GROUP TAB LOCATOR

	Introduction
0	Lubrication & Maintenance
2	Suspension
3	Differential & Driveline
4	Vehicle Quick Reference
5	Brakes
7	Cooling
8A	Audio/Video
8B	Chime/Buzzer
8C	Clock
8E	Electronic Control Modules
8F	Engine Systems
8G	Heated Systems
8H	Horn
8I	Ignition Control
8J	Instrument Cluster
8L	Lamps
8M	Message Systems
8N	Power Systems
8O	Restraints
8P	Speed Control
8Q	Vehicle Theft Security
8R	Wipers/Washers
8T	Navigation/Telecommunication
8W	Wiring
9	Engine
11	Exhaust System
13	Frame & Bumpers
14	Fuel System
19	Steering
21	Automatic Transmission
22	Tires/Wheels
23	Body
24	Heating & Air Conditioning
25	Emissions Control
	Component and System Index
	DTC Index

Service Manual Comment Forms (Rear of Manual)

INTRODUCTION

TABLE OF CONTENTS

page

BODY CODE PLATE
DESCRIPTION 2
FASTENER IDENTIFICATION
DESCRIPTION 5
FASTENER USAGE
DESCRIPTION
DESCRIPTION 7
DESCRIPTION 7
INTERNATIONAL SYMBOLS
DESCRIPTION 8
MANUFACTURE PLATE
DESCRIPTION 9

page

METRIC SYSTEM
DESCRIPTION 10
TORQUE REFERENCES
DESCRIPTION 12
VECI LABEL
DESCRIPTION 13
VEHICLE IDENTIFICATION NUMBER
DESCRIPTION 14
VEHICLE CERTIFICATION LABEL
DESCRIPTION 17

BODY CODE PLATE

DESCRIPTION

LOCATION AND DECODING

The Body Code Plate is located in the engine compartment on the front right side shock tower mounting front panel.

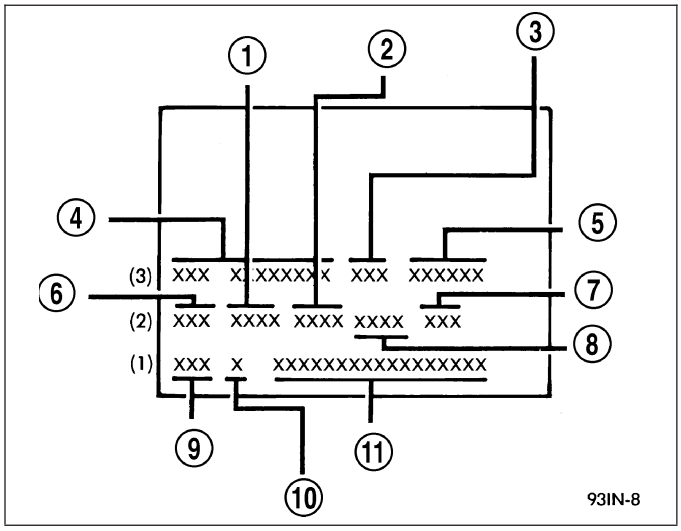

BODY CODE PLATE

1 - PRIMARY PAINT
2 - SECONDARY PAINT
3 - VINYL ROOF
4 - VEHICLE ORDER NUMBER
5 - CAR LINE SHELL
6 - PAINT PROCEDURE
7 - ENGINE
8 - TRIM
9 - TRANSMISSION
10 - MARKET
11 - VIN

BODY CODE PLATE LINE 3

There are seven lines of information on the body code plate. Lines 4, 5, 6, and 7 are not used to define service information. Information reads from left to right, starting with line 3 in the center of the plate to line 1 at the bottom of the plate.

DIGITS 1, 2, AND 3

Paint procedure

DIGIT 4

Open Space

DIGITS 5 THROUGH 7

Primary Paint

DIGIT 8 AND 9

Open Space

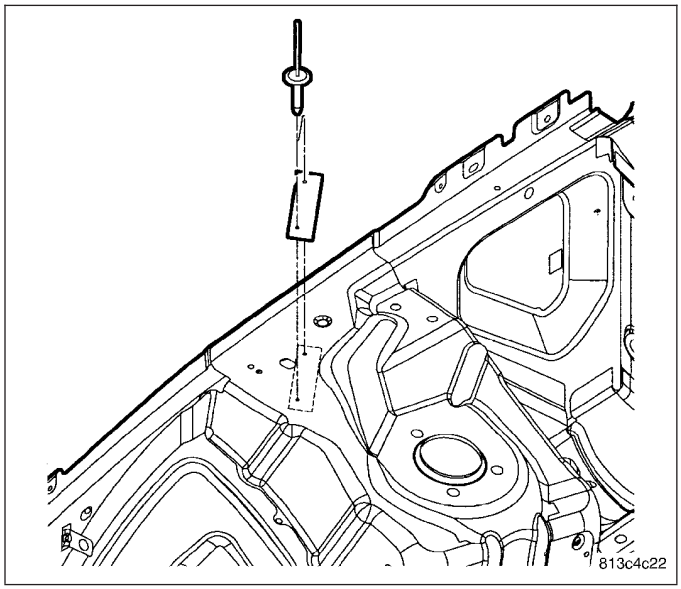

DIGITS 10 THROUGH 12

Secondary Paint

DIGIT 13 AND 14

Open Space

DIGITS 15 THROUGH 18

Interior Trim Code

DIGIT 19

Open Space

DIGITS 20, 21, AND 22

Engine Code

- EER = 2.7 L, V-6 Cylinder, 24 Valve, DOHC, Gasoline, Aluminum Block (MPI)
- EGG = 3.5 L, V -6 Cylinder, 24 Valve, High Output, Gasoline, Aluminum Block (MPI)
- ESF = 6.1 L, V-8 Cylinder, HEMI, Gasoline (SMPI)
- EZB = 5.7 L, V-8 Cylinder, HEMI, Multi-Displacement, Gasoline,

DIGIT 23

Open Space

BODY CODE PLATE – LINE 2

DIGITS 1 THROUGH 12

Vehicle Order Number

DIGITS 13, THROUGH 15

Vinyl Roof Code

DIGITS 16 AND 17

Open space

DIGITS 18 AND 19

Vehicle Shell Line

- LX

DIGITS 20

Carline

- C = Chrysler
- D = Dodge

DIGIT 21

Price Class

- E = Economy
- H = High Line
- L = Low Line
- M = Medium

- P = Premium
- S = Sport
- X = Special

DIGITS 22 AND 23

Body Type
- 48 = Four Door Sedan Tall
- 49 =Hatchback Tall

BODY CODE PLATE LINE 1

DIGITS 1, 2, AND 3

Transmission Codes
- DG6 = 4-Speed Electronic Automatic Transmission
- DGJ = 5-Speed Automatic Transmission

DIGIT 4

Open Space

DIGIT 5

Market Code
- C = Canada
- B = International
- M = Mexico
- U = United States

DIGIT 6

Open Space

DIGITS 7 THROUGH 23

Vehicle Identification Number
- (Refer to VEHICLE DATA/VEHICLE INFORMATION/VEHICLE IDENTIFICATION NUMBER - DESCRIPTION) for proper breakdown of VIN code.

IF TWO BODY CODE PLATES ARE REQUIRED

The last code shown on either plate will be followed by END. When two plates are required, the last code space on the first plate will indicate (CTD)

When a second plate is required, the first four spaces of each line will not be used due to overlap of the plates.

FASTENER IDENTIFICATION

DESCRIPTION

The SAE bolt strength grades range from grade 2 to grade 8. The higher the grade number, the greater the bolt strength. Identification is determined by the line marks on the top of each bolt head. The actual bolt strength grade corresponds to the number of line marks plus 2. The most commonly used metric bolt strength classes are 9.8 and 10.9. The metric strength class identification number is imprinted on the head of the bolt. The higher the class number, the greater the bolt strength. Some metric nuts are imprinted with a single-digit strength class on the nut face. Refer to the Fastener Identification and Fastener Strength Charts.

Bolt Markings and Torques - Metric

Bolt Markings	8.8/8.9		10.9		12.9	
Bolt Dia.	N·m	Ft. Lbs.	N·m	Ft. Lbs.	N·m	Ft. Lbs.
6	12	105*	14	120*	16	12
8	25	250*	32	23	38	28
10	54	40	60	45	74	55
12	95	70	108	80	135	100
14	155	115	175	130	216	160
16	243	180	324	210	324	240
* Inch Lbs.						

Bolt Markings and Torques - U. S. Customary

Bolt Markings	Grade 5		Grade 8	
Bolt Dia.	N·m	Ft. Lbs	N·m	Ft. Lbs
1/4 - 20	10	95*	14	125*
1/4 - 28	10	95*	17	150*
5/16 - 18	22	200*	30	270*
5/16 - 24	26	240*	33	300*
3/8 - 16	40	30	55	40
3/8 - 24	47	35	60	45
7/16 - 14	68	50	88	65
7/16 - 20	74	55	95	70
1/2 - 13	101	75	135	100
1/2 -20	115	85	150	110
9/16 - 12	135	105	182	135
9/16 - 18	155	115	202	150
5/8 - 11	202	150	263	195
5/8 - 18	215	160	284	210
3/4 - 10	230	170	297	220
3/4 - 16	236	175	304	225
7/8 - 14	405	300	540	400
* Inch Lbs.				

HOW TO DETERMINE BOLT STRENGTH

	Mark	Class
Hexagon head bolt	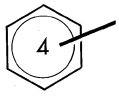 Bolt head No. 4 — 4T; 5 — 5T; 6 — 6T; 7 — 7T; 8 — 8T; 9 — 9T; 10 — 10T; 11 — 11T	
	 No mark	4T
Hexagon flange bolt w/washer hexagon bolt	 No mark	4T
Hexagon head bolt	 Two protruding lines	5T
Hexagon flange bolt w/washer hexagon bolt	 Two protruding lines	6T
Hexagon head bolt	 Three protruding lines	7T
Hexagon head bolt	 Four protruding lines	8T

	Mark	Class
Stud bolt	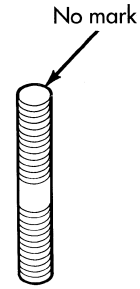	4T
	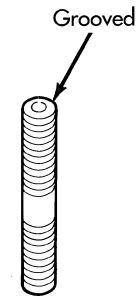	6T
Welded bolt	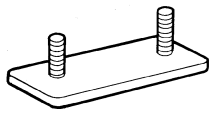	4T

95IN-4

FASTENER USAGE

DESCRIPTION

DESCRIPTION

WARNING: Use of an incorrect fastener may result in component damage or personal injury.

Fasteners and torque specifications references in this Service Manual are identified in metric and SAE format.

During any maintenance or repair procedures, it is important to salvage all fasteners (nuts, bolts, etc.) for reassembly. If the fastener is not salvageable, a fastener of equivalent specification must be used.

DESCRIPTION

Most stripped threaded holes can be repaired using a Helicoil®. Follow the vehicle or Helicoil® recommendations for application and repair procedures.

INTERNATIONAL SYMBOLS

DESCRIPTION

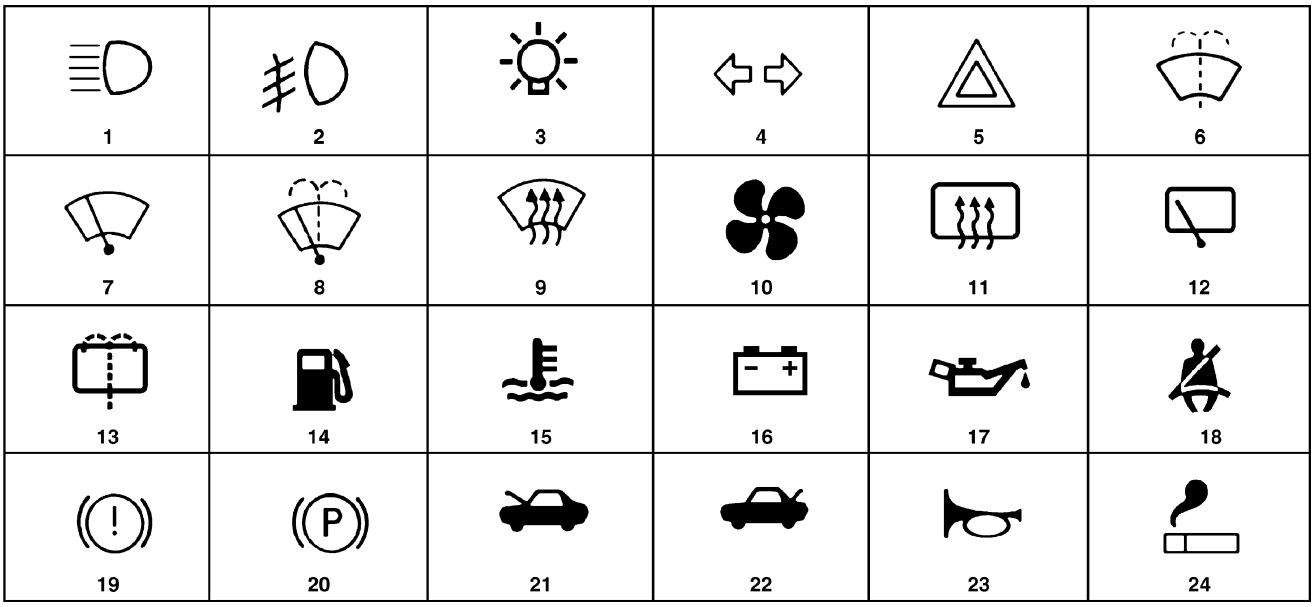

The graphic symbols illustrated in the following International Control and Display Symbols Chart are used to identify various instrument controls. The symbols correspond to the controls and displays that are located on the instrument panel.

MANUFACTURE PLATE

DESCRIPTION

The Manufacturer Plate is located in the engine compartment on the passenger side rear corner of the hood. The plate contains five lines of information:

1. Vehicle Identification Number (VIN)
2. Gross Vehicle Mass (GVM)
3. Gross Train Mass (GTM)
4. Gross Front Axle Rating (GFAR)
5. Gross Rear Axle Rating (GRAR)

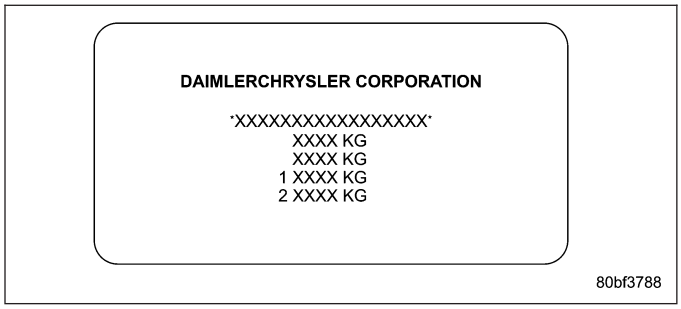

METRIC SYSTEM

DESCRIPTION

in-lbs to N•m

in-lb	N•m	in-lb	N•m	in-lb	N•m	in-lb	N•m	in-lb	N•m
2	.2260	42	4.7453	82	9.2646	122	13.7839	162	18.3032
4	.4519	44	4.9713	84	9.4906	124	14.0099	164	18.5292
6	.6779	46	5.1972	86	9.7165	126	14.2359	166	18.7552
8	.9039	48	5.4232	88	9.9425	128	14.4618	168	18.9811
10	1.1298	50	5.6492	90	10.1685	130	14.6878	170	19.2071
12	1.3558	52	5.8751	92	10.3944	132	14.9138	172	19.4331
14	1.5818	54	6.1011	94	10.6204	134	15.1397	174	19.6590
16	1.8077	56	6.3270	96	10.8464	136	15.3657	176	19.8850
18	2.0337	58	6.5530	98	11.0723	138	15.5917	178	20.1110
20	2.2597	60	6.7790	100	11.2983	140	15.8176	180	20.3369
22	2.4856	62	7.0049	102	11.5243	142	16.0436	182	20.5629
24	2.7116	64	7.2309	104	11.7502	144	16.2696	184	20.7889
26	2.9376	66	7.4569	106	11.9762	146	16.4955	186	21.0148
28	3.1635	68	7.6828	108	12.2022	148	16.7215	188	21.2408
30	3.3895	70	7.9088	110	12.4281	150	16.9475	190	21.4668
32	3.6155	72	8.1348	112	12.6541	152	17.1734	192	21.6927
34	3.8414	74	8.3607	114	12.8801	154	17.3994	194	21.9187
36	4.0674	76	8.5867	116	13.1060	156	17.6253	196	22.1447
38	4.2934	78	8.8127	118	13.3320	158	17.8513	198	22.3706
40	4.5193	80	9.0386	120	13.5580	160	18.0773	200	22.5966

N•m to in-lbs

N•m	in-lb	N•m	in-lb	N•m	in-lb	N•m	in-lb	N•m	in-lb
.2	1.7702	4.2	37.1747	8.2	72.5792	12.2	107.9837	16.2	143.3882
.4	3.5404	4.4	38.9449	8.4	74.3494	12.4	109.7539	16.4	145.1584
.6	5.3107	4.6	40.7152	8.6	76.1197	12.6	111.5242	16.6	146.9287
.8	7.0809	4.8	42.4854	8.8	77.8899	12.8	113.2944	16.8	148.6989
1	8.8511	5	44.2556	9	79.6601	13	115.0646	17	150.4691
1.2	10.6213	5.2	46.0258	9.2	81.4303	13.2	116.8348	17.2	152.2393
1.4	12.3916	5.4	47.7961	9.4	83.2006	13.4	118.6051	17.4	154.0096
1.6	14.1618	5.6	49.5663	9.6	84.9708	13.6	120.3753	17.6	155.7798
1.8	15.9320	5.8	51.3365	9.8	86.7410	13.8	122.1455	17.8	157.5500
2	17.7022	6	53.1067	10	88.5112	14	123.9157	18	159.3202
2.2	19.4725	6.2	54.8770	10.2	90.2815	14.2	125.6860	18.5	163.7458
2.4	21.2427	6.4	56.6472	10.4	92.0517	14.4	127.4562	19	168.1714
2.6	23.0129	6.6	58.4174	10.6	93.8219	14.6	129.2264	19.5	172.5970
2.8	24.7831	6.8	60.1876	10.8	95.5921	14.8	130.9966	20	177.0225
3	26.5534	7	61.9579	11	97.3624	15	132.7669	20.5	181.4480
3.2	28.3236	7.2	63.7281	11.2	99.1326	15.2	134.5371	21	185.8736
3.4	30.0938	7.4	65.4983	11.4	100.9028	15.4	136.3073	22	194.7247
3.6	31.8640	7.6	67.2685	11.6	102.6730	15.6	138.0775	23	203.5759
3.8	33.6342	7.8	69.0388	11.8	104.4433	15.8	139.8478	24	212.4270
4	35.4045	8	70.8090	12	106.2135	16	141.6180	25	221.2781

ft-lbs to N•m

ft-lb	N•m	ft-lb	N•m	ft-lb	N•m	ft-lb	N•m	ft-lb	N•m
1	1.3558	21	28.4722	41	55.5885	61	82.7049	81	109.8212
2	2.7116	22	29.8280	42	56.9444	62	84.0607	82	111.1770
3	4.0675	23	31.1838	43	58.3002	63	85.4165	83	112.5328
4	5.4233	24	32.5396	44	59.6560	64	86.7723	84	113.8888
5	6.7791	25	33.8954	45	61.0118	65	88.1281	85	115.2446
6	8.1349	26	35.2513	46	62.3676	66	89.4840	86	116.6004
7	9.4907	27	36.6071	47	63.7234	67	90.8398	87	117.9562
8	10.8465	28	37.9629	48	65.0793	68	92.1956	88	119.3120
9	12.2024	29	39.3187	49	66.4351	69	93.5514	89	120.6678
10	13.5582	30	40.6745	50	67.7909	70	94.9073	90	122.0236
11	14.9140	31	42.0304	51	69.1467	71	96.2631	91	123.3794
12	16.2698	32	43.3862	52	70.5025	72	97.6189	92	124.7352
13	17.6256	33	44.7420	53	71.8583	73	98.9747	93	126.0910
14	18.9815	34	46.0978	54	73.2142	74	100.3316	94	127.4468
15	20.3373	35	47.4536	55	74.5700	75	101.6862	95	128.8026
16	21.6931	36	48.8094	56	75.9258	76	103.0422	96	130.1586
17	23.0489	37	50.1653	57	77.2816	77	104.3980	97	131.5144
18	24.4047	38	51.5211	58	78.6374	78	105.7538	98	132.8702
19	25.7605	39	52.8769	59	79.9933	79	107.1196	99	134.2260
20	27.1164	40	54.2327	60	81.3491	80	108.4654	100	135.5820

N•m to ft-lbs

N•m	ft-lb	N•m	ft-lb	N•m	ft-lb	N•m	ft-lb	N•m	ft-lb
1	.7376	21	15.9888	41	30.2400	61	44.9913	81	59.7425
2	1.4751	22	16.2264	42	30.9776	62	45.7289	82	60.4801
3	2.2127	23	16.9639	43	31.7152	63	46.4664	83	61.2177
4	2.9502	24	17.7015	44	32.4527	64	47.2040	84	61.9552
5	3.6878	25	18.4391	45	33.1903	65	47.9415	85	62.6928
6	4.4254	26	19.1766	46	33.9279	66	48.6791	86	63.4303
7	5.1629	27	19.9142	47	34.6654	67	49.4167	87	64.1679
8	5.9005	28	20.6517	48	35.4030	68	50.1542	88	64.9545
9	6.6381	29	21.3893	49	36.1405	69	50.8918	89	65.6430
10	7.3756	30	22.1269	50	36.8781	70	51.6293	90	66.3806
11	8.1132	31	22.8644	51	37.6157	71	52.3669	91	67.1181
12	8.8507	32	23.6020	52	38.3532	72	53.1045	92	67.8557
13	9.5883	33	24.3395	53	39.0908	73	53.8420	93	68.5933
14	10.3259	34	25.0771	54	39.8284	74	54.5720	94	69.3308
15	11.0634	35	25.8147	55	40.5659	75	55.3172	95	70.0684
16	11.8010	36	26.5522	56	41.3035	76	56.0547	96	70.8060
17	12.5386	37	27.2898	57	42.0410	77	56.7923	97	71.5435
18	13.2761	38	28.0274	58	42.7786	78	57.5298	98	72.2811
19	14.0137	39	28.7649	59	43.5162	79	58.2674	99	73.0187
20	14.7512	40	29.5025	60	44.2537	80	59.0050	100	73.7562

in. to mm

in.	mm	in.	mm	in.	mm	in.	mm	in.	mm
.01	.254	.21	5.334	.41	10.414	.61	15.494	.81	20.574
.02	.508	.22	5.588	.42	10.668	.62	15.748	.82	20.828
.03	.762	.23	5.842	.43	10.922	.63	16.002	.83	21.082
.04	1.016	.24	6.096	.44	11.176	.64	16.256	.84	21.336
.05	1.270	.25	6.350	.45	11.430	.65	16.510	.85	21.590
.06	1.524	.26	6.604	.46	11.684	.66	16.764	.86	21.844
.07	1.778	.27	6.858	.47	11.938	.67	17.018	.87	22.098
.08	2.032	.28	7.112	.48	12.192	.68	17.272	.88	22.352
.09	2.286	.29	7.366	.49	12.446	.69	17.526	.89	22.606
.10	2.540	.30	7.620	.50	12.700	.70	17.780	.90	22.860
.11	2.794	.31	7.874	.51	12.954	.71	18.034	.91	23.114
.12	3.048	.32	8.128	.52	13.208	.72	18.288	.92	23.368
.13	3.302	.33	8.382	.53	13.462	.73	18.542	.93	23.622
.14	3.556	.34	8.636	.54	13.716	.74	18.796	.94	23.876
.15	3.810	.35	8.890	.55	13.970	.75	19.050	.95	24.130
.16	4.064	.36	9.144	.56	14.224	.76	19.304	.96	24.384
.17	3.318	.37	9.398	.57	14.478	.77	19.558	.97	24.638
.18	4.572	.38	9.652	.58	14.732	.78	19.812	.98	24.892
.19	4.826	.39	9.906	.59	14.986	.79	20.066	.99	25.146
.20	5.080	.40	10.160	.60	15.240	.80	20.320	1.00	25.400

mm to in.

mm	in.	mm	in.	mm	in.	mm	in.	mm	in.
.01	.00039	.21	.00827	.41	.01614	.61	.02402	.81	.03189
.02	.00079	.22	.00866	.42	.01654	.62	.02441	.82	.03228
.03	.00118	.23	.00906	.43	.01693	.63	.02480	.83	.03268
.04	.00157	.24	.00945	.44	.01732	.64	.02520	.84	.03307
.05	.00197	.25	.00984	.45	.01772	.65	.02559	.85	.03346
.06	.00236	.26	.01024	.46	.01811	.66	.02598	.86	.03386
.07	.00276	.27	.01063	.47	.01850	.67	.02638	.87	.03425
.08	.00315	.28	.01102	.48	.01890	.68	.02677	.88	.03465
.09	.00354	.29	.01142	.49	.01929	.69	.02717	.89	.03504
.10	.00394	.30	.01181	.50	.01969	.70	.02756	.90	.03543
.11	.00433	.31	.01220	.51	.02008	.71	.02795	.91	.03583
.12	.00472	.32	.01260	.52	.02047	.72	.02835	.92	.03622
.13	.00512	.33	.01299	.53	.02087	.73	.02874	.93	.03661
.14	.00551	.34	.01339	.54	.02126	.74	.02913	.94	.03701
.15	.00591	.35	.01378	.55	.02165	.75	.02953	.95	.03740
.16	.00630	.36	.01417	.56	.02205	.76	.02992	.96	.03780
.17	.00669	.37	.01457	.57	.02244	.77	.03032	.97	.03819
.18	.00709	.38	.01496	.58	.02283	.78	.03071	.98	.03858
.19	.00748	.39	.01535	.59	.02323	.79	.03110	.99	.03898
.20	.00787	.40	.01575	.60	.02362	.80	.03150	1.00	.03937

J901N-10

The metric system is based on quantities of one, ten, one hundred, one thousand and one million.

The following chart will assist in converting metric units to equivalent English and SAE units, or vise versa.

CONVERSION FORMULAS AND EQUIVALENT VALUES

MULTIPLY	BY	TO GET	MULTIPLY	BY	TO GET
in-lbs	x 0.11298	= Newton Meters (N·m)	N·m	x 8.851	= in-lbs
ft-lbs	x 1.3558	= Newton Meters (N·m)	N·m	x 0.7376	= ft-lbs
Inches Hg (60° F)	x 3.377	= Kilopascals (kPa)	kPa	x 0.2961	= Inches Hg
psi	x 6.895	= Kilopascals (kPa)	kPa	x 0.145	= psi
Inches	x 25.4	= Millimeters (mm)	mm	x 0.03937	= Inches
Feet	x 0.3048	= Meters (M)	M	x 3.281	= Feet
Yards	x 0.9144	= Meters	M	x 1.0936	= Yards
mph	x 1.6093	= Kilometers/Hr. (Km/h)	Km/h	x 0.6214	= mph
Feet/Sec	x 0.3048	= Meters/Sec (M/S)	M/S	x 3.281	= Feet/Sec
mph	x 0.4470	= Meters/Sec (M/S)	M/S	x 2.237	= mph
Kilometers/Hr. (Km/h)	x 0.27778	= Meters/Sec (M/S)	M/S	x 3.600	Kilometers/Hr. (Km/h)

COMMON METRIC EQUIVALENTS

1 inch = 25 Millimeters	1 Cubic Inch = 16 Cubic Centimeters
1 Foot = 0.3 Meter	1 Cubic Foot = 0.03 Cubic Meter
1 Yard = 0.9 Meter	1 Cubic Yard = 0.8 Cubic Meter
1 Mile = 1.6 Kilometers	

Refer to the Metric Conversion Chart to convert torque values listed in metric Newton- meters (N·m). Also, use the chart to convert between millimeters (mm) and inches (in.).

TORQUE REFERENCES

DESCRIPTION

SPECIFIED TORQUE FOR STANDARD BOLTS

Class	Diameter mm	Pitch mm	Specified torque					
			Hexagon head bolt			Hexagon flange bolt		
			N•m	kgf-cm	ft-lbf	N•m	kgf-cm	ft-lbf
4T	6	1	5	55	48 in.-lbf	6	60	52 in.-lbf
	8	1.25	12.5	130	9	14	145	10
	10	1.25	26	260	19	29	290	21
	12	1.25	47	480	35	53	540	39
	14	1.5	74	760	55	84	850	61
	16	1.5	115	1,150	83	—	—	—
5T	6	1	6.5	65	56 in.-lbf	7.5	75	65 in.-lbf
	8	1.25	15.5	160	12	17.5	175	13
	10	1.25	32	330	24	36	360	26
	12	1.25	59	600	43	65	670	48
	14	1.5	91	930	67	100	1,050	76
	16	1.5	140	1,400	101	—	—	—
6T	6	1	8	80	69 in.-lbf	9	90	78 in.-lbf
	8	1.25	19	195	14	21	210	15
	10	1.25	39	400	29	44	440	32
	12	1.25	71	730	53	80	810	59
	14	1.5	110	1,100	80	125	1,250	90
	16	1.5	170	1,750	127	—	—	—
7T	6	1	10.5	110	8	12	120	9
	8	1.25	25	260	19	28	290	21
	10	1.25	52	530	38	58	590	43
	12	1.25	95	970	70	105	1,050	76
	14	1.5	145	1,500	108	165	1,700	123
	16	1.5	230	2,300	166	—	—	—
8T	8	1.25	29	300	22	33	330	24
	10	1.25	61	620	45	68	690	50
	12	1.25	110	1,100	80	120	1,250	90
9T	8	1.25	34	340	25	37	380	27
	10	1.25	70	710	51	78	790	57
	12	1.25	125	1,300	94	140	1,450	105
10T	8	1.25	38	390	28	42	430	31
	10	1.25	78	800	58	88	890	64
	12	1.25	140	1,450	105	155	1,600	116
11T	8	1.25	42	430	31	47	480	35
	10	1.25	87	890	64	97	990	72
	12	1.25	155	1,600	116	175	1,800	130

Individual Torque Charts appear within many or the Groups. Refer to the Standard Torque Specifications Chart for torque references not listed in the individual torque charts.

VECI LABEL

DESCRIPTION

All vehicles are equipped with a combined VECI label. This label is located in the engine compartment.

The VECI label contains the following:

- Engine family and displacement
- Evaporative family
- Emission control system schematic
- Certification application
- Engine timing specifications (if adjustable)
- Idle speeds (if adjustable)
- Spark plug and gap

The label also contains an engine vacuum schematic. There are unique labels for vehicles built for sale in the state of California and the country of Canada. Canadian labels are written in both the English and French languages. These labels are permanently attached and cannot be removed without defacing information and destroying label.

VEHICLE IDENTIFICATION NUMBER

DESCRIPTION

The Vehicle Identification Number (VIN) plate is attached to the top left side of the instrument panel. The VIN contains 17 characters that provide data concerning the vehicle. Refer to the decoding chart to determine the identification of a vehicle.

To protect the consumer from theft and possible fraud the manufacturer is required to include a Check Digit at the ninth position of the Vehicle Identification Number. The check digit is used by the manufacturer and government agencies to verify the authenticity of the vehicle and official documentation. The formula to use the check digit is not released to the general public.

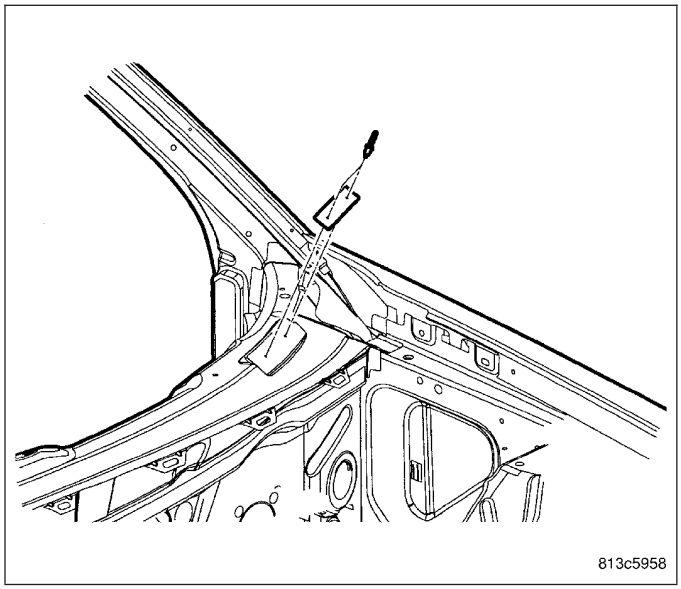

VIN DECODING INFORMATION

POSITION	INTERPRETATION	CODE = DESCRIPTION
1	Country of Origin	1 = Manufactured by DaimlerChrysler Canada Inc.
2	Make	A = Chrysler (Hatchback) B = Dodge (Sedan) C = Chrysler (Sedan) D = Dodge (Hatchback)
3	Vehicle Type	3 = Passenger Car 4 = Multipurpose Passenger Vehicle Without Side Air Bags Sales Code (CGS) (Hatchback) 8 = Multipurpose Passenger Vehicle With Side Air Bags Sales Code (CGS) (Hatchback)

POSITION	INTERPRETATION	CODE = DESCRIPTION
4	Restraint System	H = Restraint System Air bags Front Next Generation Multi-Stage Sales Code (CG1) Witht Side Air Bags Sales Code (CGS) J = Restraint System Air Bags Front Next Generation Multi Stage Sales Code (CG1) Without Side Air Bags Sales Code (CGS) K = Restraint System Advanced Multistages Front Air Bags Sales Code (CG3) With Side Air Bags Sales Code (CGS) L = Restraint System Advanced Multistage Front Air Bags Sales Code (CG3) With Side Air Bags Sales Code (CGS) 4 = Multipurpose Passenger Vehicle Without Side Air Bags Sales Code (CGS) (Hatchback) 8= Multipurpose Passenger Vehicle With Side Air Bags Sales Code (CGS) (Hatchback)
	Gross Vehicle Weight Rating	E = 3001- 4000 lbs. (1361- 1814) KG (Hatchback) F = 4001- 5000 lbs. (1815 - 2267) KG (Hatchback)
5	Vehicle Line	A = 300 / 300C / SRT-8/ Charger (RWD) (LWD) K = 300 / 300C (AWD) (LWD) R = 300C/ SRT-8 (RWD) (RHD) V = 300 Touring / Magnum (RWD) Z = 300 Touring Magnum (AWD)
6	Series	4 - H High Line 5 = P Premium 6 = S Sport 7 = X Special B = 4 Speed Automatic, Sales Code (DG6) B = 4 Speed Automatic VLP, Sales Code (DGV) E = 5 Speed Automatic, Sales Code (DGJ)
7	Body Style	3 = 4 Door Sedan Tall 7 = Hatchback Tall

POSITION	INTERPRETATION	CODE = DESCRIPTION
8	Engine	D = 3.0L V-6 cyl. Turbo Diesel Sales Code (EXL) G = 3.5L V-6 cyl. High Output 24 Valve MPI Gasoline Sales Code (EGG) H = 5.7L V-8 cyl. HEMI Multiple Displacement Gasoline Sales Code (EZB) M = 3.0L V6 CYL 24 Valve Turbo Diesel Sales Code (EXL) (Hatchback) R = 2.7L V6 Cyl. 24V DOHC Gasoline (MPI) Sales Code (EER) T = 2.7L V6 CYL 24 ValveDOHC Gasoline MPI Sales Code (EER) (Hatchback) V = 3.5l V6 CYL 24 Valve High Output Gasoline, Sales Code (EZB) (Hatchback) W= 6.1L V8 CYL SRT HEMI Gasoline SMPI, Sales Code (ESF) 2 = 5.7L V8 CYL HEMI Multiple Displacement Gasoline Sales Code (EZB) (Hatchback) 3 = 6.1L V8 CYL SRT HEMI Gasoline SMPI, Sales Code (ESF) (Hatchback)
9	Check Digit	0 through 9 or X
10	Model Year	6 = 2006
11	Assembly Plant	H = Brampton Assembly
12 Through 17	Vehicle Build Sequence	Six Digit Number Assigned By Assembly Plant

VEHICLE CERTIFICATION LABEL

DESCRIPTION

A vehicle certification label is attached to every DaimlerChrysler Corporation vehicle. The label certifies that the vehicle conforms to all applicable Federal Motor Vehicle Standards. The label also lists:

- Month and year of vehicle manufacture.
- Gross Vehicle Weight Rating (GVWR). The gross front and rear axle weight ratings (GAWR's) are based on a minimum rim size and maximum cold tire inflation pressure.
- Vehicle Identification Number (VIN).
- Type of vehicle.
- Type of rear wheels.
- Bar code.
- Month, Day and Hour (MDH) of final assembly.
- Paint and Trim codes.
- Country of origin.

The label is located on the driver-side door shut-face.

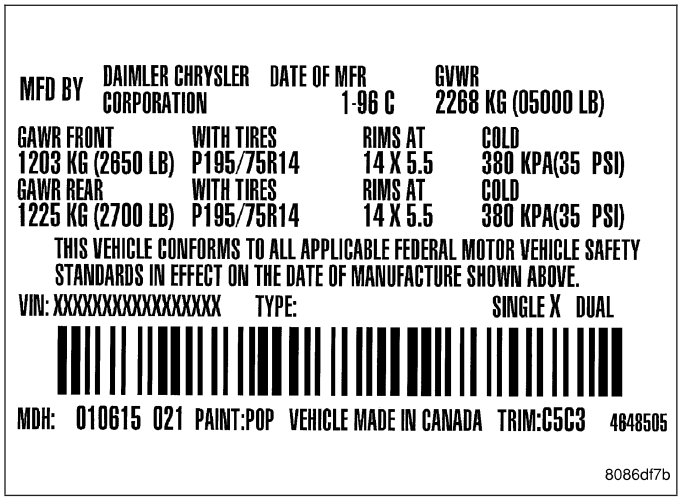

LUBRICATION AND MAINTENANCE

TABLE OF CONTENTS

page

INTERNATIONAL SYMBOLS
DESCRIPTION 2
PARTS AND LUBRICANT RECOMMENDATIONS
DESCRIPTION
LUBRICANT RECOMMENDATIONS 3
FLUID TYPES 3
FLUID TYPES
DESCRIPTION
AUTOMATIC TRANSMISSION FLUID 5
AXLE 5
ENGINE OIL 5
ENGINE COOLANT 7
TRANSFER CASE 8
BRAKE FLUID 8
POWER STEERING FLUID 9
OPERATION - AUTOMATIC TRANSMISSION FLUID 9

page

FLUID CAPACITIES
SPECIFICATIONS - FLUID CAPACITIES 10
FLUID FILL AND CHECK LOCATIONS
DESCRIPTION 11
LUBRICATION POINTS
DESCRIPTION 12
MAINTENANCE SCHEDULES
DESCRIPTION
MAINTENANCE SCHEDULES 13
HOISTING
STANDARD PROCEDURE - HOISTING 20
JUMP STARTING
STANDARD PROCEDURE
JUMP STARTING 22
TOWING
STANDARD PROCEDURE - TOWING 24

INTERNATIONAL SYMBOLS

DESCRIPTION

DaimlerChrysler Corporation uses international symbols to identify engine compartment lubricant and fluid inspection and fill locations.

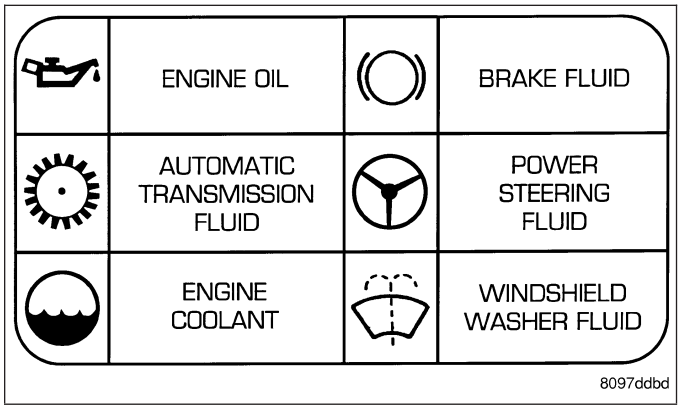

PARTS AND LUBRICANT RECOMMENDATIONS

DESCRIPTION

LUBRICANT RECOMMENDATIONS

SPECIALIZED LUBRICANTS AND OILS

Some maintenance or repair procedures may require the use of specialized lubricants or oils. Consult the appropriate sections in this manual for the correct application of these lubricants.

Chassis

Component	Fluid, Lubricant, or Genuine Part
Steering Gear & Linkage, Ball Joints, Prop Shafts & Yokes, Wheel Bearings	Mopar® Multi-Purpose Lubricant NLGI Grade 2 EP, GC-LB

Body

Component	Fluid, Lubricant, and Genuine Part
Hinges:	
Door & Hood	Mopar® Engine Oil
Swing Gate	Mopar® Multi-Purpose Lube NLGI Grade 2 EP, GC-LB
Latches: Door, Hood/Safety Catch, Swing Gate	Mopar® Multi-Purpose Lube NLGI Grade 2 EP, GC-LB
Seat Regulator & Track	Mopar® Multi-Purpose Lube NLGI Grade 2 EP, GC-LB
Lock Cylinders	Mopar® Lock Cylinder Lube

FLUID TYPES

When service is required, DaimlerChrysler Corporation recommends that only Mopar® brand parts, lubricants and chemicals be used. Mopar® provides the best engineered products for servicing DaimlerChrysler Corporation vehicles.

Only lubricants bearing designations defined by the following organization should be used to service a Chrysler Corporation vehicle.

- Society of Automotive Engineers (SAE)
- American Petroleum Institute (API)
- National Lubricating Grease Institute (NLGI)

API QUALITY CLASSIFICATION

This symbol on the front of an oil container means that the oil has been certified by the American Petroleum Institute (API) to meet all the lubrication requirements specified by DaimlerChrysler Corporation.

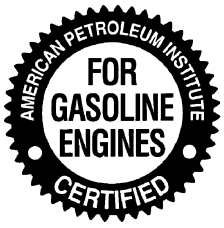

9400-9

GEAR LUBRICANTS

SAE ratings also apply to multigrade gear lubricants. In addition, API classification defines the lubricants usage. Such as API GL-5 and SAE 75W-90.

FLUID TYPES

DESCRIPTION

AUTOMATIC TRANSMISSION FLUID

NOTE: Refer to Service Procedures in this group for fluid level checking procedures.

Mopar® ATF +4, Automatic Transmission Fluid is the recommended fluid for DaimlerChrysler automatic transmissions.

Dexron II fluid IS NOT recommended. Clutch chatter can result from the use of improper fluid.

Mopar® ATF +4, Automatic Transmission Fluid when new is red in color. The ATF is dyed red so it can be identified from other fluids used in the vehicle such as engine oil or antifreeze. The red color is not permanent and is not an indicator of fluid condition. As the vehicle is driven, the ATF will begin to look darker in color and may eventually become brown. **This is normal.** ATF+4 also has a unique odor that may change with age. Consequently, odor and color cannot be used to indicate the fluid condition or the need for a fluid change.

FLUID ADDITIVES

DaimlerChrysler strongly recommends against the addition of any fluids to the transmission, other than those automatic transmission fluids listed above. Exceptions to this policy are the use of special dyes to aid in detecting fluid leaks.

Various “special” additives and supplements exist that claim to improve shift feel and/or quality. These additives and others also claim to improve converter clutch operation and inhibit overheating, oxidation, varnish, and sludge. These claims have not been supported to the satisfaction of DaimlerChrysler and these additives **must not be used.** The use of transmission “sealers” should also be avoided, since they may adversely affect the integrity of transmission seals.

AXLE

NOTE: DaimlerChrysler recommends the use of Mopar® lubricants. Fluid additives are not required for these axles.

FRONT AXLE

- 175MM FIA - Mopar® Synthetic Gear & Axle Lubricant 75W-90

REAR AXLE

- 198MM RII - Mopar® Synthetic Gear & Axle Lubricant 75W-140
- 210MM RII - Mopar® Synthetic Gear & Axle Lubricant 75W-140

ENGINE OIL

WARNING: New or used engine oil can be irritating to the skin. Avoid prolonged or repeated skin contact with engine oil. Contaminants in used engine oil, caused by internal combustion, can be hazardous to your health. Thoroughly wash exposed skin with soap and water. Do not wash skin with gasoline, diesel fuel, thinner, or solvents, health problems can result. Do not pollute, dispose of used engine oil properly. Contact your dealer or government agency for location of collection center in your area.

When service is required, DaimlerChrysler Corporation recommends that only Mopar® brand parts, lubricants and chemicals be used. Mopar® provides the best engineered products for servicing DaimlerChrysler Corporation vehicles.

Only lubricants bearing designations defined by the following organization should be used.

- Society of Automotive Engineers (SAE)
- American Petroleum Institute (API)
- National Lubricating Grease Institute (NLGI)

- Association des Constructeurs Européens d' Automobiles (European Automobile Manufacturers Association) (ACEA)

API SERVICE GRADE CERTIFIED

Use an engine oil that is API Certified. Mopar® provides engine oils, meeting Material Standard MS-6395, that meet or exceed this requirement.

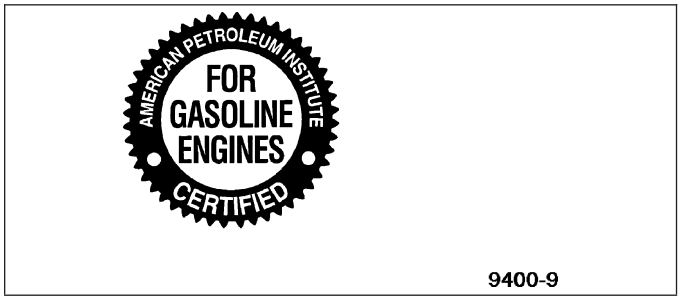

SAE VISCOSITY

SAE 5W-30 engine oils are recomended for the 2.7L and 3.5L engines, for all operating temperatures. These engine oils improve low temperature starting and vehicle fuel economy. The recommended engine oil viscosity for vehicles equipped with the 5.7L engine is SAE 5W-20. Vehicles with 5.7L engines equipped with Multiple Displacement System (MDS) must use SAE 5W-20 oil. Failure to do so may result in improper operation of the Multiple Displacement System (MDS). Refer to Multi Displacement System under Starting and Operating for details. Refer to the engine oil filler cap for the recommened engine oil viscosity for each vehicle. An SAE viscosity grade is used to specify the viscosity of engine oil. Use only engine oils with multiple viscosities such as 5W-20 or 5W-30. These are specified with a dual SAE viscosity grade which indicates the cold-to-hot temperature viscosity range.

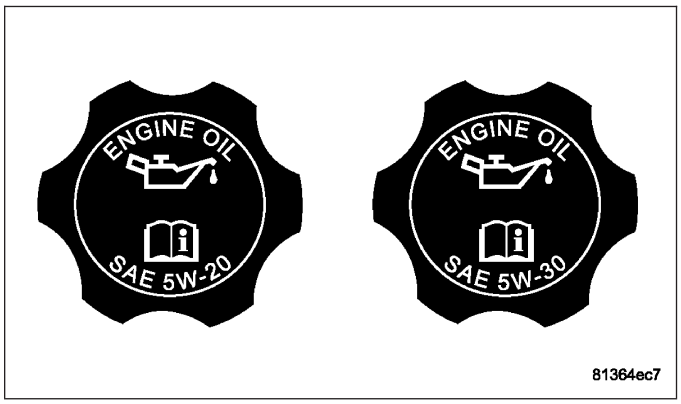

NOTE: For 5.7L INTERNATIONAL APPLICATIONS ONLY: SAE 5W30 may be substituted for the recommended SAE 5W20 if the 5W20 viscosity is not available in the region.

NOTE: For 6.1L only Use API rated SL/CF full synthetic engine oil, such as Mobil 1®. SAE 0W-40 is recommended. Refer to the engine oil viscosity chart for the correct SAE grade meeting DaimlerChrysler Material Standard MS-10725.

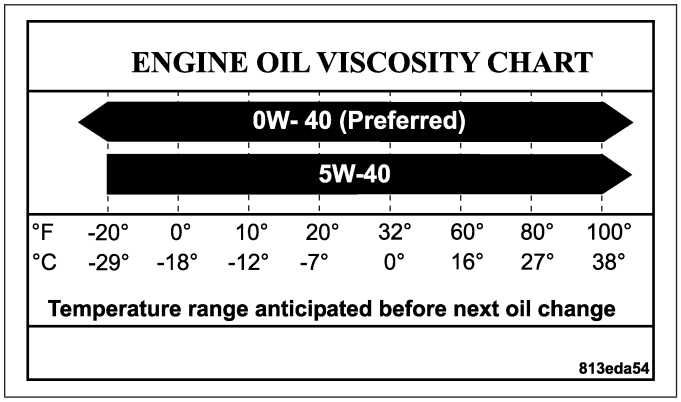

ACEA Categories

For countries that use the ACEA European Oil Categories for Service Fill Oils, use engine oils that meet the requirements of ACEA A1/B1, A2/B2, or A3/B3.

ENERGY CONSERVING OIL

An Energy Conserving type oil is recommended for gasoline engines. The designation of ENERGY CONSERVING is located on the label of an engine oil container.

CONTAINER IDENTIFICATION

Standard engine oil identification notations have been adopted to aid in the proper selection of engine oil. The identifying notations are located on the front label of engine oil plastic bottles and the top of engine oil cans.

This symbol means that the oil has been certified by the American Petroleum Institute (API). Diamler-Chrysler only recommend API Certified engine oils that meet the requirements of Material Standard MS-6395. Use Mopar® or an equivalent oil meeting the specification MS-6395.

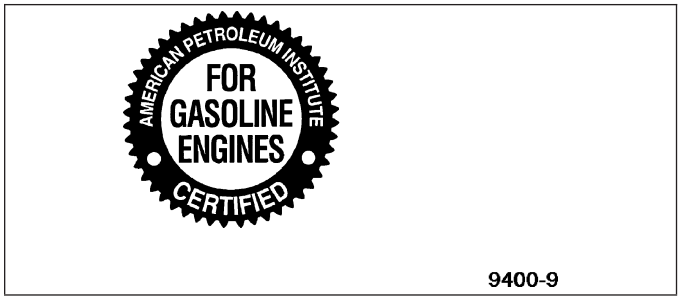

SYNTHETIC ENGINE OILS

There are a number of engine oils being promoted as either synthetic or semi-synthetic. If you chose to use such a product, use **only** those oils that meet the American Petroleum Institute (API) and SAE viscosity standard. Follow the service schedule that describes your driving type.

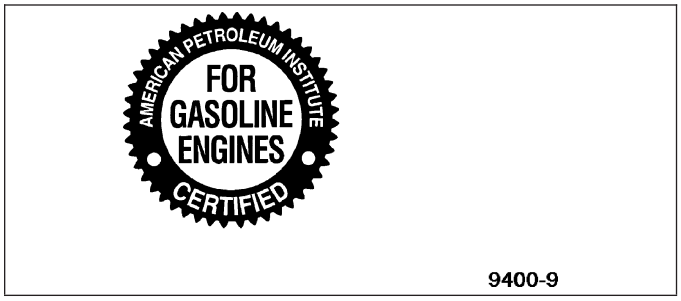

ENGINE OIL ADDITIVES/SUPPLEMENTS

The manufacturer **does not recommend** the addition of any engine oil additives/supplements to the specified engine oil. Engine oil additives/supplements should not be used to enhance engine oil performance. Engine oil additives/supplements should not be used to extend engine oil change intervals. No additive is known to be safe for engine durability and can degrade emission components. Additives can contain undesirable materials that harm the long term durability of engines by:

- Doubling the level of Phosphorus in the engine oil. The ILSAC (International Lubricant Standard Approval Committee) GF-2 and GF-3 standards require that engine oil contain no more than 0.10% Phosphorus to protect the vehicles emissions performance. Addition of engine oil additives/supplements can poison, from the added sulfur and phosphorus, catalysts and hinder efforts to guarantee emissions performance to 80,000 miles.
- Altering the viscosity characteristics of the engine oil so that it no longer meets the requirements of the specified viscosity grade.
- Creating potential for an undesirable additive compatibility interaction in the engine crankcase. Generally it is not desirable to mix additive packages from different suppliers in the crankcase; there have been reports of low temperature engine failures caused by additive package incompatibility with such mixtures.

ENGINE COOLANT

WARNING: ANTIFREEZE IS AN ETHYLENE GLYCOL BASE COOLANT AND IS HARMFUL IF SWALLOWED OR INHALED. IF SWALLOWED, DRINK TWO GLASSES OF WATER AND INDUCE VOMITING. IF INHALED, MOVE TO FRESH AIR AREA. SEEK MEDICAL ATTENTION IMMEDIATELY. DO NOT STORE IN OPEN OR UNMARKED CONTAINERS. WASH SKIN AND CLOTHING THOROUGHLY AFTER COMING IN CONTACT WITH ETHYLENE GLYCOL. KEEP OUT OF REACH OF CHILDREN. DISPOSE OF GLYCOL BASE COOLANT PROPERLY, CONTACT YOUR DEALER OR GOVERNMENT AGENCY FOR LOCATION OF COLLECTION CENTER IN YOUR AREA.

WARNING: DO NOT OPEN A COOLING SYSTEM WHEN THE ENGINE IS AT OPERATING TEMPERATURE OR HOT UNDER PRESSURE, PERSONAL INJURY CAN RESULT. AVOID RADIATOR COOLING FAN WHEN ENGINE COMPARTMENT RELATED SERVICE IS PERFORMED, PERSONAL INJURY CAN RESULT.

CAUTION: Use of Propylene Glycol based coolants is not recommended, as they provide less freeze protection and less corrosion protection.

The cooling system is designed around the coolant. The coolant must accept heat from engine metal, in the cylinder head area near the exhaust valves and engine block. Then coolant carries the heat to the radiator where the tube/fin radiator can transfer the heat to the air.

The use of aluminum cylinder blocks, cylinder heads, and water pumps requires special corrosion protection. Mopar® Antifreeze/Coolant, 5 Year/100,000 Mile Formula (MS-9769), or the equivalent ethylene glycol base coolant with organic corrosion inhibitors (called HOAT, for Hybrid Organic Additive Technology) is recommended. This coolant offers the best engine cooling without corrosion when mixed with 50% Ethylene Glycol and 50% distilled water to obtain a freeze point of -37°C (-35°F). If it loses color or becomes contaminated, drain, flush, and replace with fresh properly mixed coolant solution.

CAUTION: Do not use coolant additives that are claimed to improve engine cooling.

CAUTION: Mopar® Antifreeze/Coolant, 5 Year/100,000 Mile Formula (MS-9769) may not be mixed with any other type of antifreeze. Mixing of coolants other than specified non-HOAT or other HOAT coolant, may result in engine damage that may not be covered under the new vehicle warranty, and decreased corrosion protection.

COOLANT PERFORMANCE

The required ethylene-glycol (antifreeze) and distilled water mixture depends upon climate and vehicle operating conditions. The coolant performance of various mixtures follows:

Pure Distilled Water - Distilled water can absorb more heat than a mixture of water and ethylene-glycol. This is for purpose of heat transfer only. Water also freezes at a higher temperature and allows corrosion.

100 percent Ethylene-Glycol - The corrosion inhibiting additives in ethylene-glycol need the presence of distilled water to dissolve. Without water, additives form deposits in system. These act as insulation causing temperature to rise to as high as 149°C (300°F). This temperature is hot enough to melt plastic and soften solder. The increased temperature can result in engine detonation. In addition, 100 percent ethylene-glycol freezes at -22°C (-8°F).

50/50 Ethylene-Glycol and Distilled Water - Is the recommended mixture, it provides protection against freezing to -37°C (-34°F). The antifreeze concentration **must always** be a minimum of 44 percent, year-round in all climates. If percentage is lower, engine parts may be eroded by cavitation. Maximum protection against freezing is provided with a 68 percent antifreeze concentration, which prevents freezing down to -67.7°C (-90°F). A higher percentage will freeze at a warmer temperature. Also, a higher percentage of antifreeze can cause the engine to overheat because specific heat of antifreeze is lower than that of water.

CAUTION: Richer antifreeze mixtures cannot be measured with normal field equipment and can cause problems associated with 100 percent ethylene-glycol.

TRANSFER CASE

Recommended lubricant for the MS140 transfer case is Mopar® Transfer Case Lubricant - LX.

BRAKE FLUID

The brake fluid used in this vehicle must conform to DOT 3 specifications and SAE J1703 standards. No other type of brake fluid is recommended or approved for usage in the vehicle brake system. Use only Mopar® Brake Fluid or equivalent from a tightly sealed container.

CAUTION: Never use reclaimed brake fluid or fluid from an container which has been left open. An open container of brake fluid will absorb moisture from the air and contaminate the fluid.

CAUTION: Never use any type of a petroleum-based fluid in the brake hydraulic system. Use of such type fluids will result in seal damage of the vehicle brake hydraulic system causing a failure of the vehicle brake system. Petroleum based fluids would be items such as engine oil, transmission fluid, power steering fluid, etc.

POWER STEERING FLUID

The recommended fluid for the power steering system is Mopar® Power Steering fluid + 4 or Mopar® ATF+4 Automatic Transmission Fluid. Both Fluids have the same material standard specifications (MS-9602).

Mopar® ATF+4 (and Mopar® Power Steering fluid + 4), when new, is red in color. ATF+4 is dyed red so it can be identified from other fluids used in the vehicle such as engine oil or antifreeze. The red color is not permanent and is not an indicator of fluid condition. As the vehicle is driven, ATF+4 will begin to look darker in color and may eventually become brown. **THIS IS NORMAL**. ATF+4 also has a unique odor that may change with age. Consequently, odor and color cannot be used to indicate the fluid condition or the need for a fluid change.

The power steering system is filled-for-life at the factory and requires no regular maintenance. Although not required at specific intervals, the fluid level may be checked periodically. Check the fluid level anytime there is a system noise or fluid leak suspected. (Refer to 19 - STEERING/PUMP/FLUID - STANDARD PROCEDURE)

OPERATION - AUTOMATIC TRANSMISSION FLUID

The automatic transmission fluid is selected based upon several qualities. The fluid must provide a high level of protection for the internal components by providing a lubricating film between adjacent metal components. The fluid must also be thermally stable so that it can maintain a consistent viscosity through a large temperature range. If the viscosity stays constant through the temperature range of operation, transmission operation and shift feel will remain consistent. Transmission fluid must also be a good conductor of heat. The fluid must absorb heat from the internal transmission components and transfer that heat to the transmission case.

FLUID CAPACITIES

SPECIFICATIONS - FLUID CAPACITIES

DESCRIPTION	SPECIFICATION
Fuel Tank - V6 Engine	68 L (18 gal.)
Fuel Tank - V8 Engine	72 L (19 gal.)
Engine Oil* - 2.7L	5.7L (6.0 qts.)
Engine Oil* - 3.5L	5.7L (6.0 qts.)
Engine Oil* - 5.7L	6.6 L (7.0 qts.)
Engine Oil* - 6.1L	6.6 L (7.0 qts.)
Cooling System - 2.7L**	9.2 L (9.7 qts.)
Cooling System - 3.5L**	10.0 L (10.6 qts.)
Cooling System - 5.7L**	13.8 L (14.6 qts.)
Cooling System - 6.1L**	14.0 L (14.8 qts.)
*(includes filter)	
**(includes heater and coolant recovery bottle filled to MAX level)	
AUTOMATIC TRANSMISSION	
Service Fill - NAG1	5.0 L (10.6 pts.)
Overhaul Fill - NAG1	7.7 L (16.3 pts.) ♢
Service Fill - 42RLE	3.8L (4.0 qts)
Overhaul Fill - 42RLE	8.3L (17.6 pts) ♢
♢ Dry fill capacity. Depending on type and size of internal cooler, length and inside diameter of cooler lines, or use of an auxiliary cooler, these figures may vary. (Refer to 21 - TRANSMISSION/AUTOMATIC/FLUID - STANDARD PROCEDURE)	
TRANSFER CASE	
MS140	0.6L (1.3 pts.)
AXLE - FRONT	
175MM FIA Axle	600 ml (0.63 qts)
AXLE - REAR	
198 MM RII Axle	1.4L (1.5 qts.)
210 MM RII Axle	1.6L (1.7 qts.)

FLUID FILL AND CHECK LOCATIONS

DESCRIPTION

The fluid check/fill points and lubrication locations are located in each applicable Sections.

LUBRICATION POINTS

DESCRIPTION

Lubrication point locations are located in each applicable Sections.

MAINTENANCE SCHEDULES

DESCRIPTION

MAINTENANCE SCHEDULES

- For 2.7L engines with Federal Certified Emission Control Systems, and all 6.1L engines, follow Maintenance Schedule **"A"** from 0 to 102,000 miles, or Schedule **"B"** from 0 to 105,000 miles.
- For 2.7L engines with California Certified Emission Control Systems, and all 3.5L and 5.7L engines follow Maintenance Schedule **"A"** or **"B"** from 0–120,000 miles.

There are two maintenance schedules that show the **required** service for your vehicle.

First is Schedule **"B"**. It is for vehicles that are operated under the conditions that are listed below and at the beginning of the schedule. Change the automatic transmission fluid and filter every 60,000 miles (96 000 km) if the vehicle is usually operated under one or more of the conditions marked with an ◇.

- Day or night temperatures are below 32° F (0° C).
- Stop and go driving.
- Extensive engine idling.
- Driving in dusty conditions.
- Short trips of less than 10 miles (16 km).
- More than 50% of your driving is at sustained high speeds during hot weather, above 90° F (32° C).
- Trailer towing. ◇
- Taxi, police, or delivery service (commercial service). ◇
- Off-road or desert operation.

NOTE: If ANY of these apply to you then change your engine oil every 3,000 miles (5 000 km) or 3 months, whichever comes first and follow schedule "B" of the ″Maintenance Schedules″ section of this manual.

NOTE: IF ANY of these apply to you then flush and replace the engine coolant every 102,000 miles (170,000 km) or 60 months, whichever comes first, and follow schedule B of the ″Maintenance Schedules″ section of this manual.

NOTE: Most vehicles are operated under the conditions listed for Schedule ″B″.

Second is Schedule **"A"**. It is for vehicles that are not operated under any of the conditions listed under Schedule ″B″.

Use the schedule that best describes your driving conditions. Where time and mileage are listed, follow the interval that occurs first.

NOTE: Under no circumstances should oil change intervals exceed 6000 miles (10 000 km) or 6 months whichever comes first.

CAUTION: Failure to perform the required maintenance items may result in damage to the vehicle.

At Each Stop for Fuel

- Check the engine oil level about 5 minutes after a fully warmed engine is shut off. Checking the oil level while the vehicle is on level ground will improve the accuracy of the oil level reading. Add oil only when the level is at or below the ADD or MIN mark.
- Check the windshield washer solvent and add if required.

Once a Month

- Check tire pressure and look for unusual wear or damage.
- Inspect the battery and clean and tighten the terminals as required.
- Check the fluid levels of coolant reservoir, brake master cylinder, and transmission and add as needed.

- Check all lights and all other electrical items for correct operation.
- Check rubber seals on each side of the radiator for proper fit.

At Each Oil Change

- Change the engine oil filter.
- Inspect the exhaust system.
- Inspect the brake hoses.
- Inspect the CV joints and front and rear suspension components.
- Check the coolant level, hoses, and clamps.

SCHEDULE B

Follow schedule “B” if you usually operate your vehicle under one or more of the following conditions. Change the automatic transmission fluid and filter every 60,000 miles (96 000 km) if the vehicle is usually operated under one or more of the conditions marked with an ◇.

- Day or night temperatures are below 32° F (0° C).
- Stop and go driving.
- Extensive engine idling.
- Driving in dusty conditions.
- Short trips of less than 10 miles (16.2 km).
- More than 50% of your driving is at sustained high speeds during hot weather, above 90° F (32° C).
- Trailer towing. ◇
- Taxi, police or delivery service (commercial services). ◇
- Off-road or desert operation.
- **If equipped for and operating with E-85 (ethanol) fuel.**

NOTE: If ANY of these apply to you then change your engine oil every 3,000 miles (5 000 km) or 3 months, whichever comes first and follow schedule “B” of the ″Maintenance Schedules″ section of this manual.

NOTE: IF ANY of these apply to you then flush and replace the engine coolant every 102,000 miles (164,000 km) or 60 months, whichever comes first, and follow schedule B of the ″Maintenance Schedules″ section of this manual.

Miles	**3,000**	**6,000**	**9,000**	**12,000**	**15,000**	**18,000**
(Kilometers)	**(5 000)**	**(10 000)**	**(15 000)**	**(20 000)**	**(25 000)**	**(30 000)**
Change engine oil and engine oil filter, if not replaced at 3 months.	X	X	X	X	X	X
Inspect the **air cleaner filter** and replace if required.*	X	X	X	X		X
Replace the **air cleaner filter.**					X	
Inspect the front and rear brake linings and rotors.				X		
Replace the air conditioning filter.				X		
Rotate the tires.		X		X		X

Miles	**21,000**	**24,000**	**27,000**	**30,000**	**33,000**	**36,000**
(Kilometers)	**(35 000)**	**(40 000)**	**(45 000)**	**(50 000)**	**(55 000)**	**(60 000)**
Change engine oil and engine oil filter, if not replaced at 3 months.	X	X	X	X	X	X
Inspect the **air cleaner filter** and replace if required.*	X	X	X		X	X
Replace the **air cleaner filter.**				X		

Miles	**21,000**	**24,000**	**27,000**	**30,000**	**33,000**	**36,000**
(Kilometers)	**(35 000)**	**(40 000)**	**(45 000)**	**(50 000)**	**(55 000)**	**(60 000)**
Replace the **spark plugs.** 5.7L Engine.				X		
Inspect the front and rear brake linings and rotors.		X				X
Check and replace, if necessary, the **PCV valve.***				X		
Replace the air conditioning filter.		X				X
Rotate the tires.		X		X		X

Miles	**39,000**	**42,000**	**45,000**	**48,000**	**51,000**	**54,000**
(Kilometers)	**(65 000)**	**(70 000)**	**(75 000)**	**(80 000)**	**(85 000)**	**(90 000)**
Change engine oil and engine oil filter, if not replaced at 3 months.	X	X	X	X	X	X
Inspect the **air cleaner filter** and replace if required.*	X	X		X	X	X
Replace the **air cleaner filter.**			X			
Inspect the front and rear brake linings and rotors.				X		
Change the rear axle fluid.				X		
Replace the air conditioning filter.				X		
Rotate the tires.		X		X		X
Change the Transfer Case Fluid - All Wheel Drive (AWD) only				X		

Miles	**57,000**	**60,000**	**63,000**	**66,000**	**69,000**	**72,000**
(Kilometers)	**(95 000)**	**(100 000)**	**(105 000)**	**(110 000)**	**(115 000)**	**(120 000)**
Change engine oil and engine oil filter, if not replaced at 3 months.	X	X	X	X	X	X
Inspect the **air cleaner filter** and replace if required.*	X		X	X	X	X
Replace the **air cleaner filter.**		X				
Replace the **spark plugs.** 5.7L Engine.		X				
Inspect the front and rear brake linings and rotors.		X				X
Check and Inspect the accessory drive belt and tensioner. Replace if required.						X
Check and replace, if necessary, the **PCV valve.*** ‡		X				
Change the automatic transmission fluid and filter.		X				
Replace the air conditioning filter.		X				X
Flush and replace engine coolant at 60 months if not done at 102,000 miles.		X				
Rotate the tires.		X		X		X

Miles (Kilometers)	**75,000 (125 000)**	**78,000 (130 000)**	**81,000 (135 000)**	**84,000 (140 000)**	**87,000 (145 000)**	**90,000 (150 000)**
Change engine oil and engine oil filter, if not replaced at 3 months.	X	X	X	X	X	X
Inspect the **air cleaner filter** and replace if required.*		X	X	X	X	
Replace the **air cleaner filter.**	X					X
Replace the **spark plugs.** 5.7L Engine.						X
Inspect the front and rear brake linings and rotors.				X		
Check and replace, if necessary, the **PCV valve.*** ‡						X
Replace the air conditioning filter.				X		
Rotate the tires.		X		X		X

Miles (Kilometers)	**93,000 (155 000)**	**96,000 (160 000)**	**99,000 (165 000)**	**102,000 (170 000)**	**105,000 (175 000)**
Change engine oil and engine oil filter, if not replaced at 3 months.	X	X	X	X	X
Inspect the **air cleaner filter** and replace if required.*	X	X	X	X	
Replace the **air cleaner filter.**					X
Inspect the front and rear brake linings and rotors.		X			
Replace the **engine timing belt** 3.5L Engine.					X
Replace the **spark plugs.** 2.7L, 3.5L Engines.			X		
Check and Inspect the accessory drive belt and tensioner. Replace if required.				X	
Change the rear axle fluid.		X			
Replace the air conditioning filter.		X			
Change the Transfer Case Fluid - All Wheel Drive (AWD) only		X			
Flush and replace engine coolant at 102,000 miles if not done at 60 months.				X	
Rotate the tires.		X		X	

Miles (Kilometers)	**108,000 (180 000)**	**111,000 (185 000)**	**114,000 (190 000)**	**117,000 (195 000)**	**120,000 (200 000)**
Change engine oil and engine oil filter, if not replaced at 3 months.	X	X	X	X	X
Inspect the **air cleaner filter** and replace if required.*	X	X	X	X	
Replace the **air cleaner filter.**					X
Inspect the front and rear brake linings and rotors.	X				X
Replace the **spark plugs.** 5.7L Engines.					X

Miles (Kilometers)	108,000 (180 000)	111,000 (185 000)	114,000 (190 000)	117,000 (195 000)	120,000 (200 000)
Check and replace, if necessary, the **PCV valve.***					X
Change the automatic transmission fluid and filter.					X
Replace the air conditioning filter.	X				X
Flush and replace the engine coolant at 120 months, if not replaced at 102,000 miles.					X
Rotate the tires.	X		X		X

* This maintenance is recommended by the manufacture to the owner but is not required to maintain the emissions warranty.

‡ This maintenance is not required if previously replaced.

Inspection and service should also be performed anytime a malfunction is observed or suspected. Retain all receipts.

SCHEDULE A

Miles (Kilometers) [Months]	6,000 (10 000) [6]	12,000 (20 000) [12]	18,000 (30 000) [18]	24,000 (40 000) [24]	30,000 (50 000) [30]	36,000 (60 000) [36]
Change engine oil and engine oil filter.	X	X	X	X	X	X
Inspect the **air cleaner filter** and replace if required.*	X	X	X	X		X
Replace the **air cleaner filter.**					X	
Replace the **spark plugs.** 5.7L Engine.					X	
Inspect the front and rear brake linings and rotors.			X			X
Replace the air conditioning filter.		X		X		X
Rotate the tires.	X	X	X	X	X	X

Miles (Kilometers) [Months]	42,000 (70 000) [42]	48,000 (80 000) [48]	54,000 (90 000) [54]	60,000 (100 000) [60]	66,000 (110 000) [66]	72,000 (120 000) [72]
Change engine oil and engine oil filter.	X	X	X	X	X	X
Inspect the **air cleaner filter** and replace if required.*	X	X	X		X	X
Replace the **air cleaner filter.**				X		
Inspect the front and rear brake linings and rotors.			X			X
Replace the **spark plugs.** 5.7L Engine.				X		
Check and Inspect the accessory drive belt and tensioner. Replace if required.						X
Flush and replace engine coolant at 60 months if not done at 102,000 miles.				X		

Miles **(Kilometers)** **[Months]**	**42,000** **(70 000)** **[42]**	**48,000** **(80 000)** **[48]**	**54,000** **(90 000)** **[54]**	**60,000** **(100 000)** **[60]**	**66,000** **(110 000)** **[66]**	**72,000** **(120 000)** **[72]**
Check and replace, if necessary, the **PCV valve.** *				X		
Replace the air conditioning filter.		X		X		X
Rotate the tires.	X	X	X	X	X	X

Miles **(Kilometers)** **[Months]**	**78,000** **(130 000)** **[78]**	**84,000** **(140 000)** **[84]**	**90,000** **(150 000)** **[90]**	**96,000** **(160 000)** **[96]**	**102,000** **(170 000)** **[102]**
Change engine oil and engine oil filter.	X	X	X	X	X
Inspect the **air cleaner filter** and replace if required.*	X	X		X	X
Replace the **air cleaner filter.**			X		
Inspect the front and rear brake linings and rotors.			X		
Check and Inspect the accessory drive belt and tensioner. Replace if required.					X
Replace the **spark plugs.** 2.7L, 3.5L Engines.				X	
Replace the **spark plugs.** 5.7L Engine.			X		
Check and replace, if necessary, the **PCV valve.***‡			X		
Replace the **engine timing belt** 3.5L Engine.					X
Flush and replace the engine coolant at 102,000 miles if not done at 60 months.					X
Replace the air conditioning filter.		X		X	
Rotate the tires.	X	X	X	X	X

Miles **(Kilometers)** **[Months]**	**108,000** **(180 000)** **[108]**	**114,000** **(190 000)** **[114]**	**120,000** **(200 000)** **[120]**
Change engine oil and engine oil filter.	X	X	X
Inspect the **air cleaner filter** and replace if required.*	X	X	
Replace the **air cleaner filter.**			X
Inspect the front and rear brake linings and rotors.	X		
Replace the **spark plugs.** 5.7L Engine.			X
Check and replace, if necessary, the **PCV valve.***			X
Replace the air conditioning filter.	X		X
Flush and replace the engine coolant at 120 months, if not replaced at 102,000 miles.			X
Rotate the tires.	X	X	X

* This maintenance is recommended by the manufacturer to the owner but is not required to maintain the emissions warranty.

‡ This maintenance is not required if previously replaced.

Inspection and service should also be performed anytime a malfunction is observed or suspected. Retain all receipts.

WARNING:
You can be badly injured working on or around a motor vehicle. Do only that service work for which you have the knowledge and the right equipment. If you have any doubt about your ability to perform a service job, take your vehicle to a competent mechanic.

HOISTING

STANDARD PROCEDURE - HOISTING

The lifting points for the sedan.

Refer to Owner's Manual provided with vehicle for proper emergency jacking procedures.

WARNING: THE HOISTING AND JACK LIFTING POINTS PROVIDED ARE FOR A COMPLETE VEHICLE. WHEN THE ENGINE OR REAR SUSPENSION IS REMOVED FROM A VEHICLE, THE CENTER OF GRAVITY IS ALTERED MAKING SOME HOISTING CONDITIONS UNSTABLE. PROPERLY SUPPORT OR SECURE VEHICLE TO HOISTING DEVICE WHEN THESE CONDITIONS EXIST.

CAUTION: Do not position hoisting device on any suspension component, including the front or rear suspension crossmembers. Do not hoist on the front and rear bumpers, the lower liftgate crossmember, the lower radiator crossmember, or the front engine mount.

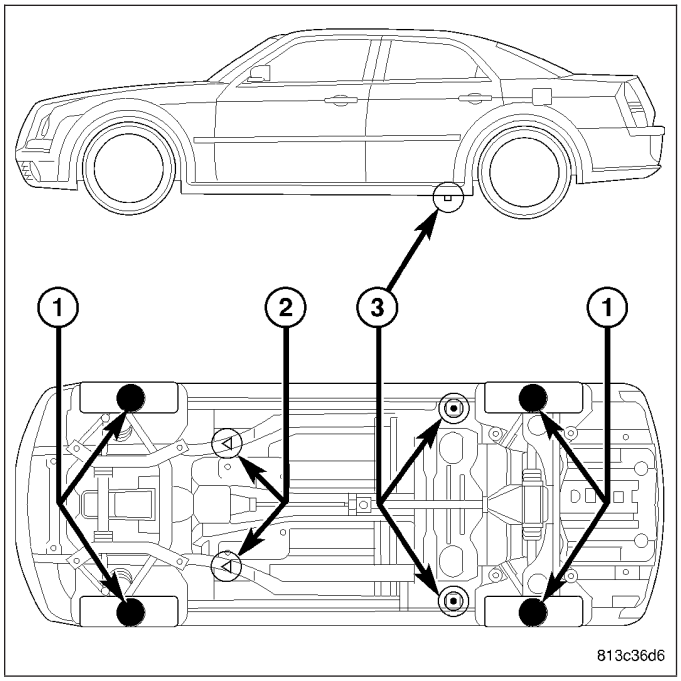

1 - DRIVE ON LIFT
2 - SAE HOISTING SYMBOLS
2 - FRAME CONTACT LIFT (SINGLE POST)
2 - CHASSIS LIFT (DUAL LIFT)
2 - OUTBOARD LIFT (DUAL LIFT)
2 - FLOOR JACK
3 - HOISTING PADS
3 - FRAME CONTACT LIFT (SINGLE POST)
3 - CHASSIS LIFT (DUAL LIFT)
3 - OUTBOARD LIFT (DUAL LIFT)
3 - FLOOR JACK

The lifting points for the wagon.

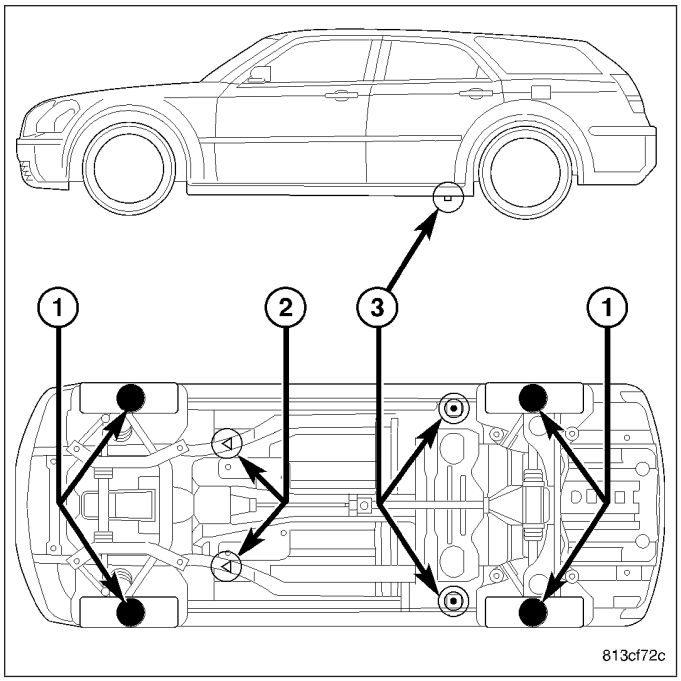

1 - DRIVE ON LIFT
2 - SAE HOISTING SYMBOLS
2 - FRAME CONTACT LIFT (SINGLE POST)
2 - CHASSIS LIFT (DUAL LIFT)
2 - OUTBOARD LIFT (DUAL LIFT)
2 - FLOOR JACK
3 - HOISTING PADS
3 - FRAME CONTACT LIFT (SINGLE POST)
3 - CHASSIS LIFT (DUAL LIFT)
3 - OUTBOARD LIFT (DUAL LIFT)
3 - FLOOR JACK

JUMP STARTING

STANDARD PROCEDURE

JUMP STARTING

WARNING: REVIEW ALL SAFETY PRECAUTIONS AND WARNINGS IN THE BATTERY SYSTEM SECTION OF THE SERVICE MANUAL. (Refer to 8 - ELECTRICAL/BATTERY SYSTEM/BATTERY - STANDARD PROCEDURE) Take care to avoid the radiator cooling fan whenever the hood is raised. It can start anytime the ignition switch is on. You can be hurt by the fan.

- **DO NOT JUMP START A FROZEN BATTERY, PERSONAL INJURY CAN RESULT.**
- **IF EQUIPPED, DO NOT JUMP START WHEN MAINTENANCE FREE BATTERY INDICATOR DOT IS YELLOW OR BRIGHT COLOR.**
- **DO NOT JUMP START A VEHICLE WHEN THE BATTERY FLUID IS BELOW THE TOP OF LEAD PLATES.**
- **DO NOT ALLOW JUMPER CABLE CLAMPS TO TOUCH EACH OTHER WHEN CONNECTED TO A BOOSTER SOURCE.**
- **DO NOT USE OPEN FLAME NEAR BATTERY.**
- **REMOVE METALLIC JEWELRY WORN ON HANDS OR WRISTS TO AVOID INJURY BY ACCIDENTAL ARCING OF BATTERY CURRENT.**
- **WHEN USING A HIGH OUTPUT BOOSTING DEVICE, DO NOT ALLOW BATTERY VOLTAGE TO EXCEED 16 VOLTS. REFER TO INSTRUCTIONS PROVIDED WITH DEVICE BEING USED.**
- **Do not attempt to push or tow your vehicle to get it started. Vehicles equipped with an automatic transmission cannot be started this way. Unburned fuel could enter the catalytic converter and once the engine has started, ignite and damage the converter and vehicle. If the vehicle has a discharged battery, booster cables may be used to obtain a start from another vehicle. This type of start can be dangerous if done improperly, so follow this procedure carefully.**
- **Battery fluid is a corrosive acid solution; do not allow battery fluid to contact eyes, skin or clothing. Don't lean over battery when attaching clamps or allow the clamps to touch each other. If acid splashes in eyes or on skin, flush contaminated area immediately with large quantities of water.**
- **A battery generates hydrogen gas which is flammable and explosive. Keep flame or spark away from the vent holes. Do not use a booster battery or any other booster source with an output that exceeds 12 volts.**

  FAILURE TO FOLLOW THESE INSTRUCTIONS MAY RESULT IN PERSONAL INJURY.

CAUTION: When using another vehicle as a booster, do not allow vehicles to touch. Electrical systems can be damaged on either vehicle.

NOTE: The battery is stored under an access cover in the trunk. Remote battery terminals are located in the engine compartment for jump starting.

NOTE: The battery in this vehicle has a vent hose that should not be disconnected and should only be replaced with a battery of the same type (vented).

TO JUMP START A DISABLED VEHICLE:

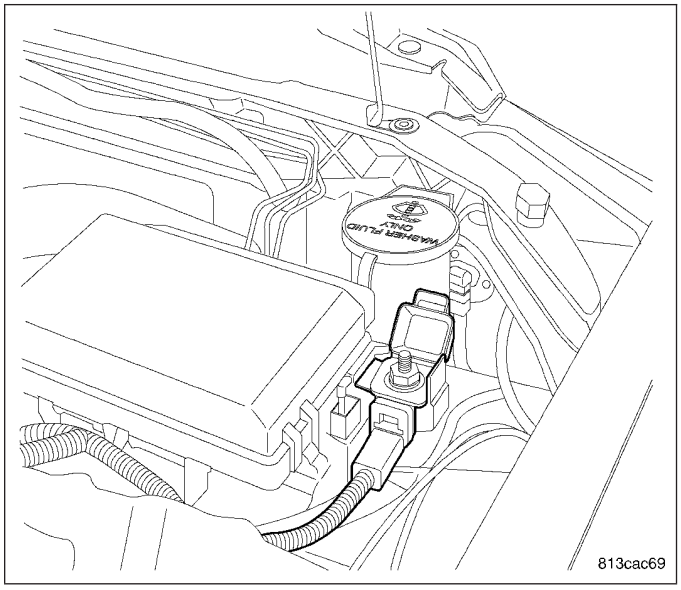

- Wear eye protection and remove any metal jewelry such as watch bands or bracelets that might make an inadvertent electrical contact.
- When boost is provided by a battery in another vehicle, park that vehicle within booster cable reach and without letting the vehicles touch. Set the parking brake, place the automatic transmission in PARK and turn the ignition switch to the OFF (or LOCK) position for both vehicles.
- Turn off the heater, radio and all unnecessary electrical loads.
- Connect one end of the jumper cable RED clamp to the remote jump start positive battery post in the engine compartment of the disabled vehicle. Connect the other end of the jumper cable RED clamp to the positive terminal of the booster battery.
- Connect the jumper cable BLACK clamp, first to the negative terminal of the booster battery and then connect the other end of the jumper cable BLACK clamp to a suitable engine ground on the disabled vehicle battery. Make sure you have a good contact on the engine ground.

DISCONNECT CABLE CLAMPS AS FOLLOWS:

- Disconnect BLACK cable clamp from engine ground on disabled vehicle.
- When using a booster vehicle, disconnect BLACK cable clamp from battery negative terminal. Disconnect RED cable clamp from battery positive terminal.
- Disconnect RED cable clamp from battery positive terminal on disabled vehicle.

TOWING

STANDARD PROCEDURE - TOWING

WARNINGS AND CAUTIONS

WARNING: Do not allow towing attachment devices to contact the fuel tank or lines, fuel leak can result.
Do not lift or tow vehicle by front or rear bumper.
Do not go under a lifted vehicle if not supported properly on safety stands.
Do not allow passengers to ride in a towed vehicle.
Use a safety chain that is independent from the towing attachment device.

CAUTION: Do not damage brake lines, exhaust system, shock absorbers, sway bars, or any other under vehicle components when attaching towing device to vehicle.
Do not secure vehicle to towing device by the use of front or rear suspension or steering components.
Remove or secure loose or protruding objects from a damaged vehicle before towing.
Refer to state and local rules and regulations before towing a vehicle.
Do not allow weight of towed vehicle to bear on lower fascia, air dams, or spoilers.

RECOMMENDED TOWING EQUIPMENT

- RWD vehicles, a flat bed towing device is recommended.
- AWD vehicles, a flat bed towing device is recommended.

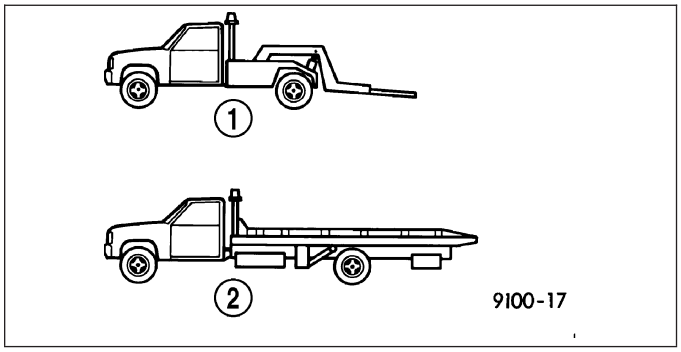

CAUTION:
- **Do not attempt to tow this vehicle from the front with sling type towing equipment. Damage to the front fascia and air dams will result.**
- **The only approved method of towing is with a flat bed truck.**
- **Do not tow the vehicle from the rear. Damage to the rear sheet metal, liftgate and fascia will occur.**
- **Do not push or tow this vehicle with another vehicle as damage to the bumper fascia and transmission may result.**

GROUND CLEARANCE

CAUTION: If vehicle is towed with wheels removed, install lug nuts to retain brake drums or rotors.

be sure the has at least 100 mm (4 in.) ground clearance. If minimum ground clearance cannot be reached, use a towing dolly. If a flat bed device is used, the approach angle should not exceed 15 degrees.

If using a wheel lift towing device, the disabled vehicle should be raised until the lifted wheels are a minimum 100 mm (4 in.) from the ground. Be sure there is at least 100 mm (4 in.) clearance between the tail pipe and the ground. If necessary, remove the wheels from the front end of the vehicle and lower the front end closer to the ground, to increase the ground clearance at the rear of the vehicle. Install lug nuts on wheel attaching studs to retain brake rotors.

LOCKED VEHICLE TOWING

When a locked vehicle must be towed with the front wheels on the ground, use a towing dolly or flat bed hauler.

FLAT BED TOWING TIE DOWNS

CAUTION: Do not tie vehicle down by attaching chains or cables to suspension components or engine mounts, damage to vehicle can result.

The vehicle can be tied to a flat bed device using the pair of front transportation slots on the bottom surface of the rails, behind the front wheels. The rear transportation slots are on the bottom of the left bumper extension and in the bracket extending inboard of the right bumper extension.

WITHOUT THE IGNITION KEY

Special care must be taken when the vehicle is towed with the ignition in the LOCK position. The only approved method of towing with out the ignition key is with a flat bed truck. Proper towing equipment is necessary to prevent damage to the vehicle.

TOWING THIS VEHICLE BEHIND ANOTHER VEHICLE (Flat towing with all four wheels on the ground)

Your vehicle may be towed under the following conditions: The gear selector must be in NEUTRAL, the distance to be traveled must not exceed 48 km (30) miles, and the towing speed must not exceed 48 km/h (30 mph). Exceeding these towing limits may cause a transmission geartrain failure. If the transmission is not operative, or if the vehicle is to be towed more than 48 km (30) miles, the vehicle must be transported using a flat bed or the drive shaft disconnected at the rear axle drive flange.

TOWING THIS VEHICLE BEHIND ANOTHER VEHICLE WITH A TOW DOLLEY

The manufacture **does not recommend** that you tow this vehicle on a tow dolley. Vehicle damage may occur.

SUSPENSION

TABLE OF CONTENTS

	page
SUSPENSION	
STANDARD PROCEDURE	
LUBRICATION	2
FRONT	3
REAR	91
WHEEL ALIGNMENT	202

SUSPENSION

STANDARD PROCEDURE

LUBRICATION

There are no serviceable lubrication points on the front or rear suspension. The ball joints are sealed-for-life and require no maintenance.

FRONT

TABLE OF CONTENTS

page

FRONT
DESCRIPTION
FRONT SUSPENSION 4
FRONT SUSPENSION - SRT8 4
SPECIFICATIONS
FRONT SUSPENSION FASTENER TORQUE . . . 5
SPECIAL TOOLS
FRONT SUSPENSION 7
HUB AND BEARING
DESCRIPTION 8
DIAGNOSIS AND TESTING
HUB AND BEARING 8
REMOVAL
AWD 9
RWD 10
INSTALLATION
AWD 11
RWD 13
KNUCKLE - AWD
REMOVAL 15
INSTALLATION 19
KNUCKLE - RWD
REMOVAL 23
DISASSEMBLY - BALL JOINT 28
ASSEMBLY - BALL JOINT 31
INSTALLATION 32
BALL JOINT - LOWER
DESCRIPTION 36
DIAGNOSIS AND TESTING
LOWER BALL JOINT 36
REMOVAL 37
INSTALLATION 37

page

ARM - LOWER CONTROL - AWD
REMOVAL 38
INSTALLATION 41
ARM - LOWER CONTROL - RWD
REMOVAL 45
INSTALLATION 49
SHOCK ASSEMBLY
REMOVAL
AWD 55
RWD 57
DISASSEMBLY 60
ASSEMBLY 62
INSTALLATION
AWD 65
RWD 68
BAR - STABILIZER
REMOVAL
AWD 71
RWD 71
INSTALLATION
AWD 73
RWD 75
STRUT - TENSION
REMOVAL 78
INSTALLATION 80
BALL JOINT - UPPER
DESCRIPTION 83
DIAGNOSIS AND TESTING
UPPER BALL JOINT 83
ARM - UPPER CONTROL
REMOVAL 84
INSTALLATION 87

FRONT

DESCRIPTION

FRONT SUSPENSION

The front suspension for both All-Wheel-Drive (AWD) and Rear-Wheel-Drive (RWD) vehicles is a long and short arm design.

Each side of the AWD front suspension includes the following components:

- Hub And Bearing
- Knuckle (4)
- Lower Control Arm (4)
- Shock Assembly (2)
- Stabilizer Bar and Link (2)
- Upper Control Arm (1)

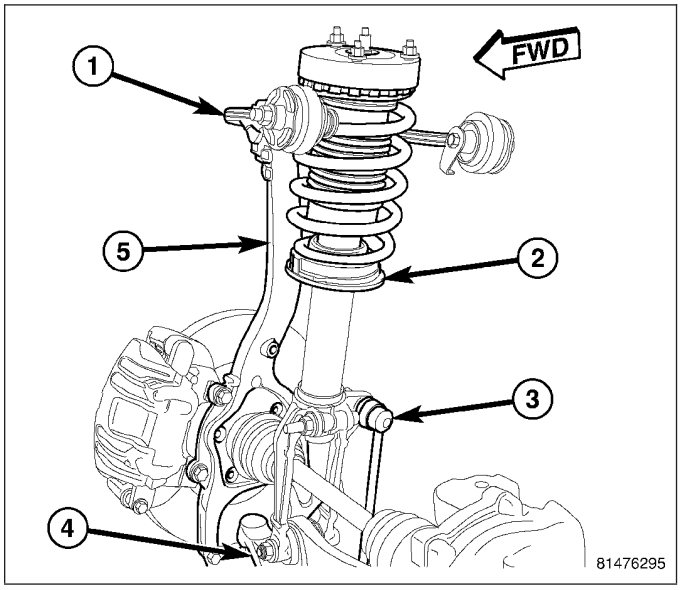

Each side of the RWD front suspension includes the following components:

- Hub And Bearing
- Knuckle (3)
- Lower Control Arm (5)
- Shock Assembly (1)
- Stabilizer Bar (6) and Link (7)
- Tension Strut (4)
- Upper Control Arm (2)

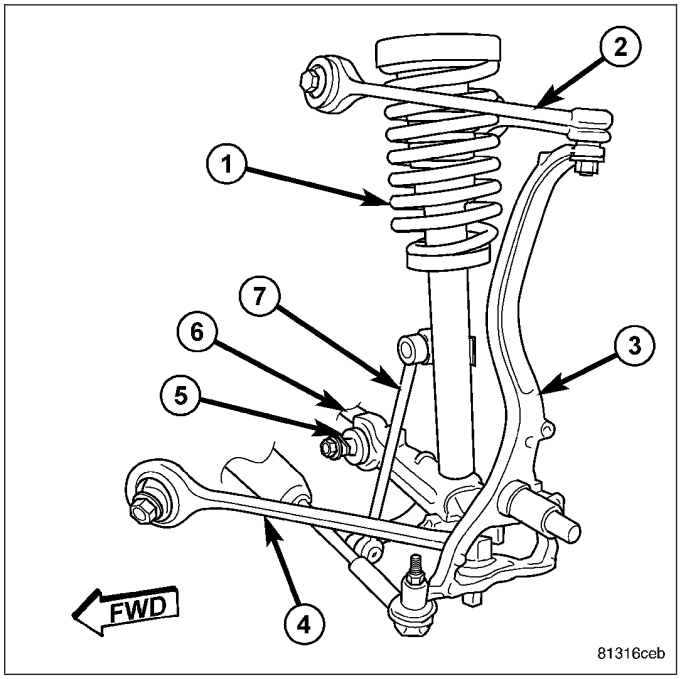

FRONT SUSPENSION - SRT8

The SRT8 front suspension is very similar to the standard RWD front suspension but some components have been modified for better handling and durability. Most component bushings are increased rate bushings. Service of all front suspension components remain the same as the standard RWD components. When components differ, be sure to use only SRT8 components on SRT8 vehicles.

The front knuckle (8) for the SRT8 is different from the standard RWD knuckle. Although similar in appearance, the knuckle has been modified to accept the larger 20 inch tire and wheel assembly. Also, the mounting bosses for the disc brake caliper have been moved downward to allow for mounting of the Brembo four-piston disc brake caliper (2).

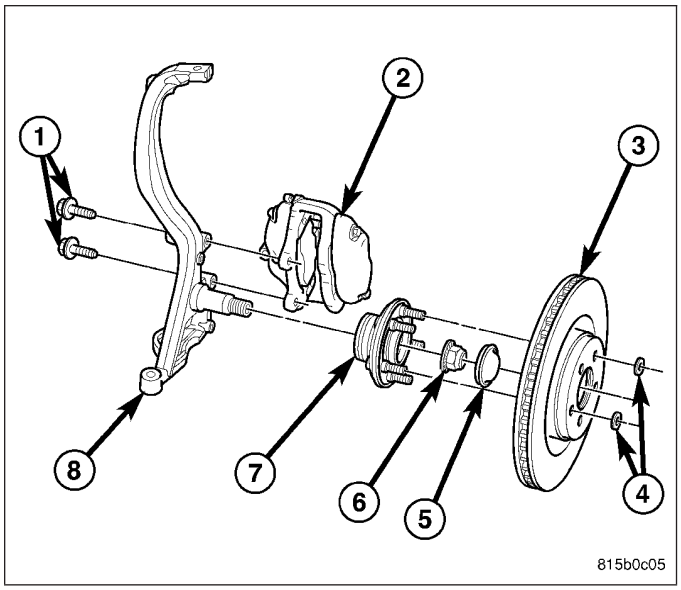

Although serviced the same, the components of the SRT8 shock assembly are unique to this vehicle. The front shock absorber is manufactured by Bilstein®. It can be easily identified by its color. It is painted yellow. Because the shock absorber is a mono-tube design, it is important to handle it with care and not support the shock by it tubular housing.

The front stabilizer bar diameter has been increased for the SRT8 to the size of that used on Export vehicles, 30 mm. It is serviced in the same manner as the standard RWD bar.

SPECIFICATIONS

FRONT SUSPENSION FASTENER TORQUE

DESCRIPTION	N·m	Ft. Lbs.	In. Lbs.
ENGINE CRADLE MOUNTING BOLTS	185	136	—
HUB NUT - AWD	212	157	—
HUB NUT - RWD	250	184	—
KNUCKLE DUST SHIELD SCREWS	10	7	89
LOWER CONTROL ARM CRADLE NUT	176	130	—
LOWER CONTROL ARM BALL JOINT NUT - AWD	122	90	—
LOWER CONTROL ARM BALL JOINT NUT - RWD	68 + 90° TURN	50 + 90° TURN	—
TENSION STRUT CRADLE NUT	176	130	—
TENSION STRUT BALL JOINT NUT	68 + 90° TURN	50 + 90° TURN	—
SHOCK ABSORBER CLEVIS BRACKET LOWER BOLT - AWD	174	128	—
SHOCK ABSORBER CLEVIS BRACKET PINCH BOLT - AWD	61	45	—
SHOCK ABSORBER LOWER MOUNTING BOLT - RWD	174	128	—
SHOCK ABSORBER UPPER MOUNTING NUTS	27	20	239
SHOCK ABSORBER SHAFT NUT	95	70	—
STABILIZER BAR LINK UPPER (SHOCK) NUT	128	95	—

DESCRIPTION	N·m	Ft. Lbs.	In. Lbs.
STABILIZER BAR LINK LOWER NUT	128	95	—
STABILIZER BAR ISOLATOR RETAINER BOLTS	60	44	—
STABILIZER BAR HEAT SHIELD SCREWS	7	5	62
UPPER CONTROL ARM BALL JOINT NUT	47 + 90° TURN	35 + 90° TURN	—
UPPER CONTROL ARM BODY NUTS	75	55	—
OUTER TIE ROD BALL JOINT NUT	85	63	—
TIE ROD JAM NUT	75	55	—

SPECIAL TOOLS

FRONT SUSPENSION

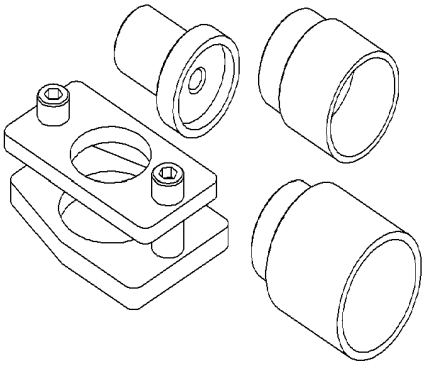

Remover/Installer, Ball Joint 9320

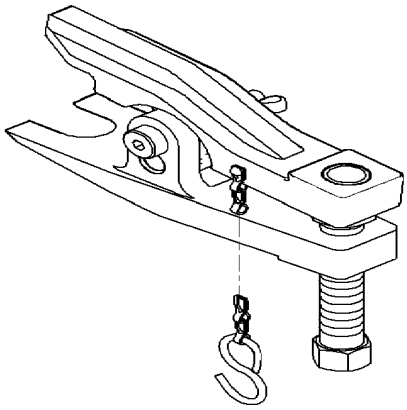

Remover, Ball Stud 9360

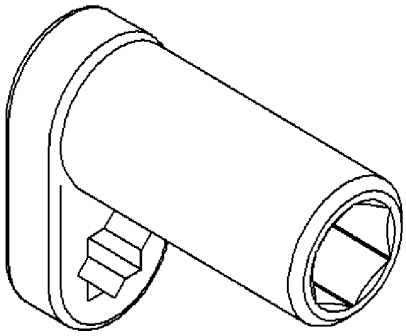

Wrench, Shock Nut 9362

HUB AND BEARING

DESCRIPTION

The front wheel bearing and wheel hub of this vehicle are a one piece sealed unit or hub and bearing unit type assembly.

On All-Wheel-Drive (AWD) vehicles, the hub and bearing (1) is mounted to the knuckle using four mounting bolts and to the axle half shaft using a retaining nut. The center of the AWD hub and bearing is splined to match the outer joint of the axle half shaft.

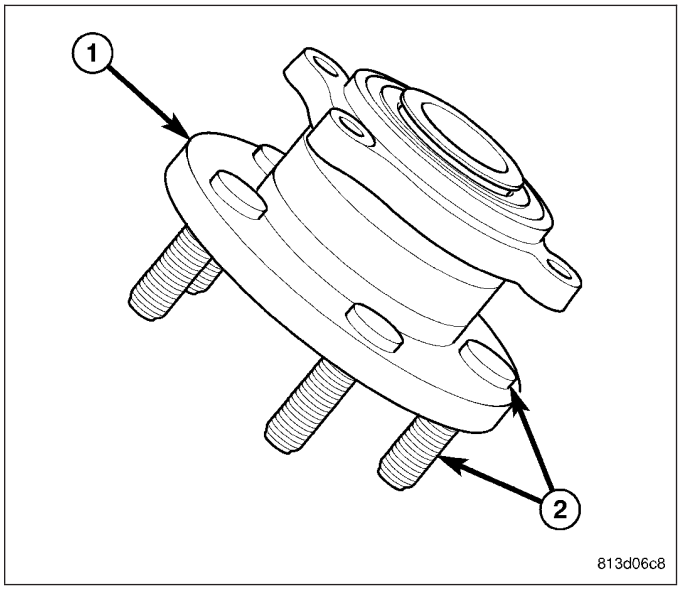

On Rear-Wheel-Drive (RWD) vehicles, the hub and bearing (1) is mounted to the center of the spindle using a retaining nut.

All front hub and bearings have five wheel mounting studs (3) on the hub flange for mounting the wheel to the vehicle. The wheel mounting studs are the only replaceable components of the hub and bearing. Otherwise, the hub and bearing is serviced only as a complete assembly.

On RWD vehicles, a magnetic encoder (2) for the wheel speed sensor is pressed onto the hub and bearing. A magnetic encoder is not located on the AWD hub and bearing. It is pressed onto the axle half shaft outer joint.

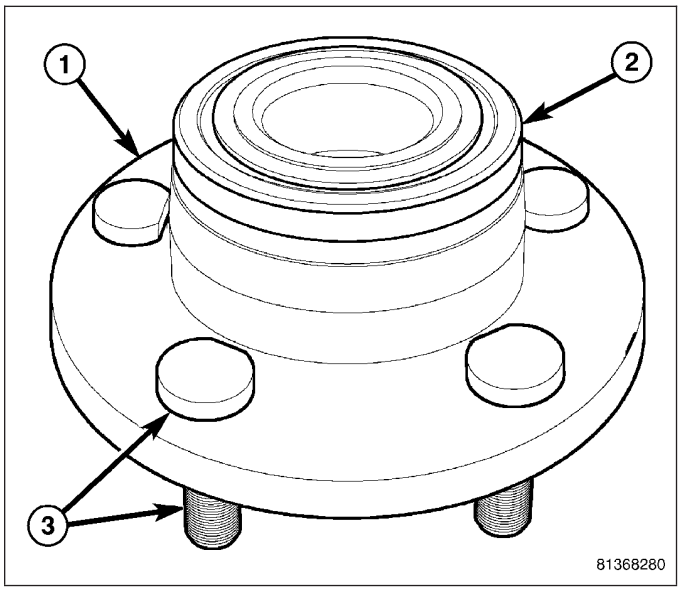

DIAGNOSIS AND TESTING

HUB AND BEARING

NOTE: The hub and bearing is designed for the life of the vehicle and should require no maintenance.

With wheel and brake rotor removed, rotate flanged outer ring of hub. Excessive roughness, lateral play or resistance to rotation may indicate dirt intrusion or bearing failure. If the rear wheel bearings exhibit these conditions during inspection, the hub and bearing assembly should be replaced.

Damaged bearing seals and resulting excessive grease loss may also require bearing replacement. Moderate grease loss from bearing is considered normal and should not require replacement of the hub and bearing assembly.

REMOVAL

AWD

1. Raise and support vehicle. (Refer to LUBRICATION & MAINTENANCE/HOISTING - STANDARD PROCEDURE)
2. Remove wheel mounting nuts (3), then tire and wheel assembly (1).

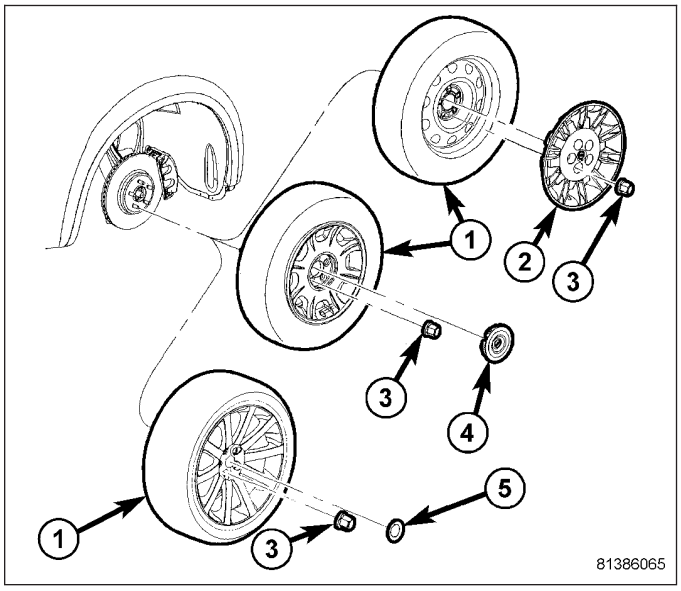

3. While a helper applies brakes to keep hub from rotating, remove hub nut (1) from the axle half shaft (2).
4. Access and remove front brake rotor. (Refer to 5 - BRAKES/HYDRAULIC/MECHANICAL/ROTOR - REMOVAL)

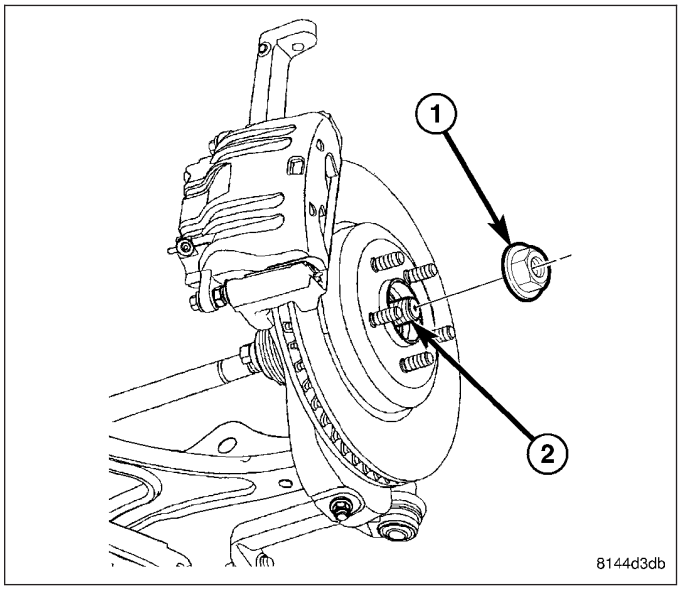

5. Remove four bolts (3) fastening hub and bearing (2) to knuckle.
6. Slide hub and bearing (2) off axle half shaft (1) and knuckle.

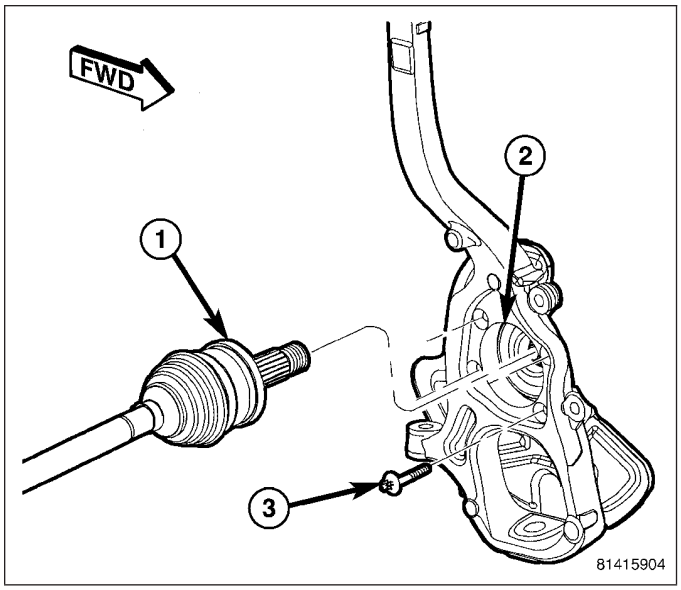

RWD

1. Raise and support vehicle. (Refer to LUBRICATION & MAINTENANCE/HOISTING - STANDARD PROCEDURE)
2. Remove wheel mounting nuts (3), then tire and wheel assembly (1).
3. Access and remove front brake rotor. (Refer to 5 - BRAKES/HYDRAULIC/MECHANICAL/ROTOR - REMOVAL)

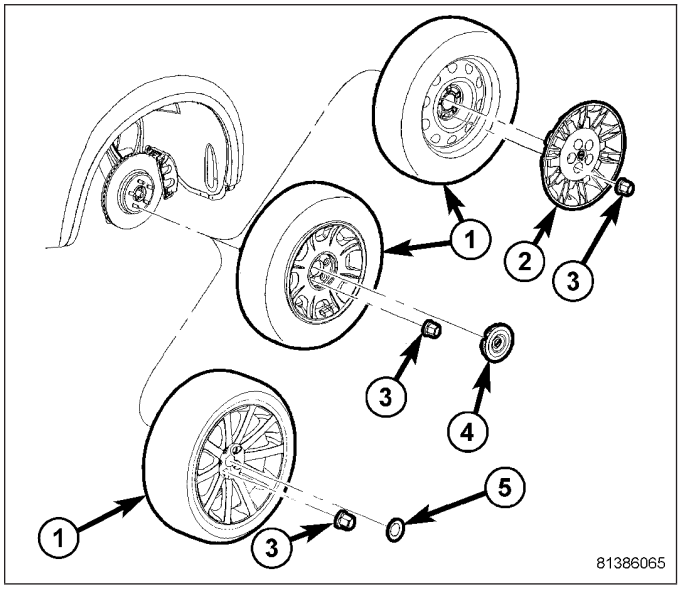

4. Remove dust cap (2). When doing this, avoid damaging internal bore of hub to preserve seal integrity.
5. Remove hub nut (1).
6. Slide hub and bearing off knuckle spindle.

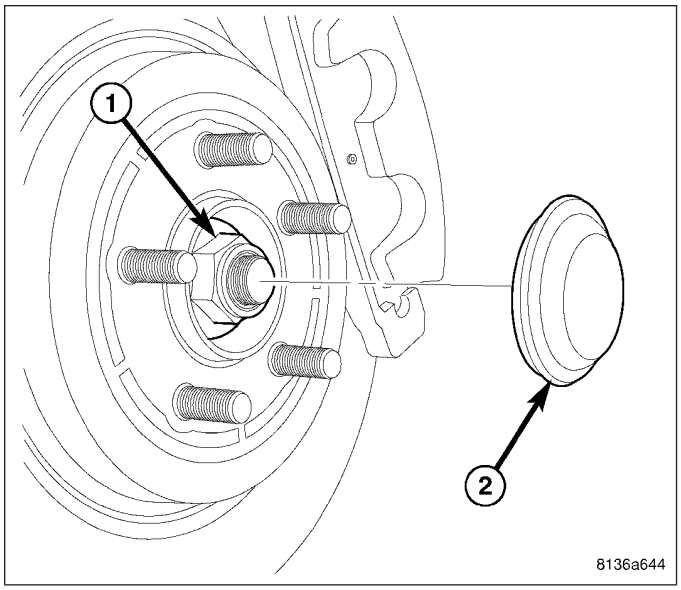

INSTALLATION

AWD

NOTE: Before installing hub and bearing on end of axle half shaft, ensure isolation washer is present on end of half shaft. Inspect washer making sure it is not worn or damaged. Washer can be installed in either direction on shaft.

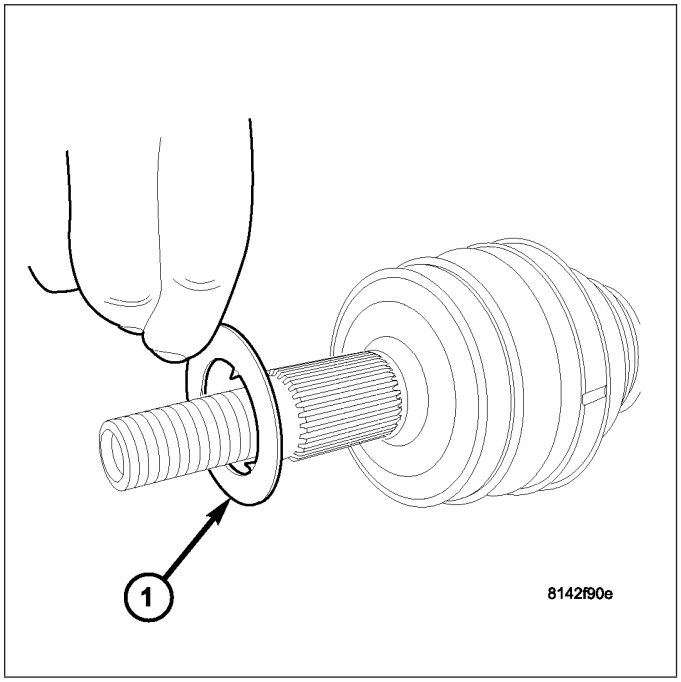

1. Slide hub and bearing (2) onto axle half shaft (1). Position hub and bearing onto knuckle, lining up mounting bolt holes.
2. Install four bolts (3) fastening hub and bearing in place. Tighten mounting bolts to 68 N·m (50 ft. lbs.) torque.
3. Install brake rotor, then disc brake caliper and adapter assembly. (Refer to 5 - BRAKES/HYDRAULIC/MECHANICAL/ROTOR - INSTALLATION)

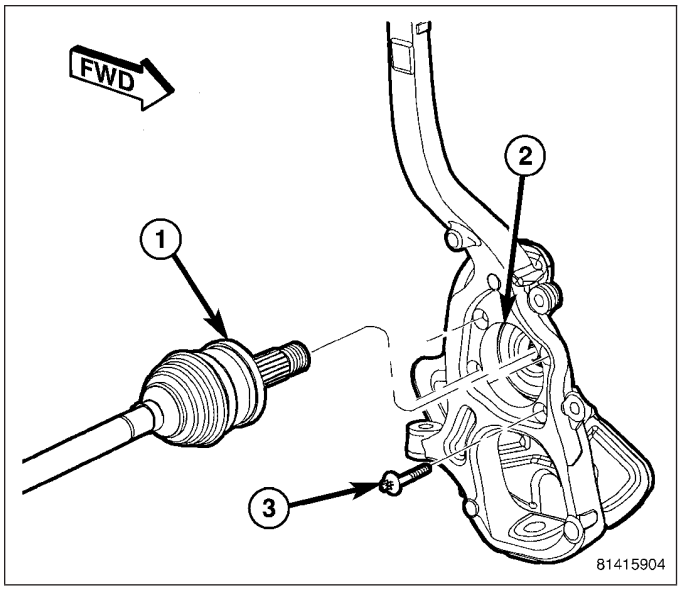

4. Install hub nut (1) on end of axle half shaft (2). While a helper applies brakes to keep hub from turning, tighten hub nut to 213 N·m (157 ft. lbs.) torque.

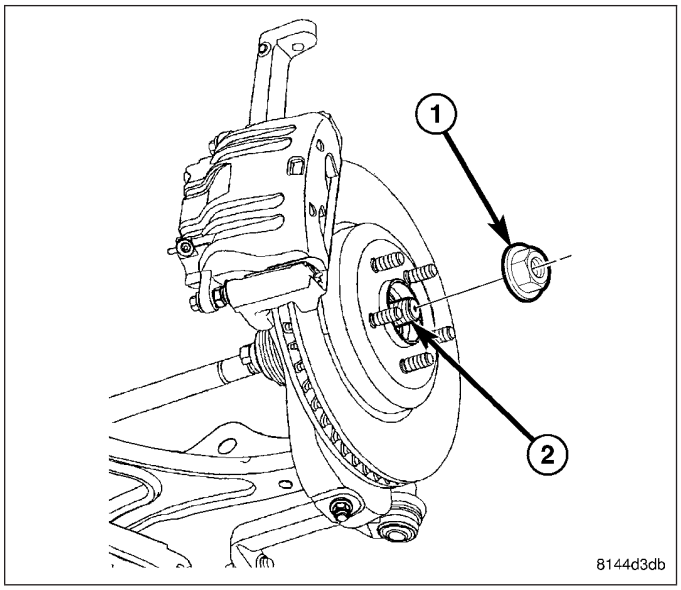

5. Install tire and wheel assembly (1) (Refer to 22 - TIRES/WHEELS - INSTALLATION). Tighten wheel mounting nuts (3) to 150 N·m (110 ft. lbs.) torque.
6. Lower vehicle.

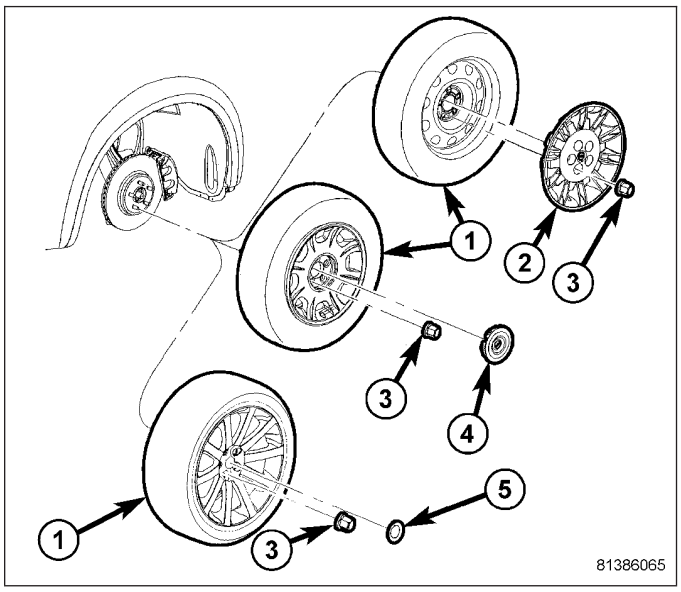

7. Pump brake pedal several times to ensure vehicle has a firm brake pedal before moving vehicle.
8. Check and adjust brake fluid level in reservoir (1) as necessary.
9. Road test vehicle and make several stops to wear off any foreign material on brakes and to seat brake pads.

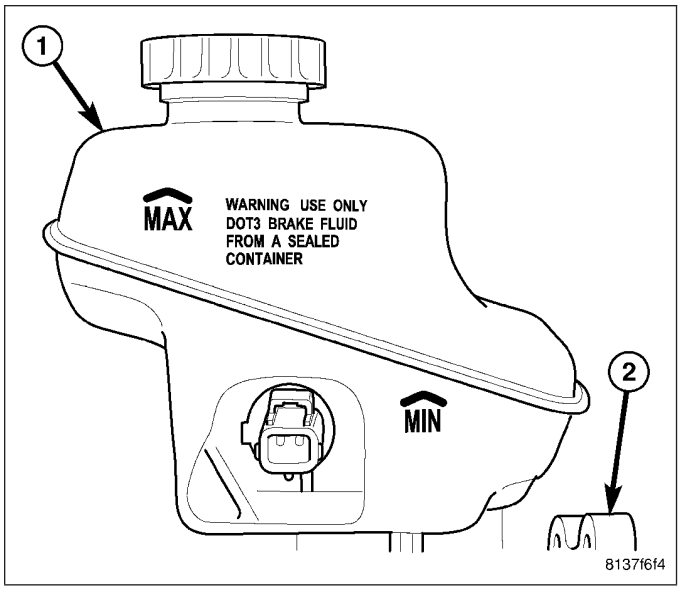

RWD

NOTE: Prior to installation, inspect magnetic encoder (for wheel speed sensor) (2) for any damage and make sure any metal debris sticking to it is removed.

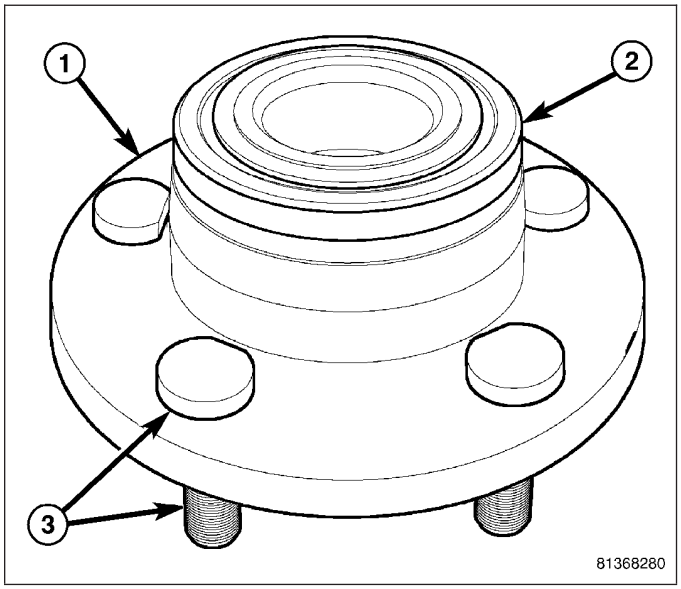

1. Slide hub and bearing onto knuckle spindle.

2. Install hub nut (1) on end of spindle. Tighten hub nut to 250 N·m (184 ft. lbs.) torque.
3. Install brake rotor, then disc brake caliper and adapter assembly. (Refer to 5 - BRAKES/HYDRAULIC/MECHANICAL/ROTOR - INSTALLATION)

NOTE: Install a new dust cap to preserve seal integrity.

4. Install NEW dust cap (2) on hub and bearing.

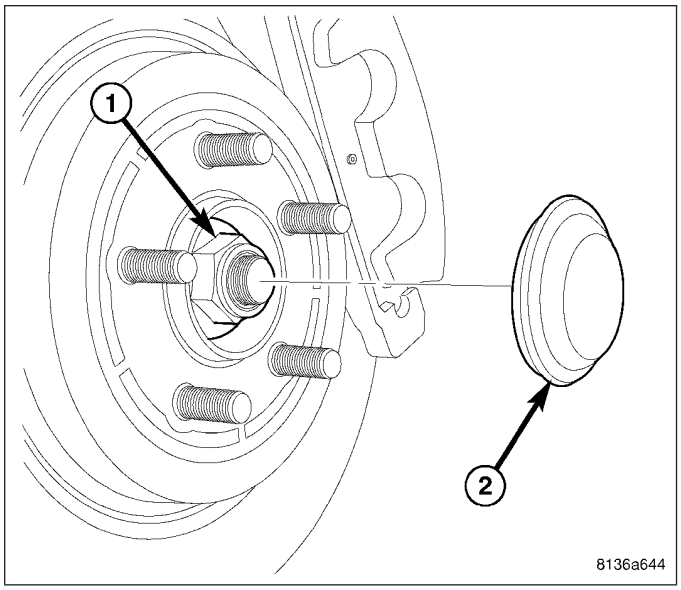

5. Install tire and wheel assembly (1) (Refer to 22 - TIRES/WHEELS - INSTALLATION). Tighten wheel mounting nuts (3) to 150 N·m (110 ft. lbs.) torque.
6. Lower vehicle.

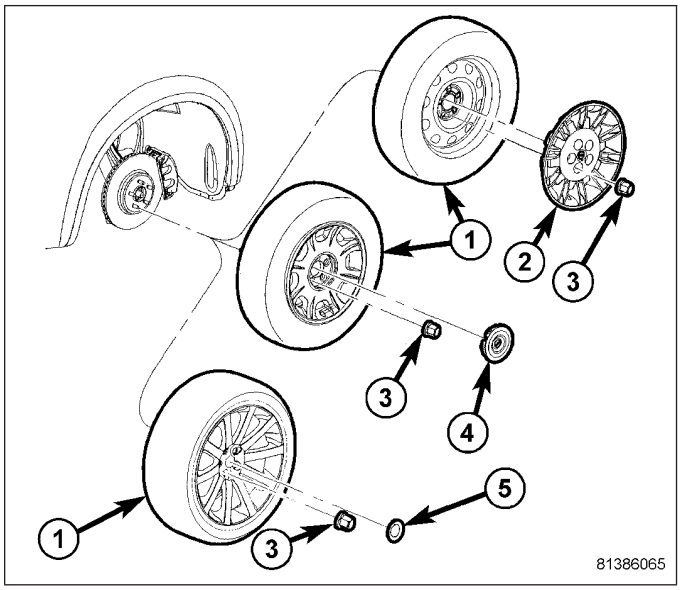

7. Pump brake pedal several times to ensure vehicle has a firm brake pedal before moving vehicle.
8. Check and adjust brake fluid level in reservoir (1) as necessary.
9. Road test vehicle and make several stops to wear off any foreign material on brakes and to seat brake pads.

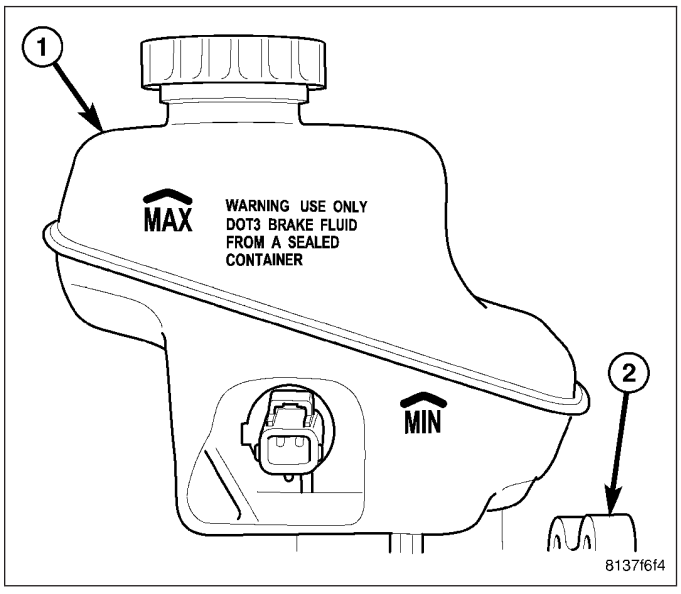

KNUCKLE - AWD

REMOVAL

1. Raise and support vehicle. (Refer to LUBRICATION & MAINTENANCE/HOISTING - STANDARD PROCEDURE)

2. Remove wheel mounting nuts (3), then tire and wheel assembly (1).

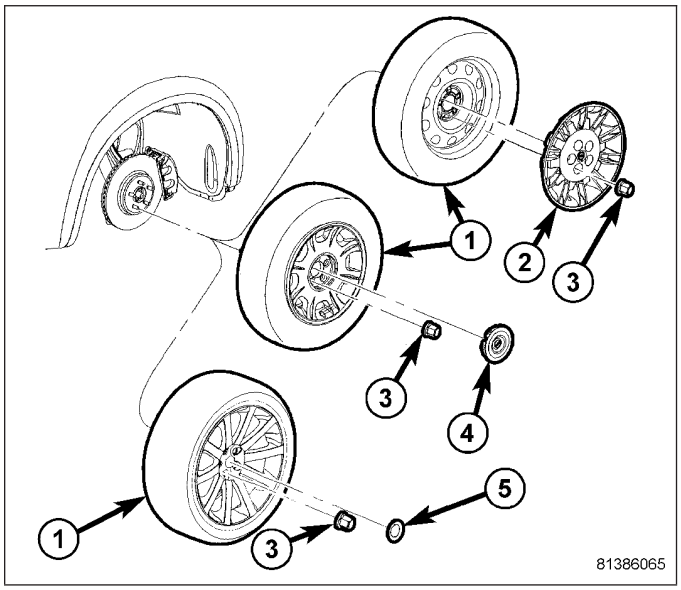

3. While a helper applies brakes to keep hub from rotating, remove hub nut (1) from axle half shaft (2).

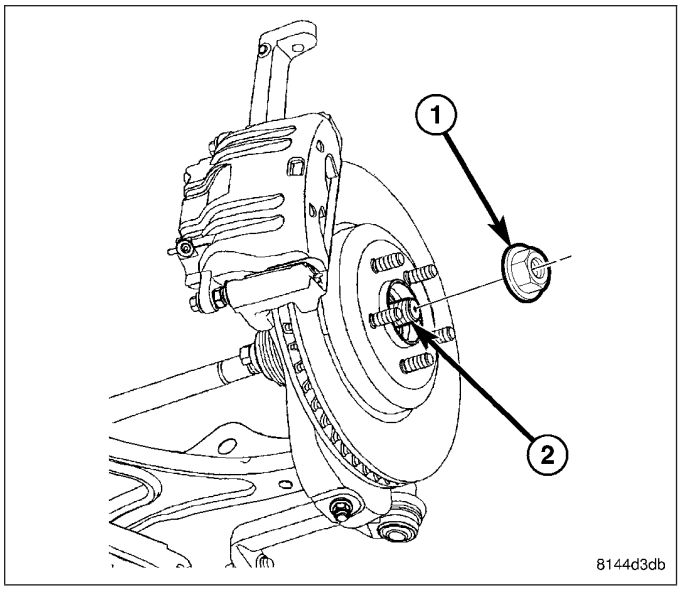

4. Remove clip (3) fastening wheel speed sensor (2) to knuckle (4).
5. Remove screw (1) fastening wheel speed sensor (2) to knuckle (4). Pull sensor head (4) out of knuckle.
6. Access and remove front brake rotor. (Refer to 5 - BRAKES/HYDRAULIC/MECHANICAL/ROTOR - REMOVAL)

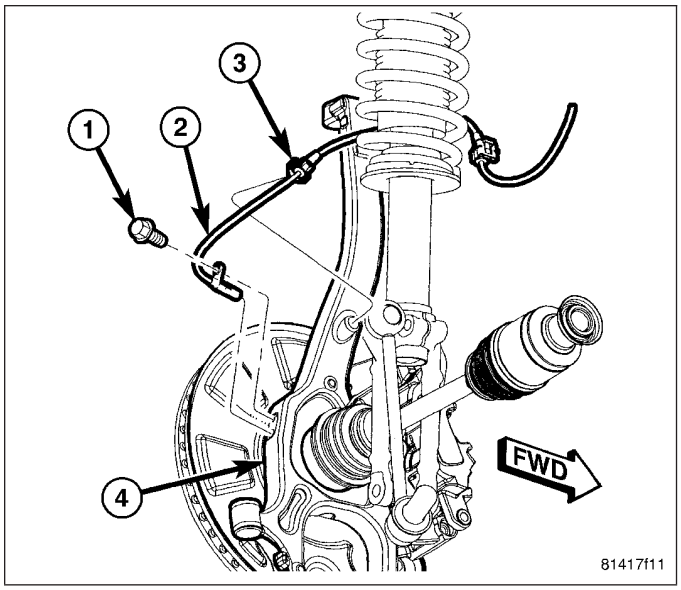

7. Remove nut (1) from outer tie rod end (2) stud.

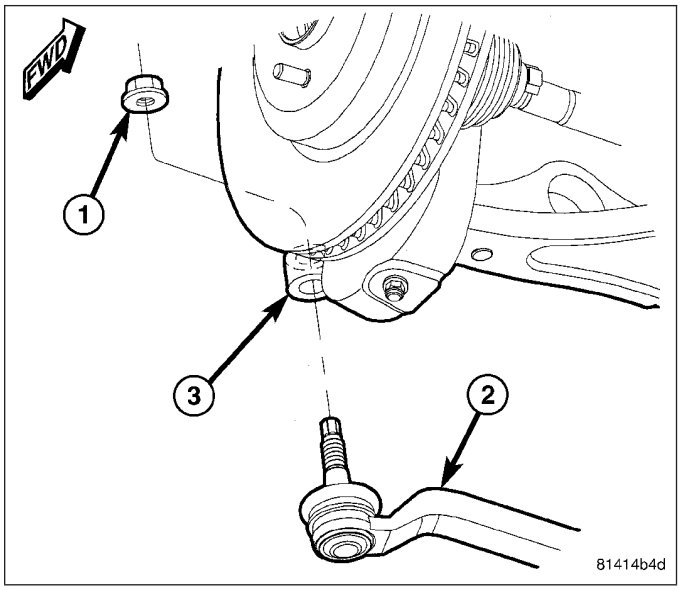

8. Using Puller (2), Special Tool 9360, separate tie rod stud (1) from knuckle.

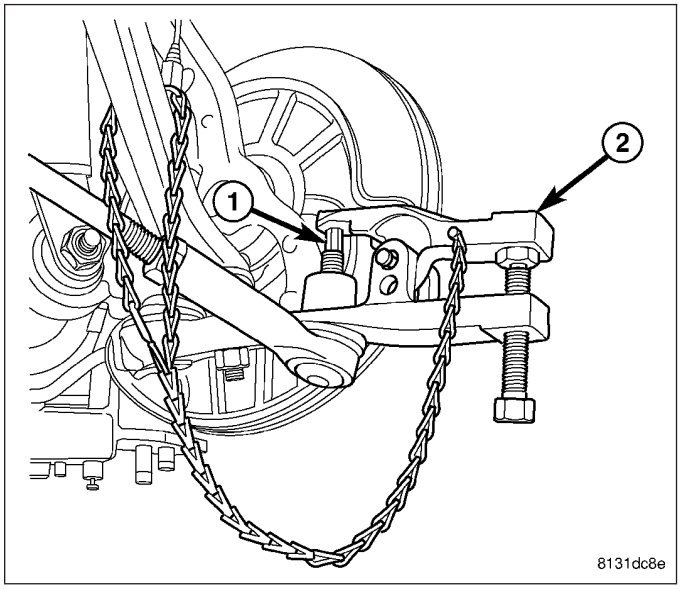

9. Loosen nut (4) attaching lower control arm ball joint stud to knuckle (3). Back nut off until nut is even with end of stud. **Keeping nut on at this location will help keep end of stud from distorting while using Puller in next step.**

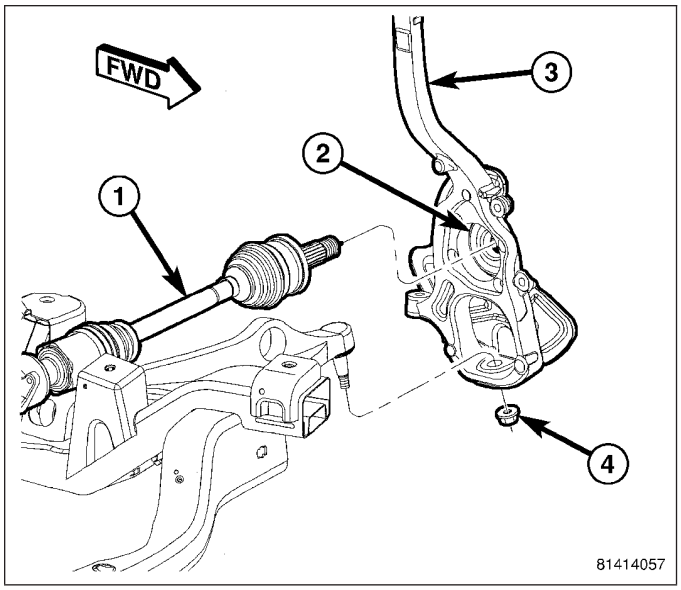

CAUTION: In following step, use care not to damage ball joint seal boot while sliding Puller, Special Tool 9360, into place past seal boot.

10. Using Puller (2), Special Tool 9360, separate ball joint stud from knuckle.
11. Remove tool.
12. Remove nut (1) from end of ball joint stud.

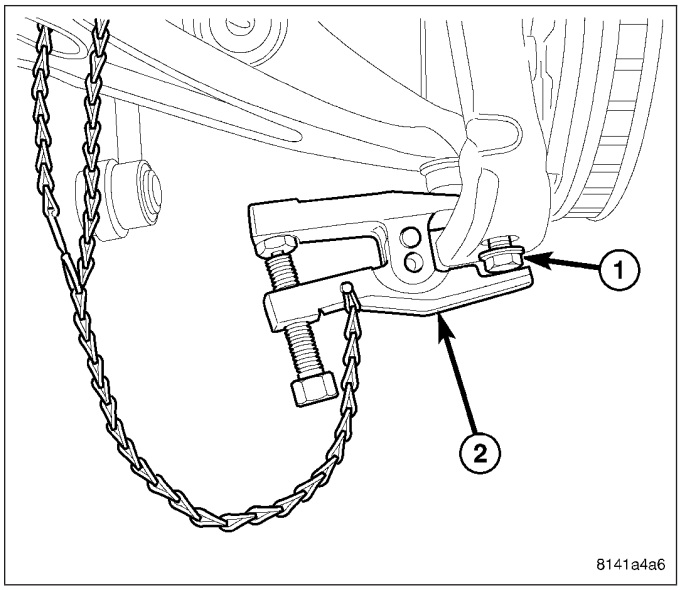

13. Loosen nut (4) attaching upper ball joint stud (1) to knuckle. Back nut off until nut is even with end of stud. **Keeping nut on at this location will help keep end of stud from distorting while using Puller in next step.**

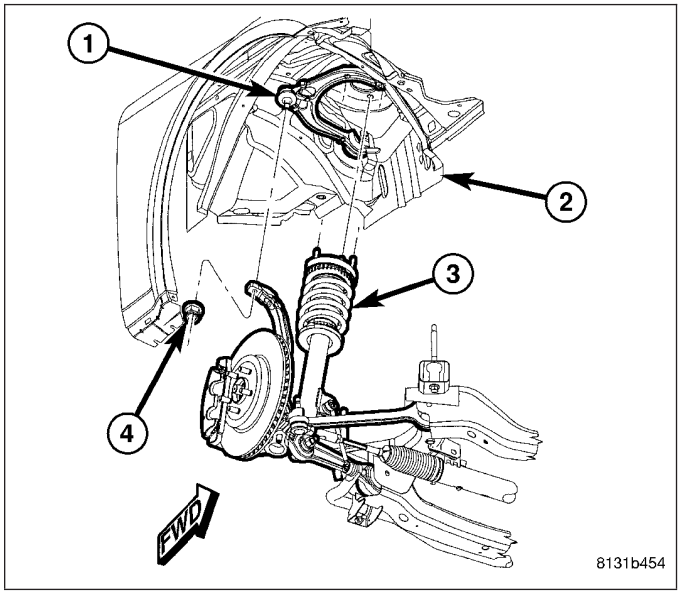

CAUTION: In following step, use care not to damage ball joint seal boot while sliding Puller, Special Tool 9360, into place past seal boot.

14. Using Puller (2), Special Tool 9360, separate upper ball joint stud (1) from knuckle.
15. Remove tool.
16. Remove nut (1) from end of upper ball joint stud.

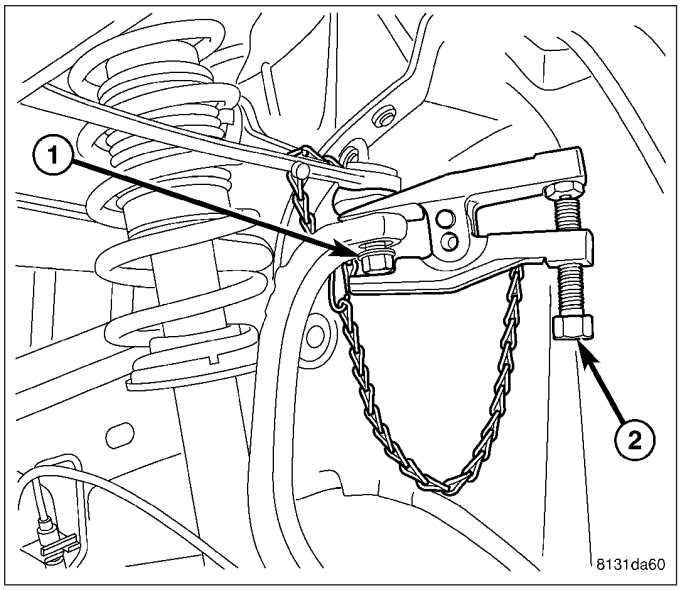

17. Slide knuckle (3) off half shaft (1) and remove from vehicle.

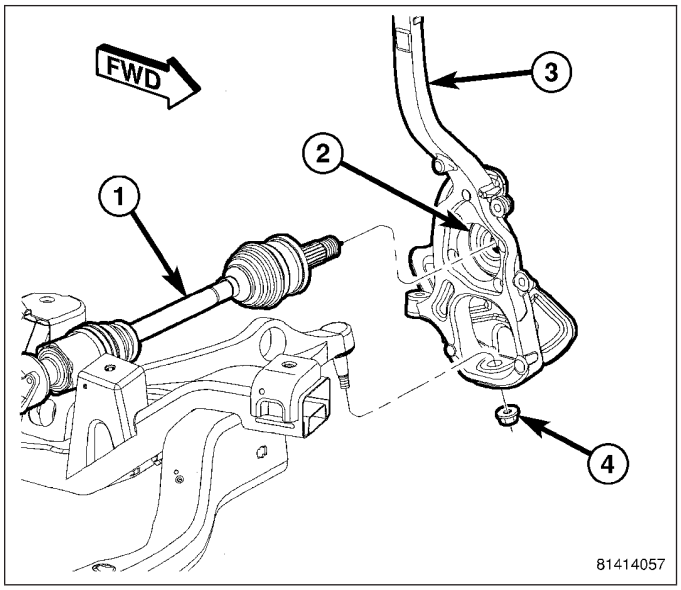

18. If hub and bearing and dust shield need to be removed:
    a. Remove four bolts (3) fastening hub and bearing (2) to knuckle.
    b. Slide hub and bearing out of knuckle along with shield.

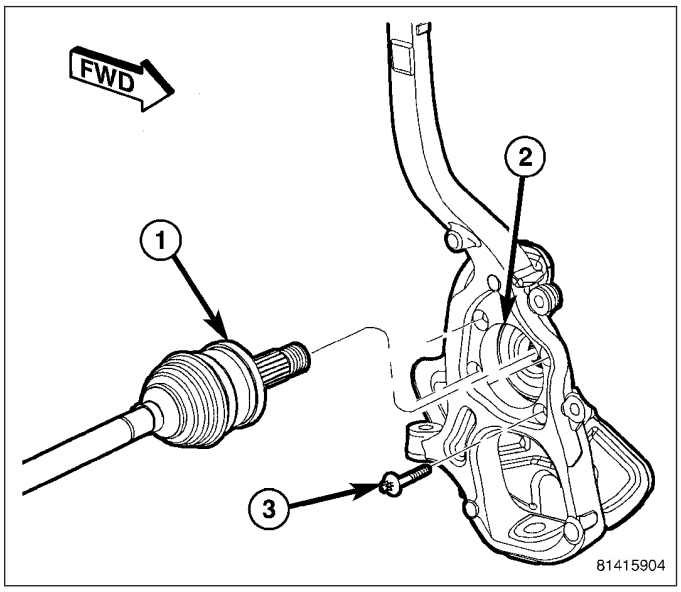

INSTALLATION

1. If hub and bearing and dust shield needs to be installed on knuckle, perform following:
   a. Slide shield onto rear of hub and bearing.
   b. Slide hub and bearing into knuckle, lining up mounting holes in hub and bearing with those in shield and knuckle
   c. Install four bolts (3) fastening hub and bearing in place. Tighten mounting bolts to 68 N·m (50 ft. lbs.) torque.

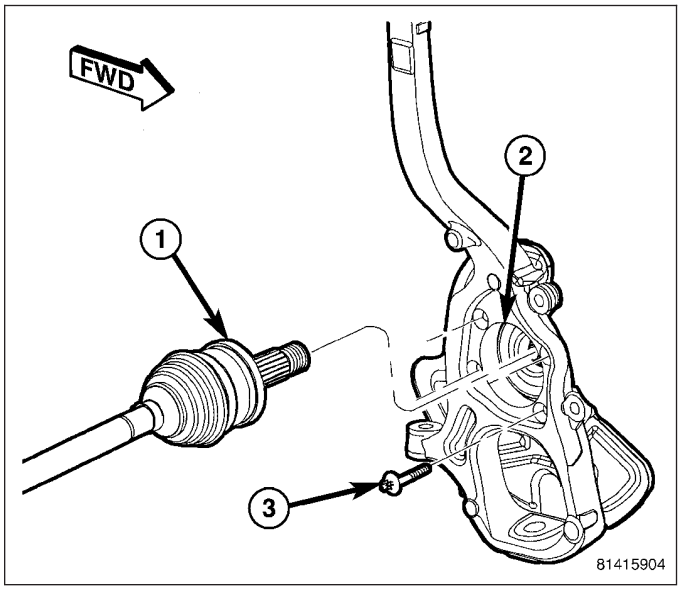

NOTE: Before installing hub and bearing on end of axle half shaft, ensure isolation washer is present on end of half shaft. Inspect washer making sure it is not worn or damaged. Washer can be installed in either direction on shaft.

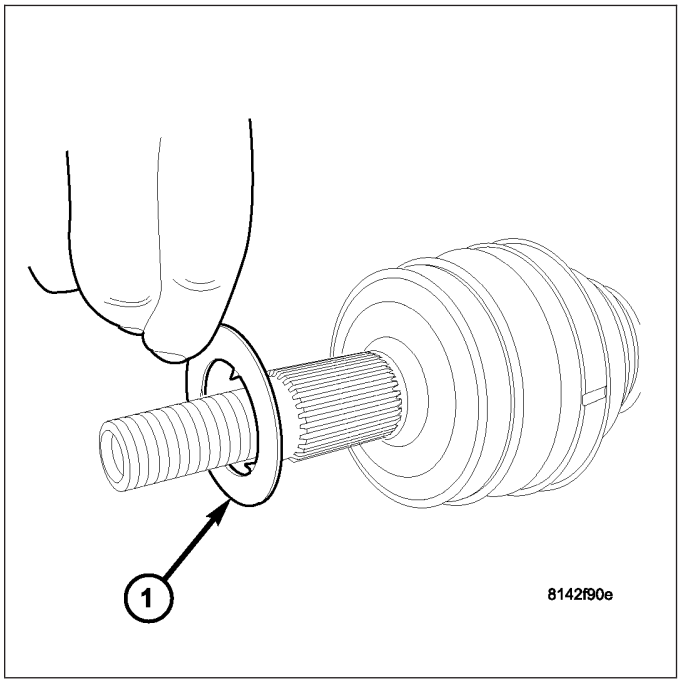

2. Place knuckle (3) over lower ball joint stud and guide hub and bearing (2) onto axle half shaft (1).
3. Start NEW nut (4) on lower ball joint stud. **Do not tighten at this time.**

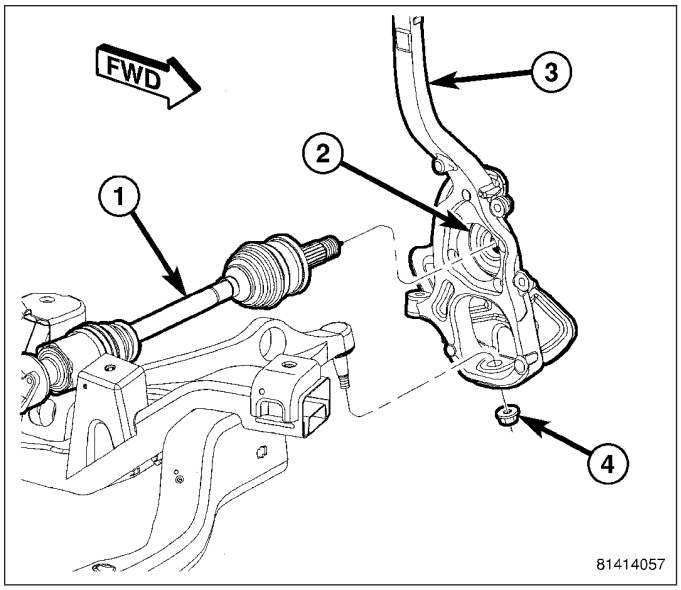

CAUTION: It is important to tighten nut as described in following step to avoid damaging ball stud joint.

4. Place upper ball joint stud (1) through hole in top of knuckle and install nut (4). Tighten nut by holding ball joint stud with a hex wrench while turning nut with a wrench. Tighten nut using crow foot wrench on torque wrench to 47 N·m + 90° turn (35 ft. lbs. + 90° turn) torque.

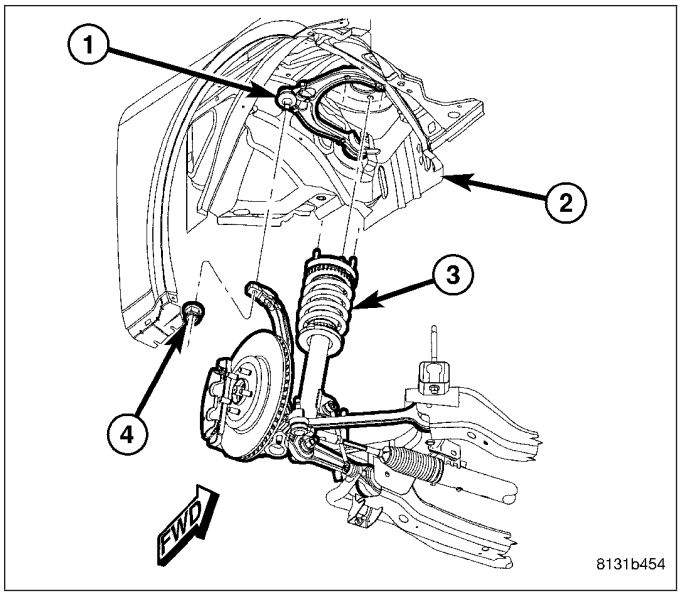

CAUTION: It is important to tighten nut as described in following step to avoid damaging ball stud joint.

5. Tighten lower ball joint nut (4) by holding ball joint stud with a hex wrench while turning nut with a wrench. Tighten nut using crow foot wrench on torque wrench to 68 N·m + 90° turn (50 ft. lbs. + 90° turn) torque.

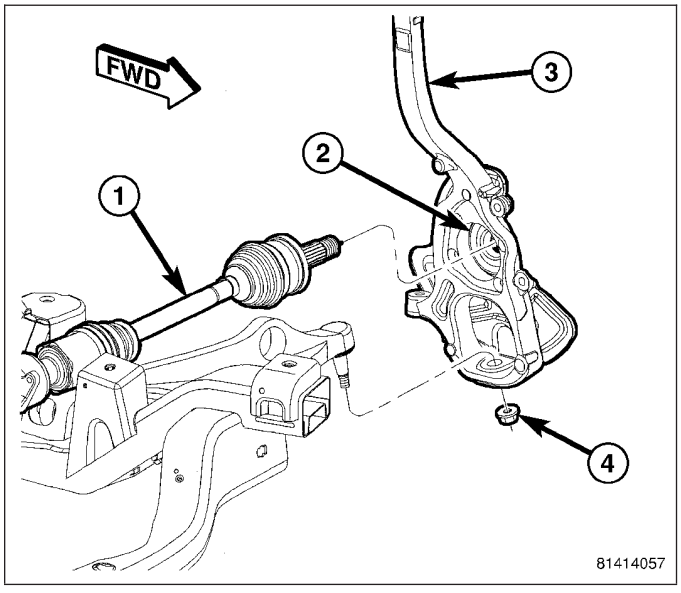

CAUTION: It is important to tighten nut as described in following step to avoid damaging ball stud joint.

6. Place outer tie rod stud through hole in knuckle (3) and install nut (1). Tighten nut by holding stud with a wrench while turning nut with another wrench. Tighten nut using crow foot wrench on torque wrench to 85 N·m (63 ft. lbs.) torque.
7. Install brake rotor, then disc brake caliper and adapter assembly. (Refer to 5 - BRAKES/HYDRAULIC/MECHANICAL/ROTOR - INSTALLATION)

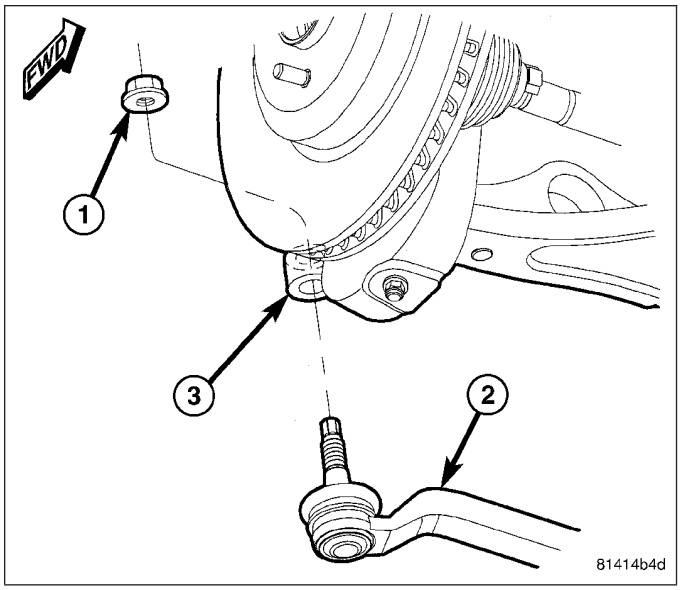

8. Install hub nut (1) on end of axle half shaft (2). While a helper applies brakes to keep hub from turning, tighten hub nut to 213 N·m (157 ft. lbs.) torque.

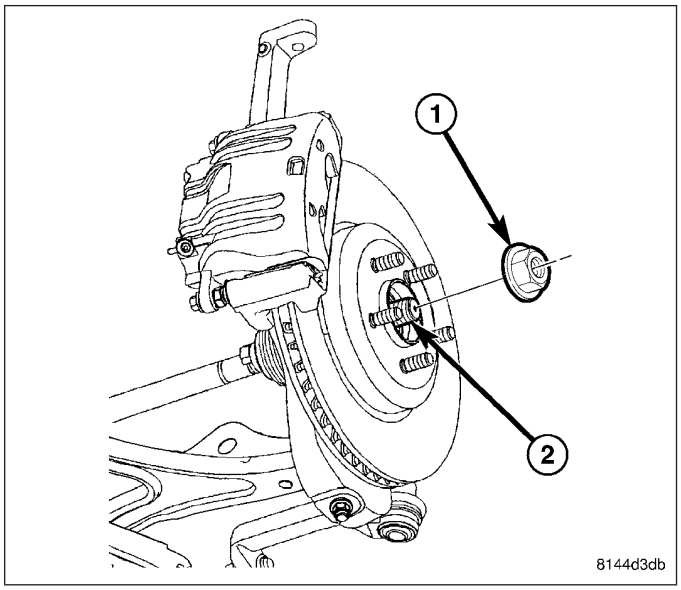

9. Install wheel speed sensor (2) head into knuckle (4) and install mounting screw (1). Tighten screw to 11 N·m (95 in. lbs.) torque.
10. Attach wheel speed sensor cable routing clip (3) at knuckle (4).

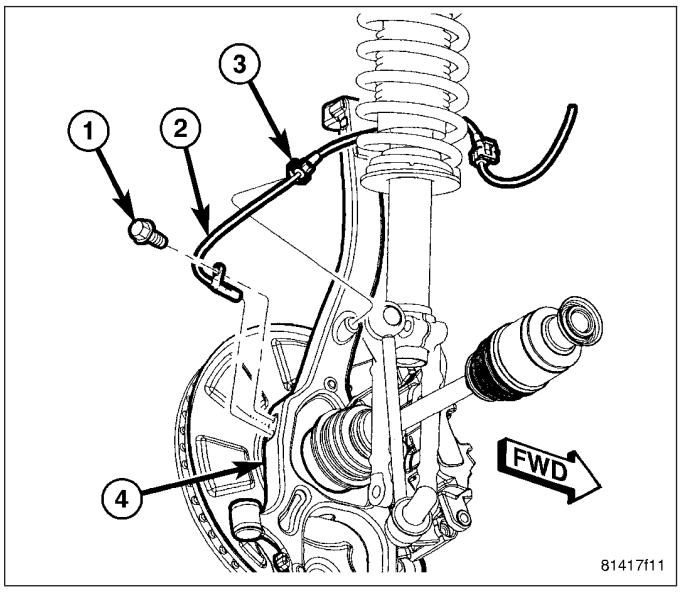

11. Install tire and wheel assembly (1) (Refer to 22 - TIRES/WHEELS - INSTALLATION). Tighten wheel mounting nuts (3) to 150 N·m (110 ft. lbs.) torque.
12. Lower vehicle.

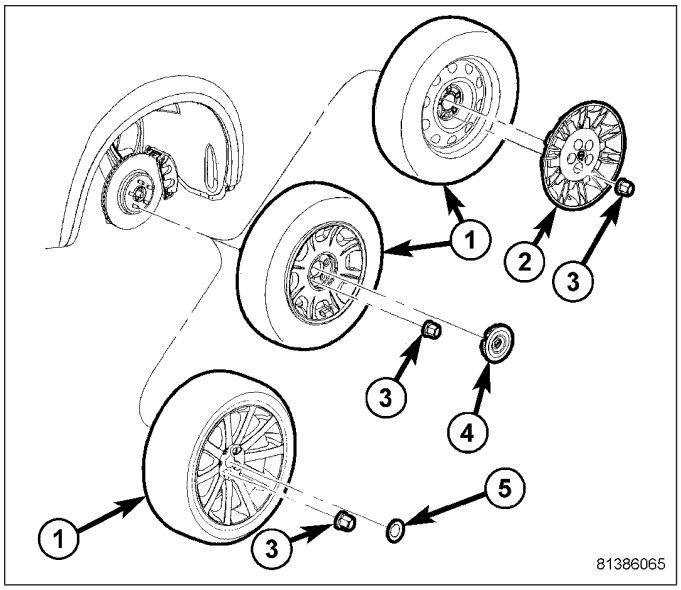

13. Pump brake pedal several times to ensure vehicle has a firm brake pedal before moving vehicle.
14. Check and adjust brake fluid level in reservoir (1) as necessary.
15. Perform wheel alignment. (Refer to 2 - SUSPENSION/WHEEL ALIGNMENT - STANDARD PROCEDURE)

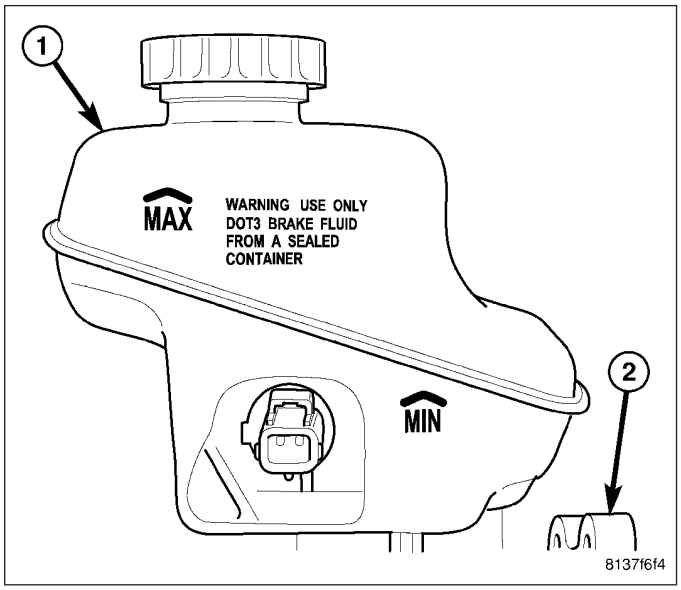

KNUCKLE - RWD

REMOVAL

1. Raise and support vehicle. (Refer to LUBRICATION & MAINTENANCE/HOISTING - STANDARD PROCEDURE)

2. Remove wheel mounting nuts (3), then tire and wheel assembly (1).

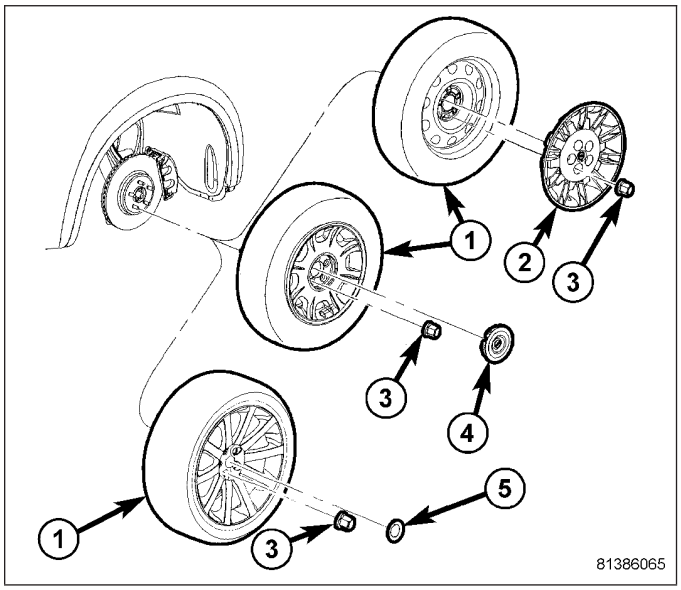

3. Remove screw (3) fastening wheel speed sensor to knuckle (1). Pull sensor head (4) out of knuckle.
4. Remove wheel speed sensor cable routing clip (2) from brake flex hose routing bracket (5).

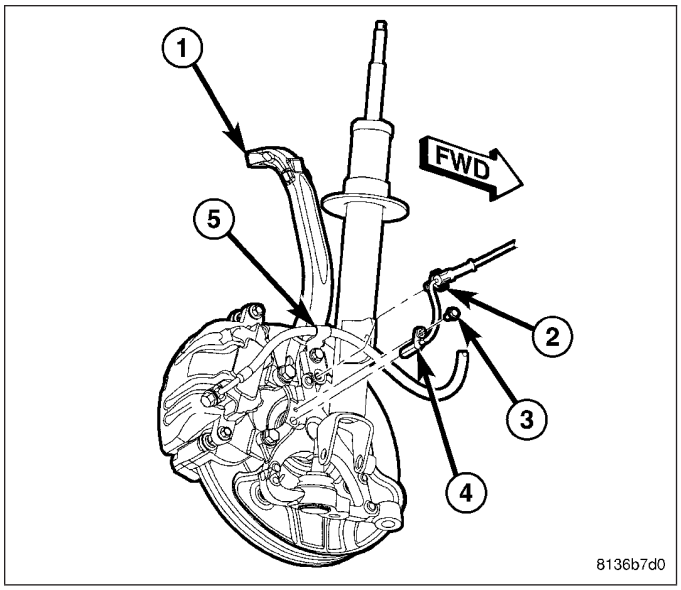

5. Remove screw (3) fastening brake flex hose routing bracket (2) to knuckle (4).
6. Access and remove front brake rotor. (Refer to 5 - BRAKES/HYDRAULIC/MECHANICAL/ROTOR - REMOVAL)

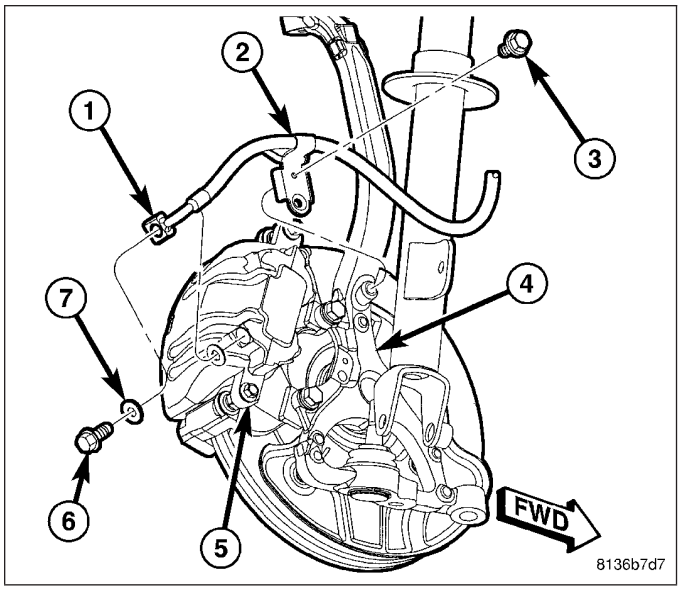

7. Remove nut (1) from outer tie rod end stud.

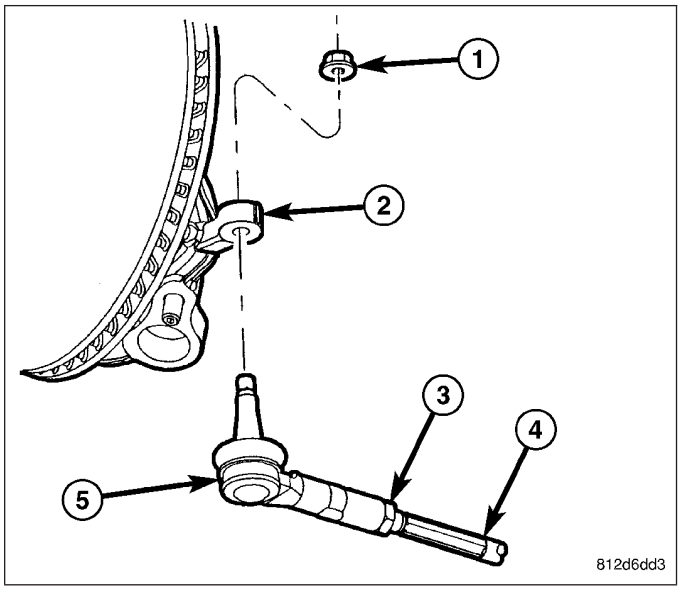

8. Using Puller (2), Special Tool 9360, separate tie rod stud (1) from knuckle.

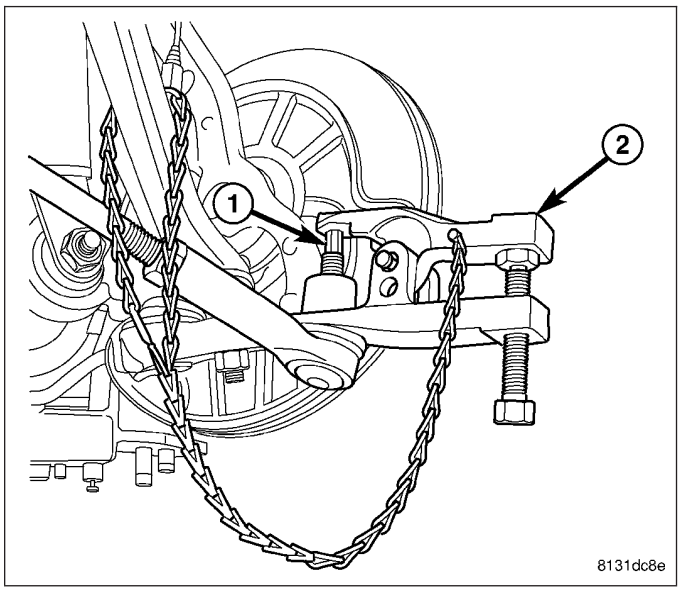

9. Loosen nut (4) attaching upper ball joint stud (1) to knuckle. Back nut off until nut is even with end of stud. **Keeping nut on at this location will help keep end of stud from distorting while using Puller in next step.**

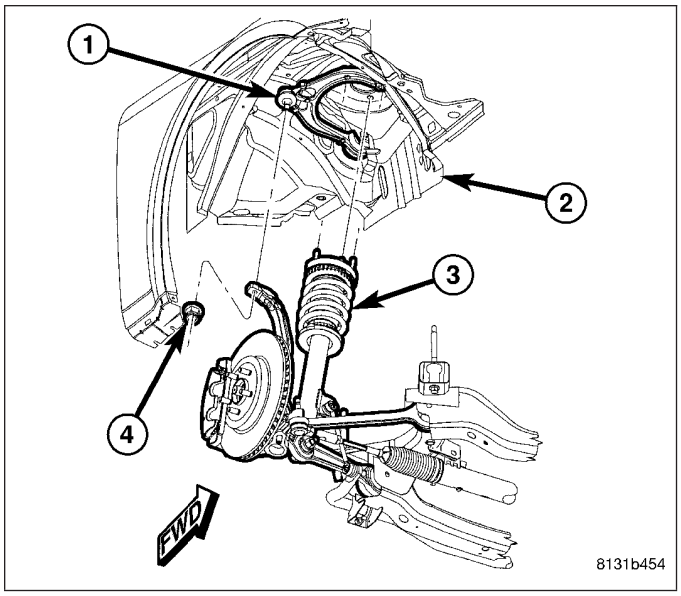

CAUTION: In following step, use care not to damage ball joint seal boot while sliding Puller, Special Tool 9360, into place past seal boot.

10. Using Puller (2), Special Tool 9360, separate upper ball joint stud (1) from knuckle.

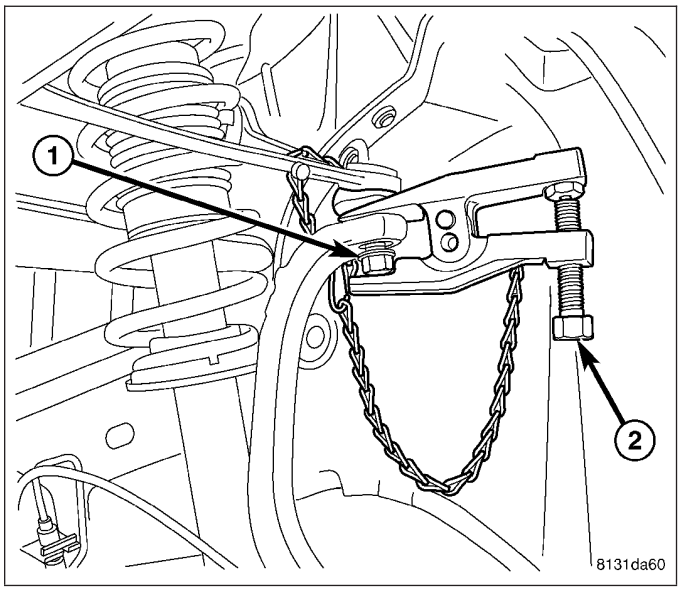

11. Remove nut (4) from end of upper ball joint stud (1).

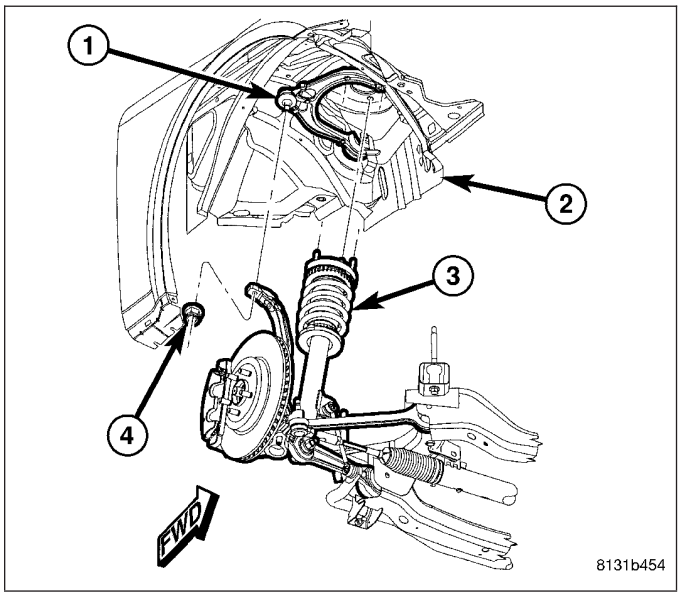

12. Loosen nut (3) attaching tension strut (2) ball joint stud to knuckle. Back nut off until nut is even with end of stud. **Keeping nut on at this location will help keep end of stud from distorting while using Puller in next step.**

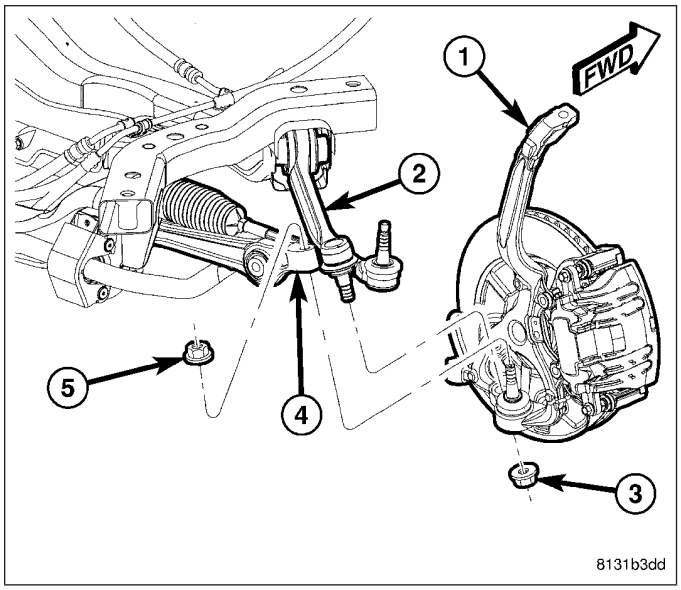

CAUTION: In following step, use care not to damage ball joint seal boot while sliding Puller, Special Tool 9360, into place past seal boot.

13. Using Puller (1), Special Tool 9360, separate tension strut ball joint stud (2) from knuckle.

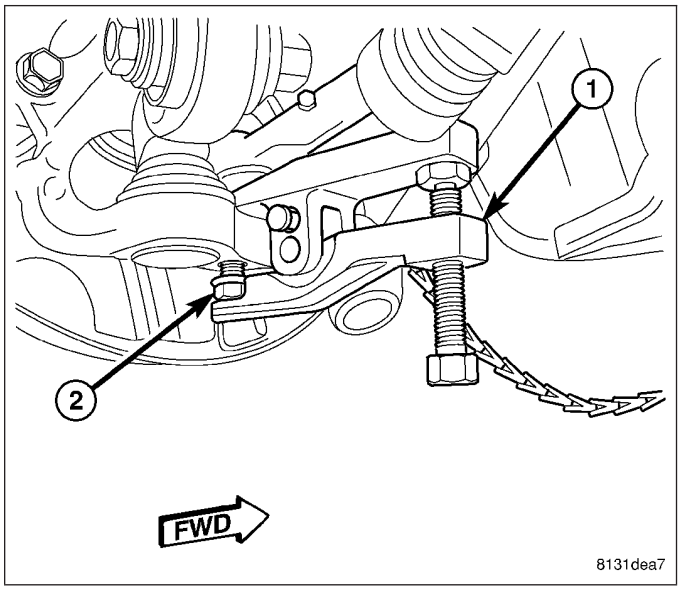

14. Remove nut (3) from end of tension strut (2) ball joint stud.
15. Loosen nut (5) attaching ball joint stud to lower control arm (4). Back nut off until nut is even with end of stud. **Keeping nut on at this location will help keep end of stud from distorting while using Puller in next step.**

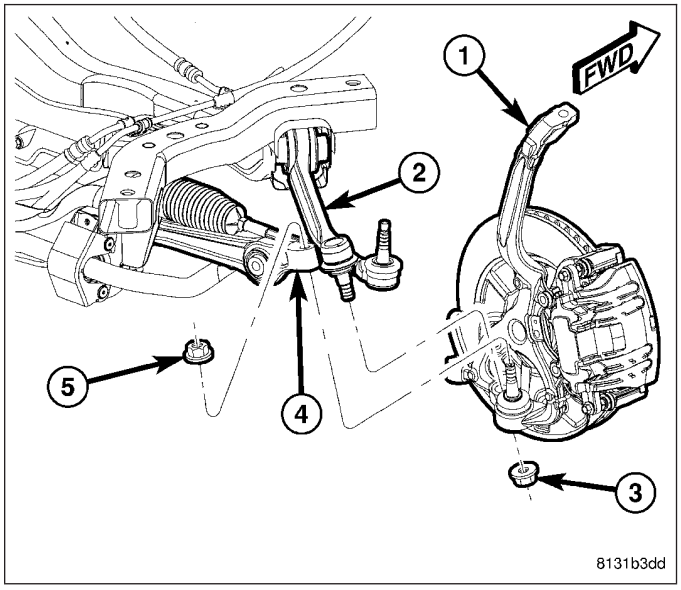

CAUTION: In following step, use care not to damage ball joint seal boot while sliding Puller, Special Tool 9360, into place past seal boot.

16. Using Puller (1), Special Tool 9360, separate ball joint stud (2) from lower control arm.

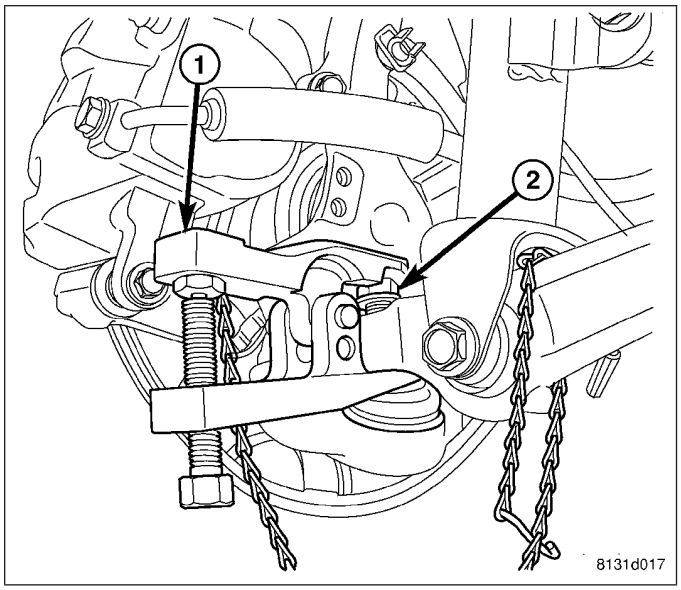

17. Remove nut (5) from end of ball joint stud attaching lower control arm to knuckle.
18. Remove knuckle from vehicle.

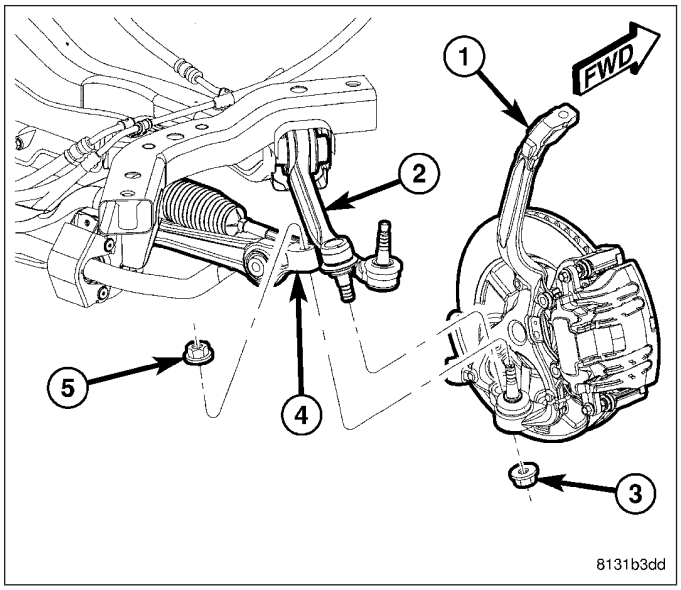

19. If hub and bearing needs to be removed, perform the following:
    a. Remove dust cap (2). When doing this, avoid damaging internal bore of hub to preserve seal integrity.
    b. Remove hub nut (1).
    c. Slide hub and bearing off knuckle spindle.
20. If shield needs to be removed from knuckle, remove 3 mounting screws, then shield.
21. If lower control arm ball joint needs to be removed from knuckle, (Refer to 2 - SUSPENSION/ FRONT/KNUCKLE - DISASSEMBLY).

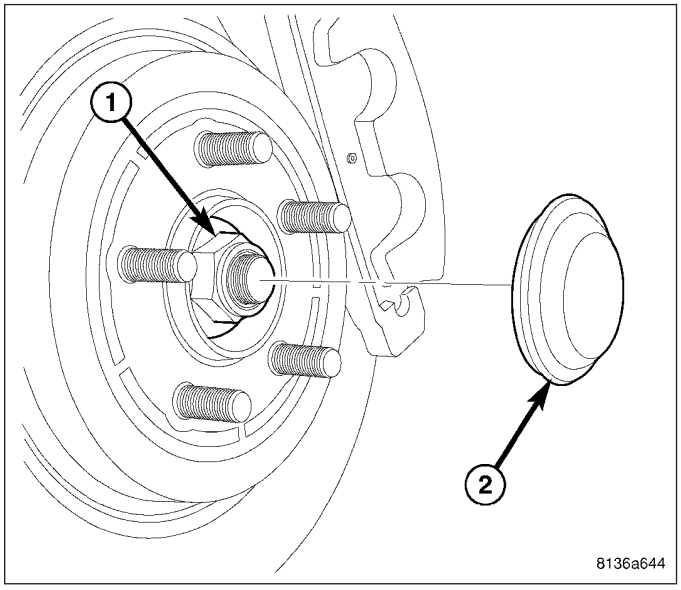

DISASSEMBLY - BALL JOINT

NOTE: To perform this procedure it works best to mount Press (3), Special Tool C-4212F, in a vise and hold the component in your hands.

1. Place Receiver (1), Special Tool 9320-5, into cup area of Press (3), Special Tool C-4212F, as shown and tighten set screw.
2. Place Remover (2), Special Tool 9320-3, onto end of screw-drive of Press (3), Special Tool C-4212F, as shown.

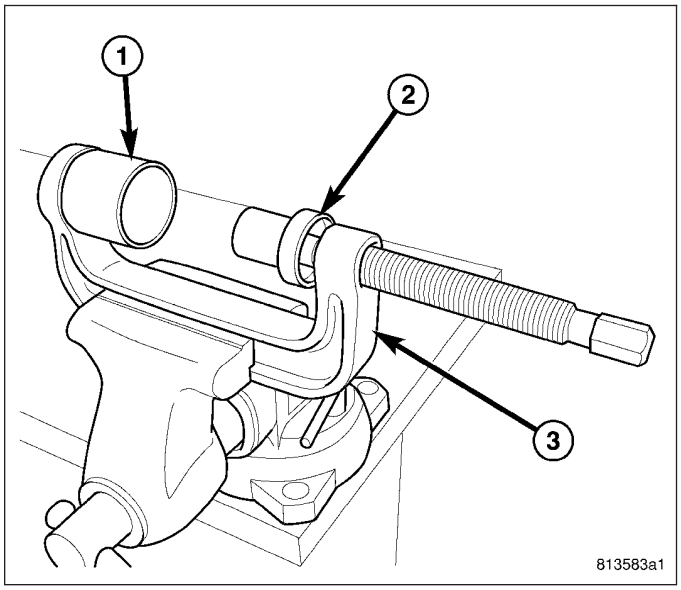

3. Using a pair of snap-ring pliers (2), remove snap-ring (3) from bottom of ball joint (1).

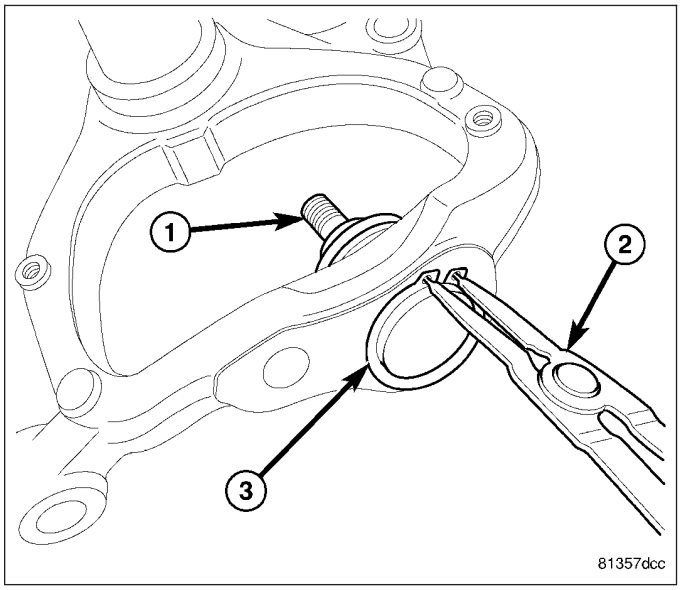

4. Install halves of Support Clamp (1), Special Tool 9320-1, over ball joint (2) and around knuckle surface (3) as shown. Install and snug Support Clamp (1) screws from underside.

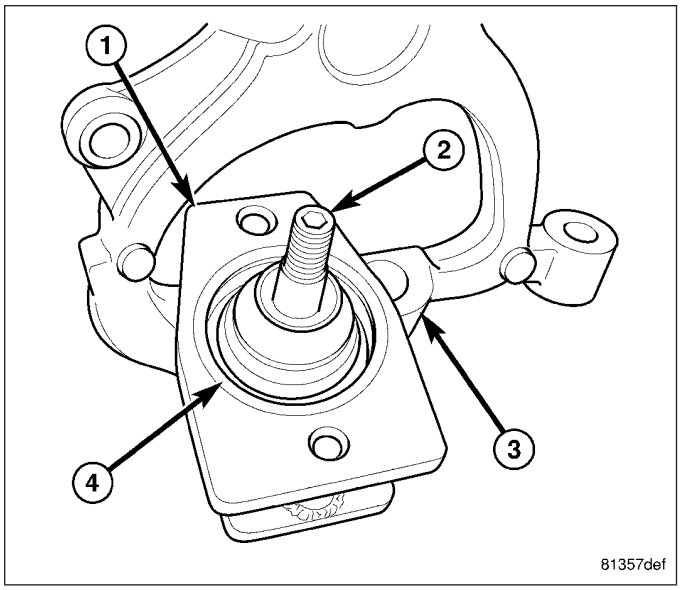

5. Position knuckle (1) over tools guiding top of ball joint inside of Receiver (6), then hand tighten Press screw-drive (4) until Remover (3) comes into contact with bottom of ball joint (2).

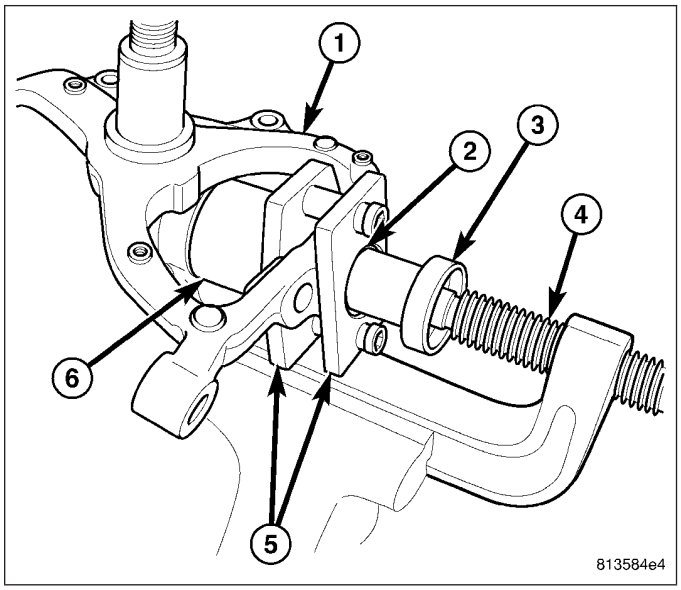

NOTE: When positioning knuckle over tools, make sure Receiver, Special Tool 9320-5, sets into recessed area (4) of Support Clamp, Special Tool 9320-1.

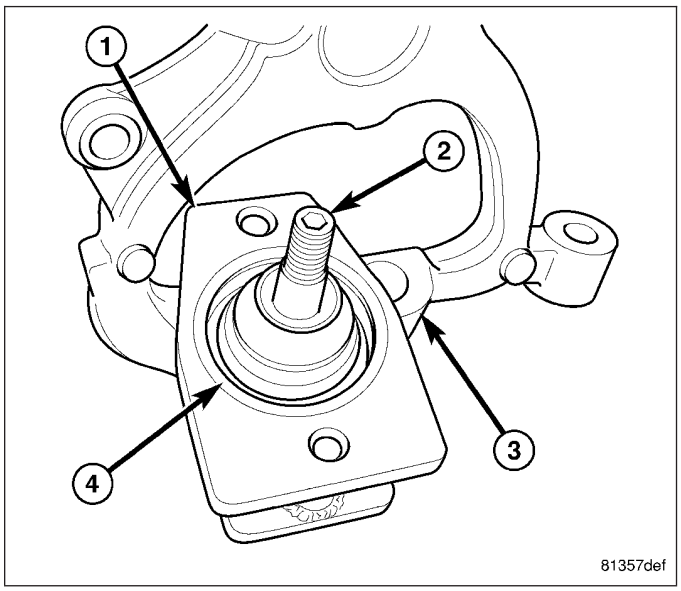

6. Tighten Press screw-drive (4) forcing ball joint out of knuckle (1) and into Receiver (6).
7. Loosen screw-drive (4) and remove knuckle (1) from Press. Remove ball joint from Receiver (6).

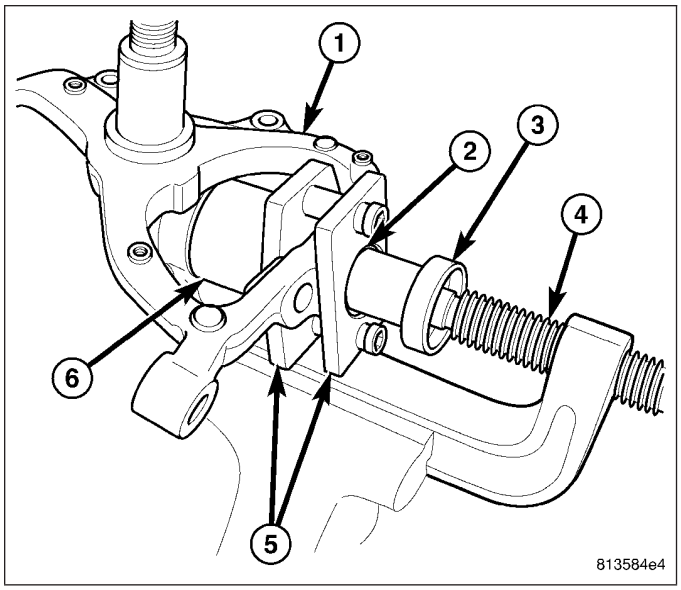

8. Remove Support Clamp (1) from knuckle (3).

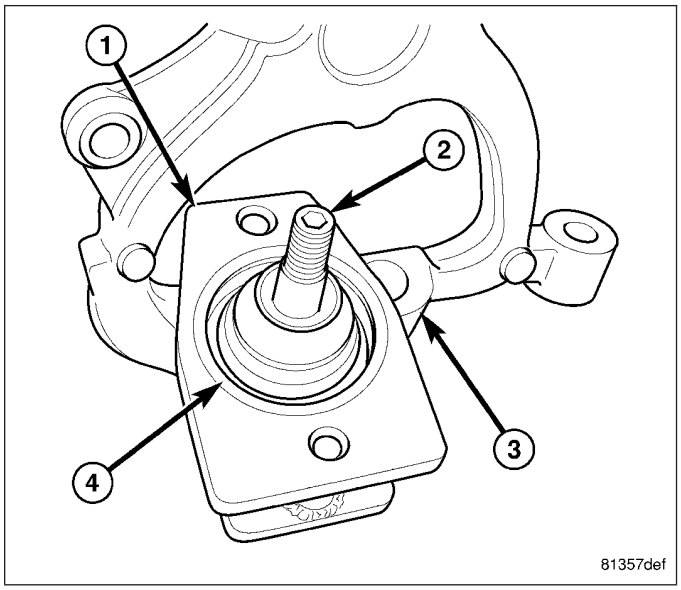

ASSEMBLY - BALL JOINT

NOTE: To perform this procedure it works best to mount Press (3), Special Tool C-4212F, in a vise and hold the component in your hands.

1. Place Installer (1), Special Tool 9320-4, into cup area of Press (3), Special Tool C-4212F, as shown and tighten set screw.
2. Place Remover (2), Special Tool 9320-3, onto end of screw-drive of Press (3), Special Tool C-4212F, as shown.**Note: This is the reverse of how Remover is installed on screw-drive for removal.**

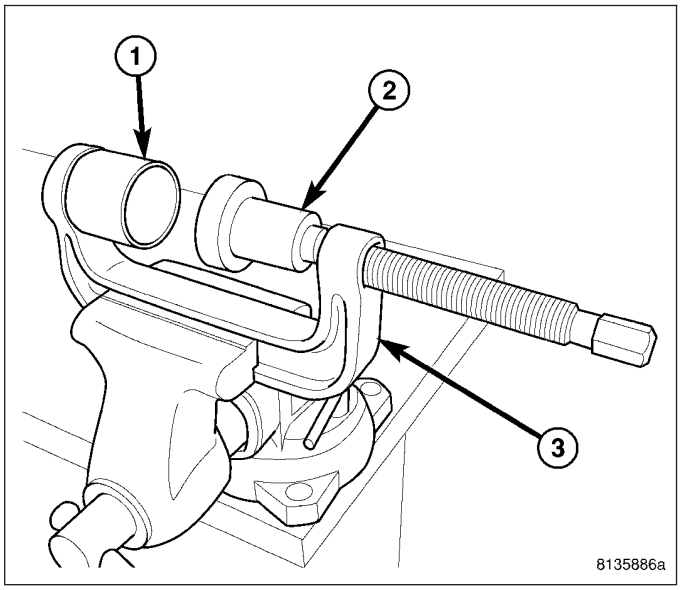

3. Start NEW ball joint (1) into bore of knuckle (2).

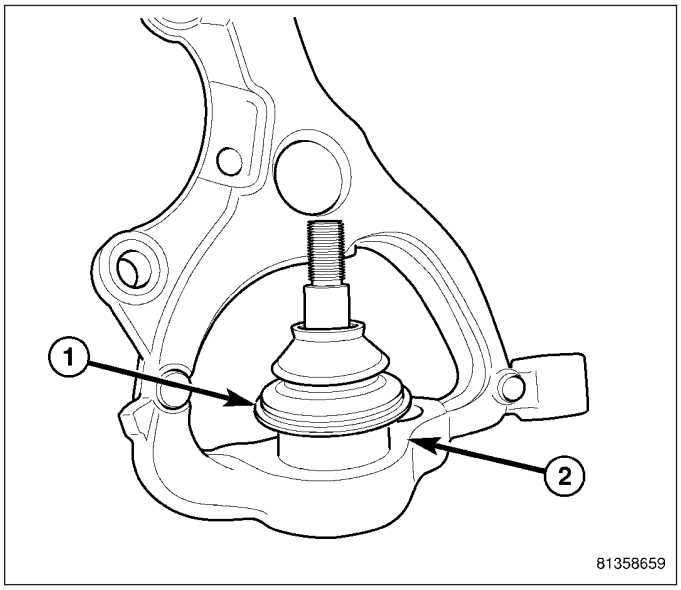

4. Position knuckle (1) over tools guiding top of ball joint inside of Installer (5) until outside flange of ball joint (4) comes into contact with Installer, then hand tighten Press screw-drive (3) until Remover (2) comes into contact with bottom of knuckle (1).
5. Using hand tools, tighten screw-drive (3), pressing ball joint into knuckle until flange (4) comes to a stop against the knuckle.
6. Loosen screw-drive and remove knuckle from Press.

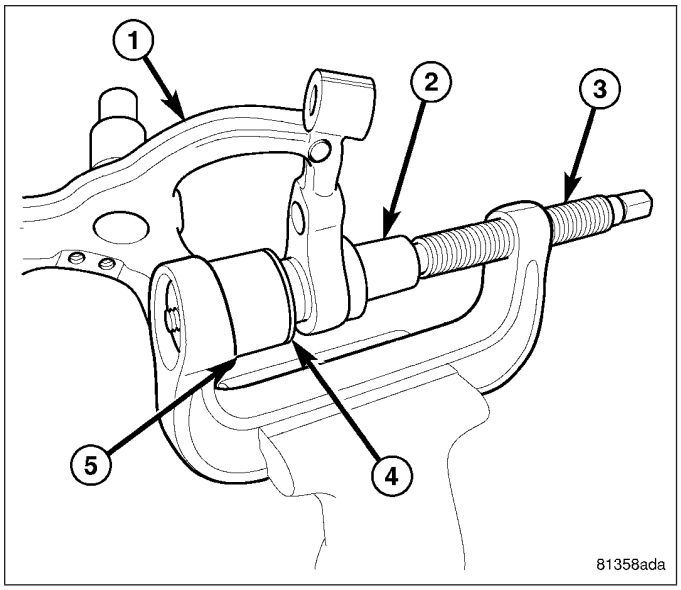

7. Install snap-ring (3) into groove on bottom of ball joint.
8. Inspect ball joint for proper fit. Make sure seal boot is uniform and wire rings are in place.

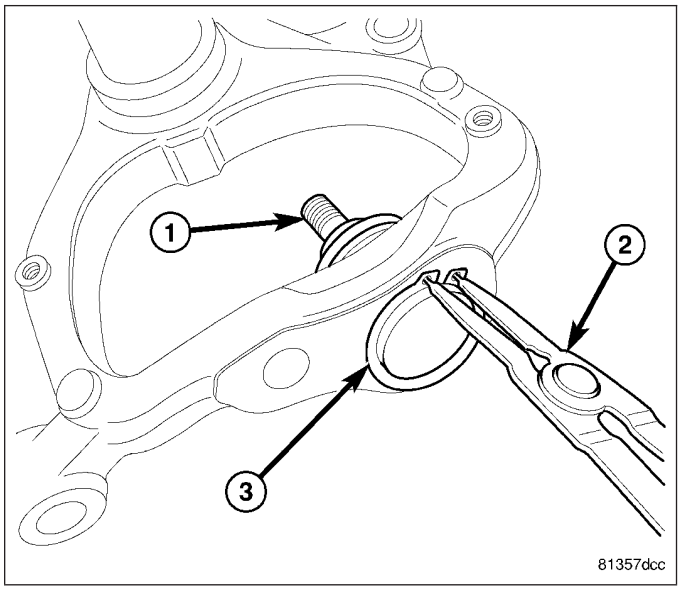

9. Install knuckle on vehicle. (Refer to 2 - SUSPENSION/FRONT/KNUCKLE - INSTALLATION)

INSTALLATION

1. If shield needs to be installed on knuckle, place shield in place and attach to knuckle using 3 screws. Tighten screws to 10 N·m (89 in. lbs.) torque.

2. If hub and bearing needs to be installed on knuckle, perform the following:
   a. Slide hub and bearing onto knuckle spindle.
   b. Install hub nut (1) on end of spindle. Tighten hub nut to 250 N·m (184 ft. lbs.) torque.
   c. Install NEW dust cap (2).

NOTE: Install a new dust cap to preserve seal integrity.

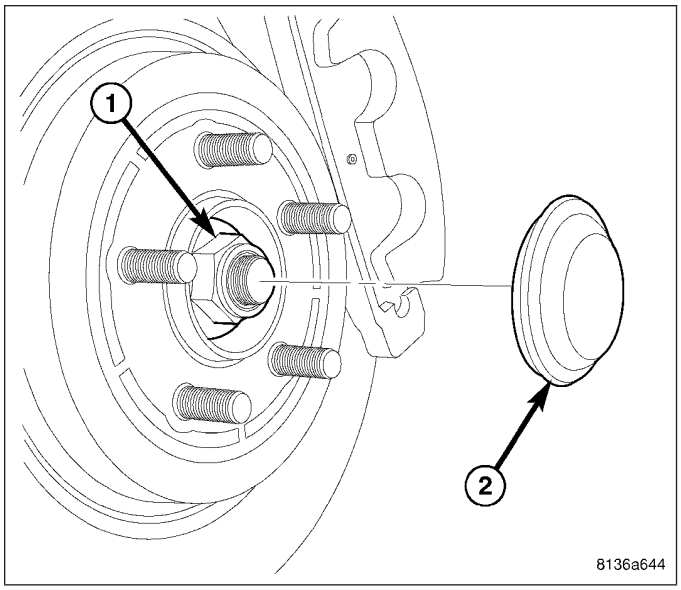

CAUTION: Before installing knuckle on lower control arm, measure height of ball joint seal boot (1) mounted on knuckle. If seal boot height is above 25.5 mm, any air inside seal boot must be expelled. To do so, follow these steps.
- **Tip ball joint stud completely to one side.**
- **Using thumb and index finger, gently squeeze seal boot together at center expelling any air. Do not allow grease to be release.**
- **Push down very top of seal boot.**
- **Return ball joint stud to original "centered" position.**
- **Measure ball joint seal boot height (1) making sure it is within specification.**
- **Wipe any grease from ball joint stud.**

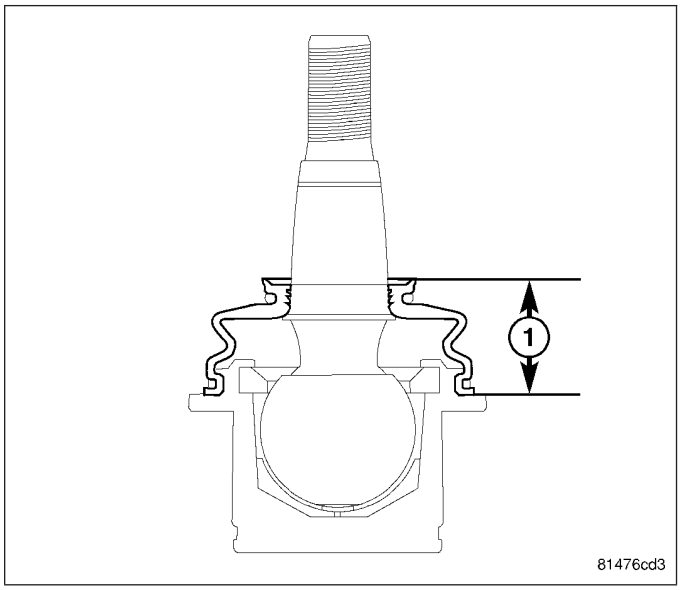

3. Place knuckle (1) over lower ball joint studs on vehicle and loosely install NEW nuts by hand.

CAUTION: It is important to tighten nuts as described in following steps to avoid damaging ball stud joints.

4. Completely install NEW nut (5) on ball joint stud attaching lower control arm (4) to knuckle (1). Tighten nut by holding ball joint stud with a hex wrench while turning nut with a wrench. Tighten nut using crow foot wrench on torque wrench to 68 N·m + 90° turn (50 ft. lbs. + 90° turn) torque.
5. Completely install NEW nut (3) on ball joint stud attaching tension strut (2) to knuckle (1). Tighten nut by holding ball joint stud with a hex wrench while turning nut with a wrench. Tighten nut using crow foot wrench on torque wrench to 68 N·m + 90° turn (50 ft. lbs. + 90° turn) torque.

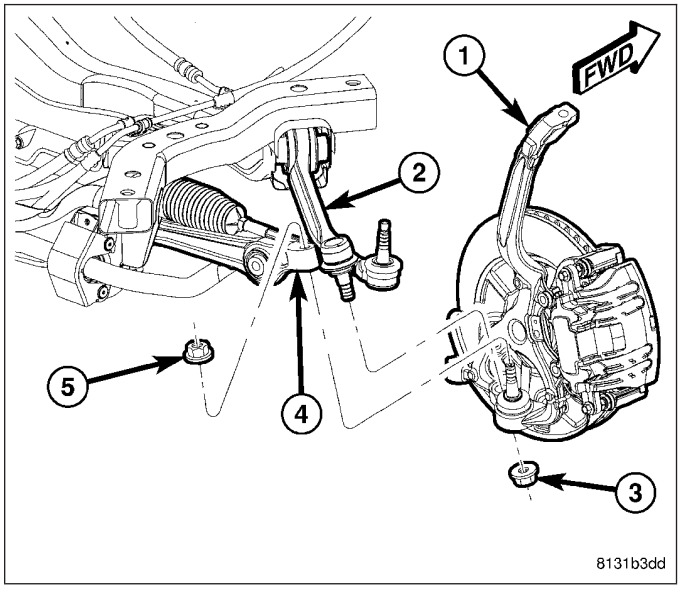

CAUTION: It is important to tighten nut as described in following step to avoid damaging ball stud joint.

6. Place upper ball joint stud (1) through hole in top of knuckle and install nut (4). Tighten nut by holding ball joint stud with a hex wrench while turning nut with a wrench. Tighten nut using crow foot wrench on torque wrench to 47 N·m + 90° turn (35 ft. lbs. + 90° turn) torque.

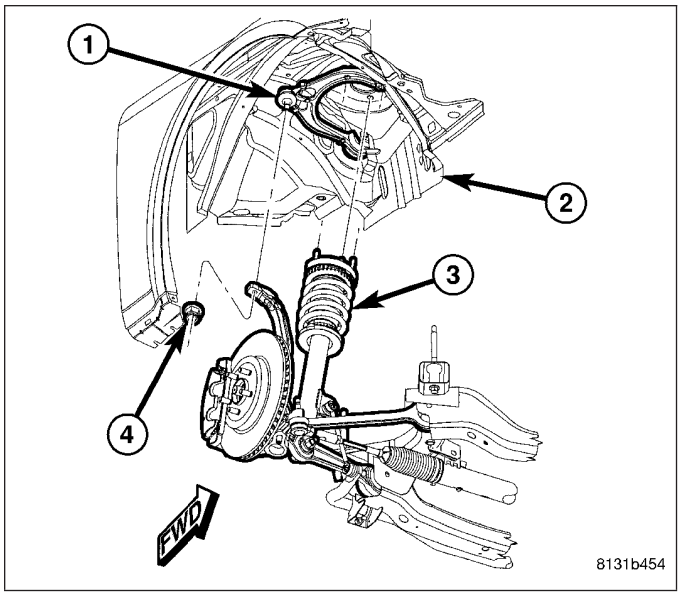

CAUTION: It is important to tighten nut as described in following step to avoid damaging ball stud joint.

7. Place outer tie rod stud through hole in knuckle (2) and install nut (1). Tighten nut by holding stud with a wrench while turning nut with another wrench. Tighten nut using crow foot wrench on torque wrench to 85 N·m (63 ft. lbs.) torque.
8. Install brake rotor, then disc brake caliper and adapter assembly. (Refer to 5 - BRAKES/HYDRAULIC/MECHANICAL/ROTOR - INSTALLATION)

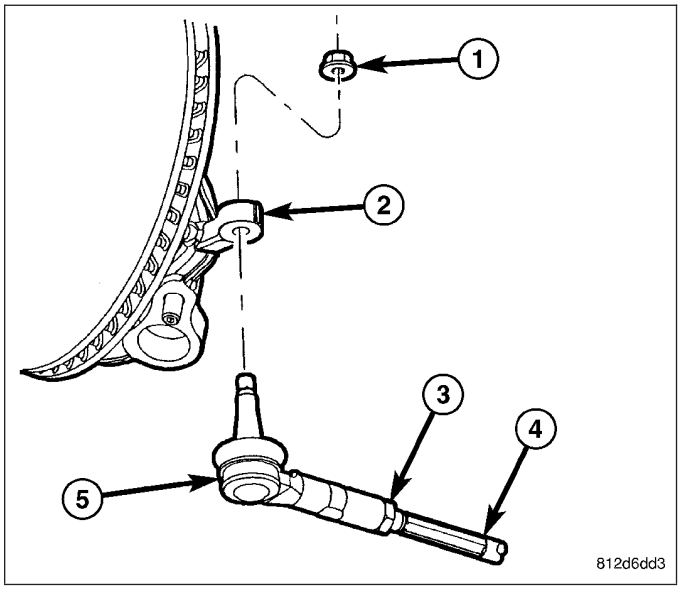

9. Install screw (3) fastening brake flex hose routing bracket (2) to knuckle (4). Tighten screw to 12 N·m (106 in. lbs.) torque.

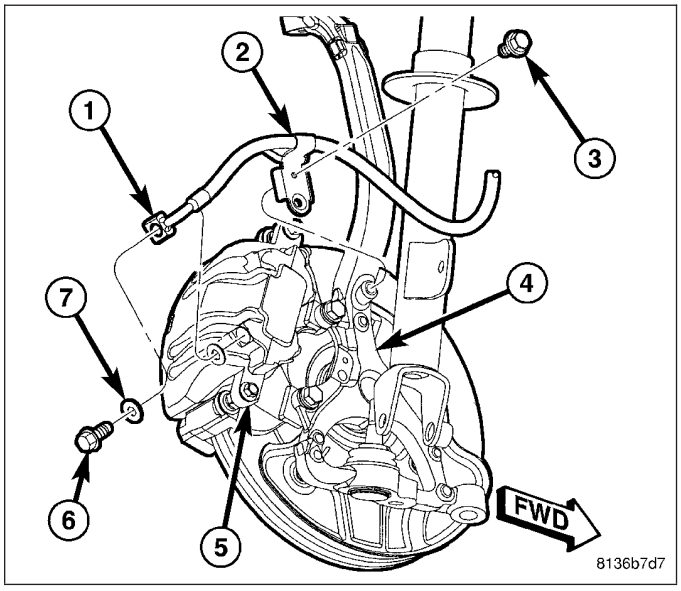

10. Install wheel speed sensor head (4) into knuckle and install mounting screw (3). Tighten screw to 11 N·m (95 in. lbs.) torque.
11. Attach wheel speed sensor cable and routing clip (2) to brake flex hose routing bracket (5).

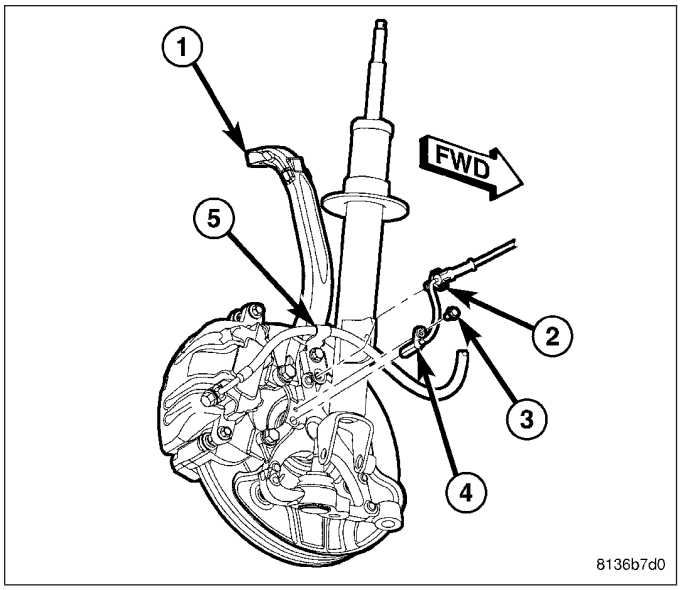

12. Install tire and wheel assembly (1) (Refer to 22 - TIRES/WHEELS - INSTALLATION). Tighten wheel mounting nuts (3) to 150 N·m (110 ft. lbs.) torque.
13. Lower vehicle.

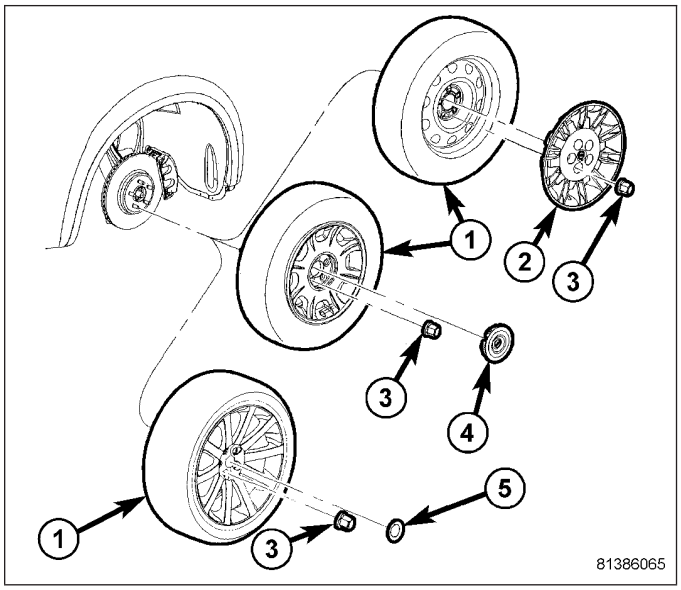

14. Pump brake pedal several times to ensure vehicle has a firm brake pedal before moving vehicle.
15. Check and adjust brake fluid level in reservoir (1) as necessary.
16. Perform wheel alignment. (Refer to 2 - SUSPENSION/WHEEL ALIGNMENT - STANDARD PROCEDURE)

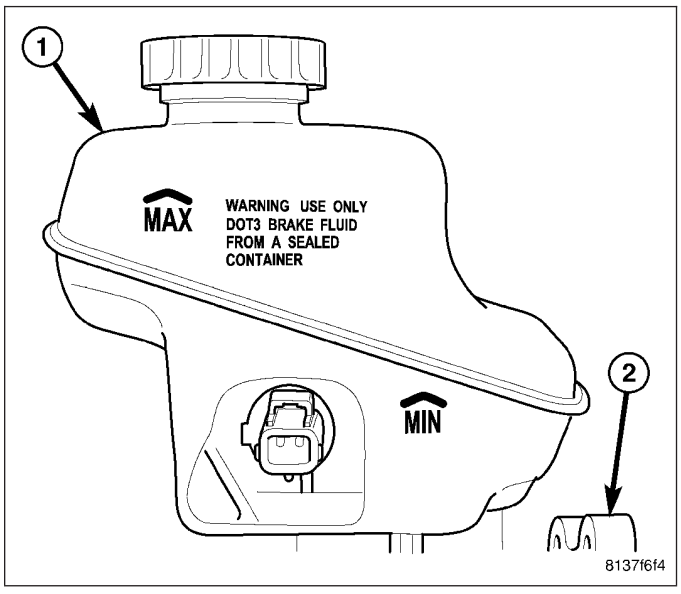

BALL JOINT - LOWER

DESCRIPTION

AWD

The ball joint for the lower control arm is pressed into the lower control arm. The ball joint is a “sealed for life” component and cannot be maintenance lubricated. The ball joint is lubricated for life at the time of assembly. **No attempt should be made to ever add any lubrication to these ball joints.**

Neither the ball joint, nor the seal boot for the lower control arm can be serviced as a separate component. They entire arm must be replaced if either are damaged.

RWD

There are two lower ball joints on the RWD version of this vehicle. One in for the lower control arm and the other for the tension strut. The ball joint for the lower control arm is pressed into the knuckle and the ball joint for the tension strut is part of the tension strut. The ball joints are both “sealed for life” components and cannot be maintenance lubricated. These ball joints are lubricated for life at the time of assembly. **No attempt should be made to ever add any lubrication to these ball joints.**

The ball joint for the lower control arm is a ball joint and seal boot cartridge type and can be replaced as a separate component of the knuckle. The boot cannot be serviced separately. To service this ball joint, (Refer to 2 - SUSPENSION/FRONT/KNUCKLE - DISASSEMBLY).

Neither the ball joint, nor the seal boot for the tension strut can be serviced as a separate component. They entire tension strut must be replaced if either are damaged.

The ball joint connection to the lower control arm and the ball joint connection at the knuckle is achieved by an interference fit created by the tapered stud of the ball joint and a tapered hole in the steering knuckle. The ball joint stud is retained in the steering knuckle using a locking nut.

DIAGNOSIS AND TESTING

LOWER BALL JOINT

1. Raise vehicle on a drive-on hoist.

NOTE: If a drive-on hoist is not available, use wooden blocks with jack stands to support the lower control arm in the ball joint area. Place the jack stands appropriately and lower the hoist placing weight on the lower control arm. The lower control arms should now be supporting the vehicle weight.

2. Using a jack, lift the front end off the hoist and position a wooden block underneath lower control arm supporting that corner of the vehicles weight.
3. Remove tire and wheel assembly. (Refer to 22 - TIRES/WHEELS - REMOVAL)
4. Attach a dial indicator as follows:
   a. AWD Lower Control Arm – Attach a dial indicator to base of lower control arm, then align dial indicator’s contact pointer with direction of stud axis and touch machined flat on knuckle near ball joint. Zero dial indicator.
   b. RWD Tension Strut – Attach a dial indicator to base of tension strut, then align dial indicator’s contact pointer with direction of stud axis and touch machined flat on knuckle near ball joint. Zero dial indicator.
   c. RWD Lower Control Arm – Attach a dial indicator to base of lower control arm, then align dial indicator’s contact pointer with direction of stud axis and touch machined flat on knuckle near ball joint. Zero dial indicator.

NOTE: Use care when applying the load to the knuckle so as to not damage components of the suspension.

5. Insert a pry bar and rest it against lower control arm or tension strut (depending on which is being tested) and use lever principle to push knuckle upward until dial indicator no longer moves.

6. Record any ball joint movement. If movement in the lower control arm exceeds 1.5 mm (.059 in.), the ball joint is faulty.
7. If the lower ball joint for an All-Wheel-Drive vehicle needs replaced, the lower control arm needs to be replaced. (Refer to 2 - SUSPENSION/FRONT/LOWER CONTROL ARM - REMOVAL)
8. If the ball joint for the lower control arm on a Rear-Wheel-Drive vehicle needs replaced, it can be serviced separately. (Refer to 2 - SUSPENSION/FRONT/KNUCKLE - DISASSEMBLY)
9. If the tension strut ball joint (RWD vehicle) needs replaced, the entire tension strut needs to be replaced. (Refer to 2 - SUSPENSION/FRONT/TENSION STRUT - REMOVAL)

REMOVAL

To service the lower ball joint for the lower control arm on RWD vehicles, the knuckle must be removed from the vehicle, then the ball joint can be removed. (Refer to 2 - SUSPENSION/FRONT/KNUCKLE - REMOVAL) (Refer to 2 - SUSPENSION/FRONT/KNUCKLE - DISASSEMBLY)

INSTALLATION

To install the ball joint for the lower control arm on RWD vehicles, refer to the following information. (Refer to 2 - SUSPENSION/FRONT/KNUCKLE - ASSEMBLY)

ARM - LOWER CONTROL - AWD

REMOVAL

1. Raise and support vehicle. (Refer to LUBRICATION & MAINTENANCE/HOISTING - STANDARD PROCEDURE)
2. Remove wheel mounting nuts (3), then tire and wheel assembly (1).

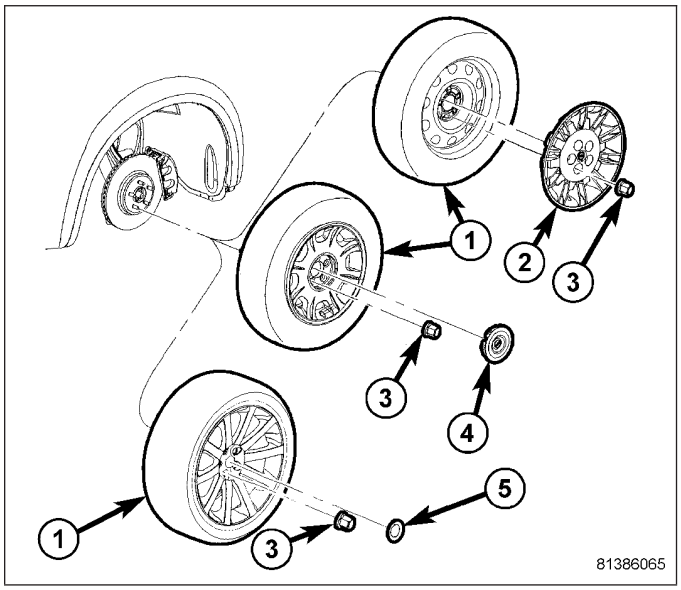

3. While a helper applies brakes to keep hub from rotating, remove hub nut (1) from the axle half shaft (2).
4. Remove belly pan. (Refer to 23 - BODY/EXTERIOR/BELLY PAN - REMOVAL)

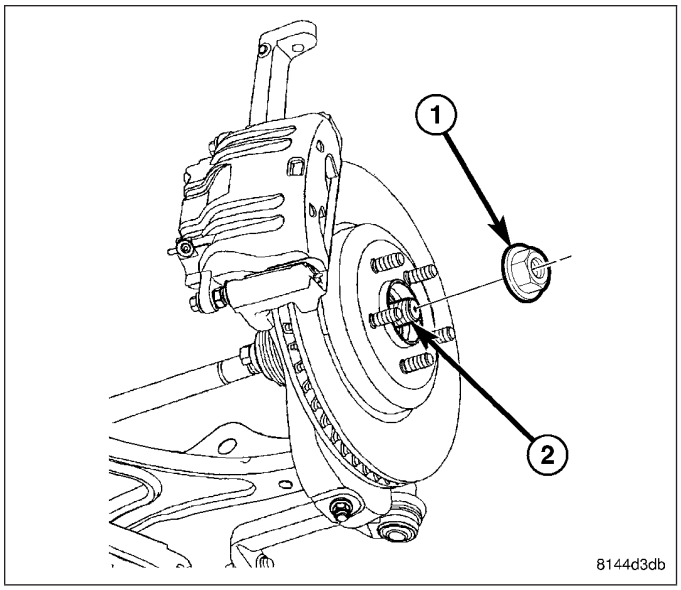

5. Loosen nut (4) attaching lower control arm ball joint stud to knuckle (3). Back nut off until nut is even with end of stud. **Keeping nut on at this location will help keep end of stud from distorting while using Puller in next step.**

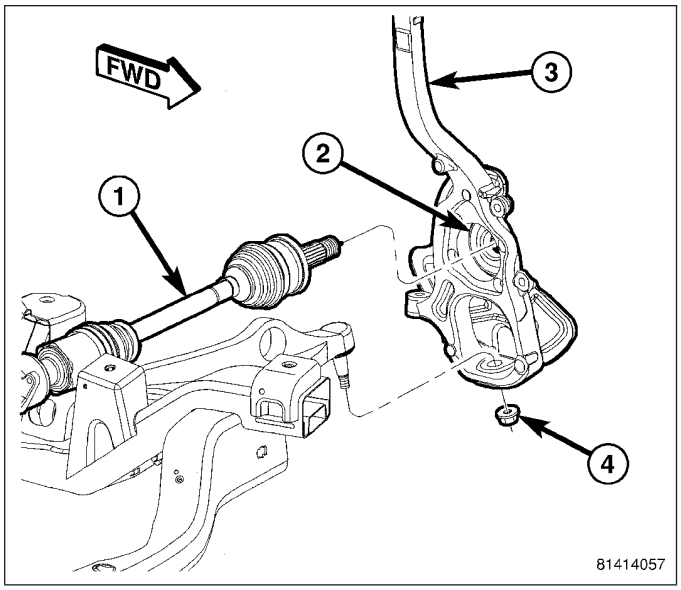

CAUTION: In following step, use care not to damage ball joint seal boot while sliding Puller, Special Tool 9360, into place past seal boot.

6. Using Puller (2), Special Tool 9360, separate ball joint stud from knuckle.
7. Remove tool.
8. Remove nut (1) from end of ball joint stud.

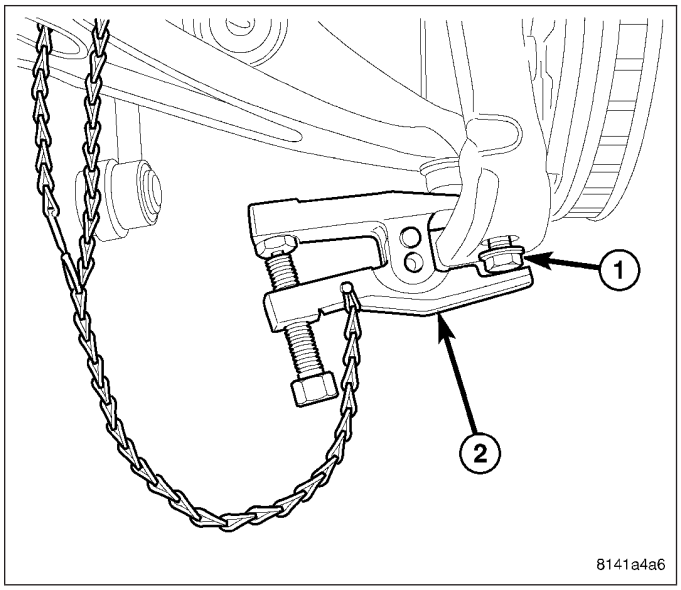

9. Back off nut (3) from bolt (1) attaching shock clevis bracket (2) to lower control arm (7) until it is flush with end of bolt.
10. Using a brass drift punch, tap the bolt out of the clevis bracket until bolt serrations clear bracket.
11. Remove nut (3) and bolt (1) for clevis bracket and control arm.

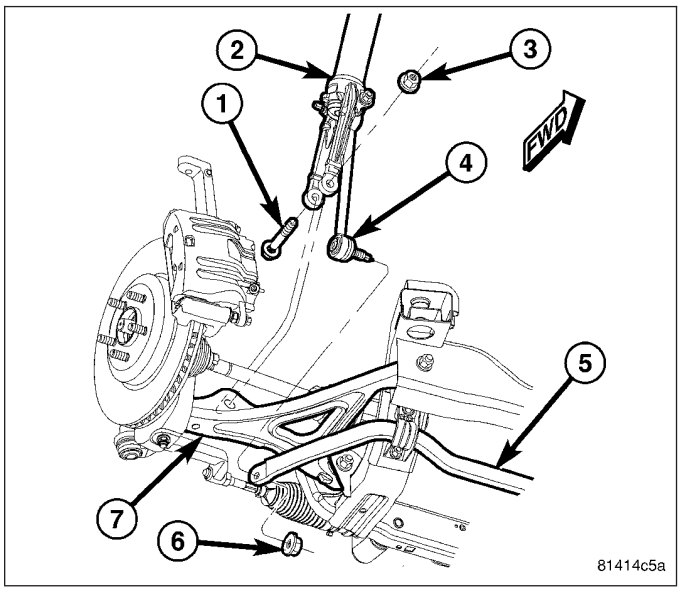

12. Remove mounting screws, then heat shields (3) above both inner tie rod bellows (2).

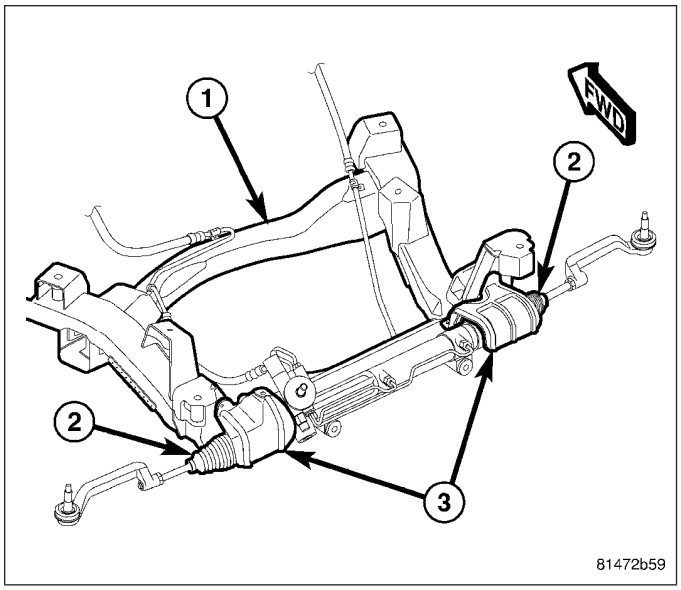

CAUTION: While steering gear bolts are removed, it important to avoid putting downward force on steering gear.

13. Remove steering gear mounting bolts as listed:
    a. Left side arm – Remove bolts (3) and (4). Loosen, but do not remove, bolt (2). It is important leave bolt (2) installed to avoid dropping gear too far, putting excessive force on steering coupling.
    b. Right side arm – Remove bolts (2) and (3). Loosen, but do not remove, bolt (4). It is important to leave bolt (4) installed to avoid dropping gear too far, putting excessive force on steering coupling.

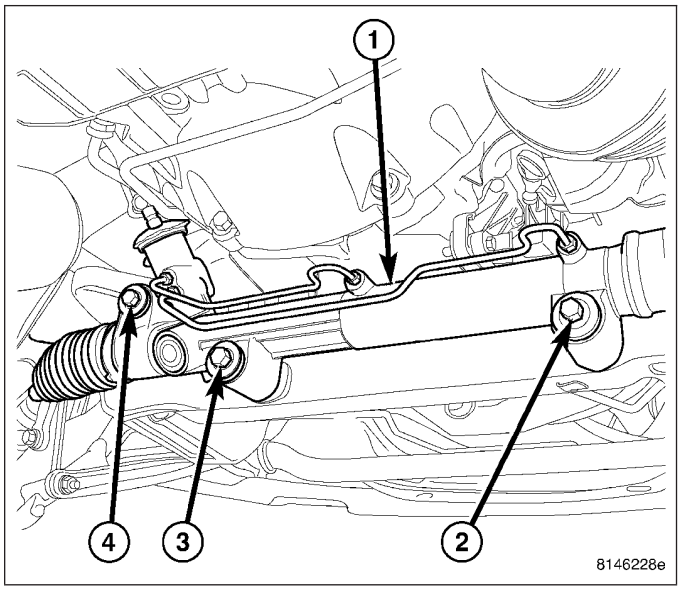

CAUTION: If the lower control arm bolt at the engine cradle has a lengthwise grooved shaft (2), it is a special wheel alignment adjustment bolt and the bolt head (1) must not be rotated in the vehicle or damage to the bolt and engine cradle will result. While holding the bolt in place with a wrench, remove the nut, then slide the bolt out of the bushing and cradle taking note of bolt positioning in engine cradle for reassembly purposes. The bolt needs to be installed in the same position as removed to make sure wheel camber and caster return to adjusted position.

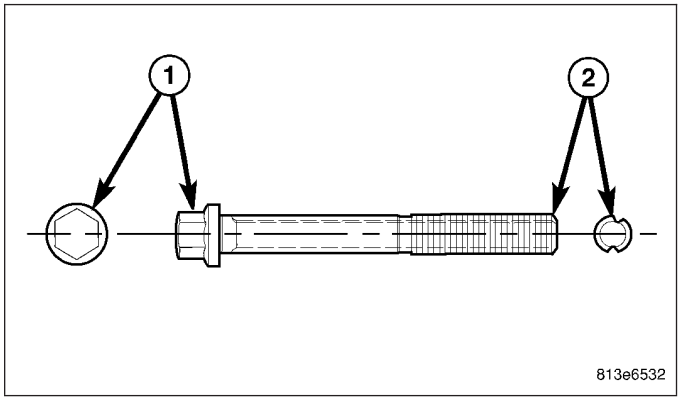

14. Remove bolt (3) and nut securing forward end of lower control arm (1) to engine cradle (2). If bolt has a lengthwise grooved shaft (see above note), remove bolt and nut by holding bolt stationary with a wrench, removing nut, then sliding bolt out of bushing and cradle while taking note of bolt positioning in engine cradle for reassembly purposes.
15. Remove bolt and nut (4) securing rearward end of lower control arm (1) to engine cradle (2). If bolt has a lengthwise grooved shaft (see above note), remove bolt and nut by holding bolt stationary with a wrench, removing nut, then sliding bolt out of bushing and cradle while taking note of bolt positioning in engine cradle for reassembly purposes.
16. Slide lower control arm (1) from engine cradle (2) and knuckle, and remove from vehicle.

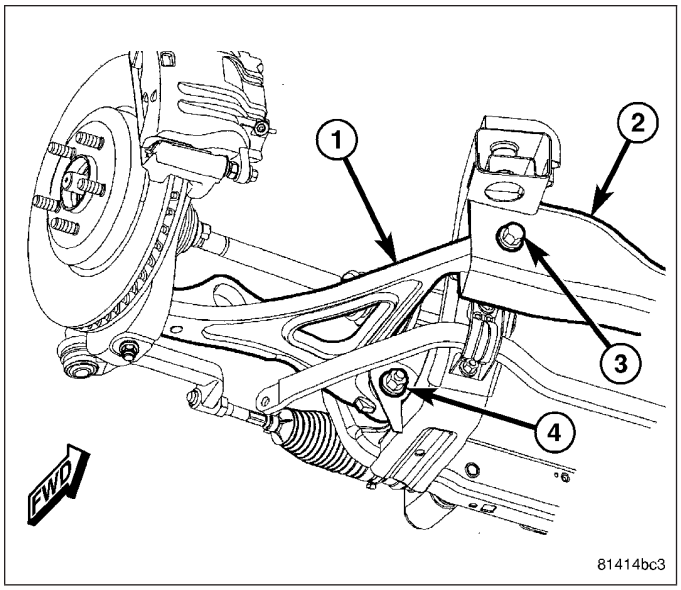

INSTALLATION

NOTE: If installing a lower control arm engine cradle bolt that is a wheel alignment adjustment bolt (1) (identifying lengthwise grooved shaft (2)), make sure to install it in the same position which it was in upon removal. For more details on installation of this special bolt, (Refer to 2 - SUSPENSION/ WHEEL ALIGNMENT - STANDARD PROCEDURE).

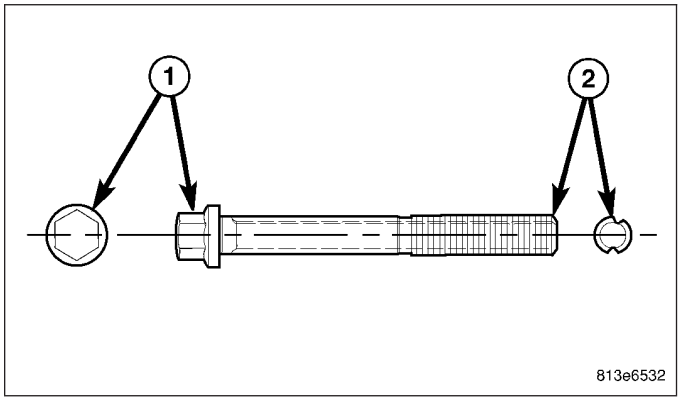

1. Slide lower control arm (1) into position in engine cradle (2) and place ball joint stem into mounting hole in knuckle.

NOTE: When installing lower control arm engine cradle bolts, it important to note that the forward bolt is installed front-to-rear and the rearward bolt is installed rear-to-front.

2. Install lower control arm mounting bolts and nuts (3 and 4). **Do not tighten bolts at this time.**

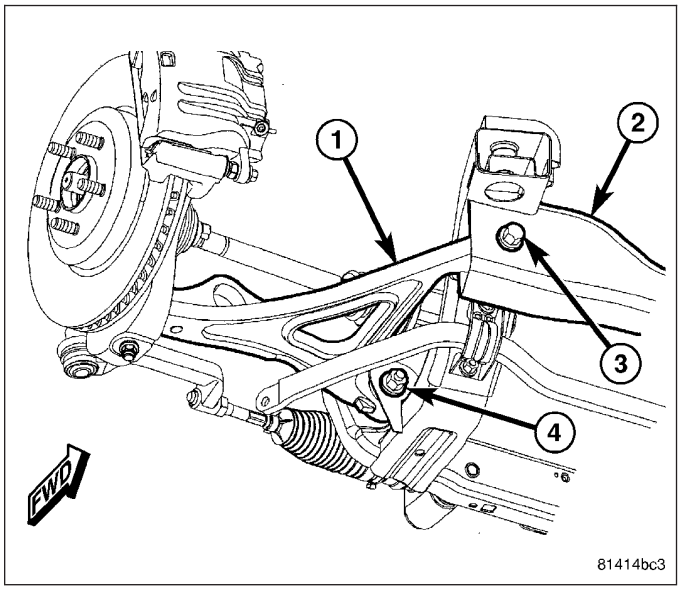

3. Raise steering gear to mounted position and install lower mounting bolts (2 and 3). Install upper mounting bolt (4) and nut. Tighten all mounting bolts to 122 N·m (90 ft. lbs.) torque.

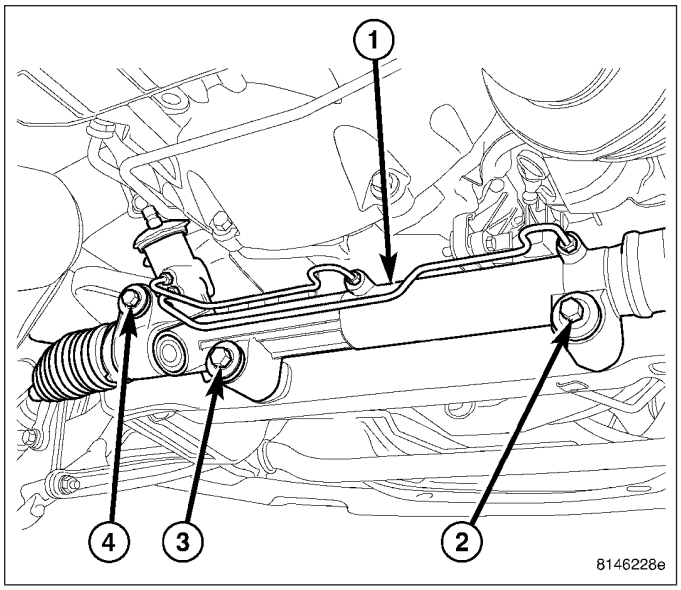

4. Install heat shields (3) above both inner tie rod bellows (2). Tighten mounting screws to 7 N·m (62 in. lbs.) torque.

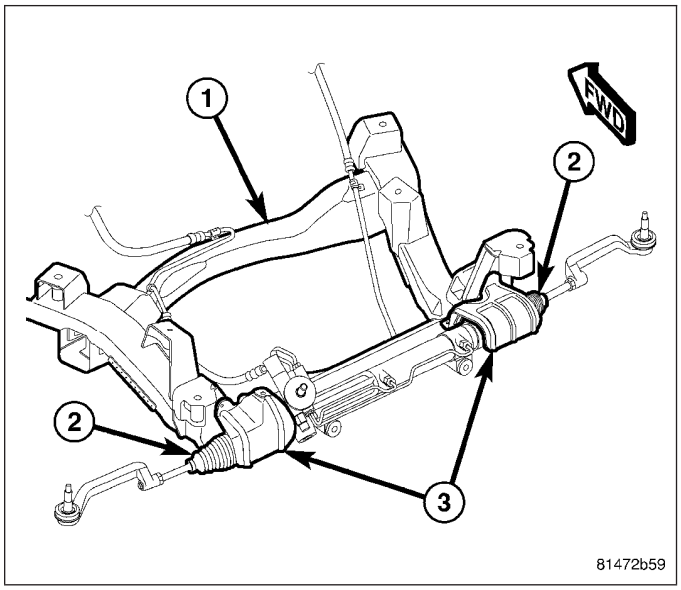

5. Pull downward on control arm and guide ball joint stud into knuckle (3). Install NEW nut (4) on ball joint stud. Tighten nut by holding ball joint stud with a hex wrench while turning nut with a wrench. Tighten nut using crow foot wrench on torque wrench to 122 N·m (90 ft. lbs.) torque.

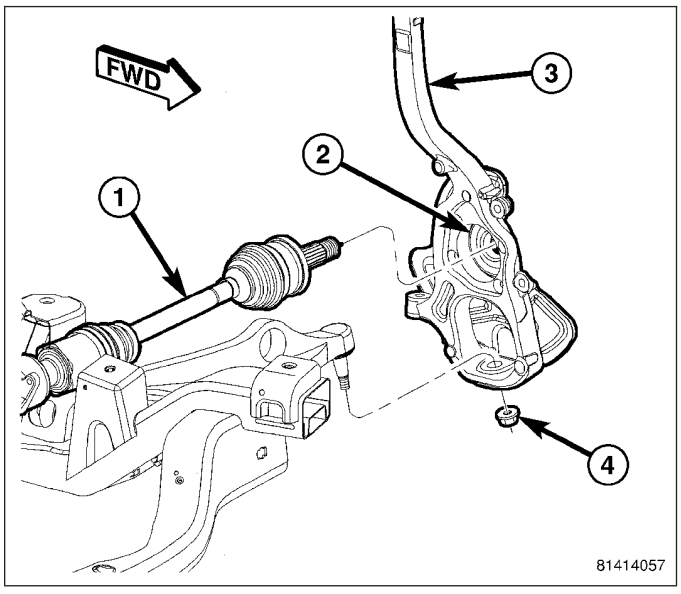

6. Align shock clevis bracket (2) with lower control arm (7) bushing and install mounting bolt (1) and nut (3). **Do not tighten nut at this time.**

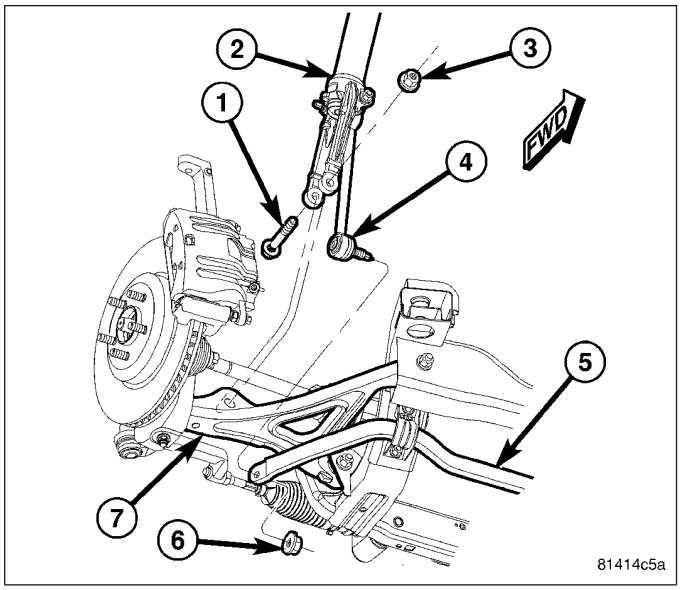

7. Install hub nut (1) on end of axle half shaft (2). While a helper applies brakes to keep hub from turning, tighten hub nut to 213 N·m (157 ft. lbs.) torque.

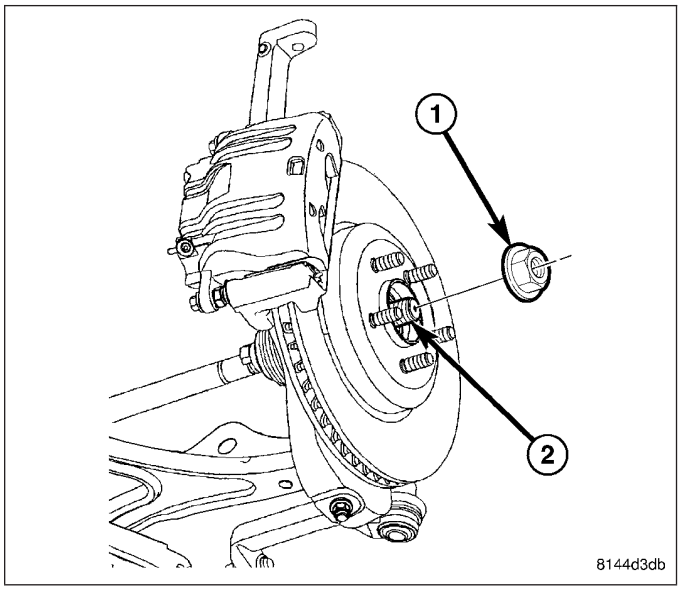

8. Install tire and wheel assembly (1) (Refer to 22 - TIRES/WHEELS - INSTALLATION). Tighten wheel mounting nuts (3) to 150 N·m (110 ft. lbs.) torque.
9. Lower vehicle.
10. Position vehicle on an alignment rack/drive-on lift.

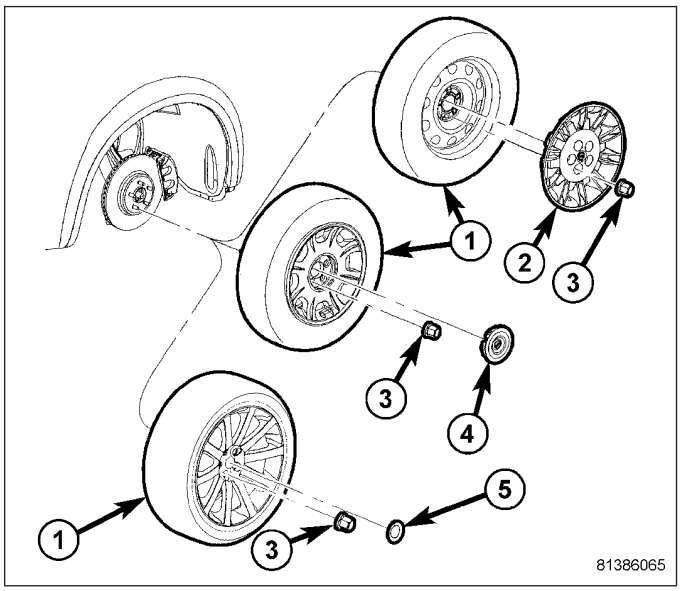

NOTE: When tightening lower shock clevis mounting bolt, do not attempt rotating bolt. Bolt shaft is serrated. Turn nut only.

11. Tighten lower shock clevis bracket bolt nut (3) to 174 N·m (128 ft. lbs.) torque.
12. Perform wheel alignment. (Refer to 2 - SUSPENSION/WHEEL ALIGNMENT - STANDARD PROCEDURE)

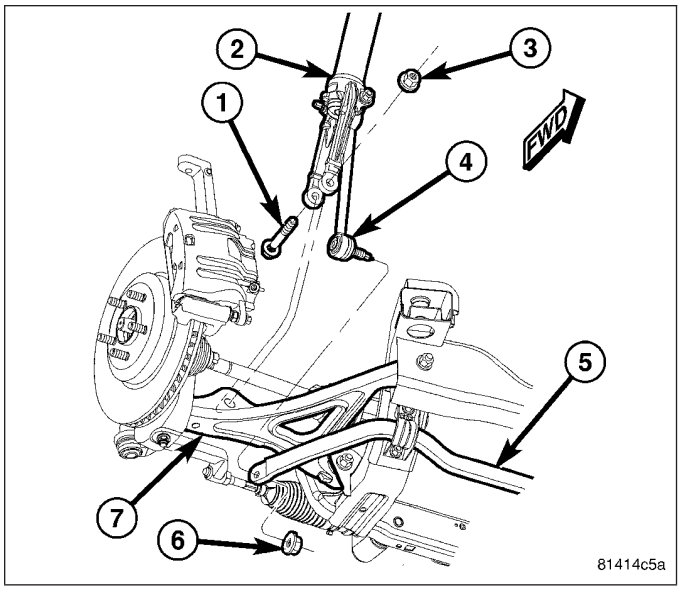

CAUTION: If lower control arm engine cradle bolt is a wheel alignment adjustment bolt (lengthwise grooved shaft (2)), be sure to only tighten nut. Do not rotate bolt or damage to cradle will occur.

13. Once camber is found to be within specifications, tighten lower control arm cradle bolt nuts to 176 N·m (130 ft. lbs.) torque while holding the bolts stationary.

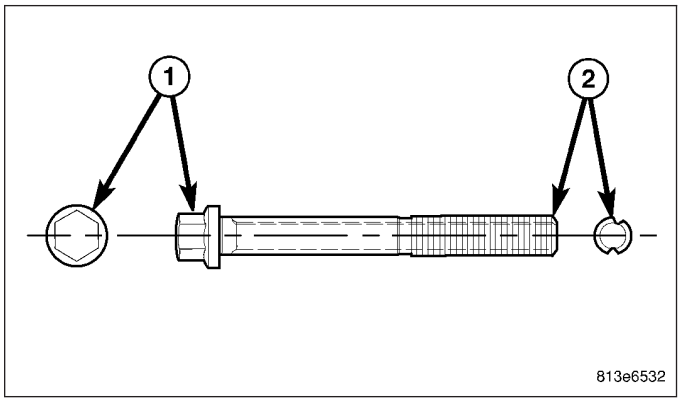

14. install belly pan. (Refer to 23 - BODY/EXTERIOR/BELLY PAN - INSTALLATION)

ARM - LOWER CONTROL - RWD

REMOVAL

1. Raise and support vehicle. (Refer to LUBRICATION & MAINTENANCE/HOISTING - STANDARD PROCEDURE)
2. Remove wheel mounting nuts (3), then tire and wheel assembly (1).
3. Remove belly pan. (Refer to 23 - BODY/EXTERIOR/BELLY PAN - REMOVAL)

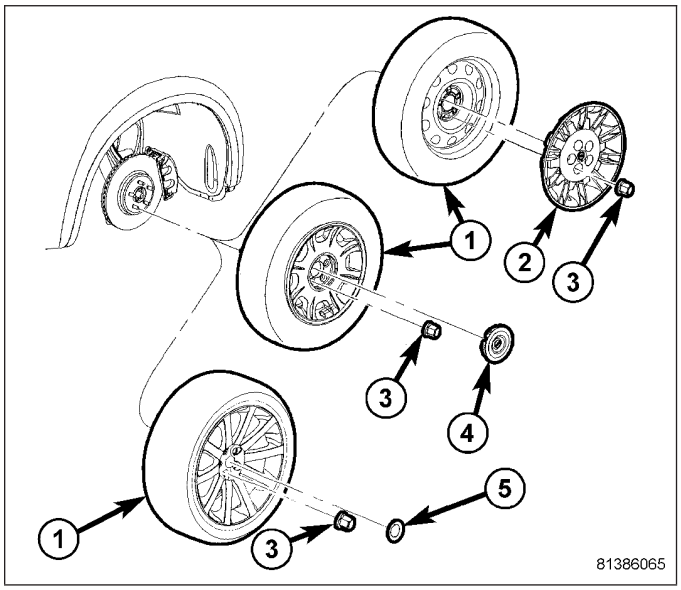

4. Remove screws (1) fastening stabilizer bar heat shield (3) on side of control arm repair.

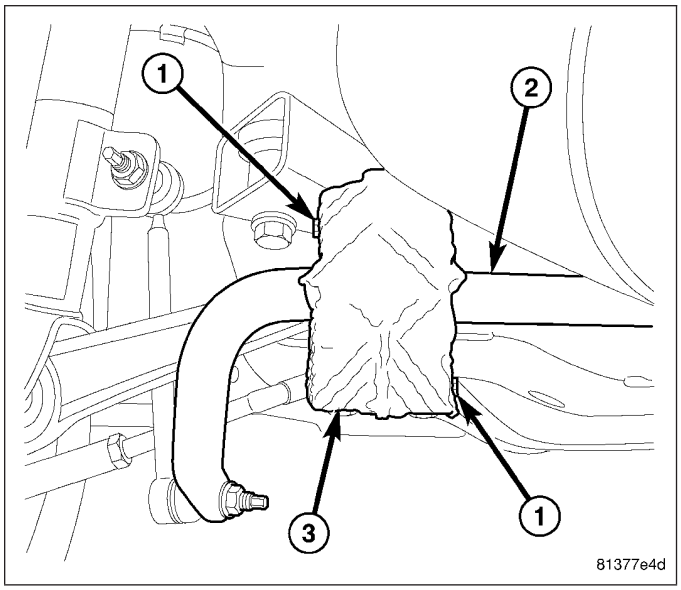

5. Remove bolts (2) fastening stabilizer bar bushing retainer (1) in place on side of control arm repair.

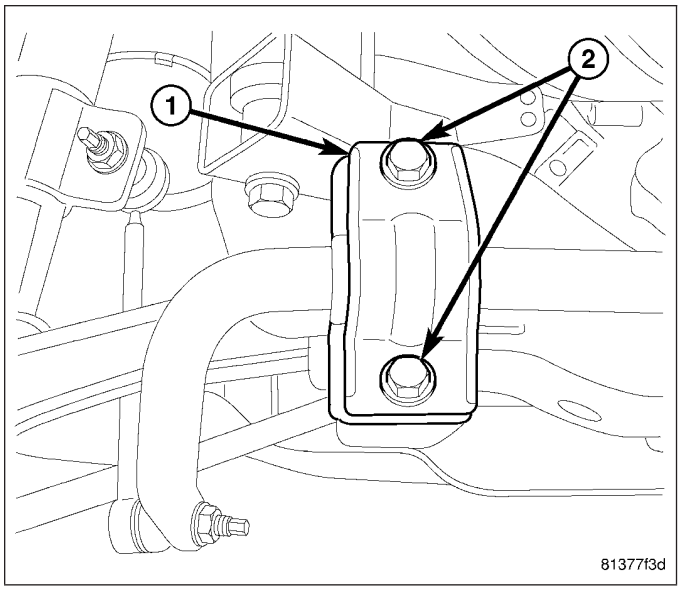

6. Remove retainer halves (1)(2) from around stabilizer bar bushing (3).

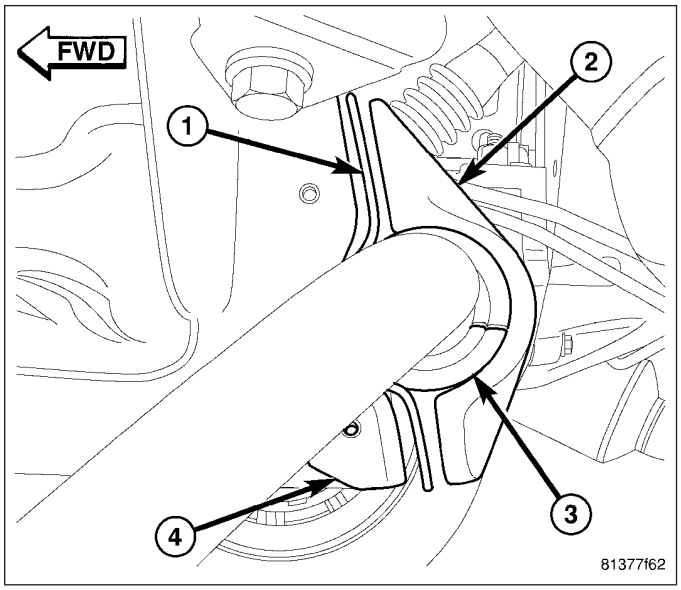

7. Utilizing slit, remove bushing (1) from stabilizer bar (2).

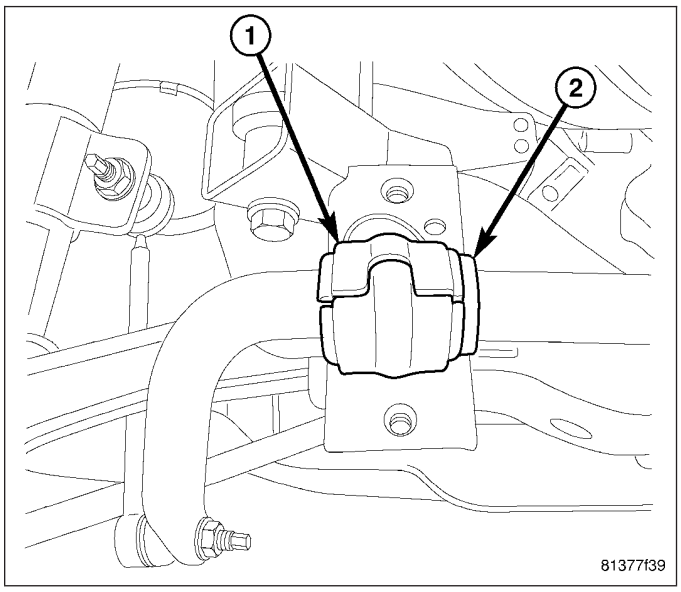

NOTE: In the following step, the lower control arm cradle bolt (3) is accessed through the opening (2) created by removal of the bushing from the stabilizer bar (4).

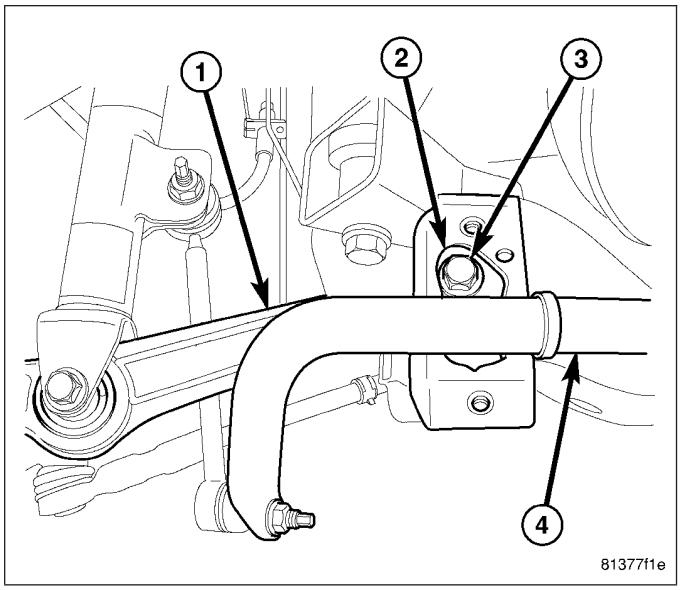

CAUTION: If the lower control arm bolt at the engine cradle has a lengthwise grooved shaft (2), it is a special wheel alignment adjustment bolt and the bolt head (1) must not be rotated in the vehicle or damage to the bolt and engine cradle will result. While holding the bolt in place with a wrench, remove the nut, then slide the bolt out of the bushing and cradle taking note of bolt positioning in engine cradle for reassembly purposes. The bolt needs to be installed in the same position as removed to make sure wheel camber and caster return to adjusted position.

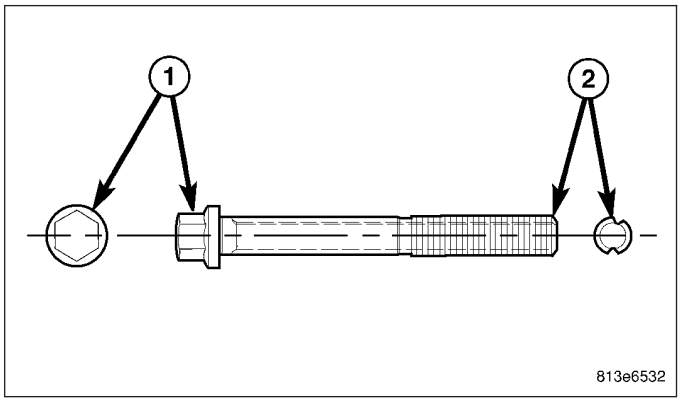

8. Remove bolt and nut (1) securing lower control arm (2) to engine cradle. If bolt has a lengthwise grooved shaft (see above note), remove bolt and nut by holding the bolt in place with a wrench, removing nut, then sliding bolt out of bushing and cradle while taking note of bolt positioning in lower control arm bushing for reassembly purposes.

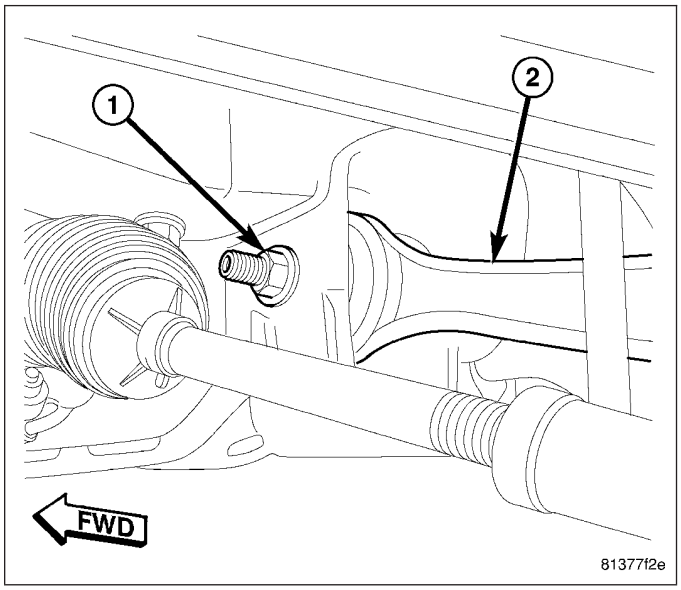

9. Remove bolt (3) securing shock assembly (1) to lower control arm (4).

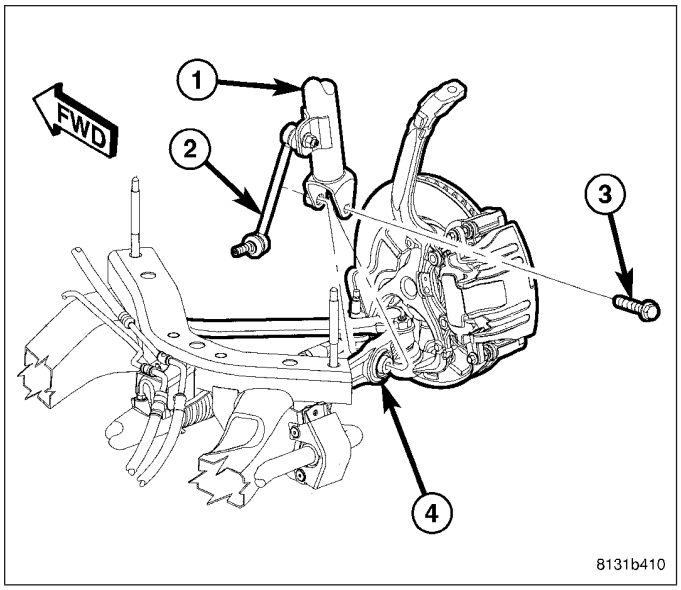

10. Remove screw (3) fastening wheel speed sensor to knuckle (1). Pull sensor head (4) out of knuckle.
11. Remove wheel speed sensor cable routing clip (2) from brake flex hose routing bracket (5).

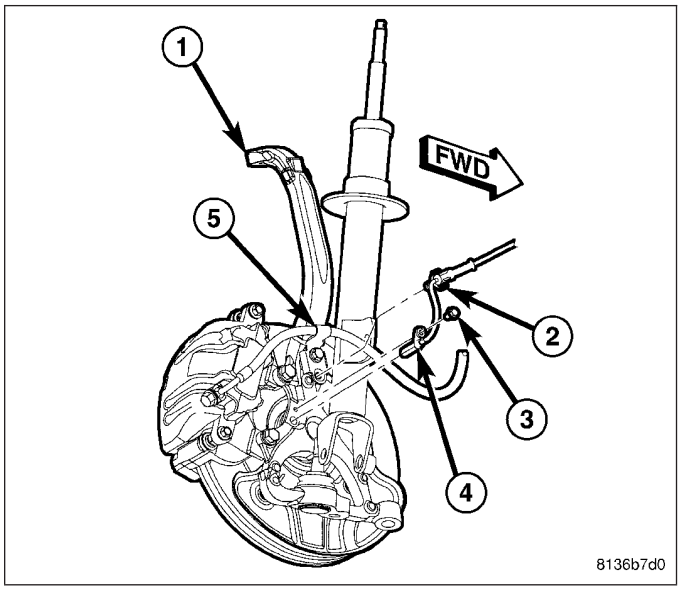

12. Loosen nut (5) attaching ball joint stud to lower control arm (4). Back nut off until nut is even with end of stud. **Keeping nut on at this location will help keep end of stud from distorting while using Puller in next step.**

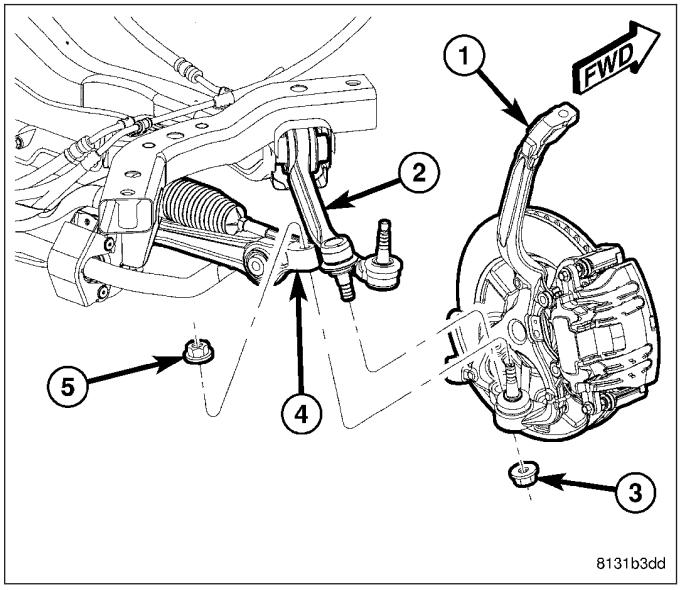

CAUTION: In following step, use care not to damage ball joint seal boot while sliding Puller, Special Tool 9360, into place past seal boot.

13. Using Puller (1), Special Tool 9360, separate ball joint stud (2) from lower control arm.

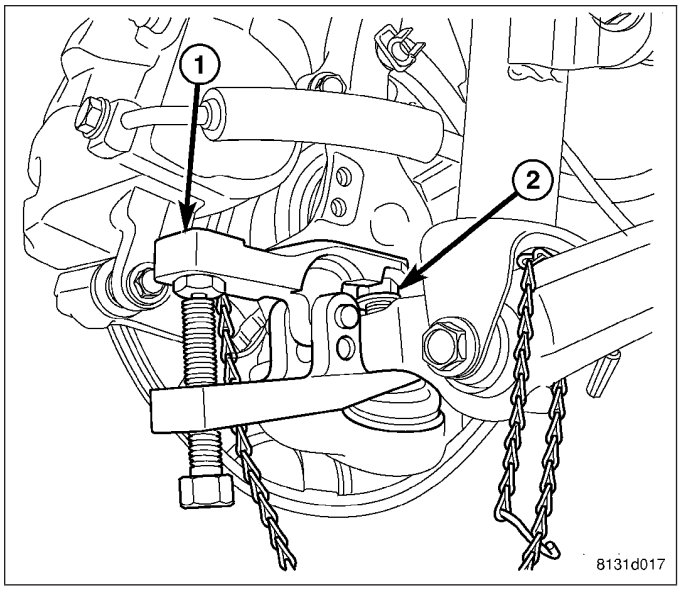

14. Remove nut (5) from end of ball joint stud attaching lower control arm to knuckle.
15. Pry knuckle downward and slide ball joint stud out of lower control arm. Position knuckle outward, away from lower control arm.
16. Slide lower control arm out of engine cradle and remove from vehicle.

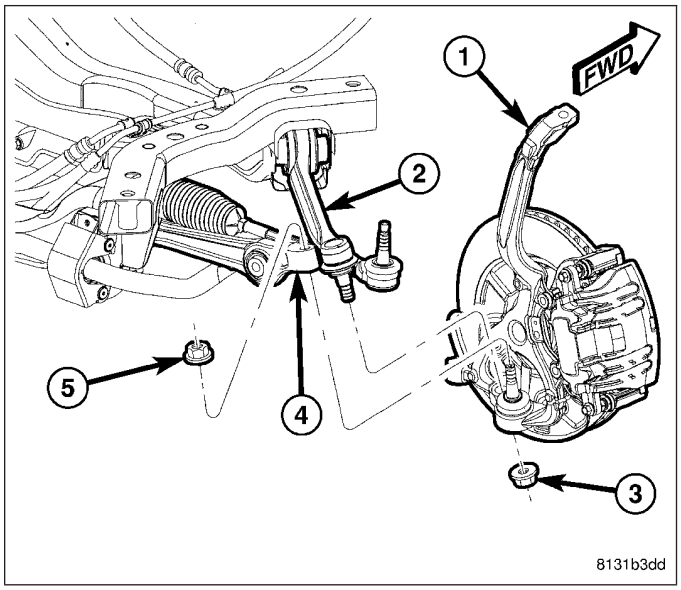

INSTALLATION

NOTE: If installing a lower control arm engine cradle bolt that is a wheel alignment adjustment bolt (1) (lengthwise grooved shaft (2)), make sure to install it in the same position which it was in upon removal. For more details on installation of this special bolt, (Refer to 2 - SUSPENSION/WHEEL ALIGNMENT - STANDARD PROCEDURE).

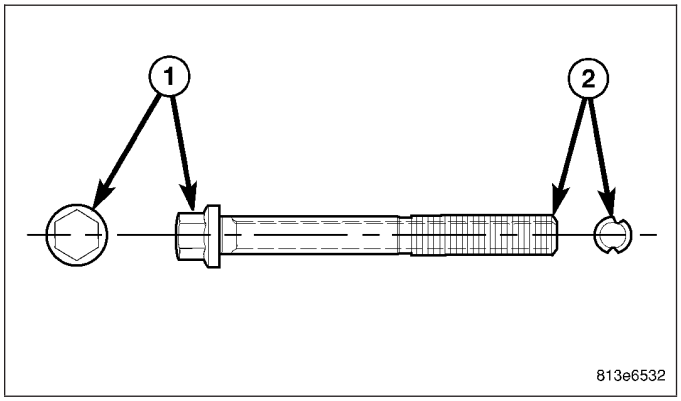

1. Slide lower control arm (4) into position in engine cradle and install mounting bolt from rear.

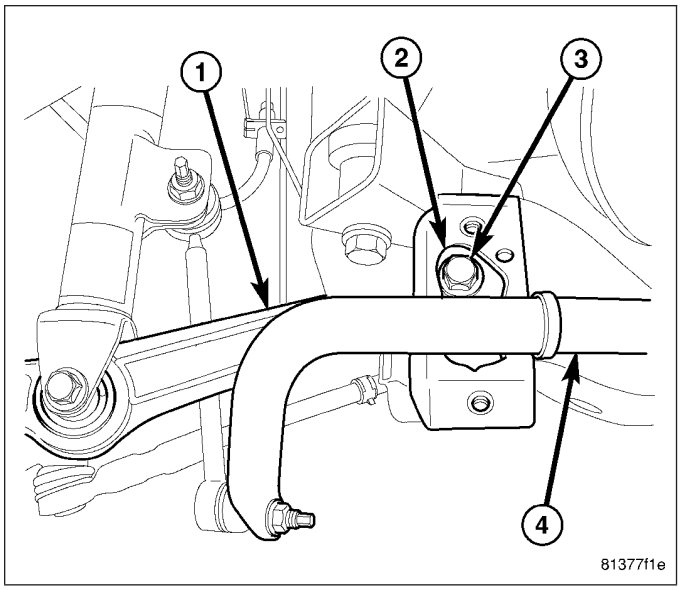

2. Install nut (1) on lower control arm cradle bolt, but **do not tighten at this time**.

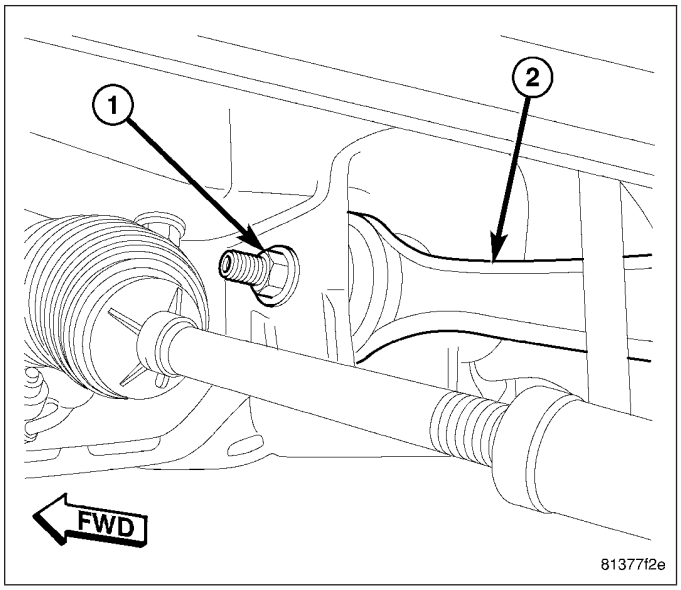

CAUTION: Before installing knuckle to lower control arm, measure height of ball joint seal boot (1) mounted on knuckle. If seal boot height is above 25.5 mm, any air inside seal boot must be expelled. To do so, follow these steps.

- **Tip ball joint stud completely to one side.**
- **Using thumb and index finger, gently squeeze seal boot together at center expelling any air. Do not allow grease to be release.**
- **Push down very top of seal boot.**
- **Return ball joint stud to original "centered" position.**
- **Measure ball joint seal boot height (1) making sure it is within specification.**
- **Wipe any grease from ball joint stud.**

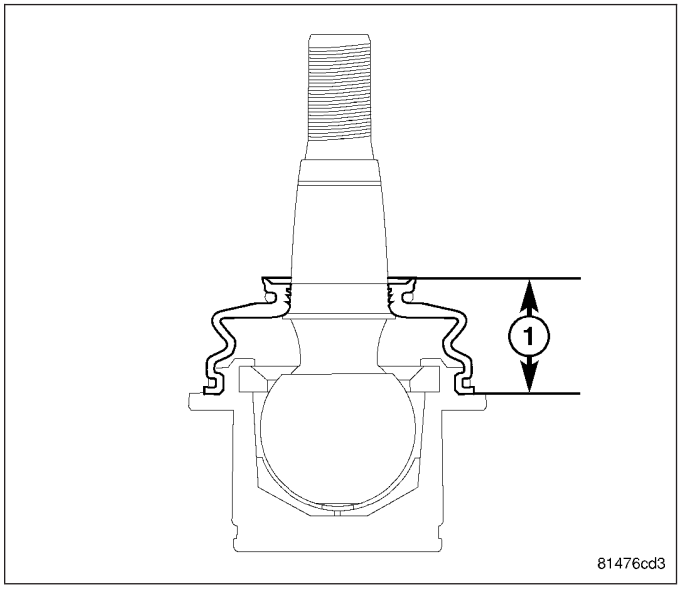

3. Pull knuckle (1) downward and position lower control arm (4) over ball joint stud. Release knuckle, guiding stud into lower control arm. Install NEW nut (5) on ball joint stud attaching lower control arm (4) to knuckle (1). Tighten nut by holding ball joint stud with a hex wrench while turning nut with a wrench. Tighten nut using crow foot wrench on torque wrench to 68 N·m + 90° turn (50 ft. lbs. + 90° turn) torque.

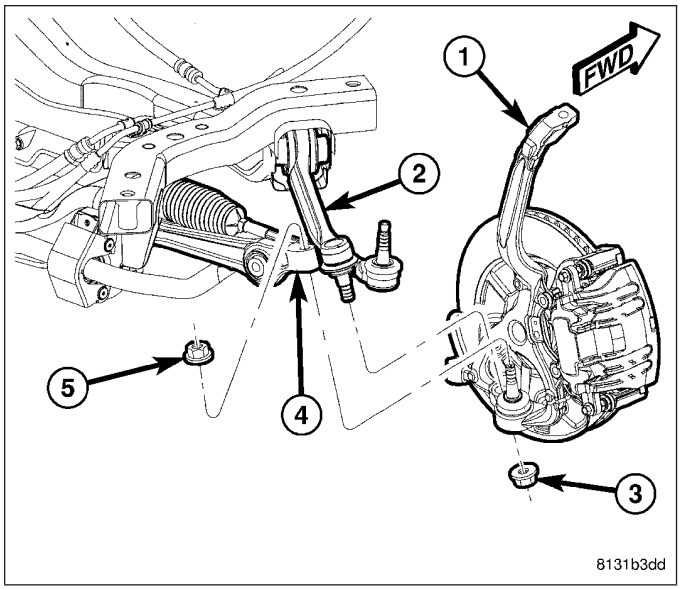

4. Install wheel speed sensor head (4) into knuckle and install mounting screw (3). Tighten screw to 11 N·m (95 in. lbs.) torque.
5. Attach wheel speed sensor cable and routing clip (2) to brake flex hose routing bracket (5).

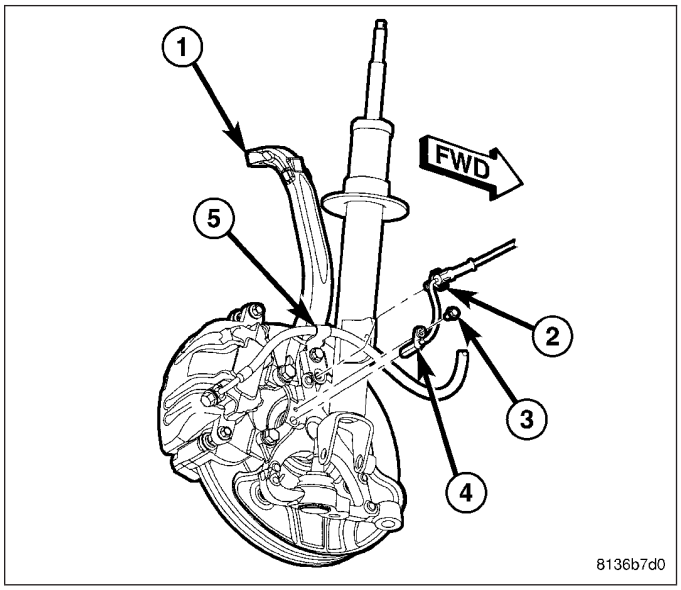

6. Install lower shock mounting bolt (3) attaching shock assembly (1) to lower control arm (4). **Do not tighten bolt at this time.**

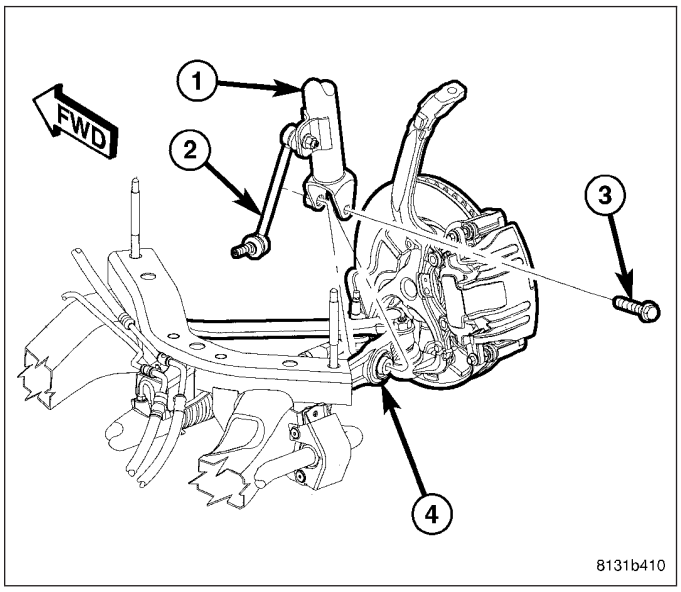

7. Install tire and wheel assembly (1) (Refer to 22 - TIRES/WHEELS - INSTALLATION). Tighten wheel mounting nuts (3) to 150 N·m (110 ft. lbs.) torque.
8. Lower vehicle.

CAUTION: Because stabilizer bar is disconnected at cradle it is important to use extra care while moving vehicle to alignment rack/drive-on lift.

9. Position vehicle on an alignment rack/drive-on lift.
10. Tighten lower shock mounting bolt (3) to 174 N·m (128 ft. lbs.) torque.

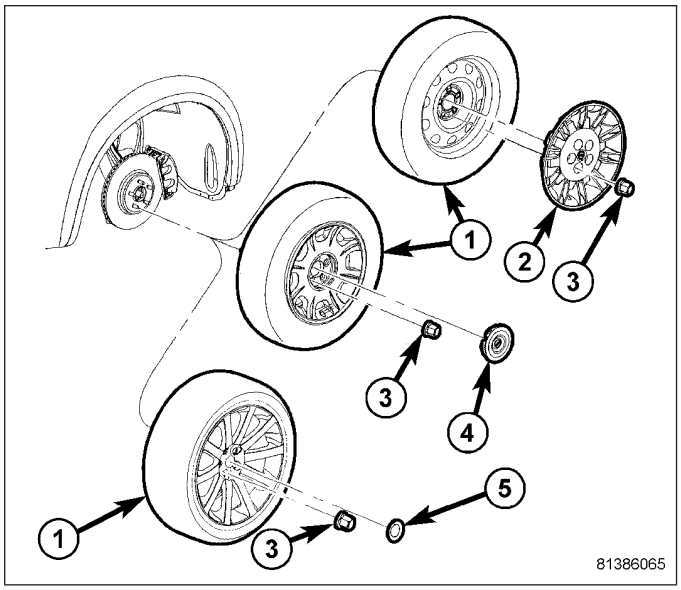

11. Perform wheel alignment. (Refer to 2 - SUSPENSION/WHEEL ALIGNMENT - STANDARD PROCEDURE)

CAUTION: If the control arm engine cradle bolt is a wheel alignment adjustment bolt (lengthwise grooved shaft (2)), be sure to only tighten the nut. Do not rotate the bolt head (1) or damage to the bushing will occur.

12. Once camber is found to be within specifications, using a crowfoot wrench, tighten lower control arm cradle bolt nut (1) to 176 N·m (130 ft. lbs.) torque while holding the bolt stationary.

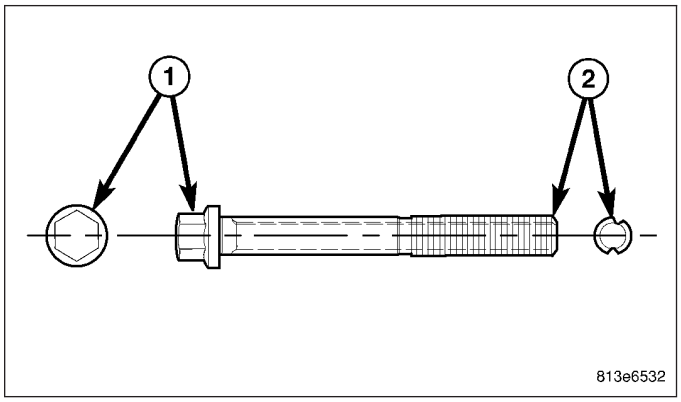

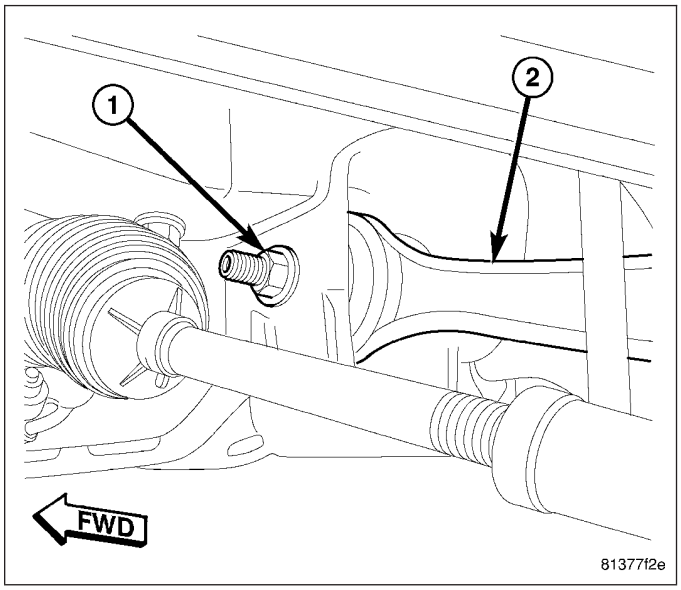

CAUTION: Because of stabilizer bushing outer shape, it is very important to install bushings in position discussed in following step.

13. Utilizing slit in bushing, install stabilizer bar bushing (1) against locating collar on stabilizer bar (2) as shown. Make sure slit in bushing is positioned toward rear of vehicle.

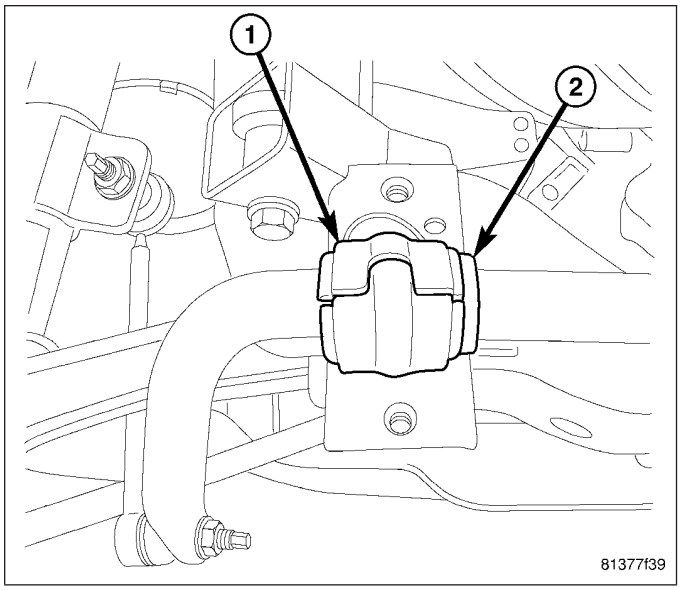

14. Install stabilizer bar bushing retainer halves (1)(2) around bushing (3).

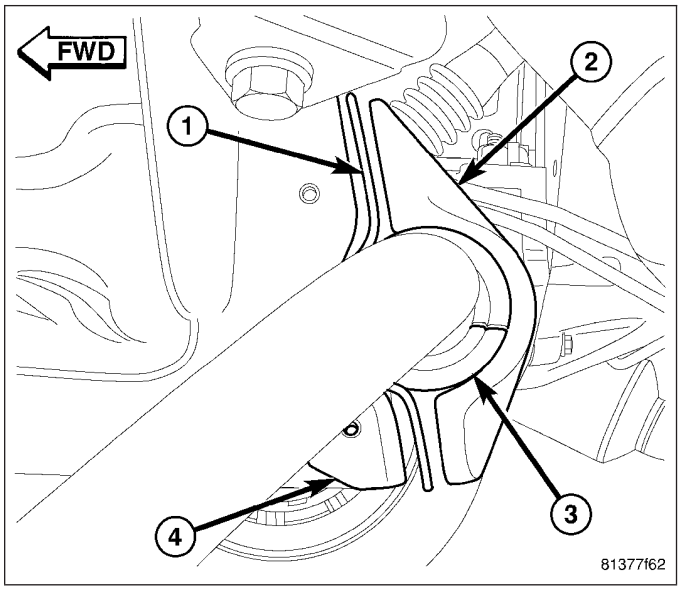

15. Install bolts (2) securing stabilizer bar bushing retainer halves (2) to cradle. Tighten bolts (2) to 60 N·m (44 ft. lbs.) torque.

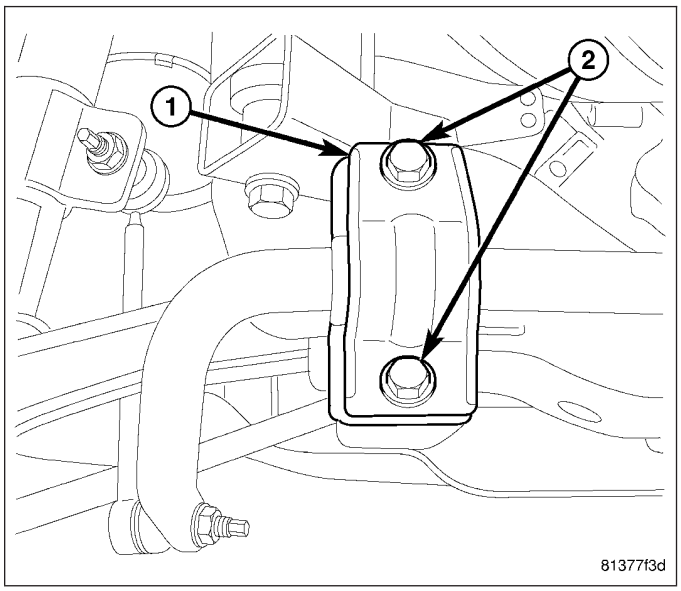

16. Install stabilizer bar heat shield (3) over stabilizer bar bushing retainer. Install mounting screws (1).
17. Install belly pan. (Refer to 23 - BODY/EXTERIOR/ BELLY PAN - REMOVAL)

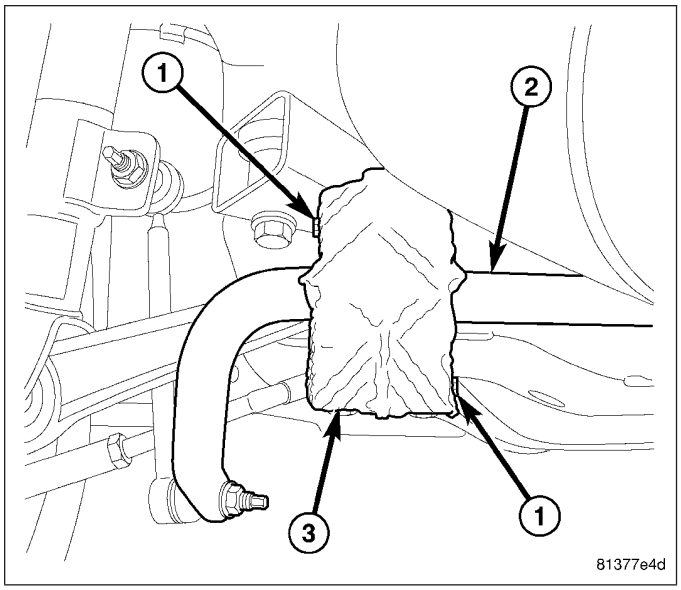

SHOCK ASSEMBLY

REMOVAL

AWD

1. Raise and support vehicle. (Refer to LUBRICATION & MAINTENANCE/HOISTING - STANDARD PROCEDURE)

2. Remove wheel mounting nuts (3), then tire and wheel assembly (1).

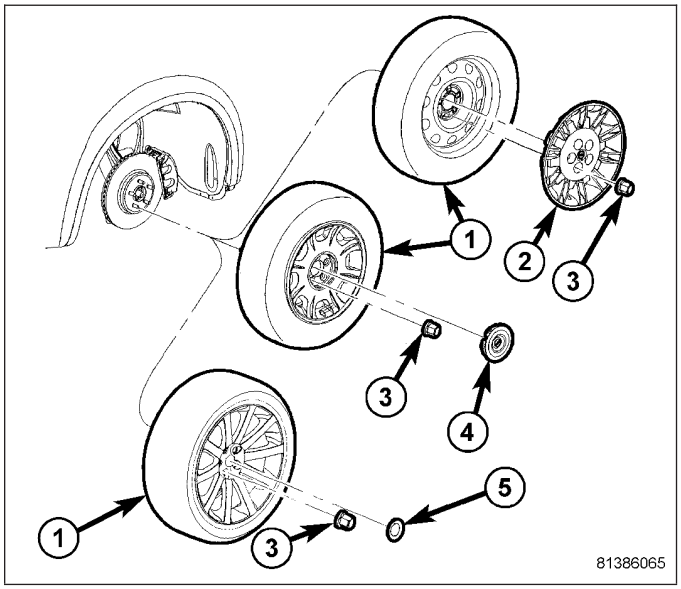

3. While holding link ball joint stem from rotating, remove nut (2) fastening stabilizer link (1) to shock clevis bracket (3). Slide link ball joint stem from clevis bracket.

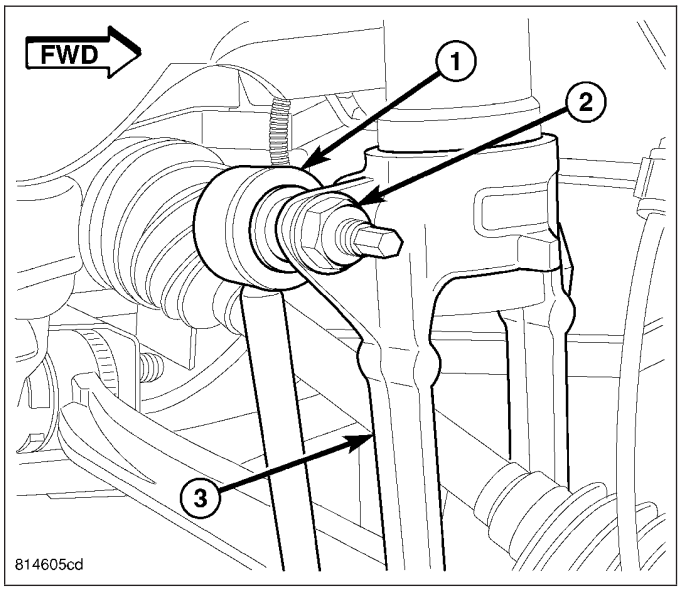

4. Remove nut and pinch bolt (1) fastening clevis bracket (3) to bottom of shock assembly (2).

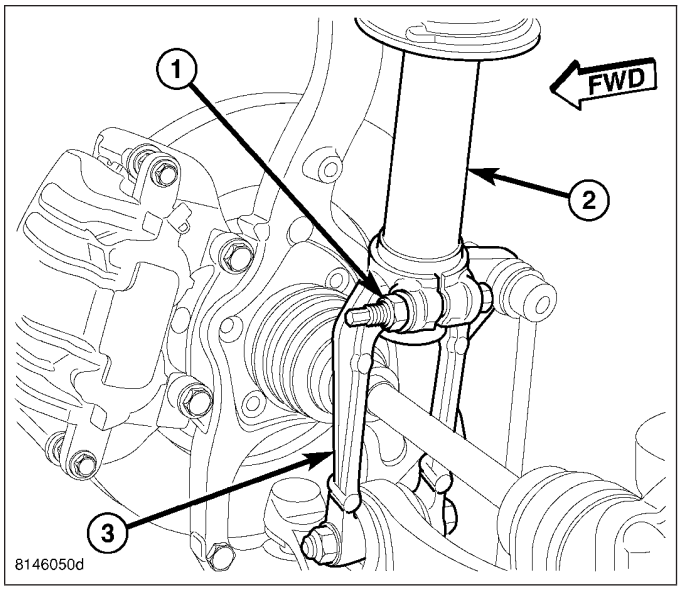

5. Remove nut (3) and bolt (1) attaching shock clevis bracket (2) to lower control arm (7).
6. Pull lower end of clevis bracket outward away from lower control arm bushing, then slide it off shock assembly. It may be necessary to use an appropriate prying tool to spread clamp area of clevis bracket allowing removal from shock assembly.

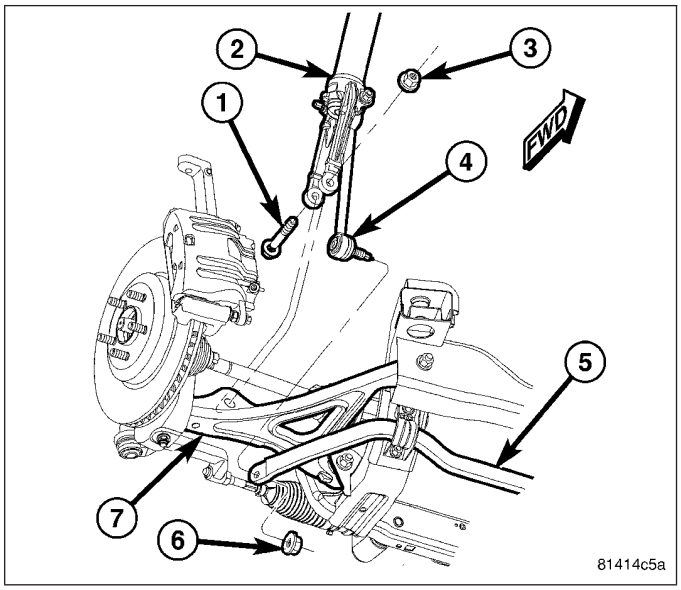

7. Lower vehicle just enough to access upper shock assembly mounting nuts (2).
8. If equipped, remove shock tower cap (1) from top of shock assembly (4).
9. Remove three nuts (2) fastening shock assembly (4) to shock tower (3).
10. Remove shock assembly from vehicle.

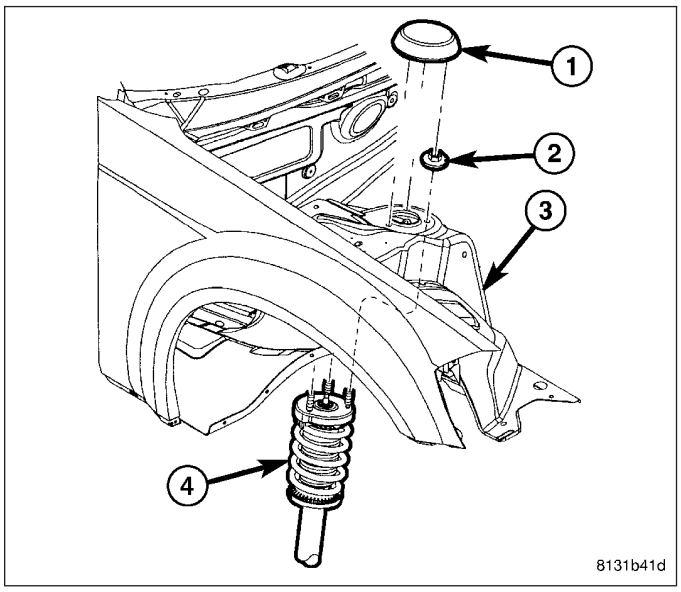

RWD

1. If equipped, remove front shock tower cap (1) from top of shock assembly (4).
2. Remove three nuts (2) fastening shock assembly (4) to shock tower (3).
3. Raise and support vehicle. (Refer to LUBRICATION & MAINTENANCE/HOISTING - STANDARD PROCEDURE)

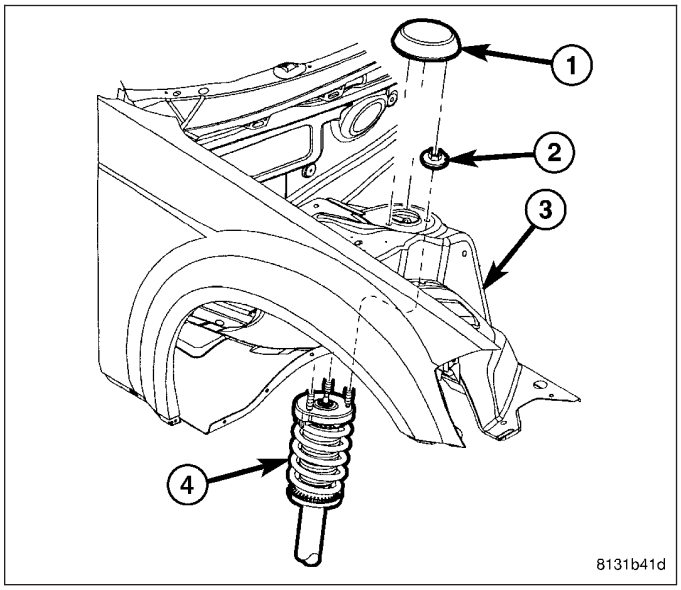

4. Remove wheel mounting nuts (3), then tire and wheel assembly (1).

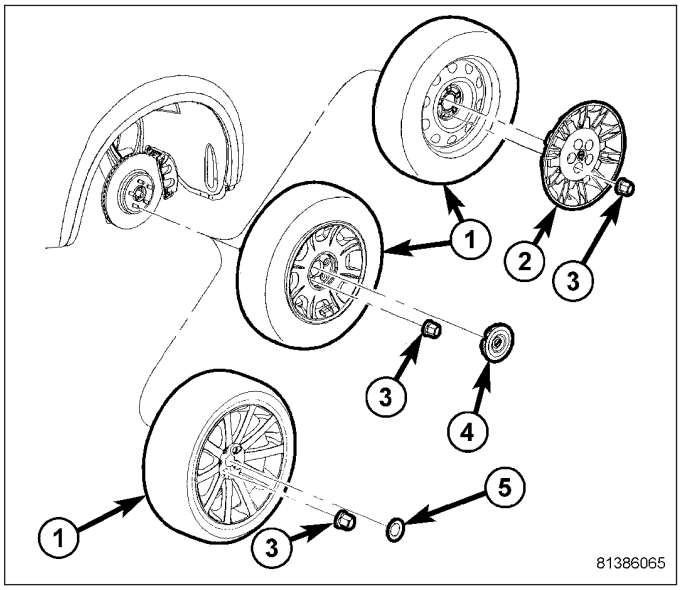

5. Remove nut (2) fastening stabilizer link (3) to shock assembly (1). Slide link ball joint stem from shock assembly.

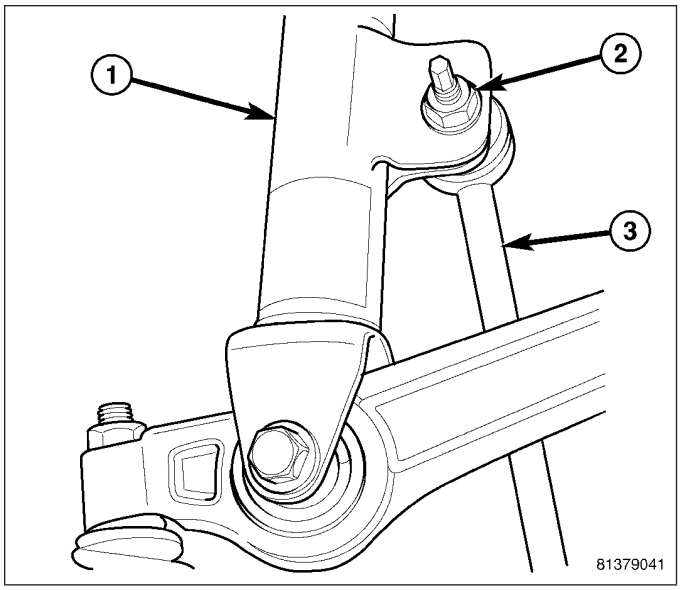

6. Remove bolt (3) securing shock assembly (1) to lower control arm (4).

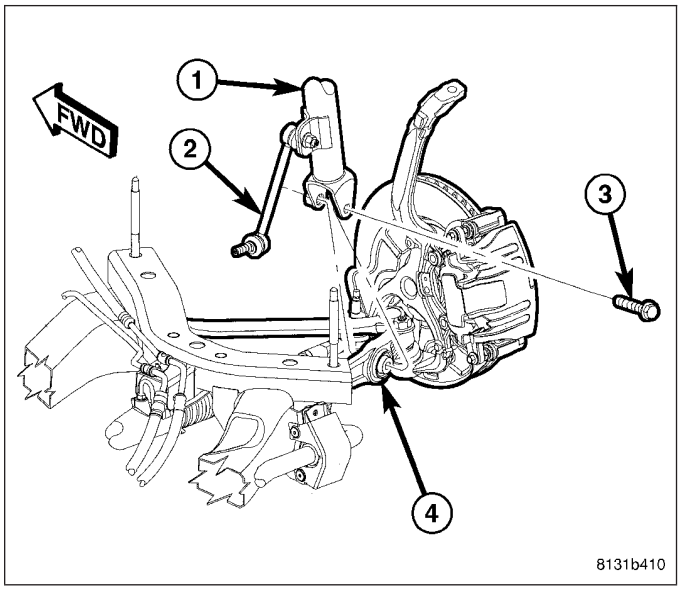

7. Disconnect wheel speed sensor cable routing clip (2) at brake tube bracket (3).

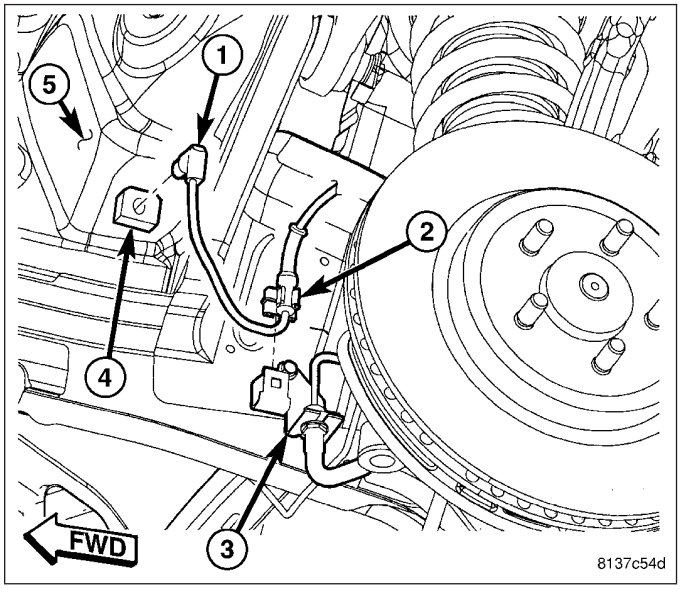

8. Loosen nut (4) attaching upper ball joint stud (1) to knuckle. Back nut off until nut is even with end of stud. **Keeping nut on at this location will help keep end of stud from distorting while using Puller in next step.**

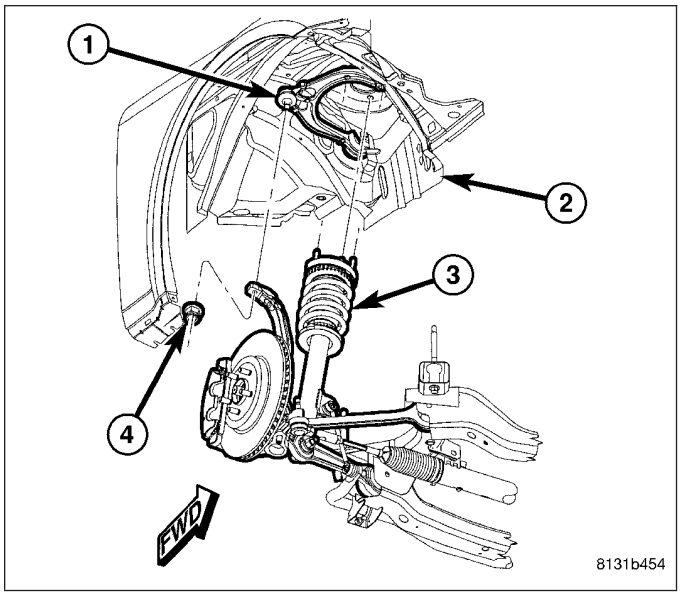

CAUTION: In following step, use care not to damage ball joint seal boot while sliding Puller, Special Tool 9360, into place past seal boot.

9. Using Puller (2), Special Tool 9360, separate upper ball joint stud (1) from knuckle.

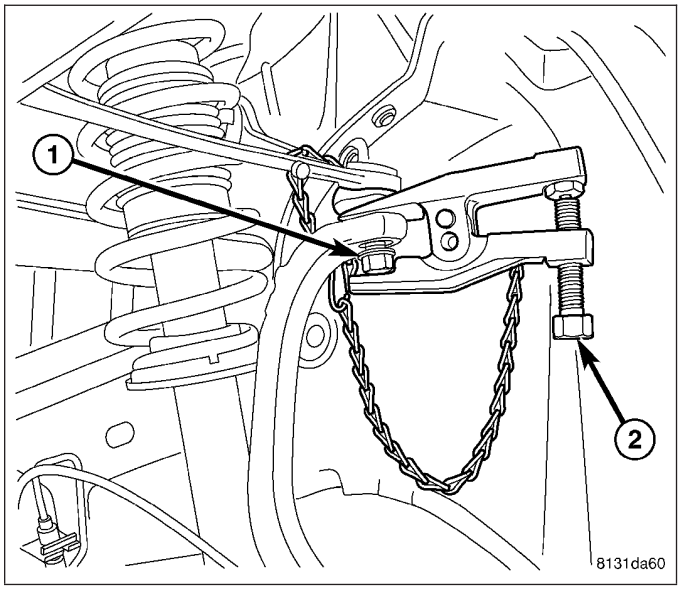

10. Remove nut (4) from end of upper ball joint stud (1).
11. Tip top of knuckle outward using care not to overextend bake flex hose.
12. Remove shock assembly from vehicle.

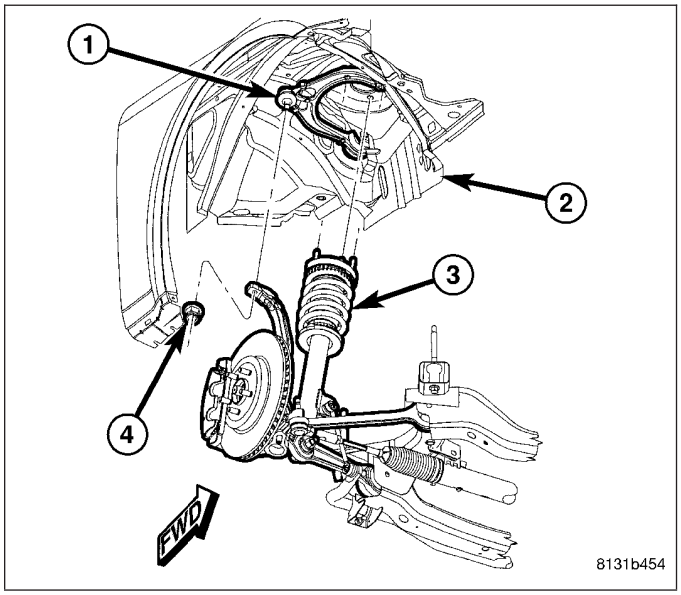

DISASSEMBLY

The shock assembly must be removed from vehicle for it to be disassembled and assembled.

For shock assembly disassembly and assembly, use of shock Spring Compressor, Pentastar Service Equipment (PSE) tool W-7200, or equivalent, is recommended to compress coil spring. Follow manufacturer's instructions closely.

WARNING: Do not remove shock shaft nut before coil spring is compressed. Coil spring is held under pressure and must be compressed, removing spring tension from upper and lower mounts, before shock removal.

1. Position shock assembly coil spring (1) on hooks (2) of Compressor following manufacturers instructions. Install clamp securing shock to lower spring coil.

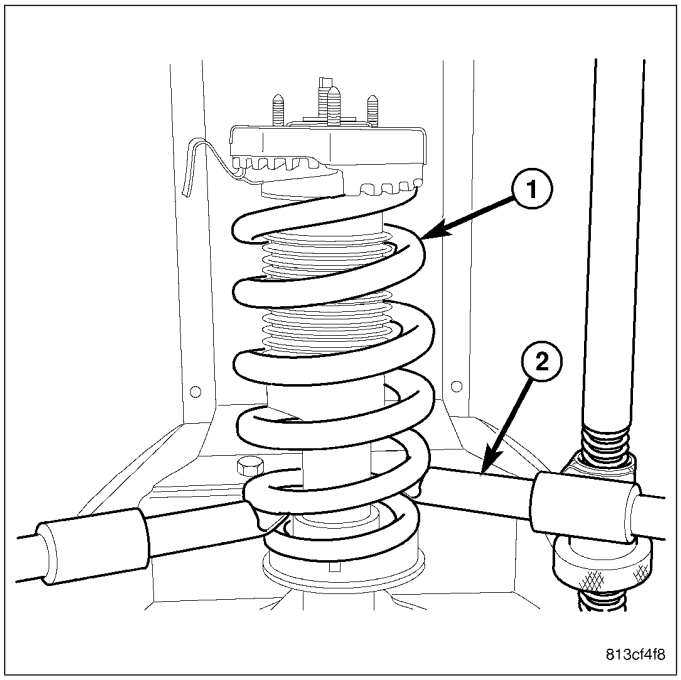

2. Position Compressor upper hooks (1) on upper coil spring (2) following manufacturers instructions. To ease installation, rotate shock as necessary positioning shock in compressor so that upper spring coil ends (step in upper mount) at straight outward position from Compressor.
3. Compress coil spring until all spring tension is removed from upper mount.

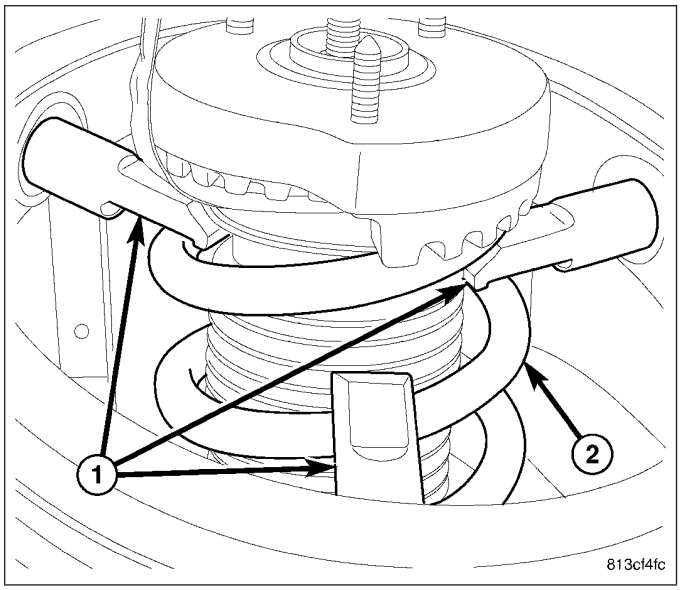

4. Position Wrench (2), Special Tool 9362, on shock shaft retaining nut. Next, insert 8 mm socket though Wrench onto hex located on end of shock shaft. While holding shock shaft from turning, remove nut from shock shaft using Wrench.
5. Remove clamp from bottom of coil spring and remove shock and lower isolator out through bottom of coil spring.

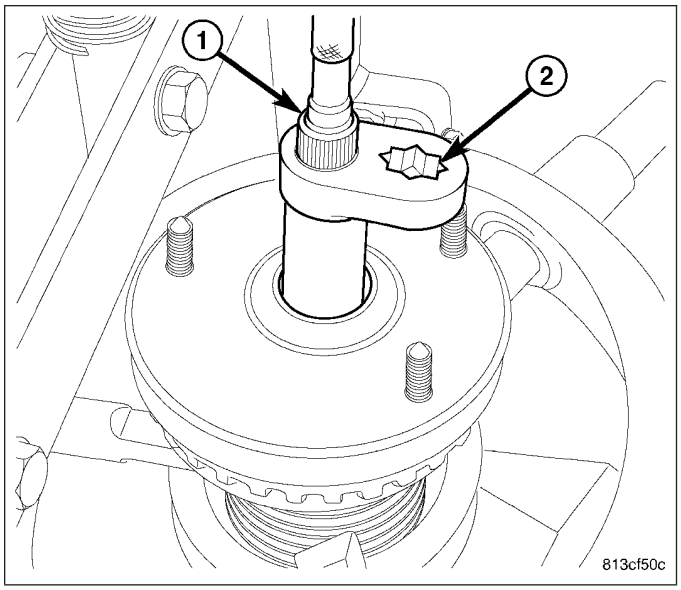

NOTE: If upper mount or coil spring needs to be serviced, proceed with next step, otherwise, proceed with step 8.

6. Remove upper mount (1) from shock shaft and coil spring.

NOTE: Prior to removing spring from compressor, note location of lower spring coil end in relationship to compressor to ease assembly of components later.

7. Back off Compressor drive, releasing tension from coil spring. Push back compressor upper hooks and remove coil spring from Compressor.

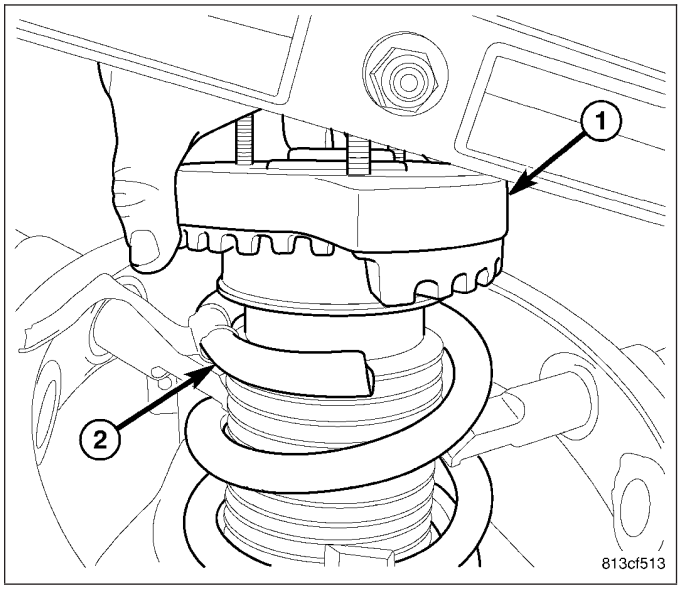

8. Remove jounce bumper (4) from shock shaft by pulling straight up and off.
9. Remove lower isolator (2) from shock body by pulling straight up and off shock shaft.
10. Inspect shock assembly components for following and replace as necessary:
    - Inspect shock (3) for any condition of shaft binding over full stroke of shaft.
    - Inspect upper mount (5) for cracks and distortion and its retaining studs for any sign of damage.
    - Inspect upper spring isolator (5) for severe deterioration.
    - Inspect lower spring isolator (2) for severe deterioration.
    - Inspect dust shield for tears and deterioration.
    - Inspect coil spring (1) for cracks in the coating and corrosion.
    - Inspect jounce bumper (4) for cracks and signs of deterioration.

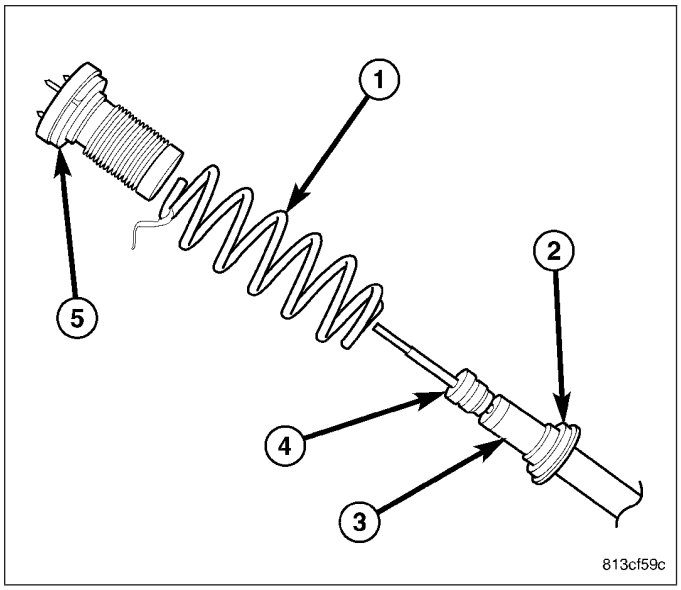

ASSEMBLY

CAUTION: Use care not to damage coil spring coating during spring assembly. Damage to coating will jeopardize its corrosion protection.

NOTE: Left and right springs must not be interchanged.

NOTE: If coil spring has been removed from spring compressor, proceed with next step, otherwise, proceed with step 4.

1. Place coil spring **(part number tag end upward)** in compressor lower hooks following manufacturers instructions. To ease shock reassembly, rotate coil spring around until upper coil (1) ends at straight outward position from Compressor. Proper orientation of spring to upper mount (once installed) is necessary.
2. Position compressor upper hooks over coil spring following manufacturers instructions.
3. Compress coil spring far enough to allow shock installation.

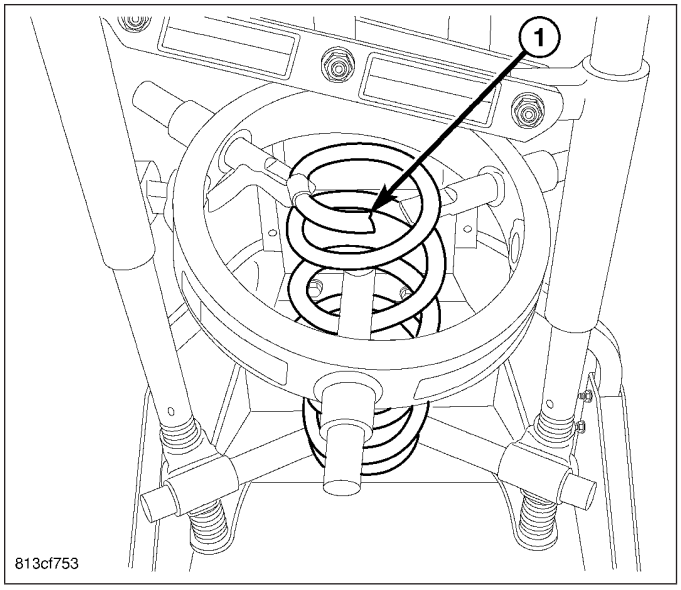

4. If separated, install upper mount (1) onto coil spring (2). Match step in upper isolator to end of spring coil.

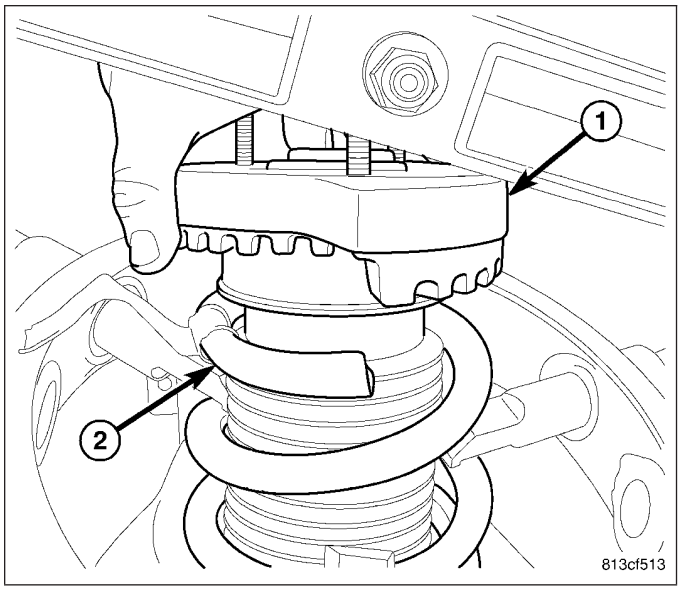

5. Install lower spring isolator (2) on shock body (3).
6. Install jounce bumper (4) on shock shaft, small end first.

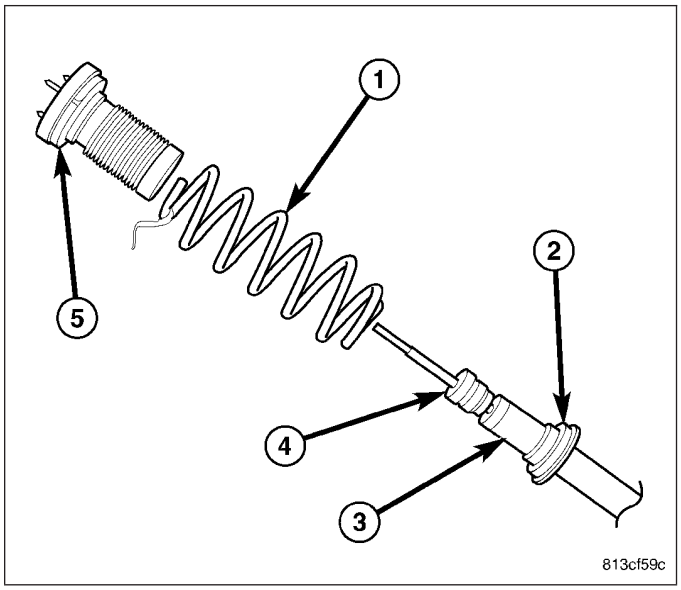

7. Install shock through bottom of coil spring until lower spring isolator (on shock) contacts lower end of coil spring. Match step built into isolator (1) to lower coil end (2). Once in this position, stabilizer bar bracket, or clevis key on AWD models, should point straight inward toward Compressor body. If not, rotate isolator on shock body until alignment is achieved when isolator is correctly positioned with lower spring coil.
8. Install clamp to hold shock and coil spring together.

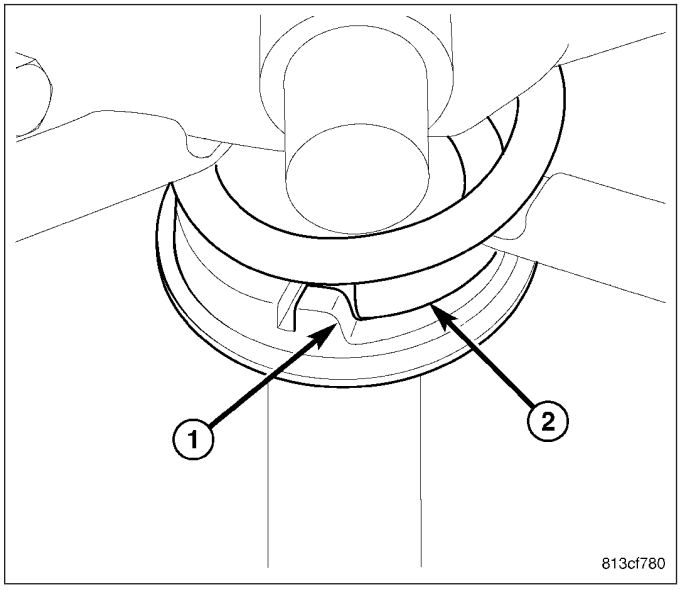

9. Install retaining nut (1) on shock shaft (2) as far as possible by hand. Make sure nut is installed far enough for 8 mm socket to grasp hex (2) on end of shaft for tightening.

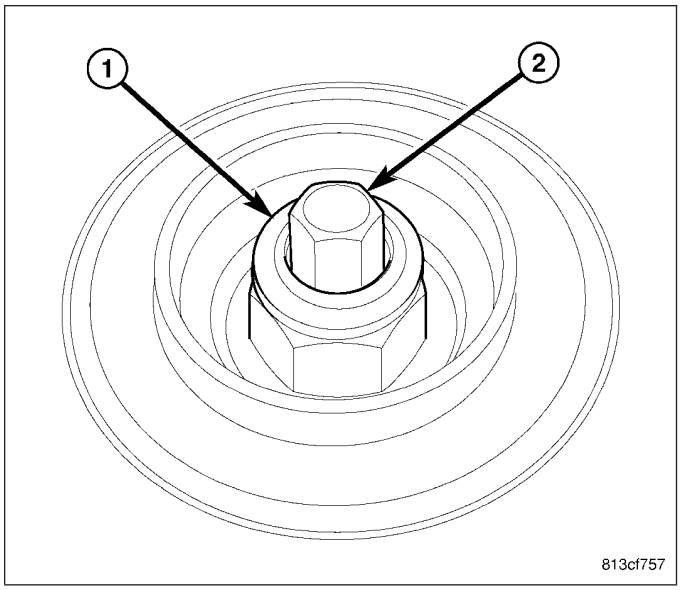

10. Install Wrench (on end of a torque wrench), Special Tool 9362, on shock shaft retaining nut. Next, insert 8 mm socket though Wrench onto hex located on end of shock shaft. While holding shock shaft from turning, tighten nut using Wrench to 90 N·m (66 ft. lbs.) torque.
11. Slowly release tension from coil spring by backing off Compressor drive fully. As tension is relieved, make sure shock components are properly in place.
12. Remove clamp from lower end of coil spring and shock. Push back spring compressor upper and lower hooks, then remove shock assembly from spring compressor.
13. Install shock assembly on vehicle. (Refer to 2 - SUSPENSION/FRONT/SHOCK - INSTALLATION)

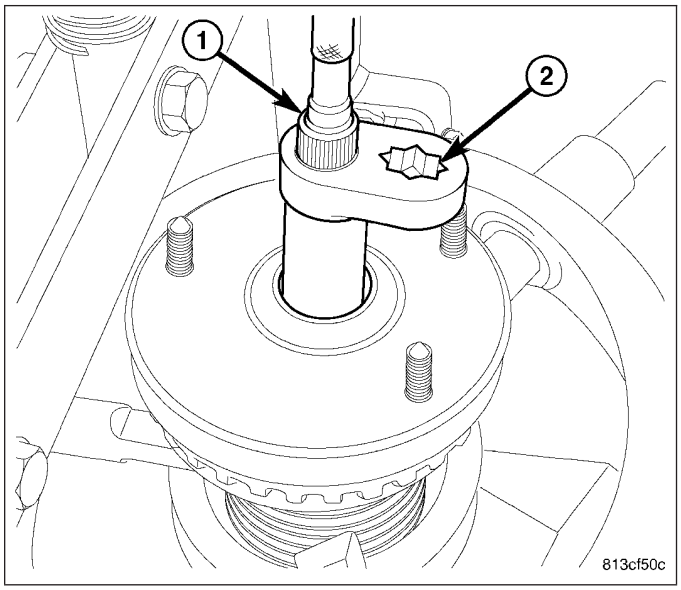

INSTALLATION

AWD

1. Guide shock assembly up into shock tower (3) and into mounting holes.
2. Install three nuts (2) fastening shock assembly (4) to shock tower (3). Tighten nuts to 27 N·m (20 ft. lbs.) torque.
3. If equipped, align shock tower cap (1) with shock mounting nuts (2) and snap into place.

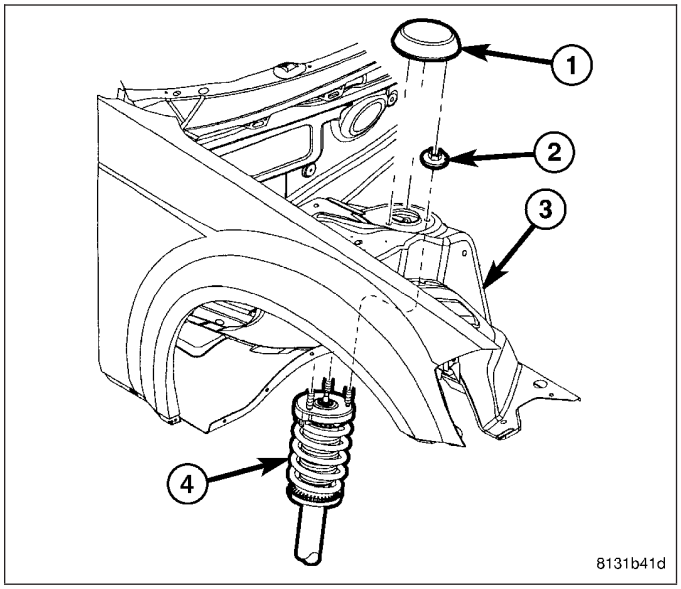

4. Raise and support vehicle.
5. Pull lower end of shock assembly outward, then slide clevis bracket (3) onto lower end. Slide clevis bracket onto shock assembly until bracket contacts collar on shock housing (2).
6. Install pinch bolt and nut (1) fastening clevis bracket (3) to bottom of shock assembly (2). Install pinch bolt from rear. **Do not tighten at this time.**

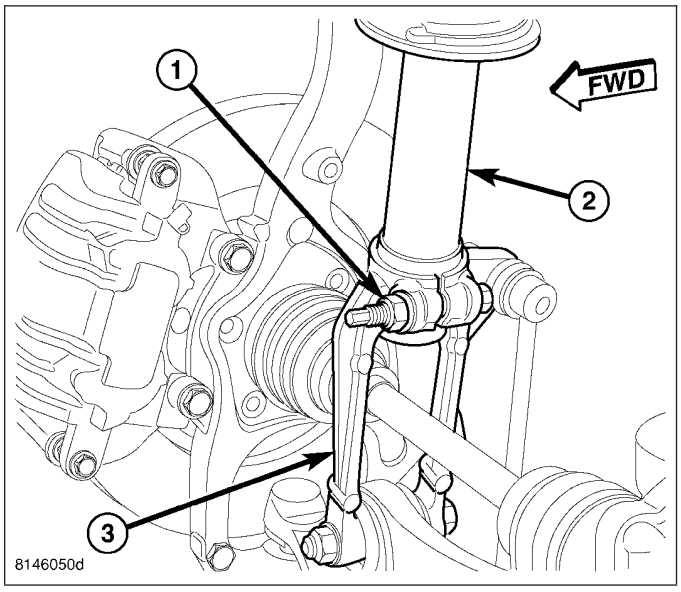

7. Slide clevis bracket (2) over bushing mounted in lower control arm (7).
8. Install bolt (1) and nut (3) attaching shock clevis bracket (2) to lower control arm (7). **Do not tighten at this time.**

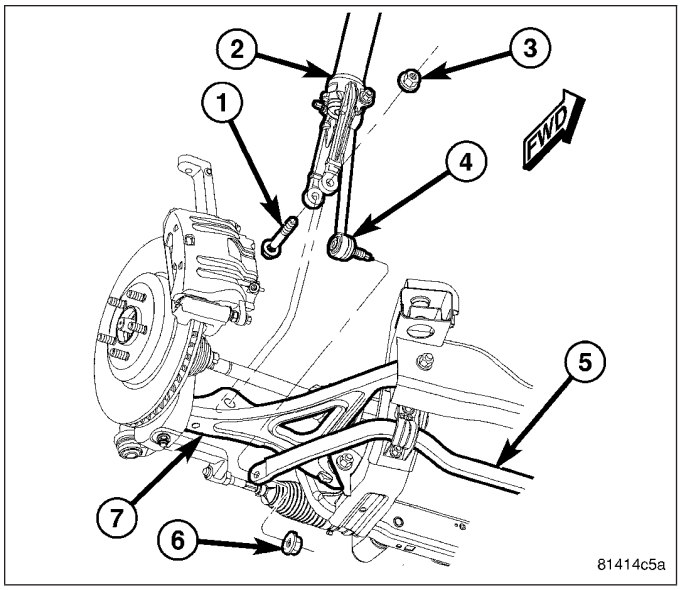

9. Tighten pinch bolt (1) attaching clevis bracket to shock assembly to 61 N·m (45 ft. lbs.) torque.

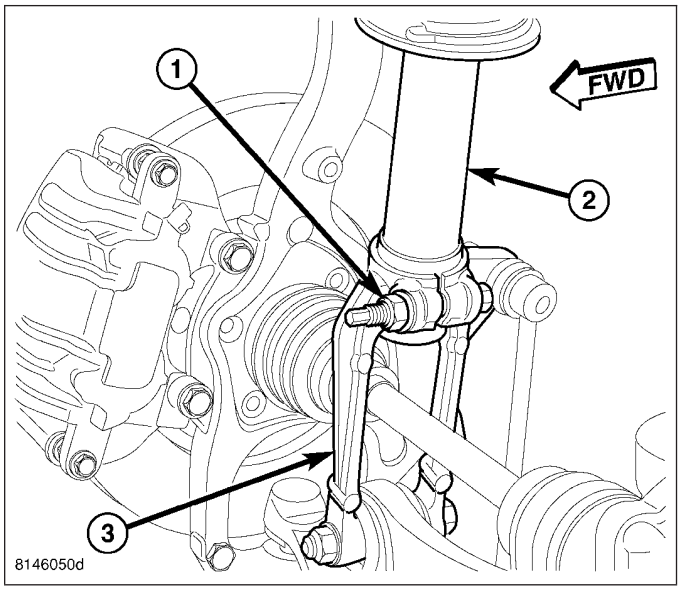

10. Slide stabilizer link ball joint stem into clevis bracket. Install nut (2) fastening link to clevis bracket (3). Tighten nut by holding ball joint stud while turning nut. Tighten nut using crow foot wrench on torque wrench to 128 N·m (95 ft. lbs.) torque.

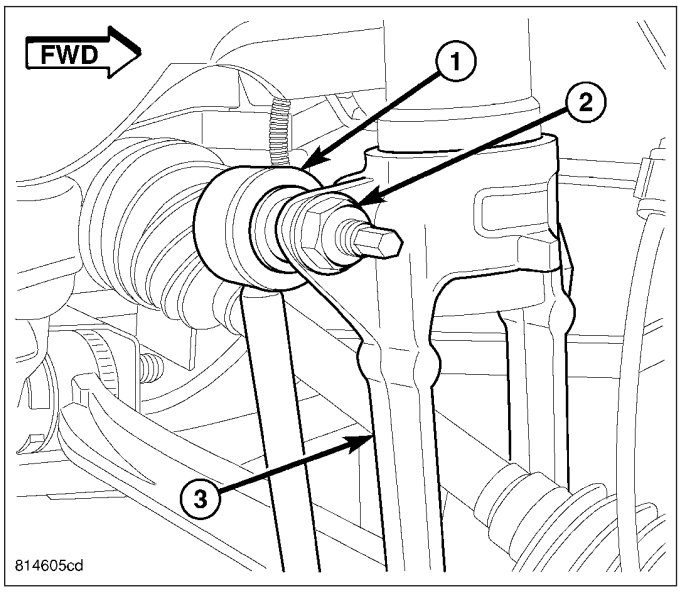

11. Install tire and wheel assembly (1) (Refer to 22 - TIRES/WHEELS - INSTALLATION). Tighten wheel mounting nuts (3) to 150 N·m (110 ft. lbs.) torque.
12. Lower vehicle.

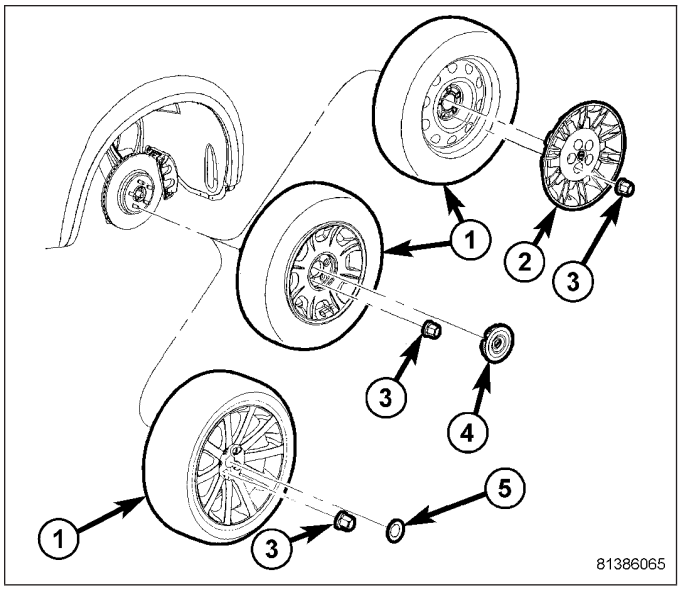

NOTE: When tightening lower shock clevis mounting bolt, do not attempt rotating bolt. Bolt shaft is serrated. Turn nut only.

13. Tighten lower shock clevis bracket bolt nut (3) to 174 N·m (128 ft. lbs.) torque.

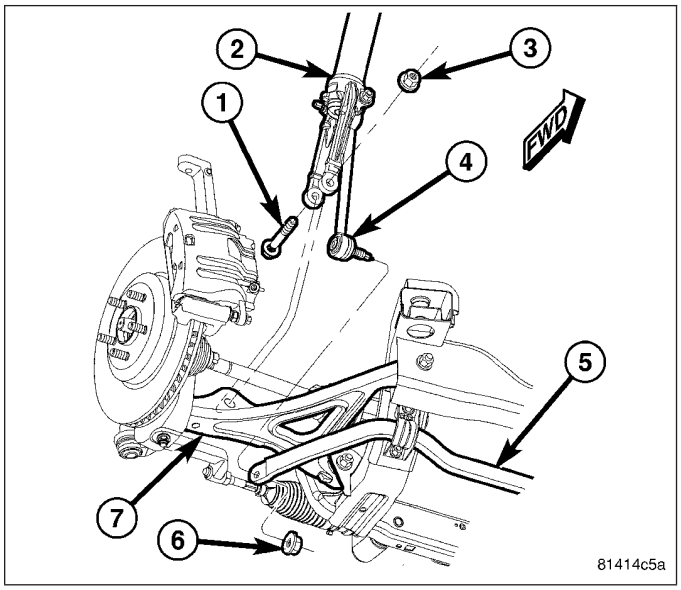

RWD

1. Place shock assembly into front suspension using reverse direction in which it was removed.

CAUTION: It is important to tighten nut as described in following step to avoid damaging ball stud joint.

2. Place upper ball joint stud (1) through hole in top of knuckle and install nut (4). Tighten nut by holding ball joint stud with a hex wrench while turning nut with a wrench. Tighten nut using crow foot wrench on torque wrench to 47 N·m + 90° turn (35 ft. lbs. + 90° turn) torque.

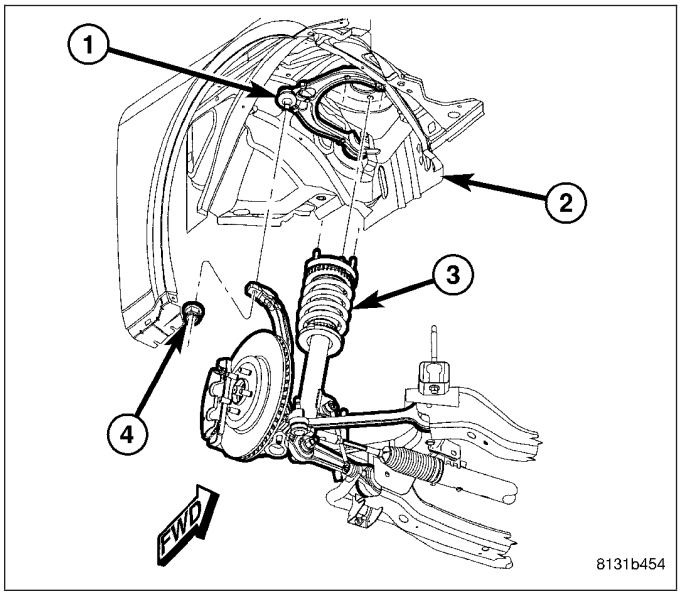

3. Connect wheel speed sensor cable routing clip (2) at brake tube bracket (3).

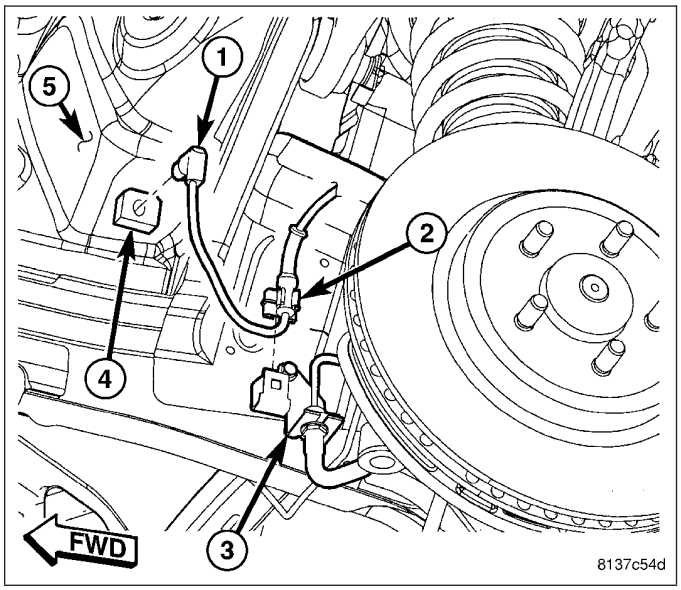

4. Install lower shock mounting bolt (3) attaching shock assembly (1) to lower control arm (4). **Do not tighten bolt at this time.**

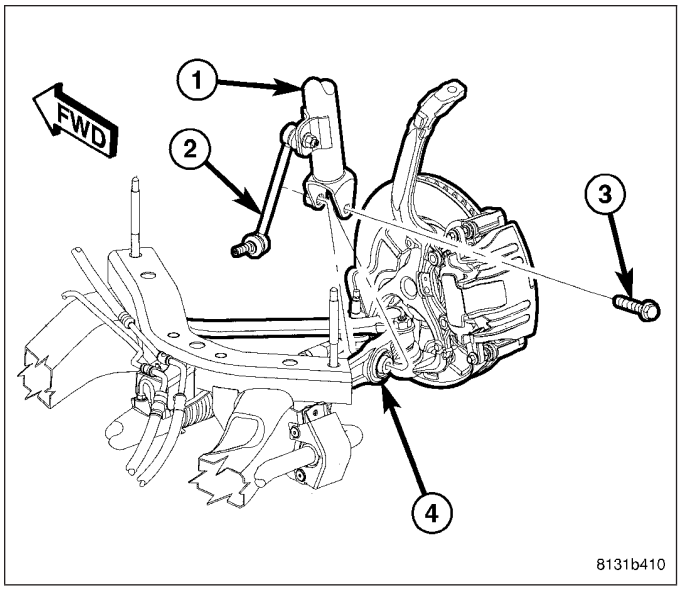

5. Slide stabilizer link (3) ball joint stem into shock assembly from front. Install nut fastening link (3) to shock assembly (1). Tighten nut by holding ball joint stud while turning nut. Tighten nut using crow foot wrench on torque wrench to 128 N·m (95 ft. lbs.) torque.

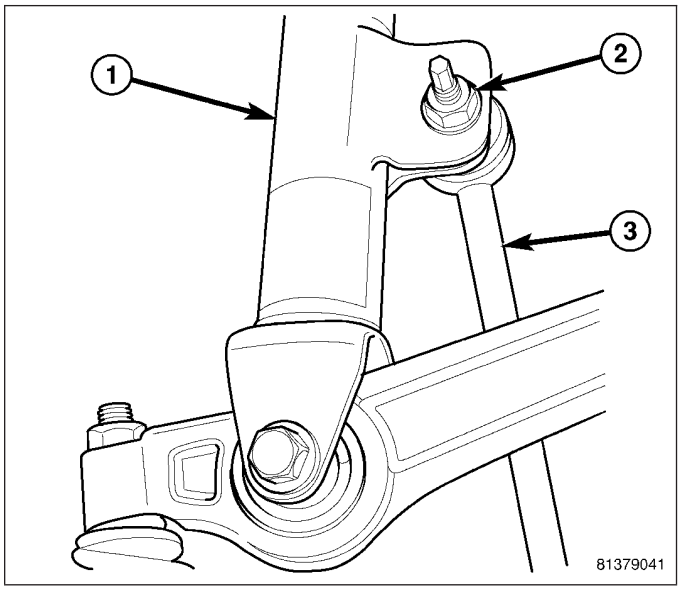

6. Install tire and wheel assembly (1) (Refer to 22 - TIRES/WHEELS - INSTALLATION). Tighten wheel mounting nuts (3) to 150 N·m (110 ft. lbs.) torque.
7. Lower vehicle.

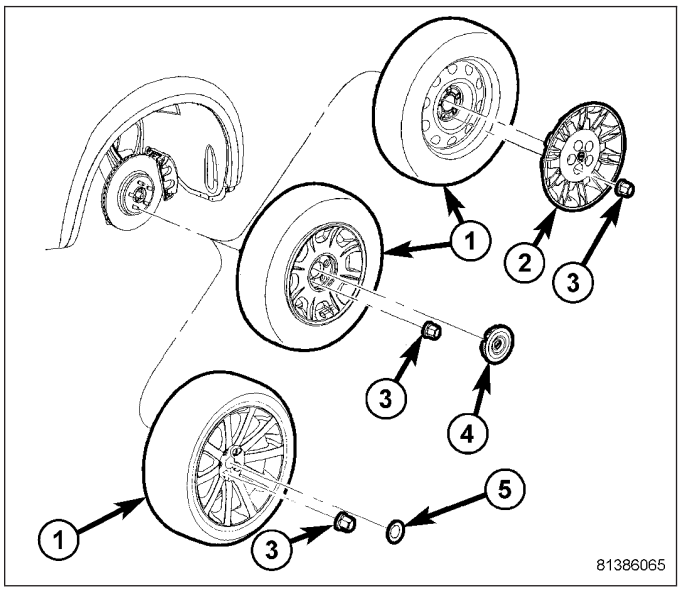

8. Install three nuts (2) fastening shock assembly (4) to shock tower (3). Tighten nuts to 27 N·m (20 ft. lbs.) torque.
9. If equipped, align shock tower cap (1) with shock mounting nuts (2) and snap into place.

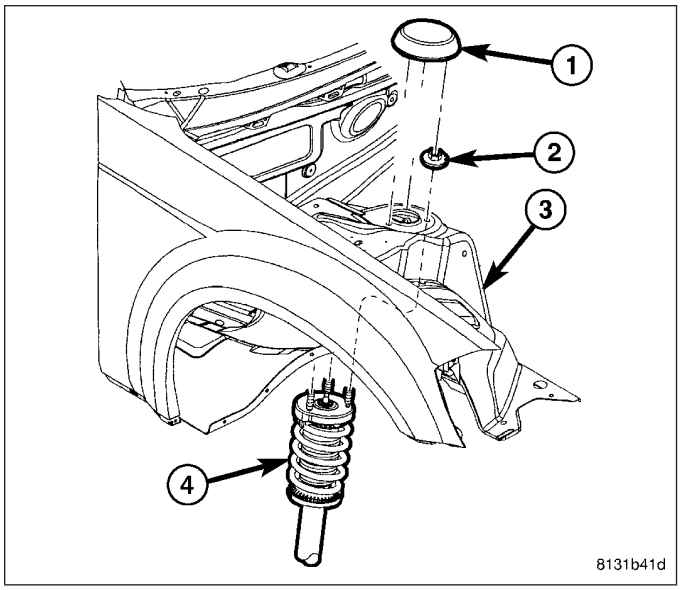

BAR - STABILIZER

REMOVAL

AWD

1. Raise and support vehicle. (Refer to LUBRICATION & MAINTENANCE/HOISTING - STANDARD PROCEDURE)
2. Remove belly pan. (Refer to 23 - BODY/EXTERIOR/BELLY PAN - REMOVAL)
3. On each side of vehicle, remove nut (5) fastening stabilizer link (3) to stabilizer bar (4). Slide link ball joint stem (1) from bar.

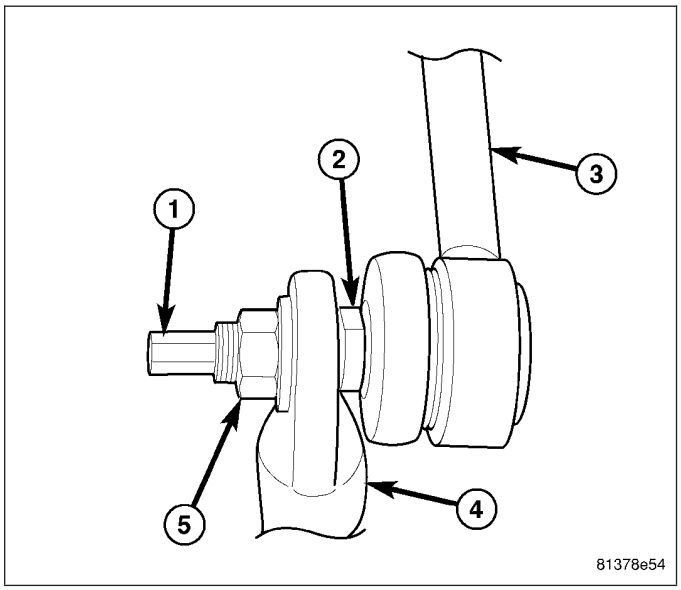

4. On each side of vehicle, remove bolts (2) fastening stabilizer bar isolator retainer (3) in place.
5. Remove stabilizer bar with isolators and retainers from vehicle.
6. On each side of bar, remove retainers (3) from around stabilizer bar isolators (1).
7. Utilizing slit, remove each isolator (1) from stabilizer bar (2).

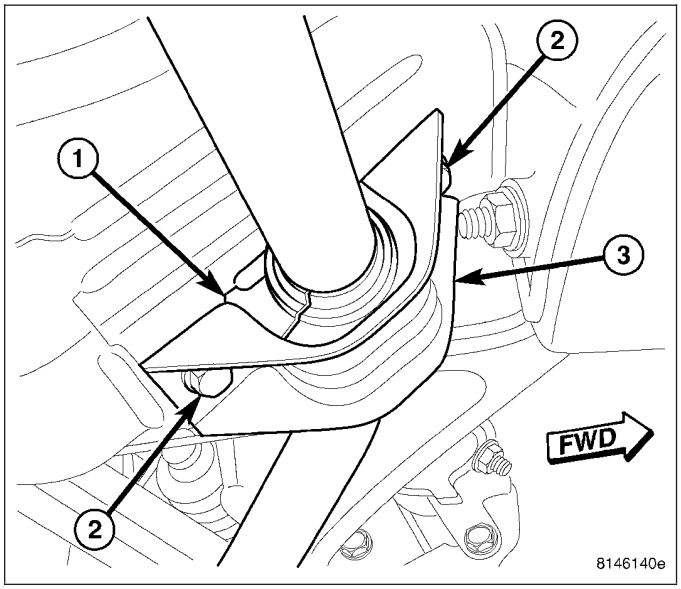

RWD

1. Raise and support vehicle. (Refer to LUBRICATION & MAINTENANCE/HOISTING - STANDARD PROCEDURE)
2. Remove belly pan. (Refer to 23 - BODY/EXTERIOR/BELLY PAN - REMOVAL)

3. On each side of vehicle, remove screws (1) fastening stabilizer bar heat shield (3). Remove heat shield.

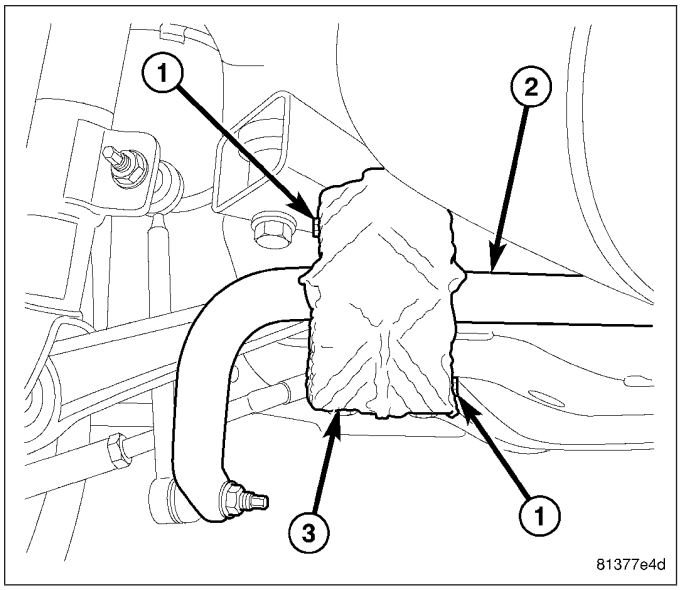

4. On each side of vehicle, remove bolts (2) fastening stabilizer bar isolator retainer (1) in place.

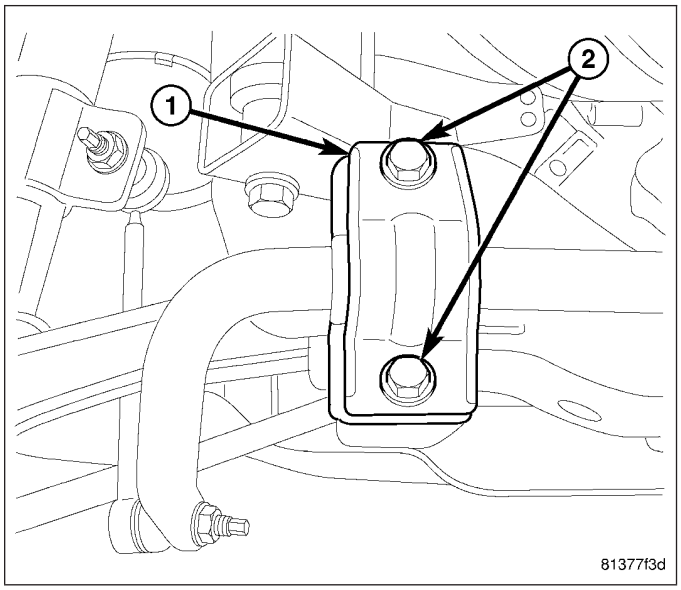

5. On each side of vehicle, remove retainer halves (1)(2) from around stabilizer bar isolator (3).

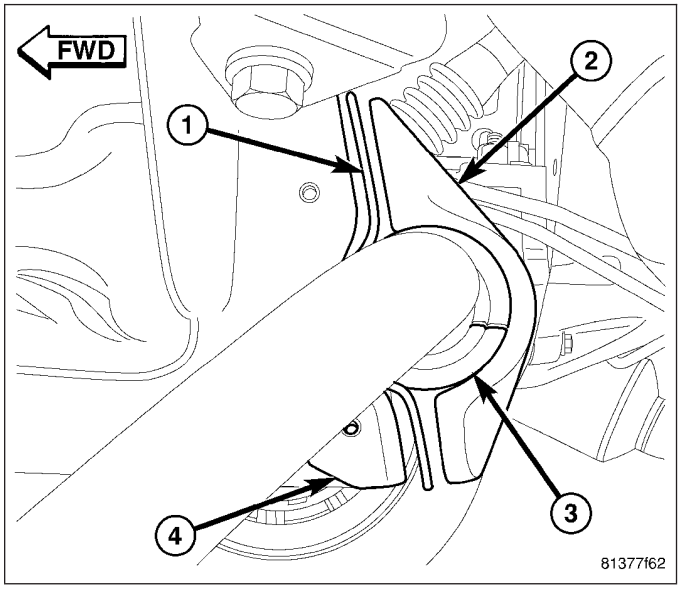

6. Utilizing slit, remove each isolator (1) from stabilizer bar (2).

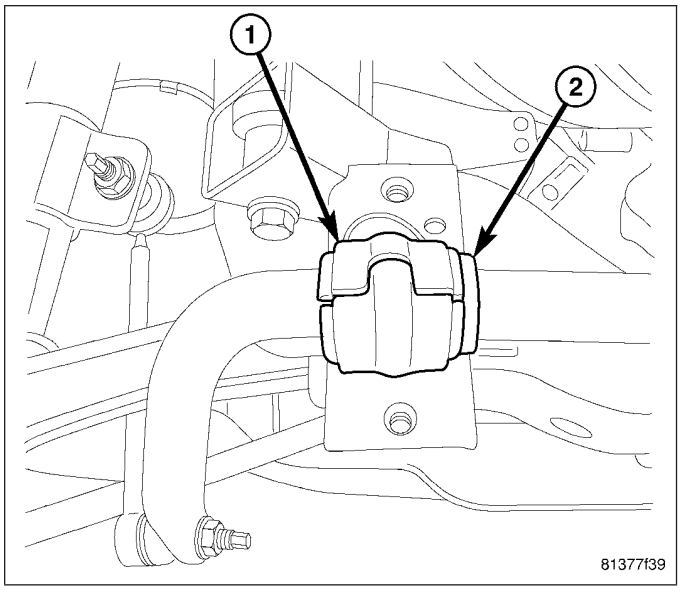

7. On each side of vehicle, remove nut (5) fastening stabilizer link (3) to stabilizer bar (4). Slide link ball joint stem (1) from bar, then remove bar from vehicle.

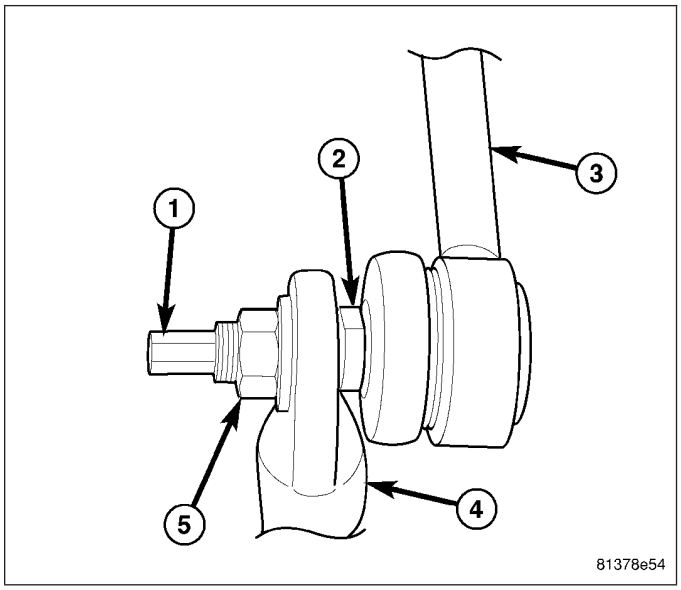

INSTALLATION

AWD

1. Utilizing slit in isolator, install each stabilizer bar isolator on bar. Make sure slit in isolator is positioned toward rear of vehicle once installed on vehicle.
2. Install stabilizer bar isolator retainer over each isolator.

NOTE: When attaching stabilizer link to stabilizer bar, make sure link ball joint stem is pointed inboard toward engine cradle.

3. Install stabilizer bar ends (4) to each stabilizer link (3). Slide link ball joint stem (1) through mounting hole in bar. Loosely install nuts (5) at this time.

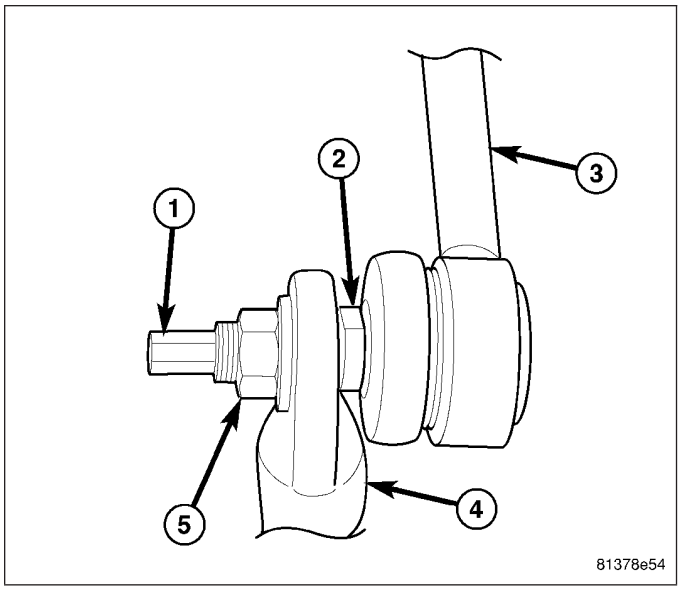

4. Raise stabilizer bar to engine cradle, placing bushings (1) into mounted position.
5. Install bolts (2) securing each stabilizer bar isolator retainer (3) to cradle. Tighten bolts to 60 N·m (44 ft. lbs.) torque.

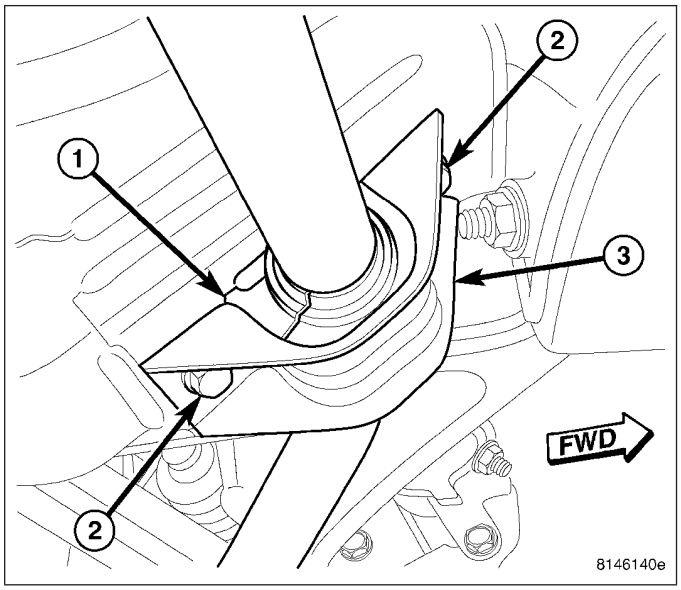

6. While holding stem from rotating at hex (1) or flat (2) tighten stabilizer link nuts at each end of stabilizer bar (4) to 128 N·m (95 ft. lbs.) torque.

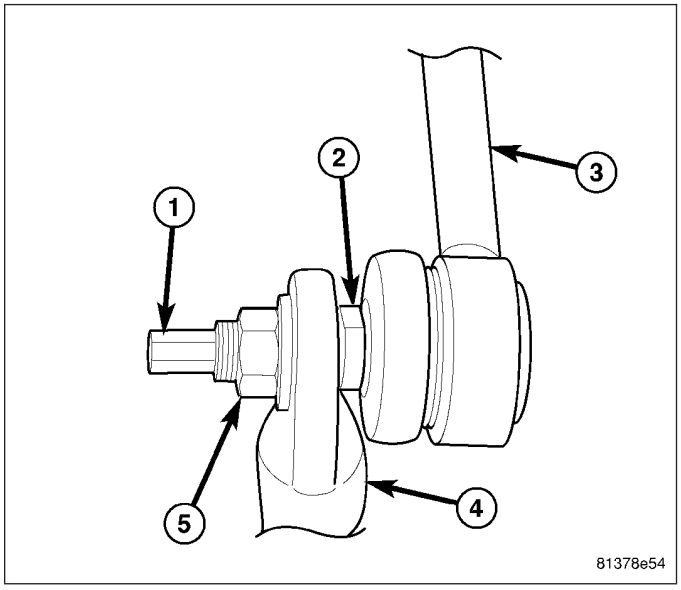

7. Install belly pan. (Refer to 23 - BODY/EXTERIOR/BELLY PAN - REMOVAL)
8. Lower vehicle.

RWD

NOTE: When attaching stabilizer link to stabilizer bar, make sure link ball joint stem is pointed inboard toward engine cradle.

1. On each side of vehicle, raise stabilizer bar (4) to stabilizer link (3) and slide link ball joint stem (1) through mounting hole in bar. Loosely install nut (5) at this time.

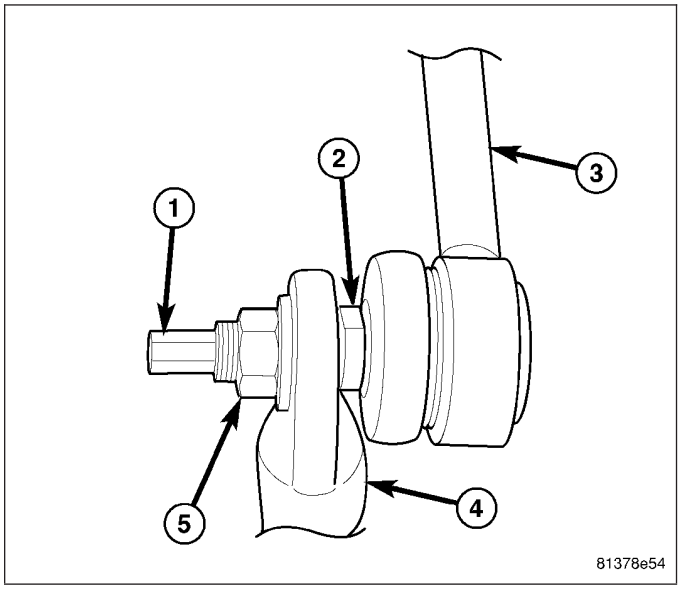

CAUTION: Because of stabilizer isolator outer shape, it is very important to install isolators in position discussed in following step.

2. Utilizing slit in isolator, install each stabilizer bar isolator (1) on bar resting against locating collar (2) as shown. Make sure slit in isolator is positioned toward rear of vehicle.

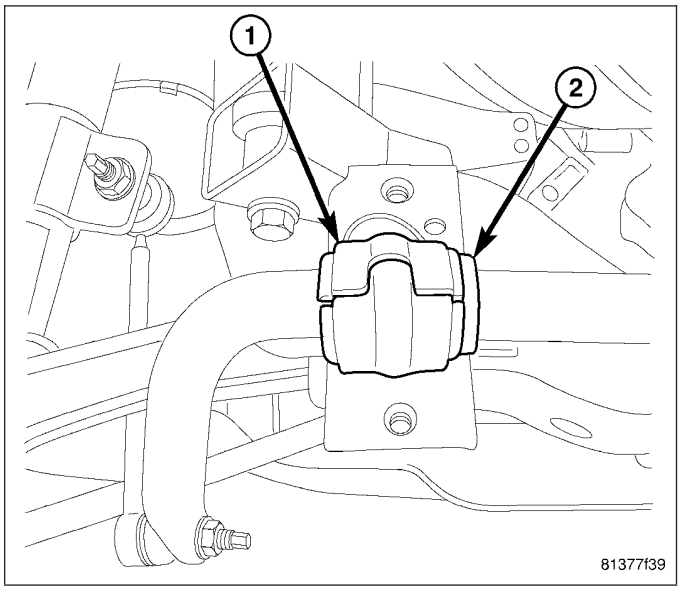

3. On each side of vehicle, install stabilizer bar isolator retainer halves (1)(2) around isolator (3).

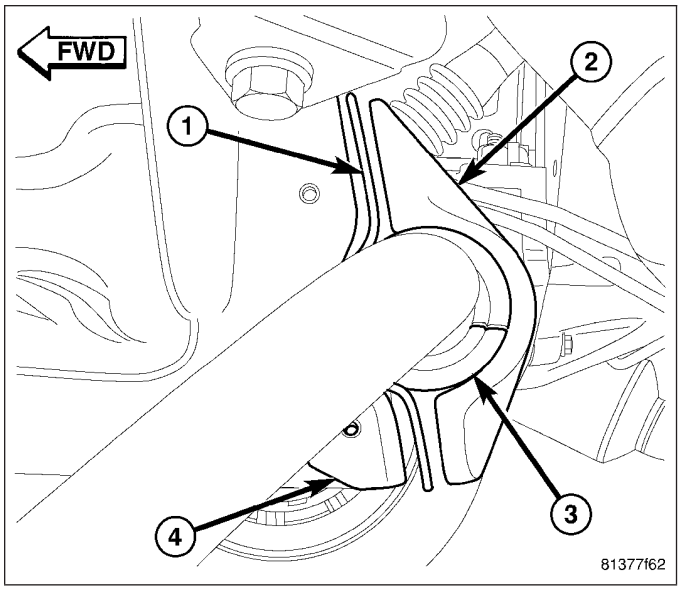

4. On each side of vehicle, install bolts (2) securing stabilizer bar isolator retainer halves (2) to cradle. Tighten bolts (2) to 60 N·m (44 ft. lbs.) torque.

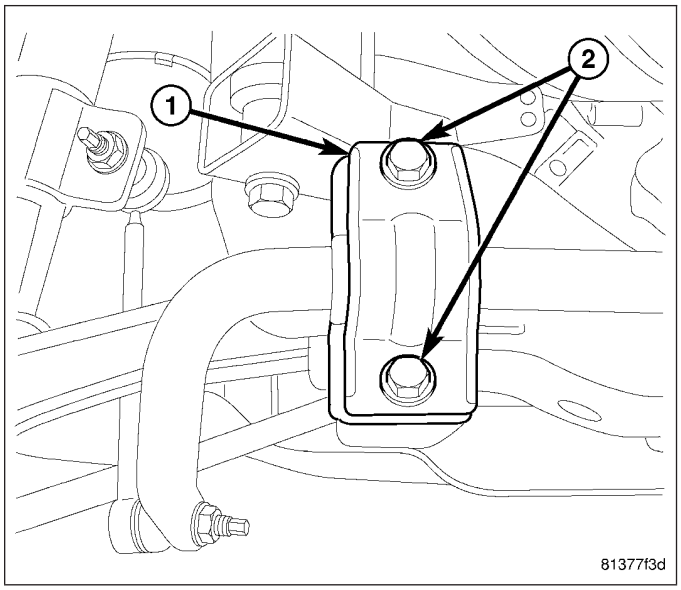

5. On each side of vehicle, install stabilizer bar heat shield (3) over stabilizer bar isolator retainer. Install mounting screws (1).

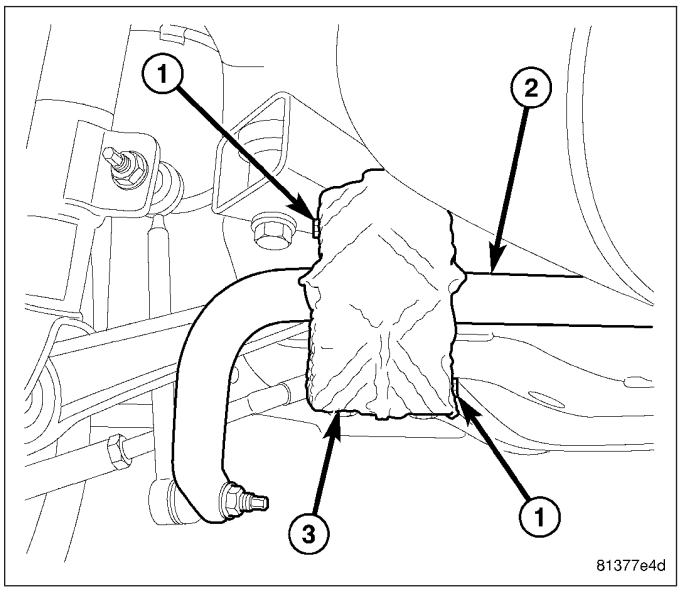

6. While holding stem from rotating at hex (1) or flat (2) tighten stabilizer link nuts at each end of stabilizer bar (4) to 128 N·m (95 ft. lbs.) torque.

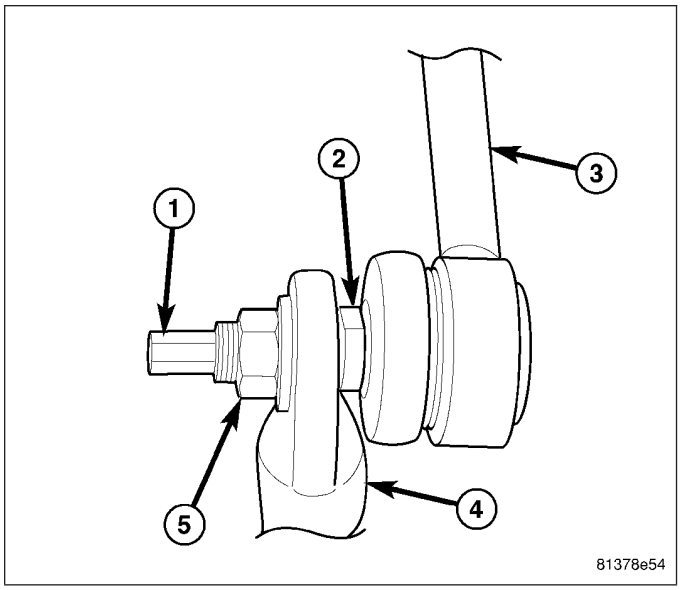

7. Install belly pan. (Refer to 23 - BODY/EXTERIOR/BELLY PAN - REMOVAL)
8. Lower vehicle.

STRUT - TENSION

REMOVAL

1. Raise and support vehicle. (Refer to LUBRICATION & MAINTENANCE/HOISTING - STANDARD PROCEDURE)
2. Remove wheel mounting nuts (3), then tire and wheel assembly (1).
3. Remove belly pan. (Refer to 23 - BODY/EXTERIOR/BELLY PAN - REMOVAL)

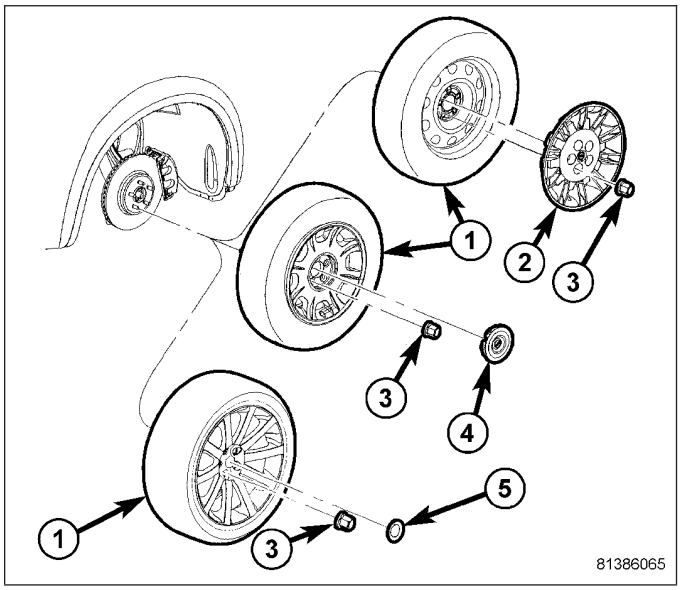

4. Loosen nut (3) attaching tension strut (2) ball joint stud to knuckle. Back nut off until nut is even with end of stud. **Keeping nut on at this location will help keep end of stud from distorting while using Puller in next step.**

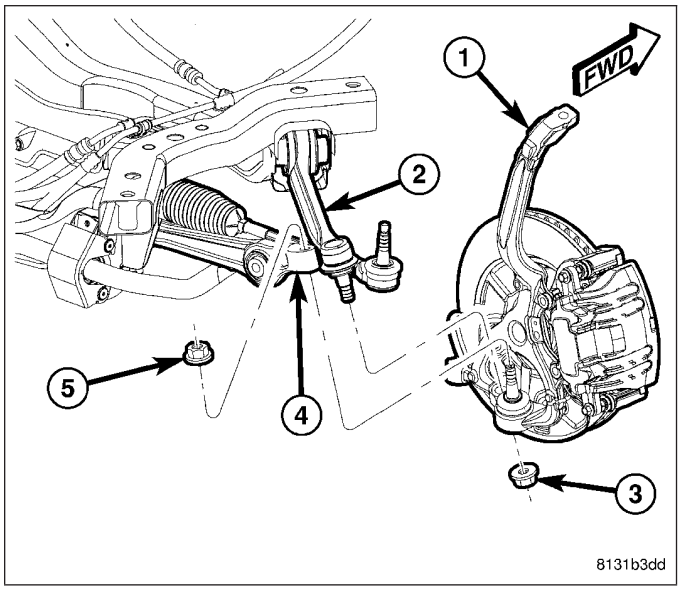

CAUTION: In following step, use care not to damage ball joint seal boot while sliding Puller, Special Tool 9360, into place past seal boot.

5. Using Puller (1), Special Tool 9360, separate tension strut ball joint stud (2) from knuckle.

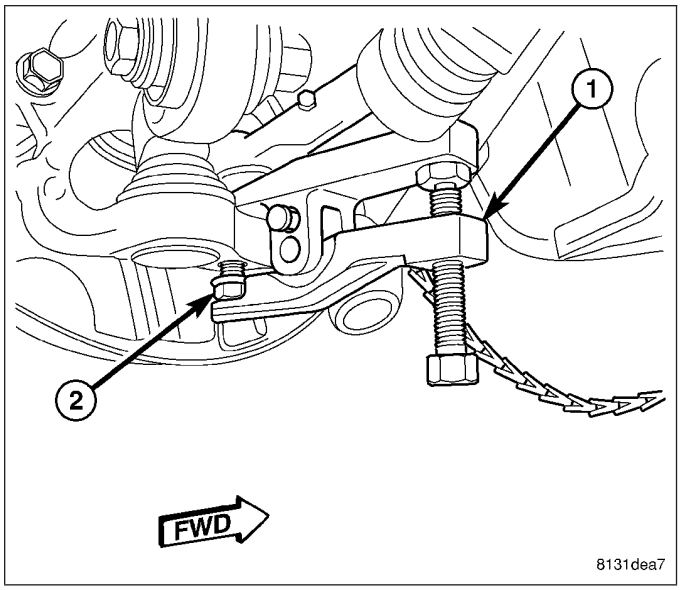

6. Remove nut (3) from end of tension strut (2) ball joint stud.
7. Rotate knuckle outward and push ball joint upward, out of knuckle.

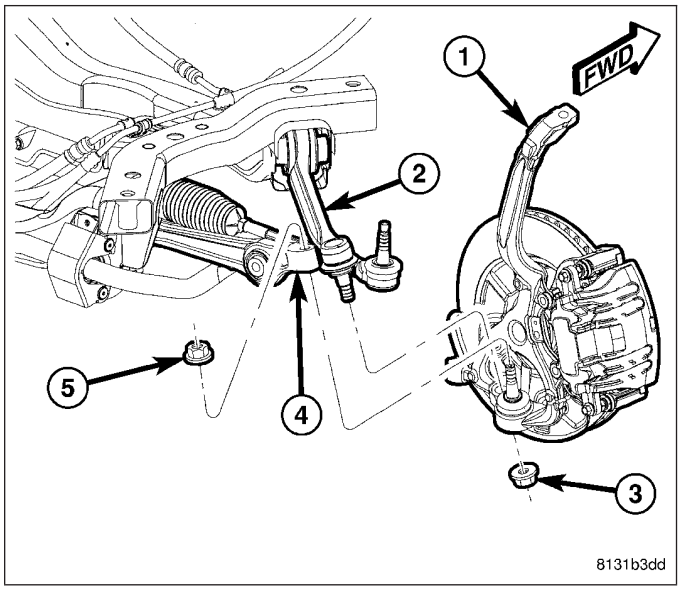

CAUTION: If the tension strut bolt at the engine cradle has a lengthwise grooved shaft (2), it is a special wheel alignment adjustment bolt and the bolt head (1) must not be rotated in the vehicle or damage to the bolt and engine cradle will result. While holding the bolt in place with a wrench, remove the nut, then slide the bolt out of the bushing and cradle taking note of bolt positioning in engine cradle for reassembly purposes. The bolt needs to be installed in the same position as removed to make sure wheel camber and caster return to adjusted position.

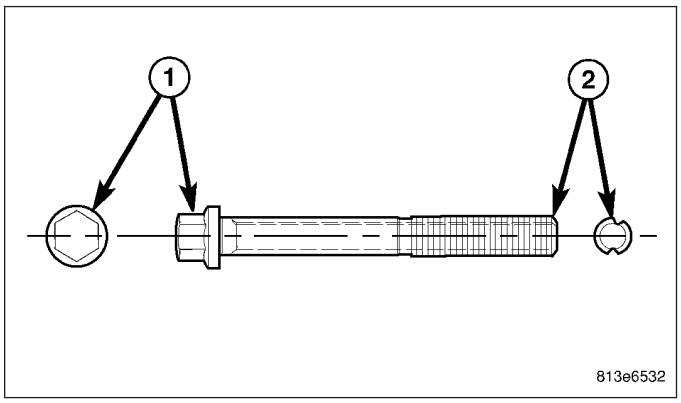

8. Remove nut and bolt (2) securing tension strut (1) to engine cradle (3).
9. Slide tension strut out of cradle bracket and remove from vehicle.

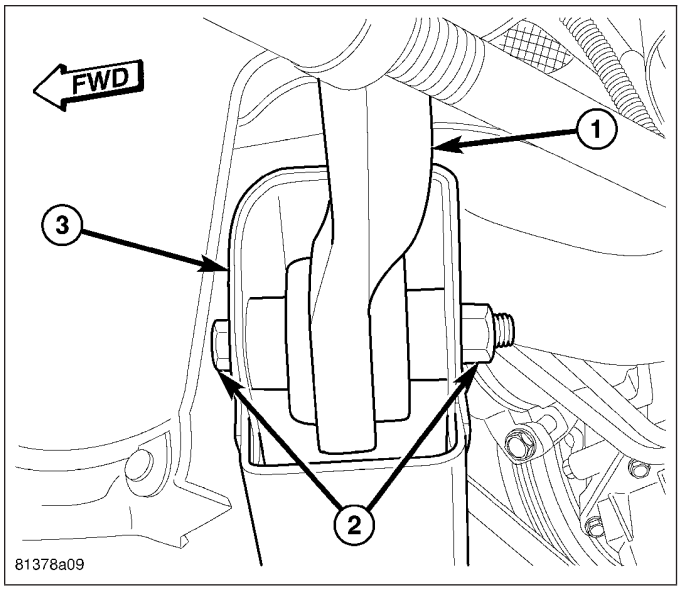

INSTALLATION

NOTE: If installing a tension strut engine cradle bolt that is a wheel alignment adjustment bolt (lengthwise grooved shaft (2)), make sure to install it in the same position which it was in upon removal. For more details on installation of this special bolt, (Refer to 2 - SUSPENSION/WHEEL ALIGNMENT - STANDARD PROCEDURE).

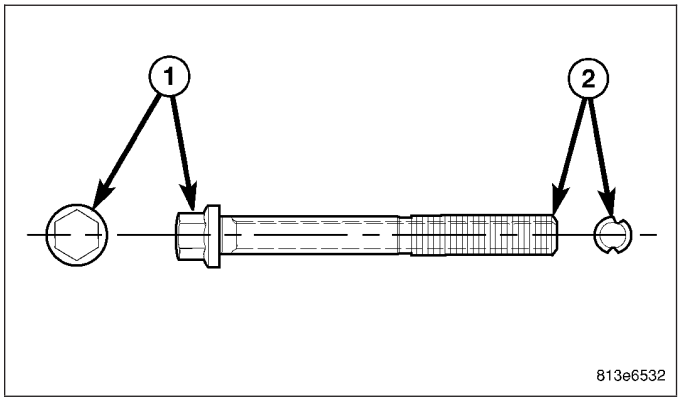

1. Slide bushing end of tension strut (1) into cradle bracket (3).
2. Install mounting bolt (2) from front through cradle and bushing.
3. Install nut (2), but **do not tighten at this time**.

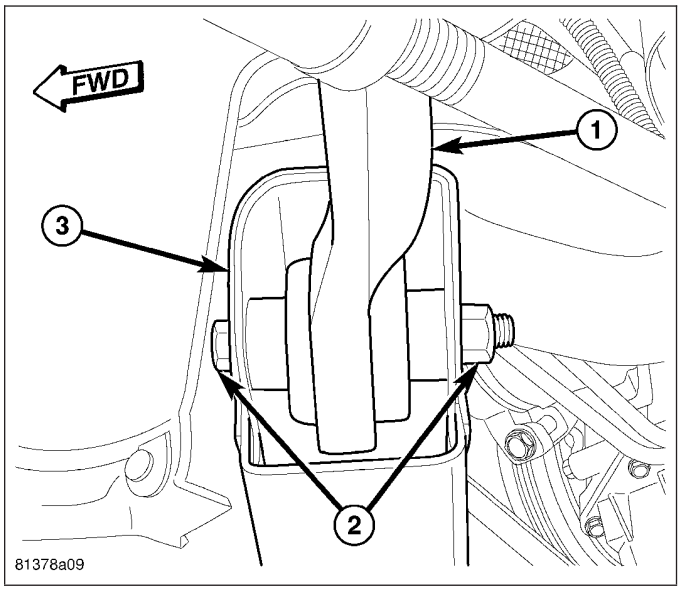

4. Insert tension strut (2) ball joint stud downward, into knuckle hole.
5. Completely install NEW nut (3) on ball joint stud attaching tension strut (2) to knuckle (1). Tighten nut by holding ball joint stud with a hex wrench while turning nut with a wrench. Tighten nut using crow foot wrench on torque wrench to 68 N·m + 90° turn (50 ft. lbs. + 90° turn) torque.

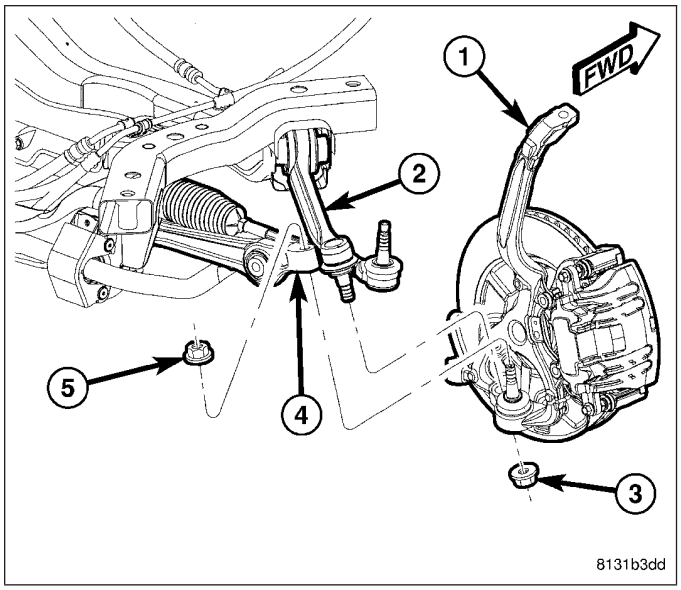

6. Install tire and wheel assembly (1) (Refer to 22 - TIRES/WHEELS - INSTALLATION). Tighten wheel mounting nuts (3) to 150 N·m (110 ft. lbs.) torque.
7. Lower vehicle.
8. Position vehicle on an alignment rack/drive-on lift.

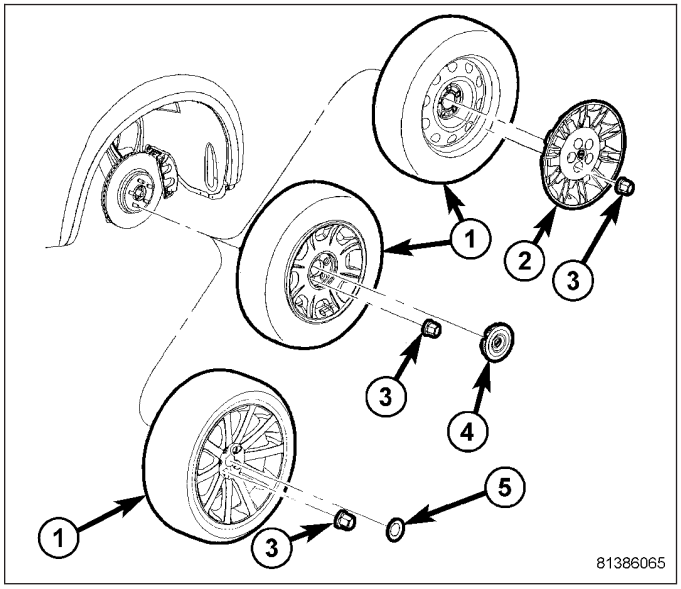

9. Perform wheel alignment. (Refer to 2 - SUSPENSION/WHEEL ALIGNMENT - STANDARD PROCEDURE)

CAUTION: If the tension strut engine cradle bolt is a wheel alignment adjustment bolt (lengthwise grooved shaft (2)), be sure to only tighten the nut. Do not rotate the bolt head (1) or damage to the bushing will occur.

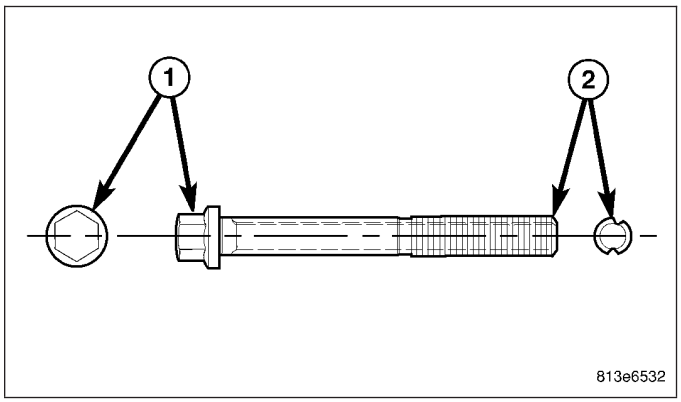

10. Once alignment is found to be within specifications, using a crowfoot wrench, tighten tension strut cradle bolt nut (2) to 176 N·m (130 ft. lbs.) torque while holding the bolt stationary.
11. Install belly pan. (Refer to 23 - BODY/EXTERIOR/ BELLY PAN - REMOVAL)

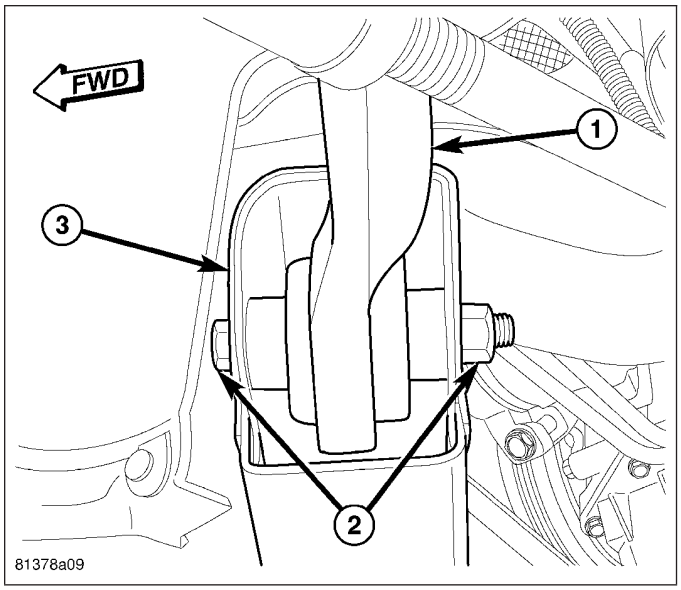

BALL JOINT - UPPER

DESCRIPTION

The upper ball joint is pressed into the upper control arm. The ball joint is a “sealed for life” component and cannot be maintenance lubricated. This ball joint is lubricated for life at the time of assembly. **No attempt should be made to ever add any lubrication to this ball joint.**

Neither the upper ball joint, nor the seal boot can be serviced as a separate component. The entire upper control arm must be replaced if either are damaged.

The ball joint connection at the knuckle is achieved by an interference fit created by the tapered stud of the ball joint and a tapered hole in the steering knuckle. The ball joint stud is retained in the steering knuckle using a locking nut.

DIAGNOSIS AND TESTING

UPPER BALL JOINT

1. Raise vehicle on a drive-on hoist.

NOTE: If a drive-on hoist is not available, use wooden blocks with jack stands to support the lower control arm in the ball joint area. Place the jack stands appropriately and lower the hoist placing weight on the lower control arm. The lower control arms should now be supporting the vehicle weight.

2. Using a jack, lift the front end off the hoist and position a wooden block underneath lower control arm supporting that corner of the vehicles weight.
3. Remove tire and wheel assembly. (Refer to 22 - TIRES/WHEELS - REMOVAL)
4. Attach a dial indicator to body of upper control arm, then align dial indicator’s contact pointer with direction of stud axis and touch machined flat on end of knuckle near ball joint. Zero dial indicator.

NOTE: Use care when applying the load to the knuckle so as to not damage components of suspension.

5. Insert a pry bar and rest it against bottom of upper control arm and use lever principle to push arm upward until dial indicator no longer moves.
6. Record any ball joint movement. If movement in the control arm exceeds 1.5 mm (.059 in.), the ball joint is faulty.
7. If the ball joint needs replaced, the entire upper control arm needs to be replaced. (Refer to 2 - SUSPENSION/ FRONT/UPPER CONTROL ARM - REMOVAL)

ARM - UPPER CONTROL

REMOVAL

1. If removing left upper control arm, remove and reposition coolant recovery container. (Refer to 7 - COOLING/ENGINE/COOLANT RECOVERY CONTAINER - REMOVAL)
2. If removing right upper control arm, remove IPM from mount and reposition. (Refer to 8 - ELECTRICAL/POWER DISTRIBUTION/INTEGRATED POWER MODULE - REMOVAL)
3. If equipped, remove front shock tower cap (1) from top of shock assembly (4).
4. Remove three nuts (2) fastening shock assembly (4) to shock tower (3).

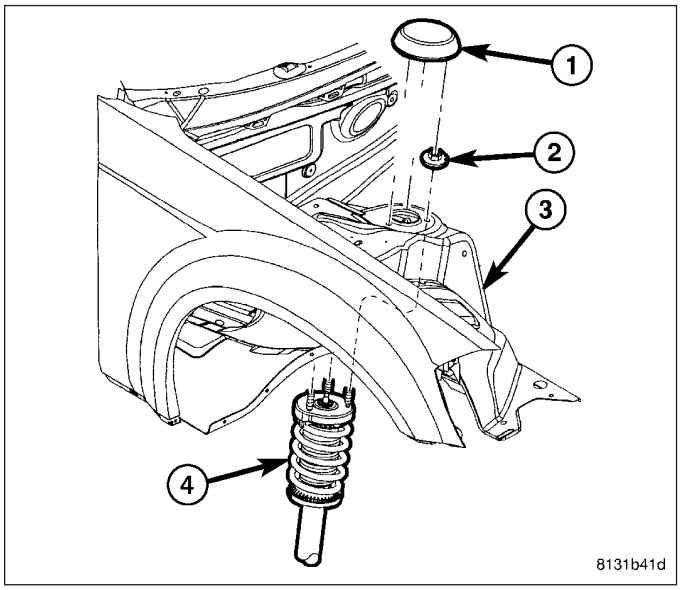

5. Remove nuts (2) from upper control arm mounting bolts (1).
6. Raise and support vehicle. (Refer to LUBRICATION & MAINTENANCE/HOISTING - STANDARD PROCEDURE)

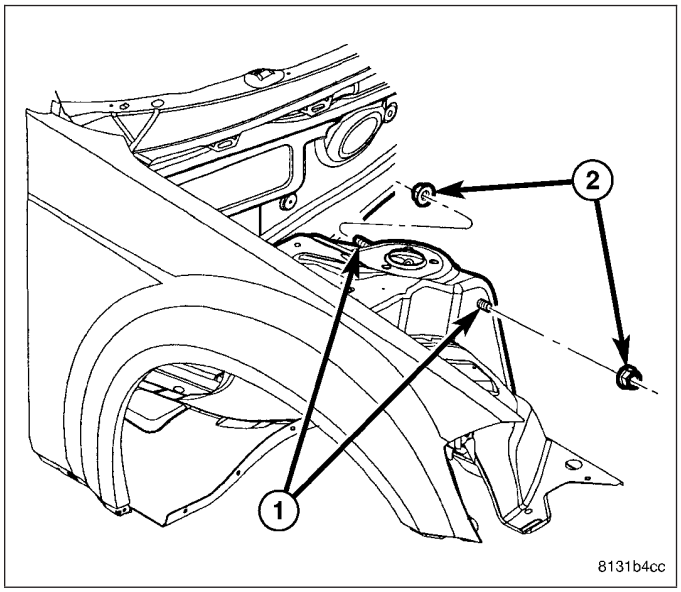

7. Remove wheel mounting nuts (3), then tire and wheel assembly (1).

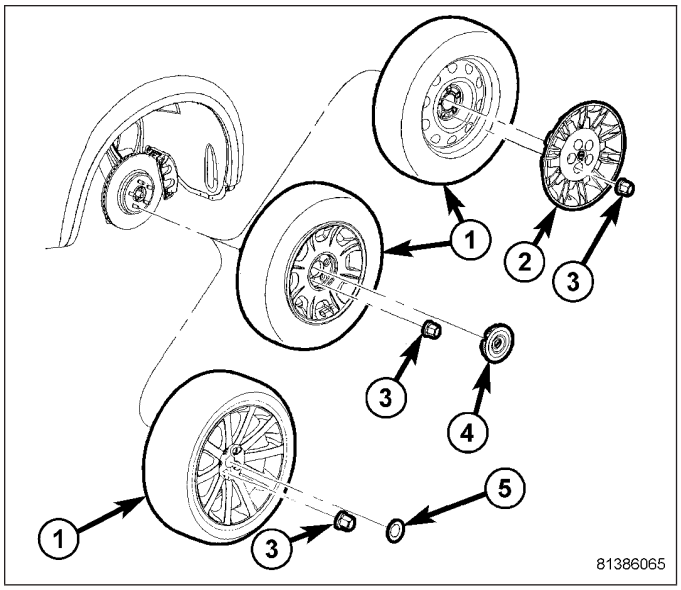

8. Disconnect wheel speed sensor cable routing clip (2) at brake tube bracket (3).

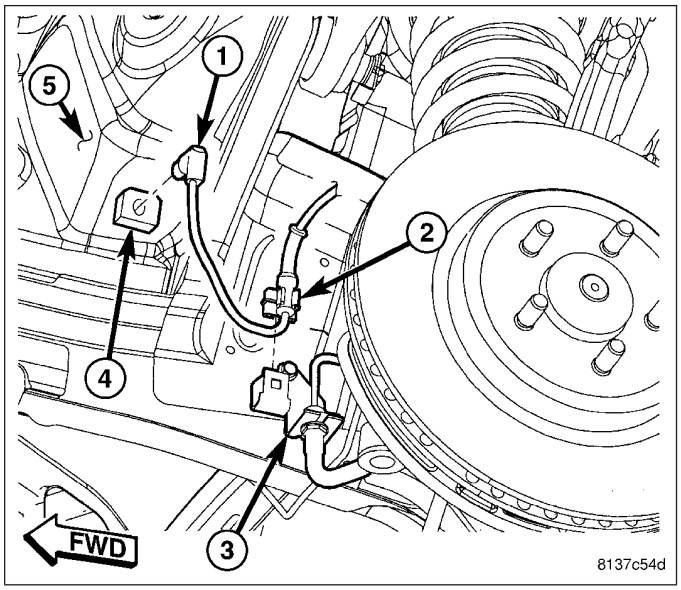

9. Loosen nut (4) attaching upper ball joint stud (1) to knuckle. Back nut off until nut is even with end of stud. **Keeping nut on at this location will help keep end of stud from distorting while using Puller in next step.**

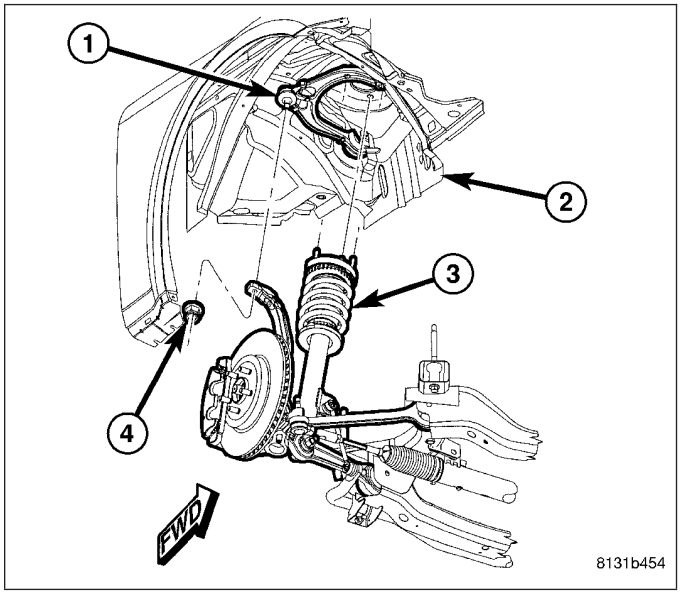

CAUTION: In following step, use care not to damage ball joint seal boot while sliding Puller, Special Tool 9360, into place past seal boot.

10. Using Puller (2), Special Tool 9360, separate upper ball joint stud (1) from knuckle.

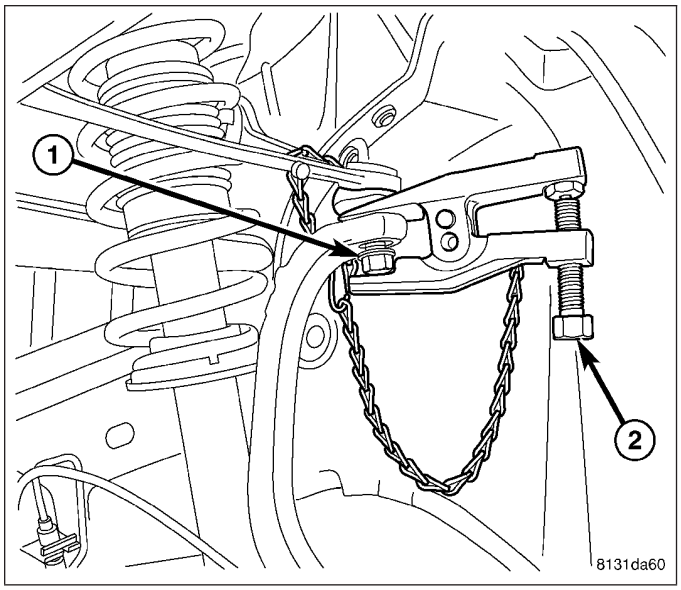

11. Remove nut (4) from end of upper ball joint stud (1).
12. Pull shock assembly (3) downward until studs clear shock tower (2), then pull it outward allowing access to upper control arm mounting bolts.

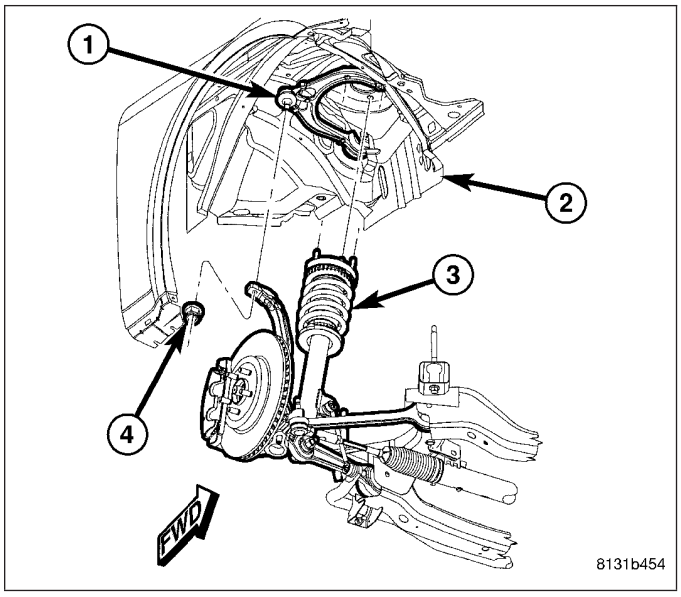

13. Export Only – If servicing right upper control arm, disconnect headlamp leveling sensor (2) link at upper control arm (1).

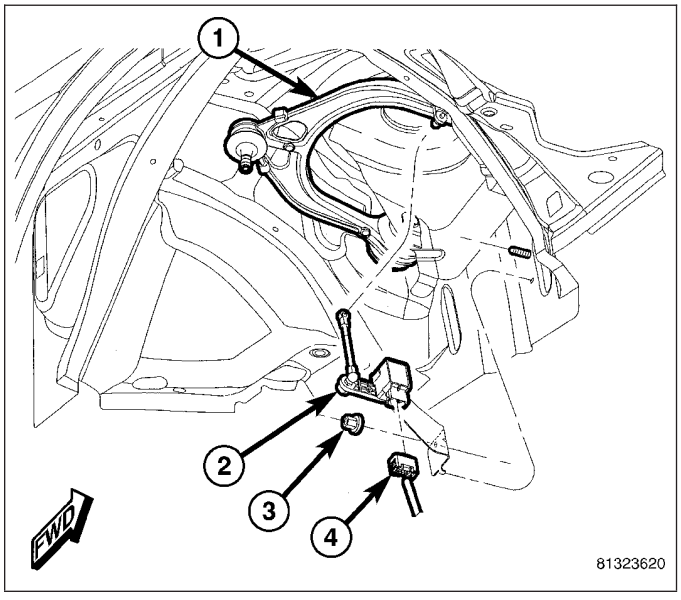

14. Remove upper control arm mounting (flag) bolts (1).
15. Remove upper control arm (2) from bracket (3) in shock tower (4).

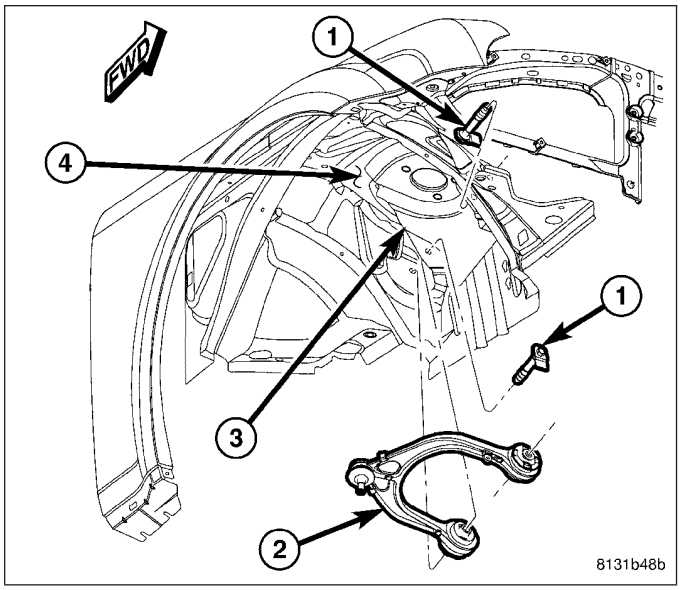

INSTALLATION

NOTE: Although AWD and RWD upper control arms are similar in appearance, they are not interchangeable.

1. Slide upper control arm (2) into bracket (3) located in shock tower (4).
2. Install upper control arm mounting (flag) bolts (1) through bracket, arm and tower. Position flags on bolt heads outward, toward wheel opening.

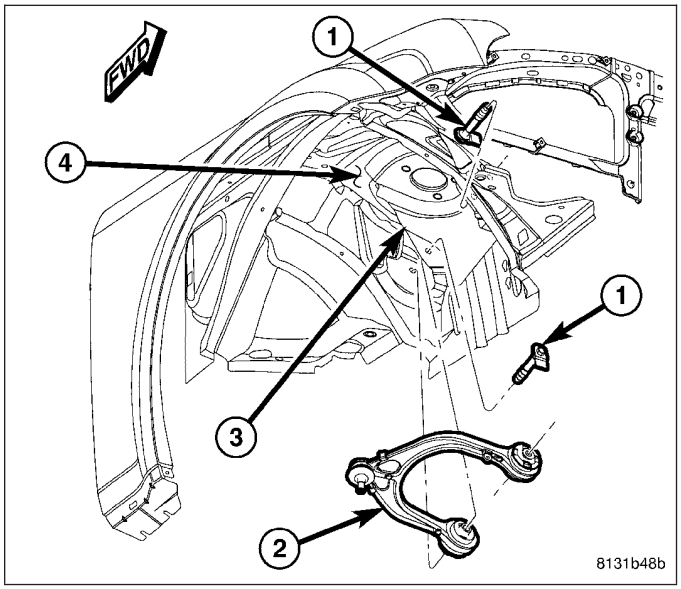

3. Export Only – If servicing right upper control arm, connect headlamp leveling sensor (2) link at upper control arm (1).

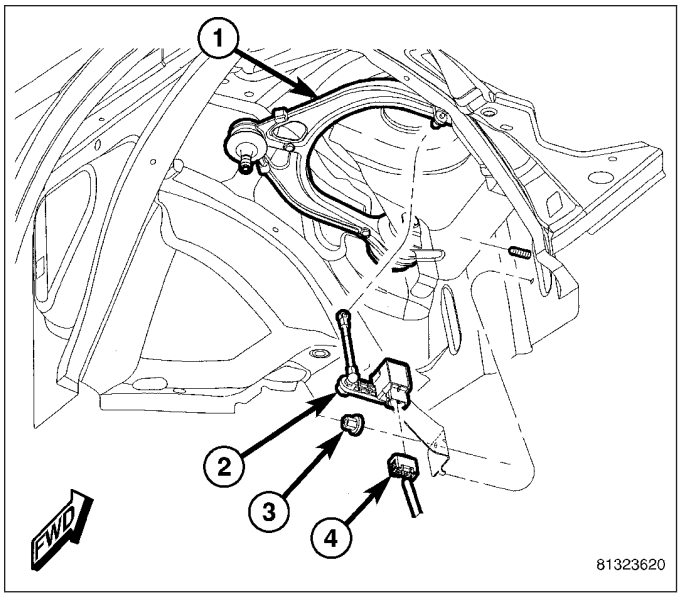

4. Move shock assembly (3) allowing studs to be inserted through shock tower (2) mounting holes.
5. Place upper ball joint stud (1) through hole in top of knuckle and install nut (4). Tighten nut by holding ball joint stud with a hex wrench while turning nut with a wrench. Tighten nut using crow foot wrench on torque wrench to 47 N·m + 90° turn (35 ft. lbs. + 90° turn) torque.

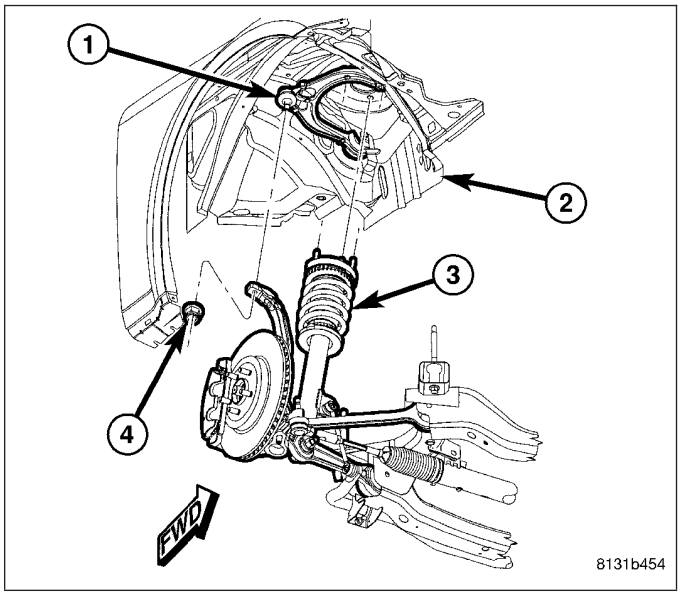

6. Connect wheel speed sensor cable routing clip (2) at brake tube bracket (3).

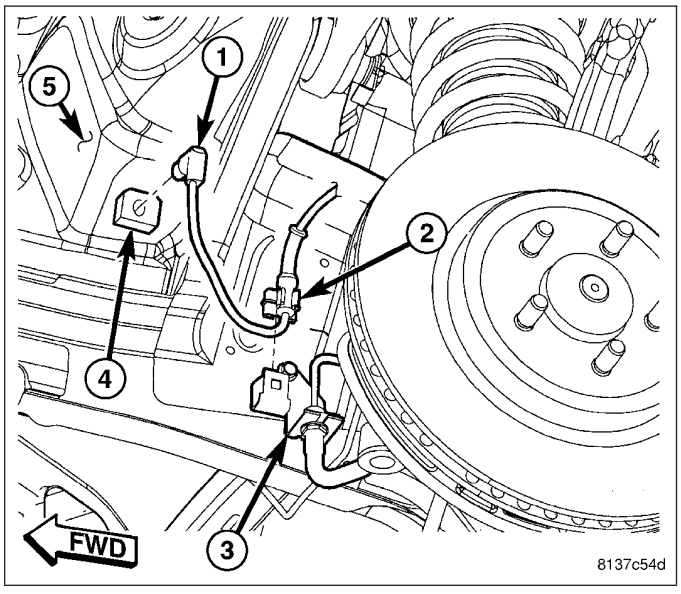

7. Install tire and wheel assembly (1) (Refer to 22 - TIRES/WHEELS - INSTALLATION). Tighten wheel mounting nuts (3) to 150 N·m (110 ft. lbs.) torque.
8. Lower vehicle to curb position.

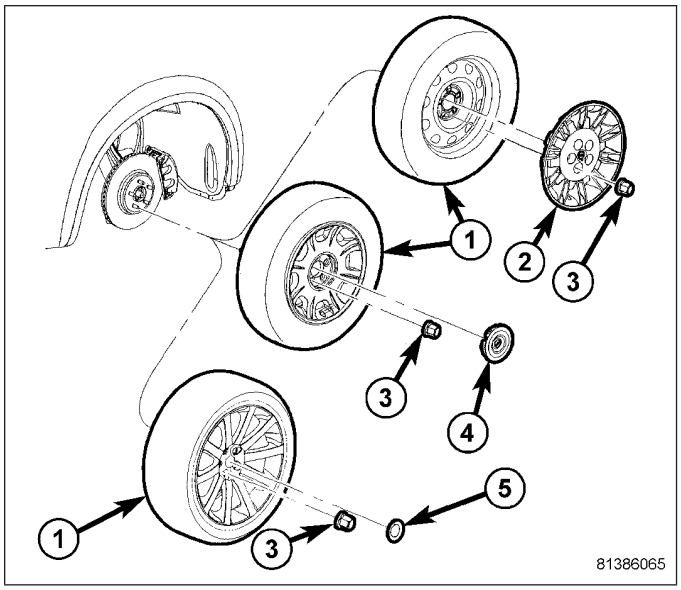

9. Install nuts (2) on upper control arm body mounting bolts (1). Tighten nuts to 75 N·m (55 ft. lbs.) torque.

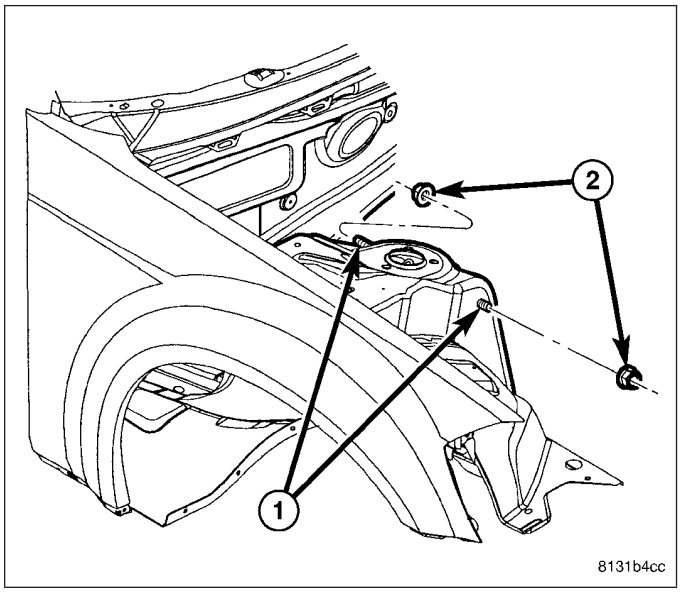

10. Install three nuts (2) fastening shock assembly (4) to shock tower (3). Tighten nuts to 27 N·m (20 ft. lbs.) torque.
11. If equipped, align shock tower cap (1) with shock mounting nuts (2) and snap into place.

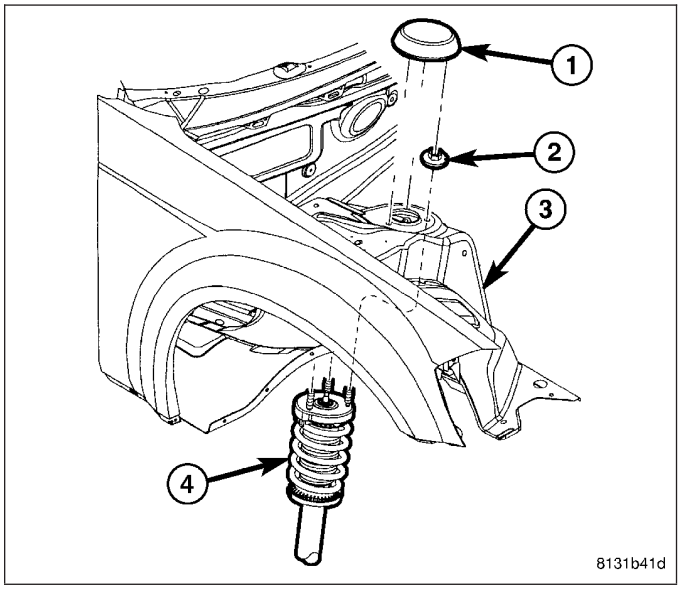

12. If installing left upper control arm, install coolant recovery container. (Refer to 7 - COOLING/ENGINE/COOLANT RECOVERY CONTAINER - INSTALLATION)
13. If installing right upper control arm, install IPM. (Refer to 8 - ELECTRICAL/POWER DISTRIBUTION/INTEGRATED POWER MODULE - INSTALLATION)

REAR

TABLE OF CONTENTS

page

REAR
DESCRIPTION
REAR SUSPENSION 92
REAR SUSPENSION - SRT8 92
SPECIFICATIONS
REAR SUSPENSION FASTENER TORQUE 93
SPECIAL TOOLS
REAR SUSPENSION 94
HUB AND BEARING
DESCRIPTION 95
DIAGNOSIS AND TESTING
HUB AND BEARING 95
REMOVAL
HUB AND BEARING 95
HUB AND BEARING - SRT8 97
INSTALLATION
HUB AND BEARING 101
HUB AND BEARING - SRT8 104
KNUCKLE
REMOVAL
KNUCKLE 108
KNUCKLE - SRT8 111
INSTALLATION
KNUCKLE 114
KNUCKLE - SRT8 117
CAMBER LINK
REMOVAL 121
INSTALLATION 124
COMPRESSION LINK
REMOVAL 130
INSTALLATION 130

page

SPRING LINK
REMOVAL
SPRING LINK 132
SPRING LINK - SRT8 134
INSTALLATION
SPRING LINK 137
SPRING LINK - SRT8 139
TENSION LINK
REMOVAL 141
INSTALLATION 144
TOE LINK
REMOVAL
LEFT LINK 150
RIGHT LINK 153
INSTALLATION
LEFT LINK 155
RIGHT LINK 159
SHOCK ABSORBER
DESCRIPTION 162
REMOVAL
STANDARD 162
LOAD-LEVELING 164
INSTALLATION
STANDARD 167
LOAD-LEVELING 169
SPRING
REMOVAL 173
INSTALLATION 176
BAR - STABILIZER
REMOVAL 181
INSTALLATION 190

REAR

DESCRIPTION

REAR SUSPENSION

This vehicle utilizes a five-link rear suspension including the following major components:

- Camber Link (1)
- Compression Link (5)
- Spring Link (2)
- Tension Link (6)
- Toe Link (3)
- Coil Spring
- Crossmember
- Hub And Bearing
- Knuckle (4)
- Shock Absorber
- Stabilizer Bar

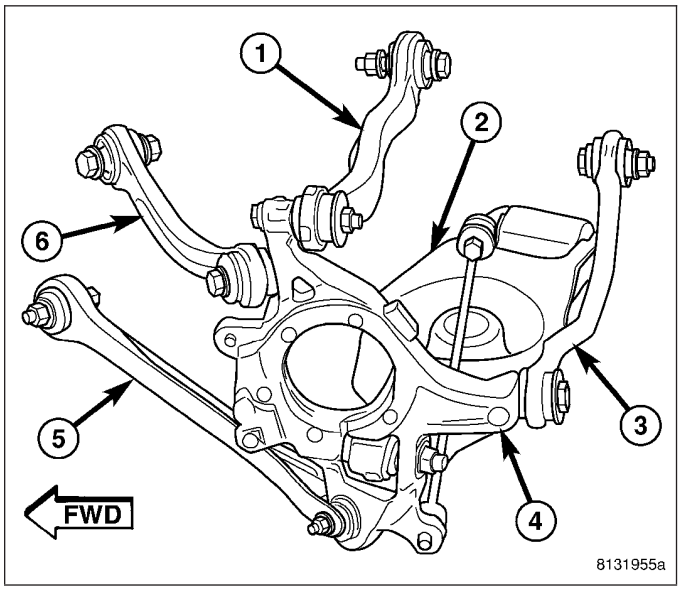

The knuckle, camber link, compression link and tension link are **aluminum** castings. Extra care needs to be taken when servicing these components.

Service Procedures for the crossmember can be found in Frame And Bumpers. (Refer to 13 - FRAME & BUMPERS/FRAME/REAR CROSSMEMBER - REMOVAL)

REAR SUSPENSION - SRT8

The SRT8 rear suspension is very similar to the standard RWD front suspension but some components have been modified for better handling and durability. Most component bushings are increased rate bushings. Service of all rear suspension components remain the same as the standard RWD components. When components differ, be sure to use only SRT8 components on SRT8 vehicles.

The rear knuckle for the SRT8 is different from the standard RWD knuckle. Although similar in appearance and in service, the mounting bosses for the disc brake caliper have been moved downward to allow mounting of the Brembo four-piston brake caliper. Due to this change, an updated special tool is needed to remove the sleeve that retains the lower control arm ball joint to the knuckle.

The rear shock absorber used on this vehicle is a load-leveling shock (2). This shock absorber appears the same as the one used on the standard LX, but has been specially calibrated for this vehicle. It can be easily identified by an identification tag on its side (1). This shock absorber is serviced the same as the standard load-leveling shock absorber.

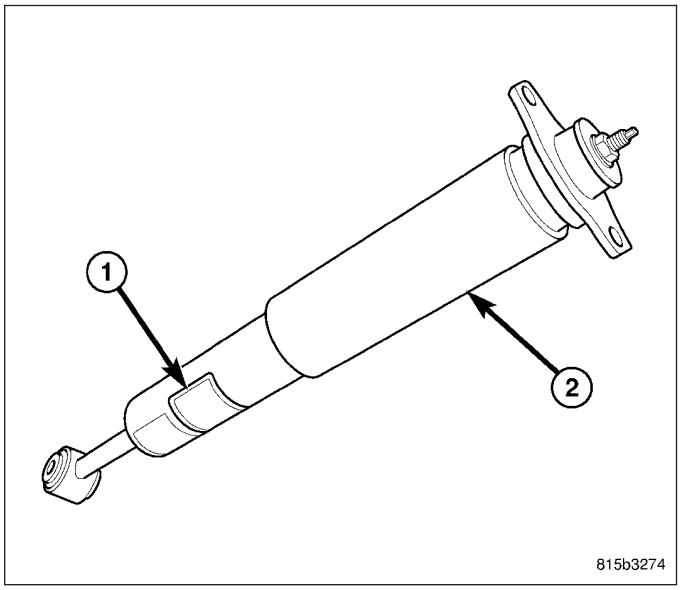

The rear stabilizer bar diameter has been increased for the SRT8 to the size of that used on Export vehicles, 15 mm. It is serviced in the same manner as the standard RWD bar.

SPECIFICATIONS

REAR SUSPENSION FASTENER TORQUE

DESCRIPTION	N·m	Ft. Lbs.	In. Lbs.
Brake Caliper Adapter Knuckle Bolts	119	88	—
Camber Link Crossmember Bolt	85	63	—
Camber Link Knuckle Bolt	98	72	—
Compression Link Crossmember Bolt	85	63	—
Compression Link Knuckle Bolt	81	60	—
Crossmember Mounting Bolts	180	133	—
Hub And Bearing Mounting Bolts	68	50	—
Hub Nut	213	157	—
Parking Brake Cable Knuckle Screw	8	—	71
Shock Absorber Mounting Bolts - Upper	52	38	—
Shock Absorber Mounting Bolt Nut - Lower	72	53	—
Spring Link Crossmember Bolt	108	80	—
Spring Link Knuckle Nut	138	102	—
Stabilizer Bar Isolator Retainer Bolts	61	45	—
Stabilizer Link Nuts	61	45	—
Tension Link Crossmember Bolt	85	63	—
Tension Link Knuckle Bolt	98	72	—
Toe Link Crossmember Nut	108	80	—
Toe Link Knuckle Bolt	81	60	—

SPECIAL TOOLS

REAR SUSPENSION

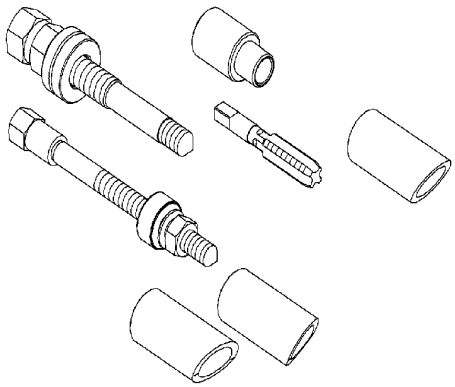

Remover/Installer, Sleeve 9361

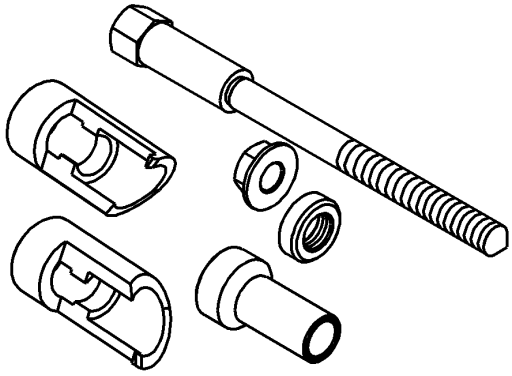

Remover/Installer, Sleeve 9361-UPD

HUB AND BEARING

DESCRIPTION

The rear wheel bearing and wheel hub of this vehicle are a one piece sealed unit or hub and bearing unit type assembly. The hub and bearing (1) is mounted to the center of the knuckle using 4 bolts. It has five wheel mounting studs (2) on the hub flange.

The center of the hub and bearing is splined to match the axle half shaft.

The wheel mounting studs used to mount the tire and wheel to the vehicle are the only replaceable components of the hub and bearing. Otherwise, the hub and bearing is serviced only as a complete assembly.

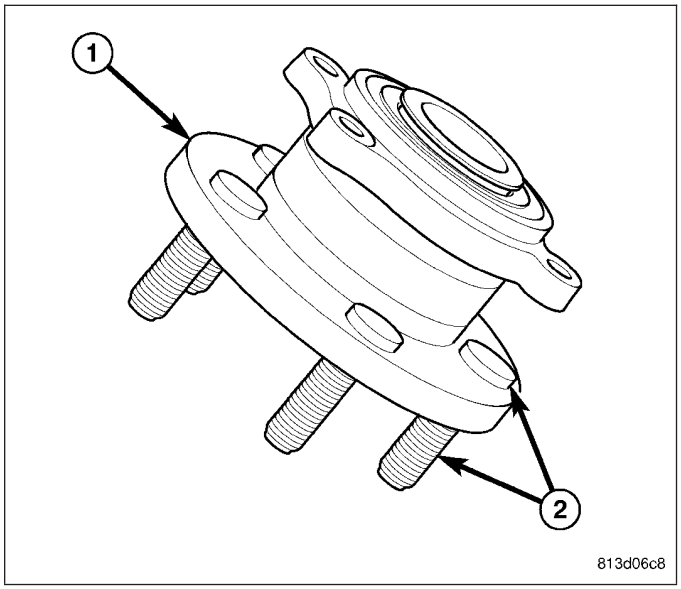

DIAGNOSIS AND TESTING

HUB AND BEARING

NOTE: The hub and bearing is designed for the life of the vehicle and should require no maintenance.

With wheel and brake rotor removed, rotate flanged outer ring of hub. Excessive roughness, lateral play or resistance to rotation may indicate dirt intrusion or bearing failure. If the rear wheel bearings exhibit these conditions during inspection, the hub and bearing assembly should be replaced.

Damaged bearing seals and resulting excessive grease loss may also require bearing replacement. Moderate grease loss from bearing is considered normal and should not require replacement of the hub and bearing assembly.

REMOVAL

HUB AND BEARING

1. Raise and support vehicle. (Refer to LUBRICATION & MAINTENANCE/HOISTING - STANDARD PROCEDURE)

2. Remove wheel mounting nuts (3), then tire and wheel assembly (1).

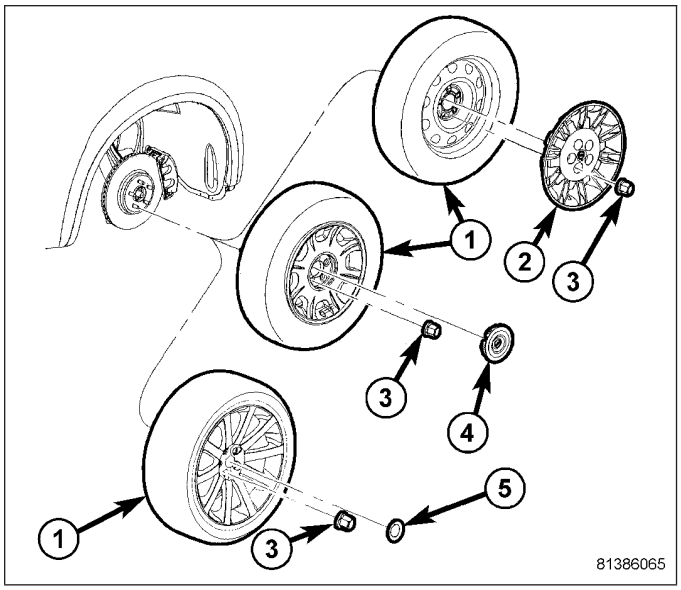

3. While a helper applies brakes to keep hub from rotating, remove hub nut (1) from the half shaft (2).

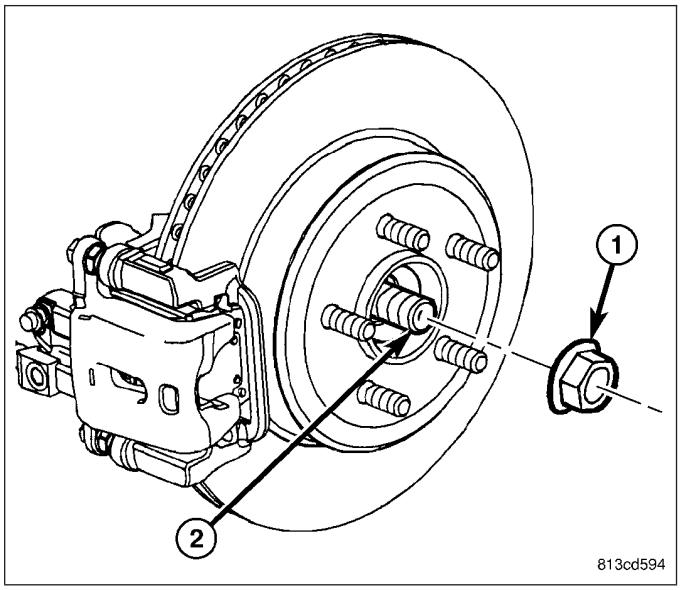

NOTE: In some cases, it may be necessary to retract caliper piston in its bore a small amount in order to provide sufficient clearance between shoes and rotor to easily remove caliper from knuckle. This can usually be accomplished before guide pin bolts are removed, by grasping rear of caliper and pulling outward working with guide pins, thus retracting piston. Never push on piston directly as it may get damaged.

4. Remove two bolts (1) securing disc brake caliper adapter (3) to knuckle (2).
5. Remove disc brake caliper and adapter (3) from knuckle as an assembly. Hang assembly out of way using wire or a bungee cord. Use care not to overextend brake hose when doing this.

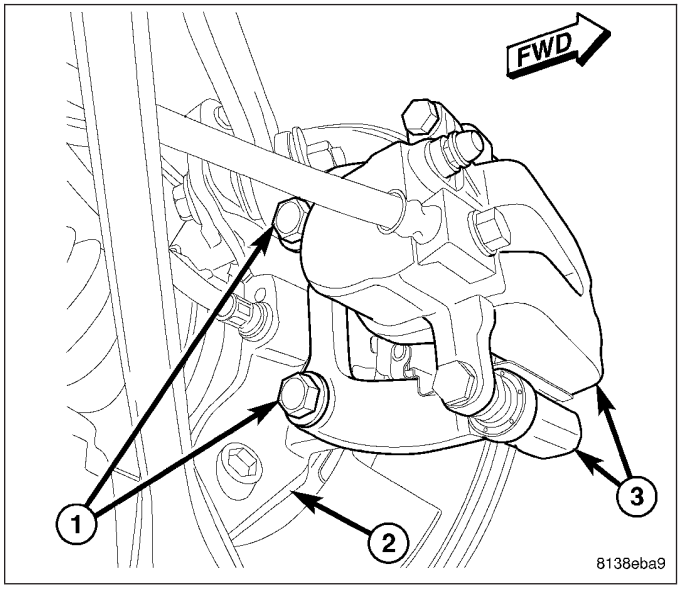

6. Remove any clips (2) retaining brake rotor (3) to wheel mounting studs.
7. Slide brake rotor (3) off hub and bearing (1).

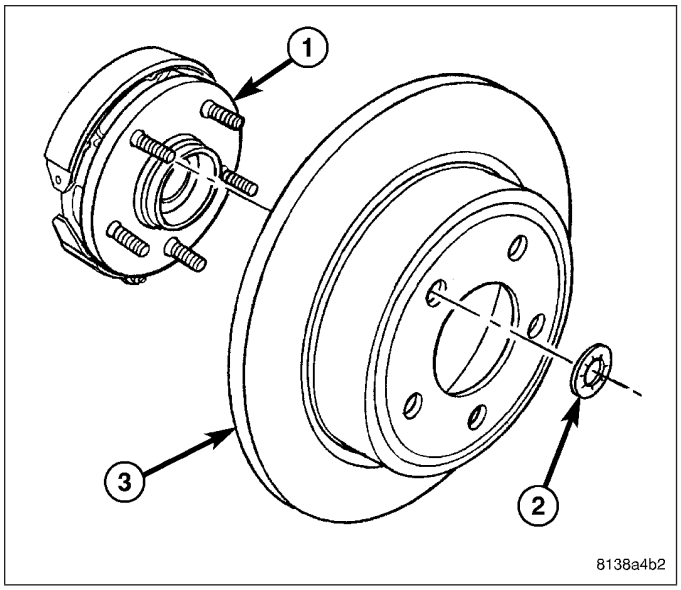

8. Loosen each hub and bearing mounting bolt (2) a turn or two at a time while pulling outward on hub and bearing to avoid bolt contact with half shaft outer joint. Once removed from threads in hub and bearing (but not knuckle), allow bolts to stay in and protrude through knuckle and brake support plate to keep brake support plate in place when hub and bearing is removed.
9. Slide hub and bearing off knuckle and half shaft.

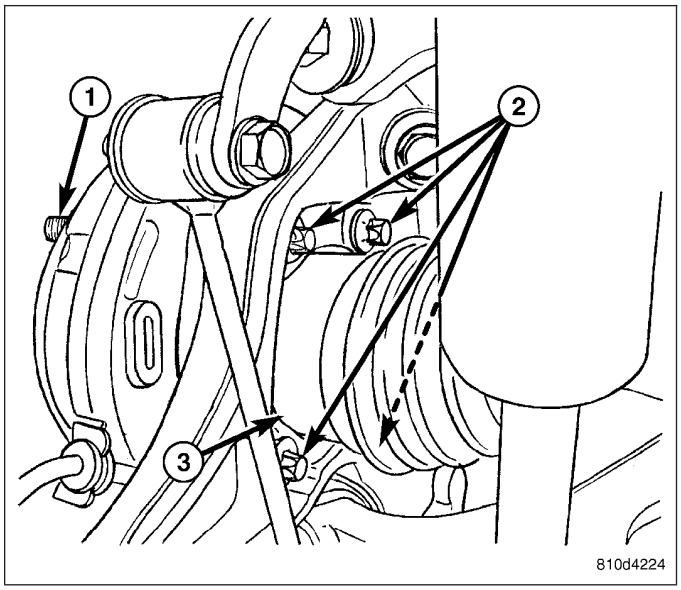

HUB AND BEARING - SRT8

1. Raise and support vehicle. (Refer to LUBRICATION & MAINTENANCE/HOISTING - STANDARD PROCEDURE)

2. Remove wheel mounting nuts (3), then tire and wheel assembly (1).

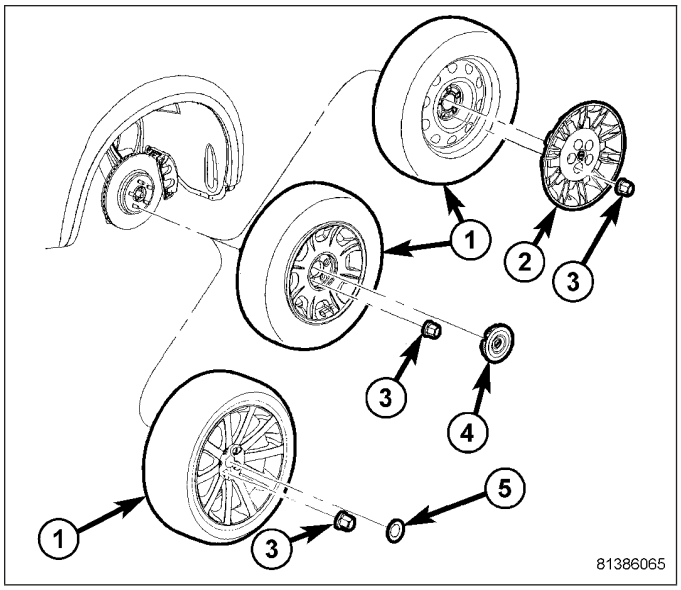

3. While a helper applies brakes to keep hub from rotating, remove hub nut (1) from the half shaft (2).

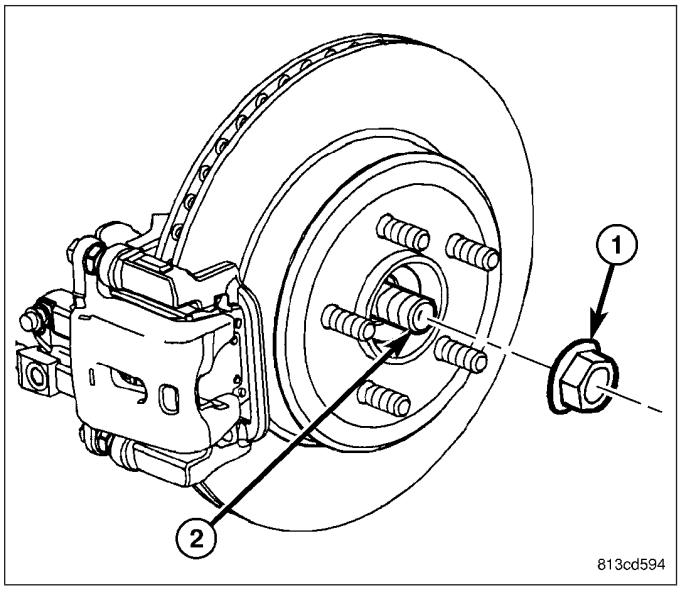

CAUTION: When pushing pistons back into caliper bores, use only a trim stick as shown or other suitable soft tool. Never use a screwdriver or other metal pry bar due to potential damage to braking surface of rotor, caliper, pistons or dust boots.

4. Place trim stick (4) between brake pad (2) and outer edge of rotor (3).
5. Using trim stick, slowly apply pressure against brake pad (2) until both pistons (on that side of caliper) are completely bottomed in bores of caliper half.

NOTE: Repeat above procedure to opposite brake pad (1) and pistons as necessary.

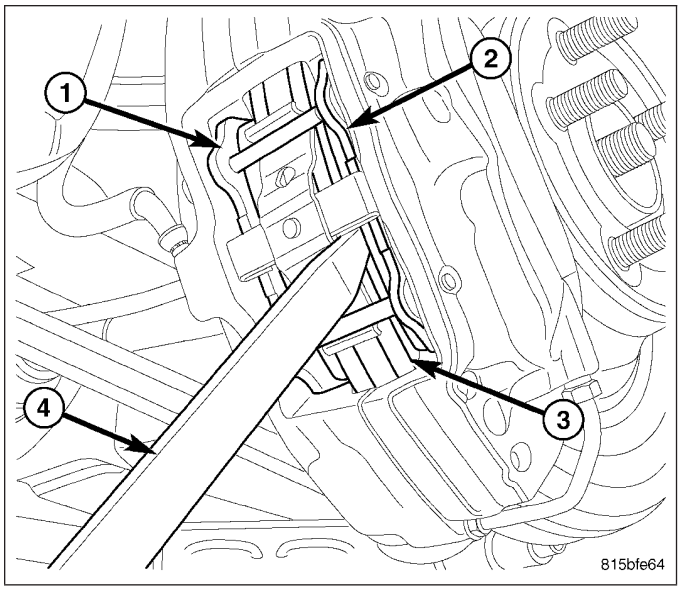

6. Support spring link (1) using a transmission jack (5) or other appropriate jack. Raise spring link just enough to access brake caliper lower mounting bolt (4) from above compression link (2).

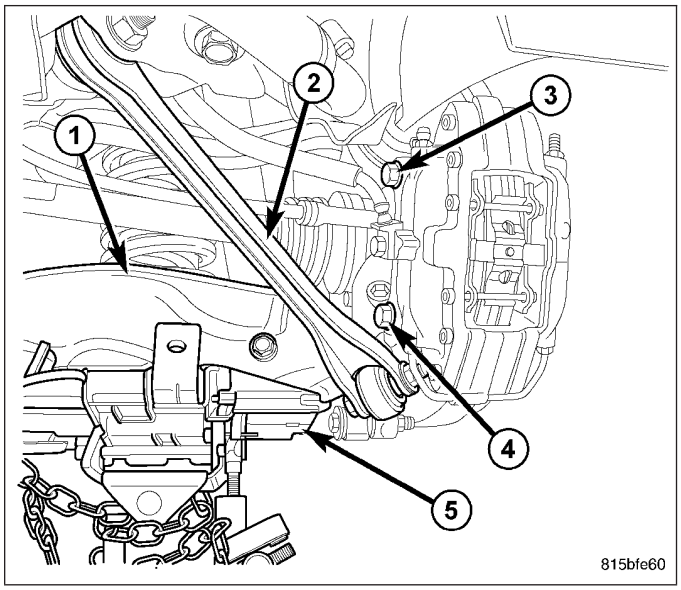

7. Remove the lower and upper caliper mounting bolts (1).
8. Remove brake caliper (2) with pads from knuckle and brake rotor. Hang assembly out of way using wire or a bungee cord. Use care not to overextend brake hose when doing this.

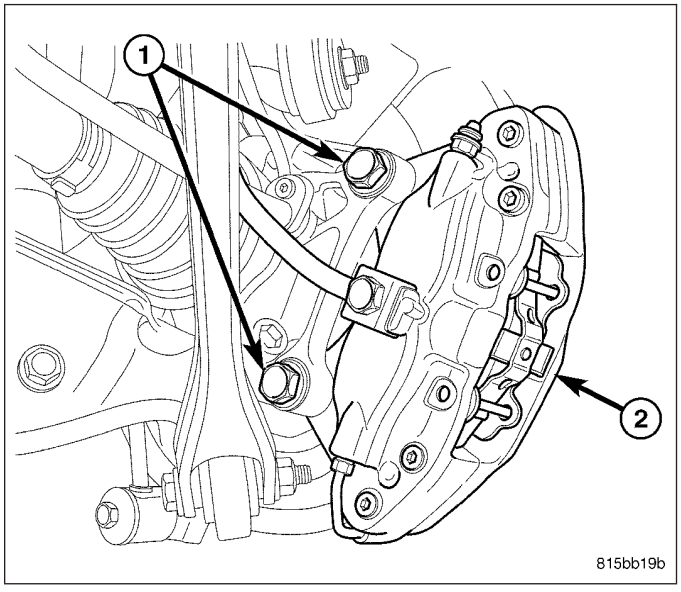

9. Remove any clips (3) retaining brake rotor (2) to wheel mounting studs.
10. Slide brake rotor (2) off hub and bearing (1).

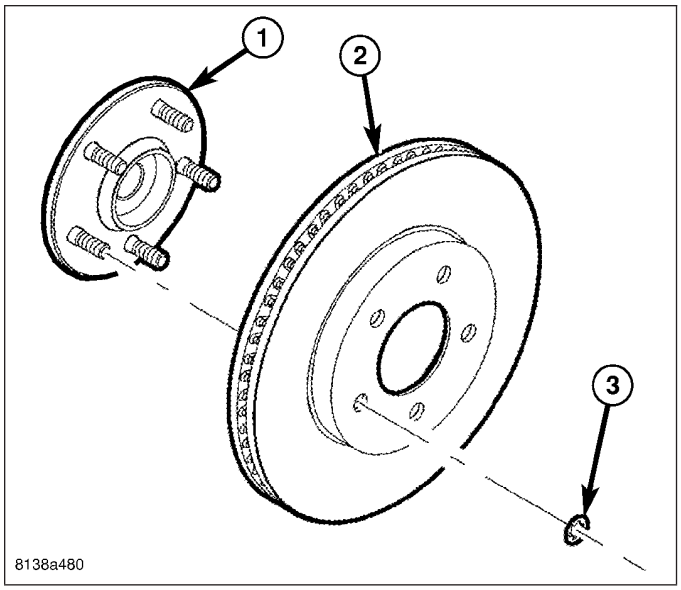

11. Push inward on end of half shaft (2) until C/V joints bottom. This is necessary to give as much access to hub and bearing mounting bolts as possible.

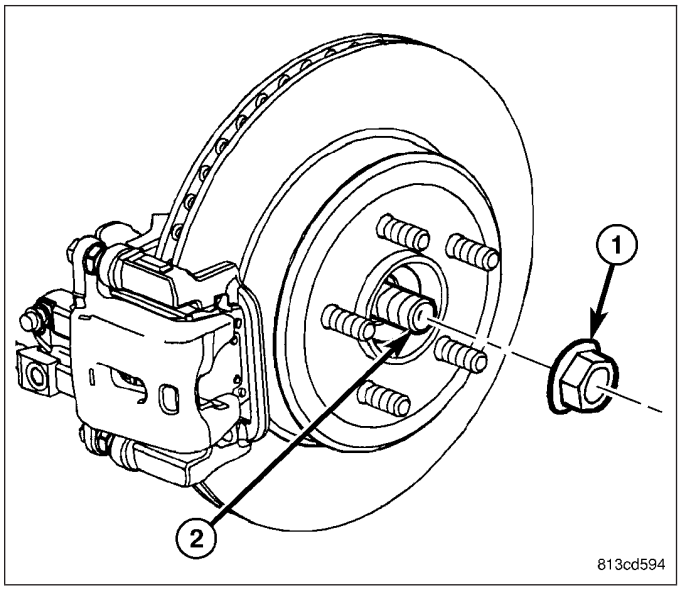

NOTE: It is important to keep suspension jacked up as requested in Step 6 to ease access to lower hub and bearing mounting bolts.

NOTE: Use a 3/8 inch drive wobble extension along with a Torx® socket to access and remove two top and lower front mounting bolt. Use a standard 3/8 inch drive universal joint along with a Torx® socket to access and remove lower rear mounting bolt.

12. Loosen each (of the four) hub and bearing mounting bolt a turn or two at a time while pulling outward on hub and bearing to avoid bolt contact with half shaft outer joint. Once removed from threads in hub and bearing (but not knuckle), allow bolts to stay in and protrude through knuckle and parking brake adapter to keep brake

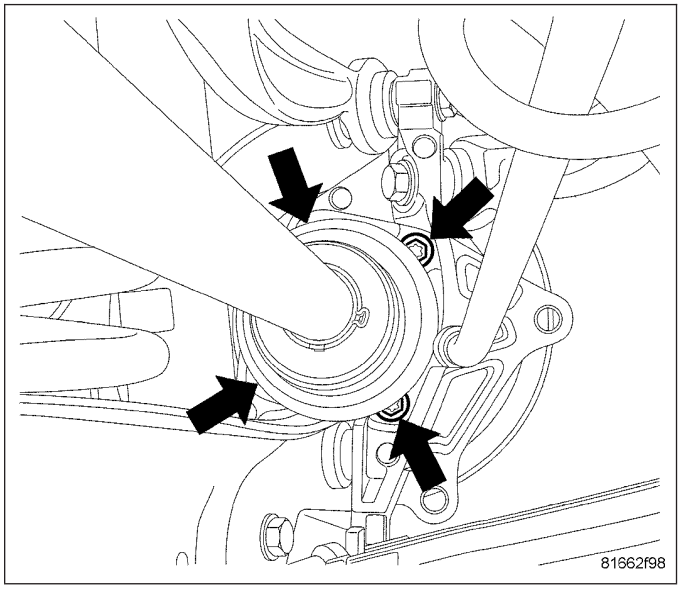

adapter in place while hub and bearing is off vehicle.

13. Slide hub and bearing out of knuckle and off half shaft.

INSTALLATION

HUB AND BEARING

NOTE: Before installing hub and bearing on end of axle half shaft, ensure isolation washer is present on end of half shaft. Inspect washer making sure it is not worn or damaged. Washer can be installed in either direction on shaft.

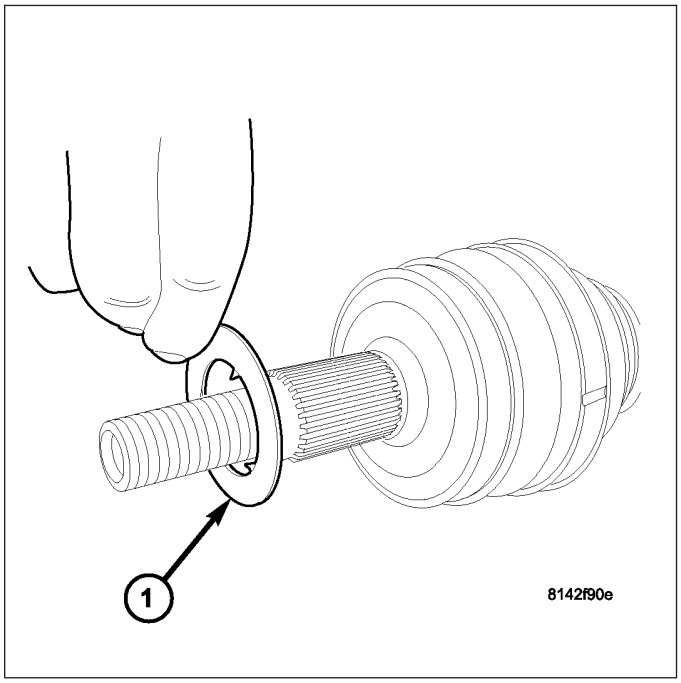

1. Position hub and bearing bolts though rear of knuckle and parking brake support just enough to hold support in place as hub and bearing is installed.
2. Slide hub and bearing onto half shaft. Place hub and bearing through brake support, onto knuckle, lining up mounting bolt holes with bolts.
3. Install four bolts (2) fastening hub and bearing in place. Tighten mounting bolts to 68 N·m (50 ft. lbs.) torque.

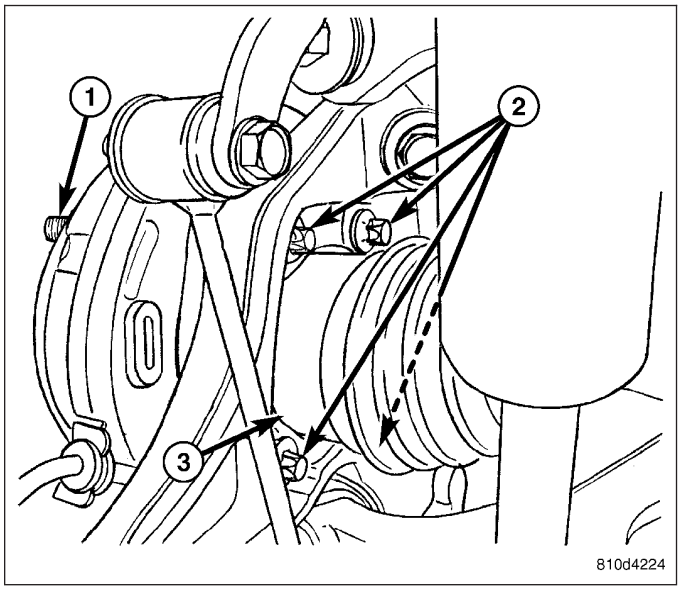

NOTE: Inspect disc brake pads and parking brake shoes before brake rotor installation. (Refer to 5 - BRAKES/HYDRAULIC/MECHANICAL/BRAKE PADS/ SHOES - INSPECTION)

4. Install brake rotor (3) over wheel mounting studs and onto hub (1).

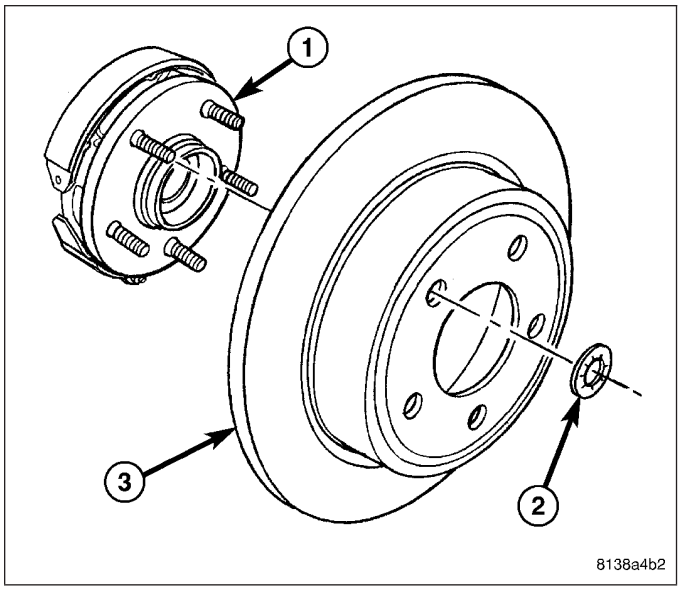

5. Install disc brake caliper and adapter assembly (3) over brake rotor.
6. Install mounting bolts (1) securing caliper adapter (3) to knuckle (2). Tighten bolts to 95 N·m (70 ft. lbs.) torque.

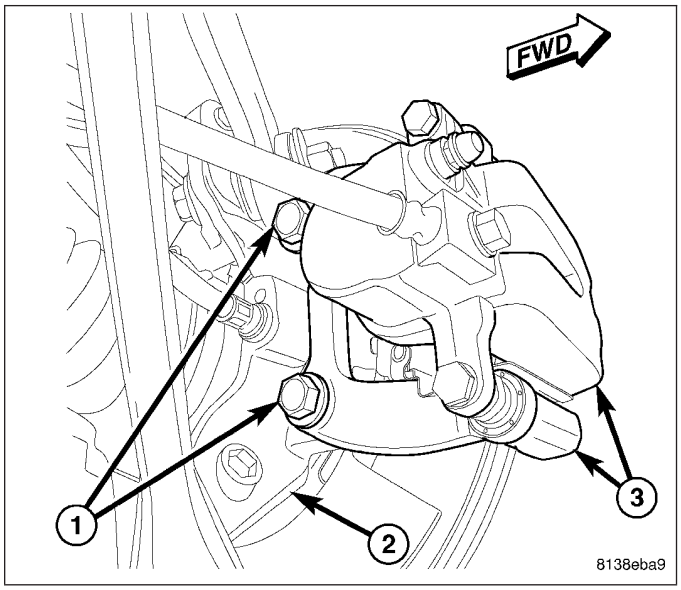

7. Install hub nut (1) on end of half shaft (2). While a helper applies brakes to keep hub from turning, tighten hub nut to 213 N·m (157 ft. lbs.) torque.
8. Verify proper adjustment of the parking brake shoes and adjust as necessary. (Refer to 5 - BRAKES/PARKING BRAKE/SHOES - ADJUSTMENT)

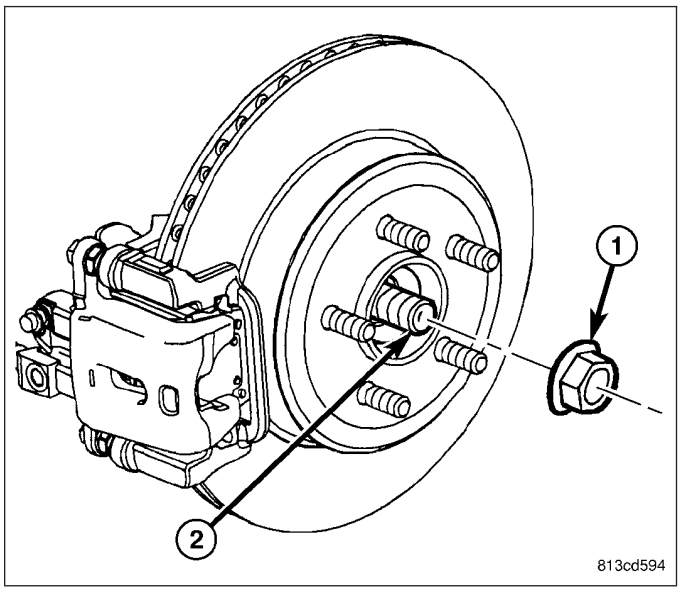

9. Install tire and wheel assembly (1) (Refer to 22 - TIRES/WHEELS - INSTALLATION). Tighten wheel mounting nuts (3) to 150 N·m (110 ft. lbs.) torque.
10. Lower vehicle.
11. Pump brake pedal several times to ensure vehicle has a firm brake pedal before moving vehicle.

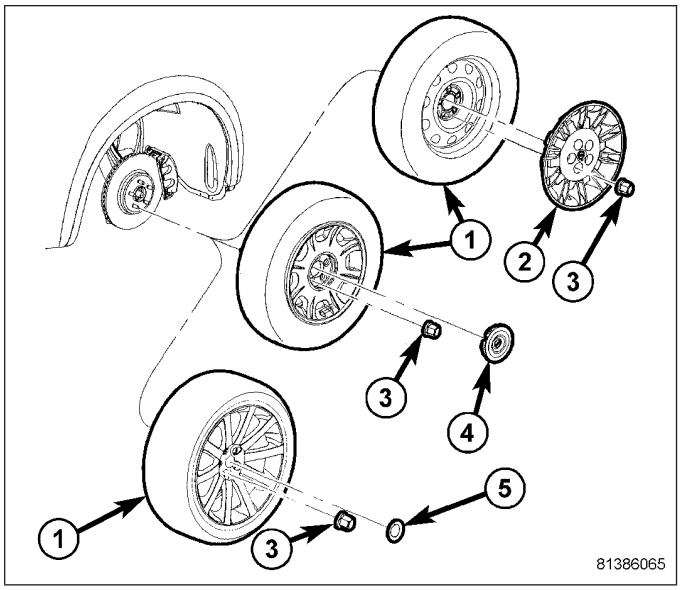

12. Check and adjust brake fluid level in reservoir (1) as necessary.
13. Road test vehicle and make several stops to wear off any foreign material on brakes and to seat brake pads.

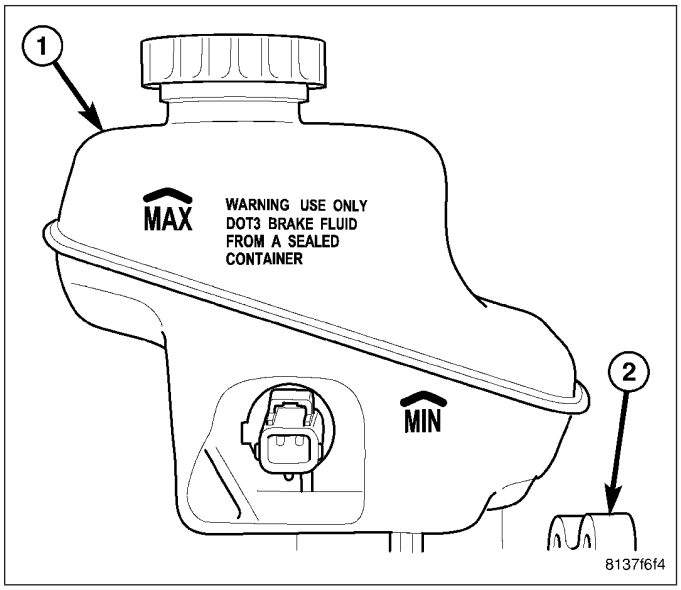

HUB AND BEARING - SRT8

NOTE: Before installing hub and bearing on end of axle half shaft, ensure isolation washer (1) is present on end of half shaft. Inspect washer making sure it is not worn or damaged. Washer can be installed in either direction on shaft.

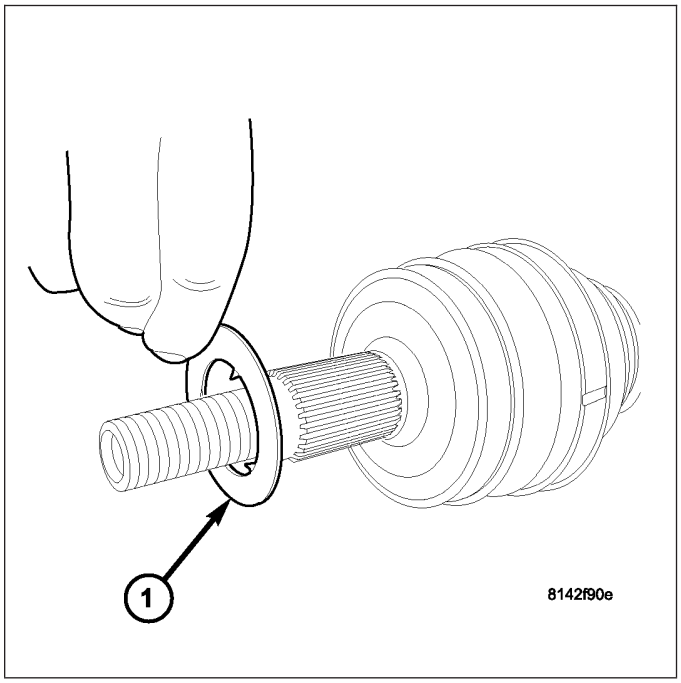

NOTE: To help upon installation, make sure that hub and bearing mounting bolts (1) extend through knuckle (3) and parking brake adapter (2) to hold adapter in place during hub and bearing installation.

1. Position hub and bearing mounting bolts (1) though rear of knuckle (3) and parking brake adapter (2) just enough to hold adapter in place.

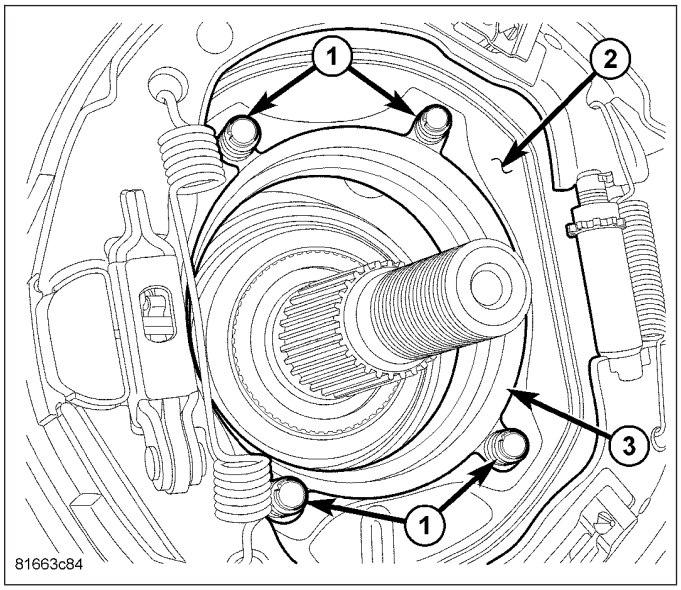

NOTE: Hub and bearing mounting bolt holes are not evenly spaced. Upper mounting holes (2) are not as far apart as lower mounting holes (1). Make note of this before installing hub and bearing.

2. Slide hub and bearing onto half shaft. Insert hub and bearing through parking brake adapter and knuckle, lining up mounting bolt holes with bolts.

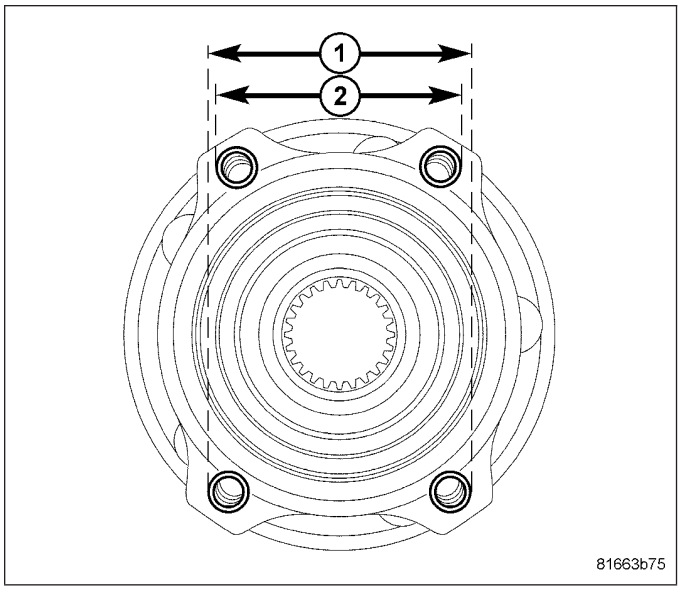

NOTE: Make sure suspension is jacked up as requested during removal to ease access to lower hub and bearing mounting bolts.

NOTE: Use a 3/8 inch drive wobble extension along with a Torx® socket to slip past half shaft outer C/V joint and install two top and lower front mounting bolts. Use a standard 3/8 inch drive universal joint along with a Torx® socket to install lower rear mounting bolt.

3. Carefully start all four mounting bolts into hub and bearing. Using a cross pattern, tighten each hub and bearing mounting bolt a turn or two at a time, slowly drawing hub and bearing into mounted position. Periodically, push in on end of half shaft to give as much room as possible for tools on mounting bolts. Tighten mounting bolts to 68 N·m (50 ft. lbs.) torque.

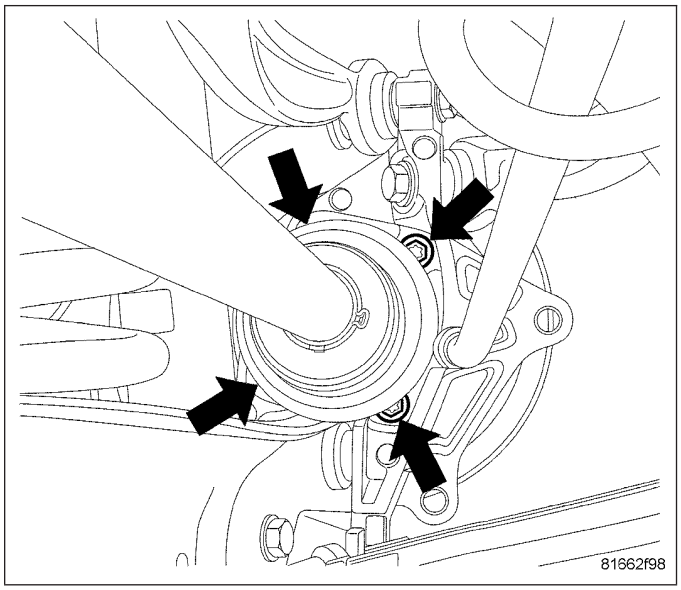

NOTE: Inspect disc brake pads and parking brake shoes before brake rotor installation. (Refer to 5 - BRAKES/HYDRAULIC/MECHANICAL/BRAKE PADS/SHOES - INSPECTION)

4. Clean hub face (1) to remove any dirt or corrosion where rotor mounts.
5. Install brake rotor (2) over studs on hub and bearing (1).

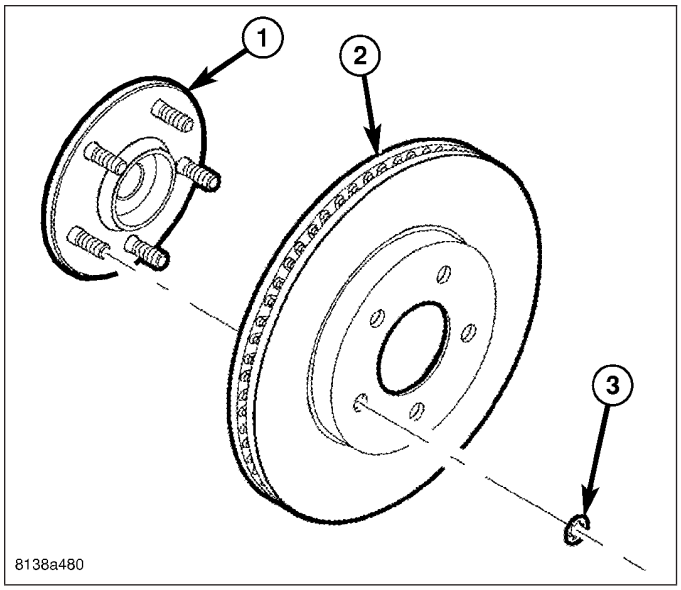

6. Slide caliper with pads (2) over brake rotor and align with knuckle.
7. Install caliper mounting bolts (1). Tighten bolts to 130 N·m (96 ft. lbs.) torque.
8. Remove jack from under spring link.

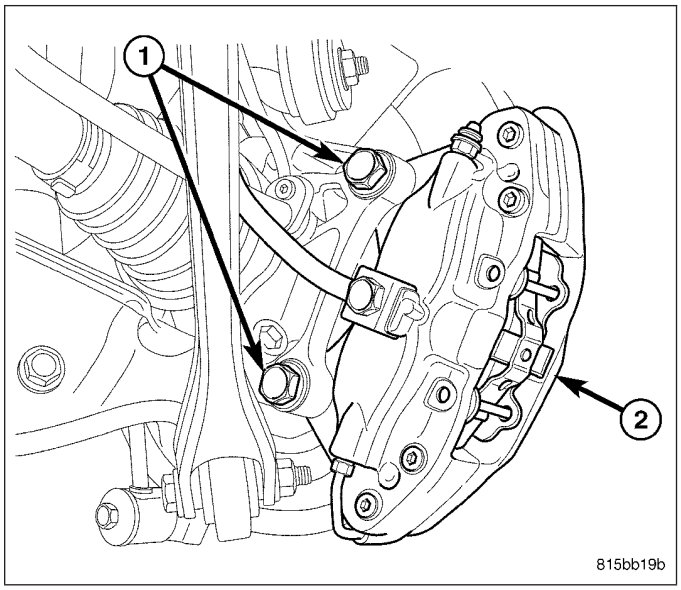

9. Install hub nut (1) on end of half shaft (2). While a helper applies brakes to keep hub from turning, tighten hub nut to 213 N·m (157 ft. lbs.) torque.
10. Verify proper adjustment of the parking brake shoes and adjust as necessary. (Refer to 5 - BRAKES/PARKING BRAKE/SHOES - ADJUSTMENT)

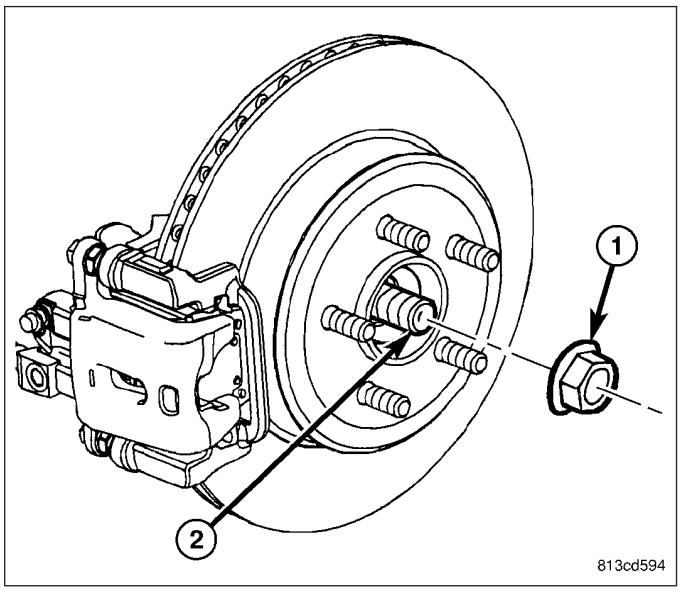

11. Install tire and wheel assembly (1) (Refer to 22 - TIRES/WHEELS - INSTALLATION). Tighten wheel mounting nuts (3) to 150 N·m (110 ft. lbs.) torque.
12. Lower vehicle.
13. Pump brake pedal several times to ensure vehicle has a firm brake pedal before moving vehicle.

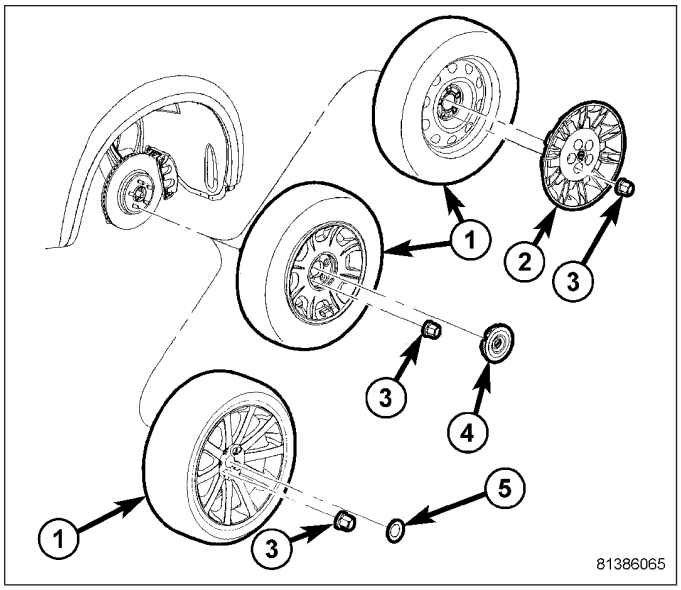

14. Check and adjust brake fluid level in reservoir (1) as necessary.
15. Road test vehicle and make several stops to wear off any foreign material on brakes and to seat brake pads.

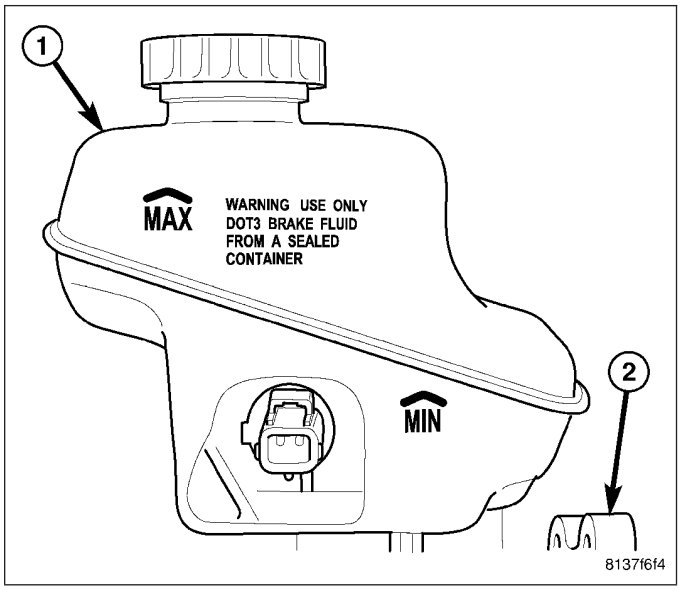

KNUCKLE

REMOVAL

KNUCKLE

1. Raise and support vehicle. (Refer to LUBRICATION & MAINTENANCE/HOISTING - STANDARD PROCEDURE)
2. Unclip wheel speed sensor cable at rear brake rotor shield (1).
3. Remove screw (2) fastening sensor head (3) to rear knuckle.
4. Remove wheel speed sensor head from knuckle.
5. Access and remove rear hub and bearing. (Refer to 2 - SUSPENSION/REAR/HUB / BEARING - REMOVAL)
6. Remove parking brake shoes. (Refer to 5 - BRAKES/PARKING BRAKE/SHOES - REMOVAL)

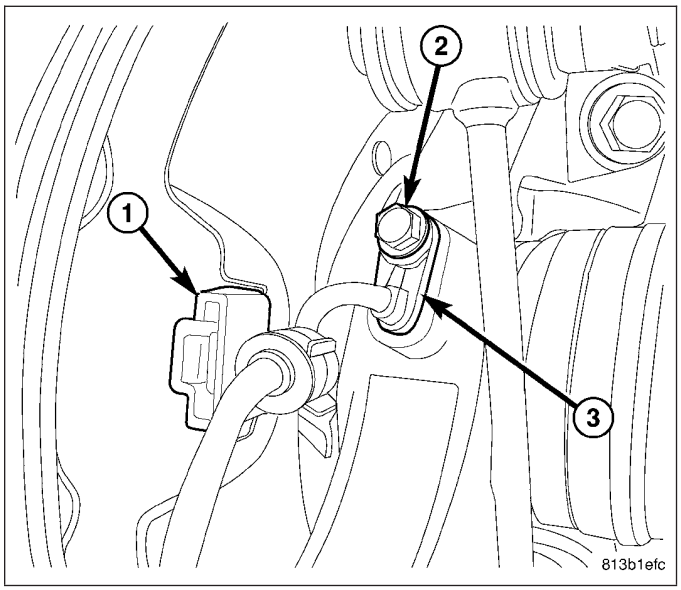

7. If not removed, remove parking brake shoe actuator lever (1) from end of cable (2).
8. Remove shoe support from knuckle.

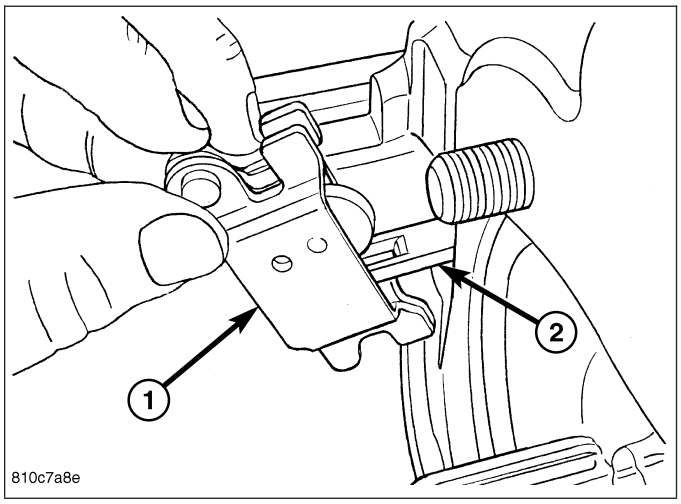

9. Remove parking brake cable screw (2) at knuckle (3) and pull cable (1) out of knuckle.
10. Position under-hoist utility jack or jack stand under spring link. Raise jack head to contact spring link at shock mount secure in place.

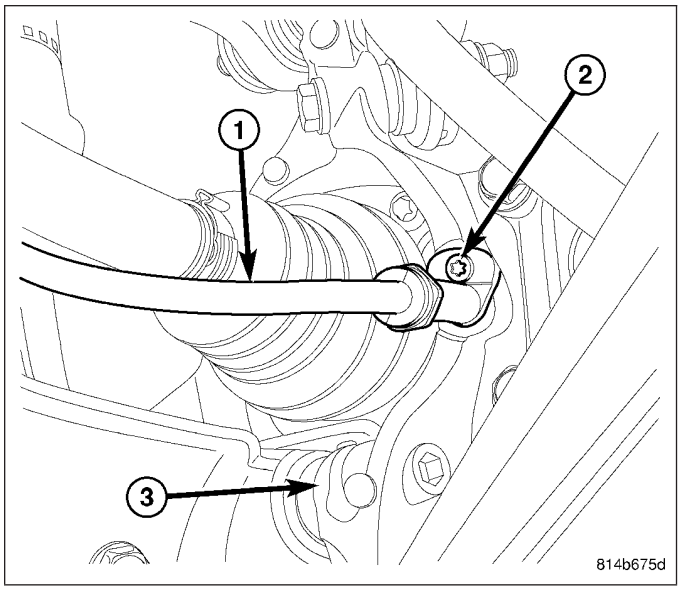

11. Remove spring link-to-knuckle nut and bolt (2).

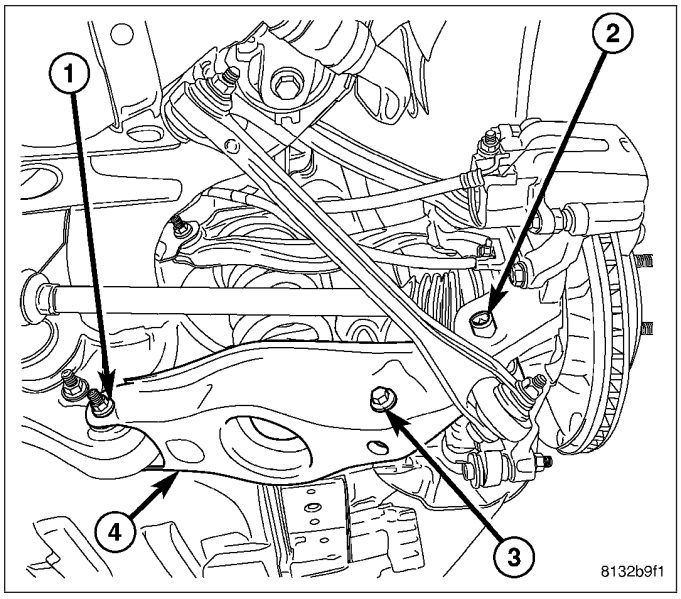

CAUTION: It important to use Guide (2) , Special Tool 9361-2, when tapping sleeve in knuckle to help keep Tap (1) , Special Tool 9361-1, straight during use or damage to Tap may occur.

12. Place Guide 9361-2 (2) against sleeve (3) in knuckle to keep Tap 9361-1 (1) straight. Using Tap with an appropriate handle, cut threads approximately halfway through bushing (or about six complete threads). **It is important to back tap out, clean out burrs and lubricate Tap often during process.**

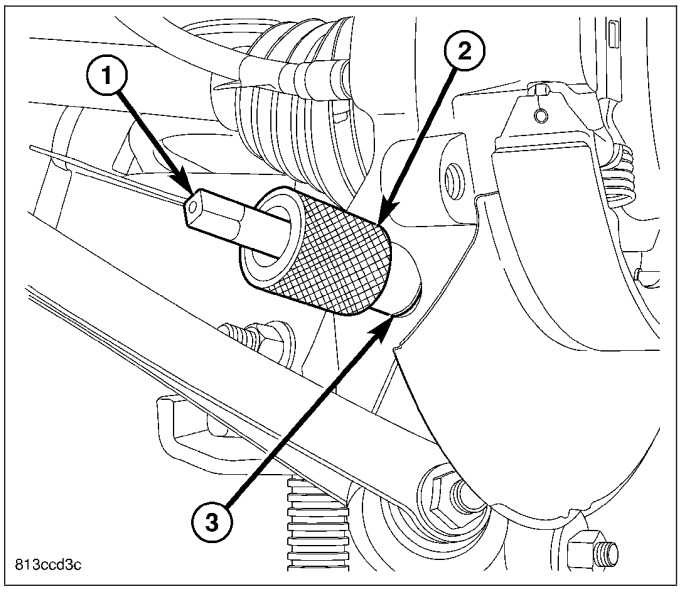

NOTE: Prior to using Special Tool 9361, lubricate Bolt (1) threads to provide ease of use and promote tool longevity.

13. Assemble Remover, Special Tool 9361, as shown.
    - (1) Bolt 9361-3
    - (2) Nut
    - (3) Spherical Washer
    - (4) Thrust Bearing
    - (5) Sleeve 9361-4 (RWD)
    - (5) Sleeve 9361-5 (AWD – Left Side)
    - (5) Sleeve 9361-6 (AWD – Right Side)

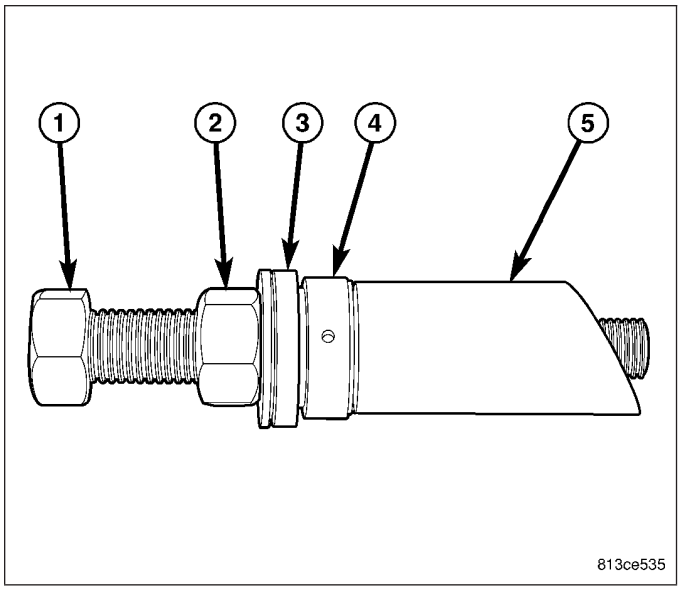

NOTE: When installing thrust bearing on Remover, be sure to place hardened side against nut. Place bearing outer cage against stationary component.

NOTE: It is important to use appropriate Sleeve on Remover to provide proper Tool-to-Knuckle contact. RWD sleeve can be used on either side while AWD knuckles require specific left or right side Sleeves.

14. Thread Remover Bolt 9361-3 (1) into tapped knuckle sleeve.
15. Rotate Nut down, matching Sleeve angled end with angled face of knuckle.
16. Continue to rotate Nut until knuckle sleeve is removed from knuckle. **Discard knuckle sleeve; replace it with new upon installation.**

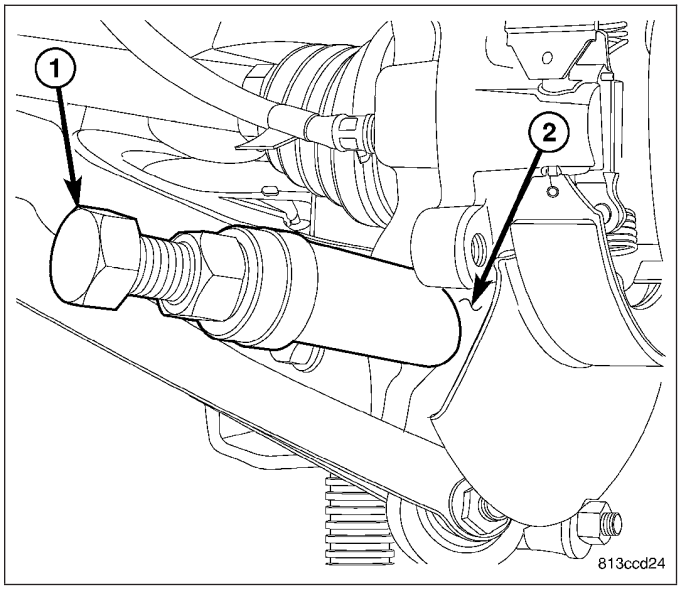

17. Remove bolt and nut fastening compression link (5) to knuckle (4).
18. Remove bolt fastening toe link (3) to knuckle (4).
19. Remove nut and bolt fastening stabilizer link to knuckle (4).
20. Remove nut and bolt fastening tension link (6) to knuckle (4).
21. Remove nut and bolt fastening camber link (1) to knuckle (4).
22. Remove knuckle (4).
23. Remove hub mounting bolts from knuckle.

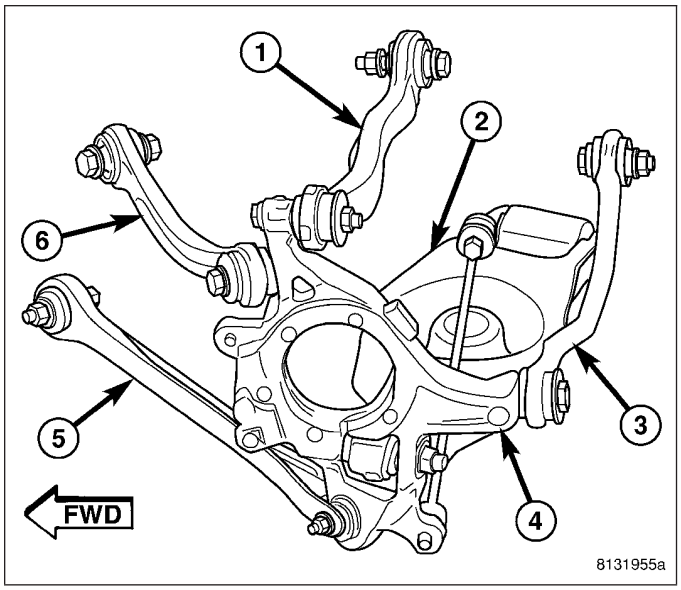

KNUCKLE - SRT8

1. Raise and support vehicle. (Refer to LUBRICATION & MAINTENANCE/HOISTING - STANDARD PROCEDURE)
2. Unclip wheel speed sensor cable at rear brake rotor shield (1).
3. Remove screw (2) fastening sensor head (3) to rear knuckle.
4. Remove wheel speed sensor head from knuckle.
5. Access and remove rear hub and bearing. (Refer to 2 - SUSPENSION/REAR/HUB / BEARING - REMOVAL)
6. Remove parking brake shoes. (Refer to 5 - BRAKES/PARKING BRAKE/SHOES - REMOVAL)

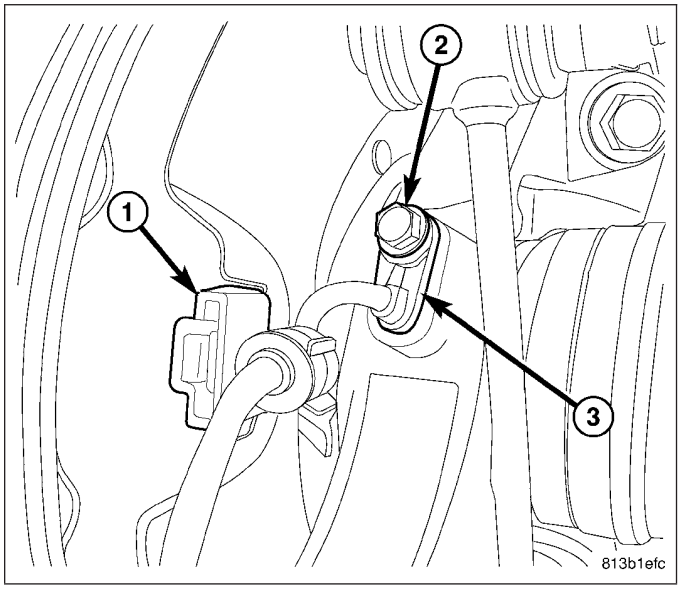

7. If not removed, remove parking brake shoe actuator lever (1) from end of cable (2).
8. Remove shoe support from knuckle.

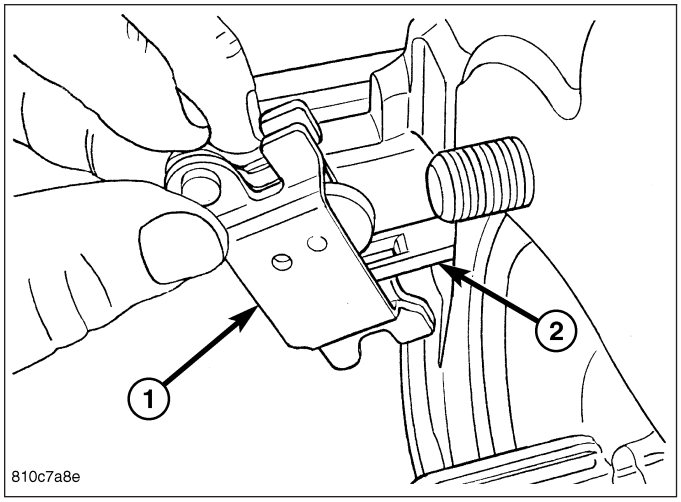

9. Remove parking brake cable screw (2) at knuckle (3) and pull cable (1) out of knuckle.
10. Position under-hoist utility jack or jack stand under spring link. Raise jack head to contact spring link at shock mount secure in place.

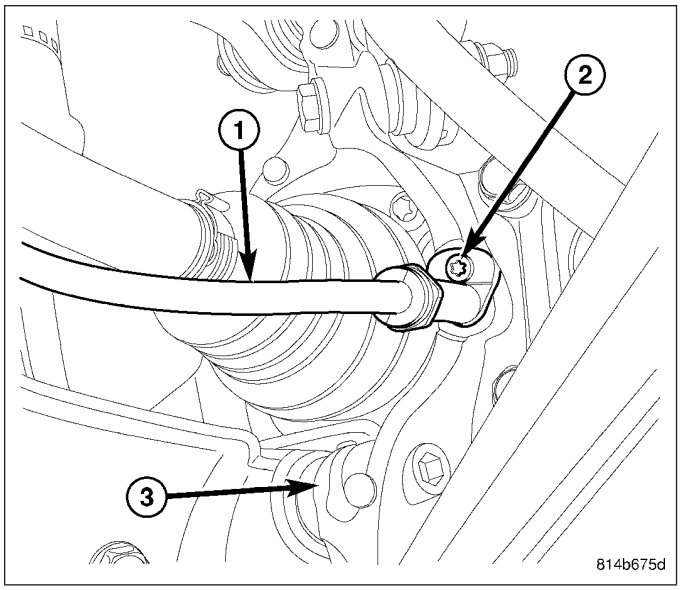

11. Remove spring link-to-knuckle nut and bolt (2).

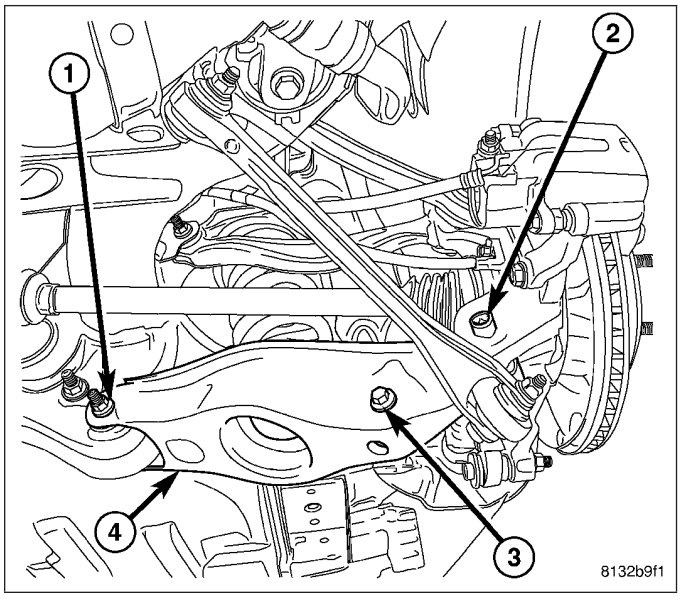

CAUTION: It important to use Guide (2), Special Tool 9361-11, when tapping sleeve in knuckle to help keep Tap (1) , Special Tool 9361-1, straight during use or damage to Tap may occur.

12. Place Guide 9361-11 (2) against sleeve (3) in knuckle to keep Tap 9361-1 (1) straight. Using Tap with an appropriate handle, cut threads approximately halfway through bushing (or about six complete threads). **It is important to back tap out, clean out burrs and lubricate Tap often during process.**

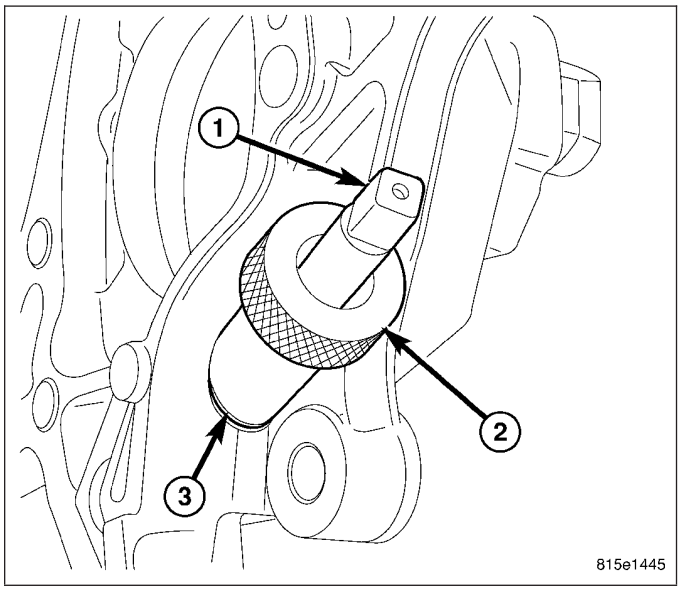

NOTE: Prior to using Special Tool 9361, lubricate Bolt (1) threads to provide ease of use and promote tool longevity.

13. Assemble Remover, Special Tool 9361, as shown.
    - (1) Bolt 9361-3
    - (2) Nut
    - (3) Thrust Bearing
    - (4) Spherical Washer
    - (5) Sleeve 9361-9 (Left Side - Shown in figure)
    - (5) Sleeve 9361-10 (Right Side)

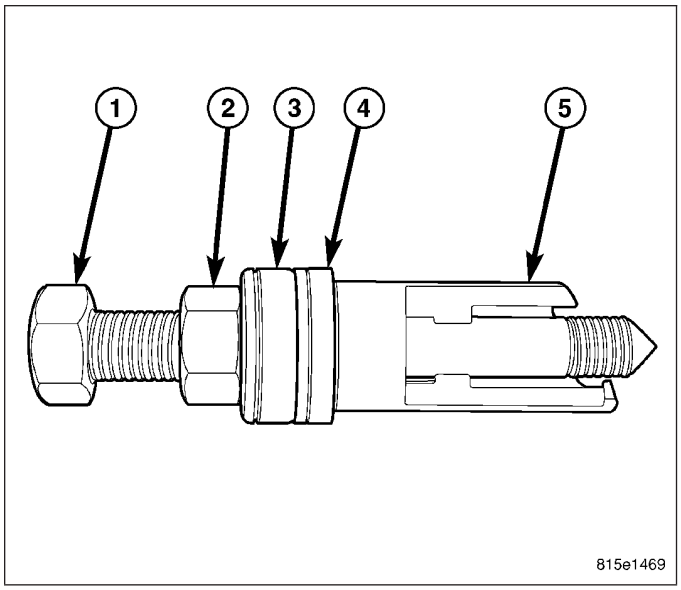

NOTE: When installing thrust bearing (3) on Remover, be sure to place hardened side against nut (2). Place bearing outer cage against stationary component.

NOTE: It is important to use appropriate Sleeve (9361-9 or 9361-10) on Remover to provide proper Tool-to-Knuckle contact.

14. Thread Remover Bolt 9361-3 (2) into tapped knuckle sleeve.
15. Rotate Nut down, matching Sleeve (9361-9 or 9361-10) angled end with angled face of knuckle (1). **Make sure foot on Sleeve (3) is inserted behind machined brake caliper mounting boss.**
16. Continue to rotate Nut until knuckle sleeve is removed from knuckle. **Discard knuckle sleeve; replace it with new upon installation.**

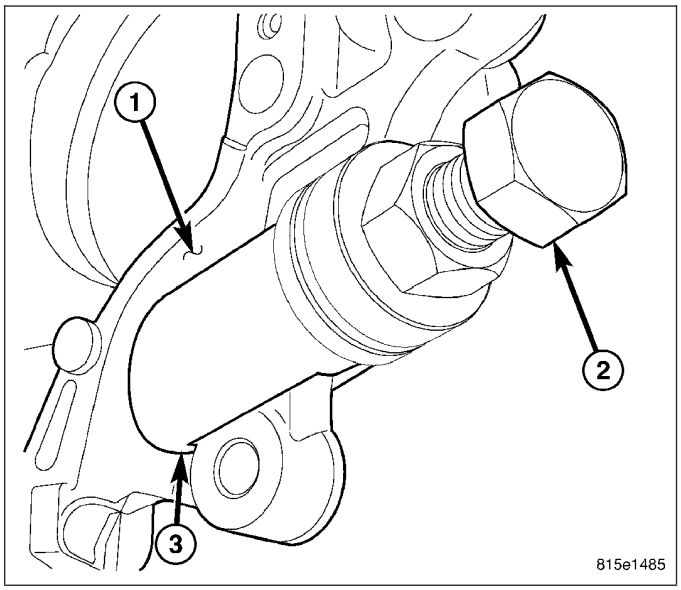

17. Remove bolt and nut fastening compression link (5) to knuckle (4).
18. Remove bolt fastening toe link (3) to knuckle (4).
19. Remove nut and bolt fastening stabilizer link to knuckle (4).
20. Remove nut and bolt fastening tension link (6) to knuckle (4).
21. Remove nut and bolt fastening camber link (1) to knuckle (4).
22. Remove knuckle (4).
23. Remove hub mounting bolts from knuckle.

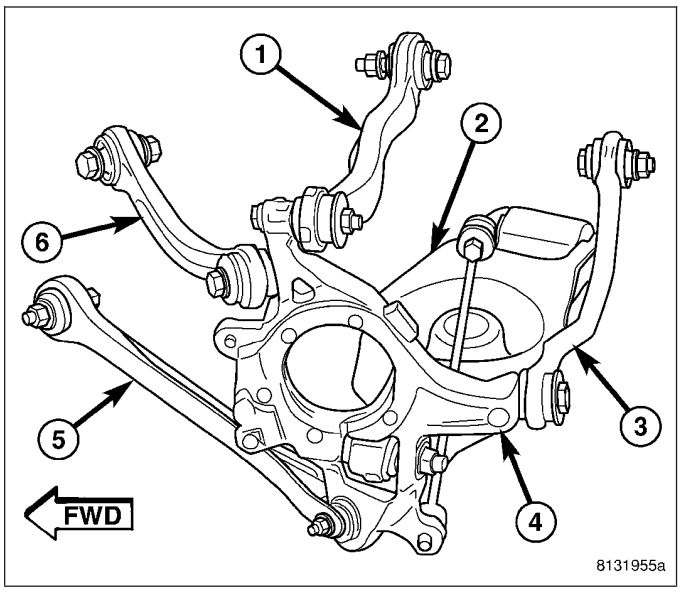

INSTALLATION

KNUCKLE

1. Install four hub mounting bolts through knuckle from inboard side allowing ends to protrude from opposite side.
2. Position knuckle on vehicle and install bolt and nut fastening camber link (1) to knuckle (4) as shown. **Do not tighten bolt at this time.**
3. Install bolt and nut fastening tension link (6) to knuckle (4) as shown. **Do not tighten bolt at this time.**
4. Install bolt and nut fastening stabilizer link to knuckle (4). **Do not tighten bolt at this time.**
5. Install bolt fastening toe link (3) to knuckle (4). **Do not tighten bolt at this time.**
6. Install bolt and nut fastening compression link (5) to knuckle (4). **Do not tighten bolt at this time.**

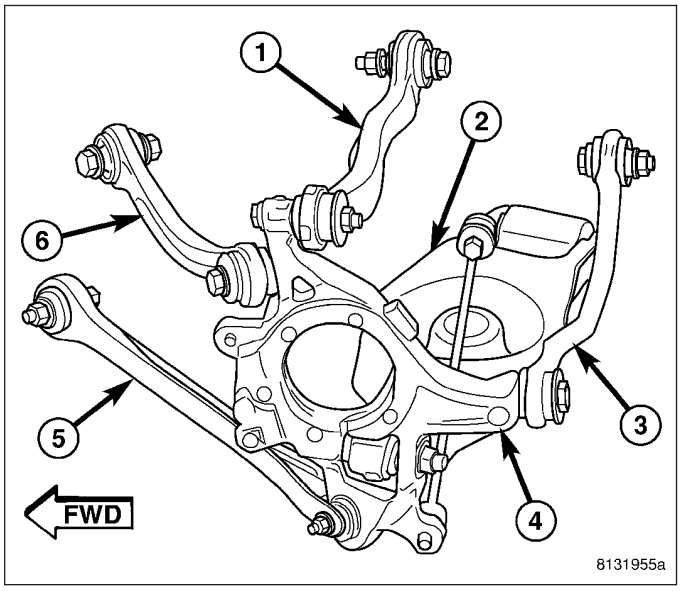

NOTE: If a new knuckle sleeve is not installed in knuckle, perform Step 7 through Step 11.

NOTE: Prior to using Special Tool 9361, lubricate bolt (1) threads to provide ease of use and promote tool longevity.

7. Place NEW knuckle sleeve (2) onto Installer Bolt 9361-7 (1), and slide it up to Bolt's head.

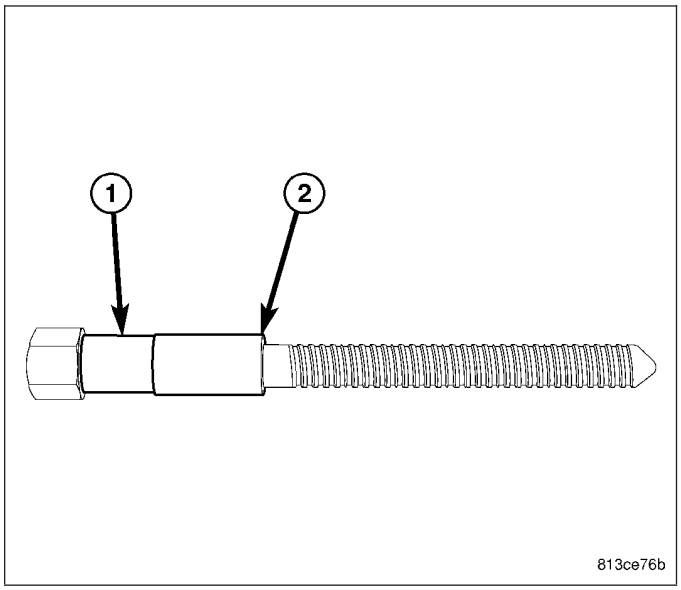

8. Starting from knuckle forward end, slide Bolt 9361-7 (1) with sleeve (5) through knuckle (2) and spring link ball joint (3).
9. Install thrust bearing and nut (4) on end of Bolt. **When installing thrust bearing on Installer, be sure to place hardened side against nut. Place bearing outer cage against stationary component.**
10. While holding Bolt head (1) stationary, rotate Nut (4) (using hand tools) installing sleeve in knuckle. Install sleeve until Nut stops turning. **Do not overtighten Nut.**
11. Remove special tool.

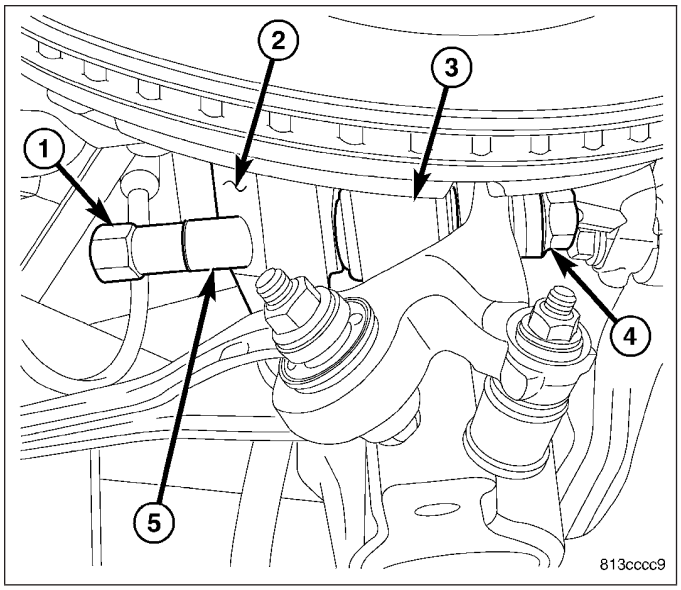

12. Install spring link-to-knuckle bolt (2) front-to-rear through knuckle and link, then install nut. While holding bolt head stationary, tighten nut to 138 N·m (102 ft. lbs.) torque.
13. Remove under-hoist utility jack or jack stand from under spring link.

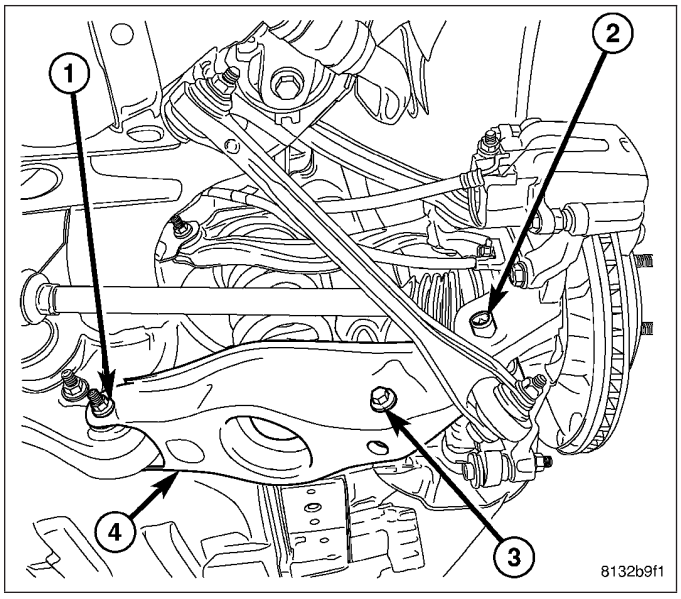

14. Insert end of cable (1) through rear knuckle (3) and install mounting screw (2). Tighten screw to 8 N·m (71 in. lbs.) torque.
15. Install parking brake shoe support over hub and bearing mounting screws and onto face of knuckle.

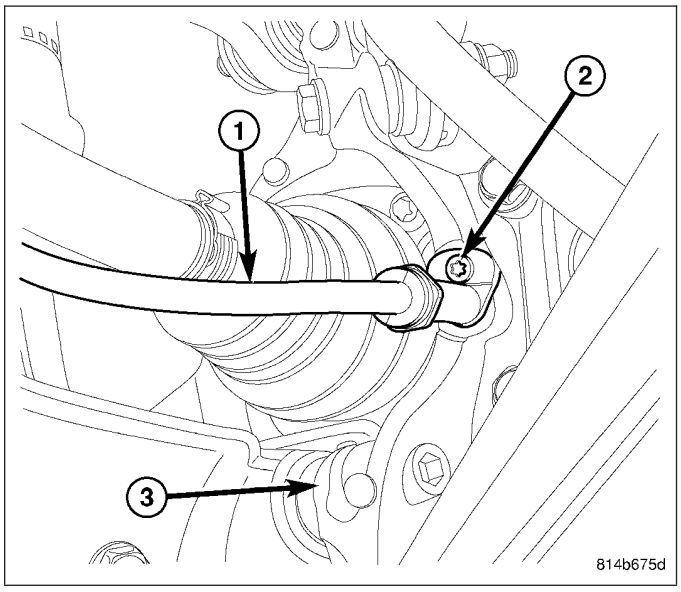

16. Install shoe actuator lever (1) on end of parking brake cable (2). Make sure actuator lever is positioned with word “UP” facing outward.
17. Install parking brake shoes as well as all components necessary to access them. (Refer to 5 - BRAKES/PARKING BRAKE/SHOES - INSTALLATION)

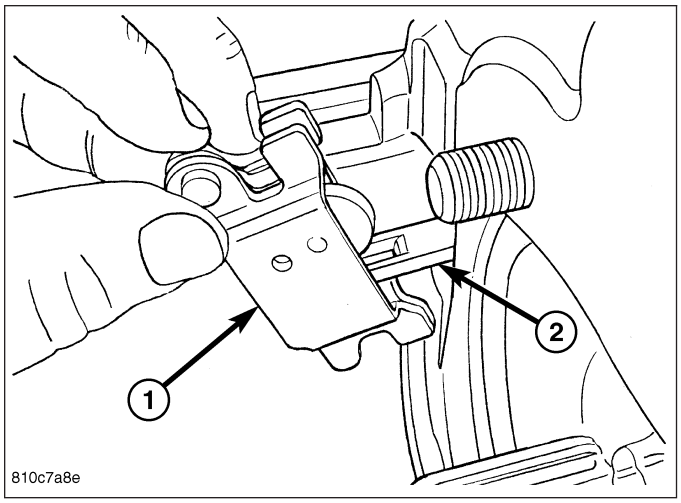

NOTE: Before installing hub and bearing on end of axle half shaft, ensure isolation washer is present on end of half shaft. Inspect washer making sure it is not worn or damaged. Washer can be installed in either direction on shaft.

18. Install hub and bearing as well as all components necessary to access it. (Refer to 2 - SUSPENSION/REAR/HUB / BEARING - INSTALLATION)

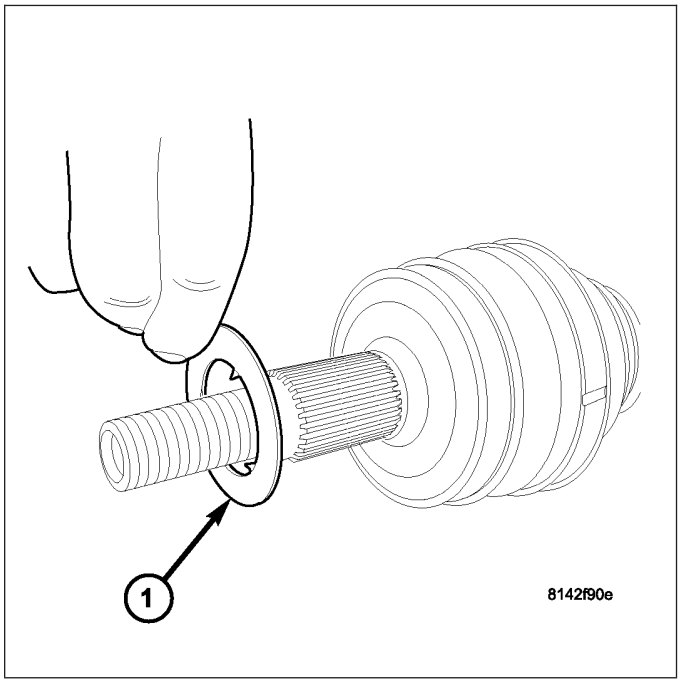

19. Insert wheel speed sensor head (3) into mounting hole in rear of knuckle.
20. Install screw (2) fastening sensor head (3) to rear knuckle. Tighten Screw to 11 N·m (97 in. lbs.) torque.
21. Install sensor cable at rear brake rotor shield (1).
22. Lower vehicle.
23. Adjust parking brake shoes as necessary. (Refer to 5 - BRAKES/PARKING BRAKE/SHOES - ADJUSTMENTS)
24. Position vehicle on alignment rack/drive-on hoist. Raise vehicle as necessary to access mounting bolts.

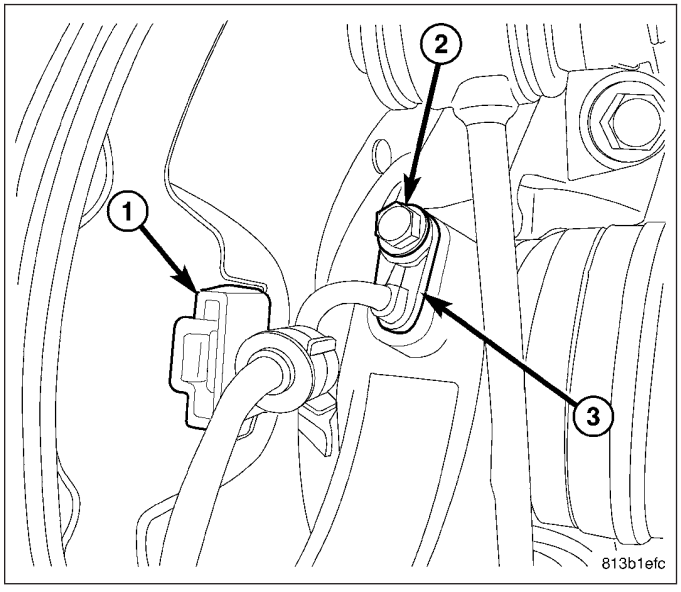

25. Tighten fasteners at knuckle (vehicle at curb height) as follows:
    - Camber Link (1) – 98 N·m (72 ft. lbs.) torque.
    - Compression Link (5) – 81 N·m (60 ft. lbs.) torque.
    - Stabilizer Link – 61 N·m (45 ft. lbs.) torque.
    - Tension Link (6) – 98 N·m (72 ft. lbs.) torque.
    - Toe Link (3) – 81 N·m (60 ft. lbs.) torque.
26. Perform wheel alignment. (Refer to 2 - SUSPENSION/WHEEL ALIGNMENT - STANDARD PROCEDURE)

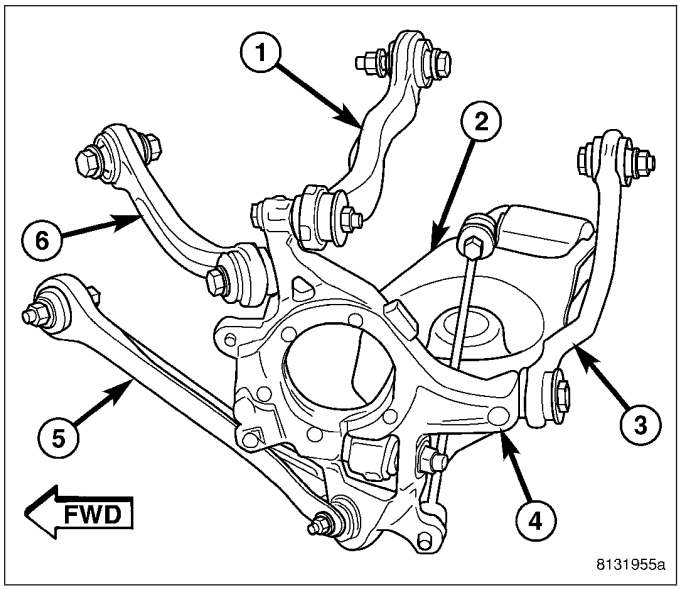

KNUCKLE - SRT8

1. Install four hub mounting bolts through knuckle from inboard side allowing ends to protrude from opposite side.
2. Position knuckle on vehicle and install bolt and nut fastening camber link (1) to knuckle (4) as shown. **Do not tighten bolt at this time.**
3. Install bolt and nut fastening tension link (6) to knuckle (4) as shown. **Do not tighten bolt at this time.**
4. Install bolt and nut fastening stabilizer link to knuckle (4). **Do not tighten bolt at this time.**
5. Install bolt fastening toe link (3) to knuckle (4). **Do not tighten bolt at this time.**
6. Install bolt and nut fastening compression link (5) to knuckle (4). **Do not tighten bolt at this time.**

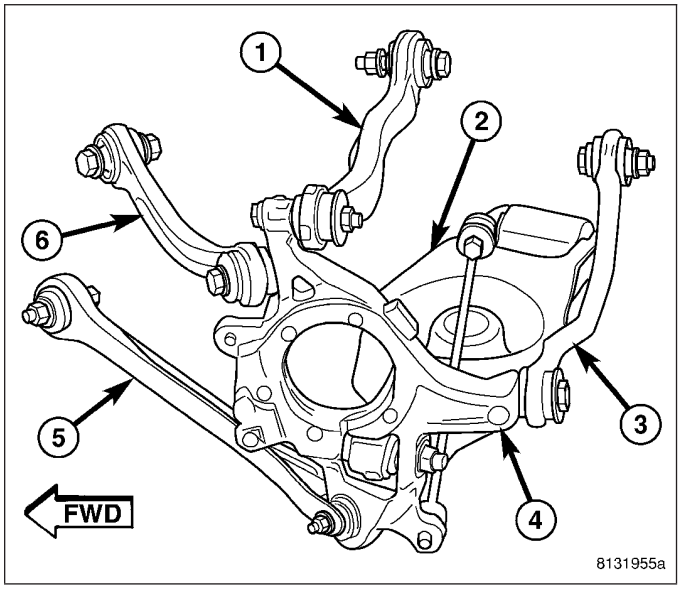

NOTE: If a new knuckle sleeve is not installed in knuckle, perform Step 7 through Step 11.

NOTE: Prior to using Special Tool 9361, lubricate bolt (1) threads to provide ease of use and promote tool longevity.

7. Place NEW knuckle sleeve (2) onto Installer Bolt 9361-12 (1), and slide it up to Bolt's head.

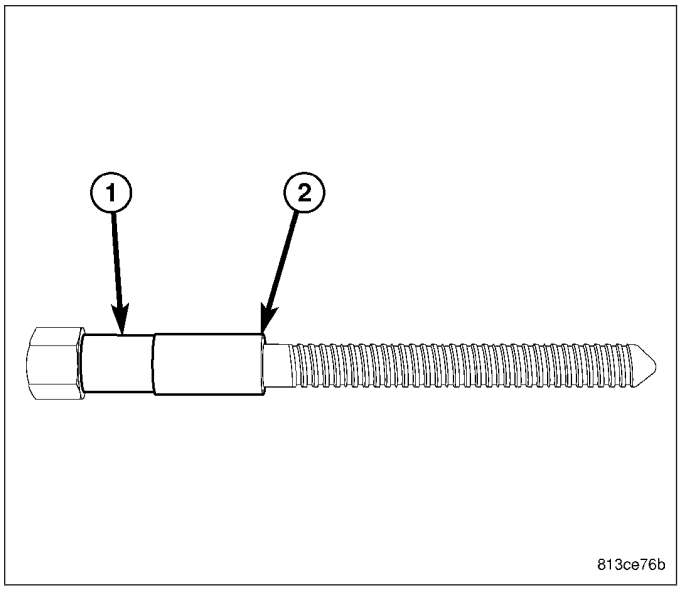

8. Starting from knuckle forward end, slide Bolt 9361-12 (1) with sleeve (5) through knuckle (2) and spring link ball joint (3).
9. Install Installation Thrust Bearing (around 3/8 inch thick) and special flange nut (4) on end of Bolt. **When installing thrust bearing on Installer, be sure to place hardened side against nut. Place bearing outer cage against stationary component.**
10. While holding Bolt head (1) stationary, rotate Nut (4) (using hand tools) installing sleeve in knuckle. Install sleeve until Nut stops turning. **Do not overtighten Nut.**
11. Remove special tool.

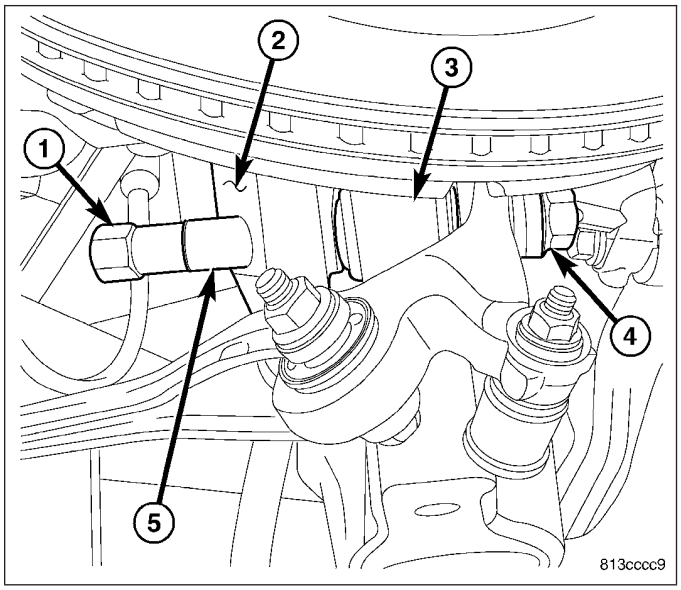

12. Install spring link-to-knuckle bolt (2) front-to-rear through knuckle and link, then install nut. While holding bolt head stationary, tighten nut to 138 N·m (102 ft. lbs.) torque.
13. Remove under-hoist utility jack or jack stand from under spring link.

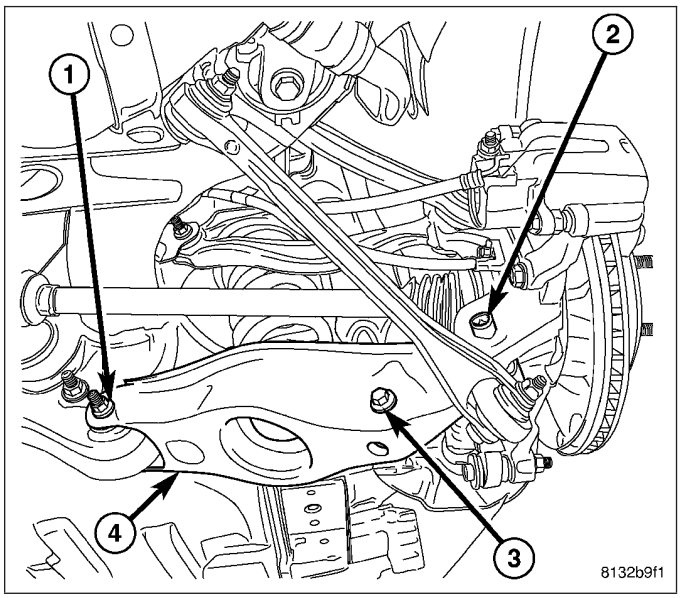

14. Insert end of cable (1) through rear knuckle (3) and install mounting screw (2). Tighten screw to 8 N·m (71 in. lbs.) torque.
15. Install parking brake shoe support over hub and bearing mounting screws and onto face of knuckle.

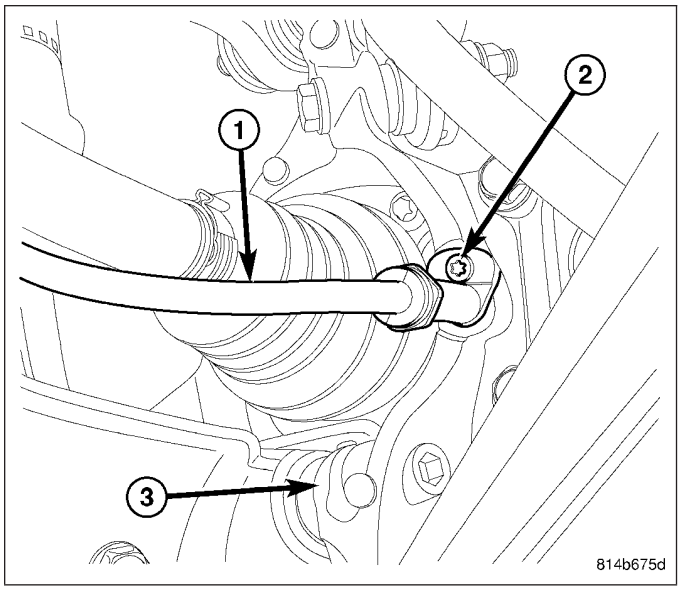

16. Install shoe actuator lever (1) on end of parking brake cable (2). Make sure actuator lever is positioned with word “UP” facing outward.
17. Install parking brake shoes as well as all components necessary to access them. (Refer to 5 - BRAKES/PARKING BRAKE/SHOES - INSTALLATION)

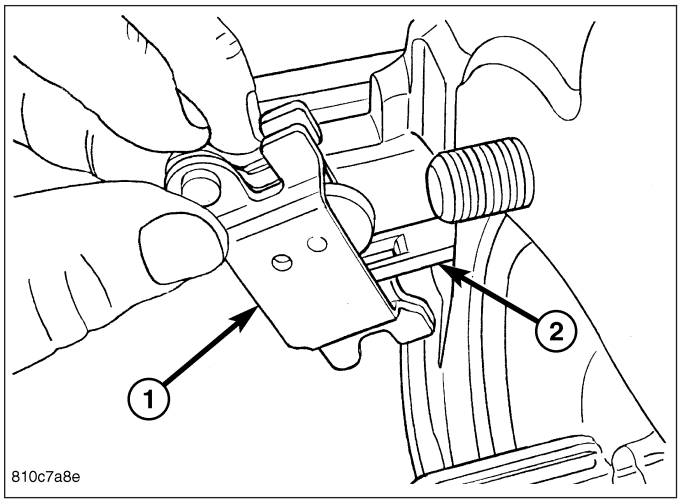

NOTE: Before installing hub and bearing on end of axle half shaft, ensure isolation washer is present on end of half shaft. Inspect washer making sure it is not worn or damaged. Washer can be installed in either direction on shaft.

18. Install hub and bearing as well as all components necessary to access it. (Refer to 2 - SUSPENSION/REAR/HUB / BEARING - INSTALLATION)

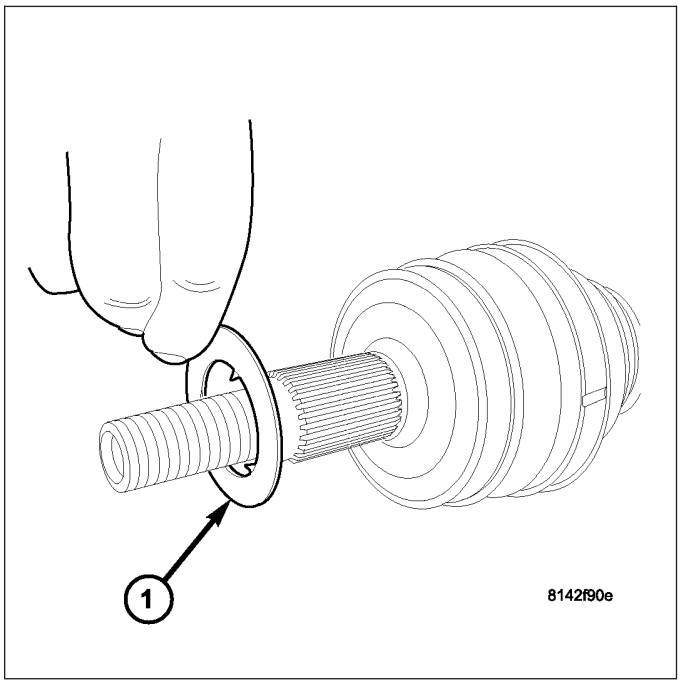

19. Insert wheel speed sensor head (3) into mounting hole in rear of knuckle.
20. Install screw (2) fastening sensor head (3) to rear knuckle. Tighten Screw to 11 N·m (97 in. lbs.) torque.
21. Install sensor cable at rear brake rotor shield (1).
22. Lower vehicle.
23. Adjust parking brake shoes as necessary. (Refer to 5 - BRAKES/PARKING BRAKE/SHOES - ADJUSTMENTS)
24. Position vehicle on alignment rack/drive-on hoist. Raise vehicle as necessary to access mounting bolts.

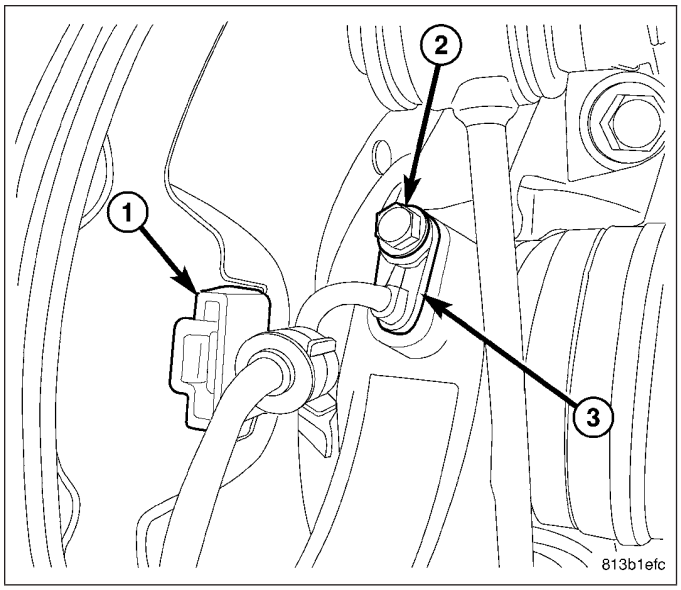

25. Tighten fasteners at knuckle (vehicle at curb height) as follows:
    - Camber Link (1) – 98 N·m (72 ft. lbs.) torque.
    - Compression Link (5) – 81 N·m (60 ft. lbs.) torque.
    - Stabilizer Link – 61 N·m (45 ft. lbs.) torque.
    - Tension Link (6) – 98 N·m (72 ft. lbs.) torque.
    - Toe Link (3) – 81 N·m (60 ft. lbs.) torque.
26. Perform wheel alignment. (Refer to 2 - SUSPENSION/WHEEL ALIGNMENT - STANDARD PROCEDURE)

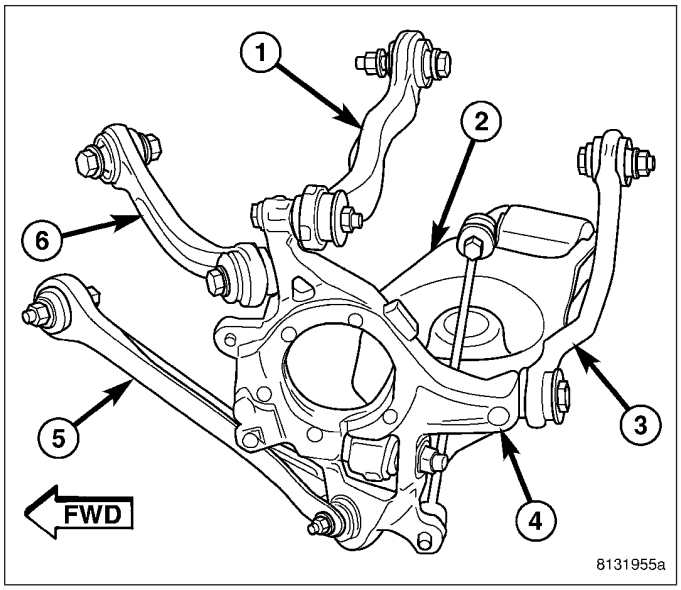

CAMBER LINK

REMOVAL

1. Raise and support vehicle. (Refer to LUBRICATION & MAINTENANCE/HOISTING - STANDARD PROCEDURE)
2. On both sides of vehicle, remove wheel mounting nuts (3), then rear tire and wheel assembly (1).

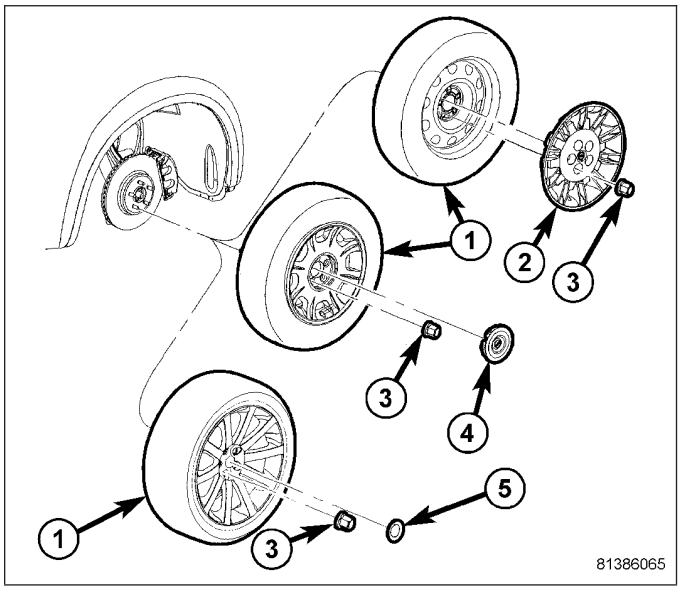

WARNING: Before opening fuel system, review all Warnings and Cautions.

3. If servicing left side, remove fuel filler tube. (Refer to 14 - FUEL SYSTEM/FUEL DELIVERY/FUEL TANK FILLER TUBE - REMOVAL)
4. Position an extra pair of jack stands under and support forward end of engine cradle to help stabilize vehicle during rear suspension removal/installation.
5. Perform following if vehicle is equipped with dual-exhaust or are servicing right side on vehicle with single exhaust.
   a. Position under-hoist utility jack or stand several inches below exhaust at muffler.
   b. Disconnect exhaust isolators at muffler and resonators hangers.
   c. Lower exhaust down to rest upon top of jack or stand placed below muffler.

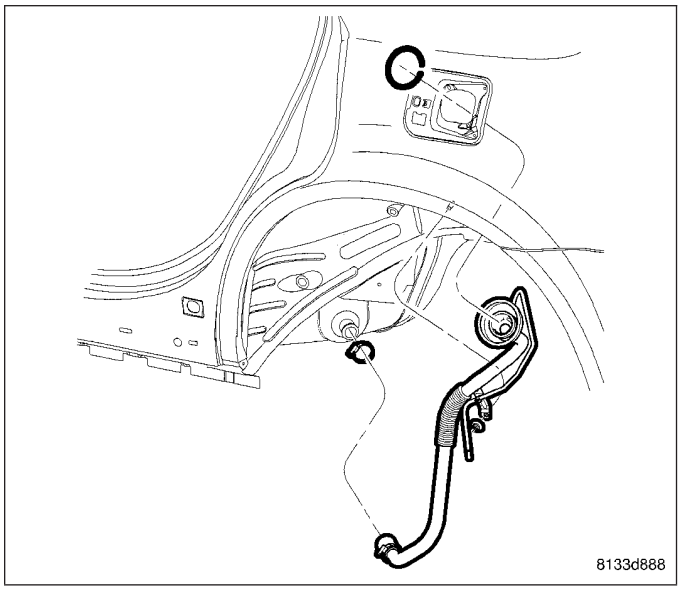

6. Position under-hoist utility jack or transmission jack (3) under center of rear axle differential (1). Raise jack head to contact differential and secure in place. **When securing crossmember to jack, be sure not to secure stabilizer bar.**

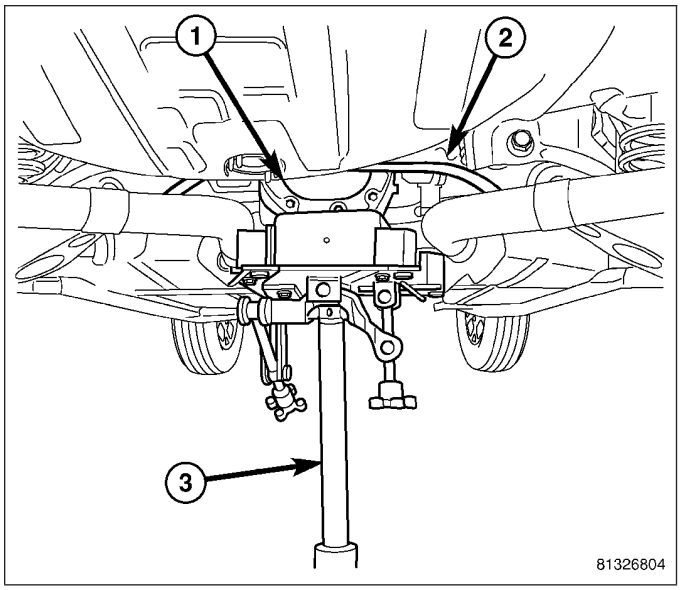

7. Remove shock absorber (1) upper mounting screws (2).

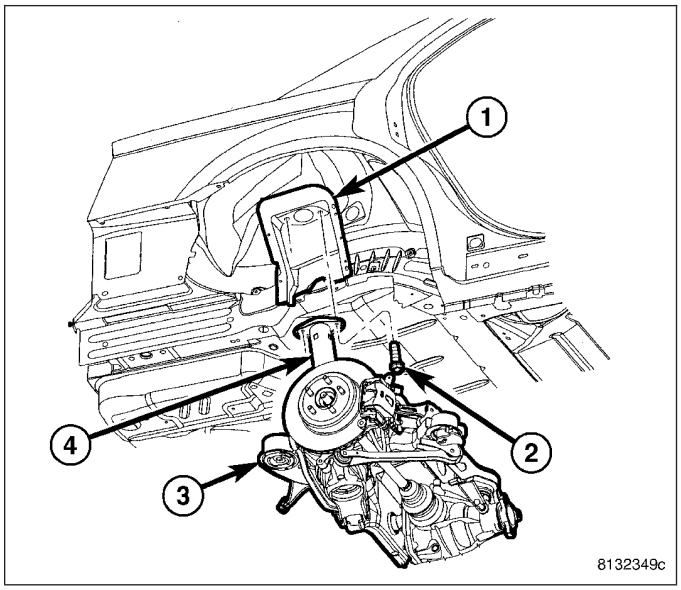

8. Remove shock absorber (1) lower mounting bolt (2) and nut (4).

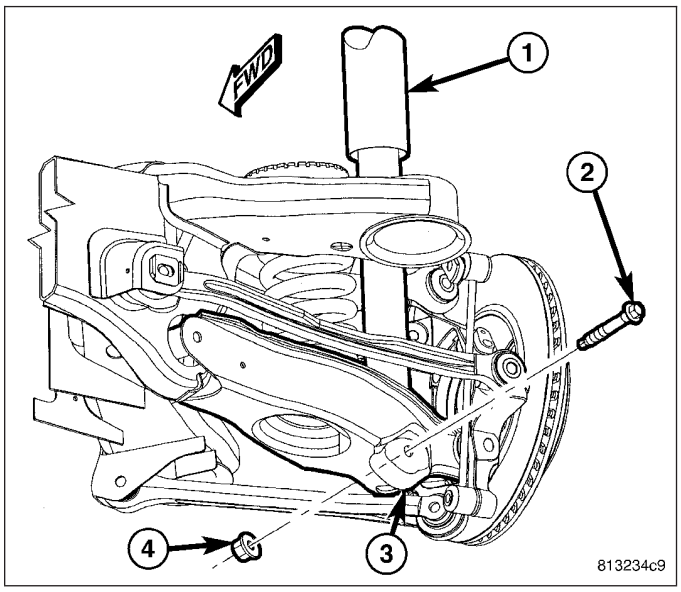

NOTE: If equipped with AWD, when removing crossmember mounting bolts in following step, be sure to not to misplace spacers (1) between crossmember mounts (2) and body.

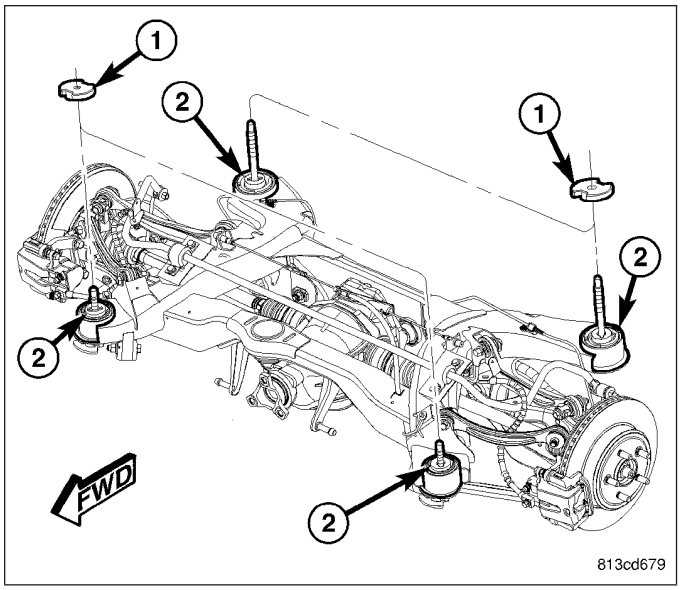

CAUTION: When removing crossmember mounting bolts (2 and 3) it is important NOT to loosen or remove crossmember mounting bolts on opposite side of vehicle. Doing so will require rear wheel alignment following reinstallation to ensure proper thrust angle.

9. Remove both front and rear crossmember mounting bolts (2 and 3) on repair-side of vehicle.

CAUTION: To avoid damaging other components of vehicle, do not lower crossmember (1) any further than necessary to remove shock absorber.

10. **Slowly** lower jack allowing repair-side of crossmember to drop. **Do not lower jack at a fast rate.** Lower jack just enough to allow top of shock absorber to clear body flange.

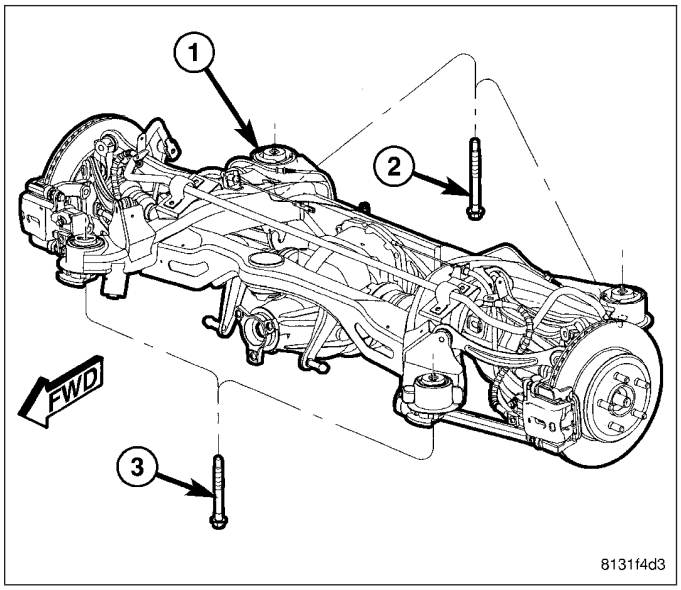

11. Remove shock absorber (3) by tipping top outward and lifting lower end out of pocket in spring link (4).

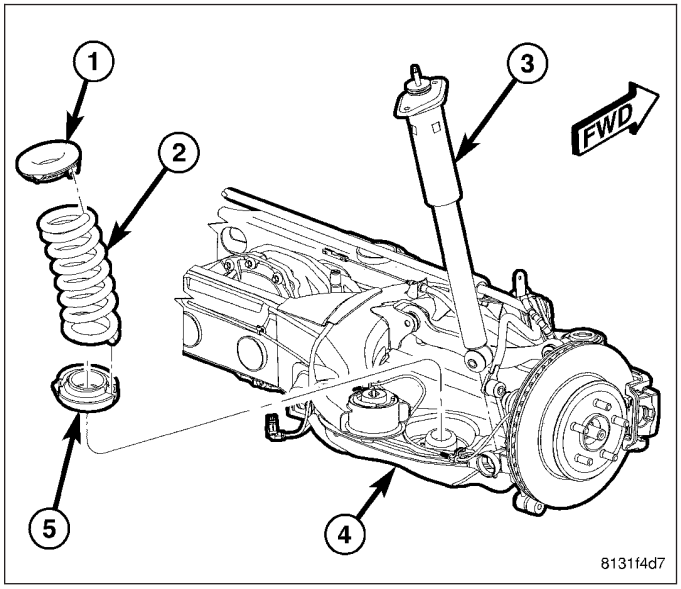

NOTE: Do not lower repair-side of crossmember any further than necessary to gain access to link mounting bolts at crossmember.

12. Remove nut and bolt (2) mounting link to knuckle (3).
13. Remove nut and bolt (2) mounting link to crossmember (1).
14. Remove link.

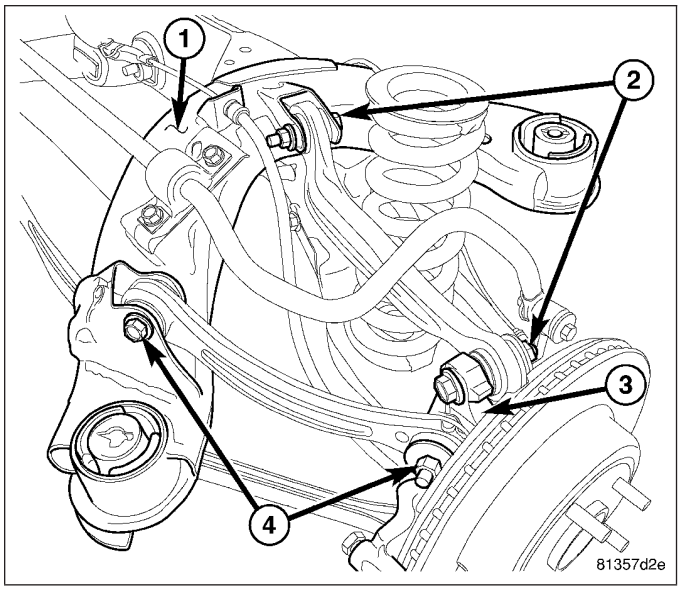

INSTALLATION

NOTE: When installing link (1), ensure following to avoid mis-installation:

- **Heavier, thicker end goes toward crossmember.**
- **Fore-or-aft bow faces forward (curves around coil spring).**
- **Up-or-down bow faces downward.**

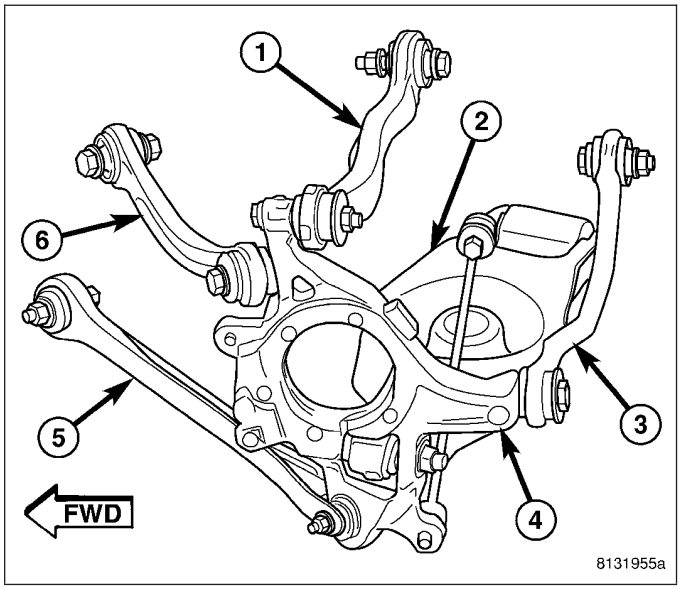

1. Place link in bracket on crossmember (1). Install bolt and nut (2) at crossmember (1) as shown. **Do not tighten bolt at this time.**
2. Install bolt and nut (2) mounting link to knuckle (3) as shown. **Do not tighten bolt at this time.**

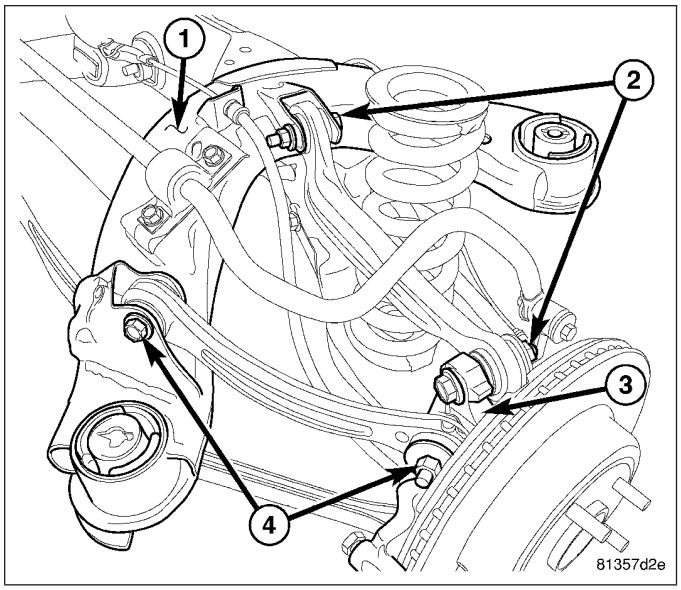

3. Install shock absorber (3) by setting lower end into pocket in spring link (4), then tipping top inward until aligned with upper mounting holes.

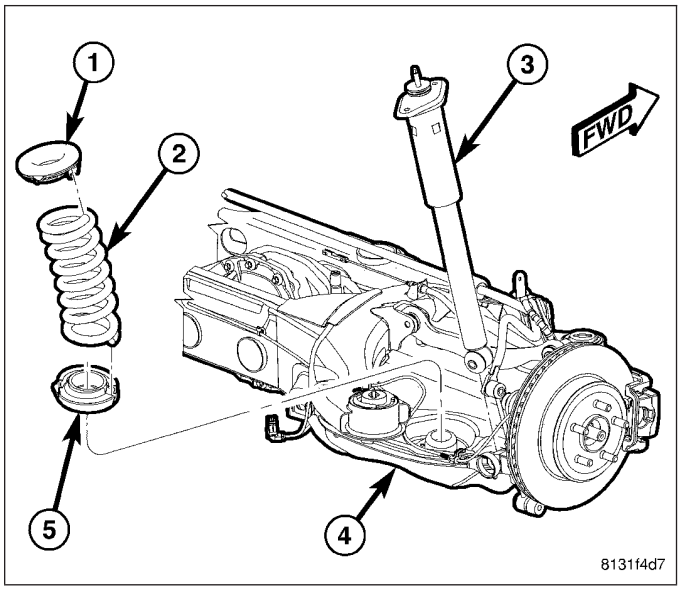

4. Install lower shock mounting bolt and nut. **Do not tighten at this time.**

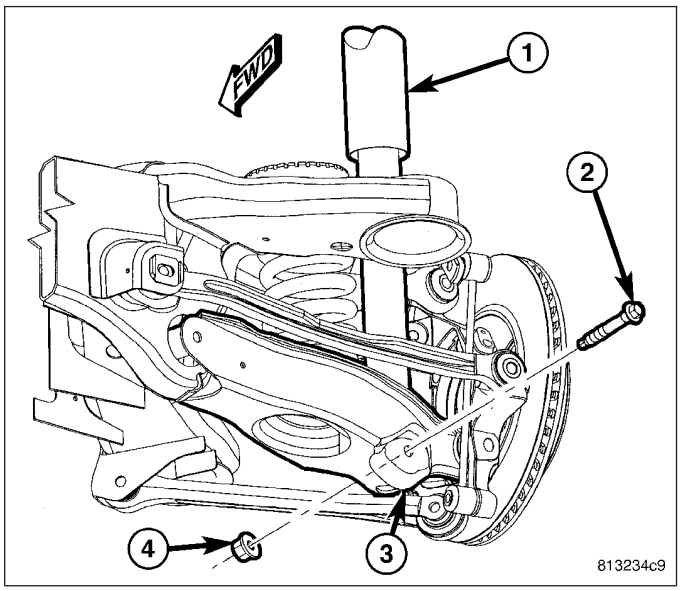

5. If vehicle is equipped with AWD, make sure spacers (1) on top of crossmember mount bushings (2) on side of repair are in position.

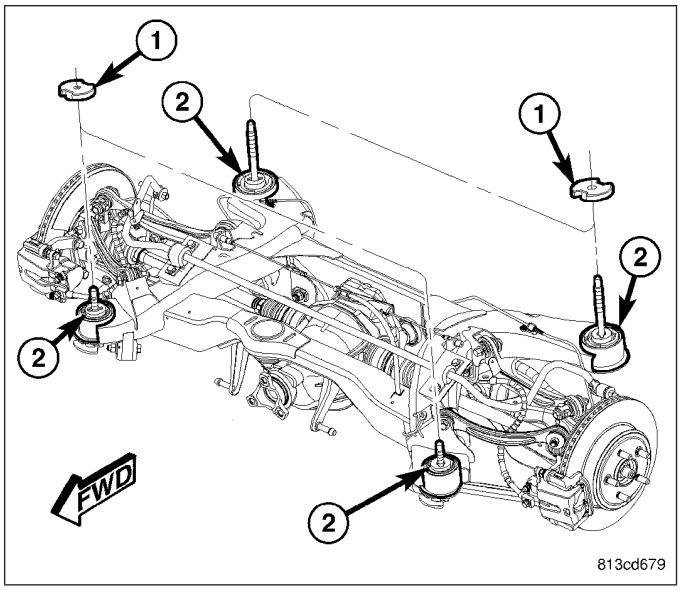

6. Carefully raise jack, guiding coil spring and upper end of shock absorber (4) into mounted positions.
7. Install shock absorber upper mounting screws (2). Tighten upper mounting screws to 52 N·m (38 ft. lbs.) torque.

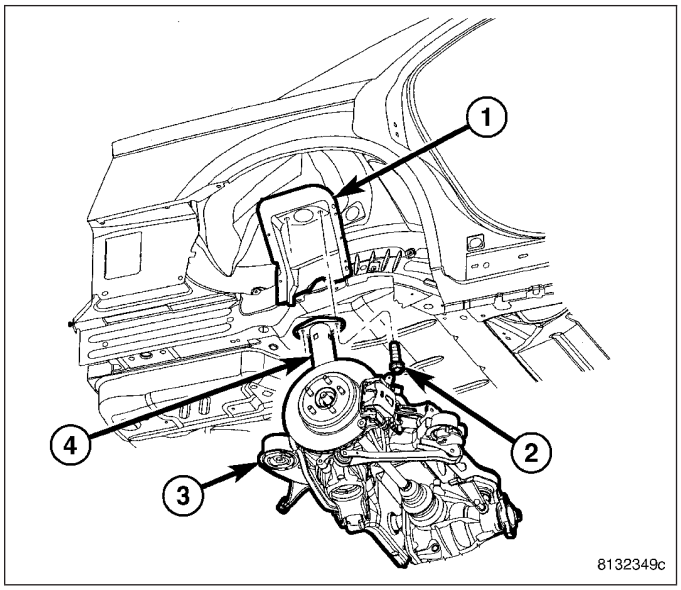

NOTE: Rear crossmember mounting bolts (2) are longer than front mounting bolts (3). Do not interchange mounting bolts.

8. Install crossmember mounting bolts (2 and 3). **Snug, but do not fully tighten bolts at this time.**

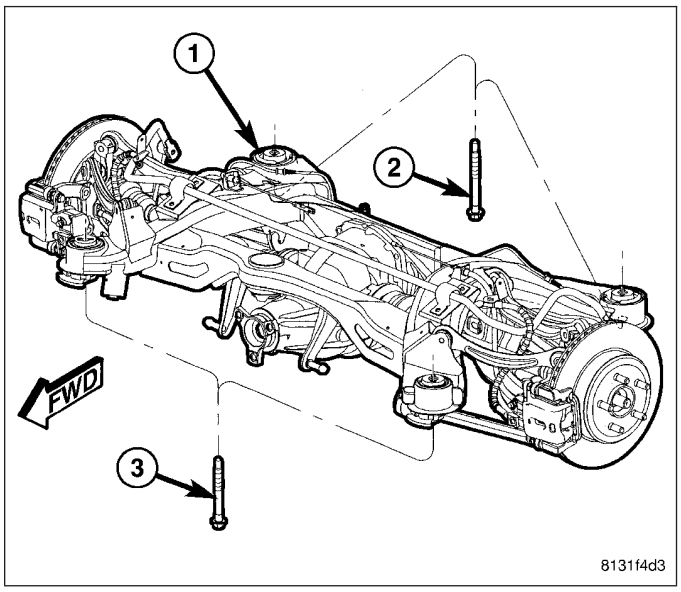

9. Measure distance (1) between from tension link (2) to body weld flange (3) directly in front of it, just outboard of front mount bushing (4). **This distance must be at least 12 mm to allow proper clearance for suspension movement.** If distance is less than 12 mm, shift that side of rear crossmember directly rearward until distance is 12 mm or greater. To do so, loosen 3 mounting bolts slightly, leaving one on opposite side of shift snugged to pivot off of. Shift crossmember rearward and snug loosened bolts. Measure opposite side to be sure it also maintains minimum 12 mm distance.

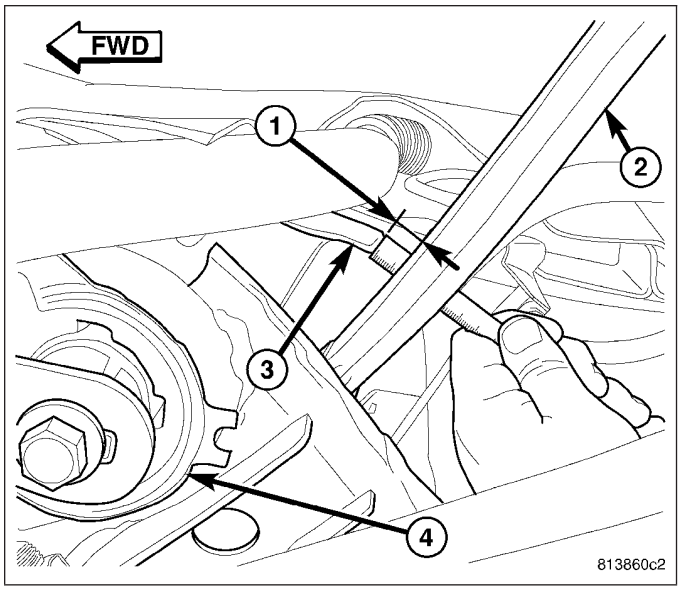

10. Tighten all crossmember mounting bolts (2 and 3) to 180 N·m (133 ft. lbs.) torque.

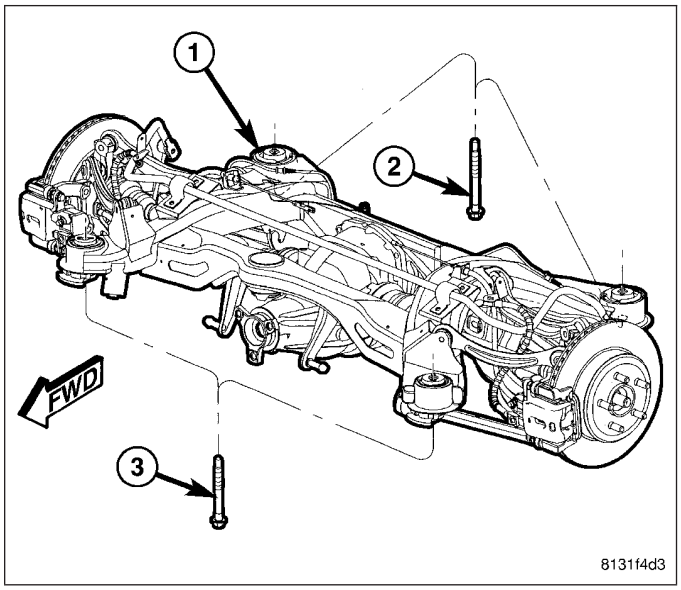

11. Remove jack (3) from under rear axle differential.
12. If previously lowered, raise rear exhaust back to mounted position and connect exhaust isolators at muffler and resonators hangers. Remove jack or stand below exhaust muffler.

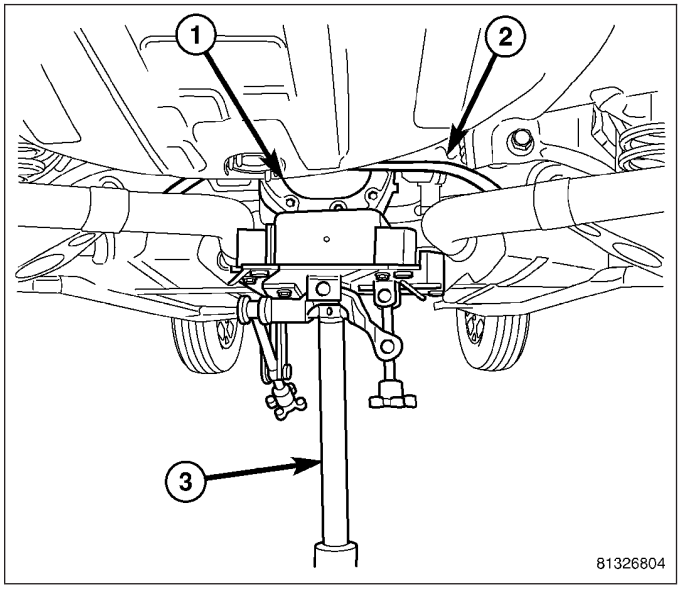

13. If removed, install fuel filler tube. (Refer to 14 - FUEL SYSTEM/FUEL DELIVERY/FUEL TANK FILLER TUBE - INSTALLATION)

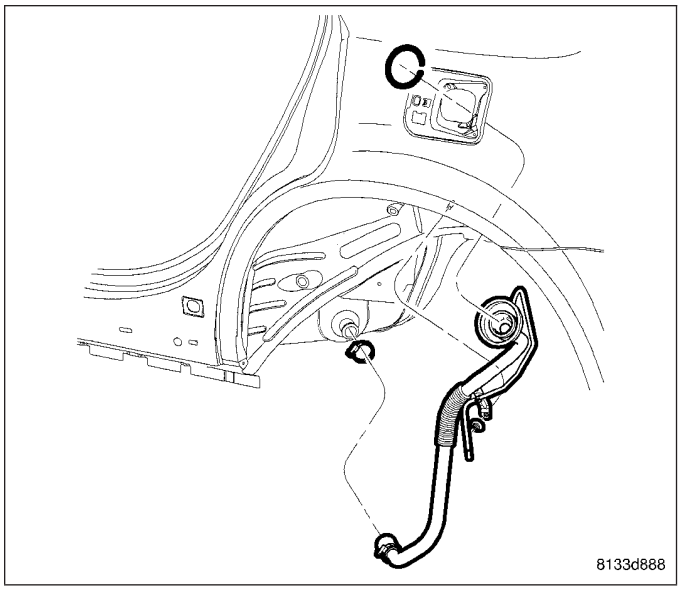

14. Lower vehicle until front tires contact floor but rear is still suspended. Place jack stands under each rear suspension spring link. Place an appropriate wooden block between stand and link to avoid damaging spring link, then lower vehicle until full vehicle weight is supported by suspension.

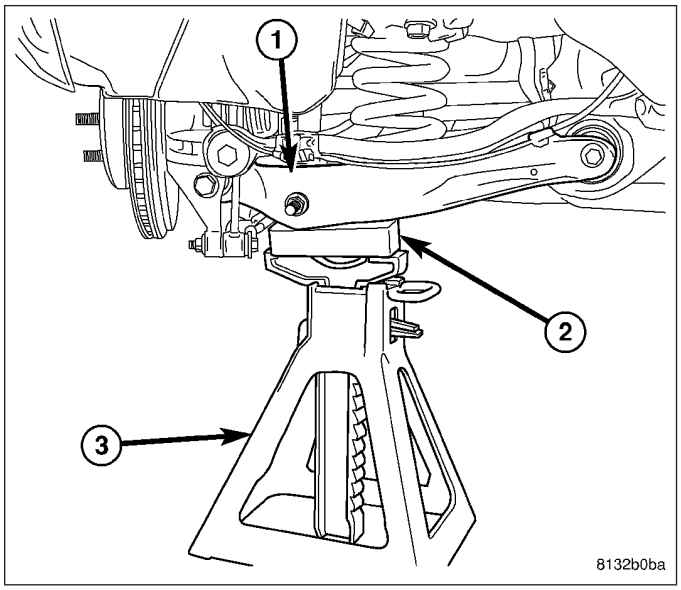

15. Tighten camber link fasteners (2) to:
    - Bolt at crossmember – 85 N·m (63 ft. lbs.) torque.
    - Bolt nut at knuckle – 98 N·m (72 ft. lbs.) torque.

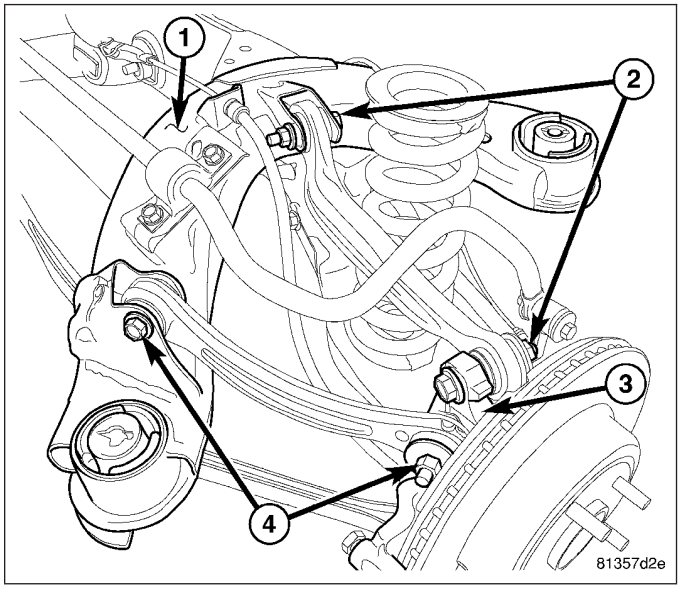

16. Tighten shock absorber lower mounting bolt nut (4) to 72 N·m (53 ft. lbs.) torque.

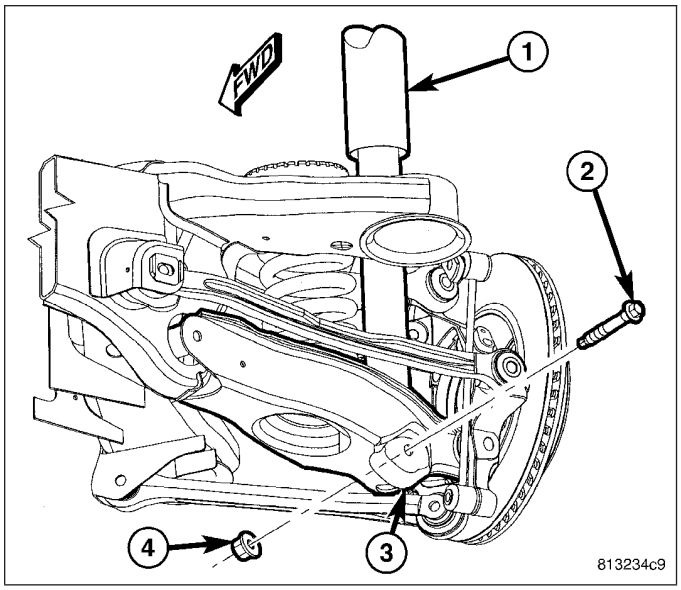

17. Raise vehicle and remove jack stands (3).

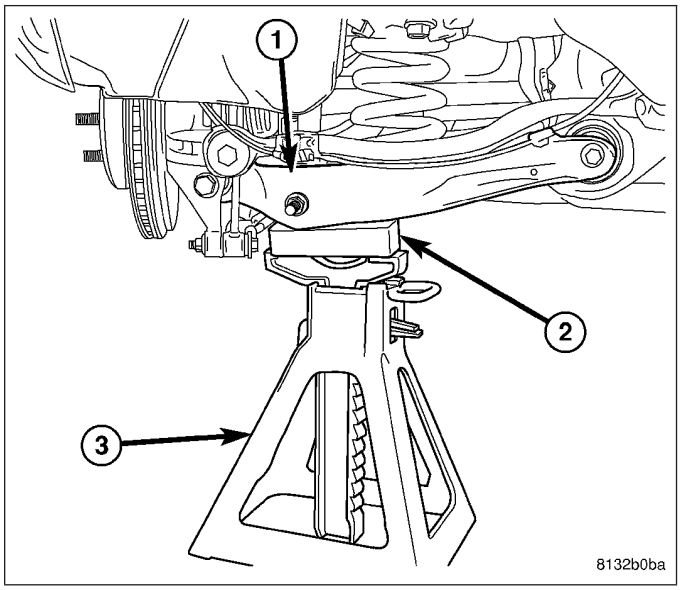

18. Install tire and wheel assemblies (1). Tighten wheel mounting nuts (3) to 150 N·m (110 ft. lbs.) torque. (Refer to 22 - TIRES/WHEELS - INSTALLATION)
19. Lower vehicle.
20. Perform wheel alignment. (Refer to 2 - SUSPENSION/WHEEL ALIGNMENT - STANDARD PROCEDURE)

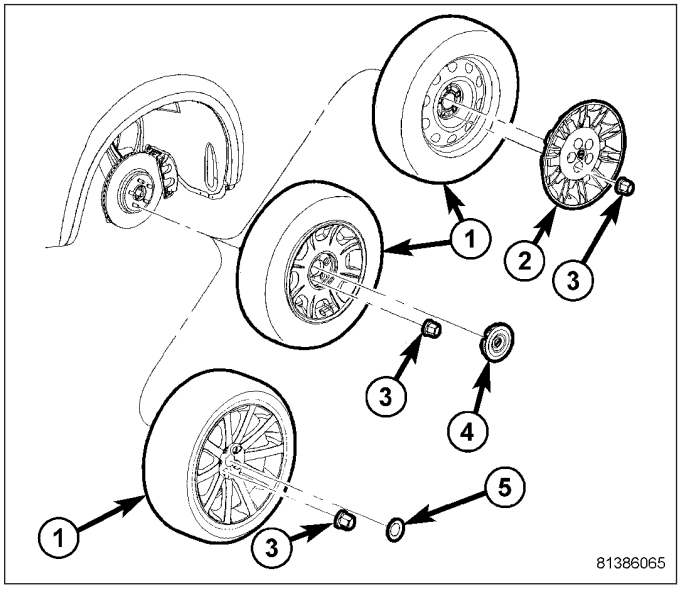

COMPRESSION LINK

REMOVAL

1. Raise and support vehicle. (Refer to LUBRICATION & MAINTENANCE/HOISTING - STANDARD PROCEDURE)
2. Remove wheel mounting nuts (3), then rear tire and wheel assembly (1).

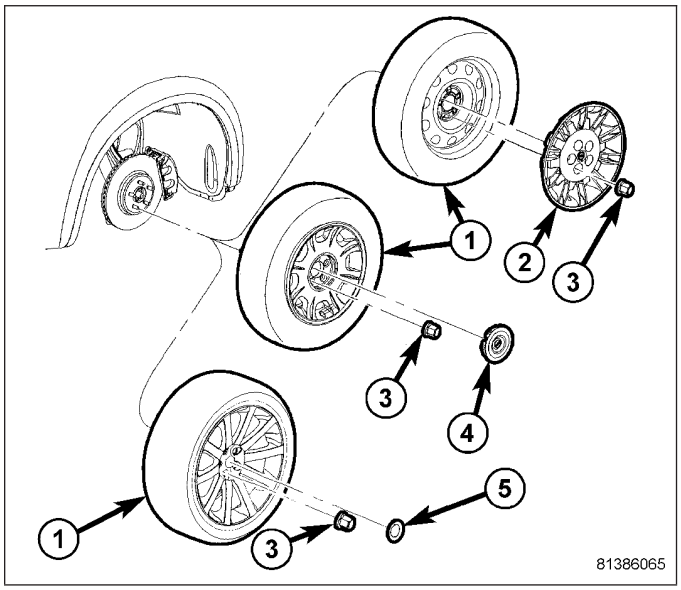

3. Remove bolt and nut (2) mounting link (3) at knuckle.
4. Remove bolt and nut (1) mounting link (3) at cross-member.
5. Remove link (3).

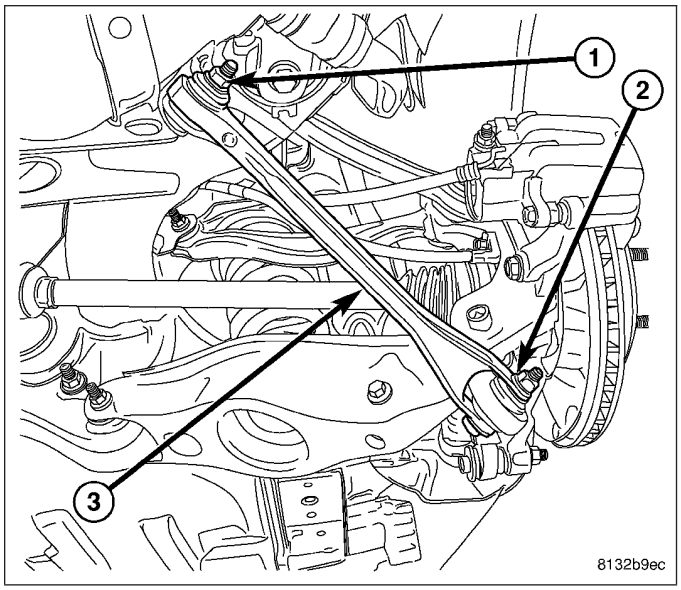

INSTALLATION

NOTE: Although the compression link is different end-to-end, there is no top and bottom.

1. Position link and install bolt and nut (1) mounting link (3) at crossmember. **Do not tighten bolt at this time.**
2. Install bolt and nut (2) mounting link (3) at knuckle. **Do not tighten bolt at this time.**

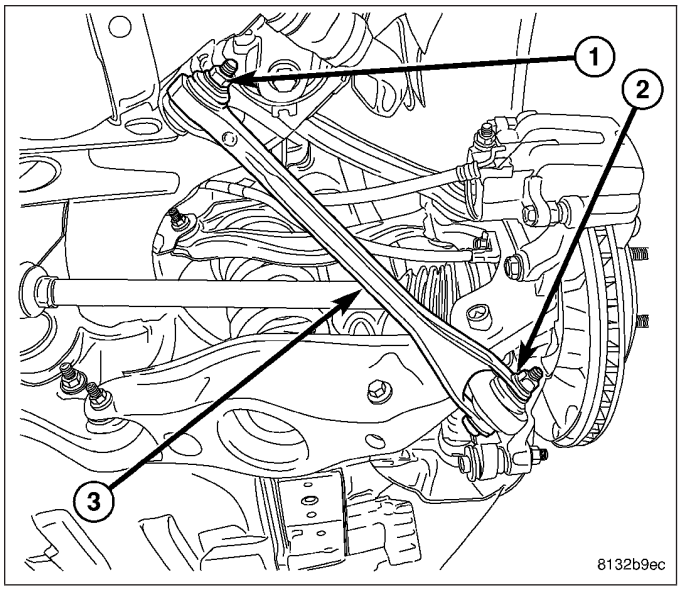

3. Install tire and wheel assembly (1). Tighten wheel mounting nuts (3) to 150 N·m (110 ft. lbs.) torque. (Refer to 22 - TIRES/WHEELS - INSTALLATION)
4. Lower vehicle.
5. Position vehicle on alignment rack/drive-on lift. Raise vehicle as necessary to access link fasteners.
6. Tighten compression link fasteners to:
   - Bolt at crossmember – 85 N·m (63 ft. lbs.) torque.
   - Bolt at knuckle – 81 N·m (60 ft. lbs.) torque.
7. Perform wheel alignment. (Refer to 2 - SUSPENSION/WHEEL ALIGNMENT - STANDARD PROCEDURE)

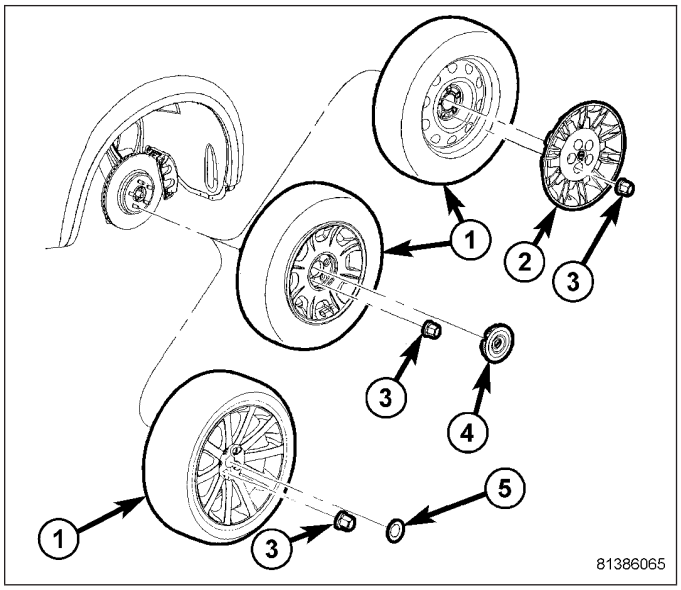

SPRING LINK

REMOVAL

SPRING LINK

1. Raise and support vehicle. (Refer to LUBRICATION & MAINTENANCE/HOISTING - STANDARD PROCEDURE)
2. Access and remove rear spring. (Refer to 2 - SUSPENSION/REAR/SPRING - REMOVAL)
3. Export Only – If servicing right spring link, disconnect headlamp leveling sensor (1) link at spring link (3).

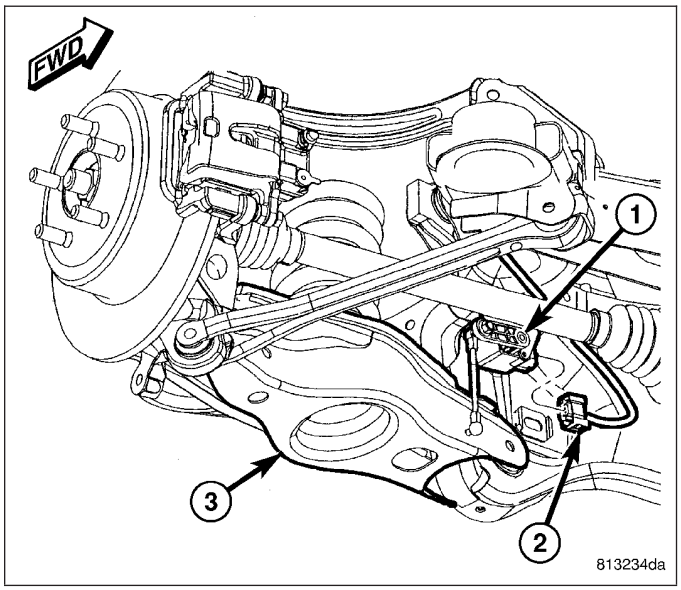

4. Remove spring link-to-knuckle nut and bolt (2).

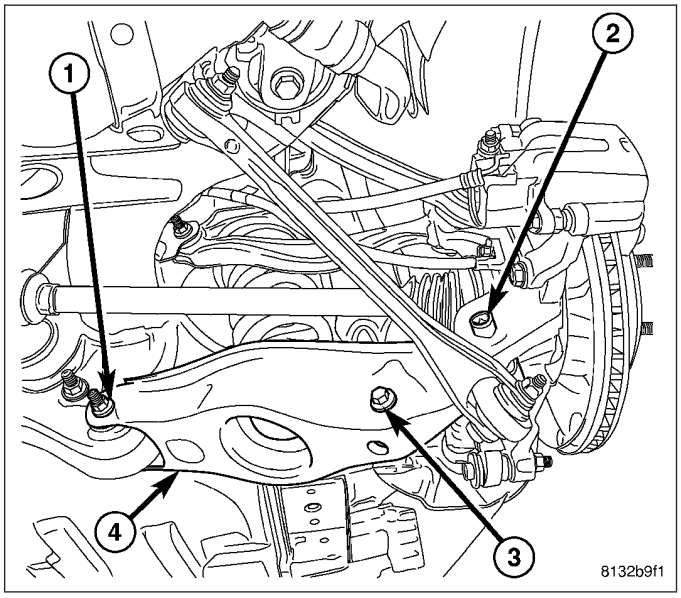

CAUTION: It important to use Guide (2), Special Tool 9361-2, when tapping sleeve in knuckle to help keep Tap (1) , Special Tool 9361-1, straight during use or damage to Tap may occur.

5. Place Guide 9361-2 (2) against sleeve (3) in knuckle to keep Tap 9361-1 (1) straight. Using Tap with an appropriate handle, cut threads approximately halfway through bushing (or about six complete threads). **It is important to back tap out, clean out burrs and lubricate Tap often during process.**

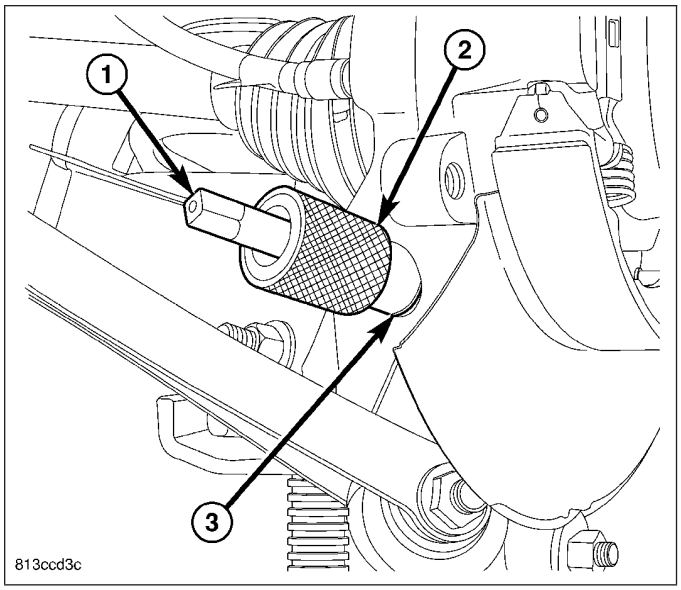

NOTE: Prior to using Special Tool 9361, lubricate Bolt (1) threads to provide ease of use and promote tool longevity.

6. Assemble Remover, Special Tool 9361, as shown.
   - (1) Bolt 9361-3
   - (2) Nut
   - (3) Spherical Washer
   - (4) Thrust Bearing
   - (5) Sleeve 9361-4 (RWD)
   - (5) Sleeve 9361-5 (AWD – Left Side)
   - (5) Sleeve 9361-6 (AWD – Right Side)

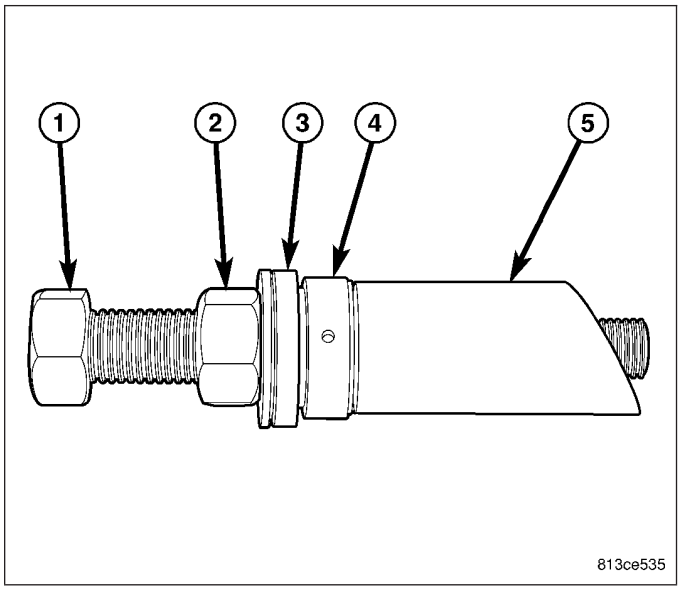

NOTE: When installing thrust bearing on Remover, be sure to place hardened side against nut. Place bearing outer cage against stationary component.

NOTE: It is important to use appropriate Sleeve on Remover to provide proper Tool-to-Knuckle contact. RWD sleeve can be used on either side while AWD knuckles require specific left or right side Sleeves.

7. Thread Remover Bolt 9361-3 (1) into tapped knuckle sleeve.
8. Rotate Nut down, matching Sleeve angled end with angled face of knuckle.
9. Continue to rotate Nut until knuckle sleeve is removed from knuckle. **Discard knuckle sleeve; replace it with new upon installation.**

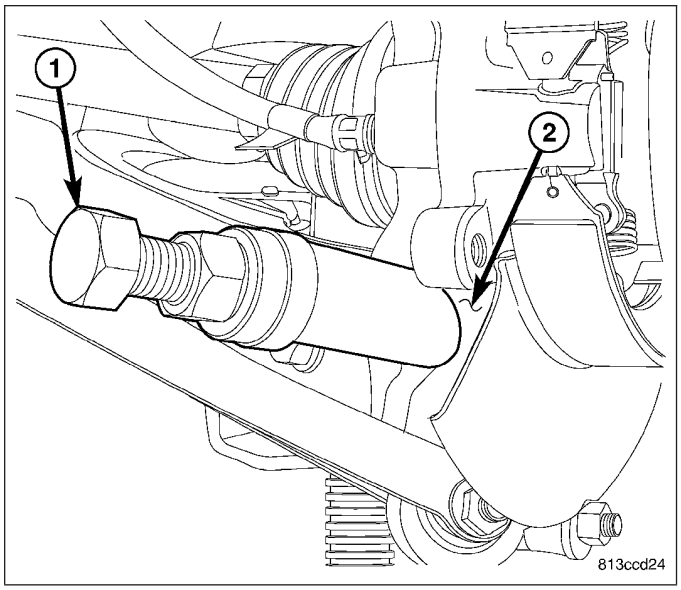

10. Remove bolt and nut (1) fastening spring link (4) to crossmember.
11. Remove spring link (4).

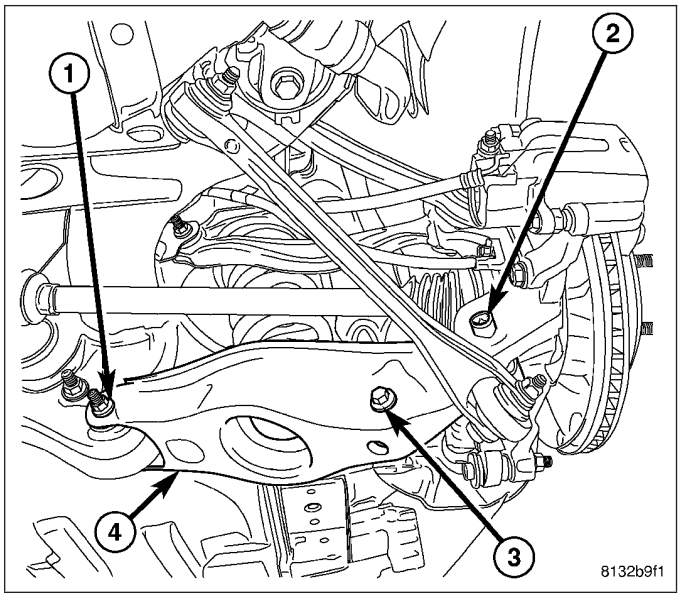

SPRING LINK - SRT8

1. Access and remove rear brake rotor on side of repair. (Refer to 5 - BRAKES/HYDRAULIC/MECHANICAL/ROTOR - REMOVAL)
2. Access and remove rear spring on side of repair. (Refer to 2 - SUSPENSION/REAR/SPRING - REMOVAL)

3. Remove spring link-to-knuckle nut and bolt (2).

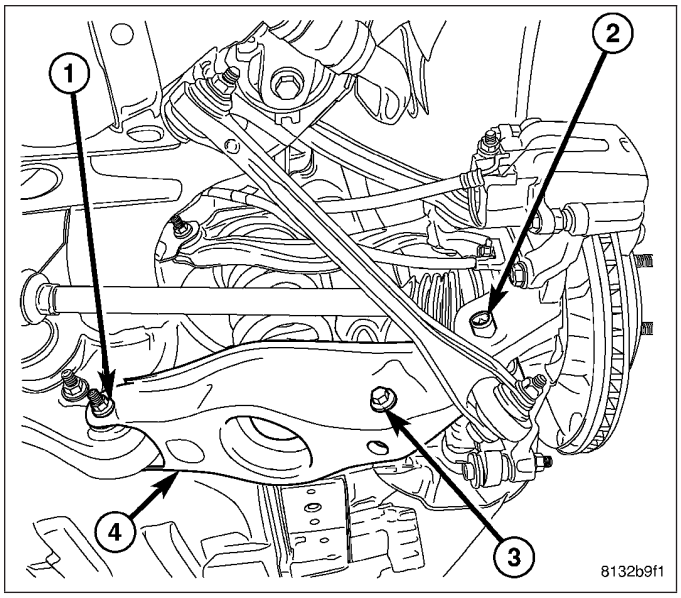

CAUTION: It important to use Guide (2), Special Tool 9361-11, when tapping sleeve in knuckle to help keep Tap (1) , Special Tool 9361-1, straight during use or damage to Tap may occur.

4. Place Guide 9361-11 (2) against sleeve (3) in knuckle to keep Tap 9361-1 (1) straight. Using Tap with an appropriate handle, cut threads approximately halfway through bushing (or about six complete threads). **It is important to back tap out, clean out burrs and lubricate Tap often during process.**

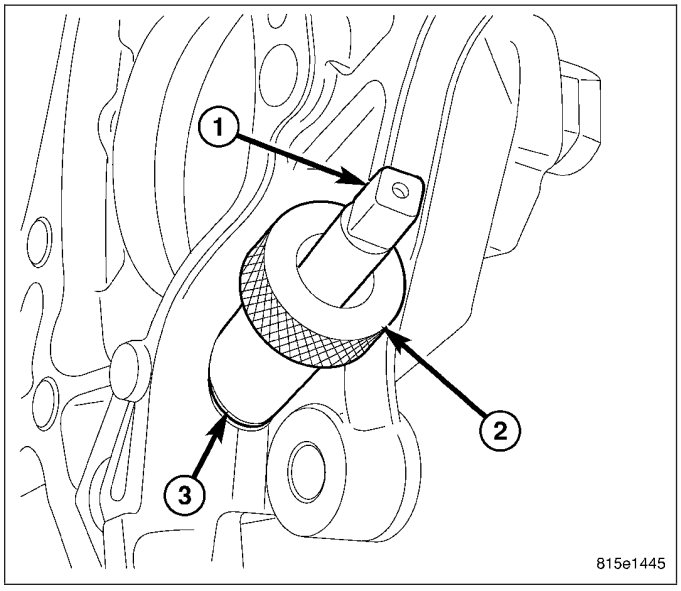

NOTE: Prior to using Special Tool 9361, lubricate Bolt (1) threads to provide ease of use and promote tool longevity.

5. Assemble Remover, Special Tool 9361, as shown.
   - (1) Bolt 9361-3
   - (2) Nut
   - (3) Thrust Bearing
   - (4) Spherical Washer
   - (5) Sleeve 9361-9 (Left Side - Shown in figure)
   - (5) Sleeve 9361-10 (Right Side)

NOTE: When installing thrust bearing (3) on Remover, be sure to place hardened side against nut (2). Place bearing outer cage against stationary component.

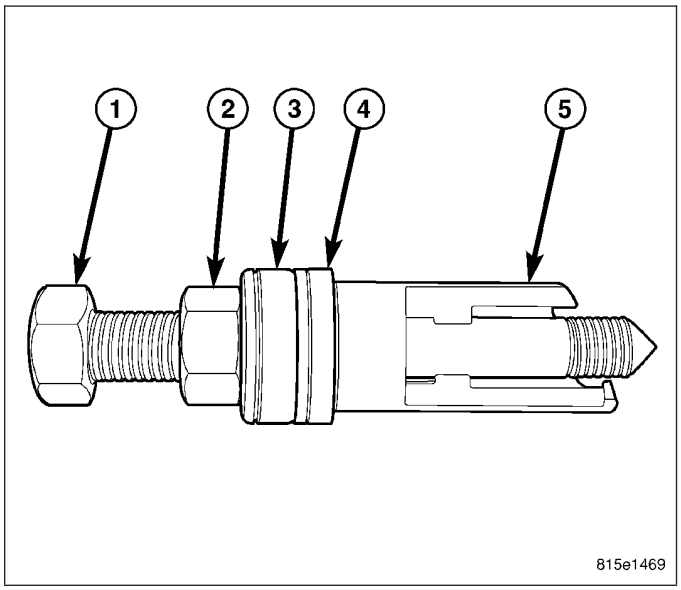

NOTE: It is important to use appropriate Sleeve (9361-9 or 9361-10) on Remover to provide proper Tool-to-Knuckle contact.

6. Thread Remover Bolt 9361-3 (2) into tapped knuckle sleeve.
7. Rotate Nut down, matching Sleeve (9361-9 or 9361-10) angled end with angled face of knuckle (1). **Make sure foot on Sleeve (3) is inserted behind machined brake caliper mounting boss.**
8. Continue to rotate Nut until knuckle sleeve is removed from knuckle. **Discard knuckle sleeve; replace it with new upon installation.**

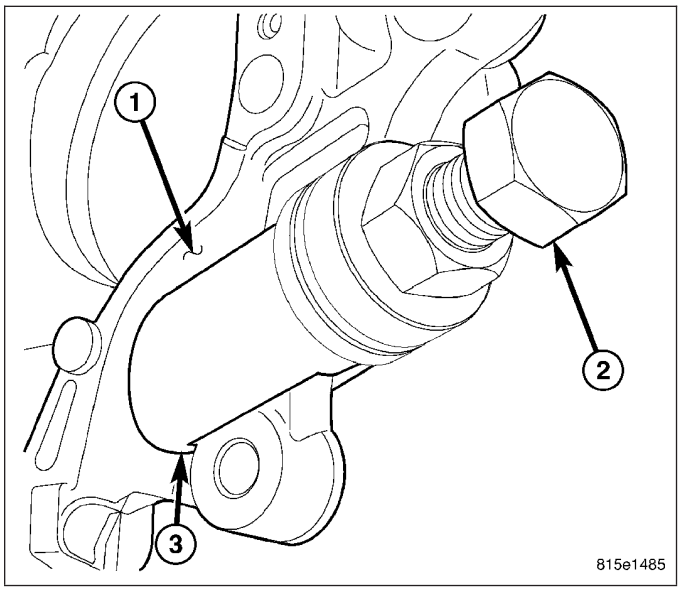

9. Remove bolt and nut (1) fastening spring link (4) to crossmember.
10. Remove spring link (4).

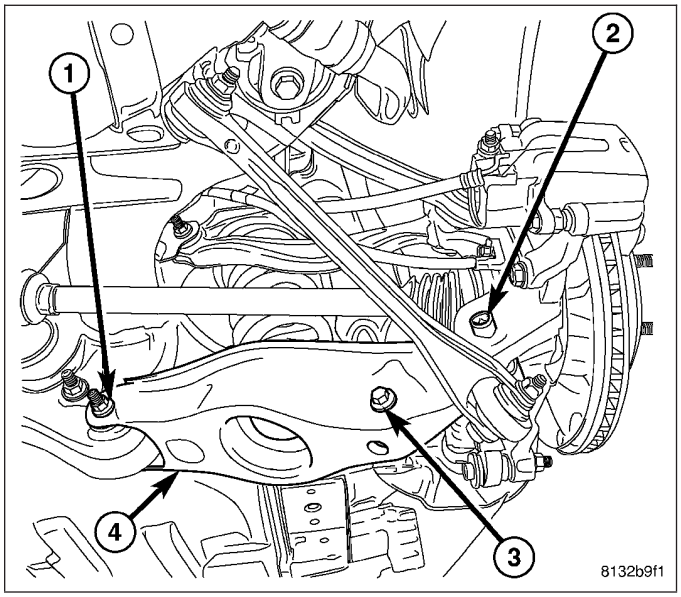

INSTALLATION

SPRING LINK

1. Guide ball joint end of spring link (4) into mounting pocket of knuckle, then swing opposite end up to bushing in crossmember and install bolt and nut (1) fastening spring link (4) to crossmember. **Do not tighten bolt at this time.**

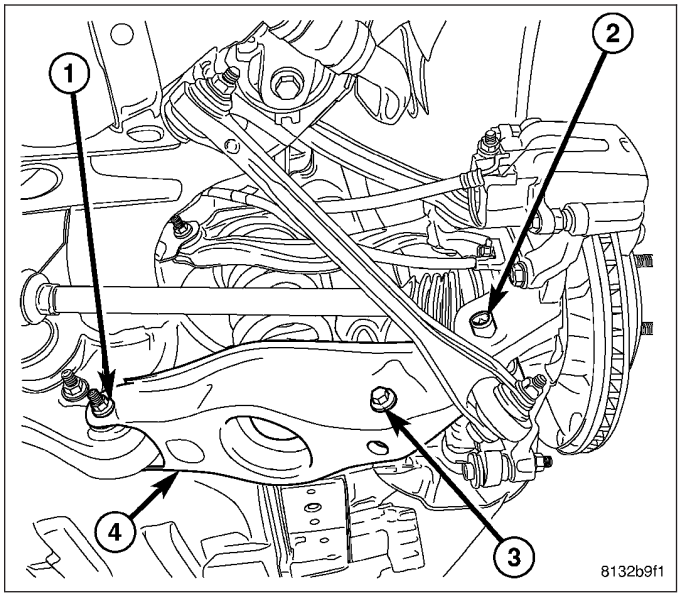

NOTE: Prior to using Special Tool 9361, lubricate bolt (1) threads to provide ease of use and promote tool longevity.

2. Place NEW knuckle sleeve (2) onto Installer Bolt 9361-7 (1), and slide it up to Bolt's head.

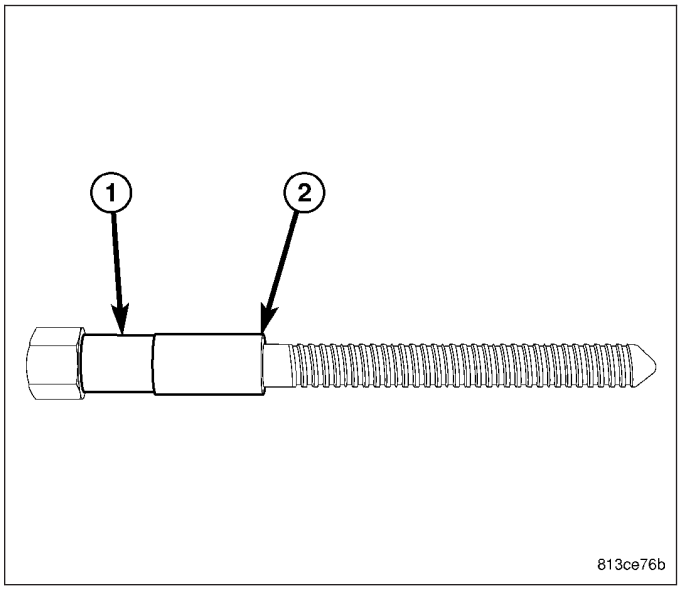

3. Starting from knuckle forward end, slide Bolt 9361-7 (1) with sleeve (5) through knuckle (2) and spring link ball joint (3).
4. Install thrust bearing and nut (4) on end of Bolt. **When installing thrust bearing on Installer, be sure to place hardened side against nut. Place bearing outer cage against stationary component.**
5. While holding Bolt head (1) stationary, rotate Nut (4) (using hand tools) installing sleeve in knuckle. Install sleeve until Nut stops turning. **Do not overtighten Nut.**
6. Remove special tool.

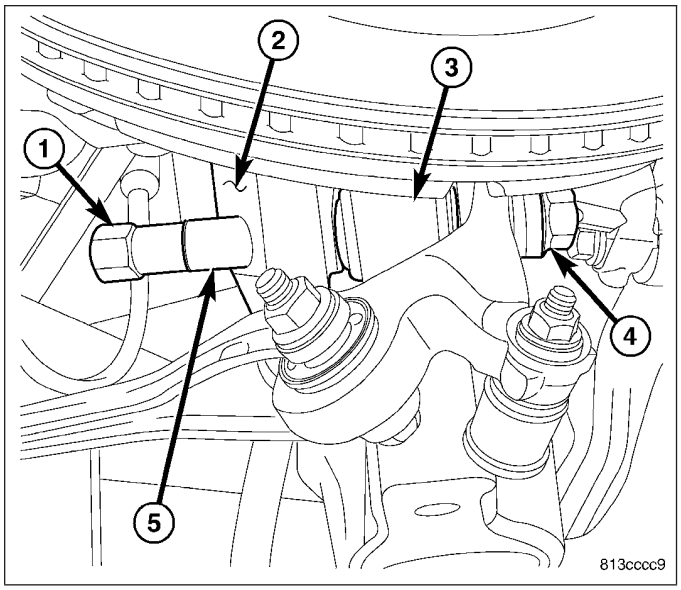

7. Install spring link-to-knuckle bolt (2) front-to-rear through knuckle and link, then install nut. While holding bolt head stationary, tighten nut to 138 N·m (102 ft. lbs.) torque.

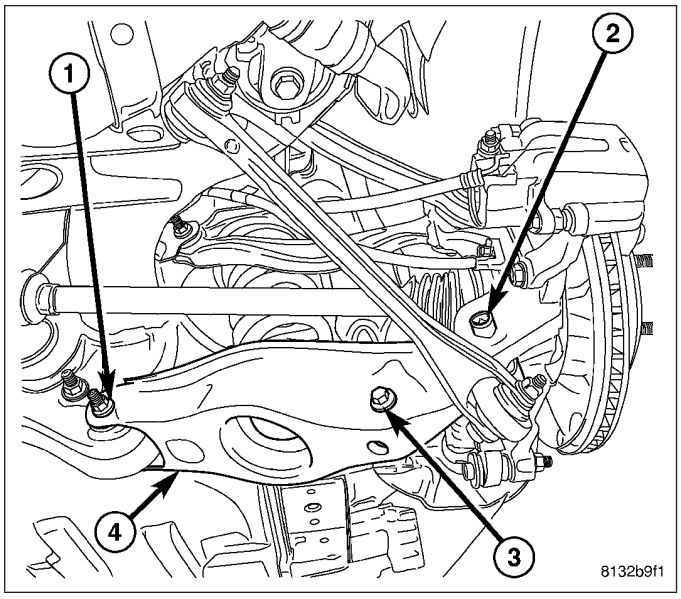

8. Export Only – If servicing right spring link, connect headlamp leveling sensor (1) link at spring link (3).
9. Install rear spring as well as all components necessary to access it. (Refer to 2 - SUSPENSION/ REAR/SPRING - INSTALLATION)
10. Lower vehicle.
11. Position vehicle on alignment rack/drive-on lift. Raise vehicle as necessary to access mounting bolt.
12. Tighten spring link bolt at crossmember to 108 N·m (80 ft. lbs.) torque.
13. Perform wheel alignment. (Refer to 2 - SUSPENSION/WHEEL ALIGNMENT - STANDARD PROCEDURE)

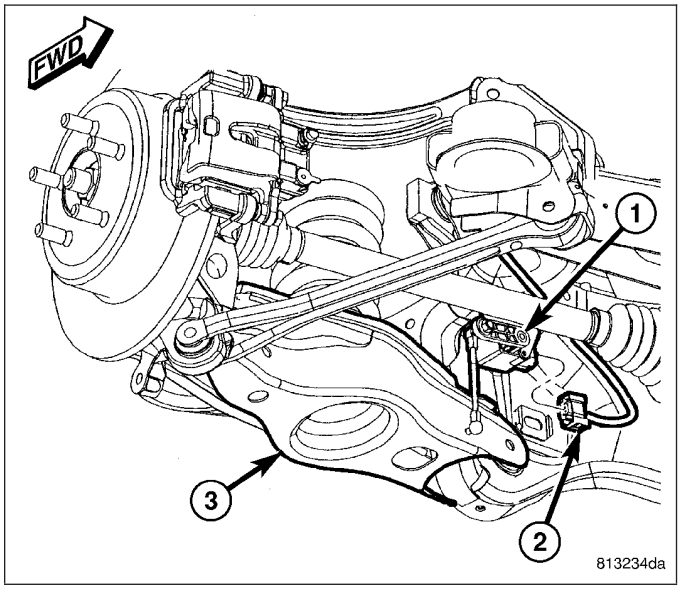

SPRING LINK - SRT8

1. Guide ball joint end of spring link (4) into mounting pocket of knuckle, then swing opposite end up to bushing in crossmember and install bolt and nut (1) fastening spring link (4) to crossmember. **Do not tighten bolt at this time.**

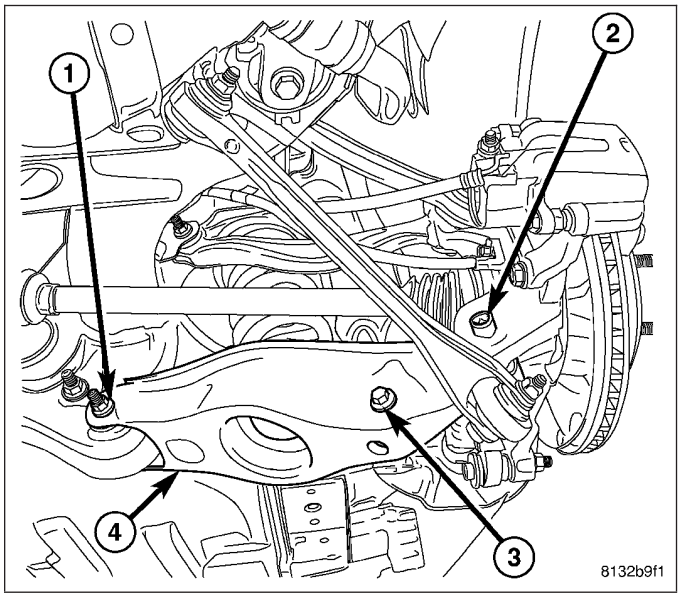

NOTE: Prior to using Special Tool 9361, lubricate bolt (1) threads to provide ease of use and promote tool longevity.

2. Place NEW knuckle sleeve (2) onto Installer Bolt 9361-12 (1), and slide it up to Bolt's head.

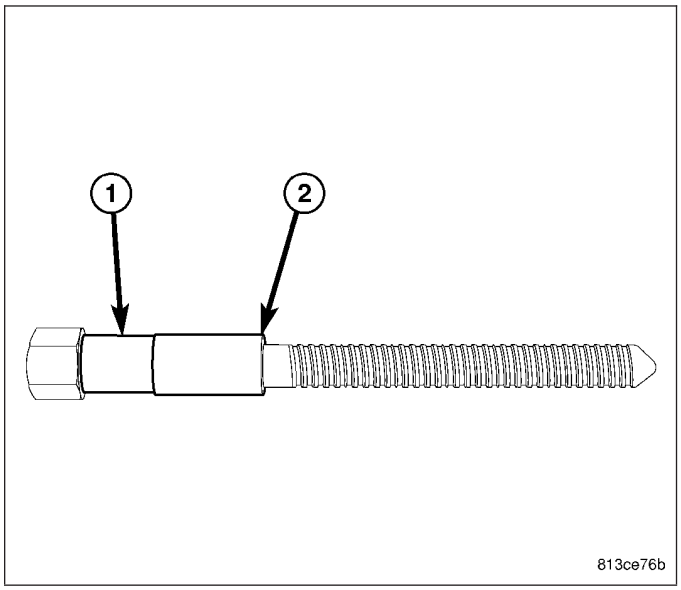

3. Starting from knuckle forward end, slide Bolt 9361-12 (1) with sleeve (5) through knuckle (2) and spring link ball joint (3).
4. Install Installation Thrust Bearing (around 3/8 inch thick) and special flange nut (4) on end of Bolt. **When installing thrust bearing on Installer, be sure to place hardened side against nut. Place bearing outer cage against stationary component.**
5. While holding Bolt head (1) stationary, rotate Nut (4) (using hand tools) installing sleeve in knuckle. Install sleeve until Nut stops turning. **Do not overtighten Nut.**
6. Remove special tool.

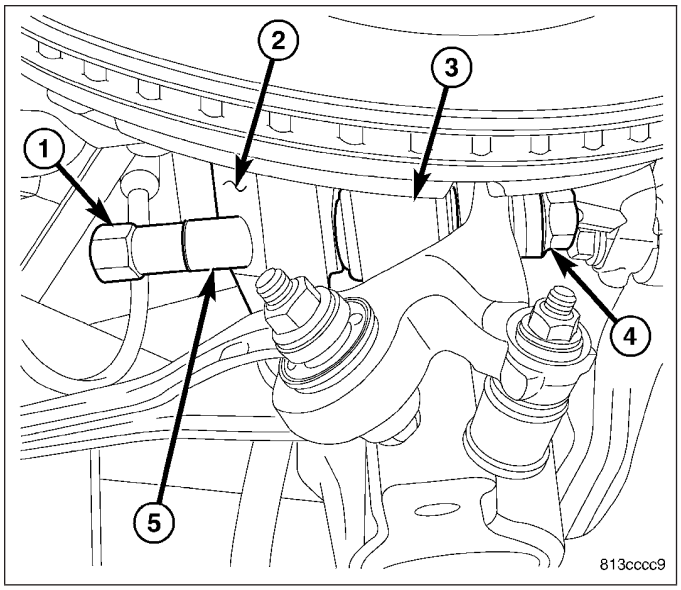

7. Install spring link-to-knuckle bolt (2) front-to-rear through knuckle and link, then install nut. While holding bolt head stationary, tighten nut to 138 N·m (102 ft. lbs.) torque.
8. Install rear spring and all components necessary to access it, except rear tire and wheel assembly on side of repair. (Refer to 2 - SUSPENSION/REAR/SPRING - INSTALLATION)
9. Install rear brake rotor and components necessary to access it. (Refer to 5 - BRAKES/HYDRAULIC/MECHANICAL/ROTOR - INSTALLATION)
10. Lower vehicle.
11. Pump brake pedal several times to ensure vehicle has a firm brake pedal before moving vehicle.

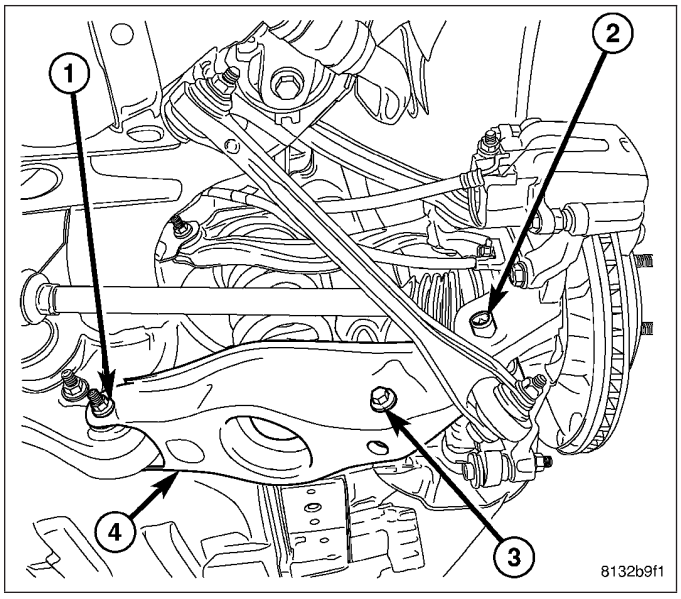

12. Position vehicle on alignment rack/drive-on lift. Raise vehicle as necessary to access mounting bolt.
13. Tighten spring link bolt at crossmember to 108 N·m (80 ft. lbs.) torque.
14. Tighten shock absorber lower mounting bolt nut to 72 N·m (53 ft. lbs.) torque.
15. Perform wheel alignment. (Refer to 2 - SUSPENSION/WHEEL ALIGNMENT - STANDARD PROCEDURE)

TENSION LINK

REMOVAL

1. Raise and support vehicle. (Refer to LUBRICATION & MAINTENANCE/HOISTING - STANDARD PROCEDURE)
2. On both sides of vehicle, remove wheel mounting nuts (3), then rear tire and wheel assembly (1).

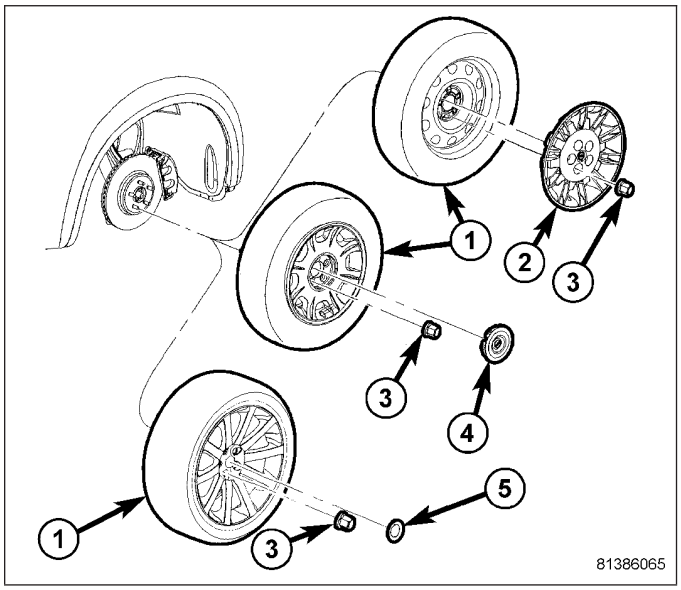

WARNING: Before opening fuel system, review all Warnings and Cautions.

3. If servicing left side, remove fuel filler tube. (Refer to 14 - FUEL SYSTEM/FUEL DELIVERY/FUEL TANK FILLER TUBE - REMOVAL)
4. Position an extra pair of jack stands under and support forward end of engine cradle to help stabilize vehicle during rear suspension removal/installation.
5. Perform following if vehicle is equipped with dual-exhaust or are servicing right side on vehicle with single exhaust.
   a. Position under-hoist utility jack or stand several inches below exhaust at muffler.
   b. Disconnect exhaust isolators at muffler and resonators hangers.
   c. Lower exhaust down to rest upon top of jack or stand placed below muffler.

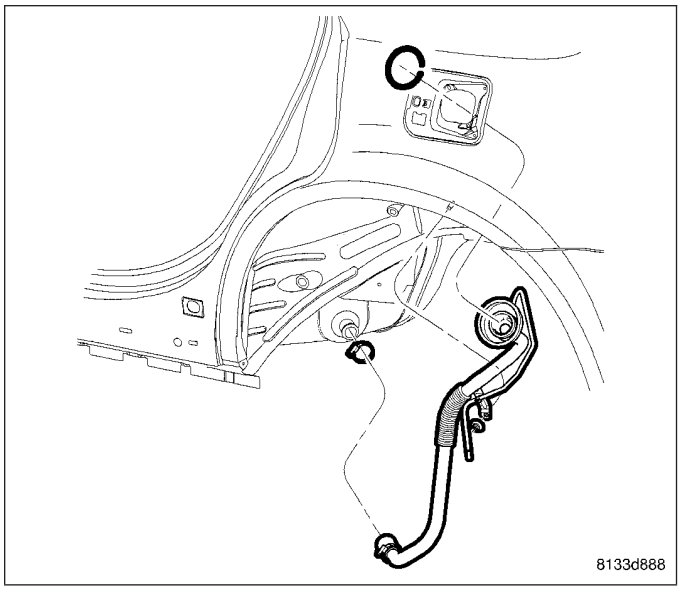

6. Position under-hoist utility jack or transmission jack (3) under center of rear axle differential (1). Raise jack head to contact differential and secure in place. **When securing crossmember to jack, be sure not to secure stabilizer bar.**

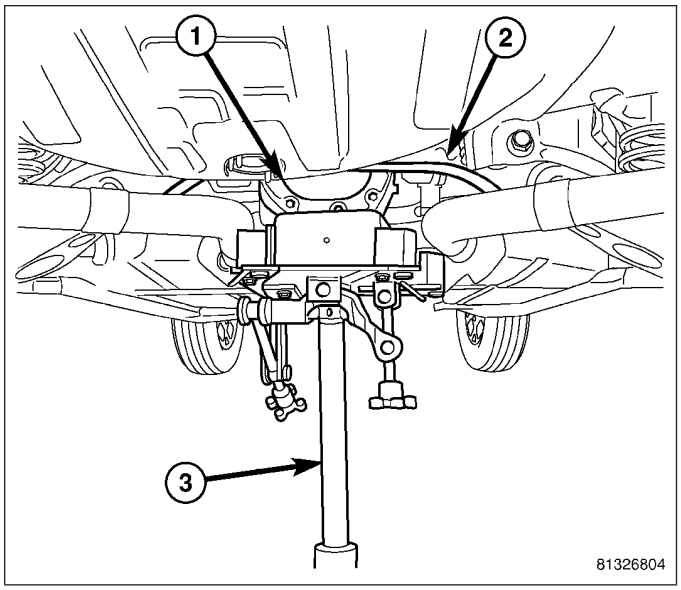

7. Remove shock absorber (1) upper mounting screws (2).

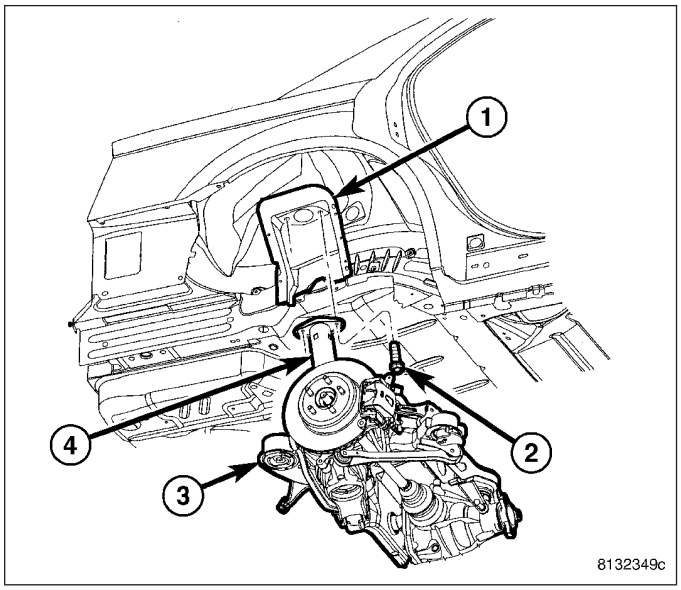

8. Remove shock absorber (1) lower mounting bolt (2) and nut (4).

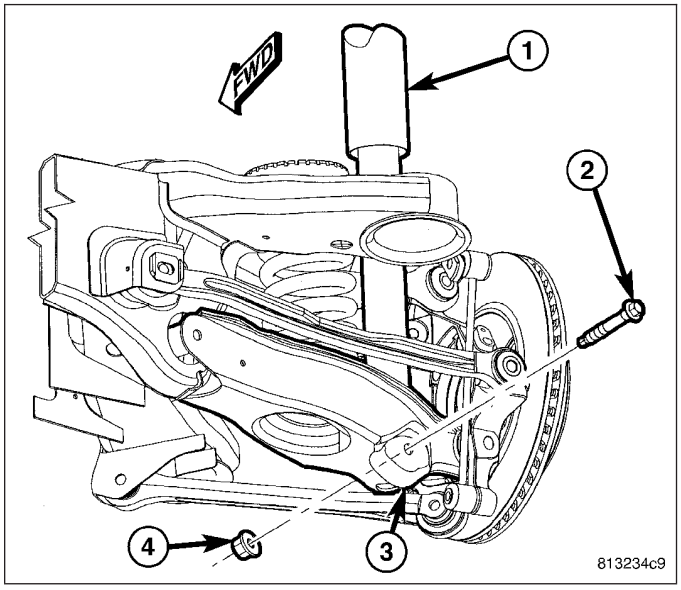

NOTE: If equipped with AWD, when removing crossmember mounting bolts in following step, be sure to not to misplace spacers (1) between crossmember mounts (2) and body.

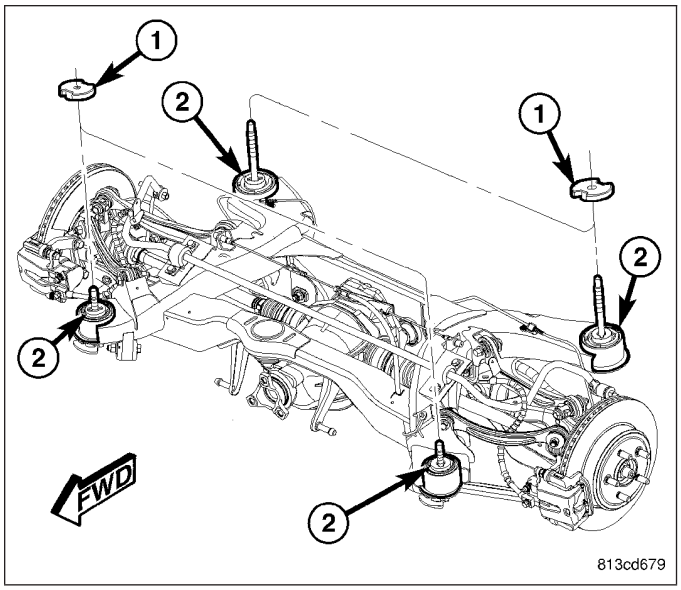

CAUTION: When removing crossmember mounting bolts (2 and 3) it is important NOT to loosen or remove crossmember mounting bolts on opposite side of vehicle. Doing so will require rear wheel alignment following reinstallation to ensure proper thrust angle.

9. Remove both front and rear crossmember mounting bolts (2 and 3) on repair-side of vehicle.

CAUTION: To avoid damaging other components of vehicle, do not lower crossmember (1) any further than necessary to remove shock absorber.

10. **Slowly** lower jack allowing repair-side of crossmember to drop. **Do not lower jack at a fast rate.** Lower jack just enough to allow top of shock absorber to clear body flange.

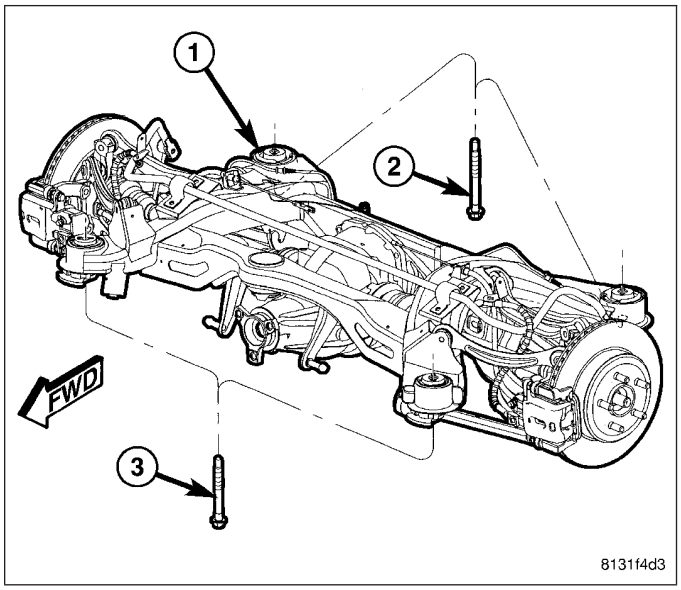

11. Remove shock absorber (3) by tipping top outward and lifting lower end out of pocket in spring link (4).

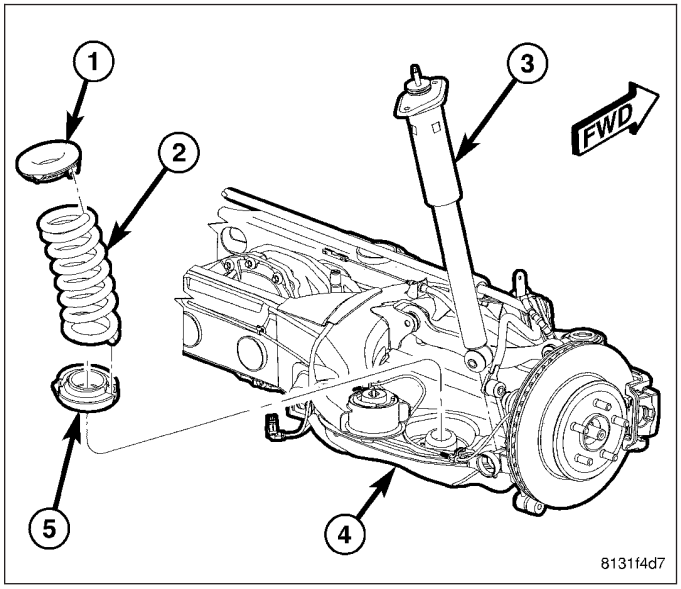

NOTE: Do not lower repair-side of crossmember any further than necessary to gain access to link mounting bolts at crossmember.

12. Remove nut and bolt (4) mounting link to knuckle (3).
13. Remove nut and bolt (4) mounting link to crossmember (1).
14. Remove link.

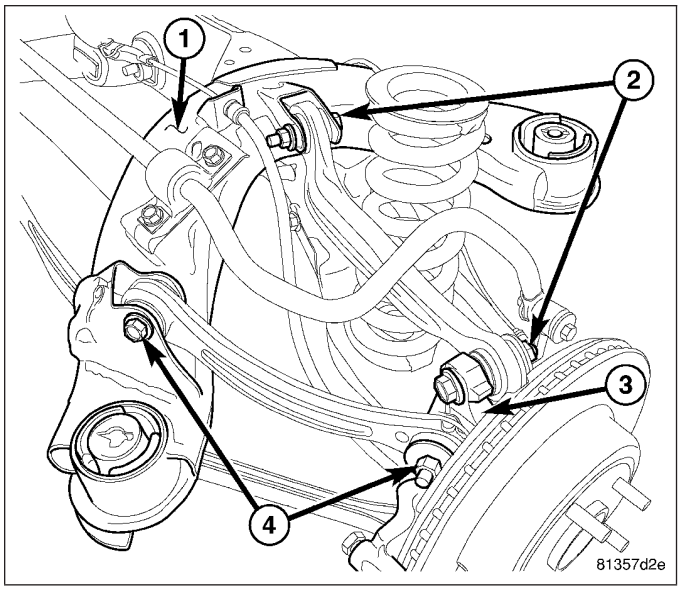

INSTALLATION

NOTE: When installing tension link, although link (6) is same end-to-end, make sure that center bow is facing downward.

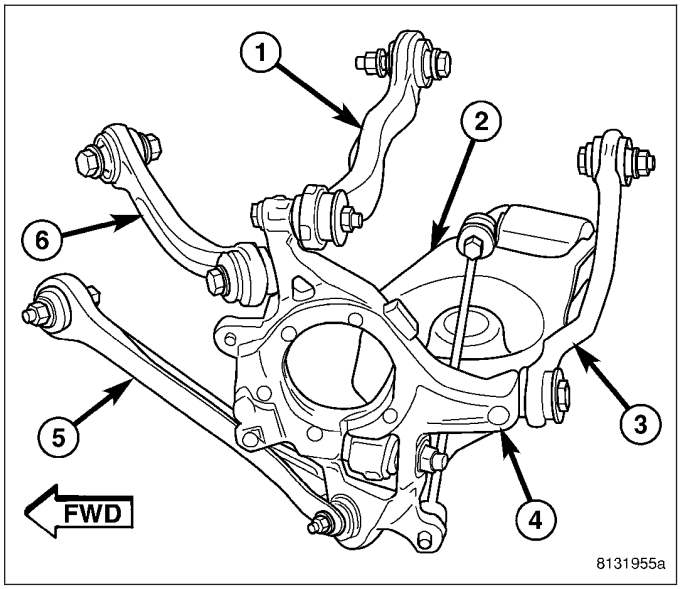

1. Place link in bracket on crossmember (1). Install bolt and nut (4) at crossmember (1) as shown. **Do not tighten bolt at this time.**
2. Install bolt and nut (4) mounting link to knuckle (3) as shown. **Do not tighten bolt at this time.**

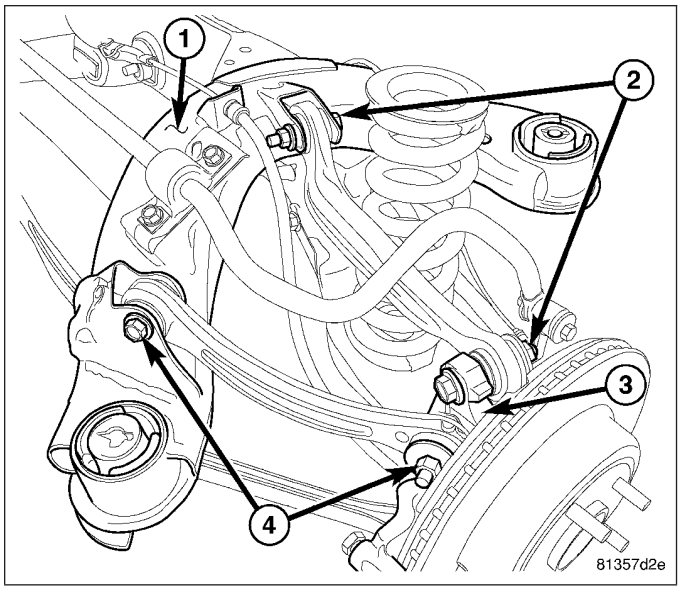

3. Install shock absorber (3) by setting lower end into pocket in spring link (4), then tipping top inward until aligned with upper mounting holes.

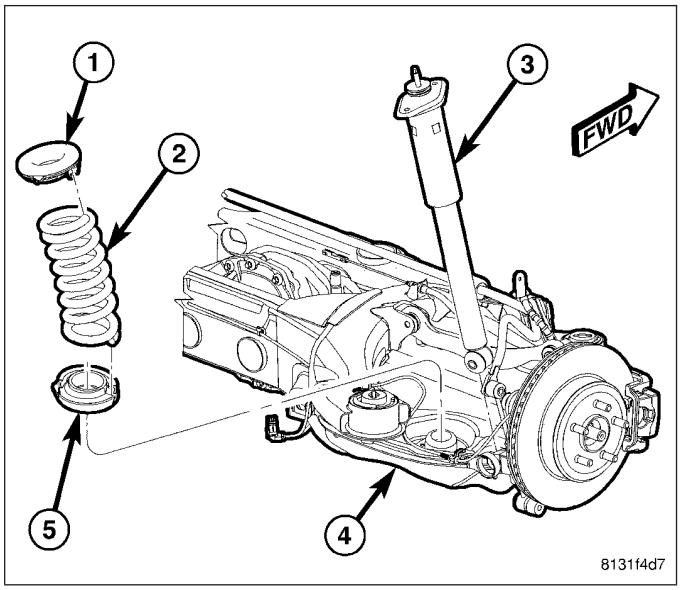

4. Install lower shock mounting bolt and nut. **Do not tighten at this time.**

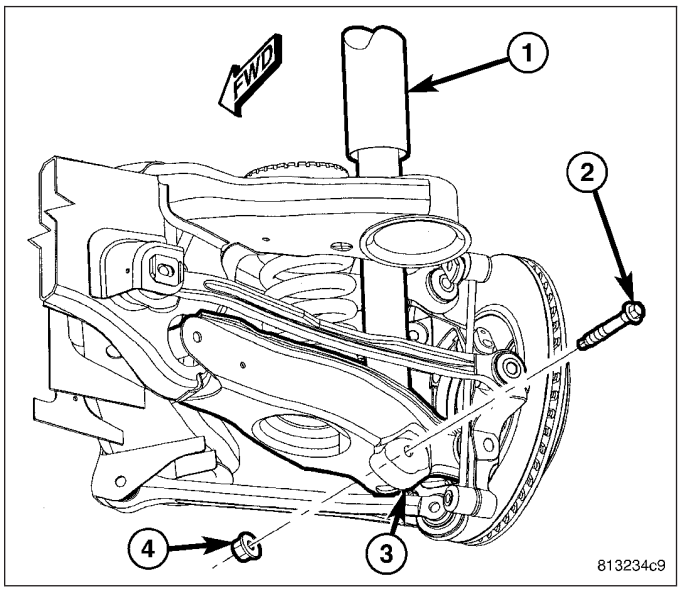

5. If vehicle is equipped with AWD, make sure spacers (1) on top of crossmember mount bushings (2) on side of repair are in position.

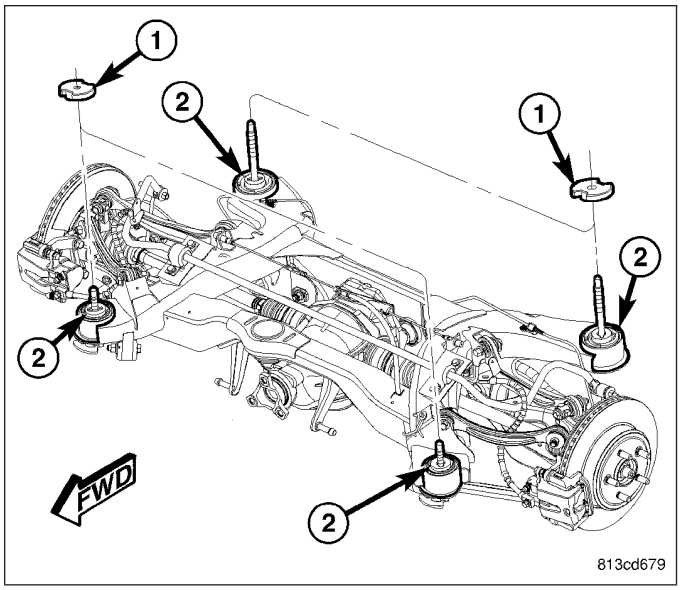

6. Carefully raise jack, guiding coil spring and upper end of shock absorber (4) into mounted positions.
7. Install shock absorber upper mounting screws (2). Tighten upper mounting screws to 52 N·m (38 ft. lbs.) torque.

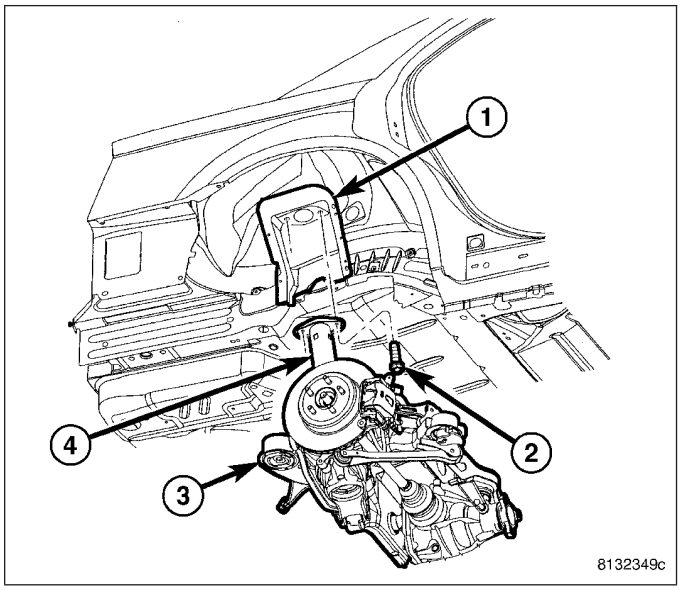

NOTE: Rear crossmember mounting bolts (2) are longer than front mounting bolts (3). Do not interchange mounting bolts.

8. Install crossmember mounting bolts (2 and 3). **Snug, but do not fully tighten bolts at this time.**

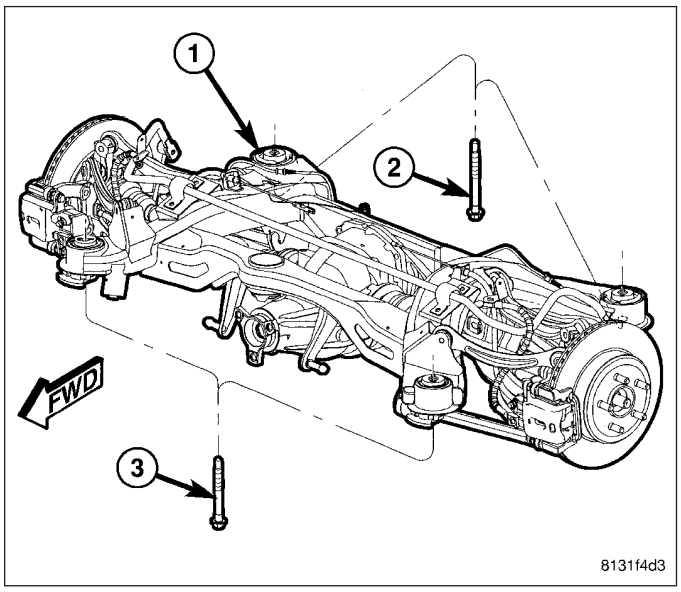

9. Measure distance (1) between from tension link (2) to body weld flange (3) directly in front of it, just outboard of front mount bushing (4). **This distance must be at least 12 mm to allow proper clearance for suspension movement.** If distance is less than 12 mm, shift that side of rear crossmember directly rearward until distance is 12 mm or greater. To do so, loosen 3 mounting bolts slightly, leaving one on opposite side of shift snugged to pivot off of. Shift crossmember rearward and snug loosened bolts. Measure opposite side to be sure it also maintains minimum 12 mm distance.

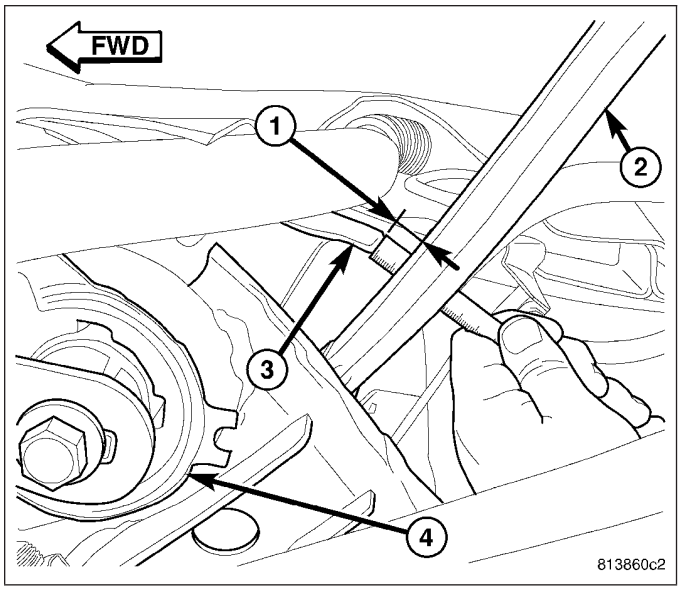

10. Tighten all crossmember mounting bolts (2 and 3) to 180 N·m (133 ft. lbs.) torque.

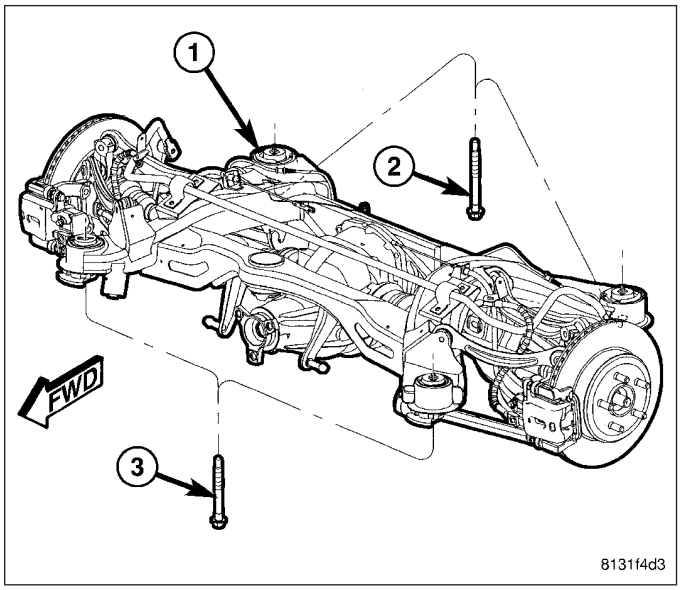

11. Remove jack (3) from under rear axle differential.
12. If previously lowered, raise rear exhaust back to mounted position and connect exhaust isolators at muffler and resonators hangers. Remove jack or stand below exhaust muffler.

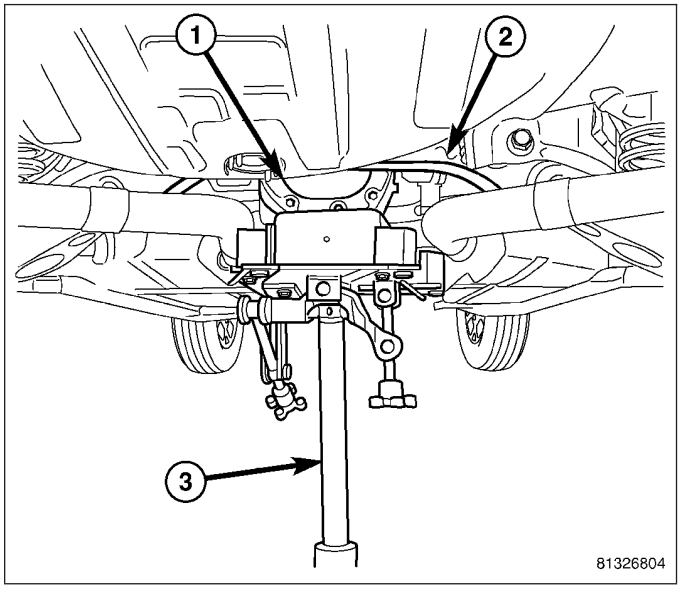

13. If removed, install fuel filler tube. (Refer to 14 - FUEL SYSTEM/FUEL DELIVERY/FUEL TANK FILLER TUBE - INSTALLATION)

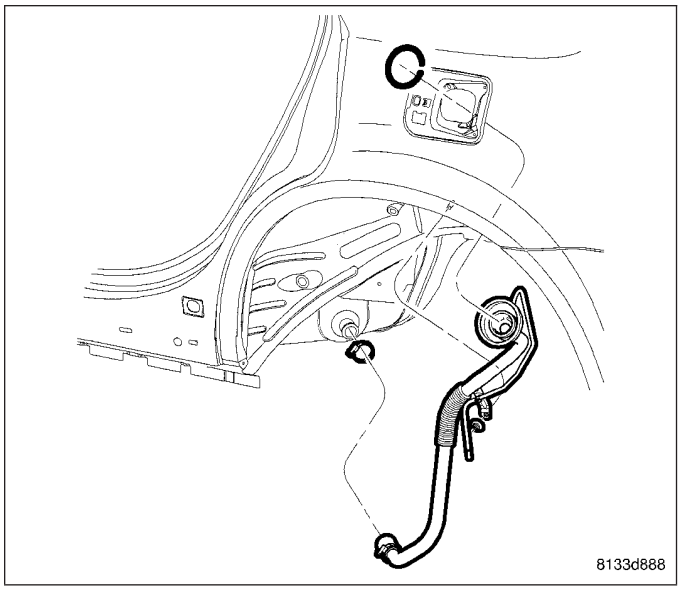

14. Lower vehicle until front tires contact floor but rear is still suspended. Place jack stands under each rear suspension spring link. Place an appropriate wooden block between stand and link to avoid damaging spring link, then lower vehicle until full vehicle weight is supported by suspension.

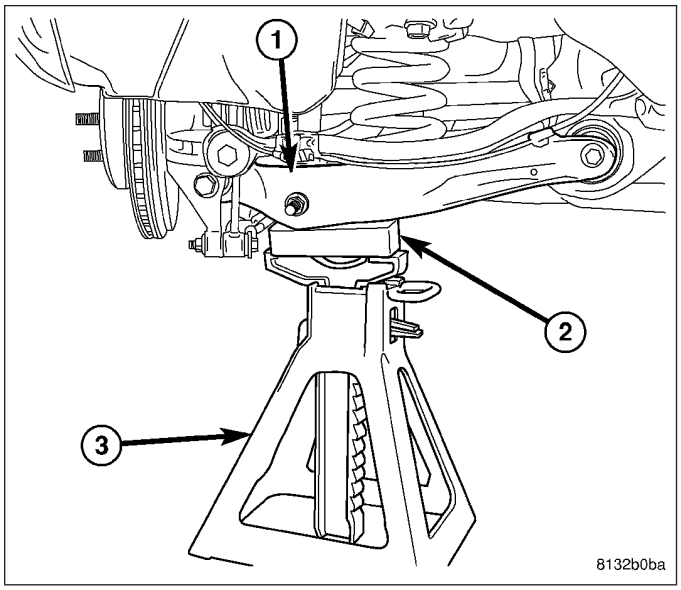

15. Tighten tension link fasteners (4) to:
    - Bolt nut at crossmember – 85 N·m (63 ft. lbs.) torque.
    - Bolt at knuckle – 98 N·m (72 ft. lbs.) torque.

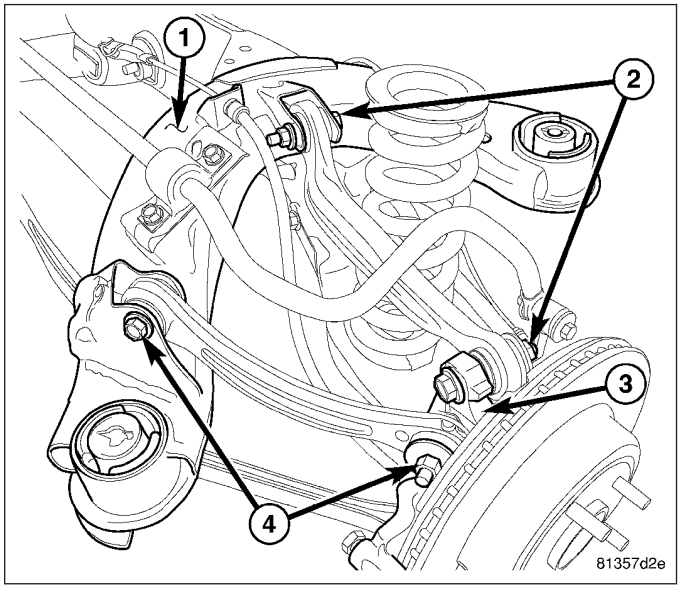

16. Tighten shock absorber lower mounting bolt nut (4) to 72 N·m (53 ft. lbs.) torque.

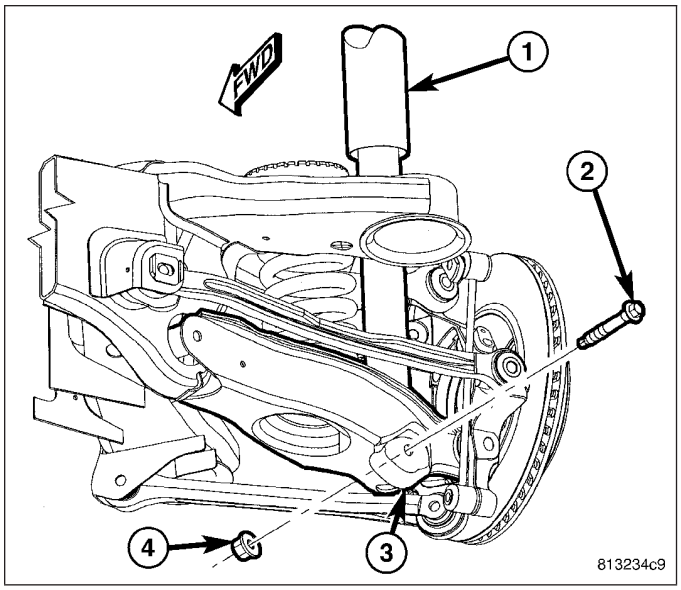

17. Raise vehicle and remove jack stands (3).

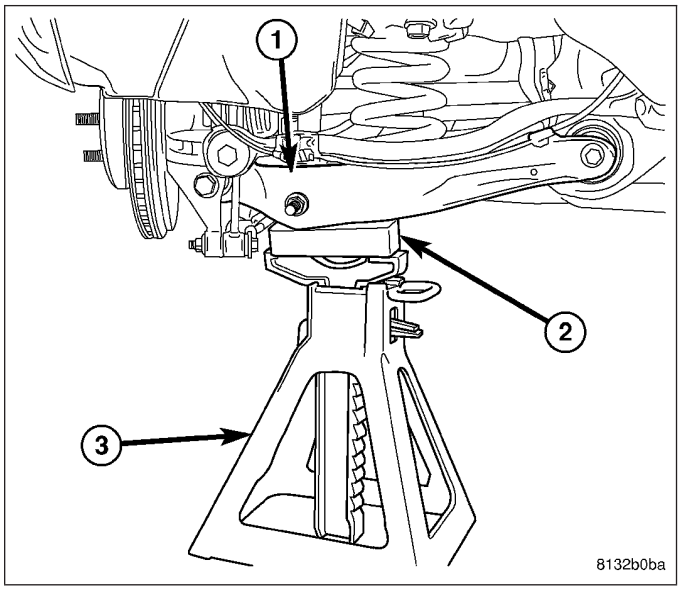

18. Install tire and wheel assemblies (1). Tighten wheel mounting nuts (3) to 150 N·m (110 ft. lbs.) torque. (Refer to 22 - TIRES/WHEELS - INSTALLATION)
19. Lower vehicle.
20. Perform wheel alignment. (Refer to 2 - SUSPENSION/WHEEL ALIGNMENT - STANDARD PROCEDURE)

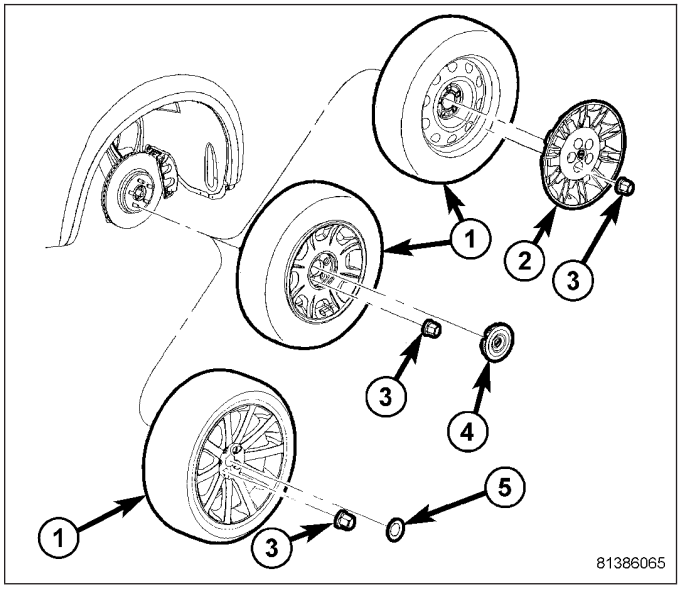

TOE LINK

REMOVAL

LEFT LINK

1. Raise and support vehicle. (Refer to LUBRICATION & MAINTENANCE/HOISTING - STANDARD PROCEDURE)
2. On both sides of vehicle, remove wheel mounting nuts (3), then rear tire and wheel assembly (1).

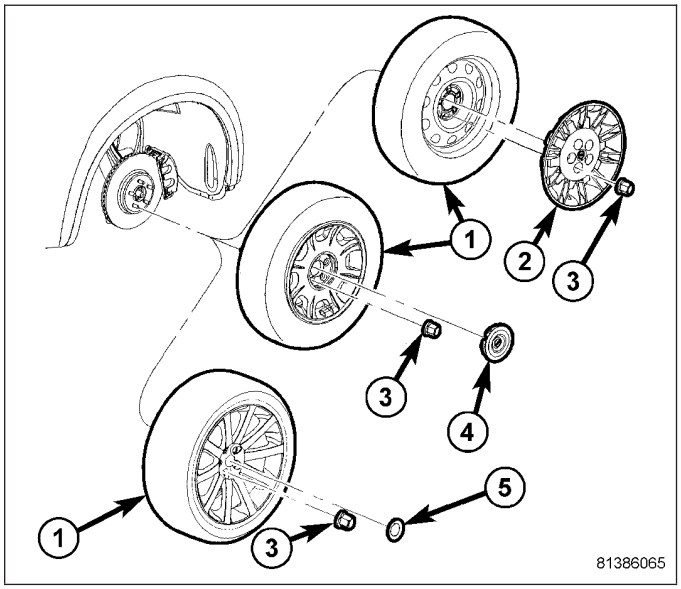

WARNING: Before opening fuel system, review all Warnings and Cautions.

3. Remove fuel filler tube. (Refer to 14 - FUEL SYSTEM/FUEL DELIVERY/FUEL TANK FILLER TUBE - REMOVAL)
4. Position an extra pair of jack stands under and support forward end of engine cradle to help stabilize vehicle during rear suspension removal/installation.
5. Perform following if vehicle is equipped with dual-exhaust.
   a. Position under-hoist utility jack or stand several inches below exhaust at muffler.
   b. Disconnect exhaust isolators at muffler and resonators hangers.
   c. Lower exhaust down to rest upon top of jack or stand placed below muffler.

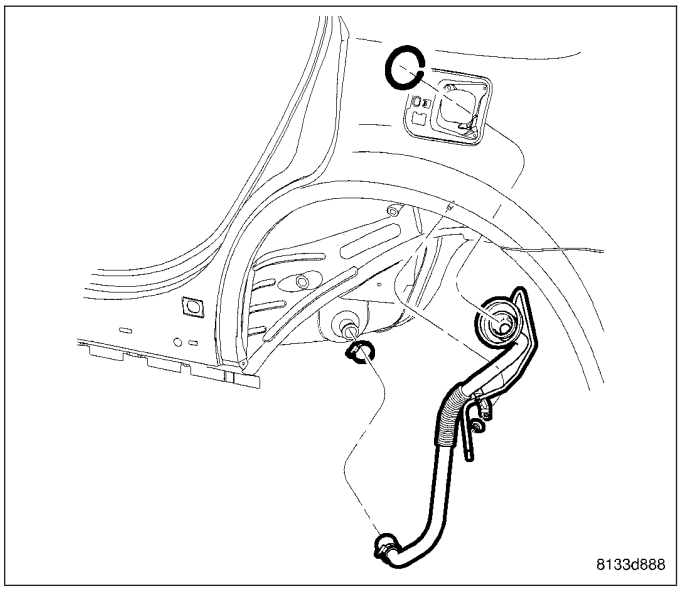

6. Position under-hoist utility jack or transmission jack (3) under center of rear axle differential (1). Raise jack head to contact differential and secure in place.

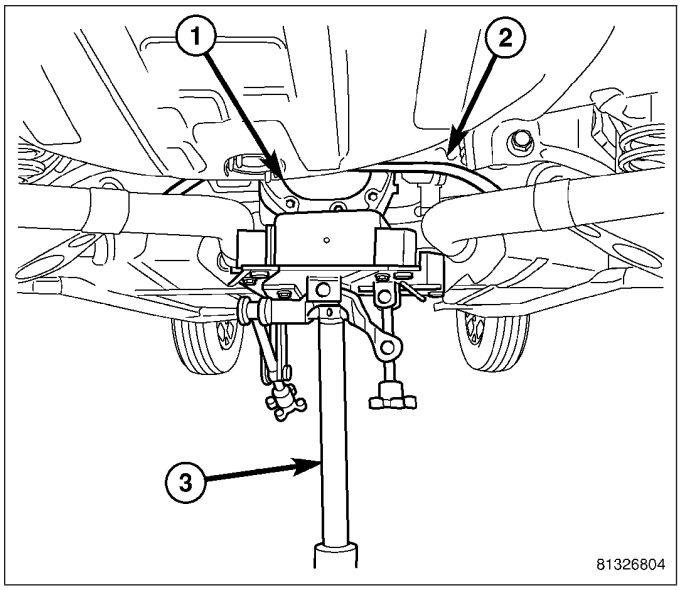

7. Remove shock absorber (1) lower mounting bolt (2) and nut (4).

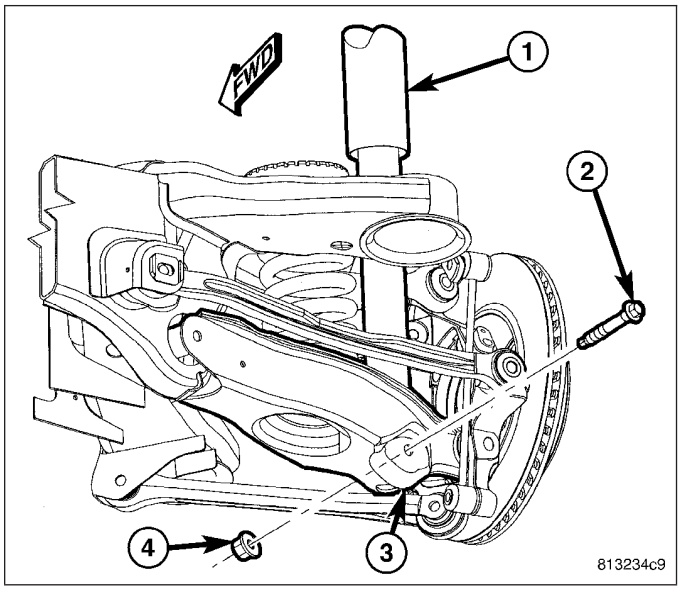

CAUTION: When removing crossmember mounting bolts (2 and 3) it is important NOT to loosen or remove crossmember mounting bolts on opposite side of vehicle. Doing so will require rear wheel alignment following reinstallation to ensure proper thrust angle.

8. Remove both front and rear crossmember mounting bolts (2 and 3) on repair-side of vehicle. **If equipped with AWD, be sure to not to misplace spacers between crossmember mounts and body.**

CAUTION: To avoid damaging other components of vehicle, do not lower crossmember (1) any further than necessary to remove shock absorber.

9. **Slowly** lower jack allowing repair-side of crossmember to drop. **Do not lower jack at a fast rate.**

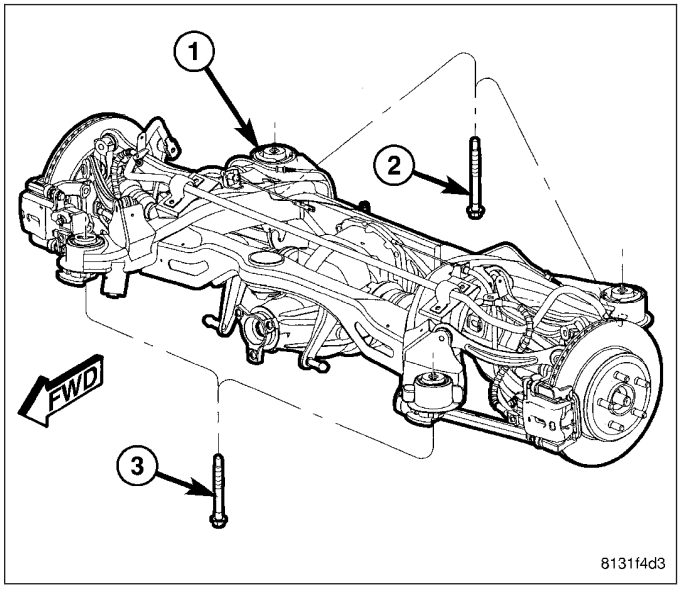

Lower jack just enough to allow toe link mounting bolt at crossmember.

10. If equipped, remove wheel speed sensor cable (2) from toe link.

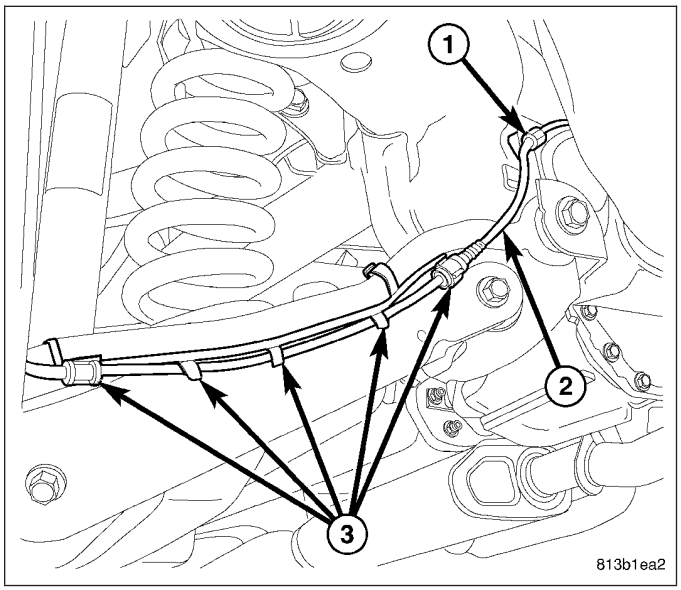

11. While holding toe adjustment cam bolt from rotating, remove nut (3) securing toe link at crossmember (1).

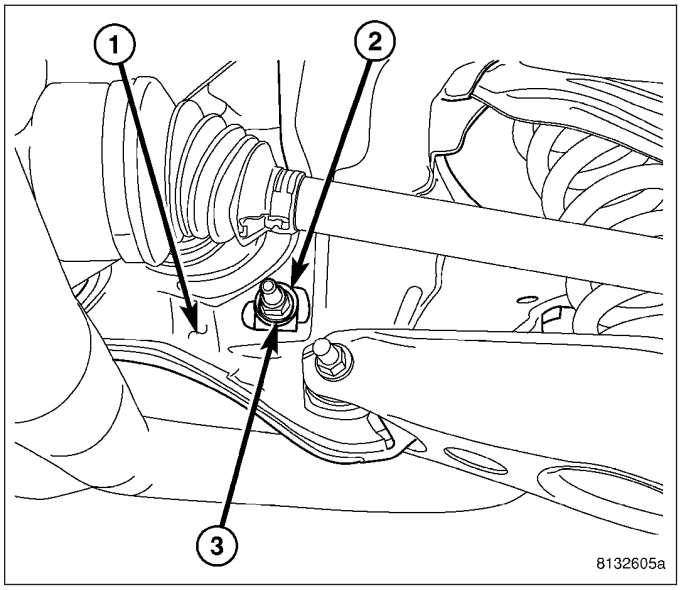

12. Slide cam bolt (2) rearward out of crossmember and link (1).
13. Remove mounting bolt (3) and nut at knuckle.
14. Remove toe link (1).

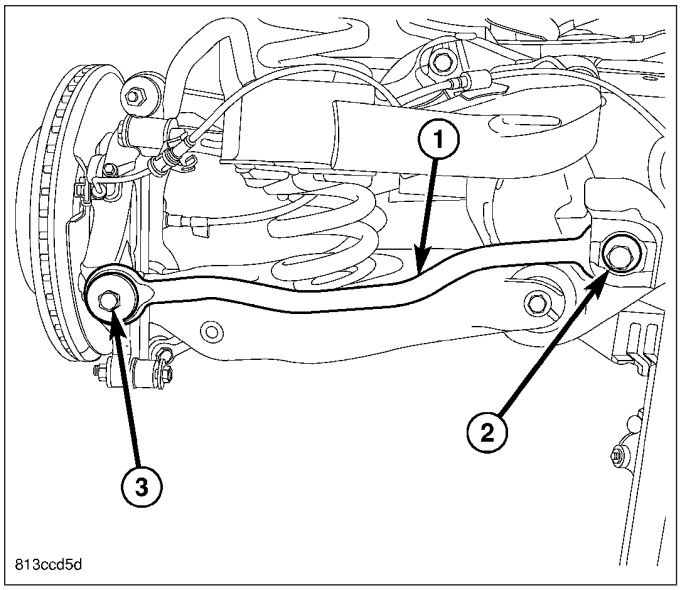

RIGHT LINK

1. Raise and support vehicle. (Refer to LUBRICATION & MAINTENANCE/HOISTING - STANDARD PROCEDURE)

2. Remove wheel mounting nuts (3), then rear tire and wheel assembly (1).

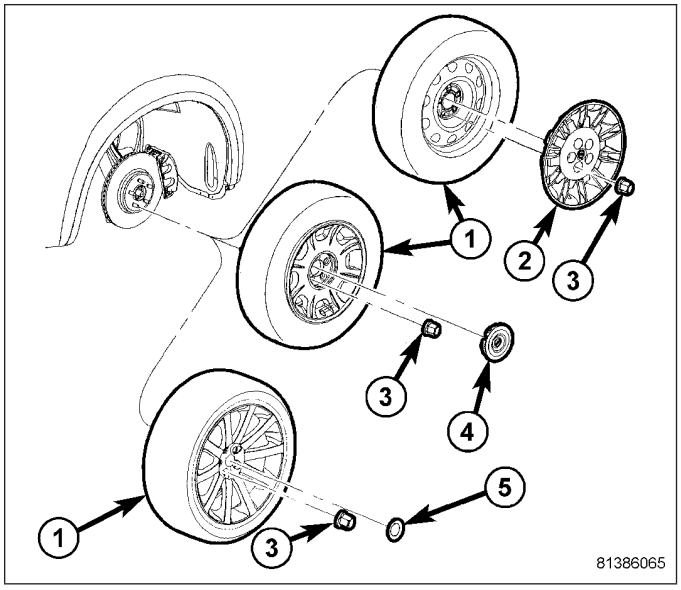

3. If equipped, remove wheel speed sensor cable (2) from toe link.

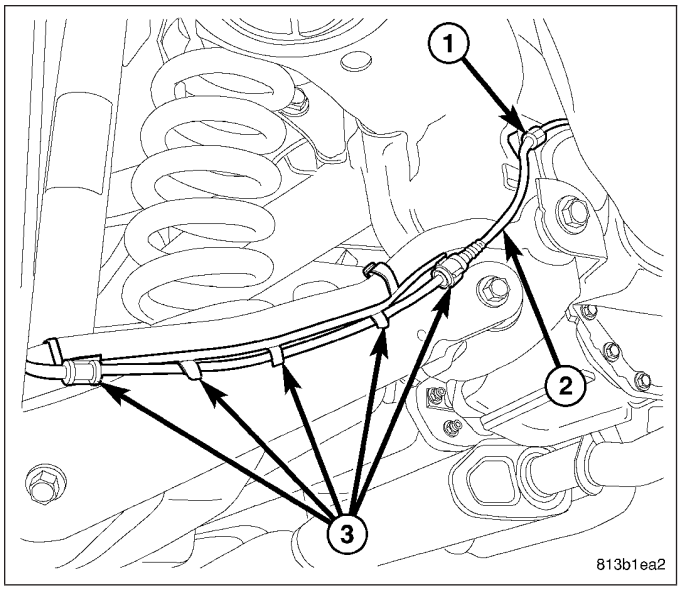

4. While holding toe adjustment cam bolt from rotating, remove nut (3) securing toe link at crossmember (1).

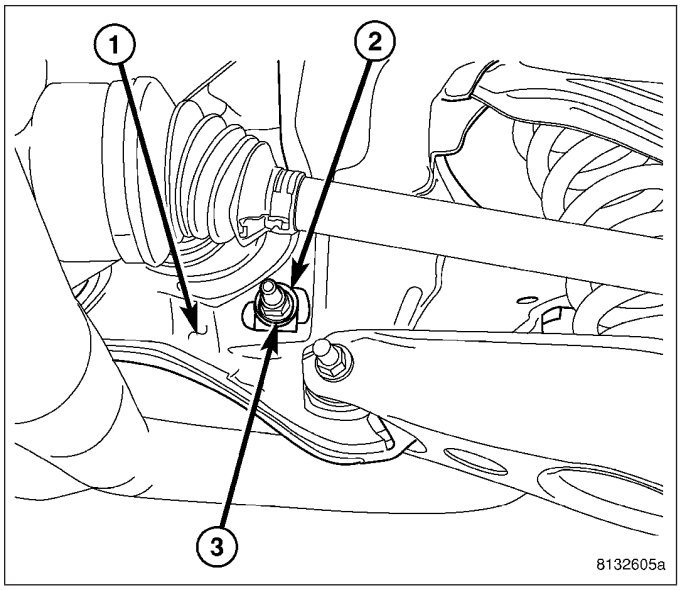

5. Slide cam bolt (2) rearward out of crossmember and link (1).
6. Remove mounting bolt (3) and nut at knuckle.
7. Remove toe link (1).

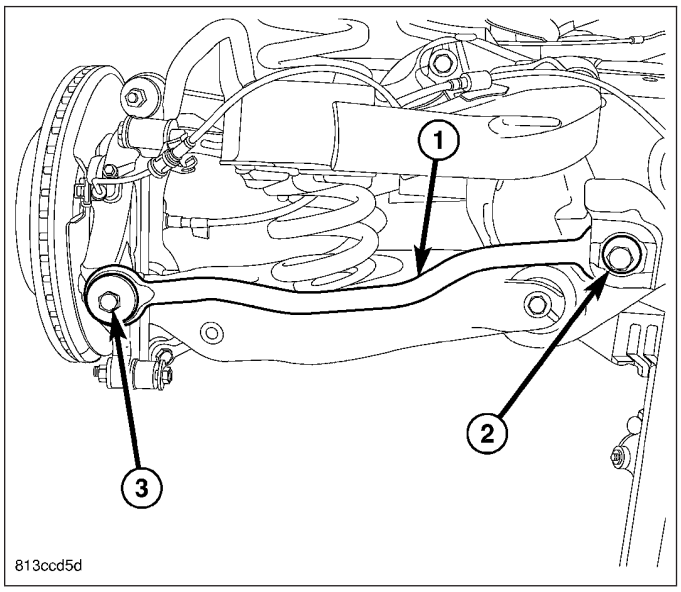

INSTALLATION

LEFT LINK

1. Slide crossmember end of toe link (1) into box bracket on crossmember. Slide cam bolt (2) through bracket and link from rear.
2. Install bolt (3) and nut securing link to knuckle. **Do not tighten bolt at this time.**

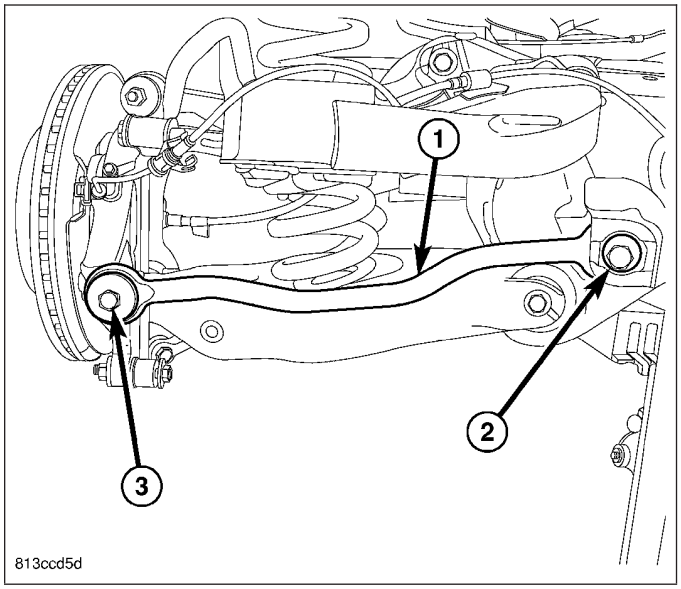

3. While holding toe adjustment cam bolt from rotating (cam facing upward), Install cam washer (2) and nut (3) securing toe link at crossmember (1). **Do not tighten nut at this time.**

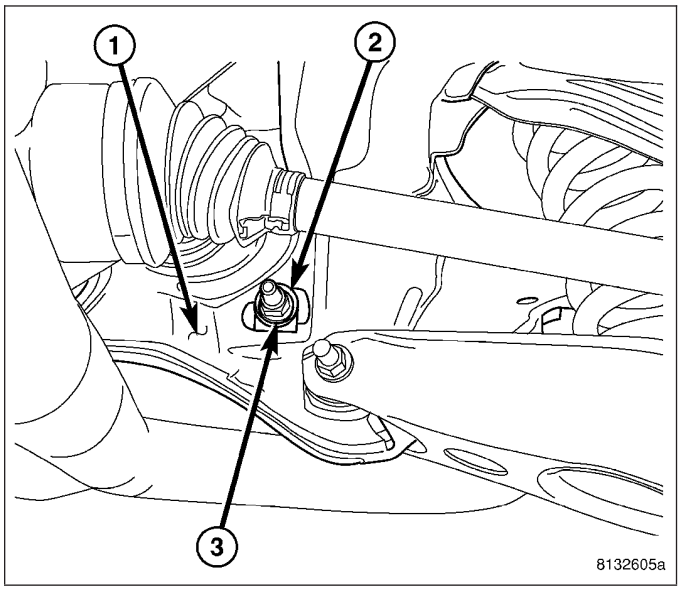

4. If equipped, Attach wheel speed sensor cable (2) to toe link.

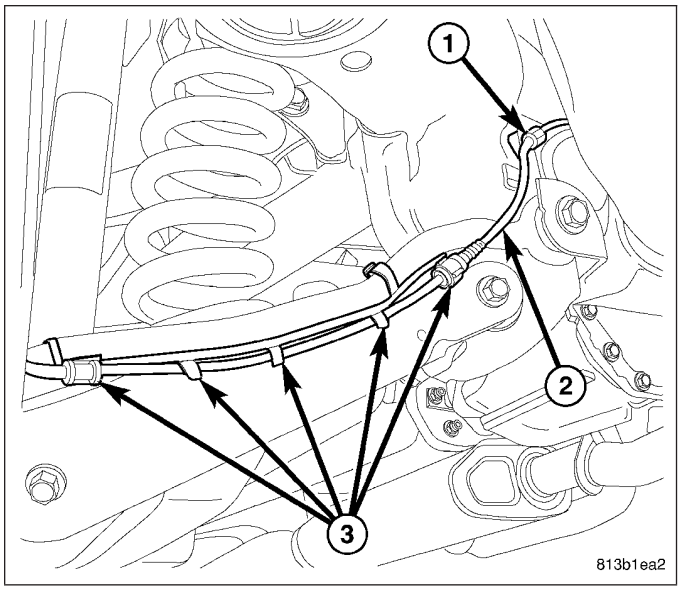

5. Carefully raise jack, guiding coil spring and lower end of shock absorber (4) into mounted positions.
6. When lower shock mounting bolt holes line up install bolt (2) and nut (4). **Do not tighten at this time.**

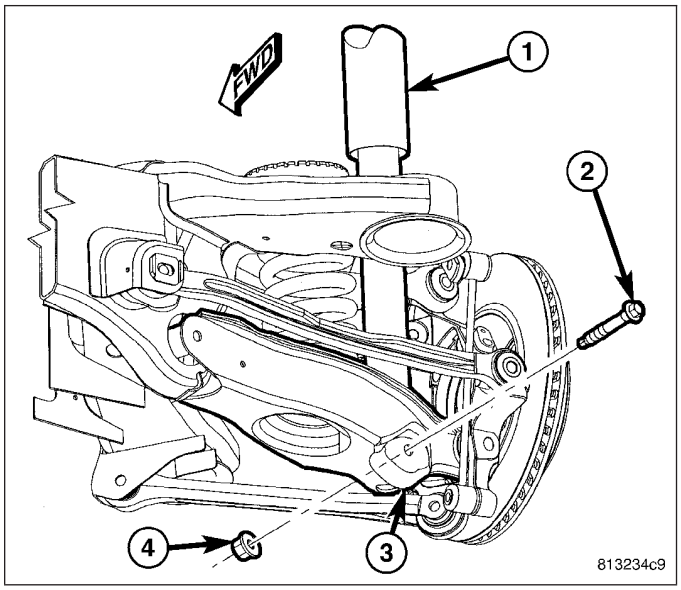

NOTE: Rear crossmember mounting bolts (2) are longer than front mounting bolts (3). Do not interchange mounting bolts.

7. Continue to raise crossmember in not already in mounted position, then install crossmember mounting bolts (2 and 3). **Snug, but do not fully tighten bolts at this time.**

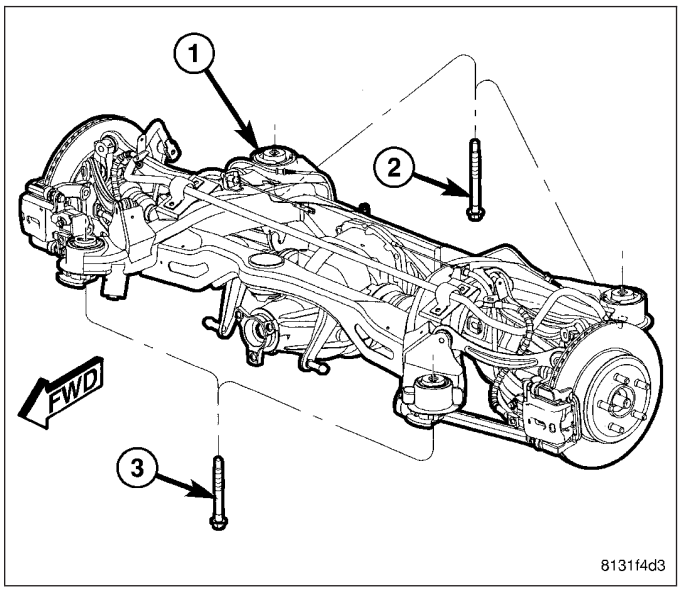

8. Measure distance (1) between from tension link (2) to body weld flange (3) directly in front of it, just outboard of front mount bushing (4). **This distance must be at least 12 mm to allow proper clearance for suspension movement.** If distance is less than 12 mm, shift that side of rear crossmember directly rearward until distance is 12 mm or greater. To do so, loosen 3 mounting bolts slightly, leaving one on opposite side of shift snugged to pivot off of. Shift crossmember rearward and snug loosened bolts. Measure opposite side to be sure it also maintains minimum 12 mm distance.

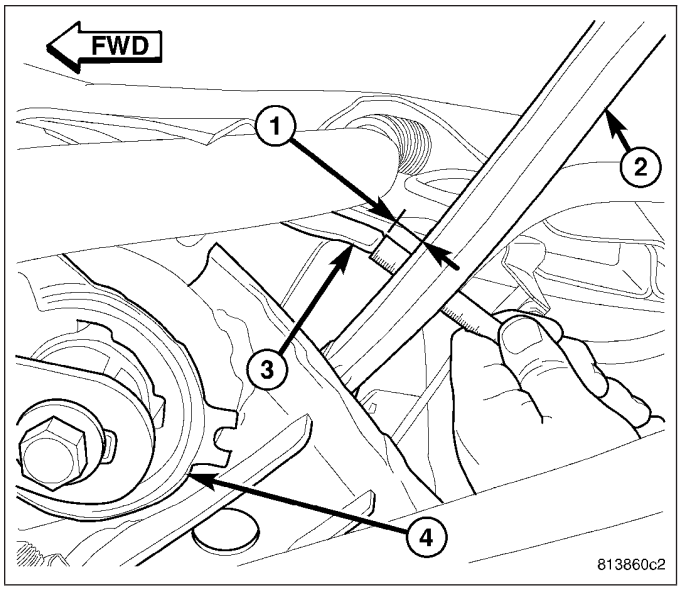

9. Tighten all crossmember mounting bolts (2 and 3) to 180 N·m (133 ft. lbs.) torque.

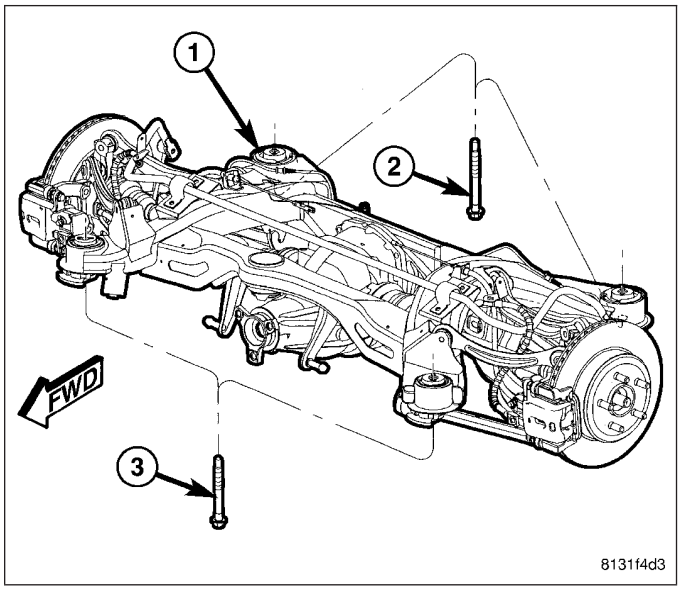

10. Remove jack (3) from under rear axle differential.
11. If previously lowered, raise rear exhaust back to mounted position and connect exhaust isolators at muffler and resonators hangers. Remove jack or stand below exhaust muffler.

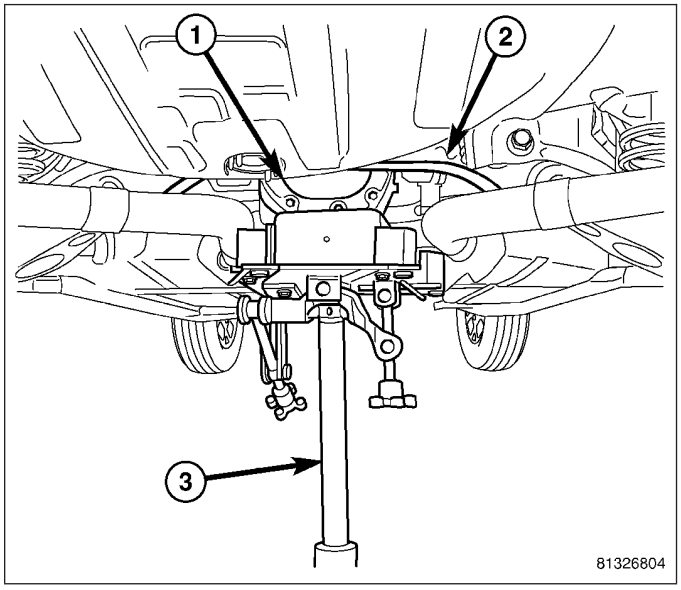

12. Install fuel filler tube. (Refer to 14 - FUEL SYSTEM/FUEL DELIVERY/FUEL TANK FILLER TUBE - INSTALLATION)

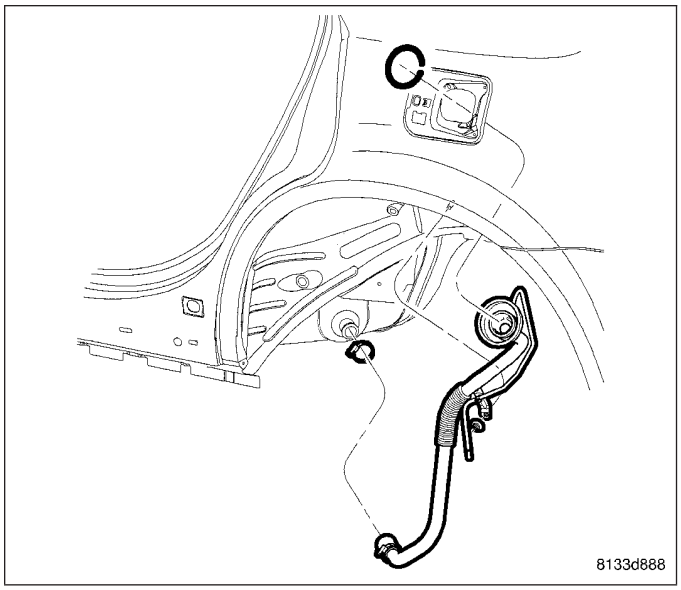

13. Install tire and wheel assemblies (1). Tighten wheel mounting nuts (3) to 150 N·m (110 ft. lbs.) torque. (Refer to 22 - TIRES/WHEELS - INSTALLATION)
14. Lower vehicle.
15. Position vehicle on alignment rack/drive-on lift. Raise vehicle as necessary to access mounting bolts.

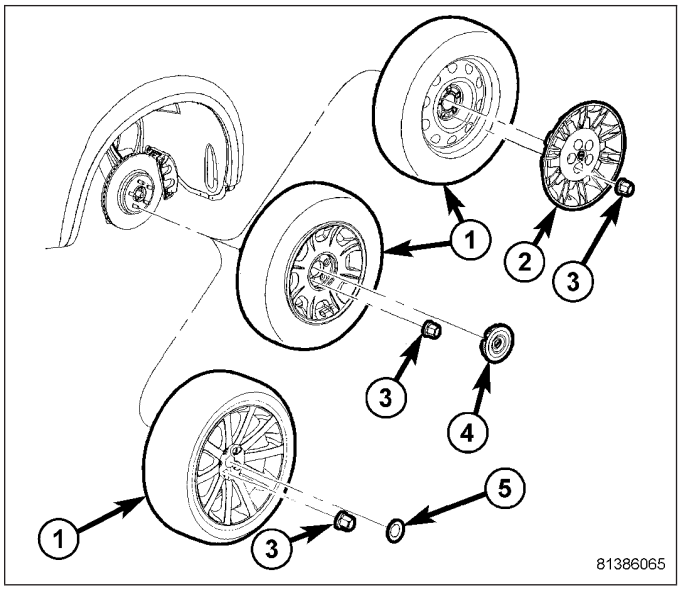

16. Tighten shock absorber lower mounting bolt nut (4) to 72 N·m (53 ft. lbs.) torque.

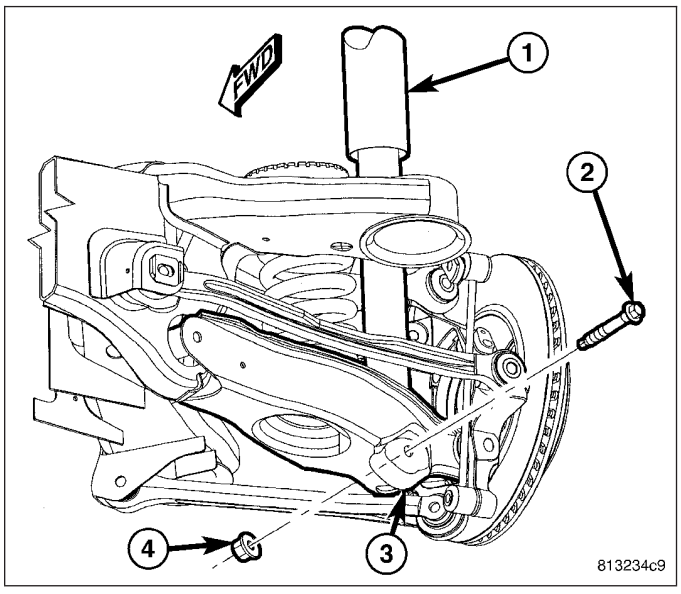

17. Tighten toe link (1) fasteners to:
    - Nut at crossmember – 108 N·m (80 ft. lbs.) torque (This nut may be tightened after rear wheel alignment toe is set. Do not tighten from bolt head end.).
    - Bolt at knuckle – 81 N·m (60 ft. lbs.) torque.
18. Perform wheel alignment. (Refer to 2 - SUSPENSION/WHEEL ALIGNMENT - STANDARD PROCEDURE)

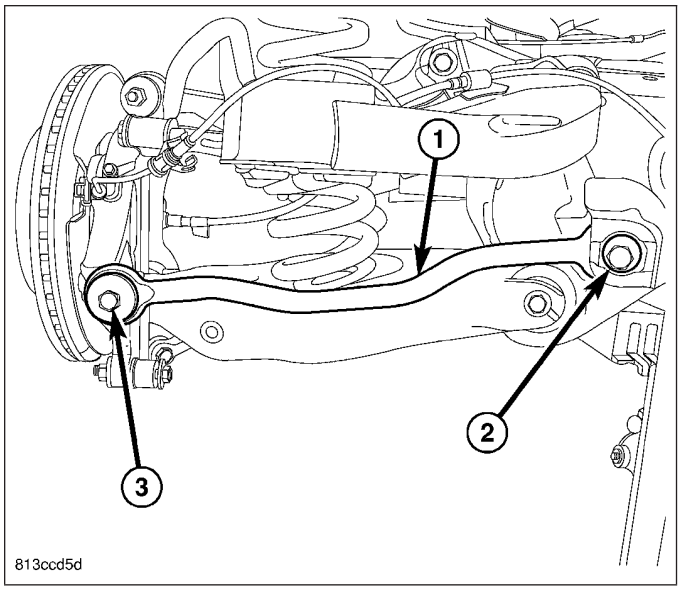

RIGHT LINK

1. Slide crossmember end of toe link (1) into box bracket on crossmember. Slide cam bolt (2) through bracket and link from rear of vehicle.
2. Install bolt (3) and nut securing link to knuckle. **Do not tighten bolt at this time.**

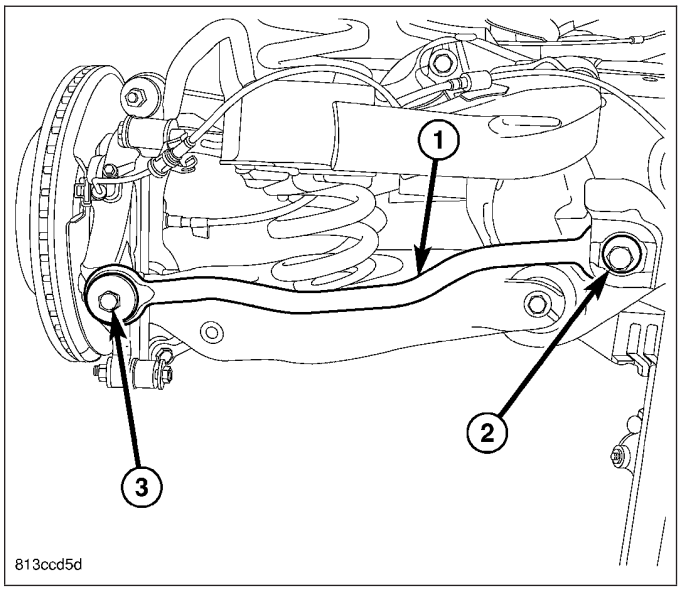

3. While holding toe adjustment cam bolt from rotating (cam facing upward), Install cam washer (2) and nut (3) securing toe link at crossmember (1). **Do not tighten nut at this time.**

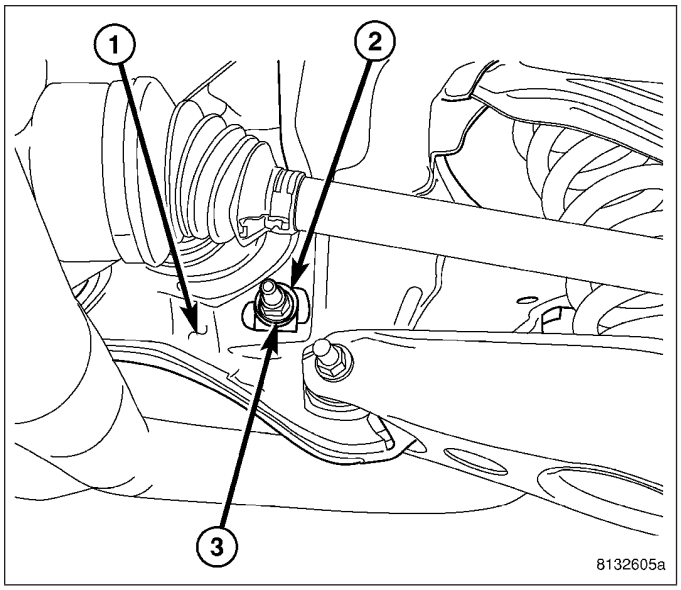

4. If equipped, Attach wheel speed sensor cable (2) to toe link.
5. Raise rear exhaust back to mounted position and connect exhaust isolators at muffler and resonators hangers. Remove jack or stand below exhaust muffler.

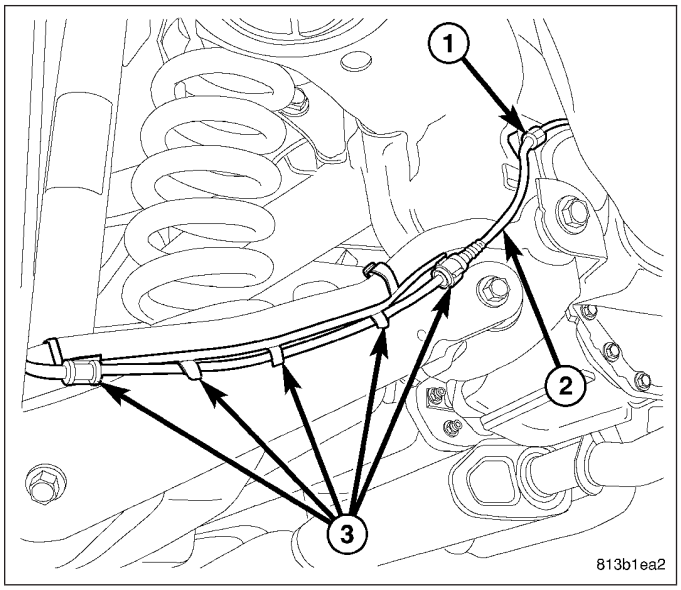

6. Install tire and wheel assembly (1). Tighten wheel mounting nuts (3) to 150 N·m (110 ft. lbs.) torque. (Refer to 22 - TIRES/WHEELS - INSTALLATION)
7. Lower vehicle.
8. Position vehicle on alignment rack/drive-on lift. Raise vehicle as necessary to access mounting bolts.

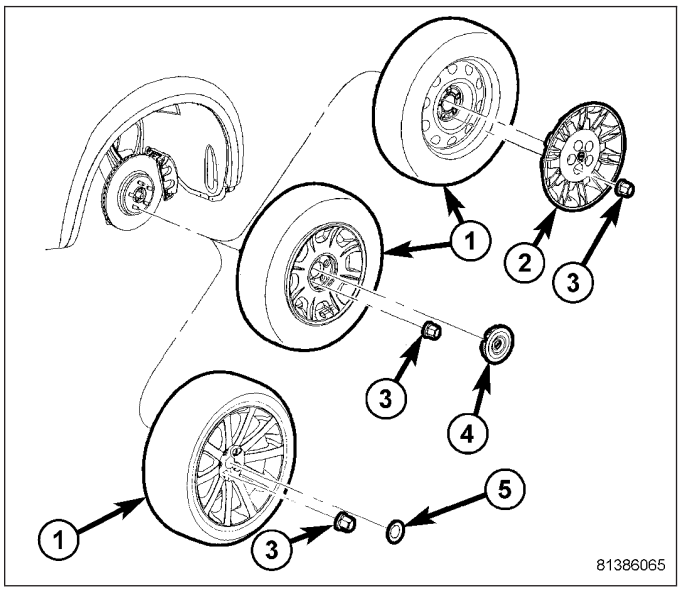

9. Tighten toe link (1) fasteners to:
   - Nut at crossmember – 108 N·m (80 ft. lbs.) torque (This nut may be tightened after rear wheel alignment toe is set. Do not tighten from bolt head end.).
   - Bolt at knuckle – 81 N·m (60 ft. lbs.) torque.
10. Perform wheel alignment. (Refer to 2 - SUSPENSION/WHEEL ALIGNMENT - STANDARD PROCEDURE)

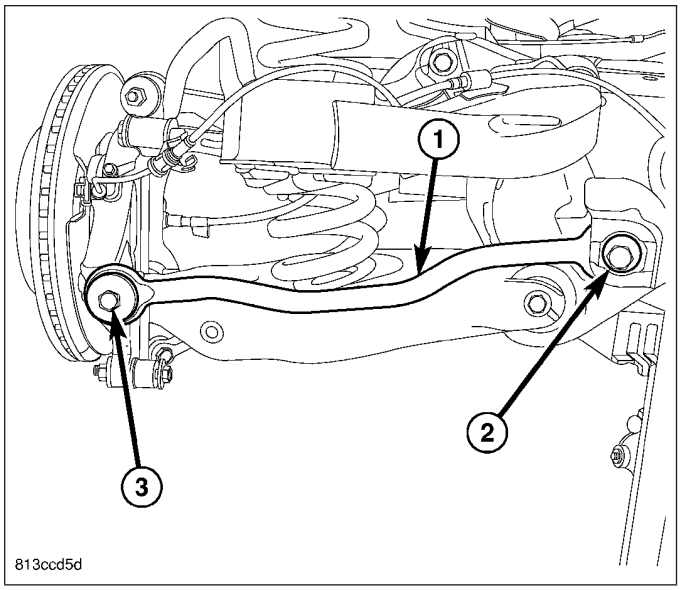

SHOCK ABSORBER

DESCRIPTION

This vehicle is available with either standard gas-charged shock absorbers or Nivomat™ load-leveling shock absorbers for the rear suspension. Depending on options, the load-leveling shock absorbers may either be standard or optional equipment.

On the exterior, the load-leveling shock absorbers (1) are larger in diameter than the standard shock absorbers. Each load-leveling shock absorber is a self-contained vehicle leveling system and shock absorber combined. It does not require any external compressor, hoses, or height leveling sensors. When cargo or passengers are added, the load-leveling shock absorbers use normal ride motions during driving, even on smooth roads, to raise the rear of the vehicle automatically to the unloaded (or curb) height. When the load is removed, the vehicle maintains this rear ride height.

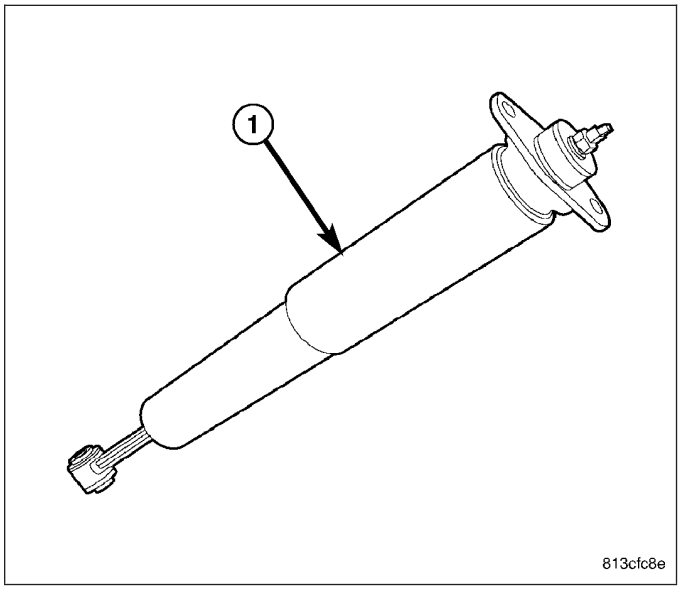

The rear shock absorber used on the SRT8 is a load-leveling shock (2). This shock absorber appears the same as the standard load-leveling shock, but has been specially calibrated for this vehicle. It can be identified by an identification tag on its side (1). This shock absorber is serviced the same as the standard load-leveling shock absorber.

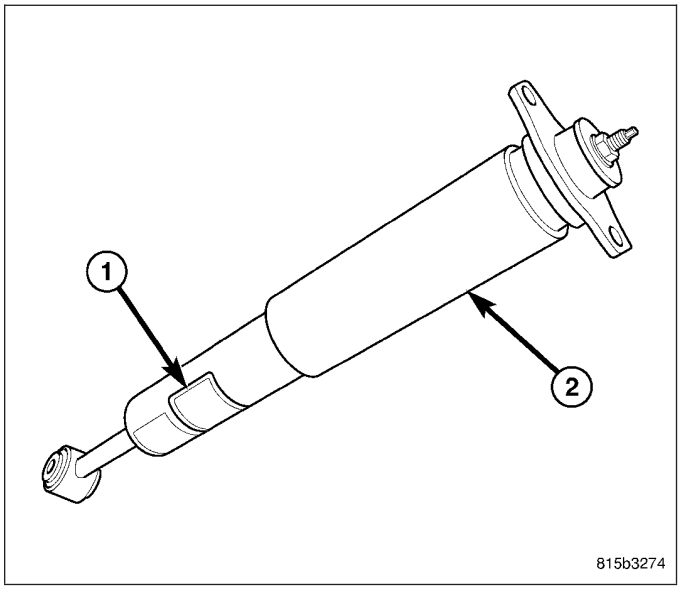

REMOVAL

STANDARD

1. Raise and support vehicle. (Refer to LUBRICATION & MAINTENANCE/HOISTING - STANDARD PROCEDURE)

2. Remove wheel mounting nuts (3), then tire and wheel assembly (1).
3. Position under-hoist utility jack or jack stand under outer spring link adding just enough support to keep suspension from going into full-rebound when shock absorber mounting bolts are removed.

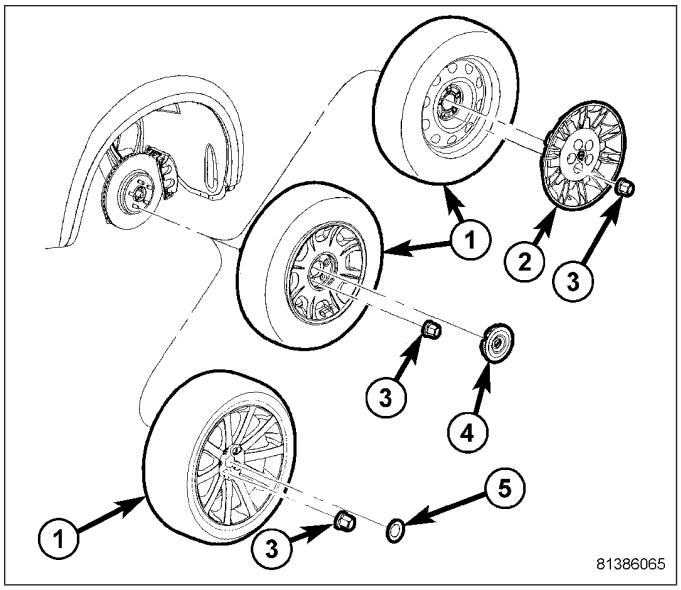

4. Remove shock absorber (1) lower mounting bolt (2) and nut (4).

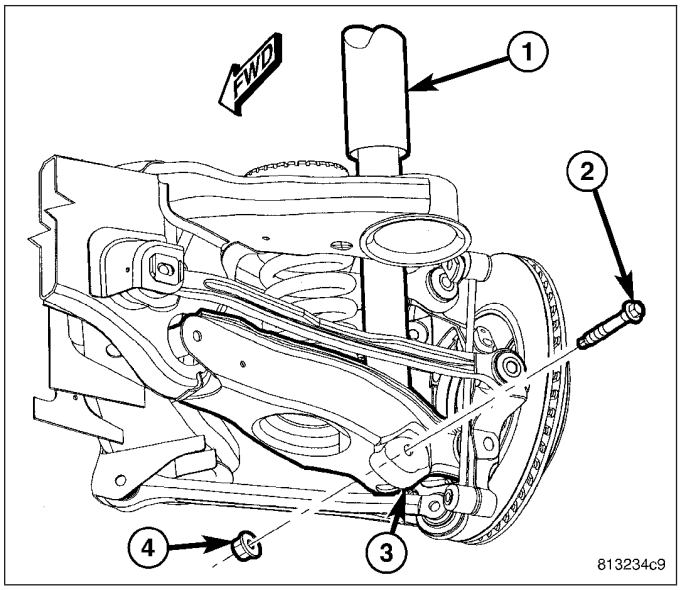

5. Remove shock absorber (1) upper mounting bolts (2).
6. Remove shock absorber (4).

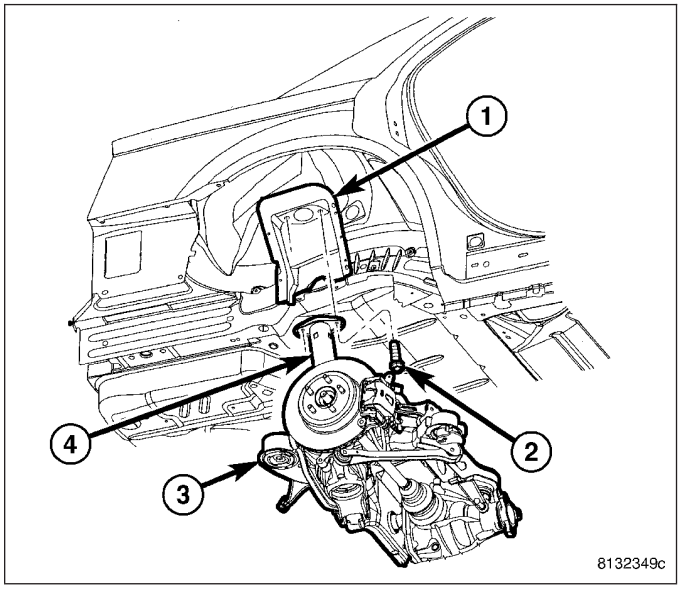

LOAD-LEVELING

1. Raise and support vehicle. (Refer to LUBRICATION & MAINTENANCE/HOISTING - STANDARD PROCEDURE)
2. On both sides of vehicle, remove wheel mounting nuts (3), then rear tire and wheel assembly (1).

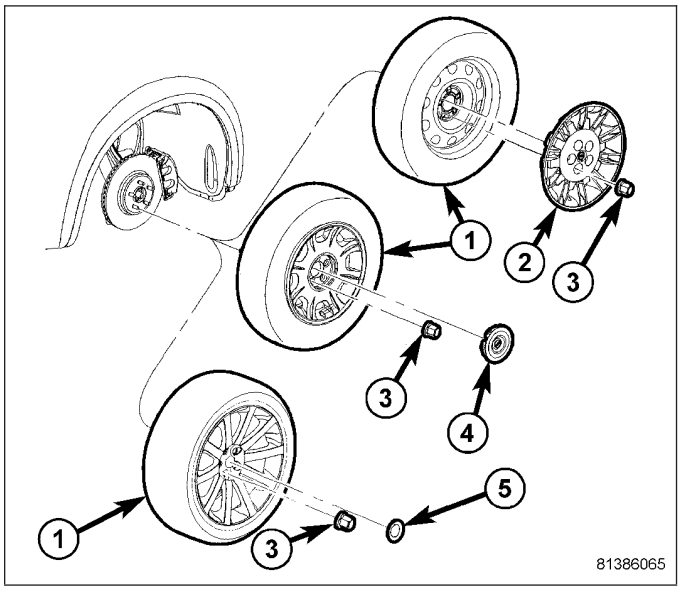

WARNING: Before opening fuel system, review all Warnings and Cautions.

3. If servicing left side shock absorber, remove fuel filler tube. (Refer to 14 - FUEL SYSTEM/FUEL DELIVERY/FUEL TANK FILLER TUBE - REMOVAL)
4. Position an extra pair of jack stands under and support forward end of engine cradle to help stabilize vehicle during rear suspension removal/installation.
5. Perform following if vehicle is equipped with dual-exhaust or are servicing right side on vehicle with single exhaust.
   a. Position under-hoist utility jack or stand several inches below exhaust at muffler.
   b. Disconnect exhaust isolators at muffler and resonators hangers.

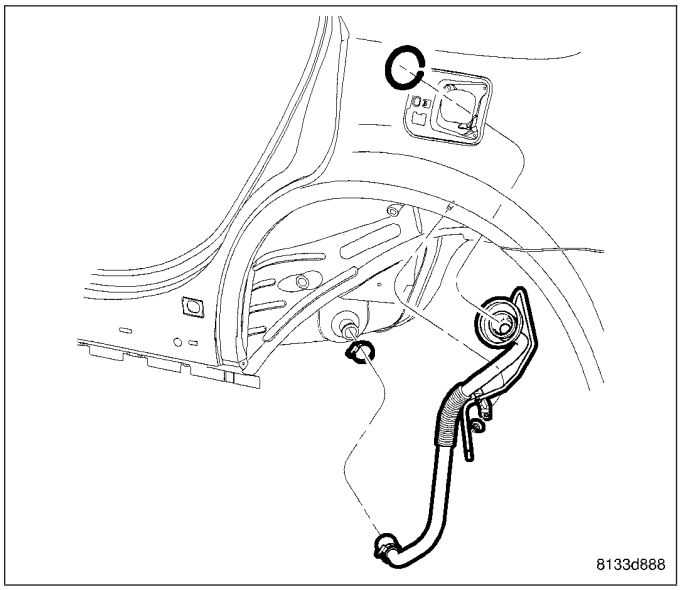

   c. Lower exhaust down to rest upon top of jack or stand placed below muffler.

6. Position under-hoist utility jack or transmission jack (3) under center of rear axle differential (1). Raise jack head to contact differential and secure in place. **When securing crossmember to jack, be sure not to secure stabilizer bar.**

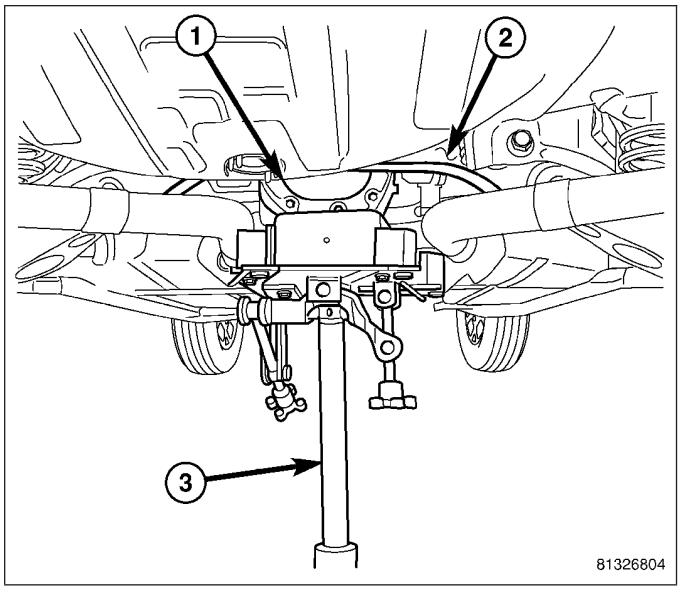

7. Remove shock absorber (1) upper mounting screws (2).

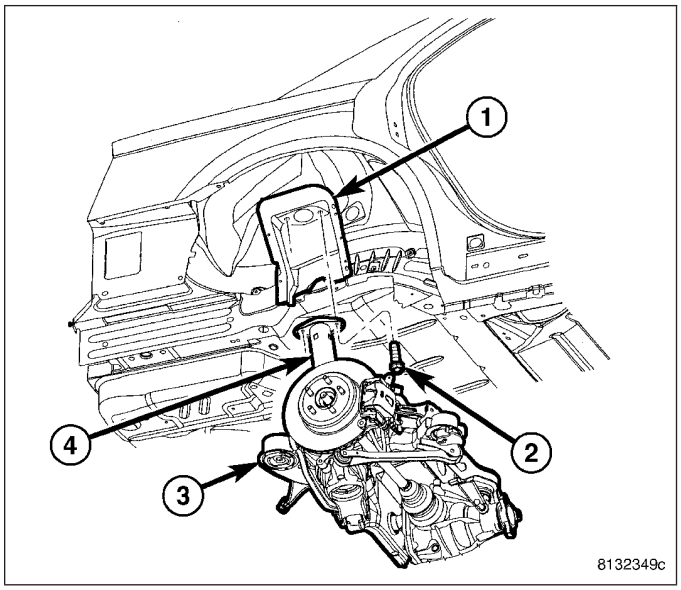

8. Remove shock absorber (1) lower mounting bolt (2) and nut (4).

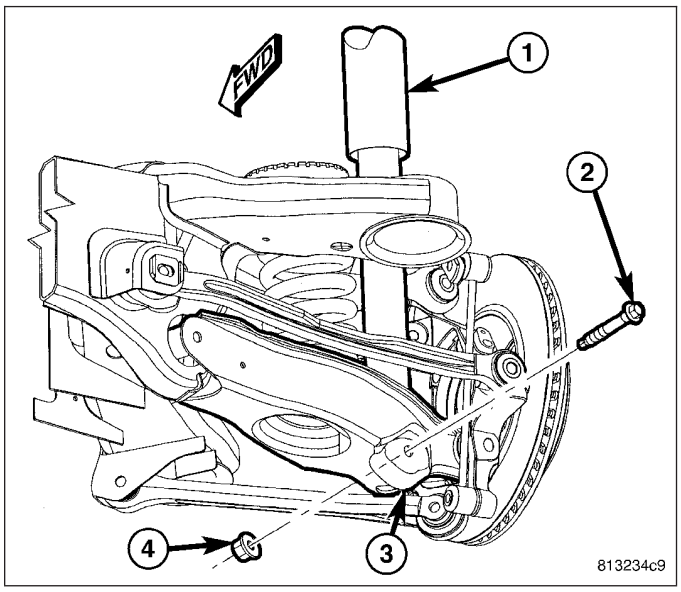

NOTE: If equipped with AWD, when removing crossmember mounting bolts in following step, be sure to not to misplace spacers (1) between crossmember mounts (2) and body.

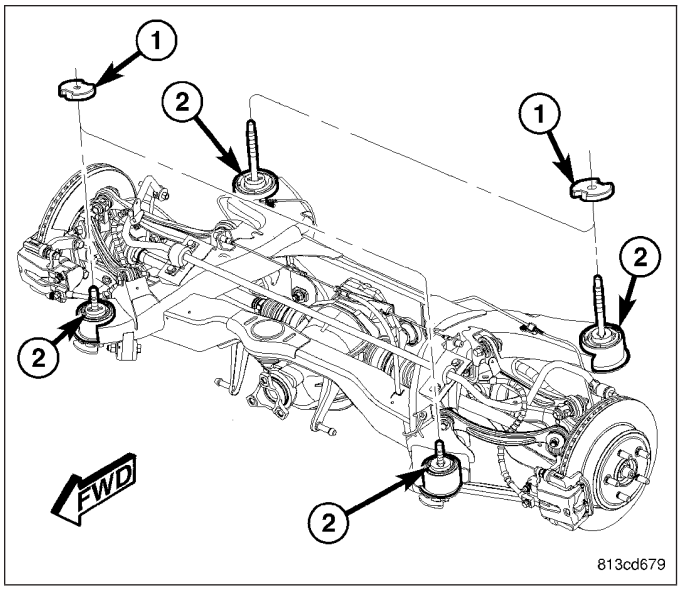

CAUTION: When removing crossmember mounting bolts (2 and 3) it is important NOT to loosen or remove crossmember mounting bolts on opposite side of vehicle. Doing so will require rear wheel alignment following reinstallation to ensure proper thrust angle.

9. Remove both front and rear crossmember mounting bolts (2 and 3) on repair-side of vehicle.

CAUTION: To avoid damaging other components of vehicle, do not lower crossmember (1) any further than necessary to remove shock absorber.

10. **Slowly** lower jack allowing repair-side of crossmember to drop. **Do not lower jack at a fast rate.** Lower jack just enough to allow top of shock absorber to clear body flange.

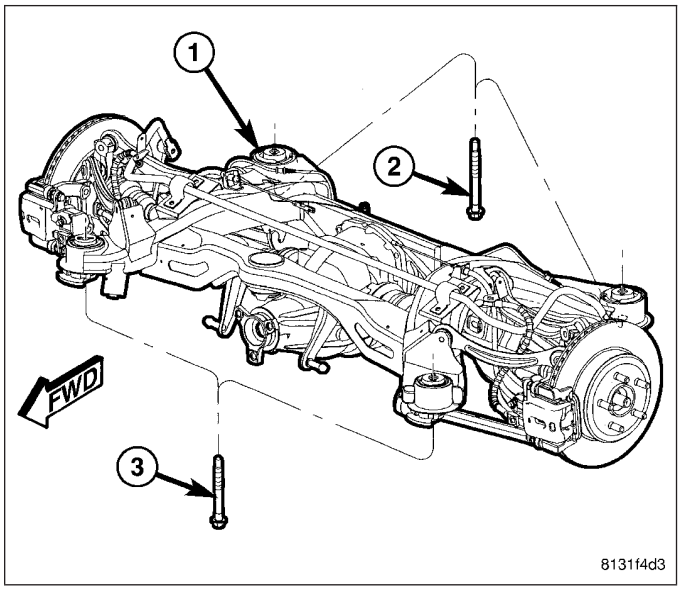

11. Remove shock absorber (3) by tipping top outward and lifting lower end out of pocket in spring link (4).

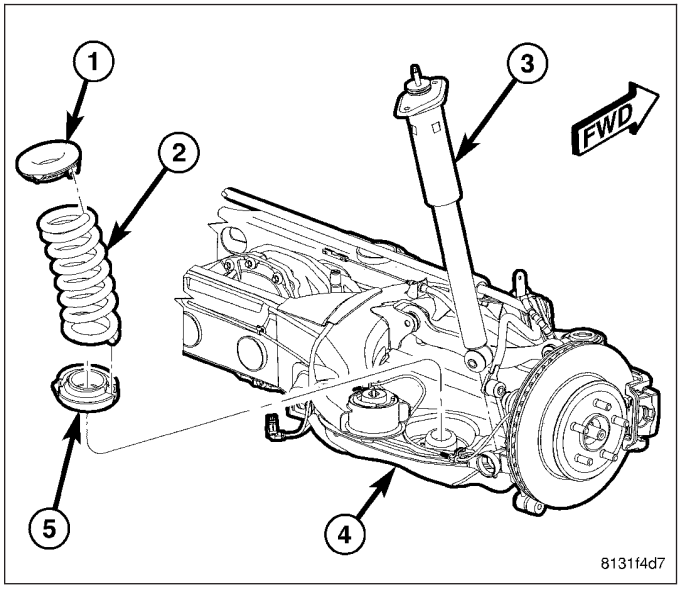

INSTALLATION

STANDARD

1. Insert lower end of shock absorber (3) into well of spring link (4).

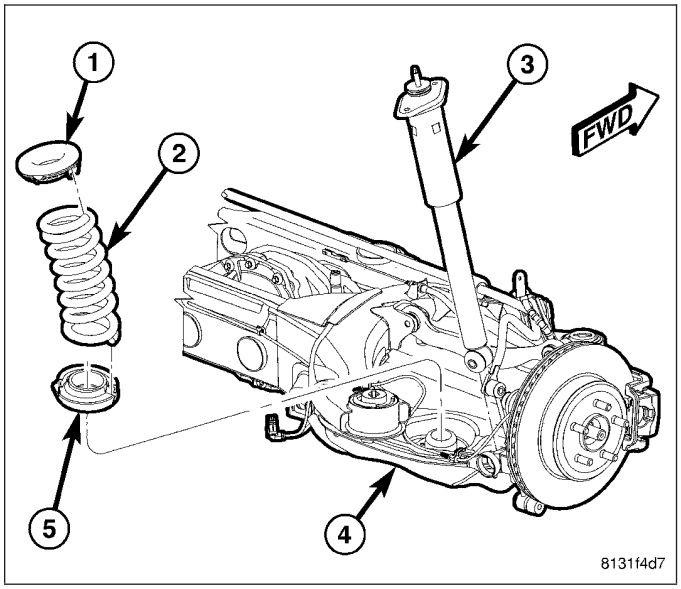

2. Raise upper end of shock absorber (4) up into mounted position on body (1) and install upper mounting screws (2). Tighten upper mounting screws to 52 N·m (38 ft. lbs.) torque.

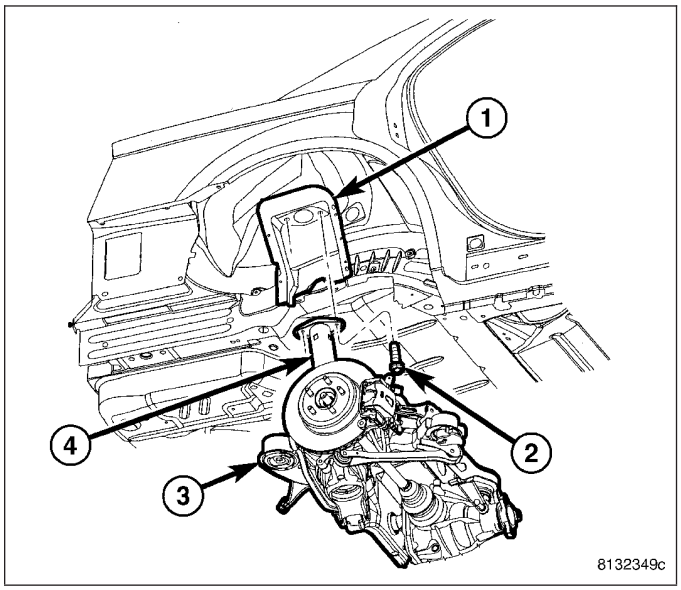

3. Install lower shock mounting bolt (2) and nut (4). **Do not tighten at this time.**
4. Remove under-hoist utility jack or jack stand from under spring link.

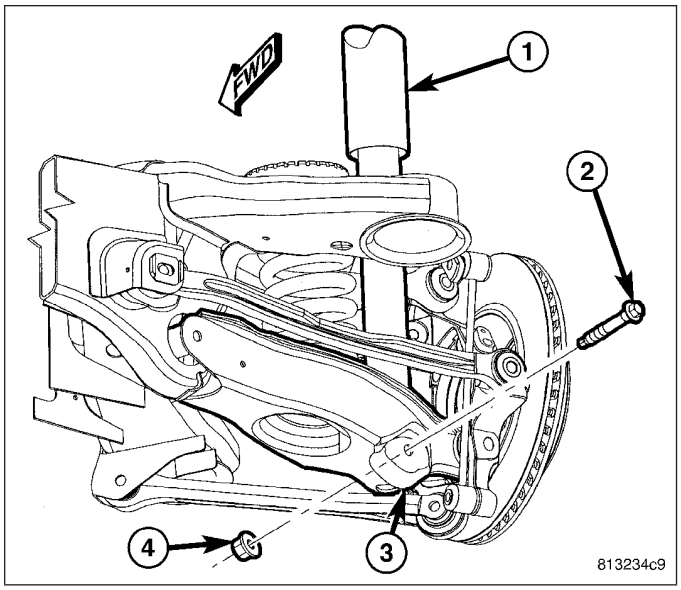

5. Install tire and wheel assembly (1). Tighten wheel mounting nuts (3) to 150 N·m (110 ft. lbs.) torque. (Refer to 22 - TIRES/WHEELS - INSTALLATION)
6. Lower vehicle.
7. Position vehicle on alignment rack/drive-on hoist. Raise vehicle as necessary to access lower mounting bolt.

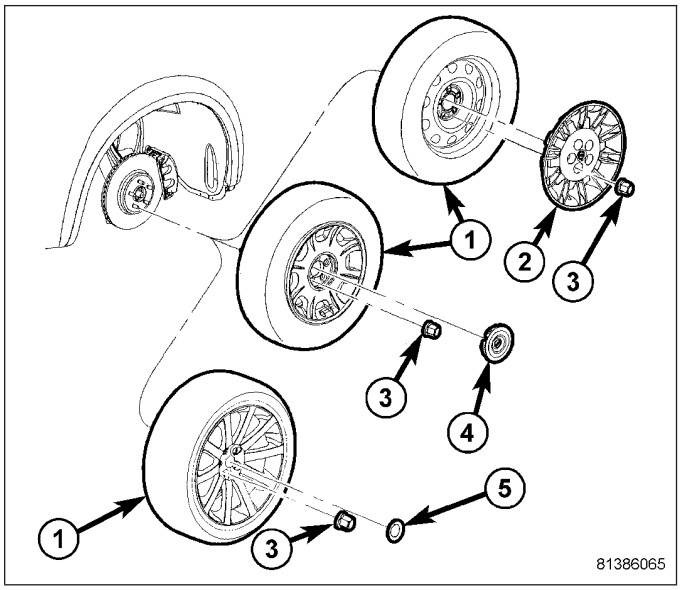

8. Tighten shock absorber lower mounting bolt nut (4) to 72 N·m (53 ft. lbs.) torque.

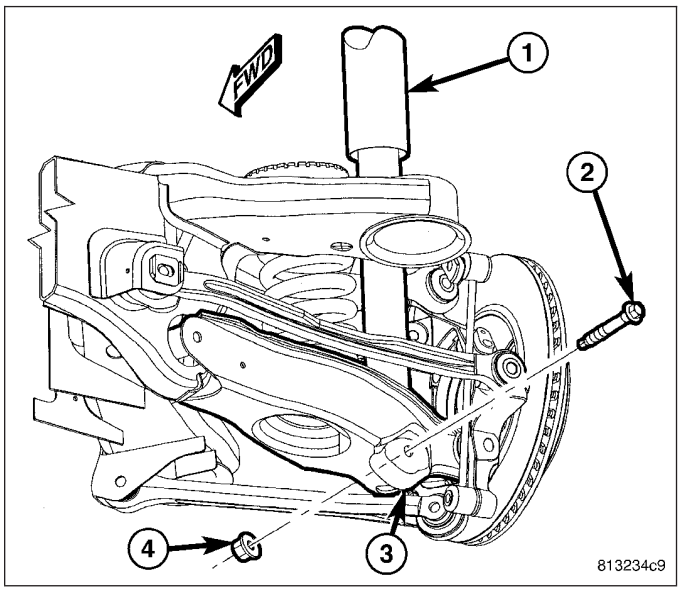

LOAD-LEVELING

1. Install shock absorber (3) by setting lower end into pocket in spring link (4), then tipping top inward until aligned with upper mounting holes.

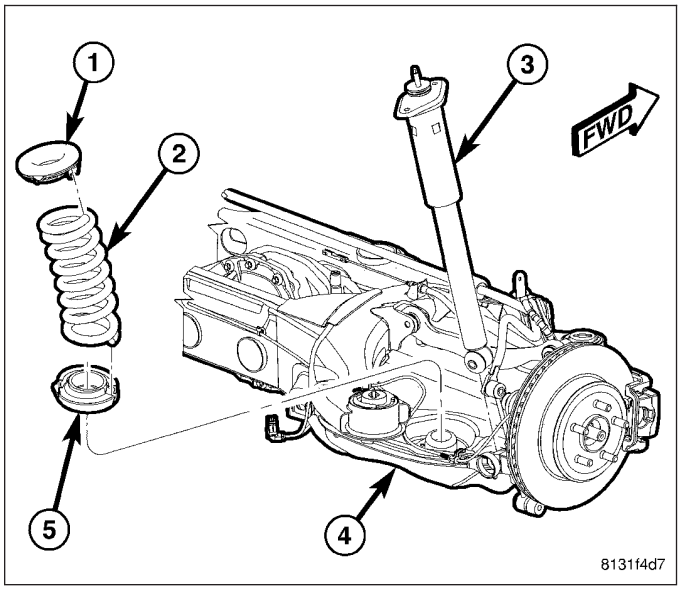

2. Install lower shock mounting bolt and nut. **Do not tighten at this time.**

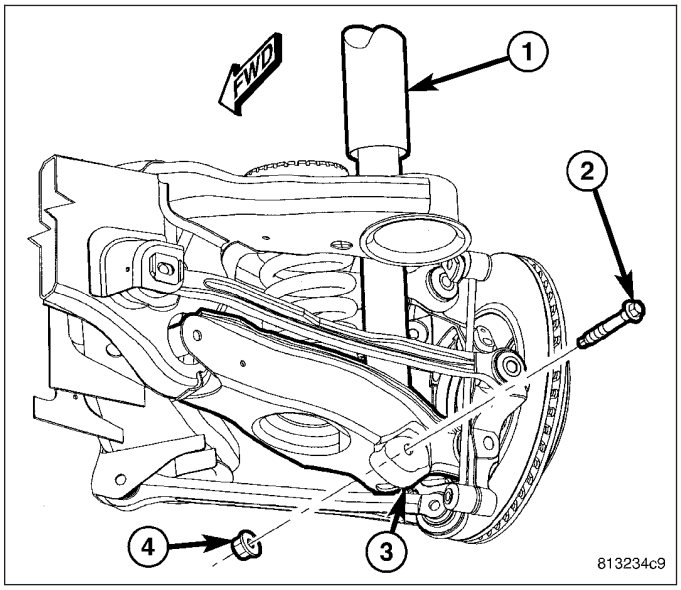

3. If vehicle is equipped with AWD, make sure spacers (1) on top of crossmember mount bushings (2) on side of repair are in position.

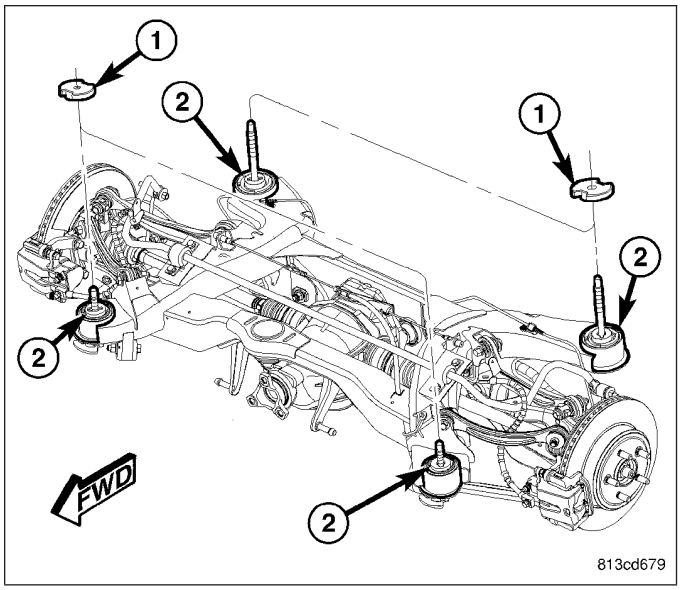

4. Carefully raise jack, guiding coil spring and upper end of shock absorber (4) into mounted positions.
5. Install shock absorber upper mounting screws (2). Tighten upper mounting screws to 52 N·m (38 ft. lbs.) torque.

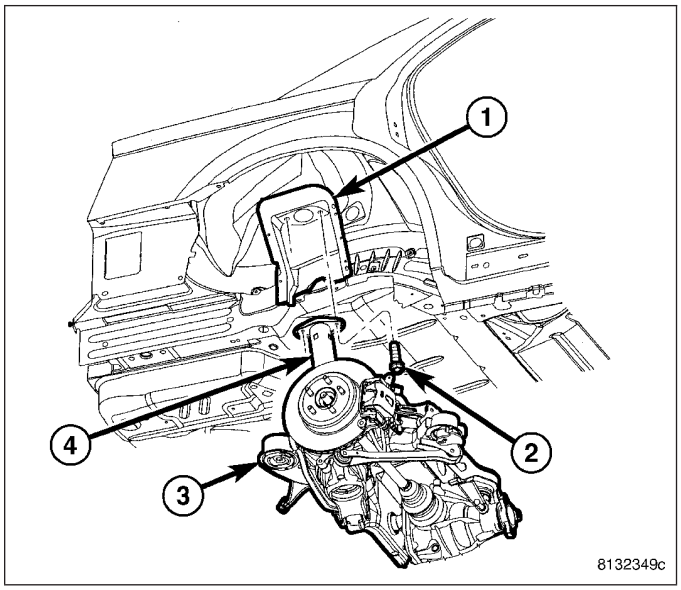

NOTE: Rear crossmember mounting bolts (2) are longer than front mounting bolts (3). Do not interchange mounting bolts.

6. Install crossmember mounting bolts (2 and 3). **Snug, but do not fully tighten bolts at this time.**

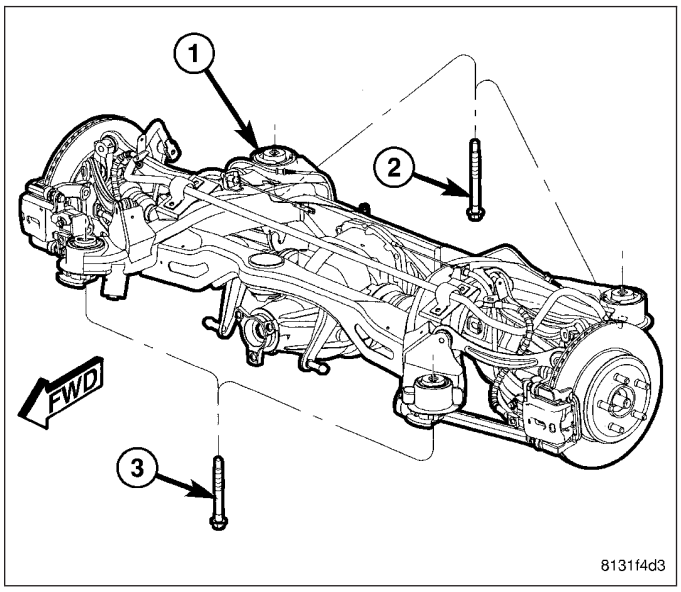

7. Measure distance (1) between from tension link (2) to body weld flange (3) directly in front of it, just outboard of front mount bushing (4). **This distance must be at least 12 mm to allow proper clearance for suspension movement.** If distance is less than 12 mm, shift that side of rear crossmember directly rearward until distance is 12 mm or greater. To do so, loosen 3 mounting bolts slightly, leaving one on opposite side of shift snugged to pivot off of. Shift crossmember rearward and snug loosened bolts. Measure opposite side to be sure it also maintains minimum 12 mm distance.

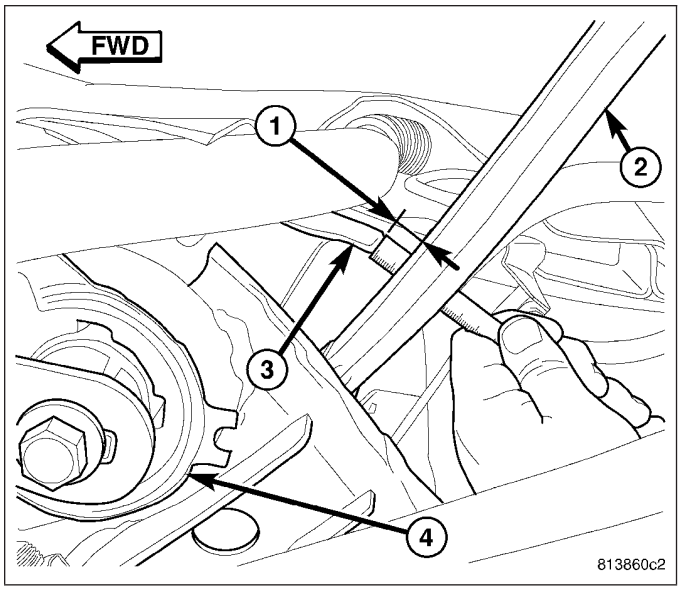

8. Tighten all crossmember mounting bolts (2 and 3) to 180 N·m (133 ft. lbs.) torque.

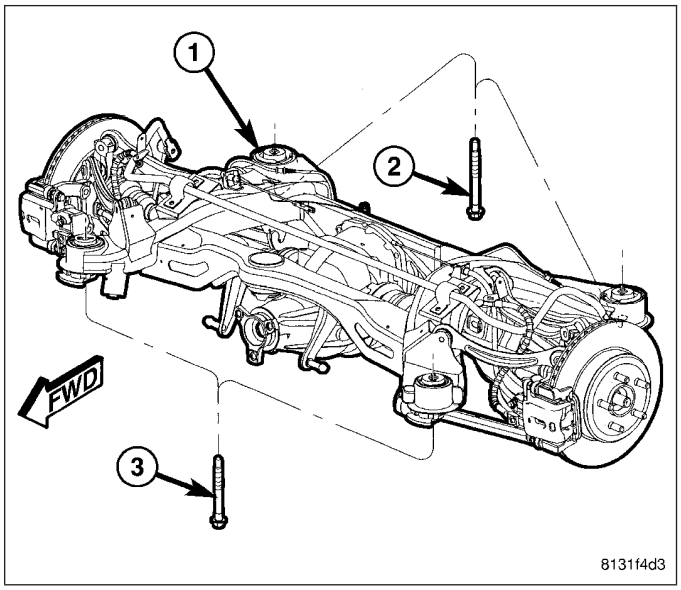

9. Remove jack (3) from under rear axle differential.
10. If previously lowered, raise rear exhaust back to mounted position and connect exhaust isolators at muffler and resonators hangers. Remove jack or stand below exhaust muffler.

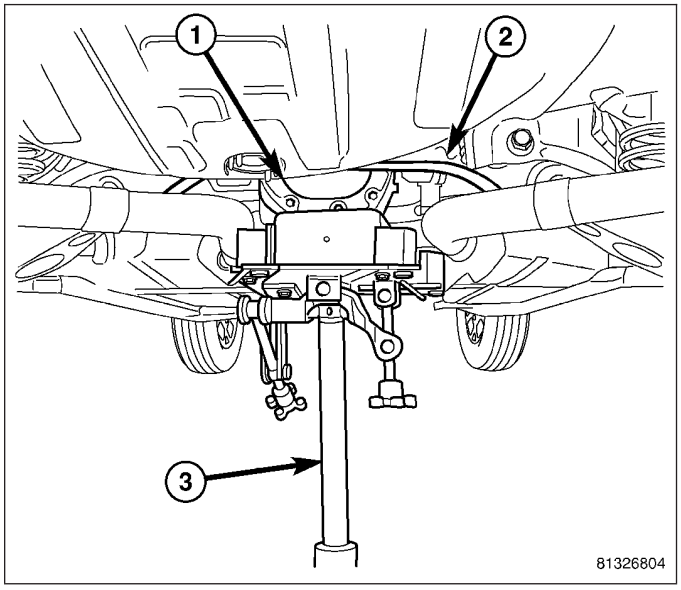

11. If removed, install fuel filler tube. (Refer to 14 - FUEL SYSTEM/FUEL DELIVERY/FUEL TANK FILLER TUBE - INSTALLATION)

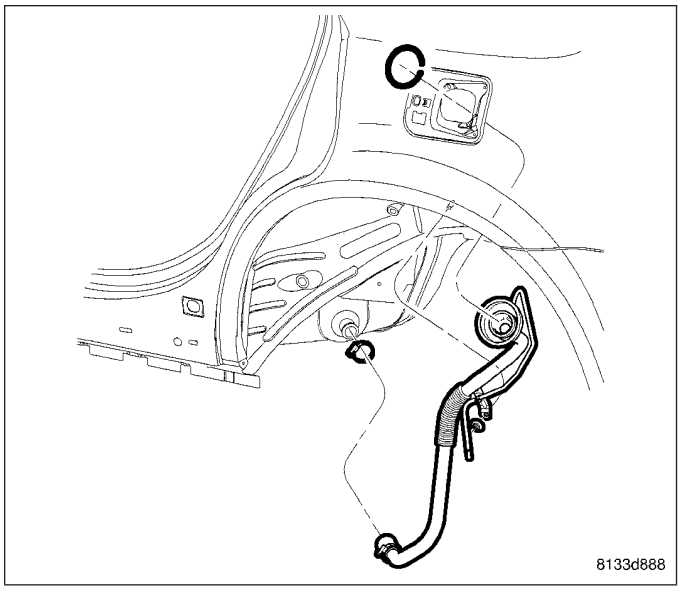

12. Install tire and wheel assemblies (1). Tighten wheel mounting nuts (3) to 150 N·m (110 ft. lbs.) torque. (Refer to 22 - TIRES/WHEELS - INSTALLATION)
13. Lower vehicle.
14. Position vehicle on alignment rack/drive-on lift. Raise lift as necessary to access lower mounting bolt.

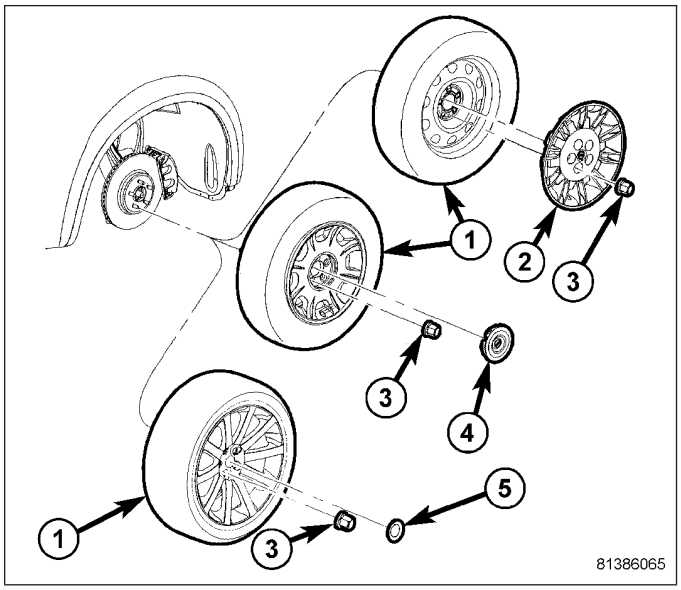

15. Tighten shock absorber lower mounting bolt nut (4) to 72 N·m (53 ft. lbs.) torque.

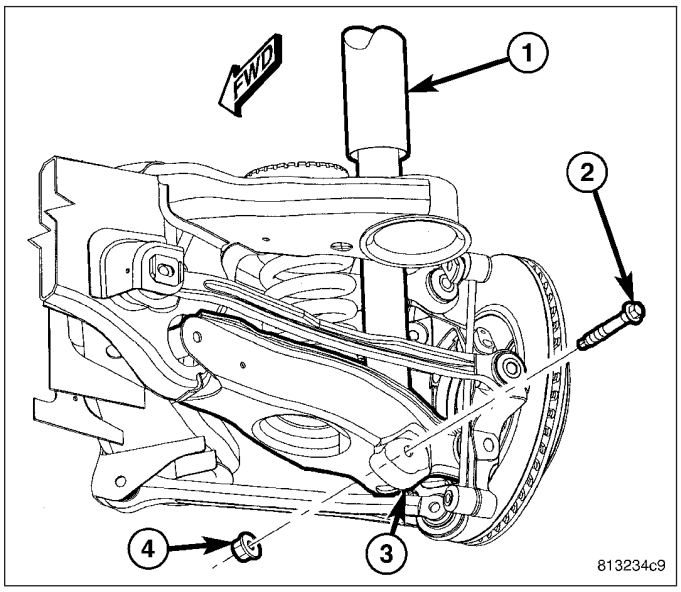

SPRING

REMOVAL

1. Raise and support vehicle. (Refer to LUBRICATION & MAINTENANCE/HOISTING - STANDARD PROCEDURE)

2. On both sides of vehicle, remove wheel mounting nuts (3), then rear tire and wheel assembly (1).

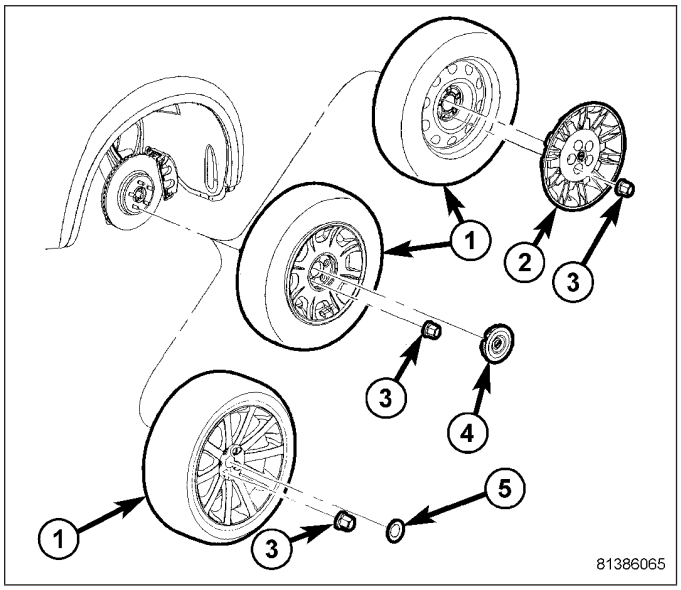

WARNING: Before opening fuel system, review all Warnings and Cautions.

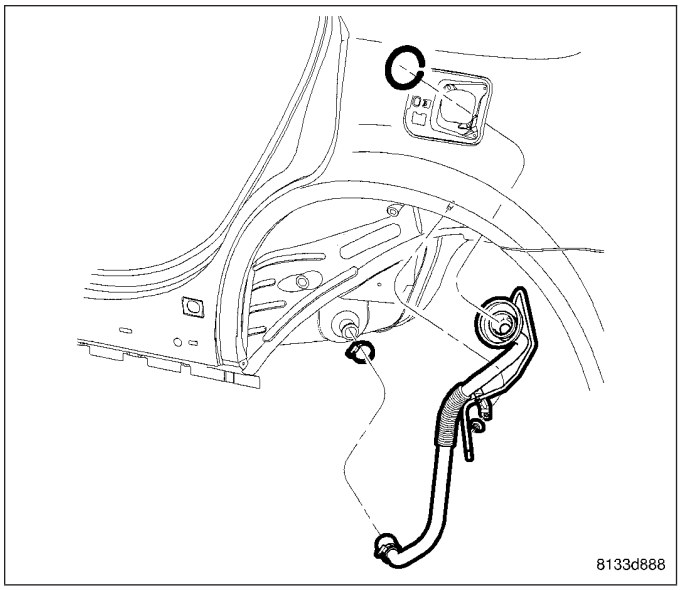

3. If servicing left side shock absorber, remove fuel filler tube. (Refer to 14 - FUEL SYSTEM/FUEL DELIVERY/FUEL TANK FILLER TUBE - REMOVAL)
4. Position an extra pair of jack stands under and support forward end of engine cradle to help stabilize vehicle during rear suspension removal/installation.
5. Perform following if vehicle is equipped with dual-exhaust or are servicing right side on vehicle with single exhaust.
   a. Position under-hoist utility jack or stand several inches below exhaust at muffler.
   b. Disconnect exhaust isolators at muffler and resonators hangers.
   c. Lower exhaust down to rest upon top of jack or stand placed below muffler.

6. Position under-hoist utility jack or transmission jack (3) under center of rear axle differential (1). Raise jack head to contact differential and secure in place. **When securing crossmember to jack, be sure not to secure stabilizer bar.**

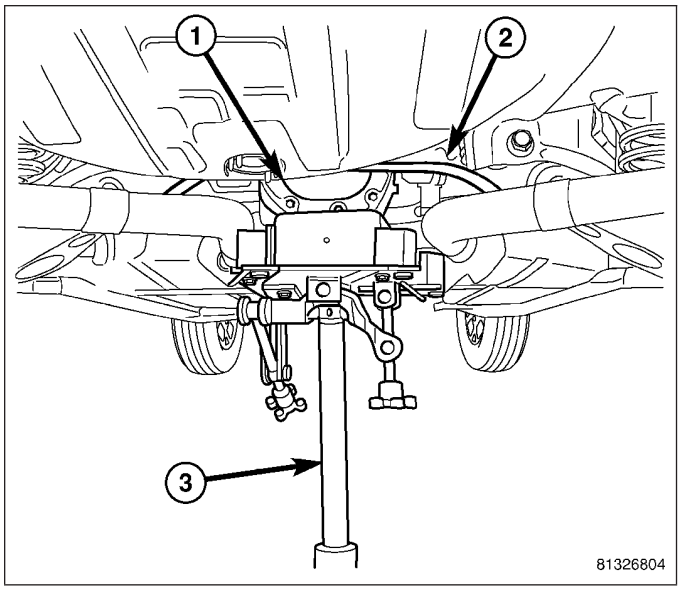

7. Remove shock absorber (1) upper mounting screws (2).

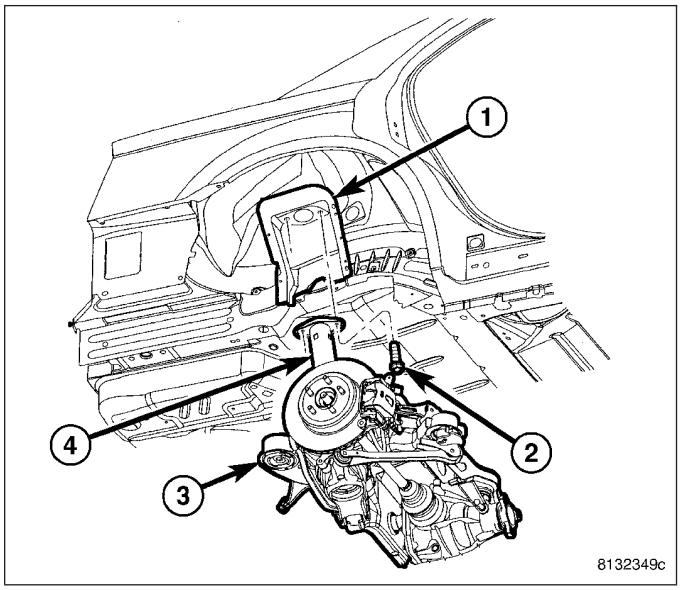

8. Remove shock absorber (1) lower mounting bolt (2) and nut (4).

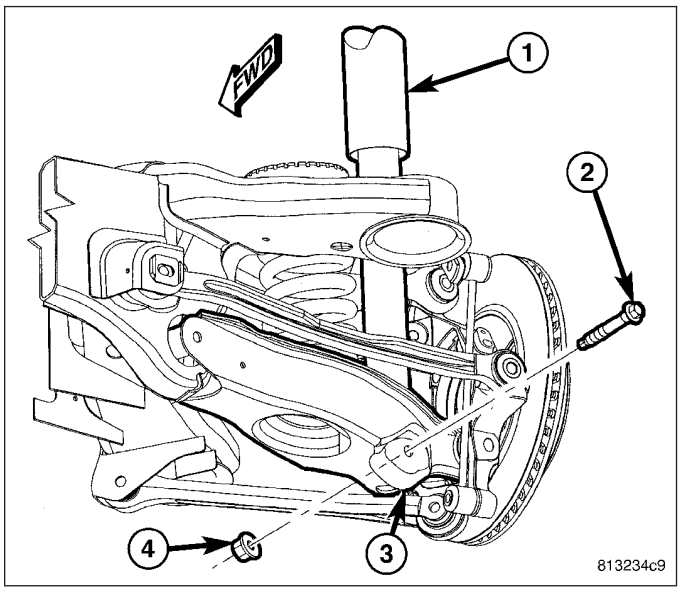

NOTE: If equipped with AWD, when removing crossmember mounting bolts in following step, be sure to not to misplace spacers (1) between crossmember mounts (2) and body.

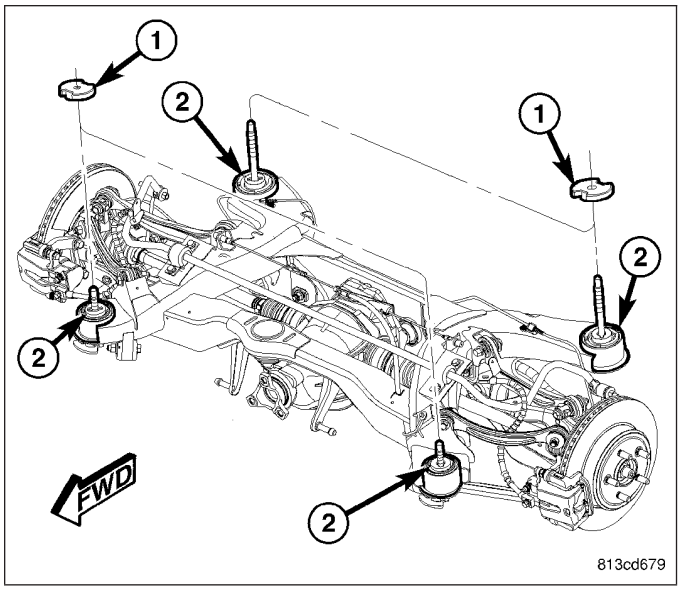

CAUTION: When removing crossmember mounting bolts (2 and 3) it is important NOT to loosen or remove crossmember mounting bolts on opposite side of vehicle. Doing so will require rear wheel alignment following reinstallation to ensure proper thrust angle.

9. Remove both front and rear crossmember mounting bolts (2 and 3) on repair-side of vehicle.

CAUTION: To avoid damaging other components of vehicle, do not lower crossmember (1) any further than necessary to remove shock absorber.

10. **Slowly** lower jack allowing repair-side of crossmember to drop. **Do not lower jack at a fast rate.** Lower jack just enough to allow top of shock absorber to clear body flange.

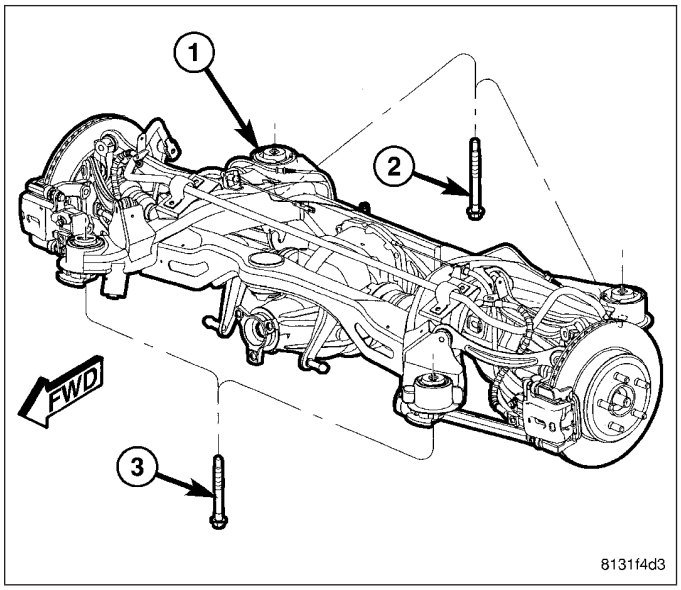

11. Remove shock absorber (3) by tipping top outward and lifting lower end out of pocket in spring link (4).
12. Disconnect brake hose at bracket mounted to body to allow to avoid overextending hose, damaging it, during following step.
13. Slowly lower jack until crossmember is low enough to remove coil spring. **Do not lower jack any further than necessary to remove spring.**
14. Remove coil spring and isolators (1, 2 and 5).

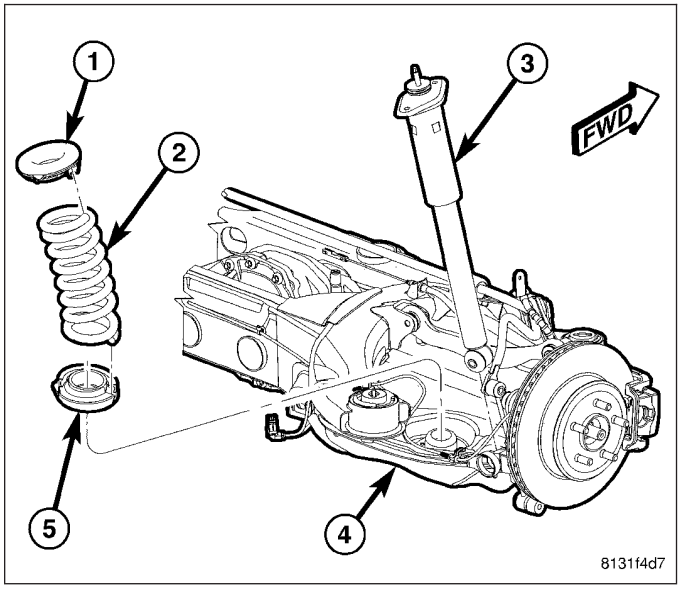

INSTALLATION

NOTE: Rear coil springs are interchangeable.

1. Install upper (1) and lower (5) isolators on coil spring (2).

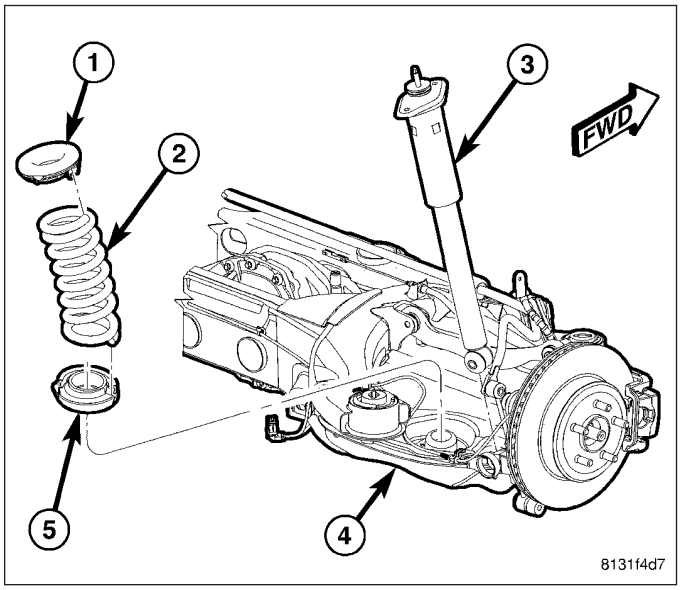

NOTE: Before installing coil spring, make sure isolators (1 and 5) are completely installed on ends of spring.

2. Install coil spring with isolators into spring pocket of spring link (1) fitting lower isolator (2) to shape of pocket, then align top of spring with body mount.

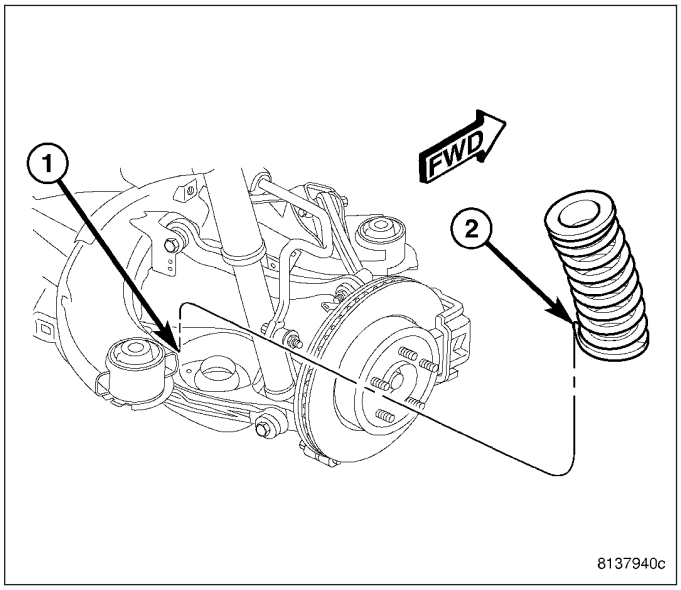

3. Install shock absorber (3) by setting lower end into pocket in spring link (4), then tipping top inward until aligned with upper mounting holes.

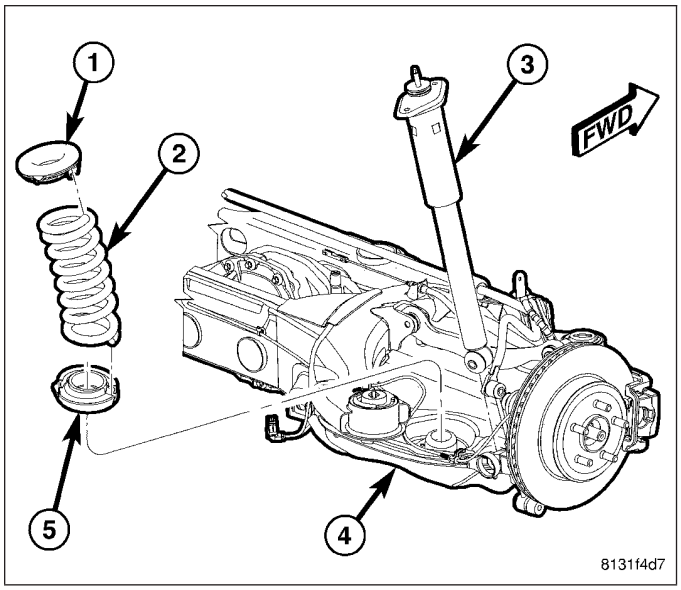

4. Install lower shock mounting bolt and nut. **Do not tighten at this time.**

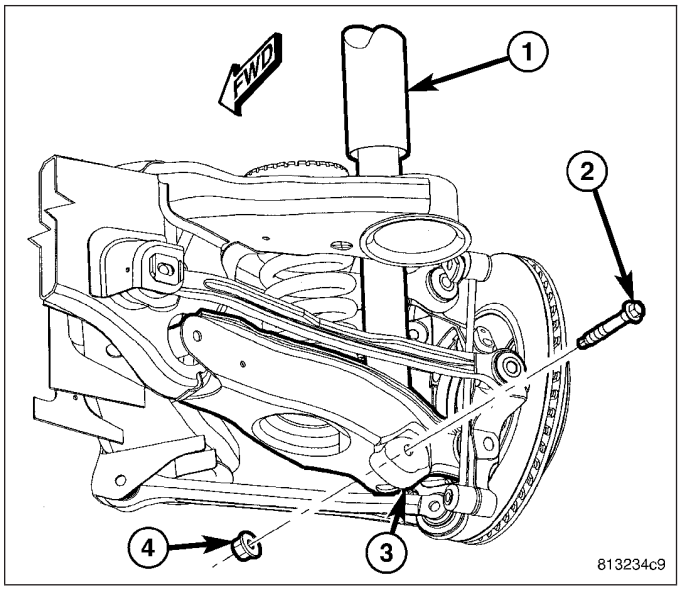

5. If vehicle is equipped with AWD, make sure spacers (1) on top of crossmember mount bushings (2) on side of repair are in position.

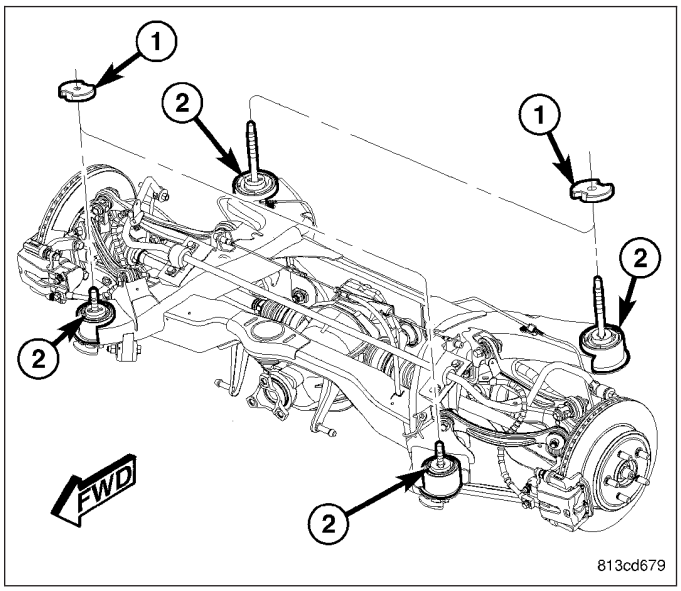

6. Carefully raise jack, guiding coil spring and upper end of shock absorber (4) into mounted positions.
7. Install shock absorber upper mounting screws (2). Tighten upper mounting screws to 52 N·m (38 ft. lbs.) torque.

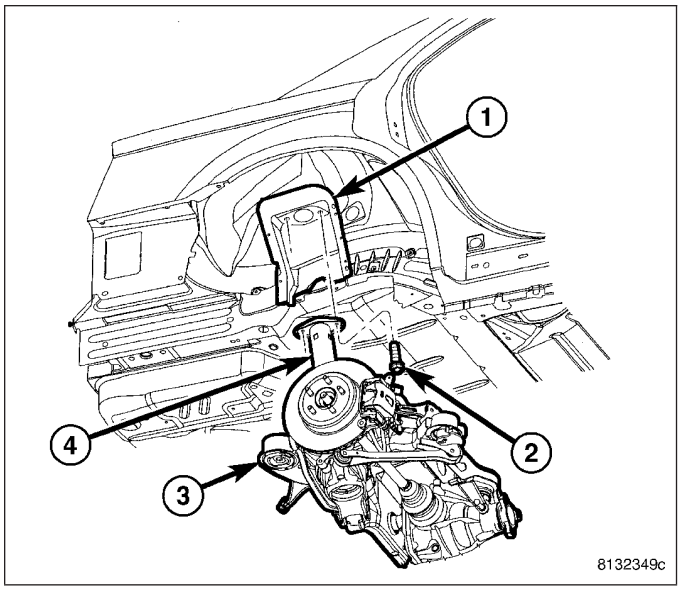

NOTE: Rear crossmember mounting bolts (2) are longer than front mounting bolts (3). Do not interchange mounting bolts.

8. Install crossmember mounting bolts (2 and 3). **Snug, but do not fully tighten bolts at this time.**

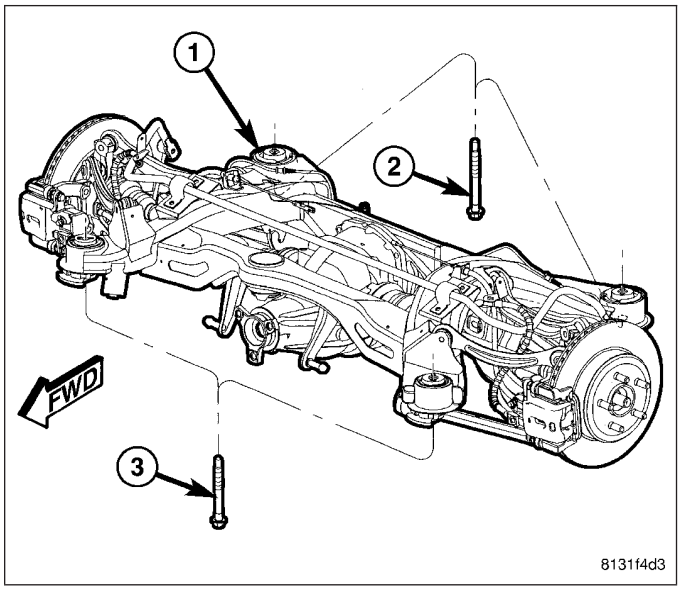

9. Measure distance (1) between from tension link (2) to body weld flange (3) directly in front of it, just outboard of front mount bushing (4). **This distance must be at least 12 mm to allow proper clearance for suspension movement.** If distance is less than 12 mm, shift that side of rear crossmember directly rearward until distance is 12 mm or greater. To do so, loosen 3 mounting bolts slightly, leaving one on opposite side of shift snugged to pivot off of. Shift crossmember rearward and snug loosened bolts. Measure opposite side to be sure it also maintains minimum 12 mm distance.

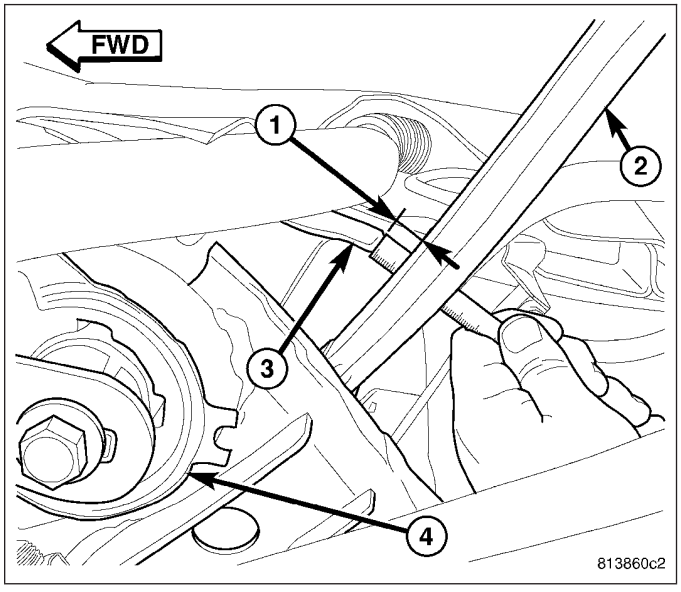

10. Tighten all crossmember mounting bolts (2 and 3) to 180 N·m (133 ft. lbs.) torque.

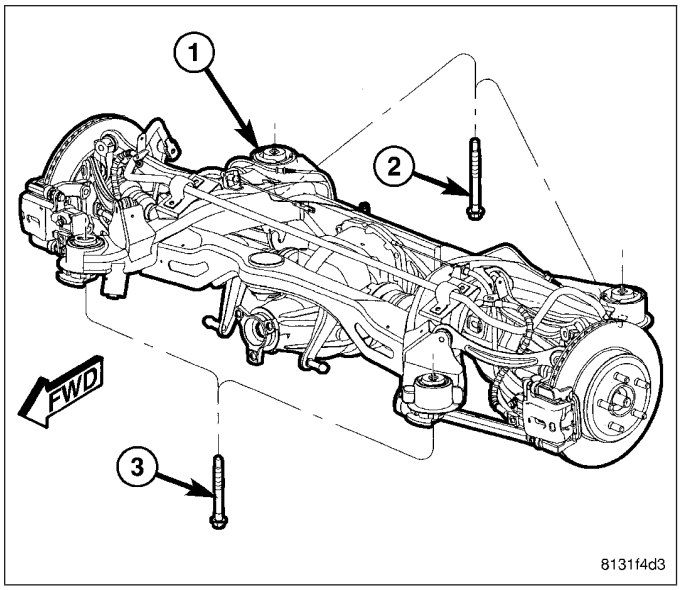

11. Remove jack (3) from under rear axle differential.
12. If previously lowered, raise rear exhaust back to mounted position and connect exhaust isolators at muffler and resonators hangers. Remove jack or stand below exhaust muffler.

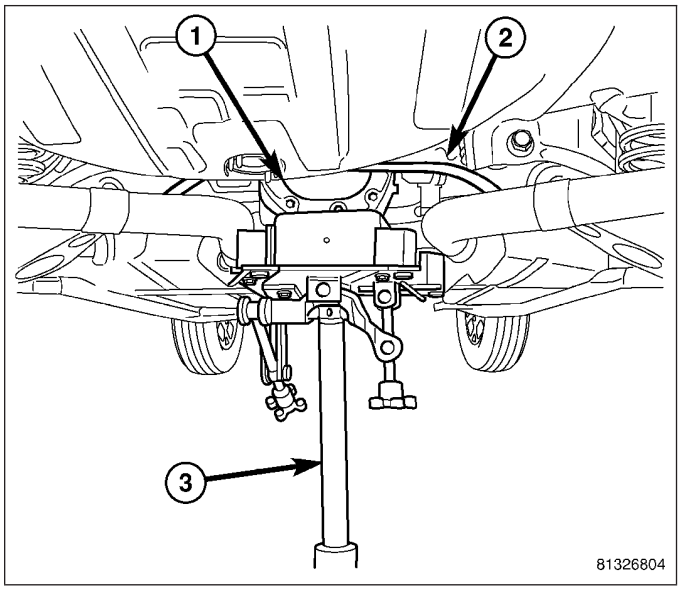

13. Install fuel filler tube. (Refer to 14 - FUEL SYSTEM/FUEL DELIVERY/FUEL TANK FILLER TUBE - INSTALLATION)

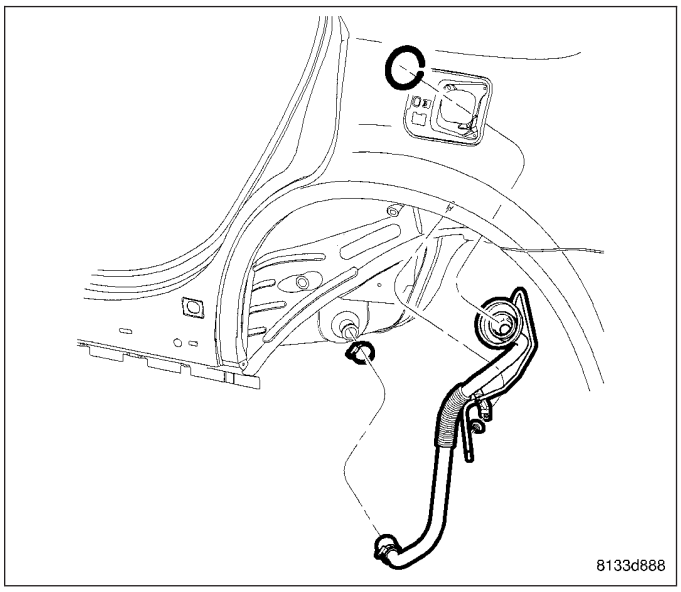

14. Install tire and wheel assemblies (1). Tighten wheel mounting nuts (3) to 150 N·m (110 ft. lbs.) torque. (Refer to 22 - TIRES/WHEELS - INSTALLATION)
15. Lower vehicle.
16. Position vehicle on alignment rack/drive-on lift. Raise lift as necessary to access lower mounting bolt.

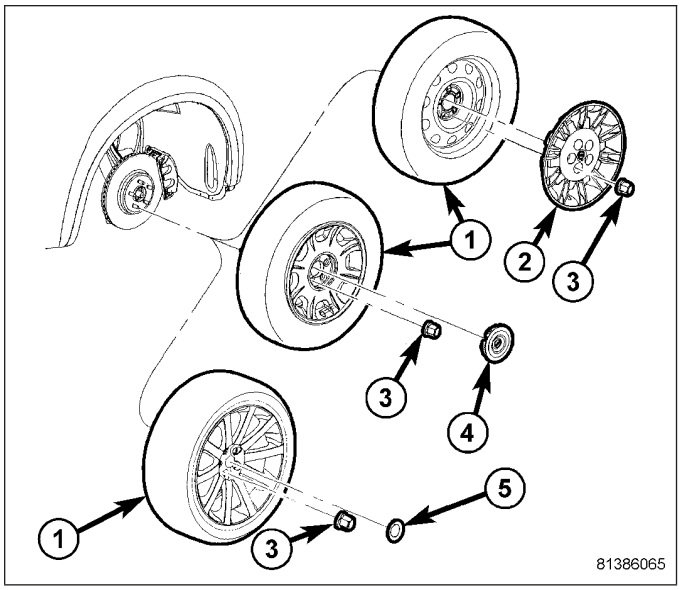

17. Tighten shock absorber lower mounting bolt nut (4) to 72 N·m (53 ft. lbs.) torque.

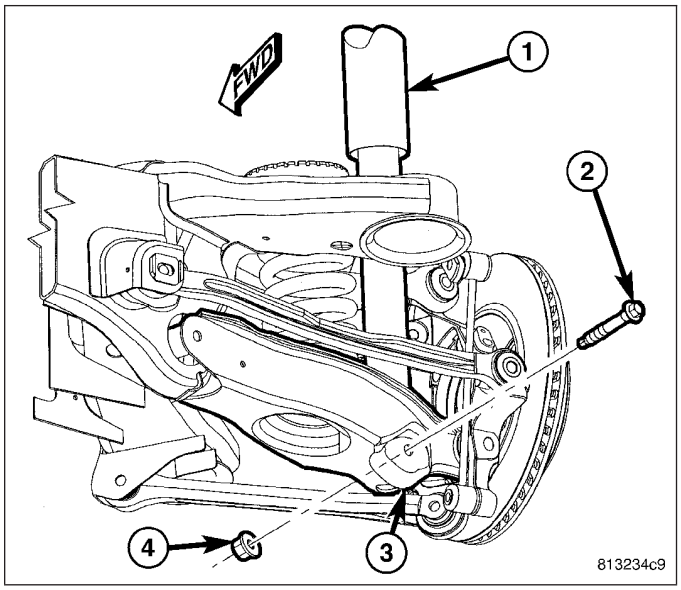

BAR - STABILIZER

REMOVAL

1. Disconnect and isolate battery negative cable (2) from battery post.

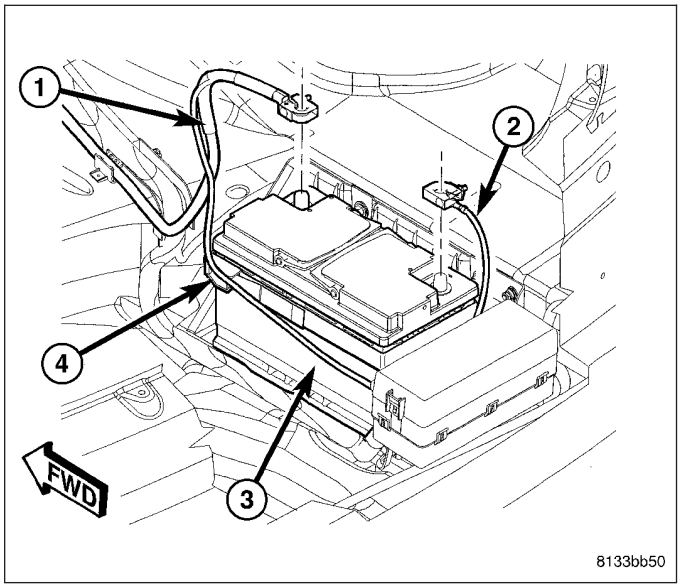

2. Raise and support vehicle. (Refer to LUBRICATION & MAINTENANCE/HOISTING - STANDARD PROCEDURE)

3. On each side of vehicle rear, remove wheel mounting nuts (3), then tire and wheel assembly (1).

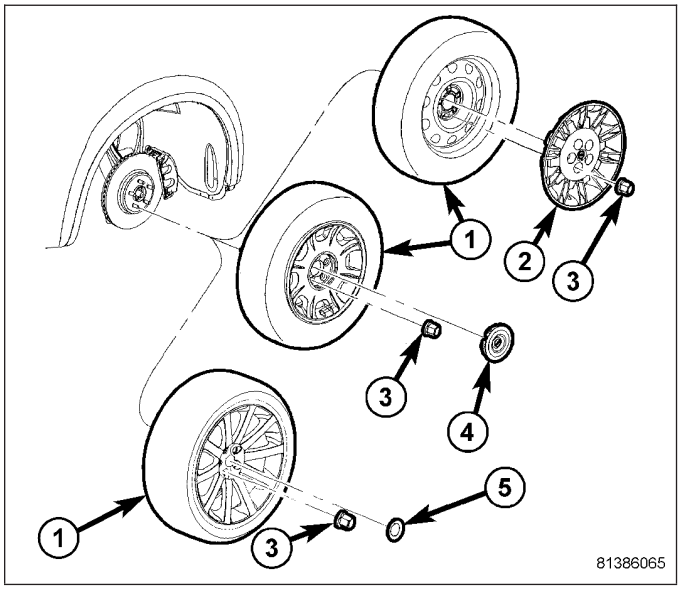

4. Remove rear exhaust system (2) (dual-outlet exhaust shown in figure). (Refer to 11 - EXHAUST SYSTEM - REMOVAL)

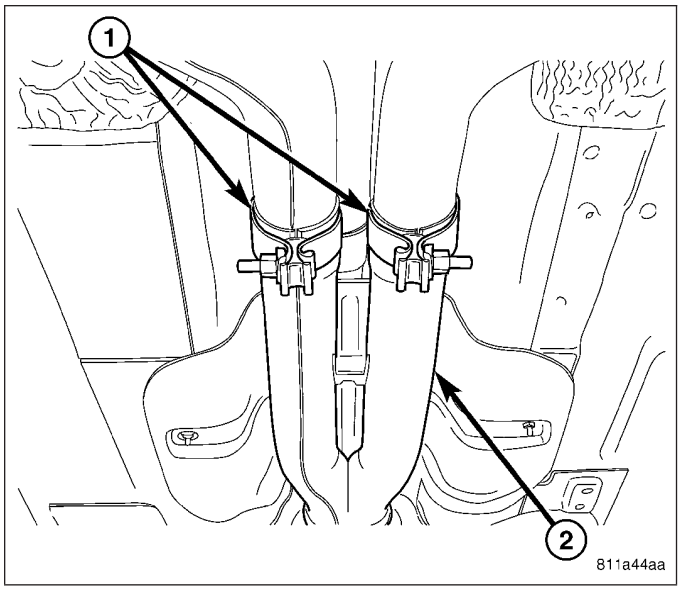

5. Apply alignment index marks (3) to the propeller shaft rubber coupler (1) and axle flange (2).

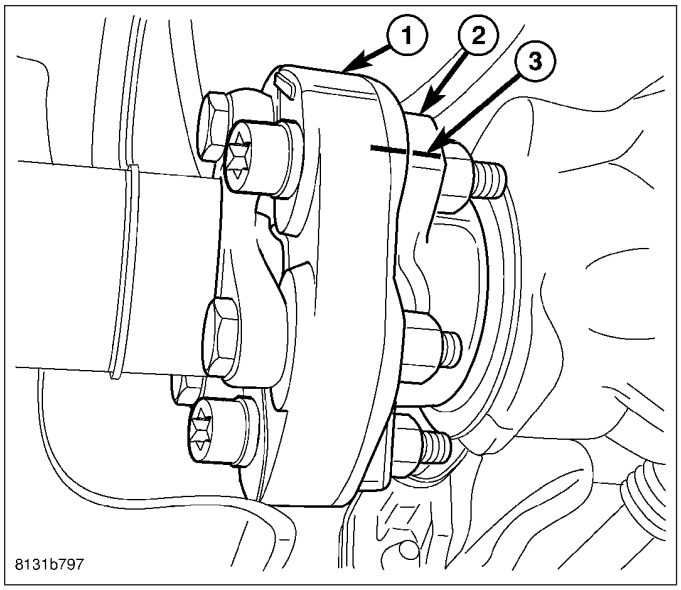

6. Remove three (four if equipped with 215 MM axle) propeller shaft coupler-to-axle flange bolts and nuts.

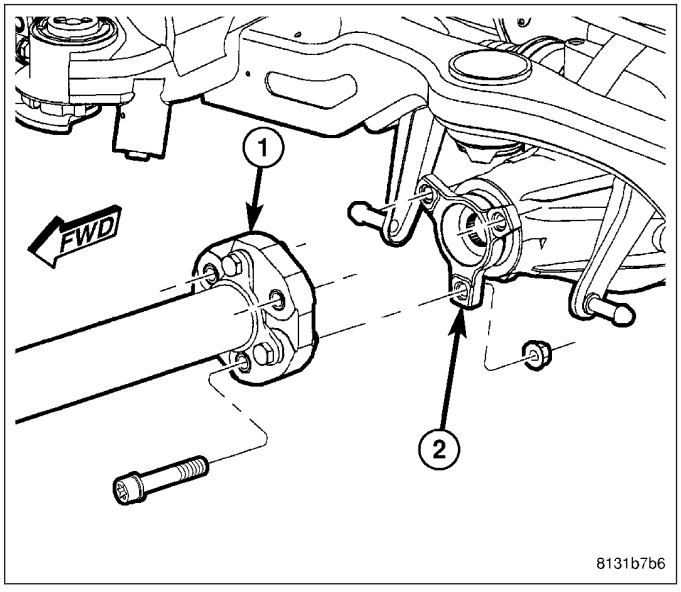

7. Support propeller shaft (2) using a bungee cord (1). Attach ends of cord to fuel tank straps as shown.

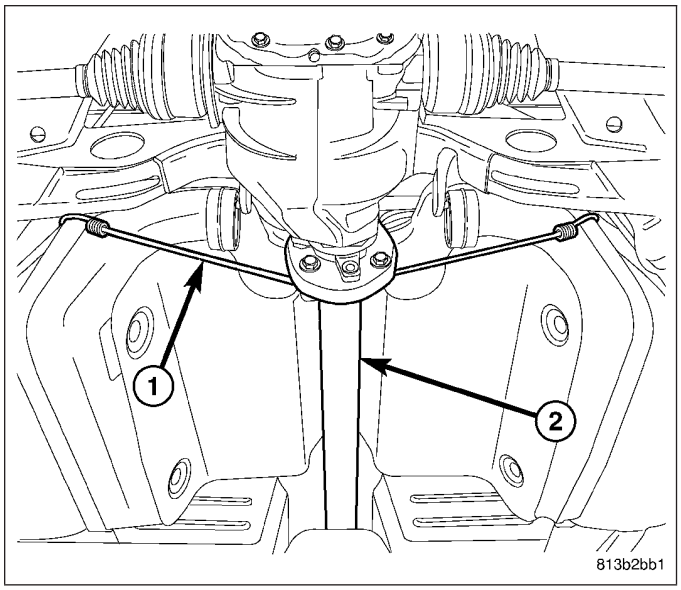

NOTE: Due to short travel and low spring tension, it is not necessary to lock-out parking brake lever to service parking brake components.

8. Disconnect front parking brake cable (5) at connector (3) to right rear parking brake cable (4).

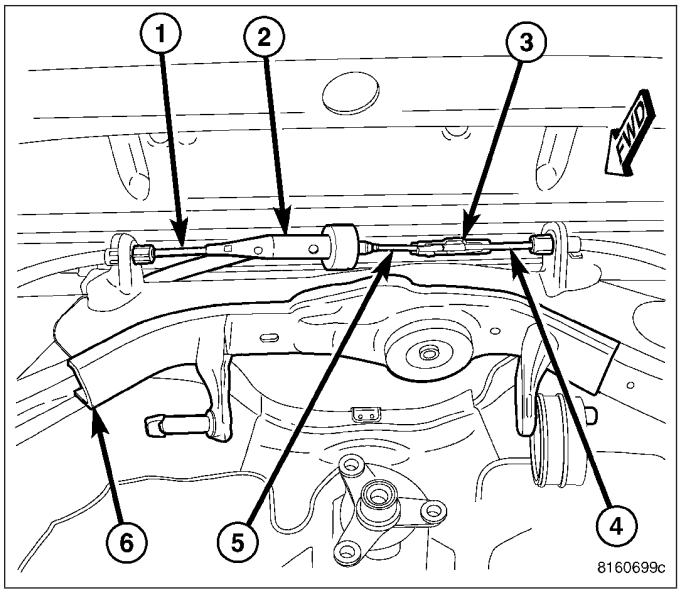

9. Remove front parking brake cable (3) from equalizer (2).

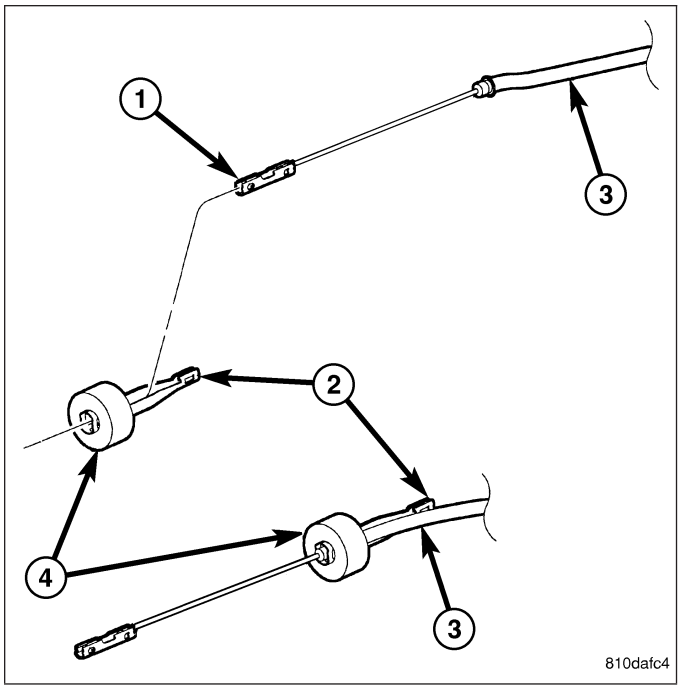

10. Remove screw (2) fastening front parking brake cable (1) routing bracket to rear crossmember front flange (3).

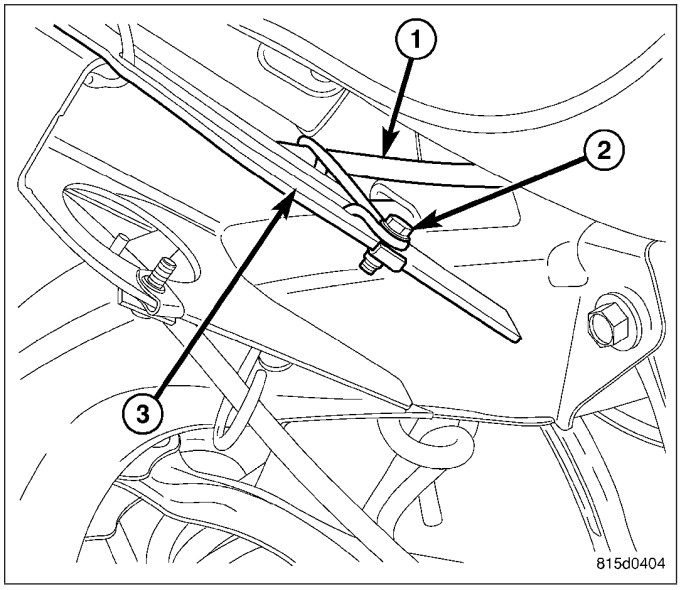

11. If equipped with standard or premium disc brakes, on each rear disc brake:
    a. While holding guide pins from turning, remove disc brake caliper guide pin bolts (2).
    b. Remove brake caliper (1) from brake adapter (3) and pads.
    c. Guide brake caliper up through suspension, following brake hose path. Support caliper above rear suspension using with bungee cord or wire to keep caliper from overextending brake hose when crossmember is lowered.

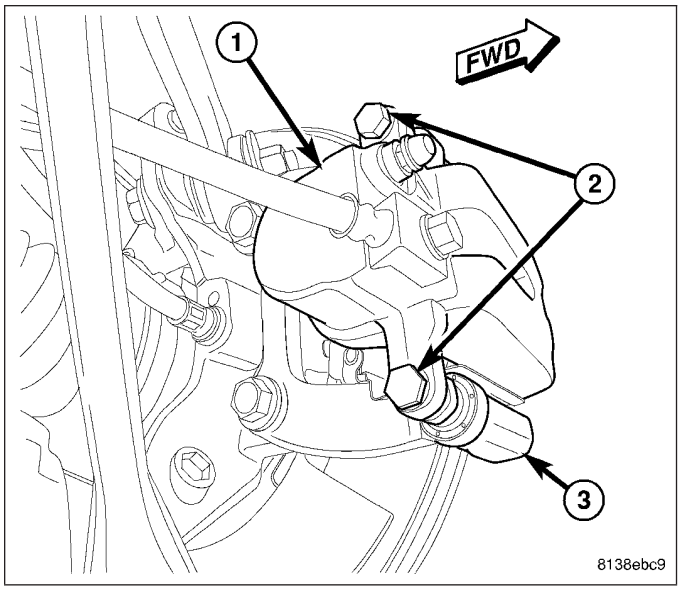

CAUTION: When pushing pistons back into caliper bores, use only a trim stick as shown or other suitable soft tool. Never use a screwdriver or other metal pry bar due to potential damage to braking surface of rotor, caliper, pistons or dust boots.

12. If equipped with SRT8 disc brakes, on each rear disc brake, place trim stick (4) between brake pad (2) and outer edge of rotor (3).
13. If equipped with SRT8 disc brakes, on each rear disc brake, using trim stick, slowly apply pressure against brake pad (2) until both pistons (on that side of caliper) are completely bottomed in bores of caliper half.

NOTE: Repeat above procedure to opposite brake pad (1) and pistons as necessary.

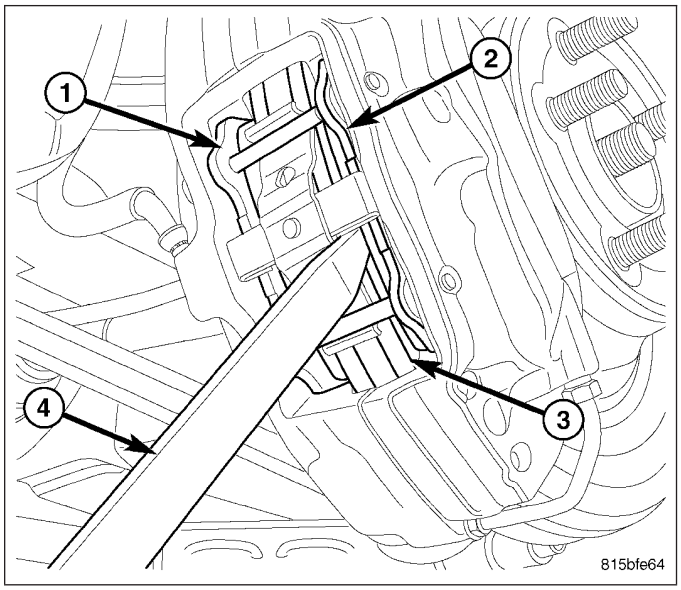

14. If equipped with SRT8 disc brakes, on each rear disc brake, support spring link (1) using a transmission jack (5) or other appropriate jack. Raise spring link just enough to access brake caliper lower mounting bolt (4) from above compression link (2).

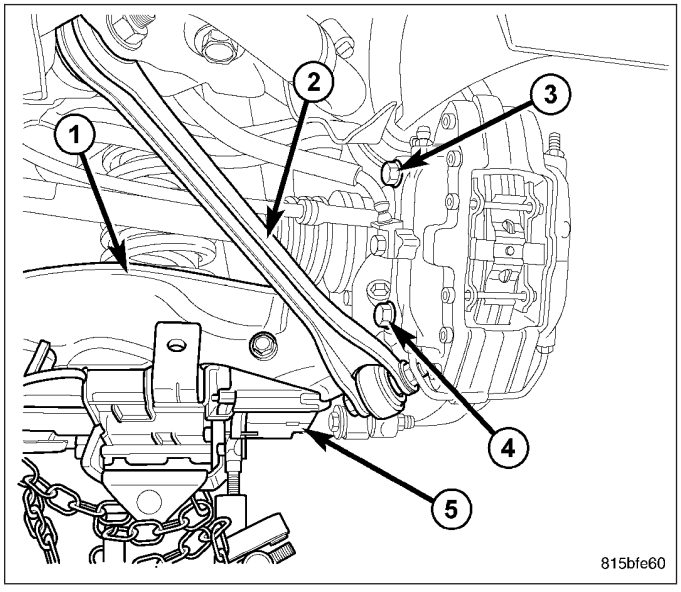

15. If equipped with SRT8 disc brakes, on each rear disc brake, remove the lower and upper caliper mounting bolts (1).
16. If equipped with SRT8 disc brakes, on each rear disc brake, remove brake caliper (2) with pads from knuckle and brake rotor. Hang assembly out of way using wire or a bungee cord. Use care not to overextend brake hose when doing this.
17. If equipped with SRT8 disc brakes, remove jack from under spring link.

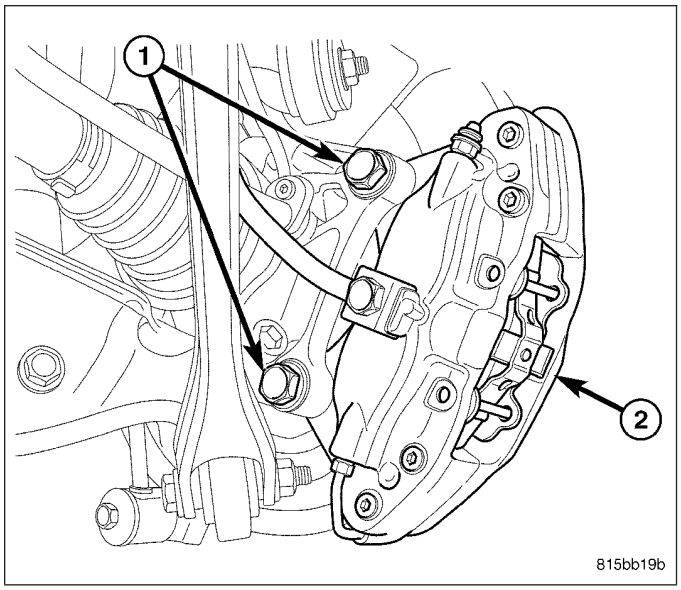

NOTE: To remove wheel speed sensor connector from body wiring harness connector, move retaining clip (2) and pull sensor connector outward.

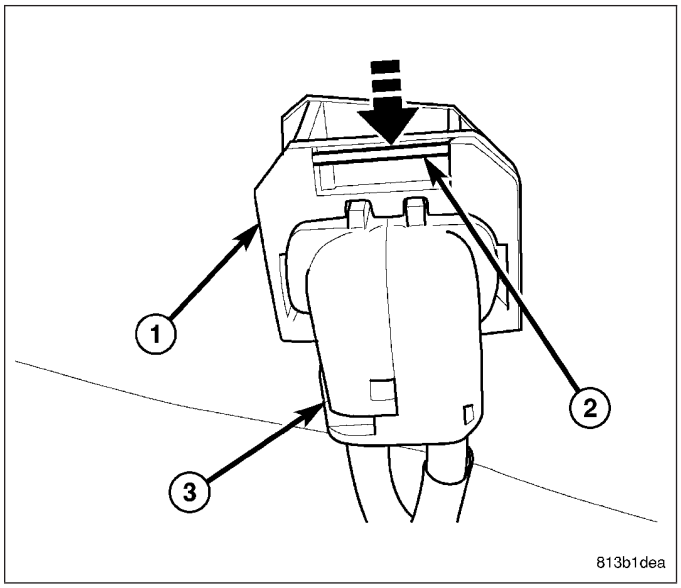

18. Remove wheel speed sensor connectors (3 and 4) from body wiring harness connector (1) located in luggage compartment floor pan (2).

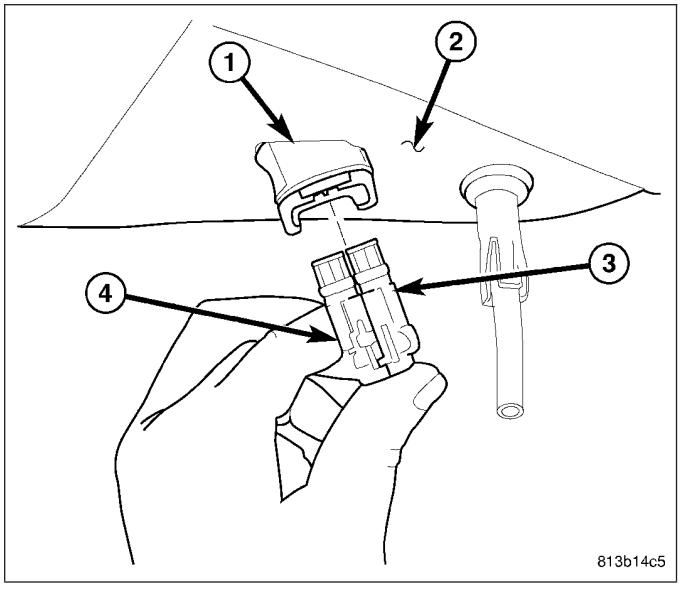

19. Unclip left wheel speed sensor cable (3) from routing clip (1) near body connector.

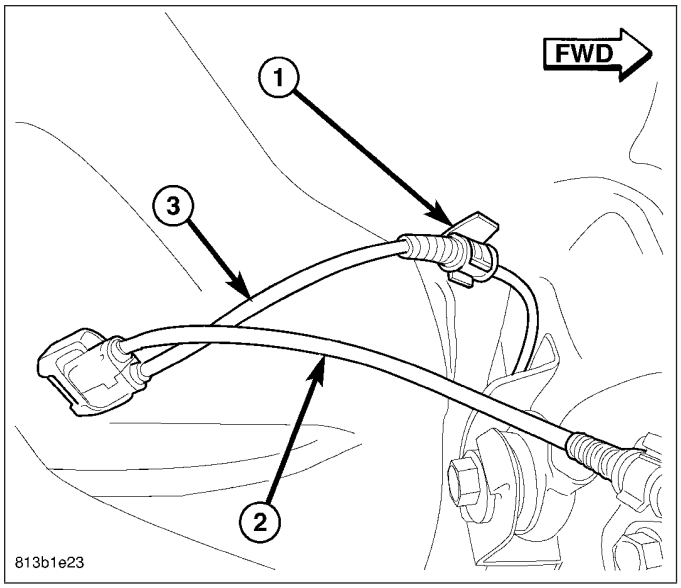

20. On each side of vehicle, remove shock absorber (1) lower mounting bolt (2) and nut (4).

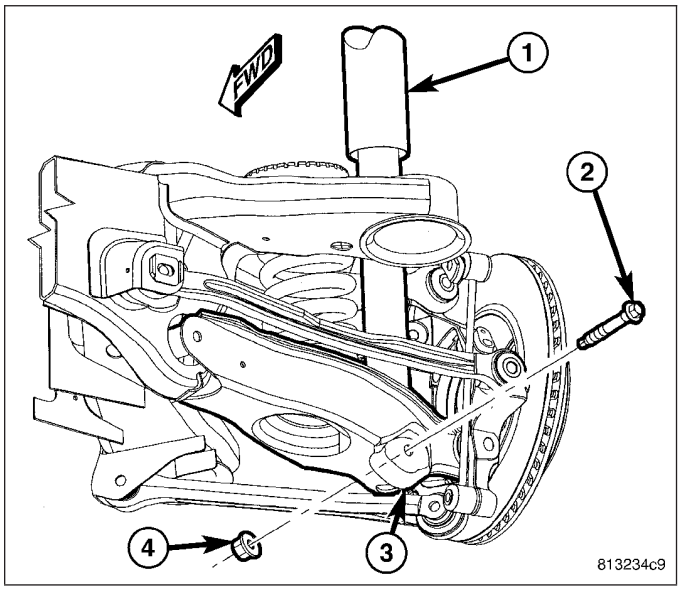

21. Carefully mark location of rear crossmember on body at all four mount (bushing) locations using a marker or crayon. **Do not use a scratch awl to mark location.**

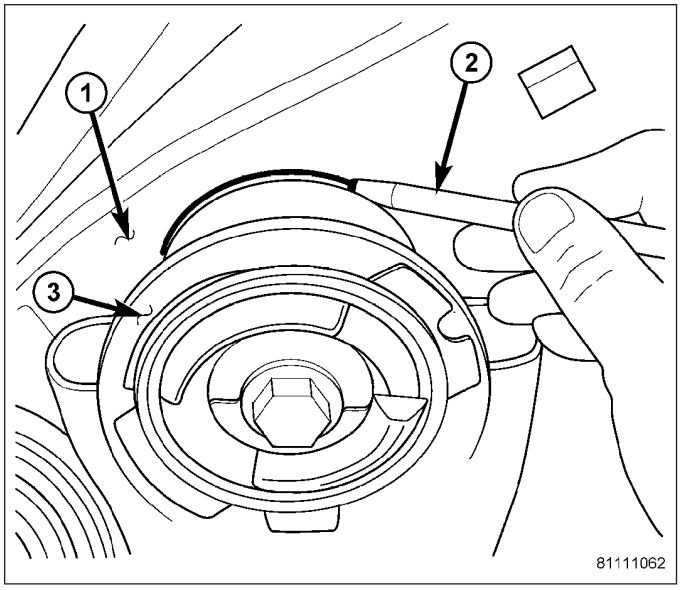

22. Position an extra pair of jack stands under and support forward end of engine cradle to help stabilize vehicle during rear suspension removal/installation.
23. Position under-hoist utility jack or transmission jack (3) under center of rear axle differential (1). Raise jack head to contact differential and secure in place. **When securing crossmember to jack, be sure not to secure stabilizer bar.**

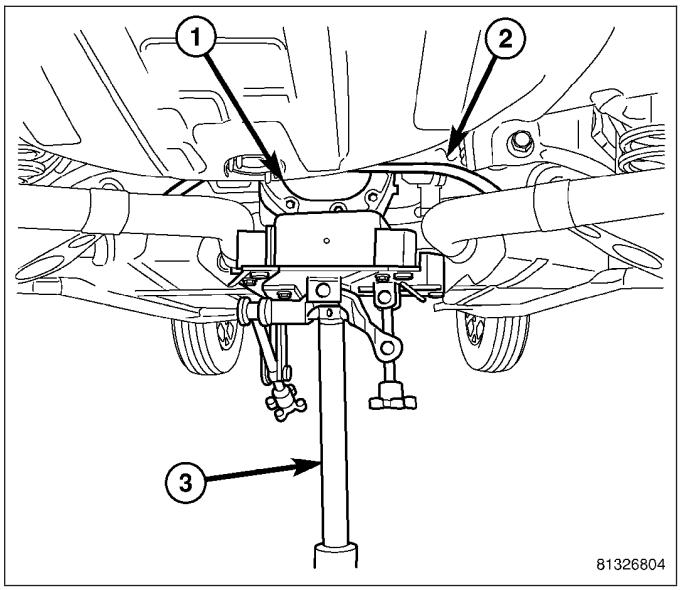

WARNING: Before opening fuel system, review all Warnings and Cautions.

24. Remove fuel filler tube. (Refer to 14 - FUEL SYSTEM/FUEL DELIVERY/FUEL TANK FILLER TUBE - REMOVAL)

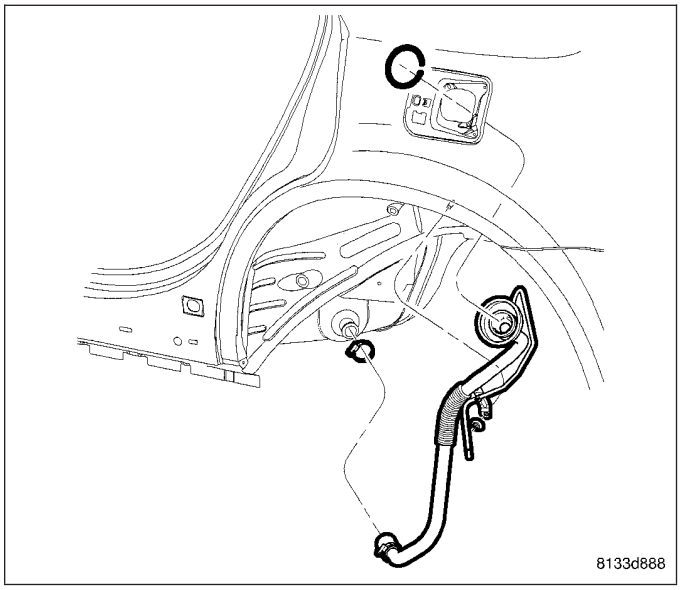

NOTE: If equipped with AWD, when removing crossmember mounting bolts in following step, be sure to not to misplace spacers (1) between crossmember mounts (2) and body.

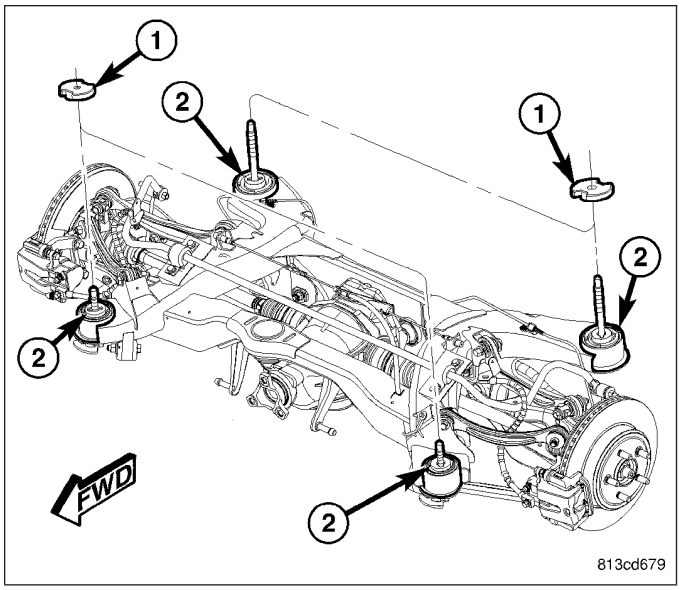

25. Remove both front (3) and both rear (2) mounting bolts fastening crossmember (1) in place.

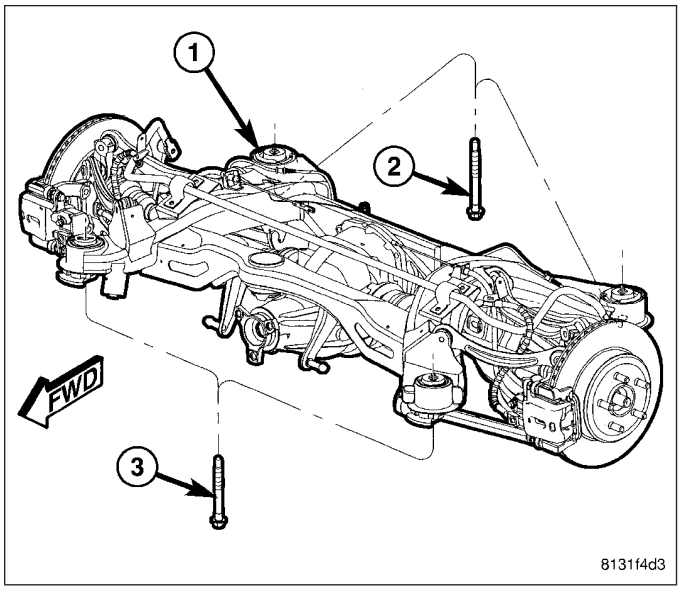

26. **Slowly** lower crossmember using jack. **Do not lower jack at a fast rate.** Lower just enough to allow propeller shaft removal from rear axle differential. **Do not lower jack any further than necessary.** Slide propeller shaft out of rear axle differential and allow bungee cord previously installed to support.
27. Continue to lower jack until crossmember is at a comfortable working level to access stabilizer bar fasteners.

28. On each end, remove bolt (3) and nut fastening stabilizer bar (4) to stabilizer link (2).
29. Remove bolts (1) fastening each stabilizer bar isolator retainer to crossmember.
30. Remove stabilizer bar (4) with isolators and retainers.
31. Remove retainers from isolators.
32. Remove isolators from stabilizer bar utilizing slits in bushings.

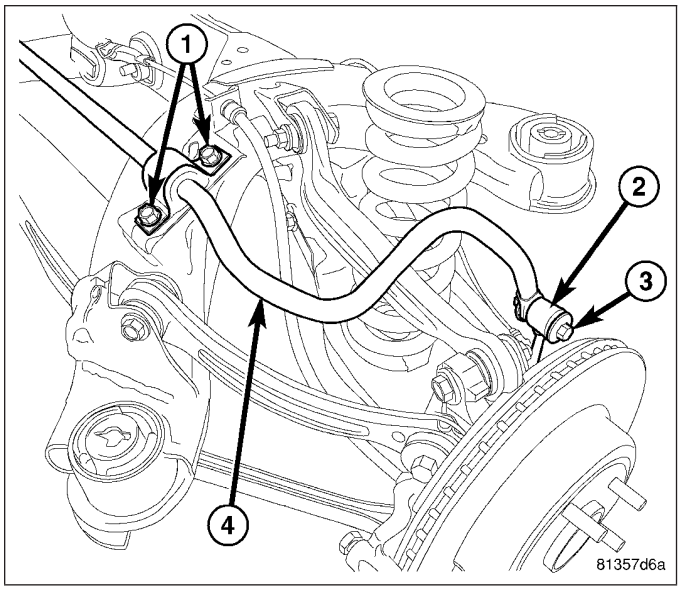

INSTALLATION

1. Install isolators on stabilizer bar utilizing slits in bushings. Install each isolator so its slit faces forward and flat side is positioned toward crossmember once installed.
2. Install retainers on isolators.
3. Install stabilizer bar (4) with isolators and retainers on crossmember.
4. Install isolator retainer mounting bolts (1). **Do not tighten at this time.**
5. Install bolt (3) and nut fastening stabilizer bar ends to each stabilizer links (2). **Do not tighten at this time.**
6. Tighten isolator retainer mounting bolts (1) to 61 N·m (45 ft. lbs.) torque.

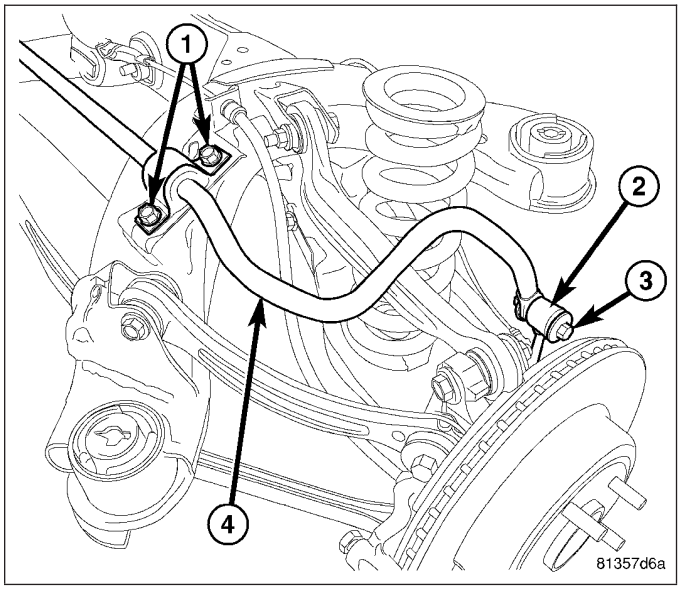

7. Remove coil springs (2) with isolators (1 and 5) from spring links (4).

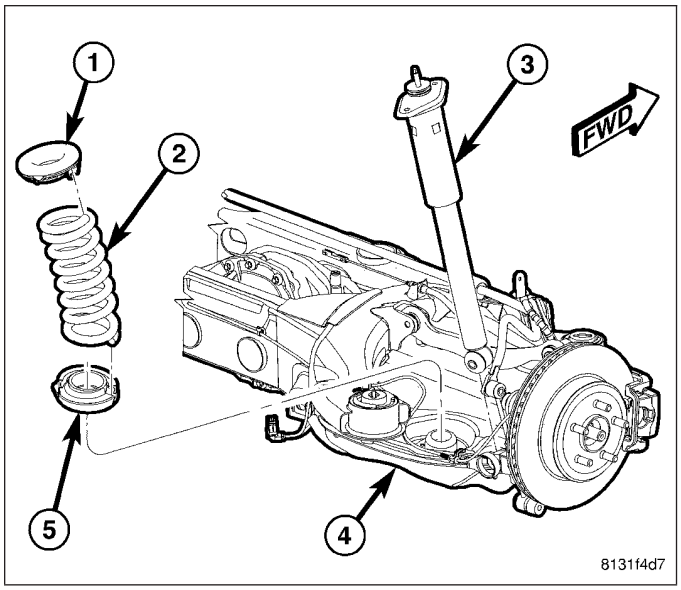

8. Raise crossmember to body mounting points. As crossmember is raised, slide propeller shaft onto rear axle differential flange and align shocks with pockets in spring links.

NOTE: There are four crossmember mounting bolts. Rear mounting bolts (2) are longer than front mounting bolts (3). Do not interchange mounting bolts.

9. Continue to raise crossmember (1) with jack until crossmember mounting bolts (2 and 3) can be installed. Install left side crossmember mounting bolts, but not the right side bolts. It is not necessary to tighten bolts at this point.

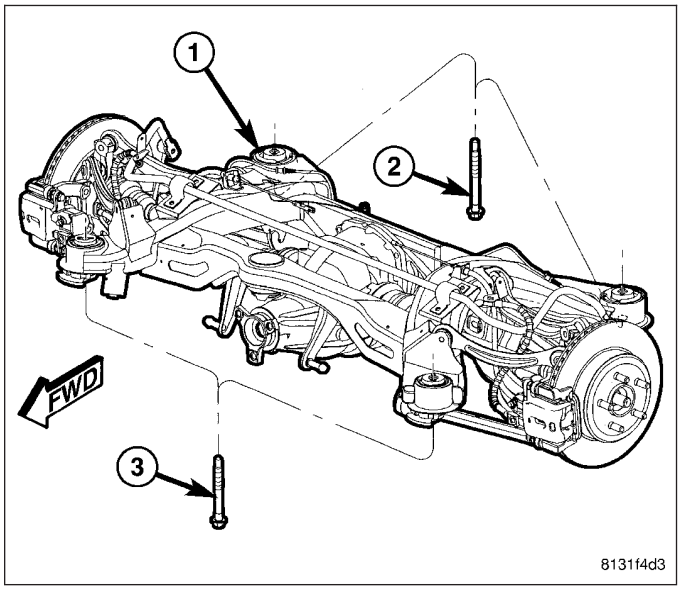

CAUTION: To avoid damaging other components of vehicle, do not lower crossmember any further than necessary to install coil spring (2).

10. **Slowly** lower jack allowing right side of crossmember to drop. **Do not lower jack at a fast rate.** Lower jack just enough to allow spring (2) Installation. **Do not lower jack any further than necessary.**

NOTE: Before installing coil spring, make sure isolators (1 and 5) are completely installed on ends of spring.

11. Install coil spring (2) with isolators into spring pocket of spring link fitting the lower isolator to the shape of the pocket, then align top of spring with body mount.

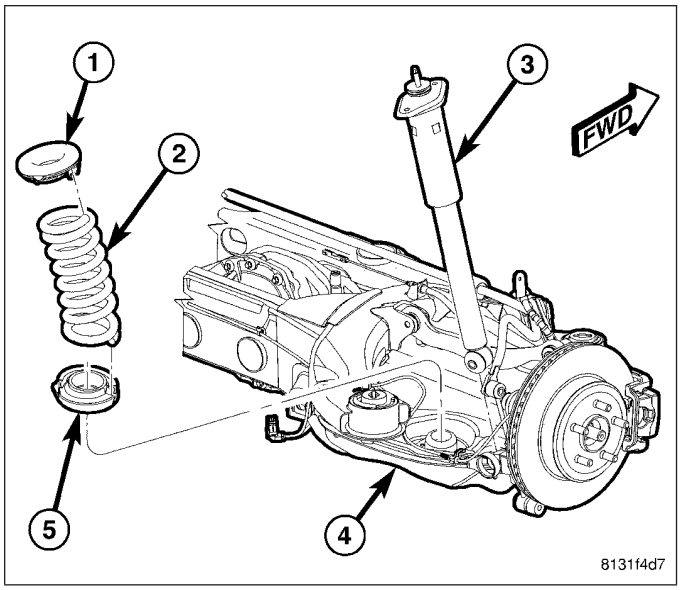

12. Carefully raise jack, guiding coil spring and lower end of shock absorber (1) into mounted positions. Once shock absorber (1) lower mounting hole lines up with hole in spring link (3), stop jacking.
13. Install lower shock mounting bolt (2) and nut (4). **Do not tighten at this time.**

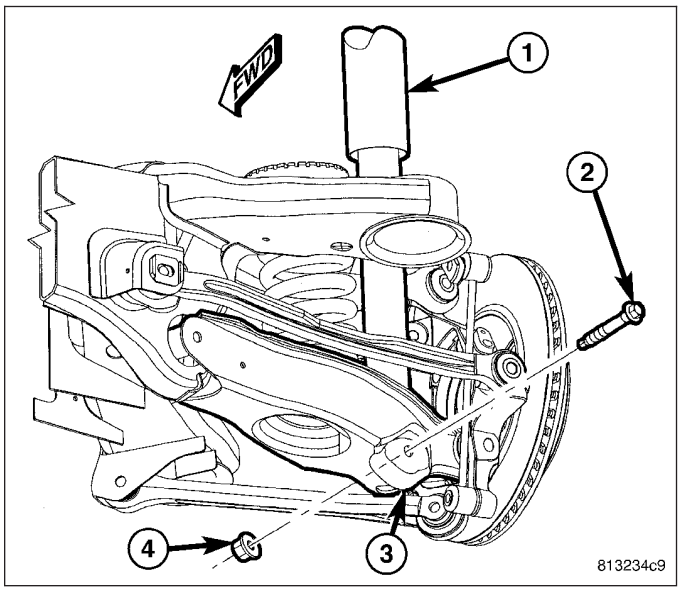

14. If vehicle is equipped with AWD, insert spacers (1) on top of right crossmember mount bushings (2) before crossmember is raised into place.

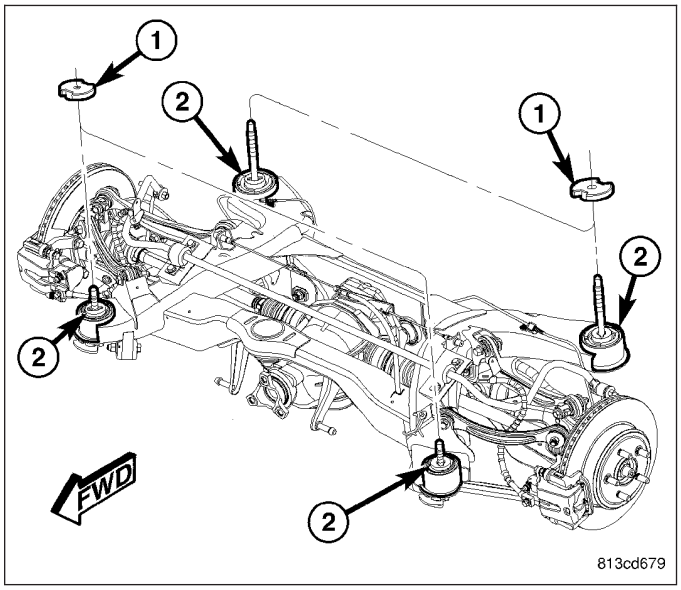

NOTE: There are four crossmember mounting bolts. Rear mounting bolts (2) are longer than front mounting bolts (3). Do not interchange mounting bolts.

15. Raise right side of crossmember (1) into mounted position. Install right side crossmember mounting bolts (2 and 3). **Snug, but do not fully tighten bolts at this time.**
16. Remove both front and rear crossmember mounting bolts (2 and 3) on **left** side of vehicle.

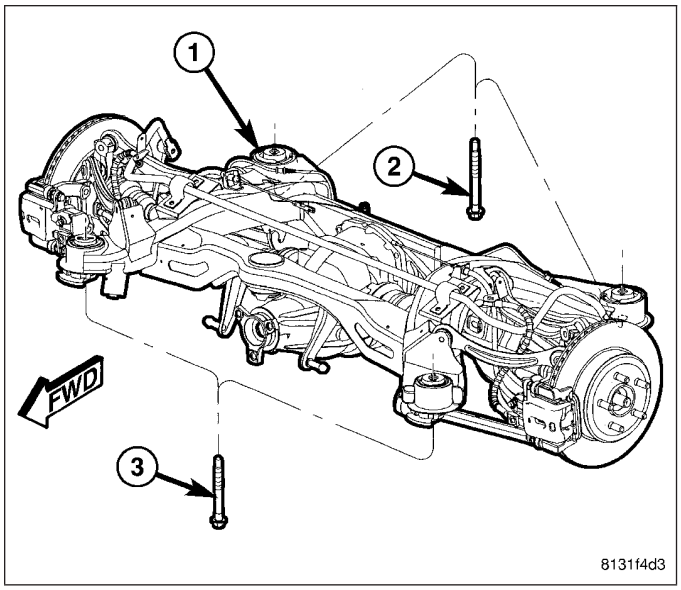

CAUTION: To avoid damaging other components of vehicle, do not lower crossmember any further than necessary to install coil spring (2).

17. **Slowly** lower jack allowing left side of crossmember to drop. **Do not lower jack at a fast rate.** Lower jack just enough to allow spring (2) Installation. **Do not lower jack any further than necessary.**

NOTE: Before installing coil spring, make sure isolators (1 and 5) are completely installed on ends of spring.

18. Install coil spring (2) with isolators into spring pocket of spring link fitting the lower isolator to the shape of the pocket, then align top of spring with body mount.

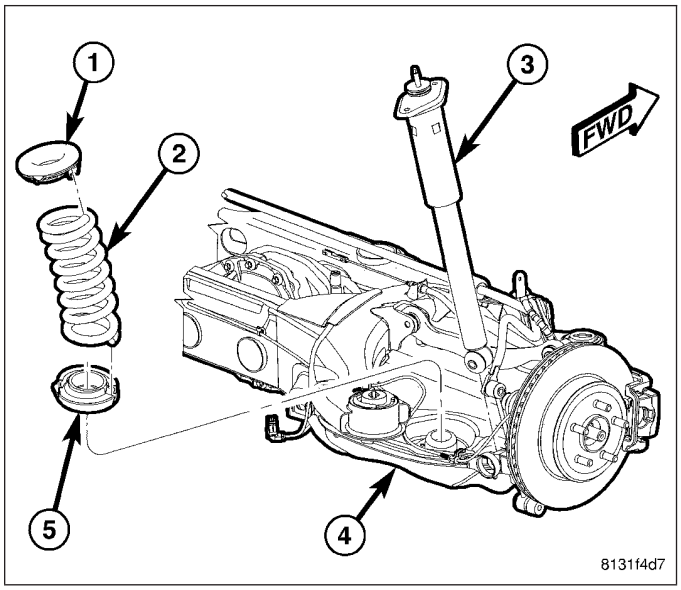

19. Carefully raise jack, guiding coil spring and lower end of shock absorber (1) into mounted positions. Once shock absorber (1) lower mounting hole lines up with hole in spring link (3), stop jacking.
20. Install lower shock mounting bolt (2) and nut (4). **Do not tighten at this time.**

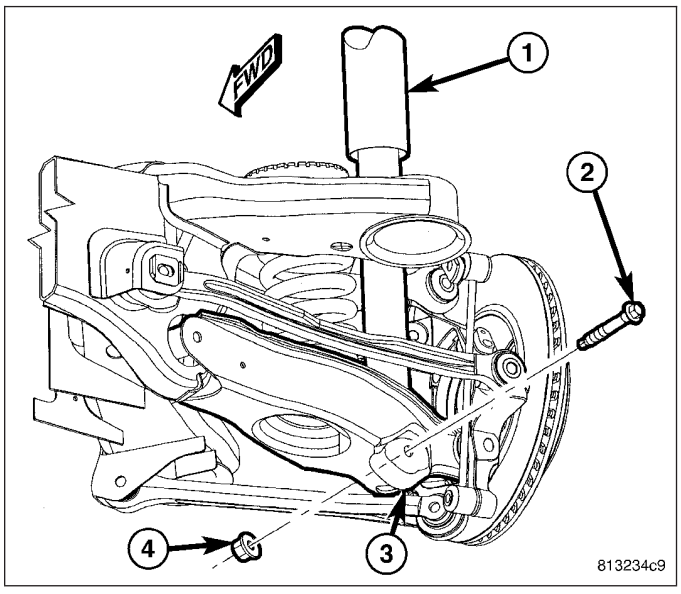

21. If vehicle is equipped with AWD, insert spacers (1) on top of left crossmember mount bushings (2) before crossmember is raised into place.

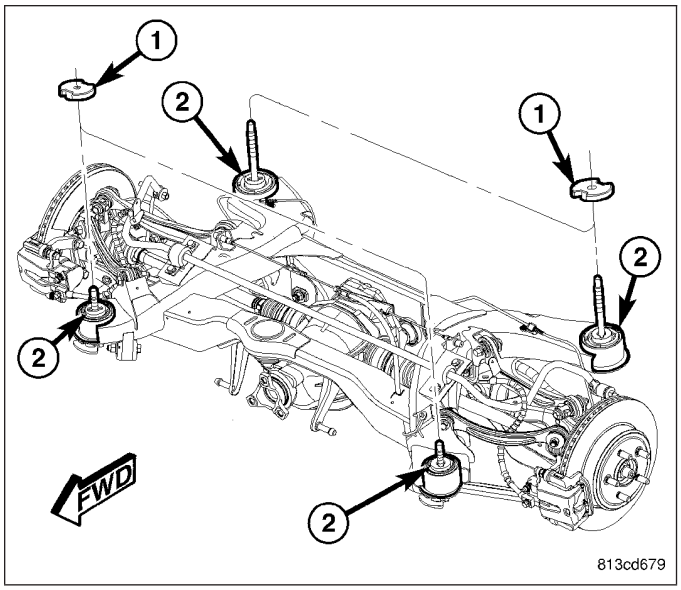

NOTE: There are four crossmember mounting bolts. Rear mounting bolts (2) are longer than front mounting bolts (3). Do not interchange mounting bolts.

22. Raise left side of crossmember (1) into mounted position. Install left side crossmember mounting bolts (2 and 3). **Snug, but do not fully tighten bolts at this time.**

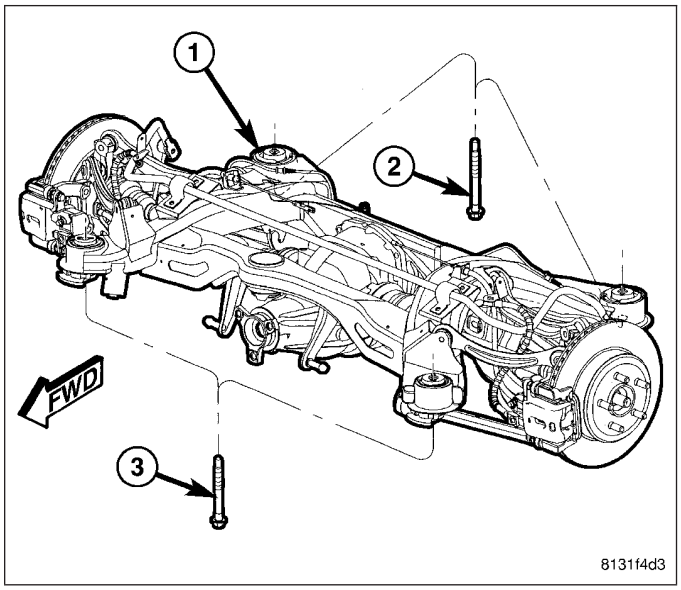

23. Shift crossmember as necessary to line up mounts (3) with location marks drawn on body (1) before removal.

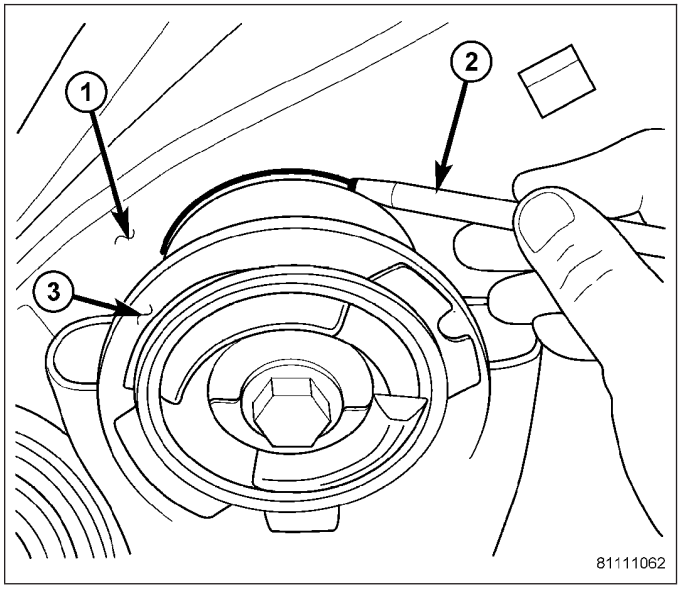

24. Once mounts are lined up with location marks, on both sides of vehicle, measure distance (1) between the tension link (2) and weld flange (3) on body directly in front of it, just outboard of the front mount bushing (4). **This distance must be at least 12 mm to allow proper clearance for suspension movement.** If distance is less than 12 mm on either side of vehicle, shift that side of rear crossmember directly rearward until distance is 12 mm or greater. To do so, loosen 3 mounting bolts slightly, leaving one on opposite side of shift snugged to pivot off of. Shift crossmember rearward and snug loosened bolts. Remeasure opposite side to be sure it still maintains minimum 12 mm distance.

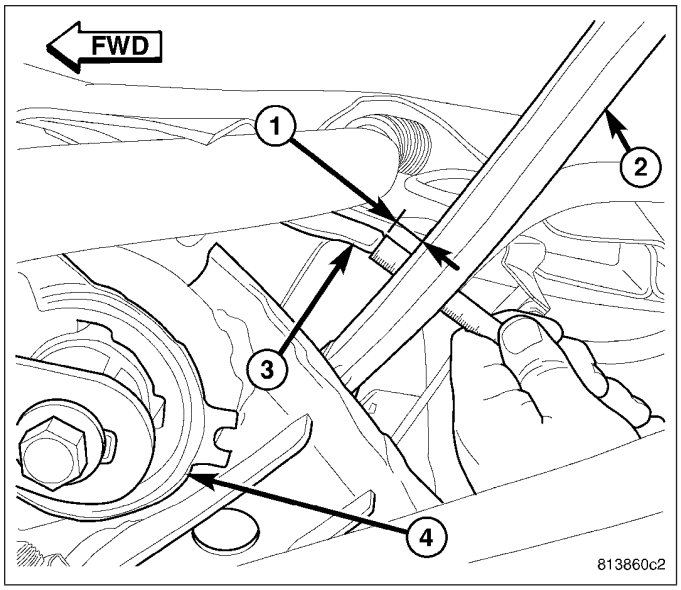

25. Tighten all four crossmember mounting bolts (2 and 3) to 180 N·m (133 ft. lbs.) torque.

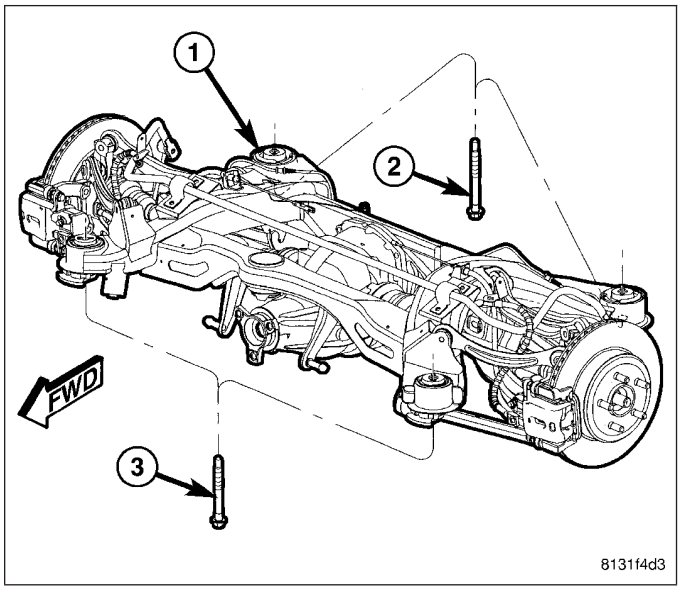

26. Remove jack (3) from under rear axle differential.

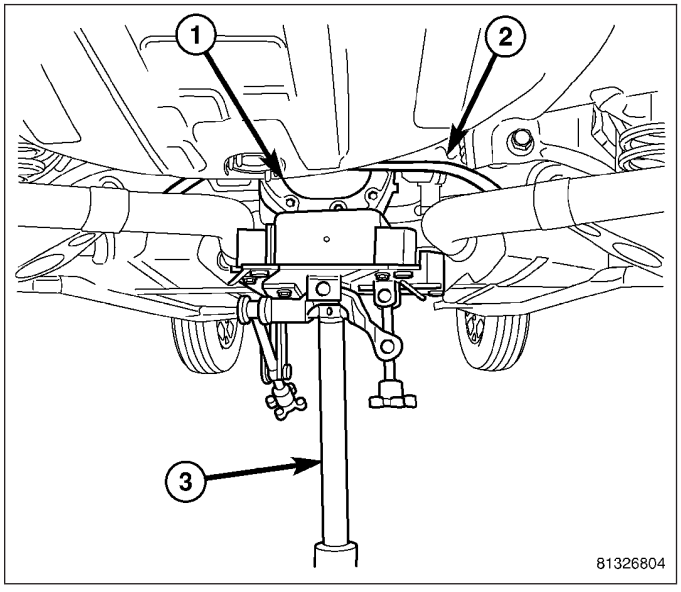

27. Remove bungee cord (1) supporting propeller shaft (2).

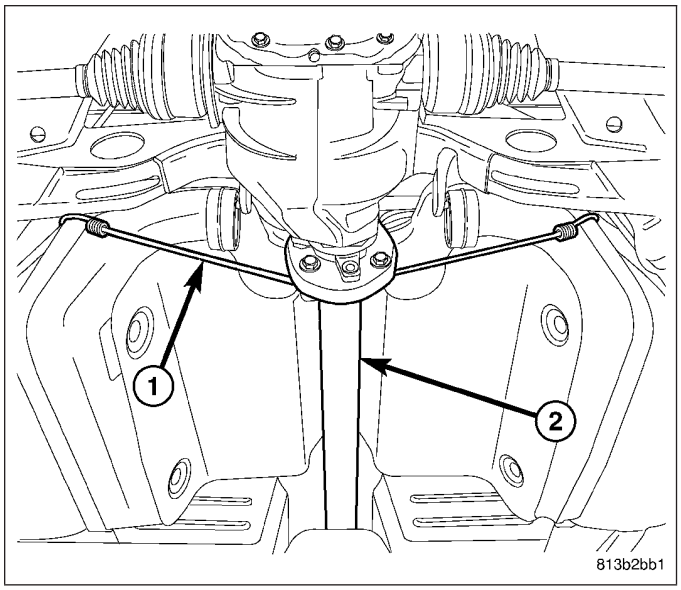

28. Align propeller shaft index marks (3) placed upon removal. Install propeller shaft rear coupler-to-axle flange bolts and nuts by hand. Tighten propeller shaft rear coupler-to-axle flange bolts to 81 N·m (60 ft. lbs.) torque.

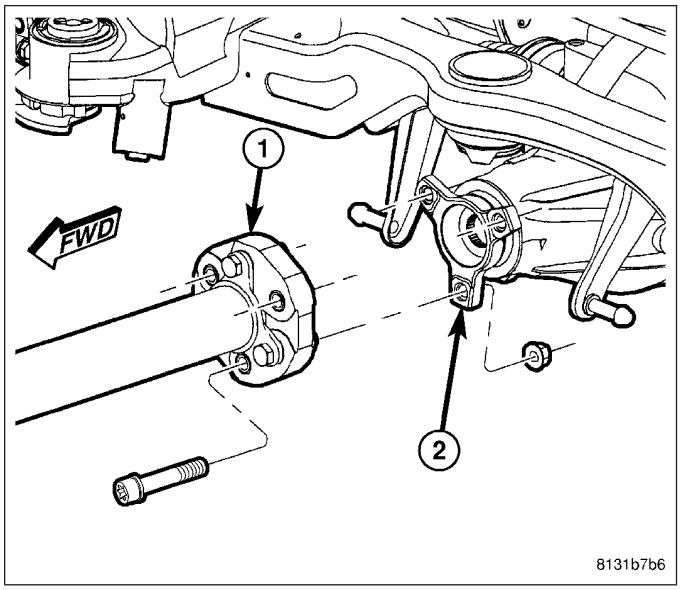

29. Install fuel filler tube. (Refer to 14 - FUEL SYSTEM/FUEL DELIVERY/FUEL TANK FILLER TUBE - INSTALLATION)

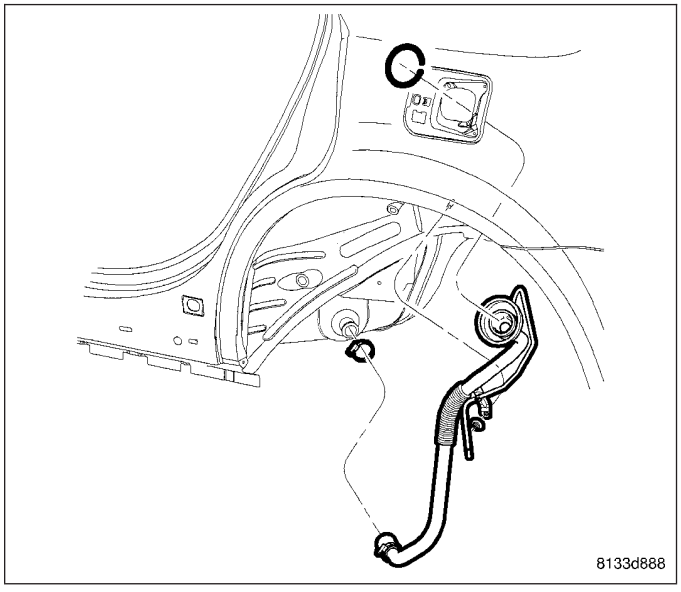

30. Clip left rear wheel speed sensor cable (3) to routing clip (1) near body connector.

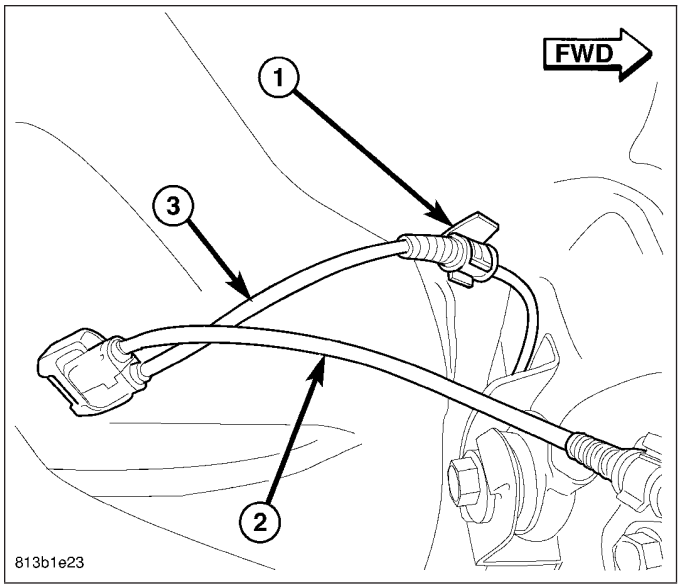

31. Match left rear wheel speed sensor connector (4) to right sensor connector (3) to make one connector.
32. Insert speed sensor connectors (3 and 4) into body wiring harness connector (1) located in luggage compartment floor pan (2). When installing connector, make sure retaining clip on body connector is properly in place and sensor connector cannot be pulled out.

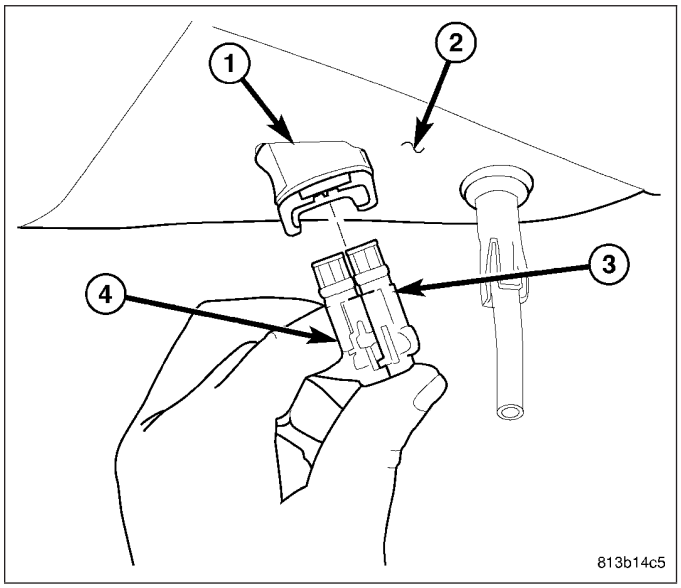

CAUTION: Extreme caution should be taken not to cross-thread caliper guide pin bolts (2) when they are installed.

33. If equipped with standard or premium disc brakes, on each rear disc brake:
    a. Push caliper guide pins into caliper adapter to clear caliper mounting bosses when installing.
    b. Guide caliper and brake hose down through rear suspension, then slide caliper over brake pads and onto caliper adapter (3).
    c. Align caliper mounting holes with guide pins, then install guide pin bolts (2). While holding guide pins from turning, tighten bolts to 31 N·m (23 ft. lbs.) torque.
    d. Make sure brake hose is properly routed and will not come in contact with suspension components.

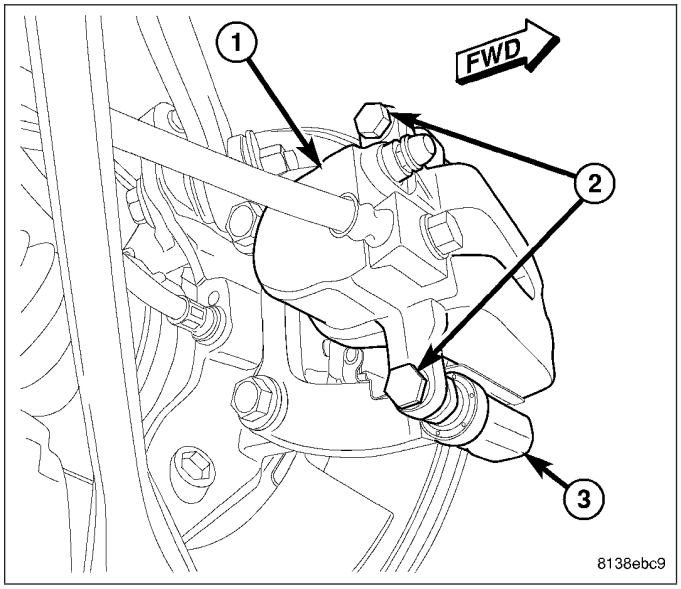

34. If equipped with SRT8 disc brakes, at each rear disc brake, support spring link using a transmission jack or other appropriate jack as indicated in removal procedure. (Refer to 2 - SUSPENSION/REAR/STABILIZER BAR - REMOVAL)
35. If equipped with SRT8 disc brakes, on each rear disc brake, slide caliper with pads (2) over brake rotor and align with knuckle.
36. If equipped with SRT8 disc brakes, on each rear disc brake, install caliper mounting bolts (1). Tighten bolts to 130 N·m (96 ft. lbs.) torque.
37. If equipped with SRT8 disc brakes, on each rear disc brake, remove jack from under spring link.

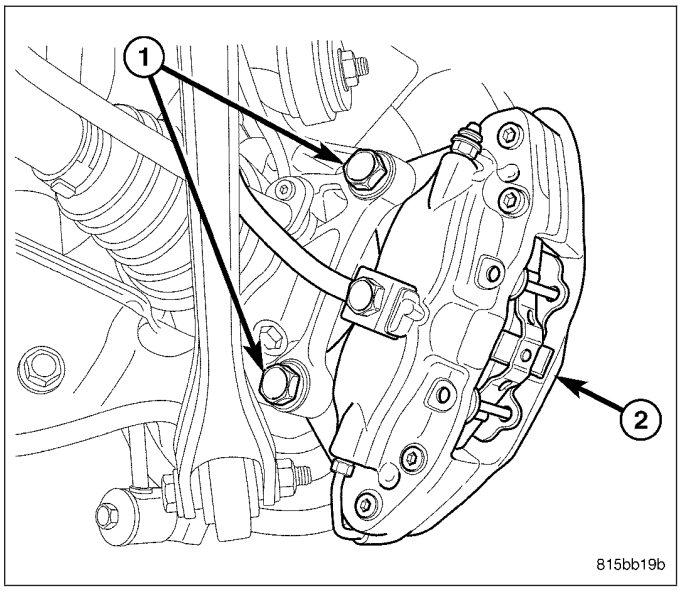

38. Insert routing front parking brake cable bracket locating pin in front flange of crossmember (3), then install screw (2) fastening cable (1) routing bracket to rear crossmember.

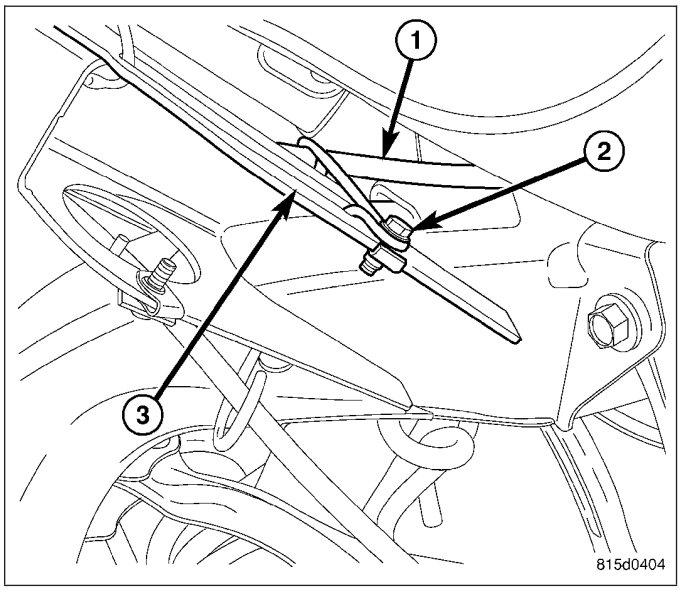

39. Route parking brake cable above rear crossmember, then slide cable (1, 3) through equalizer (2) above rear axle differential.

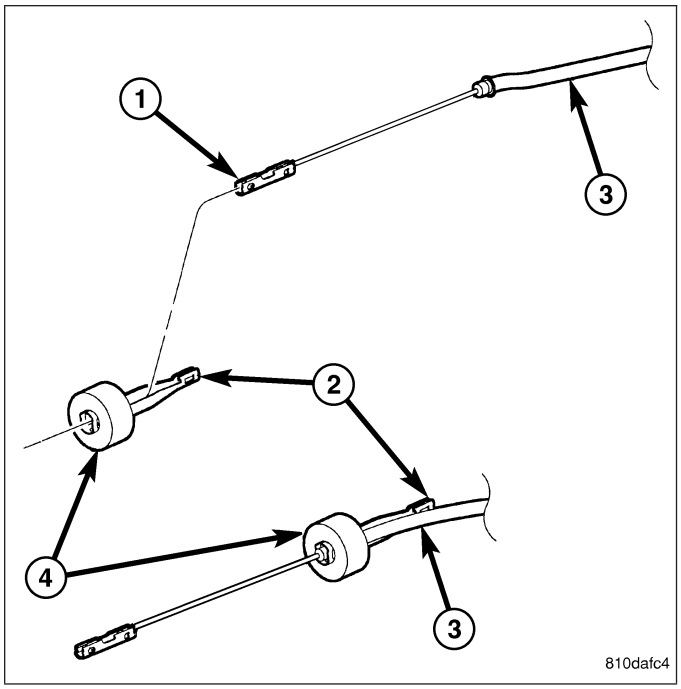

NOTE: Due to short travel and low spring tension, it is not necessary to lock-out parking brake lever to service parking brake components.

40. Connect front parking brake cable (5) at connector (3) to right rear parking brake cable (4).

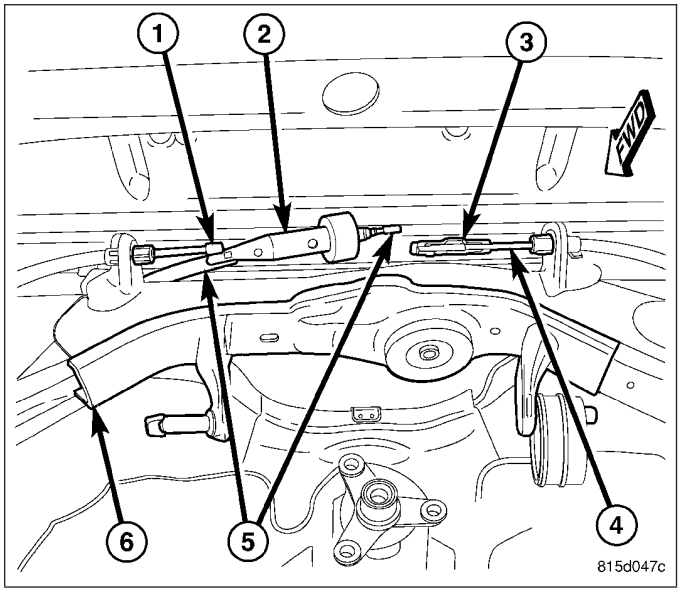

41. Install rear exhaust system (2) (dual-outlet exhaust shown in figure). (Refer to 11 - EXHAUST SYSTEM - INSTALLATION)

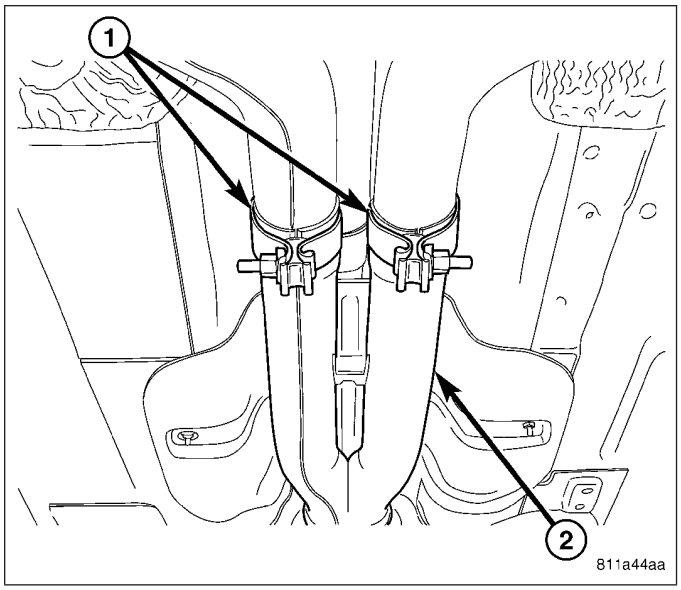

42. Install tire and wheel assemblies (1). Tighten wheel mounting nuts (3) to 150 N·m (110 ft. lbs.) torque. (Refer to 22 - TIRES/WHEELS - INSTALLATION)
43. Lower vehicle until rear wheels are just above floor level.
44. Apply parking brake lever. Release lever, then reapply.
45. Check to make sure rear wheels will not rotate with lever applied.
46. Lower vehicle.

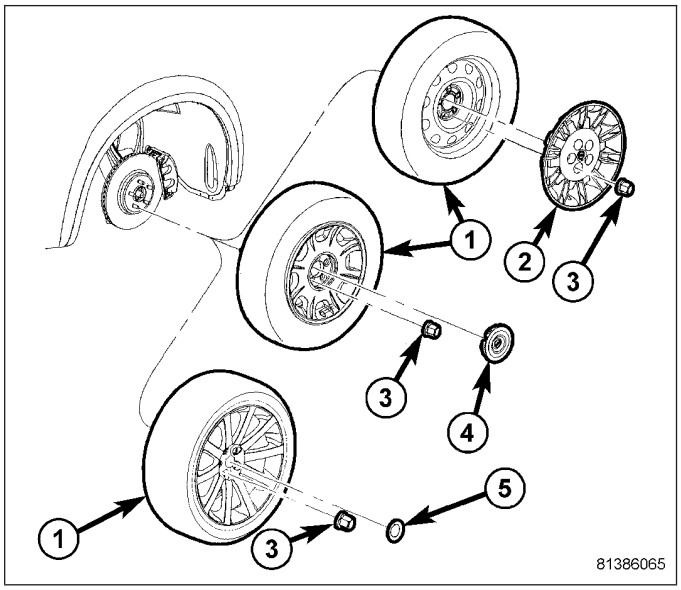

47. Connect battery negative cable (2) to battery post. It is important that this is performed properly. (Refer to 8 - ELECTRICAL/BATTERY SYSTEM - STANDARD PROCEDURE)
48. Pump brake pedal several times to ensure vehicle has a firm brake pedal before moving vehicle.
49. Position vehicle on alignment rack/drive-on hoist. Raise vehicle as necessary to access mounting bolts.

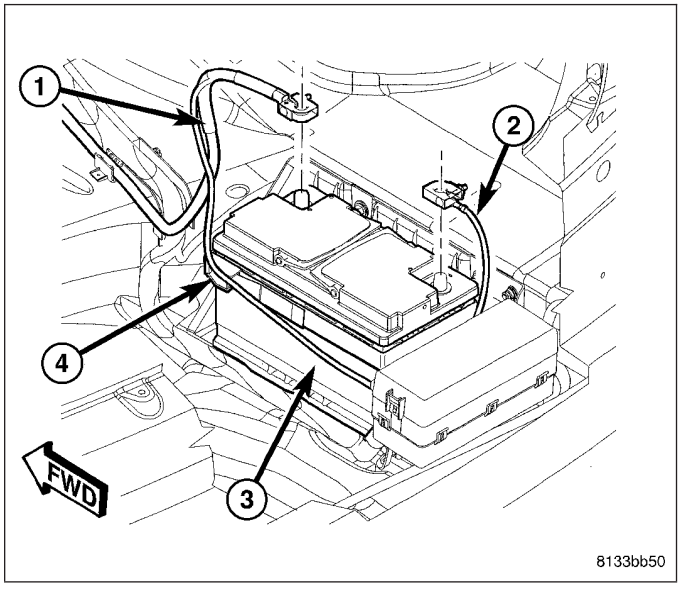

50. Tighten shock absorber lower mounting bolt nuts (4) to 72 N·m (53 ft. lbs.) torque.

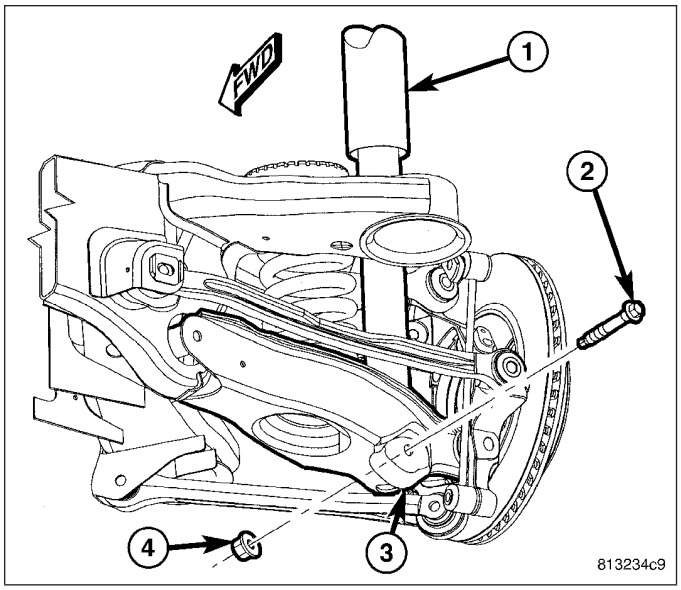

51. Tighten stabilizer link fasteners (3) to 61 N·m (45 ft. lbs.) torque.
52. Perform wheel alignment, paying special attention to thrust angle. If rear crossmember needs to be shifted to align thrust angle, try to avoid compromising tension link clearance (Refer to Step 24). (Refer to 2 - SUSPENSION/WHEEL ALIGNMENT - STANDARD PROCEDURE)

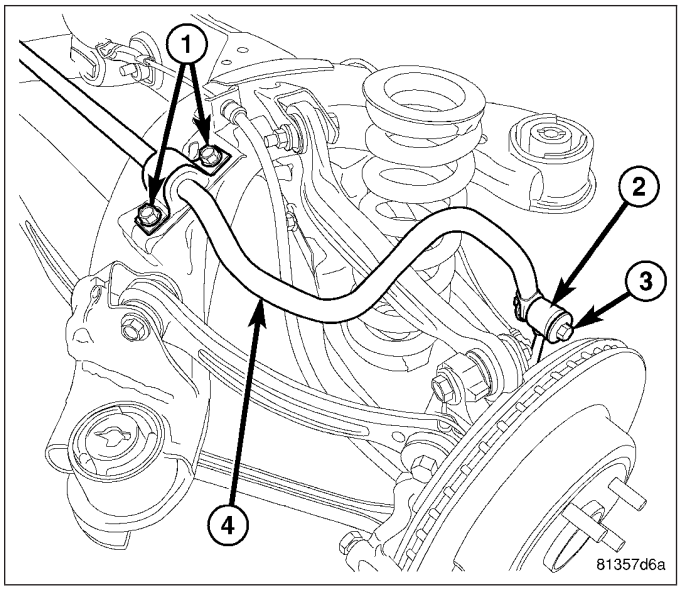

WHEEL ALIGNMENT

TABLE OF CONTENTS

page

WHEEL ALIGNMENT
DESCRIPTION 203
DIAGNOSIS AND TESTING
SUSPENSION AND STEERING 207
VEHICLE LEAD/PULL 208

page

STANDARD PROCEDURE
WHEEL ALIGNMENT 209
CURB HEIGHT MEASUREMENT 218
SPECIFICATIONS
WHEEL ALIGNMENT 219

WHEEL ALIGNMENT

DESCRIPTION

Vehicle wheel alignment is the positioning of all interrelated front and rear suspension angles. These angles affect the handling and steering of the vehicle when it is in motion. Proper wheel alignment is essential for efficient steering, good directional stability, and proper tire wear.

The method of checking a vehicle's front and rear wheel alignment varies depending on the manufacturer and type of equipment used. The manufacturer's instructions should always be followed to ensure accuracy of the alignment, except when DaimlerChrysler Corporation's wheel alignment specifications differ.

On this vehicle, the suspension angles that can be adjusted are as follows:

FRONT:

- Camber (with cradle shift/service adjustment bolt package)
- Caster (with cradle shift/service adjustment bolt package)
- Toe

REAR:

- Toe

Check the wheel alignment and make all wheel alignment adjustments with the vehicle standing at its proper curb height specification. Curb height is the normal riding height of the vehicle. It is measured from a certain point on the vehicle to the ground or a designated area while the vehicle is sitting on a flat, level surface. Refer to Curb Height Measurement in this section for additional information.

Typical wheel alignment angles and measurements are described in the following paragraphs.

CAMBER

Camber is the inward or outward tilt of the top of the tire and wheel assembly. Inward tilt (2) is negative camber. Outward tilt (1) is positive camber. Camber is measured in degrees of angle relative to a true vertical line. Camber is a tire wearing angle.

- Excessive negative camber will cause tread wear at the inside of the tire.
- Excessive positive camber will cause tread wear on the outside of the tire.

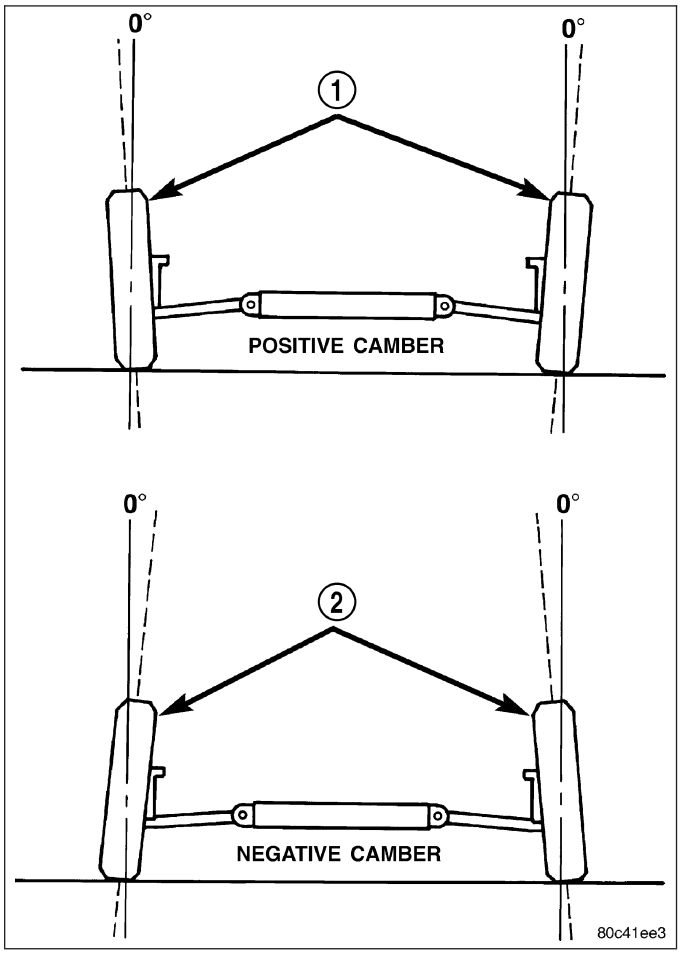

CROSS CAMBER

Cross camber is the difference between left and right camber. To achieve the cross camber reading, subtract the right side camber reading from the left. For example, if the left camber is +0.3° and the right camber is 0.0°, the cross camber would be +0.3°.

CASTER

Caster is the forward or rearward tilt of the steering knuckle in reference to the position of the upper and lower ball joints. Caster is measured in degrees of angle relative to a true vertical center line. This line is viewed from the side of the tire and wheel assembly.

- Forward tilt (upper ball joint ahead of lower) results in a negative caster angle.
- Rearward tilt (upper ball joint trailing lower) results in a positive caster angle.

Although caster does not affect tire wear, a caster imbalance between the two front wheels may cause the vehicle to lead to the side with the least positive caster.

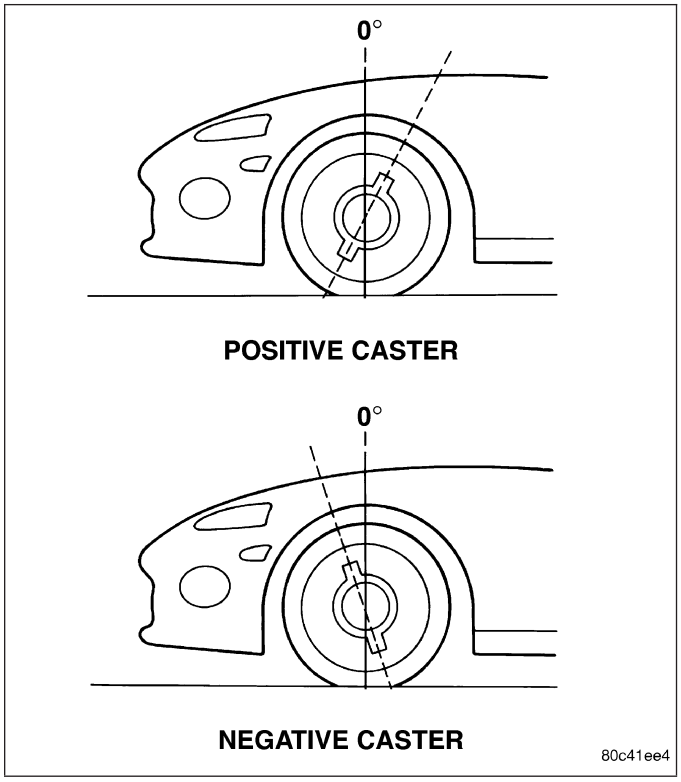

CROSS CASTER

Cross caster is the difference between left and right caster.

TOE

Toe is the inward or outward angle of the wheels as viewed from above the vehicle.

- Toe-in (1) is produced when the front edges of the wheels on the same axle are closer together than the rear edges.
- Toe-out (2) is produced when the front edges of the wheels on the same axle are farther apart than the rear edges.

Toe-in and toe-out can occur at the front wheels and the rear wheels.

Toe is measured in degrees or inches. The measurement identifies the amount that the front of the wheels point inward (toe-in) or outward (toe-out). Toe is measured at the spindle height. Zero toe means the front and rear edges of the wheels on the same axle are equally distant.

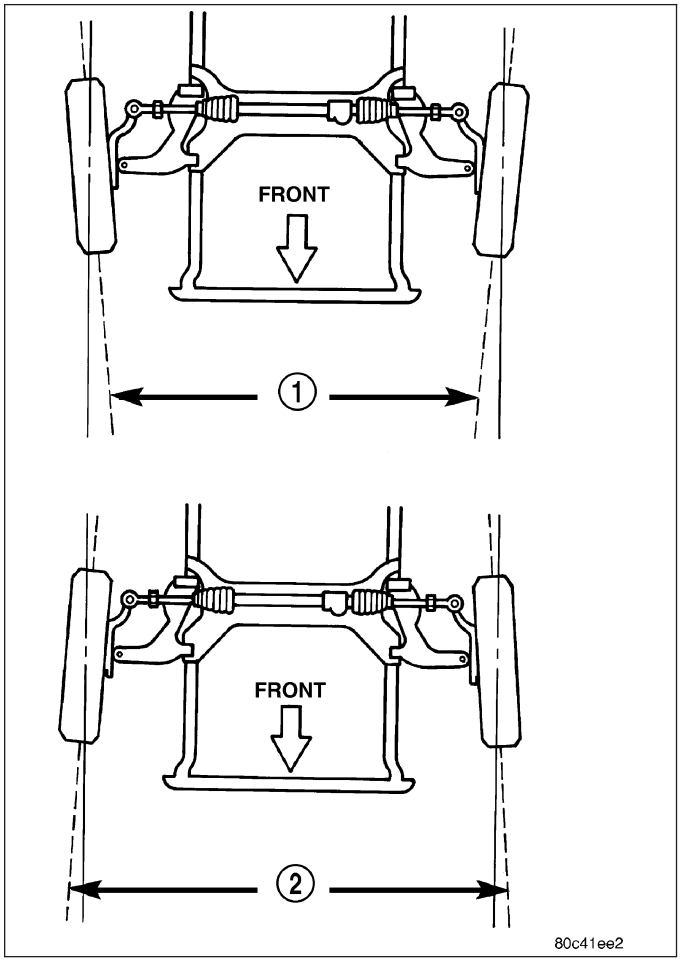

TOE-OUT ON TURNS

Toe-out on turns is the relative positioning of the front wheels while steering through a turn. This compensates for each front wheel's turning radius. As the vehicle encounters a turn, the outboard wheel must travel in a larger radius circle than the inboard wheel. The steering system is designed to make each wheel follow its particular radius circle. To accomplish this, the front wheels must progressively toe outward as the steering is turned from center. This eliminates tire scrubbing and undue tire wear when steering a vehicle through a turn.

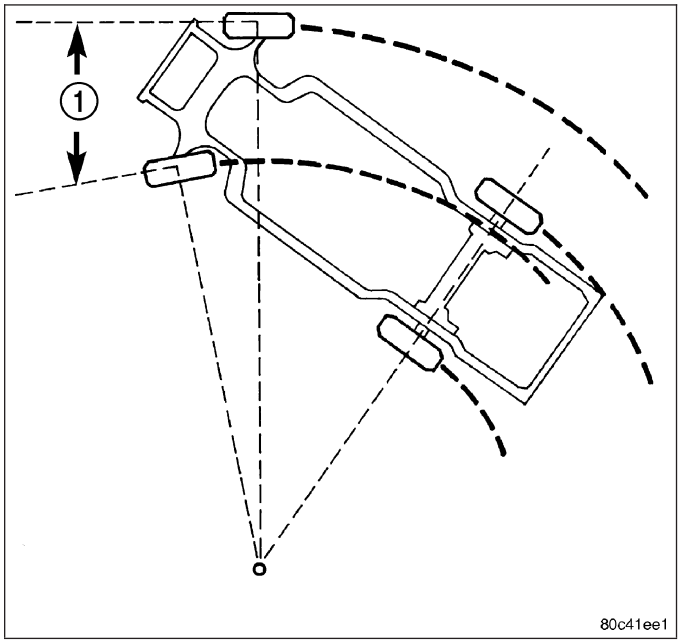

DYNAMIC TOE PATTERN

Dynamic toe pattern is the inward and outward toe movement of the front and rear tires through the suspension's jounce and rebound travel. As the vehicle's suspension moves up and down, the toe pattern varies. Toe pattern is critical in controlling the directional stability of the vehicle while in motion. Front and rear dynamic toe pattern is preset by the factory at the time the vehicle is assembled.

It is not necessary to check or adjust front or rear dynamic toe pattern when doing a normal wheel alignment. The only time dynamic toe pattern needs to be checked or adjusted is if the frame of the vehicle has been damaged.

STEERING AXIS INCLINATION (S. A. I.)

Steering axis inclination is the angle between a true vertical line starting at the center of the tire at the road contact point and a line drawn through the center of the upper ball joint (or strut) and the lower ball joint (1). S.A.I. is built into the vehicle and is not an adjustable angle. If S.A.I. is not within specifications, a bent or damaged suspension component may be the cause.

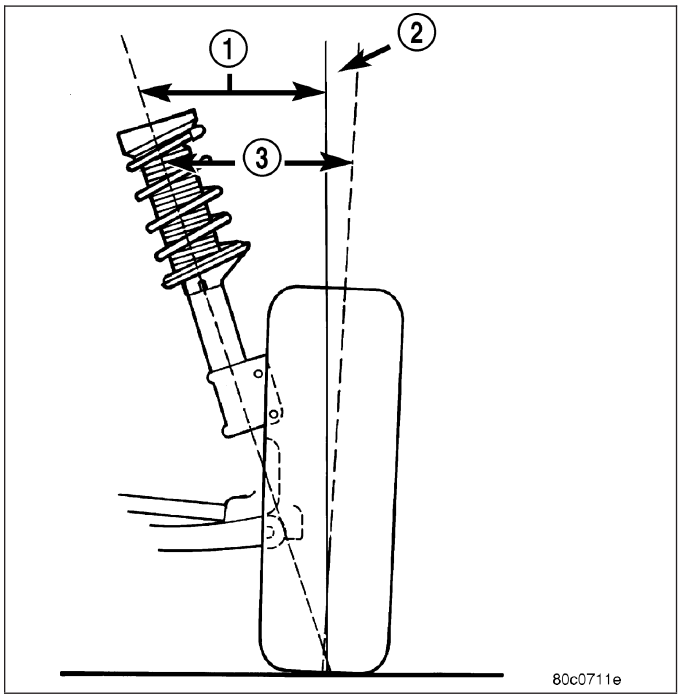

INCLUDED ANGLE (I. A.)

Included angle (3) is the sum of the S.A.I. angle (1) plus or minus the camber angle (2), depending on whether or not the wheel has positive or negative camber. If camber is positive (2), add the camber angle to the S.A.I. angle. If camber is negative, subtract the camber angle from the S.A.I. angle. Included angle is not adjustable, but can be used to diagnose a frame misalignment or bent suspension component (spindle, strut).

THRUST ANGLE

Thrust angle is the averaged direction the rear wheels are pointing in relation to the vehicle's center line. The presence of negative or positive thrust angle causes the rear tires to track improperly to the left or right of the front tires (dog tracking).

- Negative thrust angle means the rear tires are tracking to the left of the front tires.
- Positive thrust angle means the rear tires are tracking to the right of the front tires.

Improper tracking can cause undue tire wear, a lead or pull and a crooked steering wheel. Excessive thrust angle can usually be corrected by adjusting the rear wheel toe so that each wheel has one-half of the total toe measurement.

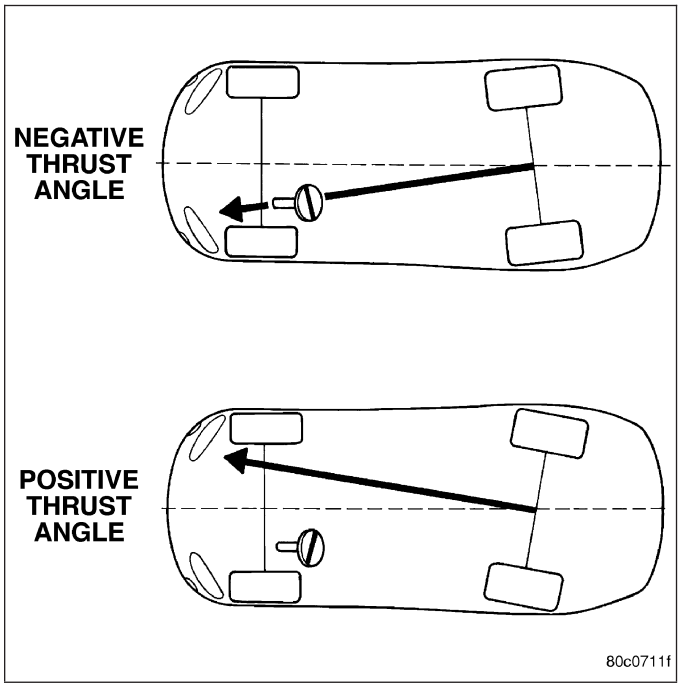

DIAGNOSIS AND TESTING

SUSPENSION AND STEERING

CONDITION	POSSIBLE CAUSES	CORRECTION
Front End Whine On Turns	1. Defective wheel bearing	1. Replace wheel bearing
	2. Incorrect wheel alignment	2. Check and reset wheel alignment
	3. Worn tires	3. Replace tires
Front End Growl Or Grinding On Turns	1. Defective wheel bearing	1. Replace wheel bearing
	2. Engine mount grounding	2. Check for motor mount hitting frame rail and reposition engine as required
	3. AWD - Worn or broken C/V joint	3. Replace C/V joint
	4. Loose wheel lug nuts	4. Verify wheel lug nut torque
	5. Incorrect wheel alignment	5. Check and reset wheel alignment
	6. Worn tires	6. Replace tires
Front End Clunk Or Snap On Turns	1. Loose lug nuts	1. Tighten wheel lug nuts to specifications
	2. Worn or loose tie rod	2. Tighten or replace tie rod end
	3. Worn or loose ball joint	3. Tighten or replace ball joint
	4. Worn/loose control arm bushing	4. Replace control arm or bushing
	5. Loose control arm fasteners	5. Tighten control arm fasteners to specified torque
	6. Loose stabilizer bar	6. Tighten stabilizer bar fasteners to specified torque
	7. Loose crossmember bolts	7. Tighten crossmember bolts to specified torque
Front End Whine With Vehicle Going Straight At A Constant Speed	1. Defective wheel bearing	1. Replace hub and bearing assembly
	2. Incorrect wheel alignment	2. Check and reset wheel alignment
	3. Worn tires	3. Replace tires
Front End Growl Or Grinding With Vehicle Going Straight At A Constant Speed	1. Engine mount grounding	1. Reposition engine/mount as required
Front End Clunk When Accelerating Or Decelerating	1. Worn or broken engine mount	1. Replace engine mount
	2. Loose lug nuts	2. Tighten wheel lug nuts to specified torque
	3. Worn or loose ball joint	3. Replace ball joint/control arm
	4. Worn or loose control arm bushing	4. Replace control arm or bushing
	5. Loose control arm fasteners	5. Tighten fasteners to specified torque
	6. Loose crossmember bolts	6. Tighten crossmember bolts to specified torque
	7. Worn tie rod end	7. Replace tie rod end

CONDITION	POSSIBLE CAUSES	CORRECTION
Road Wander	1. Incorrect tire pressure	1. Inflate tires to recommended pressure
	2. Incorrect front or rear wheel toe	2. Check and reset wheel toe
	3. Worn wheel bearing	3. Replace hub and bearing
	4. Worn control arm bushings	4. Replace control arm or bushing
	5. Excessive friction in steering gear	5. Replace steering gear
	6. Excessive friction in steering shaft coupling	6. Replace steering intermediate shaft/coupler
Lateral Pull	1. Unequal tire pressure	1. Inflate all tires to recommended pressure
	2. Radial tire lead	2. Perform lead correction procedure
	3. Incorrect front wheel camber	3. Check and reset front wheel camber
	4. Power steering gear imbalance	4. Replace power steering gear
	5. Wheel braking	5. Correct braking condition causing lateral pull
Excessive Steering Free Play	1. Incorrect Steering Gear Adjustment	1. Replace Steering Gear
	2. Worn or loose tie rod ends	2. Replace tie rod ends
	3. Loose steering gear mounting bolts	3. Tighten steering gear mounting bolts to specified torque
	4. Loose or worn steering shaft coupler	4. Replace steering intermediate shaft/coupler
Excessive Steering Effort	1. Low tire pressure	1. Inflate all tires to recommended pressure
	2. Lack of lubricant in steering gear	2. Replace steering gear
	3. Low power steering fluid level	3. Fill power steering fluid reservoir to correct level. Bleed as necessary
	4. Loose drive belt	4. Replace adjuster or drive belt
	5. Lack of lubricant in ball joints	5. Replace ball joints
	6. Steering gear malfunction	6. Replace steering gear
	7. Lack of lubricant in steering shaft coupler	7. Replace steering intermediate shaft/coupler

VEHICLE LEAD/PULL

To assure correct diagnosis, it is important to follow the steps outlined below in the order shown. Road test the vehicle before and after each step to verify that the lead condition has been corrected. When evaluating a vehicle, always drive the same road in both directions to get a feel for the effect of road crown and cross wind. A neutral vehicle will exhibit a small amount of drift on both right and left crowned roads (normal crown sensitivity). A vehicle with pronounced lead/pull may have one or more of the following conditions:

1. UNEQUAL TIRE PRESSURE. Adjust tire pressure to the pressure stated on door placard. Make sure the tire pressure is equal on all four tires and evaluate the car. Also verify that the tire size and type are correct and match each other. If the car still has a lead condition go to step (2).
2. TIRE CONICITY. Excessive tire conicity is one of the more frequent causes of vehicle lead. Cross-switch the front tires and evaluate the car. If the car still leads in the same direction or gets worse, return the front tires to their original position, then go to step (3).
3. SUSPENSION ALIGNMENT. Check and record the wheel alignment settings. Non-symmetrical front caster or camber can sometimes cause a lead condition or can be used to fix a lead condition. Adjust the wheel alignment as necessary to preferred settings (Refer to 2 - SUSPENSION/WHEEL ALIGNMENT - STANDARD PROCEDURE). If the car still leads, go to step (4).

4. STEERING GEAR VALVE IMBALANCE. Steering gear valve imbalance can sometimes cause a vehicle lead. Although there is no quick test or measurement that can be performed to verify a good or bad steering gear valve, generally the steering efforts will feel much lighter in the lead direction and heavier in the opposite direction with an unbalanced valve. Replace the steering gear only as a ″last resort″ to solve the problem. To replace the steering gear, (Refer to 19 - STEERING/GEAR - REMOVAL).

STANDARD PROCEDURE

WHEEL ALIGNMENT

PRE-WHEEL ALIGNMENT INSPECTION

Before any attempt is made to change or correct the wheel alignment, the following inspection and necessary corrections must be made to ensure proper alignment.

1. Verify that the fuel tank is full of fuel. If the tank is not full, the reduction in weight will affect the curb height of the vehicle and the alignment angles.
2. The vehicle's passenger and luggage compartments should be free of any load that is not factory equipment.
3. Check the tires on the vehicle. All tires must be the same size and in good condition with approximately the same amount of tread wear. Inflate all the tires to the recommended air pressure.
4. Check the wheel and tire assemblies for excessive radial runout.
5. Inspect lower ball joints and all steering linkage for looseness, binding, wear or damage. Repair as necessary.
6. Check suspension fasteners for proper torque and tighten as necessary.
7. Inspect all suspension component rubber bushings for signs of wear or deterioration. Replace any faulty bushings or components before aligning the vehicle.
8. Check the vehicle's curb height to verify it is within specifications. (Refer to 2 - SUSPENSION/WHEEL ALIGNMENT - STANDARD PROCEDURE - CURB HEIGHT MEASUREMENT)

WHEEL ALIGNMENT SETUP

1. Position the vehicle on an alignment rack.
2. Install all required alignment equipment on the vehicle per the alignment equipment manufacturer's instructions. On this vehicle, a four-wheel alignment is recommended.

NOTE: Prior to reading the vehicle's alignment readouts, the front and rear of vehicle should be jounced (suspension compressed/released). Induce jounce (rear first, then front) by grasping the center of the bumper and jouncing each end of vehicle an equal number of times. The bumper should always be released when vehicle is at the bottom of the jounce cycle.

3. Read the vehicle's current front and rear alignment settings. Compare the vehicle's current alignment settings to the vehicle specifications for camber, caster and toe-in. (Refer to 2 - SUSPENSION/WHEEL ALIGNMENT - SPECIFICATIONS)
4. If front camber and caster are not within specifications, proceed to CAMBER AND CASTER below. If caster and camber are within specifications, proceed to TOE which can be found following CAMBER AND CASTER. Rear camber and caster are not adjustable. If found not to be within specifications, reinspect for damaged suspension or body components and replace as necessary. If rear toe is not within specifications, adjust rear toe before proceeding to adjust front toe.

CAMBER AND CASTER

Camber and caster settings on this vehicle are determined at the time the vehicle is designed, by the location of the vehicle's suspension components. This is referred to as NET BUILD. The result is no required adjustment of camber and caster after the vehicle is built or when servicing the suspension components. Thus, when performing a wheel alignment, caster and camber are not normally considered adjustable angles. Camber and caster should be checked to ensure they meet vehicle specifications.

If individual front camber or caster is found not to meet alignment specifications, each can be adjusted by shifting the engine cradle if cross-camber and cross-caster are within specifications, or by using an available service adjustment bolt package. Always try to shift the cradle first **(if camber and caster are off slightly)** to correct the mis-

alignment before installing an adjustment bolt package. If an adjustment bolt package installation is necessary, inspect the suspension components for any signs of damage or bending first.

CAUTION: Do not attempt to adjust the vehicles wheel alignment by heating, bending or by performing any other modification to the vehicle's front suspension components or body.

ADJUSTMENT BY SHIFTING CRADLE

CAUTION: Always use care when shifting cradle to avoid damaging other components on the vehicle.

1. Loosen the four bolts (1) fastening the engine cradle (2) to the frame just enough to allow movement of the cradle.
2. Shift cradle as necessary to bring camber or caster into specifications. When shifting cradle, use care not to move other angles (camber or caster) that are within specifications, out of specifications.
3. Tighten the four bolts (1) fastening the engine cradle (2) to the frame to specifications.
4. Jounce the rear, then front of the vehicle an equal amount of times.
5. Measure camber and caster. If camber and caster are within specifications, proceed to TOE. If camber or caster cannot be brought into specifications, perform the ADJUSTMENT BOLT PACKAGE INSTALLATION below.

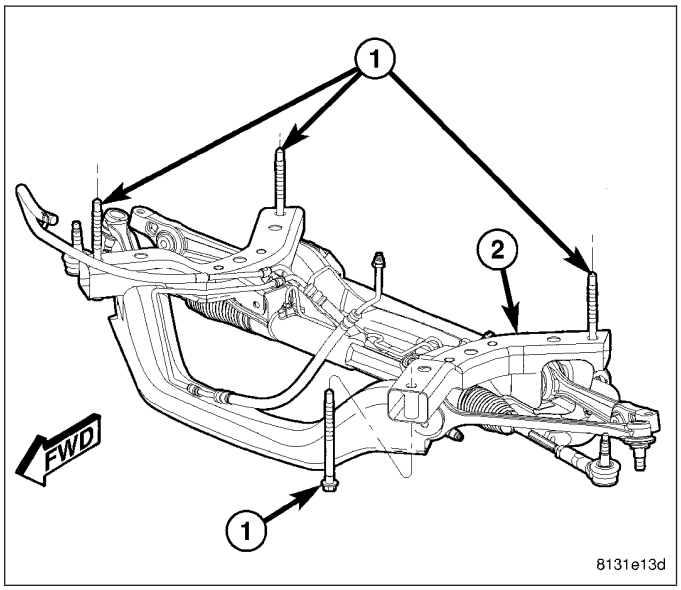

ADJUSTMENT BOLT PACKAGE INSTALLATION - AWD

NOTE: Adjustment bolts for AWD and RWD are not interchangeable.

The adjustment bolt package contains 2 special bolts (1). These bolts can be identified by the offset grooves cut into the thread section (2). These bolts are designed to replace the inboard mounting bolts of the lower control arm at the engine cradle. Each bolt allows approximately 0.3 degrees of movement. To adjust camber only, use both bolts, one at each leg of the control arm. To adjust caster only, use one bolt at the front leg only.

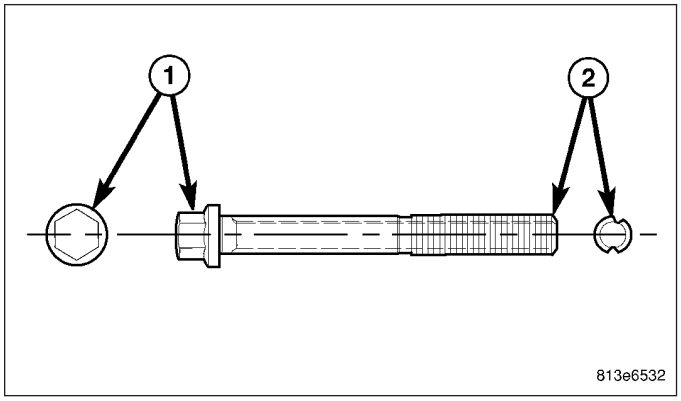

1. Raise the vehicle by the frame until the tires are not supporting the weight of the vehicle.
2. Remove the belly pan as necessary. (Refer to 23 - BODY/EXTERIOR/BELLY PAN - REMOVAL)
3. Lower control arm rear bolt only:
   a. Remove the screws fastening the heat shields covering the steering gear inner tie rod boots. Remove the heat shields.
   b. Loosen (do not remove) the steering gear mounting bolt furthest from the side of adjustment bolt installation.
   c. Remove the two remaining steering gear mounting bolts and allow steering gear to relax on the side of adjustment bolt installation, giving access to the lower control arm rear mounting bolt.

CAUTION: Wheel alignment adjustment bolts have offset grooves cut into the length of the bolt (2). If removing or installing lower control arm or tension strut mounting bolts that have these grooves, DO NOT ROTATE THE BOLT. To remove the bolt, hold the bolt head stationary and rotate the nut, then slide the bolt straight out of the bushing. This is necessary to avoid damaging the bat wings in the bushing inner metal or cradle.

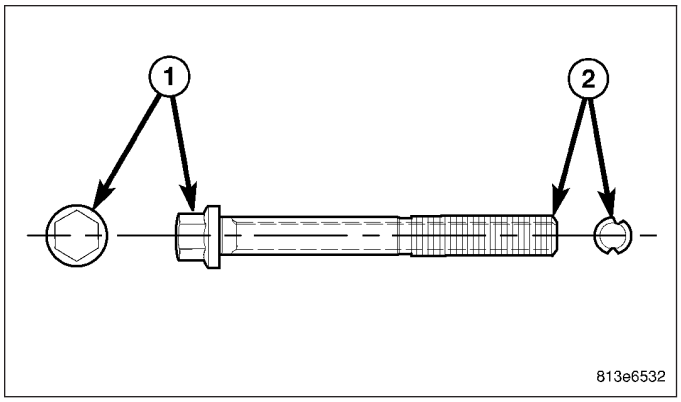

4. Hold the head of the control arm or tension strut mounting bolt stationary and remove the nut. Slide the bolt straight out of the bushing and discard.

CAUTION: When installing an adjustment bolt, be sure to install it in the correct direction. Lower control arm rear mounting bolts must be installed from the rear-forward and lower control arm front mounting bolts must be installed from the front-rearward.

NOTE: The grooves on the adjustment bolts are off-center forcing the bolt to be installed in one of two ways depending on whether more positive or negative camber or caster is necessary. The Bolts must be rotated 180° to achieve either more positive or negative camber or caster. DO NOT force the adjustment bolt.

NOTE: The original (non-grooved) mounting bolt (3) lies through the center of the hole (1), between the "bat wings" as shown in (c).

5. Camber Adjustment – The adjustment bolts are designed to work in conjunction with "bat wing" holes that are formed into the engine cradle (1) allowing for lower control arm movement approximately 0.3° in either direction.
   - To achieve more positive camber, refer to (a) in the figure. Move the control arm in the desired direction, then insert the adjustment bolt (2) with a washer installed through the bat wing hole in the engine cradle (1) and round hole in the bushing inner metal.
   - To achieve more negative camber, refer to (b) in the figure. Move the control arm in the desired direction, then insert the adjustment bolt (2) with a washer installed through the bat wing hole in the engine cradle (1) and round hole in the bushing inner metal.

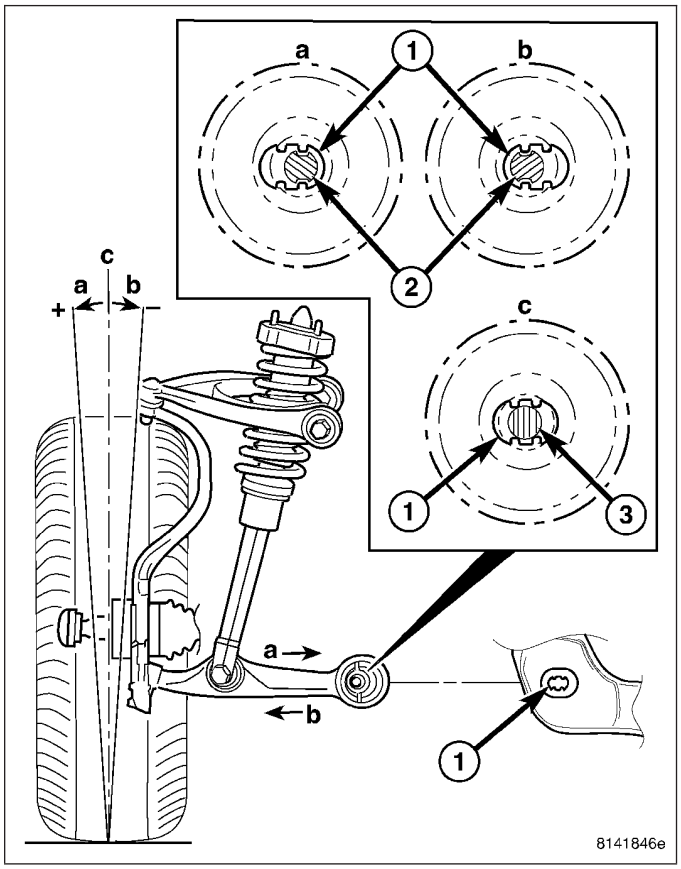

NOTE: The original (non-grooved) mounting bolt (3) lies through the center of the hole (1), between the "bat wings" as shown in (c).

6. Caster Adjustment – The adjustment bolts are designed to work in conjunction with "bat wings" that are formed into the engine cradle (1) allowing for lower control arm movement approximately 0.3° in either direction.
   - To achieve more positive caster, refer to (a) in the figure. Move the lower control arm in the desired direction, then insert the adjustment bolt (2) with a washer installed through the bat wing hole in the engine cradle (1) and the round hole in the bushing inner metal.
   - To achieve more negative caster, refer to (b) in the figure. Move the lower control arm in the desired direction, then insert the adjustment bolt (2) with a washer installed through the bat wing hole in engine cradle (1) and round hole in the bushing inner metal.

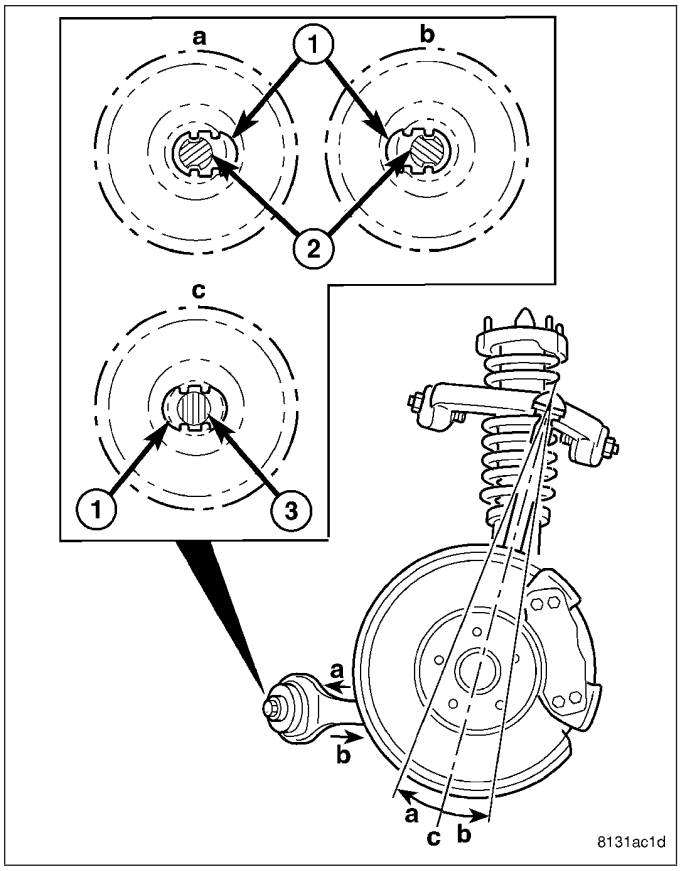

7. Start a NEW nut on the end of the mounting bolt by hand, then while holding the head of the bolt stationary, install the nut. **Do not tighten the nut at this time.**
8. Rear adjustment bolt only – Reinstall the steering gear and heat shields. (Refer to 19 - STEERING/GEAR - INSTALLATION)
9. Lower the vehicle to curb position. Jounce the rear, then the front of the vehicle an equal amount of times.
10. Using a crowfoot wrench, tighten the adjustment bolt **nut** to 176 N·m (130 ft. lbs.) torque while holding the bolt stationary. A socket on the end of a breaker bar works well for holding the rear bolt stationary with the steering gear is installed.
11. Measure camber and caster. If camber and caster are not within specifications, inspect the suspension components for any signs of damage or bending. If camber and caster (and cross-camber and cross-caster) are within specifications, proceed with TOE to check and adjust toe.
12. Install the belly pan. (Refer to 23 - BODY/EXTERIOR/BELLY PAN - INSTALLATION)

ADJUSTMENT BOLT PACKAGE INSTALLATION - RWD

NOTE: Adjustment bolts for AWD and RWD are not interchangeable.

The adjustment bolt package contains 2 special bolts (1). These bolts can be identified by the offset grooves cut into the thread section (2). These bolts are designed to replace the inboard mounting bolts of the lower control arm and tension strut. Each bolt allows approximately 0.3 degrees of movement. To adjust camber only, use both bolts, one at the tension strut and the other at the lower control arm. To adjust caster only, use one bolt at the tension strut only.

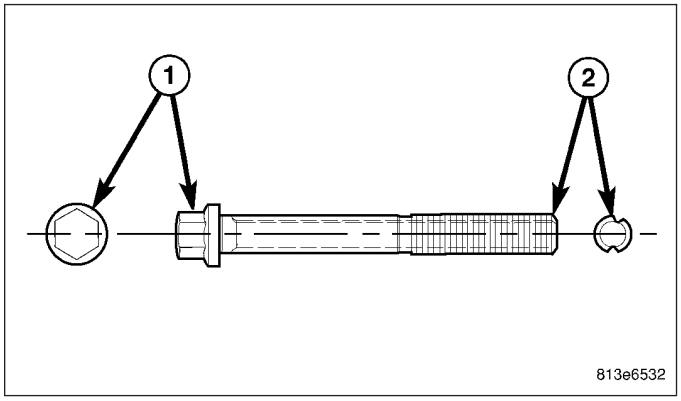

1. Raise the vehicle by the frame until the tires are not supporting the weight of the vehicle.

2. Remove the belly pan as necessary. (Refer to 23 - BODY/EXTERIOR/BELLY PAN - REMOVAL)
3. Lower control arm bolt only:
   a. Remove the screws fastening the heat shields covering the stabilizer bar bushing retainers to the cradle. Remove the heat shields.
   b. Remove the four bolts (two each) fastening the stabilizer bar bushing retainers to the cradle.
   c. Swing the stabilizer bar rearward and down out of the way of the control arm mounting bolts.

CAUTION: Wheel alignment adjustment bolts have offset grooves cut into the length of the bolt (2). If removing or installing lower control arm or tension strut mounting bolts that have these grooves, DO NOT ROTATE THE BOLT. To remove the bolt, hold the bolt head stationary and rotate the nut, then slide the bolt straight out of the bushing. This is necessary to avoid damaging the bat wings in the bushing inner metal or cradle.

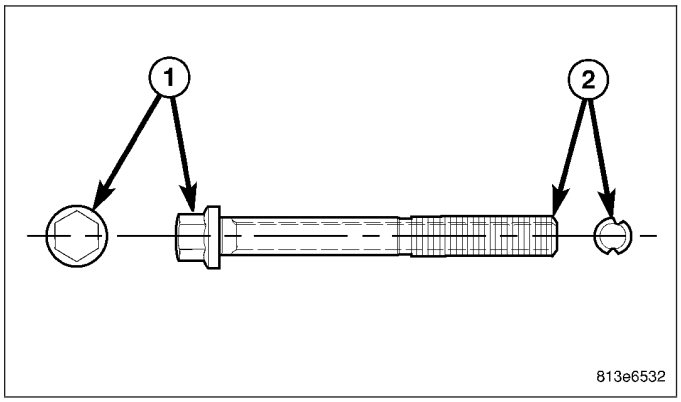

4. Hold the head of the control arm or tension strut mounting bolt stationary and remove the nut. Slide the bolt straight out of the bushing and discard.

CAUTION: When installing an adjustment bolt, be sure to install it in the correct direction. Lower control arm bolts must be installed from the rear-forward to avoid contact with the stabilizer bar upon installation. Tension strut bolts must be installed from the front-rearward.

NOTE: The grooves on the adjustment bolts are off-center forcing the bolt to be installed in one of two ways depending on whether more positive or negative camber or caster is necessary. The Bolts must be rotated 180° to achieve either more positive or negative camber or caster. DO NOT force the adjustment bolt.

NOTE: The original (non-grooved) mounting bolt (3) lies through the center of the hole (1), between the "bat wings" (c).

5. Camber Adjustment – The adjustment bolts are designed to work in conjunction with "bat wing" holes that are formed into the inner metal of the lower control arm bushing (1) allowing for lower control arm movement approximately 0.3° in either direction.
   - To achieve more positive camber, refer to (a) in the figure. Move the control arm or tension strut in the desired direction, then insert the adjustment bolt (2) with a washer installed through the round hole in the engine cradle and bat wing hole (1) in the bushing inner metal.
   - To achieve more negative camber, refer to (b) in the figure. Move the control arm or tension strut in the desired direction, then insert the adjustment bolt (2) with a washer installed through the round hole in the engine cradle and bat wing hole (1) in the bushing inner metal.

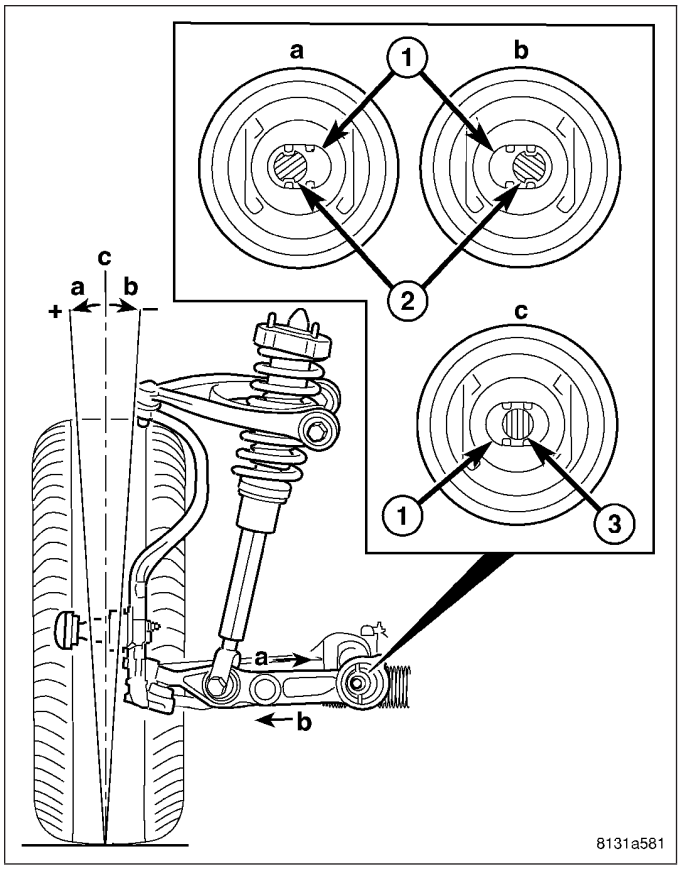

NOTE: The original (non-grooved) mounting bolt (3) lies through the center of the hole (1), between the "bat wings" (c).

6. Caster Adjustment – The adjustment bolts are designed to work in conjunction with "bat wings" that are formed into the engine cradle (1) allowing for tension strut movement approximately 0.3° in either direction.
   - To achieve more positive caster, refer to (a) in the figure. Move the tension strut in the desired direction, then insert the adjustment bolt (2) with a washer installed through the bat wing hole in the engine cradle (1) and the round hole in the bushing inner metal.
   - To achieve more negative caster, refer to (b) in the figure. Move the tension strut in the desired direction, then insert the adjustment bolt (2) with a washer installed through the bat wing hole in the engine cradle (1) and the round hole in the bushing inner metal.

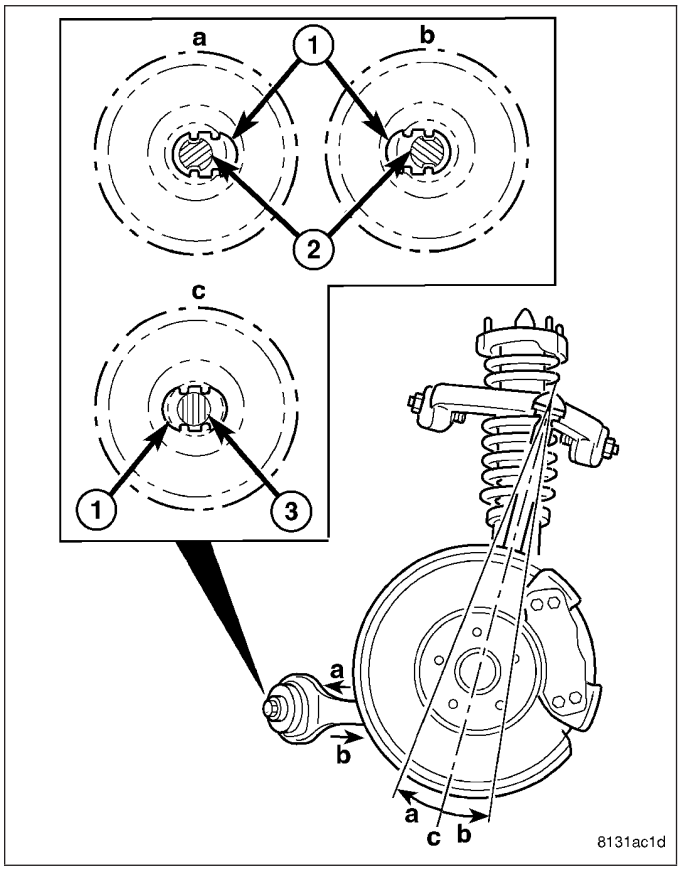

7. Start a NEW nut and a washer (on RWD vehicles) on the end of the mounting bolt by hand, then while holding the head of the bolt stationary, install the nut. **Do not tighten the nut at this time.**

8. Lower the vehicle to curb position. Jounce the rear, then the front of the vehicle an equal amount of times.
9. Using a crowfoot wrench, tighten the adjustment bolt **nut** to 176 N·m (130 ft. lbs.) torque while holding the bolt stationary.
10. Lower control arm adjustment bolt only – Reinstall the stabilizer bar and heat shields.
11. Measure camber and caster. If camber and caster are not within specifications, inspect the suspension components for any signs of damage or bending. If camber and caster (and cross-camber and cross-caster) are within specifications, proceed with TOE to check and adjust toe.
12. Install the belly pan. (Refer to 23 - BODY/EXTERIOR/BELLY PAN - INSTALLATION)

TOE

CAUTION: If the steering wheel is excessively off-center while driving, outside of Chassis specifications, inadvertent ESP activations may occur on a vehicle so equipped.

1. Center the steering wheel and lock in place using a steering wheel clamp.

NOTE: When performing the toe adjustment procedure, set rear toe to specifications before setting front toe.

2. If rear toe is not within specifications, perform the REAR TOE procedure below.
3. If front toe is not within specifications, perform the FRONT TOE procedure below.
4. Remove the steering wheel clamp.
5. Remove the alignment equipment.
6. Road test the vehicle to verify the steering wheel is straight and the vehicle does not wander or pull.

REAR TOE

NOTE: Perform the following procedure to each side of the vehicle as necessary.

1. Loosen the cam bolt nut securing the toe link to the rear crossmember (front of rear crossmember) just enough to rotate the cam bolt (1).

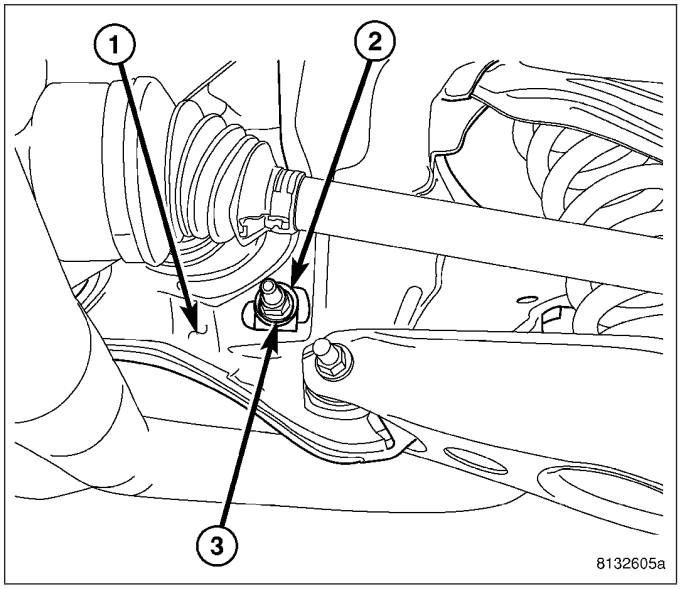

NOTE: When adjusting rear toe, the eccentric lobes on the toe adjustment cam bolts and washers are not to be facing downward. The lobes should only be facing upward or up to 90° to one side or the other from the 12 O'clock position.

2. Rotate the cam bolt head on the opposite side (rear) of the crossmember in either direction until the preferred specification is obtained. (Refer to 2 - SUSPENSION/WHEEL ALIGNMENT - SPECIFICATIONS)
3. While holding the cam bolt (1) from turning, tighten the cam bolt nut to specifications.
4. Adjust rear toe on opposite side of vehicle using above procedure as necessary.

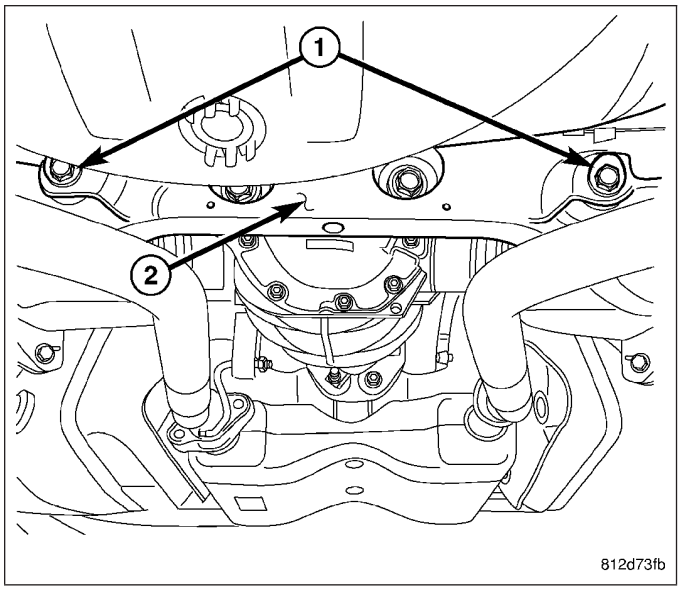

5. Once rear toe is set, proceed to FRONT TOE to set the vehicle's front toe.

FRONT TOE

NOTE: Perform the following procedure to each side of the vehicle as necessary.

CAUTION: Do not twist the inner tie rod-to-steering gear boots during front wheel Toe adjustment. Remove the boot clamps (2) at the inner tie rods and make sure the boots move freely on the inner tie rods.

1. AWD – Loosen the jam nut (1) at the inner-to-outer tie rod (3-4) connection.

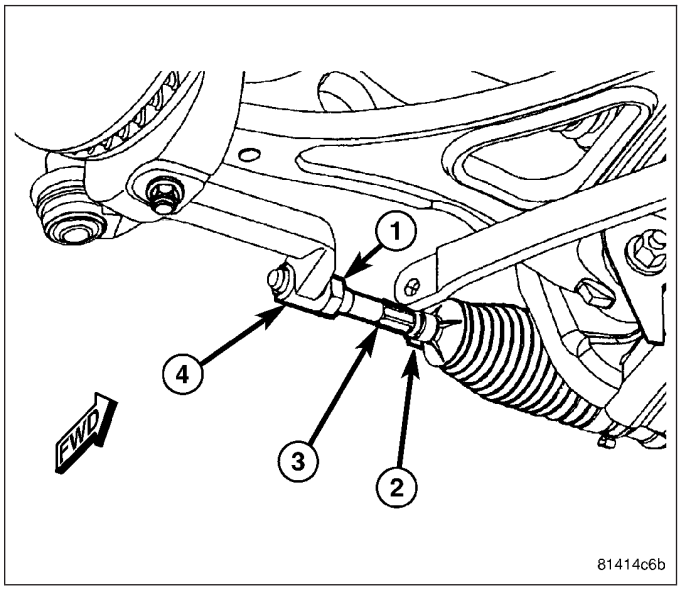

2. RWD – Loosen the jam nut (3) at the inner-to-outer tie rod (4-5) connection.

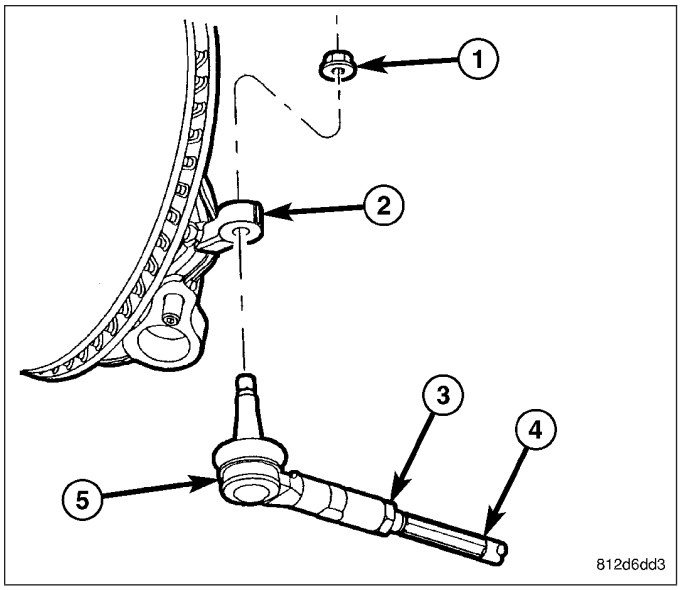

3. Grasp the inner tie rod at the hex and rotate as necessary to adjust front toe to the preferred toe specification. (Refer to 2 - SUSPENSION/WHEEL ALIGNMENT - SPECIFICATIONS)

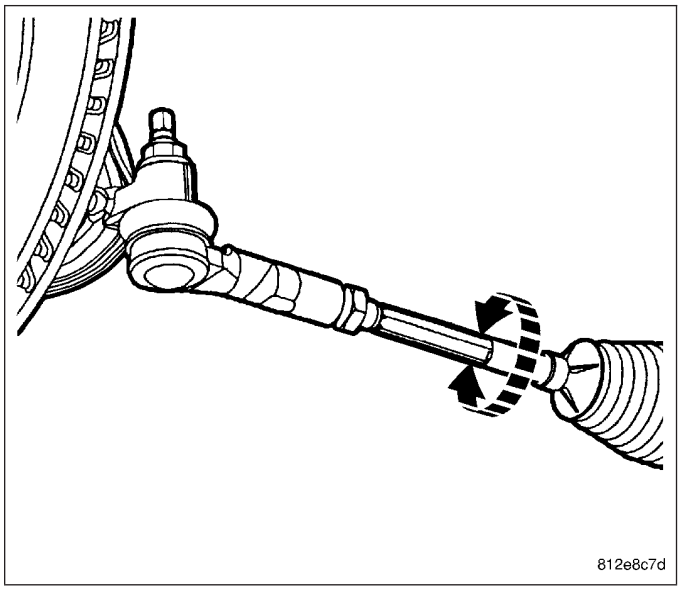

4. AWD – Tighten the tie rod jam nut (3) to 75 N·m (55 ft. lbs.) torque using care not to lose adjustment.

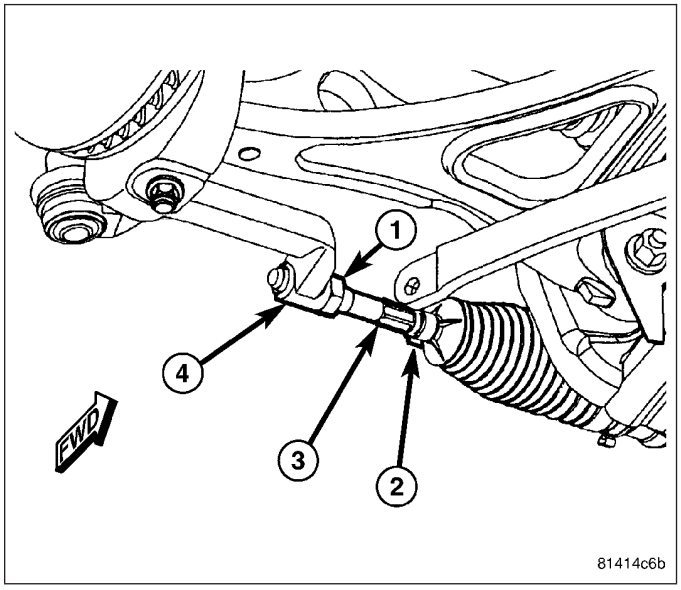

5. RWD – Tighten the tie rod jam nut (3) to 75 N·m (55 ft. lbs.) torque using care not to lose adjustment.
6. Make sure the inner tie rod-to-steering gear boot is not twisted, then reinstall the boot clamp at the inner tie rod.
7. Adjust front toe on opposite side of vehicle using the above procedure as necessary.

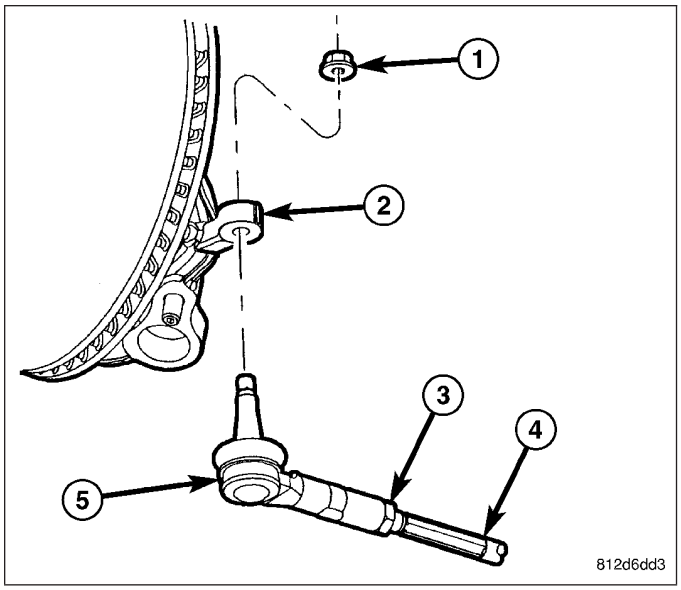

CURB HEIGHT MEASUREMENT

The wheel alignment is to be checked and all alignment adjustments made with the vehicle at its required curb height specification.

Vehicle height is to be checked with the vehicle on a flat, level surface, preferably a vehicle alignment rack. The tires are to be inflated to the recommended pressure. All tires are to be the same size as standard equipment. Vehicle height is checked with the fuel tank full of fuel, and no passenger or luggage compartment load.

Vehicle height is not adjustable. If the measurement is not within specifications, inspect the vehicle for bent or weak suspension components. Compare the parts tag on the suspect coil spring(s) to the parts book and the vehicle sales code, checking for a match. Once removed from the vehicle, compare the coil spring height to a correct new or known good coil spring. The heights should vary if the suspect spring is weak.

NOTE: When measuring, the maximum left-to-right differential is not to exceed 12.5 mm (0.5 in.).

1. Front – On each side of the vehicle, measure the distance (2) from the frame rail just behind the engine cradle rear mount (1) to the floor or alignment rack/lift runway surface. It may be necessary to measure to the bottom of a straight edge, placed from lift runway to runway, to get an accurate measurement.

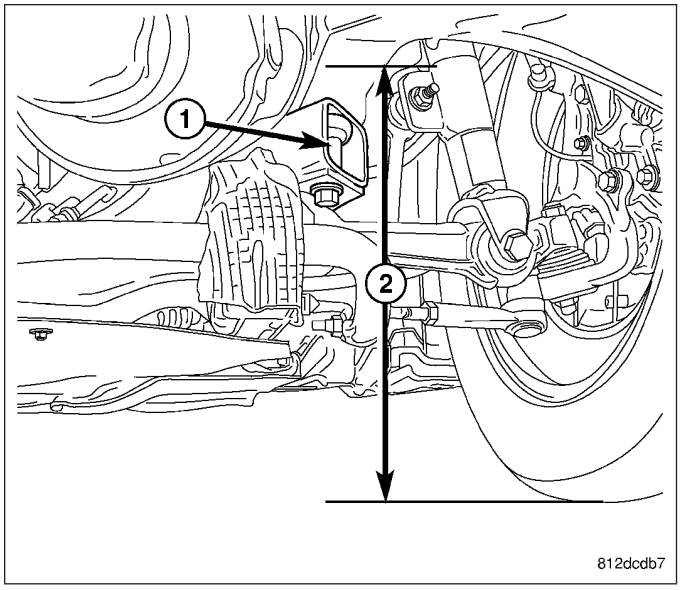

2. Rear – On each side of the vehicle, measure the distance (2) from the travel limiter (1) attached to the front rear crossmember mount bushing to the floor or alignment rack/lift runway surface. It may be necessary to measure to the bottom of a straight edge, placed from lift runway to runway, to get an accurate measurement.

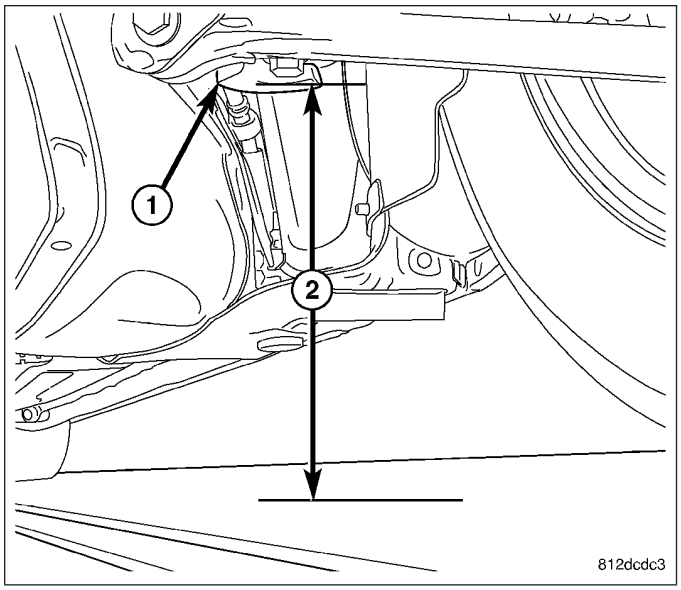

3. Compare the measurements to the specifications listed in the following Curb Height Specifications chart.

CURB HEIGHT SPECIFICATIONS

MODEL	FRONT	REAR
ALL-WHEEL-DRIVE	352 mm ± 10 mm 13.85 in. ± 0.39 in	308 mm ± 10 mm 12.13 in. ± 0.39 in.
REAR-WHEEL-DRIVE	328 mm ± 10 mm 12.91 in. ± 0.39 in	296 mm ± 10 mm 11.65 in. ± 0.39 in.
SRT8	321 mm ± 12 mm 12.64 in. ± 0.47 in	290 mm ± 12 mm 11.42 in. ± 0.47 in.
POLICE PACKAGE (Without Equipment*)	345 mm ± 10 mm 13.58 in. ± 0.39 in	315 mm ± 10 mm 12.40 in. ± 0.39 in
* NOTE: Police Package height specifications given are for settled vehicles without additional standard police equipment added. Once police equipment is added, estimated at 520 lbs. (400 lbs. for Magnum with 5.7L), vehicles should meet normal REAR-WHEEL-DRIVE specifications as listed above.		

SPECIFICATIONS

WHEEL ALIGNMENT

NOTE: All specifications are given in degrees.

NOTE: All wheel alignments are to be set at curb height. (Refer to 2 - SUSPENSION/WHEEL ALIGNMENT - STANDARD PROCEDURE)

ALL-WHEEL-DRIVE

FRONT WHEEL ALIGNMENT	PREFERRED SETTING	ACCEPTABLE RANGE
CAMBER - LEFT	0.00°	−0.50° to +0.50°
CAMBER - RIGHT	−0.30°	−0.80° to +0.20°
CROSS-CAMBER (Maximum side-to-side difference)	0.30°	−0.25° to +1.00°
CASTER - LEFT	+4.50°	+3.50° to +5.50°

FRONT WHEEL ALIGNMENT	PREFERRED SETTING	ACCEPTABLE RANGE
CASTER - RIGHT	+5.10°	+4.10° to +6.10°
CROSS-CASTER (Maximum side-to-side difference)	−0.60°	−1.20° to 0.00°
TOE - INDIVIDUAL	0.00°	−0.05° to +0.05°
TOE - TOTAL**	0.00°	−0.10° to +0.10°
Maximum side-to-side difference	0.00°	0.06°
REAR WHEEL ALIGNMENT	**PREFERRED SETTING**	**ACCEPTABLE RANGE**
CAMBER*	−0.75°	−1.25° to −0.05°
CROSS-CAMBER (Maximum side-to-side difference)	0.00°	−0.80° to +0.80°
TOE - INDIVIDUAL LEFT	+0.17°	+0.02° to +0.32°
TOE - INDIVIDUAL RIGHT	+0.03°	−0.12° to +0.18°
THRUST ANGLE	+0.07°	−0.08° to +0.22°

Notes:

* For reference only. These are nonadjustable angles.

** TOTAL TOE is the sum of both left and right wheel toe settings. TOTAL TOE must be equally split between each wheel on the same axle to ensure the steering wheel is centered after setting toe. Positive toe is toe-in and negative toe is toe-out

REAR-WHEEL-DRIVE

FRONT WHEEL ALIGNMENT	PREFERRED SETTING	ACCEPTABLE RANGE
CAMBER - LEFT	0.00°	−0.50° to +0.50°
CAMBER - RIGHT	−0.30°	−0.80° to +0.20°
CROSS-CAMBER (Maximum side-to-side difference)	0.30°	−0.25° to +1.00°
CASTER - LEFT	+9.40°	+8.40° to +10.40°
CASTER - RIGHT	+10.40°	+9.40° to +11.40°
CROSS-CASTER (Maximum side-to-side difference)	−1.00°	−1.60° to −0.40°
TOE - INDIVIDUAL	0.00°	−0.05° to +0.05°
TOE - TOTAL**	0.00°	−0.10° to +0.10°
Maximum side-to-side difference	0.00°	0.06°
REAR WHEEL ALIGNMENT	**PREFERRED SETTING**	**ACCEPTABLE RANGE**
CAMBER*	−0.75°	−1.25° to −0.05°
CROSS-CAMBER (Maximum side-to-side difference)	0.00°	−0.80° to +0.80°
TOE - INDIVIDUAL LEFT	+0.17°	+0.02° to +0.32°
TOE - INDIVIDUAL RIGHT	+0.03°	−0.12° to +0.18°
THRUST ANGLE	+0.07°	−0.08° to +0.22°

Notes:

* For reference only. These are nonadjustable angles.

** TOTAL TOE is the sum of both left and right wheel toe settings. TOTAL TOE must be equally split between each wheel on the same axle to ensure the steering wheel is centered after setting toe. Positive toe is toe-in and negative toe is toe-out

RIGHT-HAND-DRIVE

FRONT WHEEL ALIGNMENT	PREFERRED SETTING	ACCEPTABLE RANGE
CAMBER - LEFT	−0.20°	−0.70° to +0.30°
CAMBER - RIGHT	0.10°	−0.40° to +0.60°
CROSS-CAMBER (Maximum side-to-side difference)	−0.30°	−1.00° to +0.25°
CASTER - LEFT	+10.30°	+9.30° to +11.30°
CASTER - RIGHT	+9.50°	+8.50° to +10.50°
CROSS-CASTER (Maximum side-to-side difference)	0.80°	0.20° to 1.40°
TOE - INDIVIDUAL	0.00°	−0.05° to +0.05°
TOE - TOTAL**	0.00°	−0.10° to +0.10°
Maximum side-to-side difference	0.00°	0.06°
REAR WHEEL ALIGNMENT	**PREFERRED SETTING**	**ACCEPTABLE RANGE**
CAMBER*	−0.75°	−1.25° to −0.05°
CROSS-CAMBER (Maximum side-to-side difference)	0.00°	−0.80° to +0.80°
TOE - INDIVIDUAL LEFT	+0.17°	+0.02° to +0.32°
TOE - INDIVIDUAL RIGHT	+0.03°	−0.12° to +0.18°
THRUST ANGLE	+0.07°	−0.08° to +0.22°

Notes:

* For reference only. These are nonadjustable angles.

** TOTAL TOE is the sum of both left and right wheel toe settings. TOTAL TOE must be equally split between each wheel on the same axle to ensure the steering wheel is centered after setting toe. Positive toe is toe-in and negative toe is toe-out

SRT8

FRONT WHEEL ALIGNMENT	PREFERRED SETTING	ACCEPTABLE RANGE
CAMBER - LEFT	−0.05°	−0.55° to +0.45°
CAMBER - RIGHT	−0.35°	−0.85° to +0.15°
CROSS-CAMBER (Maximum side-to-side difference)	0.25°	−0.25° to +0.75°
CASTER - LEFT	+9.70°	+8.40° to +11.00°
CASTER - RIGHT	+10.30°	+8.40° to +11.00°
CROSS-CASTER (Maximum side-to-side difference)	−0.60°	−1.20° to 0.00°
TOE - TOTAL**	+0.20°	0.00° to +0.40°
Maximum side-to-side difference	0.00°	0.06°
REAR WHEEL ALIGNMENT	**PREFERRED SETTING**	**ACCEPTABLE RANGE**
CAMBER*	−0.75°	−1.25° to −0.05°
CROSS-CAMBER (Maximum side-to-side difference)	0.00°	−0.80° to +0.80°
TOE - INDIVIDUAL LEFT	+0.17°	+0.02° to +0.32°
TOE - INDIVIDUAL RIGHT	+0.03°	−0.12° to +0.18°
THRUST ANGLE	0.07°	−0.08° to +0.22°

Notes:

* For reference only. These are nonadjustable angles.

** TOTAL TOE is the sum of both left and right wheel toe settings. TOTAL TOE must be equally split between each wheel on the same axle to ensure the steering wheel is centered after setting toe. Positive toe is toe-in and negative toe is toe-out

DIFFERENTIAL & DRIVELINE

TABLE OF CONTENTS

page

SHAFT-PROPELLER 1
SHAFT-HALF (FRONT) 18
SHAFT-HALF (REAR) 41
SHAFT-INTERMEDIATE 55
FRONT AXLE - 175 FIA 57
REAR AXLE - 198RII 106
REAR AXLE - 210RII 175
REAR AXLE - 215RII 246

SHAFT-PROPELLER

TABLE OF CONTENTS

page

SHAFT-PROPELLER
DESCRIPTION 2
REMOVAL
REMOVAL - FRONT 4
REMOVAL - REAR 5
INSTALLATION
INSTALLATION - FRONT 8
INSTALLATION - REAR 9
SPECIFICATIONS – PROPELLER SHAFT 13
SPECIAL TOOLS – PROPELLER SHAFT 14
BEARING-CENTER
REMOVAL 15
INSTALLATION 16

SHAFT-PROPELLER

DESCRIPTION

REAR

WARNING: Due to propeller shaft imbalance concerns, rear propeller shaft service is limited to center support bearing and coupler replacement only. The rear segment single-cardan universal joint is not serviceable.

Both RWD and AWD models utilize a “two-piece” rear propeller shaft design to transmit torque to the rear axle assembly. This two-piece design consists of:

- Front and rear shaft segments
- Center support bearing/bracket assembly
- Single-Cardan u-joint at rear segment/bearing interface
- Rubber couplers at transmission and rear axle flanges
- Fore-mounted vibration damper (V6 Models)

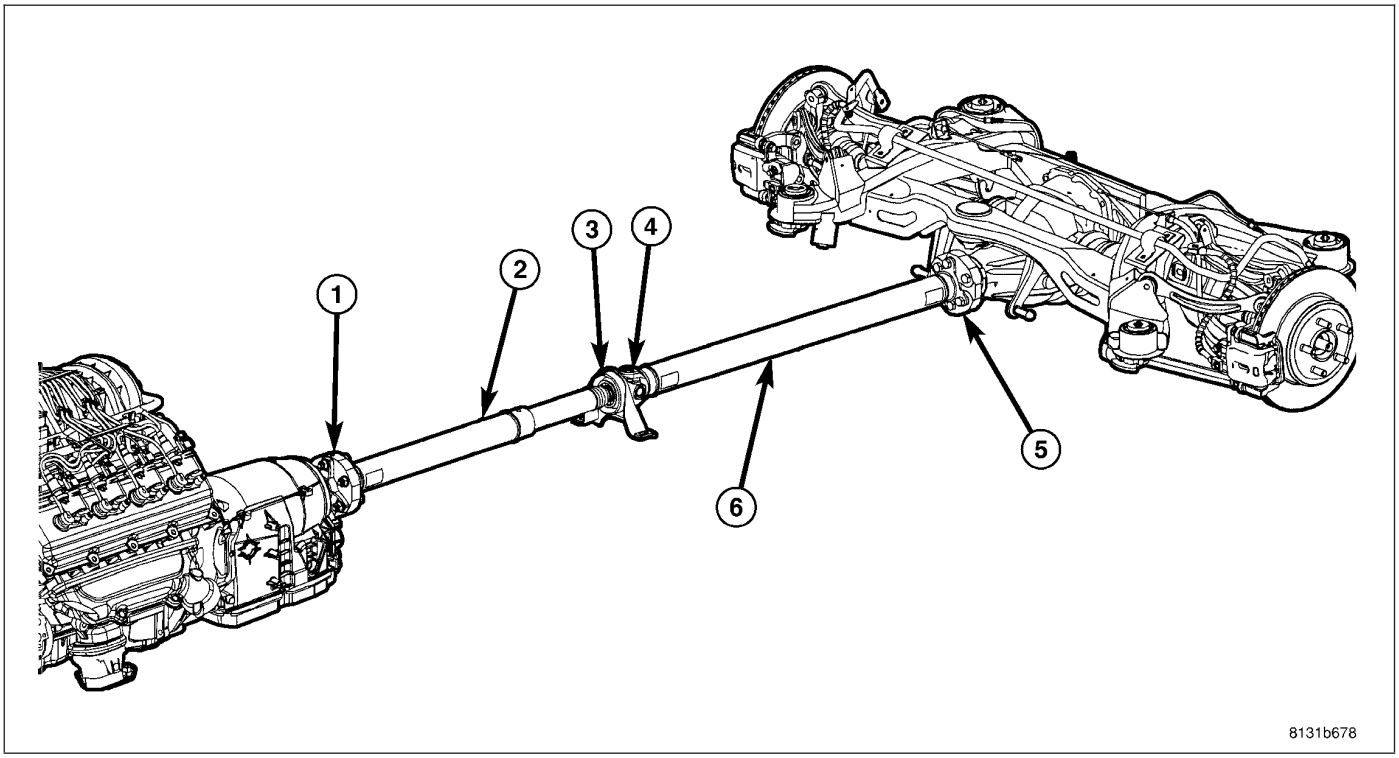

Rear Propeller Shaft Assembly (V8 System Shown)

1 - FRONT COUPLER
2 - FRONT SEGMENT
3 - BEARING/BRACKET ASSEMBLY
4 - SINGLE-CARDAN U-JOINT
5 - REAR COUPLER
6 - REAR SEGMENT

The front shaft segment is designed with a collapsing feature, consisting of two concentric tubes secured by shear pins. This feature allows the tubes to telescope up to 200 mm (8 in.) during certain impacts.

The flexible rubber couplers at the transmission and axle flanges absorb vibration. The low-travel Single-Cardan universal joint permits the minimal axial and angular variations that occur with independant rear suspension.

Additionally, models equipped with the V6 engine utilize a vibration damper which is designed to absorb and isolate driveline vibrations and harmonics. This damper is mounted to the front segment, sandwiched between the coupler and propeller shaft.

FRONT

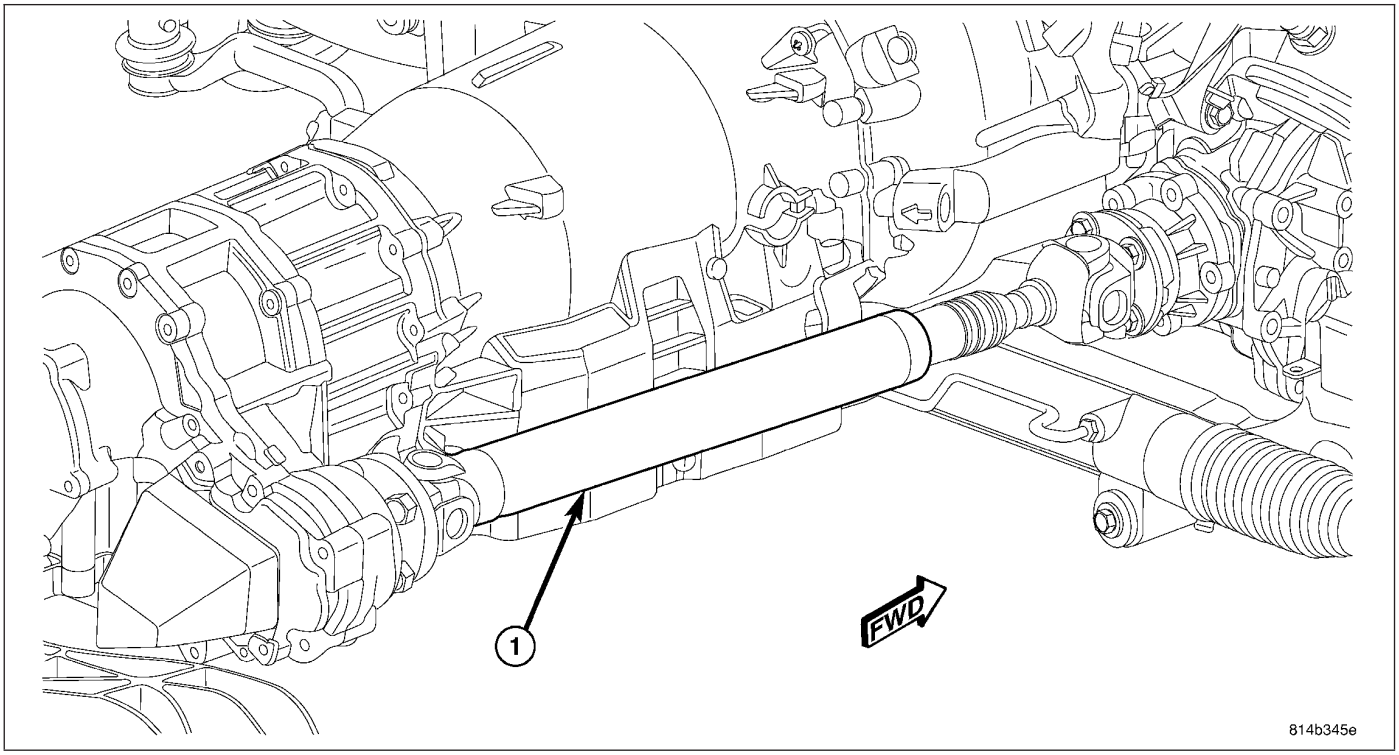

Front Propeller Shaft Assembly

1 - FRONT PROPELLER SHAFT ASSEMBLY

WARNING: Due to propeller shaft imbalance concerns, front propeller shaft service is limited to rubber coupler and entire shaft replacement. The single-cardan universal joints are not serviceable.

AWD models utilize a “two-piece” front propeller shaft design to transmit torque to the front axle assembly. This two-piece design consists of:

- Front and rear shaft segments
- Single-Cardan u-joints at end flanges
- Rubber boot at front/rear segment interface

REMOVAL

REMOVAL - FRONT

1. Place gearshift lever in NEUTRAL and raise vehicle on hoist.
2. Remove propeller shaft heat shield.

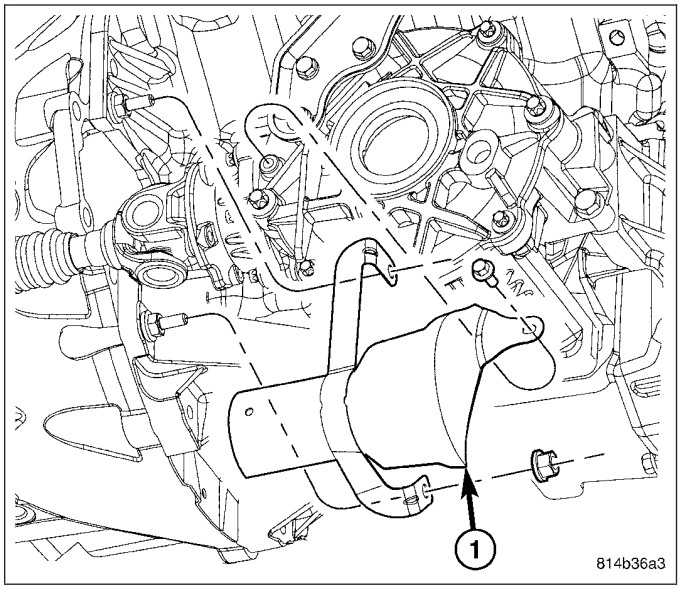

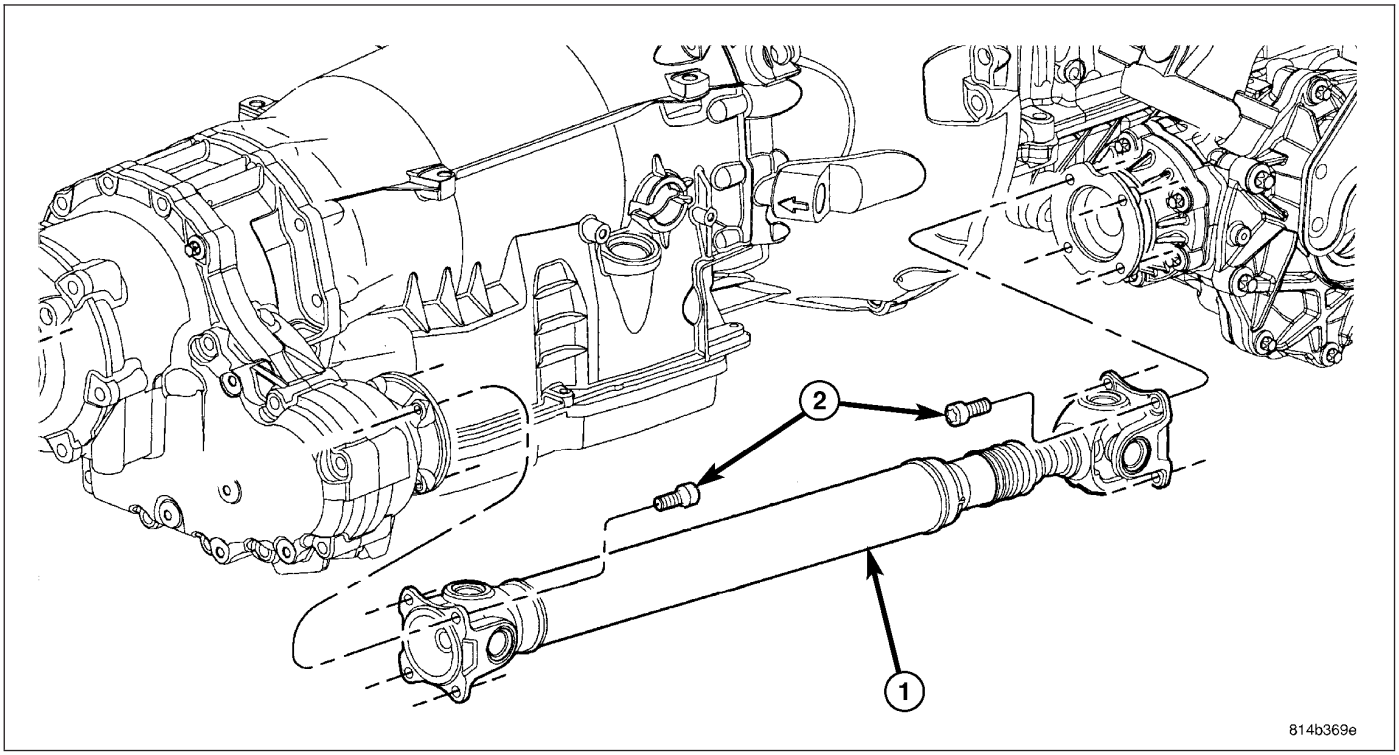

3. Apply alignment index marks on the propeller shaft and front axle flanges.
4. Remove and discard four (4) front propeller shaft-to-axle flange bolts (2).
5. Apply alignment index marks on the propeller shaft and transfer case flanges.
6. Remove and discard four (4) front propeller shaft-to-transfer case flange bolts(2).
7. Remove propeller shaft assembly (1).

REMOVAL - REAR

CAUTION: Propeller shaft removal is a two-man operation. Never allow propeller shaft to hang from the center bearing, or while only connected to the transmission or rear axle flanges. A helper is required. If a propeller shaft section is hung unsupported, damage may occur to the shaft, coupler, and/or center bearing from over-angulation. This may result in driveline vibrations and/or component failure.

1. With vehicle in neutral, position on hoist.
2. Apply alignment index marks (3) on the transmission and axle flanges (2) and rubber couplers (1).

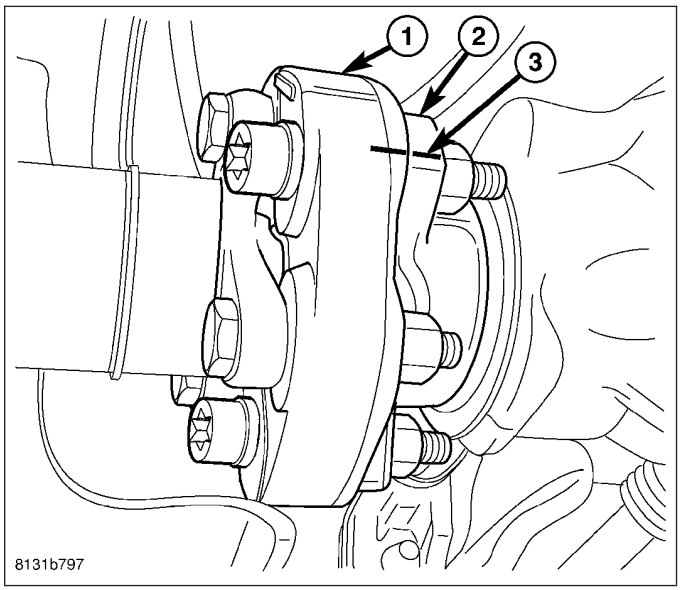

3. Remove crossmember (1).

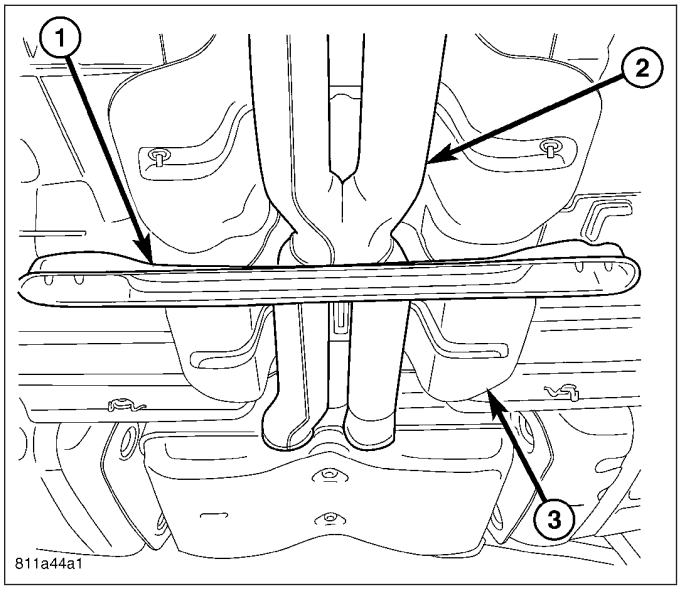

4. Remove rear exhaust system (2).

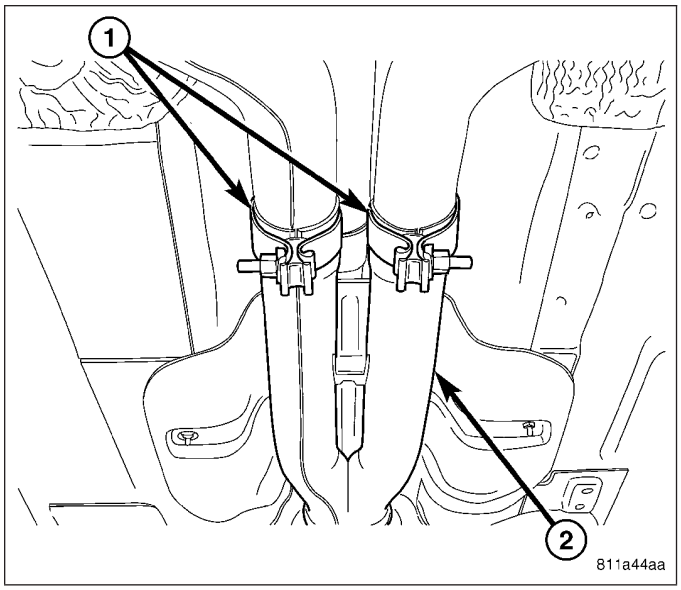

5. Remove heat shield (1).

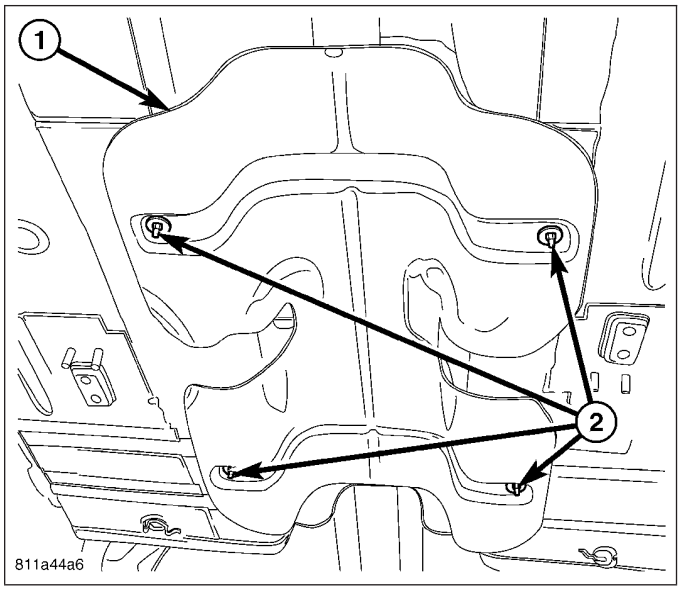

6. Remove propeller shaft front coupler-to-flange bolts.

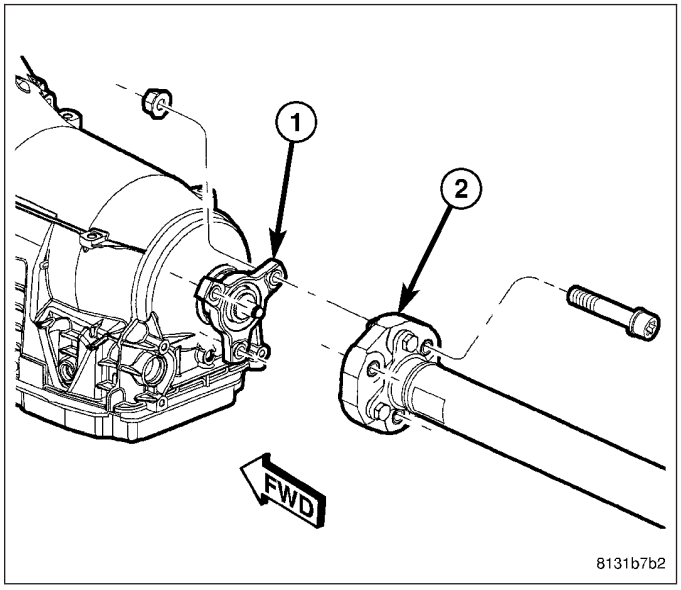

7. Remove propeller shaft rear coupler-to-flange bolts.

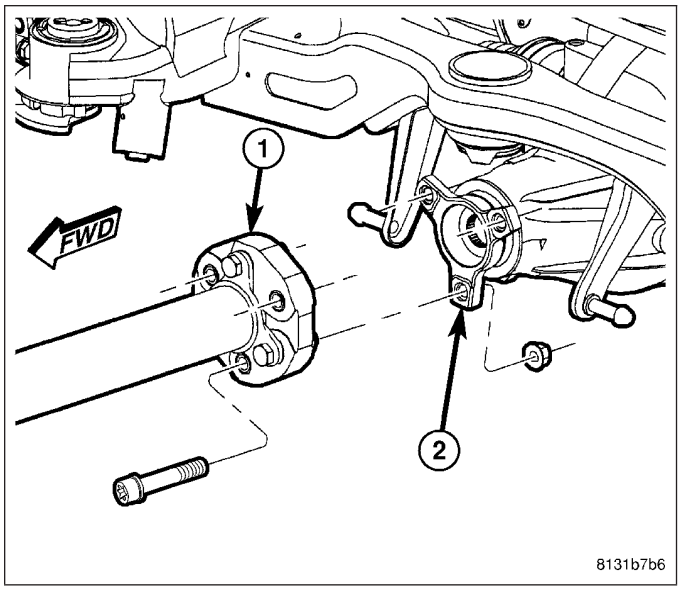

8. Remove center bearing (1) mounting bolts.
9. With the aid of a helper, remove propeller shaft assembly.

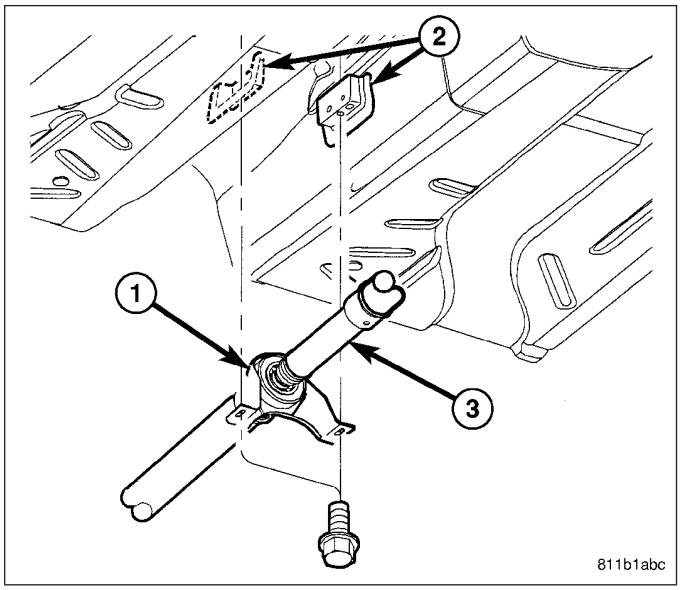

COUPLER/DAMPER SERVICE

1. Remove three coupler-to-propeller shaft bolt/nuts.
2. Separate coupler (1) and damper (3) (if equipped) from propeller shaft. Note orientation and direction of components. It is imperative that they are properly reinstalled.

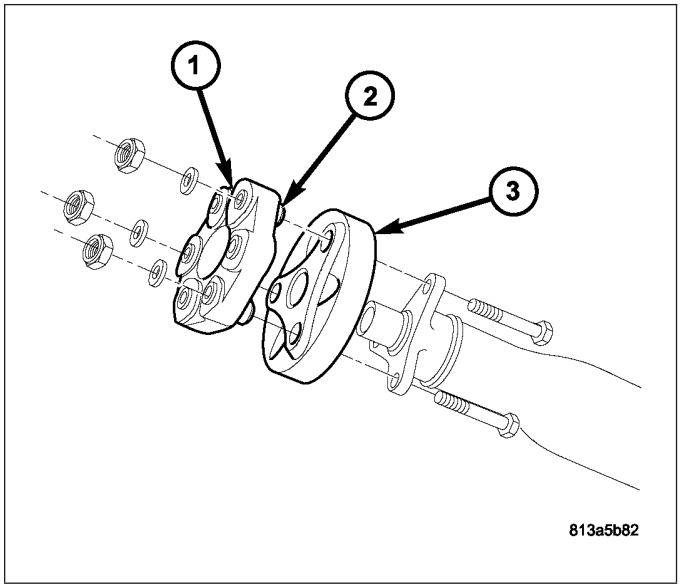

INSTALLATION

INSTALLATION - FRONT

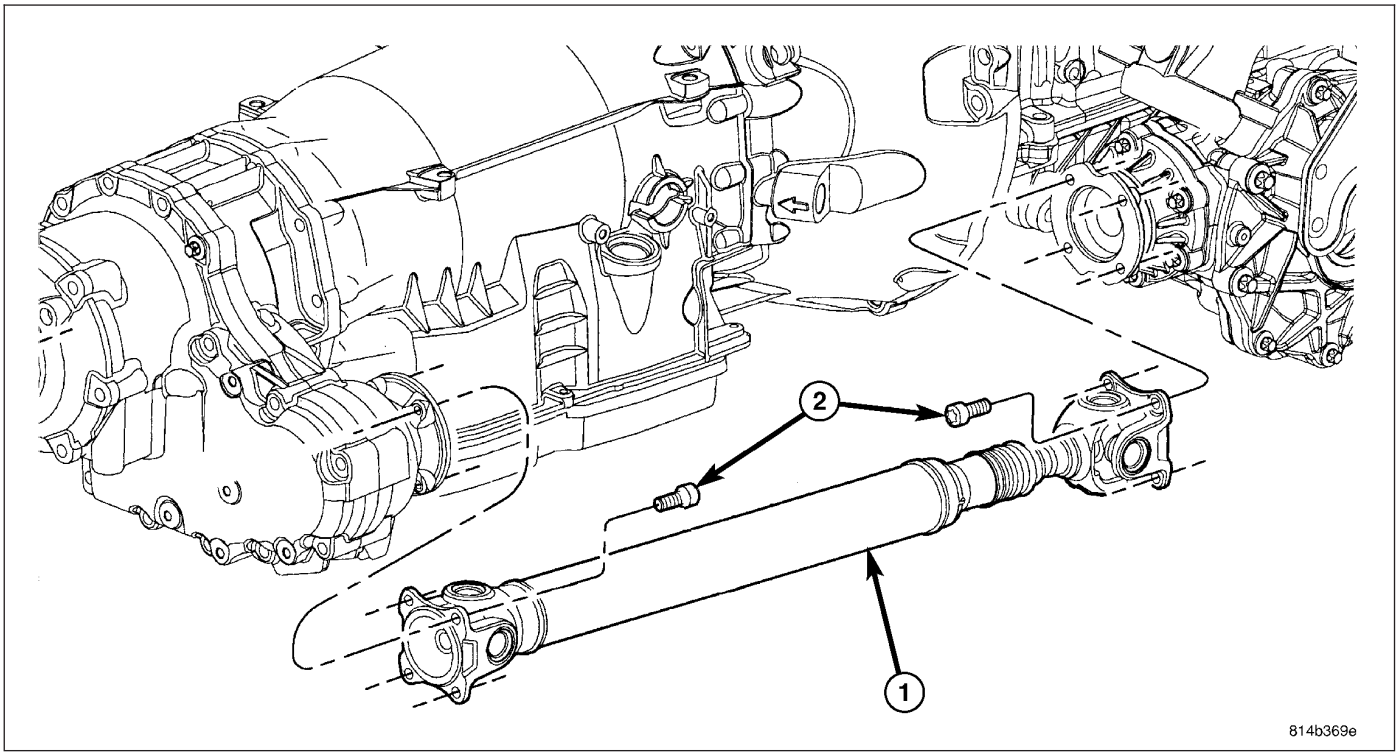

1. Install propeller shaft (1) into position.
2. Starting at transfer case end, align index marks placed upon removal and loose-install **new** propeller shaft-to-transfer case flange bolts.
3. Align index marks at front axle end of shaft, and loose-install **new** propeller shaft-to-front axle flange bolts.
4. Torque propeller shaft-to-transfer case and axle flange bolts (2) to 61 N·m (45 ft. lbs.).

5. Install propeller shaft heat shield.
6. Lower vehicle.

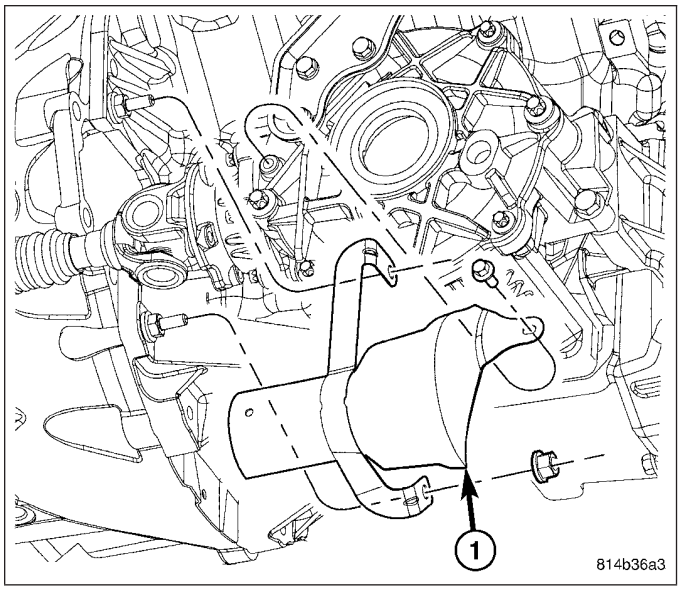

INSTALLATION - REAR

CAUTION: Propeller shaft installation is a two-man operation. Never allow propeller shaft to hang from the center bearing, or while only connected to the transmission or rear axle flanges. A helper is required. If a propeller shaft section is hung unsupported, damage may occur to the shaft, coupler, and/or center bearing from over-angulation. This may result in driveline vibrations and/or component failure.

COUPLER/DAMPER SERVICE

1. If coupler and/or damper (V6 Models) were removed, align index marks and reinstall. **Make sure protruding sleeve (2) is properly seated into propshaft or damper counterbores.**
2. Install three bolts with washers and nuts and torque to 58 N·m (43 ft. lbs.) torque.

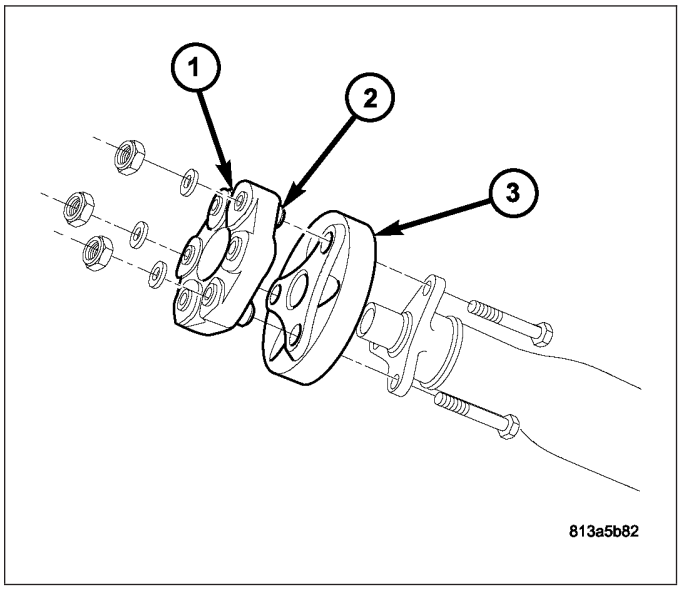

1. Obtain helper and install propeller shaft into position at axle. Align index marks (3) placed upon removal. Install propeller shaft rear coupler-to-axle flange bolt/nuts by hand. Do not torque at this time.

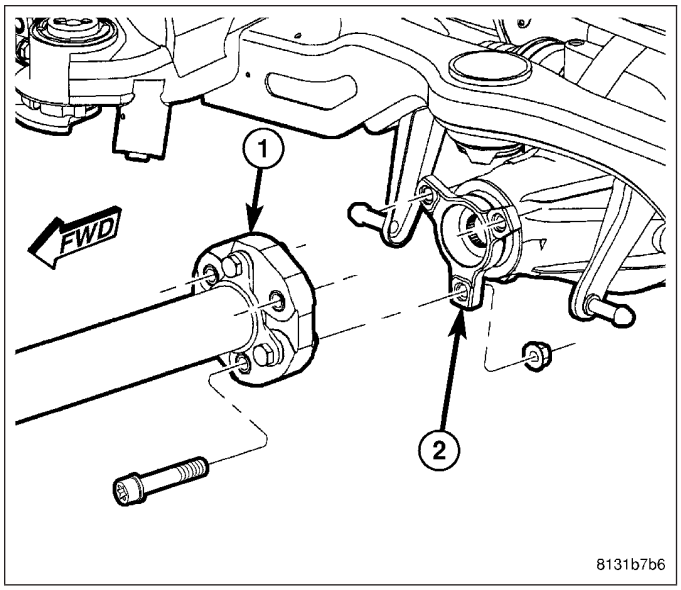

2. Install propeller shaft into position at transmission flange. Align index marks placed upon removal. Install propeller shaft front coupler-to-transmission flange bolt/nuts by hand. Do not torque at this time.

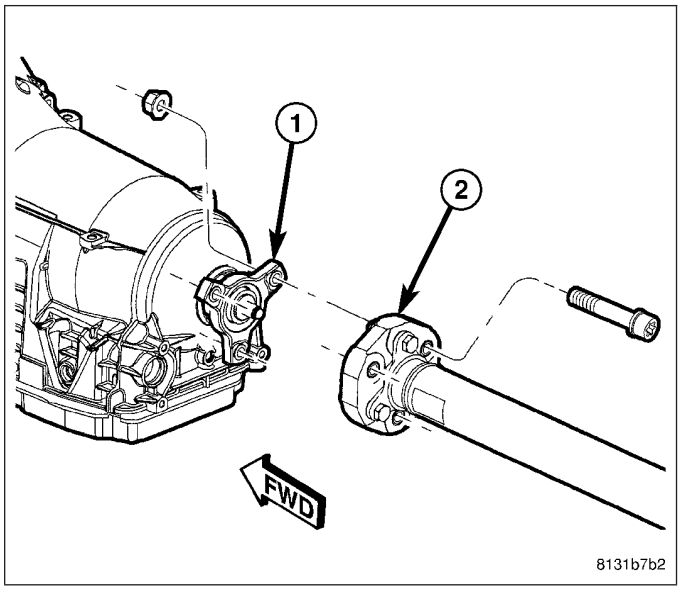

3. Loosely install center bearing-to-body bolts. Do not torque at this time.

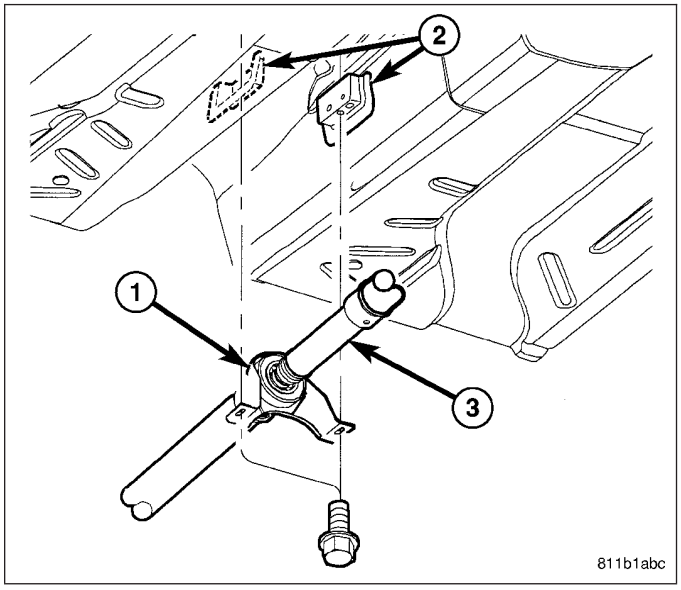

4. Torque propeller shaft front coupler-to-transmission flange bolt/nuts to 58 N·m (43 ft. lbs.)

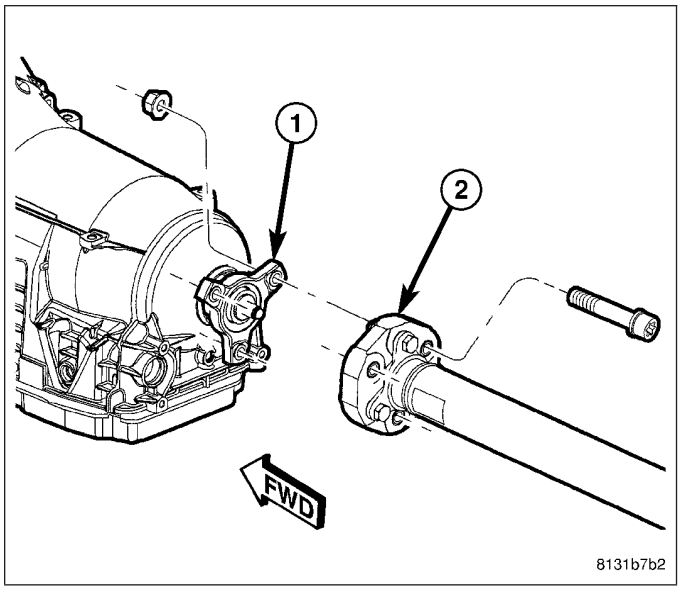

5. Torque propeller shaft rear coupler-to-axle flange bolt/nuts to 58 N·m (43 ft. lbs.)

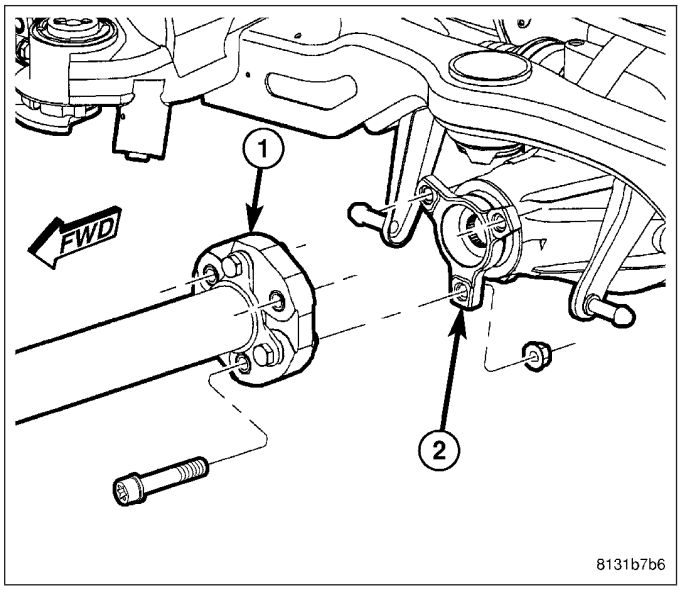

NOTE: Note: It is necessary to compress rear suspension to ride height before securing center bearing to body. Failure to compress suspension may result in objectionable noise and premature bearing wear.

6. Compress rear suspension with suitable jack stands (2).

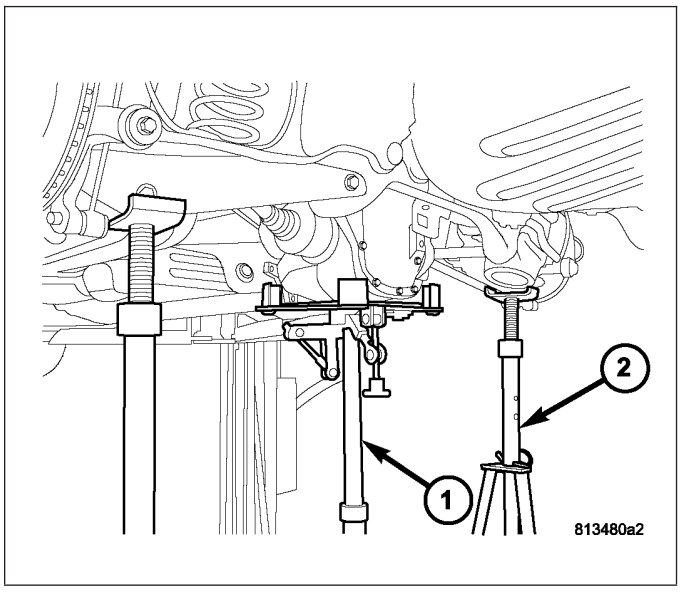

7. Torque center bearing-to-body bolts to 27 N·m (20 ft. lbs.).

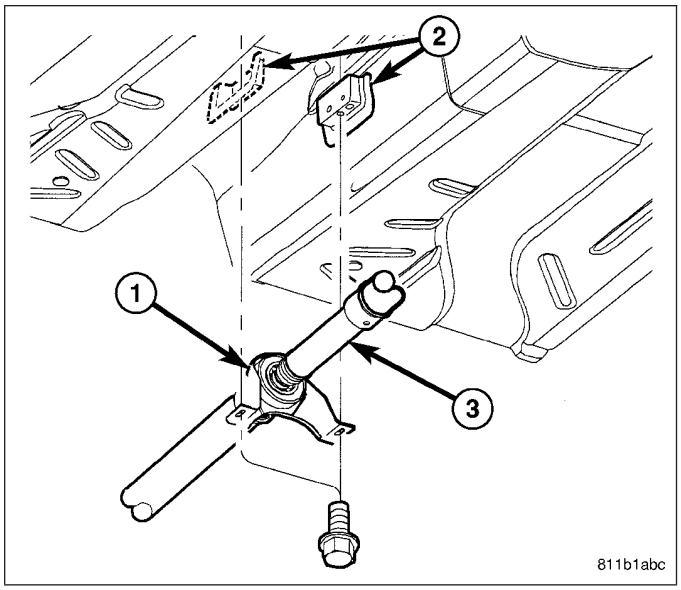

8. Install heat shield (1).

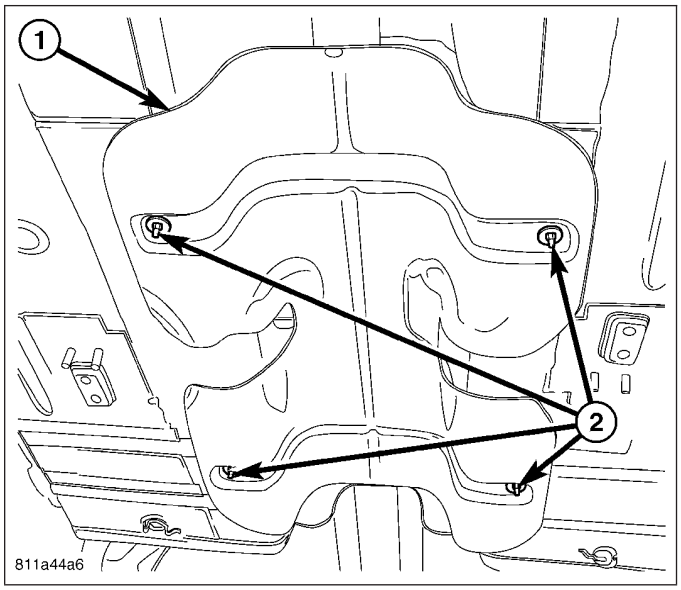

9. Install rear exhaust system (2)

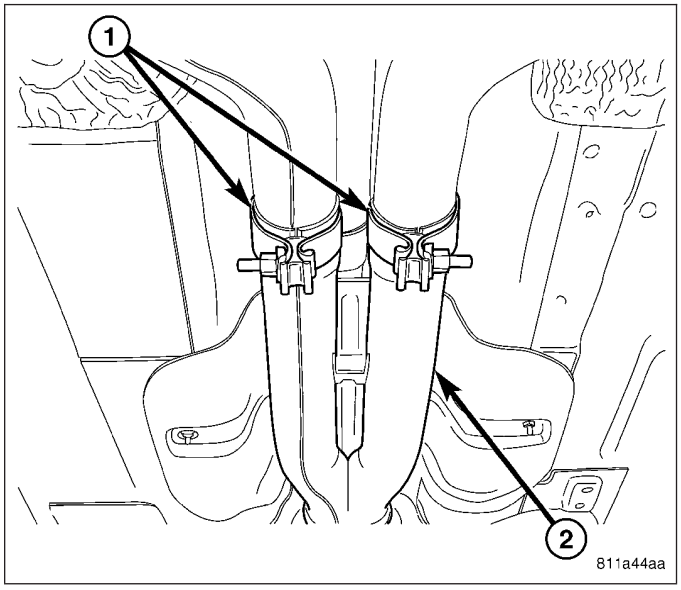

10. Install crossmember (1).

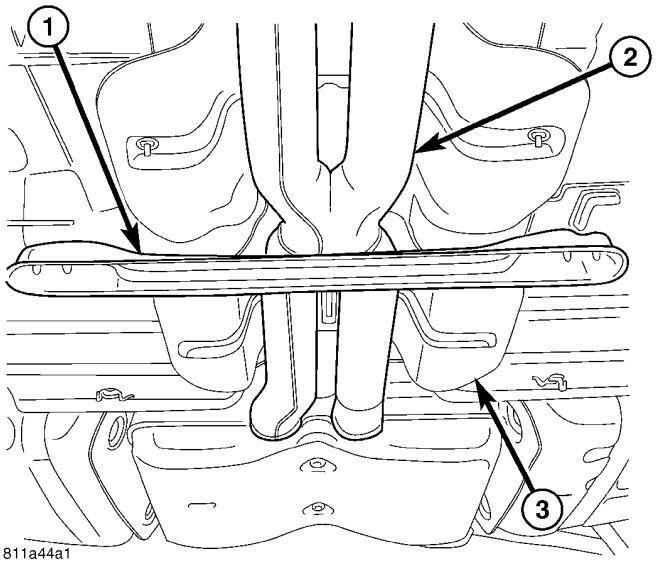

SPECIFICATIONS – PROPELLER SHAFT

TORQUE SPECIFICATIONS

DESCRIPTION	N·m	Ft. Lbs.	In. Lbs.
BOLT/NUT - SHAFT COUPLER-TO-TRANSMISSION	58	43	—
BOLT/NUT - SHAFT COUPLER-TO-REAR AXLE ASSEMBLY	58	43	—
BOLT/NUT - COUPLER/DAMPER-TO-PROPELLER SHAFT (REAR)	58	43	—
BOLT - CENTER BEARING-TO-BODY (REAR)	27	20	—
BOLT - FRONT PROPELLER SHAFT TO AXLE/TRANSFER CASE FLANGE	61	45	—

SPECIAL TOOLS – PROPELLER SHAFT

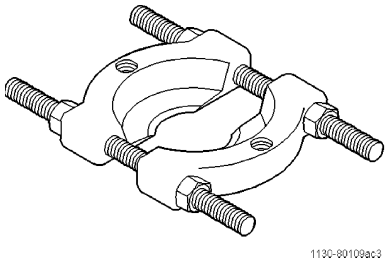

Bearing Splitter, 1130

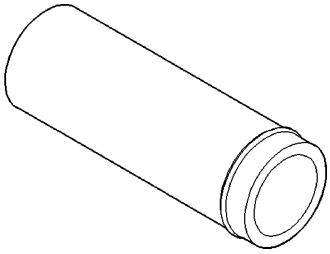

Installer C-4735-1

BEARING-CENTER

REMOVAL

1. Remove propeller shaft from vehicle.

NOTE: To address propeller shaft imbalance concerns, the propeller shaft spline interface has a "skip-tooth" design allowing only one possible assembly orientation. Install reference marks only to aid in assembly.

2. Mark front and rear shaft segments (2,3) with installation reference marks (1).

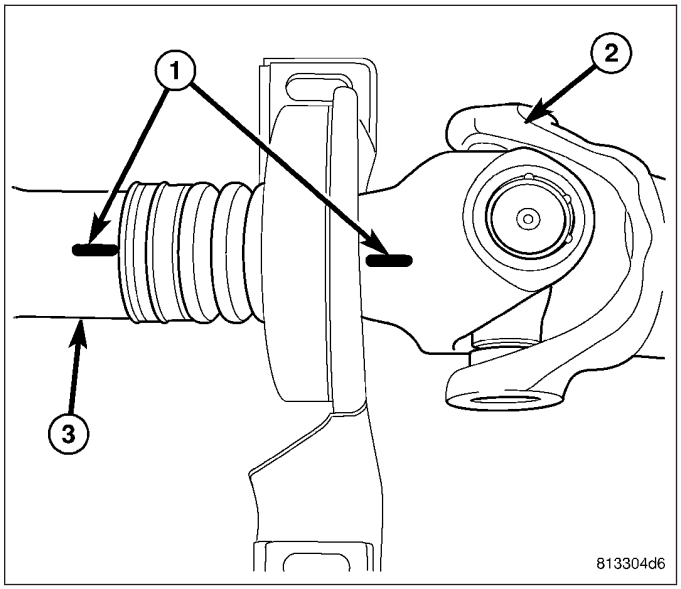

3. Separate propeller shaft front and rear segments at bearing and remove boot (1)

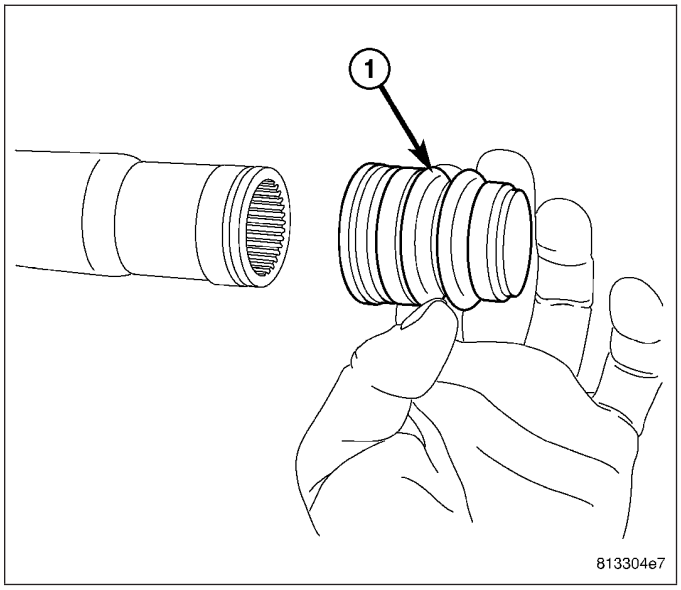

4. Press center bearing (1) off of rear shaft segment using arbor press and Bearing Splitter 1130 (2).

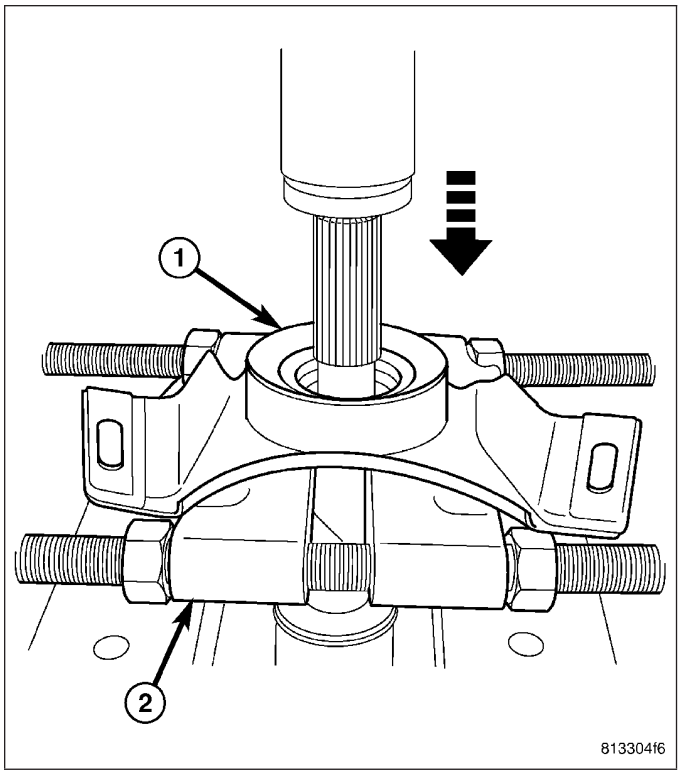

INSTALLATION

1. Install propeller shaft rear segment into press, supported on joint yoke (3).
2. Install bearing assembly as shown (2).
3. Using Tool C-4735-1 (1), press bearing assembly (2) onto shaft.

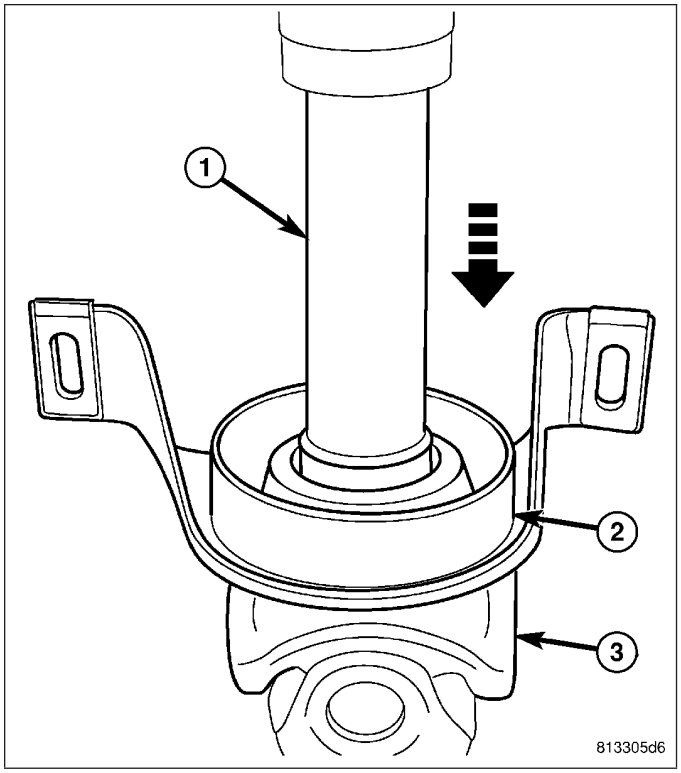

4. Remove propeller shaft from press.
5. Install boot (1) to rear shaft segment.

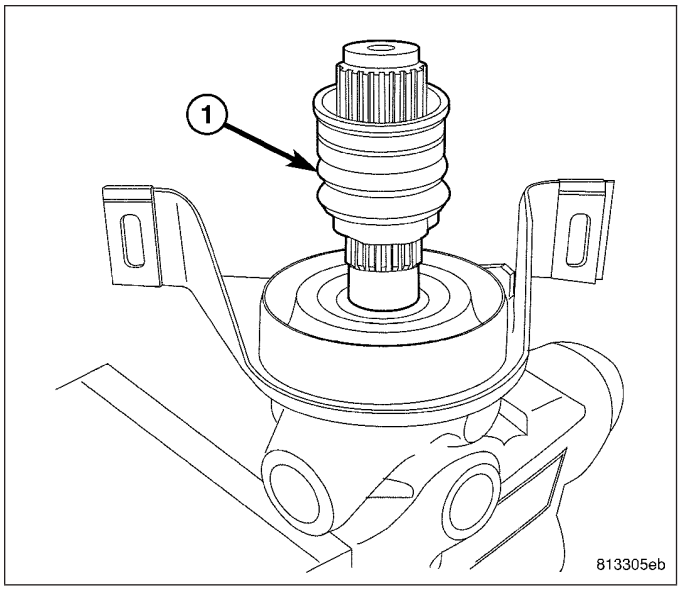

NOTE: To address propeller shaft imbalance concerns, the propeller shaft spline interface has a "skip-tooth" design allowing only one possible assembly orientation.

6. Align index marks placed upon disassembly and install front segment (1) to rear segment.
7. Install boot (2) to front segment, seating boot into groove (3).
8. Install propeller shaft into vehicle.

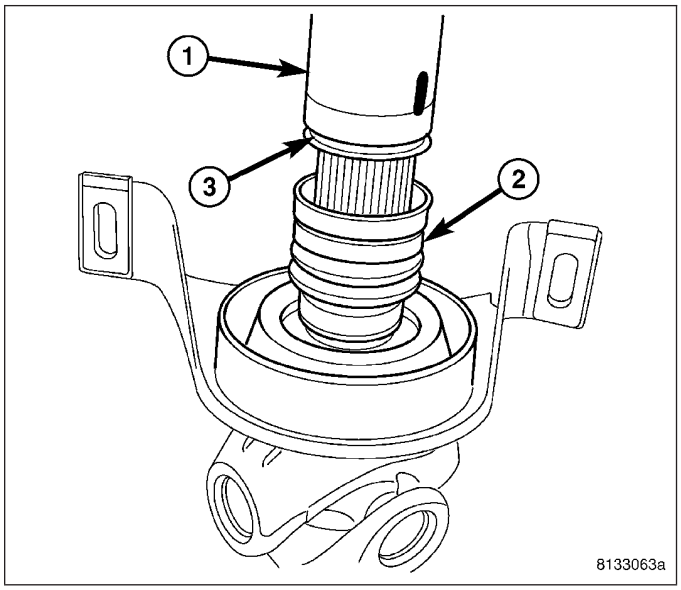

SHAFT-HALF (FRONT)

TABLE OF CONTENTS

page

SHAFT-HALF (FRONT)
DESCRIPTION 19
DIAGNOSIS AND TESTING - HALF SHAFT 19
REMOVAL 20
INSTALLATION 25
SPECIFICATIONS - HALFSHAFT 31
SPECIAL TOOLS
HALFSHAFT 32

page

BOOT-CV INNER
REMOVAL 33
INSTALLATION 34
BOOT-CV OUTER
REMOVAL 38
INSTALLATION 39

SHAFT-HALF (FRONT)

DESCRIPTION

The inner joints of both half shaft assemblies are cross-groove joints. The outer joints of both assemblies are Rzeppa Joints. The cross-groove joints are true constant velocity (CV) joint assemblies, which allow for the changes in half shaft length through the jounce and rebound travel of the rear suspension.

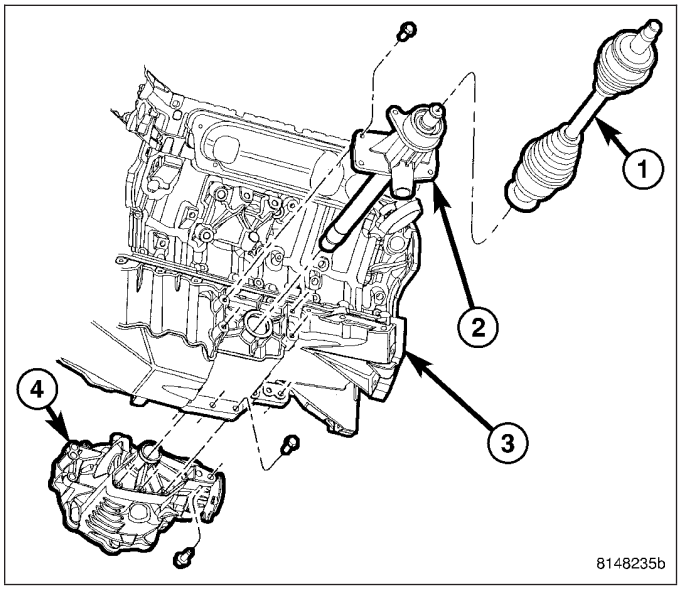

Left Halfshaft and Intermediate Shaft

The inner cross-groove joint of the left halfshaft assembly is splined to the intermediate shaft and retained with a snap ring. The right halfshaft is splined to the front axle assembly and retained with a snap ring. The outer CV joint has a stub shaft that is splined into the wheel hub and retained by a steel hub nut.

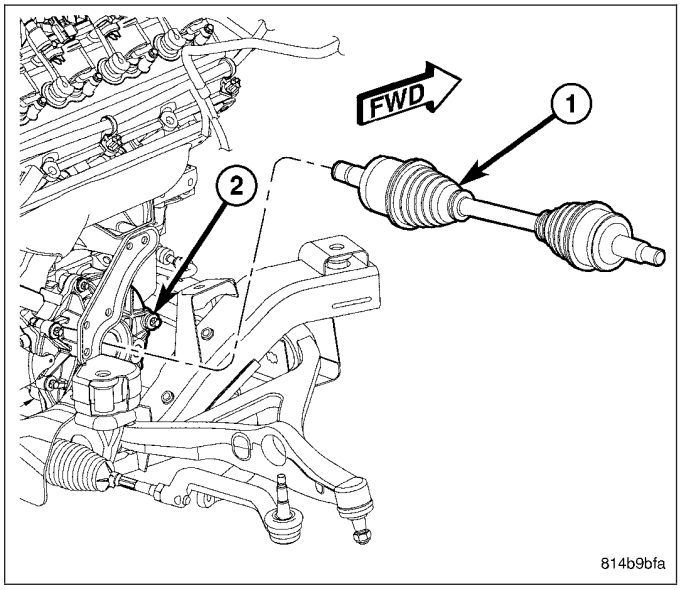

Right Halfshaft Assembly

DIAGNOSIS AND TESTING - HALF SHAFT

VEHICLE INSPECTION

1. Check for grease in the vicinity of both the inboard and outboard joints. This is a sign of inner or outer joint seal boot or seal boot clamp damage.

NOISE AND/OR VIBRATION IN TURNS

A clicking noise and/or a vibration in turns could be caused by one of the following conditions:

- Damaged outer CV or inner cross-groove joint seal boot or seal boot clamps. This will result in the loss and/or contamination of the joint grease, resulting in inadequate lubrication of the joint.
- Noise may also be caused by another component of the vehicle coming in contact with the half shafts.

CLUNKING NOISE DURING ACCELERATION

This noise may be a result of one of the following conditions:

- A torn seal boot on the inner or outer joint of the half shaft assembly.
- A loose or missing clamp on the inner or outer joint of the half shaft assembly.
- A damaged or worn half shaft CV joint.
- A worn intermediate shaft bearing (AWD Models).

SHUDDER OR VIBRATION DURING ACCELERATION

This problem could be a result of:

- A worn or damaged half shaft inner cross-groove joint.
- A worn intermediate shaft bearing (AWD Models).
- Improper wheel alignment. (Refer to 2 - SUSPENSION/WHEEL ALIGNMENT - STANDARD PROCEDURE)

VIBRATION AT HIGHWAY SPEEDS

This problem could be a result of:

- Foreign material (mud, etc.) packed on the backside of the wheel(s).
- Out of balance tires or wheels. (Refer to 22 - TIRES/WHEELS - STANDARD PROCEDURE)
- A worn intermediate shaft bearing (AWD Models).
- Improper tire and/or wheel runout. (Refer to 22 - TIRES/WHEELS - DIAGNOSIS AND TESTING)

REMOVAL

1. Raise and support vehicle. (Refer to LUBRICATION & MAINTENANCE/HOISTING - STANDARD PROCEDURE)
2. Remove wheel mounting nuts (3), then tire and wheel assembly (1).

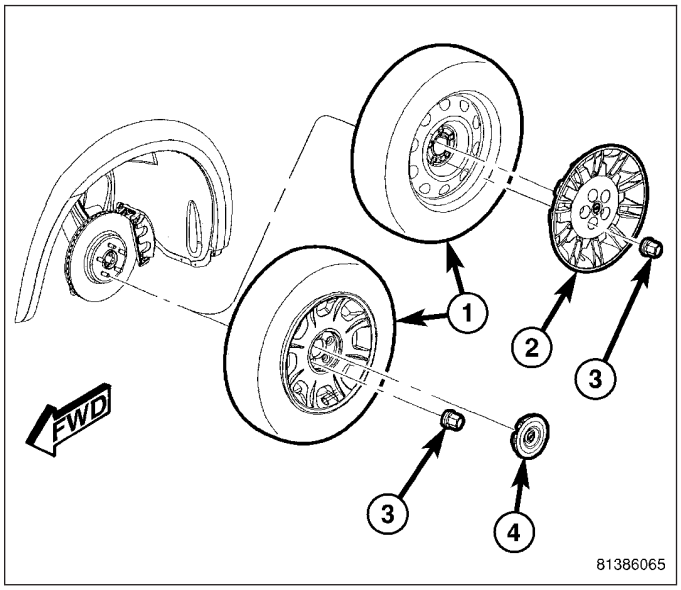

3. While holding link ball joint stem from rotating, remove nut (2) fastening stabilizer link (1) to shock clevis bracket (3). Slide link ball joint stem from clevis bracket.

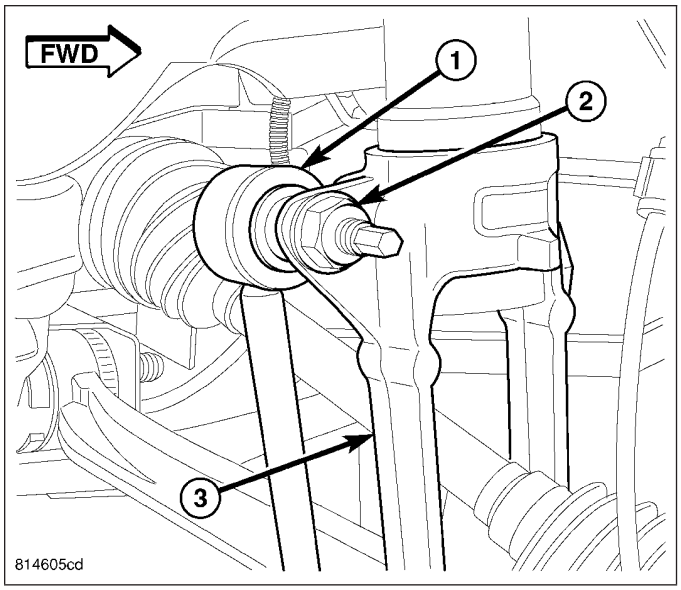

4. Remove nut and pinch bolt (1) fastening clevis bracket (3) to bottom of shock assembly (2).

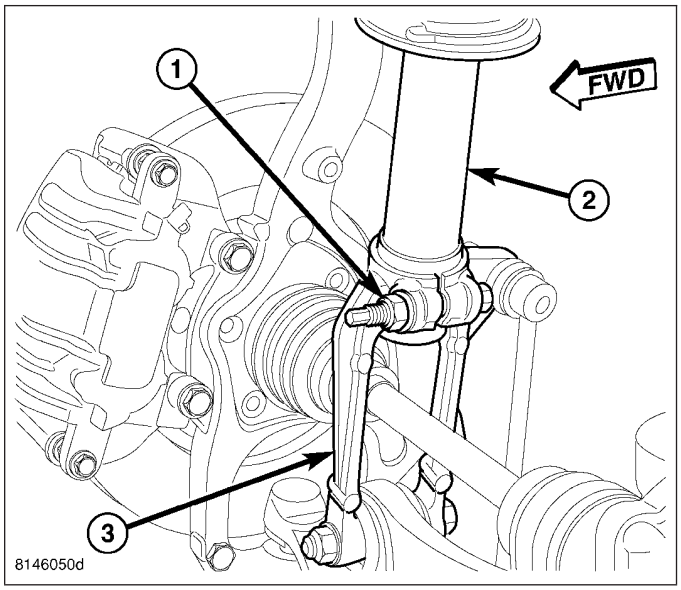

5. Remove nut (3) and bolt (1) attaching shock clevis bracket (2) to lower control arm (7).
6. Pull lower end of clevis bracket outward away from lower control arm bushing, then slide it off shock assembly. It may be necessary to use an appropriate prying tool to spread clamp area of clevis bracket allowing removal from shock assembly.

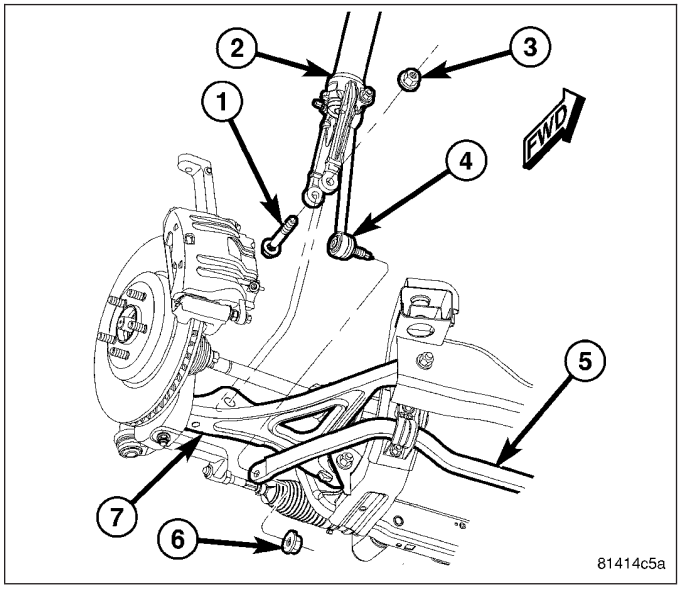

7. While a helper applies brakes to keep hub from rotating, remove hub nut (1) from axle half shaft (2).

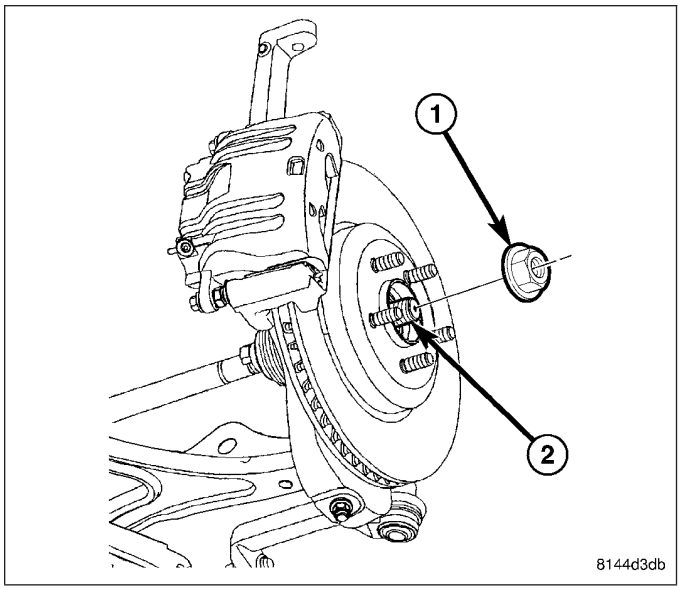

NOTE: In some cases, it may be necessary to retract caliper piston in its bore a small amount in order to provide sufficient clearance between shoes and rotor to easily remove caliper from knuckle. This can usually be accomplished before mounting bolts are removed, by grasping rear of caliper and pulling outward working with guide pins, thus retracting piston. Never push on piston directly as it may get damaged.

8. Remove two bolts (1) securing disc brake caliper and adapter (2) to knuckle (3).
9. Remove disc brake caliper and adapter (2) from knuckle (3) as an assembly. Hang assembly out of way using wire or a bungee cord. Use care not to overextend brake hose when doing this.

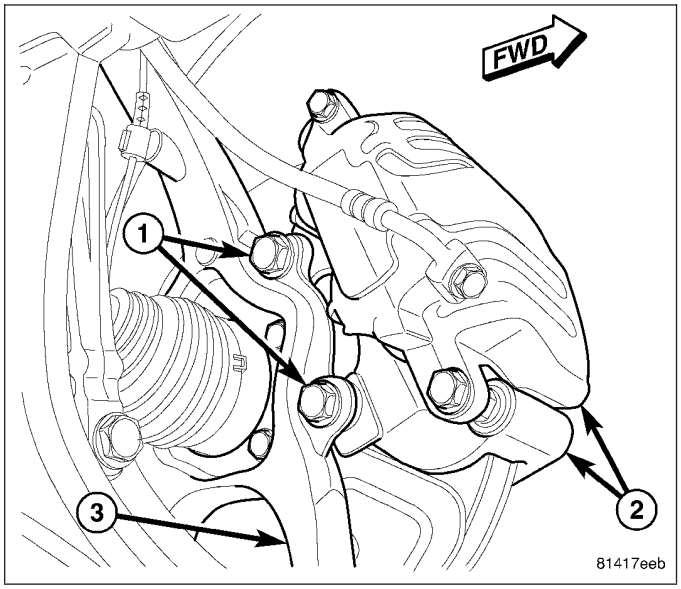

10. Remove any clips (3) retaining brake rotor (2) to wheel studs.
11. Slide brake rotor (2) off hub and bearing (1).

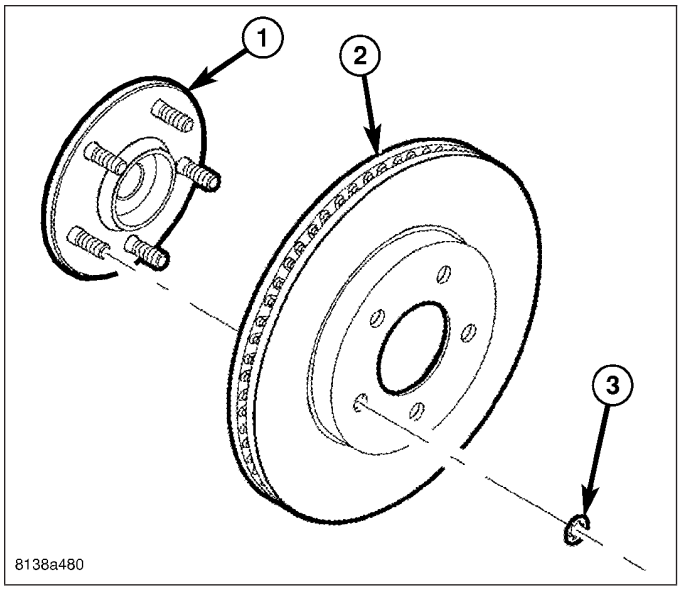

CAUTION: In following step, use care not to damage ball joint seal boot while sliding Puller, Special Tool 9360, into place past seal boot.

12. Using Puller (2), Special Tool 9360, separate upper ball joint stud (1) from knuckle.
13. Remove tool.
14. Remove nut (1) from end of upper ball joint stud.

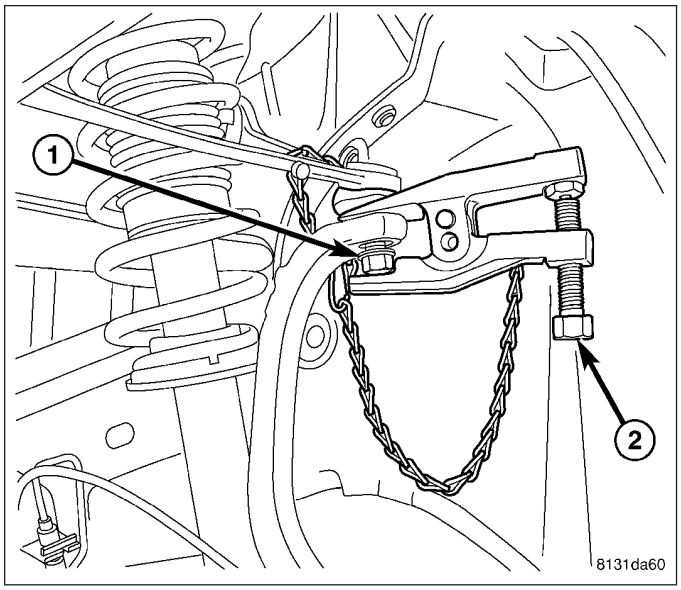

15. Remove clip (3) fastening wheel speed sensor (2) to knuckle (4).

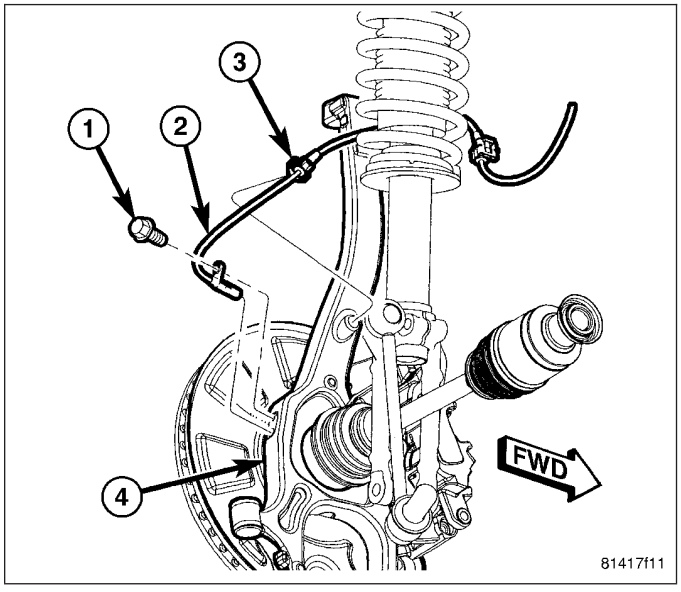

16. Disengage right halfshaft (1) from axle and remove from vehicle.

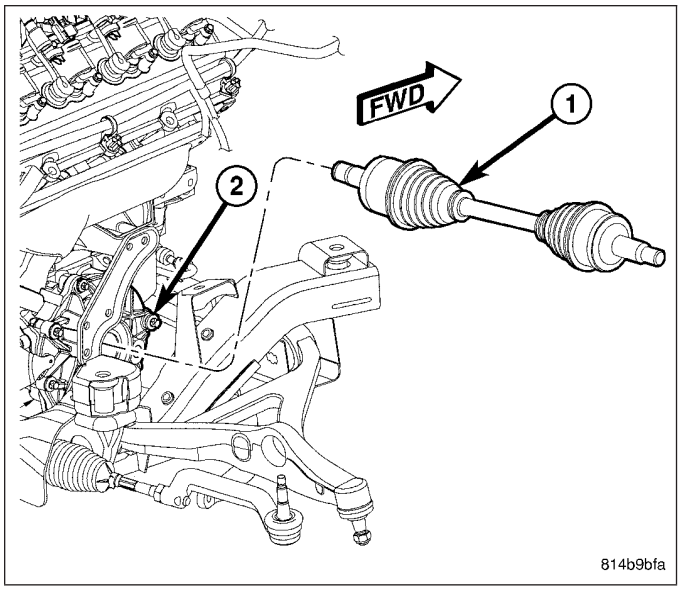

Right Halfshaft Removal/Installation

17. Remove left halfshaft (1) from vehicle.

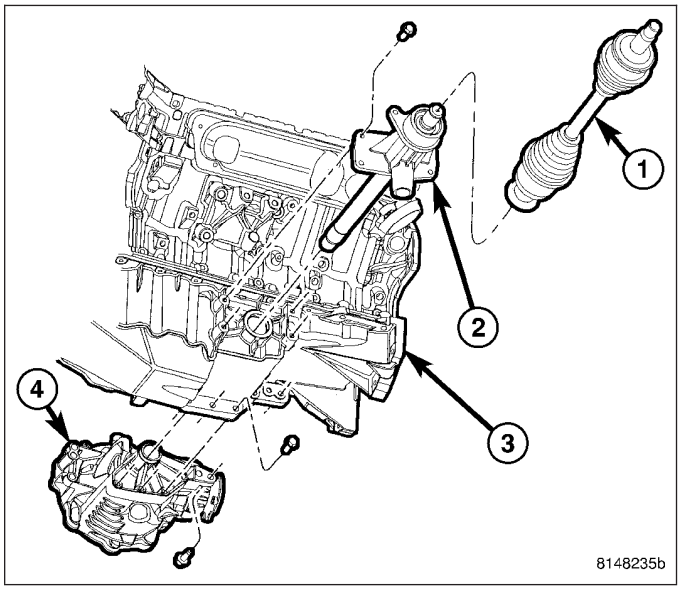

INTERMEDIATE SHAFT ASSEMBLY

NOTE: The intermediate shaft assembly is serviced only as an assembly.

1. Remove four (4) intermediate shaft assembly-to-oil pan bolts.
2. Remove intermediate shaft assembly (2) from engine oil pan.

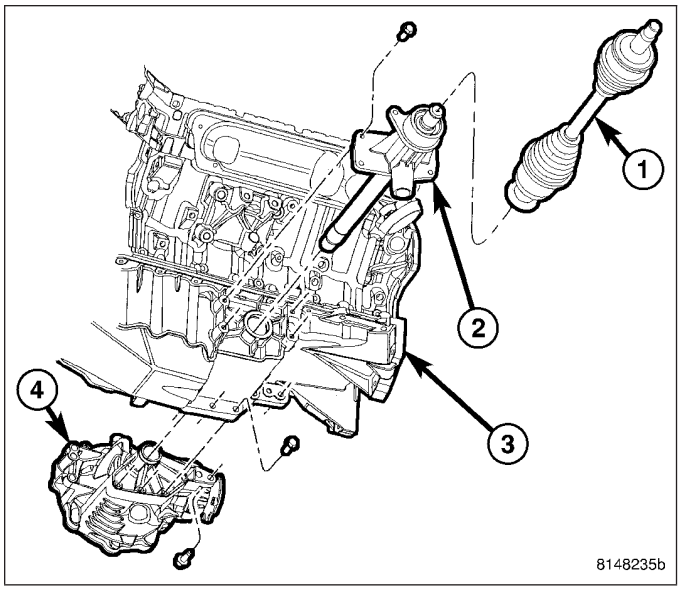

INSTALLATION

1. If previously removed, install intermediate shaft assembly (2). Install four intermediate shaft-to-oil pan bolts and torque to 25 N·m (18 ft. lbs.).
2. Install left halfshaft assembly (1).

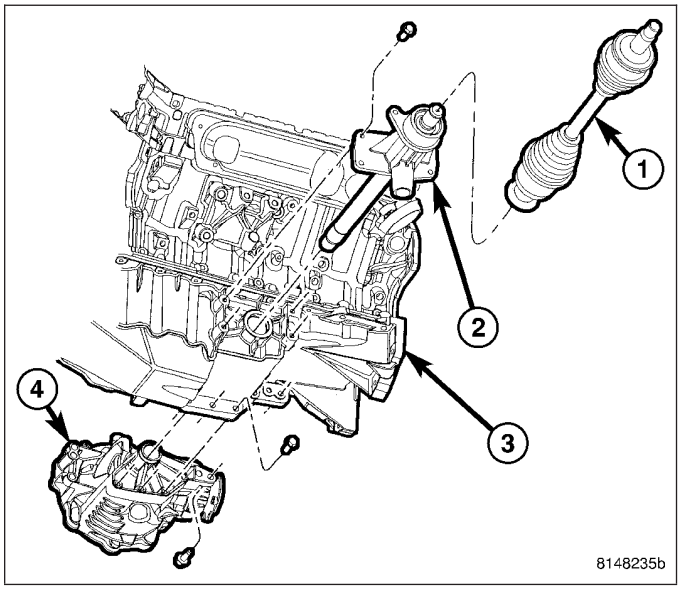

3. Using Tool C-4193-A (1), install **new** axle seal.

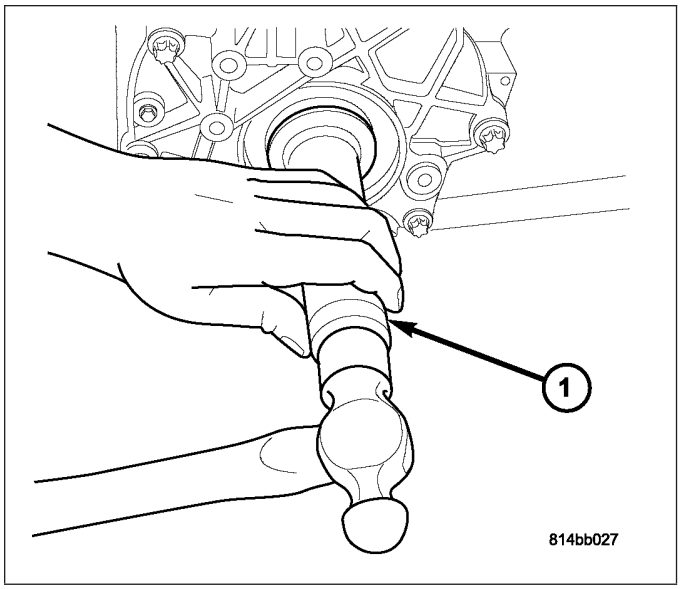

4. Install right halfshaft assembly (1).

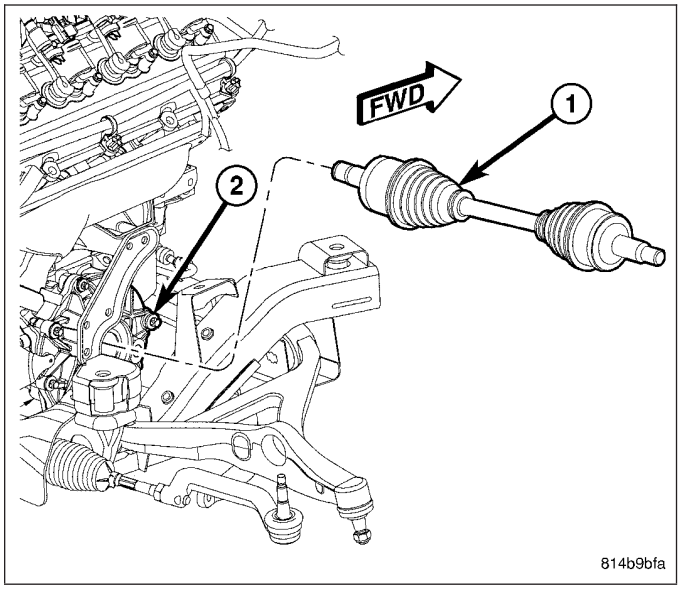

Right Halfshaft Removal/Installation

5. Install halfshaft (1) into hub/bearing assembly (2).

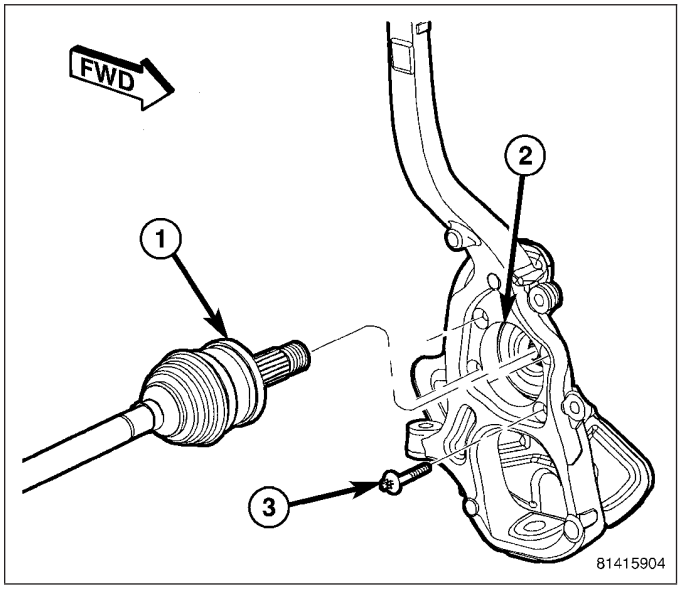

6. Loosely install halfshaft hub nut (1), and do not tighten at this time.

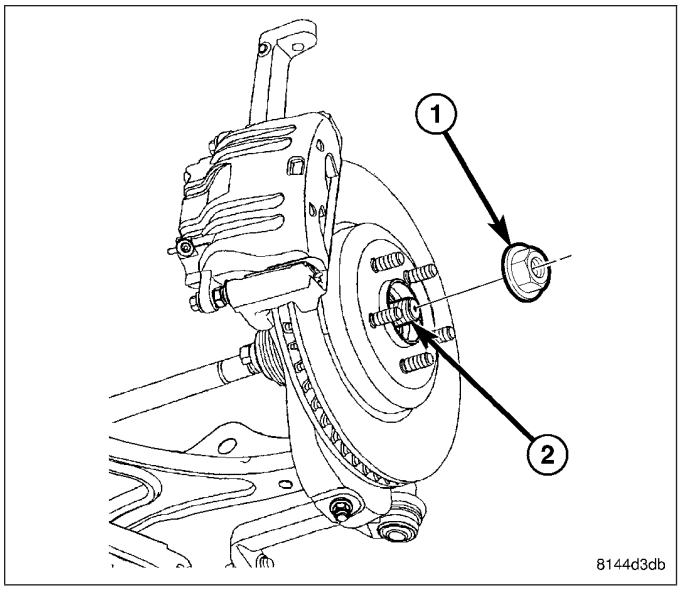

CAUTION: It is important to tighten nut as described in following step to avoid damaging ball stud joint.

7. Place upper ball joint stud (1) through hole in top of knuckle and install nut (4). Tighten nut by holding ball joint stud with a hex wrench while turning nut with a wrench. Tighten nut using crow foot wrench on torque wrench to 47 N·m + 90° turn (35 ft. lbs. + 90° turn) torque.

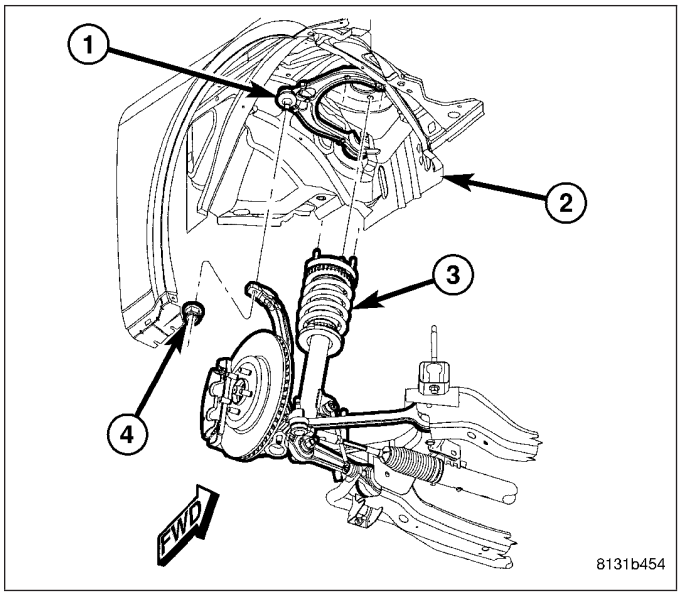

NOTE: Inspect brake shoes (pads) before installation. (Refer to 5 - BRAKES/HYDRAULIC/MECHANICAL/ BRAKE PADS/SHOES - INSPECTION)

8. Clean hub face (1) to remove any dirt or corrosion where rotor mounts.
9. Install brake rotor (2) over studs on hub and bearing.

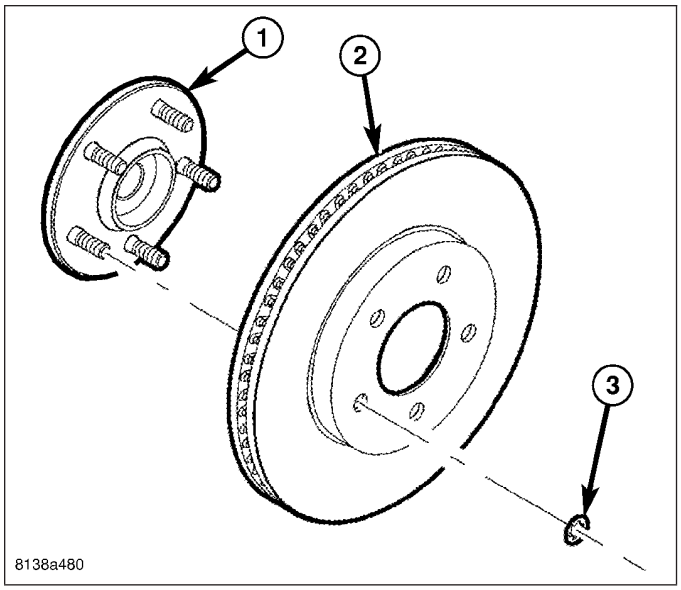

10. Install disc brake caliper and adapter assembly (2) over brake rotor.
11. Install mounting bolts (1) securing caliper adapter (2) to knuckle (3). Tighten bolts to 169 N·m (125 ft. lbs.) torque.

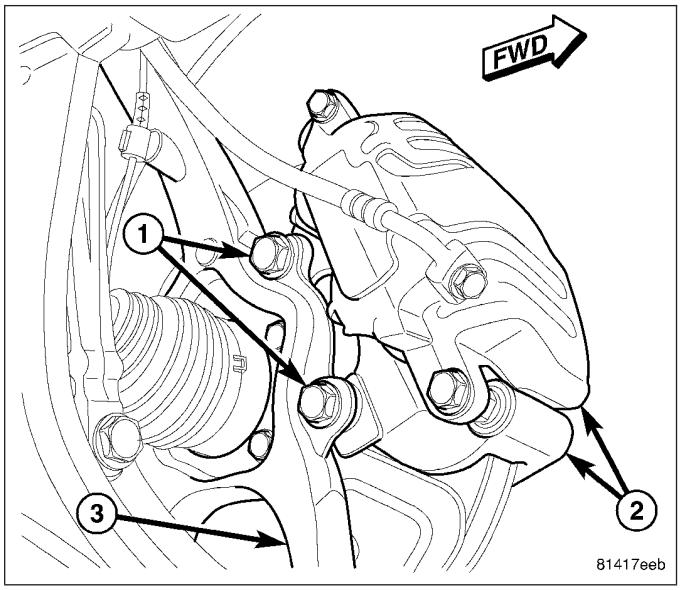

12. Pull lower end of shock assembly outward, then slide clevis bracket (3) onto lower end. Slide clevis bracket onto shock assembly until bracket contacts collar on shock housing (2).
13. Install pinch bolt and nut (1) fastening clevis bracket (3) to bottom of shock assembly (2). Install pinch bolt from rear. **Do not tighten at this time.**

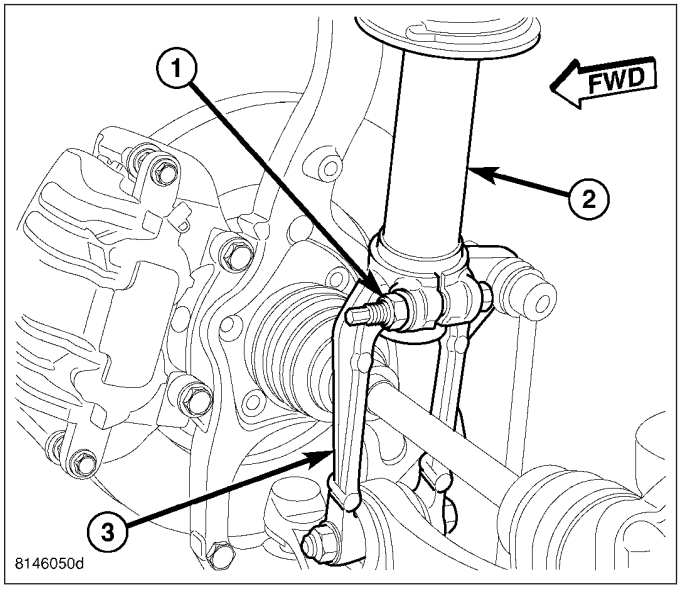

14. Slide clevis bracket (2) over bushing mounted in lower control arm (7).
15. Install bolt (1) and nut (3) attaching shock clevis bracket (2) to lower control arm (7). **Do not tighten at this time.**

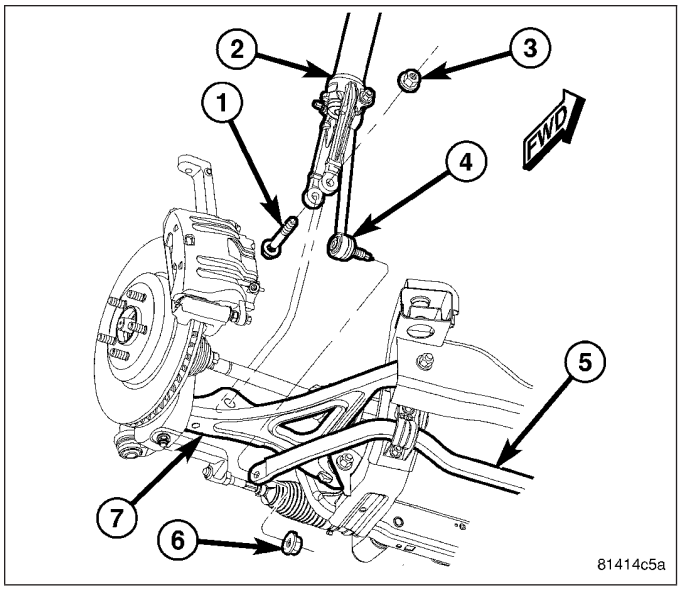

16. Tighten pinch bolt (1) attaching clevis bracket to shock assembly to 61 N·m (45 ft. lbs.) torque.

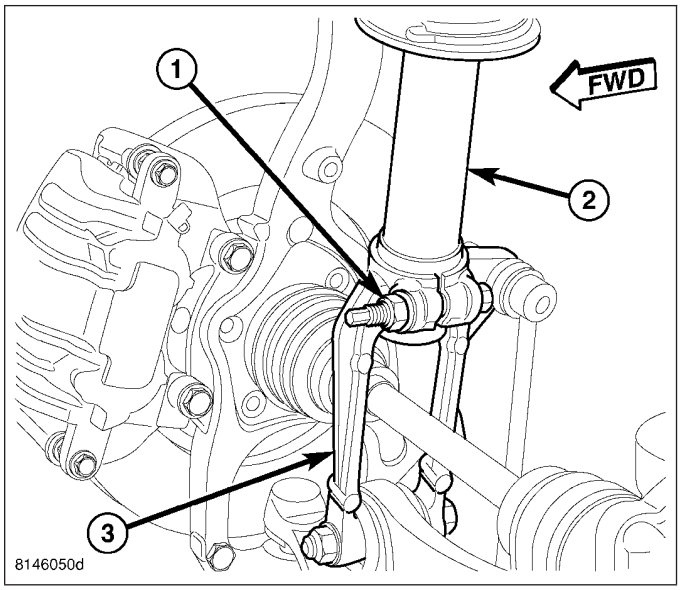

17. Slide stabilizer link ball joint stem into clevis bracket. Install nut (2) fastening link to clevis bracket (3). Tighten nut by holding ball joint stud while turning nut. Tighten nut using crow foot wrench on torque wrench to 146 N·m (108 ft. lbs.) torque.

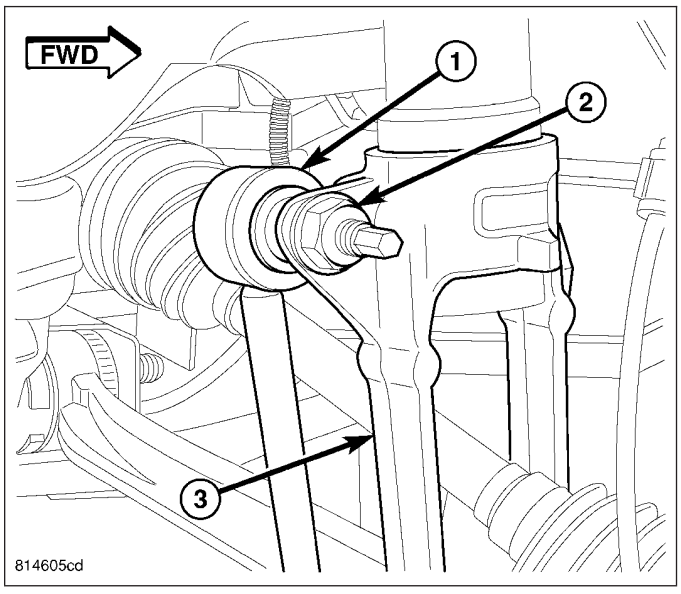

18. Attach wheel speed sensor cable routing clip (3) at knuckle (4).

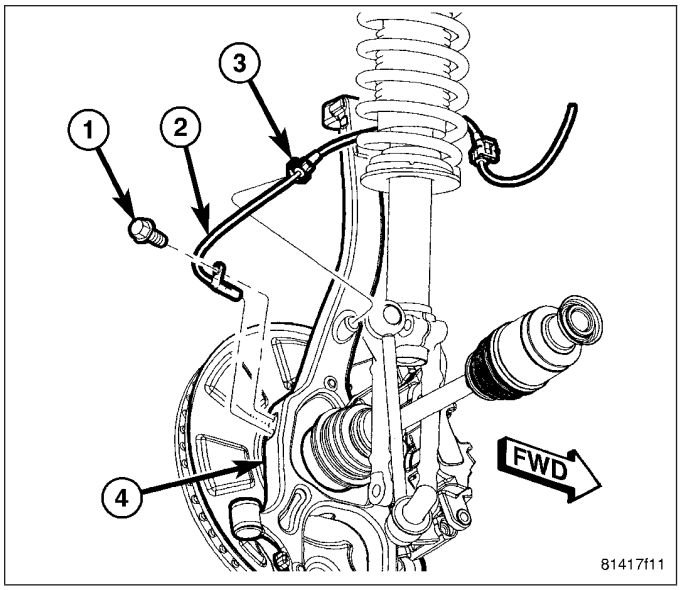

19. Install hub nut (1) on end of axle half shaft (2). While a helper applies brakes to keep hub from turning, tighten hub nut to 213 N·m (157 ft. lbs.) torque.

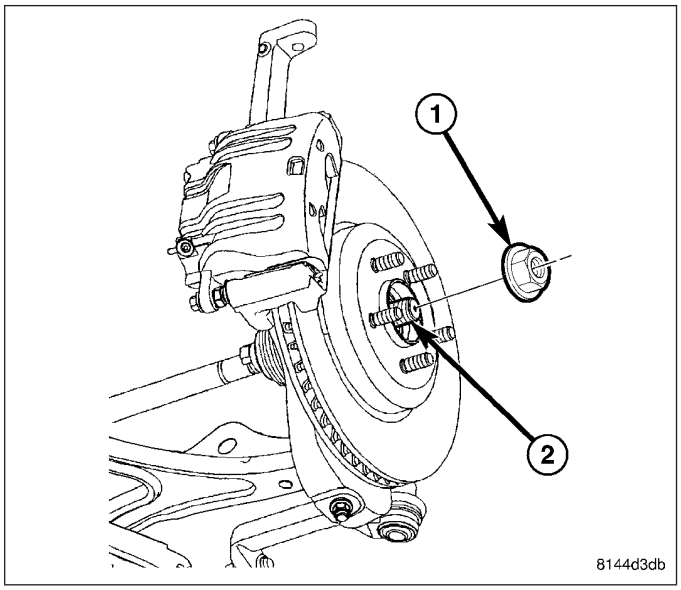

20. Install tire and wheel assembly (1) (Refer to 22 - TIRES/WHEELS - INSTALLATION). Tighten wheel mounting nuts (3) to 150 N·m (110 ft. lbs.) torque.
21. Lower vehicle.

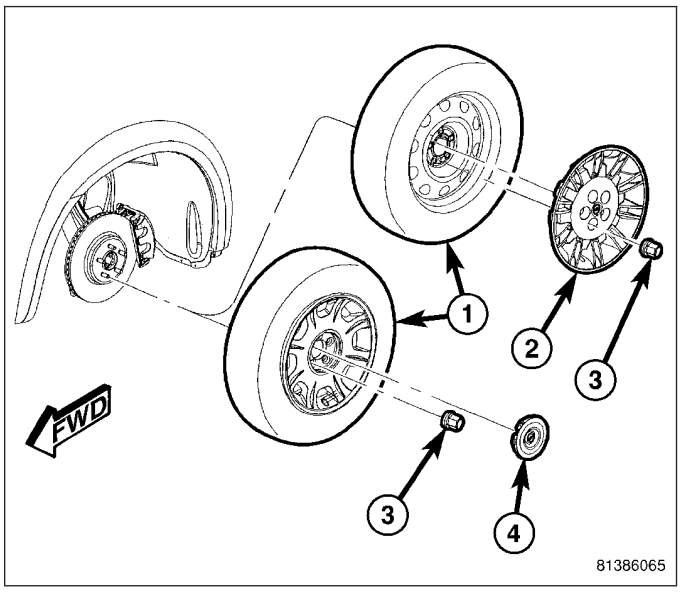

NOTE: When tightening lower shock clevis mounting bolt, do not attempt rotating bolt. Bolt shaft is serrated. Turn nut only.

22. Tighten lower shock clevis bracket bolt nut (3) to 174 N·m (128 ft. lbs.) torque.

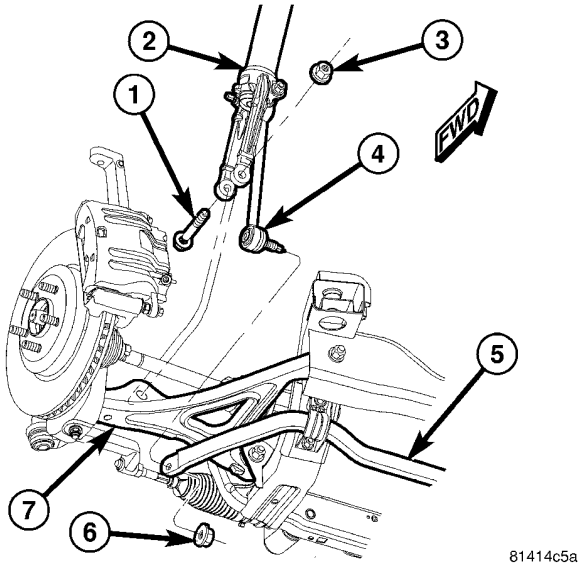

SPECIFICATIONS - HALFSHAFT

TORQUE SPECIFICATIONS

DESCRIPTION	N·m	Ft. Lbs.	In. Lbs.
Nut, Halfshaft Hub	213	157	—
Bolt, Intermediate Shaft-to-Oil Pan	25	18	—

SPECIAL TOOLS

HALFSHAFT

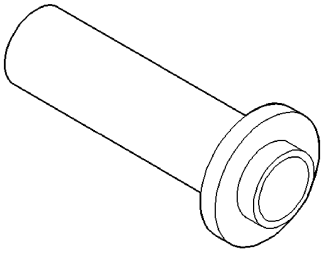

Seal Installer C-4193A

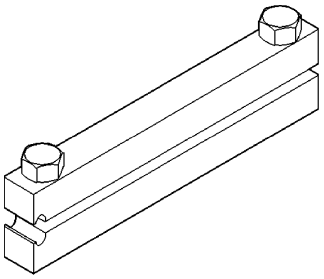

Clamp, C-4975-A

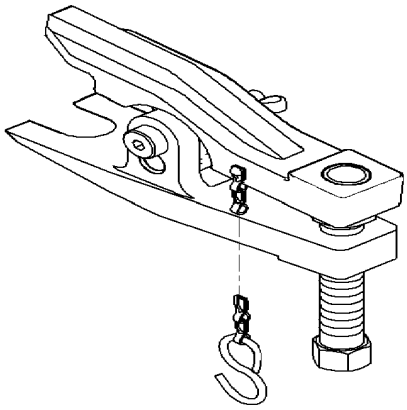

Remover, Ball Stud 9360

BOOT-CV INNER

REMOVAL

1. Remove large boot clamp which retains inner tripod joint sealing boot to tripod joint housing and discard. Remove small clamp which retains inner tripod joint sealing boot to interconnecting shaft and discard. Remove the sealing boot (3) from the tripod housing and slide it down the interconnecting shaft.

CAUTION: When removing the tripod joint housing from the spider assembly, hold the bearings in place on the spider trunions to prevent the bearings from falling away.

2. Slide the tripod joint housing (1) off the spider assembly and the interconnecting shaft.

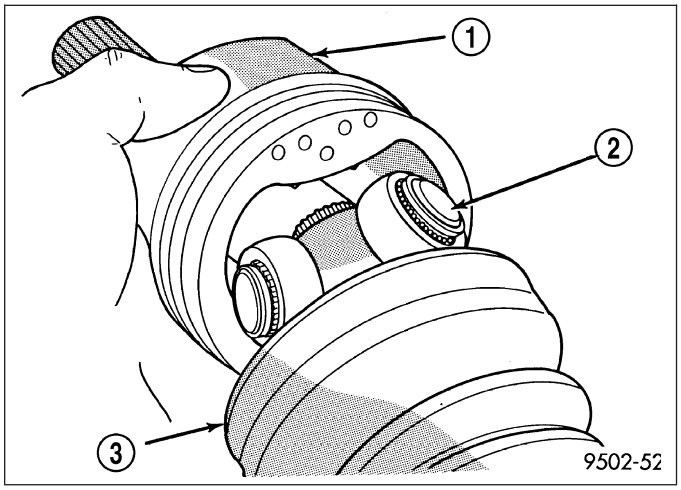

3. Remove snap ring (3) which retains spider assembly to interconnecting shaft (1). **Do not hit the outer tripod bearings in an attempt to remove spider assembly from interconnecting shaft.**

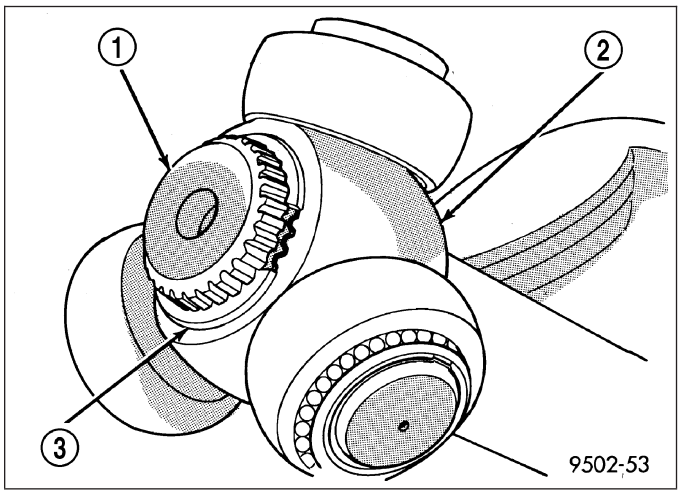

4. Remove the spider assembly (1) from interconnecting shaft (4). If spider assembly will not come off interconnecting shaft by hand, it can be removed by tapping spider assembly with a brass drift (3).
5. Slide sealing boot off interconnecting shaft.
6. Thoroughly clean and inspect spider assembly, tripod joint housing, and interconnecting shaft for any signs of excessive wear. **If any parts show signs of excessive wear, the driveshaft assembly will require replacement. Component parts of these driveshaft assemblies are not serviceable.**

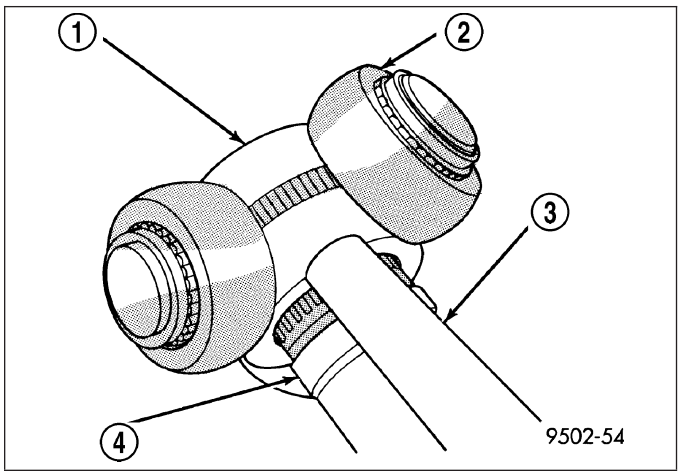

INSTALLATION

1. Slide inner tripod joint seal boot retaining clamp, onto interconnecting shaft. Then, slide the replacement inner tripod joint sealing boot (1) onto the interconnecting shaft. **Inner tripod joint seal boot MUST be positioned on interconnecting shaft, so the raised bead on the inside of the seal boot is in groove (3) on interconnecting shaft (4).**

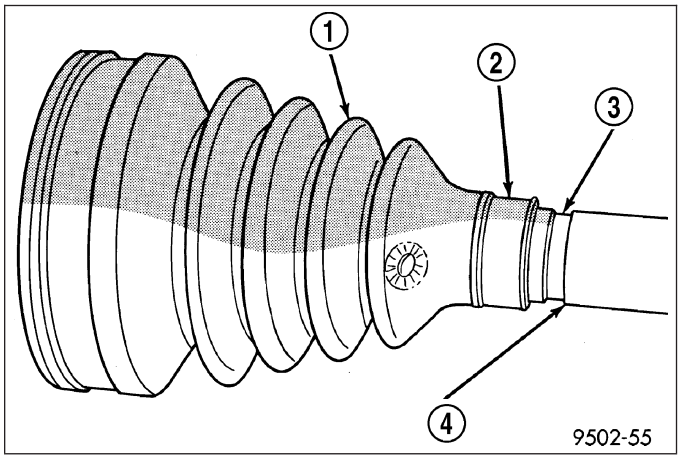

2. Install spider assembly (1) onto interconnecting shaft (2). Spider assembly must be installed on interconnecting shaft far enough to fully install spider retaining snap ring.

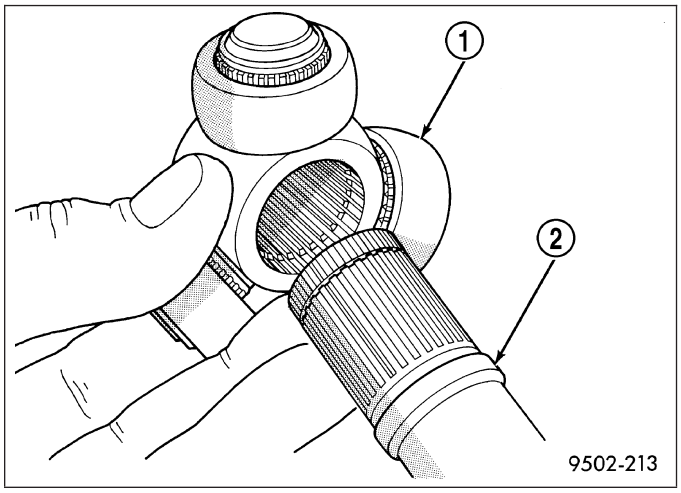

3. If spider assembly (2) will not fully install on interconnecting shaft by hand, it can be installed by tapping the spider body with a brass drift (4). **Do not hit the outer tripod bearings in an attempt to install spider assembly on interconnecting shaft.**

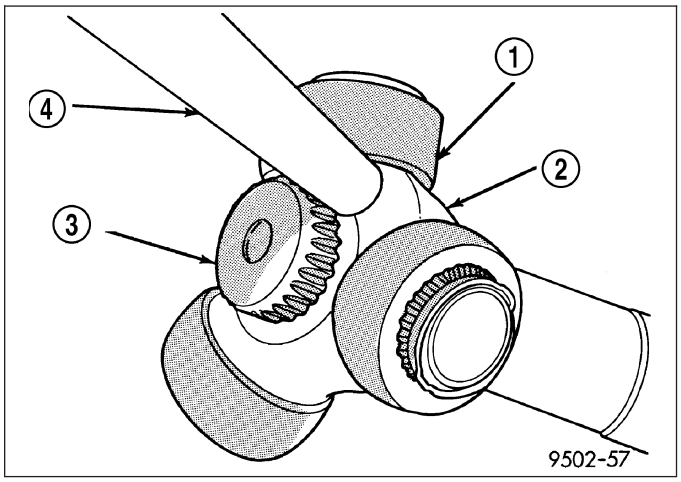

4. Install the spider assembly to interconnecting shaft retaining snap ring (3) into groove on end of interconnecting shaft. Be sure the snap ring is fully seated into groove on interconnecting shaft.

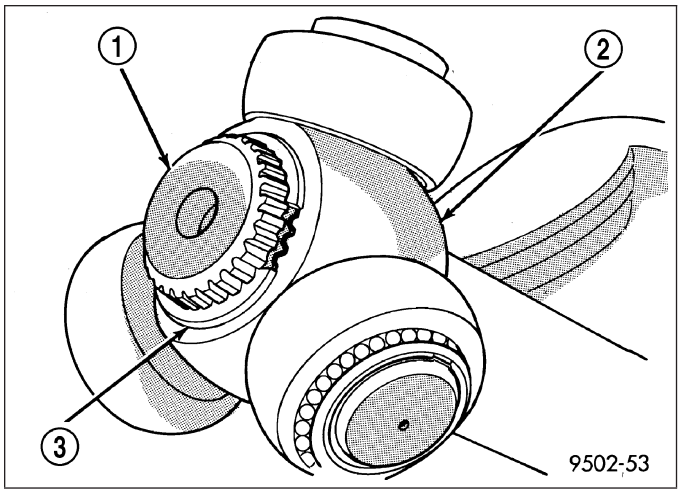

5. Distribute 1/2 the amount of grease provided in the seal boot service package (DO NOT USE ANY OTHER TYPE OF GREASE) into tripod housing. Put the remaining amount into the sealing boot.
6. Align tripod housing (1) with spider assembly (2) and then slide tripod housing over spider assembly and interconnecting shaft.

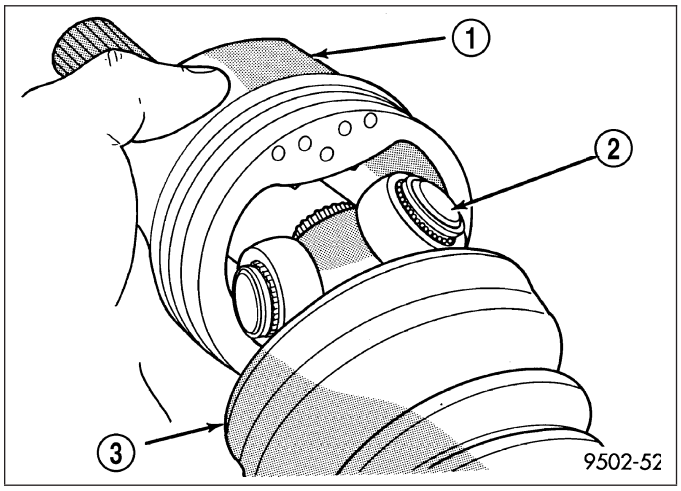

7. Install inner tripod joint seal boot to interconnecting shaft clamp evenly on sealing boot.
8. Clamp sealing boot (4) onto interconnecting shaft (3) using crimper, Special Tool C-4975-A and the following procedure. Place crimping tool C-4975-A over bridge of clamp. Tighten nut on crimping tool C-4975-A until jaws on tool (2) are closed completely together, face to face.

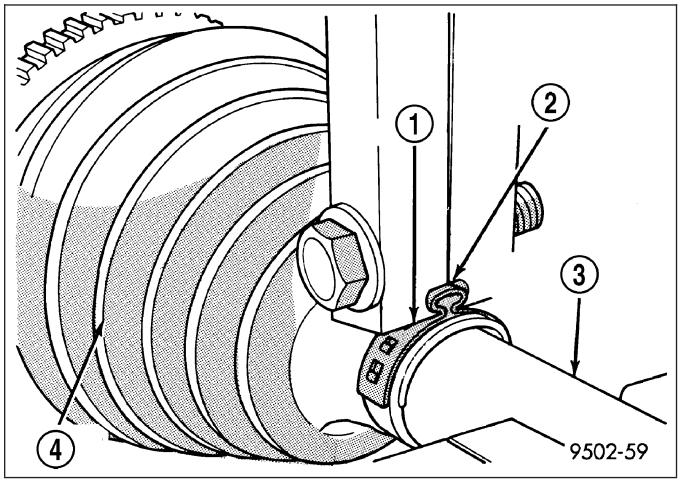

CAUTION: Seal must not be dimpled, stretched or out of shape in any way. If seal is NOT shaped correctly, equalize pressure in seal and shape it by hand.

9. Position sealing boot into the tripod housing retaining groove. Install seal boot retaining clamp evenly on sealing boot.

CAUTION: The following positioning procedure determines the correct air pressure inside the inner tripod joint assembly prior to clamping the sealing boot to inner tripod joint housing. If this procedure is not done prior to clamping sealing boot to tripod joint housing sealing boot durability can be adversely affected.

CAUTION: When venting the inner tripod joint assembly, use care so inner tripod sealing boot does not get punctured, or in any other way damaged. If sealing boot is punctured, or damaged in any way while being vented, the sealing boot can not be used.

10. Insert a trim stick (4) between the tripod joint (3) and the sealing boot (2) to vent inner tripod joint assembly. **When inserting trim stick between tripod housing and sealing boot ensure trim stick is held flat and firmly against the tripod housing. If this is not done damage to the sealing boot can occur.** If inner tripod joint has a Hytrel (hard plastic) sealing boot, be sure trim stick is inserted between soft rubber insert and tripod housing not the hard plastic sealing boot and soft rubber insert.

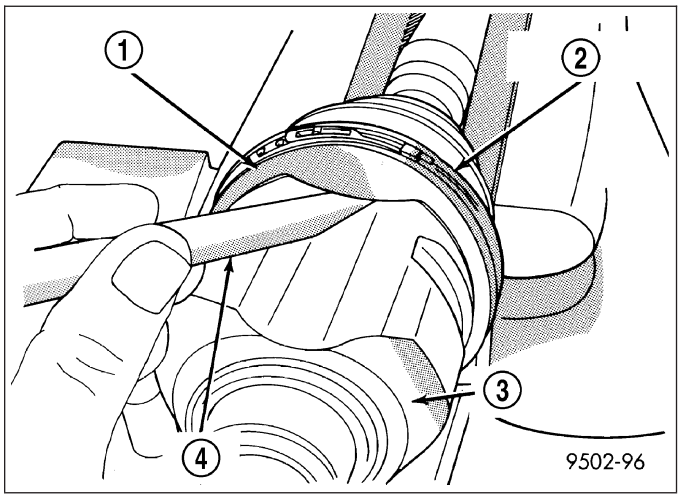

11. With trim stick inserted between sealing boot and tripod joint housing, position the interconnecting shaft so it is at the center of its travel in the tripod joint housing. Remove the trim stick from between the sealing boot and the tripod joint housing. **This procedure will equalize the air pressure in the tripod joint, preventing premature sealing boot failure.**
12. Position trilobal boot to interface with the tripod housing. The lobes of the boot must be properly aligned with the recess's of the tripod housing.
13. Clamp tripod joint sealing boot to tripod joint, using required procedure for type of boot clamp application.

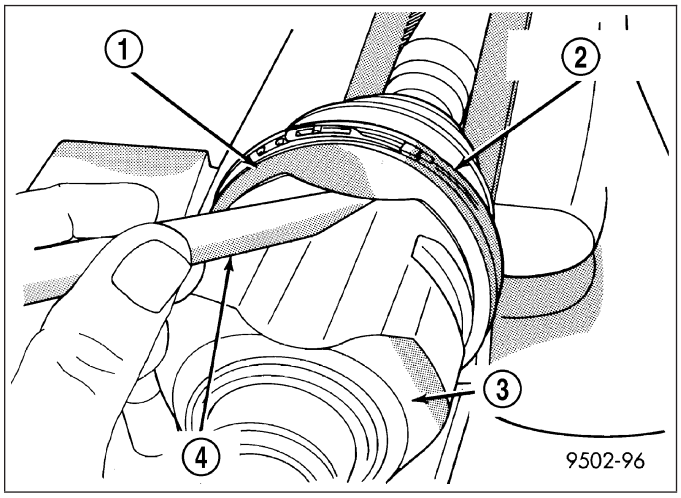

CRIMP TYPE BOOT CLAMP

1. Clamp sealing boot onto tripod housing using Crimper, Special Tool C-4975-A (3).
2. Place crimping tool C-4975-A over bridge of clamp.

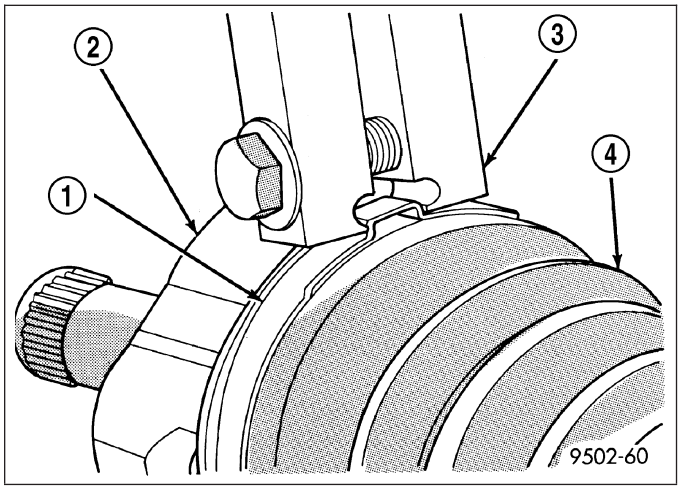

3. Tighten nut on crimping tool C-4975-A (3) until jaws on tool are closed completely together, face to face (4).

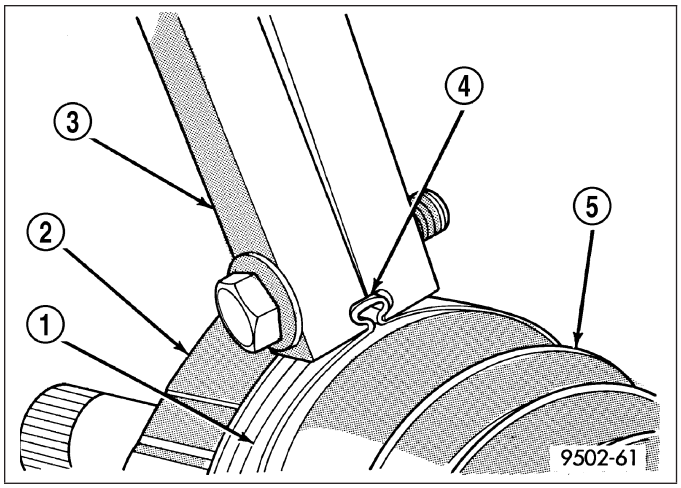

LATCHING TYPE BOOT CLAMP

1. Clamp sealing boot (3) onto tripod housing using clamp locking tool, Snap-On YA3050 (2) or an equivalent.
2. Place prongs of clamp locking tool in the holes of the clamp (1).

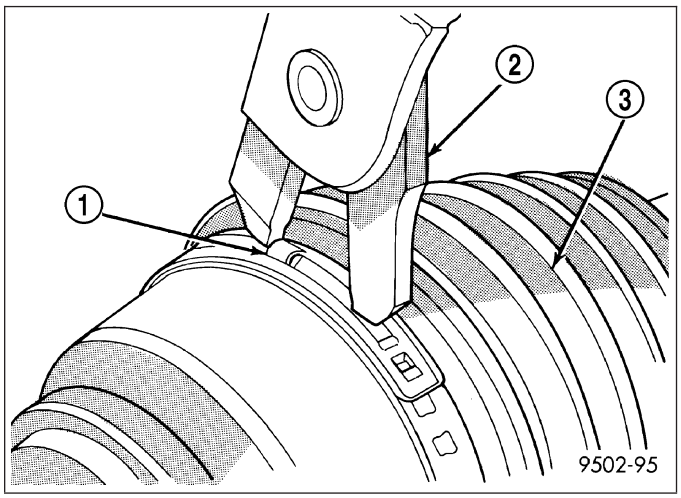

3. Squeeze tool together until top band of clamp is latched behind the two tabs on lower band of clamp (2).

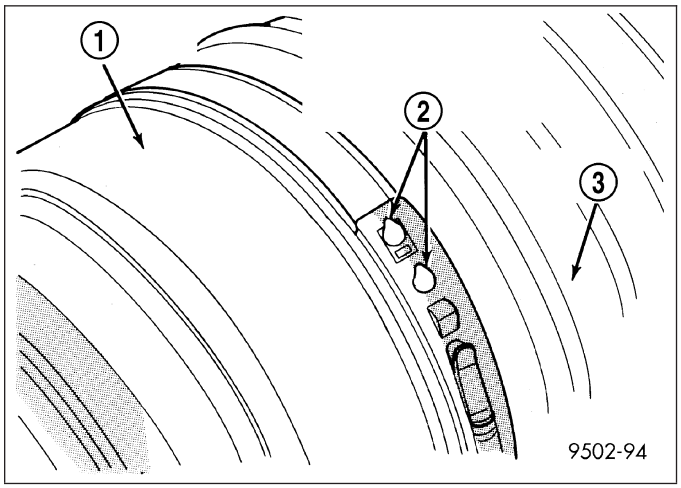

BOOT-CV OUTER

REMOVAL

1. Remove large boot clamp (4) retaining C/V joint sealing boot to C/V joint housing and discard. Remove small clamp (1) that retains outer C/V joint sealing boot to interconnecting shaft and discard. Remove sealing boot from outer C/V joint housing and slide it down interconnecting shaft.
2. Wipe away grease to expose outer C/V joint and interconnecting shaft.

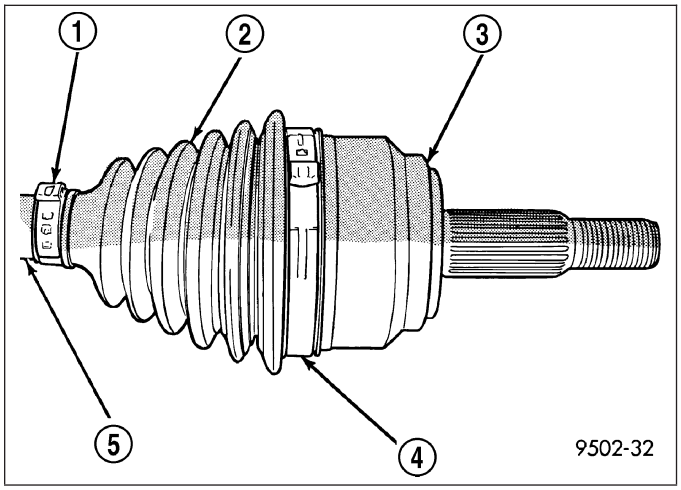

3. Remove outer C/V joint from interconnecting shaft using the following procedure: Support interconnecting shaft in a vise **equipped with protective caps on jaws of vise to prevent damage to interconnecting shaft.** Then, using a **soft–faced hammer,** sharply hit the end of the C/V joint housing to dislodge housing from internal circlip on interconnecting shaft. Then slide outer C/V joint off end of interconnecting shaft, joint may have to be tapped off shaft using a **soft–faced** hammer.

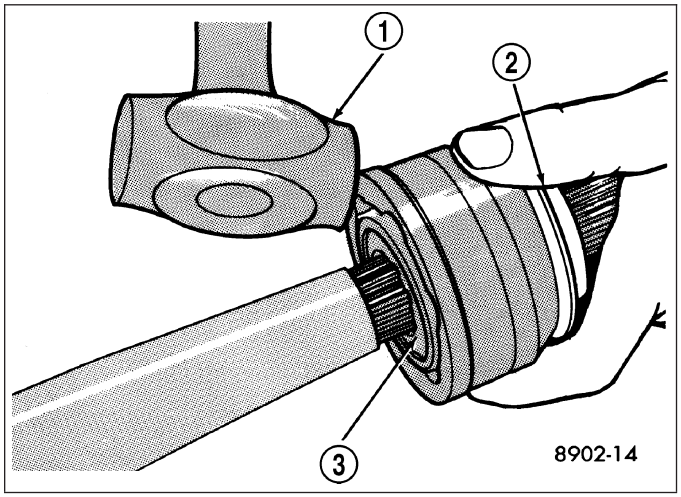

4. Remove large circlip from the interconnecting shaft (3) before attempting to remove outer C/V joint sealing boot.
5. Slide failed sealing boot off interconnecting shaft.
6. Thoroughly clean and inspect outer C/V joint assembly and interconnecting joint for any signs of excessive wear. **If any parts show signs of excessive wear, the driveshaft assembly will require replacement. Component parts of these driveshaft assemblies are not serviceable.**

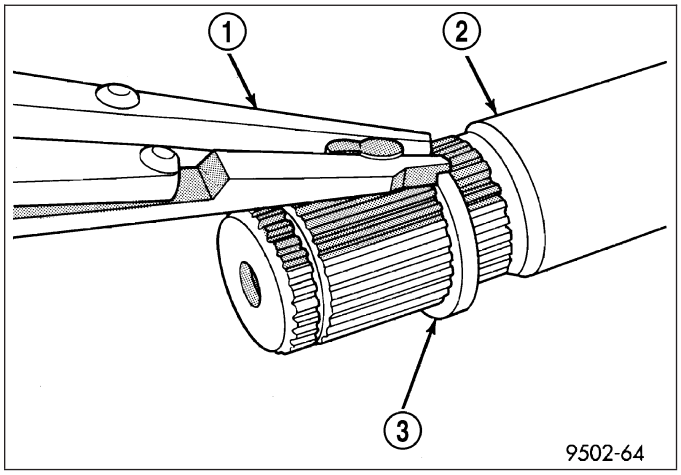

INSTALLATION

1. Slide new sealing boot (1) to interconnecting shaft retaining clamp onto interconnecting shaft. Slide the outer C/V joint assembly sealing boot onto the interconnecting shaft. **Seal boot MUST be positioned on interconnecting shaft so the raised bead on the inside of the seal boot is in groove on interconnecting shaft.**

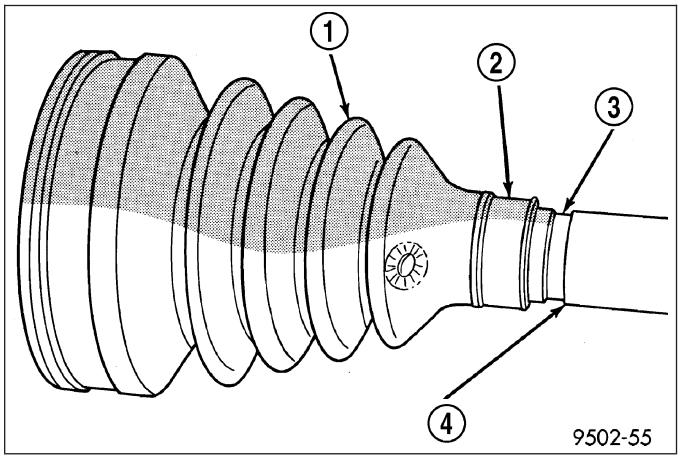

2. Align splines on interconnecting shaft with splines on cross of outer C/V joint assembly and start outer C/V joint onto interconnecting shaft.
3. Install outer C/V joint assembly onto interconnecting shaft by using a **soft–faced** hammer (1) and tapping end of stub axle (with nut installed) until outer C/V joint is fully seated on interconnecting shaft.

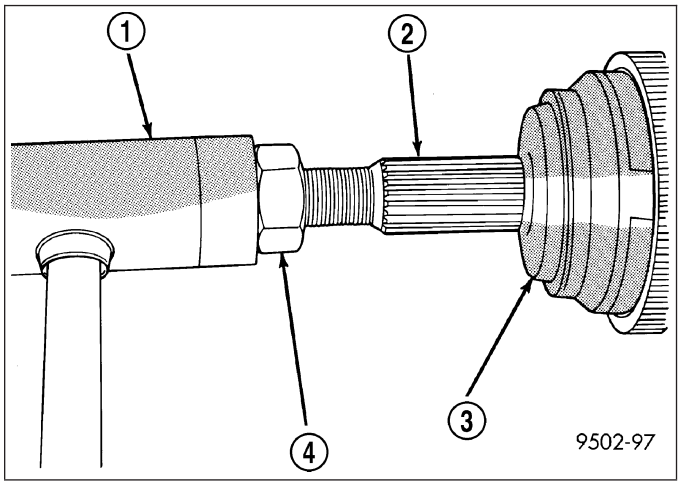

4. Outer C/V joint assembly must be installed on interconnecting shaft until cross of outer C/V joint assembly is seated against circlip on interconnecting shaft (1).

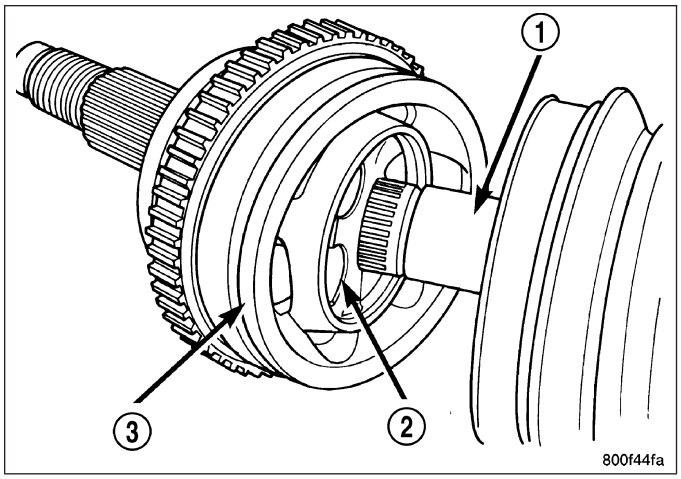

5. Distribute 1/2 the amount of grease provided in seal boot service package (DO NOT USE ANY OTHER TYPE OF GREASE) into outer C/V joint assembly housing. Put the remaining amount into the sealing boot.
6. Install outer C/V joint sealing boot to interconnecting shaft clamp evenly on sealing boot.
7. Clamp sealing boot onto interconnecting shaft using crimper, Special Tool C-4975-A and the following procedure. Place crimping tool C-4975-A over bridge of clamp. Tighten nut on crimping tool C-4975-A until jaws on tool are closed completely together, face to face (2).

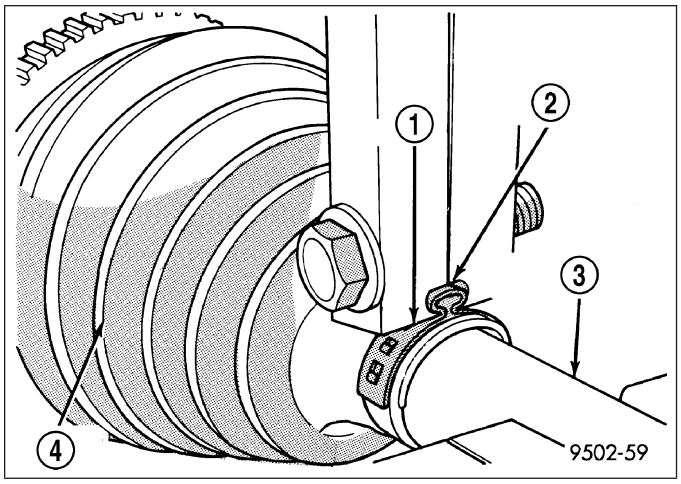

CAUTION: Seal must not be dimpled, stretched, or out–of–shape in any way. If seal is NOT shaped correctly, equalize pressure in seal and shape it by hand.

8. Position outer C/V joint sealing boot into its retaining groove on outer C/V joint housing. Install sealing boot to outer C/V joint retaining clamp evenly on sealing boot.
9. Clamp sealing boot onto outer C/V joint housing using Crimper, Special Tool C-4975-A (3) and the following procedure. Place crimping tool C-4975-A over bridge of clamp. Tighten nut on crimping tool C-4975-A until jaws on tool are closed completely together, face to face (2).

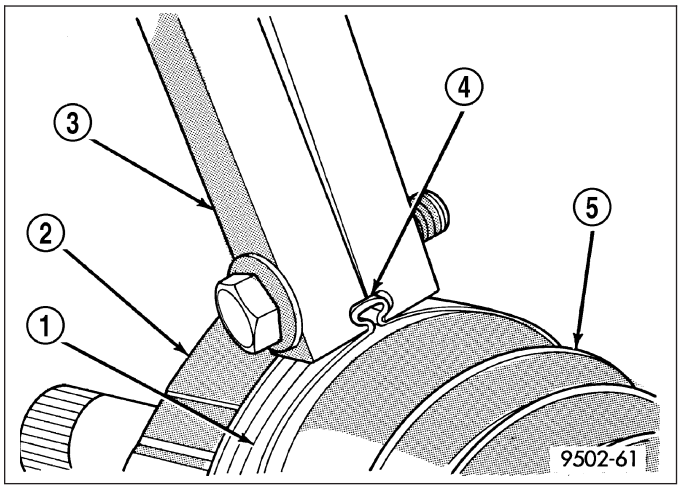

SHAFT-HALF (REAR)

TABLE OF CONTENTS

page

SHAFT-HALF (REAR)
DESCRIPTION 42
DIAGNOSIS AND TESTING - HALF SHAFT 42
REMOVAL 42
INSTALLATION 48
SPECIFICATIONS - TORQUE 53
SPECIAL TOOLS 54

SHAFT-HALF (REAR)

DESCRIPTION

The inner joints of both half shaft assemblies are cross-groove joints and are splined to the differential side gears. The outer joints of both assemblies are Rzeppa Joints. The cross-groove joints are true constant velocity (CV) joint assemblies, which allow for the changes in half shaft length through the jounce and rebound travel of the rear suspension.

DIAGNOSIS AND TESTING - HALF SHAFT

VEHICLE INSPECTION

1. Check for grease in the vicinity of both the inboard and outboard joints. This is a sign of inner or outer joint seal boot or seal boot clamp damage.

NOISE AND/OR VIBRATION IN TURNS

A clicking noise and/or a vibration in turns could be caused by one of the following conditions:

- Damaged outer CV or inner cross-groove joint seal boot or seal boot clamps. This will result in the loss and/or contamination of the joint grease, resulting in inadequate lubrication of the joint.
- Noise may also be caused by another component of the vehicle coming in contact with the half shafts.

CLUNKING NOISE DURING ACCELERATION

This noise may be a result of one of the following conditions:

- A torn seal boot on the inner or outer joint of the half shaft assembly.
- A loose or missing clamp on the inner or outer joint of the half shaft assembly.
- A damaged or worn half shaft CV joint.
- A worn intermediate shaft bearing (AWD Models).

SHUDDER OR VIBRATION DURING ACCELERATION

This problem could be a result of:

- A worn or damaged half shaft inner cross-groove joint.
- A worn intermediate shaft bearing (AWD Models).
- Improper wheel alignment. (Refer to 2 - SUSPENSION/WHEEL ALIGNMENT - STANDARD PROCEDURE)

VIBRATION AT HIGHWAY SPEEDS

This problem could be a result of:

- Foreign material (mud, etc.) packed on the backside of the wheel(s).
- Out of balance tires or wheels. (Refer to 22 - TIRES/WHEELS - STANDARD PROCEDURE)
- A worn intermediate shaft bearing (AWD Models).
- Improper tire and/or wheel runout. (Refer to 22 - TIRES/WHEELS - DIAGNOSIS AND TESTING)

REMOVAL

NOTE: This procedure requires the compression of the rear suspension to ride height. A drive-on hoist should be used. If a drive-on hoist is not used, screw-style under-hoist jack stands are required to compress the rear suspension, facilitating rear halfshaft removal.

NOTE: Halfshaft inner and outer boots are not serviceable separately. Boot replacement requires entire shaft assembly replacement.

CAUTION: Unequal-length halfshafts are used. The left halfshaft is shorter than the right, and it is necessary to identify and tag halfshafts upon removal to ensure proper installation.

CAUTION: Never grasp halfshaft assembly by the inner or outer boots. Doing so may cause the boot to pucker or crease, reducing the service life of the boot and joint. Avoid over angulating or stroking the C/V joints when handling the halfshaft.

1. With vehicle in neutral, position and raise vehicle on hoist.
2. Using 14mm hex, remove axle drain plug (1) and drain rear axle fluid into container suitable for fluid reuse.
3. Install drain plug (1) and torque to:
   - 198 Axle: 60 N·m (44 ft. lbs.)
   - 210 Axle: 50 N·m (37 ft. lbs.)

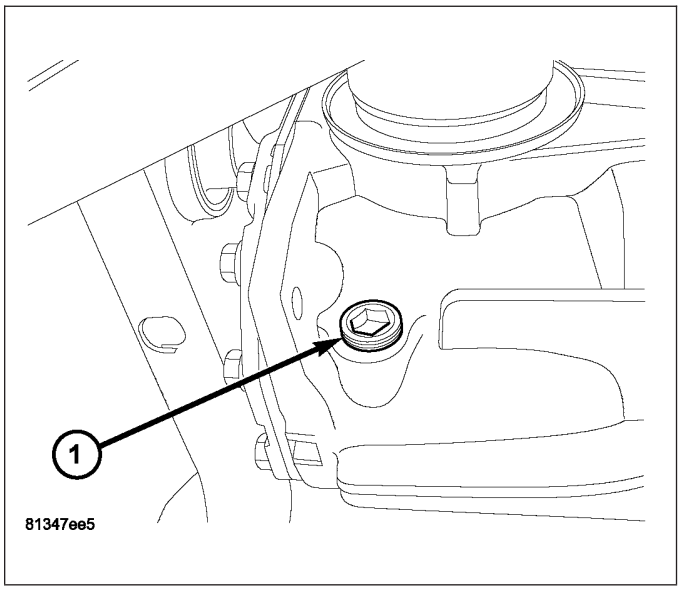

4. Remove rear exhaust system (2) on V8-equipped models.

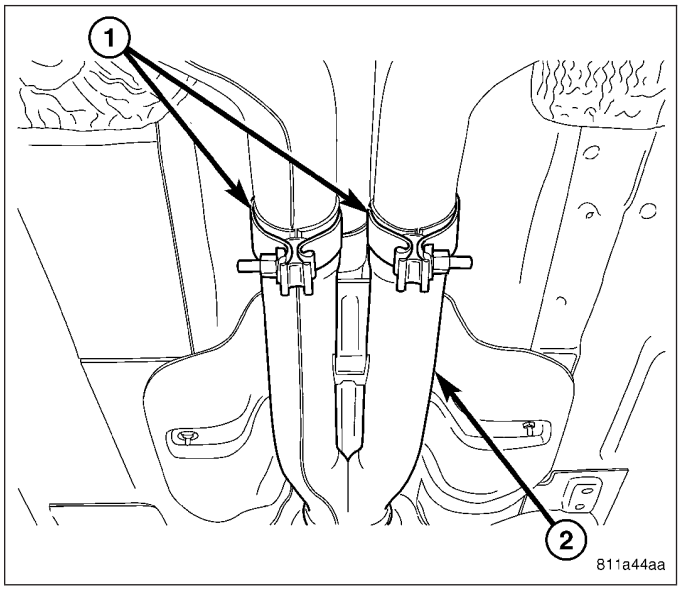

5. Remove wheel/tire assembly (1) from sides that shaft is to be removed.

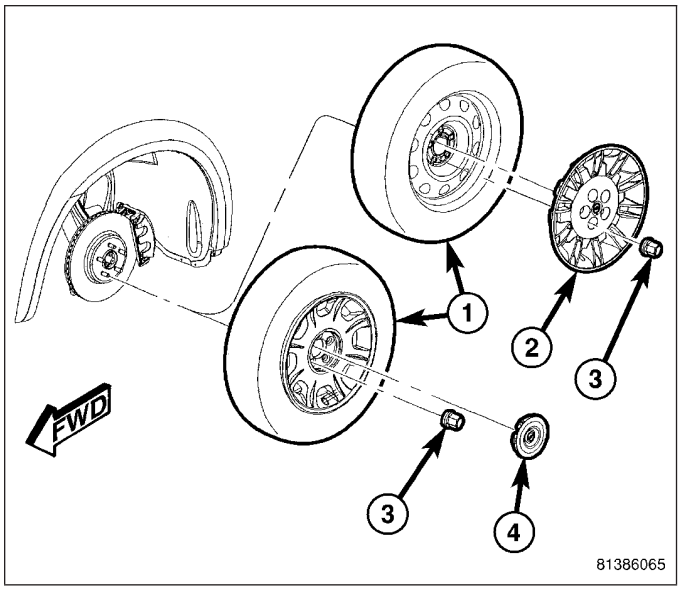

6. Remove wheel hub nut (1) and discard.

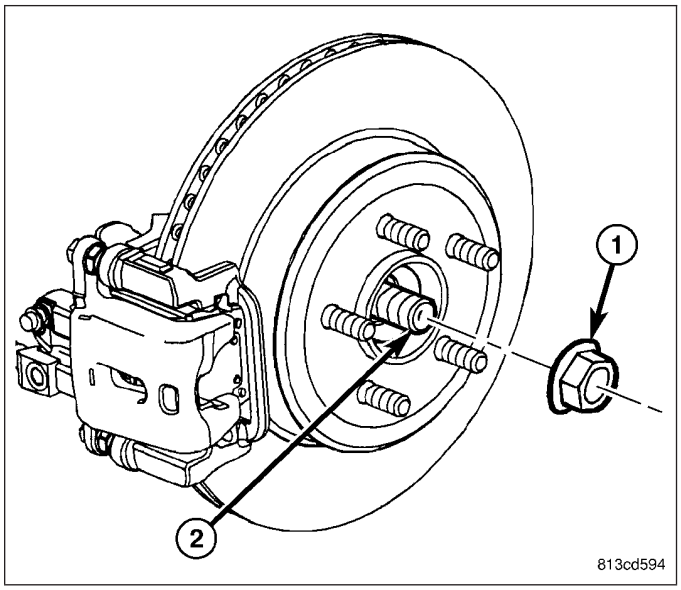

7. Apply alignment index marks (3) to the propeller shaft rubber coupler (1) and axle flange (2).

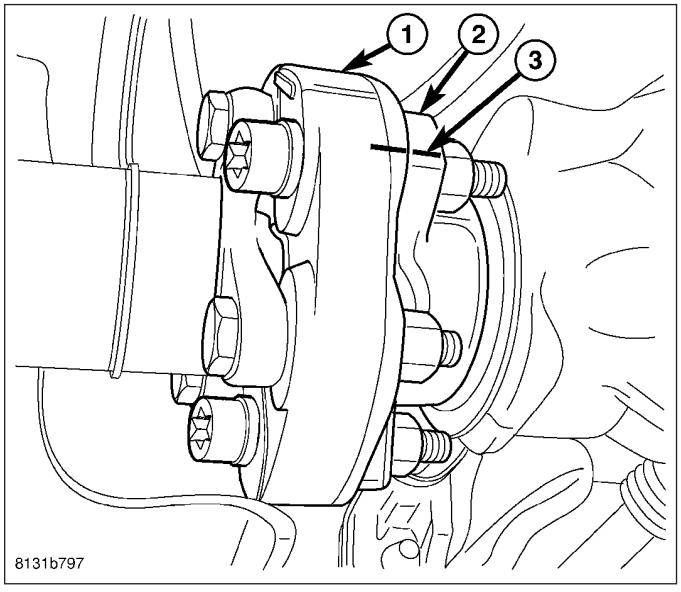

8. Remove three (3) propeller shaft coupler-to-axle flange bolt/nuts.

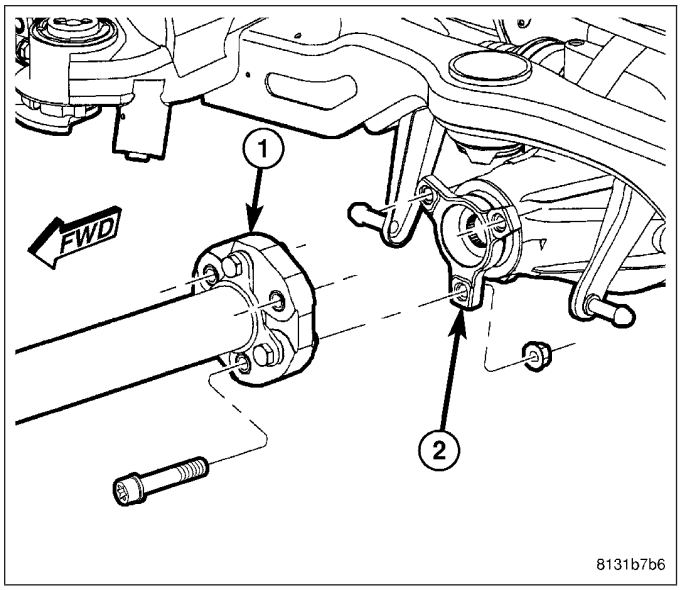

9. Using suitable screwdriver (1), partially disengage halfshaft(s) (2) from axle assembly.

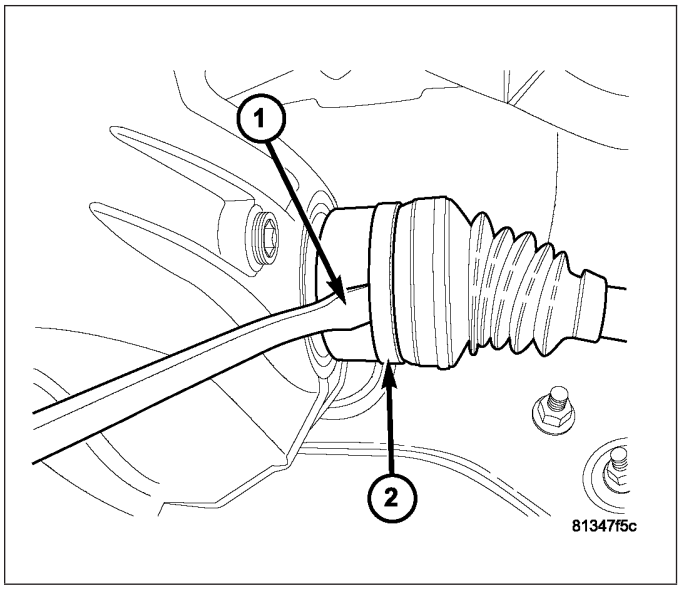

10. If a drive-on hoist is used, position transmission jack(1) to rear axle assembly. If a drive-on hoist is not used, compress rear suspension using screw-style under-hoist jack stands (2), then position transmission jack to rear axle assembly.

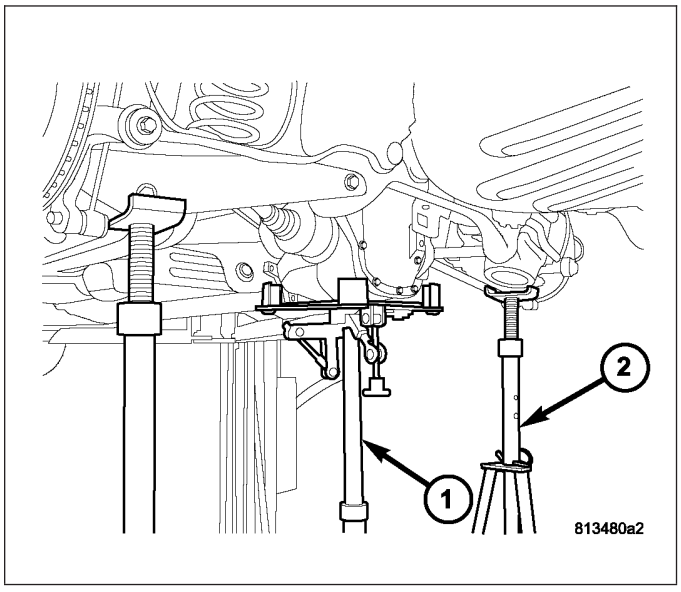

11. Remove rear axle forward mount isolator (1) bolt/nut (2).

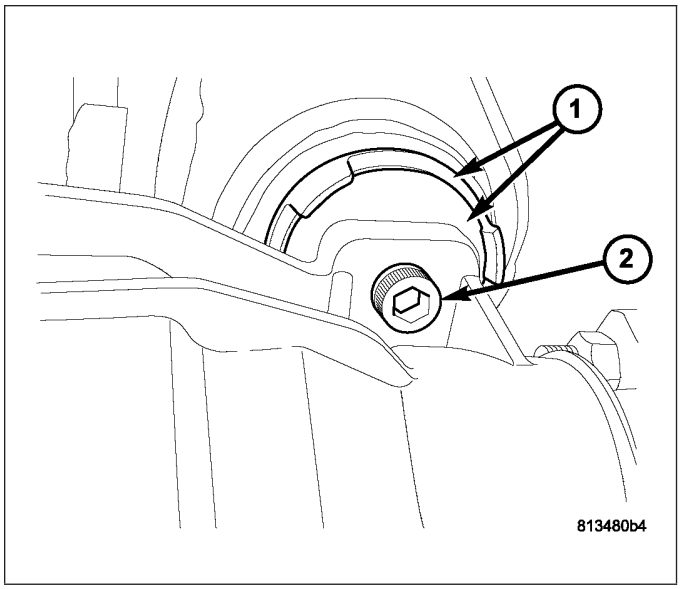

CAUTION: Access to rear axle-to-crossmember bolts is best achieved by use of short socket and a flexible-head ratchet.

12. Remove two rear axle-to-crossmember bolts (1).

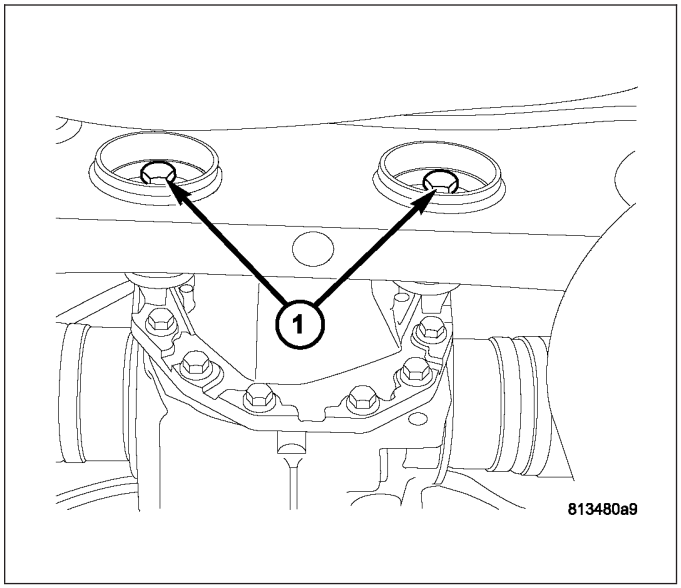

13. Carefully lower rear axle. While lowering axle, separate propeller shaft from axle and support with suitable rope or wire (1).

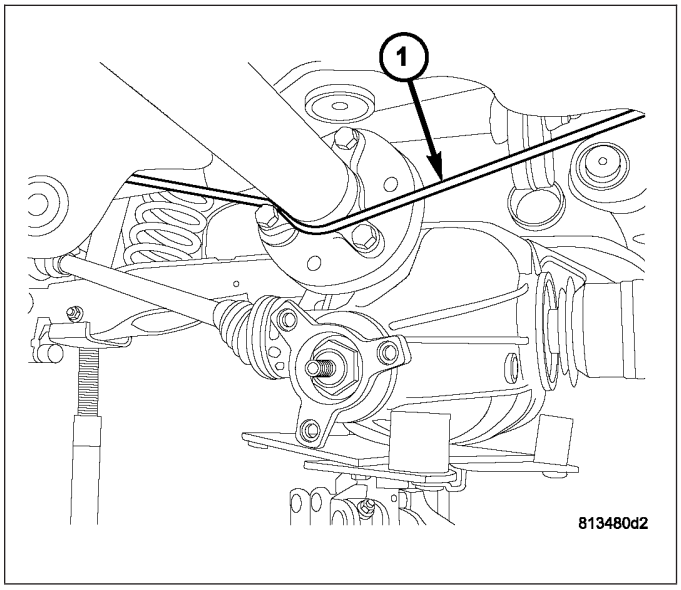

CAUTION: Unequal-length halfshafts are used. The left halfshaft is shorter than the right, and it is necessary to identify and tag halfshafts upon removal to ensure proper installation.

14. Lower axle just enough to remove halfshafts one at a time. Shift axle assembly in one direction, compressing one halfshaft while removing the other (1). Use caution to protect axle seal and journal.

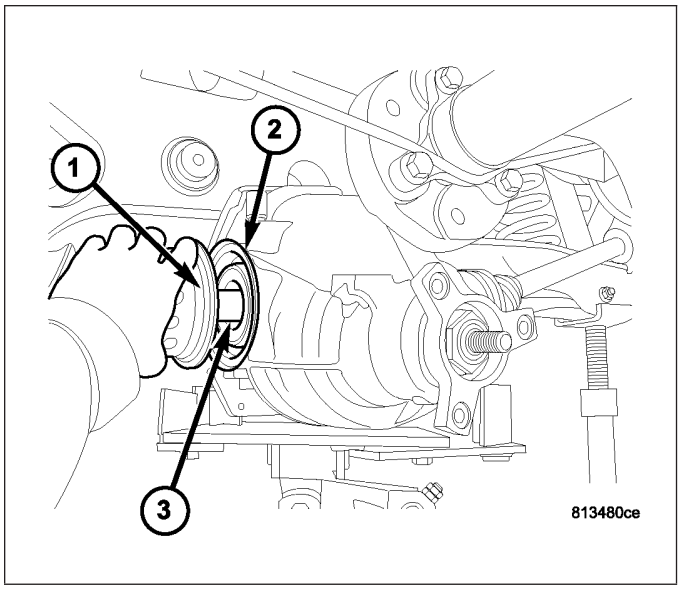

CAUTION: Never grasp halfshaft assembly by the inner or outer boots. Doing so may cause the boot to pucker or crease, reducing the service life of the boot and joint. Avoid over angulating or stroking the C/V joints when handling the halfshaft.

CAUTION: Use care while handling/storing halfshaft assembly. Damage to the slinger can result from improper handling. If slinger gets bent or damaged, straighten slinger to avoid contact with axle seal assembly.

15. Remove halfshaft from hub. Remove and inspect rubber isolation washer (1). Discard washer if rubber surfaces are worn away. Repeat on other side if necessary.

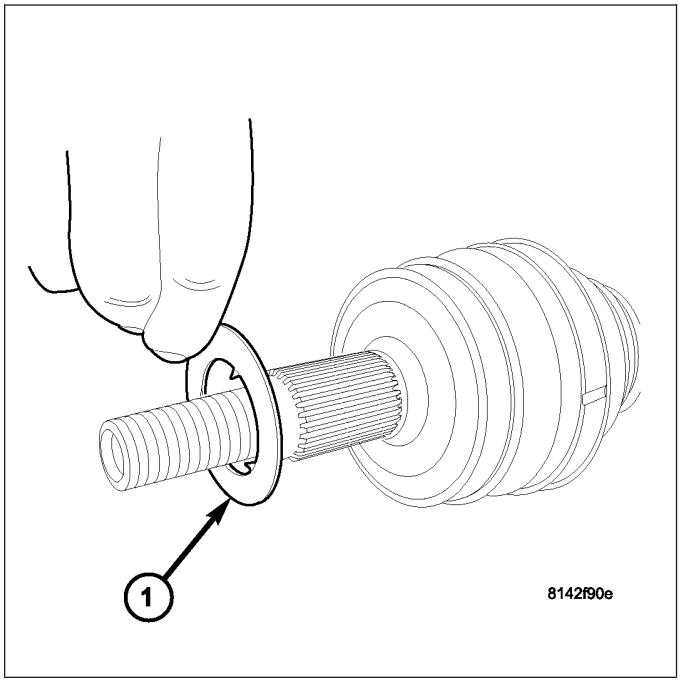

16. Remove axle seals (2) using suitable screwdriver.

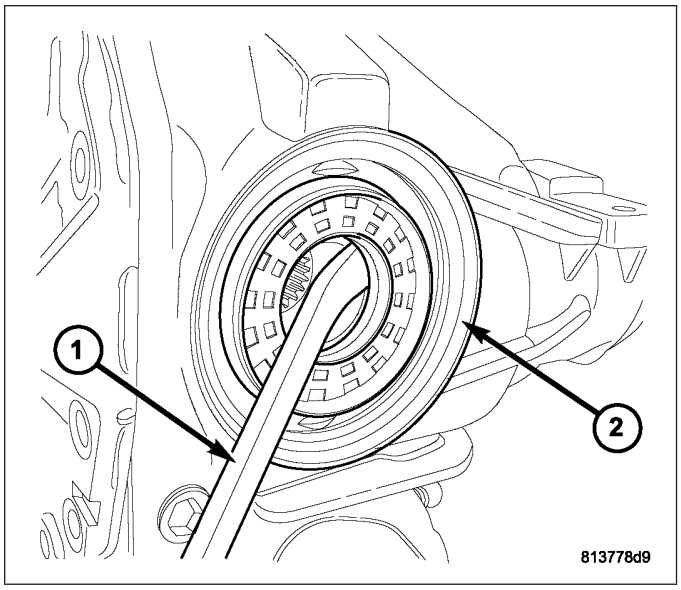

INSTALLATION

NOTE: Halfshaft inner and outer boots are not serviceable separately. Boot replacement requires entire shaft assembly replacement.

CAUTION: Unequal-length halfshafts are used. The left halfshaft is shorter than the right, and it is necessary to identify and tag halfshafts upon removal to ensure proper installation.

CAUTION: Never grasp halfshaft assembly by the inner or outer boots. Doing so may cause the boot to pucker or crease, reducing the service life of the boot and joint. Avoid over angulating or stroking the C/V joints when handling the halfshaft.

1. Install new axle seal(s) (1) using Tool 9223 (2).

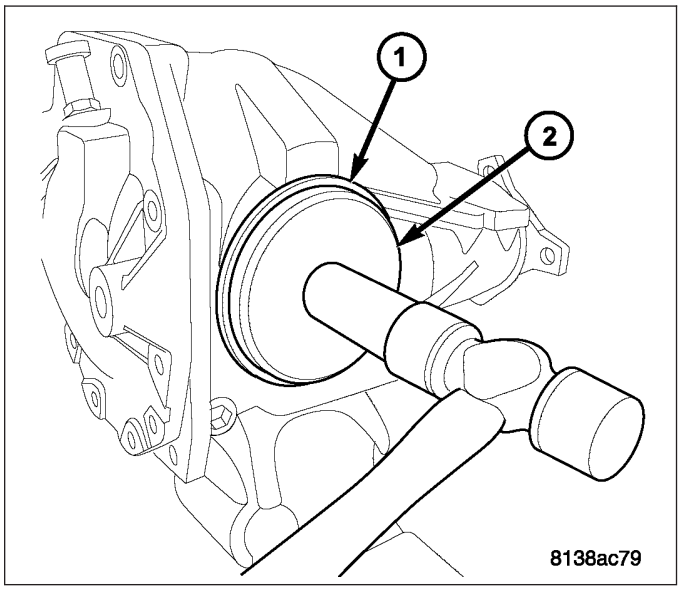

2. Install halfshaft isolation washer (1). Washer is bi-directional, and can be installed in either direction.

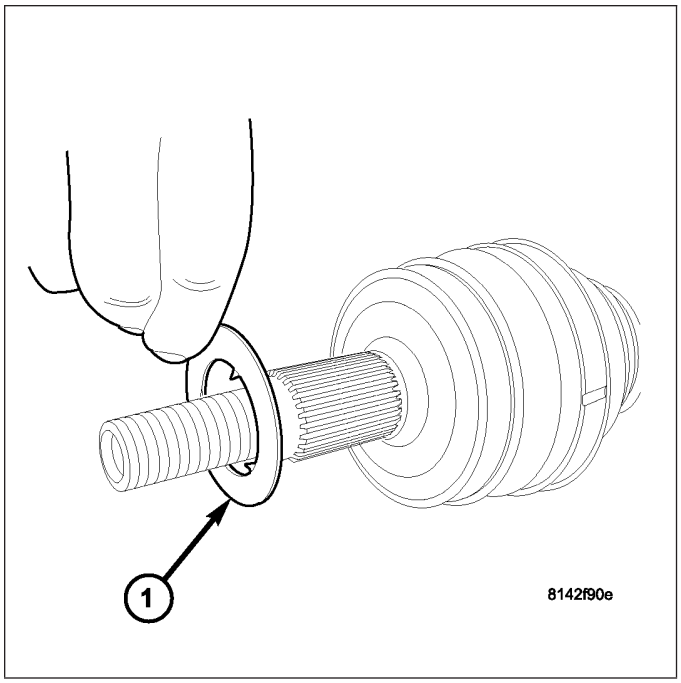

3. Install halfshaft (2) to wheel hub/knuckle assembly. Install **new** hub nut (1) by hand.

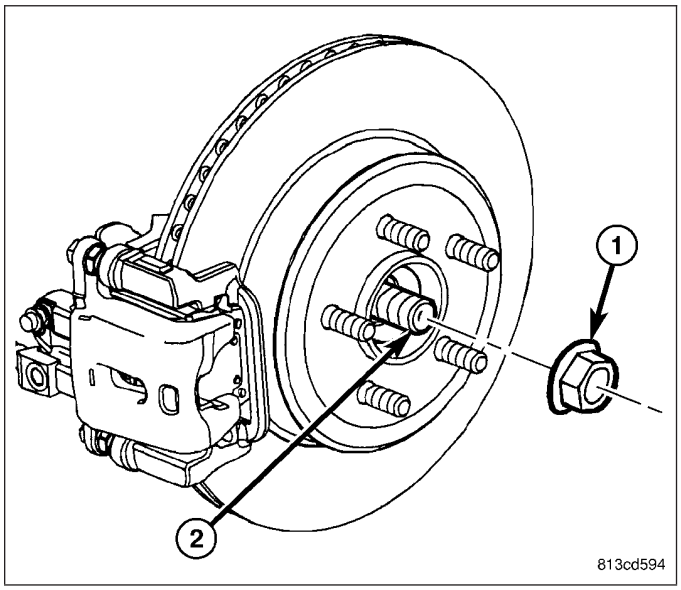

NOTE: Inspect slinger(s) for handling damage. Straighten as necessary to avoid contact with axle seal.

NOTE: Use care when installing halfshaft to axle assembly. The halfshaft installation angle should be minimized to avoid damage to seal upon installation.

4. Lubricate halfshaft inner joint bearing journal (3) with Mopar® Gear and Axle Lubricant (75W-140). Using new circlip(s), install halfshaft (1) to rear axle assembly. Use care not to damage axle seals (2). Verify proper installation by pulling outward on joint by hand.

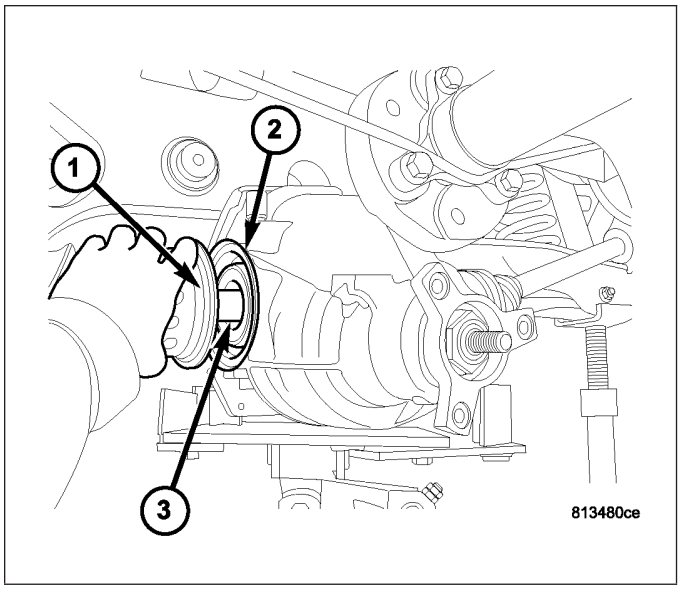

5. Raise rear axle assembly into position. Align propeller shaft index marks (3) and start propeller shaft coupler-to-axle bolt/nuts by hand.

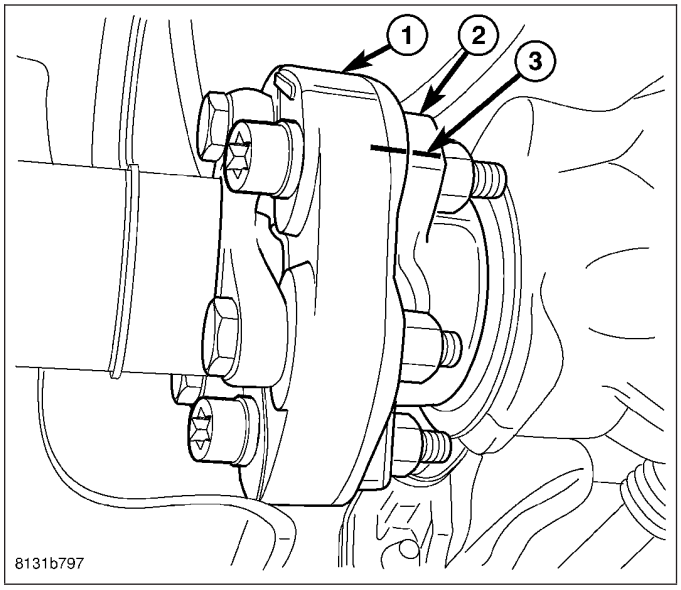

6. Install two rear axle-to-crossmember bolts (1) and torque to 220 N·m (162 ft. lbs.).

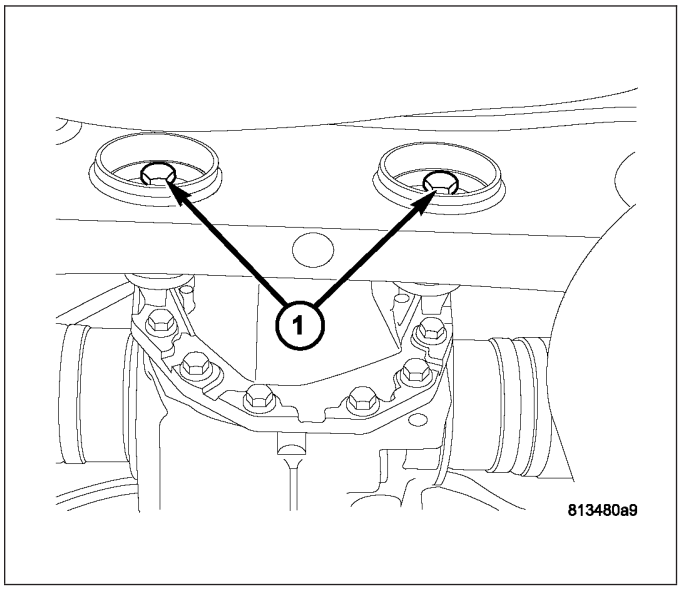

7. Install rear axle front mount isolator (1) as shown and torque bolt/nut to 65 N·m (48 ft. lbs.).

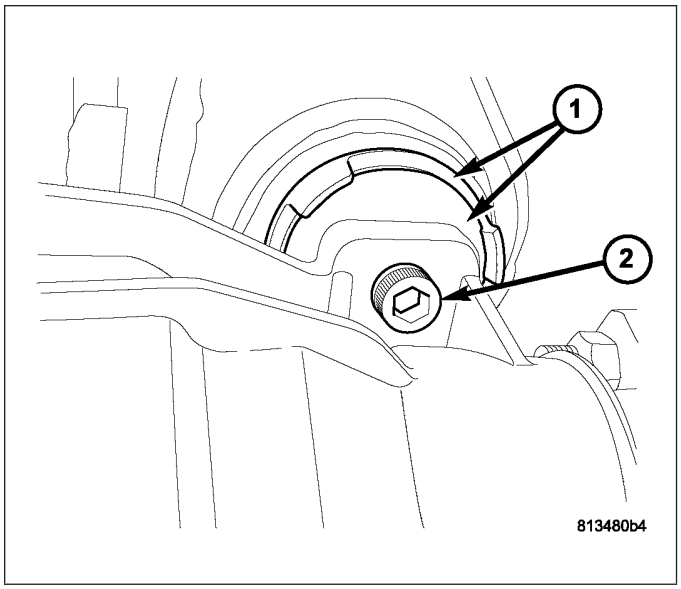

8. Again verify halfshaft inner joints are fully engaged to axle assembly.
9. Remove transmission jack (1).
10. If used, remove screw-type under-hoist jack stands (2).

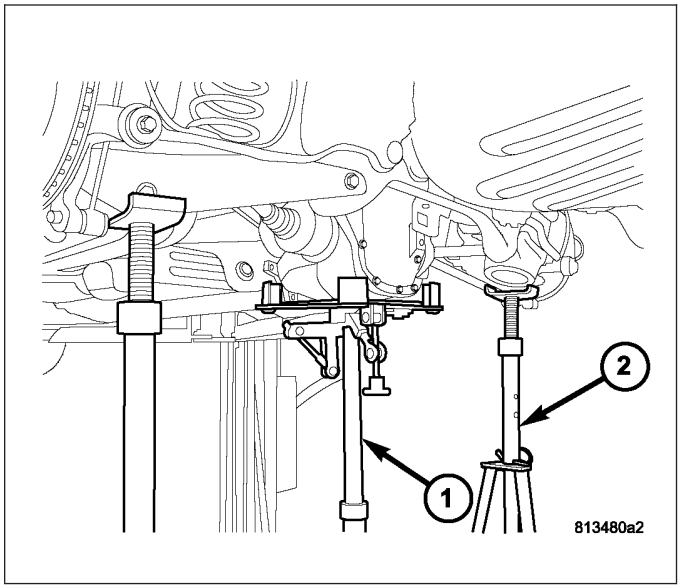

11. Torque propeller shaft coupler-to-axle flange bolt/nuts to 58 N·m (43 ft. lbs.).

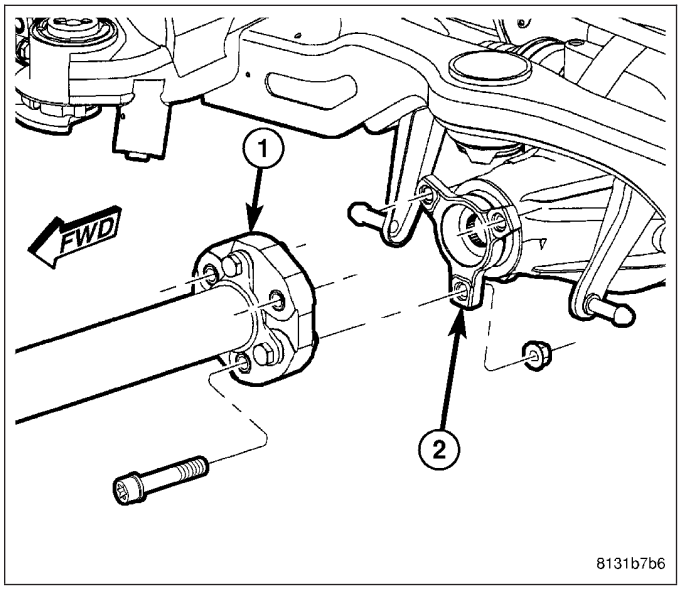

12. Using a 14mm hex, remove rear axle fill plug (1). Fill axle with Mopar® 75W-140 Synthetic Gear & Axle Lubricant in the following quantities:
    - 198 Axle: 1.4L (1.5 qts.)
    - 210 Axle: 1.6L (1.7 qts.)

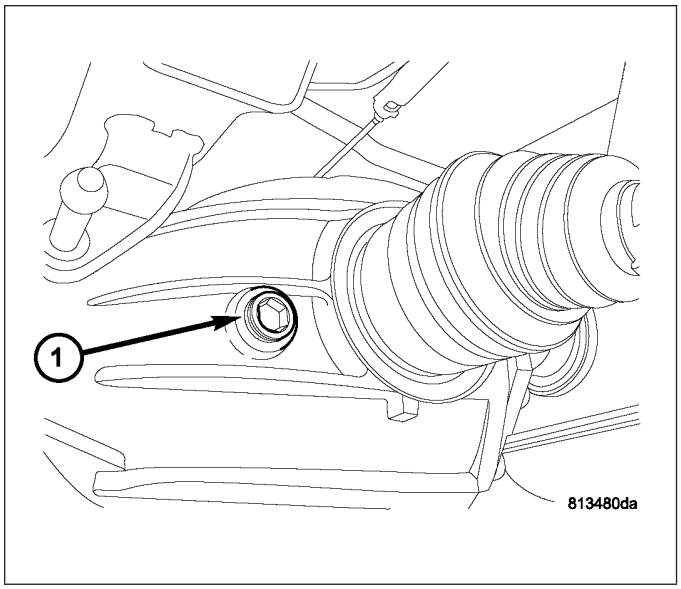

13. Install and torque fill plug (1) to:
    - 198 Axle: 60 N·m (44 ft. lbs.)
    - 210 Axle: 50 N·m (37 ft. lbs.)

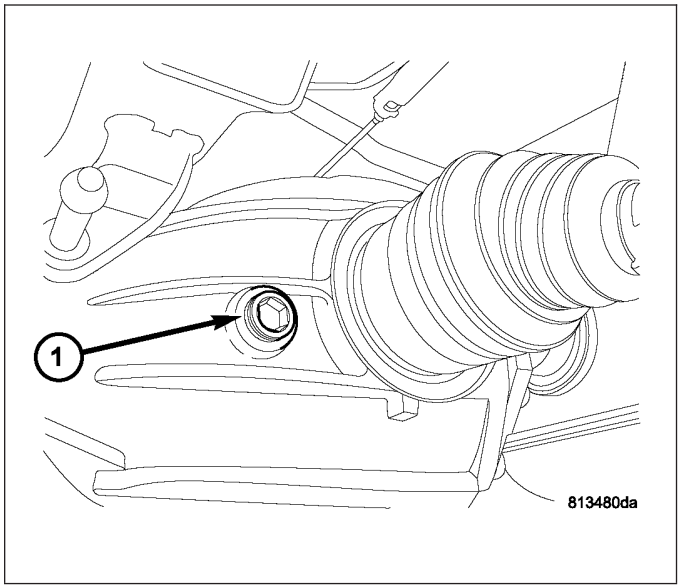

14. V8 Models: Install exhaust system. Tighten band clamps (1) to 61 N·m (45 ft. lbs.).

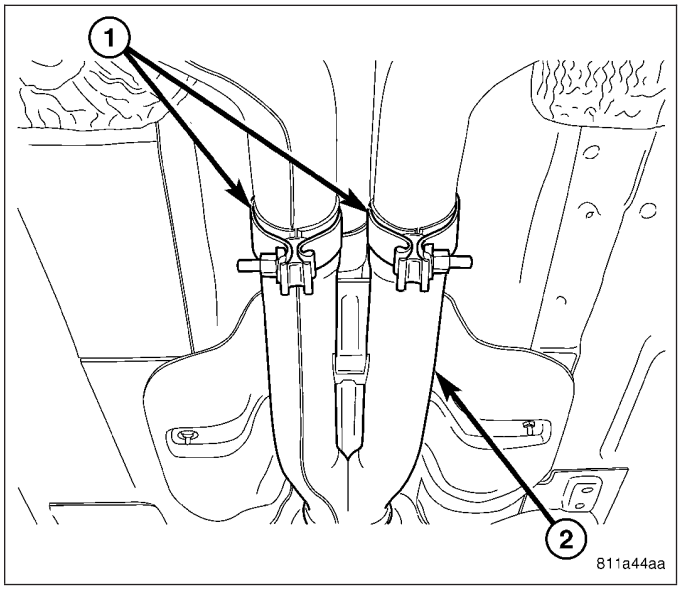

15. Lower vehicle. Torque halfshaft hub nut (1) to 213 N·m (157 ft. lbs.). Install wheel center cap.

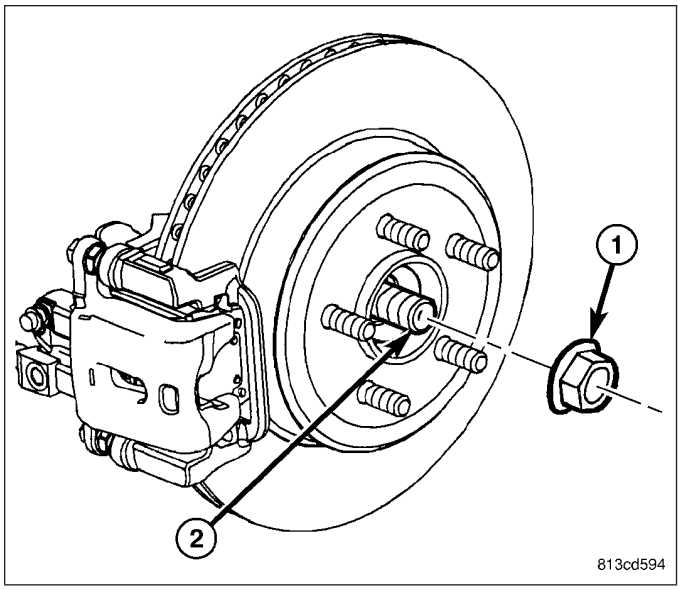

16. Install wheel/tire assembly (1) and torque lug nuts to 150 N·m (110 ft. lbs.).

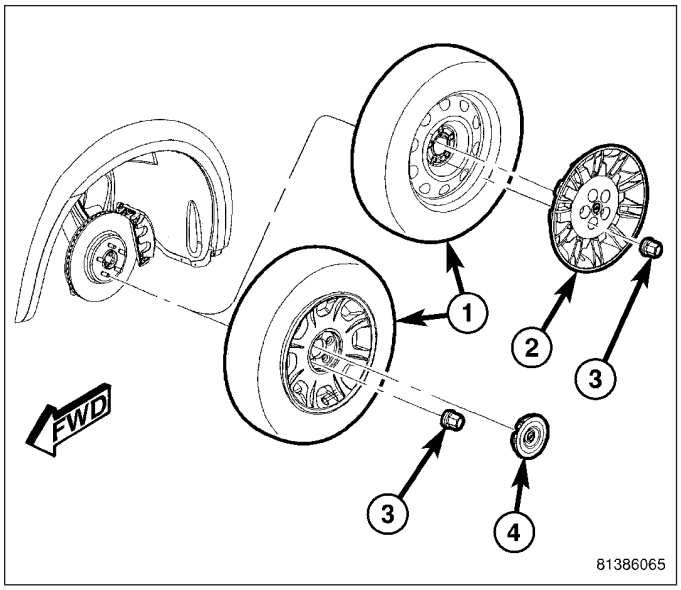

SPECIFICATIONS - TORQUE

TORQUE SPECIFICATIONS

DESCRIPTION	N·m	Ft. Lbs.	In. Lbs.
Bolt, Axle Housing-to-Crossmember	220	162	—
Bolt/Nut, Axle Front Isolator	65	48	—
Clamp, Exhaust System Band	61	45	—
Nut, Axle Hub	213	157	—

SPECIAL TOOLS

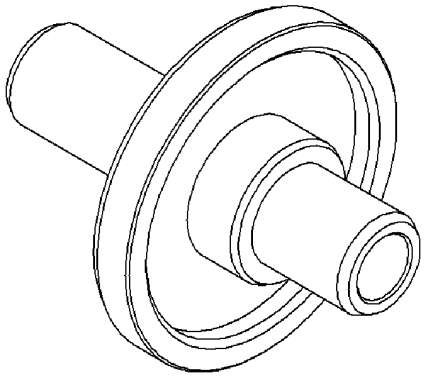

Installer, 9223

SHAFT-INTERMEDIATE

TABLE OF CONTENTS

page

SHAFT-INTERMEDIATE
REMOVAL 56
INSTALLATION 56

SHAFT-INTERMEDIATE

REMOVAL

NOTE: The intermediate shaft is serviced only as a complete assembly.

1. Remove left halfshaft assembly (2). (Refer to 3 - DIFFERENTIAL & DRIVELINE/HALF SHAFT - REMOVAL)
2. Remove four intermediate shaft-to-oil pan bolts(1). Remove assembly (3) from engine

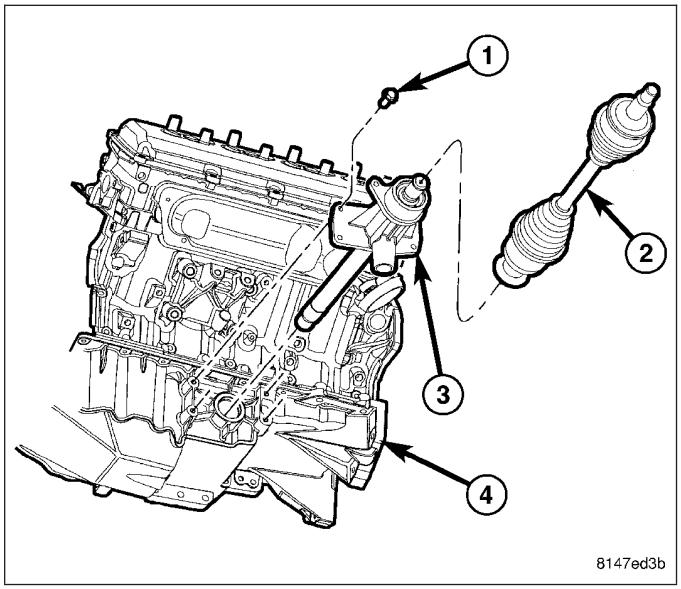

INSTALLATION

1. Install intermediate shaft assembly (3). Install and torque four intermediate shaft-to-oil pan bolts (1) to 25 N·m (18 ft. lbs.).
2. Install left halfshaft assembly (2).

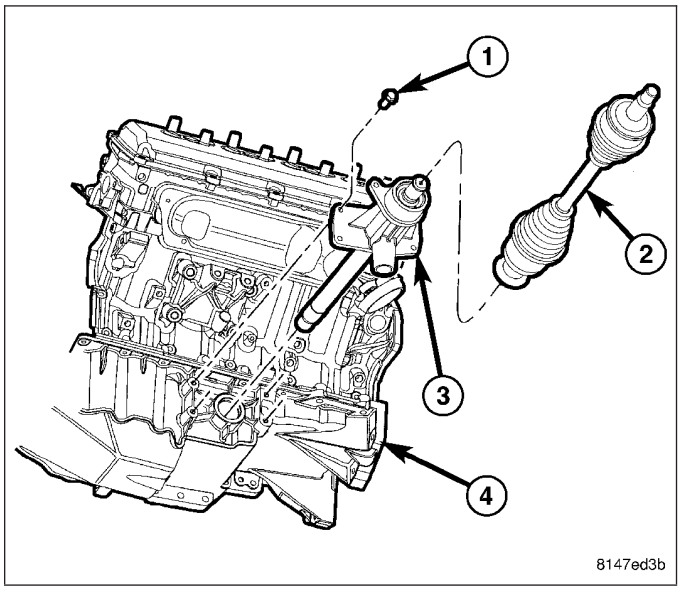

FRONT AXLE - 175 FIA

TABLE OF CONTENTS

page

FRONT AXLE - 175 FIA
DESCRIPTION 58
REMOVAL 59
DISASSEMBLY 61
ASSEMBLY 74
INSTALLATION 83
ADJUSTMENTS
ADJUSTMENT 85
SPECIFICATIONS - 175MM FIA FRONT AXLE . . . 96
SPECIAL TOOLS - 175MM FIA FRONT AXLE 97
SEAL-AXLE SHAFT
REMOVAL
REMOVAL - RIGHT AXLE SEAL 99

page

REMOVAL – LEFT AXLE SEAL 99
INSTALLATION
INSTALLATION - RIGHT AXLE SEAL 100
INSTALLATION - LEFT AXLE SEAL 100
FLUID
STANDARD PROCEDURE - FLUID FILL 102
SEAL-PINION
REMOVAL 103
INSTALLATION 104

FRONT AXLE - 175 FIA

DESCRIPTION

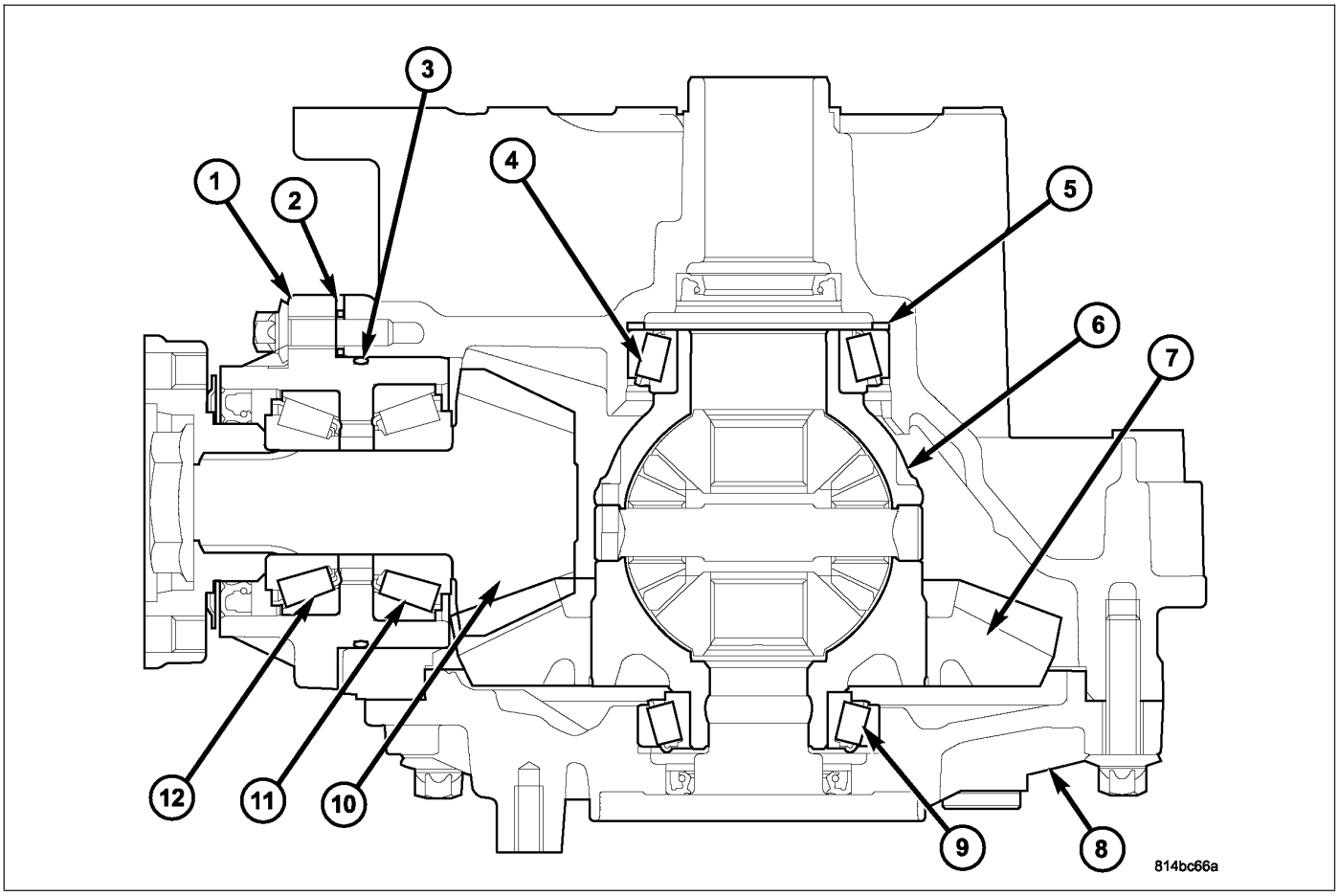

175MM FIA Axle Section View

1 - PINION HOUSING ASSEMBLY
2 - SHIM, PINION DEPTH
3 - O-RING SEAL, PINION HOUSING
4 - BEARING, DIFFERENTIAL SIDE (LARGE)
5 - SHIM, SELECT
6 - DIFFERENTIAL ASSEMBLY
7 - RING GEAR
8 - COVER, AXLE
9 - BEARING, DIFFERENTIAL SIDE (SMALL)
10 - GEAR, PINION
11 - BEARING, PINION HEAD
12 - BEARING, PINION TAIL

The 175MM FIA (Front Independent Aluminum) is an independent assembly with an aluminum housing and cast iron differential. The 175MM FIA uses an open differential which is supported by two tapered roller bearings located on either side of the case. Differential bearing preload and ring gear backlash are controlled with select shims located on the outside of the differential bearing cups. Pinion height is set with a select shim sandwiched between the pinion housing assembly and the axle housing.

The 175MM FIA Axle is available only in All-Wheel Drive models, and only in a 3:07:1 ratio.

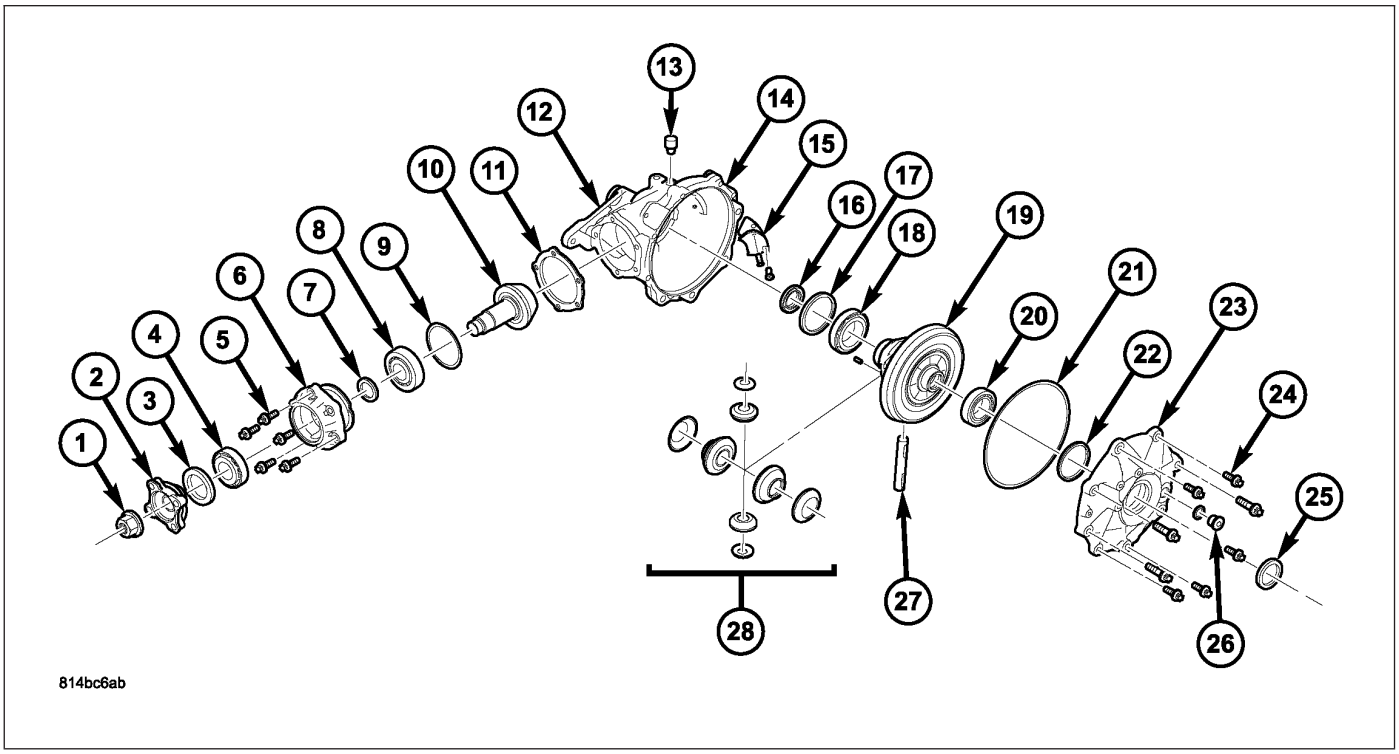

175MM FIA Front Axle Exploded View

1 - NUT, PINION FLANGE1
2 - FLANGE, PINION
3 - SEAL, PINION
4 - BEARING, PINION TAIL
5 - BOLT, PINION HOUSING
6 - HOUSING, PINION
7 - SPACER, SELECT
8 - BEARING, PINION HEAD
9 - SEAL, PINION HOUSING O-RING
10 - GEAR, PINION
11 - SHIM, PINION DEPTH (SELECT)
12 - HOUSING, AXLE
13 - VENT, HOUSING
14 - HOUSING, AXLE
15 - BAFFLE, VENT
16 - SEAL, AXLE
17 - SHIM, PRELOAD
18 - BEARING, DIFFERENTIAL SIDE
19 - ASSEMBLY, RING GEAR/DIFFERENTIAL
20 - BEARING, DIFFERENTIAL SIDE
21 - SEAL, AXLE COVER O-RING
22 - SHIM, BEARING PRELOAD
23 - COVER, AXLE HOUSING
24 - BOLT, AXLE HOUSING COVER
25 - SEAL, AXLE
26 - PLUG, AXLE FILL
27 - SHAFT, DIFFERENTIAL PINION

REMOVAL

1. Raise and support vehicle. (Refer to LUBRICATION & MAINTENANCE/HOISTING - STANDARD PROCEDURE)
2. Remove both front halfshafts. (Refer to 3 - DIFFERENTIAL & DRIVELINE/HALF SHAFT - REMOVAL)
3. Remove front intermediate shaft assembly. (Refer to 3 - DIFFERENTIAL & DRIVELINE/INTERMEDIATE SHAFT - REMOVAL)
4. Remove front propeller shaft. (Refer to 3 - DIFFERENTIAL & DRIVELINE/PROPELLER SHAFT - REMOVAL)
5. Remove RH catalytic converter/exhaust pipe assembly. (Refer to 11 - EXHAUST SYSTEM/CATALYTIC CONVERTER - REMOVAL)

6. Separate power steering return line (3) from cradle by unfastening clips (1).

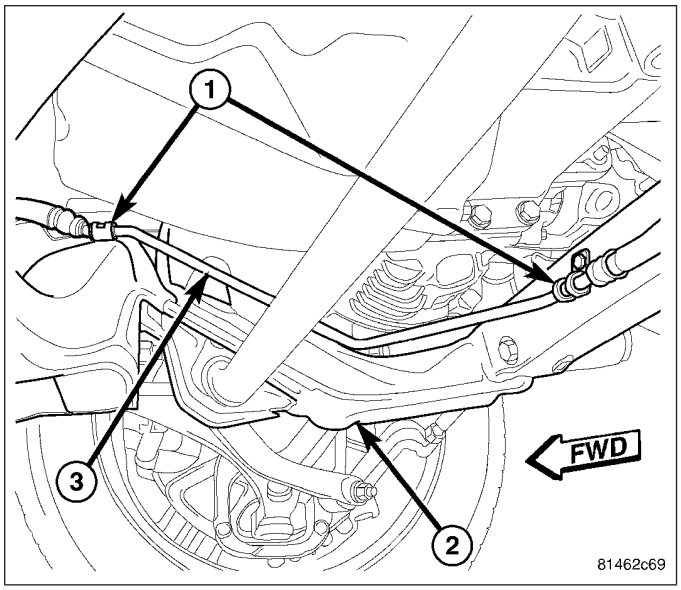

7. Remove front axle housing support bracket (1).

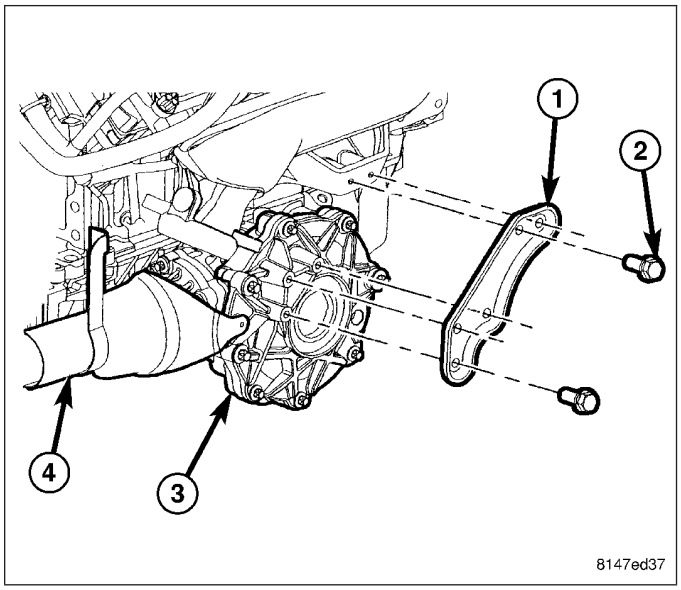

8. Remove seven front axle assembly-to-oil pan bolts. Remove axle assembly (1) from vehicle.

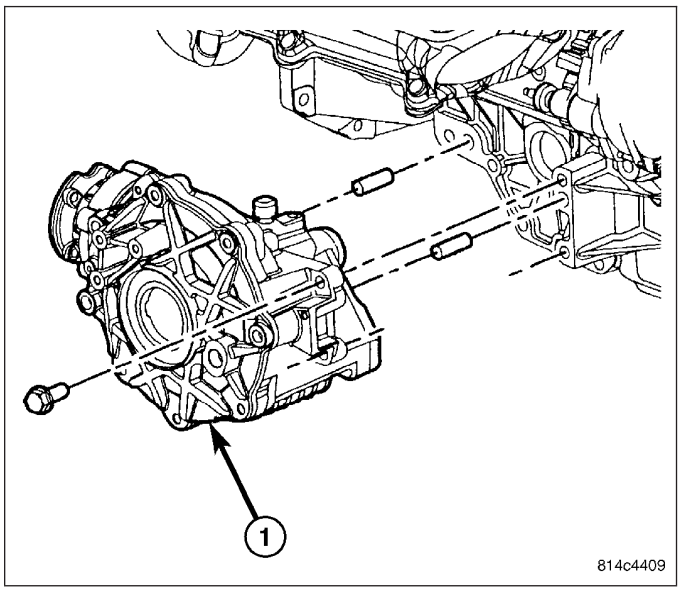

DISASSEMBLY

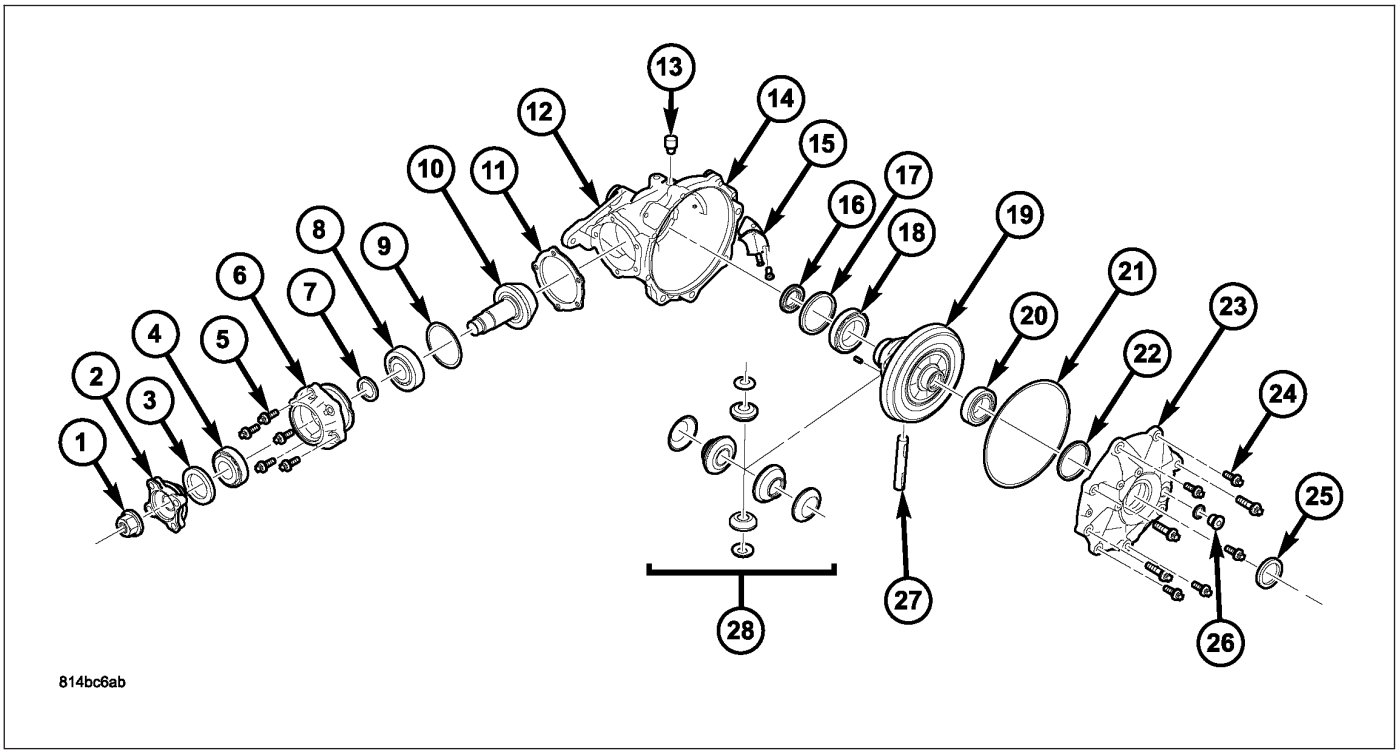

175MM FIA Front Axle Exploded View

1 - NUT, PINION FLANGE1
2 - FLANGE, PINION
3 - SEAL, PINION
4 - BEARING, PINION TAIL
5 - BOLT, PINION HOUSING
6 - HOUSING, PINION
7 - SPACER, SELECT
8 - BEARING, PINION HEAD
9 - SEAL, PINION HOUSING O-RING
10 - GEAR, PINION
11 - SHIM, PINION DEPTH (SELECT)
12 - HOUSING, AXLE
13 - VENT, HOUSING
14 - HOUSING, AXLE
15 - BAFFLE, VENT
16 - SEAL, AXLE
17 - SHIM, PRELOAD
18 - BEARING, DIFFERENTIAL SIDE
19 - ASSEMBLY, RING GEAR/DIFFERENTIAL
20 - BEARING, DIFFERENTIAL SIDE
21 - SEAL, AXLE COVER O-RING
22 - SHIM, BEARING PRELOAD
23 - COVER, AXLE HOUSING
24 - BOLT, AXLE HOUSING COVER
25 - SEAL, AXLE
26 - PLUG, AXLE FILL
27 - SHAFT, DIFFERENTIAL PINION

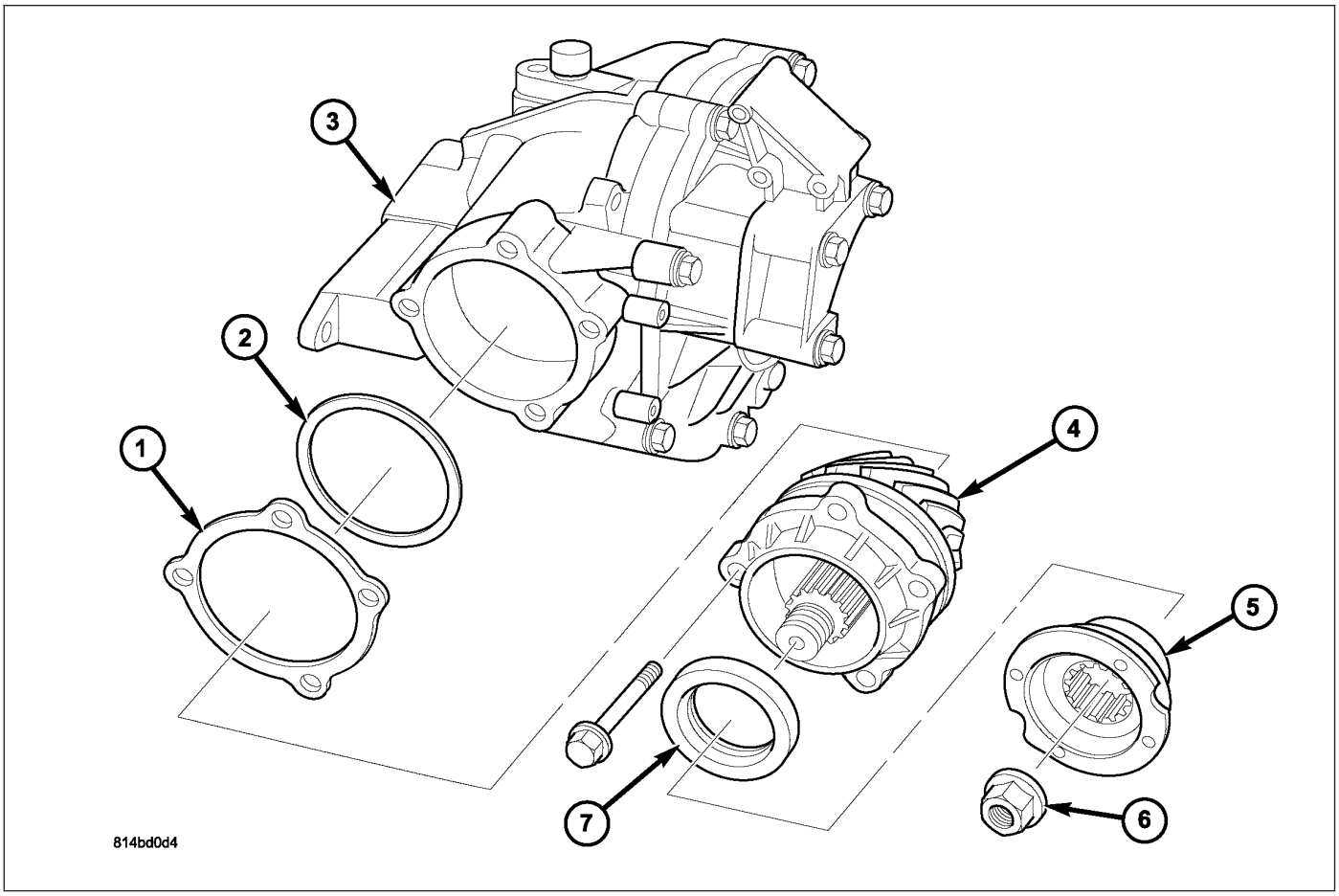

1. Remove pinion housing assembly (4).
2. Remove pinion flange nut: Install Tool 6958 (1) as shown.

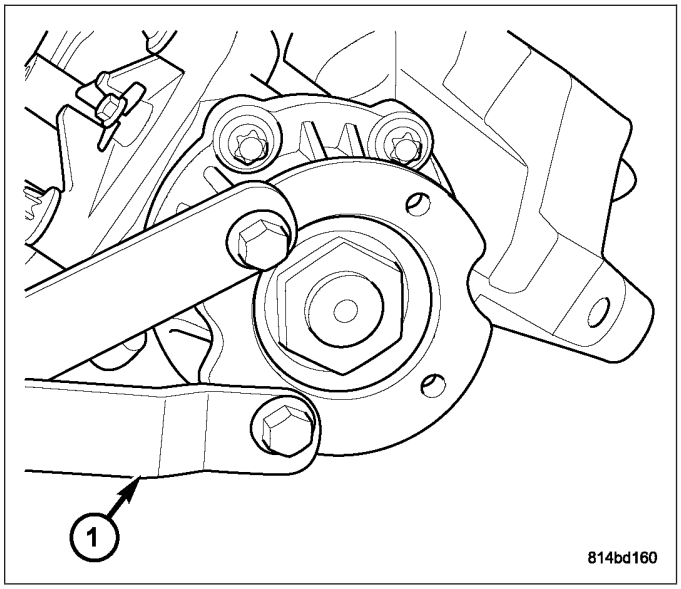

3. Using suitable socket (1) remove pinion flange nut.

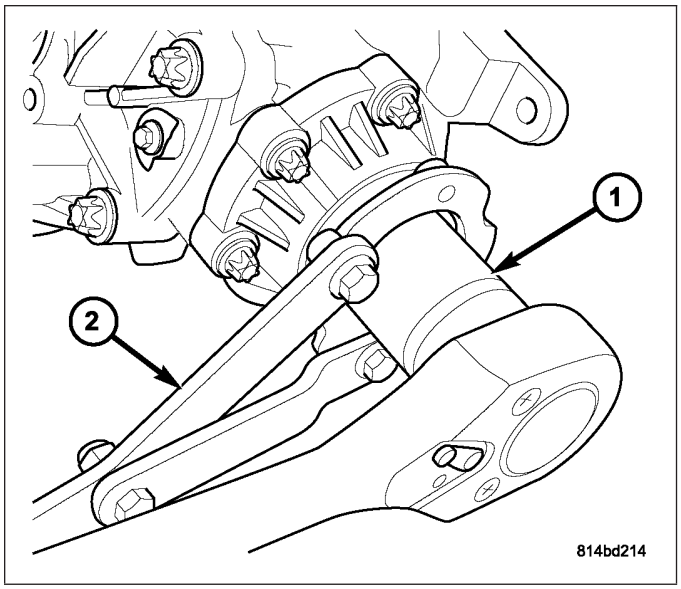

4. Using puller 1026 (1), remove pinion flange.

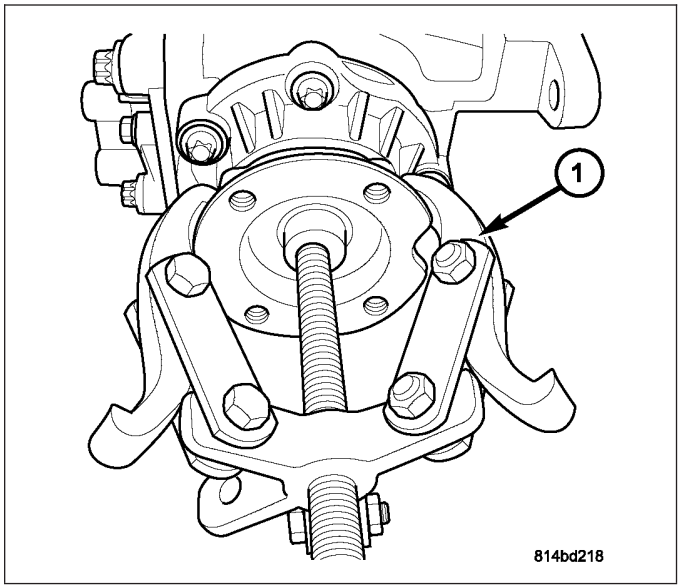

5. Using suitable screwdriver, remove pinion seal (1).

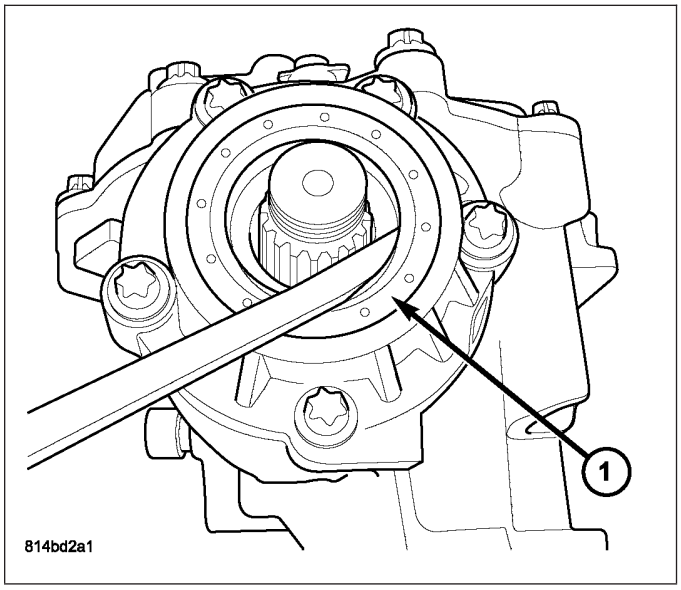

6. Remove pinion housing assembly bolts (1)

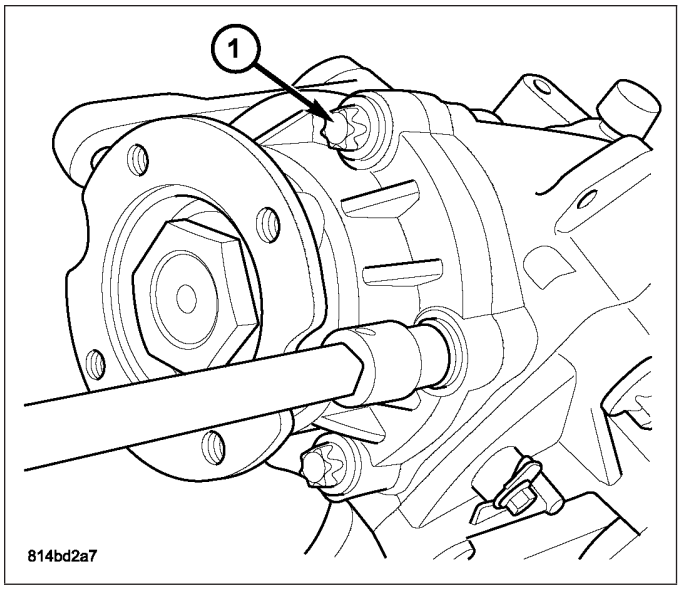

7. Remove pinion depth shim (1).

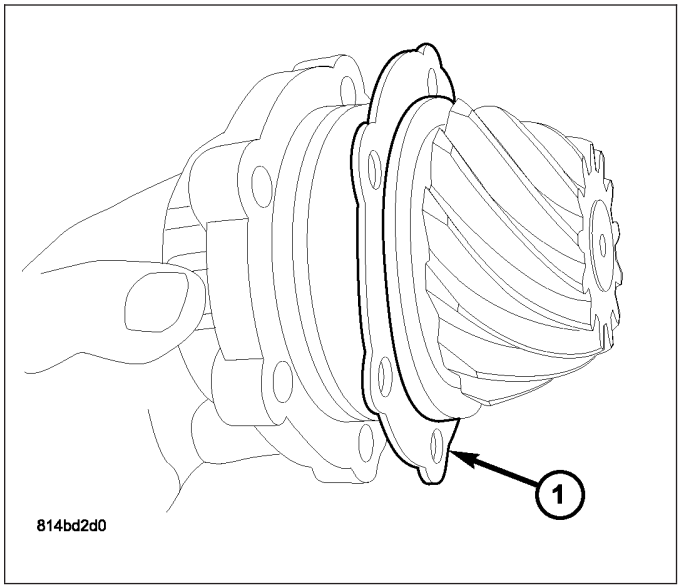

8. Remove pinion housing o-ring seal (1).

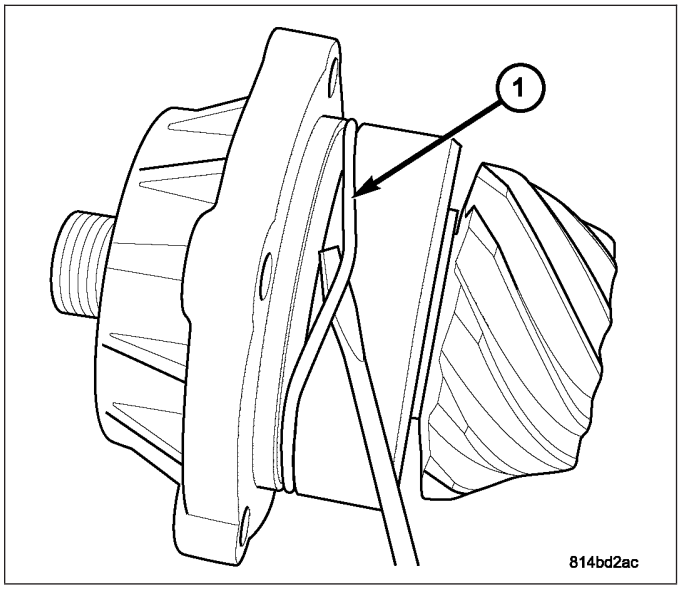

9. Measure pinion housing assembly rotating torque. Rotating torque should be 130-250 N·cm (12-22 in. lbs.). If rotating torque is outside of this range, bearing replacement is required. Refer to Pinion Housing Disassembly.

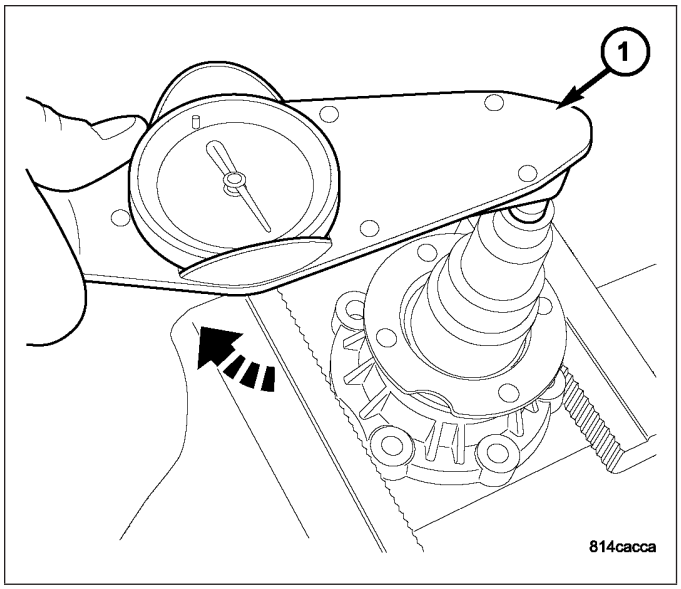

10. Measure differential rotating torque with Tool C-4995-A. Rotating torque should be within 190-260 N·cm (17–23 in. lbs). Measurements recorded out of this range require differential side bearing replacement and/or side bearing preload adjustment.

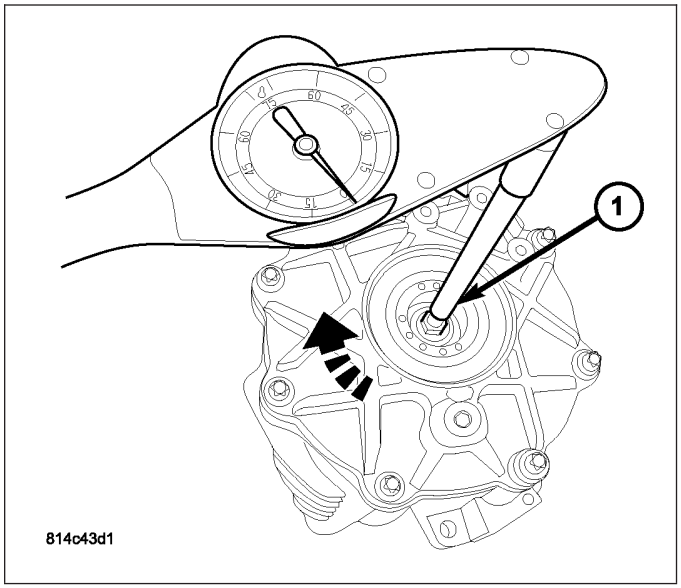

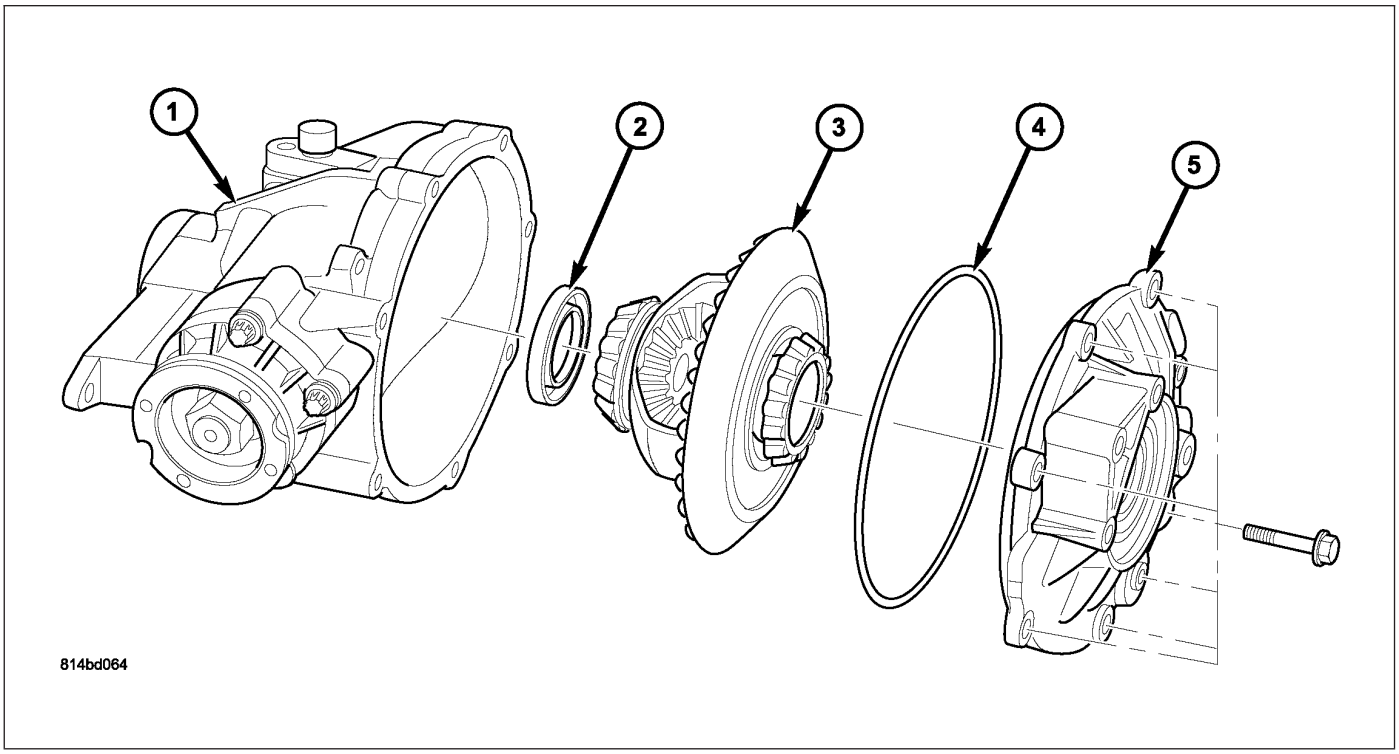

11. Remove axle housing cover (5). Remove differential assembly (3) and inboard axle seal (2).
12. Remove axle housing cover o-ring (1).

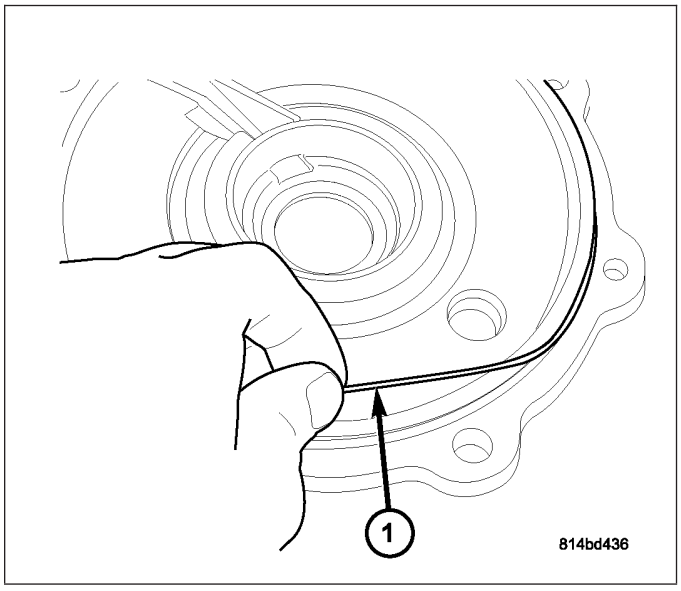

PINION HOUSING DISASSEMBLY

1. Press pinion gear/shaft (2) out of housing. Use suitable adapter (1) to protect end of shaft

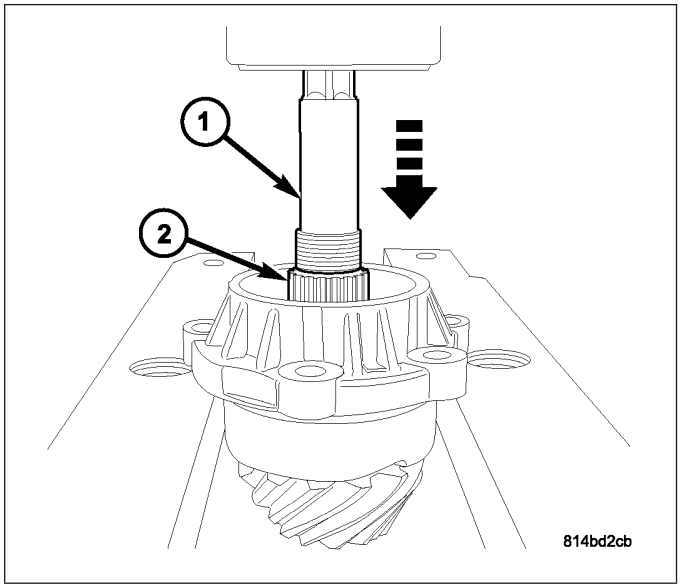

2. Remove pinion bearing spacer (1)

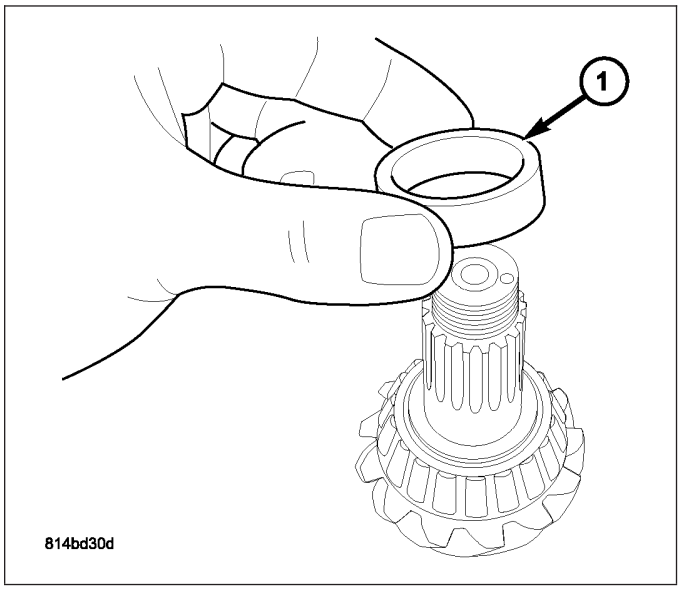

Using splitter 1130 or equivalent (2), press off pinion head bearing (1).

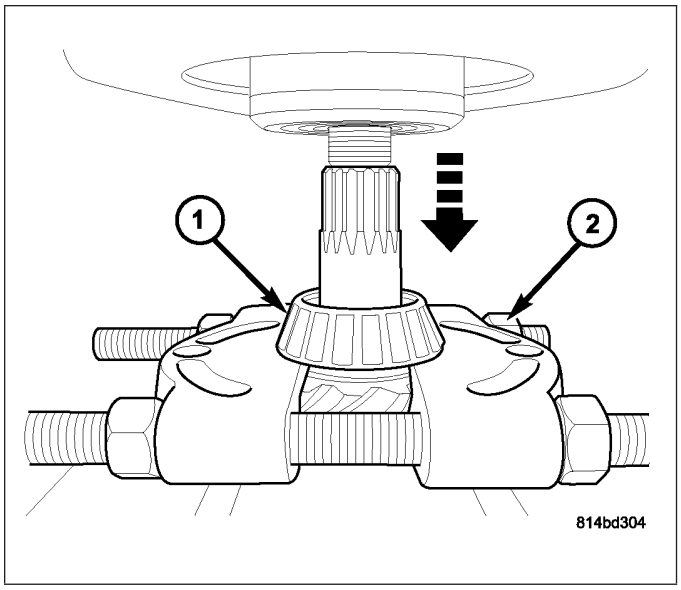

3. Using a suitable punch, remove pinion tail bearing cup (1).

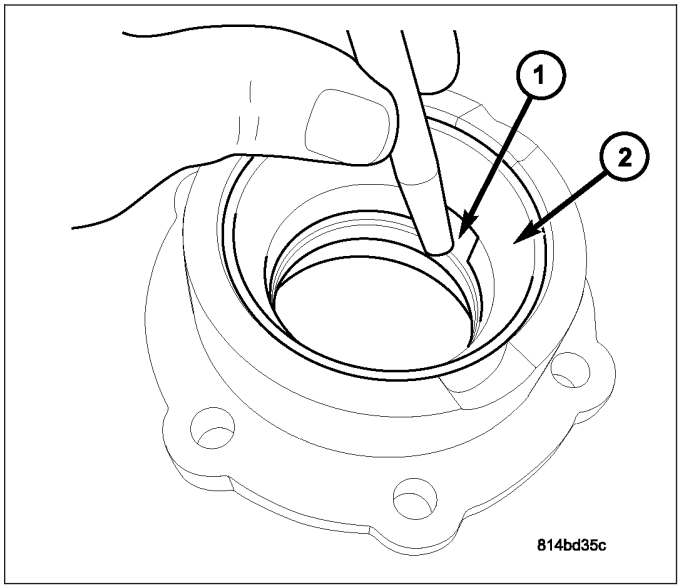

4. Using suitable punch, remove pinion head bearing cup (1).

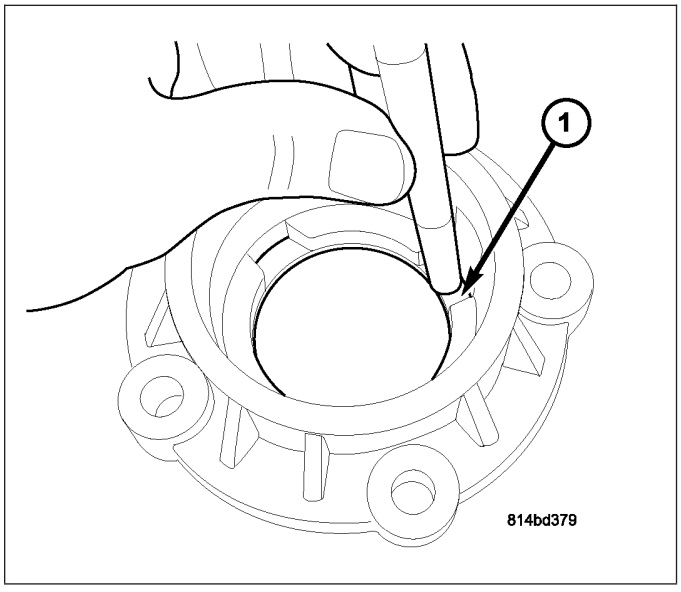

DIFFERENTIAL DISASSEMBLY

NOTE: The differential ring gear is welded to the differential case and is not serviceable separately.

1. Rotate differential side gears about case and remove side gears (2) and thrust washers (1).

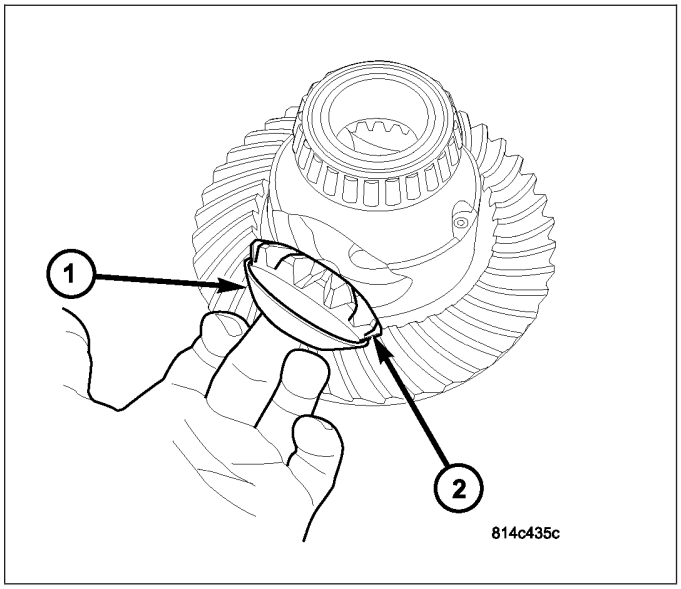

2. Using suitable punch, drive pinion shaft roll pin (1) into case until it bottoms.

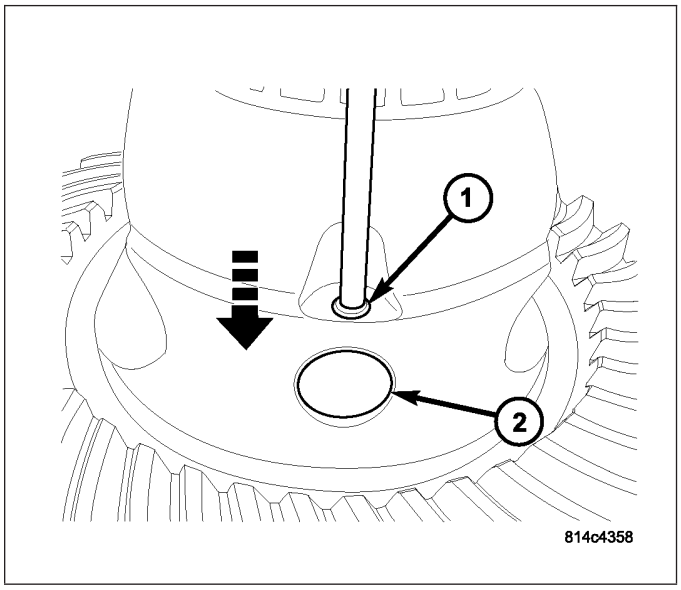

3. Remove pinion shaft (1), pinion gears (3) and thrust washers (2). Drive out and discard pinion shaft roll pin.

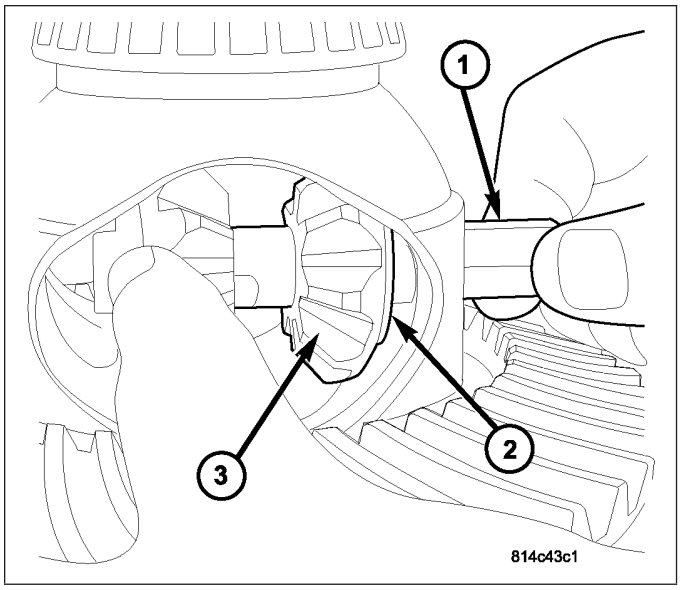

4. Using Tool 9676 (1) and Tool 1130 (3), press differential side bearing (2) off of ring gear side and discard.

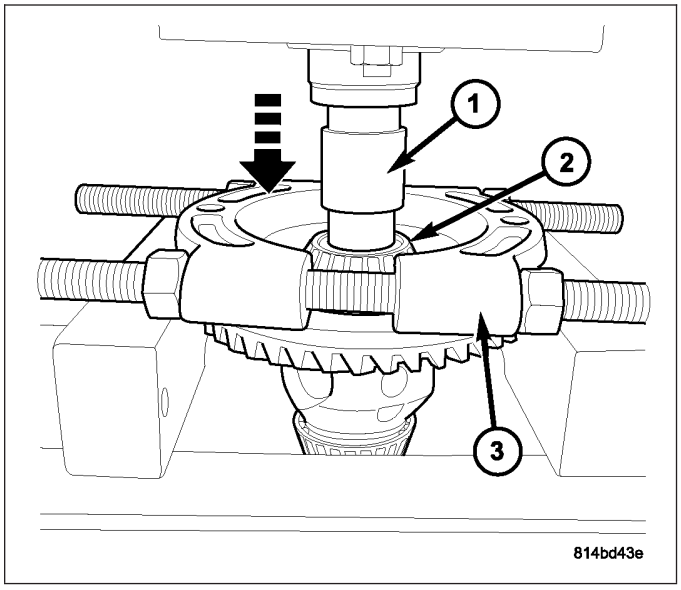

5. Using Tool 9676 (1) and Tool 1130 (3), press differential side bearing (2) off of opposite side and discard.

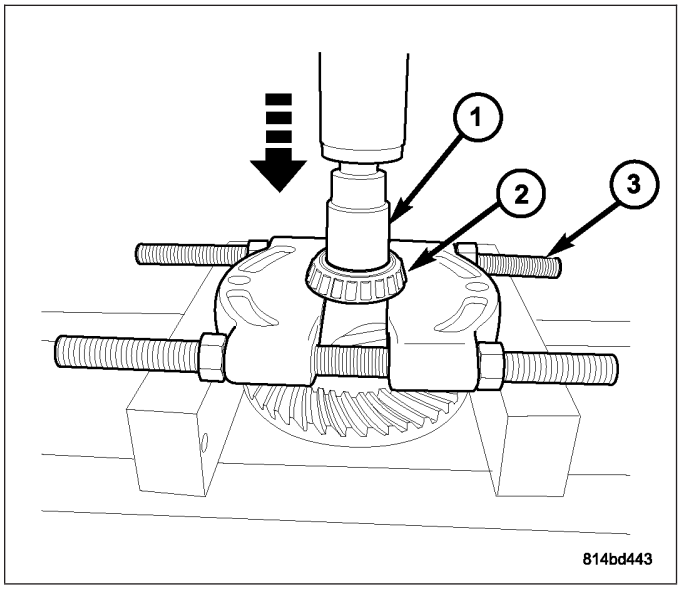

AXLE HOUSING

1. Remove differential side bearing cup from axle housing cover. Install Tool 6514 (1) as shown.

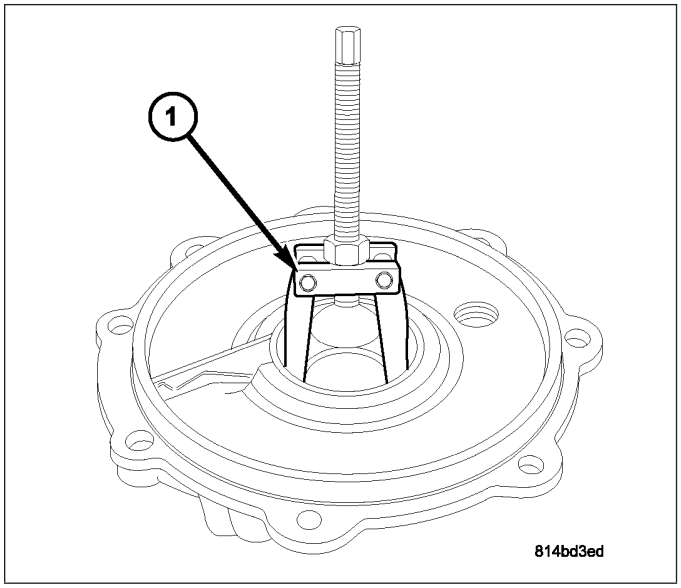

2. Remove differential side bearing cup with Tool 6514 (1).

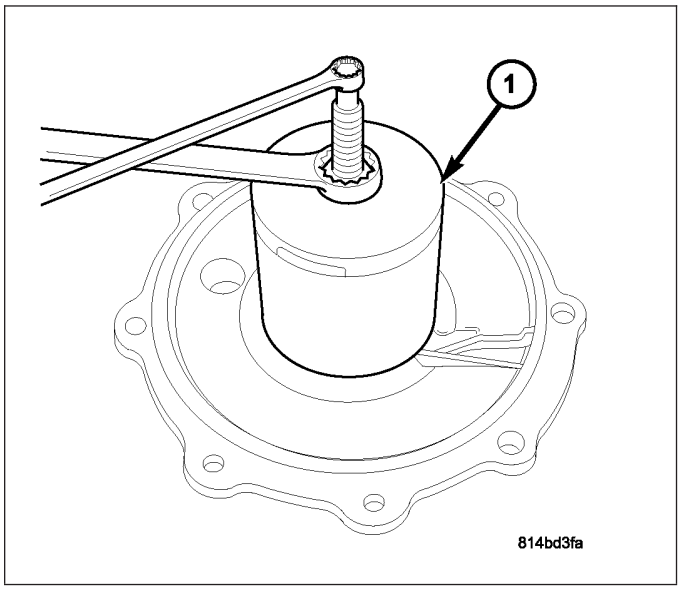

NOTE: Side bearing preload shims affect adjust differential bearing preload and ring gear backlash and must not be mixed up. Measure and tag side bearing preload shims upon removal.

3. Remove side bearing preload shim (1).

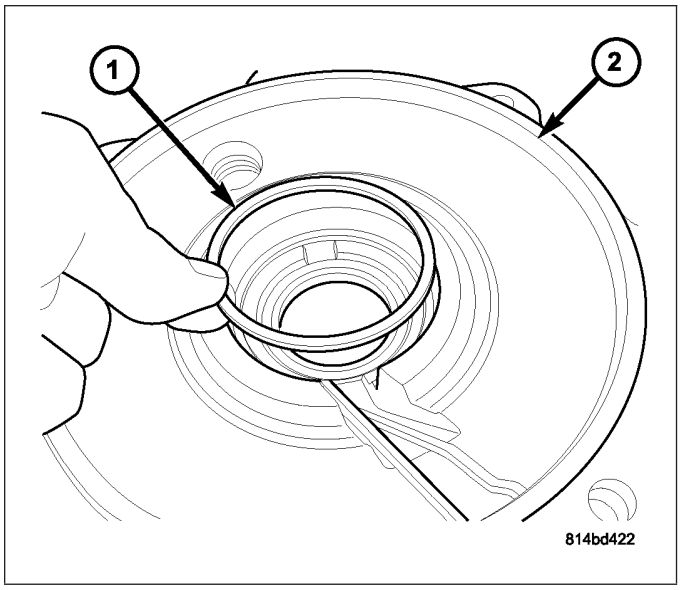

4. Measure preload shim (1) to identify for replacement.

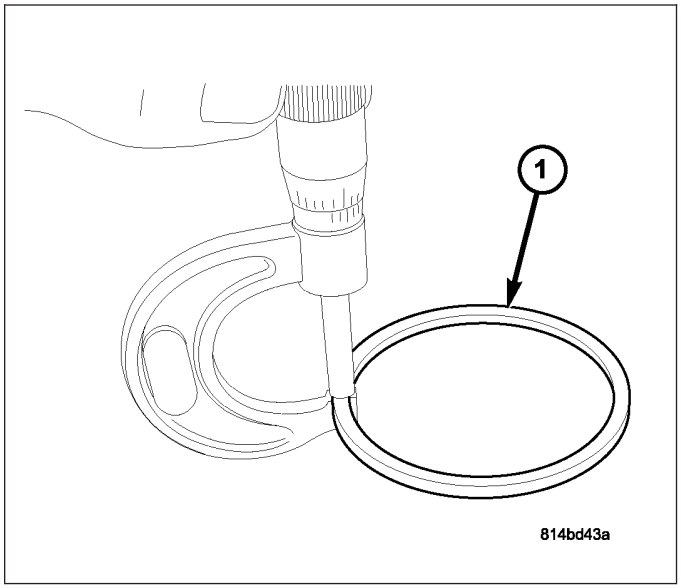

5. Using Tool 9664 (1) and Slide Hammer C-637 (2), remove and discard inboard differential side bearing cup.

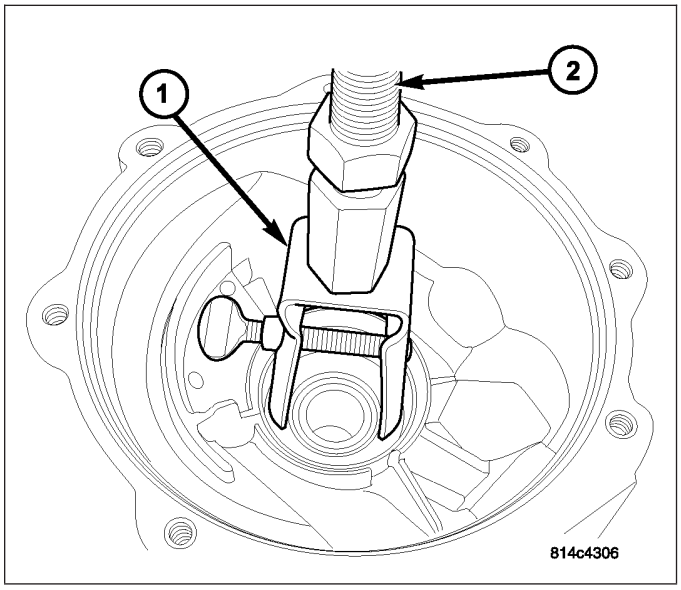

6. Remove side bearing preload shim from housing (1).

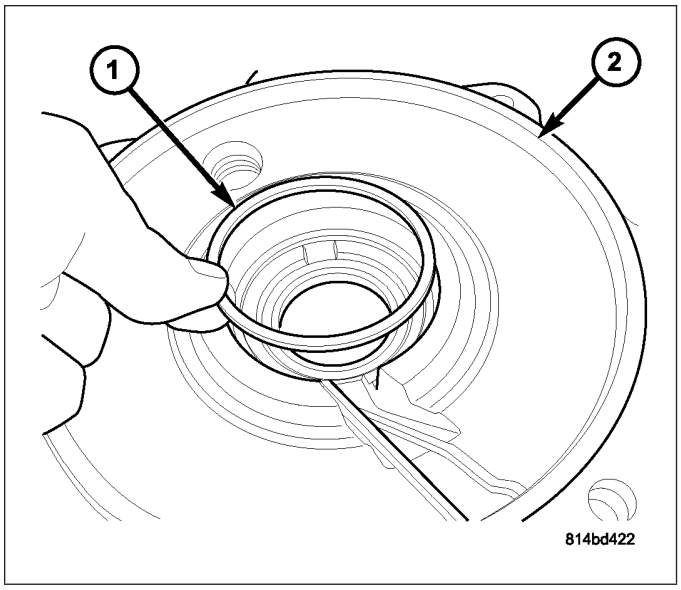

7. Measure preload shim (1) to identify for replacement.

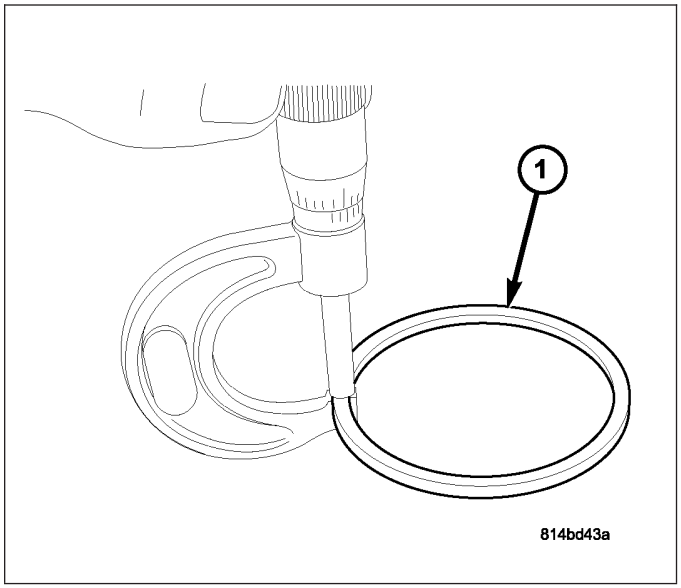

ASSEMBLY

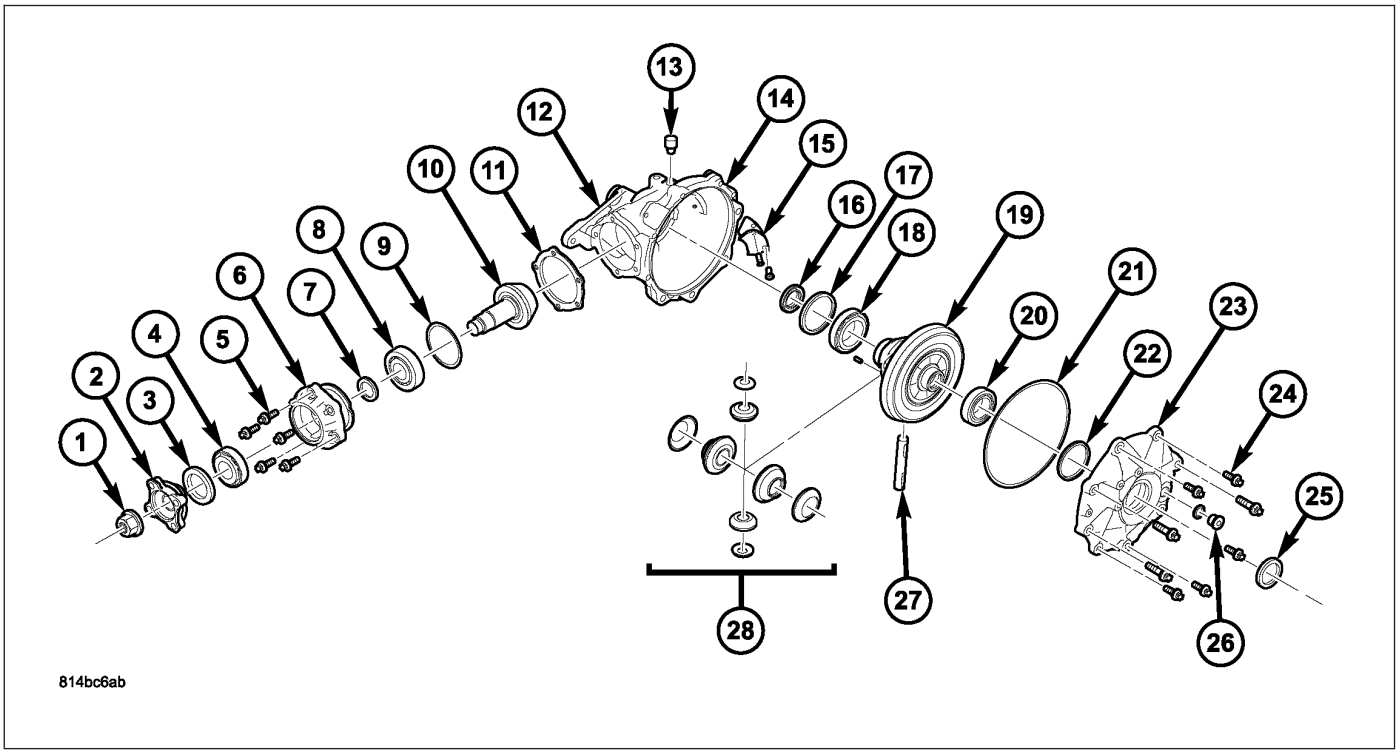

175MM FIA Front Axle Exploded View

1 - NUT, PINION FLANGE1
2 - FLANGE, PINION
3 - SEAL, PINION
4 - BEARING, PINION TAIL
5 - BOLT, PINION HOUSING
6 - HOUSING, PINION
7 - SPACER, SELECT
8 - BEARING, PINION HEAD
9 - SEAL, PINION HOUSING O-RING
10 - GEAR, PINION
11 - SHIM, PINION DEPTH (SELECT)
12 - HOUSING, AXLE
13 - VENT, HOUSING
14 - HOUSING, AXLE
15 - BAFFLE, VENT
16 - SEAL, AXLE
17 - SHIM, PRELOAD
18 - BEARING, DIFFERENTIAL SIDE
19 - ASSEMBLY, RING GEAR/DIFFERENTIAL
20 - BEARING, DIFFERENTIAL SIDE
21 - SEAL, AXLE COVER O-RING
22 - SHIM, BEARING PRELOAD
23 - COVER, AXLE HOUSING
24 - BOLT, AXLE HOUSING COVER
25 - SEAL, AXLE
26 - PLUG, AXLE FILL
27 - SHAFT, DIFFERENTIAL PINION

DIFFERENTIAL/RING GEAR ASSEMBLY

1. Install pinion shaft (1), pinion gears (3) and thrust washers (2) as shown.

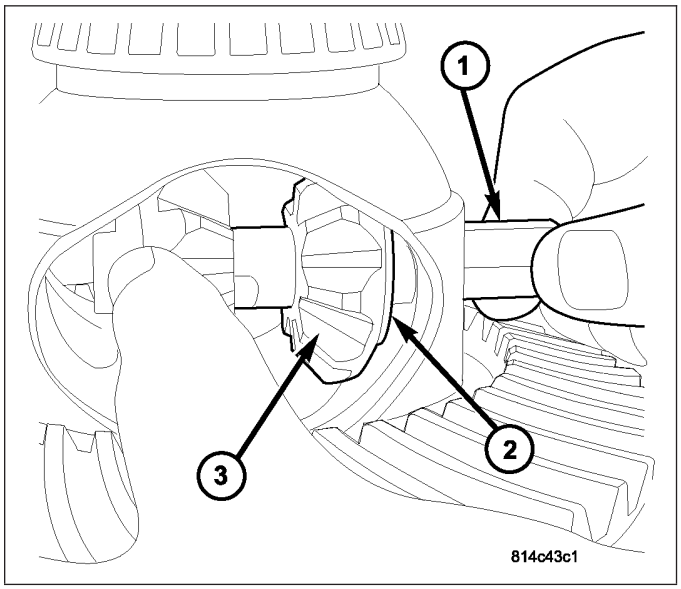

2. Using suitable punch, install **new** roll pin and install flush to differential case (1).

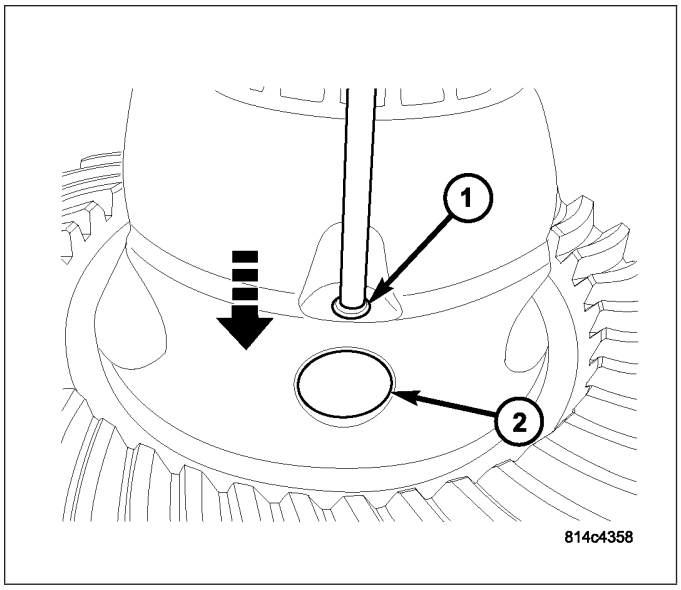

3. Install differential side gears and thrust washers (1,2). Rotate into position.

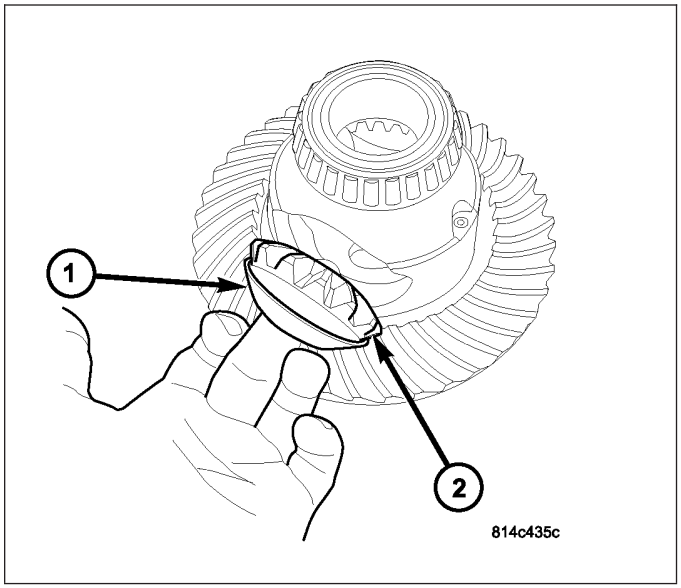

4. Using Tool 9666 (1), install **new** differential side bearing (ring gear side).

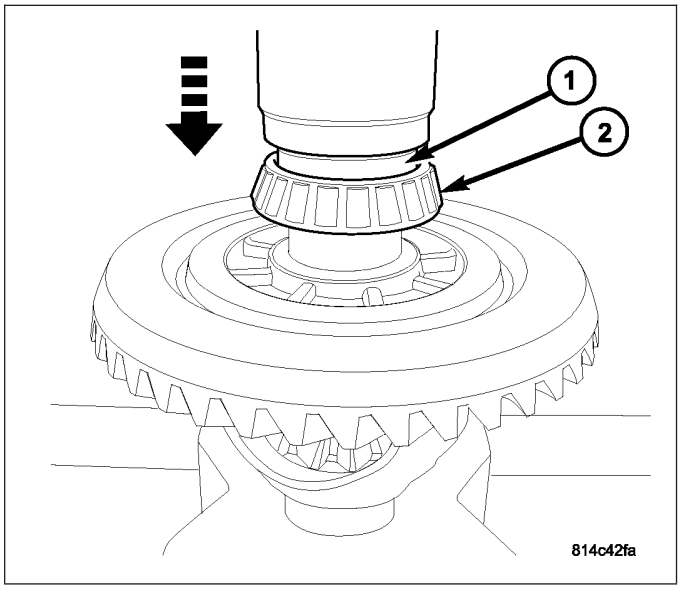

5. Using Tool 9665 (1), install **new** differential side bearing (opposite side).

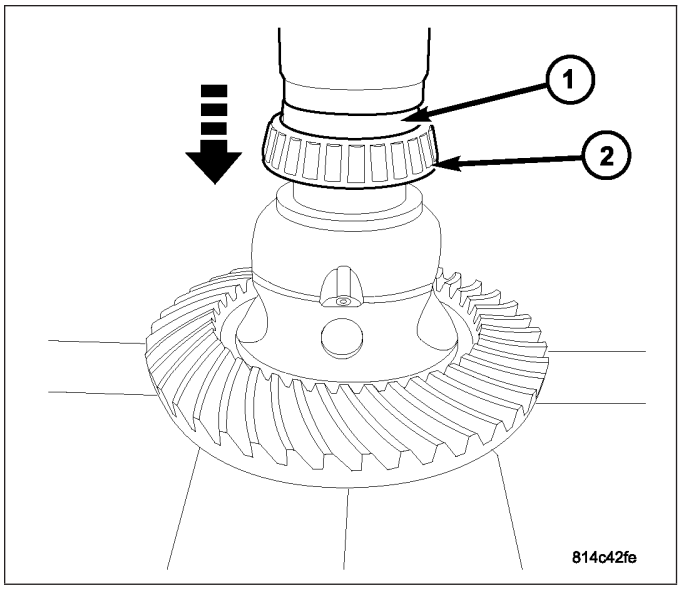

PINION HOUSING ASSEMBLY

1. Using Tools C-4171 (2) and D-129 (1), press **new** pinion head bearing cup (3) into pinion gear housing.

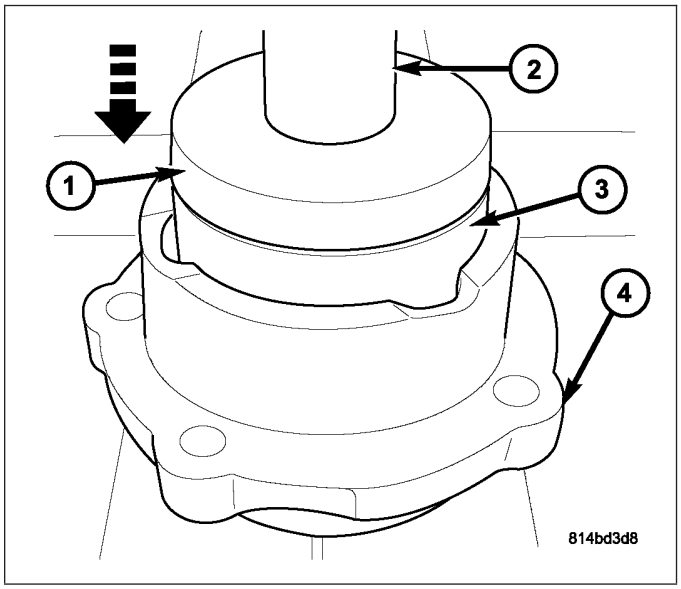

2. Using Tools C-4171 (1) and D-130 (2), press new pinion tail bearing cup into pinion gear housing.

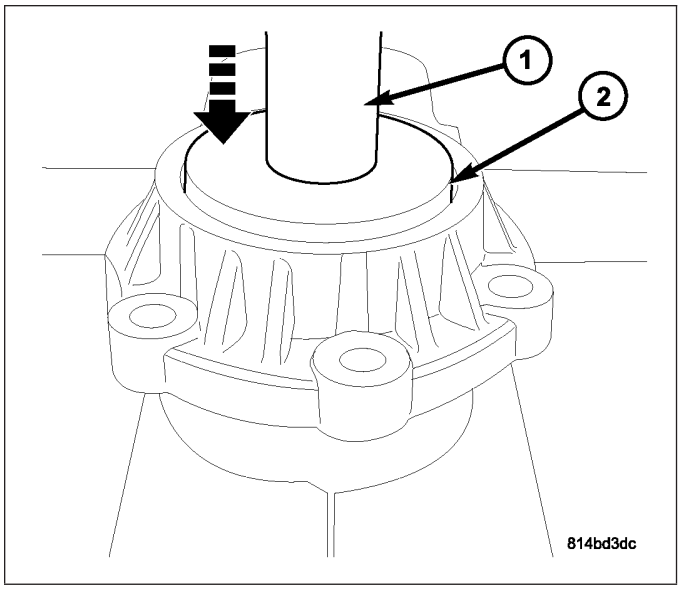

3. Using Tool L-4507, install **new** pinion head bearing.

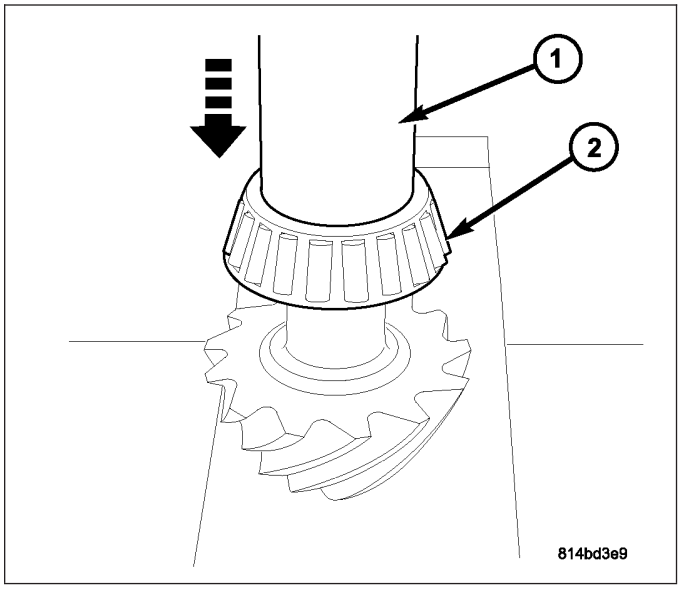

4. Install pinion bearing select spacer (1) removed upon dissasembly. Spacer thickness will be measured/verified at end of assembly.

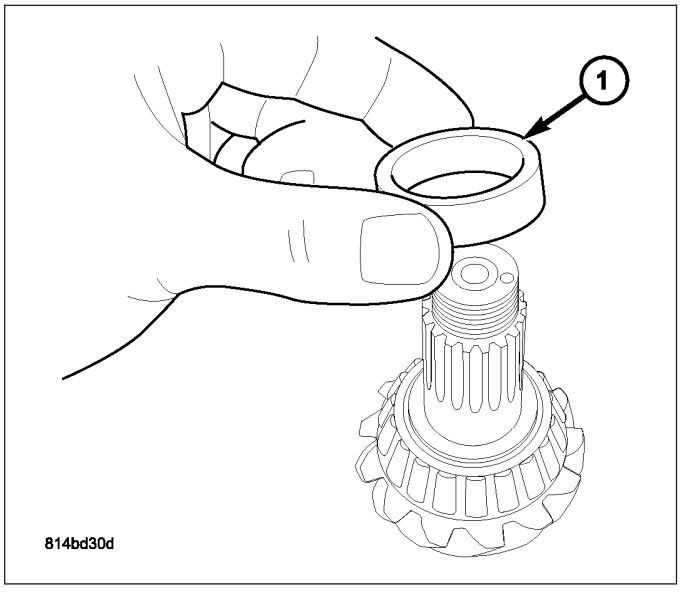

5. Install pinion gear/bearing assembly into pinion housing. Using Tool L-4507 (1) , press **new** pinion tail bearing (2) onto shaft.

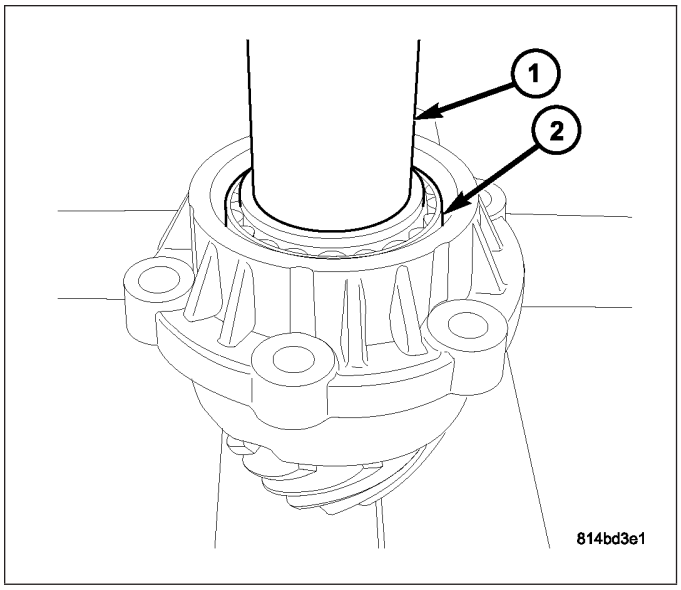

6. Usint Tool 9677 (1), install **new** pinion seal.

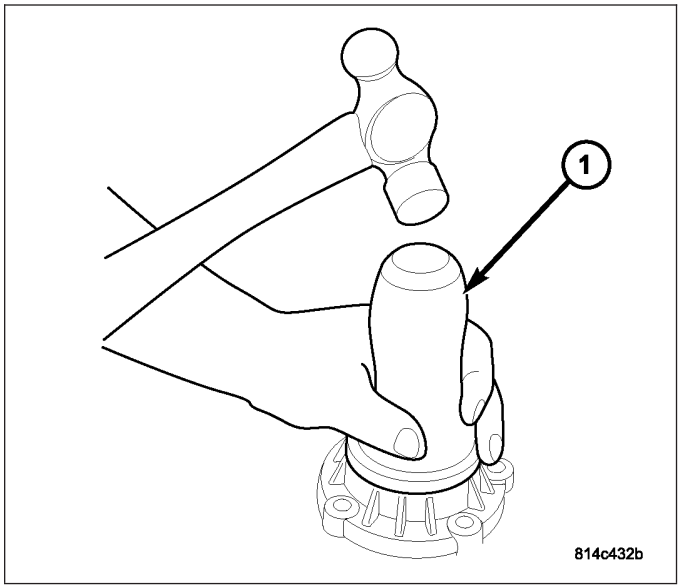

7. Using Tool L-4507 (1), install pinion flange (2) until it bottoms.

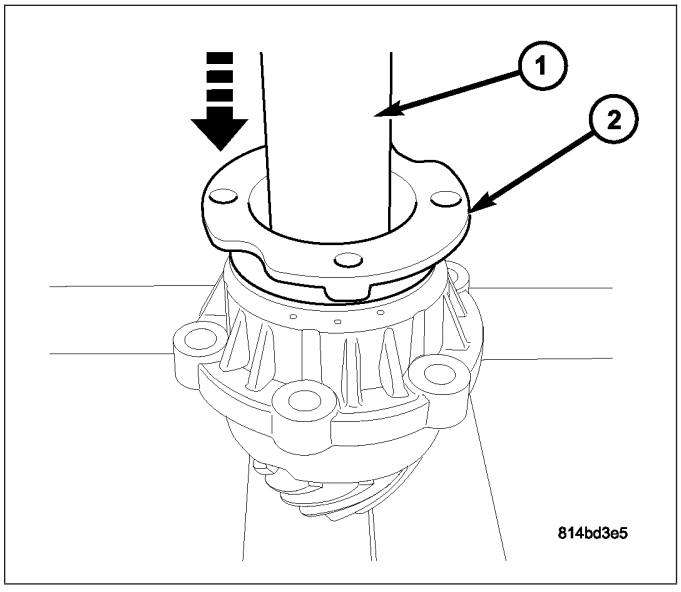

8. Using Tool 6958 (2), install pinion flange nut and torque to 475 N·m (350 ft. lbs.).

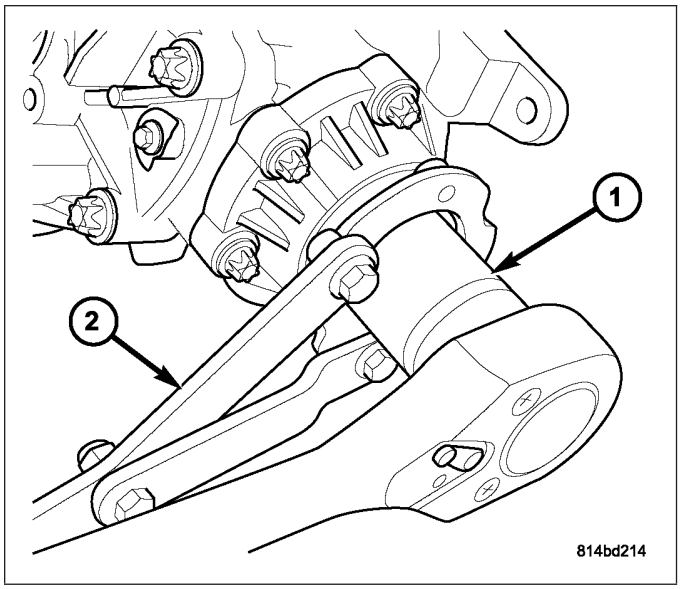

9. Measure pinion housing assembly rotating torque (1). Rotating torque should be within 130-260 N·cm (12-23 in. lbs.).

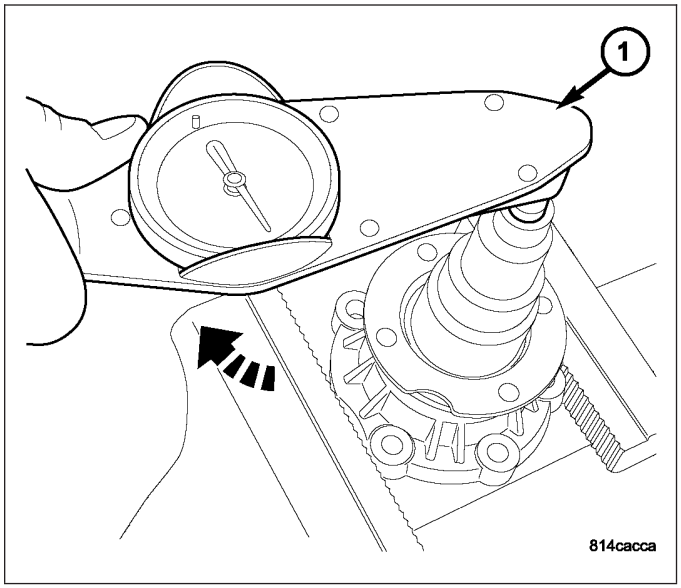

10. If rotating torque is lower than this range, disassemble pinion housing, measure and install a slightly thicker spacer (1), reassemble and reverify. If rotating torque is higher than this range, disassemble pinion housing, install a slightly thinner spacer, reassemble and reverify rotating torque.

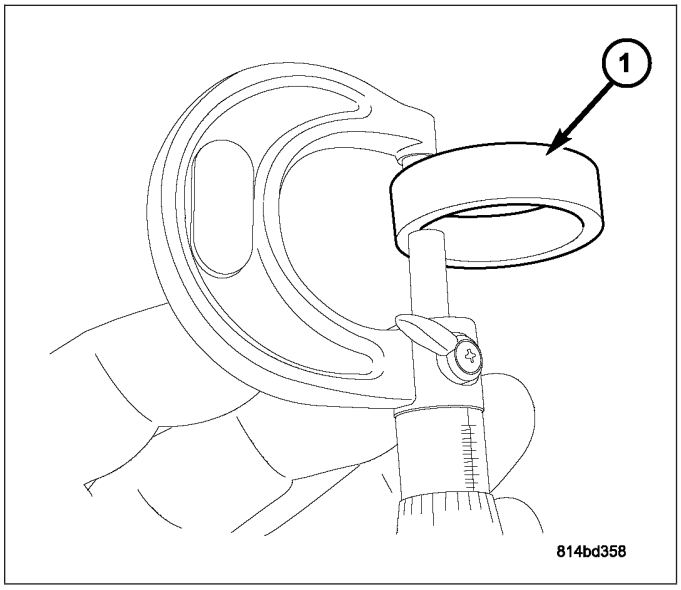

AXLE HOUSING ASSEMBLY

1. Using Tool L-4507, install new axle seal (inner) into housing.
2. Install side bearing preload shim into axle housing.
3. Using Tools C-4171 and D-145, press new side bearing cup into housing until it bottoms.
4. Install differential side bearing preload shim (1) into axle housing cover (2).

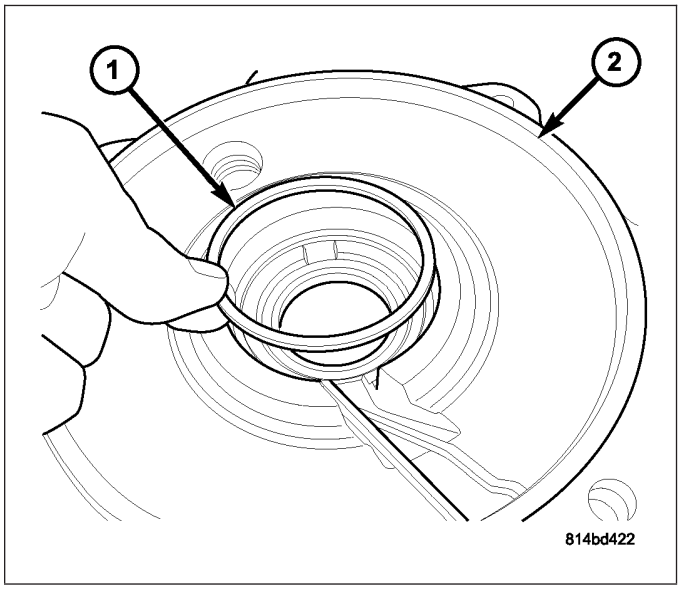

5. Using Tools C-4171 and D-129 (1), press new side bearing cup into cover until it bottoms. Use suitable cup (3) to support and protect cover.

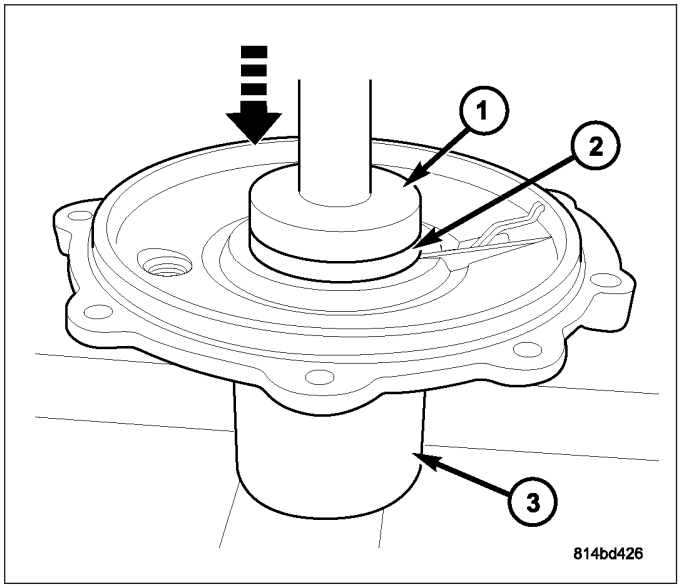

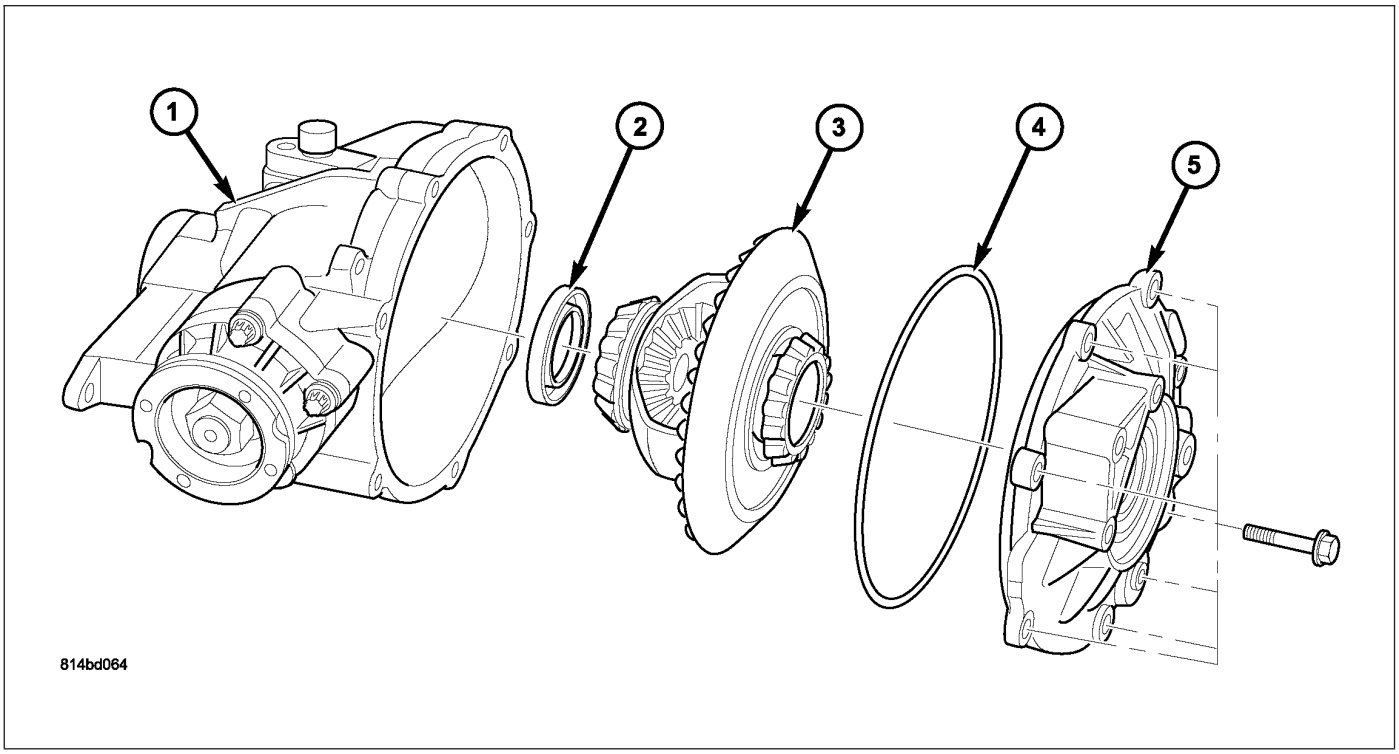

6. Install differential/ring gear assembly (3), new cover o-ring seal (4), and cover (5).
7. Install and torque cover-to-housing bolts to:
   - M10x40 — 65 N·m (48 ft. lbs.)
   - M8x25 — 34 N·m (25 ft. lbs.)
8. Using Tool C-4995 (1), measure differential side bearing rotating torque (preload). Rotating torque should be within 190-260 N·cm (17-23 in. lbs.).

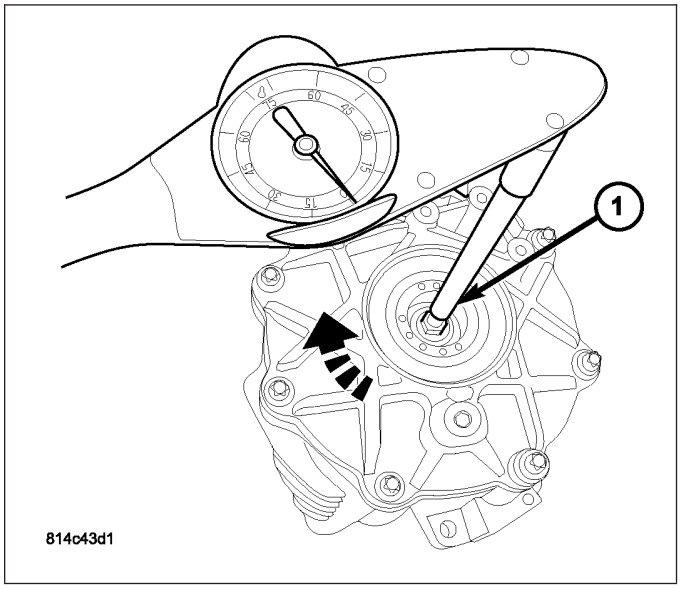

9. If rotating torque is below this range, disassemble housing, measure and install slightly thicker pre-load shims (1). Add thickness equally to both sides. If rotating torque is above this range, disassembe housing, measure and install slightly thinner pre-load shims. Remove thickness equally from both sides.

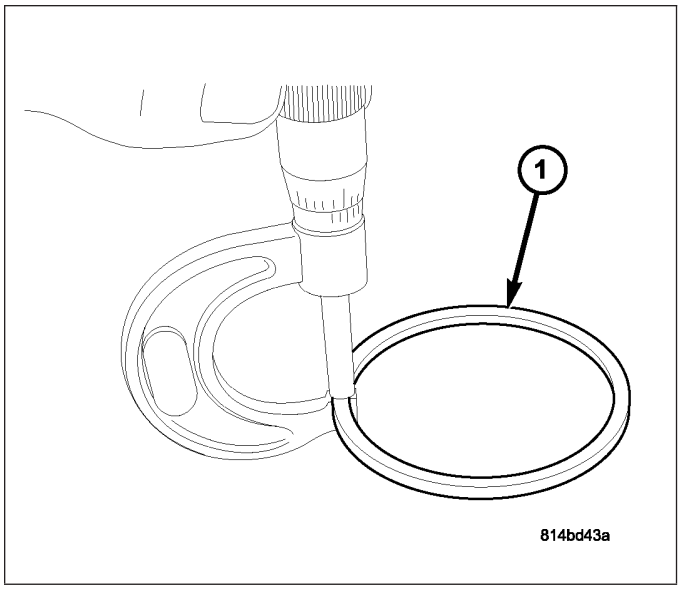

10. Install new pinion housing o-ring seal (1).

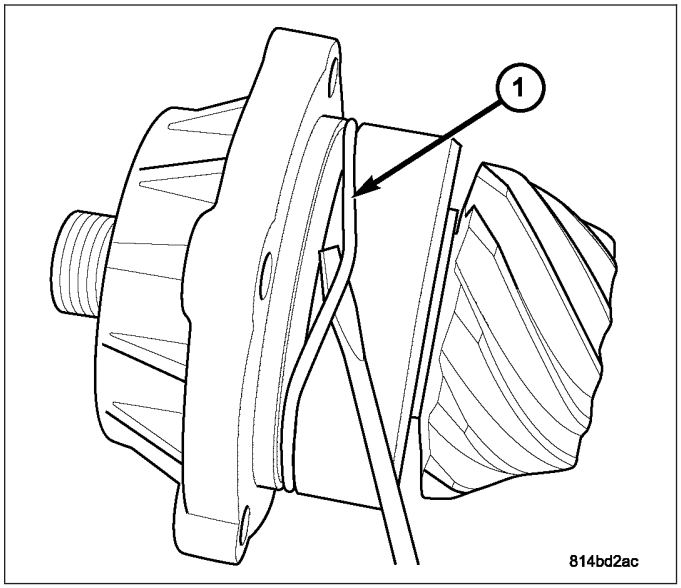

11. Install pinion housing assembly into axle housing with proper pinion depth shim (1). (Refer to 3 - DIFFERENTIAL & DRIVELINE/FRONT AXLE - ADJUSTMENTS)

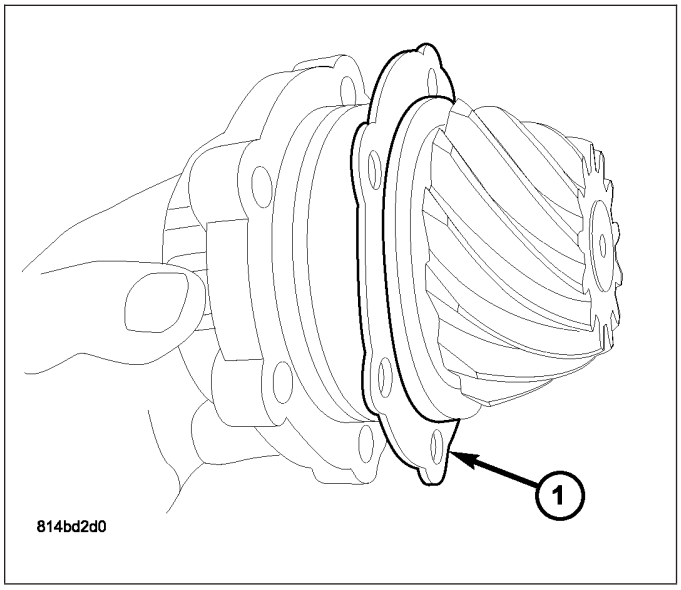

12. Install and torque pinion housing-to-axle housing bolts (1) to 34 N·m (25 ft. lbs.)
13. Measure and adjust ring gear backlash. Backlash should be within 0.05-0.11mm (0.002-0.004 in.). (Refer to 3 - DIFFERENTIAL & DRIVELINE/ FRONT AXLE - ADJUSTMENTS)

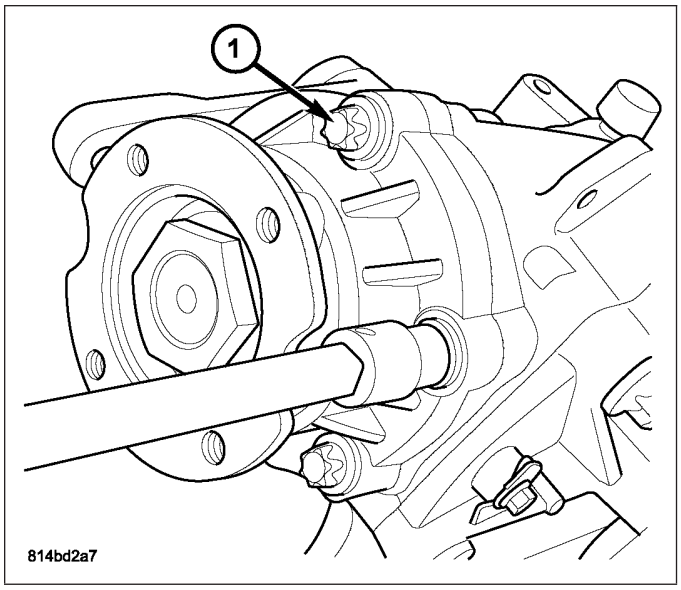

INSTALLATION

1. Install front axle assembly (1) into position. Install and torque seven bolts to 65 N·m (48 ft. lbs.).

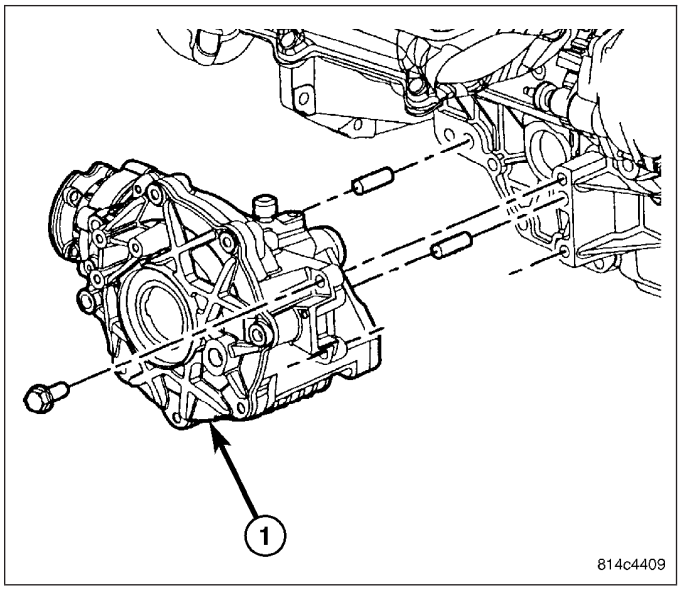

2. Install power steering return line to cradle by fastening clips (1) as shown.

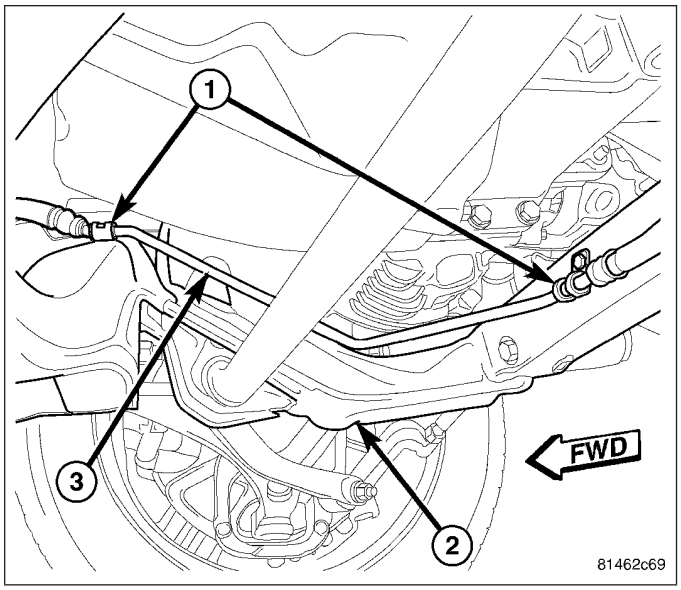

3. Install axle assembly support bracket (1) and torque bolts to 28 N·m (21 ft. lbs.).

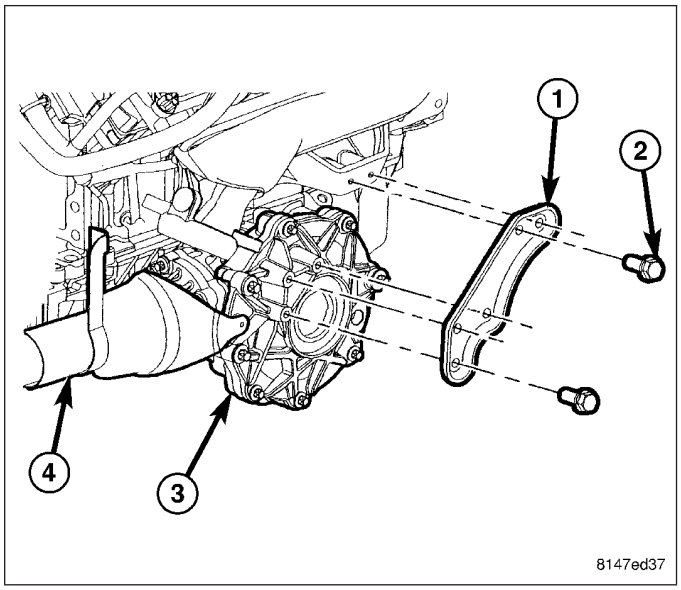

4. Install RH catalytic converter/exhaust pipe assembly. (Refer to 11 - EXHAUST SYSTEM/CATALYTIC CONVERTER - INSTALLATION)
5. Install front propeller shaft. (Refer to 3 - DIFFERENTIAL & DRIVELINE/PROPELLER SHAFT - INSTALLATION)
6. Install intermediate shaft. (Refer to 3 - DIFFERENTIAL & DRIVELINE/INTERMEDIATE SHAFT - INSTALLATION)
7. Install both front halfshafts. (Refer to 3 - DIFFERENTIAL & DRIVELINE/HALF SHAFT - INSTALLATION)

8. Fill axle with 600ml (0.64 qts.) of Mopar® 75W-90 Synthetic Gear Lubricant. Fluid level should be at or near bottom of fill hole. Torque fill plug (1) to 30 N·m (22 ft. lbs.).
9. Lower vehicle.

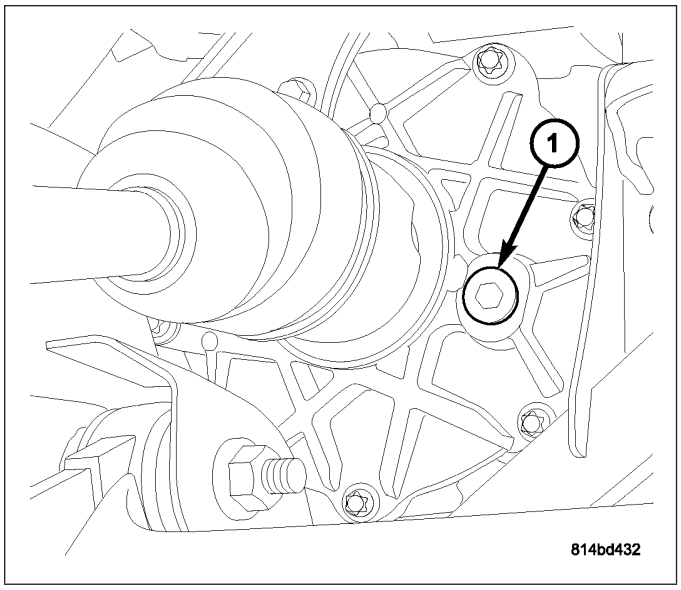

ADJUSTMENTS

ADJUSTMENT

PINION BEARING PRELOAD

NOTE: Pinion bearing preload is controlled and adjusted by means of a select-thickness spacer sandwiched between the pinion head and tail bearing cones.

1. Remove pinion housing assembly from axle housing.

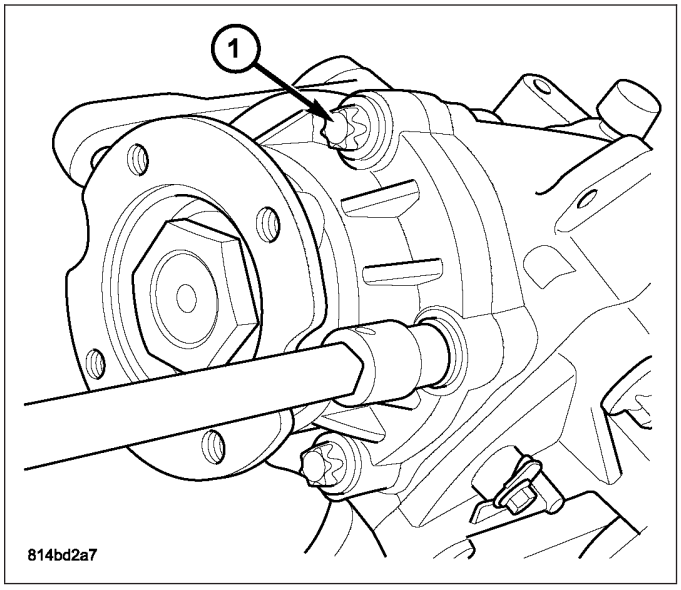

2. Using a dial-type torque wrench (1), measure pinion housing rotating torque. **Rotating torque should be within 130-260 N·cm (12-23 in. lbs.).** If rotating torque is below this range, disassemble pinion housing, measure and install a slightly thicker spacer (1), reassemble and reverify. If rotating torque is above this range, disassemble pinion housing, install a slightly thinner spacer, reassemble and reverify rotating torque.

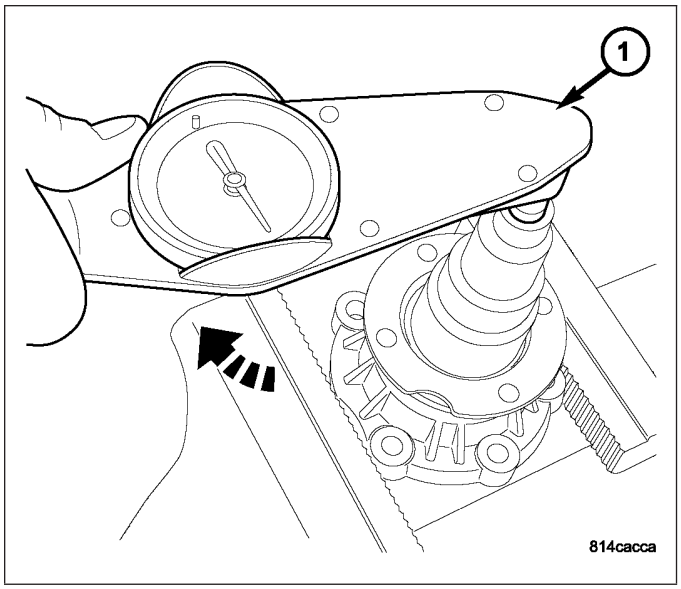

3. Using Tool 6958 (2), remove pinion flange nut.

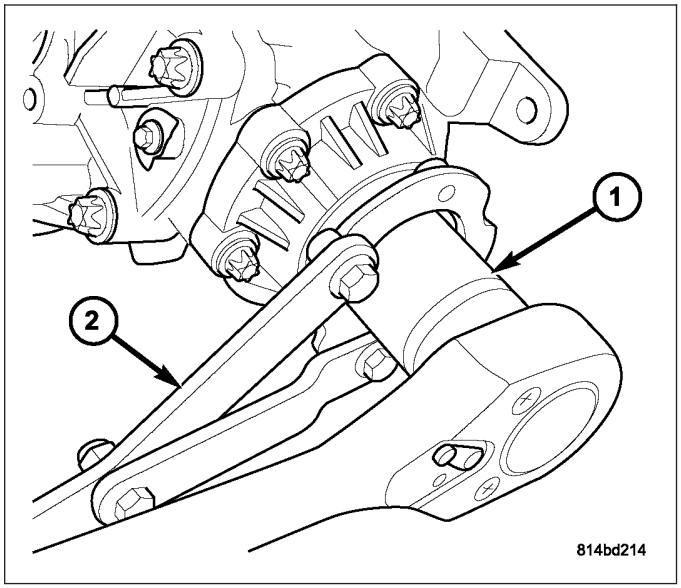

4. Using Puller 1026 (1), remove pinion flange.

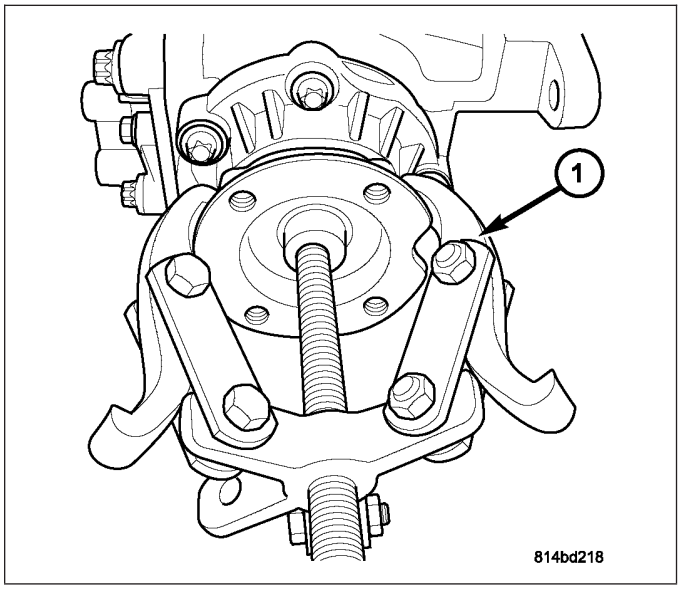

5. Press pinion gear (2) out of housing.

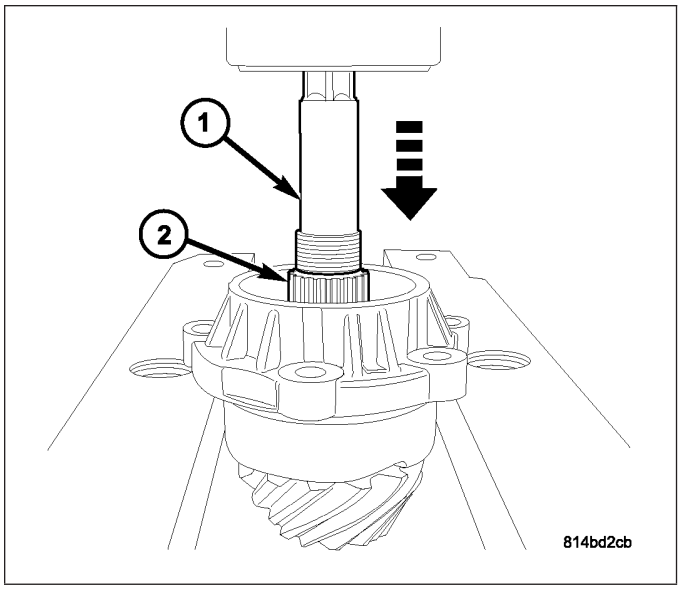

6. Remove pinion bearing preload spacer (1).

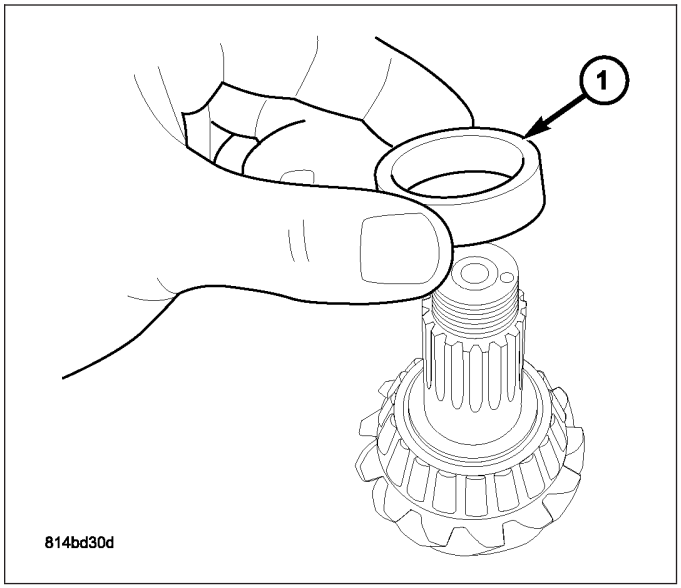

7. Measure spacer (1) and correct per rotating torque measurement.

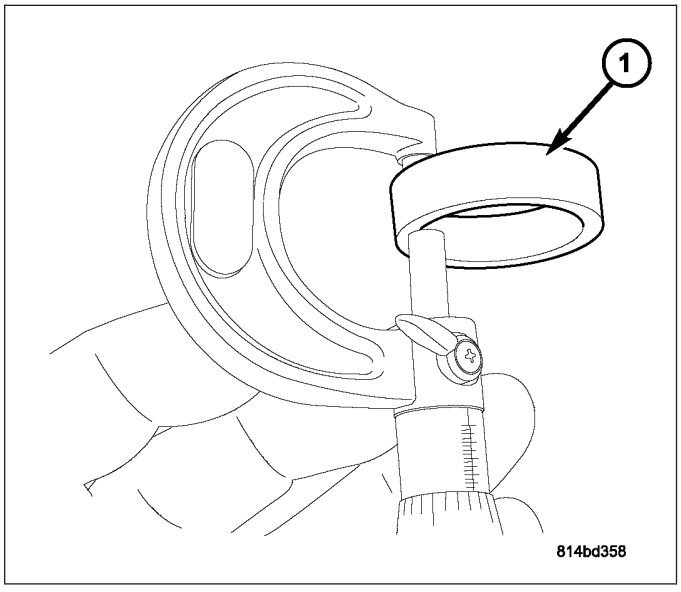

8. Install proper pinion bearing preload spacer (1).

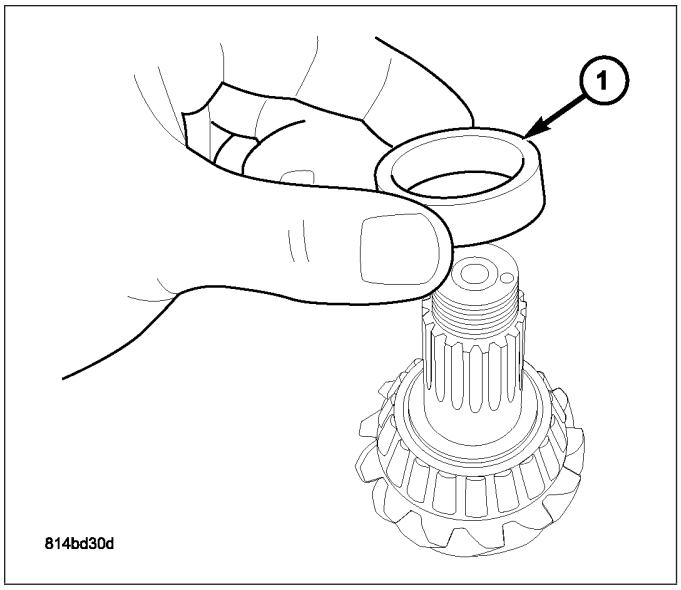

9. Install pinion gear/bearing assembly to housing. Using Tool L-4507 (1), press pinion tail bearing (2) onto shaft until it bottoms.

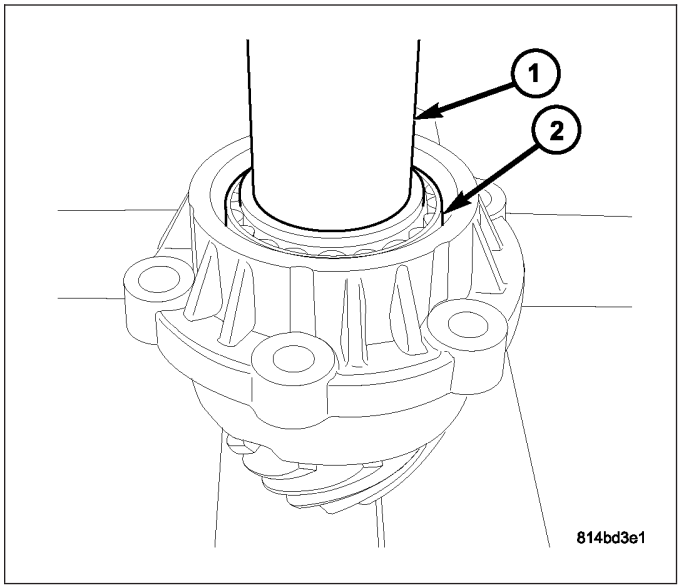

10. Using Tool L-4507 (1), press on pinion flange (2).

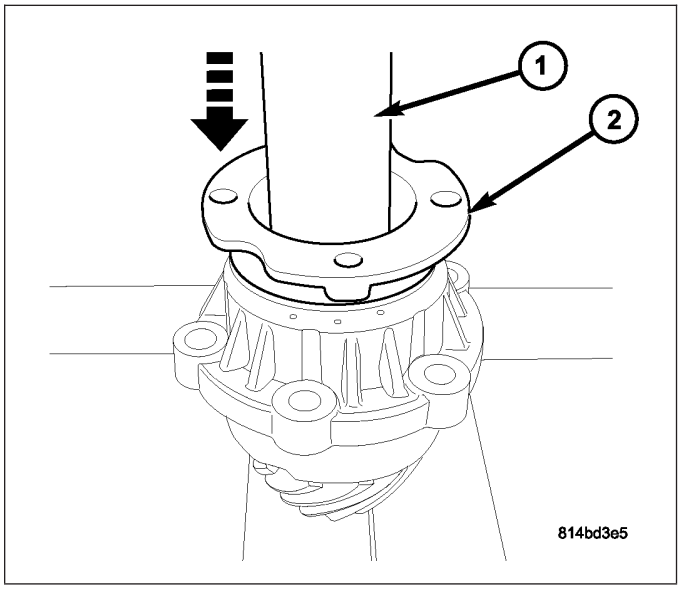

11. Install and torque pinion flange nut to 475 N·m (350 ft. lbs.).

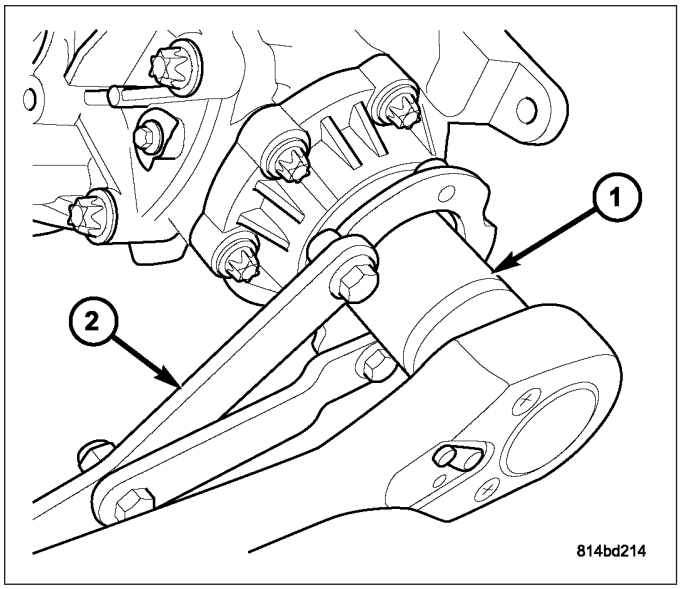

12. Install pinion housing assembly and depth shim to axle assembly.
13. Install and torque pinion housing-to-axle housing bolts (1) to 34 N·m (25 ft. lbs.).

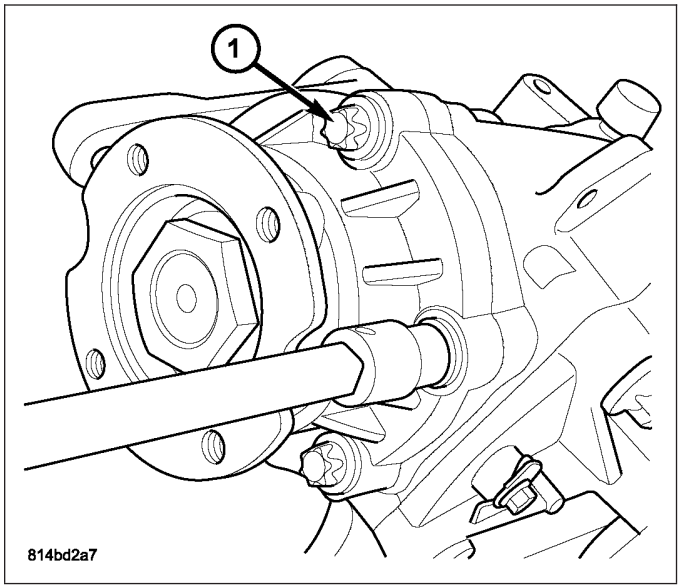

DIFFERENTIAL SIDE BEARING PRELOAD

NOTE: Differential side bearing preload is controlled and adjusted by means of select-thickness shims sandwiched between the side bearing cups and the housing/cover.

NOTE: For accurate results, differential side bearing preload must only be measured when the pinion housing assembly is removed from the axle.

1. Remove pinion housing-to-axle housing bolts (1).

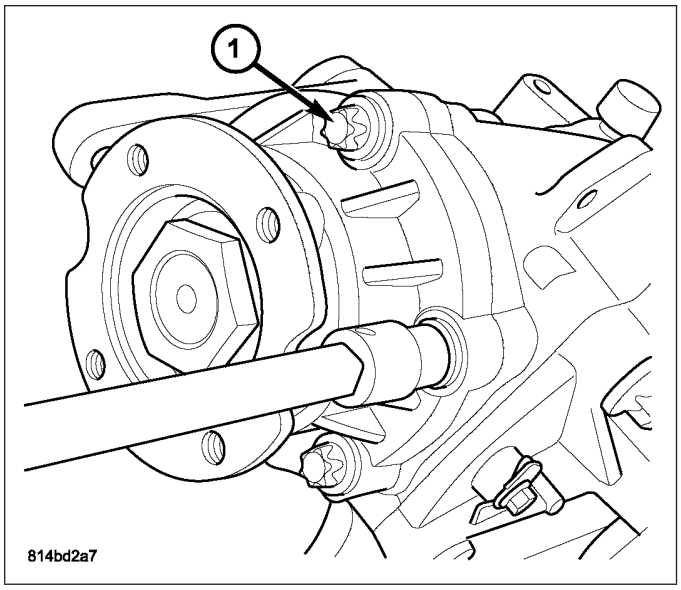

2. Remove pinion housing and depth shim (1) from axle assembly.

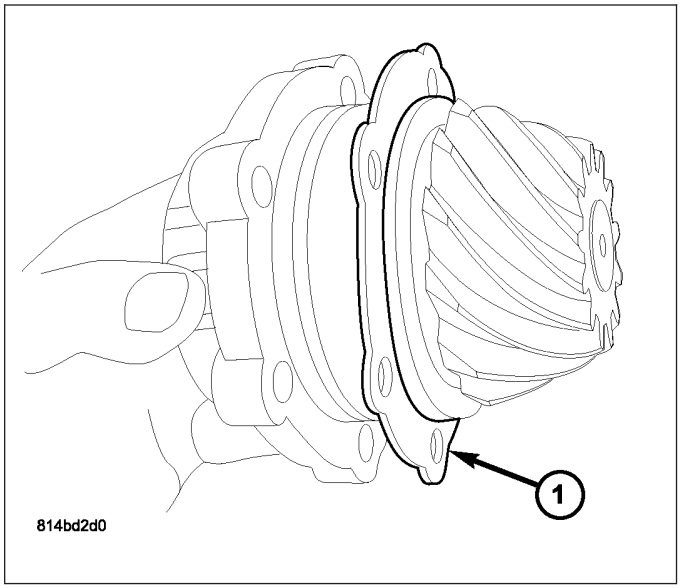

3. Install Tool C-4995 (1) to differential housing as shown. Measure and record differential rotating torque. **Differential rotating torque should be within 190-260 N·cm (17-23 in. lbs.).** If rotating torque is below this range, disassemble housing, measure and install slightly thicker preload shims (1). Add thickness equally to both sides. If rotating torque is above this range, disassembe housing, measure and install slightly thinner preload shims. Remove thickness equally from both sides.

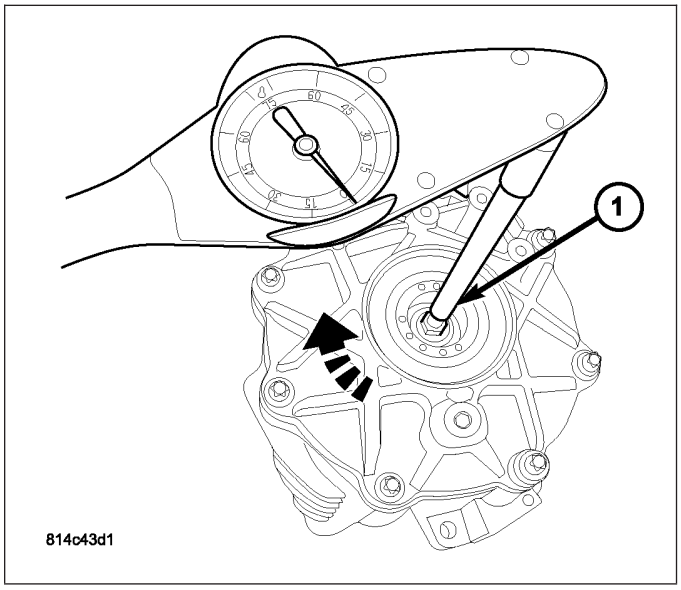

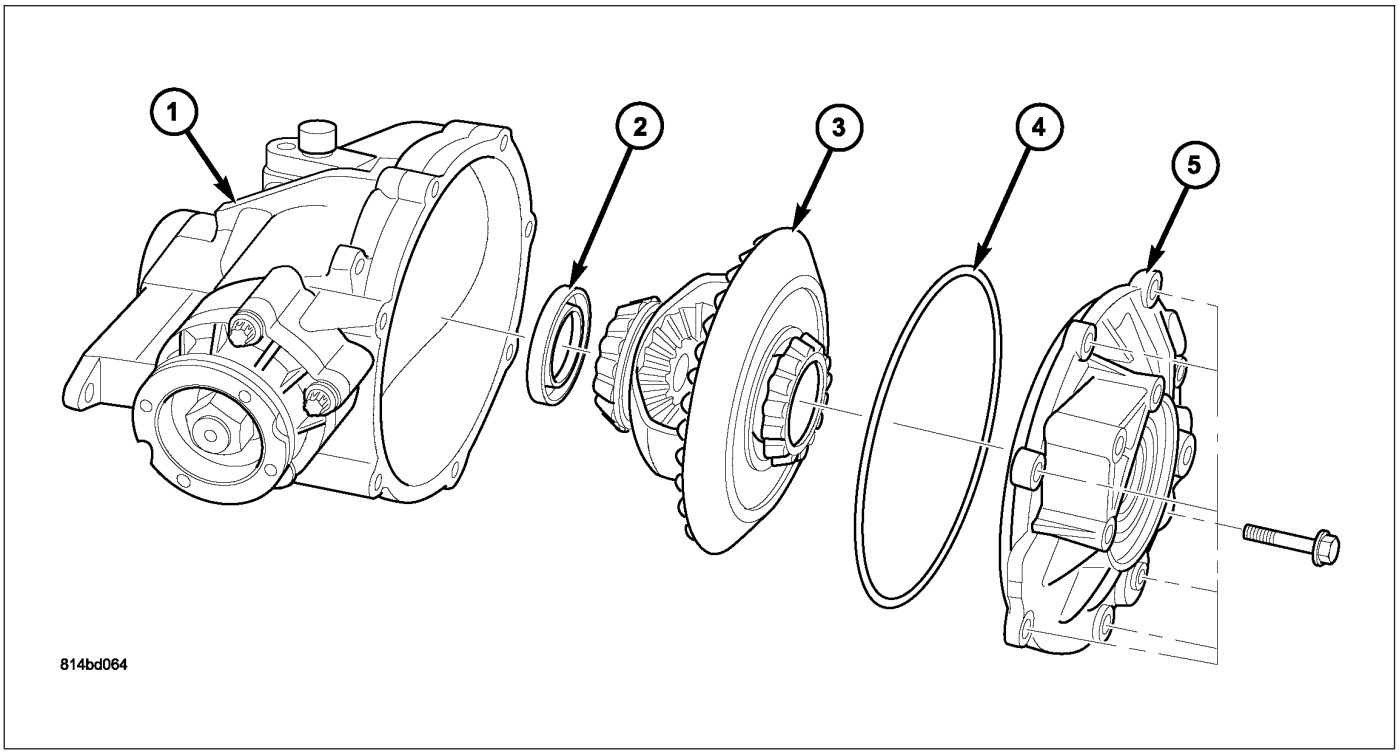

4. Remove axle housing cover and differential assembly.
5. Remove differential side bearing cup from axle housing cover. Install Tool 6514 (1) as shown.

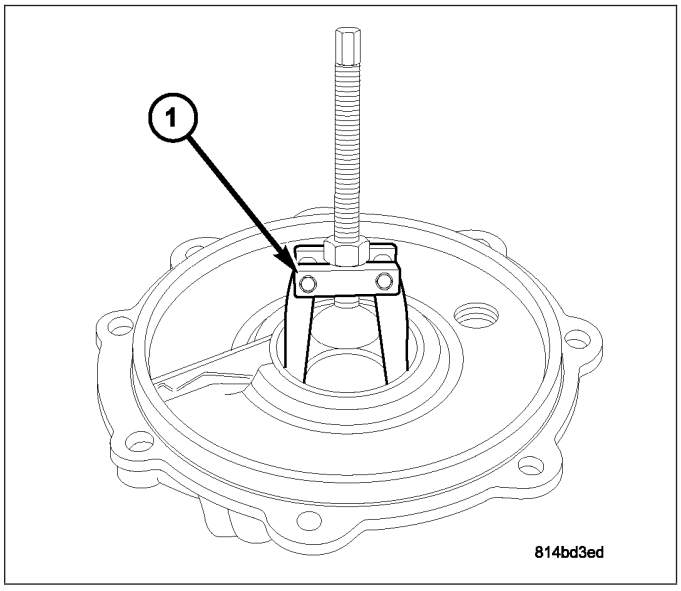

6. Remove differential side bearing cup with Tool 6514 (1).

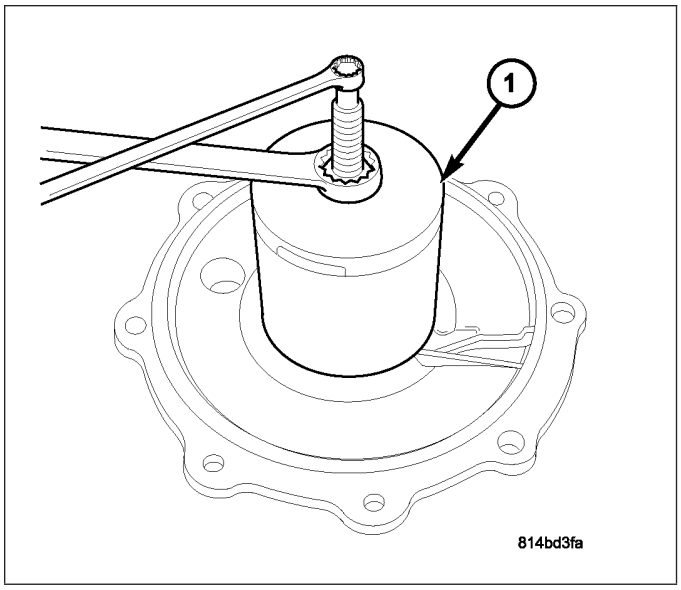

7. Remove side bearing preload shim (1).

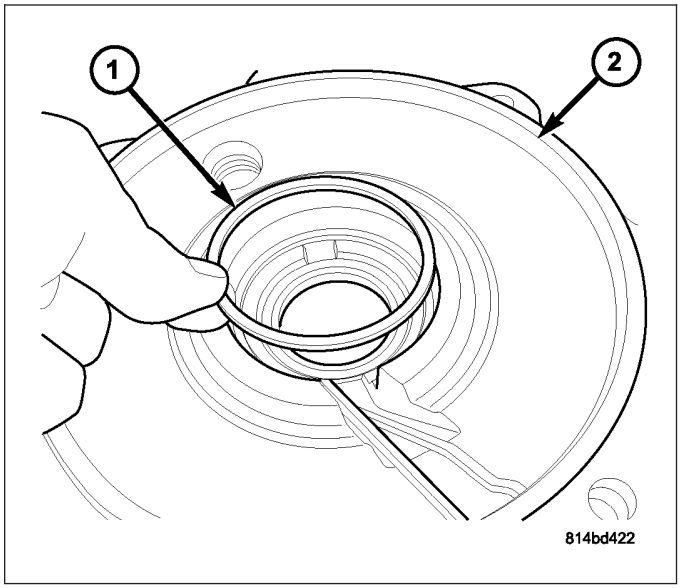

8. Measure preload shim (1) to identify for replacement.

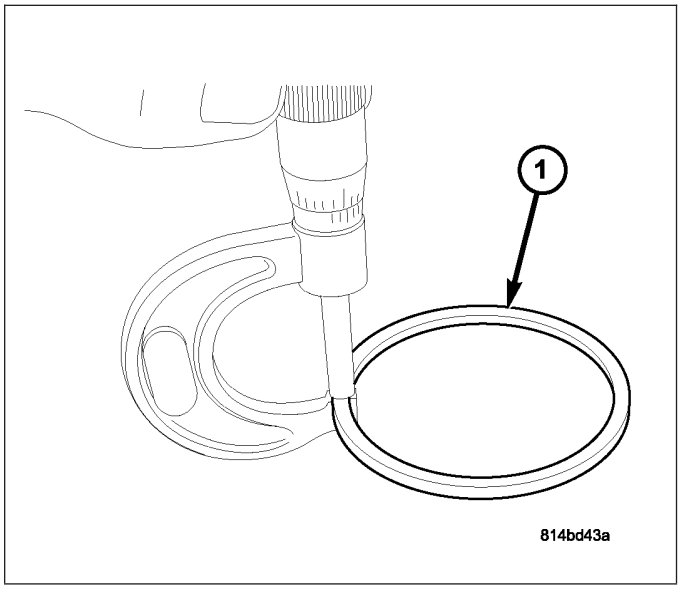

9. Install new differential side bearing preload shim (1) into axle housing cover (2).

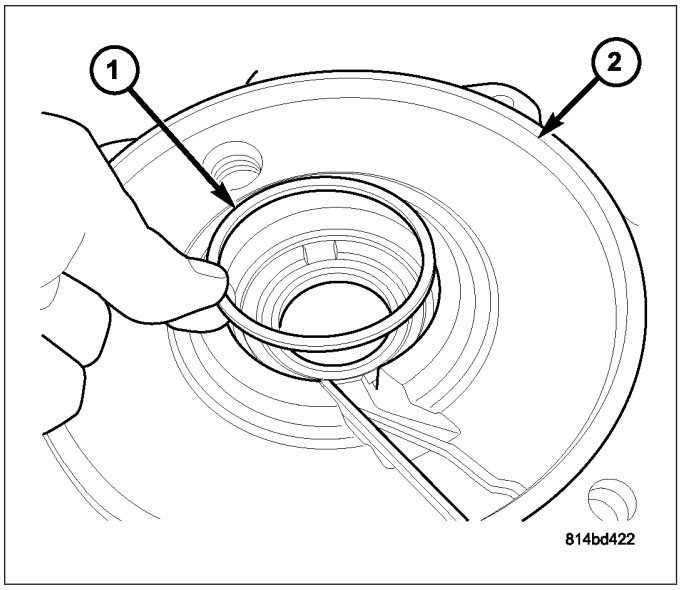

10. Using Tools C-4171 and D-129 (1), press new side bearing cup into cover until it bottoms. Use suitable cup (3) to support and protect cover.

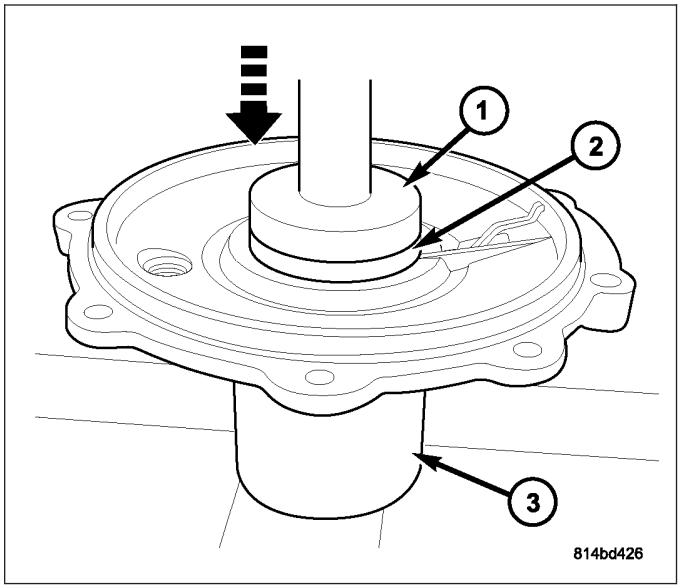

11. Using Tool 9664 (1) and Slide Hammer C-637 (2) , remove differential side bearing (inboard) cup

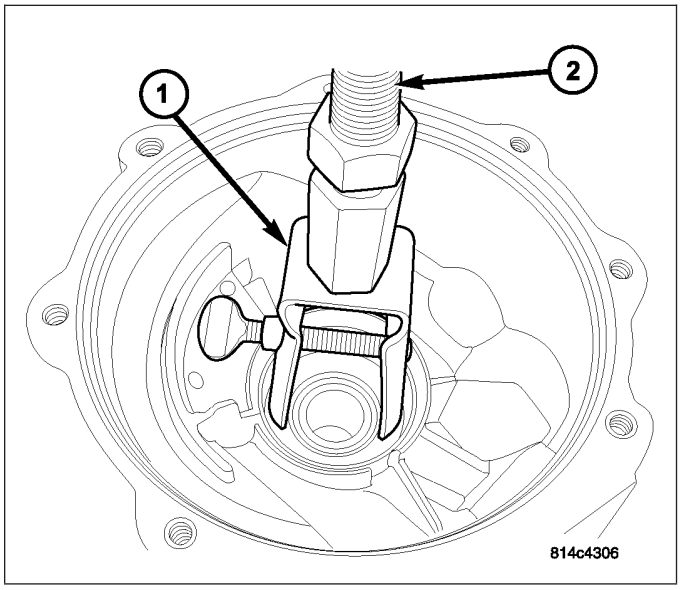

12. Measure preload shim (1) to identify for replacement.
13. Install new differential side bearing preload shim (1) into axle housing.
14. Using Tools C-4171 and D-145, press differential side bearing cup into housing until it bottoms.

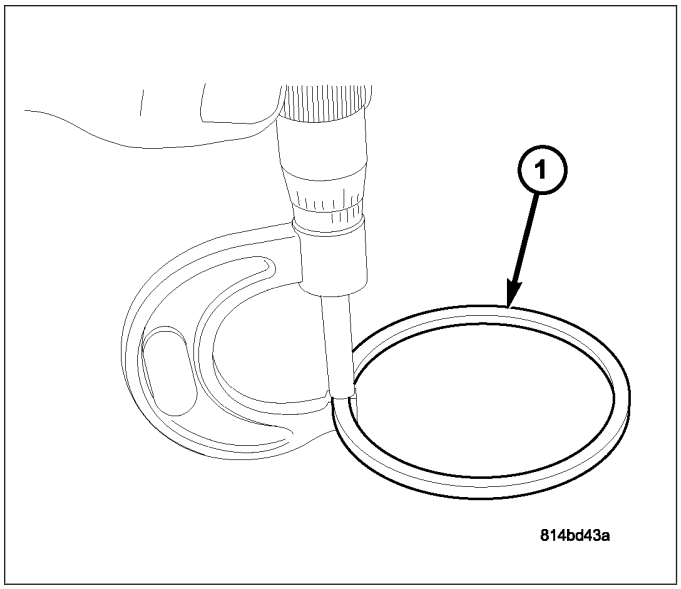

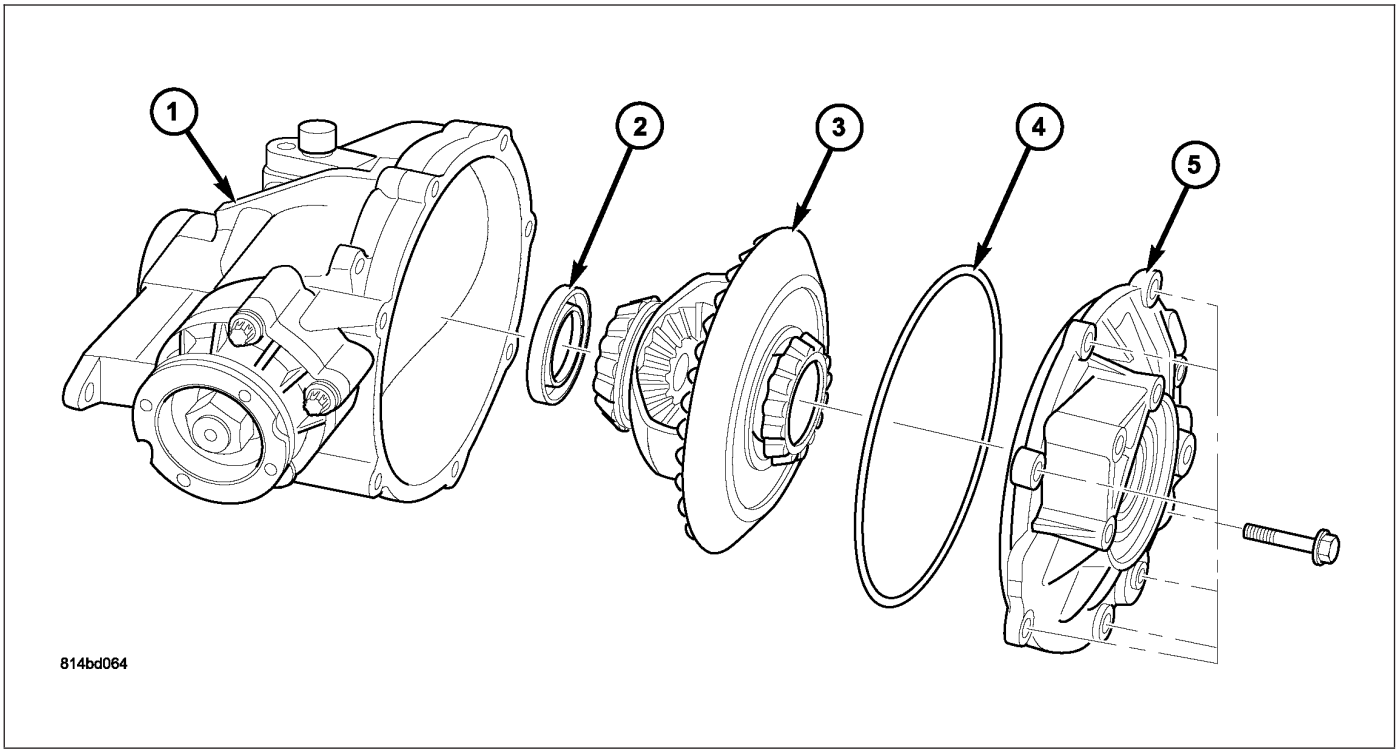

15. Install differential/ring gear assembly (3), new cover o-ring seal (4), and cover (5).
16. Install and torque cover-to-housing bolts to:
    - M10x40 — 65 N·m (48 ft. lbs.)
    - M8x25 — 34 N·m (25 ft. lbs.)

17. Re-verify rotating torque measurement. Repeat adjustment procedure until proper rotating torque is obtained.

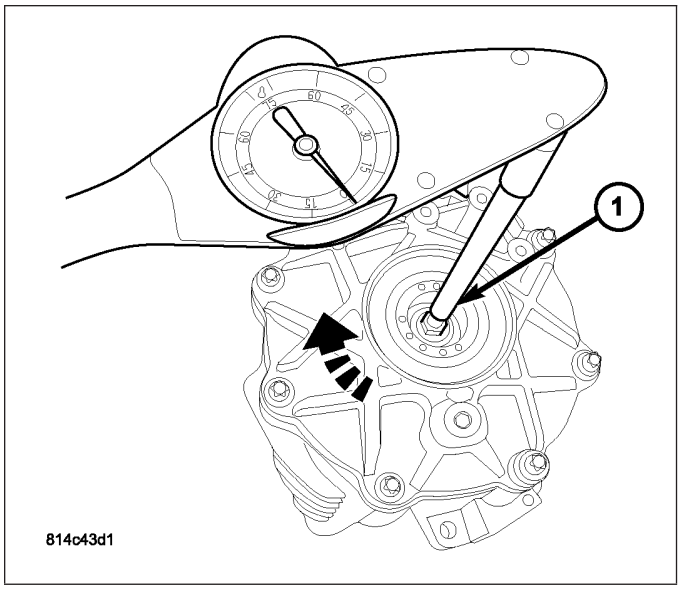

18. Install pinion housing assembly and depth shim (1). Use new o-ring on housing.

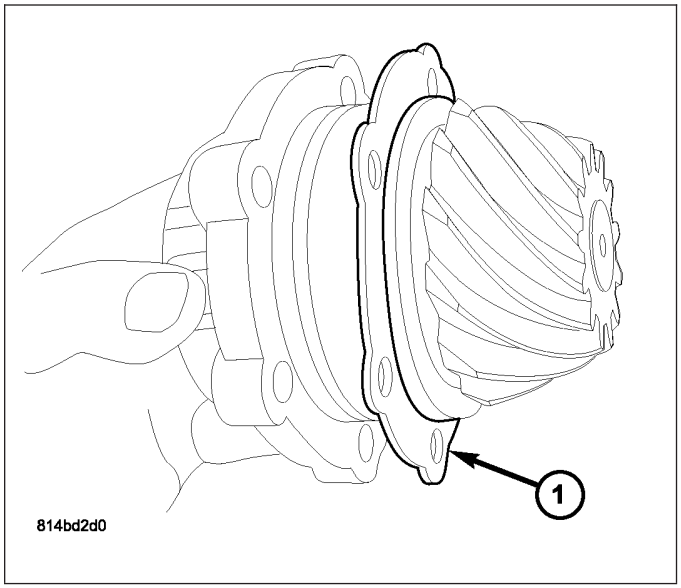

19. Install and torque pinion housing-to-axle housing bolts (1) to 34 N·m (25 ft. lbs.)

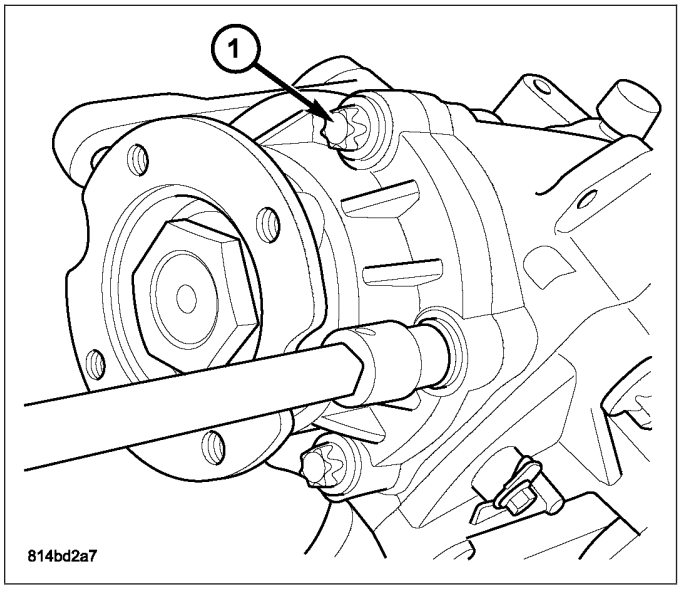

SPECIFICATIONS - 175MM FIA FRONT AXLE

SPECIFICATIONS

DESCRIPTION	SPECIFICATION
Axle Ratio	3.07
Ring Gear Diameter	175 mm (6.9 in.)
Ring Gear Backlash	0.05-0.11 mm (0.002-0.004 in.)
Differential Torque-to-Rotate	190-260 N·cm (17-23 in. lbs.)
Pinion Housing Torque-to-Rotate	130-260 N·cm (12-23 in. lbs.)
Pinion Depth Shim Size	1.15-2.11mm (0.045-0.083 in.) Available in 0.04 mm (0.0015 in.) increments
Pinion Bearing Preload Spacer Size	9.60-10.59mm (0.378-0.417 in.) Available in 0.03 mm (0.001 in.) increments
Differential Bearing Preload Shim Size	1.31-2.51 mm (0.051-0.099 in.) Available in 0.04 mm (0.0015 in.) increments
Differential Backlash Shim Size	1.34-2.98 mm (0.053-0.117 in.) Available in 0.04 mm (0.0015 in.) increments

TORQUE SPECIFICATIONS

DESCRIPTION	N·m	Ft. Lbs.	In. Lbs.
Bolt, Axle Cover-to-Housing (M10x40)	65	48	—
Bolt, Axle Cover-to-Housing (M8x25)	34	25	—
Bolt, Axle Housing-to-Engine	65	48	—
Bolt, Intermediate Shaft-to-Engine	25	19	—
Bolt, Pinion Housing-to-Axle Housing	34	25	—
Nut, Pinion Flange	475	350	—
Plug, Axle Housing Fill	30	22	—

SPECIAL TOOLS - 175MM FIA FRONT AXLE

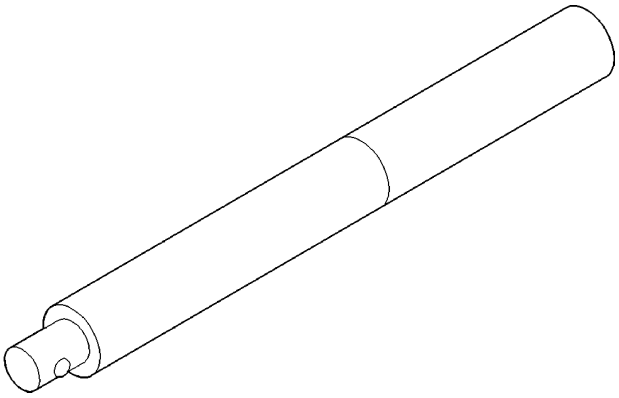

Handle, Driver - C-4171

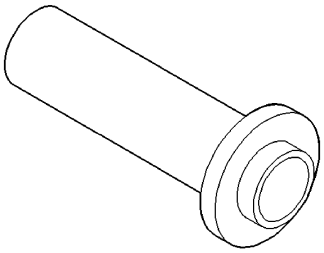

Seal Installer C-4193A

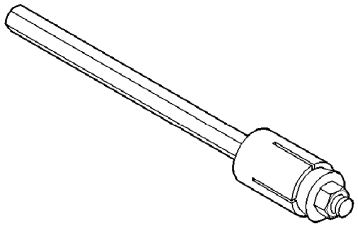

Torque Tool, C-4995

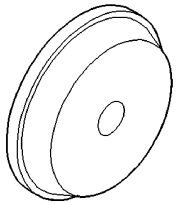

Installer, D-129

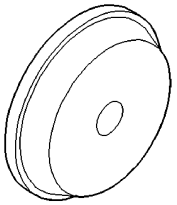

Installer, D-130

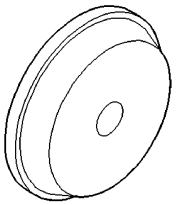

Installer, D-145

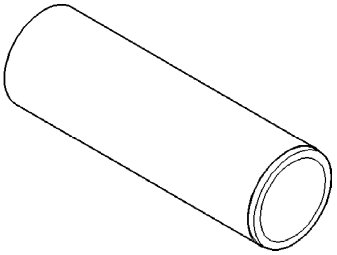

Installer L-4507

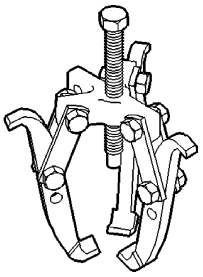

Puller, 1026

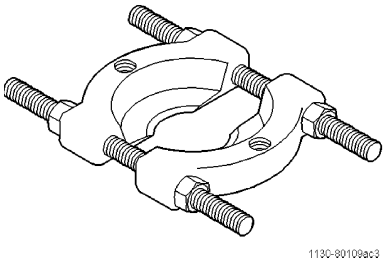

Bearing Splitter, 1130

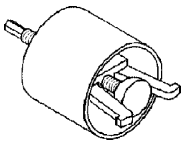

Bearing Remover, 6514

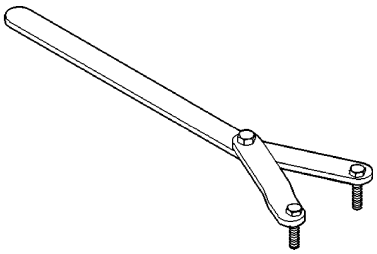

Wrench, Spanner - 6958

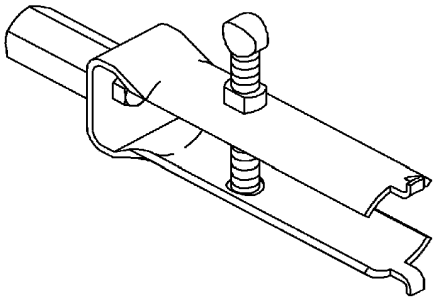

Remover, 9664

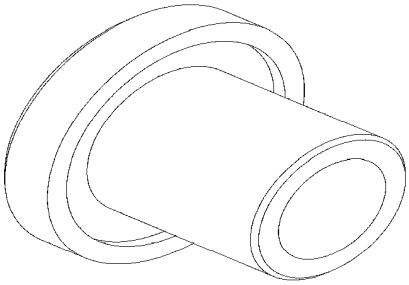

Installer, 9665

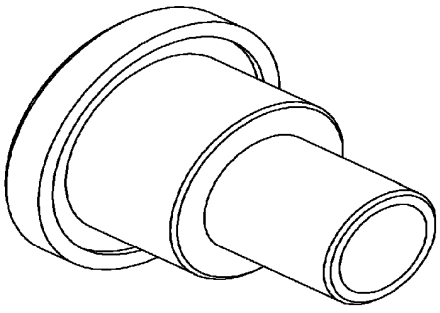

Installer, 9666

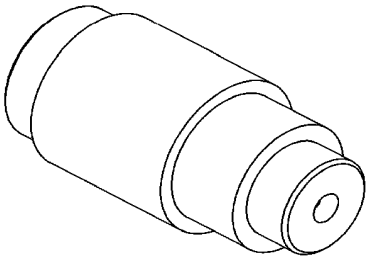

Plug, 9676

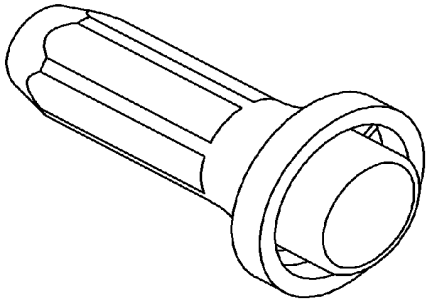

Installer, 9677

SEAL-AXLE SHAFT

REMOVAL

REMOVAL - RIGHT AXLE SEAL

1. Remove right halfshaft assembly. (Refer to 3 - DIFFERENTIAL & DRIVELINE/HALF SHAFT - REMOVAL)
2. Using suitable screwdriver, remove axle seal (1).

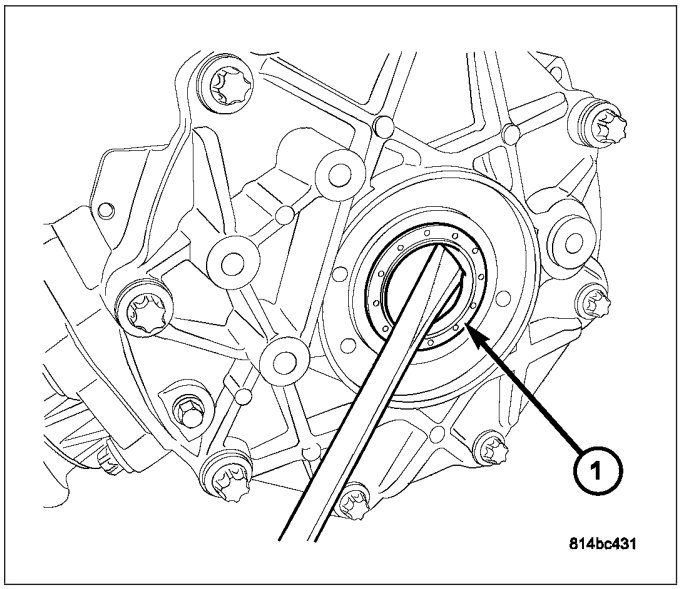

REMOVAL – LEFT AXLE SEAL

NOTE: Inboard (Left) axle seal replacement requires removal and disassembly of the axle assembly.

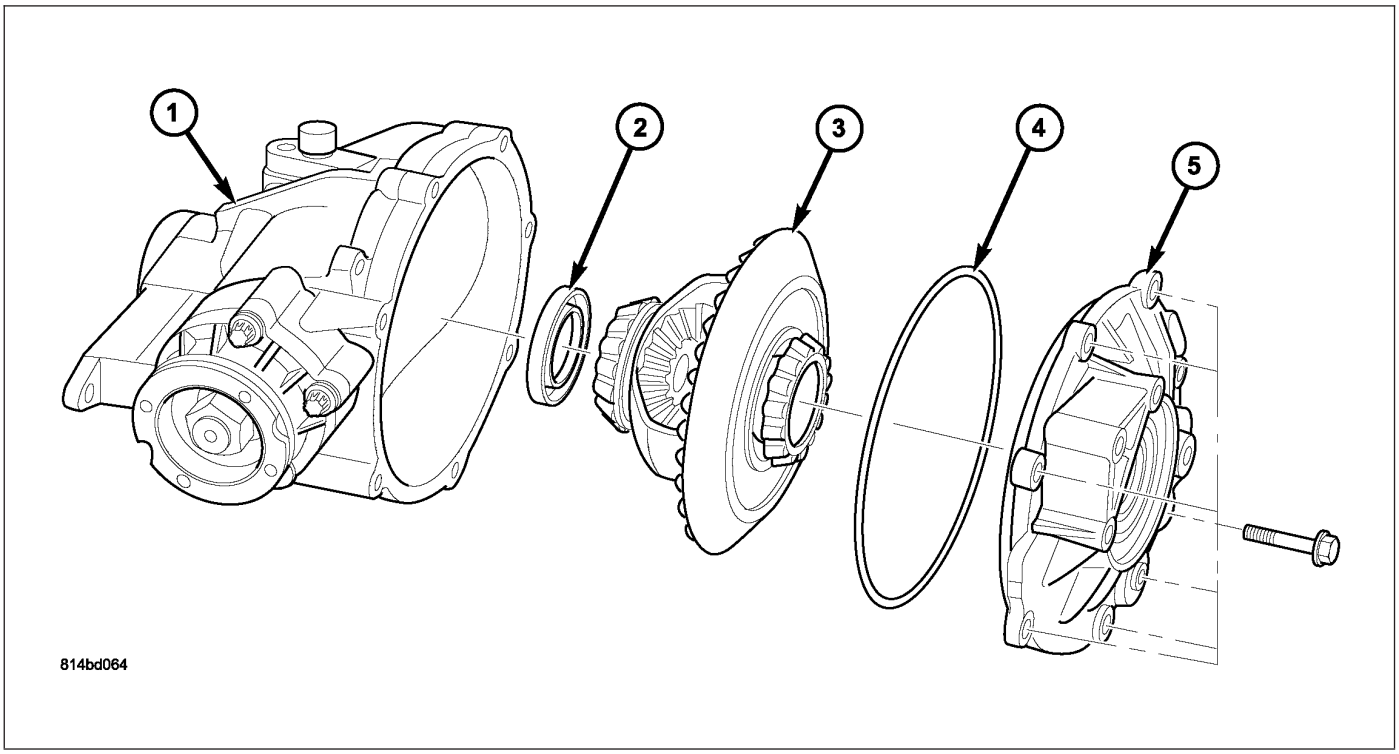

1. Remove front axle assembly. (Refer to 3 - DIFFERENTIAL & DRIVELINE/FRONT AXLE - REMOVAL)
2. Drain axle lubricant by turning housing on its side and draining out of left output bore.
3. Remove differential cover (5) and differential (3). Remove and discard o-ring seal.
4. Using Tool 9664 and Slide Hammer C-637, remove left axle seal.

INSTALLATION

INSTALLATION - RIGHT AXLE SEAL

1. Using Tool C-4193-A (1), install new axle shaft seal.
2. Install right halfshaft assembly. (Refer to 3 - DIFFERENTIAL & DRIVELINE/HALF SHAFT - INSTALLATION)

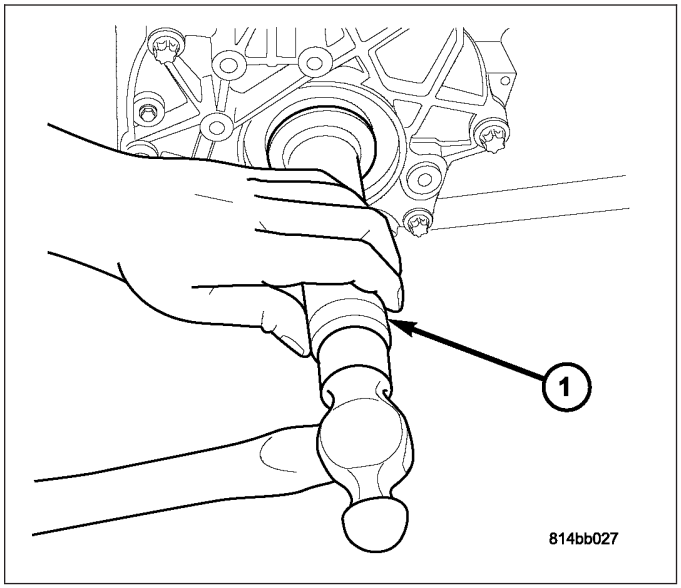

INSTALLATION - LEFT AXLE SEAL

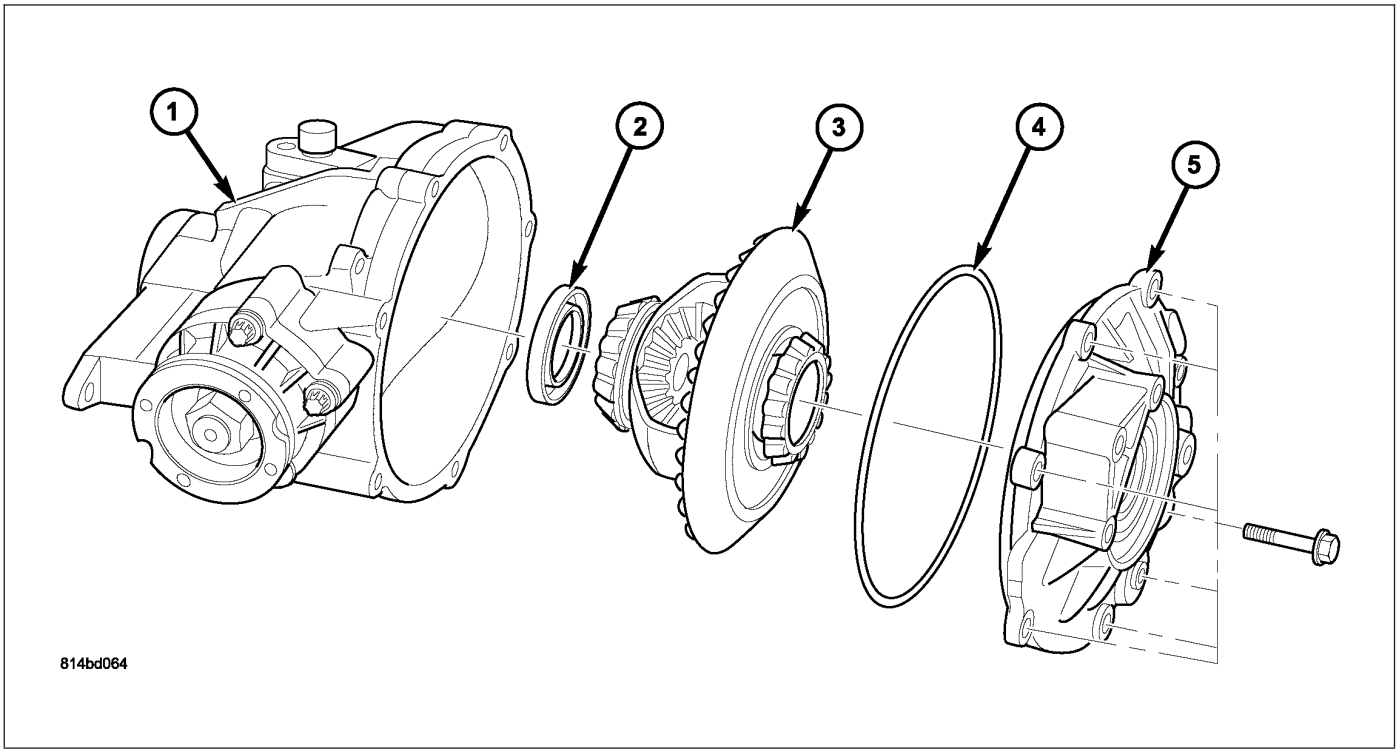

1. Using Tool L-4507, install left (inboard) axle seal (2).
2. Install differential (3). Install cover (5) with new o-ring seal (4).
3. Install and torque cover-to-housing bolts to:
   - M10x40 — 65 N·m (48 ft. lbs.)
   - M8x25 — 34 N·m (25 ft. lbs.)

4. Install axle assembly into vehicle. (Refer to 3 - DIFFERENTIAL & DRIVELINE/FRONT AXLE - INSTALLATION)
5. Fill axle with 600ml (0.64 qts.) Mopar® 75W-90 Synthetic Gear Lubricant. Torque fill plug (1) to 30 N·m (22 ft. lbs.)

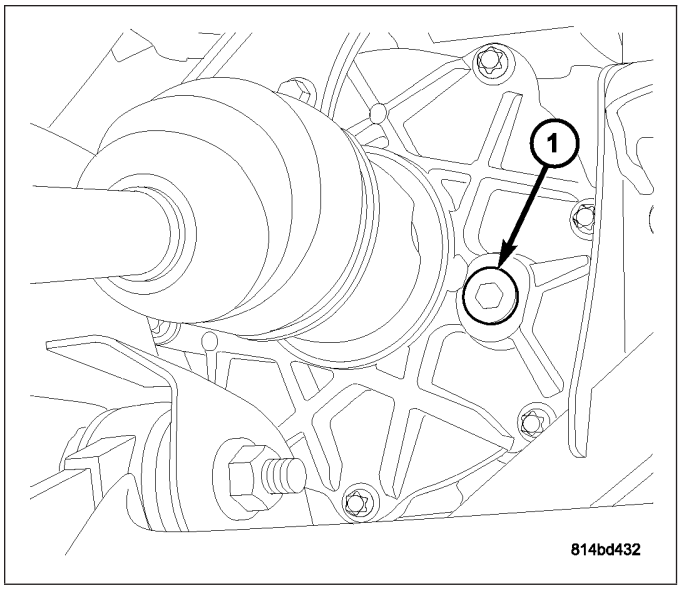

FLUID

STANDARD PROCEDURE - FLUID FILL

NOTE: The 175MM FIA Front Axle assembly is designed for 'fill for life' and is not manufactured with a fluid drain plug.

1. Raise and support vehicle. (Refer to LUBRICATION & MAINTENANCE/HOISTING - STANDARD PROCEDURE)
2. Remove axle fill plug (1).
3. Fill axle with 600ml (0.64 qts.) of Mopar® 75W-90 Synthetic Gear Lubricant. Fluid should be within 3/16" of bottom of fill hole.

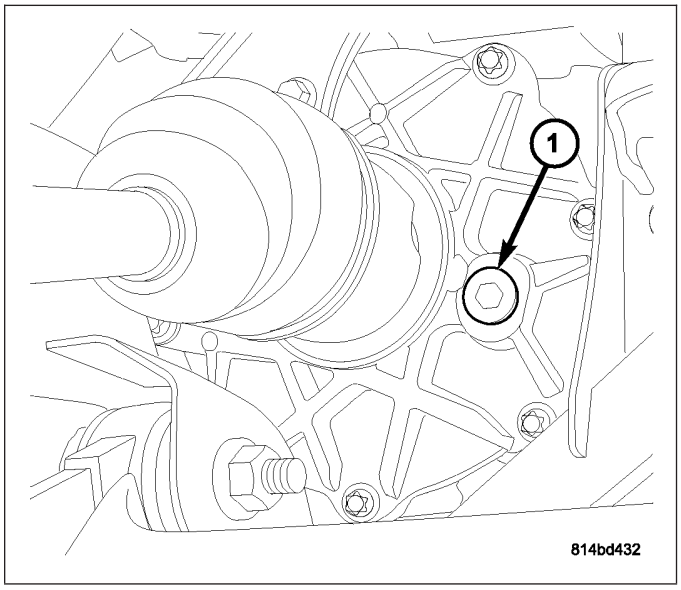

SEAL-PINION

REMOVAL

1. Remove propeller shaft and heat shield. (Refer to 3 - DIFFERENTIAL & DRIVELINE/PROPELLER SHAFT - REMOVAL)
2. Using Tool 6958 (2), remove pinion flange nut.

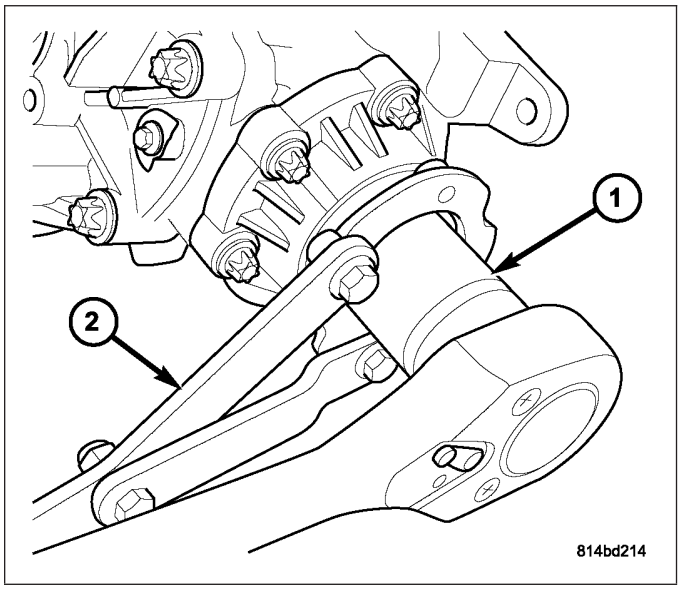

3. Using Puller 1026 (1), remove pinion flange.

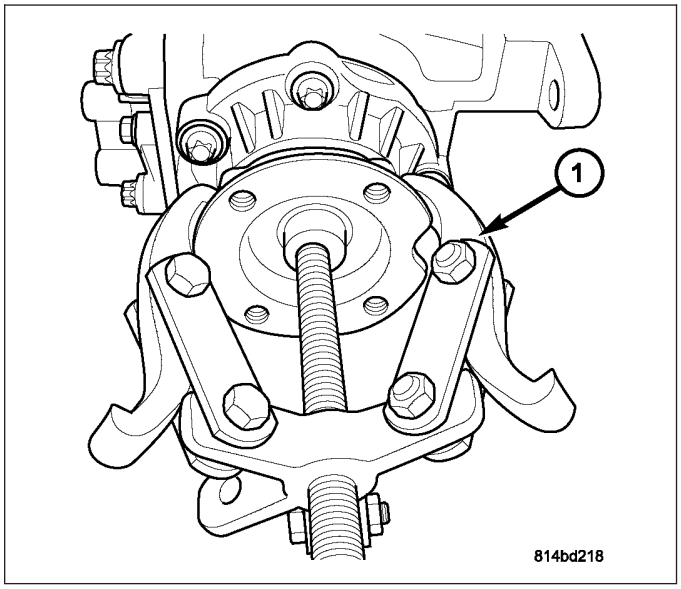

4. Remove pinion flange seal (1) with suitable screwdriver and discard.

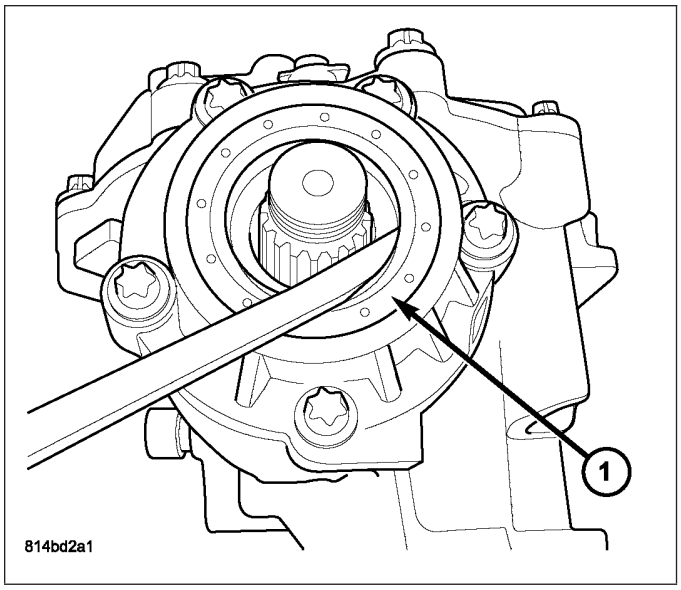

INSTALLATION

1. Using Tool 9677 (1), install new pinion flange seal.

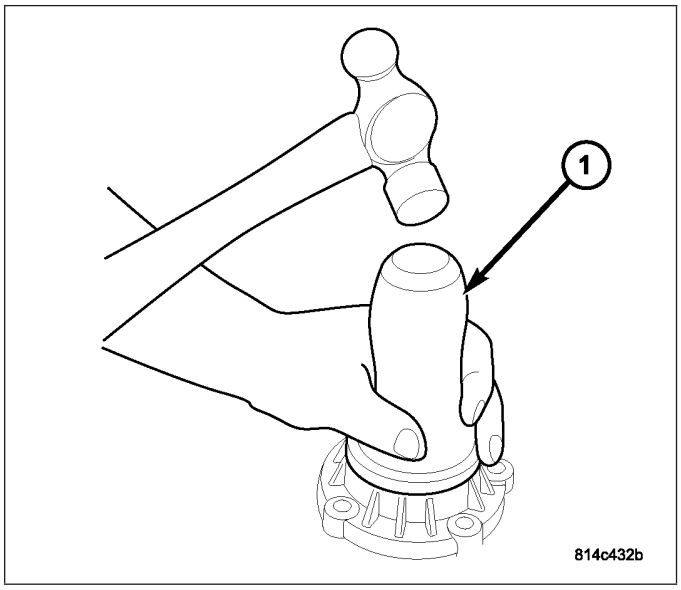

2. Using Tool L-4507 (1) , **lightly tap** pinion flange (2) onto shaft, just enough to start flange nut by hand.

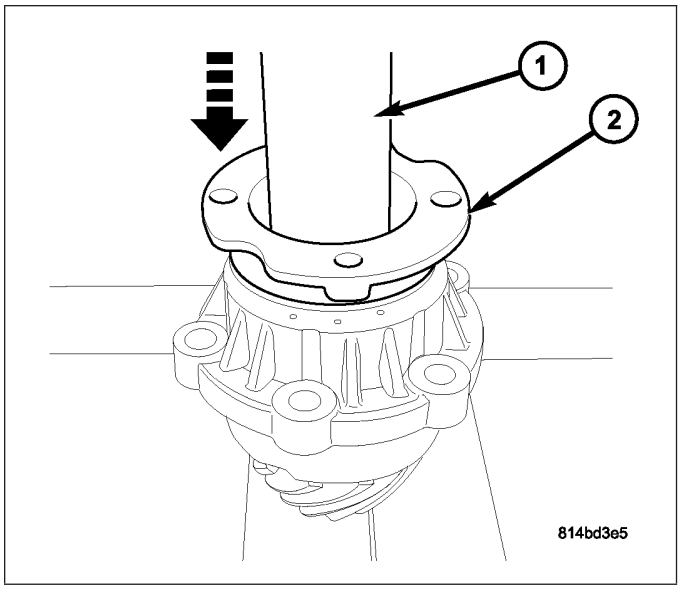

3. Install pinion flange nut and torque to 475 N·m (350 ft. lbs.).

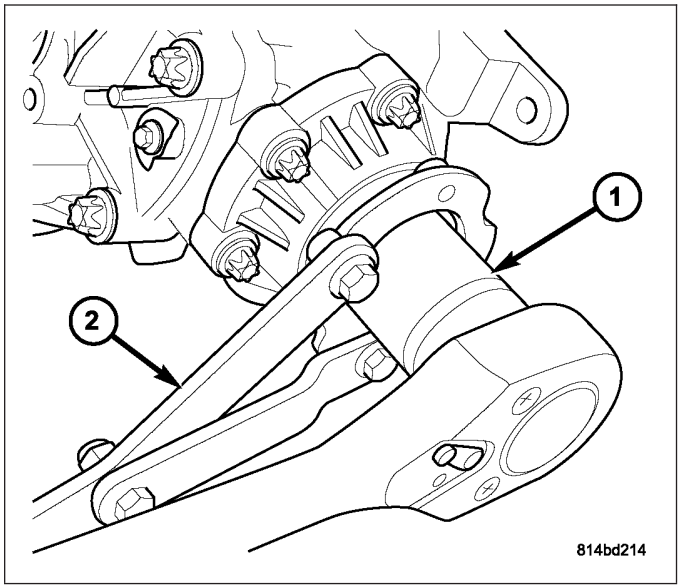

4. Install propeller shaft and heat shield. (Refer to 3 - DIFFERENTIAL & DRIVELINE/PROPELLER SHAFT - INSTALLATION)

REAR AXLE - 198RII

TABLE OF CONTENTS

page

REAR AXLE - 198RII
DESCRIPTION 107
DIAGNOSIS AND TESTING 109
STANDARD PROCEDURE - FLUID DRAIN AND FILL 112
REMOVAL 112
INSTALLATION 117
ADJUSTMENTS
ADJUSTMENT - PINION DEPTH 120
ADJUSTMENT - SIDE BEARING PRELOAD AND RING GEAR BACKLASH. 126
SPECIFICATIONS - 198 RII AXLE 133
SPECIAL TOOLS - 198 RII AXLE 134
SEAL-AXLE SHAFT
REMOVAL 137
INSTALLATION 137
SEAL-PINION FLANGE
REMOVAL 139
INSTALLATION 141
DIFFERENTIAL
REMOVAL 144
DISASSEMBLY 149
ASSEMBLY 152
INSTALLATION 155
BEARING-DIFFERENTIAL CASE
REMOVAL 160
INSTALLATION 161
COVER-DIFFERENTIAL
REMOVAL 162
INSTALLATION 162
GEAR-PINION/RING
REMOVAL 164
INSTALLATION 168

REAR AXLE - 198RII

DESCRIPTION

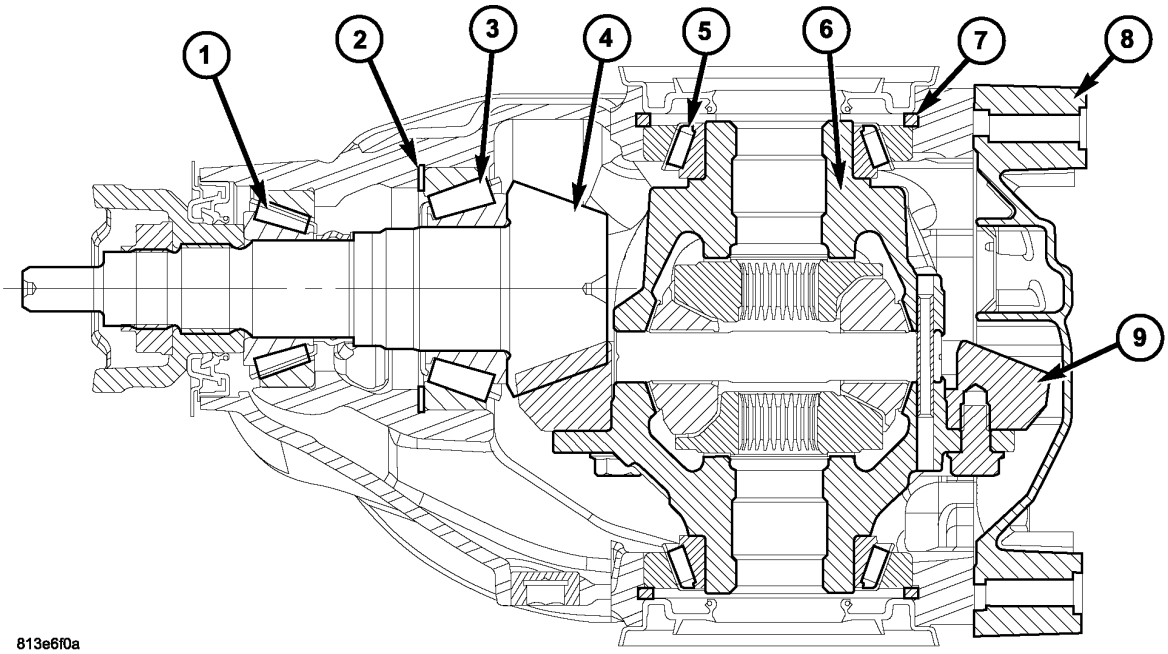

198/210 MM RII Axle Section View

1 - BEARING, PINION TAIL
2 - SHIM, PINION DEPTH
3 - BEARING, PINION HEAD
4 - GEAR/SHAFT, PINION
5 - BEARING, DIFFERENTIAL SIDE
6 - DIFFERENTIAL
7 - RING, SNAP
8 - COVER, AXLE
9 - GEAR, RING

The 198 MM RII (Rear-Independent-Iron) axle is an independent assembly with a cast iron housing and differential. The 198 MM RII uses an open differential which is supported by two tapered roller bearings located on either side of the case. Differential bearing preload and ring gear backlash are controlled with select snap-rings located on the outside of the differential bearing cups. Pinion height is set with a select shim located under the rear pinion bearing cup.

The 198 axle is available only in all-wheel-drive (AWD) models, and in V-6 engine-equipped rear-wheel-drive (RWD) models, and is available in three gear ratios: 3.07 3.64 & 3.90:1.

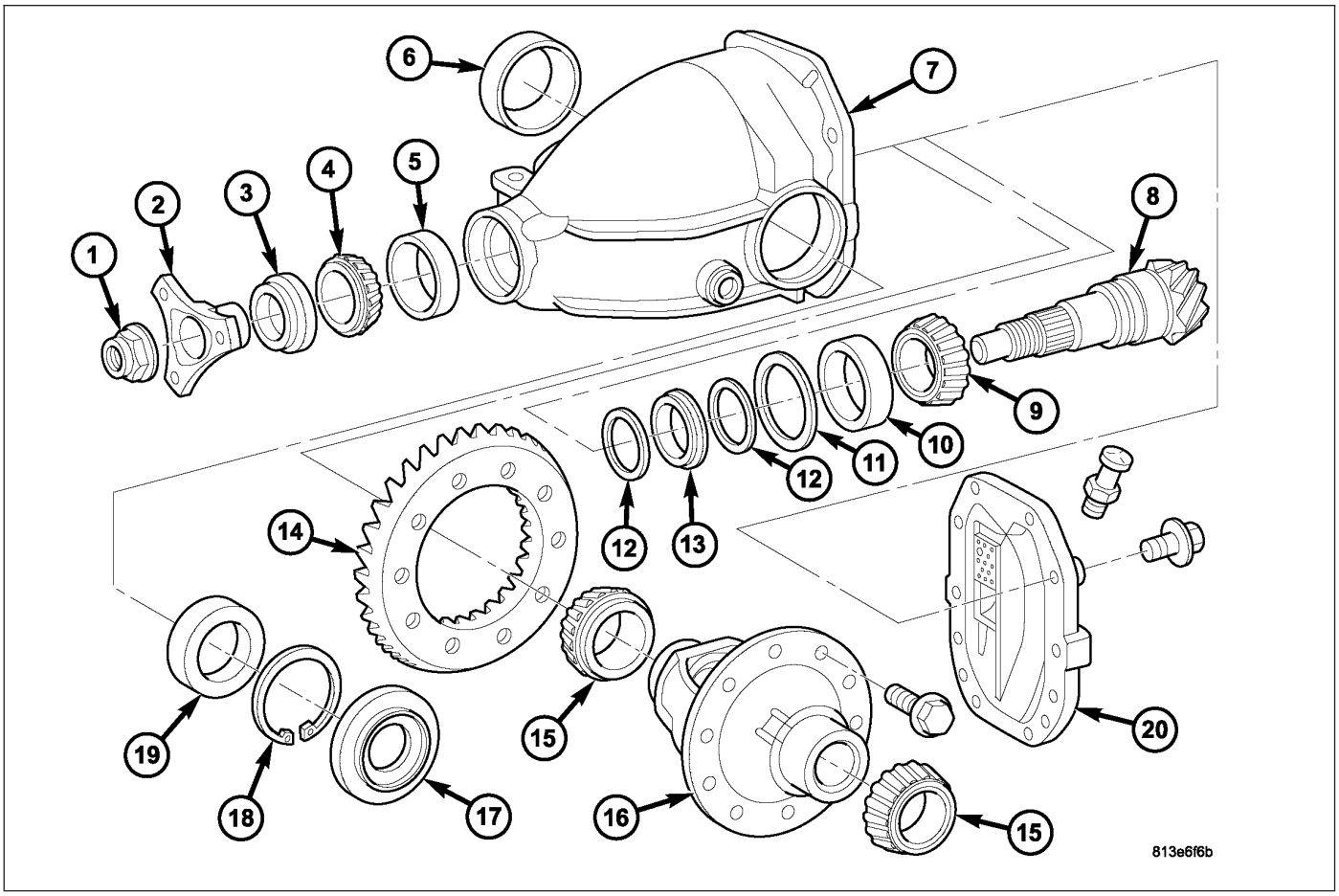

198/210 Axle Components

1 - NUT, PINION FLANGE
2 - FLANGE, PINION
3 - SEAL, PINION
4 - CONE, PINION TAIL BEARING
5 - CUP, PINION TAIL BEARING
6 - CUP, DIFFERENTIAL SIDE BEARING
7 - HOUSING, AXLE
8 - GEAR/SHAFT, PINION
9 - CONE, PINION HEAD BEARING
10 - CUP, PINION HEAD BEARING
11 - SHIM, PINION DEPTH
12 - WASHER (2)
13 - SPACER, COLLAPSIBLE
14 - GEAR, RING
15 - CONE, DIFFERENTIAL SIDE BEARING
16 - DIFFERENTIAL
17 - SEAL, AXLE
18 - RING, SNAP
19 - CUP, DIFFERENTIAL SIDE BEARING
20 - COVER, AXLE HOUSING

AXLE IDENTIFICATION

The 198 MM axle utilizes a barcoded label (1) which is adhered to the top of the axle housing as shown. The following information is found on the identification label:

- Traceability Code (Plant Use)
- Axle Part Number
- Axle Gear Ratio

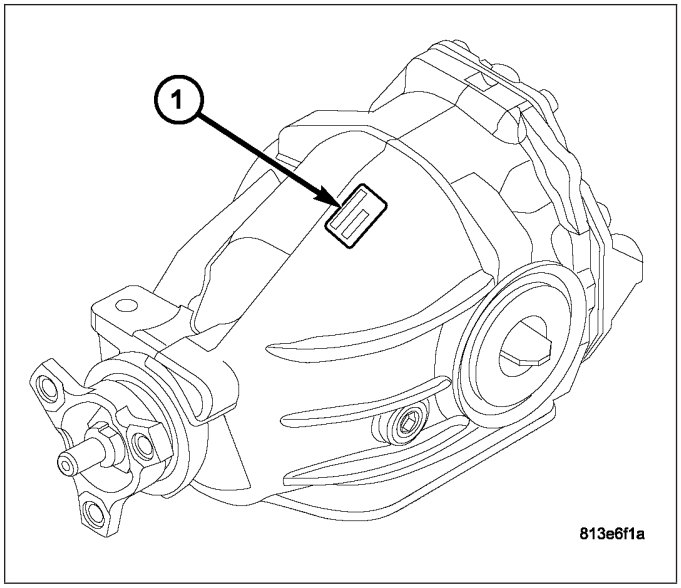

198 Axle Identification Label

DIAGNOSIS AND TESTING

GEAR NOISE

Axle gear noise can be caused by insufficient lubricant, incorrect backlash, incorrect pinion depth, tooth contact, worn/damaged gears, or the carrier housing not having the proper offset and squareness.

Gear noise usually happens at a specific speed range. The noise can also occur during a specific type of driving condition. These conditions are acceleration, deceleration, coast, or constant load.

When road testing, first warm-up the axle fluid by driving the vehicle at least 5 miles and then accelerate the vehicle to the speed range where the noise is the greatest. Shift out-of-gear and coast through the peak-noise range. If the noise stops or changes greatly:

- Check for insufficient lubricant.
- Incorrect ring gear backlash.
- Gear damage.

Differential side gears and pinions can be checked by turning the vehicle. They usually do not cause noise during straight-ahead driving when the gears are unloaded. The side gears are loaded during vehicle turns. A worn pinion shaft can also cause a snapping or a knocking noise.

BEARING NOISE

The differential and pinion bearings can produce noise when worn or damaged. Bearing noise can be either a whining, or a growling sound.

Pinion bearings have a constant-pitch noise. This noise changes only with vehicle speed. Pinion bearing noise will be higher pitched because it rotates at a faster rate. Drive the vehicle and load the differential. If bearing noise occurs, the rear pinion bearing is the source of the noise. If the bearing noise is heard during a coast, the front pinion bearing is the source.

Worn or damaged differential bearings usually produce a low pitch noise. Differential bearing noise is similar to pinion bearing noise. The pitch of differential bearing noise is also constant and varies only with vehicle speed.

Wheel hub bearings produce noise and vibration when worn or damaged. The noise generally changes when the bearings are loaded. Road test the vehicle. Turn the vehicle sharply to the left and to the right. This will load the bearings and change the noise level. Where axle bearing damage is slight, the noise is usually not noticeable at speeds above 30 mph.

LOW SPEED KNOCK

Low speed knock is generally caused by a worn U-joint or by worn side-gear thrust washers. A worn pinion shaft bore will also cause low speed knock.

VIBRATION

Vibration at the rear of the vehicle is usually caused by a:

- Damaged propeller shaft.
- Missing propeller shaft balance weight(s).
- Worn or out-of-balance wheels.
- Loose wheel lug nuts.
- Worn U-joints or CV joints.
- Loose/broken springs.
- Damaged axle shaft bearing(s).
- Loose pinion gear nut.
- Excessive pinion yoke run out.
- Bent halfshaft(s).

Check for loose or damaged front-end components or engine/transmission mounts. These components can contribute to what appears to be a rearend vibration. Do not overlook engine accessories, brackets and drive belts.

All driveline components should be examined before starting any repair.

DRIVELINE SNAP

A snap or clunk noise when the vehicle is shifted into gear, can be caused by:

- High engine idle speed.
- Transmission shift operation.
- Loose engine/transmission/transfer case mounts.
- Worn U-joints or CV joints.
- Worn or broken axle mount isolators.
- Loose pinion gear nut and yoke.
- Excessive ring gear backlash.
- Excessive side gear to case clearance.

The source of a snap or a clunk noise can be determined with the assistance of a helper. Raise the vehicle on a hoist with the wheels free to rotate. Instruct the helper to shift the transmission into gear. Listen for the noise, a mechanics stethoscope is helpful in isolating the source of a noise.

DIAGNOSTIC CHART

CONDITION	POSSIBLE CAUSE	CORRECTION
Wheel Noise	1. Wheel loose.	1. Tighten loose nuts.
	2. Faulty, brinelled wheel bearing.	2. Replace bearing.
Differential Cracked	1. Improper differential side bearing preload.	1. Replace case and inspect gears and bearings for further damage. Set differential bearing preload properly.
	2. Excessive ring gear backlash.	2. Replace case and inspect gears and bearings for further damage. Set ring gear backlash properly.
	3. Vehicle overloaded.	3. Replace case and inspect gears and bearings for further damage. Avoid excessive vehicle weight.

CONDITION	POSSIBLE CAUSE	CORRECTION
Differential Gears Scored	1. Insufficient lubrication.	1. Replace scored gears. Fill differential with the correct fluid type and quantity.
	2. Improper grade of lubricant.	2. Replace scored gears. Fill differential with the proper fluid type and quantity.
	3. Excessive spinning of one wheel/tire.	3. Replace scored gears. Inspect all gears, pinion bores, and shaft for damage. Service as necessary.
Loss Of Lubricant	1. Lubricant level too high.	1. Drain lubricant to the correct level.
	2. Worn axle shaft seals.	2. Replace seals.
	3. Cracked axle housing.	3. Repair as necessary.
	4. Worn pinion seal.	4. Replace seal.
	5. Worn/scored pinion flange journal.	5. Replace pinion flange and seal.
	6. Axle cover not properly sealed.	6. Remove, clean, and re-seal cover.
Axle Overheating	1. Lubricant level low.	1. Fill differential to correct level.
	2. Improper grade of lubricant.	2. Fill differential with the correct fluid type and quantity.
	3. Bearing preload too high.	3. Readjust bearing pre-load.
	4. Insufficient ring gear backlash.	4. Re-adjust ring gear backlash.
Gear Teeth Broke	1. Overloading.	1. Replace gears. Examine other gears and bearings for possible damage.
	2. Ice-spotted pavement.	2. Replace gears and examine remaining parts for damage.
	3. Improper adjustments.	3. Replace gears and examine remaining parts for damage. Ensure ring gear backlash is correct.
Axle Noise	1. Insufficient lubricant.	1. Fill axle with the correct fluid type and quantity.
	2. Improper ring gear and pinion adjustment.	2. Check ring gear and pinion contact pattern. Adjust backlash or pinion depth.
	3. Unmatched ring gear and pinion.	3. Replace gears with a matched ring gear and pinion.
	4. Worn teeth on ring gear and/or pinion.	4. Replace ring gear and pinion.
	5. Loose pinion bearings.	5. Adjust pinion bearing pre-load.
	6. Loose differential bearings.	6. Adjust differential bearing preload.
	7. Misaligned or sprung ring gear.	7. Measure ring gear run-out. Replace components as necessary.
	8. Housing not machined properly.	8. Replace housing.

STANDARD PROCEDURE - FLUID DRAIN AND FILL

NOTE: Note: The fluid required for use in this axle is Mopar® Synthetic Gear and Axle Lubricant 75W-140.

1. Drive the vehicle until the differential lubricant is at the normal operating temperature.
2. With vehicle in neutral, position and raise vehicle on hoist.
3. Remove rear axle drain plug and drain lubricant completely from the axle.
4. Install drain plug and tighten to 60 N·m (44 ft lbs).

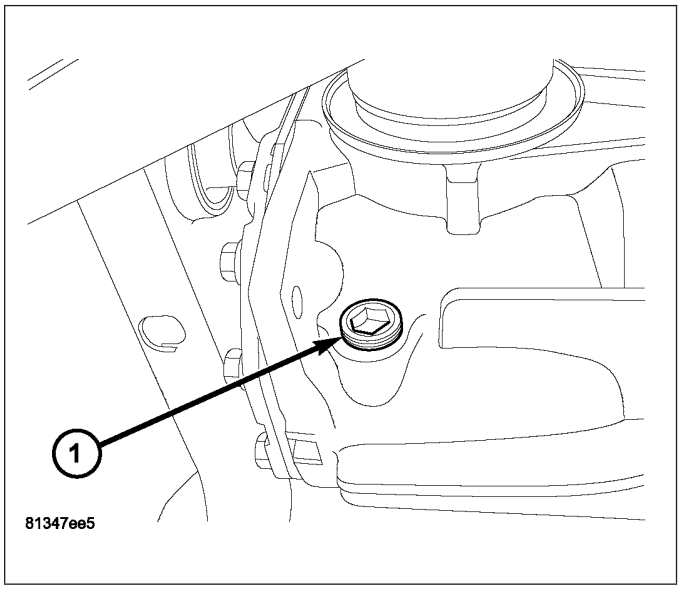

5. Remove fill plug (1) and fill rear axle with 1.4 L (1.5 qts.) Mopar® Synthetic Gear & Axle Lubricant 75W-140.
6. Install fill plug and tighten to 60 N·m (44 ft lbs).

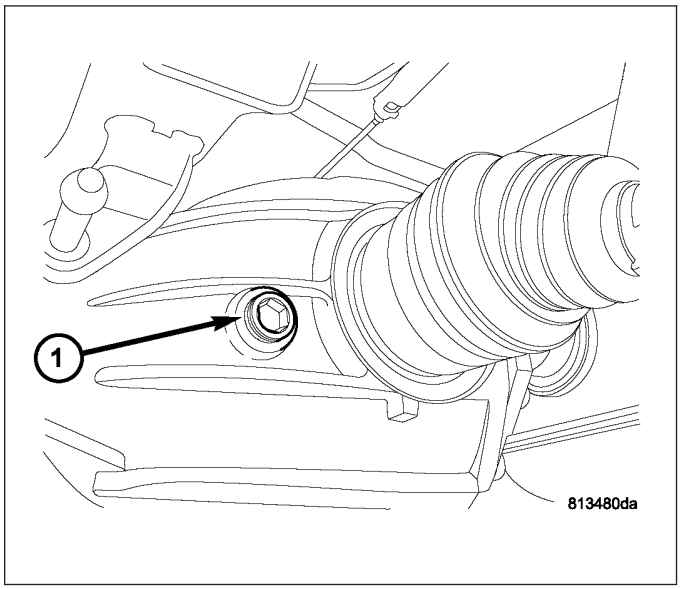

REMOVAL

NOTE: This procedure requires the compression of the rear suspension to ride height. A drive-on hoist should be used. If a drive-on hoist is not used, screw-style under-hoist jack stands are required to compress the rear suspension, facilitating rear halfshaft removal.

CAUTION: Never grasp halfshaft assembly by the inner or outer boots. Doing so may cause the boot to pucker or crease, reducing the service life of the boot and joint. Avoid over angulating or stroking the C/V joints when handling the halfshaft.

1. With vehicle in neutral, position and raise vehicle on hoist.
2. Using 14mm hex, remove axle drain plug (1) and drain rear axle fluid into container suitable for fluid reuse.
3. Install drain plug (1) and torque to 60 N·m (44 ft. lbs.) torque.

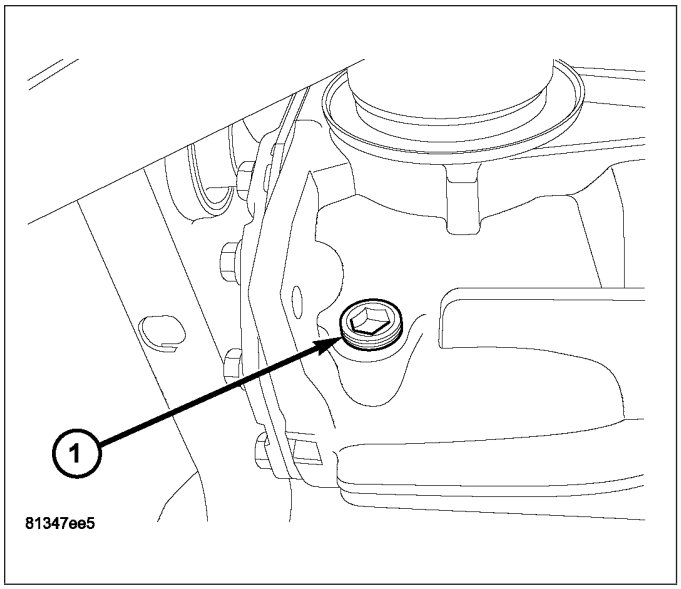

4. Remove rear exhaust system (2) on dual-outlet exhaust models, otherwise, lower exhaust system at rear hanger(s) to provide adequate clearance.

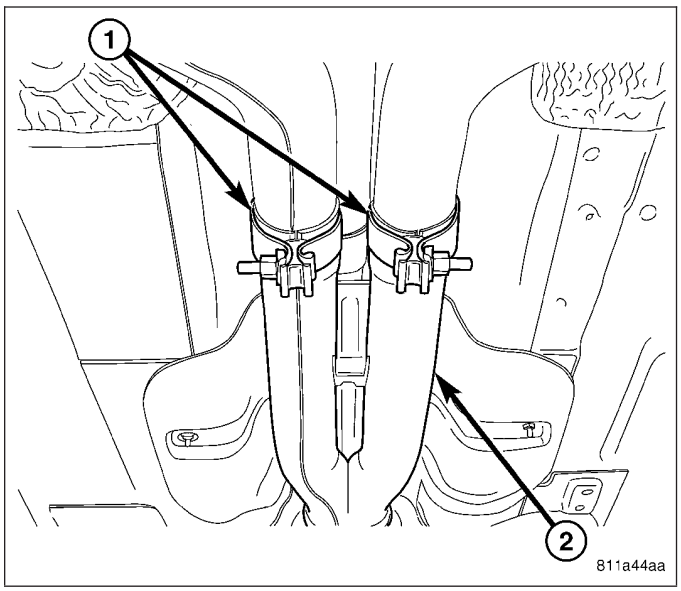

5. Apply alignment index marks (3) to the propeller shaft rubber coupler (1) and axle flange (2).

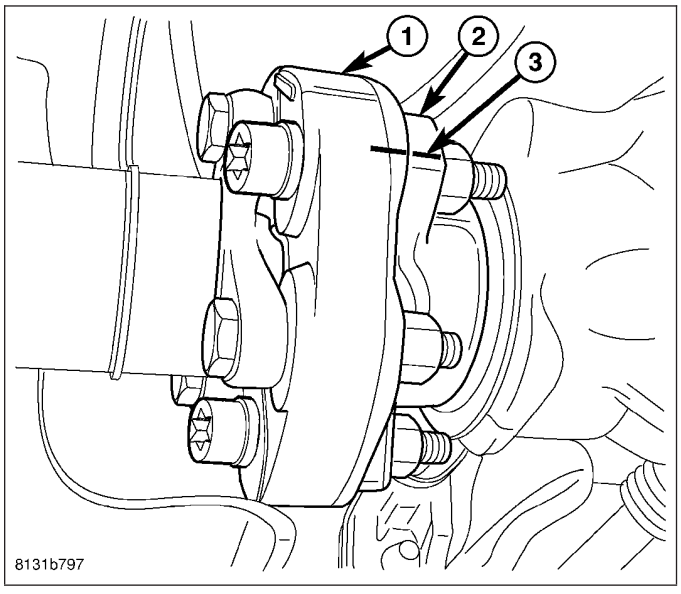

6. Remove three (3) propeller shaft coupler-to-axle flange bolt/nuts.

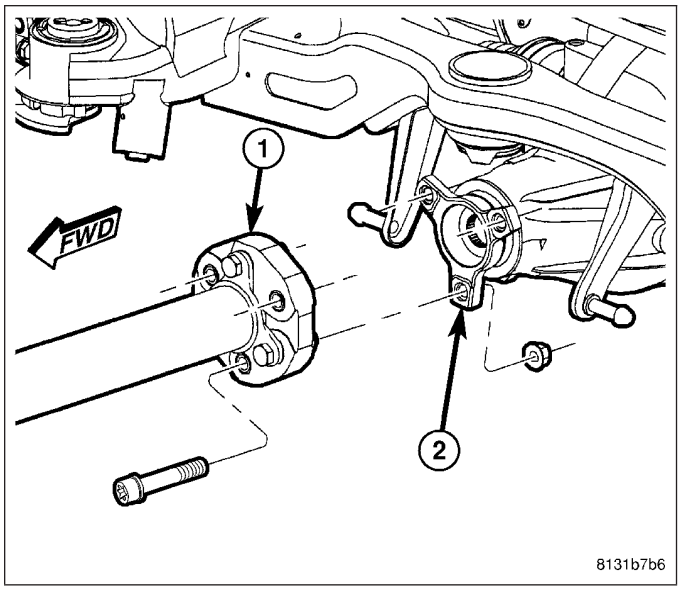

7. Using suitable screwdriver (1), partially disengage halfshaft(s) (2) from axle assembly.

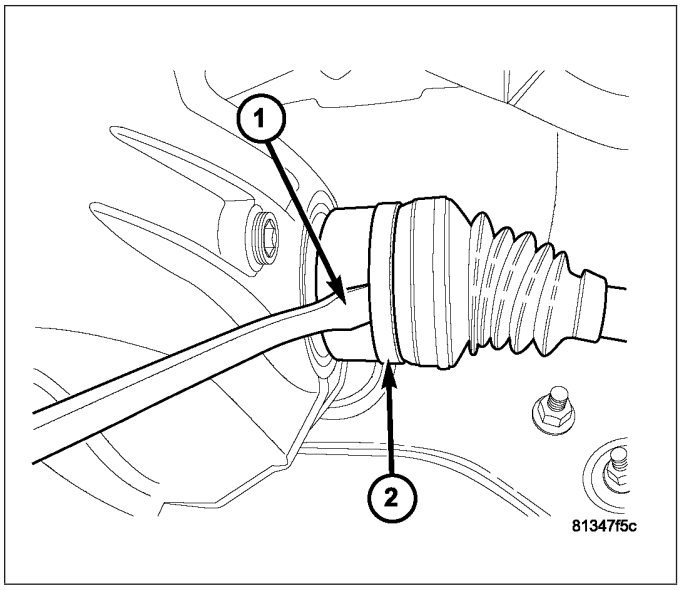

8. If a drive-on hoist is used, position transmission jack(1) to rear axle assembly. If a drive-on hoist is not used, compress rear suspension using screw-style under-hoist jack stands (2), then position transmission jack to rear axle assembly.

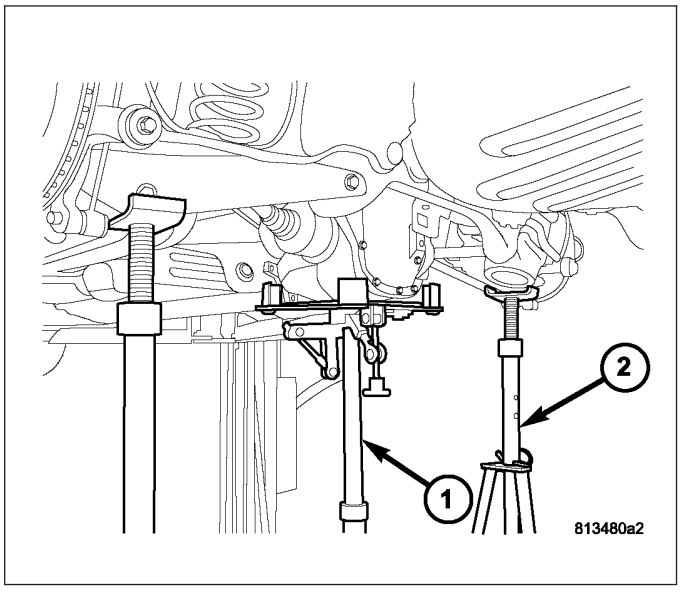

9. Remove rear axle forward mount isolator (1) bolt/nut (2).

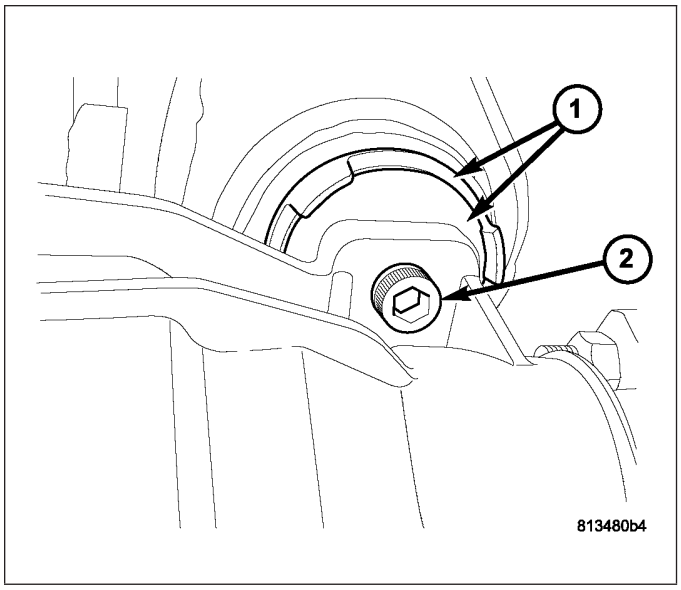

10. Remove two rear axle-to-crossmember bolts (1).

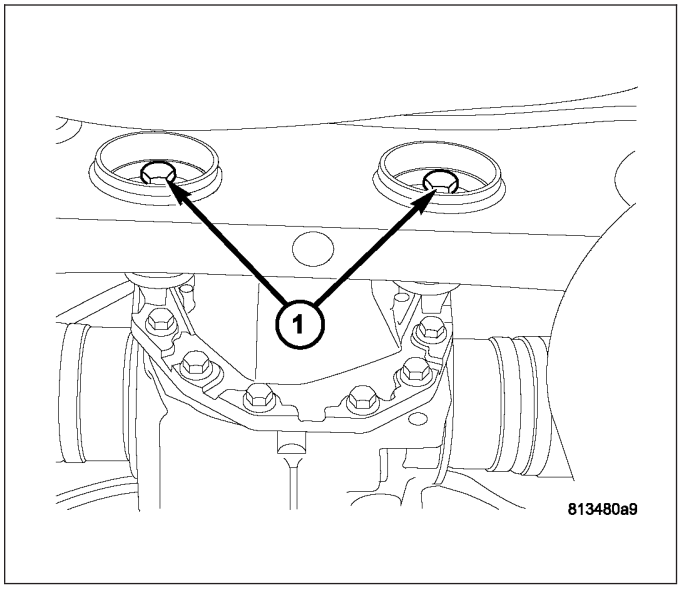

11. Carefully lower rear axle. While lowering axle, separate propeller shaft from axle and support with suitable rope or wire (1).

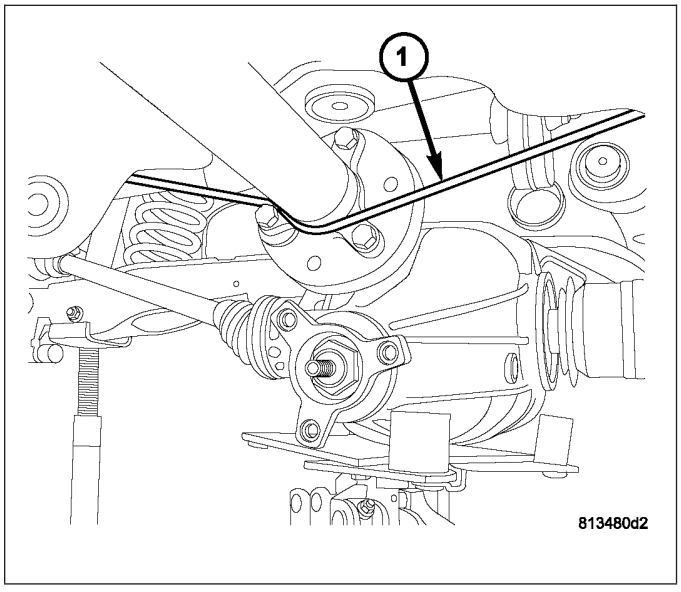

12. Lower axle just enough to remove both halfshafts one at a time. Shift axle assembly in one direction, compressing one halfshaft while removing the other (1). Use caution to protect axle seal and journal.

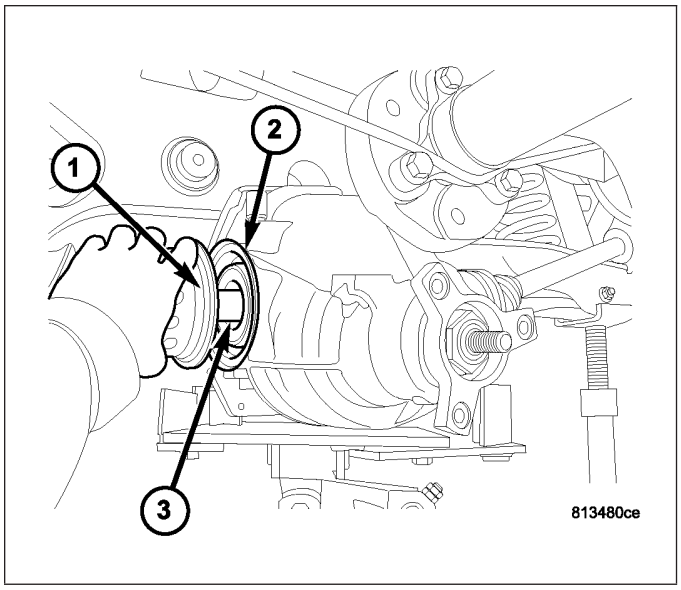

13. Remove axle assembly from vehicle and transfer to bench.
14. Using suitable screwdriver, remove axle seals and discard.

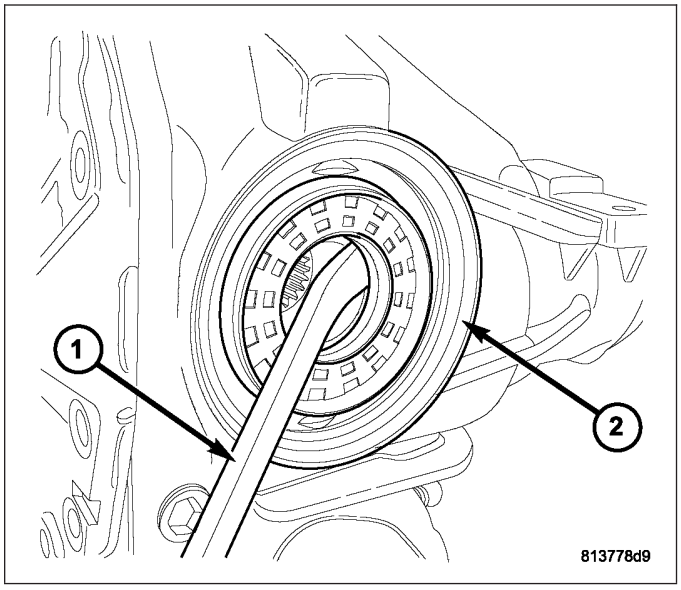

INSTALLATION

1. Install new axle seal(s) (1) using Tool 9223 (2).

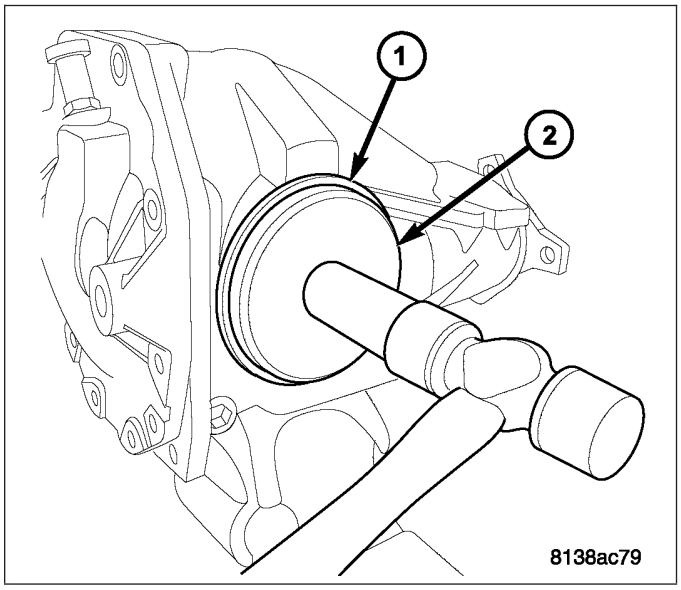

NOTE: Use care when installing halfshaft to axle assembly. The halfshaft installation angle should be minimized to avoid damage to seal upon installation.

2. Using new circlip(s), install halfshaft (1) to rear axle assembly. Use care not to damage axle seals (2). Verify proper installation by pulling outward on joint by hand.

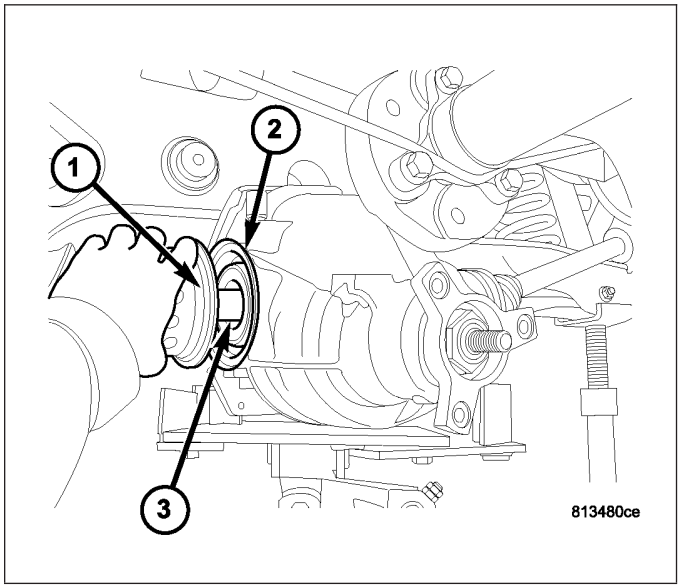

3. Raise rear axle assembly into position. Align propeller shaft index marks (3) and start propeller shaft coupler-to-axle bolt/nuts by hand.

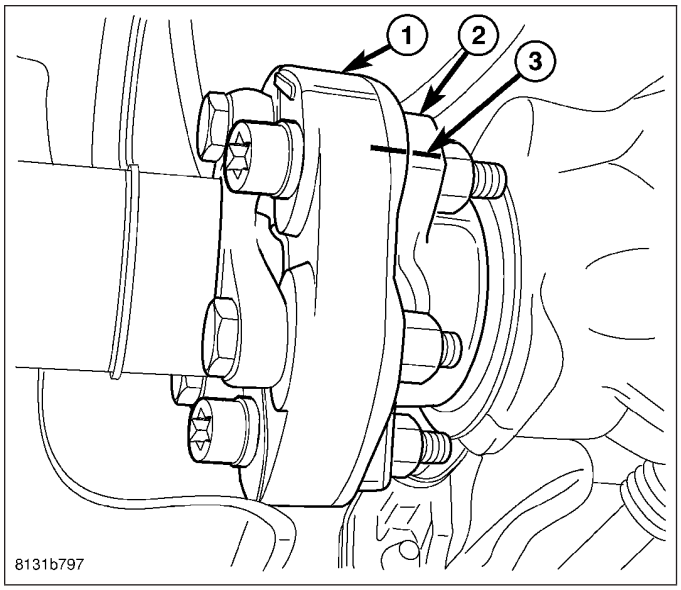

4. Install two rear axle-to-crossmember bolts (1) and torque to 220 N·m (162 ft. lbs.).

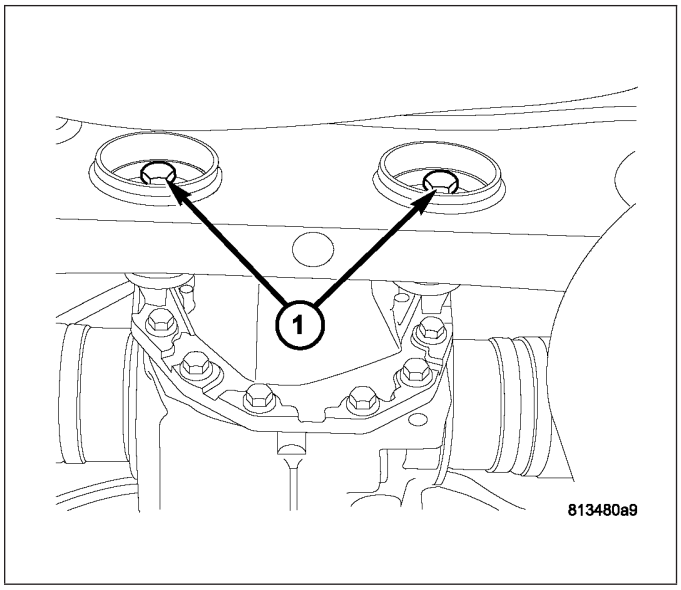

5. Install rear axle front mount isolator (1) as shown and torque bolt/nut to 65 N·m (48 ft. lbs.).

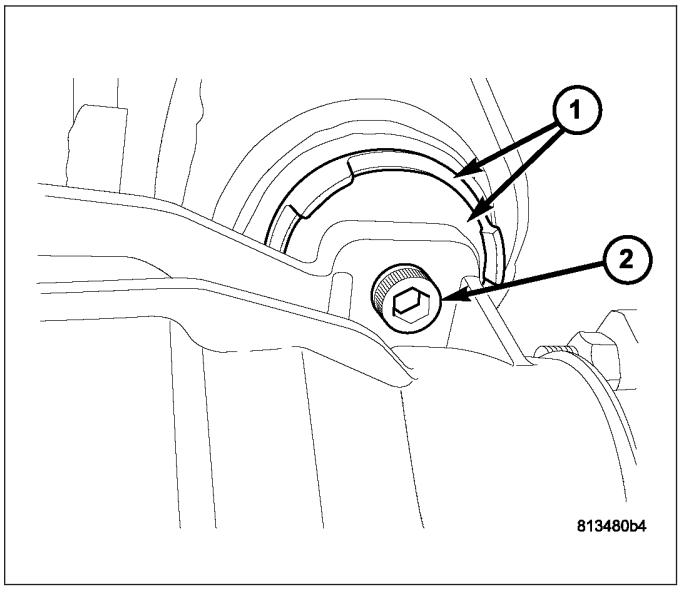

6. Again verify halfshaft inner joints are fully engaged to axle assembly.
7. Remove transmission jack (1).
8. If used, remove screw-type under-hoist jack stands (2).

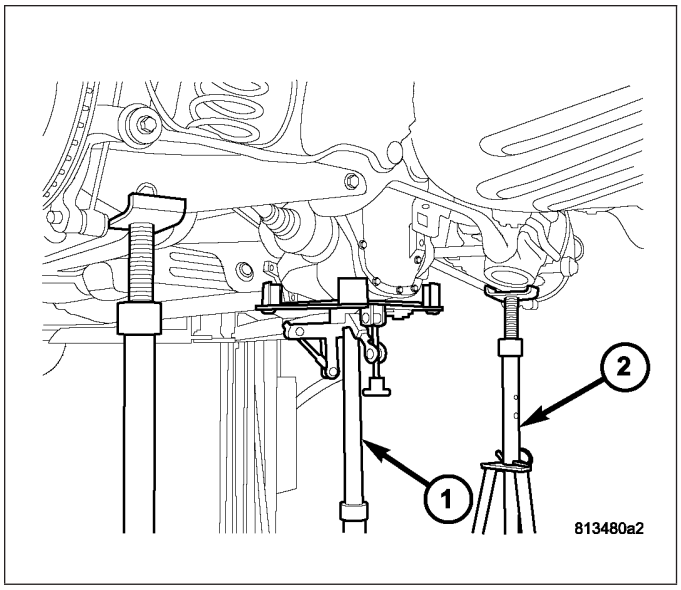

9. Torque propeller shaft coupler-to-axle flange bolt/nuts to 58 N·m (43 ft. lbs.).

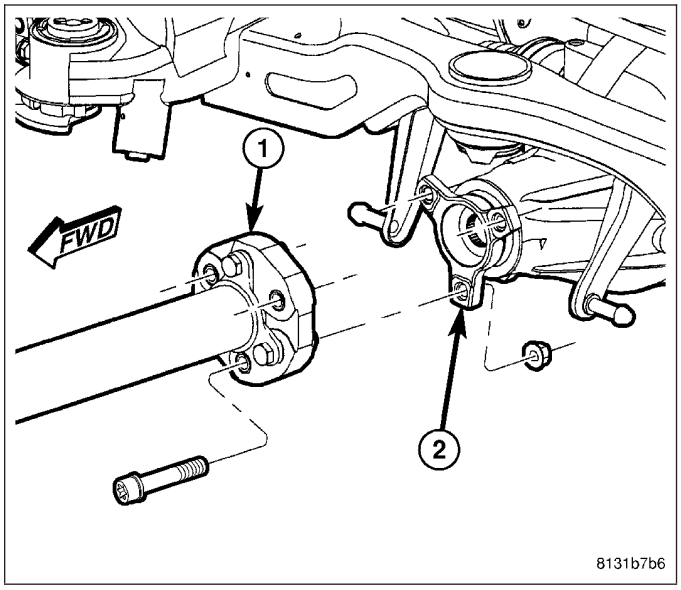

10. Using a 14mm hex, remove rear axle fill plug (1). Fill axle with 1.4L (1.5 qts.) of Mopar® 75W-140 Synthetic Gear & Axle Lubricant. Install fill plug and torque to 60 N·m (44 ft. lbs.).

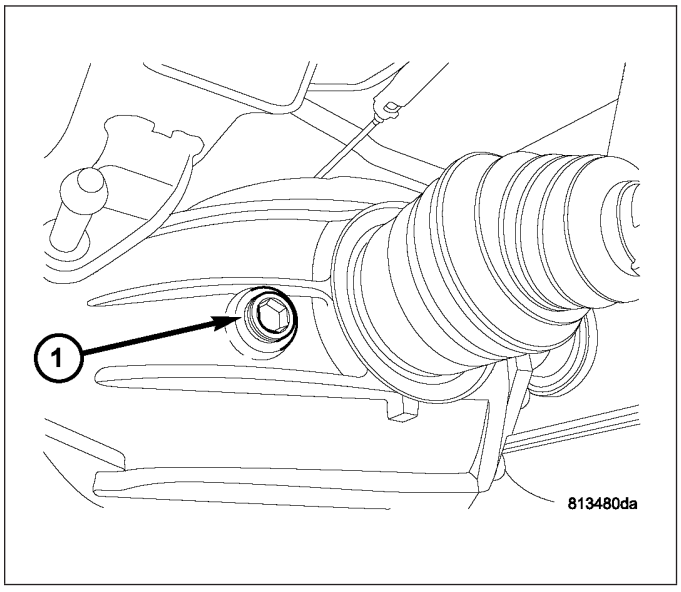

ADJUSTMENTS

ADJUSTMENT - PINION DEPTH

PINION DEPTH VARIANCE

Ring gear and pinion are supplied as matched sets. Identifying numbers for the ring gear and pinion are painted onto the pinion gear shaft and the side of the ring gear. A plus (+) number, minus (–) number or zero (0) along with the gear set sequence number (01 to 99) is on each gear. The pinion depth variance (1) is the amount the depth varies from the standard depth setting of a pinion marked with a (0). The remaining numbers (2) are the sequence number of the gear set. The standard depth provides the best gear tooth contact pattern.

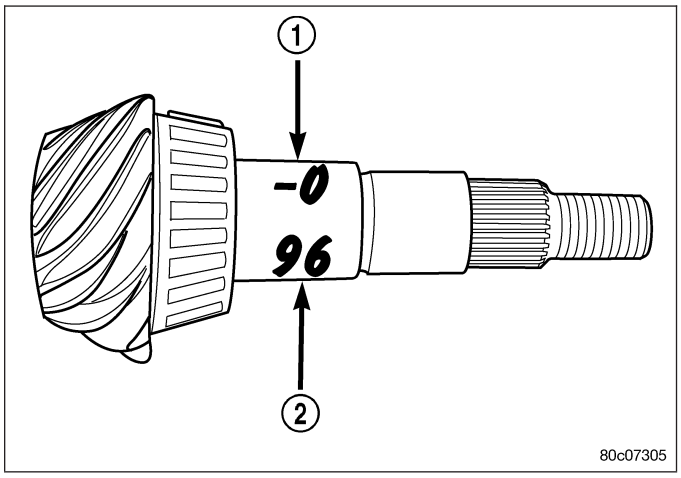

Compensation for pinion depth variance is achieved with select shims (3). The shims are sandwiched between the pinion head bearing cup (4) and axle housing.

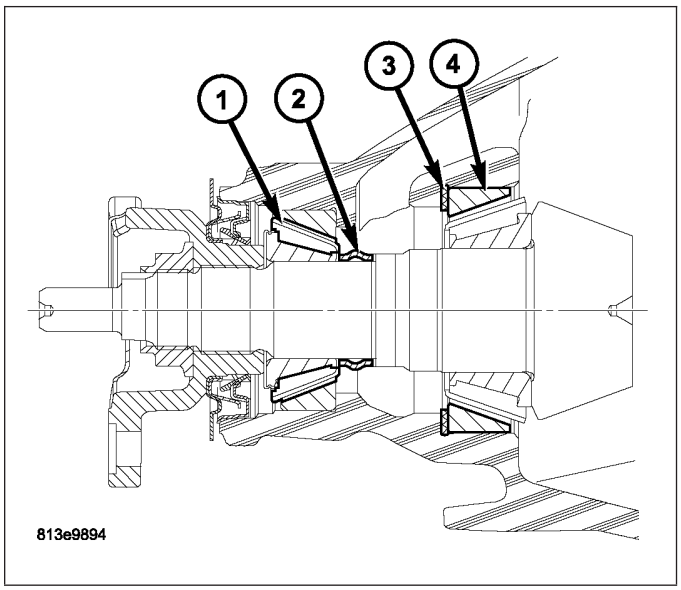

If installing a new gear, note the depth variance number of the original and replacement pinion. Add or subtract this number from the original depth shim to compensate for the difference in the depth variances. The numbers represent deviation from the standard in microns. If the number is negative, add that value to the required thickness of the depth shims. If the number is positive, subtract that value from the thickness of the depth shim.

PINION GEAR DEPTH VARIANCE

Original Pinion Gear Depth Variance	Replacement Pinion Gear Depth Variance								
	−4	**−3**	**−2**	**−1**	**0**	**+1**	**+2**	**+3**	**+4**
+4	+0.08	+0.07	+0.06	+0.05	+0.04	+0.03	+0.02	+0.01	0
+3	+0.07	+0.06	+0.05	+0.04	+0.03	+0.02	+0.01	0	−0.01
+2	+0.06	+0.05	+0.04	+0.03	+0.02	+0.01	0	−0.01	−0.02
+1	+0.05	+0.04	+0.03	+0.02	+0.01	0	−0.01	−0.02	−0.03
0	+0.04	+0.03	+0.02	+0.01	0	−0.01	−0.02	−0.03	−0.04
−1	+0.03	+0.02	+0.01	0	−0.01	−0.02	−0.03	−0.04	−0.05
−2	+0.02	+0.01	0	−0.01	−0.02	−0.03	−0.04	−0.05	−0.06
−3	+0.01	0	−0.01	−0.02	−0.03	−0.04	−0.05	−0.06	−0.07
−4	0	−0.01	−0.02	−0.03	−0.04	−0.05	−0.06	−0.07	−0.08

PINION DEPTH MEASUREMENT

Pinion depth measurement is taken with the pinion head and tail bearing cups pressed into the axle housing without the shim.

1. Press pinion head bearing cup into housing using Tools C-4171 (1) and C-4310 (2).

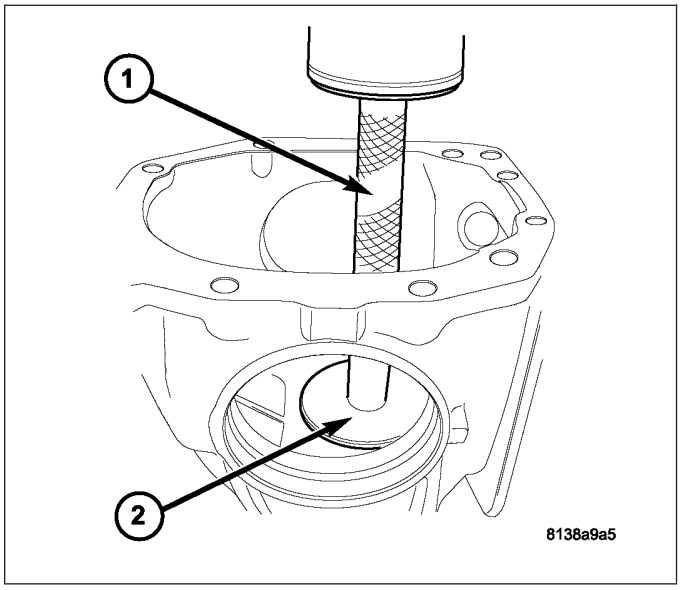

2. Press pinion tail bearing cup into housing using Tools C-4171 (1) and D-146 (2).

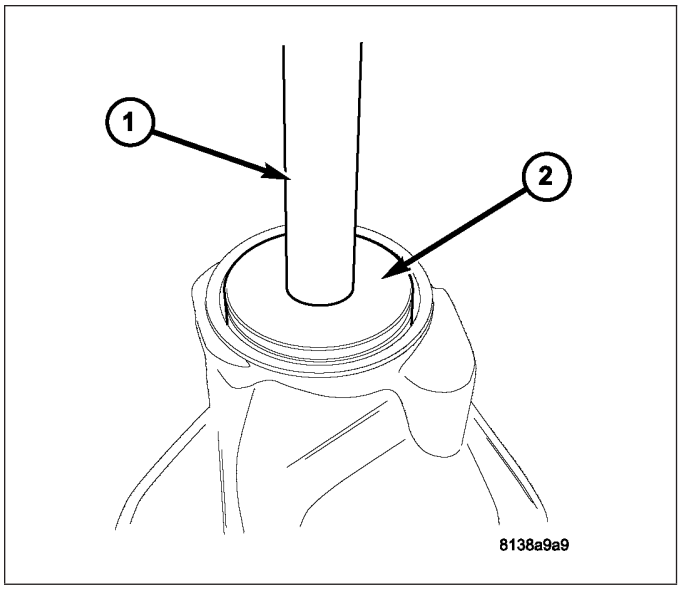

3. Install Pinion Height Block 6739 (3), Pinion Gage Block 9227 (2), and pinion head bearing cone (1) onto Screw 6741. Install assembly into axle housing and through bearing cups.

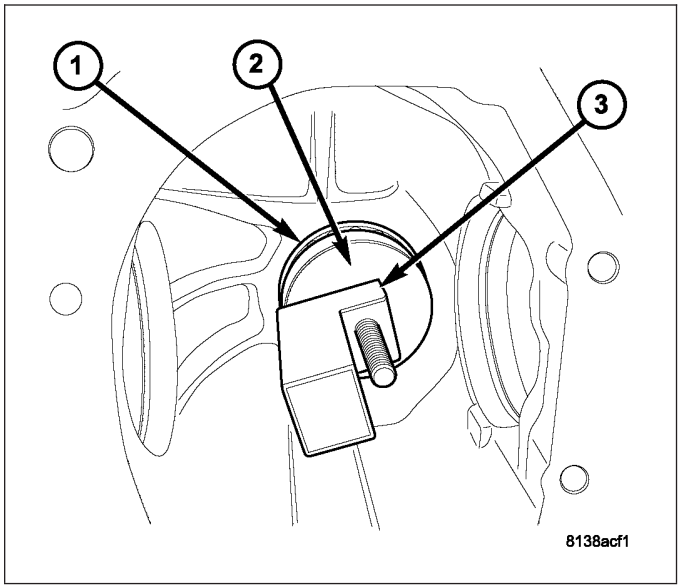

4. Install pinion tail bearing and Cone 6740 (4). Tighten Cone 6740 by hand until 3.4 N·m (30 in. lbs.) of rotating torque is measured at Screw 6741 (5).

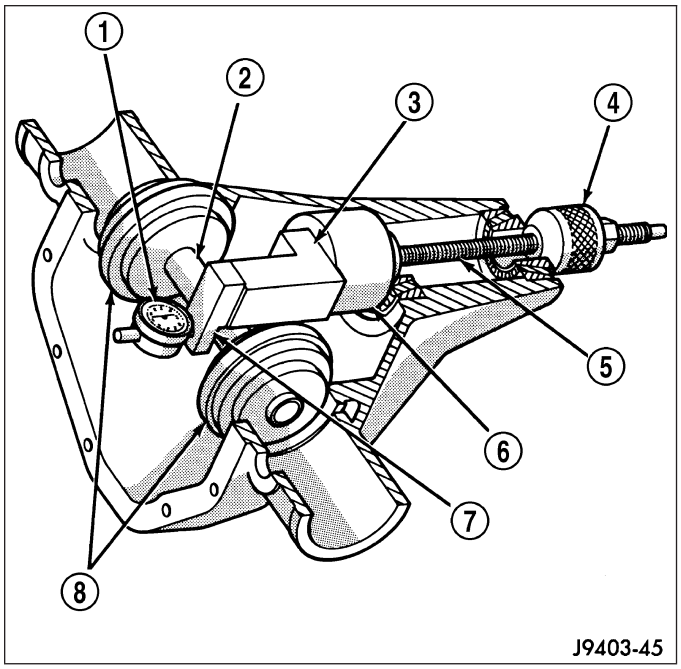

5. Install Arbor Discs 9228 (1).

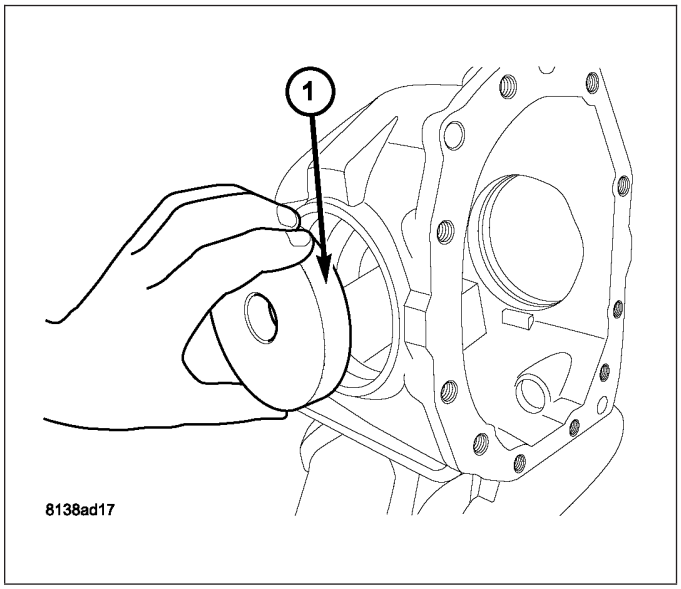

6. Install Arbor Bar D-115-3 (1).

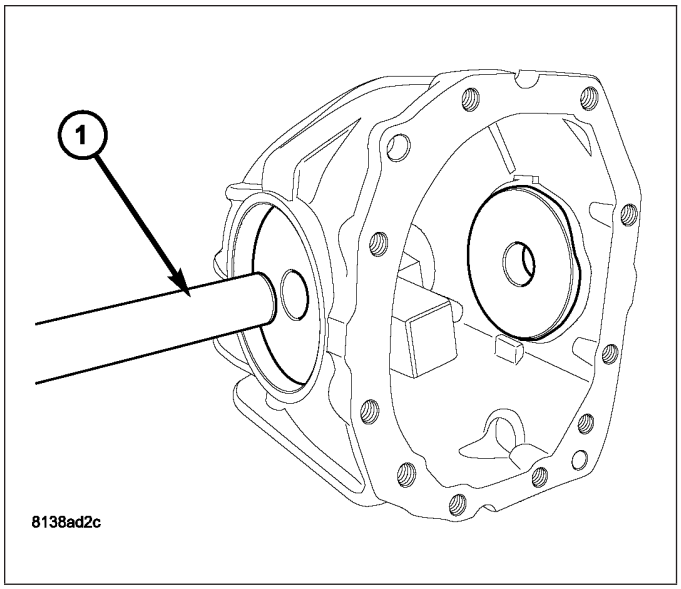

7. Verify pinion depth setup is a shown.

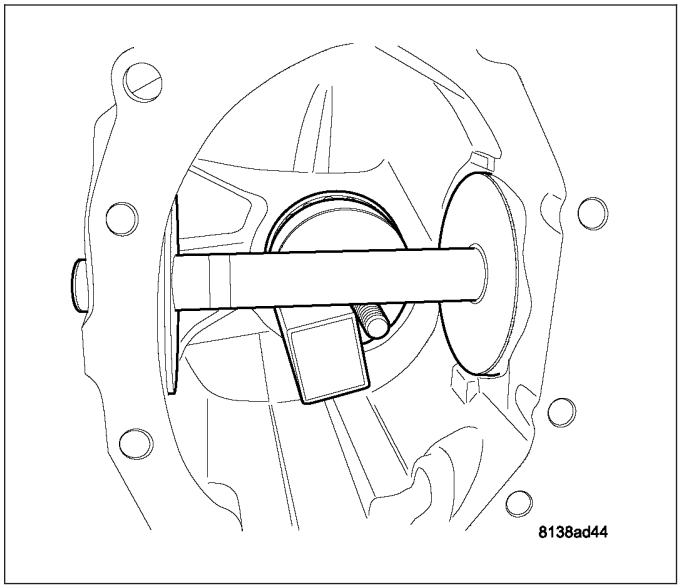

8. Install Dial Indicator 9524 (1) to Scooter Block D-115-2A (2). Secure with set-screw (3).

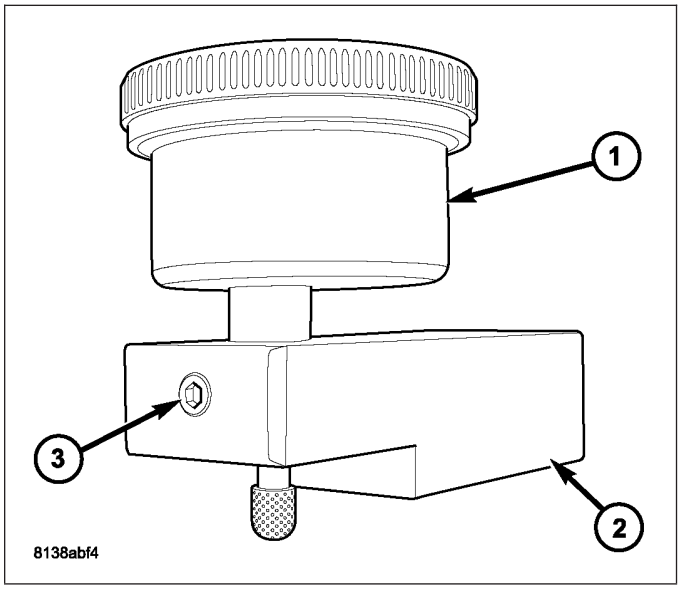

9. Install Indicator/Block assembly to top of Height Block 6739 (1). Zero indicator on top surface.

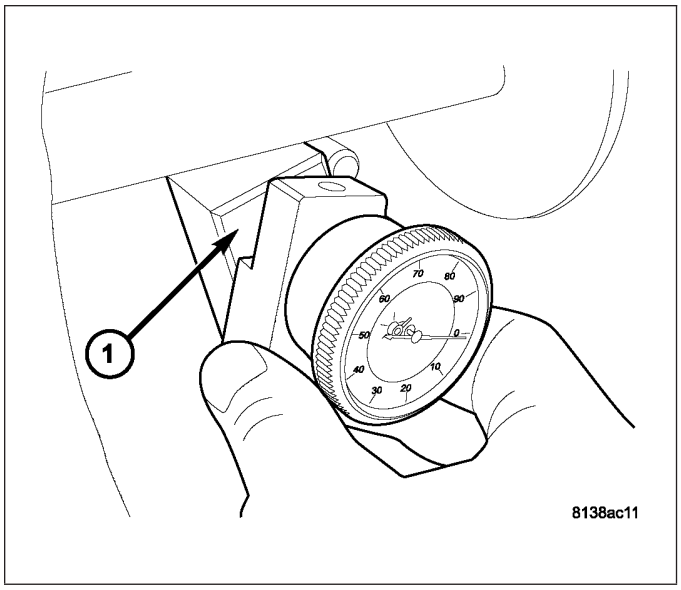

10. Slide indicator probe off of height block and onto Arbor Bar D-115-3 (2). As indicator contacts Arbor Bar (2), indicator needle will rotate clockwise. Continue moving indicator probe to the crest of the arbor bar and record the highest reading.

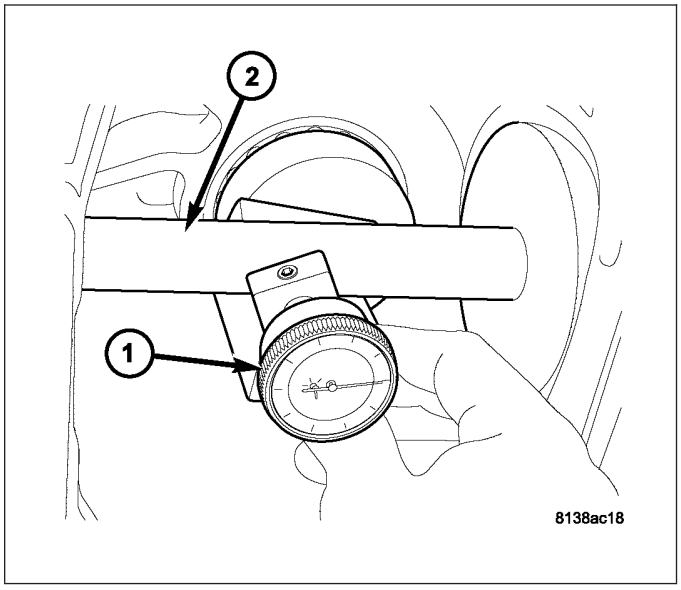

11. Select a shim equal to the dial indicator reading plus the drive pinion gear depth variance number (1) written on the side of the pinion shaft. For example, if the depth variance is –1, subtract 0.01 mm (0.0004 in.) from dial indicator reading.

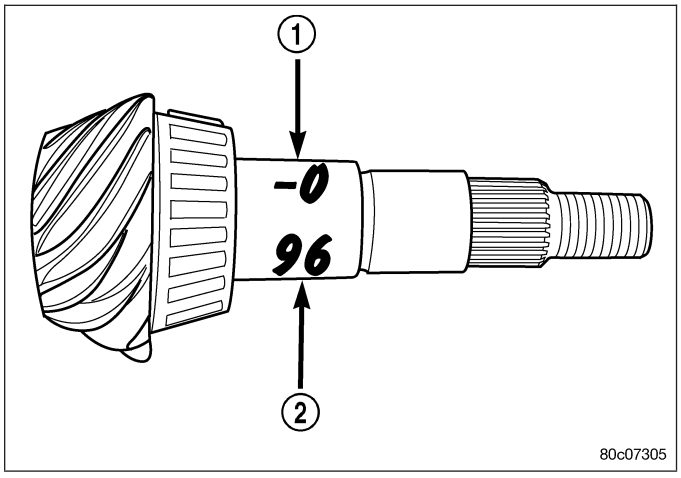

ADJUSTMENT - SIDE BEARING PRELOAD AND RING GEAR BACKLASH

DIFFERENTIAL SIDE BEARING PRELOAD MEASUREMENT/CORRECTION

Differential side bearing preload should be measured and adjusted after the following scenarios:

- Differential case replacement
- Differential side bearing replacement
- Axle housing replacement
- Loss or replacement of side bearing snap rings

If none of these situations apply, refer to Adjustment — Ring Gear Backlash

1. Install Spreader Adapter Plates 9226 (1) as shown

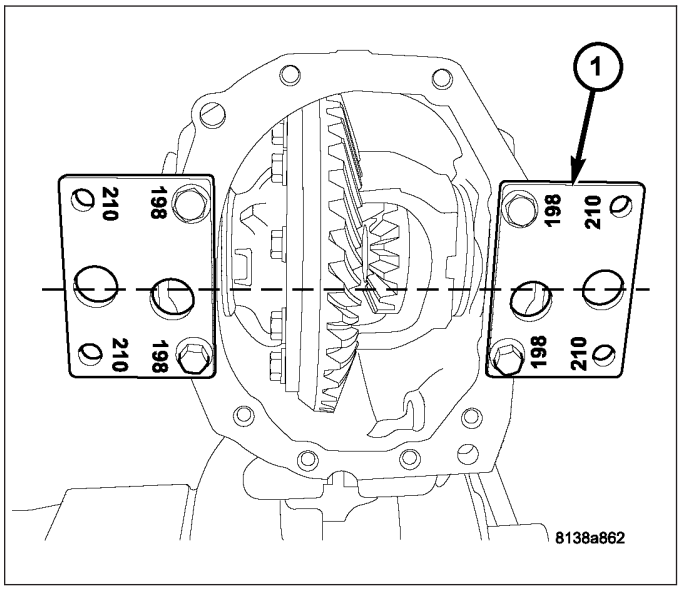

2. Mount axle housing to Spreader W-129-B (1).

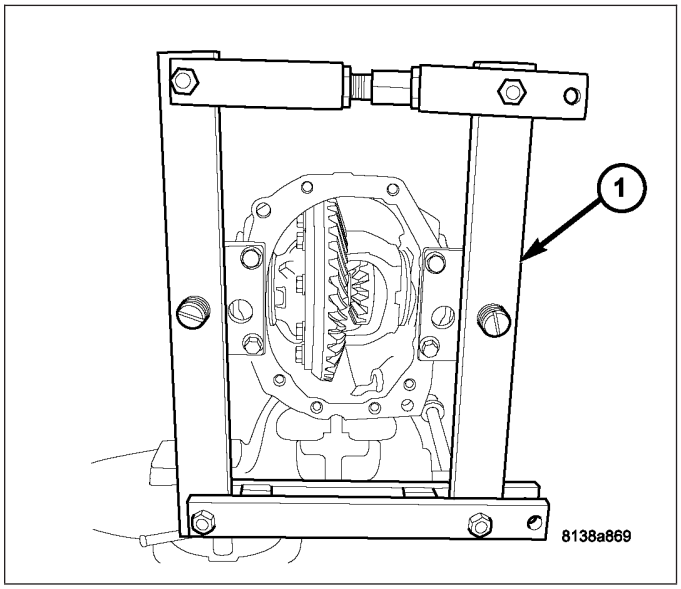

3. Set up Dial Indicator Set C-3339-A as shown to measure axle housing spread:
   a. Clamp SP-5426 (1)
   b. Post SP-5425-B (2)
   c. Metric Dial Indicator 9524 (3)

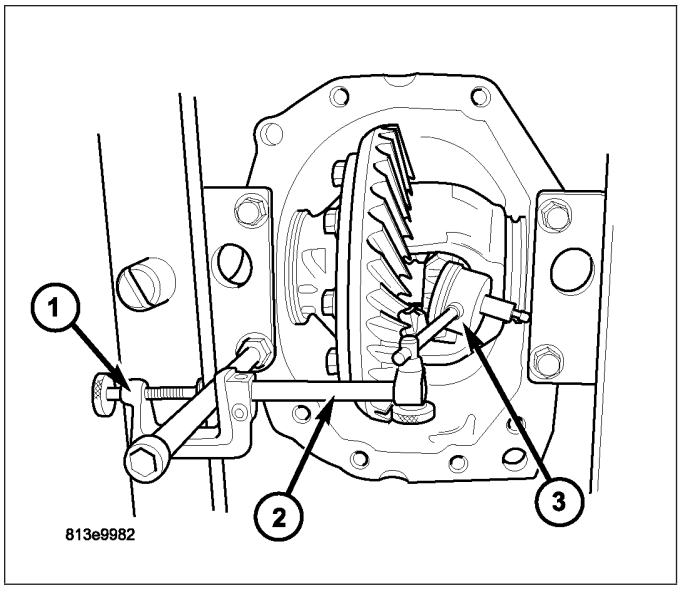

4. If differential side bearing cups and snap rings are removed at this point, skip to Step 8. Otherwise, expand spreader to spread axle housing no more than 0.30 mm (0.012 in.).

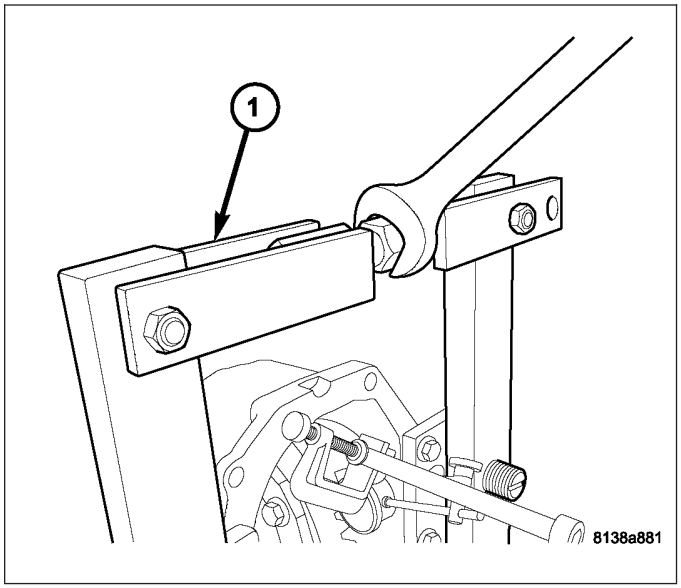

5. Remove both differential side bearing snap rings (1). Tag snap ring to ensure replacement to original position.

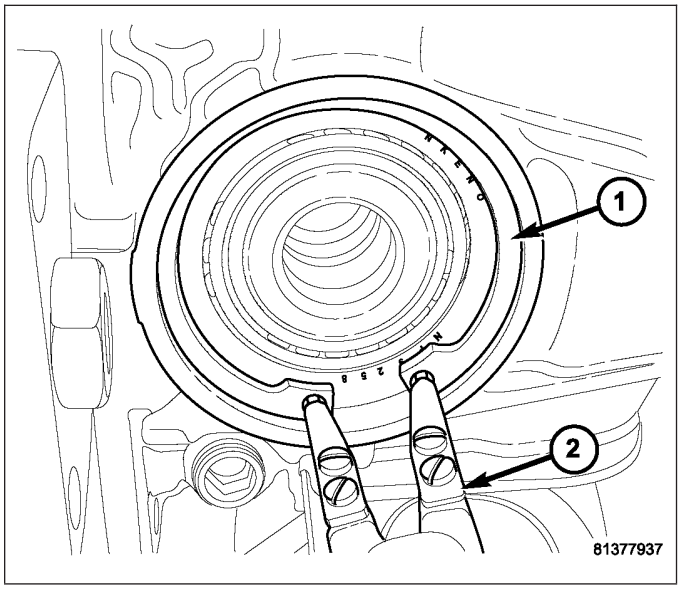

6. Measure and record snap ring (2) thickness for later use.

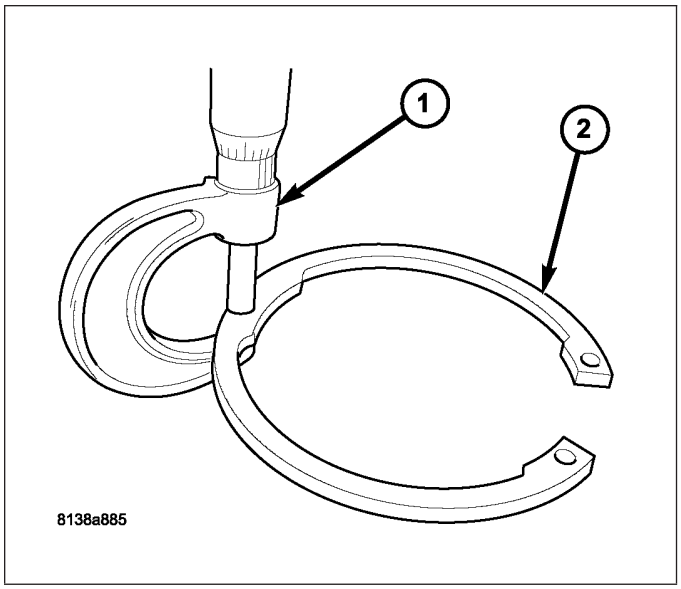

7. Relax spreader (1) to relieve tension on axle housing.

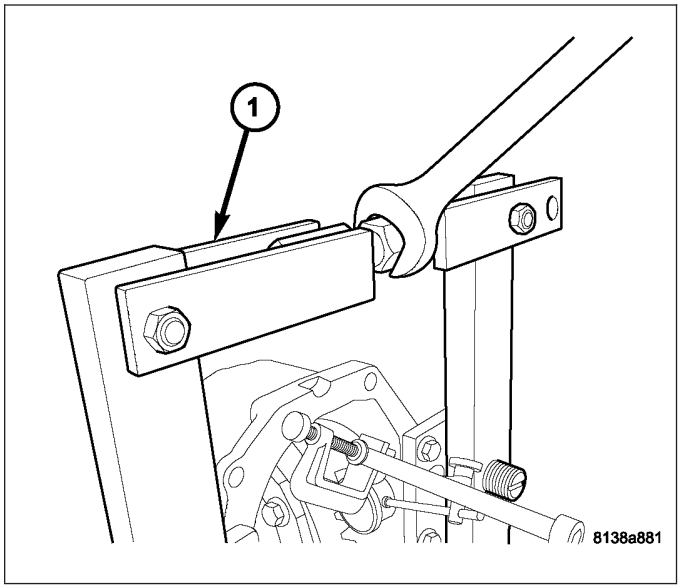

8. Install right (pinion) side bearing cup and snap ring (1).

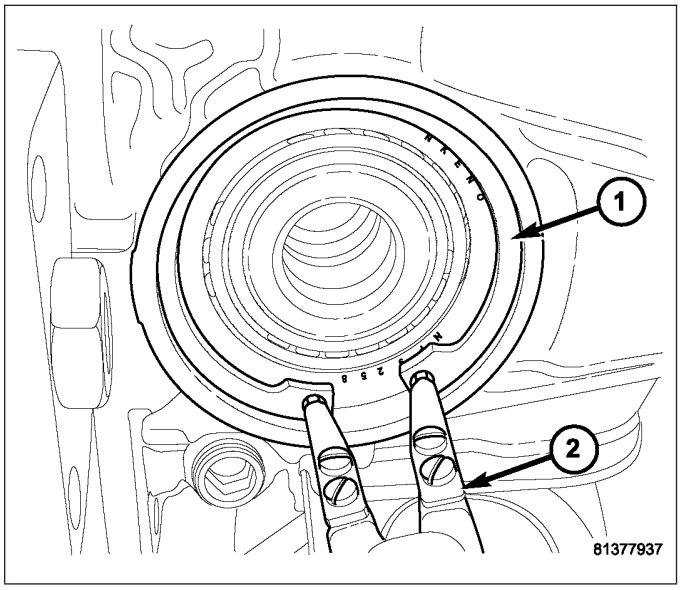

9. Zero dial indicator.
10. Expand spreader (1) to spread axle housing no more than 0.30 mm (0.012 in.).

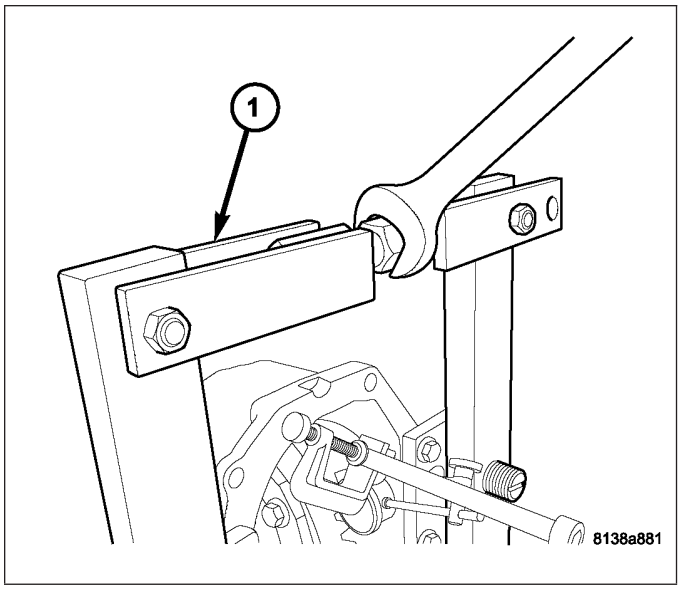

11. Install left (ring gear) side bearing cup and snap ring (1).

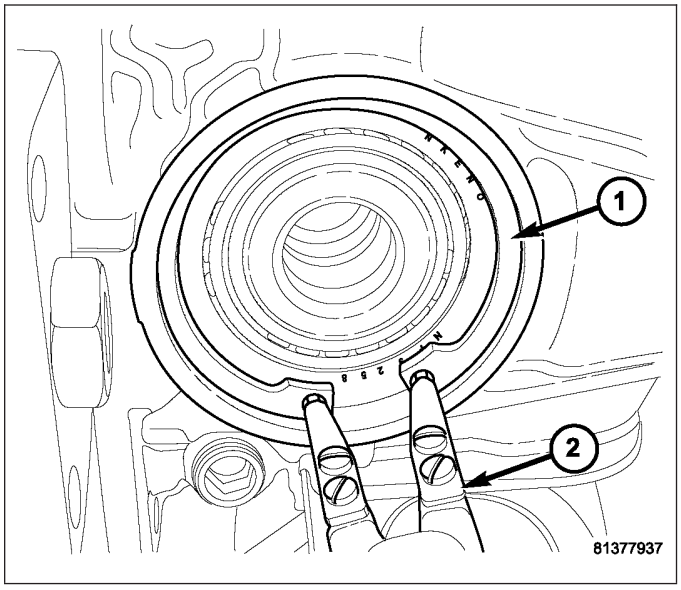

12. Relax spreader (1) to relieve tension on axle housing.

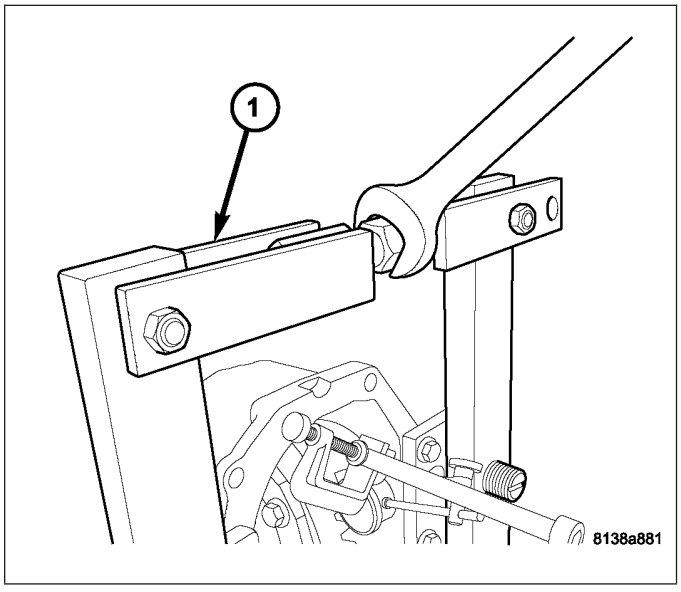

13. Measurement showing on indicator is the axle housing retained spread. Proper differential side bearing preload is achieved with an axle housing retained spread of 0.18-0.23 mm (0.007-0.009 in.).
14. If retained spread is less than 0.18 mm (0.007 in.), increase snap ring thickness at each side in equal increments.
15. If retained spread is greater than 0.23 mm (0.009 in.), decrease snap ring thickness at each side in equal increments.

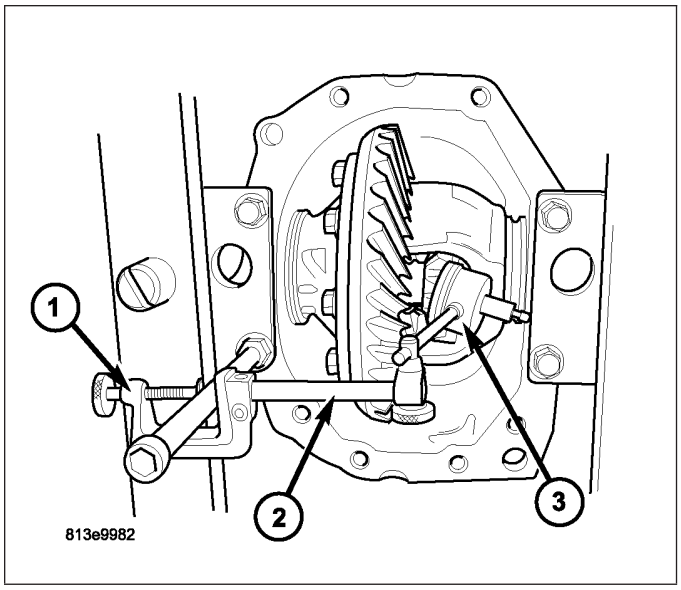

RING GEAR BACKLASH MEASUREMENT/CORRECTION

Differential Ring Gear Backlash should be measured and adjusted after the following scenarios:

1. Ring and pinion gear replacement
2. Pinion head bearing replacement
3. Pinion depth (shim) adjustment
4. Differential case replacement
5. Differential side bearing replacement
6. Axle housing replacement

NOTE: If Spreader W-129-B is installed, make sure tension on axle housing is relieved.

7. Set up Dial Indicator Set C-3339-A as shown to measure ring gear backlash:
   a. Clamp SP-5426 (1)
   b. Post SP-5425-B (2)
   c. Metric Dial Indicator 9524 (3)
8. Rotate ring gear one direction to take up clearance to pinion. Verify indicator tip is in contact with ring gear and zero indicator. Rotate ring gear back and forth and record measurement. Ring gear backlash should be 0.13-0.18 mm (0.005-0.007 in.). Verify back lash measurement in four (4) positions.

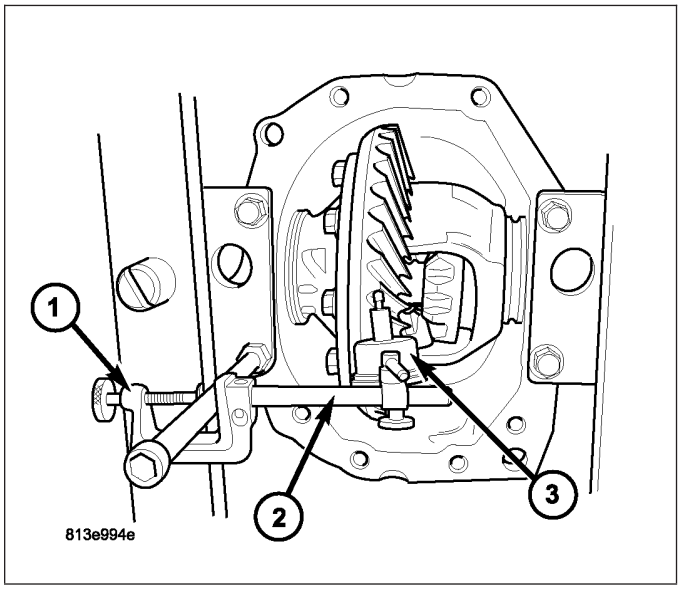

9. If backlash measurement is less than 0.13 mm (0.005 in.), it is necessary to decrease the snap ring thickness on the ring gear (left) side, and increase the thickness on the pinion (right) side.
10. If backlash measurement is greater than 0.18 mm (0.007 in.), it is necessary to increase the snap ring thickness on the ring gear (right) side, and decrease the thickness on the pinion (left) side.

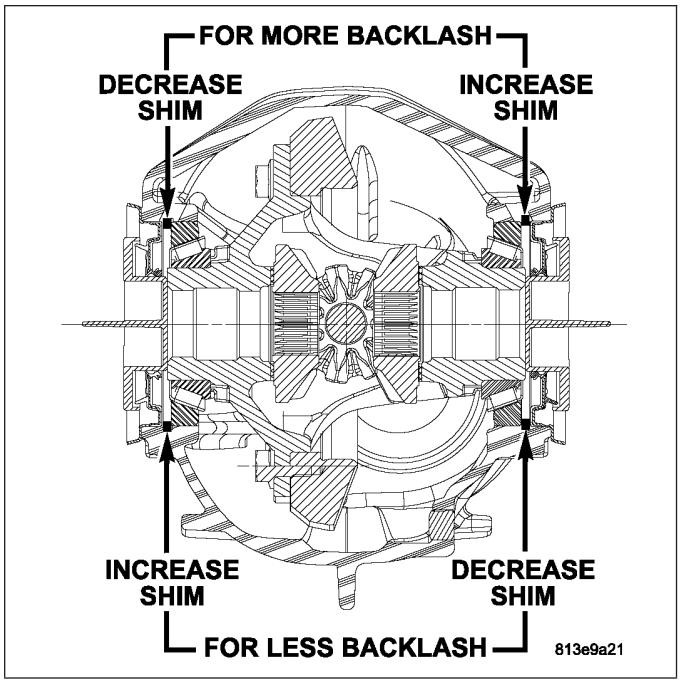

GEAR CONTACT PATTERN

The ring gear and pinion teeth contact patterns will show if the pinion depth is correct in the housing. It will also show if the ring gear backlash has been adjusted correctly. The backlash can be adjusted within specifications to achieve desired tooth contact patterns.

1. Apply a thin coat of hydrated ferric oxide or equivalent to the drive and coast side of the ring gear teeth.
2. Wrap, twist, and hold a shop towel around the pinion yoke to increase the turning resistance of the pinion. This will provide a more distinct contact pattern.
3. With a boxed end wrench on a ring gear bolt, rotate the differential case one complete revolution in both directions while a load is being applied from shop towel.

The areas on the ring gear teeth with the greatest degree of contact against the pinion teeth will squeegee the compound to the areas with the least amount of contact. Note and compare patterns on the ring gear teeth to Gear Tooth Contact Patterns chart and adjust pinion depth and gear backlash as necessary.

DRIVE SIDE OF RING GEAR TEETH	COAST SIDE OF RING GEAR TEETH	
HEEL TOE 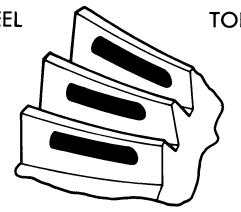	TOE HEEL 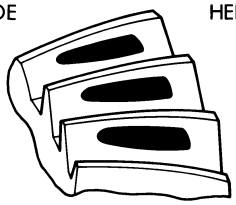	DESIRABLE CONTACT PATTERN. PATTERN SHOULD BE CENTERED ON THE DRIVE SIDE OF TOOTH. PATTERN SHOULD BE CENTERED ON THE COAST SIDE OF TOOTH, BUT MAY BE SLIGHTLY TOWARD THE TOE. THERE SHOULD ALWAYS BE SOME CLEARANCE BETWEEN CONTACT PATTERN AND TOP OF THE TOOTH.
	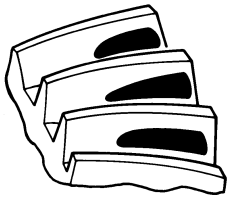	RING GEAR BACKLASH CORRECT. **THINNER** PINION GEAR DEPTH SHIM REQUIRED.
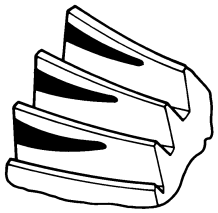	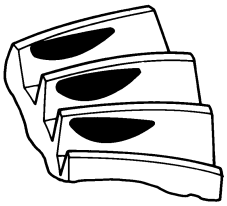	RING GEAR BACKLASH CORRECT. **THICKER** PINION GEAR DEPTH SHIM REQUIRED.
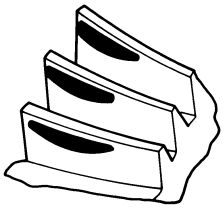	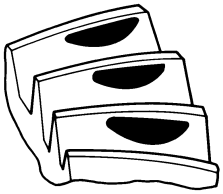	PINION GEAR DEPTH SHIM CORRECT. **DECREASE** RING GEAR BACKLASH.
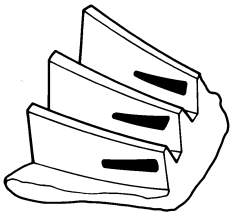	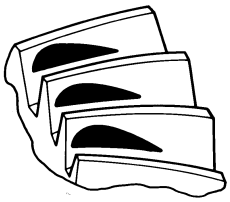	PINION GEAR DEPTH SHIM CORRECT. **INCREASE** RING GEAR BACKLASH.

J9003-24

Gear Tooth Contact Patterns

SPECIFICATIONS - 198 RII AXLE

SPECIFICATIONS

DESCRIPTION	SPECIFICATION
Axle Ratios	3.07, 3.64, 3.90
Ring Gear Diameter	198 mm (7.8 in.)
Ring Gear Backlash	0.13-0.18 mm (0.005-0.007 in.)
Side Bearing Preload	6000-8000 N
Axle Housing Retained Spread	0.18 mm to 0.23 mm (0.007 in. to 0.009 in.)
Select Snap Ring Size	3.60-4.68 mm (0.14-0.18 in.) In 0.02mm (0.0007 in.) increments
Select Pinion Shim Size	1.40-2.50mm (0.05-0.10 in.) In 0.01mm (0.0004 in.) increments
Pinion Torque To Rotate	2.25N·m (20 in. lbs.)
Total Torque To Rotate (Approx.)	3.38N·m (30 in. lbs.)

TORQUE SPECIFICATIONS

DESCRIPTION	N·m	Ft. Lbs.	In. Lbs.
Plug, Rear Axle Drain/Fill	60	44	—
Bolt, Differential Cover	30 +45°	22 + 45°	—
Bolt, Ring Gear-to-Differential Case	85	63	—
Bolt, Axle Housing-to-Crossmember	220	162	—
Bolt/Nut, Axle Front Mount Isolator	65	48	—

SPECIAL TOOLS - 198 RII AXLE

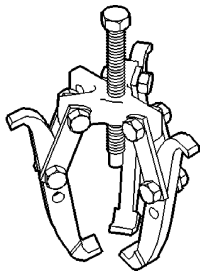

Puller, 1026

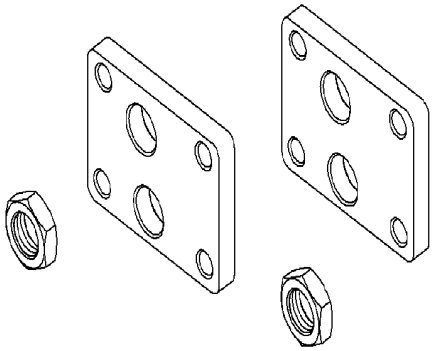

Spreader Adapters, 9226

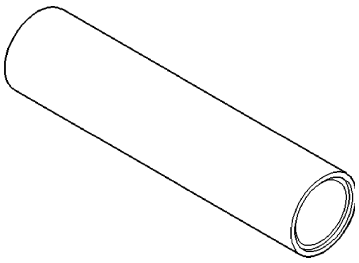

Installer, 6448A

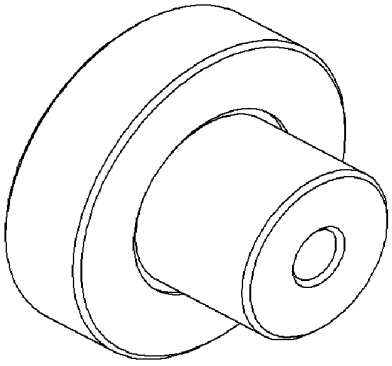

Pinion Height Gage, 9227

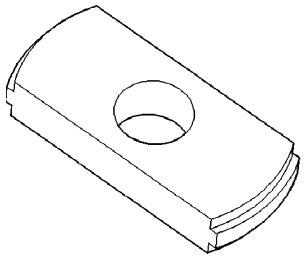

Remover, 9084

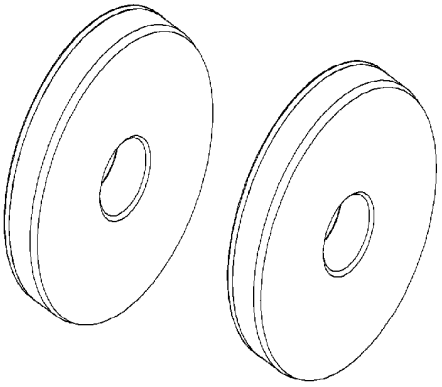

Arbor Discs, 9228

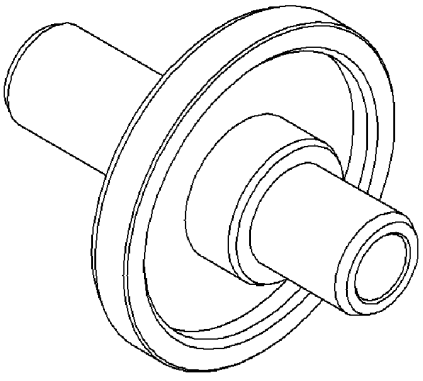

Installer, 9223

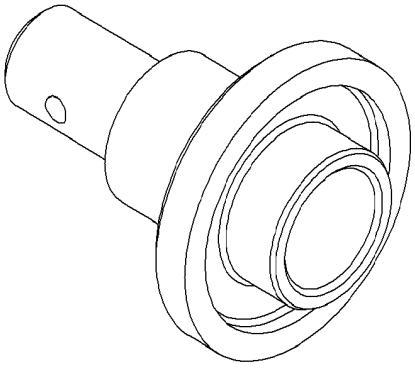

Installer, 9231A

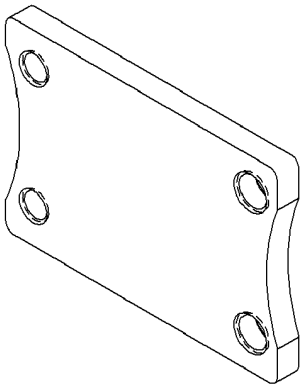

Mounting Plate, 9630

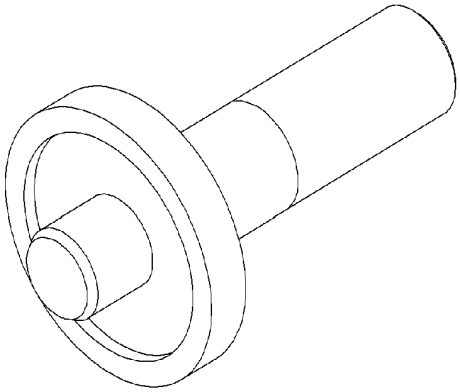

Removal/Installation Arbor, 9522

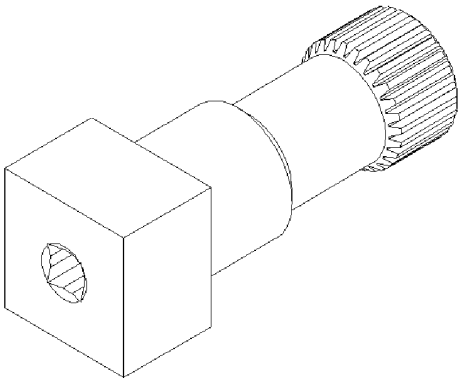

Fixture, 9631

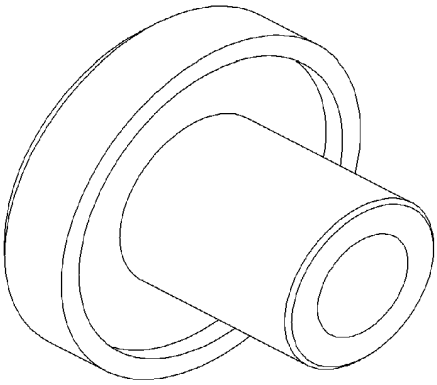

Installer, 9523

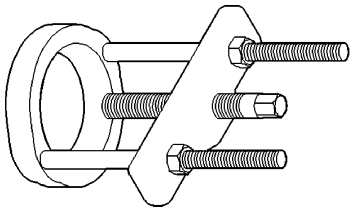

Puller Press, C-293-PA

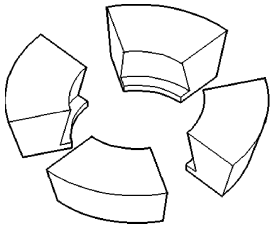

Adapters, C-293-37

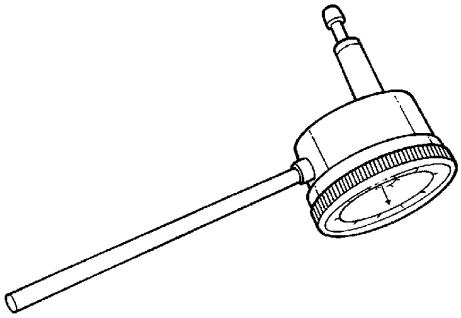

Dial Indicator, 9524

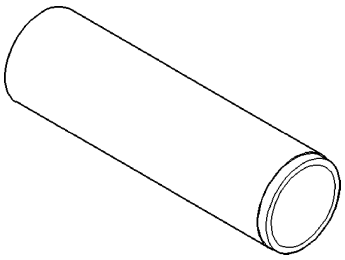

Installer, C-3095-A

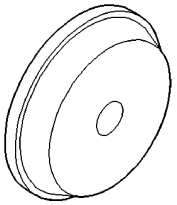

Installer, D-146

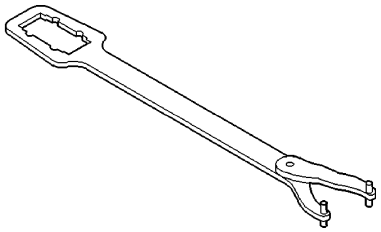

Flange Wrench, C-3281

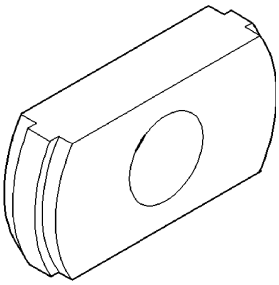

Remover, D-149

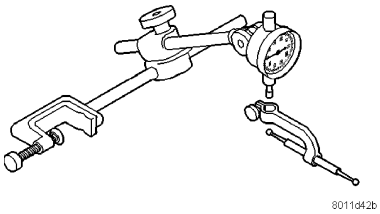

Dial Indicator Set, C-3339-A

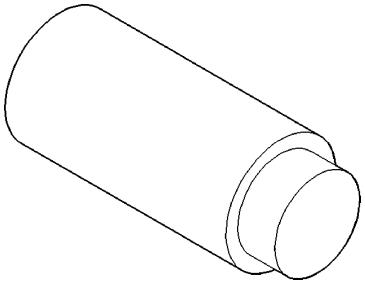

Adapter, SP-3289

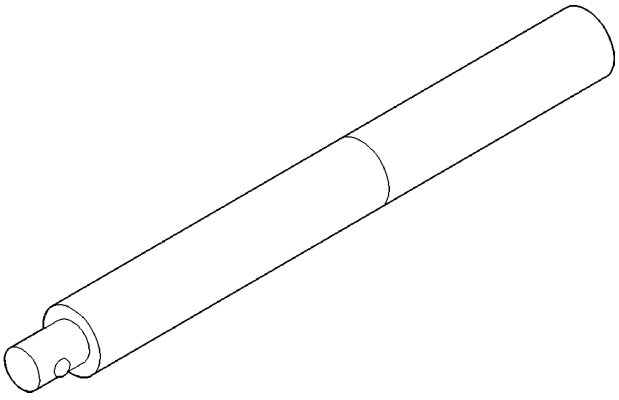

Handle, C-4171

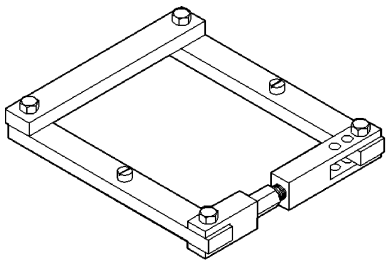

Spreader, W-129-B

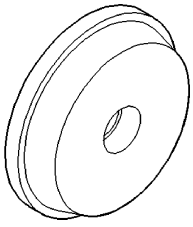

Installer, C-4310

SEAL-AXLE SHAFT

REMOVAL

1. Remove halfshaft(s). (Refer to 3 - DIFFERENTIAL & DRIVELINE/HALF SHAFT - REMOVAL)
2. Using suitable screwdriver (1), remove axle shaft seal (2).
3. Visually inspect halfshaft seal journal for damage (excessive seal groove, nicks, scratches, etc. Replace halfshaft if necessary.

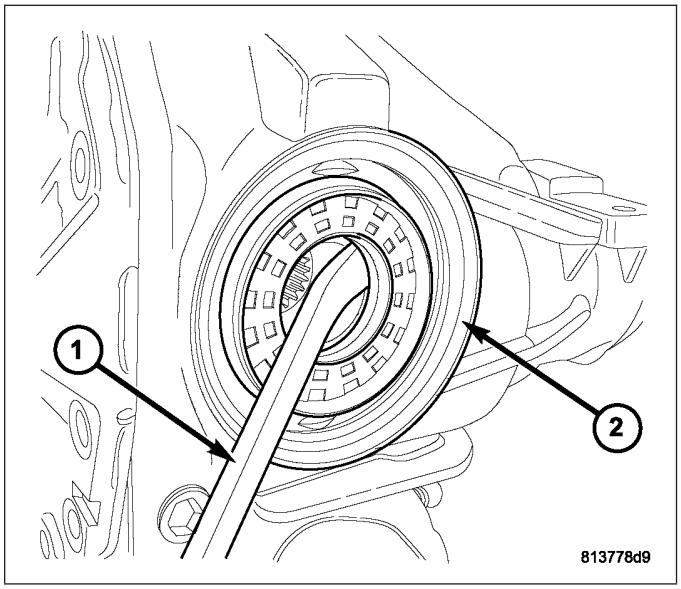

INSTALLATION

1. Using Tool 9223 (2), install **NEW** axle shaft seal (1). Lubricate the inside diameter with Mopar® Gear and Axle Lubricant 75W-140 to protect seal during halfshaft installation.
2. Install halfshaft(s). (Refer to 3 - DIFFERENTIAL & DRIVELINE/HALF SHAFT - INSTALLATION)

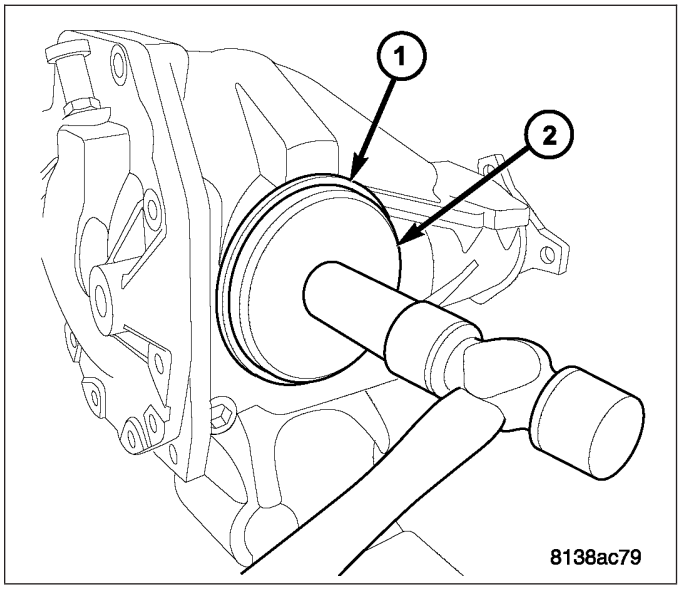

3. Remove fill plug (1) to check and adjust rear axle fluid level. Top off axle with Mopar® Gear and Axle Lubricant 75W-140. Reinstall fill plug torque to 60 N·m (44 ft. lbs.) torque.

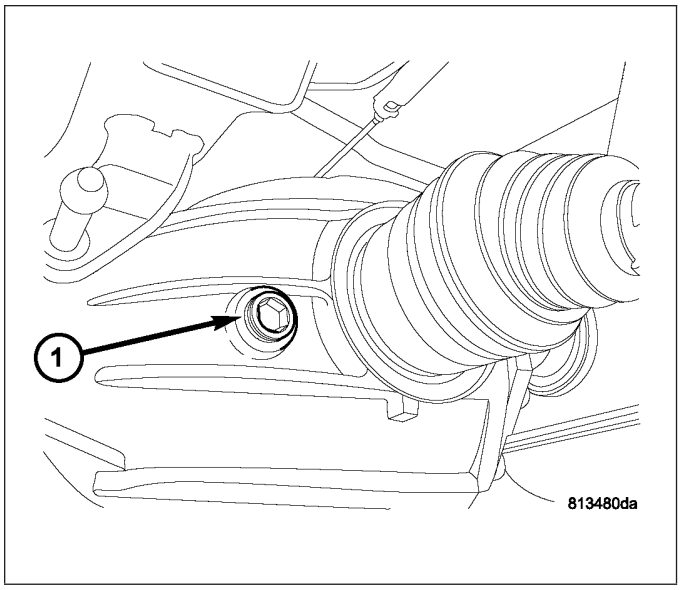

SEAL-PINION FLANGE

REMOVAL

1. Remove rear axle assembly from vehicle. Refer to Rear Axle Removal.
2. Measure axle assembly rotating torque and record measurement for reuse on assembly.

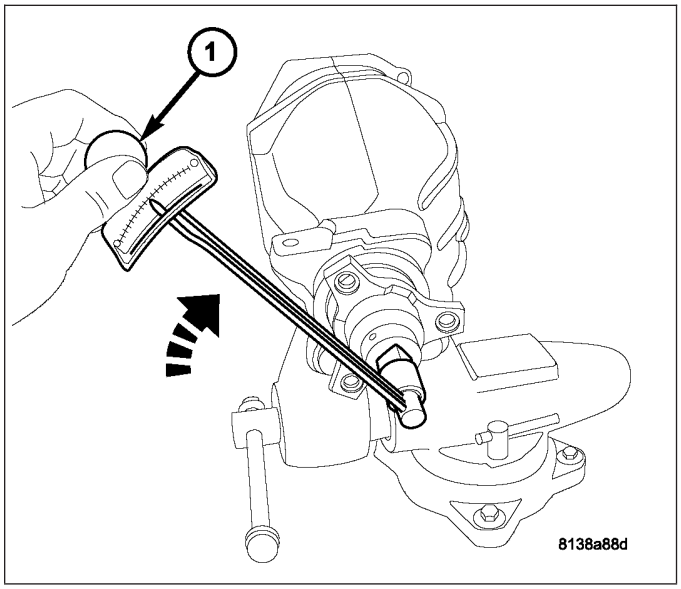

3. Using flange holder C-3281(1) and 41mm socket, remove pinion flange nut and discard.

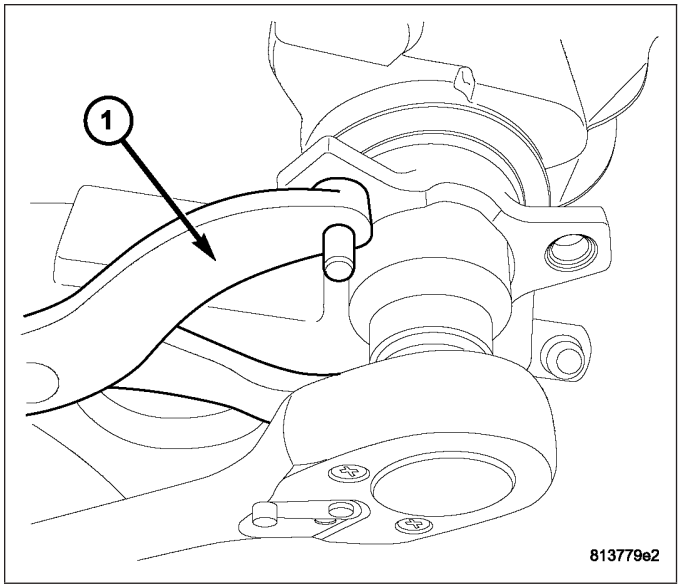

NOTE: Due to axle imbalance concerns, it is necessary to make sure pinion flange-to-shaft orientation is maintained. If alignment marks are not visible, apply appropriate marks before removing pinion flange.

4. Using puller 1026 (1), remove pinion flange (2) from pinion shaft.

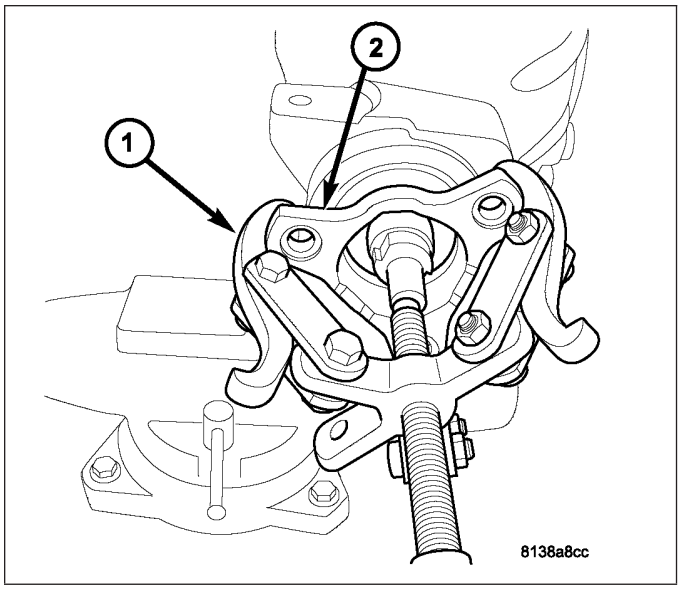

5. Using suitable tool (1), remove pinion seal (2) and discard.

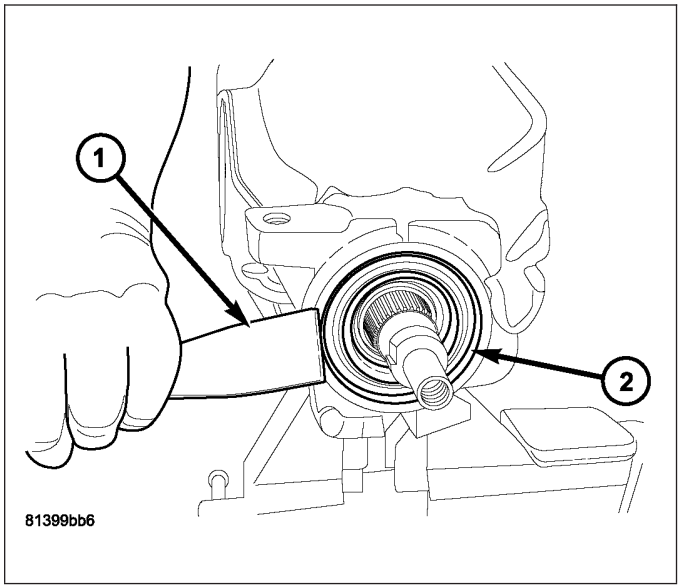

INSTALLATION

1. Apply light coating of gear lubricant to the lip of the pinion seal.
2. Using Tool 9231A (1), install pinion seal until tool bottoms on carrier.

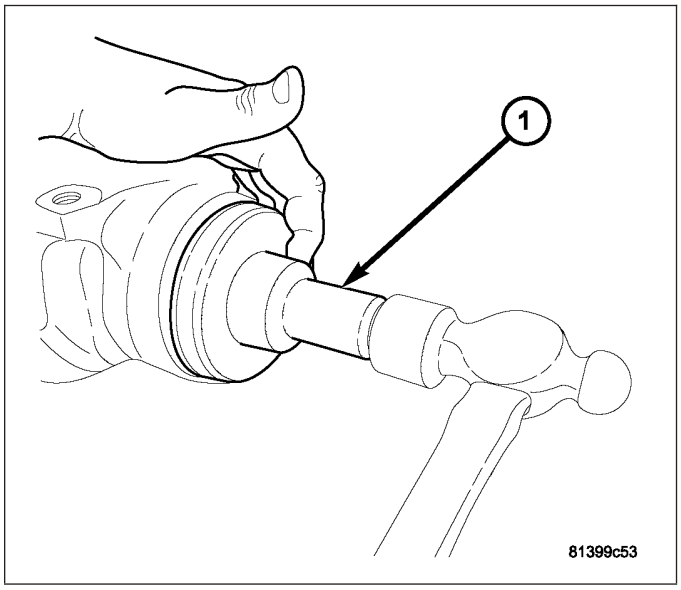

3. Install pinion flange into position. Align index marks to maintain assembly balance.
4. Using Installer 6448A (1), lightly tap on pinion flange (2) until adequate pinion shaft threads are exposed.

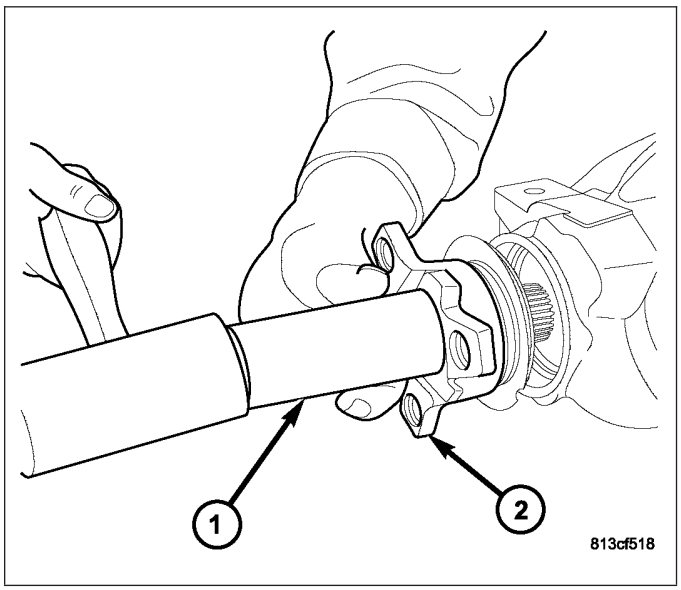

5. Install **new** pinion flange nut. Using flange holder tool C-3281(1) and 41mm socket, torque nut to 136 N·m (100 ft. lbs.).

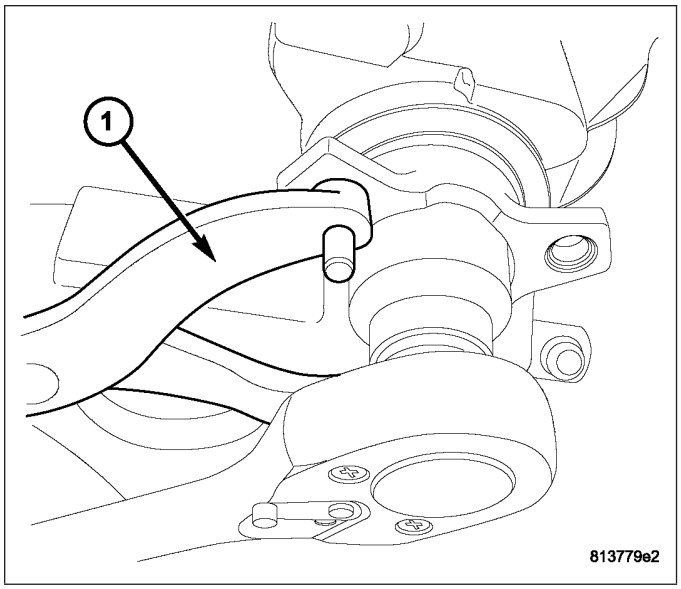

6. Measure assembly turning torque. Axle assembly rotating torque must be should be equal to the reading recorded upon seal/flange removal.

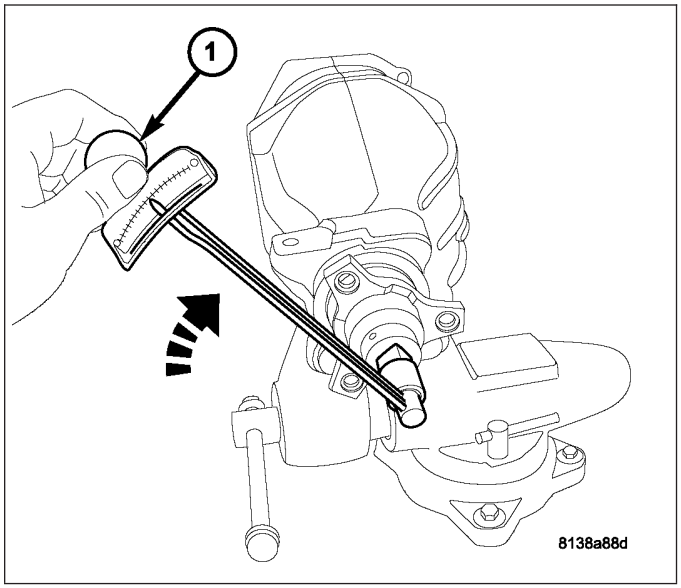

7. If rotating torque is low, increase pinion flange nut torque in 7 N·m (5 ft. lbs.) increments. Repeat until proper rotating torque is received.

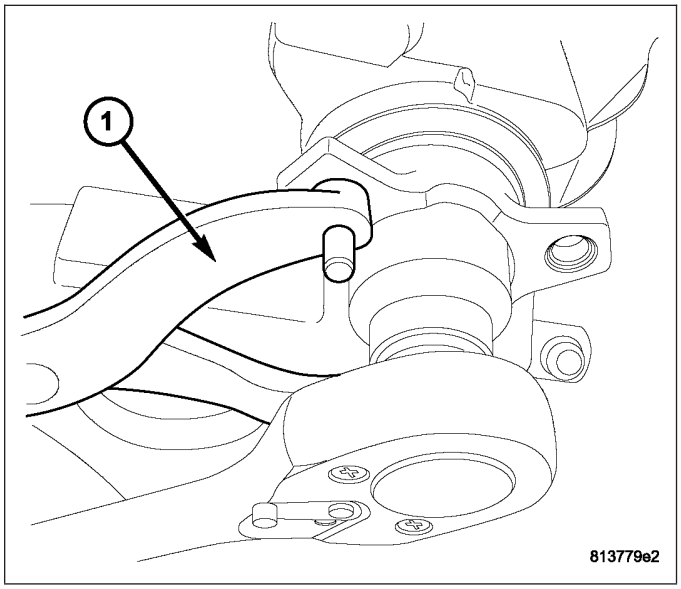

8. Stake pinion flange nut (1) as shown.
9. Install rear axle assembly. Refer to Rear Axle Installation.

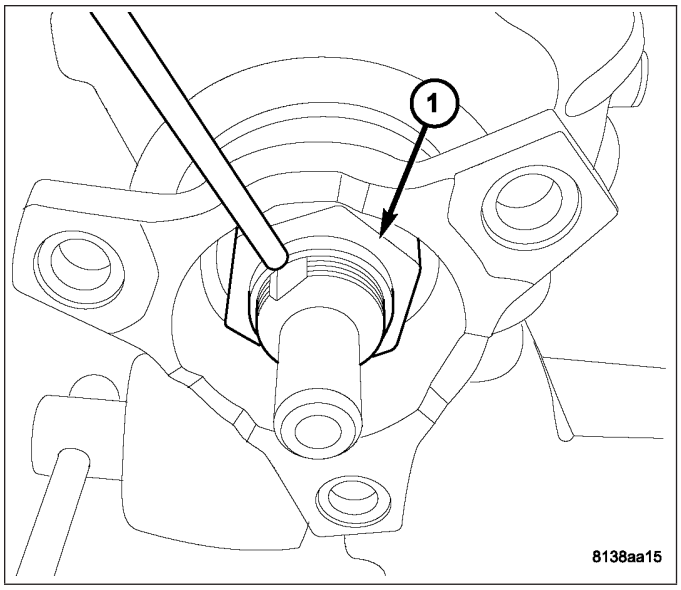

DIFFERENTIAL

REMOVAL

1. Clamp rear axle assembly into bench vise (1).

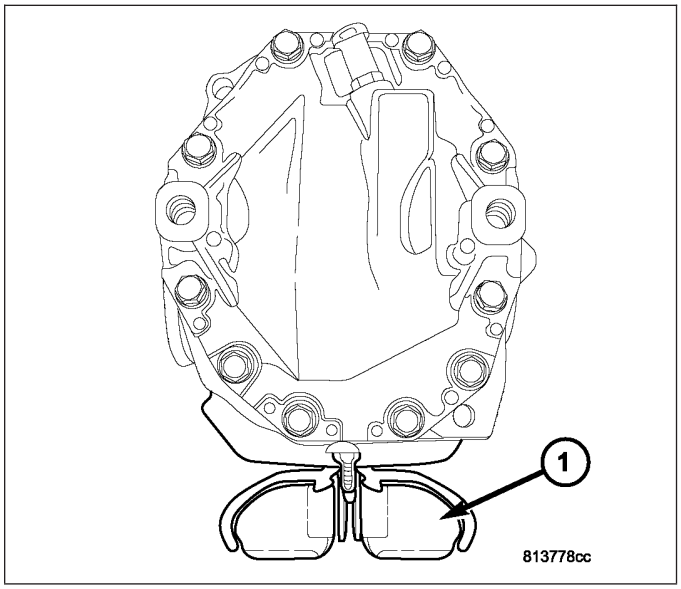

2. Remove drain plug (1) and drain fluid into container suitable for reuse.
3. Install drain plug and torque to 60 N·m (44 ft. lbs.).

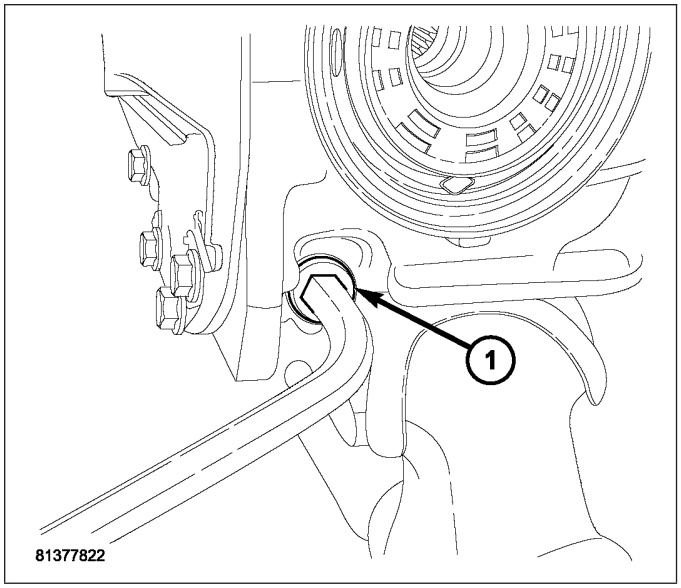

4. Using suitable torque wrench (1), measure and record rear axle assembly total turning torque.

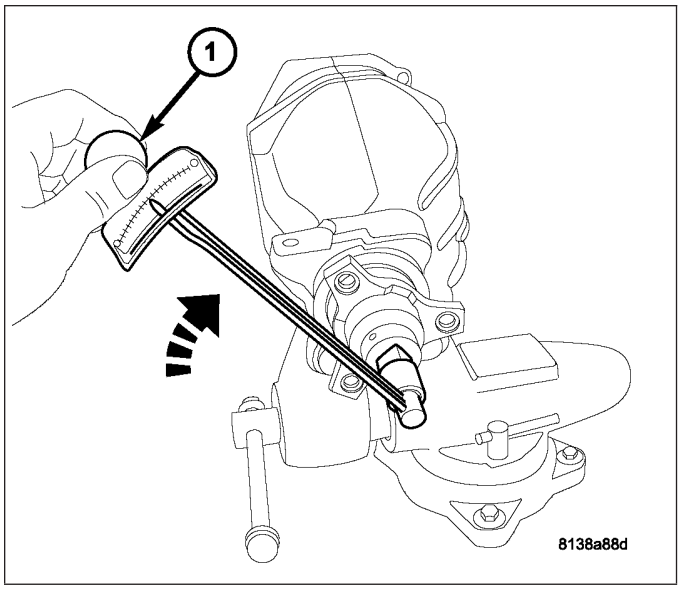

5. Using suitable screwdriver (1), remove both axle seals (2).

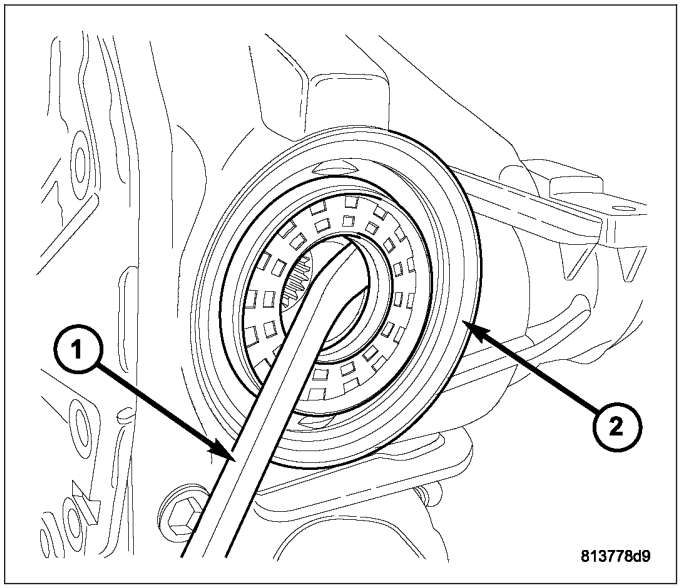

6. Remove twelve axle cover-to-housing bolts (1) and remove cover (2).

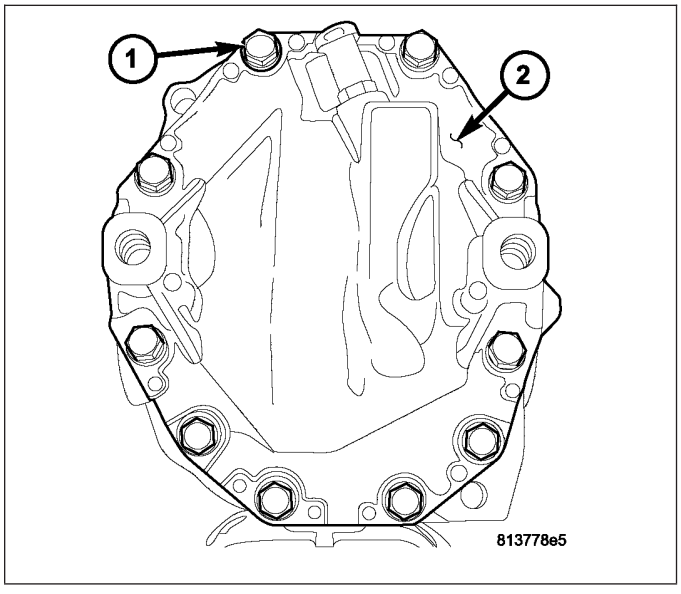

7. Install spreader adapters (1), Tool 9226, as shown. Adapters contain two hole patterns and are labeled accordingly.

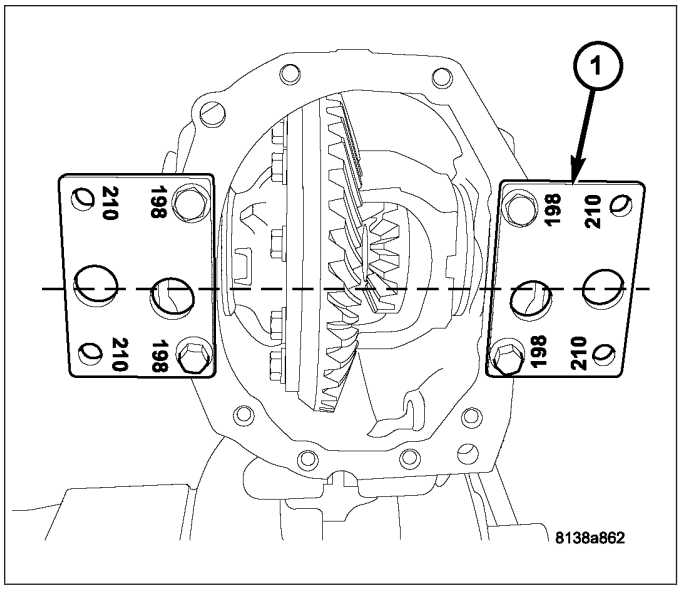

8. Install spreader, Tool W-129-B (1), as shown.

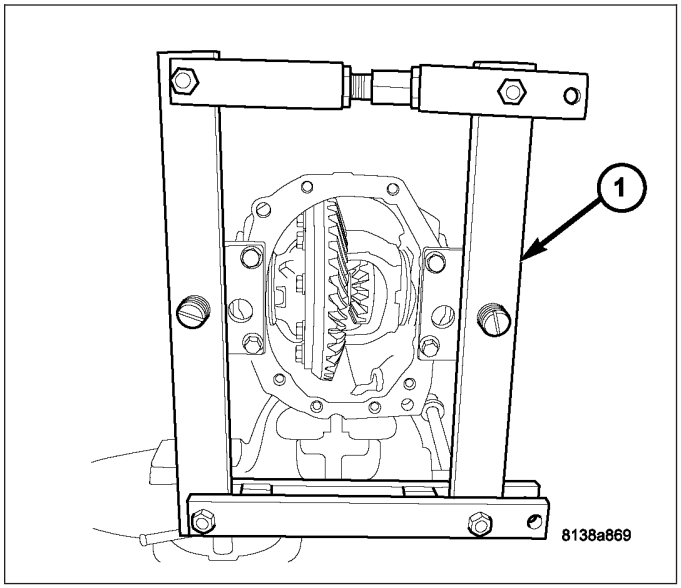

9. Set up Dial Indicator Set C-3339-A to measure housing spread as shown.

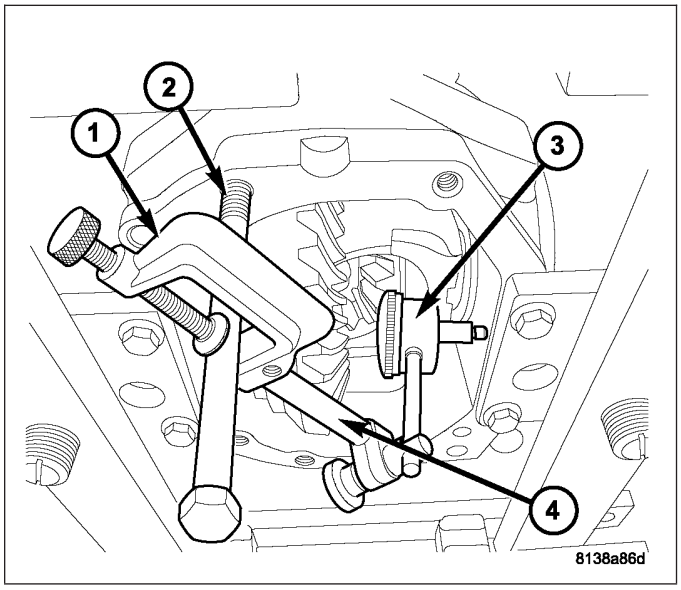

a. Clamp SP-5426 (1)

b. Post SP-5425-B (2)

c. Metric Dial Indicator 9524 (3)

10. Spread axle housing no more than 0.30 mm (0.012 in.).

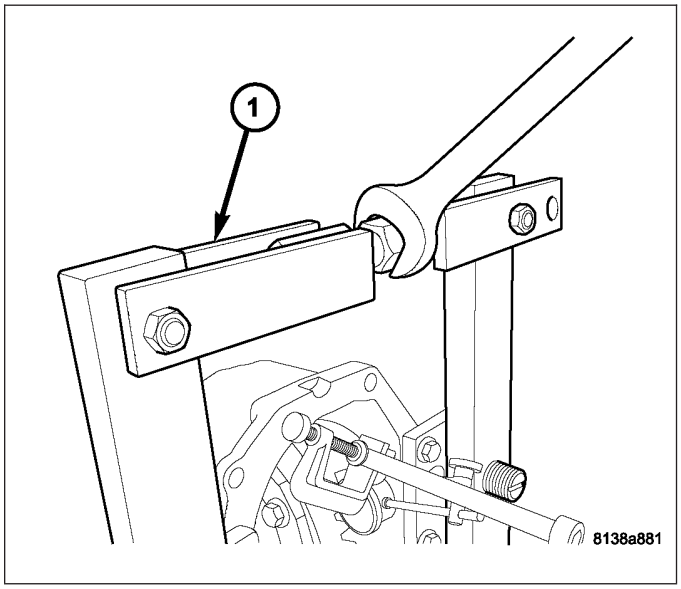

NOTE: The differential side bearing snap rings are select-fit, and control ring gear backlash and differential side bearing preload. It is important to return original snap rings to their original position.

11. Using suitable snap ring pliers (2), compress and remove differential side bearing snap rings (1). Identify and tag for proper reuse.

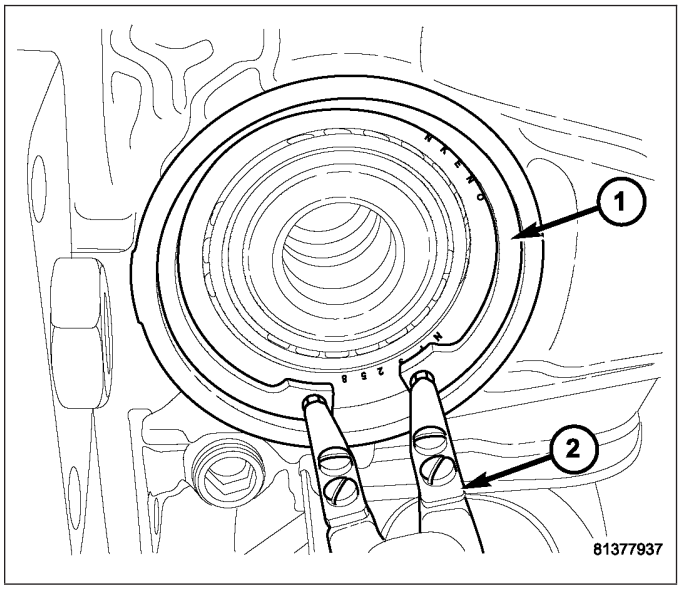

12. Back off W-129-B spreader (1) to relax tension on housing.
13. Measure snap ring thickness and record for future use.

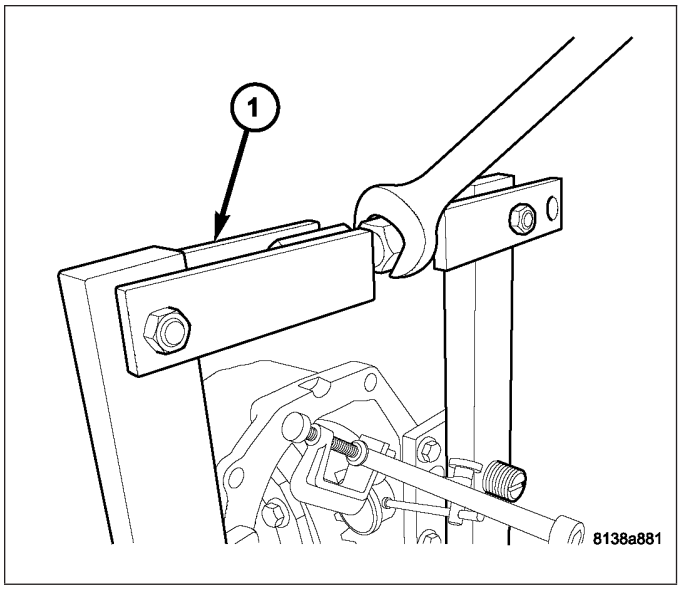

14. Install Tool 9522 (1) into one side of housing and push inward to release differential side bearing cup (2) from opposite side. Repeat for other bearing.

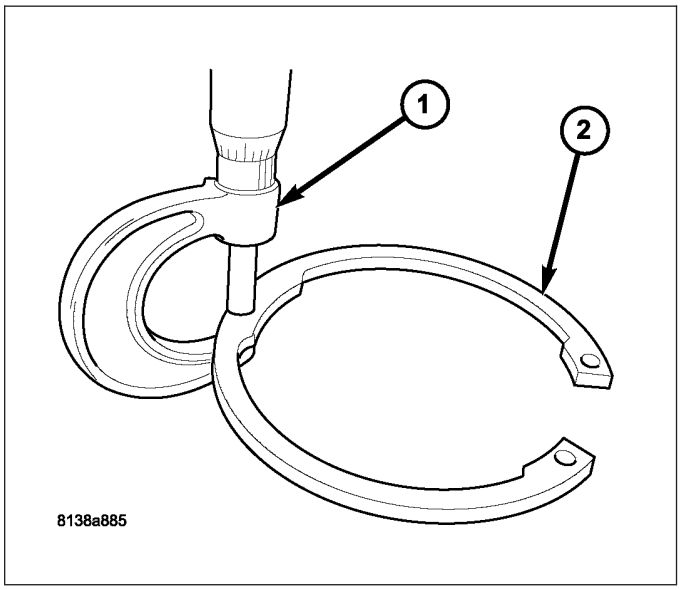

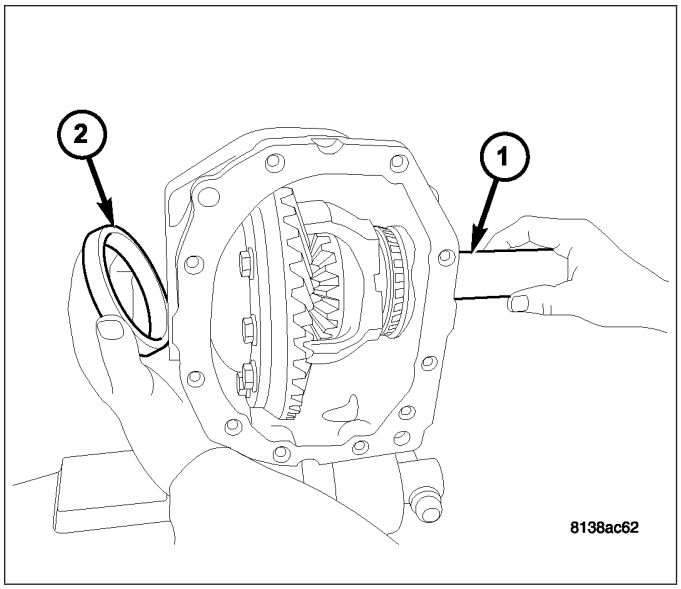

15. Remove differential assembly from axle housing.

NOTE: Note: If difficulty removing differential is encountered due to interference with W-129-B spreader and adapter plates, remove spreader and adapter plates to facilitate removal.

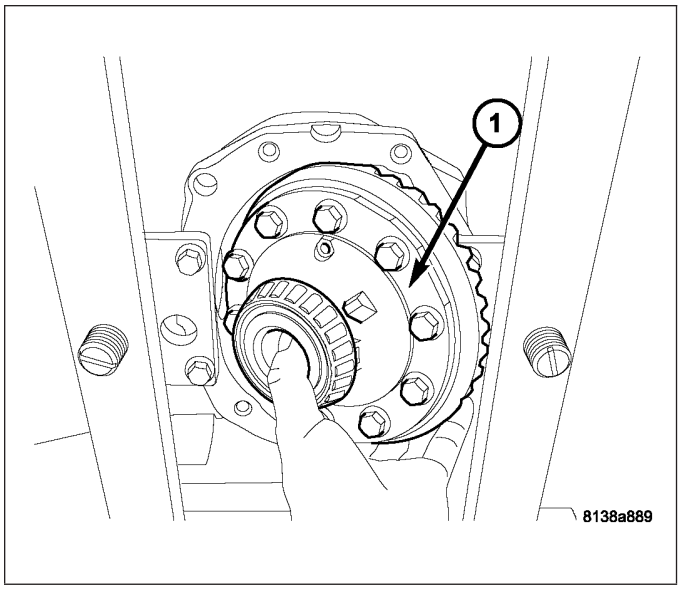

DISASSEMBLY

1. Remove differential ring gear-to-case bolts (1).

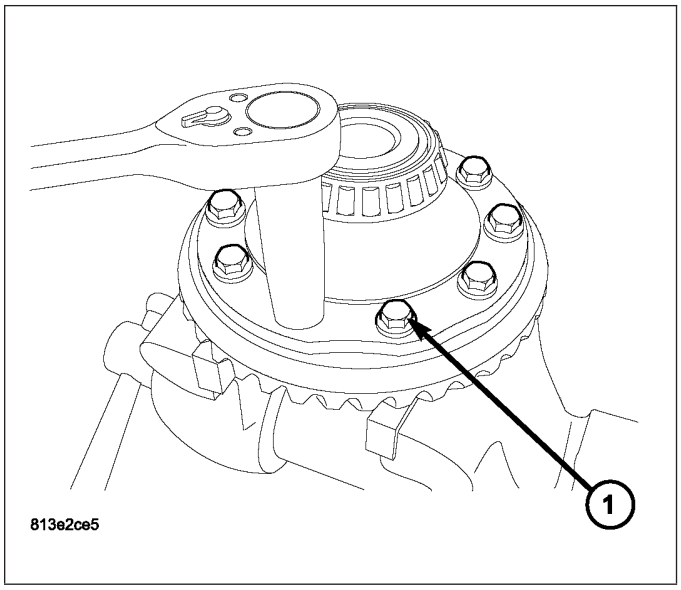

2. Using brass drift (1), remove ring gear (2).

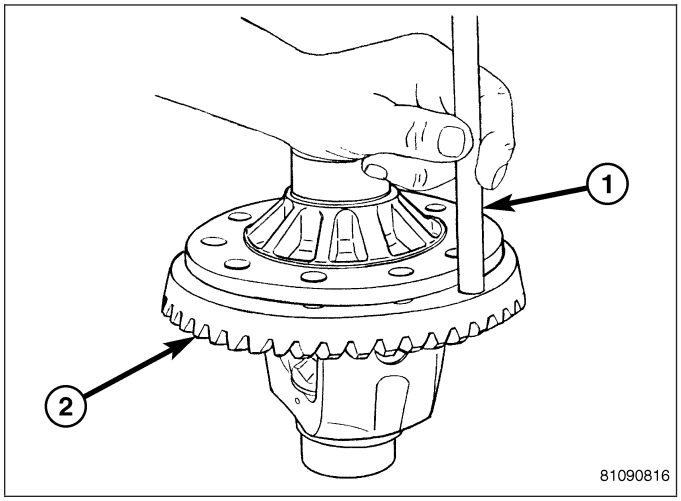

3. Remove bearings (2) from the differential case (3) with Puller/Press C-293-PA (5), Adapters C-293-37 (1) and Plug SP-3289 (4).

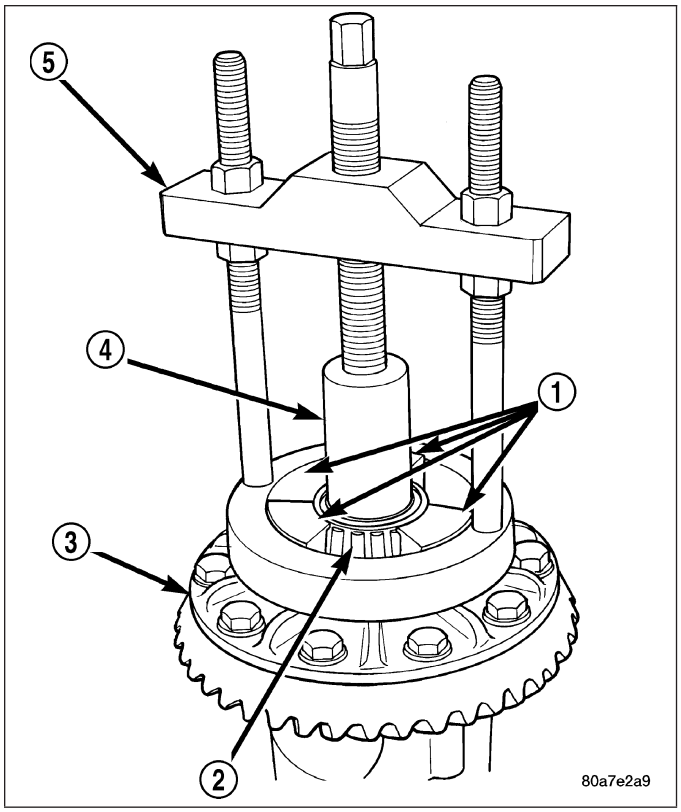

4. Drive out pinion shaft-to-case roll pin using hammer and suitable punch.

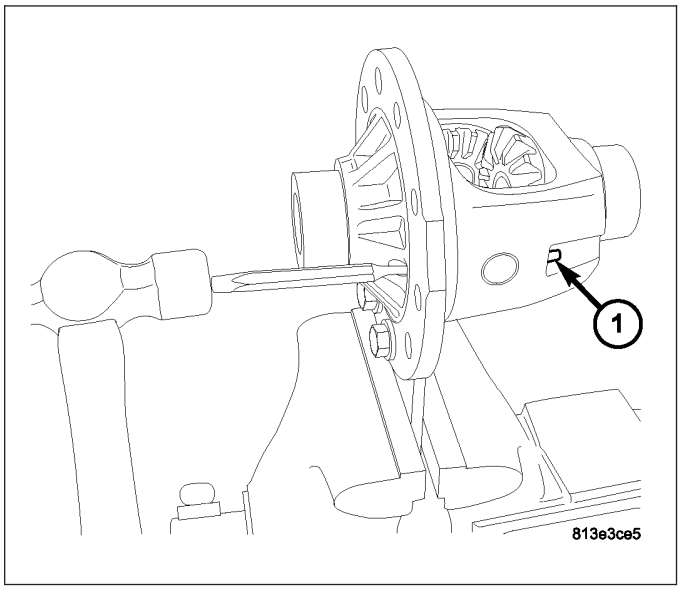

5. Using brass drift (2), drive out pinion shaft (1).

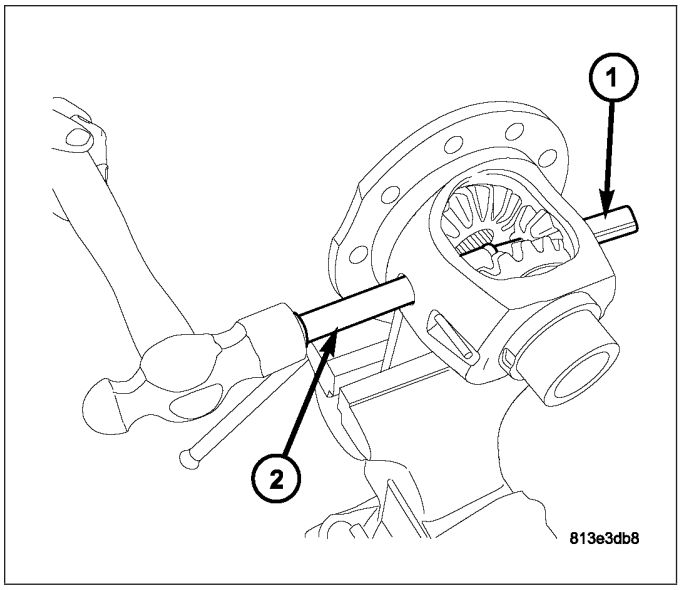

6. Install Tool 9631 (1) into differential side gear.

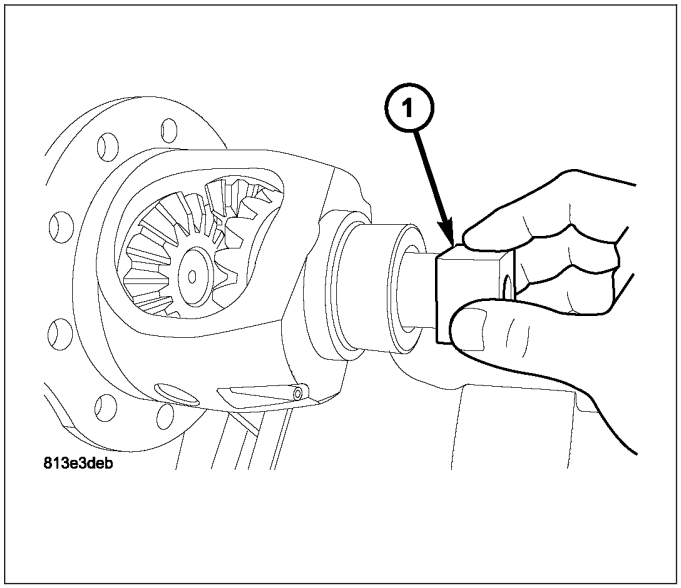

7. Rotate Tool 9631 (1) to gain access to and remove pinion gears and thrust washers.

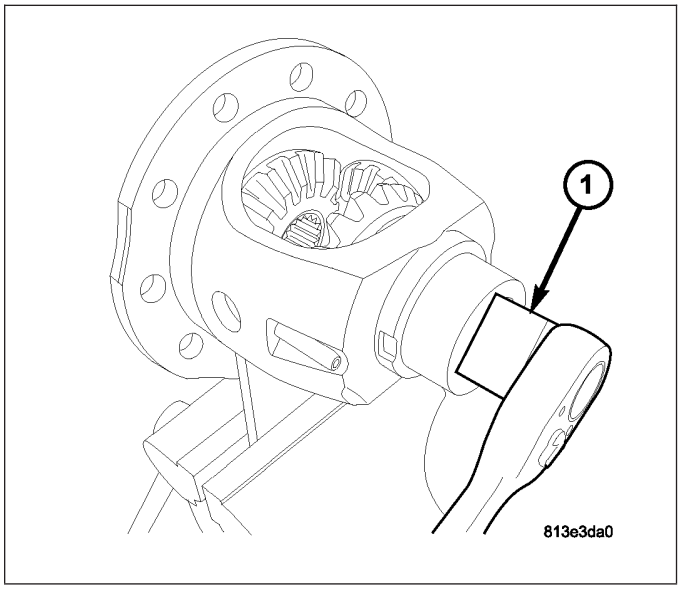

8. Remove differential side gears (4) and thrust washers (5).

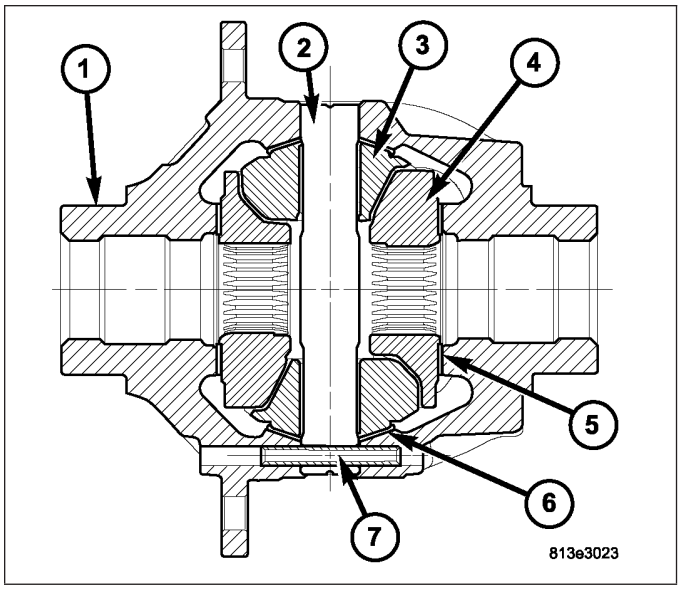

ASSEMBLY

1. Lubricate all differential components with hypoid gear lubricant.
2. Install differential side gears (2) and thrust washers to Tools 9631 (1) as shown in illustration.

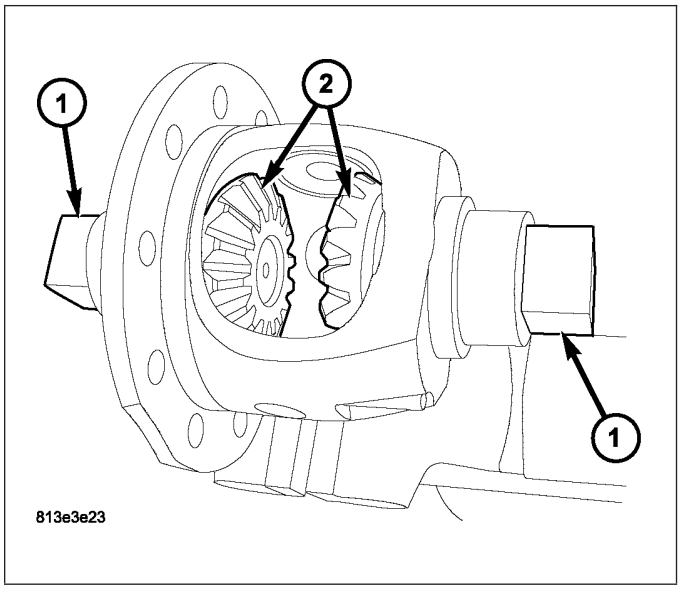

3. Install differential pinion gears (1) and thrust washers into position across from each other.

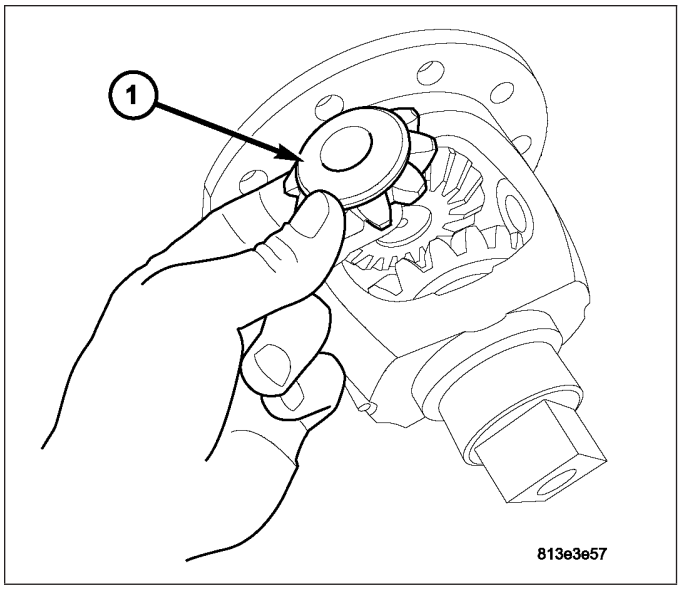

4. Rotate pinion gears into place using Tool 9631 and line up gear centers with pinion shaft bore.

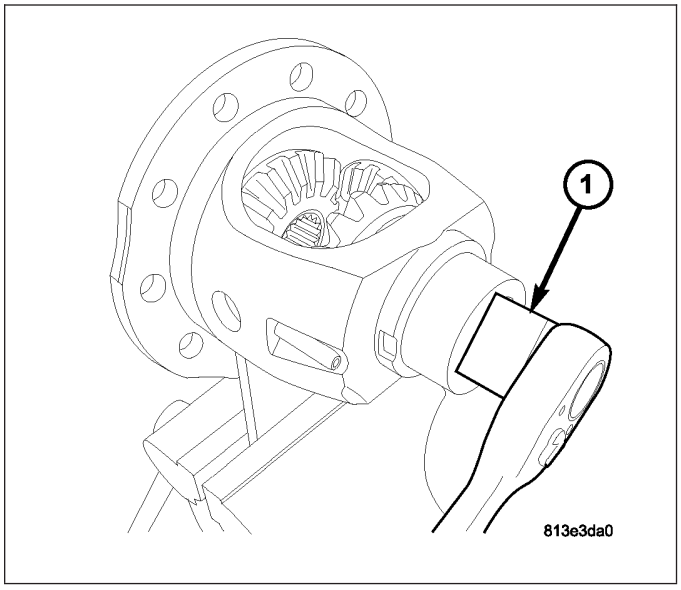

5. Using a brass hammer, drive pinion shaft (3) into differential case (1), making sure to line up roll pin bores.
6. Using suitable punch (2), drive new roll pin into position.

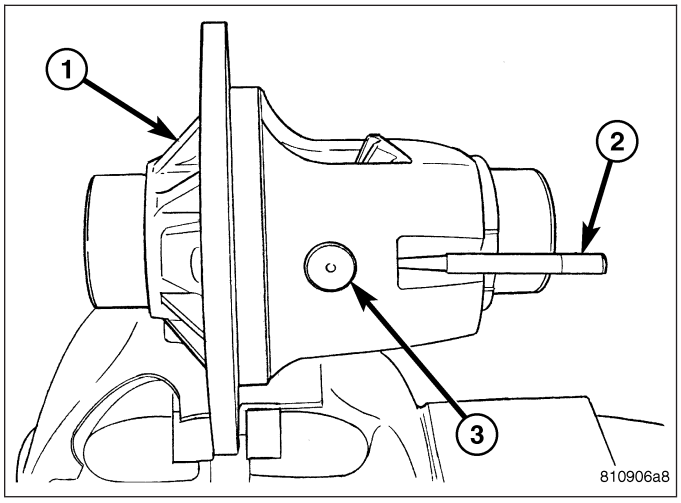

7. Measure differential gear rotating torque as shown. Differential gear rotating torque should be 5-30 N·m (44-266 in. lbs.) Rotating torque is adjusted using select side gear thrust washers. Refer to the following chart.

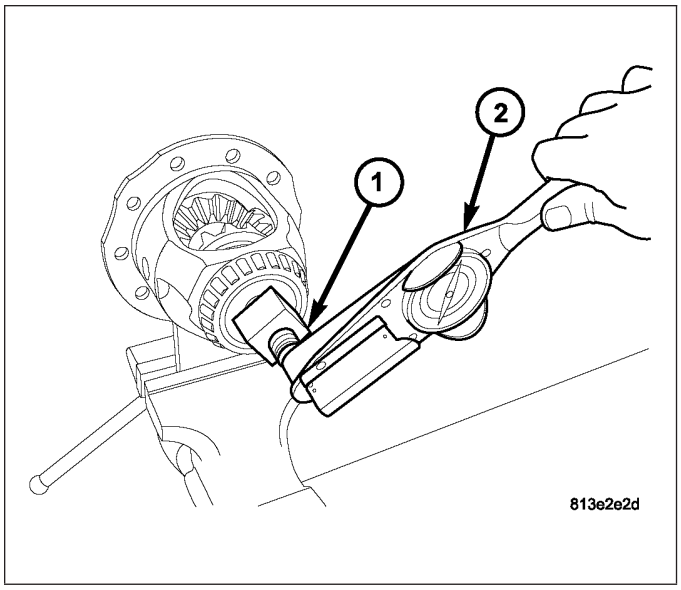

Available Side Gear Thrust Washer Thicknesses
1.25 mm (0.049 in.)
1.30 mm (0.051 in.)
1.35 mm (0.053 in.)
1.40 mm (0.055 in.)
1.45 mm (0.057 in.)
1.50 mm (0.059 in.)
1.55 mm (0.061 in.)
1.60 mm (0.063 in.)
1.65 mm (0.065 in.)

8. Remove differential case from Tool 9630 (2).

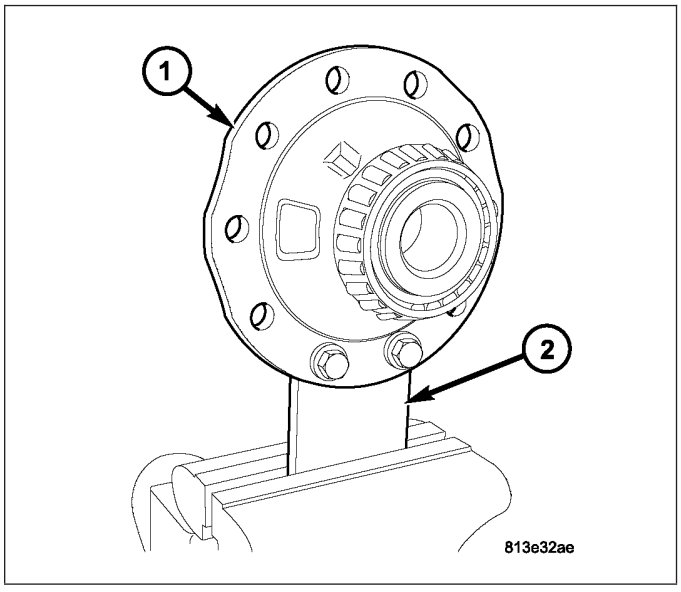

9. Install ring gear to case. Lightly tap ring gear into position to facilitate starting of bolts.
10. Install **new** ring gear-to-case bolts and torque to 85 N·m (63 ft. lbs.).

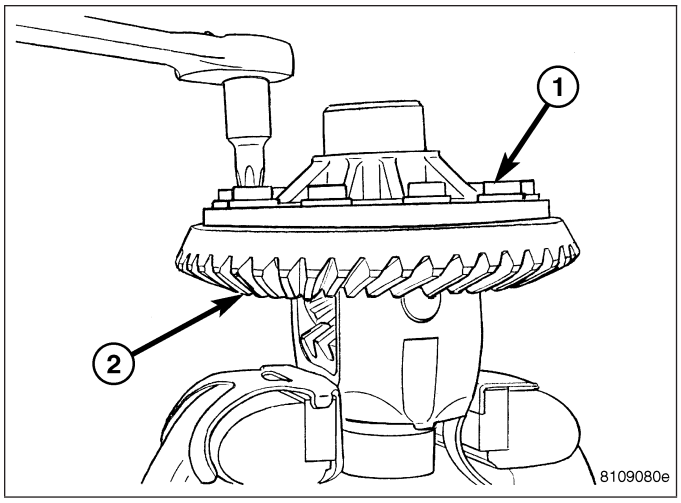

11. Using Tool 9523 (2) and Handle C-4171 (1), press **new** differential side bearings (3) onto differential case.

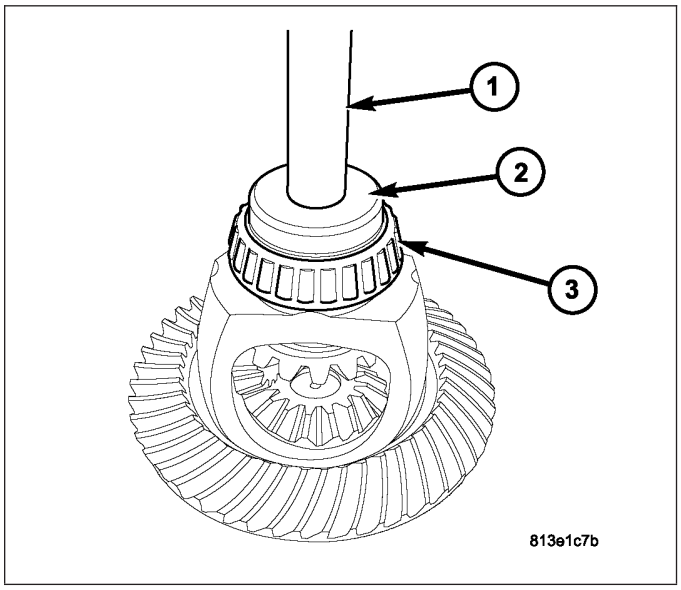

INSTALLATION

NOTE: If replacement differential side bearings or differential case are being installed, it is necessary to measure and adjust Differential Side Bearing Preload and Gear Backlash. Refer to Adjustments — Differential Side Bearing Preload and Gear Backlash to determine proper snap ring selection.

1. Install differential assembly (1) into axle housing.

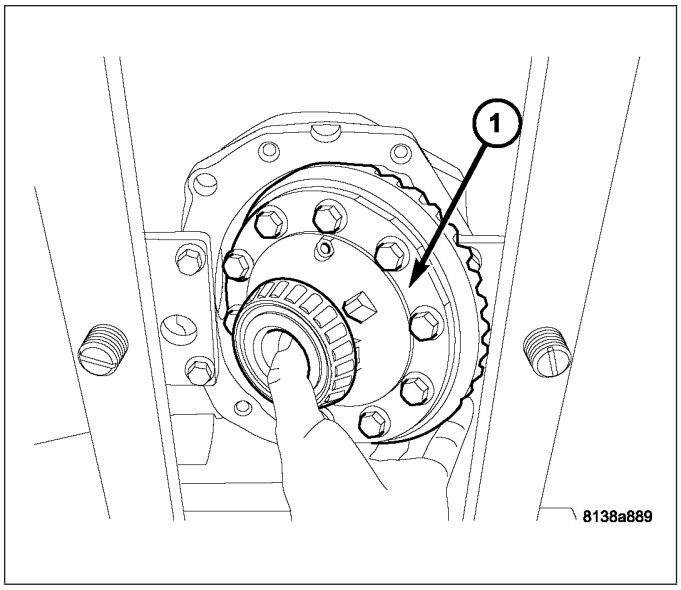

2. Install differential side bearing cups (2).

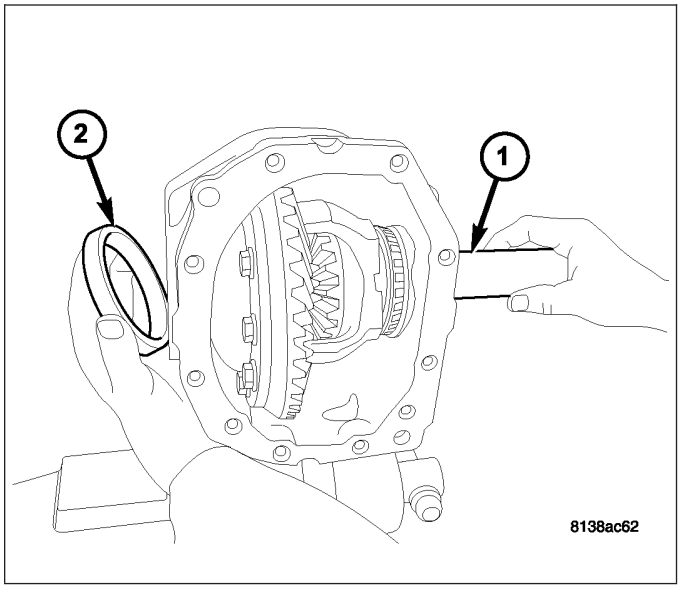

3. Use Tool 9522 (1) to aid in seating side bearing cups (2).

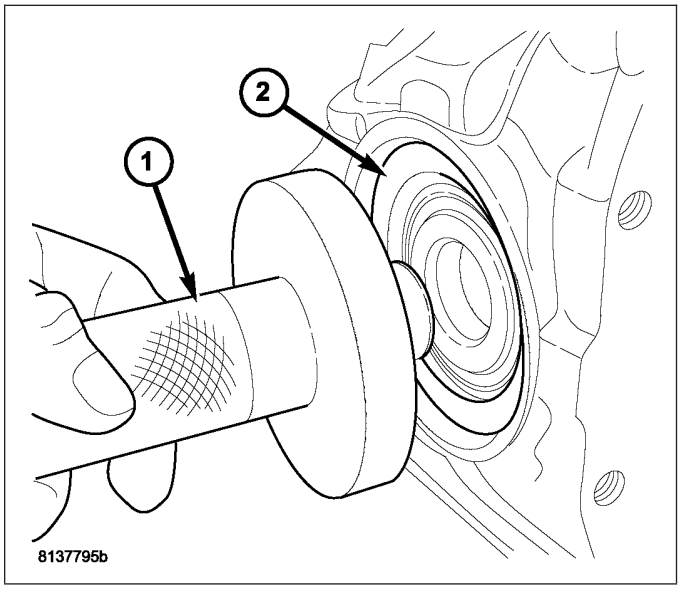

4. Set up Dial Indicator Set C-3339-A to measure housing spread as shown:
   a. Clamp SP-5426 (1)
   b. Post SP-5425-B (2)
   c. Metric Dial Indicator 9524 (3)

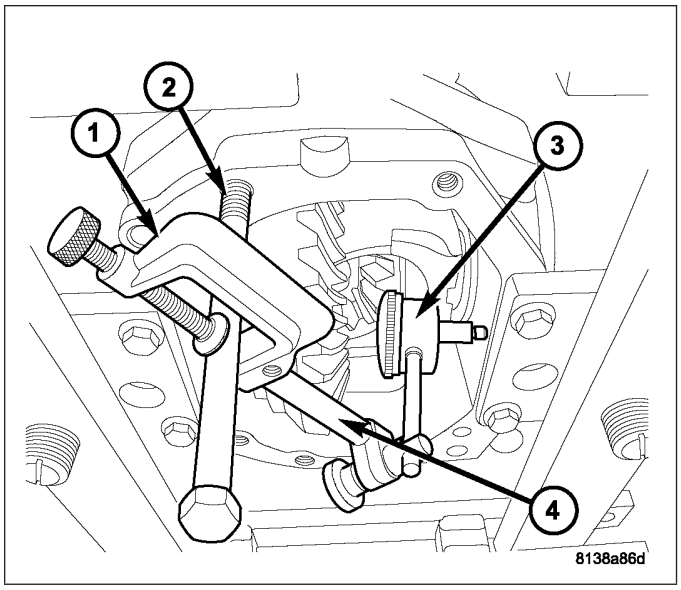

5. Expand spreader W-129-B (1) to spread axle housing no more than 0.30 mm (0.012 in.).

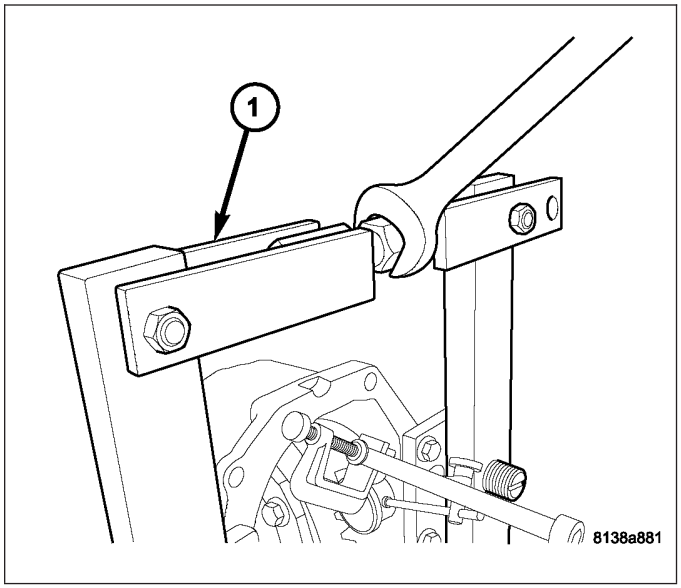

NOTE: The differential side bearing snap rings are select-fit, and control ring gear backlash and differential side bearing preload. It is necessary to return snap rings to their original position. If replacement differential side bearings or differential case are being installed, refer to Adjustments — Differential Side Bearing Preload and Gear Backlash to determine proper snap ring selection.

6. Using suitable snap ring pliers (2), install differential side bearing snap rings (1).

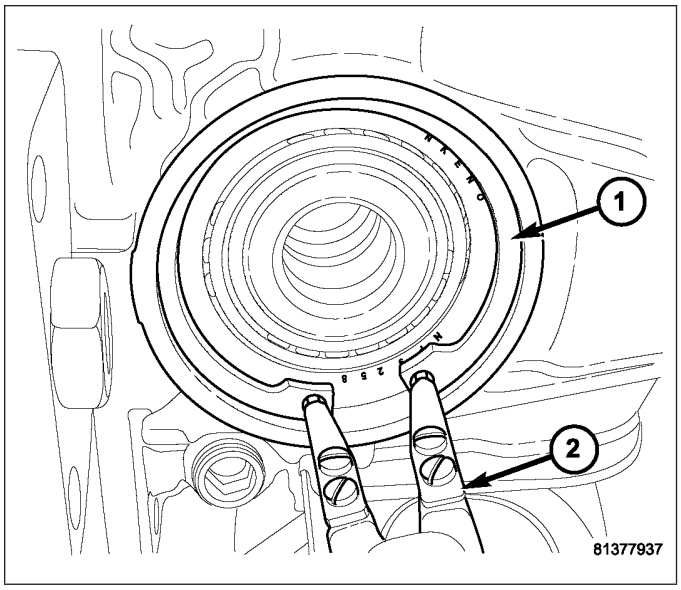

7. Back off W-129-B spreader (1) to relax tension on housing.

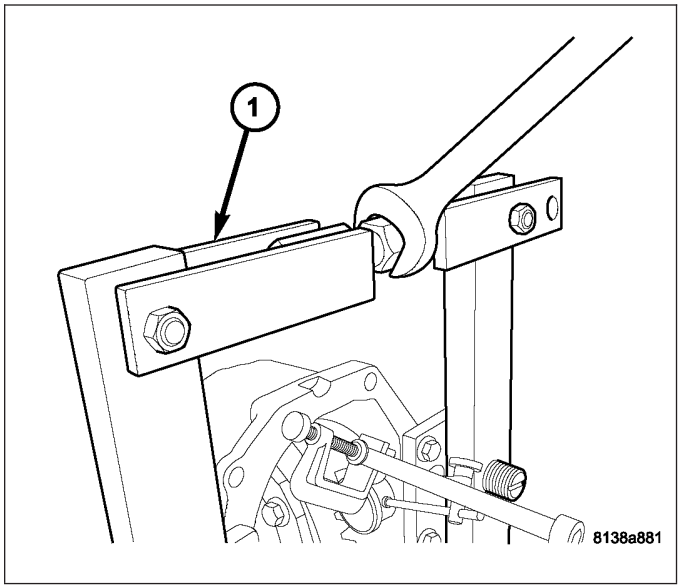

8. Install axle seals (1) using Tool 9223 (2).

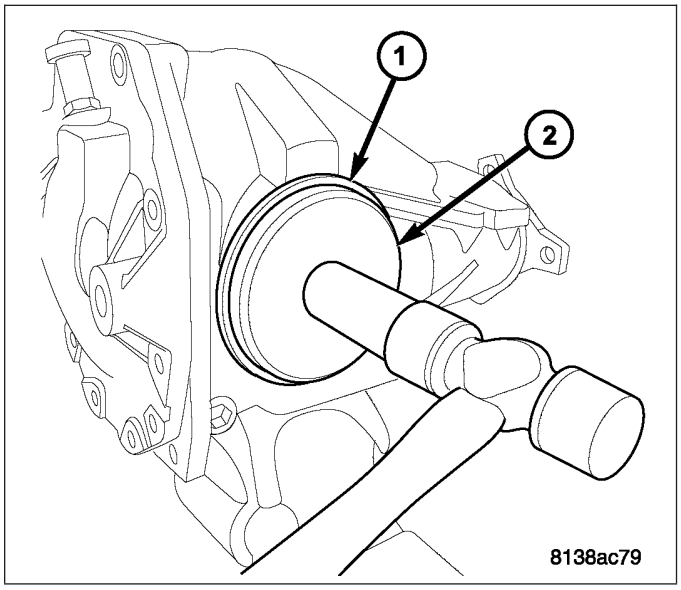

9. Remove spreader W-129-B and adapter plates 9226 (1).

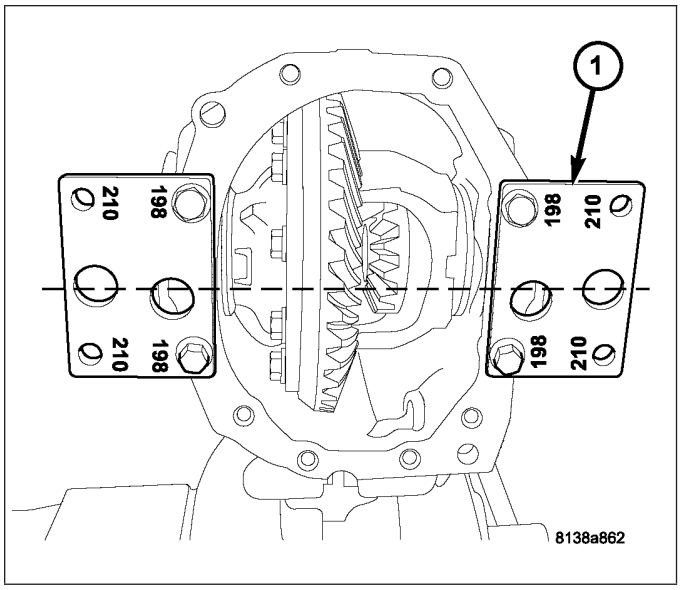

10. Apply 4mm (0.157 in.) bead (2) of Mopar® Axle RTV to axle housing cover (1) as shown.

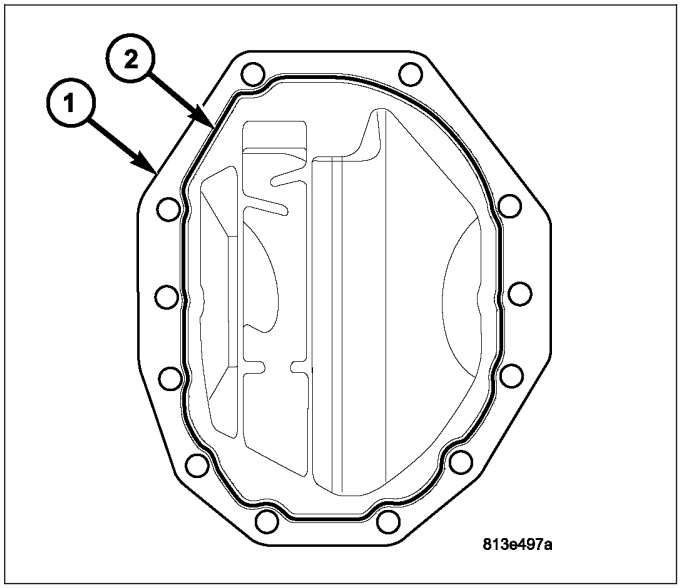

11. Install cover to axle housing. Install and torque cover-to-housing bolts to 30 N·m (22 ft. lbs.) + 90°.

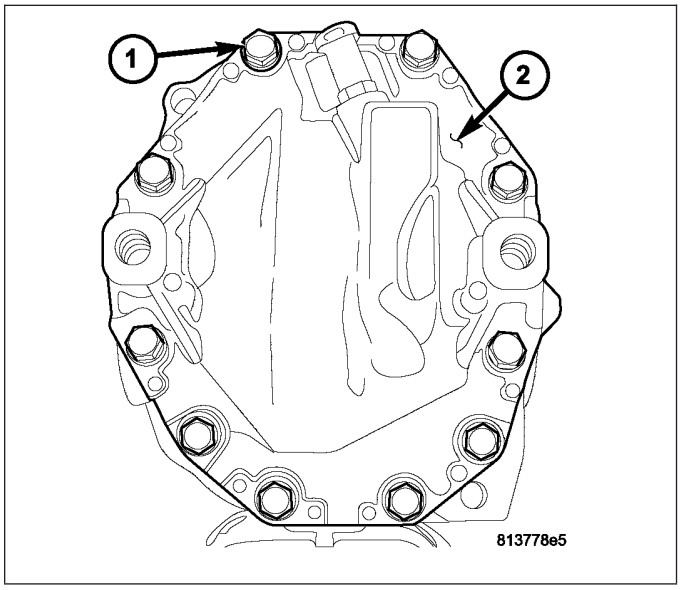

BEARING-DIFFERENTIAL CASE

REMOVAL

1. Remove differential assembly from axle. Refer to Differential Removal.

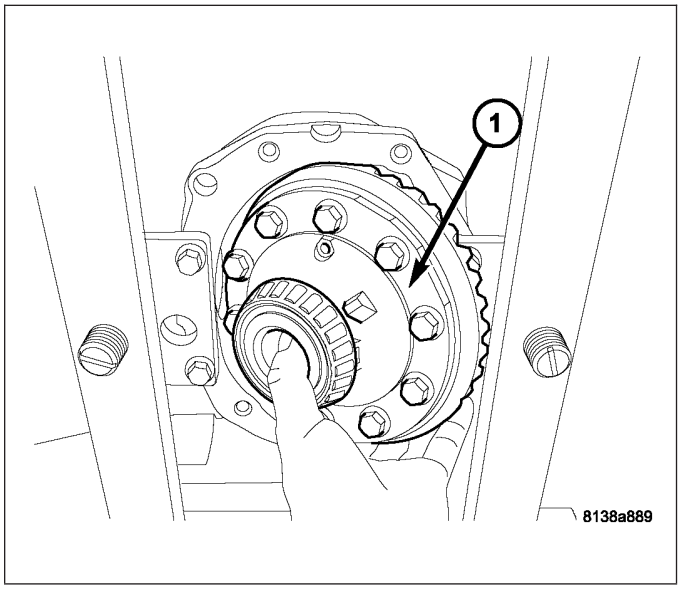

2. Remove bearings (2) from the differential case (3) with Puller/Press C-293-PA (5), Adapters C-293-37 (1) and Plug SP-3289 (4).

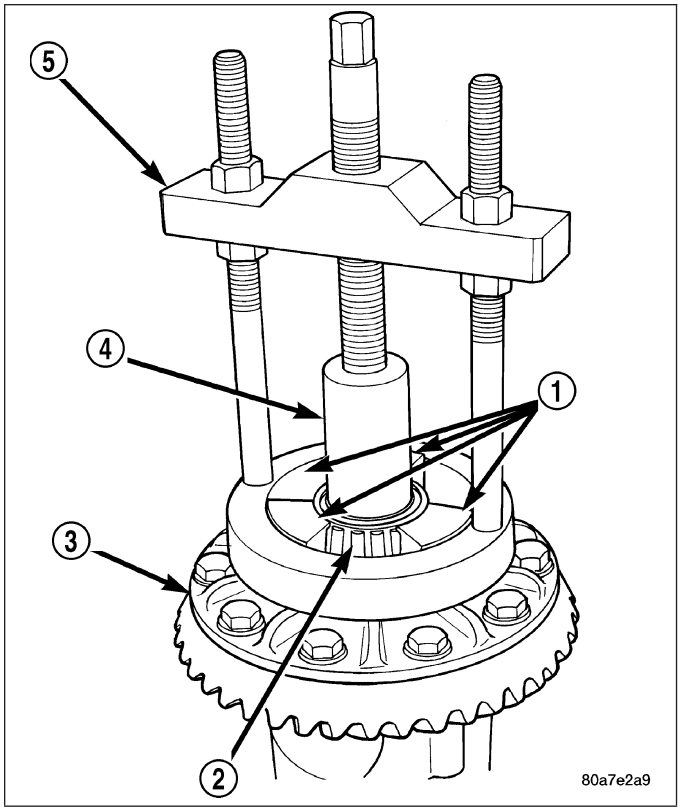

INSTALLATION

1. Using Tool 9523 and Handle C-4171, press differential side bearings onto differential case.

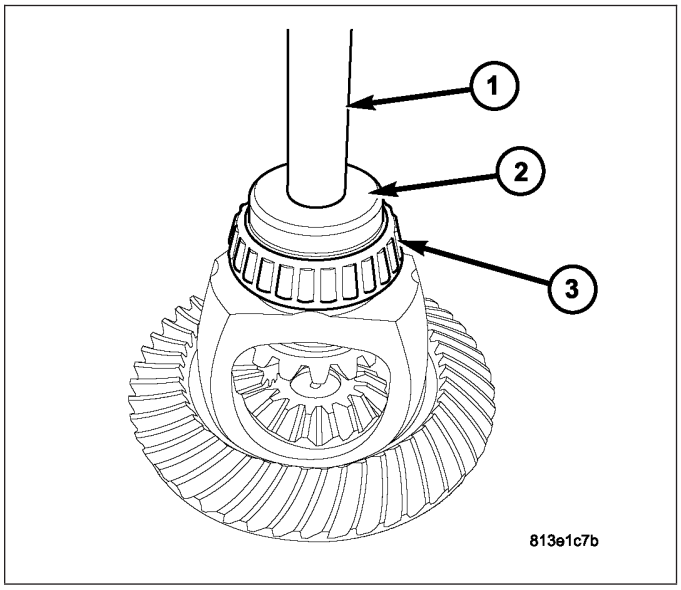

2. Install differential and reassemble axle assembly.

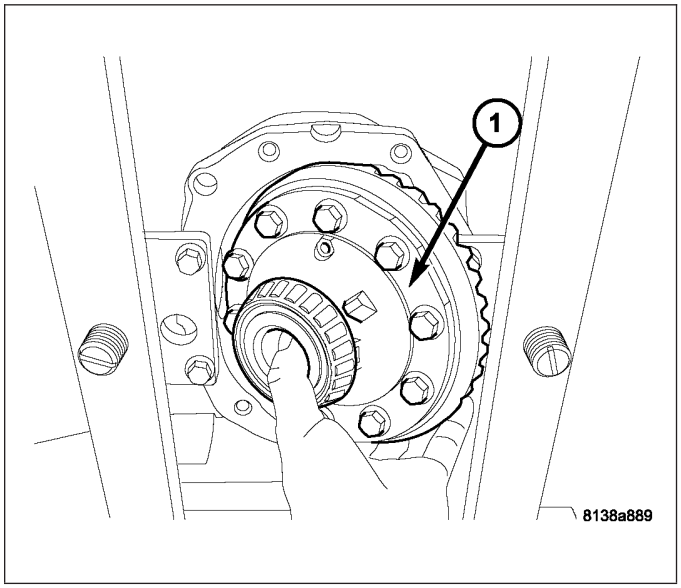

COVER-DIFFERENTIAL

REMOVAL

1. Remove axle assembly from vehicle. (Refer to 3 - DIFFERENTIAL & DRIVELINE/REAR AXLE - 198MM - REMOVAL)
2. Remove axle housing cover bolts (1).
3. Using suitable screwdriver, remove axle housing cover (1).

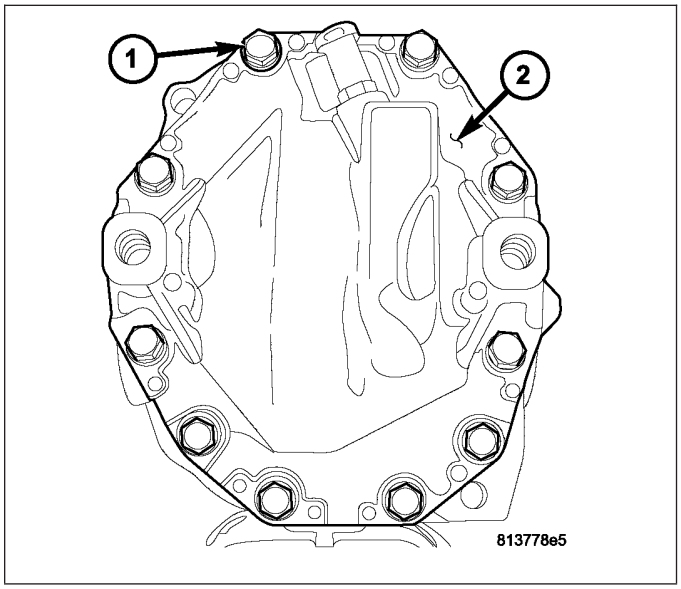

INSTALLATION

1. After thoroughly cleaning axle housing cover (1), apply a 4 mm (0.157 in.) bead (2) of Mopar® Axle RTV as shown.

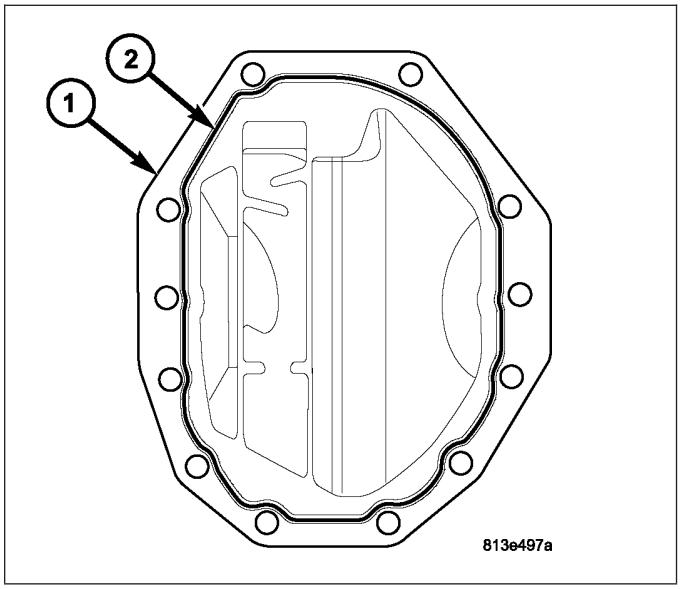

2. Immediately install cover (2) to axle housing. Install and torque axle housing cover bolts (1) to 30 N·m (22 ft. lbs.) + 45°.
3. Install axle assembly to vehicle. (Refer to 3 - DIFFERENTIAL & DRIVELINE/REAR AXLE - 198MM - INSTALLATION)

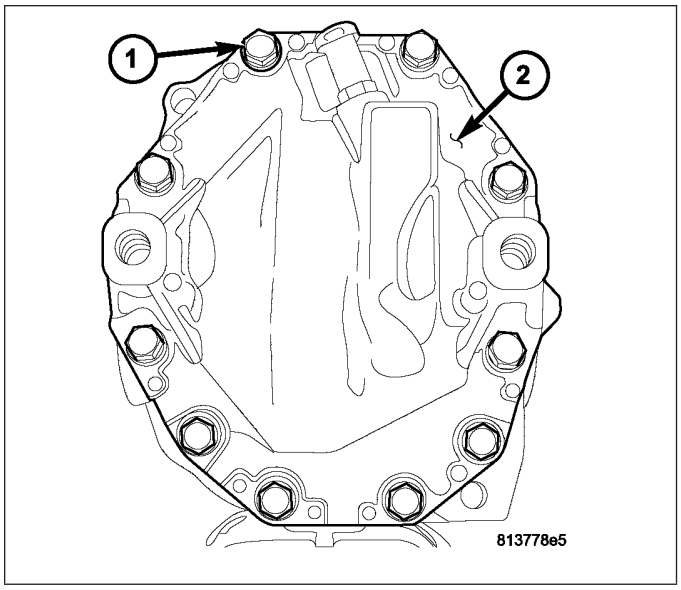

GEAR-PINION/RING

REMOVAL

1. Remove differential assembly. (Refer to 3 - DIFFERENTIAL & DRIVELINE/REAR AXLE - 198MM/ DIFFERENTIAL - REMOVAL)
2. Place differential case in a soft-jawwed vise and remove ring gear-to-case bolts.

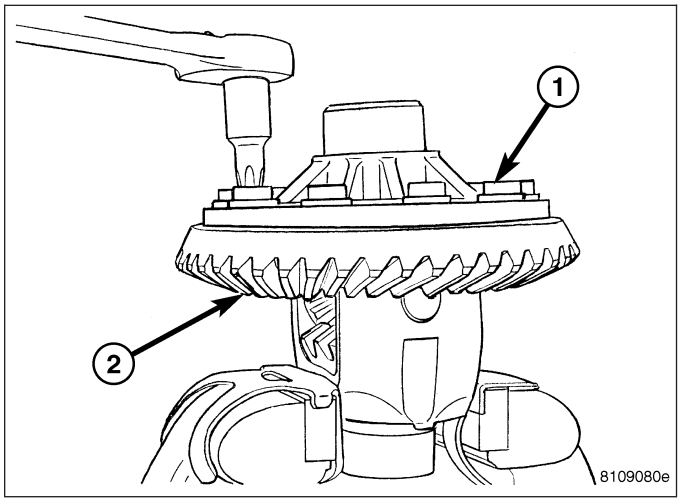

3. Remove ring gear from differential case with a brass drift and hammer.

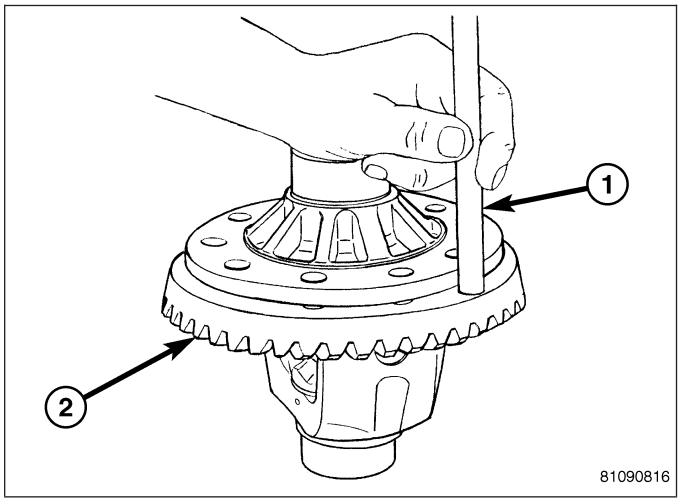

4. Using 41mm socket and flange wrench Tool C-3281 (1), remove pinion nut and discard.

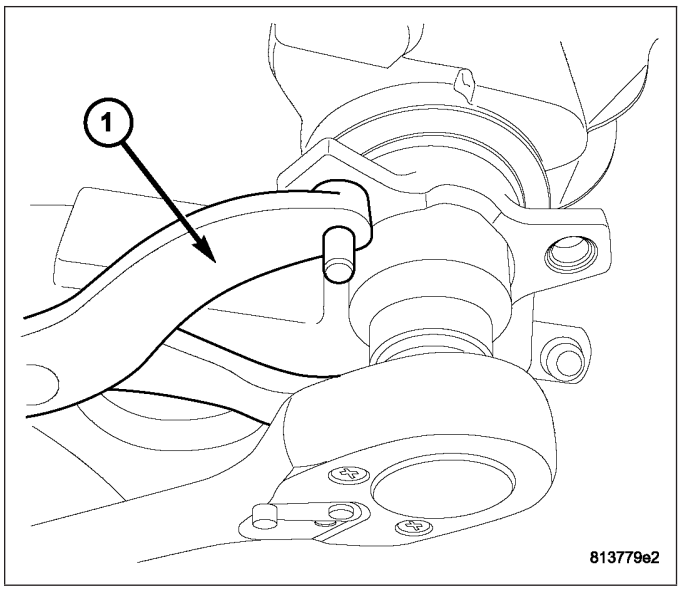

5. Using puller Tool 1026 (1), remove pinion flange (2).

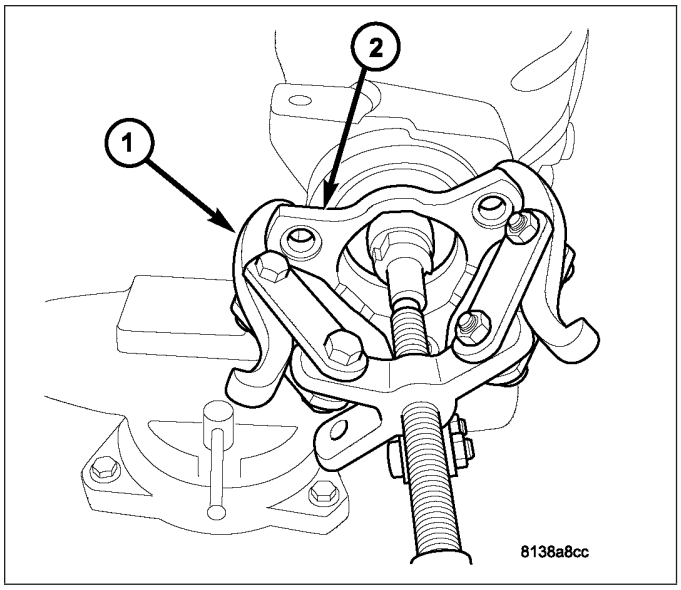

6. Using a suitable screwdriver, remove and discard the pinion seal.
7. Remove pinion tail bearing cone.

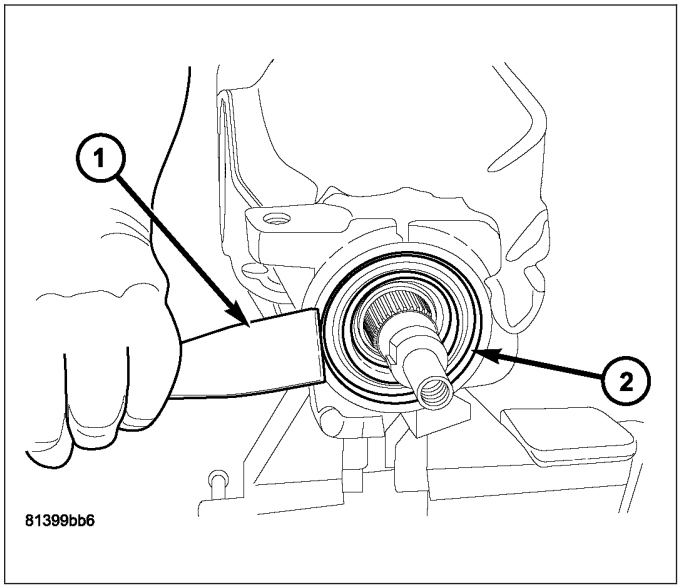

8. Move axle housing to press and press out pinion shaft (1) as shown.

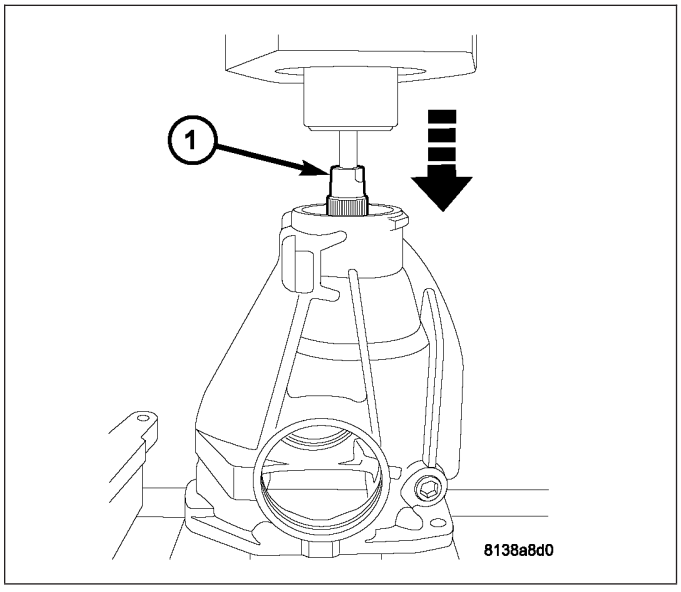

9. Remove collapsible spacer (1) and washers (2). Discard collapsible spacer.

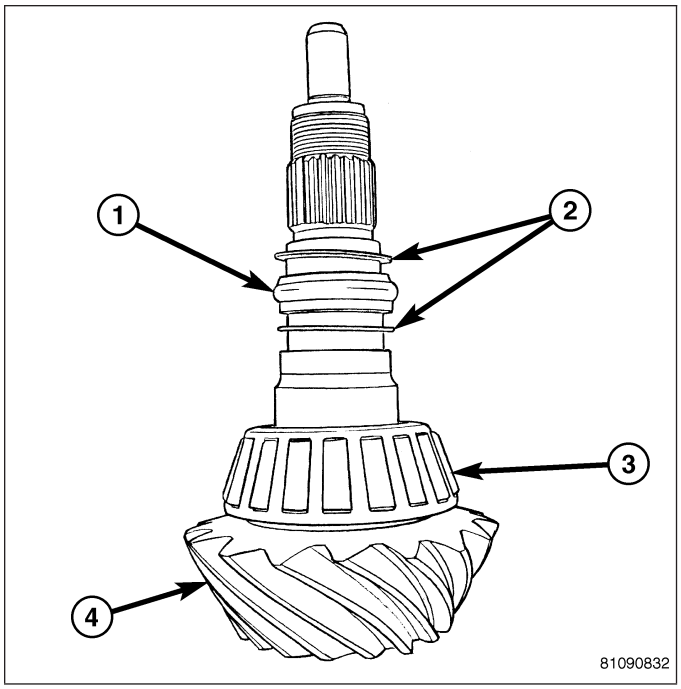

10. Remove pinion head bearing (2) with Puller C-293-PA (1) and Adapters C-293-37 (3,4).

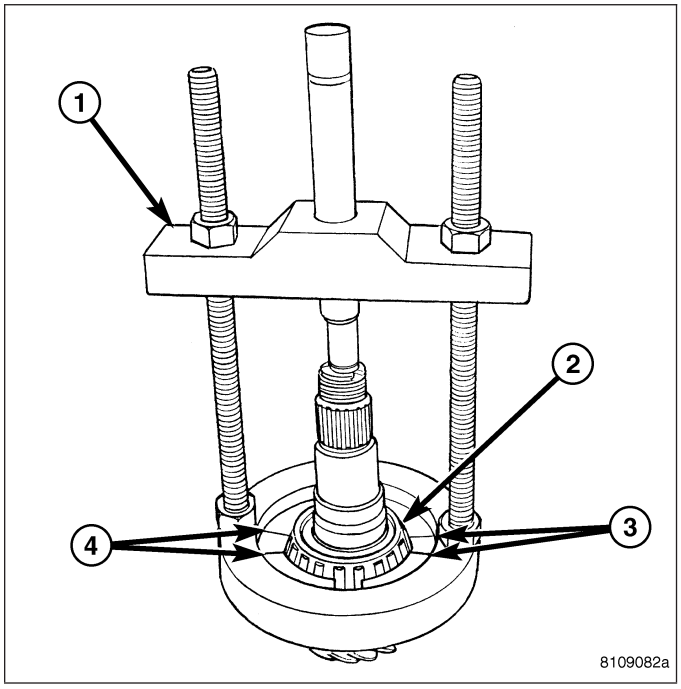

11. Using driver handle C-4171(2) and remover Tool 9084 (1), drive out pinion head bearing cup.

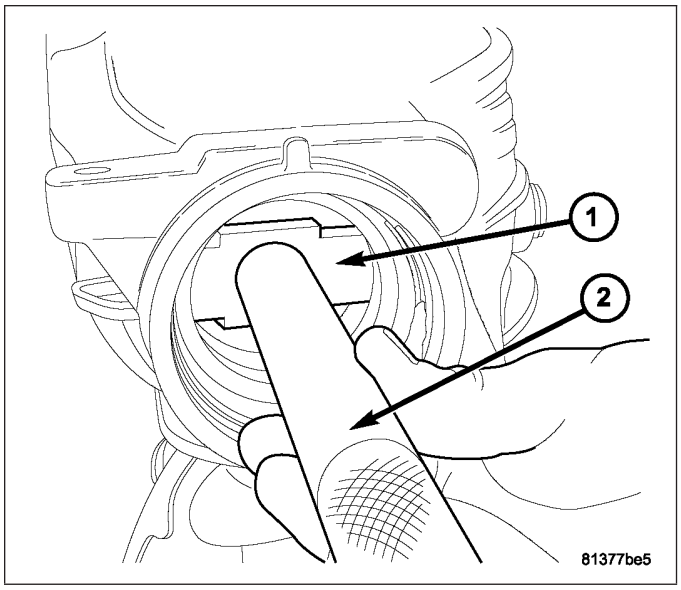

12. Remove pinion head shim. Measure and record shim thickness.

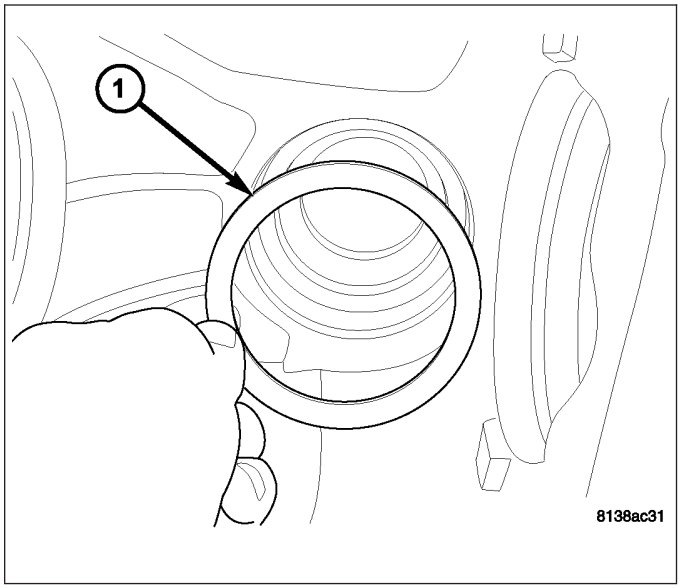

13. Using driver handle C-4171 (2) and remover Tool D-149 (1), drive out pinion tail bearing cup.

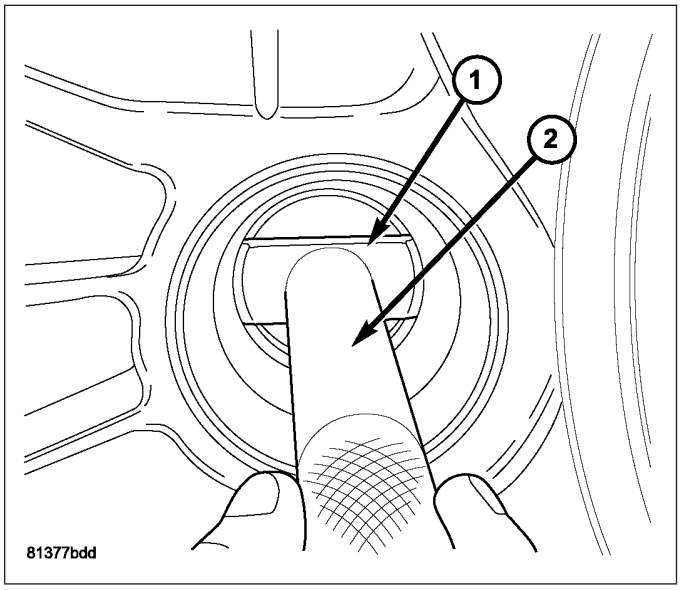

INSTALLATION

1. Install selected pinion depth shim (1) into housing.

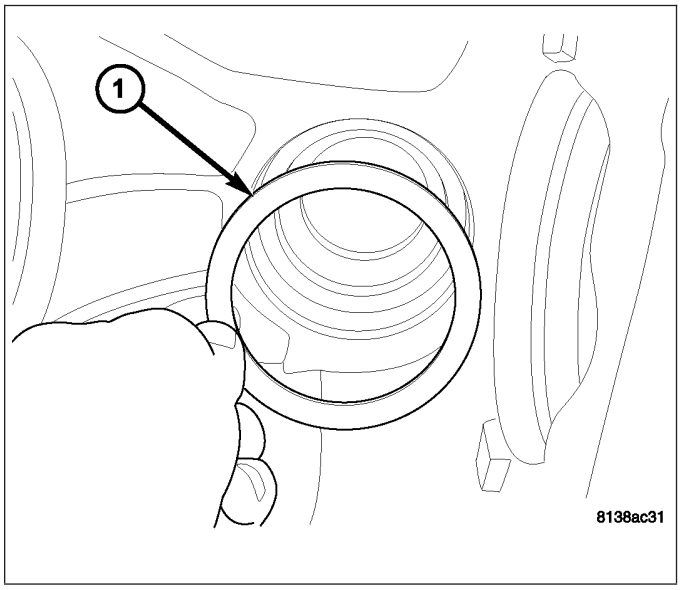

2. Press pinion head bearing cup into housing using Tools C-4171 (1) and C-4310 (2).

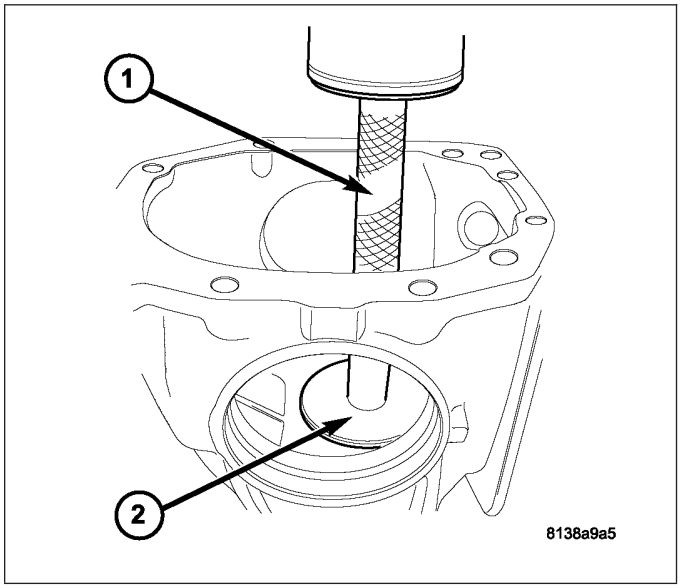

3. Press pinion tail bearing cup into housing using Tools C-4171 (1) and D-146 (2).

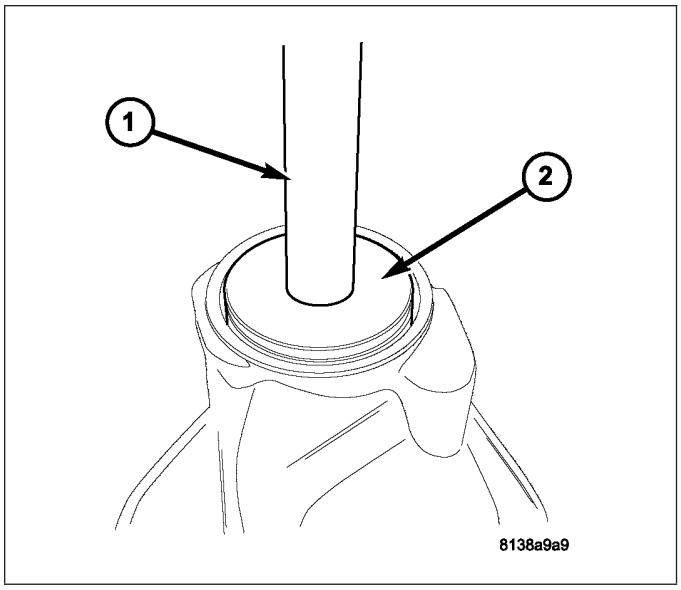

4. Press **new** pinion head bearing (2) onto pinion shaft using Tool C-3095-A (1).

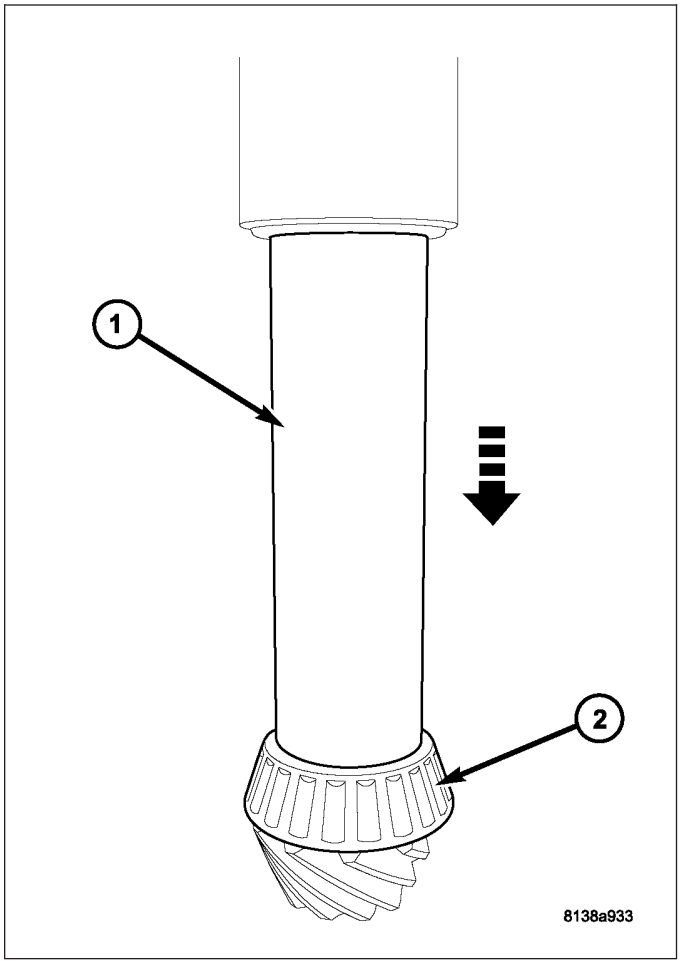

5. Install washers (2) and **new** collapsible spacer (1) to pinion shaft.

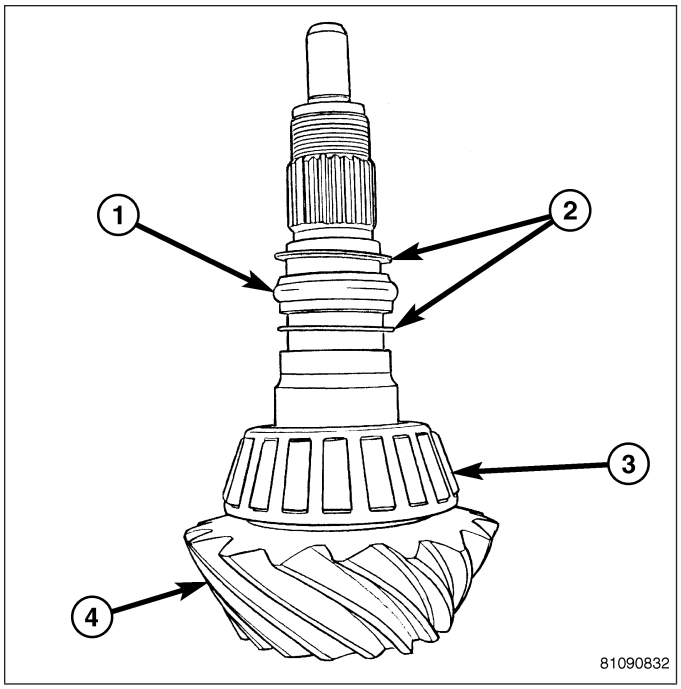

6. Install pinion shaft (1) into housing and support on press table atop Tool 8255 (2). **Ensure pinion gear face is centered atop Tool 8255.**

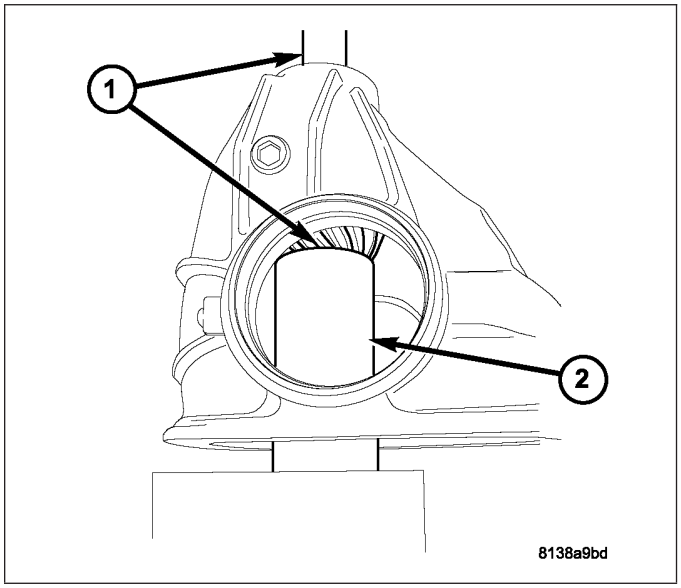

7. Using Tool C-3095-A (1), press on **new** pinion tail bearing (2).

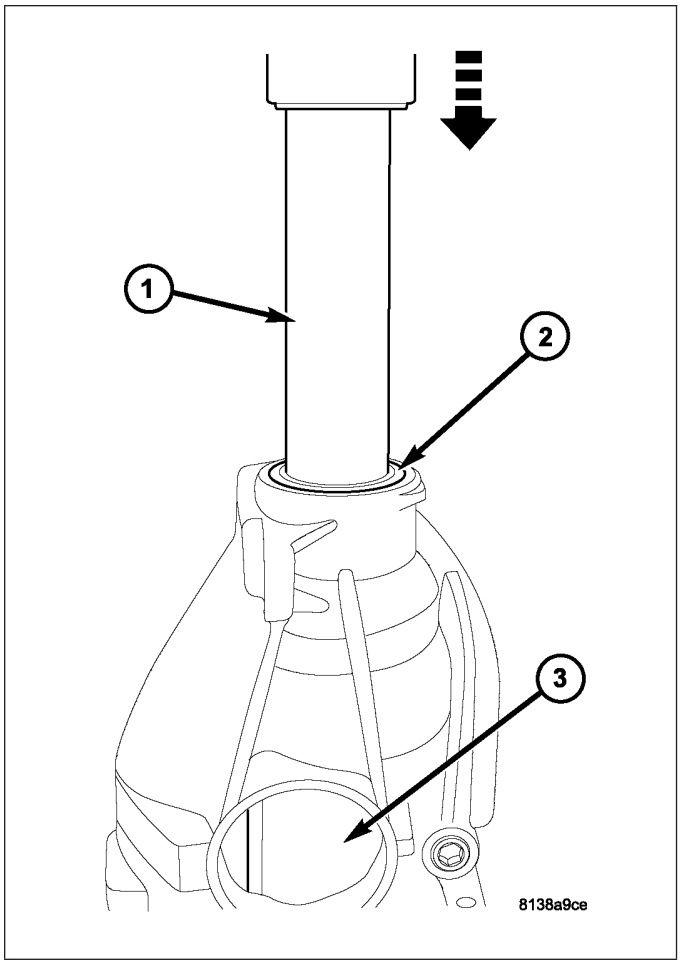

8. Install new pinion seal into position.
9. Press pinion seal into housing using Tool 9231A (1).

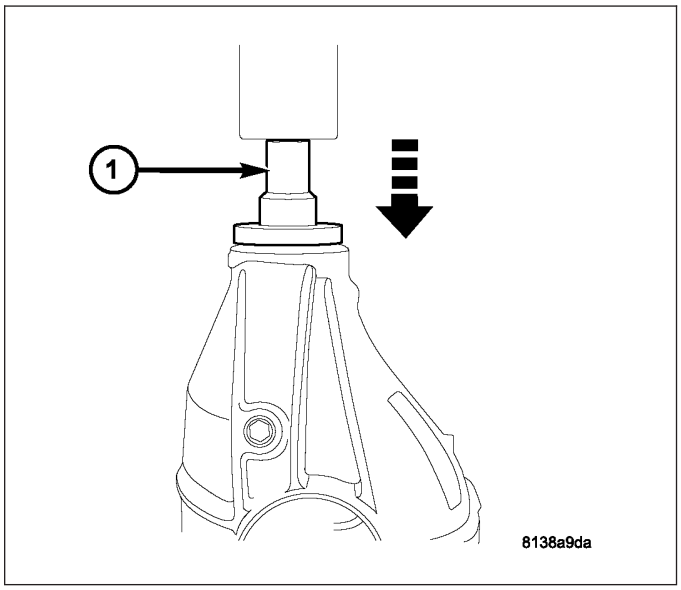

10. Lightly lubricate pinion flange seal with axle lubricant for flange installation.
11. Align index marks and press pinion flange (2) on using Tool C-3095-A (1).

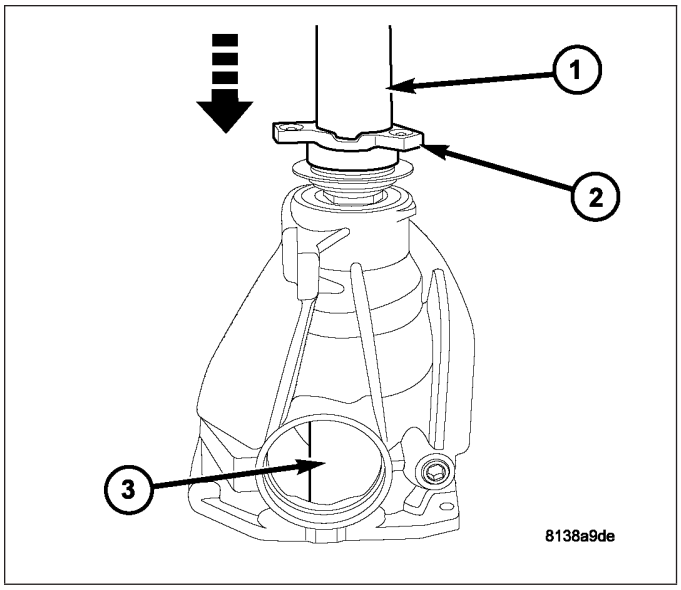

12. Install new pinion flange nut by hand.
13. Hold pinion flange with Tool C-3281 (1). Using a deep 41 mm socket, tighten pinion flange nut to an initial torque of 203 N·m (150 ft. lbs.).

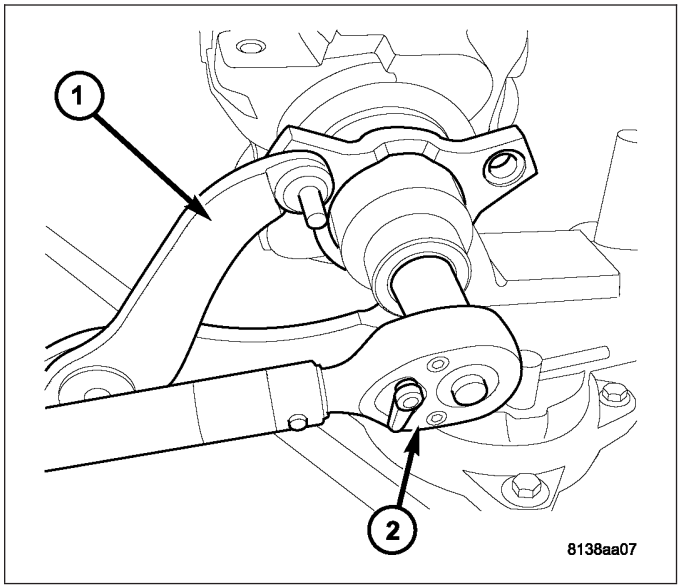

14. Rotate pinion flange to ensure bearing is properly seated.
15. Measure pinion rotating torque using suitable torque wrench (1). **Pinion rotating torque should be 215-245 N. cm (19-22 in. lbs.).**
16. If pinion rotating torque exceeds the specified range, the pinion shaft must be removed and the crush sleeve replaced.

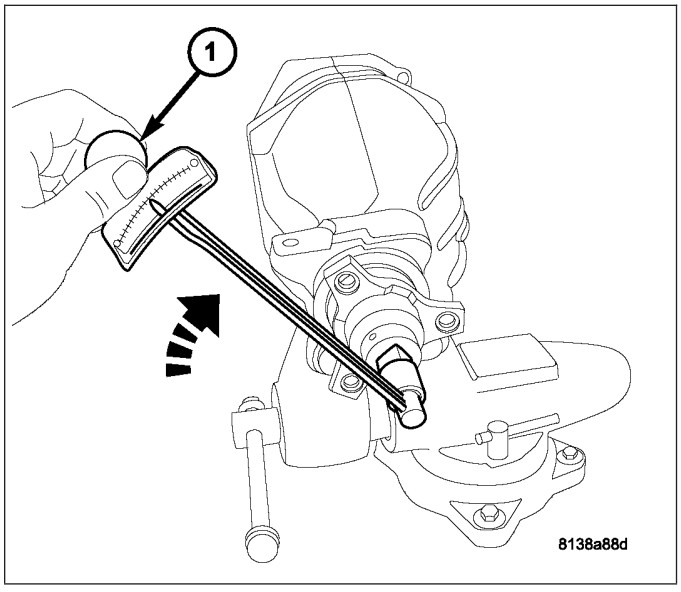

17. If pinion rotating torque is below the specified range, increase nut torque by 7 N·m (5 ft. lbs.) increments and recheck turning torque until rotating torque is within range.

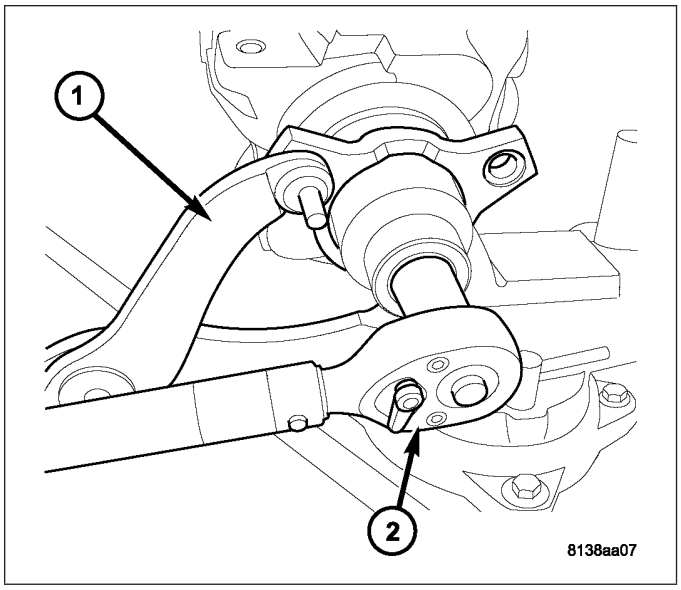

18. Stake pinion flange nut (1) using hammer and suitable punch.

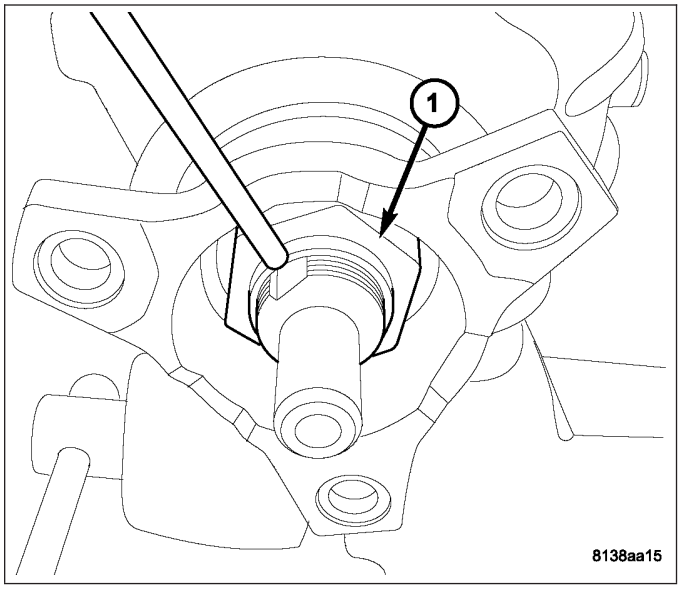

19. Install ring gear to differential case. Loosely install **new** ring-gear-to-differential case bolts.
20. Torque all ring gear-to-case bolts to 85 N·m (64 ft. lbs.)

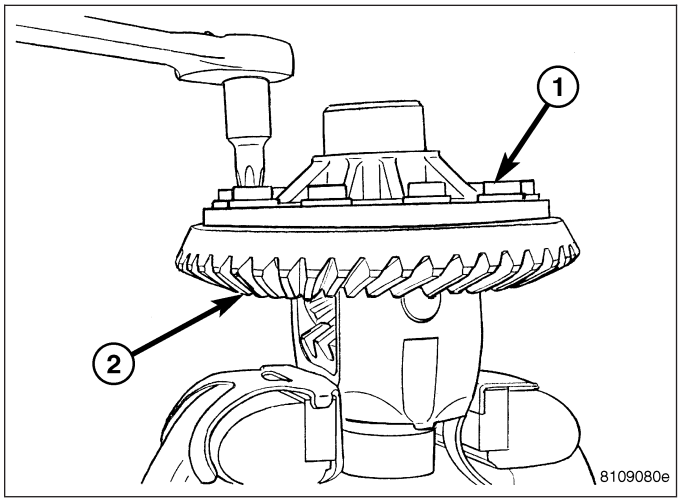

21. Install differential and reassemble axle assembly. (Refer to 3 - DIFFERENTIAL & DRIVELINE/REAR AXLE - 198MM/DIFFERENTIAL - INSTALLATION)

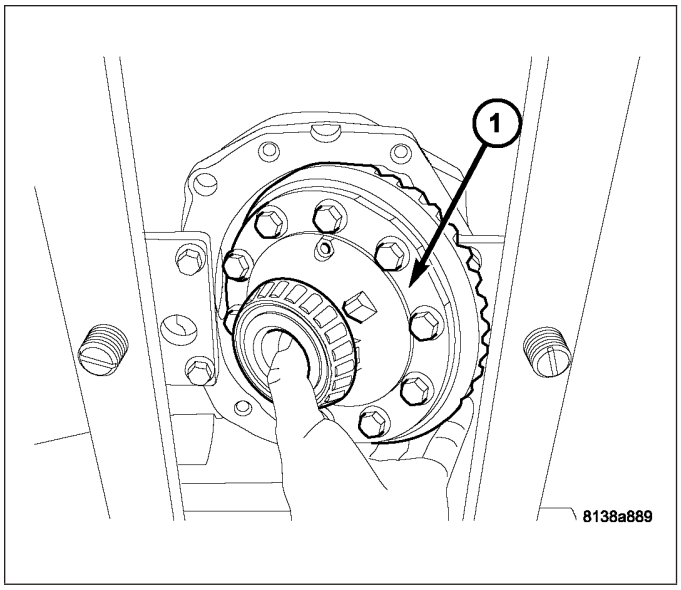

REAR AXLE - 210RII

TABLE OF CONTENTS

page

REAR AXLE - 210RII
- DESCRIPTION 176
- DIAGNOSIS AND TESTING 178
- STANDARD PROCEDURE - FLUID DRAIN AND FILL 181
- REMOVAL 181
- INSTALLATION 186
- ADJUSTMENTS
  - ADJUSTMENT - PINION DEPTH MEASUREMENT. 189
  - ADJUSTMENT — SIDE BEARING PRELOAD AND RING GEAR BACKLASH. 195
- SPECIFICATIONS - 210 MM RII AXLE 202
- SPECIAL TOOLS - 210 RII AXLE 203

SEAL-AXLE SHAFT
- REMOVAL 206
- INSTALLATION 206

page

SEAL-PINION FLANGE
- REMOVAL 208
- INSTALLATION 210

DIFFERENTIAL
- REMOVAL 213
- DISASSEMBLY 218
- ASSEMBLY 221
- INSTALLATION 224

BEARING-DIFFERENTIAL CASE
- REMOVAL 230
- INSTALLATION 231

COVER-DIFFERENTIAL
- REMOVAL 232
- INSTALLATION 232

GEAR-PINION/RING
- REMOVAL 234
- INSTALLATION 239

REAR AXLE - 210RII

DESCRIPTION

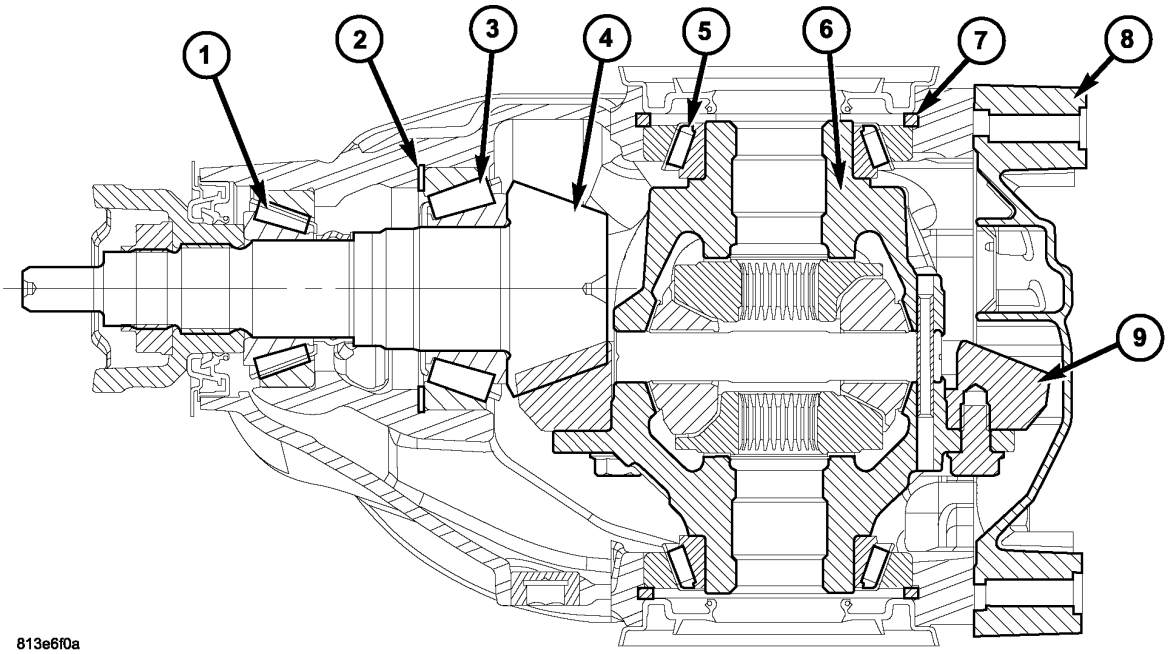

198/210 MM RII Axle Section View

1 - BEARING, PINION TAIL
2 - SHIM, PINION DEPTH
3 - BEARING, PINION HEAD
4 - GEAR/SHAFT, PINION
5 - BEARING, DIFFERENTIAL SIDE
6 - DIFFERENTIAL
7 - RING, SNAP
8 - COVER, AXLE
9 - GEAR, RING

The 210 MM RII (Rear-Independent-Iron) axle is an independent assembly with a cast iron housing and differential. The 210 MM RII uses an open differential which is supported by two tapered roller bearings located on either side of the case. Differential bearing preload and ring gear backlash are controlled with select snap-rings located on the outside of the differential bearing cups. Pinion height is set with a select shim located under the rear pinion bearing cup.

The 210 MM axle is available only in V8 engine-equipped models with a 2.82:1 gear ratio.

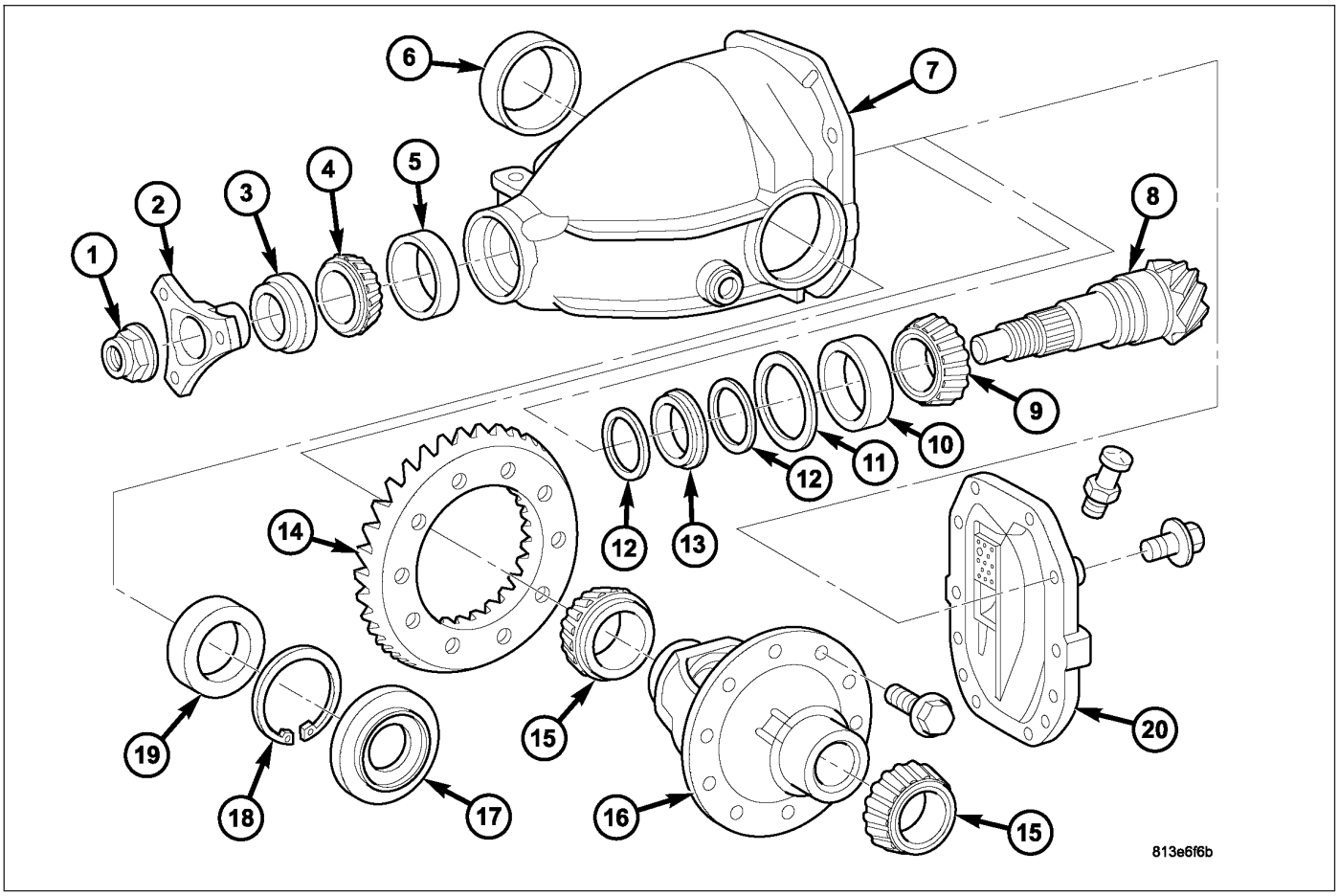

198/210 MM Axle Components

1 - NUT, PINION FLANGE
2 - FLANGE, PINION
3 - SEAL, PINION
4 - CONE, PINION TAIL BEARING
5 - CUP, PINION TAIL BEARING
6 - CUP, DIFFERENTIAL SIDE BEARING
7 - HOUSING, AXLE
8 - GEAR/SHAFT, PINION
9 - CONE, PINION HEAD BEARING
10 - CUP, PINION HEAD BEARING
11 - SHIM, PINION DEPTH
12 - WASHER (2)
13 - SPACER, COLLAPSIBLE
14 - GEAR, RING
15 - CONE, DIFFERENTIAL SIDE BEARING
16 - DIFFERENTIAL
17 - SEAL, AXLE
18 - RING, SNAP
19 - CUP, DIFFERENTIAL SIDE BEARING
20 - COVER, AXLE HOUSING

AXLE IDENTIFICATION

The 210 MM axle utilizes a barcoded label which is adhered to the top of the axle housing as shown. The following information is found on the identification label:

- Traceability Code (Plant Use)
- Axle Part Number
- Axle Gear Ratio

DIAGNOSIS AND TESTING

GEAR NOISE

Axle gear noise can be caused by insufficient lubricant, incorrect backlash, incorrect pinion depth, tooth contact, worn/damaged gears, or the carrier housing not having the proper offset and squareness.

Gear noise usually happens at a specific speed range. The noise can also occur during a specific type of driving condition. These conditions are acceleration, deceleration, coast, or constant load.

When road testing, first warm-up the axle fluid by driving the vehicle at least 5 miles and then accelerate the vehicle to the speed range where the noise is the greatest. Shift out-of-gear and coast through the peak-noise range. If the noise stops or changes greatly:

- Check for insufficient lubricant.
- Incorrect ring gear backlash.
- Gear damage.

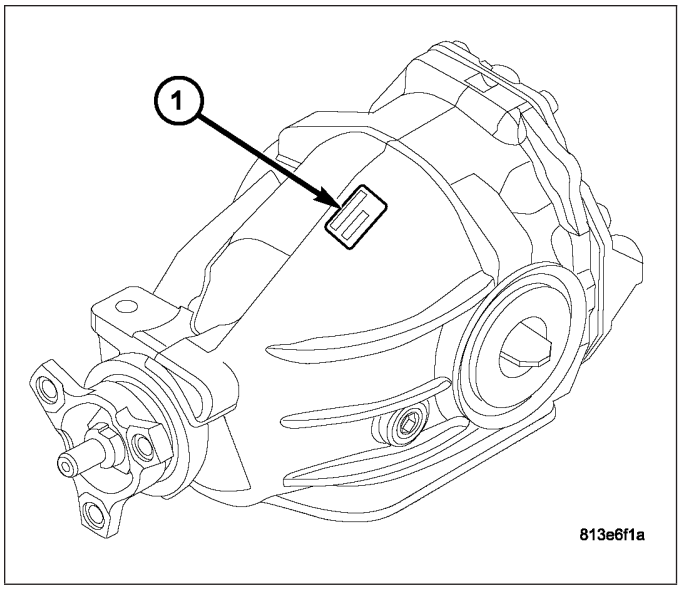

210 MM Axle Identification Tag

Differential side gears and pinions can be checked by turning the vehicle. They usually do not cause noise during straight-ahead driving when the gears are unloaded. The side gears are loaded during vehicle turns. A worn pinion shaft can also cause a snapping or a knocking noise.

BEARING NOISE

The differential and pinion bearings can produce noise when worn or damaged. Bearing noise can be either a whining, or a growling sound.

Pinion bearings have a constant-pitch noise. This noise changes only with vehicle speed. Pinion bearing noise will be higher pitched because it rotates at a faster rate. Drive the vehicle and load the differential. If bearing noise occurs, the rear pinion bearing is the source of the noise. If the bearing noise is heard during a coast, the front pinion bearing is the source.

Worn or damaged differential bearings usually produce a low pitch noise. Differential bearing noise is similar to pinion bearing noise. The pitch of differential bearing noise is also constant and varies only with vehicle speed.

Wheel hub bearings produce noise and vibration when worn or damaged. The noise generally changes when the bearings are loaded. Road test the vehicle. Turn the vehicle sharply to the left and to the right. This will load the bearings and change the noise level. Where axle bearing damage is slight, the noise is usually not noticeable at speeds above 30 mph.

LOW SPEED KNOCK

Low speed knock is generally caused by a worn U-joint or by worn side-gear thrust washers. A worn pinion shaft bore will also cause low speed knock.

VIBRATION

Vibration at the rear of the vehicle is usually caused by a:

- Damaged propeller shaft.
- Missing propeller shaft balance weight(s).
- Worn or out-of-balance wheels.
- Loose wheel lug nuts.
- Worn U-joints or CV joints.
- Loose/broken springs.
- Damaged axle shaft bearing(s).
- Loose pinion gear nut.
- Excessive pinion yoke run out.
- Bent halfshaft(s).

Check for loose or damaged front-end components or engine/transmission mounts. These components can contribute to what appears to be a rearend vibration. Do not overlook engine accessories, brackets and drive belts.

All driveline components should be examined before starting any repair.

DRIVELINE SNAP

A snap or clunk noise when the vehicle is shifted into gear, can be caused by:

- High engine idle speed.
- Transmission shift operation.
- Loose engine/transmission/transfer case mounts.
- Worn U-joints or CV joints.
- Worn or broken axle mount isolators.
- Loose pinion gear nut and yoke.
- Excessive ring gear backlash.
- Excessive side gear to case clearance.

The source of a snap or a clunk noise can be determined with the assistance of a helper. Raise the vehicle on a hoist with the wheels free to rotate. Instruct the helper to shift the transmission into gear. Listen for the noise, a mechanics stethoscope is helpful in isolating the source of a noise.

DIAGNOSTIC CHART

CONDITION	POSSIBLE CAUSE	CORRECTION
Wheel Noise	1. Wheel loose.	1. Tighten loose nuts.
	2. Faulty, brinelled wheel bearing.	2. Replace bearing.
Differential Cracked	1. Improper differential side bearing preload.	1. Replace case and inspect gears and bearings for further damage. Set differential bearing preload properly.
	2. Excessive ring gear backlash.	2. Replace case and inspect gears and bearings for further damage. Set ring gear backlash properly.
	3. Vehicle overloaded.	3. Replace case and inspect gears and bearings for further damage. Avoid excessive vehicle weight.
Differential Gears Scored	1. Insufficient lubrication.	1. Replace scored gears. Fill differential with the correct fluid type and quantity.
	2. Improper grade of lubricant.	2. Replace scored gears. Fill differential with the proper fluid type and quantity.
	3. Excessive spinning of one wheel/tire.	3. Replace scored gears. Inspect all gears, pinion bores, and shaft for damage. Service as necessary.

CONDITION	POSSIBLE CAUSE	CORRECTION
Loss Of Lubricant	1. Lubricant level too high.	1. Drain lubricant to the correct level.
	2. Worn axle shaft seals.	2. Replace seals.
	3. Cracked axle housing.	3. Repair as necessary.
	4. Worn pinion seal.	4. Replace seal.
	5. Worn/scored pinion flange journal.	5. Replace pinion flange and seal.
	6. Axle cover not properly sealed.	6. Remove, clean, and re-seal cover.
Axle Overheating	1. Lubricant level low.	1. Fill differential to correct level.
	2. Improper grade of lubricant.	2. Fill differential with the correct fluid type and quantity.
	3. Bearing preload too high.	3. Readjust bearing pre-load.
	4. Insufficient ring gear backlash.	4. Re-adjust ring gear backlash.
Gear Teeth Broke	1. Overloading.	1. Replace gears. Examine other gears and bearings for possible damage.
	2. Ice-spotted pavement.	2. Replace gears and examine remaining parts for damage.
	3. Improper adjustments.	3. Replace gears and examine remaining parts for damage. Ensure ring gear backlash is correct.
Axle Noise	1. Insufficient lubricant.	1. Fill axle with the correct fluid type and quantity.
	2. Improper ring gear and pinion adjustment.	2. Check ring gear and pinion contact pattern. Adjust backlash or pinion depth.
	3. Unmatched ring gear and pinion.	3. Replace gears with a matched ring gear and pinion.
	4. Worn teeth on ring gear and/or pinion.	4. Replace ring gear and pinion.
	5. Loose pinion bearings.	5. Adjust pinion bearing pre-load.
	6. Loose differential bearings.	6. Adjust differential bearing preload.
	7. Misaligned or sprung ring gear.	7. Measure ring gear run-out. Replace components as necessary.
	8. Housing not machined properly.	8. Replace housing.

STANDARD PROCEDURE - FLUID DRAIN AND FILL

NOTE: The fluid required for use in this axle is Mopar® Synthetic Gear and Axle Lubricant 75W-140.

1. Drive the vehicle until the differential lubricant is at the normal operating temperature.
2. With vehicle in neutral, position and raise vehicle on hoist.
3. Remove rear axle drain plug (1) and drain lubricant completely from the axle.
4. Install drain plug and tighten to 50 N·m (37 ft lbs).

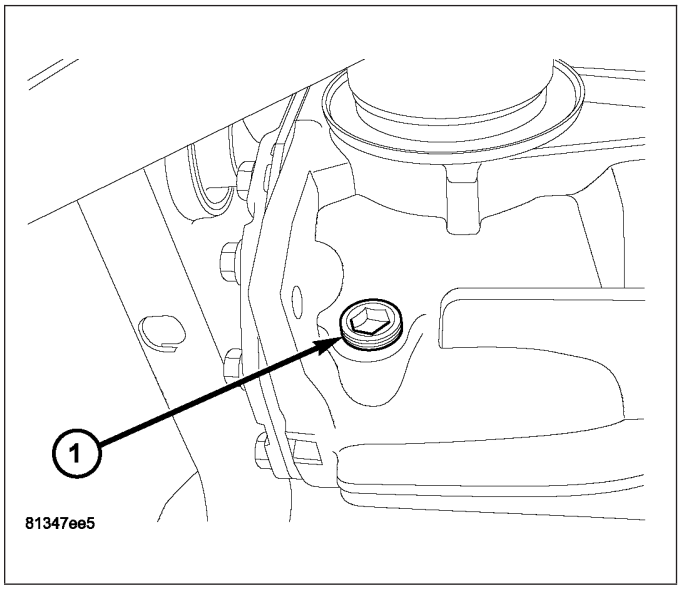

5. Remove fill plug (1) and fill rear axle with 1.6 L (1.7 qts.) Mopar® Synthetic Gear & Axle Lubricant 75W-140.
6. Install fill plug and tighten to 50 N·m (37 ft lbs).

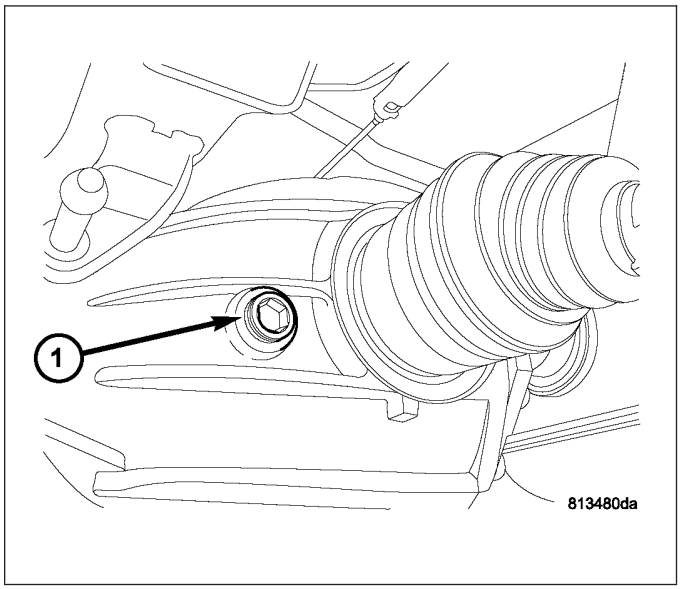

REMOVAL

NOTE: This procedure requires the compression of the rear suspension to ride height. A drive-on hoist should be used. If a drive-on hoist is not used, screw-style under-hoist jack stands are required to compress the rear suspension, facilitating rear halfshaft removal.

CAUTION: Never grasp halfshaft assembly by the inner or outer boots. Doing so may cause the boot to pucker or crease, reducing the service life of the boot and joint. Avoid over angulating or stroking the C/V joints when handling the halfshaft.

1. With vehicle in neutral, position and raise vehicle on hoist.
2. Using 14mm hex, remove axle drain plug (1) and drain rear axle fluid into container suitable for fluid reuse.
3. Install drain plug (1) and torque to 50 N·m (37 ft. lbs.) torque.

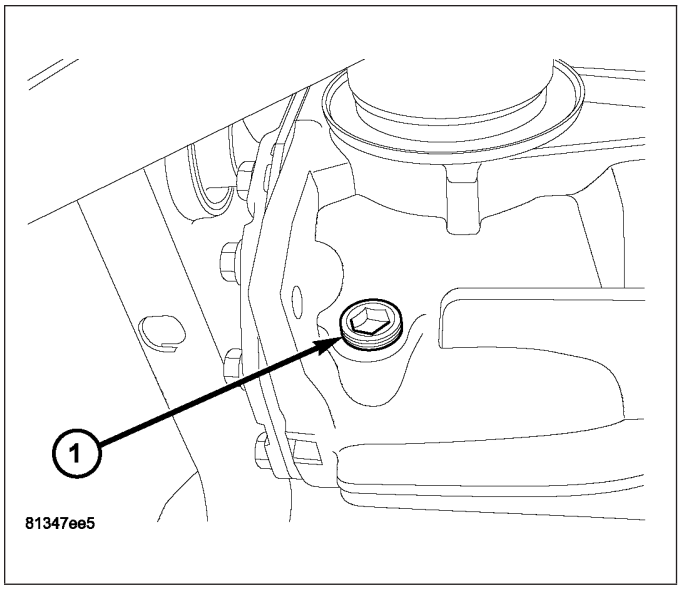

4. Remove rear exhaust system (2) on dual-outlet exhaust models, otherwise, lower exhaust system at rear hanger(s).

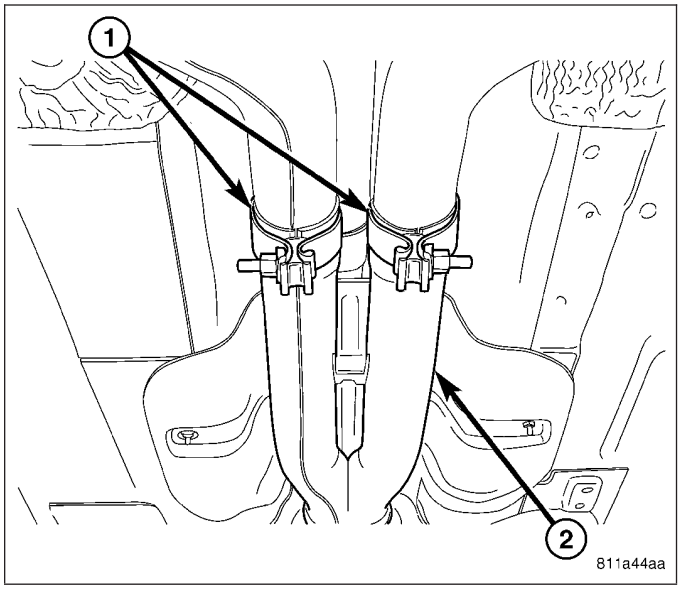

5. Apply alignment index marks (3) to the propeller shaft rubber coupler (1) and axle flange (2).

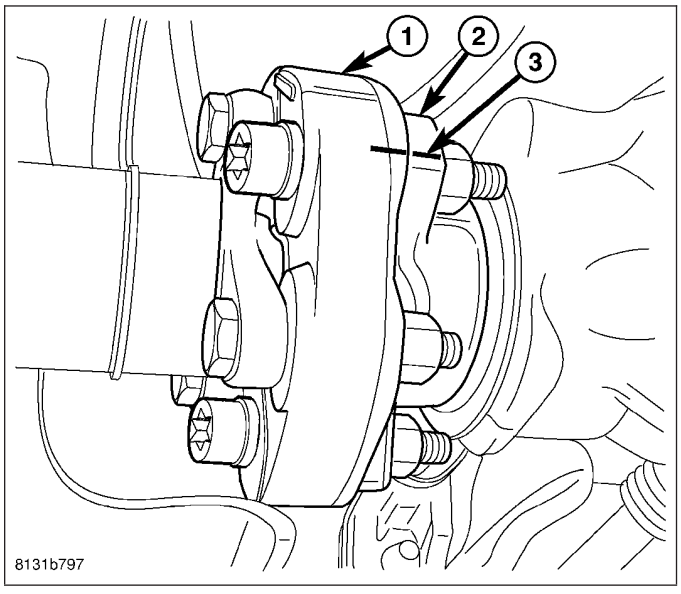

6. Remove three (3) propeller shaft coupler-to-axle flange bolt/nuts.

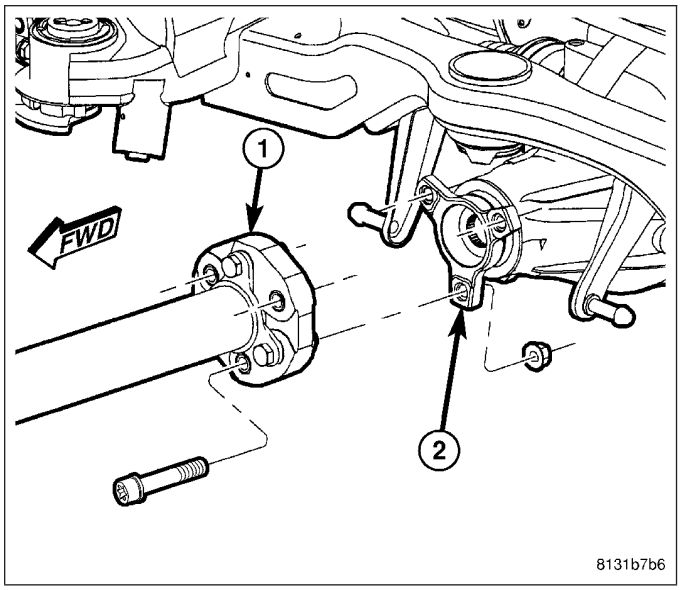

7. Using suitable screwdriver (1), partially disengage halfshaft(s) (2) from axle assembly.

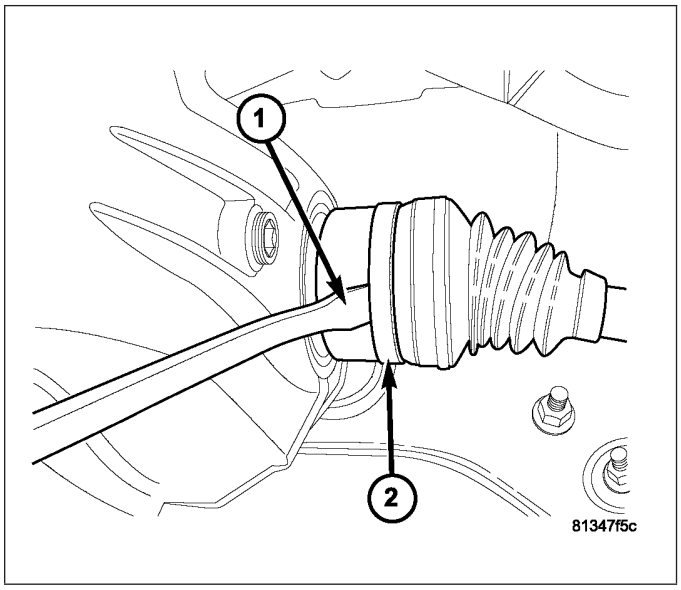

8. If a drive-on hoist is used, position transmission jack(1) to rear axle assembly. If a drive-on hoist is not used, compress rear suspension using screw-style under-hoist jack stands (2), then position transmission jack to rear axle assembly.

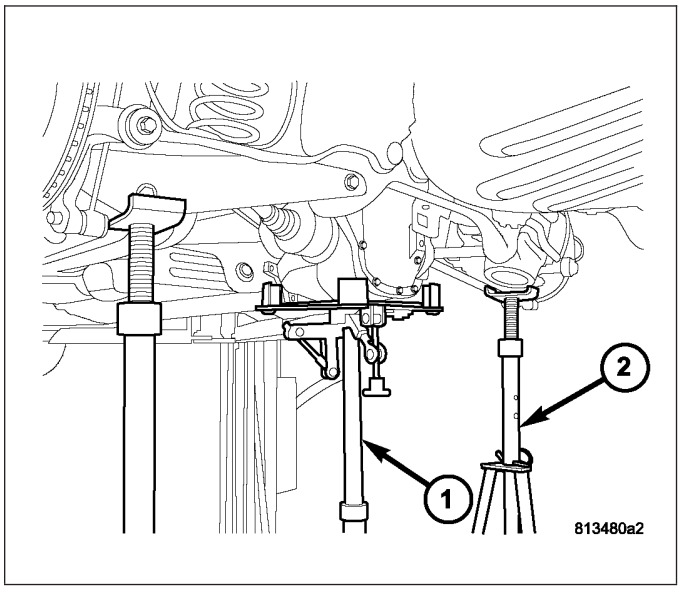

9. Remove rear axle forward mount isolator (1) bolt/nut (2).

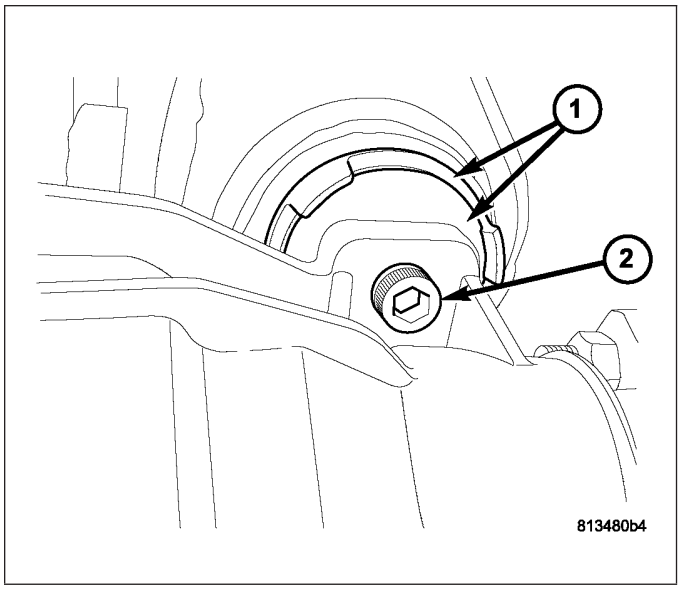

10. Remove two rear axle-to-crossmember bolts (1).

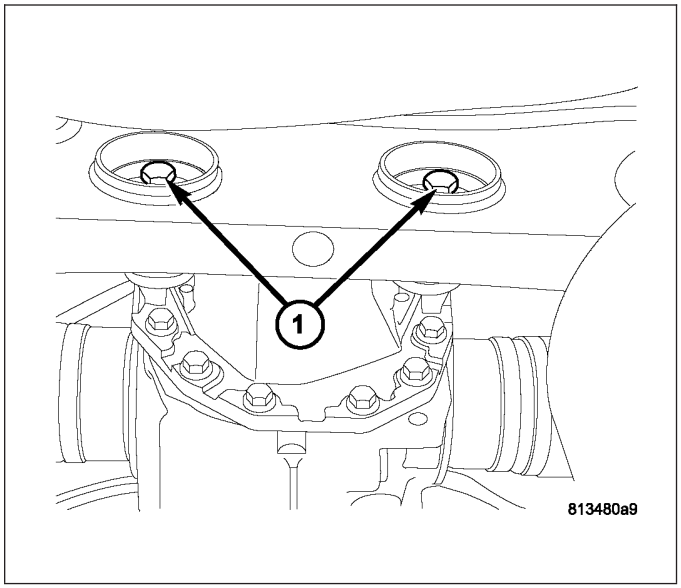

11. Carefully lower rear axle. While lowering axle, separate propeller shaft from axle and support with suitable rope or wire (1).

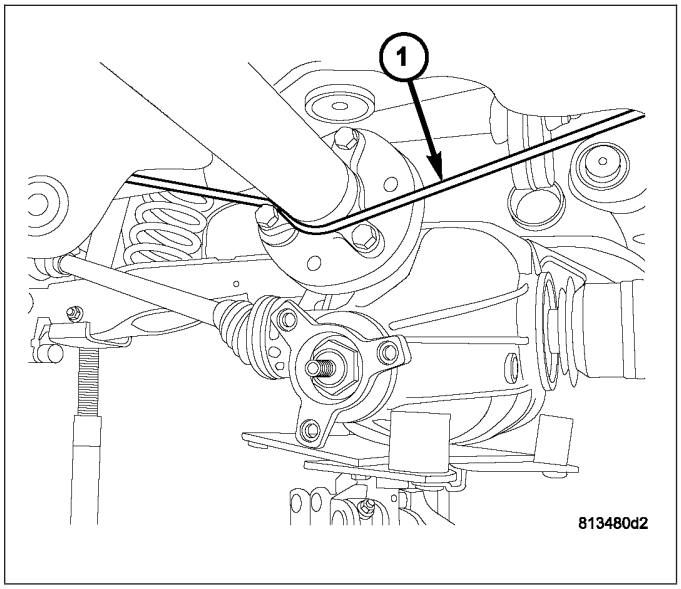

12. Lower axle just enough to remove both halfshafts one at a time. Shift axle assembly in one direction, compressing one halfshaft while removing the other (1). Use caution to protect axle seal and journal.

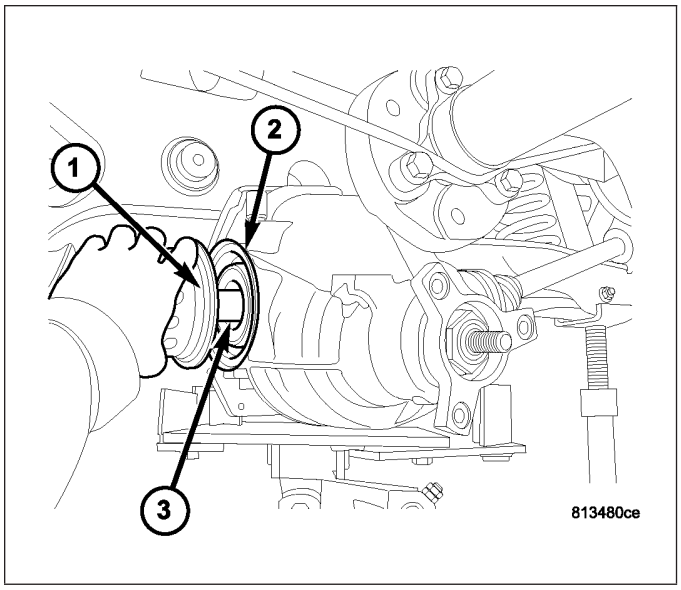

13. Remove axle assembly from vehicle and transfer to bench.
14. Using suitable screwdriver, remove axle seals and discard.

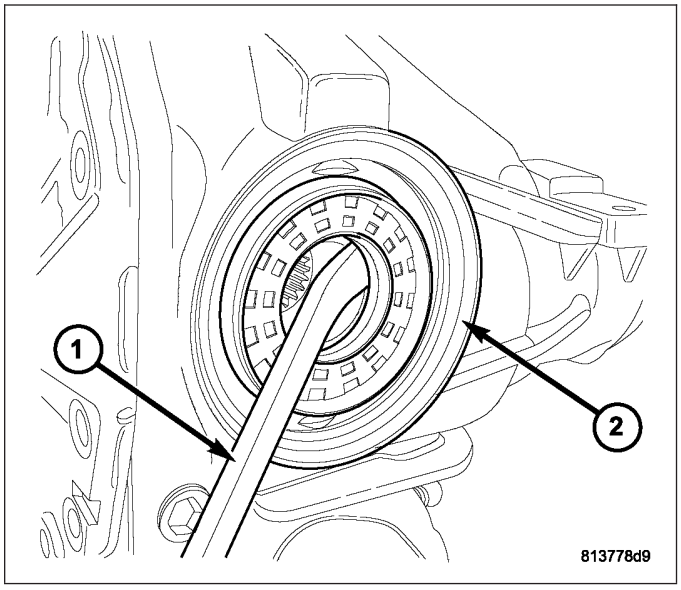

INSTALLATION

1. Install new axle seal(s) (1) using Tool 9223 (2).

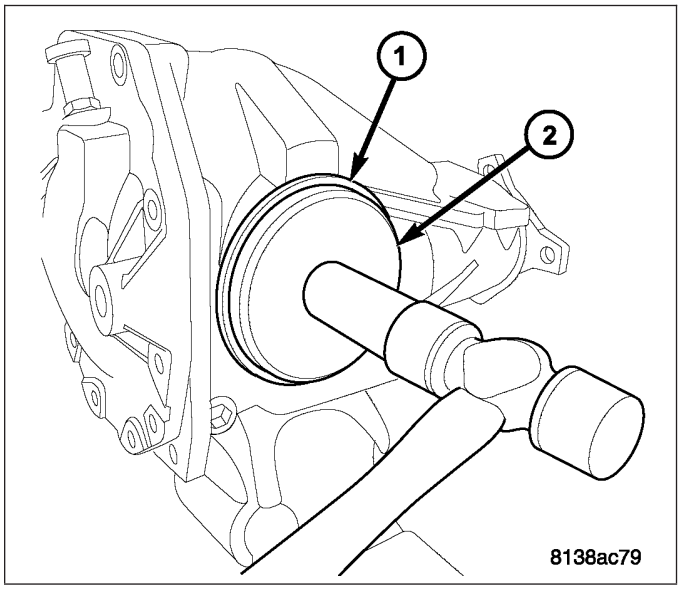

NOTE: Use care when installing halfshaft to axle assembly. The halfshaft installation angle should be minimized to avoid damage to seal upon installation.

2. Using new circlip(s), install halfshaft (1) to rear axle assembly. Use care not to damage axle seals(2). Verify proper installation by pulling outward on joint by hand.

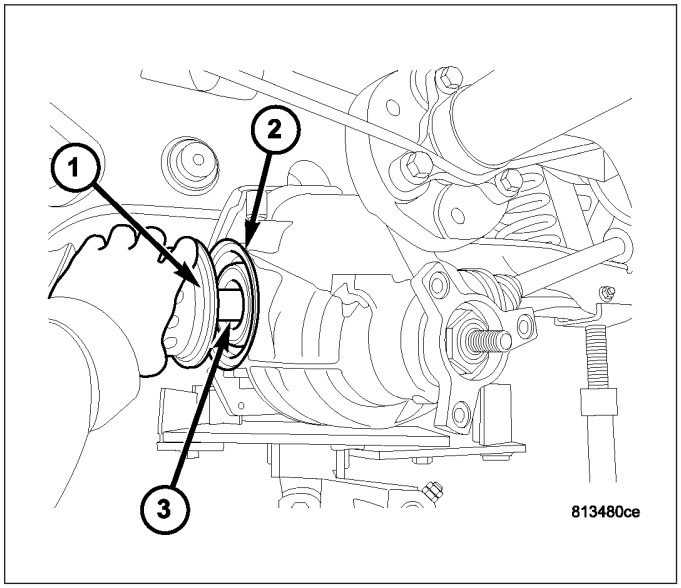

3. Raise rear axle assembly into position. Align propeller shaft index marks (3) and start propeller shaft coupler-to-axle bolt/nuts by hand.

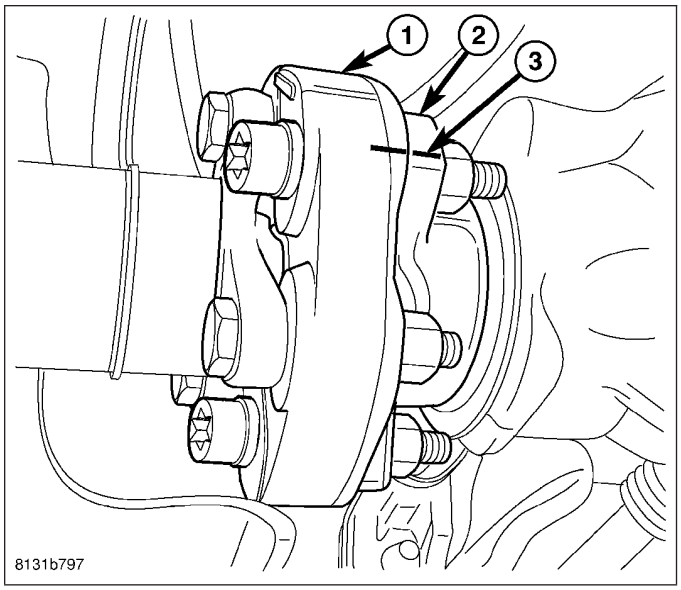

4. Install two rear axle-to-crossmember bolts (1) and torque to 220 N·m (162 ft. lbs.).

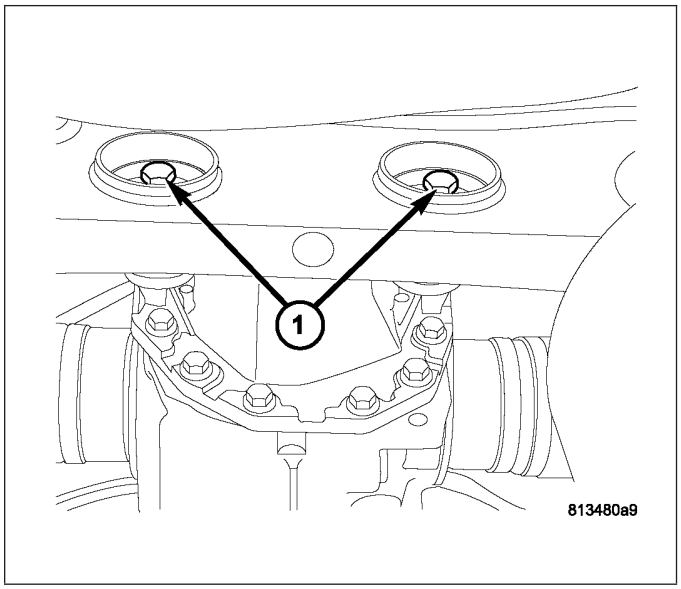

5. Install rear axle front mount isolator (1) as shown and torque bolt/nut to 65 N·m (48 ft. lbs.).

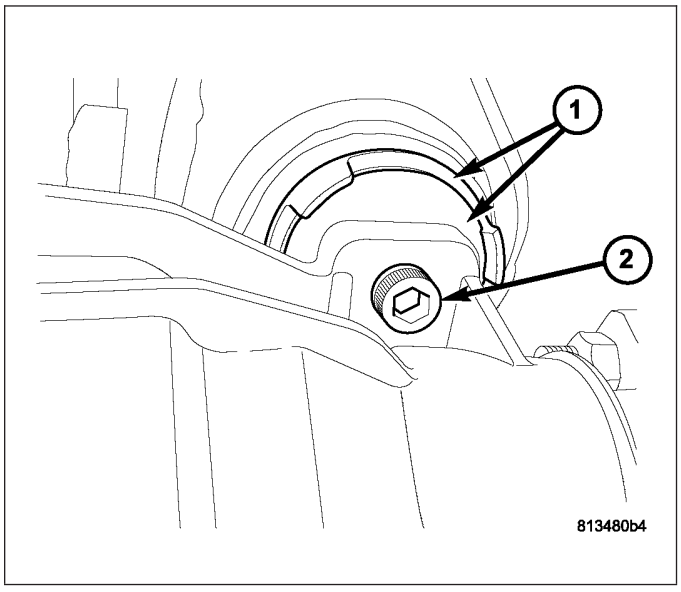

6. Again verify halfshaft inner joints are fully engaged to axle assembly.
7. Remove transmission jack (1).
8. If used, remove screw-type under-hoist jack stands (2).

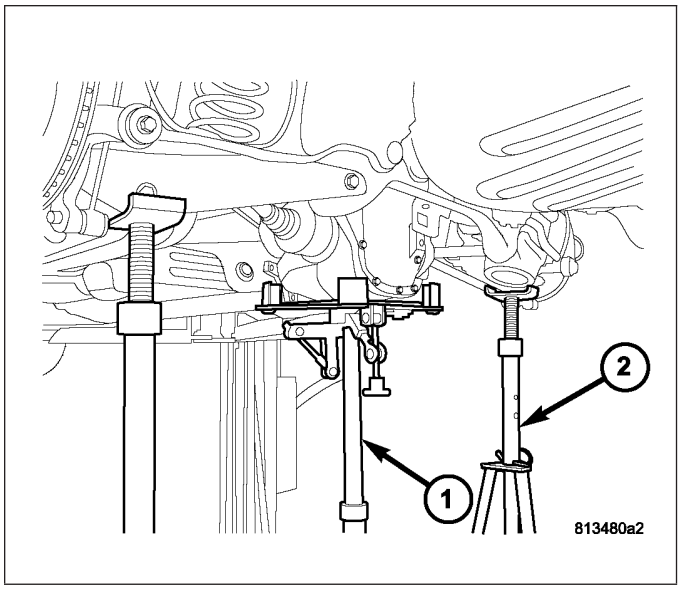

9. Torque propeller shaft coupler-to-axle flange bolt/nuts to 58 N·m (43 ft. lbs.).

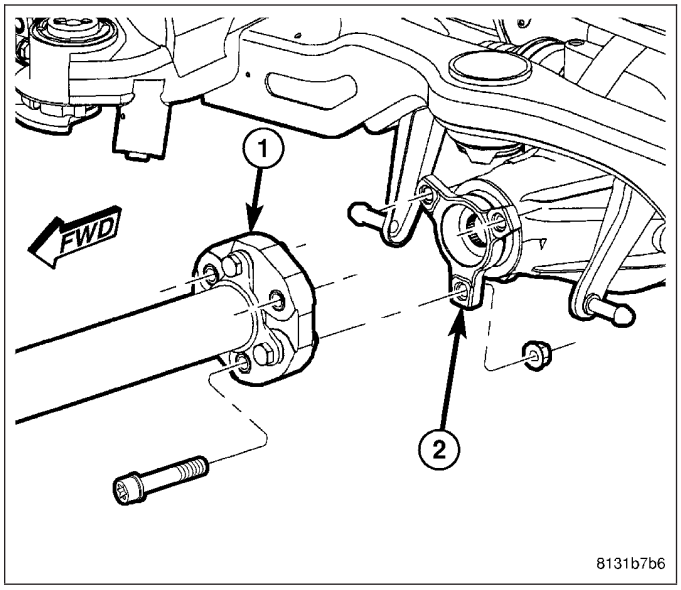

10. Using a 14mm hex, remove rear axle fill plug (1). Fill axle with 1.6L (1.7 qts.) of Mopar® 75W-140 Synthetic Gear & Axle Lubricant. Install fill plug and torque to 50 N·m (37 ft. lbs.).

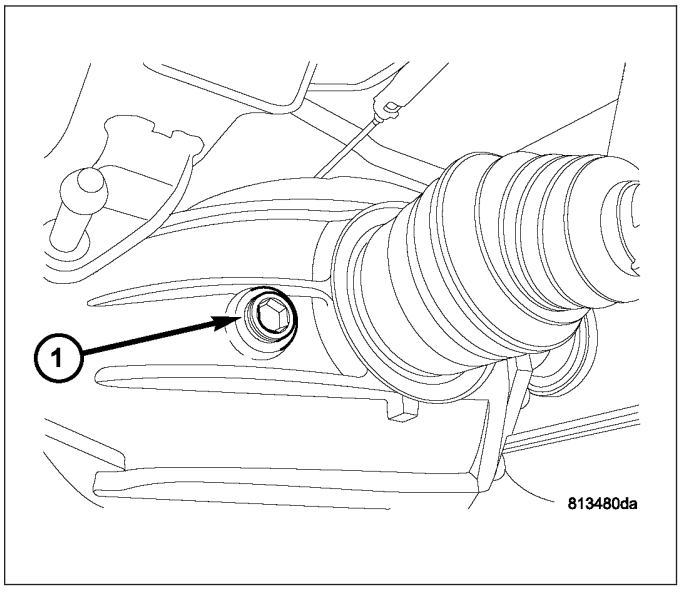

ADJUSTMENTS

ADJUSTMENT - PINION DEPTH MEASUREMENT

PINION DEPTH VARIANCE

Ring gear and pinion are supplied as matched sets. Identifying numbers for the ring gear and pinion are etched into the pinion gear face. A plus (+) number, minus (–) number or zero (0) along with the gear set sequence number (01 to 99) is on each gear. The pinion depth variance (1) is the amount the depth varies from the standard depth setting of a pinion marked with a zero. The remaining numbers are the sequence number of the gear set. The standard depth provides the best gear tooth contact pattern.

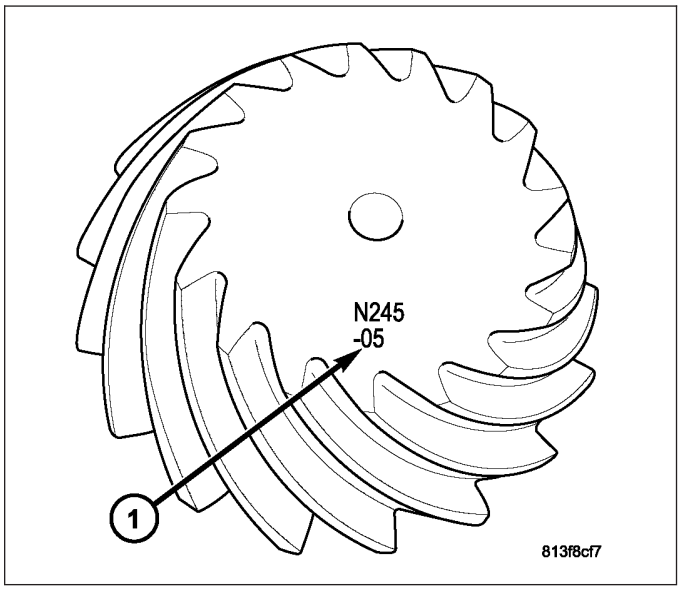

Compensation for pinion depth variance is achieved with select shims. The shims (3) are sandwiched between the pinion head bearing cup and axle housing.

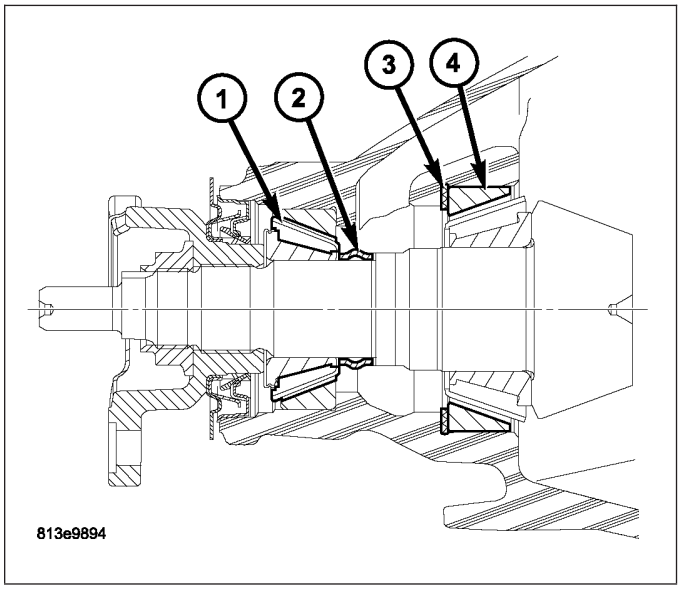

Pinion Depth Shim and Collapsible Washer

If installing a new gear, note the depth variance number of the original and replacement pinion. Add or subtract this number from the original depth shim to compensate for the difference in the depth variances. The numbers represent deviation from the standard in microns. If the number is negative, add that value to the required thickness of the depth shims. If the number is positive, subtract that value from the thickness of the depth shim.

PINION GEAR DEPTH VARIANCE

Original Pinion Gear Depth Variance	Replacement Pinion Gear Depth Variance								
	−04	**−03**	**-02**	**−01**	**00**	**+01**	**+02**	**+03**	**+04**
+04	+0.08	+0.07	+0.06	+0.05	+0.04	+0.03	+0.02	+0.01	0
+03	+0.07	+0.06	+0.05	+0.04	+0.03	+0.02	+0.01	0	-0.01
+02	+0.06	+0.05	+0.04	+0.03	+0.02	+0.01	0	-0.01	-0.02
+01	+0.05	+0.04	+0.03	+0.02	+0.01	0	-0.01	-0.02	-0.03
00	+0.04	+0.03	+0.02	+0.01	0	-0.01	-0.02	-0.03	-0.04
−01	+0.03	+0.02	+0.01	0	-0.01	-0.02	-0.03	-0.04	-0.05
−02	+0.02	+0.01	0	-0.01	-0.02	-0.03	-0.04	-0.05	-−0.06
−03	+0.01	0	-0.01	-0.02	-0.03	-0.04	-0.05	-0.06	-0.07
−04	0	–0.01	-0.02	-0.03	-0.04	-0.05	-0.06	-0.07	-0.08

PINION DEPTH MEASUREMENT

Pinion depth measurement is taken with the pinion head and tail bearing cups pressed into the axle housing without the shim.

1. Press pinion head bearing cup into housing using Tools C-4171 (1) and C-4310 (2).

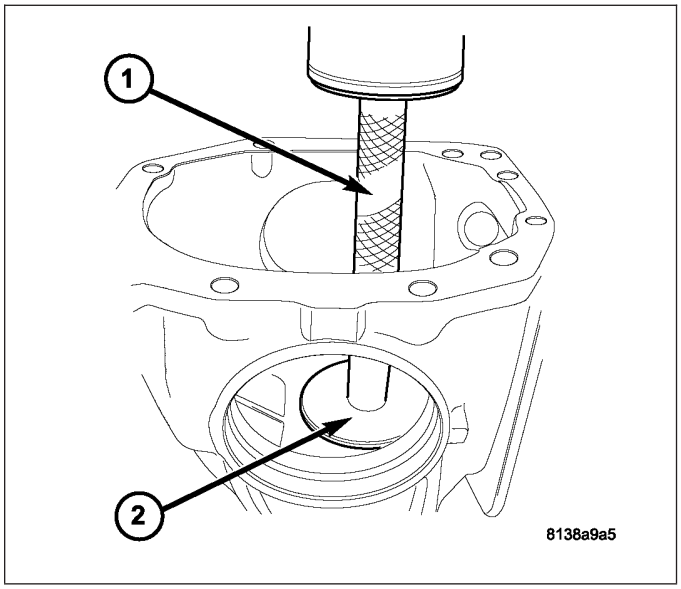

2. Press pinion tail bearing cup into housing using Tools C-4171 (1) and D-146 (2).

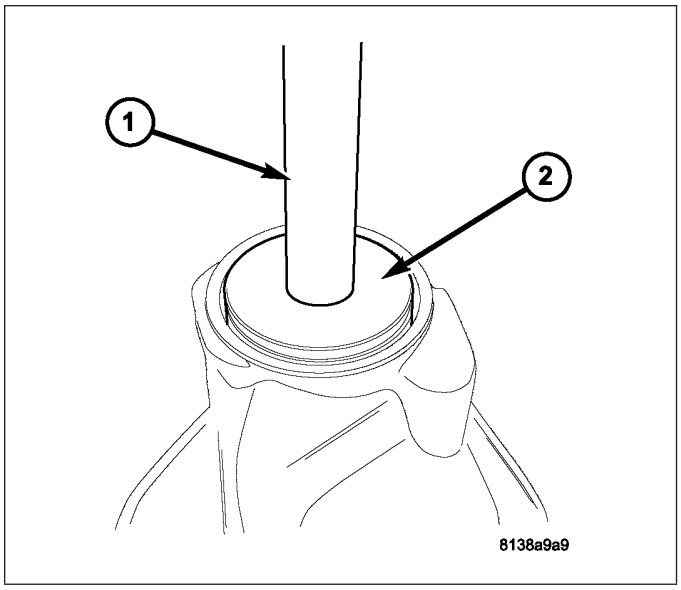

3. Install Pinion Height Block 6739 (3), Pinion Gage Block 9085 (2), and pinion head bearing cone (1) onto Screw 6741. Install assembly into axle housing and through bearing cups.

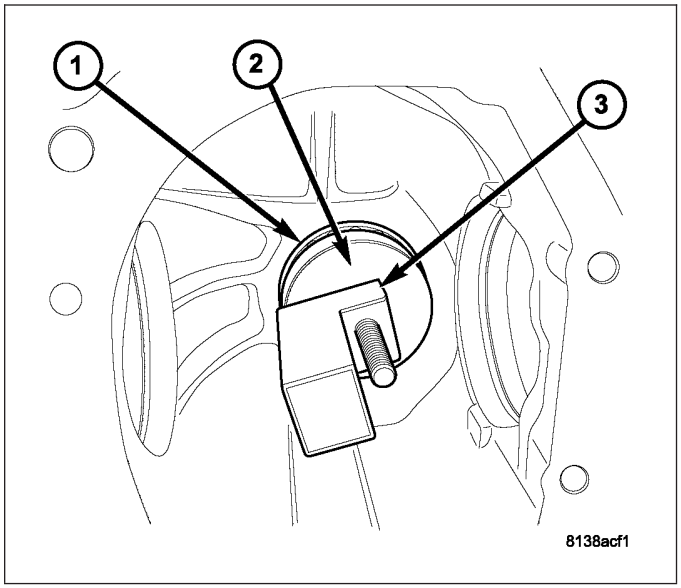

4. Install pinion tail bearing and Cone 6740 (4). Tighten Cone 6740 by hand until 3.4 N·m (30 in. lbs.) of rotating torque is measured at Screw 6741 (5).

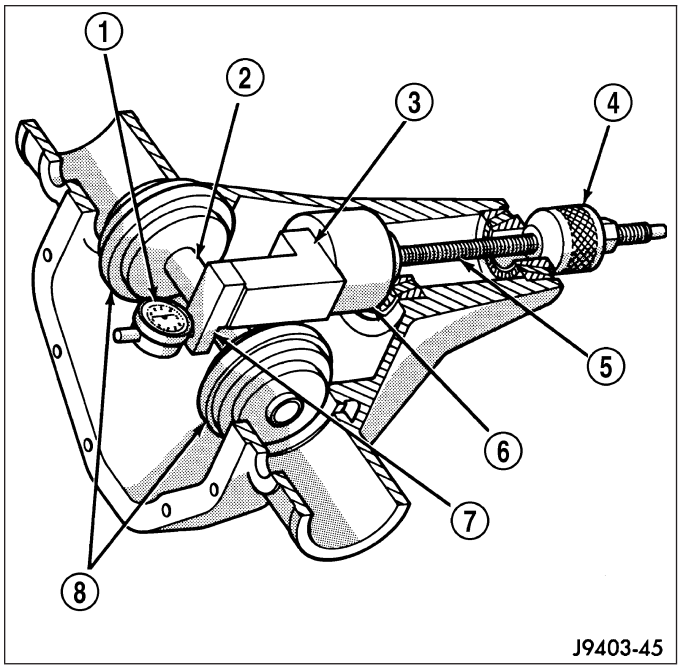

5. Install Arbor Discs 9083 (1).

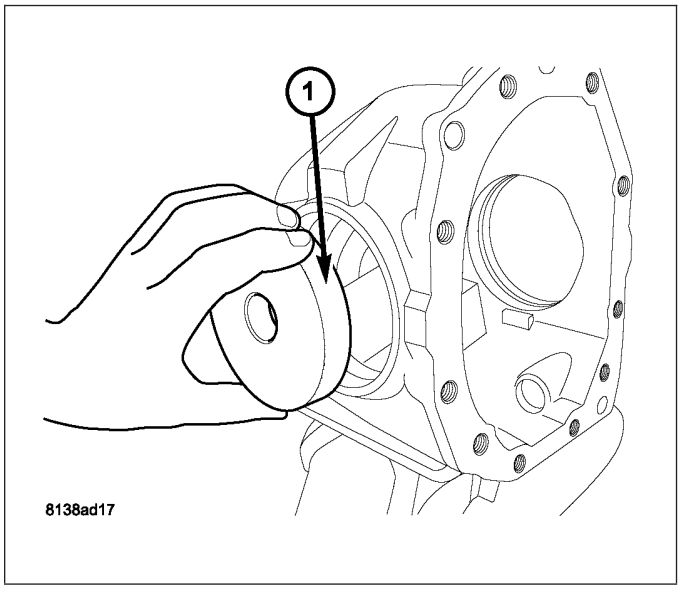

6. Install Arbor Bar D-115-3 (1).

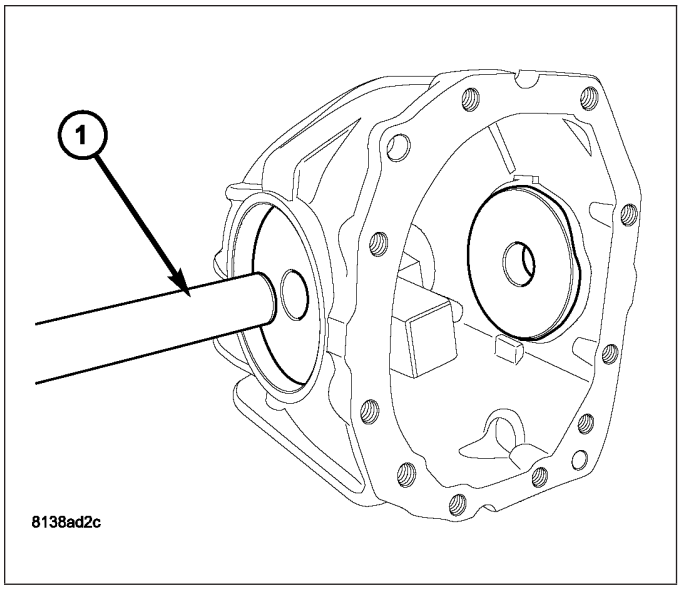

7. Verify pinion depth setup is a shown.

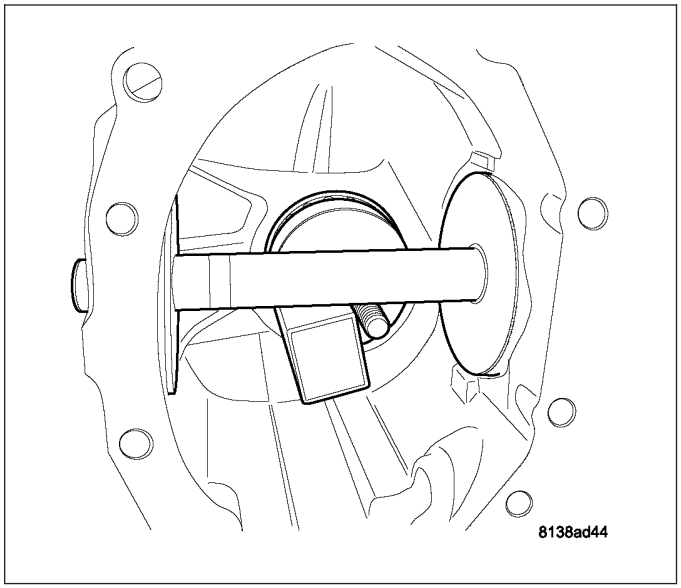

8. Install Dial Indicator 9524 (1) to Scooter Block D-115-2A (2). Secure with set-screw (3).

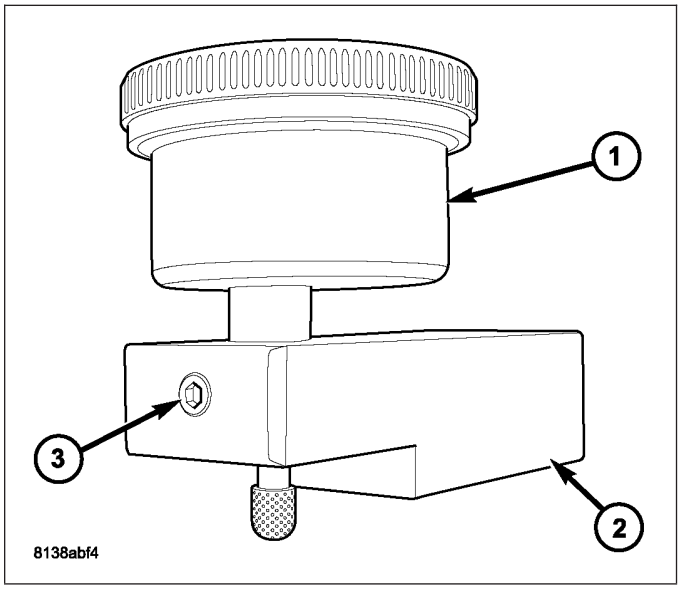

9. Install Indicator/Block assembly to top of Height Block 6739 (1). Zero indicator on top surface.

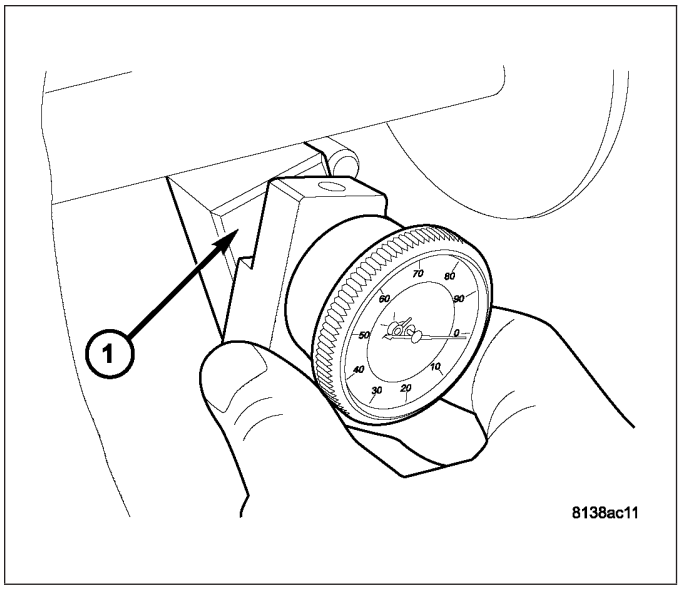

10. Slide indicator probe off of height block and onto Arbor Bar D-115-3 (2). As indicator contacts Arbor Bar (2), indicator needle will rotate clockwise. Continue moving indicator probe to the crest of the arbor bar and record the highest reading.

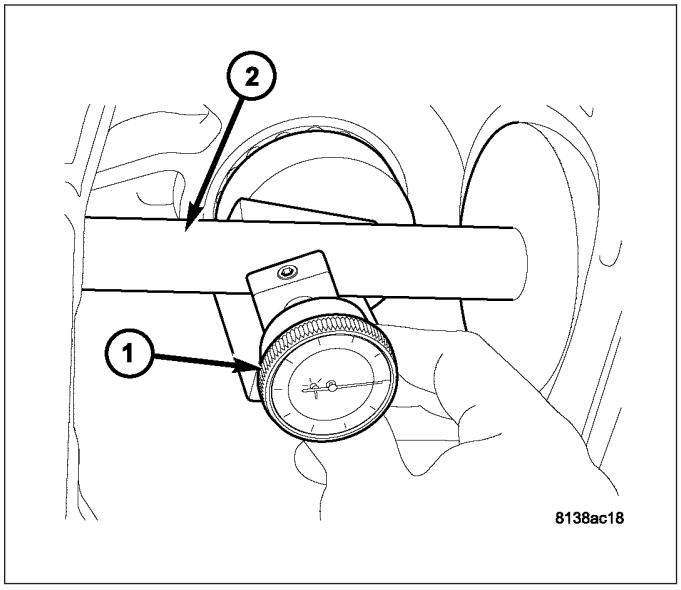

11. Select a shim equal to the dial indicator reading plus the drive pinion gear depth variance number etched into the pinion face (1). For example, if the depth variance is –01, subtract 0.01mm (0.0004 in.) from dial indicator reading.

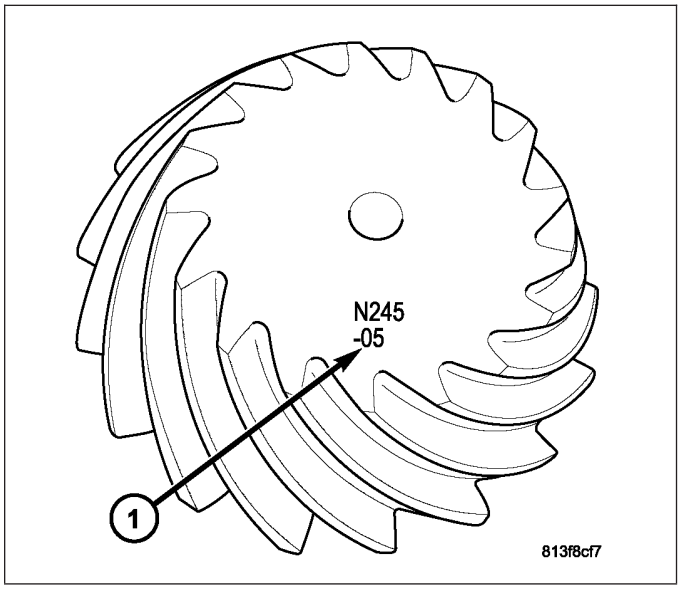

12. Using Tool C-4171 (2) and Remover 9084 (1), drive out pinion head bearing cup and insert specified shim.

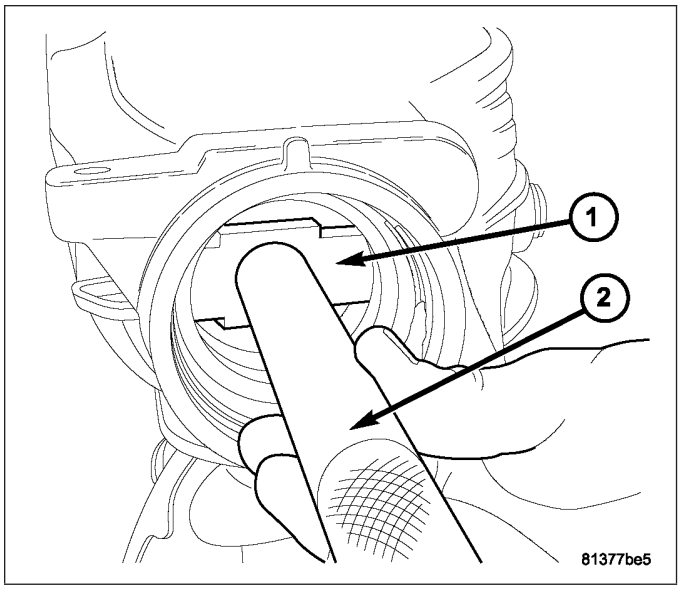

ADJUSTMENT — SIDE BEARING PRELOAD AND RING GEAR BACKLASH

DIFFERENTIAL SIDE BEARING PRELOAD MEASUREMENT/CORRECTION

Differential side bearing preload should be measured and adjusted after the following scenarios:

- Differential case replacement
- Differential side bearing replacement
- Axle housing replacement
- Loss or replacement of side bearing snap rings

If none of these situations apply, refer to Adjustment — Ring Gear Backlash

1. Install Spreader Adapter Plates 9226 (1).

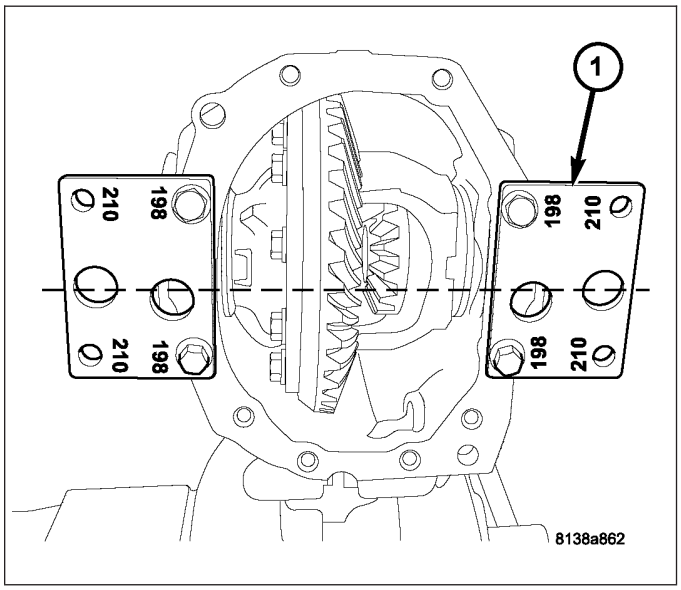

2. Mount axle housing to Spreader W-129-B (1)

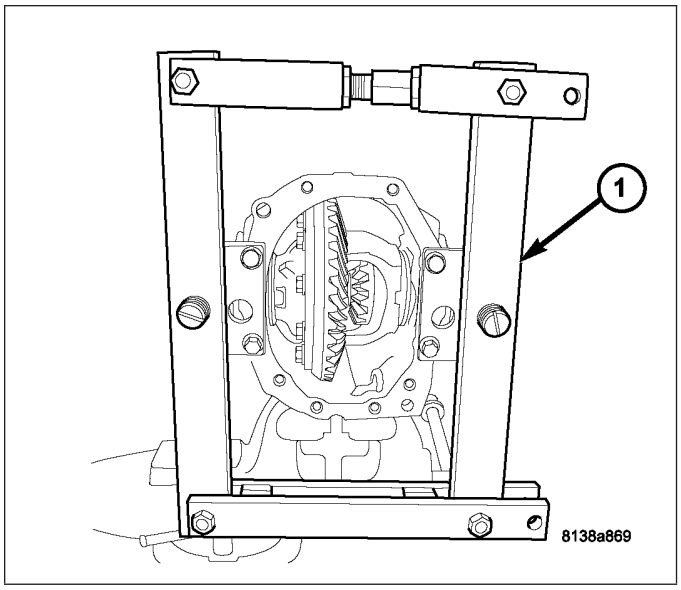

3. Set up Dial Indicator Set C-3339-A as shown to measure axle housing spread:
   a. Clamp SP-5426 (1)
   b. Post SP-5425-B (2)
   c. Metric Dial Indicator 9524 (3)

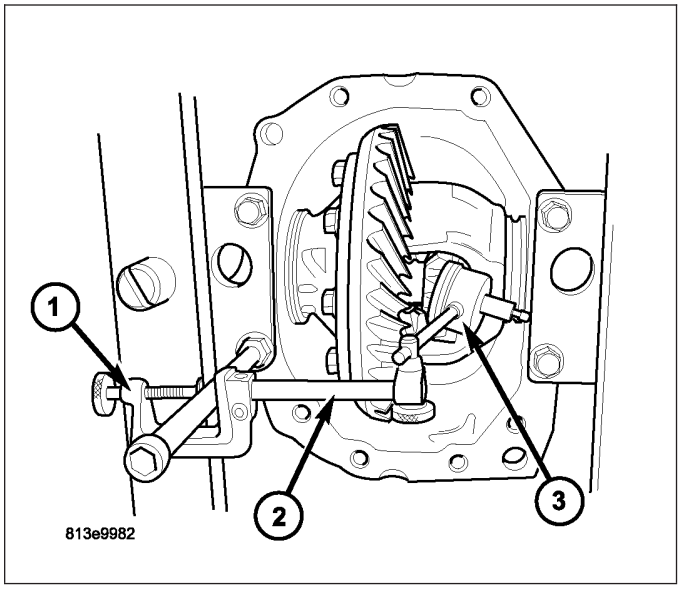

4. If differential side bearing cups and snap rings are already removed at this point, skip to Step 8. Otherwise, expand spreader (1) to spread axle housing no more than 0.30 mm (0.012 in.).

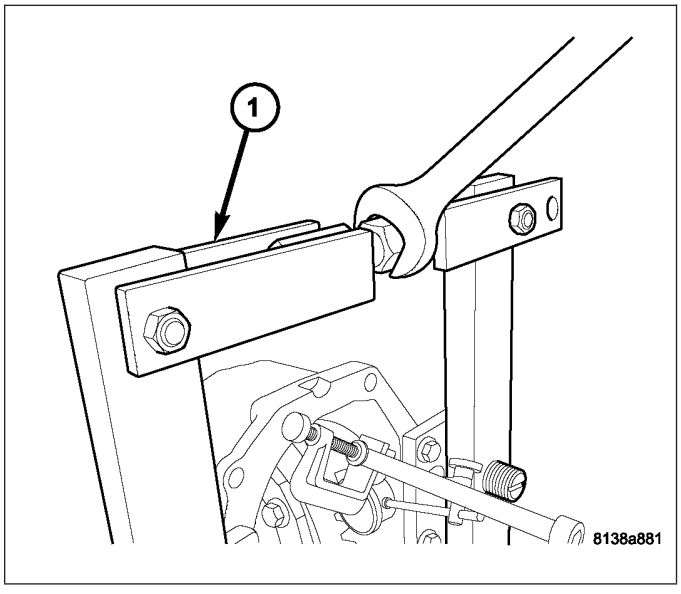

5. Remove both differential side bearing snap rings (1). Tag snap ring to ensure replacement to original position.

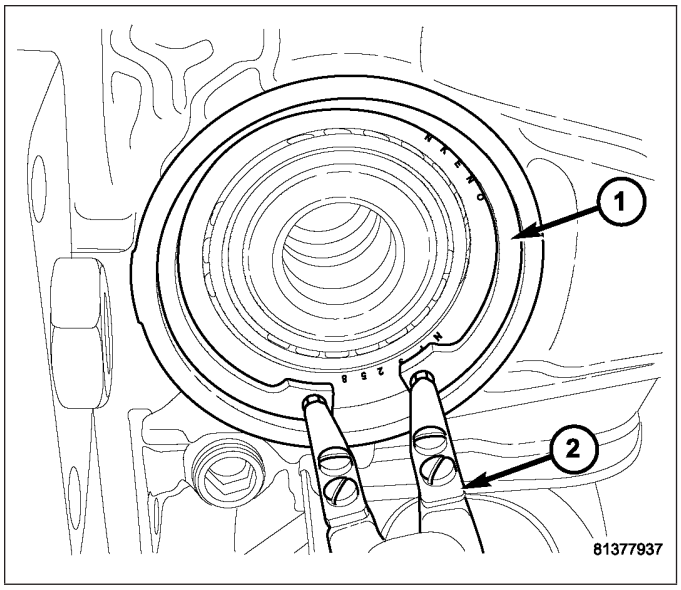

6. Measure and record snap ring (2) thickness for later use.

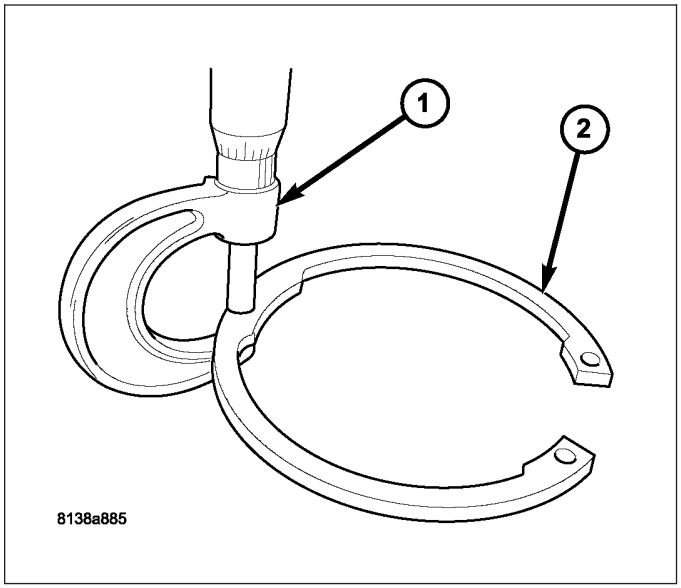

7. Relax spreader (1) to relieve tension on axle housing.

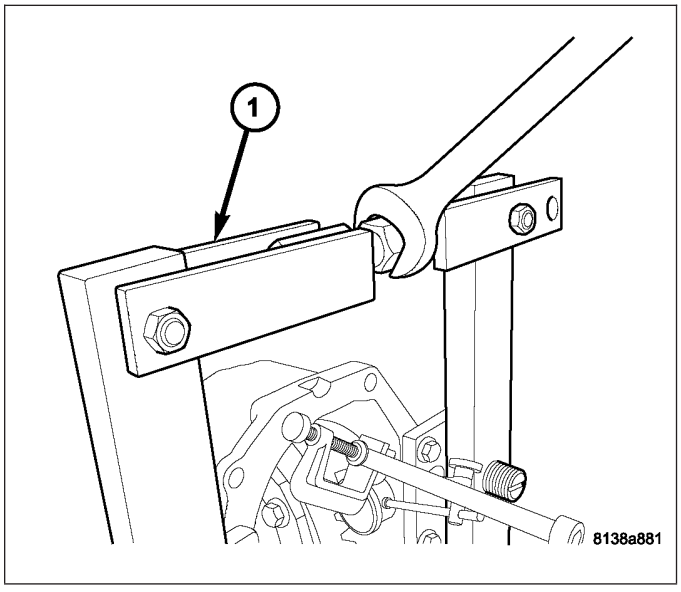

8. Install right (pinion) side bearing cup and snap ring (1).

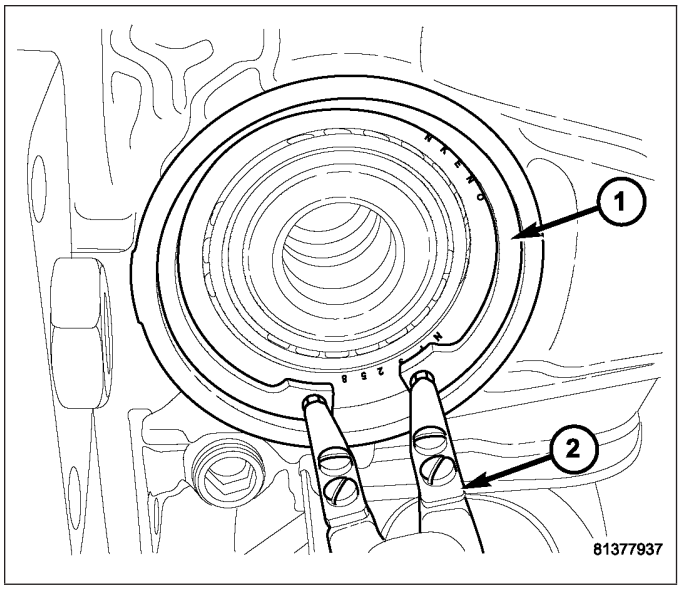

9. Zero dial indicator.
10. Expand spreader (1) to spread axle housing no more than 0.30 mm (0.012 in.).

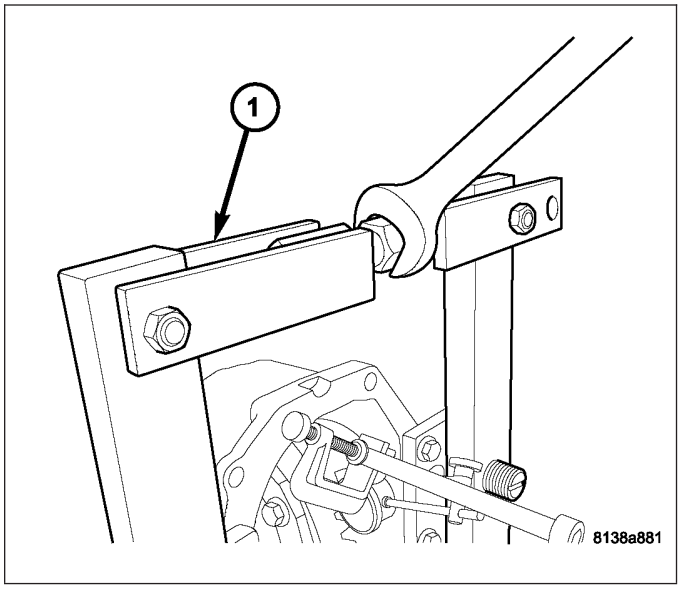

11. Install left (ring gear) side bearing cup and snap ring (1).

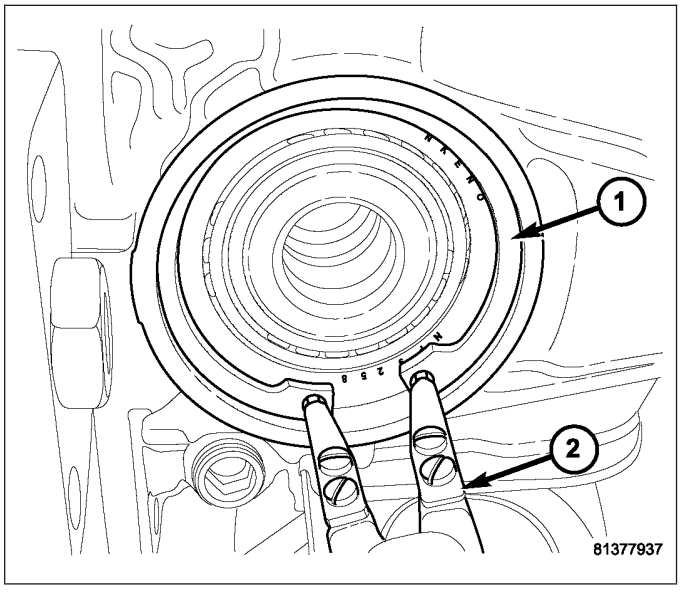

12. Relax spreader (1) to relieve tension on axle housing.

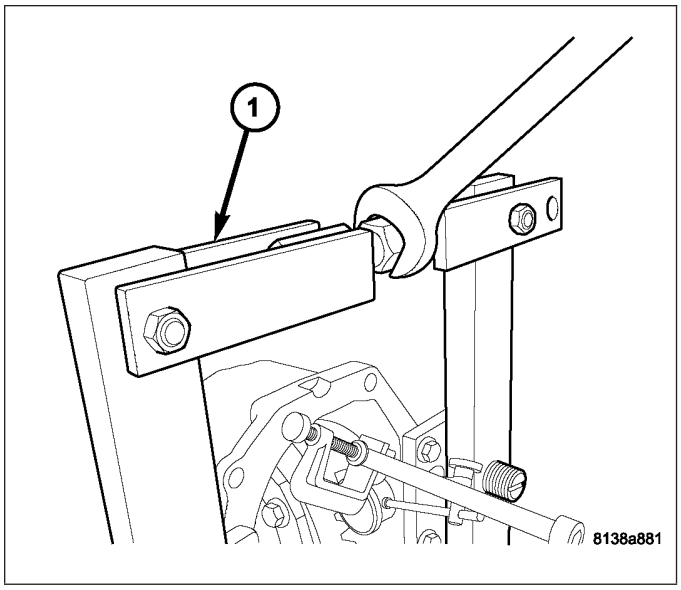

13. Measurement showing on indicator (3) is the axle housing retained spread. Proper differential side bearing preload is achieved with an axle housing retained spread of 0.11-0.17 mm (0.004-0.007 in.).
14. If retained spread is less than 0.11 mm (0.004 in.), increase snap ring thickness at each side in equal increments.
15. If retained spread is greater than 0.17 mm (0.007 in.), decrease snap ring thickness at each side in equal increments.

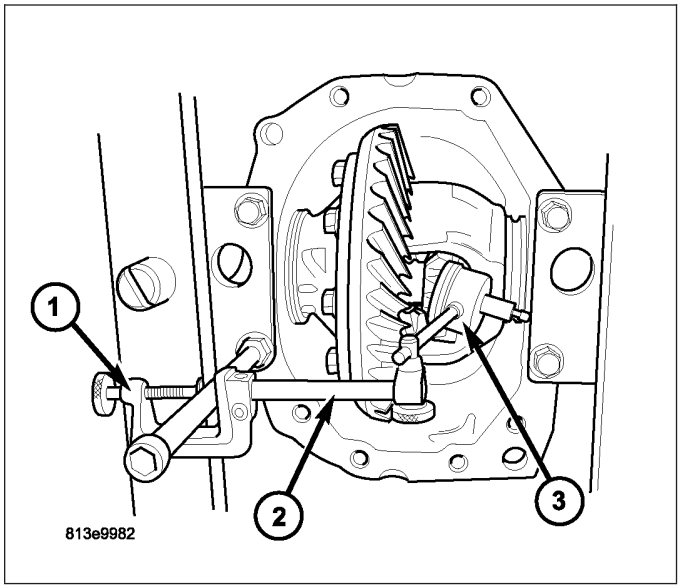

RING GEAR BACKLASH MEASUREMENT/CORRECTION

Differential Ring Gear Backlash should be measured and adjusted after the following scenarios:

1. Ring and pinion gear replacement
2. Pinion head bearing replacement
3. Pinion depth (shim) adjustment
4. Differential case replacement
5. Differential side bearing replacement
6. Axle housing replacement

NOTE: If Spreader W-129-B is installed, make sure tension on axle housing is relieved.

7. Set up Dial Indicator Set C-3339-A as shown to measure ring gear backlash:
   a. Clamp SP-5426 (1)
   b. Post SP-5425-B (2)
   c. Metric Dial Indicator 9524 (3)
8. Rotate ring gear one direction to take up clearance to pinion. Verify indicator tip is in contact with ring gear and zero indicator. Rotate ring gear back and forth and record measurement. Ring gear backlash should be 0.10-0.16 mm (0.004-0.006 in.). Verify back lash measurement in four (4) positions.

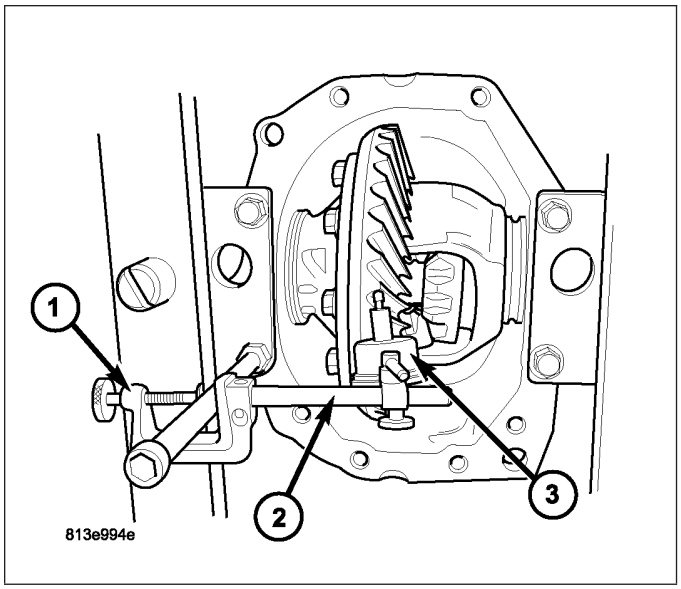

9. If backlash measurement is less than 0.10 mm (0.004 in.), it is necessary to decrease the snap ring thickness on the ring gear (left) side, and increase the thickness on the pinion (right) side.
10. If backlash measurement is greater than 0.16 mm (0.006 in.), it is necessary to increase the snap ring thickness on the ring gear (right) side, and decrease the thickness on the pinion (left) side.

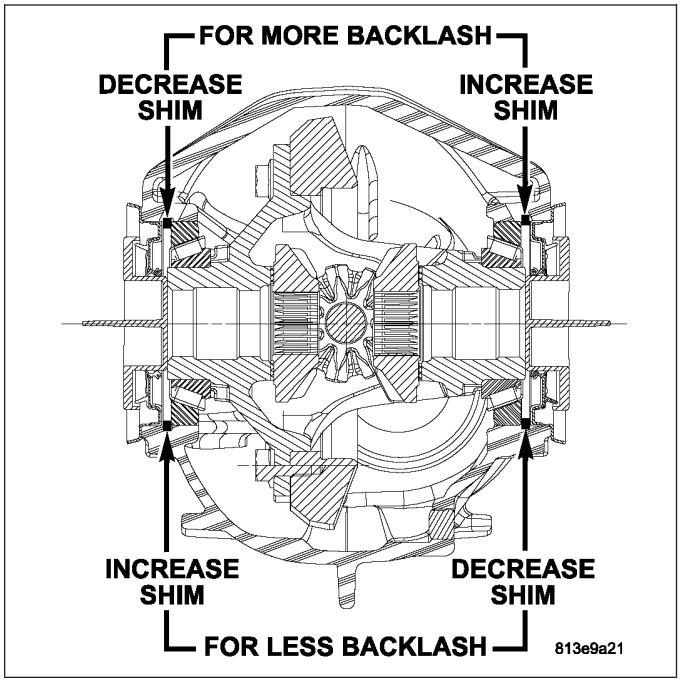

GEAR CONTACT PATTERN

The ring gear and pinion teeth contact patterns will show if the pinion depth is correct in the housing. It will also show if the ring gear backlash has been adjusted correctly. The backlash can be adjusted within specifications to achieve desired tooth contact patterns.

1. Apply a thin coat of hydrated ferric oxide or equivalent to the drive and coast side of the ring gear teeth.
2. Wrap, twist, and hold a shop towel around the pinion yoke to increase the turning resistance of the pinion. This will provide a more distinct contact pattern.
3. With a boxed end wrench on a ring gear bolt, rotate the differential case one complete revolution in both directions while a load is being applied from shop towel.

The areas on the ring gear teeth with the greatest degree of contact against the pinion teeth will squeegee the compound to the areas with the least amount of contact. Note and compare patterns on the ring gear teeth to Gear Tooth Contact Patterns chart and adjust pinion depth and gear backlash as necessary.

DRIVE SIDE OF RING GEAR TEETH	COAST SIDE OF RING GEAR TEETH	
HEEL TOE 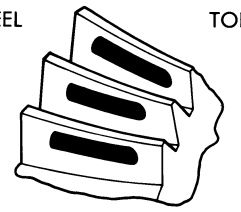	TOE HEEL 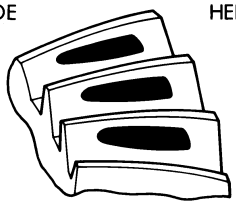	DESIRABLE CONTACT PATTERN. PATTERN SHOULD BE CENTERED ON THE DRIVE SIDE OF TOOTH. PATTERN SHOULD BE CENTERED ON THE COAST SIDE OF TOOTH, BUT MAY BE SLIGHTLY TOWARD THE TOE. THERE SHOULD ALWAYS BE SOME CLEARANCE BETWEEN CONTACT PATTERN AND TOP OF THE TOOTH.
	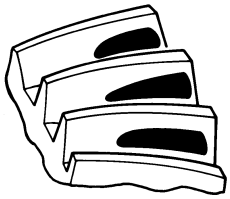	RING GEAR BACKLASH CORRECT. **THINNER** PINION GEAR DEPTH SHIM REQUIRED.
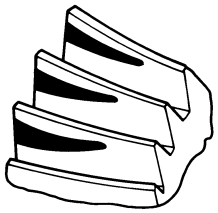	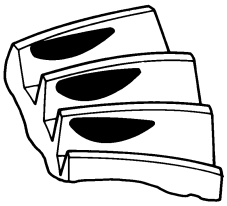	RING GEAR BACKLASH CORRECT. **THICKER** PINION GEAR DEPTH SHIM REQUIRED.
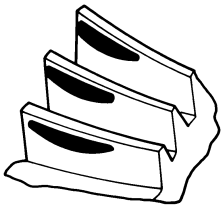	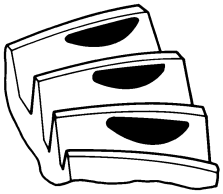	PINION GEAR DEPTH SHIM CORRECT. **DECREASE** RING GEAR BACKLASH.
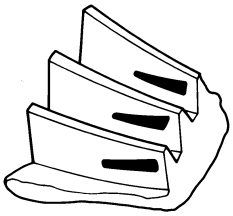	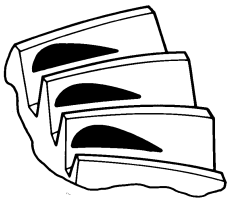	PINION GEAR DEPTH SHIM CORRECT. **INCREASE** RING GEAR BACKLASH.

J9003-24

GEAR TOOTH CONTACT PATTERNS

SPECIFICATIONS - 210 MM RII AXLE

SPECIFICATIONS

DESCRIPTION	SPECIFICATION
Axle Ratios	2.82
Ring Gear Diameter	210 mm (8.3 in.)
Ring Gear Backlash	0.10-0.16 mm (0.004-0.006 in.)
Side Bearing Preload	6-8000 N
Axle Housing Retained Spread	0.11 mm to 0.17 mm (0.004 in. to 0.007 in.)
Select Snap Ring Size	3.60-4.50mm (0.14-0.17 in.) In 0.02mm (0.0007 in.) increments
Select Pinion Shim Size	1.40-2.50mm (0.05-0.10 in.) In 0.01mm (0.0004 in.) increments
Pinion Torque To Rotate	2.25N·m (20 in. lbs.)
Total Torque To Rotate (Approx.)	3.38N·m (30 in. lbs.)

TORQUE SPECIFICATIONS

DESCRIPTION	N·m	Ft. Lbs.	In. Lbs.
Plug, Rear Axle Drain/Fill	50	37	—
Bolt, Differential Cover	50	37	—
Bolt, Ring Gear-to-Differential Case	85	63	—
Bolt, Axle Housing-to-Crossmember	220	162	—
Bolt/Nut, Axle Front Mount Isolator	65	48	—

SPECIAL TOOLS - 210 RII AXLE

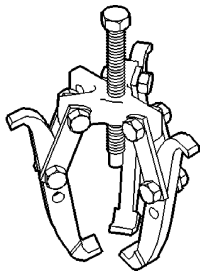

Puller 1026

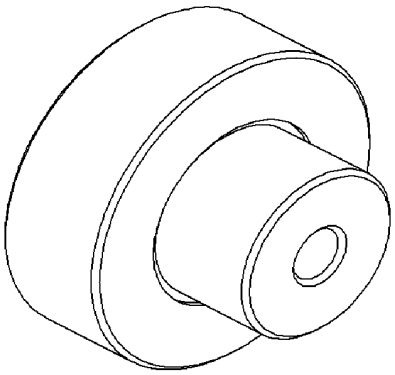

Pinion Height Gage, 9085

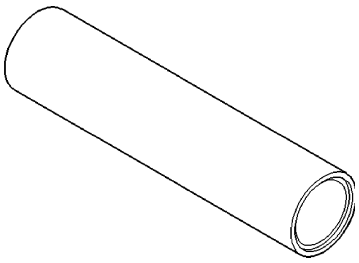

Installer, 6448A

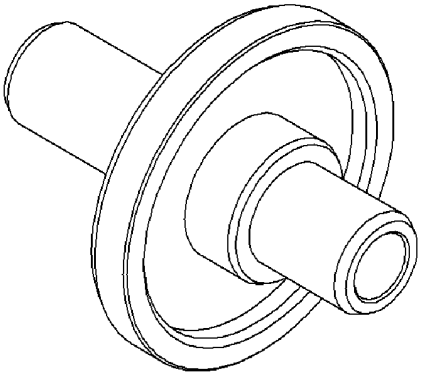

Installer, 9223

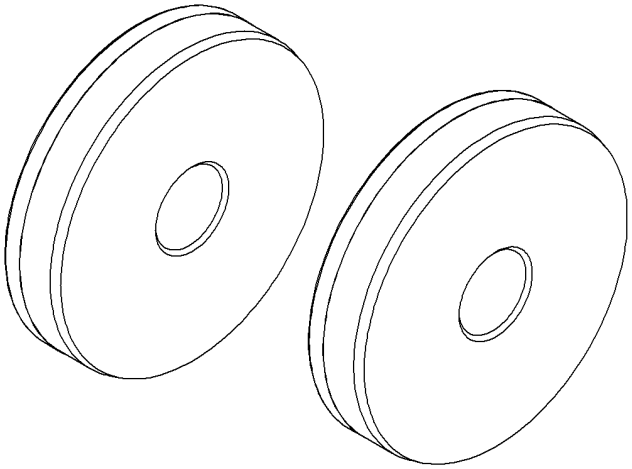

Arbor Discs, 9083

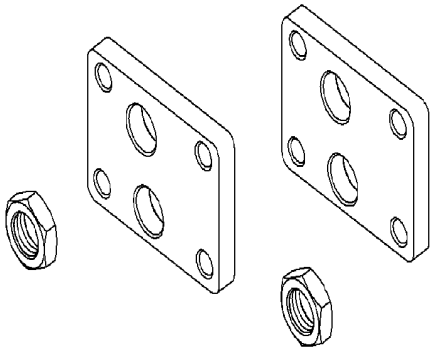

Spreader Adapters, 9226

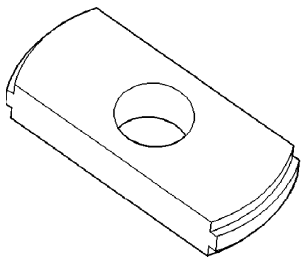

Remover, 9084

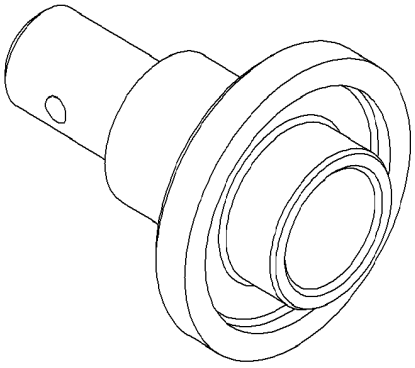

Installer, 9231

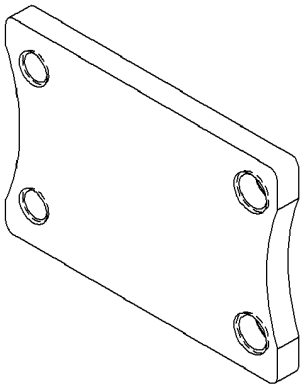

Mounting Plate, 9630

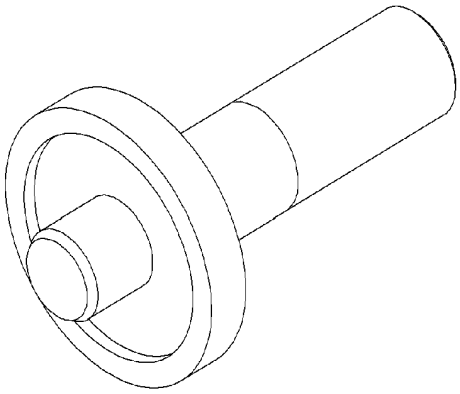

Removal/Installation Arbor, 9522

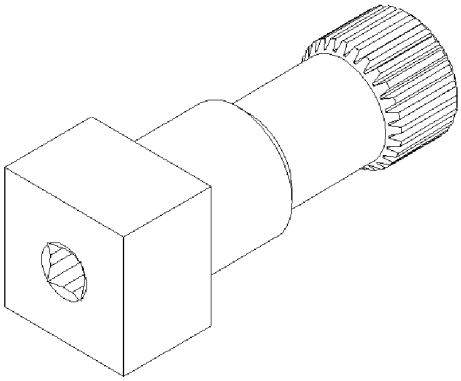

Fixture, 9631

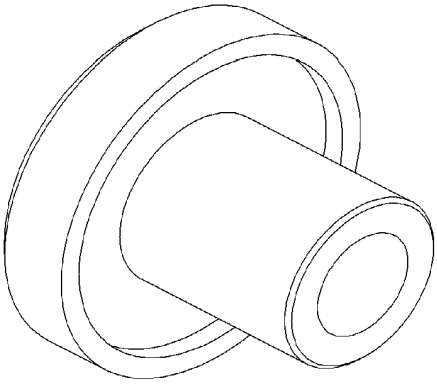

Installer, 9523

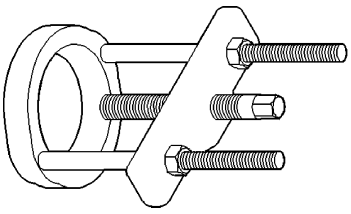

Puller Press, C-293-PA

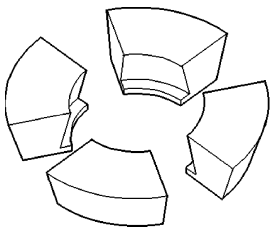

Adapters, C-293-37

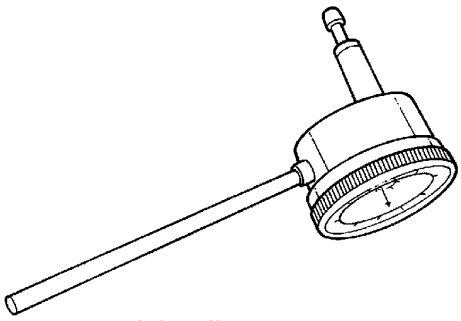

Dial Indicator, 9524

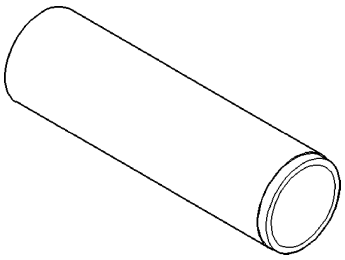

Installer, C-3095-A

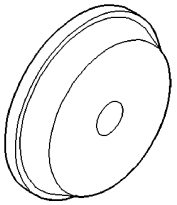

Installer, D-146

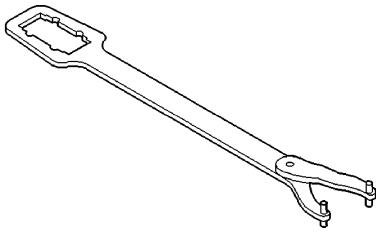

Flange Wrench, C-3281

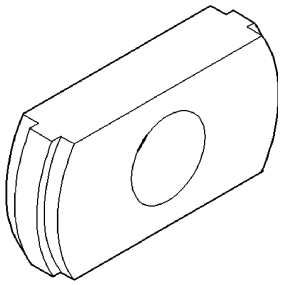

Remover, D-149

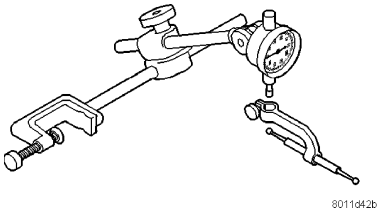

Dial Indicator Set, C-3339-A

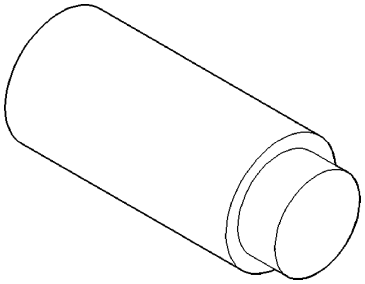

Adapter, SP-3289

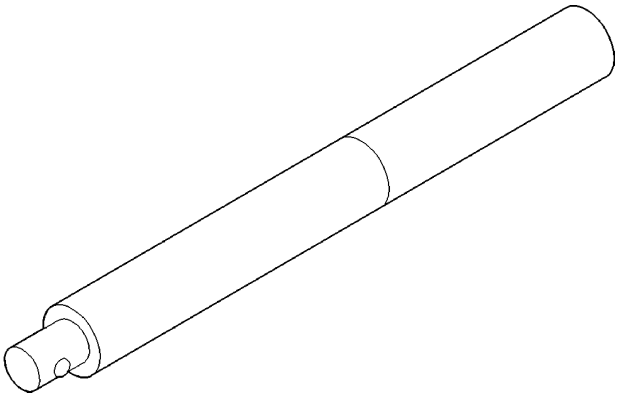

Handle, C-4171

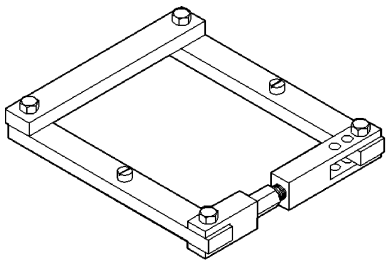

Spreader, W-129-B

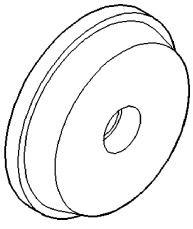

Installer, C-4310

SEAL-AXLE SHAFT

REMOVAL

1. Remove halfshaft(s). (Refer to 3 - DIFFERENTIAL & DRIVELINE/HALF SHAFT - REMOVAL)
2. Using suitable screwdriver (1), remove axle shaft seal (2).
3. Visually inspect halfshaft seal journal for damage (excessive seal groove, nicks, scratches, etc. Replace halfshaft if necessary.

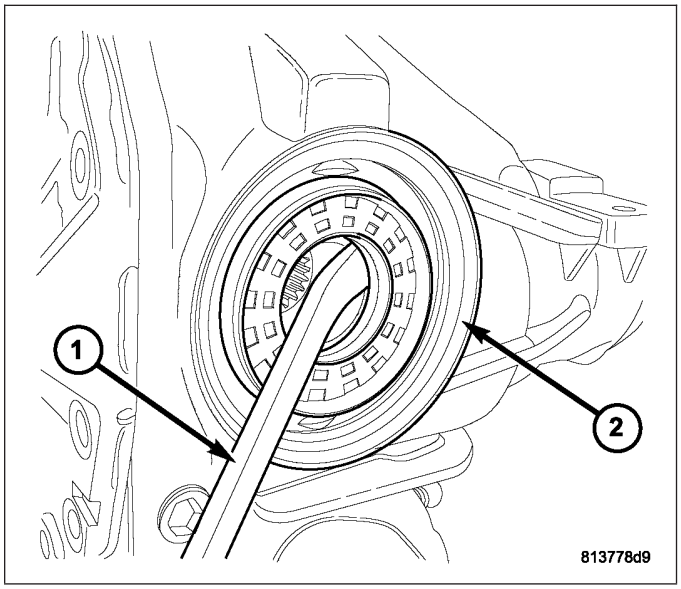

INSTALLATION

1. Using Tool 9223 (2), install **NEW** axle shaft seal (1). Lubricate the inside diameter with Mopar® Gear and Axle Lubricant 75W-140 to protect seal during halfshaft installation.
2. Install halfshaft(s). (Refer to 3 - DIFFERENTIAL & DRIVELINE/HALF SHAFT - INSTALLATION)

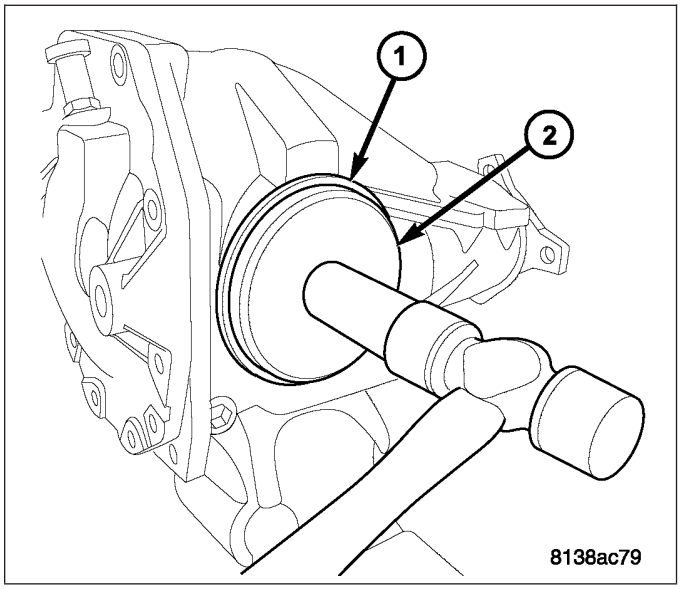

3. Remove fill plug (1) to check and adjust rear axle fluid level. Top off axle with Mopar® Gear and Axle Lubricant 75W-140. Reinstall fill plug and torque to 50 N·m (37 ft. lbs.) torque.

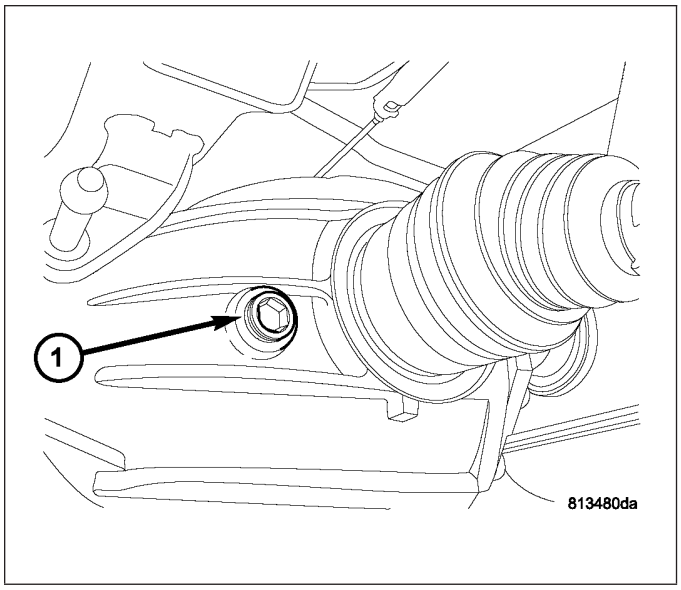

SEAL-PINION FLANGE

REMOVAL

1. Remove rear axle assembly from vehicle. Refer to Rear Axle Removal.
2. Measure axle assembly rotating torque and record measurement for reuse on assembly.

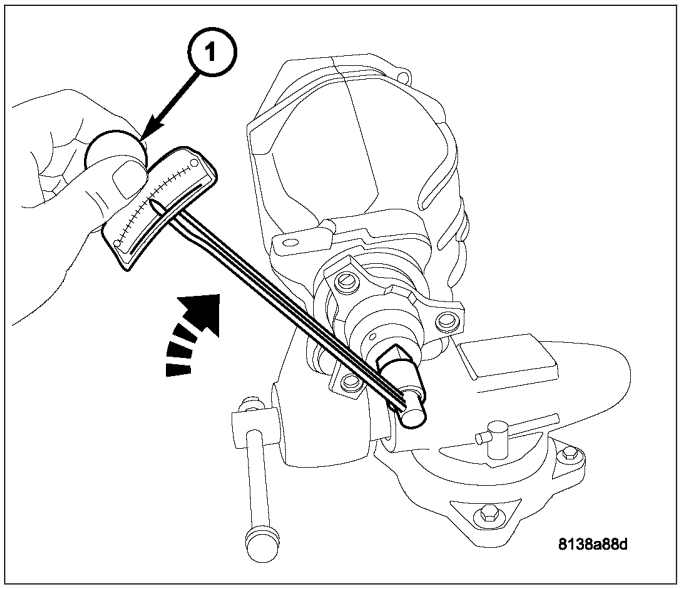

3. Using flange holder C-3281(1) and 41mm socket, remove pinion flange nut and discard.

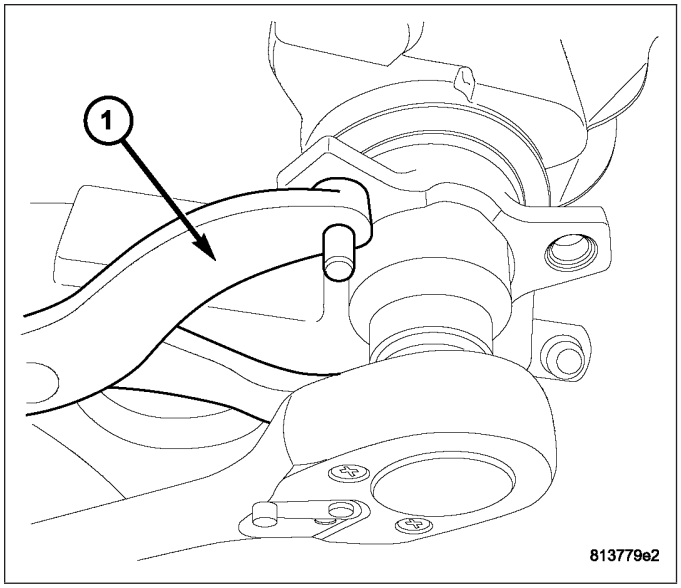

NOTE: Due to axle imbalance concerns, it is necessary to make sure pinion flange-to-shaft orientation is maintained. If alignment marks are not visible, apply appropriate marks before removing pinion flange.

4. Using puller 1026 (1), remove pinion flange (2) from pinion shaft.

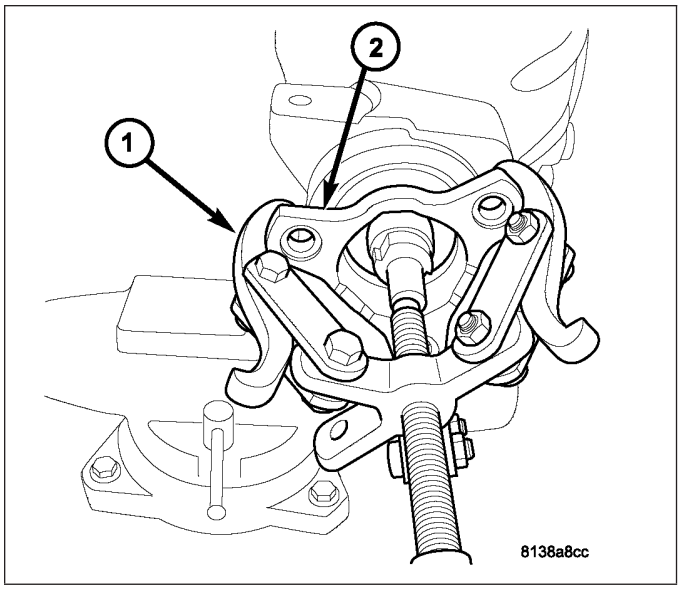

5. Using suitable tool (1), remove pinion seal (2) and discard.

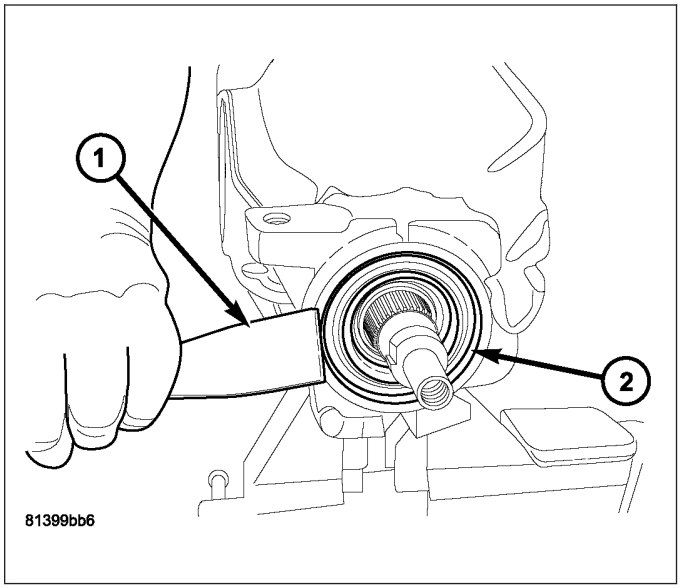

INSTALLATION

1. Apply light coating of gear lubricant to the lip of the pinion seal.
2. Using Tool 9231A (1), install pinion seal until tool bottoms on carrier.

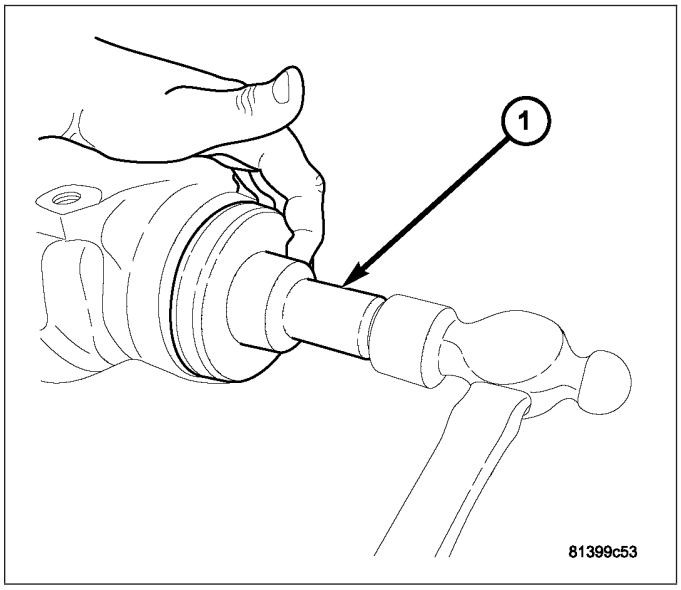

3. Install pinion flange into position. Align index marks to maintain assembly balance.
4. Using Installer 6448A (1), lightly tap on pinion flange (2) until adequate pinion shaft threads are exposed.

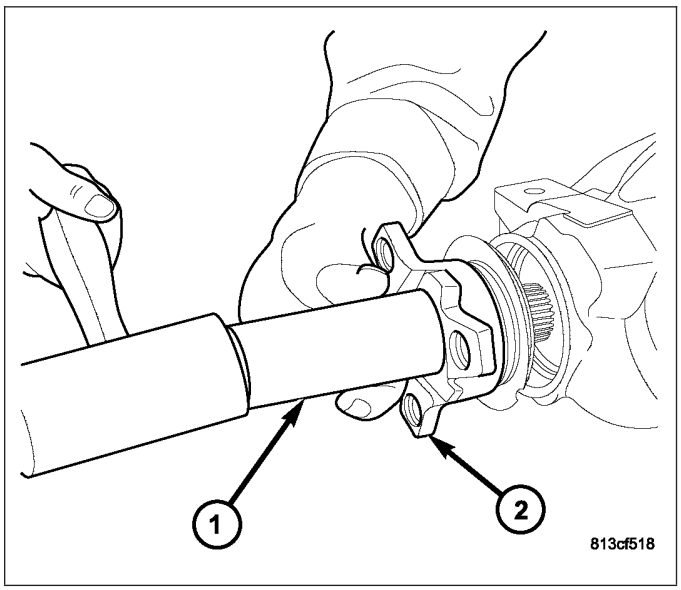

5. Install **new** pinion flange nut. Using flange holder tool C-3281(1) and 41mm socket, torque nut to 136 N·m (100 ft. lbs.).

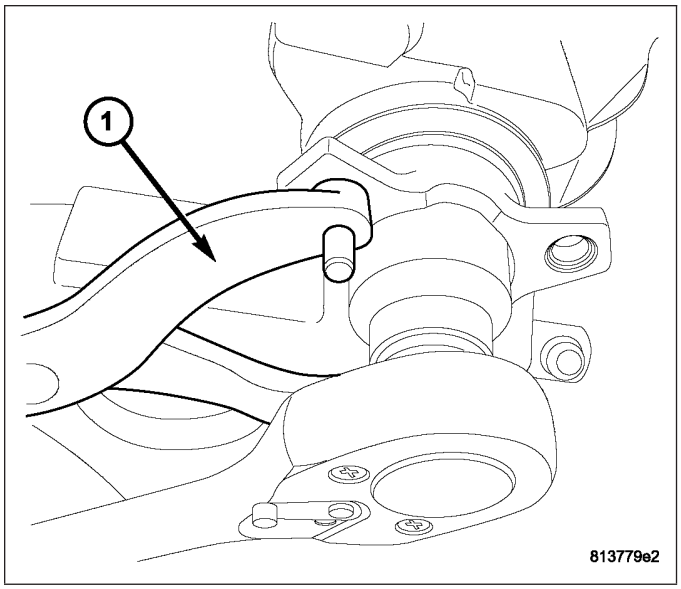

6. Measure assembly turning torque. Axle assembly rotating torque must be should be equal to the reading recorded upon seal/flange removal.

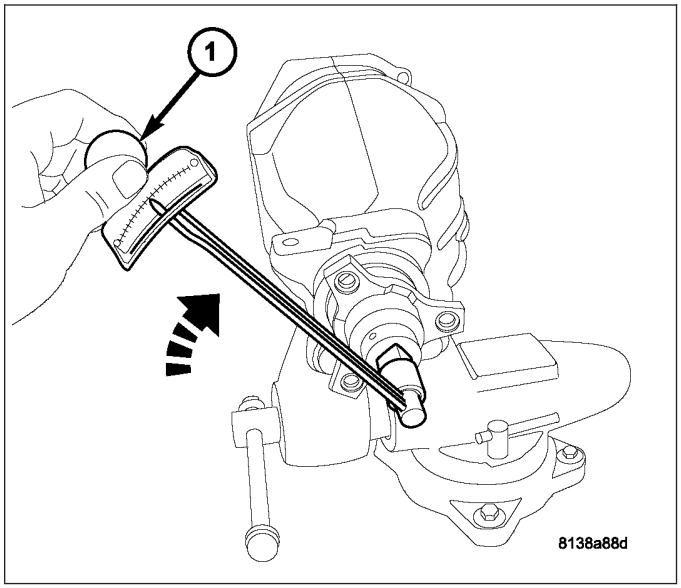

7. If rotating torque is low, increase pinion flange nut torque in 7 N·m (5 ft. lbs.) increments. Repeat until proper rotating torque is received.

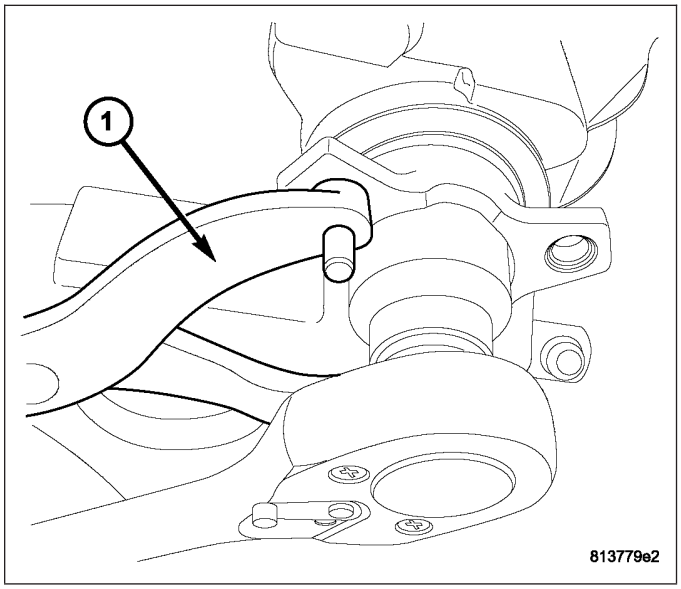

8. Stake pinion flange nut (1) as shown.
9. Install rear axle assembly. Refer to Rear Axle Installation.

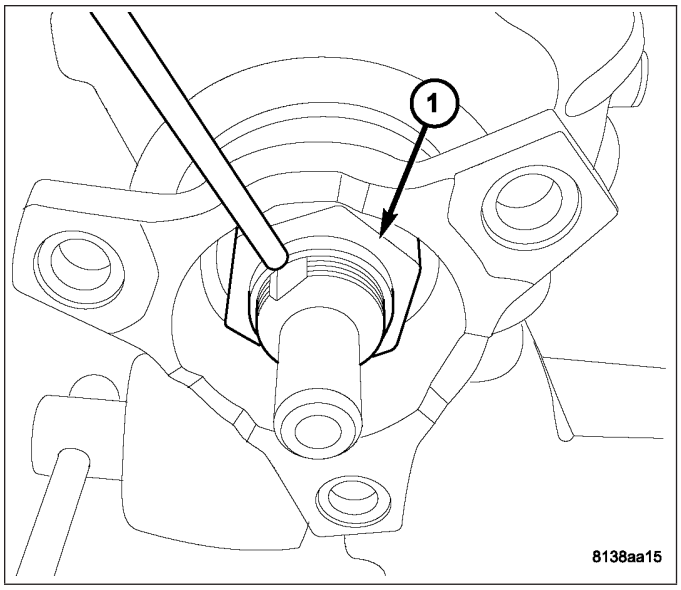

DIFFERENTIAL

REMOVAL

1. Remove drain plug (1) and drain fluid into container suitable for reuse.
2. Install drain plug and torque to 50 N·m (37 ft. lbs.).

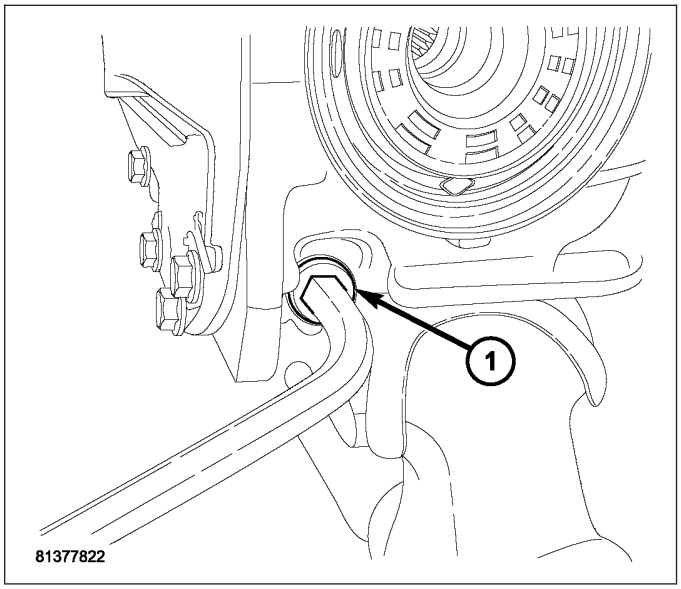

3. Remove twelve axle cover-to-housing bolts (1) and remove cover (2) with a suitable screwdriver.

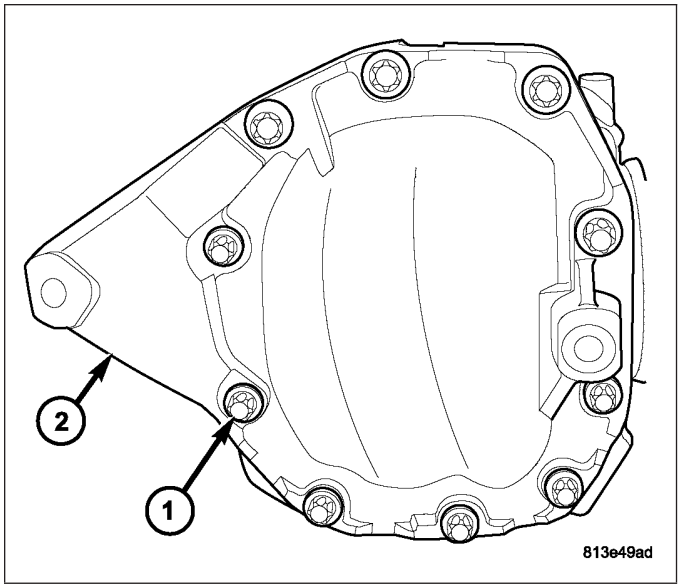

4. Install spreader adapters (1), Tool 9226, as shown. Adapters contain two hole patterns and are labeled accordingly.

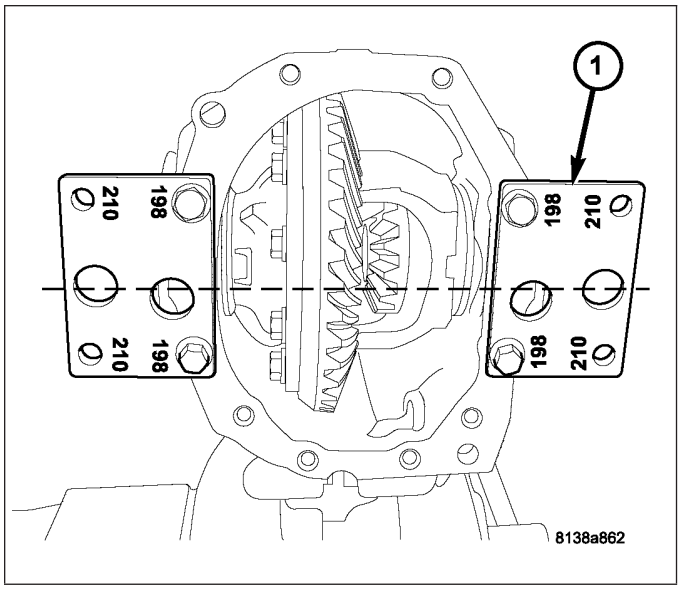

5. Mount spreader Tool W-129-B (1) into bench vise. Install axle assembly to spreader and secure with nuts 9226-2.

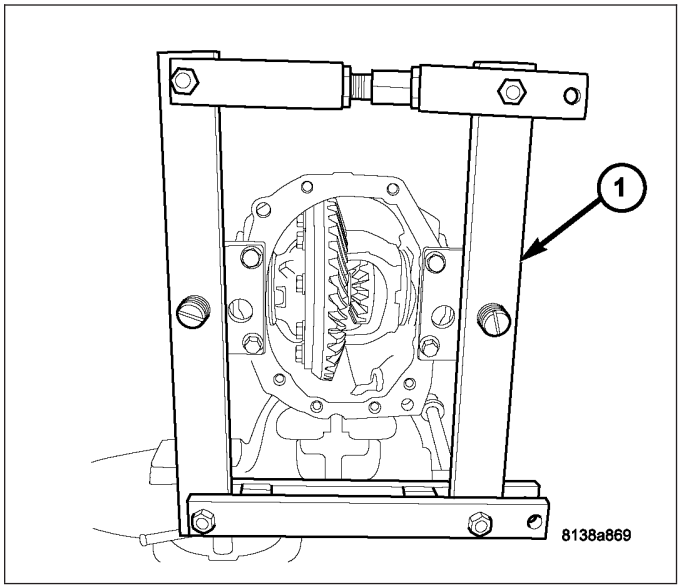

6. Using suitable torque wrench (1), measure and record rear axle assembly total turning torque.

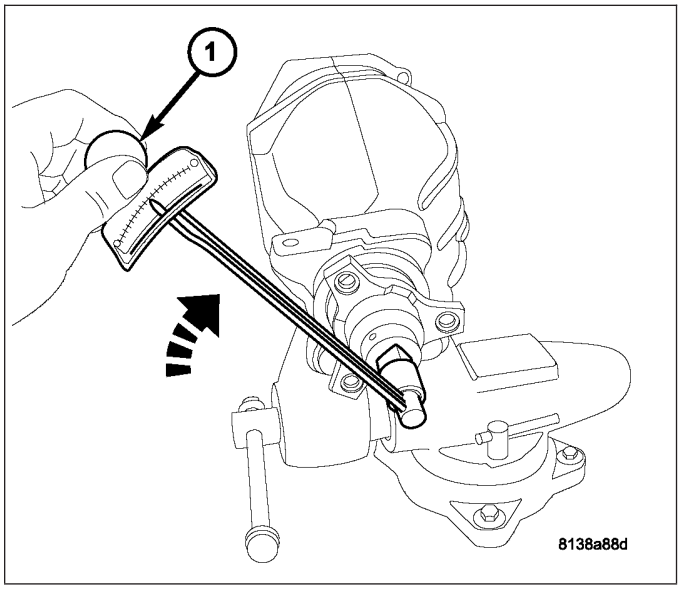

7. Using suitable screwdriver (1), remove both axle seals (2).

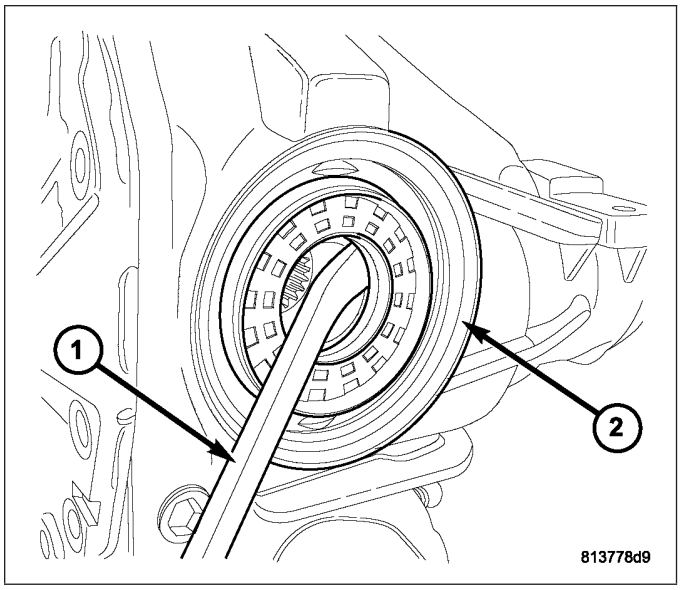

8. Set up dial indicator C-3339-A to measure housing spread as shown.

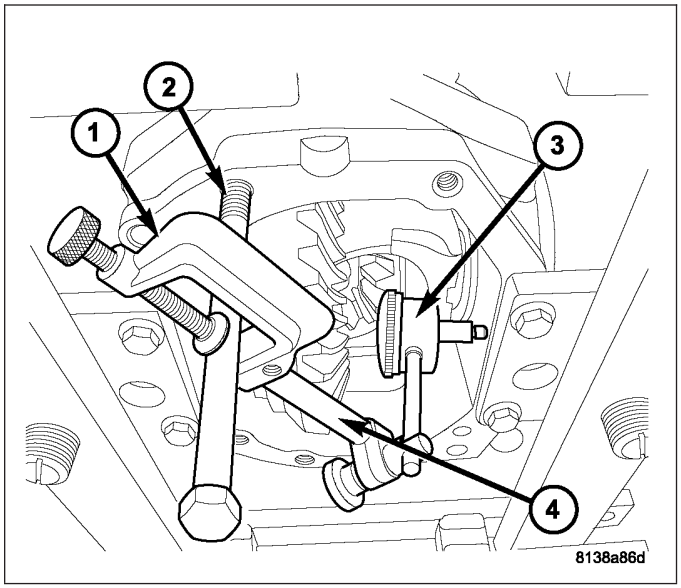

9. Spread axle housing no more than 0.30 mm (0.012 in.).

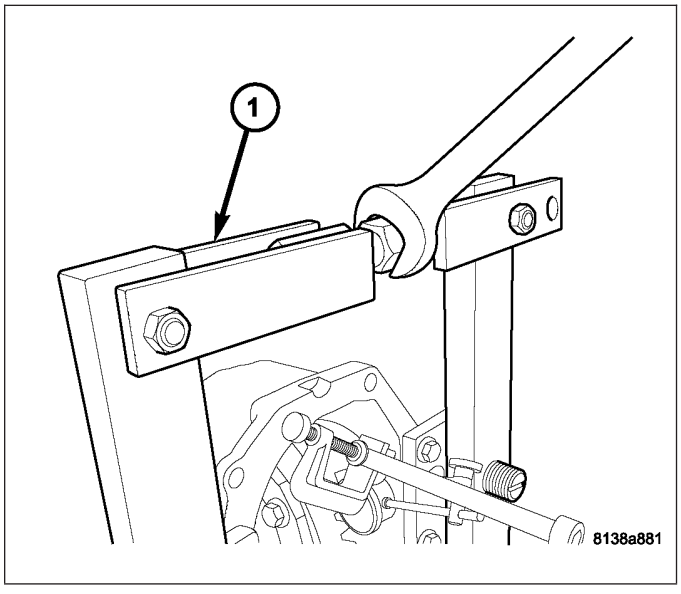

NOTE: The differential side bearing snap rings are select-fit, and control ring gear backlash and differential side bearing preload. It is important to return original snap rings to their original position.

10. Using suitable snap ring pliers (2), compress and remove differential side bearing snap rings (1). Identify and tag for proper reuse.

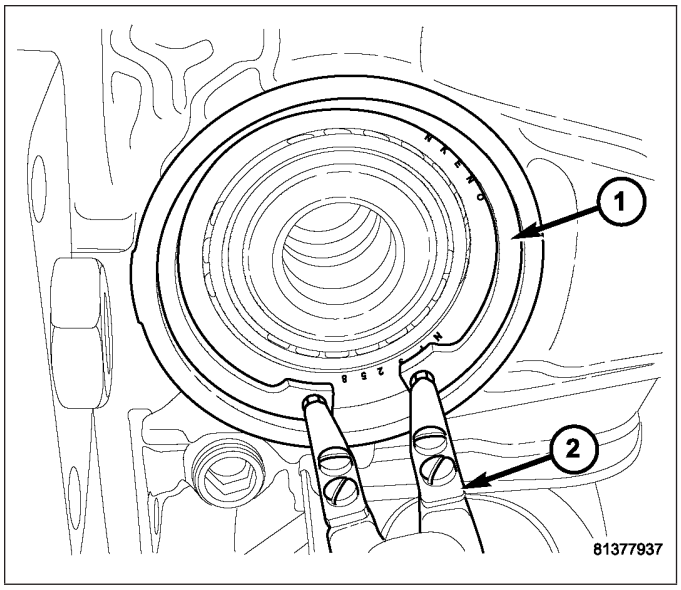

11. Back off W-129-B spreader (1) to relax tension on housing.

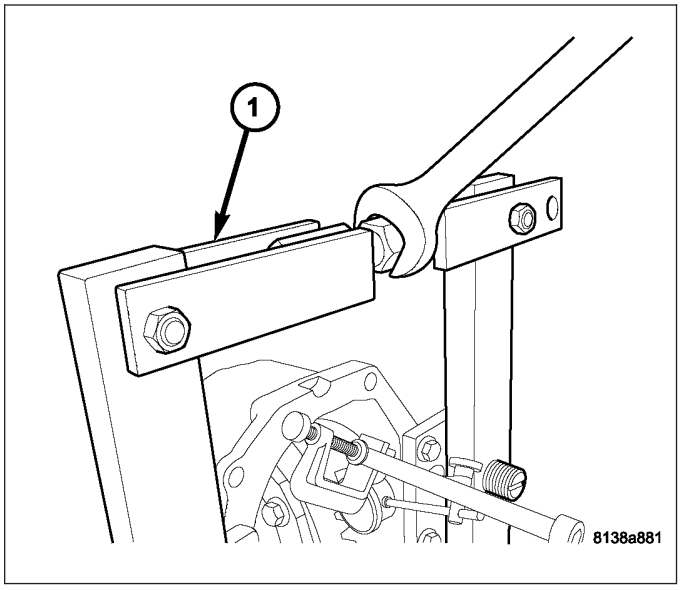

12. Measure snap ring thickness and record for future use.

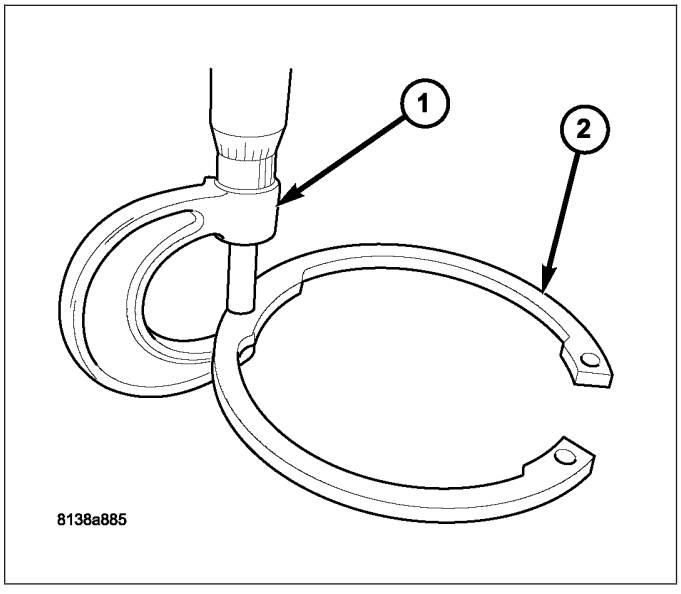

13. Install Tool 9522 (1) into one side of housing and push inward to release differential side bearing cup (2) from opposite side. Repeat for other bearing.

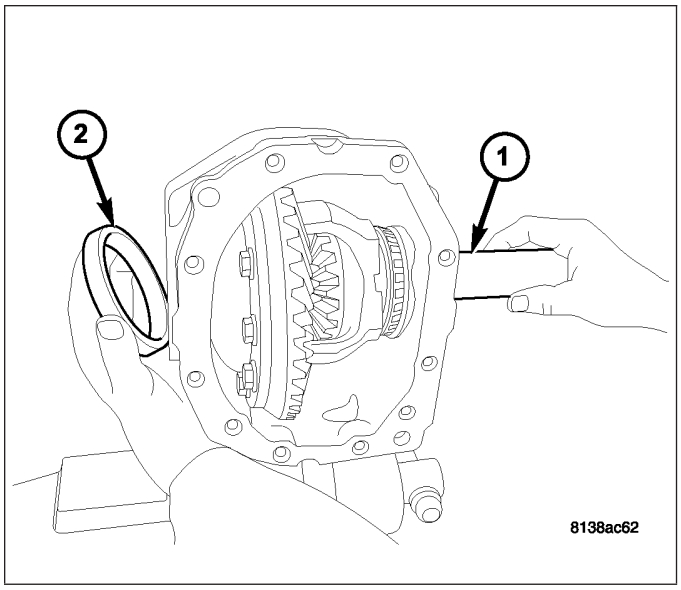

14. Remove differential assembly from axle housing.

NOTE: Note: If difficulty removing differential is encountered due to interference with W-129-B spreader and adapter plates, remove axle from spreader and adapter plates from axle to facilitate removal.

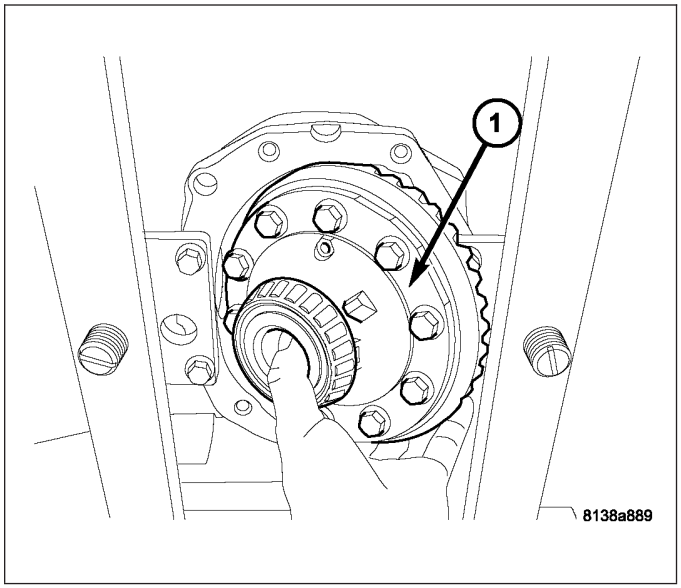

DISASSEMBLY

1. Remove differential ring gear-to-case bolts (1).

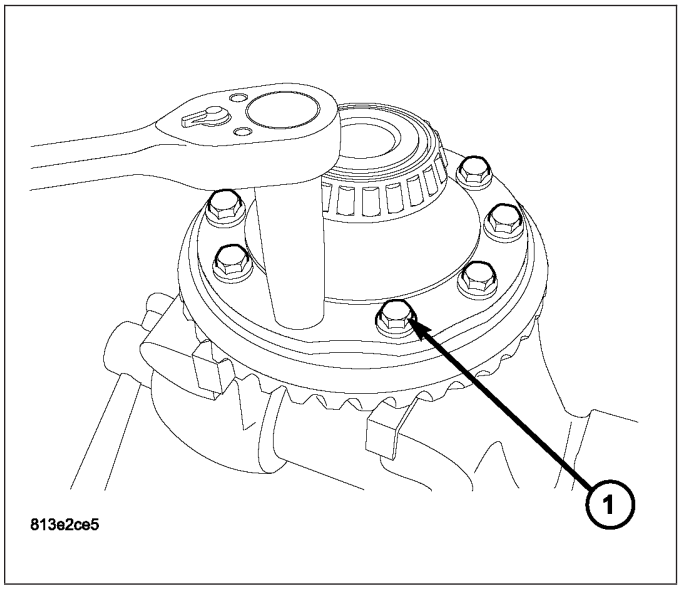

2. Using brass drift (1), remove ring gear (2).

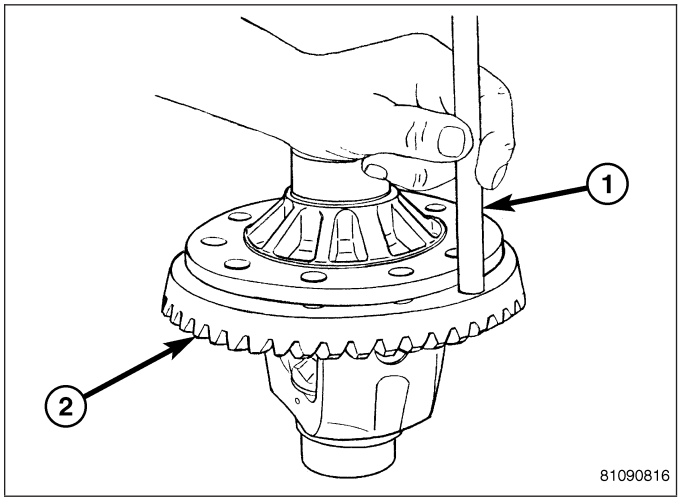

3. Remove bearings (2) from the differential case (3) with Puller/Press C-293-PA (5), Adapters C-293-37 (1) and Plug SP-3289 (4).

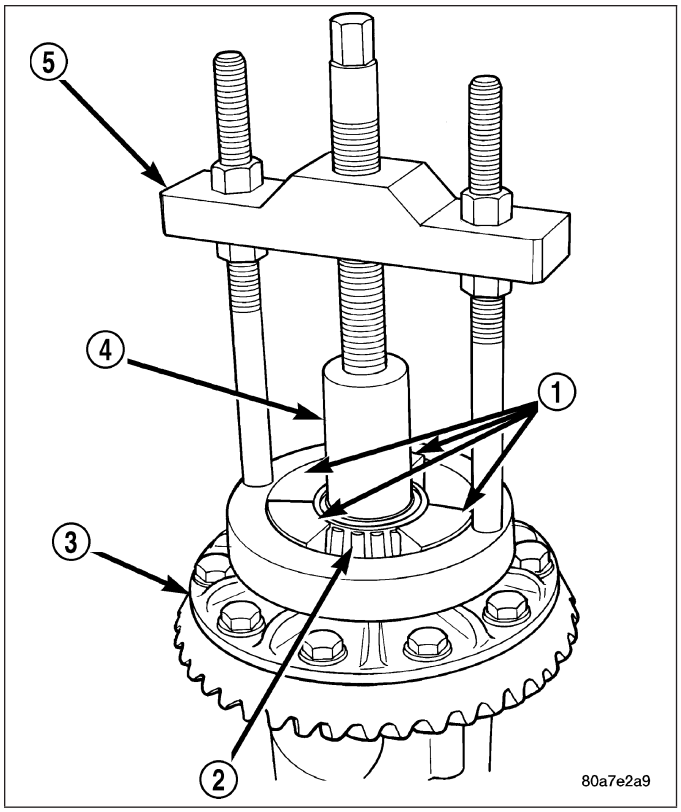

4. Drive out pinion shaft-to-case roll pin using hammer and suitable punch.

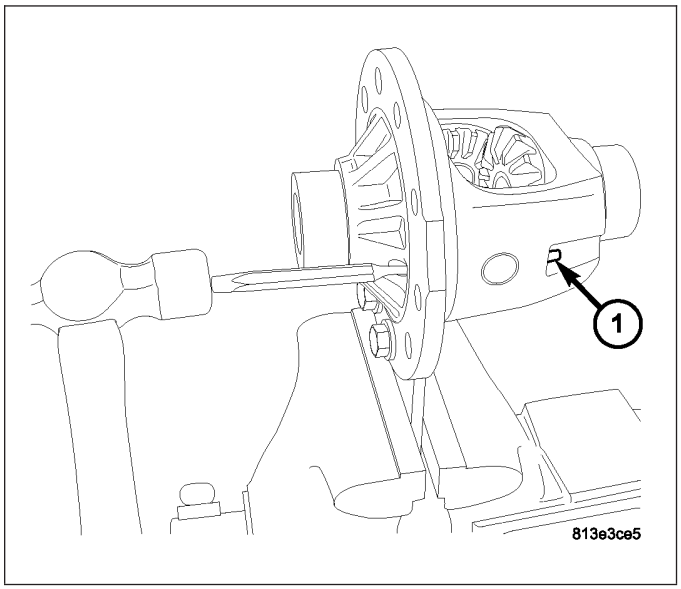

5. Using brass drift (2), drive out pinion shaft (1).

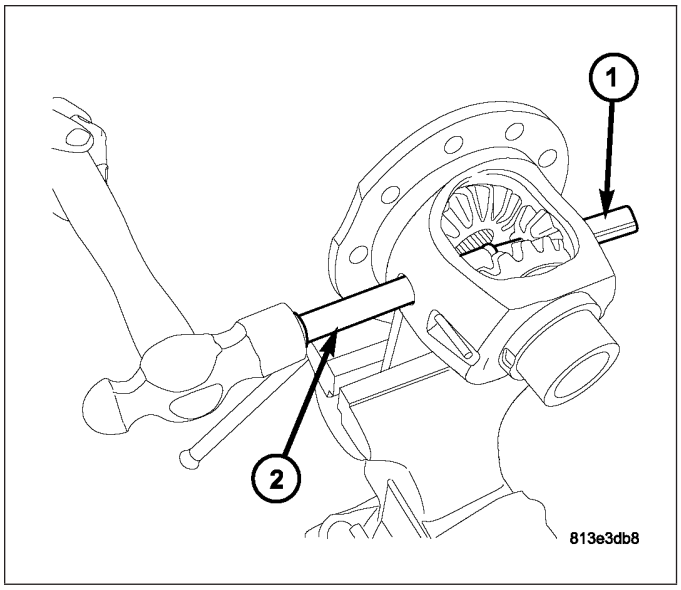

6. Install Tool 9631 (1) into differential side gear.

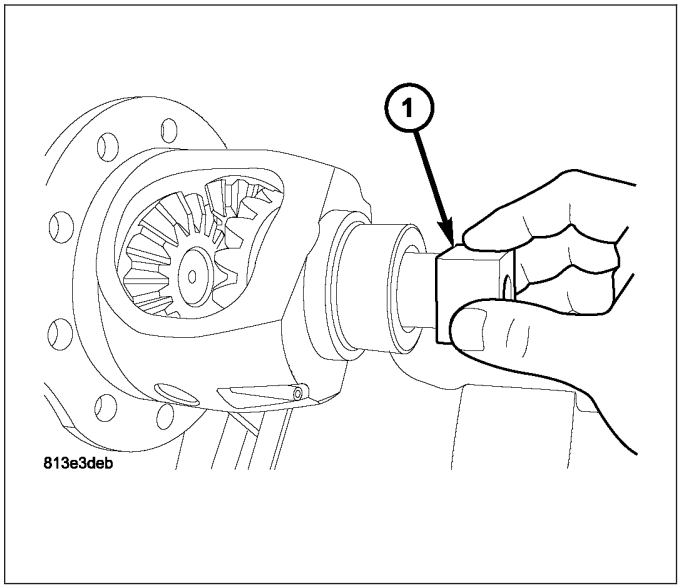

7. Rotate Tool 9631 (1) to gain access to and remove pinion gears and thrust washers.

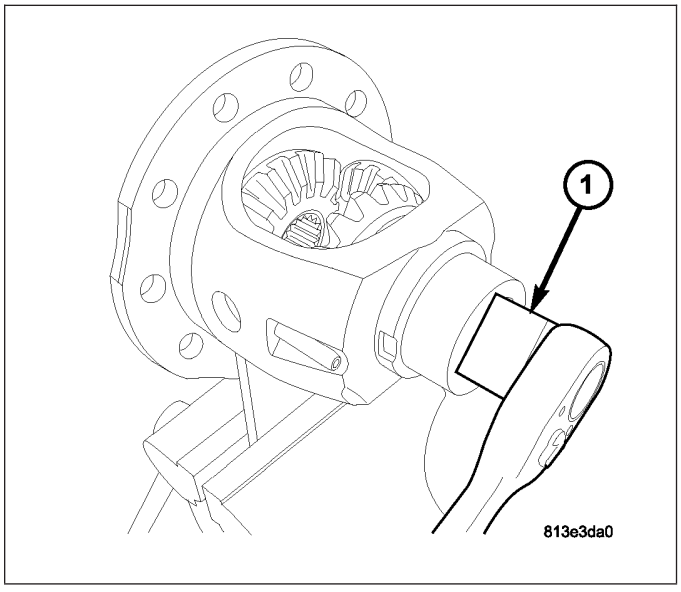

8. Remove differential side gears (4) and thrust washers (5).

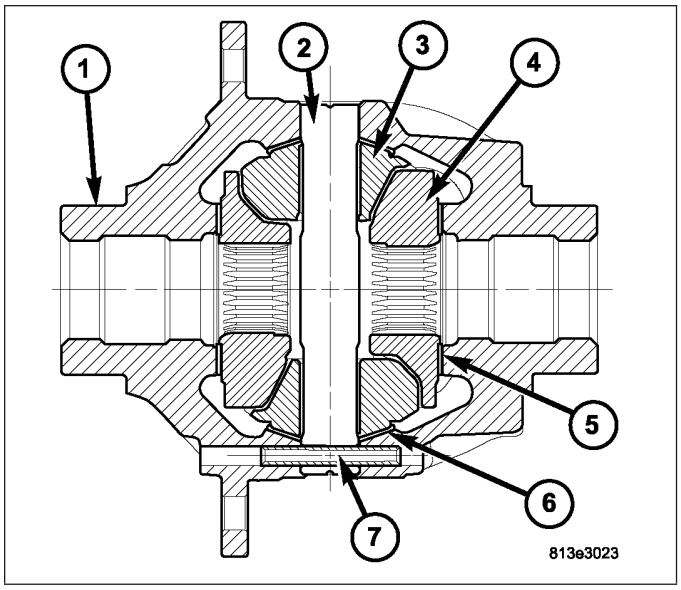

ASSEMBLY

1. Lubricate all differential components with hypoid gear lubricant.
2. Install differential side gears (2) and thrust washers to Tools 9631 (1) as shown in illustration.

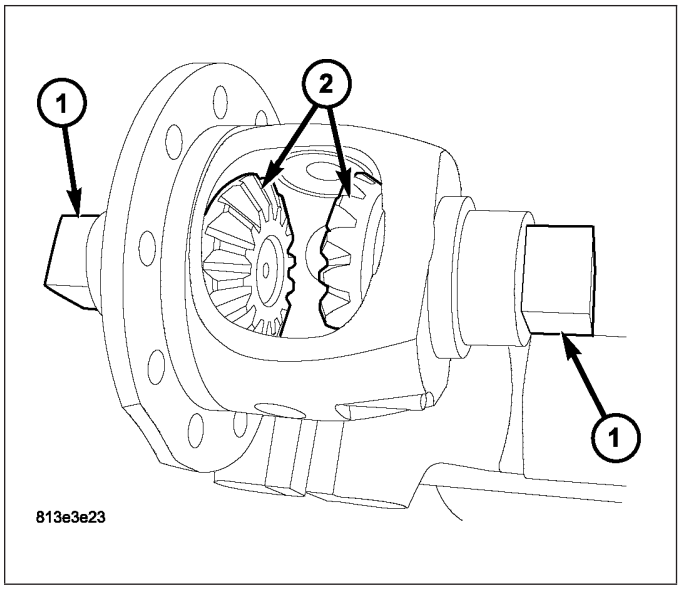

3. Install differential pinion gears (1) and thrust washers into position across from each other.

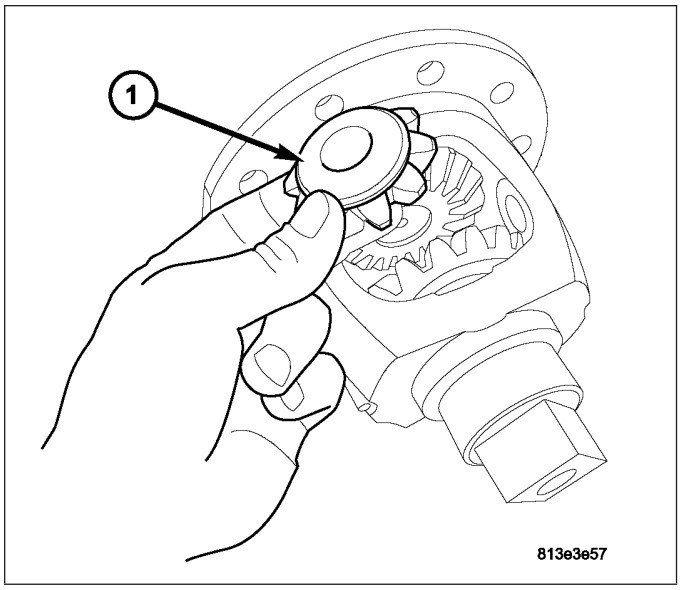

4. Rotate pinion gears into place using Tool 9631 and line up gear centers with pinion shaft bore.

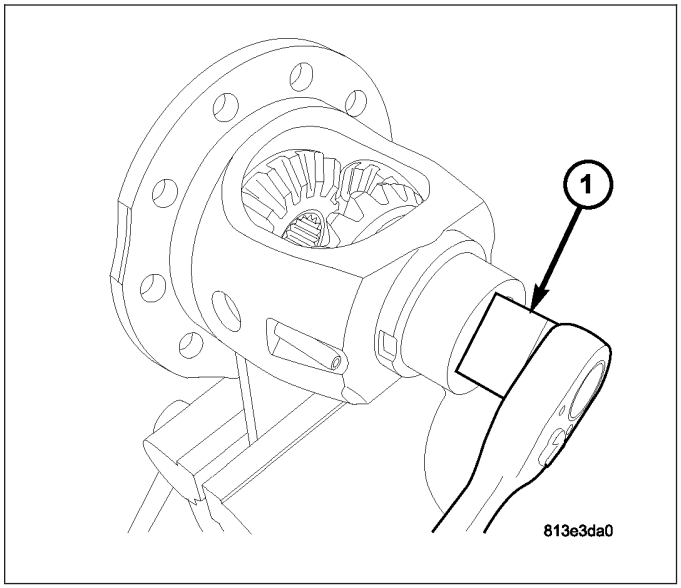

5. Using a brass hammer, drive pinion shaft (3) into differential case (1), making sure to line up roll pin bores.
6. Using suitable punch (2), drive new roll pin into position.

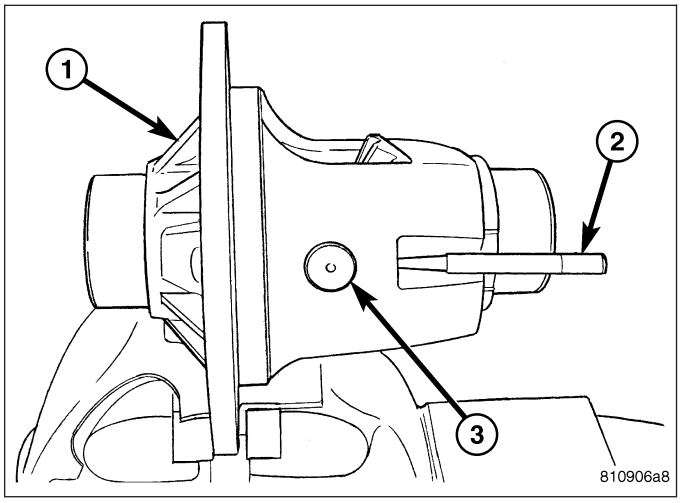

7. Measure differential gear rotating torque as shown. Differential gear rotating torque should be 5-30 N·m (44-266 in. lbs.) Rotating torque is adjusted using select side gear thrust washers. Refer to the following chart.

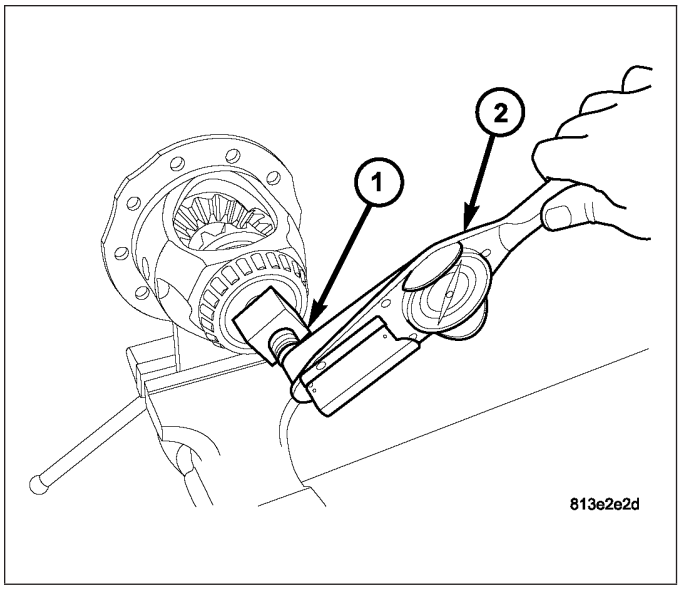

Available Side Gear Thrust Washer Thicknesses
1.25 mm (0.049 in.)
1.30 mm (0.051 in.)
1.35 mm (0.053 in.)
1.40 mm (0.055 in.)
1.45 mm (0.057 in.)
1.50 mm (0.059 in.)
1.55 mm (0.061 in.)
1.60 mm (0.063 in.)
1.65 mm (0.065 in.)

8. Remove differential case from Tool 9630 (2).

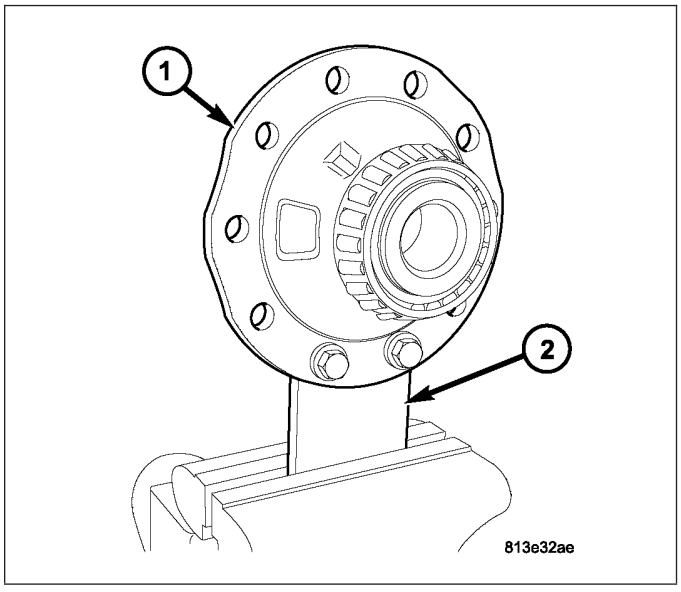

9. Install ring gear to case. Lightly tap ring gear into position to facilitate starting of bolts.
10. Install **new** ring gear-to-case bolts and torque to 85 N·m (63 ft. lbs.).

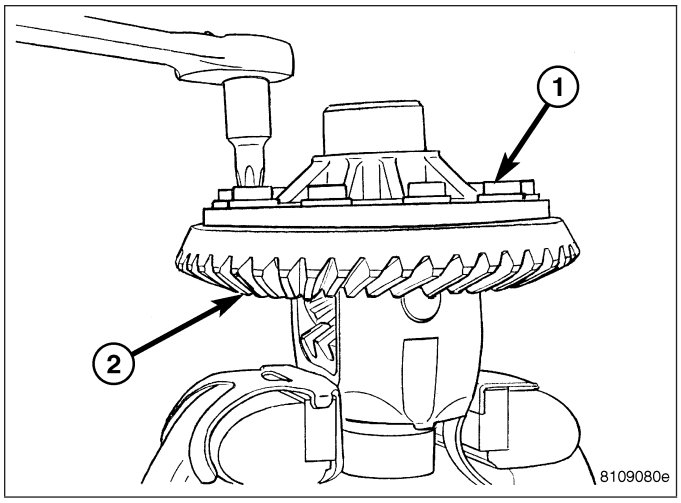

11. Using Tool 9523 (2) and Handle C-4171 (1), press **new** differential side bearings (3) onto differential case.

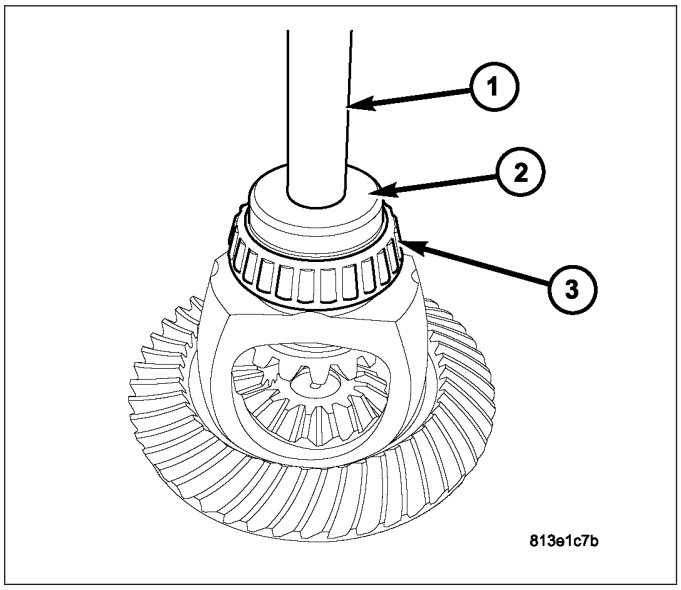

INSTALLATION

NOTE: If replacement differential side bearings or differential case are being installed, it is necessary to measure and adjust Differential Side Bearing Preload and Gear Backlash. Refer to Adjustments — Differential Side Bearing Preload and Gear Backlash to determine proper snap ring selection.

1. Install differential assembly (1) into axle housing. **Note: If difficulty installing differential is encountered due to interference with spreader and plates, remove axle housing from spreader, plates from housing, and install differential. Return assembly to the spreader.**

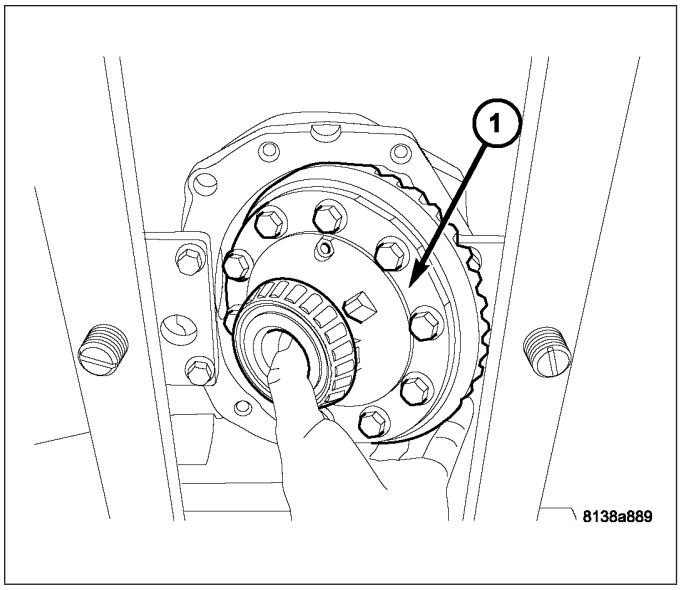

2. Install differential side bearing cups (2). Use tool 9522 (1) to aid in differential alignment.

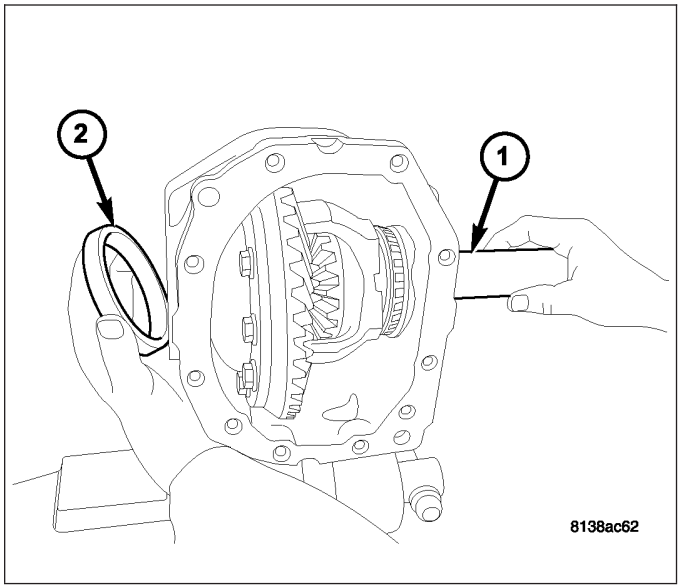

3. Use Tool 9522 (1) to aid in seating side bearing cups (2).

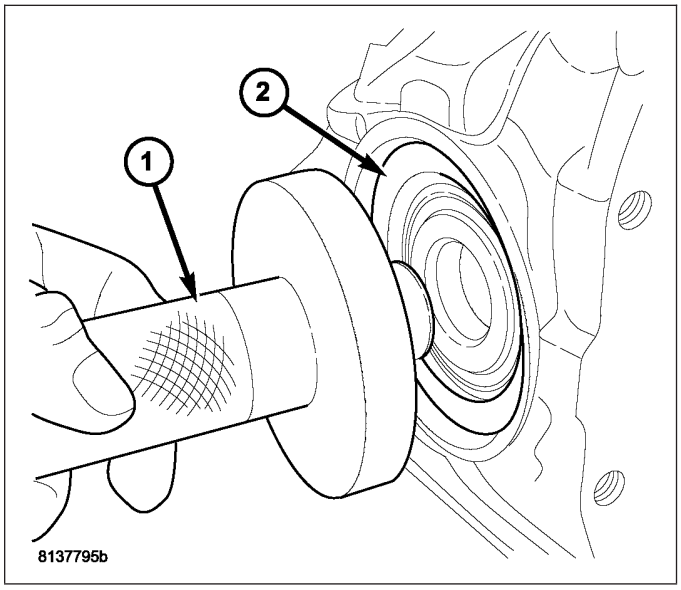

4. Set up Dial Indicator Set C-3339-A to measure housing spread as shown:
   a. Clamp SP-5426 (1)
   b. Post SP-5425-B (2)
   c. Metric Dial Indicator 9524 (3)

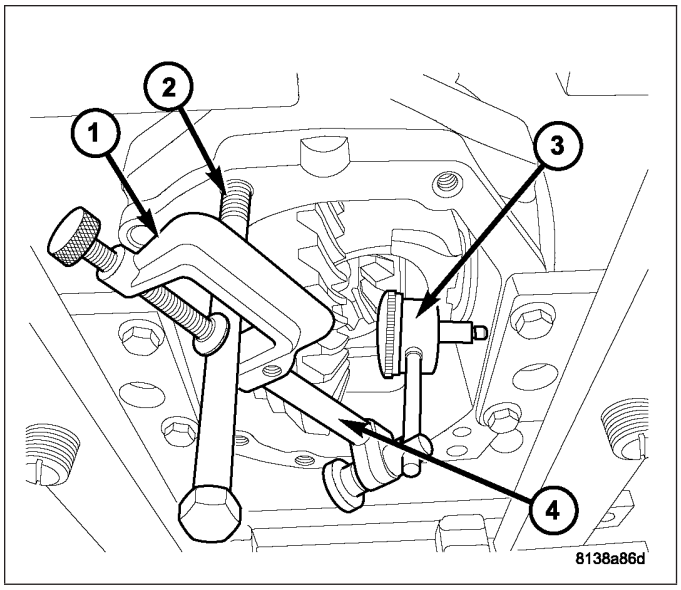

5. Expand spreader W-129-B (1) to spread axle housing no more than 0.30 mm (0.012 in.).

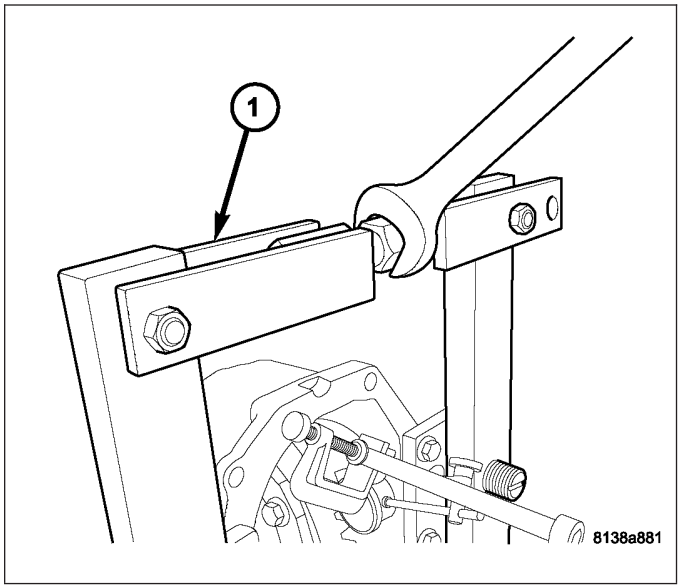

NOTE: The differential side bearing snap rings are select-fit, and control ring gear backlash and differential side bearing preload. It is necessary to return snap rings to their original position. If replacement differential side bearings, differential case, or axle housing are being installed, refer to Adjustments — Differential Side Bearing Preload and Gear Backlash to determine proper snap ring selection.

6. Using suitable snap ring pliers (2), install differential side bearing snap rings (1).

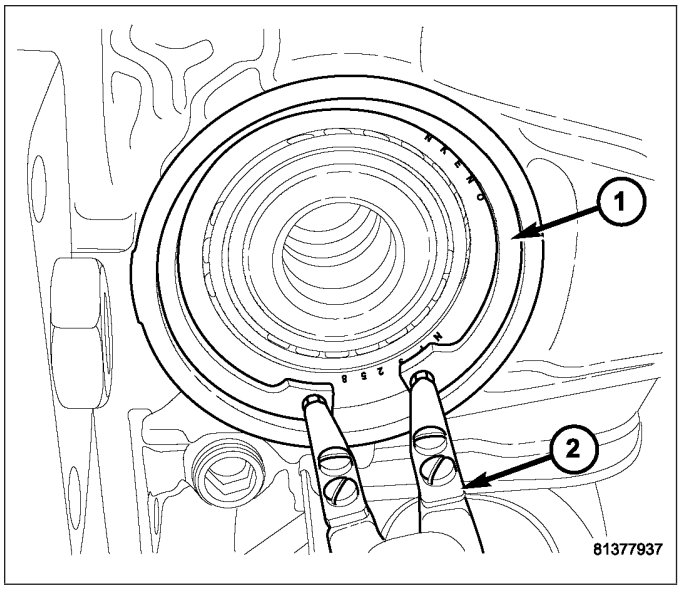

7. Back off W-129-B spreader (1) to relax tension on housing.

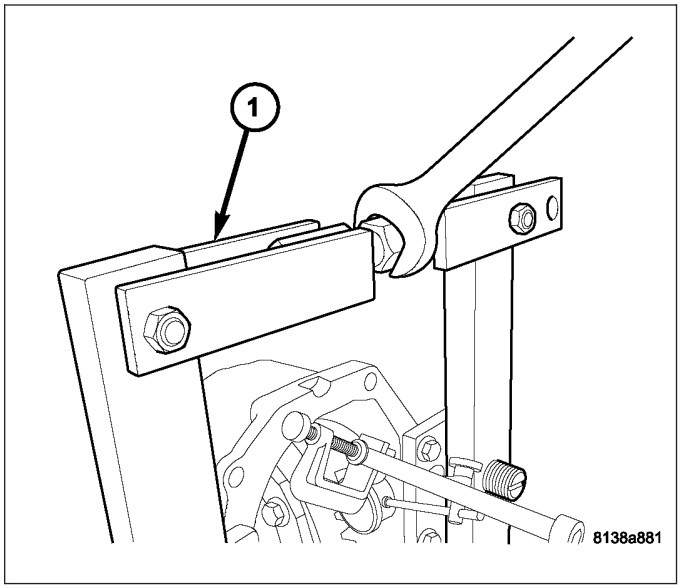

8. Remove axle assembly from spreader. Remove plates (1).

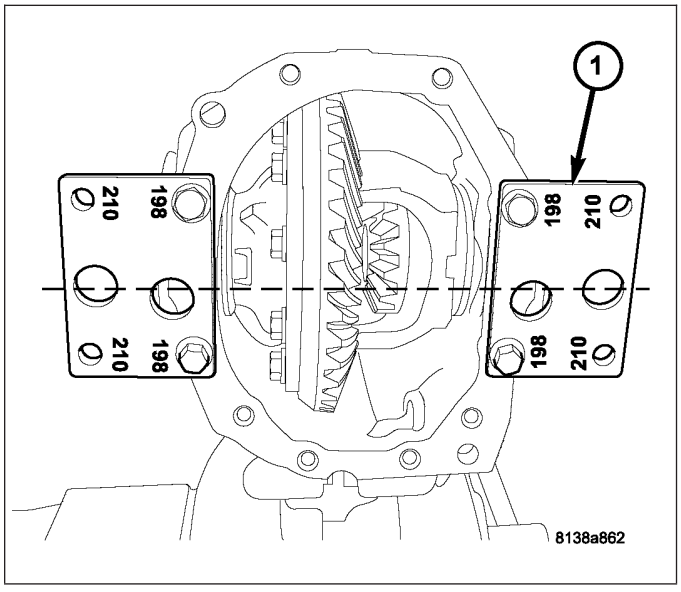

9. Apply 4mm (0.157 in.) bead (2) of Mopar® Axle RTV to axle housing cover (1) as shown.

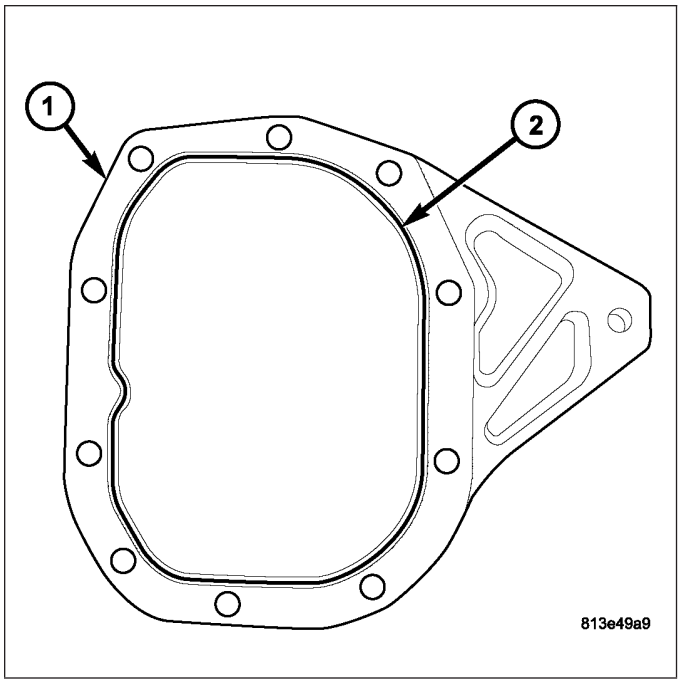

10. Install cover (2) to axle housing. Install and torque cover-to-housing bolts (1) to 30 N·m (22 ft. lbs.) + 90°.

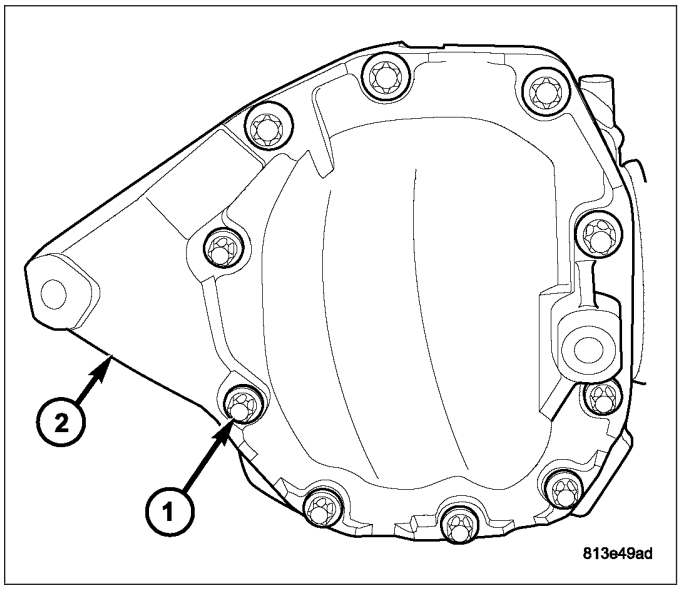

11. Install axle seals (1) using Tool 9223 (2).

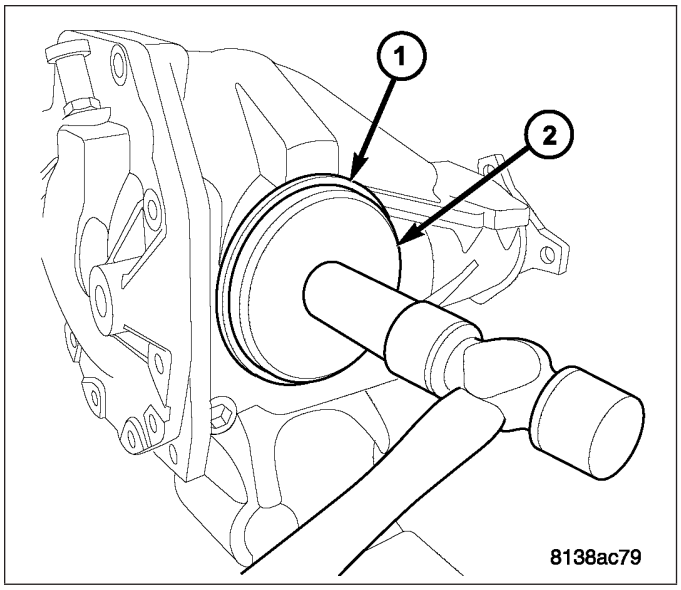

BEARING-DIFFERENTIAL CASE

REMOVAL

1. Remove differential assembly from axle. Refer to Differential Removal.

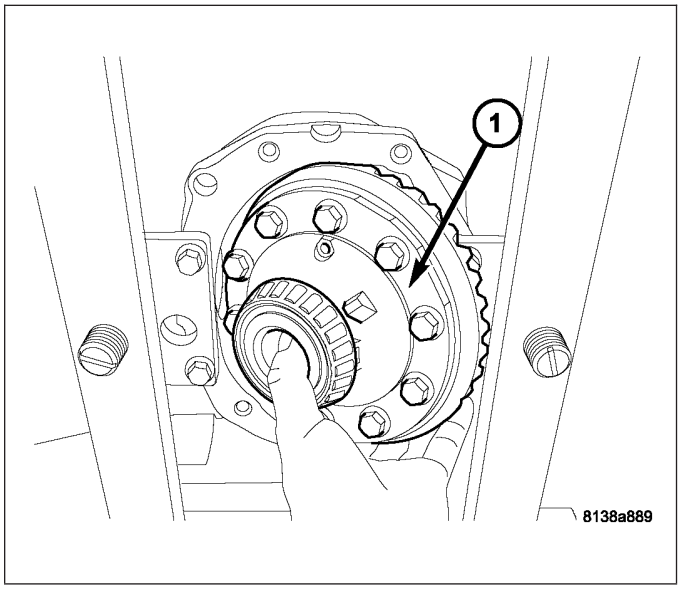

2. Remove bearings (2) from the differential case (3) with Puller/Press C-293-PA (5), Adapters C-293-37 (1) and Plug SP-3289 (4).

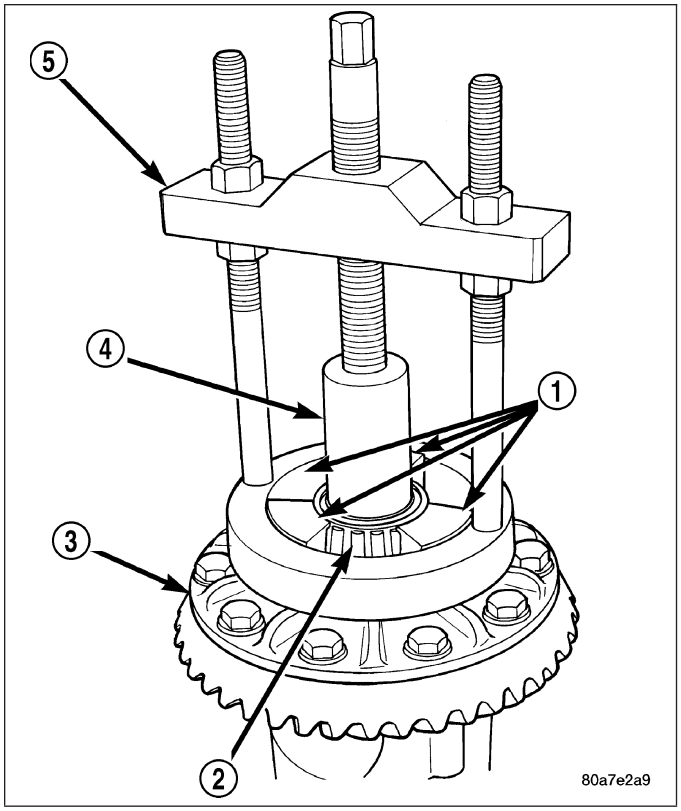

INSTALLATION

1. Using Tool 9523 and Handle C-4171, press differential side bearings onto differential case.

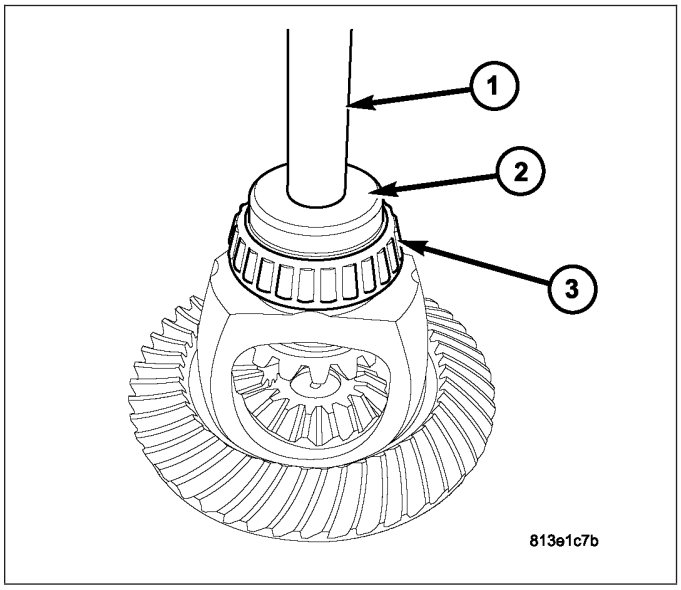

2. Install differential and reassemble axle assembly.

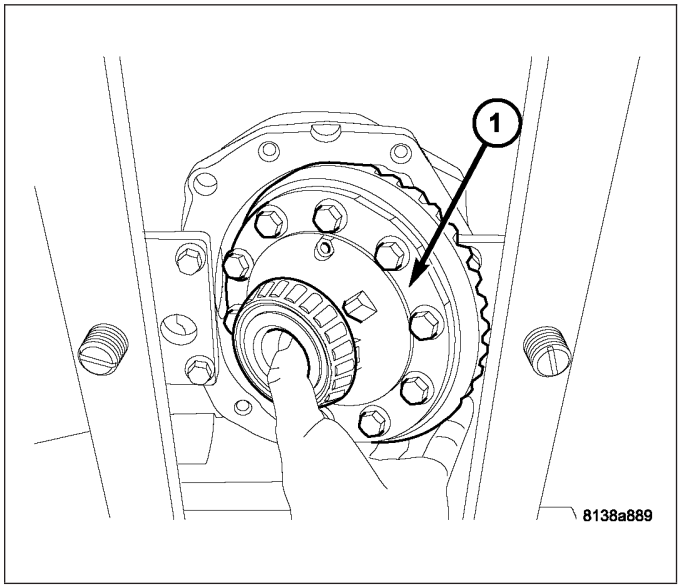

COVER-DIFFERENTIAL

REMOVAL

1. Remove axle assembly from vehicle. (Refer to 3 - DIFFERENTIAL & DRIVELINE/REAR AXLE - 210MM - REMOVAL)
2. Remove axle housing cover bolts (1). Using suitable screwdriver, pry cover (2) from housing.

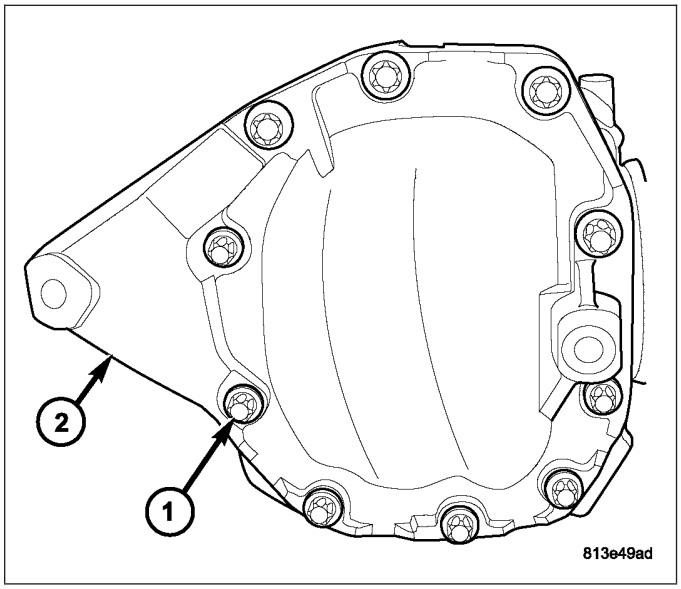

INSTALLATION

1. Thoroughly clean cover and install a 4 mm (0.157 in.) bead of Mopar® AXLE RTV (2) as shown.

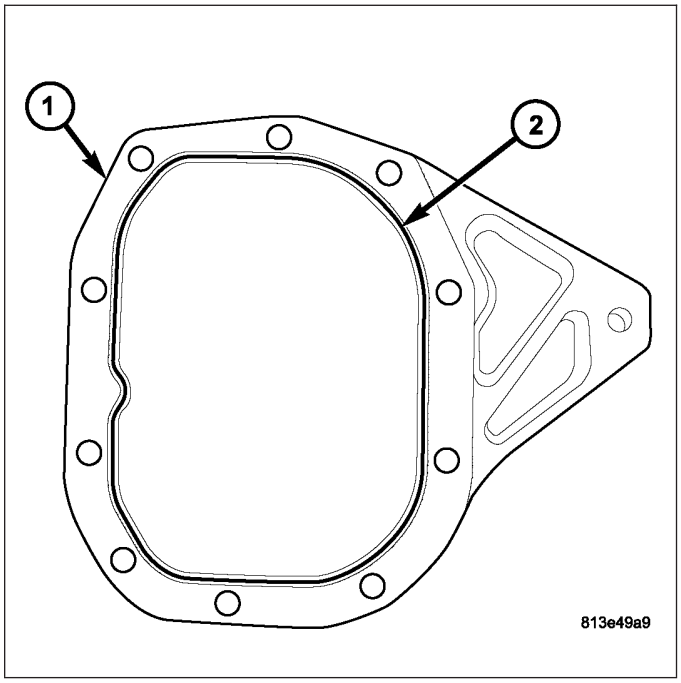

2. Immediately install cover. Install and torque bolts (1) to 50 N·m (37 ft. lbs.).
3. Install axle assembly to vehicle. (Refer to 3 - DIFFERENTIAL & DRIVELINE/REAR AXLE - 210MM - INSTALLATION)

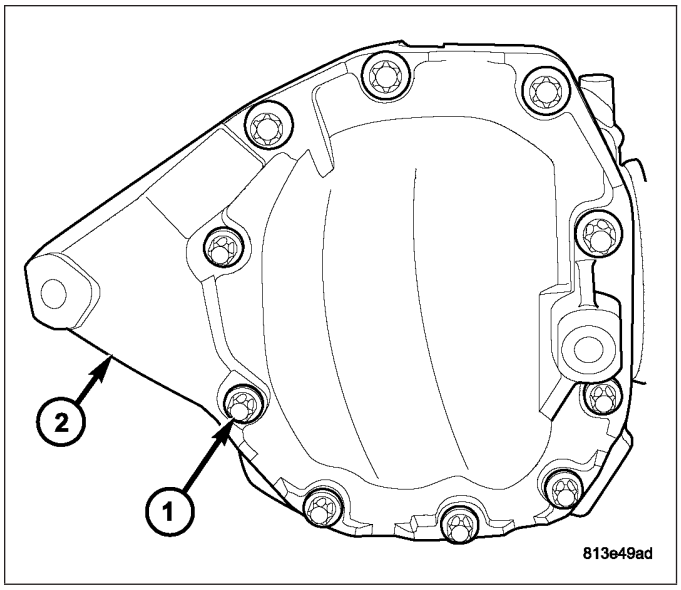

GEAR-PINION/RING

REMOVAL

1. Remove differential assembly. (Refer to 3 - DIFFERENTIAL & DRIVELINE/REAR AXLE - 210MM/ DIFFERENTIAL - REMOVAL)

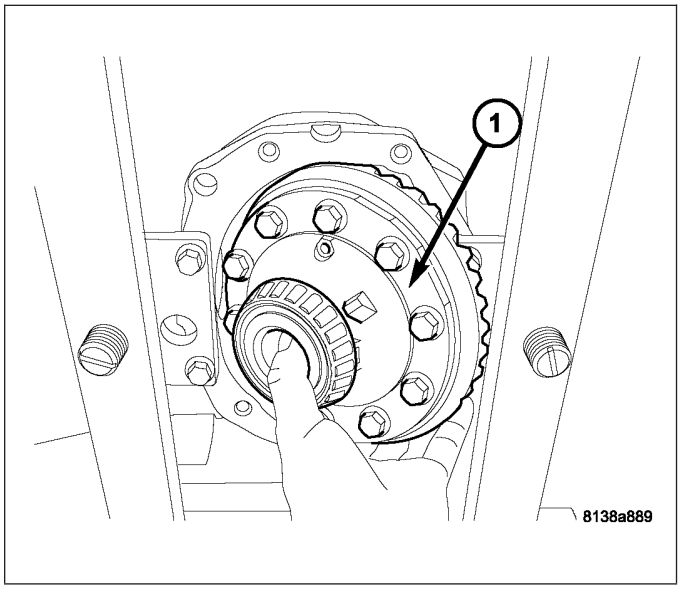

2. Place differential case in a soft-jawwed vise and remove ring gear-to-case bolts (1).

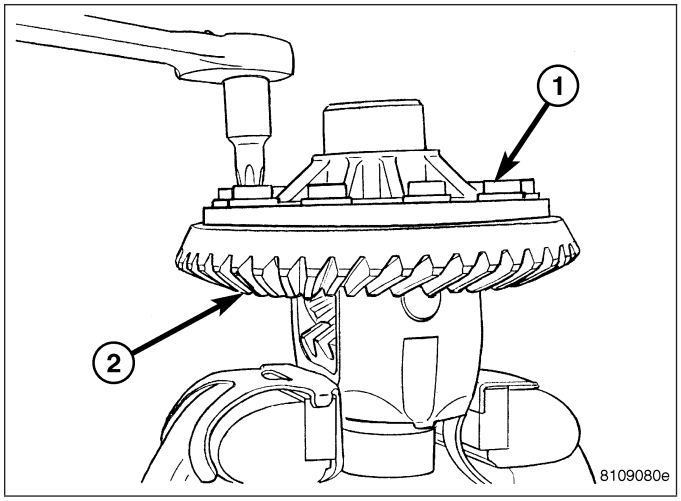

3. Remove ring gear from differential case with a brass drift (1) and hammer.

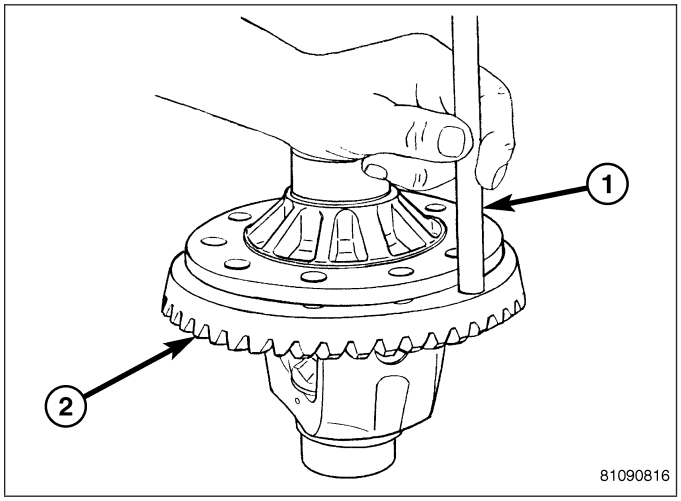

4. Using 41mm socket and flange wrench Tool C-3281 (1), remove pinion nut and discard.

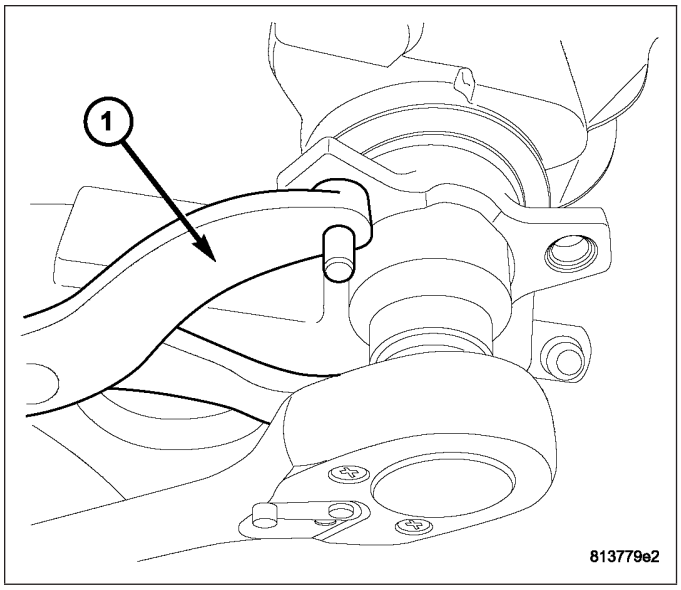

5. Using puller Tool 1026 (1), remove pinion flange (2).

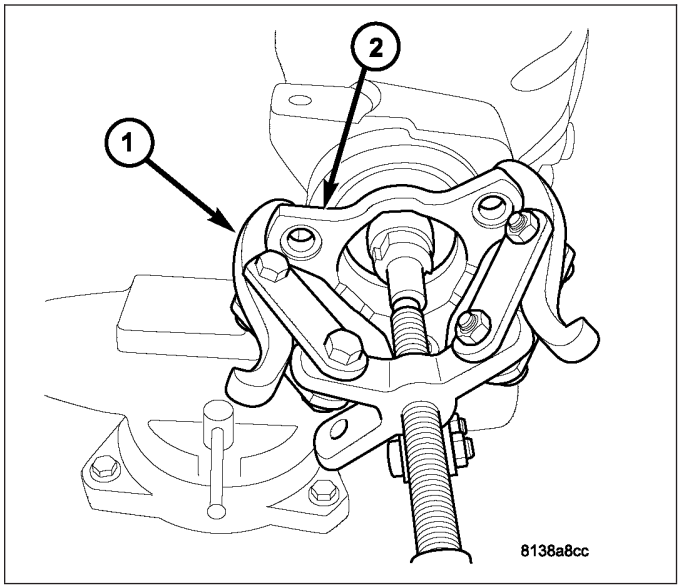

6. Using a suitable screwdriver, remove and discard the pinion seal.
7. Remove pinion tail bearing cone.

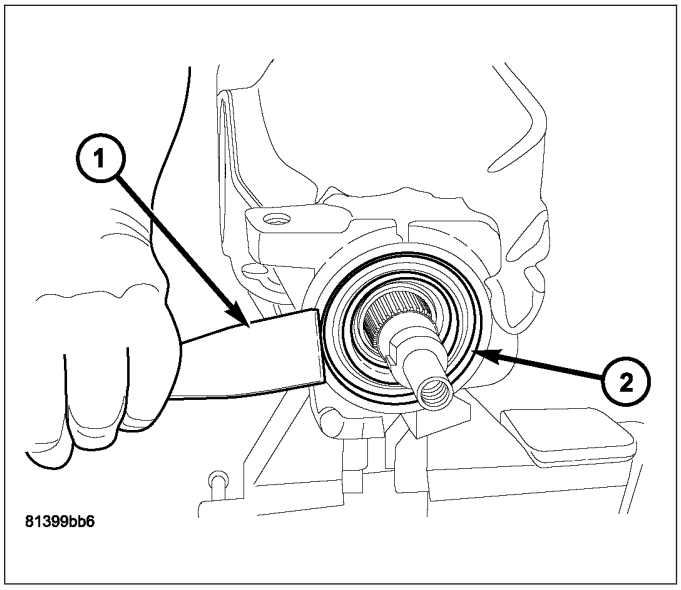

8. Move axle housing to press and press out pinion shaft (1) as shown.

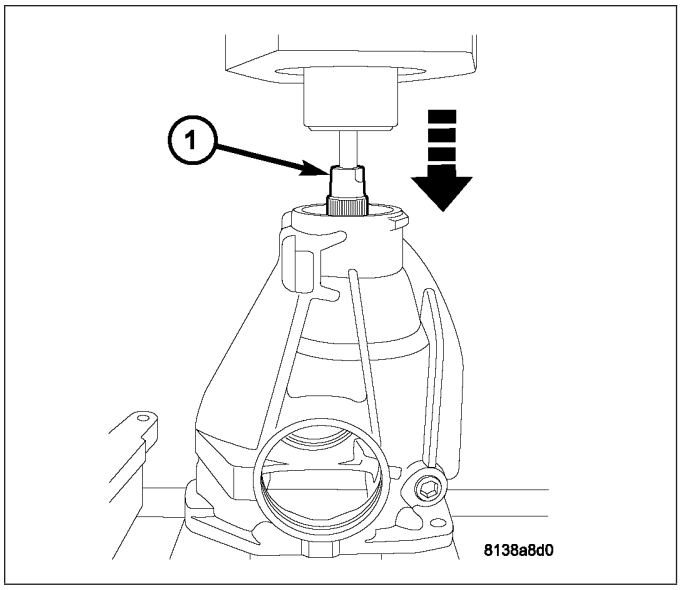

9. Remove collapsible spacer (1) and washers (2). Discard collapsible spacer.

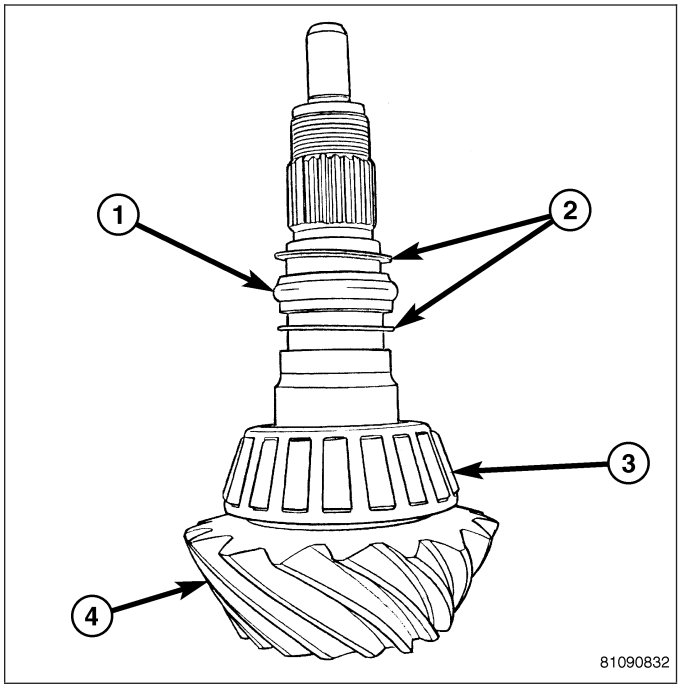

10. Remove pinion head bearing (2) with Puller C-293-PA (1) and Adapters C-293-37 (3,4).

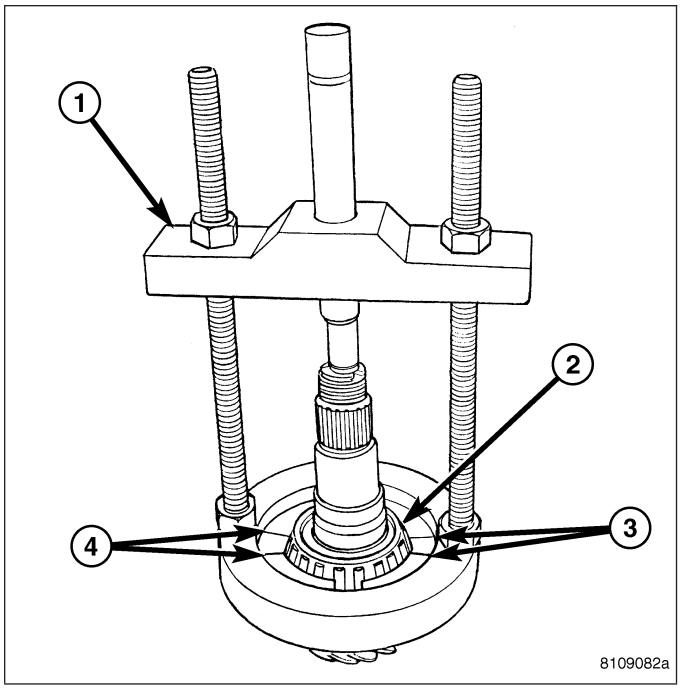

11. Using driver handle C-4171(2) and remover Tool 9084 (1), drive out pinion head bearing cup.

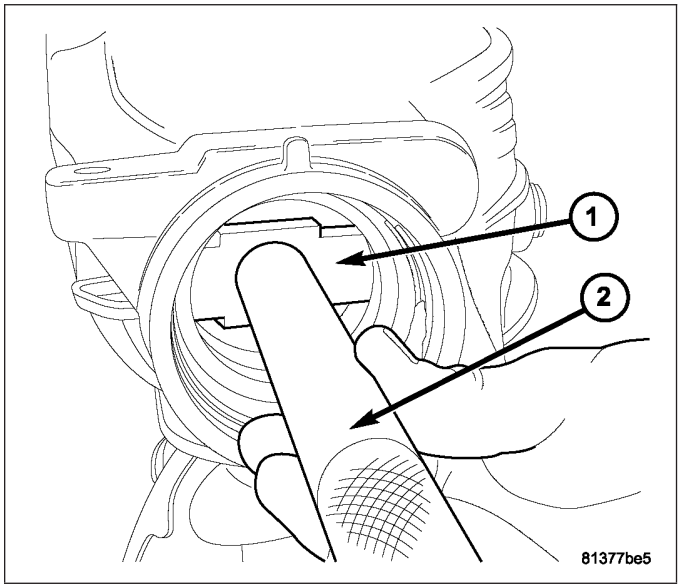

12. Remove pinion head shim. Measure and record shim thickness.

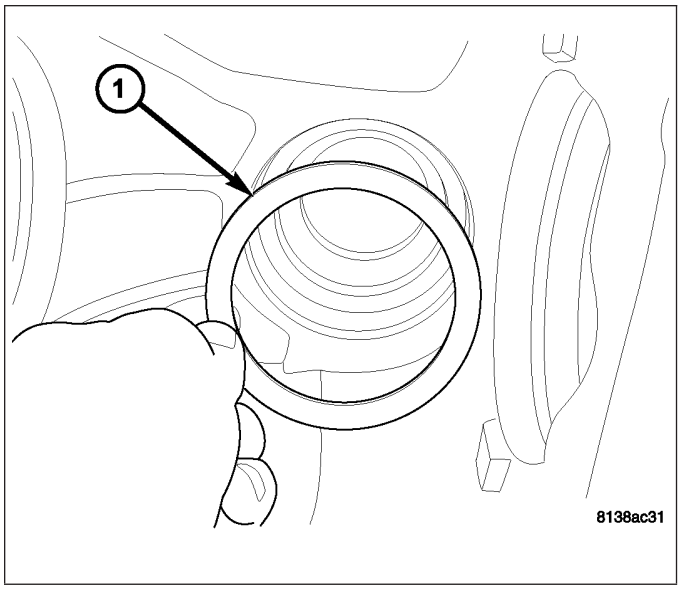

13. Using driver handle C-4171 (2) and remover Tool D-149 (1), drive out pinion tail bearing cup.

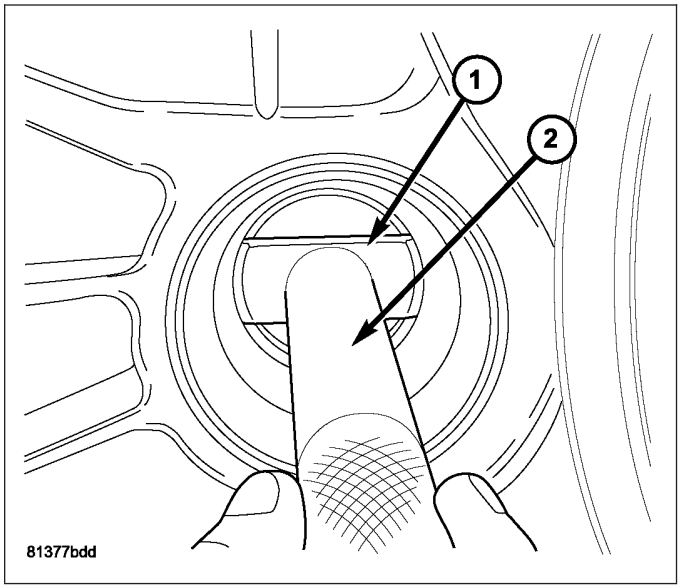

INSTALLATION

1. Install selected pinion depth shim into housing.

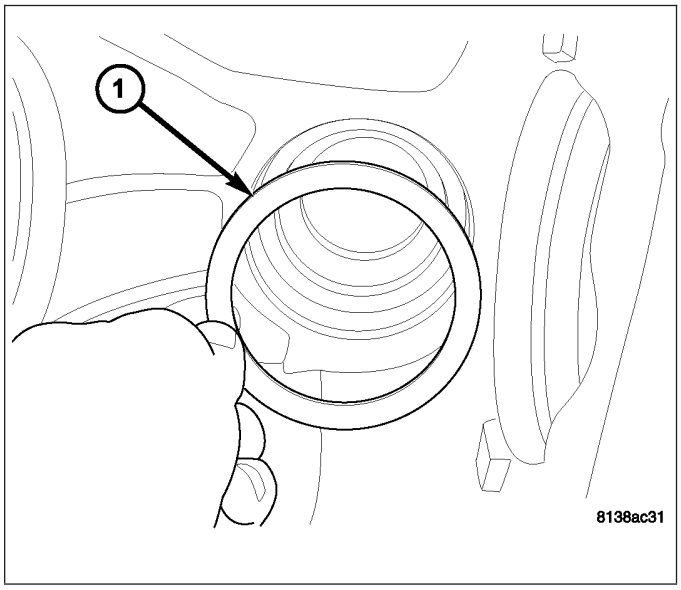

2. Press pinion head bearing cup into housing using Tools C-4171 (1) and C-4310 (2).

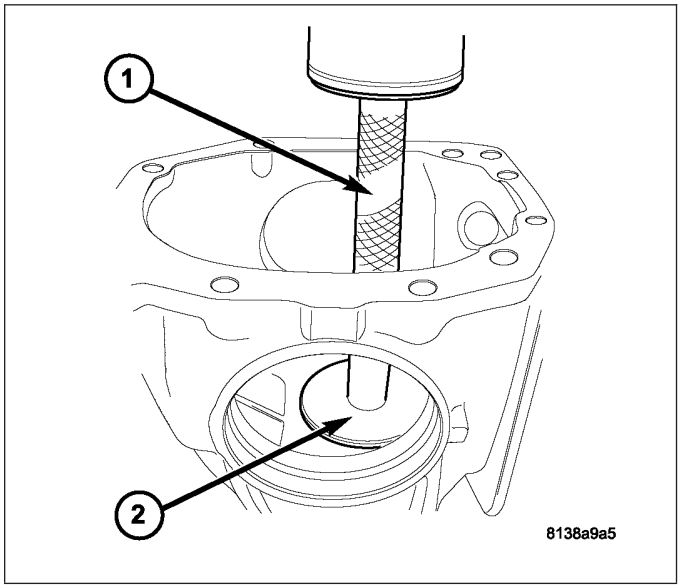

3. Press pinion tail bearing cup into housing using Tools C-4171 (1) and D-146 (2).

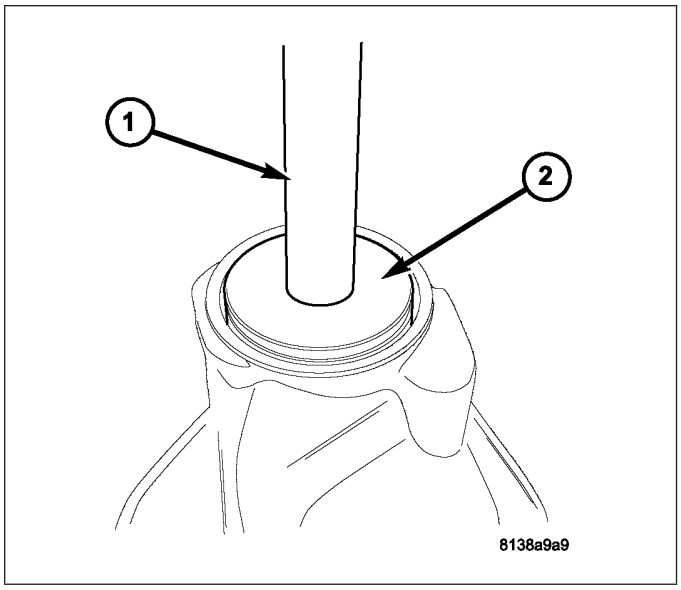

4. Press **new** pinion head bearing (2) onto pinion shaft using Tool C-3095-A (1).

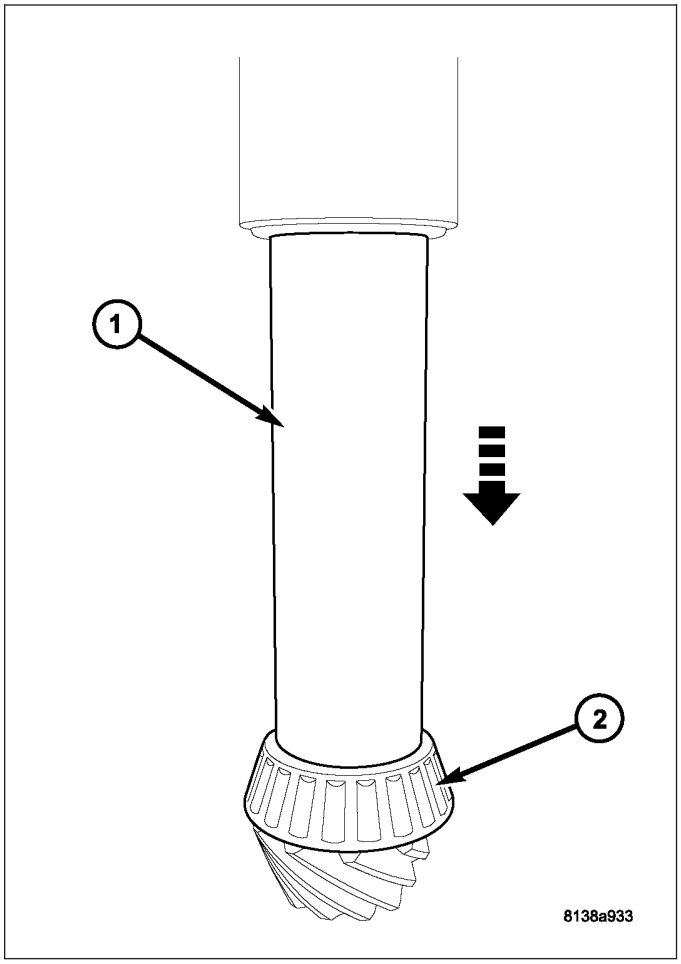

5. Install washers (2) and **new** collapsible spacer (1) to pinion shaft.

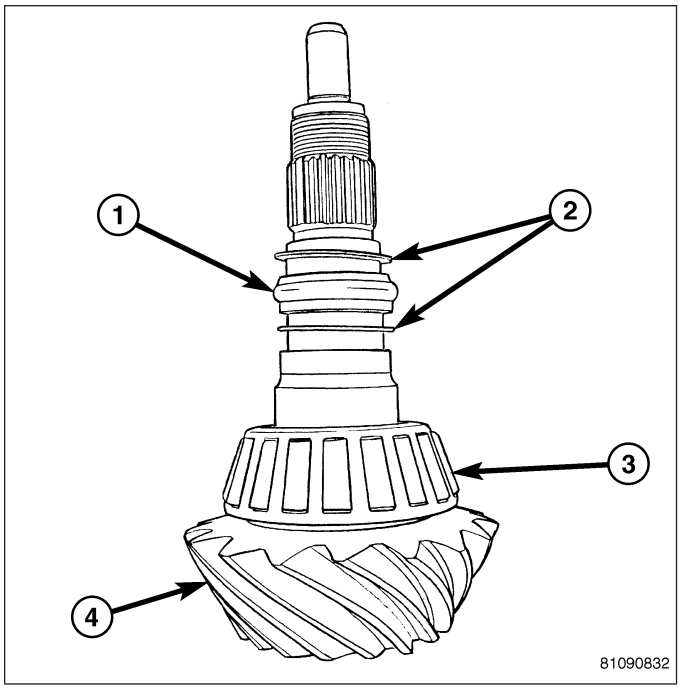

6. Install pinion shaft (1) into housing and support on press table atop Tool 8255 (2). **Ensure pinion gear face is centered atop Tool 8255.**

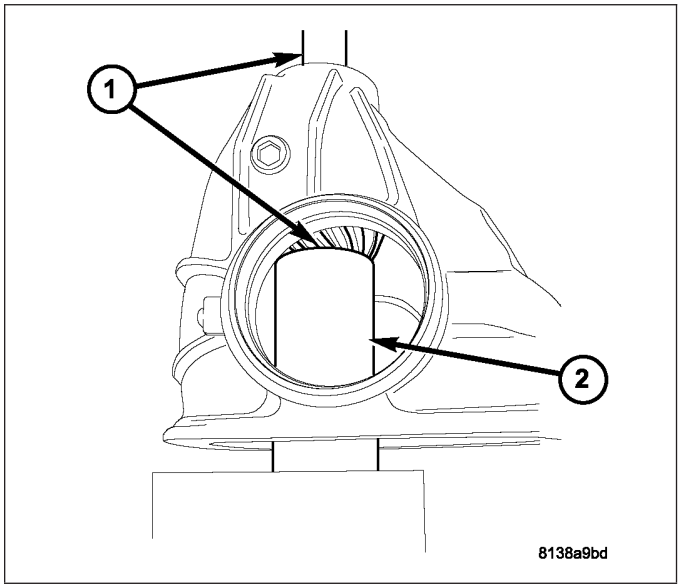

7. Using Tool C-3095-A (1), press on **new** pinion tail bearing (2).

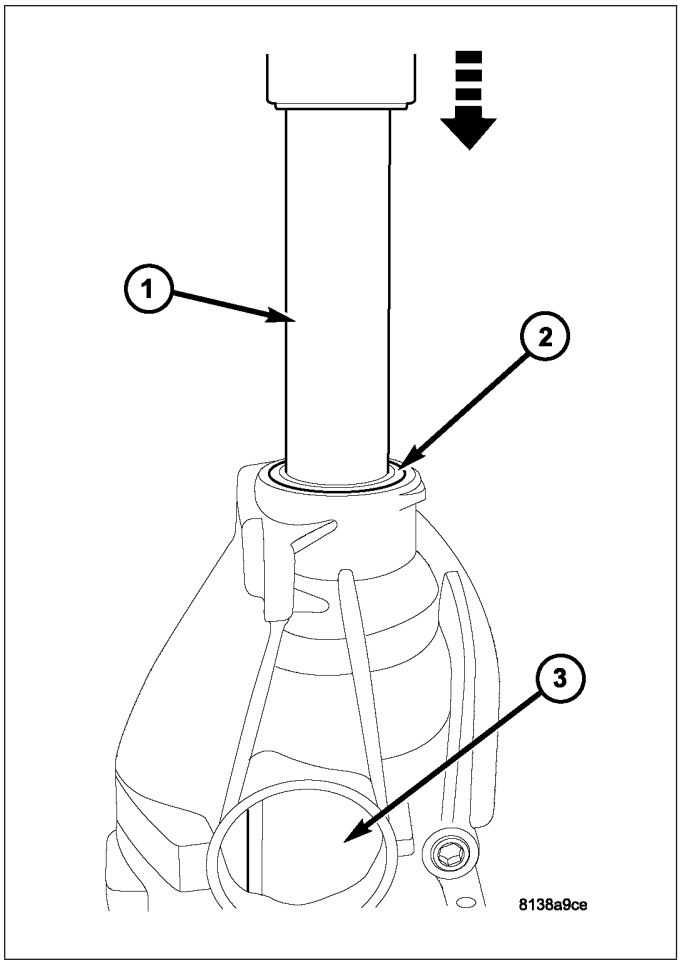

8. Install new pinion seal (1) into position.

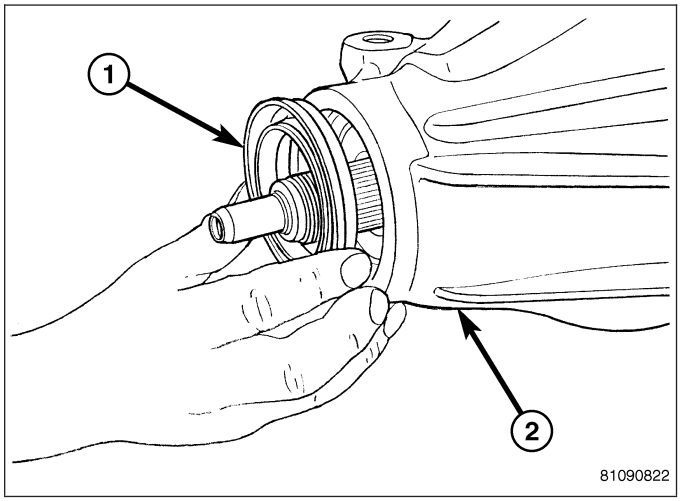

9. Press pinion seal into housing using Tool 9231A (1).

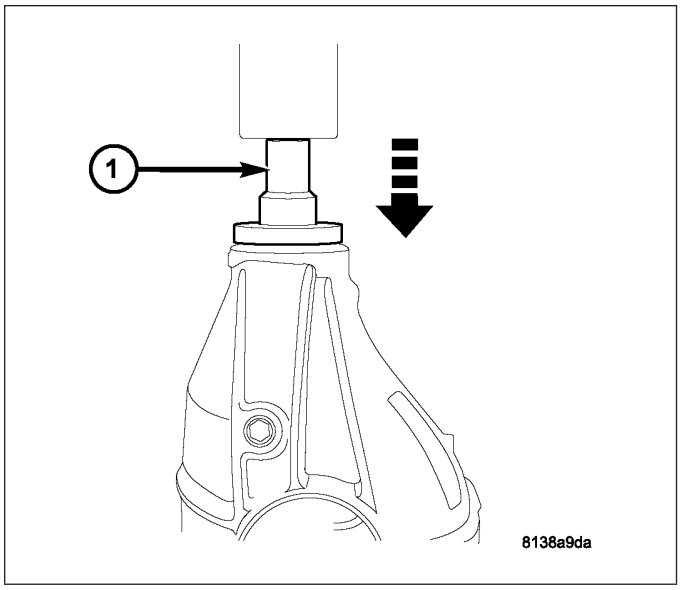

10. Lightly lubricate pinion flange seal with axle lubricant for flange installation.
11. Align index marks and press pinion flange (2) on using Tool C-3095-A (1).

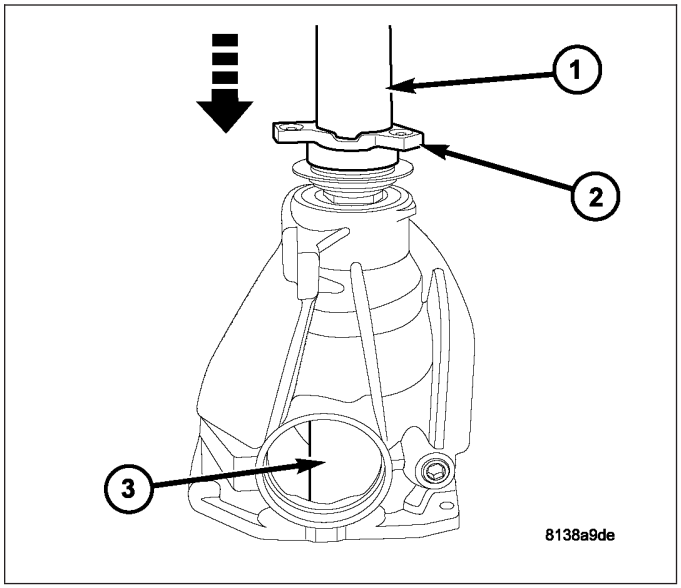

12. Install new pinion flange nut by hand.
13. Hold pinion flange with Tool C-3281 (1). Using a deep 41 mm socket, tighten pinion flange nut to an initial torque of 203 N·m (150 ft. lbs.).

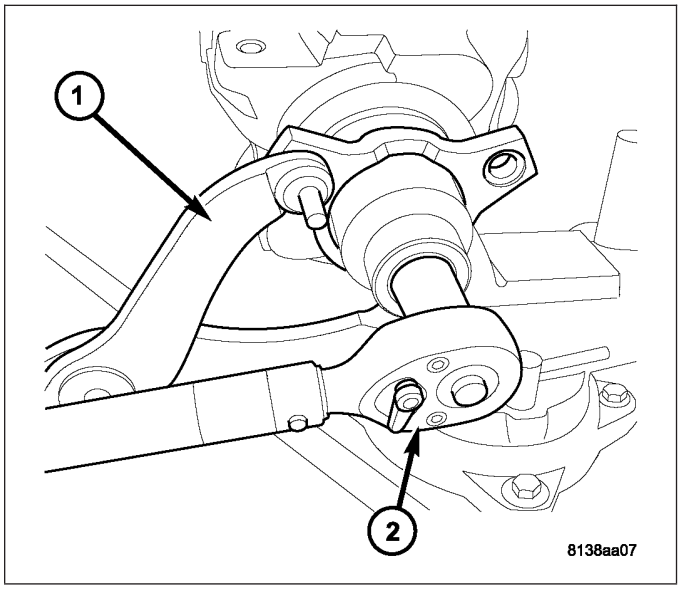

14. Rotate pinion flange to ensure bearing is properly seated.
15. Measure pinion rotating torque using suitable torque wrench (1). **Pinion rotating torque should be 215-245 N. cm (19-22 in. lbs.).**
16. If pinion rotating torque exceeds the specified range, the pinion shaft must be removed and the crush sleeve replaced.

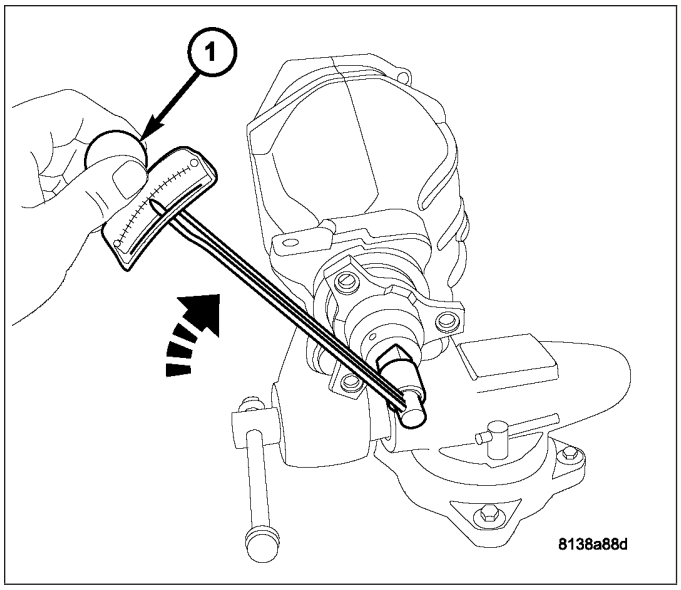

17. If pinion rotating torque is below the specified range, increase nut torque by 7 N·m (5 ft. lbs.) increments and recheck turning torque until rotating torque is within range.

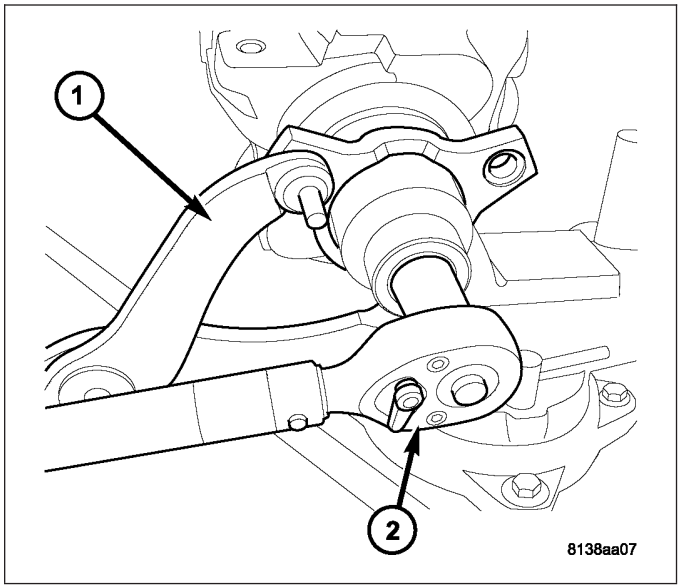

18. Stake pinion flange nut (1) using hammer and suitable punch.

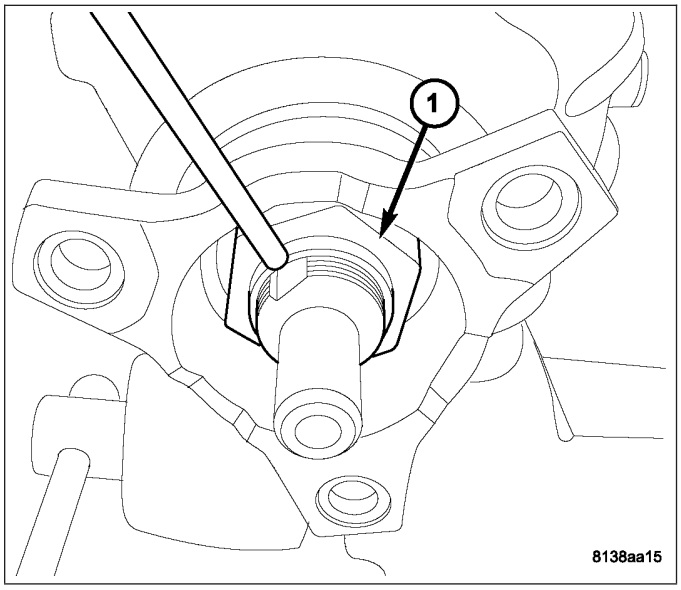

19. Install ring gear to differential case. Loosely install **new** ring-gear-to-differential case bolts.
20. Torque all ring gear-to-case bolts to 85 N·m (64 ft. lbs.)

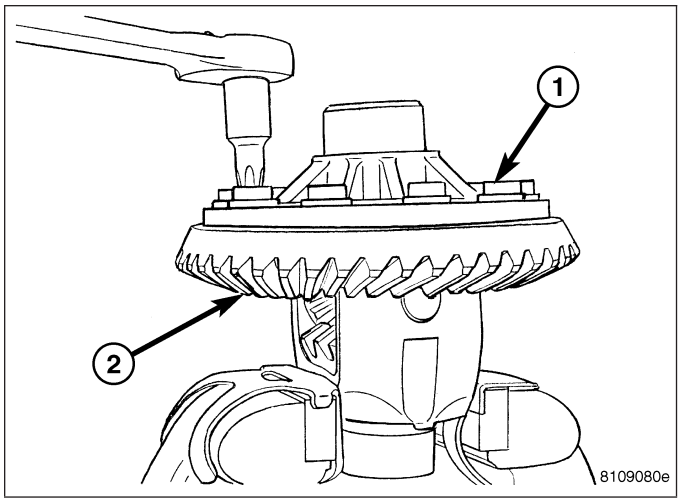

21. Install differential and reassemble axle assembly. (Refer to 3 - DIFFERENTIAL & DRIVELINE/REAR AXLE - 210MM/DIFFERENTIAL - INSTALLATION)

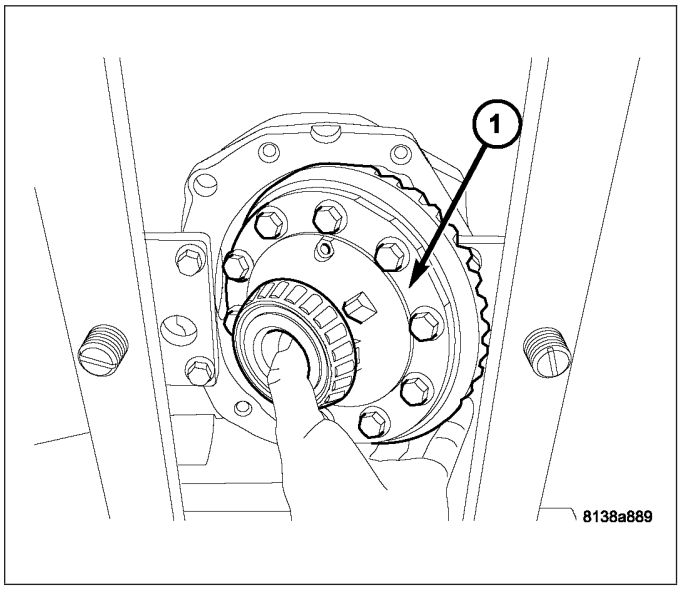

REAR AXLE - 215RII

TABLE OF CONTENTS

page

REAR AXLE - 215RII
DESCRIPTION 247
DIAGNOSIS AND TESTING 248
STANDARD PROCEDURE - FLUID DRAIN AND FILL 251
REMOVAL 251
INSTALLATION 256
SPECIAL TOOLS–215 MM RII AXLE 260
SEAL - PINION FLANGE
REMOVAL 261
INSTALLATION 263
SEAL - AXLE SHAFT
REMOVAL 266
INSTALLATION 266

REAR AXLE - 215RII

DESCRIPTION

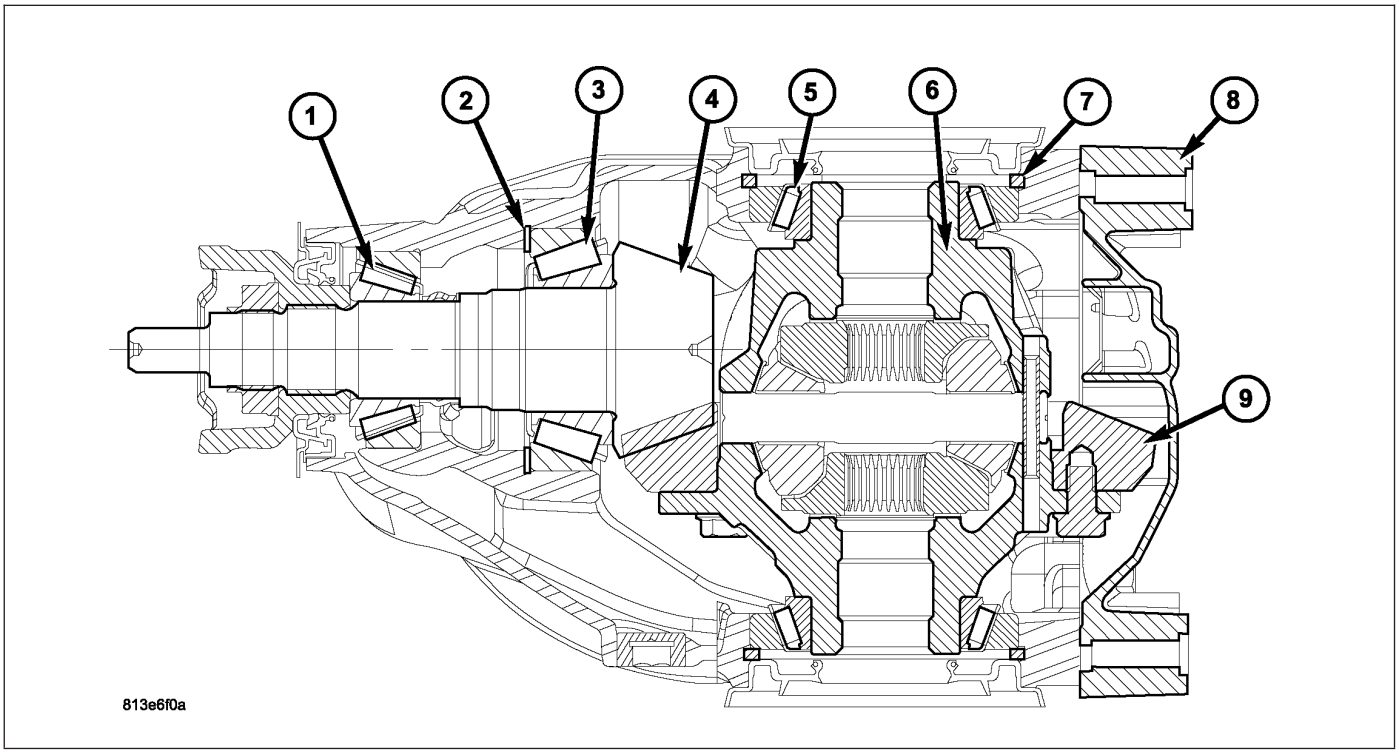

The 215 MM RII (Rear-Independent-Iron) axle is an independent assembly with a cast iron housing and differential. The 215 MM RII uses an open differential which is supported by two tapered roller bearings located on either side of the case. Differential bearing preload and ring gear backlash are controlled with select snap-rings located on the outside of the differential bearing cups. Pinion height is set with a select shim located under the rear pinion bearing cup.

AXLE IDENTIFICATION

The 215 MM axle utilizes a barcoded label which is adhered to the top of the axle housing as shown. The following information is found on the identification label:

- Traceability Code (Plant Use)
- Axle Part Number
- Axle Gear Ratio

DIAGNOSIS AND TESTING

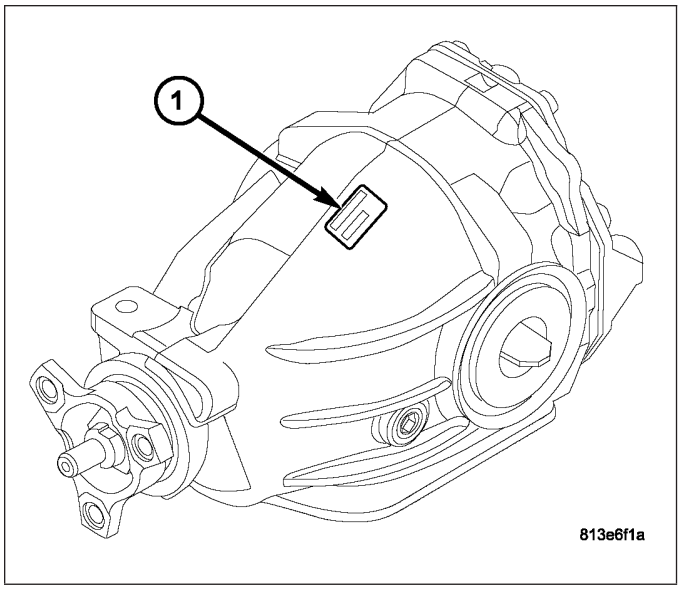

GEAR NOISE

Axle gear noise can be caused by insufficient lubricant, incorrect backlash, incorrect pinion depth, tooth contact, worn/damaged gears, or the carrier housing not having the proper offset and squareness.

Gear noise usually happens at a specific speed range. The noise can also occur during a specific type of driving condition. These conditions are acceleration, deceleration, coast, or constant load.

When road testing, first warm-up the axle fluid by driving the vehicle at least 5 miles and then accelerate the vehicle to the speed range where the noise is the greatest. Shift out-of-gear and coast through the peak-noise range. If the noise stops or changes greatly:

- Check for insufficient lubricant.
- Incorrect ring gear backlash.
- Gear damage.

Differential side gears and pinions can be checked by turning the vehicle. They usually do not cause noise during straight-ahead driving when the gears are unloaded. The side gears are loaded during vehicle turns. A worn pinion shaft can also cause a snapping or a knocking noise.

BEARING NOISE

The differential and pinion bearings can produce noise when worn or damaged. Bearing noise can be either a whining, or a growling sound.

Pinion bearings have a constant-pitch noise. This noise changes only with vehicle speed. Pinion bearing noise will be higher pitched because it rotates at a faster rate. Drive the vehicle and load the differential. If bearing noise occurs, the rear pinion bearing is the source of the noise. If the bearing noise is heard during a coast, the front pinion bearing is the source.

Worn or damaged differential bearings usually produce a low pitch noise. Differential bearing noise is similar to pinion bearing noise. The pitch of differential bearing noise is also constant and varies only with vehicle speed.

Wheel hub bearings produce noise and vibration when worn or damaged. The noise generally changes when the bearings are loaded. Road test the vehicle. Turn the vehicle sharply to the left and to the right. This will load the bearings and change the noise level. Where axle bearing damage is slight, the noise is usually not noticeable at speeds above 30 mph.

LOW SPEED KNOCK

Low speed knock is generally caused by a worn U-joint or by worn side-gear thrust washers. A worn pinion shaft bore will also cause low speed knock.

VIBRATION

Vibration at the rear of the vehicle is usually caused by a:

- Damaged propeller shaft.
- Missing propeller shaft balance weight(s).
- Worn or out-of-balance wheels.
- Loose wheel lug nuts.
- Worn U-joints or CV joints.
- Loose/broken springs.
- Damaged axle shaft bearing(s).
- Loose pinion gear nut.
- Excessive pinion yoke run out.
- Bent halfshaft(s).

Check for loose or damaged front-end components or engine/transmission mounts. These components can contribute to what appears to be a rearend vibration. Do not overlook engine accessories, brackets and drive belts.

All driveline components should be examined before starting any repair.

DRIVELINE SNAP

A snap or clunk noise when the vehicle is shifted into gear, can be caused by:

- High engine idle speed.
- Transmission shift operation.
- Loose engine/transmission/transfer case mounts.
- Worn U-joints or CV joints.
- Worn or broken axle mount isolators.
- Loose pinion gear nut and yoke.
- Excessive ring gear backlash.
- Excessive side gear to case clearance.

The source of a snap or a clunk noise can be determined with the assistance of a helper. Raise the vehicle on a hoist with the wheels free to rotate. Instruct the helper to shift the transmission into gear. Listen for the noise, a mechanics stethoscope is helpful in isolating the source of a noise.

DIAGNOSTIC CHART

CONDITION	POSSIBLE CAUSE	CORRECTION
Wheel Noise	1. Wheel loose.	1. Tighten loose nuts.
	2. Faulty, brinelled wheel bearing.	2. Replace bearing.
Differential Cracked	1. Improper differential side bearing preload.	1. Replace case and inspect gears and bearings for further damage. Set differential bearing preload properly.
	2. Excessive ring gear backlash.	2. Replace case and inspect gears and bearings for further damage. Set ring gear backlash properly.
	3. Vehicle overloaded.	3. Replace case and inspect gears and bearings for further damage. Avoid excessive vehicle weight.
Differential Gears Scored	1. Insufficient lubrication.	1. Replace scored gears. Fill differential with the correct fluid type and quantity.
	2. Improper grade of lubricant.	2. Replace scored gears. Fill differential with the proper fluid type and quantity.
	3. Excessive spinning of one wheel/tire.	3. Replace scored gears. Inspect all gears, pinion bores, and shaft for damage. Service as necessary.

CONDITION	POSSIBLE CAUSE	CORRECTION
Loss Of Lubricant	1. Lubricant level too high.	1. Drain lubricant to the correct level.
	2. Worn axle shaft seals.	2. Replace seals.
	3. Cracked axle housing.	3. Repair as necessary.
	4. Worn pinion seal.	4. Replace seal.
	5. Worn/scored pinion flange journal.	5. Replace pinion flange and seal.
	6. Axle cover not properly sealed.	6. Remove, clean, and re-seal cover.
Axle Overheating	1. Lubricant level low.	1. Fill differential to correct level.
	2. Improper grade of lubricant.	2. Fill differential with the correct fluid type and quantity.
	3. Bearing preload too high.	3. Readjust bearing pre-load.
	4. Insufficient ring gear backlash.	4. Re-adjust ring gear backlash.
Gear Teeth Broke	1. Overloading.	1. Replace gears. Examine other gears and bearings for possible damage.
	2. Ice-spotted pavement.	2. Replace gears and examine remaining parts for damage.
	3. Improper adjustments.	3. Replace gears and examine remaining parts for damage. Ensure ring gear backlash is correct.
Axle Noise	1. Insufficient lubricant.	1. Fill axle with the correct fluid type and quantity.
	2. Improper ring gear and pinion adjustment.	2. Check ring gear and pinion contact pattern. Adjust backlash or pinion depth.
	3. Unmatched ring gear and pinion.	3. Replace gears with a matched ring gear and pinion.
	4. Worn teeth on ring gear and/or pinion.	4. Replace ring gear and pinion.
	5. Loose pinion bearings.	5. Adjust pinion bearing pre-load.
	6. Loose differential bearings.	6. Adjust differential bearing preload.
	7. Misaligned or sprung ring gear.	7. Measure ring gear run-out. Replace components as necessary.
	8. Housing not machined properly.	8. Replace housing.

STANDARD PROCEDURE - FLUID DRAIN AND FILL

NOTE: The fluid required for use in this axle is Mopar® Synthetic Gear and Axle Lubricant 75W-140.

1. Drive the vehicle until the differential lubricant is at the normal operating temperature.
2. With vehicle in neutral, position and raise vehicle on hoist.
3. Remove rear axle drain plug (1) and drain lubricant completely from the axle.
4. Install drain plug and tighten to 50 N·m (37 ft lbs).

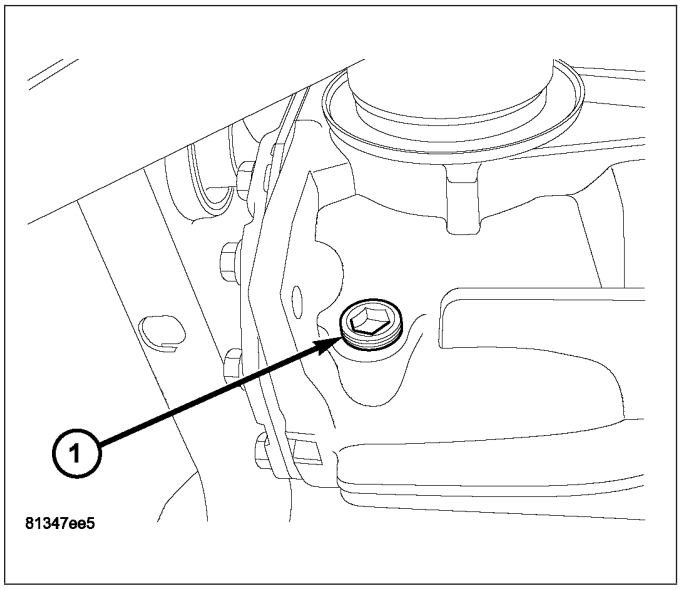

5. Remove fill plug (1) and fill rear axle with 1.2 L (1.3 qts.) Mopar® Synthetic Gear & Axle Lubricant 75W-140.
6. Install fill plug and tighten to 50 N·m (37 ft lbs).

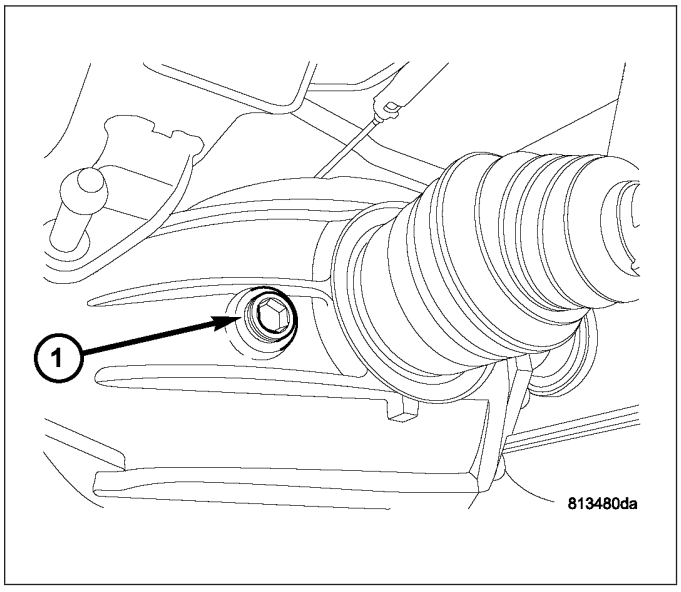

REMOVAL

NOTE: This procedure requires the compression of the rear suspension to ride height. A drive-on hoist should be used. If a drive-on hoist is not used, screw-style under-hoist jack stands are required to compress the rear suspension, facilitating rear halfshaft removal.

CAUTION: Never grasp halfshaft assembly by the inner or outer boots. Doing so may cause the boot to pucker or crease, reducing the service life of the boot and joint. Avoid over angulating or stroking the C/V joints when handling the halfshaft.

1. With vehicle in neutral, position and raise vehicle on hoist.
2. Using 14mm hex, remove axle drain plug (1) and drain rear axle fluid into container suitable for fluid reuse.
3. Install drain plug (1) and torque to 50 N·m (37 ft. lbs.) torque.

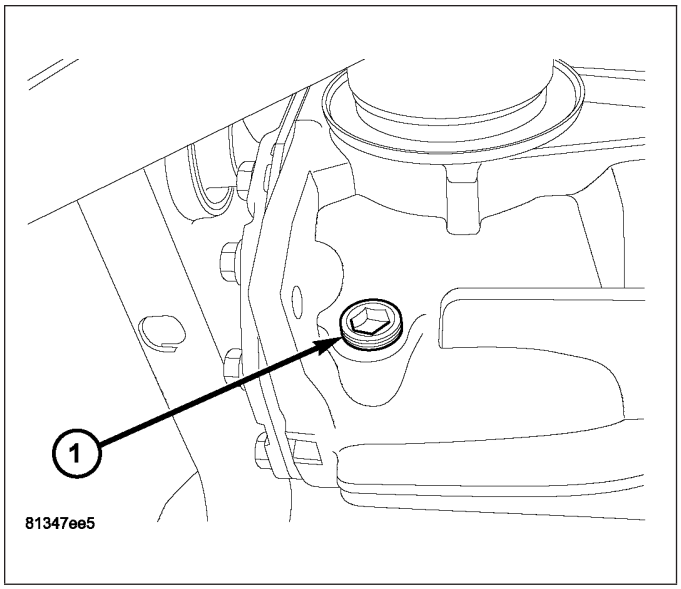

4. Remove rear exhaust system (2) on dual-outlet exhaust models, otherwise, lower exhaust system at rear hanger(s).

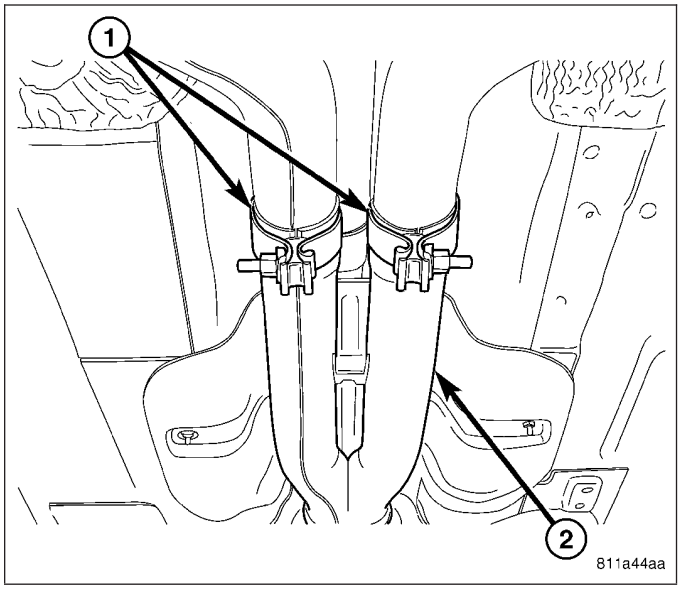

5. Apply alignment index marks (3) to the propeller shaft rubber coupler (1) and axle flange (2).

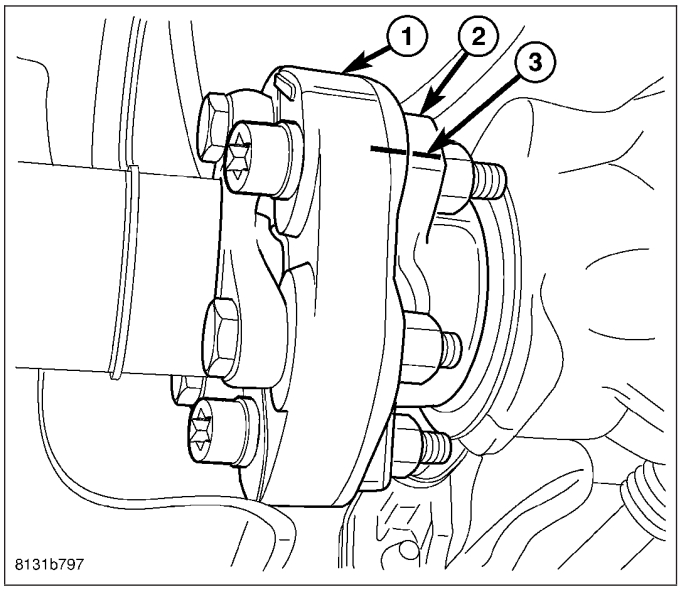

6. Remove three (3) propeller shaft coupler-to-axle flange bolt/nuts.

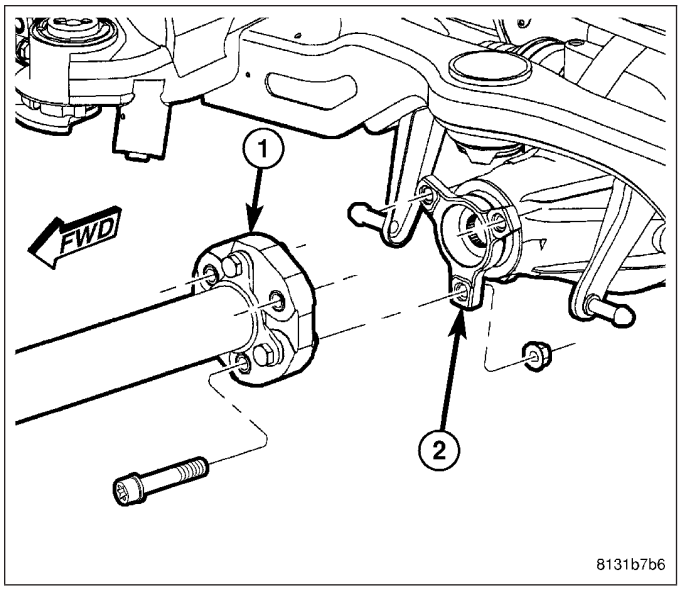

7. Using suitable screwdriver (1), partially disengage halfshaft(s) (2) from axle assembly.

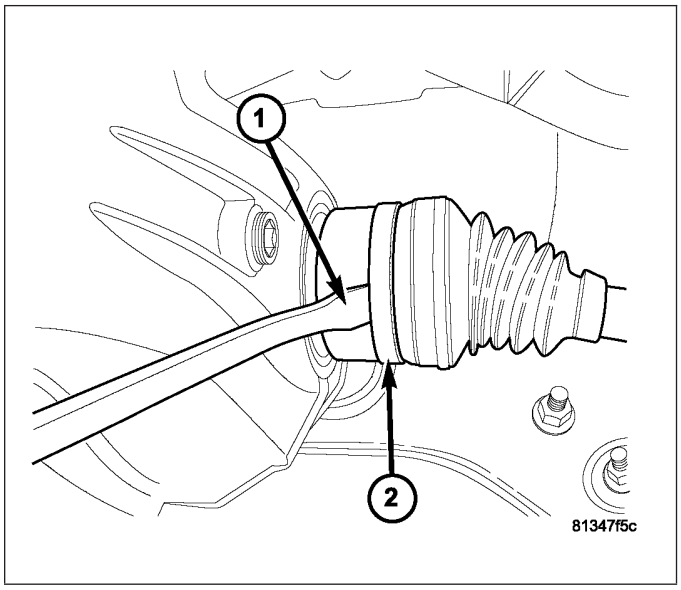

8. If a drive-on hoist is used, position transmission jack(1) to rear axle assembly. If a drive-on hoist is not used, compress rear suspension using screw-style under-hoist jack stands (2), then position transmission jack to rear axle assembly.

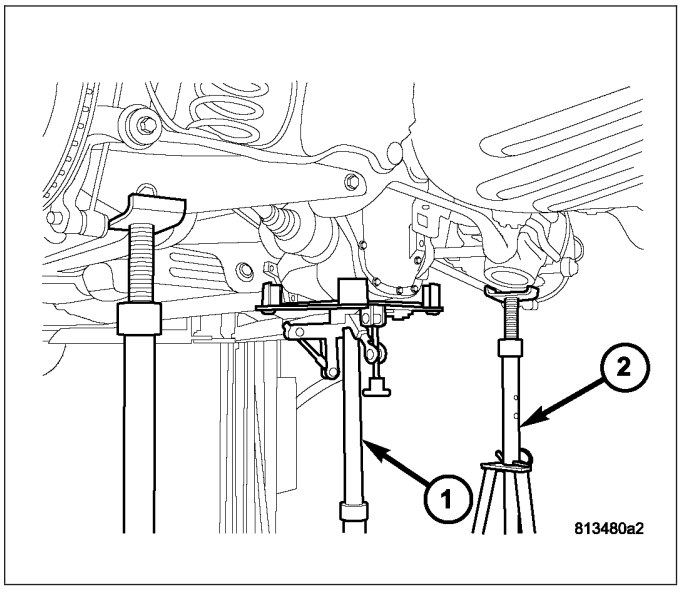

9. Remove rear axle forward mount isolator (1) bolt/nut (2).

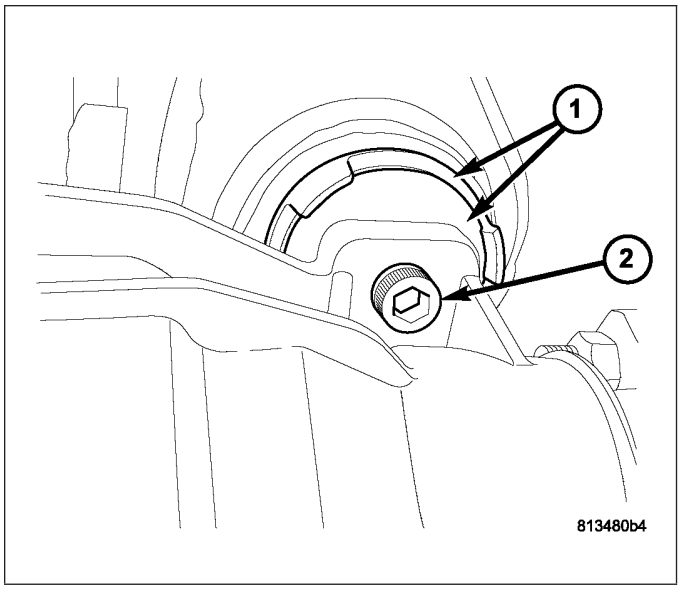

10. Remove two rear axle-to-crossmember bolts (1).

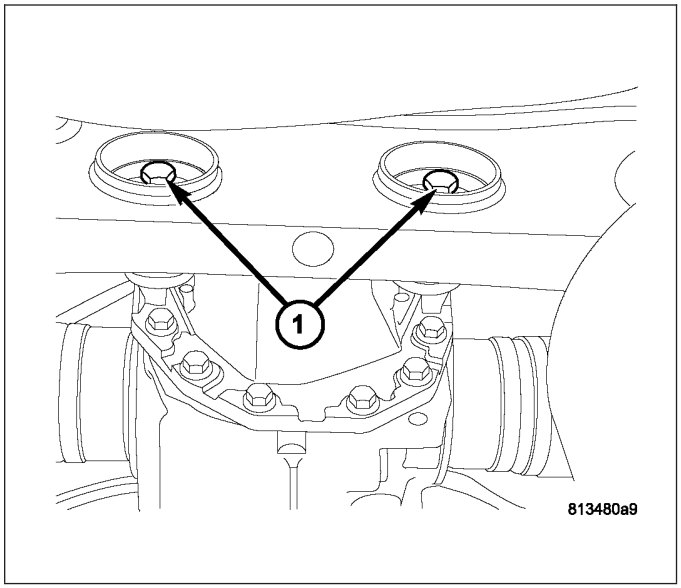

11. Carefully lower rear axle. While lowering axle, separate propeller shaft from axle and support with suitable rope or wire (1).

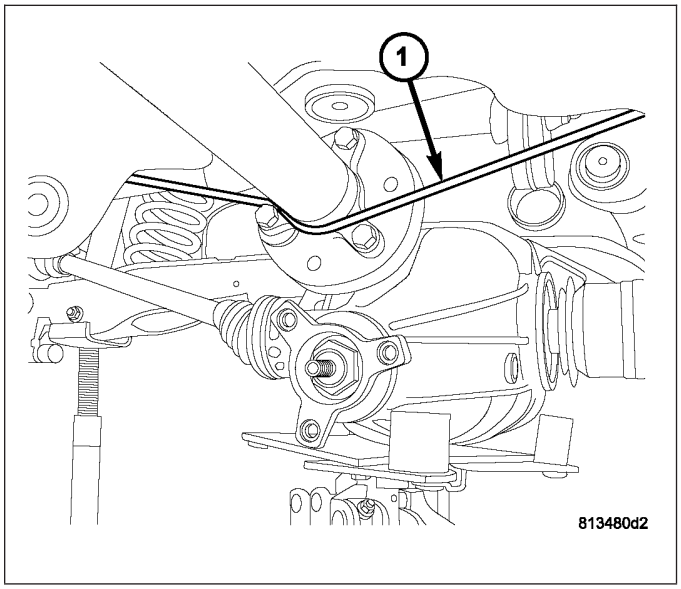

12. Lower axle just enough to remove both halfshafts one at a time. Shift axle assembly in one direction, compressing one halfshaft while removing the other (1). Use caution to protect axle seal and journal.

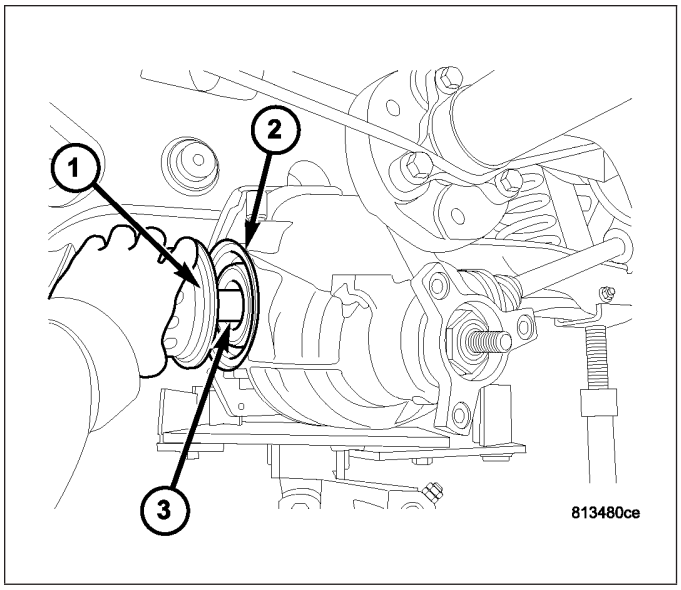

13. Remove axle assembly from vehicle and transfer to bench.
14. Using suitable screwdriver, remove axle seals and discard.

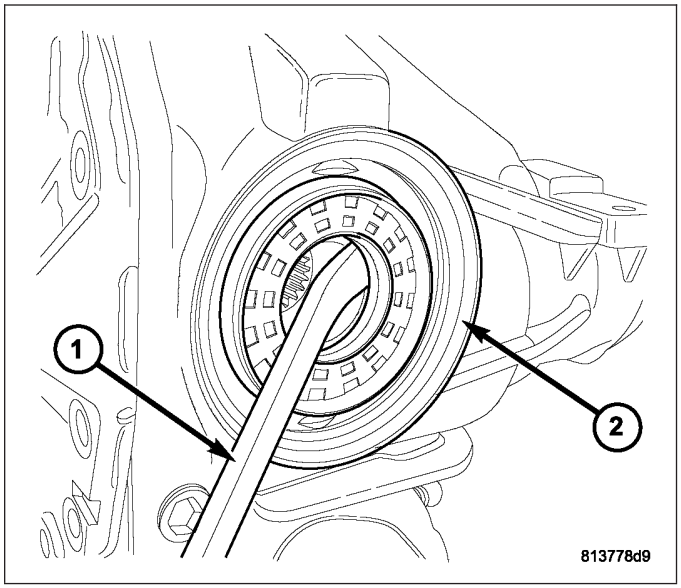

INSTALLATION

1. Install new axle seal(s) (1) using Tool 9755 (2).

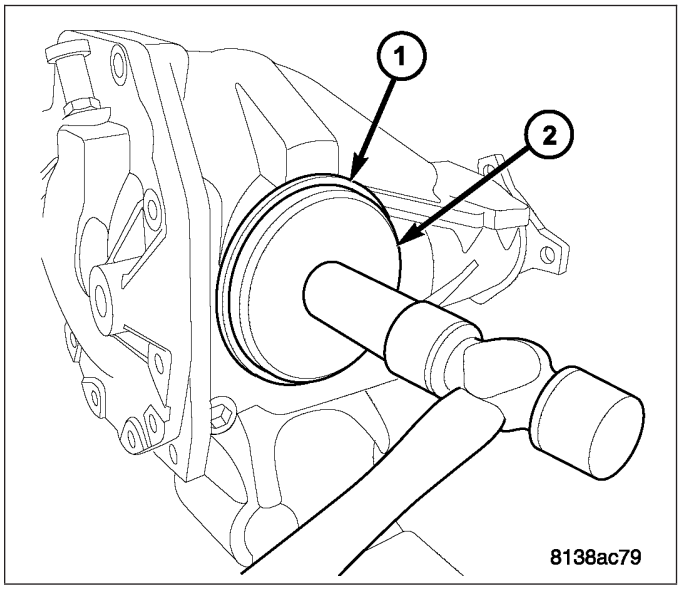

NOTE: Use care when installing halfshaft to axle assembly. The halfshaft installation angle should be minimized to avoid damage to seal upon installation.

2. Using new circlip(s), install halfshaft (1) to rear axle assembly. Use care not to damage axle seals(2). Verify proper installation by pulling outward on joint by hand.

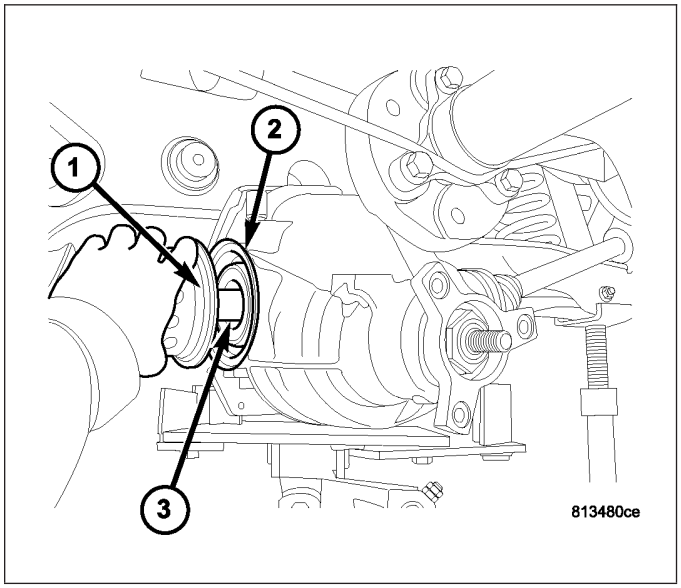

3. Raise rear axle assembly into position. Align propeller shaft index marks (3) and start propeller shaft coupler-to-axle bolt/nuts by hand.

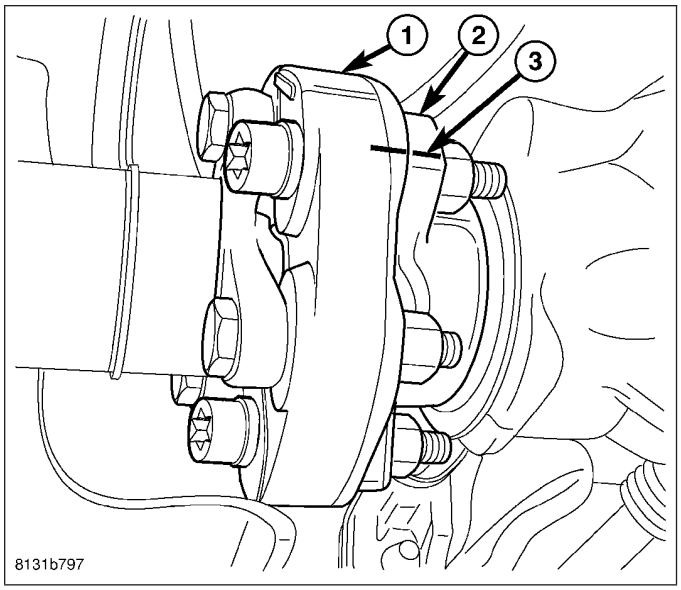

4. Install two rear axle-to-crossmember bolts (1) and torque to 220 N·m (162 ft. lbs.).

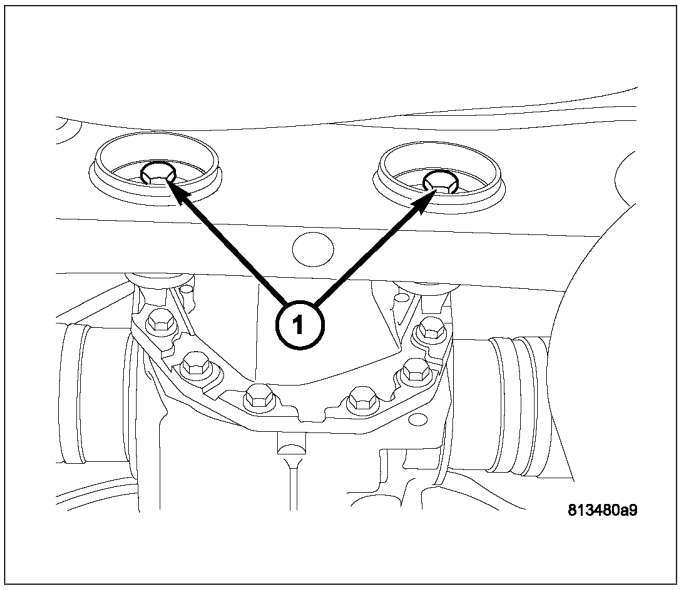

5. Install rear axle front mount isolator (1) as shown and torque bolt/nut to 65 N·m (48 ft. lbs.).

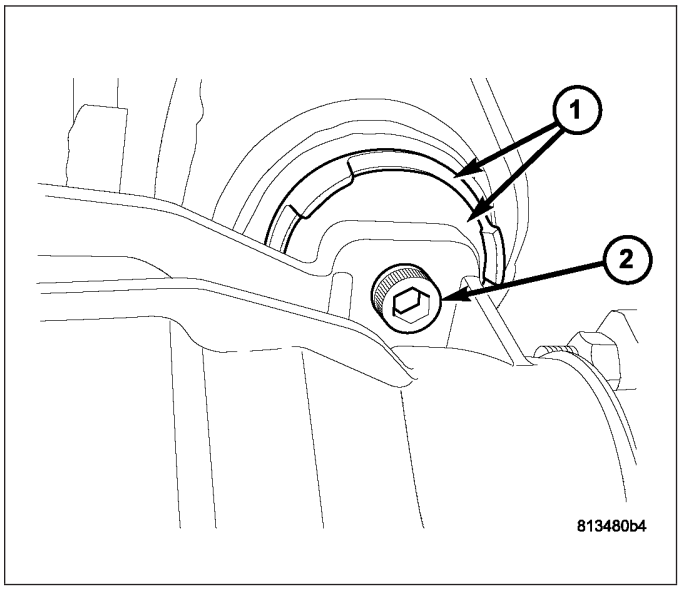

6. Again verify halfshaft inner joints are fully engaged to axle assembly.
7. Remove transmission jack (1).
8. If used, remove screw-type under-hoist jack stands (2).

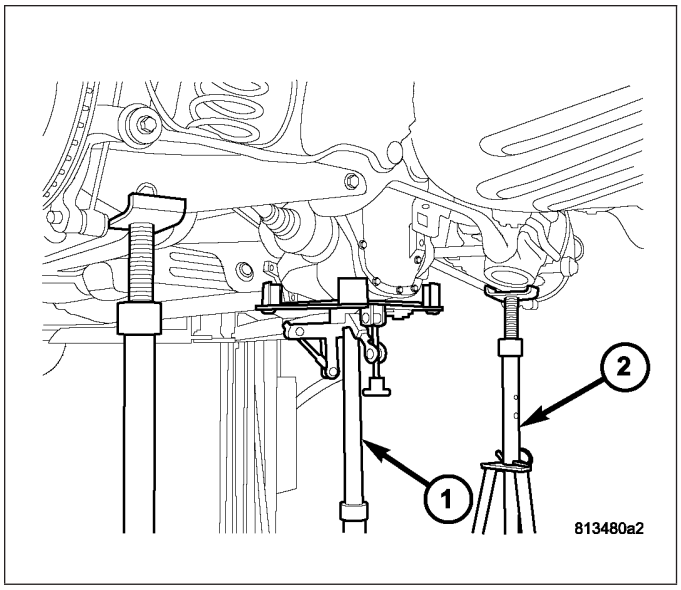

9. Torque propeller shaft coupler-to-axle flange bolt/nuts to 58 N·m (43 ft. lbs.).

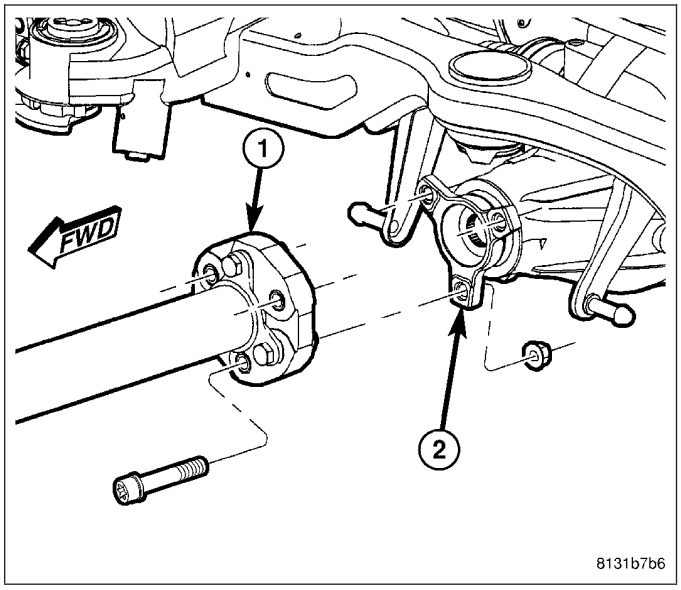

10. Using a 14mm hex, remove rear axle fill plug (1). Fill axle with 1.2L (1.3 qts.) of Mopar® 75W-140 Synthetic Gear & Axle Lubricant. Install fill plug and torque to 50 N·m (37 ft. lbs.).

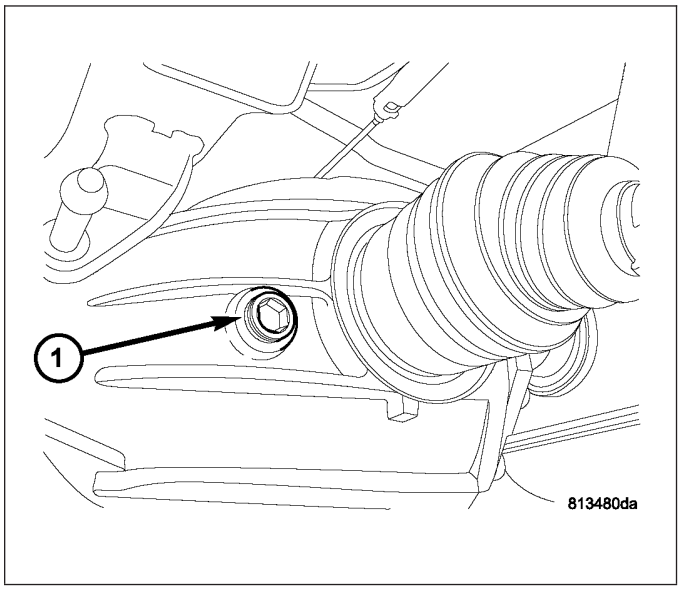

SPECIAL TOOLS–215 MM RII AXLE

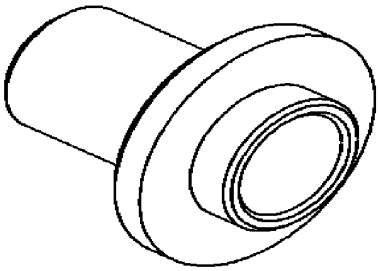

Installer, 9754

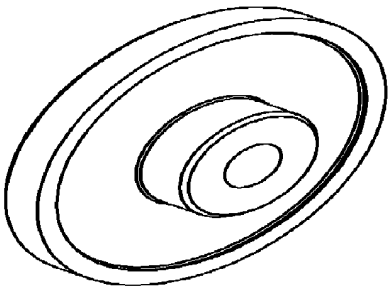

Installer, 9755

SEAL - PINION FLANGE

REMOVAL

1. Remove rear axle assembly from vehicle. Refer to Rear Axle Removal.
2. Measure axle assembly rotating torque and record measurement for reuse on assembly.

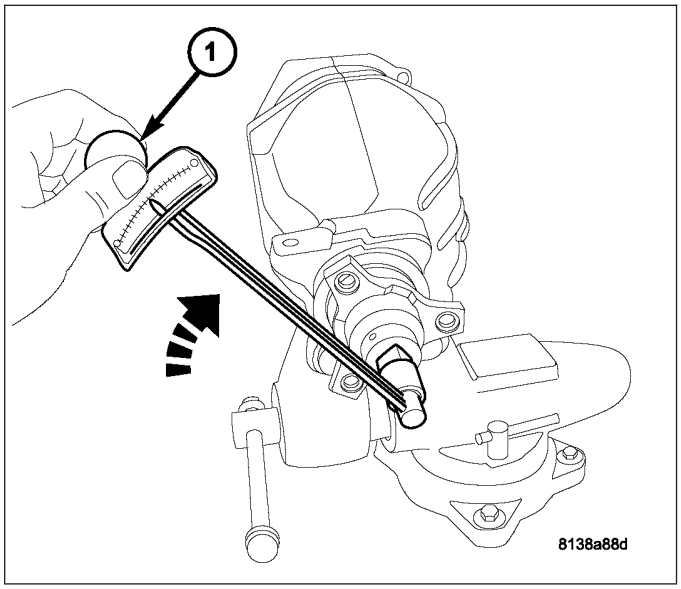

3. Using flange holder C-3281(1) and 41mm socket, remove pinion flange nut and discard.

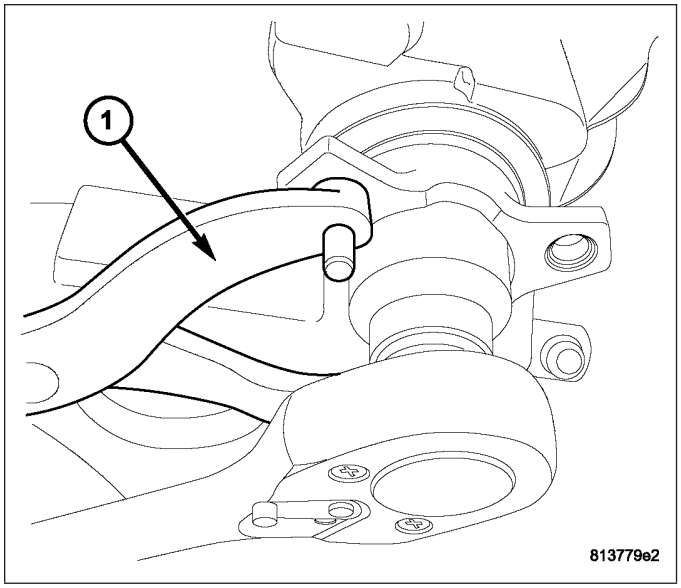

NOTE: Due to axle imbalance concerns, it is necessary to make sure pinion flange-to-shaft orientation is maintained. If alignment marks are not visible, apply appropriate marks before removing pinion flange.

4. Using puller 1026 (1), remove pinion flange (2) from pinion shaft.

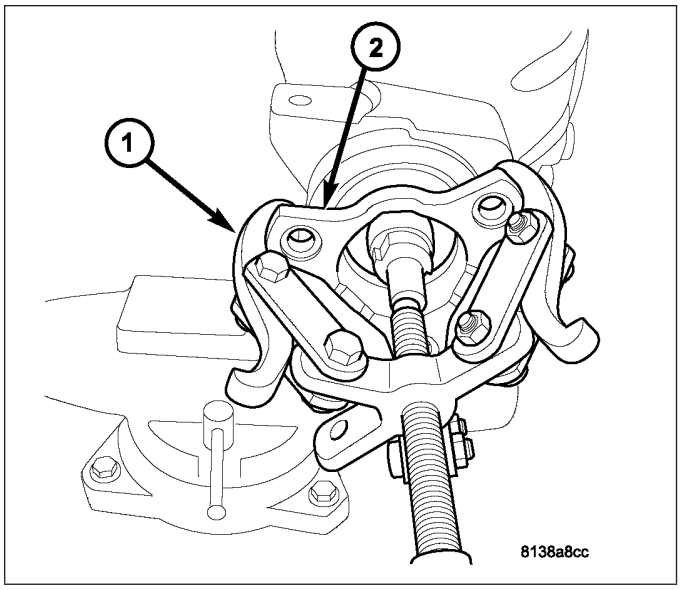

5. Using suitable tool (1), remove pinion seal (2) and discard.

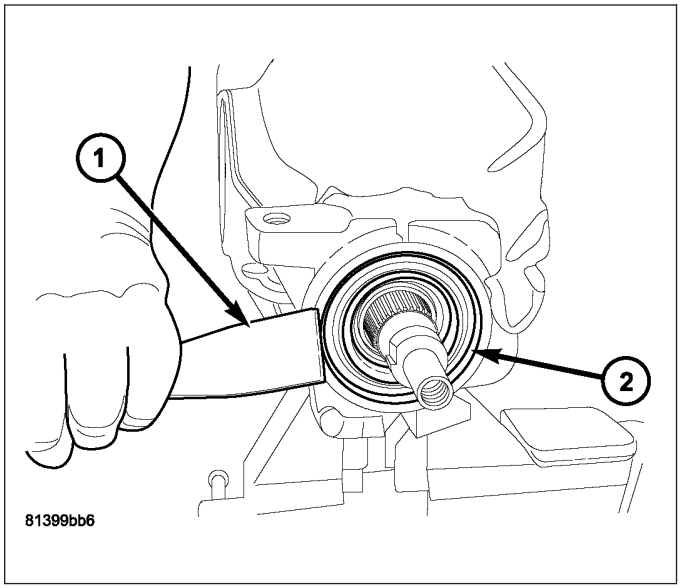

INSTALLATION

1. Apply light coating of gear lubricant to the lip of the pinion seal.
2. Using Tool 9754 (1), install pinion seal until tool bottoms on carrier.

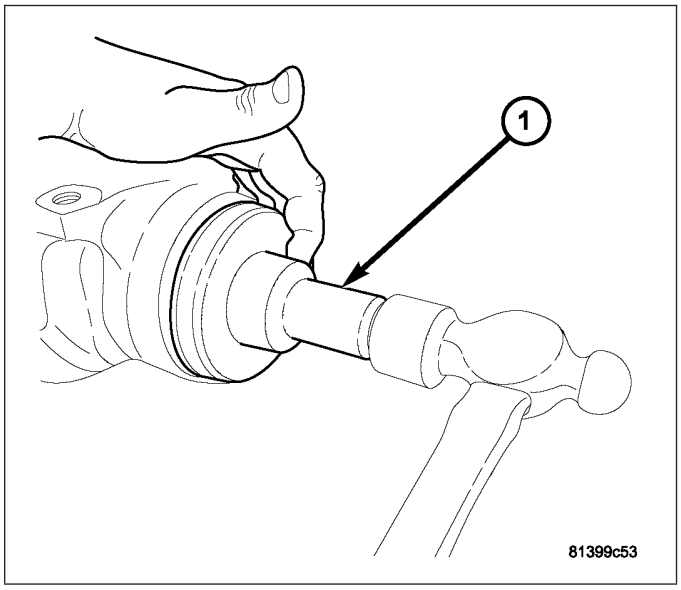

3. Install pinion flange into position. Align index marks to maintain assembly balance.
4. Using Installer 6448A (1), lightly tap on pinion flange (2) until adequate pinion shaft threads are exposed.

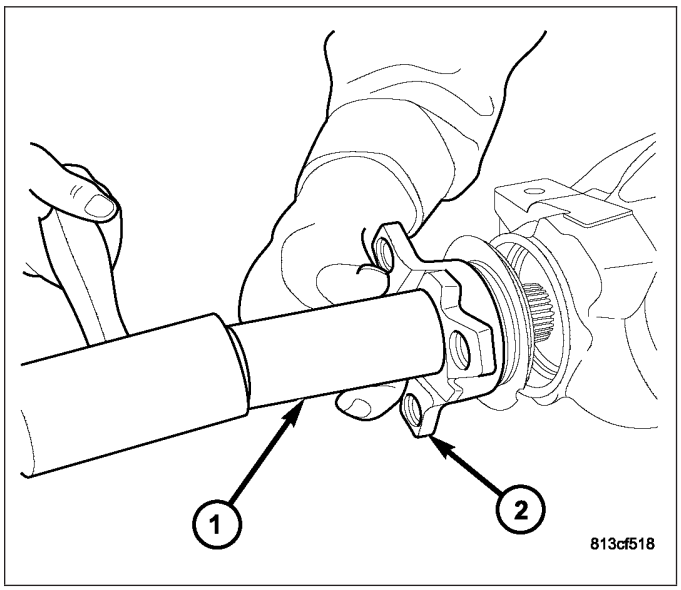

5. Install **new** pinion flange nut. Using flange holder tool C-3281(1) and 41mm socket, torque nut to 136 N·m (100 ft. lbs.).

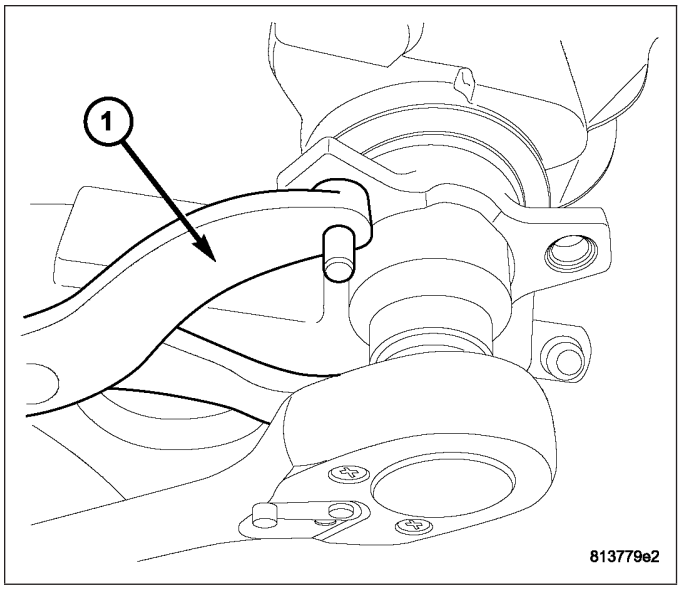

6. Measure assembly turning torque. Axle assembly rotating torque must be should be equal to the reading recorded upon seal/flange removal.

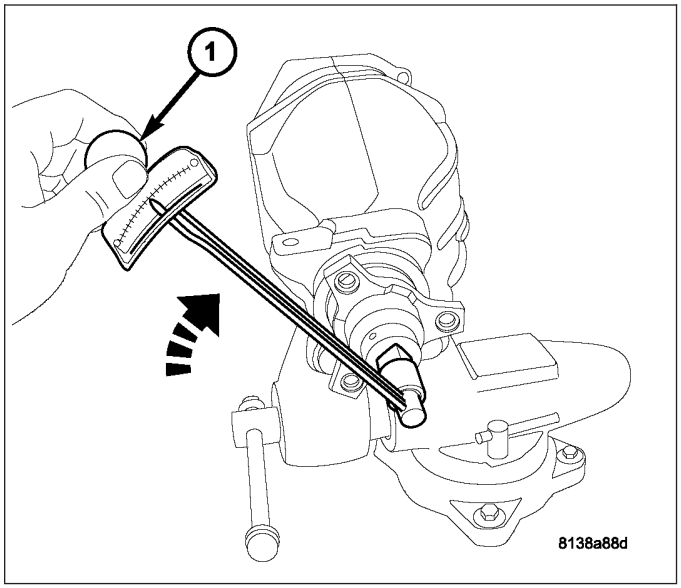

7. If rotating torque is low, increase pinion flange nut torque in 7 N·m (5 ft. lbs.) increments. Repeat until proper rotating torque is received.

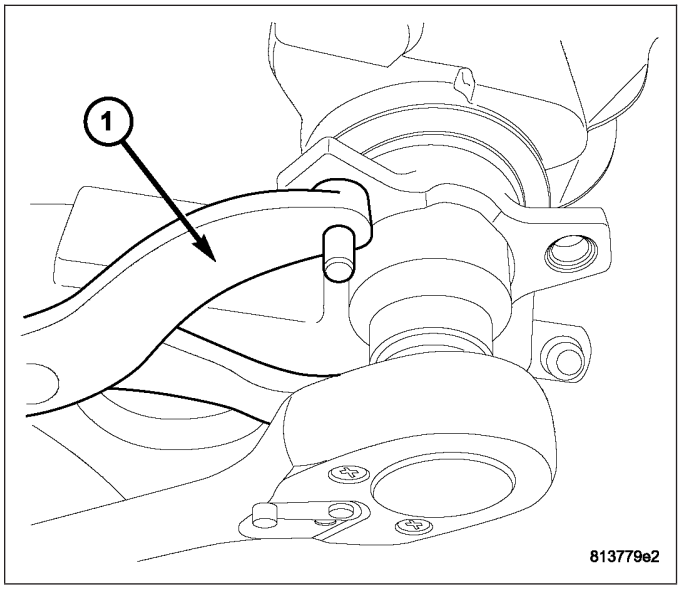

8. Stake pinion flange nut (1) as shown.
9. Install rear axle assembly. Refer to Rear Axle Installation.

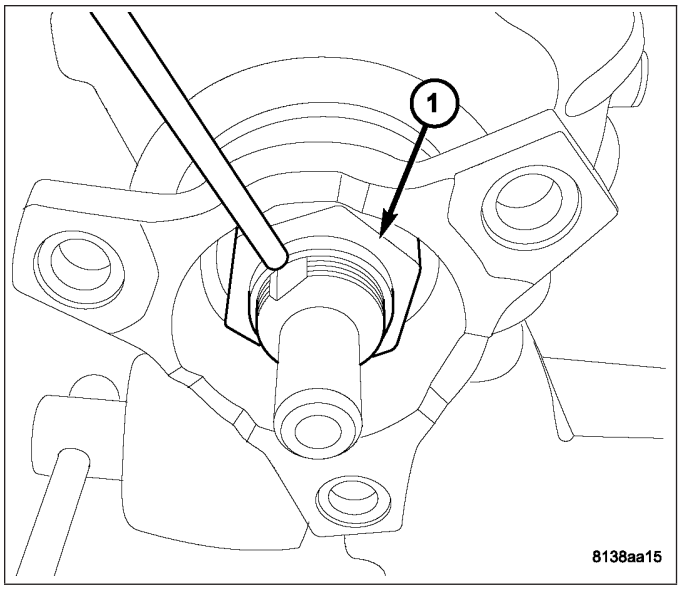

SEAL - AXLE SHAFT

REMOVAL

1. Remove halfshaft(s). (Refer to 3 - DIFFERENTIAL & DRIVELINE/HALF SHAFT - REMOVAL)
2. Using suitable screwdriver (1), remove axle shaft seal (2).
3. Visually inspect halfshaft seal journal for damage (excessive seal groove, nicks, scratches, etc. Replace halfshaft if necessary.

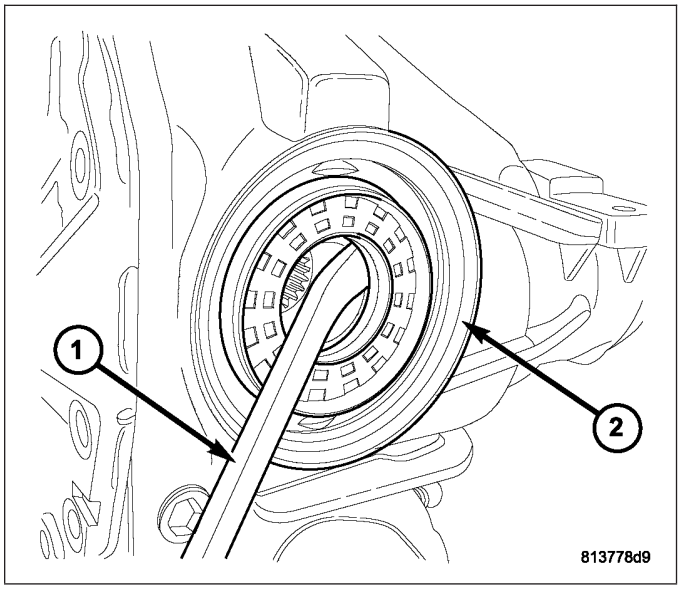

INSTALLATION

1. Using Tool 9755 (2), install **NEW** axle shaft seal (1). Lubricate the inside diameter with Mopar® Gear and Axle Lubricant 75W-140 to protect seal during halfshaft installation.
2. Install halfshaft(s). (Refer to 3 - DIFFERENTIAL & DRIVELINE/HALF SHAFT - INSTALLATION)

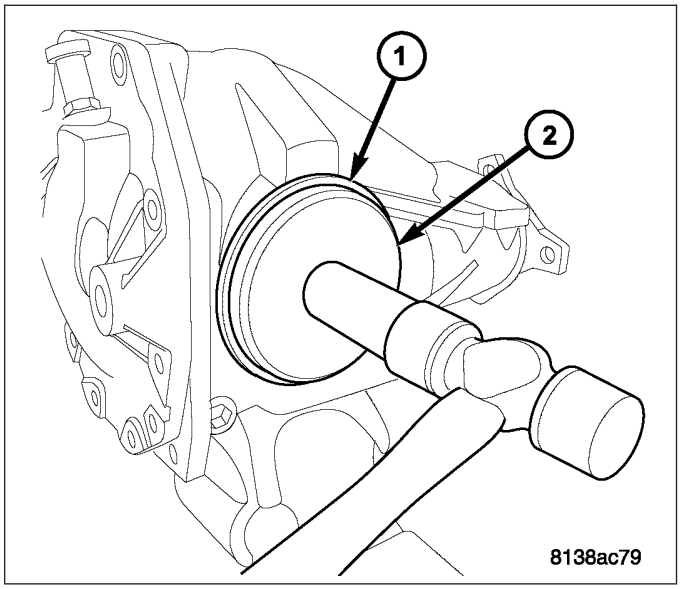

3. Remove fill plug (1) to check and adjust rear axle fluid level. Top off axle with Mopar® Gear and Axle Lubricant 75W-140. Reinstall fill plug and torque to 50 N·m (37 ft. lbs.) torque.

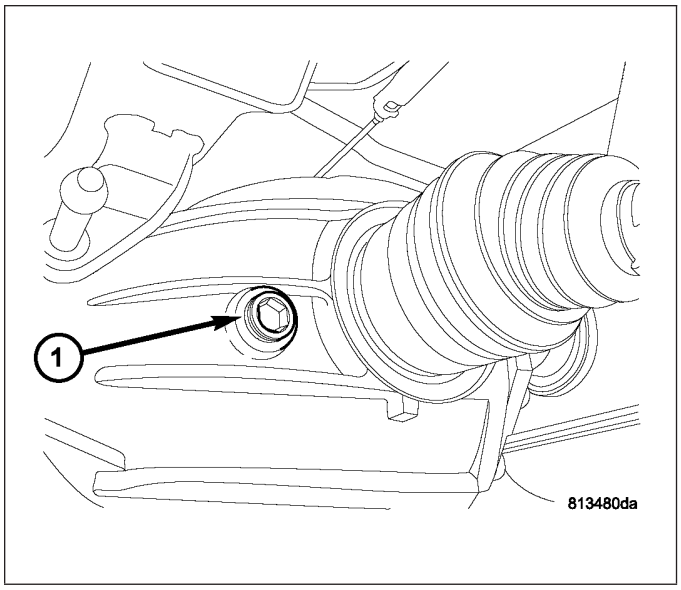

VEHICLE QUICK REFERENCE

TABLE OF CONTENTS

page

FLUID - CAPACITIES & RECOMMENDED
SPECIFICATIONS
RECOMMENDED FLUIDS, LUBRICANTS AND GENUINE PARTS 2
FUSE LOCATIONS & TYPES
SPECIFICATIONS
Power Distribution Centers 4
MAINTENANCE SCHEDULES
DESCRIPTION
MAINTENANCE SCHEDULES 8

page

REPLACEMENT BULBS
SPECIFICATIONS
REPLACEMENT LIGHT BULBS - INTERIOR . . . 15
REPLACEMENT LIGHT BULBS - EXTERIOR . . 15
TRAILER TOWING
SPECIFICATIONS
TRAILER TOWING 17

FLUID - CAPACITIES & RECOMMENDED

SPECIFICATIONS

RECOMMENDED FLUIDS, LUBRICANTS AND GENUINE PARTS

ENGINE

Component	Fluids, Lubricants and Genuine Parts
Engine Coolant	Mopar ® Antifreeze/Coolant 5 Year/100,000 Mile Formula HOAT (Hybrid Organic Additive Technology)
Engine Oil (2.7 Liter)	Use API Certified engine oil. SAE 5W-20 is recommended. Refer to the engine oil fill cap for the correct SAE grade meeting DaimlerChrysler Material Standard MS-6395.
Engine Oil (3.5 Liter)	Use API Certified engine oil. SAE 10W-30 is recommended. Refer to the engine oil viscosity chart for the correct SAE grade meeting DaimlerChrysler Material Standard MS-6395.
Engine Oil (5.7 Liter)	Use API Certified engine oil. SAE 5W-20 is recommended. Refer to the engine oil fill cap for the correct SAE grade meeting DaimlerChrysler Material Standard MS-6395.
Spark Plugs	Refer to the Vehicle Emission Control Information label in the engine compartment.
Oil Filter (2.7 Liter)	Mopar ® 05281090 or equivalent.
Oil Filter (3.5 Liter)	Mopar ® 05281090 or equivalent.
Oil Filter (5.7 Liter)	Mopar ® 05281090 or equivalent.
Fuel Selection (2.7 Liter)	87 Octane
Fuel Selection (3.5 Liter)	89 Octane
Fuel Selection (5.7 Liter)	89 Octane

CHASSIS

Component	Fluids, Lubricants and Genuine Parts
Automatic Transmission	Mopar ® ATF+4 Automatic Transmission Fluid or equivalent.
Brake Master Cylinder	Mopa ® DOT 3 and SAE J1703 or equivalent should be used. Use only recommended brake fluids.
Front Axle	API Certified GL-5 SAE 75W90 Gear Lubricant or equivalent.
Power Steering Reservoir	Mopar ® Power Steering Fluid + 4, Mopar ® ATF+4 Automatic Transmission Fluid or equivalent.
Rear Axle	API Certified GL-5 SAE 75W140 Synthetic Gear Lubricant or equivalent.
Transfer Case	Mopar ® Transfer Case Lubricant LX, P/N 05170055EA, or equivalent.

CAPACITIES

DESCRIPTION	U.S.	Metric
Fuel (approximate)		
2.7 Liter Engines (87 Octane)	18 gallons	68 liters
3.5 Liter Engines (89 Octane)	18 gallons	68 liters
5.7 Liter Engines (89 Octane)	19 gallons	72 liters
Engine Oil-With Filter		
2.7 Liter Engines (SAE 5W-20, API Certified)	6.0 qts.	5.7 liters
3.5 Liter Engines (SAE 10W-30, API Certified)	6.0 qts.	5.7 liters
5.7 Liter Engines (SAE 5W-20, API Certified)	7.0 qts.	6.6 liters
Cooling System *		
2.7 Liter Engines (Mopar ® Antifreeze/Coolant 5 Year/100,000 Mile Formula) or equivalent.	9.7 qts	9.2 liters
3.5 Liter Engines (Mopar ® Antifreeze/Coolant 5 Year/100,000 Mile Formula) or equivalent.	10.6 qts	10.0 liters
5.7 Liter Engines (Mopar ® Antifreeze/Coolant 5 Year/100,000 Mile Formula) or equivalent.	14.6 qts	13.8 liters
* Includes heater and coolant recovery bottle filled to MAX level.		

FUSE LOCATIONS & TYPES

SPECIFICATIONS

Power Distribution Centers

Front Power Distribution Center Fuses

A power distribution center is located in the engine compartment. This center contains fuses and relays.

CAUTION:

- **When installing the Power Distribution Center cover, it is important to ensure the cover is properly positioned and fully latched. Failure to do so may allow water to get into the Power Distribution Center, and possibly result in a electrical system failure.**
- **When replacing a blown fuse, it is important to use only a fuse having the correct amperage rating. The use of a fuse with a rating other than indicated may result in a dangerous electrical system overload. If a properly rated fuse continues to blow, it indicates a problem in the circuit that must be corrected.**

Cavity	Fuse	Circuits
1	20 Amp Yellow	Left High Beam Headlight
2	20 Amp Yellow	Right High Beam Headlight
3	15 Amp Dk. Blue	Adjustable Pedal
4	20 Amp Yellow	Horn
5	25 Amp Clear	Headlamp Washer — If Equipped
6	15 Amp Dk. Blue	Front Control Module (FCM)
7	20 Amp Yellow	Fog Lamp
8	15 Amp Dk. Blue	Park Lamp
9	15 Amp Dk. Blue	Non ABS Brakes
10	5 Amp Orange	Starter
11	20 Amp Yellow	Auto Shutdown/Powertrain Control Module (PCM)
12	—	—
13	—	—
14	25 Amp Clear	Powertrain Control Module
15	20 Amp Yellow	Injectors, Ignition Coils
16	15 Amp Dk. Blue	Powertrain Control Module
17	30 Amp Pink	Antilock Brake System (ABS) Valves
18	30 Amp Pink	Windshield Wiper/Washer

Cavity	Fuse	Circuits
19	50 Amp Red	Radiator Fan
20	20 Amp Lt. Blue	Starter
21	50 Amp Red	ABS Pump Motor
22	40 Amp Green	Radiator Fan High/Low
23	50 Amp Red	High Intensity Lighting
24	—	—
25	30 Amp Pink	Lighting Left High Beam/Right Low Beam
26	20 Amp Lt. Blue	Transmission
27	30 Amp Pink	Lighting Left Low Beam/Right High Beam

Rear Power Distribution Center Fuses

There is also a power distribution center located in the trunk under the spare tire access panel. This center contains fuses and relays.

CAUTION:

- **When installing the Power Distribution Center cover, it is important to ensure the cover is properly positioned and fully latched. Failure to do so may allow water to get into the Power Distribution Center, and possibly result in a electrical system failure.**
- **When replacing a blown fuse, it is important to use only a fuse having the correct amperage rating. The use of a fuse with a rating other than indicated may result in a dangerous electrical system overload. If a properly rated fuse continues to blow, it indicates a problem in the circuit that must be corrected.**

Cavity	Fuse	Circuits
1	60 Amp Clear	Ignition Off Draw
2	40 Amp Green	Battery
3	—	—
4	40 Amp Green	Battery
5	30 Amp Pink	Heated Seat/Steering Column
6	20 Amp Yellow	Fuel Pump
7	—	—
8	15 Amp Dk. Blue	Ignition Start/Run - Start
9	20 Amp Yellow	Console Power Outlet
10	10 Amp Red	Rear Fog Lamp — If Equipped
11	25 Amp C/BRKR	Memory Module/Door Locks
12	25 Amp C/BRKR	Passenger Power Seat

Cavity	Fuse	Circuits
13	30 Amp C/BRKR	Door Module Run/Acc/Delay
14	10 Amp Red	Sentry Key/Remote Keyless Entry/Cluster
15	20 Amp Yellow	Brake Light (5.7L)
16	20 Amp Yellow	Power Outlet Trunk - if equipped
17	—	—
18	20 Amp Yellow	Selectable Power Outlet
19	10 Amp Red	Stop Lamp
20	20 Amp Yellow	Rear Wiper — If Equipped
21	—	—
22	—	—
23	—	—
24	—	—
25	—	—
26	—	—
27	10 Amp Red	Airbag/Occupant Classification Module
28	10 Amp Red	Curtain Airbag - if equipped
29	5 Amp Orange	Sentry Key/Remote Keyless Entry/Powertrain Control Module Ignition Feed
30	10 Amp Red	Steering Column Module/Power Mirrors - if equipped
31	—	—
32	—	—
33	—	—
34	—	—
35	5 Amp Orange	Power Antenna/Garage Door Opener/Ignition Delay
36	20 Amp Yellow	Radio/Navigation
37	15 Amp Dk. Blue	Transmission
38	5 Amp Orange	Analog Clock/Garage Door Opener
39	10 Amp Red	Heated Mirror
40	5 Amp Orange	Power Mirror
41	10 Amp Red	Climate Control Module/Headlamp Leveling — if equipped/Rear Park Assist — if equipped/Tire Pressure Monitoring — if equipped
42	30 Amp Pink	Automatic Temperature Control (ATC) Blower Motor

Cavity	Fuse	Circuits
43	30 Amp Pink	Rear Defroster
44	20 Amp Lt. Blue	Audio Amplifier

MAINTENANCE SCHEDULES

DESCRIPTION

MAINTENANCE SCHEDULES

- For 2.7L engines with Federal Certified Emission Control Systems, and all 6.1L engines, follow Maintenance Schedule **"A"** from 0 to 102,000 miles, or Schedule **"B"** from 0 to 105,000 miles.
- For 2.7L engines with California Certified Emission Control Systems, and all 3.5L and 5.7L engines follow Maintenance Schedule **"A"** or **"B"** from 0–120,000 miles.

There are two maintenance schedules that show the **required** service for your vehicle.

First is Schedule **"B"**. It is for vehicles that are operated under the conditions that are listed below and at the beginning of the schedule. Change the automatic transmission fluid and filter every 60,000 miles (96 000 km) if the vehicle is usually operated under one or more of the conditions marked with an ◇.

- Day or night temperatures are below 32° F (0° C).
- Stop and go driving.
- Extensive engine idling.
- Driving in dusty conditions.
- Short trips of less than 10 miles (16 km).
- More than 50% of your driving is at sustained high speeds during hot weather, above 90° F (32° C).
- Trailer towing. ◇
- Taxi, police, or delivery service (commercial service). ◇
- Off-road or desert operation.

NOTE: If ANY of these apply to you then change your engine oil every 3,000 miles (5 000 km) or 3 months, whichever comes first and follow schedule "B" of the ″Maintenance Schedules″ section of this manual.

NOTE: IF ANY of these apply to you then flush and replace the engine coolant every 102,000 miles (170,000 km) or 60 months, whichever comes first, and follow schedule B of the ″Maintenance Schedules″ section of this manual.

NOTE: Most vehicles are operated under the conditions listed for Schedule ″B″.

Second is Schedule **"A"**. It is for vehicles that are not operated under any of the conditions listed under Schedule ″B″.

Use the schedule that best describes your driving conditions. Where time and mileage are listed, follow the interval that occurs first.

NOTE: Under no circumstances should oil change intervals exceed 6000 miles (10 000 km) or 6 months whichever comes first.

CAUTION: Failure to perform the required maintenance items may result in damage to the vehicle.

At Each Stop for Fuel

- Check the engine oil level about 5 minutes after a fully warmed engine is shut off. Checking the oil level while the vehicle is on level ground will improve the accuracy of the oil level reading. Add oil only when the level is at or below the ADD or MIN mark.
- Check the windshield washer solvent and add if required.

Once a Month

- Check tire pressure and look for unusual wear or damage.
- Inspect the battery and clean and tighten the terminals as required.
- Check the fluid levels of coolant reservoir, brake master cylinder, and transmission and add as needed.

- Check all lights and all other electrical items for correct operation.
- Check rubber seals on each side of the radiator for proper fit.

At Each Oil Change

- Change the engine oil filter.
- Inspect the exhaust system.
- Inspect the brake hoses.
- Inspect the CV joints and front and rear suspension components.
- Check the coolant level, hoses, and clamps.

SCHEDULE B

Follow schedule “B” if you usually operate your vehicle under one or more of the following conditions. Change the automatic transmission fluid and filter every 60,000 miles (96 000 km) if the vehicle is usually operated under one or more of the conditions marked with an ◇.

- Day or night temperatures are below 32° F (0° C).
- Stop and go driving.
- Extensive engine idling.
- Driving in dusty conditions.
- Short trips of less than 10 miles (16.2 km).
- More than 50% of your driving is at sustained high speeds during hot weather, above 90° F (32° C).
- Trailer towing. ◇
- Taxi, police or delivery service (commercial services). ◇
- Off-road or desert operation.
- **If equipped for and operating with E-85 (ethanol) fuel.**

NOTE: If ANY of these apply to you then change your engine oil every 3,000 miles (5 000 km) or 3 months, whichever comes first and follow schedule “B” of the ″Maintenance Schedules″ section of this manual.

NOTE: IF ANY of these apply to you then flush and replace the engine coolant every 102,000 miles (164,000 km) or 60 months, whichever comes first, and follow schedule B of the ″Maintenance Schedules″ section of this manual.

Miles	**3,000**	**6,000**	**9,000**	**12,000**	**15,000**	**18,000**
(Kilometers)	**(5 000)**	**(10 000)**	**(15 000)**	**(20 000)**	**(25 000)**	**(30 000)**
Change engine oil and engine oil filter, if not replaced at 3 months.	X	X	X	X	X	X
Inspect the **air cleaner filter** and replace if required.*	X	X	X	X		X
Replace the **air cleaner filter.**					X	
Inspect the front and rear brake linings and rotors.				X		
Replace the air conditioning filter.				X		
Rotate the tires.		X		X		X

Miles	**21,000**	**24,000**	**27,000**	**30,000**	**33,000**	**36,000**
(Kilometers)	**(35 000)**	**(40 000)**	**(45 000)**	**(50 000)**	**(55 000)**	**(60 000)**
Change engine oil and engine oil filter, if not replaced at 3 months.	X	X	X	X	X	X
Inspect the **air cleaner filter** and replace if required.*	X	X	X		X	X
Replace the **air cleaner filter.**				X		

Miles	**21,000**	**24,000**	**27,000**	**30,000**	**33,000**	**36,000**
(Kilometers)	**(35 000)**	**(40 000)**	**(45 000)**	**(50 000)**	**(55 000)**	**(60 000)**
Replace the **spark plugs.** 5.7L Engine.				X		
Inspect the front and rear brake linings and rotors.		X				X
Check and replace, if necessary, the **PCV valve.***				X		
Replace the air conditioning filter.		X				X
Rotate the tires.		X		X		X

Miles	**39,000**	**42,000**	**45,000**	**48,000**	**51,000**	**54,000**
(Kilometers)	**(65 000)**	**(70 000)**	**(75 000)**	**(80 000)**	**(85 000)**	**(90 000)**
Change engine oil and engine oil filter, if not replaced at 3 months.	X	X	X	X	X	X
Inspect the **air cleaner filter** and replace if required.*	X	X		X	X	X
Replace the **air cleaner filter.**			X			
Inspect the front and rear brake linings and rotors.				X		
Change the rear axle fluid.				X		
Replace the air conditioning filter.				X		
Rotate the tires.		X		X		X
Change the Transfer Case Fluid - All Wheel Drive (AWD) only				X		

Miles	**57,000**	**60,000**	**63,000**	**66,000**	**69,000**	**72,000**
(Kilometers)	**(95 000)**	**(100 000)**	**(105 000)**	**(110 000)**	**(115 000)**	**(120 000)**
Change engine oil and engine oil filter, if not replaced at 3 months.	X	X	X	X	X	X
Inspect the **air cleaner filter** and replace if required.*	X		X	X	X	X
Replace the **air cleaner filter.**		X				
Replace the **spark plugs.** 5.7L Engine.		X				
Inspect the front and rear brake linings and rotors.		X				X
Check and Inspect the accessory drive belt and tensioner. Replace if required.						X
Check and replace, if necessary, the **PCV valve.*** ‡		X				
Change the automatic transmission fluid and filter.		X				
Replace the air conditioning filter.		X				X
Flush and replace engine coolant at 60 months if not done at 102,000 miles.		X				
Rotate the tires.		X		X		X

Miles	**75,000**	**78,000**	**81,000**	**84,000**	**87,000**	**90,000**
(Kilometers)	**(125 000)**	**(130 000)**	**(135 000)**	**(140 000)**	**(145 000)**	**(150 000)**
Change engine oil and engine oil filter, if not replaced at 3 months.	X	X	X	X	X	X
Inspect the **air cleaner filter** and replace if required.*		X	X	X	X	
Replace the **air cleaner filter.**	X					X
Replace the **spark plugs.** 5.7L Engine.						X
Inspect the front and rear brake linings and rotors.				X		
Check and replace, if necessary, the **PCV valve.*** ‡						X
Replace the air conditioning filter.				X		
Rotate the tires.		X		X		X

Miles	**93,000**	**96,000**	**99,000**	**102,000**	**105,000**
(Kilometers)	**(155 000)**	**(160 000)**	**(165 000)**	**(170 000)**	**(175 000)**
Change engine oil and engine oil filter, if not replaced at 3 months.	X	X	X	X	X
Inspect the **air cleaner filter** and replace if required.*	X	X	X	X	
Replace the **air cleaner filter.**					X
Inspect the front and rear brake linings and rotors.		X			
Replace the **engine timing belt** 3.5L Engine.					X
Replace the **spark plugs.** 2.7L, 3.5L Engines.			X		
Check and Inspect the accessory drive belt and tensioner. Replace if required.				X	
Change the rear axle fluid.		X			
Replace the air conditioning filter.		X			
Change the Transfer Case Fluid - All Wheel Drive (AWD) only		X			
Flush and replace engine coolant at 102,000 miles if not done at 60 months.				X	
Rotate the tires.		X		X	

Miles	**108,000**	**111,000**	**114,000**	**117,000**	**120,000**
(Kilometers)	**(180 000)**	**(185 000)**	**(190 000)**	**(195 000)**	**(200 000)**
Change engine oil and engine oil filter, if not replaced at 3 months.	X	X	X	X	X
Inspect the **air cleaner filter** and replace if required.*	X	X	X	X	
Replace the **air cleaner filter.**					X
Inspect the front and rear brake linings and rotors.	X				X
Replace the **spark plugs.** 5.7L Engines.					X

Miles (Kilometers)	108,000 (180 000)	111,000 (185 000)	114,000 (190 000)	117,000 (195 000)	120,000 (200 000)
Check and replace, if necessary, the **PCV valve.***					X
Change the automatic transmission fluid and filter.					X
Replace the air conditioning filter.	X				X
Flush and replace the engine coolant at 120 months, if not replaced at 102,000 miles.					X
Rotate the tires.	X		X		X

* This maintenance is recommended by the manufacture to the owner but is not required to maintain the emissions warranty.

‡ This maintenance is not required if previously replaced.

Inspection and service should also be performed anytime a malfunction is observed or suspected. Retain all receipts.

SCHEDULE A

Miles (Kilometers) [Months]	6,000 (10 000) [6]	12,000 (20 000) [12]	18,000 (30 000) [18]	24,000 (40 000) [24]	30,000 (50 000) [30]	36,000 (60 000) [36]
Change engine oil and engine oil filter.	X	X	X	X	X	X
Inspect the **air cleaner filter** and replace if required.*	X	X	X	X		X
Replace the **air cleaner filter.**					X	
Replace the **spark plugs.** 5.7L Engine.					X	
Inspect the front and rear brake linings and rotors.			X			X
Replace the air conditioning filter.		X		X		X
Rotate the tires.	X	X	X	X	X	X

Miles (Kilometers) [Months]	42,000 (70 000) [42]	48,000 (80 000) [48]	54,000 (90 000) [54]	60,000 (100 000) [60]	66,000 (110 000) [66]	72,000 (120 000) [72]
Change engine oil and engine oil filter.	X	X	X	X	X	X
Inspect the **air cleaner filter** and replace if required.*	X	X	X		X	X
Replace the **air cleaner filter.**				X		
Inspect the front and rear brake linings and rotors.			X			X
Replace the **spark plugs.** 5.7L Engine.				X		
Check and Inspect the accessory drive belt and tensioner. Replace if required.						X
Flush and replace engine coolant at 60 months if not done at 102,000 miles.				X		

Miles **(Kilometers)** **[Months]**	**42,000** **(70 000)** **[42]**	**48,000** **(80 000)** **[48]**	**54,000** **(90 000)** **[54]**	**60,000** **(100 000)** **[60]**	**66,000** **(110 000)** **[66]**	**72,000** **(120 000)** **[72]**
Check and replace, if necessary, the **PCV valve.** *				X		
Replace the air conditioning filter.		X		X		X
Rotate the tires.	X	X	X	X	X	X

Miles **(Kilometers)** **[Months]**	**78,000** **(130 000)** **[78]**	**84,000** **(140 000)** **[84]**	**90,000** **(150 000)** **[90]**	**96,000** **(160 000)** **[96]**	**102,000** **(170 000)** **[102]**
Change engine oil and engine oil filter.	X	X	X	X	X
Inspect the **air cleaner filter** and replace if required.*	X	X		X	X
Replace the **air cleaner filter.**			X		
Inspect the front and rear brake linings and rotors.			X		
Check and Inspect the accessory drive belt and tensioner. Replace if required.					X
Replace the **spark plugs.** 2.7L, 3.5L Engines.				X	
Replace the **spark plugs.** 5.7L Engine.			X		
Check and replace, if necessary, the **PCV valve.***‡			X		
Replace the **engine timing belt** 3.5L Engine.					X
Flush and replace the engine coolant at 102,000 miles if not done at 60 months.					X
Replace the air conditioning filter.		X		X	
Rotate the tires.	X	X	X	X	X

Miles **(Kilometers)** **[Months]**	**108,000** **(180 000)** **[108]**	**114,000** **(190 000)** **[114]**	**120,000** **(200 000)** **[120]**
Change engine oil and engine oil filter.	X	X	X
Inspect the **air cleaner filter** and replace if required.*	X	X	
Replace the **air cleaner filter.**			X
Inspect the front and rear brake linings and rotors.	X		
Replace the **spark plugs.** 5.7L Engine.			X
Check and replace, if necessary, the **PCV valve.***			X
Replace the air conditioning filter.	X		X
Flush and replace the engine coolant at 120 months, if not replaced at 102,000 miles.			X
Rotate the tires.	X	X	X

* This maintenance is recommended by the manufacturer to the owner but is not required to maintain the emissions warranty.

‡ This maintenance is not required if previously replaced.

Inspection and service should also be performed anytime a malfunction is observed or suspected. Retain all receipts.

WARNING:
You can be badly injured working on or around a motor vehicle. Do only that service work for which you have the knowledge and the right equipment. If you have any doubt about your ability to perform a service job, take your vehicle to a competent mechanic.

REPLACEMENT BULBS

SPECIFICATIONS

REPLACEMENT LIGHT BULBS - INTERIOR

LIGHT BULBS — Interior	Bulb Number
Rear Courtesy/Reading Lights	W5W
Rear Compartment (Trunk) Light	579
Overhead Console Reading Lights	578
Visor Vanity Lights	A6220
Glove Box Light	194
Door Courtesy	562
Shift Indicator Light	JKLE14140

NOTE: For lighted switches, see your dealer for replacement instructions.

All of the interior bulbs are glass wedge base or glass cartridge types. Aluminum base bulbs are not approved and should not be used for replacement.

REPLACEMENT LIGHT BULBS - EXTERIOR

LIGHT BULBS — Exterior (300, 300 Touring Models)	Bulb Number
Low Beam Headlamp	9006
High Beam Headlamp	9005
Front Park/Turn Lamp	3757AK
Front Inner Park Lamp	194NA
Front Outer Park Lamp	194NA
Front Fog Lamp—If Equipped	9145/H10 (Serviced at Dealer)
Front Sidemarker	W5W (Serviced at Dealer)
Tail/Stop/Turn Lamp	3057
Rear Sidemarker	168
Backup Lamp	3057
Center High Mount Stop Lamp (CHMSL)	LED
License	168

LIGHT BULBS — Exterior (300C Models)	Bulb Number
Low Beam Headlamp (Standard Halogen)	9006XS
Low Beam Headlamp – High Intensity Discharge (HID)	D1S (Serviced at Dealer)
High Beam Headlamp	9005
Front Park/Turn Lamp	3157AK
Front Fog Lamp	9145/H10 (Serviced at Dealer)
Front Sidemarker	W5W (Serviced at Dealer)
Tail/Stop Lamp	3057
Tail Lamp	3057
Turn Signal Lamp	3057
Backup Lamp	3057
Center High Mount Stop Lamp (CHMSL)	LED

LIGHT BULBS — Exterior (300C Models)	Bulb Number
License	W5W

TRAILER TOWING

SPECIFICATIONS

TRAILER TOWING

In this section you will find safety tips and information on limits to the type of towing you can reasonably do with your vehicle. Before towing a trailer carefully review this information to tow your load as efficiently and safely as possible.

Common Towing Definitions

The following trailer towing related definitions will assist you in understanding the following information:

Gross Vehicle Weight Rating (GVWR)

The GVWR is the total allowable weight of your vehicle. This includes driver, passengers, cargo and tongue weight. The total load must be limited so that you do not exceed the GVWR.

Gross Trailer Weight (GTW)

The gross trailer weight (GTW) is the weight of the trailer plus the weight of all cargo, consumables and equipment (permanent or temporary) loaded in or on the trailer in its ″loaded and ready for operation″ condition. The recommended way to measure GTW is to put your fully loaded trailer on a vehicle scale. The entire weight of the trailer must be supported by the scale.

Gross Axle Weight Rating (GAWR)

The GAWR is the maximum capacity of the front and rear axles. Distribute the load over the front and rear axles evenly. Make sure that you do not exceed either front or rear GAWR.

WARNING:
It is important that you do not exceed the maximum front or rear GAWR. A dangerous driving condition can result if either rating is exceeded. You could lose control of the vehicle and have an accident.

Tongue Weight (TW)

The downward force exerted on the hitch ball by the trailer. In most cases it should not be less than 10% or more than 15% of the trailer load. You must consider this as part of the load on your vehicle.

Frontal Area

The maximum height and maximum width of the front of a trailer.

Trailer Sway Control

The trailer sway control is a telescoping link that can be installed between the hitch receiver and the trailer tongue that typically provides adjustable friction associated with the telescoping motion to dampen any unwanted trailer swaying motions while traveling.

Weight-Carrying Hitch

A weight-carrying hitch supports the trailer tongue weight, just as if it were luggage located at a hitch ball or some other connecting point of the vehicle. These kind of hitches are the most popular on the market today and they’re commonly used to tow small- and medium-sized trailers.

Weight-Distributing Hitch

A weight-distributing hitch includes a receiver attached to the tow vehicle, plus a removable hitch head and spring bar assembly that fits into the receiver opening and hook up brackets that connect the spring bars to the trailer frame.

Trailer Hitch Classification

Your vehicle may be factory equipped for safe towing of trailers weighing over 2,000 lbs (907 kg) with the optional Trailer Tow Prep Package. See your dealer for package content.

The following chart provides the industry standard for the maximum trailer weight a given trailer hitch class can tow and should be used to assist you in selecting the correct trailer hitch for your intended towing condition. Refer to the Trailer Towing Weights (Maximum Trailer Weight Ratings) chart for the Max. GTW towable for your given drivetrain.

Trailer Hitch Classification	
Class	**Max. GTW (Gross Trailer Wt.)**
Class I - Light Duty	2,000 lbs (907 kg)
Class II - Medium Duty	3,500 lbs (1587 kg)
Class III - Heavy Duty	5,000 lbs (2268 kg)
Class IV - Extra Heavy Duty	10,000 lbs (4540 kg)

All trailer hitches should be professionally installed on your vehicle.

Trailer Towing Weights (Maximum Trailer Weight Ratings)

The following chart provides the maximum trailer weight ratings towable for your given drivetrain.

Engine/Transmission	Frontal Area	Max. GTW (Gross Trailer Wt.)	Max. Tongue Wt.
2.7L Automatic	22 SQ. FT. (2.04 square meters)	Up to 2 persons & Luggage 1,000 lbs (454 kg)	100 lbs (45 kg)
	22 SQ. FT. (2.04 square meters)	Up to 3 persons & Luggage 1,000 lbs (454 kg)	100 lbs (45 kg)
	22 SQ. FT. (2.04 square meters)	Up to 4 persons & Luggage 1,000 lbs (454 kg)	100 lbs (45 kg)
	22 SQ. FT. (2.04 square meters)	Up to 5 persons & NO Luggage 1,000 lbs (454 kg)	100 lbs (45 kg)
3.5L & 5.7L Automatic	32 SQ. FT. (2.97 square meters)	Up to 2 persons & Luggage 2,000 lbs (907 kg)	200 lbs (91 kg)
	32 SQ. FT. (2.97 square meters)	Up to 3 persons & Luggage 2,000 lbs (907 kg)	200 lbs (91 kg)
	32 SQ. FT. (2.97 square meters)	Up to 4 persons & Luggage 1,500 lbs (680 kg)	150 lbs (68 kg)
	32 SQ. FT. (2.97 square meters)	Up to 5 persons & NO Luggage 1,000lbs (454 kg)	100 lbs (45 kg)
Refer to local laws for maximum trailer towing speeds.			

NOTE: The trailer tongue weight must be considered as part of the combined weight of occupants and cargo, and should never exceed the weight referenced on the Tire and Loading Information placard.

Trailer and Tongue Weight

Always load a trailer with 60% to 65% of the weight in the front of the trailer. This places 10% to 15% of the Gross Trailer Weight (GTW) on the tow hitch of your vehicle. Loads balanced over the wheels or heavier in the rear can cause the trailer to sway **severely** side to side which will cause loss of control of the vehicle and trailer. Failure to load trailers heavier in front is the cause of many trailer accidents.

Never exceed the maximum tongue weight stamped on your bumper or trailer hitch.

Consider the following items when computing the weight on the rear axle of the vehicle:

- The tongue weight of the trailer.
- The weight of any other type of cargo or equipment put in or on your vehicle.
- The weight of the driver and all passengers.

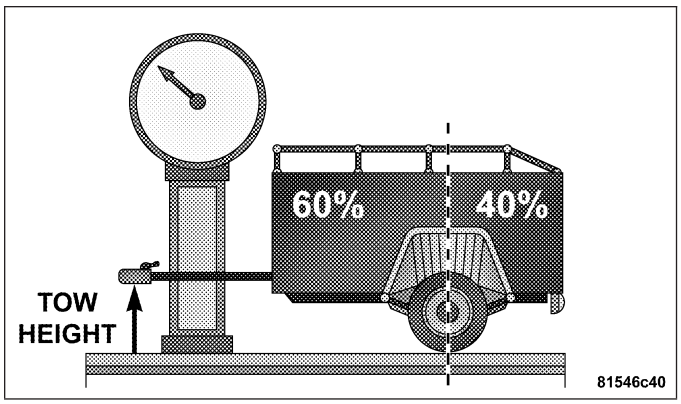

NOTE: Remember that everything put into or on the trailer adds to the load on your vehicle. Also, additional factory-installed options, or dealer-installed options, must be considered as part of the total load on your vehicle. Refer to the Tire and Loading Information placard in the Tire Safety Information Section of this manual for the maximum combined weight of occupants and cargo for your vehicle.

Trailer sway control and a weight distributing (load equalizing) hitch are recommended for Tongue Weights (TW) above 150 lbs (68 kg) and required for Tongue Weights above 300 lbs (136 kg).

Towing Requirements

To promote proper break-in of your new vehicle drivetrain components the following guidelines are recommended:

CAUTION:

- **Avoid towing a trailer for the first 500 miles (805 km) of vehicle operation. Doing so may damage your vehicle.**
- **During the first 500 miles (805 km) of trailer towing, limit your speed to 50 mph (80 km/h).**

When towing a trailer, never exceed the GAWR, or GCWR, ratings.

WARNING:
Improper towing can lead to an injury accident. Follow these guidelines to make your trailer towing as safe as possible:
Make certain that the load is secured in the trailer and will not shift during travel. When trailering cargo that is not fully secured, dynamic load shifts can occur that may be difficult for the driver to control. You could lose control of your vehicle and have an accident.

- When hauling cargo or towing a trailer, do not overload your vehicle or trailer. Overloading can cause a loss of control, poor performance or damage to brakes, axle, engine, transmission, steering, suspension, chassis structure or tires.
- Safety chains must always be used between your vehicle and trailer. Always connect the chains to the frame or hook retainers of the vehicle hitch. Cross the chains under the trailer tongue and allow enough slack for turning corners.
- Vehicles with trailers should not be parked on a grade. When parking, apply the parking brake on the tow vehicle. Put the tow vehicle automatic transmission in P for Park. Always, block or ″chock″ the trailer wheels.
- GCWR must not be exceeded.
- **Total weight must be distributed between the tow vehicle and the trailer such that the following four ratings are not exceeded:**
  - GVWR
  - GTW
  - GAWR

- Tongue weight rating for the trailer hitch utilized (This requirement may limit the ability to always achieve the 10% to 15% range of tongue weight as a percentage of total trailer weight).

Towing Requirements - Tires

− Do not attempt to tow a trailer while using a compact spare tire.

− Proper tire inflation pressures are essential to the safe and satisfactory operation of your vehicle.

− Also, check the trailer tires for proper tire inflation pressures before trailer usage.

− Check for signs of tire wear or visible tire damage before towing a trailer. Refer to the (Refer to 22 - TIRES/WHEELS/TIRES - DESCRIPTION) section of this manual on Tread Wear Indicators for the proper inspection procedure.

− When replacing tires refer to (Refer to 22 - TIRES/WHEELS/TIRES - DESCRIPTION) section of this manual on Replacement Tires for proper tire replacement procedures. Replacing tires with a higher load carrying capacity will not increase the vehicle's GVWR and GAWR limits.

Towing Requirements - Trailer Brakes

− Do **not** interconnect the hydraulic brake system or vacuum system of your vehicle with that of the trailer. This could cause inadequate braking and possible personal injury.

− An electronically actuated trailer brake controller is required when towing a trailer with electronically actuated brakes. When towing a trailer equipped with a hydraulic surge actuated brake system, an electronic brake controller is not required.

− Trailer brakes are recommended for trailers over 1,000 lbs (454 kg) and required for trailers in excess of 2,000 lbs (907 kg).

CAUTION:
If the trailer weighs more than 1,000 lbs (454 kg) loaded, it should have its own brakes and they should be of adequate capacity. Failure to do this could lead to accelerated brake lining wear, higher brake pedal effort, and longer stopping distances.

WARNING:
Do not connect trailer brakes to your vehicle's hydraulic brake lines. It can overload your brake system and cause it to fail. You might not have brakes when you need them and could have an accident.
Towing any trailer will increase your stopping distance. When towing you should allow for additional space between your vehicle and the vehicle in front of you. Failure to do so could result in an accident.

Towing Requirements - Trailer Lights & Wiring

Whenever you pull a trailer, regardless of the trailer size, stop lights and turn signals on the trailer are required for motoring safety.

The Trailer Tow Package may include a 4 and 7 pin wiring harness. Use a factory approved trailer harness and connector.

NOTE: Do not cut or splice wiring into the vehicles wiring harness.

The electrical connections are all complete to the vehicle but you must mate the harness to a trailer connector. Refer to the following illustrations.

Towing Tips

Before setting out on a trip, practice turning, stopping and backing the trailer in an area away from heavy traffic.

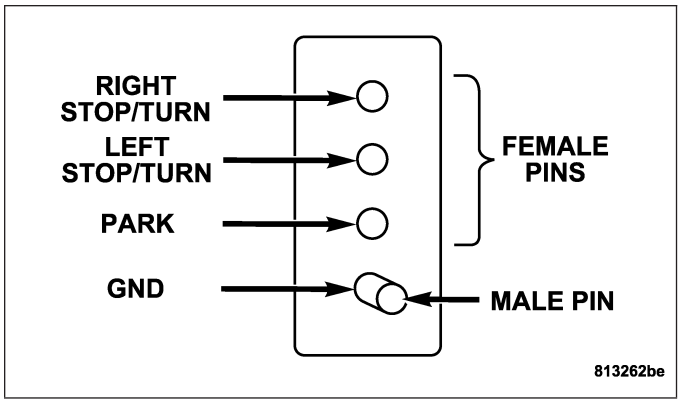

Towing Tips - Automatic Transmission

The “D” range can be selected when towing. However, if frequent shifting occurs while in this range, the “3” range should be selected.Using the “3” range while operating the vehicle under heavy operating conditions will improve performance and extend transmission life by reducing excessive shifting and heat build up. This action will also provide better engine braking.

The automatic transmission fluid and filter should be changed if you REGULARLY tow a trailer for more than 45 minutes of continuous operation. See Schedule “B” in section 8 of this manual for transmission fluid change intervals.

NOTE: Check the automatic transmission fluid level before towing.

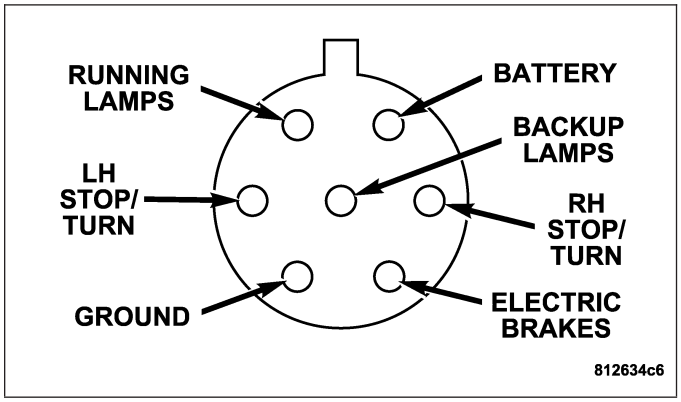

Towing Tips - Electronic Speed Control (If Equipped)

- Don’t use in hilly terrain or with heavy loads.
- When using the speed control, if you experience speed drops greater than 10 mph (16 km/h), disengage until you can get back to cruising speed.
- Use speed control in flat terrain and with light loads to maximize fuel efficiency.

Towing Tips - Autostick (If Equipped)

- For vehicles equipped with Autostick. By using the Autostick modes, and selecting a specific gear range, frequent shifting can be avoided. The highest gear range should be selected that allows for adequate performance. For example, choose “4” if the desired speed can be maintained. Choose “3” or “2” if needed to maintain the desired speed.
- Extended driving at high RPM should be avoided to prevent excess heat generation. A reduction in vehicle speed may be required to avoid extended driving at high RPM. Return to a higher gear range or vehicle speed when road conditions and RPM level allows.

Towing Tips - Cooling System

To reduce potential for engine and transmission overheating, take the following actions:

- City Driving - When stopped for short periods of time, put transmission in neutral and increase engine idle speed.
- Highway Driving - Reduce speed.
- Air Conditioning - Turn off temporarily.
- refer to Cooling System Operating information in the Maintenance section of this manual for more information.

BRAKES

TABLE OF CONTENTS

page

BRAKES - BASE 1
BRAKES - ABS ELECTRICAL DIAGNOSTICS . . . 173
BRAKES - ABS SERVICE INFORMATION 385

BRAKES - BASE

TABLE OF CONTENTS

page

BRAKES - BASE
DESCRIPTION - BASE BRAKES 3
WARNING 3
CAUTION 3
STANDARD PROCEDURE
BASE BRAKE BLEEDING 4
BASE BRAKE BLEEDING - SRT8 7
SPECIFICATIONS
BRAKE FASTENER TORQUE 13
SPECIAL TOOLS
BASE BRAKE SYSTEM 14
SWITCH-ADJUSTABLE PEDALS
DESCRIPTION 15
REMOVAL 15
INSTALLATION 16
SENSOR - BRAKE FLUID LEVEL
REMOVAL 17
INSTALLATION 17
HYDRAULIC/MECHANICAL
DESCRIPTION
DISC BRAKES 18
DISC BRAKES - SRT8 19
PADS - FRONT BRAKE
REMOVAL 20
CLEANING 21
INSPECTION 21
INSTALLATION 21
PADS - REAR BRAKE
REMOVAL 24
CLEANING 25
INSPECTION 25
INSTALLATION 25
PADS - FRONT/REAR BRAKE - SRT8
STANDARD PROCEDURE
BRAKE PAD BURNISHING 28
REMOVAL 28
CLEANING 31
INSPECTION 31
INSTALLATION 31
CALIPER - FRONT SINGLE PISTON DISC BRAKE
REMOVAL 35
DISASSEMBLY 36
CLEANING 38
INSPECTION 38
ASSEMBLY 38
INSTALLATION 40
CALIPER - FRONT TWIN PISTON DISC BRAKE
REMOVAL
AWD 43
RWD 44
DISASSEMBLY 46
CLEANING 49
INSPECTION 49
ASSEMBLY 49
INSTALLATION
AWD 52
RWD 54
CALIPER - FRONT DISC BRAKE - SRT8
REMOVAL 56
INSTALLATION 58
CALIPER - REAR DISC BRAKE
REMOVAL 61
DISASSEMBLY 62
CLEANING 64
INSPECTION 64
ASSEMBLY 64
INSTALLATION 67
CALIPER - REAR DISC BRAKE - SRT8
REMOVAL 69
INSTALLATION 71

FLUID
DIAGNOSIS AND TESTING
BRAKE FLUID CONTAMINATION 74
STANDARD PROCEDURE
BRAKE FLUID LEVEL CHECKING 74
SPECIFICATIONS
BRAKE FLUID 74
RESERVOIR - MASTER CYLINDER FLUID
REMOVAL 75
INSTALLATION 77
JUNCTION BLOCK
DESCRIPTION 79
OPERATION 79
REMOVAL 79
INSTALLATION 81
MASTER CYLINDER
DESCRIPTION 83
STANDARD PROCEDURE
MASTER CYLINDER BLEEDING - MK25 84
MASTER CYLINDER BLEEDING - MK25E 85
REMOVAL
MASTER CYLINDER 86
MASTER CYLINDER - RHD 89
DISASSEMBLY 92
ASSEMBLY 93
INSTALLATION
MASTER CYLINDER 94
MASTER CYLINDER - RHD 97
PEDAL
REMOVAL
PEDAL 100
PEDAL - RHD 101
INSTALLATION
PEDAL 103
PEDAL - RHD 105
PEDAL - ADJUSTABLE BRAKE
STANDARD PROCEDURE
ADJUSTABLE PEDALS SYCHRONIZATION . . 107
REMOVAL 108
INSTALLATION 110
BOOSTER - POWER BRAKE
REMOVAL
BOOSTER 113
BOOSTER - RHD 115
INSTALLATION
BOOSTER 118
BOOSTER - RHD 121
VALVE - PROPORTIONING
DESCRIPTION 125
OPERATION 125
ROTOR
DIAGNOSIS AND TESTING
BRAKE ROTOR 126
STANDARD PROCEDURE
BRAKE ROTOR MACHINING 130
REMOVAL
FRONT 131
REAR 133
FRONT - SRT8 135
REAR - SRT8 136
INSTALLATION
FRONT 139
REAR 141
FRONT - SRT8 142
REAR - SRT8 144
SPECIFICATIONS
BRAKE ROTOR 146
TUBES/HOSES
DESCRIPTION 147
INSPECTION 147
PARKING BRAKE
DESCRIPTION 148
CABLE - PARKING BRAKE FRONT
REMOVAL 149
INSTALLATION 152
CABLE - PARKING BRAKE REAR
REMOVAL 156
INSTALLATION 158
LEVER - PARKING BRAKE
REMOVAL
LEVER 161
LEVER - RHD 163
INSTALLATION
LEVER 165
LEVER - RHD 167
SHOE AND LINING - PARKING BRAKE
REMOVAL 169
INSTALLATION 170
ADJUSTMENTS
PARKING BRAKE SHOE ADJUSTMENT 171

BRAKES - BASE

DESCRIPTION - BASE BRAKES

The base brake system consists of the following components:

- Brake pedal
- Master cylinder
- Power brake booster
- Brake tubes and hoses
- Proportioning valve (non-ABS only)
- Disc brakes (front and rear)
- Brake lamp switch
- Brake fluid level sensor
- Parking brake

All brakes are power assist type through the use of a vacuum operated power brake booster.

The hydraulic brake system is front/rear split on both the non-antilock and antilock braking systems. This means the front brakes are on one hydraulic circuit from the master cylinder and the rear brakes are on the other.

Front disc brakes control the braking of the front wheels; rear braking is controlled by rear disc brakes.

Some vehicles are equipped with an optional antilock brake system (ABS) with traction control. This system shares most base brake hardware used on vehicles without ABS. An Electronic Stability Program (ESP) is also available. All components differing from the base brake hardware are described in detail in the Antilock Brake System section.

The parking brake on this vehicle is pedal-operated.

For more information on the description of any individual base brake component, refer to that component elsewhere in this section. For information on the brake lamp switch, (Refer to 8 - ELECTRICAL/LAMPS/LIGHTING - EXTERIOR/BRAKE LAMP SWITCH - DESCRIPTION)

WARNING

WARNING: Dust and dirt accumulating on brake parts during normal use may contain asbestos fibers from production or aftermarket brake linings. Breathing excessive concentrations of asbestos fibers can cause serious bodily harm. Exercise care when servicing brake parts. Do not sand or grind brake lining unless equipment used is designed to contain the dust residue. Do not clean brake parts with compressed air or by dry brushing. Cleaning should be done by dampening the brake components with a fine mist of water, then wiping the brake components clean with a dampened cloth. Dispose of cloth and all residue containing asbestos fibers in an impermeable container with the appropriate label. Follow practices prescribed by the Occupational Safety And Health Administration (OSHA) and the Environmental Protection Agency (EPA) for the handling, processing, and disposing of dust or debris that may contain asbestos fibers.

CAUTION

CAUTION: Use only Mopar® brake fluid or an equivalent from a tightly sealed container. Brake fluid must conform to DOT 3 specifications. Do not use petroleum-based fluid because seal damage in the brake system will result.

CAUTION: Brake fluid will damage painted surfaces. If brake fluid is spilled on any painted surfaces, wash it off immediately with water.

CAUTION: Never use gasoline, kerosene, alcohol, motor oil, transmission fluid, or any fluid containing mineral oil to clean system components. These fluids damage rubber cups and seals.

CAUTION: During service procedures, grease or any other foreign material must be kept off the caliper assembly, brake linings, brake rotor and external surfaces of the hub.

CAUTION: Disc brake calipers are made of aluminum. They are anodized and appear black in color. When handling the calipers or brake rotors, be careful to avoid damaging them, and avoid scratching or nicking the brake pad lining.

CAUTION: Anytime the battery has been disconnected and is reconnected it is important that this be performed properly. The vehicle may be equipped with systems that require special calibration processes. (Refer to 8 - ELECTRICAL/BATTERY SYSTEM - STANDARD PROCEDURE)

STANDARD PROCEDURE

BASE BRAKE BLEEDING

CAUTION: Before removing the master cylinder cover, wipe it clean to prevent dirt and other foreign matter from dropping into the master cylinder.

CAUTION: Use only Mopar® brake fluid or an equivalent from a fresh, tightly sealed container. Brake fluid must conform to DOT 3 specifications.

NOTE: For bleeding the antilock brake hydraulic system, (Refer to 5 - BRAKES - STANDARD PROCEDURE)

NOTE: Do not pump the brake pedal at any time while having a bleeder screw open during the bleeding process. This will only increase the amount of air in the system and make additional bleeding necessary.

NOTE: Do not allow the master cylinder reservoir to run out of brake fluid while bleeding the system. An empty reservoir will allow additional air into the brake system. Check the fluid level frequently and add fluid as needed.

The following wheel circuit sequence for bleeding the brake hydraulic system should be used to ensure adequate removal of all trapped air from the brake hydraulic system.

- Right rear wheel
- Left rear wheel
- Right front wheel
- Left front wheel

NOTE: Pressure bleeding is highly recommended to bleed this brake system to ensure all air is removed from system. Manual bleeding may also be used, but additional time is needed to remove all air from system.

The base brake system can be bled using the pressure method or the manual method. Both methods are presented in this text.

PRESSURE BLEEDING METHOD

NOTE: Follow pressure bleeder manufacturer's instructions for use of pressure bleeding equipment.

1. Remove filler cap from the top of fluid reservoir (2) on master cylinder.
2. Install Adapter (1), Special Tool 6921, in the caps place on the reservoir (2).
3. Attach Bleeder Tank, Special Tool C-3496-B, or equivalent, to Adapter 6921 (1). Pressurize the system following the pressure bleeder manufacturer's instructions.

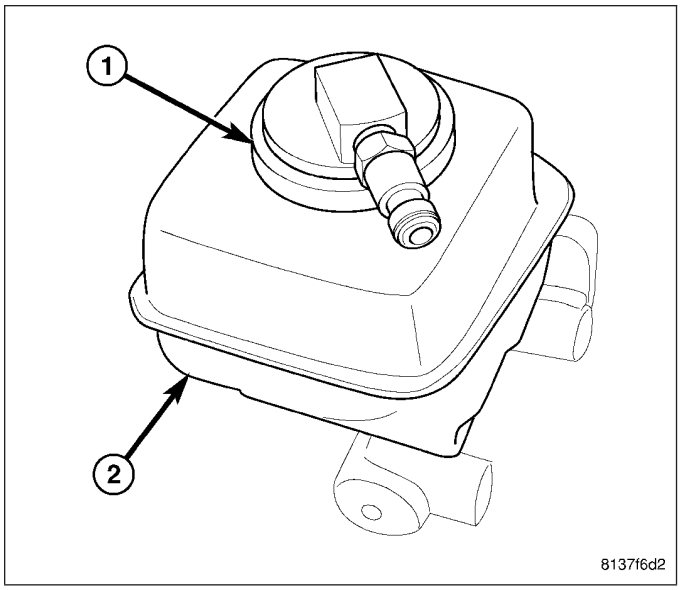

NOTE: To ensure all air is bled from the ICU or junction block in a timely manner, it is recommended to raise the rear of the vehicle approximately 5° higher than the front or approximately 10–12 inches as measured at the rear bumper (1).

4. Raise and support vehicle placing rear of vehicle approximately 5° higher than the front or if measured at the rear bumper (1), approximately 10–12 inches above level. It will be necessary to add extra support stands under vehicle to support this angle.

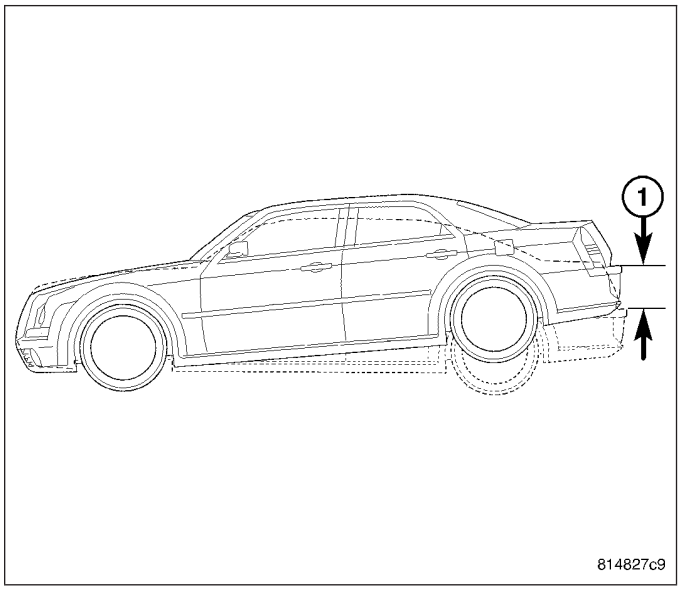

5. If installed, remove rubber dust caps from all four bleeder screws on calipers.
6. Starting at the first wheel circuit as listed earlier, attach a clear hose (1) to the bleeder screw at that wheels brake caliper and feed the other end of hose into a clear jar (2) containing enough fresh brake fluid to submerge the end of the hose.

CAUTION: Open the bleeder screw at least one full turn when instructed. Some air may be trapped in the brake lines or valves far upstream, as far as ten feet or more from the bleeder screw. If the bleeder screw is not opened sufficiently, fluid flow is restricted causing a slow, weak fluid discharge. This will NOT get all the air out. Therefore, it is essential to open the bleeder screw at least one full turn to allow a fast, large volume discharge of brake fluid.

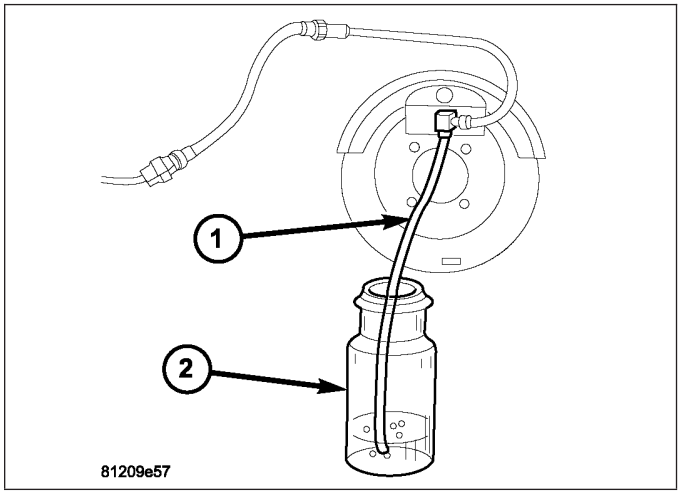

7. Open bleeder screw at least one full turn or more to obtain an adequate flow of brake fluid.

8. After 4 to 8 ounces of brake fluid has been bled through the brake hydraulic circuit, and an air-free flow (no bubbles) is maintained in the clear plastic hose (1) and jar (2), close the bleeder screw.
9. Bleed the remaining wheel circuits in the same manner until all air is removed from the brake hydraulic system.
10. Check brake pedal travel. If pedal travel is excessive or has not improved, some air may still be trapped in the hydraulic system. Rebleed the brake system as necessary.
11. If equipped with antilock brakes, the hydraulic control unit may need to be bled, then rebleed base brakes. (Refer to 5 - BRAKES - STANDARD PROCEDURE)
12. Reinstall all 4 bleeder screw dust caps.
13. Test drive vehicle to ensure brakes are operating properly and pedal feel is correct.

MANUAL BLEEDING METHOD

NOTE: To bleed the base brake system manually, an assistants help is required.

NOTE: To ensure all air is bled from the ICU or junction block in a timely manner, it is recommended to raise the rear of the vehicle approximately 5° higher than the front or approximately 10–12 inches as measured at the rear bumper (1).

1. Raise and support vehicle placing rear of vehicle approximately 5° higher than the front or if measured at the rear bumper (1), approximately 10–12 inches above level. It will be necessary to add extra support stands under vehicle to support this angle.

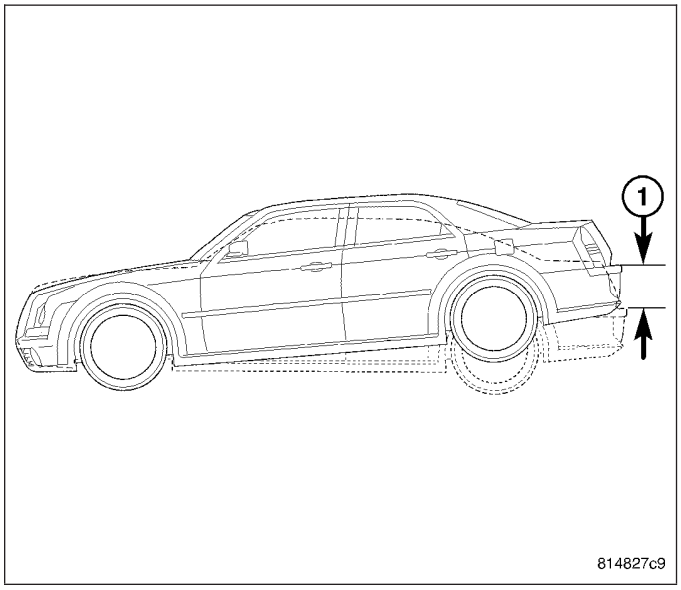

2. Remove rubber duct caps from all 4 bleeder screws.
3. Attach a clear hose (1) to the bleeder screw at one wheel and feed the other end of the hose into a clear jar (2) containing fresh brake fluid.
4. Have an assistant pump the brake pedal three or four times and hold it down before the bleeder screw is opened.

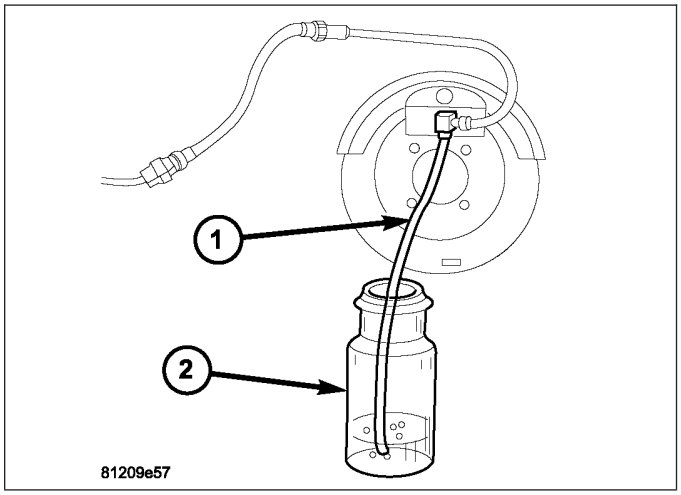

CAUTION: Open the bleeder screw at least one full turn when instructed. Some air may be trapped in the brake lines or valves far upstream, as far as ten feet or more from the bleeder screw. If the bleeder screw is not opened sufficiently, fluid flow is restricted causing a slow, weak fluid discharge. This will NOT get all the air out. Therefore, it is essential to open the bleeder screw at least one full turn to allow a fast, large volume discharge of brake fluid.

5. While the pedal is being held down, open the bleeder screw at least 1 full turn. When the bleeder screw opens the brake pedal will drop all the way to the floor. Continue to hold the pedal all the way down.
6. Once the brake pedal has dropped, close the bleeder screw. The pedal can then be released.
7. Repeat steps One through Five until all trapped air is removed from that wheel circuit (usually four or five times). This should pass a sufficient amount of fluid to expel all the trapped air from the brakes hydraulic system. Be

sure to monitor brake fluid level in master cylinder fluid reservoir making sure it stays at a proper level. This will ensure air does not reenter brake hydraulic system through master cylinder.

NOTE: Monitor the brake fluid level in the fluid reservoir periodically to make sure it does not go too low. This will ensure that air does not reenter the brake hydraulic system.

8. Bleed the remaining wheel circuits in the same manner until all air is removed from the brake hydraulic system.
9. Check brake pedal travel. If pedal travel is excessive or has not improved, some air may still be trapped in the hydraulic system. Rebleed the brake system as necessary.
10. If equipped with antilock brakes, the hydraulic control unit may need to be bled, then rebleed base brakes. (Refer to 5 - BRAKES - STANDARD PROCEDURE)
11. Reinstall all 4 bleeder screw dust caps.
12. Test drive vehicle to ensure brakes are operating properly and pedal feel is correct.

BASE BRAKE BLEEDING - SRT8

Use the following procedure to bleed the rear brake calipers of this vehicle. The front brake calipers may be bled using the same procedure as the standard model.

CAUTION: Before removing the master cylinder cover, wipe it clean to prevent dirt and other foreign matter from dropping into the master cylinder.

CAUTION: Use only Mopar® brake fluid or an equivalent from a fresh, tightly sealed container. Brake fluid must conform to DOT 3 specifications.

NOTE: For bleeding the antilock brake hydraulic system, (Refer to 5 - BRAKES - STANDARD PROCEDURE)

NOTE: Do not pump the brake pedal at any time while having a bleeder screw open during the bleeding process. This will only increase the amount of air in the system and make additional bleeding necessary.

NOTE: Do not allow the master cylinder reservoir to run out of brake fluid while bleeding the system. An empty reservoir will allow additional air into the brake system. Check the fluid level frequently and add fluid as needed.

NOTE: Pressure bleeding is highly recommended to bleed this brake system to ensure all air is removed from system. Manual bleeding may also be used, but additional time is needed to remove all air from system.

Although it is recommended that the base brake system be bled using the pressure method, the manual method can also be performed. Both methods are presented in this text.

PRESSURE BLEEDING METHOD

NOTE: Follow pressure bleeder manufacturer's instructions for use of pressure bleeding equipment.

1. Remove filler cap from the top of fluid reservoir (2) on master cylinder.
2. Install Adapter (1), Special Tool 6921, in the caps place on the reservoir (2).
3. Attach Bleeder Tank, Special Tool C-3496-B, or equivalent, to Adapter 6921 (1). Pressurize the system following the pressure bleeder manufacturer's instructions.

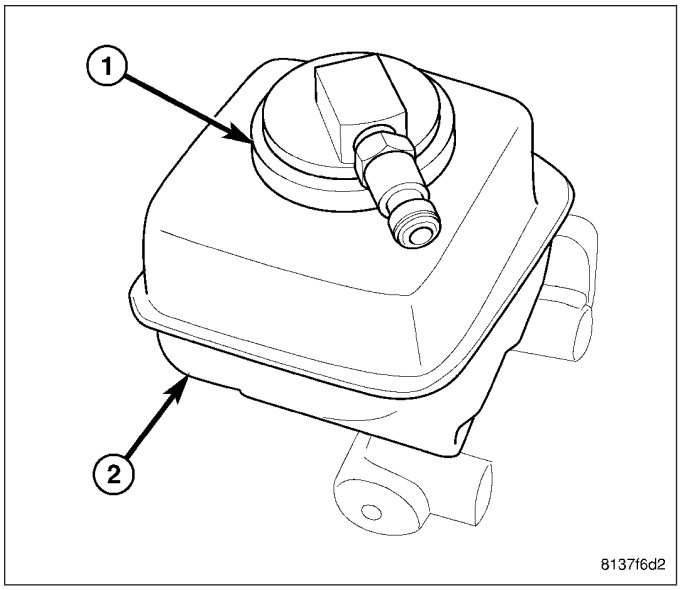

NOTE: To ensure all air is bled from the ICU or junction block in a timely manner, it is recommended to raise the rear of the vehicle approximately 5° higher than the front or approximately 10–12 inches as measured at the rear bumper (1).

4. Raise and support vehicle placing rear of vehicle approximately 5° higher than the front or if measured at the rear bumper (1), approximately 10–12 inches above level. It will be necessary to add extra support stands under vehicle to support this angle.

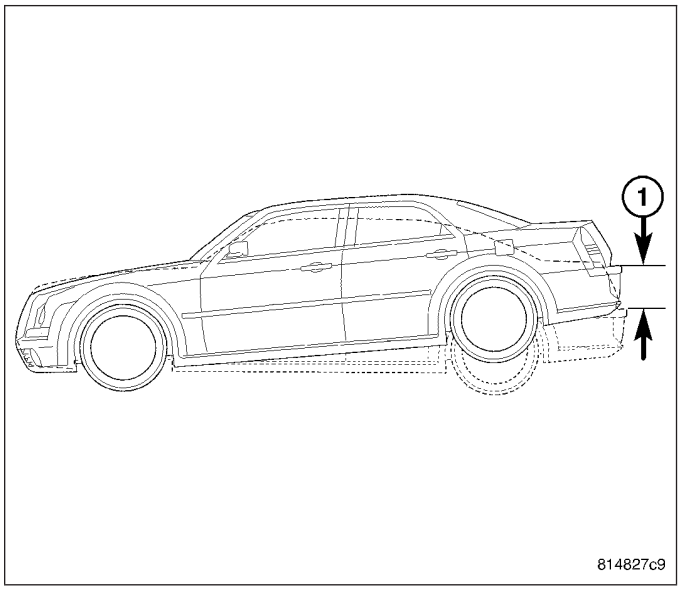

NOTE: The following wheel circuit sequence for bleeding the brake hydraulic system should be used to ensure adequate removal of all trapped air from the brake hydraulic system.

- **Right rear wheel**
- **Left rear wheel**
- **Right front wheel**
- **Left front wheel**

REAR BRAKES

1. If installed, remove rubber dust caps from both bleeder screws on each caliper.
2. Starting at the first wheel circuit that needs to be bled (See list in above note), attach a clear hose (3) to the inboard bleeder screw (2) at that wheels brake caliper and feed the other end of hose into a clear jar (4) containing enough fresh brake fluid to submerge the end of the hose.

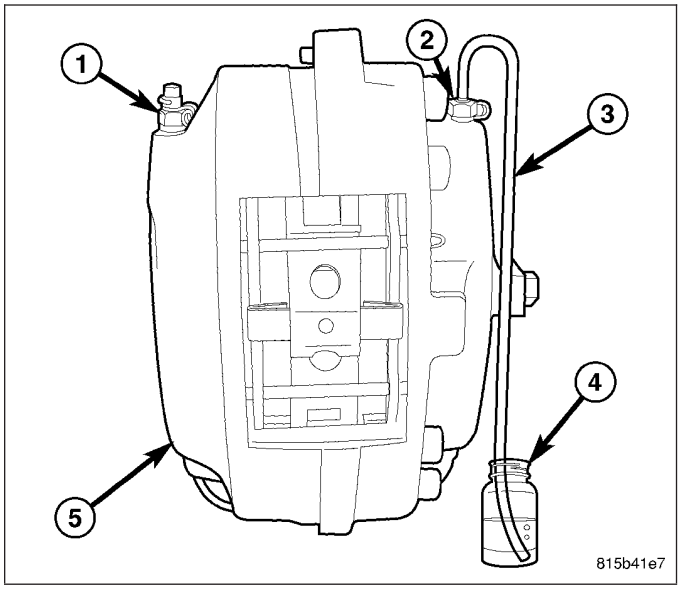

CAUTION: Open the bleeder screw at least one full turn when instructed. Some air may be trapped in the brake lines or valves far upstream, as far as ten feet or more from the bleeder screw. If the bleeder screw is not opened sufficiently, fluid flow is restricted causing a slow, weak fluid discharge. This will NOT get all the air out. Therefore, it is essential to open the bleeder screw at least one full turn to allow a fast, large volume discharge of brake fluid.

3. Open inboard bleeder screw (2) at least one full turn or more to obtain an adequate flow of brake fluid.
4. After 4 to 8 ounces of brake fluid has been bled through the brake hydraulic circuit, and an air-free flow (no bubbles) is maintained in the clear plastic hose (3) and jar (4), close the bleeder screw (2).
5. Remove clear hose and install bleeder screw dust cap.
6. Attach a clear hose (5) to the outboard bleeder screw (1) at that same wheels brake caliper and feed the other end of hose into a clear jar (4) containing enough fresh brake fluid to submerge the end of the hose.

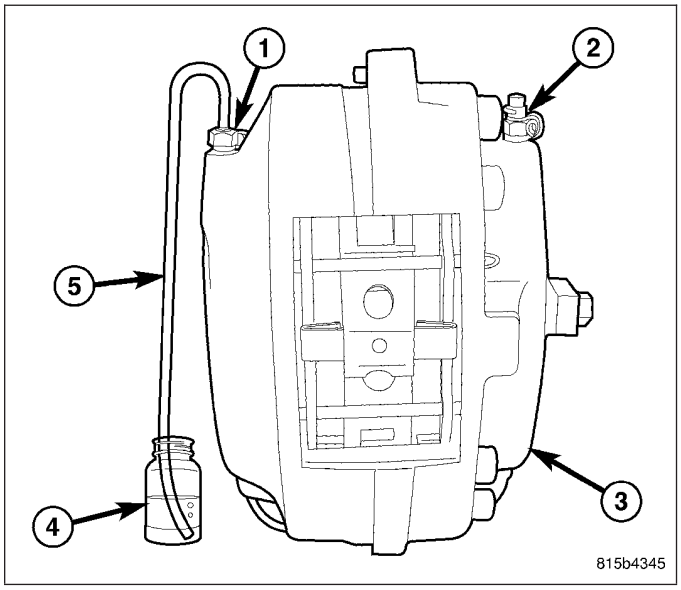

CAUTION: Open the bleeder screw at least one full turn when instructed. Some air may be trapped in the brake lines or valves far upstream, as far as ten feet or more from the bleeder screw. If the bleeder screw is not opened sufficiently, fluid flow is restricted causing a slow, weak fluid discharge. This will NOT get all the air out. Therefore, it is essential to open the bleeder screw at least one full turn to allow a fast, large volume discharge of brake fluid.

7. Open outboard bleeder screw (1) at least one full turn or more to obtain an adequate flow of brake fluid.
8. After 4 to 8 ounces of brake fluid has been bled through the brake hydraulic circuit, and an air-free flow (no bubbles) is maintained in the clear plastic hose (5) and jar (4), close the bleeder screw (1).
9. Remove clear hose and install bleeder screw dust cap.
10. Bleed opposite rear brake wheel circuits as necessary in the same manner until all air is removed from the brake hydraulic system, then proceed to the front brakes.

FRONT BRAKES

1. If installed, remove rubber dust cap from bleeder screw on each front brake caliper.
2. Starting at the first wheel circuit that needs to be bled (See list in above note), attach a clear hose (1) to the bleeder screw at that wheels brake caliper and feed the other end of hose into a clear jar (2) containing enough fresh brake fluid to submerge the end of the hose.

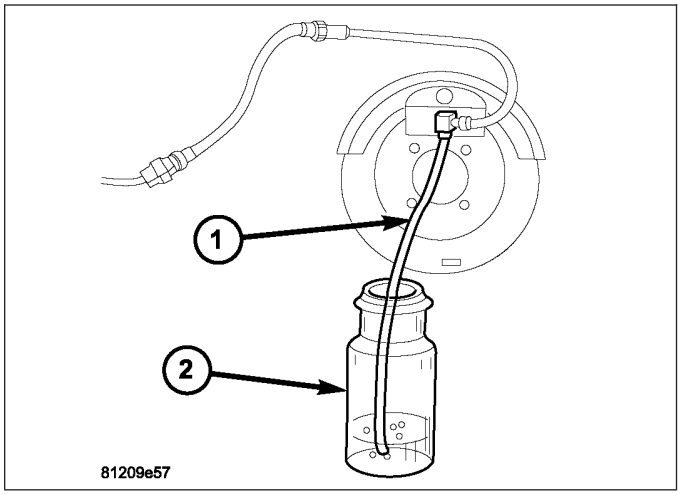

CAUTION: Open the bleeder screw at least one full turn when instructed. Some air may be trapped in the brake lines or valves far upstream, as far as ten feet or more from the bleeder screw. If the bleeder screw is not opened sufficiently, fluid flow is restricted causing a slow, weak fluid discharge. This will NOT get all the air out. Therefore, it is essential to open the bleeder screw at least one full turn to allow a fast, large volume discharge of brake fluid.

3. Open bleeder screw at least one full turn or more to obtain an adequate flow of brake fluid.
4. After 4 to 8 ounces of brake fluid has been bled through the brake hydraulic circuit, and an air-free flow (no bubbles) is maintained in the clear plastic hose (1) and jar (2), close the bleeder screw.
5. Install bleeder screw dust cap.
6. Bleed opposite front brake wheel circuit as necessary in the same manner until all air is removed from the brake hydraulic system.
5. If equipped with antilock brakes, the hydraulic control unit may need to be bled, then rebleed base brakes. (Refer to 5 - BRAKES - STANDARD PROCEDURE)
6. Once all brakes are bled, check brake pedal travel. If pedal travel is excessive or has not improved, some air may still be trapped in the hydraulic system. Rebleed the brake system as necessary.
7. Test drive vehicle to ensure brakes are operating properly and pedal feel is correct.

MANUAL BLEEDING METHOD

NOTE: To bleed the base brake system manually, an assistants help is required.

NOTE: To ensure all air is bled from the ICU or junction block in a timely manner, it is recommended to raise the rear of the vehicle approximately 5° higher than the front or approximately 10–12 inches as measured at the rear bumper (1).

1. Raise and support vehicle placing rear of vehicle approximately 5° higher than the front or if measured at the rear bumper (1), approximately 10–12 inches above level. It will be necessary to add extra support stands under vehicle to support this angle.

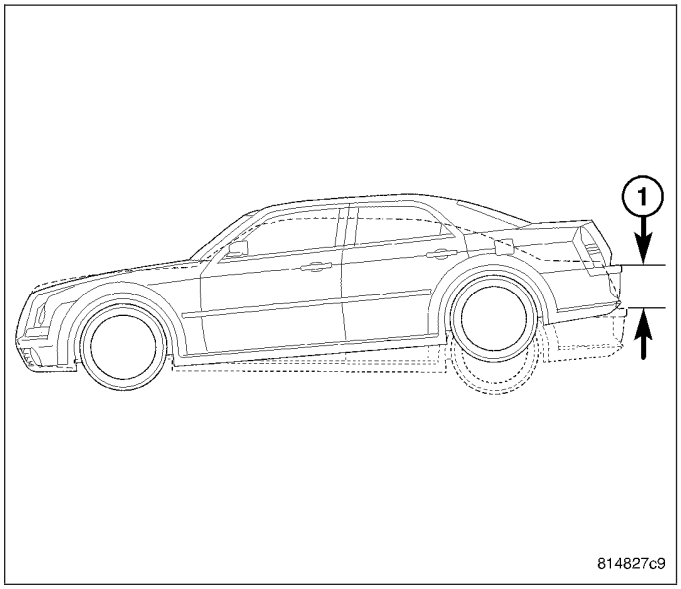

NOTE: The following wheel circuit sequence for bleeding the brake hydraulic system should be used to ensure adequate removal of all trapped air from the brake hydraulic system.

- **Right rear wheel**
- **Left rear wheel**
- **Right front wheel**
- **Left front wheel**

REAR BRAKES

1. If installed, remove rubber dust caps from both bleeder screws on each caliper.
2. Starting at the first wheel circuit that needs to be bled (See list in above note), attach a clear hose (3) to the inboard bleeder screw (2) at that wheels brake caliper and feed the other end of hose into a clear jar (4) containing enough fresh brake fluid to submerge the end of the hose.
3. Have an assistant pump the brake pedal three or four times, then hold it down before the bleeder screw is opened.

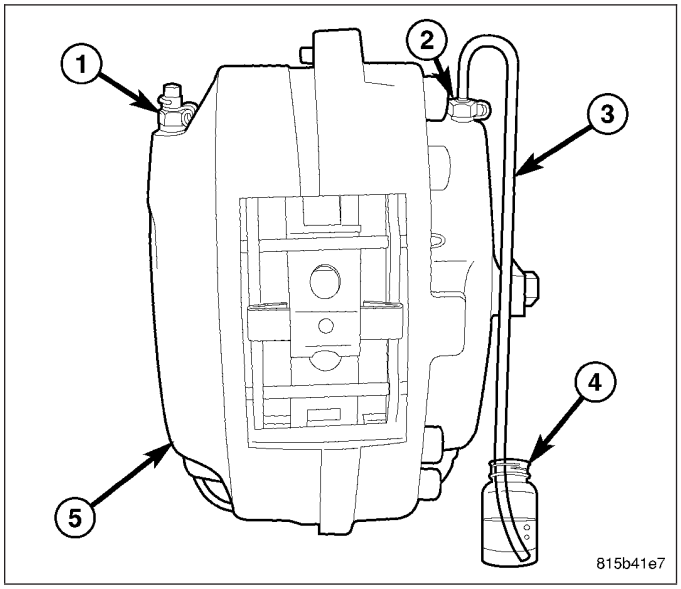

CAUTION: Open the bleeder screw at least one full turn when instructed. Some air may be trapped in the brake lines or valves far upstream, as far as ten feet or more from the bleeder screw. If the bleeder screw is not opened sufficiently, fluid flow is restricted causing a slow, weak fluid discharge. This will NOT get all the air out. Therefore, it is essential to open the bleeder screw at least one full turn to allow a fast, large volume discharge of brake fluid.

4. While the pedal is being held down, open the inboard bleeder screw (2) at least one full turn. When the bleeder screw opens the brake pedal will drop all the way to the floor. Continue to hold the pedal all the way down.
5. Once the brake pedal has dropped, close the bleeder screw. The pedal can then be released.
6. Repeat the above three steps until all trapped air is removed from that wheel circuit (usually four or five times). This should pass a sufficient amount of fluid to expel all the trapped air from the brakes hydraulic system. **Be sure to monitor brake fluid level in master cylinder fluid reservoir making sure it stays at a proper level.** This will ensure air does not reenter brake hydraulic system through master cylinder.

NOTE: Monitor the brake fluid level in the fluid reservoir periodically to make sure it does not go too low. This will ensure that air does not reenter the brake hydraulic system.

7. Remove clear hose and install bleeder screw dust cap.

8. Attach a clear hose (5) to the outboard bleeder screw (1) at that same wheels brake caliper and feed the other end of hose into a clear jar (4) containing enough fresh brake fluid to submerge the end of the hose.
9. Have an assistant pump the brake pedal three or four times, then hold it down before the bleeder screw is opened.

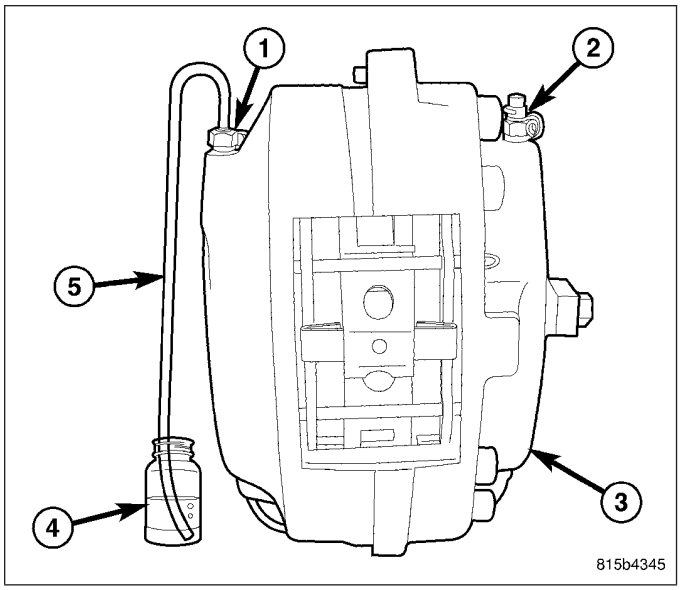

CAUTION: Open the bleeder screw at least one full turn when instructed. Some air may be trapped in the brake lines or valves far upstream, as far as ten feet or more from the bleeder screw. If the bleeder screw is not opened sufficiently, fluid flow is restricted causing a slow, weak fluid discharge. This will NOT get all the air out. Therefore, it is essential to open the bleeder screw at least one full turn to allow a fast, large volume discharge of brake fluid.

10. While the pedal is being held down, open the outboard bleeder screw (2) at least one full turn. When the bleeder screw opens the brake pedal will drop all the way to the floor. Continue to hold the pedal all the way down.
11. Once the brake pedal has dropped, close the bleeder screw. The pedal can then be released.
12. Repeat the above three steps until all trapped air is removed from that wheel circuit (usually four or five times). This should pass a sufficient amount of fluid to expel all the trapped air from the brakes hydraulic system. **Be sure to monitor brake fluid level in master cylinder fluid reservoir making sure it stays at a proper level.** This will ensure air does not reenter brake hydraulic system through master cylinder.

NOTE: Monitor the brake fluid level in the fluid reservoir periodically to make sure it does not go too low. This will ensure that air does not reenter the brake hydraulic system.

13. Remove clear hose and install bleeder screw dust cap.
14. Bleed opposite rear brake wheel circuits as necessary in the same manner until all air is removed from the brake hydraulic system, then proceed to the front brakes.

FRONT BRAKES

1. If installed, remove rubber dust cap from bleeder screw on each front brake caliper.
2. Starting at the first wheel circuit that needs to be bled (See list in above note), attach a clear hose (1) to the bleeder screw at one wheel and feed the other end of the hose into a clear jar (2) containing fresh brake fluid.
3. Have an assistant pump the brake pedal three or four times and hold it down before the bleeder screw is opened.

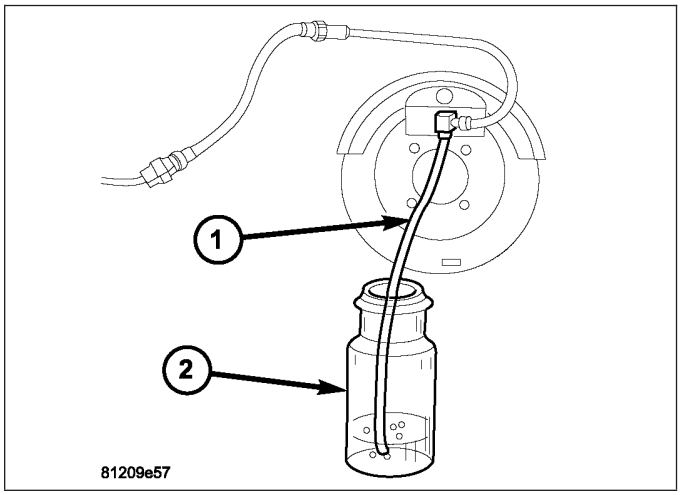

CAUTION: Open the bleeder screw at least one full turn when instructed. Some air may be trapped in the brake lines or valves far upstream, as far as ten feet or more from the bleeder screw. If the bleeder screw is not opened sufficiently, fluid flow is restricted causing a slow, weak fluid discharge. This will NOT get all the air out. Therefore, it is essential to open the bleeder screw at least one full turn to allow a fast, large volume discharge of brake fluid.

4. While the pedal is being held down, open the bleeder screw at least one full turn. When the bleeder screw opens the brake pedal will drop all the way to the floor. Continue to hold the pedal all the way down.

5. Once the brake pedal has dropped, close the bleeder screw. The pedal can then be released.
6. Repeat steps One through Five until all trapped air is removed from that wheel circuit (usually four or five times). This should pass a sufficient amount of fluid to expel all the trapped air from the brakes hydraulic system. Be sure to monitor brake fluid level in master cylinder fluid reservoir making sure it stays at a proper level. This will ensure air does not reenter brake hydraulic system through master cylinder.

NOTE: Monitor the brake fluid level in the fluid reservoir periodically to make sure it does not go too low. This will ensure that air does not reenter the brake hydraulic system.

7. Install bleeder screw dust cap.
8. Bleed opposite front brake wheel circuit as necessary in the same manner until all air is removed from the brake hydraulic system.
2. If equipped with antilock brakes, the hydraulic control unit may need to be bled, then rebleed base brakes. (Refer to 5 - BRAKES - STANDARD PROCEDURE)
3. Once all brakes are bled, check brake pedal travel. If pedal travel is excessive or has not improved, some air may still be trapped in the hydraulic system. Rebleed the brake system as necessary.
4. Test drive vehicle to ensure brakes are operating properly and pedal feel is correct.

SPECIFICATIONS

BRAKE FASTENER TORQUE

DESCRIPTION	N·m	Ft. Lbs.	In. Lbs.
ABS ICU Mounting Bolts To Bracket	11	8	97
ABS ABM-To-HCU Mounting Screws	2	—	17
ABS Wheel Speed Sensor Head Mounting Screw - Front	11	8	97
ABS Wheel Speed Sensor Head Mounting Screw - Rear	11	8	97
Adjustable Pedal Position Sensor Mounting Screws	7.5	5.5	66
Brake Pedal Mounting Nuts	25	18	221
Brake Tube Nuts	20	15	177
Brake Hose-to-Front knuckle Bracket Screw	11	8	97
Brake Hose Caliper Banjo Bolt	50	37	—
Brake Hose Caliper Banjo Bolt - SRT8	33	24	—
Disc Brake Caliper Adapter Mounting Bolts - Front	95	70	—
Disc Brake Caliper Adapter Mounting Bolts - Rear	115	85	—
Disc Brake Caliper Guide Pin Bolts - Front	60	44	—
Disc Brake Caliper Guide Pin Bolts - Rear	31	23	275
Disc Brake Caliper Mounting Bolts - Front - SRT8	190	140	—
Disc Brake Caliper Mounting Bolts - Rear - SRT8	130	96	—
Disc Brake Caliper Bleeder Screw	11	8	97
Master Cylinder Mounting Nuts - MK25	25	18	221
Master Cylinder Mounting Nuts - MK25E	15	11	133
Power Brake Booster Mounting Nuts	25	18	221
Parking Brake Cable Knuckle Mounting Screw	8	6	71
Parking Brake Lever (Pedal) Mounting Bolt And Nuts	26	19	230
Wheel Mounting (Lug) Nuts	150	110	—

SPECIAL TOOLS

BASE BRAKE SYSTEM

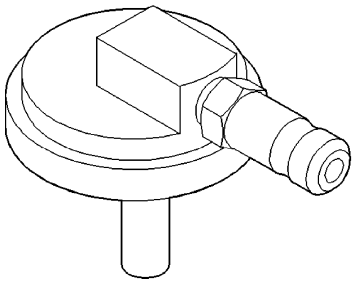

Adapter, Master Cylinder Pressure Bleed Cap 6921

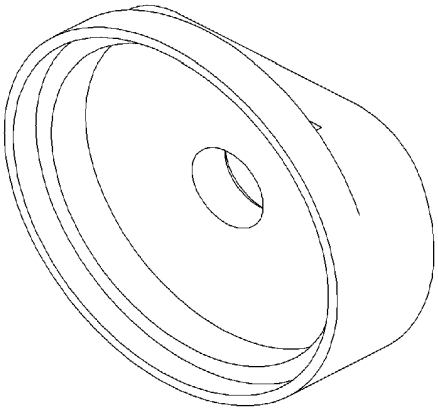

Installer, Dust Boot 9315

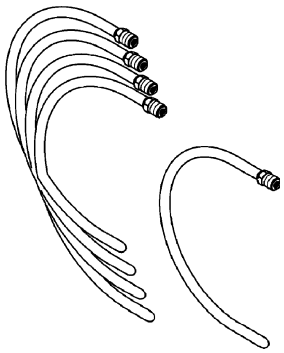

Tubes, Master Cylinder Bleed 8358

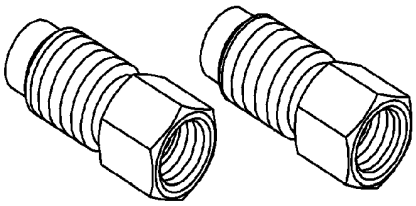

Adapters, Master Cylinder 9748

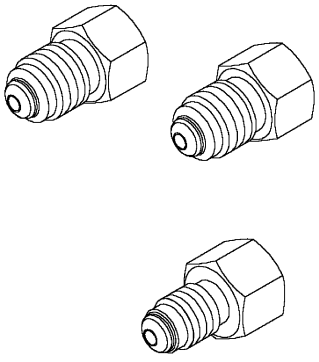

Adapters, Master Cylinder 8822

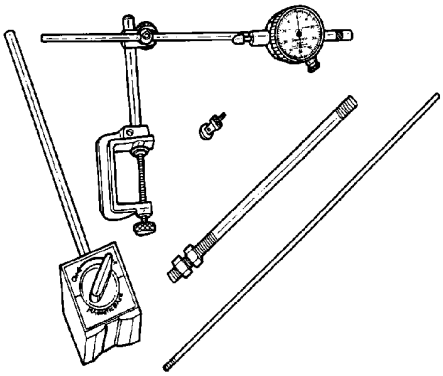

Dial Indicator C-3339A

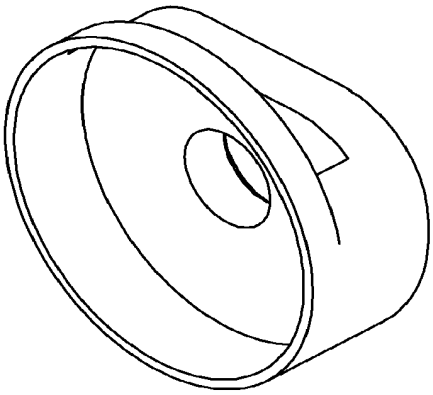

Installer, Dust Boot 9314

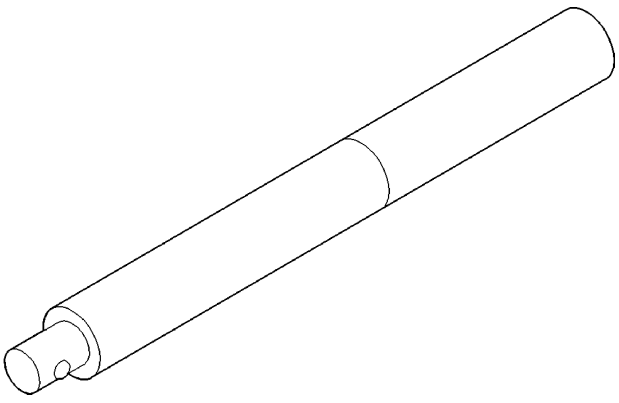

Handle, Universal C–4171

SWITCH-ADJUSTABLE PEDALS

DESCRIPTION

The adjustable pedals switch is located on the left side trim of the driver's seat cushion. Fore and Aft movement of the paddle-type switch allows front-to-rear travel of the adjustable pedals, up to approximately 76 mm (3 inches) total movement. Pushing the paddle forward moves the peddles away from the driver and vice-versa. Movement stops when the switch is released.

The switch actuates the electric motor-driven adjustable pedals mechanism through the memory seat module (MSM). MSM logic prevents pedal adjustment while the speed control is set and when the transmission is in Reverse.

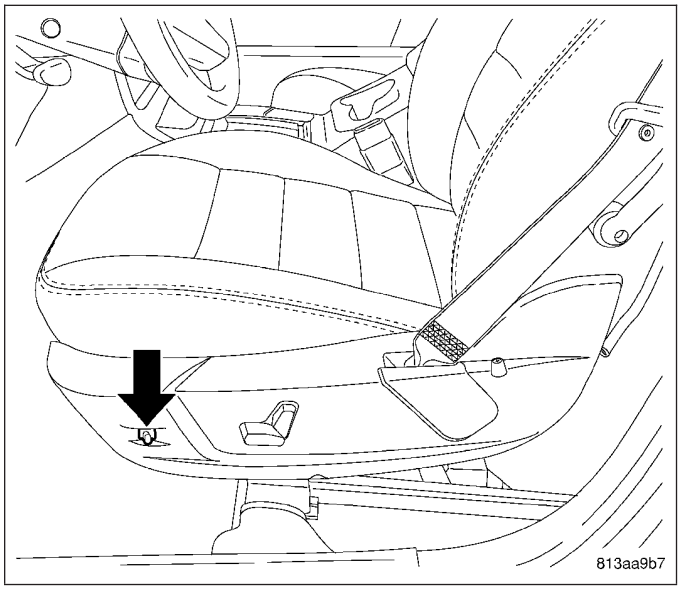

REMOVAL

1. Move driver's seat to full-forward, full-upward position.
2. Disconnect battery negative cable from battery post and isolate.
3. Remove seat belt shield from driver's seat cushion left side trim.
4. Remove three screws fastening seat cushion side trim in place.
5. Lift side trim from seat and utilizing slack in seat belt, turn trim over.
6. Disconnect wiring connector (2) from adjustable pedals switch (3).
7. Remove two mounting screws (1) and remove switch (3).

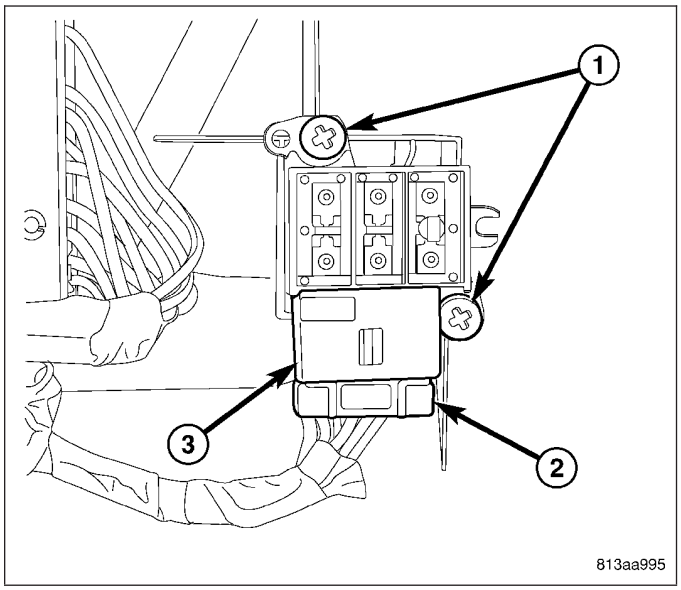

INSTALLATION

1. Position switch (3) connector-side-down on the inside of the driver's seat cushion side trim.
2. Install two screws (1) fastening switch in place.
3. Connect wiring connector (2) to adjustable pedals switch (3).
4. Position side trim on driver's seat cushion left side and install three screws fastening side trim in place.
5. Install seat belt shield on driver's seat cushion left side trim.
6. Connect negative battery cable to battery post. (Refer to 8 - ELECTRICAL/BATTERY SYSTEM - STANDARD PROCEDURE)
7. Check operation of adjustable pedals.
8. If vehicle is equipped with memory seats, the system will need to be initialized. Refer to appropriate diagnostic information.

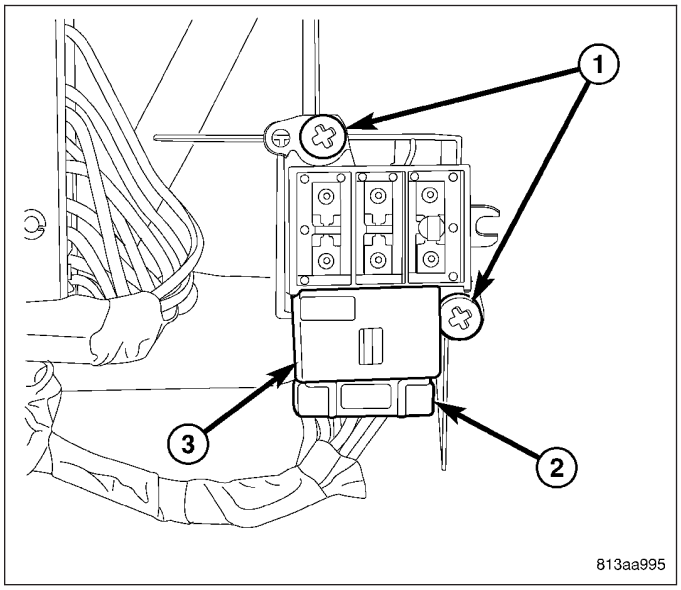

SENSOR - BRAKE FLUID LEVEL

REMOVAL

The brake fluid level sensor (2) is an integral part of the master cylinder fluid reservoir (1). (Refer to 5 - BRAKES/HYDRAULIC/MECHANICAL/FLUID RESERVOIR - REMOVAL)

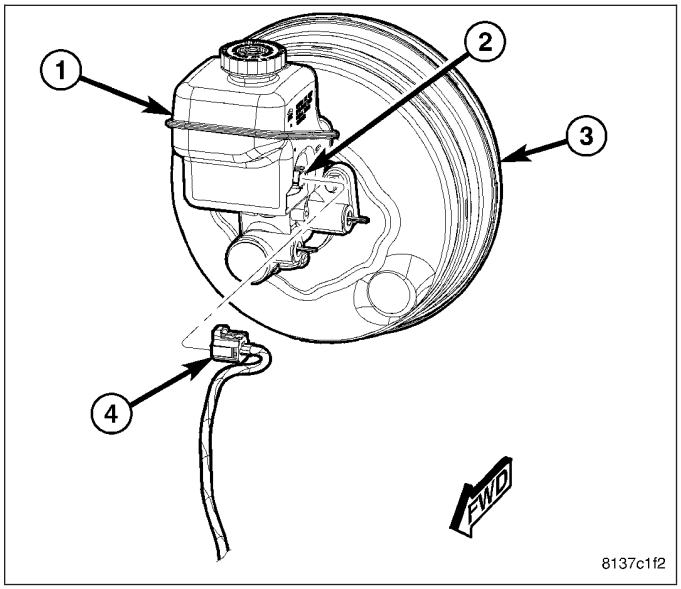

INSTALLATION

The brake fluid level sensor (2) is an integral part of the master cylinder fluid reservoir (1). (Refer to 5 - BRAKES/HYDRAULIC/MECHANICAL/FLUID RESERVOIR - INSTALLATION)

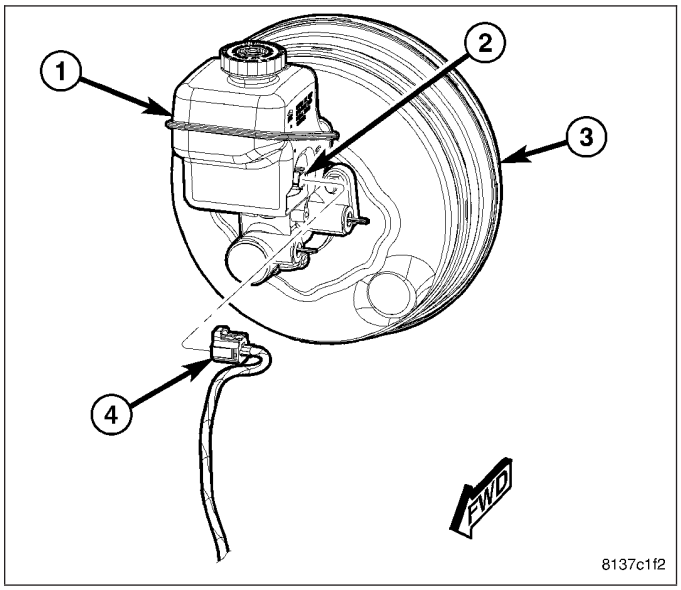

HYDRAULIC/MECHANICAL

DESCRIPTION

DISC BRAKES

Four-wheel disc brakes are standard on this vehicle. There are two four-wheel disc brake systems available, a standard and a premium. The standard disc brake system is referred to as “Seventeen-Inch.” The premium disc brake system is referred to as “Eighteen-Inch.”

“Seventeen-inch” four-wheel disc brakes (so called because they are designed to fit inside 17-inch wheels) are standard on rear-wheel drive models with V6 engines. They feature single-piston aluminum calipers (2) and vented rotors (1) in the front and single-piston aluminum calipers (4) with solid rotors (3) in the rear.

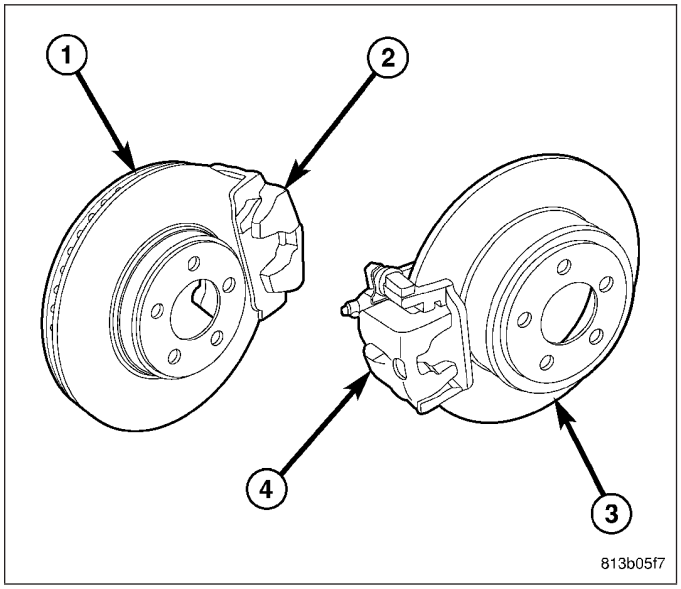

“Eighteen-inch” four-wheel disc brakes (so called because they are designed to fit inside 18-inch wheels) are standard on Chrysler 300 Hemi C and all international models, and optional on other models. They feature twin-piston aluminum calipers (1) and vented rotors (2) in the front and single-piston aluminum calipers (4) with vented rotors (3) in the rear. Although the rear calipers appear the same as the 17-inch system, the rear calipers used with this system feature a wider jaw to compensate for the wider, vented brake rotors used.

Although the twin-piston caliper used is the same, Rear-Wheel-Drive (RWD) models mount the caliper to the rear (trailing end) of the knuckle while All-Wheel-Drive (AWD) models mount the caliper to the front (leading end) of the knuckle.

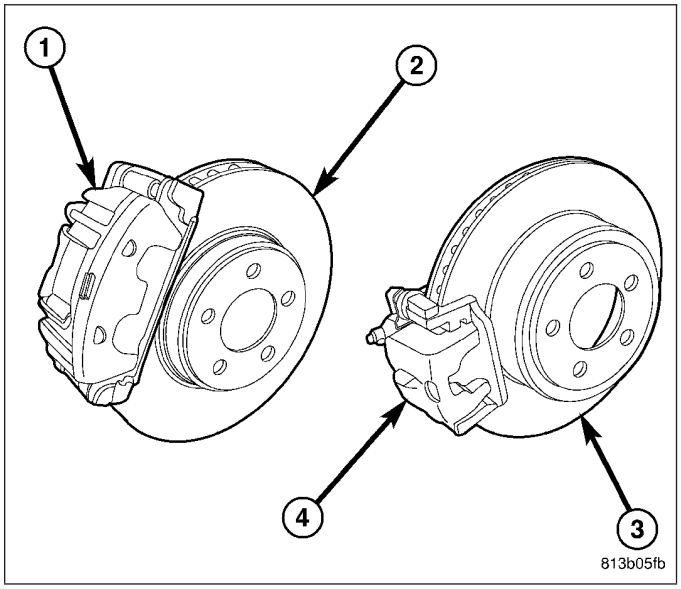

Vehicles equipped with the Police Package have heavy-duty brakes. Special brake linings are used front and rear. The front brake calipers and rotors are the same as the premium “Eighteen-inch” brakes, but the rear brakes are somewhat different. The rear brake caliper is similar, using the same diameter piston and seals, but is larger to accommodate a larger brake rotor. The rear brake rotor is a thicker (4 mm thicker than premium), larger diameter (350 mm) vented unit. The hat section of the rotor remains the same as premium to allow use of the standard parking brake system. The rear brake caliper adapter (anchor) is different to allow for the larger brake rotor. All components are serviced the same as premium brakes.

All calipers are aluminum construction and are the low-drag type. New-technology caliper construction allows minimal drag of the pads on the discs with low clearance to the rotors to maintain maximum pedal feel and responsiveness.

All calipers are anodized, giving them an off-black appearance. This coating offers corrosion protection and a long-term neat appearance.

Phenolic pistons are used in all calipers. The premium twin caliper pistons have stainless steel caps for protection against damage due to contact with the brake pads.

All brake rotors are fully coated with Geomet™, a water-soluble, environmental friendly corrosion preventive. Both the friction surfaces and the vents are coated. During initial brake applications of a new rotor, the brake pads scrub the coating off the friction surfaces, ensuring that the remainder will be rust free. Coating the vents also ensures that there will not be a loss of heat capacity over time.

DISC BRAKES - SRT8

SRT8 models utilize four-wheel disc brakes. All brake calipers (2) are four-piston opposed fixed design manufactured by Brembo. While identical in all other ways, Chrysler SRT8 calipers are silver in color while Dodge SRT8 calipers are red.

All brake rotors (3) are the internal vented type. There are no dust shields behind the front brake rotors.

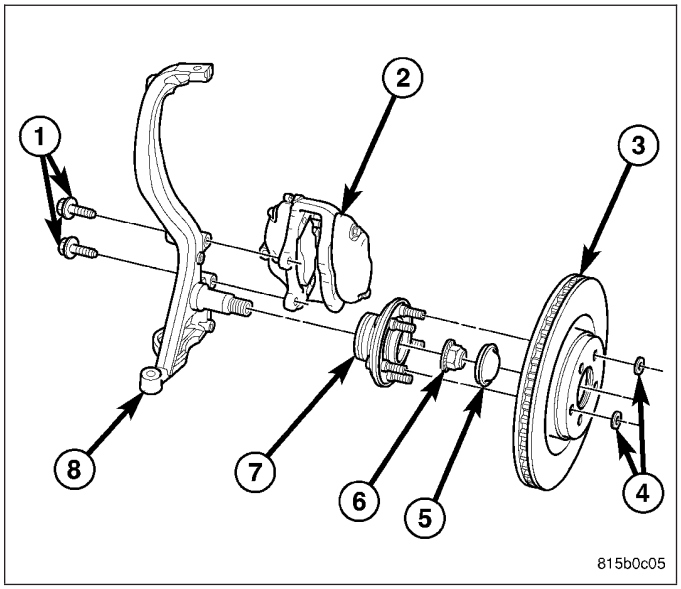

Each front brake caliper features four 42 mm pistons, two in each outer half of the caliper. The two outer halves of this caliper connect hydraulically using internal passageways. These calipers are not serviceable. Do not attempt disassembly.

Each rear brake caliper features four pistons also, two in each half of the caliper. Each half has one 28 mm and one 32 mm piston. When mounted, the smaller size (28 mm) piston is located at the top while the larger size (32 mm) piston is located at the bottom. The two halves of the caliper are connected hydraulically by means of an external brake tube located on the bottom of the caliper assembly. Each caliper half has its own bleeder screw at the top and must be bled individually when bleeding is required. These calipers are not serviceable. Do not attempt disassembly.

All SRT8 calipers mount directly to the knuckle. They do not use brake caliper adapters.

The SRT8 rear brake rotors have integrated parking brake drums like the standard rear disc brake system.

PADS - FRONT BRAKE

REMOVAL

NOTE: Before proceeding, (Refer to 5 - BRAKES - WARNING) (Refer to 5 - BRAKES - CAUTION).

1. Raise and support vehicle. (Refer to LUBRICATION & MAINTENANCE/HOISTING - STANDARD PROCEDURE)

NOTE: Perform steps 2 through 6 on each side of the vehicle.

2. Remove wheel mounting nuts (3), then tire and wheel assembly (1).

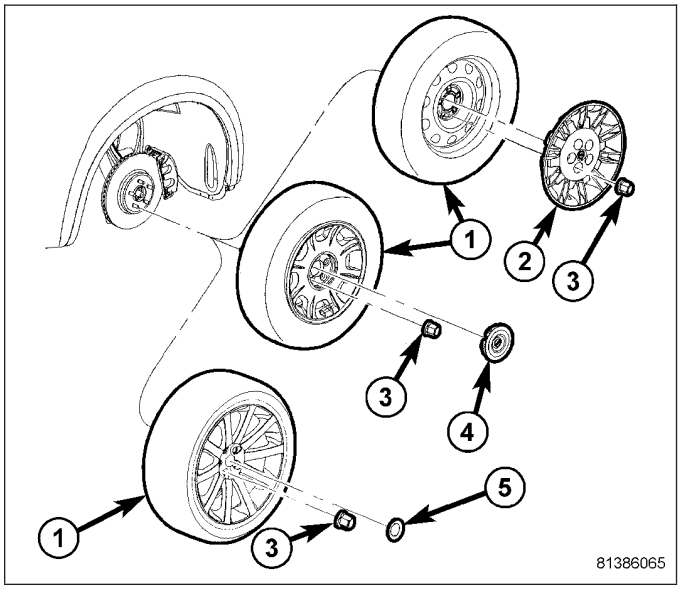

NOTE: In some cases, it may be necessary to retract caliper piston in its bore a small amount in order to provide sufficient clearance between shoes and rotor to easily remove caliper from knuckle. This can usually be accomplished before guide pin bolts are removed by grasping rear of caliper and pulling outward working with guide pins, thus retracting piston. Never push on piston directly as it may get damaged.

3. Remove Lower caliper guide pin bolt. To do so, hold the guide pin (3) stationary while turning bolt (1).

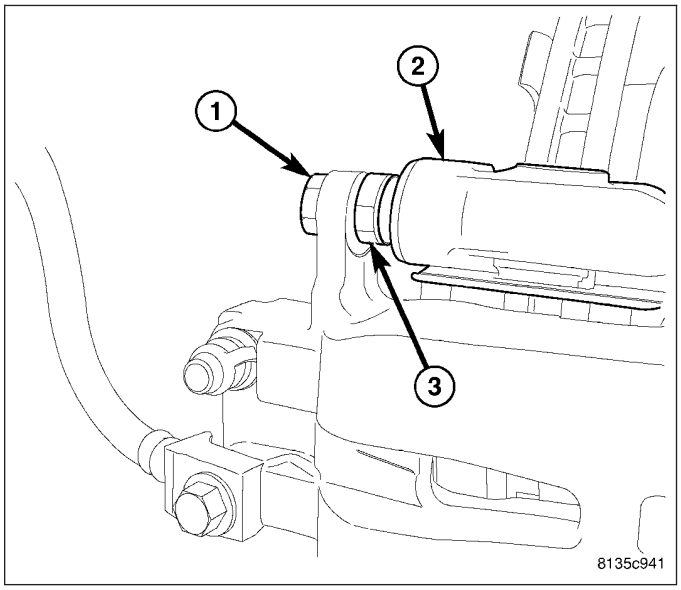

4. Rotate caliper upward (1), exposing brake pads (2 and 5). **Use care not to overextend brake hose when doing this or damage may occur.**
5. Remove inboard (2) and outboard (5) brake pads from caliper adapter (4).
6. If necessary, remove anti-rattle clips (3) from upper and lower abutments of adapter (4).

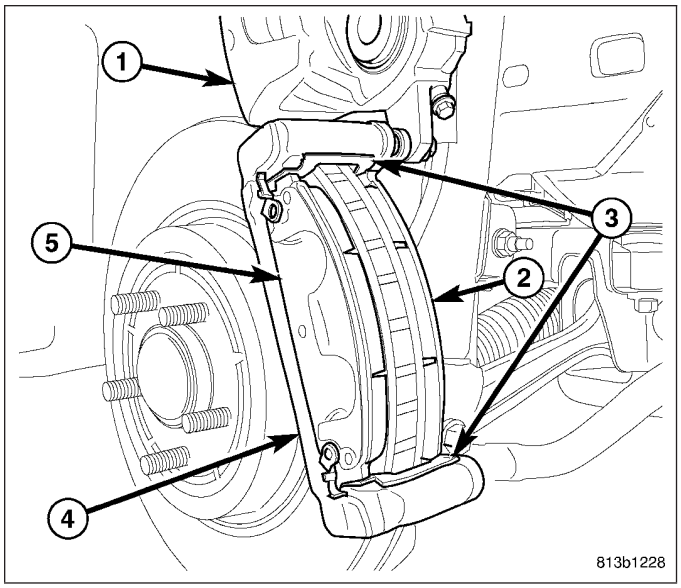

CLEANING

WARNING: Dust and dirt accumulating on brake parts during normal use may contain asbestos fibers from production or aftermarket brake linings. Breathing excessive concentrations of asbestos fibers can cause serious bodily harm. Exercise care when servicing brake parts. Do not sand or grind brake lining unless equipment used is designed to contain the dust residue. Do not clean brake parts with compressed air or by dry brushing. Cleaning should be done by dampening the brake components with a fine mist of water, then wiping the brake components clean with a dampened cloth. Dispose of cloth and all residue containing asbestos fibers in an impermeable container with the appropriate label. Follow practices prescribed by the occupational Safety And Health Administration (OSHA) and the Environmental Protection Agency (EPA) for the handling, processing, and disposing of dust or debris that may contain asbestos fibers.

INSPECTION

Visually inspect brake pads for uneven lining wear. Also inspect for excessive lining deterioration. Check the clearance between the tips of the wear indicators (if equipped) on the pads and the brake rotors.

If a visual inspection does not adequately determine the condition of the lining, remove the disc brake pads from the calipers and perform a physical check.

NOTE: It is important to inspect both front and rear brake pads during the same inspection. Typically, front and rear brake pads wear out at the same time.

When servicing, replace **both** disc brake pads (inboard and outboard) for each caliper. It is necessary to replace the pads on the opposite side of the vehicle as well as the pads failing inspection.

If the brake pads do not require replacement, be sure to reinstall the brake pads in the original position they were removed from.

INSTALLATION

NOTE: Perform steps 1 through 7 on each side of the vehicle.

1. Completely retract caliper piston(s) back into bore(s) of caliper. To do so:
   a. Remove fluid reservoir cap.
   b. Use hand pressure or a C-clamp may be used to retract piston, first placing a wood block over piston(s) before installing C-clamp to avoid damaging piston(s).
   c. Install fluid reservoir cap.

2. If removed, attach anti-rattle clips (3) to upper and lower abutments of adapter (4).
3. Install NEW inboard (2) and outboard (5) brake pads on caliper adapter (4). NEW Inboard and outboard pads are interchangeable.
4. Push caliper guide pins into caliper adapter to clear caliper mounting bosses when installing.
5. Rotate caliper downward, aligning upper mounting boss with lower guide pin.

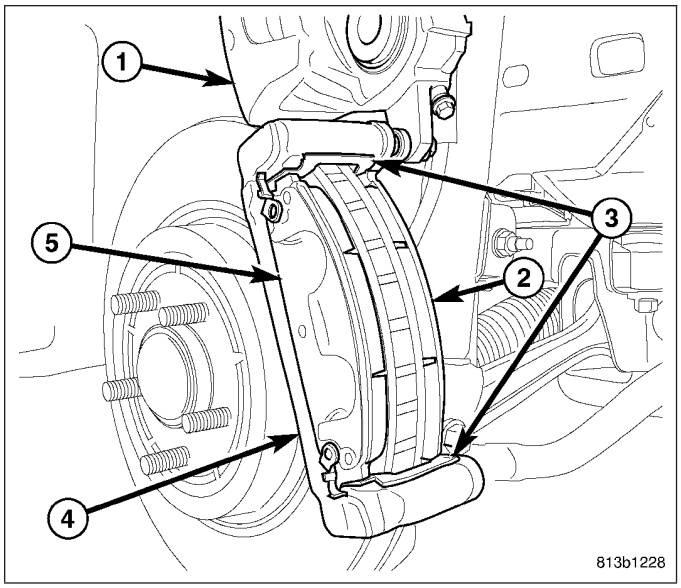

6. Install Upper caliper guide pin bolt (1). While holding guide pin (3) stationary tighten bolt to 60 N·m (44 ft. lbs.) torque.

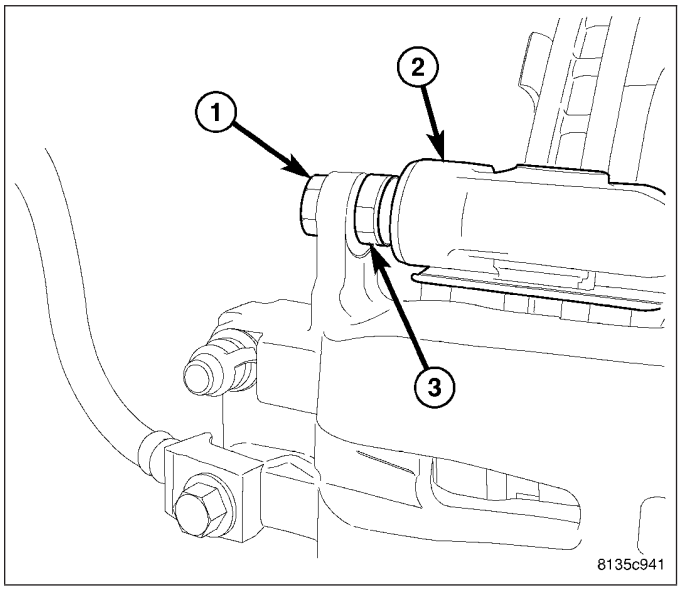

7. Install tire and wheel assembly (1). Tighten wheel mounting nuts (3) to 150 N·m (110 ft. lbs.) torque. (Refer to 22 - TIRES/WHEELS - INSTALLATION)
8. Lower vehicle.
9. Pump brake pedal several times to set pads to caliper and brake rotor.

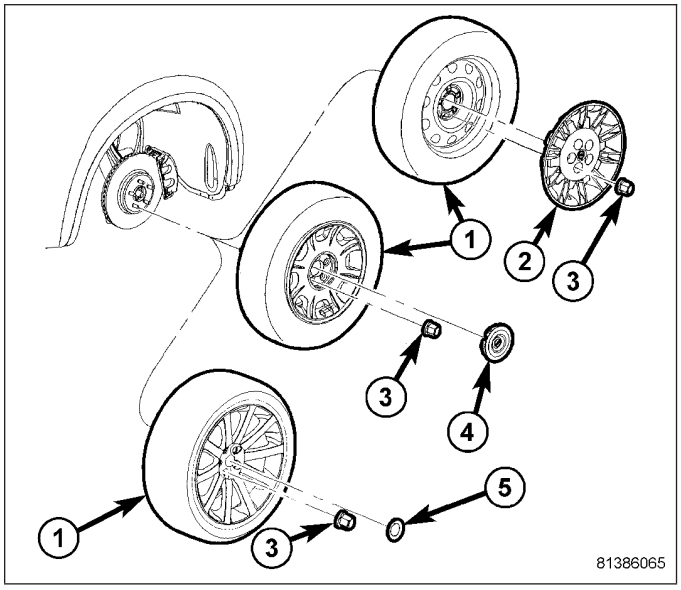

10. Check and adjust brake fluid level in reservoir (1). (Refer to 5 - BRAKES/HYDRAULIC/MECHANICAL/FLUID - STANDARD PROCEDURE)

CAUTION: When NEW brake pads have been installed, keep in mind that braking effectiveness might be somewhat reduced during the first brake applications following installation.

11. Road test vehicle making several stops to wear off any foreign material on brakes and to seat brake shoes.

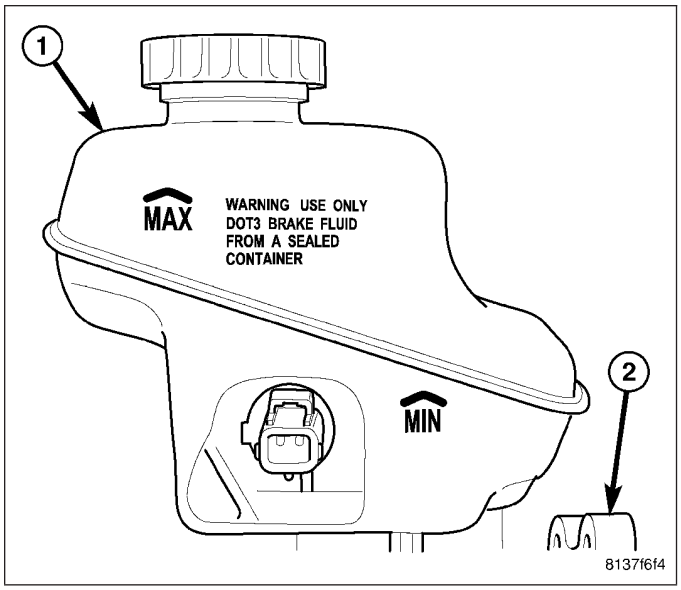

PADS - REAR BRAKE

REMOVAL

NOTE: Before proceeding, (Refer to 5 - BRAKES - WARNING) (Refer to 5 - BRAKES - CAUTION).

1. Raise and support vehicle. (Refer to LUBRICATION & MAINTENANCE/HOISTING - STANDARD PROCEDURE)

NOTE: Perform steps 2 through 6 on each side of the vehicle.

2. Remove wheel mounting nuts (3), then tire and wheel assembly (1).

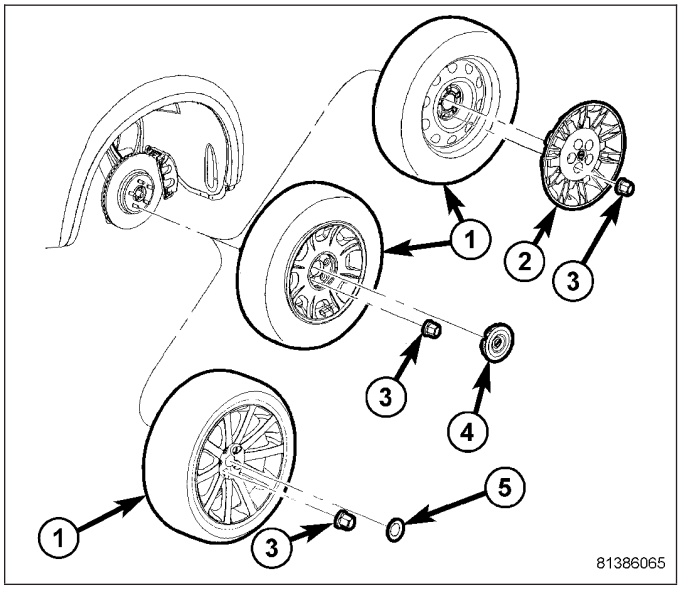

NOTE: In some cases, it may be necessary to retract caliper piston in its bore a small amount in order to provide sufficient clearance between shoes and rotor to easily remove caliper from knuckle. This can usually be accomplished before guide pin bolts are removed by grasping rear of caliper and pulling outward working with guide pins, thus retracting piston. Never push on piston directly as it may get damaged.

3. Remove Upper caliper guide pin bolt (1). To do so, hold the guide pin (3) stationary while turning bolt.

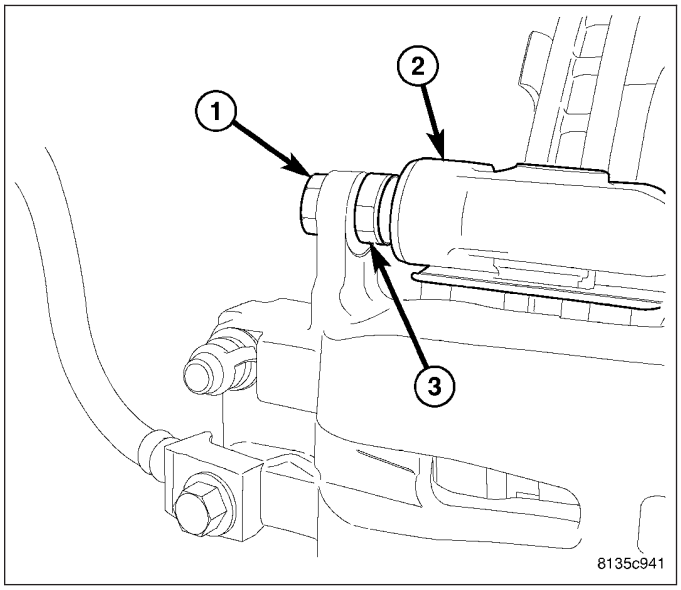

4. Rotate caliper downward (5), exposing brake pads (2 and 3). **Use care not to overextend brake hose when doing this or damage may occur.**
5. Remove inboard (2) and outboard (3) brake pads from caliper adapter (4).
6. If necessary, remove anti-rattle clips (1) from upper and lower abutments of adapter (4).

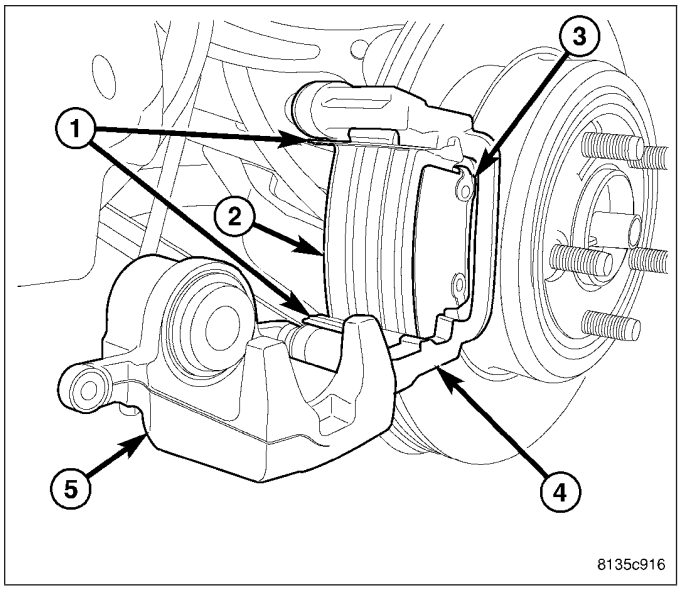

CLEANING

WARNING: Dust and dirt accumulating on brake parts during normal use may contain asbestos fibers from production or aftermarket brake linings. Breathing excessive concentrations of asbestos fibers can cause serious bodily harm. Exercise care when servicing brake parts. Do not sand or grind brake lining unless equipment used is designed to contain the dust residue. Do not clean brake parts with compressed air or by dry brushing. Cleaning should be done by dampening the brake components with a fine mist of water, then wiping the brake components clean with a dampened cloth. Dispose of cloth and all residue containing asbestos fibers in an impermeable container with the appropriate label. Follow practices prescribed by the Occupational Safety And Health Administration (OSHA) and the Environmental Protection Agency (EPA) for the handling, processing, and disposing of dust or debris that may contain asbestos fibers.

INSPECTION

Visually inspect brake pads for uneven lining wear. Also inspect for excessive lining deterioration. Check the clearance between the tips of the wear indicators (if equipped) on the pads and the brake rotors.

If a visual inspection does not adequately determine the condition of the lining, remove the disc brake pads from the calipers and perform a physical check.

NOTE: It is important to inspect both front and rear brake pads during the same inspection. Typically, front and rear brake pads wear out at the same time.

When servicing, replace **both** disc brake pads (inboard and outboard) for each caliper. It is necessary to replace the pads on the opposite side of the vehicle as well as the pads failing inspection.

If the brake pads do not require replacement, be sure to reinstall the brake pads in the original position they were removed from.

INSTALLATION

NOTE: Perform steps 1 through 7 on each side of the vehicle.

1. Completely retract caliper piston back into bore of caliper. To do so:
   a. Remove fluid reservoir cap.
   b. Use hand pressure or a C-clamp may be used to retract piston, first placing a wood block over piston before installing C-clamp to avoid damaging piston.
   c. Install fluid reservoir cap.

2. If removed, attach anti-rattle clips (1) to upper and lower abutments of adapter (4).
3. Install NEW inboard (2) and outboard (3) brake pads on caliper adapter (4). NEW Inboard and outboard pads are interchangeable.
4. Push caliper guide pins into caliper adapter to clear caliper mounting bosses when installing.
5. Rotate caliper upward, aligning upper mounting boss with upper guide pin.

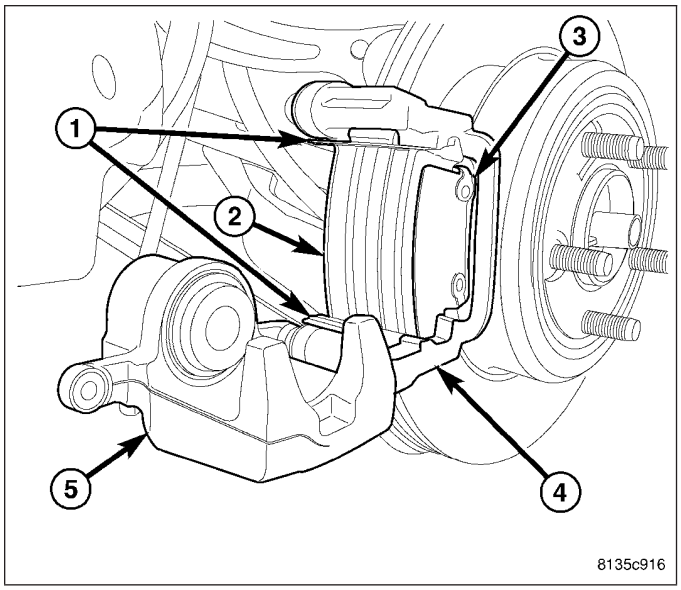

6. Install Upper caliper guide pin bolt (1). While holding guide pin (3) stationary tighten bolt to 31 N·m (23 ft. lbs.) torque.

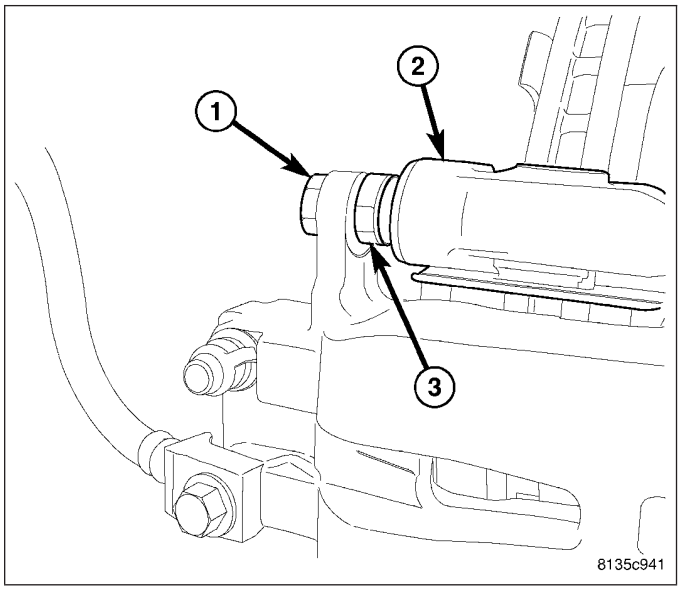

7. Install tire and wheel assembly (1). Tighten wheel mounting nuts (3) to 150 N·m (110 ft. lbs.) torque. (Refer to 22 - TIRES/WHEELS - INSTALLATION)
8. Lower vehicle.
9. Pump brake pedal several times to set pads to caliper and brake rotor.

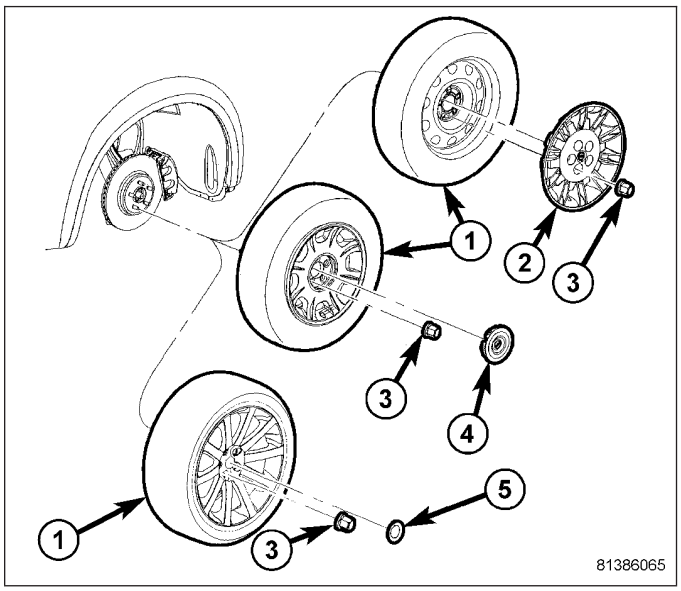

10. Check and adjust brake fluid level in reservoir (1). (Refer to 5 - BRAKES/HYDRAULIC/MECHANICAL/FLUID - STANDARD PROCEDURE)

CAUTION: When NEW brake pads have been installed, keep in mind that braking effectiveness might be somewhat reduced during the first brake applications following installation.

11. Road test vehicle making several stops to wear off any foreign material on brakes and to seat brake shoes.

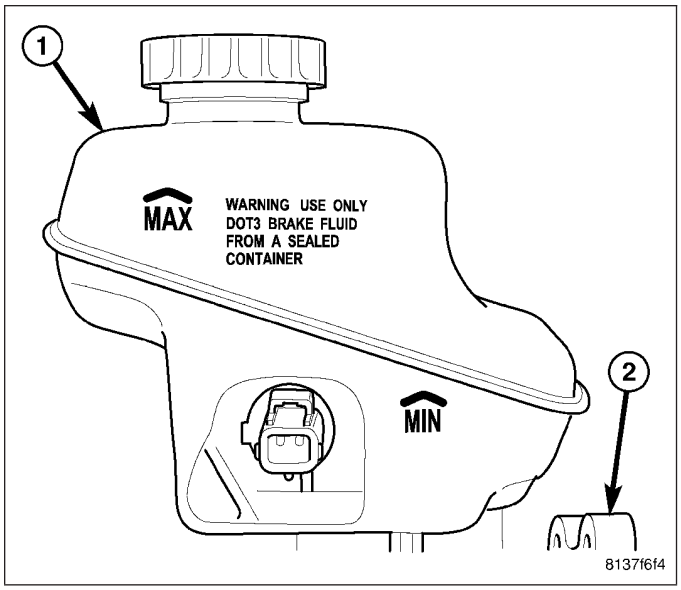

PADS - FRONT/REAR BRAKE - SRT8

STANDARD PROCEDURE

BRAKE PAD BURNISHING

CAUTION: After installing NEW brake pads, keep in mind that braking effectiveness might be somewhat reduced during the first brake applications.

When NEW brake pads are installed on a vehicle, this procedure must be used to correctly burnish (seat) the brake linings to the brake rotor discs.

1. Accelerate the vehicle to a steady speed of about 40 mph (65 km/h).
2. Using light brake pedal pressure, slow the vehicle from 40 mph to 0 mph in approximately 6 seconds.
3. Accelerate back up to 40 mph for approximately one minute to allow the brakes to cool down.
4. Repeat this procedure 15 to 20 times to correctly seat the brake lining material.

REMOVAL

NOTE: Review all Warnings and Cautions. (Refer to 5 - BRAKES - WARNING)

1. Raise and support vehicle. (Refer to LUBRICATION & MAINTENANCE/HOISTING - STANDARD PROCEDURE)

NOTE: Perform Step 2 through Step 8 on each side of vehicle to complete pad set removal.

2. Remove wheel mounting nuts (3), then tire and wheel assembly (1).

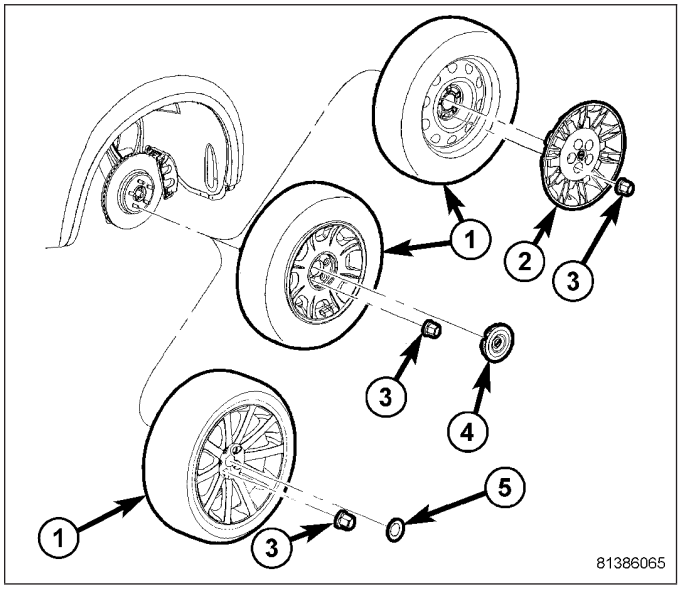

3. Using hammer (4) and pin punch (3) on outboard end, tap lower brake pad support pin (2) out of caliper (1).

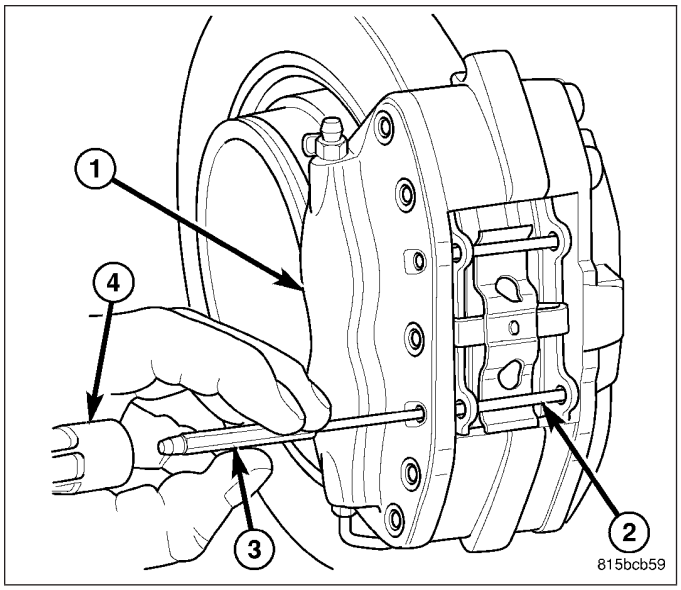

4. Remove brake pad spring clip (2) out from under the upper support pin (1) still in caliper.

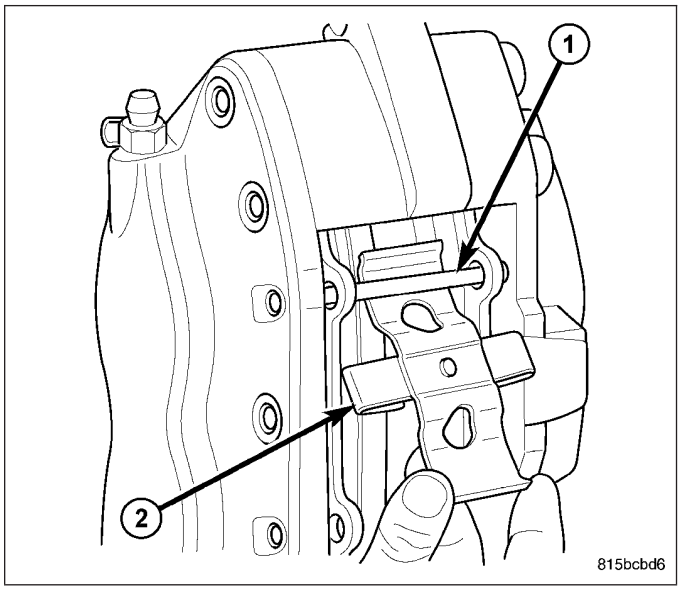

5. Using pin punch (3) and hammer (4), remove upper brake pad support pin (2) in same manner used on lower support pin.

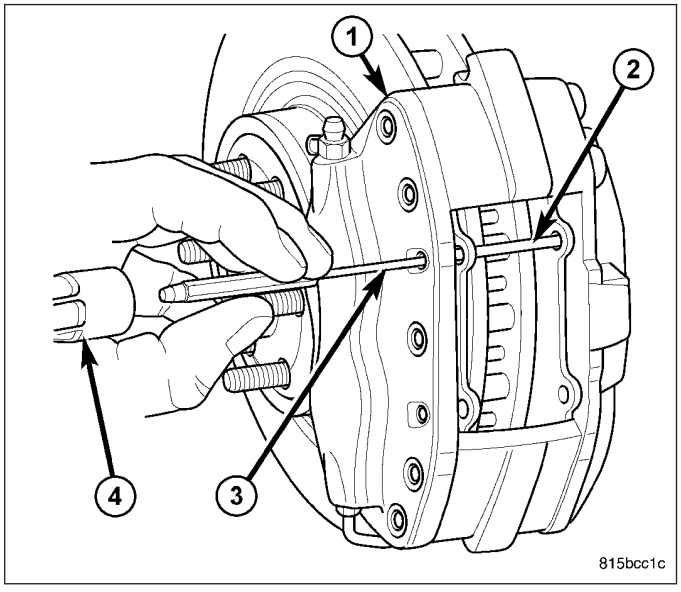

CAUTION: When pushing pistons back into caliper bores, if hand pressure is not sufficient, use only a trim stick as shown or other suitable soft tool to do so. Never use a screwdriver or other metal pry bar due to potential damage to braking surface of rotor or pads.

6. Using hand pressure, pull pads back to seat caliper pistons into bores if possible. If not possible, perform the following to do this correctly without damaging the caliper, pistons, dust boots or brake rotor disc.
   a. Place trim stick (3) between inboard brake pad and outer edge of rotor (1).
   b. Using trim stick (3), apply pressure against the inboard brake pad until both pistons are completely bottomed in bores of inboard caliper half. Leave trim stick in place to hold pistons in place.
   c. Place second trim stick between outboard brake pad and rotor, then repeat above step on outboard pad and pistons.

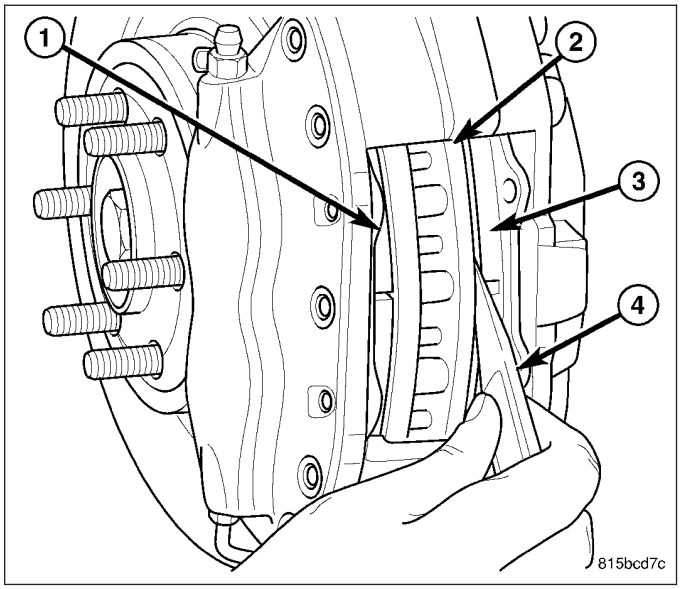

7. Remove inboard brake pad (2) through opening in caliper (1). Remove outboard brake pad in same manner.

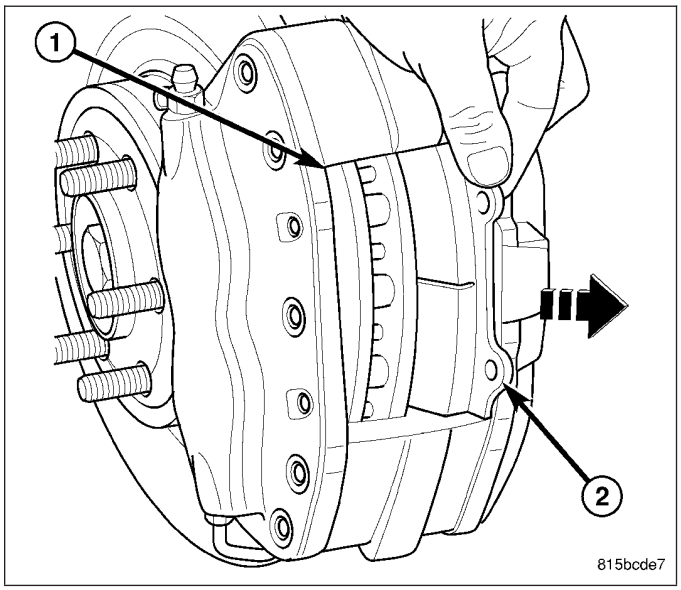

8. Once brake pads are removed from caliper (1), inspect all four caliper pistons (3) and dust boots (2) for evidence of brake fluid leakage. Also inspect dust boots on all caliper pistons for any cuts, tears or heat cracks and brake pad supports (4) (if equipped) for excess wear or damage. If caliper fails inspection, it should be replaced.

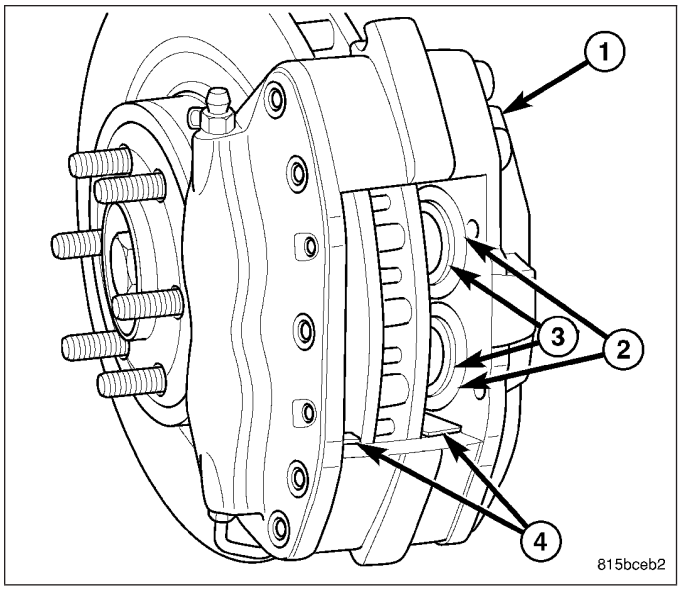

CLEANING

WARNING: Dust and dirt accumulating on brake parts during normal use may contain asbestos fibers from production or aftermarket brake linings. Breathing excessive concentrations of asbestos fibers can cause serious bodily harm. Exercise care when servicing brake parts. Do not sand or grind brake lining unless equipment used is designed to contain the dust residue. Do not clean brake parts with compressed air or by dry brushing. Cleaning should be done by dampening the brake components with a fine mist of water, then wiping the brake components clean with a dampened cloth. Dispose of cloth and all residue containing asbestos fibers in an impermeable container with the appropriate label. Follow practices prescribed by the Occupational Safety And Health Administration (OSHA) and the Environmental Protection Agency (EPA) for the handling, processing, and disposing of dust or debris that may contain asbestos fibers.

INSPECTION

Visually inspect brake pads for uneven lining wear. Also inspect for excessive lining deterioration. Check the clearance between the tips of the wear indicators (if equipped) on the pads and the brake rotors.

If a visual inspection does not adequately determine the condition of the lining, remove the disc brake pads from the calipers and perform a physical check.

NOTE: It is important to inspect both front and rear brake pads during the same inspection. Typically, front and rear brake pads wear out at the same time.

When servicing, replace **both** disc brake pads (inboard and outboard) for each caliper. It is necessary to replace the pads on the opposite side of the vehicle as well as the pads failing inspection.

If the brake pads do not require replacement, be sure to reinstall the brake pads in the original position they were remove from.

INSTALLATION

NOTE: Perform Step 1 through Step 10 on each side of vehicle to complete pad set installation before proceeding with Step 11.

1. Make sure all caliper pistons are fully seated (bottomed) in bores.

2. Slide NEW inboard (2) and outboard brake pads into opening (1) in disc brake caliper. **If installing rear brake pads, make sure beveled end of each pad lining is directed against the direction the rotor is rotating in when vehicle is moving forward, in other words, the rear pads need to have beveled end facing upward.**

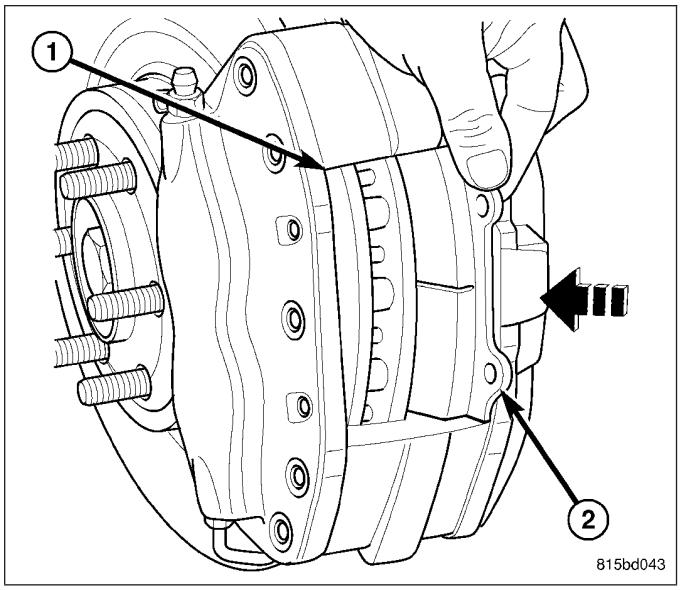

3. From inboard side, slide upper brake pad support pin (2) through caliper (3) and upper holes in both brake pads (1). Ensure that small end of support pin is in hole (4) in outboard half of caliper.

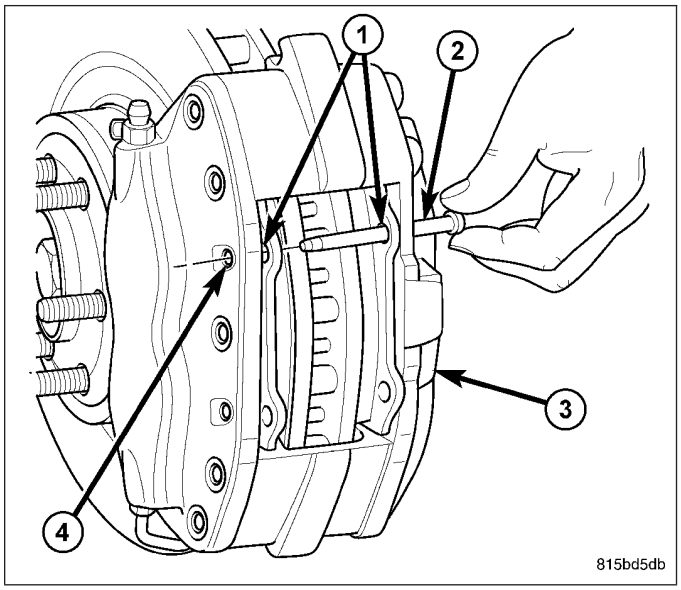

4. Install upper end of brake pad spring clip (2) under upper brake pad support pin (1).

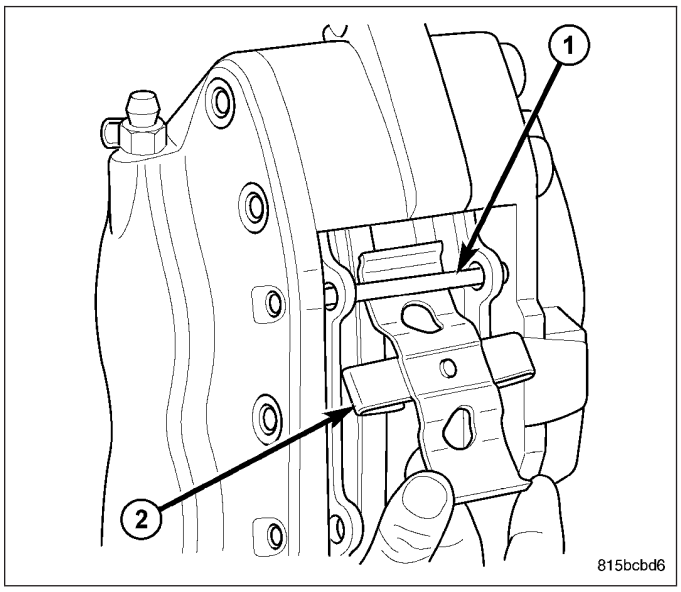

5. Press on lower end of spring clip (5) until it touches brake rotor.
6. Slide lower brake pad support pin (2) through caliper (1) and lower holes in both brake pads (3) in the same manner the upper pin was installed. Ensure small end of support pin is in hole (4) in outboard half of caliper.
7. Release the spring clip allowing it to engage lower support pin.

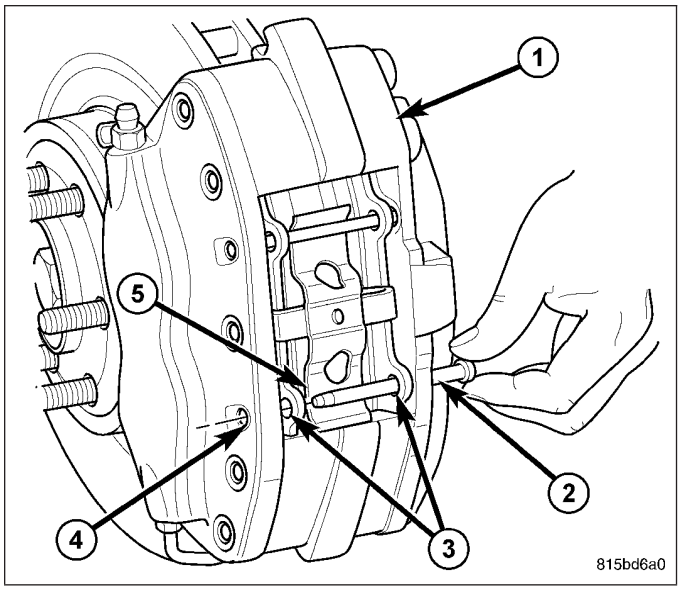

8. From inboard side, seat upper and lower support pins (4) into caliper (3) using pin punch (1) and hammer (2). Support pins must be driven into caliper until support pin retaining rings are locked into place.

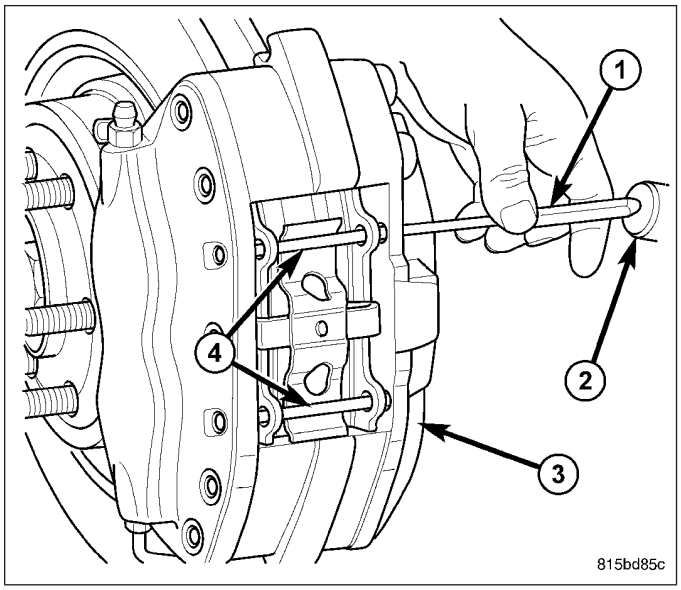

9. Once support pins are fully installed into caliper, inspect assembled caliper to make sure spring clip (2) is centered in opening (1) of caliper, correctly engaging upper and lower support pins, and is resting against both brake pads (3).

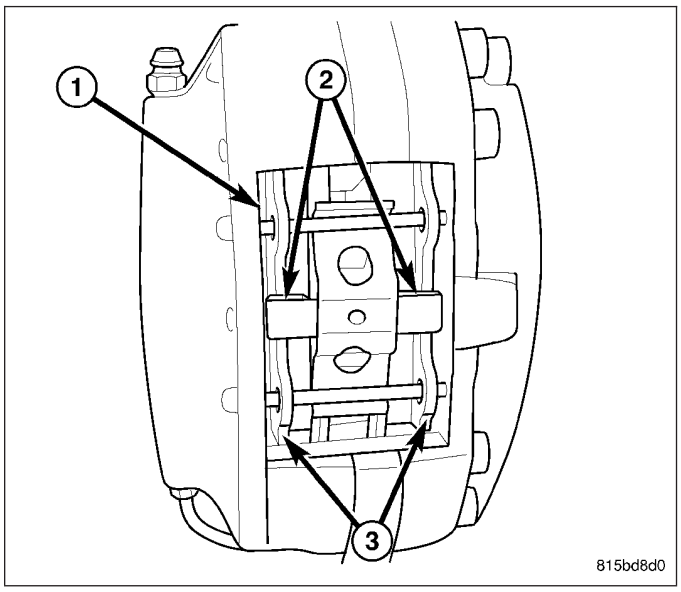

10. Install tire and wheel assembly (1). Tighten wheel mounting nuts (3) to 150 N·m (110 ft. lbs.) torque. (Refer to 22 - TIRES/WHEELS - INSTALLATION)
11. Lower vehicle.
12. Pump brake pedal several times to set pads to caliper and brake rotor.

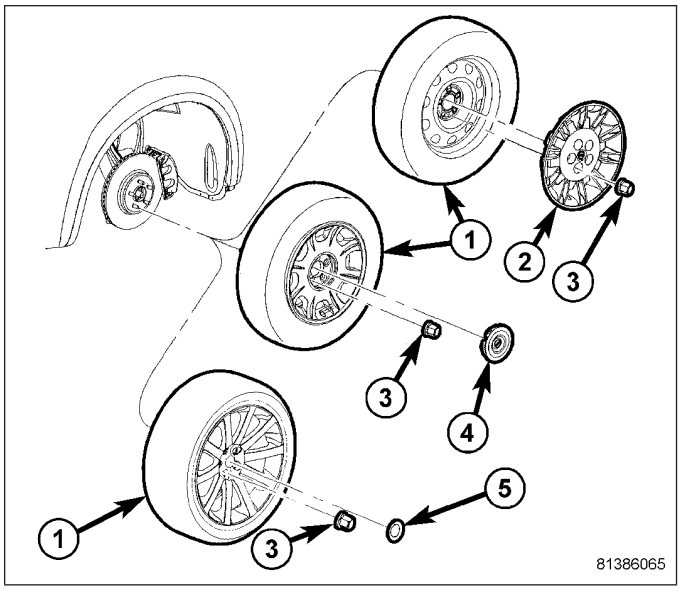

13. Check and adjust brake fluid level in reservoir (1). (Refer to 5 - BRAKES/HYDRAULIC/MECHANICAL/FLUID - STANDARD PROCEDURE)

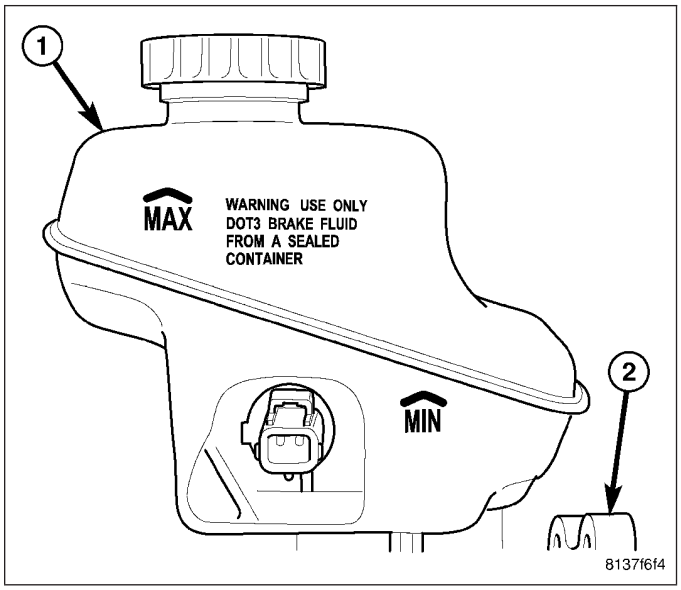

CAUTION: When NEW brake pads have been installed, keep in mind that braking effectiveness might be somewhat reduced during the first brake applications following installation.

NOTE: When NEW brake pads are installed, they must be burnished (seated) to the rotor. This must be done to ensure the proper performance of the replacement brake pads.

14. Road test vehicle making several stops to wear off any foreign material on brakes and to seat brake pad linings. NEW brake pads need to be burnished properly. (Refer to 5 - BRAKES/HYDRAULIC/MECHANICAL/BRAKE PADS/SHOES - STANDARD PROCEDURE)

CALIPER - FRONT SINGLE PISTON DISC BRAKE

REMOVAL

NOTE: Before proceeding, (Refer to 5 - BRAKES - WARNING) (Refer to 5 - BRAKES - CAUTION).

1. Disconnect and isolate battery negative cable (2) from battery post.
2. Using a brake pedal holding tool, depress brake pedal past its first inch of travel and hold it in this position. Holding pedal in this position will isolate master cylinder from hydraulic brake system and will not allow brake fluid to drain out of brake fluid reservoir while brake lines are open.
3. Raise and support vehicle. (Refer to LUBRICATION & MAINTENANCE/HOISTING - STANDARD PROCEDURE)

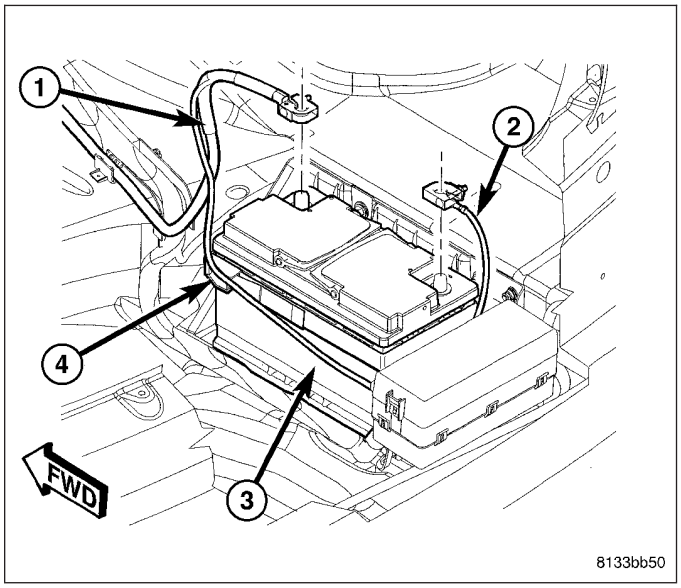

4. Remove wheel mounting nuts (3), then tire and wheel assembly (1).

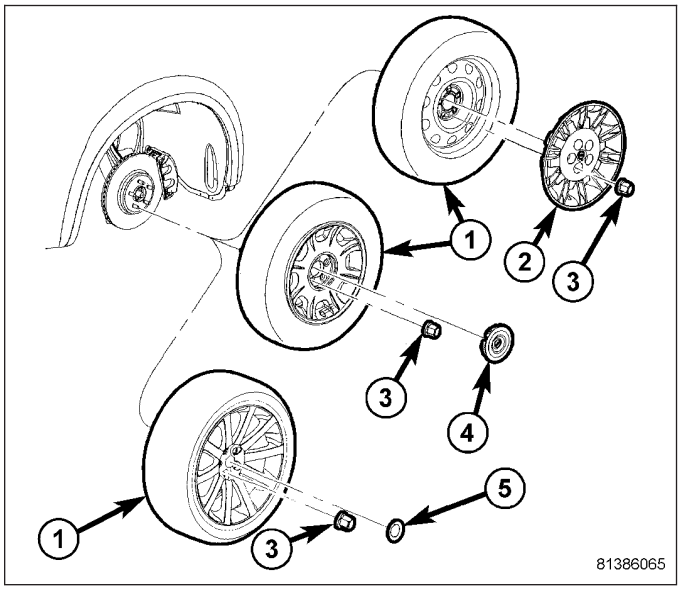

5. Remove banjo bolt (6) connecting flexible brake hose (1) to caliper (5). There are two sealing washers (7) (one one each side of hose fitting) that will come off when bolt is removed. Discard these washers; install NEW washers on installation.

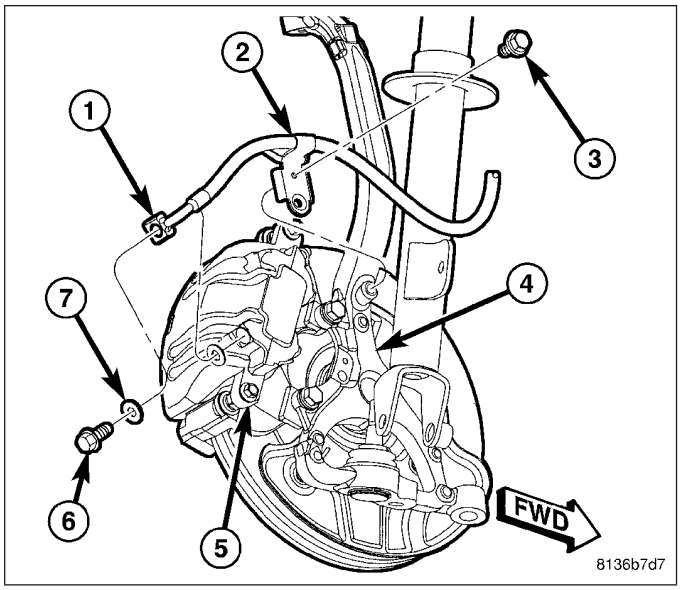

6. While holding guide pins from turning, remove caliper guide pin bolts (2).
7. Remove brake caliper (1) from brake adapter (3) and pads.

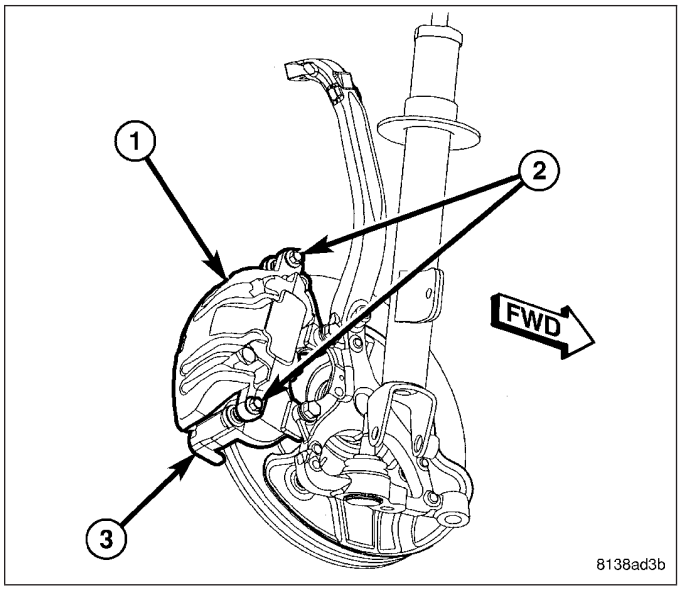

DISASSEMBLY

NOTE: Before disassembling brake caliper, clean and inspect it. (Refer to 5 - BRAKES/HYDRAULIC/MECHANICAL/DISC BRAKE CALIPER - CLEANING) (Refer to 5 - BRAKES/HYDRAULIC/MECHANICAL/DISC BRAKE CALIPER - INSPECTION)

WARNING: Under no condition should high pressure air ever be used to remove a piston from a caliper bore. Personal injury could result from such a practice.

CAUTION: Do not use excessive force when clamping caliper in vise. Excessive vise pressure will cause bore distortion.

1. Drain brake fluid from caliper.

2. Mount caliper in a vise equipped with protective jaws.
3. Place a wooden block (2) (padded with approximately one-inch thickness of shop towels) in front of caliper (1) piston as shown. Padded block should be sized to allow piston to push out of bore far enough to be removed by hand after being loosened by air pressure, yet large enough to keep piston from coming completely out. This will cushion and protect caliper piston during removal.

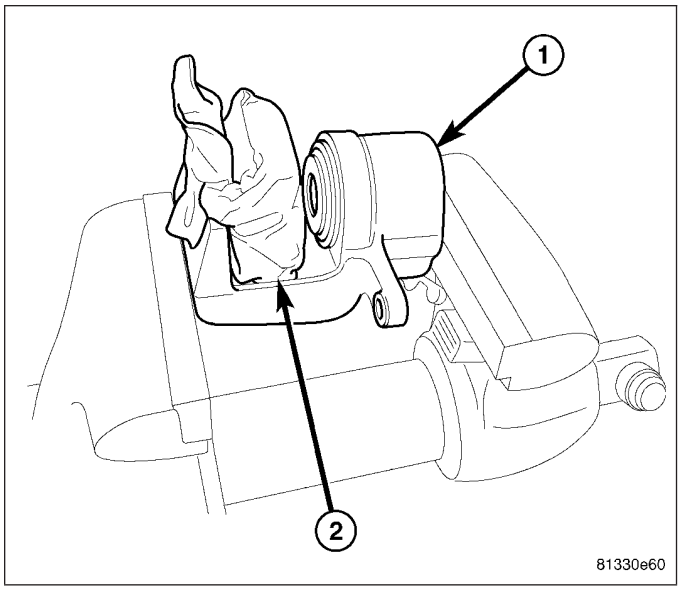

WARNING: Do not place face or hands near caliper and piston if using compressed air pressure to remove piston. Do not use high pressure.

4. Apply low pressure compressed air to caliper fluid inlet in **short spurts** to ease piston out of bore.
5. Remove piston from caliper (1).

CAUTION: When working on disc brake caliper, always use care and suitable tools to avoid damaging the aluminum housing.

6. Using a suitable tool (1), carefully remove dust boot (2) and discard it.

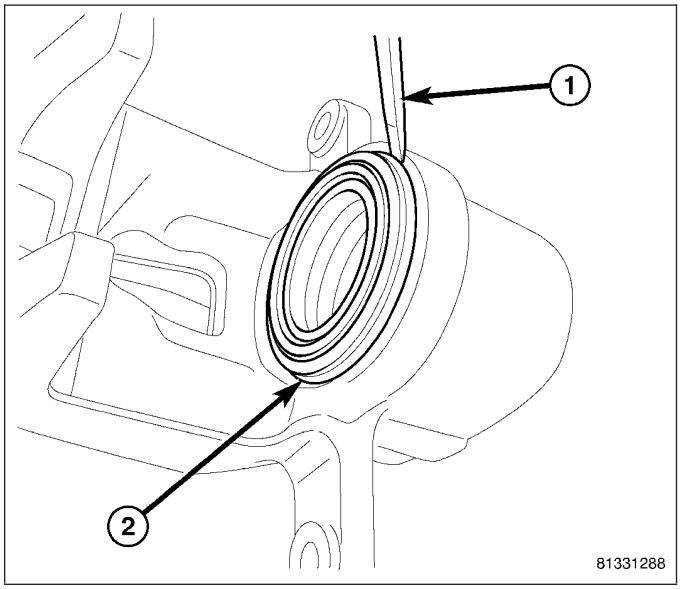

CAUTION: Do not use a screw driver or other metal tool for seal removal. Using such tools can scratch bore or leave burrs on seal groove edges.

7. Using a soft tool such as a plastic trim stick (2), work piston seal (1) out of its groove in caliper piston bore. Discard used seal.

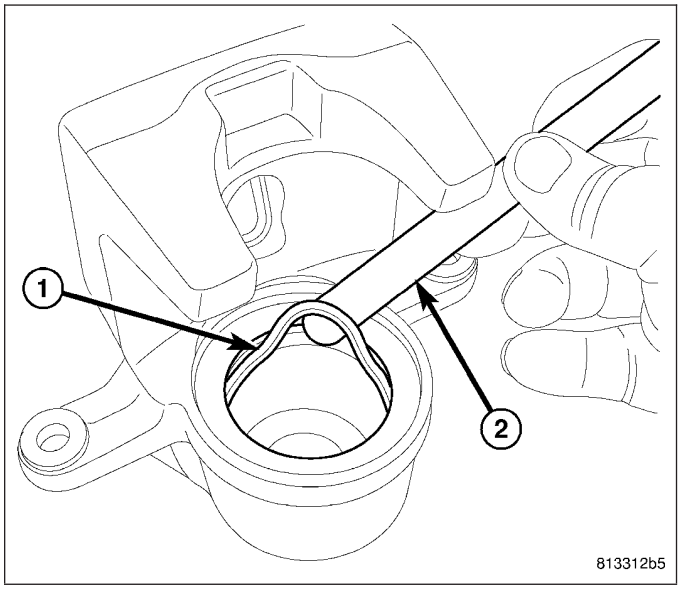

8. Remove caliper bleeder screw (1) from caliper housing (2).
9. Clean piston bore and drilled passage ways with alcohol or a suitable solvent. Wipe it dry using only a lint-free cloth.
10. Inspect both piston and bore for scoring or pitting.

NOTE: It is not recommended to hone caliper bore. The anodized coating would be compromised.

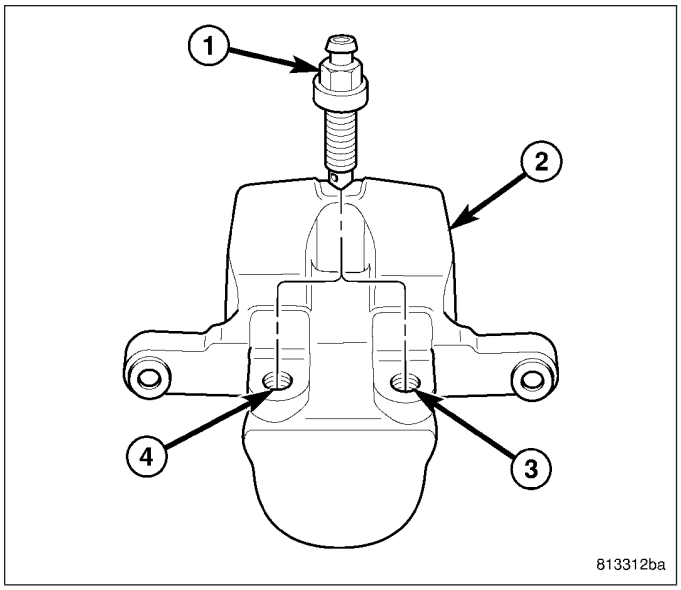

CLEANING

WARNING: Dust and dirt accumulating on brake parts during normal use may contain asbestos fibers from production or aftermarket brake linings. Breathing excessive concentrations of asbestos fibers can cause serious bodily harm. Exercise care when servicing brake parts. Do not sand or grind brake lining unless equipment used is designed to contain the dust residue. Do not clean brake parts with compressed air or by dry brushing. Cleaning should be done by dampening the brake components with a fine mist of water, then wiping the brake components clean with a dampened cloth. Dispose of cloth and all residue containing asbestos fibers in an impermeable container with the appropriate label. Follow practices prescribed by the Occupational Safety And Health Administration (OSHA) and the Environmental Protection Agency (EPA) for the handling, processing, and disposing of dust or debris that may contain asbestos fibers.

To clean or flush the internal passages of the brake caliper, use fresh brake fluid or Mopar® Non-Chlorinated Brake Parts Cleaner. Never use gasoline, kerosene, alcohol, oil, transmission fluid or any fluid containing mineral oil to clean the caliper. These fluids will damage rubber cups and seals.

INSPECTION

Inspect the disc brake caliper for the following:

- Cracked or damaged housing
- Brake fluid leaks in and around boot area
- Ruptures, brittleness or damage to the piston dust boot

If caliper fails inspection, disassemble and recondition caliper, replacing the seals and dust boots or replace caliper.

ASSEMBLY

CAUTION: Dirt, oil, and solvents can damage caliper seals. Ensure assembly area is clean and dry.

NOTE: Always use new, clean Mopar® DOT 3 Motor Vehicle Brake Fluid or equivalent when assembling brake caliper.

NOTE: Never use used or old piston seals or boots for reassembly.

1. Lubricate caliper piston, piston seal (1) and piston bore (2) with clean, fresh brake fluid.
2. Install NEW piston seal (1) in groove of caliper bore (2). Seal should be started at one area of groove and gently worked around and into the groove using only your clean fingers to seat it.

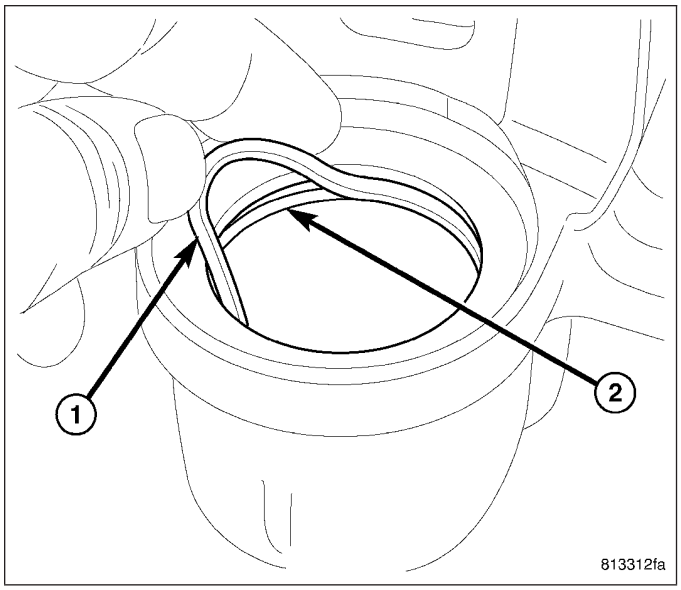

3. Install NEW dust boot (1) on piston (2) and work boot lip into groove at top of piston. Stretch boot downward, straightening boot folds, then move boot back upward as necessary until folds snap uniformly into place.

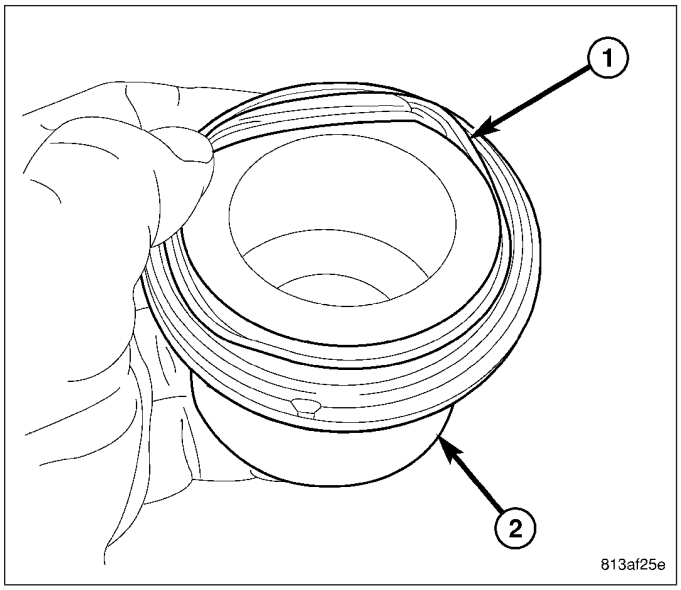

4. Install piston (1) into caliper piston (2) bore, pressing piston down to bottom of bore using hand-pressure. Using a piece of wood or wooden hammer handle may also suffice as long as piston and boot damage can be avoided. **The dust boot will not seat at this time. Refer to following step.**

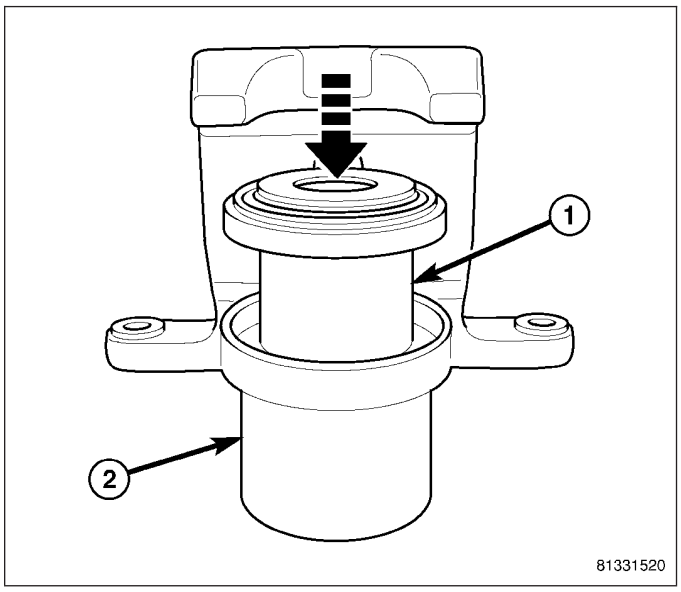

5. Seat dust boot (3) in caliper counterbore using Installer (2), Special Tool 9315, with Handle (1), Special Tool C-4171. Install dust boot until it bottoms. Do not over-seat dust boot or damage will occur.

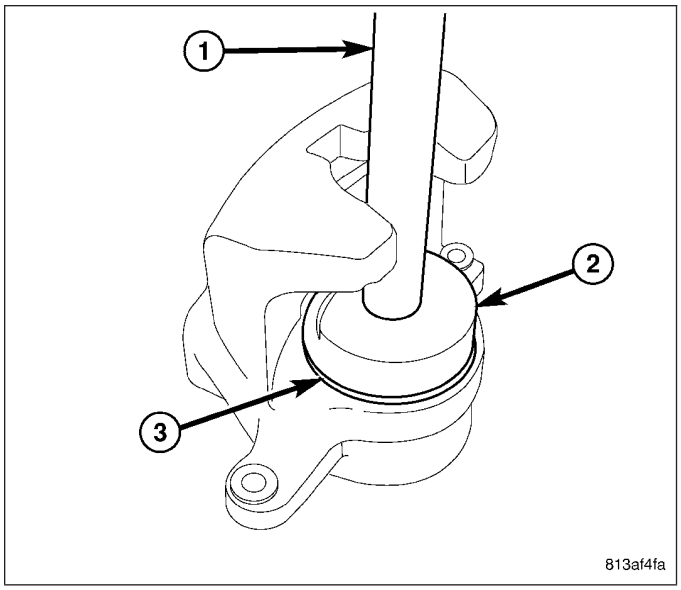

6. Install bleeder screw in correct threaded hole. Caliper housing is not side-specific, so it is important to install bleeder screw in threaded hole that will be uppermost once caliper is installed on vehicle. Tighten bleeder screw to 15 N·m (125 in. lbs.) torque.
7. Install caliper on vehicle. (Refer to 5 - BRAKES/HYDRAULIC/MECHANICAL/DISC BRAKE CALIPER - INSTALLATION)

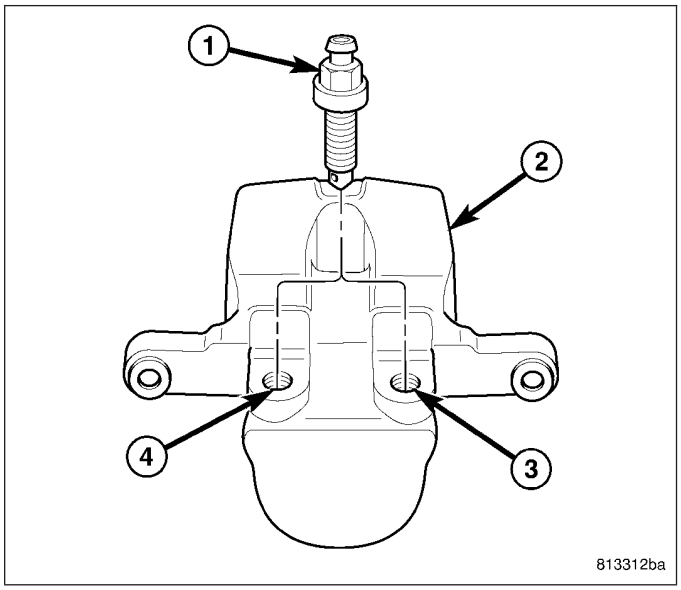

INSTALLATION

CAUTION: Always inspect brake pads before installing disc brake caliper and replace as necessary. (Refer to 5 - BRAKES/HYDRAULIC/MECHANICAL/BRAKE PADS/SHOES - INSPECTION)

1. Completely retract caliper piston back into bore of caliper. Use hand pressure or a C-clamp may be used to retract piston, first placing a wood block over piston before installing C-clamp to avoid damaging piston.

CAUTION: Use care when installing caliper onto disc brake adapter to avoid damaging boots on caliper guide pins.

2. Push caliper guide pins into caliper adapter to clear caliper mounting bosses when installing.

3. Slide caliper over brake pads and onto caliper adapter (3).

CAUTION: Extreme caution should be taken not to crossthread caliper guide pin bolts (2) when they are installed.

4. Align caliper mounting holes with guide pins, then install guide pin bolts (2). While holding guide pins from turning, tighten bolts to 60 N·m (44 ft. lbs.) torque.

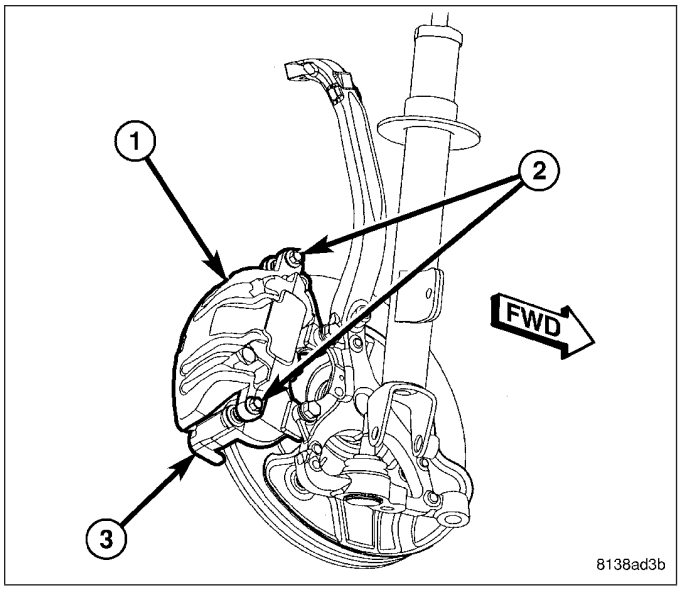

5. Install banjo bolt (6) attaching brake hose (1) to caliper (5). Install NEW washers (7) on each side of hose fitting as banjo bolt is placed through fitting. Thread banjo bolt into caliper and tighten to 50 N·m (37 ft. lbs.) torque.

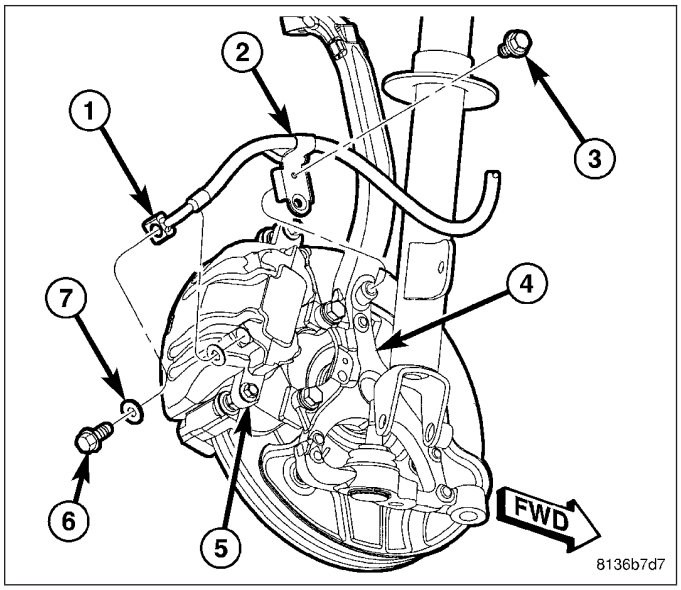

6. Install tire and wheel assembly (1). Tighten wheel mounting nuts (3) to 150 N·m (110 ft. lbs.) torque. (Refer to 22 - TIRES/WHEELS - INSTALLATION)
7. Lower vehicle.
8. Remove brake pedal holding tool.

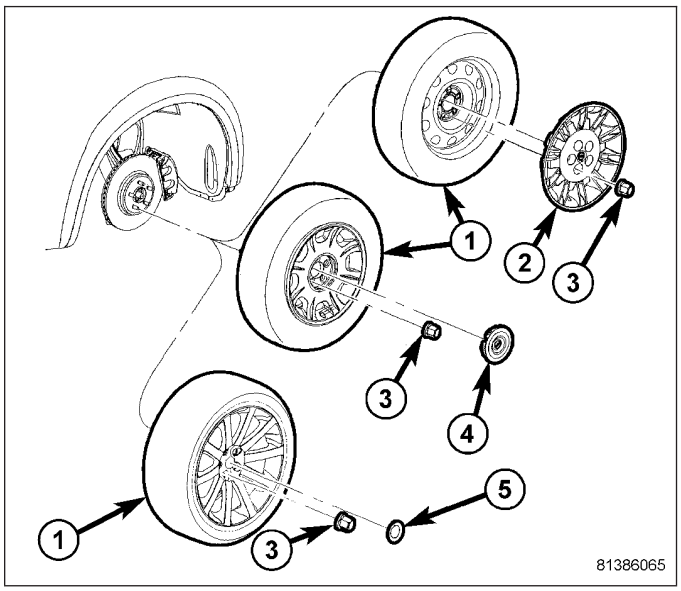

9. Connect battery negative cable (2) to battery post. It is important that this is performed properly. (Refer to 8 - ELECTRICAL/BATTERY SYSTEM - STANDARD PROCEDURE)

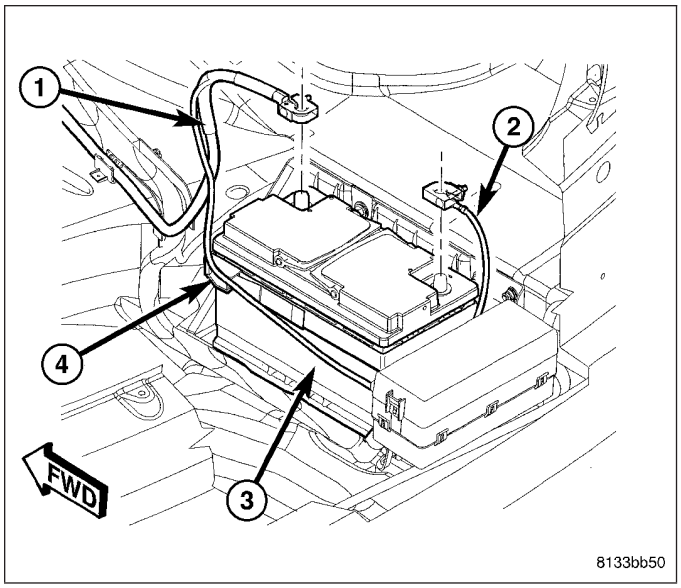

10. Bleed (1) base brake hydraulic system as necessary. (Refer to 5 - BRAKES - STANDARD PROCEDURE)
11. Road test vehicle making several stops to wear off any foreign material on brakes and to seat brake shoes.

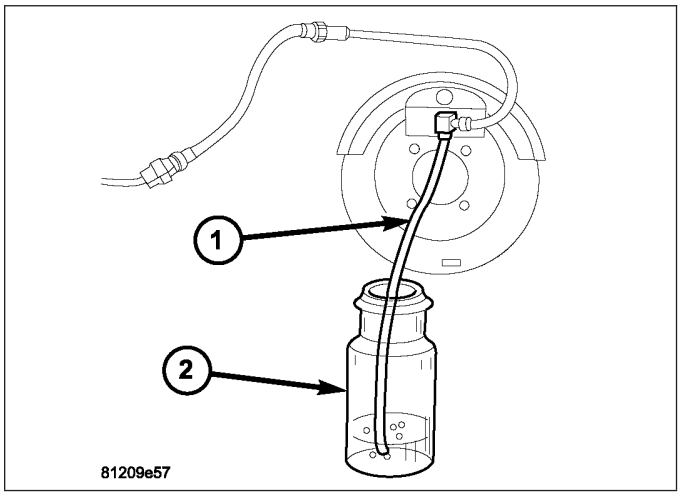

CALIPER - FRONT TWIN PISTON DISC BRAKE

REMOVAL

AWD

NOTE: Before proceeding, (Refer to 5 - BRAKES - WARNING) (Refer to 5 - BRAKES - CAUTION).

1. Disconnect and isolate battery negative cable (2) from battery post.
2. Using a brake pedal holding tool, depress brake pedal past its first inch of travel and hold it in this position. Holding pedal in this position will isolate master cylinder from hydraulic brake system and will not allow brake fluid to drain out of brake fluid reservoir while brake lines are open.
3. Raise and support vehicle. (Refer to LUBRICATION & MAINTENANCE/HOISTING - STANDARD PROCEDURE)

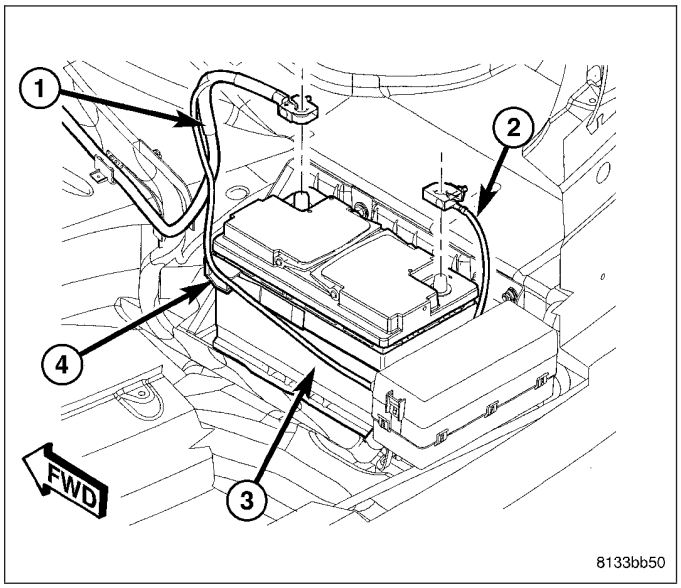

4. Remove wheel mounting nuts (3), then tire and wheel assembly (1).

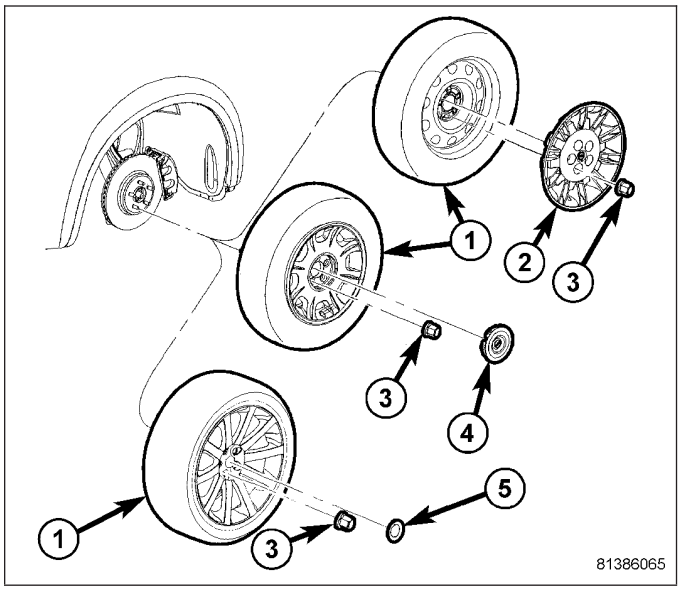

5. Remove banjo bolt (3) connecting flexible brake hose (1) to caliper (4). There are two sealing washers (2) (one one each side of hose fitting) that will come off when bolt is removed. Discard these washers; install NEW washers on installation.

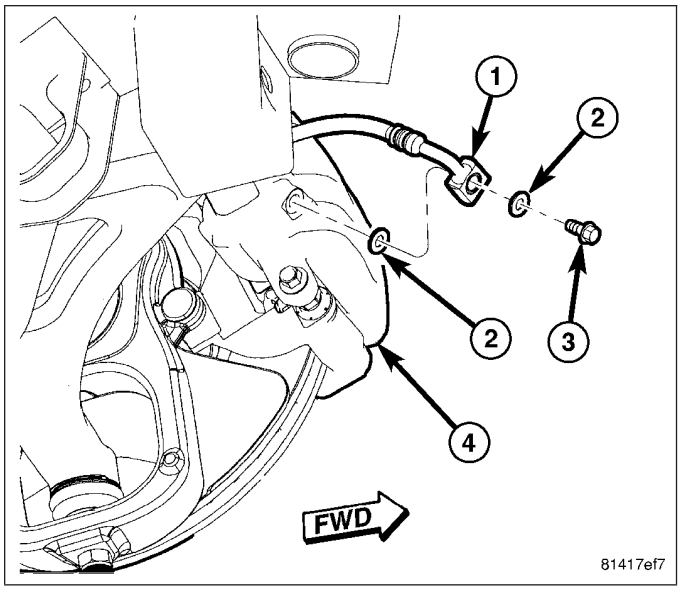

6. While holding guide pins from turning, remove caliper guide pin bolts (1).
7. Remove brake caliper (3) from brake adapter (2) and pads.

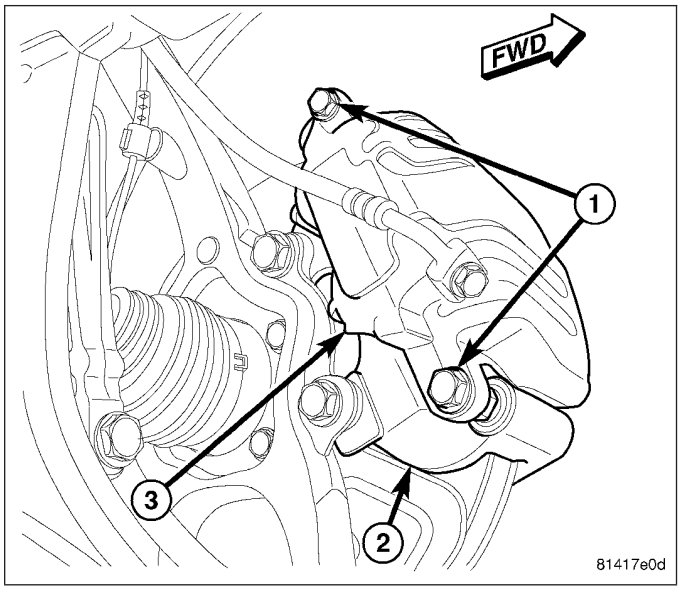

RWD

NOTE: Before proceeding, (Refer to 5 - BRAKES - WARNING) (Refer to 5 - BRAKES - CAUTION).

1. Disconnect and isolate battery negative cable (2) from battery post.
2. Using a brake pedal holding tool, depress brake pedal past its first inch of travel and hold it in this position. Holding pedal in this position will isolate master cylinder from hydraulic brake system and will not allow brake fluid to drain out of brake fluid reservoir while brake lines are open.
3. Raise and support vehicle. (Refer to LUBRICATION & MAINTENANCE/HOISTING - STANDARD PROCEDURE)

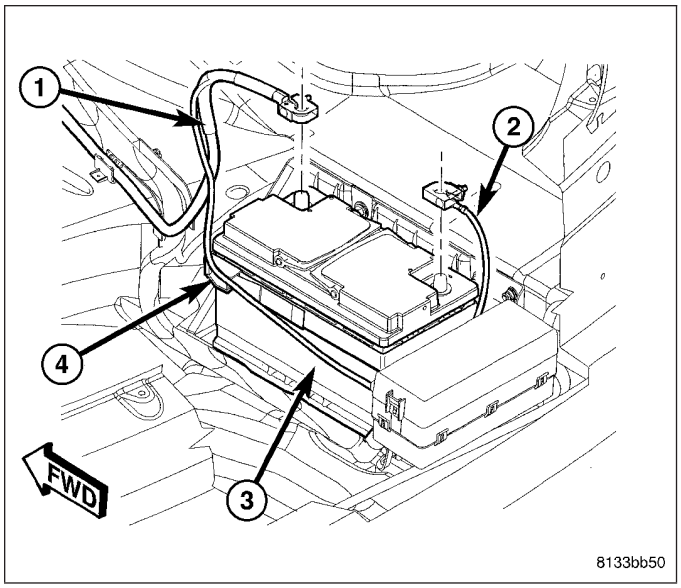

4. Remove wheel mounting nuts (3), then tire and wheel assembly (1).

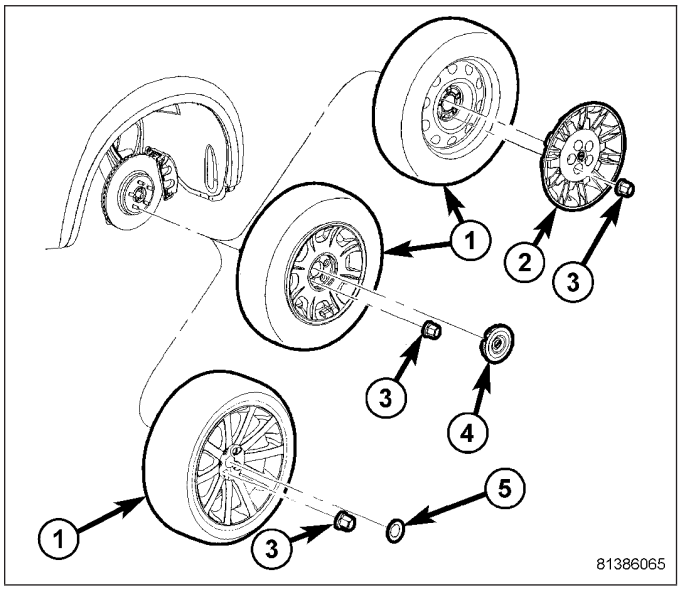

5. Remove banjo bolt (6) connecting flexible brake hose (1) to caliper (5). There are two sealing washers (7) (one one each side of hose fitting) that will come off when bolt is removed. Discard these washers; install NEW washers on installation.

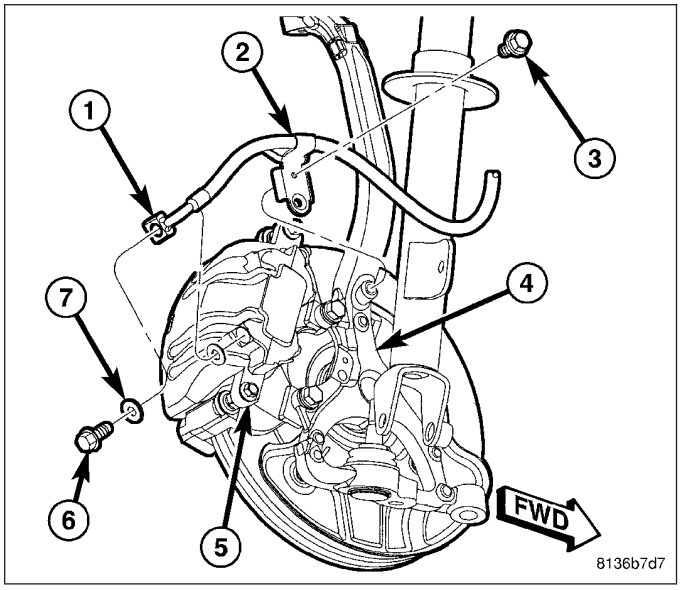

6. While holding guide pins from turning, remove caliper guide pin bolts (2).
7. Remove brake caliper (1) from brake adapter (3) and pads.

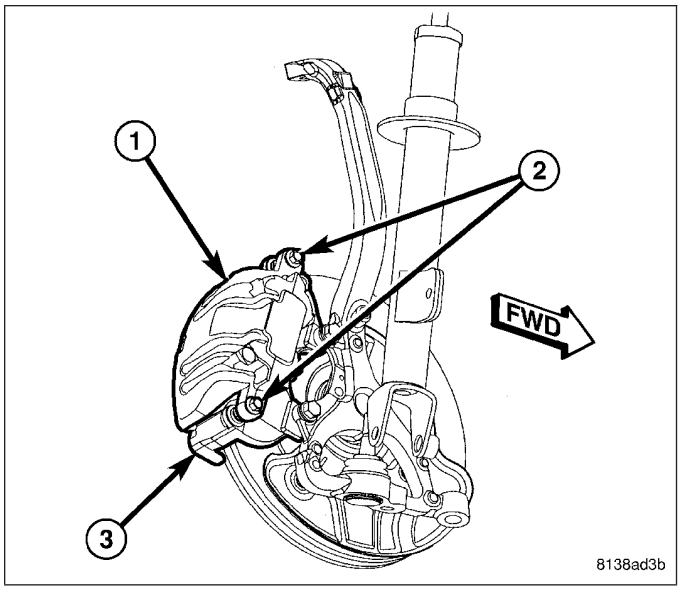

DISASSEMBLY

NOTE: Before disassembling the brake caliper, clean and inspect it. (Refer to 5 - BRAKES/HYDRAULIC/MECHANICAL/DISC BRAKE CALIPER - CLEANING) (Refer to 5 - BRAKES/HYDRAULIC/MECHANICAL/DISC BRAKE CALIPER - INSPECTION)

WARNING: Under no condition should high pressure air ever be used to remove a piston from a caliper bore. Personal injury could result from such practice.

1. Drain brake fluid from caliper.

CAUTION: Do not use excessive force when clamping caliper (2) in vise. Caliper housing is made of aluminum. Excessive vise pressure will cause bore distortion.

2. Mount caliper (2) in vise equipped with protective jaws.
3. C-clamp (1) a block of wood (3) over one piston.

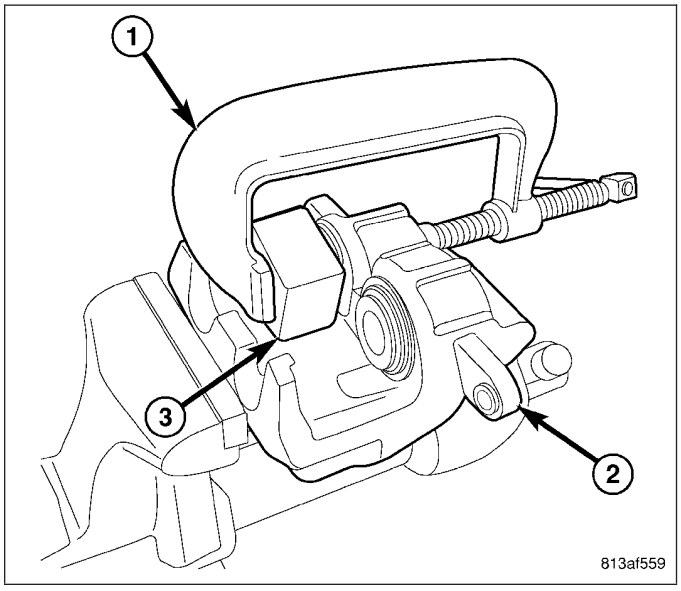

4. Take another block of wood and pad it with one-inch thickness of shop towels. Padded block should be sized to allow piston to push out of bore far enough to be removed by hand after being loosened by air pressure, yet large enough to keep piston from coming completely out.
5. Place the padded block of wood (1) in outboard shoe side of caliper (2) in front of exposed piston (3). This will cushion and protect caliper piston during removal.

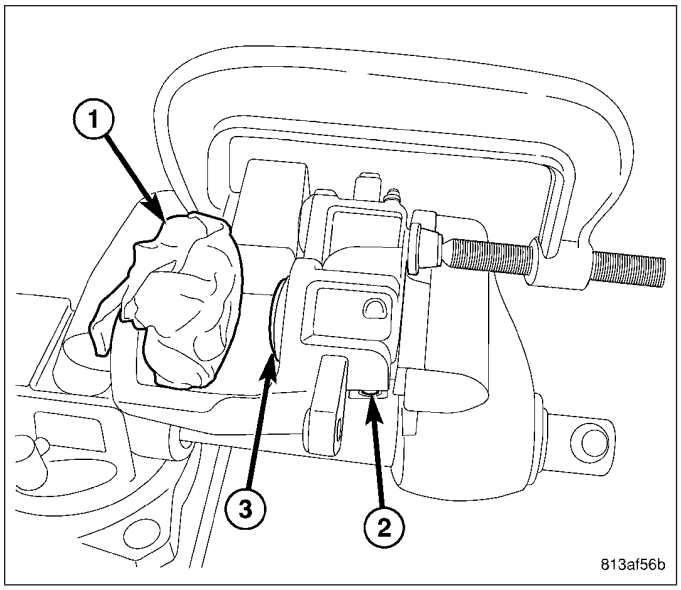

WARNING: Do not place face or hands near caliper and piston if using compressed air to remove piston. Do not use high pressure.

WARNING: Never attempt to catch piston as it leaves bore. This could result in personal injury.

CAUTION: Do not blow piston out of bore with sustained air pressure. This could result in a cracked piston. Use only short spurts of air.

6. Apply **short spurts of low pressure air** with a rubber tipped blow gun through caliper brake hose port. Use only enough air pressure to ease piston out of bore.
7. Remove piston from caliper (2).
8. Remove C-clamp and block of wood.
9. C-clamp (1) the block of wood (3) over dust boot of first piston removed. This will seal empty piston bore.

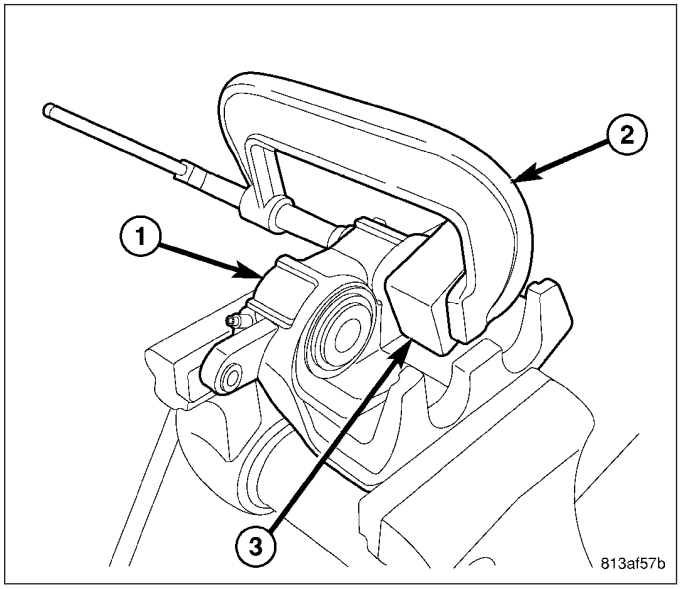

10. Move padded piece of wood (1) in front of piston (2) yet to be removed.
11. Remove second piston using same procedure with **short spurts of low pressure air**.
12. Remove C-clamp and block of wood from caliper.

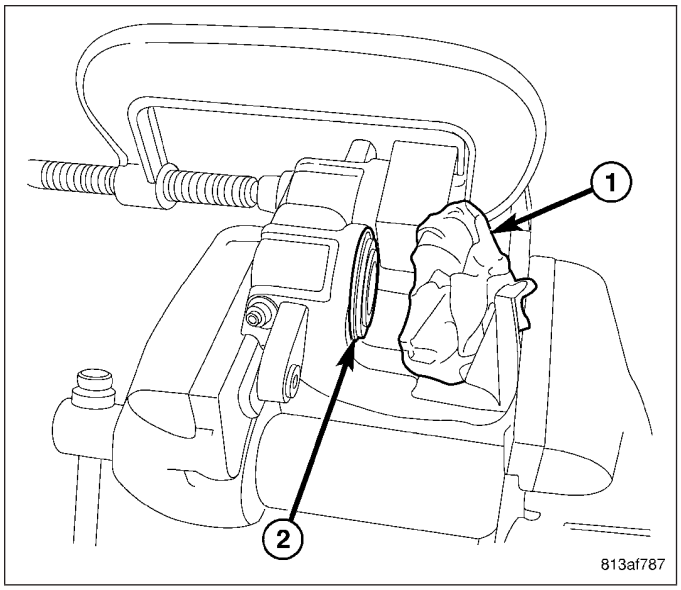

13. Remove piston dust boots (1) (over each bore) with an appropriate pry tool (2). **Use care not to damage aluminum housing.**

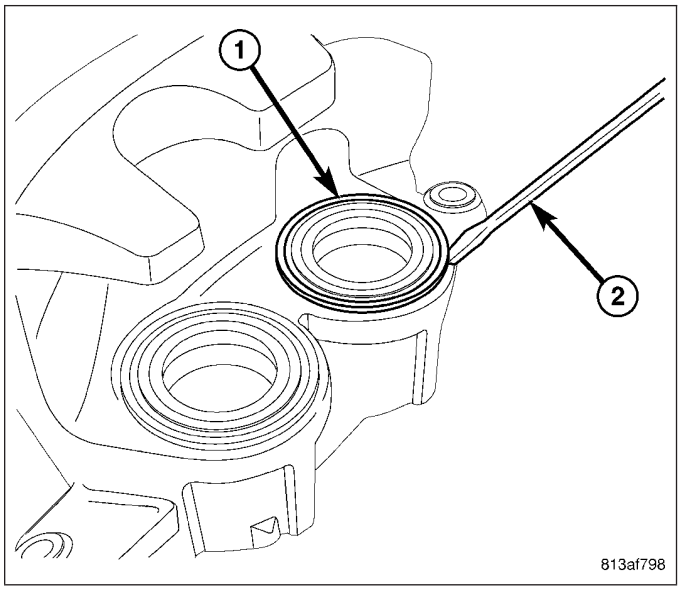

CAUTION: Use an appropriate tool (1) to remove piston seals (2) to avoid scratching piston bore. Do not use a screwdriver or other metal tool to remove seals.

14. Using a soft tool such as a plastic trim stick (1), remove piston seals (2) from caliper bores.

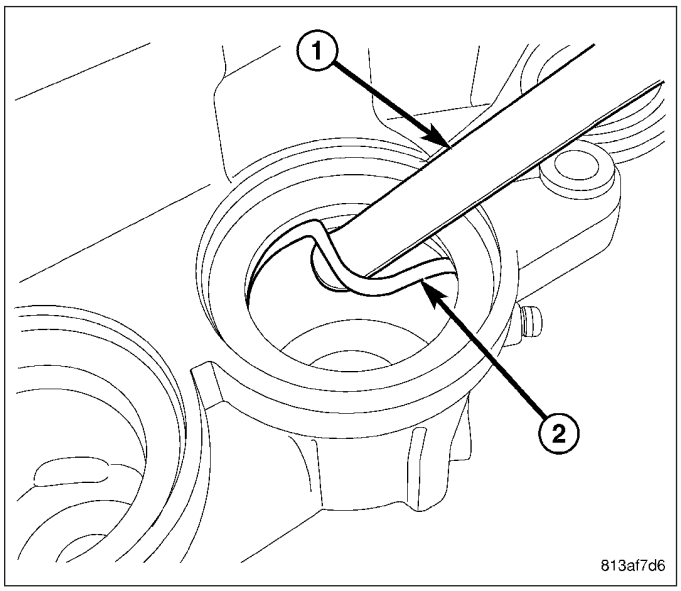

15. Remove caliper bleeder screw (2) from caliper housing (1).
16. Clean piston bore and drilled passage ways with alcohol or a suitable solvent. Wipe it dry using only a lint-free cloth.
17. Inspect both piston and bore for scoring or pitting.

NOTE: It is not recommended to hone caliper bore. The anodized coating would be compromised.

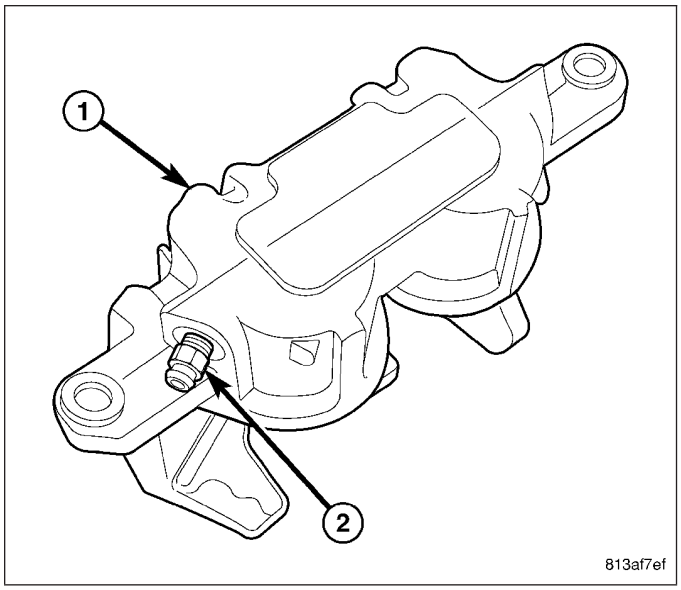

CLEANING

WARNING: Dust and dirt accumulating on brake parts during normal use may contain asbestos fibers from production or aftermarket brake linings. Breathing excessive concentrations of asbestos fibers can cause serious bodily harm. Exercise care when servicing brake parts. Do not sand or grind brake lining unless equipment used is designed to contain the dust residue. Do not clean brake parts with compressed air or by dry brushing. Cleaning should be done by dampening the brake components with a fine mist of water, then wiping the brake components clean with a dampened cloth. Dispose of cloth and all residue containing asbestos fibers in an impermeable container with the appropriate label. Follow practices prescribed by the Occupational Safety And Health Administration (OSHA) and the Environmental Protection Agency (EPA) for the handling, processing, and disposing of dust or debris that may contain asbestos fibers.

To clean or flush the internal passages of the brake caliper, use fresh brake fluid or Mopar® Non-Chlorinated Brake Parts Cleaner. Never use gasoline, kerosene, alcohol, oil, transmission fluid or any fluid containing mineral oil to clean the caliper. These fluids will damage rubber cups and seals.

INSPECTION

Inspect the disc brake caliper for the following:

- Cracked or damaged housing
- Brake fluid leaks in and around boot area
- Ruptures, brittleness or damage to the piston dust boot

If caliper fails inspection, disassemble and recondition caliper, replacing the seals and dust boots or replace caliper.

ASSEMBLY

CAUTION: Dirt, oil, and solvents can damage caliper seals. Ensure assembly area is clean and dry.

NOTE: Always use new, clean Mopar® DOT 3 Motor Vehicle Brake Fluid when assembling brake caliper.

NOTE: Never use old or used piston seals or boots for assembly.

1. Lubricate caliper pistons, piston seals (1) and piston bores (2) with clean, fresh brake fluid.
2. Install NEW piston seal (1) into groove of each caliper piston bore (2).

NOTE: Make sure seal is fully seated and not twisted in groove.

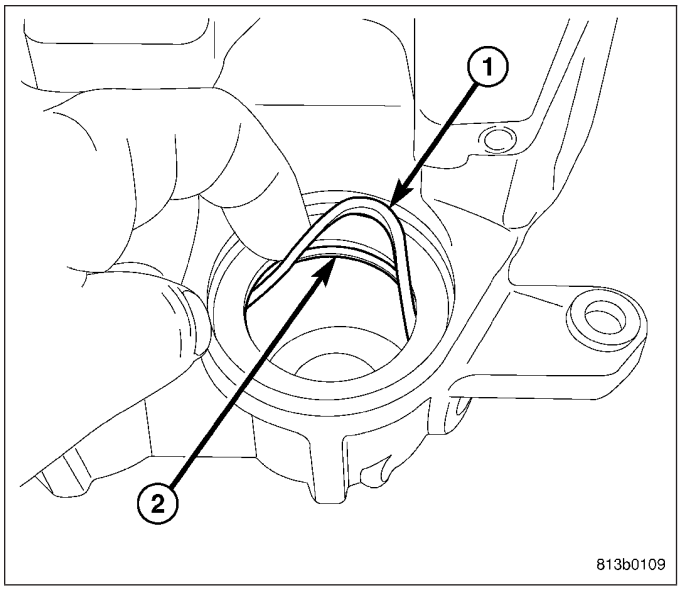

3. Install NEW boot (1) on each piston (2) and work boot lip into groove at top of piston. Stretch boot rearward straightening boot folds, then move boot forward as necessary until folds snap uniformly into place.

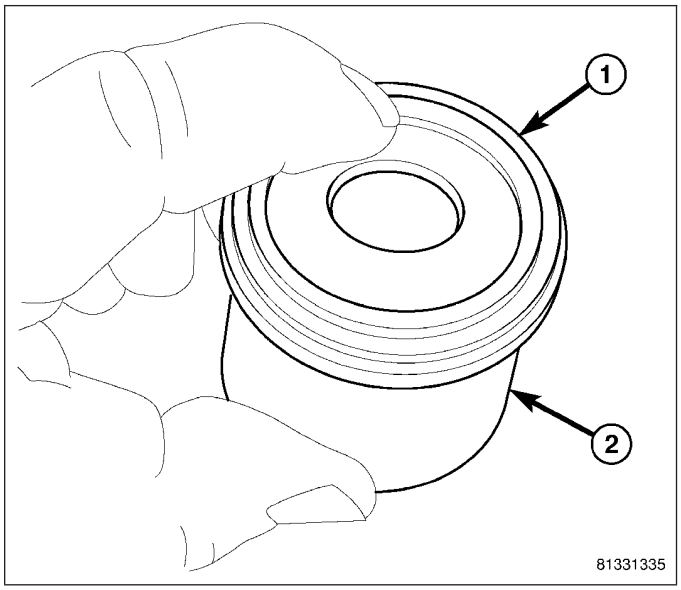

4. Install each piston (1), one at a time, into its caliper piston (2) bore, pressing piston down to bottom of bore using hand-pressure. Using a piece of wood or wooden hammer handle may also suffice as long as piston and boot damage is avoided.

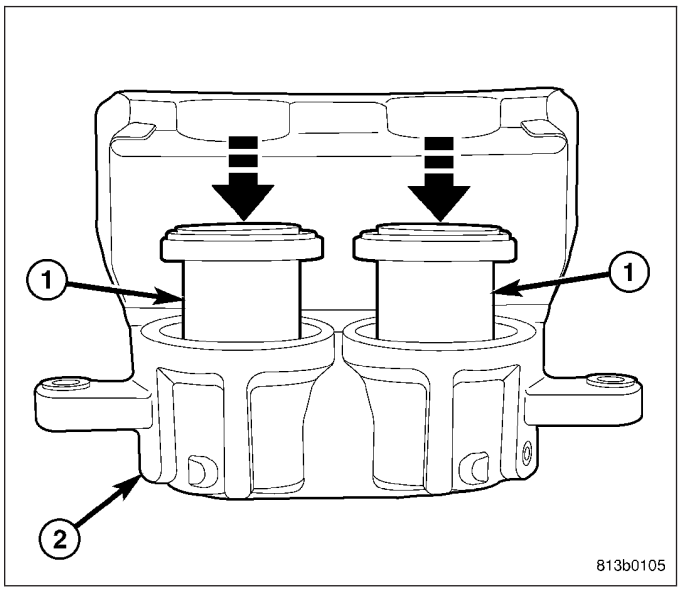

CAUTION: When seating dust boots in following step, use care not to over-install boots or damage will occur. Each boot (2) will bottom in the counterbore before the top of the boot reaches the surface of the caliper. The boot will bottom with approximately 2 mm (1/16 inch) (3) of boot still showing above caliper housing.

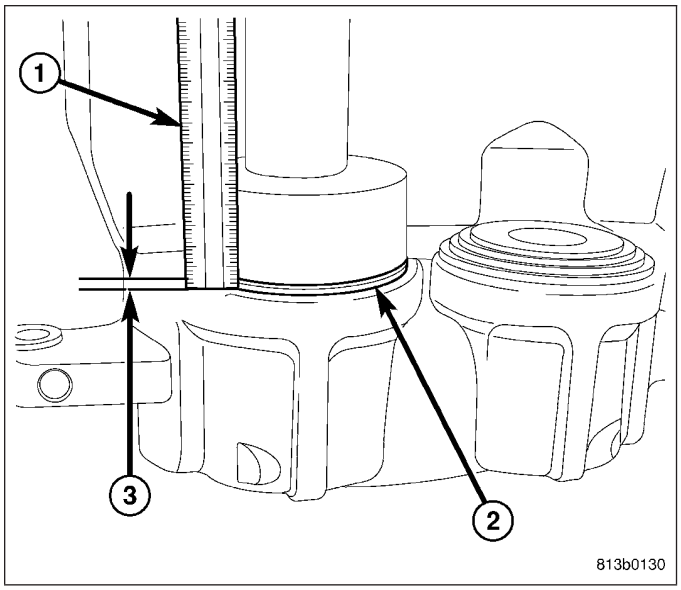

5. Seat dust boots (3) in caliper counterbores using Installer (2), Special Tool 9315, with Handle (1), Special Tool C-4171. Install each dust boot until it bottoms. Do not over-seat dust boot or damage will occur.

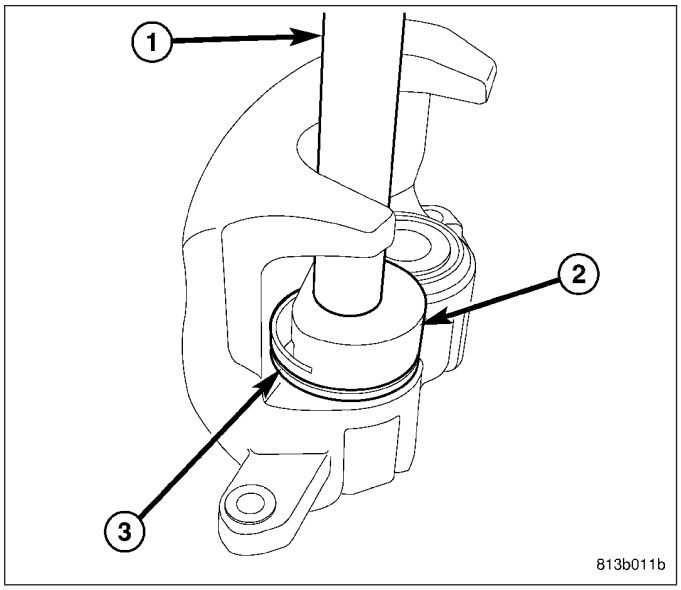

6. Install caliper bleeder screw (2) in caliper housing (1). Tighten bleeder screw to 15 N·m (125 in. lbs.) torque.
7. Install caliper on vehicle. (Refer to 5 - BRAKES/HYDRAULIC/MECHANICAL/DISC BRAKE CALIPER - INSTALLATION)

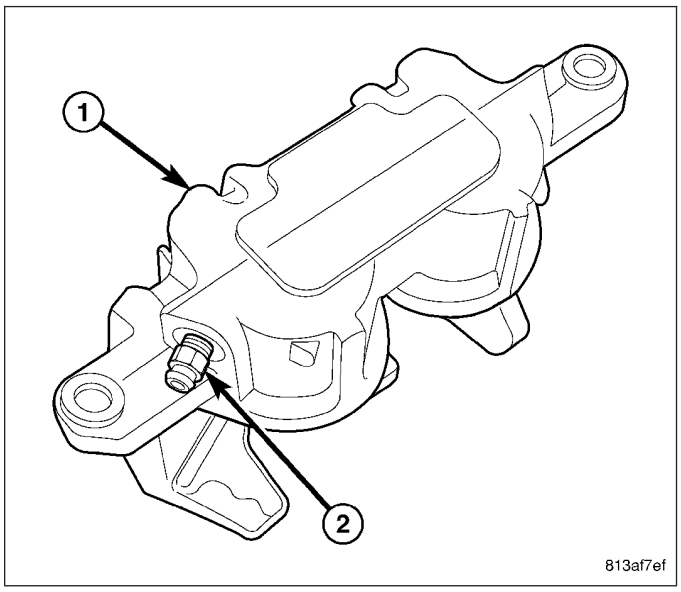

INSTALLATION

AWD

CAUTION: Always inspect brake pads before installing disc brake caliper and replace as necessary. (Refer to 5 - BRAKES/HYDRAULIC/MECHANICAL/BRAKE PADS/SHOES - INSPECTION)

1. Completely retract caliper pistons back into bores of caliper. Use hand pressure or a C-clamp may also be used to retract pistons, first placing a wood block over piston before installing C-clamp to avoid damaging piston.

CAUTION: Use care when installing caliper onto disc brake adapter to avoid damaging boots on caliper guide pins.

2. Push caliper guide pins into caliper adapter to clear caliper mounting bosses when installing.
3. Slide caliper (3) over brake pads and onto caliper adapter (2).

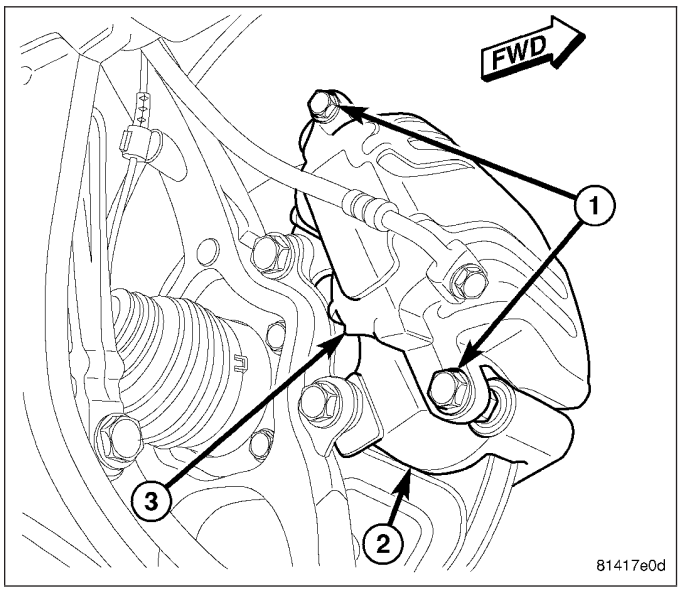

CAUTION: Extreme caution should be taken not to crossthread caliper guide pin bolts (1) when they are installed.

4. Align caliper mounting holes with guide pins, then install guide pin bolts (1). While holding guide pins from turning, tighten bolts to 60 N·m (44 ft. lbs.) torque.

5. Install banjo bolt (3) attaching brake hose (1) to caliper (4). Install NEW washers (2) on each side of hose fitting as banjo bolt is placed through fitting. Thread banjo bolt into caliper and tighten to 50 N·m (37 ft. lbs.) torque.

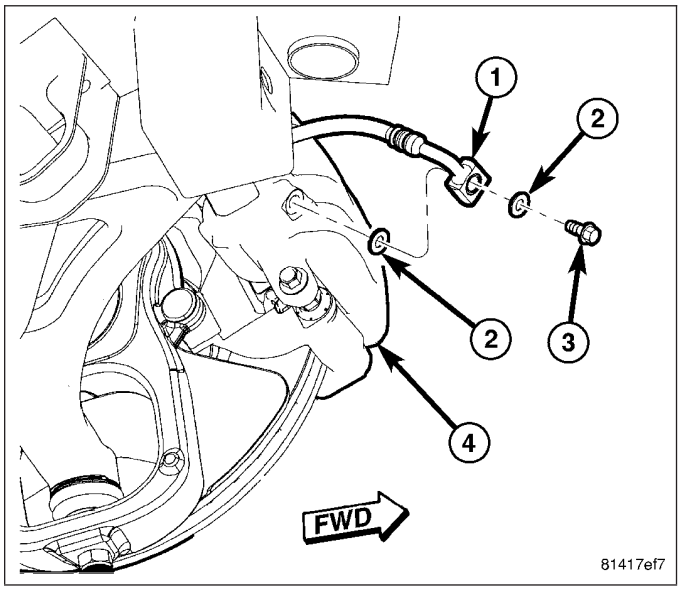

6. Install tire and wheel assembly (1). Tighten wheel mounting nuts (3) to 150 N·m (110 ft. lbs.) torque. (Refer to 22 - TIRES/WHEELS - INSTALLATION)
7. Lower vehicle.
8. Remove brake pedal holding tool.

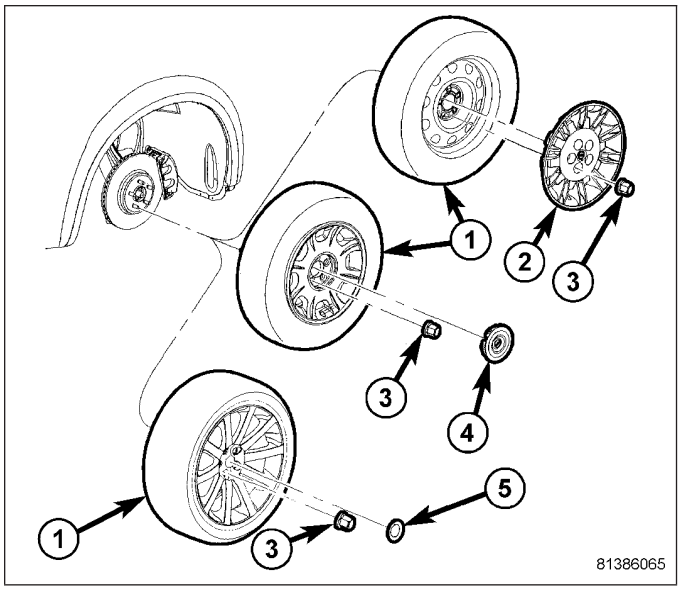

9. Connect battery negative cable (2) to battery post. It is important that this is performed properly. (Refer to 8 - ELECTRICAL/BATTERY SYSTEM - STANDARD PROCEDURE)

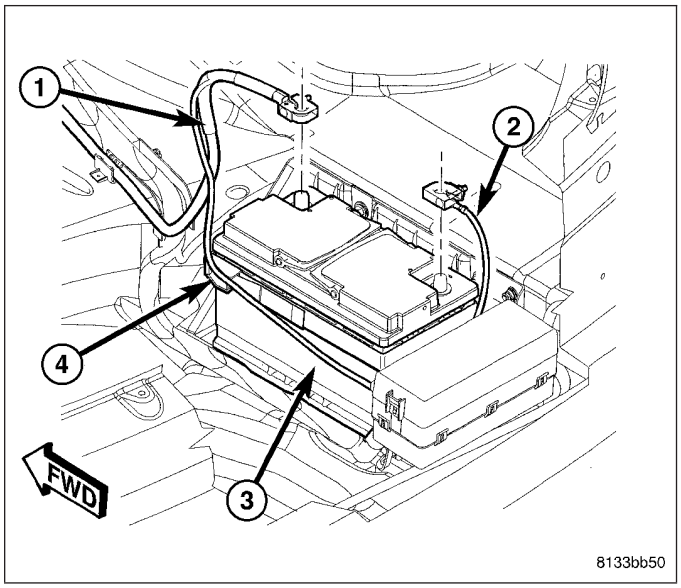

10. Bleed (1) base brake hydraulic system as necessary. (Refer to 5 - BRAKES - STANDARD PROCEDURE)
11. Road test vehicle making several stops to wear off any foreign material on brakes and to seat brake shoes.

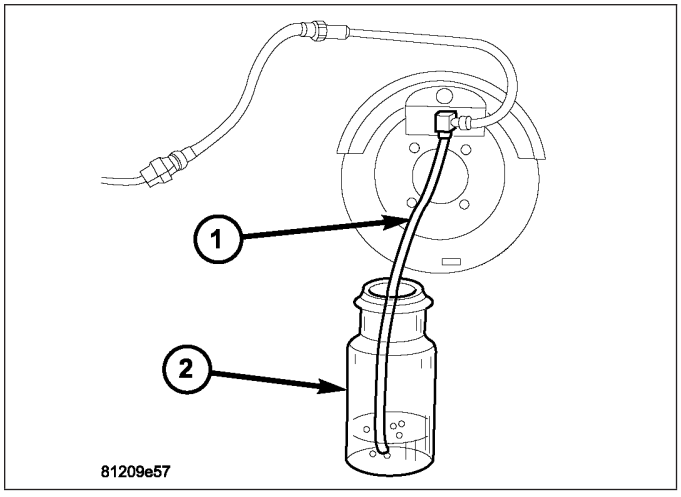

RWD

CAUTION: Always inspect brake pads before installing disc brake caliper and replace as necessary. (Refer to 5 - BRAKES/HYDRAULIC/MECHANICAL/BRAKE PADS/SHOES - INSPECTION)

1. Completely retract caliper pistons back into bores of caliper. Use hand pressure or a C-clamp may also be used to retract pistons, first placing a wood block over piston before installing C-clamp to avoid damaging piston.

CAUTION: Use care when installing caliper onto disc brake adapter to avoid damaging boots on caliper guide pins.

2. Push caliper guide pins into caliper adapter to clear caliper mounting bosses when installing.
3. Slide caliper over brake pads and onto caliper adapter (3).

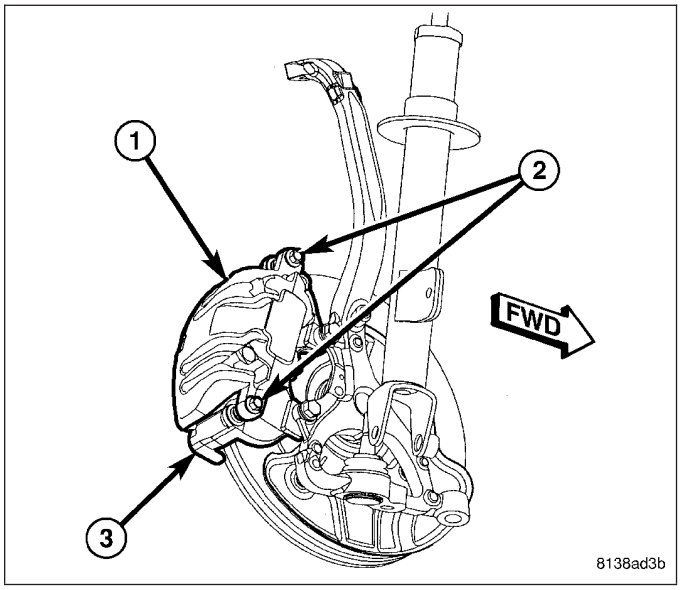

CAUTION: Extreme caution should be taken not to crossthread caliper guide pin bolts (2) when they are installed.

4. Align caliper mounting holes with guide pins, then install guide pin bolts (2). While holding guide pins from turning, tighten bolts to 60 N·m (44 ft. lbs.) torque.

5. Install banjo bolt (6) attaching brake hose (1) to caliper (5). Install NEW washers (7) on each side of hose fitting as banjo bolt is placed through fitting. Thread banjo bolt into caliper and tighten to 50 N·m (37 ft. lbs.) torque.

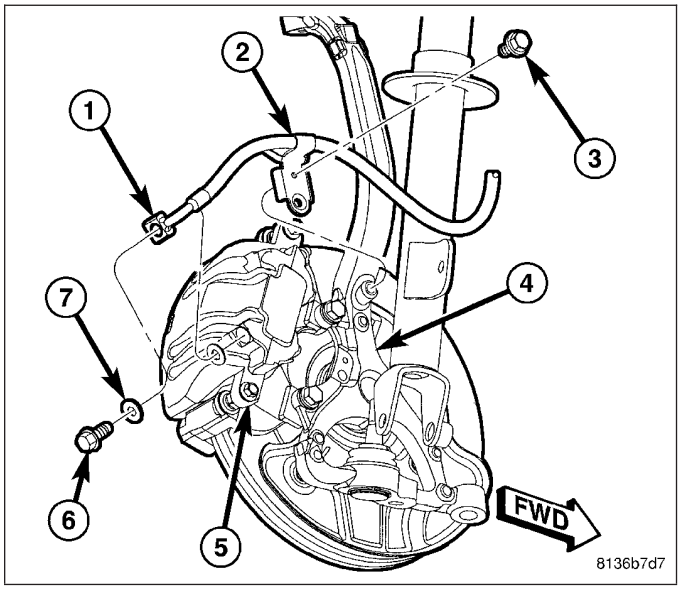

6. Install tire and wheel assembly (1). Tighten wheel mounting nuts (3) to 150 N·m (110 ft. lbs.) torque. (Refer to 22 - TIRES/WHEELS - INSTALLATION)
7. Lower vehicle.
8. Remove brake pedal holding tool.

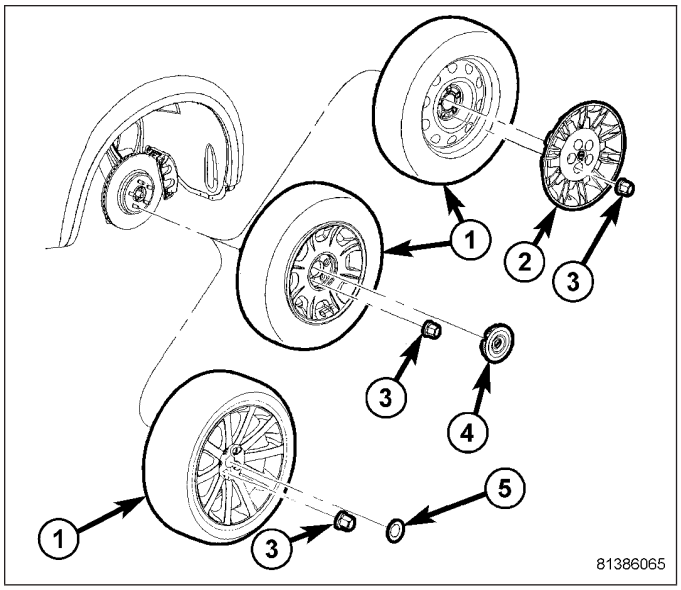

9. Connect battery negative cable (2) to battery post. It is important that this is performed properly. (Refer to 8 - ELECTRICAL/BATTERY SYSTEM - STANDARD PROCEDURE)

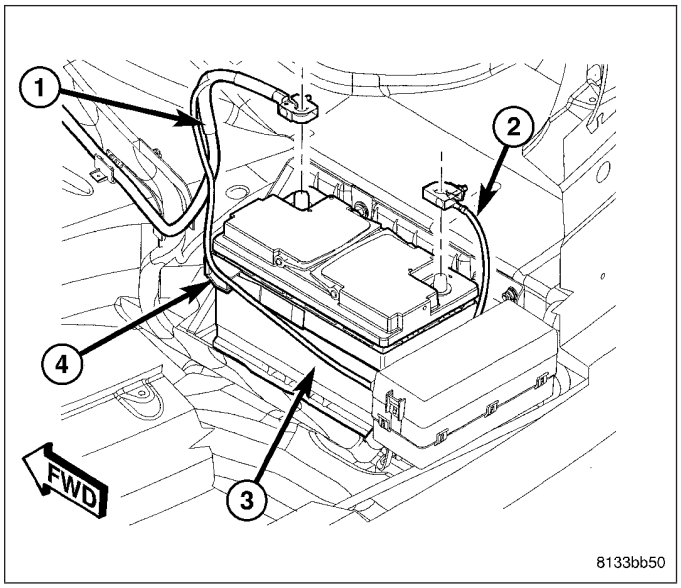

10. Bleed (1) base brake hydraulic system as necessary. (Refer to 5 - BRAKES - STANDARD PROCEDURE)
11. Road test vehicle making several stops to wear off any foreign material on brakes and to seat brake shoes.

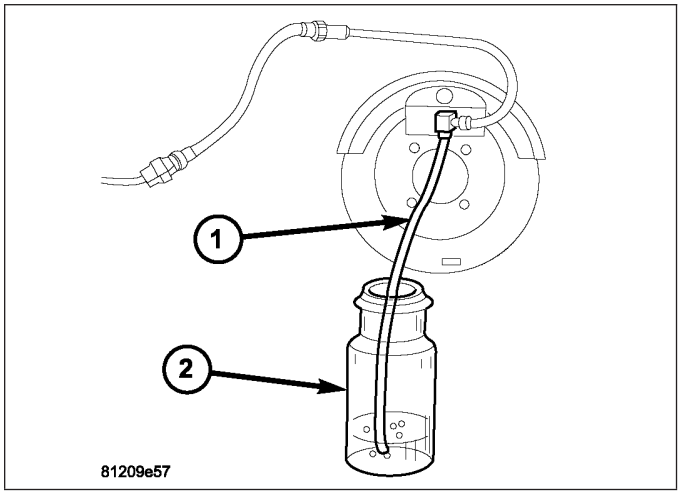

CALIPER - FRONT DISC BRAKE - SRT8

REMOVAL

NOTE: Before proceeding, (Refer to 5 - BRAKES - WARNING) (Refer to 5 - BRAKES - CAUTION).

1. Disconnect and isolate battery negative cable (2) from battery post.
2. Using a brake pedal holding tool, depress brake pedal past its first inch of travel and hold it in this position. Holding pedal in this position will isolate master cylinder from hydraulic brake system and will not allow brake fluid to drain out of brake fluid reservoir while brake lines are open.
3. Raise and support vehicle. (Refer to LUBRICATION & MAINTENANCE/HOISTING - STANDARD PROCEDURE)

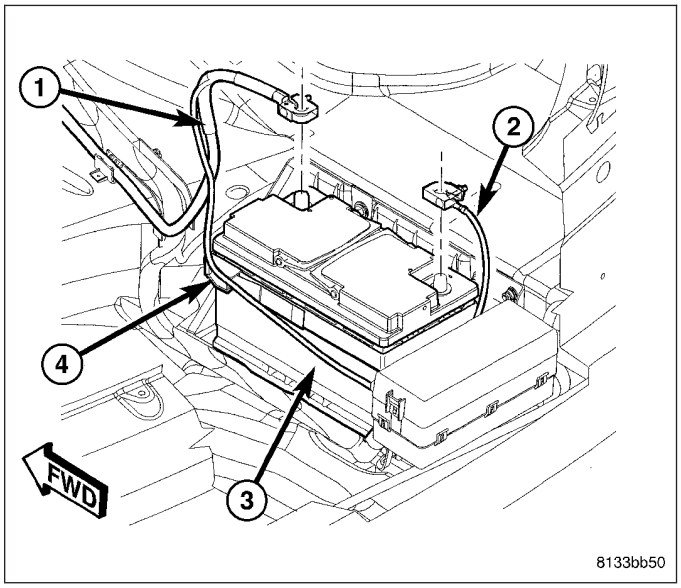

4. Remove wheel mounting nuts (3), then tire and wheel assembly (1).

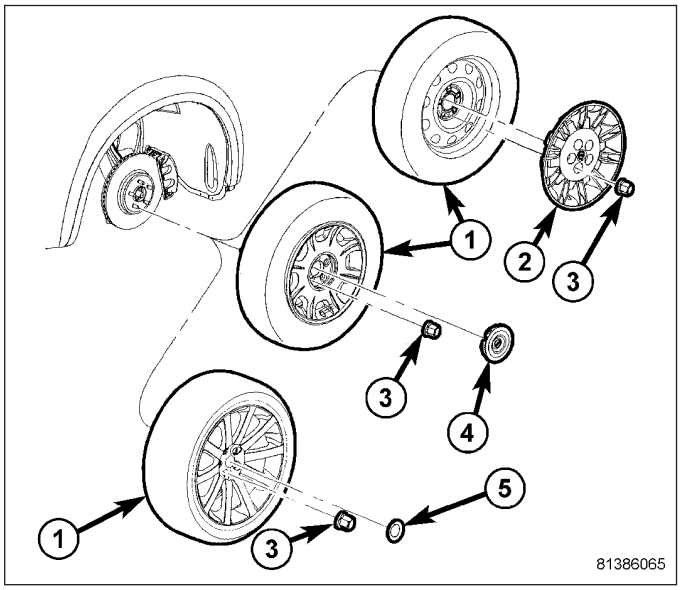

5. Remove banjo bolt (4) connecting flexible brake hose (5) to caliper (1). There are two sealing washers (2, 3) (one one each side of hose fitting) that will come off when bolt is removed. Discard these washers; use NEW washers upon installation.

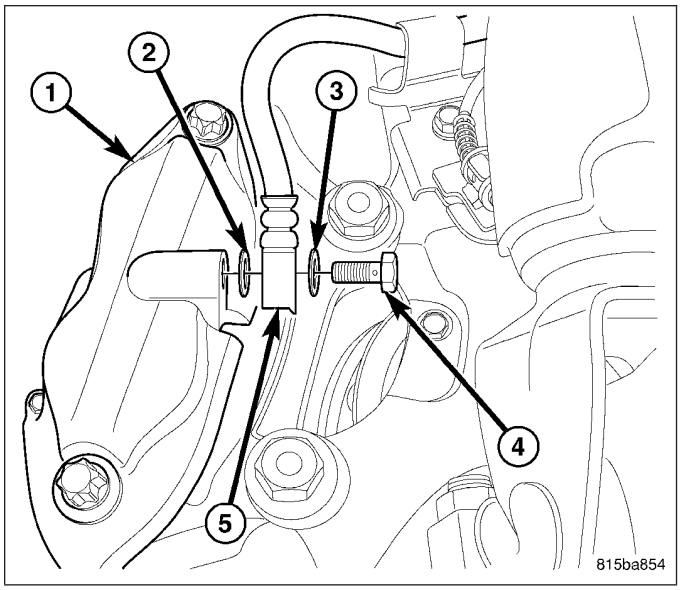

CAUTION: When pushing pistons back into caliper bores, use only a trim stick as shown or other suitable soft tool. Never use a screwdriver or other metal pry bar due to potential damage to braking surface of rotor, caliper, pistons or dust boots.

6. Place trim stick (4) between brake pad (2) and outer edge of rotor (3).
7. Using trim stick, slowly apply pressure against brake pad (2) until both pistons (on that side of caliper) are completely bottomed in bores of caliper half.

NOTE: Repeat above procedure to opposite brake pad (1) and pistons as necessary.

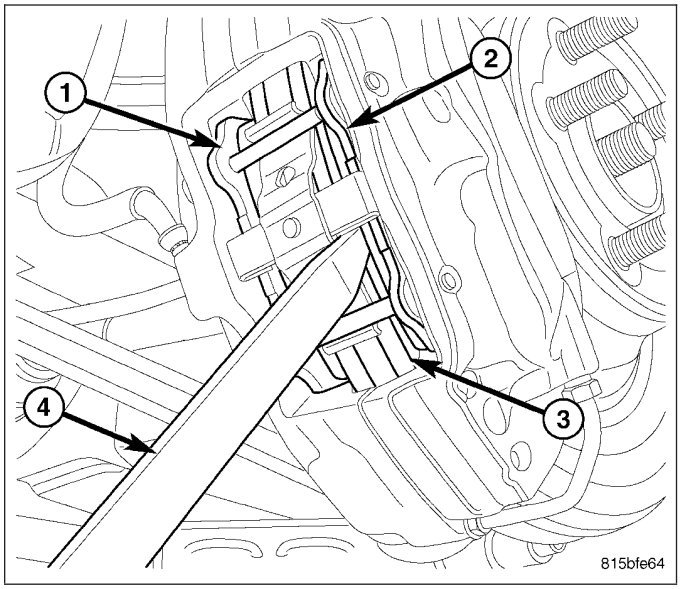

8. Remove caliper mounting bolts (1).
9. Remove brake caliper (2) with pads from knuckle (3) and brake rotor (3).
10. If brake pads need to be removed from caliper, (Refer to 5 - BRAKES/HYDRAULIC/MECHANICAL/BRAKE PADS/SHOES - REMOVAL).

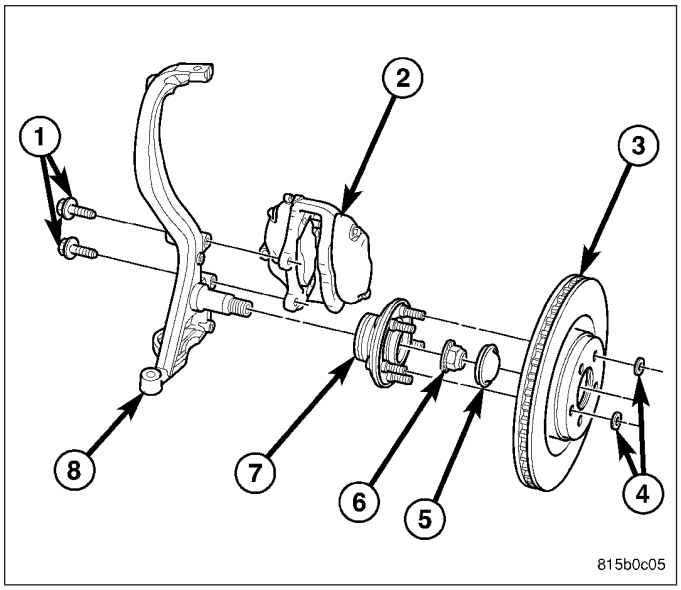

NOTE: These calipers are not serviceable. Do not attempt disassembly.

INSTALLATION

CAUTION: Always inspect brake pads before installing disc brake caliper and replace as necessary. (Refer to 5 - BRAKES/HYDRAULIC/MECHANICAL/BRAKE PADS/SHOES - INSPECTION)

1. Completely retract caliper pistons back into bores of caliper. Use hand pressure or a C-clamp may also be used to retract pistons, first placing a wood block or used brake pad (not to be reused) over pistons before installing C-clamp to avoid damaging piston.
2. If brake pads need to be installed in caliper before installation, (Refer to 5 - BRAKES/HYDRAULIC/MECHANICAL/BRAKE PADS/SHOES - INSTALLATION).
3. Slide caliper with pads (2) over brake rotor (3) and align with knuckle (8).
4. Install caliper mounting bolts (1). Tighten bolts to 190 N·m (140 ft. lbs.) torque.

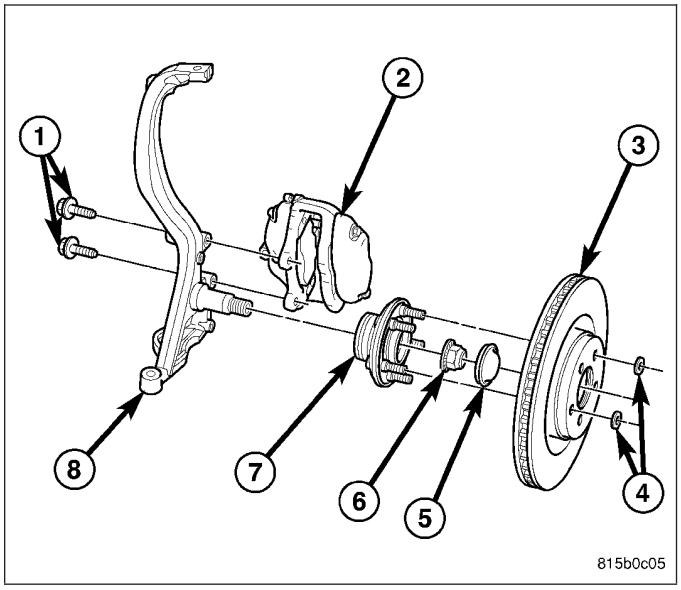

5. Install banjo bolt (4) attaching brake hose (5) to caliper (1). Install NEW washers (2, 3) on each side of hose fitting as banjo bolt is placed through banjo fitting. Thread banjo bolt into caliper and tighten to 33 N·m (24 ft. lbs.) torque.

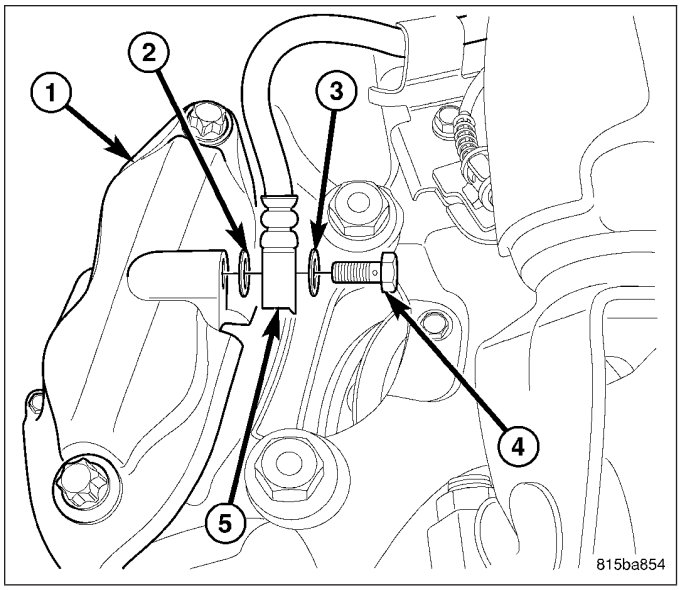

6. Install tire and wheel assembly (1). Tighten wheel mounting nuts (3) to 150 N·m (110 ft. lbs.) torque. (Refer to 22 - TIRES/WHEELS - INSTALLATION)
7. Lower vehicle.
8. Remove brake pedal holding tool.

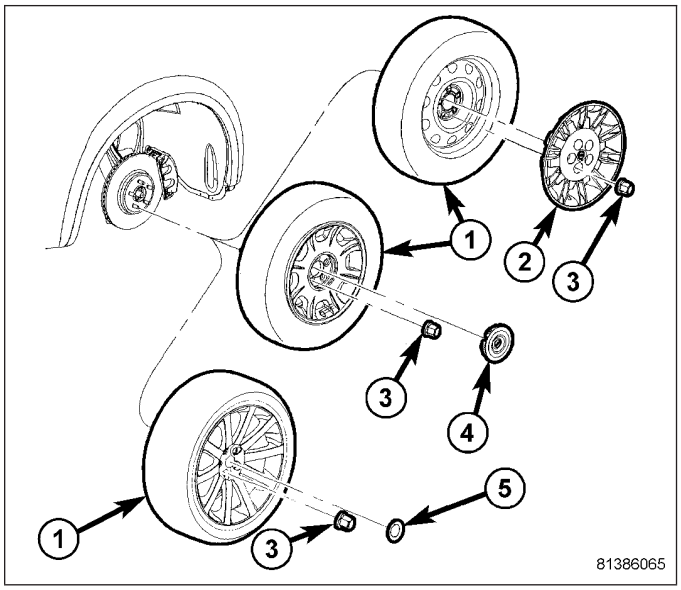

9. Connect battery negative cable (2) to battery post. It is important that this is performed properly. (Refer to 8 - ELECTRICAL/BATTERY SYSTEM - STANDARD PROCEDURE)

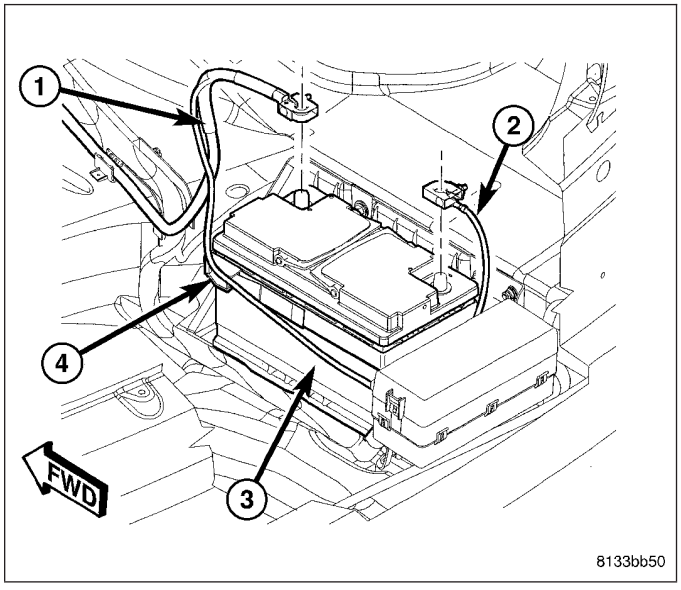

10. Bleed (1) base brake hydraulic system as necessary. (Refer to 5 - BRAKES - STANDARD PROCEDURE)

CAUTION: If NEW brake pads have been installed, keep in mind that braking effectiveness might be somewhat reduced during the first brake applications.

11. Road test vehicle making several stops to wear off any foreign material on brakes and to seat brake pads. If NEW brake pads are installed, they need to be properly burnished. (Refer to 5 - BRAKES/ HYDRAULIC/MECHANICAL/BRAKE PADS/ SHOES - STANDARD PROCEDURE)

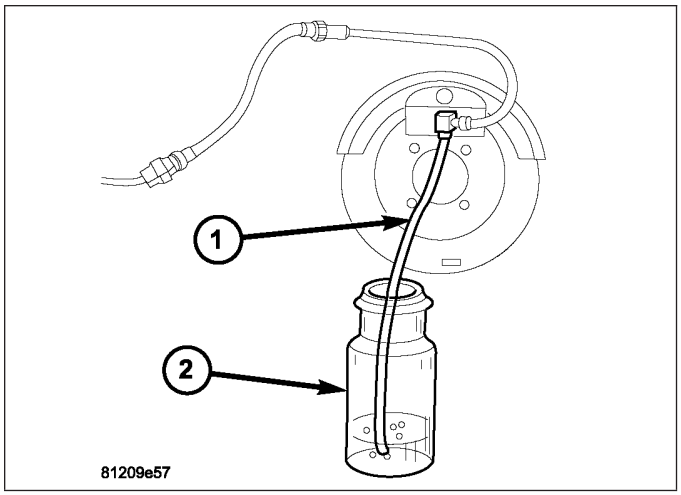

CALIPER - REAR DISC BRAKE

REMOVAL

NOTE: Before proceeding, (Refer to 5 - BRAKES - WARNING) (Refer to 5 - BRAKES - CAUTION).

1. Disconnect and isolate battery negative cable (2) from battery post.
2. Using a brake pedal holding tool, depress brake pedal past its first inch of travel and hold it in this position. Holding pedal in this position will isolate master cylinder from hydraulic brake system and will not allow brake fluid to drain out of brake fluid reservoir while brake lines are open.
3. Raise and support vehicle. (Refer to LUBRICATION & MAINTENANCE/HOISTING - STANDARD PROCEDURE)

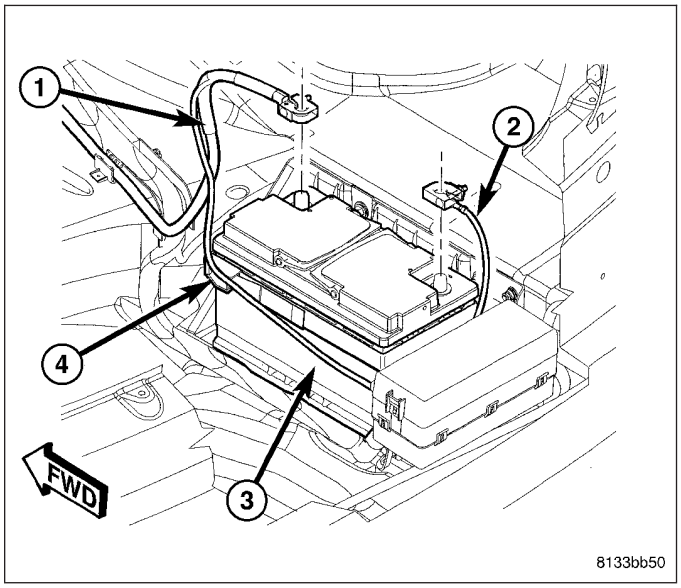

4. Remove wheel mounting nuts (3), then tire and wheel assembly (1).

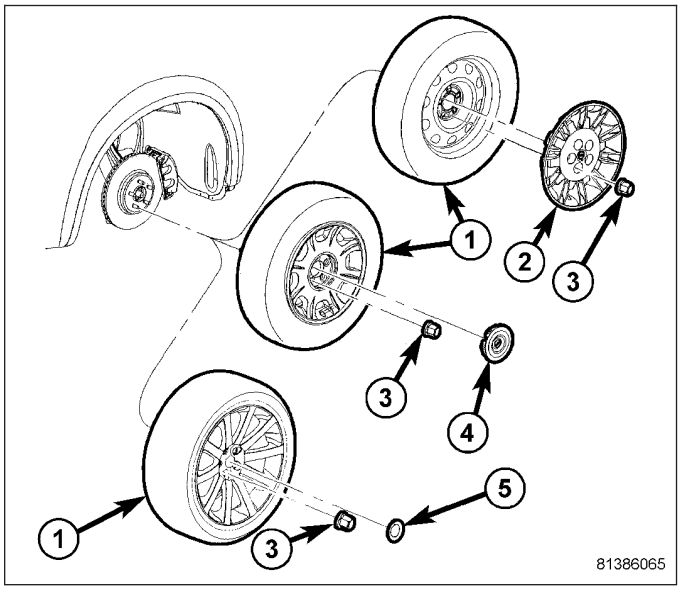

5. Remove banjo bolt (4) connecting flexible brake hose (3) to caliper (1). There are two sealing washers (2) (one one each side of hose fitting) that will come off when bolt is removed. Discard these washers; install NEW washers on installation.

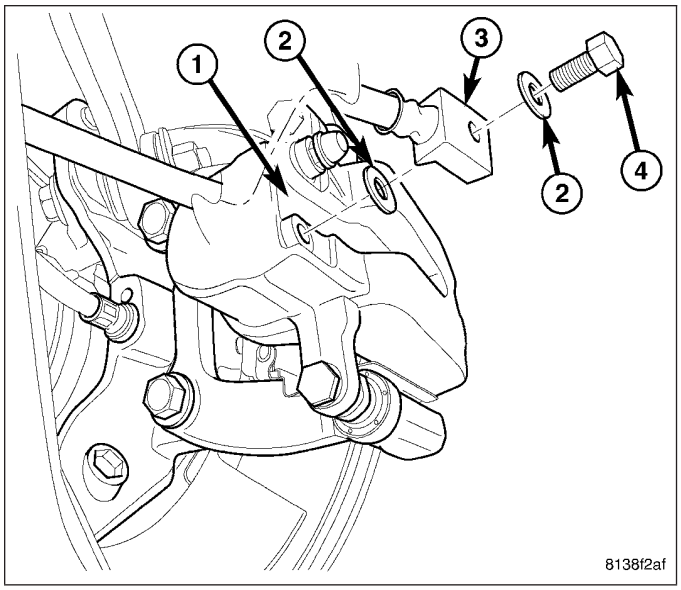

6. While holding guide pins from turning, remove caliper guide pin bolts (2).
7. Remove brake caliper (1) from brake adapter (3) and pads.

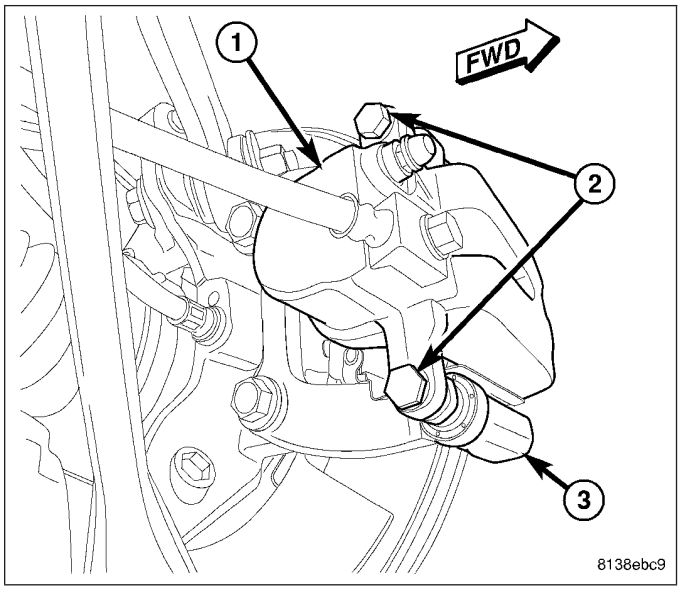

DISASSEMBLY

NOTE: Before disassembling brake caliper, clean and inspect it. (Refer to 5 - BRAKES/HYDRAULIC/MECHANICAL/DISC BRAKE CALIPER - CLEANING) (Refer to 5 - BRAKES/HYDRAULIC/MECHANICAL/DISC BRAKE CALIPER - INSPECTION)

WARNING: Under no condition should high pressure air ever be used to remove a piston from a caliper bore. Personal injury could result from such a practice.

CAUTION: Do not use excessive force when clamping caliper in vise. Excessive vise pressure will cause bore distortion.

1. Drain brake fluid from caliper.

2. Mount caliper in a vise equipped with protective jaws.
3. Place a wooden block (2) (padded with approximately one-inch thickness of shop towels) in front of caliper (1) piston as shown. Padded block should be sized to allow piston to push out of bore far enough to be removed by hand after being loosened by air pressure, yet large enough to keep piston from coming completely out. This will cushion and protect caliper piston during removal.

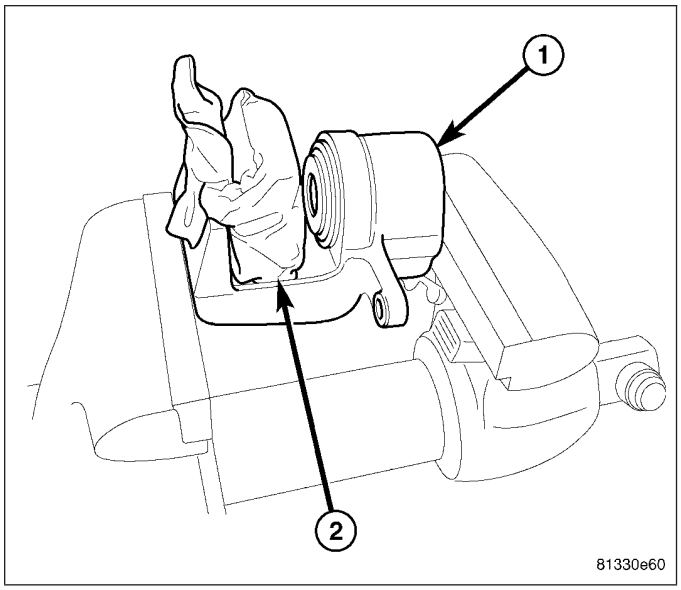

WARNING: Do not place face or hands near caliper and piston if using compressed air pressure to remove piston. Do not use high pressure.

4. Apply low pressure compressed air to caliper fluid inlet in **short spurts** to ease piston out of bore.
5. Remove piston from caliper (1).

CAUTION: When working on disc brake caliper, always use care and suitable tools to avoid damaging the aluminum housing.

6. Using a suitable tool (1), carefully remove dust boot (2) and discard it.

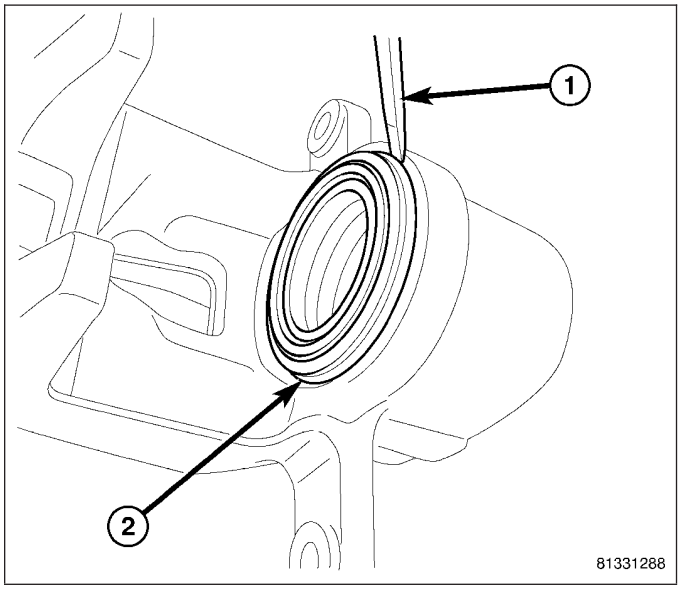

CAUTION: Do not use a screw driver or other metal tool for seal removal. Using such tools can scratch bore or leave burrs on seal groove edges.

7. Using a soft tool such as a plastic trim stick (2), work piston seal (1) out of its groove in caliper piston bore. Discard used seal.

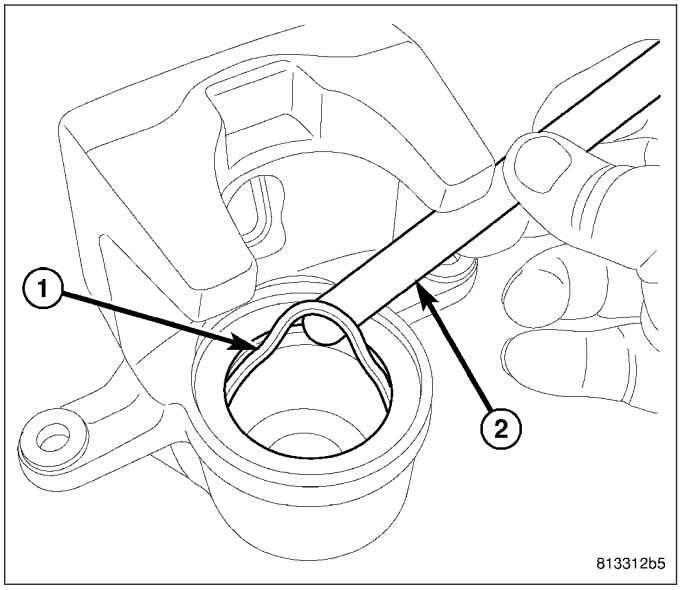

8. Remove caliper bleeder screw (1) from caliper housing (2).
9. Clean piston bore and drilled passage ways with alcohol or a suitable solvent. Wipe it dry using only a lint-free cloth.
10. Inspect both piston and bore for scoring or pitting.

NOTE: It is not recommended to hone caliper bore. The anodized coating would be compromised.

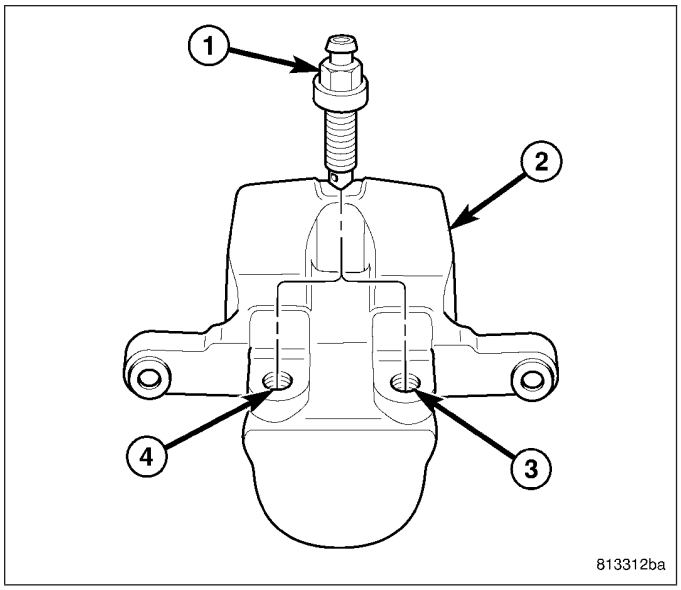

CLEANING

WARNING: Dust and dirt accumulating on brake parts during normal use may contain asbestos fibers from production or aftermarket brake linings. Breathing excessive concentrations of asbestos fibers can cause serious bodily harm. Exercise care when servicing brake parts. Do not sand or grind brake lining unless equipment used is designed to contain the dust residue. Do not clean brake parts with compressed air or by dry brushing. Cleaning should be done by dampening the brake components with a fine mist of water, then wiping the brake components clean with a dampened cloth. Dispose of cloth and all residue containing asbestos fibers in an impermeable container with the appropriate label. Follow practices prescribed by the Occupational Safety And Health Administration (OSHA) and the Environmental Protection Agency (EPA) for the handling, processing, and disposing of dust or debris that may contain asbestos fibers.

To clean or flush the internal passages of the brake caliper, use fresh brake fluid or Mopar® Non-Chlorinated Brake Parts Cleaner. Never use gasoline, kerosene, alcohol, oil, transmission fluid or any fluid containing mineral oil to clean the caliper. These fluids will damage rubber cups and seals.

INSPECTION

Inspect the disc brake caliper for the following:

- Cracked or damaged housing
- Brake fluid leaks in and around boot area
- Ruptures, brittleness or damage to the piston dust boot

If caliper fails inspection, disassemble and recondition caliper, replacing the seals and dust boots or replace caliper.

ASSEMBLY

CAUTION: Dirt, oil, and solvents can damage caliper seals. Ensure assembly area is clean and dry.

NOTE: Always use new, clean Mopar® DOT 3 Motor Vehicle Brake Fluid or equivalent when assembling brake caliper.

NOTE: Never use used or old piston seals or boots for reassembly.

1. Lubricate caliper piston, piston seal (1) and piston bore (2) with clean, fresh brake fluid.
2. Install NEW piston seal (1) in groove of caliper bore (2). Seal should be started at one area of groove and gently worked around and into the groove using only your clean fingers to seat it.

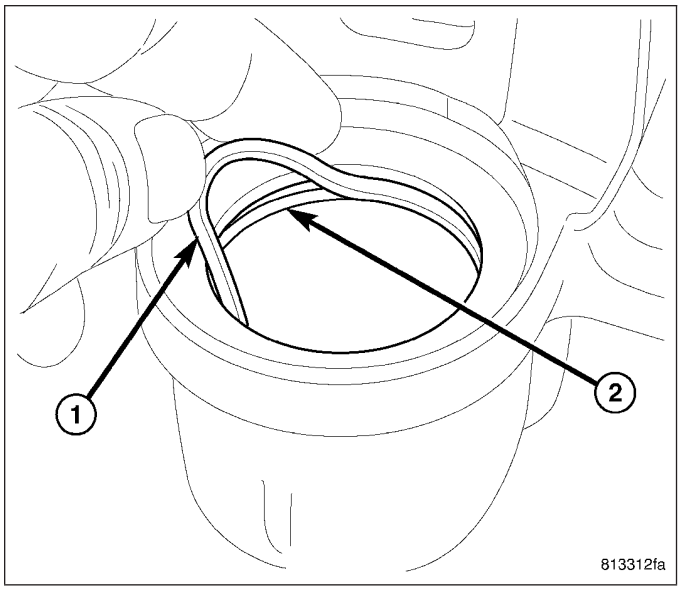

3. Install NEW dust boot (1) on piston (2) and work boot lip into groove at top of piston. Stretch boot downward, straightening boot folds, then move boot back upward as necessary until folds snap uniformly into place.

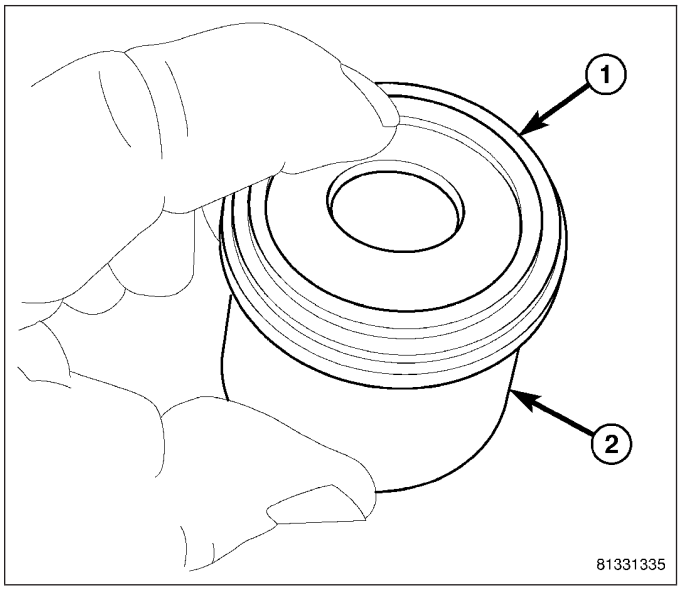

4. Install piston (1) into caliper piston (2) bore, pressing piston down to bottom of bore using hand-pressure. Using a piece of wood or wooden hammer handle may also suffice as long as piston and boot damage can be avoided.

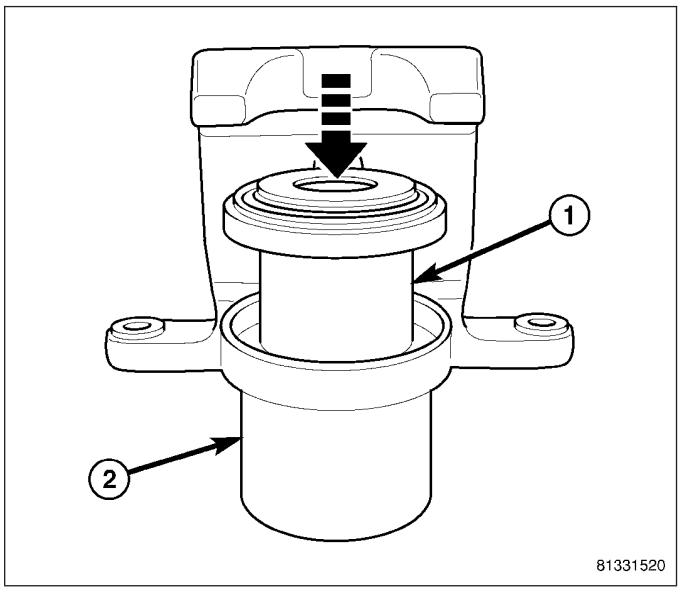

CAUTION: When installing dust boot in following step, use care not to over-install boot or damage will occur. The boot (3) will bottom in the counterbore before the top of the boot reaches the surface of the caliper. The boot will bottom with approximately 2 mm (1/16 inch) (2) of boot still showing above caliper housing.

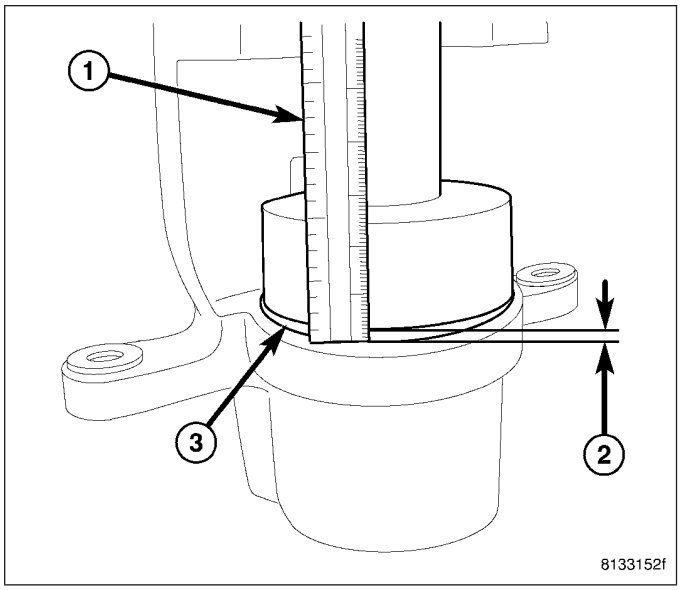

5. Seat dust boot (3) in caliper counterbore using Installer, Special Tool 9314, with Handle, Special Tool C-4171. Install dust boot until it bottoms. Do not over-seat dust boot or damage will occur.

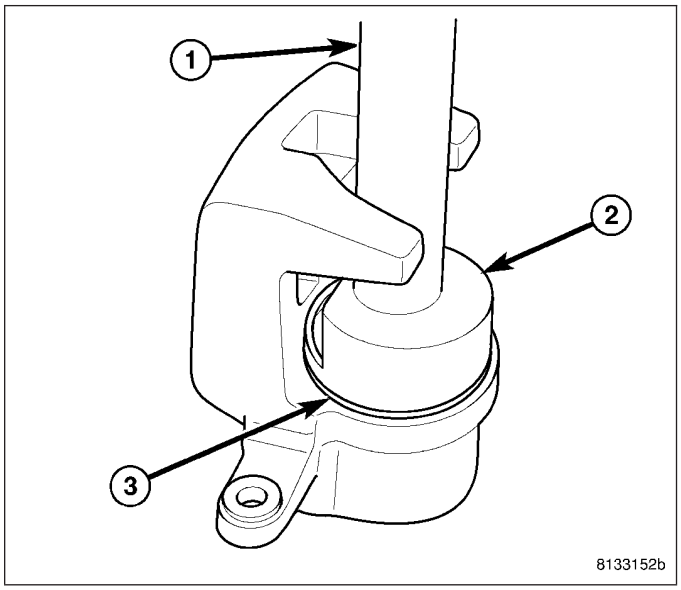

6. Install bleeder screw in correct threaded hole. Caliper housing is not side-specific, so it is important to install bleeder screw in threaded hole that will be uppermost once caliper is installed on vehicle. Tighten bleeder screw to 15 N·m (125 in. lbs.) torque.
7. Install caliper on vehicle. (Refer to 5 - BRAKES/HYDRAULIC/MECHANICAL/DISC BRAKE CALIPER - INSTALLATION)

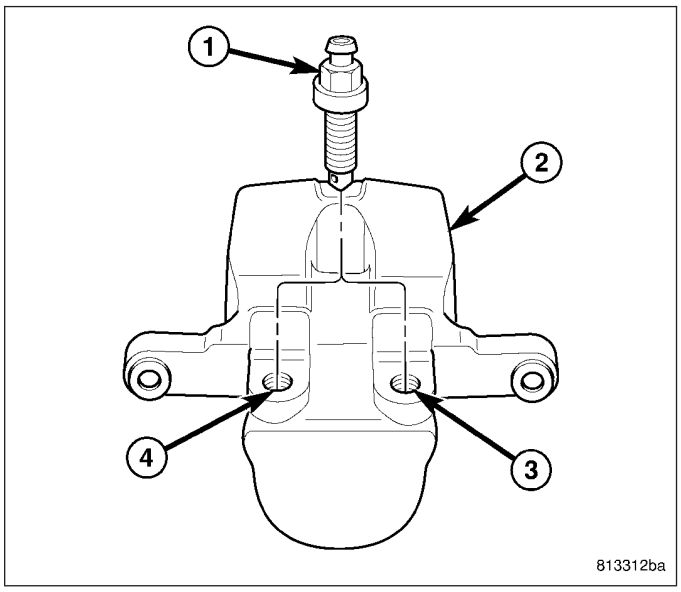

INSTALLATION

CAUTION: Always inspect brake pads before installing disc brake caliper and replace as necessary. (Refer to 5 - BRAKES/HYDRAULIC/MECHANICAL/BRAKE PADS/SHOES - INSPECTION)

1. Completely retract caliper piston back into bore of caliper. Use hand pressure or a C-clamp may be used to retract piston, first placing a wood block over piston before installing C-clamp to avoid damaging piston.

CAUTION: Use care when installing caliper onto disc brake adapter to avoid damaging boots on caliper guide pins.

2. Push caliper guide pins into caliper adapter to clear caliper mounting bosses when installing.
3. Slide caliper over brake pads and onto caliper adapter (3).

CAUTION: Extreme caution should be taken not to crossthread caliper guide pin bolts (2) when they are installed.

4. Align caliper mounting holes with guide pins, then install guide pin bolts (2). While holding guide pins from turning, tighten bolts to 31 N·m (23 ft. lbs.) torque.

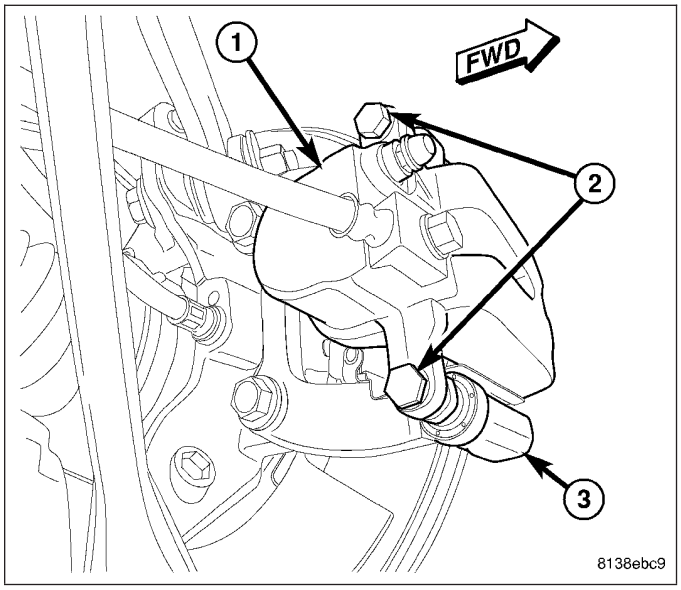

5. Install banjo bolt (4) attaching brake hose (3) to caliper (1). Install NEW washers (2) on each side of hose fitting as banjo bolt is placed through fitting. Thread banjo bolt into caliper and tighten to 50 N·m (37 ft. lbs.) torque.

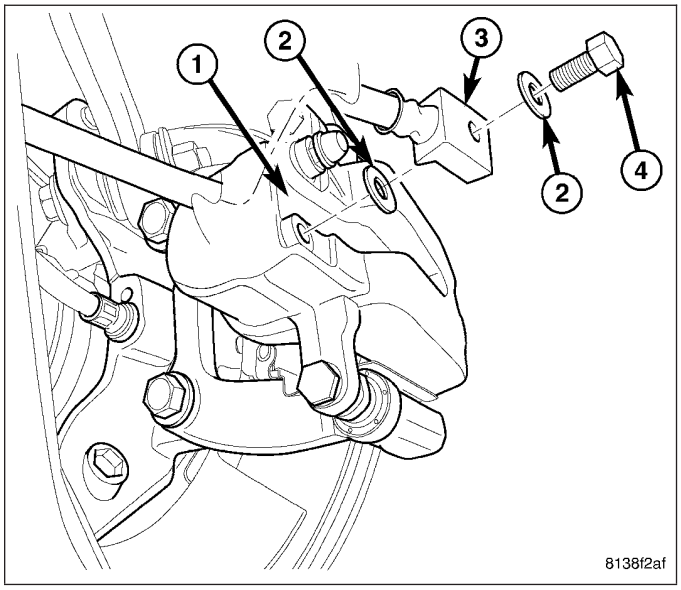

6. Install tire and wheel assembly (1). Tighten wheel mounting nuts (3) to 150 N·m (110 ft. lbs.) torque. (Refer to 22 - TIRES/WHEELS - INSTALLATION)
7. Lower vehicle.
8. Remove brake pedal holding tool.

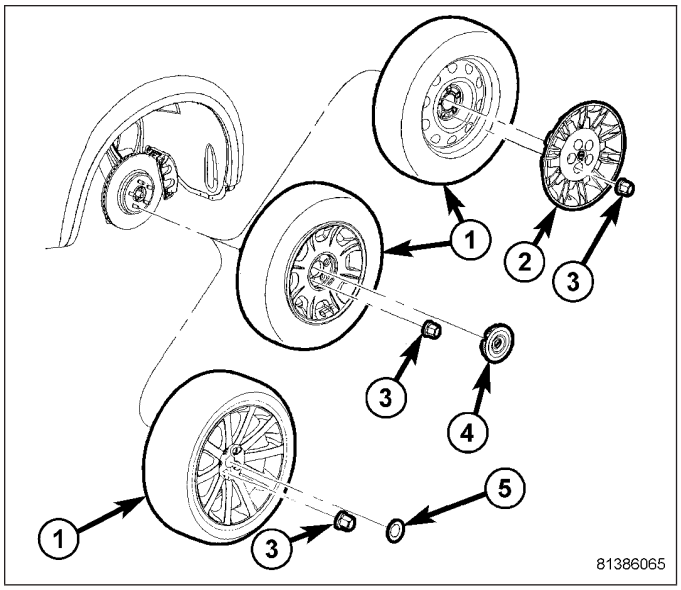

9. Connect battery negative cable (2) to battery post. It is important that this is performed properly. (Refer to 8 - ELECTRICAL/BATTERY SYSTEM - STANDARD PROCEDURE)

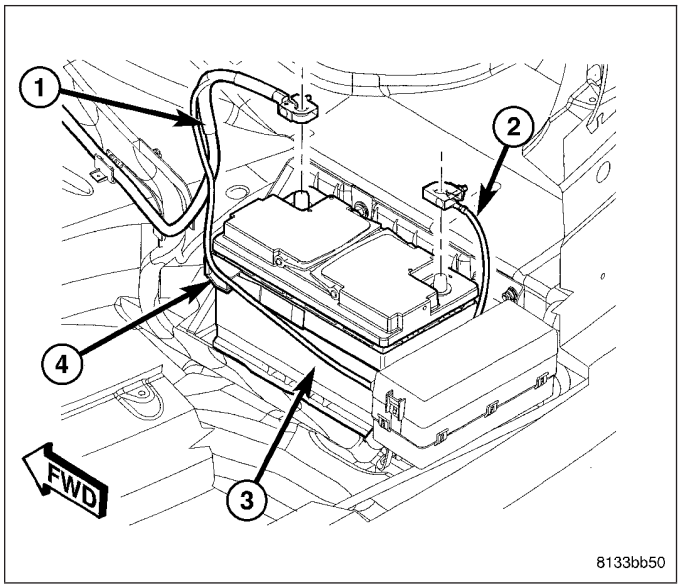

10. Bleed (1) base brake hydraulic system as necessary. (Refer to 5 - BRAKES - STANDARD PROCEDURE)
11. Road test vehicle making several stops to wear off any foreign material on brakes and to seat brake shoes.

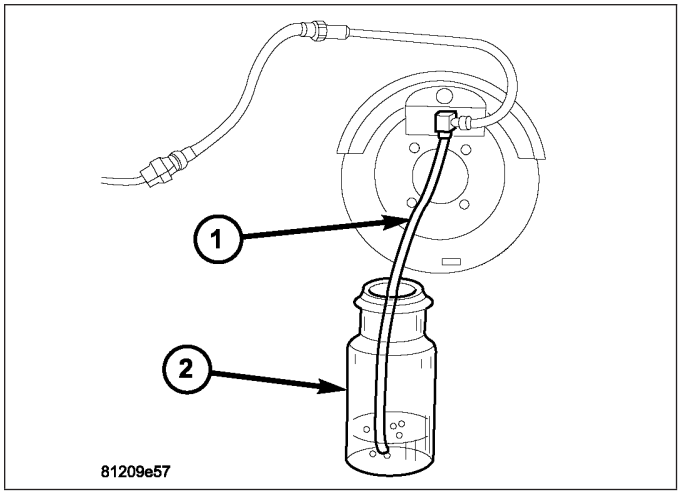

CALIPER - REAR DISC BRAKE - SRT8

REMOVAL

NOTE: Before proceeding, (Refer to 5 - BRAKES - WARNING) (Refer to 5 - BRAKES - CAUTION).

1. Disconnect and isolate battery negative cable (2) from battery post.
2. Using a brake pedal holding tool, depress brake pedal past its first inch of travel and hold it in this position. Holding pedal in this position will isolate master cylinder from hydraulic brake system and will not allow brake fluid to drain out of brake fluid reservoir while brake lines are open.
3. Raise and support vehicle. (Refer to LUBRICATION & MAINTENANCE/HOISTING - STANDARD PROCEDURE)

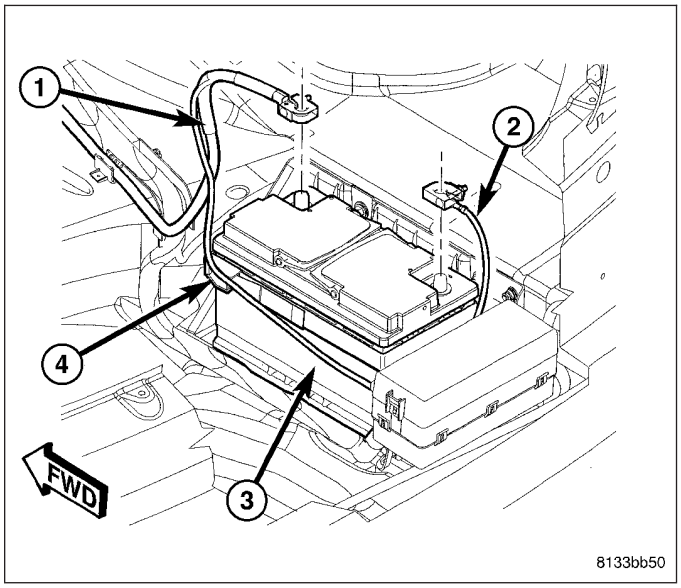

4. Remove wheel mounting nuts (3), then tire and wheel assembly (1).

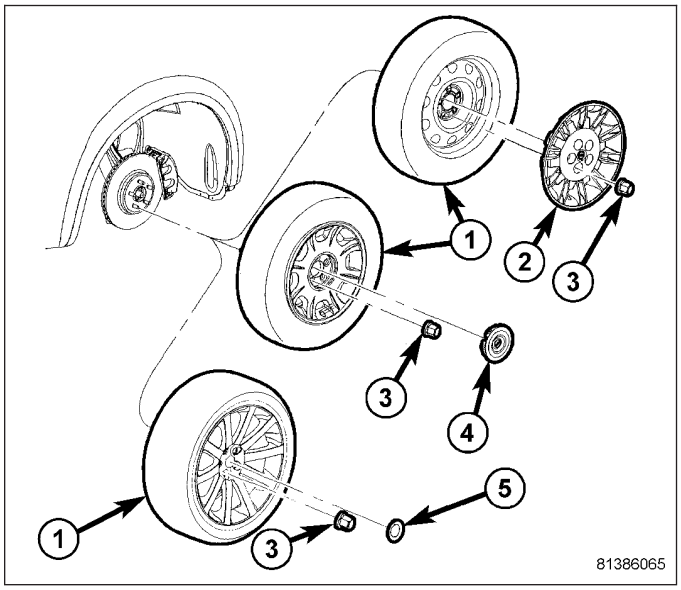

5. Remove banjo bolt (1) connecting flexible brake hose (5) to caliper (4). There are two sealing washers (2, 3) (one one each side of hose fitting) that will come off when bolt is removed. Discard these washers; install NEW washers on installation.

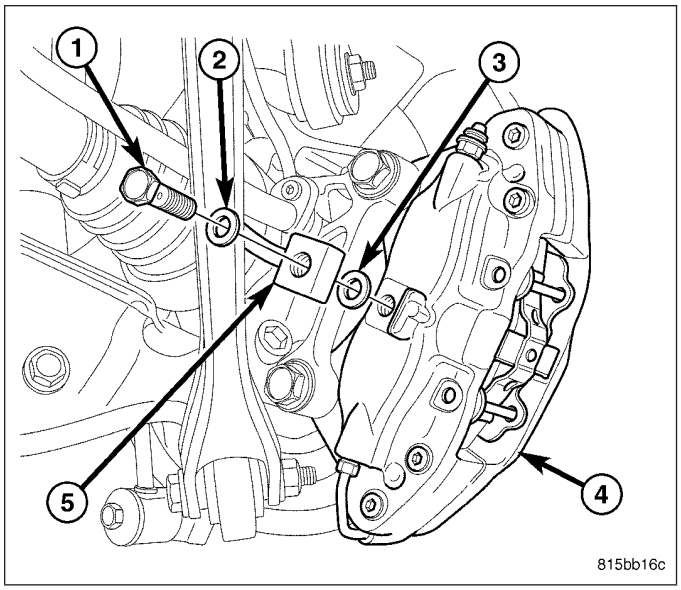

CAUTION: When pushing pistons back into caliper bores, use only a trim stick as shown or other suitable soft tool. Never use a screwdriver or other metal pry bar due to potential damage to braking surface of rotor, caliper, pistons or dust boots.

6. Place trim stick (4) between brake pad (2) and outer edge of rotor (3).
7. Using trim stick, slowly apply pressure against brake pad (2) until both pistons (on that side of caliper) are completely bottomed in bores of caliper half.

NOTE: Repeat above procedure to opposite brake pad (1) and pistons as necessary.

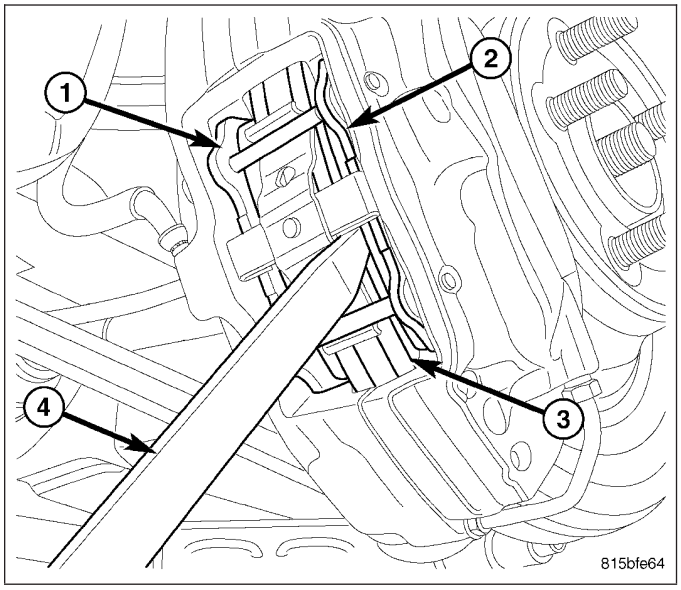

8. Support spring link (1) using a transmission jack (5) or other appropriate jack. Raise spring link just enough to access brake caliper lower mounting bolt (4) from above compression link (2).

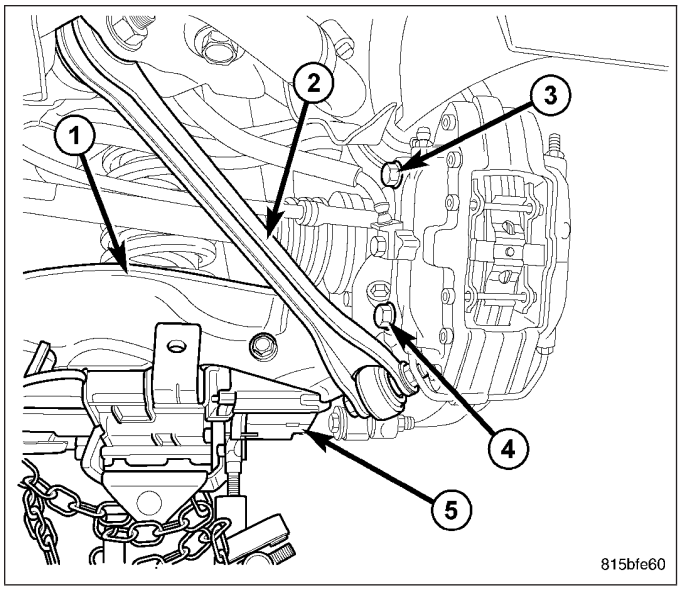

9. Remove the lower and upper caliper mounting bolts (1).
10. Remove brake caliper (2) with pads from knuckle and brake rotor.
11. If brake pads need to be removed from caliper, (Refer to 5 - BRAKES/HYDRAULIC/MECHANICAL/BRAKE PADS/SHOES - REMOVAL).

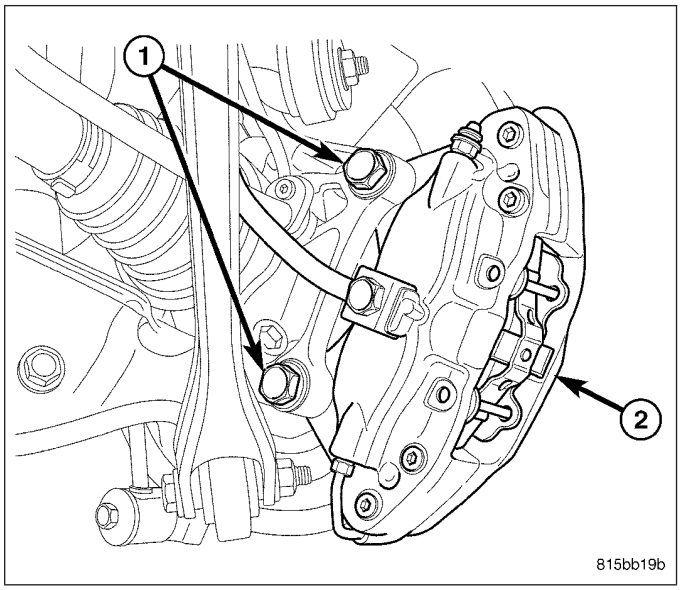

NOTE: These calipers are not serviceable. Do not attempt disassembly.

INSTALLATION

CAUTION: Always inspect brake pads before installing disc brake caliper and replace as necessary. (Refer to 5 - BRAKES/HYDRAULIC/MECHANICAL/BRAKE PADS/SHOES - INSPECTION)

1. Completely retract caliper pistons back into bores of caliper. Use hand pressure or a C-clamp may also be used to retract pistons, first placing a wood block or used brake pad (not to be reused) over piston before installing C-clamp to avoid damaging piston.
2. If brake pads need to be installed in caliper before installation, (Refer to 5 - BRAKES/HYDRAULIC/MECHANICAL/BRAKE PADS/SHOES - INSTALLATION).

3. Slide caliper with pads (2) over brake rotor and align with knuckle.
4. Install caliper mounting bolts (1). Tighten bolts to 130 N·m (96 ft. lbs.) torque.
5. Remove jack from under spring link.

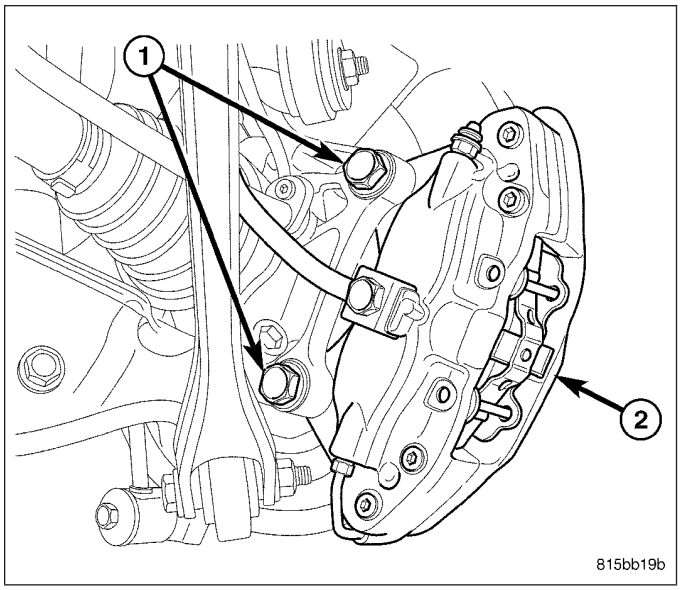

6. Install banjo bolt (1) attaching brake hose (5) to caliper (4). Install NEW washers (2, 3) on each side of hose fitting as banjo bolt is placed through banjo fitting. Thread banjo bolt into caliper and tighten to 33 N·m (24 ft. lbs.) torque.

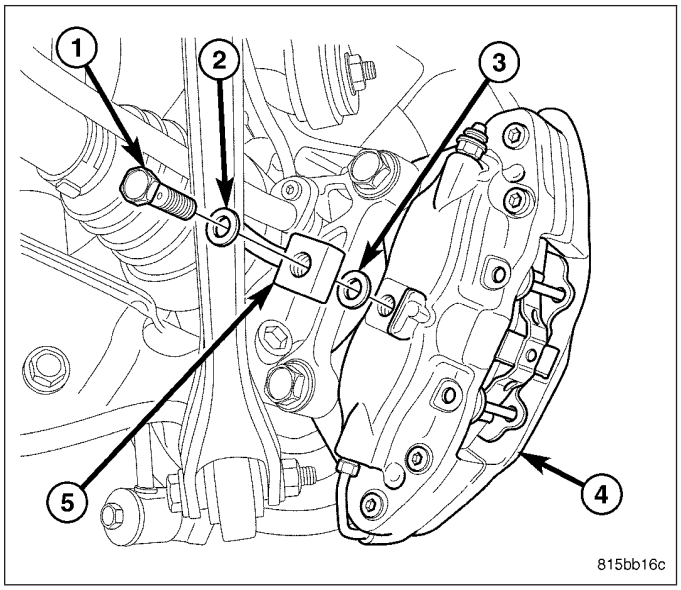

7. Install tire and wheel assembly (1). Tighten wheel mounting nuts (3) to 150 N·m (110 ft. lbs.) torque. (Refer to 22 - TIRES/WHEELS - INSTALLATION)
8. Lower vehicle.
9. Remove brake pedal holding tool.

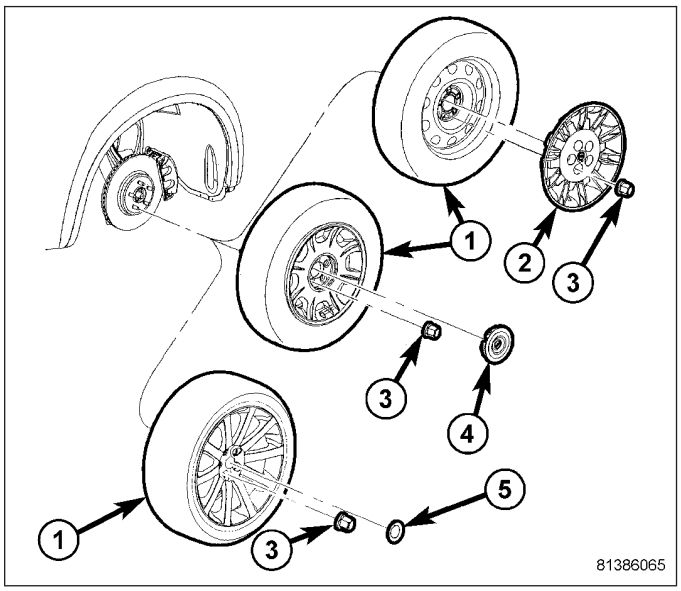

10. Connect battery negative cable (2) to battery post. It is important that this is performed properly. (Refer to 8 - ELECTRICAL/BATTERY SYSTEM - STANDARD PROCEDURE)

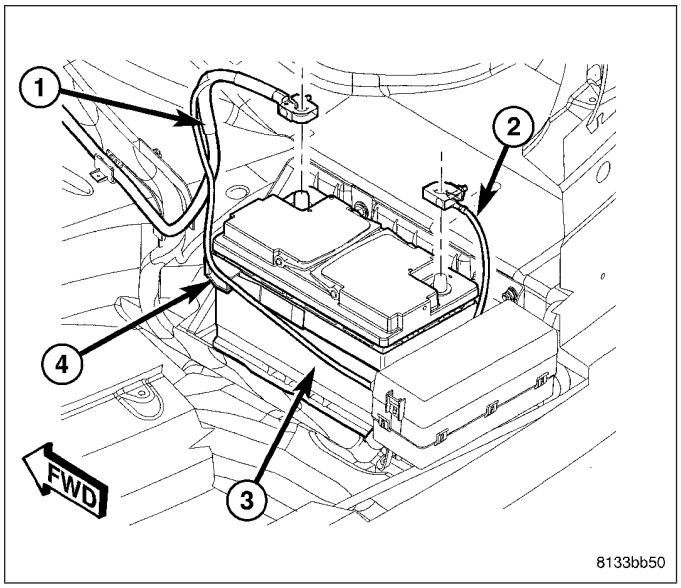

11. Bleed (1) base brake hydraulic system as necessary. (Refer to 5 - BRAKES - STANDARD PROCEDURE)

CAUTION: If NEW brake pads have been installed, keep in mind that braking effectiveness might be somewhat reduced during the first brake applications.

12. Road test vehicle making several stops to wear off any foreign material on brakes and to seat brake pads. If NEW brake pads are installed, they need to be properly burnished. (Refer to 5 - BRAKES/HYDRAULIC/MECHANICAL/BRAKE PADS/SHOES - STANDARD PROCEDURE)

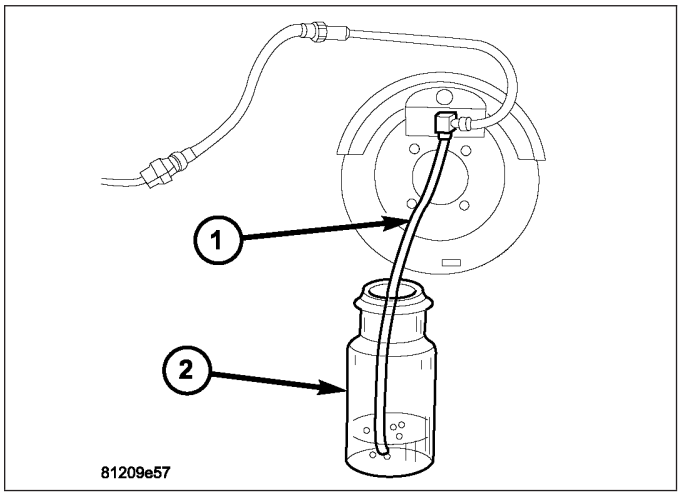

FLUID

DIAGNOSIS AND TESTING

BRAKE FLUID CONTAMINATION

Indications of fluid contamination are swollen or deteriorated rubber parts.

Swollen rubber parts indicate the presence of petroleum in the brake fluid.

To test for contamination, put a small amount of drained brake fluid in clear glass jar. If fluid separates into layers, there is mineral oil or other fluid contamination of the brake fluid.

If brake fluid is contaminated, drain and thoroughly flush system. Replace master cylinder, proportioning valve, caliper seals, wheel cylinder seals, Antilock Brake hydraulic unit and all hydraulic fluid hoses.

STANDARD PROCEDURE

BRAKE FLUID LEVEL CHECKING

Check master cylinder reservoir fluid level a minimum of twice annually.

Fluid reservoirs (1) are marked with the words MAX and MIN to indicate proper brake fluid fill level of the master cylinder.

If necessary, add brake fluid to bring the level to the bottom of the MAX mark on the side of the master cylinder fluid reservoir (1).

Use only Mopar® brake fluid or equivalent from a sealed container. Brake fluid must conform to DOT 3 specifications (Refer to 5 - BRAKES/HYDRAULIC/MECHANICAL/FLUID - SPECIFICATIONS).

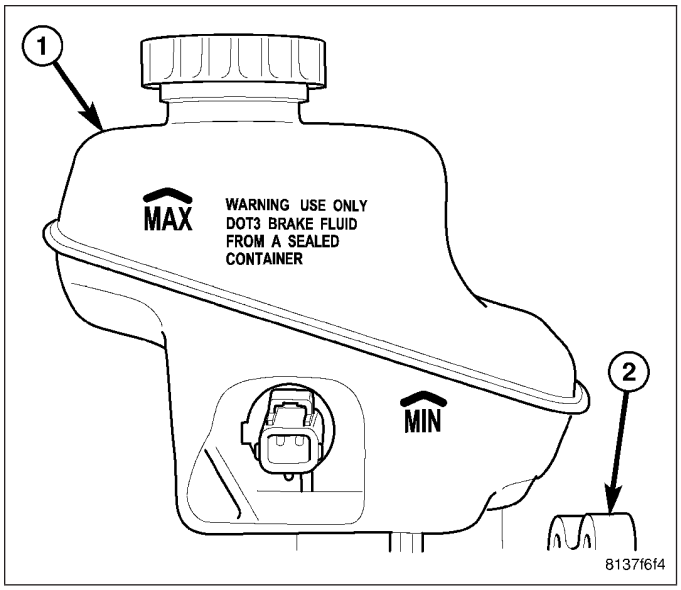

DO NOT use brake fluid with a lower boiling point, as brake failure could result during prolonged hard braking.

Use only brake fluid that was stored in a tightly-sealed container.

DO NOT use petroleum-based fluid because seal damage will result. Petroleum based fluids would be items such as engine oil, transmission fluid, power steering fluid etc.

SPECIFICATIONS

BRAKE FLUID

The brake fluid used in this vehicle must conform to DOT 3 specifications and SAE J1703 standards. No other type of brake fluid is recommended or approved for usage in the vehicle brake system. Use only Mopar® Brake Fluid or equivalent from a tightly sealed container.

CAUTION: Never use reclaimed brake fluid or fluid from an container which has been left open. An open container of brake fluid will absorb moisture from the air and contaminate the fluid.

CAUTION: Never use any type of a petroleum-based fluid in the brake hydraulic system. Use of such type fluids will result in seal damage of the vehicle brake hydraulic system causing a failure of the vehicle brake system. Petroleum based fluids would be items such as engine oil, transmission fluid, power steering fluid, etc.

RESERVOIR - MASTER CYLINDER FLUID

REMOVAL

1. Remove access panel (1) in cowl area to expose master cylinder (2).
2. Thoroughly clean all surfaces of brake fluid reservoir and master cylinder. Use only Mopar® Brake Parts Cleaner or equivalent.

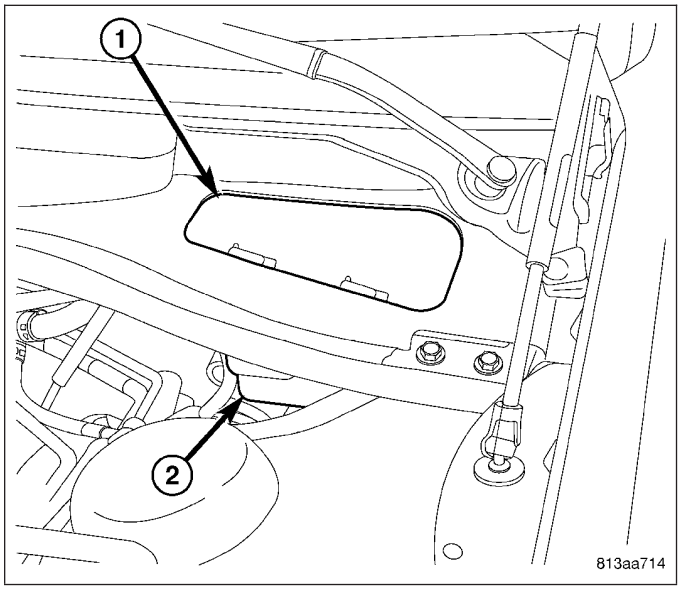

3. Disconnect wiring harness connector (4) from brake fluid level sensor (2) in master cylinder brake fluid reservoir (1).

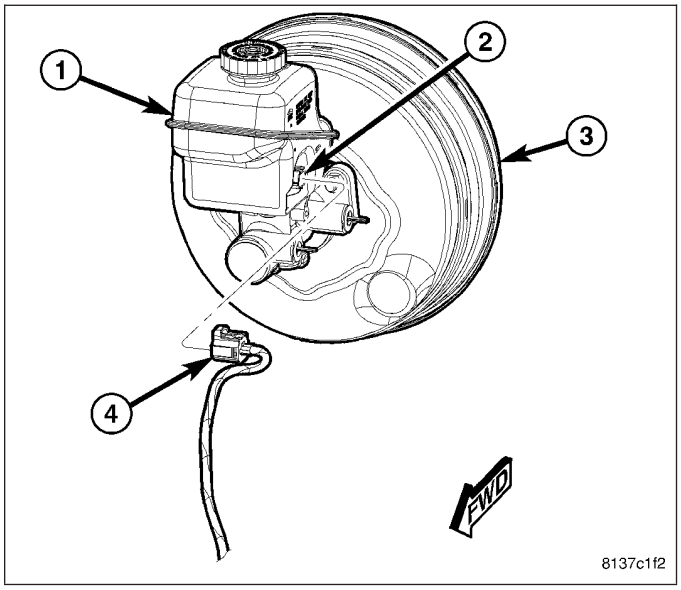

4. Remove brake fluid reservoir cap (1). Using a clean syringe or equivalent type tool, empty as much brake fluid as possible from the reservoir.

CAUTION: When removing fluid reservoir from the master cylinder, do not pry off using any type of tool. This can damage the fluid reservoir or master cylinder housing.

5. Remove screw (3) fastening fluid reservoir to master cylinder housing.
6. Rock the brake fluid reservoir side-to-side while pulling up to remove it from seal grommets in master cylinder housing.

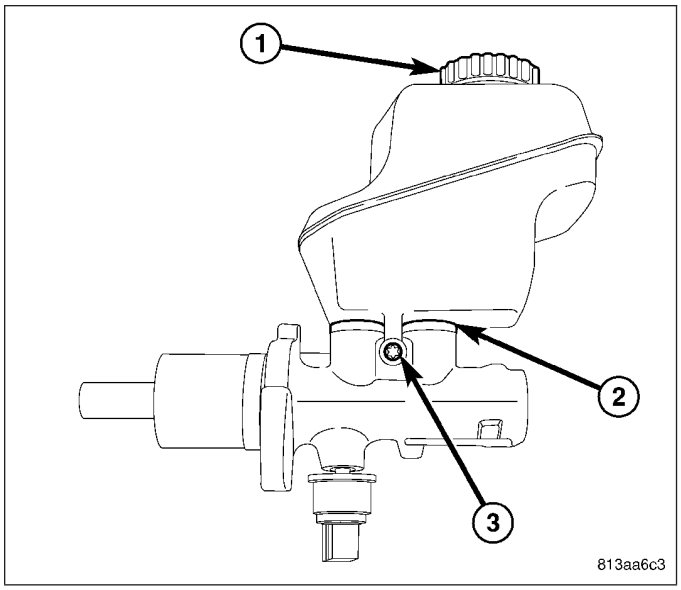

7. Remove two brake fluid reservoir seal grommets (2) from master cylinder housing (1).

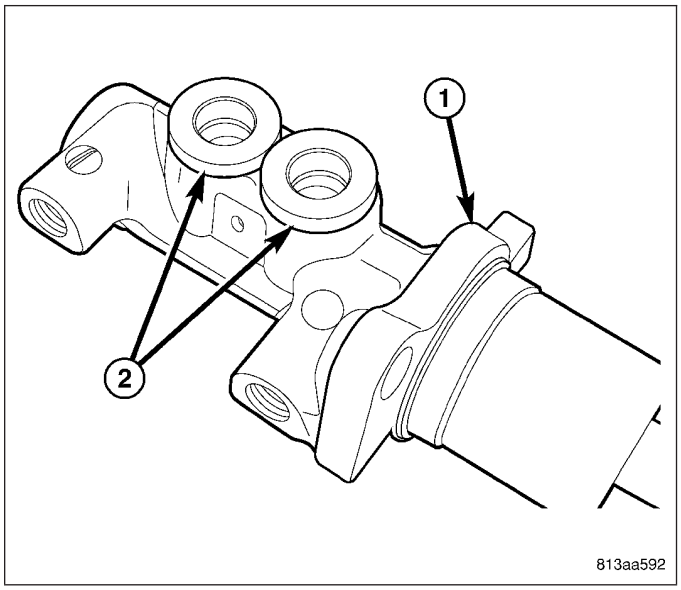

INSTALLATION

1. Install NEW brake fluid reservoir sealing grommets (2) in master cylinder housing (1).

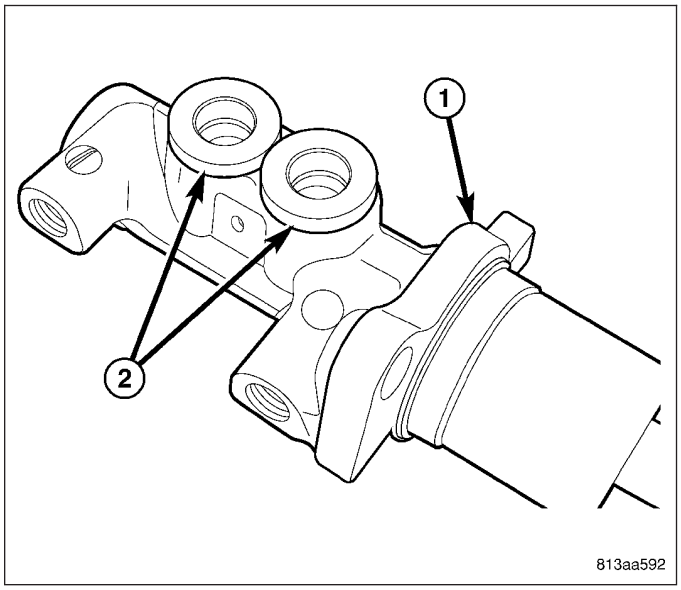

2. Lubricate reservoir mounting area with fresh clean brake fluid. Place reservoir in position over sealing grommets. Seat reservoir into sealing grommets using a rocking motion while firmly pressing down on fluid reservoir. Once installed, make sure fluid reservoir is touching the top of both sealing grommets (2) or reservoir is not properly installed.
3. Install fluid reservoir mounting screw (3). Tighten screw to 28 N·m (250 in. lbs.) torque.

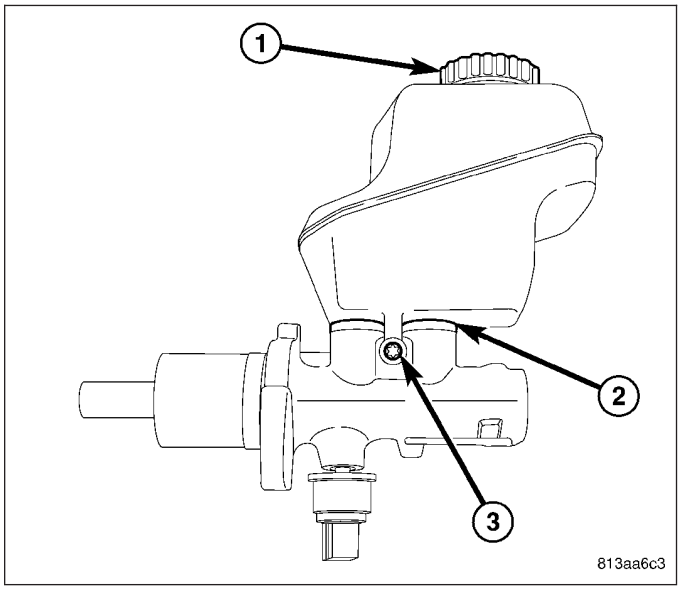

4. Connect wiring harness connector (4) to brake fluid level sensor (2) mounted in brake fluid reservoir (1).

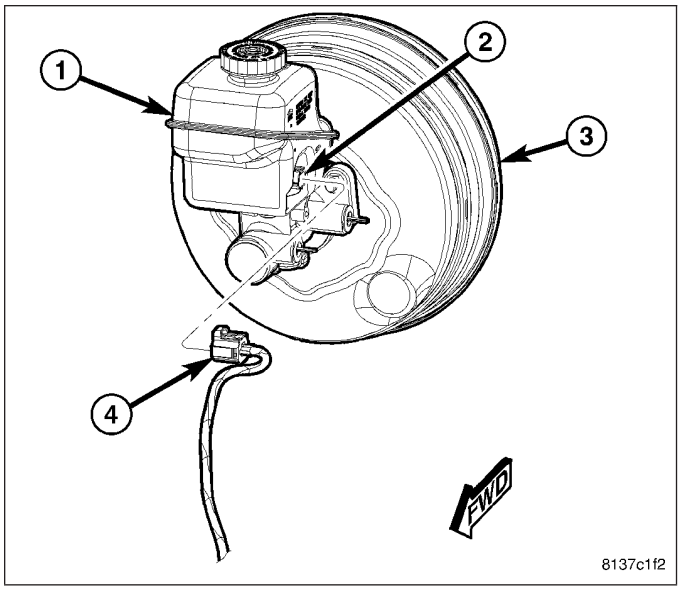

5. Fill master cylinder fluid reservoir (1) with clean, fresh Mopar® Brake Fluid or equivalent.
6. Install access panel in cowl area.

WARNING: Be certain a firm brake pedal is achieved prior to attempting vehicle operation. If a firm brake pedal cannot be achieved, bleed entire brake hydraulic system and check for leaks. (refer to 5 - brakes - standard procedure)

7. Road test vehicle to ensure proper operation of brakes.

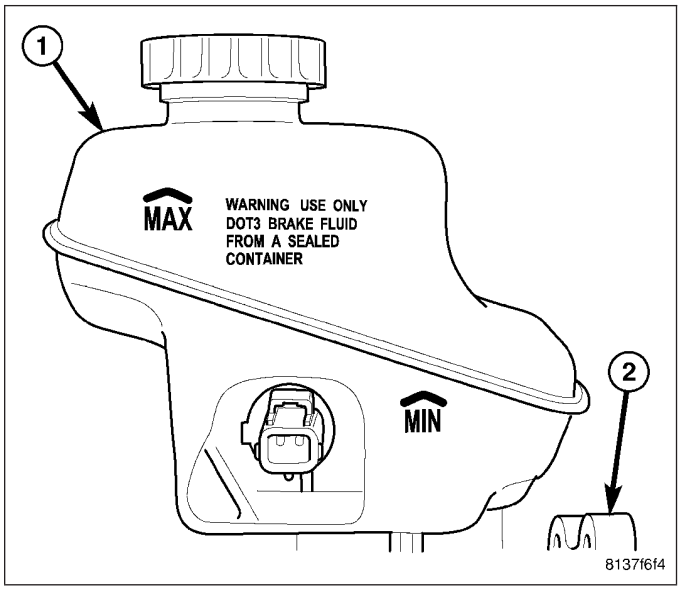

JUNCTION BLOCK

DESCRIPTION

A junction block is used on vehicles that are not equipped with antilock brakes (ABS) allowing use of the same brake tubes on all applications. The junction block is located in the engine compartment, in front of the right wheel well. The junction block mounts in the same location as the ABS integrated control unit (ICU) does on vehicles with ABS.

It has six threaded ports to which the brake tubes connect. Two are for the brake tubes coming from the master cylinder. The remaining four ports are for the brake tubes going to each wheel brake assembly.

The junction block contains a proportioning valve. The proportioning valve is not serviced separately from the junction block. For more information on the proportioning valve, (Refer to 5 - BRAKES/HYDRAULIC/MECHANICAL/PROPORTIONING VALVE - DESCRIPTION)

OPERATION

The junction block distributes the brake fluid coming from the master cylinder primary and secondary ports to the four brake tubes leading to the wheel brakes. Since the junction block mounts in the same location as the ABS integrated control unit (ICU), it allows for the common use of brake tubes on the vehicle whether it is equipped with or without ABS.

The junction block includes a rear brake proportioning valve. Placed in the fluid flow passages leading to the rear brake tube ports, it balances front-to-rear braking. (Refer to 5 - BRAKES - BASE/HYDRAULIC/MECHANICAL/PROPORTIONING VALVE - OPERATION)

REMOVAL

NOTE: Before proceeding, (Refer to 5 - BRAKES - WARNING) (Refer to 5 - BRAKES - CAUTION).

1. Disconnect and isolate battery negative cable (2) from battery post.
2. Using a brake pedal holding tool, depress brake pedal past its first inch of travel and hold it in this position. Holding pedal in this position will isolate master cylinder from hydraulic brake system and will not allow brake fluid to drain out of brake fluid reservoir while brake lines are open.

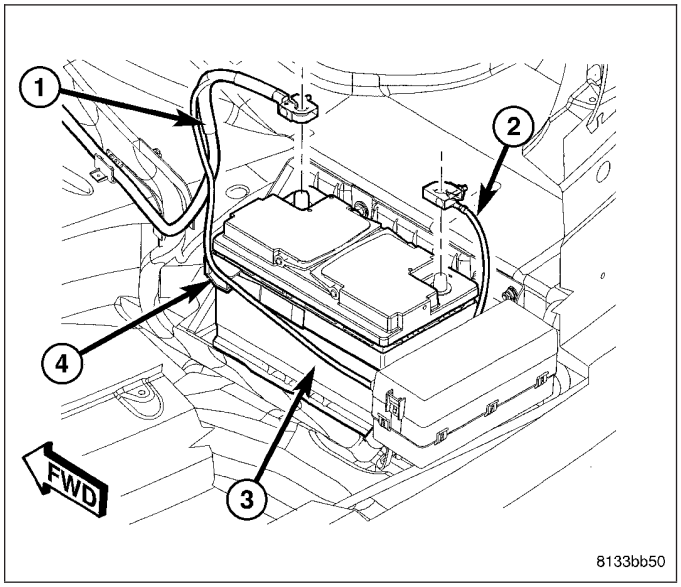

3. Remove brake tubes (1, 2, 3 and 10) at junction block (5).

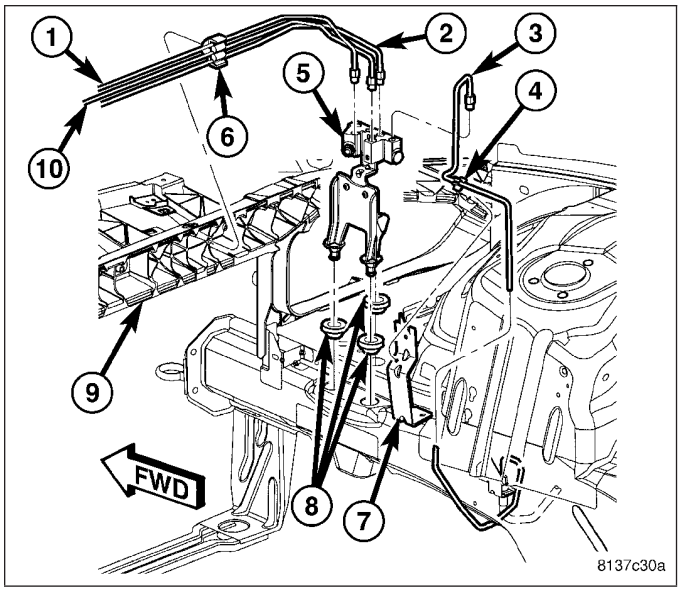

4. Remove remaining brake tubes (1 and 3) at junction block (5).

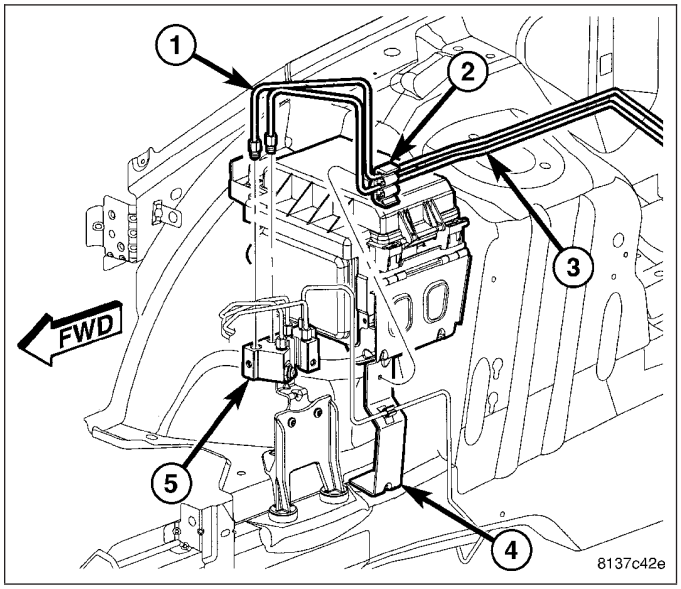

5. Pull up on junction block (5) and remove from mounting grommets (8).

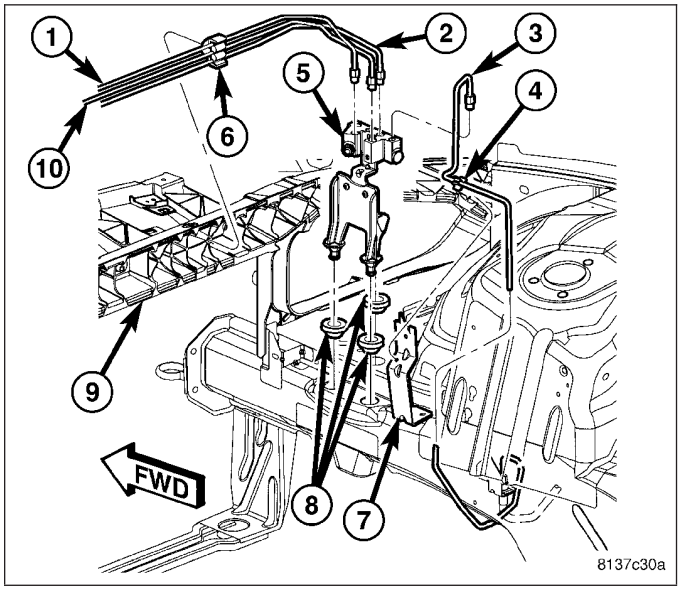

INSTALLATION

1. Install junction block (5), pushing mounting bracket down into mounting grommets (8) located in body of vehicle.

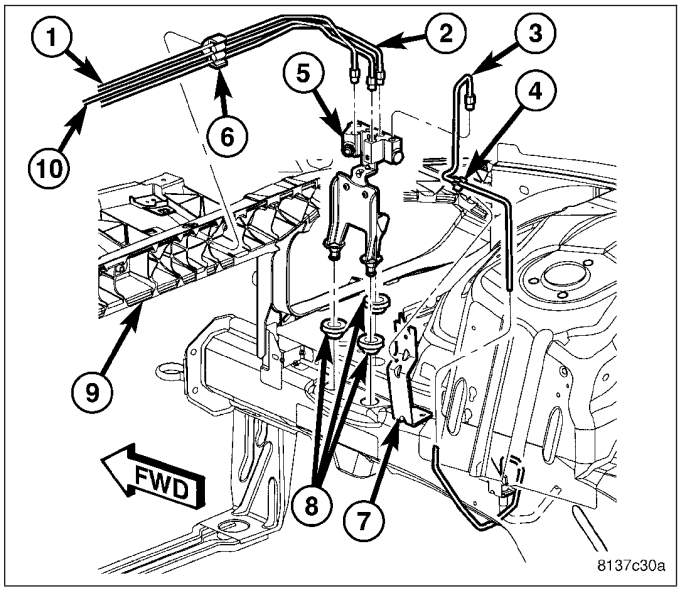

2. Install brake tubes to rear (1 and 3) at hydraulic control unit. Tighten tube nuts to 20 N·m (177 in. lbs.) torque.

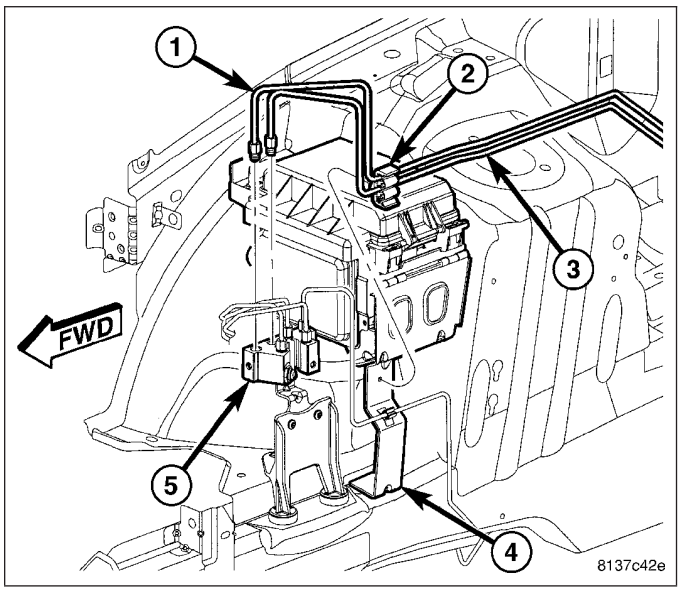

3. Install brake tubes (1, 2, 3 and 10) at junction block (5). Tighten tube nuts to 20 N·m (177 in. lbs.) torque.
4. Remove brake pedal holding tool.

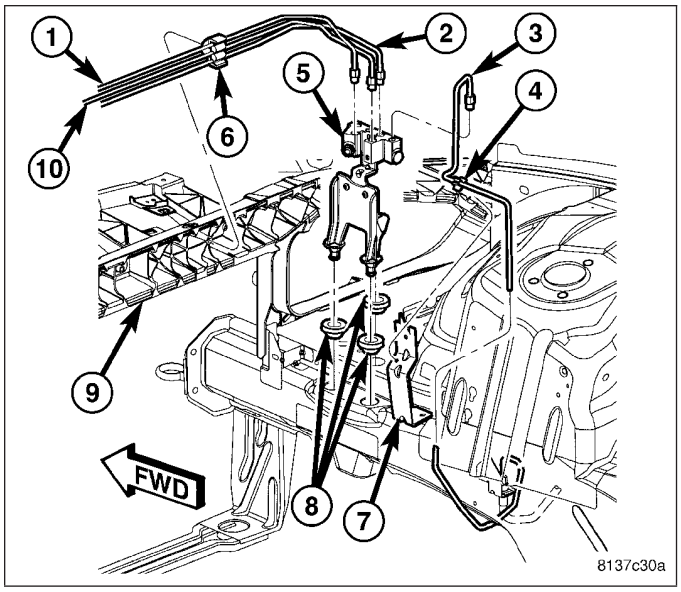

5. Connect battery negative cable (2) to battery post. It is important that this is performed properly. (Refer to 8 - ELECTRICAL/BATTERY SYSTEM - STANDARD PROCEDURE)

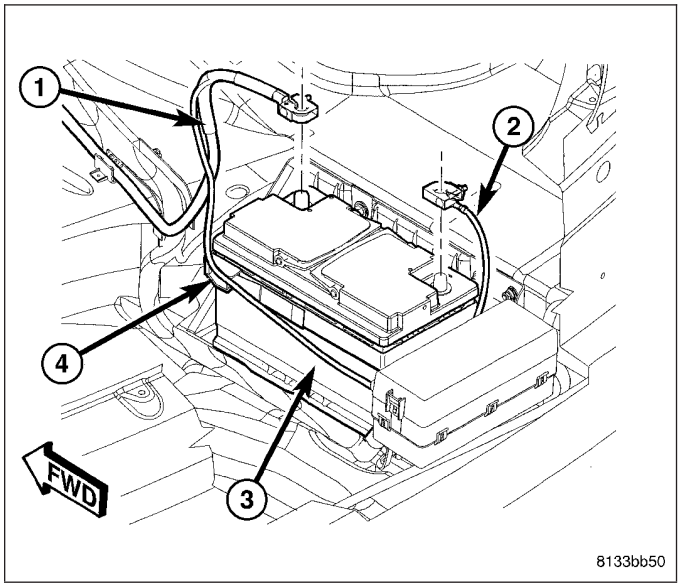

6. Fill and bleed (1) base brake hydraulic system. (Refer to 5 - BRAKES - STANDARD PROCEDURE)
7. Road test vehicle to verify proper operation of brakes.

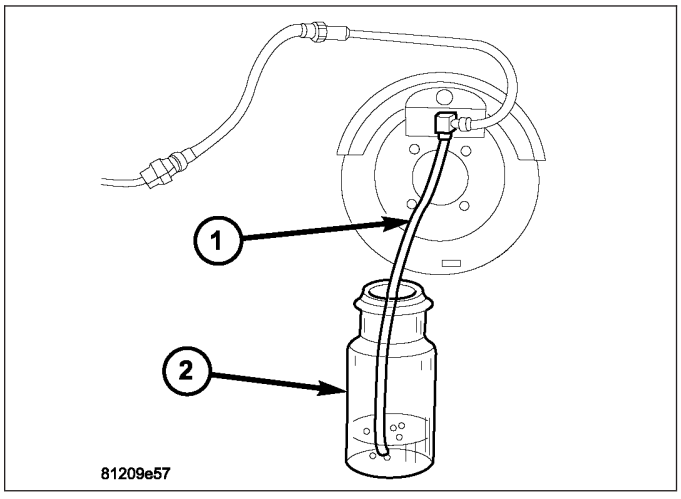

MASTER CYLINDER

DESCRIPTION

There are two different master cylinder designs used depending on whether the vehicle is an early build vehicle or a later build vehicle. To simplify the differentiation between early and later brake systems, for this service information they are referred to as the MK25 master cylinder and the MK25E master cylinder. This is because the master cylinders change when the availability of the antilock brake systems change. Early build vehicles use MK25 ABS and later build vehicles use MK25E ABS. Be aware that these type master cylinders are also used on vehicles that are not equipped with antilock brakes.

Although similar in function and appearance, the MK25E master cylinder does not have a pressure switch located on the bottom and it has larger outlet ports with SAE flares. The primary port (1) is designed for 5/16 inch (8 mm) tubing and the secondary port (2) is designed for 1/4 inch (6.25 mm) tubing.

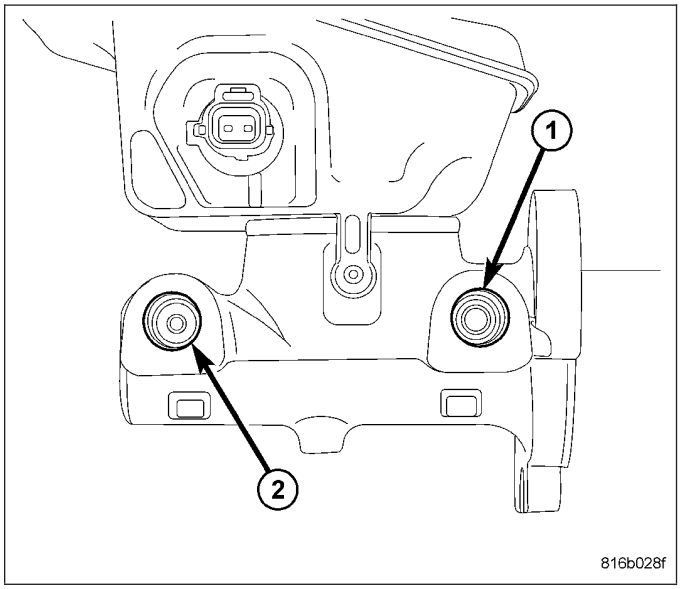

Both standard MK25 and MK25E master cylinders have 25.4 mm bores. Although appearing and serviced the same, the master cylinder used on SRT8 and Police vehicles has a larger 27 mm bore. The SRT8 and Police Package master cylinder can be identified by a green dot placed on the body of the master cylinder.

On SRT8 vehicles with the MK25 ABS system, the brake pressure sensor (3) which normally mounts to the bottom of the master cylinder is mounted to the primary brake tube (3) near the master cylinder (1).

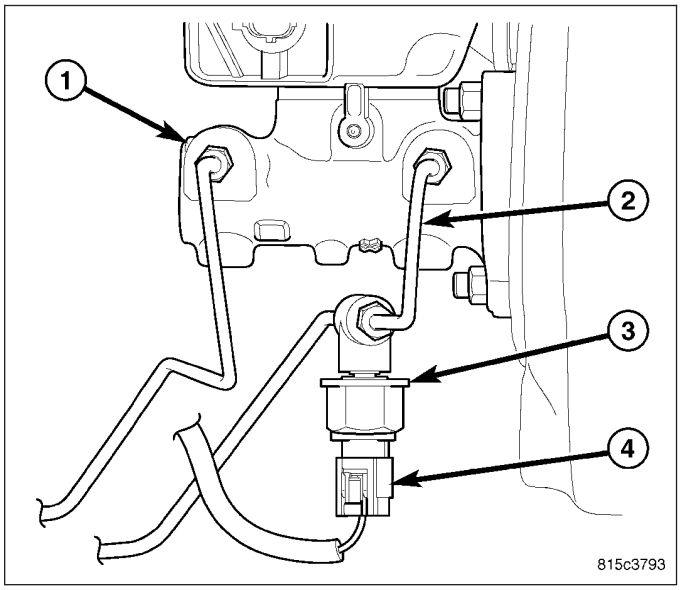

STANDARD PROCEDURE

MASTER CYLINDER BLEEDING - MK25

NOTE: Vehicles that are not equipped with ABS also use this master cylinder, but in an effort to simplify the differentiation between early and late brake systems it is being referred to as the MK25 master cylinder.

CAUTION: When clamping master cylinder in vise, only clamp master cylinder by its mounting flange. Do not clamp master cylinder piston rod, reservoir, seal or body.

1. Clamp master cylinder in a vise.
2. Attach special tools for bleeding master cylinder in the following fashion:
   a. Thread one Adapter (3), Special Tool 8822–2, in each outlet port. Tighten Adapters to 14 N·m (124 in. lbs.) torque.
   b. Thread a Bleeder Tube (1), Special Tool 8358–1, into each Adapter. Tighten each tube to 14 N·m (124 in. lbs.) torque. Flex each bleeder tube and place open end into mouth of fluid reservoir as far down as possible.

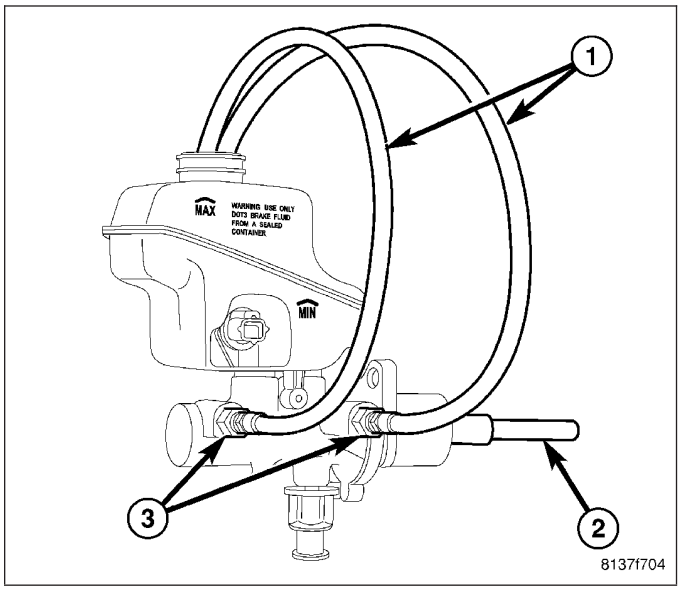

NOTE: Make sure open ends of bleeder tubes stay below surface of brake fluid once reservoir is filled to proper level.

3. Fill brake fluid reservoir (1) to the MAX level with Mopar® brake fluid or equivalent conforming to DOT 3 specifications. Make sure fluid level is above tips of bleeder tubes in reservoir to ensure no air is ingested during bleeding.

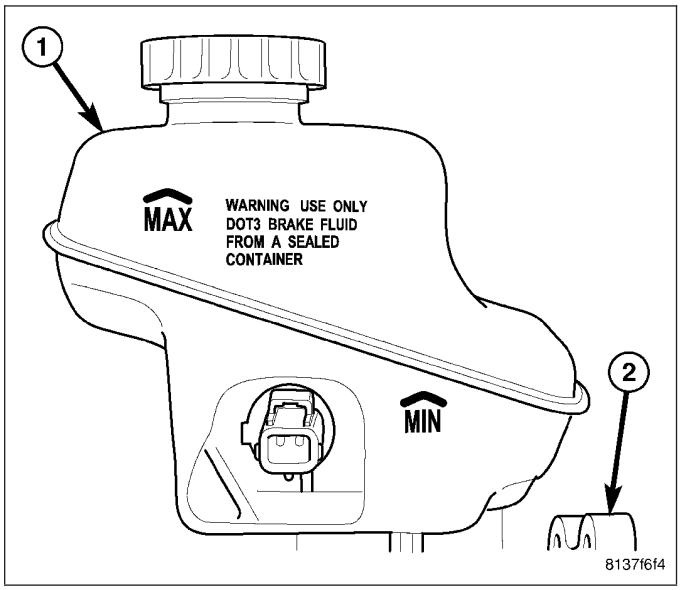

4. Using a wooden dowel as a pushrod (2), slowly depress master cylinder pistons, then release pressure, allowing pistons to return to released position. Repeat several times until all air bubbles are expelled. Make sure fluid level stays above tips of bleeder tubes in reservoir while bleeding.
5. Remove bleeder tubes (1) and adapters (3) from master cylinder outlet ports, then plug outlet ports and install fill cap on reservoir.
6. Remove master cylinder from vise.
7. Install master cylinder on vehicle. (Refer to 5 - BRAKES - BASE/HYDRAULIC/MECHANICAL/ MASTER CYLINDER - INSTALLATION)

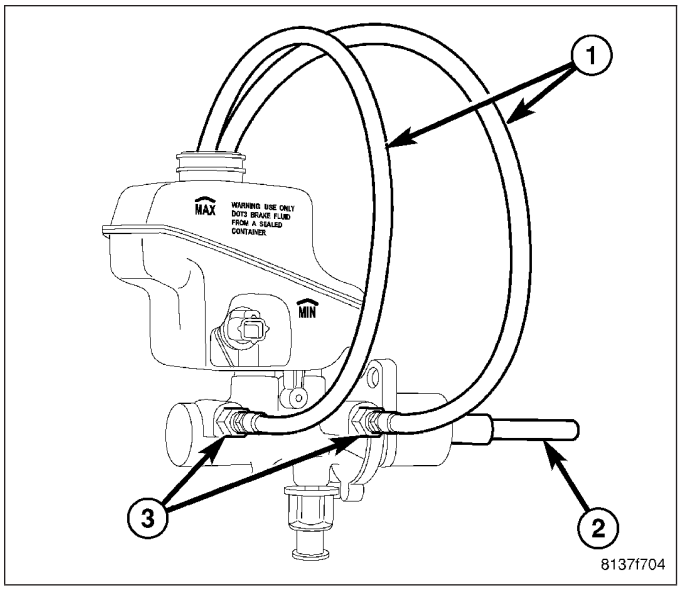

MASTER CYLINDER BLEEDING - MK25E

NOTE: Vehicles that are not equipped with ABS also use this master cylinder, but in an effort to simplify the differentiation between early and late brake systems it is being referred to as the MK25E master cylinder.

CAUTION: When clamping master cylinder in vise, only clamp master cylinder by its mounting flange. Do not clamp master cylinder piston rod, reservoir, seal or body.

1. Clamp master cylinder in a vise.

CAUTION: When installing Adapters in master cylinder, do not overtighten. Damage to master cylinder could occur.

NOTE: Adapters 9748-1 and 9748-2 are not interchangeable. To avoid mix-up of Adapters, 9748–1 is silver while 9748–2 is black.

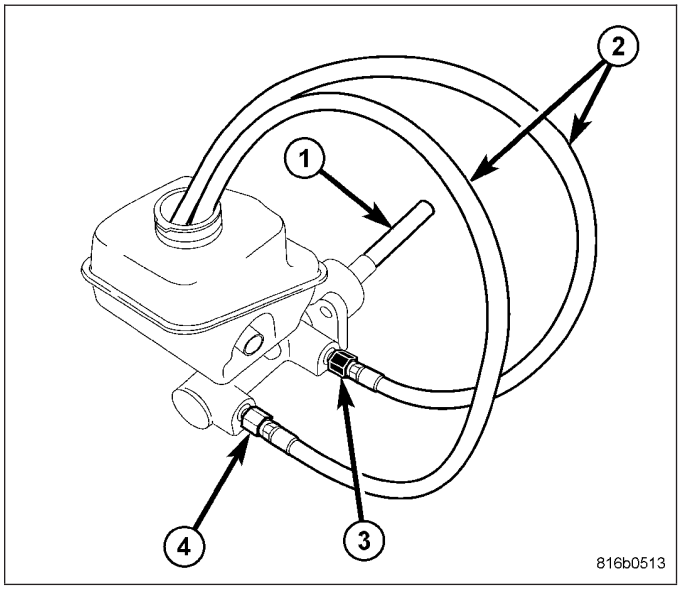

2. Attach special tools for bleeding master cylinder in following fashion:
   a. Thread Adapter (3), Special Tool 9748–2, into primary outlet port. Tighten Adapter to 14 N·m (124 in. lbs.).
   b. Thread Adapter (4), Special Tool 9748–1, into secondary outlet port. Tighten Adapter to 14 N·m (124 in. lbs.).
   c. Thread a Bleeder Tube (2), Special Tool 8358–1, into each Adapter. Tighten each tube to 14 N·m (124 in. lbs.). Flex each bleeder tube and place open end into mouth of fluid reservoir as far down as possible.

NOTE: Make sure open ends of bleeder tubes stay below surface of brake fluid once reservoir is filled to proper level.

3. Fill brake fluid reservoir (1) to the MAX level with Mopar® brake fluid or equivalent conforming to DOT 3 specifications. Make sure fluid level is above tips of bleeder tubes in reservoir to ensure no air is ingested during bleeding.

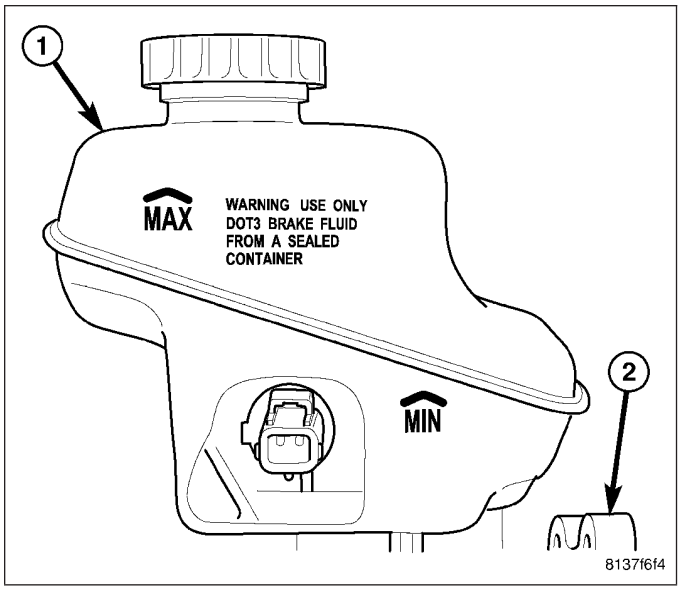

4. Using a wooden dowel as a pushrod (1), slowly depress master cylinder pistons, then release pressure, allowing pistons to return to released position. Repeat several times until all air bubbles are expelled. Make sure fluid level stays above tips of bleeder tubes in reservoir while bleeding.
5. Remove bleeder tubes (2) and adapters (3, 4) from master cylinder outlet ports, then plug outlet ports and install fill cap on reservoir.
6. Remove master cylinder from vise.
7. Install master cylinder on vehicle. (Refer to 5 - BRAKES - BASE/HYDRAULIC/MECHANICAL/ MASTER CYLINDER - INSTALLATION)

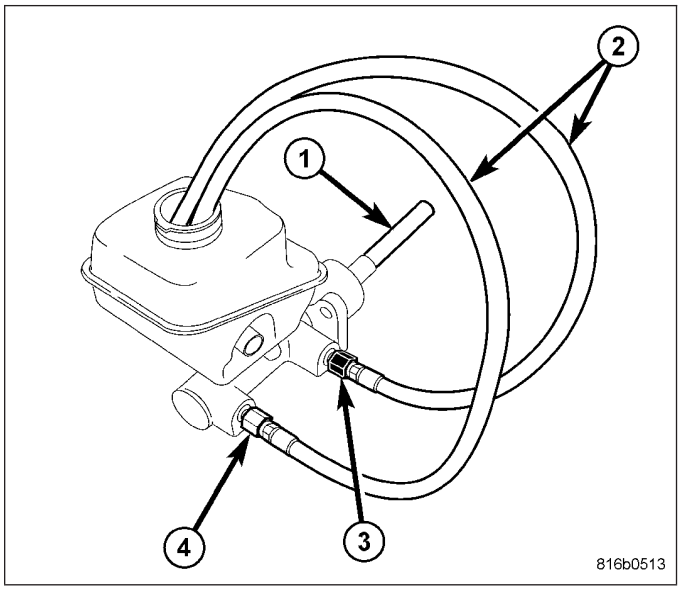

REMOVAL

MASTER CYLINDER

CAUTION: Vacuum in power brake booster must be pumped down (removed) before removing master cylinder from power brake booster. This is necessary to prevent power brake booster from sucking in any contamination as master cylinder is removed. This can be done simply by pumping brake pedal, with vehicle's engine not running, until a firm feeling brake pedal is achieved.

1. With engine not running, pump brake pedal until a firm pedal is achieved (4-5 strokes).

2. Disconnect and isolate battery negative cable (2) from battery post.

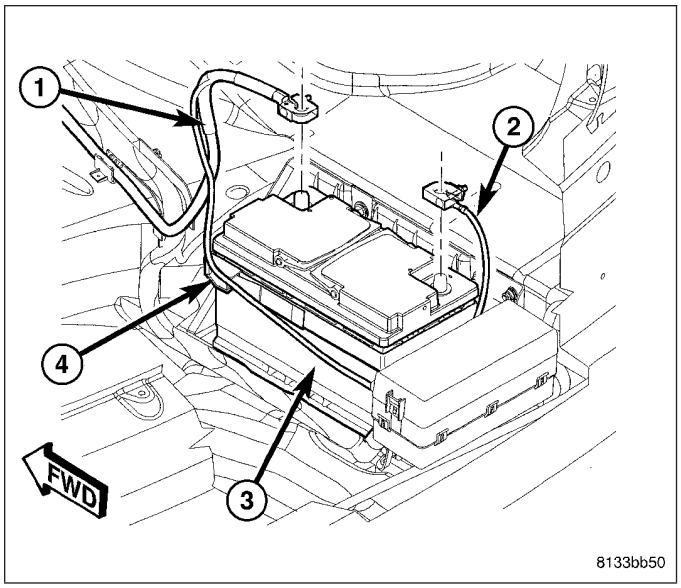

3. Remove access panel (1) in cowl area to expose master cylinder (2).
4. Thoroughly clean all surfaces of brake fluid reservoir and master cylinder. Use only Mopar® Brake Parts Cleaner or equivalent.

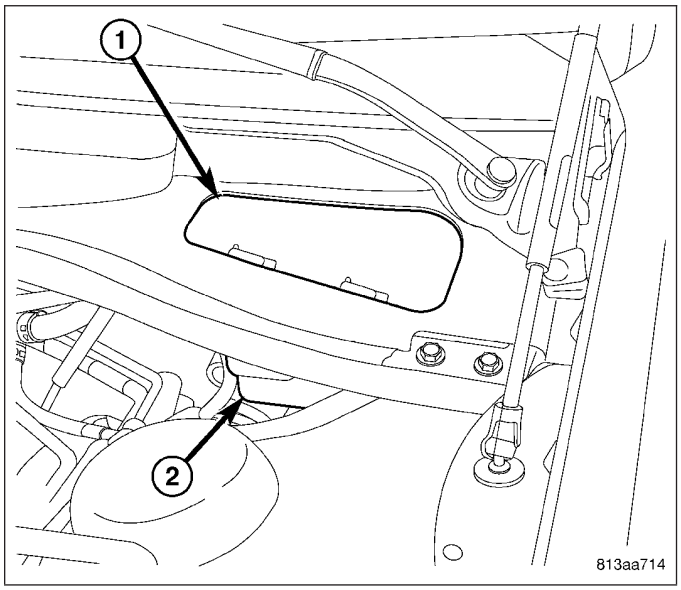

5. Disconnect wiring harness connector (4) from brake fluid level sensor (2) in master cylinder brake fluid reservoir (1).

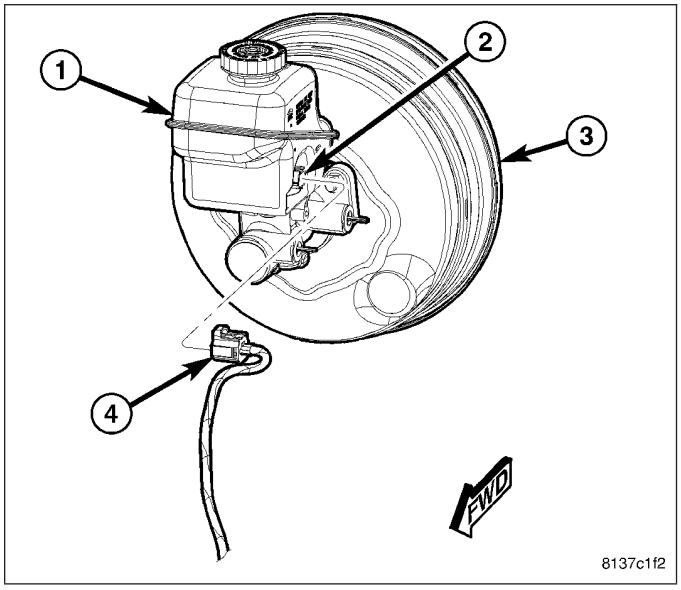

NOTE: SRT8 vehicles with MK25 ABS are not equipped with a master cylinder mounted pressure switch for the Electronic Stability Program. The switch is located in the primary brake tube.

6. If equipped with MK25 ABS and Electronic Stability Program (non-SRT8), disconnect wiring harness (6) connector from pressure switch (5).

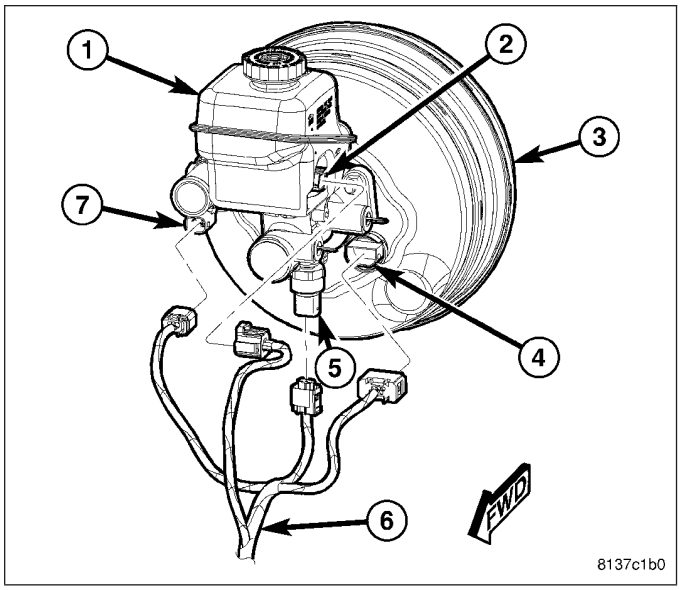

7. Disconnect primary (3) and secondary (2) brake tubes from master cylinder (4). Install sealing plugs in open brake tube outlet ports.

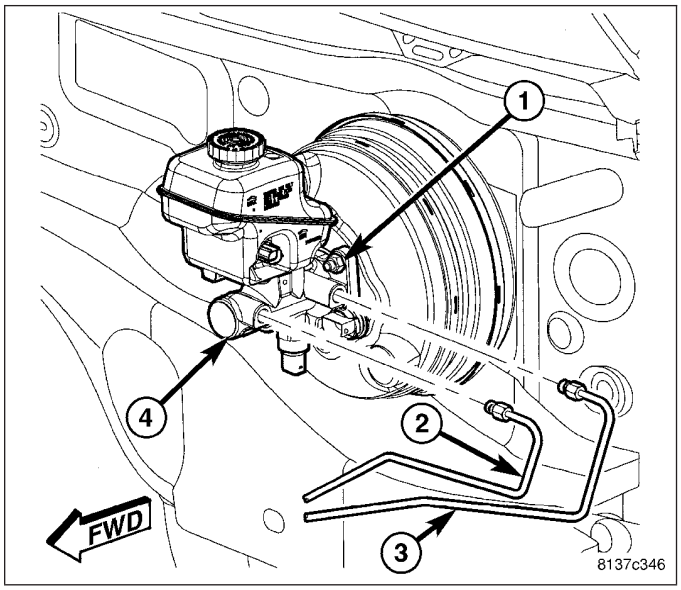

CAUTION: Before removing master cylinder from power brake vacuum booster, master cylinder and vacuum booster must be thoroughly cleaned. This must be done to prevent dirt particles from falling into power brake vacuum booster. Use only Mopar® Brake Parts Cleaner or equivalent.

8. Remove two nuts (2) attaching master cylinder (3) to power brake booster (1).
9. Slide master cylinder (3) straight out of power brake booster (1).

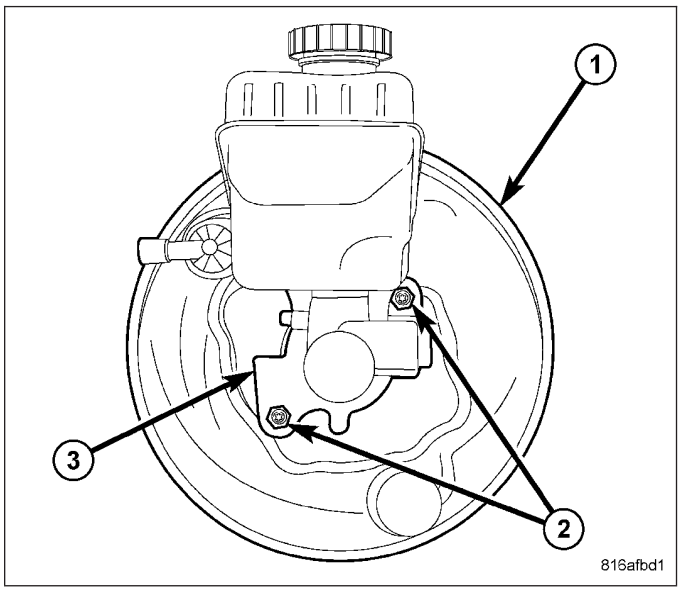

CAUTION: Vacuum seal (1) on rear of master cylinder (2) is used to allow vacuum ability in power brake vacuum booster. Vacuum seal MUST be replaced whenever master cylinder is removed from power brake vacuum booster.

10. Remove vacuum seal (1) located on mounting flange of master cylinder (2). Vacuum seal is removed by **carefully** pulling it off rear of master cylinder. **Do not attempt to pry seal off master cylinder by inserting a sharp tool between seal and master cylinder casting. Damage can occur.**

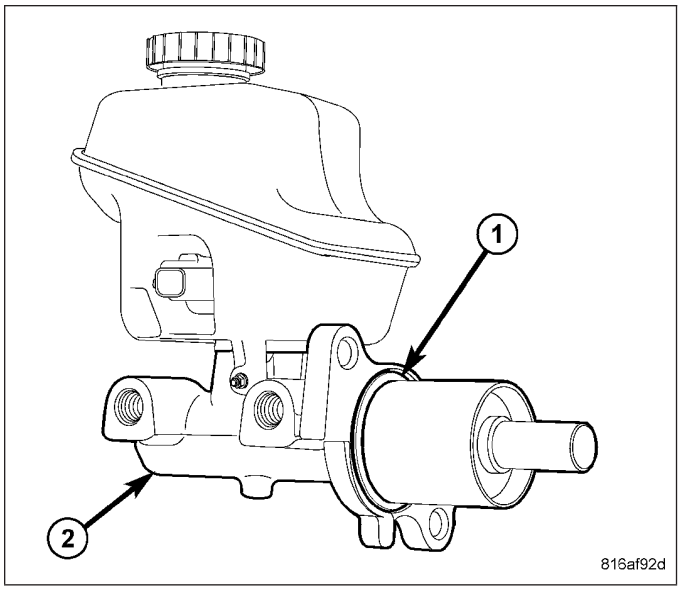

MASTER CYLINDER - RHD

CAUTION: Vacuum in power brake booster must be pumped down (removed) before removing master cylinder from power brake booster. This is necessary to prevent power brake booster from sucking in any contamination as master cylinder is removed. This can be done simply by pumping brake pedal, with vehicle's engine not running, until a firm feeling brake pedal is achieved.

1. With engine not running, pump brake pedal until a firm pedal is achieved (4-5 strokes).
2. Disconnect and isolate battery negative cable (2) from battery post.

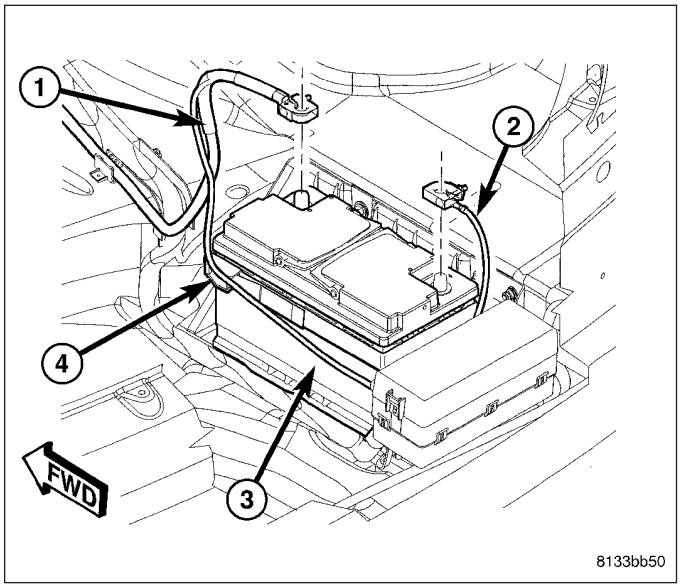

3. Remove access panel (1) in cowl area to expose master cylinder.
4. Thoroughly clean all surfaces of brake fluid reservoir and master cylinder. Use only Mopar® Brake Parts Cleaner or equivalent.

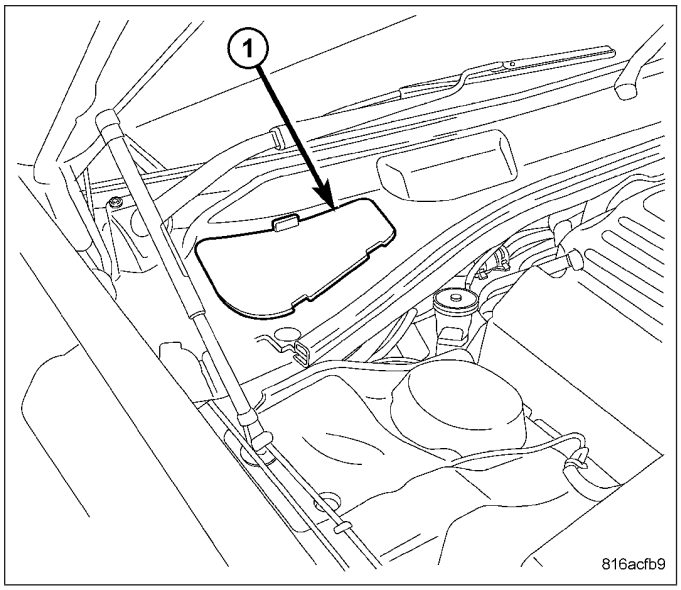

5. Remove purge solenoid (1) from mount (2) and move it to side leaving hoses and wiring connected.

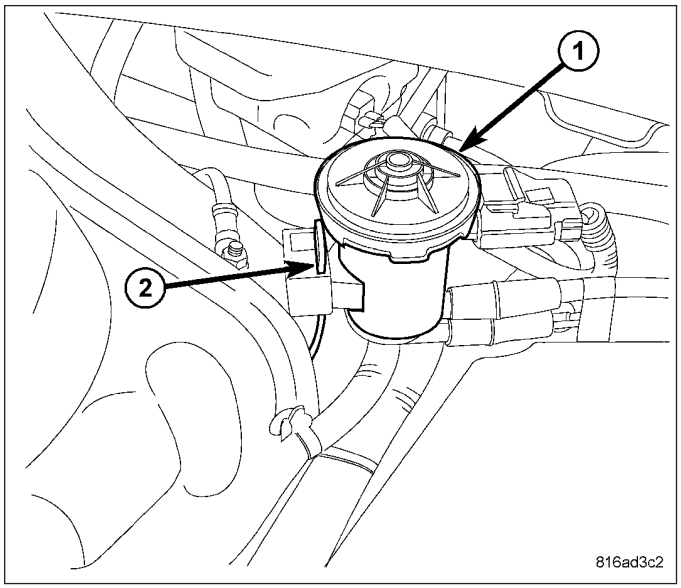

6. Disconnect wiring harness connector (4) from brake fluid level sensor (2) in master cylinder brake fluid reservoir (1).

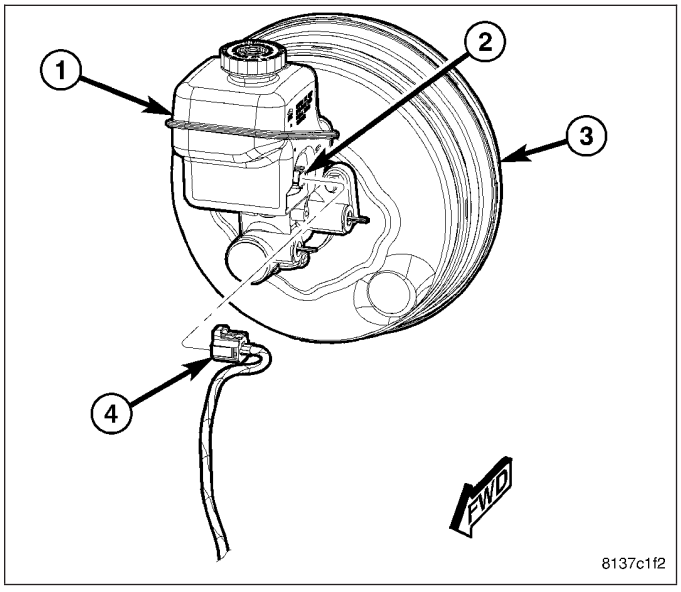

7. Remove primary (3) and secondary (2) brake tubes from master cylinder (4). Install sealing plugs in open brake tube outlet ports.

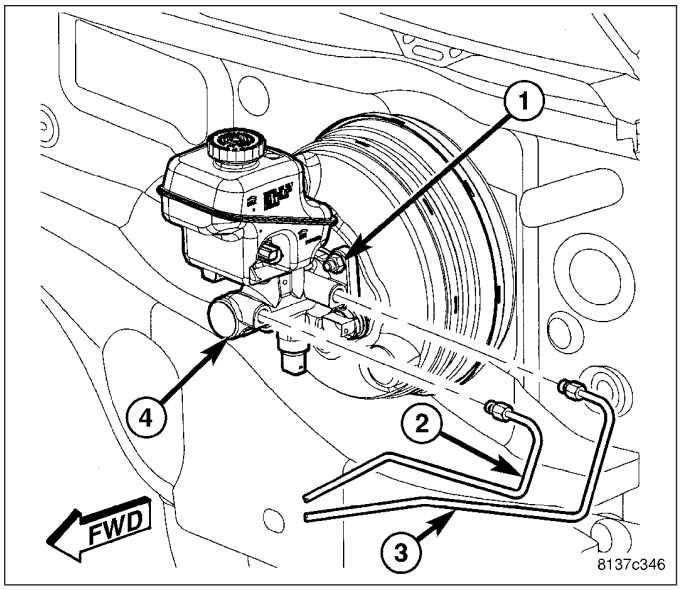

CAUTION: Before removing master cylinder from power brake vacuum booster, master cylinder and vacuum booster must be thoroughly cleaned. This must be done to prevent dirt particles from falling into power brake vacuum booster. Use only Mopar® Brake Parts Cleaner or equivalent.

8. Remove two nuts (2) attaching master cylinder (3) to power brake booster (1).
9. Slide master cylinder (3) straight out of power brake booster (1).

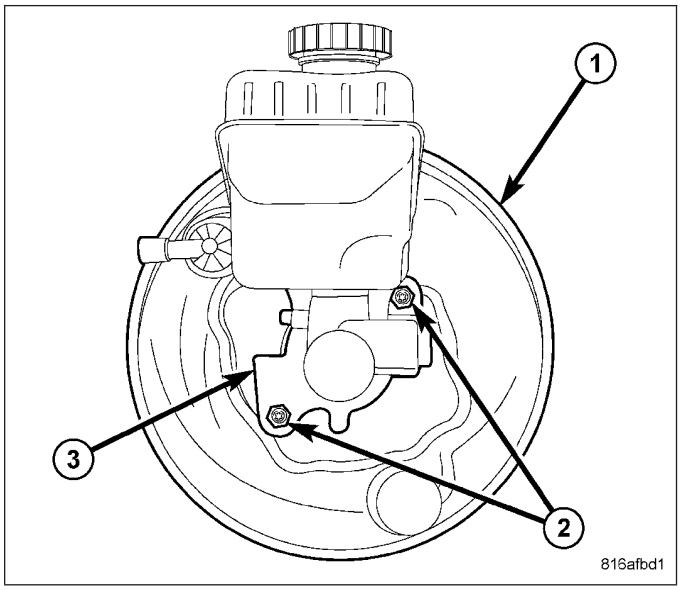

CAUTION: Vacuum seal (1) on rear of master cylinder (2) is used to allow vacuum ability in power brake vacuum booster. Vacuum seal MUST be replaced whenever master cylinder is removed from power brake vacuum booster.

10. Remove vacuum seal (1) located on mounting flange of master cylinder (2). Vacuum seal is removed by **carefully** pulling it off rear of master cylinder. **Do not attempt to pry seal off master cylinder by inserting a sharp tool between seal and master cylinder casting. Damage can occur.**

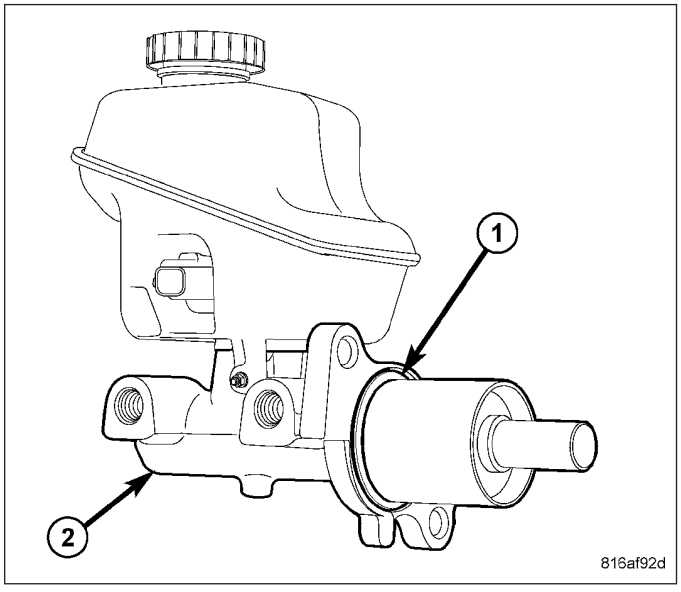

DISASSEMBLY

1. Clean master cylinder housing and brake fluid reservoir. Use only Mopar® Brake Parts Cleaner or equivalent.
2. If equipped, remove pressure switch on bottom of master cylinder (1).

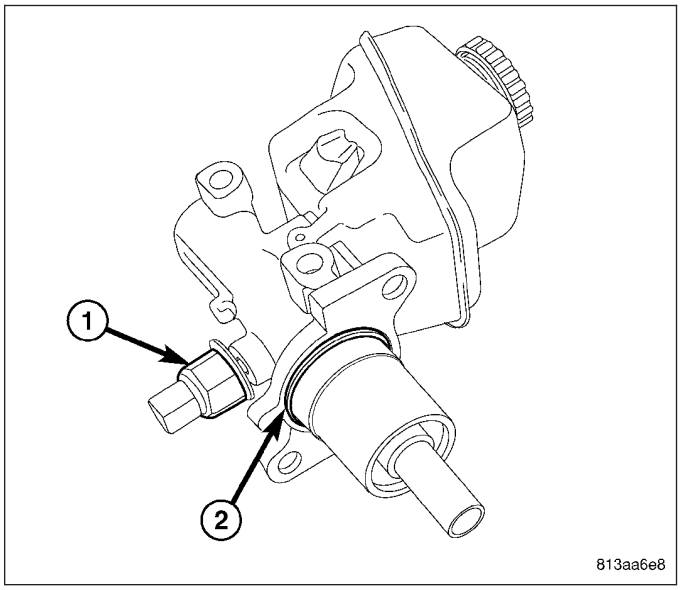

3. Remove brake fluid reservoir cap (1). Using a syringe or equivalent type tool, empty as much brake fluid as possible from the reservoir.

CAUTION: When removing fluid reservoir from the master cylinder, do not pry off using any type of tool. This can damage the fluid reservoir or master cylinder housing.

4. Remove screw (3) fastening fluid reservoir to master cylinder housing.
5. Rock the brake fluid reservoir side-to-side while pulling up to remove it from seal grommets in master cylinder housing.

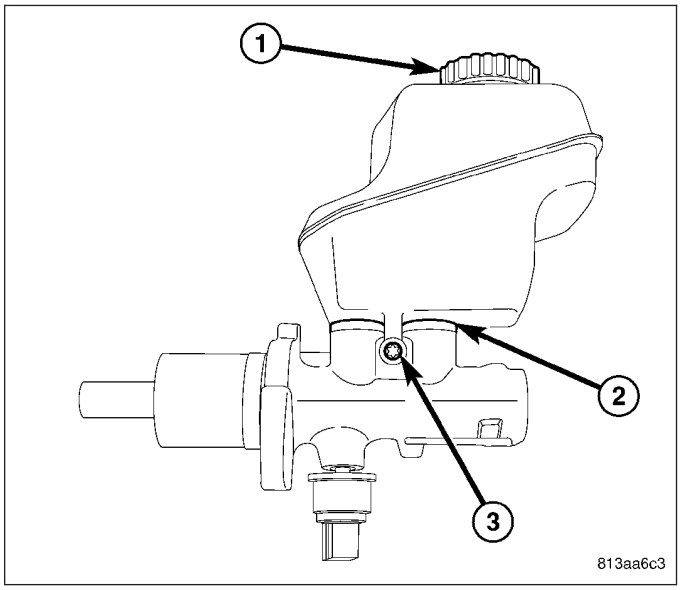

6. Remove two brake fluid reservoir seal grommets (2) from master cylinder housing (1).

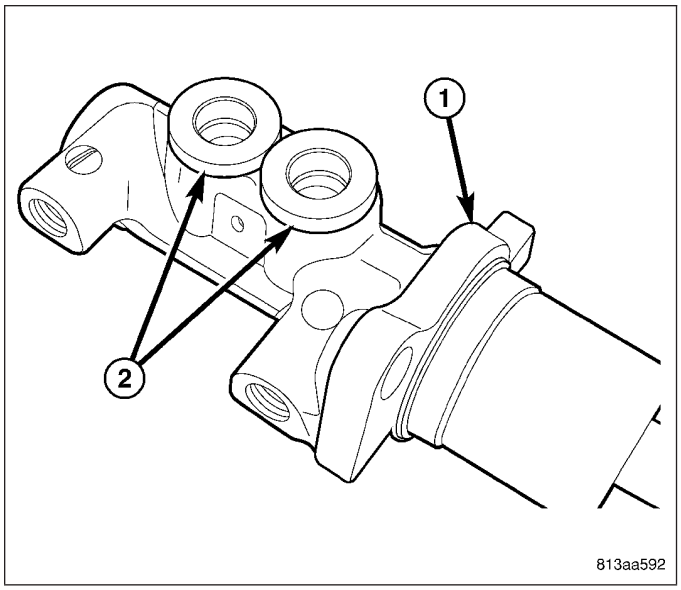

ASSEMBLY

1. Install NEW brake fluid reservoir sealing grommets (2) in master cylinder housing (1).

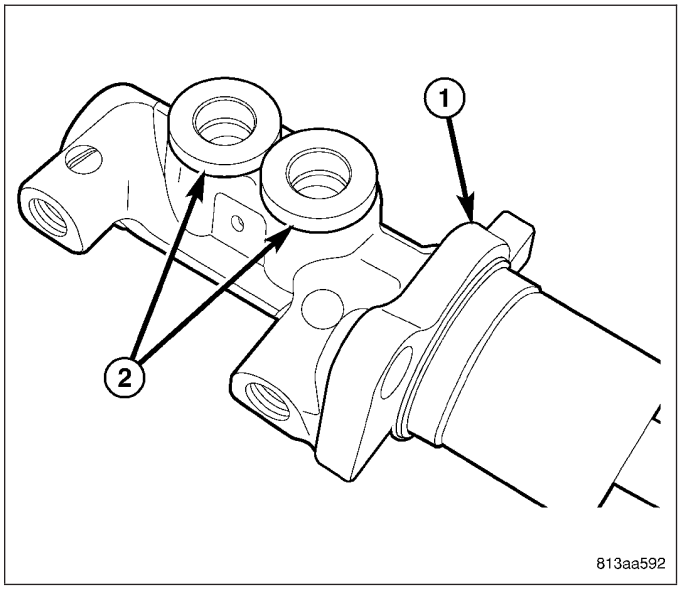

2. Lubricate reservoir mounting area with fresh clean brake fluid. Place reservoir in position over sealing grommets. Seat reservoir into sealing grommets using a rocking motion while firmly pressing down on fluid reservoir. Once installed, make sure fluid reservoir is touching the top of both sealing grommets (2) or reservoir is not properly installed.
3. Install fluid reservoir mounting screw (3). Tighten screw to 28 N·m (250 in. lbs.) torque.

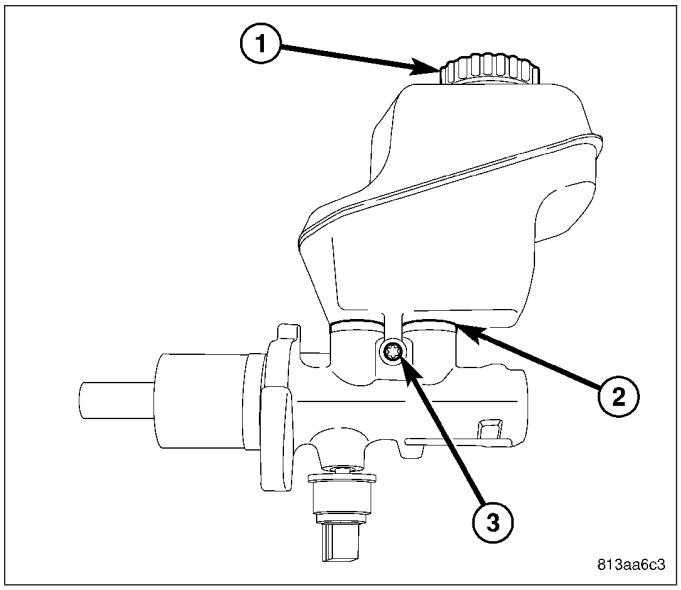

4. If equipped, install pressure switch (1) on bottom of master cylinder. Tighten switch to 28 N·m (250 in. lbs.) torque.
5. Thoroughly bleed master cylinder before installing it on vehicle. (Refer to 5 - BRAKES/HYDRAULIC/MECHANICAL/MASTER CYLINDER - STANDARD PROCEDURE)
6. Install master cylinder on power brake booster. Upon installation, vacuum seal (2) on rear of master cylinder must be replaced. (Refer to 5 - BRAKES/HYDRAULIC/MECHANICAL/MASTER CYLINDER - INSTALLATION)

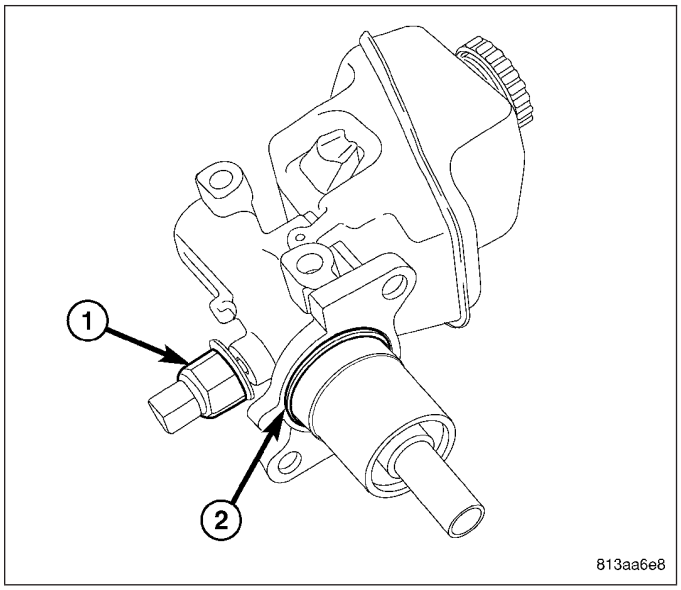

INSTALLATION

MASTER CYLINDER

1. Thoroughly bleed master cylinder before installing it on vehicle. (Refer to 5 - BRAKES/HYDRAULIC/MECHANICAL/MASTER CYLINDER - STANDARD PROCEDURE)

CAUTION: When replacing master cylinder on vehicle, a NEW vacuum seal (2) MUST be installed on master cylinder.

2. Install NEW vacuum seal (1) on rear of master cylinder (2) making sure seal fits squarely in mounting groove.

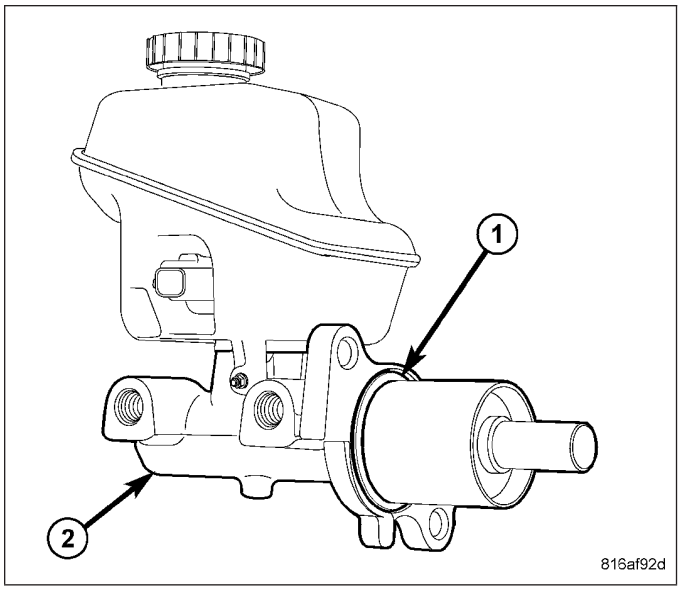

3. Position master cylinder (3) on studs of power brake booster, aligning booster push rod with master cylinder piston.

NOTE: In an effort to simplify the differentiation between early and late brake systems the master cylinders are being referred to MK25 or MK25E master cylinders. Vehicles that are not equipped with ABS use the same master cylinder as the ABS system available at that build date.

4. Install two master cylinder mounting nuts (1). Tighten mounting nuts as follows:
   - MK25 master cylinder – Tighten mounting nuts to 25 N·m (221 in. lbs.).
   - MK25E master cylinder – Tighten mounting nuts to 15 N·m (133 in. lbs.).

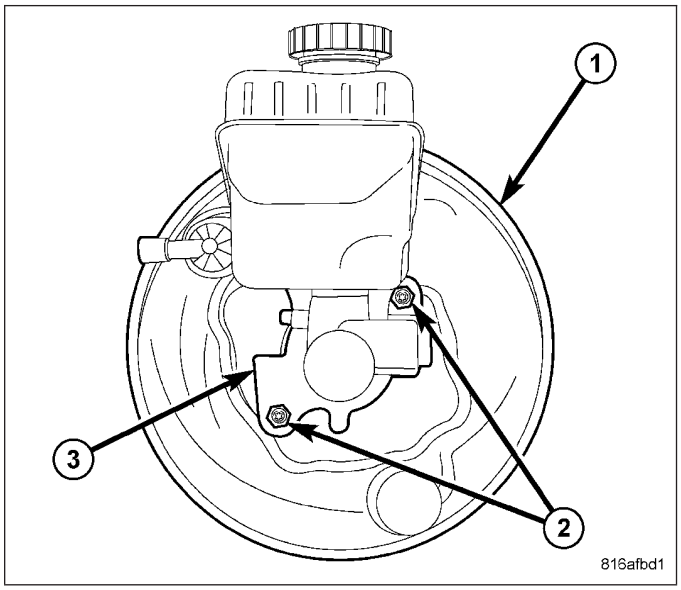

5. Thread primary (3) and secondary (2) brake tubes into master cylinder primary and secondary ports. Tighten tube nuts to 20 N·m (177 in. lbs.).

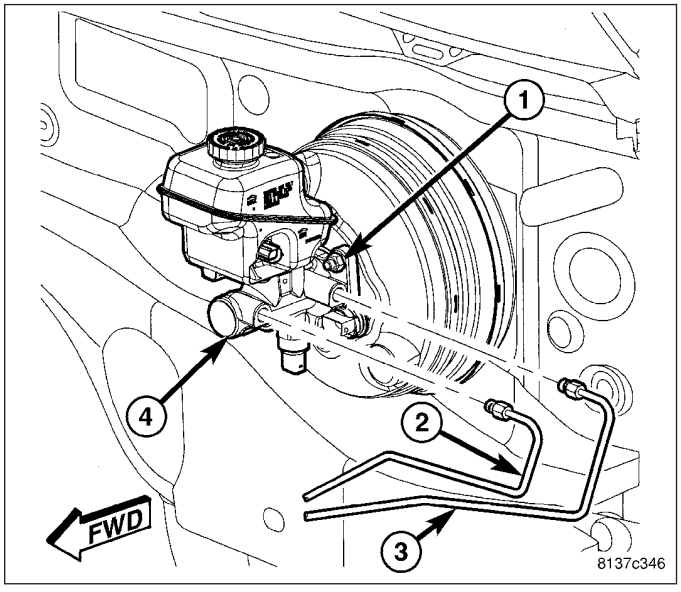

NOTE: SRT8 vehicles with MK25 ABS are not equipped with a master cylinder mounted pressure switch for the Electronic Stability Program. The switch is located in the primary brake tube.

6. If equipped with MK25 ABS and Electronic Stability Program (non-SRT8), connect wiring harness (6) connector to pressure switch (5).

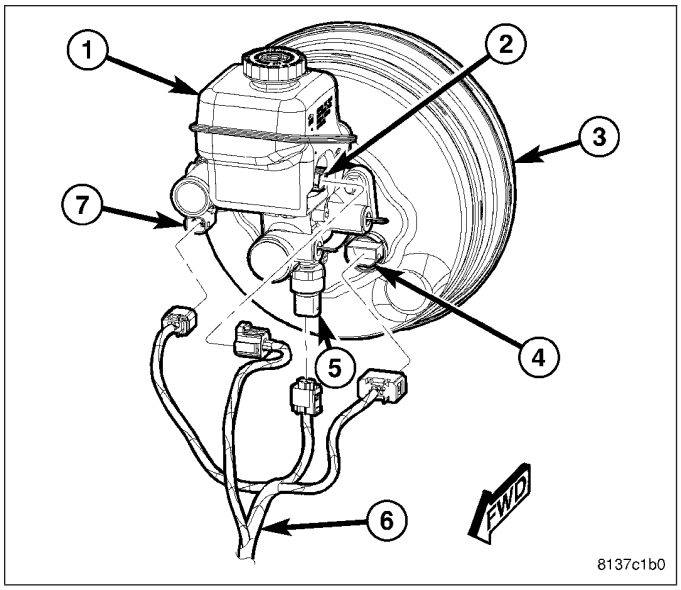

7. Connect wiring harness connector (4) to brake fluid level sensor (2) mounted in brake fluid reservoir (1).

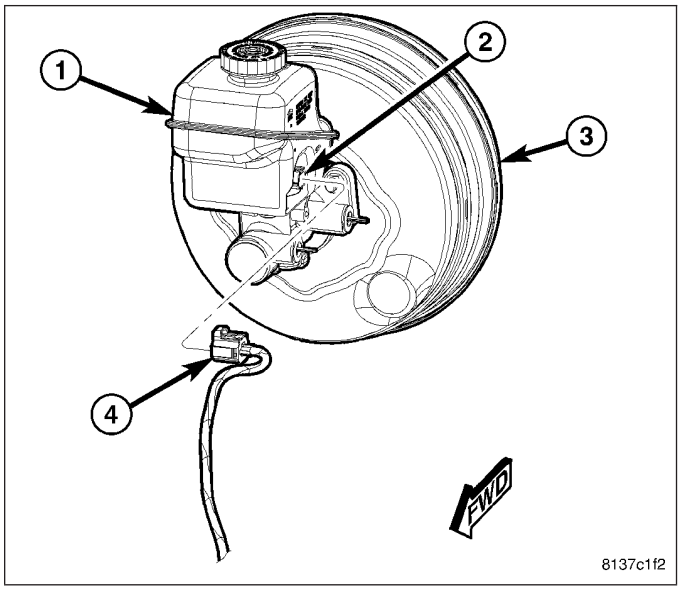

8. Connect battery negative cable (2) to battery post. It is important that this is performed properly. (Refer to 8 - ELECTRICAL/BATTERY SYSTEM - STANDARD PROCEDURE)

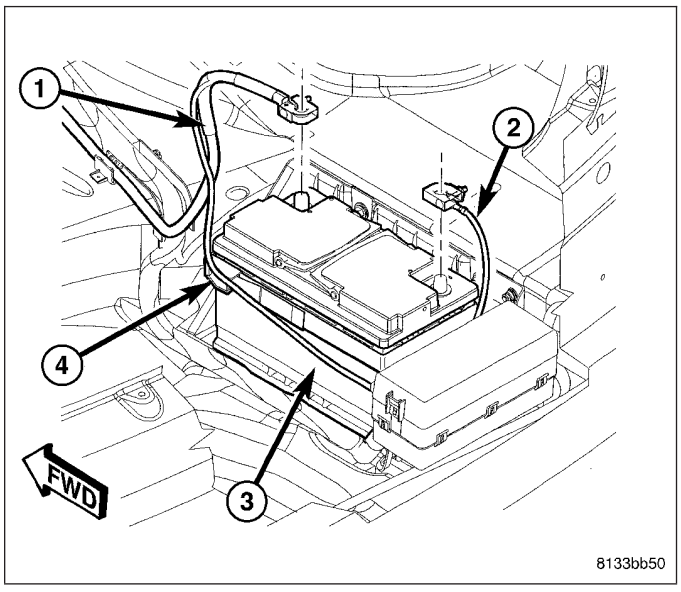

9. Fill master cylinder fluid reservoir (1) with clean, fresh Mopar® Brake Fluid or equivalent.
10. Install access panel in cowl area.

WARNING: Be certain a firm brake pedal is achieved prior to attempting vehicle operation. If a firm brake pedal cannot be achieved, bleed entire brake hydraulic system and check for leaks. (Refer to 5 - BRAKES - STANDARD PROCEDURE)

11. Road test vehicle to ensure proper operation of brakes.

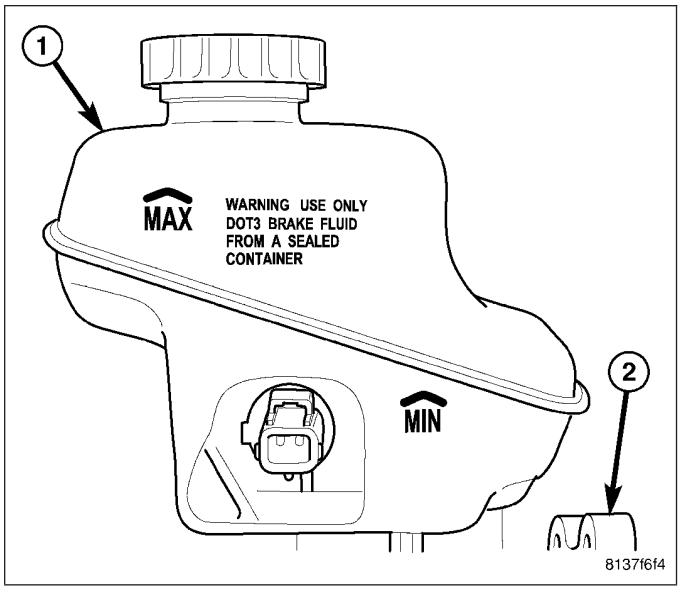

MASTER CYLINDER - RHD

1. Thoroughly bleed master cylinder before installing it on vehicle. (Refer to 5 - BRAKES/HYDRAULIC/MECHANICAL/MASTER CYLINDER - STANDARD PROCEDURE)

CAUTION: When replacing master cylinder on vehicle, a NEW vacuum seal (2) MUST be installed on master cylinder.

2. Install NEW vacuum seal (1) on rear of master cylinder (2) making sure seal fits squarely in mounting groove.

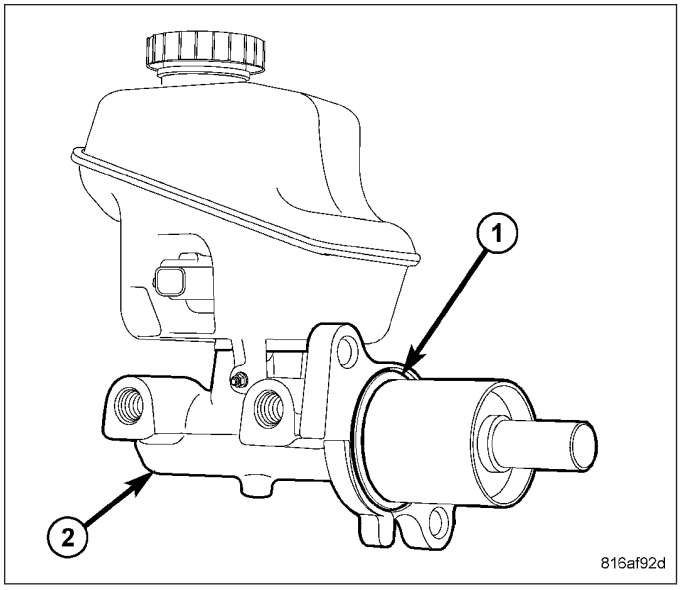

3. Position master cylinder (3) on studs of power brake booster, aligning booster push rod with master cylinder piston.
4. Install two master cylinder mounting nuts (1). Tighten mounting nuts to 15 N·m (133 in. lbs.).

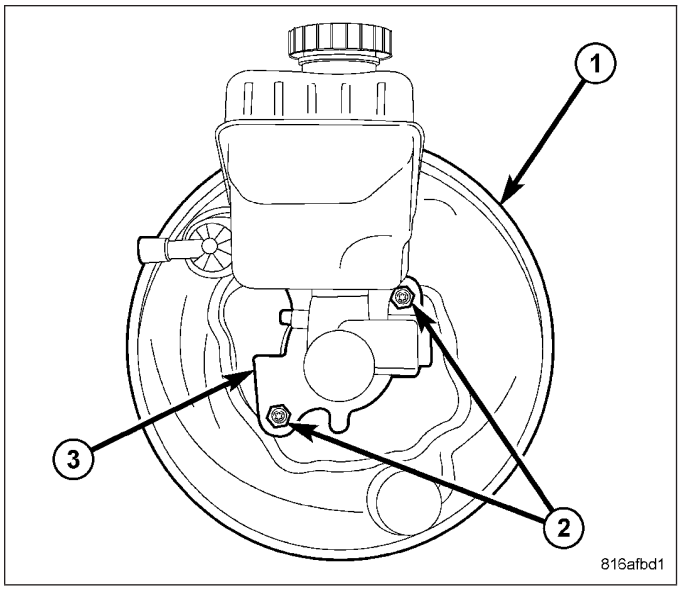

5. Thread primary (3) and secondary (2) brake tubes into master cylinder primary and secondary ports. Tighten tube nuts to 20 N·m (177 in. lbs.).

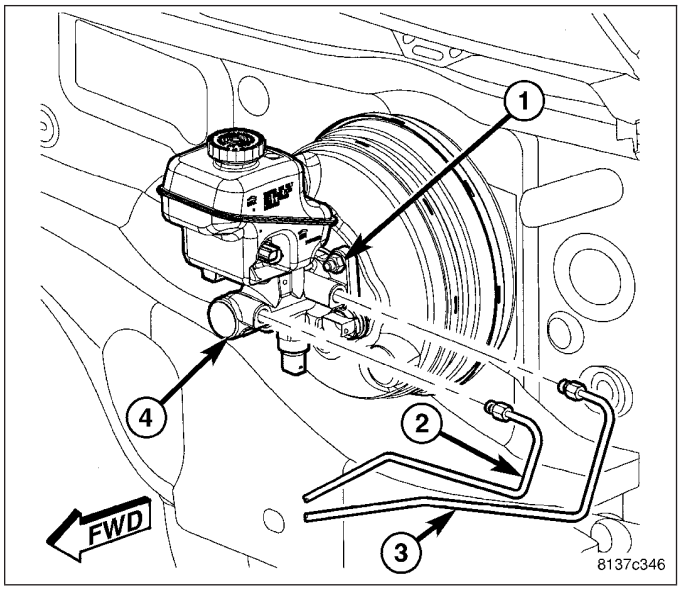

6. Connect wiring harness connector (4) to brake fluid level sensor (2) mounted in brake fluid reservoir (1).

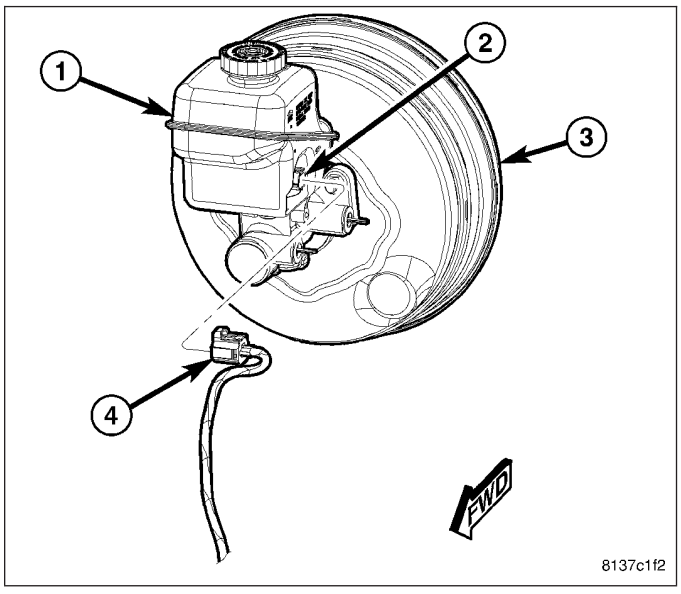

7. Install purge solenoid (1) on mount (2).

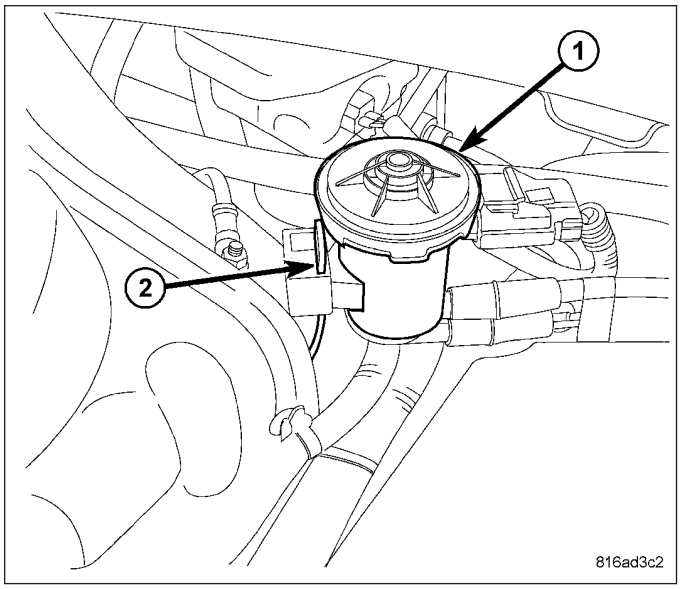

8. Connect battery negative cable (2) to battery post. It is important that this is performed properly. (Refer to 8 - ELECTRICAL/BATTERY SYSTEM - STANDARD PROCEDURE)

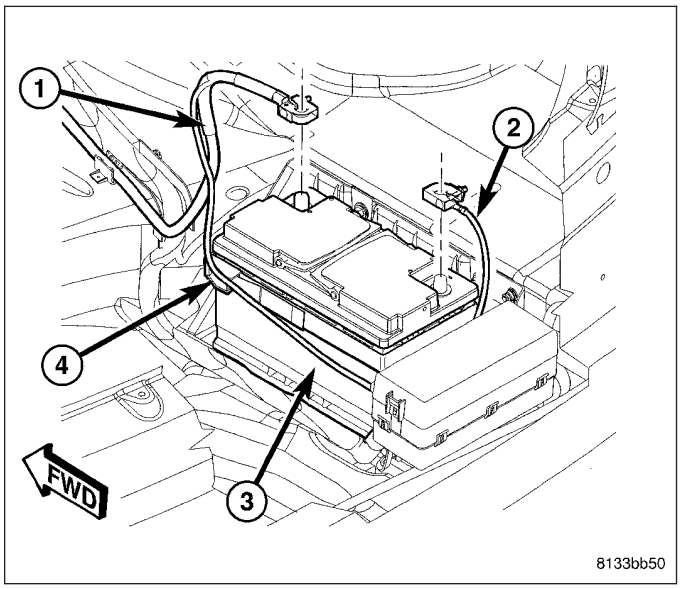

9. Fill master cylinder fluid reservoir (1) with clean, fresh Mopar® Brake Fluid or equivalent.
10. Install access panel in cowl area.

WARNING: Be certain a firm brake pedal is achieved prior to attempting vehicle operation. If a firm brake pedal cannot be achieved, bleed entire brake hydraulic system and check for leaks. (Refer to 5 - BRAKES - STANDARD PROCEDURE)

11. Road test vehicle to ensure proper operation of brakes.

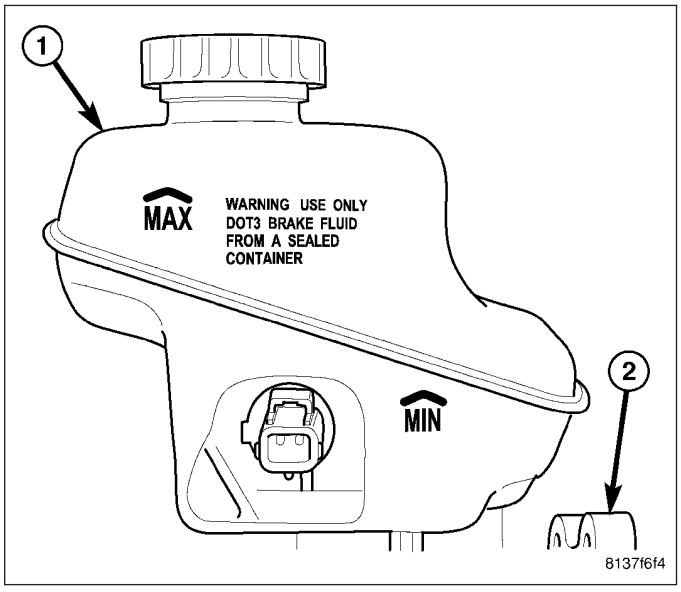

PEDAL

REMOVAL

PEDAL

1. Disconnect and isolate battery negative cable (2) from battery post.
2. Remove driver side silencer under instrument panel. (Refer to 23 - BODY/INSTRUMENT PANEL/ INSTRUMENT PANEL SILENCER - INSTALLATION)
3. Remove steering column opening cover. (Refer to 23 - BODY/INSTRUMENT PANEL/STEERING COLUMN OPENING COVER - INSTALLATION)

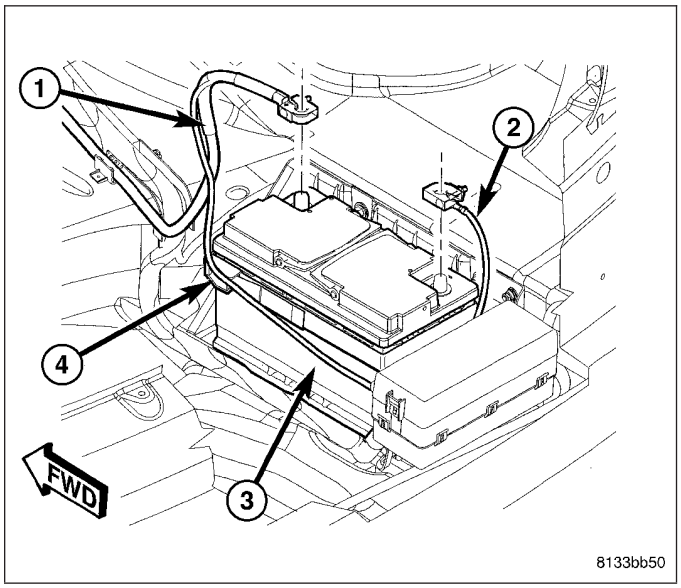

4. Remove brake lamp switch. (Refer to 8 - ELECTRICAL/LAMPS/LIGHTING - EXTERIOR/BRAKE LAMP SWITCH - REMOVAL)
5. Remove booster push rod from pin on brake pedal. To do so:
   a. Position small screwdriver between center tang on power brake booster brake pedal pin retaining clip (3).
   b. Rotate screwdriver enough to allow retaining clip center tang to pass over end of brake pedal pin, then slide retaining clip off brake pedal pin.
   c. **Discard retaining clip (3). It is not to be reused. Install NEW retaining clip when assembling.**
6. Slide booster push rod (5) off brake pedal pin (4).

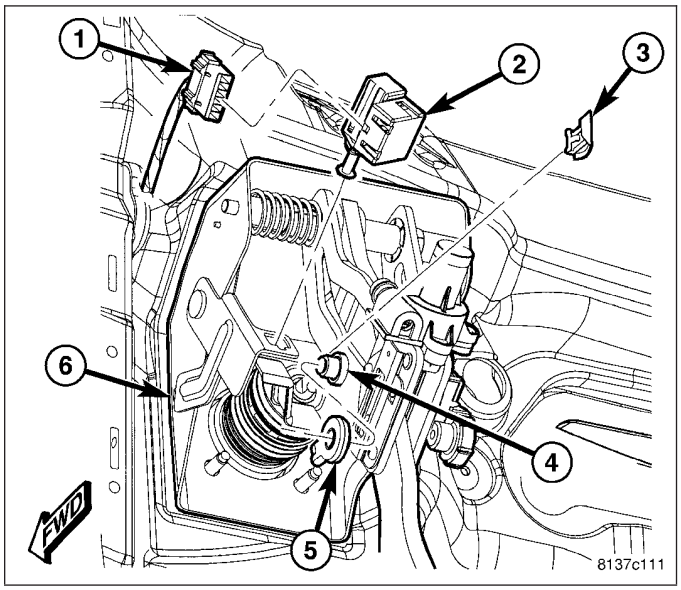

7. Remove four power brake booster (3) mounting nuts (1).
8. Remove two nuts (1) fastening pedal bracket to upper dash panel (2).
9. Push power brake booster (3) forward into engine compartment as far as possible by hand. Do not force it.
10. Remove brake pedal (4).

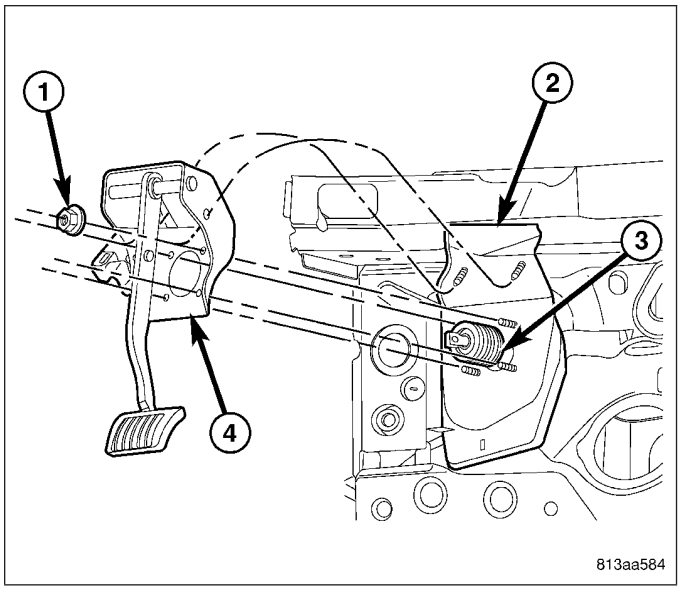

PEDAL - RHD

1. Move driver's seat to full rearward position.
2. Disconnect and isolate battery negative cable (2) from battery post.
3. Remove driver side silencer under instrument panel. (Refer to 23 - BODY/INSTRUMENT PANEL/ INSTRUMENT PANEL SILENCER - INSTALLATION)
4. Remove steering column opening cover. (Refer to 23 - BODY/INSTRUMENT PANEL/STEERING COLUMN OPENING COVER - INSTALLATION)

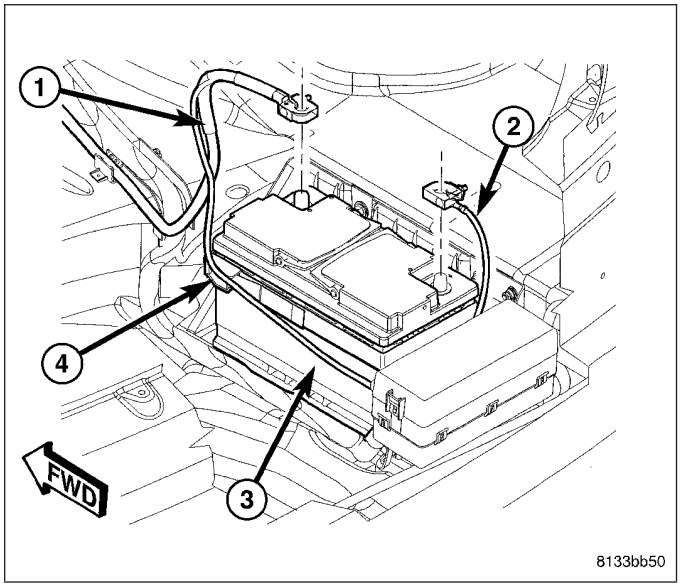

5. Remove stop lamp switch (2). (Refer to 8 - ELECTRICAL/LAMPS/LIGHTING - EXTERIOR/BRAKE LAMP SWITCH - REMOVAL)

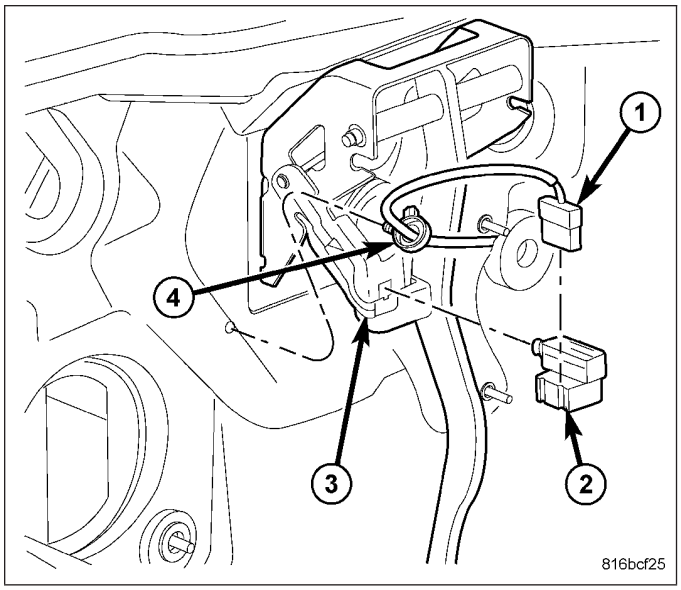

CAUTION: When removing booster push rod from brake pedal pin, be careful not to damage rubber O-ring on pin.

6. Remove booster push rod from pin on brake pedal. To do so:
   a. Position small screwdriver (1) between center tang on power brake booster brake pedal pin retaining clip (4).
   b. Rotate screwdriver enough to allow retaining clip center tang to pass over end of brake pedal pin (3), then slide retaining clip off brake pedal pin.
   c. **Discard retaining clip. It is not to be reused. Install NEW retaining clip when assembling.**
7. Slide booster push rod (2) off brake pedal pin (3).

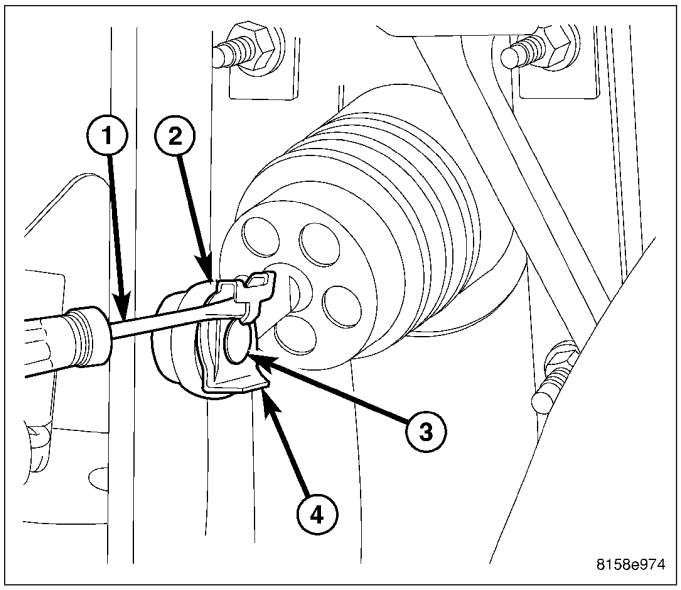

8. Remove two lower (2) and one upper mounting screw fastening the radio amplifier/transmission control module assembly (1) in place.
9. Disconnect four wiring connectors and remove radio amplifier/transmission control module assembly (1).

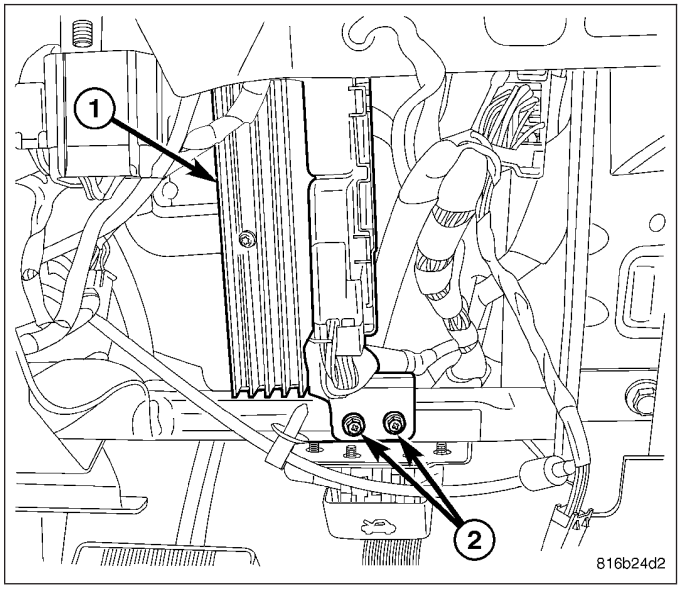

10. Remove four power brake booster (2) mounting nuts (5).
11. Remove two nuts (4) fastening pedal bracket to upper dash panel (3).
12. Push power brake booster (3) forward into engine compartment as far as possible by hand. Do not force it.
13. Remove brake pedal (1).

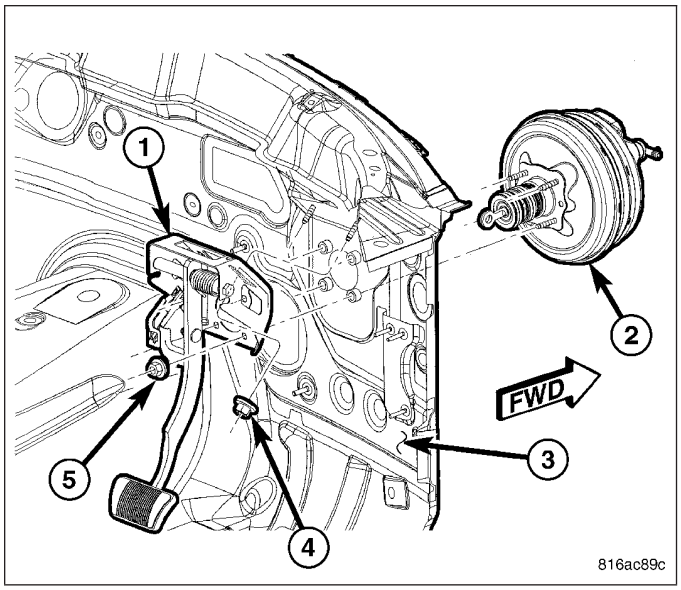

INSTALLATION

PEDAL

1. Install adjustable brake pedal assembly (4) under instrument panel and slide over booster push rod.
2. From engine compartment side, push power brake booster (3) mounting studs back through dash panel (2) and brake pedal bracket.
3. Install two upper mounting nuts (1) fastening pedal bracket to upper dash panel (2). **Do not tighten at this time.**
4. Install four power brake booster mounting nuts (1). Tighten nuts to 25 N·m (18 ft. lbs.) torque.
5. Tighten two upper mounting nuts (1) to 25 N·m (18 ft. lbs.) torque.

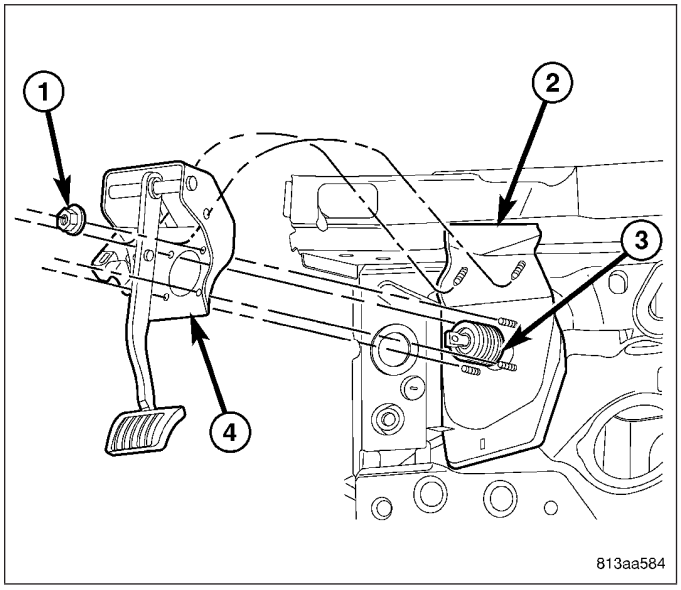

6. Slide booster push rod (5) onto brake pedal pin (4). Install NEW retaining clip (3) securing push rod to brake pedal.
7. Install and adjust brake lamp switch (2). (Refer to 8 - ELECTRICAL/LAMPS/LIGHTING - EXTERIOR/ BRAKE LAMP SWITCH - INSTALLATION)

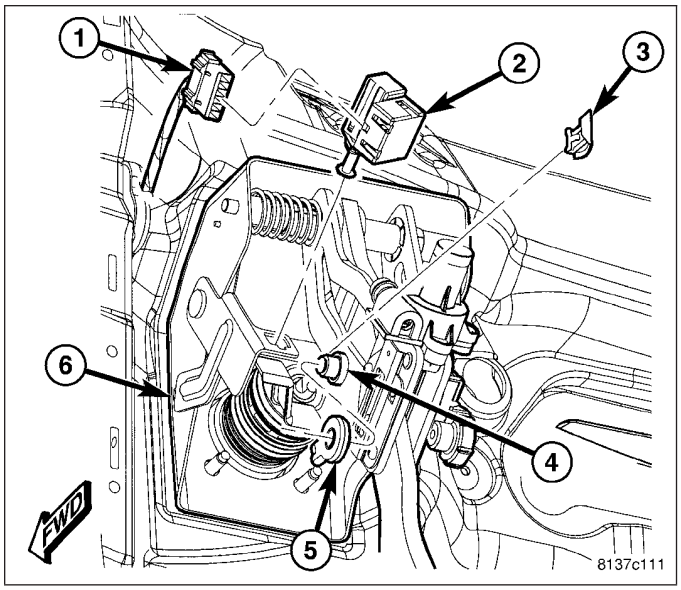

8. Install steering column opening cover. (Refer to 23 - BODY/INSTRUMENT PANEL/STEERING COLUMN OPENING COVER - INSTALLATION)
9. Install driver side silencer under instrument panel. (Refer to 23 - BODY/INSTRUMENT PANEL/INSTRUMENT PANEL SILENCER - INSTALLATION)
10. Connect battery negative cable (2) to battery post. It is important that this is performed properly. (Refer to 8 - ELECTRICAL/BATTERY SYSTEM - STANDARD PROCEDURE)
11. Road test vehicle testing operation of brakes.

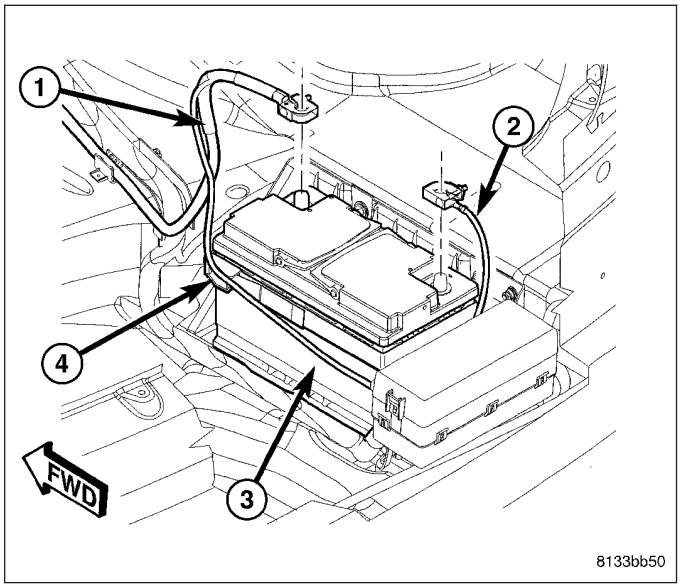

PEDAL - RHD

1. Install brake pedal assembly (4) under instrument panel and slide over booster push rod.
2. From engine compartment side, push power brake booster (3) mounting studs back through dash panel (2) and brake pedal bracket.
3. Install two upper mounting nuts (4) fastening pedal bracket to dash panel (3). **Do not tighten at this time.**
4. Install four power brake booster mounting nuts (5). Tighten nuts to 25 N·m (18 ft. lbs.).
5. Tighten two upper mounting nuts (4) to 25 N·m (18 ft. lbs.).

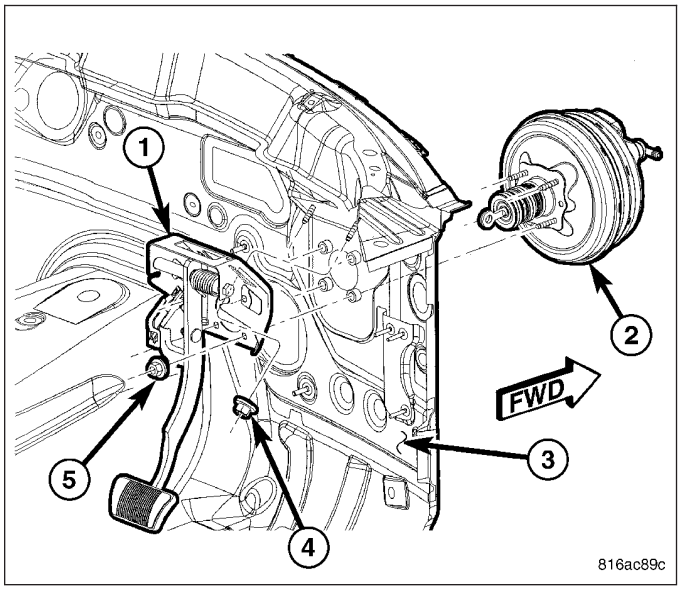

CAUTION: When installing booster push rod on brake pedal pin, be careful not to damage rubber O-ring on pin.

6. Slide booster push rod onto brake pedal pin. Install NEW retaining clip securing push rod to brake pedal.
7. Install and adjust brake lamp switch (2). (Refer to 8 - ELECTRICAL/LAMPS/LIGHTING - EXTERIOR/ BRAKE LAMP SWITCH - INSTALLATION)

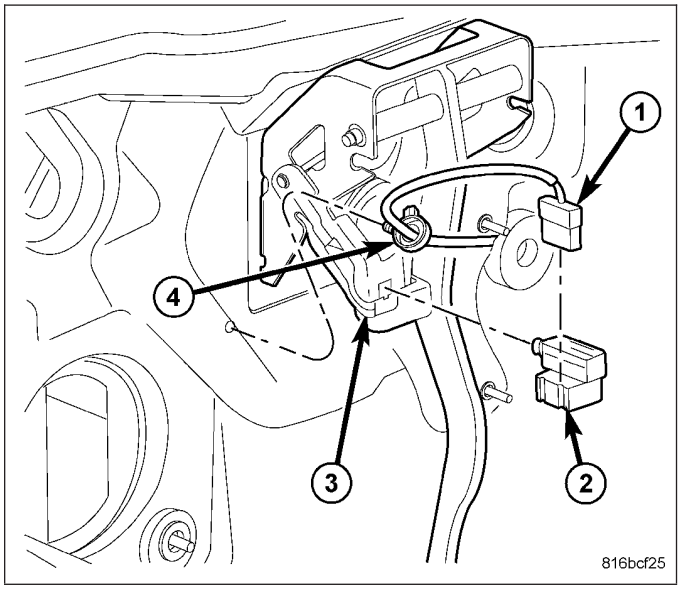

8. Connect four wiring connectors to radio amplifier/ transmission control module assembly (1).
9. Place radio amplifier/transmission control module assembly (1) in mounted position. Install one upper and two lower (2) mounting screws.
10. Install steering column opening cover. (Refer to 23 - BODY/INSTRUMENT PANEL/STEERING COLUMN OPENING COVER - INSTALLATION)
11. Install driver side silencer under instrument panel. (Refer to 23 - BODY/INSTRUMENT PANEL/INSTRUMENT PANEL SILENCER - INSTALLATION)

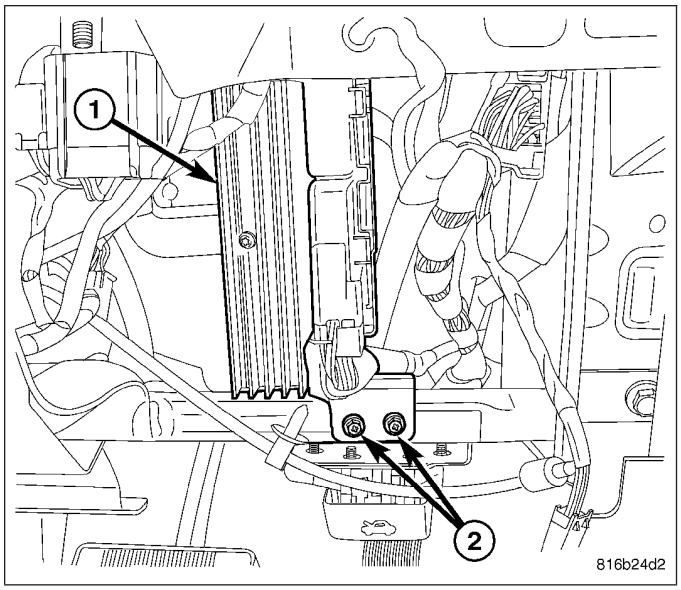

12. Connect battery negative cable (2) to battery post. It is important that this is performed properly. (Refer to 8 - ELECTRICAL/BATTERY SYSTEM - STANDARD PROCEDURE)
13. Road test vehicle testing operation of brakes.

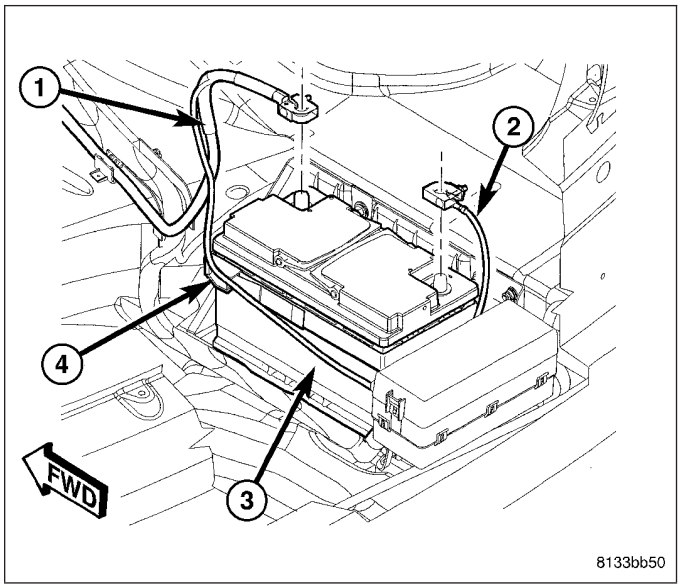

PEDAL - ADJUSTABLE BRAKE

STANDARD PROCEDURE

ADJUSTABLE PEDALS SYCHRONIZATION

NOTE: Although the pedals can be synchronized at either the full-forward or full-rearward positions (both pedals must be in the same position), it is recommended to do so with the pedals positioned in the full-forward position due to service part positioning from the factory.

1. Disconnect the adjuster cable (1) running between the accelerator pedal module and the brake pedal assembly at the adjuster motor (2).

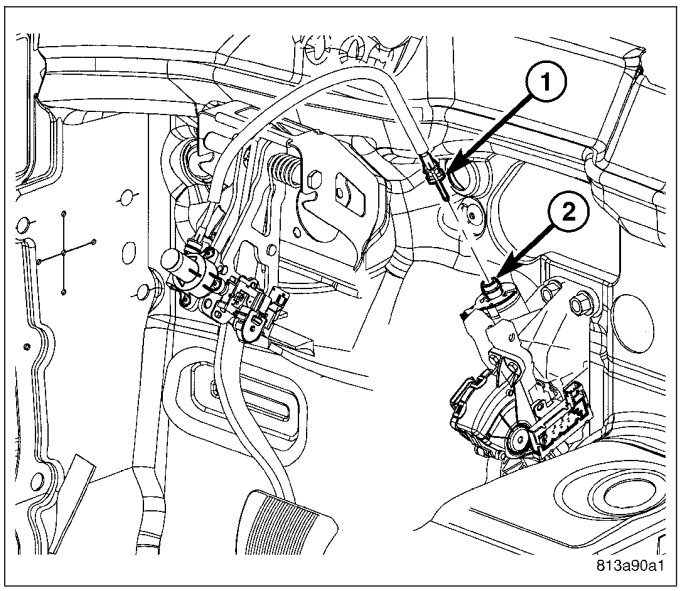

2. Using the switch, position the accelerator pedal (2) in the full-forward position. The pin on the pedal (1) will line up with the adjustment line (2) at this point.

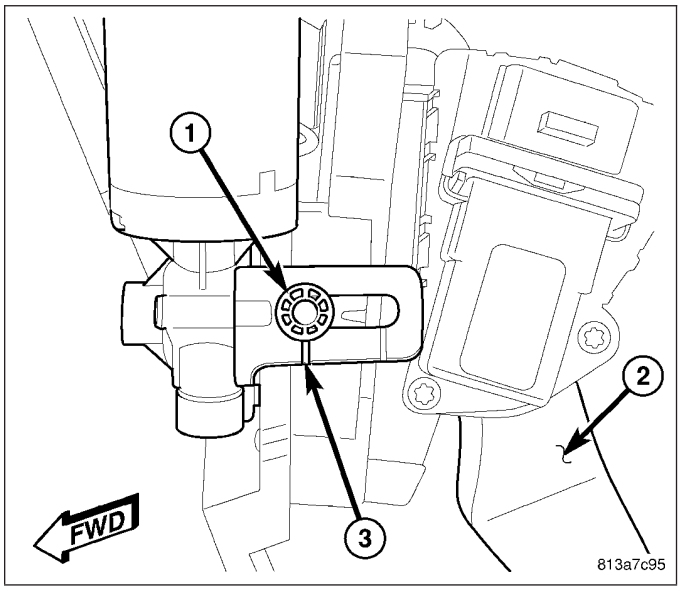

3. Using a drill motor, or other suitable device, rotate the adjuster cable strand (2) from the accelerator pedal end to position the brake pedal (1) toward the full-forward position.

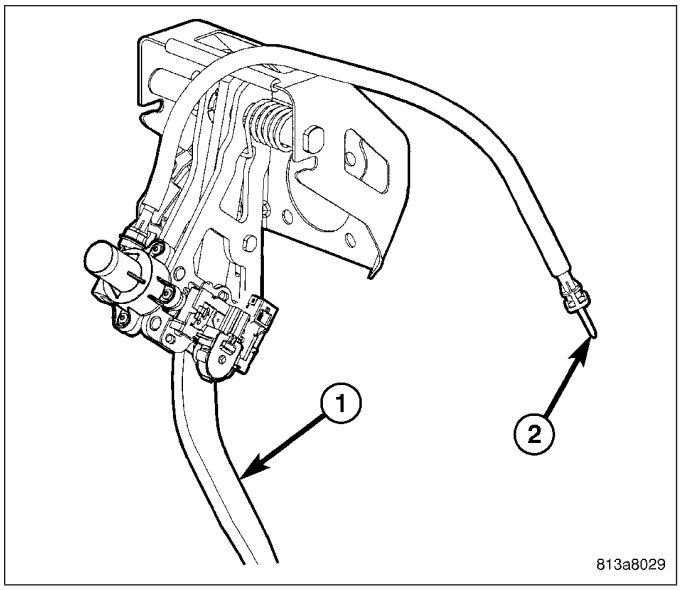

4. Rotate the adjuster cable strand until the brake pedal (4) gear drive block (1) lines up with the full-forward adjustment line (3) as shown. If equipped, fine adjustments can be made by turning the adjustment knob (2) by hand to line up the components.
5. Reconnect the adjuster cable to the adjuster motor. If the cable resists connection, if equipped, turn the adjustment knob (2) by hand until the cable drops into place. If not equipped with the adjustment knob, wiggle the cable around until the cable drops into place.
6. Verify proper operation of the adjustable pedals.

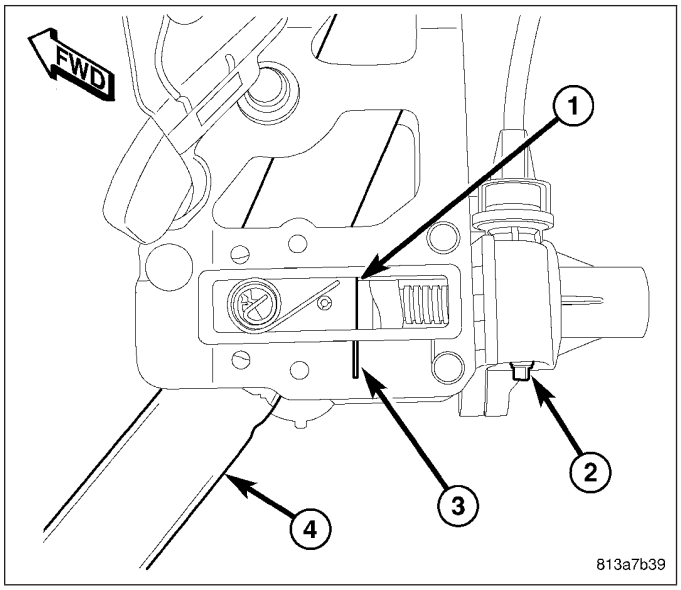

REMOVAL

1. Move driver's seat to full rearward position.

2. Disconnect and isolate battery negative cable (2) from battery post.

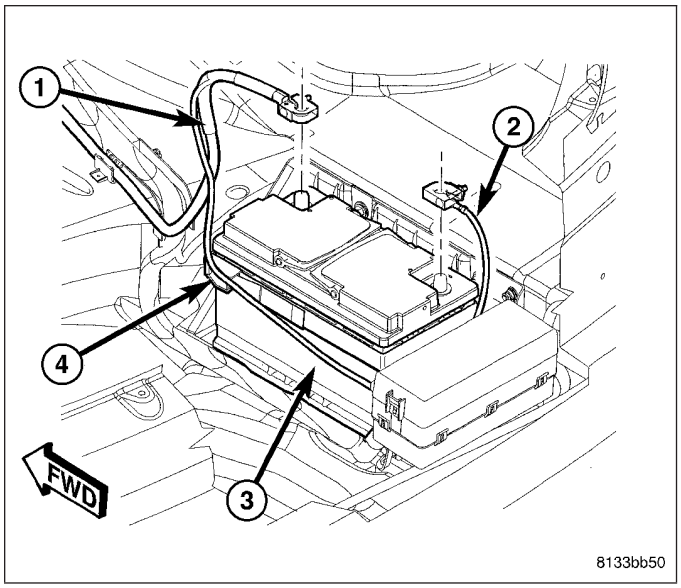

3. Disconnect adjuster cable (1) at accelerator adjuster motor (2).

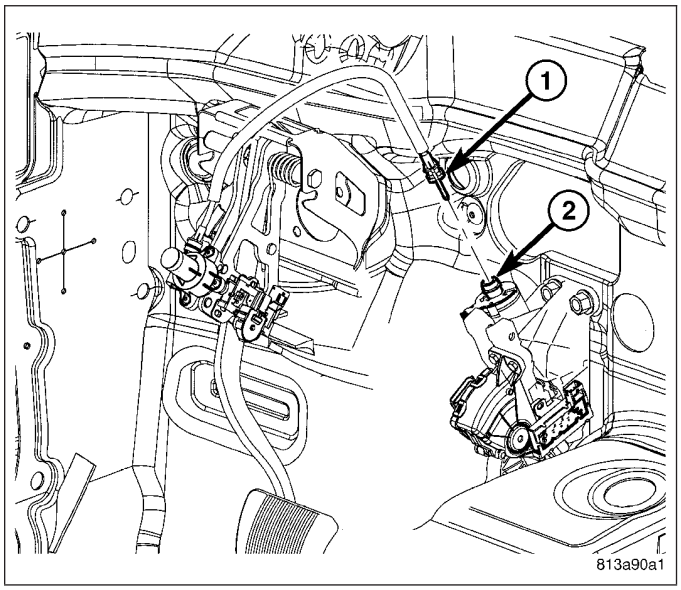

4. Remove brake lamp switch. (Refer to 8 - ELECTRICAL/LAMPS/LIGHTING - EXTERIOR/BRAKE LAMP SWITCH - REMOVAL)
5. Remove booster push rod from pin on brake pedal. To do so:
   a. Position small screwdriver between center tang on power brake booster brake pedal pin retaining clip (3).
   b. Rotate screwdriver enough to allow retaining clip center tang to pass over end of brake pedal pin, then slide retaining clip off brake pedal pin.
   c. **Discard retaining clip (3). It is not to be reused. Install NEW retaining clip when assembling.**
6. Slide booster push rod (5) off brake pedal pin (4).

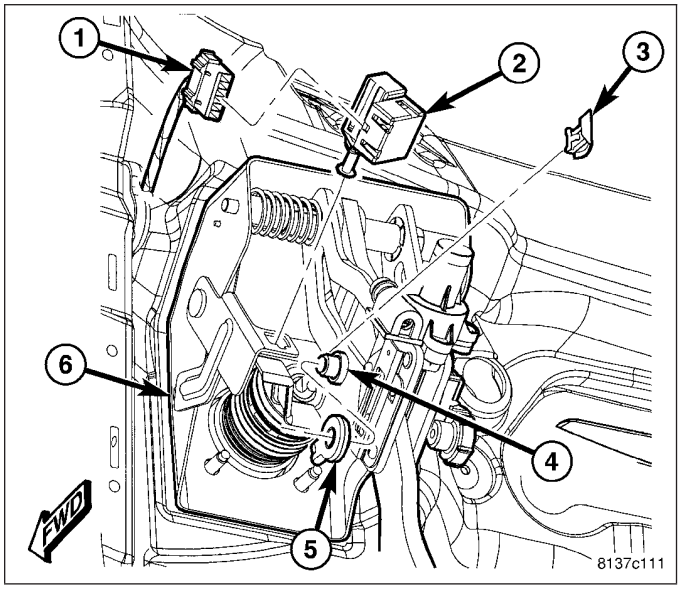

7. Disconnect wiring connector (2) at brake pedal position sensor (3).

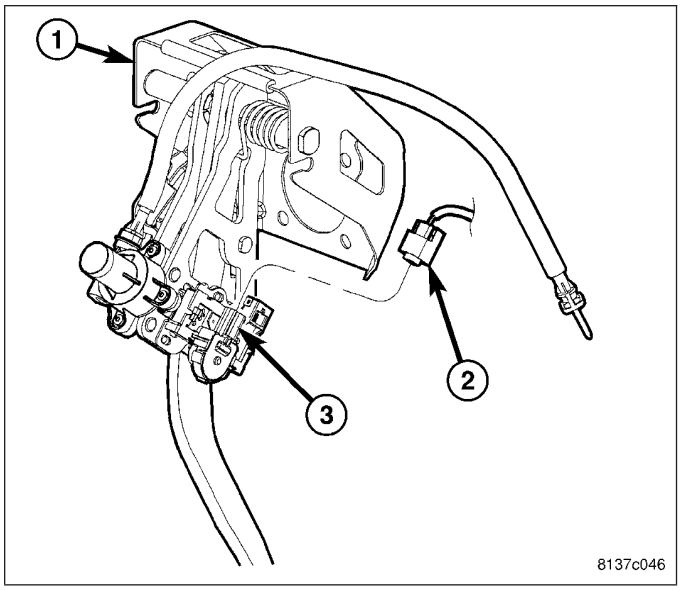

8. Remove four power brake booster mounting nuts (4).
9. Remove two nuts (5) fastening pedal bracket to upper dash panel (2).
10. Push power brake booster (1) forward into engine compartment as far as possible by hand. Do not force it.
11. Remove adjustable brake pedal assembly (3).
12. Remove adjuster cable at brake pedal gear drive.

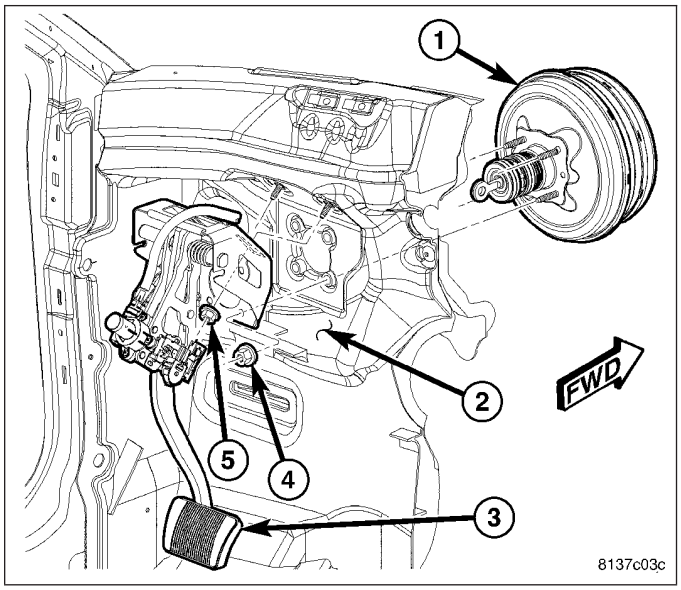

INSTALLATION

1. Attach cable to brake pedal gear drive.

2. Install adjustable brake pedal assembly (3) under instrument panel and slide over booster push rod.
3. From engine compartment side, push power brake booster (1) mounting studs back through dash panel (2) and brake pedal bracket.
4. Install two nuts (5) fastening pedal bracket to upper dash panel (2). **Do not tighten at this time.**
5. Install four power brake booster mounting nuts (4). Tighten nuts to 25 N·m (18 ft. lbs.) torque.
6. Tighten two upper mounting nuts (5) to 25 N·m (18 ft. lbs.) torque.

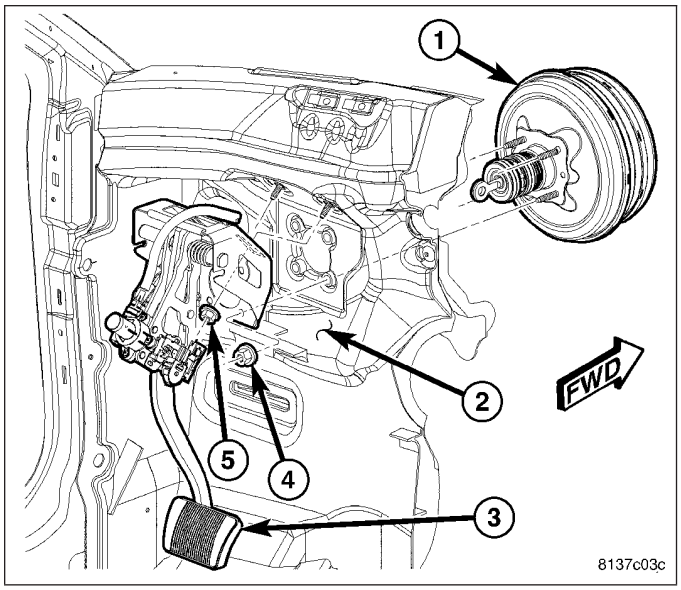

7. Connect wiring connector (2) at brake pedal position sensor (3).

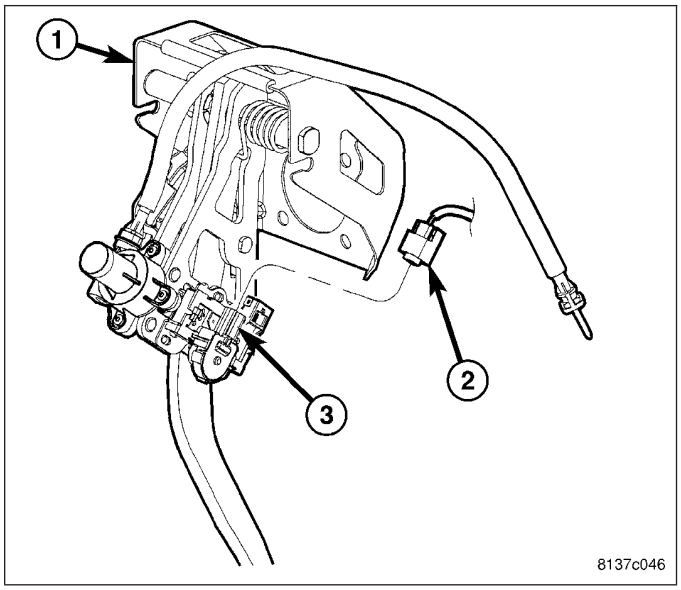

8. Slide booster push rod (5) onto brake pedal pin (4). Install NEW retaining clip (3) securing push rod to brake pedal.
9. Install and adjust brake lamp switch (2). (Refer to 8 - ELECTRICAL/LAMPS/LIGHTING - EXTERIOR/ BRAKE LAMP SWITCH - INSTALLATION)

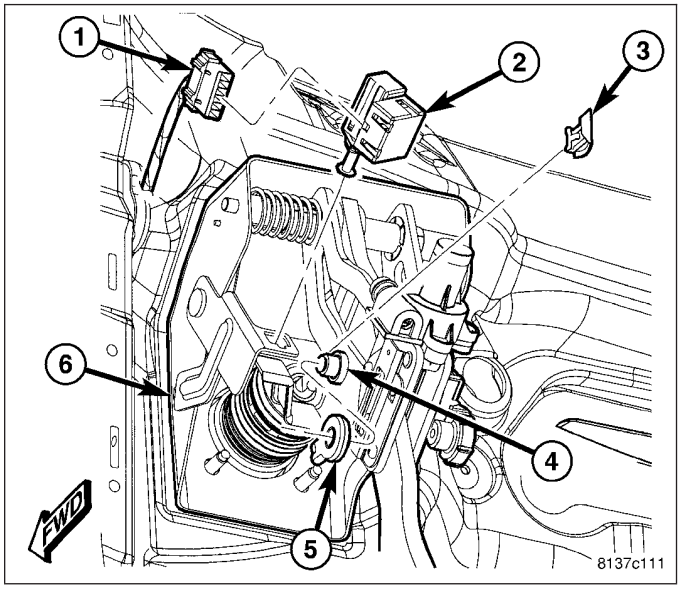

10. Connect battery negative cable (2) to battery post. It is important that this is performed properly. (Refer to 8 - ELECTRICAL/BATTERY SYSTEM - STANDARD PROCEDURE)

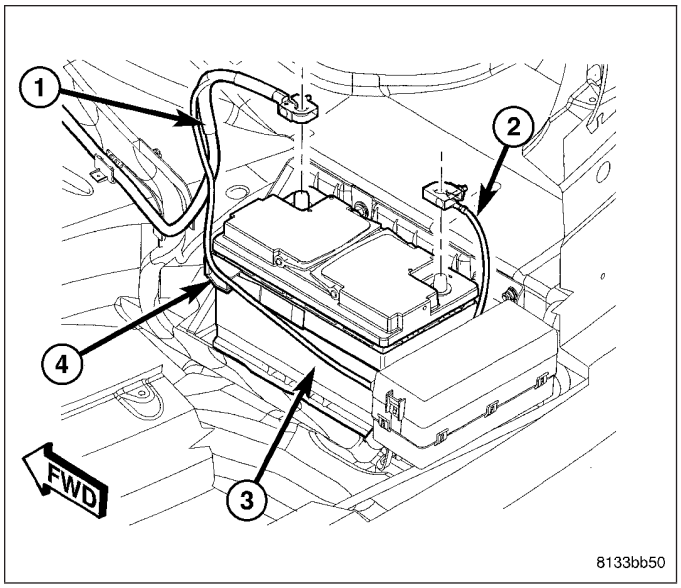

11. Synchronize brake pedal to accelerator pedal, then connect adjuster cable (1) to adjuster motor (2). (Refer to 5 - BRAKES/HYDRAULIC/MECHANICAL/PEDAL - STANDARD PROCEDURE)
12. If vehicle is equipped with memory seats, the system will need to be initialized. Refer to appropriate diagnostic information.
13. Test operation of adjustable pedals.
14. Road test vehicle testing operation of brakes and accelerator.

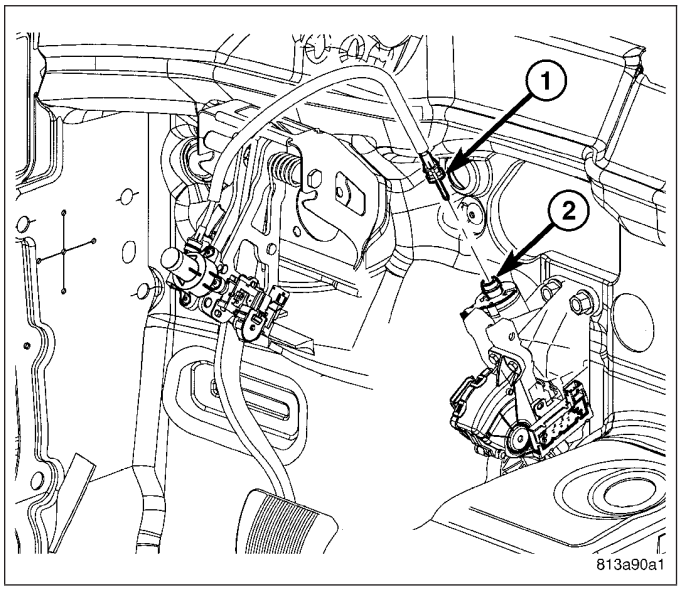

BOOSTER - POWER BRAKE

REMOVAL

BOOSTER

1. Move driver's seat to full rearward position.
2. Disconnect and isolate battery negative cable (2) from battery post.
3. Remove windshield wiper module. (Refer to 8 - ELECTRICAL/WIPERS/WASHERS/WIPER MODULE - REMOVAL)
4. Remove master cylinder. (Refer to 5 - BRAKES/HYDRAULIC/MECHANICAL/MASTER CYLINDER - REMOVAL)

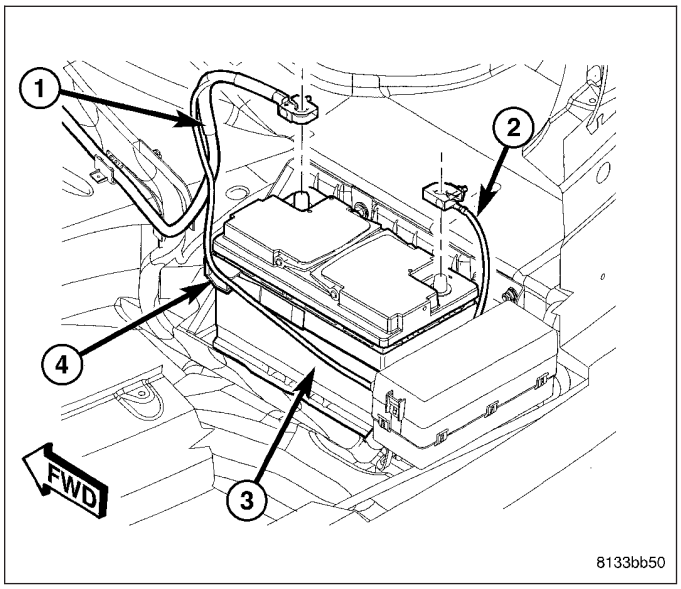

5. If equipped with MK25 and Electronic Stability Program (ESP), disconnect wiring harness (6) connector at pedal travel sensor (7) on power brake booster (3).
6. If equipped with MK25 and ESP, disconnect wiring harness (6) connector at active brake booster solenoid (4).

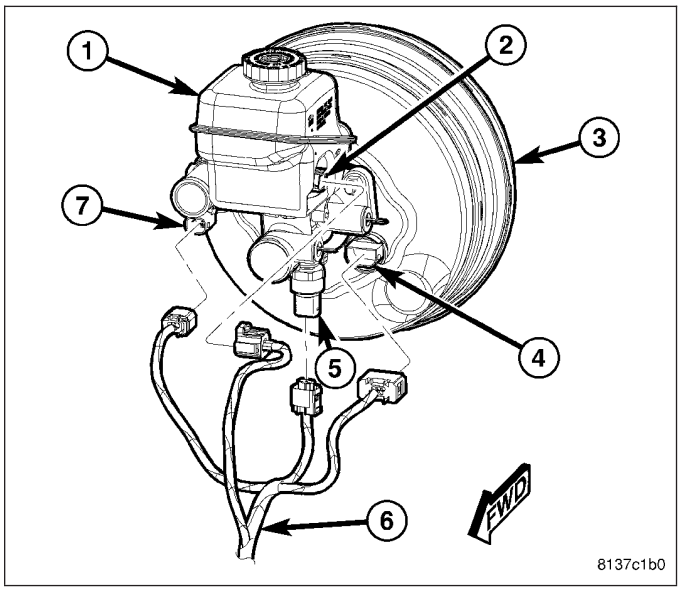

7. Disconnect vacuum hose (3) from check valve (2) on face of booster (1). **Do not remove check valve from booster.**

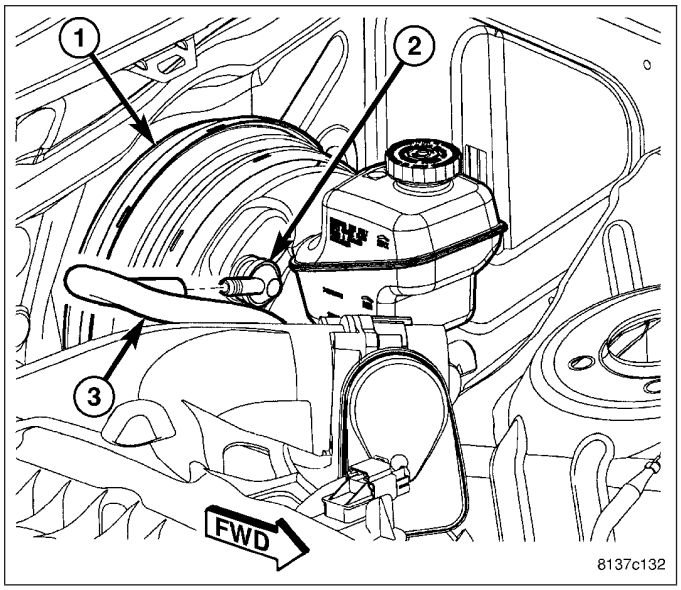

8. Remove brake lamp switch. (Refer to 8 - ELECTRICAL/LAMPS/LIGHTING - EXTERIOR/BRAKE LAMP SWITCH - REMOVAL)
9. Remove booster push rod from pin on brake pedal. To do so:
   a. Position small screwdriver between center tang on power brake booster brake pedal pin retaining clip (3).
   b. Rotate screwdriver enough to allow retaining clip center tang to pass over end of brake pedal pin, then slide retaining clip off brake pedal pin.
   c. **Discard retaining clip (3). It is not to be reused. Install NEW retaining clip when assembling.**
10. Slide booster push rod (5) off brake pedal pin (4).

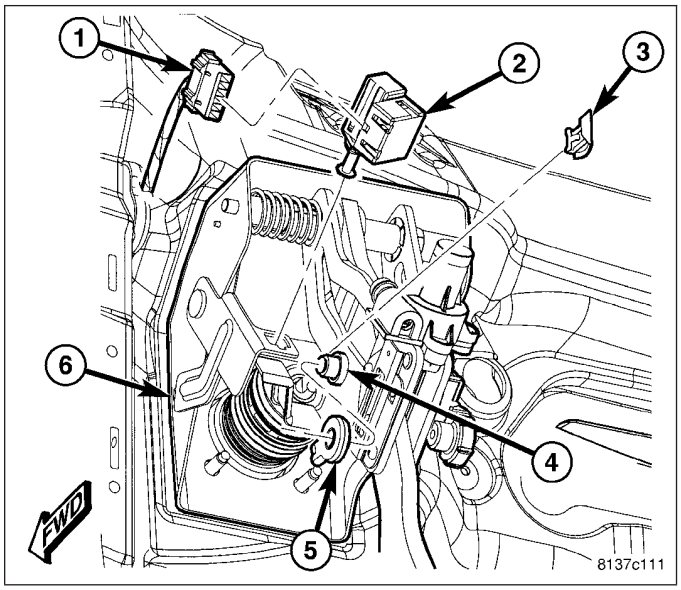

11. Remove four power brake booster mounting nuts (4).
12. Slide power brake booster forward out of dash panel and remove through opening between cross-brace and windshield.

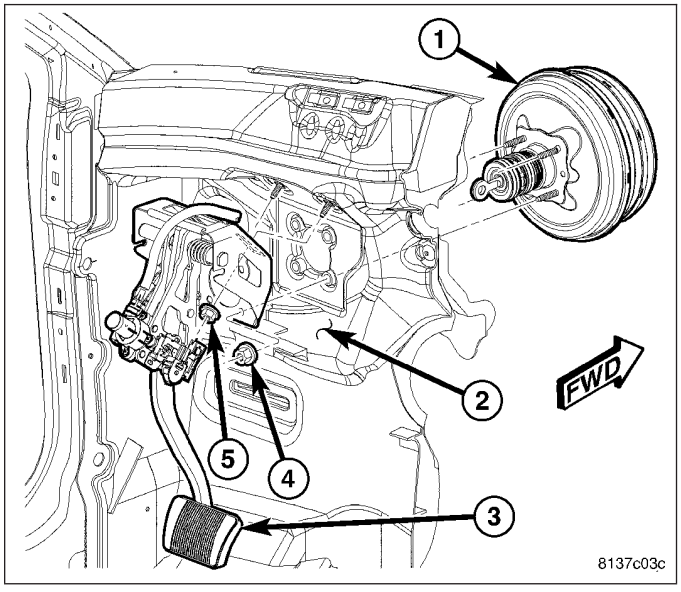

BOOSTER - RHD

1. Move driver's seat to full rearward position.
2. Disconnect and isolate battery negative cable (2) from battery post.
3. Remove windshield wiper module. (Refer to 8 - ELECTRICAL/WIPERS/WASHERS/WIPER MODULE - REMOVAL)

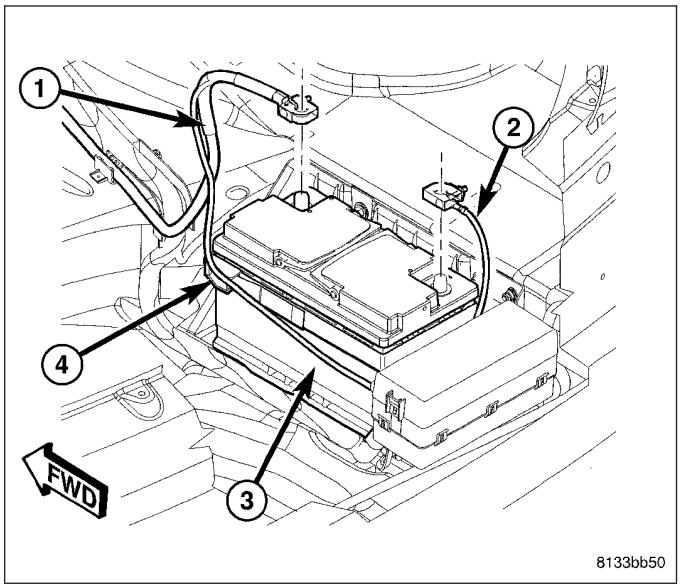

4. Disconnect wiring harness connector (4) from brake fluid level sensor (2) in master cylinder brake fluid reservoir (1).

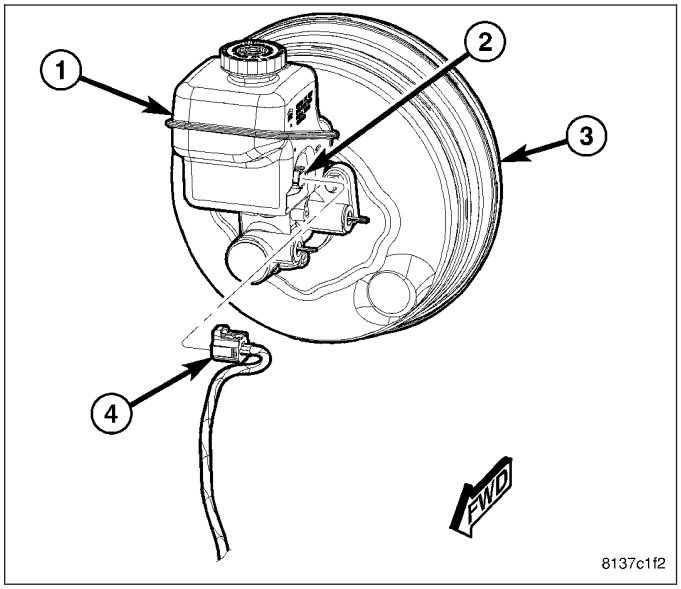

5. Remove primary (3) and secondary (2) brake tubes from master cylinder (4). Install sealing plugs in open brake tube outlet ports.

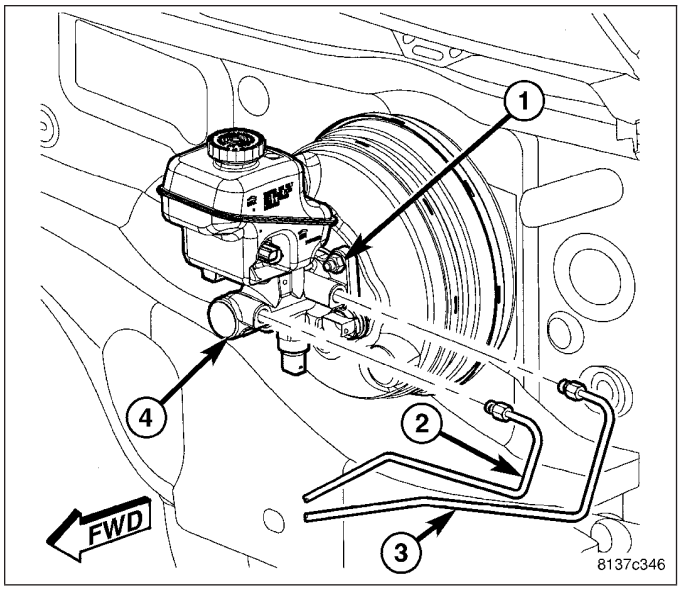

CAUTION: Before removing master cylinder from power brake vacuum booster, master cylinder and vacuum booster must be thoroughly cleaned. This must be done to prevent dirt particles from falling into power brake vacuum booster. Use only Mopar® Brake Parts Cleaner or equivalent.

6. Remove two nuts (2) attaching master cylinder (3) to power brake booster (1).
7. Slide master cylinder (3) straight out of power brake booster (1).

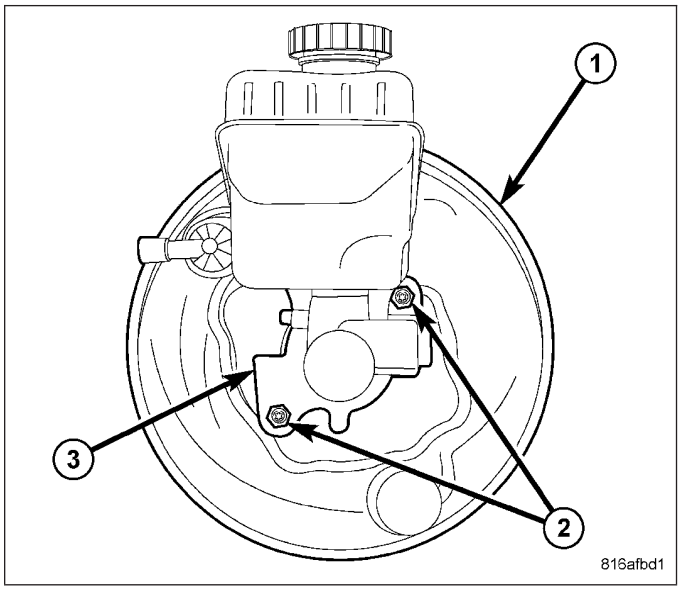

8. Disconnect vacuum hose (1) from check valve on face of booster (2). **Do not remove check valve from booster.**

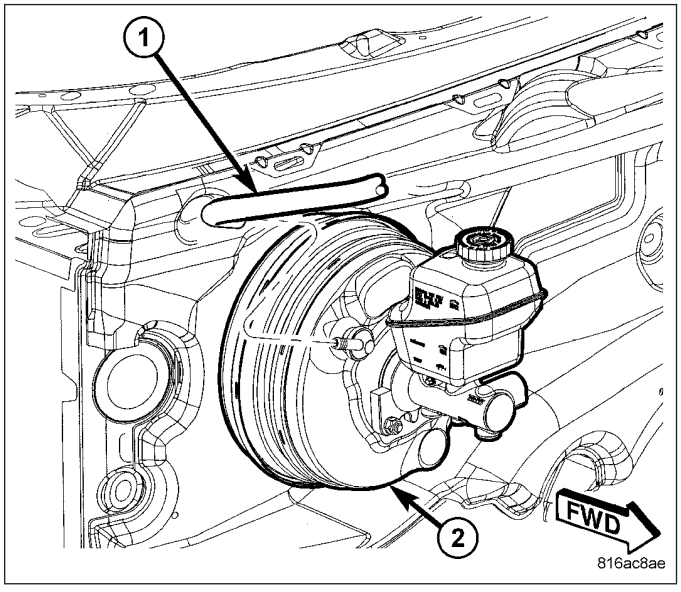

9. Remove driver side silencer under instrument panel. (Refer to 23 - BODY/INSTRUMENT PANEL/INSTRUMENT PANEL SILENCER - INSTALLATION)
10. Remove steering column opening cover. (Refer to 23 - BODY/INSTRUMENT PANEL/STEERING COLUMN OPENING COVER - INSTALLATION)
11. Remove stop lamp switch (2). (Refer to 8 - ELECTRICAL/LAMPS/LIGHTING - EXTERIOR/BRAKE LAMP SWITCH - REMOVAL)

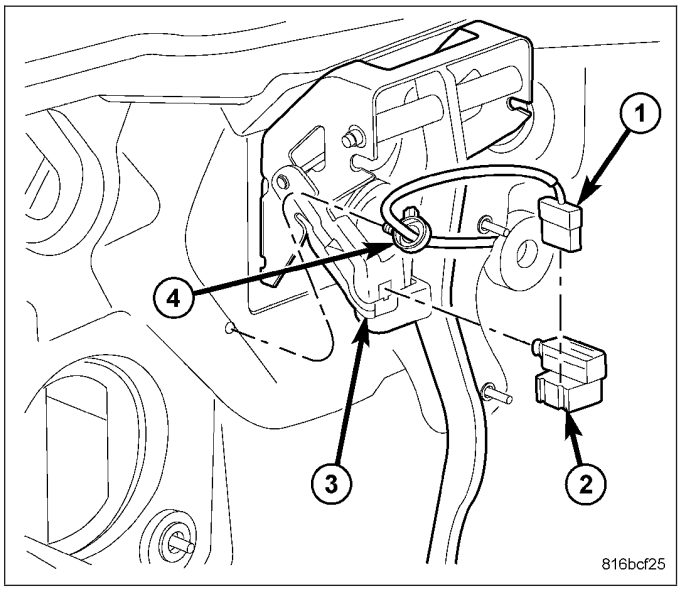

CAUTION: When removing booster push rod from brake pedal pin, be careful not to damage rubber O-ring on pin.

12. Remove booster push rod from pin on brake pedal. To do so:
    a. Position small screwdriver (1) between center tang on power brake booster brake pedal pin retaining clip (4).
    b. Rotate screwdriver enough to allow retaining clip center tang to pass over end of brake pedal pin (3), then slide retaining clip off brake pedal pin.
    c. **Discard retaining clip. It is not to be reused. Install NEW retaining clip when assembling.**
13. Slide booster push rod (2) off brake pedal pin (3).

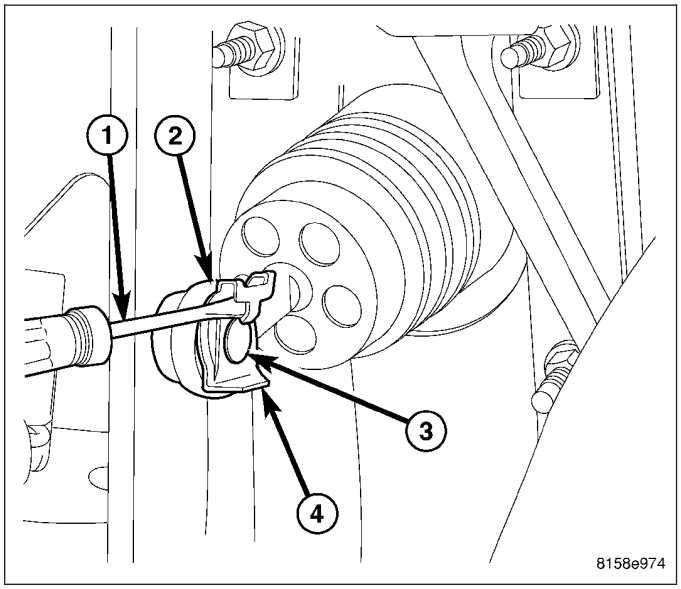

14. Remove four power brake booster mounting nuts (5).
15. Slide power brake booster forward out of dash panel and remove through opening between cross-brace and windshield.

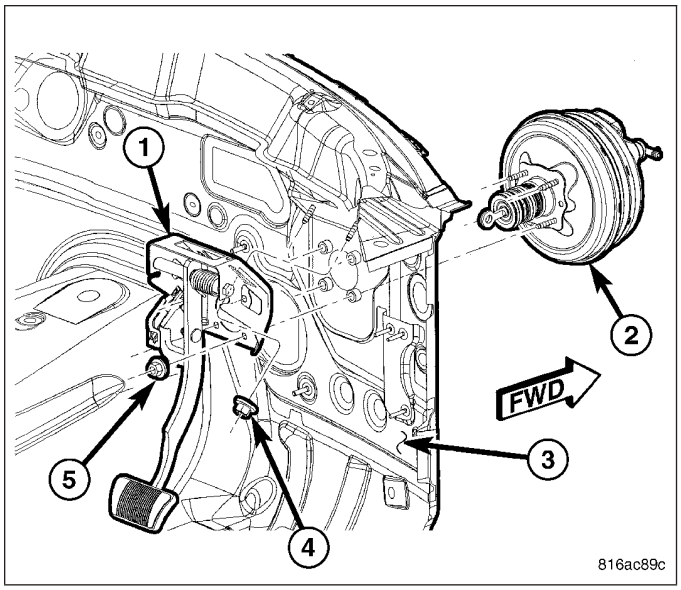

INSTALLATION

BOOSTER

NOTE: Before installing booster, make sure there is a NEW booster seal (2) placed over push rod and mounting studs on rear of booster (1).

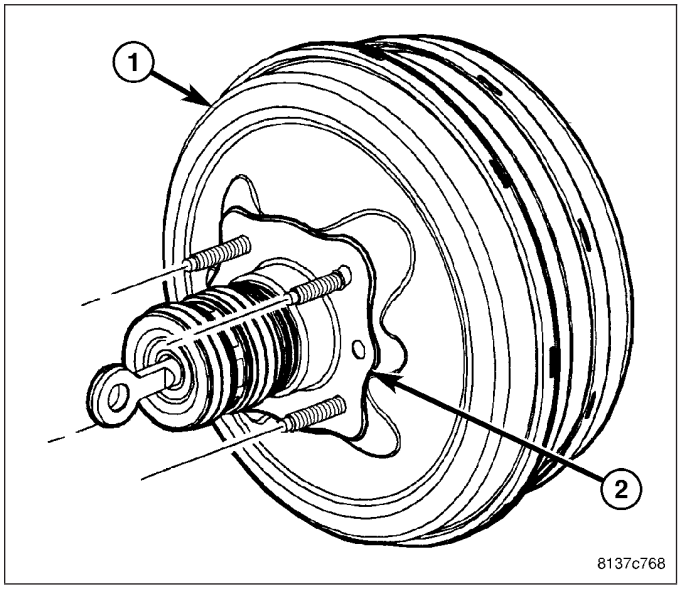

1. Install power brake booster through opening between cross-brace and windshield. Guide booster (1) push rod and mounting studs through dash panel (2).

NOTE: Be sure to tighten all four booster mounting nuts to specifications or a vacuum leak can result.

2. Install four power brake booster mounting nuts (4). Tighten nuts to 25 N·m (18 ft. lbs.) torque.

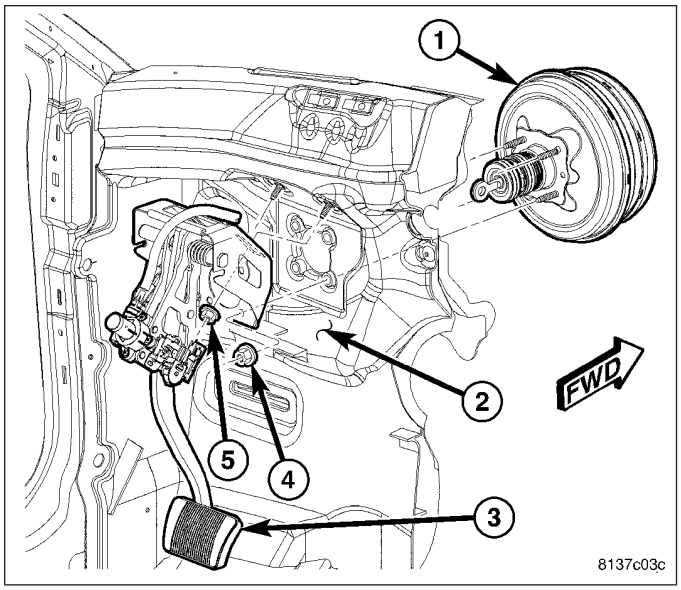

3. Slide booster push rod (5) onto brake pedal pin (4). Install NEW retaining clip (3) securing push rod to brake pedal.
4. Install and adjust brake lamp switch (2). (Refer to 8 - ELECTRICAL/LAMPS/LIGHTING - EXTERIOR/ BRAKE LAMP SWITCH - INSTALLATION)

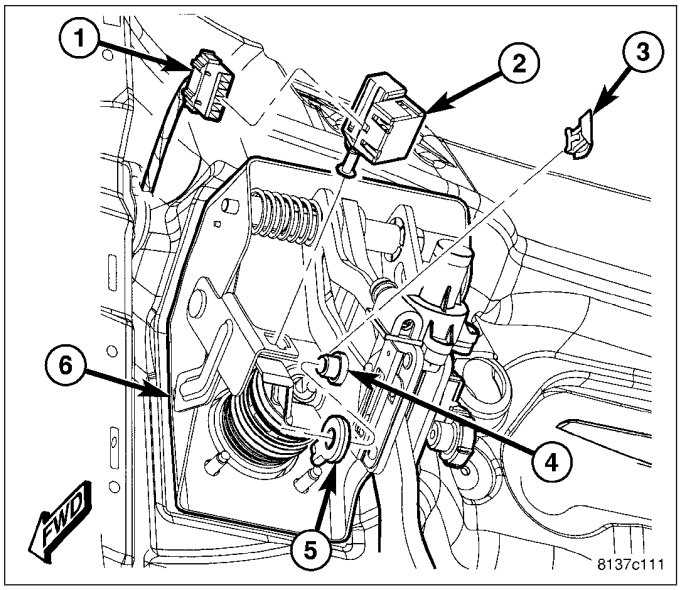

5. Connect vacuum hose (3) to check valve (2) on face of booster (1). **Do not remove check valve from booster.**

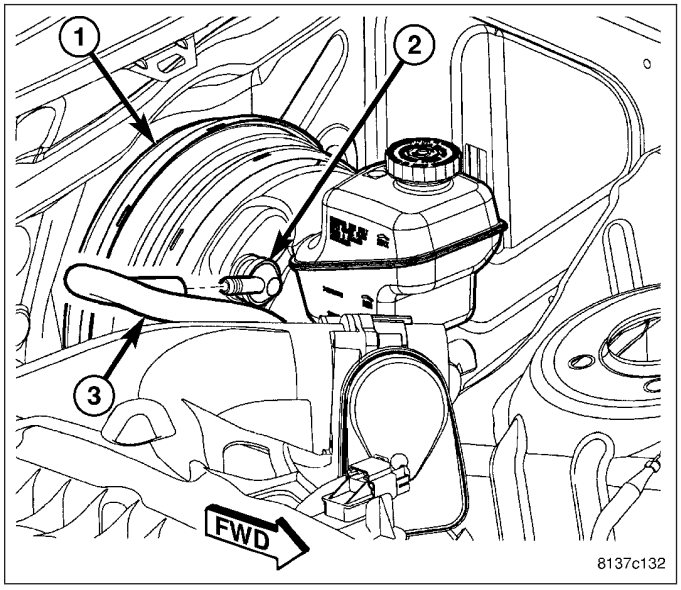

6. If equipped with MK25 and Electronic Stability Program (ESP), connect wiring harness (6) connector at pedal travel sensor (7) on power brake booster (3).
7. If equipped with MK25 and ESP, connect wiring harness (6) connector at active brake booster solenoid (4).
8. Install master cylinder (1). (Refer to 5 - BRAKES/ HYDRAULIC/MECHANICAL/MASTER CYLINDER - INSTALLATION)
9. Install windshield wiper module and components removed to access. (Refer to 8 - ELECTRICAL/ WIPERS/WASHERS/WIPER MODULE - INSTALLATION)

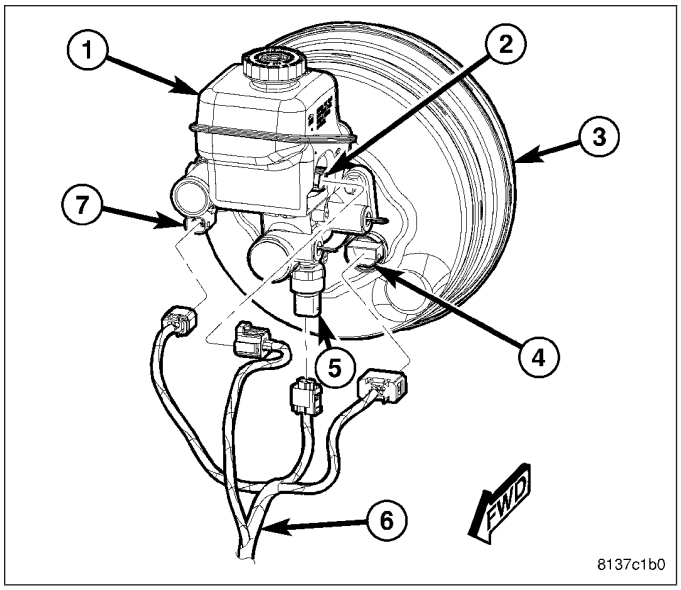

10. Connect battery negative cable (2) to battery post. It is important that this is performed properly. (Refer to 8 - ELECTRICAL/BATTERY SYSTEM - STANDARD PROCEDURE)
11. Fill and bleed brakes as necessary.
12. Road test vehicle to ensure proper operation of brakes.

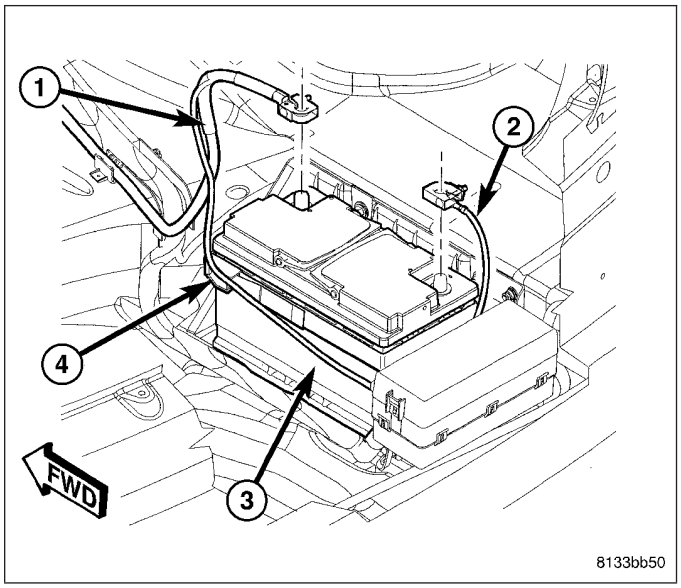

BOOSTER - RHD

NOTE: Before installing booster, make sure there is a NEW booster seal (2) placed over push rod and mounting studs on rear of booster (1).

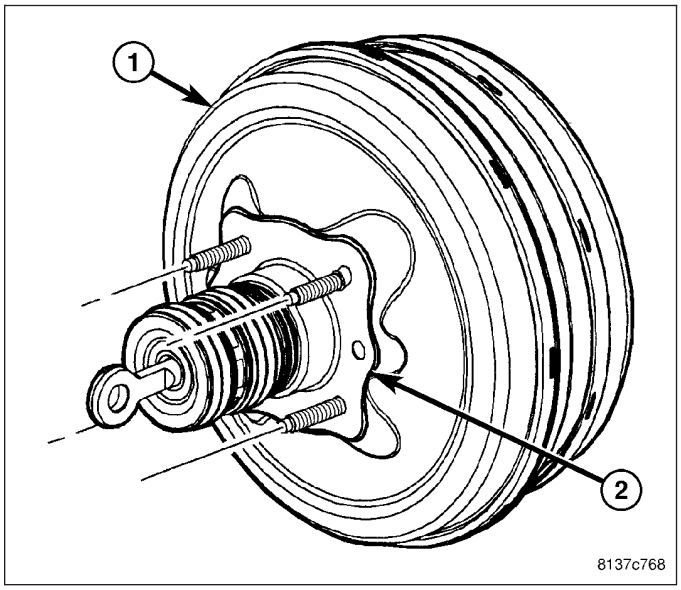

1. Install power brake booster through opening between cross-brace and windshield. Guide booster (2) push rod and mounting studs through dash panel (3).

NOTE: Be sure to evenly tighten all four booster mounting nuts to specifications or a vacuum leak can result.

2. Install four power brake booster mounting nuts (5). Tighten nuts to 25 N·m (18 ft. lbs.).

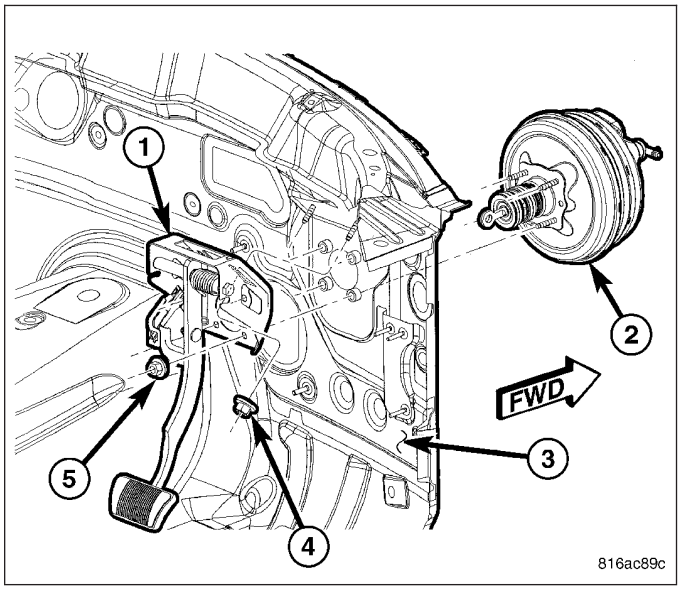

CAUTION: When installing booster push rod on brake pedal pin, be careful not to damage rubber O-ring on pin.

3. Slide booster push rod onto brake pedal pin. Install NEW retaining clip securing push rod to brake pedal.

4. Install and adjust brake lamp switch (2). (Refer to 8 - ELECTRICAL/LAMPS/LIGHTING - EXTERIOR/ BRAKE LAMP SWITCH - INSTALLATION)

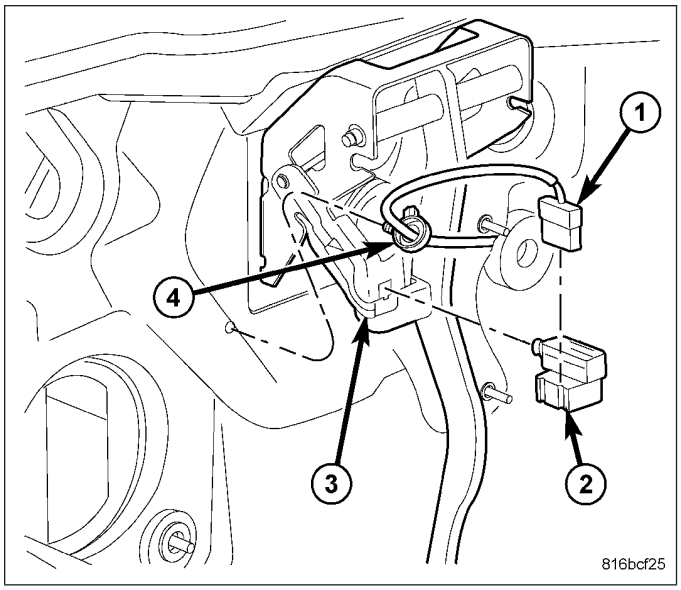

5. Install steering column opening cover. (Refer to 23 - BODY/INSTRUMENT PANEL/STEERING COLUMN OPENING COVER - INSTALLATION)
6. Install driver side silencer under instrument panel. (Refer to 23 - BODY/INSTRUMENT PANEL/INSTRUMENT PANEL SILENCER - INSTALLATION)
7. Connect vacuum hose (1) to check valve on face of booster (2). **Do not remove check valve from booster.**

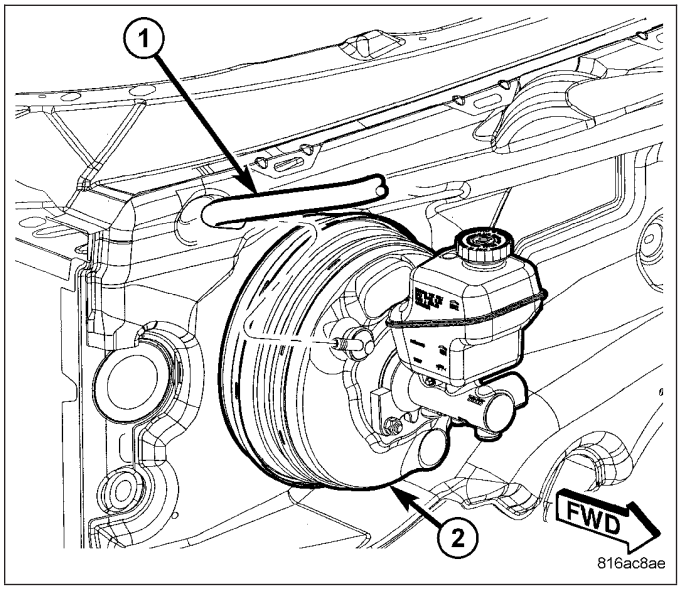

CAUTION: When replacing master cylinder on vehicle, a NEW vacuum seal (2) MUST be installed on master cylinder.

8. Install NEW vacuum seal (1) on rear of master cylinder (2) making sure seal fits squarely in mounting groove.

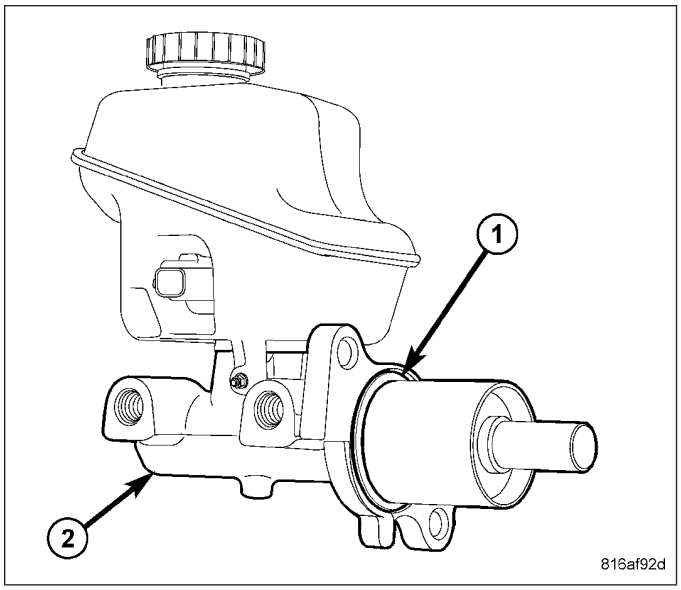

9. Position master cylinder (3) on studs of power brake booster, aligning booster push rod with master cylinder piston.
10. Install two master cylinder mounting nuts (1). Tighten mounting nuts to 15 N·m (133 in. lbs.).

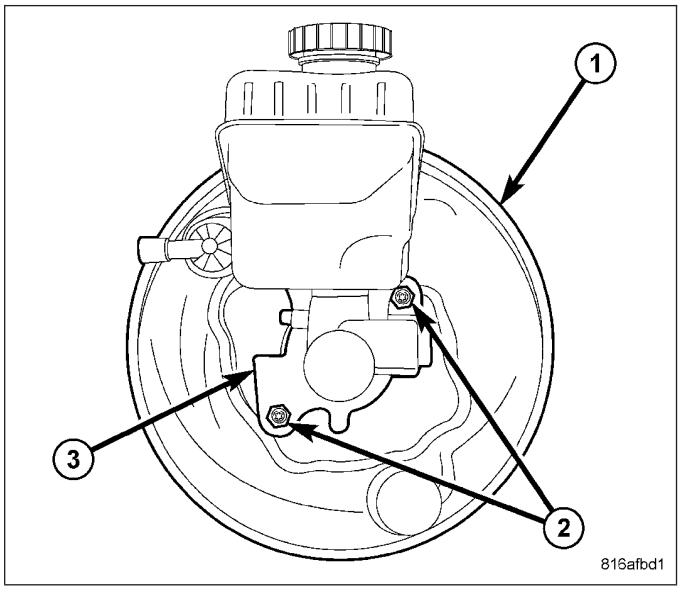

11. Thread primary (3) and secondary (2) brake tubes into master cylinder primary and secondary ports. Tighten tube nuts to 20 N·m (177 in. lbs.).

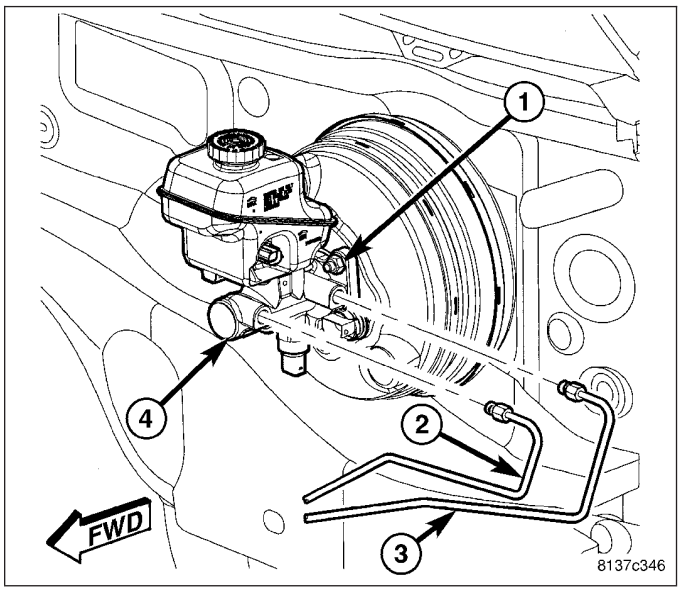

12. Connect wiring harness connector (4) to brake fluid level sensor (2) mounted in brake fluid reservoir (1).

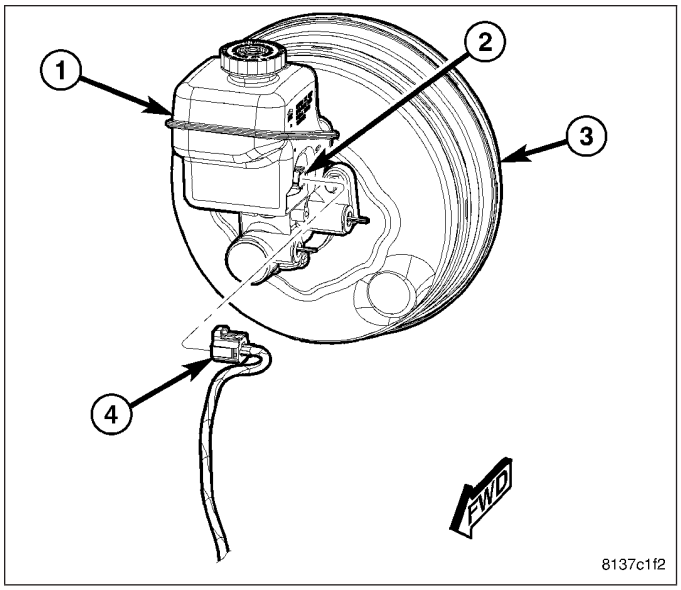

13. Install windshield wiper module and components removed to access. (Refer to 8 - ELECTRICAL/WIPERS/WASHERS/WIPER MODULE - INSTALLATION)
14. Connect battery negative cable (2) to battery post. It is important that this is performed properly. (Refer to 8 - ELECTRICAL/BATTERY SYSTEM - STANDARD PROCEDURE)
15. Fill and bleed brakes as necessary.
16. Road test vehicle to ensure proper operation of brakes.

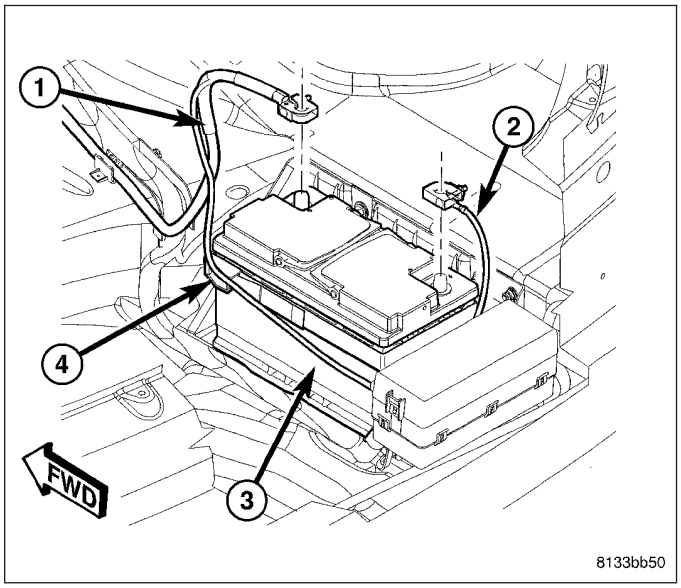

VALVE - PROPORTIONING

DESCRIPTION

A proportioning valve is used on each vehicle without antilock brakes. One valve is used for both rear brake hydraulic circuits. The proportioning valve is located in the junction block (Refer to 5 - BRAKES - BASE/HYDRAULIC/MECHANICAL/JUNCTION BLOCK - DESCRIPTION). The valve is not serviceable and must be replaced as part of the junction block.

OPERATION

Proportioning valves balance front to rear braking by controlling (at a given ratio) brake hydraulic pressure to the rear brakes above a preset level (split point). On light pedal applications equal brake pressure is transmitted to both the front and rear brakes. On heavier pedal applications, through the use of proportioning valves, the pressure transmitted to the rear will be lower than the front brakes. This prevents premature rear wheel skid.

ROTOR

DIAGNOSIS AND TESTING

BRAKE ROTOR

Any servicing of the rotor requires extreme care to maintain the rotor within service tolerances to ensure proper brake action.

Excessive runout or wobble in a rotor can increase pedal travel due to piston knock-back. This increases guide pin sleeve wear due to the tendency of the caliper to follow the rotor wobble.

When diagnosing a brake noise or pulsation, the machined disc braking surface should be inspected.

BRAKING SURFACE INSPECTION

Light braking surface scoring and wear is acceptable. If heavy scoring or warping is evident, the rotor must be refaced or replaced. (Refer to 5 - BRAKES/HYDRAULIC/MECHANICAL/ROTORS - STANDARD PROCEDURE).

Excessive wear and scoring of the rotor can cause improper lining contact on the rotor's braking surface. If the ridges on the rotor are not removed before new brake shoes are installed, improper wear of the shoes will result.

If a vehicle has not been driven for a period of time, the rotor's braking surface will rust in the areas not covered by the brake shoes at that time. Once the vehicle is driven, noise and chatter from the disc brakes can result when the brakes are applied.

Some discoloration or wear of the rotor surface is normal and does not require resurfacing when linings are replaced. If cracks or burned spots are evident, the rotor must be replaced.

ROTOR MINIMUM THICKNESS

Measure rotor thickness (1) at the center of the brake shoe contact surface. Replace the rotor if it is worn below minimum thickness or if machining the rotor will cause its thickness to fall below specifications.

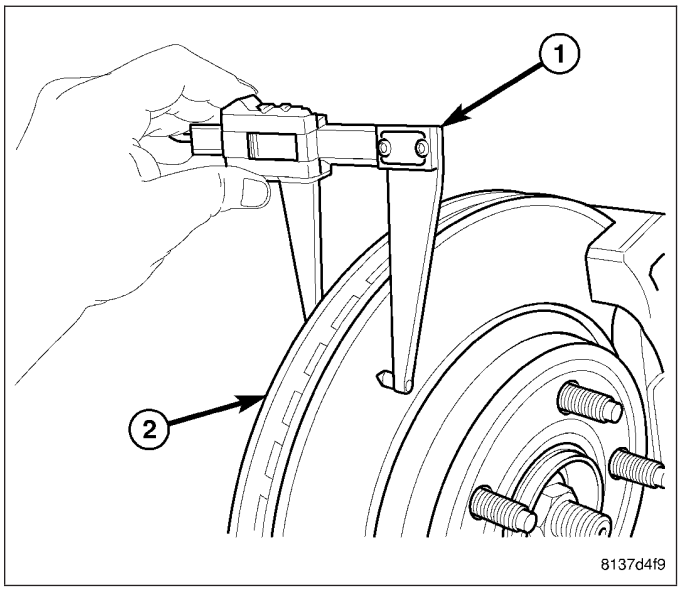

CAUTION: Do not machine the rotor if it will cause the rotor to fall below minimum thickness.

Most minimum thickness specifications (1) are cast into the rotor's unmachined surface (2). Some brake rotors have the minimum thickness specification located elsewhere. Refer to the following paragraph. Limits can also be found in this component's specification table. (Refer to 5 - BRAKES/HYDRAULIC/MECHANICAL/ROTOR - SPECIFICATIONS)

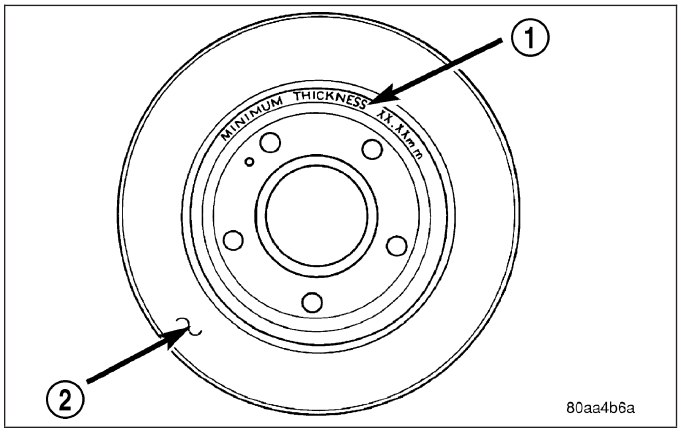

SRT8 vehicles have the minimum thickness specification stamped into the outer diameter edge (1) (along vented end) of the disc.

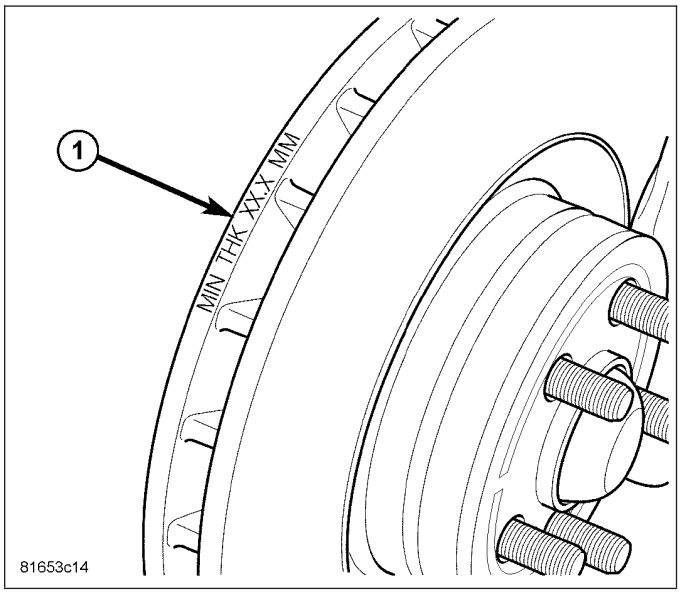

ROTOR THICKNESS VARIATION

Thickness variation in a rotor's braking surface can result in pedal pulsation, chatter and surge. This can also be caused by excessive runout in the rotor or the hub.

Rotor thickness variation measurements should be made in conjunction with measuring runout. Measure thickness of the brake rotor (2) at 12 equal points around the rotor braking surface with a micrometer (1) at a radius approximately 25 mm (1 inch) from edge of rotor. If thickness measurements vary beyond the specification listed in the specification table (Refer to 5 - BRAKES/HYDRAULIC/MECHANICAL/ROTOR - SPECIFICATIONS), the rotor should be refaced or replaced. (Refer to 5 - BRAKES/HYDRAULIC/MECHANICAL/ROTOR - STANDARD PROCEDURE).

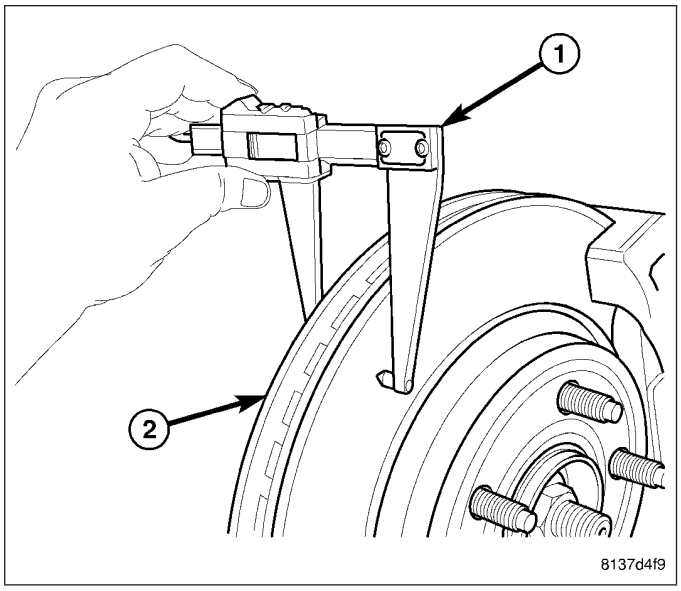

ROTOR RUNOUT

On-vehicle rotor runout is the combination of the individual runout of the hub face and the runout of the brake rotor (hub runout can be measured separately). To measure rotor runout on the vehicle:

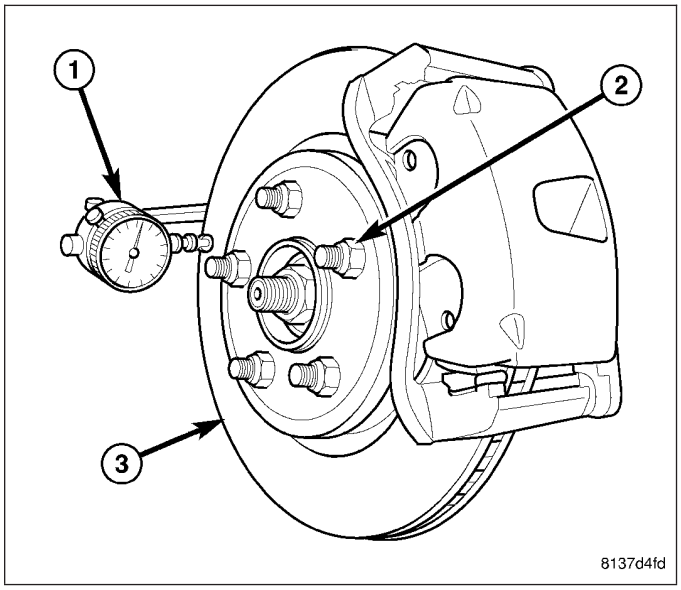

1. Raise and support vehicle. (Refer to LUBRICATION & MAINTENANCE/HOISTING - STANDARD PROCEDURE)
2. Remove tire and wheel assembly. (Refer to 22 - TIRES/WHEELS - REMOVAL)
3. Install standard wheel mounting nuts, flat side to rotor, on all studs (2). Progressively tighten nuts to 150 N·m (110 ft. lbs.) torque.
4. Mount Dial Indicator (1), Special Tool C-3339A, with Wheel, Special Tool 25w, or equivalent, to knuckle. Position Dial Indicator Wheel to contact rotor braking surface approximately ten millimeters from outer edge of rotor (3).
5. Slowly rotate brake rotor checking lateral runout, marking the low and high spots. Record these measurements.
6. Check and record runout of opposite side of rotor in same fashion, marking the low and high spots.
7. Compare runout measurement to specifications. (Refer to 5 - BRAKES/HYDRAULIC/MECHANICAL/ROTOR - SPECIFICATIONS)

If runout is in excess of specifications, check the lateral runout of the hub face. Before removing the rotor from the hub, place a chalk mark across both the rotor (1) and the one wheel stud (2) closest to where the high runout measurement was taken. This way, the original mounting spot of the rotor on the hub is indexed.

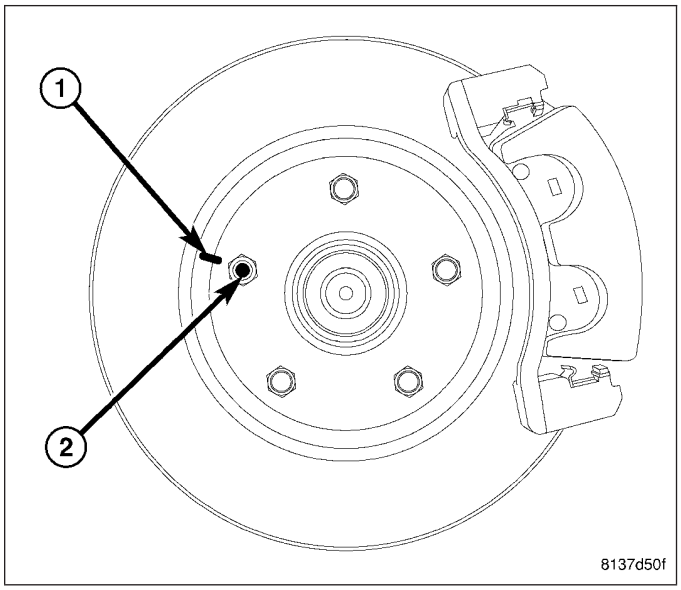

8. Remove the rotor from the hub. (Refer to 5 - BRAKES/HYDRAULIC/MECHANICAL/ROTORS - REMOVAL)

NOTE: Before measuring hub runout, clean the hub face surface with an appropriate cleaner. This provides a clean surface to get an accurate indicator reading.

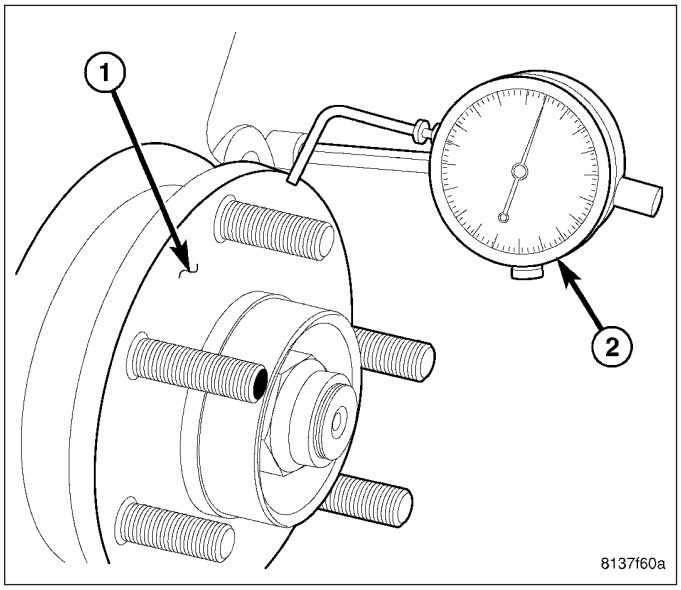

9. Mount Dial Indicator (2), Special Tool C-3339A, to the knuckle. Position Dial Indicator stem so it contacts hub face (1) near outer diameter. Care must be taken to position stem outside of stud circle, but inside of chamfer on the hub rim.
10. Slowly rotate hub measuring runout. Hub runout should not exceed 0.01 mm (0.0004 inch). If runout exceeds this specification, the hub must be replaced. (Refer to 2 - SUSPENSION/FRONT/HUB / BEARING - REMOVAL) (Refer to 2 - SUSPENSION/REAR/HUB / BEARING - REMOVAL)

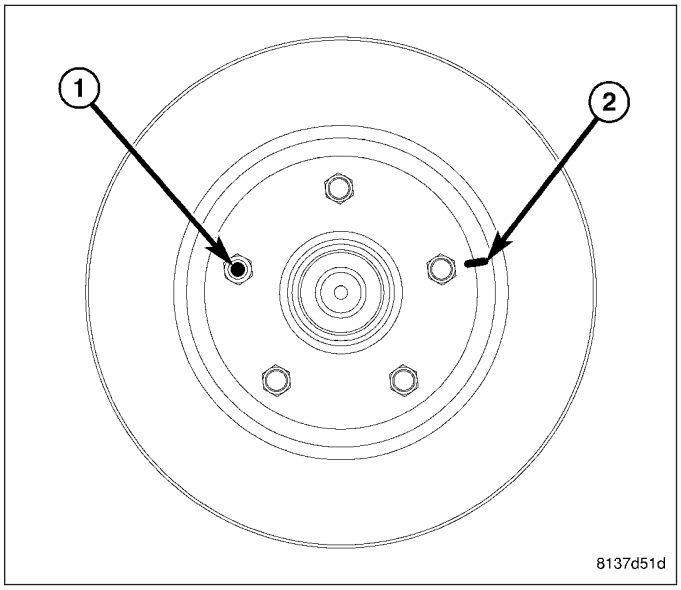

11. If hub runout does not exceed this specification, install original rotor back on hub, aligning chalk

mark on rotor (2) with a wheel mounting stud, two studs apart from original stud (1).

12. Install standard wheel mounting nuts, flat side to rotor, on all studs (2). Progressively tighten nuts to 150 N·m (110 ft. lbs.) torque.
13. Mount Dial Indicator (1) and remeasure runout on both sides of the brake rotor as explained in earlier steps to see if runout is now within specifications. (Refer to 5 - BRAKES/HYDRAULIC/MECHANICAL/ROTOR - SPECIFICATIONS)
14. If runout is still not within specifications, reface or replace brake rotor. (Refer to 5 - BRAKES/HYDRAULIC/MECHANICAL/ROTORS - STANDARD PROCEDURE)

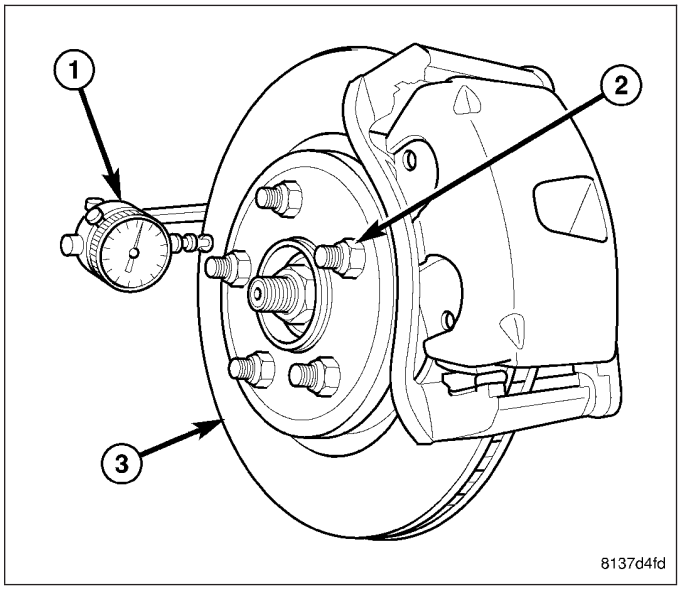

STANDARD PROCEDURE

BRAKE ROTOR MACHINING

NOTE: Refacing the rotor is not required each time the brake pads are replaced, only when the need is foreseen.

Any servicing of the rotor requires extreme care to maintain the rotor within service tolerances to ensure proper brake action.

If the rotor surface is deeply scored or warped, or there is a complaint of brake roughness or brake pedal pulsation, the rotor should be refaced using a hub-mounted on-car brake lathe (1), or replaced.

The use of a hub-mounted on-car brake lathe (1) is highly recommended to eliminate the possibility of excessive runout. It trues the brake rotor to the vehicle's hub and bearing.

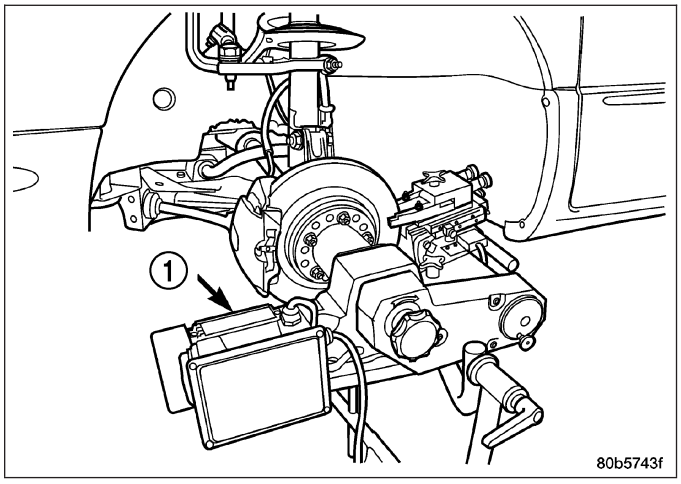

Minimum allowable thickness is the minimum thickness which the brake rotor machined surface may be cut to.

CAUTION: Do not machine the rotor if it will cause the rotor to fall below minimum thickness.

NOTE: Most brake rotors (2) have markings for minimum allowable thickness specification cast into an unmachined surface of the rotor or stamped into the hat section (1). Some brake rotors have the minimum thickness specification located elsewhere. Refer to the following paragraph. Minimum thickness specifications can also be found in this component's specification table. (Refer to 5 - BRAKES/HYDRAULIC/MECHANICAL/ ROTOR - SPECIFICATIONS)

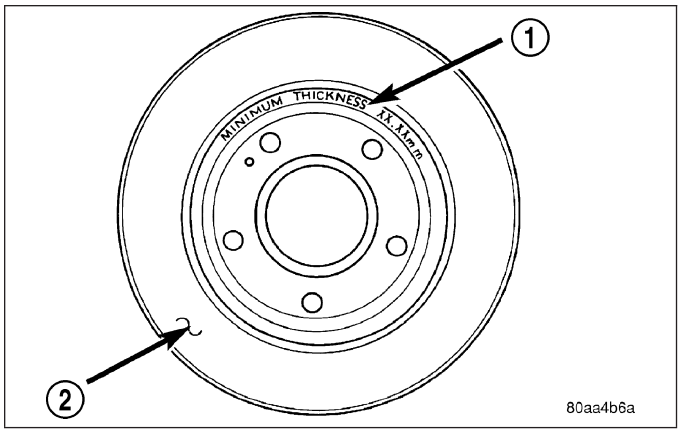

NOTE: SRT8 vehicles have the minimum thickness specification stamped into the outer diameter edge (1) (along vented end) of the disc.

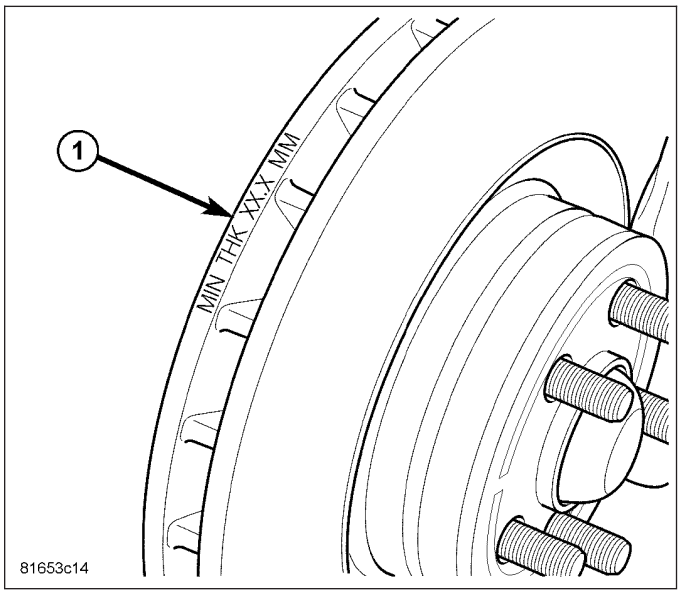

Before lathe installation, verify the brake rotor face and the hub adapters are free of any chips, rust, or contamination.

When mounting and using the brake lathe, strict attention to the brake lathe manufacturer's operating instructions is required.

Machine both sides of the brake rotor at the same time. Cutting both sides at the same time minimizes the possibility of a tapered or uneven cut.

When refacing a rotor, the required TIR (Total Indicator Reading) and thickness variation limits MUST BE MAINTAINED. Extreme care in the operation of rotor turning equipment is required. Specifications for brake rotor machining can be found in this sections specification table. (Refer to 5 - BRAKES/HYDRAULIC/MECHANICAL/ROTOR - SPECIFICATIONS)

REMOVAL

FRONT

NOTE: Before proceeding, (Refer to 5 - BRAKES - WARNING) (Refer to 5 - BRAKES - CAUTION).

1. Raise and support vehicle. (Refer to LUBRICATION & MAINTENANCE/HOISTING - STANDARD PROCEDURE)

2. Remove wheel mounting nuts(3), then tire and wheel assembly (1).

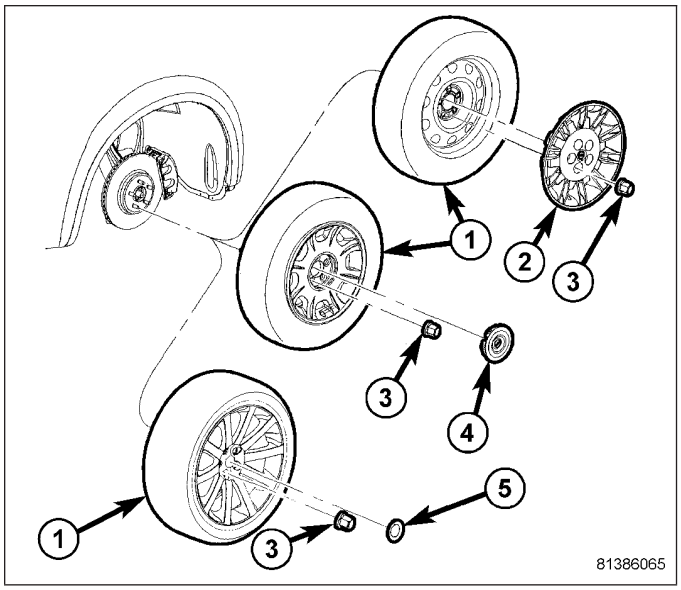

NOTE: In some cases, it may be necessary to retract caliper piston in its bore a small amount in order to provide sufficient clearance between shoes and rotor to easily remove caliper from knuckle. This can usually be accomplished before mounting bolts are removed, by grasping rear of caliper and pulling outward working with guide pins, thus retracting piston. Never push on piston directly as it may get damaged.

3. AWD – Remove two bolts (1) securing disc brake caliper and adapter (2) to knuckle (3).
4. AWD – Remove disc brake caliper and adapter (2) from knuckle (3) as an assembly. Hang assembly out of way using wire or a bungee cord. Use care not to overextend brake hose when doing this.

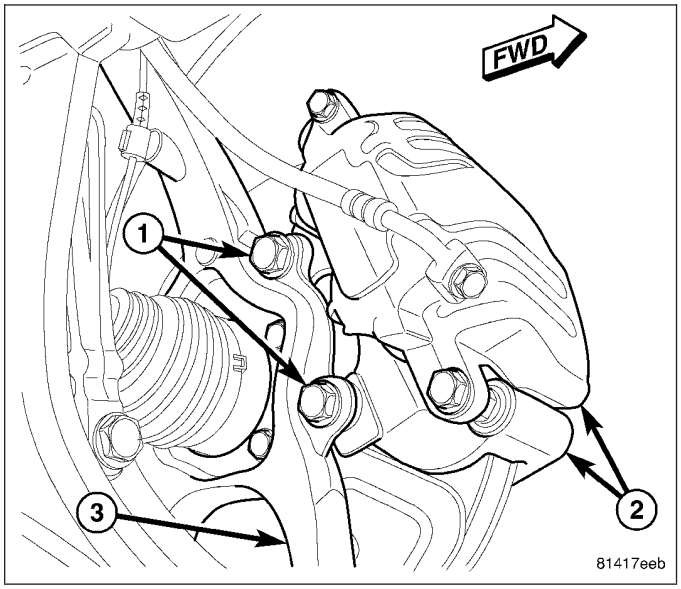

5. RWD – Remove two bolts (2) securing disc brake caliper and adapter (3) to knuckle (1).
6. RWD – Remove disc brake caliper and adapter (3) from knuckle (1) as an assembly. Hang assembly out of way using wire or a bungee cord. Use care not to overextend brake hose when doing this.

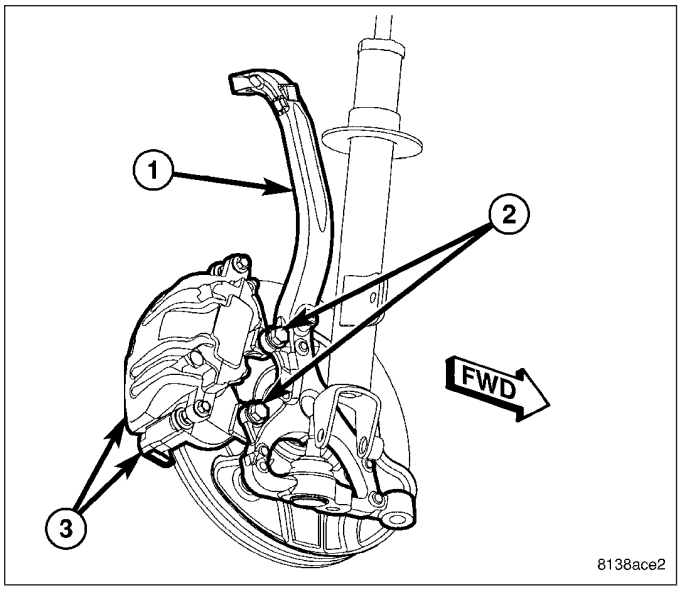

7. Remove any clips (3) retaining brake rotor (2) to wheel studs.
8. Slide brake rotor (2) off hub and bearing (1).

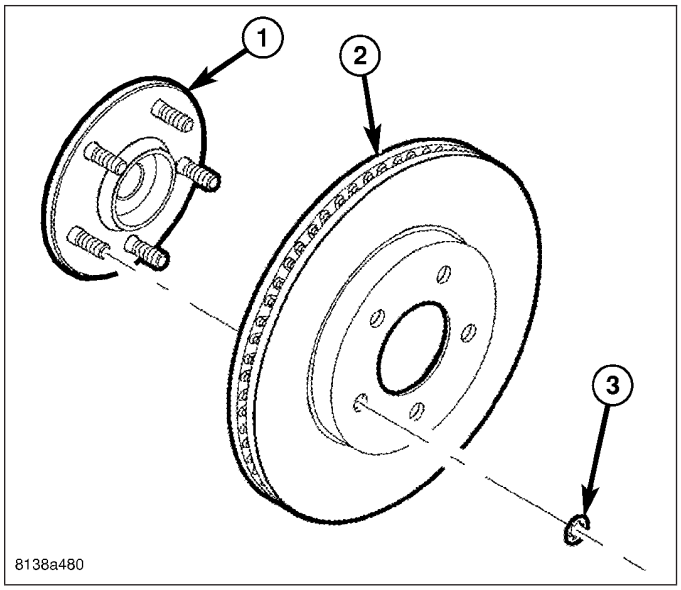

REAR

NOTE: Before proceeding, (Refer to 5 - BRAKES - WARNING) (Refer to 5 - BRAKES - CAUTION).

1. Raise and support vehicle. (Refer to LUBRICATION & MAINTENANCE/HOISTING - STANDARD PROCEDURE)

2. Remove wheel mounting nuts (3), then tire and wheel assembly (1).

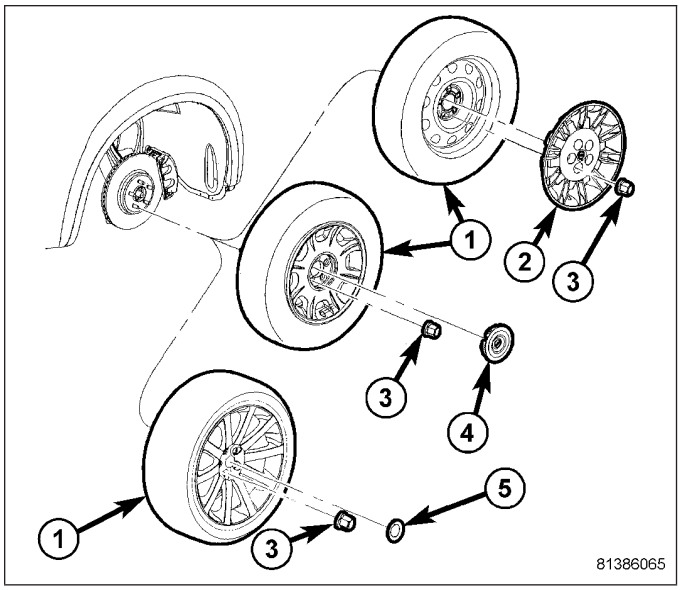

NOTE: In some cases, it may be necessary to retract caliper piston in its bore a small amount in order to provide sufficient clearance between shoes and rotor to easily remove caliper from knuckle. This can usually be accomplished before guide pin bolts are removed, by grasping rear of caliper and pulling outward working with guide pins, thus retracting piston. Never push on piston directly as it may get damaged.

3. Remove two bolts (1) securing disc brake caliper adapter (3) to knuckle (2).
4. Remove disc brake caliper and adapter (3) from knuckle as an assembly. Hang assembly out of way using wire or a bungee cord. Use care not to overextend brake hose when doing this.

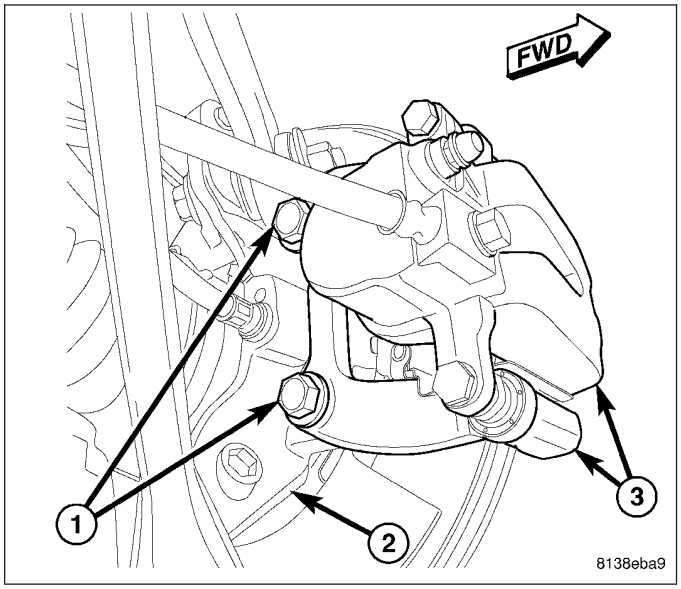

5. Remove any clips (2) retaining brake rotor (3) to wheel mounting studs.
6. Slide brake rotor (3) off hub and bearing (1).

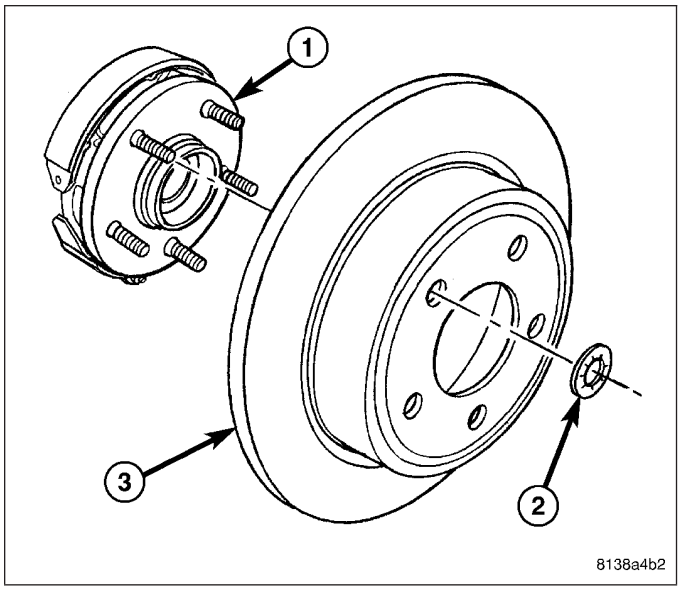

FRONT - SRT8

NOTE: Before proceeding, (Refer to 5 - BRAKES - WARNING) (Refer to 5 - BRAKES - CAUTION).

1. Raise and support vehicle. (Refer to LUBRICATION & MAINTENANCE/HOISTING - STANDARD PROCEDURE)
2. Remove wheel mounting nuts (3), then tire and wheel assembly (1).

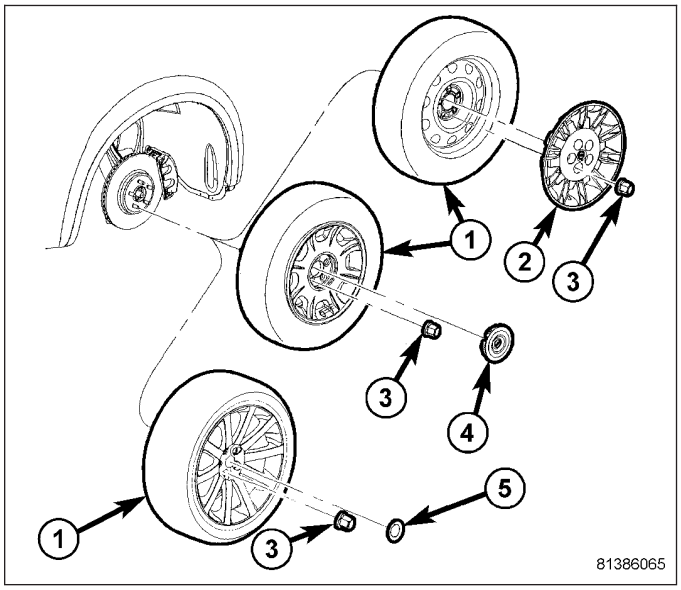

CAUTION: When pushing pistons back into caliper bores, use only a trim stick as shown or other suitable soft tool. Never use a screwdriver or other metal pry bar due to potential damage to braking surface of rotor, caliper, pistons or dust boots.

3. Place trim stick (4) between brake pad (2) and outer edge of rotor (3).
4. Using trim stick, slowly apply pressure against brake pad (2) until both pistons (on that side of caliper) are completely bottomed in bores of caliper half.

NOTE: Repeat above procedure to opposite brake pad (1) and pistons as necessary.

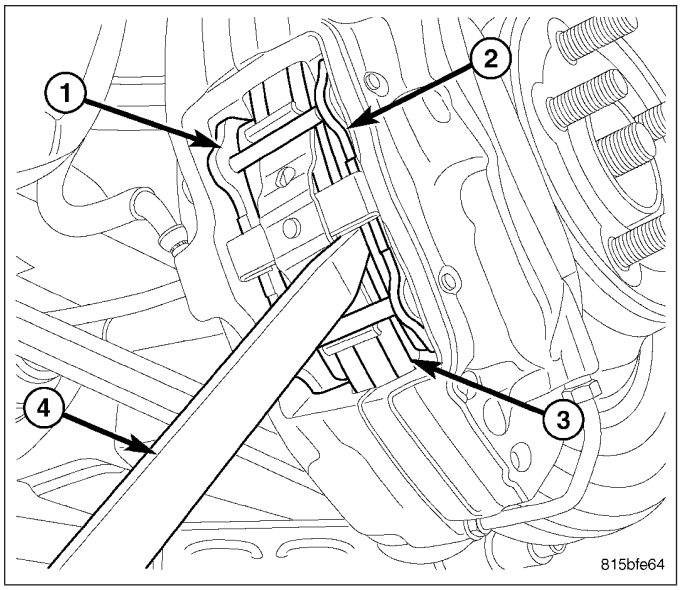

5. Remove caliper mounting bolts (1).
6. Remove brake caliper (2) with pads from knuckle (8) and brake rotor (3). Hang assembly out of way using wire or a bungee cord. Use care not to overextend brake hose when doing this.
7. Remove any clips (4) retaining brake rotor (3) to wheel studs.
8. Slide brake rotor (3) off hub and bearing (7).

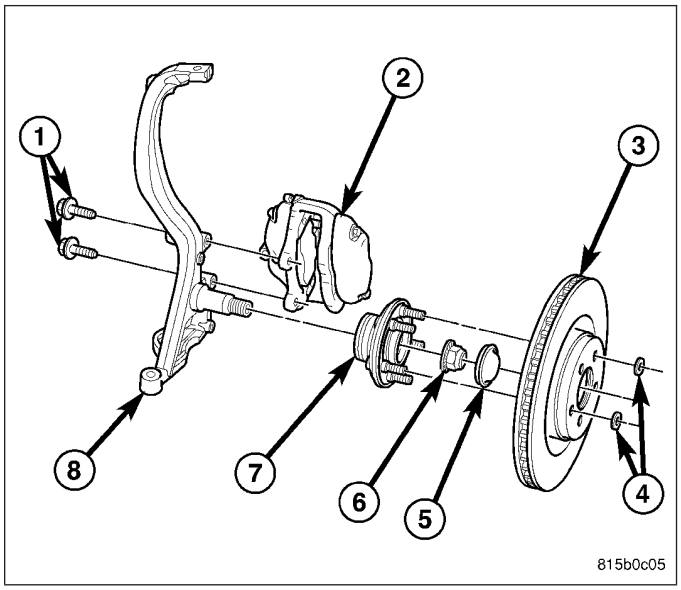

REAR - SRT8

NOTE: Before proceeding, (Refer to 5 - BRAKES - WARNING) (Refer to 5 - BRAKES - CAUTION).

1. Raise and support vehicle. (Refer to LUBRICATION & MAINTENANCE/HOISTING - STANDARD PROCEDURE)

2. Remove wheel mounting nuts (3), then tire and wheel assembly (1).

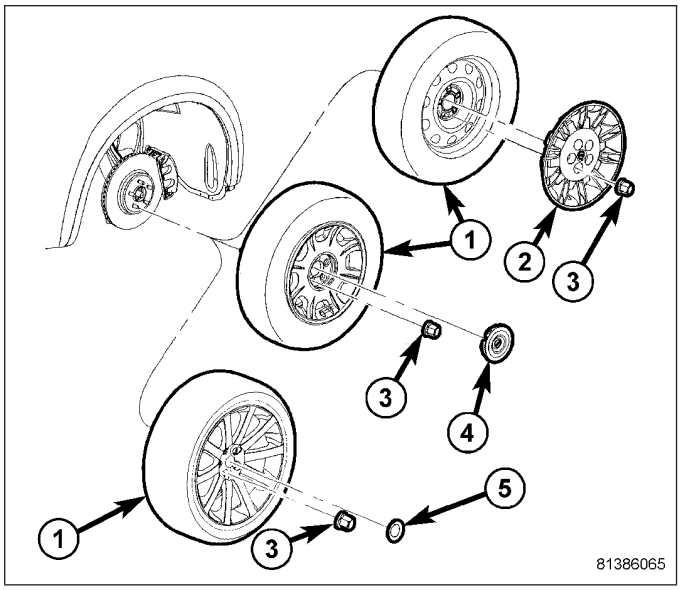

CAUTION: When pushing pistons back into caliper bores, use only a trim stick as shown or other suitable soft tool. Never use a screwdriver or other metal pry bar due to potential damage to braking surface of rotor, caliper, pistons or dust boots.

3. Place trim stick (4) between brake pad (2) and outer edge of rotor (3).
4. Using trim stick, slowly apply pressure against brake pad (2) until both pistons (on that side of caliper) are completely bottomed in bores of caliper half.

NOTE: Repeat above procedure to opposite brake pad (1) and pistons as necessary.

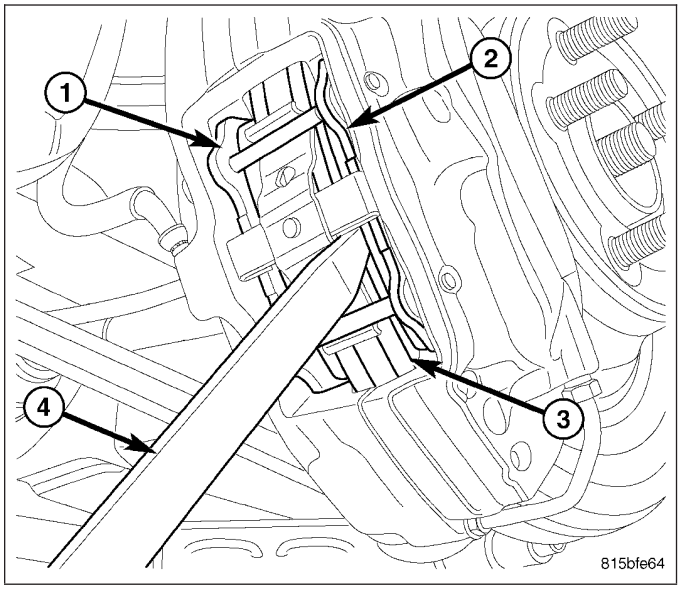

5. Support spring link (1) using a transmission jack (5) or other appropriate jack. Raise spring link just enough to access brake caliper lower mounting bolt (4) from above compression link (2).

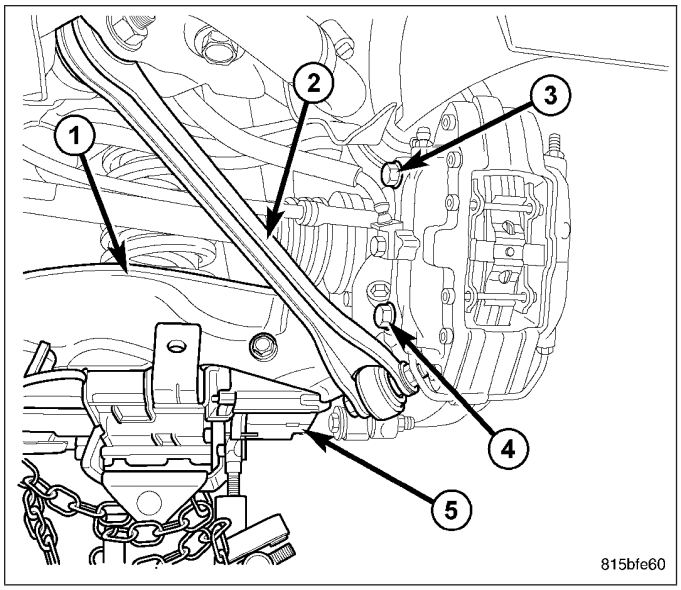

6. Remove the lower and upper caliper mounting bolts (1).
7. Remove brake caliper (2) with pads from knuckle and brake rotor. Hang assembly out of way using wire or a bungee cord. Use care not to overextend brake hose when doing this.

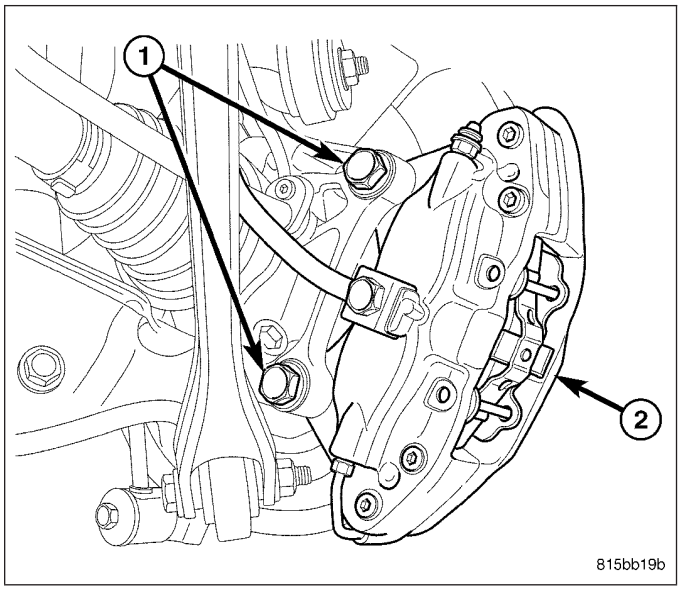

8. Remove any clips (3) retaining brake rotor (2) to wheel mounting studs.
9. Slide brake rotor (2) off hub and bearing (1).

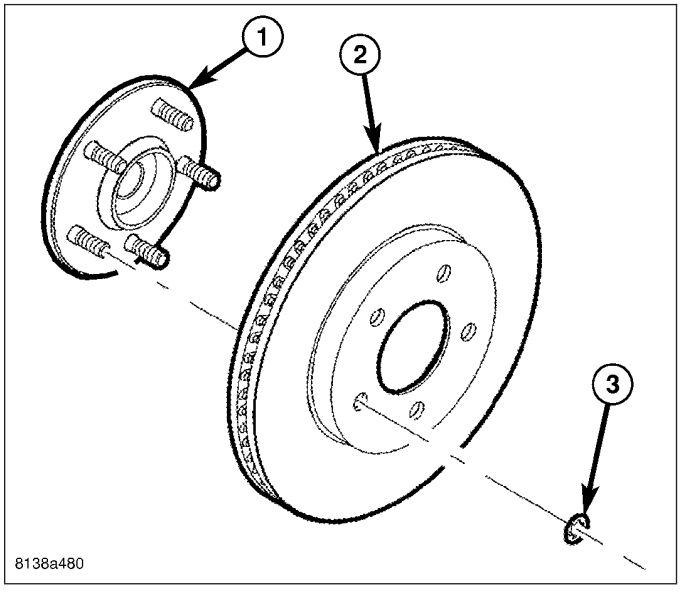

INSTALLATION

FRONT

NOTE: Inspect brake pads before installation. (Refer to 5 - BRAKES/HYDRAULIC/MECHANICAL/BRAKE PADS/SHOES - INSPECTION)

1. Clean hub face (1) to remove any dirt or corrosion where rotor mounts.
2. Install brake rotor (2) over studs on hub and bearing.

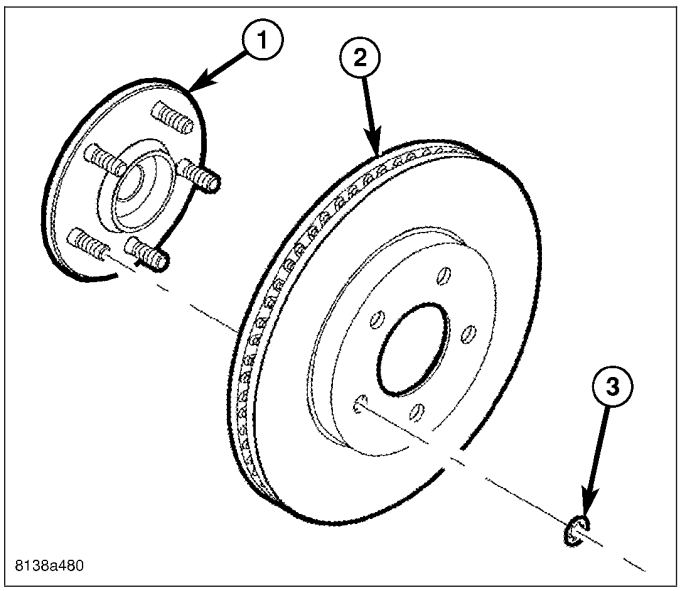

3. AWD – Install disc brake caliper and adapter assembly (2) over brake rotor.
4. AWD – Install mounting bolts (1) securing caliper adapter (2) to knuckle (3). Tighten bolts to 95 N·m (70 ft. lbs.) torque.

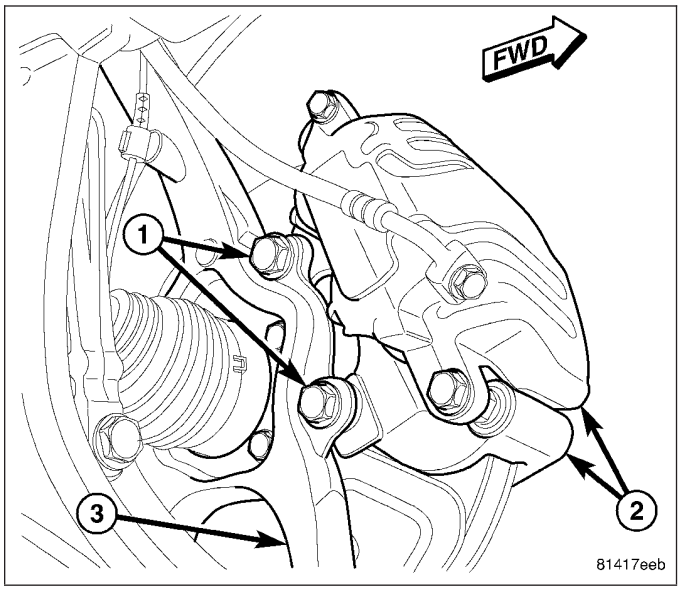

5. RWD – Install disc brake caliper and adapter assembly (3) over brake rotor.
6. RWD – Install mounting bolts (2) securing caliper adapter (3) to knuckle (1). Tighten bolts to 95 N·m (70 ft. lbs.) torque.

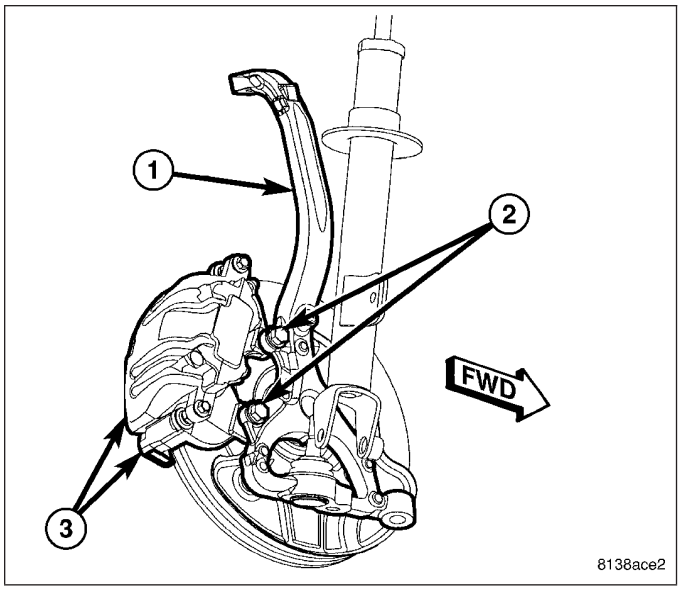

7. Install tire and wheel assembly (1) (Refer to 22 - TIRES/WHEELS - INSTALLATION). Tighten wheel mounting nuts (3) to 150 N·m (110 ft. lbs.) torque.
8. Lower vehicle.
9. Pump brake pedal several times to ensure vehicle has a firm brake pedal before moving vehicle.

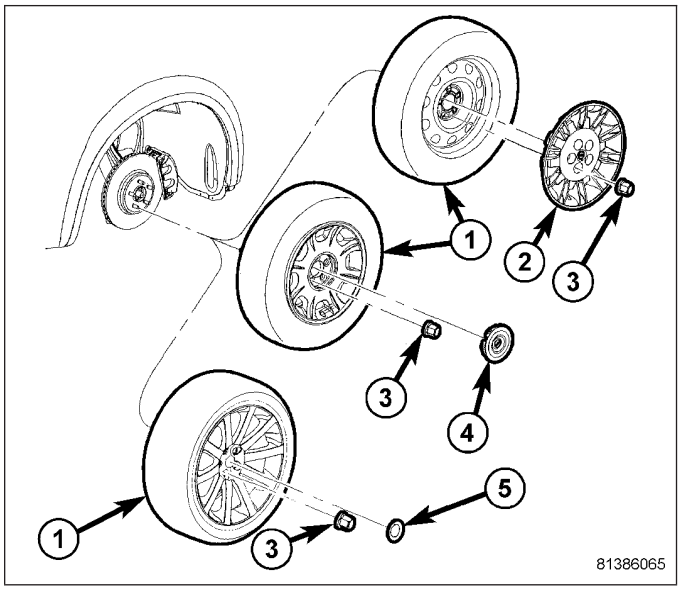

10. Check and adjust brake fluid level in reservoir (1) as necessary.

CAUTION: If NEW brake rotors or pads have been installed, keep in mind that braking effectiveness might be somewhat reduced during the first brake applications following installation.

11. Road test vehicle and make several stops to wear off any foreign material on brakes and to seat brake shoes.

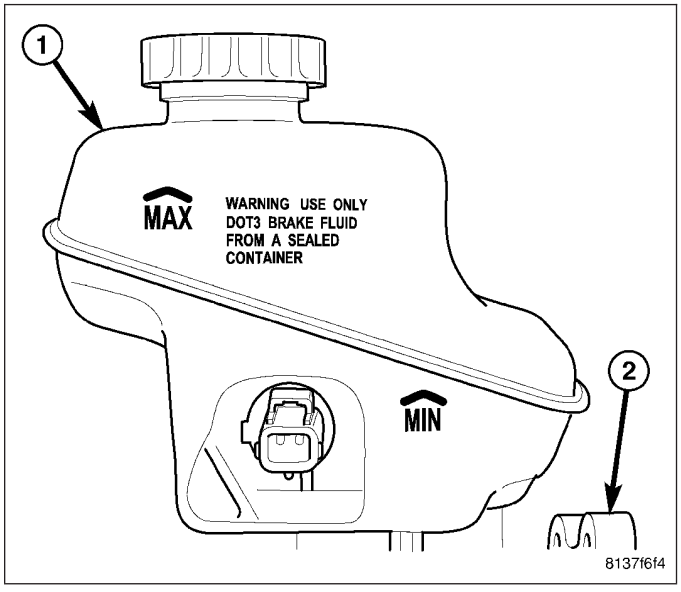

REAR

NOTE: Inspect disc brake pads and parking brake shoes before installation. (Refer to 5 - BRAKES/HYDRAULIC/MECHANICAL/BRAKE PADS/SHOES - INSPECTION)

1. Clean hub face to remove any dirt or corrosion where brake rotor mounts (1).
2. Install brake rotor (3) over wheel mounting studs and onto hub (1).

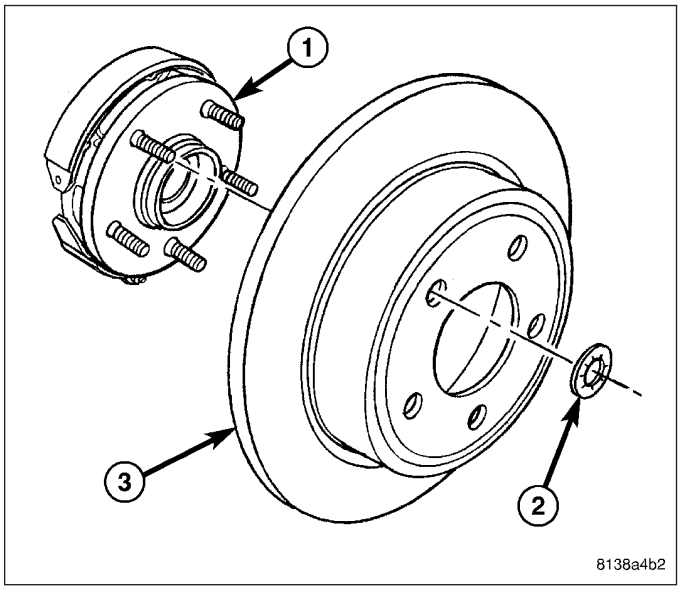

3. Install disc brake caliper and adapter assembly (3) over brake rotor.
4. Install mounting bolts (1) securing caliper adapter (3) to knuckle (2). Tighten bolts to 115 N·m (85 ft. lbs.) torque.

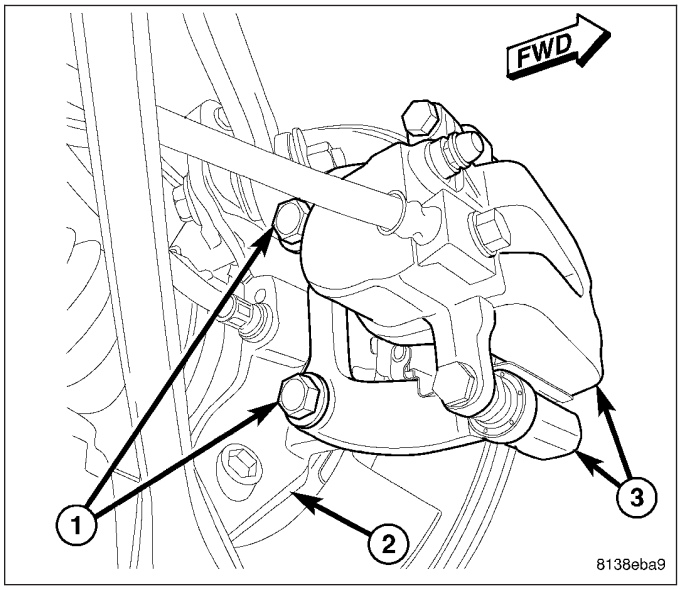

5. Install tire and wheel assembly (1) (Refer to 22 - TIRES/WHEELS - INSTALLATION). Tighten wheel mounting nuts (3) to 150 N·m (110 ft. lbs.) torque.
6. Lower vehicle.
7. Pump brake pedal several times to ensure vehicle has a firm brake pedal before moving vehicle.

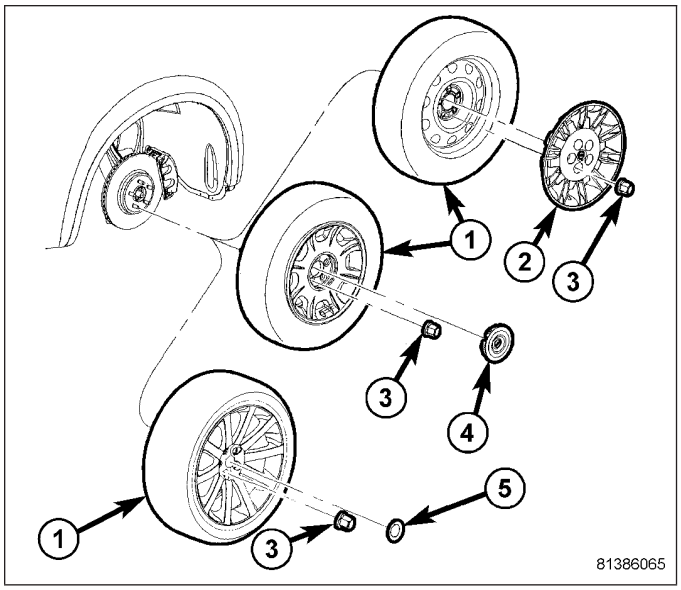

8. Check and adjust brake fluid level in reservoir (1) as necessary.

CAUTION: If NEW brake rotors or pads have been installed, keep in mind that braking effectiveness might be somewhat reduced during the first brake applications following installation.

9. Road test vehicle and make several stops to wear off any foreign material on brakes and to seat brake shoes.

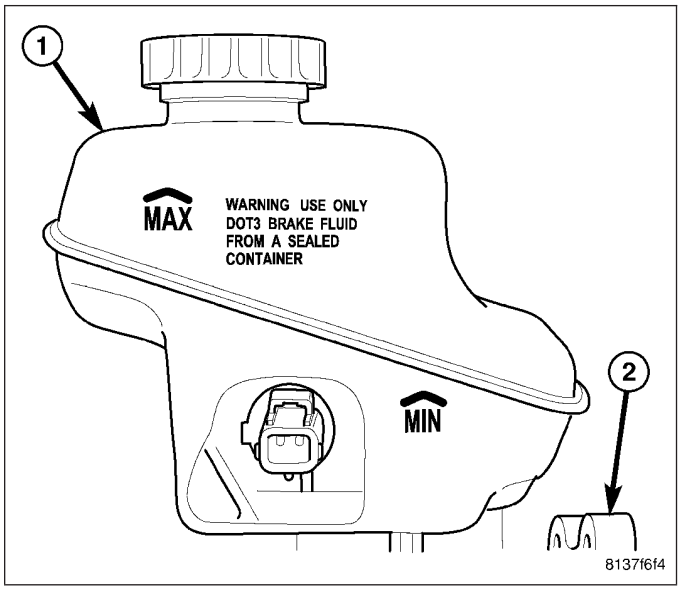

FRONT - SRT8

NOTE: Inspect brake pads before installation. (Refer to 5 - BRAKES/HYDRAULIC/MECHANICAL/BRAKE PADS/SHOES - INSPECTION)

1. Clean hub face (1) to remove any dirt or corrosion where rotor mounts.

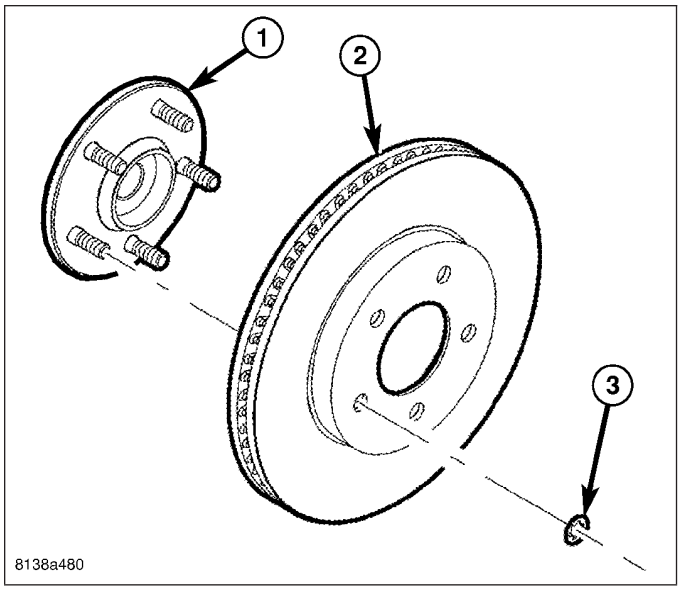

2. Install brake rotor (3) over studs on hub and bearing (7).
3. Slide caliper with pads (2) over brake rotor (3) and align with knuckle (8).
4. Install caliper mounting bolts (1). Tighten bolts to 190 N·m (140 ft. lbs.) torque.

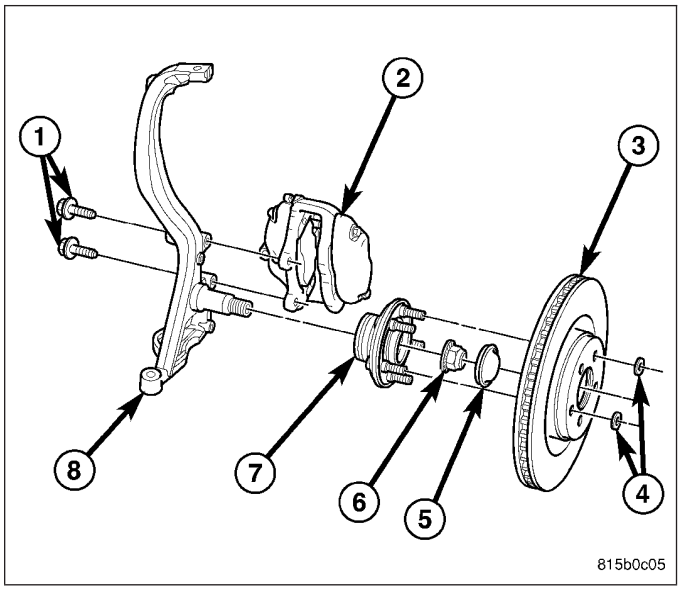

5. Install tire and wheel assembly (1). Tighten wheel mounting nuts (3) to 150 N·m (110 ft. lbs.) torque. (Refer to 22 - TIRES/WHEELS - INSTALLATION)
6. Lower vehicle.
7. Pump brake pedal several times to ensure vehicle has a firm brake pedal before moving vehicle.

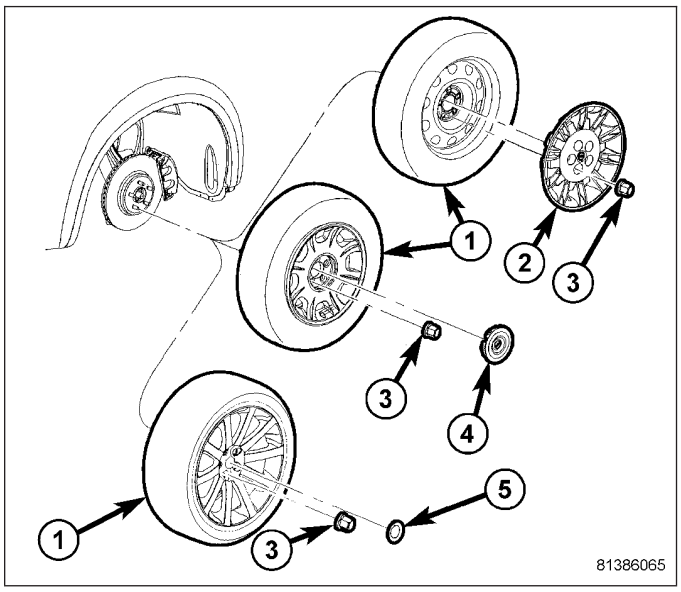

8. Check and adjust brake fluid level in reservoir (1) as necessary.

CAUTION: If NEW brake rotors or pads have been installed, keep in mind that braking effectiveness might be somewhat reduced during the first brake applications following installation.

9. Road test vehicle making several stops to wear off any foreign material on brakes and to seat brake pads. If NEW brake pads are installed, they need to be properly burnished. (Refer to 5 - BRAKES/ HYDRAULIC/MECHANICAL/BRAKE PADS/SHOES - STANDARD PROCEDURE)

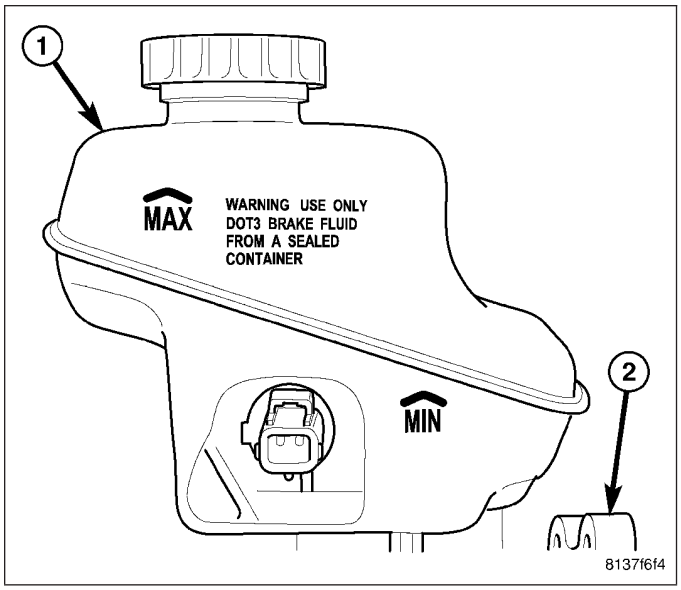

REAR - SRT8

NOTE: Inspect brake pads and parking brake shoes before installation. (Refer to 5 - BRAKES/HYDRAULIC/ MECHANICAL/BRAKE PADS/SHOES - INSPECTION)

1. Clean hub face (1) to remove any dirt or corrosion where rotor mounts.
2. Install brake rotor (2) over studs on hub and bearing (1).

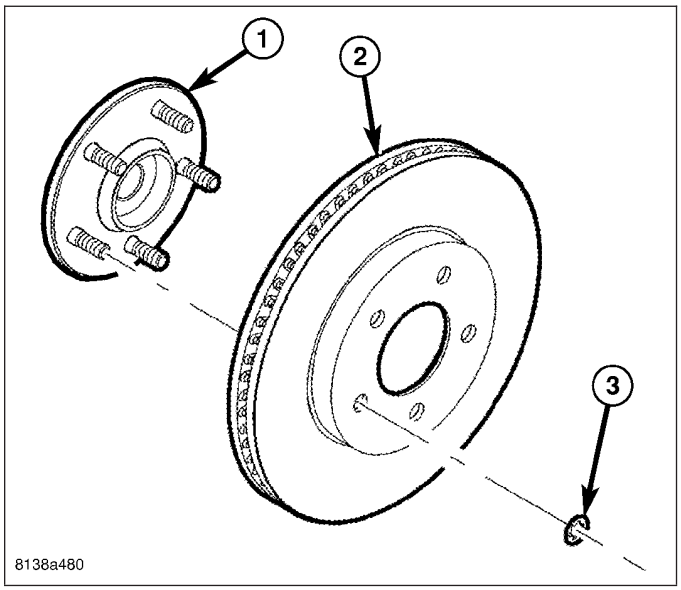

3. Slide caliper with pads (2) over brake rotor and align with knuckle.
4. Install caliper mounting bolts (1). Tighten bolts to 130 N·m (96 ft. lbs.) torque.
5. Remove jack from under spring link.

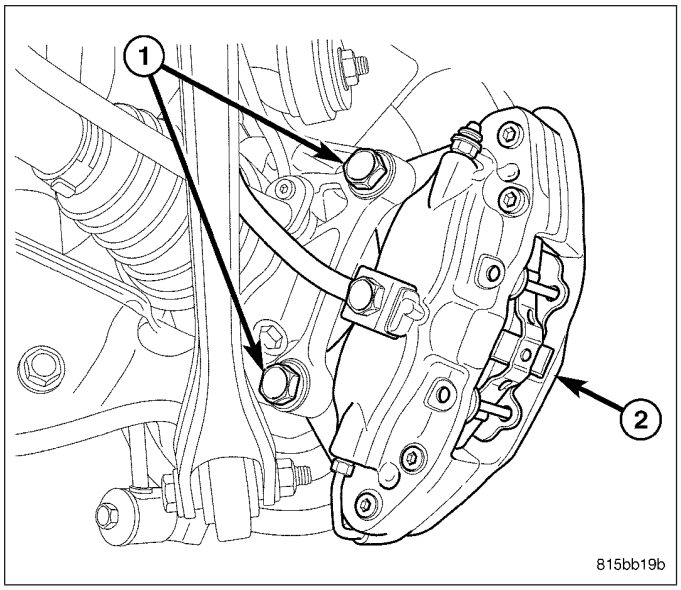

6. Install tire and wheel assembly (1). Tighten wheel mounting nuts (3) to 150 N·m (110 ft. lbs.) torque. (Refer to 22 - TIRES/WHEELS - INSTALLATION)
7. Lower vehicle.
8. Pump brake pedal several times to ensure vehicle has a firm brake pedal before moving vehicle.

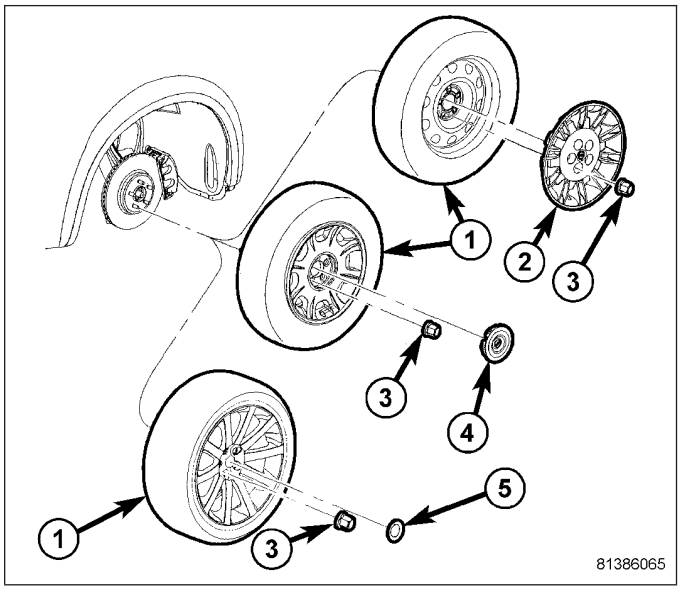

9. Check and adjust brake fluid level in reservoir (1) as necessary.

CAUTION: If NEW brake rotors or pads have been installed, keep in mind that braking effectiveness might be somewhat reduced during the first brake applications following installation.

10. Road test vehicle making several stops to wear off any foreign material on brakes and to seat brake pads. If NEW brake pads are installed, they need to be properly burnished. (Refer to 5 - BRAKES/HYDRAULIC/MECHANICAL/BRAKE PADS/SHOES - STANDARD PROCEDURE)

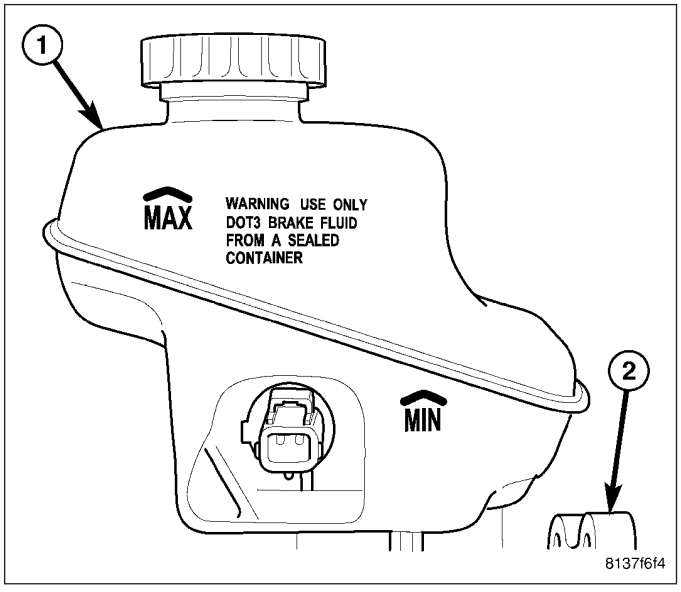

SPECIFICATIONS

BRAKE ROTOR

NOTE: When refacing a rotor, the required TIR (Total Indicator Reading) and thickness variation limits MUST BE MAINTAINED. Extreme care in the operation of rotor turning (machining) equipment is required.

LIMITS/SPECIFICATIONS - 17 INCH BRAKES (BASE)

Brake Rotor	Rotor Thickness	Minimum Rotor Thickness	Rotor Thickness Variation	Rotor Runout *
Front	27.87-28.13 mm 1.097-1.107 in.	26.5 mm 1.040 in.	0.010 mm 0.0004 in.	0.035 mm 0.0014 in.
Rear	9.87-10.13 mm 0.389-0.399 in.	8.5 mm 0.335 in.	0.010 mm 0.0004 in.	0.035 mm 0.0014 in.
* TIR Total Indicator Reading (Measured On Vehicle)				

LIMITS/SPECIFICATIONS - 18 INCH BRAKES (PREMIUM)

Brake Rotor	Rotor Thickness	Minimum Rotor Thickness	Rotor Thickness Variation	Rotor Runout *
Front	27.87-28.13 mm 1.097-1.107 in.	26.5 mm 1.040 in.	0.010 mm 0.0004 in.	0.035 mm 0.0014 in.
Rear	21.87-22.13 mm 0.861-0.871 in.	20.5 mm 0.807 in.	0.010 mm 0.0004 in.	0.035 mm 0.0014 in.
* TIR Total Indicator Reading (Measured On Vehicle)				

LIMITS/SPECIFICATIONS - SRT8 BRAKES

Brake Rotor	Rotor Thickness	Minimum Rotor Thickness	Rotor Thickness Variation	Rotor Runout *
Front	31.90-32.10 mm 1.256-1.264 in.	30.00 mm 1.181 in.	0.040 mm 0.0016 in.	0.030 mm 0.0012 in.
Rear	27.90-28.10 mm 1.098-1.106 in.	26.00 mm 1.024 in.	0.040 mm 0.0016 in.	0.030 mm 0.0012 in.
* TIR Total Indicator Reading (Measured On Vehicle)				

LIMITS/SPECIFICATIONS - POLICE PACKAGE BRAKES

Brake Rotor	Rotor Thickness	Minimum Rotor Thickness	Rotor Thickness Variation	Rotor Runout *
Front	27.87-28.13 mm 1.097-1.107 in.	26.5 mm 1.040 in.	0.010 mm 0.0004 in.	0.035 mm 0.0014 in.
Rear	25.87-26.13 mm 1.019-1.029 in.	24.5 mm 0.965 in.	0.008 mm 0.0003 in.	0.025 mm 0.0010 in.
* TIR Total Indicator Reading (Measured On Vehicle)				

TUBES/HOSES

DESCRIPTION

The brake tubes are steel with a corrosion-resistant nylon coating applied to the external surfaces.

The flex hoses used at each wheel brake are made of reinforced rubber with fittings at each end. The fitting at each brake caliper is the banjo-type and requires a special banjo bolt and copper washers.

INSPECTION

Brake tubing should be inspected periodically for evidence of physical damage or contact with moving or hot components.

Flexible rubber hose is used at both the front and rear wheel brakes. Inspection of the flexible brake hoses should be performed whenever the brake system is serviced and every 7,500 miles or 12 months, whichever comes first. Inspect hydraulic brake hoses for surface cracking, scuffing, or worn spots. If the fabric casing of the hose becomes exposed due to cracks or abrasions in the hose cover, the hose should be replaced immediately. Eventual deterioration of the hose can take place with possible burst failure. Faulty installation can cause twisting, resulting in wheel, tire, or chassis interference.

PARKING BRAKE

DESCRIPTION

This vehicle uses drum-in-hat style parking brakes at each rear wheel. The system is actuated using a foot-operated mechanism and three parking brake cables.

The SRT8 uses the same parking brake system as other models. The rear parking brake cables (and the knuckle) have been modified at the knuckle mounting bracket to clear the larger rear axle half shaft.

CABLE - PARKING BRAKE FRONT

REMOVAL

NOTE: Before proceeding, (Refer to 5 - BRAKES - WARNING) (Refer to 5 - BRAKES - CAUTION).

1. Raise and support vehicle. (Refer to LUBRICATION & MAINTENANCE/HOISTING - STANDARD PROCEDURE)

NOTE: Due to short travel and low spring tension, it is not necessary to lock-out parking brake lever to service parking brake components.

2. Disconnect front parking brake cable (5) at connector (3) to right rear parking brake cable (4) above axle differential (not shown).

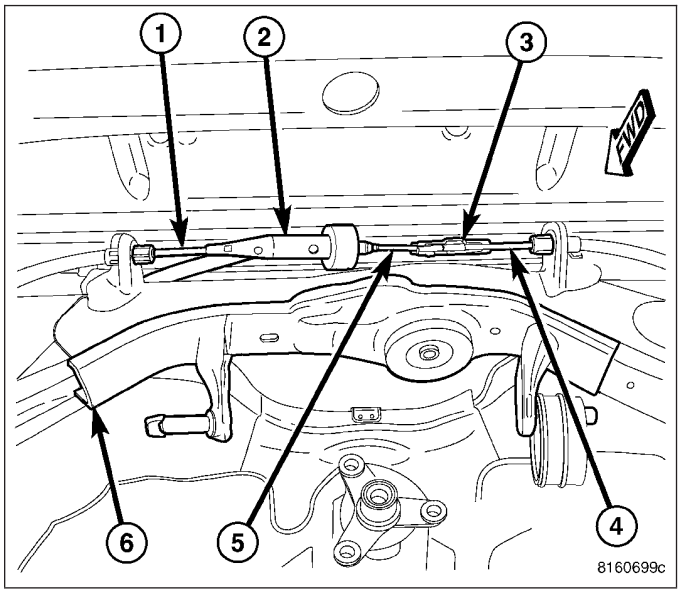

3. Remove front cable (3) from equalizer (2).

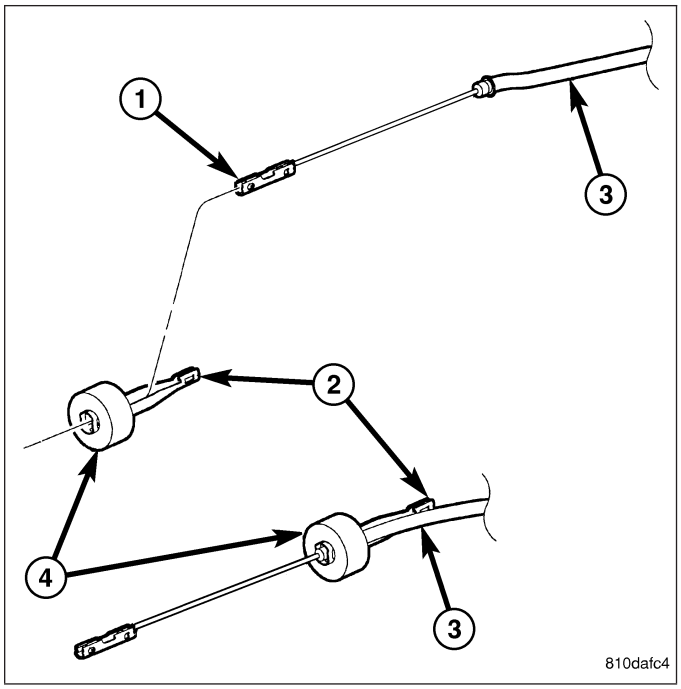

4. Remove screw (2) fastening cable (1) routing bracket to rear crossmember front flange (3).

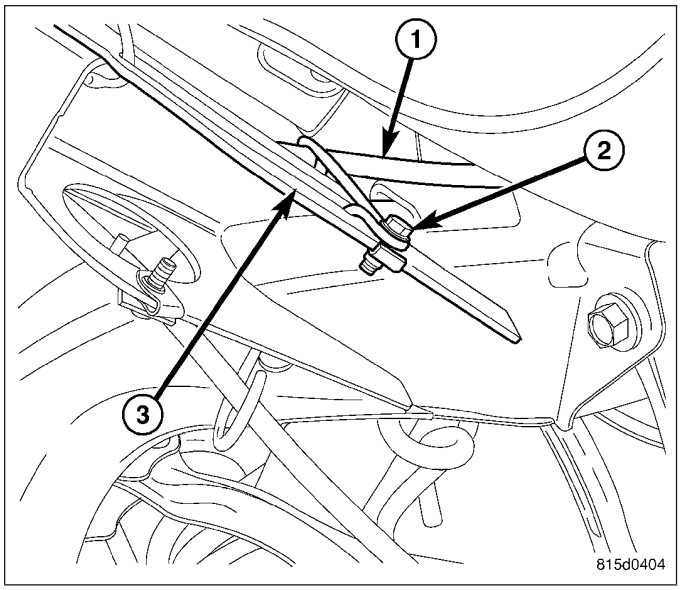

5. Remove nuts (1), bolt (2) and push-pins (4), securing lower rear wheelhouse shield (3) to body of vehicle. Remove lower rear wheelhouse shield.

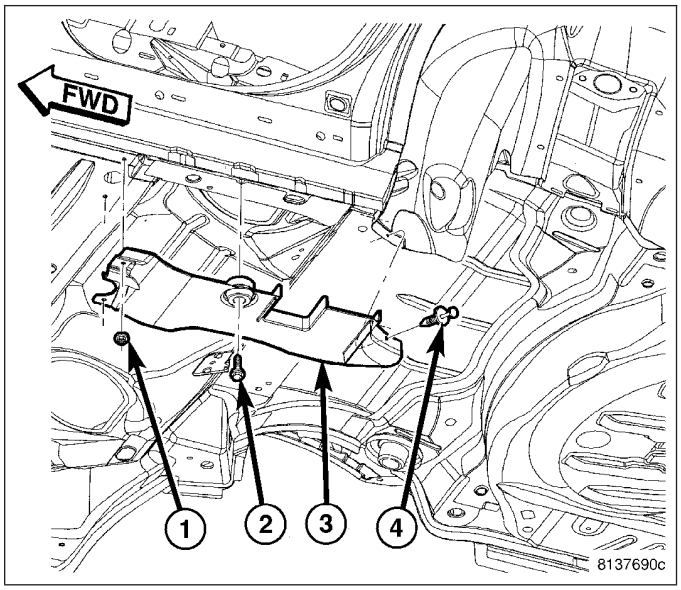

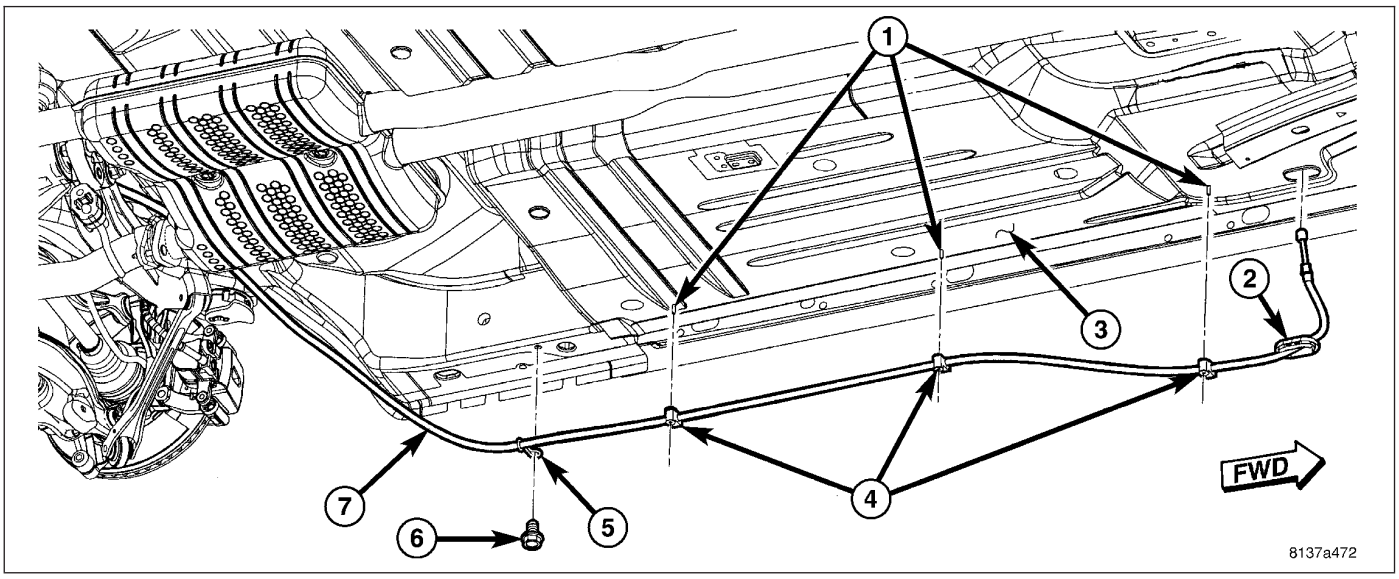

6. Remove screw (6) and routing clip (4) nuts fastening cable (7) to underside of body (3).

7. Lower vehicle.
8. Remove driver door opening sill scuff plate and cowl side trim.
9. Remove clip and roll back carpet away from front cable.
10. Disconnect front parking brake cable strand (3) at lever connector (2).

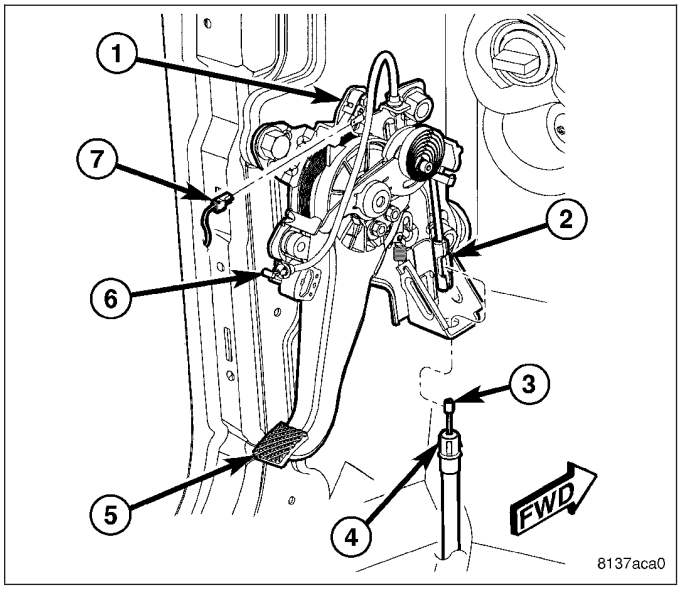

11. Place 13 mm 12-point box wrench (2) over cable retainer (1) at lever bracket as shown to collapse retainer fingers. Pull cable from bracket.

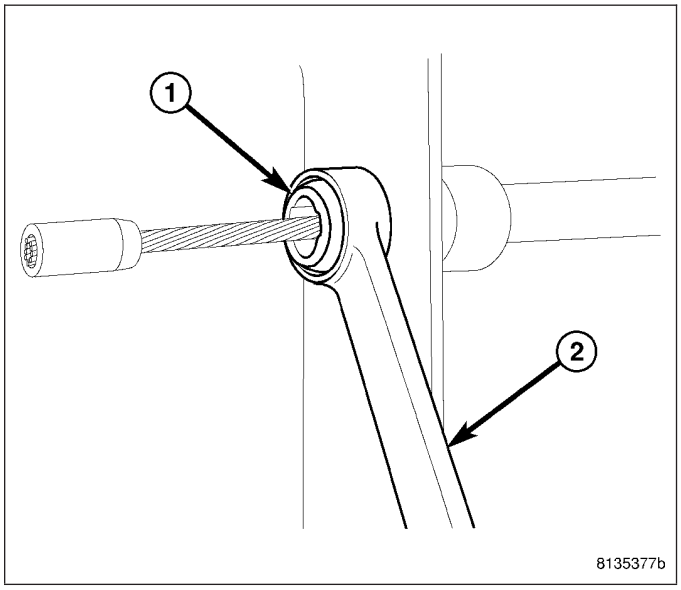

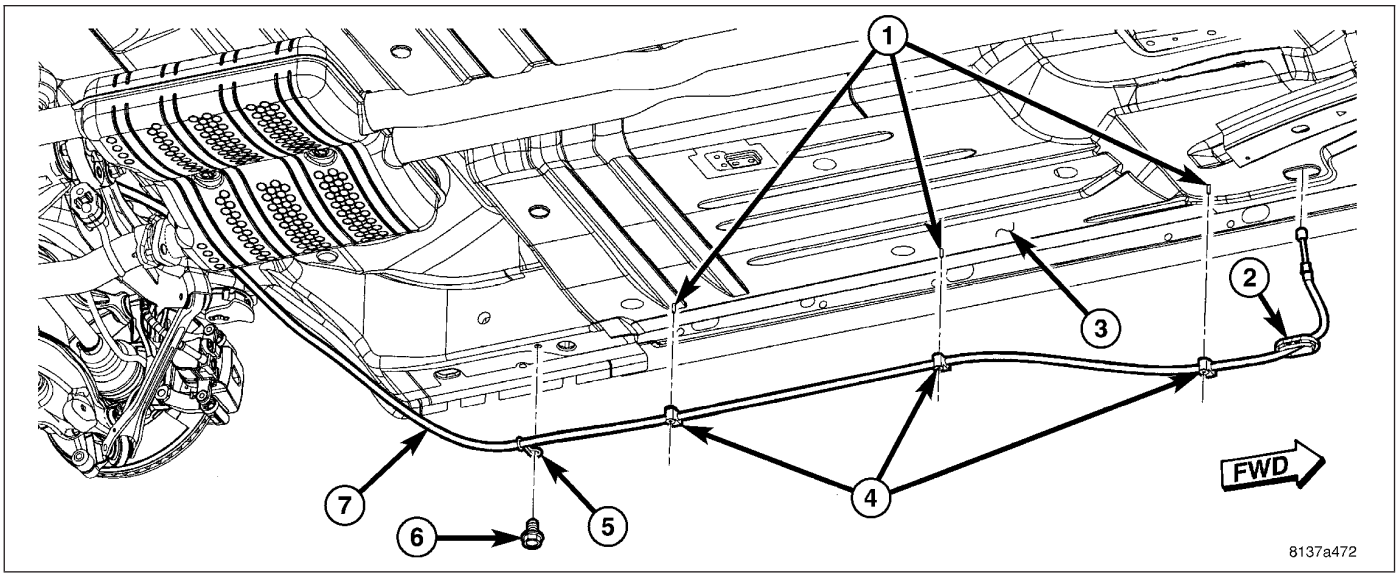

12. Remove parking brake cable grommet (2) from floor pan (3).
13. Remove parking brake cable (7) through hole in floor pan.

INSTALLATION

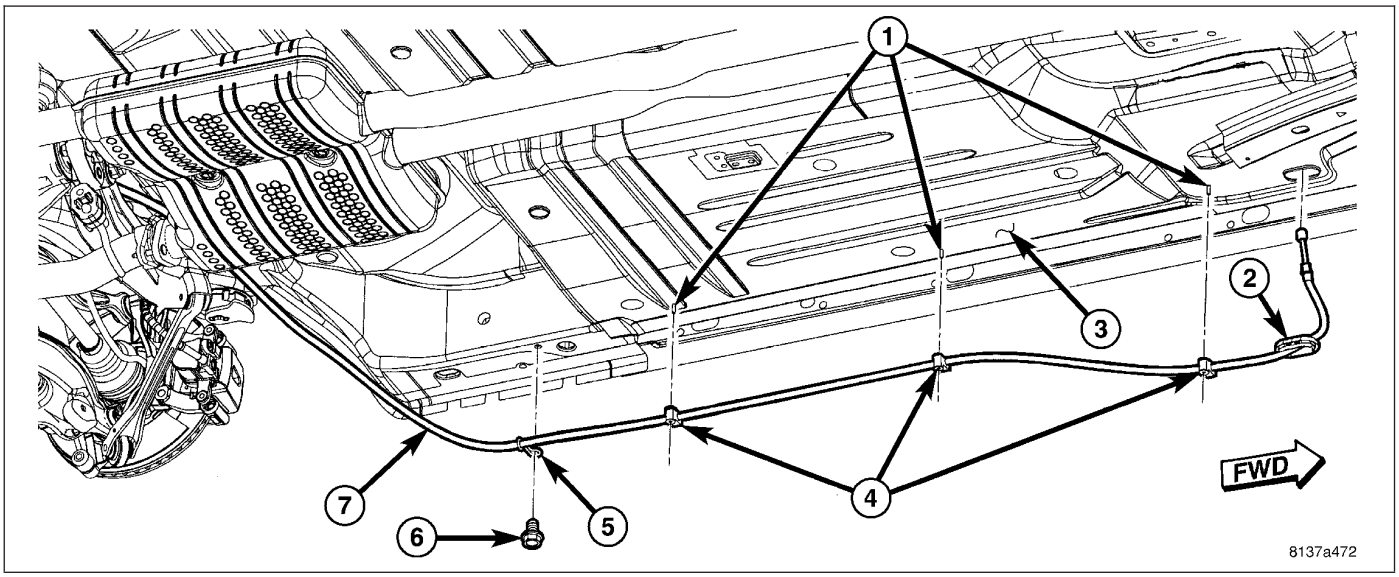

1. Guide parking brake cable (7) down through hole in floor pan.
2. Install parking brake cable grommet (2) in hole of floor pan (3).

3. Guide cable end (3) up through lever bracket and press cable housing retainer (7) into bracket allowing retainer fingers to lock cable in place.
4. Connect front parking brake cable strand (3) at lever connector (2).
5. Lay carpet back into place and install retaining clip.
6. Install driver door opening sill scuff plate and cowl side trim.
7. Raise and support vehicle.

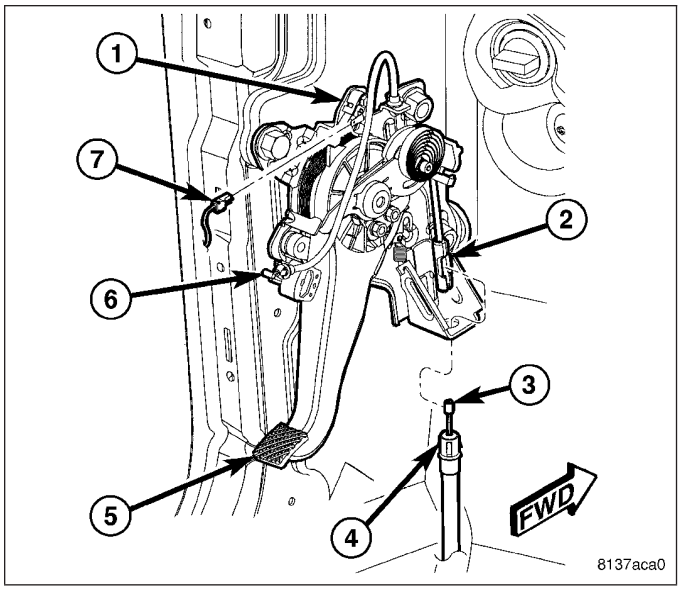

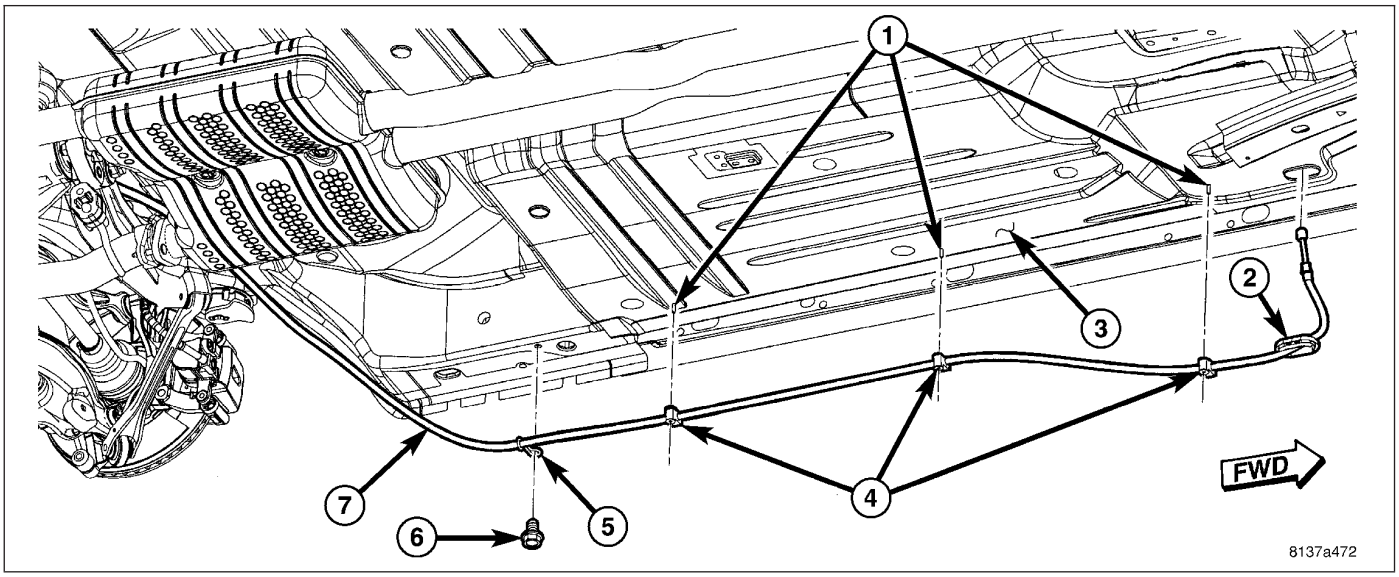

8. Install screw (6) and routing clip (4) nuts fastening cable (7) to underside of body (3).

9. Route cable above rear crossmember, then slide cable end (1) (shown with connector) and housing (3) through equalizer (2) above rear axle differential.

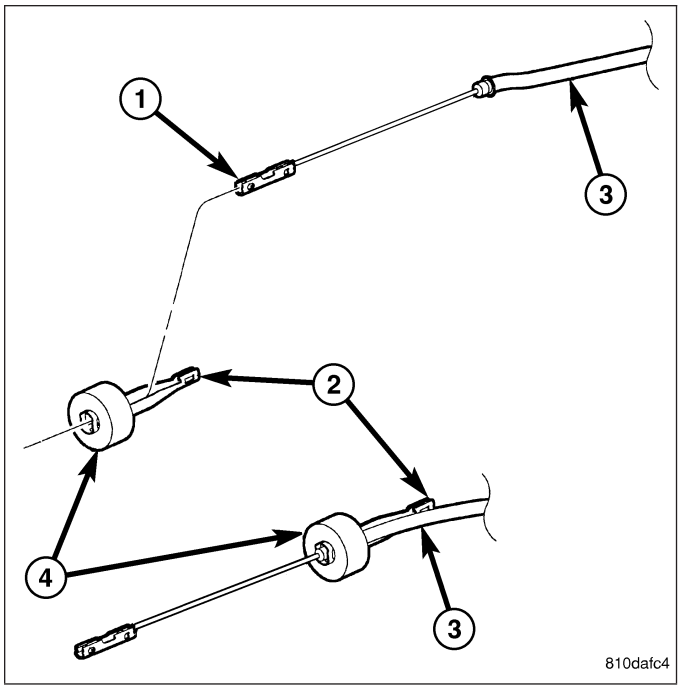

NOTE: Due to short travel and low spring tension, it is not necessary to lock-out parking brake lever to service parking brake components.

10. Connect front parking brake cable (5) at connector (3) to right rear parking brake cable (4) (axle differential not shown).

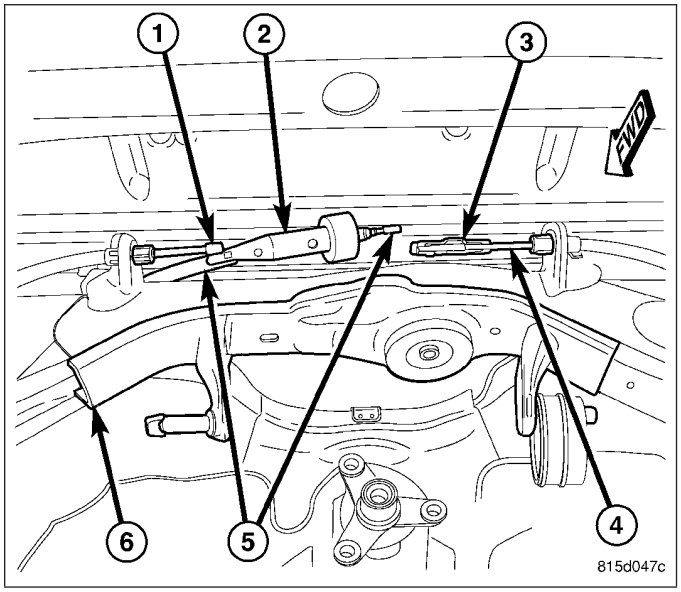

11. Install screw (2) fastening cable (1) routing bracket to rear crossmember front flange (3).

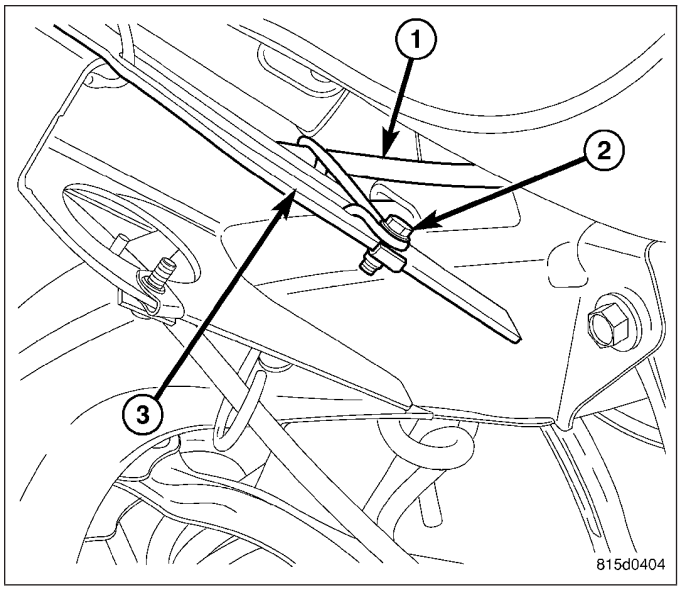

12. Position lower rear wheelhouse shield (3) onto body of vehicle. Install nuts (1), bolt (2) and push-pins (4) securing lower rear wheelhouse shield to body. Tighten nuts and bolt securely.

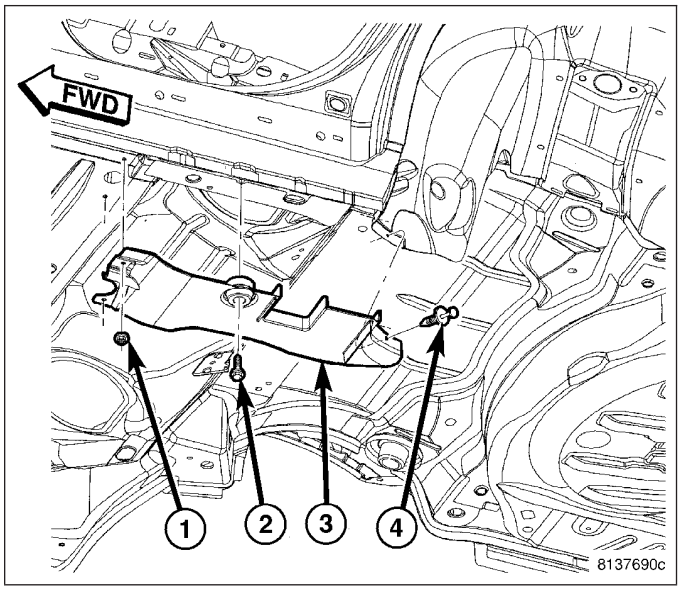

13. Lower vehicle until rear wheels are just above floor level.
14. Apply parking brake lever. Release lever, then reapply.
15. Check to make sure rear wheels will not rotate with lever applied.
16. Release parking brake lever, then check to make sure rear wheels rotate without excessive drag.
17. Apply parking brake lever.
18. Lower vehicle.

CABLE - PARKING BRAKE REAR

REMOVAL

NOTE: Before proceeding, (Refer to 5 - BRAKES - WARNING) (Refer to 5 - BRAKES - CAUTION).

1. Raise and support vehicle. (Refer to LUBRICATION & MAINTENANCE/HOISTING - STANDARD PROCEDURE)

NOTE: Due to short travel and low spring tension, it is not necessary to lock-out parking brake lever to service parking brake components.

2. Disconnect rear parking brake cable near front cable as follows:
   - If removing left rear cable, disconnect cable (1) at equalizer (2) above rear axle differential (not shown) and rear crossmember (6).
   - If removing right rear cable, disconnect cable (4) at connector (3) above rear axle differential (not shown) and rear crossmember (6).

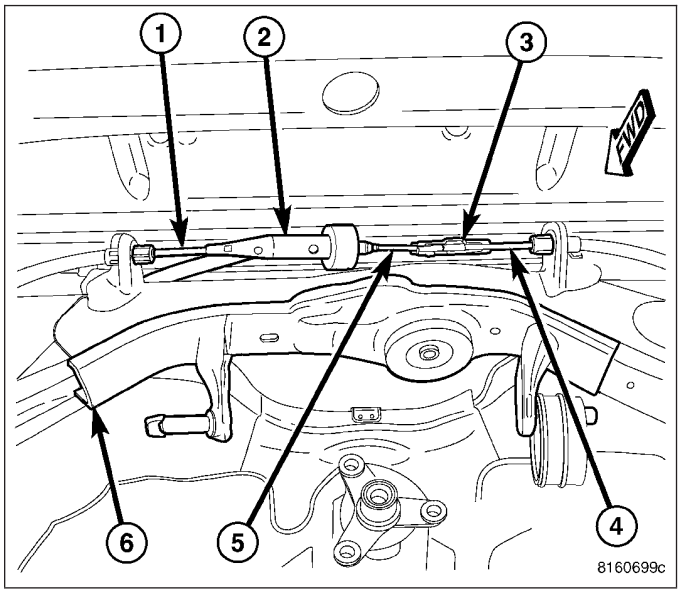

3. Remove parking brake shoes on side of cable service. (Refer to 5 - BRAKES/PARKING BRAKE/SHOES - REMOVAL)
4. Remove shoe actuator lever (1) from end of cable (2) and support.

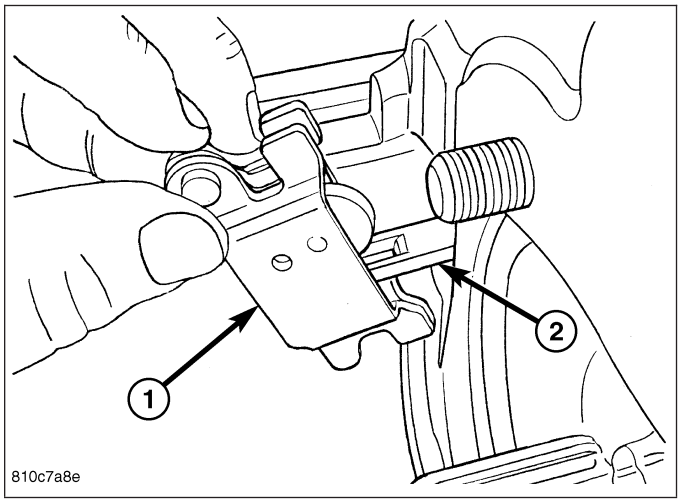

5. Remove screw (4) fastening cable (2) to knuckle (3). Remove cable from knuckle.
6. Remove cable (2) from routing guide (1).

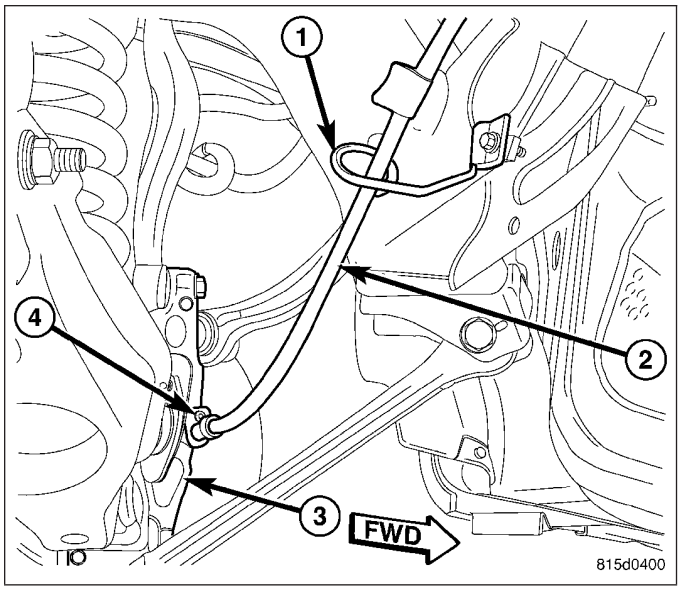

7. Place 13 mm 12-point box wrench (4) over cable strand and completely onto cable retainer (3) as shown at crossmember bracket (1 - left)(2 - right). It may be necessary to wiggle wrench around somewhat to collapse retainer fingers. With wrench in place, pull cable from bracket.
8. Remove parking brake cable from vehicle.

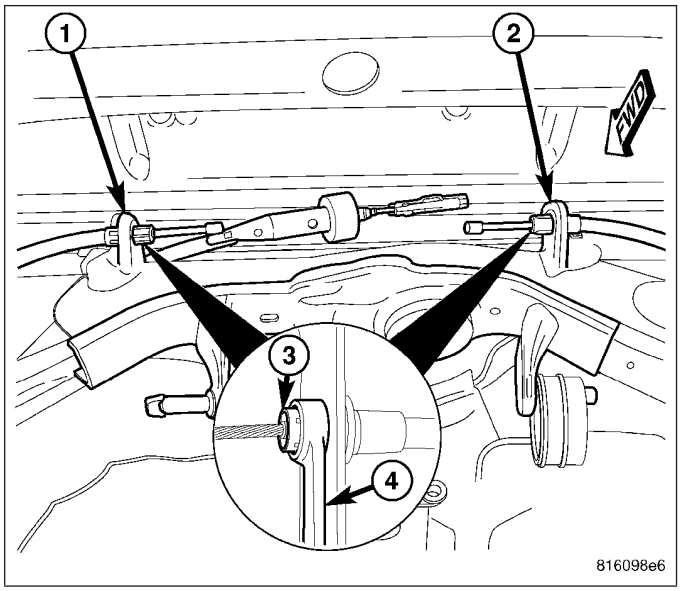

INSTALLATION

1. Route leading end of rear parking brake cable (2) up through cable guide (1) on crossmember.

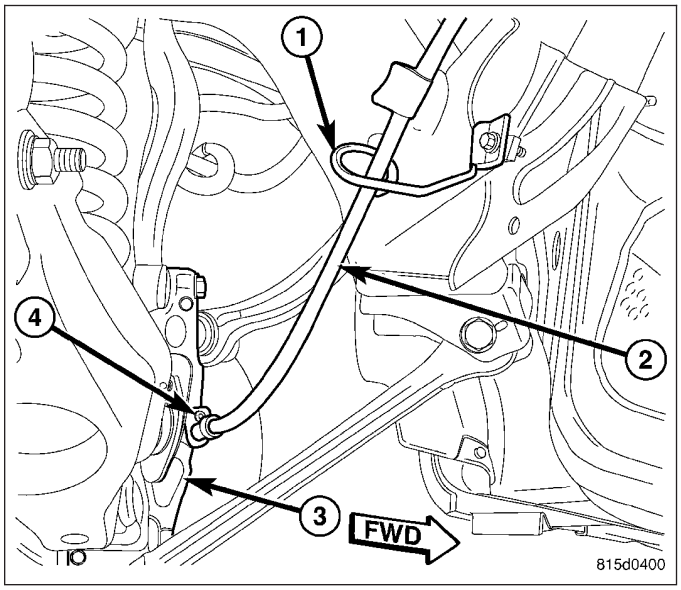

2. Guide cable leading end through crossmember bracket (1 - left)(2 - right) near equalizer and press cable housing retainer into bracket allowing retainer fingers to lock cable in place.

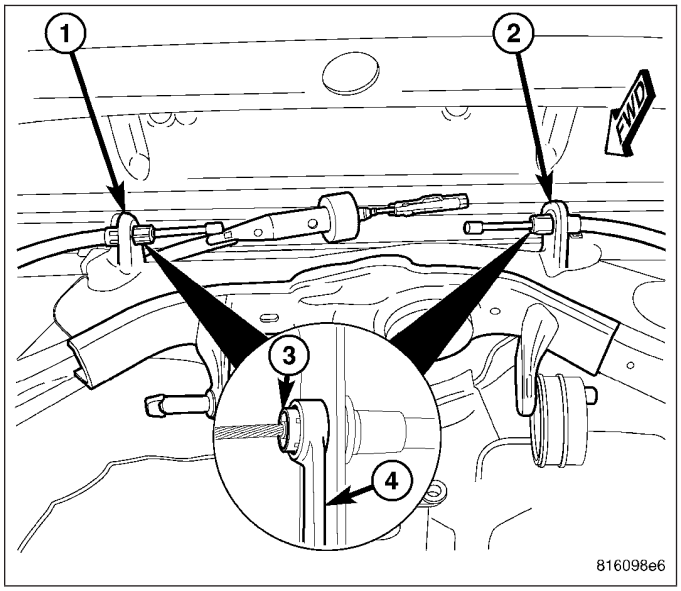

3. Insert opposite end of cable (2) through rear knuckle (3) and install mounting screw (4). Tighten screw to 8 N·m (71 in. lbs.) torque.

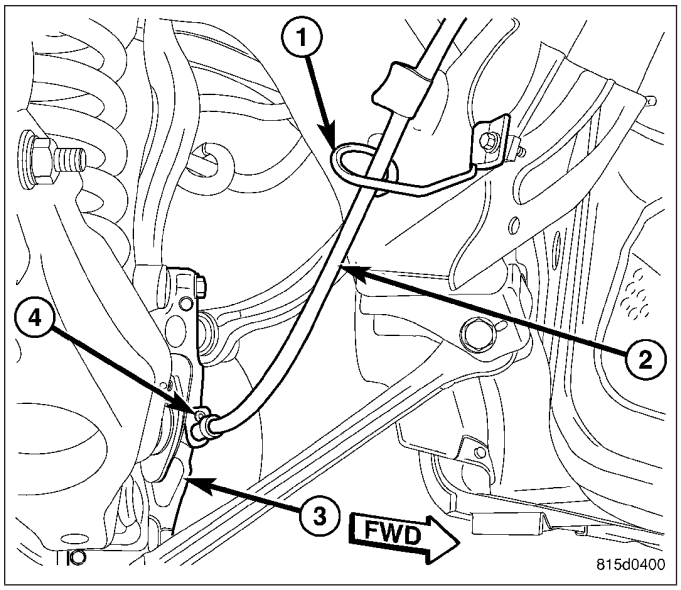

4. Install shoe actuator lever (1) on end of parking brake cable (2). Make sure actuator lever is positioned with word “UP” facing outward.
5. Install parking brake shoes as well as all components necessary to access them. (Refer to 5 - BRAKES/PARKING BRAKE/SHOES - INSTALLATION)

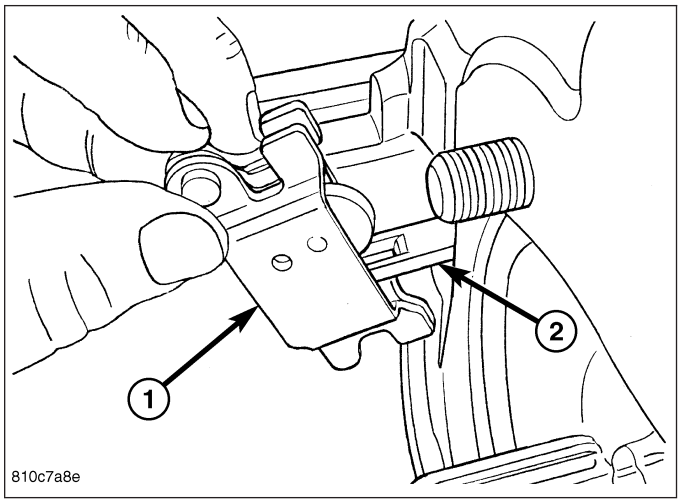

NOTE: Due to short travel and low spring tension, it is not necessary to lock out parking brake lever to service parking brake components.

6. Connect rear parking brake cable at equalizer/front cable as follows:
   - If installing left rear cable, connect cable (1) at equalizer (2) above rear axle differential (not shown) and rear crossmember (6).
   - If installing right rear cable, connect cable (4) at connector (3) above rear axle differential (not shown) and rear crossmember (6).

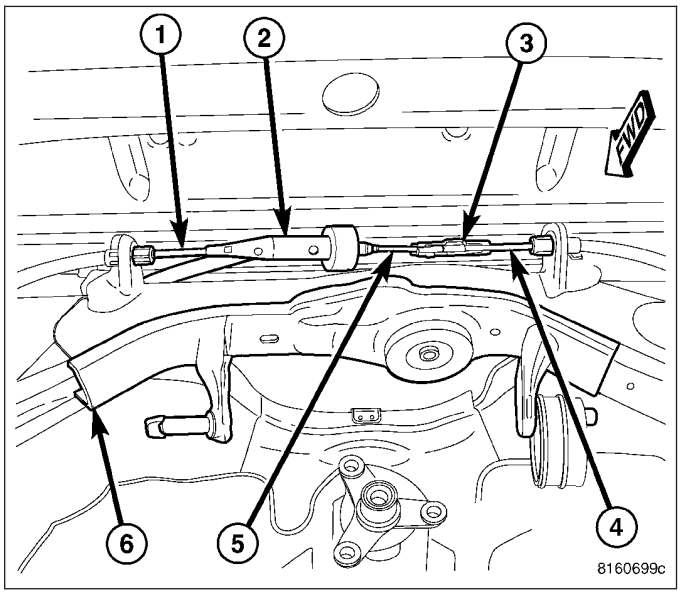

7. Lower vehicle until rear wheels are just above floor level.
8. Apply parking brake lever. Release lever, then reapply.
9. Check to make sure rear wheels will not rotate with lever applied.

10. Release parking brake lever, then check to make sure rear wheels rotate without excessive drag.
11. Adjust parking brake shoes as necessary. (Refer to 5 - BRAKES/PARKING BRAKE/SHOES - ADJUSTMENT)
12. Lower vehicle.

LEVER - PARKING BRAKE

REMOVAL

LEVER

NOTE: Before proceeding, (Refer to 5 - BRAKES - WARNING) (Refer to 5 - BRAKES - CAUTION).

1. Raise and support vehicle. (Refer to LUBRICATION & MAINTENANCE/HOISTING - STANDARD PROCEDURE)

NOTE: Due to short travel and low spring tension, it is not necessary to lock-out parking brake lever to service parking brake components.

2. Disconnect front parking brake cable (5) at connector (3) to right rear parking brake cable.
3. Lower vehicle.

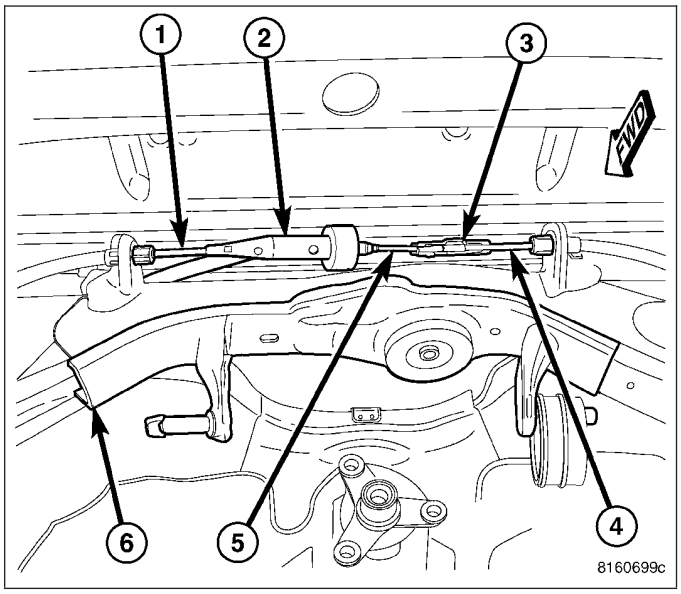

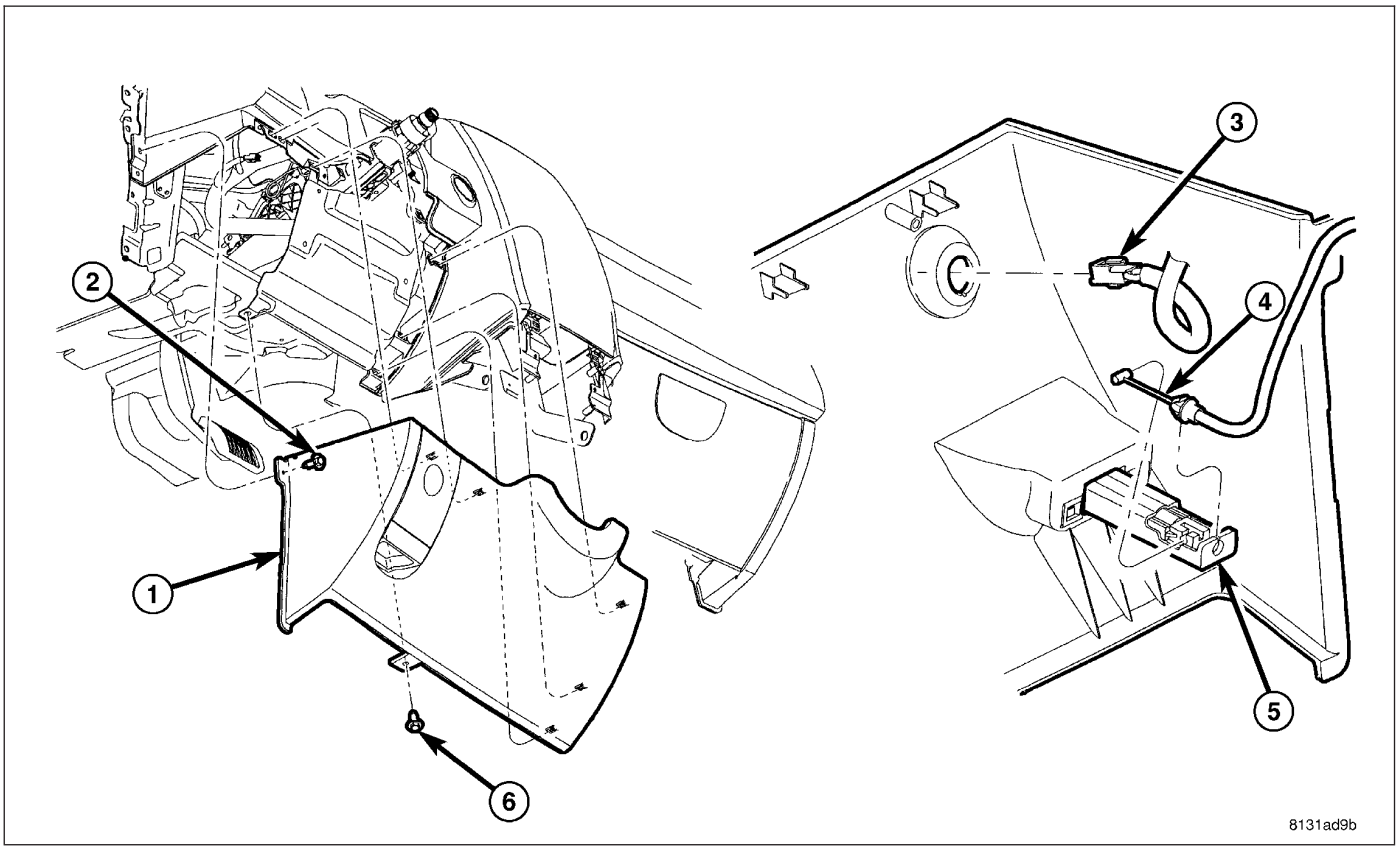

4. Remove fasteners (6) securing steering column opening cover (1) in place.
5. Disconnect wiring connector (3) at decklid release switch.
6. Disconnect parking brake release cable (4) at lever (5) and remove steering column opening cover (1).
7. Disconnect wiring connector (7) at parking brake switch (1).
8. Disconnect front parking brake cable strand (3) at lever connector (2).

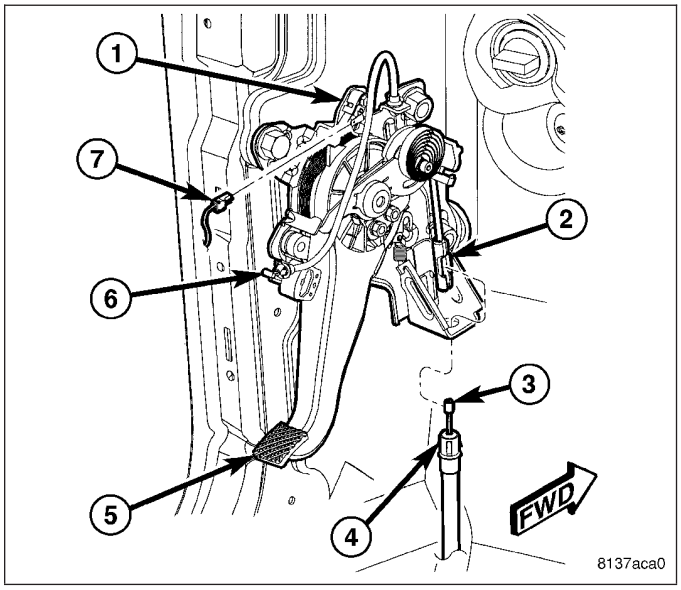

9. Place 13 mm 12-point box wrench (2) over cable retainer (1) at lever bracket as shown to collapse retainer fingers. Pull cable from bracket.

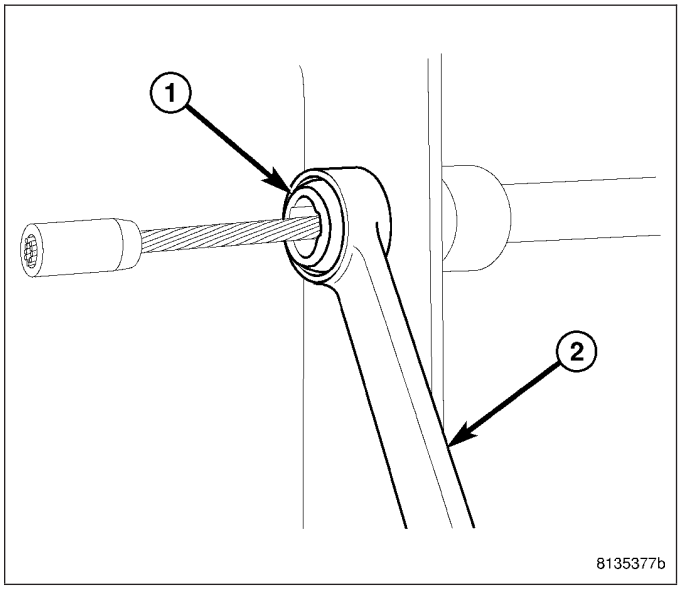

10. Remove bolt (4) and two nuts (2) mounting parking brake lever (3) to body (5).
11. Remove parking brake lever (3).

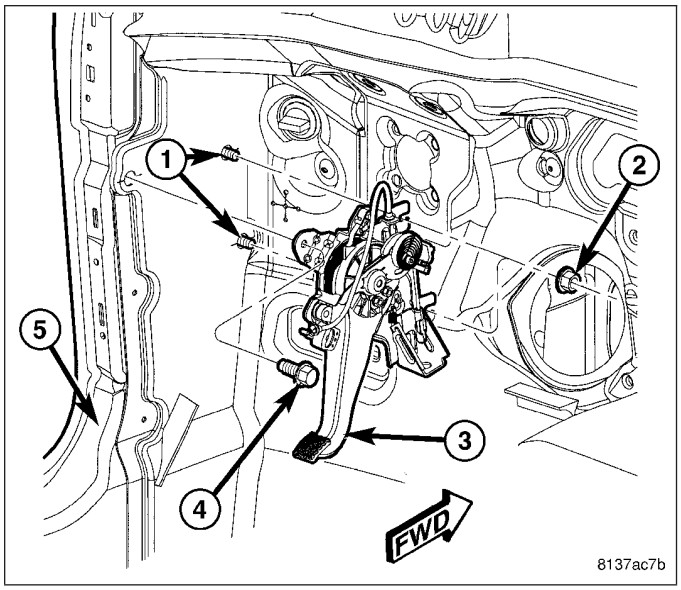

LEVER - RHD

NOTE: Before proceeding, (Refer to 5 - BRAKES - WARNING) (Refer to 5 - BRAKES - CAUTION).

1. Raise and support vehicle. (Refer to LUBRICATION & MAINTENANCE/HOISTING - STANDARD PROCEDURE)

NOTE: Due to short travel and low spring tension, it is not necessary to lock-out parking brake lever to service parking brake components.

2. Disconnect front parking brake cable (5) at connector (2) to right rear parking brake cable.
3. Lower vehicle.

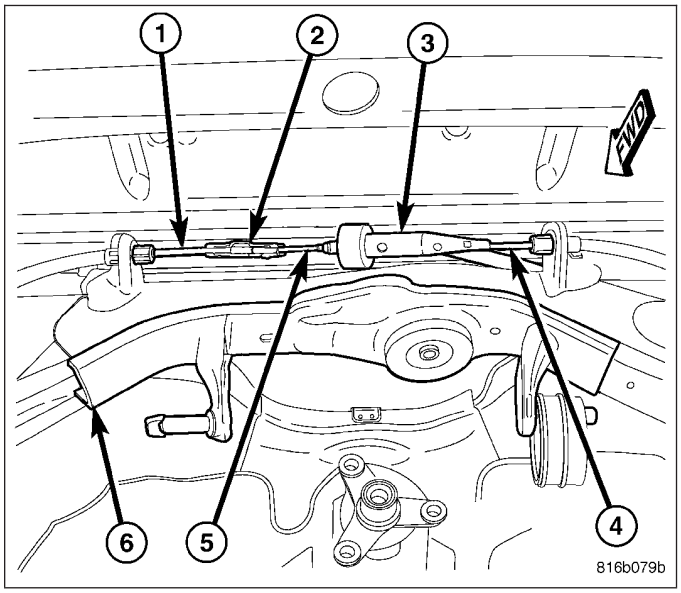

4. Remove driver side silencer under instrument panel. (Refer to 23 - BODY/INSTRUMENT PANEL/INSTRUMENT PANEL SILENCER - INSTALLATION)
5. Remove steering column opening cover. (Refer to 23 - BODY/INSTRUMENT PANEL/STEERING COLUMN OPENING COVER - INSTALLATION)
6. Remove foot rest. (Refer to 23 - BODY/INTERIOR/FRONT FLOOR FOOT REST - REMOVAL)
7. Roll back carpet at center console to access lever mounting nuts.

8. Disconnect wiring connector at parking brake switch on lever.
9. Disconnect front parking brake cable strand (3) at lever connector (2).

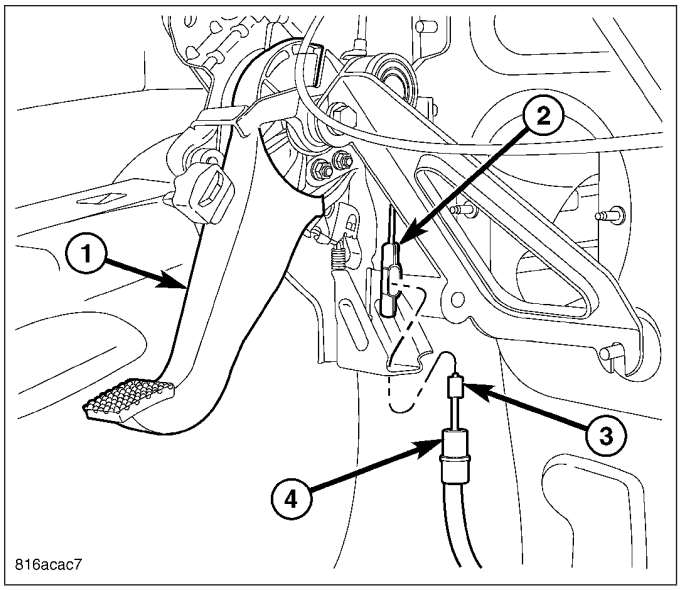

10. Place 13 mm 12-point box wrench (2) over cable retainer (1) at lever bracket as shown to collapse retainer fingers. Pull cable from bracket.

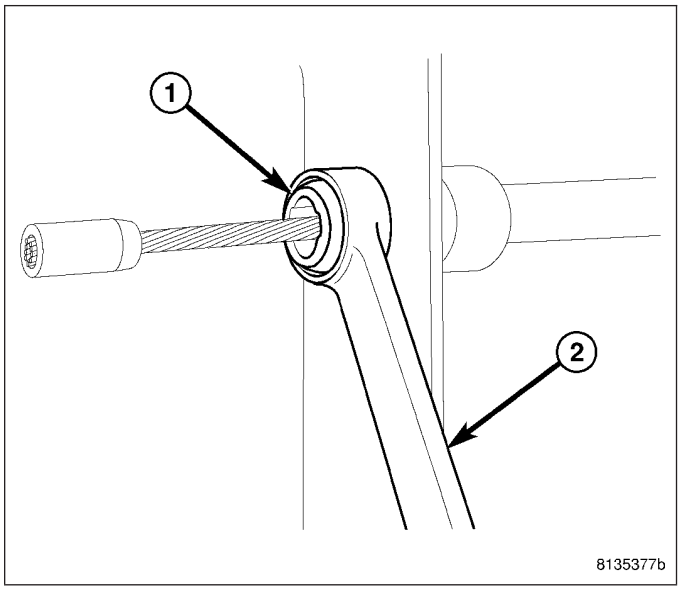

11. Loosen nut (5) mounting parking brake lever (7) to body.
12. Remove nuts (8) mounting parking brake lever (7) to body.
13. Remove parking brake lever (7).

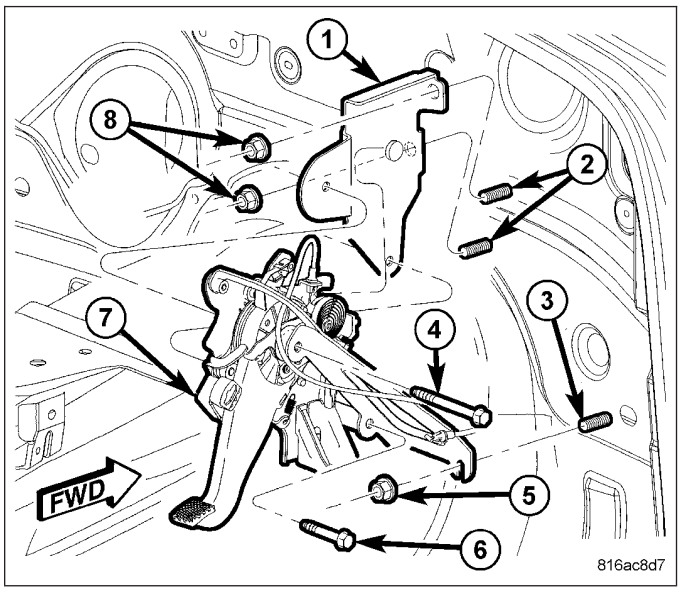

INSTALLATION

LEVER

1. Install parking brake lever (3) over mounting studs (1).
2. Install bolt (4) and two nuts (2) mounting parking brake lever to body (5). Tighten bolt and nuts to 26 N·m (19 ft. lbs.) torque.

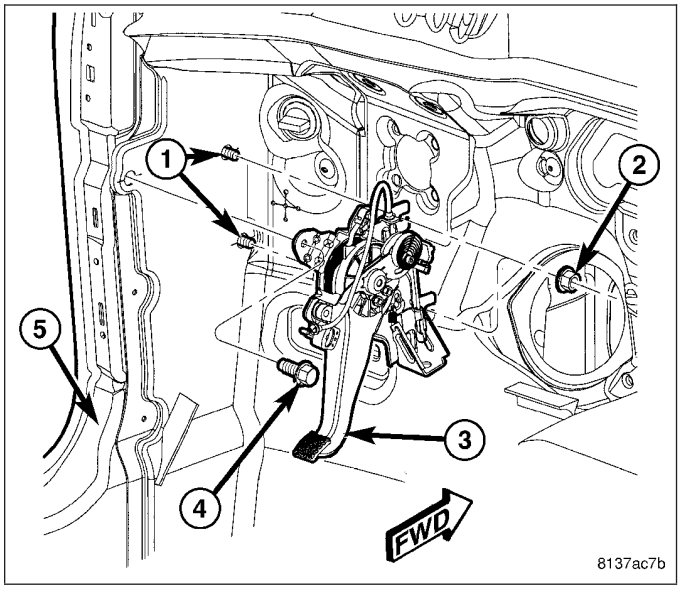

3. Connect wiring connector (7) at parking brake switch (1).
4. Guide cable end (3) up through lever bracket and press cable housing retainer (7) into bracket allowing retainer fingers to lock cable in place.
5. Connect front parking brake cable strand (3) at lever connector (2).
6. If installing new lever, remove pin locking out automatic tensioning spring.

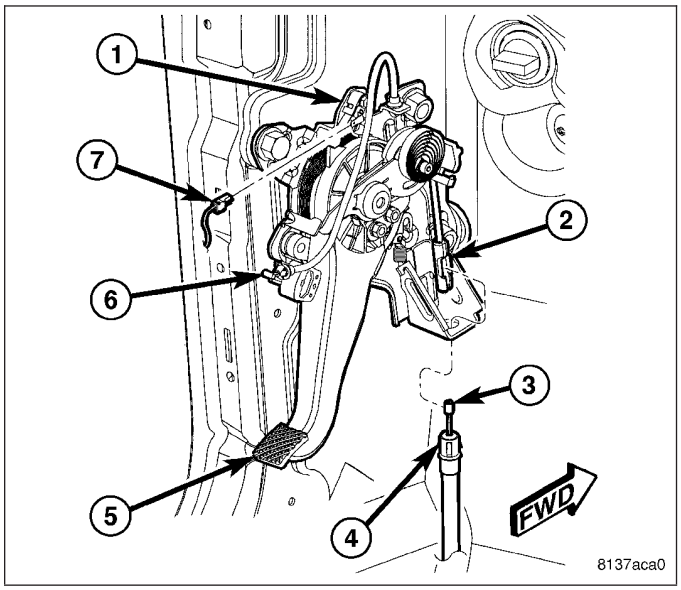

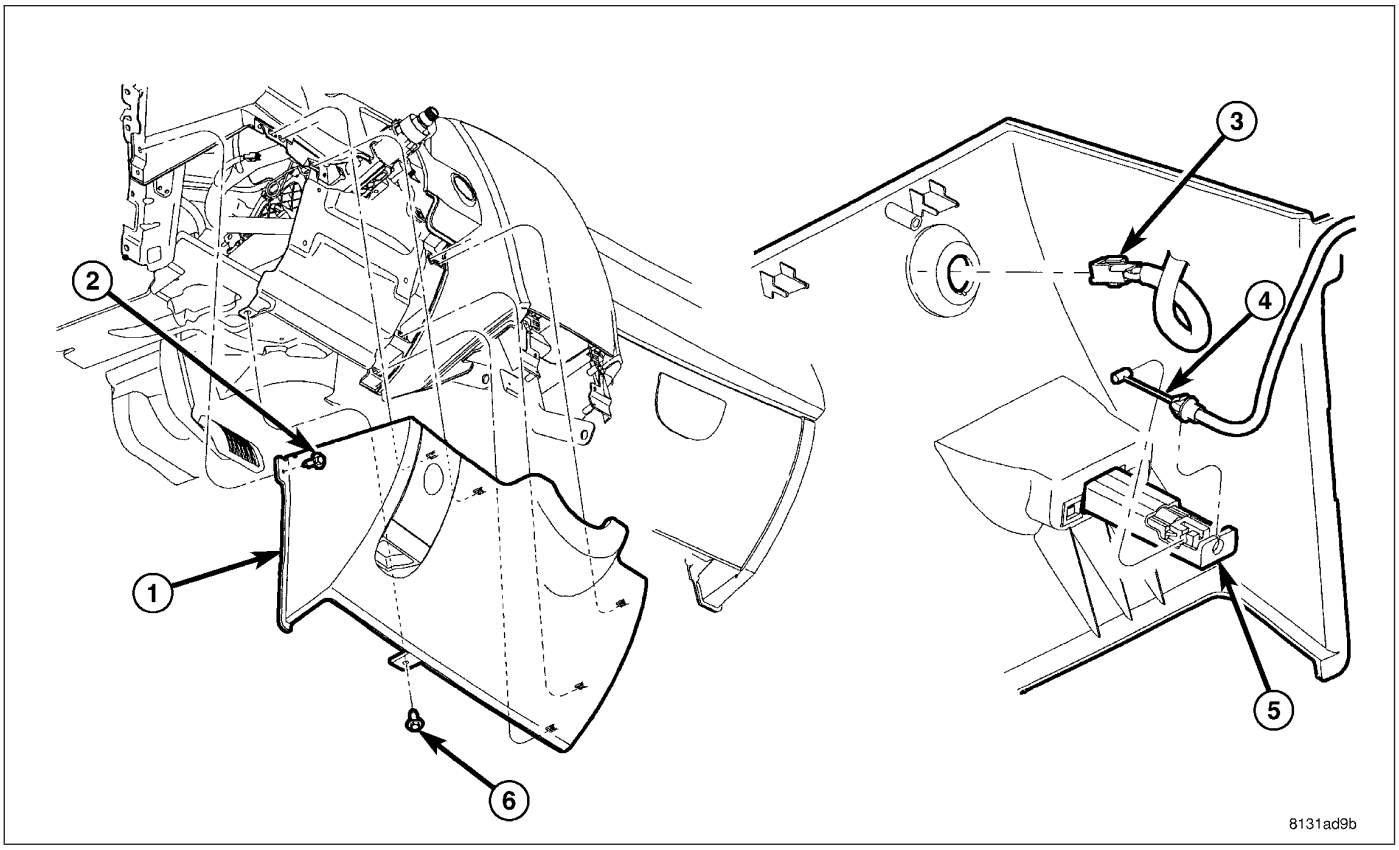

7. Connect parking brake release cable (4) at handle (5) in steering column opening cover (1).
8. Connect wiring connector (3) at decklid release switch.
9. Position steering column opening cover (1) and install fasteners (6) securing it in place.
10. Raise and support vehicle.

NOTE: Due to short travel and low spring tension, it is not necessary to lock-out parking brake lever to service parking brake components.

11. Connect front parking brake cable (5) at connector (3) to right rear parking brake cable (4).
12. Lower vehicle until rear wheels are just above floor level.
13. Apply parking brake lever. Release lever to test release cable and handle. Reapply lever. While doing this, check to make sure the red indicator lamp in the cluster turns on and off properly.
14. Check to make sure rear wheels will not rotate with lever applied.
15. Release parking brake lever, then check to make sure rear wheels rotate without excessive drag.
16. Apply parking brake lever.
17. Lower vehicle.

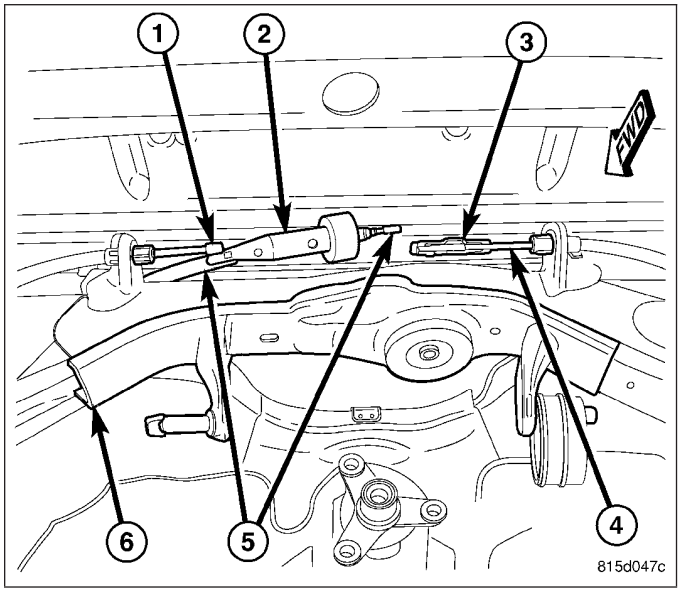

LEVER - RHD

1. Install parking brake lever (7) over mounting studs (2, 3).
2. Install two nuts (8) mounting left side of parking brake lever to body. Tighten nuts to 26 N·m (19 ft. lbs.).

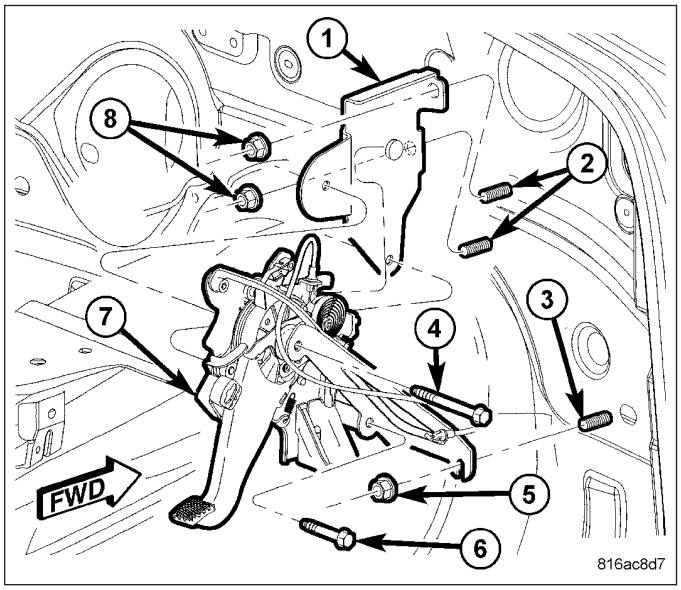

3. Tighten nut (5) left on stud (3) to 26 N·m (19 ft. lbs.).
4. Connect wiring connector at parking brake switch.
5. Guide front parking brake cable strand (3) up through lever bracket and press cable housing retainer (4) into bracket allowing retainer fingers to lock cable in place.
6. Connect parking brake cable strand (3) at lever connector (2).
7. If installing new lever, remove pin locking out automatic tensioning spring.

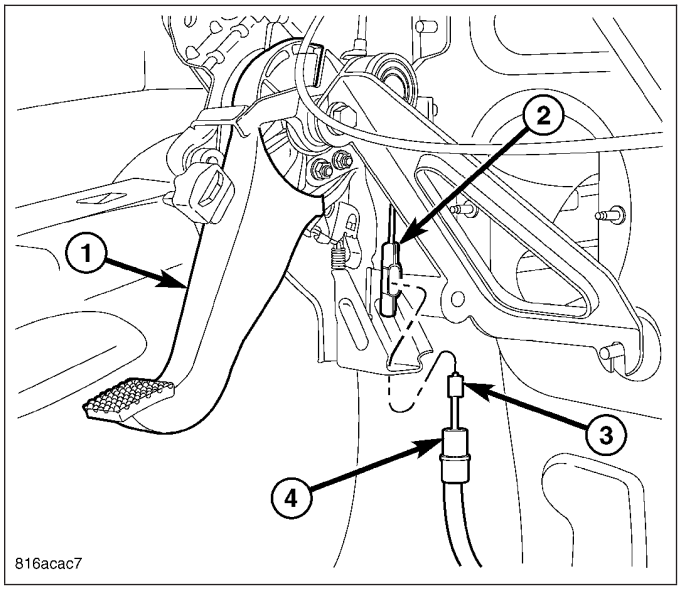

8. Reposition carpet back to original position at center console.
9. Install foot rest. (Refer to 23 - BODY/INTERIOR/FRONT FLOOR FOOT REST - INSTALLATION)
10. Install steering column opening cover. (Refer to 23 - BODY/INSTRUMENT PANEL/STEERING COLUMN OPENING COVER - INSTALLATION)
11. Install driver side silencer under instrument panel. (Refer to 23 - BODY/INSTRUMENT PANEL/INSTRUMENT PANEL SILENCER - INSTALLATION)
12. Raise and support vehicle.

NOTE: Due to short travel and low spring tension, it is not necessary to lock-out parking brake lever to service parking brake components.

13. Connect front parking brake cable (5) at connector (2) to left rear parking brake cable (1).
14. Lower vehicle until rear wheels are just above floor level.
15. Apply parking brake lever. Release lever to test release cable and handle. Reapply lever. While doing this, check to make sure the red indicator lamp in the cluster turns on and off properly.
16. Check to make sure rear wheels will not rotate with lever applied.
17. Release parking brake lever, then check to make sure rear wheels rotate without excessive drag.
18. Apply parking brake lever.
19. Lower vehicle.

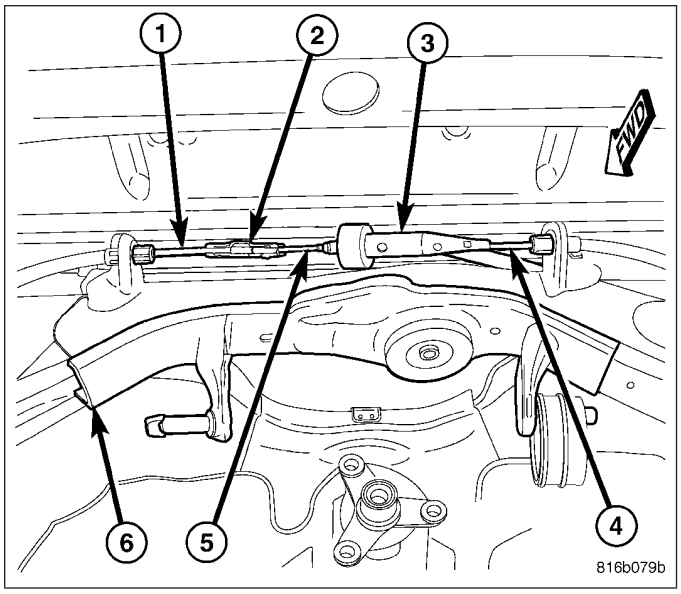

SHOE AND LINING - PARKING BRAKE

REMOVAL

NOTE: The following procedure may be used to remove shoes on either side of the vehicle.

1. Raise and support vehicle. (Refer to LUBRICATION & MAINTENANCE/HOISTING - STANDARD PROCEDURE)
2. Access and remove rear hub and bearing. (Refer to 2 - SUSPENSION/REAR/HUB / BEARING - REMOVAL)
3. Completely back off parking brake shoe adjustment (8).
4. Remove parking brake shoe adjuster spring (3).
5. Remove shoe adjuster (8).
6. Remove upper brake shoe hold-down clip and pin (7).
7. Remove upper shoe (6) from return spring (4) and shoe actuator lever (1).
8. Remove return spring (4) from lower shoe (6).

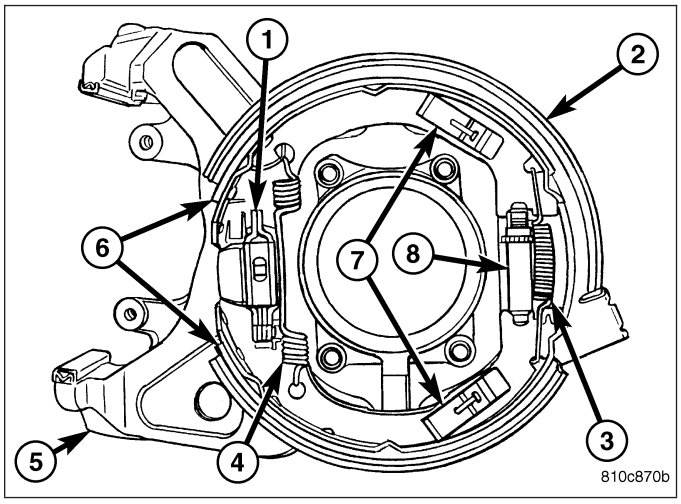

9. Remove shoe actuator lever (1) from end of cable (2).

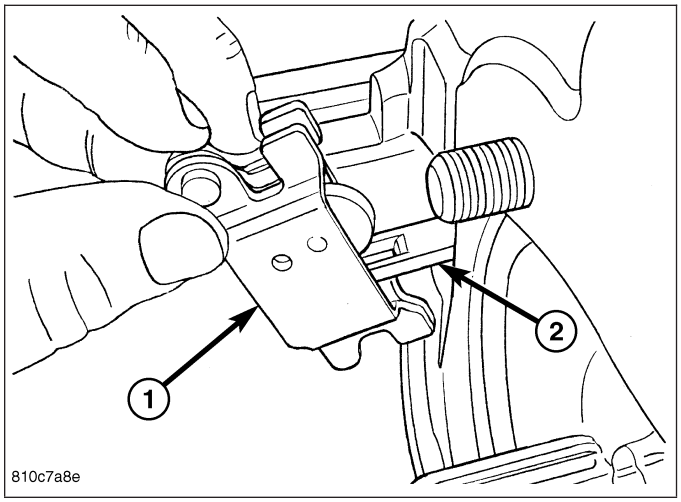

10. Remove lower brake shoe hold-down clip and pin (7).
11. Remove lower shoe (6).
12. Inspect springs, adjuster, lever and aluminum shoe anchor pin for wear or damage. Replace as necessary.

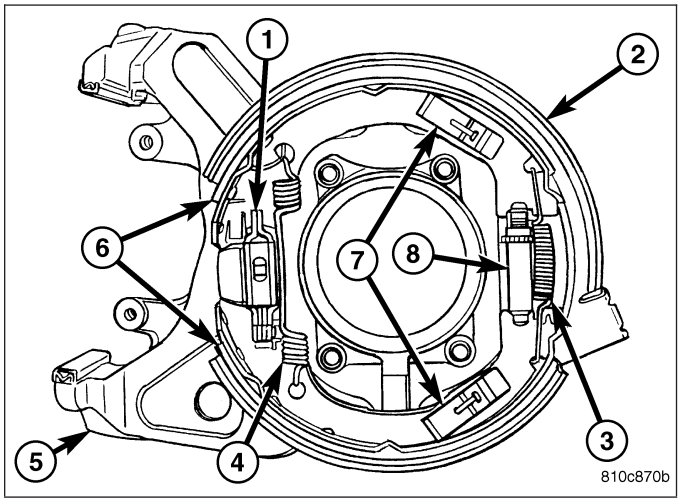

INSTALLATION

NOTE: The following procedure may be used to install shoes on either side of the vehicle.

NOTE: Inspect springs, adjuster, lever and aluminum shoe anchor pin for wear or damage prior to installation. Replace as necessary.

1. Install lower brake shoe hold-down pin (7) through rear of support (2).
2. Install lower shoe (6) against support plate (2).
3. Install lower brake shoe hold-down clip (7).

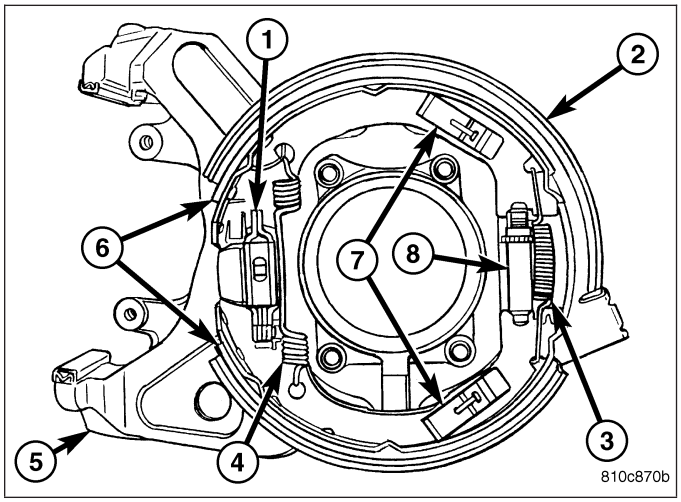

4. Install shoe actuator lever (1) on end of parking brake cable (2). Make sure actuator lever is positioned with word “UP” facing outward.

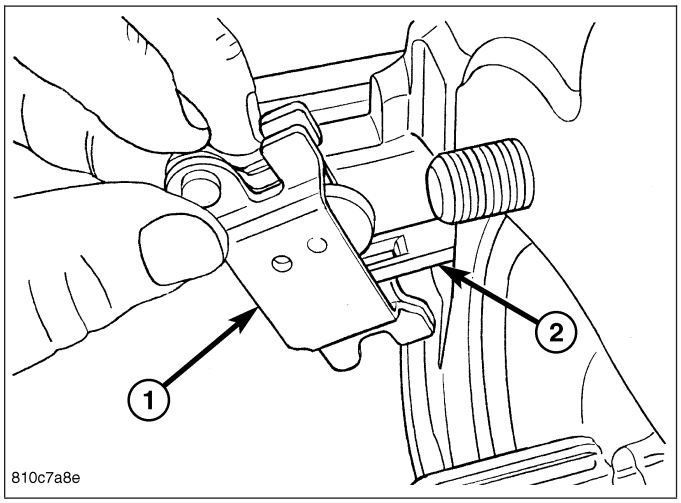

5. Install return spring (4) to lower shoe (6).
6. Install upper shoe (6) against support plate and onto shoe actuator lever.
7. Install upper brake shoe hold-down pin (7) through rear of support and upper shoe.
8. Install upper brake shoe hold-down clip (7).
9. Attach return spring (4) to upper shoe (6).
10. Install shoe adjuster (8). Place end of adjuster with star wheel upward.
11. Install parking brake shoe adjuster spring (3).

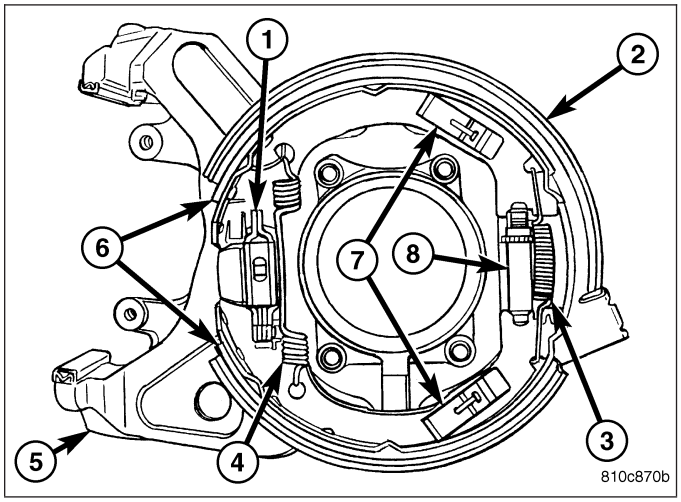

12. Using Brake Shoe Gauge, Special Tool C-3919, or equivalent, measure inside diameter of parking brake drum portion of rotor. Set gauge.

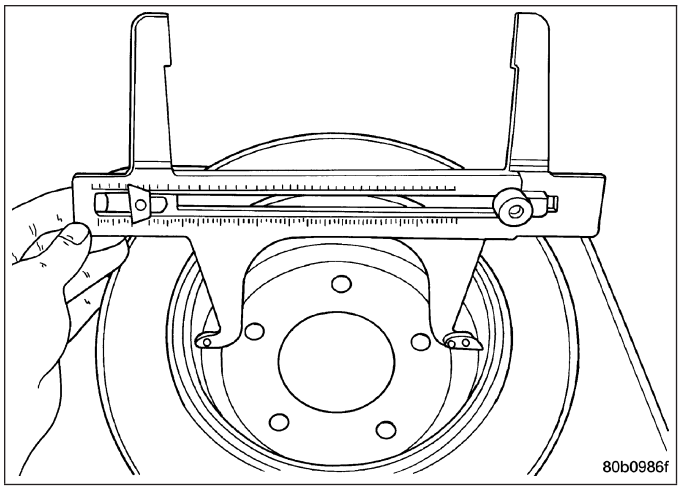

13. Place Gauge (1) over parking brake shoes at widest point.
14. Using adjuster star wheel (2), adjust parking brake shoes until linings on both park brake shoes just touch jaws on gauge. This will give a good preliminary adjustment of parking brake shoes, before a final adjustment is made at end of this procedure.
15. Install hub and bearing with wheel speed sensor as well as all components necessary to access it. (Refer to 2 - SUSPENSION/REAR/HUB / BEARING - INSTALLATION)
16. Lower vehicle.
17. Perform final adjustment of parking brake shoes. (Refer to 5 - BRAKES/PARKING BRAKE/SHOES - ADJUSTMENT)

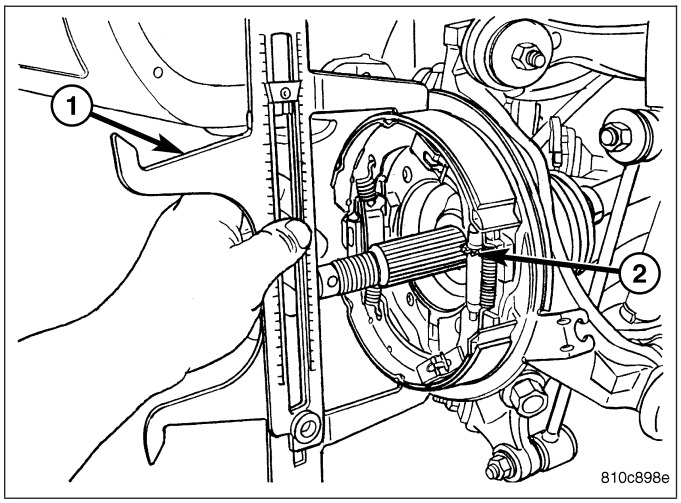

ADJUSTMENTS

PARKING BRAKE SHOE ADJUSTMENT

1. Place parking brake lever in “full released” position.
2. Raise and support vehicle. (Refer to LUBRICATION & MAINTENANCE/HOISTING - STANDARD PROCEDURE)
3. Remove plug in parking brake shoe support to access adjuster star-wheel (1).

NOTE: Through the access hole (2), rotate the adjuster star wheel (1) in the following direction to expand the shoes outward against the drum.
- **Left brake – Rotate star-wheel toward rear of vehicle.**
- **Right brake – Rotate star-wheel toward front of vehicle.**

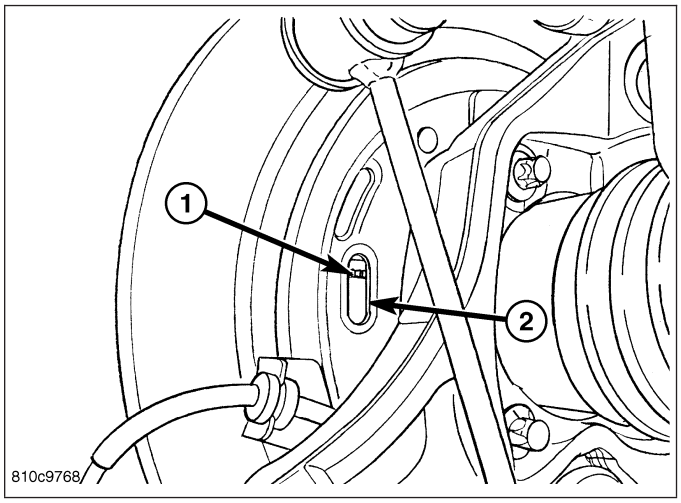

4. Using an appropriate tool, turn adjuster star wheel (1) until wheel will not rotate (dead lock).
5. Back off adjuster six detents (teeth).
6. Rotate wheel, checking for light drag. If drag is too heavy, continue to back off adjuster one detent at a time until light drag is present. **Do not back off star-wheel more than 17 detents from wheel lock.**

7. Install access plug.
8. Adjust opposite wheel parking brake shoes using same method.
9. Lower vehicle.
10. Apply and release parking brake lever once to ensure proper operation of parking brakes.

BRAKES - ABS ELECTRICAL DIAGNOSTICS

TABLE OF CONTENTS

page

BRAKES - ABS ELECTRICAL DIAGNOSTICS
DIAGNOSIS AND TESTING
APS-INTERMITTENT CONDITION 176
B1D4F-ADJUSTABLE PEDAL INHIBIT CIRCUIT LOW 177
B1D50-ADJUSTABLE PEDAL INHIBIT CIRCUIT HIGH 181
B1D51-ADJUSTABLE PEDAL INHIBIT CIRCUIT OPEN 184
B1D56–ADJUSTABLE PEDAL SENSOR CIRCUIT LOW 187
B1D57–ADJUSTABLE PEDAL SENSOR CIRCUIT HIGH 191
B1D5B–ADJUSTABLE PEDAL SWITCH CIRCUIT PERFORMANCE 194
B1D5C–ADJUSTABLE PEDAL SWITCH CIRCUIT STUCK FORWARD 198
B1D5D–ADJUSTABLE PEDAL SWITCH CIRCUIT STUCK REARWARD 201
B1D67–ADJUSTABLE PEDAL CONTROL CIRCUIT PERFORMANCE 204
ABS INTERMITTENT CONDITION 208
C100A–LEFT FRONT WHEEL SPEED SENSOR CIRCUIT 209
C1011-LEFT FRONT WHEEL SPEED SENSOR SIGNAL ERRATIC PERFORMANCE 215
C1014-LEFT FRONT WHEEL SPEED COMPARATIVE PERFORMANCE 219
C1015–RIGHT FRONT WHEEL SPEED SENSOR CIRCUIT 222
C101C-RIGHT FRONT WHEEL SPEED SENSOR SIGNAL ERRATIC PERFORMANCE 228
C101F-RIGHT FRONT WHEEL SPEED COMPARATIVE PERFORMANCE 232
C1020–LEFT REAR WHEEL SPEED SENSOR CIRCUIT 235
C1027-LEFT REAR WHEEL SPEED SENSOR SIGNAL ERRATIC PERFORMANCE 241
C102A-LEFT REAR WHEEL SPEED COMPARATIVE PERFORMANCE 245
C102B–RIGHT REAR WHEEL SPEED SENSOR CIRCUIT 248
C1032-RIGHT REAR WHEEL SPEED SENSOR SIGNAL ERRATIC PERFORMANCE 254
C1035-RIGHT REAR WHEEL SPEED COMPARATIVE PERFORMANCE 258
C1041-LEFT FRONT TONE WHEEL PERFORMANCE 261

page

C1042-RIGHT FRONT TONE WHEEL PERFORMANCE 262
C1043-LEFT REAR TONE WHEEL PERFORMANCE 263
C1044-RIGHT REAR TONE WHEEL PERFORMANCE 264
C1046–LEFT FRONT WHEEL PRESSURE PHASE MONITORING 265
C1047-RIGHT FRONT WHEEL PRESSURE PHASE MONITORING 268
C1048-LEFT REAR WHEEL PRESSURE PHASE MONITORING 271
C1049-RIGHT REAR WHEEL PRESSURE PHASE MONITORING 274
C1073-ABS PUMP MOTOR CONTROL CIRCUIT 277
C1078–TIRE REVOLUTIONS RANGE PERFORMANCE 281
C107C–BRAKE PEDAL SWITCH 1/2 STUCK . . 282
C107D-BRAKE PEDAL SWITCH 1/2 CORRELATION 286
C1210–G SENSOR INPUT CIRCUIT PERFORMANCE 290
C1219-STEERING ANGLE SENSOR ERRATIC PERFORMANCE 293
C121A–STEERING ANGLE SENSOR NOT INITIALIZED 297
C121C–TORQUE REQUEST SIGNAL DENIED 298
C121D-BRAKE PRESSURE SENSOR CIRCUIT 299
C121E-BRAKE PRESSURE SENSOR COMPARATIVE PERFORMANCE 300
C1231–DRIVE TEST: STEERING ANGLE SENSOR 301
C1232–DRIVE TEST: PRESSURE SENSOR . . 303
C1234–DRIVE TEST: SENSOR CLUSTER INSTALLATION 304
C1238-DRIVE TEST: UNSUCCESSFUL 305
C1239–EMISSIONS ROLLS TEST ACTIVE . . . 305
C123A-ESP SYSTEM SENSORS CALIBRATION 306
C123B-ESP SYSTEM CONTROL TOO LONG . 308
C123C-DYNAMICS SENSOR MOUNTING/ INSTALLATION PERFORMANCE 310
C123F–STEERING ANGLE SENSOR COMPARATIVE PERFORMANCE 313
C1240–STEERING ANGLE SENSOR OVERTRAVEL PERFORMANCE 316
C1242–G SENSOR INPUT SIGNAL PERFORMANCE 319

C1243–G SENSOR NOT INITIALIZED 320
C2100-BATTERY VOLTAGE LOW 321
C2101-BATTERY VOLTAGE HIGH 323
C2111-SENSOR SUPPLY VOLTAGE CIRCUIT LOW. 325
C2112-SENSOR SUPPLY VOLTAGE CIRCUIT HIGH 327
C2114-DYNAMICS SENSOR SUPPLY VOLTAGE LOW. 329
C2115-DYNAMICS SENSOR SUPPLY VOLTAGE HIGH 333
C2116-ABS PUMP MOTOR SUPPLY LOW VOLTAGE 335
C2200-ANTI-LOCK BRAKE MODULE INTERNAL 339
C2202-ORIGINAL VIN MISMATCH/MISSING . . 341
C2204-DYNAMICS SENSOR INTERNAL 342
C2205-STEERING ANGLE SENSOR INTERNAL 345
C2206-VEHICLE CONFIGURATION MISMATCH. 347
U0002–CAN C BUS OFF PERFORMANCE . . . 348
U0100–LOST COMMUNICATION WITH ECM/PCM. 352
U0101–LOST COMMUNICATION WITH TCM . 354
U0125–LOST COMMUNICATION WITH DYNAMICS SENSOR. 356
U0126–LOST COMMUNICATION WITH STEERING ANGLE SENSOR. 360
U0141–LOST COMMUNICATION WITH FRONT CONTROL MODULE. 362
U0146–LOST COMMUNICATION WITH CENTRAL GATEWAY. 364
U0401–IMPLAUSIBLE DATA RECEIVED FROM ECM/PCM 366
U0429–IMPLAUSIBLE DATA RECEIVED FROM SCM 367
U1003–ESP CAN C BUS PERFORMANCE . . . 368
U1104–CAN C BUS CRC PERFORMANCE . . . 372
U140E–IMPLAUSIBLE VEHICLE CONFIGURATION DATA RECEIVED 376
U1501–IMPLAUSIBLE MESSAGE DATA LENGTH RECEIVED FROM ECM/PCM. 378
U1502–IMPLAUSIBLE MESSAGE DATA LENGTH RECEIVED FROM TCM. 380
U1503–IMPLAUSIBLE MESSAGE DATA LENGTH RECEIVED FROM FCM. 382
STANDARD PROCEDURE
APS VERIFICATION TEST 383
ABS VERIFICATION TEST — VER 1 384

BRAKES - ABS ELECTRICAL DIAGNOSTICS

DIAGNOSIS AND TESTING

APS-INTERMITTENT CONDITION

For a complete wiring diagram **Refer to Section 8W**.

Diagnostic Test

1.

WARNING: When the engine is operating, do not stand in direct line with the fan. Do not put your hands near the pulleys, belts, or fan. Do not wear loose clothing. Failure to follow these instructions can result in personal injury or death.

The DTC is not active at this time. The following list may help to identify an intermittent condition:

1. Refer to any Technical Service Bulletins (TSBs) that may apply.
2. Use DTC environmental data to try to duplicate the conditions in which the DTC was set.
3. Turn the ignition off.
4. Inspect the related wiring harness and connectors. Look for any chafed, pierced, pinched, partially broken wires, or broken, bent, pushed out, or corroded terminals.
5. Perform a voltage drop test on the circuits between the component and the applicable module.
6. If multiple DTCs are set, use a wiring schematic and inspect any common ground or supply circuits.
7. Inspect and clean all ground circuits that are related to the most current DTC.
8. Use the scan tool to perform a System Test or Actuation, if one applies to the component.
9. Perform a wiggle test on the related wiring and connectors while monitoring the scan tool. Look for the DTC to reset or data to change during the test.
10. A co-pilot, data recorder, and/or lab scope should be used to diagnose an intermittent condition.

Were any problems found during the above inspection?

Yes >> Repair as necessary.
Perform APS VERIFICATION TEST - VER 1. (Refer to 5 - BRAKES - STANDARD PROCEDURE).

No >> Test Complete.

B1D4F-ADJUSTABLE PEDAL INHIBIT CIRCUIT LOW

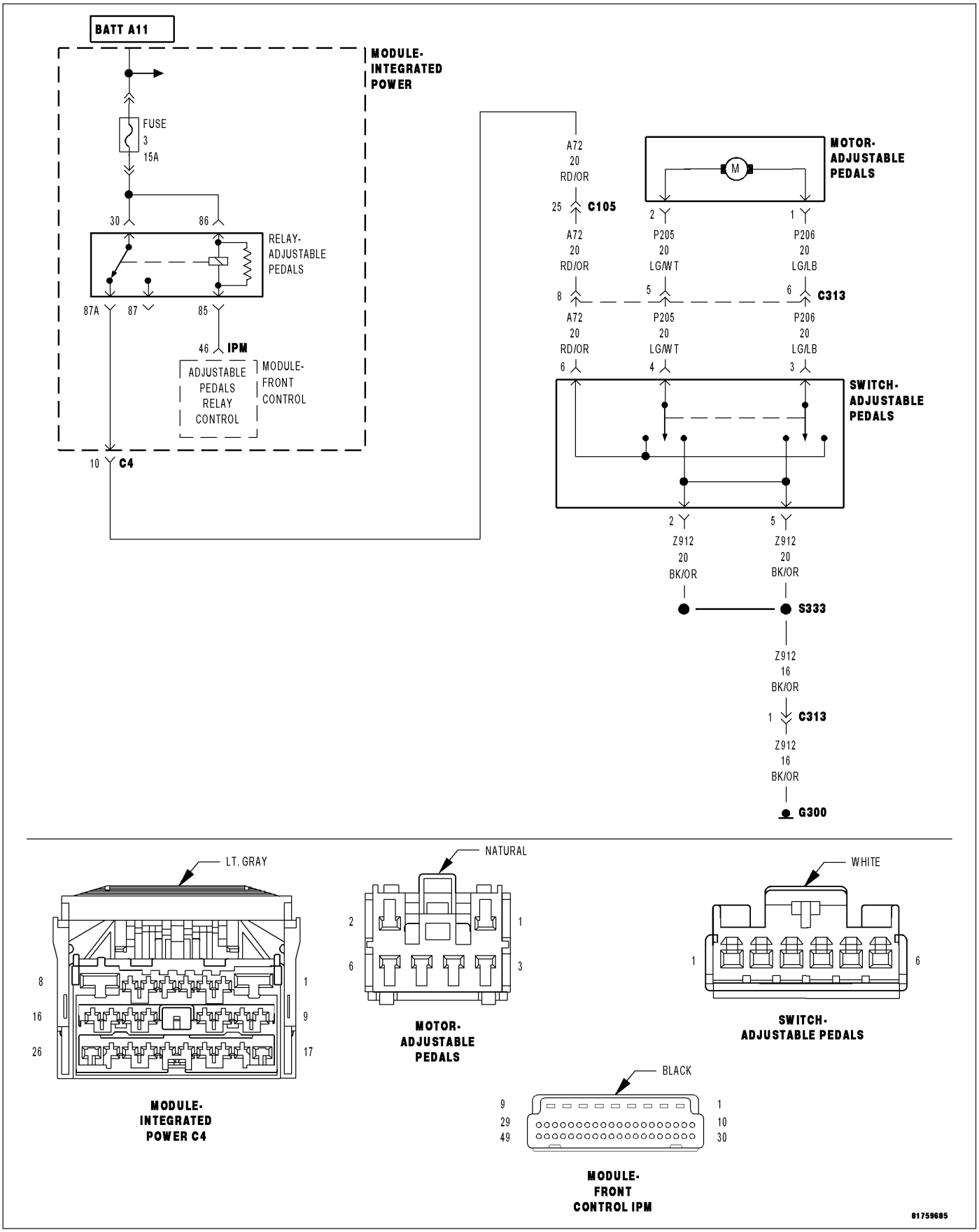

For a complete wiring diagram **Refer to Section 8W**.

- **When Monitored:**
  With the ignition on.
- **Set Condition:**
  When the Front Control Module detects low voltage on the Adjustable Pedals Relay control circuit.

Possible Causes
WIRING HARNESS CONNECTOR/TERMINALS
ADJUSTABLE PEDALS RELAY
FRONT CONTROL MODULE
INTEGRATED POWER MODULE

Diagnostic Test

1. DTC IS ACTIVE

Turn the ignition on.
With the scan tool, select view DTCs. Record DTC and DTC Environmental data.
With the scan tool, clear stored DTCs.
Cycle the ignition switch off then on.

WARNING: Apply the parking brake. The vehicle may roll when the Transmission is shifted out of Park.
Shift into Reverse for at least 5 seconds, then move the shifter back into Park.
With the scan tool, select view DTCs.

Is the status active for this DTC?

Yes >> Go To 2

No >> Refer to the Adjustable Pedal System intermittent condition test. (Refer to 5 - BRAKES - DIAGNOSIS AND TESTING)

2. WIRING HARNESS CONNECTOR/TERMINALS

Turn the ignition off.
Remove the Adjustable Pedals Relay from the IPM.
Remove the Front Control Module from the IPM.
Visually inspect the connector terminals for damage or corrosion.

Were any problems found?

Yes >> Repair as necessary.
Perform APS VERIFICATION TEST - VER 1. (Refer to 5 - BRAKES - STANDARD PROCEDURE).

No >> Go To 3

3. FUSED B+ CIRCUIT OPEN OR HIGH RESISTANCE (IPM)

Using a 12–volt test light connect to ground, check the internal Fused B(+) circuits at the Adjustable Pedals Relay connector of the IPM.

NOTE: The test light should be illuminated and bright. Compare the brightness to that of a direct connection to the battery.

Is the test light illuminated and bright for both circuits?

Yes >> Go To 4

No >> Remove and inspect Fuse in the IPM. If the fuse is open, test the circuit for a short to ground. Repair as necessary. If the fuse is OK, replace the Integrated Power Module in accordance with the Service Information.

Perform ABS VERIFICATION TEST - VER 1. (Refer to 5 - BRAKES - STANDARD PROCEDURE).

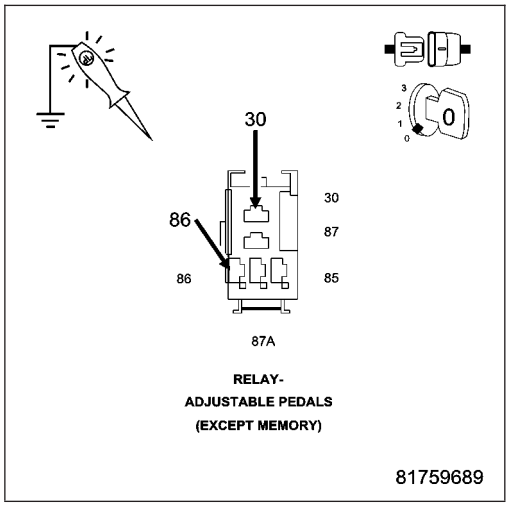

4. (P201) ADJUSTABLE PEDALS RELAY CONTROL CIRCUIT OPEN OR HIGH RESISTANCE (IPM)

Connect a jumper wire between the (P201) Adjustable Pedals Relay Control circuit and ground at the FCM connector of the IPM.

Using a 12-volt test light connected to 12-volts, check the (P201) Adjustable Pedals Relay Control circuit at the Adjustable Pedals Relay connector of the IPM.

NOTE: The test light should be illuminated and bright. Compare the brightness to that of a direct connection to the battery.

NOTE: Remove the jumper wire before proceeding to the next test.

Is the test light illuminated and bright?

Yes >> Go To 5

No >> Replace the Integrated Power Module in accordance with the Service Information.

Perform ABS VERIFICATION TEST - VER 1. (Refer to 5 - BRAKES - STANDARD PROCEDURE).

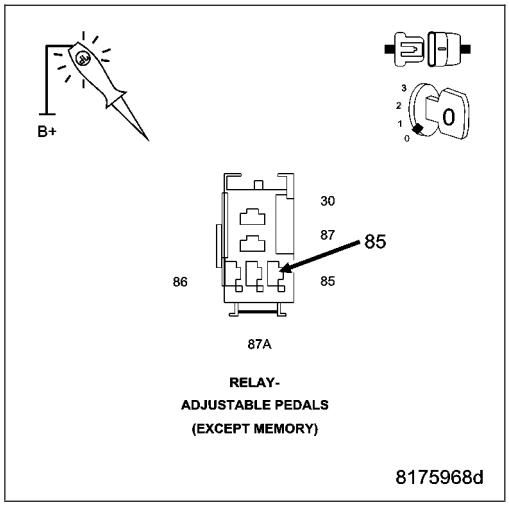

5. (P201) ADJUSTABLE PEDALS RELAY CONTROL CIRCUIT SHORT TO GROUND (IPM)

Measure the resistance between ground and the (P201) Adjustable Pedals Relay Control circuit at the Adjustable Pedals Relay connector of the IPM.

Is the resistance below 5.0 ohms?

Yes >> Replace the Integrated Power Module in accordance with the Service Information.

Perform ABS VERIFICATION TEST - VER 1. (Refer to 5 - BRAKES - STANDARD PROCEDURE).

No >> Go To 6

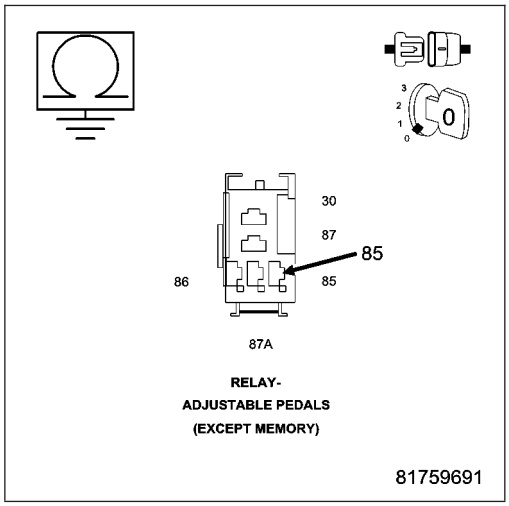

6. ADJUSTABLE PEDALS RELAY

Reconnect all components.

Turn the ignition on.

With the scan tool, actuate the Adjustable Pedals Relay.

Measure the voltage of the (P201) Adjustable Pedals Relay Control circuit at the Adjustable Pedals Relay connector of the IPM.

NOTE: With the Relay actuated ON, the circuit voltage should be 0 volts.

NOTE: With the Relay actuated OFF, the circuit voltage should be approximately 2.5 volts.

Does the circuit voltage display as described during the actuation test?

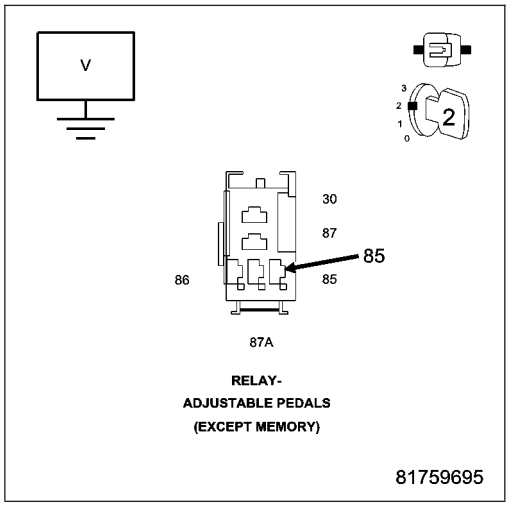

Yes >> Replace the Adjustable Pedals Relay in accordance with the Service Information.
Perform ABS VERIFICATION TEST - VER 1. (Refer to 5 - BRAKES - STANDARD PROCEDURE).

No >> Replace the Front Control Module in accordance with the Service Information.
Perform ABS VERIFICATION TEST - VER 1. (Refer to 5 - BRAKES - STANDARD PROCEDURE).

B1D50-ADJUSTABLE PEDAL INHIBIT CIRCUIT HIGH

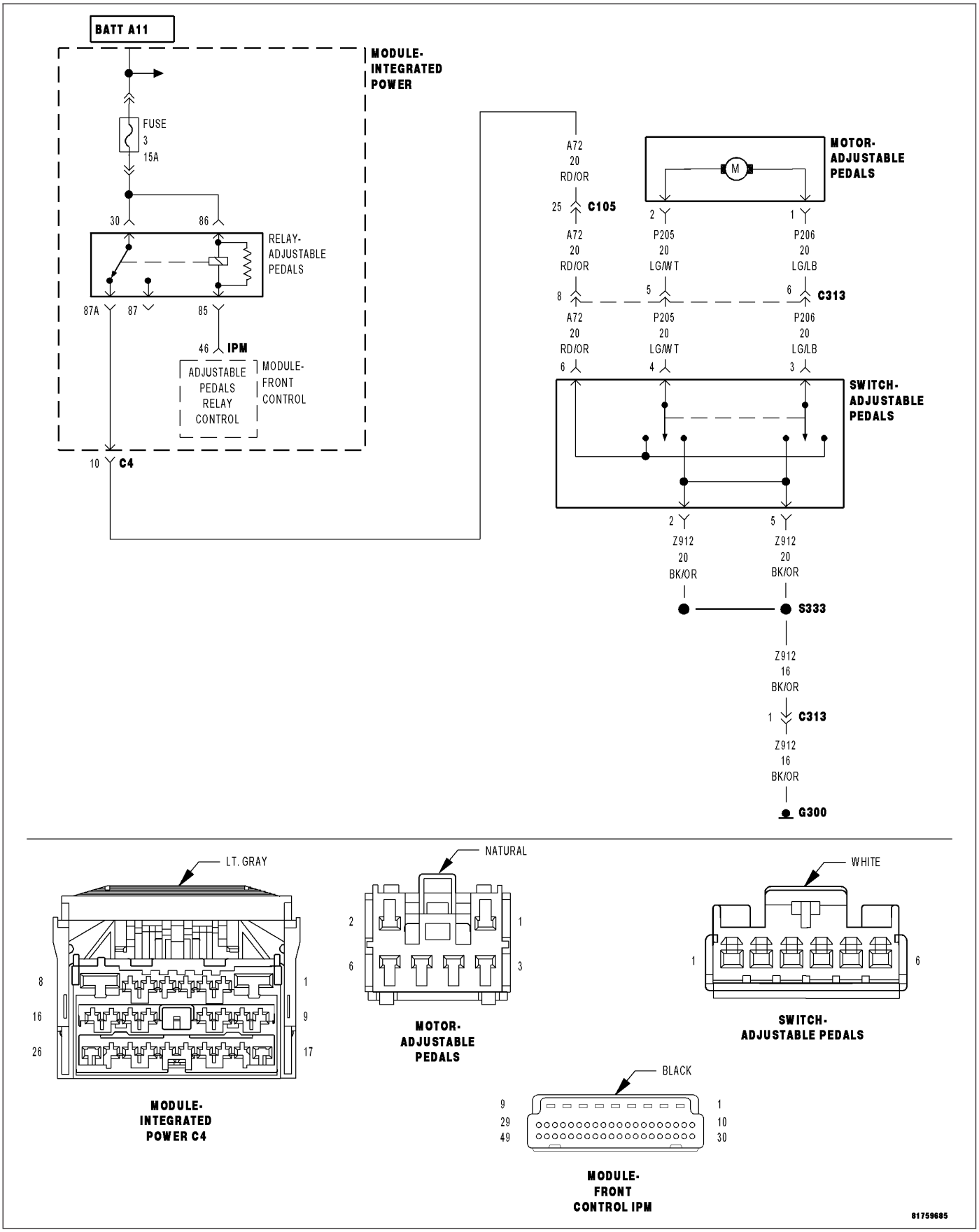

For a complete wiring diagram **Refer to Section 8W**.

- **When Monitored:**
  With the ignition on.
- **Set Condition:**
  When the Front Control Module detects high voltage on the Adjustable Pedals Relay control circuit.

Possible Causes
TERMINAL/CONNECTOR DAMAGE OR CORROSION
ADJUSTABLE PEDALS RELAY
FRONT CONTROL MODULE
INTEGRATED POWER MODULE

Diagnostic Test

1. DTC IS ACTIVE

Turn the ignition on.
With the scan tool, select view DTCs. Record DTC and DTC Environmental data.
With the scan tool, clear stored DTCs.
Cycle the ignition switch off then on.
Start the engine.

WARNING: Apply the brakes. The vehicle may roll when the Transmission is shifted out of Park.
Shift into Reverse for at least 5 seconds, then move the shifter back into Park.
With the scan tool, select view DTCs..

Is the status active for this DTC?

Yes >> Go To 2

No >> Refer to the Adjustable Pedal System intermittent condition test. (Refer to 5 - BRAKES - DIAGNOSIS AND TESTING)

2. WIRING HARNESS CONNECTOR/TERMINALS

Turn the ignition off.
Remove the Adjustable Pedals Relay from the IPM.
Remove the Front Control Module from the IPM.
Visually inspect the connector terminals for damage or corrosion.

Were any problems found?

Yes >> Repair as necessary.
Perform ABS VERIFICATION TEST - VER 1. (Refer to 5 - BRAKES - STANDARD PROCEDURE).

No >> Go To 3

3. (P201) ADJUSTABLE PEDALS RELAY CONTROL CIRCUIT SHORT TO VOLTAGE (IPM)

Turn the ignition on.

Measure the voltage of the (P201) Adjustable Pedals Relay Control circuit at the Adjustable Pedals Relay connector of the IPM.

Is there any voltage present?

Yes >> Replace the Integrated Power Module in accordance with the Service Information.
Perform ABS VERIFICATION TEST - VER 1. (Refer to 5 - BRAKES - STANDARD PROCEDURE).

No >> Go To 4

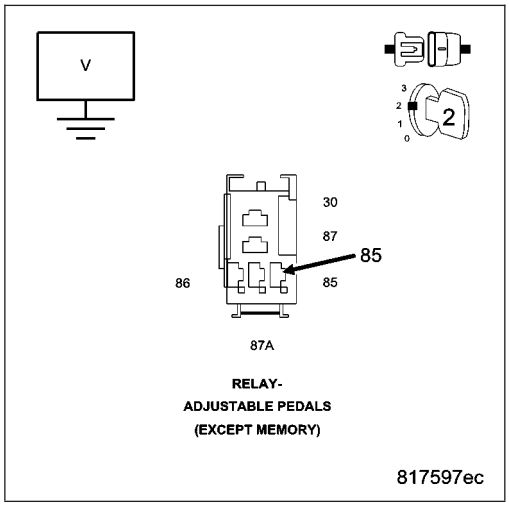

4. (P201) ADJUSTABLE PEDALS RELAY CONTROL CIRCUIT OPEN OR HIGH RESISTANCE (IPM)

Turn the ignition off.

Connect a jumper wire between the (P201) Adjustable Pedals Relay Control circuit and ground at the FCM connector of the IPM.

Using a 12-volt test light connected to 12-volts, check the (P201) Adjustable Pedals Relay Control circuit at the Adjustable Pedals Relay connector of the IPM.

NOTE: The test light should be illuminated and bright. Compare the brightness to that of a direct connection to the battery.

NOTE: Remove the jumper wire before proceeding to the next test.

Is the test light illuminated and bright?

Yes >> Go To 5

No >> Replace the Integrated Power Module in accordance with the Service Information.
Perform ABS VERIFICATION TEST - VER 1. (Refer to 5 - BRAKES - STANDARD PROCEDURE).

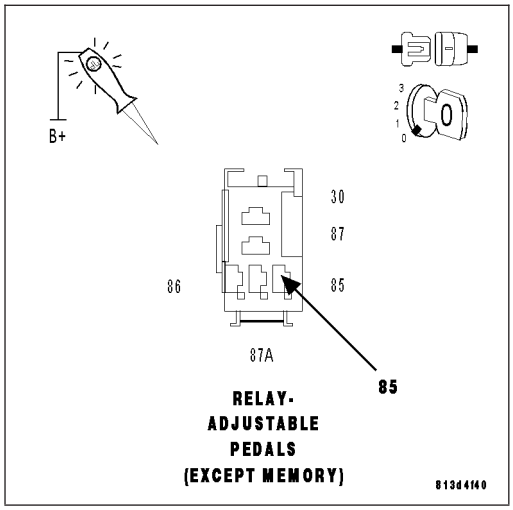

5. ADJUSTABLE PEDALS RELAY

Reconnect all components.

Turn the ignition on.

With the scan tool, actuate the Adjustable Pedals Relay.

Measure the voltage of the (P201) Adjustable Pedals Relay Control circuit at the Adjustable Pedals Relay connector of the IPM.

NOTE: With the Relay actuated ON, the circuit voltage should be 0 volts.

NOTE: With the Relay actuated OFF, the circuit voltage should be approximately 2.5 volts.

Does the circuit voltage display as described during the actuation test?

Yes >> Replace the Adjustable Pedals Relay in accordance with the Service Information.
Perform ABS VERIFICATION TEST - VER 1. (Refer to 5 - BRAKES - STANDARD PROCEDURE).

No >> Replace the Front Control Module in accordance with the Service Information.
Perform ABS VERIFICATION TEST - VER 1. (Refer to 5 - BRAKES - STANDARD PROCEDURE).

B1D51-ADJUSTABLE PEDAL INHIBIT CIRCUIT OPEN

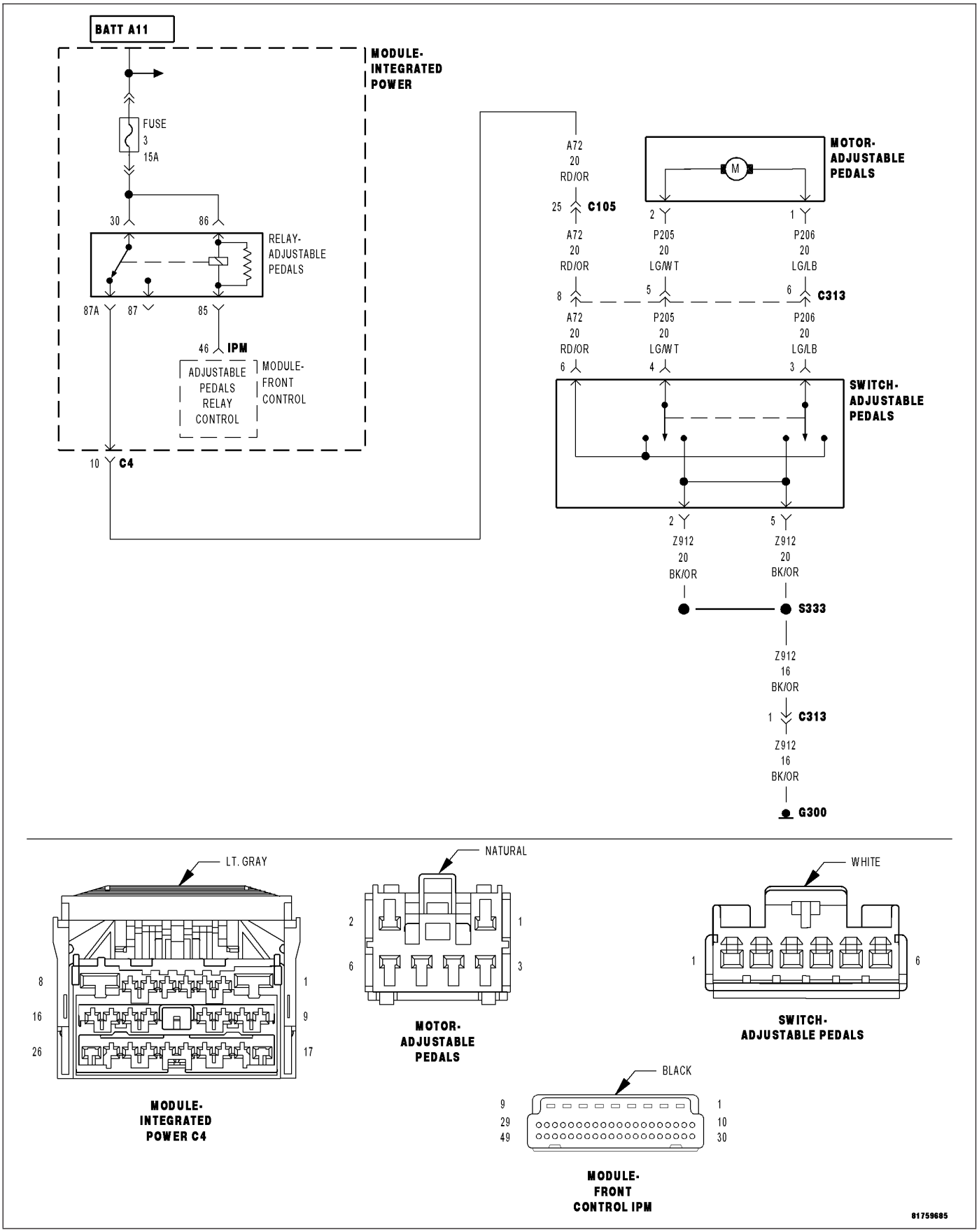

For a complete wiring diagram **Refer to Section 8W**.

- **When Monitored:**
  With the ignition on.
- **Set Condition:**
  When the Front Control Module fails the Adjustable Pedal Inhibit Relay circuit.

Possible Causes
TERMINAL/CONNECTOR DAMAGE OR CORROSION
ADJUSTABLE PEDALS RELAY
FRONT CONTROL MODULE
INTEGRATED POWER MODULE

Diagnostic Test

1. DTC IS ACTIVE

Turn the ignition on.
With the scan tool, select view DTCs. Record DTC and DTC Environmental data.
With the scan tool, clear stored DTCs.
Cycle the ignition switch off then on.

WARNING: Apply the parking brake. The vehicle may roll when the Transmission is shifted out of Park.
Shift into Reverse for at least 5 seconds, then move the shifter back into Park.
With the scan tool, select view DTCs..

Is the status active for this DTC?

Yes >> Go To 2

No >> Refer to the Adjustable Pedal System intermittent condition test. (Refer to 5 - BRAKES - DIAGNOSIS AND TESTING)

2. WIRING HARNESS CONNECTOR/TERMINALS

Turn the ignition off.
Remove the Adjustable Pedals Relay from the IPM.
Remove the Front Control Module from the IPM.
Visually inspect the connector terminals for damage or corrosion.

Were any problems found?

Yes >> Repair as necessary.
Perform ABS VERIFICATION TEST - VER 1. (Refer to 5 - BRAKES - STANDARD PROCEDURE).

No >> Go To 3

3. FUSED B+ CIRCUIT OPEN OR HIGH RESISTANCE (IPM)

Using a 12–volt test light connect to ground, check the internal Fused B(+) circuits at the Adjustable Pedals Relay connector of the IPM.

NOTE: The test light should be illuminated and bright. Compare the brightness to that of a direct connection to the battery.

Is the test light illuminated and bright for both circuits?

Yes >> Go To 4

No >> Remove and inspect Fuse 3 in the IPM. If the fuse is open, test the circuit for a short to ground. Repair as necessary. If the fuse is OK, replace the Integrated Power Module in accordance with the Service Information.
Perform ABS VERIFICATION TEST - VER 1. (Refer to 5 - BRAKES - STANDARD PROCEDURE).

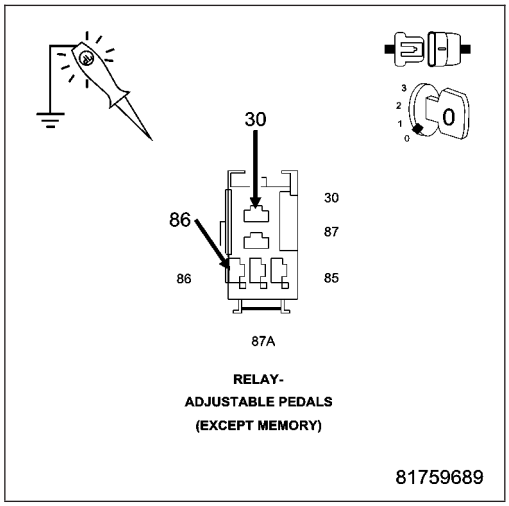

4. (P201) ADJUSTABLE PEDALS RELAY CONTROL CIRCUIT OPEN OR HIGH RESISTANCE (IPM)

Connect a jumper wire between the (P201) Adjustable Pedals Relay Control circuit and ground at the FCM connector of the IPM.

Using a 12-volt test light connected to 12-volts, check the (P201) Adjustable Pedals Relay Control circuit at the Adjustable Pedals Relay connector of the IPM.

NOTE: The test light should be illuminated and bright. Compare the brightness to that of a direct connection to the battery.

NOTE: Remove the jumper wire before proceeding to the next test.

Is the test light illuminated and bright?

Yes >> Go To 5

No >> Replace the Integrated Power Module in accordance with the Service Information.
Perform ABS VERIFICATION TEST - VER 1. (Refer to 5 - BRAKES - STANDARD PROCEDURE).

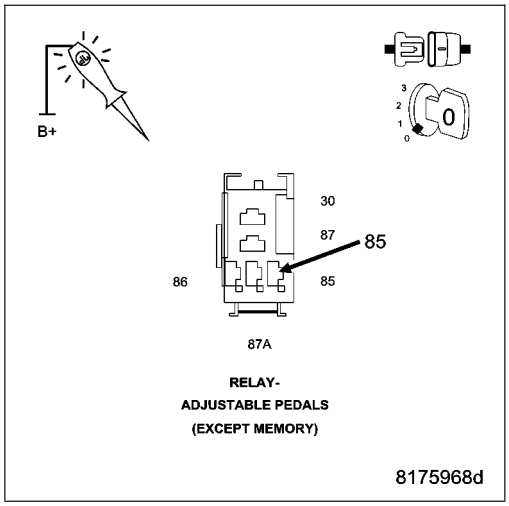

5. ADJUSTABLE PEDALS RELAY

Reconnect all components.

Turn the ignition on.

With the scan tool, actuate the Adjustable Pedals Relay.

Measure the voltage of the (P201) Adjustable Pedals Relay Control circuit at the Adjustable Pedals Relay connector of the IPM.

NOTE: With the Relay actuated ON, the circuit voltage should be 0 volts.

NOTE: With the Relay actuated OFF, the circuit voltage should be approximately 2.5 volts.

Does the circuit voltage display as described during the actuation test?

Yes >> Replace the Adjustable Pedals Relay in accordance with the Service Information.
Perform ABS VERIFICATION TEST - VER 1. (Refer to 5 - BRAKES - STANDARD PROCEDURE).

No >> Replace the Front Control Module in accordance with the Service Information.
Perform ABS VERIFICATION TEST - VER 1. (Refer to 5 - BRAKES - STANDARD PROCEDURE).

B1D56–ADJUSTABLE PEDAL SENSOR CIRCUIT LOW

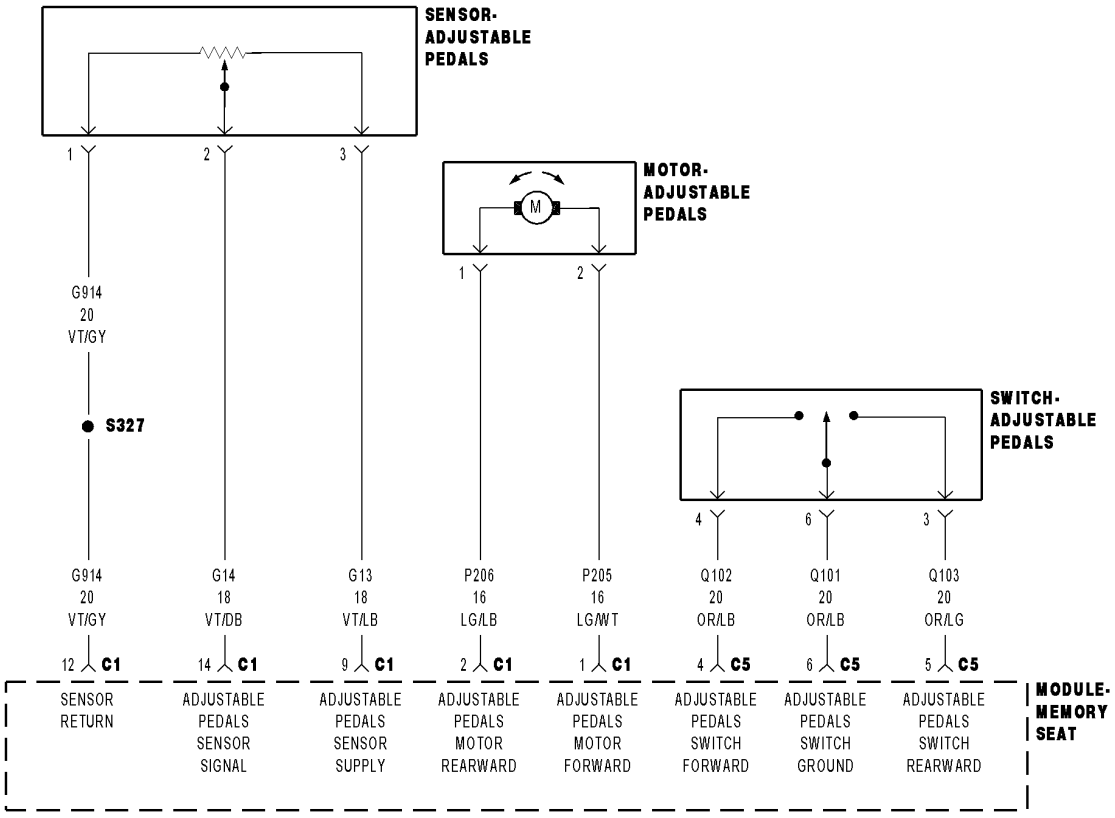

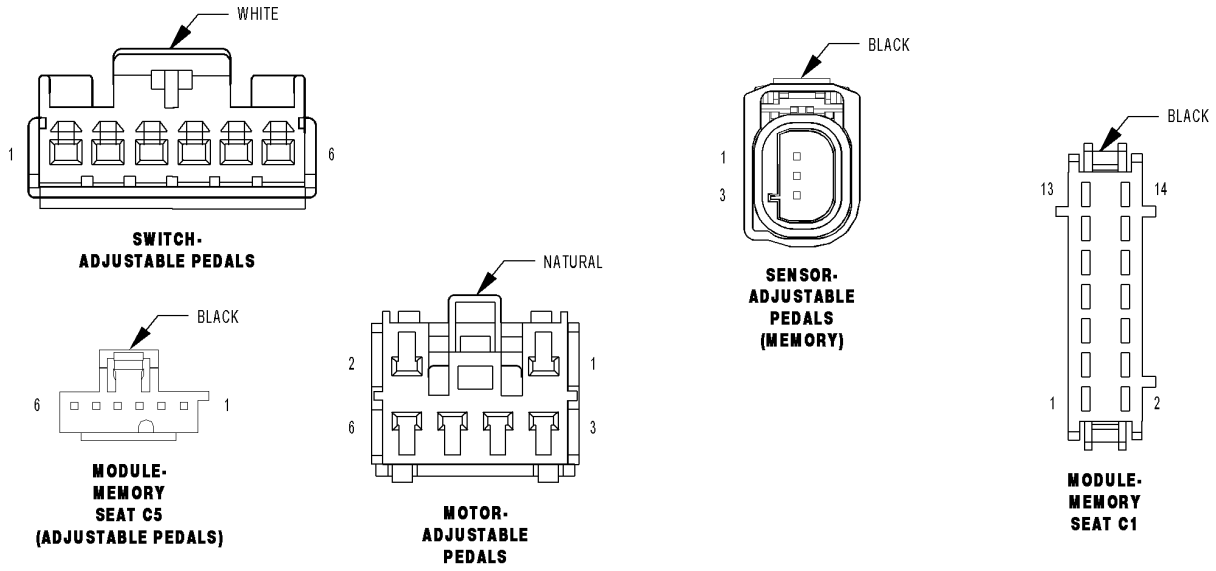

8175a44a

For a complete wiring diagram **Refer to Section 8W**.

- **When Monitored:**
  The Adjustable Pedal Motor is in active operation.
- **Set Condition:**
  The Memory Seat Module detects a low signal circuit voltage that is not within voltage specification from the Adjustable Pedal Sensor.

Possible Causes
WIRING HARNESS CONNECTOR/TERMINALS
(G13) ADJUSTABLE PEDALS SENSOR SUPPLY CIRCUIT SHORT TO GROUND OR OPEN/HIGH RESISTANCE
(G14) ADJUSTABLE PEDALS SENSOR SIGNAL CIRCUIT SHORT TO GROUNDOR OPEN/HIGH RESISTANCE
ADJUSTABLE PEDALS SENSOR
MEMORY SEAT MODULE

Diagnostic Test

1. CHECK FOR DTC B1D56–ADJUSTABLE PEDAL SENSOR CIRCUIT LOW

NOTE: This DTC must be active for the results of this test to be valid.
Turn the ignition on.
With the scan tool, record and erase DTC's.
Cycle the ignition switch from off to on.
Cycle the Adjustable Pedals Switch forward and rearward.
With the scan tool, read DTC's.

Does the scan tool display: B1D56–ADJUSTABLE PEDAL SENSOR CIRCUIT LOW?

Yes >> Go To 2

No >> Refer to the Adjustable Pedal System intermittent condition test. (Refer to 5 - BRAKES - DIAGNOSIS AND TESTING)

2. CHECK CONNECTOR/TERMINAL FOR DAMAGE

NOTE: Check all terminals for broken, bent, pushed out, or corroded terminals.
Turn the ignition off.
Inspect the Seat Memory Module harness connector, Adjustable Pedals Sensor, and Adjustable Pedals Sensor harness connector.

Is the Adjustable Pedals Sensor or any of the connectors/terminals damaged?

Yes >> Repair as necessary.
Perform APS VERIFICATION TEST - VER 1. (Refer to 5 - BRAKES - STANDARD PROCEDURE).

No >> Go To 3

3. (G13) ADJUSTABLE PEDALS SENSOR SUPPLY CIRCUIT VOLTAGE

Disconnect the Seat Memory Module harness connector.

Disconnect the Adjustable Pedals Sensor harness connector.

Using a 12-volt test light connected to 12-volts, probe the (G13) Adjustable Pedals Sensor Supply circuit at the Memory Seat Module C1 harness connector.

Does the test light illuminate brightly?

Yes >> Repair the (G13) Adjustable Pedals Sensor Supply circuit for a short to ground.
Perform APS VERIFICATION TEST - VER 1. (Refer to 5 - BRAKES - STANDARD PROCEDURE).

No >> Go To 4

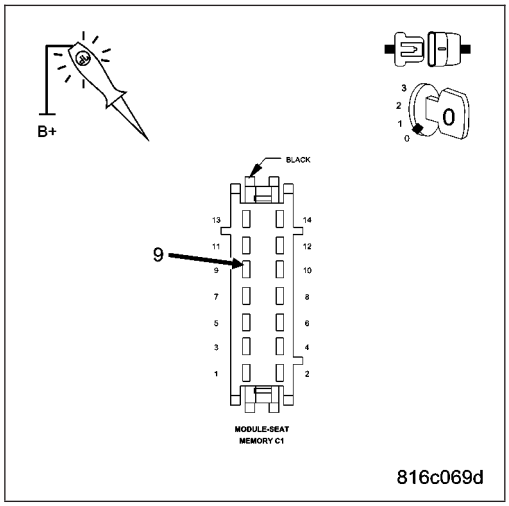

4. (G13) ADJUSTABLE PEDALS SENSOR SUPPLY CIRCUIT SHORT TO GROUND

Connect a jumper wire between the (G13) Adjustable Pedals Sensor Supply circuit and ground at the Adjustable Pedal Sensor harness connector.

Using a 12-volt test light connected to 12-volts, probe the (G13) Adjustable Pedals Sensor Supply circuit at the Memory Seat Module C1 harness connector.

Does the test light illuminate brightly

Yes >> Go To 5

No >> Repair the (G13) Adjustable Pedals Sensor Supply circuit for an open.
Perform APS VERIFICATION TEST - VER 1. (Refer to 5 - BRAKES - STANDARD PROCEDURE).

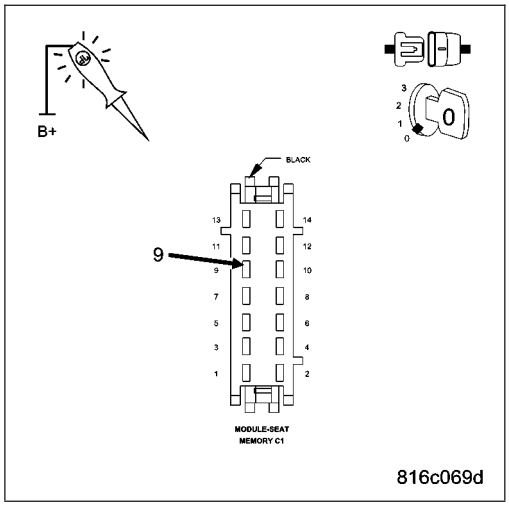

5. (G14) ADJUSTABLE PEDALS SENSOR SUPPLY CIRCUIT OPEN

Using a 12-volt test light connected to 12-volts, probe the (G14) Adjustable Pedals Sensor Signal circuit at the Memory Seat Module C1 harness connector.

Does the test light illuminate brightly?

Yes >> Repair the (G14) Adjustable Pedals Sensor Signal circuit for a short to ground.
Perform APS VERIFICATION TEST - VER 1. (Refer to 5 - BRAKES - STANDARD PROCEDURE).

No >> Go To 6

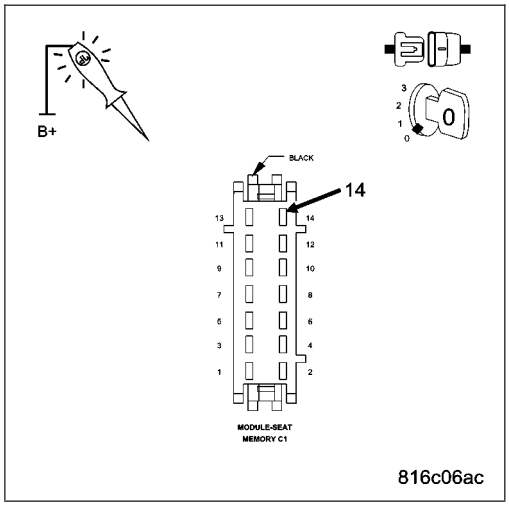

6. (G14) ADJUSTABLE PEDALS SENSOR SIGNAL CIRCUIT SHORT TO GROUND

Connect a jumper wire between the (G14) Adjustable Pedals Sensor Signal circuit and ground at the Adjustable Pedal Sensor harness connector.

Using a 12-volt test light connected to 12-volts, probe the (G14) Adjustable Pedals Sensor Signal circuit at the Memory Seat Module C1 harness connector.

Does the test light illuminate brightly?

Yes >> Go To 7

No >> Repair the (G14) Adjustable Pedals Sensor Signal circuit for an open.
Perform APS VERIFICATION TEST - VER 1. (Refer to 5 - BRAKES - STANDARD PROCEDURE).

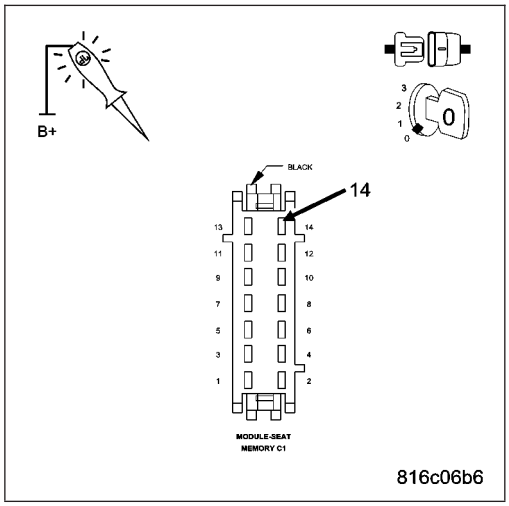

7. (G13) ADJUSTABLE PEDALS SENSOR SIGNAL CIRCUIT FOR AN OPEN

Measure the voltage between the (G13) Adjustable Pedals Sensor Supply circuit and ground at the Adjustable Pedal Sensor harness connector.

Is the voltage between 4.0 and 5.0 volts?

Yes >> Go To 8

No >> Replace and reprogram the Seat Memory Module in accordance with the Service Information.
Perform APS VERIFICATION TEST - VER 1. (Refer to 5 - BRAKES - STANDARD PROCEDURE).

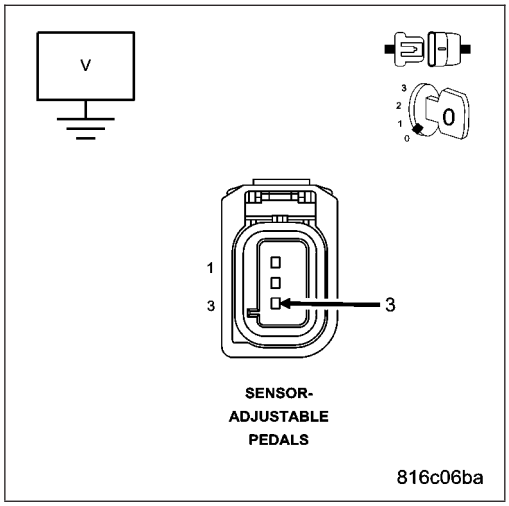

8. (G14) ADJUSTABLE PEDALS SENSOR SIGNAL CIRCUIT VOLTAGE

Reconnect Adjustable Pedal Sensor harness connector.

Turn ignition on.

Measure the voltage of the (G14) Adjustable Pedals Sensor Signal circuit in the Seat Memory Module C1 harness connector.

Is the voltage above 0.5 volts?

Yes >> Replace the Seat Memory Module in accordance with the Service Information.
Perform APS VERIFICATION TEST - VER 1. (Refer to 5 - BRAKES - STANDARD PROCEDURE).

No >> Replace the Adjustable Pedals Sensor in accordance with the Service Information.
Perform APS VERIFICATION TEST - VER 1. (Refer to 5 - BRAKES - STANDARD PROCEDURE).

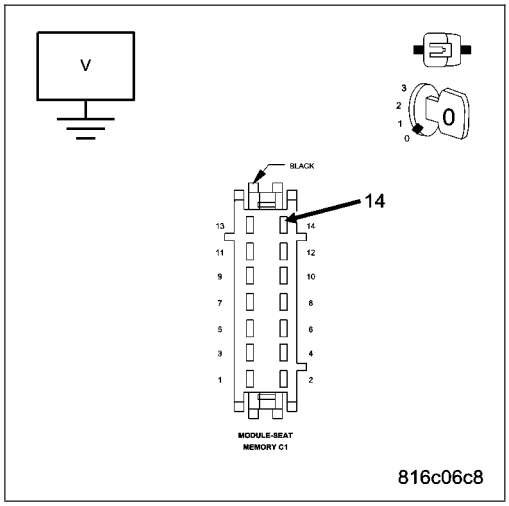

B1D57–ADJUSTABLE PEDAL SENSOR CIRCUIT HIGH

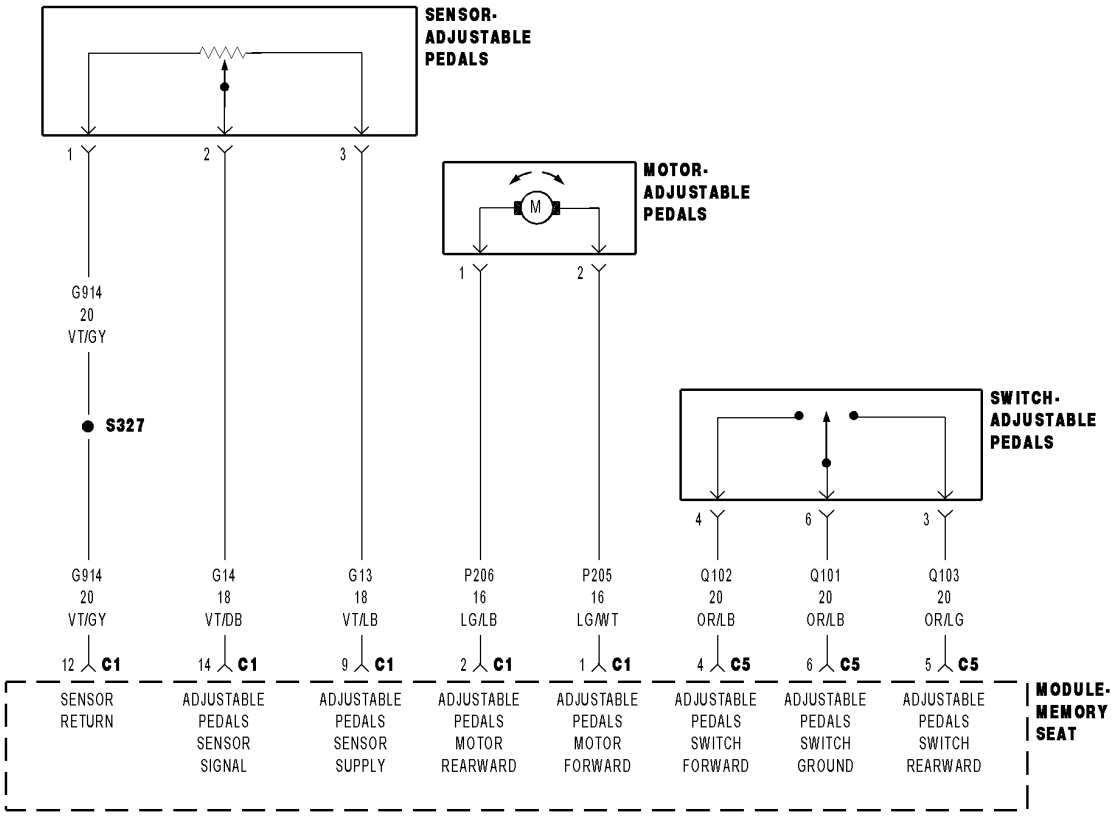

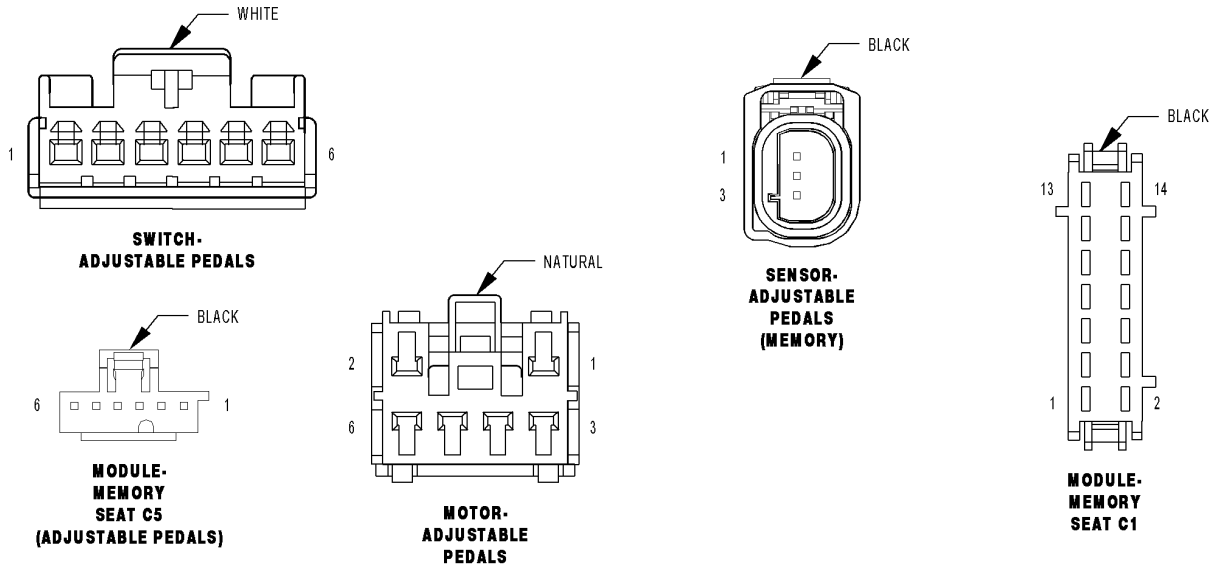

For a complete wiring diagram **Refer to Section 8W**.

- **When Monitored:**
  The Adjustable Pedal Motor is in active operation.
- **Set Condition:**
  The Memory Seat Module detects a high signal circuit voltage that is not within voltage specification from the Adjustable Pedal Sensor.

Possible Causes
WIRING HARNESS CONNECTOR/TERMINALS
(G13) ADJUSTABLE PEDALS SENSOR SUPPLY CIRCUIT SHORT TO VOLTAGE
(G14) ADJUSTABLE PEDALS SENSOR SIGNAL CIRCUIT SHORT TO VOLTAGE
ADJUSTABLE PEDALS SENSOR
MEMORY SEAT MODULE

Diagnostic Test

1. DTC IS ACTIVE

Turn the ignition on.
With the scan tool, select view DTCs. Record all DTC information.
With the scan tool, clear stored DTCs.
Cycle the ignition switch off then on.
Move the Adjustable Pedals Switch forward and rearward several times.
With the scan tool, select view DTCs.

Is the status active for this DTC?

Yes >> Go To 2

No >> Refer to the Adjustable Pedal System intermittent condition test. (Refer to 5 - BRAKES - DIAGNOSIS AND TESTING)

2. WIRING HARNESS CONNECTOR/TERMINALS

Turn the ignition off.
Disconnect the Memory Seat Module harness connector.
Disconnect the Adjustable Pedals Sensor harness connector.
Inspect the wiring harness, connectors and terminals.

Were any problems found?

Yes >> Repair as necessary.
Perform APS VERIFICATION TEST. (Refer to 5 - BRAKES - STANDARD PROCEDURE).

No >> Go To 3

3. (G13) ADJUSTABLE PEDALS SENSOR SUPPLY CIRCUIT SHORT TO VOLTAGE

Turn the ignition on.

Measure the voltage of the (G13) Adjustable Pedals Sensor Supply circuit and ground at the Memory Seat Module C1 harness connector.

Is there any voltage present?

Yes >> Repair the (G13) Adjustable Pedals Sensor Supply circuit for a short to voltage.
Perform APS VERIFICATION TEST. (Refer to 5 - BRAKES - STANDARD PROCEDURE).

No >> Go To 4

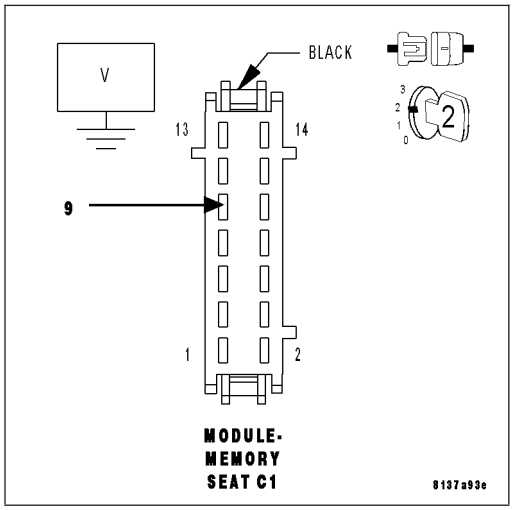

4. (G14) ADJUSTABLE PEDALS SENSOR SIGNAL CIRCUIT SHORT TO VOLTAGE

Measure the voltage of the (G14) Adjustable Pedals Sensor Signal circuit and ground at the Memory Seat Module C1 harness connector.

Is there any voltage present?

Yes >> Repair the (G14) Adjustable Pedals Sensor Signal circuit for a short to voltage.
Perform APS VERIFICATION TEST. (Refer to 5 - BRAKES - STANDARD PROCEDURE).

No >> Go To 5

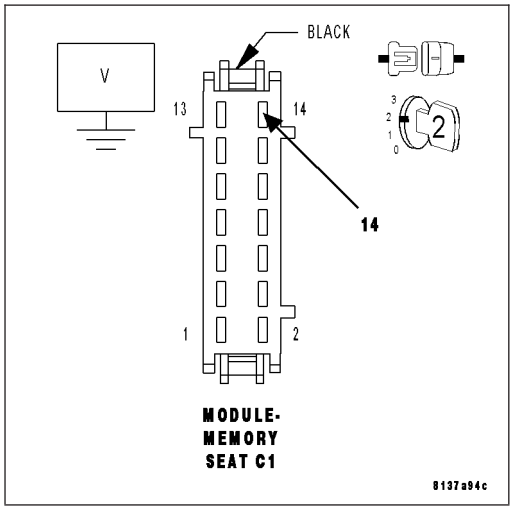

5. (G14) ADJUSTABLE PEDALS SENSOR SIGNAL CIRCUIT VOLTAGE

Turn the ignition off.

Reconnect all connectors.

Measure the voltage of the (G14) Adjustable Pedals Sensor Signal circuit at the Memory Seat Module C1 harness connector.

Is the voltage below 4.0 volts?

Yes >> Replace and reprogram the Memory Seat Module in accordance with the Service Information.
Perform APS VERIFICATION TEST. (Refer to 5 - BRAKES - STANDARD PROCEDURE).

No >> Replace the Adjustable Pedals Sensor in accordance with the Service Information.
Perform APS VERIFICATION TEST. (Refer to 5 - BRAKES - STANDARD PROCEDURE).

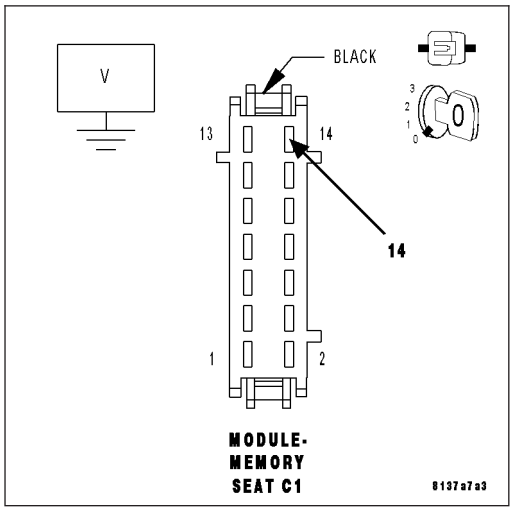

B1D5B–ADJUSTABLE PEDAL SWITCH CIRCUIT PERFORMANCE

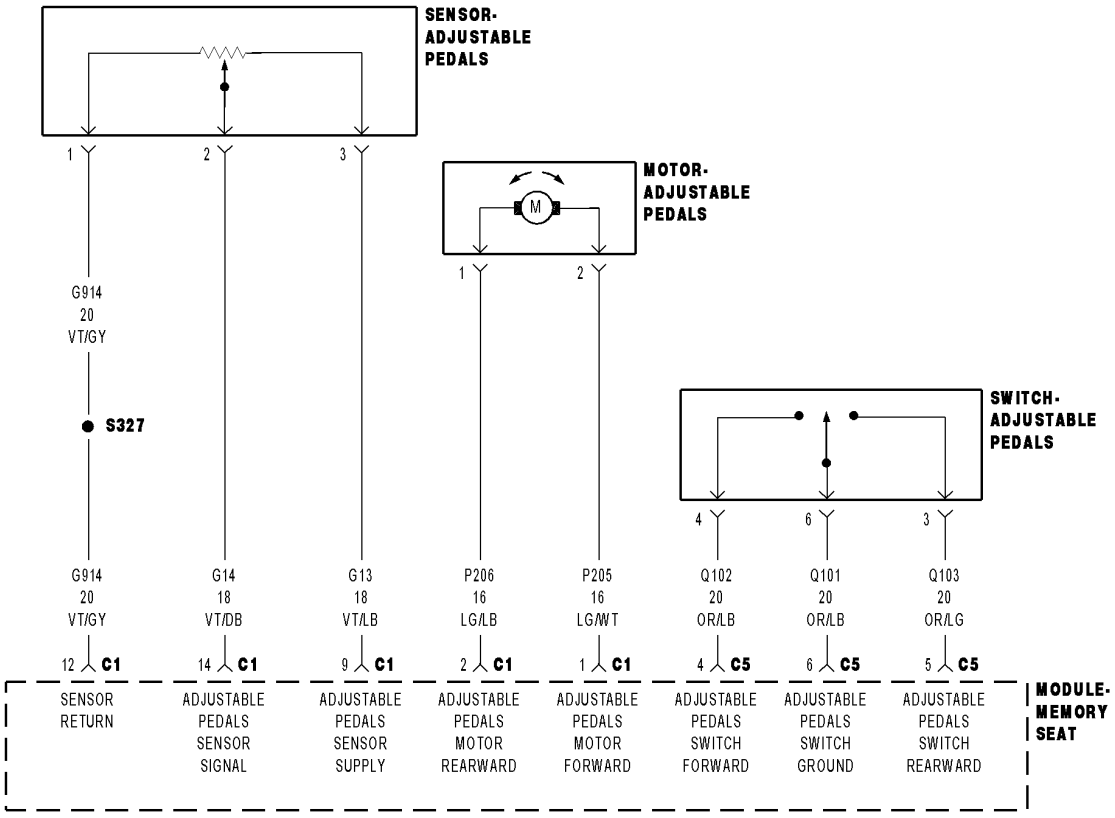

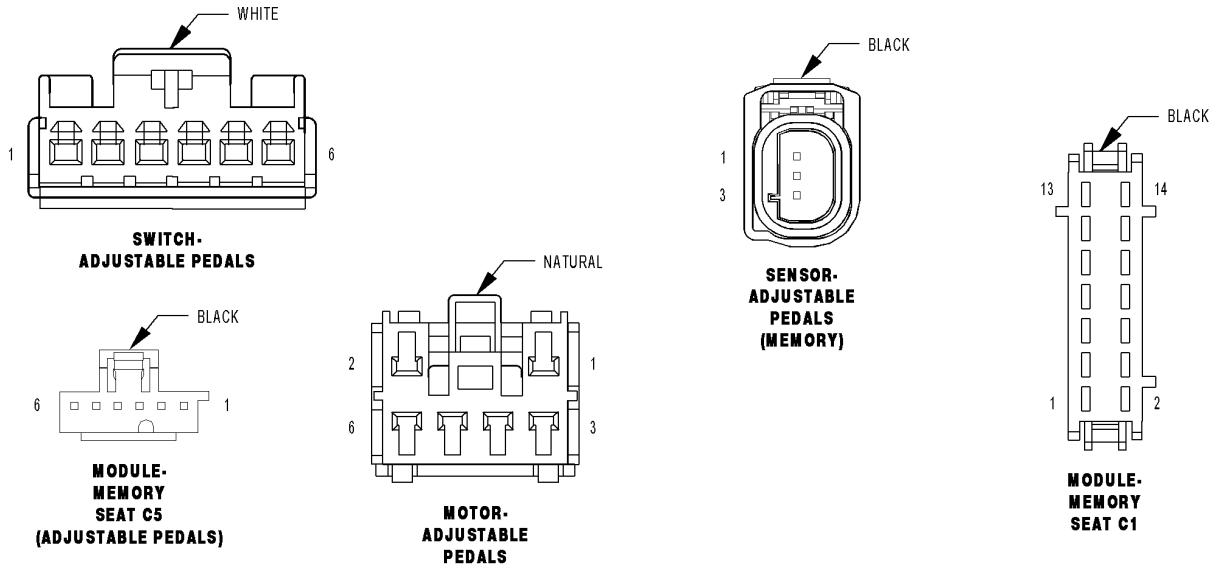

8175a44a

For a complete wiring diagram **Refer to Section 8W**.

- **When Monitored:**
  The Adjustable Pedals Switch is in active operation.
- **Set Condition:**
  The Memory Seat Module detects an activation of both pedal switches at the same time.

Possible Causes
WIRING HARNESS CONNECTOR/TERMINALS
(Q103) ADJUSTABLE PEDALS SWITCH REARWARD CIRCUIT SHORT TO GROUND
(Q102) ADJUSTABLE PEDALS SWITCH FORWARD CIRCUIT SHORT TO GROUND
(Q103) ADJUSTABLE PEDALS SWITCH REARWARD CIRCUIT SHORT TO THE (Q102) ADJUSTABLE PEDALS SWITCH FORWARD CIRCUIT
ADJUSTABLE PEDALS SWITCH
MEMORY SEAT MODULE

Diagnostic Test

1. DTC IS ACTIVE

NOTE: This DTC must be active for the results of this test to be valid.
Turn the ignition on.
With the scan tool, select view DTCs. Record all DTC information.
With the scan tool, clear stored DTCs.
Cycle the ignition switch off then on.
Move the Adjustable Pedals Switch forward and rearward several times.
With the scan tool, select view DTCs.

Is the status active for this DTC?

Yes >> Go To 2

No >> Refer to the Adjustable Pedal System intermittent condition test. (Refer to 5 - BRAKES - DIAGNOSIS AND TESTING)

2. WIRING HARNESS CONNECTOR/TERMINALS

Turn the ignition off.
Disconnect the Memory Seat Module harness connector.
Disconnect the Adjustable Pedals Switch harness connector.
Inspect the wiring harness, connectors and terminals.

Were any problems found?

Yes >> Repair as necessary.
Perform APS VERIFICATION TEST. (Refer to 5 - BRAKES - STANDARD PROCEDURE).

No >> Go To 3

3. (Q103) ADJUSTABLE PEDALS SWITCH REARWARD CIRCUIT SHORT TO GROUND

Disconnect the Memory Seat Module harness connector.

Disconnect the Adjustable Pedals Switch harness connector.

Using a 12-volt test light connected to 12-volts, probe the (Q103) Adjustable Pedals Switch Rearward circuit at the Memory Seat Module C5 harness connector.

Does the test light illuminate brightly?

Yes >> Repair the (Q103) Adjustable Pedals Switch Rearward circuit for a short to ground.
Perform APS VERIFICATION TEST. (Refer to 5 - BRAKES - STANDARD PROCEDURE).

No >> Go To 4

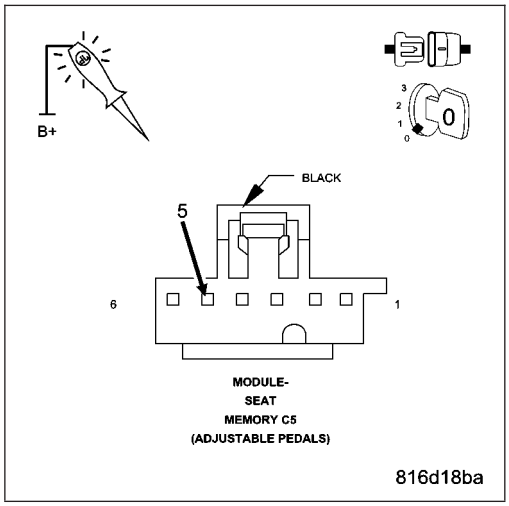

4. (Q102) ADJUSTABLE PEDALS SWITCH FORWARD CIRCUIT SHORT TO GROUND

Using a 12-volt test light connected to 12-volts, probe the (Q102) Adjustable Pedals Switch Rearward circuit at the Memory Seat Module C5 harness connector.

Does the test light illuminate brightly?

Yes >> Repair the (Q102) Adjustable Pedals Switch Forward circuit for a short to ground.
Perform APS VERIFICATION TEST. (Refer to 5 - BRAKES - STANDARD PROCEDURE).

No >> Go To 5

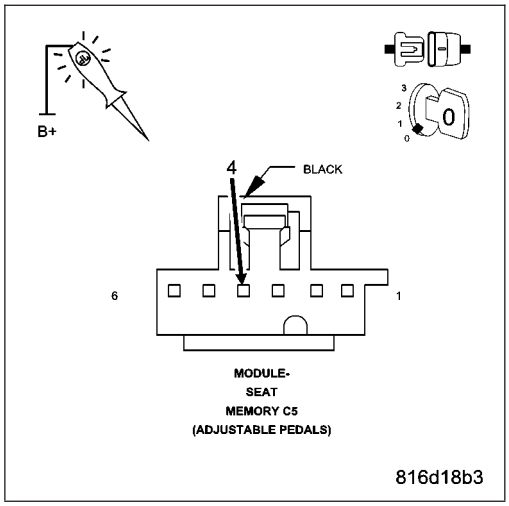

5. (Q103) ADJUSTABLE PEDALS SWITCH REARWARD CIRCUIT SHORT TO THE (Q102) ADJUSTABLE PEDALS SWITCH FORWARD CIRCUIT

Measure the resistance between the (Q103) Adjustable Pedals Switch Rearward circuit and the (Q102) Adjustable Pedals Switch Forward circuit at the Memory Seat Module C5 harness connector.

Is the resistance below 5.0 ohms?

Yes >> Repair the (Q103) Adjustable Pedals Switch Rearward circuit for a short to the (Q102) Adjustable Pedals Switch Forward circuit.
Perform APS VERIFICATION TEST. (Refer to 5 - BRAKES - STANDARD PROCEDURE).

No >> Go To 6

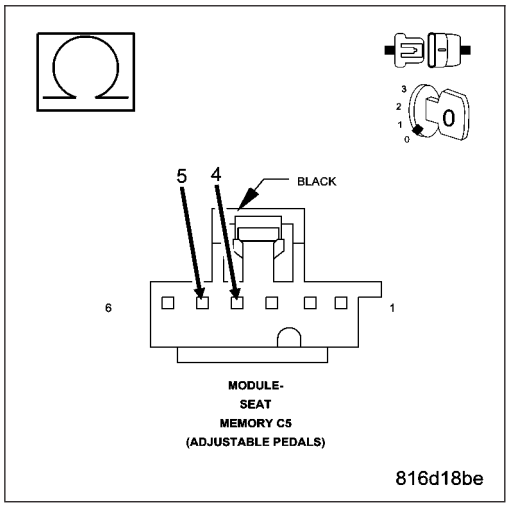

6. ADJUSTABLE PEDALS SWITCH

Measure the resistance between the (Q103) Adjustable Pedals Switch Rearward circuit and (Q102) Adjustable Pedals Switch Forward circuit at the terminals of the Adjustable Pedals Switch harness connector.

Is the resistance below 5.0 ohms?

Yes >> Replace the Adjustable Pedals Switch in accordance with the Service Information.
Perform APS VERIFICATION TEST. (Refer to 5 - BRAKES - STANDARD PROCEDURE).

No >> Replace the Memory Seat Module in accordance with the Service Information.
Perform APS VERIFICATION TEST. (Refer to 5 - BRAKES - STANDARD PROCEDURE).

B1D5C–ADJUSTABLE PEDAL SWITCH CIRCUIT STUCK FORWARD

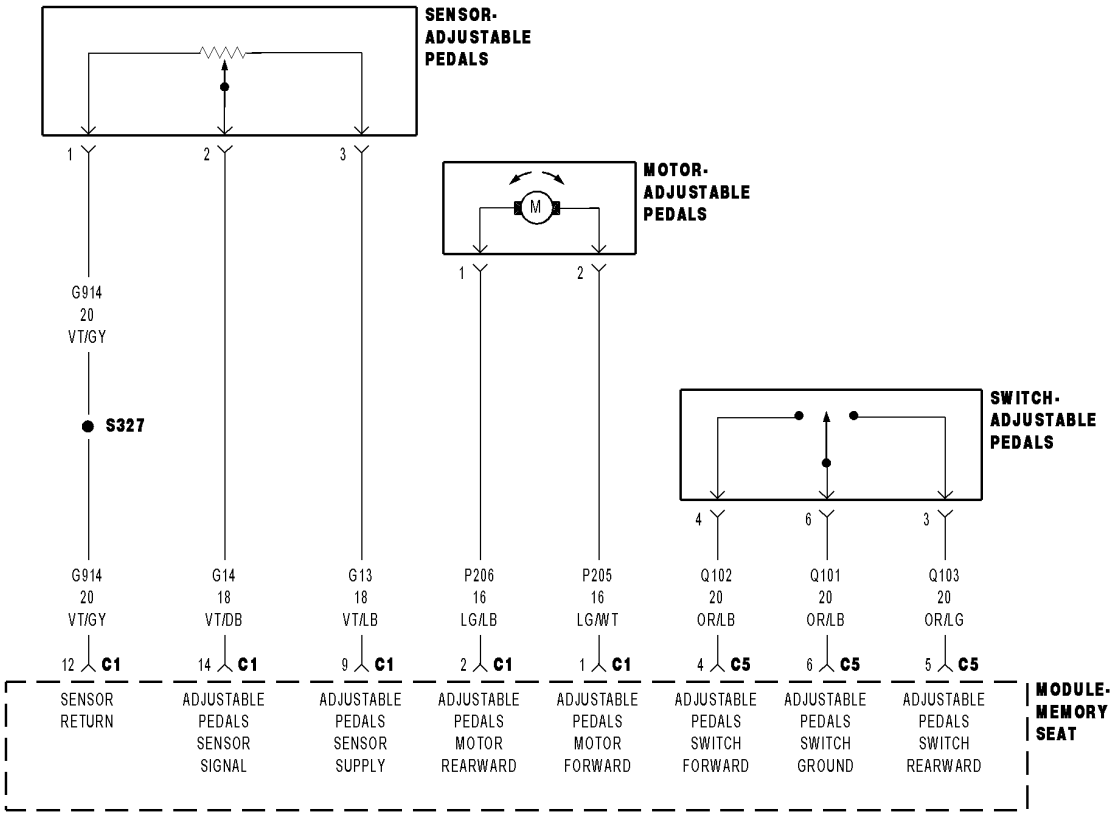

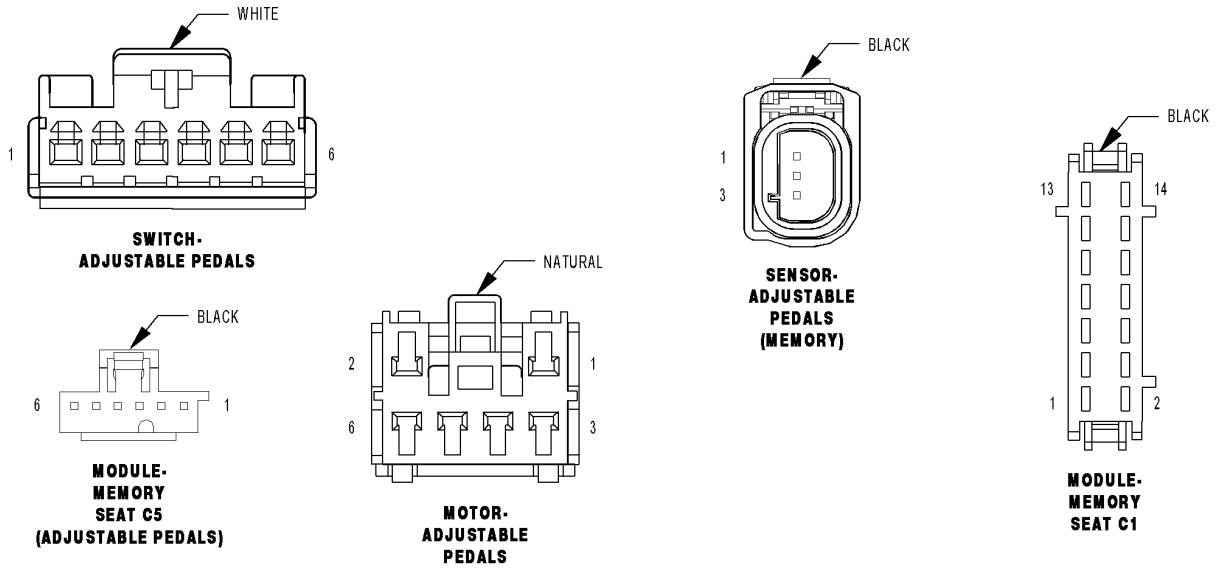

8175a44a

For a complete wiring diagram **Refer to Section 8W**.

- **When Monitored:**
  The Adjustable Pedals Switch is in active operation.
- **Set Condition:**
  The Memory Seat Module detects that the Adjustable Pedals Switch has been activated in the forward position for more than 50 seconds.

Possible Causes
WIRING HARNESS CONNECTOR/TERMINALS
(Q102) ADJUSTABLE PEDALS SWITCH FORWARD CIRCUIT SHORT TO GROUND
(Q102) ADJUSTABLE PEDALS SWITCH FORWARD CIRCUIT SHORT TO (Q101) ADJUSTABLE PEDALS SWITCH GROUND CIRCUIT
ADJUSTABLE PEDALS SWITCH
MEMORY SEAT MODULE

Diagnostic Test

1. DTC IS ACTIVE

NOTE: This DTC must be active for the results of this test to be valid.
Turn the ignition on.
With the scan tool, select view DTCs. Record all DTC information.
With the scan tool, clear stored DTCs.
Cycle the ignition switch off then on.
Move the Adjustable Pedals Switch forward and rearward several times.
With the scan tool, select view DTCs.

Is the status active for this DTC?

Yes >> Go To 2

No >> Refer to the Adjustable Pedal System intermittent condition test. (Refer to 5 - BRAKES - DIAGNOSIS AND TESTING)

2. ADJUSTABLE PEDALS SWITCH

Disconnect the Adjustable Pedals Sensor harness connector.
Wait approximately 10 seconds.
With the scan tool, select view DTCs.

Does the status remain active for this DTC?

Yes >> Go To 3

No >> Replace the Adjustable Pedals Switch in accordance with the Service Information.
Perform APS VERIFICATION TEST. (Refer to 5 - BRAKES - STANDARD PROCEDURE).

3. WIRING HARNESS CONNECTOR/TERMINALS

Turn the ignition off.
Disconnect the Memory Seat Module harness connector.
Inspect the Adjustable Pedals Sensor and Memory Seat Module wiring harness, connectors and terminals.

Were any problems found?

Yes >> Repair as necessary.
Perform APS VERIFICATION TEST. (Refer to 5 - BRAKES - STANDARD PROCEDURE).

No >> Go To 4

4. (Q102) ADJUSTABLE PEDALS SWITCH FORWARD CIRCUIT SHORT TO GROUND

Measure the resistance between ground and the (Q102) Adjustable Pedals Switch Forward circuit.

Is the resistance below 5.0 ohms?

Yes >> Repair the (Q102) Adjustable Pedals Switch Forward circuit for a short to ground.

Perform APS VERIFICATION TEST. (Refer to 5 - BRAKES - STANDARD PROCEDURE).

No >> Go To 5

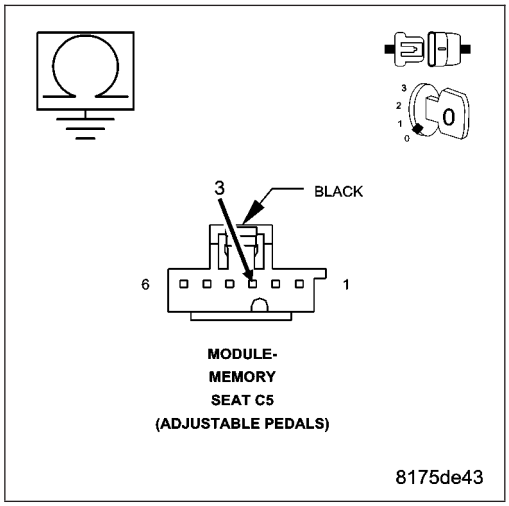

5. (Q102) ADJUSTABLE PEDALS SWITCH FORWARD CIRCUIT SHORT TO (Q101) ADJUSTABLE PEDALS SWITCH GROUND CIRCUIT

Measure the resistance between the (Q102) Adjustable Pedals Switch Forward circuit and the (Q101) Adjustable Pedals Switch Ground circuit.

Is the resistance below 5.0 ohms?

Yes >> Repair the (Q102) Adjustable Pedals Switch Forward circuit for a short to the (Q101) Adjustable Pedals Switch Ground circuit.

Perform APS VERIFICATION TEST. (Refer to 5 - BRAKES - STANDARD PROCEDURE).

No >> Replace the Memory Seat Module in accordance with the Service Information.

Perform APS VERIFICATION TEST. (Refer to 5 - BRAKES - STANDARD PROCEDURE).

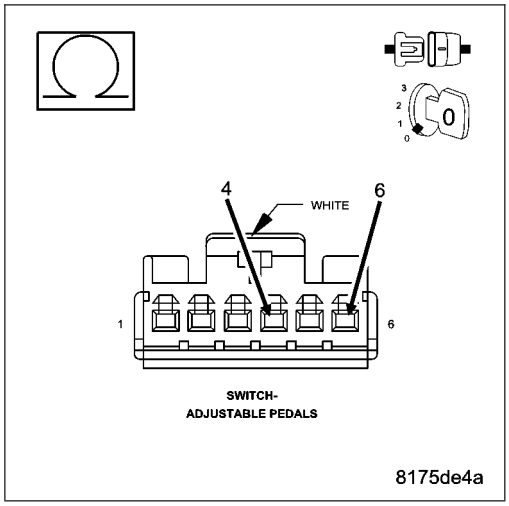

B1D5D–ADJUSTABLE PEDAL SWITCH CIRCUIT STUCK REARWARD

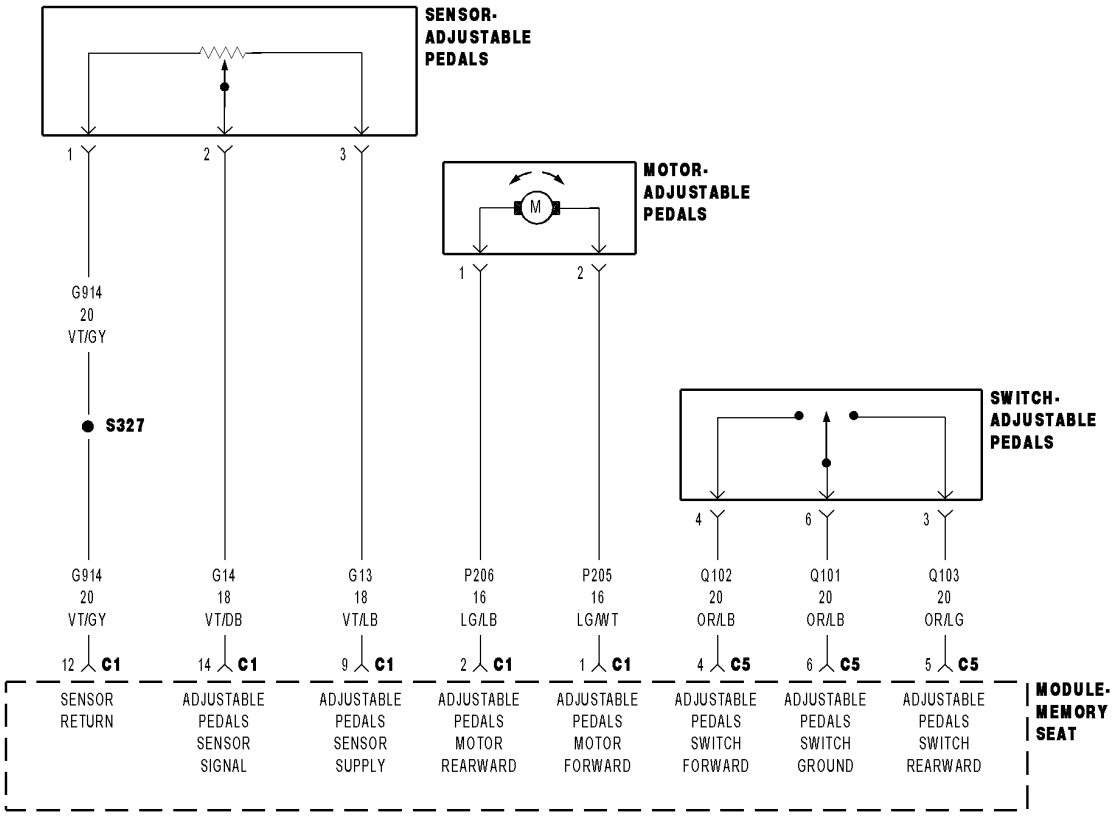

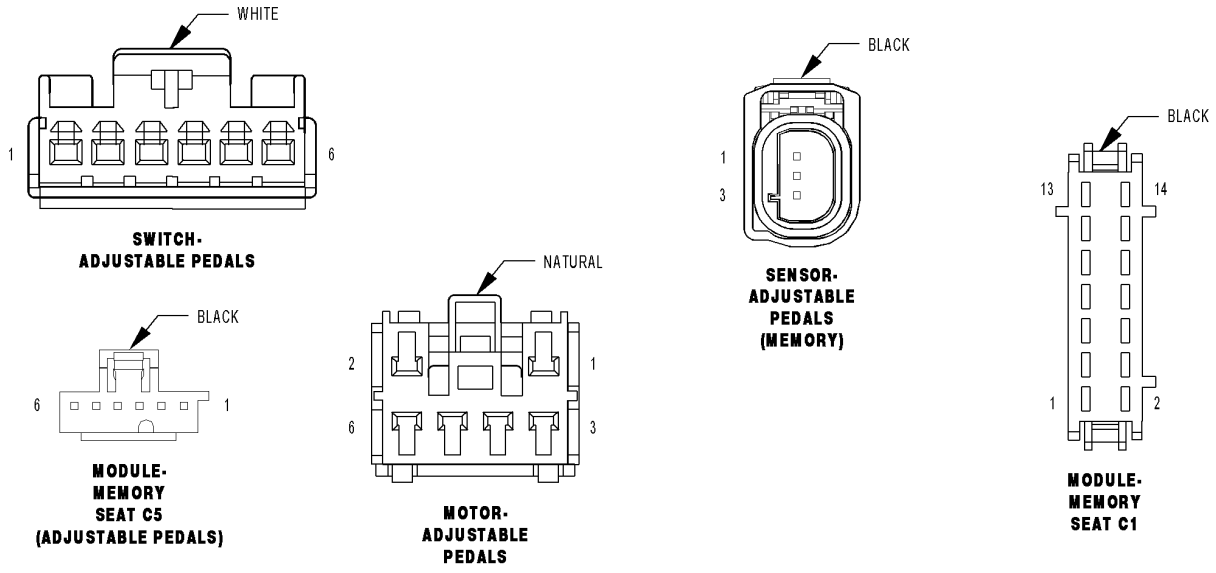

8175a44a

For a complete wiring diagram **Refer to Section 8W**.

- **When Monitored:**
  The Adjustable Pedals Switch is in active operation.
- **Set Condition:**
  The Memory Seat Module detects that the Adjustable Pedals Switch has been activated in the rearward position for more than 50 seconds.

Possible Causes
WIRING HARNESS CONNECTOR/TERMINALS
(Q103) ADJUSTABLE PEDALS SWITCH REARWARD CIRCUIT SHORT TO GROUND
(Q103) ADJUSTABLE PEDALS SWITCH REARWARD CIRCUIT SHORT TO (Q101) ADJUSTABLE PEDALS SWITCH GROUND CIRCUIT
ADJUSTABLE PEDALS SWITCH
MEMORY SEAT MODULE

Diagnostic Test

1. DTC IS ACTIVE

Turn the ignition on.
With the scan tool, select view DTCs. Record all DTC and DTC Environmental data.
With the scan tool, clear stored DTCs.
Cycle the ignition switch off then on.
Move the Adjustable Pedals Switch forward and rearward several times.
With the scan tool, select view DTCs.

Is the status active for this DTC?

Yes >> Go To 2

No >> Refer to the Adjustable Pedal System intermittent condition test. (Refer to 5 - BRAKES - DIAGNOSIS AND TESTING)

2. ADJUSTABLE PEDALS SWITCH

Disconnect the Adjustable Pedals Switch harness connector.
Wait approximately 10 seconds.
With the scan tool, select view DTCs.

Does the status remain active for this DTC?

Yes >> Go To 3

No >> Replace the Adjustable Pedals Switch in accordance with the Service Information.
Perform APS VERIFICATION TEST - VER 1. (Refer to 5 - BRAKES - STANDARD PROCEDURE).

3. WIRING HARNESS CONNECTOR/TERMINALS

Turn the ignition off.
Disconnect the Memory Seat Module harness connector.
Inspect the Adjustable Pedals Switch and Memory Seat Module wiring harness, connectors and terminals.

Were any problems found?

Yes >> Repair as necessary.
Perform APS VERIFICATION TEST - VER 1. (Refer to 5 - BRAKES - STANDARD PROCEDURE).

No >> Go To 4

4. (Q103) ADJUSTABLE PEDALS SWITCH REARWARD CIRCUIT SHORT TO GROUND

Measure the resistance between ground and the (Q103) Adjustable Pedals Switch Rearward circuit.

Is the resistance below 5.0 ohms?

Yes >> Repair the (Q103) Adjustable Pedals Switch Rearward circuit for a short to ground.
Perform APS VERIFICATION TEST - VER 1. (Refer to 5 - BRAKES - STANDARD PROCEDURE).

No >> Go To 5

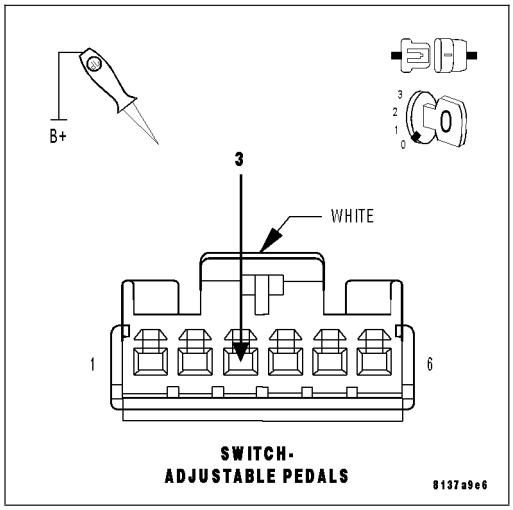

5. (Q103) ADJUSTABLE PEDALS SWITCH REARWARD CIRCUIT SHORT TO (Q101) ADJUSTABLE PEDALS SWITCH GROUND CIRCUIT

Measure the resistance between the (Q103) Adjustable Pedals Switch Rearward circuit and the (Q101) Adjustable Pedals Switch Ground circuit.

Is the resistance below 5.0 ohms?

Yes >> Repair the (Q103) Adjustable Pedals Switch Rearward circuit for a short to the (Q101) Adjustable Pedals Switch Ground circuit.
Perform APS VERIFICATION TEST - VER 1. (Refer to 5 - BRAKES - STANDARD PROCEDURE).

No >> Replace the Memory Seat Module in accordance with the Service Information.
Perform APS VERIFICATION TEST - VER 1. (Refer to 5 - BRAKES - STANDARD PROCEDURE).

B1D67–ADJUSTABLE PEDAL CONTROL CIRCUIT PERFORMANCE

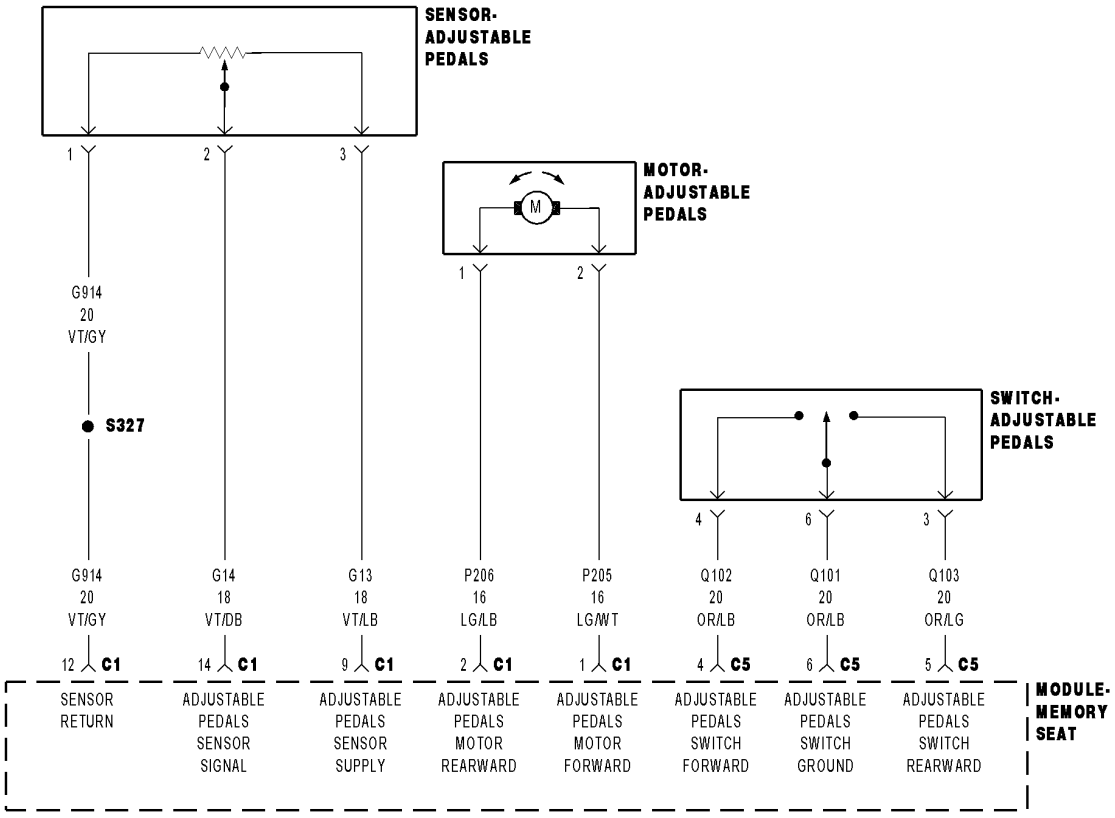

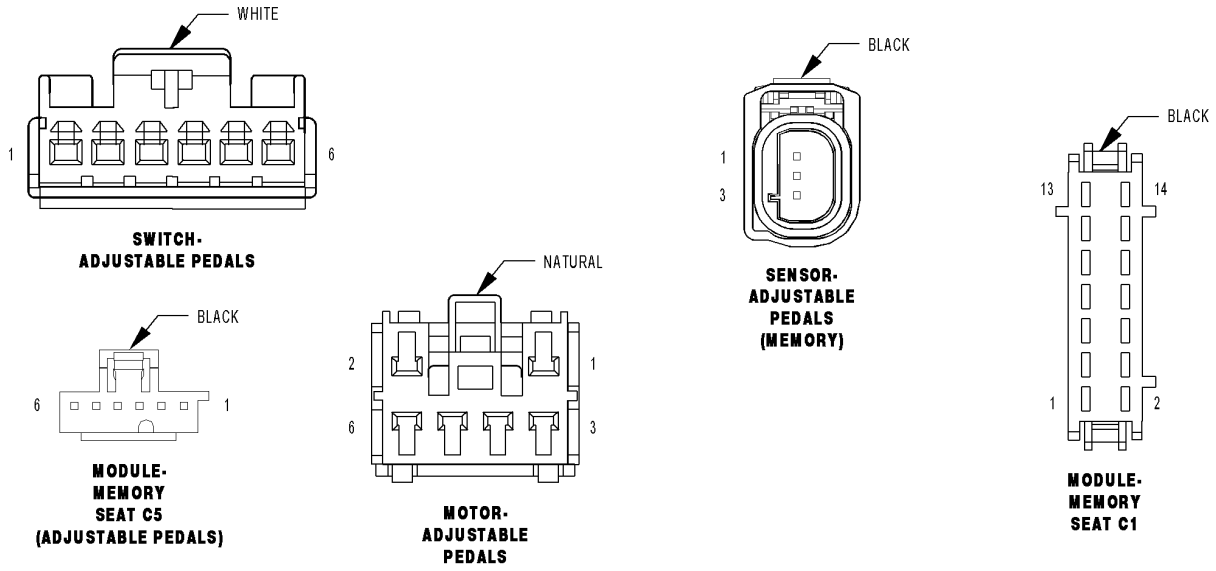

8175a44a

For a complete wiring diagram **Refer to Section 8W**.

- **When Monitored:**
  The Adjustable Pedals Motor is in active operation.
- **Set Condition:**
  The Memory Seat Module detects that the Adjustable Pedals Motor has been activated for a time period and has not spun with three motor direction commands.

Possible Causes
WIRING HARNESS CONNECTOR/TERMINALS
(P205) ADJUSTABLE PEDALS MOTOR FORWARD CIRCUIT OPEN
(P206) ADJUSTABLE PEDALS MOTOR REARWARD CIRCUIT OPEN
(G914) RETURN CIRCUIT OPEN
ADJUSTABLE PEDALS ASSEMBLY
ADJUSTABLE PEDALS MOTOR
MEMORY SEAT MODULE

Diagnostic Test

1. DTC IS ACTIVE

Turn the ignition on.
With the scan tool, select view DTCs. Record all DTC and DTC Environmental data.
With the scan tool, clear stored DTCs.
Cycle the ignition switch off then on.
Move the Adjustable Pedals Switch forward and rearward several times.
With the scan tool, select view DTCs.

Is the status active for this DTC?

Yes >> Go To 2

No >> Refer to the Adjustable Pedal System intermittent condition test. (Refer to 5 - BRAKES - DIAGNOSIS AND TESTING)

2. WIRING HARNESS CONNECTOR/TERMINALS

Turn the ignition off.
Disconnect the Memory Seat Module harness connector.
Disconnect the Adjustable Pedals Motor harness connector.
Disconnect the Adjustable Pedals Sensor harness connector.
Inspect the wiring harness, connectors and terminals.

Were any problems found?

Yes >> Repair as necessary.
Perform APS VERIFICATION TEST - VER 1. (Refer to 5 - BRAKES - STANDARD PROCEDURE).

No >> Go To 3

3. ADJUSTABLE PEDALS ASSEMBLY

Turn the ignition off.

Inspect the Adjustable Pedals Assembly for a condition that would cause the motor to stick or stall.

Were any problems found?

Yes >> Replace the Adjustable Pedals Assembly in accordance with the Service Information.
Perform APS VERIFICATION TEST - VER 1. (Refer to 5 - BRAKES - STANDARD PROCEDURE).

No >> Go To 4

4. (P205) ADJUSTABLE PEDALS MOTOR FORWARD CIRCUIT OPEN OR HIGH RESISTANCE

Connect a jumper wire between the (P205) Adjustable Pedals Motor Forward circuit and ground at the Adjustable Pedals Motor harness connector.

Using a 12-volt test light connected to 12-volts, check the (P205) Adjustable Pedals Motor Forward circuit at the Memory Seat Module harness connector.

NOTE: The test light should be illuminated and bright. Compare the brightness to that of a direct connection to the battery.

Is the test light illuminated and bright?

Yes >> Go To 5

No >> Repair the (P205) Adjustable Pedals Motor Forward circuit for an open circuit or high resistance.
Perform APS VERIFICATION TEST - VER 1. (Refer to 5 - BRAKES - STANDARD PROCEDURE).

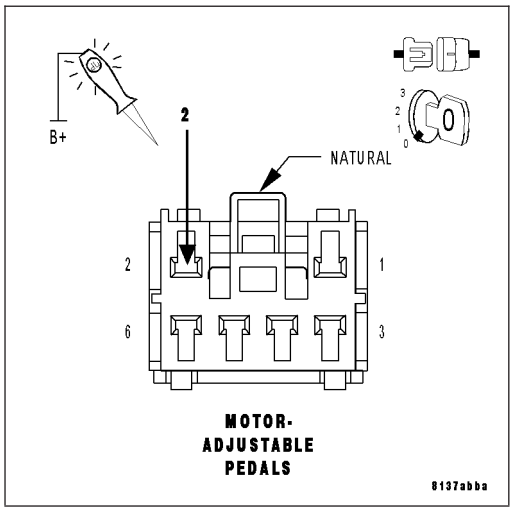

5. (P206) ADJUSTABLE PEDALS MOTOR REARWARD CIRCUIT OPEN CIRCUIT OR HIGH RESISTANCE

Connect the jumper wire between the (P206) Adjustable Pedals Motor Rearward circuit and ground at the Adjustable Pedals Motor harness connector.

Using a 12-volt test light connected to 12-volts, check the (P206) Adjustable Pedals Motor Rearward circuit at the Memory Seat Module harness connector.

NOTE: The test light should be illuminated and bright. Compare the brightness to that of a direct connection to the battery.

Is the test light illuminated and bright?

Yes >> Go To 6

No >> Repair the (P206) Adjustable Pedals Motor Rearward circuit for an open.
Perform APS VERIFICATION TEST - VER 1. (Refer to 5 - BRAKES - STANDARD PROCEDURE).

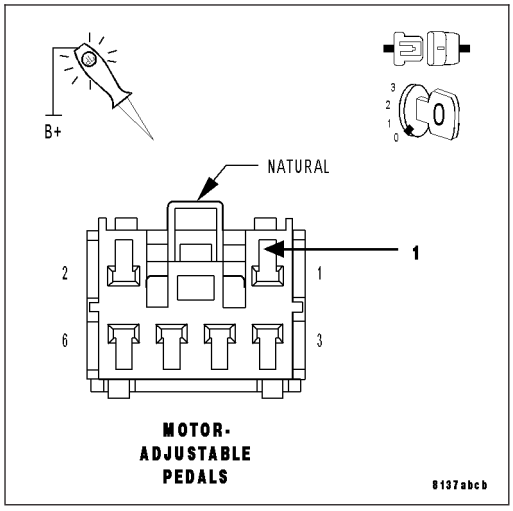

6. (G914) SENSOR RETURN CIRCUIT OPEN OR HIGH RESISTANCE

Connect the jumper wire between the (G914) Sensor Return circuit and ground at the Adjustable Pedals Motor harness connector.

Using a 12-volt test light connected to 12-volts, check the (G914) Sensor Return circuit at the Memory Seat Module harness connector.

NOTE: The test light should be illuminated and bright. Compare the brightness to that of a direct connection to the battery.

NOTE: Remove the jumper wire before proceeding to the next test.

Is the test light illuminated and bright?

Yes >> Go To 7

No >> Repair the (G914) Sensor Return circuit for an open.
Perform APS VERIFICATION TEST - VER 1. (Refer to 5 - BRAKES - STANDARD PROCEDURE).

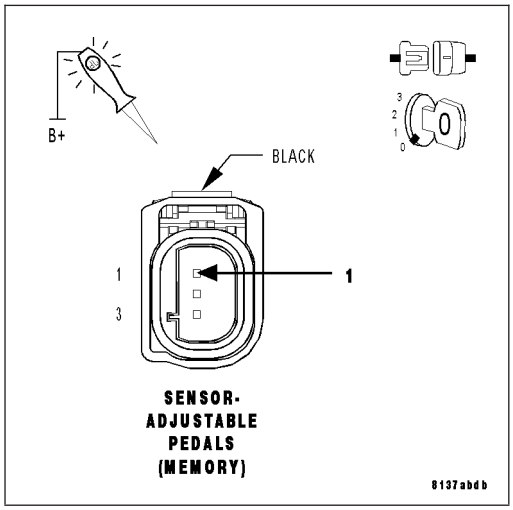

7. ADJUSTABLE PEDALS MOTOR

Turn the ignition off.

Disconnect the Adjustable Pedals Motor harness connector.

Measure the resistance between the (P205) Adjustable Pedals Motor Forward circuit and the (P206) Adjustable Pedals Motor Rearward circuit at the terminals of the Adjustable Pedals Motor.

Is the resistance below 100.0 ohms?

Yes >> Replace and reprogram the Memory Seat Module in accordance with the Service Information.
Perform APS VERIFICATION TEST - VER 1. (Refer to 5 - BRAKES - STANDARD PROCEDURE).

No >> Replace the Adjustable Pedals Motor in accordance with the Service Information.
Perform APS VERIFICATION TEST - VER 1. (Refer to 5 - BRAKES - STANDARD PROCEDURE).

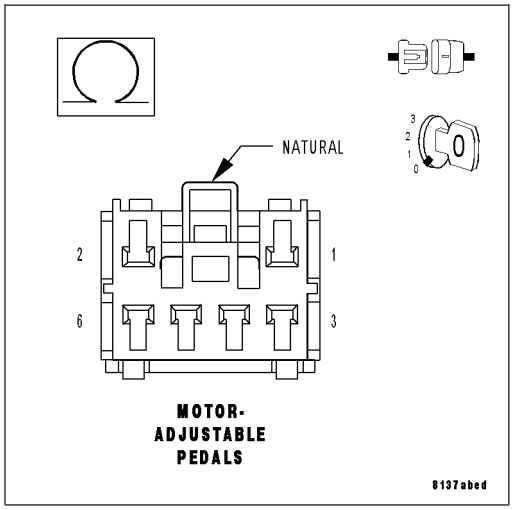

ABS INTERMITTENT CONDITION

For a complete wiring diagram **Refer to Section 8W**.

Diagnostic Test

1. PERFORM ABS INTERMITTENT CONDITION TEST

NOTE: The conditions that set the DTC are not present at this time. The following list may help in identifying the intermittent condition.

WARNING: When the engine is operating, do not stand in direct line with the fan. Do not put your hands near the pulleys, belts, or fan. Do not wear loose clothing. Failure to follow these instructions can result in personal injury or death.

Refer to any Technical Service Bulletins (TSBs) that may apply.

Review the scan tool Environmental Data (EV Data). If possible, try to duplicate the conditions under which the DTC set.

Turn the ignition off.

Visually inspect the related wire harness. Disconnect all the related harness connectors. Look for any chafed, pierced, pinched, partially broken wires and broken, bent, pushed out, or corroded terminals.

Wiggle the wires while checking for shorts and open circuits.

Perform a voltage drop test on the related circuits between the suspected faulty component and the Anti-Lock Brake Module.

Inspect and clean all PCM, ABS, engine, and chassis grounds that are related to the most current DTC.

If numerous trouble codes were set, use a wire schematic and look for any common ground or supply circuits

For any Relay DTCs, actuate the Relay with the scan tool and wiggle the related wire harness to try to interrupt the actuation.

Use the scan tool to perform a System Test if one applies to failing component.

A co-pilot, data recorder, and/or lab scope should be used to help diagnose intermittent conditions.

Were any problems found during the above inspections?

Yes >> Perform the necessary repairs.
Perform ABS VERIFICATION TEST - VER 1. (Refer to 5 - BRAKES - STANDARD PROCEDURE).

No >> Test Complete.

C100A–LEFT FRONT WHEEL SPEED SENSOR CIRCUIT

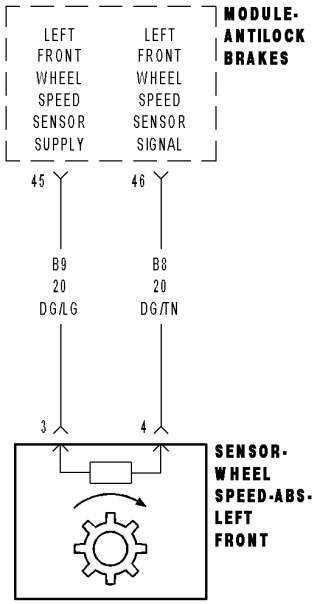

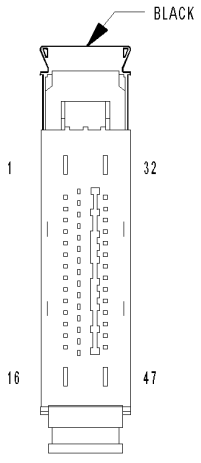

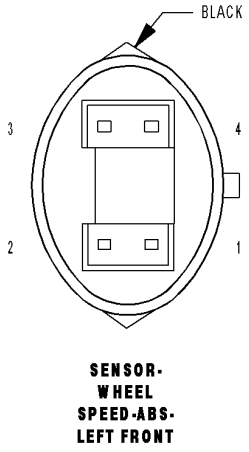

813cd7c9

For a complete wiring diagram **Refer to Section 8W**.

- **When Monitored:**
  With the ignition on.
- **Set Condition:**
  When the Left Front Wheel Speed Sensor circuit fails the diagnostic test.

Possible Causes
WIRING HARNESS, TERMINAL, CONNECTOR DAMAGE
(B9) LEFT FRONT WSS 12 VOLT SUPPLY CIRCUIT SHORTED TO VOLTAGE, GROUND, OR OPEN
(B8) LEFT FRONT WSS SIGNAL CIRCUIT SHORTED TO VOLTAGE, GROUND, OR OPEN
(B8) LEFT FRONT WSS SIGNAL CIRCUIT SHORTED TO (B9) LEFT FRONT WSS 12 VOLT SUPPLY CIRCUIT
LEFT FRONT WSS
ANTI-LOCK BRAKES MODULE

Diagnostic Test

1. CHECK FOR DTC C100A–LEFT FRONT WHEEL SPEED SENSOR CIRCUIT

NOTE: This DTC must be active for the results of this test to be valid.
Turn the ignition on.
With the scan tool, record and erase DTCs.
Cycle the ignition switch from off to on.
With the scan tool, read DTCs.

NOTE: The Anti-Lock Brake Module must sense ALL 4 wheels at 12 km/h (7.5 mph) before it will extinguish the ABS indicators.

Does the scan tool display: C100A–LEFT FRONT WHEEL SPEED SENSOR CIRCUIT?

Yes >> Go To 2

No >> Refer to the INTERMITTENT CONDITION diagnostic procedure.
Perform ABS VERIFICATION TEST - VER 1. (Refer to 5 - BRAKES - STANDARD PROCEDURE).

2. CHECK CONNECTOR/TERMINAL FOR DAMAGE

NOTE: Check all terminals for broken, bent, pushed out, or corroded terminals.
Turn the ignition off.
Inspect the Anti-Lock Brake Module harness connector, Left Front WSS, and Left Front WSS harness connector.

Is the Left Front WSS or any of the connectors/terminals damaged?

Yes >> Repair as necessary.
Perform ABS VERIFICATION TEST - VER 1. (Refer to 5 - BRAKES - STANDARD PROCEDURE).

No >> Go To 3

3. CHECK (B9) LEFT FRONT WSS 12 VOLT SUPPLY CIRCUIT VOLTAGE

Disconnect the Left Front WSS harness connector.

Turn the ignition on.

Measure the voltage of the (B9) Left Front WSS 12 Volt Supply circuit.

Is the voltage above 10.0 volts?

Yes >> Go To 6

No >> Go To 4

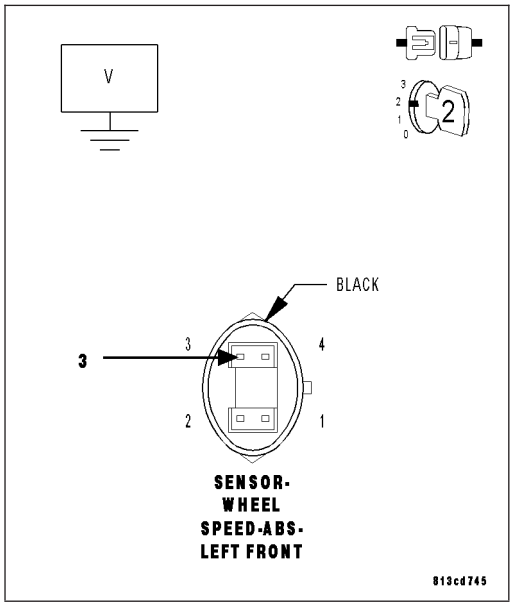

4. CHECK (B9) LEFT FRONT WSS SUPPLY CIRCUIT SHORT TO GROUND

Turn the ignition off.

Disconnect the Left Front WSS harness connector.

Disconnect the Anti-Lock Brake Module harness connector.

Using a 12-volt test light connected to 12-volts, probe the (B9) Left Front WSS Supply circuit.

Does the test light illuminate brightly?

Yes >> Repair the (B9) Left Front WSS Supply circuit for a short to ground.

Perform ABS VERIFICATION TEST - VER 1. (Refer to 5 - BRAKES - STANDARD PROCEDURE).

No >> Go To 5

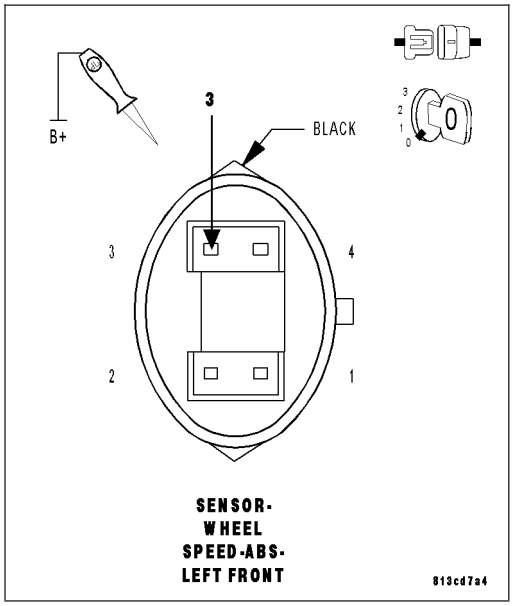

5. CHECK (B9) LEFT FRONT WSS SUPPLY CIRCUIT OPEN

Connect a jumper wire between ground and the (B9) Left Front WSS Supply circuit in the Anti-Lock Brakes Module harness connector.

Using a 12-volt test light connected to 12-volts, probe the (B9) Left Front WSS Supply circuit.

Does the test light illuminate brightly?

Yes >> Replace the Anti-Lock Brakes Module in accordance with the Service Information.

Perform ABS VERIFICATION TEST - VER 1. (Refer to 5 - BRAKES - STANDARD PROCEDURE).

No >> Repair the (B9) Left Front WSS Supply circuit for an open.

Perform ABS VERIFICATION TEST - VER 1. (Refer to 5 - BRAKES - STANDARD PROCEDURE).

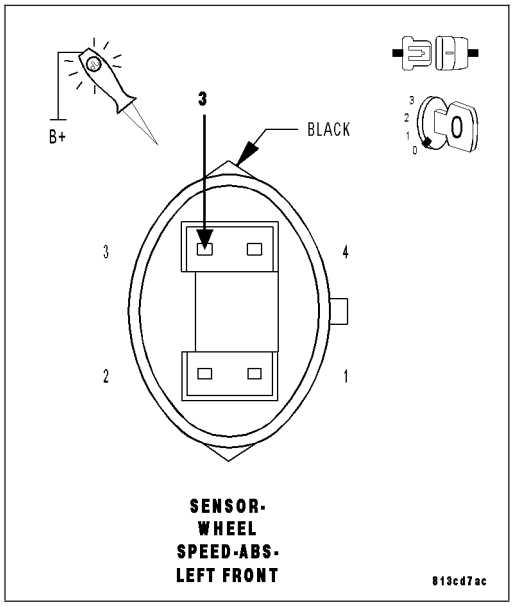

6. CHECK (B8) LEFT FRONT WSS SIGNAL CIRCUIT SHORT TO GROUND

Using a 12-volt test light connected to 12-volts, probe the (B8) Left Front WSS Signal circuit.

Does the test light illuminate brightly?

Yes >> Repair the (B8) Left Front WSS Signal circuit for a short to ground.

Perform ABS VERIFICATION TEST - VER 1. (Refer to 5 - BRAKES - STANDARD PROCEDURE).

No >> Go To 7

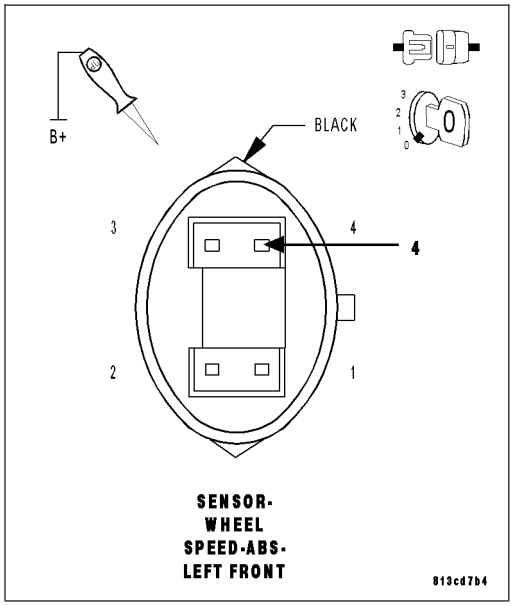

7. CHECK (B8) LEFT FRONT WSS SIGNAL CIRCUIT OPEN

Connect a jumper wire between ground and the (B8) Left Front WSS Signal circuit in the Anti-Lock Brakes Module harness connector.

Using a 12-volt test light connected to 12-volts, probe the (B8) Left Front WSS Signal circuit.

Does the test light illuminate brightly?

Yes >> Go To 8

No >> Repair the (B8) Left Front WSS Signal circuit for an open.
Perform ABS VERIFICATION TEST - VER 1. (Refer to 5 - BRAKES - STANDARD PROCEDURE).

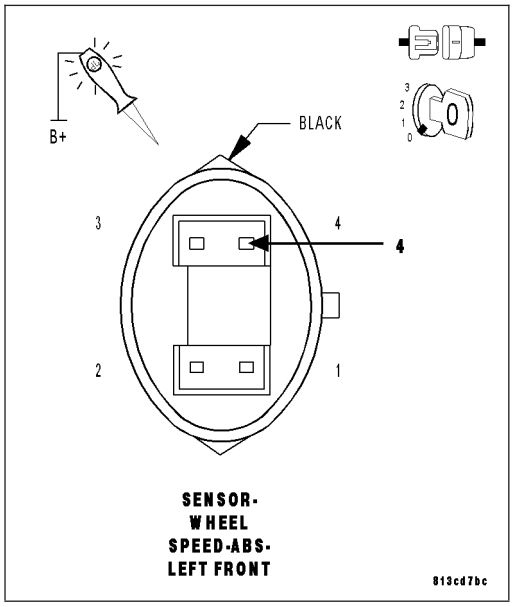

8. CHECK (B8) LEFT FRONT WSS SIGNAL CIRCUIT SHORT TO VOLTAGE

Turn the ignition on.

Remove all jumper wires.

Measure the voltage between the (B8) Left Front WSS Signal circuit and ground.

Is the voltage above one volt?

Yes >> Repair the (B8) Left Front WSS Signal circuit for a short to voltage.
Perform ABS VERIFICATION TEST - VER 1. (Refer to 5 - BRAKES - STANDARD PROCEDURE).

No >> Go To 9

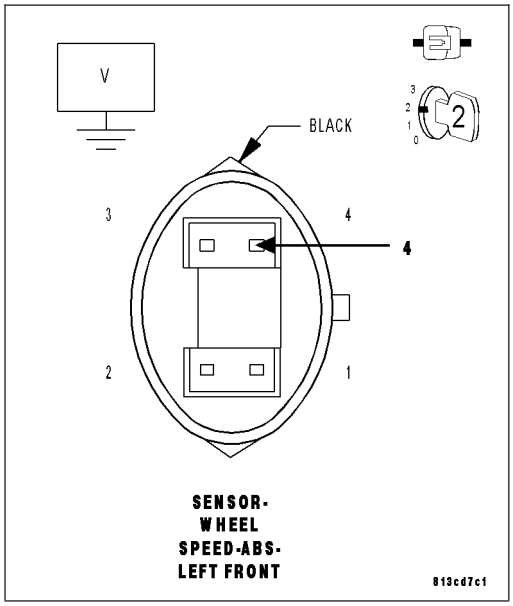

9. CHECK (B8) LEFT FRONT WSS SIGNAL CIRCUIT AND (B9) LEFT FRONT WSS SUPPLY CIRCUIT SHORT TOGETHER

Turn the ignition off.

Measure the resistance between the (B8) Left Front WSS Signal circuit and the (B9) Left Front WSS Supply circuit.

Is the resistance above 5.0 ohms?

Yes >> Go To 10

No >> Repair the (B8) Left Front WSS Signal circuit and the (B9) Left Front WSS Supply circuit for a short together.
Perform ABS VERIFICATION TEST - VER 1. (Refer to 5 - BRAKES - STANDARD PROCEDURE).

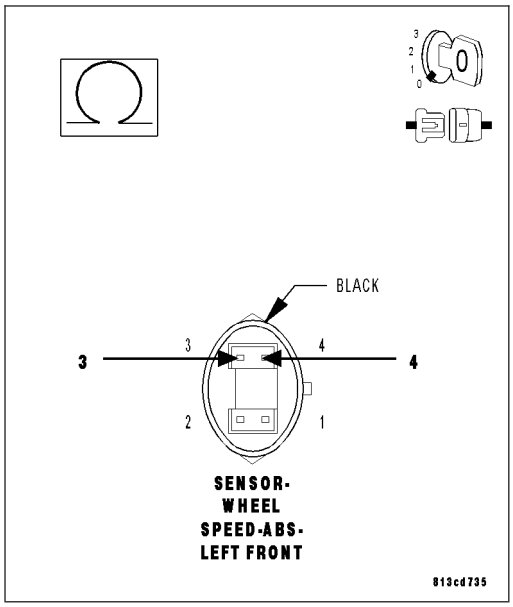

10. LEFT FRONT WHEEL SPEED SENSOR

Replace the Left Front Wheel Speed Sensor in accordance with the Service Information.

Perform ABS VERIFICATION TEST - VER 1. (Refer to 5 - BRAKES - STANDARD PROCEDURE).

CAUTION: Ensure brake capability is available before road testing.
Road test the vehicle over 40 km/h (25 m.p.h.).

NOTE: Vehicle must be driven above 40 km/h (25 m.p.h.) for set conditions to be meet.
With the scan tool, read ABS DTCs.

NOTE: The Anti-Lock Brake Module must sense ALL 4 wheels at 12 km/h (7.5 mph) before it will extinguish the ABS indicators.

Did DTC C100A–LEFT FRONT WHEEL SPEED SENSOR CIRCUIT reset?

Yes >> Replace the Anti-Lock Brakes Module in accordance with the Service Information.
Perform ABS VERIFICATION TEST - VER 1. (Refer to 5 - BRAKES - STANDARD PROCEDURE).

No >> Test Complete.

C1011-LEFT FRONT WHEEL SPEED SENSOR SIGNAL ERRATIC PERFORMANCE

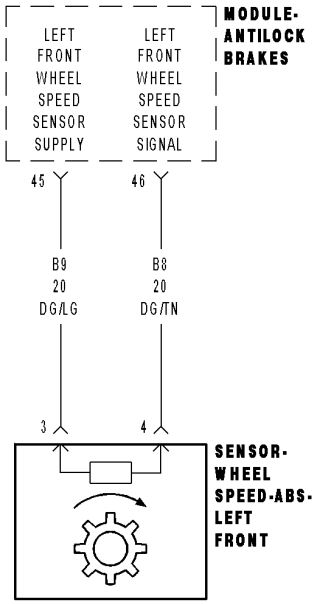

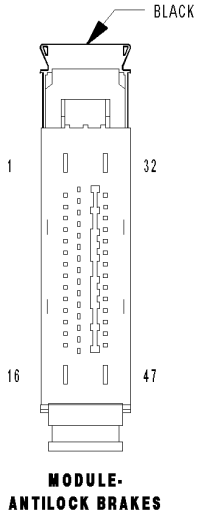

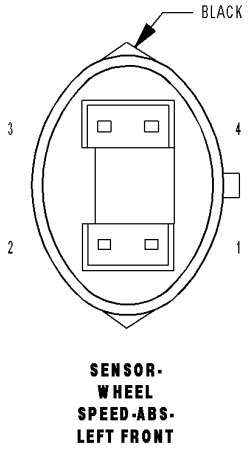

813cd7c9

For a complete wiring diagram **Refer to Section 8W**.

- **When Monitored:**
  With the ignition on.
- **Set Condition:**
  When the Left Front WSS Signal is intermittently missing a vehicle speed above 40 kph (25 mph) or erratic wheel speed signal during acceleration or sensed wheel speed is different from other wheels.

Possible Causes
LEFT FRONT WSS LOOSE — B8, B9 CIRCUITS/CONNECTOR/TERMINAL DAMAGE
LEFT FRONT TONE WHEEL DAMAGE
LEFT FRONT WHEEL BEARING DAMAGE
IMPROPER LEFT FRONT TIRE PRESSURE/MISMATCHED TIRES
LEFT FRONT WSS
ANTI-LOCK BRAKE MODULE

Diagnostic Test

1. CHECK FOR DTC C1011-LEFT FRONT WHEEL SPEED SENSOR SIGNAL ERRATIC PERFORMANCE

NOTE: This DTC must be active for the results of this test to be valid.

NOTE: If DTC C100A Left Front Wheel Speed Sensor Circuit is present it must be repaired before continuing.

Turn the ignition on.

With the scan tool, record and erase DTCs.

Road test the vehicle over 40 km/h (25 m.p.h.).

NOTE: Vehicle must be driven above 40 km/h (25 m.p.h.) for set conditions to be meet.

With the scan tool, read DTCs.

NOTE: The Anti-Lock Brake Module must sense ALL 4 wheels at 12 km/h (7.5 mph) before it will extinguish the ABS indicators.

Does the scan tool display: C1011-LEFT FRONT WHEEL SPEED SENSOR SIGNAL ERRATIC PERFORMANCE?

Yes >> Go To 3

No >> Go To 2

2. CHECK WHEEL SPEED SENSOR SIGNALS

Turn the ignition on.

With the scan tool, monitor and graph ALL the WSS speeds and compare graph while an assistant drives the vehicle.

NOTE: If graph shows periodic dropouts pay close attention to the tone wheel.

Slowly accelerate as straight as possible from a stop to 40 km/h (25 m.p.h.).

Is the Left Front WSS speed showing 0 km/h (0 m.p.h.) or not matching other wheel speeds?

Yes >> Go To 3

No >> Refer to the INTERMITTENT CONDITION diagnostic procedure.
Perform ABS VERIFICATION TEST - VER 1. (Refer to 5 - BRAKES - STANDARD PROCEDURE).

3. CHECK FOR IMPROPER LEFT FRONT TIRE PRESSURE/MISMATCHED TIRES

Turn the ignition off.
Check and adjust the Left Front Tire pressure.
Check and adjust all other tire pressures.
Inspect for mismatched tires on vehicle.

Is the Left Front Tire improperly inflated or mismatched tires on vehicle?

Yes >> Repair as necessary
Perform ABS VERIFICATION TEST - VER 1. (Refer to 5 - BRAKES - STANDARD PROCEDURE).

No >> Go To 4

4. CHECK LEFT FRONT WSS LOOSENESS, INSPECT B8, B9 CIRCUITS/TERMINALS FOR DAMAGE

NOTE: Check all terminals for broken, bent, pushed out, or corroded terminals
Inspect the Anti-Lock Brake Module harness connector, Left Front WSS, and Left Front WSS harness connector
Inspect the Left Front WSS for looseness, excessive corrosion and not properly fastened.
Inspect the (B8) Left Front WSS Signal and (B9) Left Front WSS Supply circuits between the Left Front WSS and Anti-Lock Brake Module for damage.

Is the Left Front WSS loose or any of the wiring/connectors/terminals damaged?

Yes >> Repair as necessary
Perform ABS VERIFICATION TEST - VER 1. (Refer to 5 - BRAKES - STANDARD PROCEDURE).

No >> Go To 5

5. CHECK LEFT FRONT TONE WHEEL FOR DAMAGE

Inspect the Left Front Tone Wheel for damage, missing teeth, cracks, or looseness.

NOTE: The Tone Wheel teeth should be perfectly square, not bent, or nicked.

Is the Left Front Tone Wheel damaged?

Yes >> Repair as necessary
Perform ABS VERIFICATION TEST - VER 1. (Refer to 5 - BRAKES - STANDARD PROCEDURE).

No >> Go To 6

6. CHECK LEFT FRONT WHEEL BEARING FOR DAMAGE

Inspect the Left Front wheel bearing for excessive runout or clearance.

NOTE: Refer to the appropriate service information, if necessary, for procedures or specifications.

Is the Left Front Wheel Bearing Damaged?

Yes >> Repair as necessary
Perform ABS VERIFICATION TEST - VER 1. (Refer to 5 - BRAKES - STANDARD PROCEDURE).

No >> Go To 7

7. LEFT FRONT WHEEL SPEED SENSOR

Replace the Left Front Wheel Speed Sensor in accordance with the Service Information.

Perform ABS VERIFICATION TEST - VER 1. (Refer to 5 - BRAKES - STANDARD PROCEDURE).

Road test the vehicle over 40 km/h (25 m.p.h.).

NOTE: Vehicle must be driven above 40 km/h (25 m.p.h.) for set conditions to be meet.
With the scan tool, read ABS DTCs.

NOTE: The Anti-Lock Brake Module must sense ALL 4 wheels at 12 km/h (7.5 mph) before it will extinguish the ABS indicators.

Did DTC C1011-LEFT FRONT WHEEL SPEED SENSOR SIGNAL ERRATIC PERFORMANCE reset?

Yes >> Replace the Anti-Lock Brakes Module in accordance with the Service Information.
Perform ABS VERIFICATION TEST - VER 1. (Refer to 5 - BRAKES - STANDARD PROCEDURE).

No >> Test Complete.

C1014-LEFT FRONT WHEEL SPEED COMPARATIVE PERFORMANCE

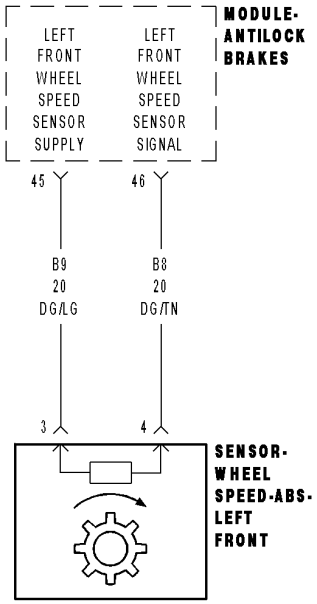

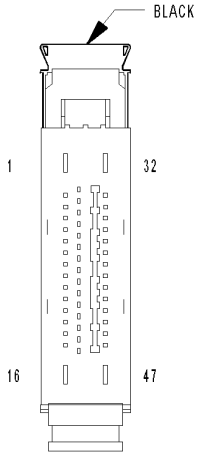

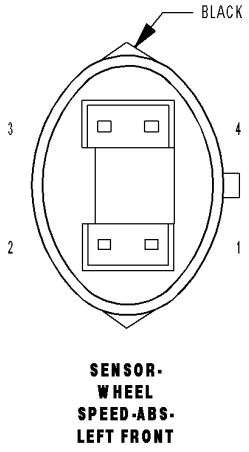

813cd7c9

For a complete wiring diagram **Refer to Section 8W**.

- **When Monitored:**
  With the ignition on.
- **Set Condition:**
  When the Left Front WSS reading is different from the readings received from the other WSS's at a vehicle speed above 40 kph (25 mph). The Anti-Lock Brake Module compares WSS readings from side-to-side on an axle and front-to-rear.

Possible Causes
LEFT FRONT WSS LOOSE — B8, B9 CIRCUITS/CONNECTOR/TERMINAL DAMAGE
IMPROPER LEFT FRONT TIRE PRESSURE/MISMATCHED TIRES
LEFT FRONT TONE WHEEL/BEARING DAMAGE
LEFT FRONT WSS
ANTI-LOCK BRAKE MODULE

Diagnostic Test

1. CHECK FOR DTC C1014-LEFT FRONT WHEEL SPEED COMPARATIVE PERFORMANCE

NOTE: This DTC must be active for the results of this test to be valid.
Turn the ignition on.
With the scan tool, record and erase DTCs.
Road test the vehicle over 40 km/h (25 m.p.h.).

NOTE: Vehicle must be driven above 40 km/h (25 m.p.h.) for set conditions to be meet.
With the scan tool, read DTCs.

NOTE: The Anti-Lock Brake Module must sense ALL 4 wheels at 12 km/h (7.5 mph) before it will extinguish the ABS indicators.

Does the scan tool display: C1014-LEFT FRONT WHEEL SPEED COMPARATIVE PERFORMANCE?

Yes >> Go To 3

No >> Go To 2

2. CHECK WHEEL SPEED SENSOR SIGNALS

Turn the ignition on.
With the scan tool, monitor and graph ALL the WSS speeds and compare graph while an assistant drives the vehicle.

NOTE: If graph shows periodic dropouts pay close attention to the tone wheel.
Slowly accelerate as straight as possible from a stop to 40 km/h (25 m.p.h.).

Is the Left Front WSS speed showing 0 km/h (0 m.p.h.) or not matching other wheel speeds?

Yes >> Go To 3

No >> Refer to the INTERMITTENT CONDITION diagnostic procedure.
Perform ABS VERIFICATION TEST - VER 1. (Refer to 5 - BRAKES - STANDARD PROCEDURE).

3. CHECK FOR IMPROPER LEFT FRONT TIRE PRESSURE/MISMATCHED TIRES

Turn the ignition off.
Check and adjust the Left Front Tire pressure.
Check and adjust all other tire pressures.
Inspect for mismatched tires on vehicle.

Is the Left Front Tire improperly inflated or mismatched tires on vehicle?

Yes >> Repair as necessary
Perform ABS VERIFICATION TEST - VER 1. (Refer to 5 - BRAKES - STANDARD PROCEDURE).

No >> Go To 4

4. CHECK LEFT FRONT WSS LOOSENESS, INSPECT B8, B9 CIRCUITS/TERMINALS FOR DAMAGE

NOTE: Check all terminals for broken, bent, pushed out, or corroded terminals
Inspect the Anti-Lock Brake Module harness connector, Left Front WSS, and Left Front WSS harness connector
Inspect the Left Front WSS for looseness, excessive corrosion and not properly fastened.
Inspect the (B8) Left Front WSS Signal and (B9) Left Front WSS Supply circuits between the Left Front WSS and Anti-Lock Brake Module for damage.

Is the Left Front WSS loose or any of the wiring/connectors/terminals damaged?

Yes >> Repair as necessary
Perform ABS VERIFICATION TEST - VER 1. (Refer to 5 - BRAKES - STANDARD PROCEDURE).

No >> Go To 5

5. CHECK LEFT FRONT TONE WHEEL FOR DAMAGE

Inspect the Left Front Tone Wheel for damage, missing teeth, cracks, or looseness.

NOTE: The Tone Wheel teeth should be perfectly square, not bent, or nicked.

Is the Left Front Tone Wheel damaged?

Yes >> Repair as necessary
Perform ABS VERIFICATION TEST - VER 1. (Refer to 5 - BRAKES - STANDARD PROCEDURE).

No >> Go To 6

6. LEFT FRONT WHEEL SPEED SENSOR

Replace the Left Front Wheel Speed Sensor in accordance with the Service Information.
Perform ABS VERIFICATION TEST - VER 1. (Refer to 5 - BRAKES - STANDARD PROCEDURE).
Road test the vehicle over 40 km/h (25 m.p.h.).

NOTE: Vehicle must be driven above 40 km/h (25 m.p.h.) for set conditions to be meet.
With the scan tool, read ABS DTCs.

NOTE: The Anti-Lock Brake Module must sense ALL 4 wheels at 12 km/h (7.5 mph) before it will extinguish the ABS indicators.

Did DTC C1011-LEFT FRONT WHEEL SPEED SENSOR SIGNAL ERRATIC PERFORMANCE reset?

Yes >> Replace the Anti-Lock Brakes Module in accordance with the Service Information.
Perform ABS VERIFICATION TEST - VER 1. (Refer to 5 - BRAKES - STANDARD PROCEDURE).

No >> Test Complete.

C1015–RIGHT FRONT WHEEL SPEED SENSOR CIRCUIT

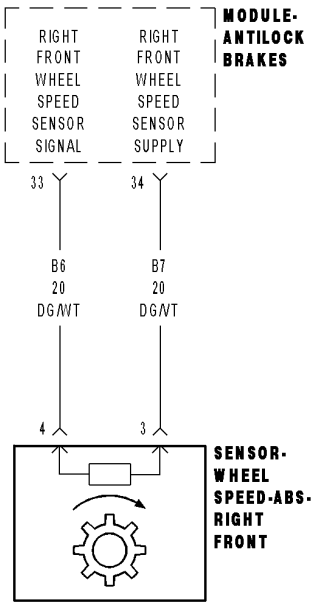

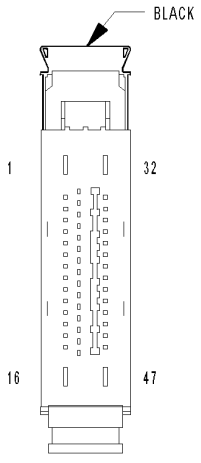

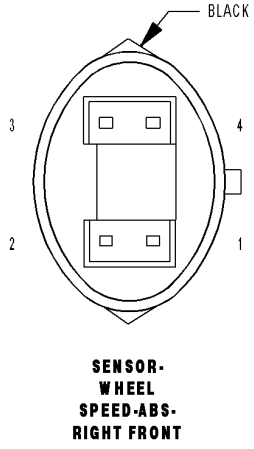

813cf6d7

For a complete wiring diagram **Refer to Section 8W**.

- **When Monitored:**
  With the ignition on.
- **Set Condition:**
  If the Right Front Wheel Speed Sensor circuit fails the diagnostic test.

Possible Causes
WIRING HARNESS, TERMINAL, CONNECTOR DAMAGE
(B7) RIGHT FRONT WSS 12 VOLT SUPPLY CIRCUIT SHORTED TO VOLTAGE, GROUND, OR OPEN
(B6) RIGHT FRONT WSS SIGNAL CIRCUIT SHORTED TO VOLTAGE, GROUND, OR OPEN
(B6) RIGHT FRONT WSS SIGNAL CIRCUIT SHORTED TO (B7) RIGHT FRONT WSS 12 VOLT SUPPLY CIRCUIT
RIGHT FRONT WSS
ANTI-LOCK BRAKES MODULE

Diagnostic Test

1. CHECK FOR DTC C1015–RIGHT FRONT WHEEL SPEED SENSOR CIRCUIT

NOTE: This DTC must be active for the results of this test to be valid.
Turn the ignition on.
With the scan tool, record and erase DTCs.
Cycle the ignition switch from off to on.
With the scan tool, read DTCs.

NOTE: The Anti-Lock Brake Module must sense ALL 4 wheels at 12 km/h (7.5 mph) before it will extinguish the ABS indicators.

Does the scan tool display: C1015–RIGHT FRONT WHEEL SPEED SENSOR CIRCUIT?

Yes >> Go To 2

No >> Refer to the INTERMITTENT CONDITION diagnostic procedure.
Perform ABS VERIFICATION TEST - VER 1. (Refer to 5 - BRAKES - STANDARD PROCEDURE).

2. CHECK CONNECTOR/TERMINAL FOR DAMAGE

NOTE: Check all terminals for broken, bent, pushed out, or corroded terminals.
Turn the ignition off.
Inspect the Anti-Lock Brake Module harness connector, Right Front WSS, and Right Front WSS harness connector.

Is the Right Front WSS or any of the connectors/terminals damaged?

Yes >> Repair as necessary.
Perform ABS VERIFICATION TEST - VER 1. (Refer to 5 - BRAKES - STANDARD PROCEDURE).

No >> Go To 3

3. CHECK (B7) RIGHT FRONT WSS 12 VOLT SUPPLY CIRCUIT VOLTAGE

Disconnect the Right Front WSS harness connector.

Turn the ignition on.

Measure the voltage of the (B7) Right Front WSS 12 Volt Supply circuit.

Is the voltage above 10.0 volts?

Yes >> Go To 6

No >> Go To 4

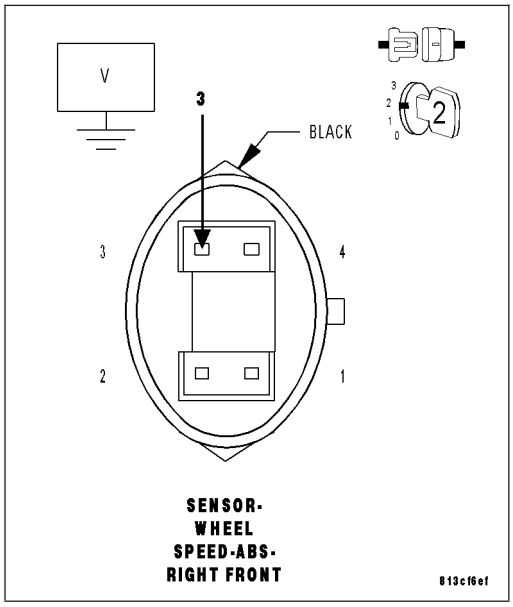

4. CHECK (B7) RIGHT FRONT WSS 12 VOLT SUPPLY CIRCUIT FOR A SHORT TO GROUND

Turn the ignition off.

Disconnect the Right Front WSS harness connector.

Disconnect the Anti-Lock Brake Module harness connector.

Using a 12-volt test light connected to 12-volts, probe the (B7) Right Front WSS Supply circuit.

Does the test light illuminate brightly?

Yes >> Repair the (B7) Right Front WSS Supply circuit for a short to ground.

Perform ABS VERIFICATION TEST - VER 1. (Refer to 5 - BRAKES - STANDARD PROCEDURE).

No >> Go To 5

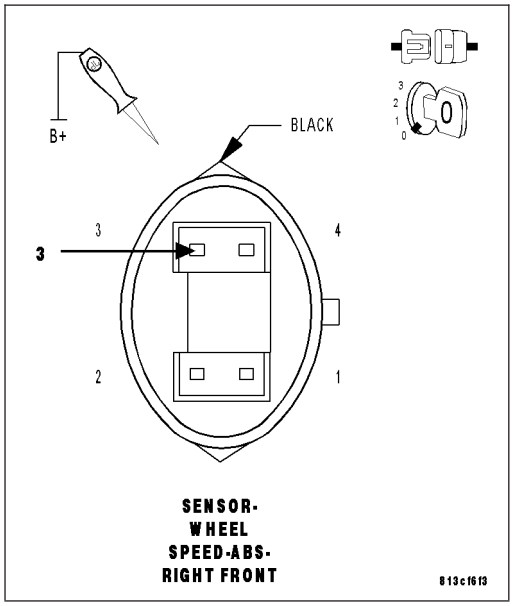

5. CHECK (B7) RIGHT FRONT WSS 12 VOLT SUPPLY CIRCUIT FOR AN OPEN

Connect a jumper wire between ground and the (B7) Right Front WSS Supply circuit in the Anti-Lock Brakes Module harness connector.

Using a 12-volt test light connected to 12-volts, probe the (B7) Right Front WSS Supply circuit.

Does the test light illuminate brightly?

Yes >> Replace the Anti-Lock Brakes Module in accordance with the Service Information.

Perform ABS VERIFICATION TEST - VER 1. (Refer to 5 - BRAKES - STANDARD PROCEDURE).

No >> Repair the (B7) Right Front WSS Supply circuit for an open.

Perform ABS VERIFICATION TEST - VER 1. (Refer to 5 - BRAKES - STANDARD PROCEDURE).

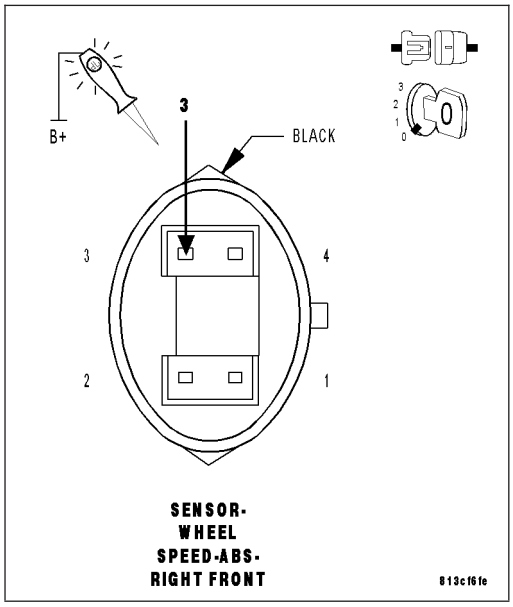

6. CHECK (B6) RIGHT FRONT WSS SIGNAL CIRCUIT SHORT TO GROUND

Using a 12-volt test light connected to 12-volts, probe the (B6) Right Front WSS Signal circuit.

Does the test light illuminate brightly?

Yes >> Repair the (B6) Right Front WSS Signal circuit for a short to ground.

Perform ABS VERIFICATION TEST - VER 1. (Refer to 5 - BRAKES - STANDARD PROCEDURE).

No >> Go To 7

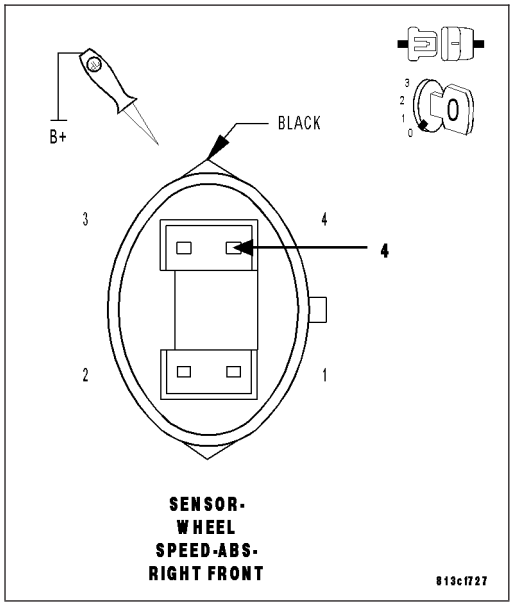

7. CHECK (B6) RIGHT FRONT WSS SIGNAL CIRCUIT OPEN

Connect a jumper wire between ground and the (B6) Right Front WSS Signal circuit in the Anti-Lock Brakes Module harness connector.

Using a 12-volt test light connected to 12-volts, probe the (B6) Right Front WSS Signal circuit.

Does the test light illuminate brightly?

Yes >> Go To 8

No >> Repair the (B6) Right Front WSS Signal circuit for an open.
Perform ABS VERIFICATION TEST - VER 1. (Refer to 5 - BRAKES - STANDARD PROCEDURE).

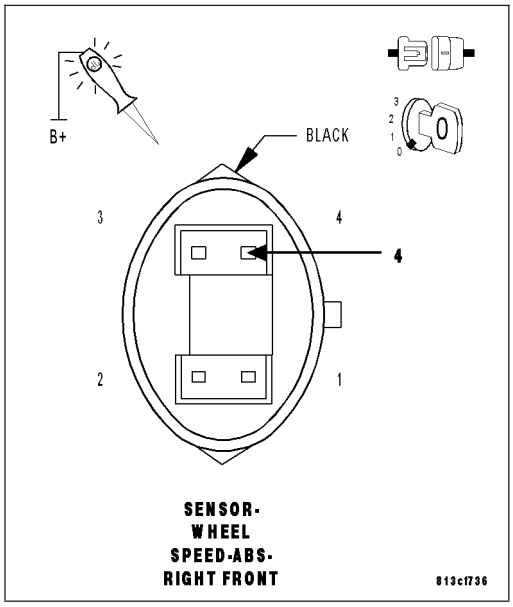

8. CHECK (B6) RIGHT FRONT WSS SIGNAL CIRCUIT FOR AN SHORT TO VOLTAGE

Turn the ignition on.

Remove all jumper wires.

Measure the voltage between the (B6) Right Front WSS Signal circuit and ground.

Is the voltage above one volt?

Yes >> Repair the (B6) Right Front WSS Signal circuit for a short to voltage.
Perform ABS VERIFICATION TEST - VER 1. (Refer to 5 - BRAKES - STANDARD PROCEDURE).

No >> Go To 9

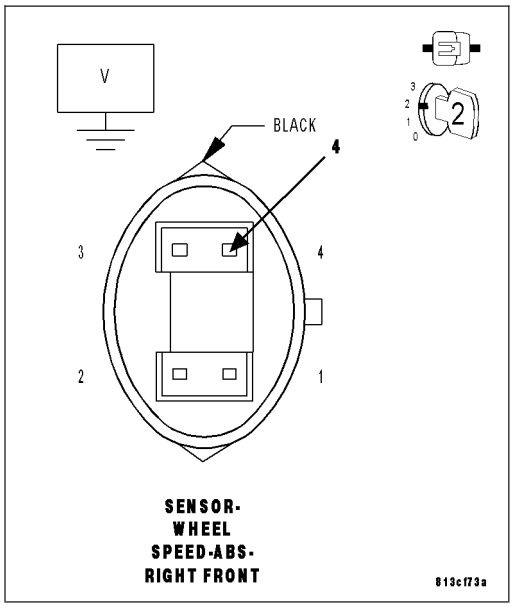

9. CHECK (B6) RIGHT FRONT WSS SIGNAL CIRCUIT AND (B7) RIGHT FRONT WSS 12 VOLT SUPPLY CIRCUIT SHORTED TOGETHER

Turn the ignition off.

Measure the resistance between the (B6) Right Front WSS Signal circuit and the (B7) Right Front WSS Supply circuit.

Is the resistance above 5.0 ohms?

Yes >> Go To 10

No >> Repair the (B6) Right Front WSS Signal circuit and the (B7) Right Front WSS Supply circuit for a short together.
Perform ABS VERIFICATION TEST - VER 1. (Refer to 5 - BRAKES - STANDARD PROCEDURE).

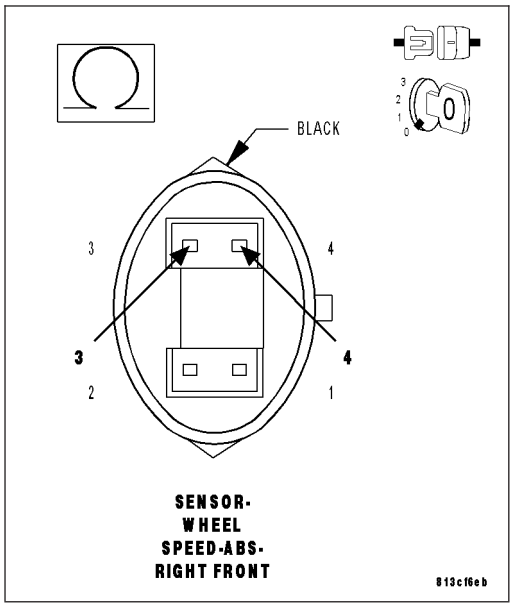

10. RIGHT FRONT WHEEL SPEED SENSOR

Replace the Right Front Wheel Speed Sensor in accordance with the Service Information.

Perform ABS VERIFICATION TEST - VER 1. (Refer to 5 - BRAKES - STANDARD PROCEDURE).

CAUTION: Ensure brake capability is available before road testing.
Road test the vehicle over 40 km/h (25 m.p.h.).

NOTE: Vehicle must be driven above 40 km/h (25 m.p.h.) for set conditions to be meet.
With the scan tool, read ABS DTCs.

NOTE: The Anti-Lock Brake Module must sense ALL 4 wheels at 12 km/h (7.5 mph) before it will extinguish the ABS indicators.

Did DTC C1015–RIGHT FRONT WHEEL SPEED SENSOR CIRCUIT reset?

Yes >> Replace the Anti-Lock Brakes Module in accordance with the Service Information.
Perform ABS VERIFICATION TEST - VER 1. (Refer to 5 - BRAKES - STANDARD PROCEDURE).

No >> Test Complete.

C101C-RIGHT FRONT WHEEL SPEED SENSOR SIGNAL ERRATIC PERFORMANCE

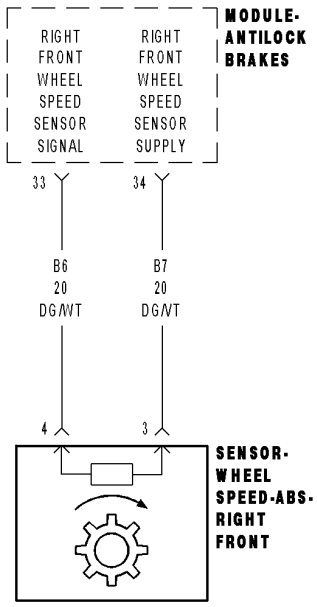

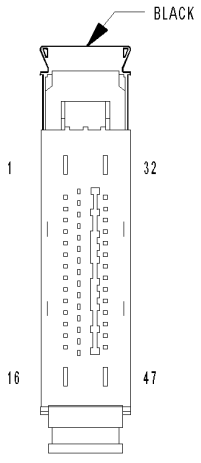

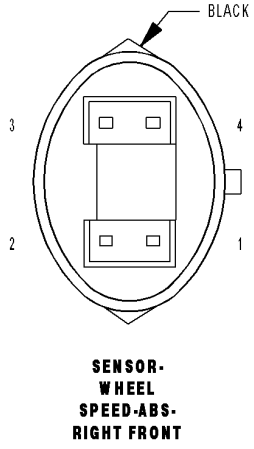

813cf6d7

For a complete wiring diagram **Refer to Section 8W**.

- **When Monitored:**
  With the ignition on.
- **Set Condition:**
  When the Right Front WSS Signal is intermittently missing a vehicle speed above 25mph (40 kph) or erratic wheel speed signal during acceleration or sensed wheel speed is different from other wheels.

Possible Causes
RIGHT FRONT WSS LOOSE — B6, B7 CIRCUITS/CONNECTOR/TERMINAL DAMAGE
RIGHT FRONT TONE WHEEL DAMAGE
RIGHT FRONT WHEEL BEARING DAMAGE
IMPROPER RIGHT FRONT TIRE PRESSURE/MISMATCHED TIRES
RIGHT FRONT WSS
ANTI-LOCK BRAKE MODULE

Diagnostic Test

1. CHECK FOR DTC C101C-RIGHT FRONT WHEEL SPEED SENSOR SIGNAL ERRATIC PERFORMANCE

NOTE: This DTC must be active for the results of this test to be valid.

NOTE: If DTC C1015–Right Front Wheel Speed Sensor Circuit is present it must be repaired before continuing.

Turn the ignition on.

With the scan tool, record and erase DTCs.

Road test the vehicle over 40 km/h (25 m.p.h.).

NOTE: Vehicle must be driven above 40 km/h (25 m.p.h.) for set conditions to be meet.

With the scan tool, read DTCs.

NOTE: The Anti-Lock Brake Module must sense ALL 4 wheels at 12 km/h (7.5 mph) before it will extinguish the ABS indicators.

Does the scan tool display: C101C-RIGHT FRONT WHEEL SPEED SENSOR SIGNAL ERRATIC PERFORMANCE?

Yes >> Go To 3

No >> Go To 2

2. CHECK WHEEL SPEED SENSOR SIGNALS

Turn the ignition on.

With the scan tool, monitor and graph ALL the WSS speeds and compare graph while an assistant drives the vehicle.

NOTE: If graph shows periodic dropouts pay close attention to the tone wheel.

Slowly accelerate as straight as possible from a stop to 40 km/h (25 m.p.h.).

Is the Right Front WSS speed showing 0 km/h (0 m.p.h.) or not matching other wheel speeds?

Yes >> Go To 3

No >> Refer to the INTERMITTENT CONDITION diagnostic procedure.
Perform ABS VERIFICATION TEST - VER 1. (Refer to 5 - BRAKES - STANDARD PROCEDURE).

3. CHECK FOR IMPROPER RIGHT FRONT TIRE PRESSURE/MISMATCHED TIRES

Turn the ignition off.
Check and adjust the Right Front Tire pressure.
Check and adjust all other tire pressures.
Inspect for mismatched tires on vehicle.

Is the Right Front Tire improperly inflated or mismatched tires on vehicle?

Yes >> Repair as necessary
Perform ABS VERIFICATION TEST - VER 1. (Refer to 5 - BRAKES - STANDARD PROCEDURE).

No >> Go To 4

4. CHECK RIGHT FRONT WSS LOOSENESS, INSPECT B6, B7 CIRCUITS/TERMINALS FOR DAMAGE

NOTE: Check all terminals for broken, bent, pushed out, or corroded terminals
Inspect the Anti-Lock Brake Module harness connector, Right Front WSS, and Right Front WSS harness connector
Inspect the Right Front WSS for looseness, excessive corrosion and not properly fastened.
Inspect the (B6) Right Front WSS Signal and (B7) Right Front WSS Supply circuits between the Right Front WSS and Anti-Lock Brake Module for damage.

Is the Right Front WSS loose or any of the wiring/connectors/terminals damaged?

Yes >> Repair as necessary
Perform ABS VERIFICATION TEST - VER 1. (Refer to 5 - BRAKES - STANDARD PROCEDURE).

No >> Go To 5

5. CHECK RIGHT FRONT TONE WHEEL FOR DAMAGE

Inspect the Right Front Tone Wheel for damage, missing teeth, cracks, or looseness.

NOTE: The Tone Wheel teeth should be perfectly square, not bent, or nicked.

Is the Right Front Tone Wheel damaged?

Yes >> Repair as necessary
Perform ABS VERIFICATION TEST - VER 1. (Refer to 5 - BRAKES - STANDARD PROCEDURE).

No >> Go To 6

6. CHECK RIGHT FRONT WHEEL BEARING FOR DAMAGE

Inspect the Right Front wheel bearing for excessive runout or clearance.

NOTE: Refer to the appropriate service information, if necessary, for procedures or specifications.

Is the Right Front Wheel Bearing Damaged?

Yes >> Repair as necessary
Perform ABS VERIFICATION TEST - VER 1. (Refer to 5 - BRAKES - STANDARD PROCEDURE).

No >> Go To 7

7. RIGHT FRONT WHEEL SPEED SENSOR

Replace the Right Front Wheel Speed Sensor in accordance with the Service Information.
Perform ABS VERIFICATION TEST - VER 1. (Refer to 5 - BRAKES - STANDARD PROCEDURE).
Road test the vehicle over 40 km/h (25 m.p.h.).

NOTE: Vehicle must be driven above 40 km/h (25 m.p.h.) for set conditions to be meet.
With the scan tool, read ABS DTCs.

NOTE: The Anti-Lock Brake Module must sense ALL 4 wheels at 12 km/h (7.5 mph) before it will extinguish the ABS indicators.

Did DTC C101C-RIGHT FRONT WHEEL SPEED SENSOR SIGNAL ERRATIC PERFORMANCE reset?

Yes >> Replace the Anti-Lock Brakes Module in accordance with the Service Information.
Perform ABS VERIFICATION TEST - VER 1. (Refer to 5 - BRAKES - STANDARD PROCEDURE).

No >> Test Complete.

C101F-RIGHT FRONT WHEEL SPEED COMPARATIVE PERFORMANCE

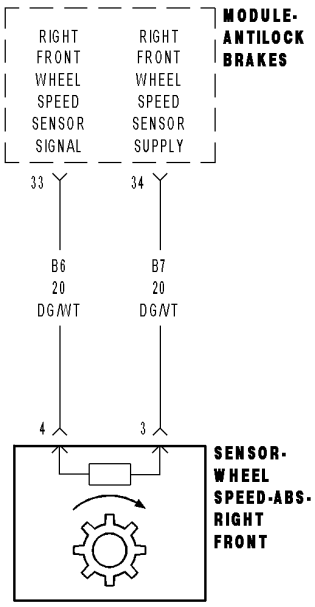

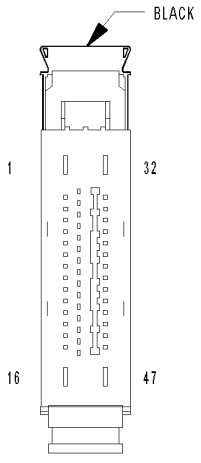

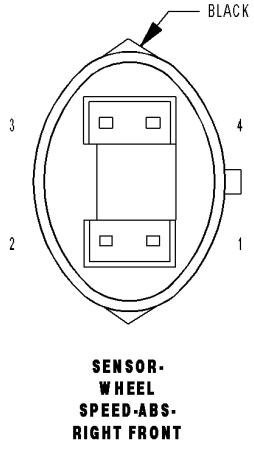

813cf6d7

For a complete wiring diagram **Refer to Section 8W**.

- **When Monitored:**
  With the ignition on.
- **Set Condition:**
  When the Right Front WSS reading is different from the readings received from the other WSS's at a vehicle speed above 40 kph (25 mph). The Anti-Lock Brake Module compares WSS readings from side-to-side on an axle and front-to-rear.

Possible Causes
RIGHT FRONT WSS LOOSE — B6, B7 CIRCUITS/CONNECTOR/TERMINAL DAMAGE
IMPROPER RIGHT FRONT TIRE PRESSURE/MISMATCHED TIRES
RIGHT FRONT TONE WHEEL/BEARING DAMAGE
RIGHT FRONT WSS
ANTI-LOCK BRAKE MODULE

Diagnostic Test

1. CHECK FOR DTC C101F-RIGHT FRONT WHEEL SPEED COMPARATIVE PERFORMANCE

NOTE: This DTC must be active for the results of this test to be valid.
Turn the ignition on.
With the scan tool, record and erase DTCs.
Road test the vehicle over 40 km/h (25 m.p.h.).

NOTE: Vehicle must be driven above 40 km/h (25 m.p.h.) for set conditions to be meet.
With the scan tool, read DTCs.

NOTE: The Anti-Lock Brake Module must sense ALL 4 wheels at 12 km/h (7.5 mph) before it will extinguish the ABS indicators.

Does the scan tool display: C101F-RIGHT FRONT WHEEL SPEED COMPARATIVE PERFORMANCE?

Yes >> Go To 3

No >> Go To 2

2. CHECK WHEEL SPEED SENSOR SIGNALS

Turn the ignition on.
With the scan tool, monitor and graph ALL the WSS speeds and compare graph while an assistant drives the vehicle.

NOTE: If graph shows periodic dropouts pay close attention to the tone wheel.
Slowly accelerate as straight as possible from a stop to 40 km/h (25 m.p.h.).

Is the Right Front WSS speed showing 0 km/h (0 m.p.h.) or not matching other wheel speeds?

Yes >> Go To 3

No >> Refer to the INTERMITTENT CONDITION diagnostic procedure.
Perform ABS VERIFICATION TEST - VER 1. (Refer to 5 - BRAKES - STANDARD PROCEDURE).

3. CHECK FOR IMPROPER RIGHT FRONT TIRE PRESSURE/MISMATCHED TIRES

Turn the ignition off.
Check and adjust the Right Front Tire pressure.
Check and adjust all other tire pressures.
Inspect for mismatched tires on vehicle.

Is the Right Front Tire improperly inflated or mismatched tires on vehicle?

Yes >> Repair as necessary
Perform ABS VERIFICATION TEST - VER 1. (Refer to 5 - BRAKES - STANDARD PROCEDURE).

No >> Go To 4

4. CHECK RIGHT FRONT WSS LOOSENESS, INSPECT B6, B7 CIRCUITS/TERMINALS FOR DAMAGE

NOTE: Check all terminals for broken, bent, pushed out, or corroded terminals
Inspect the Anti-Lock Brake Module harness connector, Right Front WSS, and Right Front WSS harness connector
Inspect the Right Front WSS for looseness, excessive corrosion and not properly fastened.
Inspect the (B6) Right Front WSS Signal and (B7) Right Front WSS Supply circuits between the Right Front WSS and Anti-Lock Brake Module for damage.

Is the Right Front WSS loose or any of the wiring/connectors/terminals damaged?

Yes >> Repair as necessary
Perform ABS VERIFICATION TEST - VER 1. (Refer to 5 - BRAKES - STANDARD PROCEDURE).

No >> Go To 5

5. CHECK RIGHT FRONT TONE WHEEL FOR DAMAGE

Inspect the Right Front Tone Wheel for damage, missing teeth, cracks, or looseness.

NOTE: The Tone Wheel teeth should be perfectly square, not bent, or nicked.

Is the Right Front Tone Wheel damaged?

Yes >> Repair as necessary
Perform ABS VERIFICATION TEST - VER 1. (Refer to 5 - BRAKES - STANDARD PROCEDURE).

No >> Go To 6

6. RIGHT FRONT WHEEL SPEED SENSOR

Replace the Right Front Wheel Speed Sensor in accordance with the Service Information.
Perform ABS VERIFICATION TEST - VER 1. (Refer to 5 - BRAKES - STANDARD PROCEDURE).
Road test the vehicle over 40 km/h (25 m.p.h.).

NOTE: Vehicle must be driven above 40 km/h (25 m.p.h.) for set conditions to be meet.
With the scan tool, read ABS DTCs.

NOTE: The Anti-Lock Brake Module must sense ALL 4 wheels at 12 km/h (7.5 mph) before it will extinguish the ABS indicators.

Did DTC C101F-RIGHT FRONT WHEEL SPEED COMPARATIVE PERFORMANCE reset?

Yes >> Replace the Anti-Lock Brakes Module in accordance with the Service Information.
Perform ABS VERIFICATION TEST - VER 1. (Refer to 5 - BRAKES - STANDARD PROCEDURE).

No >> Test Complete.

C1020–LEFT REAR WHEEL SPEED SENSOR CIRCUIT

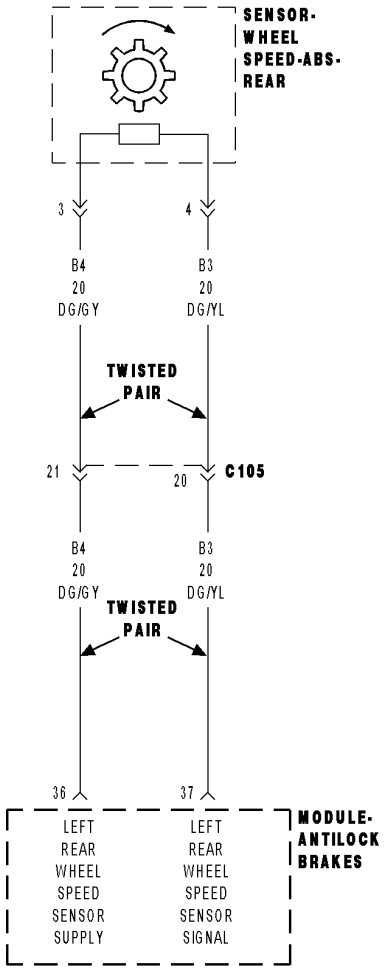

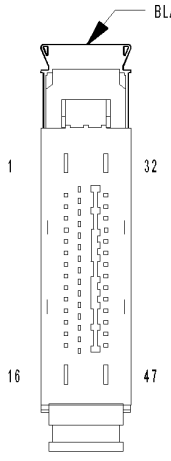

MODULE-
ANTILOCK BRAKES

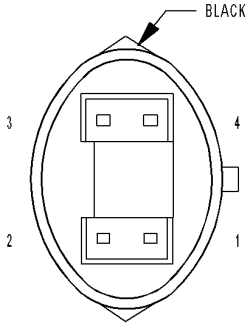

SENSOR-
WHEEL
SPEED-ABS-
REAR

813cf813

For a complete wiring diagram **Refer to Section 8W**.

- **When Monitored:**
  With the ignition on.
- **Set Condition:**
  If the Left Rear Wheel Speed Sensor circuit fails the diagnostic test.

Possible Causes
WIRING HARNESS, TERMINAL, CONNECTOR DAMAGE
(B4) LEFT REAR WSS 12 VOLT SUPPLY CIRCUIT SHORTED TO VOLTAGE, GROUND, OR OPEN
(B3) LEFT REAR WSS SIGNAL CIRCUIT SHORTED TO VOLTAGE, GROUND, OR OPEN
(B3) LEFT REAR WSS SIGNAL CIRCUIT SHORTED TO (B4) LEFT REAR WSS 12 VOLT SUPPLY CIRCUIT
LEFT REAR WSS
ANTI-LOCK BRAKES MODULE

Diagnostic Test

1. CHECK FOR DTC C1020–LEFT REAR WHEEL SPEED SENSOR CIRCUIT

NOTE: This DTC must be active for the results of this test to be valid.
Turn the ignition on.
With the scan tool, record and erase DTCs.
Cycle the ignition switch from off to on.
With the scan tool, read DTCs.

NOTE: The Anti-Lock Brake Module must sense ALL 4 wheels at 12 km/h (7.5 mph) before it will extinguish the ABS indicators.

Does the scan tool display: C1020–LEFT REAR WHEEL SPEED SENSOR CIRCUIT?

Yes >> Go To 2

No >> Refer to the INTERMITTENT CONDITION diagnostic procedure.
Perform ABS VERIFICATION TEST - VER 1. (Refer to 5 - BRAKES - STANDARD PROCEDURE).

2. CHECK CONNECTOR/TERMINAL FOR DAMAGE

NOTE: Check all terminals for broken, bent, pushed out, or corroded terminals.
Turn the ignition off.
Inspect the Anti-Lock Brake Module harness connector, Left Rear WSS, and Left Rear WSS harness connector.

Is the Left Rear WSS or any of the connectors/terminals damaged?

Yes >> Repair as necessary.
Perform ABS VERIFICATION TEST - VER 1. (Refer to 5 - BRAKES - STANDARD PROCEDURE).

No >> Go To 3

3. CHECK (B4) LEFT REAR WSS 12 VOLT SUPPLY CIRCUIT VOLTAGE

Disconnect the Left Rear WSS harness connector.

Turn the ignition on.

Measure the voltage of the (B4) Left Rear WSS 12 Volt Supply circuit.

Is the voltage above 10.0 volts?

Yes >> Go To 6

No >> Go To 4

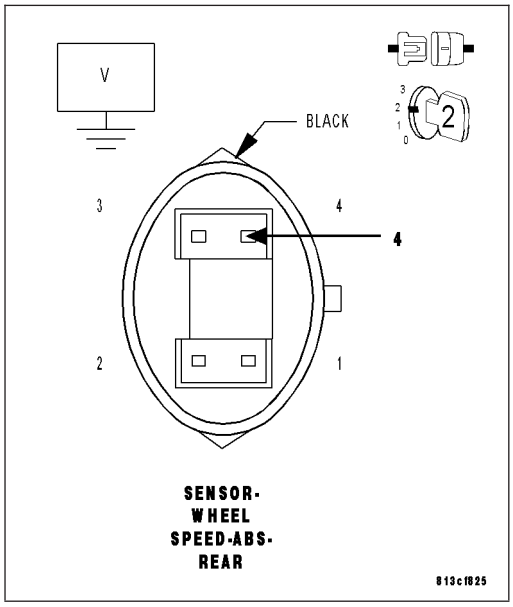

4. CHECK (B4) LEFT REAR WSS 12 VOLT SUPPLY CIRCUIT FOR A SHORT TO GROUND

Turn the ignition off.

Disconnect the Left Rear WSS harness connector.

Disconnect the Anti-Lock Brake Module harness connector.

Using a 12-volt test light connected to 12-volts, probe the (B4) Left Rear WSS Supply circuit.

Does the test light illuminate brightly?

Yes >> Repair the (B4) Left Rear WSS Supply circuit for a short to ground.

Perform ABS VERIFICATION TEST - VER 1. (Refer to 5 - BRAKES - STANDARD PROCEDURE).

No >> Go To 5

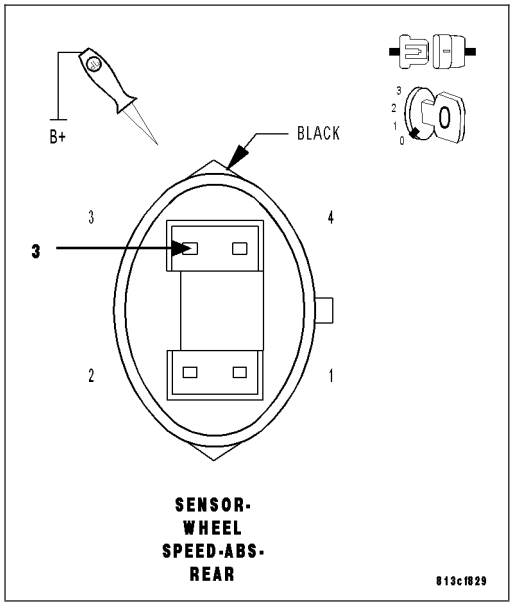

5. CHECK (B4) LEFT REAR WSS 12 VOLT SUPPLY CIRCUIT FOR AN OPEN

Connect a jumper wire between ground and the (B4) Left Rear WSS Supply circuit in the Anti-Lock Brakes Module harness connector.

Using a 12-volt test light connected to 12-volts, probe the (B4) Left Rear WSS Supply circuit.

Does the test light illuminate brightly?

Yes >> Replace the Anti-Lock Brakes Module in accordance with the Service Information.

Perform ABS VERIFICATION TEST - VER 1. (Refer to 5 - BRAKES - STANDARD PROCEDURE).

No >> Repair the (B4) Left Rear WSS Supply circuit for an open.

Perform ABS VERIFICATION TEST - VER 1. (Refer to 5 - BRAKES - STANDARD PROCEDURE).

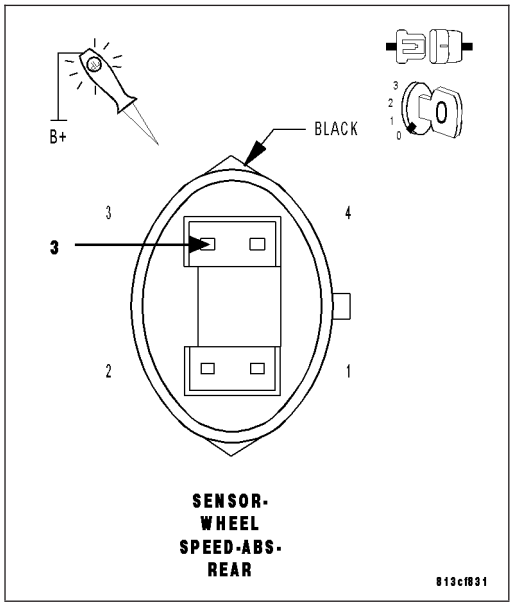

6. CHECK (B3) LEFT REAR WSS SIGNAL CIRCUIT FOR A SHORT TO GROUND

Using a 12-volt test light connected to 12-volts, probe the (B3) Left Rear WSS Signal circuit.

Does the test light illuminate brightly?

Yes >> Repair the (B3) Left Rear WSS Signal circuit for a short to ground.

Perform ABS VERIFICATION TEST - VER 1. (Refer to 5 - BRAKES - STANDARD PROCEDURE).

No >> Go To 7

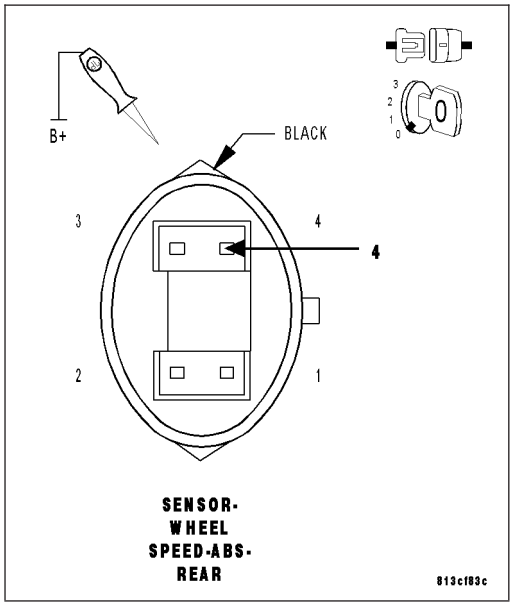

7. CHECK (B3) LEFT REAR WSS SIGNAL CIRCUIT FOR AN OPEN

Connect a jumper wire between ground and the (B3) Left Rear WSS Signal circuit in the Anti-Lock Brakes Module harness connector.

Using a 12-volt test light connected to 12-volts, probe the (B3) Left Rear WSS Signal circuit.

Does the test light illuminate brightly?

Yes >> Go To 8

No >> Repair the (B3) Left Rear WSS Signal circuit for an open.
Perform ABS VERIFICATION TEST - VER 1. (Refer to 5 - BRAKES - STANDARD PROCEDURE).

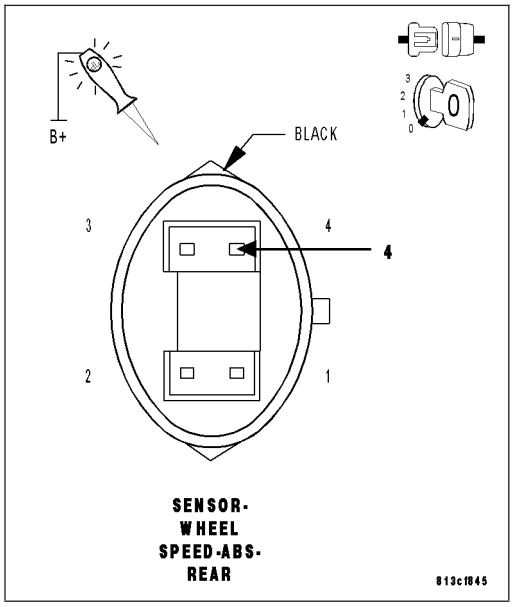

8. CHECK (B3) LEFT REAR WSS SIGNAL CIRCUIT SHORT TO VOLTAGE

Turn the ignition on.

Remove all jumper wires.

Measure the voltage between the (B3) Left Rear WSS Signal circuit and ground.

Is the voltage above one volt?

Yes >> Repair the (B3) Left Rear WSS Signal circuit for a short to voltage.
Perform ABS VERIFICATION TEST - VER 1. (Refer to 5 - BRAKES - STANDARD PROCEDURE).

No >> Go To 9

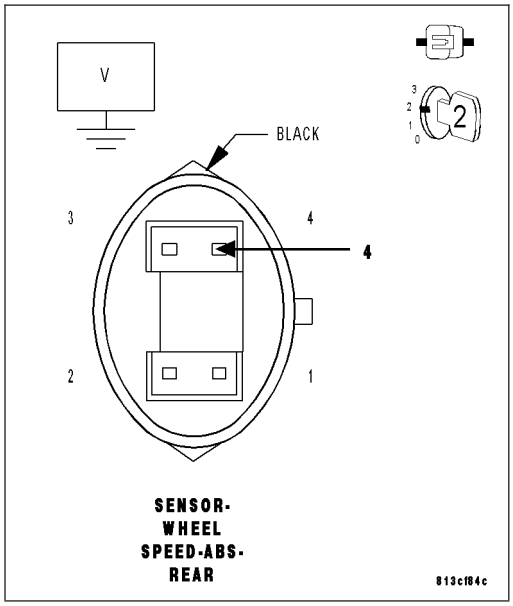

9. CHECK (B3) LEFT REAR WSS SIGNAL CIRCUIT AND (B4) LEFT REAR WSS 12 VOLT SUPPLY CIRCUIT SHORTED TOGETHER

Turn the ignition off.

Measure the resistance between the (B3) Left Rear WSS Signal circuit and the (B4) Left Rear WSS Supply circuit.

Is the resistance above 5.0 ohms?

Yes >> Go To 10

No >> Repair the (B3) Left Rear WSS Signal circuit and the (B4) Left Rear WSS Supply circuit for a short together.
Perform ABS VERIFICATION TEST - VER 1. (Refer to 5 - BRAKES - STANDARD PROCEDURE).

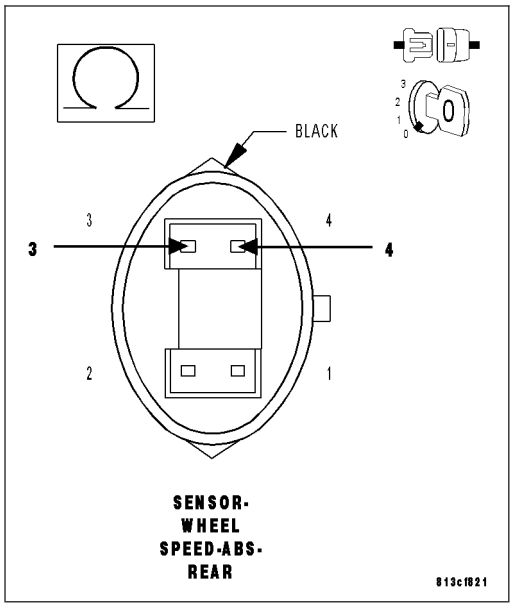

10. LEFT REAR WHEEL SPEED SENSOR

Replace the Left Rear Wheel Speed Sensor in accordance with the Service Information.

Perform ABS VERIFICATION TEST - VER 1. (Refer to 5 - BRAKES - STANDARD PROCEDURE).

CAUTION: Ensure brake capability is available before road testing.
Road test the vehicle over 40 km/h (25 m.p.h.).

NOTE: Vehicle must be driven above 40 km/h (25 m.p.h.) for set conditions to be meet.
With the scan tool, read ABS DTCs.

NOTE: The Anti-Lock Brake Module must sense ALL 4 wheels at 12 km/h (7.5 mph) before it will extinguish the ABS indicators.

Did DTC C1020–LEFT REAR WHEEL SPEED SENSOR CIRCUIT reset?

Yes >> Replace the Anti-Lock Brakes Module in accordance with the Service Information.
Perform ABS VERIFICATION TEST - VER 1. (Refer to 5 - BRAKES - STANDARD PROCEDURE).

No >> Test Complete.

C1027-LEFT REAR WHEEL SPEED SENSOR SIGNAL ERRATIC PERFORMANCE

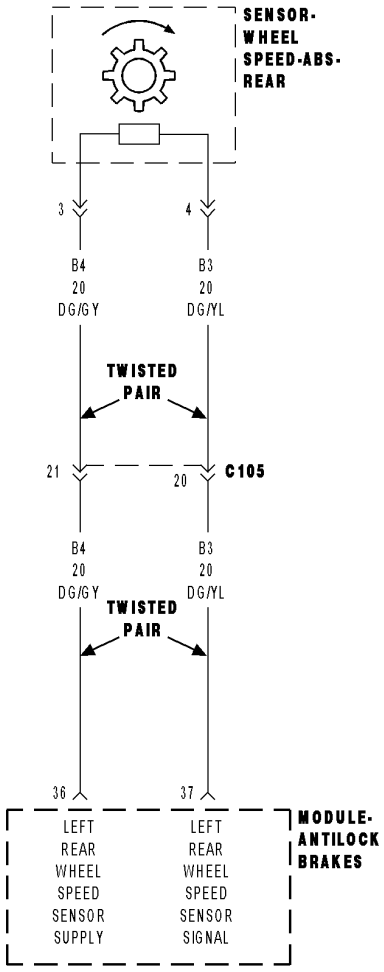

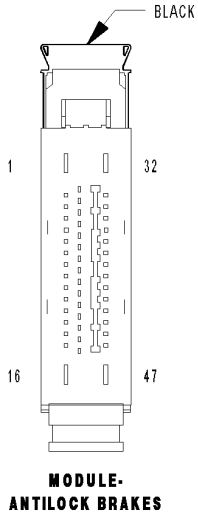

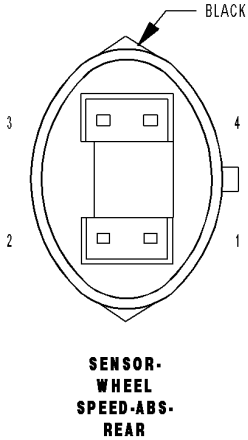

813cf813

For a complete wiring diagram **Refer to Section 8W**.

- **When Monitored:**
  With the ignition on.
- **Set Condition:**
  When the Left Rear WSS Signal is intermittently missing a vehicle speed above 25mph (40 kph) or erratic wheel speed signal during acceleration or sensed wheel speed is different from other wheels.

Possible Causes
LEFT REAR WSS AIR GAP FAULT
LEFT REAR WSS LOOSE — B3, B4 CIRCUITS/CONNECTOR/TERMINAL DAMAGE
LEFT REAR TONE WHEEL DAMAGE
LEFT REAR WHEEL BEARING DAMAGE
IMPROPER LEFT REAR TIRE PRESSURE/MISMATCHED TIRES
LEFT REAR WSS
ANTI-LOCK BRAKE MODULE

Diagnostic Test

1. CHECK FOR DTC C1027-LEFT REAR WHEEL SPEED SENSOR SIGNAL ERRATIC PERFORMANCE

NOTE: This DTC must be active for the results of this test to be valid.
Turn the ignition on.
With the scan tool, record and erase DTCs.
Road test the vehicle over 40 km/h (25 m.p.h.).

NOTE: Vehicle must be driven above 40 km/h (25 m.p.h.) for set conditions to be meet.
With the scan tool, read DTCs.

NOTE: The Anti-Lock Brake Module must sense ALL 4 wheels at 12 km/h (7.5 mph) before it will extinguish the ABS indicators.

Does the scan tool display: C1027-LEFT REAR WHEEL SPEED SENSOR SIGNAL ERRATIC PERFORMANCE?

Yes >> Go To 3

No >> Go To 2

2. CHECK LEFT REAR WSS AIR GAP

Turn the ignition off.
Using a feeler gauge, measure the Left Rear WSS air gap.

NOTE: Refer to the appropriate service information, if necessary, for procedures or specifications.

Is the Left Rear WSS air gap within specifications?

Yes >> Go To 3

No >> Repair as necessary.
Perform ABS VERIFICATION TEST - VER 1. (Refer to 5 - BRAKES - STANDARD PROCEDURE).

3. CHECK WHEEL SPEED SENSOR SIGNALS

Turn the ignition on.

With the scan tool, monitor and graph ALL the WSS speeds and compare graph while an assistant drives the vehicle.

NOTE: If graph shows periodic dropouts pay close attention to the tone wheel.

Slowly accelerate as straight as possible from a stop to 40 km/h (25 m.p.h.).

Is the Left Rear WSS speed showing 0 km/h (0 m.p.h.) or not matching other wheel speeds?

Yes >> Go To 4

No >> Refer to the INTERMITTENT CONDITION diagnostic procedure.
Perform ABS VERIFICATION TEST - VER 1. (Refer to 5 - BRAKES - STANDARD PROCEDURE).

4. CHECK FOR IMPROPER LEFT REAR TIRE PRESSURE/MISMATCHED TIRES

Turn the ignition off.

Check and adjust the Left Rear Tire pressure.

Check and adjust all other tire pressures.

Inspect for mismatched tires on vehicle.

Is the Left Rear Tire improperly inflated or mismatched tires on vehicle?

Yes >> Repair as necessary
Perform ABS VERIFICATION TEST - VER 1. (Refer to 5 - BRAKES - STANDARD PROCEDURE).

No >> Go To 5

5. CHECK LEFT REAR WSS LOOSENESS, INSPECT B4, B5 CIRCUITS/TERMINALS FOR DAMAGE

NOTE: Check all terminals for broken, bent, pushed out, or corroded terminals

Inspect the Anti-Lock Brake Module harness connector, Left Rear WSS, and Left Rear WSS harness connector

Inspect the Left Rear WSS for looseness, excessive corrosion and not properly fastened.

Inspect the (B3) Left Rear WSS Signal and (B4) Left Rear WSS Supply circuits between the Left Rear WSS and Anti-Lock Brake Module for damage.

Is the Left Rear WSS loose or any of the wiring/connectors/terminals damaged?

Yes >> Repair as necessary
Perform ABS VERIFICATION TEST - VER 1. (Refer to 5 - BRAKES - STANDARD PROCEDURE).

No >> Go To 6

6. CHECK LEFT REAR TONE WHEEL FOR DAMAGE

Inspect the Left Rear Tone Wheel for damage, missing teeth, cracks, or looseness.

NOTE: The Tone Wheel teeth should be perfectly square, not bent, or nicked.

Is the Left Rear Tone Wheel damaged?

Yes >> Repair as necessary
Perform ABS VERIFICATION TEST - VER 1. (Refer to 5 - BRAKES - STANDARD PROCEDURE).

No >> Go To 7

7. CHECK LEFT REAR WHEEL BEARING FOR DAMAGE

Inspect the Left Rear wheel bearing for excessive runout or clearance.

NOTE: Refer to the appropriate service information, if necessary, for procedures or specifications.

Is the Left Rear Wheel Bearing Damaged?

Yes >> Repair as necessary
Perform ABS VERIFICATION TEST - VER 1. (Refer to 5 - BRAKES - STANDARD PROCEDURE).

No >> Go To 8

8. LEFT REAR WHEEL SPEED SENSOR

Replace the Left Rear Wheel Speed Sensor in accordance with the Service Information.
Perform ABS VERIFICATION TEST - VER 1. (Refer to 5 - BRAKES - STANDARD PROCEDURE).
Road test the vehicle over 40 km/h (25 m.p.h.).

NOTE: Vehicle must be driven above 40 km/h (25 m.p.h.) for set conditions to be meet.
With the scan tool, read ABS DTCs.

NOTE: The Anti-Lock Brake Module must sense ALL 4 wheels at 12 km/h (7.5 mph) before it will extinguish the ABS indicators.

Did DTC C1027-LEFT REAR WHEEL SPEED SENSOR SIGNAL ERRATIC PERFORMANCE reset?

Yes >> Replace the Anti-Lock Brakes Module in accordance with the Service Information.
Perform ABS VERIFICATION TEST - VER 1. (Refer to 5 - BRAKES - STANDARD PROCEDURE).

No >> Test Complete.

C102A-LEFT REAR WHEEL SPEED COMPARATIVE PERFORMANCE

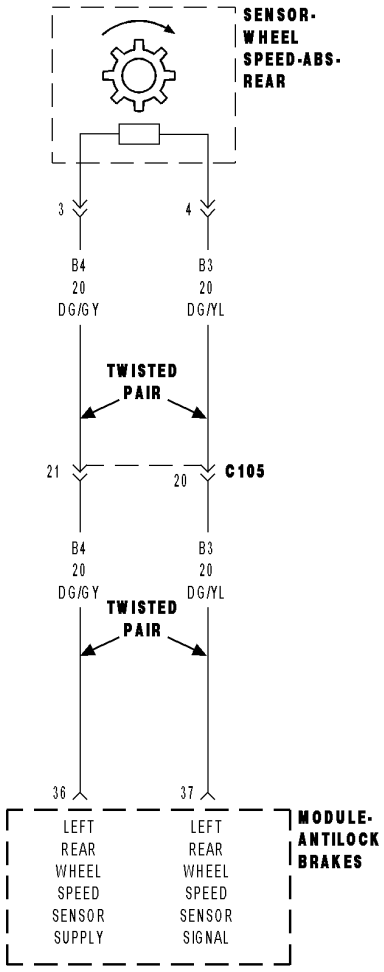

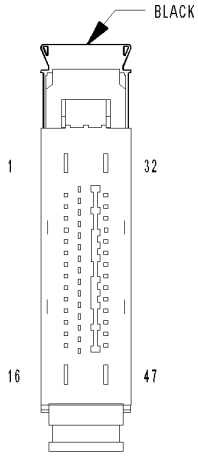

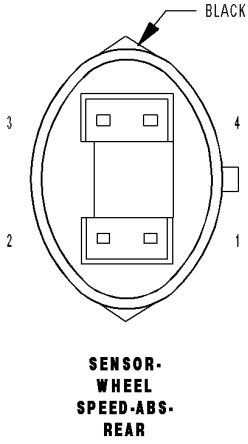

813cf813

For a complete wiring diagram **Refer to Section 8W**.

- **When Monitored:**
  With the ignition on.
- **Set Condition:**
  When the Left Rear WSS reading is different from the readings received from the other WSS's at a vehicle speed above 40 kph (25 mph). The Anti-Lock Brake Module compares WSS readings from side-to-side on an axle and front-to-rear.

Possible Causes
LEFT REAR WSS LOOSE — B3, B4 CIRCUITS/CONNECTOR/TERMINAL DAMAGE
IMPROPER LEFT REAR TIRE PRESSURE/MISMATCHED TIRES
LEFT REAR TONE WHEEL DAMAGE
LEFT REAR WSS
ANTI-LOCK BRAKE MODULE

Diagnostic Test

1. CHECK FOR DTC C102A-LEFT REAR WHEEL SPEED COMPARATIVE PERFORMANCE

NOTE: This DTC must be active for the results of this test to be valid.
Turn the ignition on.
With the scan tool, record and erase DTCs.
Road test the vehicle over 40 km/h (25 m.p.h.).

NOTE: Vehicle must be driven above 40 km/h (25 m.p.h.) for set conditions to be meet.
With the scan tool, read DTCs.

NOTE: The Anti-Lock Brake Module must sense ALL 4 wheels at 12 km/h (7.5 mph) before it will extinguish the ABS indicators.

Does the scan tool display: C102A-LEFT REAR WHEEL SPEED COMPARATIVE PERFORMANCE?

Yes >> Go To 3

No >> Go To 2

2. CHECK WHEEL SPEED SENSOR SIGNALS

Turn the ignition on.
With the scan tool, monitor and graph ALL the WSS speeds and compare graph while an assistant drives the vehicle.

NOTE: If graph shows periodic dropouts pay close attention to the tone wheel.
Slowly accelerate as straight as possible from a stop to 40 km/h (25 m.p.h.).

Is the Left Rear WSS speed showing 0 km/h (0 m.p.h.) or not matching other wheel speeds?

Yes >> Go To 3

No >> Refer to the INTERMITTENT CONDITION diagnostic procedure.
Perform ABS VERIFICATION TEST - VER 1. (Refer to 5 - BRAKES - STANDARD PROCEDURE).

3. CHECK FOR IMPROPER LEFT REAR TIRE PRESSURE/MISMATCHED TIRES

Turn the ignition off.
Check and adjust the Left Rear Tire pressure.
Check and adjust all other tire pressures.
Inspect for mismatched tires on vehicle.

Is the Left Rear Tire improperly inflated or mismatched tires on vehicle?

Yes >> Repair as necessary
Perform ABS VERIFICATION TEST - VER 1. (Refer to 5 - BRAKES - STANDARD PROCEDURE).

No >> Go To 4

4. CHECK LEFT REAR WSS LOOSENESS, INSPECT B3, B4 CIRCUITS/TERMINALS FOR DAMAGE

NOTE: Check all terminals for broken, bent, pushed out, or corroded terminals
Inspect the Anti-Lock Brake Module harness connector, Left Rear WSS, and Left Rear WSS harness connector
Inspect the Left Rear WSS for looseness, excessive corrosion and not properly fastened.
Inspect the (B3) Left Rear WSS Signal and (B4) Left Rear WSS Supply circuits between the Left Rear WSS and Anti-Lock Brake Module for damage.

Is the Left Rear WSS loose or any of the wiring/connectors/terminals damaged?

Yes >> Repair as necessary
Perform ABS VERIFICATION TEST - VER 1. (Refer to 5 - BRAKES - STANDARD PROCEDURE).

No >> Go To 5

5. CHECK LEFT REAR TONE WHEEL FOR DAMAGE

Inspect the Left Rear Tone Wheel for damage, missing teeth, cracks, or looseness.

NOTE: The Tone Wheel teeth should be perfectly square, not bent, or nicked.

Is the Left Rear Tone Wheel damaged?

Yes >> Repair as necessary
Perform ABS VERIFICATION TEST - VER 1. (Refer to 5 - BRAKES - STANDARD PROCEDURE).

No >> Go To 6

6. LEFT REAR WHEEL SPEED SENSOR

Replace the Left Rear Wheel Speed Sensor in accordance with the Service Information.
Perform ABS VERIFICATION TEST - VER 1. (Refer to 5 - BRAKES - STANDARD PROCEDURE).
Road test the vehicle over 40 km/h (25 m.p.h.).

NOTE: Vehicle must be driven above 40 km/h (25 m.p.h.) for set conditions to be meet.
With the scan tool, read ABS DTCs.

NOTE: The Anti-Lock Brake Module must sense ALL 4 wheels at 12 km/h (7.5 mph) before it will extinguish the ABS indicators.

Did DTC C102A-LEFT REAR WHEEL SPEED COMPARATIVE PERFORMANCE reset?

Yes >> Replace the Anti-Lock Brakes Module in accordance with the Service Information.
Perform ABS VERIFICATION TEST - VER 1. (Refer to 5 - BRAKES - STANDARD PROCEDURE).

No >> Test Complete.

C102B–RIGHT REAR WHEEL SPEED SENSOR CIRCUIT

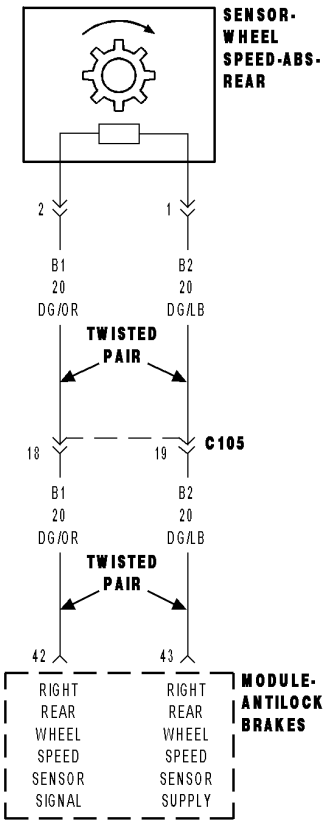

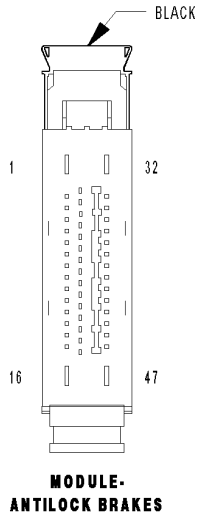

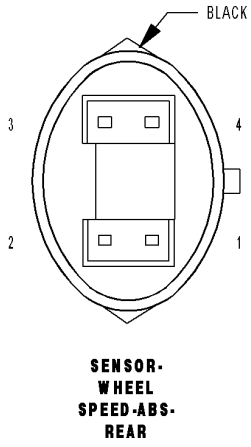

813cf9cf

For a complete wiring diagram **Refer to Section 8W**.

- **When Monitored:**
  With the ignition on.
- **Set Condition:**
  If the Right Rear Wheel Speed Sensor circuit fails the diagnostic test.

Possible Causes
WIRING HARNESS, TERMINAL, CONNECTOR DAMAGE
(B2) RIGHT REAR WSS 12 VOLT SUPPLY CIRCUIT SHORTED TO VOLTAGE, GROUND, OR OPEN
(B1) RIGHT REAR WSS SIGNAL CIRCUIT SHORTED TO VOLTAGE, GROUND, OR OPEN
(B1) RIGHT REAR WSS SIGNAL CIRCUIT SHORTED TO (B2) RIGHT REAR WSS 12 VOLT SUPPLY CIRCUIT
RIGHT REAR WSS
ANTI-LOCK BRAKES MODULE

Diagnostic Test

1. CHECK FOR DTC C102B–RIGHT REAR WHEEL SPEED SENSOR CIRCUIT

NOTE: This DTC must be active for the results of this test to be valid.
Turn the ignition on.
With the scan tool, record and erase DTCs.
Cycle the ignition switch from off to on.
With the scan tool, read DTCs.

NOTE: The Anti-Lock Brake Module must sense ALL 4 wheels at 12 km/h (7.5 mph) before it will extinguish the ABS indicators.

Does the scan tool display: C102B–RIGHT REAR WHEEL SPEED SENSOR CIRCUIT?

Yes >> Go To 2

No >> Refer to the INTERMITTENT CONDITION diagnostic procedure.
Perform ABS VERIFICATION TEST - VER 1. (Refer to 5 - BRAKES - STANDARD PROCEDURE).

2. CHECK CONNECTOR/TERMINAL FOR DAMAGE

NOTE: Check all terminals for broken, bent, pushed out, or corroded terminals.
Turn the ignition off.
Inspect the Anti-Lock Brake Module harness connector, Right Rear WSS, and Right Rear WSS harness connector.

Is the Right Rear WSS or any of the connectors/terminals damaged?

Yes >> Repair as necessary.
Perform ABS VERIFICATION TEST - VER 1. (Refer to 5 - BRAKES - STANDARD PROCEDURE).

No >> Go To 3

3. CHECK (B2) RIGHT REAR WSS 12 VOLT SUPPLY CIRCUIT VOLTAGE

Disconnect the Right Rear WSS harness connector.

Turn the ignition on.

Measure the voltage of the (B2) Right Rear WSS 12 Volt Supply circuit.

Is the voltage above 10.0 volts?

Yes >> Go To 6

No >> Go To 4

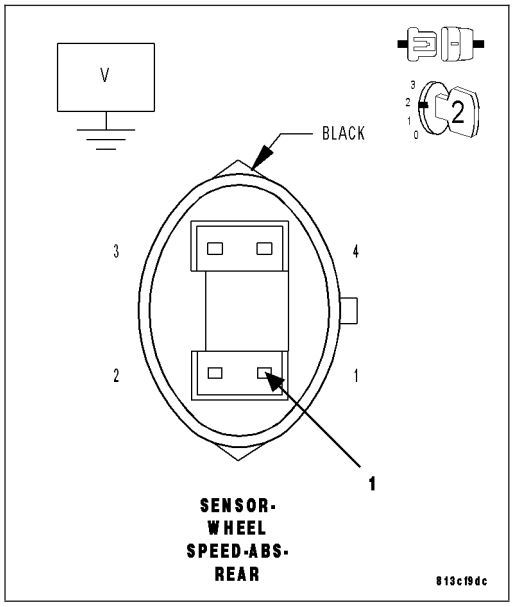

4. CHECK (B2) RIGHT REAR WSS 12 VOLT SUPPLY CIRCUIT FOR A SHORT TO GROUND

Turn the ignition off.

Disconnect the Right Rear WSS harness connector.

Disconnect the Anti-Lock Brake Module harness connector.

Using a 12-volt test light connected to 12-volts, probe the (B2) Right Rear WSS Supply circuit.

Does the test light illuminate brightly?

Yes >> Repair the (B2) Right Rear WSS Supply circuit for a short to ground.

Perform ABS VERIFICATION TEST - VER 1. (Refer to 5 - BRAKES - STANDARD PROCEDURE).

No >> Go To 5

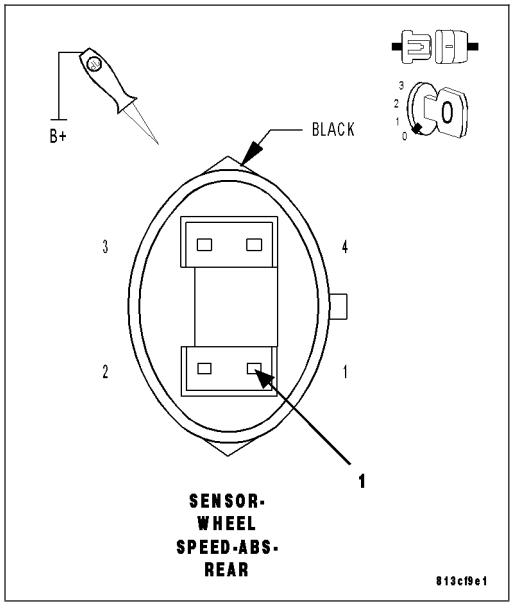

5. CHECK (B2) RIGHT REAR WSS 12 VOLT SUPPLY CIRCUIT FOR AN OPEN

Connect a jumper wire between ground and the (B2) Right Rear WSS Supply circuit in the Anti-Lock Brakes Module harness connector.

Using a 12-volt test light connected to 12-volts, probe the (B2) Right Rear WSS Supply circuit.

Does the test light illuminate brightly?

Yes >> Replace the Anti-Lock Brakes Module in accordance with the Service Information.

Perform ABS VERIFICATION TEST - VER 1. (Refer to 5 - BRAKES - STANDARD PROCEDURE).

No >> Repair the (B2) Right Rear WSS Supply circuit for an open.

Perform ABS VERIFICATION TEST - VER 1. (Refer to 5 - BRAKES - STANDARD PROCEDURE).

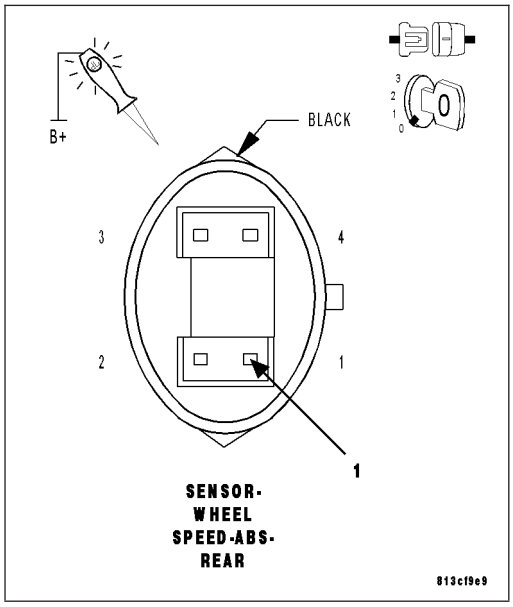

6. CHECK (B1) RIGHT REAR WSS SIGNAL CIRCUIT FOR A SHORT TO GROUND

Using a 12-volt test light connected to 12-volts, probe the (B1) Right Rear WSS Signal circuit.

Does the test light illuminate brightly?

Yes >> Repair the (B1) Right Rear WSS Signal circuit for a short to ground.

Perform ABS VERIFICATION TEST - VER 1. (Refer to 5 - BRAKES - STANDARD PROCEDURE).

No >> Go To 7

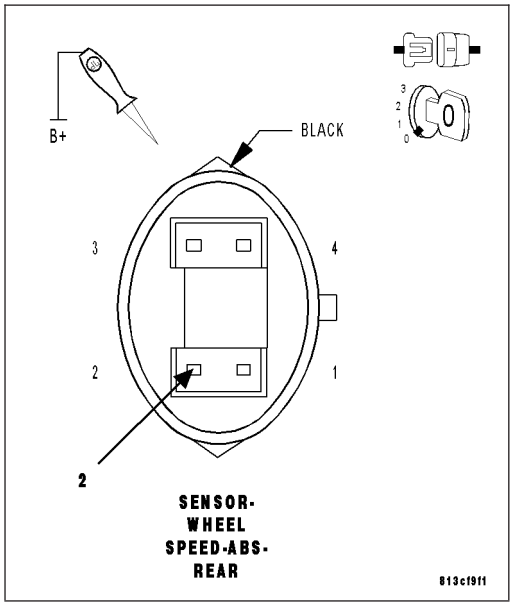

7. CHECK (B1) RIGHT REAR WSS SIGNAL CIRCUIT FOR AN OPEN

Connect a jumper wire between ground and the (B1) Right Rear WSS Signal circuit in the Anti-Lock Brakes Module harness connector.

Using a 12-volt test light connected to 12-volts, probe the (B1) Right Rear WSS Signal circuit.

Does the test light illuminate brightly?

Yes >> Go To 8

No >> Repair the (B1) Right Rear WSS Signal circuit for an open. Perform ABS VERIFICATION TEST - VER 1. (Refer to 5 - BRAKES - STANDARD PROCEDURE).

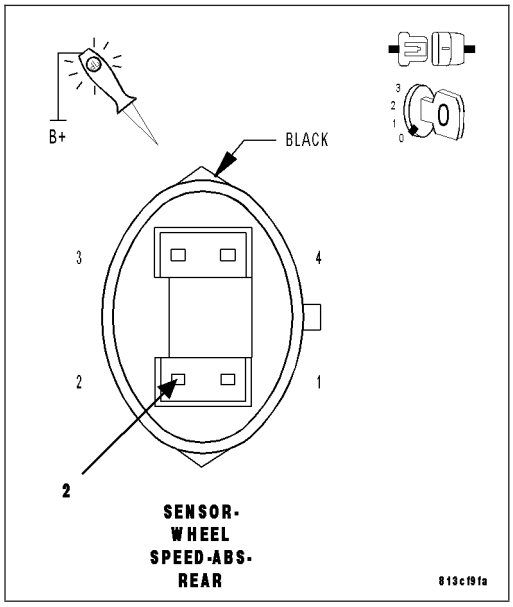

8. CHECK (B1) RIGHT REAR WSS SIGNAL CIRCUIT SHORT TO VOLTAGE

Turn the ignition on.

Remove all jumper wires.

Measure the voltage between the (B1) Right Rear WSS Signal circuit and ground.

Is the voltage above one volt?

Yes >> Repair the (B1) Right Rear WSS Signal circuit for a short to voltage.
Perform ABS VERIFICATION TEST - VER 1. (Refer to 5 - BRAKES - STANDARD PROCEDURE).

No >> Go To 9

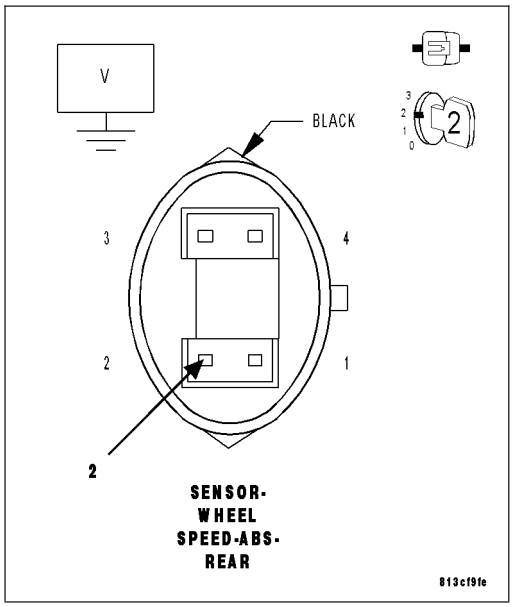

9. CHECK (B1) RIGHT REAR WSS SIGNAL CIRCUIT FOR A SHORT TO (B2) RIGHT REAR WSS 12 VOLT SUPPLY CIRCUIT

Turn the ignition off.

Measure the resistance between the (B1) Right Rear WSS Signal circuit and the (B2) Right Rear WSS Supply circuit.

Is the resistance above 5.0 ohms?

Yes >> Go To 10

No >> Repair the (B1) Right Rear WSS Signal circuit and the (B2) Right Rear WSS Supply circuit for a short together.
Perform ABS VERIFICATION TEST - VER 1. (Refer to 5 - BRAKES - STANDARD PROCEDURE).

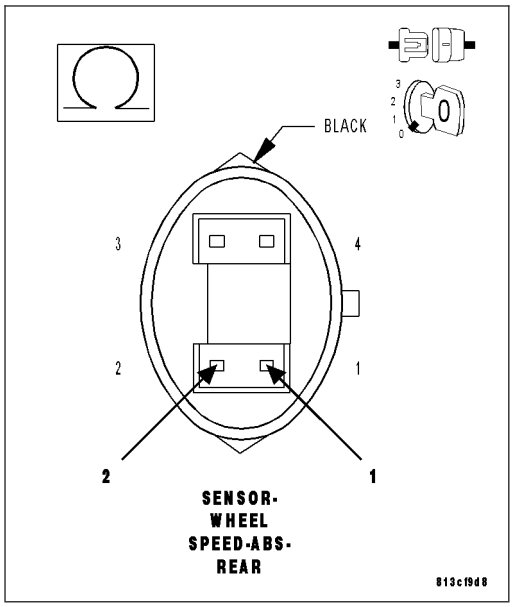

10. RIGHT REAR WHEEL SPEED SENSOR

Replace the Right Rear Wheel Speed Sensor in accordance with the Service Information.

Perform ABS VERIFICATION TEST - VER 1. (Refer to 5 - BRAKES - STANDARD PROCEDURE).

CAUTION: Ensure brake capability is available before road testing.
Road test the vehicle over 40 km/h (25 m.p.h.).

NOTE: Vehicle must be driven above 40 km/h (25 m.p.h.) for set conditions to be meet.
With the scan tool, read ABS DTCs.

NOTE: The Anti-Lock Brake Module must sense ALL 4 wheels at 12 km/h (7.5 mph) before it will extinguish the ABS indicators.

Did DTC C102B–RIGHT REAR WHEEL SPEED SENSOR CIRCUIT reset?

Yes >> Replace the Anti-Lock Brakes Module in accordance with the Service Information.
Perform ABS VERIFICATION TEST - VER 1. (Refer to 5 - BRAKES - STANDARD PROCEDURE).

No >> Test Complete.

C1032-RIGHT REAR WHEEL SPEED SENSOR SIGNAL ERRATIC PERFORMANCE

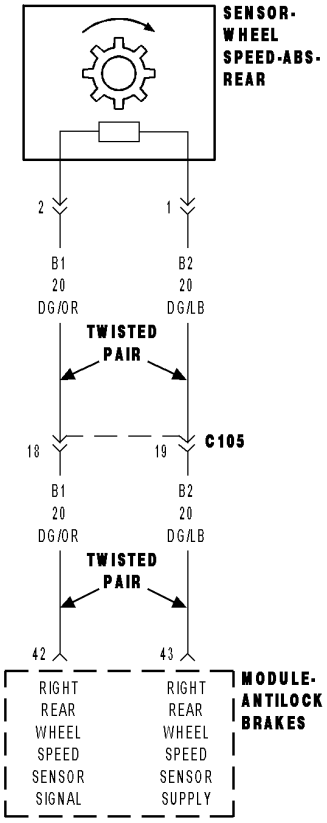

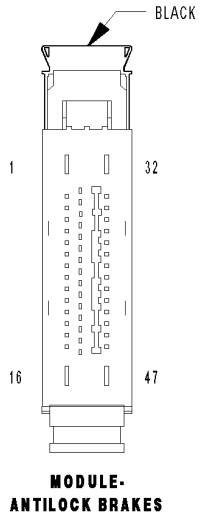

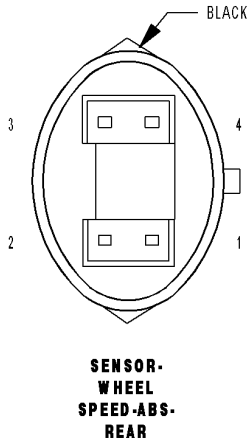

813cf9cf

For a complete wiring diagram **Refer to Section 8W**.

- **When Monitored:**
  With the ignition on.
- **Set Condition:**
  When the Right Rear WSS Signal is intermittently missing a vehicle speed above 25mph (40 kph) or erratic wheel speed signal during acceleration or sensed wheel speed is different from other wheels.

Possible Causes
RIGHT REAR WSS AIR GAP FAULT
RIGHT REAR WSS LOOSE — B1, B2 CIRCUITS/CONNECTOR/TERMINAL DAMAGE
RIGHT REAR TONE WHEEL DAMAGE
RIGHT REAR WHEEL BEARING DAMAGE
IMPROPER RIGHT REAR TIRE PRESSURE/MISMATCHED TIRES
RIGHT REAR WSS
ANTI-LOCK BRAKE MODULE

Diagnostic Test

1. CHECK FOR DTC C1032-RIGHT REAR WHEEL SPEED SENSOR SIGNAL ERRATIC PERFORMANCE

NOTE: This DTC must be active for the results of this test to be valid.
Turn the ignition on.
With the scan tool, record and erase DTCs.
Road test the vehicle over 40 km/h (25 m.p.h.).

NOTE: Vehicle must be driven above 40 km/h (25 m.p.h.) for set conditions to be meet.
With the scan tool, read DTCs.

NOTE: The Anti-Lock Brake Module must sense ALL 4 wheels at 12 km/h (7.5 mph) before it will extinguish the ABS indicators.

Does the scan tool display: C1032-RIGHT REAR WHEEL SPEED SENSOR SIGNAL ERRATIC PERFORMANCE?

Yes >> Go To 2

No >> Refer to the INTERMITTENT CONDITION diagnostic procedure.
Perform ABS VERIFICATION TEST - VER 1. (Refer to 5 - BRAKES - STANDARD PROCEDURE).

2. CHECK RIGHT REAR WSS AIR GAP

Turn the ignition off.
Using a feeler gauge, measure the Right Rear WSS air gap.

NOTE: Refer to the appropriate service information, if necessary, for procedures or specifications.

Is the Right Rear WSS air gap within specifications?

Yes >> Go To 3

No >> Repair as necessary.
Perform ABS VERIFICATION TEST - VER 1. (Refer to 5 - BRAKES - STANDARD PROCEDURE).

3. CHECK WHEEL SPEED SENSOR SIGNALS

Turn the ignition on.

With the scan tool, monitor and graph ALL the WSS speeds and compare graph while an assistant drives the vehicle.

NOTE: If graph shows periodic dropouts pay close attention to the tone wheel.

Slowly accelerate as straight as possible from a stop to 40 km/h (25 m.p.h.).

Is the Right Rear WSS speed showing 0 km/h (0 m.p.h.) or not matching other wheel speeds?

Yes >> Go To 4

No >> Refer to the INTERMITTENT CONDITION diagnostic procedure.
Perform ABS VERIFICATION TEST - VER 1. (Refer to 5 - BRAKES - STANDARD PROCEDURE).

4. CHECK FOR IMPROPER RIGHT REAR TIRE PRESSURE/MISMATCHED TIRES

Turn the ignition off.

Check and adjust the Right Rear Tire pressure.

Check and adjust all other tire pressures.

Inspect for mismatched tires on vehicle.

Is the Right Rear Tire improperly inflated or mismatched tires on vehicle?

Yes >> Repair as necessary
Perform ABS VERIFICATION TEST - VER 1. (Refer to 5 - BRAKES - STANDARD PROCEDURE).

No >> Go To 5

5. CHECK RIGHT REAR WSS LOOSENESS, INSPECT B1, B2 CIRCUITS/TERMINALS FOR DAMAGE

NOTE: Check all terminals for broken, bent, pushed out, or corroded terminals

Inspect the Anti-Lock Brake Module harness connector, Right Rear WSS, and Right Rear WSS harness connector

Inspect the Right Rear WSS for looseness, excessive corrosion and not properly fastened.

Inspect the (B1) Right Rear WSS Signal and (B2) Right Rear WSS Supply circuits between the Right Rear WSS and Anti-Lock Brake Module for damage.

Is the Right Rear WSS loose or any of the wiring/connectors/terminals damaged?

Yes >> Repair as necessary
Perform ABS VERIFICATION TEST - VER 1. (Refer to 5 - BRAKES - STANDARD PROCEDURE).

No >> Go To 6

6. CHECK RIGHT REAR TONE WHEEL FOR DAMAGE

Inspect the Right Rear Tone Wheel for damage, missing teeth, cracks, or looseness.

NOTE: The Tone Wheel teeth should be perfectly square, not bent, or nicked.

Is the Right Rear Tone Wheel damaged?

Yes >> Repair as necessary
Perform ABS VERIFICATION TEST - VER 1. (Refer to 5 - BRAKES - STANDARD PROCEDURE).

No >> Go To 7

7. CHECK RIGHT REAR WHEEL BEARING FOR DAMAGE

Inspect the Right Rear wheel bearing for excessive runout or clearance.

NOTE: Refer to the appropriate service information, if necessary, for procedures or specifications.

Is the Right Rear Wheel Bearing Damaged?

Yes >> Repair as necessary
Perform ABS VERIFICATION TEST - VER 1. (Refer to 5 - BRAKES - STANDARD PROCEDURE).

No >> Go To 8

8. RIGHT REAR WHEEL SPEED SENSOR

Replace the Right Rear Wheel Speed Sensor in accordance with the Service Information.
Perform ABS VERIFICATION TEST - VER 1. (Refer to 5 - BRAKES - STANDARD PROCEDURE).
Road test the vehicle over 40 km/h (25 m.p.h.).

NOTE: Vehicle must be driven above 40 km/h (25 m.p.h.) for set conditions to be meet.
With the scan tool, read ABS DTCs.

NOTE: The Anti-Lock Brake Module must sense ALL 4 wheels at 12 km/h (7.5 mph) before it will extinguish the ABS indicators.

Did DTC C1032-RIGHT REAR WHEEL SPEED SENSOR SIGNAL ERRATIC PERFORMANCE reset?

Yes >> Replace the Anti-Lock Brakes Module in accordance with the Service Information.
Perform ABS VERIFICATION TEST - VER 1. (Refer to 5 - BRAKES - STANDARD PROCEDURE).

No >> Test Complete.

C1035-RIGHT REAR WHEEL SPEED COMPARATIVE PERFORMANCE

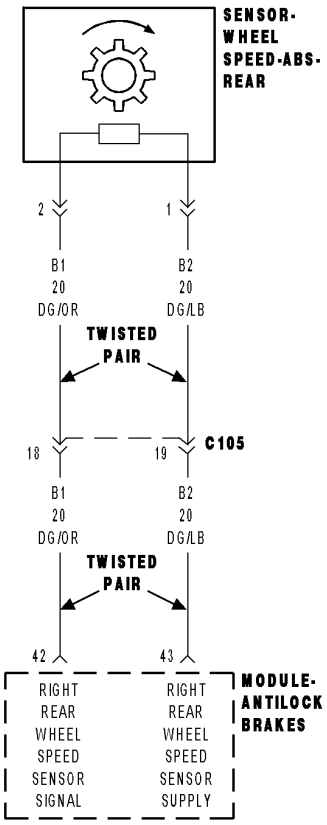

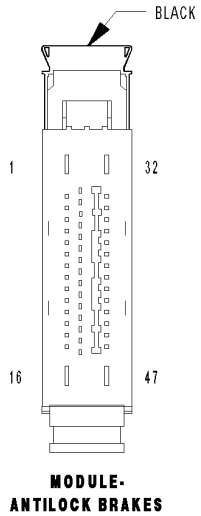

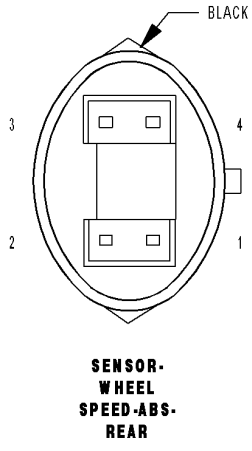

813cf9cf

For a complete wiring diagram **Refer to Section 8W**.

- **When Monitored:**
  With the ignition on.
- **Set Condition:**
  When the Right Rear WSS reading is different from the readings received from the other WSS's at a vehicle speed above 40 kph (25 mph). The Anti-Lock Brake Module compares WSS readings from side-to-side on an axle and front-to-rear.

Possible Causes
RIGHT REAR WSS LOOSE — B1, B2 CIRCUITS/CONNECTOR/TERMINAL DAMAGE
IMPROPER RIGHT REAR TIRE PRESSURE/MISMATCHED TIRES
RIGHT REAR TONE WHEEL DAMAGE
RIGHT REAR WSS
ANTI-LOCK BRAKE MODULE

Diagnostic Test

1. CHECK FOR DTC C1035-RIGHT REAR WHEEL SPEED COMPARATIVE PERFORMANCE

NOTE: This DTC must be active for the results of this test to be valid.
Turn the ignition on.
With the scan tool, record and erase DTCs.
Road test the vehicle over 40 km/h (25 m.p.h.).

NOTE: Vehicle must be driven above 40 km/h (25 m.p.h.) for set conditions to be meet.
With the scan tool, read DTCs.

NOTE: The Anti-Lock Brake Module must sense ALL 4 wheels at 12 km/h (7.5 mph) before it will extinguish the ABS indicators.

Does the scan tool display: C1035-RIGHT REAR WHEEL SPEED COMPARATIVE PERFORMANCE?

Yes >> Go To 3

No >> Go To 2

2. CHECK WHEEL SPEED SENSOR SIGNALS

Turn the ignition on.
With the scan tool, monitor and graph ALL the WSS speeds and compare graph while an assistant drives the vehicle.

NOTE: If graph shows periodic dropouts pay close attention to the tone wheel.
Slowly accelerate as straight as possible from a stop to 40 km/h (25 m.p.h.).

Is the Right Rear WSS speed showing 0 km/h (0 m.p.h.) or not matching other wheel speeds?

Yes >> Go To 3

No >> Refer to the INTERMITTENT CONDITION diagnostic procedure.
Perform ABS VERIFICATION TEST - VER 1. (Refer to 5 - BRAKES - STANDARD PROCEDURE).

3. CHECK FOR IMPROPER RIGHT REAR TIRE PRESSURE/MISMATCHED TIRES

Turn the ignition off.
Check and adjust the Right Rear Tire pressure.
Check and adjust all other tire pressures.
Inspect for mismatched tires on vehicle.

Is the Right Rear Tire improperly inflated or mismatched tires on vehicle?

Yes >> Repair as necessary
Perform ABS VERIFICATION TEST - VER 1. (Refer to 5 - BRAKES - STANDARD PROCEDURE).

No >> Go To 4

4. CHECK RIGHT REAR WSS LOOSENESS, INSPECT B1, B2 CIRCUITS/TERMINALS FOR DAMAGE

NOTE: Check all terminals for broken, bent, pushed out, or corroded terminals
Inspect the Anti-Lock Brake Module harness connector, Right Rear WSS, and Right Rear WSS harness connector
Inspect the Right Rear WSS for looseness, excessive corrosion and not properly fastened.
Inspect the (B1) Right Rear WSS Signal and (B2) Right Rear WSS Supply circuits between the Right Rear WSS and Anti-Lock Brake Module for damage.

Is the Right Rear WSS loose or any of the wiring/connectors/terminals damaged?

Yes >> Repair as necessary
Perform ABS VERIFICATION TEST - VER 1. (Refer to 5 - BRAKES - STANDARD PROCEDURE).

No >> Go To 5

5. CHECK RIGHT REAR TONE WHEEL FOR DAMAGE

Inspect the Right Rear Tone Wheel for damage, missing teeth, cracks, or looseness.

NOTE: The Tone Wheel teeth should be perfectly square, not bent, or nicked.

Is the Right Rear Tone Wheel damaged?

Yes >> Repair as necessary
Perform ABS VERIFICATION TEST - VER 1. (Refer to 5 - BRAKES - STANDARD PROCEDURE).

No >> Go To 6

6. RIGHT REAR WHEEL SPEED SENSOR

Replace the Right Rear Wheel Speed Sensor in accordance with the Service Information.
Perform ABS VERIFICATION TEST - VER 1. (Refer to 5 - BRAKES - STANDARD PROCEDURE).
Road test the vehicle over 40 km/h (25 m.p.h.).

NOTE: Vehicle must be driven above 40 km/h (25 m.p.h.) for set conditions to be meet.
With the scan tool, read ABS DTCs.

NOTE: The Anti-Lock Brake Module must sense ALL 4 wheels at 12 km/h (7.5 mph) before it will extinguish the ABS indicators.

Did DTC C1035-RIGHT REAR WHEEL SPEED COMPARATIVE PERFORMANCE reset?

Yes >> Replace the Anti-Lock Brakes Module in accordance with the Service Information.
Perform ABS VERIFICATION TEST - VER 1. (Refer to 5 - BRAKES - STANDARD PROCEDURE).

No >> Test Complete.

C1041-LEFT FRONT TONE WHEEL PERFORMANCE

For a complete wiring diagram **Refer to Section 8W**.

- **When Monitored:**
  With the ignition on.
- **Set Condition:**
  When the Anti-Lock Brake Module detects periodic drops of a WSS signal.

Possible Causes
LEFT FRONT TONE WHEEL
DIRTY TONE WHEEL/SENSOR

Diagnostic Test

1. CHECK FOR A DTC C1041-LEFT FRONT TONE WHEEL PERFORMANCE

NOTE: This DTC must be active for the results of this test to be valid.
Turn the ignition on.
With the scan tool, read DTCs.
Record DTC and Freeze Frame information.
With the scan tool, erase DTCs.
Cycle the ignition switch off then on.

CAUTION: Ensure brake capability is available before road testing.
Test drive the vehicle in a straight line to 40 km/h (25 mph).

NOTE: Vehicle must be driven above 40 km/h (25 m.p.h.) for set conditions to be meet.
With the scan tool, read DTCs.

Does the scan tool display: C1041-LEFT FRONT TONE WHEEL PERFORMANCE?

Yes >> Replace the Left Front Tone Wheel in accordance with the Service Information.
Perform ABS VERIFICATION TEST - VER 1. (Refer to 5 - BRAKES - STANDARD PROCEDURE).

No >> Refer to the INTERMITTENT CONDITION diagnostic procedure.
Perform ABS VERIFICATION TEST - VER 1. (Refer to 5 - BRAKES - STANDARD PROCEDURE).

C1042-RIGHT FRONT TONE WHEEL PERFORMANCE

For a complete wiring diagram **Refer to Section 8W**.

- **When Monitored:**
  With the ignition on.
- **Set Condition:**
  When the Anti-Lock Brake Module detects periodic drops of a WSS signal.

Possible Causes
RIGHT FRONT TONE WHEEL/BEARING DAMAGE
DIRTY TONE WHEEL/SENSOR

Diagnostic Test

1. CHECK FOR A DTC C1042-RIGHT FRONT TONE WHEEL PERFORMANCE

NOTE: This DTC must be active for the results of this test to be valid.
Turn the ignition on.
With the scan tool, read DTCs.
Record DTC and Freeze Frame information.
With the scan tool, erase DTCs.
Cycle the ignition switch off then on.

CAUTION: Ensure brake capability is available before road testing.
Test drive the vehicle in a straight line to 40 Km/h (25 mph).

NOTE: Vehicle must be driven above 40 km/h (25 m.p.h.) for set conditions to be meet.
With the scan tool, read DTCs.

Does the scan tool display: C1042-RIGHT FRONT TONE WHEEL PERFORMANCE?

Yes >> Replace the Right Front Tone Wheel in accordance with the Service Information.
Perform ABS VERIFICATION TEST - VER 1. (Refer to 5 - BRAKES - STANDARD PROCEDURE).

No >> Refer to the INTERMITTENT CONDITION diagnostic procedure.
Perform ABS VERIFICATION TEST - VER 1. (Refer to 5 - BRAKES - STANDARD PROCEDURE).

C1043-LEFT REAR TONE WHEEL PERFORMANCE

For a complete wiring diagram **Refer to Section 8W**.

- **When Monitored:**
  With the ignition on.
- **Set Condition:**
  When the Anti-Lock Brake Module detects periodic drops of a WSS signal.

Possible Causes
LEFT REAR TONE WHEEL/BEARING DAMAGE
DIRTY TONE WHEEL/SENSOR

Diagnostic Test

1. CHECK FOR A DTC C1043-LEFT REAR TONE WHEEL PERFORMANCE

NOTE: This DTC must be active for the results of this test to be valid.
Turn the ignition on.
With the scan tool, read DTCs.
Record DTC and Freeze Frame information.
With the scan tool, erase DTCs.
Cycle the ignition switch off then on.

CAUTION: Ensure brake capability is available before road testing.
Test drive the vehicle in a straight line to 40 Km/h (25 mph).

NOTE: Vehicle must be driven above 40 km/h (25 m.p.h.) for set conditions to be meet.
With the scan tool, read DTCs.

Does the scan tool display: C1043-LEFT REAR TONE WHEEL PERFORMANCE?

Yes >> Go To 2

No >> Refer to the INTERMITTENT CONDITION diagnostic procedure.
Perform ABS VERIFICATION TEST - VER 1. (Refer to 5 - BRAKES - STANDARD PROCEDURE).

2. CHECK THE LEFT REAR TONE WHEEL FOR DAMAGE

NOTE: Check the tone wheel teeth for missing teeth, cracks, or looseness. Teeth should be perfectly square, not bent, or nicked.
Check the Left Rear Tone Wheel for damage.
Check the Left Rear Tone Wheel for dirt.

Was the tone wheel dirty?

Yes >> Clean tone wheel and sensor. Clear codes and retest.
Perform ABS VERIFICATION TEST - VER 1. (Refer to 5 - BRAKES - STANDARD PROCEDURE).

No >> Replace the Left Rear Tone Wheel in accordance with the Service Information.
Perform ABS VERIFICATION TEST - VER 1. (Refer to 5 - BRAKES - STANDARD PROCEDURE).

C1044-RIGHT REAR TONE WHEEL PERFORMANCE

For a complete wiring diagram **Refer to Section 8W**.

- **When Monitored:**
  With the ignition on.
- **Set Condition:**
  When the Anti-Lock Brake Module detects periodic drops of a WSS signal.

Possible Causes
RIGHT REAR TONE WHEEL/BEARING DAMAGE
DIRTY TONE WHEEL/SENSOR

Diagnostic Test

1. CHECK FOR A DTC C1044-RIGHT REAR TONE WHEEL PERFORMANCE

NOTE: This DTC must be active for the results of this test to be valid.
Turn the ignition on.
With the scan tool, read DTCs.
Record DTC and Freeze Frame information.
With the scan tool, erase DTCs.
Cycle the ignition switch off then on.

CAUTION: Ensure brake capability is available before road testing.
Test drive the vehicle in a straight line to 40 Km/h (25 mph).

NOTE: Vehicle must be driven above 40 km/h (25 m.p.h.) for set conditions to be meet.
With the scan tool, read DTCs.

Does the scan tool display: C1044-RIGHT REAR TONE WHEEL PERFORMANCE?

Yes >> Go To 2

No >> Refer to the INTERMITTENT CONDITION diagnostic procedure.
Perform ABS VERIFICATION TEST - VER 1. (Refer to 5 - BRAKES - STANDARD PROCEDURE).

2. CHECK THE RIGHT REAR TONE WHEEL FOR DAMAGE

NOTE: Check the tone wheel teeth for missing teeth, cracks, or looseness. Teeth should be perfectly square, not bent, or nicked.
Check the Right Rear Tone Wheel for damage.
Check the Right Rear Tone Wheel for dirt.

Was the tone wheel dirty?

Yes >> Clean tone wheel and sensor. Clear codes and retest.
Perform ABS VERIFICATION TEST - VER 1. (Refer to 5 - BRAKES - STANDARD PROCEDURE).

No >> Replace the Right Rear Tone Wheel in accordance with the Service Information.
Perform ABS VERIFICATION TEST - VER 1. (Refer to 5 - BRAKES - STANDARD PROCEDURE).

C1046–LEFT FRONT WHEEL PRESSURE PHASE MONITORING

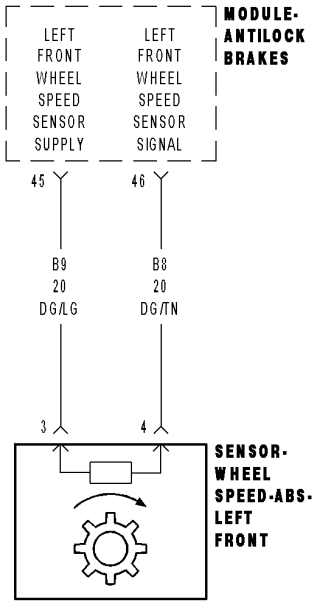

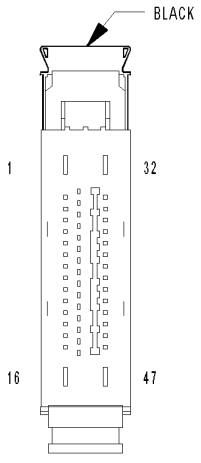

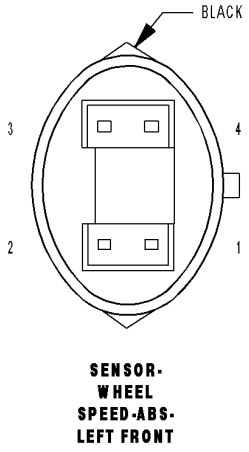

813cd7c9

For a complete wiring diagram **Refer to Section 8W**.

- **When Monitored:**
  During active ABS control.
- **Set Condition:**
  If the Anti-Lock Brakes Module detects a pressure reduction phase and the following pressure hold phase is too long.

Possible Causes
LEFT FRONT TONE WHEEL/BEARING DAMAGED
WHEEL SPEED SIGNALS SWAPPED
LEFT FRONT WSS
ANTI-LOCK BRAKES MODULE

Diagnostic Test

1. COMPARE WHEEL SPEED SENSOR SIGNALS

WARNING: Ensure brake capability is available before road testing.
With the scan tool, monitor ALL the WSS speeds while an assistant drives the vehicle.
Slowly accelerate as straight as possible from a stop to 40 km/h (25 m.p.h.).

Does the Left Front WSS speed differ from the other WSS speeds by 8 km/h (5 m.p.h.) or show NO speed?

Yes >> Go To 2

No >> Perform the ABS Intermittent Condition diagnostic procedure in this Section.
Perform ABS VERIFICATION TEST - VER 1. (Refer to 5 - BRAKES - STANDARD PROCEDURE).

2. INSPECT TONE WHEEL/BEARING

Turn the ignition off.
Visually inspect the tone wheel and bearing for damage.

- Check the tone wheel teeth for missing teeth, cracks, and looseness. The teeth must be perfectly square, not bent, or nicked. Check the wheel bearing for worn/looseness.

Were any problems found?

Yes >> Repair as necessary.
Perform ABS VERIFICATION TEST - VER 1. (Refer to 5 - BRAKES - STANDARD PROCEDURE).

No >> Go To 3

3. CHECK WHEEL SPEED SENSOR WIRING

Check the Anti-Lock Brakes Module and Wheel Speed Sensors harness connectors for incorrectly wired connectors.

Were any problems found?

Yes >> Repair as necessary.
Perform ABS VERIFICATION TEST - VER 1. (Refer to 5 - BRAKES - STANDARD PROCEDURE).

No >> Go To 4

4. LEFT FRONT WHEEL SPEED SENSOR

Replace the Left Front Wheel Speed Sensor in accordance with the Service Information.
Perform ABS VERIFICATION TEST - VER 1. (Refer to 5 - BRAKES - STANDARD PROCEDURE).

CAUTION: Ensure brake capability is available before road testing.
Road test the vehicle over 40 km/h (25 m.p.h.).

NOTE: Vehicle must be driven above 40 km/h (25 m.p.h.) for set conditions to be meet.
With the scan tool, read ABS DTCs.

NOTE: The Anti-Lock Brake Module must sense ALL 4 wheels at 12 km/h (7.5 mph) before it will extinguish the ABS indicators.

Did DTC C1046–LEFT FRONT WHEEL PRESSURE PHASE MONITORING reset?

Yes >> Replace the Anti-Lock Brakes Module in accordance with the Service Information.
Perform ABS VERIFICATION TEST - VER 1. (Refer to 5 - BRAKES - STANDARD PROCEDURE).

No >> Test Complete.

C1047-RIGHT FRONT WHEEL PRESSURE PHASE MONITORING

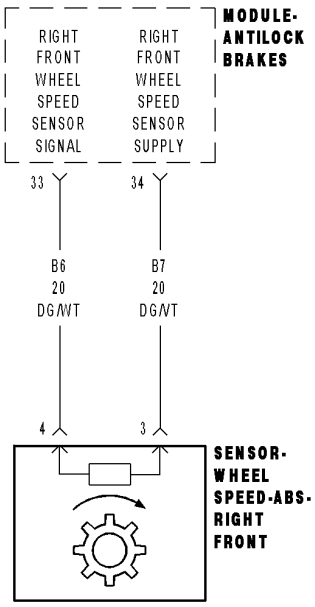

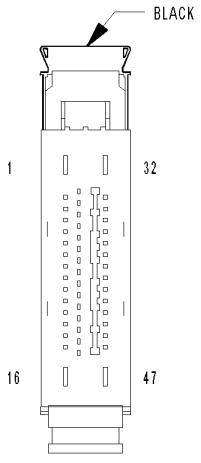

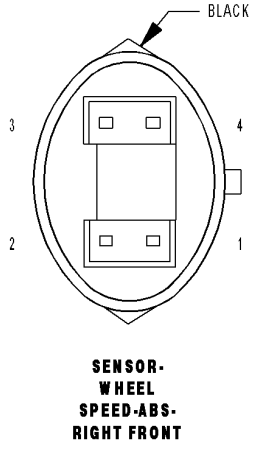

813cf6d7

For a complete wiring diagram **Refer to Section 8W**.

- **When Monitored:**
  During active ABS control.
- **Set Condition:**
  If the Anti-Lock Brakes Module detects a pressure reduction phase and the following pressure hold phase is too long.

Possible Causes
RIGHT FRONT TONE WHEEL DAMAGED
WHEEL SPEED SIGNALS SWAPPED
RIGHT FRONT WSS
ANTI-LOCK BRAKES MODULE

Diagnostic Test

1. COMPARE WHEEL SPEED SENSOR SIGNALS

WARNING: Ensure brake capability is available before road testing.
With the scan tool, monitor ALL the WSS speeds while an assistant drives the vehicle.
Slowly accelerate as straight as possible from a stop to 40 km/h (25 m.p.h.).

Does the Right Front WSS speed differ from the other WSS speeds by 8 km/h (5 m.p.h.) or show NO speed?

Yes >> Go To 2

No >> Perform the ABS Intermittent Condition diagnostic procedure in this Section.
Perform ABS VERIFICATION TEST - VER 1. (Refer to 5 - BRAKES - STANDARD PROCEDURE).

2. INSPECT TONE WHEEL/BEARING

Turn the ignition off.
Visually inspect the tone wheel and bearing for damage.

- Check the tone wheel teeth for missing teeth, cracks, and looseness. The teeth must be perfectly square, not bent, or nicked. Check the wheel bearing for worn/looseness.

Were any problems found?

Yes >> Repair as necessary.
Perform ABS VERIFICATION TEST - VER 1. (Refer to 5 - BRAKES - STANDARD PROCEDURE).

No >> Go To 3

3. CHECK WHEEL SPEED SENSOR WIRING

Check the Anti-Lock Brakes Module and Wheel Speed Sensors harness connectors for incorrectly wired connectors.

Were any problems found?

Yes >> Repair as necessary.
Perform ABS VERIFICATION TEST - VER 1. (Refer to 5 - BRAKES - STANDARD PROCEDURE).

No >> Go To 4

4. RIGHT FRONT WHEEL SPEED SENSOR

Replace the Right Front Wheel Speed Sensor in accordance with the Service Information.
Perform ABS VERIFICATION TEST - VER 1. (Refer to 5 - BRAKES - STANDARD PROCEDURE).

CAUTION: Ensure brake capability is available before road testing.
Road test the vehicle over 40 km/h (25 m.p.h.).

NOTE: Vehicle must be driven above 40 km/h (25 m.p.h.) for set conditions to be meet.
With the scan tool, read ABS DTCs.

NOTE: The Anti-Lock Brake Module must sense ALL 4 wheels at 12 km/h (7.5 mph) before it will extinguish the ABS indicators.

Did DTC C1047–RIGHT FRONT WHEEL PRESSURE PHASE MONITORING reset?

Yes >> Replace the Anti-Lock Brakes Module in accordance with the Service Information.
Perform ABS VERIFICATION TEST - VER 1. (Refer to 5 - BRAKES - STANDARD PROCEDURE).

No >> Test Complete.

C1048-LEFT REAR WHEEL PRESSURE PHASE MONITORING

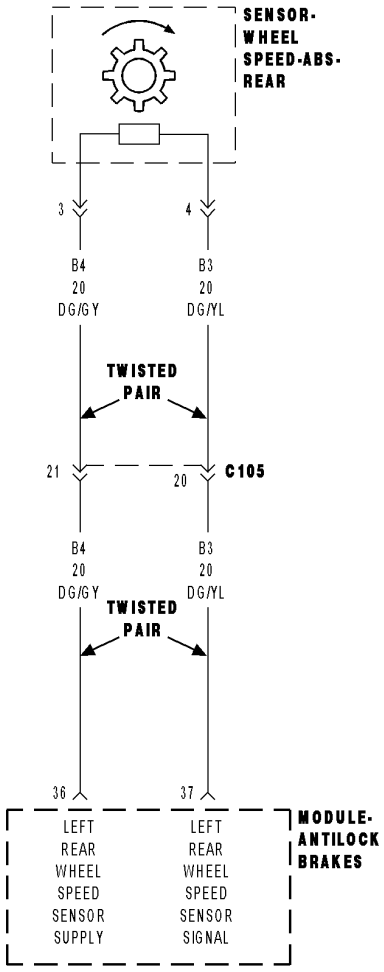

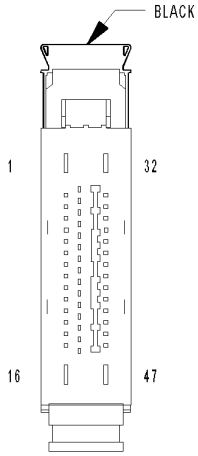

MODULE-
ANTILOCK BRAKES

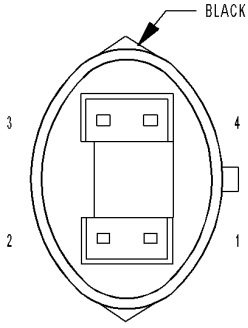

SENSOR-
WHEEL
SPEED-ABS-
REAR

813cf813

For a complete wiring diagram **Refer to Section 8W**.

- **When Monitored:**
  During active ABS control.
- **Set Condition:**
  If the Anti-Lock Brakes Module detects a pressure reduction phase and the following pressure hold phase is too long.

Possible Causes
LEFT REAR TONE WHEEL/WHEEL BEARING
WHEEL SPEED SIGNALS SWAPPED
LEFT REAR WSS
ANTI-LOCK BRAKES MODULE

Diagnostic Test

1. COMPARE WHEEL SPEED SENSOR SIGNALS

WARNING: Ensure brake capability is available before road testing.
With the scan tool, monitor ALL the WSS speeds while an assistant drives the vehicle.
Slowly accelerate as straight as possible from a stop to 40 km/h (25 m.p.h.).

Does the Left Rear WSS speed differ from the other WSS speeds by 8 km/h (5 m.p.h.) or show NO speed?

Yes >> Go To 2

No >> Perform the ABS Intermittent Condition diagnostic procedure in this Section.
Perform ABS VERIFICATION TEST - VER 1. (Refer to 5 - BRAKES - STANDARD PROCEDURE).

2. INSPECT TONE WHEEL/BEARING

Turn the ignition off.
Visually inspect the tone wheel and bearing for damage.

- Check the tone wheel teeth for missing teeth, cracks, and looseness. The teeth must be perfectly square, not bent, or nicked. Check the wheel bearing for worn/looseness.

Were any problems found?

Yes >> Repair as necessary.
Perform ABS VERIFICATION TEST - VER 1. (Refer to 5 - BRAKES - STANDARD PROCEDURE).

No >> Go To 3

3. CHECK WHEEL SPEED SENSOR WIRING

Check the Anti-Lock Brakes Module and Wheel Speed Sensors harness connectors for incorrectly wired connectors.

Were any problems found?

Yes >> Repair as necessary.
Perform ABS VERIFICATION TEST - VER 1. (Refer to 5 - BRAKES - STANDARD PROCEDURE).

No >> Go To 4

4. LEFT REAR WHEEL SPEED SENSOR

Replace the Left Rear Wheel Speed Sensor in accordance with the Service Information.
Perform ABS VERIFICATION TEST - VER 1. (Refer to 5 - BRAKES - STANDARD PROCEDURE).

CAUTION: Ensure brake capability is available before road testing.
Road test the vehicle over 40 km/h (25 m.p.h.).

NOTE: Vehicle must be driven above 40 km/h (25 m.p.h.) for set conditions to be meet.
With the scan tool, read ABS DTCs.

NOTE: The Anti-Lock Brake Module must sense ALL 4 wheels at 12 km/h (7.5 mph) before it will extinguish the ABS indicators.

Did DTC C1048–LEFT REAR WHEEL PRESSURE PHASE MONITORING reset?

Yes >> Replace the Anti-Lock Brakes Module in accordance with the Service Information.
Perform ABS VERIFICATION TEST - VER 1. (Refer to 5 - BRAKES - STANDARD PROCEDURE).

No >> Test Complete.

C1049-RIGHT REAR WHEEL PRESSURE PHASE MONITORING

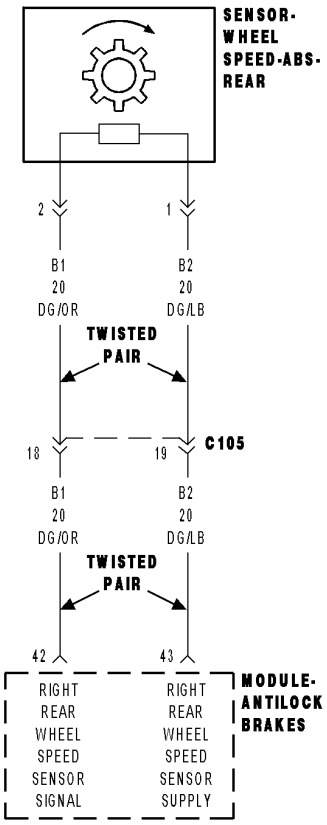

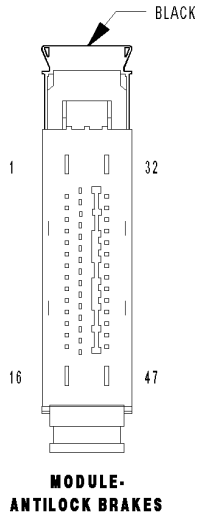

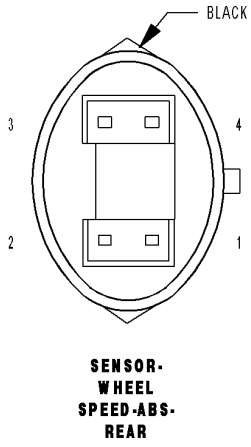

813cf9cf

For a complete wiring diagram **Refer to Section 8W**.

- **When Monitored:**
  During active ABS control.
- **Set Condition:**
  When the Anti-Lock Brakes Module detects a pressure reduction phase and the following pressure hold phase is too long.

Possible Causes
RIGHT REAR TONE WHEEL DAMAGED
WHEEL SPEED SIGNALS SWAPPED
RIGHT REAR WSS
ANTI-LOCK BRAKES MODULE

Diagnostic Test

1. COMPARE WHEEL SPEED SENSOR SIGNALS

WARNING: Ensure brake capability is available before road testing.
With the scan tool, monitor ALL the WSS speeds while an assistant drives the vehicle.
Slowly accelerate as straight as possible from a stop to 40 km/h (25 m.p.h.).

Does the Right Rear WSS speed from the other WSS speeds by 8 km/h (5 m.p.h.) or show NO speed?

Yes >> Go To 2

No >> Perform the ABS Intermittent Condition diagnostic procedure in this Section.
Perform ABS VERIFICATION TEST - VER 1. (Refer to 5 - BRAKES - STANDARD PROCEDURE).

2. INSPECT TONE WHEEL/BEARING

Turn the ignition off.
Visually inspect the tone wheel and bearing for damage.

- Check the tone wheel teeth for missing teeth, cracks, and looseness. The teeth must be perfectly square, not bent, or nicked. Check the wheel bearing for worn/looseness.

Were any problems found?

Yes >> Repair as necessary.
Perform ABS VERIFICATION TEST - VER 1. (Refer to 5 - BRAKES - STANDARD PROCEDURE).

No >> Go To 3

3. CHECK WHEEL SPEED SENSOR WIRING

Check the Anti-Lock Brakes Module and Wheel Speed Sensors harness connectors for incorrectly wired connectors.

Were any problems found?

Yes >> Repair as necessary.
Perform ABS VERIFICATION TEST - VER 1. (Refer to 5 - BRAKES - STANDARD PROCEDURE).

No >> Go To 4

4. RIGHT REAR WHEEL SPEED SENSOR

Replace the Right Rear Wheel Speed Sensor in accordance with the Service Information.
Perform ABS VERIFICATION TEST - VER 1. (Refer to 5 - BRAKES - STANDARD PROCEDURE).

CAUTION: Ensure brake capability is available before road testing.
Road test the vehicle over 40 km/h (25 m.p.h.).

NOTE: Vehicle must be driven above 40 km/h (25 m.p.h.) for set conditions to be meet.
With the scan tool, read ABS DTCs.

NOTE: The Anti-Lock Brake Module must sense ALL 4 wheels at 12 km/h (7.5 mph) before it will extinguish the ABS indicators.

Did DTC C1049–RIGHT REAR WHEEL PRESSURE PHASE MONITORING reset?

Yes >> Replace the Anti-Lock Brakes Module in accordance with the Service Information.
Perform ABS VERIFICATION TEST - VER 1. (Refer to 5 - BRAKES - STANDARD PROCEDURE).

No >> Test Complete.

C1073-ABS PUMP MOTOR CONTROL CIRCUIT

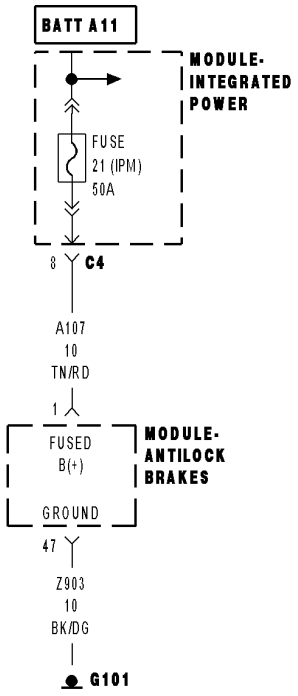

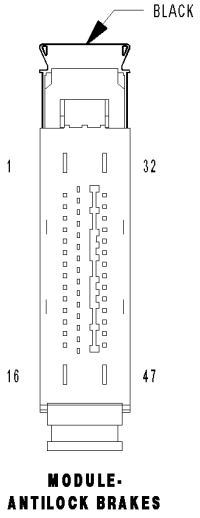

813cfa93

For a complete wiring diagram **Refer to Section 8W**.

- **When Monitored:**
  When the ABS Pump Motor is activated.
- **Set Condition:**
  The ABM detects low pump motor feedback voltage with actuation of the pump motor relay.

Possible Causes
BLOWN PUMP FUSE
WIRING HARNESS, TERMINAL, CONNECTOR DAMAGE
(A107) HIGH RESISTANCE IN B+ CIRCUITS
(Z903) HIGH RESISTANCE IN GROUND CIRCUITS
INTEGRATED CONTROL UNIT

Diagnostic Test

1. CHECK FOR A DTC C1073-ABS PUMP MOTOR CONTROL CIRCUIT

NOTE: This DTC must be active for the results of this test to be valid.
Turn the ignition on.
With the scan tool, record and erase DTCs.
Cycle the ignition switch from off to on.
Road test the vehicle over 40 km/h (25 m.p.h.).

NOTE: Vehicle must be driven above 40 km/h (25 m.p.h.) for set conditions to be meet.
With the scan tool, read DTCs.

NOTE: The Anti-Lock Brake Module must sense ALL 4 wheels at 12 km/h (7.5 mph) before it will extinguish the ABS indicators.

Does the scan tool display: C1073-ABS PUMP MOTOR CONTROL CIRCUIT?

Yes >> Go To 2

No >> Refer to the INTERMITTENT CONDITION diagnostic procedure.
Perform ABS VERIFICATION TEST - VER 1. (Refer to 5 - BRAKES - STANDARD PROCEDURE).

2. INSPECT RELATED WIRING HARNESS, TERMINALS, & CONNECTORS

Turn the ignition off.
Visually inspect the related wiring harness. Look for any pinched, chafed, pierced, and partially broken wires.
Visually inspect the related wiring harness connectors. Look for broken, bent, pushed out, and corroded terminals.

Were any problems found?

Yes >> Repair as necessary.
Perform ABS VERIFICATION TEST - VER 1. (Refer to 5 - BRAKES - STANDARD PROCEDURE).

No >> Go To 3

3. CHECK THE ABS PUMP MOTOR FUSED B+ FOR AN OPEN

Turn the ignition off.
Remove and visually inspect the ABS Pump Motor B+ fuse.

Is the ABS Pump Motor B+ fuse open?

Yes >> Go To 4

No >> Go To 6

4. CHECK THE (A107) FUSED B(+) FOR A SHORT TO GROUND

Turn the ignition off.

Disconnect the Anti-Lock Brake Module harness connector.

Using a 12–volt test light connected to 12–volts, probe the (A107) Fused B+ circuit.

Does the test light illuminate brightly?

Yes >> Repair the (A921) Fused B(+) circuit for a short to ground. Perform ABS VERIFICATION TEST - VER 1 (Refer to 5 - BRAKES - STANDARD PROCEDURE).

No >> Go To 5

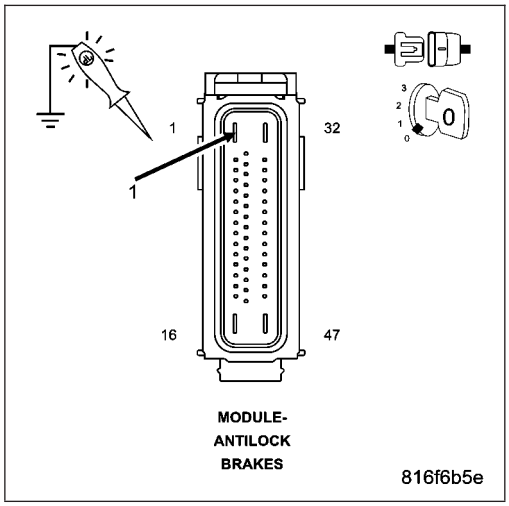

5. CHECK THE (A107) FUSED B(+) CIRCUIT

Turn the ignition off.

Visually inspect the (A107) Fused B(+) circuit in the wiring harness.

Look for any signs of intermittent short to ground.

Is the wiring harness OK?

Yes >> Go To 6

No >> Repair the (A921) Fused B(+) circuit for a short to ground. Perform ABS VERIFICATION TEST - VER 1 (Refer to 5 - BRAKES - STANDARD PROCEDURE).

6. CHECK THE VOLTAGE ON THE (A107) FUSED B(+) CIRCUIT

Turn the ignition off.

Disconnect the Anti-Lock Brake Module harness connector.

Measure the voltage of the (A107) Fused B(+) circuit in the Anti-Lock Brake Module harness connector.

Is the voltage above 10 volts?

Yes >> Go To 7

No >> Repair the (A107) Fused B(+) circuit for an open. Perform ABS VERIFICATION TEST - VER 1 (Refer to 5 - BRAKES - STANDARD PROCEDURE).

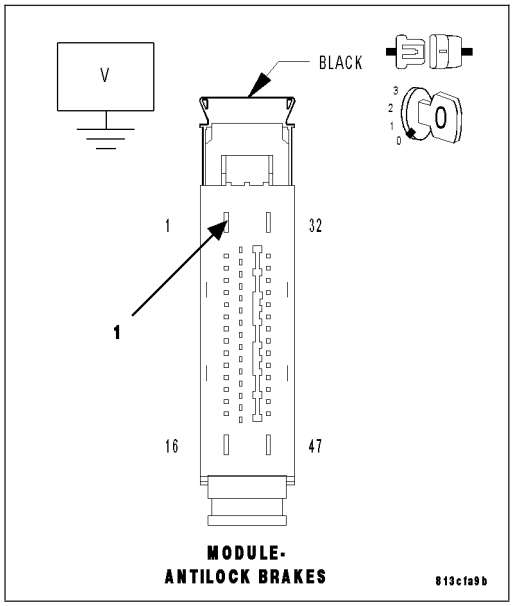

7. CHECK THE (Z903) AND (Z107) GROUND CIRCUITS FOR AN OPEN

Measure the resistance of the (Z903) Ground circuit between the Anti-Lock Brake Module harness connector and ground

Is the resistance below 5.0 ohms?

Yes >> Replace the ICU per service information.
Perform ABS VERIFICATION TEST - VER 1. (Refer to 5 - BRAKES - STANDARD PROCEDURE).

No >> Repair the high resistance in the affected circuit.
Perform ABS VERIFICATION TEST - VER 1 (Refer to 5 - BRAKES - STANDARD PROCEDURE).

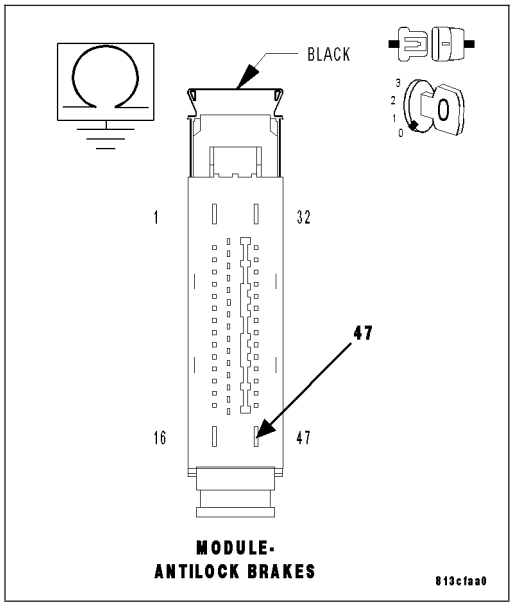

C1078–TIRE REVOLUTIONS RANGE PERFORMANCE

For a complete wiring diagram **Refer to Section 8W**.

- **When Monitored:**
  Continuously.
- **Set Condition:**
  A comparison between the tire circumference value contained in the EEPROM and the tire circumference value received on the CAN bus. Programmed value for tire size is not within acceptable range.

Possible Causes
INCORRECT VALUE PROGRAMMED INTO FCM
FRONT CONTROL MODULE

Diagnostic Test

1. VERIFY FCM IS PROGRAMMED WITH CORRECT TIRE/WHEEL INFORMATION

Verify the correct Tire/wheel information is programmed in the FCM.

Is the correct value programmed in the FCM?

Yes >> Replace the Front Control Module in accordance with service information.
Perform ABS VERIFICATION TEST - VER 1. (Refer to 5 - BRAKES - STANDARD PROCEDURE).

No >> Program the correct Tire/Wheel information in the FCM.
Perform ABS VERIFICATION TEST - VER 1. (Refer to 5 - BRAKES - STANDARD PROCEDURE).

C107C–BRAKE PEDAL SWITCH 1/2 STUCK

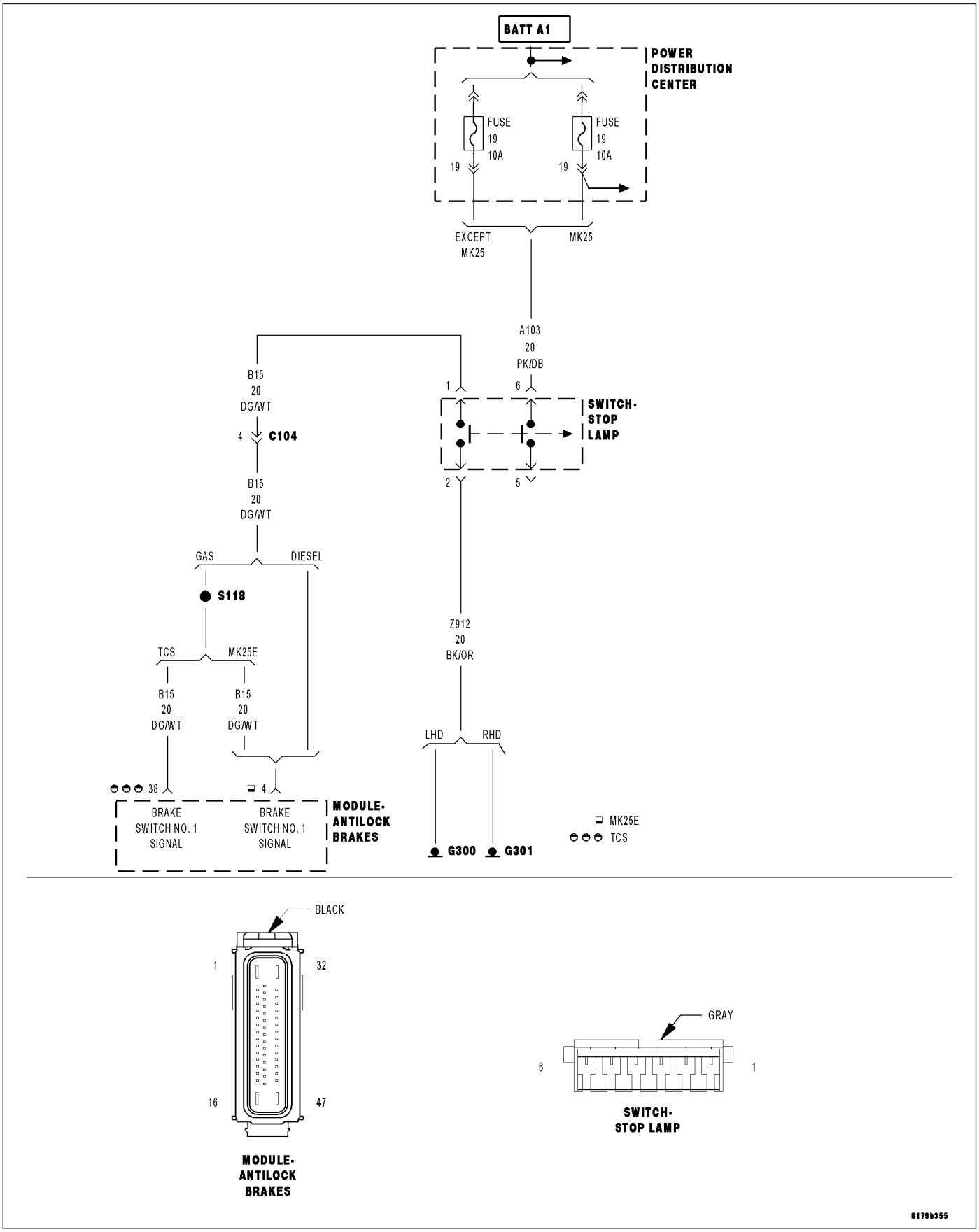

For a complete wiring diagram **Refer to Section 8W**.

- **When Monitored:**
  With the ignition on, but not during first run.
  Or, with low supply voltage.
  Or, if a Pressure Sensor fault is active.
- **Set Condition:**
  If the Anti-Lock Brakes Module detects a mismatch between the Brake Test Signal (BTS) from the Pressure Sensor and the (B15) Secondary Brake Switch Signal circuit (Diesel) or the (B15) Brake Switch No. 1 Signal circuit (Gas).

Possible Causes
WIRING HARNESS, TERMINAL, CONNECTOR DAMAGE
STOP LAMP RELATED DTCs OR SYMPTOMS PRESENT
MISADJUSTED PEDAL SWITCH
PRESSURE SENSOR OR VOLTAGE RELATED DTCs PRESENT
(B15) BRAKE SWITCH NO. 1 SIGNAL CIRCUIT OPEN
(B15) BRAKE SWITCH NO. 1 SIGNAL CIRCUIT SHORT TO GROUND
STOP LAMP SWITCH
ANTI-LOCK BRAKES MODULE

Diagnostic Test

1. VERIFY DTC IS ACTIVE

NOTE: Diagnose and repair all Pressure Sensor and Voltage related DTCs and all Stop Lamp related DTCs and symptoms before diagnosing this DTC.

Turn the ignition on.
With the scan tool, read and record ABS DTCs.
With the scan tool, read and record Environmental Data (EV Data).
With the scan tool, erase ABS DTCs.
Cycle the ignition switch.
Press and release the brake pedal several times.
With the scan tool, read ABS DTCs.

Does this DTC reset?

Yes >> Go To 2

No >> Perform the ABS Intermittent Condition diagnostic procedure in this Section.
Perform ABS VERIFICATION TEST - VER 1. (Refer to 5 - BRAKES - STANDARD PROCEDURE).

2. INSPECT RELATED WIRING HARNESS, TERMINALS, & CONNECTORS

Turn the ignition off.
Visually inspect the related wiring harness. Look for any pinched, chafed, pierced, and partially broken wires.
Visually inspect the related wiring harness connectors. Look for broken, bent, pushed out, and corroded terminals.

Were any problems found?

Yes >> Repair as necessary.
Perform ABS VERIFICATION TEST - VER 1. (Refer to 5 - BRAKES - STANDARD PROCEDURE).

No >> Go To 3

3. CHECK (B15) BRAKE SWITCH NO. 1 SIGNAL CIRCUIT FUNCTION WHILE DEPRESSING & RELEASING THE BRAKE PEDAL

Disconnect the Anti-Lock Brakes Module harness connector.

Turn the ignition on.

Using a 12-volt test light connected to 12 volts, probe the (B15) Brake Switch No. 1 Signal circuit in the Anti-Lock Brakes Module harness connector.

Depress and release the brake pedal.

Does the test light illumination toggle from off to on?

Yes >> Go To 7

No >> Go To 4

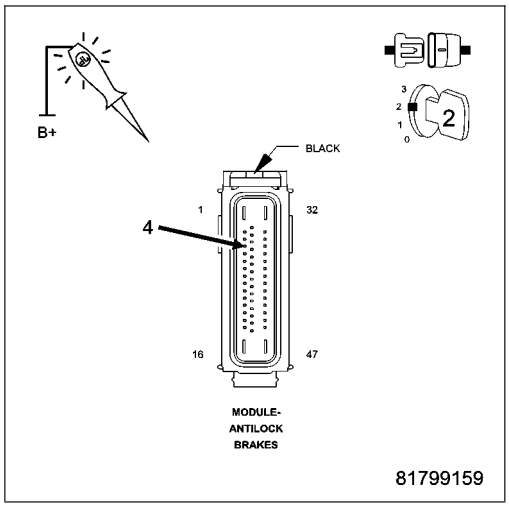

4. CHECK (B15) BRAKE SWITCH NO. 1 SIGNAL CIRCUIT FOR AN OPEN

Turn the ignition off.

Disconnect the Stop Lamp Switch harness connector.

Measure the resistance of the (B15) Brake Switch No. 1 Signal circuit between the Anti-Lock Brakes Module harness connector and the Stop Lamp Switch harness connector.

Is the resistance below 5.0 ohms?

Yes >> Go To 5

No >> Repair the (B15) Brake Switch No. 1 Signal circuit for an open.

Perform ABS VERIFICATION TEST - VER 1. (Refer to 5 - BRAKES - STANDARD PROCEDURE).

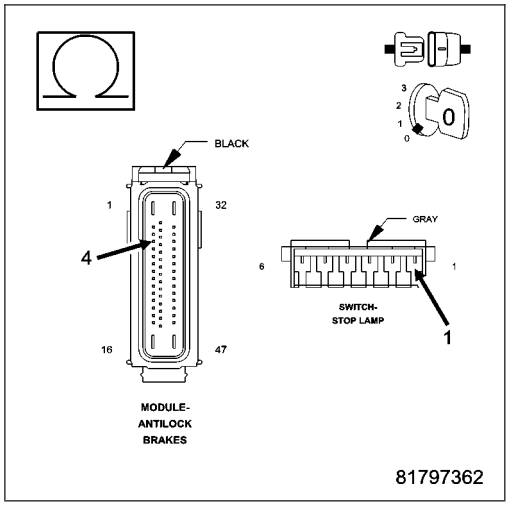

5. CHECK (B15) BRAKE SWITCH NO. 1 SIGNAL CIRCUIT FOR A SHORT TO GROUND

Turn the ignition off.

Disconnect the Stop Lamp Switch harness connector.

Measure the resistance of the (B15) Brake Switch No. 1 Signal circuit between ground and the Anti-Lock Brakes Module harness connector.

Is the resistance below 10k ohms?

Yes >> Repair the (B15) Brake Switch No. 1 Signal circuit for a short to ground.

Perform ABS VERIFICATION TEST - VER 1. (Refer to 5 - BRAKES - STANDARD PROCEDURE).

No >> Go To 6

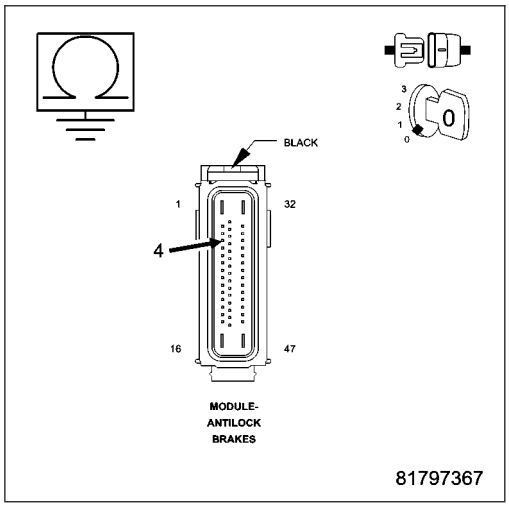

6. CHECK (B15) BRAKE SWITCH NO. 1 SIGNAL CIRCUIT (GAS) FOR A OPEN GROUND

Measure the resistance on the (Z940) Ground circuit and ground in the Stop Lamp Switch harness connector.

Is the resistance below 5 ohms?

Yes >> Replace the Stop Lamp Switch in accordance with the Service Information.

Perform ABS VERIFICATION TEST - VER 1 (Refer to 5 - BRAKES - STANDARD PROCEDURE).

No >> Repair the open in the (Z940) Ground circuit.

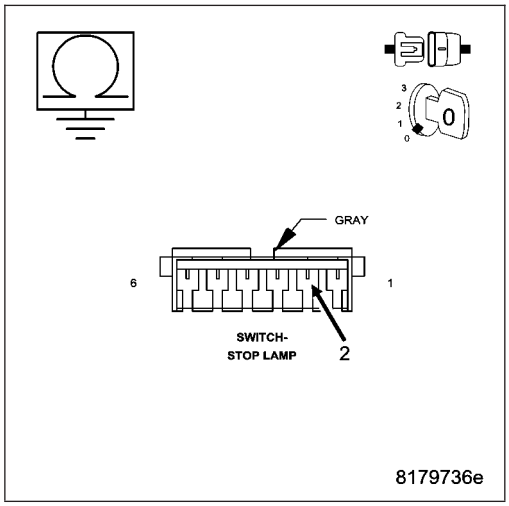

7. CHECK BRAKE PEDAL ADJUSTMENT

- Reconnect the Stop Lamp Switch harness connector.

Using a 12-volt test light connected to 12 volts, backprobe the (B15) Brake Switch No. 1 Signal circuit in the Stop Lamp Switch harness connector.

Depress and release the brake pedal.

Does the test light illumination toggle from off to on within 4–5 mm of brake pedal travel?

Yes >> Replace the Anti-Lock Bakes Module in accordance with the Service Information.

Perform ABS VERIFICATION TEST - VER 1. (Refer to 5 - BRAKES - STANDARD PROCEDURE).

No >> Replace the Stop Lamp Switch in accordance with the Service Information.

Perform ABS VERIFICATION TEST - VER 1. (Refer to 5 - BRAKES - STANDARD PROCEDURE).

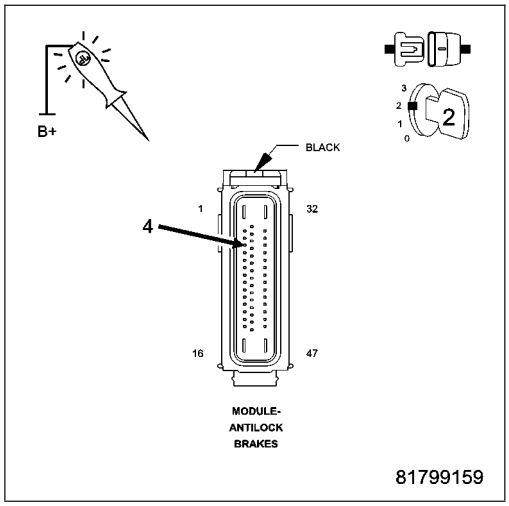

C107D-BRAKE PEDAL SWITCH 1/2 CORRELATION

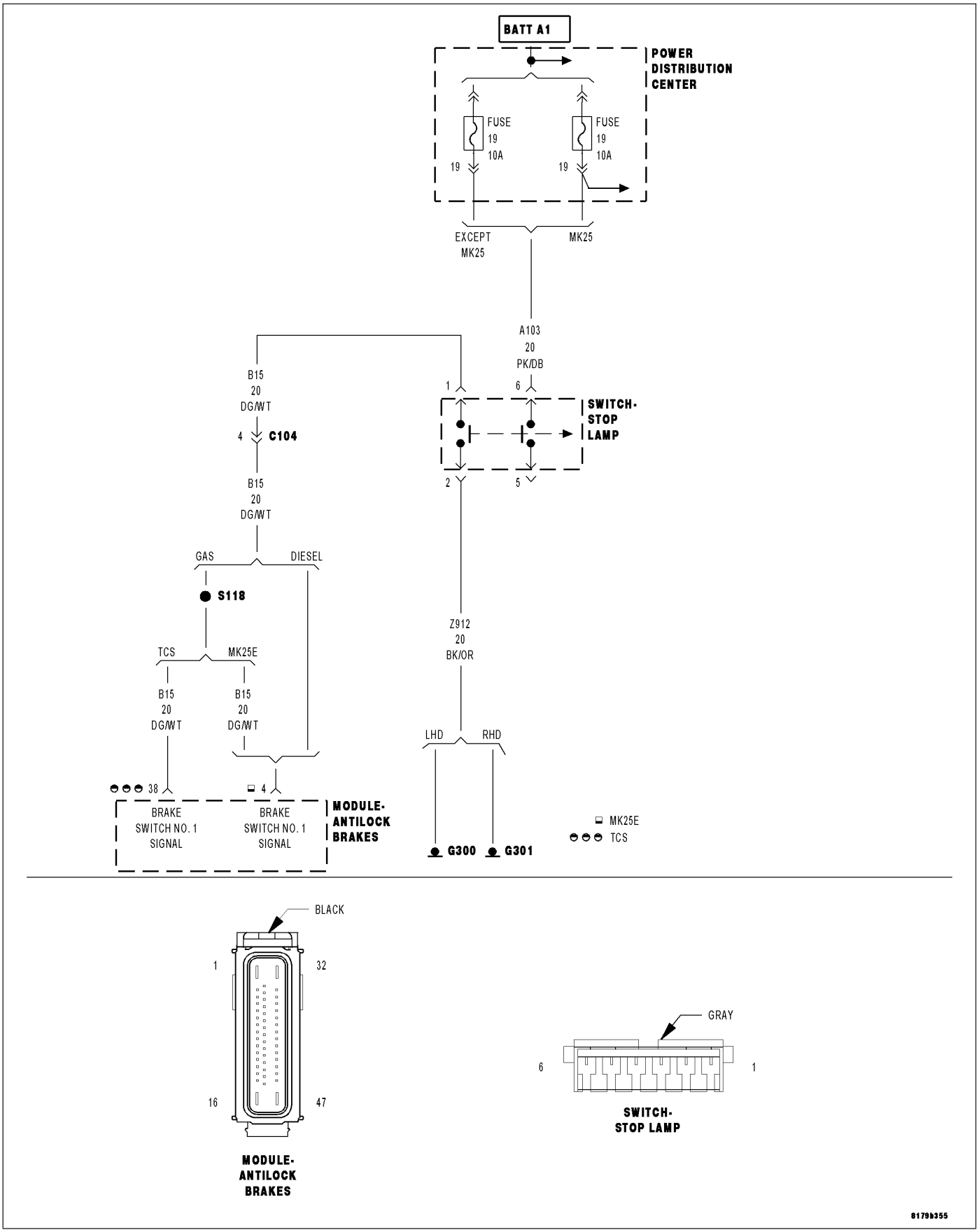

For a complete wiring diagram **Refer to Section 8W**.

- **When Monitored:**
  When the vehicle is driven.
- **Set Condition:**
  If the Anti-Lock Brakes Module detects an implausible signal from the Stop Lamp Switch.

Possible Causes
WIRING HARNESS, TERMINAL, CONNECTOR DAMAGE
STOP LAMP RELATED DTCs OR SYMPTOMS PRESENT (F942 CIRCUIT/FUSE OPEN)
MISADJUSTED PEDAL SWITCH
(B15) BRAKE SWITCH NO. 1 SIGNAL CIRCUIT SHORTED TO GROUND
(B15) BRAKE SWITCH NO. 1 SIGNAL CIRCUIT OPEN
STOP LAMP SWITCH
ANTI-LOCK BRAKES MODULE

Diagnostic Test

1. VERIFY DTC IS ACTIVE

NOTE: Diagnose and repair all Pressure Sensor and Voltage related DTCs and all Stop Lamp related DTCs and symptoms before diagnosing this DTC.
Turn the ignition on.
With the scan tool, read ABS DTCs.
With the scan tool, read and record Environmental Data (EV Data).
With the scan tool, erase DTCs.
Cycle the ignition switch.

WARNING: Ensure brake capability is available before road testing.
Test drive the vehicle as follows: Drive for more than 6 minutes at a speed greater than 40 km/h (25 m.p.h.) and accelerate to a speed greater than 40 km/h (25 m.p.h.) and then decelerate to a speed lower than 3 km/h (2 m.p.h.) five consecutive times.
Park the vehicle.
With the scan tool, read ABS DTCs.

Does this DTC reset?

Yes >> Go To 2

No >> Perform the ABS Intermittent Condition diagnostic procedure in this Section.
Perform ABS VERIFICATION TEST - VER 1. (Refer to 5 - BRAKES - STANDARD PROCEDURE).

2. INSPECT RELATED WIRING HARNESS, TERMINALS, & CONNECTORS

Turn the ignition off.
Visually inspect the related wiring harness. Look for any pinched, chafed, pierced, and partially broken wires.
Visually inspect the related wiring harness connectors. Look for broken, bent, pushed out, and corroded terminals.

Were any problems found?

Yes >> Repair as necessary.
Perform ABS VERIFICATION TEST - VER 1. (Refer to 5 - BRAKES - STANDARD PROCEDURE).

No >> Go To 3

3. CHECK (B15) BRAKE SWITCH NO. 1 SIGNAL CIRCUIT FUNCTION WHILE DEPRESSING & RELEASING THE BRAKE PEDAL

Disconnect the Anti-Lock Brakes Module harness connector.

Turn the ignition on.

Using a 12-volt test light connected to 12 volts, backprobe the (B15) Brake Switch No. 1 Signal circuit in the Anti-Lock Brakes Module harness connector.

Depress and release the brake pedal.

Does the test light illumination toggle from off to on?

Yes >> Go To 7

No >> Go To 4

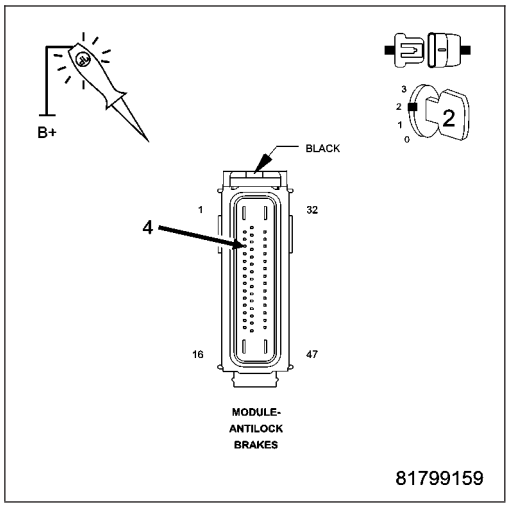

4. CHECK (B15) BRAKE SWITCH NO. 1 SIGNAL CIRCUIT FOR A SHORT TO GROUND

Turn the ignition off.

Disconnect the Stop Lamp Switch harness connector.

Measure the resistance of the (B15) Brake Switch No. 1 Signal circuit between ground and the Anti-Lock Brakes Module harness connector.

Is the resistance below 5.0 ohms?

Yes >> Repair the (B15) Brake Switch No. 1 Signal circuit for a short to ground.

Perform ABS VERIFICATION TEST - VER 1. (Refer to 5 - BRAKES - STANDARD PROCEDURE).

No >> Go To 5

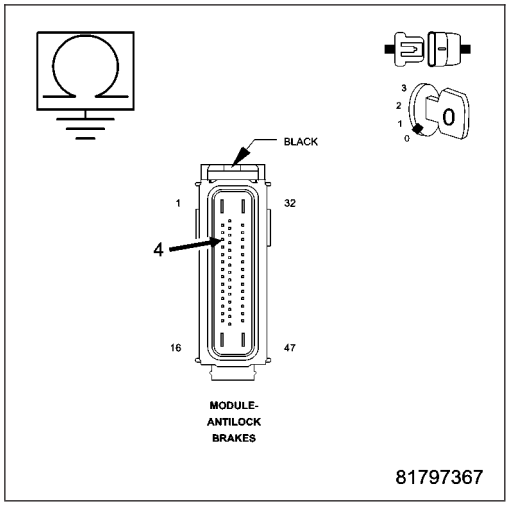

5. CHECK (B15) BRAKE SWITCH NO. 1 SIGNAL CIRCUIT FOR AN OPEN

Measure the resistance of the (B15) Brake Switch No. 1 Signal circuit between the Anti-Lock Brakes Module harness connector and the Stop Lamp Switch harness connector.

Is the resistance below 5.0 ohms?

Yes >> Go To 6

No >> Repair the (B15) Brake Switch No. 1 Signal circuit for an open.

Perform ABS VERIFICATION TEST - VER 1. (Refer to 5 - BRAKES - STANDARD PROCEDURE).

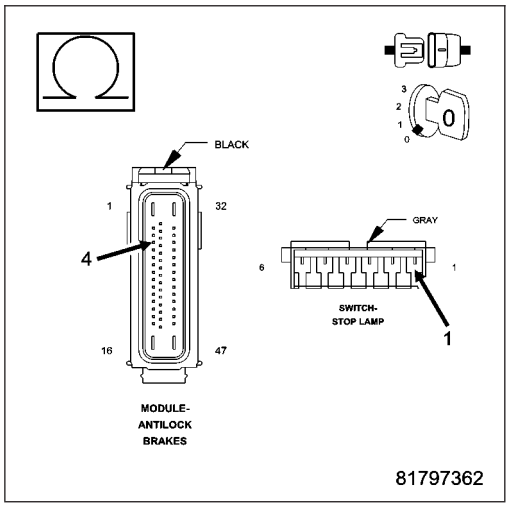

6. CHECK (B15) BRAKE SWITCH NO. 1 SIGNAL CIRCUIT FOR A OPEN GROUND

Measure the resistance on the (Z912) Ground circuit and ground in the Stop Lamp Switch harness connector.

Is the resistance below 5 ohms?

Yes >> Replace the Stop Lamp Switch in accordance with the Service Information.
Perform ABS VERIFICATION TEST - VER 1 (Refer to 5 - BRAKES - STANDARD PROCEDURE).

No >> Repair the open in the (Z912) Ground circuit.

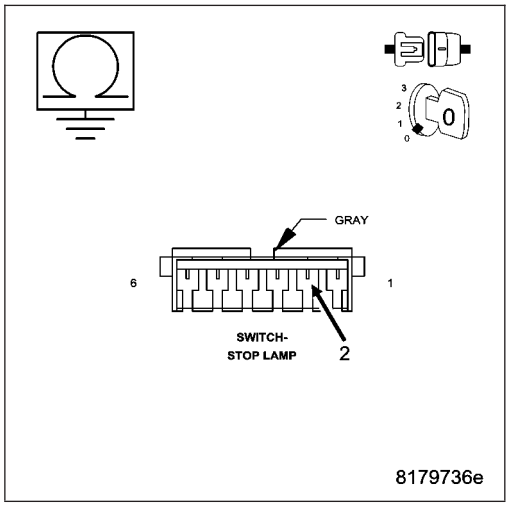

7. CHECK BRAKE PEDAL ADJUSTMENT

- Reconnect the Stop Lamp Switch harness connector.

Using a 12-volt test light connected to 12 volts, backprobe the (B15) Brake Switch No. 1 Signal circuit in the Stop Lamp Switch harness connector.

urn the ignition on.

Depress and release the brake pedal.

Does the test light illumination toggle from off to on within 4–5 mm of brake pedal travel?

Yes >> Replace the Anti-Lock Bakes Module in accordance with the Service Information.
Perform ABS VERIFICATION TEST - VER 1. (Refer to 5 - BRAKES - STANDARD PROCEDURE).

No >> Replace the Stop Lamp Switch in accordance with the Service Information.
Perform ABS VERIFICATION TEST - VER 1. (Refer to 5 - BRAKES - STANDARD PROCEDURE).

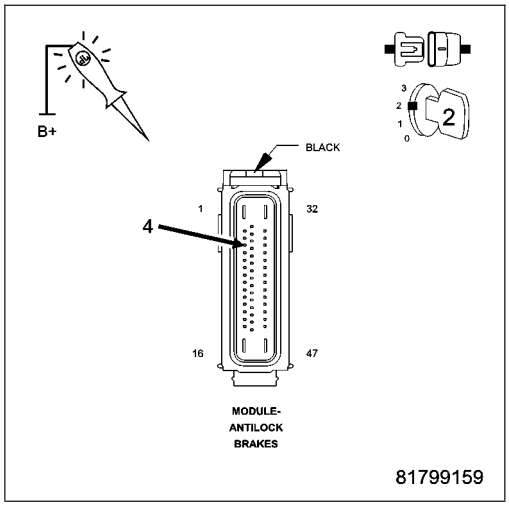

C1210–G SENSOR INPUT CIRCUIT PERFORMANCE

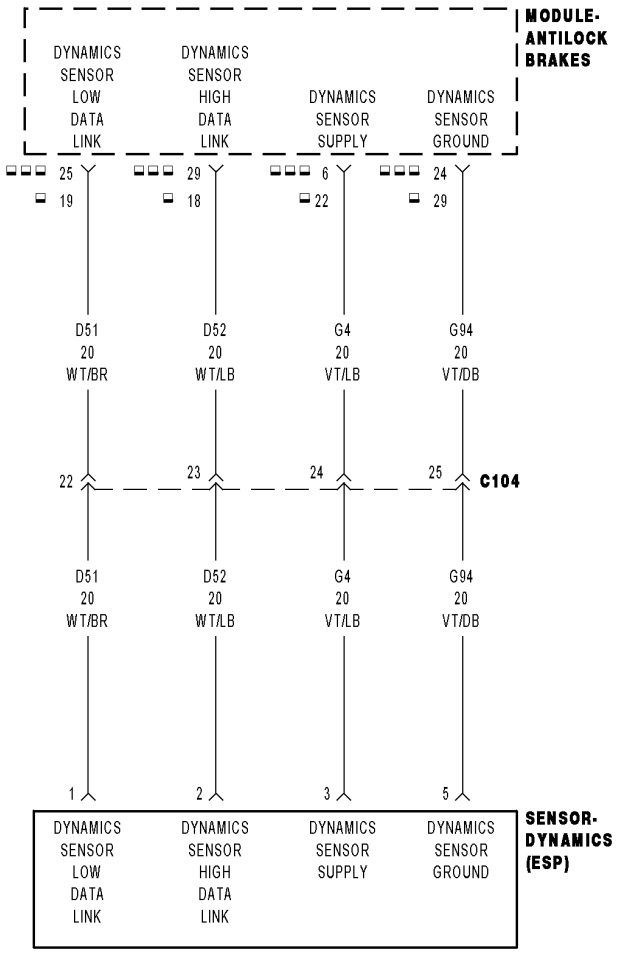

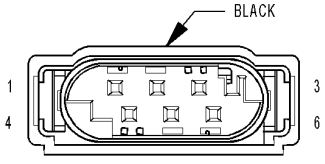

SENSOR-
DYNAMICS
(ESP)

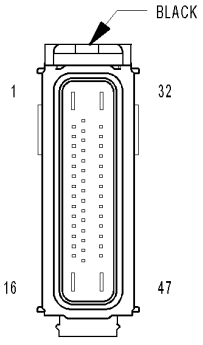

MODULE-
ANTILOCK
BRAKES

8179b247

For a complete wiring diagram **Refer to Section 8W**.

- **When Monitored:**
  Continuously, with ignition on, until vehicle speed exceeds 20 km/h (12.4 m.p.h.) for the first time, but not if the sensor voltage is out of range.
  Or, during diagnostic mode.
  Or, if the monitoring was inhibited by a corresponding diagnostics command.
- **Set Condition:**
  If the measured acceleration signal is higher than 0.8 g for longer than the specified detection time.

Possible Causes
WIRING HARNESS, TERMINAL, CONNECTOR DAMAGE
(G4) DYNAMICS SENSOR SUPPLY HIGH RESISTANCE
(G94) GROUND CIRCUIT HIGH RESISTANCE
DYNAMICS SENSOR INSTALLATION
DYNAMICS SENSOR
ANTI-LOCK BRAKES MODULE

Diagnostic Test

1. CHECK FOR A DTC C1210–G SENSOR INPUT CIRCUIT PERFORMANCE

NOTE: This DTC must be active for the results of this test to be valid.
Turn the ignition on.
With the scan tool, read and record DTCs.
With the scan tool, read and record Freeze Frame information.
With the scan tool, erase DTCs.
Cycle the ignition switch from off to on.
With the scan tool, read and record DTCs.

Does the scan tool display: C1210–G SENSOR INPUT CIRCUIT PERFORMANCE?

Yes >> Go To 2

No >> Refer to the INTERMITTENT CONDITION diagnostic procedure.
Perform ABS VERIFICATION TEST - VER 1. (Refer to 5 - BRAKES - STANDARD PROCEDURE).

2. CHECK THE TERMINALS/CONNECTORS/WIRING HARNESS FOR DAMAGE

Check the Steering Angle Sensor installation.
Check all related wiring for bruised, chafed, pierced, or partially broken wires.
Check all related connectors for broken, bent, pushed out, or corroded terminals.

Were any problems found?

Yes >> Repair as necessary.
Perform ABS VERIFICATION TEST - VER 1. (Refer to 5 - BRAKES - STANDARD PROCEDURE).

No >> Go To 3

3. (G4) DYNAMICS SENSOR SUPPLY HIGH RESISTANCE

Turn the ignition off.

Disconnect the Dynamics Sensor harness connector.

Disconnect the Anti-Lock Brakes Module harness connector.

Measure the resistance of the (G4) Dynamics Sensor Supply circuit between the Dynamics Sensor harness connector and the Anti-Lock Brakes Module harness connector.

Is the resistance below 5.0 ohms?

Yes >> Go To 4

No >> Repair the (G4) Dynamics Sensor Supply circuit for high resistance.
Perform ABS VERIFICATION TEST - VER 1. (Refer to 5 - BRAKES - STANDARD PROCEDURE).

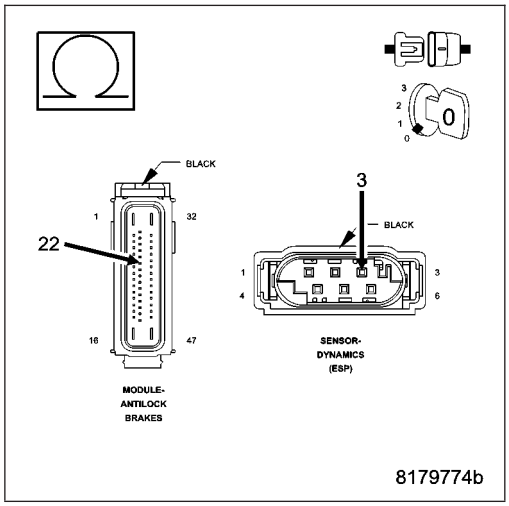

4. (G94) GROUND CIRCUIT HIGH RESISTANCE

Turn the ignition off.

Measure the resistance between the (G94) Ground circuit and ground.

Is the resistance below 5.0 ohms?

Yes >> Go To 5

No >> Repair the (G94) Ground circuit for high resistance.
Perform ABS VERIFICATION TEST - VER 1. (Refer to 5 - BRAKES - STANDARD PROCEDURE).

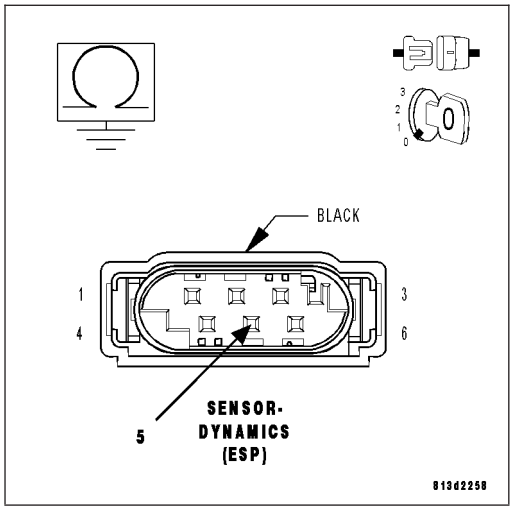

5. CHECK THE DYNAMICS SENSOR INSTALLATION

NOTE: Dynamics Sensor installation and mounting bolt torque is crucial for proper operation.

Turn the ignition off.

Check the Dynamics Sensor for damaged, modified, and bent mounting brackets.

Check the Dynamics Sensor mounting bolts for a loose or over tightened condition.

Were any problems found?

Yes >> Repair as necessary.
Perform ABS VERIFICATION TEST - VER 1. (Refer to 5 - BRAKES - STANDARD PROCEDURE).

No >> Replace the Dynamics Sensor in accordance with the Service Information.
Perform ABS VERIFICATION TEST - VER 1. (Refer to 5 - BRAKES - STANDARD PROCEDURE).

C1219-STEERING ANGLE SENSOR ERRATIC PERFORMANCE

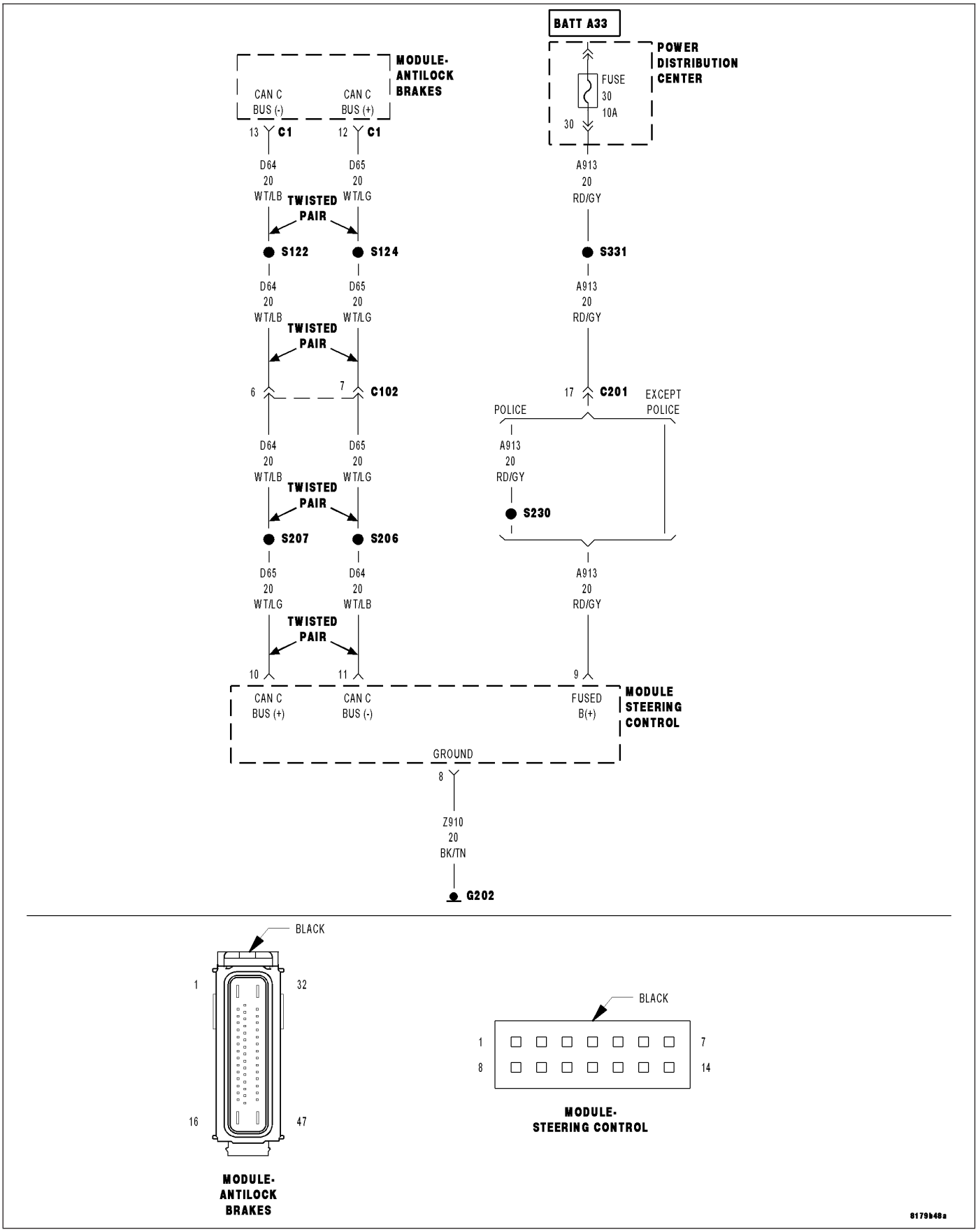

For a complete wiring diagram **Refer to Section 8W**.

- **When Monitored:**
  With the ignition on.
- **Set Condition:**
  If the Anti-Lock Brake Module detects that the calculated steering wheel angle exceeds what is physically possible.

Possible Causes
VEHICLE DAMAGE
STEERING COLUMN / INTERMEDIATE SHAFT DAMAGE
STEERING WHEEL ALIGNMENT
STEERING ANGLE SENSOR LOOSE
STEERING ANGLE SENSOR IMPROPERLY INSTALLED (WRONG MOUNTING POSITION)
WIRING HARNESS, TERMINAL, CONNECTOR DAMAGE
(A913) FUSED IGNITION SWITCH OUTPUT (RUN-ACC) CIRCUIT HIGH RESISTANCE
(Z910) GROUND CIRCUIT HIGH RESISTANCE
STEERING ANGLE SENSOR
ANTI-LOCK BRAKES MODULE

Diagnostic Test

1. PERFORM TEST DRIVE & VERIFY DTC IS STILL ACTIVE

Turn the ignition on.

With the scan tool, erase ABS DTCs.

Cycle the ignition switch.

WARNING: Ensure brake capability is available before road testing.

Test drive the vehicle by turning the vehicle left or right in a curving manner at a velocity between 10 and 25 km/hr (6 and 15 m.p.h.).

Park the vehicle.

With the scan tool, read ABS DTCs.

Does this DTC reset?

Yes >> Go To 2

No >> Refer to the INTERMITTENT CONDITION diagnostic procedure.
Perform ABS VERIFICATION TEST - VER 1. (Refer to 5 - BRAKES - STANDARD PROCEDURE).

2. INSPECT VEHICLE, STEERING COLUMN, & INTERMEDIATE SHAFT FOR DAMAGE

NOTE: If possible, check vehicle repair history for collision damage.

Turn the ignition off.

Inspect the vehicle for damage causing tracking problems or steering wheel misalignment.

Inspect the steering column and intermediate shaft for damage.

Were any problems found?

Yes >> Repair as necessary.
Perform ABS VERIFICATION TEST - VER 1. (Refer to 5 - BRAKES - STANDARD PROCEDURE).

No >> Go To 3

3. CHECK STEERING ANGLE SENSOR OUTPUT

Start the engine.

Turn the steering wheel so wheels point in a straight ahead position.

With the scan tool, read the Steering Angle Sensor Position.

Is the Steering Angle Sensor Position within ± 15° degrees?

Yes >> Go To 8

No >> Go To 4

4. CHECK STEERING ANGLE SENSOR INSTALLATION

WARNING: To avoid personal injury or death, on vehicles equipped with airbags, disable the supplemental restraint system before attempting any steering wheel, steering column, airbag, occupant classification system, seat belt tensioner, impact sensor, or instrument panel component diagnosis or service. Disconnect and isolate the battery negative (ground) cable, then wait two minutes for the system capacitor to discharge before performing further diagnosis or service. This is the only sure way to disable the supplemental restraint system. Failure to take the proper precautions could result in accidental airbag deployment.

NOTE: Proper Steering Angle Sensor installation is crucial for proper operation.

Verify that the Steering Angle Sensor are properly installed.

Is the Steering Angle Sensor properly installed?

Yes >> Go To 5

No >> Repair as necessary and clear offsets by initializing ECU with wheels pointing straight ahead.
Perform ABS VERIFICATION TEST - VER 1. (Refer to 5 - BRAKES - STANDARD PROCEDURE).

5. INSPECT RELATED WIRING HARNESS, TERMINALS, & CONNECTORS

WARNING: To avoid personal injury or death, on vehicles equipped with airbags, disable the supplemental restraint system before attempting any steering wheel, steering column, airbag, occupant classification system, seat belt tensioner, impact sensor, or instrument panel component diagnosis or service. Disconnect and isolate the battery negative (ground) cable, then wait two minutes for the system capacitor to discharge before performing further diagnosis or service. This is the only sure way to disable the supplemental restraint system. Failure to take the proper precautions could result in accidental airbag deployment.

NOTE: A low voltage condition at the Steering Angle Sensor will cause this DTC to set.

Check all related wiring for pinched, chafed, pierced, and partially broken wires.

Check all related connectors for broken, bent, pushed out, and corroded terminals.

Were any problems found?

Yes >> Repair as necessary.
Perform ABS VERIFICATION TEST - VER 1. (Refer to 5 - BRAKES - STANDARD PROCEDURE).

No >> Go To 6

6. CHECK (A913) FUSED IGNITION SWITCH OUTPUT (RUN-ACC) CIRCUIT FOR HIGH RESISTANCE

Disconnect the Steering Angle Sensor harness connector.

Turn the ignition on.

Measure the voltage of the (A913) Fused Ignition Switch Output (Run-ACC) circuit.

Is the voltage above 11.0 volts?

Yes >> Go To 7

No >> Repair the (A913) Fused Ignition Switch Output (Run-ACC) circuit for high resistance.
Perform ABS VERIFICATION TEST - VER 1. (Refer to 5 - BRAKES - STANDARD PROCEDURE).

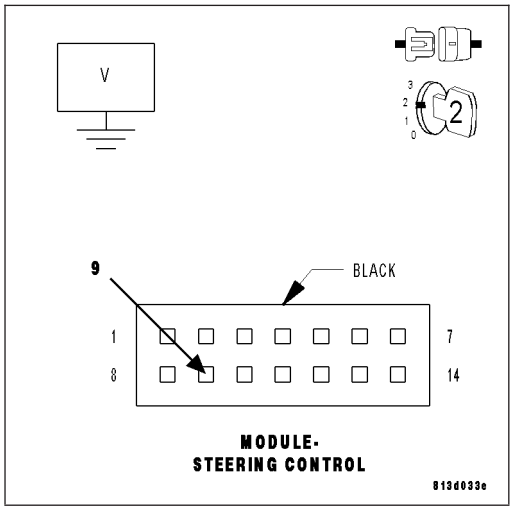

7. CHECK (Z910) GROUND CIRCUIT FOR HIGH RESISTANCE

Turn the ignition off.

Measure the resistance of the (Z910) Ground circuit between ground and the Steering Angle Sensor harness connector.

Is the resistance below 5.0 ohms?

Yes >> Replace the Steering Angle Sensor in accordance with the Service Information and clear offsets by initializing ECU with wheels pointing straight ahead. Refer to ABS VERIFICATION TEST - VER 1. (Refer to 5 - BRAKES - STANDARD PROCEDURE).

No >> Repair the (Z910) Ground circuit for high resistance.
Perform ABS VERIFICATION TEST - VER 1. (Refer to 5 - BRAKES - STANDARD PROCEDURE).

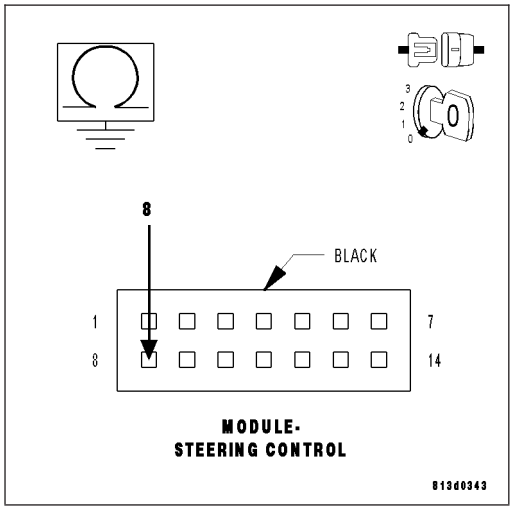

8. CHECK STEERING ANGLE SENSOR OUTPUT WHILE ROTATING THE STEERING WHEEL

With the scan tool, read the Steering Angle Sensor Position while rotating the steering wheel to the right and then to the left. The Steering Angle Sensor Position should decrease when rotating the steering wheel to the right and increase when rotating the steering wheel to the left.

Did the steering angle change accordingly?

Yes >> Replace the Anti-Lock Brake Module in accordance with the Service Information.
Perform ABS VERIFICATION TEST - VER 1. (Refer to 5 - BRAKES - STANDARD PROCEDURE).

No >> Replace the Steering Angle Sensor in accordance with the Service Information and clear offsets by initializing ECU with wheels pointing straight ahead.
Perform ABS VERIFICATION TEST - VER 1. (Refer to 5 - BRAKES - STANDARD PROCEDURE).

C121A–STEERING ANGLE SENSOR NOT INITIALIZED

For a complete wiring diagram **Refer to Section 8W**.

- **When Monitored:**
  During the Drive Test.
- **Set Condition:**
  This DTC may set with DTC C1231–DRIVE TEST: STEERING ANGLE SENSOR due to cycling of ignition several times or entering and exiting diagnostics several times.

Refer to **C1231–DRIVE TEST: STEERING ANGLE SENSOR** in this Section for the diagnostic test procedure.

C121C–TORQUE REQUEST SIGNAL DENIED

For a complete wiring diagram **Refer to Section 8W**.

- **When Monitored:**
  With the ignition on.
- **Set Condition:**
  When the Anti-Lock Brake Module indicates if engine management relevant for Automatic Yaw Control/Traction Control System control can be accomplished.

Possible Causes
ANTI-LOCK BRAKE MODULE
POWERTRAIN CONTROL MODULE

Diagnostic Test

1. CHECK FOR A DTC C121C-TORQUE REQUEST SIGNAL DENIED

NOTE: This DTC must be active for the results of this test to be valid and this DTC may set while driving under severe load conditions.

Turn the ignition on.

With the scan tool, read and record DTCs.

With the scan tool, read and record Freeze Frame information.

With the scan tool, erase DTCs.

Cycle the ignition switch from off to on.

Start Engine.

With the scan tool, read and record DTCs.

Does the scan tool display: C121C-TORQUE REQUEST SIGNAL DENIED?

Yes >> Go To 2

No >> Refer to the INTERMITTENT CONDITION diagnostic procedure.
Perform ABS VERIFICATION TEST - VER 1. (Refer to 5 - BRAKES - STANDARD PROCEDURE).

2. CHECK THE POWERTRAIN DTCs

With the scan tool, read and record Powertrain DTCs.

Were any Powertrain ESP related DTCs found?

Yes >> Replace the Powertrain Module in accordance with the Service Information.
Perform the POWERTRAIN VERIFICATION TEST. (Refer to 9 - ENGINE - STANDARD PROCEDURE)

No >> Replace the Anti-Lock Brake Module in accordance with the Service Information.
Perform ABS VERIFICATION TEST - VER 1. (Refer to 5 - BRAKES - STANDARD PROCEDURE).

C121D-BRAKE PRESSURE SENSOR CIRCUIT

For a complete wiring diagram **Refer to Section 8W**.

- **When Monitored:**
  With the ignition on.
- **Set Condition:**
  When the Anti-Lock Brake Module indicates that the Brake Pressure Sensor Signal is out of range.

Possible Causes
ANTI-LOCK BRAKE MODULE
INTEGRATED CONTROL MODULE

Diagnostic Test

1. CHECK FOR A DTC C121D-BRAKE PRESSURE SENSOR CIRCUIT

NOTE: This DTC must be active for the results of this test to be valid.
Turn the ignition on.
With the scan tool, read and record DTCs.
With the scan tool, read and record Freeze Frame information.
With the scan tool, erase DTCs.
Start the engine.
Depress and release the brake pedal.
With the scan tool, read and record DTCs.

Does the scan tool display: C121D-BRAKE PRESSURE SENSOR CIRCUIT?

Yes >> Go To 2

No >> Refer to the INTERMITTENT CONDITION diagnostic procedure.
Perform ABS VERIFICATION TEST - VER 1. (Refer to 5 - BRAKES - STANDARD PROCEDURE).

2. RECHECK FOR A DTC C121D-BRAKE PRESSURE SENSOR CIRCUIT

Turn the ignition on.
With the scan tool, read and record DTCs.
With the scan tool, read and record Freeze Fame information.
With the scan tool, erase DTCs.
Start the engine.
Depress and release the brake pedal.
With the scan tool, read and record DTCs.

Does the scan tool display: C121D-BRAKE PRESSURE SENSOR CIRCUIT?

Yes >> Replace the ICU in accordance with the Service Information.
Perform ABS VERIFICATION TEST - VER 1. (Refer to 5 - BRAKES - STANDARD PROCEDURE).

No >> Test complete

C121E-BRAKE PRESSURE SENSOR COMPARATIVE PERFORMANCE

For a complete wiring diagram **Refer to Section 8W**

Diagnostic Test

1. CHECK FOR A DTC C121D-BRAKE PRESSURE SENSOR CIRCUIT

NOTE: This DTC must be active for the results of this test to be valid.
Turn the ignition on.
With the scan tool, read and record DTCs.
With the scan tool, read and record Freeze Frame information.
With the scan tool, erase DTCs.
Start the engine.
Depress and release the brake pedal.
With the scan tool, read and record DTCs.

Does the scan tool display: C121D-BRAKE PRESSURE SENSOR CIRCUIT?

Yes >> Go To 2

No >> Refer to the INTERMITTENT CONDITION diagnostic procedure.
Perform ABS VERIFICATION TEST - VER 1. (Refer to 5 - BRAKES - STANDARD PROCEDURE).

2. RECHECK FOR A DTC C121D-BRAKE PRESSURE SENSOR CIRCUIT

Turn the ignition on.
With the scan tool, read and record DTCs.
With the scan tool, read and record Freeze Fame information.
With the scan tool, erase DTCs.
Start the engine.
Depress and release the brake pedal.
With the scan tool, read and record DTCs.

Does the scan tool display: C121D-BRAKE PRESSURE SENSOR CIRCUIT?

Yes >> Replace the ICU in accordance with the Service Information.
Perform ABS VERIFICATION TEST - VER 1. (Refer to 5 - BRAKES - STANDARD PROCEDURE).

No >> Test complete

C1231–DRIVE TEST: STEERING ANGLE SENSOR

For a complete wiring diagram **Refer to Section 8W**.

- **When Monitored:**
  During the Drive Test.
- **Set Condition:**
  If the Anti-Lock Brakes Module detects implausible Steering Angle Sensor data.

Possible Causes
STEERING ANGLE SENSOR INSTALLATION
STEERING ANGLE SENSOR
ANTI-LOCK BRAKES MODULE

Diagnostic Test

1. CHECK FOR A DTC C1231–DRIVE TEST: STEERING ANGLE SENSOR

NOTE: This DTC must be active for the results of this test to be valid.

NOTE: If any of the following DTCs are present they must be repaired before continuing.
DTC C1219-STEERING ANGLE SENSOR ERRATIC PERFORMANCE
DTC C121A-STEERING ANGLE SENSOR NOT INITIALIZED
DTC C123F-STEERING ANGLE SENSOR COMPARATIVE PERFORMANCE
DTC C1240-STEERING ANGLE SENSOR ANGLE OVERTRAVEL PERFORMANCE
Turn the ignition on.
With the scan tool, read and record DTCs.
With the scan tool, read and record Freeze Frame information.
Perform ECU initialization with drive test. Refer to Perform ABS VERIFICATION TEST - VER 1. (Refer to 5 - BRAKES - STANDARD PROCEDURE).
Start the engine.
With the scan tool, read and record DTCs.

Does the scan tool display: C1231–DRIVE TEST: STEERING ANGLE SENSOR?

Yes >> Go To 2

No >> Refer to the INTERMITTENT CONDITION diagnostic procedure.
Refer to the ABS-INTERMITTENT CONDITION TEST. (Refer to 5 - BRAKES - DIAGNOSIS AND TESTING)

2. VERIFY THAT THE STEERING ANGLE SENSOR IS ACTIVE ON THE BUS

With the scan tool, select ECU View.
Verify that the Steering Angle Sensor is active on the bus.

Is the Steering Angle Sensor active on the bus?

Yes >> Go To 3

No >> (Refer to 8 - ELECTRICAL/ELECTRONIC CONTROL MODULES - DIAGNOSIS AND TESTING) for No Response related diagnostic procedures.

3. CHECK STEERING ANGLE

Turn steering wheel so wheels point in a straight ahead position.

With scan tool check steering angle.

Is the Steering Angle reading within ±15 degrees?

Yes >> Go To 4

No >> Go To 5

4. CHECK STEERING ANGLE CHANGE

Turn steering wheel so wheels point in a straight ahead position.

With scan tool check steering angle.

Rotate steering wheel to the right and the degrees will decrease and rotating steering wheel to the left the degrees will increase.

Did the steering angle change accordingly?

Yes >> Replace the Anti-Lock Brake Module in accordance with the Service Information.
Perform ABS VERIFICATION TEST. (Refer to 5 - BRAKES - STANDARD PROCEDURE).

No >> Replace the Steering Angle Sensor in accordance with the Service Information and clear offsets by initializing ECU with wheels pointing straight ahead.
Perform ABS VERIFICATION TEST. (Refer to 5 - BRAKES - STANDARD PROCEDURE).

5. CHECK STEERING ANGLE SENSOR INSTALLATION

WARNING: To avoid personal injury or death, on vehicles equipped with airbags, disable the supplemental restraint system before attempting any steering wheel, steering column, airbag, occupant classification system, seat belt tensioner, impact sensor, or instrument panel component diagnosis or service. Disconnect and isolate the battery negative (ground) cable, then wait two minutes for the system capacitor to discharge before performing further diagnosis or service. This is the only sure way to disable the supplemental restraint system. Failure to take the proper precautions could result in accidental airbag deployment.

NOTE: Proper Steering Angle Sensor installation is crucial for proper operation.

Turn the ignition off.

Verify that the Steering Angle Sensor is properly installed. Refer to 8 - ELECTRICAL/RESTRAINTS/CLOCKSPRING - INSTALLATION.

Is the Steering Angle Sensor properly installed?

Yes >> Replace the Anti-Lock Brake Module in accordance with the Service Information.
Perform ABS VERIFICATION TEST. (Refer to 5 - BRAKES - STANDARD PROCEDURE).

No >> Repair as necessary and clear offsets by initializing ECU with wheels pointing straight ahead.
Perform ABS VERIFICATION TEST. (Refer to 5 - BRAKES - STANDARD PROCEDURE).

C1232–DRIVE TEST: PRESSURE SENSOR

For a complete wiring diagram **Refer to Section 8W**.

- **When Monitored:**
  During the Drive Test.
- **Set Condition:**
  If the Pressure Sensor fails to activate.

Possible Causes
HYDRAULIC / BRAKE SYSTEM COMPONENT INSTALLATION
INTEGRATED CONTROL UNIT
PRESSURE SENSOR (HYDRAULIC CONTROL UNIT)

Diagnostic Test

1. CHECK FOR A DTC C1232–DRIVE TEST: PRESSURE SENSOR

NOTE: This DTC must be active for the results of this test to be valid.
Turn the ignition on.

With the scan tool, read and record DTCs.

With the scan tool, read and record Freeze Frame information.

Perform ECU initialization with drive test. Refer to ABS VERIFICATION TEST. (Refer to 5 - BRAKES - STANDARD PROCEDURE).

Start the engine.

With the scan tool, read and record DTCs.

Does the scan tool display: C1232–DRIVE TEST: PRESSURE SENSOR?

Yes >> Go To 2

No >> Refer to the INTERMITTENT CONDITION diagnostic procedure.
Refer to the ABS-INTERMITTENT CONDITION TEST. (Refer to 5 - BRAKES - DIAGNOSIS AND TESTING)

2. CHECK HYDRAULIC SYSTEM & BRAKE SYSTEM COMPONENT INSTALLATION & FUNCTION

Verify that the Anti-Lock Brakes Module and Hydraulic Control Unit are properly installed.

Verify that the hydraulic system is properly filled and bled.

Verify that the brake system components are installed and functioning properly.

Were any problems found?

Yes >> Repair as necessary.
Perform ABS VERIFICATION TEST. (Refer to 5 - BRAKES - STANDARD PROCEDURE).

No >> Clean contacts in HCU first if problem reoccurs replace the Integrated Control Unit in accordance with the Service Information.
Perform ABS VERIFICATION TEST. (Refer to 5 - BRAKES - STANDARD PROCEDURE).

C1234–DRIVE TEST: SENSOR CLUSTER INSTALLATION

For a complete wiring diagram **Refer to Section 8W**.

- **When Monitored:**
  During the Drive Test.
- **Set Condition:**
  If the Anti-Lock Brakes Module detects implausible Dynamics Sensor data.

Possible Causes
DYNAMICS SENSOR INSTALLATION
DYNAMICS SENSOR
ANTI-LOCK BRAKES MODULE

Diagnostic Test

1. CHECK FOR A DTC C1234–DRIVE TEST: SENSOR CLUSTER INSTALLATION

NOTE: This DTC must be active for the results of this test to be valid.
Turn the ignition on.
With the scan tool, read and record DTCs.
With the scan tool, read and record Freeze Frame information.
Perform ECU initialization with drive test. Refer to ABS VERIFICATION TEST. (Refer to 5 - BRAKES - STANDARD PROCEDURE).
Start the engine.
With the scan tool, read and record DTCs.

Does the scan tool display: C1234–DRIVE TEST: SENSOR CLUSTER INSTALLATION?

Yes >> Go To 2

No >> Refer to the INTERMITTENT CONDITION diagnostic procedure.
Refer to the ABS-INTERMITTENT CONDITION TEST. (Refer to 5 - BRAKES - DIAGNOSIS AND TESTING)

2. CHECK THE DYNAMICS SENSOR INSTALLATION

NOTE: Dynamics Sensor installation and mounting bolt torque is crucial for proper operation.
Turn the ignition off.
Check the Dynamics Sensor for damaged, modified, and bent mounting brackets.
Check the Dynamics Sensor mounting bolts for a loose or over tightened condition.

Were any problems found?

Yes >> Repair as necessary.
Perform ABS VERIFICATION TEST. (Refer to 5 - BRAKES - STANDARD PROCEDURE).

No >> Replace the Dynamics Sensor in accordance with the Service Information.
Perform ABS VERIFICATION TEST. (Refer to 5 - BRAKES - STANDARD PROCEDURE).

C1238-DRIVE TEST: UNSUCCESSFUL

For a complete wiring diagram **Refer to Section 8W**.

- **When Monitored:**
  During the Drive Test.
- **Set Condition:**
  If the Anti-Lock Brakes Module detects a fault with the Steering Angle Sensor, the Pressure Sensor, or the Dynamics Sensor.

Possible Causes
STEERING ANGLE SENSOR
PRESSURE SENSOR
DYNAMICS SENSOR
ANTI-LOCK BRAKES MODULE

Diagnostic Test

1. DIAGNOSE & REPAIR ALL DTCs

Repair

Diagnose and repair all DTCs.

C1239–EMISSIONS ROLLS TEST ACTIVE

For a complete wiring diagram **Refer to Section 8W**.

Theory of Operation

The functional effects are that the output signal for all wheel speeds mimic the wheel with the highest wheel speed.

This DTC sets when the Emissions Rolls Test is active.

Close out the Emissions Rolls Test though the FCM.

C123A-ESP SYSTEM SENSORS CALIBRATION

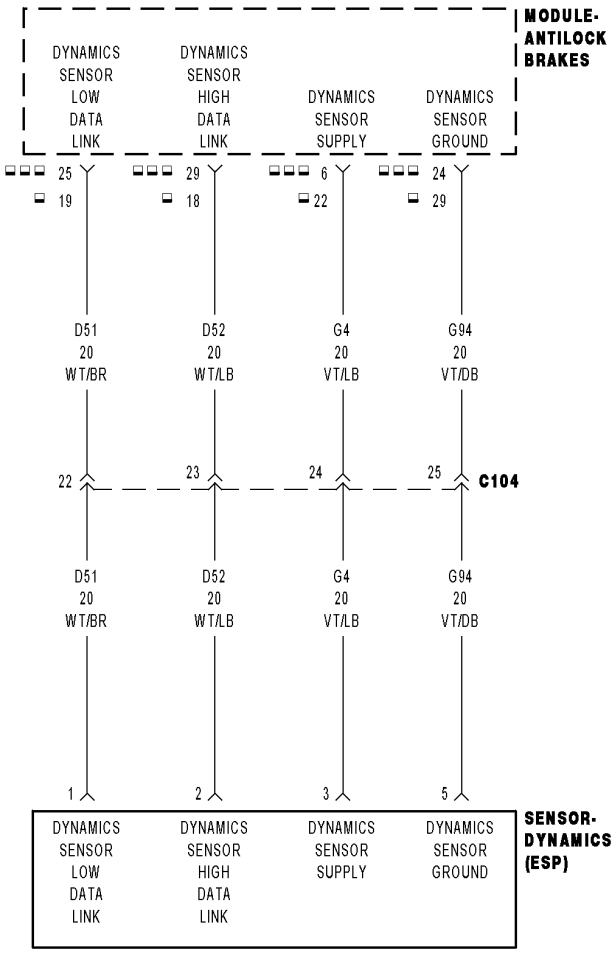

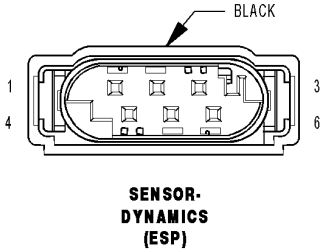

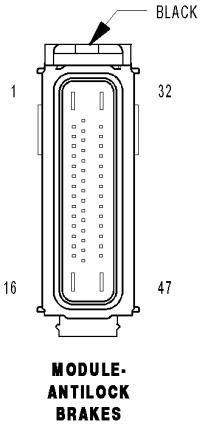

8179b247

For a complete wiring diagram **Refer to Section 8W**.

- **When Monitored:**
  Once per ignition cycle.
- **Set Condition:**
  If the calculated checksum does not match the stored checksum.

Possible Causes
ANTI-LOCK BRAKES MODULE

Diagnostic Test

1. INITIALIZE ANTI-LOCK BRAKES MODULE

Initialize ECU refer to ABS VERIFICATION TEST - VER 1. (Refer to 5 - BRAKES - STANDARD PROCEDURE).

Does this DTC reset?

Yes >> Replace the Anti-Lock Brake Module in accordance with the Service Information.
Perform ABS VERIFICATION TEST - VER 1. (Refer to 5 - BRAKES - STANDARD PROCEDURE).

No >> Test complete.

C123B-ESP SYSTEM CONTROL TOO LONG

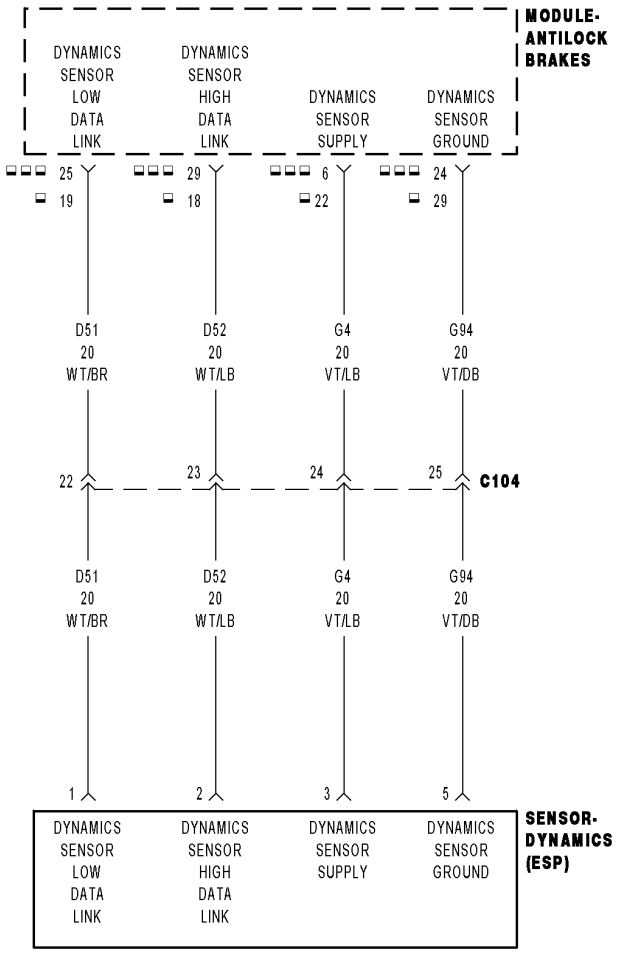

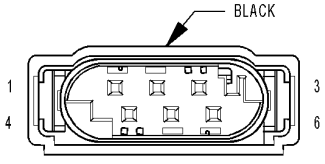

SENSOR-
DYNAMICS
(ESP)

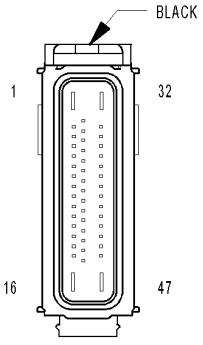

MODULE-
ANTILOCK
BRAKES

8179b247

For a complete wiring diagram **Refer to Section 8W**.

- **When Monitored:**
  With the ignition on.
- **Set Condition:**
  When the Anti-Lock Brake Module indicates ESP control lasting longer the 15 seconds.

Possible Causes
HYDRAULIC/BRAKE ISSUE
DYNAMICS SENSOR
INTEGRATED CONTROL MODULE

Diagnostic Test

1. VERIFY DTC IS ACTIVE

NOTE: If other DTC's are set they must be repaired before continuing. This DTC must be active for the results of this test to be valid and this DTC may set while driving under excessive driving conditions.
Turn the ignition on.
With the scan tool, read and record ABS DTCs.
With the scan tool, read and record Environmental Data (EV Data).
With the scan tool, erase ABS DTCs.
Cycle the ignition switch.

WARNING: Ensure brake capability is available before road testing.
Test drive the vehicle by turning the vehicle left or right in a curving manner at a velocity between 10 and 20 km/hr (6 and 12 m.p.h.).
Park the vehicle.
With the scan tool, read ABS DTCs.

Does this DTC reset?

Yes >> Go To 2

No >> Perform the ABS Intermittent Condition diagnostic procedure in this Section.
Perform ABS VERIFICATION TEST - VER 1. (Refer to 5 - BRAKES - STANDARD PROCEDURE).

2. CHECK HYDRAULIC SYSTEM & BRAKE SYSTEM COMPONENT INSTALLATION & FUNCTION

Verify that the Anti-Lock Brakes Module and Hydraulic Control Unit are properly installed.
Verify that the hydraulic system is properly filled and bled.
Verify that the brake system components are installed and functioning properly.

Were any problems found?

Yes >> Repair as necessary.
Perform ABS VERIFICATION TEST - VER 1. (Refer to 5 - BRAKES - STANDARD PROCEDURE).

No >> Replace the Dynamics Sensor in accordance with the Service Information.
Perform ABS VERIFICATION TEST - VER 1. (Refer to 5 - BRAKES - STANDARD PROCEDURE).

C123C-DYNAMICS SENSOR MOUNTING/INSTALLATION PERFORMANCE

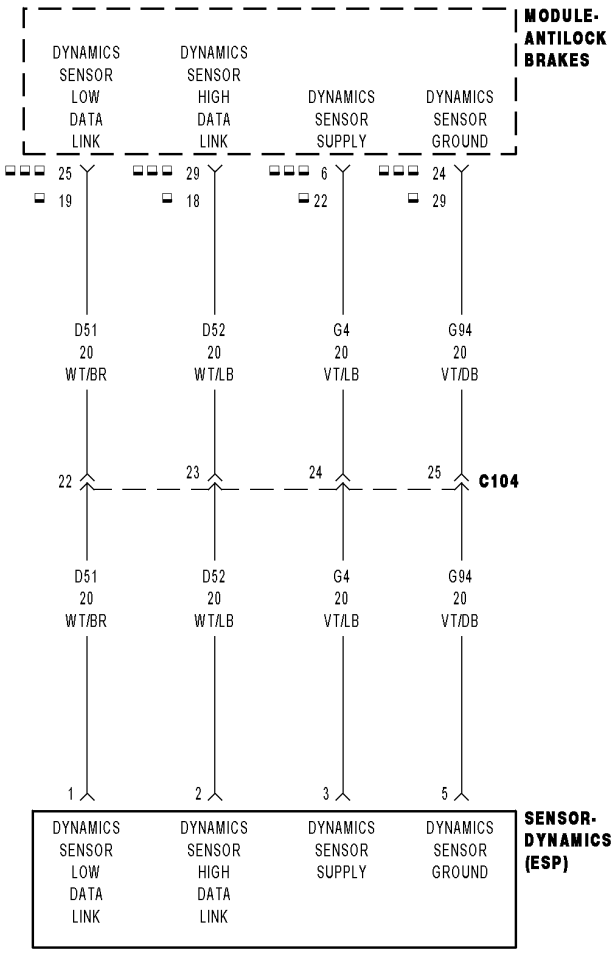

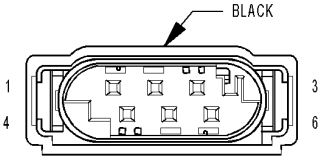

SENSOR-
DYNAMICS
(ESP)

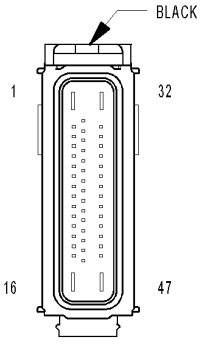

MODULE-
ANTILOCK
BRAKES

8179b247

For a complete wiring diagram **Refer to Section 8W**.

- **When Monitored:**
  With vehicle speed above 11 km/h (7 m.p.h.), but not if the sensor signal is invalid.
  Or, during skidding.
  Or, when driving in reverse.
- **Set Condition:**
  If the Anti-Lock Brakes Module detects implausible Dynamics Sensor values.

Possible Causes
WIRING HARNESS, TERMINAL, CONNECTOR DAMAGE
DYNAMICS SENSOR INSTALLATION
DYNAMICS SENSOR

Diagnostic Test

1. VERIFY DTC IS ACTIVE

NOTE: If present, diagnose and repair DTC C2114–DYNAMICS SENSOR SUPPLY VOLTAGE LOW or DTC C2115–DYNAMICS SENSOR SUPPLY VOLTAGE HIGH before diagnosing this DTC.
Turn the ignition on.
With the scan tool, read and record ABS DTCs.
With the scan tool, read and record Environmental Data (EV Data).
With the scan tool, erase ABS DTCs.
Cycle the ignition switch.

WARNING: Ensure brake capability is available before road testing.
Test drive the vehicle by turning the vehicle left or right in a curving manner at a velocity between 10 and 20 km/hr (6 and 12 m.p.h.).
Park the vehicle.
With the scan tool, read ABS DTCs.

Does this DTC reset?

Yes >> Go To 2

No >> Perform the ABS Intermittent Condition diagnostic procedure in this Section.
Perform ABS VERIFICATION TEST - VER 1. (Refer to 5 - BRAKES - STANDARD PROCEDURE).

2. CHECK THE DYNAMICS SENSOR INSTALLATION

NOTE: Dynamics Sensor installation and mounting bolt torque is crucial for proper operation.
Turn the ignition off.
Check the Dynamics Sensor for damaged, modified, and bent mounting brackets.
Check the Dynamics Sensor mounting bolts for a loose or over tightened condition.

Were any problems found?

Yes >> Repair as necessary.
Perform ABS VERIFICATION TEST - VER 1. (Refer to 5 - BRAKES - STANDARD PROCEDURE).

No >> Go To 3

3. INSPECT RELATED WIRING HARNESS, TERMINALS, & CONNECTORS

Visually inspect the related wiring harness. Look for any pinched, chafed, pierced, and partially broken wires.
Visually inspect the related wiring harness connectors. Look for broken, bent, pushed out, and corroded terminals.

Were any problems found?

Yes >> Repair as necessary.
Perform ABS VERIFICATION TEST - VER 1. (Refer to 5 - BRAKES - STANDARD PROCEDURE).

No >> Replace the Dynamics Sensor in accordance with the Service Information.
Perform ABS VERIFICATION TEST - VER 1. (Refer to 5 - BRAKES - STANDARD PROCEDURE).

C123F–STEERING ANGLE SENSOR COMPARATIVE PERFORMANCE

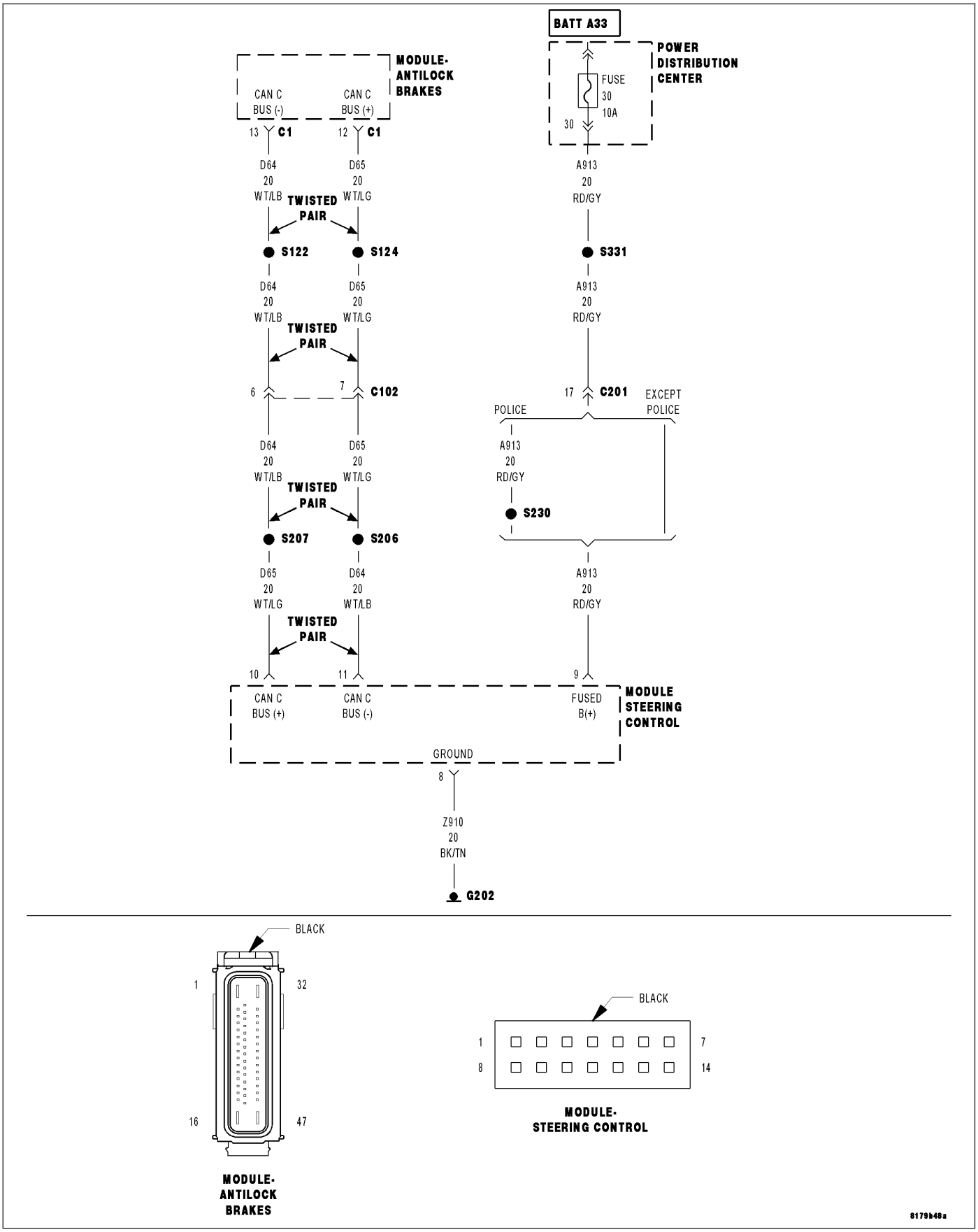

For a complete wiring diagram **Refer to Section 8W**.

- **When Monitored:**
  With ignition on, but not if a checksum failure of the stored offset values is detected.
  Or, a CAN time-out failure is detected.
  Or, a failure is detected by the Steering Angle Sensor.
- **Set Condition:**
  If the Anti-Lock Brakes Module detects that either the calculated steering wheel angle offset or the steering wheel angle signal measured output is out of range.

Possible Causes
VEHICLE DAMAGE
STEERING COLUMN / INTERMEDIATE SHAFT DAMAGE
STEERING WHEEL ALIGNMENT
STEERING ANGLE SENSOR LOOSE
STEERING ANGLE SENSOR IMPROPERLY INSTALLED (WRONG MOUNTING POSITION)
STEERING ANGLE SENSOR
ANTI-LOCK BRAKE MODULE

Diagnostic Test

1. PERFORM TEST DRIVE & VERIFY DTC IS STILL ACTIVE

Turn the ignition on.
With the scan tool, erase ABS DTCs.
Cycle the ignition switch.

WARNING: Ensure brake capability is available before road testing.
Test drive the vehicle by turning the vehicle left or right in a curving manner at a velocity between 10 and 25 km/hr (6 and 15 m.p.h.).
Park the vehicle.
With the scan tool, read ABS DTCs.

Does this DTC reset?

Yes >> Go To 2

No >> Perform ABS VERIFICATION TEST - VER 1. (Refer to 5 - BRAKES - STANDARD PROCEDURE).

2. INSPECT VEHICLE, STEERING COLUMN, & INTERMEDIATE SHAFT FOR DAMAGE

NOTE: If possible, check vehicle repair history for collision damage.
Turn the ignition off.
Inspect the vehicle for damage causing tracking problems or steering wheel misalignment.
Inspect the steering column and intermediate shaft for damage.

Were any problems found?

Yes >> Repair as necessary.
Perform ABS VERIFICATION TEST - VER 1. (Refer to 5 - BRAKES - STANDARD PROCEDURE).

No >> Go To 3

3. CHECK STEERING ANGLE SENSOR OUTPUT

Start the engine.

Turn the steering wheel so wheels point in a straight ahead position.

With the scan tool, read the Steering Angle Sensor Position.

Is the Steering Angle Sensor Position within ± 15° degrees?

Yes >> Go To 4

No >> Go To 5

4. CHECK STEERING ANGLE SENSOR INSTALLATION

WARNING: To avoid personal injury or death, on vehicles equipped with airbags, disable the supplemental restraint system before attempting any steering wheel, steering column, airbag, occupant classification system, seat belt tensioner, impact sensor, or instrument panel component diagnosis or service. Disconnect and isolate the battery negative (ground) cable, then wait two minutes for the system capacitor to discharge before performing further diagnosis or service. This is the only sure way to disable the supplemental restraint system. Failure to take the proper precautions could result in accidental airbag deployment.

NOTE: Proper Steering Angle Sensor installation is crucial for proper operation.
Verify that the Steering Angle Sensor are properly installed.

Is the Steering Angle Sensor properly installed?

Yes >> Go To 5

No >> Repair as necessary and clear offsets by initializing ECU with wheels pointing straight ahead.
Perform ABS VERIFICATION TEST - VER 1. (Refer to 5 - BRAKES - STANDARD PROCEDURE).

5. CHECK STEERING ANGLE SENSOR OUTPUT WHILE ROTATING THE STEERING WHEEL

With the scan tool, read the Steering Angle Sensor Position while rotating the steering wheel to the right and then to the left. The Steering Angle Sensor Position should decrease when rotating the steering wheel to the right and increase when rotating the steering wheel to the left.

Did the steering angle change accordingly?

Yes >> Replace the Anti-Lock Brake Module in accordance with the Service Information.
Perform ABS VERIFICATION TEST - VER 1. (Refer to 5 - BRAKES - STANDARD PROCEDURE).

No >> Replace the Steering Angle Sensor in accordance with the Service Information and clear offsets by initializing ECU with wheels pointing straight ahead.
Perform the ABS VERIFICATION TEST - VER 1. (Refer to 5 - BRAKES - STANDARD PROCEDURE).

C1240–STEERING ANGLE SENSOR OVERTRAVEL PERFORMANCE

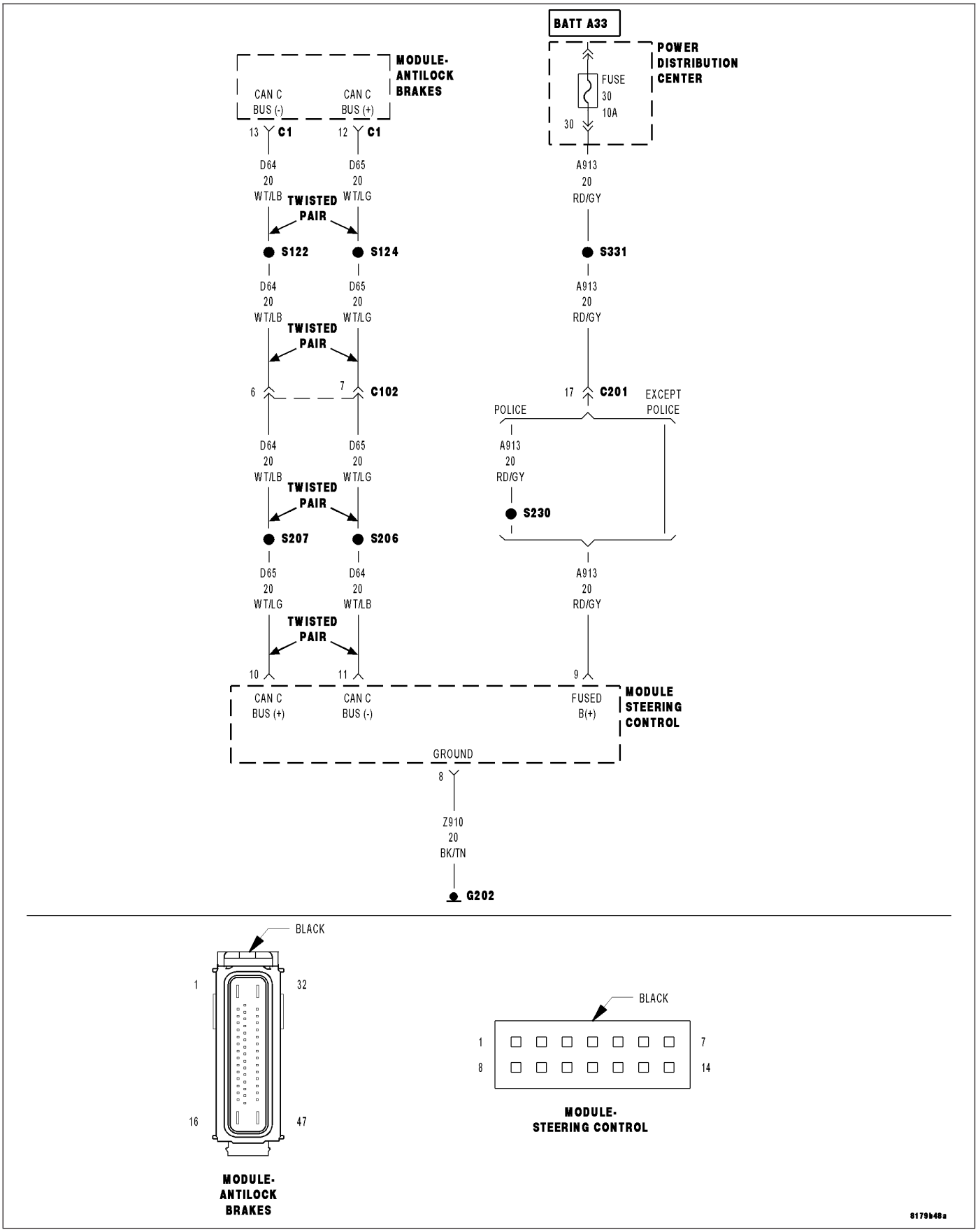

For a complete wiring diagram **Refer to Section 8W**.

- **When Monitored:**
  With ignition on, but not if a CAN time out failure is detected.
  Or, if a fault is detected by the Steering Angle Sensor.
- **Set Condition:**
  If the Anti-Lock Brakes Module detects that the absolute value of the measured steering wheel angle is greater than 720 degrees.

Possible Causes
VEHICLE DAMAGE
STEERING COLUMN / INTERMEDIATE SHAFT DAMAGE
STEERING WHEEL ALIGNMENT
STEERING ANGLE SENSOR LOOSE
STEERING ANGLE SENSOR IMPROPERLY INSTALLED (WRONG MOUNTING POSITION)
STEERING ANGLE SENSOR
ANTI-LOCK BRAKES MODULE

Diagnostic Test

1. PERFORM TEST DRIVE & VERIFY DTC IS STILL ACTIVE

Turn the ignition on.
With the scan tool, erase ABS DTCs.
Cycle the ignition switch.

WARNING: Ensure brake capability is available before road testing.
Test drive the vehicle by turning the vehicle left or right in a curving manner at a velocity between 10 and 25 km/hr (6 and 15 m.p.h.).
Park the vehicle.
With the scan tool, read ABS DTCs.

Does this DTC reset?

Yes >> Go To 2

No >> Perform ABS VERIFICATION TEST - VER 1. (Refer to 5 - BRAKES - STANDARD PROCEDURE).

2. INSPECT VEHICLE, STEERING COLUMN, & INTERMEDIATE SHAFT FOR DAMAGE

NOTE: If possible, check vehicle repair history for collision damage.
Turn the ignition off.
Inspect the vehicle for damage causing tracking problems or steering wheel misalignment.
Inspect the steering column and intermediate shaft for damage.

Were any problems found?

Yes >> Repair as necessary.
Perform ABS VERIFICATION TEST - VER 1. (Refer to 5 - BRAKES - STANDARD PROCEDURE).

No >> Go To 3

3. CHECK STEERING ANGLE CHANGE

Turn steering wheel so wheels point in a straight ahead position.

With scan tool check steering angle if reading travels to 720 degrees whiling rotating wheel from lock to lock.

NOTE: Sensor damage can occur if wheel is turned over 720 degrees.
Rotate steering wheel to the right and the degrees will decrease and rotating steering wheel to the left the degrees will increase.

Did the steering angle change accordingly and display less the 720 degrees from lock to lock?

Yes >> Go To 4

No >> Replace the Steering Angle Sensor in accordance with the Service Information and clear offsets by initializing ECU with wheels pointing straight ahead.
Perform ABS VERIFICATION TEST - VER 1. (Refer to 5 - BRAKES - STANDARD PROCEDURE).

4. CHECK STEERING ANGLE SENSOR INSTALLATION

WARNING: To avoid personal injury or death, on vehicles equipped with airbags, disable the supplemental restraint system before attempting any steering wheel, steering column, airbag, occupant classification system, seat belt tensioner, impact sensor, or instrument panel component diagnosis or service. Disconnect and isolate the battery negative (ground) cable, then wait two minutes for the system capacitor to discharge before performing further diagnosis or service. This is the only sure way to disable the supplemental restraint system. Failure to take the proper precautions could result in accidental airbag deployment.

NOTE: Proper Steering Angle Sensor installation is crucial for proper operation.
Verify that the Steering Angle Sensor are properly installed. Refer to 8 - ELECTRICAL/RESTRAINTS/CLOCKSPRING - INSTALLATION.

Is the Steering Angle Sensor properly installed?

Yes >> Replace the Steering Angle Sensor and clear offsets by initializing ECU with wheels pointing straight ahead, in accordance with the Service Information.
Perform ABS VERIFICATION TEST - VER 1. (Refer to 5 - BRAKES - STANDARD PROCEDURE).

No >> Repair as necessary and clear offsets by initializing ECU with wheels pointing straight ahead.
Perform ABS VERIFICATION TEST - VER 1. (Refer to 5 - BRAKES - STANDARD PROCEDURE).

C1242–G SENSOR INPUT SIGNAL PERFORMANCE

For a complete wiring diagram **Refer to Section 8W**.

- **When Monitored:**
  Continuously, with ignition on, until vehicle speed exceeds 20 km/h (12.4 m.p.h.) for the first time, but not if the sensor voltage is out of range,
  Or, during diagnostic mode.
  Or, if the monitoring was inhibited by a corresponding diagnostics command.
  Or, if the vehicle speed has exceeded 20 km/h (12.4 m.p.h.) during the actual ignition cycle.
  Or, if at least one over spinning wheel is detected.
  Or, if one of the control functions is active.
- **Set Condition:**
  If the measured acceleration signal is higher than 0.8 g and longer than the specified detection time.

Possible Causes
DYNAMICS SENSOR INSTALLATION
DYNAMICS SENSOR OR ANTI-LOCK BRAKE MODULE
ANTI-LOCK BRAKES MODULE

Diagnostic Test

1. VERIFY DTC IS ACTIVE

Turn the ignition on.

With the scan tool, read and record ABS DTCs.

With the scan tool, read and record Environmental Data (EV Data).

With the scan tool, erase ABS DTCs.

Cycle the ignition switch.

WARNING: Ensure brake capability is available before road testing.
Test drive the vehicle by turning the vehicle left or right in a curving manner at a velocity between 10 and 20 km/hr (6 and 12 m.p.h.).

Park the vehicle.

With the scan tool, read ABS DTCs.

Does this DTC reset?

Yes >> Go To 2

No >> Perform the ABS Intermittent Condition diagnostic procedure in this Section.
Refer to the ABS-INTERMITTENT CONDITION TEST. (Refer to 5 - BRAKES - DIAGNOSIS AND TESTING)

2. CHECK THE DYNAMICS SENSOR INSTALLATION

NOTE: Dynamics Sensor installation and mounting bolt torque is crucial for proper operation.
Turn the ignition off.

Check the Dynamics Sensor for damaged, modified, and bent mounting brackets.

Check the Dynamics Sensor mounting bolts for a loose or over tightened condition.

Were any problems found?

Yes >> Repair as necessary.
Perform ABS VERIFICATION TEST. (Refer to 5 - BRAKES - STANDARD PROCEDURE).

No >>

NOTE: Vehicles without a Dynamics Sensor replace Anti-Lock Brake Module.
Replace the Dynamics Sensor or Anti-Lock Brake Module in accordance with the Service Information.
Perform ABS VERIFICATION TEST. (Refer to 5 - BRAKES - STANDARD PROCEDURE).

C1243–G SENSOR NOT INITIALIZED

For a complete wiring diagram **Refer to Section 8W**.

- **When Monitored:**
  Once after ignition on.
- **Set Condition:**
  If the stored zero point calibration value of the longitudinal acceleration sensor is invalid.

Possible Causes
DYNAMICS SENSOR NOT CALIBRATED
DYNAMICS SENSOR
ANTI-LOCK BRAKES MODULE

Diagnostic Test

1. PERFORM ECU INITIALIZATION

Turn the ignition on.

With the scan tool, erase ABS DTCs.

Cycle the ignition switch.

WARNING: Ensure brake capability is available before road testing.
Perform ECU initialization with drive test refer to ABS VERIFICATION TEST. (Refer to 5 - BRAKES - STANDARD PROCEDURE).

NOTE: The ECU Initialization process must include driving the vehicle into a 90° turn.
Park the vehicle.

>> Go To 2

2. VERIFY IF DTC IS STILL ACTIVE

Cycle the ignition switch.

WARNING: Ensure brake capability is available before road testing.
Test drive the vehicle by turning the vehicle left or right in a curving manner at a velocity between 10 and 25 km/hr (6 and 15 m.p.h.).

Park the vehicle.

With the scan tool, read ABS DTCs.

Does this DTC reset?

Yes >>

NOTE: Vehicles without a Dynamics Sensor replace Anti-Lock Brake Module.
Replace the Dynamics Sensor or Anti-Lock Brake Module in accordance with the Service Information.

Perform ABS VERIFICATION TEST. (Refer to 5 - BRAKES - STANDARD PROCEDURE).

No >> Perform the ABS Intermittent Condition diagnostic procedure in this Section.

Refer to the ABS-INTERMITTENT CONDITION TEST. (Refer to 5 - BRAKES - DIAGNOSIS AND TESTING)

C2100-BATTERY VOLTAGE LOW

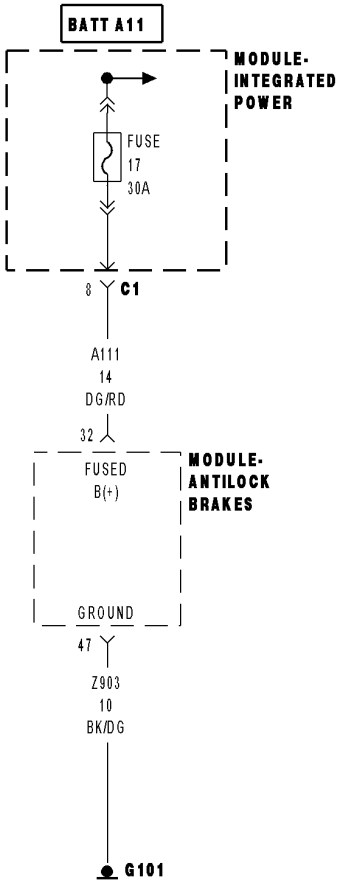

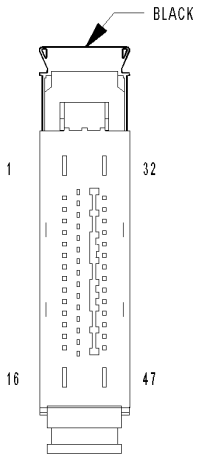

MODULE-
ANTILOCK BRAKES

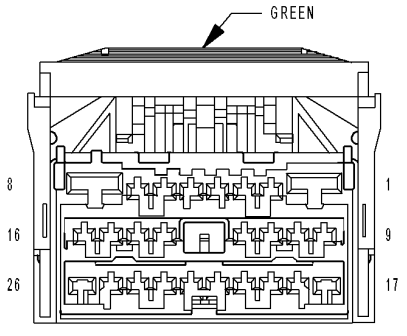

MODULE-
INTEGRATED
POWER C1

81342292

For a complete wiring diagram **Refer to Section 8W**

- **When Monitored:**
  With the ignition on.
- **Set Condition:**
  If the Anti-Lock Brakes Module detects system voltage is below 7.5 volts.

Possible Causes
ECM OR PCM DTCs PRESENT
VEHICLE BATTERY / CHARGING SYSTEM
ANTI-LOCK BRAKES MODULE

Diagnostic Test

1. DTC'S IN THE PCM

NOTE: This DTC must be active for the results of this test to be valid.
Turn the ignition on.
With the scan tool, read and record DTCs from the PCM.
With the scan tool, read and record Freeze Fame information.
With the scan tool, erase DTCs.
Start the engine.
With the scan tool, read and record DTCs.
With the scan tool read DTCs from the PCM.

Are any charging system codes present?

Yes >> Repair the charging system DTC in the PCM.
Perform ABS VERIFICATION TEST - VER 1. (Refer to 5 - BRAKES - STANDARD PROCEDURE).

No >> Go To 2

2. CHARGING SYSTEM FAILURE

Start the engine.
Connect voltmeter to vehicle battery.

Is the vehicle battery voltage under 8.2 volts?

No >> Go To 3

Yes >> Repair the charging system per service information.
Perform ABS VERIFICATION TEST - VER 1. (Refer to 5 - BRAKES - STANDARD PROCEDURE).

3. CHARGING POWER SUPPLY VOLTAGE

With a scan tool read Power Supply Voltage.

Is Power Supply Voltage under 8.2 volts?

No >> Refer to the INTERMITTENT CONDITION Diagnostic Procedure.
Perform ABS VERIFICATION TEST - VER 1. (Refer to 5 - BRAKES - STANDARD PROCEDURE).

Yes >> Replace the Anti-Lock Brakes Module in accordance with the Service Information.
Perform ABS VERIFICATION TEST - VER 1. (Refer to 5 - BRAKES - STANDARD PROCEDURE).

C2101-BATTERY VOLTAGE HIGH

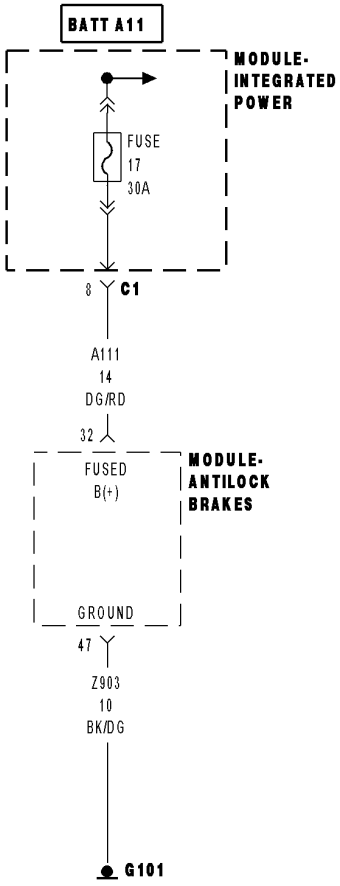

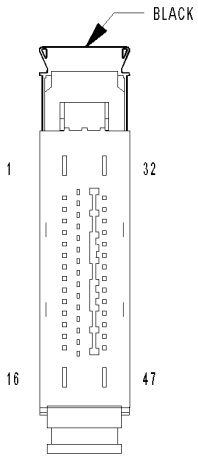

MODULE-
ANTILOCK BRAKES

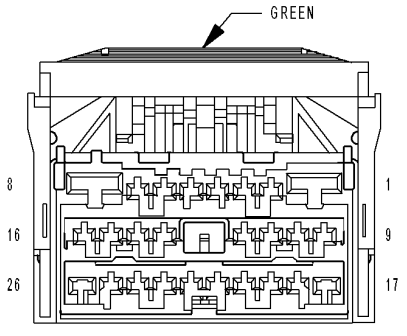

MODULE-
INTEGRATED
POWER C1

81342292

For a complete wiring diagram **Refer to Section 8W**

- **When Monitored:**
  With the ignition on.
- **Set Condition:**
  If the Anti-Lock Brakes Module detects system voltage is above 17 volts.

Possible Causes
ECM/PCM DTCs PRESENT
VEHICLE BATTERY / CHARGING SYSTEM
ANTI-LOCK BRAKES MODULE

Diagnostic Test

1.

NOTE: This DTC must be active for the results of this test to be valid.
Turn the ignition on.
With the scan tool, read and record DTCs from the ECM/PCM.
With the scan tool, read and record Freeze Frame information.
With the scan tool, erase DTC's.
Start the engine.
With the scan tool, read and record DTCs.
With the scan tool read DTCs from the PCM.

Are any charging system codes present?

Yes >> Repair the charging system DTC in the ECM/PCM.
Perform the POWERTRAIN VERIFICATION TEST. (Refer to 9 - ENGINE - STANDARD PROCEDURE).

No >> Go To 2

2. CHARGING SYSTEM FAILURE

Start the engine.
Connect voltmeter to vehicle battery.

Is the vehicle battery voltage over 16.8 volts?

No >> Go To 3

Yes >> Repair the charging system per service information.
Perform ABS VERIFICATION TEST - VER 1. (Refer to 5 - BRAKES - STANDARD PROCEDURE).

3. CHARGING POWER SUPPLY VOLTAGE

With a scan tool read Power Supply Voltage.

Is Power Supply Voltage over 16.8 volts?

No >> Refer to the INTERMITTENT CONDITION Diagnostic Procedure.
Perform ABS VERIFICATION TEST - VER 1. (Refer to 5 - BRAKES - STANDARD PROCEDURE).

Yes >> Replace the Anti-Lock Brakes Module in accordance with the Service Information.
Perform ABS VERIFICATION TEST - VER 1. (Refer to 5 - BRAKES - STANDARD PROCEDURE).

C2111-SENSOR SUPPLY VOLTAGE CIRCUIT LOW

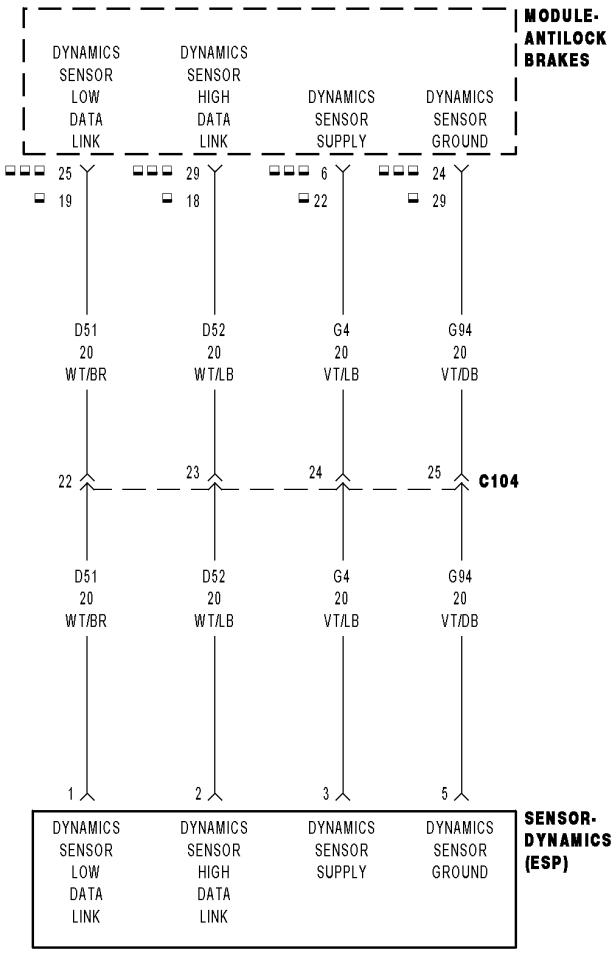

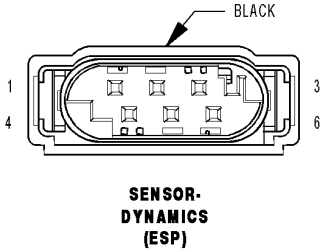

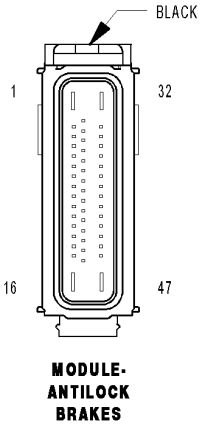

8179b247

For a complete wiring diagram **Refer to Section 8W**

- **When Monitored:**
  With the ignition on.
- **Set Condition:**
  If the Anti-Lock Brakes Module detects that the supply voltage for external analog sensors is out of range.

Possible Causes
ANTI-LOCK BRAKES MODULE
PRESSURE SENSOR (HYDRAULIC CONTROL UNIT)

Diagnostic Test

1. REPLACE ANTI-LOCK BRAKES MODULE & VERIFY IF DTC IS STILL ACTIVE

Turn the ignition off.

Replace the Anti-Lock Brakes Module in accordance with the Service Information. Perform ABS VERIFICATION TEST - VER 1. (Refer to 5 - BRAKES - STANDARD PROCEDURE).

Turn the ignition on.

With the scan tool, read ABS DTCs.

Does this DTC reset?

Yes >> Replace the Hydraulic Control Unit in accordance with the Service Information.
Perform ABS VERIFICATION TEST - VER 1. (Refer to 5 - BRAKES - STANDARD PROCEDURE).

No >> Perform ABS VERIFICATION TEST - VER 1. (Refer to 5 - BRAKES - STANDARD PROCEDURE).

C2112-SENSOR SUPPLY VOLTAGE CIRCUIT HIGH

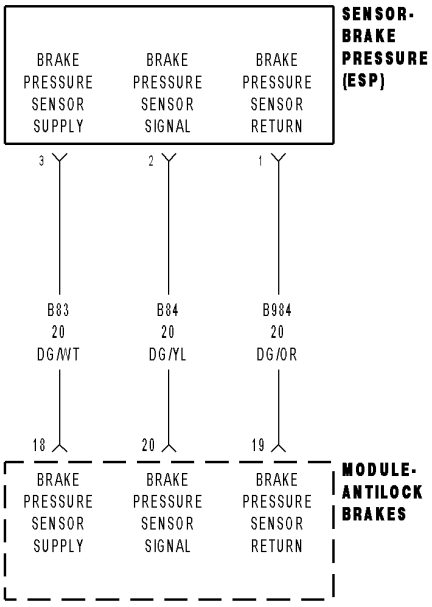

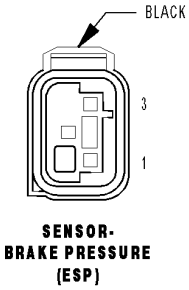

SENSOR-
BRAKE PRESSURE
(ESP)

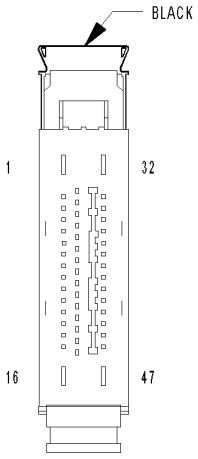

MODULE-
ANTILOCK BRAKES

81340576

For a complete wiring diagram **Refer to Section 8W**

- **When Monitored:**
  With the ignition on.
- **Set Condition:**
  If the Anti-Lock Brakes Module detects that the supply voltage for external analog sensors is out of range.

Possible Causes
ANTI-LOCK BRAKES MODULE
PRESSURE SENSOR (HYDRAULIC CONTROL UNIT)

Diagnostic Test

1. REPLACE ANTI-LOCK BRAKES MODULE & VERIFY IF DTC IS STILL ACTIVE

Turn the ignition off.

Replace the Anti-Lock Brakes Module in accordance with the Service Information. Perform ABS VERIFICATION TEST - VER 1. (Refer to 5 - BRAKES - STANDARD PROCEDURE).

Turn the ignition on.

With the scan tool, read ABS DTCs.

Does this DTC reset?

Yes >> Replace the Hydraulic Control Unit in accordance with the Service Information.
Perform ABS VERIFICATION TEST - VER 1. (Refer to 5 - BRAKES - STANDARD PROCEDURE).

No >> Perform ABS VERIFICATION TEST - VER 1. (Refer to 5 - BRAKES - STANDARD PROCEDURE).

C2114-DYNAMICS SENSOR SUPPLY VOLTAGE LOW

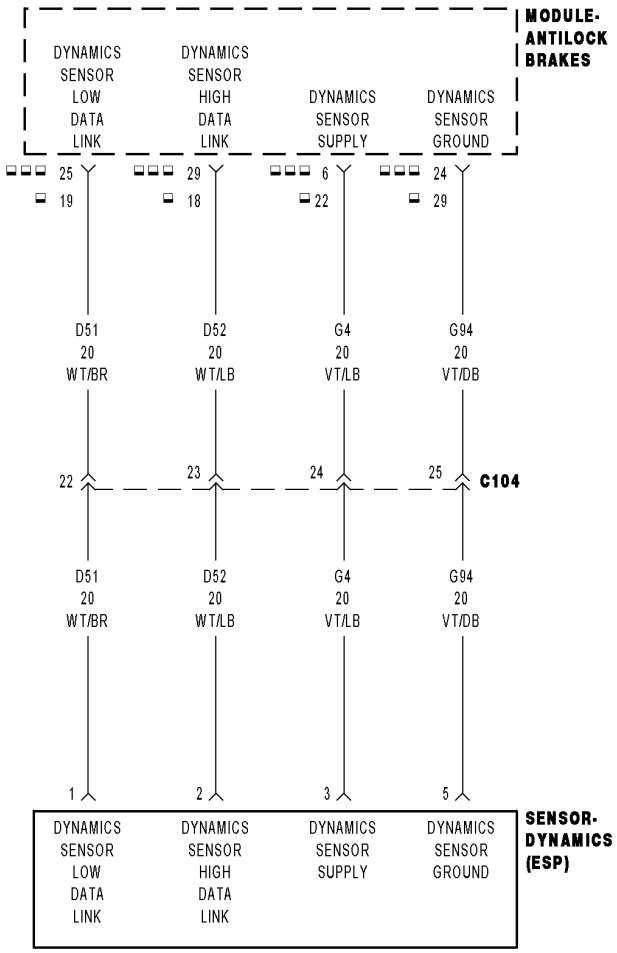

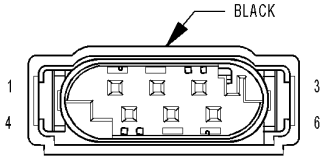

SENSOR-
DYNAMICS
(ESP)

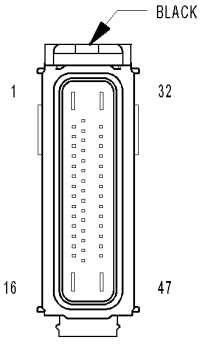

MODULE-
ANTILOCK
BRAKES

8179b247

For a complete wiring diagram **Refer to Section 8W**.

- **When Monitored:**
  With the ignition on.
- **Set Condition:**
  If the Dynamics Sensor status changes from initialized to not initialized due to low voltage on the (G4) Dynamics Sensor Supply circuit.

Possible Causes
WIRING HARNESS, TERMINAL, CONNECTOR DAMAGE
(G4) DYNAMICS SENSOR SUPPLY CIRCUIT HIGH RESISTANCE
(G94) DYNAMICS SENSOR GROUND CIRCUIT HIGH RESISTANCE
(G4) DYNAMICS SENSOR SUPPLY CIRCUIT SHORTED TO OTHER ABS CIRCUITS
DYNAMICS SENSOR
ANTI-LOCK BRAKES MODULE

1. VERIFY DTC IS ACTIVE

Turn the ignition on.
With the scan tool, read and record ABS DTCs.
With the scan tool, read and record Environmental Data (EV Data).
With the scan tool, erase ABS DTCs.
Cycle the ignition switch.
With the scan tool, read ABS DTCs.

Does this DTC reset?

Yes >> Go To 2

No >> Perform the ABS Intermittent Condition diagnostic procedure in this Section.
Perform ABS VERIFICATION TEST - VER 1. (Refer to 5 - BRAKES - STANDARD PROCEDURE).

2. INSPECT RELATED WIRING HARNESS, TERMINALS, & CONNECTORS

Turn the ignition off.
Check all related wiring for pinched, chafed, pierced, and partially broken wires.
Check all related connectors for broken, bent, pushed out, and corroded terminals.

Were any problems found?

Yes >> Repair as necessary.
Perform ABS VERIFICATION TEST - VER 1. (Refer to 5 - BRAKES - STANDARD PROCEDURE).

No >> Go To 3

3. CHECK (G4) DYNAMICS SENSOR SUPPLY CIRCUIT & (G94) DYNAMICS SENSOR GROUND CIRCUIT FUNCTION

Disconnect the Dynamics Sensor harness connector.

Turn the ignition on.

Measure the voltage between the (G4) Dynamics Sensor Supply Circuit and the (G94) Dynamics Sensor Ground Circuit.

Is the voltage above 4.5 volts?

Yes >> Replace the Dynamics Sensor in accordance with the Service Information.

Perform ABS VERIFICATION TEST - VER 1. (Refer to 5 - BRAKES - STANDARD PROCEDURE).

No >> Go To 4

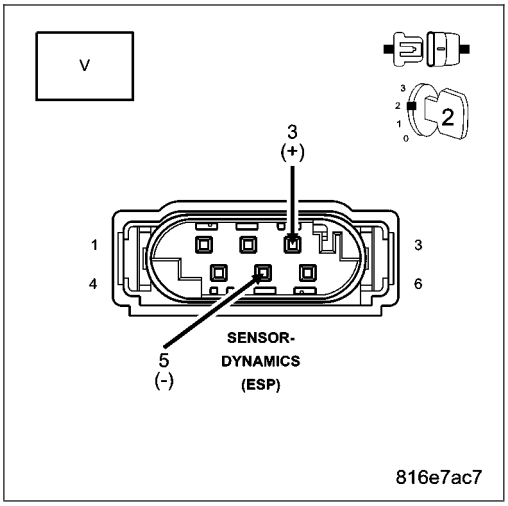

4. CHECK (G4) DYNAMICS SENSOR SUPPLY CIRCUIT FOR HIGH RESISTANCE

Turn the ignition off.

Disconnect the Anti-Lock Brakes Module harness connector.

Measure the resistance of the (G4) Dynamics Sensor Supply circuit between the Dynamics Sensor harness connector and the Anti-Lock Brakes Module harness connector.

Is the resistance below 5.0 ohms?

Yes >> Go To 5

No >> Repair the (G4) Dynamics Sensor Supply circuit for high resistance.

Perform ABS VERIFICATION TEST - VER 1. (Refer to 5 - BRAKES - STANDARD PROCEDURE).

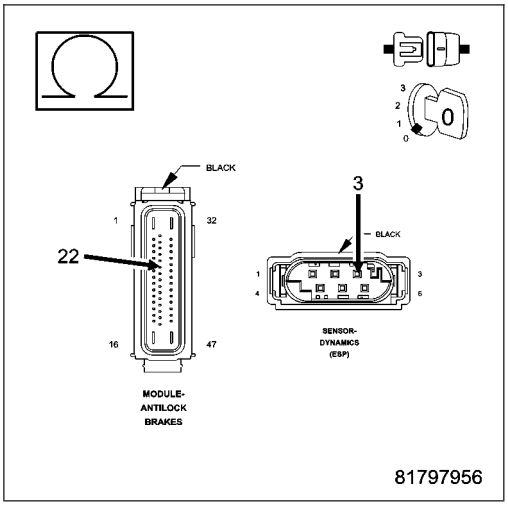

5. CHECK (G94) DYNAMICS SENSOR GROUND CIRCUIT FOR HIGH RESISTANCE

Measure the resistance of the (G94) Dynamics Sensor Ground circuit between the Dynamics Sensor harness connector and the Anti-Lock Brakes Module harness connector.

Is the resistance below 5.0 ohms?

Yes >> Go To 6

No >> Repair the (G94) Dynamics Sensor Ground circuit for high resistance.

Perform ABS VERIFICATION TEST - VER 1. (Refer to 5 - BRAKES - STANDARD PROCEDURE).

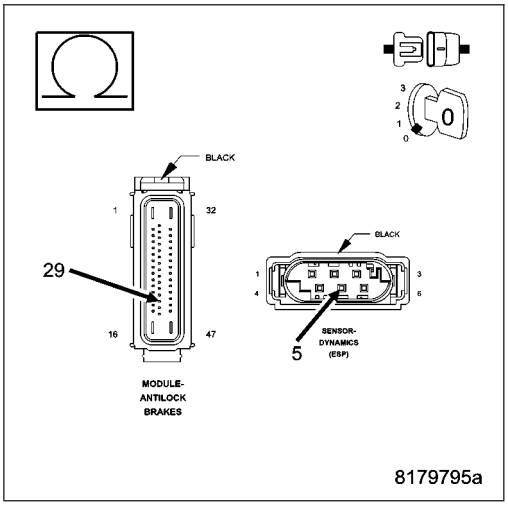

6. CHECK (G4) DYNAMICS SENSOR SUPPLY CIRCUIT FOR A SHORT TO OTHER ABS CIRCUITS

Measure the resistance between the (G4) Dynamics Sensor Supply circuit and the B46, B15, D21, D65, D64, Z127, D52, D51, G94, B6, B7, B4. B3, B1, B2, B9, B8, and Z107 circuit in the Anti-Lock Brakes Module harness connector.

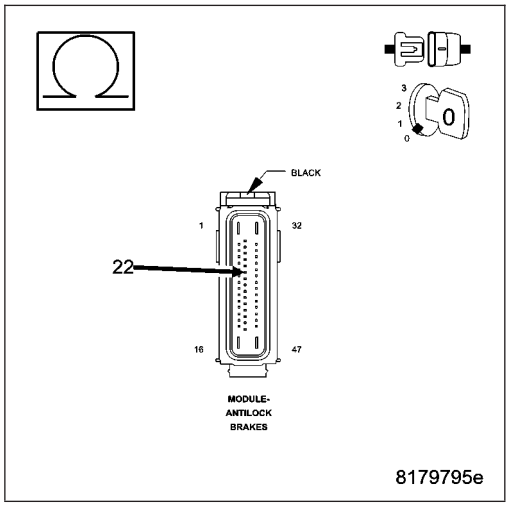

Is the resistance below 10k ohms on any of the circuits?

Yes >> Repair all circuits with a resistance below 10k ohms for a short to the (G4) Dynamics Sensor Supply circuit.

Perform ABS VERIFICATION TEST - VER 1. (Refer to 5 - BRAKES - STANDARD PROCEDURE).

No >> Replace the Anti-Lock Brakes Module in accordance with the Service Information.

Perform ABS VERIFICATION TEST - VER 1. (Refer to 5 - BRAKES - STANDARD PROCEDURE).

C2115-DYNAMICS SENSOR SUPPLY VOLTAGE HIGH

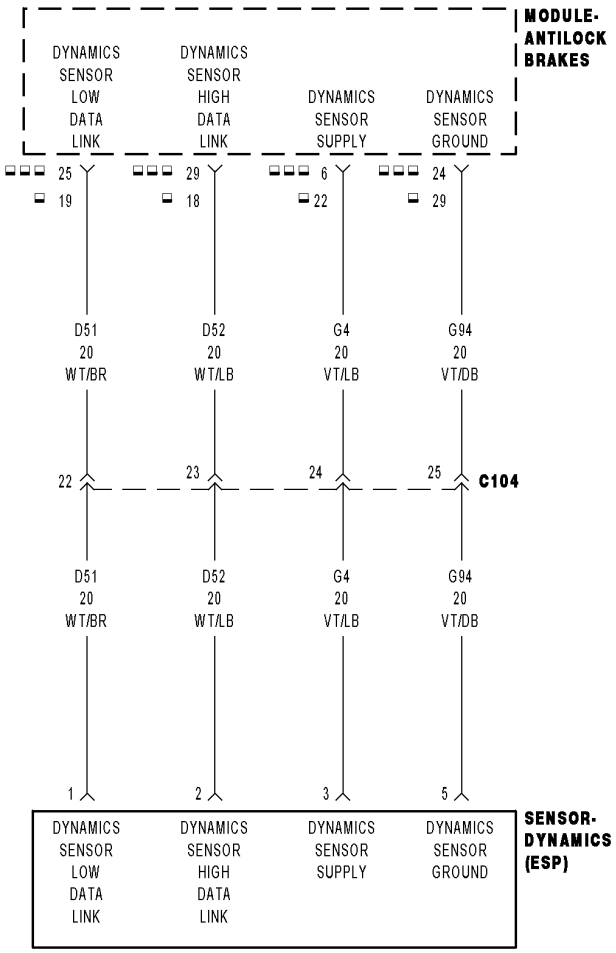

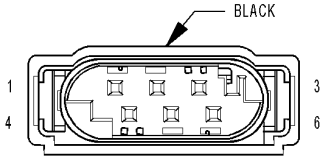

SENSOR-
DYNAMICS
(ESP)

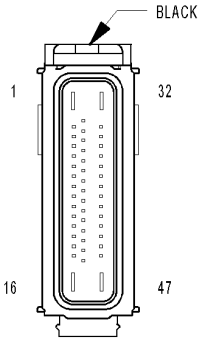

MODULE-
ANTILOCK
BRAKES

8179b247

For a complete wiring diagram **Refer to Section 8W**.

- **When Monitored:**
  Upon ignition on, prior to switching the (G4) Dynamics Sensor Supply circuit power on.
- **Set Condition:**
  If the Anti-Lock Brakes Module detects voltage on the (G4) Dynamics Sensor Supply circuit when the circuit's power is turned off.

Possible Causes
WIRING HARNESS, TERMINAL, CONNECTOR DAMAGE
(G4) DYNAMICS SENSOR SUPPLY CIRCUIT SHORTED TO VOLTAGE
ANTI-LOCK BRAKES MODULE

1. VERIFY DTC IS ACTIVE

Turn the ignition on.
With the scan tool, read and record ABS DTCs.
With the scan tool, read and record Environmental Data (EV Data).
With the scan tool, erase ABS DTCs.
Cycle the ignition switch.
With the scan tool, read ABS DTCs.

Does this DTC reset?

Yes >> Go To 2

No >> Perform the ABS Intermittent Condition diagnostic procedure in this Section.
Perform ABS VERIFICATION TEST - VER 1. (Refer to 5 - BRAKES - STANDARD PROCEDURE).

2. INSPECT RELATED WIRING HARNESS, TERMINALS, & CONNECTORS

Turn the ignition off.
Check all related wiring for pinched, chafed, pierced, and partially broken wires.
Check all related connectors for broken, bent, pushed out, and corroded terminals.

Were any problems found?

Yes >> Repair as necessary.
Perform ABS VERIFICATION TEST - VER 1. (Refer to 5 - BRAKES - STANDARD PROCEDURE).

No >> Go To 3

3. CHECK (G4) DYNAMICS SENSOR SUPPLY CIRCUIT SHORT FOR A SHORT TO VOLTAGE

Disconnect the Anti-Lock Brakes Module harness connector.
Turn the ignition on.
Measure the voltage of the (G4) Dynamics Sensor Supply Circuit.

Is the voltage above 0.2 volts?

Yes >> Repair the (G4) Dynamics Sensor Supply Circuit for a short to voltage.
Perform ABS VERIFICATION TEST - VER 1. (Refer to 5 - BRAKES - STANDARD PROCEDURE).

No >> Replace the Anti-Lock Brakes Module in accordance with the Service Information.
Perform ABS VERIFICATION TEST - VER 1. (Refer to 5 - BRAKES - STANDARD PROCEDURE).

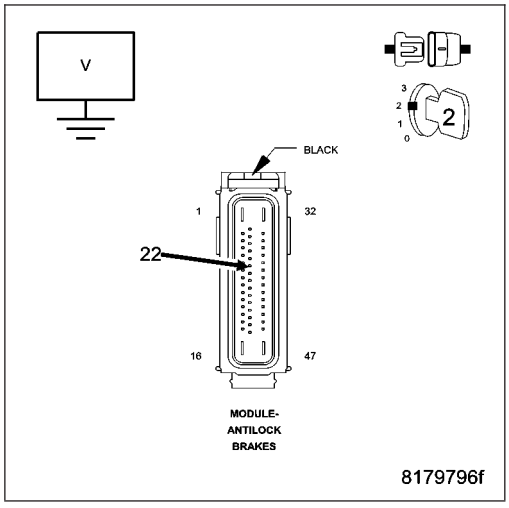

C2116-ABS PUMP MOTOR SUPPLY LOW VOLTAGE

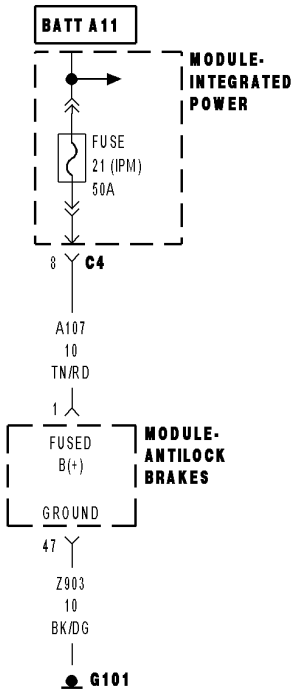

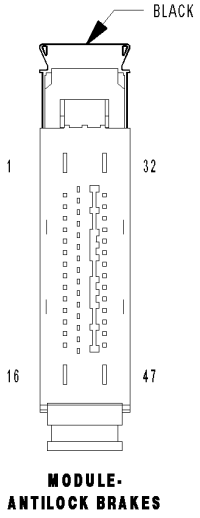

813cfa93

For a complete wiring diagram **Refer to Section 8W**.

- **When Monitored:**
  With the ignition on and the ABS Pump Motor deactivated, but not if supply voltage faults are detected. Or, if the control is switched off.
- **Set Condition:**
  If the Anti-Lock Brakes Module detects either a low voltage condition when the ABS Pump Motor is activated or deactivated or a high voltage condition when the ABS Pump Motor is deactivated.

Possible Causes
WIRING HARNESS, TERMINAL, CONNECTOR DAMAGE
ABS PUMP MOTOR FUSE OPEN
(A107) FUSED B(+) CIRCUIT SHORTED TO GROUND, OPEN, OR HIGH RESISTANCE
(Z903) GROUND CIRCUIT OPEN, OR HIGH RESISTANCE
ANTI-LOCK BRAKES MODULE
PUMP MOTOR (HYDRAULIC CONTROL UNIT)

Diagnostic Test

1. CHECK FOR A DTC C2116–ABS PUMP MOTOR SUPPLY LOW VOLTAGE

NOTE: This DTC must be active for the results of this test to be valid.
Turn the ignition on.
With the scan tool, record and erase DTCs.
Cycle the ignition switch from off to on.
Road test the vehicle over 40 km/h (25 m.p.h.).

NOTE: Vehicle must be driven above 40 km/h (25 m.p.h.) for set conditions to be meet.
With the scan tool, read DTCs.

Does the scan tool display: C2116–ABS PUMP MOTOR SUPPLY LOW VOLTAGE?

Yes >> Go To 2

No >> Refer to the INTERMITTENT CONDITION diagnostic procedure.
Perform ABS VERIFICATION TEST - VER 1. (Refer to 5 - BRAKES - STANDARD PROCEDURE). Diagnostic Test

2. INSPECT RELATED WIRING HARNESS, TERMINALS, & CONNECTORS

Turn the ignition off.
Visually inspect the Anti-Lock Brakes Module harness connector and wiring harness for damage.
Check all related wiring for pinched, chafed, pierced, and partially broken wires.
Check all related connectors for broken, bent, pushed out, and corroded terminals.

Were any problems found?

Yes >> Repair as necessary.
Perform ABS VERIFICATION TEST - VER 1. (Refer to 5 - BRAKES - STANDARD PROCEDURE).

No >> Go To 3

3. CHECK ABS PUMP MOTOR FUSE

Remove and visually inspect the ABS Pump Motor fuse.

Is the fuse open?

Yes >> Go To 4

No >> Go To 5

4. CHECK (A107) FUSED B(+) CIRCUIT FOR A SHORT TO GROUND

Disconnect the Anti-Lock Brakes Module harness connector.

Measure the resistance of the (A107) Fused B(+) circuit between ground and the Anti-Lock Brakes Module harness connector.

Is the resistance below 10k ohms?

Yes >> Repair the (A107) Fused B(+) circuit for a short to ground.
Perform ABS VERIFICATION TEST - VER 1. (Refer to 5 - BRAKES - STANDARD PROCEDURE).

No >> Go To 5

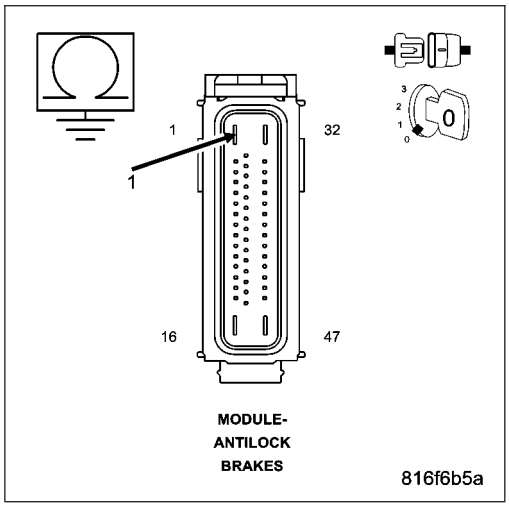

5. CHECK (A107) FUSED B(+) CIRCUIT FOR AN OPEN OR HIGH RESISTANCE

Replace the ABS Pump Motor fuse.

Using a 12-volt test light connected to ground, probe the (A107) Fused B(+) circuit.

NOTE: The test light should illuminate brightly. Compare the brightness to that of a direct connection to the battery.

Does the test light illuminate brightly?

Yes >> Go To 6

No >> Repair the (A107) Fused B(+) circuit for an open or high resistance.
Perform ABS VERIFICATION TEST - VER 1. (Refer to 5 - BRAKES - STANDARD PROCEDURE).

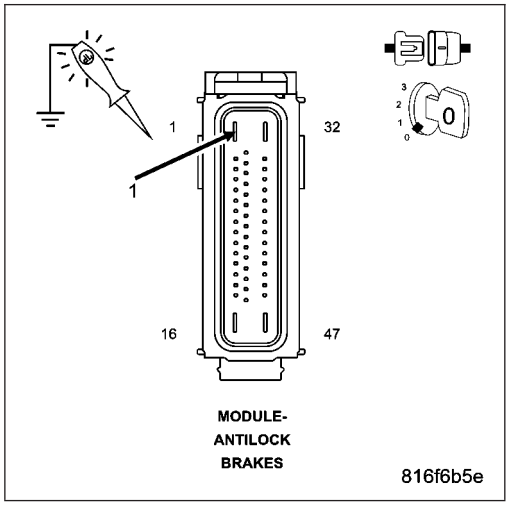

6. CHECK (Z903) GROUND CIRCUIT FOR AN OPEN OR HIGH RESISTANCE

Using a 12-volt test light connected to 12 volts, probe the (Z903) Ground circuit.

NOTE: The test light should illuminate brightly. Compare the brightness to that of a direct connection to the battery.

Does the test light illuminate brightly on both circuits?

Yes >> Go To 7

No >> Repair (Z903) circuit for an open or high resistance.
Perform ABS VERIFICATION TEST - VER 1. (Refer to 5 - BRAKES - STANDARD PROCEDURE).

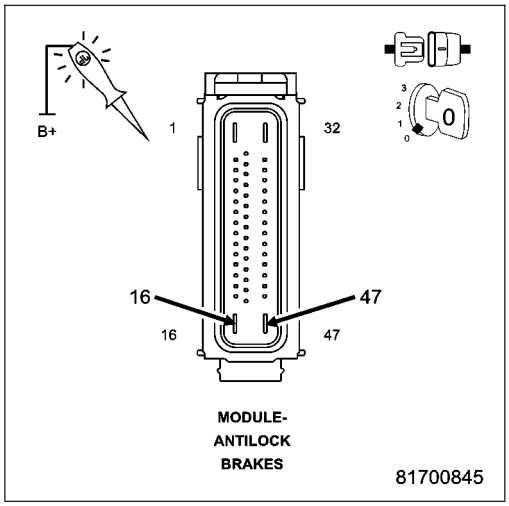

7. REPLACE ANTI-LOCK BRAKES MODULE & VERIFY IF DTC IS STILL ACTIVE

Replace the Anti-Lock Brakes Module in accordance with the Service Information.
Perform ABS VERIFICATION TEST - VER 1. (Refer to 5 - BRAKES - STANDARD PROCEDURE).
Turn the ignition on.
With the scan tool, read ABS DTCs.

Does this DTC reset?

Yes >> Replace the Hydraulic Control Unit in accordance with the Service Information.
Perform ABS VERIFICATION TEST - VER 1. (Refer to 5 - BRAKES - STANDARD PROCEDURE).

No >> Perform ABS VERIFICATION TEST - VER 1. (Refer to 5 - BRAKES - STANDARD PROCEDURE).

C2200-ANTI-LOCK BRAKE MODULE INTERNAL

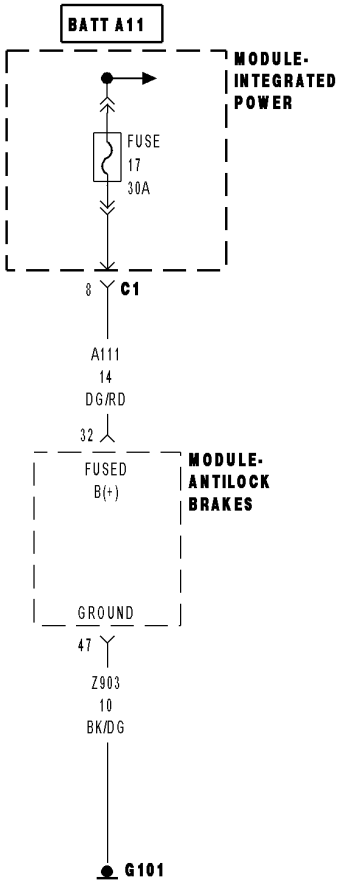

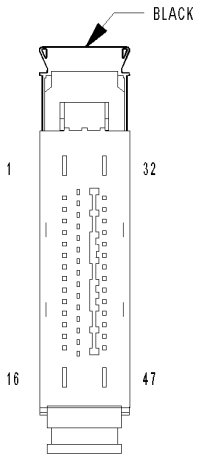

MODULE-
ANTILOCK BRAKES

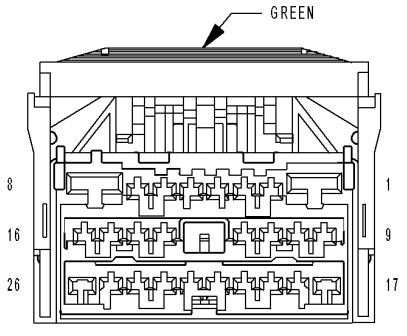

MODULE-
INTEGRATED
POWER C1

81342292

For a complete wiring diagram **Refer to Section 8W**.

- **When Monitored:**
  Ignition on. The Anti-Lock Brake Module monitors its internal microprocessors for correct operation.
- **Set Condition:**
  If the Anti-lock brake module detects an internal fault, the DTC is set.

Possible Causes
ABM - INTERNAL FAULT

Diagnostic Test

1. ABM INTERNAL FAILURE DTC PRESENT

Turn the ignition on.
With the scan tool, read DTCs.
With the scan tool, erase DTCs.
Turn the ignition off.
Turn the ignition on.
With the scan tool, read DTCs.

Does the scan tool display ANTI-LOCK BRAKE MODULE INTERNAL FAILURE?

Yes >> Replace the Anti-Lock Brake Module in accordance with the Service Information.
Perform ABS VERIFICATION TEST - VER 1. (Refer to 5 - BRAKES - STANDARD PROCEDURE).

No >> Refer to the INTERMITTENT CONDITION Diagnostic Procedure.
Perform ABS VERIFICATION TEST - VER 1. (Refer to 5 - BRAKES - STANDARD PROCEDURE).

C2202-ORIGINAL VIN MISMATCH/MISSING

For a complete wiring diagram **Refer to Section 8W**.

- **When Monitored:**
  At power up, VIN is read off the CAN bus.
- **Set Condition:**
  The VIN stored in the ABM does not match the VIN read off of the CAN bus.

Possible Causes
ABM MOVED FROM DIFFERENT VEHICLE
WRONG VIN PROGRAMMED INTO VEHICLE

Diagnostic Test

1. CHECK FOR A DTC C2202-ORIGINAL VIN MISMATCH/MISSING

NOTE: This DTC must be active for the results of this test to be valid.
Turn the ignition on.
With the scan tool, read and record DTCs.
With the scan tool, read and record Freeze Frame information.
Perform ECU initialization with drive test. Refer to ABS VERIFICATION TEST - VER 1. (Refer to 5 - BRAKES - STANDARD PROCEDURE).
Start the engine.
With the scan tool, read and record DTCs.

Does the scan tool display: C2202-ORIGINAL VIN MISMATCH/MISSING?

Yes >> Go To 2

No >> Refer to the INTERMITTENT CONDITION diagnostic procedure.
Perform ABS VERIFICATION TEST - VER 1. (Refer to 5 - BRAKES - STANDARD PROCEDURE).

2. WRONG VIN PROGRAMMED INTO VEHICLE

Is the correct VIN programmed into the vehicle?

Yes >> Replace the Anti-Lock Brake Module in accordance with the Service Information.
Perform ABS VERIFICATION TEST - VER 1. (Refer to 5 - BRAKES - STANDARD PROCEDURE).

No >> Reprogram the VIN per service information.
Perform ABS VERIFICATION TEST - VER 1. (Refer to 5 - BRAKES - STANDARD PROCEDURE).

C2204-DYNAMICS SENSOR INTERNAL

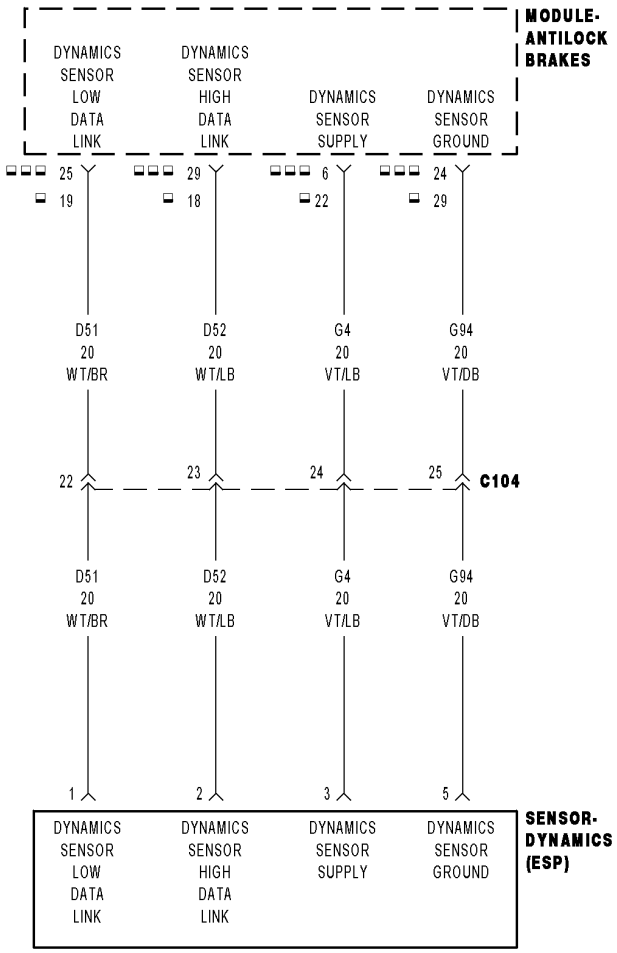

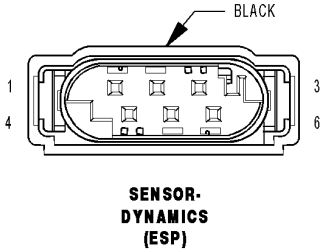

SENSOR-
DYNAMICS
(ESP)

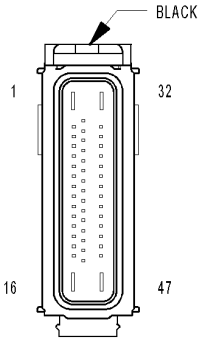

MODULE-
ANTILOCK
BRAKES

8179b247

For a complete wiring diagram **Refer to Section 8W**.

- **When Monitored:**
  Continuously, with ignition on, until vehicle speed exceeds 20 km/h (12.4 m.p.h.) for the first time, but not if the sensor voltage is out of range.
  Or, during diagnostic mode.
  Or, if the monitoring was inhibited by a corresponding diagnostics command.
  Or, if the vehicle speed has exceeded 20 km/h (12.4 m.p.h.) during the actual ignition cycle.
  Or, if at least one over spinning wheel is detected.
  Or, if one of the control functions is active.
- **Set Condition:**
  If the Anti-Lock Brakes Module detects that the Lateral Sensor signal is out of range.

Possible Causes
DYNAMICS SENSOR INSTALLATION
DYNAMICS SENSOR
ANTI-LOCK BRAKES MODULE

Diagnostic Test

1. VERIFY DTC IS ACTIVE

Turn the ignition on.

With the scan tool, read and record ABS DTCs.

With the scan tool, read and record Environmental Data (EV Data).

With the scan tool, erase ABS DTCs.

Cycle the ignition switch.

WARNING: Ensure brake capability is available before road testing.
Test drive the vehicle by turning the vehicle left or right in a curving manner at a velocity between 10 and 20 km/hr (6 and 12 m.p.h.).

Park the vehicle.

With the scan tool, read ABS DTCs.

Does this DTC reset?

Yes >> Go To 2

No >> Perform the ABS Intermittent Condition diagnostic procedure in this Section.
Perform ABS VERIFICATION TEST - VER 1. (Refer to 5 - BRAKES - STANDARD PROCEDURE).

2. CHECK THE DYNAMICS SENSOR INSTALLATION

NOTE: Dynamics Sensor installation and mounting bolt torque is crucial for proper operation.
Turn the ignition off.

Check the Dynamics Sensor for damaged, modified, and bent mounting brackets.

Check the Dynamics Sensor mounting bolts for a loose or over tightened condition.

Were any problems found?

Yes >> Repair as necessary.
Perform ABS VERIFICATION TEST - VER 1. (Refer to 5 - BRAKES - STANDARD PROCEDURE).

No >> Go To 3

3. CHECK DYNAMICS SENSOR OUTPUT

CAUTION: All previously removed connectors must be connected before test driving the vehicle.
Connect all previously disconnected components and connectors.

WARNING: Ensure brake capability is available before road testing.
Monitor Dynamics Sensor operation while an assistant drives the vehicle.

Is Lateral Sensor output between 0.02 G to 0.16 G and Yaw Sensor output between 1.30° to 5.70°

Yes >> Replace the Anti-Lock Brakes Module in accordance with the Service Information.
Perform ABS VERIFICATION TEST - VER 1. (Refer to 5 - BRAKES - STANDARD PROCEDURE).

No >> Replace the Dynamics Sensor in accordance with the Service Information.
Perform ABS VERIFICATION TEST - VER 1. (Refer to 5 - BRAKES - STANDARD PROCEDURE).

C2205-STEERING ANGLE SENSOR INTERNAL

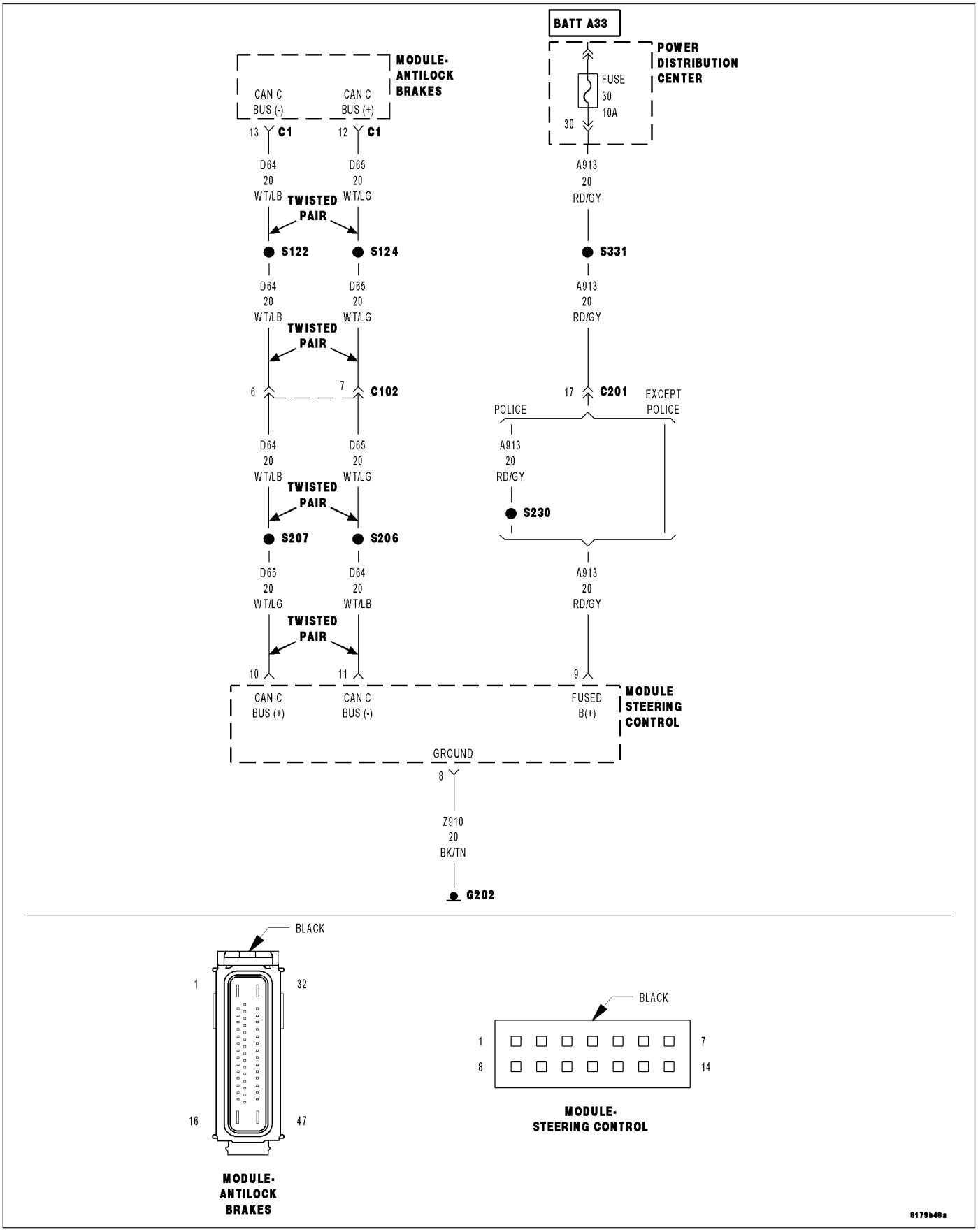

For a complete wiring diagram **Refer to Section 8W**.

- **When Monitored:**
  With ignition on, but not if supply voltage faults are detected.
- **Set Condition:**
  If the Anti-Lock Brakes Module detects that the Steering Angle Sensor is either not calibrated, or not initialized, or its status changes from initialized to not initialized, or if the sensor sends an internal failure message.

Possible Causes
STEERING ANGLE SENSOR NOT INITIALIZED
STEERING ANGLE SENSOR
ANTI-LOCK BRAKES MODULE

Diagnostic Test

1. CHECK FOR A DTC C2205-STEERING ANGLE SENSOR INTERNAL

NOTE: This DTC must be active for the results of this test to be valid.
Turn the ignition on.
With the scan tool, read and record DTCs.
With the scan tool, read and record Freeze Frame information.
With the scan tool, erase DTCs.

WARNING: Ensure brake capability is available before road testing.
Test drive the vehicle by turning the vehicle left or right in a curving manner at a velocity between 10 and 25 km/hr (6 and 15 m.p.h.).
Park the vehicle.
With the scan tool, read and record DTCs.

Does the scan tool display: C2205-STEERING ANGLE SENSOR INTERNAL?

Yes >> Replace the Anti-Lock Brakes Module in accordance with the Service Information.
Perform ABS VERIFICATION TEST - VER 1. (Refer to 5 - BRAKES - STANDARD PROCEDURE).

No >> Refer to the INTERMITTENT CONDITION diagnostic procedure.
Perform ABS VERIFICATION TEST - VER 1. (Refer to 5 - BRAKES - STANDARD PROCEDURE).

C2206-VEHICLE CONFIGURATION MISMATCH

For a complete wiring diagram **Refer to Section 8W**.

- **When Monitored:**
  With the ignition on.
- **Set Condition:**
  When the Anti-Lock Brake Module detects the signal from the gateway module relevant for vehicle characteristic is missing or does not match for a period greater than the specified fault duration.

Possible Causes
FCM / PCM NOT CONFIGURED CORRECTLY
ANTI-LOCK BRAKE MODULE

Diagnostic Test

1. CHECK FOR A DTC C2206-VEHICLE CONFIGURATION MISMATCH

NOTE: This DTC must be active for the results of this test to be valid.

NOTE: This DTC will be active when a new module is installed until initialization is performed.

Turn the ignition on.

With the scan tool, read and record DTCs.

With the scan tool, read and record Freeze Frame information.

With the scan tool, erase DTCs.

Perform ECU initialization with drive test on ABM. Refer to ABS VERIFICATION TEST - VER 1. (Refer to 5 - BRAKES - STANDARD PROCEDURE).

Cycle the ignition switch from off to on.

With the scan tool, read and record DTCs.

Does the scan tool display: C2206-VEHICLE CONFIGURATION MISMATCH?

Yes >> Go To 2

No >> Refer to the INTERMITTENT CONDITION diagnostic procedure.
Perform ABS VERIFICATION TEST - VER 1. (Refer to 5 - BRAKES - STANDARD PROCEDURE).

2. VERIFY THAT THE FCM/PCM IS CONFIGURED CORRECTLY

Turn the ignition on.

Check the following data to ensure the FCM/PCM is configured correctly. Engine Displacement (PCM), XWD 4x2, 4x4, all Wheel Drive, (FCM), Axle ratio (FCM), Vehicle Line (FCM), Brake type 0= ABS 1=ESP (FCM).

NOTE: The DTC will be active when a new controller is installed until initialization is performed.

Was the FCM/PCM configured correctly?

Yes >> Replace the Anti-Lock Brake Module in accordance with the Service Information.
Perform ABS VERIFICATION TEST - VER 1. (Refer to 5 - BRAKES - STANDARD PROCEDURE).

No >> Reprogram the appropriate module.
Perform ABS or PCM VERIFICATION TEST - VER 1. (Refer to 5 - BRAKES - STANDARD PROCEDURE).

U0002–CAN C BUS OFF PERFORMANCE

For a complete wiring diagram **Refer to Section 8W**.

- **When Monitored:**
  With the ignition on.
- **Set Condition:**
  The FCM detects a short in either CAN C Bus circuit.

Possible Causes
(D65) CAN C BUS (+) CIRCUIT SHORTED TO GROUND
(D64) CAN C BUS (-) CIRCUIT SHORTED TO GROUND
(D65) CAN C BUS (+) CIRCUIT SHORTED TO VOLTAGE
(D64) CAN C BUS (-) CIRCUIT SHORTED TO VOLTAGE
(D65) CAN C BUS (+) CIRCUIT SHORTED TO (D64) CAN C BUS (-) CIRCUIT
ANTILOCK BRAKE MODULE
POWERTRAIN CONTROL MODULE
SHIFTER LEVER ASSEMBLY (NAG1 ONLY)
TRANSMISSION CONTROL MODULE (NAG1 ONLY)
STEERING CONTROL MODULE
FRONT CONTROL MODULE

Diagnostic Test

1. TEST FOR INTERMITTENT CONDITION

Turn the ignition on.
With the scan tool, record and erase FCM DTCs.
Cycle the ignition from on to off 3 times.
Turn the ignition on.
With the scan tool, read active FCM DTCs.

Does the scan tool display U0002-CAN C BUS OFF PERFORMANCE as active?

Yes >> Go To 2

No >> Perform the ABS Intermittent Condition diagnostic procedure in this Section.
Refer to the ABS-INTERMITTENT CONDITION TEST. (Refer to 5 - BRAKES - DIAGNOSIS AND TESTING)

2. ANTILOCK BRAKE MODULE — INTERNAL SHORT

Turn the ignition off.
Disconnect the Anti-Lock Brake Module harness connector.
Turn the ignition on.
With the scan tool, record and erase FCM DTCs.
Cycle the ignition from on to off 3 times.
Turn the ignition on.
With the scan tool, read active FCM DTCs.

Does the scan tool display U0002-CAN C BUS OFF PERFORMANCE as active?

Yes >> Go To 3

No >> Inspect the wiring and connectors for damage or shorted circuits. If ok, replace the Antilock Brake Module in accordance with the service information.
Perform ABS VERIFICATION TEST. (Refer to 5 - BRAKES - STANDARD PROCEDURE).

3. POWERTRAIN CONTROL MODULE — INTERNAL SHORT

Turn the ignition off.
Disconnect the Powertrain Control Module C1 harness connector.
Turn the ignition on.
With the scan tool, record and erase FCM DTCs.
Cycle the ignition from on to off 3 times.
Turn the ignition on.
With the scan tool, read active FCM DTCs.

Does the scan tool display U0002-CAN C BUS OFF PERFORMANCE as active?

Yes >> Go To 4

No >> Inspect the wiring and connectors for damage or shorted circuits. If ok, replace and program the Powertrain Control Module in accordance with the service information.
Perform (NGC) POWERTRAIN VERIFICATION TEST VER - 5.

4. SHIFTER LEVER ASSEMBLY (NAG1 ONLY)— INTERNAL SHORT

Turn the ignition off.

NOTE: If the vehicle is not equipped with a NAG1 controller then skip this step.
Disconnect the Shifter Lever Assembly harness connector.
Turn the ignition on.
With the scan tool, record and erase FCM DTCs.
Cycle the ignition from on to off 3 times.
Turn the ignition on.
With the scan tool, read active FCM DTCs.

Does the scan tool display U0002-CAN C BUS OFF PERFORMANCE as active?

Yes >> Go To 5

No >> Inspect the wiring and connectors for damage or shorted circuits. If ok, replace and program the Shifter Lever Assembly in accordance with the service information.
Perform NAG1 TRANSMISSION VERIFICATION TEST - VER 1.

5. TRANSMISSION CONTROL MODULE (NAG1 ONLY)— INTERNAL SHORT

Turn the ignition off.

NOTE: If the vehicle is not equipped with a NAG1 controller then skip this step.
Disconnect the Transmission Control Module C2 harness connector.
Turn the ignition on.
With the scan tool, record and erase FCM DTCs.
Cycle the ignition from on to off 3 times.
Turn the ignition on.
With the scan tool, read active FCM DTCs.

Does the scan tool display U0002-CAN C BUS OFF PERFORMANCE as active?

Yes >> Go To 6

No >> Inspect the wiring and connectors for damage or shorted circuits. If ok, replace and program the Transmission Control Module in accordance with the service information.
Perform NAG1 TRANSMISSION VERIFICATION TEST - VER 1.

6. STEERING CONTROL MODULE — INTERNAL SHORT

Turn the ignition off.
Disconnect the Steering Control Module harness connector.
Turn the ignition on.
With the scan tool, record and erase FCM DTCs.
Cycle the ignition from on to off 3 times.
Turn the ignition on.
With the scan tool, read active FCM DTCs.

Does the scan tool display U0002-CAN C BUS OFF PERFORMANCE as active?

Yes >> Go To 7

No >> Inspect the wiring and connectors for damage or shorted circuits. If ok, replace and program the Steering Control Module in accordance with the service information.
Perform BODY VERIFICATION TEST – VER 1. (Refer to 8 - ELECTRICAL/ELECTRONIC CONTROL MODULES - STANDARD PROCEDURE).

7. (D65) CAN C BUS (+) CIRCUIT SHORTED TO VOLTAGE

Turn the ignition off.
Disconnect the Front Control Module C1 harness connector.
Turn the ignition on.
Measure the voltage between the (D65) CAN C Bus (+) circuit and ground.

Is there any voltage present?

Yes >> Repair the (D65) CAN C Bus (+) circuit for a short to voltage.
Perform BODY VERIFICATION TEST – VER 1. (Refer to 8 - ELECTRICAL/ELECTRONIC CONTROL MODULES - STANDARD PROCEDURE).

No >> Go To 8

8. (D64) CAN C BUS (-) CIRCUIT SHORTED TO VOLTAGE

Measure the voltage between the (D64) CAN C Bus (-) circuit and ground.

Is there any voltage present?

Yes >> Repair the (D64) CAN C Bus (-) circuit for a short to voltage.
Perform BODY VERIFICATION TEST - VER 1.

No >> Go To 9

9. (D65) CAN C BUS (+) CIRCUIT SHORTED TO GROUND

Turn the ignition off.
Measure the resistance between ground and the (D65) CAN C Bus (+) circuit.

Is any resistance present?

Yes >> Repair the (D65) CAN C Bus (+) circuit for a short to ground.
Perform BODY VERIFICATION TEST – VER 1. (Refer to 8 - ELECTRICAL/ELECTRONIC CONTROL MODULES - STANDARD PROCEDURE).

No >> Go To 10

10. (D64) CAN C BUS (-) CIRCUIT SHORTED TO GROUND

Measure the resistance between ground and the (D64) CAN C Bus (-) circuit.

Is any resistance present?

Yes >> Repair the (D64) CAN C Bus (-) circuit for a short to ground.
Perform BODY VERIFICATION TEST – VER 1. (Refer to 8 - ELECTRICAL/ELECTRONIC CONTROL MODULES - STANDARD PROCEDURE)..

No >> Go To 11

11. (D65) CAN C BUS (+) CIRCUIT SHORTED TO (D64) CAN C BUS (-) CIRCUIT

Measure the resistance between the (D65) CAN C Bus (+) circuit and the (D64) CAN C Bus (-) circuit.

Is any resistance present?

Yes >> Repair the (D65) CAN C Bus (+) circuit for a short to the (D64) CAN C Bus (-) circuit.
Perform BODY VERIFICATION TEST – VER 1. (Refer to 8 - ELECTRICAL/ELECTRONIC CONTROL MODULES - STANDARD PROCEDURE).

No >> Inspect the wiring and connectors for damage or shorted circuits. If ok, replace and program the Front Control Module in accordance with the service information.
Perform BODY VERIFICATION TEST – VER 1. (Refer to 8 - ELECTRICAL/ELECTRONIC CONTROL MODULES - STANDARD PROCEDURE).

U0100–LOST COMMUNICATION WITH ECM/PCM

For a complete wiring diagram **Refer to Section 8W**.

- **When Monitored:**
  - With the ignition on
  - Battery voltage between 10 and 16 volts
  - IOD fuse installed
- **Set Condition:**
  If the Anti-Lock Brakes Module fails to receive bus messages from the ECM or PCM for approximately 500 ms.

Possible Causes
DTCs RELATED TO BATTERY VOLTAGE, IGNITION, OR VIN MESSAGES
CAN C BUS CIRCUITS OPEN OR SHORTED
ECM OR PCM POWER AND GROUND
ECM OR PCM
ANTI-LOCK BRAKES MODULE

Diagnostic Test

1. VERIFY DTC IS ACTIVE

NOTE: Ensure the IOD fuse is installed and battery voltage is between 10 and 16 volts before proceeding.
Turn the ignition on.
With the scan tool, read and record ABS DTCs.
With the scan tool, read and record Environmental Data (EV Data).
With the scan tool, erase ABS DTCs.
Cycle the ignition switch.
With the scan tool, read ABS DTCs.

Does this DTC reset?

Yes >> Go To 2

No >> Perform the Stored Lost Communication test procedure. (Refer to 8 - ELECTRICAL/ELECTRONIC CONTROL MODULES - DIAGNOSIS AND TESTING).

2. CHECK FOR ANY OF THE FOLLOWING ACTIVE DTCs

With the scan tool, read all active DTCs from all CAN C Bus modules.

NOTE: Check for CAN C hardware electrical, VIN Missing/Mismatch, battery or ignition related DTCs.

Does the scan tool display any active DTCs related to the conditions listed above?

Yes >> Diagnose and repair the DTC(s). Refer to the Table of Contents in the applicable Section.

No >> Go To 3

3. VERIFY THAT THE ECM OR PCM IS ACTIVE ON THE BUS

With the scan tool, select ECU View.
Verify that the ECM or PCM is active on the bus.

Is the ECM or PCM active on the bus?

Yes >> Go To 4

No >> (Refer to 8 - ELECTRICAL/ELECTRONIC CONTROL MODULES - DIAGNOSIS AND TESTING) for No Response related diagnostic procedures.

4. CHECK FOR ADDITIONAL COMMUNICATION RELATED DTCs

With the scan tool, select Network View and select Advanced.

Is there more than one module with active DTCs “Logged Against” the ECM or PCM?

Yes >> Replace/update the ECM or PCM in accordance with the service information.
Perform POWERTRAIN VERIFICATION TEST. Refer to 9 - ENGINE - DIAGNOSIS AND TESTING.
Perform ABS VERIFICATION TEST - VER 1. (Refer to 5 - BRAKES - STANDARD PROCEDURE).

No >> Replace the Anti-Lock Brakes Module in accordance with the service information.
Perform ABS VERIFICATION TEST - VER 1. (Refer to 5 - BRAKES - STANDARD PROCEDURE).

U0101–LOST COMMUNICATION WITH TCM

For a complete wiring diagram **Refer to Section 8W**.

- **When Monitored:**
  - With the ignition on
  - Battery voltage between 10 and 16 volts
  - IOD fuse installed
- **Set Condition:**
  If the Anti-Lock Brakes Module fails to receive bus messages from the TCM for approximately 500 ms.

Possible Causes
DTCs RELATED TO BATTERY VOLTAGE, IGNITION, OR VIN MESSAGES
CAN C BUS CIRCUITS OPEN OR SHORTED
TCM POWER AND GROUND
PCM DTCs PRESENT
TCM
ANTI-LOCK BRAKES MODULE

Diagnostic Test

1. VERIFY DTC IS ACTIVE

NOTE: Ensure the IOD fuse is installed and battery voltage is between 10 and 16 volts before proceeding.

NOTE: If present, diagnose and repair DTC U0002–CAN C BUS OFF PERFORMANCE, DTC U0146–LOST COMMUNICATION WITH CENTRAL GATEWAY, or DTC U1502–IMPLAUSIBLE MESSAGE DATA LENGTH RECEIVED FROM FCM / BCM before diagnosing this DTC.

Turn the ignition on.

With the scan tool, read and record ABS DTCs.

With the scan tool, read and record Environmental Data (EV Data).

With the scan tool, erase ABS DTCs.

Cycle the ignition switch.

With the scan tool, read ABS DTCs.

Does this DTC reset?

Yes >> Go To 2

No >> Perform the Stored Lost Communication test procedure. Refer to the table of contents in this section. (Refer to 8 - ELECTRICAL/ELECTRONIC CONTROL MODULES - DIAGNOSIS AND TESTING).
Perform BODY VERIFICATION TEST – VER 1. (Refer to BODY VERIFICATION TEST – VER 1).

2. CHECK FOR ANY OF THE FOLLOWING ACTIVE DTCs

With the scan tool, read all active DTCs from all CAN C Bus modules.

NOTE: Check for CAN C hardware electrical, VIN Missing/Mismatch, battery or ignition related DTCs.

Does the scan tool display any active DTCs related to the conditions listed above?

Yes >> Diagnose and repair the DTC(s). Refer to the Table of Contents in the applicable Section.

No >> Go To 3

3. VERIFY THAT THE TCM IS ACTIVE ON THE BUS

With the scan tool, select ECU View.
Verify that the TCM is active on the bus.

Is the TCM active on the bus?

Yes >> Go To 4

No >> Refer to the Table of Contents located in this section for a no response test procedure.
Perform BODY VERIFICATION TEST – VER 1. (Refer to BODY VERIFICATION TEST – VER 1).

4. CHECK FOR ADDITIONAL COMMUNICATION RELATED DTCs

With the scan tool, select Network View and select Advanced.

Is there more than one module with active DTCs "Logged Against" the TCM?

Yes >> Replace/update the TCM in accordance with the service information.
Perform BODY VERIFICATION TEST – VER 1. (Refer to BODY VERIFICATION TEST – VER 1).

No >> Replace the Anti-Lock Brakes Module in accordance with the service information.
Perform BODY VERIFICATION TEST – VER 1. (Refer to BODY VERIFICATION TEST – VER 1).

U0125–LOST COMMUNICATION WITH DYNAMICS SENSOR

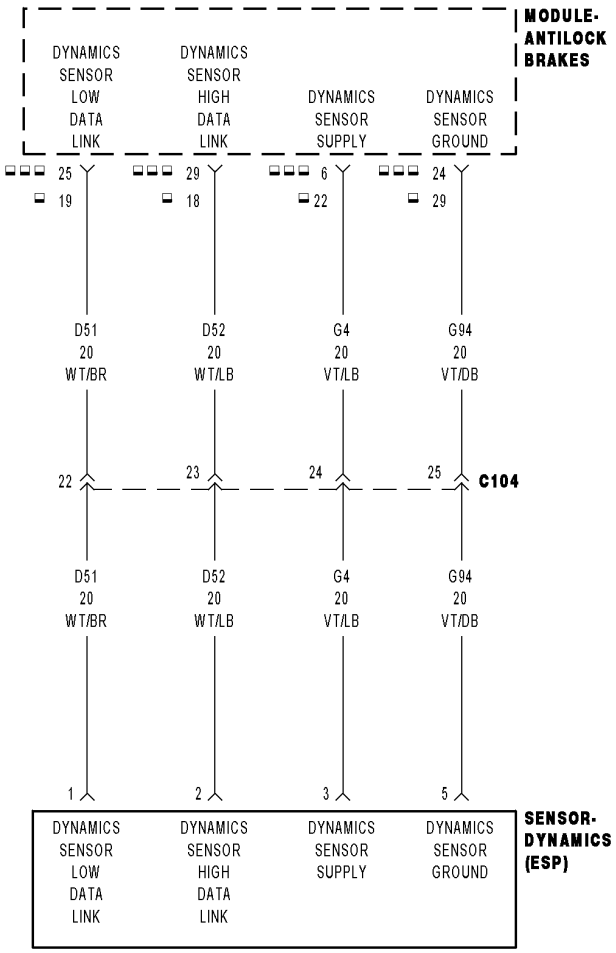

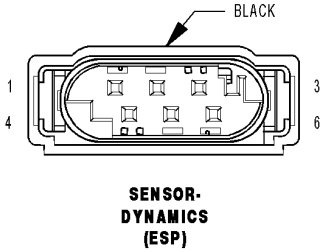

SENSOR-
DYNAMICS
(ESP)

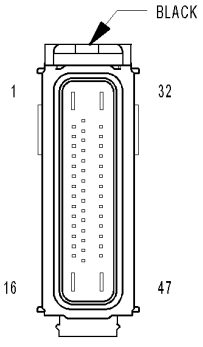

MODULE-
ANTILOCK
BRAKES

8179b247

For a complete wiring diagram **Refer to Section 8W**.

- **When Monitored:**
  With the ignition on.
- **Set Condition:**
  If the Anti-Lock Brakes Module fails to receive bus messages from the Dynamics Sensor.

Possible Causes
WIRING HARNESS, TERMINAL, CONNECTOR DAMAGE
(D52) DYNAMICS SENSOR HIGH DATA LINK CIRCUIT SHORTED TO GROUND, SHORTED TO VOLTAGE, OR OPEN
(D51) DYNAMICS SENSOR LOW DATA LINK CIRCUIT SHORTED TO GROUND, SHORTED TO VOLTAGE, OR OPEN
DYNAMICS SENSOR
ANTI-LOCK BRAKES MODULE

Diagnostic Test

1. VERIFY DTC IS ACTIVE

NOTE: If present, diagnose and repair DTC C2114–DYNAMICS SENSOR SUPPLY VOLTAGE LOW or DTC C2115–DYNAMICS SENSOR SUPPLY VOLTAGE HIGH before proceeding.

Turn the ignition on.

With the scan tool, read and record ABS DTCs.

With the scan tool, read and record Environmental Data (EV Data).

With the scan tool, erase ABS DTCs.

Cycle the ignition switch.

With the scan tool, read ABS DTCs.

Does this DTC reset?

Yes >> Go To 2

No >> Perform the ABS Intermittent Condition diagnostic procedure in this Section.
Perform ABS VERIFICATION TEST - VER 1. (Refer to 5 - BRAKES - STANDARD PROCEDURE).

2. INSPECT RELATED WIRING HARNESS, TERMINALS, & CONNECTORS

Visually inspect the related wiring harness. Look for any pinched, chafed, pierced, and partially broken wires.

Visually inspect the related wiring harness connectors. Look for broken, bent, pushed out, and corroded terminals.

Were any problems found?

Yes >> Repair as necessary.
Perform ABS VERIFICATION TEST - VER 1. (Refer to 5 - BRAKES - STANDARD PROCEDURE).

No >> Go To 3

3. CHECK THE (D52) DYNAMICS SENSOR HIGH DATA LINK CIRCUIT FOR A SHORT TO VOLTAGE

Disconnect the Anti-Lock Brakes Module harness connector.

Disconnect the Dynamics Sensor harness connector.

Turn the ignition on.

Measure the voltage of the (D52) Dynamics Sensor High Data Link circuit.

Is there any voltage present?

Yes >> Repair the (D52) Dynamics Sensor High Data Link circuit for a short to voltage.
Perform ABS VERIFICATION TEST - VER 1. (Refer to 5 - BRAKES - STANDARD PROCEDURE).

No >> Go To 4

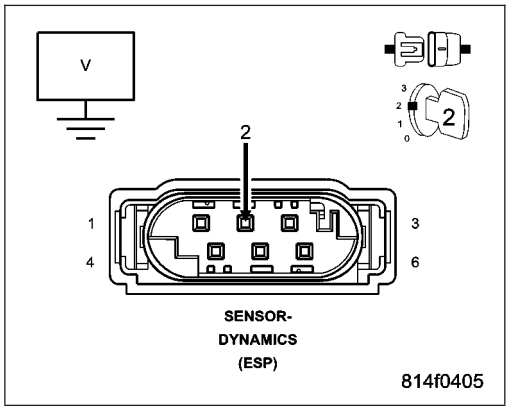

4. CHECK THE (D52) DYNAMICS SENSOR HIGH DATA LINK CIRCUIT FOR A SHORT TO GROUND

Turn the ignition off.

Measure the resistance of the (D52) Dynamics Sensor High Data Link circuit between ground and the Dynamics Sensor harness connector.

Is the resistance below 5.0 ohms?

Yes >> Repair the (D52) Dynamics Sensor High Data Link circuit for a short to ground.
Perform ABS VERIFICATION TEST - VER 1. (Refer to 5 - BRAKES - STANDARD PROCEDURE).

No >> Go To 5

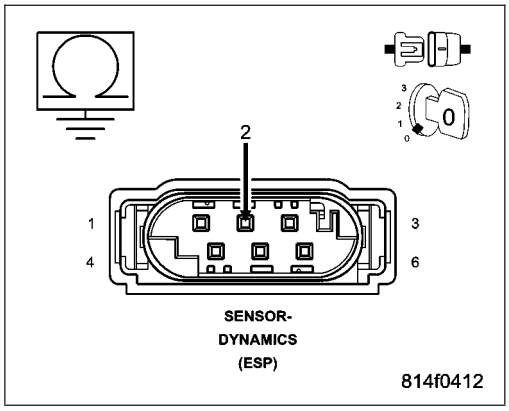

5. CHECK THE (D52) DYNAMICS SENSOR HIGH DATA LINK CIRCUIT FOR AN OPEN

Measure the resistance of the (D52) Dynamics Sensor High Data Link circuit between the Dynamics Sensor harness connector and the Anti-Lock Brakes Module harness connector.

Is the resistance below 5.0 ohms?

Yes >> Go To 6

No >> Repair the (D52) Dynamics Sensor High Data Link circuit for an open.
Perform ABS VERIFICATION TEST - VER 1. (Refer to 5 - BRAKES - STANDARD PROCEDURE).

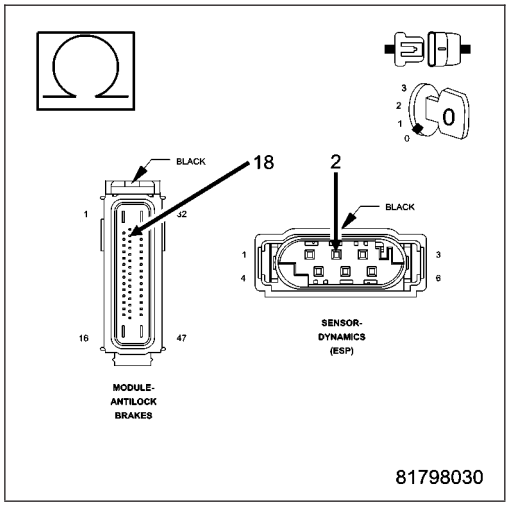

6. CHECK THE (D51) DYNAMICS SENSOR LOW DATA LINK CIRCUIT FOR A SHORT TO VOLTAGE

Turn the ignition on.

Measure the voltage of the (D51) Dynamics Sensor Low Data Link circuit.

Is there any voltage present?

Yes >> Repair the (D51) Dynamics Sensor Low Data Link circuit for a short to voltage.
Perform ABS VERIFICATION TEST - VER 1. (Refer to 5 - BRAKES - STANDARD PROCEDURE).

No >> Go To 7

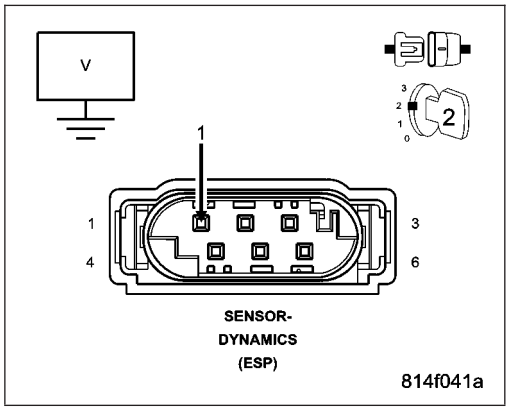

7. CHECK THE (D51) DYNAMICS SENSOR LOW DATA LINK CIRCUIT FOR A SHORT TO GROUND

Turn the ignition off.

Measure the resistance of the (D51) Dynamics Sensor Low Data Link circuit between ground and the Dynamics Sensor harness connector.

Is the resistance below 5.0 ohms?

Yes >> Repair the (D51) Dynamics Sensor Low Data Link circuit for a short to ground.
Perform ABS VERIFICATION TEST - VER 1. (Refer to 5 - BRAKES - STANDARD PROCEDURE).

No >> Go To 8

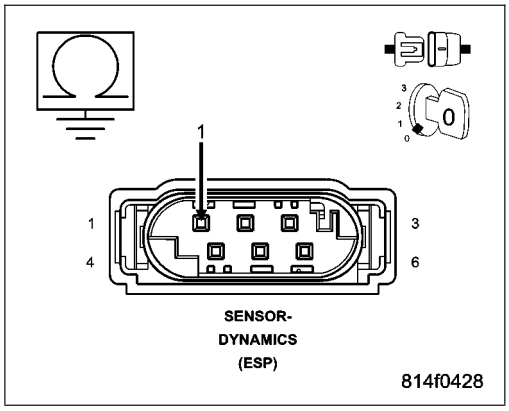

8. CHECK THE (D51) DYNAMICS SENSOR LOW DATA LINK CIRCUIT FOR AN OPEN

Measure the resistance of the (D51) Dynamics Sensor Low Data Link circuit between the Dynamics Sensor harness connector and the Anti-Lock Brakes Module harness connector.

Is the resistance below 5.0 ohms?

Yes >> Replace the Dynamics Sensor in accordance with the Service Information.
Perform ABS VERIFICATION TEST - VER 1. (Refer to 5 - BRAKES - STANDARD PROCEDURE).

No >> Repair the (D51) Dynamics Sensor Low Data Link circuit for an open.
Perform ABS VERIFICATION TEST - VER 1. (Refer to 5 - BRAKES - STANDARD PROCEDURE).

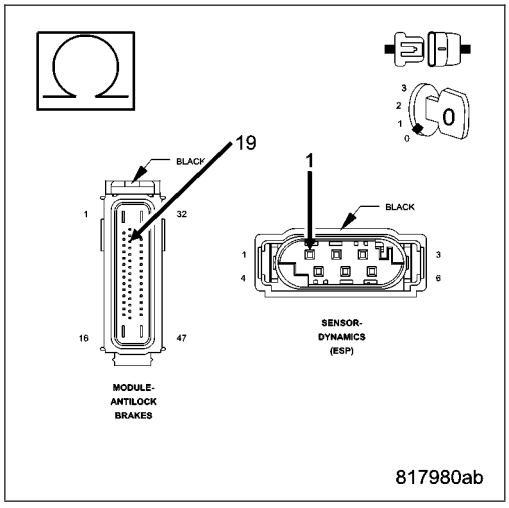

U0126–LOST COMMUNICATION WITH STEERING ANGLE SENSOR

For a complete wiring diagram **Refer to Section 8W**.

- **When Monitored:**
  - With the ignition on
  - Battery voltage between 10 and 16 volts
  - IOD fuse installed
- **Set Condition:**
  If the Anti-Lock Brakes Module fails to receive bus messages from the Steering Angle Sensor for approximately 500 ms.

Possible Causes
DTCs RELATED TO BATTERY VOLTAGE, IGNITION, OR VIN MESSAGES
CAN C BUS CIRCUITS OPEN OR SHORTED
STEERING ANGLE SENSOR POWER AND GROUND
STEERING ANGLE SENSOR
ANTI-LOCK BRAKES MODULE

Diagnostic Test

1. VERIFY DTC IS ACTIVE

NOTE: Ensure the IOD fuse is installed and battery voltage is between 10 and 16 volts before proceeding.
Turn the ignition on.
With the scan tool, read and record ABS DTCs.
With the scan tool, read and record Environmental Data (EV Data).
With the scan tool, erase ABS DTCs.
Cycle the ignition switch.
With the scan tool, read ABS DTCs.

Does this DTC reset?

Yes >> Go To 2

No >> Refer to the Stored Lost Communication test procedure. Refer to the table of contents in this section. Perform BODY VERIFICATION TEST – VER 1. (Refer to BODY VERIFICATION TEST – VER 1).

2. CHECK FOR ANY OF THE FOLLOWING ACTIVE DTCs

With the scan tool, read all active DTCs from all CAN C Bus modules.

NOTE: Check for CAN C hardware electrical, VIN Missing/Mismatch, battery or ignition related DTCs.

Does the scan tool display any active DTCs related to the conditions listed above?

Yes >> Diagnose and repair the DTC(s). Refer to the Table of Contents in the applicable Section. Perform BODY VERIFICATION TEST – VER 1. (Refer to BODY VERIFICATION TEST – VER 1).

No >> Go To 3

3. VERIFY THAT THE STEERING ANGLE SENSOR IS ACTIVE ON THE BUS

With the scan tool, select ECU View.
Verify that the Steering Angle Sensor is active on the bus.

Is the Steering Angle Sensor active on the bus?

Yes >> Go To 4

No >> Refer to the Stored Lost Communication test procedure. Refer to the table of contents in this section. Perform BODY VERIFICATION TEST – VER 1. (Refer to BODY VERIFICATION TEST – VER 1).

4. CHECK FOR ADDITIONAL COMMUNICATION RELATED DTCs

With the scan tool, select Network View and select Advanced.

Is there more than one module with active DTCs "Logged Against" the STEERING ANGLE SENSOR?

Yes >> Replace/update the Steering Angle Sensor in accordance with the service information.
Perform ABS VERIFICATION TEST - VER 1. (Refer to 5 - BRAKES - STANDARD PROCEDURE).

No >> Replace the Anti-Lock Brakes Module in accordance with the service information.
Perform ABS VERIFICATION TEST - VER 1. (Refer to 5 - BRAKES - STANDARD PROCEDURE).

U0141–LOST COMMUNICATION WITH FRONT CONTROL MODULE

For a complete wiring diagram **Refer to Section 8W**.

- **When Monitored:**
  - With the ignition on
  - Battery voltage between 10 and 16 volts
  - IOD fuse installed
  - FCM is configured correctly
- **Set Condition:**
  Bus messages not received from the Front Control Module for approximately 2 to 5 seconds.

Possible Causes
DTCS RELATED TO BATTERY VOLTAGE, IGNITION, OR VIN MESSAGES
FCM NOT CONFIGURED CORRECTLY
FRONT CONTROL MODULE
FRONT CONTROL MODULES POWER AND GROUND
MODULE THAT SET THIS DTC

Diagnostic Test

1. VERIFY DTC IS ACTIVE

NOTE: Ensure the IOD fuse is installed and battery voltage is between 10 and 16 volts before proceeding.
With the scan tool, read active DTCs.

Is this DTC active?

Yes >> Go To 2

No >> Refer to the Stored Lost Communication test procedure. Refer to the table of contents in this section. Perform BODY VERIFICATION TEST – VER 1.

2. CHECK FOR ANY OF THE FOLLOWING ACTIVE DTCS

With the scan tool, read all active DTCs from all modules.

NOTE: Check for FCM configuration, CAN B or C hardware electrical, VIN Missing/Mismatch, battery or ignition related DTCs.

Does the scan tool display any active DTCs to the conditions listed above?

Yes >> Diagnose and repair the DTC. Refer to the Table of Contents for a complete list of the symptoms. Perform BODY VERIFICATION TEST – VER 1.

No >> Go To 3

3. VERIFY THAT THE FCM IS ACTIVE ON THE BUS

Turn the ignition on.
With the scan tool, select Network Diagnostics.
Verify that the FCM is active on the bus.

Is the FCM active on the bus?

Yes >> Go To 4

No >> (Refer to 8 - ELECTRICAL/ELECTRONIC CONTROL MODULES - DIAGNOSIS AND TESTING) for No Response diagnostic procedures.
Perform BODY VERIFICATION TEST – VER 1.

4. CHECK FOR ADDITIONAL COMMUNICATION RELATED DTCS

With the scan tool, select Network Diagnostics.

Is there more than one module with active DTCs “Logged Against” the FCM?

Yes >> Replace/update the Front Control Module in accordance with the service information. Perform BODY VERIFICATION TEST – VER 1.

No >> Replace/update the module that set this DTC in accordance with the service information Perform BODY VERIFICATION TEST – VER 1.

U0146–LOST COMMUNICATION WITH CENTRAL GATEWAY

For a complete wiring diagram **Refer to Section 8W**.

- **When Monitored:**
  - With the ignition on
  - Battery voltage between 10 and 16 volts
  - IOD fuse installed
- **Set Condition:**
  If the Anti-Lock Brakes Module either fails to receive bus messages from the Front Control Module (FCM) for approximately 500 ms, or it receives invalid messages from the FCM, or it detects messages from the FCM are of improper data length.

Possible Causes
DTCs RELATED TO BATTERY VOLTAGE, IGNITION, OR VIN MESSAGES
CAN C BUS CIRCUITS OPEN OR SHORTED
FCM POWER AND GROUND
FCM
ANTI-LOCK BRAKES MODULE

Diagnostic Test

1. VERIFY DTC IS ACTIVE

NOTE: Ensure the IOD fuse is installed and battery voltage is between 10 and 16 volts before proceeding.
Turn the ignition on.
With the scan tool, read and record ABS DTCs.
With the scan tool, read and record Environmental Data (EV Data).
With the scan tool, erase ABS DTCs.
Cycle the ignition switch.
With the scan tool, read ABS DTCs.

Does this DTC reset?

Yes >> Go To 2

No >> Perform the Stored Lost Communication test procedure. (Refer to 8 - ELECTRICAL/ELECTRONIC CONTROL MODULES - DIAGNOSIS AND TESTING).

2. CHECK FOR ANY OF THE FOLLOWING ACTIVE DTCs

With the scan tool, read all active DTCs from all CAN C Bus modules.

NOTE: Check for CAN C hardware electrical, VIN Missing/Mismatch, battery or ignition related DTCs.

Does the scan tool display any active DTCs related to the conditions listed above?

Yes >> Diagnose and repair the DTC(s). Refer to the Table of Contents in the applicable Section.

No >> Go To 3

3. VERIFY THAT THE FCM IS ACTIVE ON THE BUS

With the scan tool, select ECU View.
Verify that the FCM is active on the bus.

Is the FCM active on the bus?

Yes >> Go To 4

No >> (Refer to 8 - ELECTRICAL/ELECTRONIC CONTROL MODULES - DIAGNOSIS AND TESTING) for No Response related diagnostic procedures.

4. CHECK FOR ADDITIONAL COMMUNICATION RELATED DTCs

With the scan tool, select Network View and select Advanced.

Is there more than one module with active DTCs "Logged Against" the FCM?

Yes >> Replace/update the FCM in accordance with the service information.
Perform BODY VERIFICATION TEST – VER 1. (Refer to 8 - ELECTRICAL/ELECTRONIC CONTROL MODULES - STANDARD PROCEDURE).

No >> Replace the Anti-Lock Brakes Module in accordance with the service information.
Perform ABS VERIFICATION TEST - VER 1. (Refer to 5 - BRAKES - STANDARD PROCEDURE).

U0401–IMPLAUSIBLE DATA RECEIVED FROM ECM/PCM

For a complete wiring diagram **Refer to Section 8W**

- **When Monitored:**
  Continuously with the ignition on, one valid CAN message received at least once, and no U0002-CAN C Bus Off Performance DTC present.
- **Set Condition:**
  When the Anti-Lock Brake Module detects an incorrect CAN message from the Engine Control Module (ECM).

Possible Causes
ABM CAN BUS DTCS
ENGINE DTCS
ANTI-LOCK BRAKE MODULE

Diagnostic Test

1. CHECK FOR DTC U0401-IMPLAUSIBLE DATA RECEIVED FROM ECM/PCM

NOTE: This DTC must be active for the results of this test to be valid.
Turn the ignition on.
With the scan tool, record and erase DTCs.
Cycle the ignition switch from off to on.
With the scan tool, read DTCs.

Does the scan tool display: U0401-IMPLAUSIBLE DATA RECEIVED FROM ECM/PCM?

Yes >> Go To 2

No >> Refer to the INTERMITTENT CONDITION diagnostic procedure.
Perform ABS VERIFICATION TEST - VER 1. (Refer to 5 - BRAKES - STANDARD PROCEDURE). Diagnostic Test

2. CHECK IF FCM CAN BUS DTCs ARE PRESENT

With the scan tool, read FCM DTCs.

Are there any FCM CAN BUS DTCs present?

Yes >> Refer to 8-ELECTRICAL/ELECTRONIC CONTROL MODULES - DIAGNOSIS AND TESTING and diagnose the appropriate symptom.
Perform ABS VERIFICATION TEST - VER 1. (Refer to 5 - BRAKES - STANDARD PROCEDURE).

No >> Go To 3

3. CHECK IF ENGINE DTCs ARE PRESENT

With the scan tool, read Engine DTCs.

Are there any Engine DTCs present?

Yes >> Refer to the 9 - ENGINE ELECTRICAL DIAGNOSTICS and diagnose the appropriate symptom.
Perform ABS VERIFICATION TEST - VER 1. (Refer to 5 - BRAKES - STANDARD PROCEDURE).

No >> Using the schematics as a guide, check the Anti-Lock Brake Module pins, terminals, and connectors for corrosion, damage, or terminal push out. Pay particular attention to all power and ground circuits. If no problems are found, replace the Anti-Lock Brake Module per the Service Information.
Perform ABS VERIFICATION TEST - VER 1. (Refer to 5 - BRAKES - STANDARD PROCEDURE).

U0429–IMPLAUSIBLE DATA RECEIVED FROM SCM

For a complete wiring diagram **Refer to Section 8W**

- **When Monitored:**
  With ignition on, but not if low voltage is detected.
  Or, if a CAN Bus off event is detected.
- **Set Condition:**
  If the Anti-Lock Brakes Module detects either the sequence or integrity of the Steering Angle Sensor messages is invalid.

Possible Causes
CAN C BUS CIRCUIT(S) SHORTED
LOAD TOO HIGH ON CAN C BUS
STEERING ANGLE SENSOR DTCs PRESENT
ANTI-LOCK BRAKES MODULE

Diagnostic Test

1. CHECK IF COMMUNICATION RELATED DTCs ARE PRESENT

Turn the ignition on.
With the scan tool, read ABS DTCs.

Are any Communication related DTCs present?

Yes >> Diagnose and repair the DTC(s). Refer to the Table of Contents in this Section for a complete list of symptoms.
Perform ABS VERIFICATION TEST - VER 1. (Refer to 5 - BRAKES - STANDARD PROCEDURE).

No >> Go To 2

2. CHECK IF OTHER STEERING ANGLE SENSOR RELATED DTCs ARE PRESENT

With the scan tool, read ABS DTCs.

Are any other STEERING ANGLE SENSOR DTCs present?

Yes >> Diagnose and repair the DTC(s). Refer to the Table of Contents in this Section for a complete list of symptoms.
Perform ABS VERIFICATION TEST - VER 1. (Refer to 5 - BRAKES - STANDARD PROCEDURE).

No >> Replace the Steering Angle Sensor in accordance with the Service Information.
Perform ABS VERIFICATION TEST - VER 1. (Refer to 5 - BRAKES - STANDARD PROCEDURE).

U1003–ESP CAN C BUS PERFORMANCE

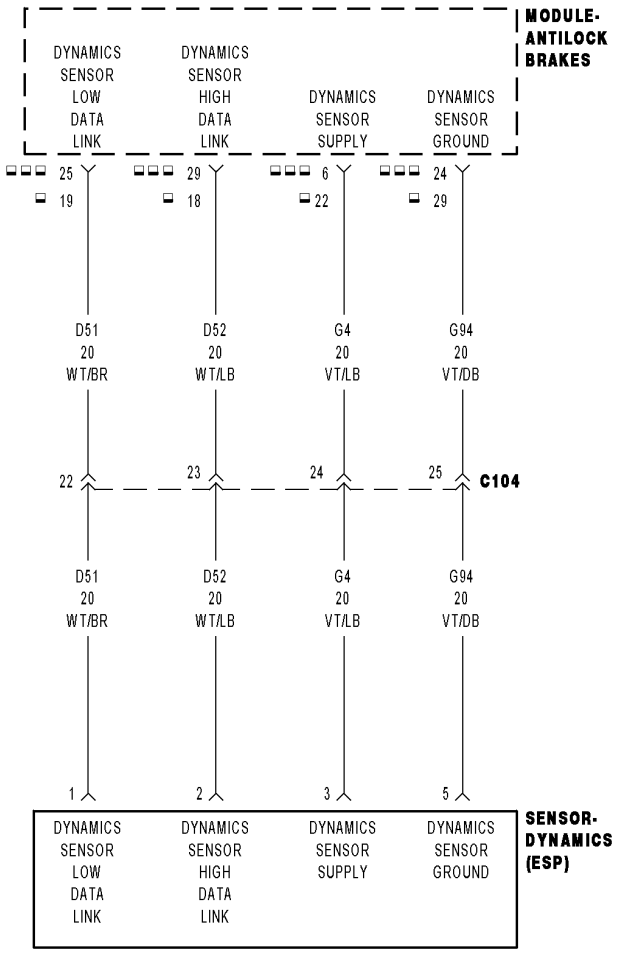

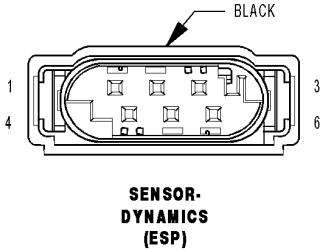

SENSOR-
DYNAMICS
(ESP)

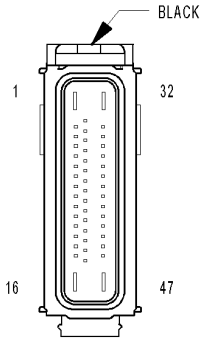

MODULE-
ANTILOCK
BRAKES

8179b247

For a complete wiring diagram **Refer to Section 8W**.

- **When Monitored:**
  With the ignition on.
- **Set Condition:**
  If the Anti-Lock Brakes Module detects too many CAN Bus off events on the Dynamics Sensor Data Link circuits.

Possible Causes
WIRING HARNESS, TERMINAL, CONNECTOR DAMAGE
(D52) DYNAMICS SENSOR HIGH DATA LINK CIRCUIT SHORTED TO GROUND, VOLTAGE, OR OPEN
(D51) DYNAMICS SENSOR LOW DATA LINK CIRCUIT SHORTED TO GROUND, VOLTAGE, OR OPEN
DYNAMICS SENSOR
ANTI-LOCK BRAKES MODULE

Diagnostic Test

1. VERIFY DTC IS ACTIVE

Turn the ignition on.
With the scan tool, read and record ABS DTCs.
With the scan tool, read and record Environmental Data (EV Data).
With the scan tool, erase ABS DTCs.
Cycle the ignition switch.
With the scan tool, read ABS DTCs.

Does this DTC reset?

Yes >> Go To 2

No >> Perform the ABS Intermittent Condition diagnostic procedure in this Section.
Perform ABS VERIFICATION TEST - VER 1. (Refer to 5 - BRAKES - STANDARD PROCEDURE).

2. INSPECT RELATED WIRING HARNESS, TERMINALS, & CONNECTORS

Visually inspect the related wiring harness. Look for any pinched, chafed, pierced, and partially broken wires.
Visually inspect the related wiring harness connectors. Look for broken, bent, pushed out, and corroded terminals.

Were any problems found?

Yes >> Repair as necessary.
Perform ABS VERIFICATION TEST - VER 1. (Refer to 5 - BRAKES - STANDARD PROCEDURE).

No >> Go To 3

3. CHECK THE (D52) DYNAMICS SENSOR HIGH DATA LINK CIRCUIT FOR A SHORT TO VOLTAGE

Disconnect the Anti-Lock Brakes Module harness connector.
Disconnect the Dynamics Sensor harness connector.
Turn the ignition on.
Measure the voltage of the (D52) Dynamics Sensor High Data Link circuit.

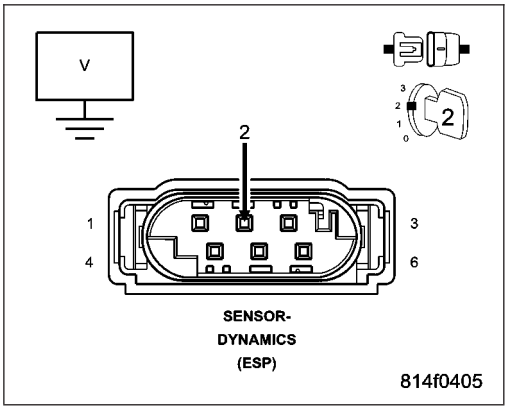

Is there any voltage present?

Yes >> Repair the (D52) Dynamics Sensor High Data Link circuit for a short to voltage.
Perform ABS VERIFICATION TEST - VER 1. (Refer to 5 - BRAKES - STANDARD PROCEDURE).

No >> Go To 4

4. CHECK THE (D52) DYNAMICS SENSOR HIGH DATA LINK CIRCUIT FOR A SHORT TO GROUND

Turn the ignition off.

Measure the resistance of the (D52) Dynamics Sensor High Data Link circuit between ground and the Dynamics Sensor harness connector.

Is the resistance below 5.0 ohms?

Yes >> Repair the (D52) Dynamics Sensor High Data Link circuit for a short to ground.
Perform ABS VERIFICATION TEST - VER 1. (Refer to 5 - BRAKES - STANDARD PROCEDURE).

No >> Go To 5

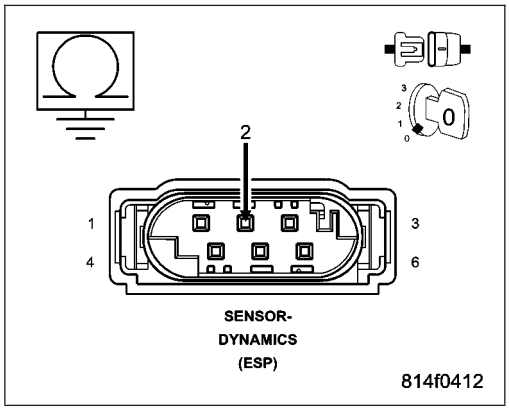

5. CHECK THE (D52) DYNAMICS SENSOR HIGH DATA LINK CIRCUIT FOR AN OPEN

Measure the resistance of the (D52) Dynamics Sensor High Data Link circuit between the Dynamics Sensor harness connector and the Anti-Lock Brakes Module harness connector.

Is the resistance below 5.0 ohms?

Yes >> Go To 6

No >> Repair the (D52) Dynamics Sensor High Data Link circuit for an open.
Perform ABS VERIFICATION TEST - VER 1. (Refer to 5 - BRAKES - STANDARD PROCEDURE).

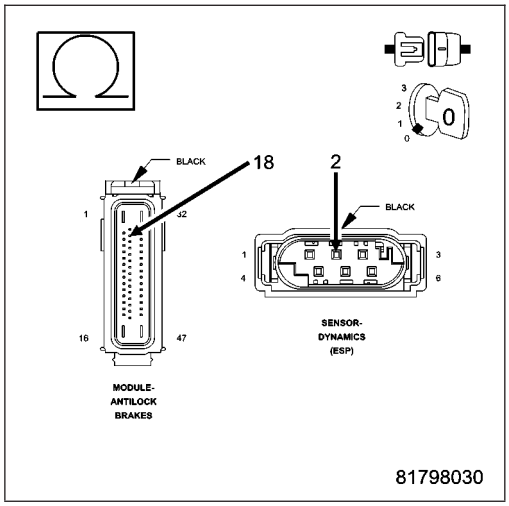

6. CHECK THE (D51) DYNAMICS SENSOR LOW DATA LINK CIRCUIT FOR A SHORT TO VOLTAGE

Turn the ignition on.

Measure the voltage of the (D51) Dynamics Sensor Low Data Link circuit.

Is there any voltage present?

Yes >> Repair the (D51) Dynamics Sensor Low Data Link circuit for a short to voltage.
Perform ABS VERIFICATION TEST - VER 1. (Refer to 5 - BRAKES - STANDARD PROCEDURE).

No >> Go To 7

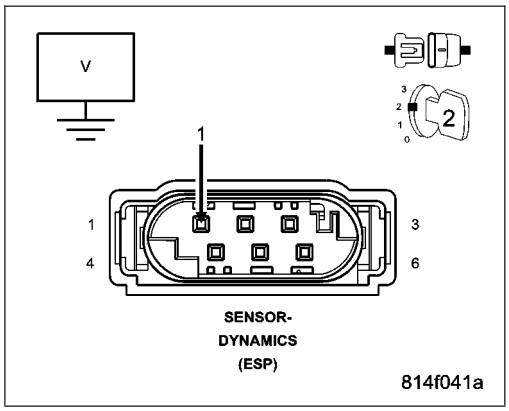

7. CHECK THE (D51) DYNAMICS SENSOR LOW DATA LINK CIRCUIT FOR A SHORT TO GROUND

Turn the ignition off.

Measure the resistance of the (D51) Dynamics Sensor Low Data Link circuit between ground and the Dynamics Sensor harness connector.

Is the resistance below 5.0 ohms?

Yes >> Repair the (D51) Dynamics Sensor Low Data Link circuit for a short to ground.
Perform ABS VERIFICATION TEST - VER 1. (Refer to 5 - BRAKES - STANDARD PROCEDURE).

No >> Go To 8

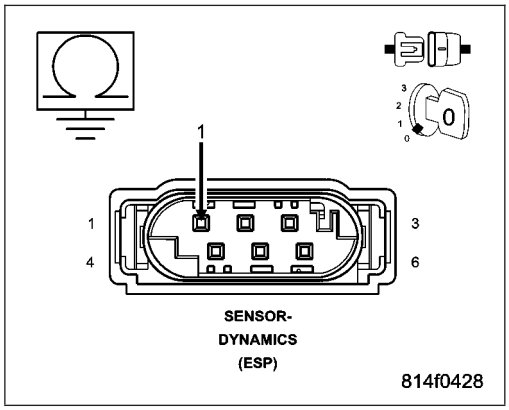

8. CHECK THE (D51) DYNAMICS SENSOR LOW DATA LINK CIRCUIT FOR AN OPEN

Measure the resistance of the (D51) Dynamics Sensor Low Data Link circuit between the Dynamics Sensor harness connector and the Anti-Lock Brakes Module harness connector.

Is the resistance below 5.0 ohms?

Yes >> Replace the Dynamics Sensor in accordance with the Service Information.
Perform ABS VERIFICATION TEST - VER 1. (Refer to 5 - BRAKES - STANDARD PROCEDURE).

No >> Repair the (D51) Dynamics Sensor Low Data Link circuit for an open.
Perform ABS VERIFICATION TEST - VER 1. (Refer to 5 - BRAKES - STANDARD PROCEDURE).

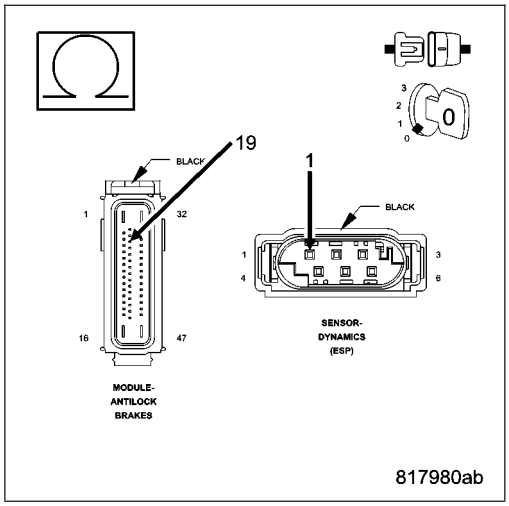

U1104–CAN C BUS CRC PERFORMANCE

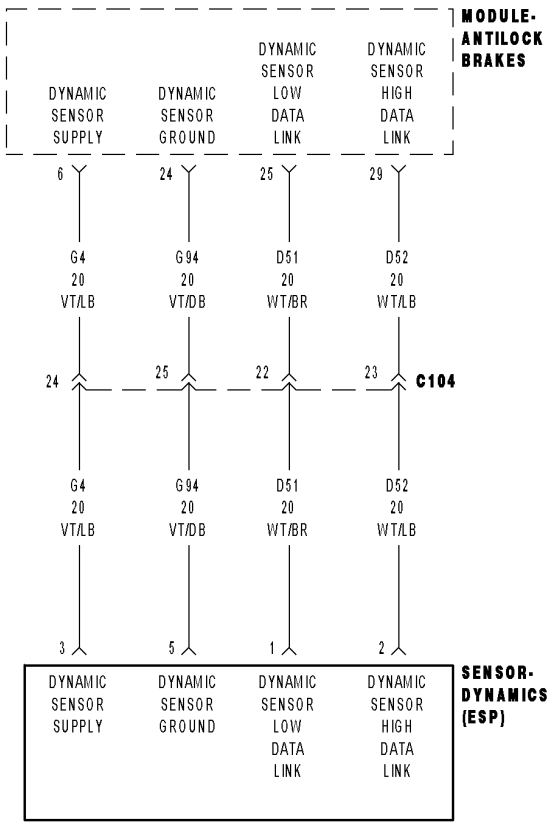

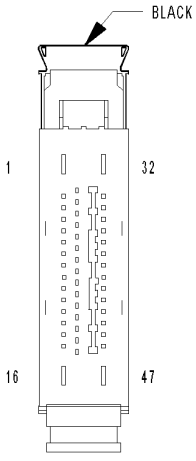

MODULE-
ANTILOCK BRAKES

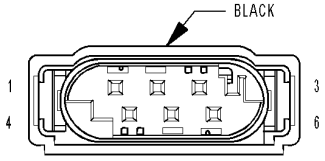

SENSOR-
DYNAMICS
(ESP)

813d2e6d

For a complete wiring diagram **Refer to Section 8W**.

- **When Monitored:**
  With the ignition on.
- **Set Condition:**
  If the Anti-Lock Brakes Module detects an invalid CAN message from the Dynamics Sensor.

Possible Causes
WIRING HARNESS, TERMINAL, CONNECTOR DAMAGE
(D52) DYNAMICS SENSOR HIGH DATA LINK CIRCUIT SHORTED TO GROUND, VOLTAGE, OR OPEN
(D51) DYNAMICS SENSOR LOW DATA LINK CIRCUIT SHORTED TO GROUND, VOLTAGE, OR OPEN
DYNAMICS SENSOR
ANTI-LOCK BRAKES MODULE

Diagnostic Test

1. VERIFY DTC IS ACTIVE

Turn the ignition on.
With the scan tool, read and record ABS DTCs.
With the scan tool, read and record Environmental Data (EV Data).
With the scan tool, erase ABS DTCs.
Cycle the ignition switch.
With the scan tool, read ABS DTCs.

Does this DTC reset?

Yes >> Go To 2

No >> Perform the ABS Intermittent Condition diagnostic procedure in this Section.
Perform ABS VERIFICATION TEST - VER 1. (Refer to 5 - BRAKES - STANDARD PROCEDURE).

2. INSPECT RELATED WIRING HARNESS, TERMINALS, & CONNECTORS

Visually inspect the related wiring harness. Look for any pinched, chafed, pierced, and partially broken wires.
Visually inspect the related wiring harness connectors. Look for broken, bent, pushed out, and corroded terminals.

Were any problems found?

Yes >> Repair as necessary.
Perform ABS VERIFICATION TEST - VER 1. (Refer to 5 - BRAKES - STANDARD PROCEDURE).

No >> Go To 3

3. CHECK THE (D52) DYNAMICS SENSOR HIGH DATA LINK CIRCUIT FOR A SHORT TO VOLTAGE

Disconnect the Anti-Lock Brakes Module harness connector.
Disconnect the Dynamics Sensor harness connector.
Turn the ignition on.
Measure the voltage of the (D52) Dynamics Sensor High Data Link circuit.

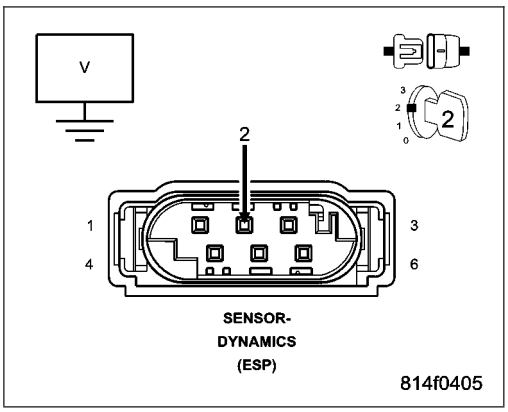

Is there any voltage present?

Yes >> Repair the (D52) Dynamics Sensor High Data Link circuit for a short to voltage.
Perform ABS VERIFICATION TEST - VER 1. (Refer to 5 - BRAKES - STANDARD PROCEDURE).

No >> Go To 4

4. CHECK THE (D52) DYNAMICS SENSOR HIGH DATA LINK CIRCUIT FOR A SHORT TO GROUND

Turn the ignition off.

Measure the resistance of the (D52) Dynamics Sensor High Data Link circuit between ground and the Dynamics Sensor harness connector.

Is the resistance below 5.0 ohms?

Yes >> Repair the (D52) Dynamics Sensor High Data Link circuit for a short to ground.
Perform ABS VERIFICATION TEST - VER 1. (Refer to 5 - BRAKES - STANDARD PROCEDURE).

No >> Go To 5

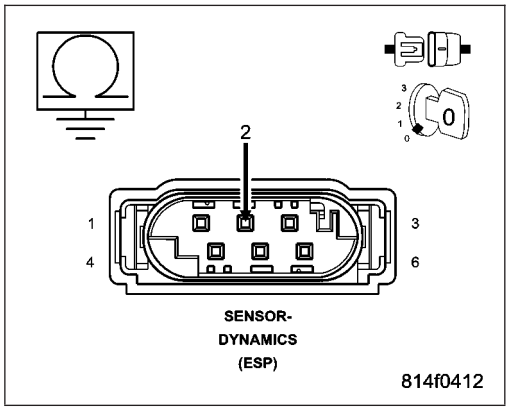

5. CHECK THE (D52) DYNAMICS SENSOR HIGH DATA LINK CIRCUIT FOR AN OPEN

Measure the resistance of the (D52) Dynamics Sensor High Data Link circuit between the Dynamics Sensor harness connector and the Anti-Lock Brakes Module harness connector.

Is the resistance below 5.0 ohms?

Yes >> Go To 6

No >> Repair the (D52) Dynamics Sensor High Data Link circuit for an open.
Perform ABS VERIFICATION TEST - VER 1. (Refer to 5 - BRAKES - STANDARD PROCEDURE).

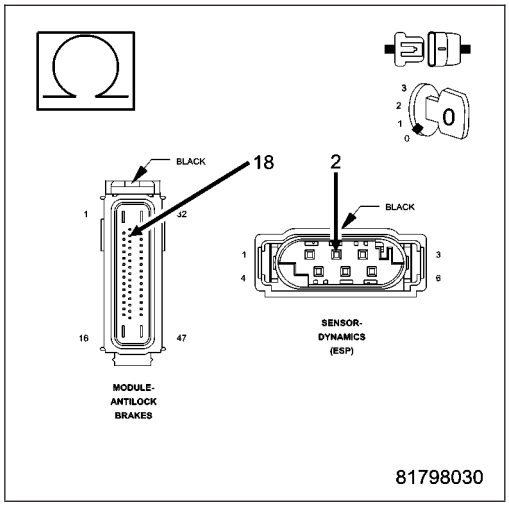

6. CHECK THE (D51) DYNAMICS SENSOR LOW DATA LINK CIRCUIT FOR A SHORT TO VOLTAGE

Turn the ignition on.

Measure the voltage of the (D51) Dynamics Sensor Low Data Link circuit.

Is there any voltage present?

Yes >> Repair the (D51) Dynamics Sensor Low Data Link circuit for a short to voltage.
Perform ABS VERIFICATION TEST - VER 1. (Refer to 5 - BRAKES - STANDARD PROCEDURE).

No >> Go To 7

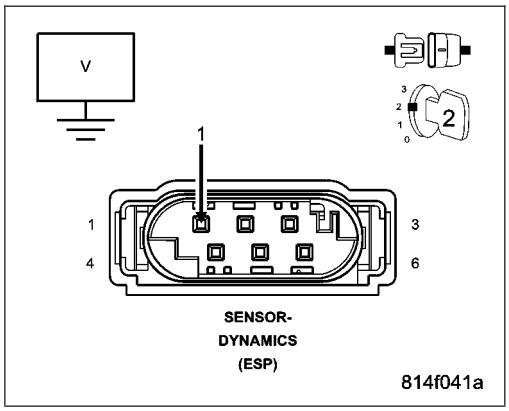

7. CHECK THE (D51) DYNAMICS SENSOR LOW DATA LINK CIRCUIT FOR A SHORT TO GROUND

Turn the ignition off.

Measure the resistance of the (D51) Dynamics Sensor Low Data Link circuit between ground and the Dynamics Sensor harness connector.

Is the resistance below 5.0 ohms?

Yes >> Repair the (D51) Dynamics Sensor Low Data Link circuit for a short to ground.
Perform ABS VERIFICATION TEST - VER 1. (Refer to 5 - BRAKES - STANDARD PROCEDURE).

No >> Go To 8

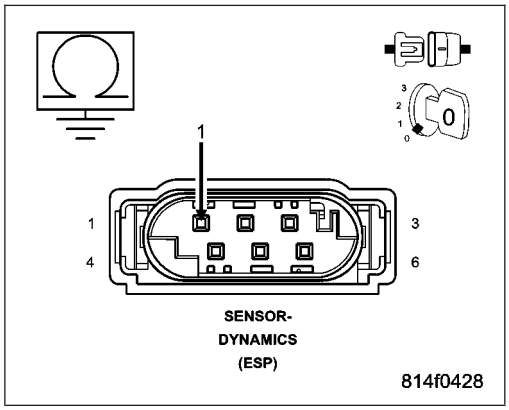

8. CHECK THE (D51) DYNAMICS SENSOR LOW DATA LINK CIRCUIT FOR AN OPEN

Measure the resistance of the (D51) Dynamics Sensor Low Data Link circuit between the Dynamics Sensor harness connector and the Anti-Lock Brakes Module harness connector.

Is the resistance below 5.0 ohms?

Yes >> Replace the Dynamics Sensor in accordance with the Service Information.
Perform ABS VERIFICATION TEST - VER 1. (Refer to 5 - BRAKES - STANDARD PROCEDURE).

No >> Repair the (D51) Dynamics Sensor Low Data Link circuit for an open.
Perform ABS VERIFICATION TEST - VER 1. (Refer to 5 - BRAKES - STANDARD PROCEDURE).

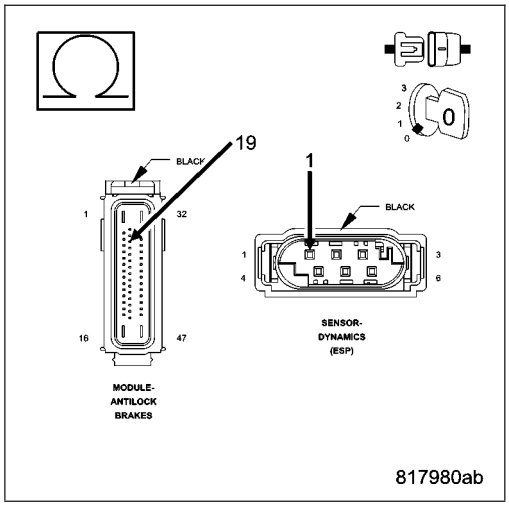

U140E–IMPLAUSIBLE VEHICLE CONFIGURATION DATA RECEIVED

For a complete wiring diagram **Refer to Section 8W**

- **When Monitored:**
  Once per ignition cycle, but not during cranking.
  Or, if low supply voltage faults are detected.
- **Set Condition:**
  If the Anti-Lock Brakes Module either fails to receive vehicle configuration data from the Engine Control Module (ECM) or Powertrain Control Module (PCM) or the configuration data it receives from the ECM or PCM is different than that received during the previous ignition cycle.

Possible Causes
WIRING HARNESS, TERMINAL, CONNECTOR DAMAGE
DTCs RELATED TO BATTERY VOLTAGE, IGNITION, OR VIN MESSAGES
CAN C BUS CIRCUITS OPEN OR SHORTED
ECM OR PCM DTCs PRESENT
ECM OR PCM NOT PROGRAMMED OR PROGRAMMED WITH INCORRECT VIN
ECM OR PCM
ANTI-LOCK BRAKES MODULE

Diagnostic Test

1. VERIFY DTC IS ACTIVE

Turn the ignition on.
With the scan tool, read and record ABS DTCs.
With the scan tool, read and record Environmental Data (EV Data).
With the scan tool, erase ABS DTCs.
Cycle the ignition switch.
With the scan tool, read ABS DTCs.

Does this DTC reset?

Yes >> Go To 2

No >> Using the schematics as a guide, check the Anti-Lock Brakes Module and the ECM or PCM pins, terminals, and connectors for corrosion, damage, and terminal push out. Pay particular attention to all Communication circuits.
Perform ABS VERIFICATION TEST - VER 1. (Refer to 5 - BRAKES - STANDARD PROCEDURE).

2. CHECK FOR ANY OF THE FOLLOWING ACTIVE DTCs

With the scan tool, read all active DTCs from all CAN C Bus modules.

NOTE: Check for CAN C hardware electrical, VIN Missing/Mismatch, battery or ignition related DTCs.

Does the scan tool display any active DTCs related to the conditions listed above?

Yes >> Diagnose and repair the DTC(s). Refer to the Table of Contents in the applicable Section.

No >> Go To 3

3. CHECK IF ECM OR PCM DTCs ARE PRESENT

With the scan tool, read ECM or PCM DTCs.

Are any DTCs present?

Yes >> Diagnose and repair the DTC(s). Refer to 9 - ENGINE - DIAGNOSIS AND TESTING.
Perform ABS VERIFICATION TEST - VER 1. (Refer to 5 - BRAKES - STANDARD PROCEDURE).

No >> Go To 4

4. VERIFY CORRECT ECM OR PCM IS INSTALLED IN THE VEHICLE

With the scan tool, verify that the ECM or PCM part number is correct for the vehicle.

Is the correct ECM or PCM installed in the vehicle?

Yes >> Replace and program the ECM or PCM in accordance with the Service Information.
Perform ABS VERIFICATION TEST - VER 1. (Refer to 5 - BRAKES - STANDARD PROCEDURE).

No >> Go To 5

5. VERIFY ECM OR PCM IS PROGRAMMED WITH CORRECT VIN

With the scan tool, verify that the ECM or PCM is programmed with the correct VIN.

Is the ECM or PCM programmed with the correct VIN?

Yes >> Using the scan tool, perform PCM Replaced to update the VIN in the PCM.
Perform ABS VERIFICATION TEST - VER 1. (Refer to 5 - BRAKES - STANDARD PROCEDURE).

No >> Go To 6

6. CHECK FOR ADDITIONAL COMMUNICATION RELATED DTCs

With the scan tool, select Network View and select Advanced.

Is there more than one module with active DTCs “Logged Against” the ECM or PCM?

Yes >> Replace/update the ECM or PCM in accordance with the service information.
Perform POWERTRAIN VERIFICATION TEST. Refer to 9 - ENGINE - DIAGNOSIS AND TESTING.
Perform ABS VERIFICATION TEST - VER 1. (Refer to 5 - BRAKES - STANDARD PROCEDURE).

No >> Using the schematics as a guide, check the Anti-Lock Brakes Module pins, terminals, and connectors for corrosion, damage, and terminal push out. Pay particular attention to all Communication circuits. If no problems are found, replace the Anti-Lock Brakes Module in accordance with the Service Information.
Perform ABS VERIFICATION TEST - VER 1. (Refer to 5 - BRAKES - STANDARD PROCEDURE).

U1501–IMPLAUSIBLE MESSAGE DATA LENGTH RECEIVED FROM ECM/PCM

For a complete wiring diagram **Refer to Section 8W**

- **When Monitored:**
  Continuously, with ignition on.
- **Set Condition:**
  If the Anti-Lock Brakes Module detects bus messages from the Engine Control Module (ECM) or Powertrain Control Module (PCM) are of improper data length.

Possible Causes
WIRING HARNESS, TERMINAL, CONNECTOR DAMAGE
DTCs RELATED TO BATTERY VOLTAGE, IGNITION, OR VIN MESSAGES
CAN C BUS CIRCUITS OPEN OR SHORTED
ECM OR PCM DTCs PRESENT
ECM OR PCM
ANTI-LOCK BRAKES MODULE

Diagnostic Test

1. VERIFY DTC IS ACTIVE

Turn the ignition on.

With the scan tool, read and record ABS DTCs.

With the scan tool, read and record Environmental Data (EV Data).

With the scan tool, erase ABS DTCs.

Cycle the ignition switch.

With the scan tool, read ABS DTCs.

Does this DTC reset?

Yes >> Go To 2

No >> Using the schematics as a guide, check the Anti-Lock Brakes Module and the ECM or PCM pins, terminals, and connectors for corrosion, damage, and terminal push out. Pay particular attention to all Communication circuits.

Perform ABS VERIFICATION TEST - VER 1. (Refer to 5 - BRAKES - STANDARD PROCEDURE).

2. CHECK FOR ANY OF THE FOLLOWING ACTIVE DTCs

With the scan tool, read all active DTCs from all CAN C Bus modules.

NOTE: Check for CAN C hardware electrical, VIN Missing/Mismatch, battery or ignition related DTCs.

Does the scan tool display any active DTCs related to the conditions listed above?

Yes >> Diagnose and repair the DTC(s). Refer to the Table of Contents in the applicable Section.

No >> Go To 3

3. CHECK IF ECM OR PCM DTCs ARE PRESENT

With the scan tool, read ECM or PCM DTCs.

Are any DTCs present?

Yes >> Diagnose and repair the DTC(s). Refer to 9 - ENGINE - DIAGNOSIS AND TESTING.
Perform ABS VERIFICATION TEST - VER 1. (Refer to 5 - BRAKES - STANDARD PROCEDURE).

No >> Go To 4

4. CHECK FOR ADDITIONAL COMMUNICATION RELATED DTCs

With the scan tool, select Network View and select Advanced.

Is there more than one module with active DTCs "Logged Against" the ECM or PCM?

Yes >> Replace/update the ECM or PCM in accordance with the service information.
Perform POWERTRAIN VERIFICATION TEST. Refer to 9 - ENGINE - DIAGNOSIS AND TESTING.
Perform ABS VERIFICATION TEST - VER 1. (Refer to 5 - BRAKES - STANDARD PROCEDURE).

No >> Using the schematics as a guide, check the Anti-Lock Brakes Module pins, terminals, and connectors for corrosion, damage, and terminal push out. Pay particular attention to all Communication circuits. If no problems are found, replace the Anti-Lock Brakes Module in accordance with the Service Information.
Perform ABS VERIFICATION TEST - VER 1. (Refer to 5 - BRAKES - STANDARD PROCEDURE).

U1502–IMPLAUSIBLE MESSAGE DATA LENGTH RECEIVED FROM TCM

For a complete wiring diagram **Refer to Section 8W**

- **When Monitored:**
  Continuously, with ignition on.
- **Set Condition:**
  If the Anti-Lock Brakes Module detects bus messages from the Transmission Control Module (TCM) are of improper data length.

Possible Causes
WIRING HARNESS, TERMINAL, CONNECTOR DAMAGE
DTCs RELATED TO BATTERY VOLTAGE, IGNITION, OR VIN MESSAGES
CAN C BUS CIRCUITS OPEN OR SHORTED
TCM DTCs PRESENT
TCM
ANTI-LOCK BRAKES MODULE

Diagnostic Test

1. VERIFY DTC IS ACTIVE

Turn the ignition on.

With the scan tool, read and record ABS DTCs.

With the scan tool, read and record Environmental Data (EV Data).

With the scan tool, erase ABS DTCs.

Cycle the ignition switch.

With the scan tool, read ABS DTCs.

Does this DTC reset?

Yes >> Go To 2

No >> Using the schematics as a guide, check the Anti-Lock Brakes Module, the BCM, and the TCM pins, terminals, and connectors for corrosion, damage, and terminal push out. Pay particular attention to all Communication circuits.

Perform ABS VERIFICATION TEST - VER 1. (Refer to 5 - BRAKES - STANDARD PROCEDURE).

2. CHECK FOR ANY OF THE FOLLOWING ACTIVE DTCs

With the scan tool, read all active DTCs from all CAN C Bus modules.

NOTE: Check for CAN C hardware electrical, VIN Missing/Mismatch, battery or ignition related DTCs.

Does the scan tool display any active DTCs related to the conditions listed above?

Yes >> Diagnose and repair the DTC(s). Refer to the Table of Contents in the applicable Section.

No >> Go To 3

3. CHECK IF TCM DTCs ARE PRESENT

With the scan tool, read TCM DTCs.

Are any TCM DTCs present?

Yes >> Diagnose and repair the DTC(s).
Perform TRANSMISSION VERIFICATION TEST - VER 1.
Perform ABS VERIFICATION TEST - VER 1. (Refer to 5 - BRAKES - STANDARD PROCEDURE).

No >> Using the schematics as a guide, check the Anti-Lock Brakes Module pins, terminals, and connectors for corrosion, damage, and terminal push out. Pay particular attention to all Communication circuits. If no problems are found, replace the Anti-Lock Brakes Module in accordance with the Service Information.
Perform ABS VERIFICATION TEST - VER 1. (Refer to 5 - BRAKES - STANDARD PROCEDURE).

U1503–IMPLAUSIBLE MESSAGE DATA LENGTH RECEIVED FROM FCM

For a complete wiring diagram **Refer to Section 8W**

- **When Monitored:**
  Continuously with the ignition on.
- **Set Condition:**
  When the Anti-Lock Brake Module detects an incorrect CAN message from the Front Control Module (FCM).

Possible Causes
FCM CAN BUS DTCS
ANTI-LOCK BRAKE MODULE

Diagnostic Test

1. CHECK IF FCM CAN BUS DTCs ARE PRESENT

With the scan tool, read FCM DTCs.

Are there any FCM CAN BUS DTCs present?

Yes >> Refer to 8-ELECTRICAL/ELECTRONIC CONTROL MODULES - DIAGNOSIS AND TESTING and diagnose the appropriate symptom.
Perform ABS VERIFICATION TEST - VER 1. (Refer to 5 - BRAKES - STANDARD PROCEDURE).

No >> Replace the Anti-Lock Brakes Module in accordance with the Service Information.
Perform ABS VERIFICATION TEST - VER 1. (Refer to 5 - BRAKES - STANDARD PROCEDURE).

STANDARD PROCEDURE

APS VERIFICATION TEST

APS VERIFICATION TEST

1.

1. Make sure that all accessories are turned off and the battery is fully charged.
2. Make sure that all wiring and components are connected.
3. If the module or the pedal assembly was replaced, reprogram the Adjustable Pedals hard stop.
   - Move the Adjustable Pedals to full forward and continue to apply the switch for 10 seconds to learn the hard stop.
   - Repeat for the rearward direction.
4. Verify that the Adjustable Pedals System is disabled with the shifter in reverse and with the speed control engaged.
5. With the scan tool, clear DTCs in all modules.
6. Move the Adjustable Pedals Switch forward and rearward several times.
7. Turn the ignition off for 5 seconds, then turn the ignition on.
8. Using the scan tool, select view DTCs in all modules.

Are there any DTCs present?

Yes >> The repair is not complete. Refer to the symptom list and perform the appropriate diagnostic procedure.

No >> Test complete.

ABS VERIFICATION TEST — VER 1

1. ABS VERIFICATION TEST — VER 1

WARNING: Ensure braking capability is available before road testing.

NOTE: If the ABM (Anti-Lock Brake Module), SAS (Steering Angle Sensor), Dynamics Sensor was replaced, it must be initialized using the scan tool. If not initialized, the ABS indicator will flash continuously with no DTCs. To initialize the ABM and clear offsets have wheels pointing straight ahead and follow the directions on the scan tool. The drive test requires a 90° turn. If the Dynamics Sensor was replaced, test drive the vehicle by turning the vehicle left or right in a curving manner at a velocity between 10 and 25 km/hr (6 and 15 m.p.h.).

1. Turn the ignition off.
2. Connect all previously disconnected components and connectors.
3. Ensure all accessories are turned off and the battery is fully charged.
4. Ensure that the ignition is on, with the scan tool, erase all Diagnostic Trouble Codes from All modules. Start the engine and allow it to run for 2 minutes and fully operate the system that was malfunctioning.
5. Turn the ignition off and wait 5 seconds. Turn the ignition on and using the scan tool, read DTCs from all modules.
6. If any Diagnostic Trouble Codes are present, return to symptom list and trouble shoot new or recurring symptom.

NOTE: For Sensor Signal and Pump Motor faults, the ABM must sense all 4 wheels at 12 km/h (7.5 mph) before it will extinguish the ABS indicator.

7. If there are no DTCs present after turning ignition on, road test the vehicle for at least 5 minutes. Perform several anti-lock braking stops.
8. Again, with the scan tool read DTCs. If any DTCs are present, refer to the Table of Contents in the applicable Section for the diagnostic test procedure and troubleshoot the new or recurring symptom.
9. If there are no Diagnostic Trouble Codes (DTCs) present, and the customer's concern can no longer be duplicated, the repair is complete.

Are any DTCs present or is the original concern still present?

Yes >> Repair is not complete, refer to appropriate symptom.

No >> Repair is complete.

BRAKES - ABS SERVICE INFORMATION

TABLE OF CONTENTS

page

BRAKES - ABS SERVICE INFORMATION
DESCRIPTION
ANTILOCK BRAKE SYSTEM WITH TRACTION CONTROL - MK25 386
ANTILOCK BRAKE SYSTEM WITH TRACTION CONTROL - MK25E 387
ELECTRONIC STABILITY PROGRAM - MK25 . 387
ELECTRONIC STABILITY PROGRAM - MK25E. 388
ELECTRONIC VARIABLE BRAKE PROPORTIONING 388
OPERATION
ANTILOCK BRAKE SYSTEM WITH TRACTION CONTROL. 388
ELECTRONIC STABILITY PROGRAM - MK25 . 390
ELECTRONIC STABILITY PROGRAM - MK25E. 390
ELECTRONIC VARIABLE BRAKE PROPORTIONING 390
STANDARD PROCEDURE
ANTILOCK BRAKE SYSTEM BLEEDING 391
SPECIFICATIONS
ABS FASTENER TORQUE 392
SENSOR-DYNAMICS (ESP)
DESCRIPTION 393
REMOVAL 393
INSTALLATION 394
SENSOR-BRAKE PRESSURE - MK25
REMOVAL
BRAKE PRESSURE SENSOR 396
BRAKE PRESSURE SENSOR - SRT8 397
INSTALLATION
BRAKE PRESSURE SENSOR 397
BRAKE PRESSURE SENSOR - SRT8 399
SENSOR-TRAVEL - MK25
REMOVAL 400
INSTALLATION 401
SENSOR-STEERING ANGLE
REMOVAL 404
INSTALLATION 406
SENSOR-FRONT WHEEL SPEED
DESCRIPTION 409
REMOVAL
AWD 409
RWD 411
INSTALLATION
AWD 413
RWD 414
SENSOR-REAR WHEEL SPEED
DESCRIPTION 415
REMOVAL 415
INSTALLATION 418
SWITCH-ESP
DESCRIPTION 420
REMOVAL 420
INSTALLATION 420
SWITCH-TRACTION CONTROL/ASR
DESCRIPTION 421
REMOVAL 421
INSTALLATION 421
BOOSTER-ACTIVE BRAKE - MK25
DESCRIPTION 422
HYDRAULIC CONTROL UNIT
REMOVAL 423
INSTALLATION 423
INTEGRATED CONTROL UNIT - MK25
REMOVAL 424
DISASSEMBLY 425
ASSEMBLY 427
INSTALLATION 428
INTEGRATED CONTROL UNIT - MK25E
DESCRIPTION 430
REMOVAL 431
DISASSEMBLY 433
ASSEMBLY 433
INSTALLATION 435

BRAKES - ABS SERVICE INFORMATION

DESCRIPTION

ANTILOCK BRAKE SYSTEM WITH TRACTION CONTROL - MK25

Early launch vehicles use the MK25 Antilock braking system (ABS). This system, a combined ABS and Traction Control system is standard on some vehicles and optional on others.

This antilock brake system uses components of the base brake system, but also features the following components:

- Integrated Control Unit (ICU) - Includes Hydraulic Control Unit (HCU) (2) and Antilock Brake Module (ABM) (3)
- Wheel Speed Sensors (WSS) - Four sensors (one at each wheel)

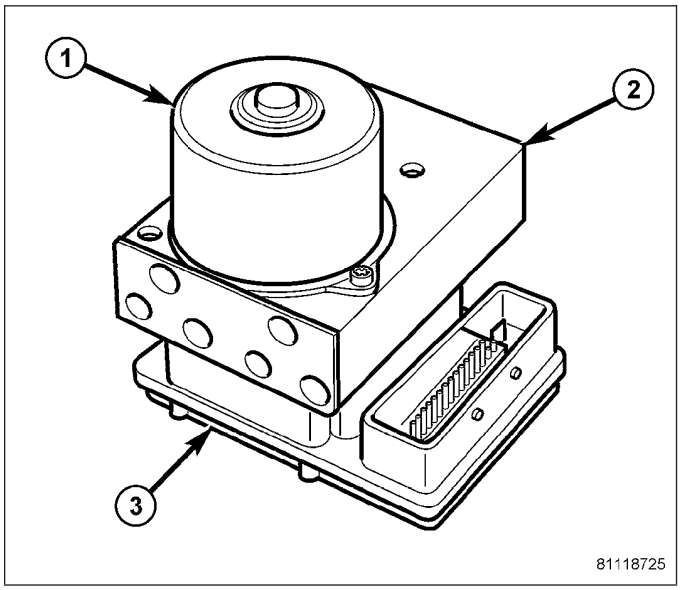

ABS

The purpose of the antilock brake system (ABS) is to prevent wheel lockup under braking conditions on virtually any type of road surface. Antilock braking is desirable because a vehicle that is stopped without locking the wheels retains directional stability and some steering capability. This allows the driver to retain greater control of the vehicle during braking.

ALL-SPEED TRACTION CONTROL

The traction control system is an all-speed traction control. All-Speed Traction Control enhances mobility and prevents wheel slip when accelerating on slippery surfaces. Depending on how slippery, an automatically activated Winter Mode feature will select lower transmission up-shift speeds. It also provides a measure of directional stability control. Using the wheel-speed sensors, it can detect excessive yaw and help keep the car on the intended course, as for instance, when accelerating around a curve.

With rear-wheel drive, All-Speed Traction Control is effective up to 85 mph (137 km/h); with AWD, All-Speed Traction Control is effective up to 45 mph (72 km/h), which is common among competitive AWD vehicles with traction control.

ANTILOCK BRAKE SYSTEM WITH TRACTION CONTROL - MK25E

Later launch vehicles uses the MK25E Antilock braking system (ABS). This system, a combined ABS and Traction Control system is standard on some vehicles and optional on others.

This antilock brake system uses components of the base brake system, but also features the following components:

- Integrated Control Unit (ICU) - Includes Hydraulic Control Unit (HCU) (2) and Antilock Brake Module (ABM) (1)
- Wheel Speed Sensors (WSS) - Four sensors (one at each wheel)

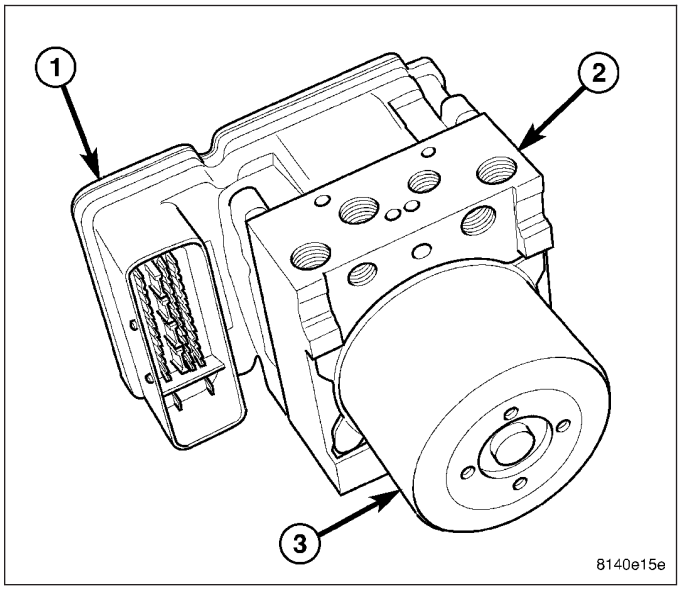

ABS

The purpose of the antilock brake system (ABS) is to prevent wheel lockup under braking conditions on virtually any type of road surface. Antilock braking is desirable because a vehicle that is stopped without locking the wheels retains directional stability and some steering capability. This allows the driver to retain greater control of the vehicle during braking.

ALL-SPEED TRACTION CONTROL

The traction control system is an all-speed traction control. All-Speed Traction Control enhances mobility and prevents wheel slip when accelerating on slippery surfaces. Depending on how slippery, an automatically activated Winter Mode feature will select lower transmission up-shift speeds. It also provides a measure of directional stability control. Using the wheel-speed sensors, it can detect excessive yaw and help keep the car on the intended course, as for instance, when accelerating around a curve.

With rear-wheel drive, All-Speed Traction Control is effective up to 85 mph (137 km/h); with AWD, All-Speed Traction Control is effective up to 45 mph (72 km/h), which is common among competitive AWD vehicles with traction control.

ELECTRONIC STABILITY PROGRAM - MK25

ESP® (Electronic Stability Program), which includes a Brake Assist feature, is standard on some models and optional on others. ESP aids the driver in maintaining vehicle directional stability. ESP will do whatever can be done, within the limits of available traction, to keep the car on course.

ESP uses the ABS with Traction Control along with the following components to operate:

- Active Brake Booster
- Brake Pressure Switch
- Dynamics (ESP) Sensor
- Travel Sensor
- Steering Angle Sensor (SAS)

The Active Brake Booster is part of the Power Brake Booster. The Brake Pressure Switch is mounted to the bottom of the Master Cylinder. The Dynamics Sensor that is mounted under the center console, which is near the center of gravity of the car for effective sensing. The Travel Sensor is mounted in the Power Brake Booster. The Steering Angle Sensor is located in the steering column.

ELECTRONIC STABILITY PROGRAM - MK25E

ESP® (Electronic Stability Program), which includes a Brake Assist feature, is standard on some models and optional on others. ESP aids the driver in maintaining vehicle directional stability. ESP will do whatever can be done, within the limits of available traction, to keep the car on course.

ESP uses the ABS with Traction Control (MK25E) along with the following components to operate:

- Dynamics (ESP) Sensor
- Steering Angle Sensor (SAS)

The Dynamics Sensor that is mounted under the center console, which is near the center of gravity of the car for effective sensing. The Steering Angle Sensor is located in the steering column.

NOTE: Some components that were necessary with earlier ESP systems are not necessary on vehicles equipped with the MK25E system.

ESP can be turned off by using the ESP Off switch. When the ESP Off switch is depressed and released, turning ESP off, it does not completely turn the system off. The ESP system reduces torque management to a lesser amount, but ESP function can still occur if the system perceives the need.

SRT8 (with MK25E ABS) and Police Package equipped vehicles have what is known as three-mode ESP. When the ESP Off switch is depressed and quickly released, the system turns off ESP like any other model, but if the switch is held down for a period of five seconds or longer before releasing, the ESP system further reduces the amount of torque management provided. The system can be returned to “normal” by briefly pressing and releasing the ESP Off switch.

ELECTRONIC VARIABLE BRAKE PROPORTIONING

Vehicles equipped with ABS use electronic variable brake proportioning (EVBP) to balance front-to-rear braking. The EVBP is used in place of a rear proportioning valve. The EVBP system uses the ABS system to control the slip of the rear wheels in partial braking range. The braking force of the rear wheels is controlled electronically by using the inlet and outlet valves located in the integrated control unit (ICU).

EVBP activation is invisible to the customer since there is no pump motor noise or brake pedal feedback.

OPERATION

ANTILOCK BRAKE SYSTEM WITH TRACTION CONTROL

ABS

There are a few performance characteristics of the Antilock Brake System (ABS) that may at first seem abnormal, but in fact are normal. These characteristics are described below.

NORMAL BRAKING

Under normal braking conditions, the ABS functions the same as a standard base brake system with a diagonally split master cylinder and conventional vacuum assist.

ABS BRAKING

ABS operation is available at all vehicle speeds above 3–5 mph. If a wheel locking tendency is detected during a brake application, the brake system enters the ABS mode. During ABS braking, hydraulic pressure in the four wheel circuits is modulated to prevent any wheel from locking. Each wheel circuit is designed with a set of electric solenoids to allow modulation, although for vehicle stability, both rear wheel solenoids receive the same electrical signal. Wheel lockup may be perceived at the very end of an ABS stop and is considered normal.

During an ABS event, the integrated control unit (ICU) regulates hydraulic pressure at all four of the vehicle’s wheels.

The hydraulic pressure at each front wheel is controlled independently (relative to the amount of slip at each wheel) in order to maximize the braking force generated by the front brakes. The rear wheels are controlled such that the hydraulic pressure at either rear wheel does not exceed that of the highest slip rear wheel in order to maintain vehicle stability.

The system can build and release pressure at each wheel, depending on signals generated by the wheel speed sensors (WSS) at each wheel and received at the Antilock Brake Module (ABM).

NOISE AND BRAKE PEDAL FEEL

During ABS braking, some brake pedal movement may be felt. In addition, ABS braking will create ticking, popping, or groaning noises heard by the driver. This is normal and is due to pressurized fluid being transferred between the master cylinder and the brakes. If ABS operation occurs during hard braking, some pulsation may be felt in the vehicle body due to fore and aft movement of the suspension as brake pressures are modulated.

At the end of an ABS stop, ABS is turned off when the vehicle is slowed to a speed of 3–4 mph. There may be a slight brake pedal drop anytime that the ABS is deactivated, such as at the end of the stop when the vehicle speed is less than 3 mph or during an ABS stop where ABS is no longer required. These conditions exist when a vehicle is being stopped on a road surface with patches of ice, loose gravel, or sand on it. Also, stopping a vehicle on a bumpy road surface activates ABS because of the wheel hop caused by the bumps.

TIRE NOISE AND MARKS

Although the ABS system prevents complete wheel lockup, some wheel slip is desired in order to achieve optimum braking performance. Wheel slip is defined as follows: 0 percent slip means the wheel is rolling freely and 100 percent slip means the wheel is fully locked. During brake pressure modulation, wheel slip is allowed to reach up to 25–30 percent. This means that the wheel rolling velocity is 25–30 percent less than that of a free rolling wheel at a given vehicle speed. This slip may result in some tire chirping, depending on the road surface. This sound should not be interpreted as total wheel lockup.

Complete wheel lockup normally leaves black tire marks on dry pavement. The ABS will not leave dark black tire marks since the wheel never reaches a fully locked condition. However, tire marks may be noticeable as light patched marks.

START-UP AND DRIVE-OFF CYCLES

When the ignition is turned on, a popping sound and a slight brake pedal movement may be noticed. The ABS warning lamp will also be on for up to 5 seconds after the ignition is turned on.

When the vehicle is first driven off, a humming may be heard or felt by the driver at approximately 12–25 mph (20–40 km/h). All of these conditions are a normal function of ABS as the system is performing a diagnosis check.

PREMATURE ABS CYCLING

Symptoms of premature ABS cycling include: clicking sounds from the solenoid valves; pump/motor running; and pulsations in the brake pedal. Premature ABS cycling can occur at any braking rate of the vehicle and on any type of road surface. Neither the red BRAKE indicator lamp, nor the amber ABS indicator lamp, illuminate and no faults are stored in the ABM.

Premature ABS cycling is a condition that needs to be correctly assessed when diagnosing problems with the antilock brake system. It may be necessary to use a scan tool to detect and verify premature ABS cycling.

Check the following common causes when diagnosing premature ABS cycling: damaged wheel bearings (causing tone wheel issues); damaged wheel bearing housings where wheel speed sensors mount; and loose wheel speed sensor mounting bolts.

After diagnosing the defective component, repair or replace it as required. When the component repair or replacement is completed, test drive the vehicle to verify that premature ABS cycling has been corrected.

ALL-SPEED TRACTION CONTROL

Traction control systems sense impending wheel spin based on a model of the rate of change of wheel speed under normal traction conditions. The All-Speed Traction Control uses signals from the same wheel speed sensors as ABS to determine when to apply the brakes to one or more wheels and when to reduce engine torque output using the electronic throttle control (ETC) to prevent wheel slip during acceleration. Throttle control makes the vehicle less reliant on brake application alone to maintain traction, increasing the operating speed range and more closely modulates speed, resulting in smoother operation. With All-Speed Traction Control reducing engine torque as well as applying the brakes, it is possible to achieve almost seamless torque application at the wheels.

If the wheel slip is severe enough to require throttle intervention, All-Speed Traction Control will reduce engine torque and sometimes upshift the transmission to avoid the condition. In milliseconds, All-Speed Traction Control

interrogates the engine control system to determine the current torque output, determines how much the torque output the current conditions will allow, and signals this requirement to the engine control system, which reduces the torque by partially closing the throttle. With execution of the torque reduction, the brake system reduces brake pressure to make the transition smooth, while maintaining forward progress. By reducing engine power, braking effectiveness is maintained and the system can operate throughout the normal vehicle speed range. That is why the system is identified as providing “all-speed” traction control.

With AWD, where front-wheel slip can occur, the degree of throttle intervention is relatively less than with rear-wheel drive. The difference in speed capability and the degree of throttle intervention between rear-wheel drive and all-wheel drive is due to the fact that non-driven front wheels on a rear-wheel drive vehicle give the system an accurate vehicle speed reference on which to base responses. With AWD, the possibility that the front wheels may also be slipping makes appropriate corrective action more difficult to determine, thus limiting the effective speed range. Offsetting this is the fact that loss of traction is less likely with AWD because torque is transmitted through all four wheels to begin with. In actual driving situations on snow or ice, the rear-wheel drive and AWD systems respond in essentially the same way up to the 45 mph (72 km/h) limit of the AWD system.

When severe wheel slippage is detected (as on snow-covered roads), the Winter Mode feature of All-Speed Traction Control causes the transmission to up-shift to higher gears at lower speeds than normal. Once a slippery launch condition is detected, the transmission will remain in Winter Mode for a minimum of three minutes. After that, if the road is providing normal traction, the system returns to providing normal up-shifts.

ELECTRONIC STABILITY PROGRAM - MK25

To determine whether the car is responding properly to cornering commands, ESP uses steering wheel angle, yaw (turning) rate and lateral acceleration sensors (combined into Dynamics Sensor). Using signals from these sensors, in addition to individual wheel speed sensor signals, the system determines appropriate brake and throttle actions. Once initiated, ESP operates much like All-Speed Traction Control, except that the goal is directional stability. If the vehicle yaw response, or rate of turning, is inconsistent with the steering angle and vehicle speed indications, the ESP system applies the brakes and, if necessary closes the throttle, to restore control. This occurs whether the vehicle is turning too rapidly (oversteering) or not rapidly enough (understeering).

ESP notifies the active brake booster electronically of the need for maximum output. A solenoid opens a valve in the booster that immediately applies maximum boost to the master cylinder. A travel sensor in the booster detects the rate and travel of the brake pedal. Above the threshold of an “extreme” brake application, ESP activates the solenoid, thus applying maximum available hydraulic pressure to the brakes. In this type of situation, stopping distance is determined by the ABS system based on available traction, rather than the amount of force that the driver can exert on the brake pedal. This becomes the deciding factor in how quickly the vehicle will stop.

ELECTRONIC STABILITY PROGRAM - MK25E

To determine whether the car is responding properly to cornering commands, ESP uses steering wheel angle, yaw (turning) rate and lateral acceleration sensors (combined into Dynamics Sensor). Using signals from these sensors, in addition to individual wheel speed sensor signals, the system determines appropriate brake and throttle actions. Once initiated, ESP operates much like All-Speed Traction Control, except that the goal is directional stability. If the vehicle yaw response, or rate of turning, is inconsistent with the steering angle and vehicle speed indications, the ESP system applies the brakes and, if necessary closes the throttle, to restore control. This occurs whether the vehicle is turning too rapidly (oversteering) or not rapidly enough (understeering).

ELECTRONIC VARIABLE BRAKE PROPORTIONING

Upon entry into EVBP the inlet valve for the rear brake circuit is switched ON so that the fluid supply from the master cylinder is shut off. In order to decrease the rear brake pressure, the outlet valve for the rear brake circuit is pulsed. This allows fluid to enter the low pressure accumulator (LPA) in the Hydraulic Control Unit (HCU) resulting in a drop in fluid pressure to the rear brakes. In order to increase the rear brake pressure, the outlet valve is switched off and the inlet valve is pulsed. This increases the pressure to the rear brakes. This back-and-forth process will continue until the required slip difference is obtained. At the end of EVBP braking (brakes released) the fluid in the LPA drains back to the master cylinder by switching on the outlet valve and draining through the inlet valve check valve. At the same time the inlet valve is switched on in case of another brake application.

The EVBP will remain functional during many ABS fault modes. If both the red BRAKE and amber ABS warning indicators are illuminated, the EVBP may not be functioning.

STANDARD PROCEDURE

ANTILOCK BRAKE SYSTEM BLEEDING

The base brake's hydraulic system must be bled anytime air enters the hydraulic system. The ABS must always be bled anytime it is suspected that the HCU has ingested air.

Brake systems with ABS must be bled as two independent braking systems. The non-ABS portion of the brake system with ABS is to be bled the same as any non-ABS system.

The ABS portion of the brake system must be bled separately. Use the following procedure to properly bleed the brake hydraulic system including the ABS.

NOTE: During the brake bleeding procedure, be sure the brake fluid level remains close to the FULL level in the master cylinder fluid reservoir. Check the fluid level periodically during the bleeding procedure and add Mopar® DOT 3 brake fluid as required.

BLEEDING

When bleeding the ABS system, the following bleeding sequence must be followed to insure complete and adequate bleeding.

1. Make sure all hydraulic fluid lines are installed and properly torqued.
2. Connect the scan tool to the diagnostics connector. The diagnostic connector is located under the lower steering column cover to the left of the steering column.
3. Using the scan tool, check to make sure the ABM does not have any fault codes stored. If it does, clear them.

WARNING: When bleeding the brake system wear safety glasses. A clear bleed tube (1) must be attached to the bleeder screws and submerged in a clear container filled part way with clean brake fluid (2). Direct the flow of brake fluid away from yourself and the painted surfaces of the vehicle. Brake fluid at high pressure may come out of the bleeder screws when opened.

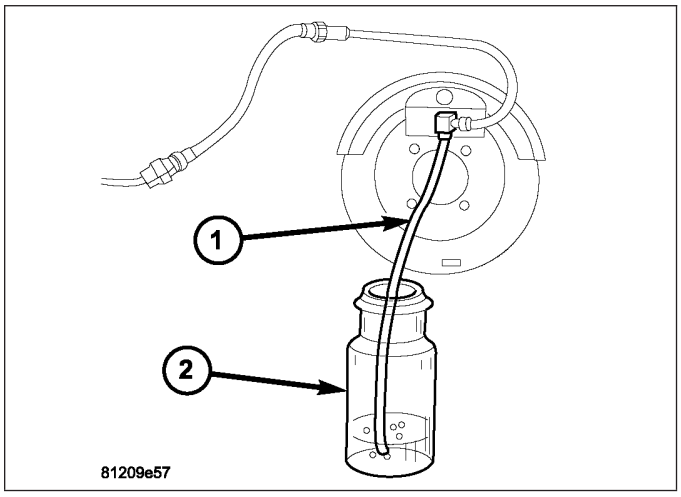

NOTE: Pressure bleeding is recommended to bleed the base brake system to ensure all air is removed from system. Manual bleeding may also be used, but additional time is needed to remove all air from system.

4. Bleed the base brake system. (Refer to 5 - BRAKES - BASE - STANDARD PROCEDURE)
5. Using the scan tool, select ECU VIEW, followed by ABS MISCELLANEOUS FUNCTIONS to access bleeding. Follow the instructions displayed. When finished, disconnect the scan tool and proceed.
6. Bleed the base brake system a second time. Check brake fluid level in the reservoir periodically to prevent emptying, causing air to enter the hydraulic system.

7. Fill the master cylinder fluid reservoir (1) to the MAX level.
8. Test drive the vehicle to be sure the brakes are operating correctly and that the brake pedal does not feel spongy.

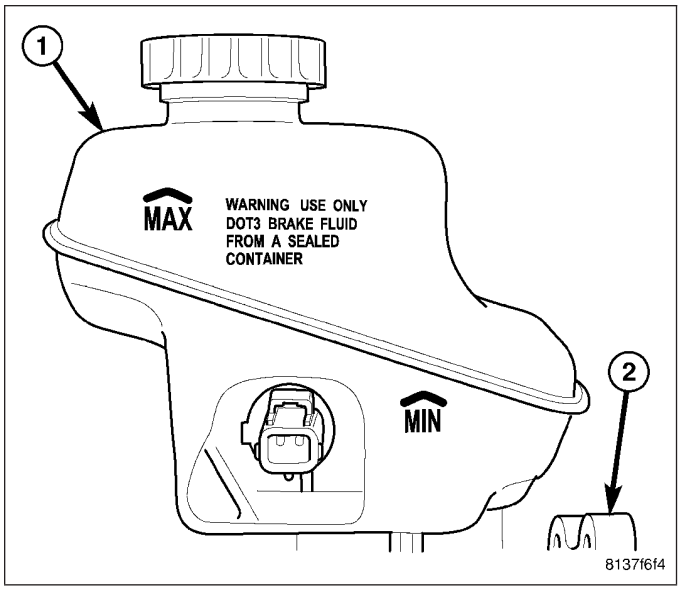

SPECIFICATIONS

ABS FASTENER TORQUE

(Refer to 5 - BRAKES - BASE - SPECIFICATIONS - BRAKE FASTENER TORQUE)

SENSOR-DYNAMICS (ESP)

DESCRIPTION

The Yaw Rate and Lateral Acceleration Sensors are housed into one unit known as the Dynamics Sensor. The sensor is used to measure side-to-side (Lateral) motion and vehicle rotational sensing (how fast the vehicle is turning - Yaw).

Yaw and Lateral Acceleration Sensors cannot be serviced separately. The entire Dynamics Sensor must be replaced when necessary.

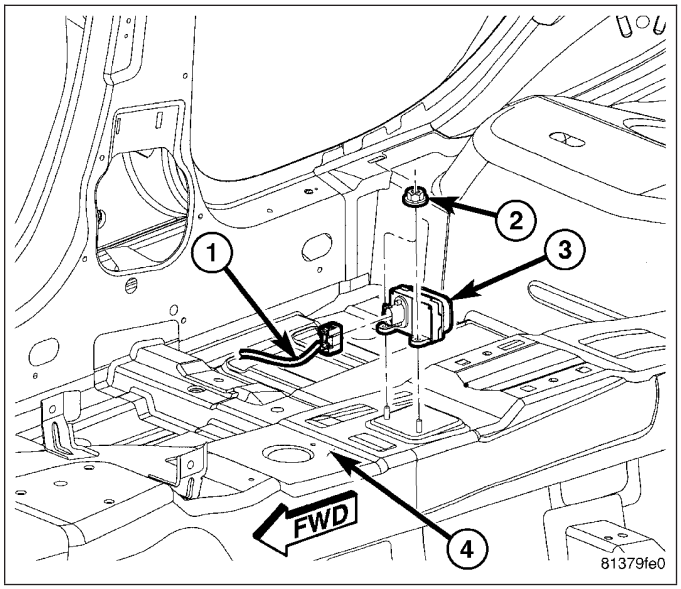

REMOVAL

1. Disconnect and isolate battery negative cable (2) from battery post.
2. Remove floor console. (Refer to 23 - BODY/INTERIOR/FLOOR CONSOLE - REMOVAL)

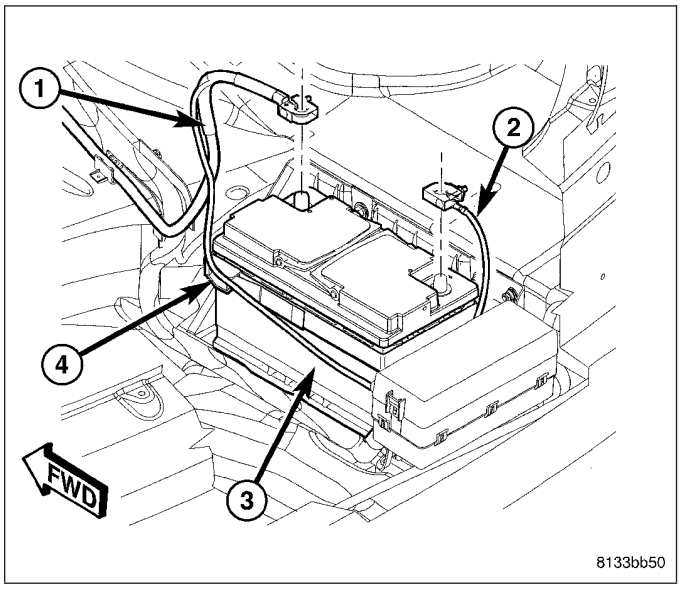

3. Disconnect wiring harness (1) connector at sensor (3).
4. Remove nuts (2) mounting sensor (3) to floor pan tunnel (4).
5. Remove dynamics sensor (3) from vehicle.

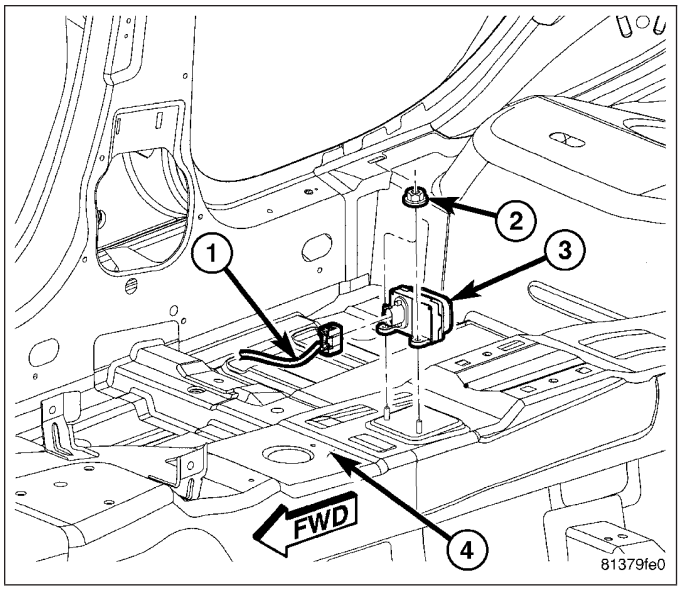

INSTALLATION

1. Install dynamics sensor (3) over studs mounted to floor pan tunnel (4).
2. Install mounting nuts (2). Tighten nuts to 12 N·m (110 in. lbs.) torque.
3. Connect wiring harness (1) connector to module (3).
4. Install floor console. (Refer to 23 - BODY/INTERIOR/FLOOR CONSOLE - INSTALLATION)

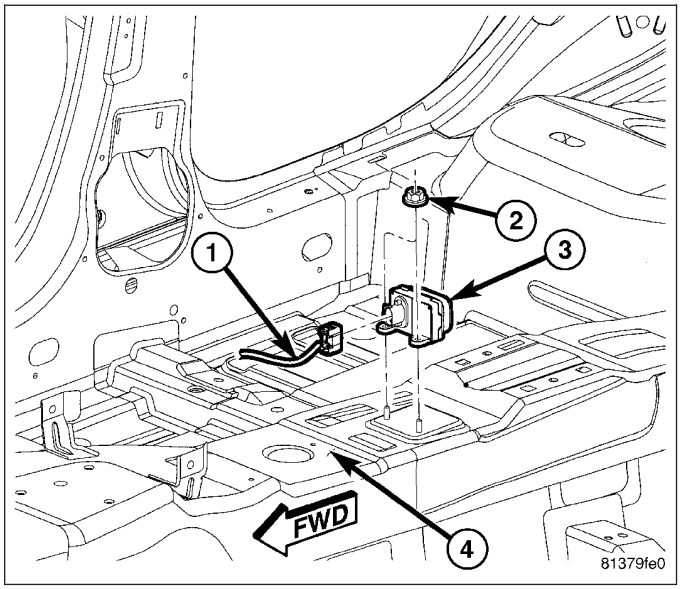

5. Connect battery negative cable (2) to battery post. It is important that this is performed properly. (Refer to 8 - ELECTRICAL/BATTERY SYSTEM - STANDARD PROCEDURE)
6. Perform Verification Test and clear any faults. (Refer to 5 - BRAKES - DIAGNOSIS AND TESTING)

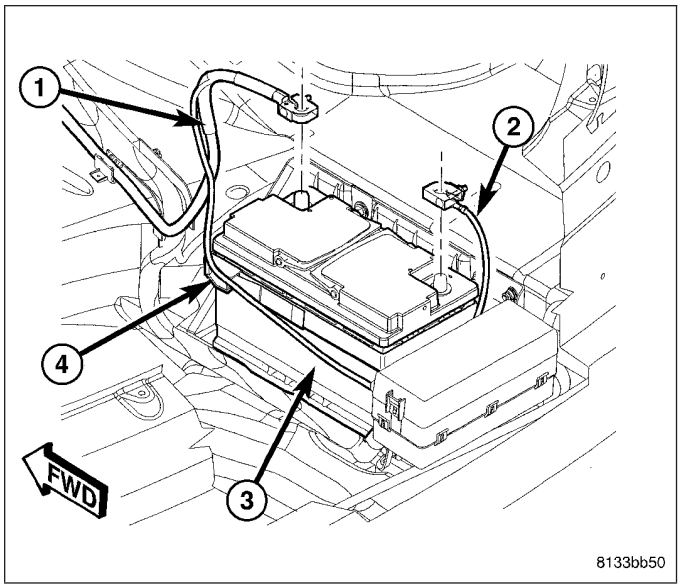

SENSOR-BRAKE PRESSURE - MK25

REMOVAL

BRAKE PRESSURE SENSOR

1. Disconnect wiring harness (6) connector from pressure sensor (5).

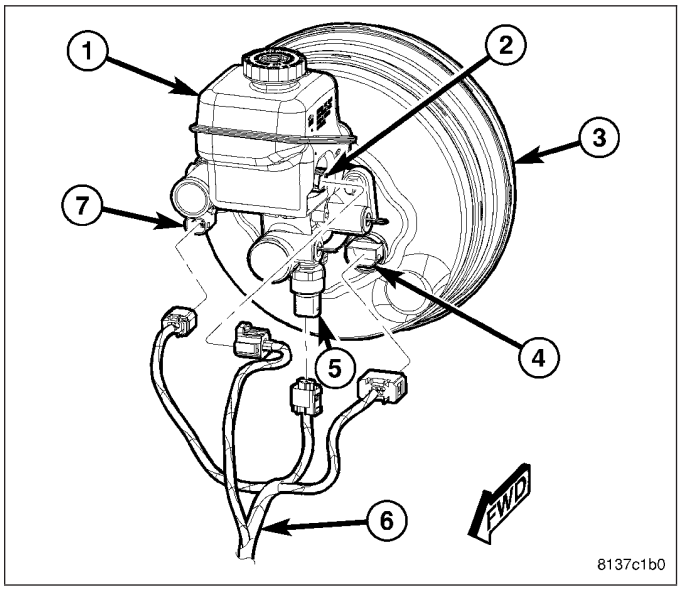

2. Remove pressure sensor (1) on bottom of master cylinder.

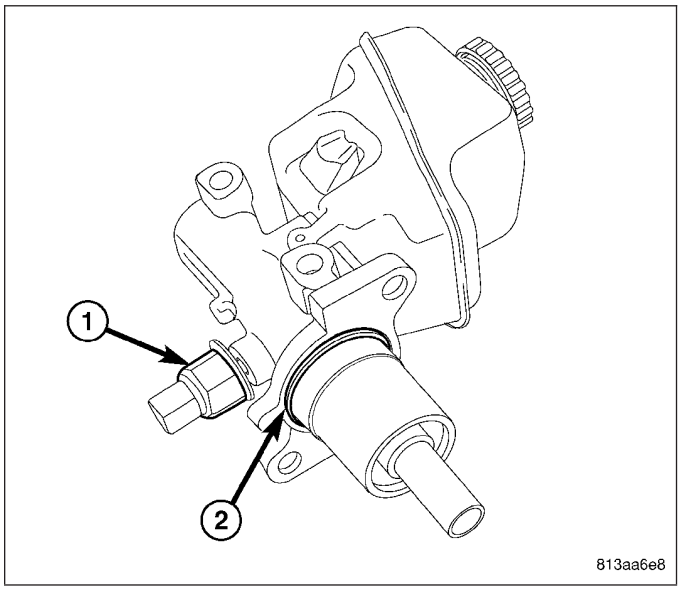

BRAKE PRESSURE SENSOR - SRT8

1. Disconnect wiring harness connector (4) from pressure sensor (3) below master cylinder (1).
2. Remove pressure sensor (3) from fitting in primary brake tube (2).

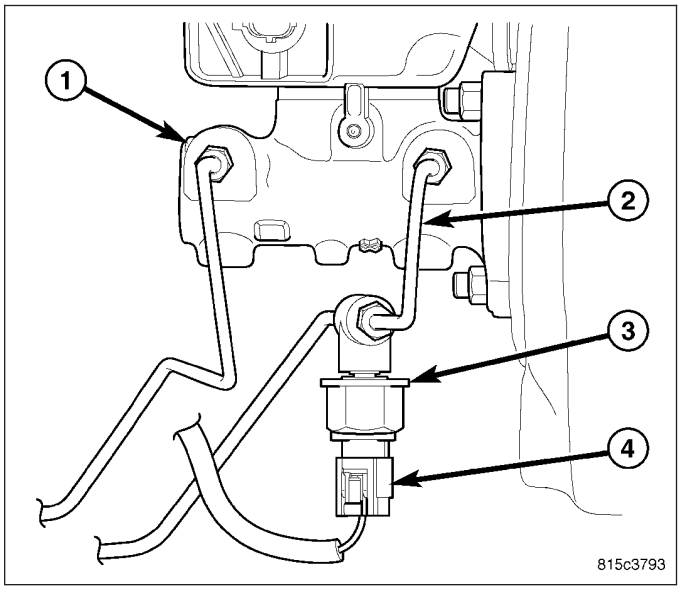

INSTALLATION

BRAKE PRESSURE SENSOR

1. Install pressure sensor (1) on bottom of master cylinder. Tighten sensor to 28 N·m (250 in. lbs.) torque.

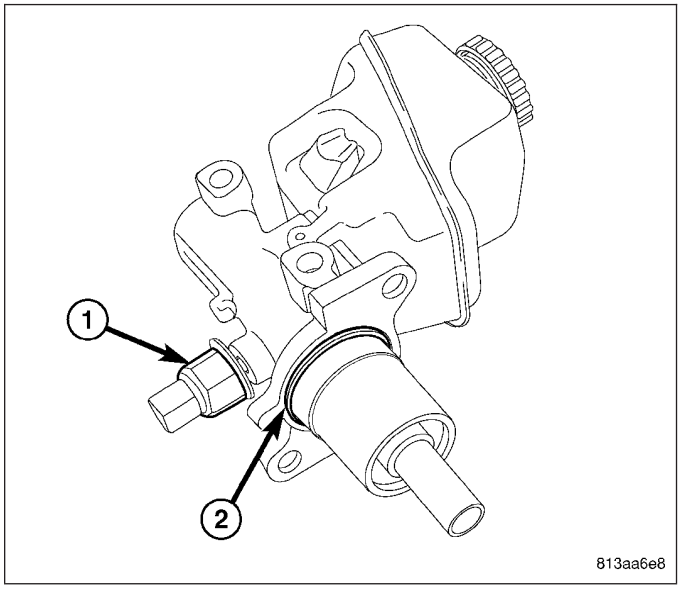

2. Connect wiring harness (6) connector to pressure switch (5).

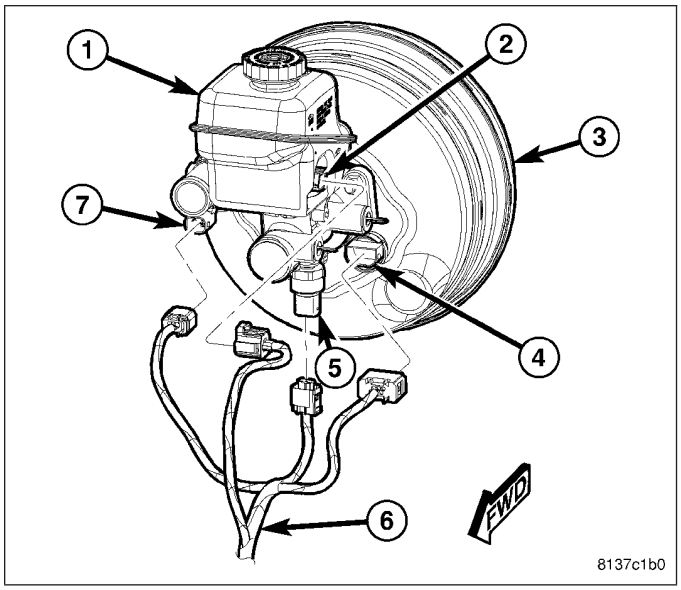

3. Fill master cylinder fluid reservoir (1) with clean, fresh Mopar® Brake Fluid or equivalent.
4. Perform Verification Test and clear any faults. (Refer to 5 - BRAKES - DIAGNOSIS AND TESTING)

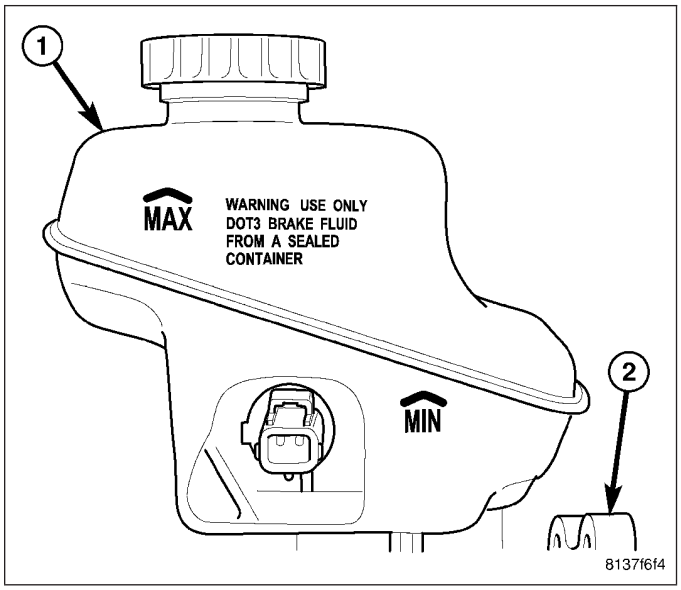

BRAKE PRESSURE SENSOR - SRT8

1. Install pressure sensor (3) into fitting on primary brake tube (2) below master cylinder (1). Tighten switch to 28 N·m (250 in. lbs.) torque.
2. Connect wiring harness connector (4) to pressure sensor (3).

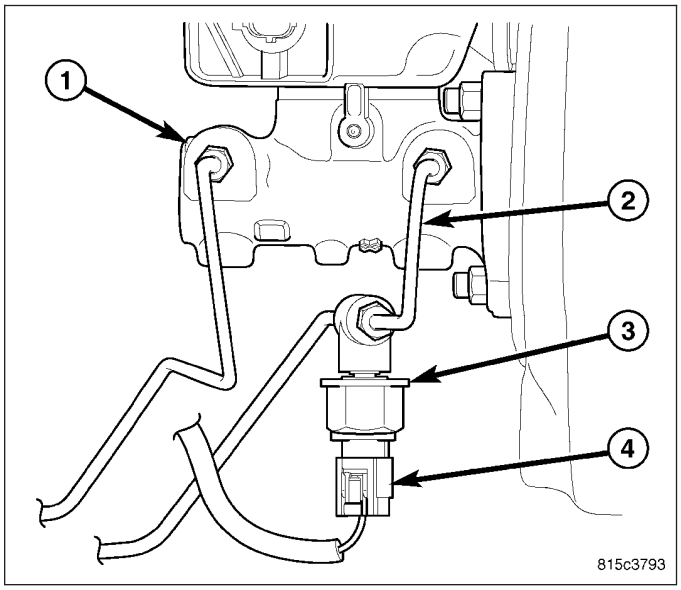

3. Fill master cylinder fluid reservoir (1) with clean, fresh Mopar® Brake Fluid or equivalent.
4. Perform Verification Test and clear any faults. (Refer to 5 - BRAKES - DIAGNOSIS AND TESTING)

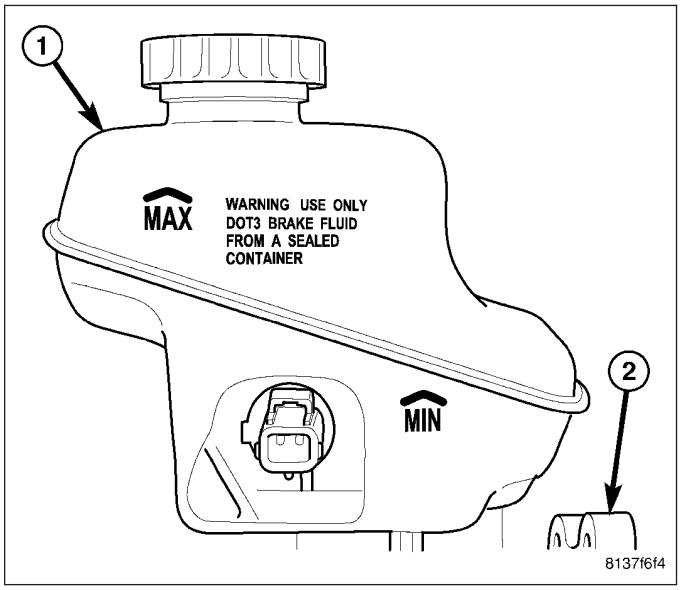

SENSOR-TRAVEL - MK25

REMOVAL

CAUTION: Vacuum in power brake booster must be pumped down (removed) before removing master cylinder from power brake booster. This is necessary to prevent power brake booster from sucking in any contamination as master cylinder is removed. This can be done simply by pumping brake pedal, with vehicle's engine not running, until a firm feeling brake pedal is achieved.

1. With engine not running, pump brake pedal until a firm pedal is achieved (4-5 strokes).
2. Disconnect and isolate battery negative cable (2) from battery post.

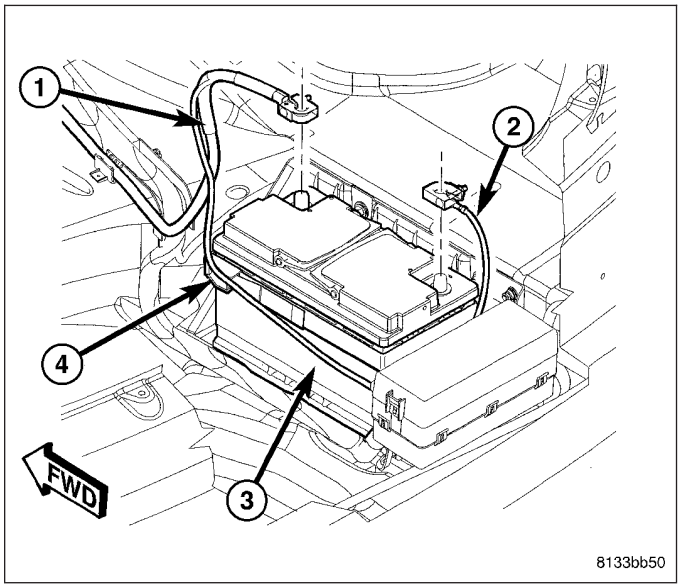

3. Disconnect wiring harness (6) connector at pedal travel sensor (7) on power brake booster (3).

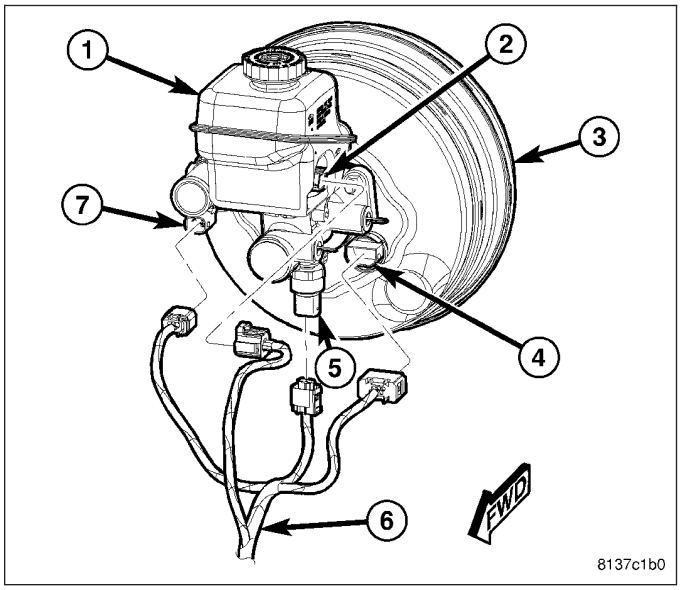

4. Using a small screwdriver, remove sensor retaining ring (1).
5. Pull travel sensor straight out of booster.

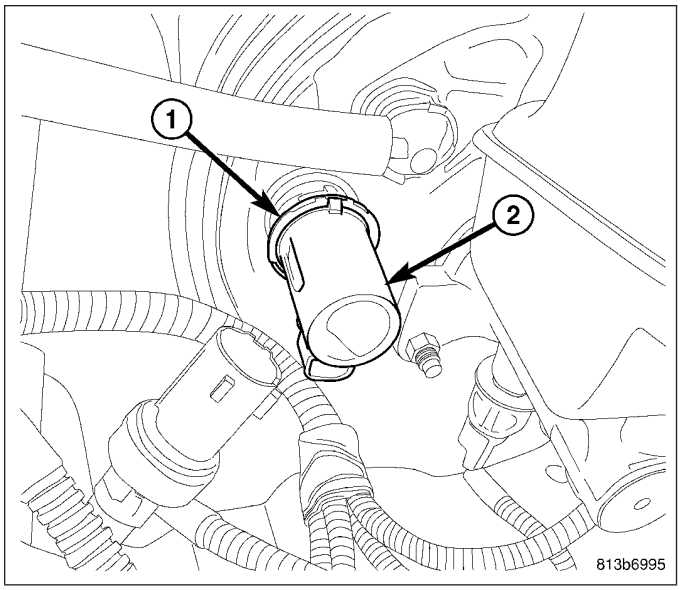

INSTALLATION

CAUTION: Before installing new pedal travel sensor, replace O-ring (2) inside booster opening. Sparingly lubricate NEW O-ring with brake fluid. Use care not to lose O-ring inside booster.

1. Install NEW sensor retaining ring (1) in groove on booster.

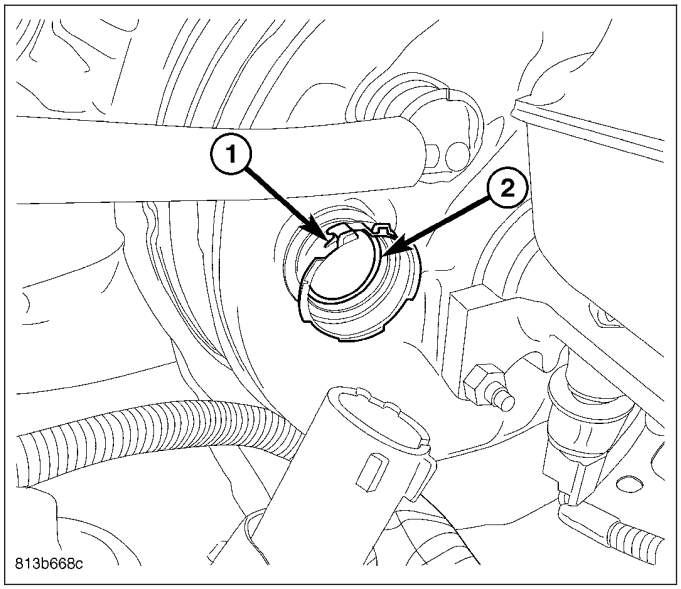

2. Align sensor keyway with notch in top of sensor mount on booster housing, then install pedal travel sensor (2). The sensor will snap into place past the retaining ring (1).

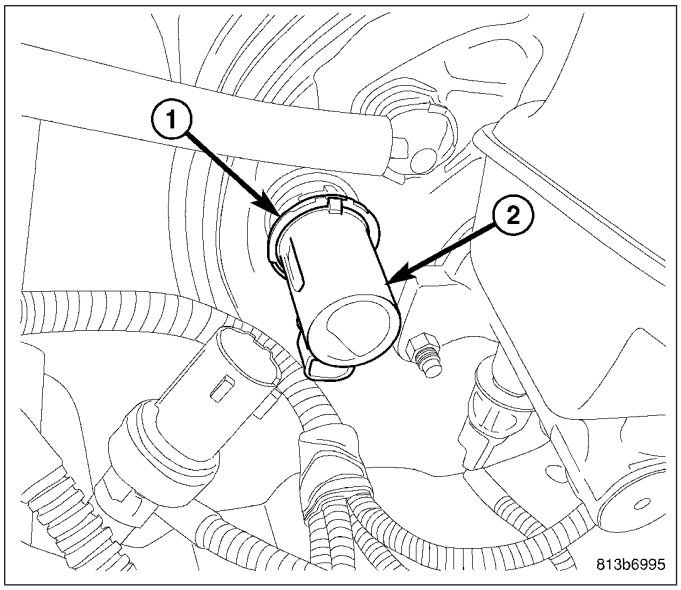

3. Connect wiring harness (6) connector to pedal travel sensor (7).

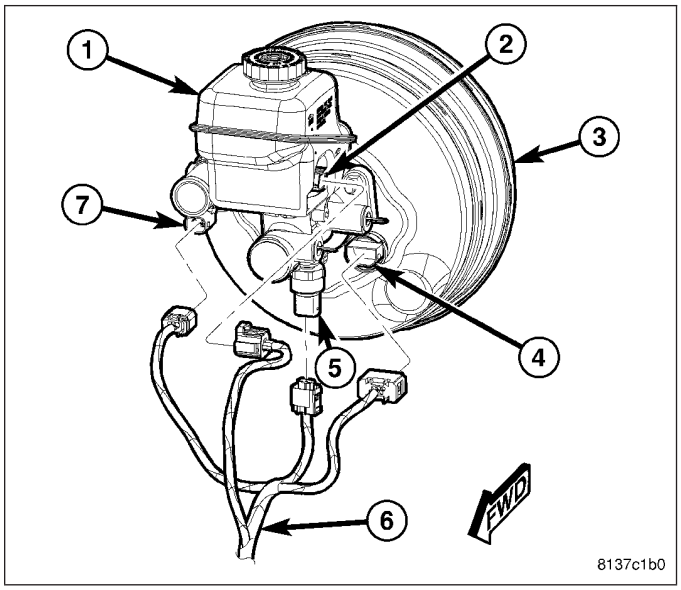

4. Connect battery negative cable (2) to battery post. It is important that this is performed properly. (Refer to 8 - ELECTRICAL/BATTERY SYSTEM - STANDARD PROCEDURE)

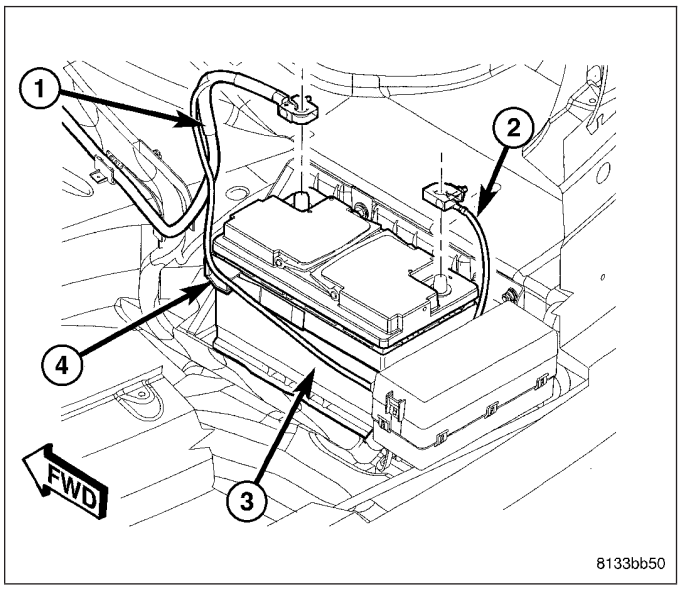

5. Perform Verification Test and clear any faults. (Refer to 5 - BRAKES - DIAGNOSIS AND TESTING)
6. Start vehicle and check for vacuum leaks around sensor. Correct as necessary.

SENSOR-STEERING ANGLE

REMOVAL

WARNING: BEFORE SERVICING THE STEERING COLUMN THE AIRBAG SYSTEM MUST BE DISARMED. REFER TO ELECTRICAL RESTRAINT SYSTEM FOR SERVICE PROCEDURES. FAILURE TO DO SO MAY RESULT IN ACCIDENTAL DEPLOYMENT OF THE AIRBAG AND POSSIBLE PERSONAL INJURY.

CAUTION: All fasteners must be torqued to specification to ensure proper operation of the steering column.

1. Position the front wheels **straight ahead**.
2. Fully extend or pull out adjustable steering column.
3. Disconnect the negative (ground) cable from the battery.
4. Remove the airbag (3) from the steering wheel (1). (Refer to 8 - ELECTRICAL/RESTRAINTS/DRIVER AIRBAG - REMOVAL).

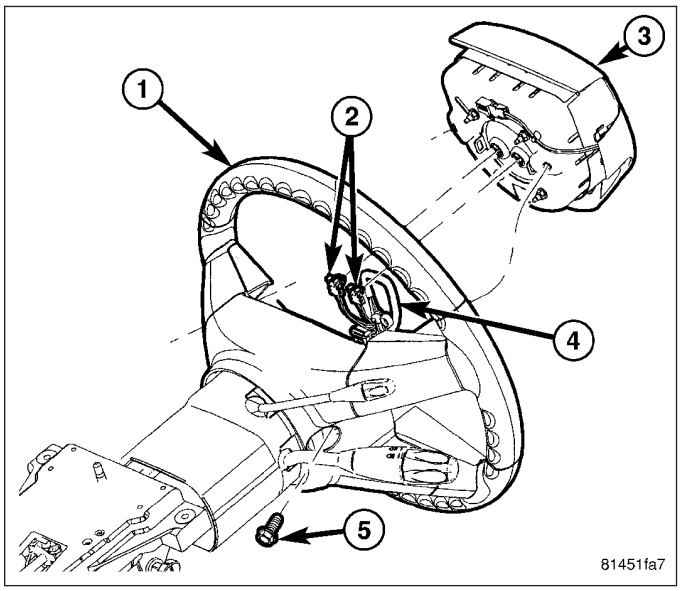

5. Remove the steering wheel mounting bolt (2) then remove the steering wheel (1).

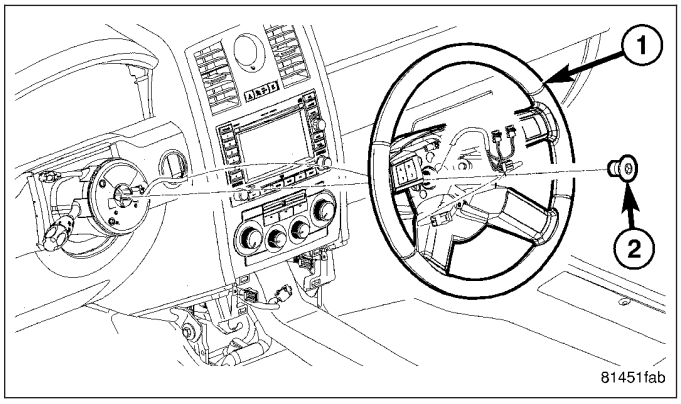

6. Remove the clock spring screws (1), (Refer to 8 - ELECTRICAL/RESTRAINTS/CLOCKSPRING - REMOVAL).

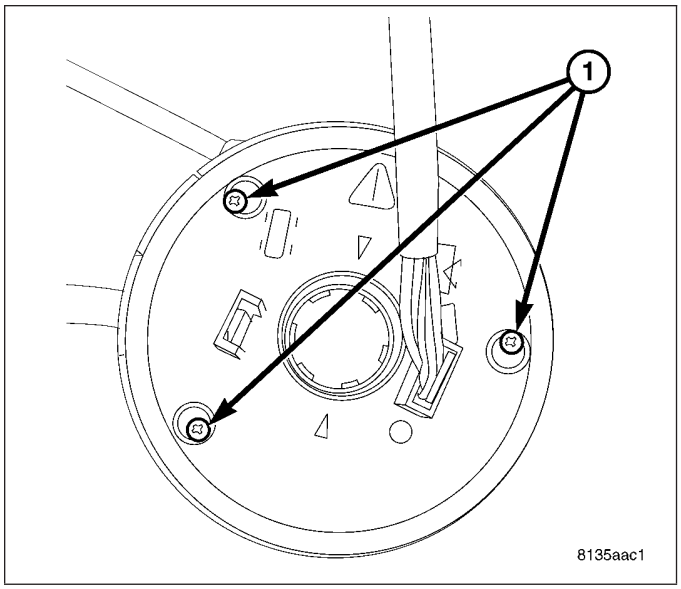

7. Remove the steering angle sensor (3) screws.

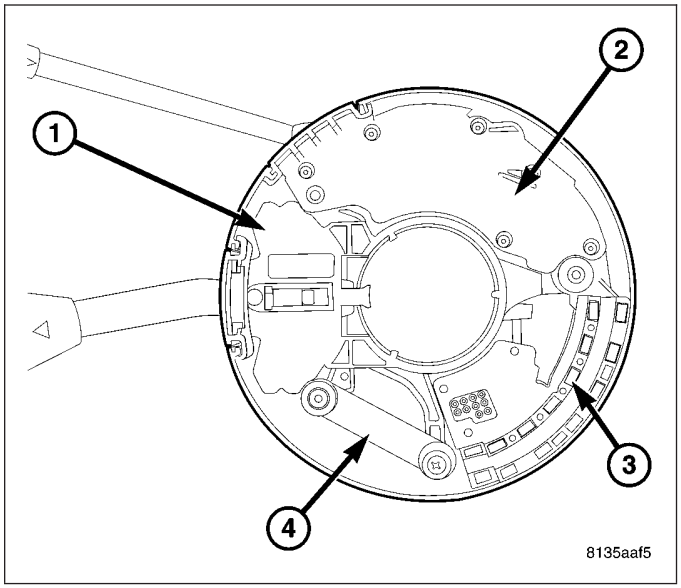

8. Remove the steering angle sensor (1) from the column (2).

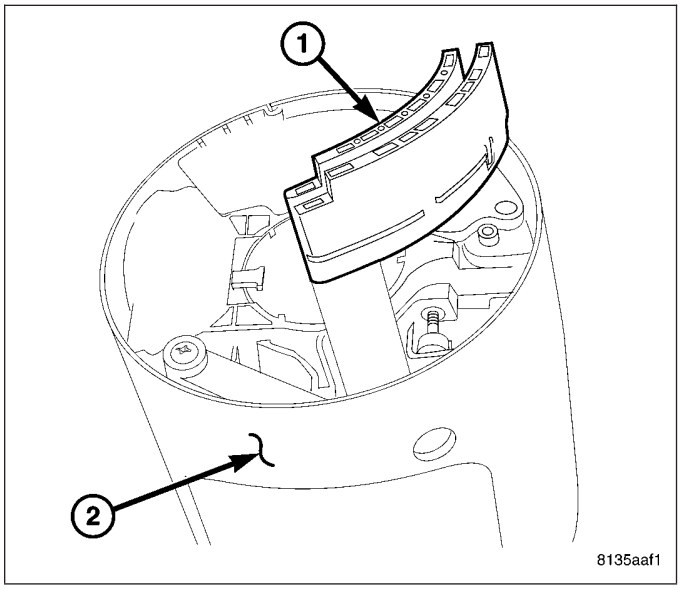

INSTALLATION

1. Install the steering angle sensor (1) to the SCCM (2).

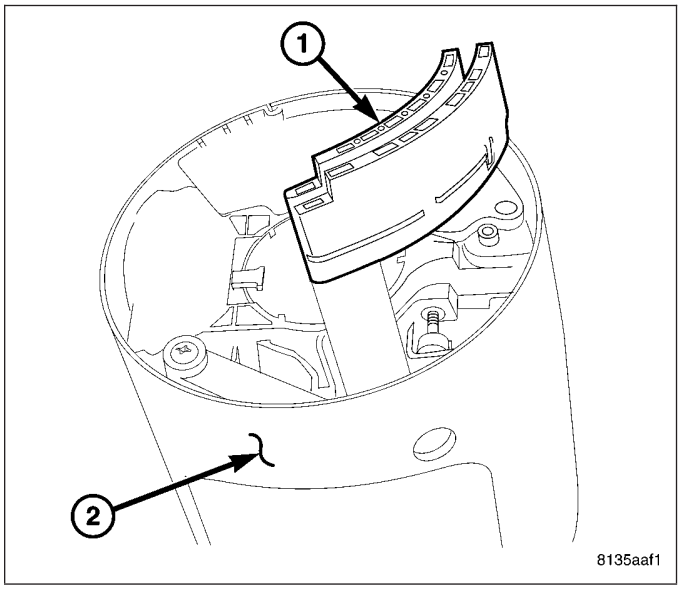

2. Tighten the screws securing the steering angle sensor (3) to the SCCM.

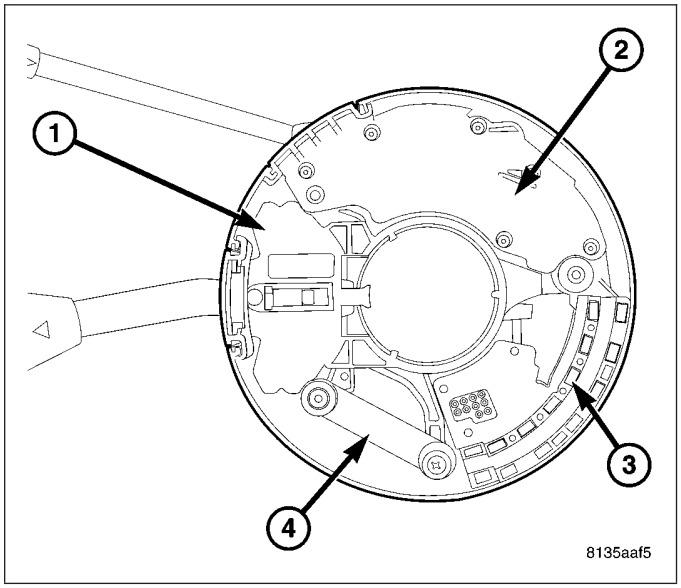

3. Install the clockspring and tighten the screws (1). (Refer to 8 - ELECTRICAL/RESTRAINTS/CLOCKSPRING - REMOVAL)

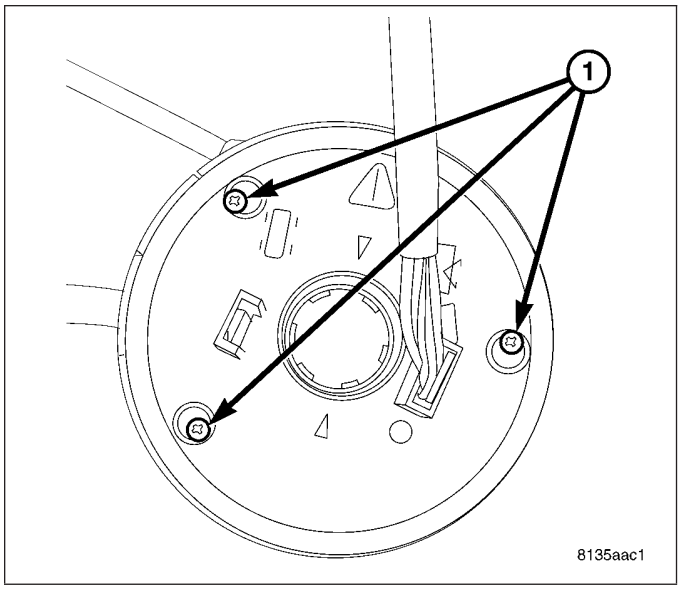

4. Align the spline on the steering wheel hub to the steering column shaft.
5. Slide the steering wheel (1) onto the shaft and install a **new** mounting bolt (2). Tighten the bolt to 61 N·m (45 ft. lbs.).

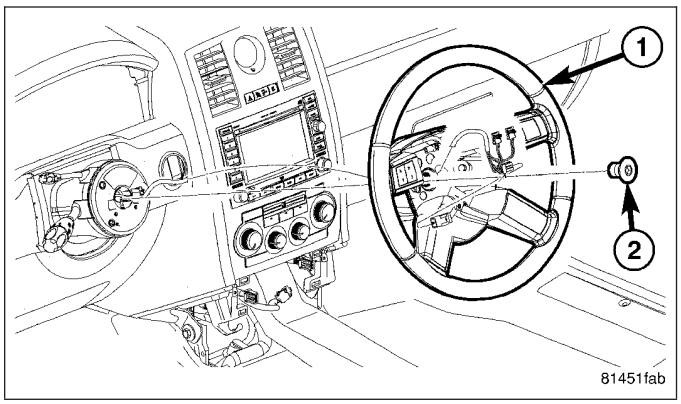

6. Install the airbag (3) on the steering wheel (1). (Refer to 8 - ELECTRICAL/RESTRAINTS/DRIVER AIRBAG - INSTALLATION)

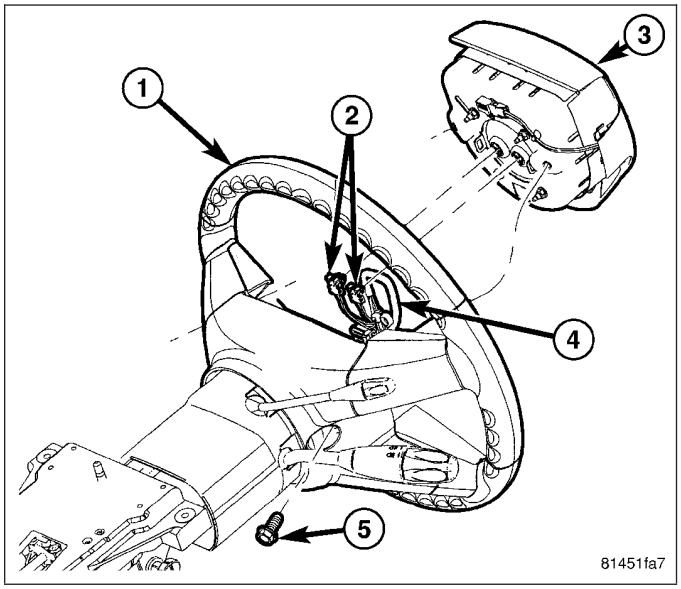

7. Connect battery negative cable (2) to battery post. It is important that this is performed properly. (Refer to 8 - ELECTRICAL/BATTERY SYSTEM - STANDARD PROCEDURE)
8. Perform Verification Test and clear any faults. (Refer to 5 - BRAKES - DIAGNOSIS AND TESTING)
9. Test the operation of the horn, lights and any other functions that are steering column operated.

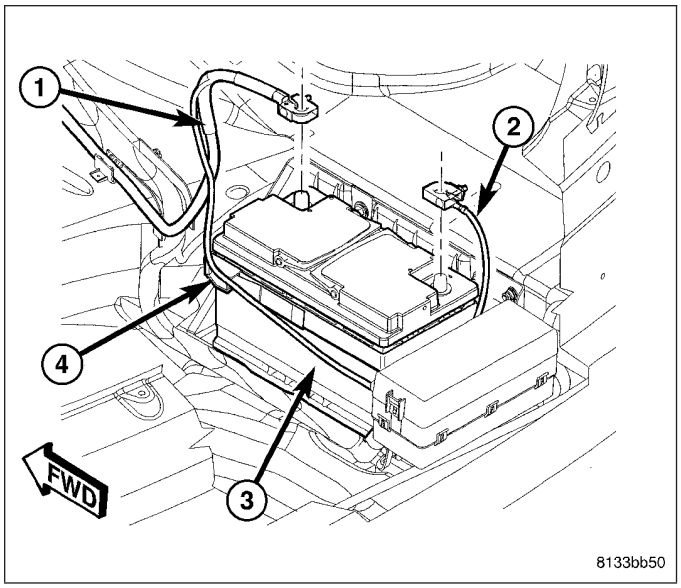

SENSOR-FRONT WHEEL SPEED

DESCRIPTION

One wheel speed sensor is mounted to each knuckle. The wheel speed sensor, using a tone wheel attached to the hub and bearing (RWD) or front half shaft (AWD) as a trigger mechanism, communicates with the Antilock Brake Module, informing it of that wheel's speed.

The head of the front wheel speed sensor used on Rear-Wheel-Drive (RWD) vehicles mounts to the inside of the knuckle.

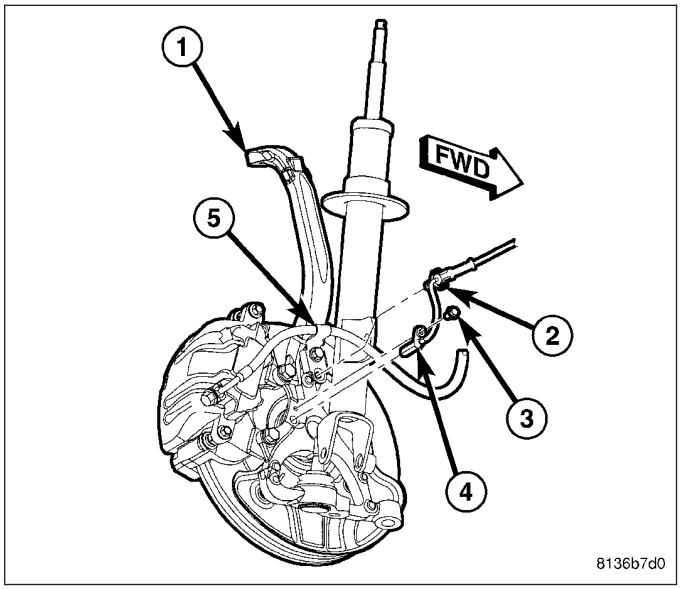

The head of the front wheel speed sensor used on All-Wheel-Drive (AWD) vehicles mounts to the rear of the knuckle.

Vehicles without antilock brakes are equipped with one front wheel speed sensor. It is attached to the right front knuckle and is used to provide wheel speed sense to various vehicle systems.

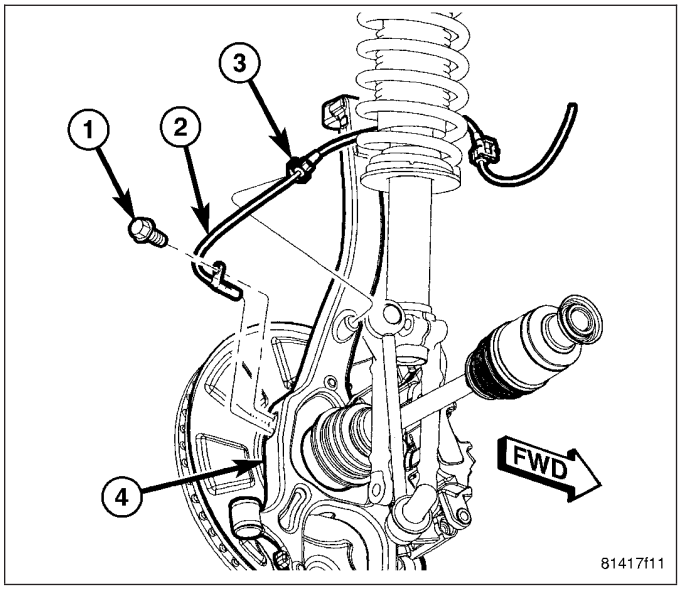

REMOVAL

AWD

1. Raise and support vehicle. (Refer to LUBRICATION & MAINTENANCE/HOISTING - STANDARD PROCEDURE)

2. Remove sensor cable routing clip (2) from brake hose bracket (3).

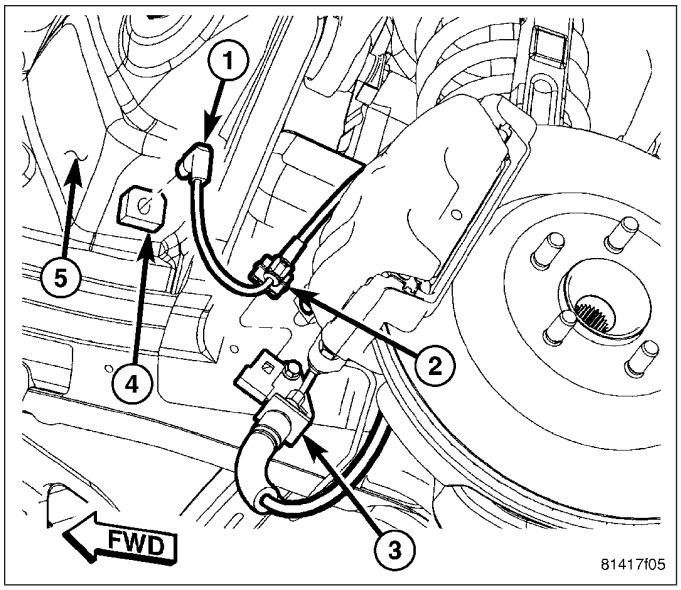

NOTE: To release sensor connector from body wiring harness connector (1) in following step, move retaining clip (2) as indicated here, then pull sensor connector (3) outward.

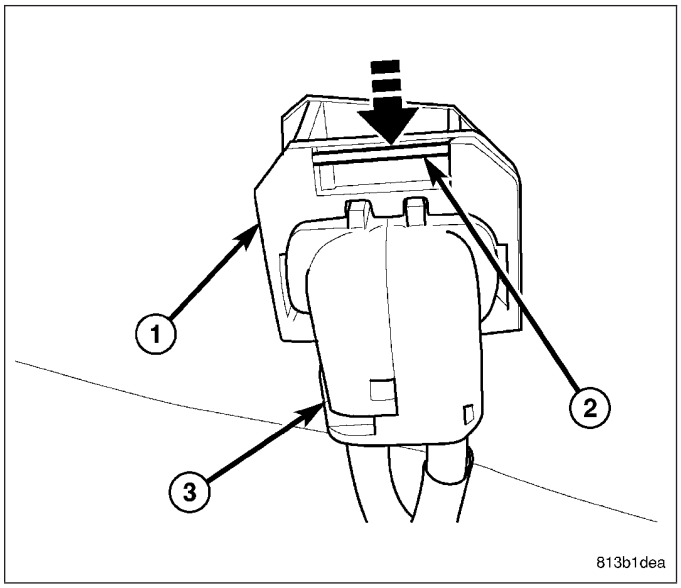

3. Remove sensor connector (1) from body wiring harness connector (4).

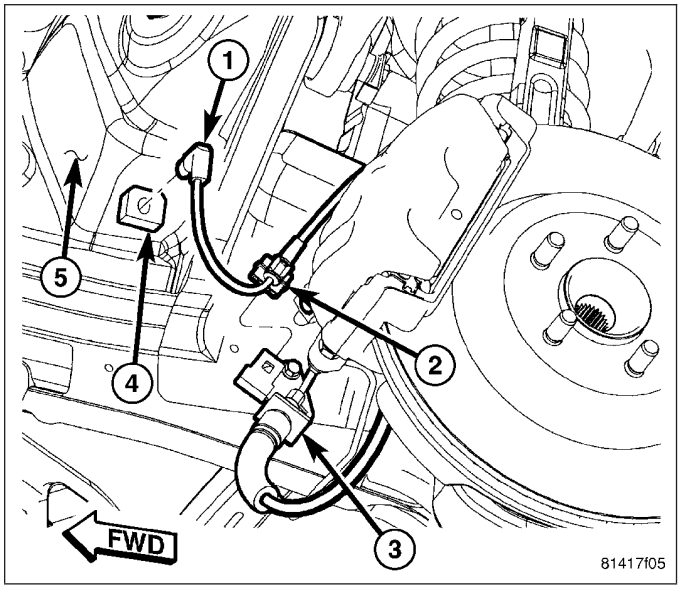

4. Remove screw (1) fastening wheel speed sensor (2) to knuckle (4). Pull sensor head out of knuckle.
5. Remove wheel speed sensor cable routing clip (3) from knuckle (4).
6. Remove wheel speed sensor (2).

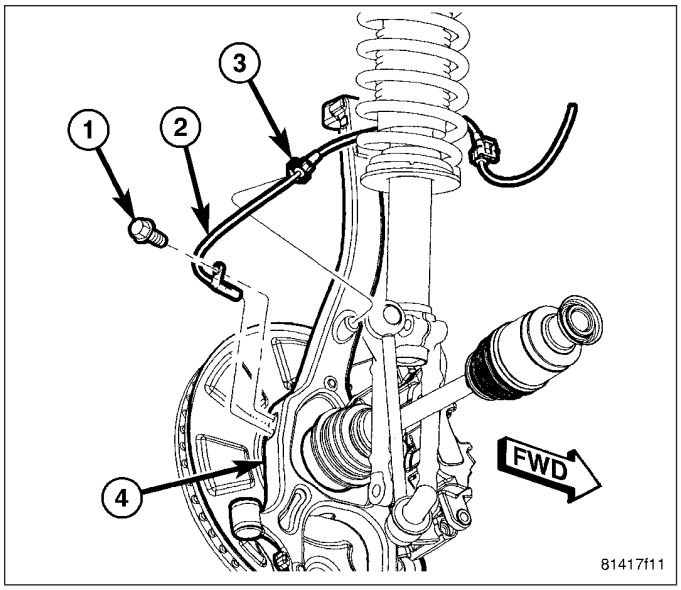

RWD

1. Raise and support vehicle. (Refer to LUBRICATION & MAINTENANCE/HOISTING - STANDARD PROCEDURE)

2. Remove sensor cable routing clip (2) from brake hose bracket (3).

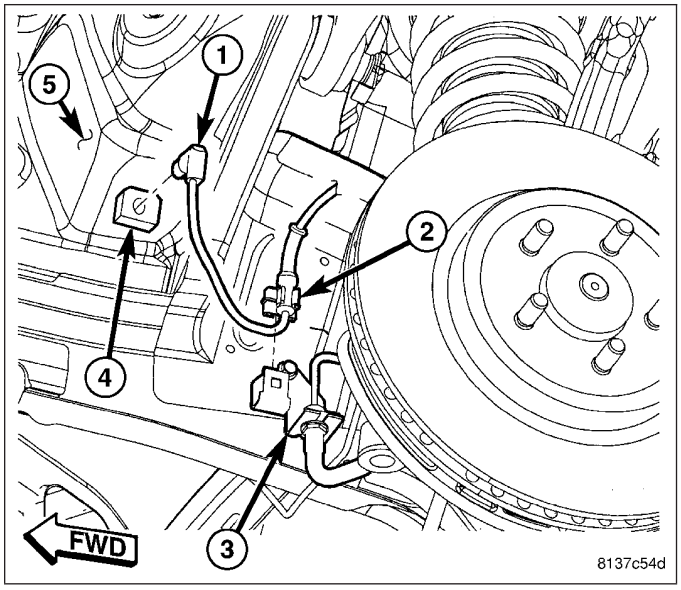

NOTE: To release sensor connector from body wiring harness connector (1) in following step, move retaining clip (2) as indicated here, then pull sensor connector (3) outward.

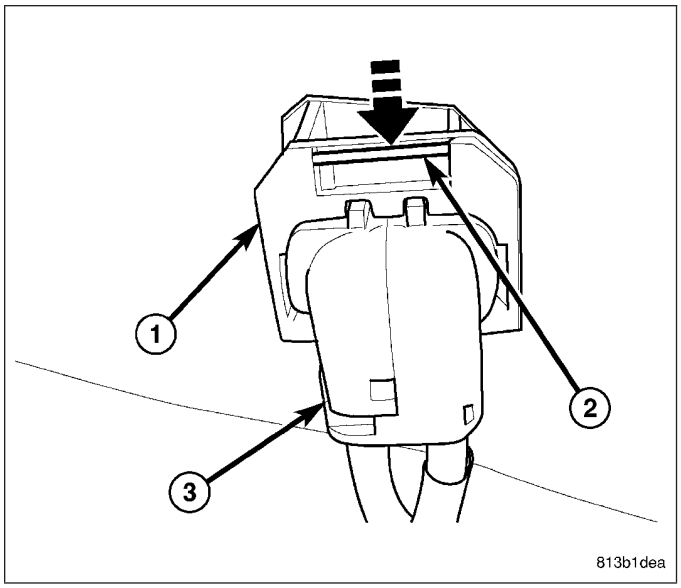

3. Remove sensor connector (1) from body wiring harness connector (4).

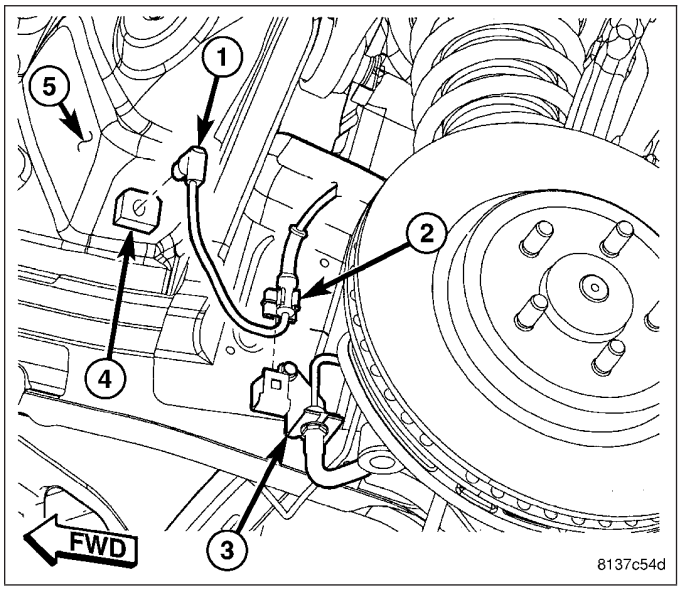

4. Remove screw (3) fastening wheel speed sensor to knuckle (1). Pull sensor head (4) out of knuckle.
5. Remove wheel speed sensor cable routing clip (2) from brake hose routing bracket (5).

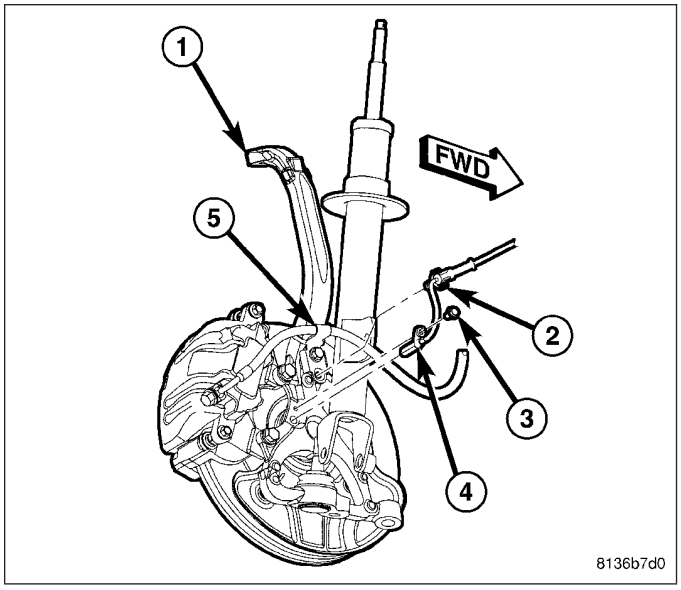

INSTALLATION

AWD

1. Install wheel speed sensor (2) head into knuckle (4) and install mounting screw (1). Tighten screw to 11 N·m (95 in. lbs.) torque.
2. Attach wheel speed sensor cable and routing clip (3) to knuckle (4).

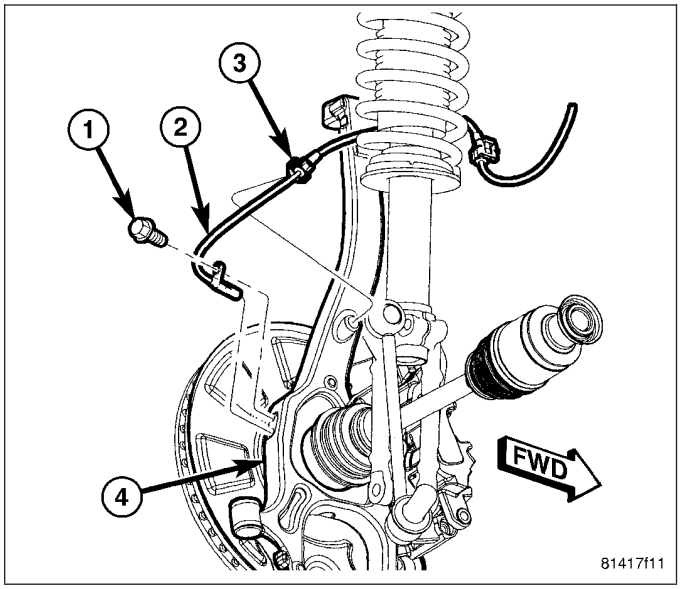

3. Attach sensor cable routing clip (2) to brake hose bracket (3).
4. Connect sensor connector (1) to body wiring harness connector (4). When installing connector, make sure retaining clip on body connector is properly in place and sensor connect cannot be pulled out.
5. Lower vehicle.
6. Perform Verification Test and clear any faults. (Refer to 5 - BRAKES - DIAGNOSIS AND TESTING)

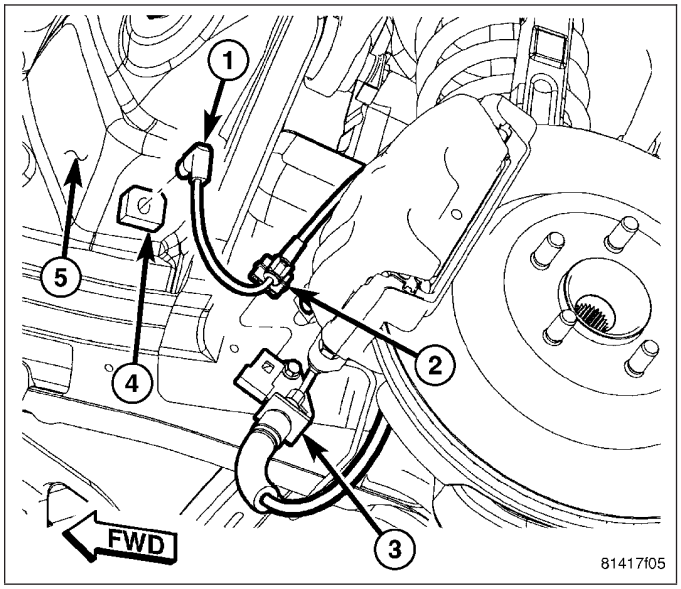

RWD

1. Install wheel speed sensor head (4) into knuckle and install mounting screw (3). Tighten screw to 11 N·m (95 in. lbs.) torque.
2. Attach wheel speed sensor cable and routing clip (2) to brake hose routing bracket (5).

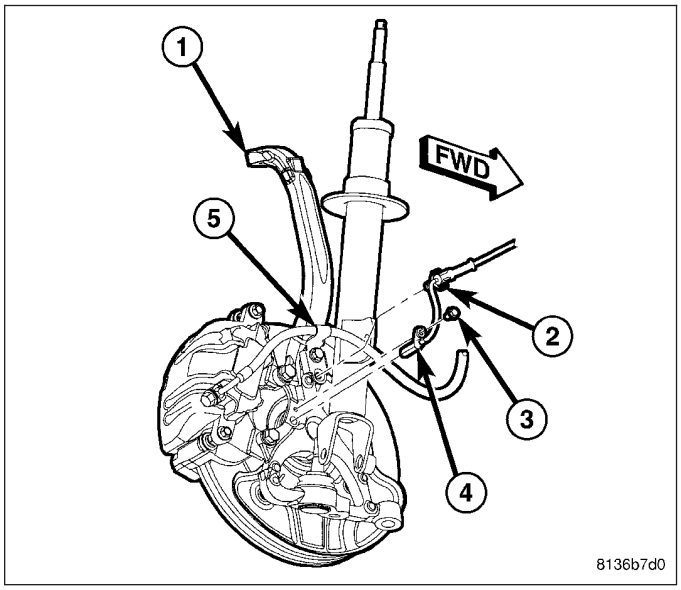

3. Attach sensor cable routing clip (2) to brake hose bracket (3).
4. Connect sensor connector (1) to body wiring harness connector (4). When installing connector, make sure retaining clip on body connector is properly in place and sensor connect cannot be pulled out.
5. Lower vehicle.
6. Perform Verification Test and clear any faults. (Refer to 5 - BRAKES - DIAGNOSIS AND TESTING)

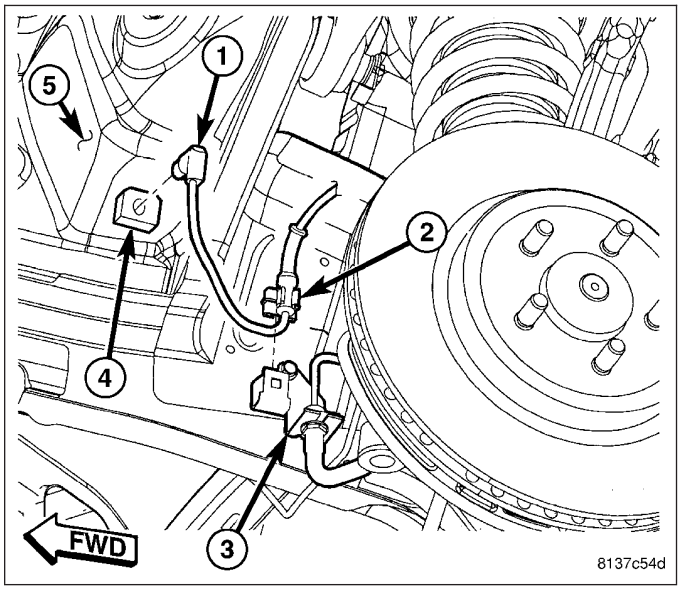

SENSOR-REAR WHEEL SPEED

DESCRIPTION

One wheel speed sensor (3) is mounted to the rear of each rear knuckle. The wheel speed sensor, using a tone wheel attached to the rear axle half shaft as a trigger mechanism, communicates with the Antilock Brake Module, informing it of that wheel's speed.

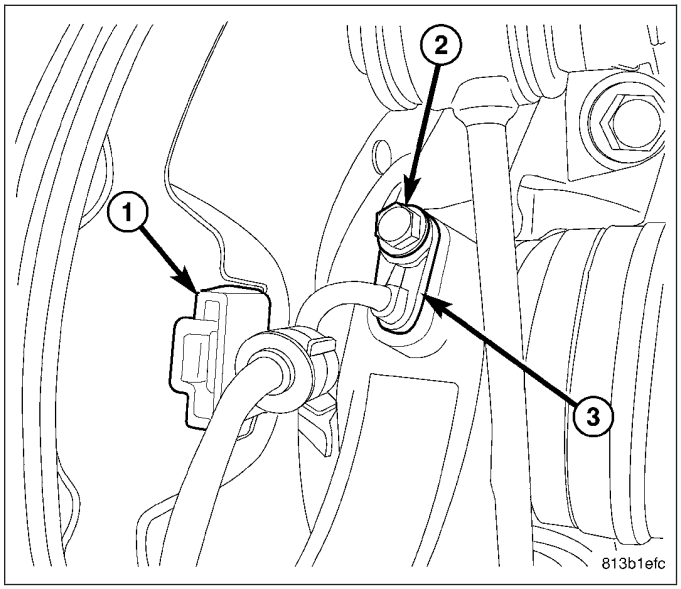

REMOVAL

1. Raise and support vehicle. (Refer to LUBRICATION & MAINTENANCE/HOISTING - STANDARD PROCEDURE)

NOTE: To release sensor connector from body wiring harness connector (1) in following step, move retaining clip (2) as indicated here, then pull sensor connector (3) outward.

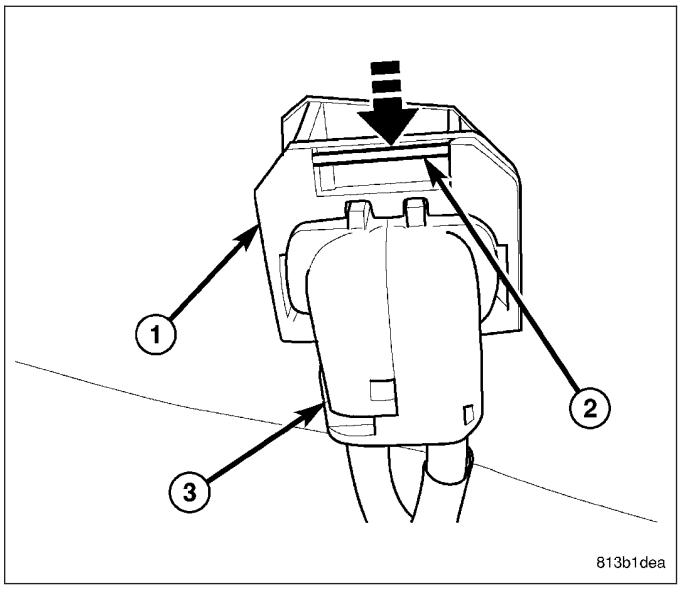

2. Remove sensor connectors (3 and 4) from body wiring harness connector (1) located in luggage compartment floor pan (2).
3. Separate left sensor connector (4) from right sensor connector (3).

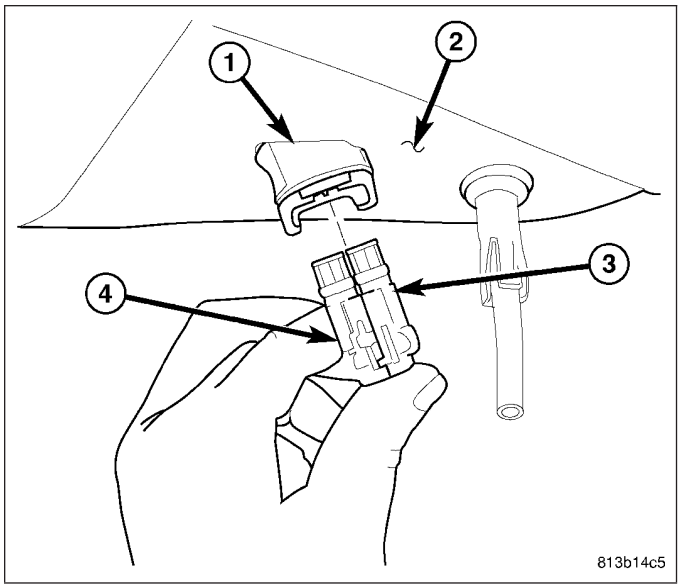

4. If removing left sensor, unclip sensor cable (3) from routing clip near body connector (1).

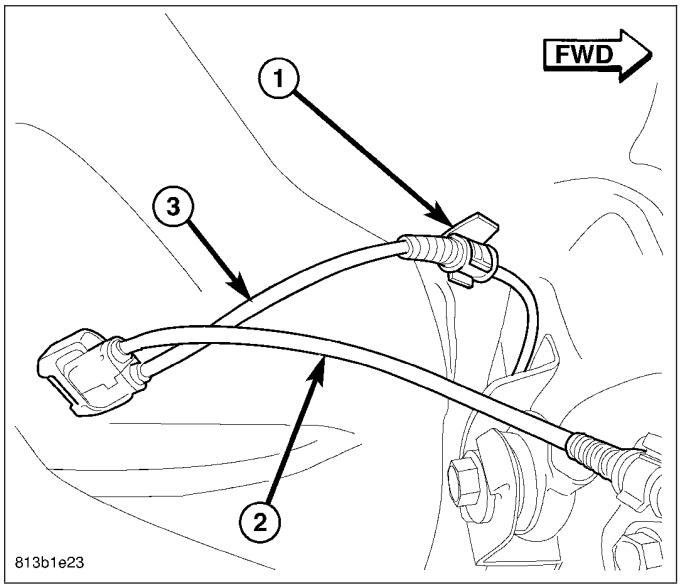

5. If removing left sensor, unclip sensor cable (1) from routing clips (2) along rear of crossmember near rear differential (3).

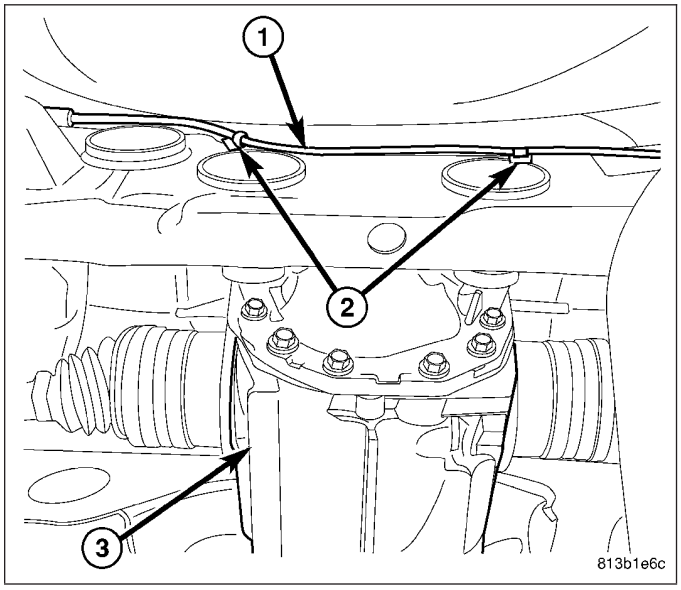

6. If removing left sensor, unclip sensor cable (2) from routing clip (1) above toe link mount on rear cross-member.
7. Unclip sensor cable (2) from routing clips (3) along toe link.

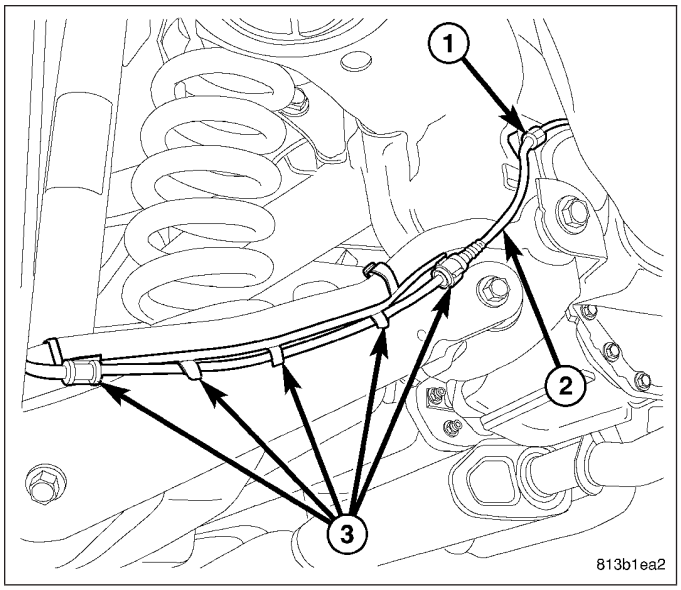

8. Unclip sensor cable at rear brake rotor shield (1).
9. Remove screw (2) fastening sensor head (3) to rear knuckle.
10. Remove wheel speed sensor.

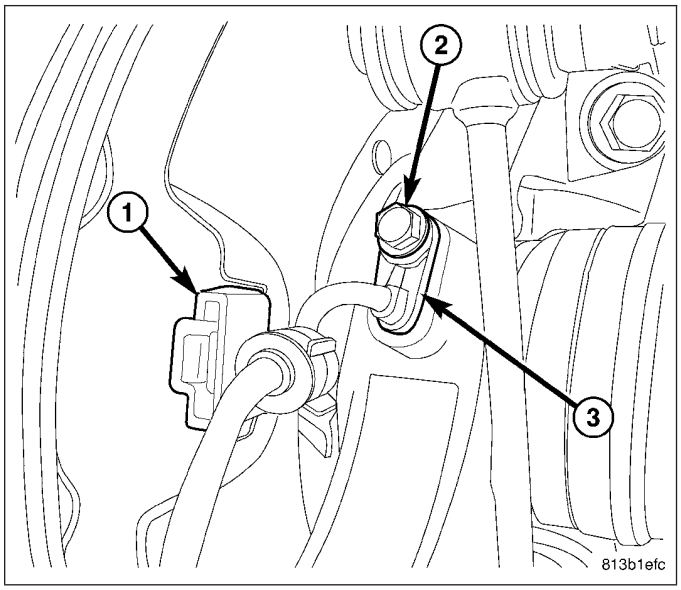

INSTALLATION

1. Insert wheel speed sensor head (3) into mounting hole in rear of knuckle.
2. Install screw (2) fastening sensor head (3) to rear knuckle. Tighten Screw to 11 N·m (100 in. lbs.) torque.
3. Install sensor cable at rear brake rotor shield (1).

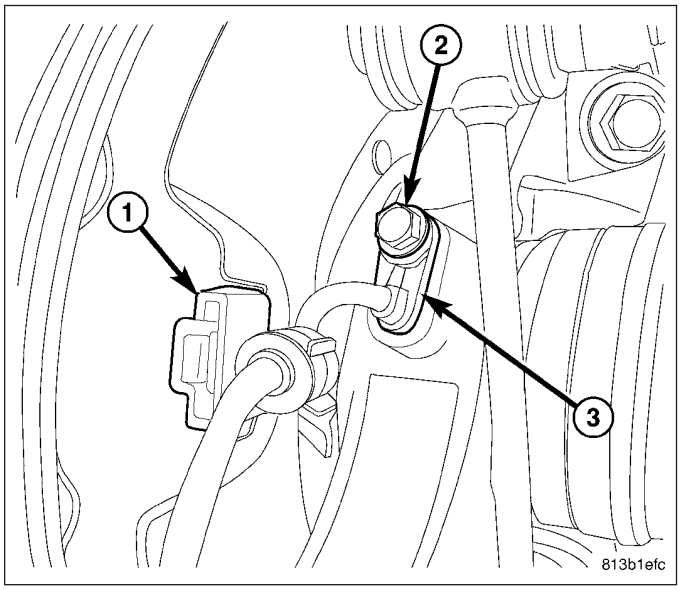

4. Clip sensor cable (2) to routing clips (3) along toe link.
5. If installing left sensor, clip sensor cable (2) to routing clip (1) above toe link mount on rear crossmember.

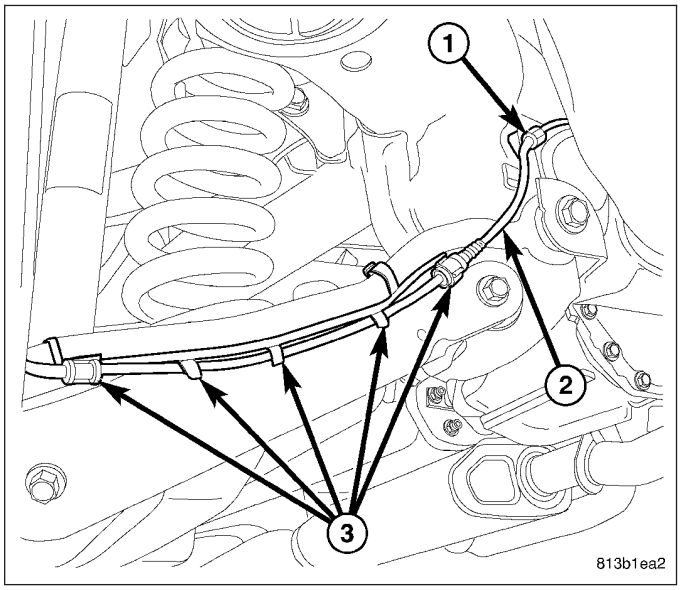

6. If installing left sensor, clip sensor cable (1) to routing clips (2) along rear of crossmember near rear differential (3).

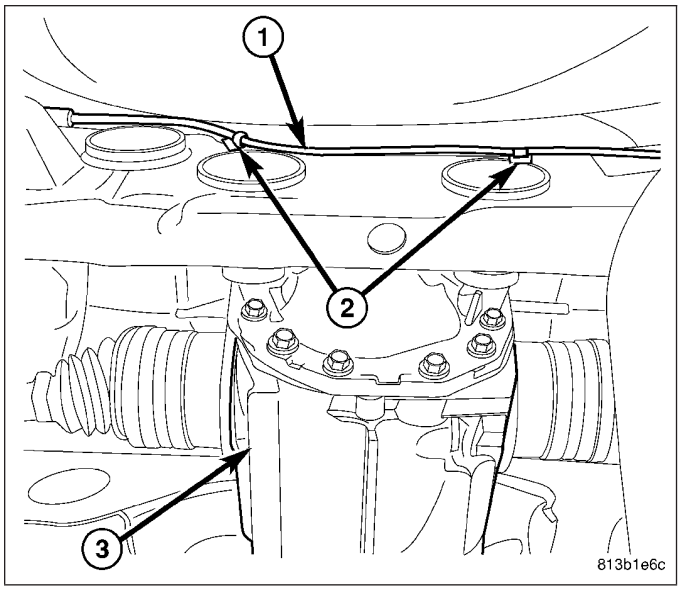

7. If installing left sensor, clip sensor cable (3) to routing clip near body connector (1).

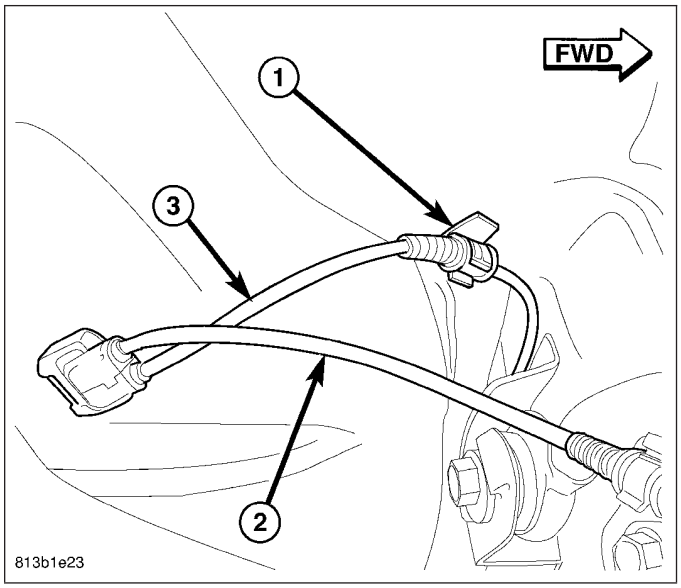

8. Match left sensor connector (4) to right sensor connector (3) to make one connector.
9. Insert sensor connectors (3 and 4) into body wiring harness connector (1) located in luggage compartment floor pan (2). When installing connector, make sure retaining clip on body connector is properly in place and sensor connector cannot be pulled out.

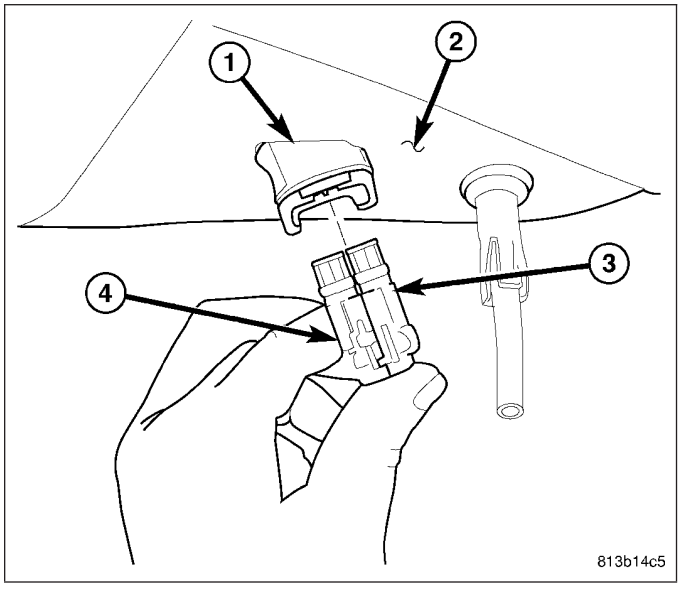

SWITCH-ESP

DESCRIPTION

The ESP Off Switch is located in the Instrument Panel Switch Pod in the center of the instrument panel. The ESP Off switch turns the Electronic Stability Program off whenever the switch is depressed. Depressing the switch a second time turns the ESP back on. The switch resets itself each time the ignition is cycled.

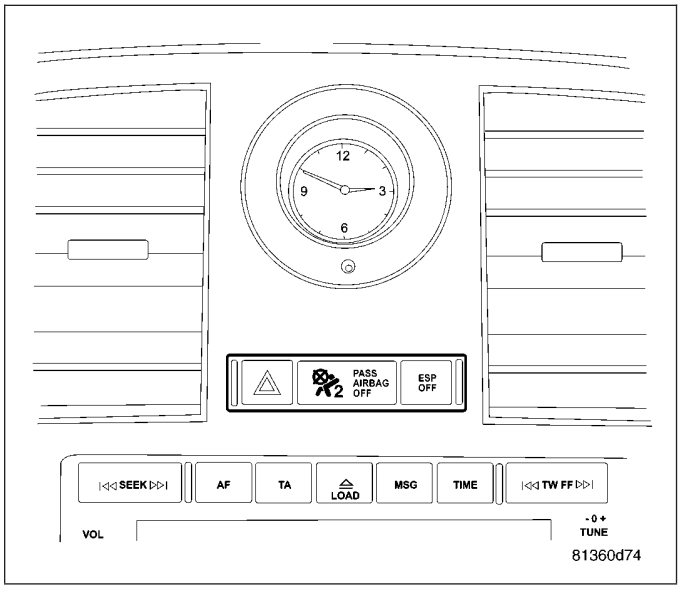

When the ESP Off switch is depressed and released, turning ESP off, it does not completely turn the system off. The ESP system reduces torque management to a lesser amount, but ESP function can still occur if the system perceives the need.

SRT8 (with MK25E ABS) and Police Package equipped vehicles have what is known as three-mode ESP. When the ESP Off switch is depressed and quickly released, the system turns off ESP like any other model, but if the switch is held down for a period of five seconds or longer before releasing, the ESP system further reduces the amount of torque management provided. The system can be returned to “normal” by briefly pressing and releasing the ESP Off switch.

The ESP Off switch is serviced as part of the Instrument Panel Switch Pod.

REMOVAL

The ESP Off switch is serviced as part of the Instrument Panel Switch Pod. (Refer to 8 - ELECTRICAL/INSTRUMENT CLUSTER/INSTRUMENT PANEL SWITCH POD - REMOVAL)

INSTALLATION

The ESP Off switch is serviced as part of the Instrument Panel Switch Pod. (Refer to 8 - ELECTRICAL/INSTRUMENT CLUSTER/INSTRUMENT PANEL SWITCH POD - INSTALLATION)

SWITCH-TRACTION CONTROL/ASR

DESCRIPTION

The Traction Control Off Switch (TCS OFF or ASR OFF on Export vehicles) is part of the Instrument Panel Switch Pod located in the center of the instrument panel. The traction control Off switch turns the traction control off whenever the switch is depressed. Depressing the switch a second time turns the traction control back on. The switch resets itself each time the ignition is cycled.

The traction control Off switch is serviced as part of the Instrument Panel Switch Pod.

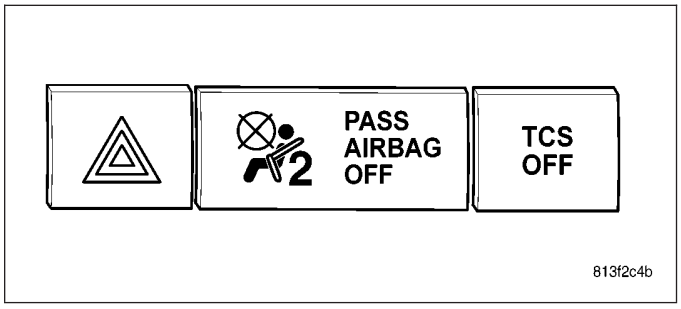

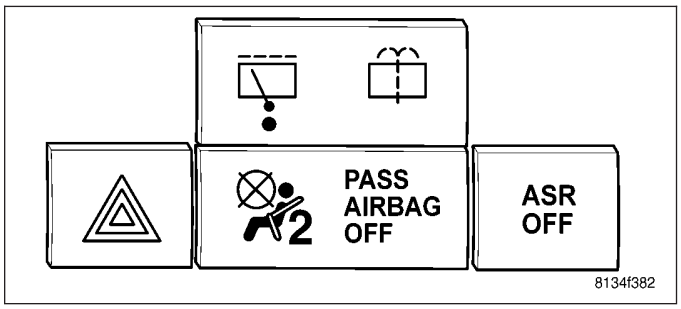

REMOVAL

The traction control Off switch is serviced as part of the Instrument Panel Switch Pod. (Refer to 8 - ELECTRICAL/ INSTRUMENT CLUSTER/INSTRUMENT PANEL SWITCH POD - REMOVAL)

INSTALLATION

The traction control Off switch is serviced as part of the Instrument Panel Switch Pod. (Refer to 8 - ELECTRICAL/ INSTRUMENT CLUSTER/INSTRUMENT PANEL SWITCH POD - INSTALLATION)

BOOSTER-ACTIVE BRAKE - MK25

DESCRIPTION

The active brake booster is part of the Electronic Stability Program (ESP). It is serviced as part of the power brake booster. For more information on ESP, (Refer to 5 - BRAKES - DESCRIPTION).

HYDRAULIC CONTROL UNIT

REMOVAL

To remove the HCU, the ICU must be removed and disassembled. (Refer to 5 - BRAKES/HYDRAULIC/MECHANICAL/ICU (INTEGRATED CONTROL UNIT) - REMOVAL) (Refer to 5 - BRAKES/HYDRAULIC/MECHANICAL/ICU (INTEGRATED CONTROL UNIT) - DISASSEMBLY)

INSTALLATION

To install the HCU, assemble and install the ICU. (Refer to 5 - BRAKES/HYDRAULIC/MECHANICAL/ICU (INTEGRATED CONTROL UNIT) - ASSEMBLY) (Refer to 5 - BRAKES/HYDRAULIC/MECHANICAL/ICU (INTEGRATED CONTROL UNIT) - INSTALLATION)

INTEGRATED CONTROL UNIT - MK25

REMOVAL

NOTE: Before proceeding, (Refer to 5 - BRAKES - WARNING) (Refer to 5 - BRAKES - CAUTION).

1. Disconnect and isolate battery negative cable (2) from battery post.
2. Using a brake pedal holding tool, depress brake pedal past its first inch of travel and hold it in this position. Holding pedal in this position will isolate master cylinder from hydraulic brake system and will not allow brake fluid to drain out of brake fluid reservoir while brake lines are open.

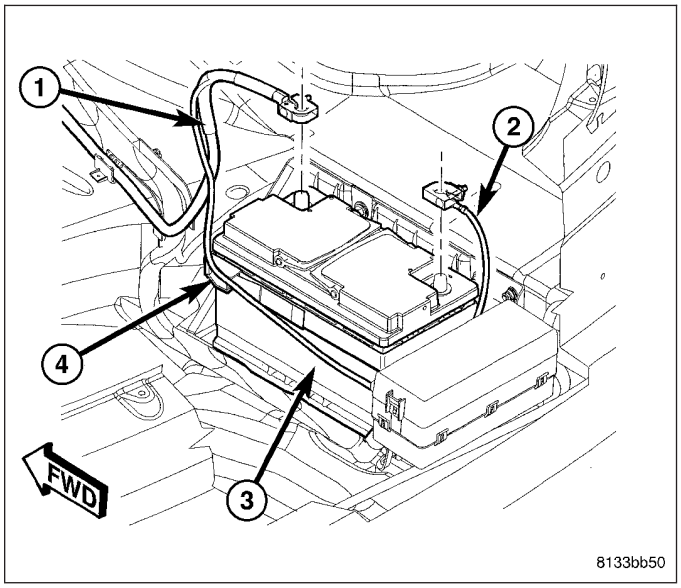

3. Remove brake tubes (1, 2, 3 and 10) at hydraulic control unit (5).

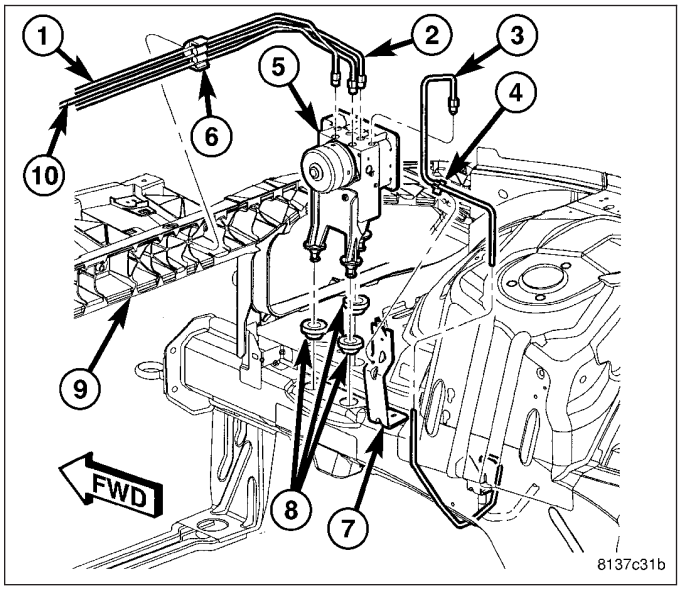

4. Remove remaining brake tubes (1 and 3) at hydraulic control unit.
5. Disconnect 47-way wiring connector (5) at antilock brake module (ABM) (6).

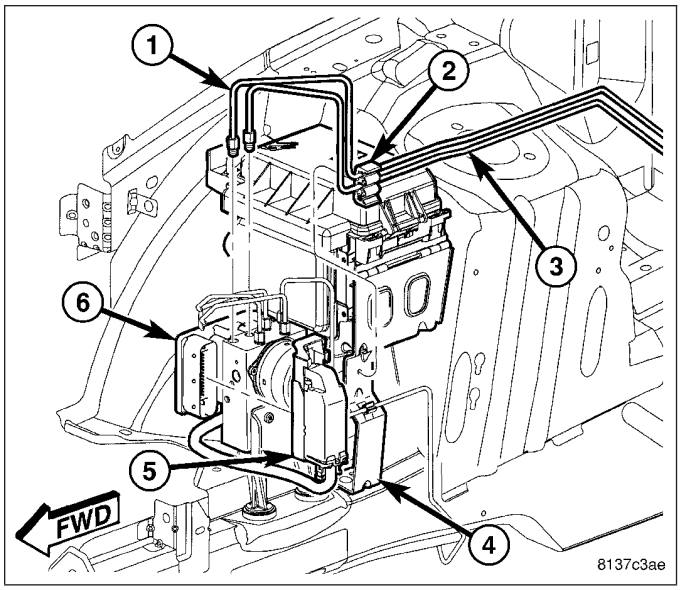

6. Pull up on unit (5) and remove from mounting grommets (8).

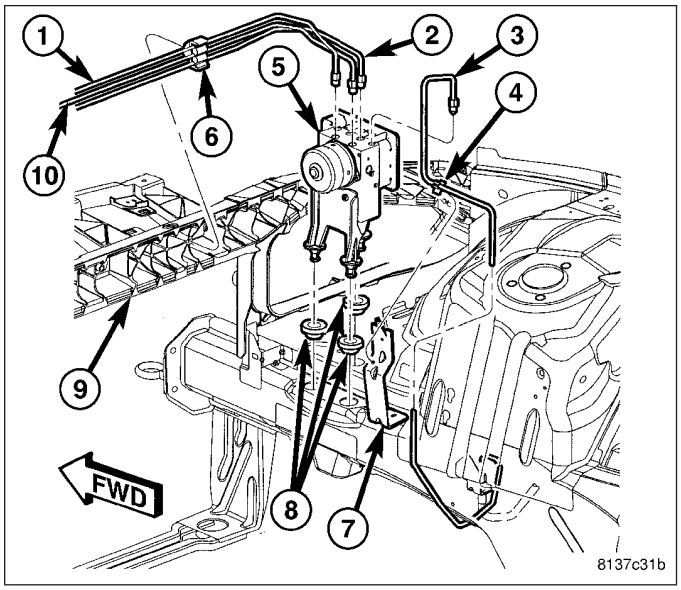

DISASSEMBLY

1. Remove two screws attaching mounting bracket to HCU. Remove bracket.

2. Remove three screws (2) attaching ABM (1).

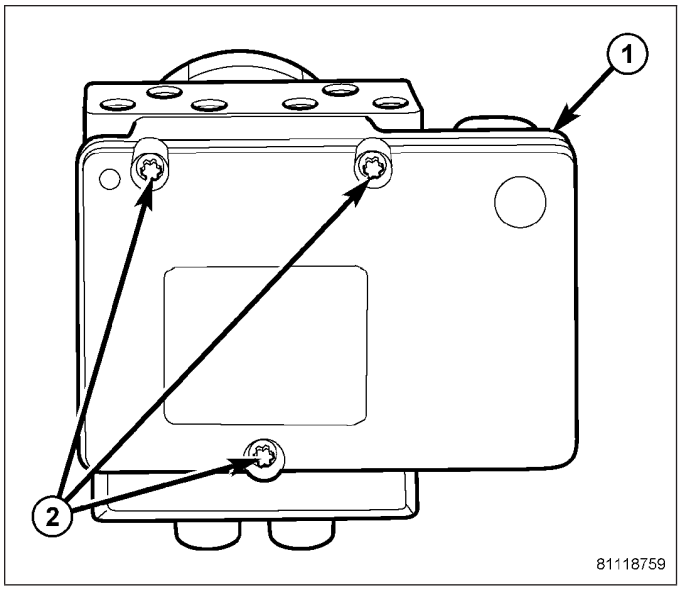

3. Remove ABM (1) from HCU (3).

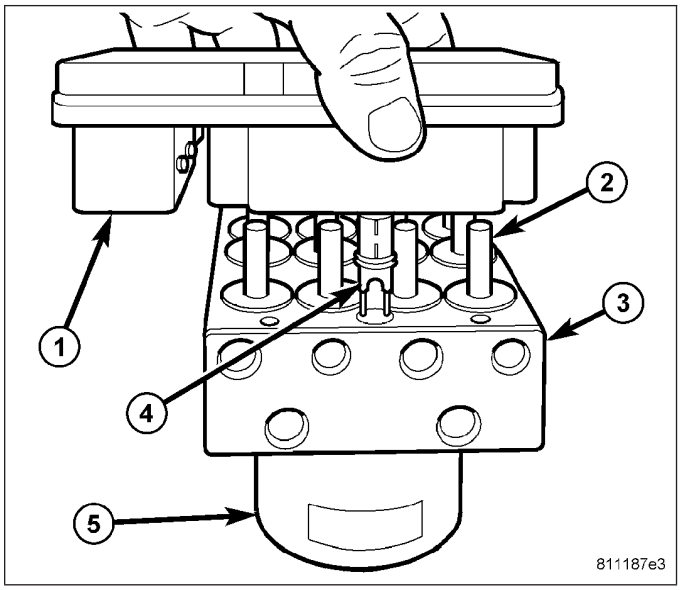

ASSEMBLY

1. Align ABM solenoids and pump/motor wiring connector (4) with HCU valves (2) and connector passage. Slide ABM (1) onto HCU (3).

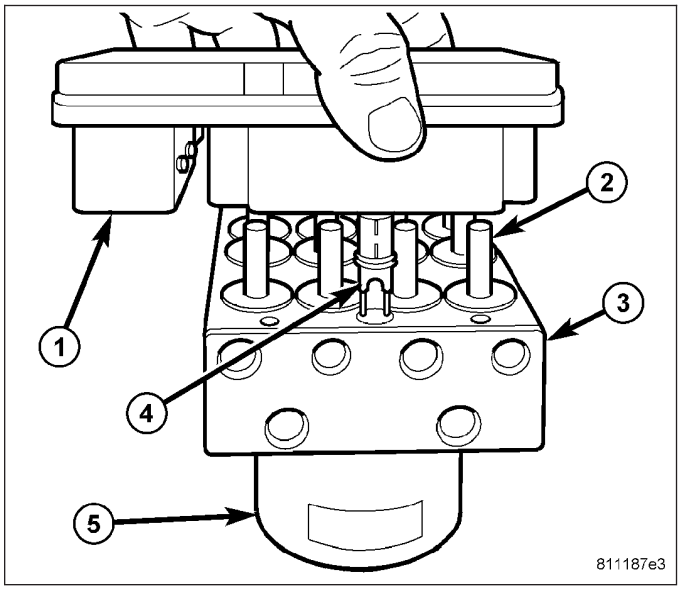

2. Install three screws (2) attaching ABM (1). Tighten screws to 2 N·m (17 in. lbs.) torque.
3. Attach mounting bracket to HCU. Install two mounting bracket attaching screws and tighten to 11 N·m (97 in. lbs.) torque.
4. Install ICU in vehicle. (Refer to 5 - BRAKES/HYDRAULIC/MECHANICAL/ICU (INTEGRATED CONTROL UNIT) - INSTALLATION)

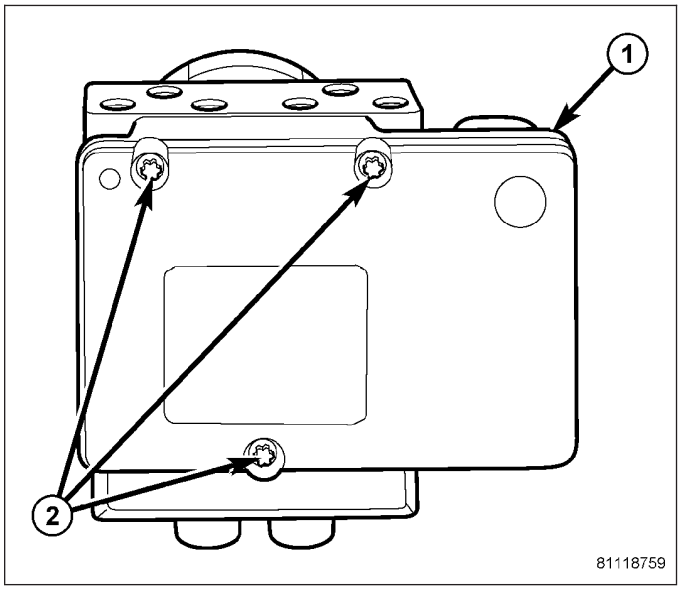

INSTALLATION

1. Install unit (5), pushing mounting bracket down into mounting grommets (8) located in body of vehicle.

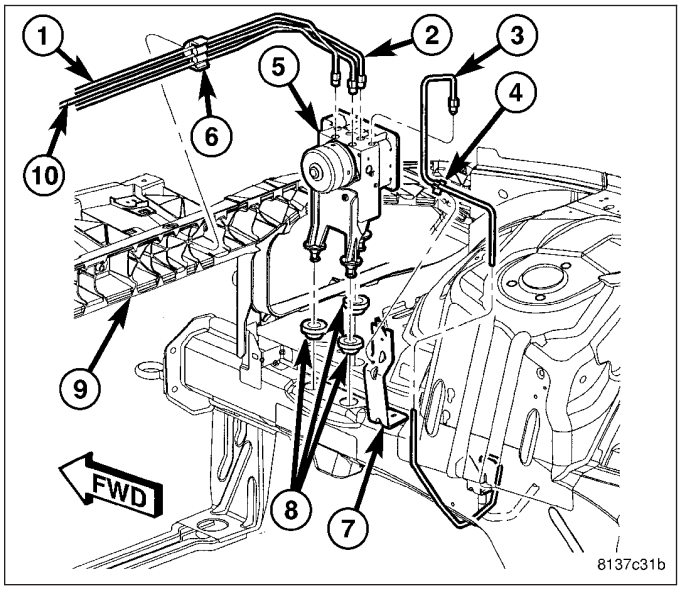

2. Connect 47-way wiring connector (5) at antilock brake module (ABM) (6).
3. Install brake tubes to rear (1 and 3) at hydraulic control unit. Tighten tube nuts to 20 N·m (177 in. lbs.) torque.

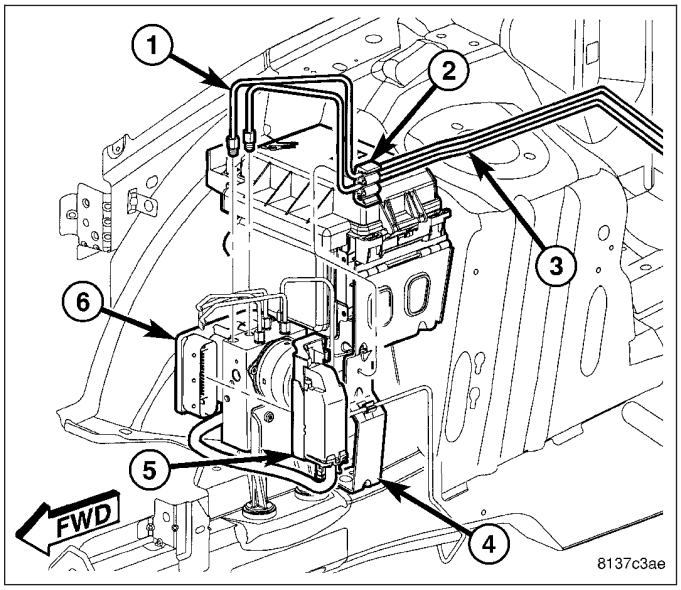

4. Install brake tubes (1, 2, 3 and 10) at hydraulic control unit (5). Tighten tube nuts to 20 N·m (177 in. lbs.) torque.
5. Remove brake pedal holding tool.

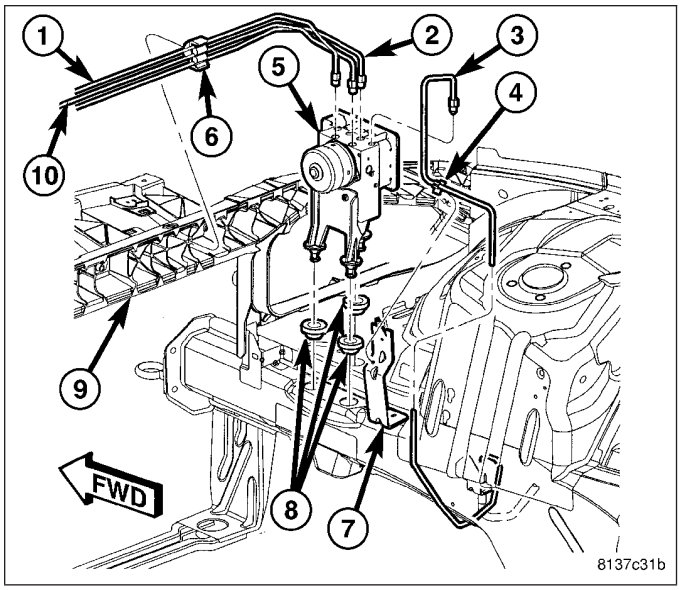

6. Connect battery negative cable (2) to battery post. It is important that this is performed properly. (Refer to 8 - ELECTRICAL/BATTERY SYSTEM - STANDARD PROCEDURE)

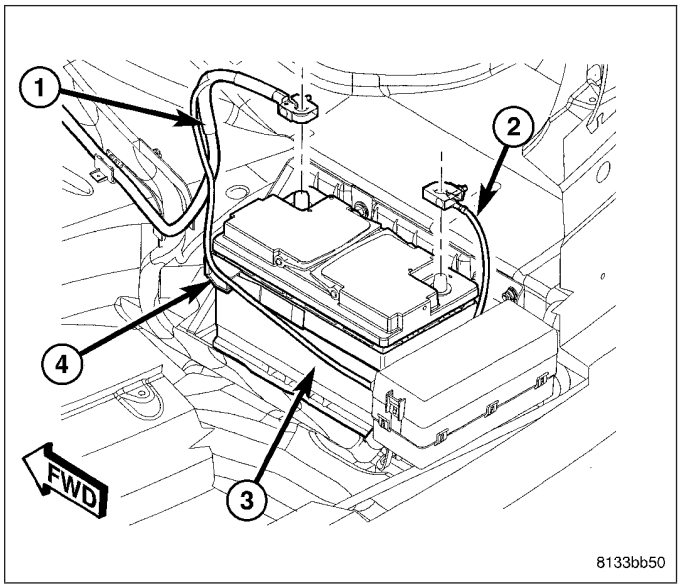

7. Fill and bleed (1) base brake hydraulic system and ABS. (Refer to 5 - BRAKES - STANDARD PROCEDURE)
8. Perform Verification Test and clear any faults. (Refer to 5 - BRAKES - DIAGNOSIS AND TESTING)

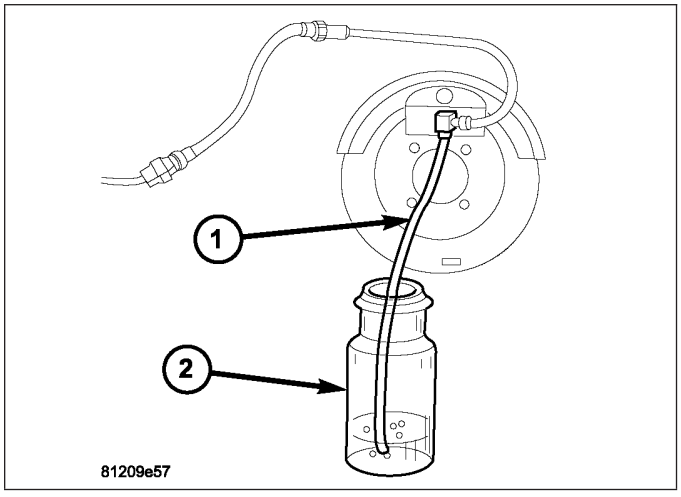

INTEGRATED CONTROL UNIT - MK25E

DESCRIPTION

NOTE: Later launch vehicles use the MK25E Antilock Braking System (ABS). The MK25E ICU can be easily identified by the brake tube ports on two sides as shown instead of on one side as used on previous systems.

The Hydraulic Control Unit (HCU) (2) and the Antilock Brake Module (ABM) (1) used with this antilock brake system are combined (integrated) into one unit, which is called the Integrated Control Unit (ICU).

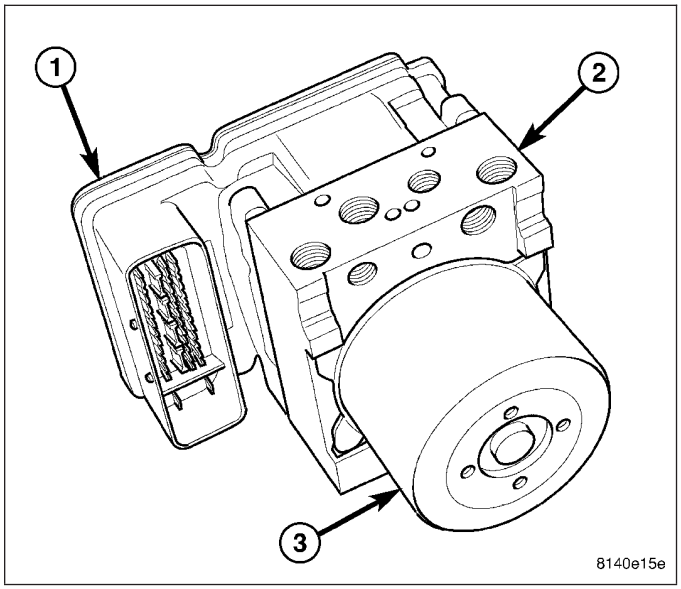

The ICU (1) is located in the engine compartment, mounted to a bracket that is attached to the right side rail through the use of isolation grommets (2).

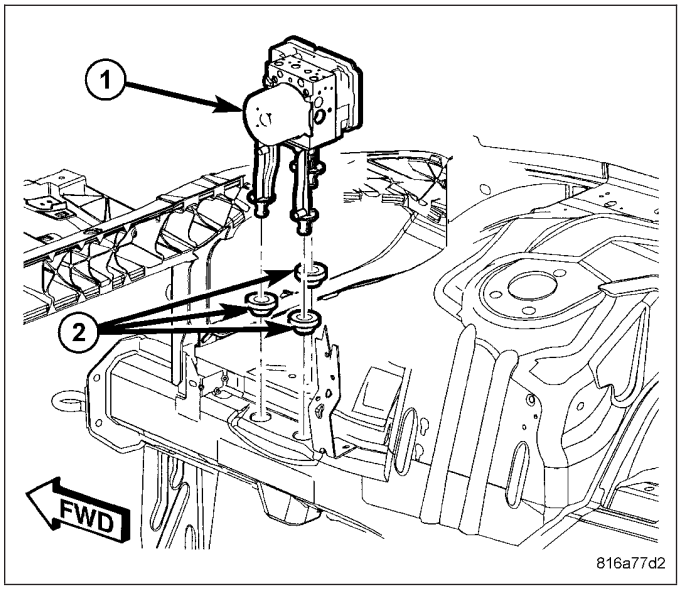

The ABS with traction control ICU consists of the following components: the ABM, eight (build/decay) solenoid valves (four inlet valves and four outlet valves), two traction control solenoid valves, two hydraulic shuttle valves, valve block, fluid accumulators, a pump, and an electric pump/motor.

The replaceable components of the ICU are the HCU and the ABM. No attempt should be made to service any components of the HCU or ABM.

For additional information on the ABM, (Refer to 8 - ELECTRICAL/ELECTRONIC CONTROL MODULES/ANTILOCK BRAKE MODULE - DESCRIPTION).

REMOVAL

NOTE: Before proceeding, (Refer to 5 - BRAKES - WARNING) (Refer to 5 - BRAKES - CAUTION).

1. Disconnect and isolate battery negative cable (2) from battery post.
2. Using a brake pedal holding tool, depress brake pedal past its first inch of travel and hold it in this position. Holding pedal in this position will isolate master cylinder from hydraulic brake system and will not allow brake fluid to drain out of brake fluid reservoir while brake lines are open.

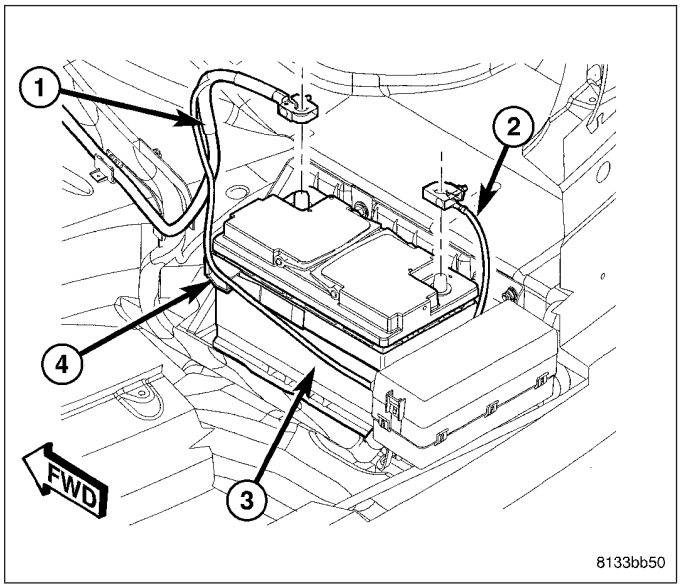

3. Remove primary (4) and secondary (1) brake tubes (from master cylinder) at hydraulic control unit (7).
4. Remove remaining brake tubes (2, 3, 5, 6) at hydraulic control unit (7).

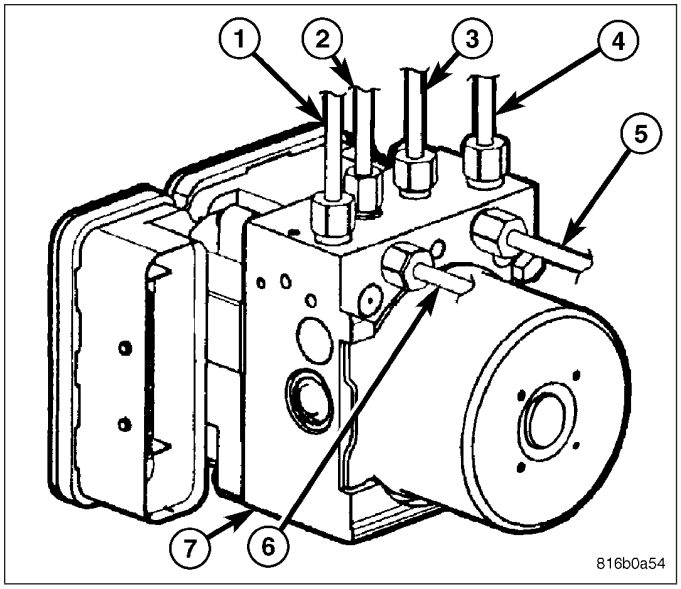

NOTE: Use this figure in the following step to release the ABM harness connector cover. It shows the location of the release tabs.

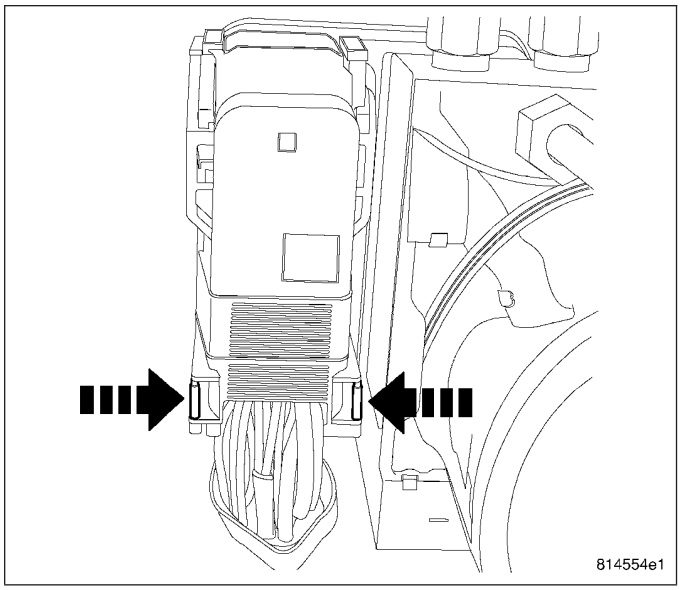

5. Disconnect ABM harness connector from antilock brake module (ABM). To do so:
   a. Depress tabs on each side of connector cover, then
   b. Pull outward and upward on lower half of cover until it locks into position pointing straight outward (2). Connector can then be pulled straight outward off ABM (1).

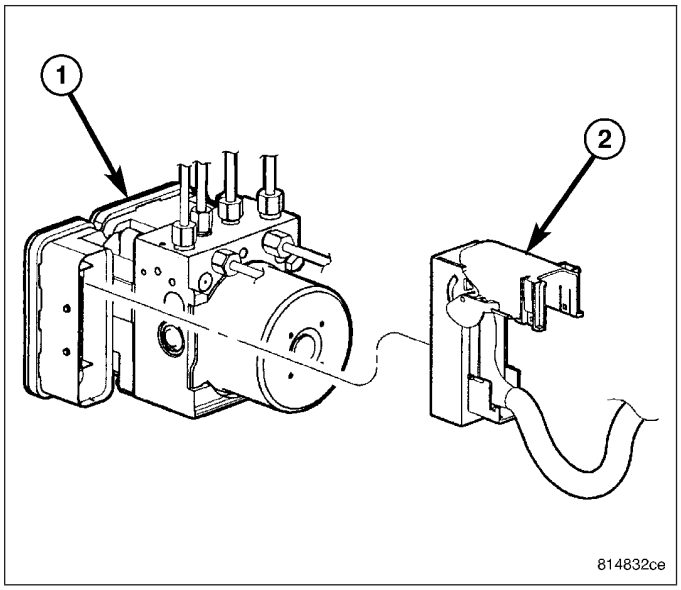

6. Pull up on unit (1) and remove from mounting grommets (2) in body side rail.

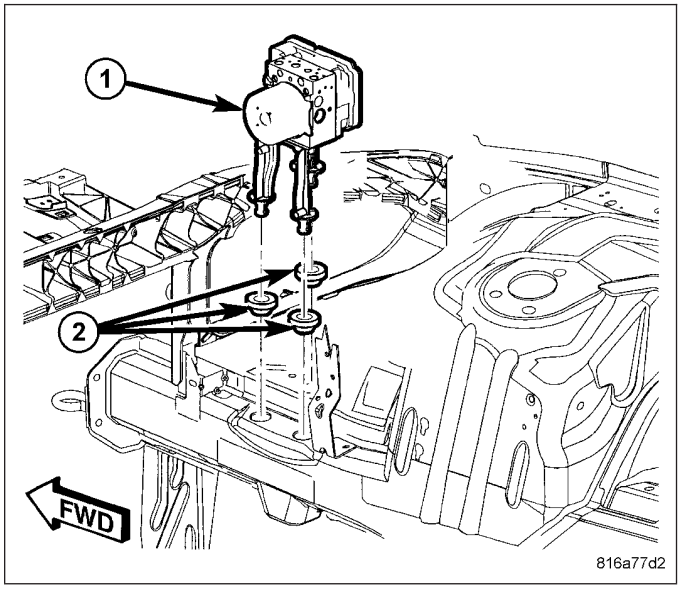

DISASSEMBLY

1. Remove two screws attaching the mounting bracket to the HCU. Remove the bracket.
2. Remove four screws (1) attaching ABM (2) to HCU.

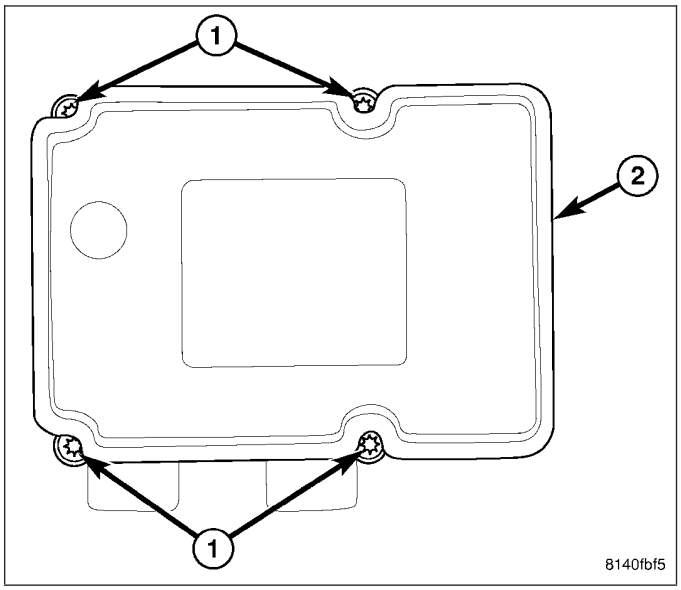

3. Separate ABM (1) from HCU (2).

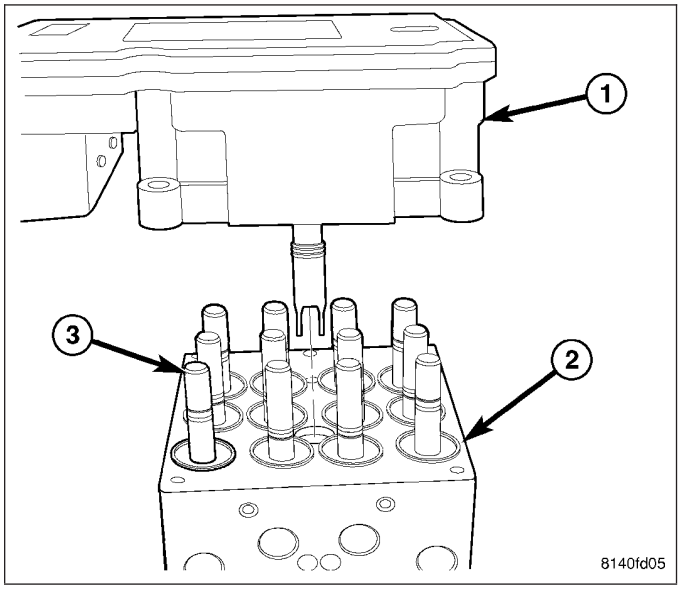

ASSEMBLY

1. Clean any debris off the mating surfaces of the HCU and ABM.

CAUTION: When installing new O-rings or solenoid valve stem seals, do not use any type of lubricant.

2. If the seals (1) on the solenoid valve stems (2) are not new, replace them all. Each of the solenoid valve stem seals must be new to keep out moisture and debris; **do not reuse solenoid valve stem seals**.

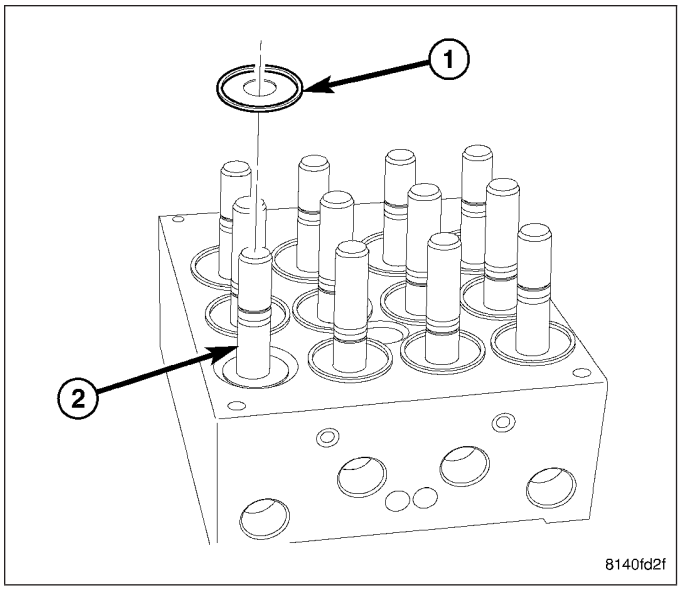

3. Replace the pump/motor connector O-ring (1) if it is not new. Be sure the O-ring is properly seated in the mounting groove (2).

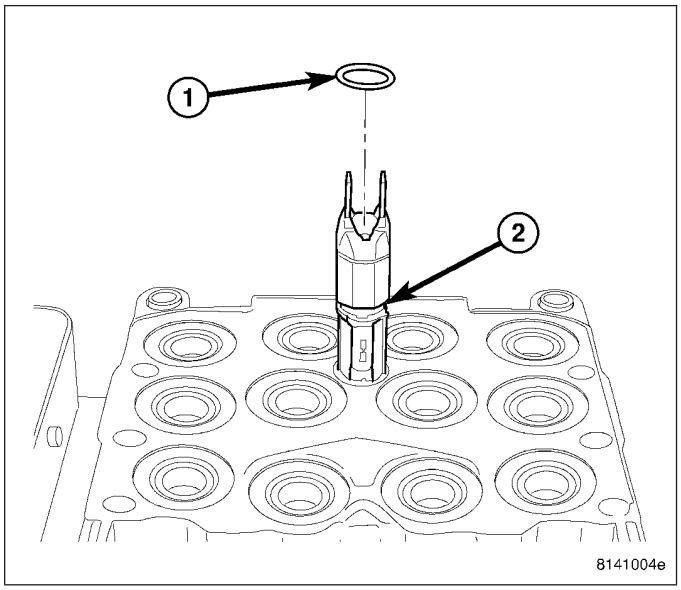

4. Align components and install the ABM (1) on the HCU (2).

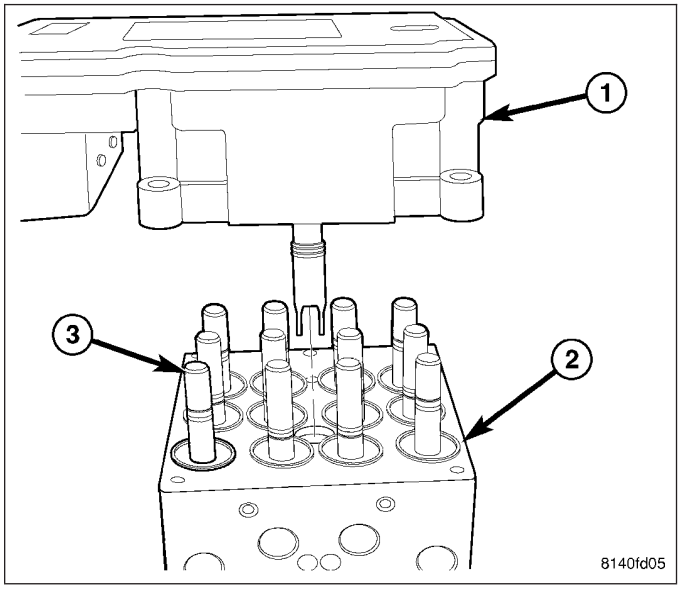

5. Install the four screws (1) attaching the ABM (2) to the HCU. Tighten the mounting screws to 2 N·m (17 in. lbs.).

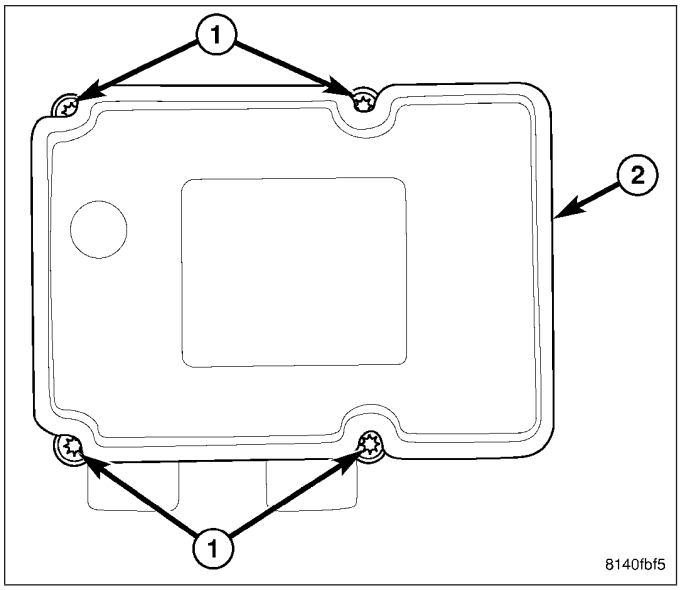

6. Attach the mounting bracket to the HCU. Install two mounting bracket attaching screws and tighten to 11 N·m (97 in. lbs.).
7. Install the ICU in the vehicle. (Refer to 5 - BRAKES/HYDRAULIC/MECHANICAL/ICU (INTEGRATED CONTROL UNIT) - INSTALLATION)

INSTALLATION

1. Install unit (1), pushing mounting bracket down into mounting grommets (2) located in body side rail.

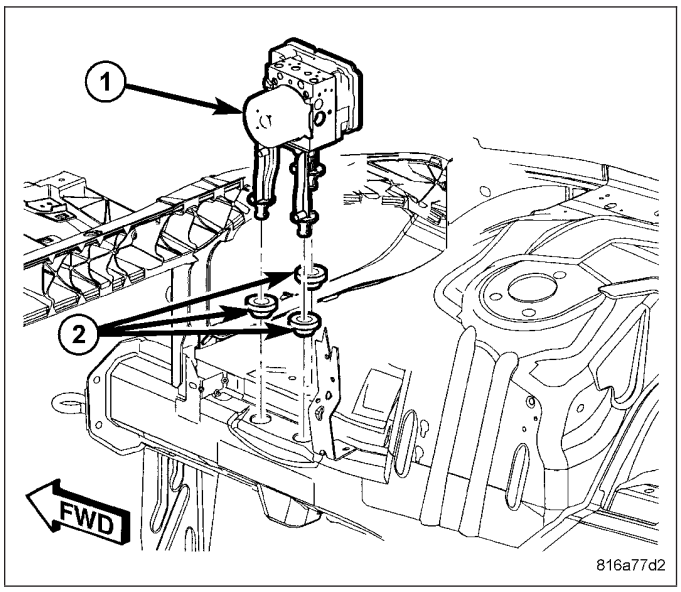

CAUTION: Before installing the ABM harness connector (2) on the ABM (1), be sure the seal is properly installed in the connector.

2. Insert ABM harness connector (2) into socket of ABM (1) and close cover, locking connector in place.

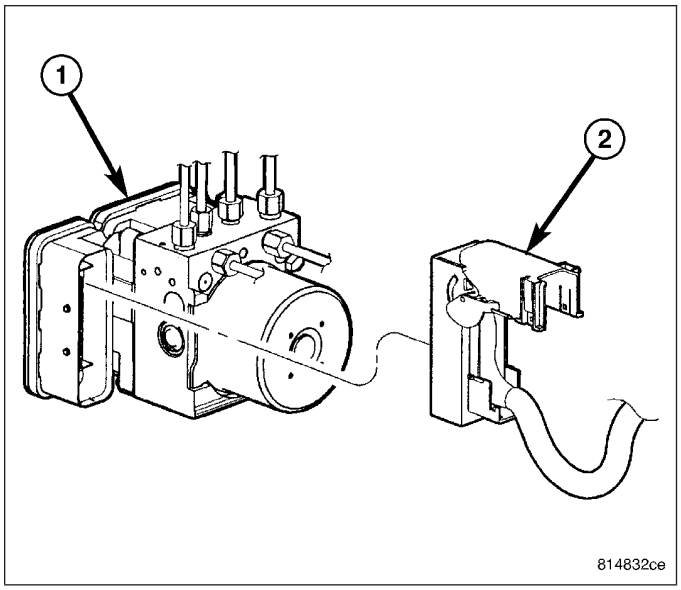

3. Install left (2) and right (1) rear brake tubes at hydraulic control unit (4). Tighten tube nuts to 20 N·m (177 in. lbs.) torque.

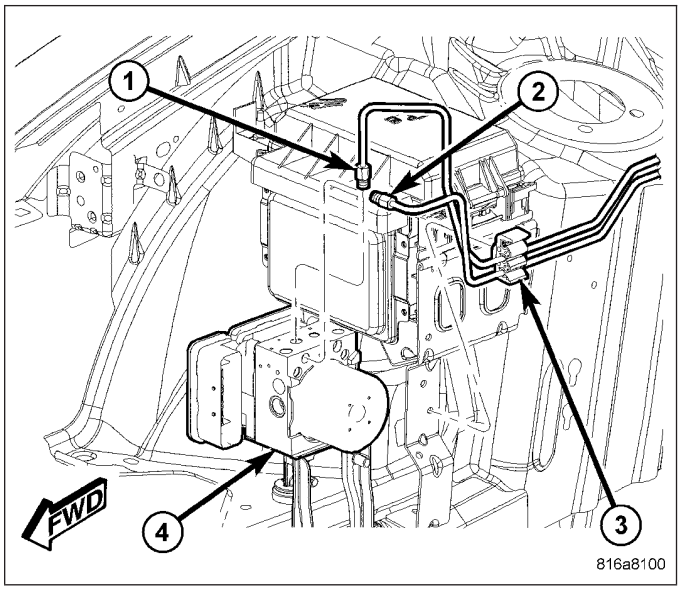

4. Install left (2) and right (3) brake tubes at hydraulic control unit (4). Tighten tube nuts to 20 N·m (177 in. lbs.) torque.

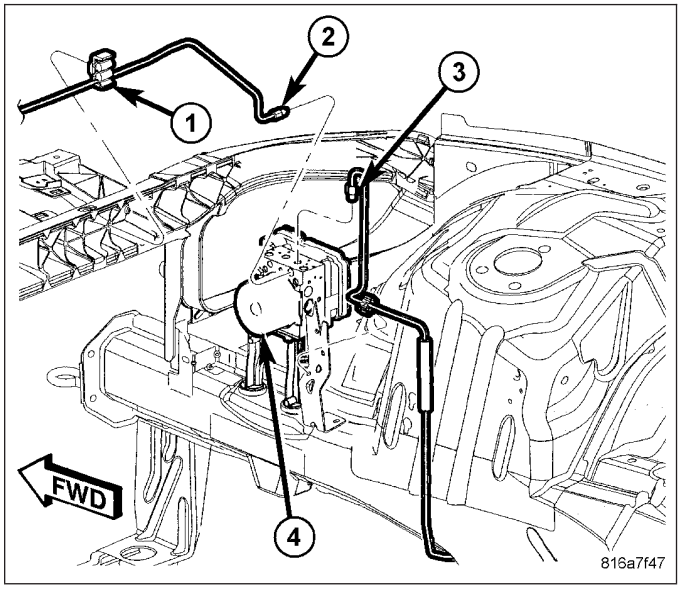

5. Install primary (4) and secondary (1) brake tubes at hydraulic control unit (7). Tighten tube nuts to 20 N·m (177 in. lbs.) torque.
6. Remove brake pedal holding tool.

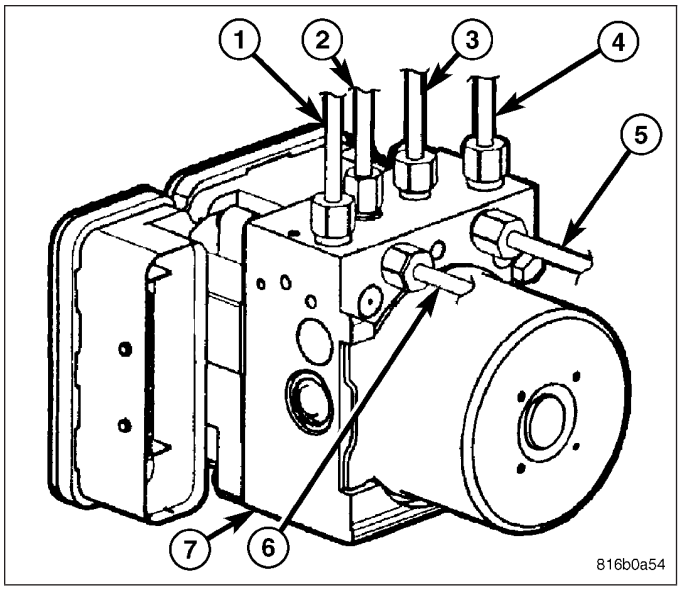

7. Connect battery negative cable (2) to battery post. It is important that this is performed properly. (Refer to 8 - ELECTRICAL/BATTERY SYSTEM - STANDARD PROCEDURE)

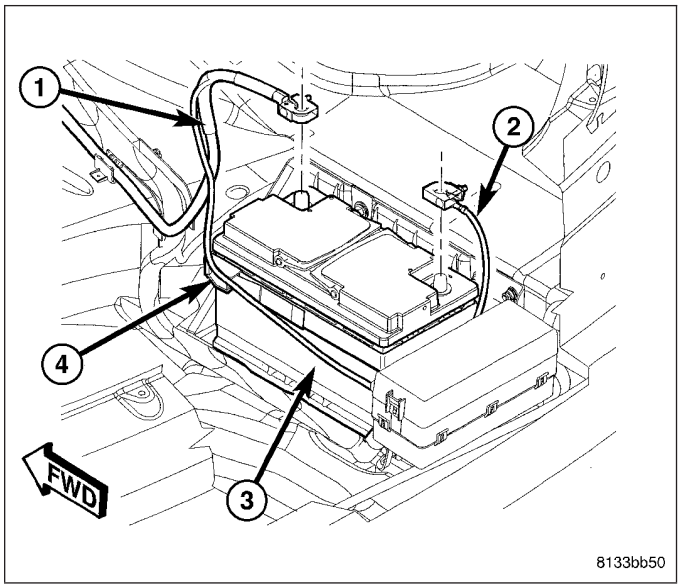

8. Fill and bleed (1) base brake hydraulic system and ABS. (Refer to 5 - BRAKES - STANDARD PROCEDURE)
9. Perform Diagnostic Verification Test and clear any faults. (Refer to 5 - BRAKES - DIAGNOSIS AND TESTING)

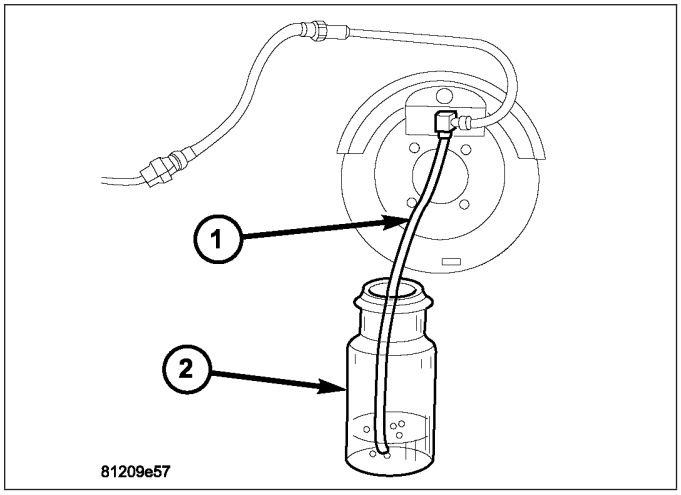

COOLING

TABLE OF CONTENTS

page

COOLING
DESCRIPTION
DESCRIPTION 2
3.0L DIESEL 2
OPERATION 3
DIAGNOSIS AND TESTING
ON-BOARD DIAGNOSTICS (OBD) 6
COOLING SYSTEM - TESTING FOR LEAKS 7
PRELIMINARY CHECKS 8
STANDARD PROCEDURE
DRAINING COOLING SYSTEM - ALL ENGINES 16
COOLING SYSTEM FILLING 16
REFILLING COOLING SYSTEM - 3.0L DIESEL 18
ADDING ADDITIONAL COOLANT 18
COOLANT LEVEL CHECK 19
DRAINING COOLING SYSTEM - ALL ENGINES 19
COOLING SYSTEM CLEANING/REVERSE FLUSHING 19
SPECIFICATIONS
TORQUE 20
FILL VOLUMES 21
SPECIAL TOOLS
COOLING 22
ACCESSORY DRIVE 23
ENGINE 39
TRANSMISSION 74

COOLING

DESCRIPTION

DESCRIPTION

The cooling system consists of :

- Radiator
- Electric Cooling fan
- Hydraulic Cooling Fan (Diesel Engine)
- Fan shroud
- Radiator pressure cap
- Thermostat
- Coolant reserve/overflow system
- EGR Cooler (Diesel Engine)
- Transmission oil cooler (if equipped with an automatic transmission)
- Coolant
- Water pump
- Hoses and hose clamps

3.0L DIESEL

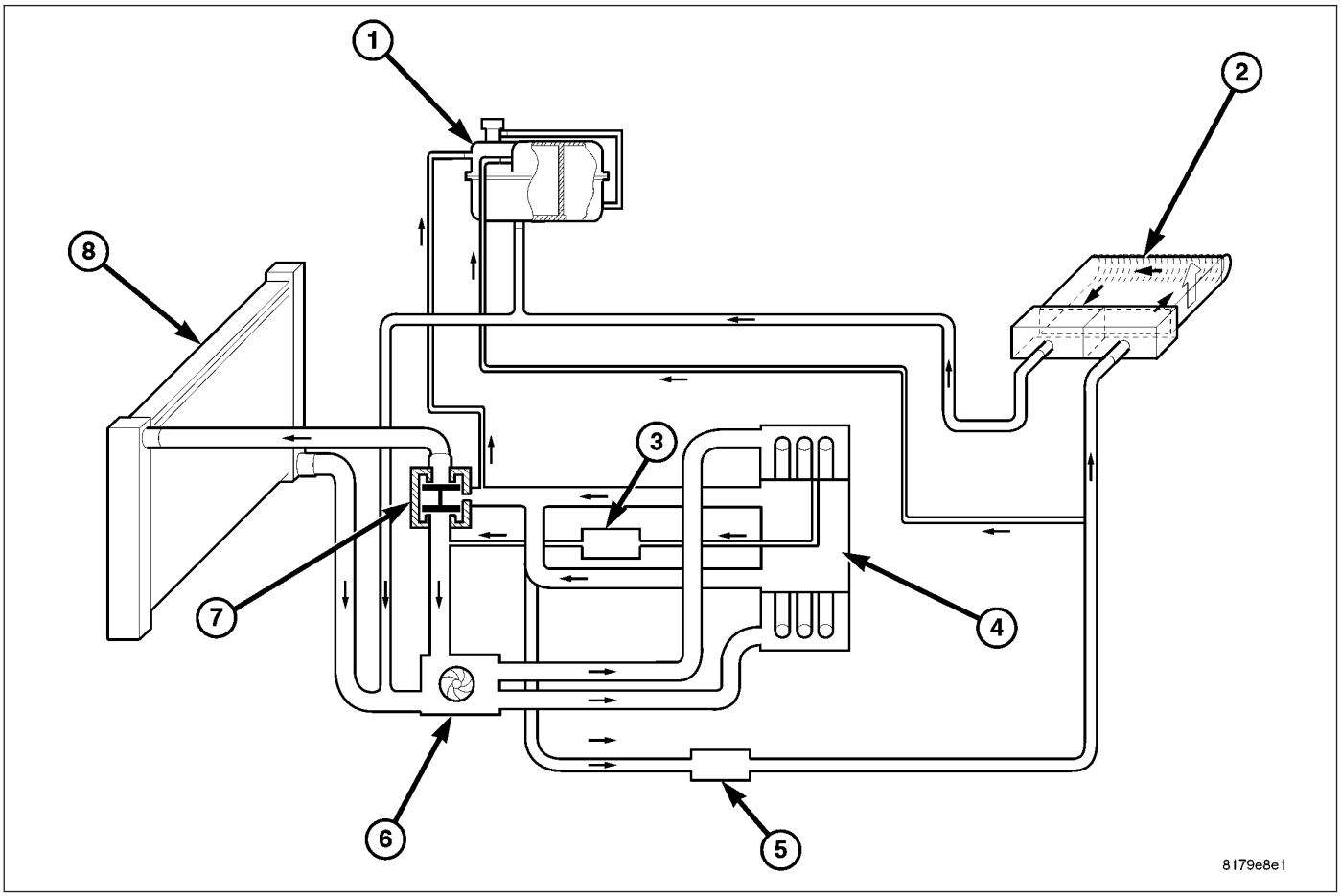

COOLING FLOW - 3.0L DIESEL

The cooling system regulates engine operating temperature. It allows the engine to reach normal operating temperature as quickly as possible, maintains normal operating temperature and prevents overheating.

The cooling system also provides a means of heating the passenger compartment. The cooling system is pressurized and uses a centrifugal water pump to circulate coolant throughout the system. A separate and remotely mounted, pressurized coolant tank using a pressure/vent cap is used.

COOLING SYSTEM COMPONENTS

The cooling system consists of:

- Charge Air Cooler
- Hydraulic Cooling Fans
- A aluminum-core radiator with plastic side tanks
- A separate pressurized coolant bottle
- A pressure/vent cap on the coolant bottle
- Thermostat
- Coolant
- Coolant temperature gauge
- Water pump
- Hoses and hose clamps

OPERATION

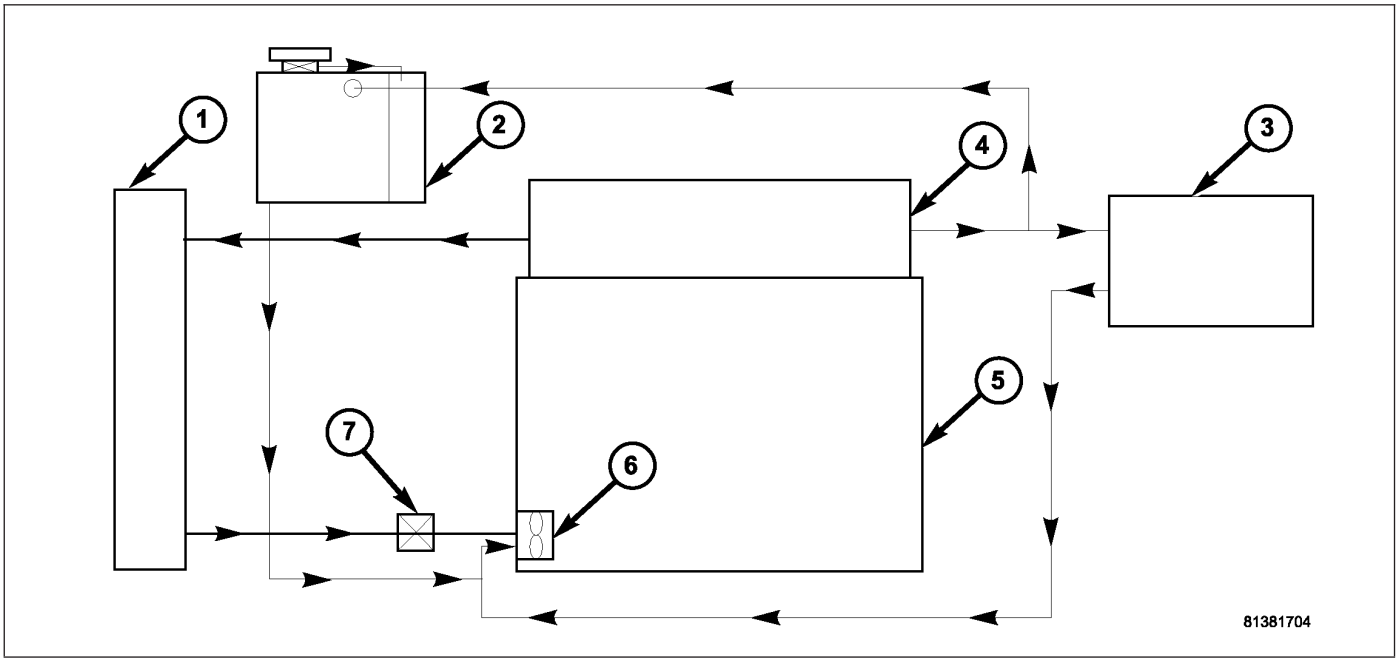

COOLING FLOW - 2.7L ENGINE

1 - RADIATOR
2 - COOLANT RECOVERY BOTTLE
3 - HEATER CORE
4 - CYLINDER HEAD
5 - CYLINDER BLOCK
6 - WATER PUMP
7 - THERMOSTAT

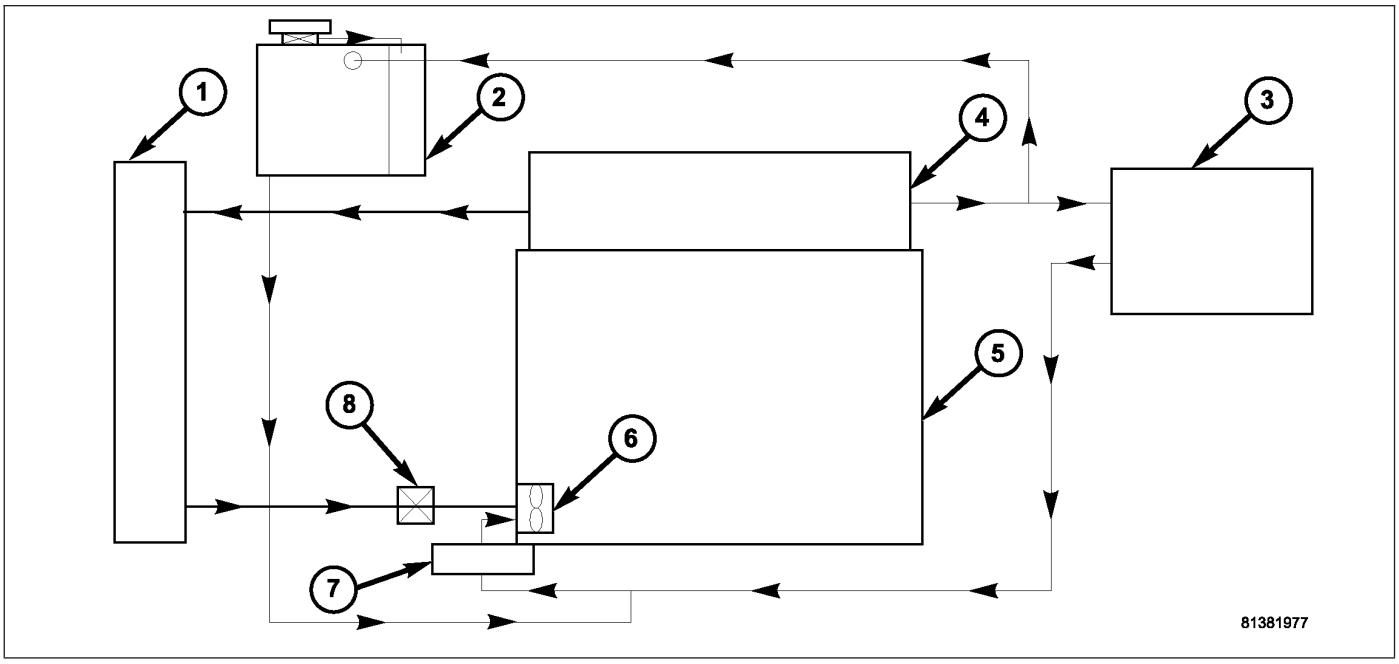

COOLING FLOW - 3.5L W/ENGINE OIL COOLER ENGINE

1 - RADIATOR
2 - HOT BOTTLE/COOLANT RECOVERY BOTTLE
3 - HEATER CORE
4 - CYLINDER HEAD
5 - CYLINDER BLOCK
6 - WATER PUMP
7 - ENGINE OIL COOLER
8 - THERMOSTAT

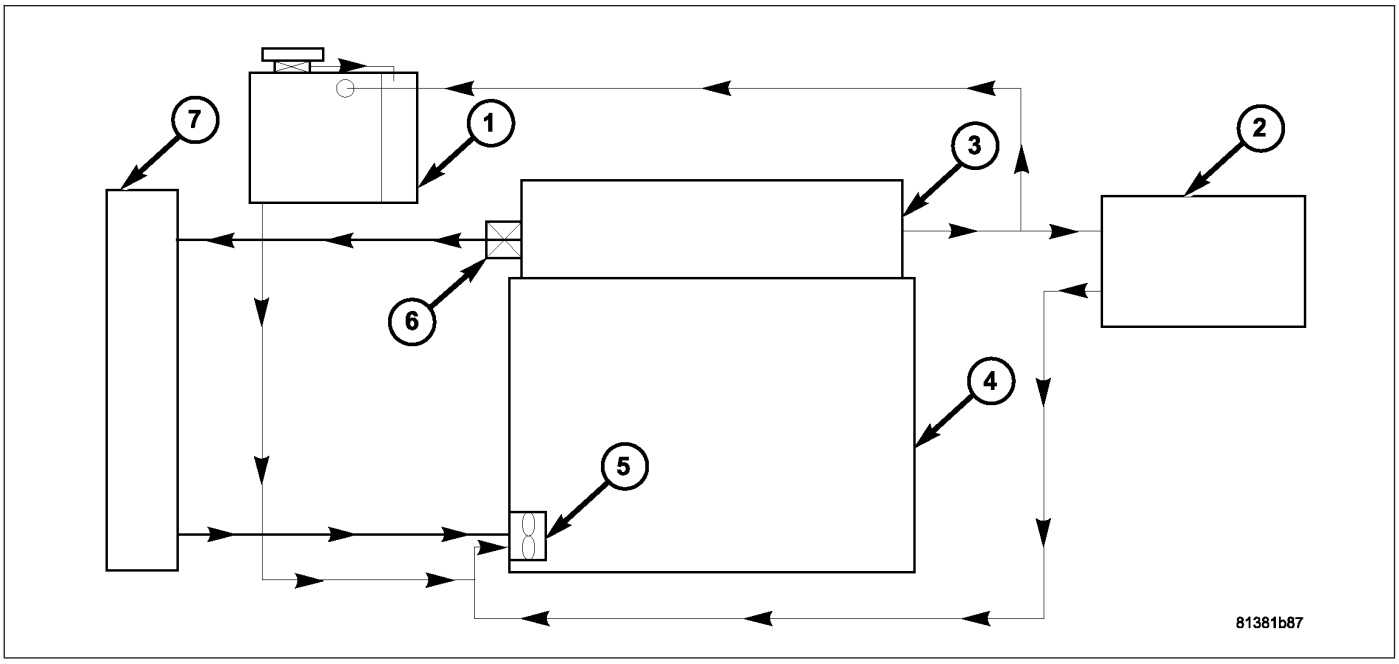

COOLING FLOW - 5.7L/6.1L ENGINE

1 - HOT BOTTLE/COOLANT RECOVERY BOTTLE
CHARGE AIR COOLER - DIESEL ENGINE
2 - HEATER CORE
3 - CYLINDER HEAD
4 - CYLINDER BLOCK
5 - WATER PUMP
6 - THERMOSTAT
7 - RADIATOR

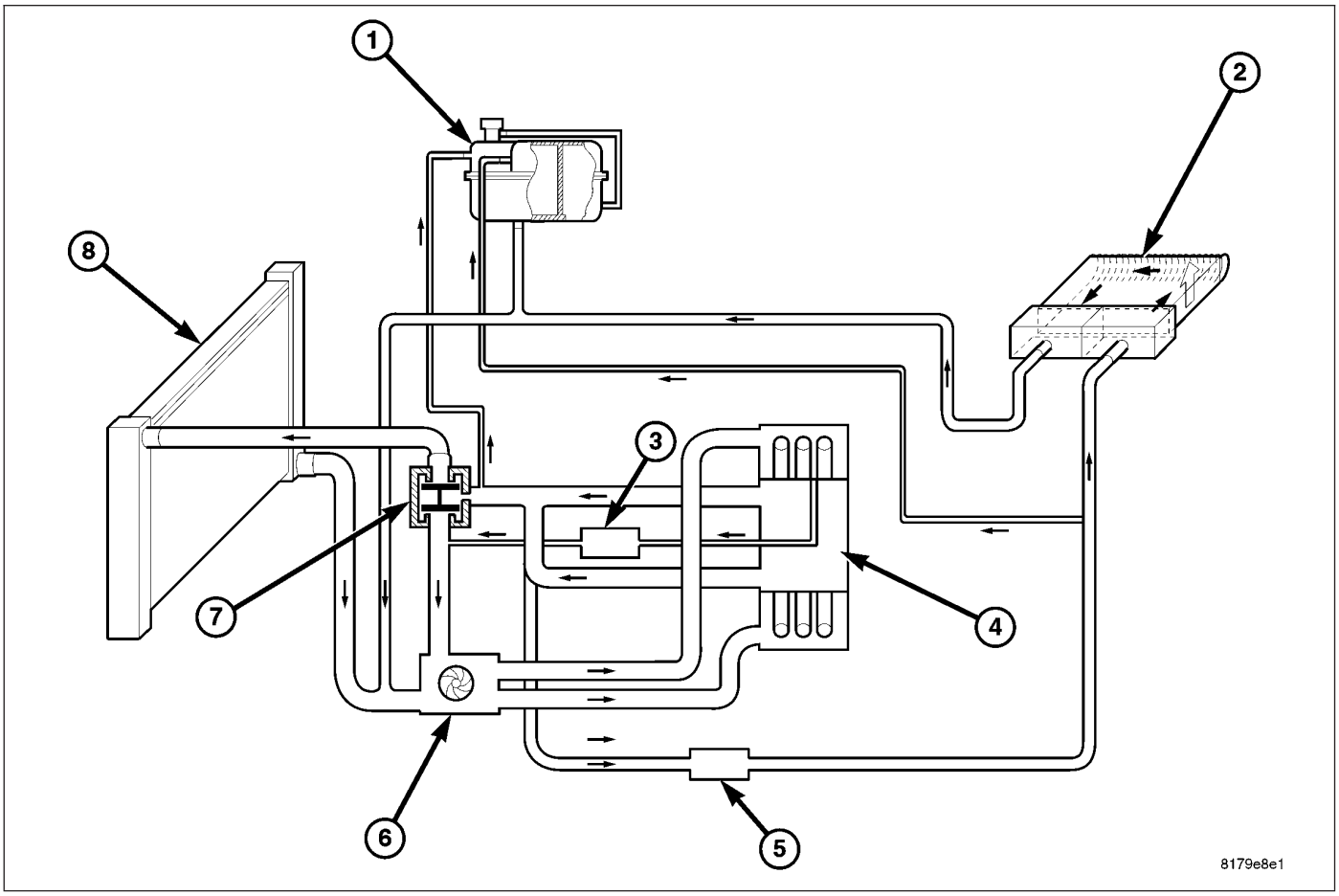

COOLING FLOW - 3.0L DIESEL

The cooling system regulates engine operating temperature. It allows the engine to reach normal operating temperature as quickly as possible. It also maintains normal operating temperature and prevents overheating.

The cooling system also provides a means of heating the passenger compartment and cooling the automatic transmission fluid (if equipped). The cooling system is pressurized and uses a centrifugal water pump to circulate coolant throughout the system.

DIAGNOSIS AND TESTING

ON-BOARD DIAGNOSTICS (OBD)

COOLING SYSTEM RELATED DIAGNOSTICS

The powertrain control module (PCM) has been programmed to monitor certain cooling system components:

- If the engine has remained cool for too long a period, such as with a stuck open thermostat, a Diagnostic Trouble Code (DTC) can be set.
- If an open or shorted condition has developed in the relay circuit controlling the electric radiator fan, a Diagnostic Trouble Code (DTC) can be set.

If the problem is sensed in a monitored circuit often enough to indicated an actual problem, a DTC is stored. The DTC will be stored in the PCM memory for eventual display to the service technician. (Refer to 25 - EMISSIONS CONTROL - DESCRIPTION).

ACCESSING DIAGNOSTIC TROUBLE CODES

To read DTC's and to obtain cooling system data, (Refer to 25 - EMISSIONS CONTROL - DESCRIPTION).

ERASING TROUBLE CODES

After the problem has been repaired, use the scan tool to erase a DTC. Refer to the appropriate Powertrain Diagnostic Procedures service information for operation of the scan tool.

COOLING SYSTEM - TESTING FOR LEAKS

ULTRAVIOLET LIGHT METHOD

A leak detection additive is available through the parts department that can be added to cooling system. The additive is highly visible under ultraviolet light (black light) (1). Pour one ounce of additive into cooling system. Place heater control unit in HEAT position. Start and operate engine until the radiator upper hose is warm to touch. Aim the commercially available black light tool at components to be checked. If leaks are present, black light will cause the additive to glow a bright green color.

The black light can be used in conjunction with a pressure tester to determine if any external leaks exist.

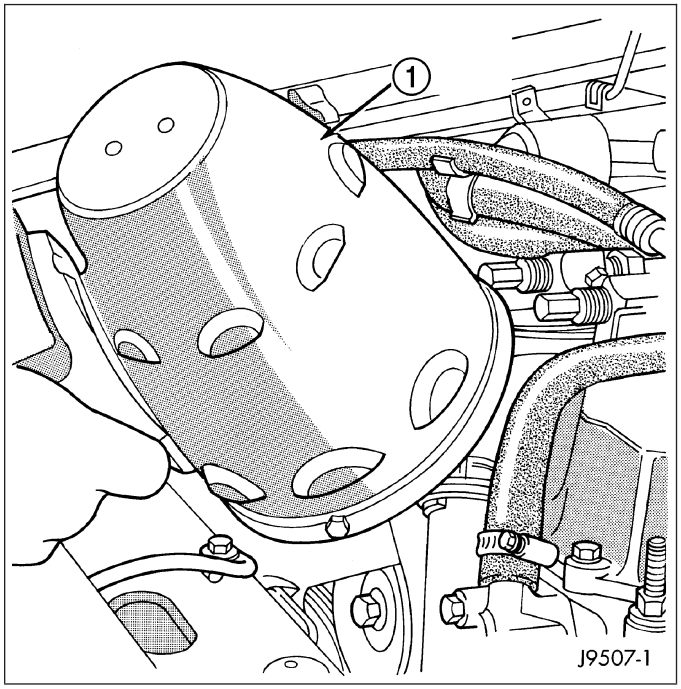

PRESSURE TESTER METHOD

The engine should be at normal operating temperature. Recheck the system cold if the cause of coolant loss is not located during the warm engine examination.

WARNING: Hot, pressurized coolant can cause injury by scalding.

Carefully remove the radiator pressure cap from the filler neck and check coolant level. Push down on cap to disengage it from the stop tabs. Wipe the inside of filler neck and examine the lower inside sealing seat for nicks, cracks, paint, dirt and solder residue. Inspect the radiator-to- reserve/overflow tank hose for internal obstructions. Insert a wire through the hose to be sure it is not obstructed.

Inspect cams on the outside of filler neck. If the cams are damaged, seating of the pressure cap valve and tester seal will be affected.

Attach pressure tester (7700 or an equivalent) (1) to radiator filler neck.

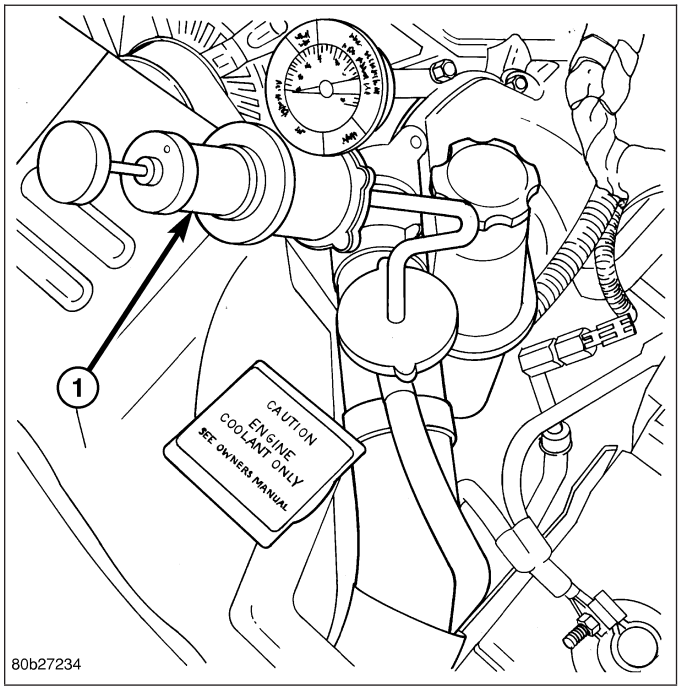

Operate tester pump to apply 124.1 kPa (18 psi) pressure to system. If hoses enlarge excessively or bulge while testing, replace as necessary. Observe the gauge pointer and determine the condition of the cooling system according to the following criteria:

Holds Steady: If the pointer remains steady for two minutes, serious coolant leaks are not present in system. However, there could be an internal leak that does not appear with normal system test pressure. If it is certain that coolant is being lost and leaks cannot be detected, inspect for interior leakage or perform Internal Leakage Test. Refer to INTERNAL LEAKAGE INSPECTION .

Drops Slowly: Indicates a small leak or seepage is occurring. Examine all connections for seepage or slight leakage with a flashlight. Inspect radiator, hoses, gasket edges and heater. Seal small leak holes with a Sealer Lubricant (or equivalent). Repair leak holes and inspect system again with pressure applied.

Drops Quickly: Indicates that serious leakage is occurring. Examine system for external leakage. If leaks are not visible, inspect for internal leakage. Large radiator leak holes should be repaired by a reputable radiator repair shop.

INTERNAL LEAKAGE INSPECTION

Remove engine oil pan drain plug and drain a small amount of engine oil. If coolant is present in the pan, it will drain first because it is heavier than oil. An alternative method is to operate engine for a short period to churn the oil. After this is done, remove engine dipstick and inspect for water globules. Also inspect the transmission dipstick for water globules and the transmission fluid cooler for leakage.

WARNING: With radiator pressure tester tool installed on radiator, do not allow pressure to exceed 145 kpa (21 psi). Pressure will build up quickly if a combustion leak is present. To release pressure, rock tester from side to side. When removing tester, do not turn tester more than 1/2 turn if system is under pressure.

Operate the engine without the pressure cap on the radiator until the thermostat opens. Attach a Pressure Tester to filler neck. If pressure builds up quickly it indicates a combustion leak exists. This is usually the result of a cylinder head gasket leak or crack in engine. Repair as necessary.

If there is not an immediate pressure increase, pump the Pressure Tester. Do this until indicated pressure is within system range of 124.1 kPa (18 psi). Fluctuation of gauge pointer indicates compression or combustion leakage into cooling system.

Because the vehicle is equipped with a catalytic converter, **do not** remove spark plug cables or short out cylinders to isolate compression leak.

If the needle on the dial of pressure tester does not fluctuate, race engine a few times to check for an abnormal amount of coolant or steam. This would be emitting from exhaust pipe. Coolant or steam from exhaust pipe may indicate a faulty cylinder head gasket, cracked engine cylinder block or cylinder head.

A convenient check for exhaust gas leakage into cooling system is provided by a commercially available Block Leak Check tool. Follow manufacturers instructions when using this product.

COMBUSTION LEAKAGE TEST - WITHOUT PRESSURE TESTER

DO NOT WASTE reusable coolant. If the solution is clean, drain the coolant into a clean container for reuse.

WARNING: Do not remove cylinder block drain plugs or loosen radiator draincock with system hot and under pressure. Serious burns from coolant can occur.

Drain sufficient coolant to allow thermostat removal (Refer to 7 - COOLING/ENGINE/ENGINE COOLANT THERMOSTAT - REMOVAL) for 2.7L/3.5L engine, (Refer to 7 - COOLING/ENGINE/ENGINE COOLANT THERMOSTAT - REMOVAL) for 5.7L engine. Remove accessory drive belt (Refer to 7 - COOLING/ACCESSORY DRIVE/DRIVE BELTS - REMOVAL).

Add coolant to radiator to bring level to within 6.3 mm (1/4 in) of the top of the thermostat housing.

CAUTION: Avoid overheating. Do not operate engine for an excessive period of time. Open draincock immediately after test to eliminate boil over.

Start engine and accelerate rapidly three times, to approximately 3000 rpm while observing coolant. If internal engine combustion gases are leaking into cooling system, bubbles will appear in coolant. If bubbles do not appear, internal combustion gas leakage is not present.

PRELIMINARY CHECKS

ENGINE COOLING SYSTEM OVERHEATING

Establish what driving conditions caused the complaint. Abnormal loads on the cooling system such as the following may be the cause:

- Prolonged idle
- Very high ambient temperature

- Slight tail wind at idle
- Slow traffic
- Traffic jams
- High speed or steep grades

Driving techniques that avoid overheating are:

- Idle with A/C off when temperature gauge is at end of normal range.
- Increasing engine speed for more air flow is recommended.

TRAILER TOWING:

Consult Trailer Towing section of owners manual. Do not exceed limits.

RECENT SERVICE OR ACCIDENT REPAIR:

Determine if any recent service has been performed on vehicle that may effect cooling system. This may be:

- Engine adjustments (incorrect timing)
- Slipping engine accessory drive belt(s)
- Brakes (possibly dragging)
- Changed parts. Incorrect water pump or pump rotating in wrong direction due to belt not correctly routed
- Reconditioned radiator or cooling system refilling (possibly under filled or air trapped in system).

NOTE: If investigation reveals none of the previous items as a cause for an engine overheating complaint, refer to COOLING SYSTEM DIAGNOSIS CHART BELOW.

These charts are to be used as a quick-reference only. Refer to COOLING SYSTEM DIAGNOSIS CHART

COOLING SYSTEM DIAGNOSIS CHART

CONDITION	POSSIBLE CAUSES	CORRECTION
TEMPERATURE GAUGE READS LOW	1. Has a Diagnostic Trouble Code (DTC) been set indicating a stuck open thermostat?	1. (Refer to 25 - EMISSIONS CONTROL - DESCRIPTION). Replace thermostat if necessary.
	2. Is the temperature sending unit connected?	2. Check the temperature sensor connector. (Refer to 8 - ELECTRICAL/INSTRUMENT CLUSTER - DIAGNOSIS AND TESTING). Repair connector if necessary.
	3. Is the temperature gauge operating OK?	3. Check gauge operation. (Refer to 8 - ELECTRICAL/INSTRUMENT CLUSTER/ENGINE TEMPERATURE GAUGE - DESCRIPTION) . Repair as necessary.
	4. Coolant level low in cold ambient temperatures accompanied with poor heater performance.	4. Check coolant level in the coolant reserve/overflow tank or degas bottle and the radiator. Inspect system for leaks. Repair leaks as necessary. Refer to the Coolant section of the manual text for WARNINGS and CAUTIONS associated with removing the radiator cap.
	5. Improper operation of internal heater doors or heater controls.	5. Inspect heater and repair as necessary. (Refer to 24 - HEATING & AIR CONDITIONING - DIAGNOSIS AND TESTING).

CONDITION	POSSIBLE CAUSES	CORRECTION
TEMPERATURE GAUGE READS HIGH OR THE COOLANT WARNING LAMP ILLUMINATES. COOLANT MAY OR MAY NOT BE LOST OR LEAKING FROM THE COOLING SYSTEM	1. Trailer is being towed, a steep hill is being climbed, vehicle is operated in slow moving traffic, or engine is being idled with very high ambient (outside) temperatures and the air conditioning is on. Higher altitudes could aggravate these conditions.	1. This may be a temporary condition and repair is not necessary. Turn off the air conditioning and attempt to drive the vehicle without any of the previous conditions. Observe the temperature gauge. The gauge should return to the normal range. If the gauge does not return to the normal range, determine the cause for overheating and repair. Refer to Possible Causes (2-18).
	2. Is the temperature gauge reading correctly?	2. Check gauge. (Refer to 8 - ELECTRICAL/INSTRUMENT CLUSTER - DIAGNOSIS AND TESTING). Repair as necessary.
	3. Is the temperature warning illuminating unnecessarily?	3. (Refer to 8 - ELECTRICAL/ INSTRUMENT CLUSTER - DIAGNOSIS AND TESTING).
	4. Coolant low in coolant reserve/ overflow tank and radiator?	4. Check for coolant leaks and repair as necessary. (Refer to 7 - COOLING - DIAGNOSIS AND TESTING).
	5. Pressure cap not installed tightly. If cap is loose, boiling point of coolant will be lowered. Also refer to the following Step 6.	5. Tighten cap
	6. Poor seals at the radiator cap.	6. (a) Check condition of cap and cap seals. Refer to Radiator Cap. Replace cap if necessary. (b) Check condition of radiator filler neck or degas bottle. If neck is bent or damaged, replace radiator or degas bottle.
	7. Coolant level low in radiator but not in coolant reserve/overflow tank. This means the radiator is not drawing coolant from the coolant reserve/overflow tank as the engine cools	7. (a) Check condition of radiator cap and cap seals. Refer to Radiator Cap in this Group. Replace cap if necessary. (b) Check condition of radiator filler neck. If neck is bent or damaged, replace radiator. (c) Check condition of the hose from the radiator to the coolant tank. It should fit tight at both ends without any kinks or tears. Replace hose if necessary. (d) Check coolant reserve/overflow tank and tanks hoses for blockage. Repair as necessary.
	8. Incorrect coolant concentration	8. Check coolant. (Refer to LUBRICATION & MAINTENANCE/ FLUID TYPES - DESCRIPTION)

CONDITION	POSSIBLE CAUSES	CORRECTION
9. Coolant not flowing through system	9. Check for coolant flow at radiator filler neck with some coolant removed, engine warm and thermostat open. Coolant should be observed flowing through radiator. If flow is not observed, determine area of obstruction and repair as necessary.	
	10. Radiator or A/C condenser fins are dirty or clogged.	10. Remove insects and debris. (Refer to 7 - COOLING - STANDARD PROCEDURE).
	11. Radiator core is corroded or plugged.	11. Have radiator re-cored or replaced.
	12. Dragging brakes	12. Check and correct as necessary. (Refer to 5 - BRAKES - DIAGNOSIS AND TESTING)
	13. Fuel or ignition system problems.	13. Refer to 14 - Fuel System or 8 - Electrical for diagnosis and testing procedures.
	14. Bug screen or cardboard is being , reducing airflow.	14. Remove bug screen or cardboard.
	15. Thermostat partially or completely shut.	15. Check thermostat operation and replace as necessary. (Refer to 7 - COOLING/ENGINE/ENGINE COOLANT THERMOSTAT - REMOVAL).
	16. Cooling fan(s) not operating properly.	16. Check cooling fan drive operation. Refer to appropriate Diagnostic Information.
	17. Cylinder head gasket leaking.	17. Check for cylinder head gasket leaks. (Refer to 7 - COOLING - DIAGNOSIS AND TESTING).
	18. Heater core leaking.	18. Check heater core for leaks. (Refer to 24 - HEATING & AIR CONDITIONING - DIAGNOSIS AND TESTING) . Repair as necessary.

CONDITION	POSSIBLE CAUSES	CORRECTION
TEMPERATURE GAUGE READING IS INCONSISTENT (FLUCTUATES, CYCLES, OR IS ERRATIC	1. During cold weather operation, with the heater in the high position, the gauge reading may drop slightly.	1. During cold weather operation, with the heater in the high position, the gauge reading may drop slightly.
	2. Temperature gauge or engine mounted gauge sensor defective or shorted. Also, corroded or loose wiring in this circuit.	2. Check operation of gauge and repair if necessary. (Refer to 8 - ELECTRICAL/INSTRUMENT CLUSTER - DIAGNOSIS AND TESTING).
	3. Gauge reading rises when vehicle is brought to a stop after heavy use (engine still running)	3. A normal condition. No correction is necessary. Gauge should return to normal range after vehicle is driven.
	4. Gauge reading high after re-starting a warmed up (hot) engine.	4. A normal condition. No correction is necessary. The gauge should return to normal range after a few minutes of engine operation.
	5. Coolant level low in radiator (air will build up in the cooling system causing the thermostat to open late).	5. Check and correct coolant leaks. (Refer to 7 - COOLING - DIAGNOSIS AND TESTING).
	6. Cylinder head gasket leaking allowing exhaust gas to enter cooling system causing a thermostat to open late.	6. (a) Check for cylinder head gasket leaks. (Refer to 7 - COOLING - DIAGNOSIS AND TESTING). (b) Check for coolant in the engine oil. Inspect for white steam emitting from the exhaust system. Repair as necessary.
	7. Water pump impeller loose on shaft.	7. Check water pump and replace as necessary. (Refer to 7 - COOLING/ENGINE/WATER PUMP - REMOVAL).
	8. Loose accessory drive belt. (water pump slipping)	8. Check and correct as necessary. (Refer to 7 - COOLING/ ACCESSORY DRIVE/DRIVE BELTS - DIAGNOSIS AND TESTING)
	9. Air leak on the suction side of the water pump allows air to build up in cooling system causing thermostat to open late.	9. Locate leak and repair as necessary.
PRESSURE CAP IS BLOWING OFF STEAM AND/OR COOLANT TO COOLANT TANK. TEMPERATURE GAUGE READING MAY BE ABOVE NORMAL BUT NOT HIGH. COOLANT LEVEL MAY BE HIGH IN COOLANT RESERVE/ OVERFLOW TANK	1. Pressure relief valve in radiator cap is defective.	1. Check condition of radiator cap and cap seals. (Refer to 7 - COOLING/ENGINE/RADIATOR PRESSURE CAP - DIAGNOSIS AND TESTING). Replace cap as necessary.

CONDITION	POSSIBLE CAUSES	CORRECTION
COOLANT LOSS TO THE GROUND WITHOUT PRESSURE CAP BLOWOFF. GAUGE READING HIGH OR HOT	1. Coolant leaks in radiator, cooling system hoses, water pump or engine.	1. Pressure test and repair as necessary. (Refer to 7 - COOLING - DIAGNOSIS AND TESTING).
DETONATION OR PRE-IGNITION (NOT CAUSED BY IGNITION SYSTEM). GAUGE MAY OR MAY NOT BE READING HIGH	1. Engine overheating. 2. Freeze point of coolant not correct. Mixture is too rich or too lean.	1. Check reason for overheating and repair as necessary. 2. Check coolant concentration. (Refer to LUBRICATION & MAINTENANCE/FLUID TYPES - DESCRIPTION).
HOSE OR HOSES COLLAPSE WHILE ENGINE IS RUNNING	1. Vacuum created in cooling system on engine cool-down is not being relieved through coolant reserve/overflow system.	1. (a) Radiator cap relief valve stuck. (Refer to 7 - COOLING/ ENGINE/RADIATOR PRESSURE CAP - DIAGNOSIS AND TESTING). Replace if necessary (b) Hose between coolant reserve/overflow tank and radiator is kinked. Repair as necessary. (c) Vent at coolant reserve/overflow tank is plugged. Clean vent and repair as necessary. (d) Reserve/overflow tank is internally blocked or plugged. Check for blockage and repair as necessary.
NOISY COOLING FAN	1. Fan blades loose. 2. Fan blades striking a surrounding object. 3. Air obstructions at radiator or air conditioning condenser.	1. Replace fan blade assembly (Refer to 7 - COOLING/ENGINE/ RADIATOR FAN - REMOVAL). 2. Locate point of fan blade contact and repair as necessary. 3. Remove obstructions and/or clean debris or insects from radiator or A/C condenser.

CONDITION	POSSIBLE CAUSES	CORRECTION
INADEQUATE HEATER PERFORMANCE. THERMOSTAT FAILED IN OPEN POSITION	1. Has a Diagnostic trouble Code (DTC) been set?	1. (Refer to 25 - EMISSIONS CONTROL - DESCRIPTION) for correct procedures and replace thermostat if necessary
	2. Coolant level low	2. (Refer to 7 - COOLING - STANDARD PROCEDURE).
	3. Obstructions in heater hose/ fittings	3. Remove heater hoses at both ends and check for obstructions
	4. Heater hose kinked	4. Locate kinked area and repair as necessary
	5. Water pump is not pumping water to/through the heater core. When the engine is fully warmed up, both heater hoses should be hot to the touch. If only one of the hoses is hot, the water pump may not be operating correctly or the heater core may be plugged. Accessory drive belt may be slipping causing poor water pump operation.	5. (Refer to 7 - COOLING/ENGINE/ WATER PUMP - REMOVAL) for 2.7L engine, (Refer to 7 - COOLING/ENGINE/WATER PUMP - REMOVAL) for 3.5L engine, (Refer to 7 - COOLING/ENGINE/WATER PUMP - REMOVAL) for 5.7L/6.1L engine. If a slipping belt is detected, (Refer to 7 - COOLING/ ACCESSORY DRIVE/DRIVE BELTS - DIAGNOSIS AND TESTING). If heater core obstruction is detected, (Refer to 24 - HEATING & AIR CONDITIONING/PLUMBING/ HEATER CORE - REMOVAL).
STEAM IS COMING FROM THE FRONT OF VEHICLE NEAR THE GRILL AREA WHEN WEATHER IS WET, ENGINE IS WARMED UP AND RUNNING, AND VEHICLE IS STATIONARY. TEMPERATURE GAUGE IS IN NORMAL RANGE	1. During wet weather, moisture (snow, ice or rain condensation) on the radiator will evaporate when the thermostat opens. This opening allows heated water into the radiator. When the moisture contacts the hot radiator, steam may be emitted. This usually occurs in cold weather with no fan or airflow to blow it away.	1. Occasional steam emitting from this area is normal. No repair is necessary.
COOLANT COLOR	1. Coolant color is not necessarily an indication of adequate corrosion or temperature protection. Do not rely on coolant color for determining condition of coolant.	1. (Refer to LUBRICATION & MAINTENANCE/FLUID TYPES - DESCRIPTION) Adjust coolant mixture as necessary.
COOLANT LEVEL CHANGES IN COOLANT RESERVE/OVERFLOW TANK. TEMPERATURE GAUGE IS IN NORMAL RANGE	1. Level changes are to be expected as coolant volume fluctuates with engine temperature. If the level in the tank was between the MIN. and MAX. marks at normal operating temperature, the level should return to within that range after operation at elevated temperatures.	1. A normal condition. No repair is necessary.

STANDARD PROCEDURE

DRAINING COOLING SYSTEM - ALL ENGINES

WARNING: Do not remove cylinder block drain plugs or loosen radiator draincock with system hot and under pressure. Serious burns from coolant can occur.

NOTE: Typical drain plug shown in illustration.

DO NOT WASTE reusable coolant. If solution is clean, drain coolant into a clean container for reuse.

1. Remove radiator pressure cap.
2. Loosen radiator petcock.
3. Remove drain plug (1).

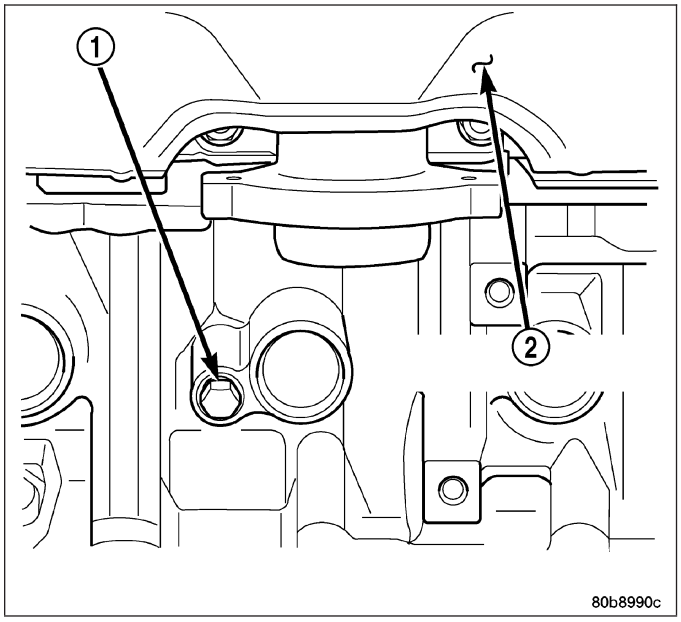

COOLING SYSTEM FILLING

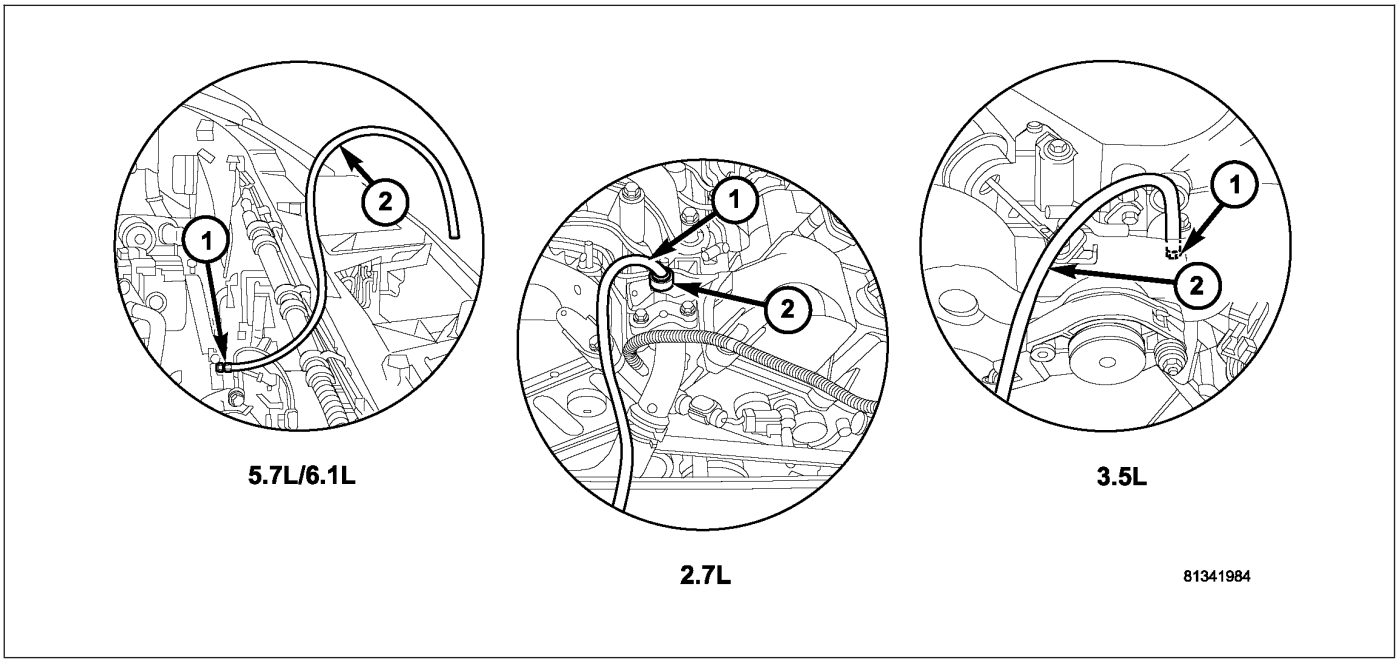

The use of aluminum cylinder blocks, cylinder heads and water pumps requires special corrosion protection. In order to maintain the required protection for these components and cooling system performance, only use the appropriate fluid (Refer to LUBRICATION & MAINTENANCE/FLUID TYPES - DESCRIPTION) when servicing the vehicle. This coolant offers the best engine cooling without corrosion when mixed with 50% distilled water to obtain a freeze point of -37° C (-35° F). If it loses color or becomes contaminated, drain, flush, and replace with fresh properly mixed coolant solution.

WARNING: Make sure engine cooling system is cool before removing pressure cap or any hose. severe personal injury may result from escaping hot coolant. The cooling system is pressurized when hot.

NOTE: Cooling system fill procedure is critical to overall cooling system performance.

1. Close radiator draincock. **Hand tighten only.**
2. Install engine block drain plugs, if removed. Coat the threads with Mopar® Thread Sealant with Teflon.

WARNING: When installing drain hose to air bleed valve, route hose away from accessory drive belts, accessory drive pulleys, and electric cooling fan motors.

NOTE: It may be necessary to install a bleed fitting on the 5.7L engine.

3. Attach a 1.5 - 2 m (4 - 6 ft.) long 6.35 mm (1/4 inch.) ID clear hose to bleeder fitting
   - **Bleed Valve Location (2.7L):** Located on the water outlet connector at the front of engine.
   - **Bleed Valve Location (3.5L):** Located on the lower intake manifold, left of center and below the upper intake plenum.
   - **Plug Location (5.7L/6.1L):** Located on the front of the water outlet housing at the front of engine.
4. Route hose (2) away from the accessory drive belt, drive pulleys and electric cooling fan. Place the other end of hose (2) into a clean container. The hose will prevent coolant from contacting the accessory drive belt when bleeding the system during the refilling operation.

NOTE: It is imperative that the cooling system air bleed valve be opened before any coolant is added to the cooling system. Failure to open the bleed valve first will result in an incomplete fill of the system.

5. 5.7L/6.1L ENGINE - Install a threaded and barbed fitting (1/4 - 18 npt) into water pump housing.
6. Attach Tool 8195, Filling Aid Funnel to pressure bottle filler neck.
7. Using hose pinch-off pliers, pinch overflow hose (3) that connects between the two chambers of the coolant bottle (2).
8. Open bleed fitting.

CAUTION: Do not mix coolants. If coolant is used other than specified, a reduction in corrosion protection will occur.

9. Pour the antifreeze mixture (Refer to LUBRICATION & MAINTENANCE/FLUID TYPES - DESCRIPTION) into the larger section of Filling Aid Funnel (the smaller section of funnel is to allow air to escape). For system capacity, (Refer to 7 - COOLING - SPECIFICATIONS).
10. Slowly fill the cooling system until a steady stream of coolant flows from the hose attached to the bleed valve.
11. Close the bleed valve and continue filling system to the top of the Tool 8195, Filling Aid Funnel.
12. Remove pinch-off pliers from overflow hose.
13. Allow the coolant in Filling Funnel to drain into overflow chamber of the pressure bottle.
14. Remove Tool 8195, Filling Aid Funnel. Install cap on coolant pressure bottle.
15. Remove hose from bleed valve.
16. 5.7L/6.1L ENGINE - Install fitting into thermostat housing. Coat the threads with Mopar® Thread Sealant with Teflon.
17. Start engine and run at 1500 - 2000 RPM for 30 minutes.

NOTE: The engine cooling system will push any remaining air into the coolant bottle within about an hour of normal driving. As a result, a drop in coolant level in the pressure bottle may occur. If the engine cooling system overheats and pushes coolant into the overflow side of the coolant bottle, this coolant will be sucked back into the cooling system ONLY IF THE PRESSURE CAP IS LEFT ON THE BOTTLE. Removing the pressure cap breaks the vacuum path between the two bottle sections and the coolant will not return to cooling system.

18. Shut off engine allow it to cool down for 30 minutes. This permits coolant to be drawn into the pressure chamber.
19. With engine COLD, observe coolant level in pressure chamber. Coolant level should be within MIN and MAX marks. Adjust coolant level as necessary.

NOTE: The coolant bottle has two chambers. Coolant will normally only be in the inboard of the two. The outboard chamber is only to recover coolant in the event of an overheat or after a recent service fill.

REFILLING COOLING SYSTEM - 3.0L DIESEL

1. Tighten the radiator draincock and the cylinder block drain plug(s) (if removed).
2. Remove thermostat housing bleed hose from two clips.
3. Hold the thermostat housing bleed hose up so that air can flow up to bottle.

CAUTION: Failure to purge air from the cooling system can result in an overheating condition and severe engine damage.

4. Fill cooling system with the antifreeze mixture (Refer to LUBRICATION & MAINTENANCE/FLUID TYPES - DESCRIPTION). Fill pressure bottle to service line and install cap.

NOTE: The engine cooling system will push any remaining air into the coolant bottle within about an hour of normal driving. As a result, a drop in coolant level in the pressure bottle may occur. If the engine cooling system overheats and pushes coolant into the overflow side of the coolant bottle, this coolant will be sucked back into the cooling system ONLY IF THE PRESSURE CAP IS LEFT ON THE BOTTLE. Removing the pressure cap breaks the vacuum path between the two bottle sections and the coolant will not return to cooling system.

5. With heater control unit in the HEAT position, operate engine with pressure bottle cap in place.
6. Add coolant to pressure bottle as necessary. **Only add coolant to the pressure bottle when the engine is cold. Coolant level in a warm engine will be higher due to thermal expansion.**
7. Reinstall the thermostat housing bleed hose in the two clips.

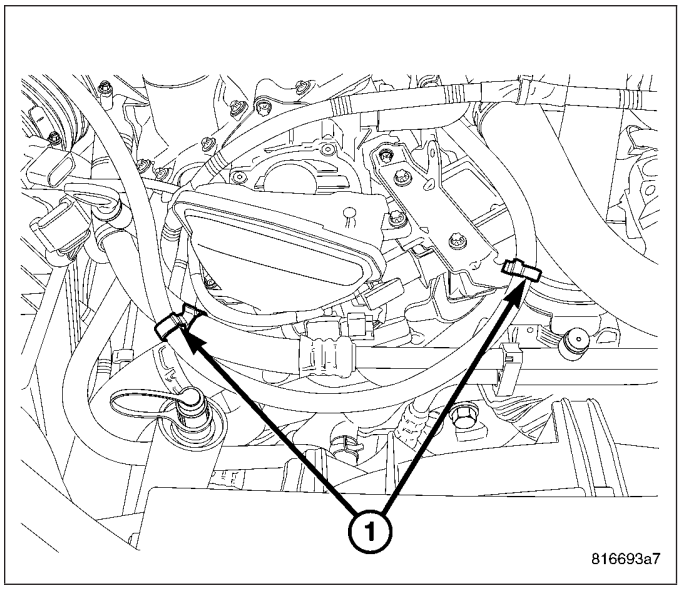

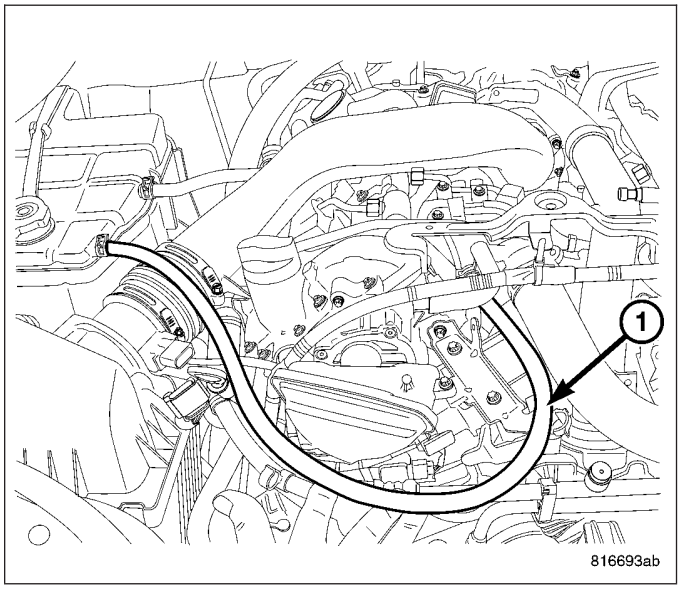

ADDING ADDITIONAL COOLANT

The use of aluminum cylinder blocks, cylinder heads and water pumps requires special corrosion protection. Only Mopar® Antifreeze/Coolant, 5 Year/100,000 Mile Formula (glycol base coolant with corrosion inhibitors called HOAT, for Hybrid Organic Additive Technology) is recommended. This coolant offers the best engine cooling without corrosion when mixed with 50% distilled water to obtain to obtain a freeze point of -37°C (-35°F). If it loses color or becomes contaminated, drain, flush, and replace with fresh properly mixed coolant solution.

CAUTION: Do not use coolant additives that are claimed to improve engine cooling.

COOLANT LEVEL CHECK

NOTE: Do not remove radiator cap for routine coolant level inspections. The coolant level can be checked at coolant recovery bottle (2).

The coolant reserve/overflow system provides a quick method for determining coolant level. With engine not running, the coolant level should be between MIN and MAX marks (3). If the coolant level is at or below the MIN mark, fill the recovery bottle with a 50/50 mixture of antifreeze and water ONE QUART AT A TIME. Repeat this procedure until the coolant level is at the FULL mark.

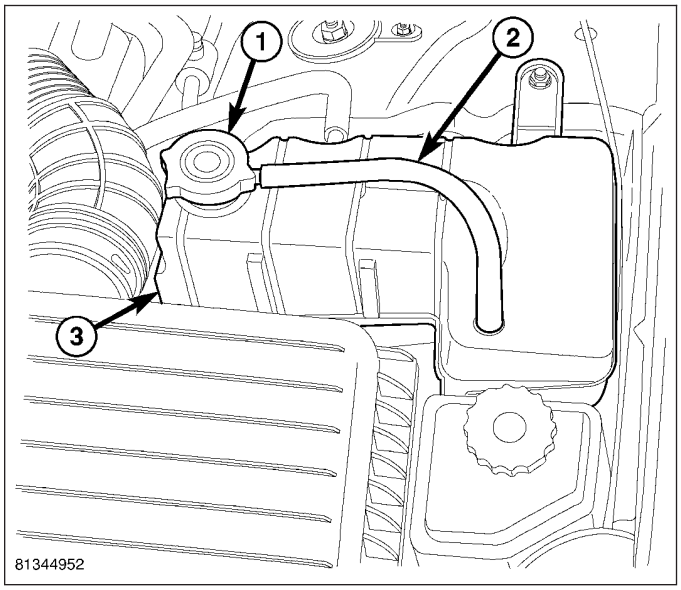

DRAINING COOLING SYSTEM - ALL ENGINES

WARNING: Do not remove cylinder block drain plugs or loosen radiator draincock with system hot and under pressure. Serious burns from coolant can occur.

NOTE: Typical drain plug shown in illustration.

DO NOT WASTE reusable coolant. If solution is clean, drain coolant into a clean container for reuse.

1. Remove radiator pressure cap.
2. Loosen radiator petcock.
3. Remove drain plug (1).

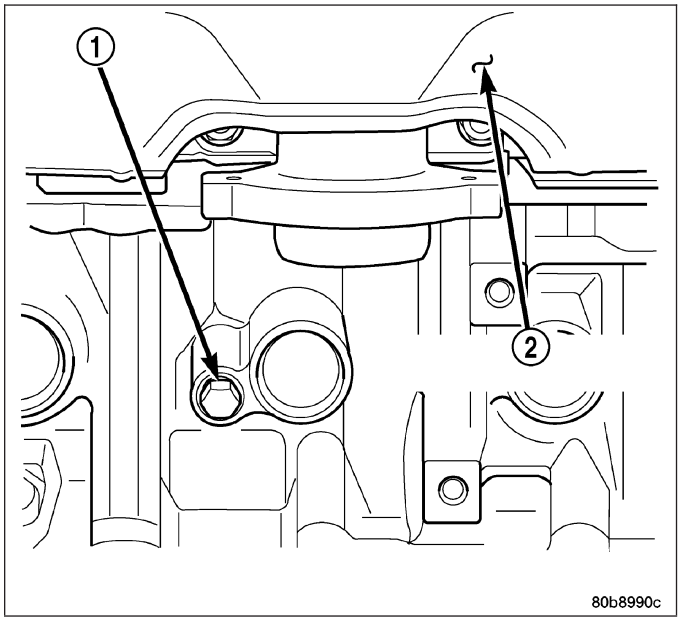

COOLING SYSTEM CLEANING/REVERSE FLUSHING

CLEANING

Drain cooling system and refill with water. Run engine with radiator cap installed until upper radiator hose is hot. Stop engine and drain water from system. If water is dirty, fill system with water, run engine and drain system. Repeat until water drains clean.

REVERSE FLUSHING

Reverse flushing of cooling system is the forcing of water through the cooling system. This is done using air pressure in the opposite direction of normal coolant flow. It is usually only necessary with very dirty systems with evidence of partial plugging.

REVERSE FLUSHING RADIATOR

Disconnect radiator hoses from radiator inlet and outlet. Attach a section of radiator hose to radiator bottom outlet fitting and insert flushing gun. Connect a water supply hose and air supply hose to flushing gun.

CAUTION: Internal radiator pressure must not exceed 138 kPa (20 psi) as damage to radiator may result.

Allow radiator to fill with water. When radiator is filled, apply air in short blasts. Allow radiator to refill between blasts. Continue this reverse flushing until clean water flows out through rear of radiator cooling tube passages. Have radiator cleaned more extensively by a radiator repair shop.

REVERSE FLUSHING ENGINE

Drain cooling system. Remove thermostat housing and thermostat. Install thermostat housing. Disconnect radiator upper hose from radiator and attach flushing gun to hose. Disconnect radiator lower hose from water pump and attach a lead-away hose to water pump inlet fitting.

CAUTION: On vehicles equipped with a heater water control valve, be sure heater control valve is closed (heat off). This will prevent coolant flow with scale and other deposits from entering heater core.

Connect water supply hose and air supply hose to flushing gun. Allow engine to fill with water. When engine is filled, apply air in short blasts, allowing system to fill between air blasts. Continue until clean water flows through the lead away hose.

Remove lead away hose, flushing gun, water supply hose and air supply hose. Remove thermostat housing and install thermostat. Install thermostat housing with a replacement gasket. Refer to Thermostat Replacement. Connect radiator hoses. Refill cooling system with correct antifreeze/water mixture. Refer to Refilling the Cooling System.

CHEMICAL CLEANING

In some instances, use a radiator cleaner (Mopar Radiator Kleen or equivalent) before flushing. This will soften scale and other deposits and aid flushing operation.

CAUTION: Follow manufacturers instructions when using these products.

SPECIFICATIONS

TORQUE

DESCRIPTION	N·m	Ft. Lbs.	In. Lbs.
Automatic Belt Tensioner to Block - Bolts	54	40	-
3.0L Diesel			
Block Heater - Bolt	2	-	17
Generator/Compressor Mounting Bracket - Bolts -			
No. 1 and No.2	54	40	-
No. 3	40	30	-
Fan Shroud Mounting - Bolts	6	-	50
Fan Blade to Fan Motor - Bolts	23	17	-
Idler Pulley - Bolt - 5.7L/6.1L	54	40	-
Idler Pulley - Bolt - 2.7L/3.5L	28	-	250
Radiator to Support Bracket - Bolts	12	-	106
Thermostat Housing - Bolts - 2.7L/3.5L	11.8	-	105
Housing - Coolant Outlet - 2.7L	11.8	-	105
Housing - Coolant - 3.0L Diesel	11.8	-	105
Heater Supply Tube	3.4	-	30

DESCRIPTION	N·m	Ft. Lbs.	In. Lbs.
Thermostat Housing - Bolts - 5.7L/6.1L	13	-	112
Upper Radiator Closure Panel - Bolts	10	-	90
Water Pump - Bolts - 2.7L/3.5L	11.8	-	105
Water Pump - Bolts - 5.7L/6.1L	28	20	-
Transmission Cooler Lines at Transmission	20	18	
Transmission Cooler lines at thermal bypass valve	20	28	
Transmission Cooler lines at thermal bypass valve	20	18	

FILL VOLUMES

SPECIFICATIONS

DESCRIPTION	SPECIFICATION	
	Metric	Standard
2.7L	9.2	9.7
3.5L	10.0	10.6
5.7L	13.8	14.6
6.1L	14.0	14.8
3.0L Diesel	14.0	14.8

SPECIAL TOOLS

COOLING

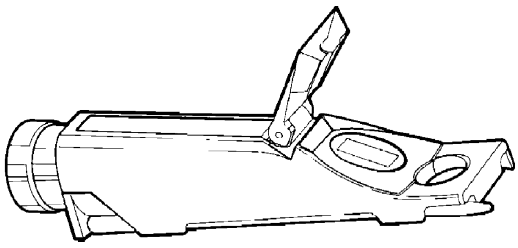

COOLANT REFRACTOMETER 8286

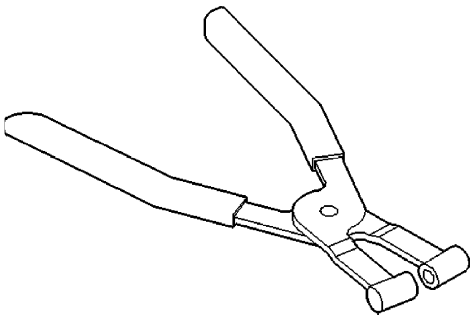

PLIERS 6094

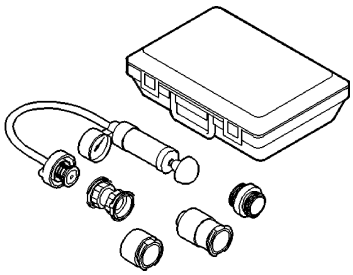

PRESSURE TESTER 7700

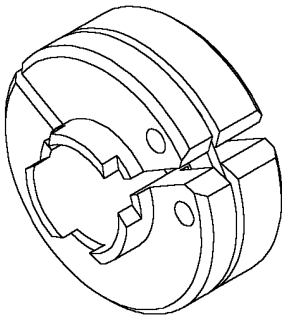

RELEASE TOOL 8875A



FILLING AID FUNNEL 8195

ACCESSORY DRIVE

TABLE OF CONTENTS

page

BELT TENSIONER
- DESCRIPTION 24
- OPERATION 24
- REMOVAL
  - 2.7L ENGINE 24
  - 3.5L ENGINE 25
  - 5.7L/6.1L ENGINE 25
  - 3.0L DIESEL 26
- INSTALLATION
  - 2.7L ENGINE 26
  - 3.5L ENGINE 27
  - 5.7L/6.1L ENGINE 27
  - 3.0L DIESEL 28

DRIVE BELT
- DIAGNOSIS AND TESTING
  - ACCESSORY DRIVE BELT 29
- REMOVAL
  - 2.7L ENGINE 31
  - 3.5L ENGINE 31
  - 5.7L/6.1L ENGINE 32
  - 3.0L DIESEL 32
- INSTALLATION
  - 2.7L ENGINE 33
  - 3.5L ENGINE 33
  - 5.7L/6.1L ENGINE 34
  - 3.0L DIESEL 34

IDLER PULLEY
- REMOVAL
  - 2.7L ENGINE 35
  - 3.5L ENGINE 35
  - 5.7L ENGINE 36
  - 3.0L Diesel Engine 36
- INSTALLATION
  - 2.7L ENGINE 37
  - 3.5L ENGINE 37
  - 5.7L ENGINE 38
  - INSTALLATION 38

BELT TENSIONER

DESCRIPTION

Correct drive belt tension is required to ensure optimum performance of the belt (1) driven engine accessories. If specified tension is not maintained, belt slippage may cause; engine overheating, lack of power steering assist, loss of air conditioning capacity, reduced generator output rate, and greatly reduced belt life.

It is not necessary to adjust belt tension on the 2.7L/3.5L or 5.7L/6.1L engines. These engines are equipped with an automatic belt tensioner (2). The tensioner maintains correct belt tension at all times. Due to use of this belt tensioner (2), do not attempt to use a belt tension gauge on these engines.

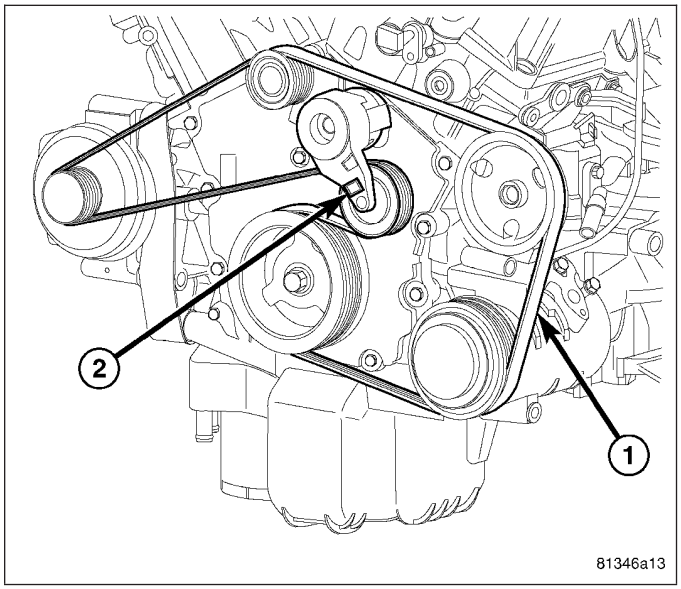

OPERATION

The automatic belt tensioner maintains belt tension by using internal spring pressure, a pivoting arm and pulley to apply force against the drive belt.

REMOVAL

2.7L ENGINE

On all engines, the tensioner (1) is equipped with an indexing tang on back of tensioner and an indexing stop on tensioner housing. If a new belt is being installed, tang must be within approximately 6 - 8mm (0.24 - 0.32 in.) of indexing stop (i.e. tang is approximately between the two indexing stops). Belt is considered new if it has been used 15 minutes or less.

If the above specification cannot be met, check for:

- The wrong belt being installed (incorrect length/width)
- Worn bearings on an engine accessory (A/C compressor, power steering pump, water pump, idler pulley or generator)
- Belt is not installed in pulley grooves
- A pulley on an engine accessory being loose
- Misalignment of an engine accessory
- Belt incorrectly routed.

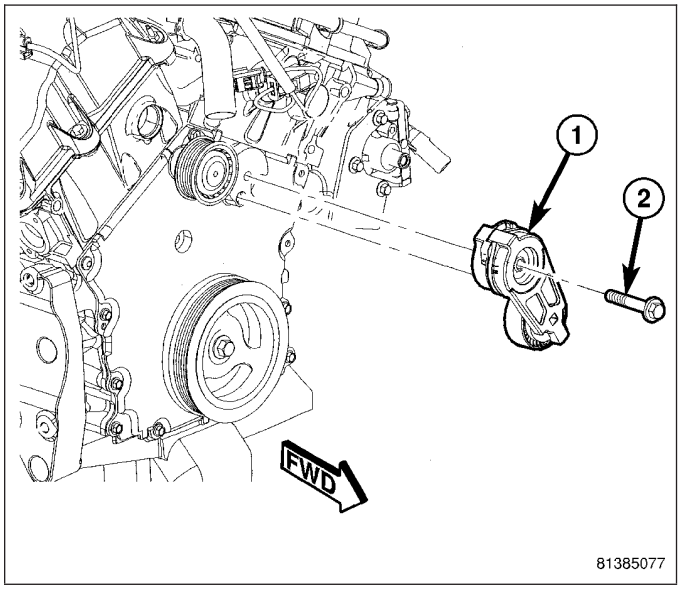

NOTE: A used belt should be replaced if tensioner indexing arrow has moved to the minimum tension indicator. Tensioner travel stops at this point.

1. Remove accessory drive belt (Refer to 7 - COOLING/ACCESSORY DRIVE/DRIVE BELTS - REMOVAL).

WARNING: Because of high spring pressure, do not attempt to disassemble automatic tensioner. Unit is serviced as an assembly except for pulley on tensioner.

2. Remove tensioner assembly bolt (2).
3. Remove tensioner assembly (1) from mounting bracket.

3.5L ENGINE

On all engines, the tensioner (1) is equipped with an indexing tang on back of tensioner and an indexing stop on tensioner housing. If a new belt is being installed, tang must be within approximately 6 - 8mm (0.24 - 0.32 in.) of indexing stop (i.e. tang is approximately between the two indexing stops). Belt is considered new if it has been used 15 minutes or less.

If the above specification cannot be met, check for:

- The wrong belt being installed (incorrect length/ width)
- Worn bearings on an engine accessory (A/C compressor, power steering pump, water pump, idler pulley or generator)
- Belt is not installed in pulley grooves
- A pulley on an engine accessory being loose
- Misalignment of an engine accessory
- Belt incorrectly routed.

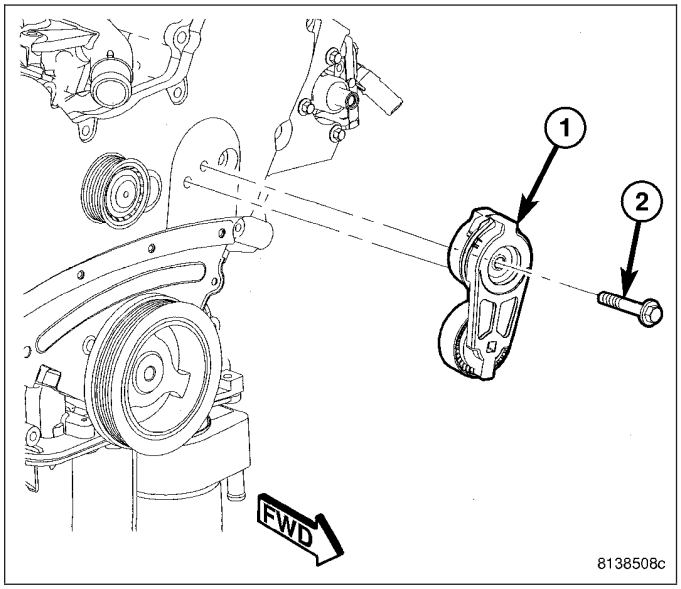

NOTE: A used belt should be replaced if tensioner indexing arrow has moved to the minimum tension indicator. Tensioner travel stops at this point.

1. Remove accessory drive belt (Refer to 7 - COOLING/ACCESSORY DRIVE/DRIVE BELTS - REMOVAL).

WARNING: Because of high spring pressure, do not attempt to disassemble automatic tensioner. Unit is serviced as an assembly except for pulley on tensioner.

2. Remove tensioner assembly bolt (1).
3. Remove tensioner assembly (2) from mounting bracket.

5.7L/6.1L ENGINE

On all engines, the tensioner (1) is equipped with an indexing tang on back of tensioner and an indexing stop on tensioner housing. If a new belt is being installed, tang must be within approximately 6 - 8mm (0.24 - 0.32 in.) of indexing stop (i.e. tang is approximately between the two indexing stops). Belt is considered new if it has been used 15 minutes or less.

If the above specification cannot be met, check for:

- The wrong belt being installed (incorrect length/ width)
- Worn bearings on an engine accessory (A/C compressor, power steering pump, water pump, idler pulley or generator)
- Belt is not installed in pulley grooves
- A pulley on an engine accessory being loose
- Misalignment of an engine accessory

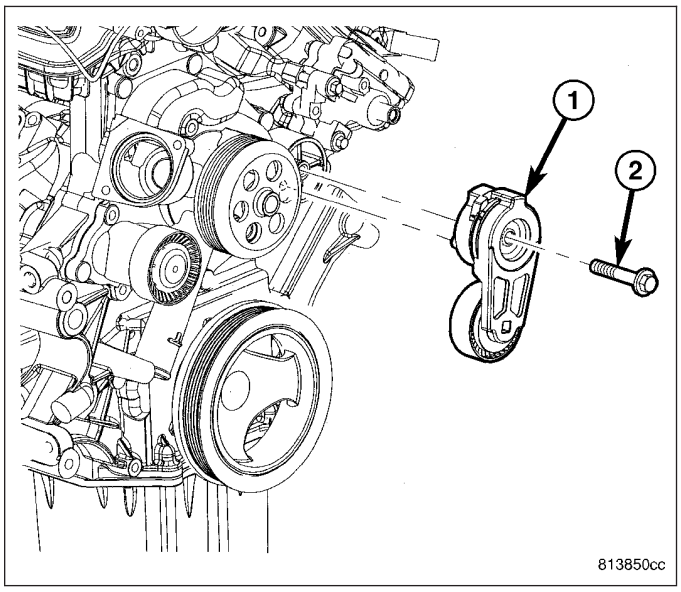

- Belt incorrectly routed.

NOTE: A used belt should be replaced if tensioner indexing arrow has moved to the minimum tension indicator. Tensioner travel stops at this point.

1. Remove accessory drive belt (Refer to 7 - COOLING/ACCESSORY DRIVE/DRIVE BELTS - REMOVAL).

WARNING: Because of high spring pressure, do not attempt to disassemble automatic tensioner. Unit is serviced as an assembly except for pulley on tensioner.

2. Remove tensioner assembly bolt (2).
3. Remove tensioner assembly (1) from mounting bracket.

3.0L DIESEL

1. Disconnect negative battery cable.
2. Remove accessory drive belt (Refer to 7 - COOLING/ACCESSORY DRIVE/DRIVE BELTS - REMOVAL).
3. Remove belt tensioner retaining bolt and remove tensioner (5) from bracket.

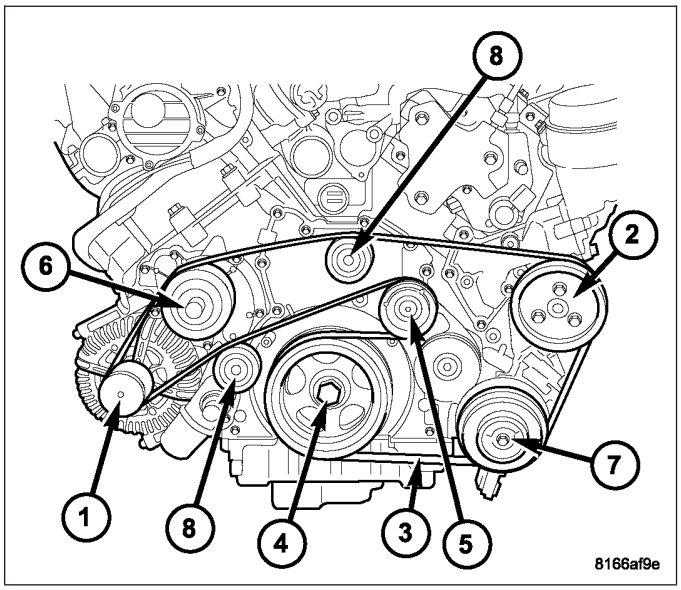

INSTALLATION

2.7L ENGINE

1. Install tensioner bolt (2) to tensioner (1). Tighten bolt to 34 N·m (40 ft. lbs.) torque.
2. Install accessory drive belt (Refer to 7 - COOLING/ACCESSORY DRIVE/DRIVE BELTS - INSTALLATION).

On all engines, the tensioner (1) is equipped with an indexing tang on back of tensioner and an indexing stop on tensioner housing. If a new belt is being installed, tang must be within approximately 6 - 8mm (0.24 - 0.32 in.) of indexing stop (i.e. tang is approximately between the two indexing stops). Belt is considered new if it has been used 15 minutes or less.

3. Check belt indexing marks.

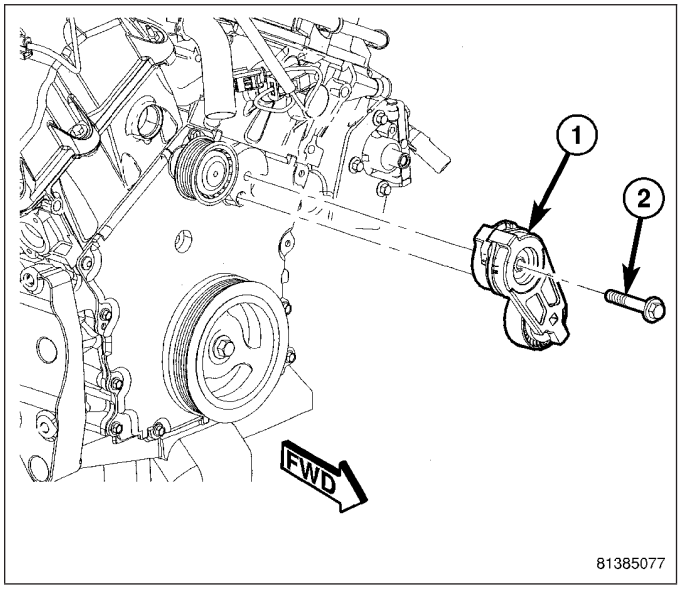

3.5L ENGINE

1. Install tensioner bolt (2) to tensioner (1). Tighten bolt to 34 N·m (40 ft. lbs.) torque.
2. Install accessory drive belt (Refer to 7 - COOLING/ ACCESSORY DRIVE/DRIVE BELTS - INSTALLATION).

On all engines, the tensioner (1) is equipped with an indexing tang on back of tensioner and an indexing stop on tensioner housing. If a new belt is being installed, tang must be within approximately 6 - 8mm (0.24 - 0.32 in.) of indexing stop (i.e. tang is approximately between the two indexing stops). Belt is considered new if it has been used 15 minutes or less.

3. Check belt indexing marks.

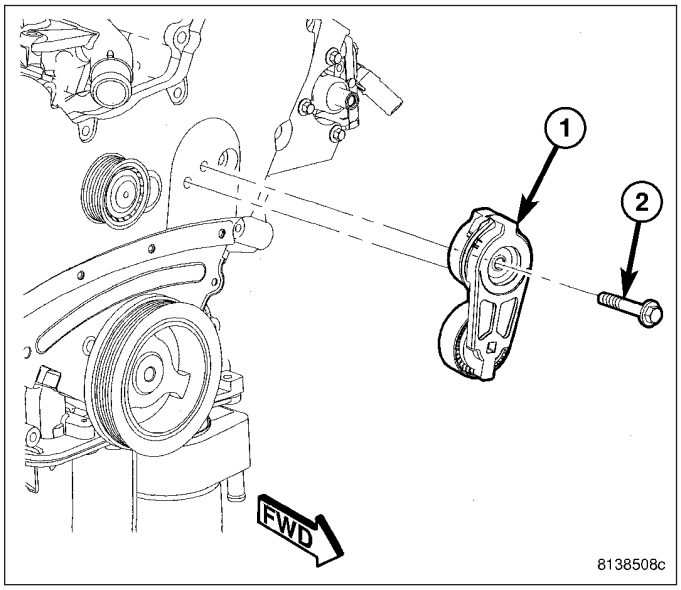

5.7L/6.1L ENGINE

1. Install tensioner bolt (2) to tensioner (1). Tighten bolt to 34 N·m (40 ft. lbs.) torque.
2. Install accessory drive belt (Refer to 7 - COOLING/ ACCESSORY DRIVE/DRIVE BELTS - INSTALLATION).

On all engines, the tensioner (1) is equipped with an indexing tang on back of tensioner and an indexing stop on tensioner housing. If a new belt is being installed, tang must be within approximately 6 - 8mm (0.24 - 0.32 in.) of indexing stop (i.e. tang is approximately between the two indexing stops). Belt is considered new if it has been used 15 minutes or less.

3. Check belt indexing marks.

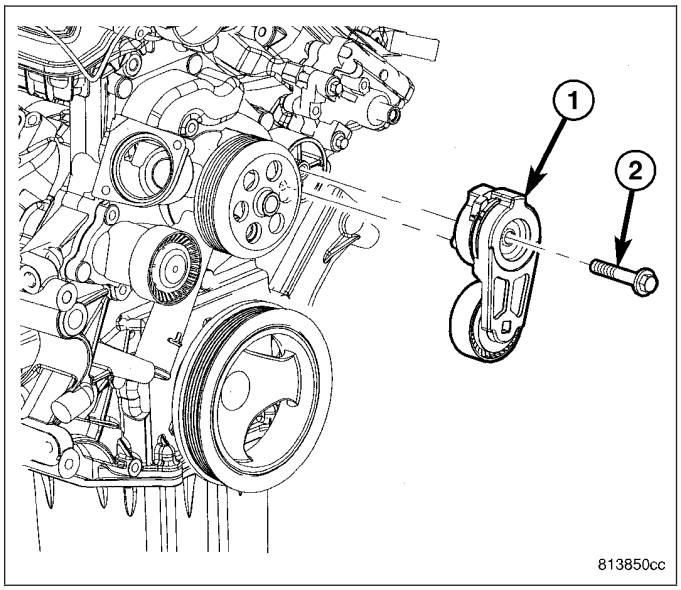

3.0L DIESEL

1. Install belt tensioner (5) on bracket. Torque retaining bolt to 47 N·m.
2. Install accessory drive belt (Refer to 7 - COOLING/ ACCESSORY DRIVE/DRIVE BELTS - INSTALLATION).
3. Connect negative battery cable.

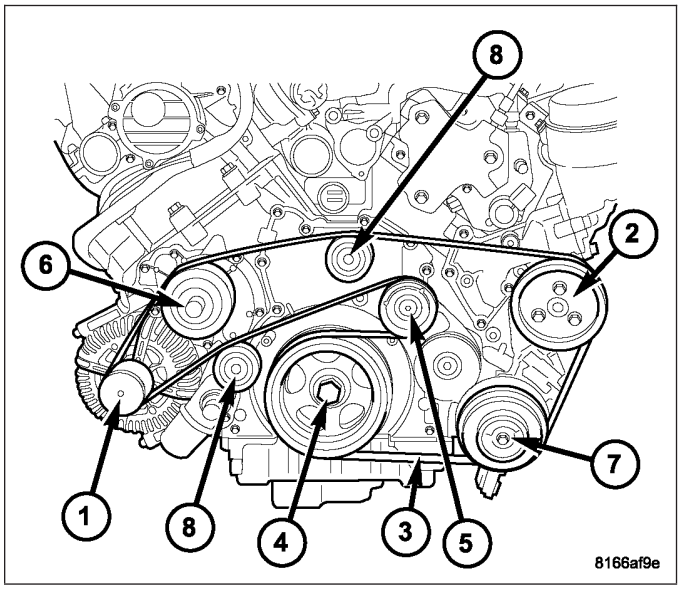

DRIVE BELT

DIAGNOSIS AND TESTING

ACCESSORY DRIVE BELT

VISUAL DIAGNOSIS

When diagnosing serpentine accessory drive belts, small cracks (1) that run across the ribbed surface of the belt from rib to rib , are considered normal. These are not a reason to replace the belt. However, cracks (2) running along a rib (not across) are **not** normal. Any belt with cracks running along a rib must be replaced. Also replace the belt if it has excessive wear, frayed cords, severe glazing or chunking.

Any belt with bumps, surface coming apart, or any other uneven indications along the flat surface of the belt must be remove and inspected and replaced if necessary.

Refer to ACCESSORY DRIVE BELT DIAGNOSIS CHART for further belt diagnosis.

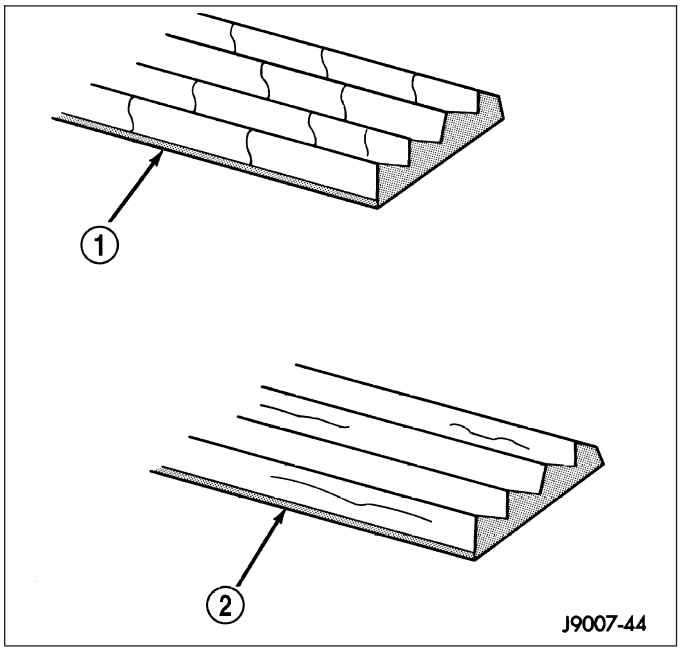

NOISE DIAGNOSIS

Noises generated by the accessory drive belt are most noticeable at idle. Before replacing a belt to resolve a noise condition, inspect all of the accessory drive pulleys for alignment, glazing, or excessive end play.

ACCESSORY DRIVE BELT DIAGNOSIS CHART

CONDITION	POSSIBLE CAUSES	CORRECTION
RIB CHUNKING (One or more ribs has separated from belt body)	1. Foreign objects imbedded in pulley grooves.	1. Remove foreign objects from pulley grooves. Replace belt.
	2. Installation damage	2. Replace belt
RIB OR BELT WEAR	1. Pulley misaligned	1. Align pulley(s)
	2. Abrasive environment	2. Clean pulley(s). Replace belt if necessary
	3. Rusted pulley(s)	3. Clean rust from pulley(s)
	4. Sharp or jagged pulley groove tips	4. Replace pulley. Inspect belt.
	5. Belt rubber deteriorated	5. Replace belt

CONDITION	POSSIBLE CAUSES	CORRECTION
BELT SLIPS	1. Belt slipping because of insufficient tension	1. Inspect/Replace tensioner if necessary
	2. Belt or pulley exposed to substance that has reduced friction (belt dressing, oil, ethylene glycol)	2. Replace belt and clean pulleys
	3. Driven component bearing failure (seizure)	3. Replace faulty component or bearing
	4. Belt glazed or hardened from heat and excessive slippage	4. Replace belt.
LONGITUDINAL BELT CRACKING	1. Belt has mis-tracked from pulley groove	1. Replace belt
	2. Pulley groove tip has worn away rubber to tensile member	2. Replace belt
″GROOVE JUMPING″ (Belt does not maintain correct position on pulley)	1. Incorrect belt tension	1. Inspect/Replace tensioner if necessary
	2. Pulley(s) not within design tolerance	2. Replace pulley(s)
	3. Foreign object(s) in grooves	3. Remove foreign objects from grooves
	4. Pulley misalignment	4. Align component
	5. Belt cord line is broken	5. Replace belt
BELT BROKEN (Note: Identify and correct problem before new belt is installed)	1. Incorrect belt tension	1. Replace Inspect/Replace tensioner if necessary
	2. Tensile member damaged during belt installation	2. Replace belt
	3. Severe misalignment	3. Align pulley(s)
	4. Bracket, pulley, or bearing failure	4. Replace defective component and belt
NOISE (Objectionable squeal, squeak, or rumble is heard or felt while drive belt is in operation)	1. Incorrect belt tension	1. Inspect/Replace tensioner if necessary
	2. Bearing noise	2. Locate and repair
	3. Belt misalignment	3. Align belt/pulley(s)
	4. Belt to pulley mismatch	4. Install correct belt
	5. Driven component induced vibration	5. Locate defective driven component and repair
	6. Belt flat surface coming apart	6. Replace belt
TENSION SHEETING FABRIC FAILURE (Woven fabric on outside, circumference of belt has cracked or separated from body of belt)	1. Tension sheeting contacting stationary object	1. Correct rubbing condition
	2. Excessive heat causing woven fabric to age	2. Replace belt
	3. Tension sheeting splice has fractured	3. Replace belt

CONDITION	POSSIBLE CAUSES	CORRECTION
CORD EDGE FAILURE (Tensile member exposed at edges of belt or separated from belt body)	1. Incorrect belt tension	1. Inspect/Replace tensioner if necessary
	2. Belt contacting stationary object	2. Replace belt
	3. Pulley(s) out of tolerance	3. Replace pulley
	4. Insufficient adhesion between tensile member and rubber matrix	4. Replace belt

REMOVAL

2.7L ENGINE

CAUTION: Do not let tensioner arm snap back to the freearm position, sever damage may occur to the tensioner.

Belt tension is not adjustable. Belt adjustment is maintained by an automatic, spring loaded belt tensioner.

1. Disconnect negative battery cable from battery.
2. Rotate belt tensioner (5) counterclockwise until it contacts it's stop. Remove belt, then slowly rotate the tensioner into the freearm position.

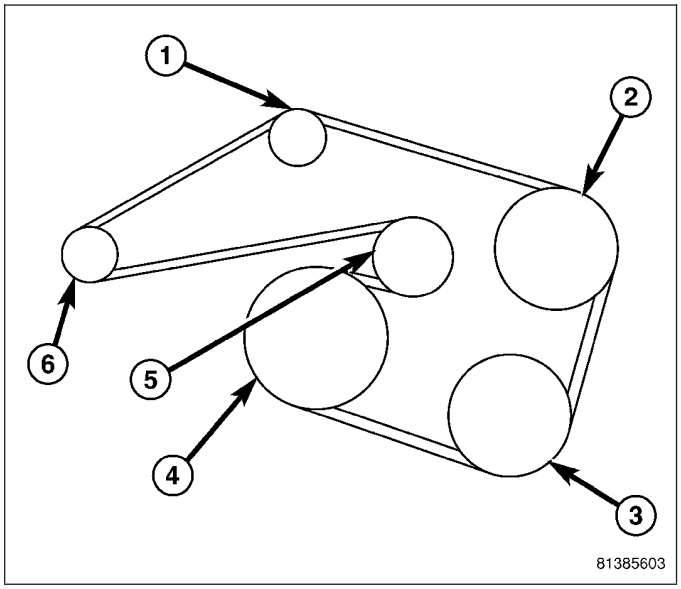

3.5L ENGINE

CAUTION: Do not let tensioner arm snap back to the freearm position, sever damage may occur to the tensioner.

Belt tension is not adjustable. Belt adjustment is maintained by an automatic, spring loaded belt tensioner.

1. Disconnect negative battery cable from battery.
2. Rotate belt tensioner (5) counterclockwise until it contacts it's stop. Remove belt, then slowly rotate the tensioner into the freearm position.

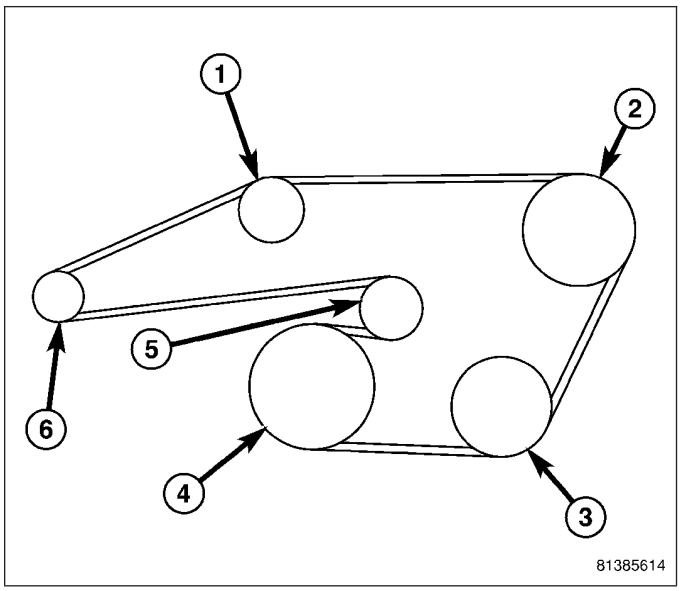

5.7L/6.1L ENGINE

CAUTION: Do not let tensioner arm snap back to the freearm position, sever damage may occur to the tensioner.

Belt tension is not adjustable. Belt adjustment is maintained by an automatic, spring loaded belt tensioner.

1. Disconnect negative battery cable from battery.
2. Rotate belt tensioner (6) counterclockwise until it contacts it's stop. Remove belt, then slowly rotate the tensioner into the freearm position.

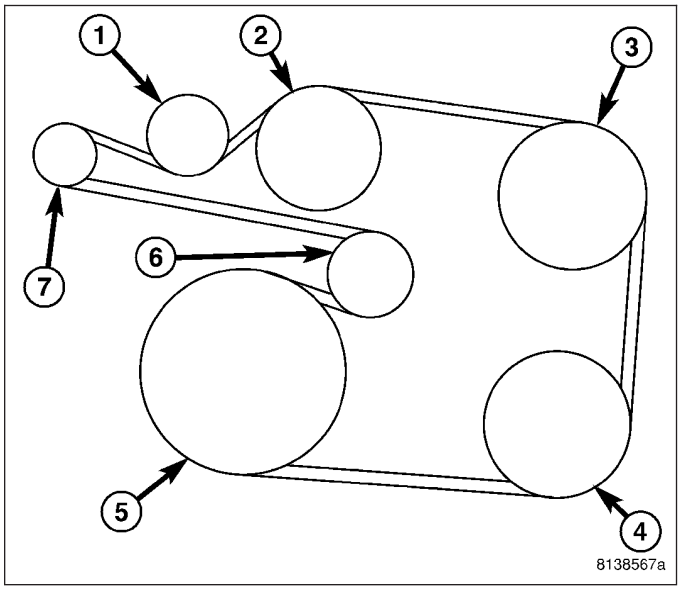

3.0L DIESEL

NOTE: The belt routing schematics are published from the latest information available at the time of publication. If anything differs between these schematics and the Belt Routing Label, use the schematics on Belt Routing Label. This label is located in the engine compartment.

CAUTION: Do not let tensioner arm snap back to the freearm position, severe damage may occur to the tensioner.

Belt tension is not adjustable. Belt adjustment is maintained by an automatic, spring loaded belt tensioner (5).

1. Disconnect negative battery cable.
2. Rotate belt tensioner (5) until it contacts its stop. Remove belt, then slowly rotate the tensioner (5) into the freearm position.

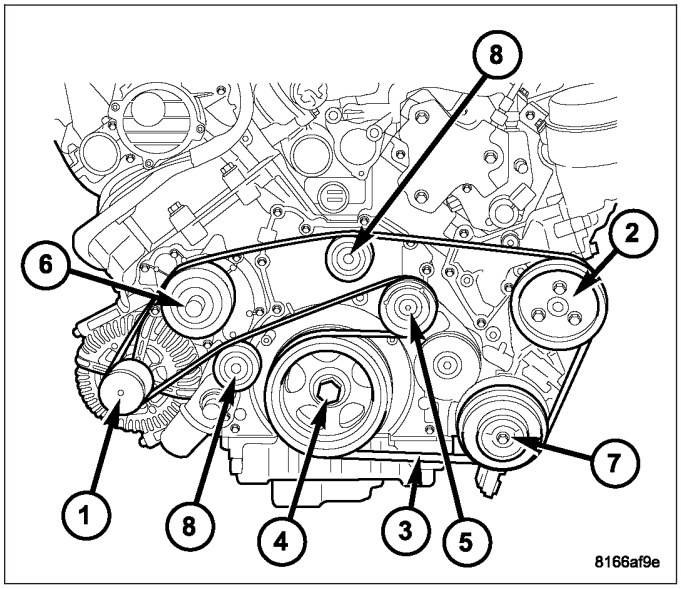

INSTALLATION

2.7L ENGINE

Belt tension is not adjustable. Belt adjustment is maintained by an automatic (spring load) belt tensioner.

1. Check condition of all pulleys.

CAUTION: When installing the serpentine accessory drive belt, the belt MUST be routed correctly. If not, the engine may overheat due to the water pump rotating in the wrong direction.

2. Install new belt. Route the belt around all pulleys except the idler pulley. Rotate the tensioner arm until it contacts it's stop position. Route the belt around the idler and slowly let the tensioner rotate into the belt. Make sure the belt is seated onto all pulleys.

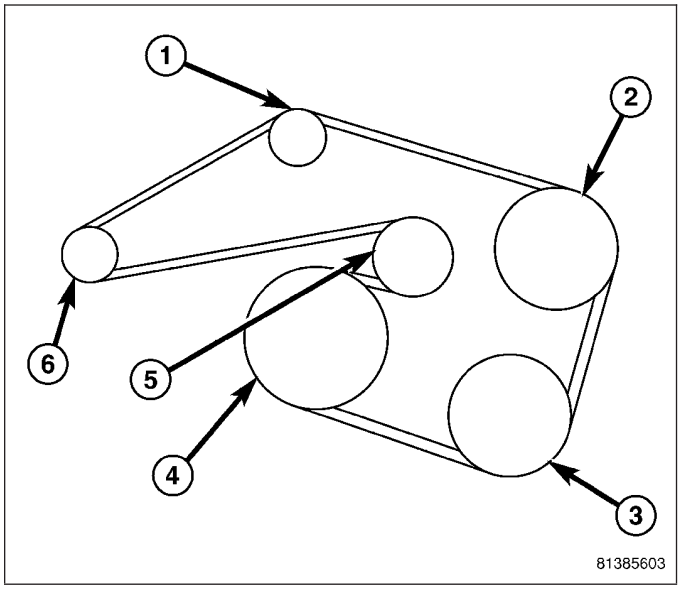

ON all engines, the tensioner (5) is equipped with an indexing tang on back of tensioner and an indexing stop on tensioner housing. If a new belt is being installed, tang must be within approximately 6 - 8mm (0.24 - 0.32 in.) of indexing stop (i.e. tang is approximately between the two indexing stops). Belt is considered new if it has been used 15 minutes or less.

3. With the drive belt installed, inspect the belt wear indicator.

3.5L ENGINE

Belt tension is not adjustable. Belt adjustment is maintained by an automatic (spring load) belt tensioner.

1. Check condition of all pulleys.

CAUTION: When installing the serpentine accessory drive belt, the belt MUST be routed correctly. If not, the engine may overheat due to the water pump rotating in the wrong direction.

2. Install new belt. Route the belt around all pulleys except the idler pulley. Rotate the tensioner arm until it contacts it's stop position. Route the belt around the idler and slowly let the tensioner rotate into the belt. Make sure the belt is seated onto all pulleys.

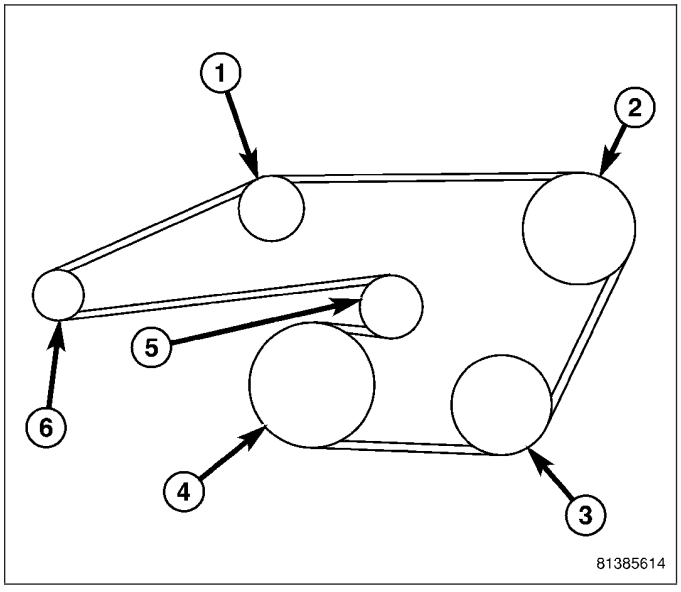

ON all engines, the tensioner (5) is equipped with an indexing tang on back of tensioner and an indexing stop on tensioner housing. If a new belt is being installed, tang must be within approximately 6 - 8mm (0.24 - 0.32 in.) of indexing stop (i.e. tang is approximately between the two indexing stops). Belt is considered new if it has been used 15 minutes or less.

3. With the drive belt installed, inspect the belt wear indicator.

5.7L/6.1L ENGINE

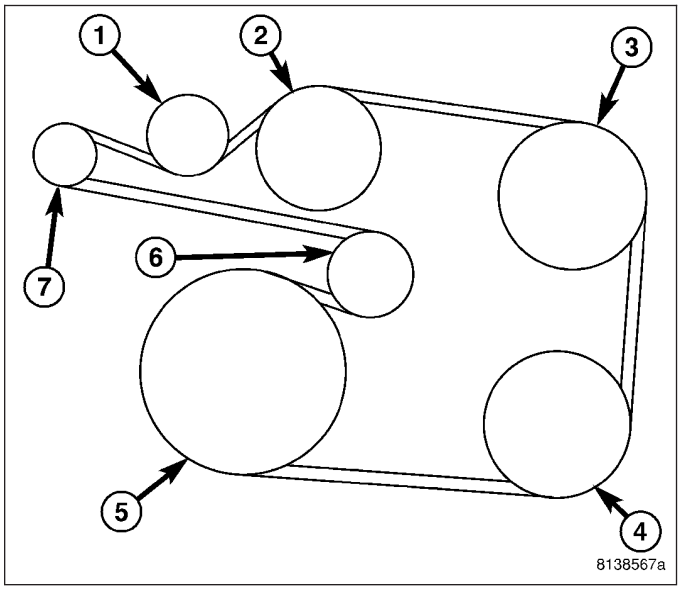

Belt tension is not adjustable. Belt adjustment is maintained by an automatic (spring load) belt tensioner.

1. Check condition of all pulleys.

CAUTION: When installing the serpentine accessory drive belt, the belt MUST be routed correctly. If not, the engine may overheat due to the water pump rotating in the wrong direction.

2. Install new belt. Route the belt around all pulleys except the idler pulley. Rotate the tensioner arm until it contacts it's stop position. Route the belt around the idler and slowly let the tensioner rotate into the belt. Make sure the belt is seated onto all pulleys.

ON all engines, the tensioner (6) is equipped with an indexing tang on back of tensioner and an indexing stop on tensioner housing. If a new belt is being installed, tang must be within approximately 6 - 8mm (0.24 - 0.32 in.) of indexing stop (i.e. tang is approximately between the two indexing stops). Belt is considered new if it has been used 15 minutes or less.

3. With the drive belt installed, inspect the belt wear indicator.

3.0L DIESEL

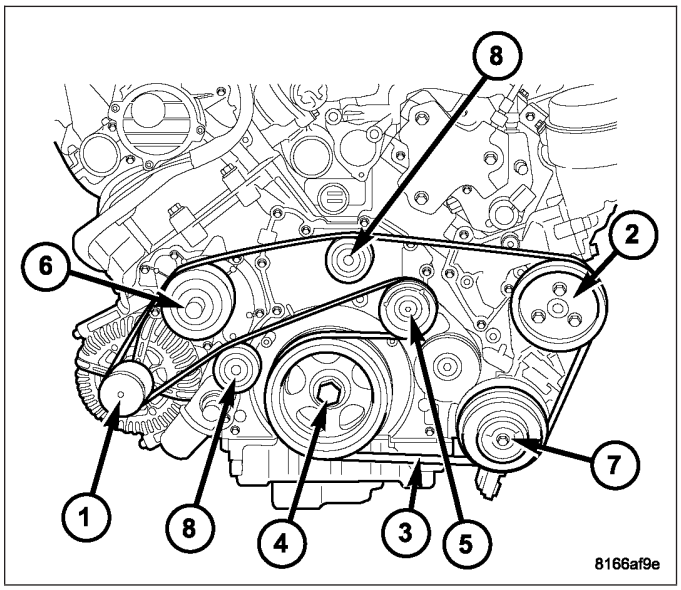

NOTE: The belt routing schematics are published from the latest information available at the time of publication. If anything differs between these schematics and the Belt Routing Label, use the schematics on Belt Routing Label. This label is located in the engine compartment.

Belt tension is not adjustable. Belt adjustment is maintained by an automatic (spring load) belt tensioner (5).

1. Check condition of all pulleys.

CAUTION: When installing the serpentine accessory drive belt, the belt MUST be routed correctly. If not, the engine may overheat due to the water pump rotating in the wrong direction.

2. Install new belt (3). Route the belt around all pulleys except the idler pulley. Rotate the tensioner arm until it contacts its stop position. Route the belt around the idler and slowly let the tensioner rotate into the belt. Make sure the belt (3) is seated onto all pulleys.

IDLER PULLEY

REMOVAL

2.7L ENGINE

1. Remove accessory drive belt (Refer to 7 - COOLING/ACCESSORY DRIVE/DRIVE BELTS - REMOVAL).
2. Remove cover (3).
3. Remove bolt (2) and idler pulley (1).

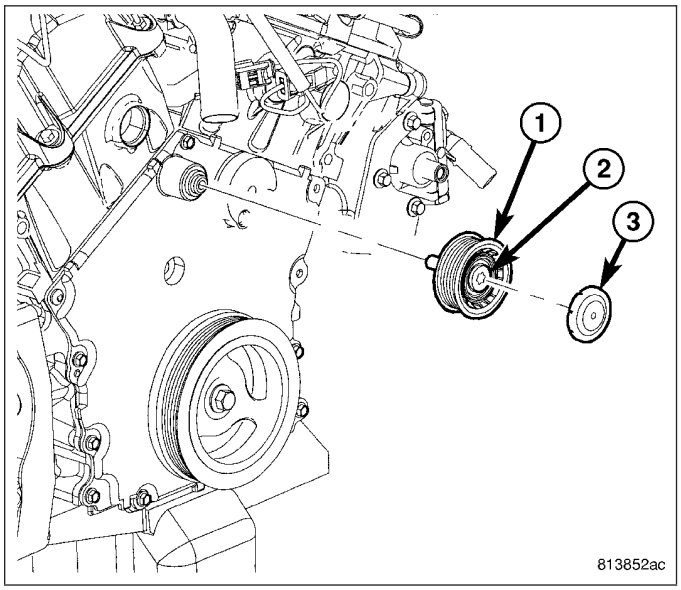

3.5L ENGINE

1. Remove accessory drive belt (Refer to 7 - COOLING/ACCESSORY DRIVE/DRIVE BELTS - REMOVAL).
2. Remove cover (3).
3. Remove bolt (2) and idler pulley (1).

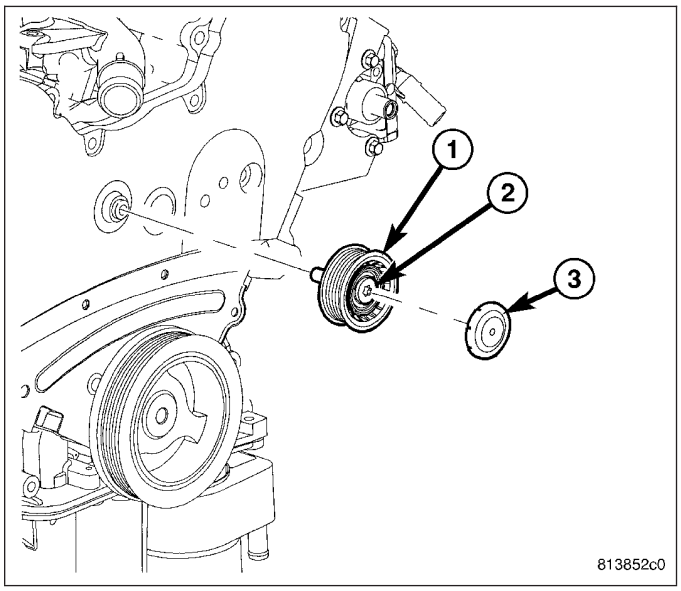

5.7L ENGINE

1. Remove accessory drive belt (Refer to 7 - COOLING/ACCESSORY DRIVE/BELT TENSIONERS - REMOVAL).
2. Remove cover (3).
3. Remove bolt (2) and idler pulley (1).

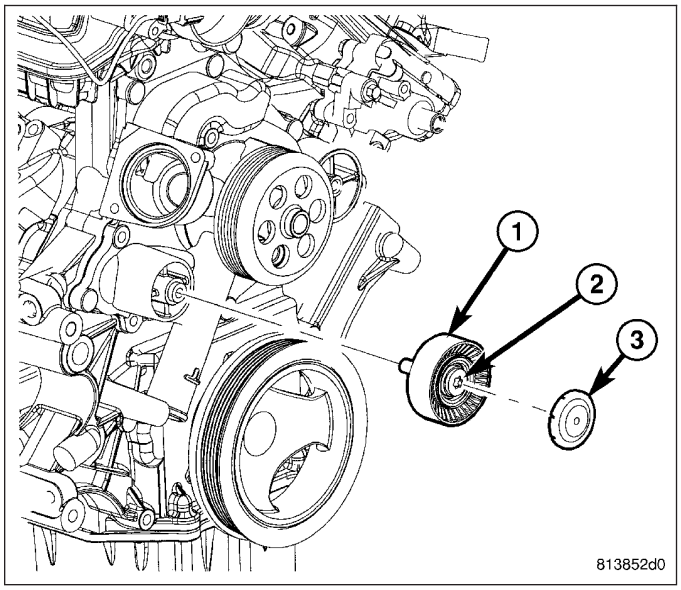

3.0L Diesel Engine

1. Remove accessory drive belt (Refer to 7 - COOLING/ACCESSORY DRIVE/DRIVE BELTS - REMOVAL).
2. Remove cover.
3. Remove bolt (5) and idler pulley.

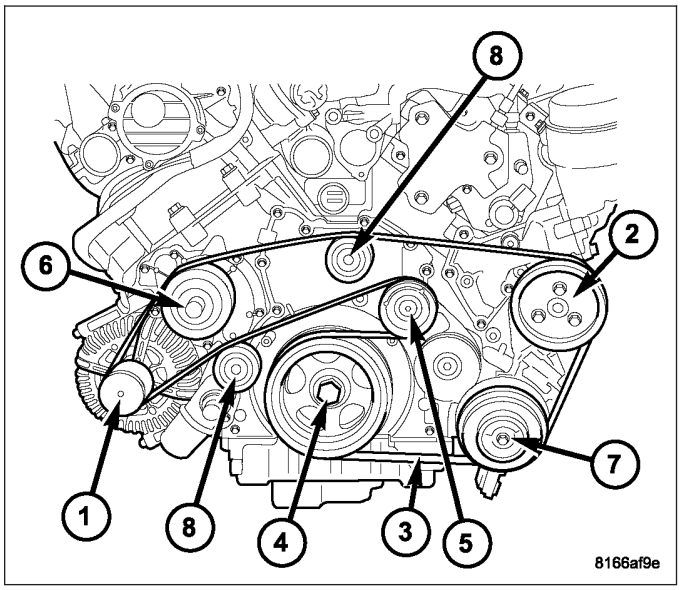

INSTALLATION

2.7L ENGINE

1. Position idler pulley (1).
2. Tighten bolt (2) to 28 N·m (250 in. lbs.).
3. Install cover (3).
4. Install accessory drive belt (Refer to 7 - COOLING/ ACCESSORY DRIVE/DRIVE BELTS - INSTALLATION)

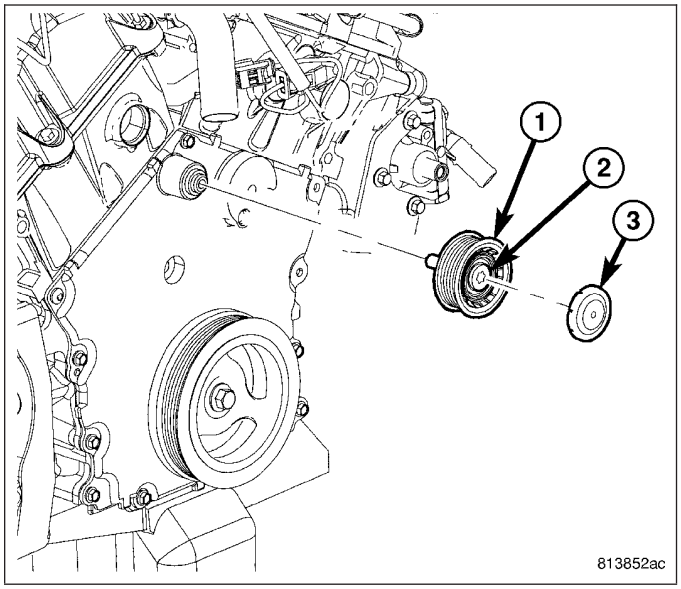

3.5L ENGINE

1. Position idler pulley (1).
2. Tighten bolt to (2) 28 N·m (250 in. lbs.).
3. Install cover (3).
4. Install accessory drive belt (Refer to 7 - COOLING/ ACCESSORY DRIVE/DRIVE BELTS - INSTALLATION).

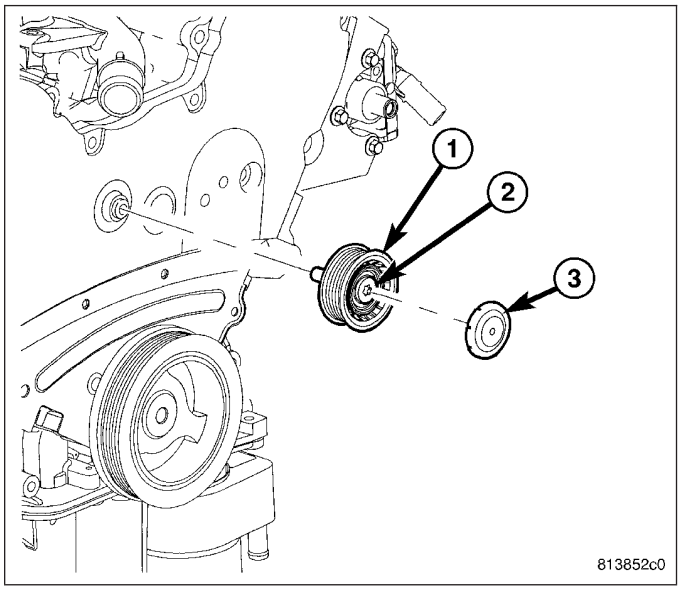

5.7L ENGINE

1. Position idler pulley (1).
2. Tighten bolt (2) to 54 N·m (40 ft. lbs.).
3. Install cover (3).
4. Install accessory drive belt (Refer to 7 - COOLING/ ACCESSORY DRIVE/DRIVE BELTS - INSTALLATION).

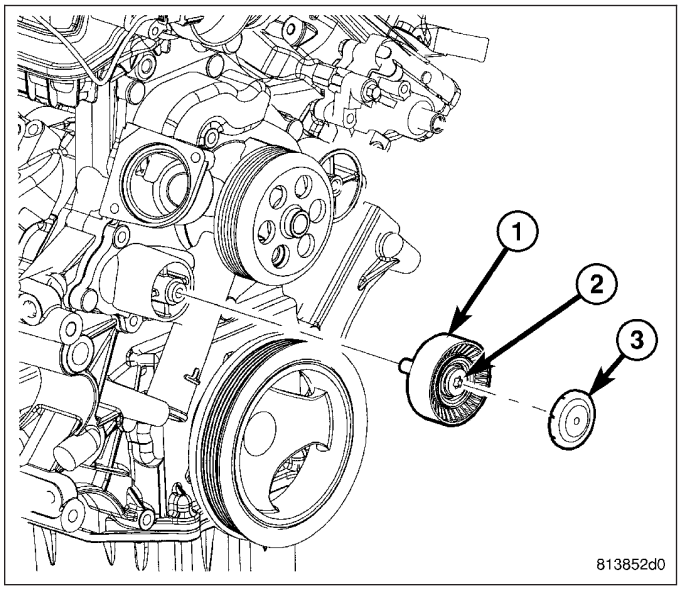

INSTALLATION

NOTE: The belt routing schematics are published from the latest information available at the time of publication. If anything differs between these schematics and the Belt Routing Label, use the schematics on Belt Routing Label. This label is located in the engine compartment.

Belt tension is not adjustable. Belt adjustment is maintained by an automatic (spring load) belt tensioner.

1. Check condition of all pulleys.

CAUTION: When installing the serpentine accessory drive belt, the belt MUST be routed correctly. If not, the engine may overheat due to the water pump rotating in the wrong direction.

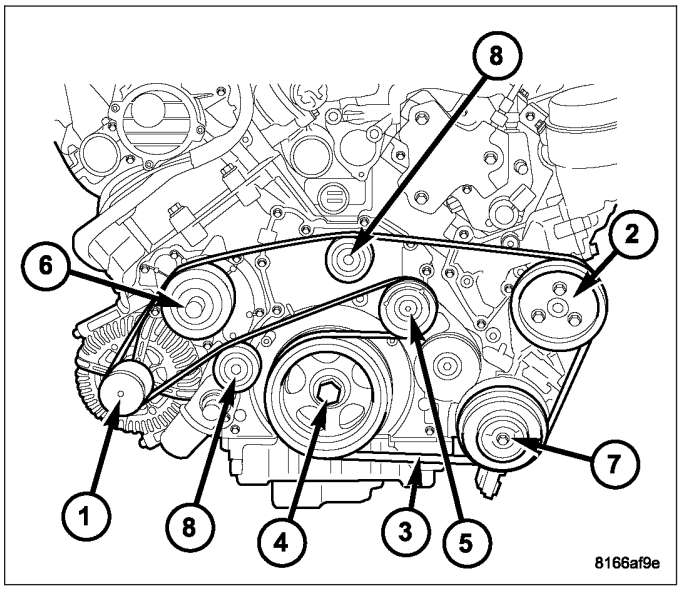

2. Install new belt (3). Route the belt around all pulleys except the idler pulley. Rotate the tensioner arm until it contacts its stop position. Route the belt around the idler and slowly let the tensioner rotate into the belt. Make sure the belt (3) is seated onto all pulleys.

ENGINE

TABLE OF CONTENTS

page

COOLANT
DESCRIPTION
ENGINE COOLANT 40
HOAT COOLANT 40
OPERATION 41
DIAGNOSIS AND TESTING
COOLANT CONCENTRATION TESTING 42
HOUSING-COOLANT OUTLET
REMOVAL
2.7L ENGINE 43
3.0L Diesel 43
INSTALLATION
2.7L ENGINE 44
3.0L Diesel 44
COOLANT RECOVERY CONTAINER
REMOVAL 45
INSTALLATION 45
ENGINE BLOCK HEATER
DESCRIPTION 46
OPERATION 46
DIAGNOSIS AND TESTING
ENGINE BLOCK HEATER 46
REMOVAL
REMOVAL 47
5.7L/6.1L ENGINE 47
INSTALLATION
INSTALLATION 47
5.7L ENGINE 48
ENGINE COOLANT TEMP SENSOR
REMOVAL
2.7L ENGINE 49
3.5L ENGINE 49
5.7L/6.1L ENGINE 50
3.0L DIESEL 50
INSTALLATION
2.7L ENGINE 51
3.5L ENGINE 51
5.7L/6.1L ENGINE 52
3.0L DIESEL 52
ENGINE COOLANT THERMOSTAT
DESCRIPTION 53
OPERATION
GAS ENGINE 53
DIAGNOSIS AND TESTING
ENGINE COOLANT THERMOSTAT 55
REMOVAL
2.7L ENGINE 56

page

3.5L ENGINE 57
5.7L/6.1L ENGINE 57
3.0L DIESEL 57
INSTALLATION
2.7L ENGINE 58
3.5L ENGINE 58
5.7L/6.1L ENGINE 59
3.0L DIESEL 59
HEATER SUPPLY TUBE
REMOVAL
3.5L ENGINE 60
5.7L/6.1L ENGINE 60
INSTALLATION
3.5L ENGINE 61
5.7L/6.1L ENGINE 61
RADIATOR
REMOVAL 62
CLEANING 63
INSPECTION 63
INSTALLATION 63
RADIATOR PRESSURE CAP
DESCRIPTION 65
OPERATION 65
DIAGNOSIS AND TESTING
RADIATOR CAP-TO-FILLER NECK SEAL 65
RADIATOR CAP 66
CLEANING 66
INSPECTION 66
WATER PUMP
DESCRIPTION 67
REMOVAL
2.7L ENGINE 68
3.5L ENGINE 68
5.7L/6.1L ENGINE 69
3.0L DIESEL 69
INSPECTION - 2.7L ENGINE 70
INSTALLATION
2.7L ENGINE 71
3.5L ENGINE 71
5.7L/6.1L ENGINE 72
3.0L DIESEL 72
FAN-RADIATOR
REMOVAL 73
INSTALLATION 73

COOLANT

DESCRIPTION

ENGINE COOLANT

ETHYLENE-GLYCOL MIXTURES

CAUTION: Richer antifreeze mixtures cannot be measured with normal field equipment and can cause problems associated with 100 percent ethylene-glycol.

The use of aluminum cylinder blocks, cylinder heads and water pumps requires special corrosion protection. Only Mopar® Antifreeze/Coolant, 5 year/100,000 Mile Formula (ethylene-glycol base coolant with corrosion inhibitors called HOAT, for Hybrid Additive Technology) is recommended. This coolant offers the best engine cooling without corrosion when mixed with 50% distilled water to obtain a freeze point of -37° C (-35° F).

The required ethylene-glycol (antifreeze) and water mixture depends upon the climate and vehicle operating conditions. The antifreeze concentration **must always** be a minimum of 44 percent, year-round in all climates. **If percentage is lower than 44 percent, engine parts may be eroded by cavitation, and cooling system components may be severely damaged by corrosion.** Maximum protection against freezing is provided with a 68% antifreeze concentration, which prevents freezing down to -67.7° C (-90° F). A higher percentage will freeze at a warmer temperature. Also, a higher percentage of antifreeze can cause the engine to overheat because the specific heat of antifreeze is lower than that of water.

Use of 100 percent ethylene-glycol will cause formation of additive deposits in the system, as the corrosion inhibitive additives in ethylene-glycol require the presence of water to dissolve. The deposits act as insulation, causing temperatures to rise to as high as 149° C (300° F). This temperature is hot enough to melt plastic and soften solder. The increased temperature can result in engine detonation. In addition, 100 percent ethylene-glycol freezes at 22° C (-8° F).

PROPYLENE-GLYCOL MIXTURES

It's overall effective temperature range is smaller than that of ethylene-glycol. The freeze point of 50/50 propylene-glycol and water is -32° C (-26° F). 5° C higher than ethylene-glycol's freeze point. The boiling point (protection against summer boil-over) of propylene-glycol is 125° C (257° F) at 96.5 kPa (14 psi), compared to 128° C (263° F) for ethylene-glycol. Use of propylene-glycol can result in boil-over or freeze-up on a cooling system designed for ethylene-glycol. Propylene glycol also has poorer heat transfer characteristics than ethylene glycol. This can increase cylinder head temperatures under certain conditions.

Propylene-glycol/ethylene-glycol Mixtures can cause the destabilization of various corrosion inhibitors, causing damage to the various cooling system components. Also, once ethylene-glycol and propylene-glycol based coolants are mixed in the vehicle, conventional methods of determining freeze point will not be accurate. Both the refractive index and specific gravity differ between ethylene glycol and propylene glycol.

HOAT COOLANT

WARNING: Antifreeze is an ethylene-glycol base coolant and is harmful if swallowed or inhaled. If swallowed, drink two glasses of water and induce vomiting. If inhaled, move to fresh air area. Seek medical attention immediately. Do not store in open or unmarked containers. Wash skin and clothing thoroughly after coming in contact with ethylene-glycol. Keep out of reach of children. Dispose of glycol base coolant properly, contact your dealer or government agency for location of collection center in your area. Do not open a cooling system when the engine is at operating temperature or hot under pressure, personal injury can result. Avoid radiator cooling fan when engine compartment related service is performed, personal injury can result.

CAUTION: Use of Propylene-Glycol based coolants is not recommended, as they provide less freeze protection and less corrosion protection.

The cooling system is designed around the coolant. The coolant must accept heat from engine metal, in the cylinder head area near the exhaust valves and engine block. Then coolant carries the heat to the radiator where the tube/fin radiator can transfer the heat to the air.

The use of aluminum cylinder blocks, cylinder heads, and water pumps requires special corrosion protection. Mopar® Antifreeze/Coolant, 5 Year/100,000 Mile Formula (MS-9769), or the equivalent ethylene-glycol base coolant with organic corrosion inhibitors (called HOAT, for Hybrid Organic Additive Technology) is recommended. This coolant offers the best engine cooling without corrosion when mixed with 50% ethylene-glycol and 50% distilled water to obtain a freeze point of -37° C (-35° F). If it loses color or becomes contaminated, drain, flush, and replace with fresh properly mixed coolant solution.

CAUTION: Mopar® Antifreeze/Coolant, 5 Year/100,000 Mile Formula (MS-9769) may not be mixed with any other type of antifreeze. Mixing of coolants other than specified (non-HOAT or other HOAT), may result in engine damage that may not be covered under the new vehicle warranty, and decreased corrosion protection.

COOLANT PERFORMANCE

The required ethylene-glycol (antifreeze) and water mixture depends upon climate and vehicle operating conditions. The coolant performance of various mixtures follows:

Pure Water-Water can absorb more heat than a mixture of water and ethylene-glycol. This is for purpose of heat transfer only. Water also freezes at a higher temperature and allows corrosion.

100 percent Ethylene-Glycol-The corrosion inhibiting additives in ethylene-glycol need the presence of water to dissolve. Without water, additives form deposits in system. These act as insulation causing temperature to rise to as high as 149° C (300° F). This temperature is hot enough to melt plastic and soften solder. The increased temperature can result in engine detonation. In addition, 100 percent ethylene-glycol freezes at -22° C (-8° F).

50/50 Ethylene-Glycol and Water-Is the recommended mixture, it provides protection against freezing to -37° C (-34° F). The antifreeze concentration **must always** be a minimum of 44 percent, year-round in all climates. If percentage is lower, engine parts may be eroded by cavitation. Maximum protection against freezing is provided with a 68 percent antifreeze concentration, which prevents freezing down to -67.7° C (-90° F). A higher percentage will freeze at a warmer temperature. Also, a higher percentage of antifreeze can cause the engine to overheat because specific heat of antifreeze is lower than that of water.

CAUTION: Richer antifreeze mixtures cannot be measured with normal field equipment and can cause problems associated with 100 percent ethylene-glycol.

COOLANT SELECTION AND ADDITIVES

The use of aluminum cylinder blocks, cylinder heads and water pumps requires special corrosion protection. Only Mopar® Antifreeze/Coolant, 5 Year/100,000 Mile Formula (glycol base coolant with corrosion inhibitors called HOAT, for Hybrid Organic Additive Technology) is recommended. This coolant offers the best engine cooling without corrosion when mixed with 50% distilled water to obtain a freeze point of -37° C (-35° F). If it loses color or becomes contaminated, drain, flush, and replace with fresh properly mixed coolant solution.

CAUTION: Do not use coolant additives that are claimed to improve engine cooling.

OPERATION

Coolant flows through the engine block absorbing the heat from the engine, then flows to the radiator where the cooling fins in the radiator transfers the heat from the coolant to the atmosphere. During cold weather the ethylene-glycol or propylene-glycol coolant prevents water present in the cooling system from freezing within temperatures indicated by mixture ratio of coolant to water.

DIAGNOSIS AND TESTING

COOLANT CONCENTRATION TESTING

Coolant concentration should be checked when any additional coolant was added to system or after a coolant drain, flush and refill. The coolant mixture offers optimum engine cooling and protection against corrosion when mixed to a freeze point of -37°C (-34°F) to -46°C (-50°F). The use of a hydrometer or a refractometer can be used to test coolant concentration.

A hydrometer will test the amount of glycol in a mixture by measuring the specific gravity of the mixture. The higher the concentration of ethylene glycol, the larger the number of balls that will float, and higher the freeze protection (up to a maximum of 60% by volume glycol).

A refractometer Tool 8286 (Refer to 7 - COOLING - SPECIAL TOOLS) will test the amount of glycol in a coolant mixture by measuring the amount a beam of light bends as it passes through the fluid.

Some coolant manufactures use other types of glycols into their coolant formulations. Propylene glycol is the most common new coolant. However, propylene glycol based coolants do not provide the same freezing protection and corrosion protection and is not recommended.

CAUTION: Do not mix types of coolant - corrosion protection will be severely reduced.

HOUSING-COOLANT OUTLET

REMOVAL

2.7L ENGINE

WARNING: Do not remove pressure cap with the system hot and under pressure because serious burns from coolant can occur.

1. Drain cooling system (Refer to 7 - COOLING - STANDARD PROCEDURE).
2. Remove radiator (Refer to 7 - COOLING/ENGINE/ RADIATOR - REMOVAL).
3. Disconnect engine coolant temperature sensor connector.
4. Remove radiator upper hose at tube (3).
5. Remove heater hose from heater tube at rear of engine.
6. Disconnect heater tube from retaining clip at rear of engine.
7. Disconnect electrical connector from coolant temperature sensor.
8. Remove screws (2) attaching Water housing outlet tube (3) to outlet connector (1).
9. Disengage Water housing outlet tube (3) from outlet connector (1). To remove heater tube, move forward until the tube (3) clears cylinder heads.

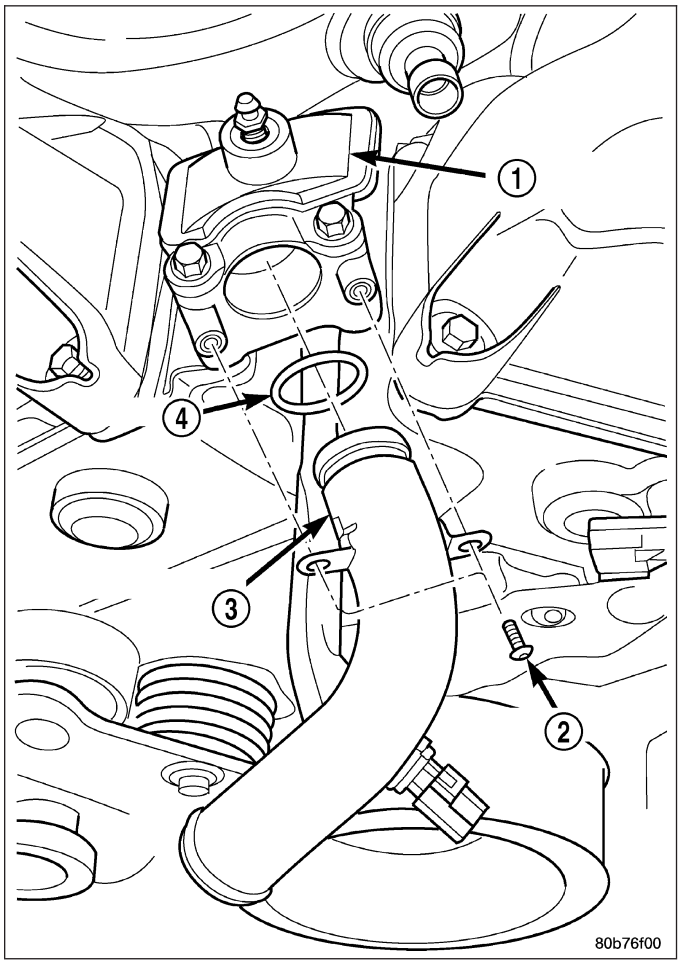

3.0L Diesel

1. Drain cooling system (Refer to 7 - COOLING - STANDARD PROCEDURE).
2. Remove heater return tube.
3. Remove lower radiator hose from coolant outlet housing.
4. Remove coolant outlet housing bolts and remove housing.

INSTALLATION

2.7L ENGINE

1. Inspect heater tube O-ring (4). Replace as necessary.
2. Lubricate O-ring (4) with a silicone type grease such as Mopar® Dielectric Grease.
3. Install the Water housing Outlet with tube (3) by inserting tube in-between cylinder heads. Insert tube into outlet connector (1).
4. Attach Water housing Outlet tube (3) to the retaining clip at rear of engine.
5. Install attaching screws and tighten to 3 N·m (30 in. lbs.).
6. Install radiator (Refer to 7 - COOLING/ENGINE/ RADIATOR - INSTALLATION).
7. Fill cooling system (Refer to 7 - COOLING - STANDARD PROCEDURE).
8. Operate engine until it reaches normal operating temperature. Check cooling system for correct fluid levels.

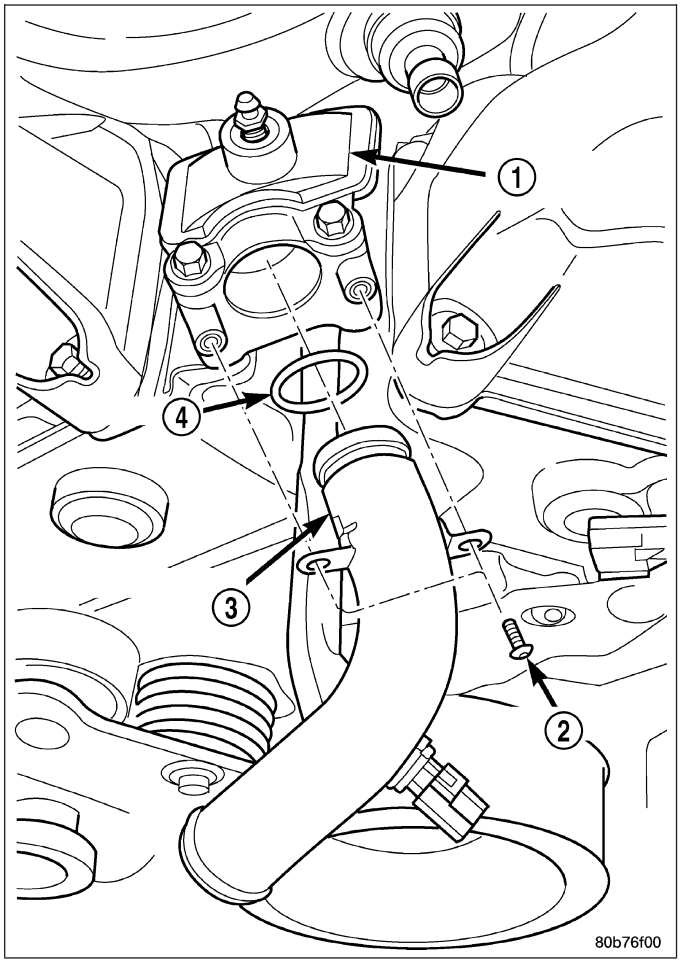

3.0L Diesel

1. Position the Water Outlet Housing on the cylinder block.
2. Install mounting nuts and tighten to 11.8 N·m (105 in. lbs.).
3. Fill cooling system (Refer to 7 - COOLING - STANDARD PROCEDURE).
4. Operate engine until it reaches normal operating temperature. Check cooling system for correct fluid levels.

COOLANT RECOVERY CONTAINER

REMOVAL

1. Remove coolant recovery container pressure cap (3).
2. Remove and plug coolant recovery tube (1).
3. Remove mounting nuts (2).
4. Remove coolant recovery container (3) from vehicle.

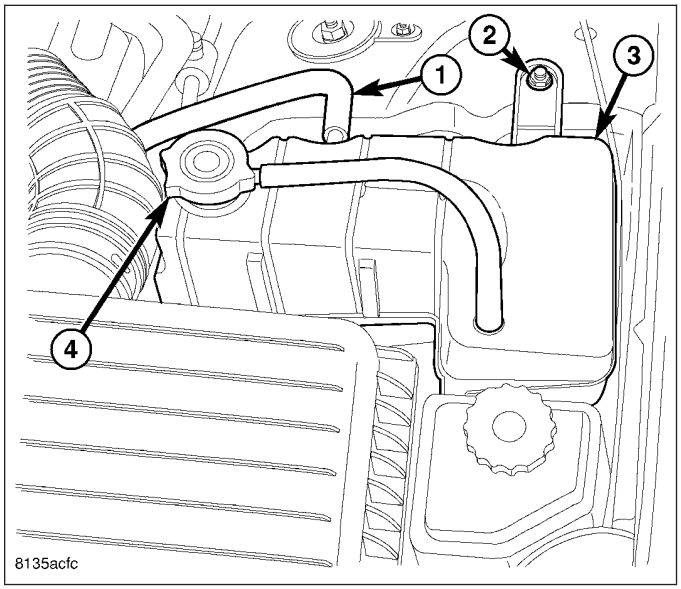

INSTALLATION

1. Position coolant recovery container (3).
2. Install mounting nuts (2). Tighten to 10 N·m (89 in. lbs.).
3. Install coolant recovery tube (1).
4. Fill cooling system (Refer to 7 - COOLING - STANDARD PROCEDURE).
5. Install coolant recovery container pressure cap (4).

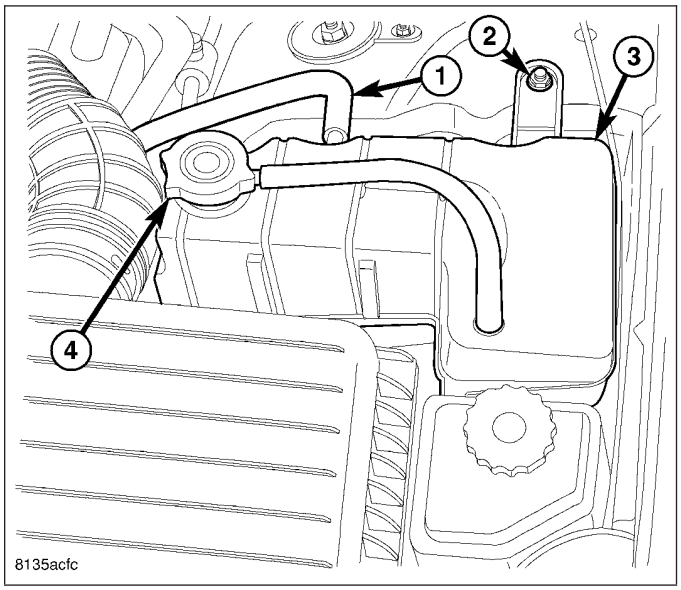

ENGINE BLOCK HEATER

DESCRIPTION

The engine block heater (1) is mounted in the cylinder block (2), near the right rear corner. The block heater is a dry cylinder type design and is powered by 110 volt AC. **The power cord must be secured in its retainer clips, and not positioned so it could contact linkages or exhaust manifolds and become damaged.**

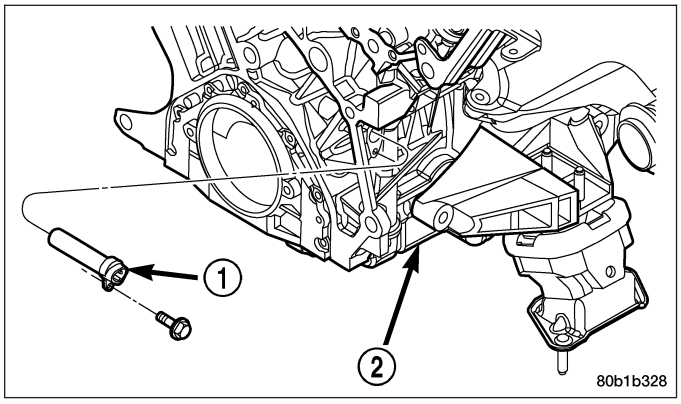

The engine block heater (1) is mounted in the cylinder block, near the left rear corner. The block heater is a dry cylinder type design and is powered by 110 volt AC. **The power cord must be secured in its retainer clips, and not positioned so it could contact linkages or exhaust manifolds and become damaged.**

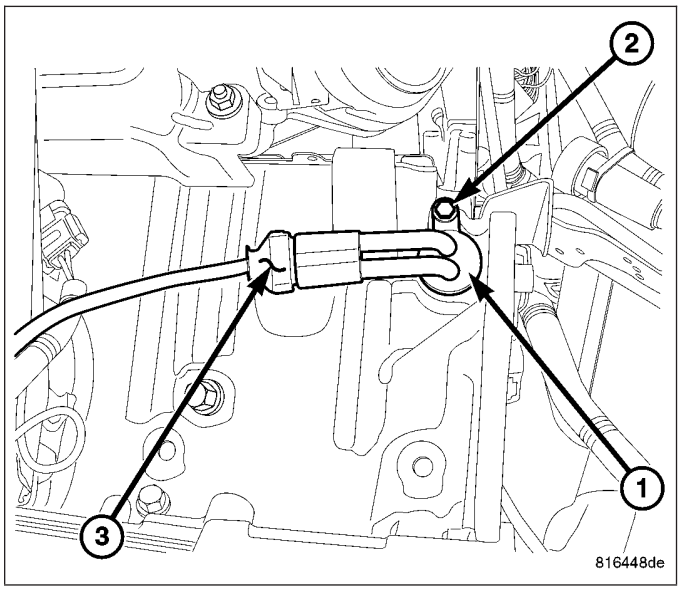

OPERATION

When power is applied (110 volt AC) to the block heater, the heating element transfers heat through the aluminum engine block and into the coolant without directly penetrating the cooling system.

DIAGNOSIS AND TESTING

ENGINE BLOCK HEATER

If unit does not operate, trouble can be in either the power cord or the heater element. Test power cord for continuity with a 110-volt voltmeter or 110-volt test light; test heater element continuity with an ohmmeter or 12-volt test light.

REMOVAL

REMOVAL

1. Raise vehicle on hoist.
2. Detach power cord plug from block heater (1).
3. Remove block heater attaching screw located below heater terminals.
4. Remove block heater from cylinder block (2).

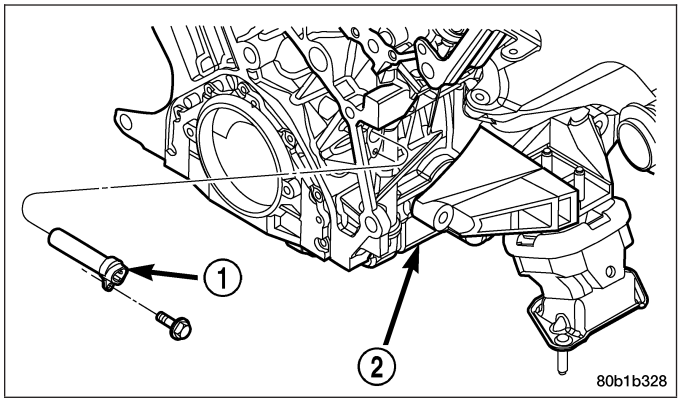

5.7L/6.1L ENGINE

1. Raise vehicle.
2. Remove power cord from block heater.
3. Remove bolt on block heater. Remove heater assembly.

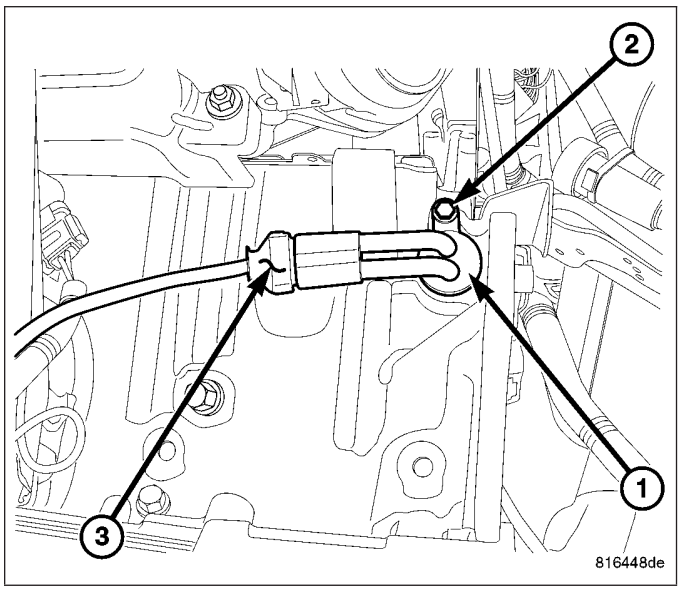

INSTALLATION

INSTALLATION

1. Thoroughly clean cylinder block heater cavity.
2. Insert heater assembly (1) into block (2) with mounting hole is located below heater terminals.
3. Install mounting screw and tighten to 12 N·m (105 in. lbs.).
4. Attach power cord to heater.

CAUTION: To prevent damage, the power cord must be secured in its retainer clips, and not positioned so it could contact linkages or exhaust manifolds.

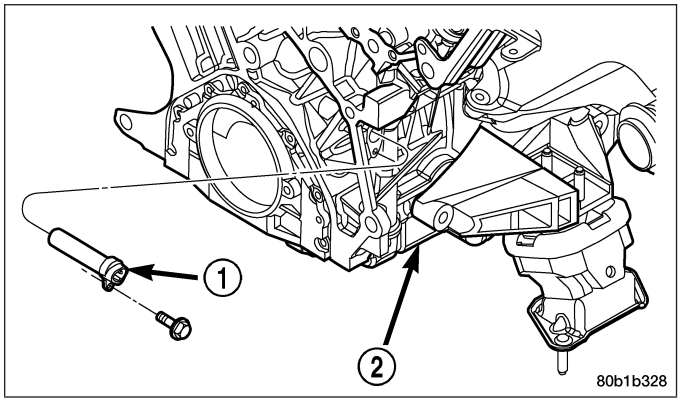

5. Lower vehicle.

5.7L ENGINE

1. Thoroughly clean cylinder block core hole and block heater seat.
2. Insert block heater assembly into the block.
3. With block heater fully seated, tighten bolt to 2 N·m (17 in. lbs.) torque.

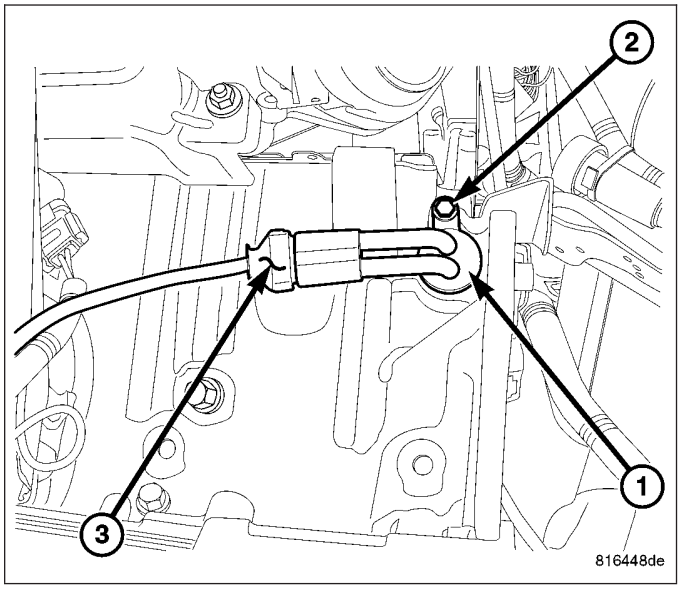

ENGINE COOLANT TEMP SENSOR

REMOVAL

2.7L ENGINE

1. Disconnect negative battery cable.
2. Partially drain cooling system (Refer to 7 - COOLING - STANDARD PROCEDURE).
3. Disconnect the electrical connector (2).
4. Remove engine coolant sensor (1) from coolant outlet tube (3).

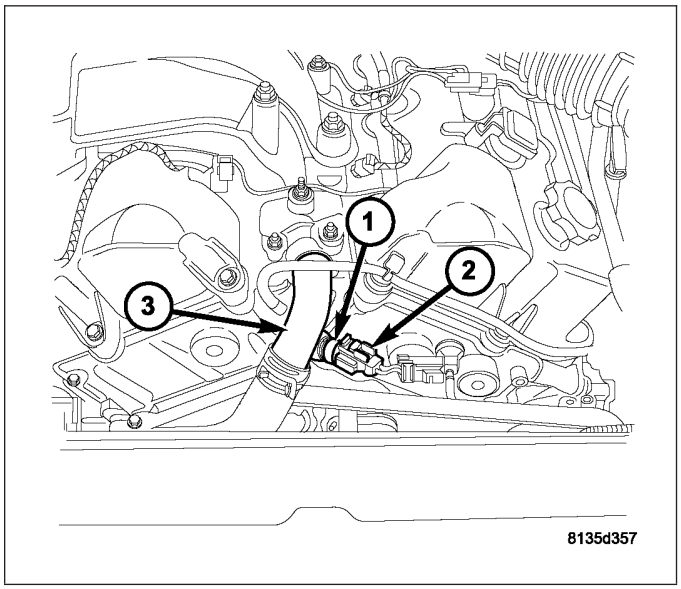

3.5L ENGINE

1. Disconnect negative battery cable.
2. Partially drain cooling system (Refer to 7 - COOLING - STANDARD PROCEDURE).
3. With the engine cold, disconnect coolant sensor electrical connector.
4. Remove sensor (2).

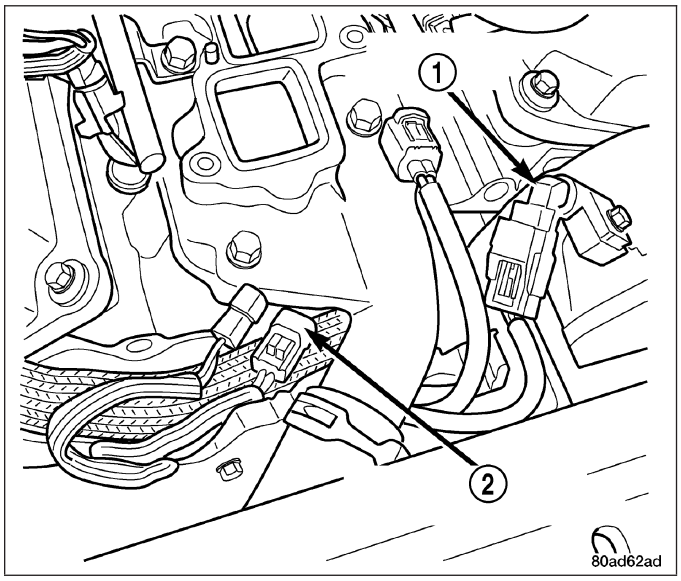

5.7L/6.1L ENGINE

The Engine Coolant Temperature (ECT) sensor (3) on the 5.7L/6.1L engine is located under the air conditioning compressor. It is installed into a water jacket at the front of the cylinder block .

WARNING: Hot, pressurized coolant can cause injury by scalding. Cooling system must be partially drained before removing the coolant temperature sensor.

1. Partially drain the cooling system (Refer to 7 - COOLING - STANDARD PROCEDURE).
2. Remove accessory drive belt (Refer to 7 - COOLING/ACCESSORY DRIVE/DRIVE BELTS - REMOVAL).
3. Carefully unbolt air conditioning compressor from front of engine. Do not disconnect any A/C hoses from compressor. Temporarily support compressor to gain access to ECT sensor (3).
4. Disconnect electrical connector (2) from sensor (3).
5. Remove sensor (3) from cylinder block.

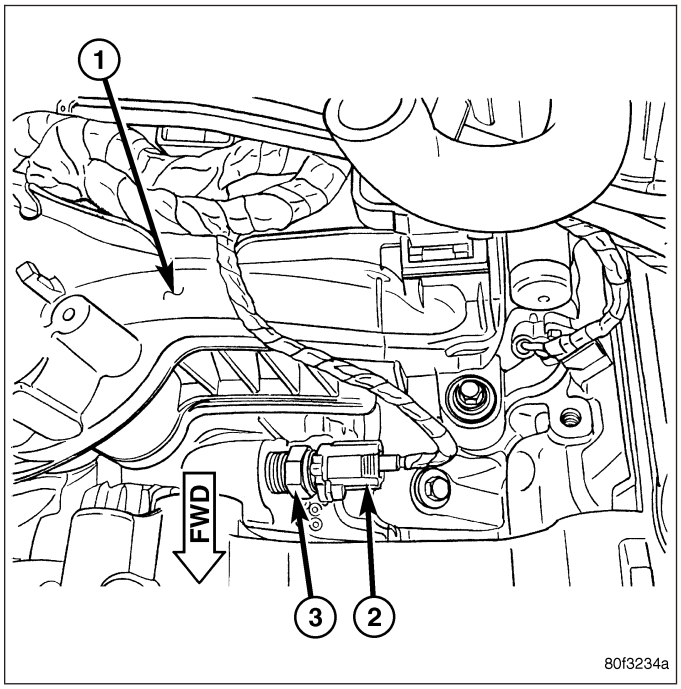

3.0L DIESEL

WARNING: Risk of injury to skin and eyes from scalding with hot coolant. Risk of poisoning from swallowing coolant. Do not open cooling system unless coolant temperature is below 90°C. Open cap slowly to release pressure. Store coolant in suitable and appropriately marked container. Wear protective gloves, clothes and eye wear.

1. Disconnect negative battery cable.
2. Remove engine cover (Refer to 9 - ENGINE - REMOVAL).
3. Partially drain coolant system (Refer to 7 - COOLING - STANDARD PROCEDURE).
4. Unplug coolant temperature sensor electrical connector.

NOTE: Capture any residual coolant that may flow.

5. Remove coolant temperature sensor (2).

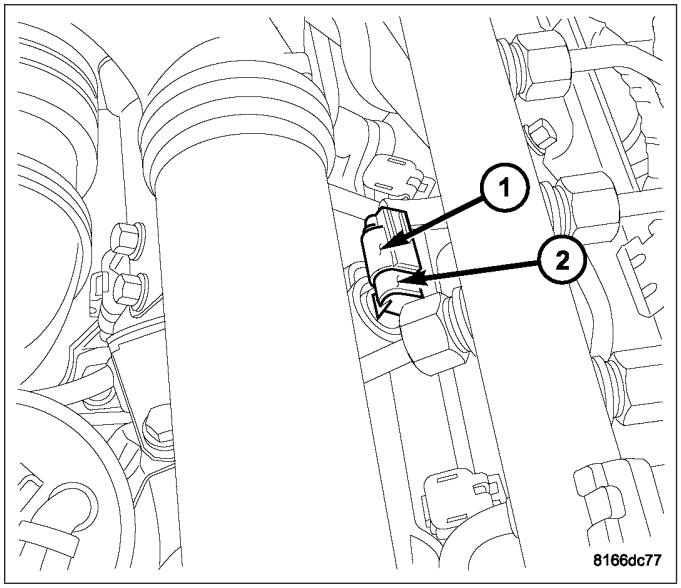

INSTALLATION

2.7L ENGINE

1. Apply thread sealant to sensor threads.
2. Install engine coolant temperature sensor (1) into coolant outlet tube (3).
3. Tighten sensor to 28 N·m (20 ft. lbs.) torque.
4. Connect electrical connector (2) to engine coolant temperature sensor (1).

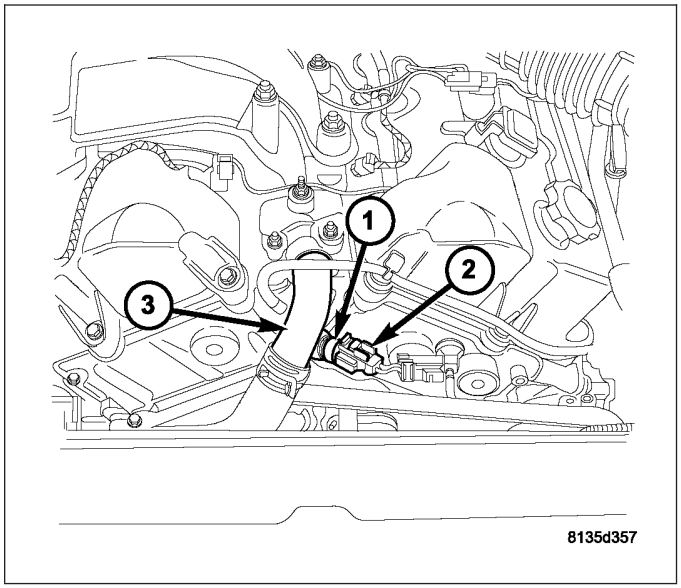

3.5L ENGINE

1. Install engine coolant temperature sensor (2). Tighten sensor to 28 N·m (20 ft. lbs.) torque.
2. Attach electrical connector to sensor.
3. Connect negative battery cable.

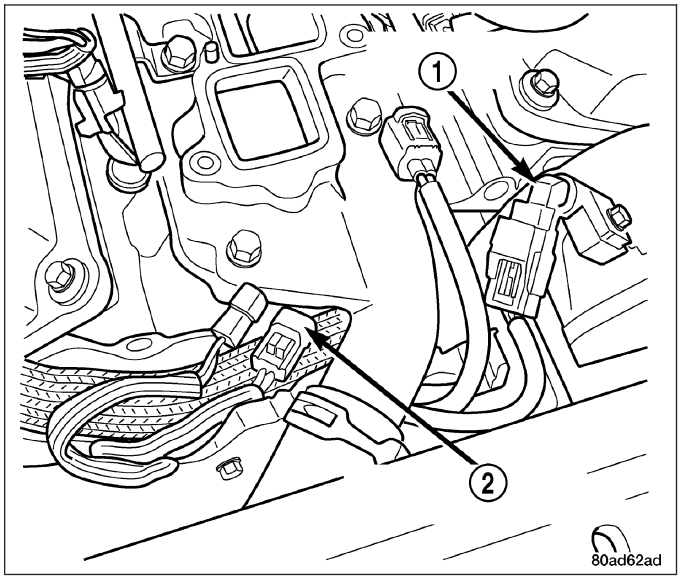

5.7L/6.1L ENGINE

1. Apply thread sealant to sensor threads.
2. Install ECT sensor (3) to engine.
3. Tighten sensor to 11 N·m (97.3 in. lbs.) torque.
4. Connect electrical connector (2) to ECT sensor (3).
5. Fill the cooling system (Refer to 7 - COOLING - STANDARD PROCEDURE).

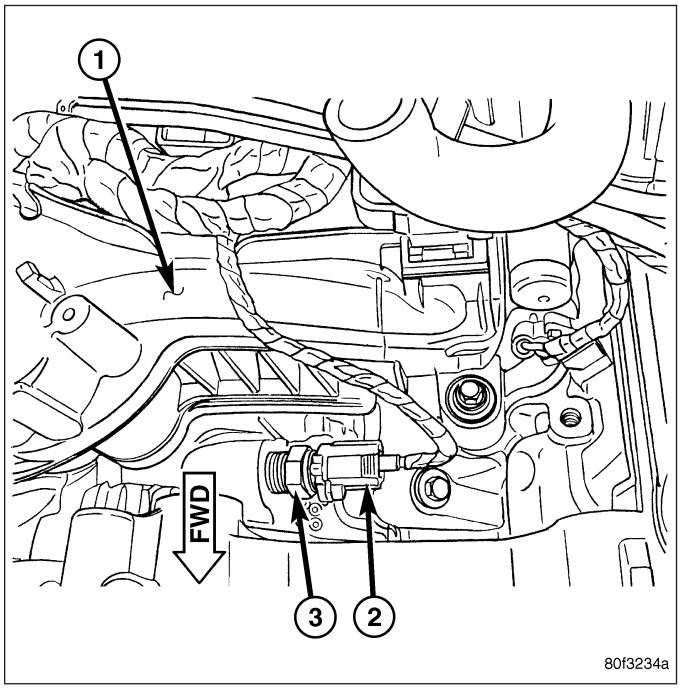

3.0L DIESEL

WARNING: Risk of injury to skin and eyes from scalding with hot coolant. Risk of poisoning from swallowing coolant. Do not open cooling system unless coolant temperature is below 90°C (194°f). Open cap slowly to release pressure. Store coolant in suitable and appropriately marked container. Wear protective gloves, clothes and eye wear.

1. Position and install coolant temperature sensor.
2. Connect coolant temperature sensor electrical connector.
3. Refill coolant system to proper level with proper mixture of coolant (Refer to 7 - COOLING - STANDARD PROCEDURE).
4. Install engine cover (Refer to 9 - ENGINE - INSTALLATION).
5. Connect negative battery cable.

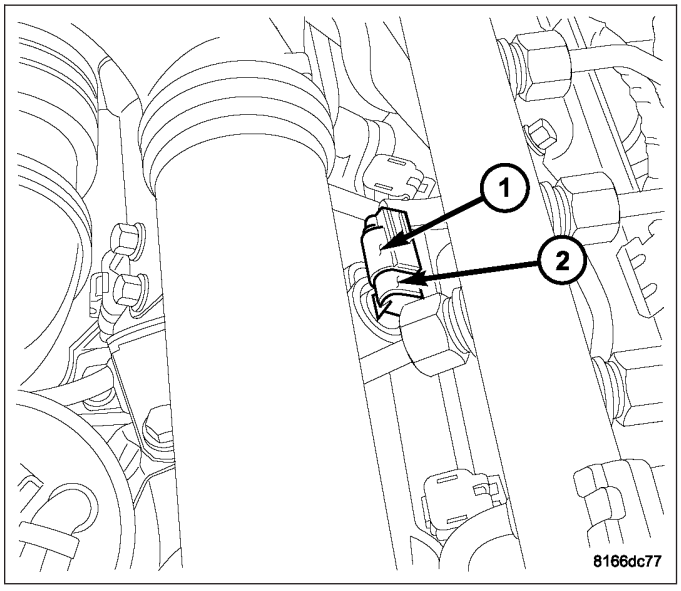

WARNING: Use extreme caution when engine is operating. Do not stand in a direct line with fan. Do not put your hands near pulleys, belts or fan. Do not wear loose clothes.

6. Start engine and inspect for leaks.

ENGINE COOLANT THERMOSTAT

DESCRIPTION

The engine cooling thermostats are a wax pellet driven, reverse poppet choke type. The thermostats have an air bleed located in the thermostat flange. The air bleed allows internal trapped air during cooling system filling to be released. The thermostat on the 2.7L and 3.5L engines are located on the lower left side of engine, near the front. The thermostat on both engines are on the inlet side of the water pump.

The thermostat on the 5.7L/6.1L gas powered engine is located beneath the thermostat housing (1) at the front of the intake manifold.

The thermostat on the 3.0L Diesel engine is integrated into the thermostat housing located at the front of the right intake manifold and is serviced as an assembly. A rubber seal is used to seal the thermostat housing to the intake manifold. The thermostat contains the following components:

- Main Valve (4) - Controls coolant flow through the radiator
- Bypass Valve (2) - Controls coolant flow through the bypass passage to the inlet side of the water pump
- Vent Valve (1) - Vents the cooling system via a ball valve when it is filled and when the engine is running
- Thermostat Housing Seal (3)

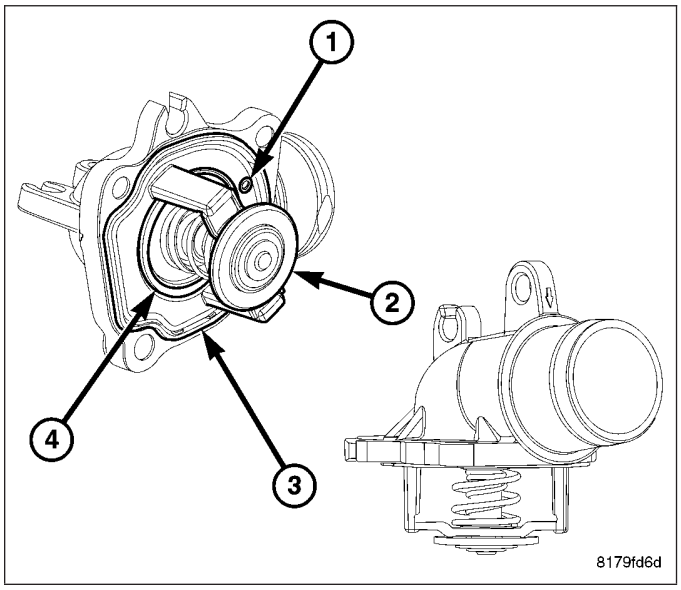

OPERATION

GAS ENGINE

The engine cooling thermostat is a wax pellet driven, reverse poppet choke type. The thermostat is designed to provide the fastest warm up possible by preventing leakage through it and to guarantee a minimum engine operating temperature of 88 to 93° C (192 to 199° F). The thermostat also will automatically reach wide open so it will not restrict flow to the radiator as temperature of the coolant rises in hot weather to around 104° C (220° F). Above this temperature the coolant temperature is controlled by the radiator, fan, and ambient temperature, not the thermostat.

The thermostat is operated by a wax filled container (pellet) which is sealed. When heated coolant reaches a predetermined temperature, the wax expands enough to overcome the closing spring and water pump pressure, which forces the valve to open.

3.0L DIESEL ENGINE

WARM-UP PHASE

Up to a coolant temperature of approximately 87° C (189° F), the main valve is closed and the bypass valve fully open. The flow through the radiator is interrupted and coolant flows through the bypass passage directly to the inlet side of the water pump.

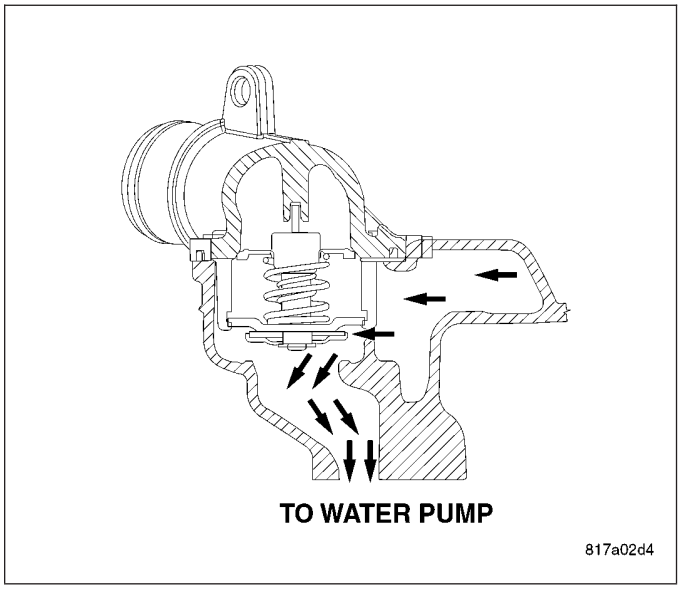

PARTIAL-LOAD PHASE

The main valve begins to open at a coolant temperature of 86° C (189° F), and a small amount of coolant flows through the radiator. As the engine temperature increases, the main valve opens further and the bypass valve gradually closes. More coolant flows through the radiator and less coolant flows through the bypass passage.

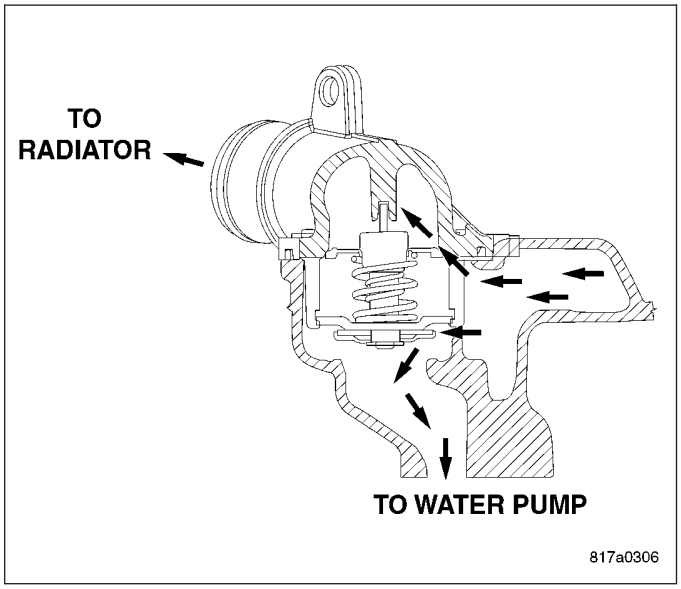

FULL-LOAD PHASE

The main valve is fully open at a coolant temperature above 102° C (216° F). The bypass plate seals off the bypass passage. The entire quantity of coolant flows through the radiator.

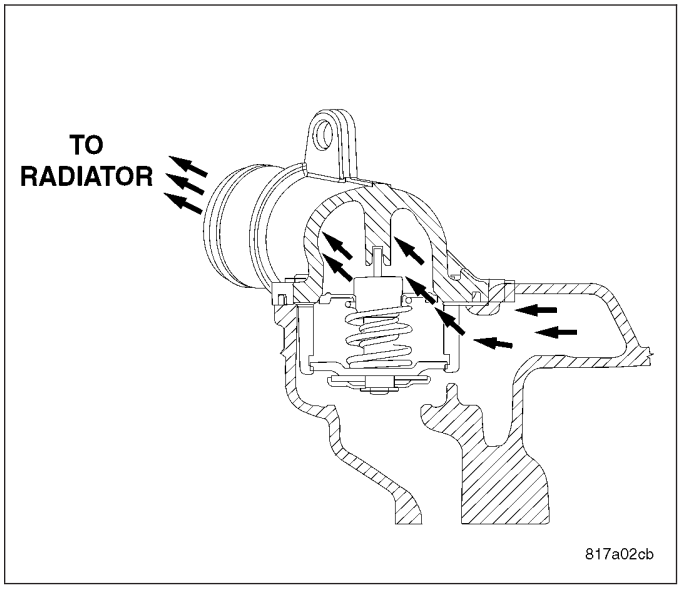

DIAGNOSIS AND TESTING

ENGINE COOLANT THERMOSTAT

The thermostat is operated by a wax filled chamber (pellet) which is sealed. When heated coolant reaches a predetermined temperature the wax pellet expands enough to overcome the closing spring and water pump pressure, which forces the valve to open. Coolant leakage into the pellet will cause a thermostat to fail open. Do not attempt to free up a thermostat with a screwdriver.

Thermostat diagnostics is included in powertrain control module's (PCM) programing for on-board diagnosis. The malfunction indicator light (MIL) will illuminate and a diagnostic trouble code (DTC) will be set when an "open too soon" condition occurs. Do not change a thermostat for lack of heater performance or temperature gauge position, unless a DTC is present. For other probable causes, (Refer to 7 - COOLING - DIAGNOSIS AND TESTING). Thermostat failing shut is the normal long term mode of failure, and normally, only on high mileage vehicles. The temperature gauge will indicate this (Refer to 7 - COOLING - DIAGNOSIS AND TESTING).

REMOVAL

2.7L ENGINE

1. Disconnect negative cable.

WARNING: Do not remove pressure cap with the system hot and under pressure because serious burns from coolant can occur.

2. Drain cooling system (Refer to 7 - COOLING - STANDARD PROCEDURE).
3. Remove radiator lower hose from thermostat housing (1).
4. Remove nuts (3) from heater tube flange studs.
5. Loosen starter bolt at heater tube bracket.
6. Pull heater tube out of thermostat housing and position out of the way.
7. Remove bolt (3) and two studs.

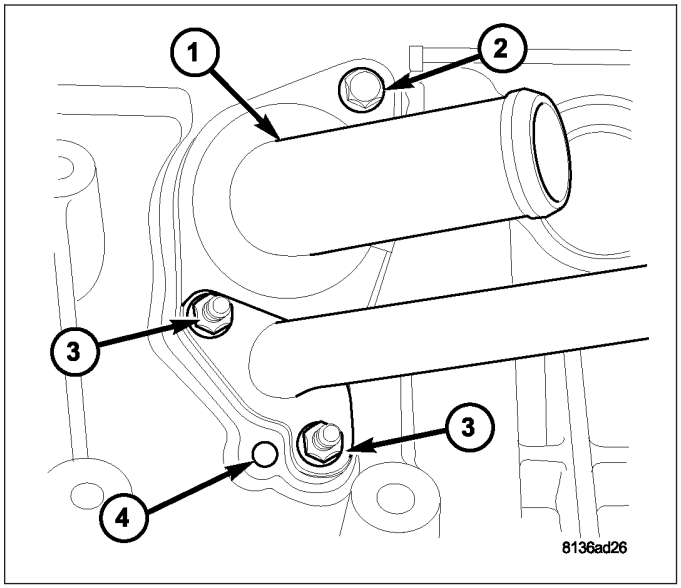

8. Remove thermostat housing (1), O-ring (2) and thermostat (4).

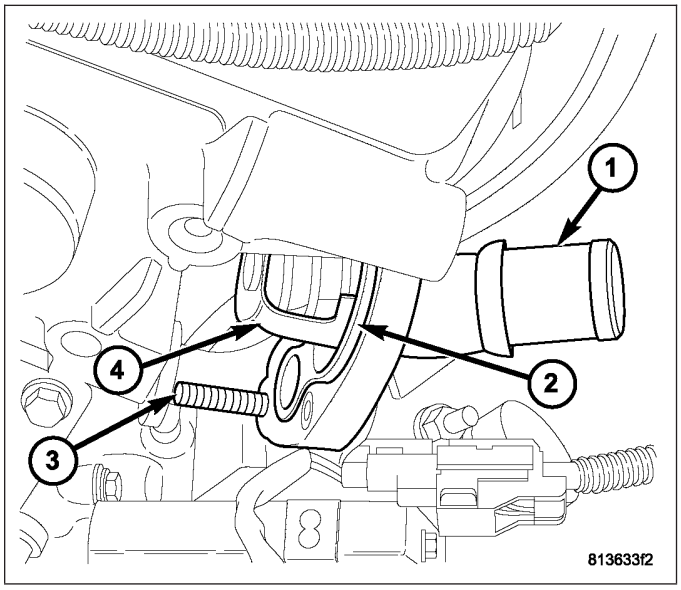

3.5L ENGINE

1. Disconnect negative cable.

WARNING: Do not remove pressure cap with the system hot and under pressure because serious burns from coolant can occur.

2. Drain cooling system (Refer to 7 - COOLING - STANDARD PROCEDURE).
3. Raise vehicle on hoist.
4. Disconnect electrical connectors from engine oil and power steering pressure switches.
5. Disconnect radiator and heater hoses from thermostat housing.
6. Remove thermostat housing bolts.
7. Remove housing, thermostat, and gasket.

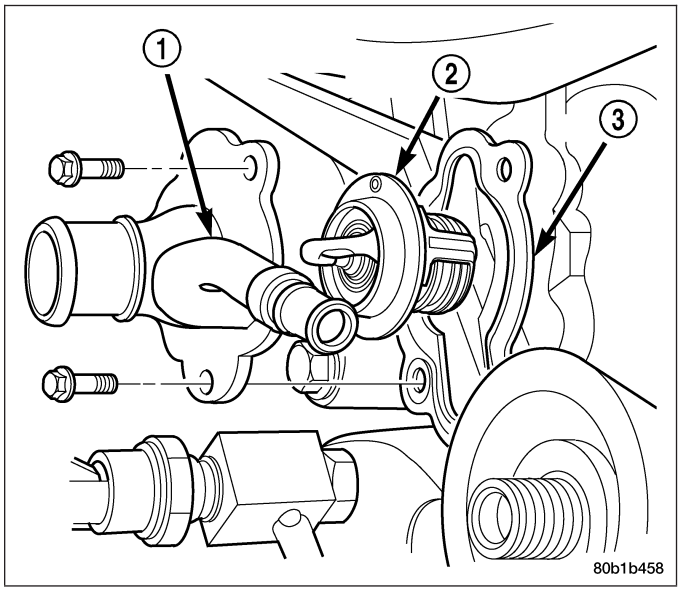

NOTE: The OEM thermostat is staked in place at the factory. To ensure proper seating of replacement thermostat, carefully remove the bulged metal from the thermostat housing using a suitable hand held grinder. It is not necessary to restake the replacement thermostat into the thermostat housing.

5.7L/6.1L ENGINE

1. Disconnect negative battery cable at battery.
2. Drain cooling system (Refer to 7 - COOLING - STANDARD PROCEDURE).
3. Remove radiator hose at thermostat housing (1).

NOTE: Thermostat o-ring is part of thermostat (2) and is not serviced separately.

4. Remove thermostat housing mounting bolts (3), thermostat housing (1) and thermostat (2).

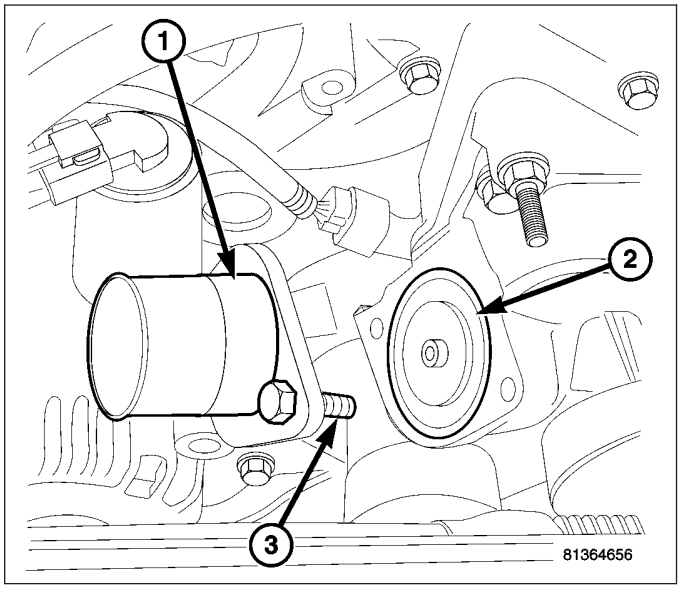

3.0L DIESEL

WARNING: Risk of injury to skin and eyes from scalding with hot coolant. Risk of poisoning from swallowing coolant. Do not open cooling system unless coolant temperature is below 90° C (194° F). Open cap slowly to release pressure. Store coolant in suitable and appropriately marked container. Wear protective gloves, clothes and eye wear.

NOTE: Inspect condition of all clamps and hoses, replace as necessary.

1. Disconnect negative battery cable.
2. Remove engine cover (Refer to 9 - ENGINE - REMOVAL).

3. Drain engine coolant (Refer to 7 - COOLING/ENGINE/COOLANT - STANDARD PROCEDURE).
4. Remove bracket for fuel line.
5. Remove coolant hoses and thermostat housing.
6. Remove thermostat housing.
7. Clean all sealing surfaces.

INSTALLATION

2.7L ENGINE

1. Clean gasket sealing surfaces.

NOTE: Install thermostat with the bleed valve located at the 12 o'clock position, between tabs on seal.

2. Install thermostat (4) and O-Ring (2) into thermostat housing (1).
3. If removed, install two studs (3).
4. Install thermostat (4) , thermostat housing (1), O-ring (2) and bolt. Tighten attaching bolts to 12 N·m (105 in. lbs.).

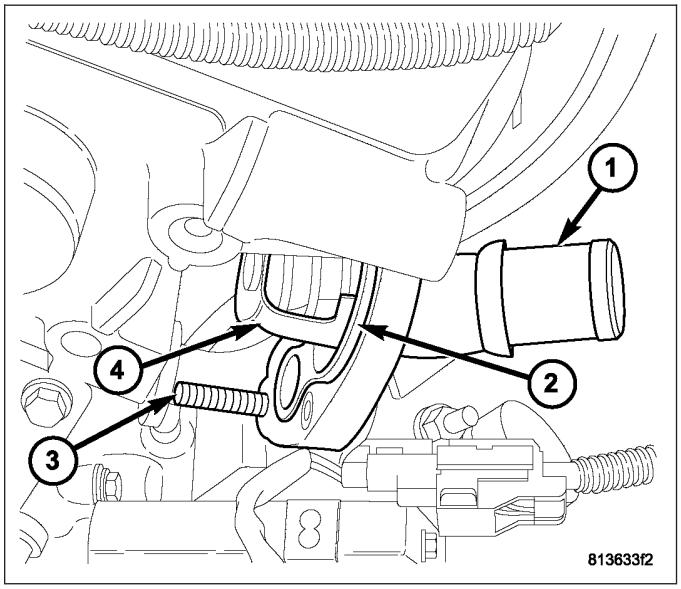

5. Lubricate new heater return tube O-ring with coolant.
6. Position heater return tube flange over two studs. Install nuts (3). Tighten retaining nuts (3) to 6 N·m (53 in. lbs.).
7. Tighten starter bolt to 54.3 N·m (40 ft. lbs.).
8. Connect the lower radiator hose to the thermostat housing (1). Install hose clamps.
9. Refill cooling system (Refer to 7 - COOLING - STANDARD PROCEDURE).
10. Connect negative cable.

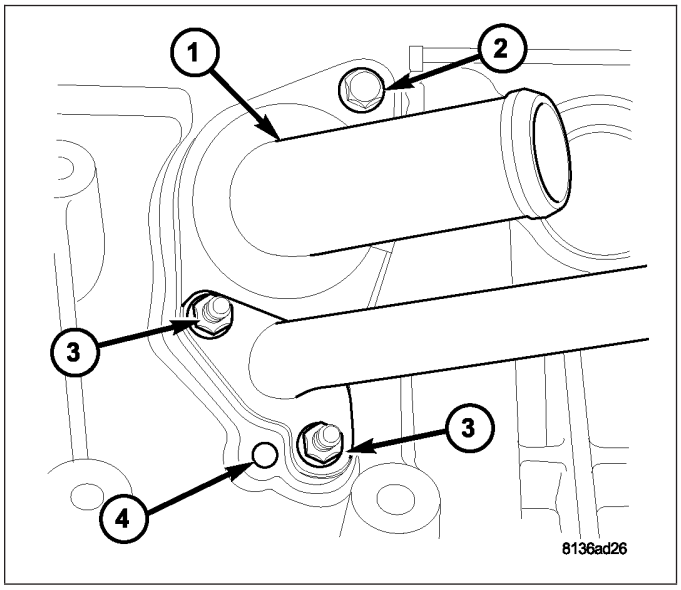

3.5L ENGINE

1. Position gasket on thermostat and housing.
2. Install thermostat housing, gasket and mounting bolts onto block. Tighten attaching bolts to 12 N·m (105 in. lbs.).
3. Install radiator hose.
4. Install bypass hose.
5. Fill cooling system (Refer to 7 - COOLING - STANDARD PROCEDURE).

5.7L/6.1L ENGINE

1. Clean mating areas of timing chain cover and thermostat housing (1).

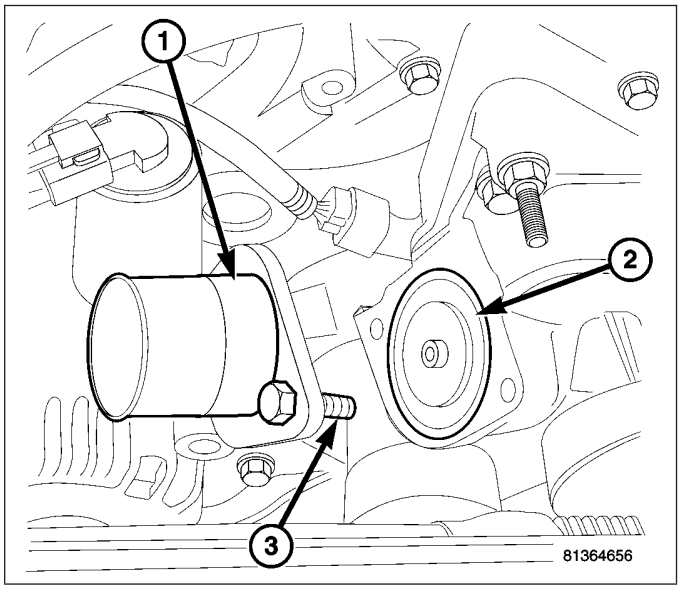

NOTE: Install thermostat with the bleed valve located at the 12 o'clock position.

2. Install thermostat (2) (spring side down) into recessed machined groove on timing chain cover with bleed valve located at the 12 o'clock position.
3. Position thermostat housing (1) on timing chain cover.
4. Install two housing-to-timing chain cover bolts (3). Tighten bolts to 13 N·m (112 in. lbs.) torque.

CAUTION: Thermostat housing must be tightened evenly and thermostat (2) must be centered into recessed groove in timing chain cover. If not, it may result in a cracked thermostat housing (1), damaged timing chain cover threads or coolant leaks.

5. Install lower radiator hose on thermostat housing.
6. Lower vehicle.
7. Fill cooling system (Refer to 7 - COOLING - STANDARD PROCEDURE).
8. Connect negative battery cable to battery.
9. Start and warm the engine. Check for leaks.

3.0L DIESEL

1. Clean all sealing surfaces.
2. Position and install thermostat housing Tighten bolts to 9 N·m (80 lbs.in.).

NOTE: Inspect condition of all clamps and hoses, replace as necessary.

3. Connect coolant hoses,
4. Install bracket for fuel line.
5. Close coolant drain.
6. Install engine cover (Refer to 9 - ENGINE - INSTALLATION).
7. Connect negative battery cable.
8. Fill coolant system to proper level with appropriate coolant mixture (Refer to 7 - COOLING/ENGINE/COOLANT - STANDARD PROCEDURE).

WARNING: Use extreme caution when engine is operating. Do not stand in direct line with fan. Do not put your hands near pulleys, belts or fan. Do not wear loose clothes.

9. Start engine and inspect for leaks.

HEATER SUPPLY TUBE

REMOVAL

3.5L ENGINE

WARNING: Do not remove pressure cap with system hot and under pressure because serious burns from coolant can occur.

1. Drain cooling system (Refer to 7 - COOLING - STANDARD PROCEDURE).
2. Remove upper and lower intake manifold (Refer to 9 - ENGINE/MANIFOLDS/INTAKE MANIFOLD - UPPER - REMOVAL) and (Refer to 9 - ENGINE/MANIFOLDS/INTAKE MANIFOLD - LOWER - REMOVAL).
3. Position lower intake manifold upside down on bench and remove the tube retaining bolt (5).
4. Remove heater supply tube (4) from manifold and discard O-ring (2).

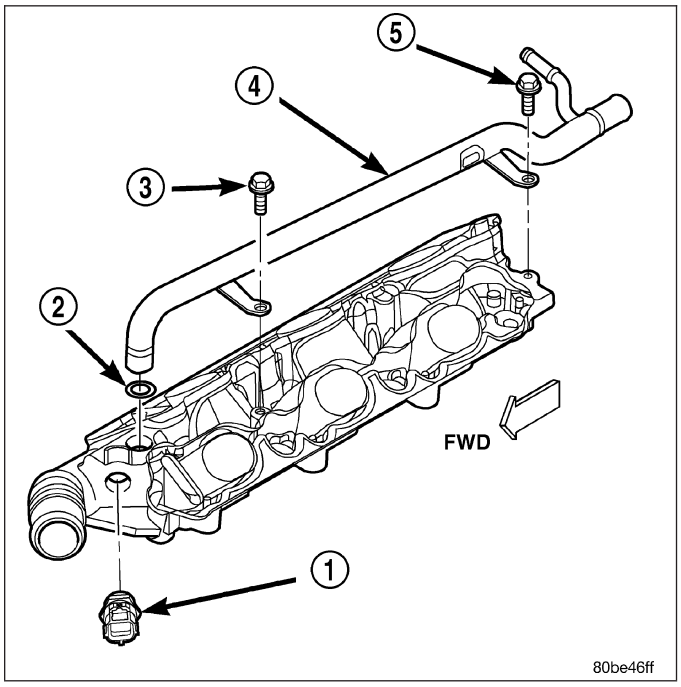

5.7L/6.1L ENGINE

1. Disconnect negative battery cable.
2. Drain cooling system (Refer to 7 - COOLING - STANDARD PROCEDURE).
3. Remove intake manifold (Refer to 9 - ENGINE/MANIFOLDS/INTAKE MANIFOLD - REMOVAL).
4. Remove heater hoses from heater tubes.
5. Remove heater tube mounting bolts.
6. Remove heater tubes from water pump housing and remove from vehicle.

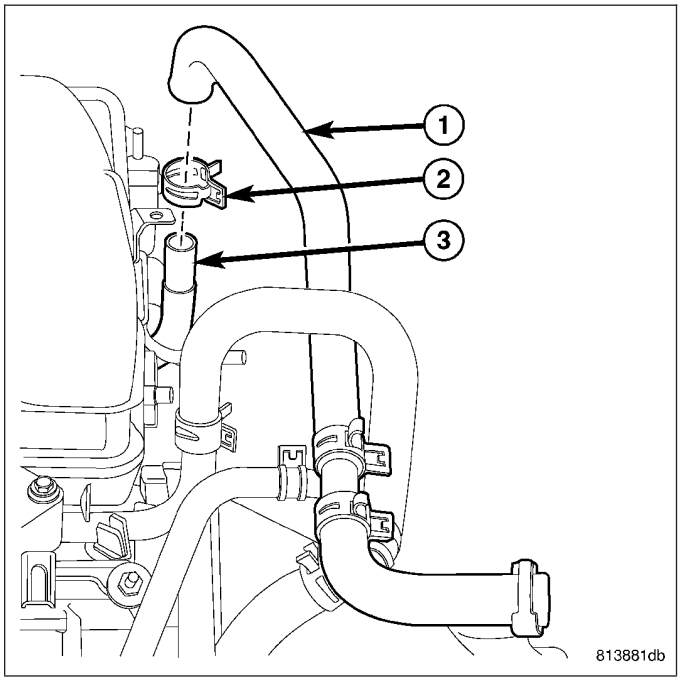

INSTALLATION

3.5L ENGINE

1. Clean heater tube sealing surfaces.
2. Inspect heater tube O-ring (2). Replace as necessary.
3. Lubricate O-ring (2) with a silicone type grease such as Mopar® Dielectric Grease.
4. Install O-ring (2) on heater supply tube (4).
5. Install heater tube (4) on manifold.
6. Install retaining bolts. Tighten bolts to 12 N·m (105 in. lbs.).
7. Install lower and upper intake manifolds (Refer to 9 - ENGINE/MANIFOLDS/INTAKE MANIFOLD - INSTALLATION - Lower) and (Refer to 9 - ENGINE/MANIFOLDS/INTAKE MANIFOLD - INSTALLATION - Upper).
8. Refill cooling system (Refer to 7 - COOLING - STANDARD PROCEDURE).
9. Operate engine until it reaches normal operating temperature. Check cooling system for correct fluid levels.

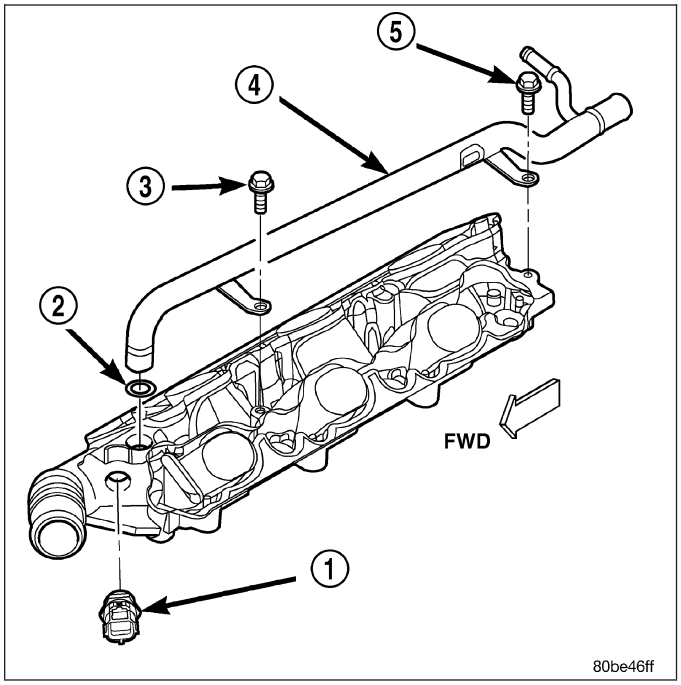

5.7L/6.1L ENGINE

1. Position heater tubes into water pump housing.
2. Install mounting bolts. Tighten bolts to 10 N·m (88 in. lbs.).
3. Install heater hose onto heater tubes.
4. Install intake manifold (Refer to 9 - ENGINE/MANIFOLDS/INTAKE MANIFOLD - INSTALLATION).
5. Connect negative battery cable.
6. Fill cooling system (Refer to 7 - COOLING - STANDARD PROCEDURE).
7. Start vehicle and check for cooling system leaks.

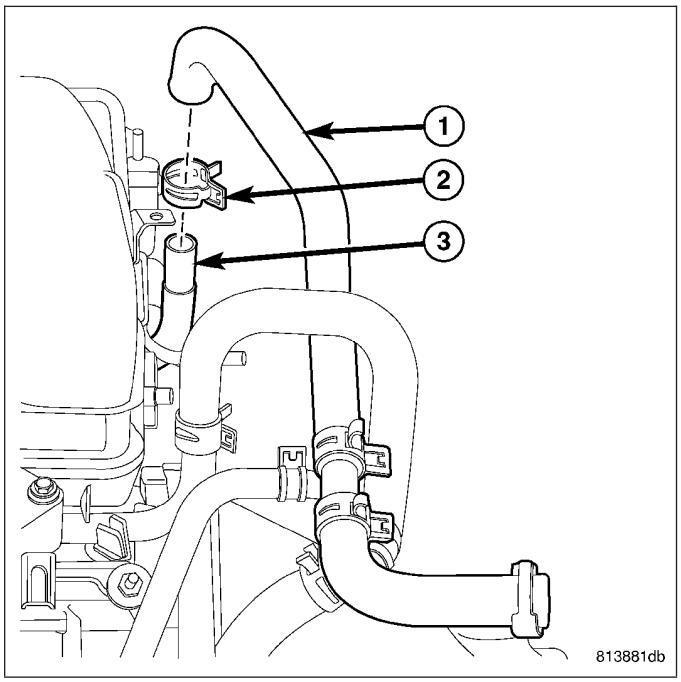

RADIATOR

REMOVAL

1. DIsconnect negative battery cable.
2. Drain cooling system (Refer to 7 - COOLING - STANDARD PROCEDURE).
3. Remove upper radiator hose (2).
4. Remove upper radiator closure panels (1).
5. Remove radiator fan assembly (4) (Refer to 7 - COOLING/ENGINE/RADIATOR FAN - REMOVAL).

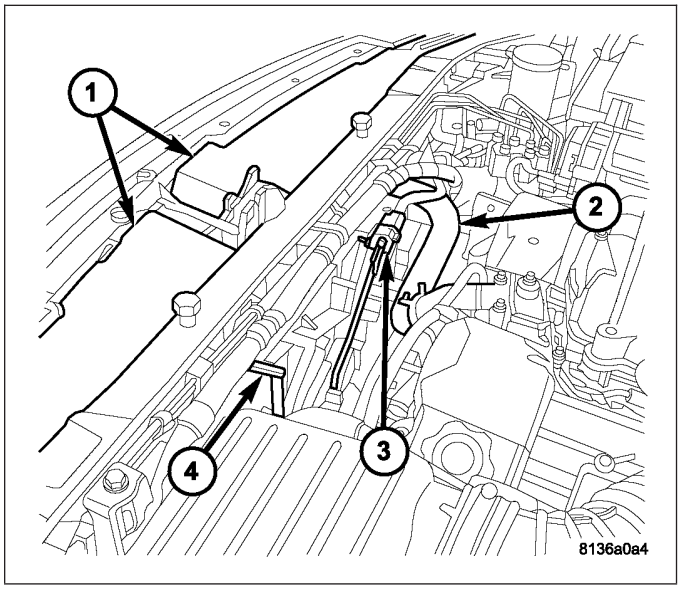

6. Raise vehicle.
7. Remove lower splash shield.
8. Remove lower radiator hose (1).
9. Remove lower condenser mount bolts.

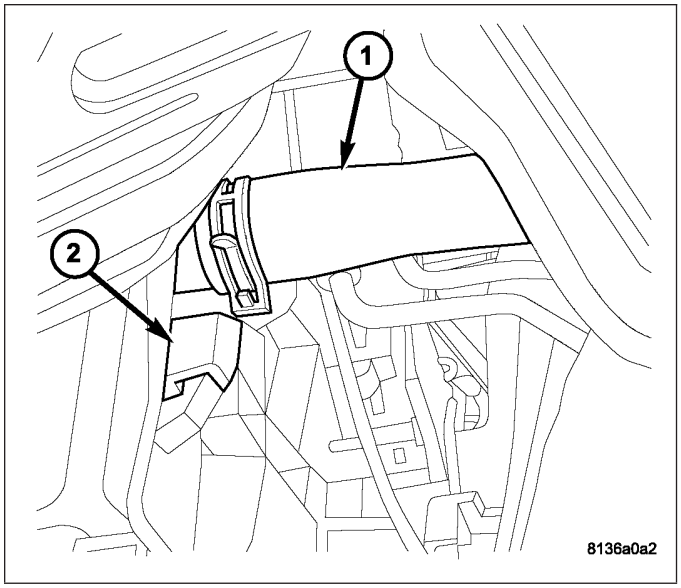

10. Lower vehicle.
11. Remove upper radiator hose.

CAUTION: Bolts have a tread locker on them, use hand tools to remove the upper radiator mounting bolts.

12. Remove upper radiator mounting brackets (1) and bolts (2).
13. Remove upper condenser mounting bolts.
14. Separate condenser assembly from radiator.
15. Tilt radiator toward engine and remove radiator from vehicle.

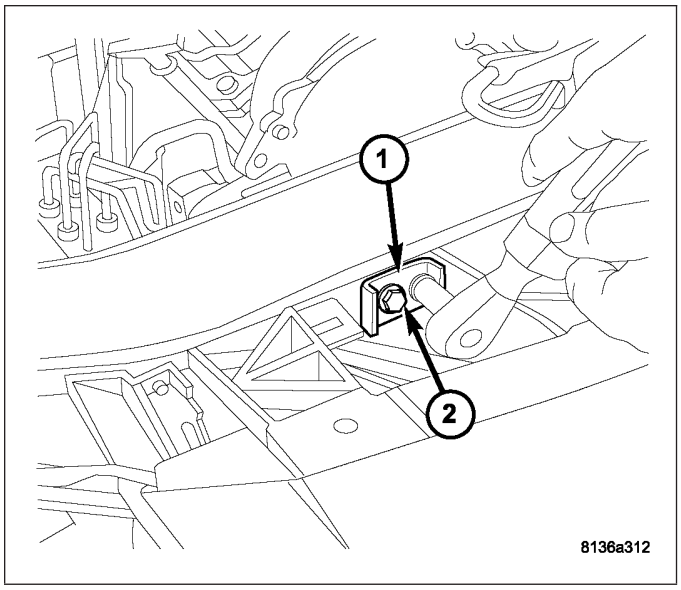

CLEANING

Clean radiator fins are necessary for good heat transfer. The radiator and air conditioning fins should be cleaned when an accumulation of debris has occurred. With the engine cold, apply cold water and compressed air to the back (engine side) of the radiator to flush the radiator and/or A/C condenser of debris.

INSPECTION

Inspect the radiator tanks for cracks, broken or missing fittings also inspect the joint where the tanks seam up to the radiator core for signs of leakage and/or deteriorating seals.

Inspect radiator core for corroded, bent or missing cooling fins. Inspect the core for bent or damaged cooling tubes.

INSTALLATION

1. Position radiator into engine compartment. Seat the radiator assembly lower rubber isolators into the mounting holes in radiator lower support.
2. Install radiator mounting bracket (1) and bolts (2). Tighten to 12 N·m (106 in. lbs.).
3. Position condenser on radiator and install upper mounting bolts. Tighten bolts to 6 N·m (50 in. lbs.).
4. Raise vehicle.

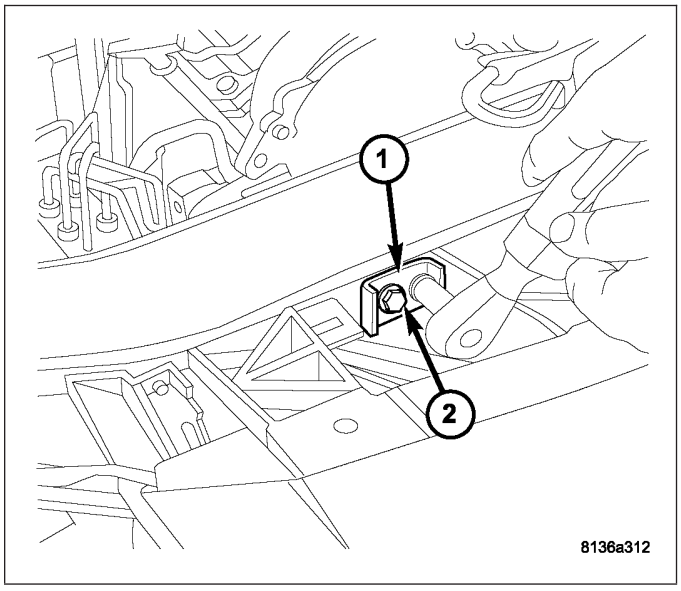

5. Install lower condenser mounting bolts. Tighten bolts to 10 N·m (88 in. lbs.)
6. Install lower radiator hose (1) and clamp.
7. Lower vehicle.

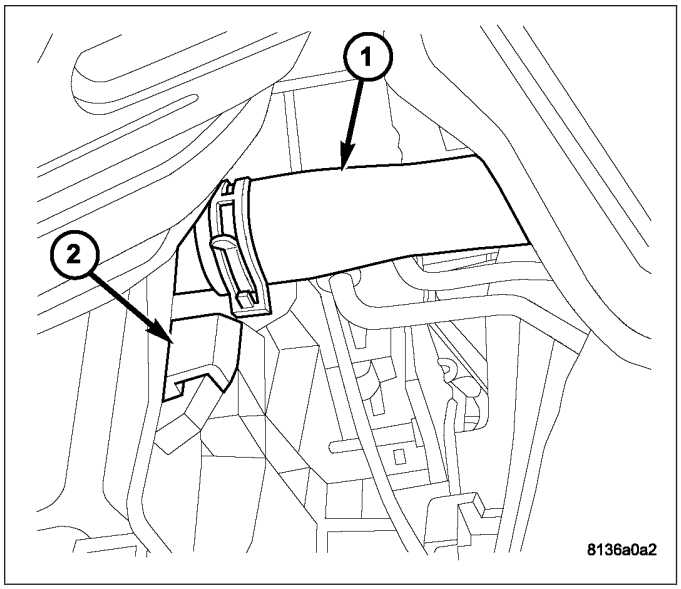

8. Install the radiator fan (Refer to 7 - COOLING/ENGINE/RADIATOR FAN - INSTALLATION).
9. Install upper radiator upper hose. Align hose so it does not interfere with the accessory drive belt or engine. Position hose clamp so it will not interfere with the hood.
10. Install upper radiator closure panels.
11. Connect negative cable.
12. Fill cooling system with coolant (Refer to 7 - COOLING - STANDARD PROCEDURE).
13. Operate engine until it reaches normal operating temperature. Check cooling system and automatic transmission for correct fluid levels.

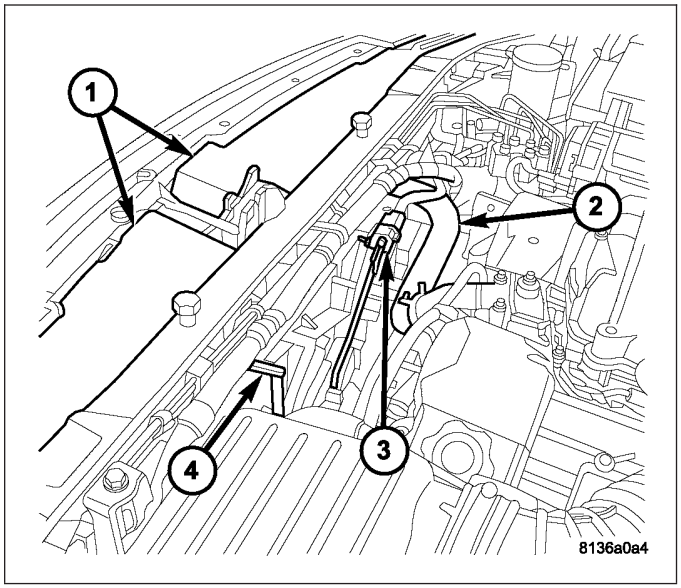

RADIATOR PRESSURE CAP

DESCRIPTION

All cooling systems are equipped with a pressure cap on the radiator. This cap releases pressure at some point within a range of 110-138 kPa (16-20 psi). The pressure relief point (in pounds) is engraved on top of the cap (3).

The cooling system will operate at pressures slightly above atmospheric pressure. This results in a higher coolant boiling point allowing increased radiator cooling capacity. The cap contains a spring-loaded pressure relief valve (4). This valve opens when system pressure reaches the release range of 110-138 kPa (16-20 psi).

A rubber gasket (2) seals the radiator filler neck. This is done to maintain vacuum during coolant cool-down and to prevent leakage when system is under pressure.

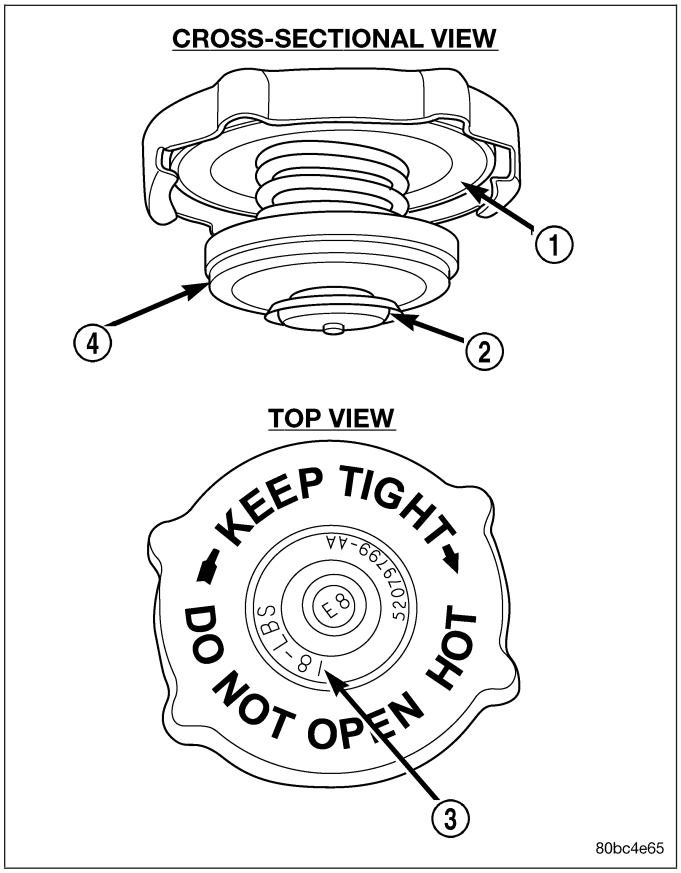

OPERATION

A vent valve in the center of the cap will remain shut as long as the cooling system is pressurized. As the coolant cools, it contracts and creates a vacuum in cooling system. This causes the vacuum valve to open and coolant in reserve/overflow tank to be drawn through connecting hose into radiator. If the vacuum valve is stuck shut, or overflow hose is kinked, radiator hoses will collapse on cool-down.

DIAGNOSIS AND TESTING

RADIATOR CAP-TO-FILLER NECK SEAL

The pressure cap upper gasket (seal) pressure relief can be tested by removing overflow hose from radiator filler neck nipple. Attach hose of pressure tester tool 7700 (or equivalent) to nipple. It will be necessary to disconnect hose from its adapter for filler neck. Pump air into radiator. The pressure cap upper gasket should relieve at 124 kPa (18 psi) and hold pressure at a minimum of 110 kPa (186psi).

WARNING: The warning words “DO NOT OPEN HOT” on radiator pressure cap, are a safety precaution. When hot, pressure builds up in cooling system. To prevent scalding or injury, radiator cap should not be removed while system is hot and/or under pressure.

Do not remove radiator cap at any time **except** for the following purposes:

1. Check and adjust antifreeze freeze point.
2. Refill system with new antifreeze.
3. Conducting service procedures.
4. Checking for vacuum leaks.

WARNING: If vehicle has been run recently, wait at least 15 minutes before removing radiator cap. With a rag, squeeze radiator upper hose to check if system is under pressure. Place a rag over cap and without pushing cap down, rotate it counter-clockwise to first stop. Allow fluid to escape through the coolant reserve/overflow hose into reserve/overflow tank. Squeeze radiator upper hose to determine when pressure has been released. When coolant and steam stop being pushed into tank and system pressure drops, remove radiator cap completely.

RADIATOR CAP

Remove cap (1) from radiator. Be sure that sealing surfaces are clean. Moisten rubber gasket with water and install cap (1) on pressure tester 7700 (2) or an equivalent.

Operate tester pump to bring pressure to 124 kPa (18 psi) on gauge. If pressure cap (1) fails to hold pressure of at least 110 kPa (16 psi) replace cap. Refer to the following **CAUTION**.

The pressure cap may test properly while positioned on tool 7700 (or equivalent). It may not hold pressure or vacuum when installed on radiator. If so, inspect radiator filler neck and cap's top gasket for damage. Also inspect for dirt or distortion that may prevent cap from sealing properly.

CAUTION: Radiator pressure testing tools are very sensitive to small air leaks, which will not cause cooling system problems. A pressure cap that does not have a history of coolant loss should not be replaced just because it leaks slowly when tested with this tool. Add water to tool. Turn tool upside down and recheck pressure cap to confirm that cap needs replacement.

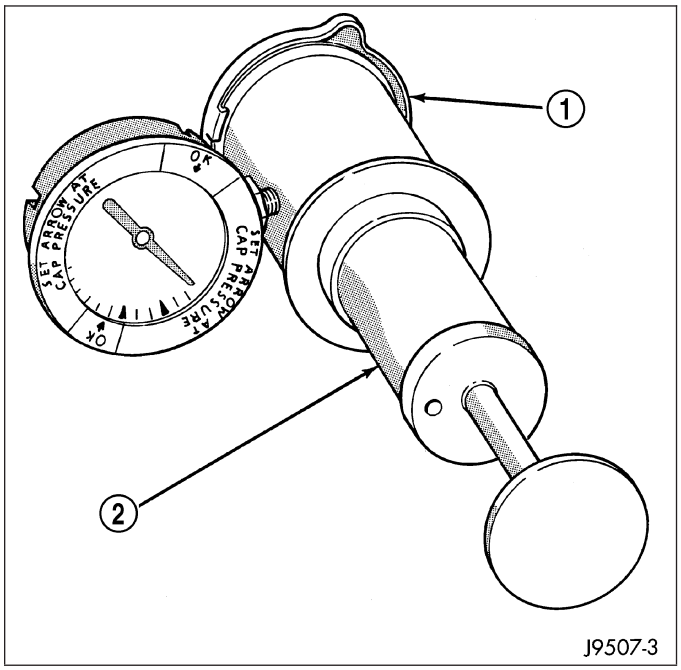

CLEANING

Use only a mild soap and water to clean the radiator cap. Using any type solvent may cause damage to the seal in the radiator cap.

INSPECTION

Hold cap at eye level, right side up. The vent valve at bottom of cap should open. If rubber gasket has swollen and prevents vent valve from opening, replace cap.

Hold cap at eye level, upside down. If any light can be seen between vent valve and rubber gasket, replace cap. **Do not use a replacement cap that has a spring to hold vent shut.** A replacement cap must be the type designed for a coolant reserve/overflow system with a completely sealed diaphragm spring and a rubber gasket. This gasket is used to seal to radiator filler neck top surface. Use of proper cap will allow coolant return to radiator.

WATER PUMP

DESCRIPTION

The 2.7L and 3.5L pumps have a die cast aluminum housing and a plastic swept vane impeller. The 2.7L water pump bolts directly to the cylinder block, behind the timing chain cover and is driven by the engine primary timing chain.

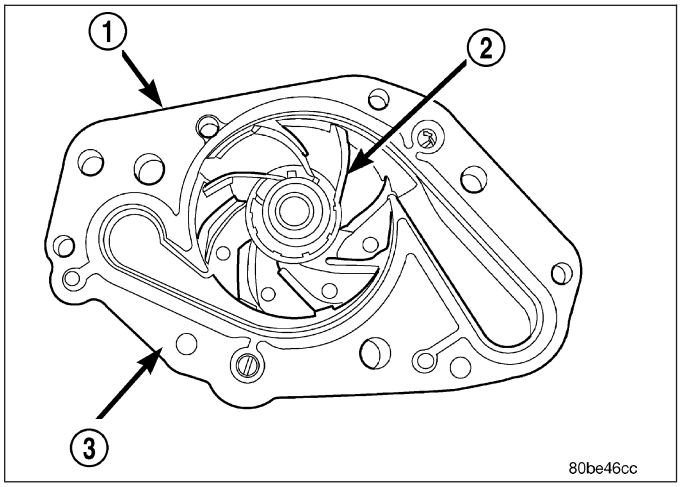

The 3.5L water pump bolts directly to the rear timing belt cover using a press-in-place gasket for sealing. The water pump is driven by the engine timing belt.

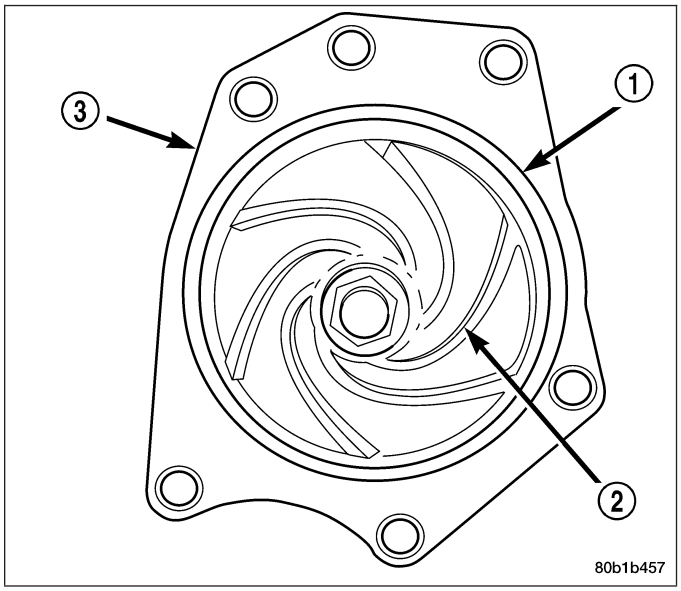

REMOVAL

2.7L ENGINE

WARNING: Do not remove pressure cap with the system hot and pressurized. Serious burns from coolant can result.

1. Drain cooling system (Refer to 7 - COOLING - STANDARD PROCEDURE).
2. Remove radiator fan assembly (Refer to 7 - COOLING/ENGINE/RADIATOR FAN - REMOVAL).
3. Remove accessory drive belt (Refer to 7 - COOLING/ACCESSORY DRIVE/DRIVE BELTS - REMOVAL).

NOTE: The water pump is driven by the primary timing chain.

4. Remove the timing chain and all chain guides (Refer to 9 - ENGINE/VALVE TIMING/TIMING BELT/CHAIN AND SPROCKETS - REMOVAL).
5. Remove bolts (2 and 3) attaching water pump (1) to block.
6. Remove water pump (1) and gasket.

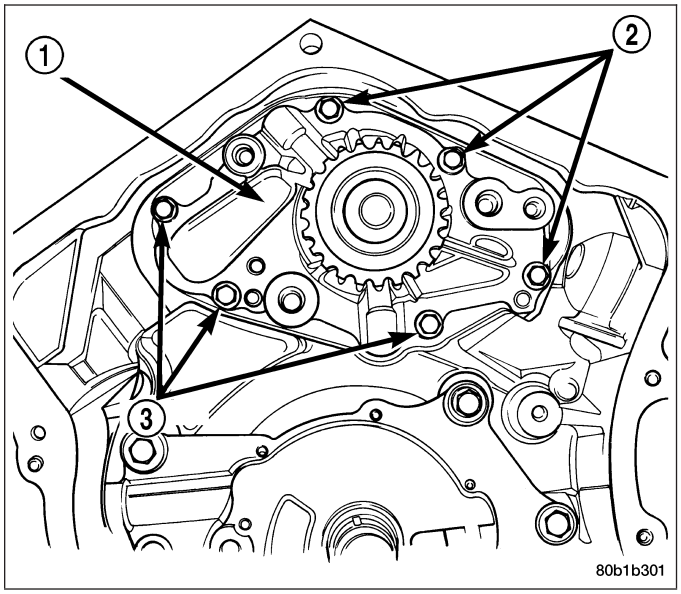

3.5L ENGINE

The water pump on all models can be replaced without discharging the air conditioning system.

WARNING: Do not remove pressure cap with the system hot and under pressure because serious burns from coolant can occur.

1. Drain cooling system (Refer to 7 - COOLING - STANDARD PROCEDURE).
2. Remove accessory drive belts (Refer to 7 - COOLING/ACCESSORY DRIVE/DRIVE BELTS - REMOVAL).

NOTE: The water pump is driven by the timing belt.

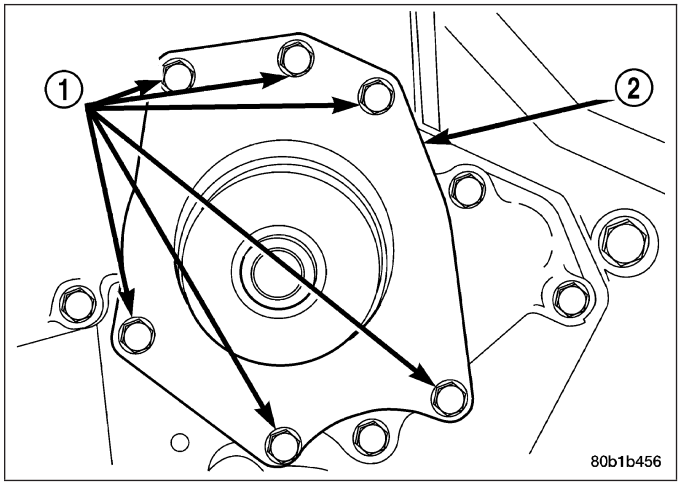

3. Remove engine timing belt (Refer to 9 - ENGINE/VALVE TIMING/TIMING BELT/CHAIN AND SPROCKETS - REMOVAL).
4. Remove water pump mounting bolts (1). Note position of longer bolts for proper re-installation.
5. Remove water pump body (2) from engine.

5.7L/6.1L ENGINE

1. Disconnect negative battery cable.
2. Drain cooling system (Refer to 7 - COOLING - STANDARD PROCEDURE).
3. Remove radiator fan assembly (Refer to 7 - COOLING/ENGINE/RADIATOR FAN - REMOVAL).
4. Remove accessory drive belt (Refer to 7 - COOLING/ACCESSORY DRIVE/DRIVE BELTS - REMOVAL)
5. Remove termostat (Refer to 7 - COOLING/ENGINE/ENGINE COOLANT THERMOSTAT - REMOVAL)

NOTE: The water pump mounting bolts (2) are different lengths. Note the location of the water pump mounting bolts (2).

6. Remove water pump mounting bolts (2) and remove water pump (1).

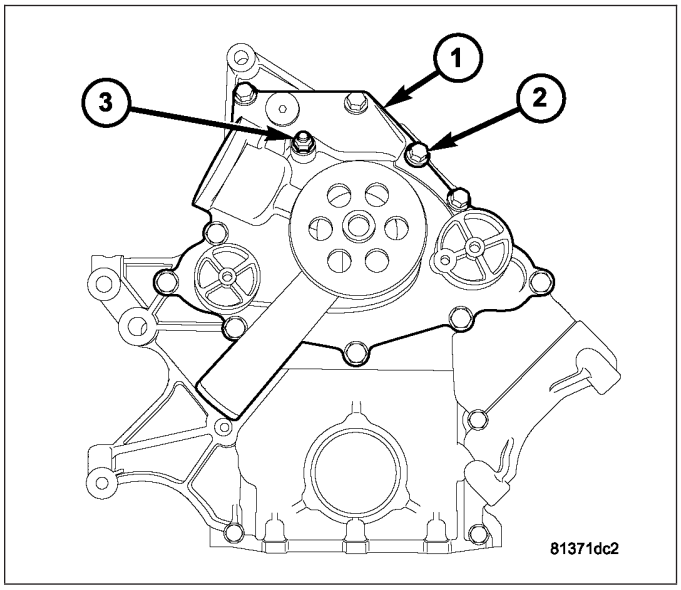

3.0L DIESEL

WARNING: Risk of injury to skin and eyes from scalding with hot coolant. Risk of poisoning from swallowing coolant. Do not open cooling system unless coolant temperature is below 90°C (194°F). Open cap slowly to release pressure. Store coolant in suitable and appropriately marked container. Wear protective gloves, clothes and eye wear.

1. Disconnect negative battery cable.
2. Remove engine cover (Refer to 9 - ENGINE - REMOVAL).
3. Drain engine coolant (Refer to 7 - COOLING - STANDARD PROCEDURE).
4. Remove accessory drive belt (Refer to 7 - COOLING/ACCESSORY DRIVE/DRIVE BELTS - REMOVAL)
5. Disconnect coolant hoses at water pump.
6. Remove idler pulley (Refer to 7 - COOLING/ACCESSORY DRIVE/IDLER PULLEY - REMOVAL).
7. Remove water pump and clean sealing surfaces.

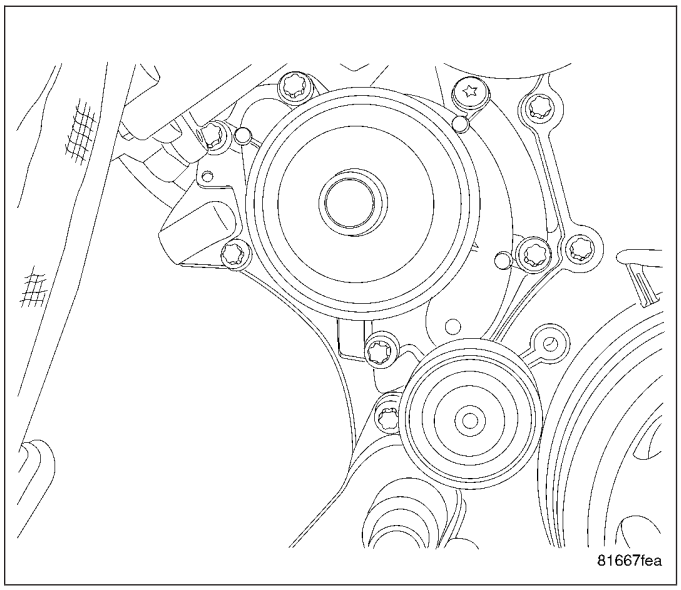

INSPECTION - 2.7L ENGINE

Inspect and replace the water pump if it has any of the following defects:

1. Damage or cracks on the pump body.

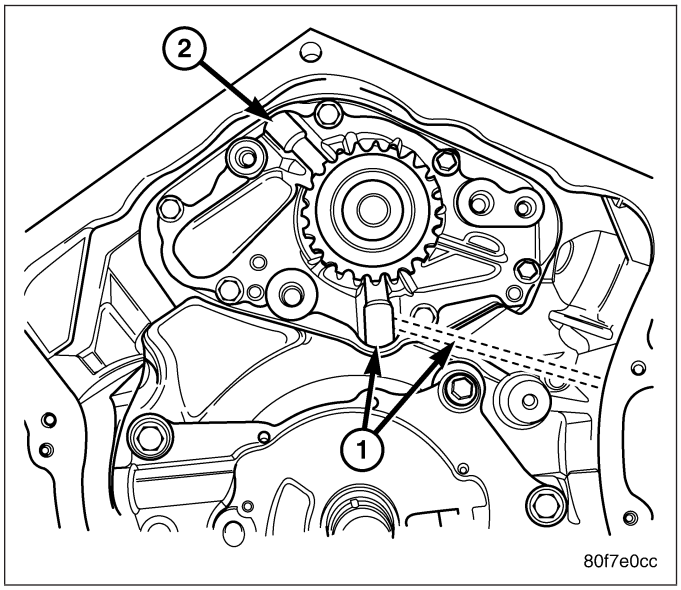

2. Coolant leaks: If the shaft seal is leaking, this will be evident by traces of thick deposits of dried glycol running down from the pump primary weep passage. A thin black stain below the pump primary weep hole/passage is considered normal operation.

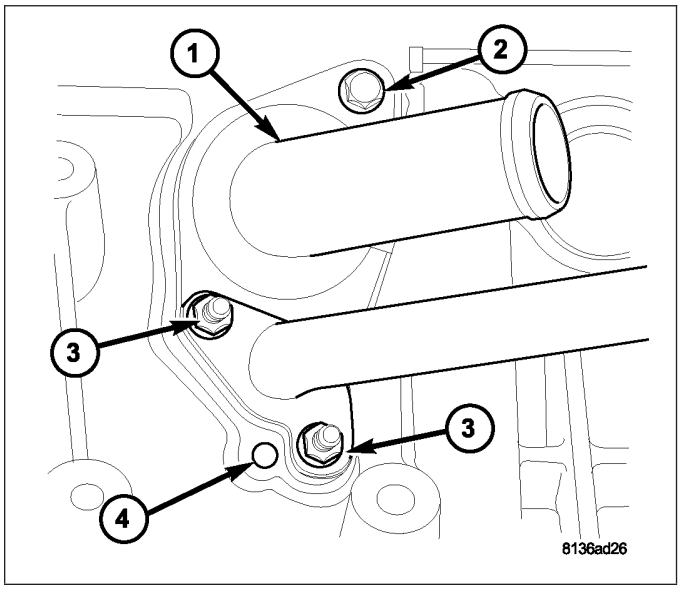

3. Coolant leaks: If the pump primary weep passage is plugged, coolant may come from the secondary weep passage and collect in the valley of the engine. The coolant will eventually run out the back side of the engine. Leakage from the secondary weep passage may give false indications that core plug(s) may be leaking on the back side of the engine block. If this condition is found, clean the primary weep passage of debris.
4. Impeller rubs inside of cylinder block.
5. Excessively loose or rough turning bearing.

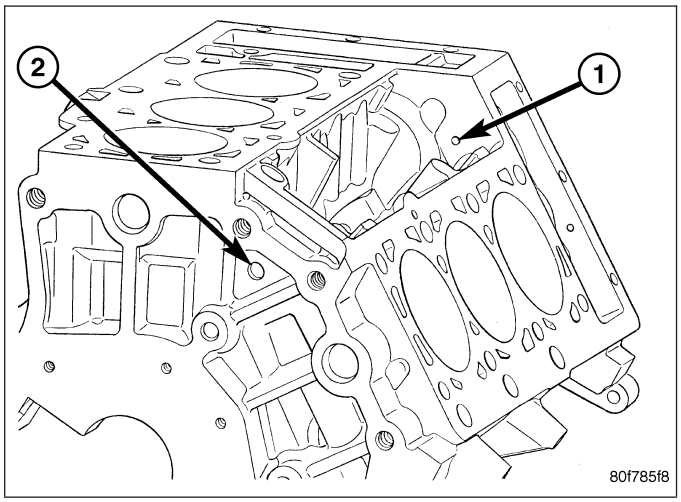

NOTE: It is normal for the water pump to weep a small amount of coolant from the primary weep hole (black stain at weep passage). Do not replace the water pump if this condition exists. Replace the water pump if a heavy deposit or a steady flow of engine coolant is evident from the primary weep passage. This indicates a shaft seal failure and pump must be replaced. Coolant may leak from the secondary weep passage and fill the valley of the engine. If this condition is found, clean the primary weep passage of debris. Be sure to perform a thorough analysis before replacing water pump.

INSTALLATION

2.7L ENGINE

1. Clean all sealing surfaces.
2. Install water pump (1) and gasket. Tighten mounting bolts to 12 N·m (105 in. lbs.).
3. Install timing chain guides and timing chain (Refer to 9 - ENGINE/VALVE TIMING/TIMING BELT/CHAIN AND SPROCKETS - INSTALLATION).
4. Install the accessory drive belts (Refer to 7 - COOLING/ACCESSORY DRIVE/DRIVE BELTS - INSTALLATION).
5. Install the radiator fan assembly (Refer to 7 - COOLING/ENGINE/RADIATOR FAN - INSTALLATION).
6. Fill cooling system (Refer to 7 - COOLING - STANDARD PROCEDURE).

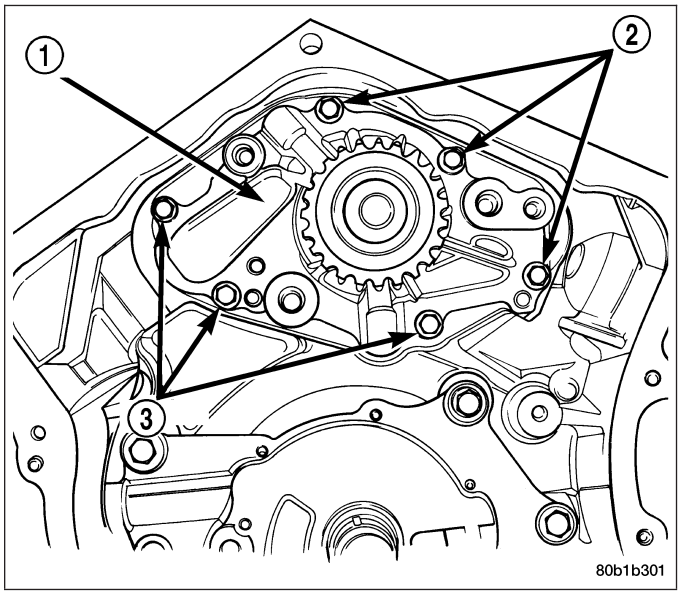

3.5L ENGINE

1. Clean all O-ring surfaces on front cover.
2. Position water pump (3) and O-ring to engine.
3. Install mounting bolts. Tighten to 12 N·m (105 in. lbs.).
4. Install timing belt (Refer to 9 - ENGINE/VALVE TIMING/TIMING BELT/CHAIN AND SPROCKETS - INSTALLATION).
5. Install accessory drive belts (Refer to 7 - COOLING/ACCESSORY DRIVE/DRIVE BELTS - INSTALLATION).
6. Fill cooling system (Refer to 7 - COOLING - STANDARD PROCEDURE).

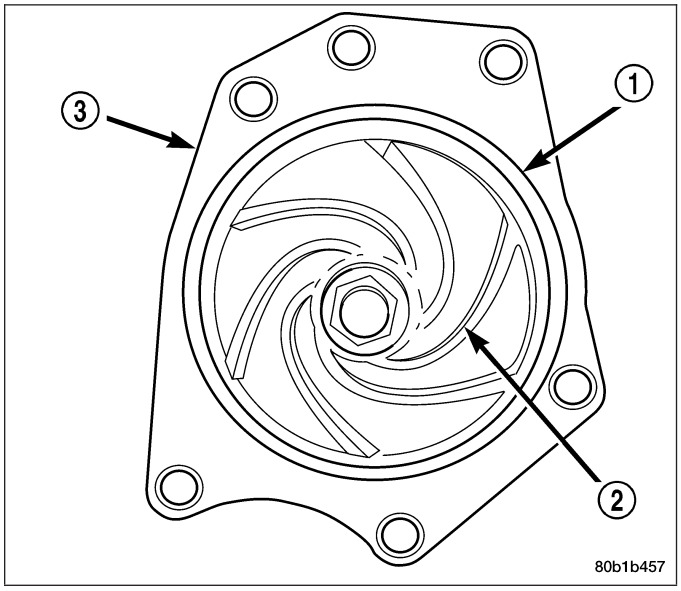

5.7L/6.1L ENGINE

1. Install water pump and mounting bolts (2). Tighten mounting bolts to 28 N·m (20 ft. lbs.).
2. Make sure double ended bolt (3) is in the proper location. Tighten double ended bolt to 28 N·m (20 ft. lbs.).
3. Install thermostat (Refer to 7 - COOLING/ENGINE/ ENGINE COOLANT THERMOSTAT - INSTALLATION).
4. Install accessory drive belt (Refer to 7 - COOLING/ ACCESSORY DRIVE/DRIVE BELTS - INSTALLATION).
5. Install the radiator fan assembly (Refer to 7 - COOLING/ENGINE/RADIATOR FAN - INSTALLATION).
6. Connect negative battery cable.
7. Fill cooling system (Refer to 7 - COOLING - STANDARD PROCEDURE).
8. Pressure test cooling system (Refer to 7 - COOLING - DIAGNOSIS AND TESTING).

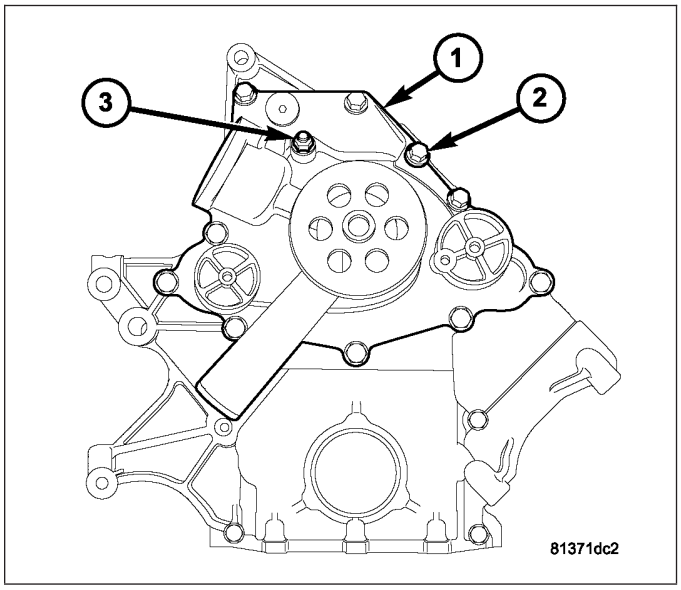

3.0L DIESEL

1. Clean all sealing surfaces.
2. Position and install water pump. Tighten M6 bolts to 14 N·m (124 lbs. in.) and M8 bolts to 20 N·m (177 lbs. in.).
3. Install idler pulley. Tighten bolt to 35 N·m (26 lbs. ft.).
4. Install coolant hoses.
5. Install accessory drive belt (Refer to 7 - COOLING/ ACCESSORY DRIVE/DRIVE BELTS - INSTALLATION).
6. Close coolant drain.
7. Install engine cover (Refer to 9 - ENGINE - INSTALLATION).
8. Connect negative battery cable.
9. Fill coolant system to proper level with the appropriate coolant mixture (Refer to 7 - COOLING/ENGINE/COOLANT - STANDARD PROCEDURE).

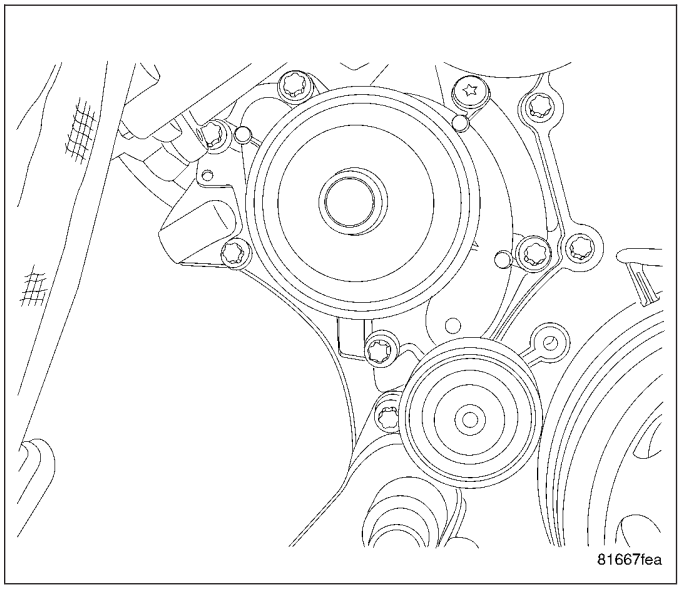

WARNING: Use extreme caution when engine is operating. Do not put your hands near pulleys, belts or fan. Do not wear loose clothes.

10. Start engine and inspect for leaks.

FAN-RADIATOR

REMOVAL

1. Disconnect negative battery cable.
2. Partially drain cooling system (Refer to 7 - COOLING - STANDARD PROCEDURE).
3. Remove upper radiator hose (3).
4. Disconnect cooling fan electrical connector (2).
5. Remove cooling fan mounting bolts.
6. Remove radiator cooling fan assembly (1) from vehicle.

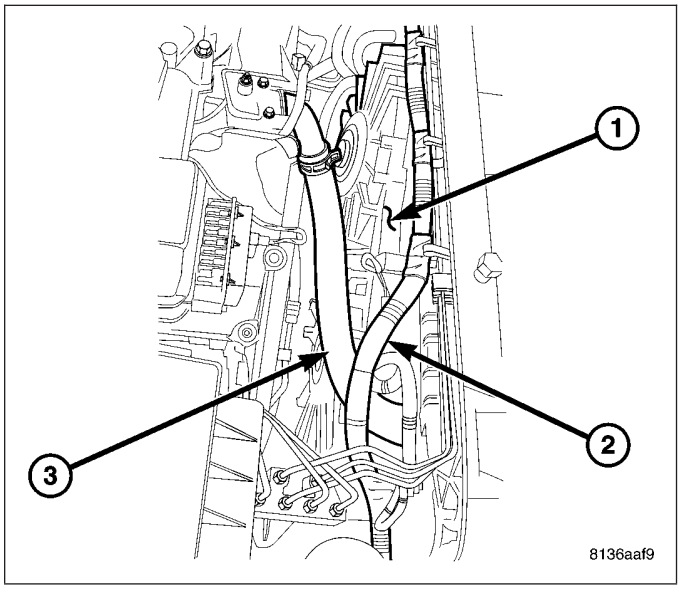

INSTALLATION

1. Position radiator cooling fan assembly (1) in vehicle.
2. Install cooling fan mounting bolts. Tighten to 6 N·m (50 in. lbs.)
3. Connect cooling fan electrical connector (2).
4. Install upper radiator hose (3).
5. Fill cooling system (Refer to 7 - COOLING - STANDARD PROCEDURE).
6. Operate engine until it reaches normal operating temperature. Check cooling system and automatic transmission for correct fluid levels.

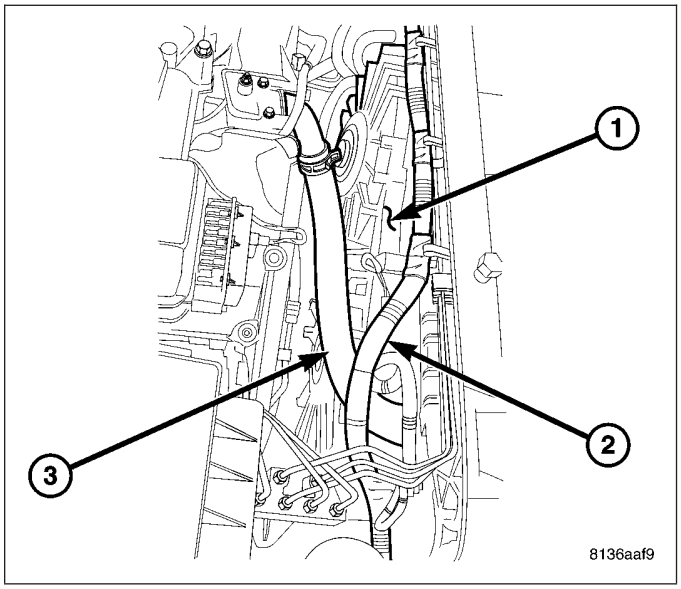

TRANSMISSION

TABLE OF CONTENTS

page

TRANSMISSION
STANDARD PROCEDURE
TRANSMISSION COOLER LINE QUICK CONNECT FITTING DISASSEMBLY/ ASSEMBLY 75

page

TRANSMISSION COOLER
DESCRIPTION 77
TRANSMISSION COOLER LINES
REMOVAL 78
INSTALLATION 78

TRANSMISSION

STANDARD PROCEDURE

TRANSMISSION COOLER LINE QUICK CONNECT FITTING DISASSEMBLY/ ASSEMBLY

DISCONNECT

1. Remove dust cap by pulling it straight back off of quick connect fitting.
2. Place disconnect tool 8875A onto transmission cooler line with the fingers of the tool facing the quick connect fitting.
3. Slide disconnect tool down the transmission line and engage the fingers of the tool into the retaining clip. When properly engaged in the clip, the tool will fit flush against the quick connect fitting.
4. Rotate the disconnect tool 60° to expand the retaining clip.
5. While holding the disconnect tool against the quick connect fitting, pull back on the transmission cooler line to remove.

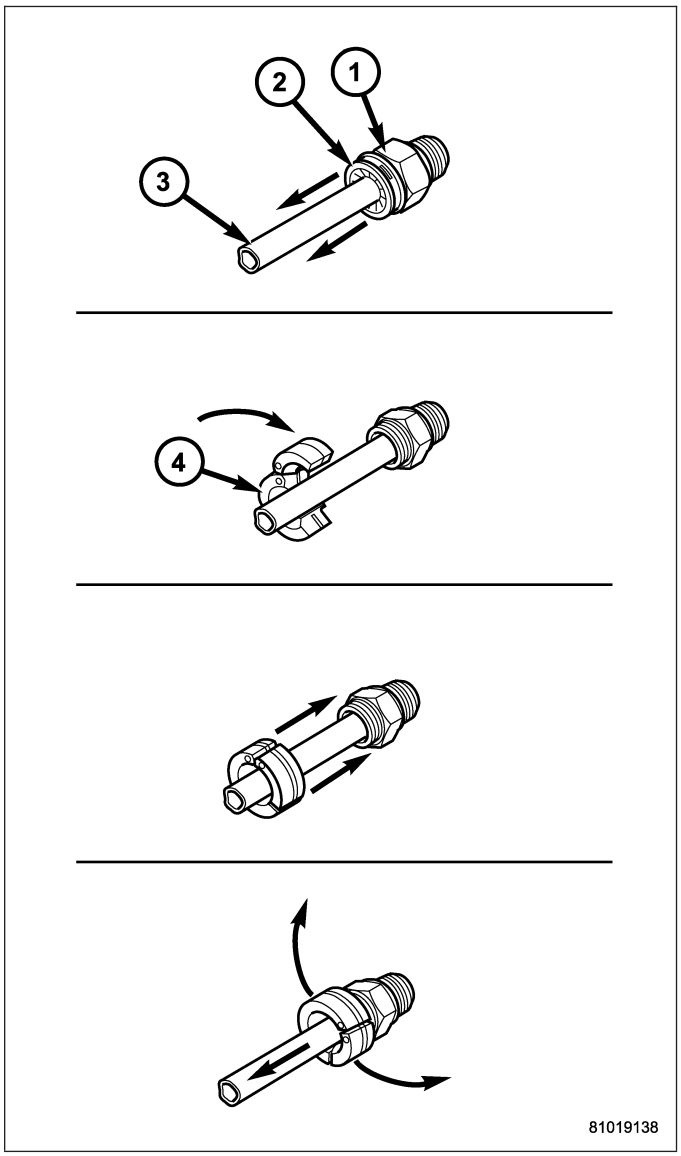

CONNECT

1. Align transmission cooler line with quick connect fitting while pushing straight into the fitting.
2. Push in on transmission cooler line until a “click” is heard or felt.
3. Slide dust cap down the transmission cooler line and snap it over the quick connect fitting until it is fully seated and rotates freely. Dust cap will only snap over quick connect fitting when the transmission cooler line is properly installed.

NOTE: If dust cap will not snap into place, repeat assembly step #2.

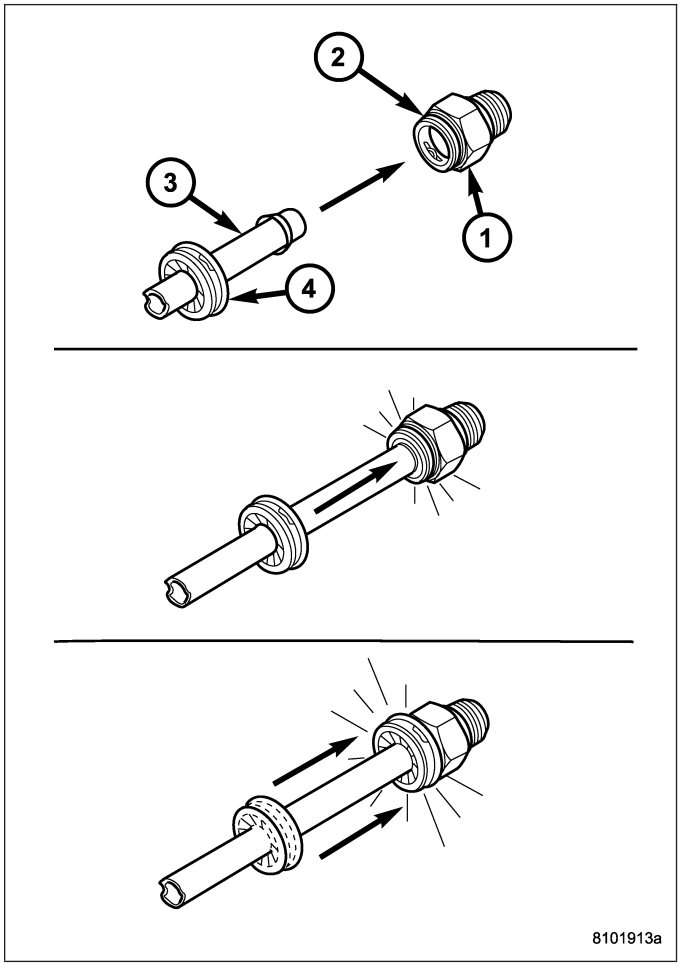

TRANSMISSION COOLER

DESCRIPTION

The automatic transmission cooler (2) is located in the front of the radiator and behind the front fascia and is combined with the A/C condenser. The transmission cooler is a heat exchanger that allows heat in the transmission fluid to be transferred to the air passing over the cooler fins.

The Transmission oil cooler/A/C condenser assembly is equipped with quick connect fitting for the transmission oil cooler lines, a tapping block (3) for the receiver/drier (4) and mounting provisions for the power steering cooler (5).

The transmission oil cooler/AC condenser is service as an assembly. For removal (Refer to 24 - HEATING & AIR CONDITIONING/PLUMBING/A/C CONDENSER - REMOVAL) and installation (Refer to 24 - HEATING & AIR CONDITIONING/PLUMBING/A/C CONDENSER - INSTALLATION).

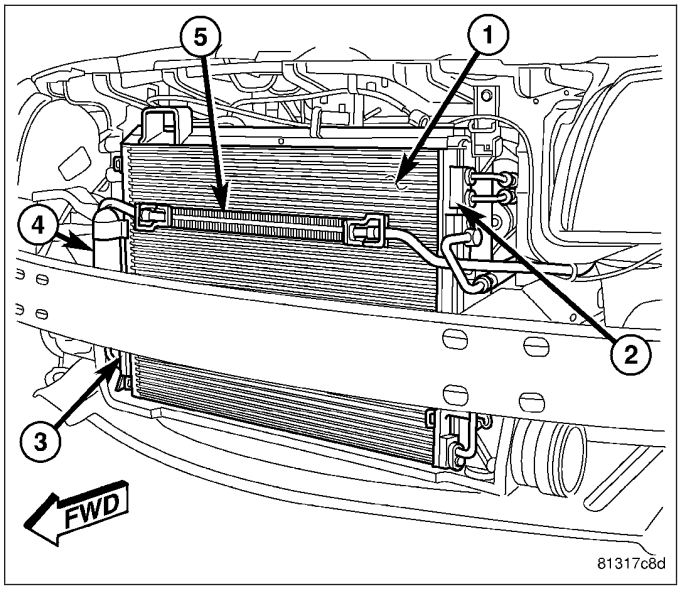

TRANSMISSION COOLER LINES

REMOVAL

1. Remove upper radiator closure panels
2. Using Release Tool 8875A, remove transmission cooler lines from transmission cooler (Refer to 7 - COOLING/ TRANSMISSION - STANDARD PROCEDURE).
3. Raise vehicle on hoist.
4. Remove front transmission cooler lines from the thermal bypass valve block.
5. Remove rear transmission cooler lines from the thermal bypass valve block
6. Remove the transmission cooler lines from the transmission.

INSTALLATION

1. Install rear transmission cooler lines at transmission. Tighten fittings to 20 N·m (18 ft. lbs.).
2. Install rear transmission cooler lines to thermal bypass valve. Tighten fittings to 20 N·m (18 ft. lbs.).
3. Install front transmission cooler lines to thermal bypass valve. Tighten fittings to 20 N·m (18 ft. lbs.).
4. Install front transmission cooler lines into transmission cooler (Refer to 7 - COOLING/TRANSMISSION - STANDARD PROCEDURE).
5. Lower vehicle.
6. Check transmission fluid level (Refer to 21 - TRANSMISSION/TRANSAXLE/AUTOMATIC - 42RLE/FLUID - STANDARD PROCEDURE).

AUDIO/VIDEO

TABLE OF CONTENTS

page

AUDIO - ELECTRICAL DIAGNOSTICS 1

page

AUDIO/VIDEO - SERVICE INFORMATION 131

AUDIO - ELECTRICAL DIAGNOSTICS

TABLE OF CONTENTS

page

AUDIO - ELECTRICAL DIAGNOSTICS
DIAGNOSIS AND TESTING
B210D-BATTERY VOLTAGE LOW 4
B210E-BATTERY VOLTAGE HIGH 5
B221F-AMPLIFIER INTERNAL 6
B1488–CABIN EQ MISMATCH PERFORMANCE 7
B1460-CHANNEL 1 AUDIO SPEAKER OUTPUT CIRCUIT PERFORMANCE 9
B1461-CHANNEL 1 AUDIO SPEAKER OUTPUT CIRCUIT LOW 10
B1462-CHANNEL 1 AUDIO SPEAKER OUTPUT CIRCUIT HIGH 13
B1463-CHANNEL 1 AUDIO SPEAKER OUTPUT CIRCUIT OPEN 16
B1464-CHANNEL 1 AUDIO SPEAKER OUTPUT CIRCUIT SHORTED TOGETHER . . . 19
B1465-CHANNEL 2 AUDIO SPEAKER OUTPUT CIRCUIT PERFORMANCE 22
B1466-CHANNEL 2 AUDIO SPEAKER OUTPUT CIRCUIT LOW 23
B1467-CHANNEL 2 AUDIO SPEAKER OUTPUT CIRCUIT HIGH 26
B1468-CHANNEL 2 AUDIO SPEAKER OUTPUT CIRCUIT OPEN 29
B1469-CHANNEL 2 AUDIO SPEAKER OUTPUT CIRCUIT SHORTED TOGETHER . . . 32
B146A-CHANNEL 3 AUDIO SPEAKER OUTPUT CIRCUIT PERFORMANCE 35
B146B-CHANNEL 3 AUDIO SPEAKER OUTPUT CIRCUIT LOW 36
B146C-CHANNEL 3 AUDIO SPEAKER OUTPUT CIRCUIT HIGH 39
B146D-CHANNEL 3 AUDIO SPEAKER OUTPUT CIRCUIT OPEN 41
B146E-CHANNEL 3 AUDIO SPEAKER OUTPUT CIRCUIT SHORTED TOGETHER . . . 44

page

B146F-CHANNEL 4 AUDIO SPEAKER OUTPUT CIRCUIT PERFORMANCE 46
B1470-CHANNEL 4 AUDIO SPEAKER OUTPUT CIRCUIT LOW 47
B1471-CHANNEL 4 AUDIO SPEAKER OUTPUT CIRCUIT HIGH 50
B1472-CHANNEL 4 AUDIO SPEAKER OUTPUT CIRCUIT OPEN 52
B1473-CHANNEL 4 AUDIO SPEAKER OUTPUT CIRCUIT SHORTED TOGETHER . . . 55
B1474-CHANNEL 5 AUDIO SPEAKER OUTPUT CIRCUIT PERFORMANCE 57
B1475-CHANNEL 5 AUDIO SPEAKER OUTPUT CIRCUIT LOW 58
B1476-CHANNEL 5 AUDIO SPEAKER OUTPUT CIRCUIT HIGH 61
B1477-CHANNEL 5 AUDIO SPEAKER OUTPUT CIRCUIT OPEN 63
B1478-CHANNEL 5 AUDIO SPEAKER OUTPUT CIRCUIT SHORTED TOGETHER . . . 66
B1479-CHANNEL 6 AUDIO SPEAKER OUTPUT CIRCUIT PERFORMANCE 68
B147A-CHANNEL 6 AUDIO SPEAKER OUTPUT CIRCUIT LOW 69
B147B-CHANNEL 6 AUDIO SPEAKER OUTPUT CIRCUIT HIGH 72
B147C-CHANNEL 6 AUDIO SPEAKER OUTPUT CIRCUIT OPEN 74
B147D-CHANNEL 6 AUDIO SPEAKER OUTPUT CIRCUIT SHORTED TOGETHER . . . 77
B147E-CHANNEL 7 AUDIO SPEAKER OUTPUT CIRCUIT PERFORMANCE 79
B147F-CHANNEL 7 AUDIO SPEAKER OUTPUT CIRCUIT LOW 80
B1480-CHANNEL 7 AUDIO SPEAKER OUTPUT CIRCUIT HIGH 83

B1481-CHANNEL 7 AUDIO SPEAKER OUTPUT CIRCUIT OPEN 85
B1482-CHANNEL 7 AUDIO SPEAKER OUTPUT CIRCUIT SHORTED TOGETHER . . . 88
U0019–CAN B BUS 90
U0020-CAN B BUS OFF PERFORMANCE 93
U0141–LOST COMMUNICATION WITH FRONT CONTROL MODULE 95
B1401-FRONT LEFT AUDIO SPEAKER OUTPUT CIRCUIT LOW 96
B1402-FRONT LEFT AUDIO SPEAKER OUTPUT CIRCUIT HIGH 98
B1403-FRONT LEFT AUDIO SPEAKER OUTPUT CIRCUIT OPEN 101
B1405-FRONT RIGHT AUDIO SPEAKER OUTPUT CIRCUIT LOW 103
B1406-FRONT RIGHT AUDIO SPEAKER OUTPUT CIRCUIT HIGH 105
B1407-FRONT RIGHT AUDIO SPEAKER OUTPUT CIRCUIT OPEN 108
B1409-REAR LEFT AUDIO SPEAKER OUTPUT CIRCUIT LOW 110
B140A-REAR LEFT AUDIO SPEAKER OUTPUT CIRCUIT HIGH 112
B140B-REAR LEFT AUDIO SPEAKER OUTPUT CIRCUIT OPEN 115
B140D-REAR RIGHT AUDIO SPEAKER OUTPUT CIRCUIT LOW 117
B140E-REAR RIGHT AUDIO SPEAKER OUTPUT CIRCUIT HIGH 119
B140F-REAR RIGHT AUDIO SPEAKER OUTPUT CIRCUIT OPEN 122
B1421-AUDIO CD READ ERROR/ INOPERABLE DISC 124
B1422-AUDIO DVD READ ERROR/ INOPERABLE DISC 125
B1429-RADIO DISPLAY HIGH TEMPERATURE 126
B142A-RADIO UNIT HIGH TEMPERATURE . . . 127
B142D-AUDIO ANTENNA NOT CONNECTED . 128
B142E-GPS ANTENNA NOT CONNECTED . . . 129
B221E-RADIO INTERNAL 130

AUDIO - ELECTRICAL DIAGNOSTICS

DIAGNOSIS AND TESTING

B210D-BATTERY VOLTAGE LOW

For a complete wiring diagram **Refer to Section 8W**.

- **When Monitored:**
- With the ignition on.
- **Set Condition:**
- If the module detects that the battery voltage is less than 9.0 volts for 1 second.

Possible Causes
VEHICLE CHARGING SYSTEM
AMPLIFIER

Diagnostic Test

1. CHECK FOR AN INTERMITTENT CONDITION

Turn the ignition on, then off, and then on again.
With the scan tool, read Amplifier DTCs.

Does the scan tool display active: B210D-BATTERY VOLTAGE LOW?

Yes >> Go To 2

No >> The conditions that caused this code to set are not present at this time. Using the wiring diagram/schematic as a guide, inspect the wiring and connectors.
Perform BODY VERIFICATION TEST VER-1.

2. CHECK THE BATTERY VOLTAGE TO THE AMPLIFIER

With the scan tool in Data Display, read Amplifier battery voltage.

Is the battery voltage less than 9.0 volts?

Yes >> Go To 3

No >> Replace the Amplifier in accordance with the Service Information.
Perform OCS VERIFICATION TEST - VER 1.

3. CHECK FOR CHARGING SYSTEM RELATED DTCs IN THE POWERTRAIN CONTROL MODULE (PCM)

With the scan tool in ECU View, select PCM and check for any Charging System related DTCs.

Does the scan tool display any Charging System related DTCs?

Yes >> Diagnose and repair the DTCs. Refer to (Refer to 9 - ENGINE - DIAGNOSIS AND TESTING).

No >> Replace the Amplifier in accordance with the Service Information.
Perform OCS VERIFICATION TEST - VER 1.

B210E-BATTERY VOLTAGE HIGH

For a complete wiring diagram **Refer to Section 8W**.

- **When Monitored:**
- With the ignition on.
- **Set Condition:**
- If the module detects that the battery voltage is greater 16.5 volts for 1 second.

Possible Causes
VEHICLE CHARGING SYSTEM
AMPLIFIER

Diagnostic Test

1. CHECK FOR AN INTERMITTENT CONDITION

Turn the ignition on, then off, and then on again.
With the scan tool, read Amplifier DTCs.

Does the scan tool display active: B210E-BATTERY VOLTAGE HIGH?

Yes >> Go To 2

No >> The conditions that caused this code to set are not present at this time. Using the wiring diagram/schematic as a guide, inspect the wiring and connectors.
Perform BODY VERIFICATION TEST VER-1.

2. CHECK THE BATTERY VOLTAGE TO THE AMPLIFIER

With the scan tool in Data Display, read Amplifier battery voltage.

Is the battery voltage greater than 16.5 volts?

Yes >> Go To 3

No >> Replace the Amplifier in accordance with the Service Information.
Perform OCS VERIFICATION TEST - VER 1.

3. CHECK FOR CHARGING SYSTEM RELATED DTCs IN THE POWERTRAIN CONTROL MODULE (PCM)

With the scan tool in ECU View, select PCM and check for any Charging System related DTCs.

Does the scan tool display any Charging System related DTCs?

Yes >> Diagnose and repair the DTCs. Refer to (Refer to 9 - ENGINE - DIAGNOSIS AND TESTING).

No >> Replace the Amplifier in accordance with the Service Information.
Perform OCS VERIFICATION TEST - VER 1.

B221F-AMPLIFIER INTERNAL

For a complete wiring diagram **Refer to Section 8W**.

- **When Monitored:**
- With the ignition on.
- **Set Condition:**
- The Amplifier detects a software checksum test failure.

Possible Causes
AMPLIFIER

Diagnostic Test

1. REPLACE THE AMPLIFIER

When this code is set, the Amplifier must be replaced.

Repair

Replace the Amplifier in accordance with the Service Information.
Perform the BODY VERIFICATION TEST-VER 1.

B1488–CABIN EQ MISMATCH PERFORMANCE

For a complete wiring diagram **Refer to Section 8W**.

- **When Monitored:**
- With the ignition on.
- **Set Condition:**
- If the cabin EQ message is incompatible with the EQ's stored in the amplifier for 10 consecutive cycles, then the amplifier will set this DTC.

POSSIBLE CAUSES
NO COMMUNICATION WITH FRONT CONTROL MODULE
ACTIVE FCM DTCs
AMPLIFIER

Diagnostic Test

1. CHECK FOR AN INTERMITTENT CONDITION

Turn the ignition on.
Turn the radio on.
With the scan tool, erase Amplifier DTCs.
With the scan tool, reset the amplifier.
With the scan tool, read Amplifier DTCs.

Does the scan tool display active: B1488–CABIN EQ MISMATCH PERFORMANCE?

Yes >> Go To 2

No >> The conditions that caused this code to set are not present at this time. Using the wiring diagram/schematic as a guide, inspect the wiring and connectors.
Perform BODY VERIFICATION TEST VER-1.

2. CHECK AMPLIFIER BUSSED INPUTS/OUTPUTS

With the scan tool in Amplifier Data Display, read the Cabin EQ# settings in the Bussed Inputs and Bussed Outputs Sections.

NOTE: The Cabin EQ# settings in the Inputs/Outputs section should match one another. The Cabin EQ# in the Inputs section is the information that is received form the FCM. The Cabin EQ# in the Outputs section is the information that is Stored in the Amplifier's memory.
The Cabin EQ# settings are as follows:

- •$51: HB Premium 1 (w/o Subwoofer)
- •$52: HB Premium 2 (with Subwoofer)

Do the Cabin EQ# settings match one another?

Yes >> Replace the Amplifier in accordance to the service information.
Perform the BODY VERIFICATION TEST-VER 1.

No >> Go To 3

3. VERIFY COMMUNICATION WITH FRONT CONTROL MODULE

With the scan tool in ECU VIEW, read active modules on the bus.

Does the scan tool show the Front Control Module active on the bus?

Yes >> Go To 4

No >> Refer to the Communication category for the related symptoms.
Perform the BODY VERIFICATION TEST VER 1.

4. CHECK FRONT CONTROL MODULE FOR ACTIVE DTCs

With the scan tool, erase FCM DTCs.
Turn the ignition off. Wait approximately 10 seconds.
Turn the ignition on.
With the scan tool, read FCM DTCs.

Are any active DTCs present?

Yes >> Refer to symptom list for problems related to the Front Control Module.
Perform the BODY VERIFICATION TEST VER 1.

No >> Replace the Front Control Module in accordance with the Service Information.
Perform the BODY VERIFICATION TEST-VER.1

B1460-CHANNEL 1 AUDIO SPEAKER OUTPUT CIRCUIT PERFORMANCE

For a complete wiring diagram **Refer to Section 8W**.

- **When Monitored:**
- With the ignition on.
- **Set Condition:**
- This DTC will set if a DC offset occurs on the output channel, the amplifier shall set a DTC after a maturity rate of 5 ±1 sec.

Possible Causes
AMPLIFIER

Diagnostic Test

1. CHECK FOR AN INTERMITTENT CONDITION

Turn the ignition on, then off, and then on again.

With the scan tool, read Amplifier DTCs.

Does the scan tool display active: B1460-CHANNEL 1 AUDIO SPEAKER OUTPUT CIRCUIT PERFORMANCE?

Yes >> Replace the Amplifier in accordance with the service information.
Perform BODY VERIFICATION TEST VER-1.

No >> The conditions that caused this code to set are not present at this time. Using the wiring diagram/schematic as a guide, inspect the wiring and connectors.
Perform BODY VERIFICATION TEST VER-1.

B1461-CHANNEL 1 AUDIO SPEAKER OUTPUT CIRCUIT LOW

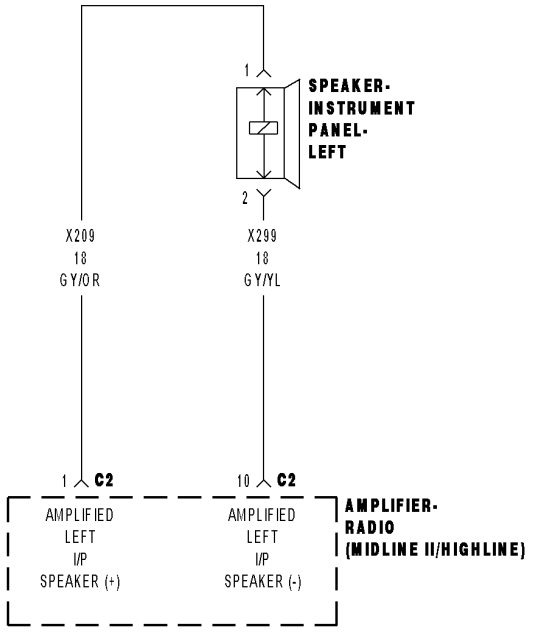

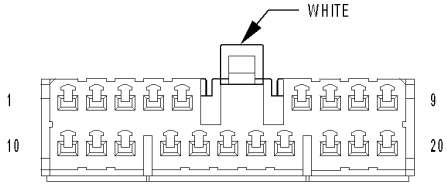

AMPLIFIER-
RADIO C2
(MIDLINE II/HIGHLINE)

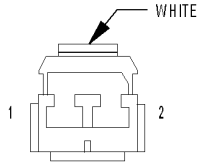

SPEAKER-
INSTRUMENT PANEL-
LEFT

813c5b8e

For a complete wiring diagram **Refer to Section 8W**.

- **When Monitored:**
- With the ignition on.
- **Set Condition:**
- The Amplifier detects a shorted to ground condition on the speaker output circuit.

Possible Causes
(X209) AMPLIFIED LEFT FRONT I/P SPEAKER (+) CIRCUIT SHORTED TO GROUND
(X299) AMPLIFIED LEFT FRONT I/P SPEAKER (-) CIRCUIT SHORTED TO GROUND
LEFT FRONT I/P SPEAKER
AMPLIFIER

Diagnostic Test

1. CHECK FOR AN INTERMITTENT CONDITION

Turn the ignition on, then off, and then on again.

With the scan tool, read Amplifier DTCs.

Does the scan tool display active: B1461-CHANNEL 1 AUDIO SPEAKER OUTPUT CIRCUIT LOW?

Yes >> Go To 2

No >> The conditions that caused this code to set are not present at this time. Using the wiring diagram/schematic as a guide, inspect the wiring and connectors.
Perform BODY VERIFICATION TEST VER-1.

2. CHECK THE (X209) AMPLIFIED LEFT FRONT I/P SPEAKER (+) CIRCUIT FOR A SHORT TO GROUND

Disconnect the Amplifier C2 harness connector.

Measure the resistance between ground and the (X209) Amplified Left Front I/P Speaker (+) circuit.

Is the resistance below 10K ohms?

Yes >> Repair the (X209) Amplified Left Front I/P Speaker (+) circuit for a short to ground.
Perform BODY VERIFICATION TEST VER-1.

No >> Go To 3

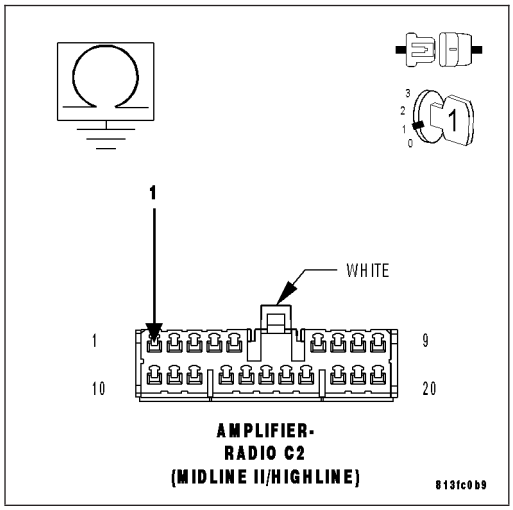

3. CHECK THE (X299) AMPLIFIED LEFT FRONT I/P SPEAKER (-) CIRCUIT FOR A SHORT TO GROUND

Measure the resistance between ground and the (X299) Amplified Left Front I/P Speaker (-) circuit.

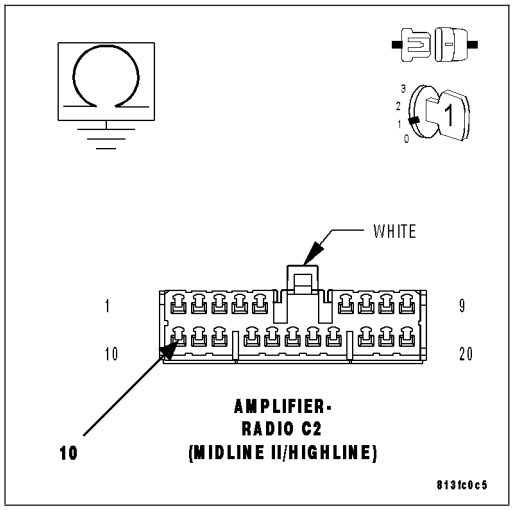

Is the resistance below 10K ohms?

Yes >> Repair the (X299) Amplified Left Front I/P Speaker (-) for a short to ground.
Perform BODY VERIFICATION TEST VER-1.

No >> Go To 4

4. CHECK OPERATION OF THE AMPLIFIED LEFT FRONT I/P SPEAKER

Turn the ignition off.

Reconnect and reinstall the Left Front I/P Speaker.

Measure the resistance of the speaker circuit between the Amplifier C2 harness connector and ground.

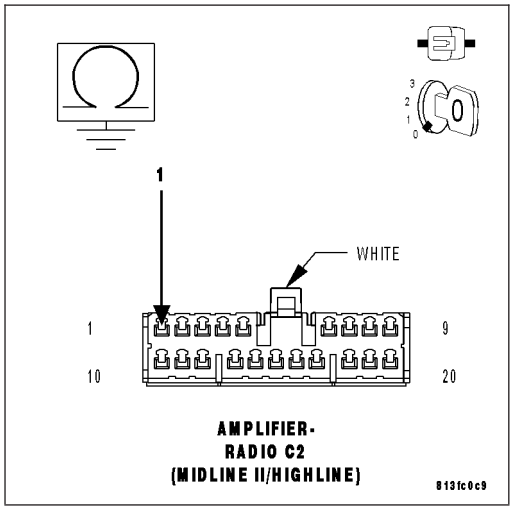

Is the resistance below 10K ohms?

Yes >> Replace the Left Front I/P Speaker in accordance with the service information.
Perform BODY VERIFICATION TEST VER-1.

No >> Replace the Amplifier in accordance with the service information.
Perform BODY VERIFICATION TEST VER-1.

B1462-CHANNEL 1 AUDIO SPEAKER OUTPUT CIRCUIT HIGH

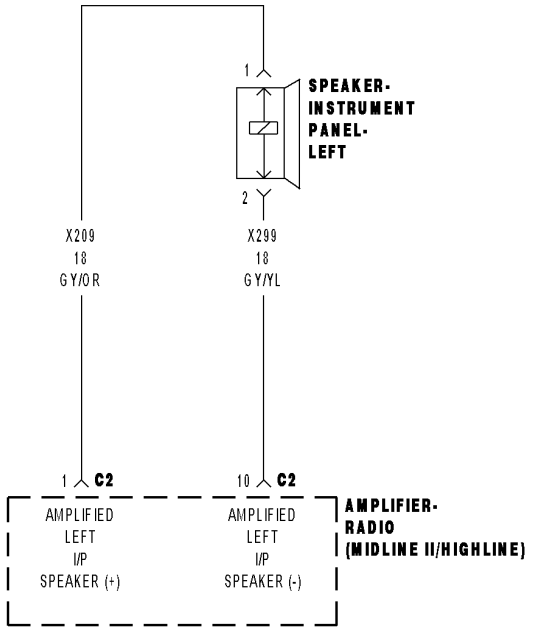

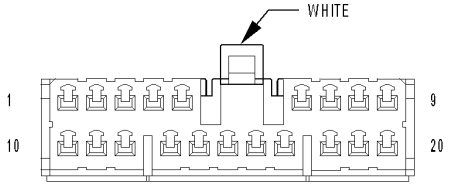

AMPLIFIER-
RADIO C2
(MIDLINE II/HIGHLINE)

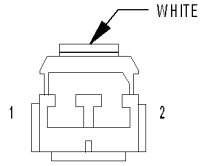

SPEAKER-
INSTRUMENT PANEL-
LEFT

813c5b8e

For a complete wiring diagram **Refer to Section 8W**.

- **When Monitored:**
- With the ignition on.
- **Set Condition:**
- The Amplifier detects a short to battery condition on the output circuit.

Possible Causes
(X209) AMPLIFIED LEFT I/P SPEAKER (+) CIRCUIT SHORT TO VOLTAGE
(X299) AMPLIFIED LEFT I/P SPEAKER (-) CIRCUIT SHORT TO VOLTAGE
AMPLIFIER

Diagnostic Test

1. CHECK FOR AN INTERMITTENT CONDITION

Turn the ignition on, then off, and then on again.

With the scan tool, read Amplifier DTCs.

Does the scan tool display active: B1462-CHANNEL 1 AUDIO SPEAKER OUTPUT CIRCUIT HIGH?

Yes >> Go To 2

No >> The conditions that caused this code to set are not present at this time. Using the wiring diagram/schematic as a guide, inspect the wiring and connectors.
Perform BODY VERIFICATION TEST VER-1.

2. CHECK FOR VOLTAGE ON THE (X209) AMPLIFIED LEFT I/P SPEAKER (+) CIRCUIT

Turn the ignition off.

Disconnect the Amplifier C2 harness connector.

Disconnect the Amplified Left I/P Speaker harness connector.

Turn the ignition on.

Measure for voltage on the (X209) Amplified Left I/P Speaker (+) circuit.

Is the voltage above 10.0 volts?

Yes >> Repair the (X209) Amplified Left I/P Speaker (+) circuit for a short to voltage.
Perform BODY VERIFICATION TEST VER-1.

No >> Go To 3

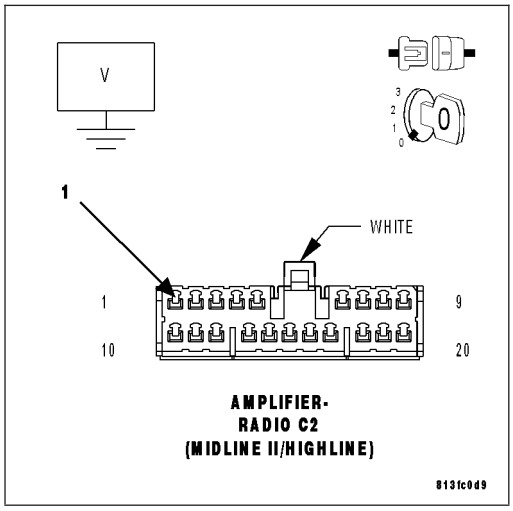

3. CHECK FOR VOLTAGE ON THE (X299) AMPLIFIED LEFT I/P SPEAKER (-) CIRCUIT

Measure for voltage on the (X299) Amplified Left I/P Speaker (-) circuit.

Is the voltage above 10.0 volts?

Yes >> Repair the (X299) Amplified Left I/P Speaker (-) circuit for a short to voltage.
Perform BODY VERIFICATION TEST VER-1.

No >> Replace the Amplifier in accordance with the service information.
Perform BODY VERIFICATION TEST VER-1.

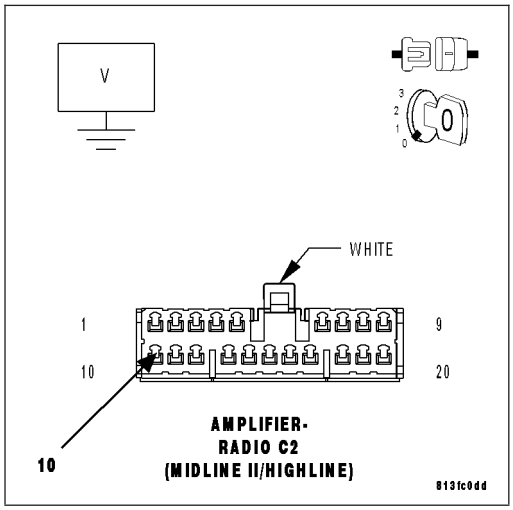

B1463-CHANNEL 1 AUDIO SPEAKER OUTPUT CIRCUIT OPEN

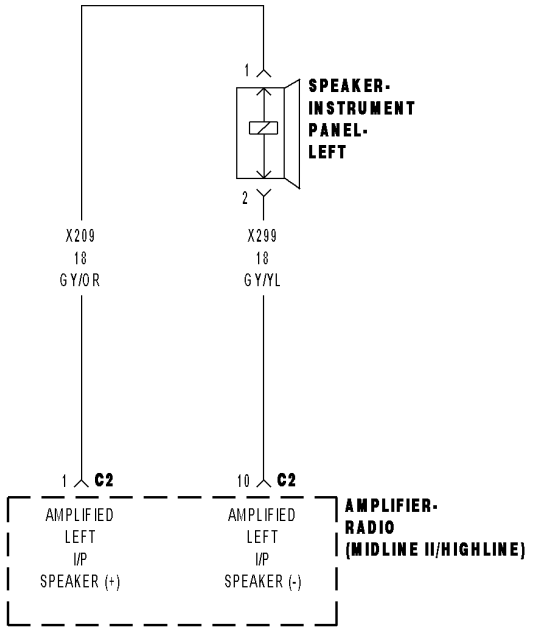

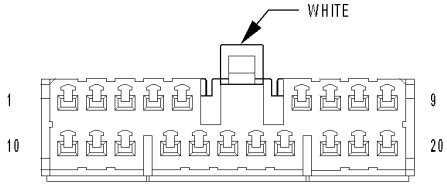

AMPLIFIER-
RADIO C2
(MIDLINE II/HIGHLINE)

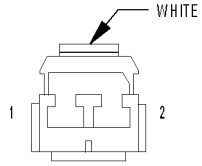

SPEAKER-
INSTRUMENT PANEL-
LEFT

813c5b8e

For a complete wiring diagram **Refer to Section 8W**.

- **When Monitored:**
- Amplifier Bus wake-up. Amplifier reset with scan tool.
- **Set Condition:**
- The Amplifier detects an open condition on the speaker output circuit.

Possible Causes
(X209) AMPLIFIED LEFT I/P SPEAKER (+) CIRCUIT OPEN
(X299) AMPLIFIED LEFT I/P SPEAKER (-) CIRCUIT OPEN
LEFT FRONT I/P SPEAKER
AMPLIFIER

Diagnostic Test

1. CHECK FOR AN INTERMITTENT CONDITION

Turn the ignition on.
Turn the radio on.
With the scan tool, erase Amplifier DTCs.
With the scan tool, reset the amplifier.
With the scan tool, read Amplifier DTCs.

Does the scan tool display active: B1463-CHANNEL 1 AUDIO SPEAKER OUTPUT CIRCUIT OPEN?

Yes >> Go To 2

No >> The conditions that caused this code to set are not present at this time. Using the wiring diagram/schematic as a guide, inspect the wiring and connectors.
Perform BODY VERIFICATION TEST VER-1.

2. CHECK THE OPERATION OF THE LEFT FRONT I/P SPEAKER

Disconnect the Left I/P Speaker harness connector.
Turn the radio on and turn the volume to mid level.
With a voltmeter set to read in A/C voltage, measure the voltage of the Amplified Left I/P Speaker circuits in the Amplified Left I/P Speaker harness connector.

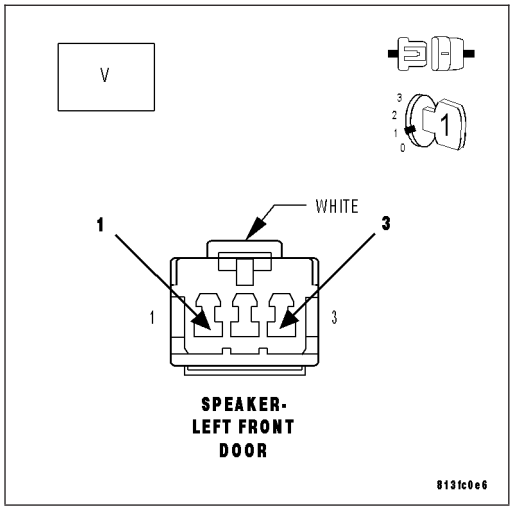

Is the voltage present greater than 1 volt?

Yes >> Replace the Amplified Left I/P Speaker in accordance with the service information.
Perform BODY VERIFICATION TEST VER-1.

No >> Go To 3

3. CHECK THE (X209) AMPLIFIED LEFT I/P SPEAKER (+) CIRCUIT FOR AN OPEN

Turn the ignition off.

Disconnect the Amplifier C2 harness connector.

Measure the resistance of the (X209) Amplified Left I/P Speaker (+) circuit between the Amplifier C2 harness connector and the Amplified Left I/P Speaker harness connector.

Is the resistance below 5.0 ohms?

Yes >> Go To 4

No >> Repair the (X209) Amplified Left I/P Speaker (+) circuit for an open.
Perform BODY VERIFICATION TEST VER-1.

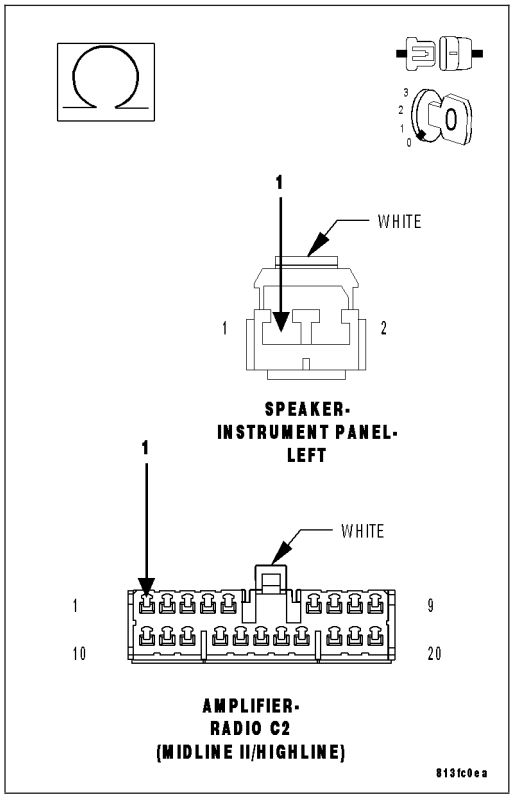

4. CHECK THE (X299) AMPLIFIED LEFT I/P SPEAKER (-) CIRCUIT FOR AN OPEN

Turn the ignition off.

Disconnect the Amplifier C2 harness connector.

Measure the resistance of the (X299) Amplified Left I/P Speaker (-) circuit between the Amplifier C2 harness connector and the Amplified Left I/P Speaker harness connector.

Is the resistance below 5.0 ohms?

Yes >> Replace the Amplifier in accordance with the service information.
Perform BODY VERIFICATION TEST VER-1.

No >> Repair the (X299) Amplified Left I/P Speaker (-) circuit for an open.
Perform BODY VERIFICATION TEST VER-1.

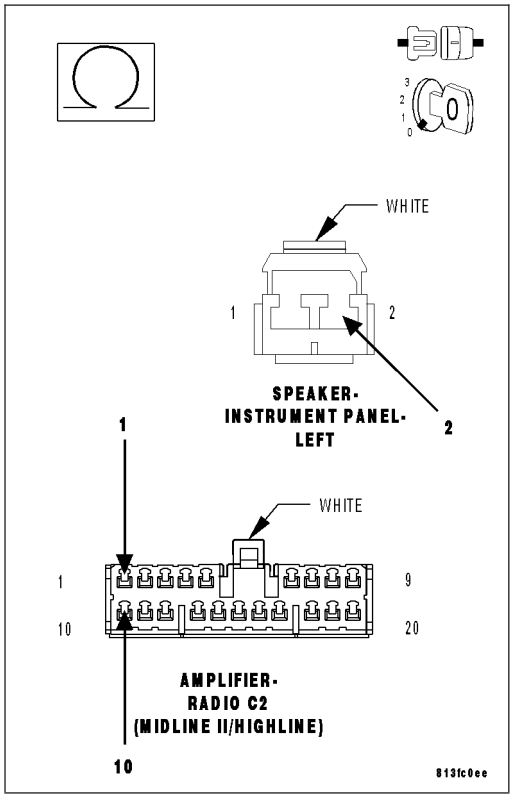

B1464-CHANNEL 1 AUDIO SPEAKER OUTPUT CIRCUIT SHORTED TOGETHER

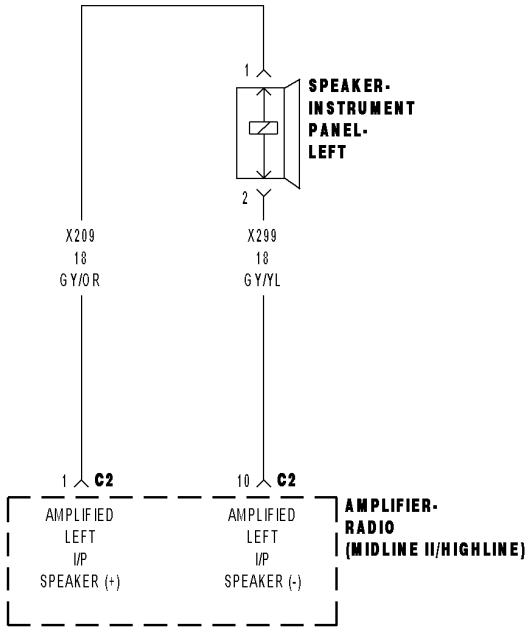

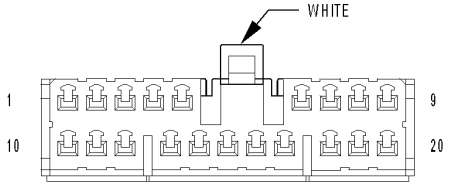

AMPLIFIER-
RADIO C2
(MIDLINE II/HIGHLINE)

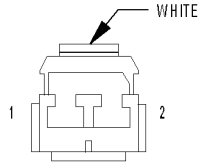

SPEAKER-
INSTRUMENT PANEL-
LEFT

813c5b8e

For a complete wiring diagram **Refer to Section 8W**.

- **When Monitored:**
- With the ignition on. Radio volume at 25 or higher.
- **Set Condition:**
- The amplifier detects that the output circuits are shorted together.

Possible Causes
(X209) AMPLIFIED LEFT I/P SPEAKER (+) CIRCUIT SHORTED TO THE (X299) AMPLIFIED LEFT I/P SPEAKER (-) CIRCUIT
AMPLIFIED LEFT I/P SPEAKER
AMPLIFIER

Diagnostic Test

1. CHECK FOR AN INTERMITTENT CONDITION

Turn the ignition on, then off, and then on again.
With the scan tool, erase Amplifier DTCs.
Turn the radio on.
Turn the volume level to 25.
With the scan tool, read Amplifier DTCs.

Does the scan tool display active: B1464-CHANNEL 1 AUDIO SPEAKER OUTPUT CIRCUIT SHORTED TOGETHER?

Yes >> Go To 2

No >> The conditions that caused this code to set are not present at this time. Using the wiring diagram/schematic as a guide, inspect the wiring and connectors.
Perform BODY VERIFICATION TEST VER-1.

2. CHECK THE OPERATION OF THE AMPLIFIED LEFT I/P SPEAKER

Disconnect the Amplified Left I/P Speaker.
Measure the resistance of the speaker between the two terminals.

Is the resistance of the speaker less than 1 ohm?

Yes >> Replace the Amplified Left I/P Speaker in accordance with the service information.
Perform BODY VERIFICATION TEST VER-1.

No >> Go To 3

3. CHECK THE (X209) AMPLIFIED LEFT I/P SPEAKER (+) CIRCUIT, AND THE (X299) AMPLIFIED LEFT I/P SPEAKER (-) CIRCUITS FOR A SHORT TOGETHER

Turn the ignition off.

Disconnect the Amplifier C2 harness connector.

Measure the resistance between the (X209) Amplified Left I/P Speaker (+) circuit, and the (X299) Amplified Left I/P Speaker (-) circuit.

Is the resistance below 10K ohms?

Yes >> Repair the (X209) Amplified Left I/P Speaker (+) circuit, and the (X299) Amplified Left I/P Speaker (-) circuit for a short together.

Perform BODY VERIFICATION TEST VER-1.

No >> Replace the Amplifier in accordance with the service information.

Perform BODY VERIFICATION TEST VER-1.

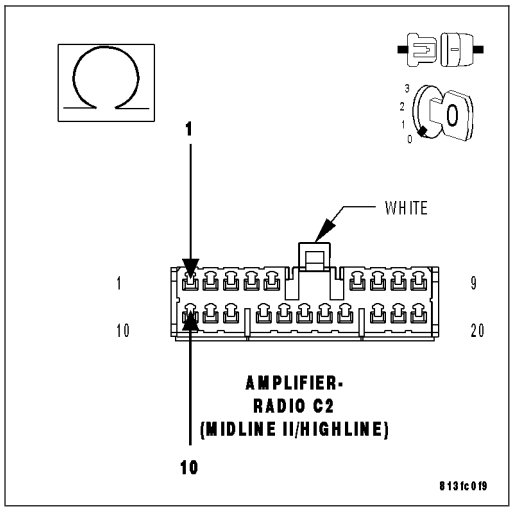

B1465-CHANNEL 2 AUDIO SPEAKER OUTPUT CIRCUIT PERFORMANCE

For a complete wiring diagram **Refer to Section 8W**.

- **When Monitored:**
- With the ignition on.
- **Set Condition:**
- This DTC will set if a DC offset occurs on the output channel, the amplifier shall set a DTC after a maturity rate of 5 ±1 sec.

Possible Causes
AMPLIFIER

Diagnostic Test

1. CHECK FOR AN INTERMITTENT CONDITION

Turn the ignition on, then off, and then on again.

With the scan tool, read Amplifier DTCs.

Does the scan tool display active: B1465-CHANNEL 2 AUDIO SPEAKER OUTPUT CIRCUIT PERFORMANCE?

Yes >> Replace the Amplifier in accordance with the service information.
Perform BODY VERIFICATION TEST VER-1.

No >> The conditions that caused this code to set are not present at this time. Using the wiring diagram/schematic as a guide, inspect the wiring and connectors.
Perform BODY VERIFICATION TEST VER-1.

B1466-CHANNEL 2 AUDIO SPEAKER OUTPUT CIRCUIT LOW

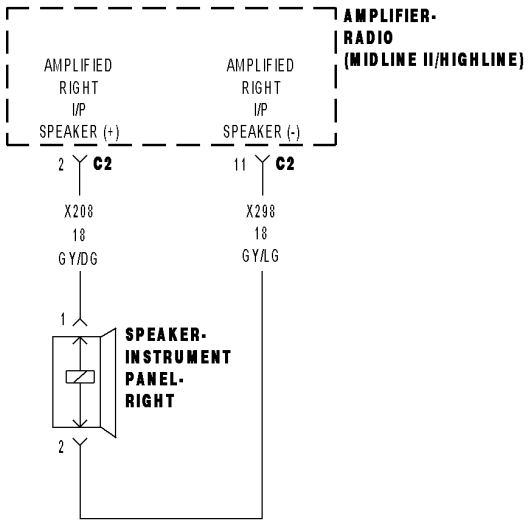

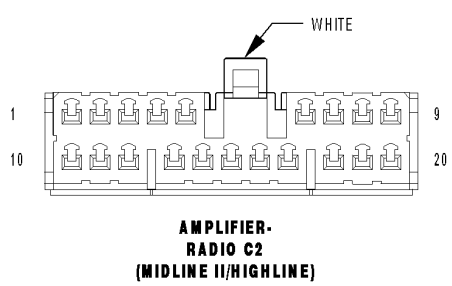

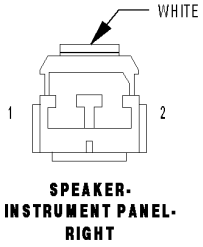

813c65e1

For a complete wiring diagram **Refer to Section 8W**.

- **When Monitored:**
- With the ignition on.
- **Set Condition:**
- The Amplifier detects a shorted to ground condition on the speaker output circuit.

Possible Causes
(X208) AMPLIFIED RIGHT FRONT I/P SPEAKER (+) CIRCUIT SHORTED TO GROUND
(X298) AMPLIFIED RIGHT FRONT I/P SPEAKER (-) CIRCUIT SHORTED TO GROUND
RIGHT FRONT I/P SPEAKER
AMPLIFIER

Diagnostic Test

1. CHECK FOR AN INTERMITTENT CONDITION

Turn the ignition on, then off, and then on again.

With the scan tool, read Amplifier DTCs.

Does the scan tool display active: B1466-CHANNEL 2 AUDIO SPEAKER OUTPUT CIRCUIT LOW?

Yes >> Go To 2

No >> The conditions that caused this code to set are not present at this time. Using the wiring diagram/schematic as a guide, inspect the wiring and connectors.
Perform BODY VERIFICATION TEST VER-1.

2. CHECK THE (X208) AMPLIFIED RIGHT FRONT I/P SPEAKER (+) CIRCUIT FOR A SHORT TO GROUND

Disconnect the Amplifier C2 harness connector.

Measure the resistance between ground and the (X208) Amplified Right Front I/P Speaker (+) circuit.

Is the resistance below 10K ohms?

Yes >> Repair the (X208) Amplified Right Front I/P Speaker (+) circuit for a short to ground.
Perform BODY VERIFICATION TEST VER-1.

No >> Go To 3

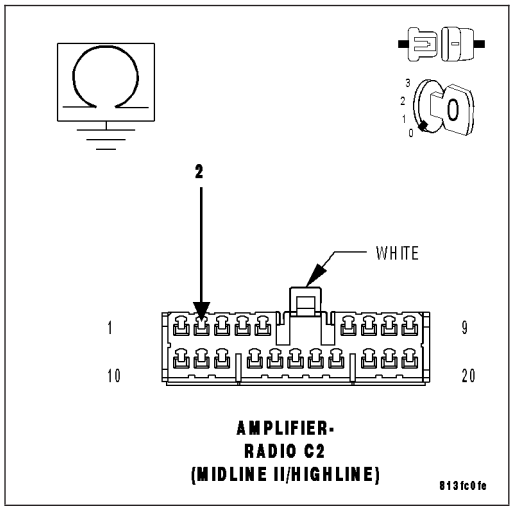

3. CHECK THE (X298) AMPLIFIED RIGHT FRONT I/P SPEAKER (-) CIRCUIT FOR A SHORT TO GROUND

Measure the resistance between ground and the (X298) Amplified Right Front I/P Speaker (-) circuit.

Is the resistance below 10K ohms?

Yes >> Repair the (X298) Amplified Right Front I/P Speaker (-) for a short to ground.
Perform BODY VERIFICATION TEST VER-1.

No >> Go To 4

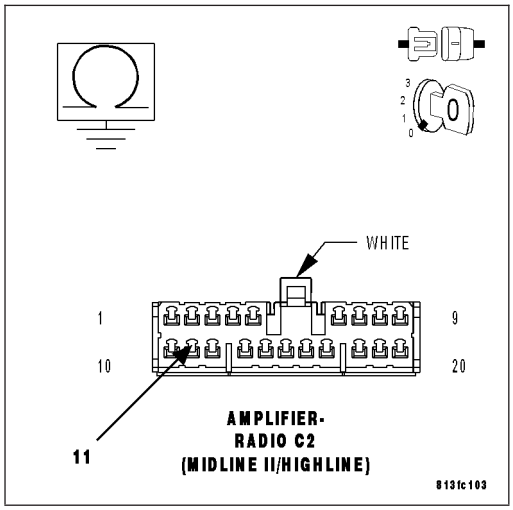

4. CHECK OPERATION OF THE AMPLIFIED RIGHT FRONT I/P SPEAKER

Turn the ignition off.

Reconnect and reinstall the Right Front I/P Speaker.

Measure the resistance of the speaker circuit between the Amplifier C2 harness connector and ground..

Is the resistance below 10K ohms?

Yes >> Replace the Right Front I/P Speaker in accordance with the service information.
Perform BODY VERIFICATION TEST VER-1.

No >> Replace the Amplifier in accordance with the service information.
Perform BODY VERIFICATION TEST VER-1.

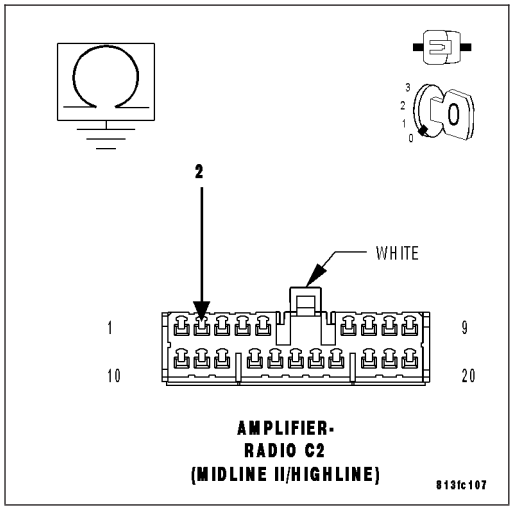

B1467-CHANNEL 2 AUDIO SPEAKER OUTPUT CIRCUIT HIGH

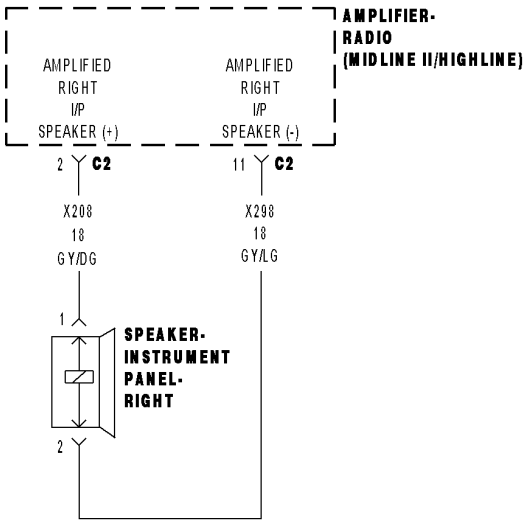

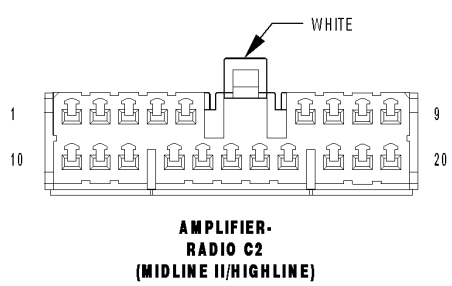

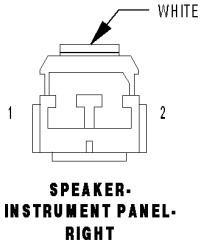

813c65e1

For a complete wiring diagram **Refer to Section 8W**.

- **When Monitored:**
- With the ignition on.
- **Set Condition:**
- The Amplifier detects a short to battery condition on the output circuit.

Possible Causes
(X208) AMPLIFIED RIGHT I/P SPEAKER (+) CIRCUIT SHORT TO VOLTAGE
(X298) AMPLIFIED RIGHT I/P SPEAKER (-) CIRCUIT SHORT TO VOLTAGE
AMPLIFIER

Diagnostic Test

1. CHECK FOR AN INTERMITTENT CONDITION

Turn the ignition on, then off, and then on again.

With the scan tool, read Amplifier DTCs.

Does the scan tool display active: B1467-CHANNEL 2 AUDIO SPEAKER OUTPUT CIRCUIT HIGH?

Yes >> Go To 2

No >> The conditions that caused this code to set are not present at this time. Using the wiring diagram/schematic as a guide, inspect the wiring and connectors.
Perform BODY VERIFICATION TEST VER-1.

2. CHECK FOR VOLTAGE ON THE (X208) AMPLIFIED RIGHT I/P SPEAKER (+) CIRCUIT

Turn the ignition off.

Disconnect the Amplifier C2 harness connector.

Disconnect the Amplified Right I/P Speaker harness connector.

Turn the ignition on.

Measure for voltage on the (X208) Amplified Right I/P Speaker (+) circuit.

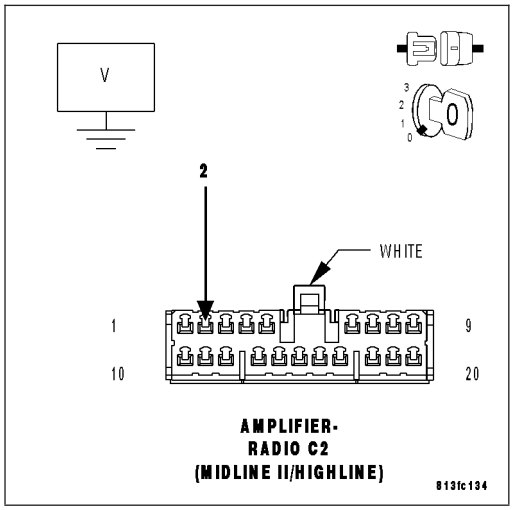

Is the voltage above 10.0 volts?

Yes >> Repair the (X208) Amplified Right I/P Speaker (+) circuit for a short to voltage.
Perform BODY VERIFICATION TEST VER-1.

No >> Go To 3

3. CHECK FOR VOLTAGE ON THE (X298) AMPLIFIED RIGHT I/P SPEAKER (-) CIRCUIT

Measure for voltage on the (X298) Amplified Right I/P Speaker (-) circuit.

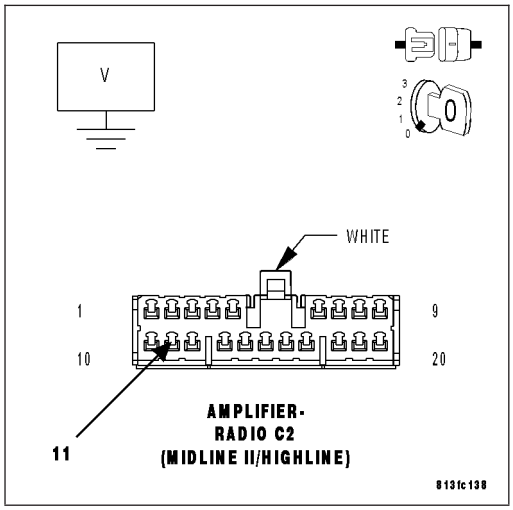

Is the voltage above 10.0 volts?

Yes >> Repair the (X298) Amplified Right I/P Speaker (-) circuit for a short to voltage.
Perform BODY VERIFICATION TEST VER-1.

No >> Replace the Amplifier in accordance with the service information.
Perform BODY VERIFICATION TEST VER-1.

B1468-CHANNEL 2 AUDIO SPEAKER OUTPUT CIRCUIT OPEN

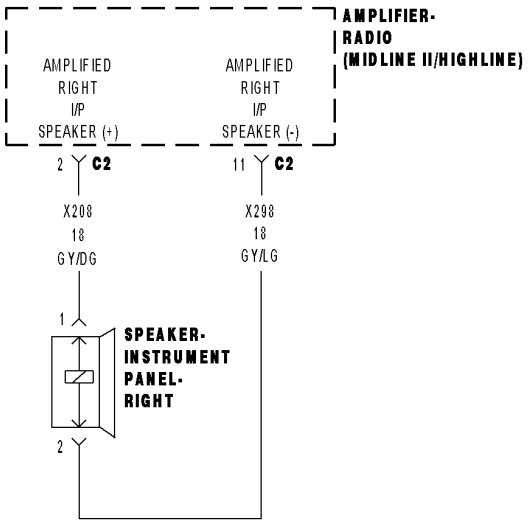

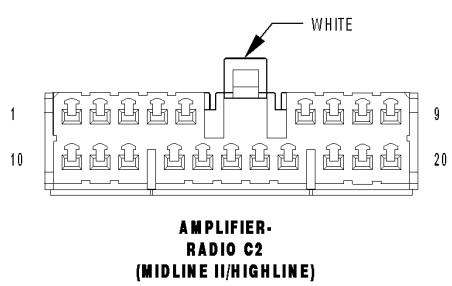

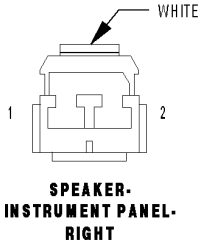

813c65e1

For a complete wiring diagram **Refer to Section 8W**.

- **When Monitored:**
- Amplifier Bus wake-up. Amplifier reset with scan tool.
- **Set Condition:**
- The Amplifier detects an open condition on the speaker output circuit.

Possible Causes
(X208) AMPLIFIED RIGHT I/P SPEAKER (+) CIRCUIT OPEN
(X298) AMPLIFIED RIGHT I/P SPEAKER (-) CIRCUIT OPEN
RIGHT I/P SPEAKER
AMPLIFIER

Diagnostic Test

1. CHECK FOR AN INTERMITTENT CONDITION

Turn the ignition on.
Turn the radio on.
With the scan tool, erase Amplifier DTCs.
With the scan tool, reset the amplifier.
With the scan tool, read Amplifier DTCs.

Does the scan tool display active: B1468-CHANNEL 2 AUDIO SPEAKER OUTPUT CIRCUIT OPEN?

Yes >> Go To 2

No >> The conditions that caused this code to set are not present at this time. Using the wiring diagram/schematic as a guide, inspect the wiring and connectors.
Perform BODY VERIFICATION TEST VER-1.

2. CHECK THE OPERATION OF THE RIGHT FRONT I/P SPEAKER

Disconnect the Right I/P Speaker harness connector.
Turn the radio on and turn the volume to mid level.
With a voltmeter set to read in A/C voltage, measure the voltage of the Amplified Right I/P Speaker circuits in the Amplified Right I/P Speaker harness connector.

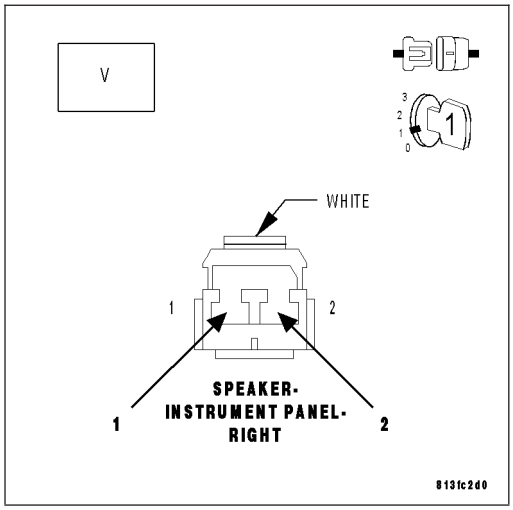

Is the voltage present greater than 1 volt?

Yes >> Replace the Amplified Right I/P Speaker in accordance with the service information.
Perform BODY VERIFICATION TEST VER-1.

No >> Go To 3

3. CHECK THE (X208) AMPLIFIED RIGHT I/P SPEAKER (+) CIRCUIT FOR AN OPEN

Turn the ignition off.

Disconnect the Amplifier C2 harness connector.

Measure the resistance of the (X208) Amplified Right I/P Speaker (+) circuit between the Amplifier C2 harness connector and the Amplified Right I/P Speaker harness connector.

Is the resistance below 5.0 ohms?

Yes >> Go To 4

No >> Repair the (X208) Amplified Right I/P Speaker (+) circuit for an open.
Perform BODY VERIFICATION TEST VER-1.

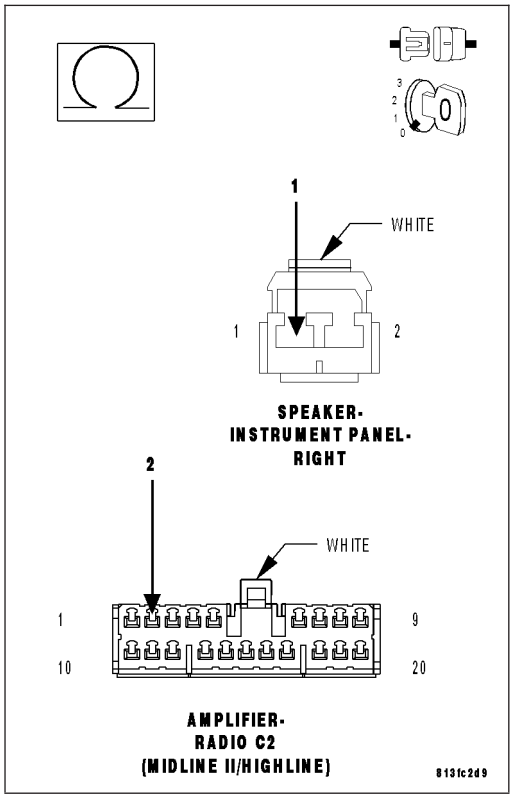

4. CHECK THE (X298) AMPLIFIED RIGHT I/P SPEAKER (-) CIRCUIT FOR AN OPEN

Turn the ignition off.

Disconnect the Amplifier C2 harness connector.

Measure the resistance of the (X298) Amplified Right I/P Speaker (-) circuit between the Amplifier C2 harness connector and the Amplified Right I/P Speaker harness connector.

Is the resistance below 5.0 ohms?

Yes >> Replace the Amplifier in accordance with the service information.
Perform BODY VERIFICATION TEST VER-1.

No >> Repair the (X298) Amplified Right I/P Speaker (-) circuit for an open.
Perform BODY VERIFICATION TEST VER-1.

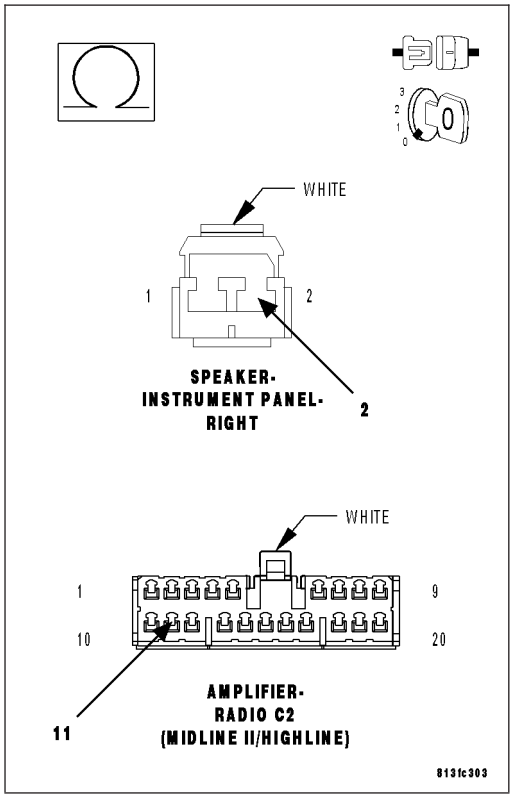

B1469-CHANNEL 2 AUDIO SPEAKER OUTPUT CIRCUIT SHORTED TOGETHER

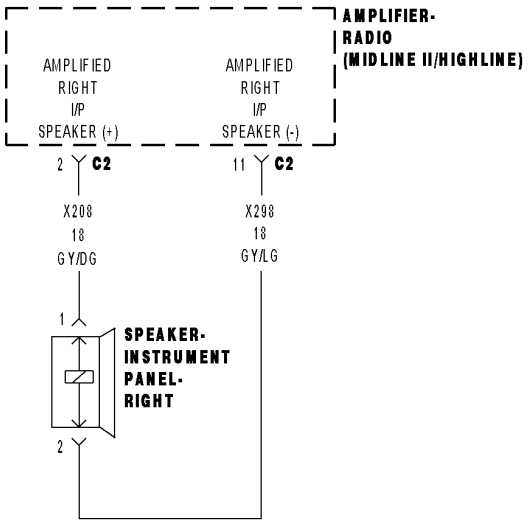

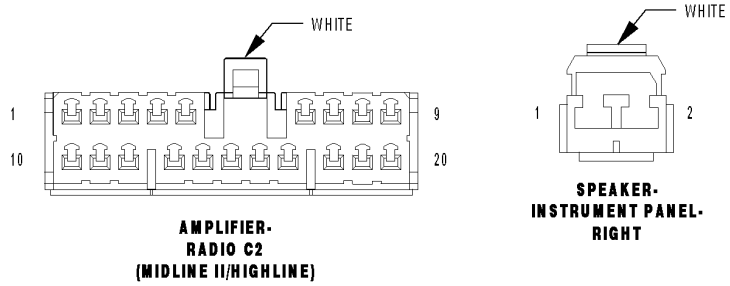

813c65e1

For a complete wiring diagram **Refer to Section 8W**.

- **When Monitored:**
- With the ignition on. Radio volume at 25 or higher.
- **Set Condition:**
- The amplifier detects that the output circuits are shorted together.

Possible Causes
(X208) AMPLIFIED RIGHT I/P SPEAKER (+) CIRCUIT SHORTED TO THE (X298) AMPLIFIED RIGHT I/P SPEAKER (-) CIRCUIT
AMPLIFIED RIGHT I/P SPEAKER
AMPLIFIER

Diagnostic Test

1. CHECK FOR AN INTERMITTENT CONDITION

Turn the ignition on, then off, and then on again.
With the scan tool, erase Amplifier DTCs.
Turn the radio on.
Turn the volume level to 25.
With the scan tool, read Amplifier DTCs.

Does the scan tool display active: B1469-CHANNEL 2 AUDIO SPEAKER OUTPUT CIRCUIT SHORTED TOGETHER?

Yes >> Go To 2

No >> The conditions that caused this code to set are not present at this time. Using the wiring diagram/schematic as a guide, inspect the wiring and connectors.
Perform BODY VERIFICATION TEST VER-1.

2. CHECK THE OPERATION OF THE AMPLIFIED RIGHT I/P SPEAKER

Disconnect the Amplified Right I/P Speaker.
Measure the resistance of the speaker between the two terminals.

Is the resistance of the speaker less than 1 ohm?

Yes >> Replace the Amplified Right I/P Speaker in accordance with the service information.
Perform BODY VERIFICATION TEST VER-1.

No >> Go To 3

3. CHECK THE (X208) AMPLIFIED RIGHT I/P SPEAKER (+) CIRCUIT, AND THE (X298) AMPLIFIED RIGHT I/P SPEAKER (-) CIRCUITS FOR A SHORT TOGETHER

Turn the ignition off.

Disconnect the Amplifier C2 harness connector.

Measure the resistance between the (X208) Amplified Right I/P Speaker (+) circuit, and the (X298) Amplified Right I/P Speaker (-) circuit.

Is the resistance below 10K ohms?

Yes >> Repair the (X208) Amplified Right I/P Speaker (+) circuit, and the (X298) Amplified Right I/P Speaker (-) circuit for a short together.

Perform BODY VERIFICATION TEST VER-1.

No >> Replace the Amplifier in accordance with the service information.

Perform BODY VERIFICATION TEST VER-1.

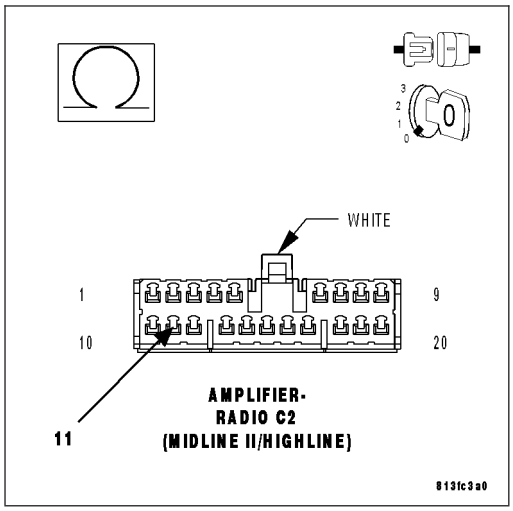

B146A-CHANNEL 3 AUDIO SPEAKER OUTPUT CIRCUIT PERFORMANCE

For a complete wiring diagram **Refer to Section 8W**.

- **When Monitored:**
- With the ignition on.
- **Set Condition:**
- This DTC will set if a DC offset occurs on the output channel, the amplifier shall set a DTC after a maturity rate of 5 ±1 sec.

Possible Causes
AMPLIFIER

Diagnostic Test

1. CHECK FOR AN INTERMITTENT CONDITION

Turn the ignition on, then off, and then on again.

With the scan tool, read Amplifier DTCs.

Does the scan tool display active: B146A-CHANNEL 3 AUDIO SPEAKER OUTPUT CIRCUIT PERFORMANCE?

Yes >> Replace the Amplifier in accordance with the service information.
Perform BODY VERIFICATION TEST VER-1.

No >> The conditions that caused this code to set are not present at this time. Using the wiring diagram/schematic as a guide, inspect the wiring and connectors.
Perform BODY VERIFICATION TEST VER-1.

B146B-CHANNEL 3 AUDIO SPEAKER OUTPUT CIRCUIT LOW

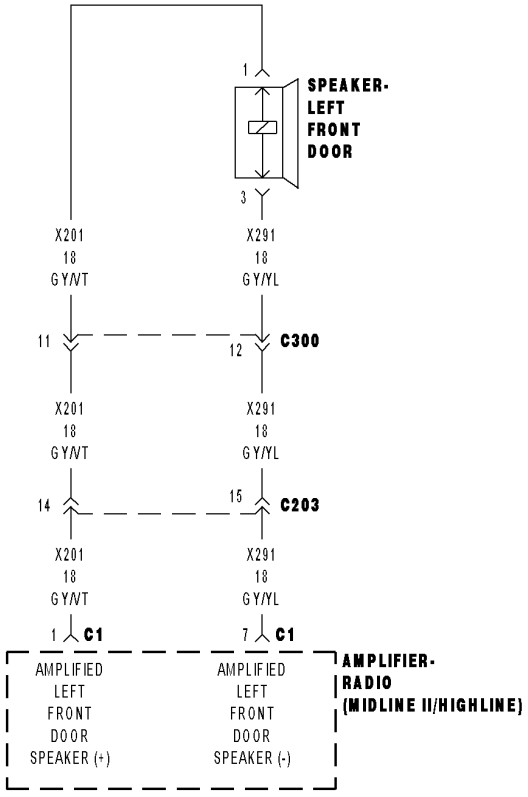

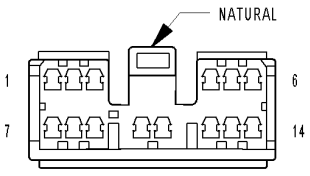

AMPLIFIER-
RADIO C1
(MIDLINE II/HIGHLINE)

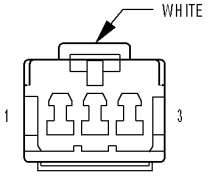

SPEAKER-
LEFT FRONT
DOOR

813c7cfa

For a complete wiring diagram **Refer to Section 8W**.

- **When Monitored:**
- With the ignition on.
- **Set Condition:**
- The Amplifier detects a shorted to ground condition on the speaker output circuit.

Possible Causes
(X201) AMPLIFIED LEFT FRONT DOOR SPEAKER (+) CIRCUIT SHORTED TO GROUND
(X291) AMPLIFIED LEFT FRONT DOOR SPEAKER (-) CIRCUIT SHORTED TO GROUND
LEFT FRONT DOOR SPEAKER
AMPLIFIER

Diagnostic Test

1. CHECK FOR AN INTERMITTENT CONDITION

Turn the ignition on, then off, and then on again.
With the scan tool, read Amplifier DTCs.

Does the scan tool display active: B146B-CHANNEL 3 AUDIO SPEAKER OUTPUT CIRCUIT LOW?

Yes >> Go To 2

No >> The conditions that caused this code to set are not present at this time. Using the wiring diagram/schematic as a guide, inspect the wiring and connectors.
Perform BODY VERIFICATION TEST VER-1.

2. CHECK THE (X201) AMPLIFIED LEFT FRONT DOOR SPEAKER (+) CIRCUIT FOR A SHORT TO GROUND

Disconnect the Amplifier C1 harness connector.
Measure the resistance between ground and the (X201) Amplified Left Front Door Speaker (+) circuit.

Is the resistance below 10K ohms?

Yes >> Repair the (X201) Amplified Left Front Door Speaker (+) circuit for a short to ground.
Perform BODY VERIFICATION TEST VER-1.

No >> Go To 3

3. CHECK THE (X291) AMPLIFIED LEFT FRONT DOOR SPEAKER (-) CIRCUIT FOR A SHORT TO GROUND

Measure the resistance between ground and the (X291) Amplified Left Front Door Speaker (-) circuit.

Is the resistance below 10K ohms?

Yes >> Repair the (X291) Amplified Left Front Door Speaker (-) for a short to ground.
Perform BODY VERIFICATION TEST VER-1.

No >> Go To 4

4. CHECK OPERATION OF THE AMPLIFIED LEFT FRONT DOOR SPEAKER

Turn the ignition off.

Reconnect and reinstall the Left Front Door Speaker.

Measure the resistance of the speaker circuit between the Amplifier C1 harness connector and ground..

Is the resistance below 10K ohms?

Yes >> Replace the Left Front Door Speaker in accordance with the service information.
Perform BODY VERIFICATION TEST VER-1.

No >> Replace the Amplifier in accordance with the service information.
Perform BODY VERIFICATION TEST VER-1.

B146C-CHANNEL 3 AUDIO SPEAKER OUTPUT CIRCUIT HIGH

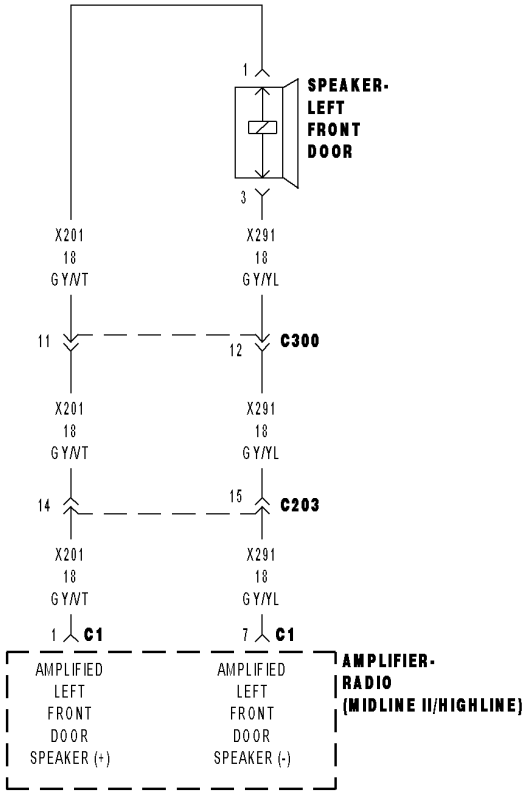

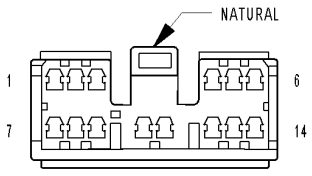

AMPLIFIER-
RADIO C1
(MIDLINE II/HIGHLINE)

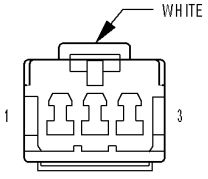

SPEAKER-
LEFT FRONT
DOOR

813c7cfa

For a complete wiring diagram **Refer to Section 8W**.

- **When Monitored:**
- With the ignition on.
- **Set Condition:**
- The Amplifier detects a short to battery condition on the output circuit.

Possible Causes
(X201) AMPLIFIED LEFT FRONT DOOR SPEAKER (+) CIRCUIT SHORT TO VOLTAGE
(X291) AMPLIFIED LEFT FRONT DOOR SPEAKER (-) CIRCUIT SHORT TO VOLTAGE
AMPLIFIER

Diagnostic Test

1. CHECK FOR AN INTERMITTENT CONDITION

Turn the ignition on, then off, and then on again.
With the scan tool, read Amplifier DTCs.

Does the scan tool display active: B146C-CHANNEL 3 AUDIO SPEAKER OUTPUT CIRCUIT HIGH?

Yes >> Go To 2

No >> The conditions that caused this code to set are not present at this time. Using the wiring diagram/schematic as a guide, inspect the wiring and connectors.
Perform BODY VERIFICATION TEST VER-1.

2. CHECK FOR VOLTAGE ON THE (X201) AMPLIFIED LEFT FRONT DOOR SPEAKER (+) CIRCUIT

Turn the ignition off.
Disconnect the Amplifier C1 harness connector.
Disconnect the Amplified Left Front Door Speaker harness connector.
Turn the ignition on.
Measure for voltage on the (X201) Amplified Left Front Door Speaker (+) circuit.

Is the voltage above 10.0 volts?

Yes >> Repair the (X201) Amplified Left Front Door Speaker (+) circuit for a short to voltage.
Perform BODY VERIFICATION TEST VER-1.

No >> Go To 3

3. CHECK FOR VOLTAGE ON THE (X291) AMPLIFIED LEFT FRONT DOOR SPEAKER (-) CIRCUIT

Measure for voltage on the (X291) Amplified Left Front Door Speaker (-) circuit.

Is the voltage above 10.0 volts?

Yes >> Repair the (X291) Amplified Left Front Door Speaker (-) circuit for a short to voltage.
Perform BODY VERIFICATION TEST VER-1.

No >> Replace the Amplifier in accordance with the service information.
Perform BODY VERIFICATION TEST VER-1.

B146D-CHANNEL 3 AUDIO SPEAKER OUTPUT CIRCUIT OPEN

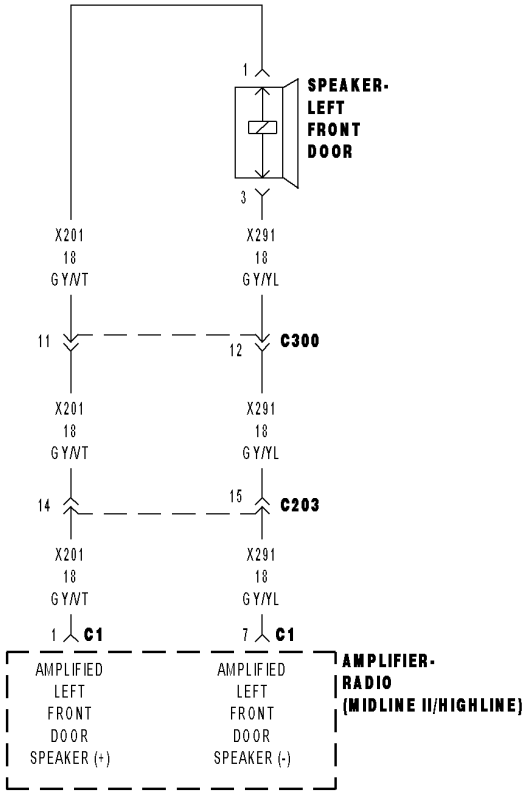

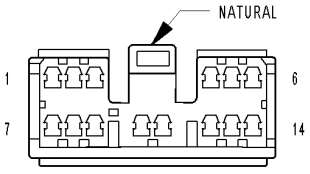

AMPLIFIER-
RADIO C1
(MIDLINE II/HIGHLINE)

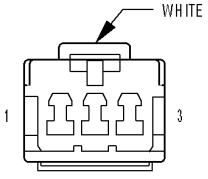

SPEAKER-
LEFT FRONT
DOOR

813c7cfa

For a complete wiring diagram **Refer to Section 8W**.

- **When Monitored:**
- Amplifier Bus wake-up. Amplifier reset with scan tool.
- **Set Condition:**
- The Amplifier detects an open condition on the speaker output circuit.

Possible Causes
(X201) AMPLIFIED LEFT REAR DOOR SPEAKER (+) CIRCUIT OPEN
(X291) AMPLIFIED LEFT REAR DOOR SPEAKER (-) CIRCUIT OPEN
LEFT REAR DOOR SPEAKER
AMPLIFIER

Diagnostic Test

1. CHECK FOR AN INTERMITTENT CONDITION

Turn the ignition on.
Turn the radio on.
With the scan tool, erase Amplifier DTCs.
With the scan tool, reset the amplifier.
With the scan tool, read Amplifier DTCs.

Does the scan tool display active: B146D-CHANNEL 3 AUDIO SPEAKER OUTPUT CIRCUIT OPEN?

Yes >> Go To 2

No >> The conditions that caused this code to set are not present at this time. Using the wiring diagram/schematic as a guide, inspect the wiring and connectors.
Perform BODY VERIFICATION TEST VER-1.

2. CHECK THE OPERATION OF THE LEFT REAR DOOR SPEAKER

Disconnect the Left Rear Door Speaker harness connector.
Turn the radio on and turn the volume to mid level.
With a voltmeter set to read in A/C voltage, measure the voltage of the Amplified Left Rear Door Speaker circuits in the Amplified Left Rear Door Speaker harness connector.

Is the voltage present greater than 1 volt?

Yes >> Replace the Amplified Left Rear Door Speaker in accordance with the service information.
Perform BODY VERIFICATION TEST VER-1.

No >> Go To 3

3. CHECK THE (X201) AMPLIFIED LEFT REAR DOOR SPEAKER (+) CIRCUIT FOR AN OPEN

Turn the ignition off.
Disconnect the Amplifier C1 harness connector.
Measure the resistance of the (X201) Amplified Left Rear Door Speaker (+) circuit between the Amplifier C1 harness connector and the Amplified Left Rear Door Speaker harness connector.

Is the resistance below 5.0 ohms?

Yes >> Go To 4

No >> Repair the (X201) Amplified Left Rear Door Speaker (+) circuit for an open.
Perform BODY VERIFICATION TEST VER-1.

4. CHECK THE (X291) AMPLIFIED LEFT REAR DOOR SPEAKER (-) CIRCUIT FOR AN OPEN

Turn the ignition off.

Disconnect the Amplifier C1 harness connector.

Measure the resistance of the (X291) Amplified Left Rear Door Speaker (-) circuit between the Amplifier C1 harness connector and the Amplified Left Rear Door Speaker harness connector.

Is the resistance below 5.0 ohms?

Yes >> Replace the Amplifier in accordance with the service information.
Perform BODY VERIFICATION TEST VER-1.

No >> Repair the (X291) Amplified Left Rear Door Speaker (-) circuit for an open.
Perform BODY VERIFICATION TEST VER-1.

B146E-CHANNEL 3 AUDIO SPEAKER OUTPUT CIRCUIT SHORTED TOGETHER

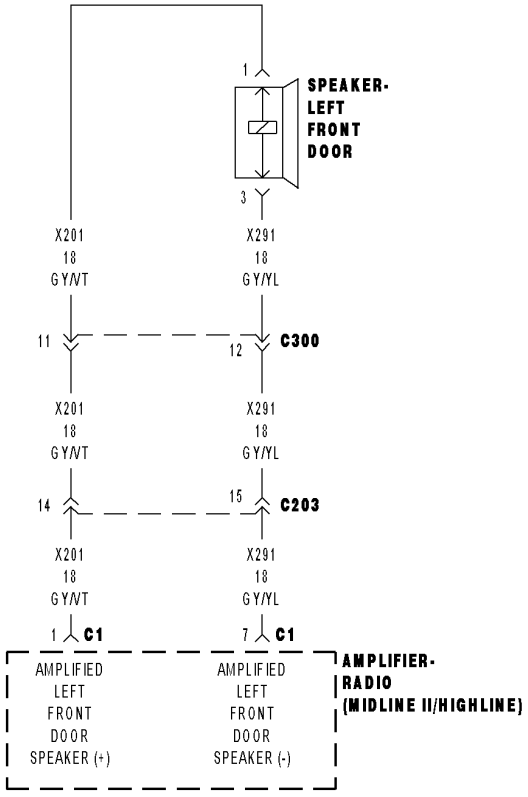

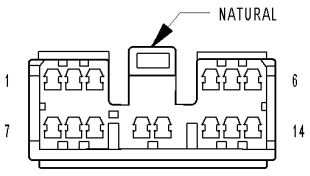

AMPLIFIER-
RADIO C1
(MIDLINE II/HIGHLINE)

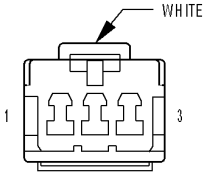

SPEAKER-
LEFT FRONT
DOOR

813c7cfa

For a complete wiring diagram **Refer to Section 8W**.

- **When Monitored:**
- With the ignition on. Radio volume at 25 or higher.
- **Set Condition:**
- The amplifier detects that the output circuits are shorted together.

Possible Causes
(X201) AMPLIFIED LEFT FRONT DOOR SPEAKER (+) CIRCUIT SHORTED TO THE (X291) AMPLIFIED LEFT FRONT DOOR SPEAKER (-) CIRCUIT
AMPLIFIED LEFT FRONT DOOR SPEAKER
AMPLIFIER

Diagnostic Test

1. CHECK FOR AN INTERMITTENT CONDITION

Turn the ignition on, then off, and then on again.
With the scan tool, erase Amplifier DTCs.
Turn the radio on.
Turn the volume level to 25.
With the scan tool, read Amplifier DTCs.

Does the scan tool display active: B146E-CHANNEL 3 AUDIO SPEAKER OUTPUT CIRCUIT SHORTED TOGETHER?

Yes >> Go To 2

No >> The conditions that caused this code to set are not present at this time. Using the wiring diagram/schematic as a guide, inspect the wiring and connectors.
Perform BODY VERIFICATION TEST VER-1.

2. CHECK THE OPERATION OF THE AMPLIFIED LEFT FRONT DOOR SPEAKER

Disconnect the Amplified Left Front Door Speaker.
Measure the resistance of the speaker between the two terminals.

Is the resistance of the speaker less than 1 ohm?

Yes >> Replace the Amplified Left Front Door Speaker in accordance with the service information.
Perform BODY VERIFICATION TEST VER-1.

No >> Go To 3

3. CHECK THE (X201) AMPLIFIED LEFT FRONT DOOR SPEAKER (+) CIRCUIT, AND THE (X291) AMPLIFIED LEFT FRONT DOOR SPEAKER (-) CIRCUITS FOR A SHORT TOGETHER

Turn the ignition off.
Disconnect the Amplifier C1 harness connector.
Measure the resistance between the (X201) Amplified Left Front Door Speaker (+) circuit, and the (X291) Amplified Left Front Door Speaker (-) circuit.

Is the resistance below 10K ohms?

Yes >> Repair the (X201) Amplified Left Front Door Speaker (+) circuit, and the (X291) Amplified Left Front Door Speaker (-) circuit for a short together.
Perform BODY VERIFICATION TEST VER-1.

No >> Replace the Amplifier in accordance with the service information.
Perform BODY VERIFICATION TEST VER-1.

B146F-CHANNEL 4 AUDIO SPEAKER OUTPUT CIRCUIT PERFORMANCE

For a complete wiring diagram **Refer to Section 8W**.

- **When Monitored:**
- With the ignition on.
- **Set Condition:**
- This DTC will set if a DC offset occurs on the output channel, the amplifier shall set a DTC after a maturity rate of 5 ±1 sec.

Possible Causes
AMPLIFIER

Diagnostic Test

1. CHECK FOR AN INTERMITTENT CONDITION

Turn the ignition on, then off, and then on again.

With the scan tool, read Amplifier DTCs.

Does the scan tool display active: B146F-CHANNEL 4 AUDIO SPEAKER OUTPUT CIRCUIT PERFORMANCE?

Yes >> Replace the Amplifier in accordance with the service information.
Perform BODY VERIFICATION TEST VER-1.

No >> The conditions that caused this code to set are not present at this time. Using the wiring diagram/schematic as a guide, inspect the wiring and connectors.
Perform BODY VERIFICATION TEST VER-1.

B1470-CHANNEL 4 AUDIO SPEAKER OUTPUT CIRCUIT LOW

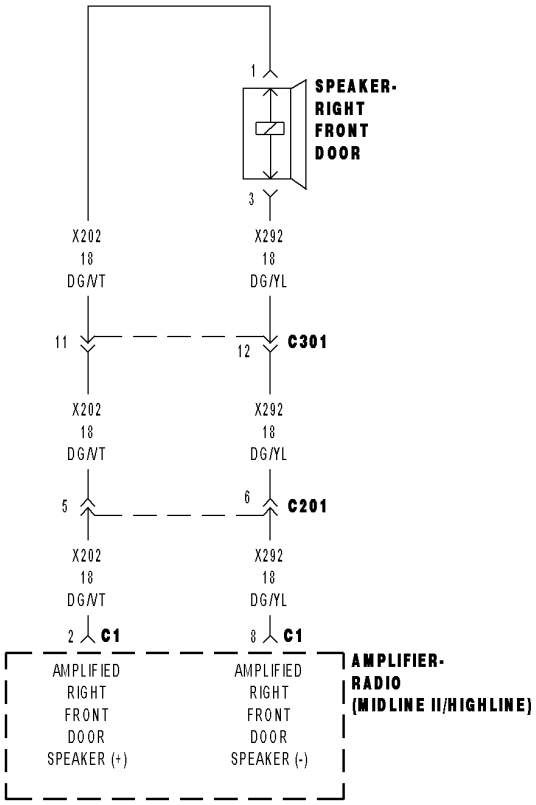

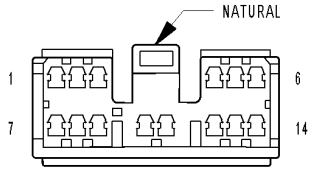

AMPLIFIER-
RADIO C1
(MIDLINE II/HIGHLINE)

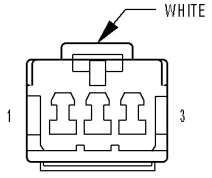

SPEAKER-
RIGHT FRONT
DOOR

813c71c

For a complete wiring diagram **Refer to Section 8W**.

- **When Monitored:**
- With the ignition on.
- **Set Condition:**
- The Amplifier detects a shorted to ground condition on the speaker output circuit.

Possible Causes
(X202) AMPLIFIED RIGHT FRONT DOOR SPEAKER (+) CIRCUIT SHORTED TO GROUND
(X292) AMPLIFIED RIGHT FRONT DOOR SPEAKER (-) CIRCUIT SHORTED TO GROUND
RIGHT FRONT DOOR SPEAKER
AMPLIFIER

Diagnostic Test

1. CHECK FOR AN INTERMITTENT CONDITION

Turn the ignition on, then off, and then on again.
With the scan tool, read Amplifier DTCs.

Does the scan tool display active: B1470-CHANNEL 4 AUDIO SPEAKER OUTPUT CIRCUIT LOW?

Yes >> Go To 2

No >> The conditions that caused this code to set are not present at this time. Using the wiring diagram/schematic as a guide, inspect the wiring and connectors.
Perform BODY VERIFICATION TEST VER-1.

2. CHECK THE (X202) AMPLIFIED RIGHT FRONT DOOR SPEAKER (+) CIRCUIT FOR A SHORT TO GROUND

Disconnect the Amplifier C1 harness connector.
Measure the resistance between ground and the (X202) Amplified Right Front Door Speaker (+) circuit.

Is the resistance below 10K ohms?

Yes >> Repair the (X202) Amplified Left Front Door Speaker (+) circuit for a short to ground.
Perform BODY VERIFICATION TEST VER-1.

No >> Go To 3

3. CHECK THE (X292) AMPLIFIED RIGHT FRONT DOOR SPEAKER (-) CIRCUIT FOR A SHORT TO GROUND

Measure the resistance between ground and the (X292) Amplified Right Front Door Speaker (-) circuit.

Is the resistance below 10K ohms?

Yes >> Repair the (X292) Amplified Right Front Door Speaker (-) for a short to ground.
Perform BODY VERIFICATION TEST VER-1.

No >> Go To 4

4. CHECK OPERATION OF THE AMPLIFIED RIGHT FRONT DOOR SPEAKER

Turn the ignition off.

Reconnect and reinstall the Right Front Door Speaker.

Measure the resistance of the speaker circuit between the Amplifier C1 harness connector and ground..

Is the resistance below 10K ohms?

Yes >> Replace the Right Front Door Speaker in accordance with the service information.
Perform BODY VERIFICATION TEST VER-1.

No >> Replace the Amplifier in accordance with the service information.
Perform BODY VERIFICATION TEST VER-1.

B1471-CHANNEL 4 AUDIO SPEAKER OUTPUT CIRCUIT HIGH

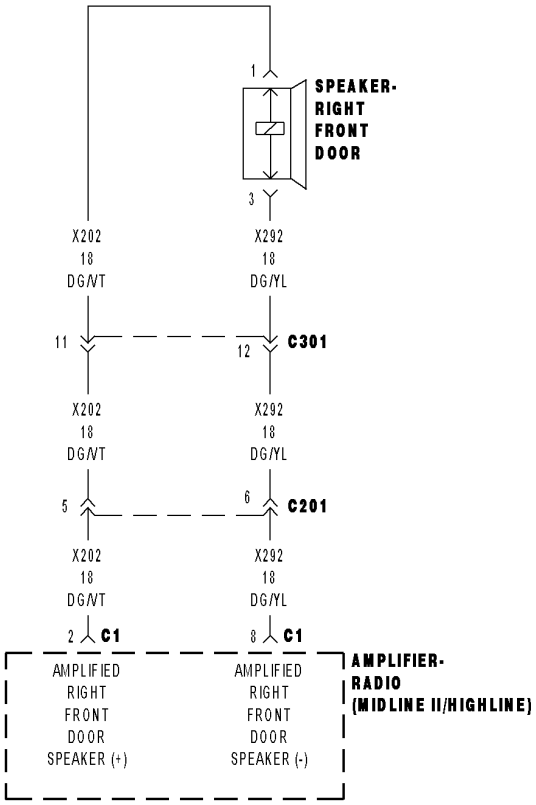

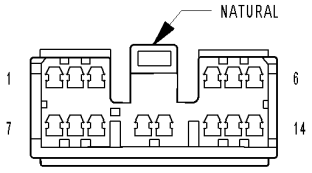

AMPLIFIER-
RADIO C1
(MIDLINE II/HIGHLINE)

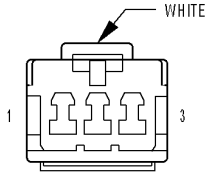

SPEAKER-
RIGHT FRONT
DOOR

813c711c

For a complete wiring diagram **Refer to Section 8W**.

- **When Monitored:**
- With the ignition on.
- **Set Condition:**
- The Amplifier detects a short to battery condition on the output circuit.

Possible Causes
(X202) AMPLIFIED RIGHT FRONT DOOR SPEAKER (+) CIRCUIT SHORT TO VOLTAGE
(X292) AMPLIFIED RIGHT FRONT DOOR SPEAKER (-) CIRCUIT SHORT TO VOLTAGE
AMPLIFIER

Diagnostic Test

1. CHECK FOR AN INTERMITTENT CONDITION

Turn the ignition on, then off, and then on again.
With the scan tool, read Amplifier DTCs.

Does the scan tool display active: B1471-CHANNEL 4 AUDIO SPEAKER OUTPUT CIRCUIT HIGH?

Yes >> Go To 2

No >> The conditions that caused this code to set are not present at this time. Using the wiring diagram/schematic as a guide, inspect the wiring and connectors.
Perform BODY VERIFICATION TEST VER-1.

2. CHECK FOR VOLTAGE ON THE (X202) AMPLIFIED RIGHT FRONT DOOR SPEAKER (+) CIRCUIT

Turn the ignition off.
Disconnect the Amplifier C1 harness connector.
Disconnect the Amplified Right Front Door Speaker harness connector.
Turn the ignition on.
Measure for voltage on the (X202) Amplified Right Front Door Speaker (+) circuit.

Is the voltage above 10.0 volts?

Yes >> Repair the (X202) Amplified Right Front Door Speaker (+) circuit for a short to voltage.
Perform BODY VERIFICATION TEST VER-1.

No >> Go To 3

3. CHECK FOR VOLTAGE ON THE (X292) AMPLIFIED RIGHT FRONT DOOR SPEAKER (-) CIRCUIT

Measure for voltage on the (X292) Amplified Right Front Door Speaker (-) circuit.

Is the voltage above 10.0 volts?

Yes >> Repair the (X292) Amplified Right Front Door Speaker (-) circuit for a short to voltage.
Perform BODY VERIFICATION TEST VER-1.

No >> Replace the Amplifier in accordance with the service information.
Perform BODY VERIFICATION TEST VER-1.

B1472-CHANNEL 4 AUDIO SPEAKER OUTPUT CIRCUIT OPEN

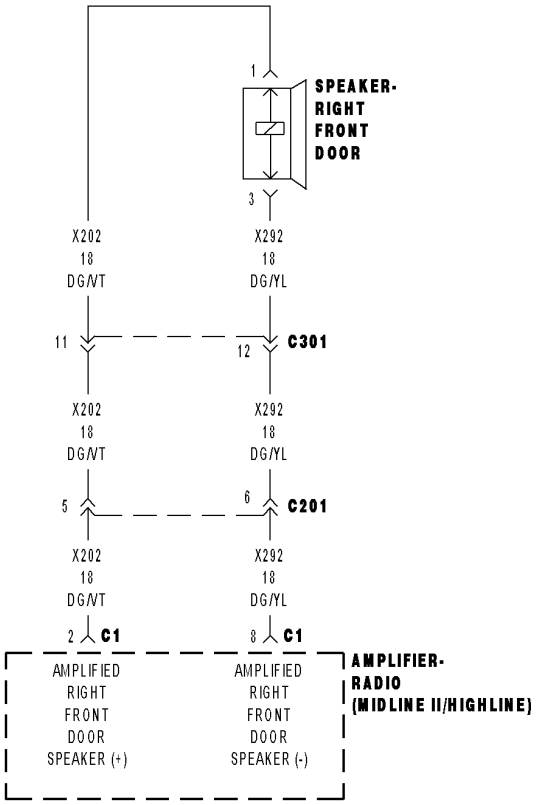

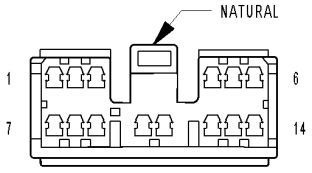

AMPLIFIER-
RADIO C1
(MIDLINE II/HIGHLINE)

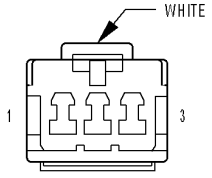

SPEAKER-
RIGHT FRONT
DOOR

813c711c

For a complete wiring diagram **Refer to Section 8W**.

- **When Monitored:**
- Amplifier Bus wake-up. Amplifier reset with scan tool.
- **Set Condition:**
- The Amplifier detects an open condition on the speaker output circuit.

Possible Causes
(X202) AMPLIFIED RIGHT FRONT DOOR SPEAKER (+) CIRCUIT OPEN
(X292) AMPLIFIED RIGHT FRONT DOOR SPEAKER (-) CIRCUIT OPEN
RIGHT FRONT DOOR SPEAKER
AMPLIFIER

Diagnostic Test

1. CHECK FOR AN INTERMITTENT CONDITION

Turn the ignition on.
Turn the radio on.
With the scan tool, erase Amplifier DTCs.
With the scan tool, reset the amplifier.
With the scan tool, read Amplifier DTCs.

Does the scan tool display active: B1472-CHANNEL 4 AUDIO SPEAKER OUTPUT CIRCUIT OPEN?

Yes >> Go To 2

No >> The conditions that caused this code to set are not present at this time. Using the wiring diagram/schematic as a guide, inspect the wiring and connectors.
Perform BODY VERIFICATION TEST VER-1.

2. CHECK THE OPERATION OF THE RIGHT FRONT DOOR SPEAKER

Disconnect the Right Front Door Speaker harness connector.
Turn the radio on and turn the volume to mid level.
With a voltmeter set to read in A/C voltage, measure the voltage of the Amplified Right Front Door Speaker circuits in the Amplified Right Front Door Speaker harness connector.

Is the voltage present greater than 1 volt?

Yes >> Replace the Amplified Right Front Door Speaker in accordance with the service information.
Perform BODY VERIFICATION TEST VER-1.

No >> Go To 3

3. CHECK THE (X202) AMPLIFIED RIGHT FRONT DOOR SPEAKER (+) CIRCUIT FOR AN OPEN

Turn the ignition off.
Disconnect the Amplifier C1 harness connector.
Measure the resistance of the (X202) Amplified Right Front Door Speaker (+) circuit between the Amplifier C1 harness connector and the Amplified Right Front Door Speaker harness connector.

Is the resistance below 5.0 ohms?

Yes >> Go To 4

No >> Repair the (X202) Amplified Right Front Door Speaker (+) circuit for an open.
Perform BODY VERIFICATION TEST VER-1.

4. CHECK THE (X292) AMPLIFIED RIGHT FRONT DOOR SPEAKER (-) CIRCUIT FOR AN OPEN

Turn the ignition off.

Disconnect the Amplifier C1 harness connector.

Measure the resistance of the (X292) Amplified Right Front Door Speaker (-) circuit between the Amplifier C1 harness connector and the Amplified Right Front Door Speaker harness connector.

Is the resistance below 5.0 ohms?

Yes >> Replace the Amplifier in accordance with the service information.
Perform BODY VERIFICATION TEST VER-1.

No >> Repair the (X292) Amplified Right Front Door Speaker (-) circuit for an open.
Perform BODY VERIFICATION TEST VER-1.

B1473-CHANNEL 4 AUDIO SPEAKER OUTPUT CIRCUIT SHORTED TOGETHER

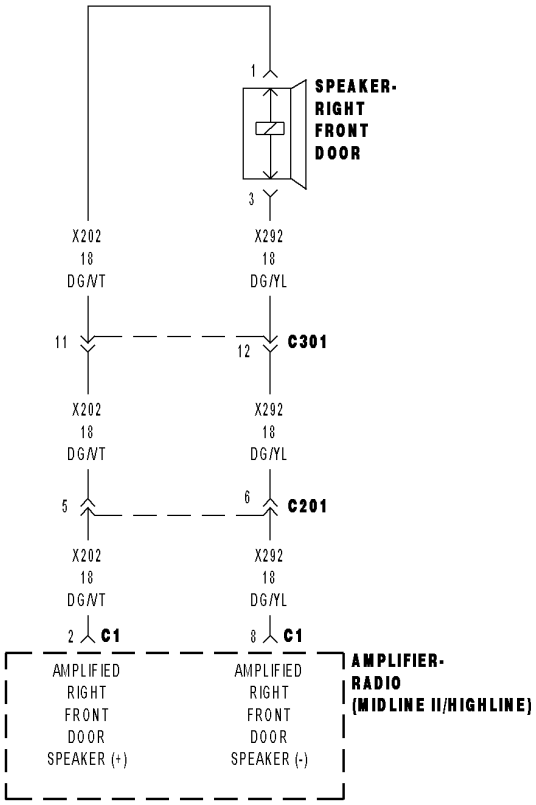

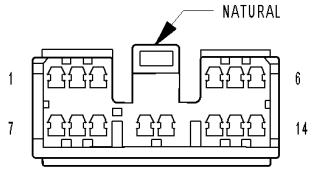

AMPLIFIER-
RADIO C1
(MIDLINE II/HIGHLINE)

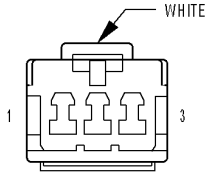

SPEAKER-
RIGHT FRONT
DOOR

813c71c

For a complete wiring diagram **Refer to Section 8W**.

- **When Monitored:**
- With the ignition on. Radio volume at 25 or higher.
- **Set Condition:**
- The amplifier detects that the output circuits are shorted together.

Possible Causes
(X202) AMPLIFIED RIGHT FRONT DOOR SPEAKER (+) CIRCUIT SHORTED TO THE (X292) AMPLIFIED RIGHT FRONT DOOR SPEAKER (-) CIRCUIT
AMPLIFIED RIGHT FRONT DOOR SPEAKER
AMPLIFIER

Diagnostic Test

1. CHECK FOR AN INTERMITTENT CONDITION

Turn the ignition on, then off, and then on again.
With the scan tool, erase Amplifier DTCs.
Turn the radio on.
Turn the volume level to 25.
With the scan tool, read Amplifier DTCs.

Does the scan tool display active: B1473-CHANNEL 4 AUDIO SPEAKER OUTPUT CIRCUIT SHORTED TOGETHER?

Yes >> Go To 2

No >> The conditions that caused this code to set are not present at this time. Using the wiring diagram/schematic as a guide, inspect the wiring and connectors.
Perform BODY VERIFICATION TEST VER-1.

2. CHECK THE OPERATION OF THE AMPLIFIED RIGHT FRONT DOOR SPEAKER

Disconnect the Amplified Right Front Door Speaker.
Measure the resistance of the speaker between the two terminals.

Is the resistance of the speaker less than 1 ohm?

Yes >> Replace the Amplified Right Front Door Speaker in accordance with the service information.
Perform BODY VERIFICATION TEST VER-1.

No >> Go To 3

3. CHECK THE (X202) AMPLIFIED RIGHT FRONT DOOR SPEAKER (+) CIRCUIT, AND THE (X292) AMPLIFIED RIGHT FRONT DOOR SPEAKER (-) CIRCUITS FOR A SHORT TOGETHER

Turn the ignition off.
Disconnect the Amplifier C1 harness connector.
Measure the resistance between the (X202) Amplified Right Front Door Speaker (+) circuit, and the (X292) Amplified Right Front Door Speaker (-) circuit.

Is the resistance below 10K ohms?

Yes >> Repair the (X202) Amplified Right Front Door Speaker (+) circuit, and the (X292) Amplified Right Front Door Speaker (-) circuit for a short together.
Perform BODY VERIFICATION TEST VER-1.

No >> Replace the Amplifier in accordance with the service information.
Perform BODY VERIFICATION TEST VER-1.

B1474-CHANNEL 5 AUDIO SPEAKER OUTPUT CIRCUIT PERFORMANCE

For a complete wiring diagram **Refer to Section 8W**.

- **When Monitored:**
- With the ignition on.
- **Set Condition:**
- This DTC will set if a DC offset occurs on the output channel, the amplifier shall set a DTC after a maturity rate of 5 ±1 sec.

Possible Causes
AMPLIFIER

Diagnostic Test

1. CHECK FOR AN INTERMITTENT CONDITION

Turn the ignition on, then off, and then on again.

With the scan tool, read Amplifier DTCs.

Does the scan tool display active: B1474-CHANNEL 5 AUDIO SPEAKER OUTPUT CIRCUIT PERFORMANCE?

Yes >> Replace the Amplifier in accordance with the service information.
Perform BODY VERIFICATION TEST VER-1.

No >> The conditions that caused this code to set are not present at this time. Using the wiring diagram/schematic as a guide, inspect the wiring and connectors.
Perform BODY VERIFICATION TEST VER-1.

B1475-CHANNEL 5 AUDIO SPEAKER OUTPUT CIRCUIT LOW

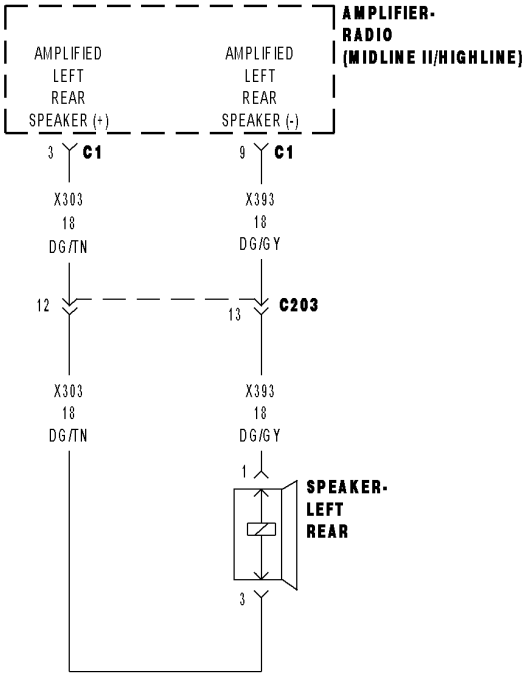

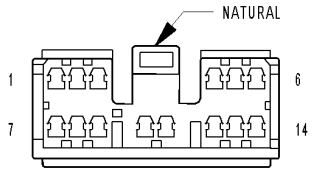

AMPLIFIER-
RADIO C1
(MIDLINE II/HIGHLINE)

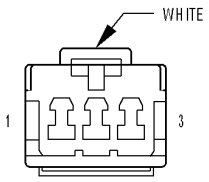

SPEAKER-
LEFT REAR

813c7f10

For a complete wiring diagram **Refer to Section 8W**.

- **When Monitored:**
- With the ignition on.
- **Set Condition:**
- The Amplifier detects a shorted to ground condition on the speaker output circuit.

Possible Causes
(X393) AMPLIFIED LEFT REAR DOOR SPEAKER (+) CIRCUIT SHORTED TO GROUND
(X303) AMPLIFIED LEFT REAR DOOR SPEAKER (-) CIRCUIT SHORTED TO GROUND
LEFT REAR DOOR SPEAKER
AMPLIFIER

Diagnostic Test

1. CHECK FOR AN INTERMITTENT CONDITION

Turn the ignition on, then off, and then on again.
With the scan tool, read Amplifier DTCs.

Does the scan tool display active: B1475-CHANNEL 5 AUDIO SPEAKER OUTPUT CIRCUIT LOW?

Yes >> Go To 2

No >> The conditions that caused this code to set are not present at this time. Using the wiring diagram/schematic as a guide, inspect the wiring and connectors.
Perform BODY VERIFICATION TEST VER-1.

2. CHECK THE (X393) AMPLIFIED LEFT REAR DOOR SPEAKER (+) CIRCUIT FOR A SHORT TO GROUND

Disconnect the Amplifier C1 harness connector.
Measure the resistance between ground and the (X393) Amplified Left Rear Door Speaker (+) circuit.

Is the resistance below 10K ohms?

Yes >> Repair the (X393) Amplified Left Rear Door Speaker (+) circuit for a short to ground.
Perform BODY VERIFICATION TEST VER-1.

No >> Go To 3

3. CHECK THE (X303) AMPLIFIED LEFT REAR DOOR SPEAKER (-) CIRCUIT FOR A SHORT TO GROUND

Measure the resistance between ground and the (X303) Amplified Left Rear Door Speaker (-) circuit.

Is the resistance below 10K ohms?

Yes >> Repair the (X303) Amplified Left Rear Door Speaker (-) for a short to ground.
Perform BODY VERIFICATION TEST VER-1.

No >> Go To 4

4. CHECK OPERATION OF THE AMPLIFIED LEFT REAR DOOR SPEAKER

Turn the ignition off.

Reconnect and reinstall the Left Rear Door Speaker.

Measure the resistance of the speaker circuit between the Amplifier C1 harness connector and ground..

Is the resistance below 10K ohms?

Yes >> Replace the Left Rear Door Speaker in accordance with the service information.
Perform BODY VERIFICATION TEST VER-1.

No >> Replace the Amplifier in accordance with the service information.
Perform BODY VERIFICATION TEST VER-1.

B1476-CHANNEL 5 AUDIO SPEAKER OUTPUT CIRCUIT HIGH

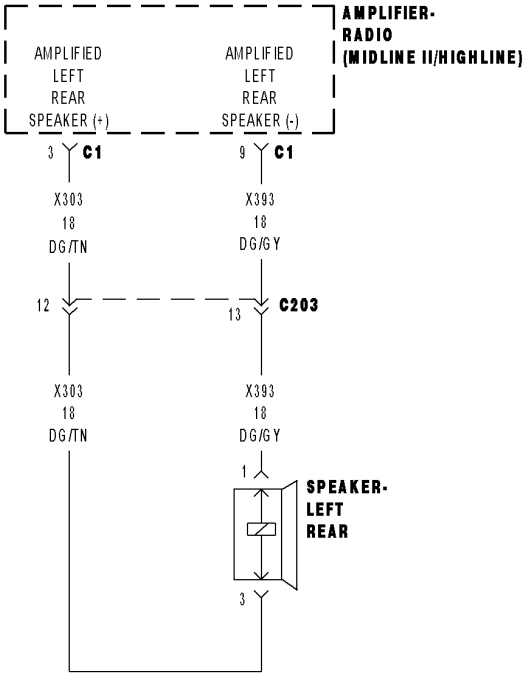

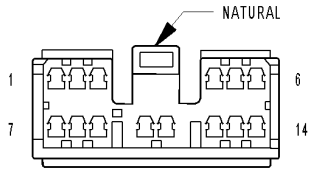

AMPLIFIER-
RADIO C1
(MIDLINE II/HIGHLINE)

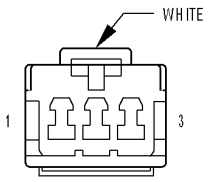

SPEAKER-
LEFT REAR

813c7f10

For a complete wiring diagram **Refer to Section 8W**.

- **When Monitored:**
- With the ignition on.
- **Set Condition:**
- The Amplifier detects a short to battery condition on the output circuit.

Possible Causes
(X393) AMPLIFIED LEFT REAR DOOR SPEAKER (+) CIRCUIT SHORT TO VOLTAGE
(X303) AMPLIFIED LEFT REAR DOOR SPEAKER (-) CIRCUIT SHORT TO VOLTAGE
AMPLIFIER

Diagnostic Test

1. CHECK FOR AN INTERMITTENT CONDITION

Turn the ignition on, then off, and then on again.
With the scan tool, read Amplifier DTCs.

Does the scan tool display active: B1476-CHANNEL 5 AUDIO SPEAKER OUTPUT CIRCUIT HIGH?

Yes >> Go To 2

No >> The conditions that caused this code to set are not present at this time. Using the wiring diagram/schematic as a guide, inspect the wiring and connectors.
Perform BODY VERIFICATION TEST VER-1.

2. CHECK FOR VOLTAGE ON THE (X393) AMPLIFIED LEFT REAR DOOR SPEAKER (+) CIRCUIT

Turn the ignition off.
Disconnect the Amplifier C1 harness connector.
Disconnect the Amplified Left Rear Door Speaker harness connector.
Turn the ignition on.
Measure for voltage on the (X393) Amplified Left Rear Door Speaker (+) circuit.

Is the voltage above 10.0 volts?

Yes >> Repair the (X393) Amplified Left Rear Door Speaker (+) circuit for a short to voltage.
Perform BODY VERIFICATION TEST VER-1.

No >> Go To 3

3. CHECK FOR VOLTAGE ON THE (X303) AMPLIFIED LEFT REAR DOOR SPEAKER (-) CIRCUIT

Measure for voltage on the (X303) Amplified Left Rear Door Speaker (-) circuit.

Is the voltage above 10.0 volts?

Yes >> Repair the (X303) Amplified Left Rear Door Speaker (-) circuit for a short to voltage.
Perform BODY VERIFICATION TEST VER-1.

No >> Replace the Amplifier in accordance with the service information.
Perform BODY VERIFICATION TEST VER-1.

B1477-CHANNEL 5 AUDIO SPEAKER OUTPUT CIRCUIT OPEN

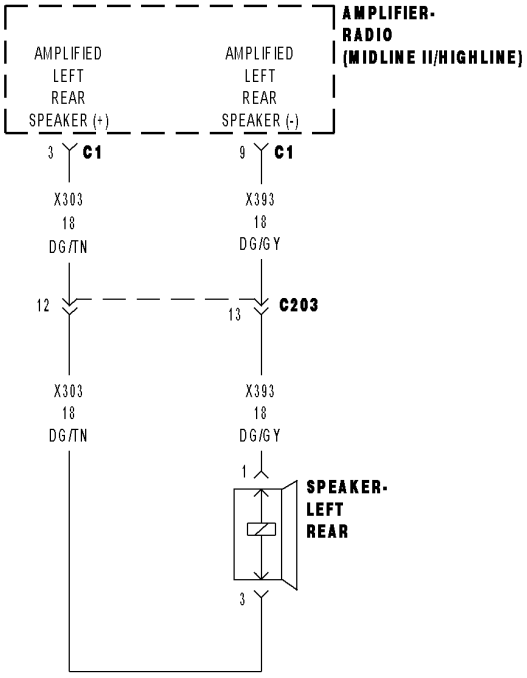

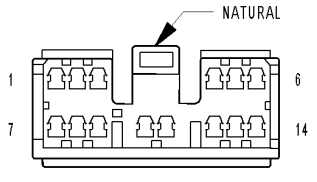

AMPLIFIER-
RADIO C1
(MIDLINE II/HIGHLINE)

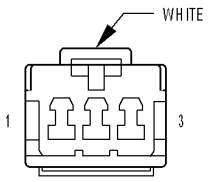

SPEAKER-
LEFT REAR

813c7f10

For a complete wiring diagram **Refer to Section 8W**.

- **When Monitored:**
- Amplifier Bus wake-up. Amplifier reset with scan tool.
- **Set Condition:**
- The Amplifier detects an open condition on the speaker output circuit.

Possible Causes
(X393) AMPLIFIED LEFT REAR DOOR SPEAKER (+) CIRCUIT OPEN
(X303) AMPLIFIED LEFT REAR DOOR SPEAKER (-) CIRCUIT OPEN
LEFT REAR DOOR SPEAKER
AMPLIFIER

Diagnostic Test

1. CHECK FOR AN INTERMITTENT CONDITION

Turn the ignition on.
Turn the radio on.
With the scan tool, erase Amplifier DTCs.
With the scan tool, reset the amplifier.
With the scan tool, read Amplifier DTCs.

Does the scan tool display active: B1477-CHANNEL 5 AUDIO SPEAKER OUTPUT CIRCUIT OPEN?

Yes >> Go To 2

No >> The conditions that caused this code to set are not present at this time. Using the wiring diagram/schematic as a guide, inspect the wiring and connectors.
Perform BODY VERIFICATION TEST VER-1.

2. CHECK THE OPERATION OF THE LEFT REAR DOOR SPEAKER

Disconnect the Left Rear Door Speaker harness connector.
Turn the radio on and turn the volume to mid level.
With a voltmeter set to read in A/C voltage, measure the voltage of the Amplified Left Rear Door Speaker circuits in the Amplified Left Rear Door Speaker harness connector.

Is the voltage present greater than 1 volt?

Yes >> Replace the Amplified Left I/P Speaker in accordance with the service information.
Perform BODY VERIFICATION TEST VER-1.

No >> Go To 3

3. CHECK THE (X393) AMPLIFIED LEFT REAR DOOR SPEAKER (+) CIRCUIT FOR AN OPEN

Turn the ignition off.
Disconnect the Amplifier C1 harness connector.
Measure the resistance of the (X393) Amplified Left Rear Door Speaker (+) circuit between the Amplifier C1 harness connector and the Amplified Left Rear Door Speaker harness connector.

Is the resistance below 5.0 ohms?

Yes >> Go To 4

No >> Repair the (X393) Amplified Left Rear Door Speaker (+) circuit for an open.
Perform BODY VERIFICATION TEST VER-1.

4. CHECK THE (X303) AMPLIFIED LEFT REAR DOOR SPEAKER (-) CIRCUIT FOR AN OPEN

Turn the ignition off.

Disconnect the Amplifier C1 harness connector.

Measure the resistance of the (X303) Amplified Left Rear Door Speaker (-) circuit between the Amplifier C1 harness connector and the Amplified Left Rear Door Speaker harness connector.

Is the resistance below 5.0 ohms?

Yes >> Replace the Amplifier in accordance with the service information.
Perform BODY VERIFICATION TEST VER-1.

No >> Repair the (X303) Amplified Left Rear Door Speaker (-) circuit for an open.
Perform BODY VERIFICATION TEST VER-1.

B1478-CHANNEL 5 AUDIO SPEAKER OUTPUT CIRCUIT SHORTED TOGETHER

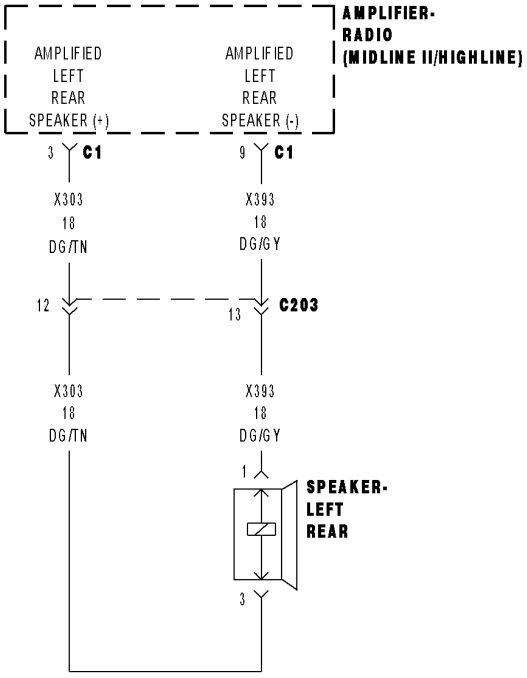

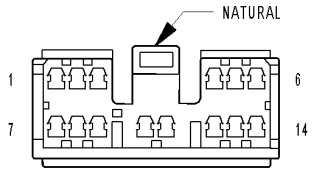

AMPLIFIER-
RADIO C1
(MIDLINE II/HIGHLINE)

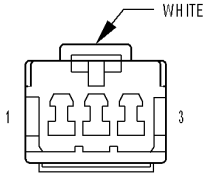

SPEAKER-
LEFT REAR

813c7f10

For a complete wiring diagram **Refer to Section 8W**.

- **When Monitored:**
- With the ignition on. Radio volume at 25 or higher.
- **Set Condition:**
- The amplifier detects that the output circuits are shorted together.

Possible Causes
(X393) AMPLIFIED LEFT REAR DOOR SPEAKER (+) CIRCUIT SHORTED TO THE (X303) AMPLIFIED LEFT REAR DOOR SPEAKER (-) CIRCUIT
AMPLIFIED LEFT REAR DOOR SPEAKER
AMPLIFIER

Diagnostic Test

1. CHECK FOR AN INTERMITTENT CONDITION

Turn the ignition on, then off, and then on again.
With the scan tool, erase Amplifier DTCs.
Turn the radio on.
Turn the volume level to 25.
With the scan tool, read Amplifier DTCs.

Does the scan tool display active: B1478-CHANNEL 5 AUDIO SPEAKER OUTPUT CIRCUIT SHORTED TOGETHER?

Yes >> Go To 2

No >> The conditions that caused this code to set are not present at this time. Using the wiring diagram/schematic as a guide, inspect the wiring and connectors.
Perform BODY VERIFICATION TEST VER-1.

2. CHECK THE OPERATION OF THE AMPLIFIED LEFT REAR DOOR SPEAKER

Disconnect the Amplified Left Rear Door Speaker.
Measure the resistance of the speaker between the two terminals.

Is the resistance of the speaker less than 1 ohm?

Yes >> Replace the Amplified Left Rear Door Speaker in accordance with the service information.
Perform BODY VERIFICATION TEST VER-1.

No >> Go To 3

3. CHECK THE (X393) AMPLIFIED LEFT REAR DOOR SPEAKER (+) CIRCUIT, AND THE (X303) AMPLIFIED LEFT REAR DOOR SPEAKER (-) CIRCUITS FOR A SHORT TOGETHER

Turn the ignition off.
Disconnect the Amplifier C1 harness connector.
Measure the resistance between the (X393) Amplified Left Rear Door Speaker (+) circuit, and the (X303) Amplified Left Rear Door Speaker (-) circuit.

Is the resistance below 10K ohms?

Yes >> Repair the (X393) Amplified Left Rear Door Speaker (+) circuit, and the (X303) Amplified Left Rear Door Speaker (-) circuit for a short together.
Perform BODY VERIFICATION TEST VER-1.

No >> Replace the Amplifier in accordance with the service information.
Perform BODY VERIFICATION TEST VER-1.

B1479-CHANNEL 6 AUDIO SPEAKER OUTPUT CIRCUIT PERFORMANCE

For a complete wiring diagram **Refer to Section 8W**.

- **When Monitored:**
- With the ignition on.
- **Set Condition:**
- This DTC will set if a DC offset occurs on the output channel, the amplifier shall set a DTC after a maturity rate of 5 ±1 sec.

Possible Causes
AMPLIFIER

Diagnostic Test

1. CHECK FOR AN INTERMITTENT CONDITION

Turn the ignition on, then off, and then on again.

With the scan tool, read Amplifier DTCs.

Does the scan tool display active: B1479-CHANNEL 6 AUDIO SPEAKER OUTPUT CIRCUIT PERFORMANCE?

Yes >> Replace the Amplifier in accordance with the service information.
Perform BODY VERIFICATION TEST VER-1.

No >> The conditions that caused this code to set are not present at this time. Using the wiring diagram/schematic as a guide, inspect the wiring and connectors.
Perform BODY VERIFICATION TEST VER-1.

B147A-CHANNEL 6 AUDIO SPEAKER OUTPUT CIRCUIT LOW

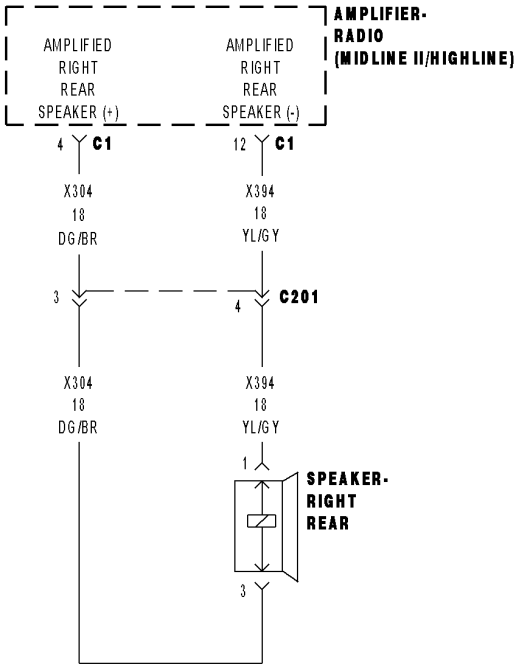

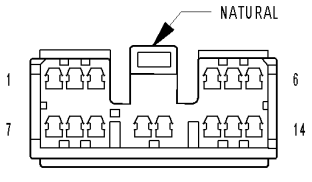

AMPLIFIER-
RADIO C1
(MIDLINE II/HIGHLINE)

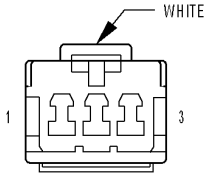

SPEAKER-
RIGHT REAR

813ca80b

For a complete wiring diagram **Refer to Section 8W**.

- **When Monitored:**
- With the ignition on.
- **Set Condition:**
- The Amplifier detects a shorted to ground condition on the speaker output circuit.

Possible Causes
(X304) AMPLIFIED RIGHT REAR DOOR SPEAKER (+) CIRCUIT SHORTED TO GROUND
(X394) AMPLIFIED RIGHT REAR DOOR SPEAKER (-) CIRCUIT SHORTED TO GROUND
RIGHT REAR DOOR SPEAKER
AMPLIFIER

Diagnostic Test

1. CHECK FOR AN INTERMITTENT CONDITION

Turn the ignition on, then off, and then on again.
With the scan tool, read Amplifier DTCs.

Does the scan tool display active: B147A-CHANNEL 6 AUDIO SPEAKER OUTPUT CIRCUIT LOW?

Yes >> Go To 2

No >> The conditions that caused this code to set are not present at this time. Using the wiring diagram/schematic as a guide, inspect the wiring and connectors.
Perform BODY VERIFICATION TEST VER-1.

2. CHECK THE (X304) AMPLIFIED RIGHT REAR DOOR SPEAKER (+) CIRCUIT FOR A SHORT TO GROUND

Disconnect the Amplifier C1 harness connector.
Measure the resistance between ground and the (X304) Amplified Right Rear Door Speaker (+) circuit.

Is the resistance below 10K ohms?

Yes >> Repair the (X304) Amplified Right Rear Door Speaker (+) circuit for a short to ground.
Perform BODY VERIFICATION TEST VER-1.

No >> Go To 3

3. CHECK THE (X394) AMPLIFIED RIGHT REAR DOOR SPEAKER (-) CIRCUIT FOR A SHORT TO GROUND

Measure the resistance between ground and the (X394) Amplified Right Rear Door Speaker (-) circuit.

Is the resistance below 10K ohms?

Yes >> Repair the (X394) Amplified Right Rear Door Speaker (-) for a short to ground.
Perform BODY VERIFICATION TEST VER-1.

No >> Go To 4

4. CHECK OPERATION OF THE AMPLIFIED RIGHT REAR DOOR SPEAKER

Turn the ignition off.

Reconnect and reinstall the Right Rear Door Speaker.

Measure the resistance of the speaker circuit between the Amplifier C1 harness connector and ground..

Is the resistance below 10K ohms?

Yes >> Replace the Right Rear Door Speaker in accordance with the service information.
Perform BODY VERIFICATION TEST VER-1.

No >> Replace the Amplifier in accordance with the service information.
Perform BODY VERIFICATION TEST VER-1.

B147B-CHANNEL 6 AUDIO SPEAKER OUTPUT CIRCUIT HIGH

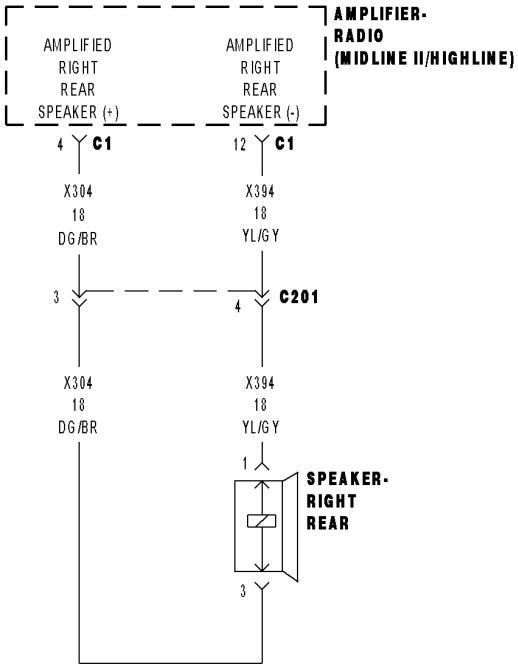

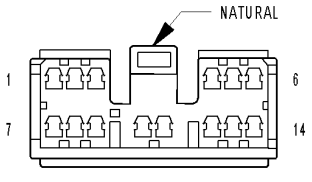

AMPLIFIER-
RADIO C1
(MIDLINE II/HIGHLINE)

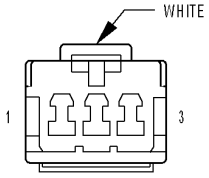

SPEAKER-
RIGHT REAR

813ca80b

For a complete wiring diagram **Refer to Section 8W**.

- **When Monitored:**
- With the ignition on.
- **Set Condition:**
- The Amplifier detects a short to battery condition on the output circuit.

Possible Causes
(X304) AMPLIFIED RIGHT REAR DOOR SPEAKER (+) CIRCUIT SHORT TO VOLTAGE
(X394) AMPLIFIED RIGHT REAR DOOR SPEAKER (-) CIRCUIT SHORT TO VOLTAGE
AMPLIFIER

Diagnostic Test

1. CHECK FOR AN INTERMITTENT CONDITION

Turn the ignition on, then off, and then on again.
With the scan tool, read Amplifier DTCs.

Does the scan tool display active: B147B-CHANNEL 6 AUDIO SPEAKER OUTPUT CIRCUIT HIGH?

Yes >> Go To 2

No >> The conditions that caused this code to set are not present at this time. Using the wiring diagram/schematic as a guide, inspect the wiring and connectors.
Perform BODY VERIFICATION TEST VER-1.

2. CHECK FOR VOLTAGE ON THE (X304) AMPLIFIED RIGHT REAR DOOR SPEAKER (+) CIRCUIT

Turn the ignition off.
Disconnect the Amplifier C1 harness connector.
Disconnect the Amplified Right Rear Door Speaker harness connector.
Turn the ignition on.
Measure for voltage on the (X304) Amplified Right Rear Door Speaker (+) circuit.

Is the voltage above 10.0 volts?

Yes >> Repair the (X304) Amplified Right Rear Door Speaker (+) circuit for a short to voltage.
Perform BODY VERIFICATION TEST VER-1.

No >> Go To 3

3. CHECK FOR VOLTAGE ON THE (X394) AMPLIFIED RIGHT REAR SPEAKER SPEAKER (-) CIRCUIT

Measure for voltage on the (X394) Amplified Right Rear Door Speaker (-) circuit.

Is the voltage above 10.0 volts?

Yes >> Repair the (X394) Amplified Right Rear Door Speaker (-) circuit for a short to voltage.
Perform BODY VERIFICATION TEST VER-1.

No >> Replace the Amplifier in accordance with the service information.
Perform BODY VERIFICATION TEST VER-1.

B147C-CHANNEL 6 AUDIO SPEAKER OUTPUT CIRCUIT OPEN

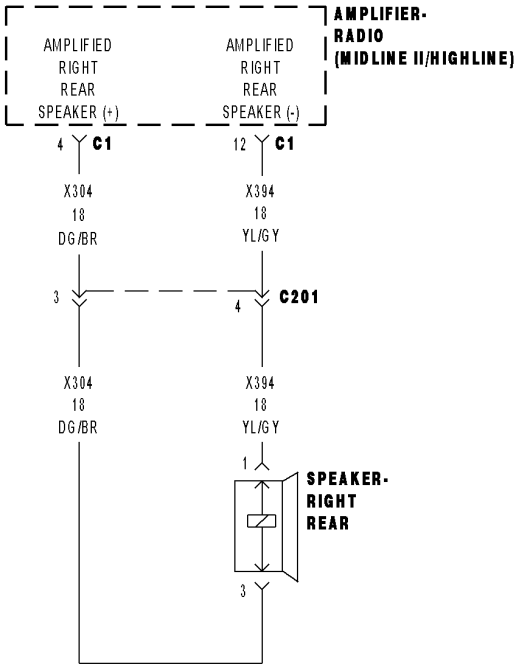

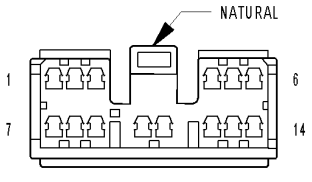

AMPLIFIER-
RADIO C1
(MIDLINE II/HIGHLINE)

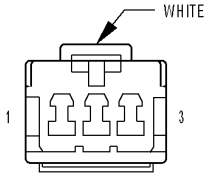

SPEAKER-
RIGHT REAR

813ca80b

For a complete wiring diagram **Refer to Section 8W**.

- **When Monitored:**
- Amplifier Bus wake-up. Amplifier reset with scan tool.
- **Set Condition:**
- The Amplifier detects an open condition on the speaker output circuit.

Possible Causes
(X304) AMPLIFIED RIGHT REAR DOOR SPEAKER (+) CIRCUIT OPEN
(X394) AMPLIFIED RIGHT REAR DOOR SPEAKER (-) CIRCUIT OPEN
RIGHT REAR DOOR SPEAKER
AMPLIFIER

Diagnostic Test

1. CHECK FOR AN INTERMITTENT CONDITION

Turn the ignition on.
Turn the radio on.
With the scan tool, erase Amplifier DTCs.
With the scan tool, reset the amplifier.
With the scan tool, read Amplifier DTCs.

Does the scan tool display active: B147C-CHANNEL 6 AUDIO SPEAKER OUTPUT CIRCUIT OPEN?

Yes >> Go To 2

No >> The conditions that caused this code to set are not present at this time. Using the wiring diagram/schematic as a guide, inspect the wiring and connectors.
Perform BODY VERIFICATION TEST VER-1.

2. CHECK THE OPERATION OF THE RIGHT REAR DOOR SPEAKER

Disconnect the Right Rear Door Speaker harness connector.
Turn the radio on and turn the volume to mid level.
With a voltmeter set to read in A/C voltage, measure the voltage of the Amplified Right Rear Door Speaker circuits in the Amplified Right Rear Door Speaker harness connector.

Is the voltage present greater than 1 volt?

Yes >> Replace the Amplified Right Rear Door Speaker in accordance with the service information.
Perform BODY VERIFICATION TEST VER-1.

No >> Go To 3

3. CHECK THE (X304) AMPLIFIED RIGHT REAR DOOR SPEAKER (+) CIRCUIT FOR AN OPEN

Turn the ignition off.
Disconnect the Amplifier C1 harness connector.
Measure the resistance of the (X304) Amplified Right Rear Door Speaker (+) circuit between the Amplifier C1 harness connector and the Amplified Right Rear Door Speaker harness connector.

Is the resistance below 5.0 ohms?

Yes >> Go To 4

No >> Repair the (X304) Amplified Right Rear Door Speaker (+) circuit for an open.
Perform BODY VERIFICATION TEST VER-1.

4. CHECK THE (X394) AMPLIFIED RIGHT REAR DOOR SPEAKER (-) CIRCUIT FOR AN OPEN

Turn the ignition off.

Disconnect the Amplifier C1 harness connector.

Measure the resistance of the (X394) Amplified Right Rear Door Speaker (-) circuit between the Amplifier C1 harness connector and the Amplified Right Rear Door Speaker harness connector.

Is the resistance below 5.0 ohms?

Yes >> Replace the Amplifier in accordance with the service information.
Perform BODY VERIFICATION TEST VER-1.

No >> Repair the (X394) Amplified Right Rear Door Speaker (-) circuit for an open.
Perform BODY VERIFICATION TEST VER-1.

B147D-CHANNEL 6 AUDIO SPEAKER OUTPUT CIRCUIT SHORTED TOGETHER

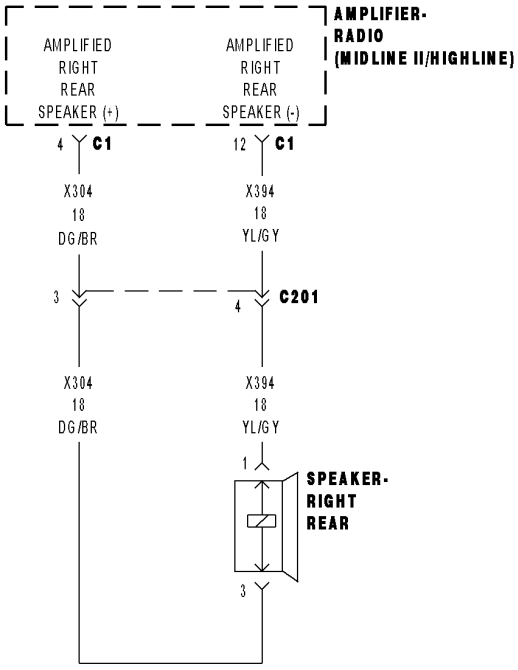

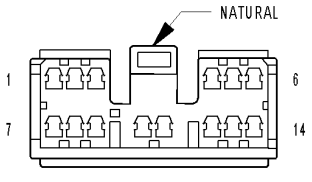

AMPLIFIER-
RADIO C1
(MIDLINE II/HIGHLINE)

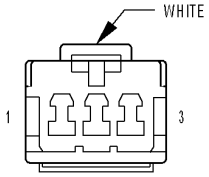

SPEAKER-
RIGHT REAR

813ca80b

For a complete wiring diagram **Refer to Section 8W**.

- **When Monitored:**
- With the ignition on. Radio volume at 25 or higher.
- **Set Condition:**
- The amplifier detects that the output circuits are shorted together.

Possible Causes
(X304) AMPLIFIED RIGHT REAR DOOR SPEAKER (+) CIRCUIT SHORTED TO THE (X394) AMPLIFIED RIGHT REAR DOOR SPEAKER (-) CIRCUIT
AMPLIFIED RIGHT REAR DOOR SPEAKER
AMPLIFIER

Diagnostic Test

1. CHECK FOR AN INTERMITTENT CONDITION

Turn the ignition on, then off, and then on again.
With the scan tool, erase Amplifier DTCs.
Turn the radio on.
Turn the volume level to 25.
With the scan tool, read Amplifier DTCs.

Does the scan tool display active: B147D-CHANNEL 6 AUDIO SPEAKER OUTPUT CIRCUIT SHORTED TOGETHER?

Yes >> Go To 2

No >> The conditions that caused this code to set are not present at this time. Using the wiring diagram/schematic as a guide, inspect the wiring and connectors.
Perform BODY VERIFICATION TEST VER-1.

2. CHECK THE OPERATION OF THE AMPLIFIED RIGHT REAR DOOR SPEAKER

Disconnect the Amplified Right Rear Door Speaker.
Measure the resistance of the speaker between the two terminals.

Is the resistance of the speaker less than 1 ohm?

Yes >> Replace the Amplified Right Rear Door Speaker in accordance with the service information.
Perform BODY VERIFICATION TEST VER-1.

No >> Go To 3

3. CHECK THE (X304) AMPLIFIED RIGHT REAR DOOR SPEAKER (+) CIRCUIT, AND THE (X394) AMPLIFIED RIGHT REAR DOOR SPEAKER (-) CIRCUITS FOR A SHORT TOGETHER

Turn the ignition off.
Disconnect the Amplifier C1 harness connector.
Measure the resistance between the (X304) Amplified Right Rear Door Speaker (+) circuit, and the (X394) Amplified Right Rear Door Speaker (-) circuit.

Is the resistance below 10K ohms?

Yes >> Repair the (X304) Amplified Right Rear Door Speaker (+) circuit, and the (X394) Amplified Right Rear Door Speaker (-) circuit for a short together.
Perform BODY VERIFICATION TEST VER-1.

No >> Replace the Amplifier in accordance with the service information.
Perform BODY VERIFICATION TEST VER-1.

B147E-CHANNEL 7 AUDIO SPEAKER OUTPUT CIRCUIT PERFORMANCE

For a complete wiring diagram **Refer to Section 8W**.

- **When Monitored:**
- With the ignition on.
- **Set Condition:**
- This DTC will set if a DC offset occurs on the output channel, the amplifier shall set a DTC after a maturity rate of 5 ±1 sec.

Possible Causes
AMPLIFIER

Diagnostic Test

1. CHECK FOR AN INTERMITTENT CONDITION

Turn the ignition on, then off, and then on again.

With the scan tool, read Amplifier DTCs.

Does the scan tool display active: B147E-CHANNEL 7 AUDIO SPEAKER OUTPUT CIRCUIT PERFORMANCE?

Yes >> Replace the Amplifier in accordance with the service information.
Perform BODY VERIFICATION TEST VER-1.

No >> The conditions that caused this code to set are not present at this time. Using the wiring diagram/schematic as a guide, inspect the wiring and connectors.
Perform BODY VERIFICATION TEST VER-1.

B147F-CHANNEL 7 AUDIO SPEAKER OUTPUT CIRCUIT LOW

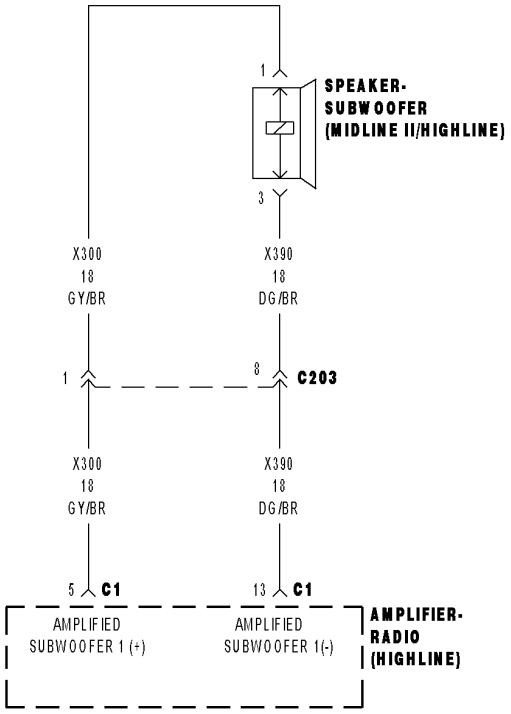

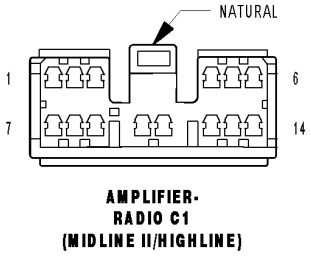

AMPLIFIER-
RADIO C1
(MIDLINE II/HIGHLINE)

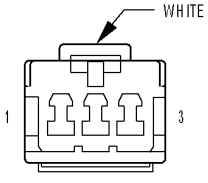

SPEAKER-
SUBWOOFER
(HIGHLINE)

813cb25b

For a complete wiring diagram **Refer to Section 8W**.

- **When Monitored:**
- With the ignition on.
- **Set Condition:**
- The Amplifier detects a shorted to ground condition on the speaker output circuit.

Possible Causes
(X300) AMPLIFIED SUBWOOFER 1(+) CIRCUIT SHORTED TO GROUND
(X390) AMPLIFIED SUBWOOFER 1 (-) CIRCUIT SHORTED TO GROUND
SUBWOOFER
AMPLIFIER

Diagnostic Test

1. CHECK FOR AN INTERMITTENT CONDITION

Turn the ignition on, then off, and then on again.
With the scan tool, read Amplifier DTCs.

Does the scan tool display active: B147F-CHANNEL 7 AUDIO SPEAKER OUTPUT CIRCUIT LOW?

Yes >> Go To 2

No >> The conditions that caused this code to set are not present at this time. Using the wiring diagram/schematic as a guide, inspect the wiring and connectors.
Perform BODY VERIFICATION TEST VER-1.

2. CHECK THE (X300) AMPLIFIED SUBWOOFER 1 (+) CIRCUIT FOR A SHORT TO GROUND

Disconnect the Amplifier C1 harness connector.
Measure the resistance between ground and the (X300) Amplified Subwoofer 1 (+) circuit.

Is the resistance below 10K ohms?

Yes >> Repair the (X300) Amplified Subwoofer 1 (+) circuit for a short to ground.
Perform BODY VERIFICATION TEST VER-1.

No >> Go To 3

3. CHECK THE (X390) AMPLIFIED SUBWOOFER 1 (-) CIRCUIT FOR A SHORT TO GROUND

Measure the resistance between ground and the (X390) Amplified Subwoofer 1 (-) circuit.

Is the resistance below 10K ohms?

Yes >> Repair the (X390) Amplified Subwoofer 1 (-) for a short to ground.
Perform BODY VERIFICATION TEST VER-1.

No >> Go To 4

4. CHECK OPERATION OF THE AMPLIFIED SUBWOOFER

Turn the ignition off.

Reconnect the Subwoofer harness connector.

Measure the resistance of the speaker circuit between the Amplifier C1 harness connector and ground..

Is the resistance below 10K ohms?

Yes >> Replace the Subwoofer 1 in accordance with the service information.
Perform BODY VERIFICATION TEST VER-1.

No >> Replace the Amplifier in accordance with the service information.
Perform BODY VERIFICATION TEST VER-1.

B1480-CHANNEL 7 AUDIO SPEAKER OUTPUT CIRCUIT HIGH

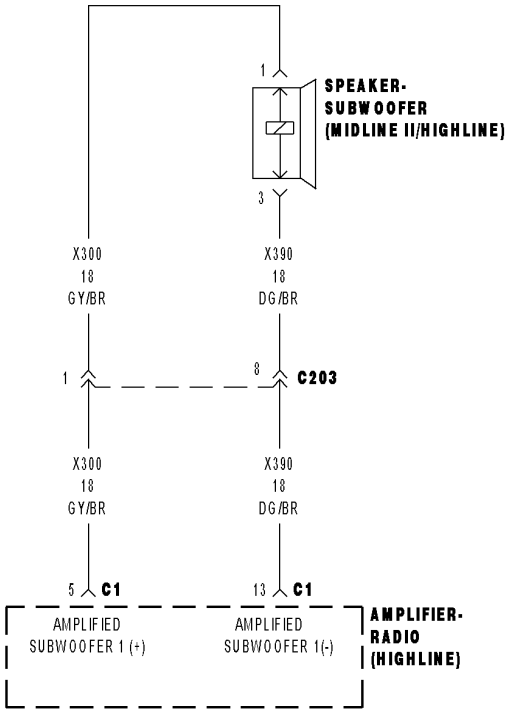

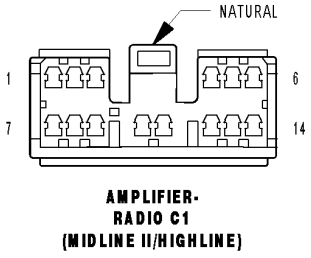

AMPLIFIER-
RADIO C1
(MIDLINE II/HIGHLINE)

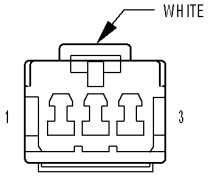

SPEAKER-
SUBWOOFER
(HIGHLINE)

813cb25b

For a complete wiring diagram **Refer to Section 8W**.

- **When Monitored:**
- With the ignition on.
- **Set Condition:**
- The Amplifier detects a short to battery condition on the output circuit.

Possible Causes
(X300) AMPLIFIED SUBWOOFER 1 (+) CIRCUIT SHORT TO VOLTAGE
(X390) AMPLIFIED SUBWOOFER 1 (-) CIRCUIT SHORT TO VOLTAGE
AMPLIFIER

Diagnostic Test

1. CHECK FOR AN INTERMITTENT CONDITION

Turn the ignition on, then off, and then on again.
With the scan tool, read Amplifier DTCs.

Does the scan tool display active: B1480-CHANNEL 7 AUDIO SPEAKER OUTPUT CIRCUIT HIGH?

Yes >> Go To 2

No >> The conditions that caused this code to set are not present at this time. Using the wiring diagram/schematic as a guide, inspect the wiring and connectors.
Perform BODY VERIFICATION TEST VER-1.

2. CHECK FOR VOLTAGE ON THE (X300) AMPLIFIED SUBWOOFER 1 (+) CIRCUIT

Turn the ignition off.
Disconnect the Amplifier C1 harness connector.
Disconnect the Amplified Subwoofer 1 harness connector.
Turn the ignition on.
Measure for voltage on the (X300) Amplified Subwoofer 1 (+) circuit.

Is the voltage above 10.0 volts?

Yes >> Repair the (X300) Amplified Subwoofer 1 (+) circuit for a short to voltage.
Perform BODY VERIFICATION TEST VER-1.

No >> Go To 3

3. CHECK FOR VOLTAGE ON THE (X390) AMPLIFIED SUBWOOFER 1 (-) CIRCUIT

Measure for voltage on the (X390) Amplified Subwoofer 1 (-) circuit.

Is the voltage above 10.0 volts?

Yes >> Repair the (X390) Amplified Subwoofer 1 (-) circuit for a short to voltage.
Perform BODY VERIFICATION TEST VER-1.

No >> Replace the Amplifier in accordance with the service information.
Perform BODY VERIFICATION TEST VER-1.

B1481-CHANNEL 7 AUDIO SPEAKER OUTPUT CIRCUIT OPEN

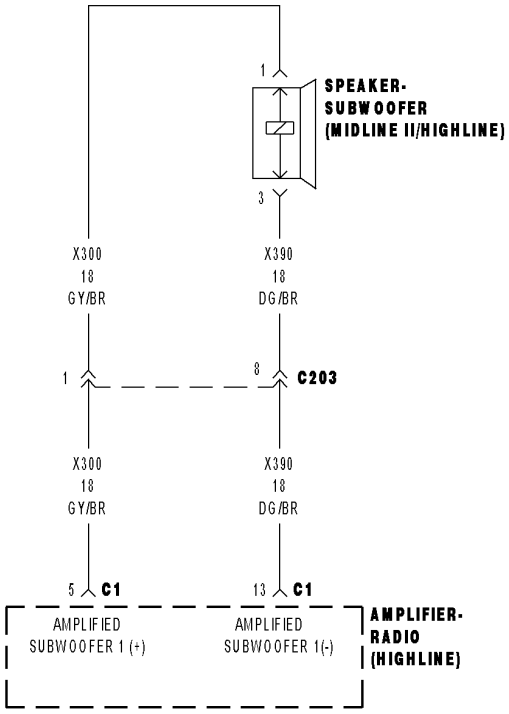

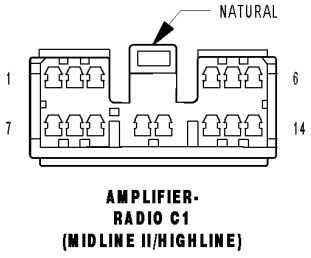

AMPLIFIER-
RADIO C1
(MIDLINE II/HIGHLINE)

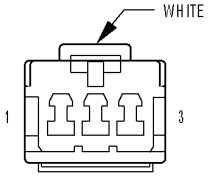

SPEAKER-
SUBWOOFER
(HIGHLINE)

813cb25b

For a complete wiring diagram **Refer to Section 8W**.

- **When Monitored:**
- Amplifier Bus wake-up. Amplifier reset with scan tool.
- **Set Condition:**
- The Amplifier detects an open condition on the speaker output circuit.

Possible Causes
(X300) AMPLIFIED SUBWOOFER 1 (+) CIRCUIT OPEN
(X299) AMPLIFIED SUBWOOFER 1 (-) CIRCUIT OPEN
SUBWOOFER
AMPLIFIER

Diagnostic Test

1. CHECK FOR AN INTERMITTENT CONDITION

Turn the ignition on.
Turn the radio on.
With the scan tool, erase Amplifier DTCs.
With the scan tool, reset the amplifier.
With the scan tool, read Amplifier DTCs.

Does the scan tool display active: B1481-CHANNEL 7 AUDIO SPEAKER OUTPUT CIRCUIT OPEN?

Yes >> Go To 2

No >> The conditions that caused this code to set are not present at this time. Using the wiring diagram/schematic as a guide, inspect the wiring and connectors.
Perform BODY VERIFICATION TEST VER-1.

2. CHECK THE OPERATION OF THE SUBWOOFER

Disconnect the Subwoofer harness connector.
Turn the radio on and turn the volume to mid level.
With a voltmeter set to read in A/C voltage, measure the voltage of the Amplified Subwoofer 1 circuits in the Amplified Subwoofer harness connector.

Is the voltage present greater than 1 volt?

Yes >> Replace the Amplified Subwoofer in accordance with the service information.
Perform BODY VERIFICATION TEST VER-1.

No >> Go To 3

3. CHECK THE (X300) AMPLIFIED SUBWOOFER 1 (+) CIRCUIT FOR AN OPEN

Turn the ignition off.
Disconnect the Amplifier C1 harness connector.
Measure the resistance of the (X300) Amplified Subwoofer 1 (+) circuit between the Amplifier C1 harness connector and the Amplified Subwoofer harness connector.

Is the resistance below 5.0 ohms?

Yes >> Go To 4

No >> Repair the (X300) Amplified Subwoofer 1 (+) circuit for an open.
Perform BODY VERIFICATION TEST VER-1.

4. CHECK THE (X390) AMPLIFIED SUBWOOFER 1 (-) CIRCUIT FOR AN OPEN

Turn the ignition off.

Disconnect the Amplifier C1 harness connector.

Measure the resistance of the (X390) Amplified Subwoofer 1 (-) circuit between the Amplifier C1 harness connector and the Amplified Subwoofer harness connector.

Is the resistance below 5.0 ohms?

Yes >> Replace the Amplifier in accordance with the service information.
Perform BODY VERIFICATION TEST VER-1.

No >> Repair the (X390) Amplified Subwoofer 1 (-) circuit for an open.
Perform BODY VERIFICATION TEST VER-1.

B1482-CHANNEL 7 AUDIO SPEAKER OUTPUT CIRCUIT SHORTED TOGETHER

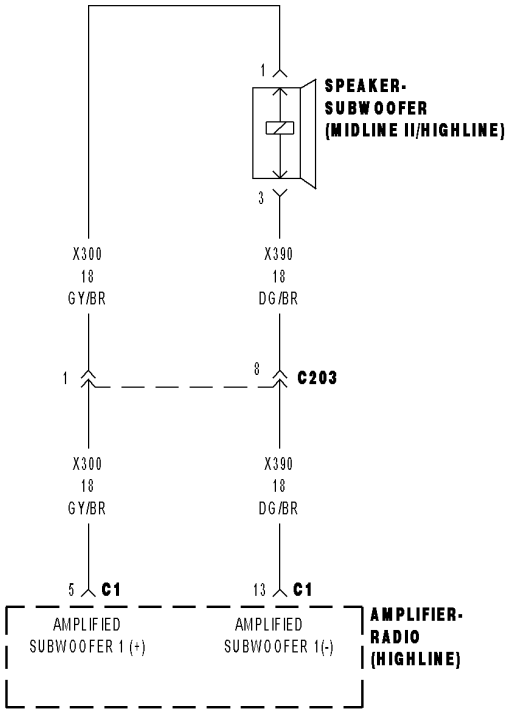

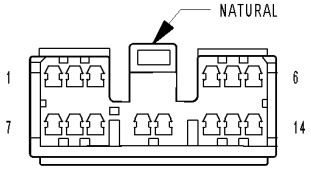

AMPLIFIER-
RADIO C1
(MIDLINE II/HIGHLINE)

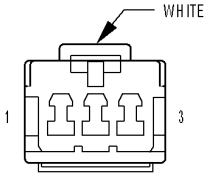

SPEAKER-
SUBWOOFER
(HIGHLINE)

813cb25b

For a complete wiring diagram **Refer to Section 8W**.

- **When Monitored:**
- With the ignition on. Radio volume at 25 or higher.
- **Set Condition:**
- The amplifier detects that the output circuits are shorted together.

Possible Causes
(X300) AMPLIFIED SUBWOOFER 1 (+) CIRCUIT SHORTED TO THE (X390) AMPLIFIED SUBWOOFER 1 (-) CIRCUIT
AMPLIFIED SUBWOOFER 1
AMPLIFIER

Diagnostic Test

1. CHECK FOR AN INTERMITTENT CONDITION

Turn the ignition on, then off, and then on again.
With the scan tool, erase Amplifier DTCs.
Turn the radio on.
Turn the volume level to 25.
With the scan tool, read Amplifier DTCs.

Does the scan tool display active: B1482-CHANNEL 7 AUDIO SPEAKER OUTPUT CIRCUIT SHORTED TOGETHER?

Yes >> Go To 2

No >> The conditions that caused this code to set are not present at this time. Using the wiring diagram/schematic as a guide, inspect the wiring and connectors.
Perform BODY VERIFICATION TEST VER-1.

2. CHECK THE OPERATION OF THE AMPLIFIED SUBWOOFER 1

Disconnect the Amplified Subwoofer 1.
Measure the resistance of the speaker between the two terminals.

Is the resistance of the speaker less than 1 ohm?

Yes >> Replace the Amplified Subwoofer 1 in accordance with the service information.
Perform BODY VERIFICATION TEST VER-1.

No >> Go To 3

3. CHECK THE (X300) AMPLIFIED SUBWOOFER 1 (+) CIRCUIT, AND THE (X390) AMPLIFIED SUBWOOFER 1 (-) CIRCUITS FOR A SHORT TOGETHER

Turn the ignition off.
Disconnect the Amplifier C1 harness connector.
Measure the resistance between the (X300) Amplified Subwoofer 1 (+) circuit, and the (X390) Amplified Subwoofer 1 (-) circuit.

Is the resistance below 10K ohms?

Yes >> Repair the (X300) Amplified Subwoofer 1 (+) circuit, and the (X390) Amplified Subwoofer 1 (-) circuit for a short together.
Perform BODY VERIFICATION TEST VER-1.

No >> Replace the Amplifier in accordance with the service information.
Perform BODY VERIFICATION TEST VER-1.

U0019–CAN B BUS

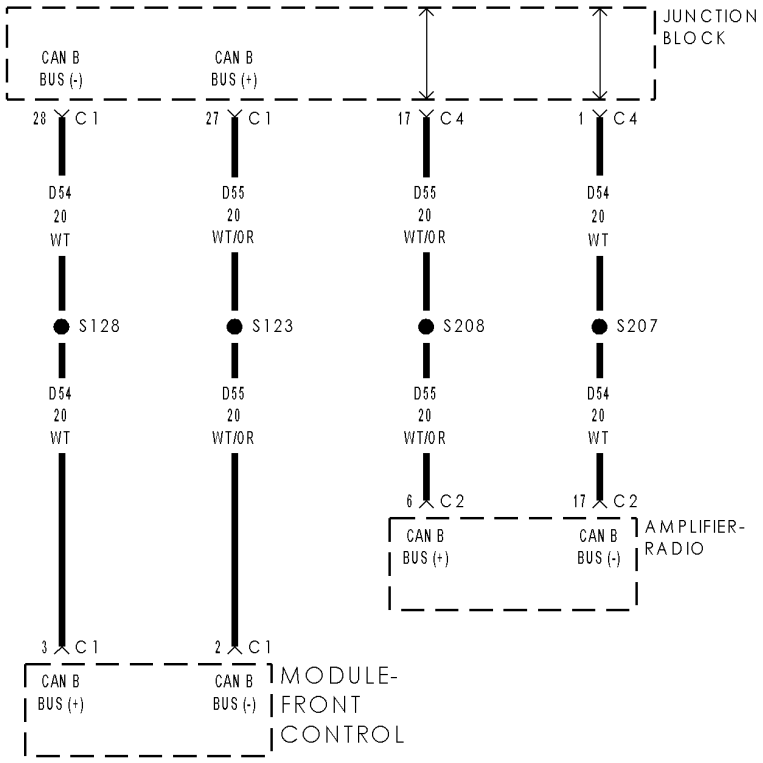

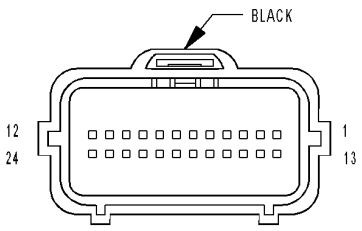

MODULE-FRONT CONTROL C1

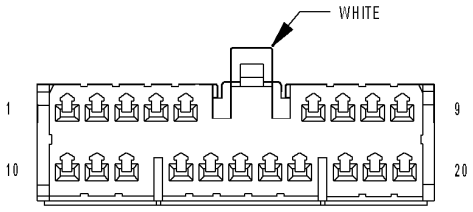

AMPLIFIER-RADIO C2 (EXCEPT SUBWOOFER)

812c45ad

For a complete wiring diagram **Refer to Section 8W**.

- **When Monitored:**
- Continuously.
- **Set Condition:**
- Whenever the Can B Bus (+) or B Bus (–) circuit is open, shorted to voltage or shorted to ground, this code will set.

Possible Causes
CAN B BUS DTCs IN FRONT CONTROL MODULE
(D54) CAN B BUS (–) CIRCUIT OPEN
(D55) CAN B BUS (+) CIRCUIT OPEN
AMPLIFIER

Diagnostic Test

1. TEST FOR INTERMITTENT CONDITION

Turn the ignition on.
With the scan tool, record and erase DTCs
Cycle the ignition from on to off 3 times.
Turn the ignition on.
With the scan tool, read DTCs.

Does the scan tool display U0019–CAN B BUS CIRCUIT?

Yes >> Go To 2

No >> The conditions that caused this code to set are not present at this time. Using the wiring diagram/schematic as a guide, inspect the wiring and connectors.
Perform BODY VERIFICATION TEST - VER 1.

2. CHECK FRONT CONTROL MODULE DTCs

With the scan tool, read Front Control Module DTCs

Does the scan tool display any CAN B BUS DTCs – ACTIVE?

Yes >> Refer to the symptom list for problems related to Communication in the ELECTRICAL.– ELECTRONIC CONTROL MODULES – ELECTRICAL DIAGNOSES section.

No >> Go to 3

3. CAN B BUS (+) CIRCUIT OPEN

Turn the ignition off.
Disconnect the Amplifier harness connector.
Disconnect the Front Control Module C1 harness connector.
Measure the resistance of the (D55) Can B Bus (+) circuit between the Front Control Module C1 harness connector and the Amplifier harness connector.

Is the resistance below 2.0 ohms?

Yes >> Go To 4
Perform BODY VERIFICATION TEST - VER 1.

No >> Repair the Can B Bus (+) circuit for an open.
Perform BODY VERIFICATION TEST - VER 1.

4. CAN B BUS (–) CIRCUIT OPEN

Measure the resistance of the (D54) Can B Bus (–) circuit between the Front Control Module C1 harness connector and the Amplifier harness connector.

Is the resistance below 2.0 ohms?

Yes >> Replace the Amplifier in accordance with the service information..
Perform BODY VERIFICATION TEST - VER 1.

No >> Repair the Can B Bus (–) circuit for an open.
Perform BODY VERIFICATION TEST - VER 1.

U0020-CAN B BUS OFF PERFORMANCE

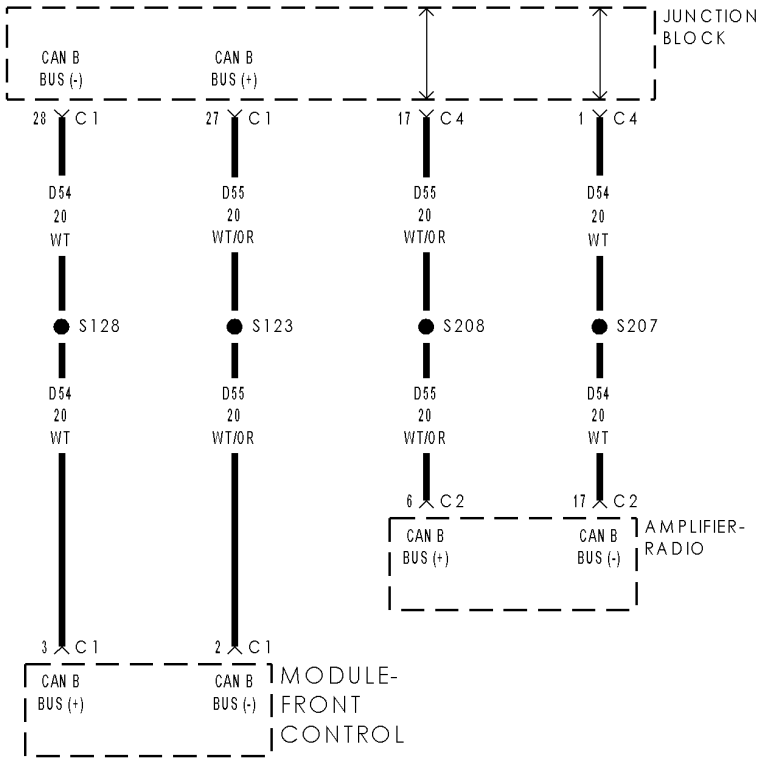

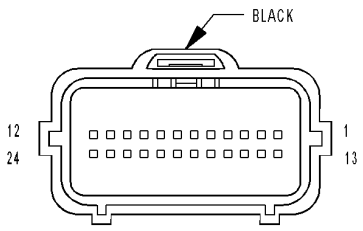

MODULE-FRONT CONTROL C1

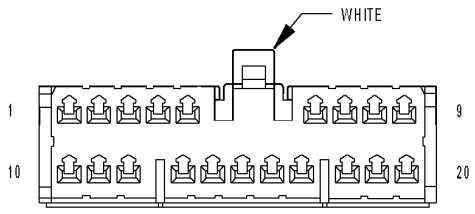

AMPLIFIER-RADIO C2 (EXCEPT SUBWOOFER)

812c45ad

For a complete wiring diagram **Refer to Section 8W**.

- **When Monitored:**
- Continuously.
- **Set Condition:**
- Whenever the Can B Bus (+) or B Bus (–) circuit is open, shorted to voltage or shorted to ground, this code will set.

Possible Causes
CAN B BUS DTCs IN FRONT CONTROL MODULE
(D54) CAN B BUS (–) CIRCUIT OPEN
(D55) CAN B BUS (+) CIRCUIT OPEN
AMPLIFIER

Diagnostic Test

1. TEST FOR INTERMITTENT CONDITION

Turn the ignition on.
With the scan tool, record and erase DTCs
Cycle the ignition from on to off 3 times.
Turn the ignition on.
With the scan tool, read DTCs.

Does the scan tool display U0020-CAN B BUS OFF PERFORMANCE?

Yes >> Go To 2

No >> The conditions that caused this code to set are not present at this time. Using the wiring diagram/schematic as a guide, inspect the wiring and connectors.
Perform BODY VERIFICATION TEST - VER 1.

2. CHECK FRONT CONTROL MODULE DTCs

With the scan tool, read Front Control Module DTCs

Does the scan tool display any CAN B BUS DTCs – ACTIVE?

Yes >> Refer to the symptom list for problems related to Communication in the ELECTRICAL.– ELECTRONIC CONTROL MODULES – ELECTRICAL DIAGNOSES section.

No >> Go to 3

3. CAN B BUS (+) CIRCUIT OPEN

Turn the ignition off.
Disconnect the Amplifier harness connector.
Disconnect the Front Control Module C1 harness connector.
Measure the resistance of the (D55) Can B Bus (+) circuit between the Front Control Module C1 harness connector and the Amplifier harness connector.

Is the resistance below 2.0 ohms?

Yes >> Go To 4
Perform BODY VERIFICATION TEST - VER 1.

No >> Repair the Can B Bus (+) circuit for an open.
Perform BODY VERIFICATION TEST - VER 1.

4. CAN B BUS (–) CIRCUIT OPEN

Measure the resistance of the (D54) Can B Bus (–) circuit between the Front Control Module C1 harness connector and the Amplifier harness connector.

Is the resistance below 2.0 ohms?

Yes >> Replace the Amplifier in accordance with the service information..
Perform BODY VERIFICATION TEST - VER 1.

No >> Repair the Can B Bus (–) circuit for an open.
Perform BODY VERIFICATION TEST - VER 1.

U0141–LOST COMMUNICATION WITH FRONT CONTROL MODULE

For a complete wiring diagram **Refer to Section 8W**.

(Refer to 8 - ELECTRICAL/ELECTRONIC CONTROL MODULES - DIAGNOSIS AND TESTING) for the diagnostic test procedure.

B1401-FRONT LEFT AUDIO SPEAKER OUTPUT CIRCUIT LOW

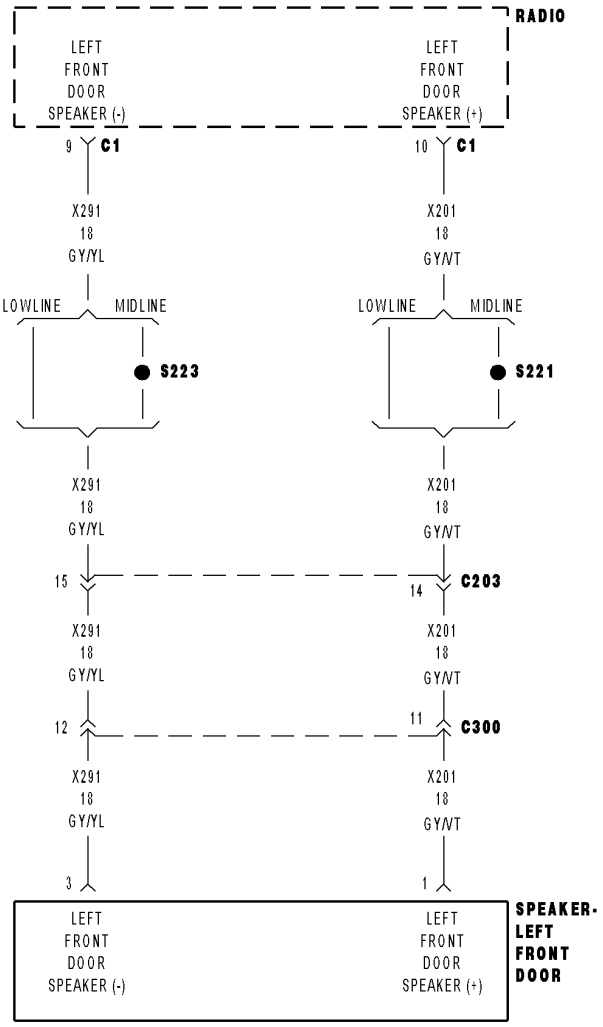

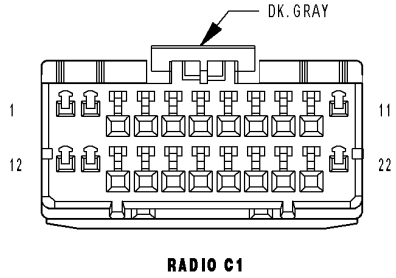

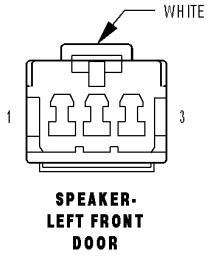

813a4fb4

For a complete wiring diagram **Refer to Section 8W**.

- **When Monitored:**
- With the Radio on.
- **Set Condition:**
- When the Output circuit is LOW for more than 3 seconds.

Possible Causes
SPEAKER
(X201) (X291) LEFT FRONT SPEAKER OUTPUT CIRCUIT

Diagnostic Test

1. INTERMITTENT CONDITION

Turn the ignition on.
With the Scan Tool, clear all Audio DTC's.
Turn the Radio on.
With the Scan Tool, read the DTC information.

Does the Scan Tool read: B1401-FRONT LEFT AUDIO SPEAKER OUTPUT CIRCUIT LOW?

Yes >> Go To 2

No >> The condition that caused the symptom is currently not present. Inspect the related wiring for a possible intermittent condition. Look for any chafed, pierced, pinched, or partially broken wires.
Perform the BODY VERIFICATION TEST VER 1.

2. (X201) (X291) SPEAKER OUTPUT CIRCUITS.

Turn the ignition off.
Disconnect the Radio C1 harness connector.
Disconnect the Front Left Audio Speaker connector.
Measure the resistance between ground and each speaker (X201)(+) and (X291)(-) circuit.

Is the resistance below 1000.0 ohms for each circuit?

Yes >> Repair the applicable Speaker (+) or (-) Output circuit for a short to ground condition.

No >> Go To 3

3. SPEAKER

Turn the ignition off.
Disconnect the Front Left Audio Speaker.
Turn the ignition on.
Turn the Radio on.
With the Scan Tool, clear all Audio DTC's.
With the Scan Tool, read the DTC information.

Does the Scan Tool read: B1401-FRONT LEFT AUDIO SPEAKER OUTPUT CIRCUIT LOW?

Yes >> Replace the Speaker in accordance with the service information.
Perform the BODY VERIFICATION TEST VER 1.

No >> Test Complete.

B1402-FRONT LEFT AUDIO SPEAKER OUTPUT CIRCUIT HIGH

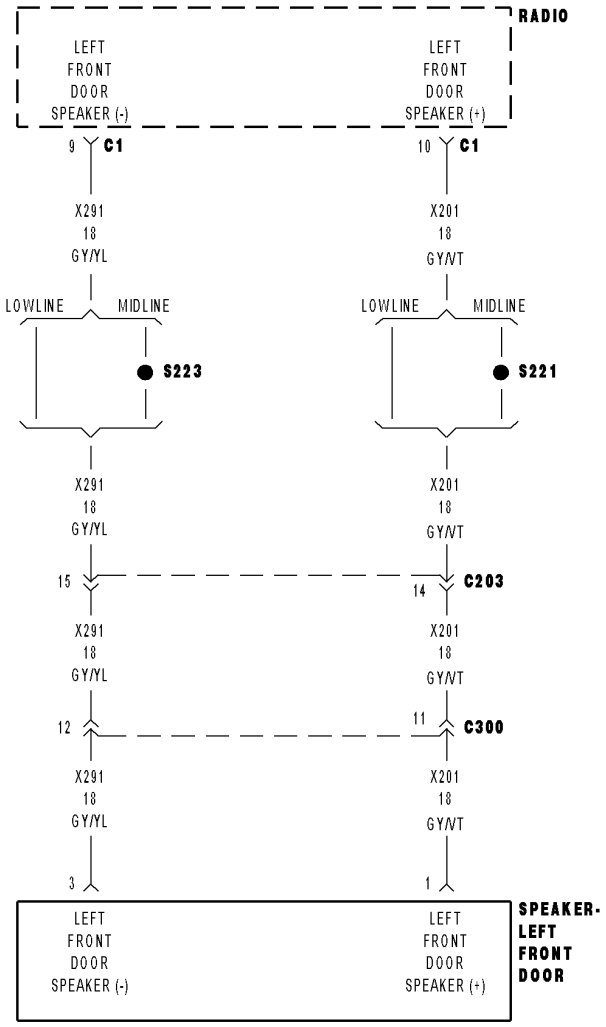

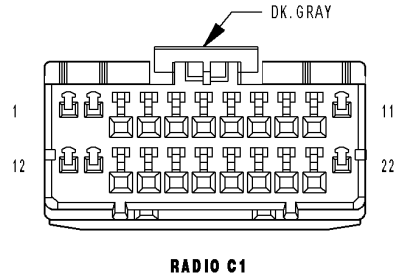

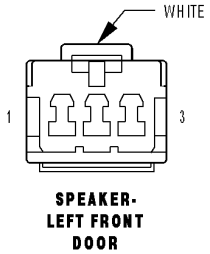

813a4fb4

For a complete wiring diagram **Refer to Section 8W**.

Possible Causes
SPEAKER
(X201) SPEAKER OUTPUT CIRCUIT (+)
(X291) SPEAKER OUTPUT CIRCUIT (-)

Diagnostic Test

1. INTERMITTENT CONDITION

Turn the ignition on, then off, and then on again.
With the scan tool, read Radio DTCs.

Does the scan tool display active: B1402-FRONT LEFT AUDIO SPEAKER OUTPUT CIRCUIT HIGH?

Yes >> Go To 2

No >> The conditions that caused this code to set are not present at this time. Using the wiring diagram/schematic as a guide, inspect the wiring and connectors.
Perform BODY VERIFICATION TEST VER-1.

2. CHECK FOR VOLTAGE ON THE (X201) SPEAKER (+) CIRCUIT

Turn the ignition off.
Disconnect the Radio C1 harness connector.
Disconnect the Left Front Speaker harness connector.
Measure for voltage on the (X201) Speaker (+) circuit.

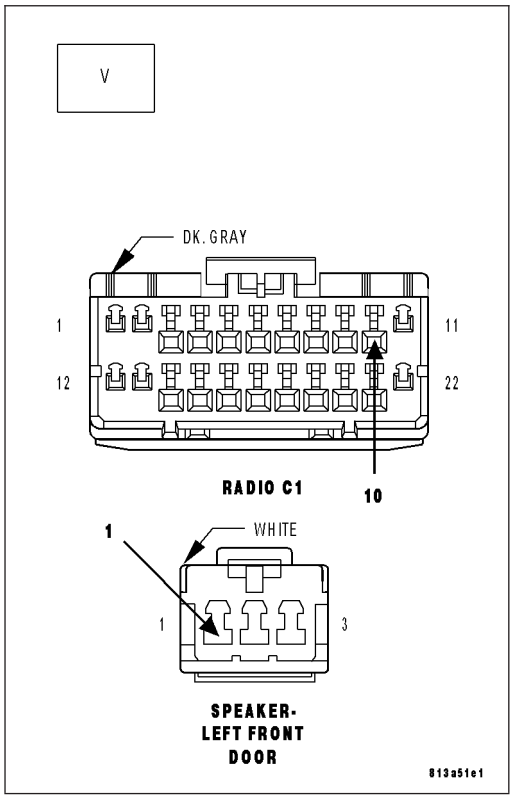

Is the voltage above 10.0 volts?

Yes >> Repair the (X201) Speaker (+) circuit for a short to voltage.
Perform BODY VERIFICATION TEST VER-1.

No >> Go To 3

3. CHECK FOR VOLTAGE ON THE (X291) SPEAKER (-) CIRCUIT

Measure for voltage on the (X291) Speaker (-) circuit.

Is the voltage above 10.0 volts?

Yes >> Repair the (X291) Speaker (-) circuit for a short to voltage.
Perform BODY VERIFICATION TEST VER-1.

No >> Replace the Radio in accordance with the service information.
Perform BODY VERIFICATION TEST VER-1.

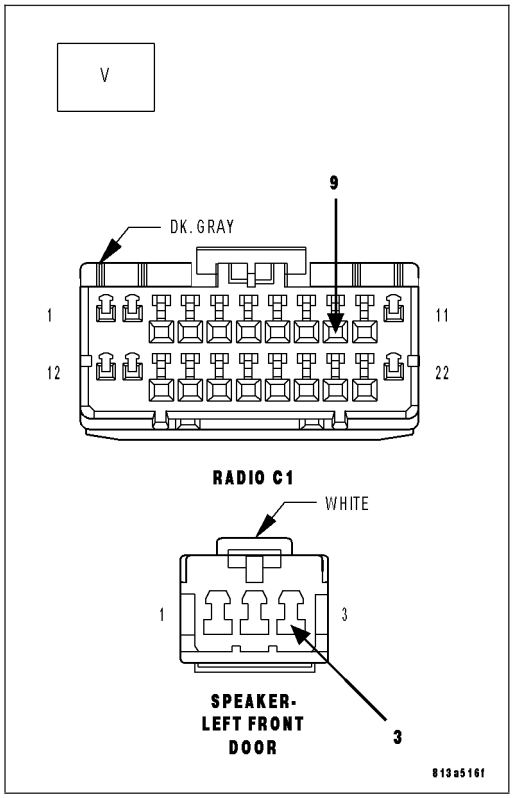

B1403-FRONT LEFT AUDIO SPEAKER OUTPUT CIRCUIT OPEN

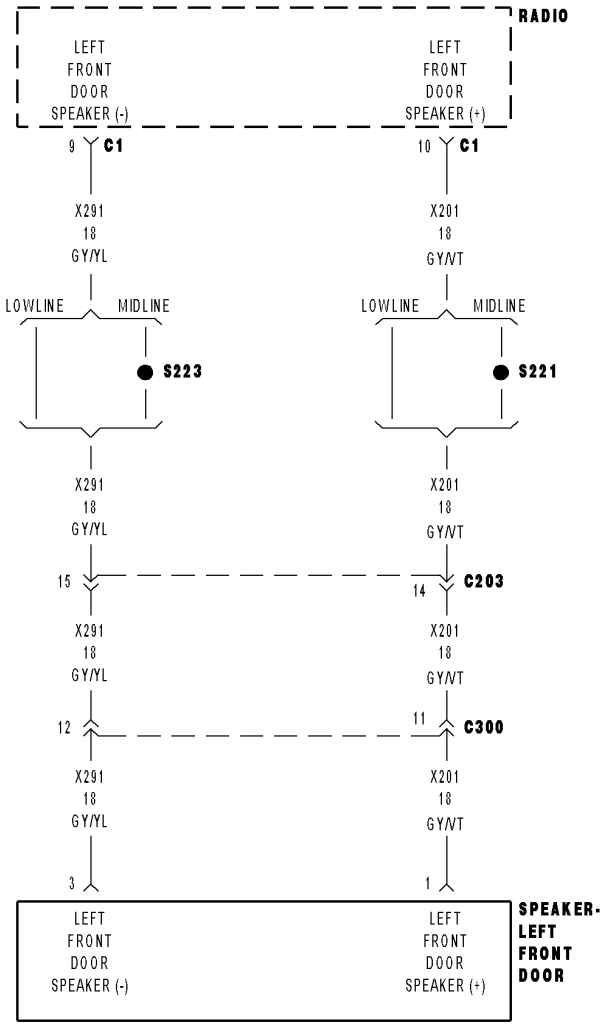

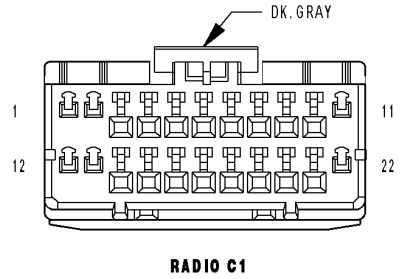

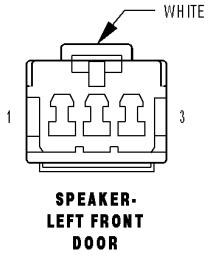

813a4fb4

For a complete wiring diagram **Refer to Section 8W**.

- **When Monitored:**
- With the Radio on.
- **Set Condition:**
- When the Output circuit is open for more than 3 seconds. The Radio will not set the fault if the radio confirms an amplifier is on the BUS.

Possible Causes
SPEAKER
(X201) (X291) LEFT FRONT SPEAKER OUTPUT CIRCUIT

Diagnostic Test

1. INTERMITTENT CONDITION

Turn the ignition on.
With the Scan Tool, clear all Audio DTC's.
Turn the Radio on.
With the Scan Tool, read the DTC information.

Does the Scan Tool read: B1403-FRONT LEFT AUDIO SPEAKER OUTPUT CIRCUIT OPEN?

Yes >> Go To 2

No >> The condition that caused the symptom is currently not present. Inspect the related wiring for a possible intermittent condition. Look for any chafed, pierced, pinched, or partially broken wires.
Perform the BODY VERIFICATION TEST VER 1.

2. (X201) (X291) SPEAKER OUTPUT CIRCUITS.

Turn the ignition off.
Disconnect the Radio C1 harness connector.
Disconnect the Front Left Audio Speaker connector.
Measure the resistance of each speaker (X201)(+) and (X291)(-) circuit between the Radio and the Speaker.

Is the resistance below 5.0 ohms for each circuit?

Yes >> Go To 3

No >> Repair the applicable Output Speaker circuit for an open condition.
Perform the BODY VERIFICATION TEST VER 1.

3. SPEAKER

Turn the ignition off.
Disconnect the Front Left Audio Speaker.
Turn the ignition on.
Turn the Radio on.
With the Scan Tool, clear all Audio DTC's.
With the Scan Tool, read the DTC information.

Does the Scan Tool read: B1403-FRONT LEFT AUDIO SPEAKER OUTPUT CIRCUIT OPEN?

Yes >> Replace the Speaker in accordance with the service information.
Perform the BODY VERIFICATION TEST VER 1.

No >> Test Complete.

B1405-FRONT RIGHT AUDIO SPEAKER OUTPUT CIRCUIT LOW

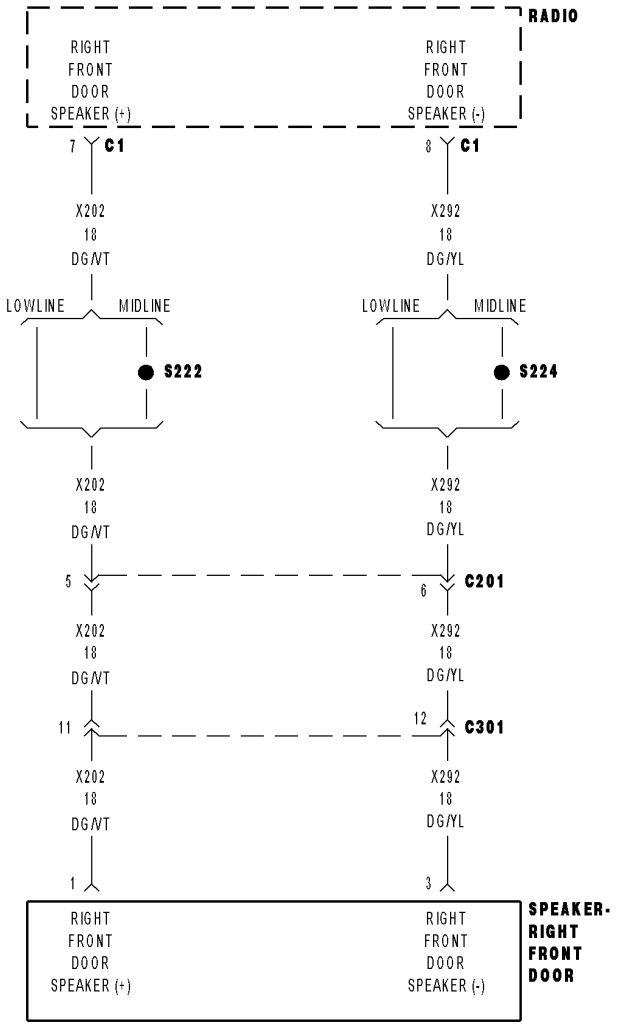

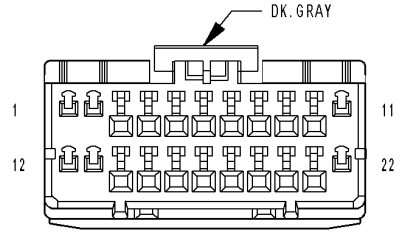

RADIO C1

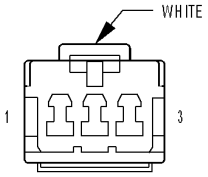

SPEAKER- RIGHT FRONT DOOR

813a30d9

For a complete wiring diagram **Refer to Section 8W**.

- **When Monitored:**
- With the Radio on.
- **Set Condition:**
- When the Output circuit is LOW for more than 3 seconds.

Possible Causes
SPEAKER
(X202) (X292) RIGHT FRONT SPEAKER OUTPUT CIRCUIT

Diagnostic Test

1. INTERMITTENT CONDITION

Turn the ignition on.
With the Scan Tool, clear all Audio DTC's.
Turn the Radio on.
With the Scan Tool, read the DTC information.

Does the Scan Tool read: B1405-FRONT RIGHT AUDIO SPEAKER OUTPUT CIRCUIT LOW?

Yes >> Go To 2

No >> The condition that caused the symptom is currently not present. Inspect the related wiring for a possible intermittent condition. Look for any chafed, pierced, pinched, or partially broken wires.
Perform the BODY VERIFICATION TEST VER 1.

2. (X202) (X292) SPEAKER OUTPUT CIRCUITS.

Turn the ignition off.
Disconnect the Radio C1 harness connector.
Disconnect the Front Right Audio Speaker connector.
Measure the resistance between ground and each speaker (X202)(+) and (X292)(-) circuit.

Is the resistance below 1000.0 ohms for each circuit?

Yes >> Repair the applicable Speaker (+) or (-) Output circuit for a short to ground condition.

No >> Go To 3

3. SPEAKER

Turn the ignition off.
Disconnect the Front Right Audio Speaker.
Turn the ignition on.
Turn the Radio on.
With the Scan Tool, clear all Audio DTC's.
With the Scan Tool, read the DTC information.

Does the Scan Tool read: B1405-FRONT RIGHT AUDIO SPEAKER OUTPUT CIRCUIT LOW?

Yes >> Replace the Speaker in accordance with the service information.
Perform the BODY VERIFICATION TEST VER 1.

No >> Test Complete.

B1406-FRONT RIGHT AUDIO SPEAKER OUTPUT CIRCUIT HIGH

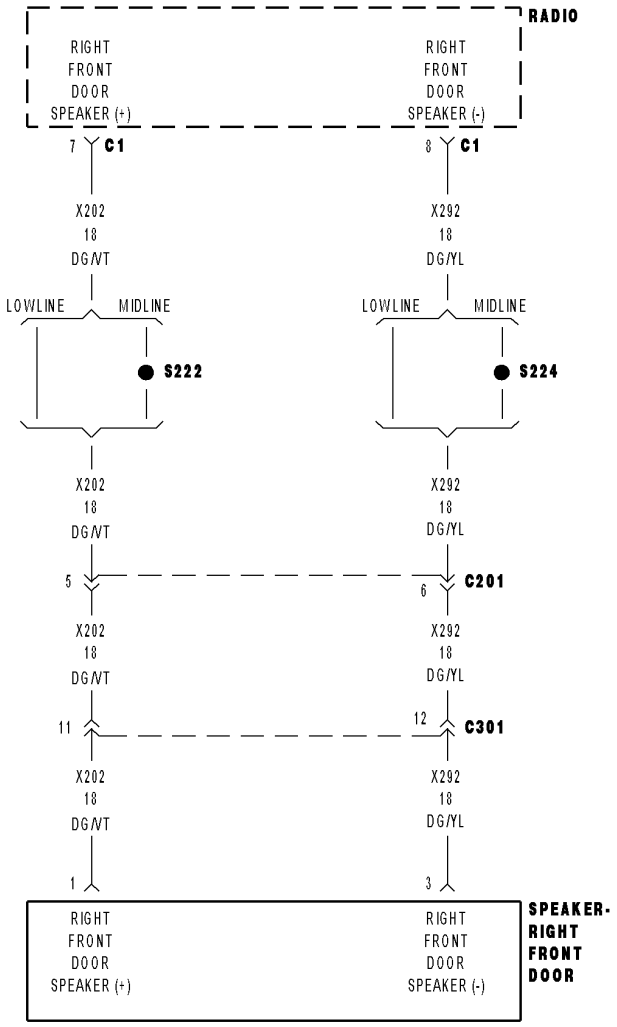

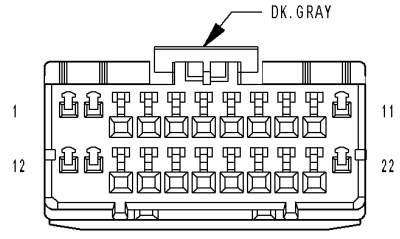

RADIO C1

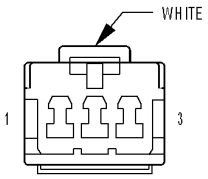

SPEAKER-RIGHT FRONT DOOR

813a30d9

For a complete wiring diagram **Refer to Section 8W**.

Possible Causes
SPEAKER
(X202) SPEAKER OUTPUT CIRCUIT (+)
(X292) SPEAKER OUTPUT CIRCUIT (-)

Diagnostic Test

1. INTERMITTENT CONDITION

Turn the ignition on, then off, and then on again.
With the scan tool, read Radio DTCs.

Does the scan tool display active: B1406-FRONT RIGHT AUDIO SPEAKER OUTPUT CIRCUIT HIGH?

Yes >> Go To 2

No >> The conditions that caused this code to set are not present at this time. Using the wiring diagram/schematic as a guide, inspect the wiring and connectors.
Perform BODY VERIFICATION TEST VER-1.

2. CHECK FOR VOLTAGE ON THE (X202) SPEAKER (+) CIRCUIT

Turn the ignition off.
Disconnect the Radio C1 harness connector.
Disconnect the Right Rear Speaker harness connector.
Measure for voltage on the (X202) Speaker (+) circuit.

Is the voltage above 10.0 volts?

Yes >> Repair the (X202) Speaker (+) circuit for a short to voltage.
Perform BODY VERIFICATION TEST VER-1.

No >> Go To 3

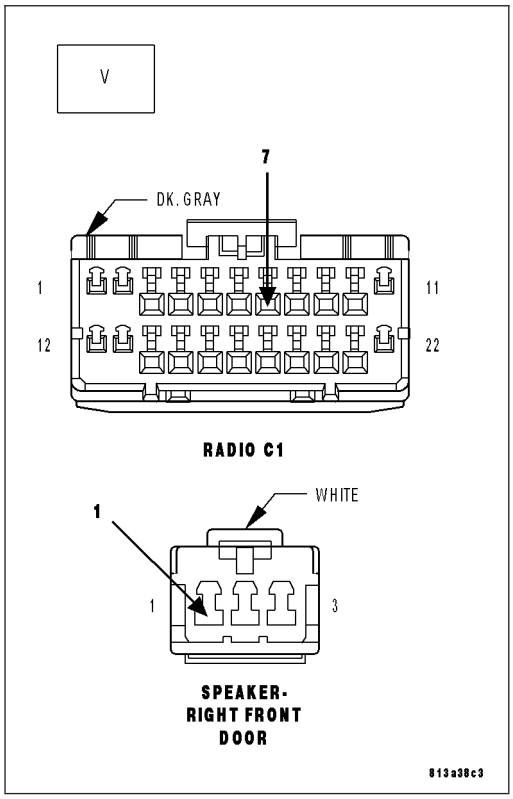

3. CHECK FOR VOLTAGE ON THE (X292) SPEAKER (-) CIRCUIT

Measure for voltage on the (X292) Speaker (-) circuit.

Is the voltage above 10.0 volts?

Yes >> Repair the (X292) Speaker (-) circuit for a short to voltage.
Perform BODY VERIFICATION TEST VER-1.

No >> Replace the Radio in accordance with the service information.
Perform BODY VERIFICATION TEST VER-1.

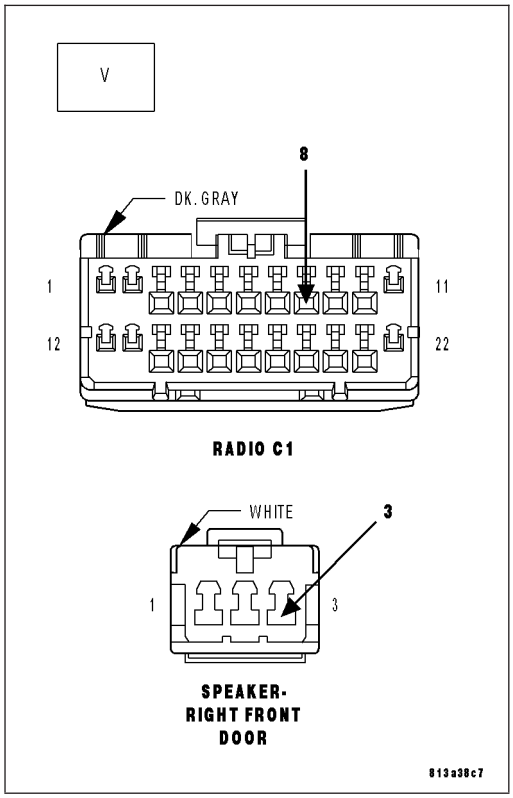

B1407-FRONT RIGHT AUDIO SPEAKER OUTPUT CIRCUIT OPEN

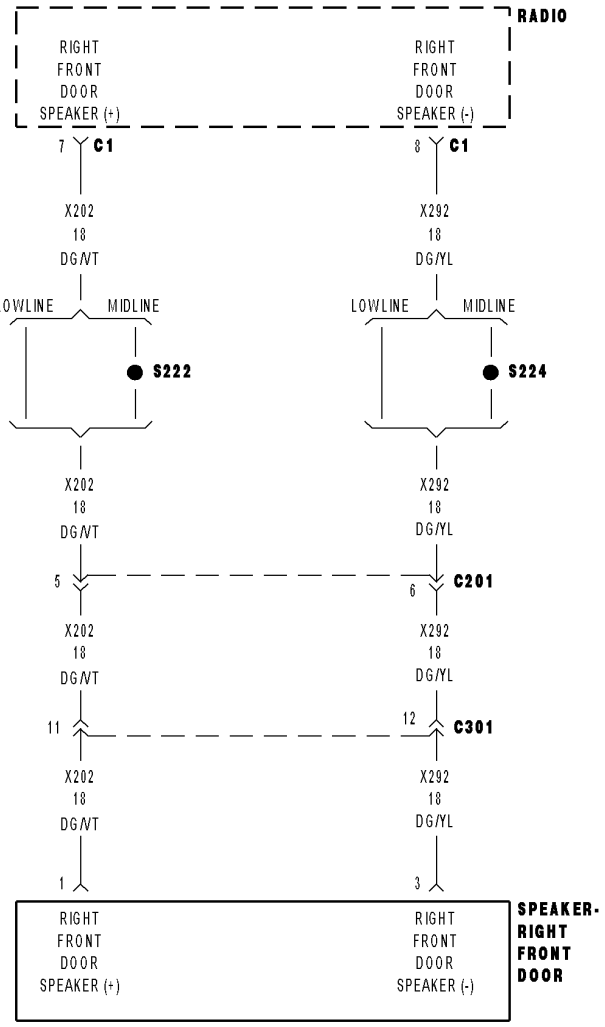

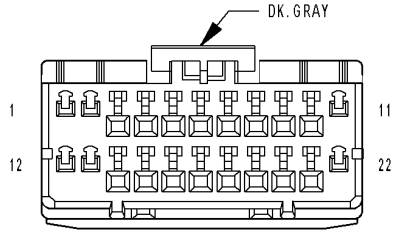

RADIO C1

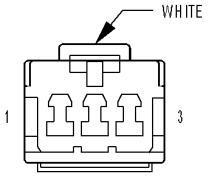

SPEAKER-RIGHT FRONT DOOR

813a30d9

For a complete wiring diagram **Refer to Section 8W**.

- **When Monitored:**
- With the Radio on.
- **Set Condition:**
- When the Output circuit is open for more than 3 seconds. The Radio will not set the fault if the radio confirms an amplifier is on the BUS.

Possible Causes
SPEAKER
(X202) (X292) RIGHT FRONT SPEAKER OUTPUT CIRCUIT

Diagnostic Test

1. INTERMITTENT CONDITION

Turn the ignition on.
With the Scan Tool, clear all Audio DTC's.
Turn the Radio on.
With the Scan Tool, read the DTC information.

Does the Scan Tool read: B1407-FRONT RIGHT AUDIO SPEAKER OUTPUT CIRCUIT OPEN?

Yes >> Go To 2

No >> The condition that caused the symptom is currently not present. Inspect the related wiring for a possible intermittent condition. Look for any chafed, pierced, pinched, or partially broken wires.
Perform the BODY VERIFICATION TEST VER 1.

2. (X202) (X292) Speaker Output circuits.

Turn the ignition off.
Disconnect the Radio C1 harness connector.
Disconnect the Front Right Audio Speaker connector.
Measure the resistance of each speaker (X202)(+) and (X292)(-) circuit between the Radio and the Speaker.

Is the resistance below 5.0 ohms for each circuit?

Yes >> Go To 3

No >> Repair the applicable Output Speaker circuit for an open condition.
Perform the BODY VERIFICATION TEST VER 1.

3. Speaker

Turn the ignition off.
Disconnect the Front Right Audio Speaker.
Turn the ignition on.
Turn the Radio on.
With the Scan Tool, clear all Audio DTC's.
With the Scan Tool, read the DTC information.

Does the Scan Tool read: B1407-FRONT RIGHT AUDIO SPEAKER OUTPUT CIRCUIT OPEN?

Yes >> Replace the Speaker in accordance with the service information.
Perform the BODY VERIFICATION TEST VER 1.

No >> Test Complete.

B1409-REAR LEFT AUDIO SPEAKER OUTPUT CIRCUIT LOW

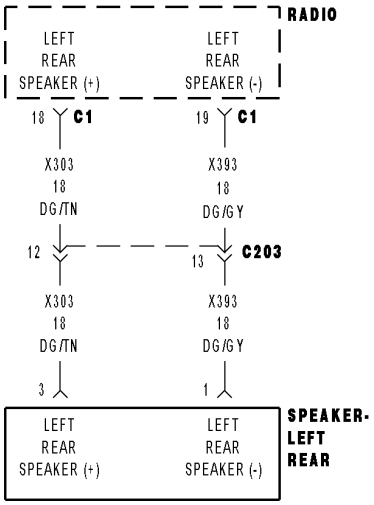

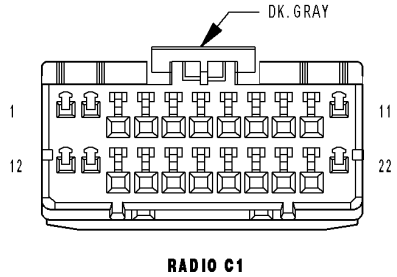

RADIO C1

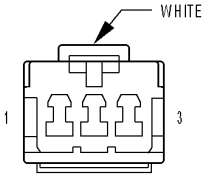

SPEAKER- LEFT REAR

81399a55

For a complete wiring diagram **Refer to Section 8W**.

- **When Monitored:**
- With the Radio on.
- **Set Condition:**
- When the Output circuit is LOW for more than 3 seconds.

Possible Causes
SPEAKER
(X303) (X393) LEFT REAR SPEAKER OUTPUT CIRCUIT

Diagnostic Test

1. INTERMITTENT CONDITION

Turn the ignition on.
With the Scan Tool, clear all Audio DTC's.
Turn the Radio on.
With the Scan Tool, read the DTC information.

Does the Scan Tool read: B1409-REAR LEFT AUDIO SPEAKER OUTPUT CIRCUIT LOW?

Yes >> Go To 2

No >> The condition that caused the symptom is currently not present. Inspect the related wiring for a possible intermittent condition. Look for any chafed, pierced, pinched, or partially broken wires.
Perform the BODY VERIFICATION TEST VER 1.

2. (X303) (X393) SPEAKER OUTPUT CIRCUITS.

Turn the ignition off.
Disconnect the Radio C1 harness connector.
Disconnect the Rear Left Audio Speaker connector.
Measure the resistance between ground and each speaker (X303)(+) and (X393)(-) circuit.

Is the resistance below 1000.0 ohms for each circuit?

Yes >> Repair the applicable Speaker (+) or (-) Output circuit for a short to ground condition.

No >> Go To 3

3. SPEAKER

Turn the ignition off.
Disconnect the Rear Left Audio Speaker.
Turn the ignition on.
Turn the Radio on.
With the Scan Tool, clear all Audio DTC's.
With the Scan Tool, read the DTC information.

Does the Scan Tool read: B1409-REAR LEFT AUDIO SPEAKER OUTPUT CIRCUIT LOW?

Yes >> Replace the Speaker in accordance with the service information.
Perform the BODY VERIFICATION TEST VER 1.

No >> Test Complete.

B140A-REAR LEFT AUDIO SPEAKER OUTPUT CIRCUIT HIGH

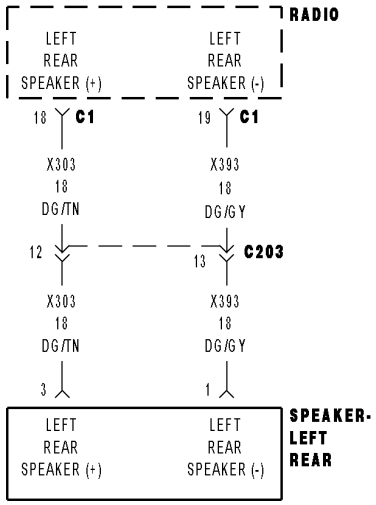

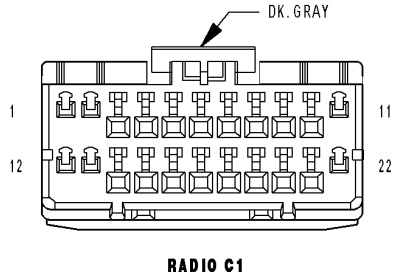

RADIO C1

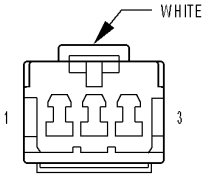

SPEAKER- LEFT REAR

81399a55

For a complete wiring diagram **Refer to Section 8W**.

Possible Causes
SPEAKER
(X303) SPEAKER OUTPUT CIRCUIT (+)
(X393) SPEAKER OUTPUT CIRCUIT (-)

Diagnostic Test

1. INTERMITTENT CONDITION

Turn the ignition on, then off, and then on again.
With the scan tool, read Radio DTCs.

Does the scan tool display active: B140A-REAR LEFT AUDIO SPEAKER OUTPUT CIRCUIT HIGH?

Yes >> Go To 2

No >> The conditions that caused this code to set are not present at this time. Using the wiring diagram/schematic as a guide, inspect the wiring and connectors.
Perform BODY VERIFICATION TEST VER-1.

2. CHECK FOR VOLTAGE ON THE (X303) SPEAKER (+) CIRCUIT

Turn the ignition off.
Disconnect the Radio C1 harness connector.
Disconnect the Left Rear Speaker harness connector.
Measure for voltage on the (X303) Speaker (+) circuit.

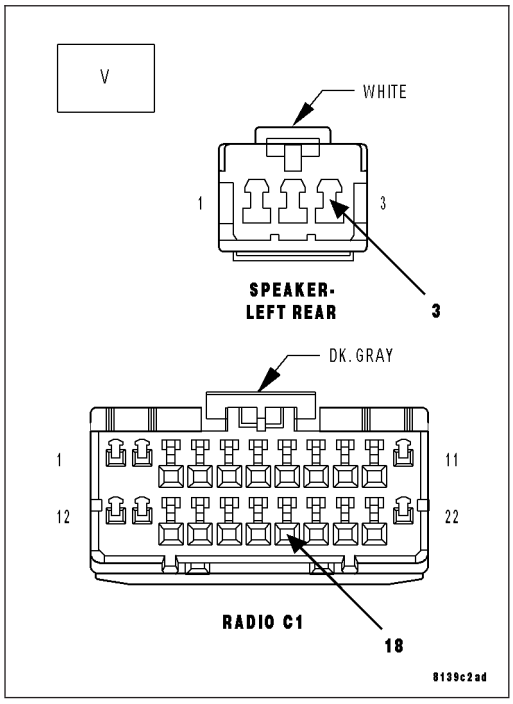

Is the voltage above 10.0 volts?

Yes >> Repair the (X303) Speaker (+) circuit for a short to voltage.
Perform BODY VERIFICATION TEST VER-1.

No >> Go To 3

3. CHECK FOR VOLTAGE ON THE (X393) SPEAKER (-) CIRCUIT

Measure for voltage on the (X393) Speaker (-) circuit.

Is the voltage above 10.0 volts?

Yes >> Repair the (X393) Speaker (-) circuit for a short to voltage. Perform BODY VERIFICATION TEST VER-1.

No >> Replace the Radio in accordance with the service information. Perform BODY VERIFICATION TEST VER-1.

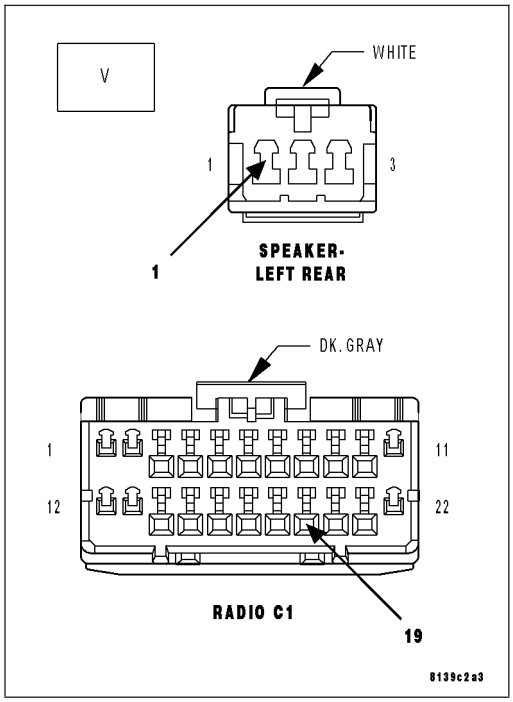

B140B-REAR LEFT AUDIO SPEAKER OUTPUT CIRCUIT OPEN

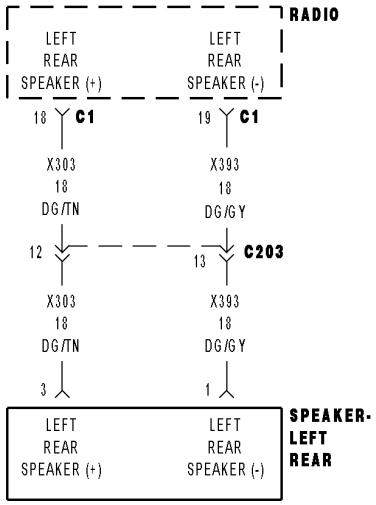

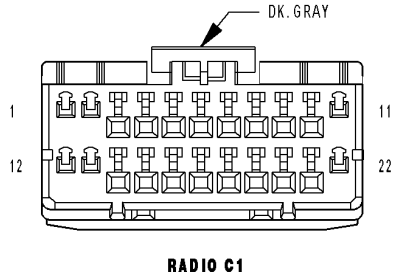

RADIO C1

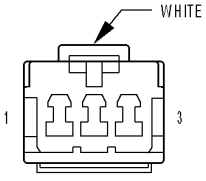

SPEAKER-LEFT REAR

81399a55

For a complete wiring diagram **Refer to Section 8W**.

- **When Monitored:**
- With the Radio on.
- **Set Condition:**
- When the Output circuit is open for more than 3 seconds. The Radio will not set the fault if the radio confirms an amplifier is on the BUS.

Possible Causes
SPEAKER
(X303) (X393) LEFT REAR SPEAKER OUTPUT CIRCUIT

Diagnostic Test

1. Intermittent Condition

Turn the ignition on.
With the Scan Tool, clear all Audio DTC's.
Turn the Radio on.
With the Scan Tool, read the DTC information.

Does the Scan Tool read: B140B-REAR LEFT AUDIO SPEAKER OUTPUT CIRCUIT OPEN?

Yes >> Go To 2

No >> The condition that caused the symptom is currently not present. Inspect the related wiring for a possible intermittent condition. Look for any chafed, pierced, pinched, or partially broken wires.
Perform the BODY VERIFICATION TEST VER 1.

2. (X303) (X393) Speaker Output circuits.

Turn the ignition off.
Disconnect the Radio C1 harness connector.
Disconnect the Rear Left Audio Speaker connector.
Measure the resistance of each speaker (X303)(+) and (X393)(-) circuit between the Radio and the Speaker.

Is the resistance below 5.0 ohms for each circuit?

Yes >> Go To 3

No >> Repair the applicable Output Speaker circuit for an open condition.
Perform the BODY VERIFICATION TEST VER 1.

3. Speaker

Turn the ignition off.
Disconnect the Rear Left Audio Speaker.
Turn the ignition on.
Turn the Radio on.
With the Scan Tool, clear all Audio DTC's.
With the Scan Tool, read the DTC information.

Does the Scan Tool read: B140B-REAR LEFT AUDIO SPEAKER OUTPUT CIRCUIT OPEN?

Yes >> Replace the Speaker in accordance with the service information.
Perform the BODY VERIFICATION TEST VER 1.

No >> Test Complete.

B140D-REAR RIGHT AUDIO SPEAKER OUTPUT CIRCUIT LOW

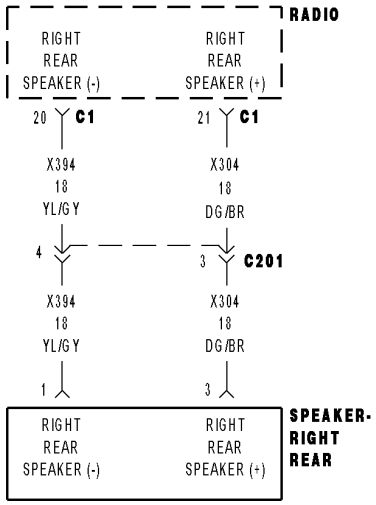

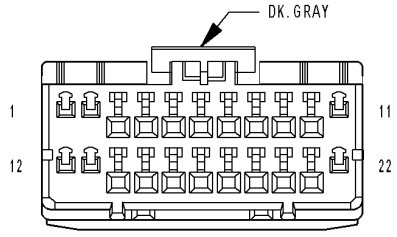

RADIO C1

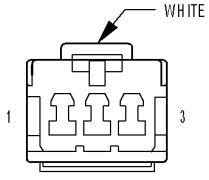

SPEAKER-RIGHT REAR

81396824

For a complete wiring diagram **Refer to Section 8W**.

- **When Monitored:**
- With the Radio on.
- **Set Condition:**
- When the Output circuit is LOW for more than 3 seconds.

Possible Causes
SPEAKER
(X304) (X394) RIGHT REAR SPEAKER OUTPUT CIRCUIT

Diagnostic Test

1. Intermittent Condition

Turn the ignition on.
With the Scan Tool, clear all Audio DTC's.
Turn the Radio on.
With the Scan Tool, read the DTC information.

Does the Scan Tool read: B140D-REAR RIGHT AUDIO SPEAKER OUTPUT CIRCUIT LOW?

Yes >> Go To 2

No >> The condition that caused the symptom is currently not present. Inspect the related wiring for a possible intermittent condition. Look for any chafed, pierced, pinched, or partially broken wires.
Perform the BODY VERIFICATION TEST VER 1.

2. (X304) (X394) Speaker Output circuits.

Turn the ignition off.
Disconnect the Radio C1 harness connector.
Disconnect the Rear Right Audio Speaker connector.
Measure the resistance between ground and each speaker (X304)(+) and (X394)(-) circuit.

Is the resistance below 1000.0 ohms for each circuit?

Yes >> Repair the applicable Speaker (+) or (-) Output circuit for a short to ground condition.

No >> Go To 3

3. Speaker

Turn the ignition off.
Disconnect the Rear Right Audio Speaker.
Turn the ignition on.
Turn the Radio on.
With the Scan Tool, clear all Audio DTC's.
With the Scan Tool, read the DTC information.

Does the Scan Tool read: B140D-REAR RIGHT AUDIO SPEAKER OUTPUT CIRCUIT LOW?

Yes >> Replace the Speaker in accordance with the service information.
Perform the BODY VERIFICATION TEST VER 1.

No >> Test Complete.

B140E-REAR RIGHT AUDIO SPEAKER OUTPUT CIRCUIT HIGH

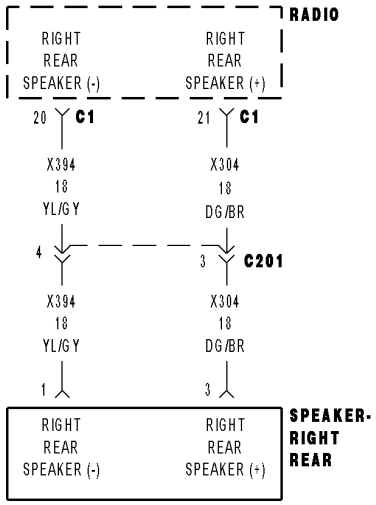

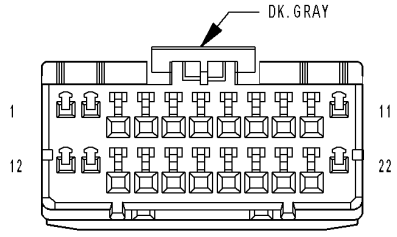

RADIO C1

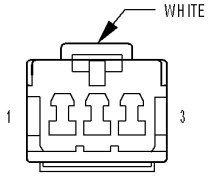

SPEAKER-RIGHT REAR

81396824

For a complete wiring diagram **Refer to Section 8W**.

Possible Causes
SPEAKER
(X304) SPEAKER OUTPUT CIRCUIT (+)
(X394) SPEAKER OUTPUT CIRCUIT (-)

Diagnostic Test

1. INTERMITTENT CONDITION

Turn the ignition on, then off, and then on again.
With the scan tool, read Radio DTCs.

Does the scan tool display active: B140E-REAR RIGHT AUDIO SPEAKER OUTPUT CIRCUIT HIGH?

Yes >> Go To 2

No >> The conditions that caused this code to set are not present at this time. Using the wiring diagram/schematic as a guide, inspect the wiring and connectors.
Perform BODY VERIFICATION TEST VER-1.

2. CHECK FOR VOLTAGE ON THE (X304) SPEAKER (+) CIRCUIT

Turn the ignition off.
Disconnect the Radio C1 harness connector.
Disconnect the Right Rear Speaker harness connector.
Measure for voltage on the (X304) Speaker (+) circuit.

Is the voltage above 10.0 volts?

Yes >> Repair the (X304) Speaker (+) circuit for a short to voltage.
Perform BODY VERIFICATION TEST VER-1.

No >> Go To 3

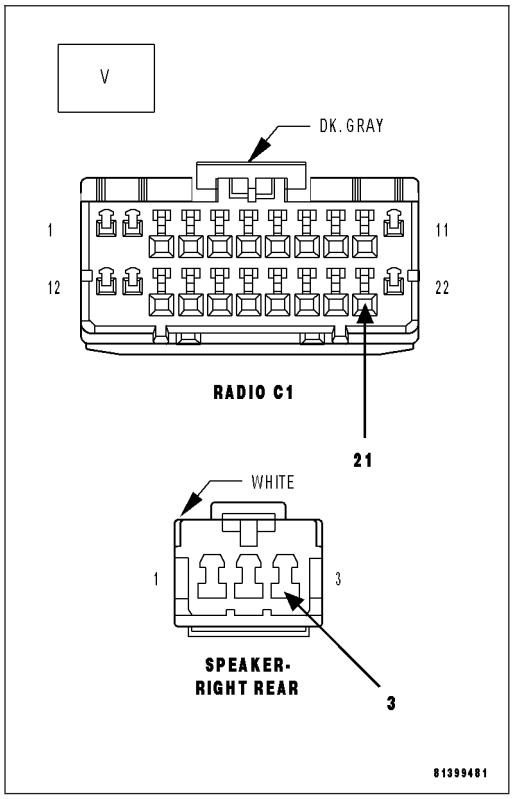

3. CHECK FOR VOLTAGE ON THE (X394) SPEAKER (-) CIRCUIT

Measure for voltage on the (X394) Speaker (-) circuit.

Is the voltage above 10.0 volts?

Yes >> Repair the (X394) Speaker (-) circuit for a short to voltage.
Perform BODY VERIFICATION TEST VER-1.

No >> Replace the Radio in accordance with the service information.
Perform BODY VERIFICATION TEST VER-1.

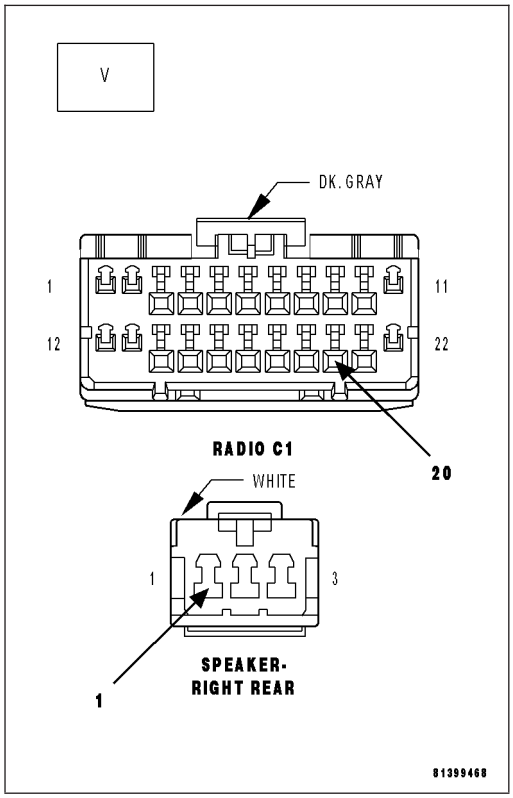

B140F-REAR RIGHT AUDIO SPEAKER OUTPUT CIRCUIT OPEN

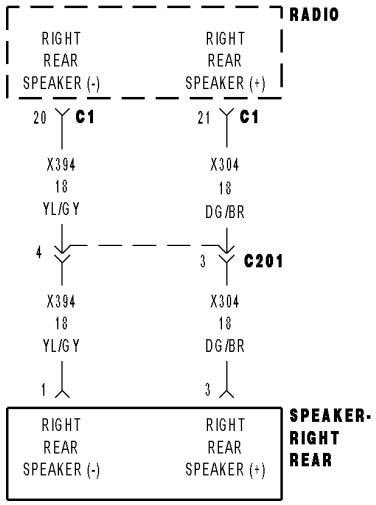

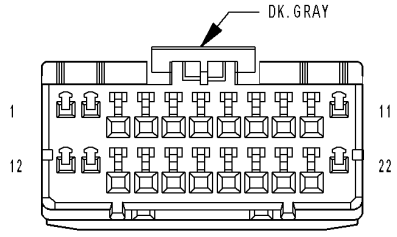

RADIO C1

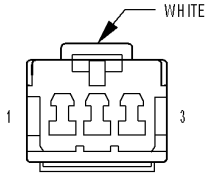

SPEAKER-RIGHT REAR

81396824

For a complete wiring diagram **Refer to Section 8W**.

- **When Monitored:**
- With the Radio on.
- **Set Condition:**
- When the Output circuit is open for more than 3 seconds. The Radio will not set the fault if the radio confirms an amplifier is on the BUS.

Possible Causes
SPEAKER
(X304) (X394) RIGHT REAR SPEAKER OUTPUT CIRCUIT

Diagnostic Test

1. Intermittent Condition

Turn the ignition on.
With the Scan Tool, clear all Audio DTC's.
Turn the Radio on.
With the Scan Tool, read the DTC information.

Does the Scan Tool read: B140F-REAR RIGHT AUDIO SPEAKER OUTPUT CIRCUIT OPEN?

Yes >> Go To 2

No >> The condition that caused the symptom is currently not present. Inspect the related wiring for a possible intermittent condition. Look for any chafed, pierced, pinched, or partially broken wires.
Perform the BODY VERIFICATION TEST VER 1.

2. (X394) (X304) Speaker Output circuits.

Turn the ignition off.
Disconnect the Radio C1 harness connector.
Disconnect the Rear Right Audio Speaker connector.
Measure the resistance of each speaker (X304)(+) and (X394)(-) circuit between the Radio and the Speaker.

Is the resistance below 5.0 ohms for each circuit?

Yes >> Go To 3

No >> Repair the applicable Output Speaker circuit for an open condition.
Perform the BODY VERIFICATION TEST VER 1.

3. Speaker

Turn the ignition off.
Disconnect the Rear Right Audio Speaker.
Turn the ignition on.
Turn the Radio on.
With the Scan Tool, clear all Audio DTC's.
With the Scan Tool, read the DTC information.

Does the Scan Tool read: B140F-REAR RIGHT AUDIO SPEAKER OUTPUT CIRCUIT OPEN?

Yes >> Replace the Speaker in accordance with the service information.
Perform the BODY VERIFICATION TEST VER 1.

No >> Test Complete.

B1421-AUDIO CD READ ERROR/INOPERABLE DISC

For a complete wiring diagram **Refer to Section 8W**.

- **When Monitored:**
- Continuously with the ignition on and the radio CD player turned on.
- **Set Condition:**
- The code will set if a CD that is not formatted as a music CD is installed in the radio CD player.

Possible Causes
CD READ FAILURE

Diagnostic Test

1. RADIO

Replace the problem CD with a good, clean,unscratched, music CD.
Turn the radio CD player on.
With the Scan Tool, read DTC's.

Does the Scan Tool display: B1421 Audio CD Read Error/Inoperable Disc?

Yes >> Eject the inoperative CD and replace the CD in accordance with the service information. Perform the BODY VERIFICATION TEST — VER 1.

No >> Test Complete.

B1422-AUDIO DVD READ ERROR/INOPERABLE DISC

For a complete wiring diagram **Refer to Section 8W**.

- **When Monitored:**
- Continuously with the ignition on and the DVD player turned on.
- **Set Condition:**
- The code will set if a DVD that is not formatted as a DVD is installed in the DVD player.

Possible Causes
DVD READ FAILURE

Diagnostic Test

1. DVD PLAYER

Replace the problem DVD with a good, clean,unscratched DVD.
Turn the DVD player on.
With the Scan Tool, read DTC's.

Does the Scan Tool display: B1422 Audio DVD Read Error/Inoperable Disc?

Yes >> Eject the inoperative DVD and replace the DVD in accordance with the service information. Perform the BODY VERIFICATION TEST — VER 1.

No >> Test Complete.

B1429-RADIO DISPLAY HIGH TEMPERATURE

For a complete wiring diagram **Refer to Section 8W**.

- **When Monitored:**
- Continuously with the ignition and Navigation Radio on.
- **Set Condition:**
- The code will set if the temperature inside the display exceeds 158°F

Possible Causes
HIGH TEMPERATURE FAILURE

Diagnostic Test

1. VERIFY THAT DTC B1429—RADIO DISPLAY HIGH TEMPERATURE IS ACTIVE.

With the Scan Tool, erase the Audio DTC's.

Start the engine and allow the engine to reach normal operating temperature.

If the vehicle has been in the hot sunlight or extreme cold, move the vehicle indoors and open the doors to allow the inside temperature to stabilize.

The radio display should operate to 158°F.

With the Scan Tool, read the DTC's.

Does the Scan Tool display, B1429— Radio Display High Temperature?

Yes >> Replace the Radio in accordance with the service information.
Perform the BODY VERIFICATION TEST — VER 1.

No >> Test Complete.

B142A-RADIO UNIT HIGH TEMPERATURE

For a complete wiring diagram **Refer to Section 8W**.

- **When Monitored:**
- Continuously with the ignition and Radio on
- **Set Condition:**
- The code will set if the temperature inside the radio is above +65°C (+145°F)

Possible Causes
HIGH TEMPERATURE FAILURE

Diagnostic Test

1. VERIFY THAT DTC B142A—RADIO UNIT HIGH TEMPERATURE IS ACTIVE.

With the Scan Tool, erase the Audio DTC's.

Start the engine and allow the engine to reach normal operating temperature.

If the vehicle has been in the hot sunlight or extreme cold, move the vehicle indoors and open the doors to allow the inside temperature to stabilize.

The Radio should operate between —23°C and 65°C (—10°F and +145°F).

With the Scan Tool, read the DTC's.

Does the Scan Tool display, B142A— Radio Unit High Temperature?

Yes >> Replace the Radio in accordance with the service information.
Perform the BODY VERIFICATION TEST — VER 1.

No >> Test Complete.

B142D-AUDIO ANTENNA NOT CONNECTED

For a complete wiring diagram **Refer to Section 8W**.

- **When Monitored:**
- With the ignition on and the radio in seek mode.
- **Set Condition:**
- With the radio in seek mode for two loops around the band. The radio does not detect an antenna connection or does not receive a radio station signal.

Possible Causes
BAD ANTENNA CONNECTION
RADIO

Diagnostic Test

1. Test Antenna

Turn the ignition off.
Disconnect the Radio Antenna connector.
Inspect the Radio Antenna connection.

Was the Antenna connection clean and secure?

Yes >> Go To 2

No >> Repair the Antenna connection as needed.
Perform the BODY VERIFICATION TEST — VER1.

2. ANTENNA

Refer to the Audio System in the service information and test the antenna in accordance with the service procedure.

Is the Antenna ok?

Yes >> Go To 3

No >> Repair or replace the Antenna assembly as necessary.
Perform the BODY VERIFICATION TEST — VER1.

3. RADIO

NOTE: Reconnect all previously disconnected components.

NOTE: Move vehicle outside approximately 30ft from any structure.
Turn the ignition and radio on.
With the Scan Tool, erase the audio DTC's, put the radio in seek up and down mode for 2 loops around the band cycle before proceeding.
With the Scan Tool, read the audio DTC's.

Did this DTC reset?

Yes >> Replace the radio in accordance with the service information.
Perform the BODY VERIFICATION TEST-VER1.

No >> Test Complete.

B142E-GPS ANTENNA NOT CONNECTED

For a complete wiring diagram **Refer to Section 8W**.

- **When Monitored:**
- With the ignition on and the radio in navigation mode.
- **Set Condition:**
- With the radio does not detect GPS antenna connection.

Possible Causes
BAD ANTENNA CONNECTION
RADIO

Always perform the Pre-Diagnostic Troubleshooting procedure before proceeding.

Diagnostic Test

1. TEST ANTENNA

Turn the ignition off.
Disconnect the GPS Antenna connector.
Inspect the GPS Antenna connection.

Was the Antenna connection clean and secure?

Yes >> Go To 2

No >> Repair the Antenna connection as needed.
Perform the BODY VERIFICATION TEST — VER1.

2. ANTENNA

Refer to the Audio System in the service information and test the antenna in accordance with the service procedure.

Is the Antenna ok?

Yes >> Go To 3

No >> Repair or replace the Antenna assembly as necessary.
Perform the BODY VERIFICATION TEST — VER1.

3. RADIO

NOTE: Reconnect all previously disconnected components.

NOTE: Move vehicle outside approximately 30ft from any structure.
Turn the ignition and radio on.
With the Scan Tool, erase the audio DTC's and operate the navigation system.
With the Scan Tool, read the audio DTC's.

Did this DTC reset?

Yes >> Replace the radio in accordance with the service information.
Perform the BODY VERIFICATION TEST-VER1.

No >> Test Complete.

B221E-RADIO INTERNAL

For a complete wiring diagram **Refer to Section 8W**.

- **When Monotored:**
- Continuously with the ignition on and radio turned on
- **Set Condition:**
- The code will set if the radio detects a radio internal failure

Possible Causes
RADIO INTERNAL FAILURE

Diagnostic Test

1. Verify DTC B221E-RADIO INTERNAL IS ACTIVE

NOTE: If a DTC is set, erase the DTC and attempt to reset the DTC. If the DTC resets, follow test.
This is an internal radio failure
View repair

Does the DTC reset and read B221E-Radio Internal?

Repair

Replace the Radio in accordance with the service information.
Perform the BODY VERIFICATION TEST — VER 1.

AUDIO/VIDEO - SERVICE INFORMATION

TABLE OF CONTENTS

page

AUDIO/VIDEO - SERVICE INFORMATION
DESCRIPTION 132
DIAGNOSIS AND TESTING
AUDIO/VIDEO 132
AMPLIFIER
DESCRIPTION 135
OPERATION 135
DIAGNOSIS AND TESTING
AMPLIFIER 135
REMOVAL 135
INSTALLATION 136
ANTENNA - SATELLITE RADIO
REMOVAL 137
INSTALLATION 137
ANTENNA - NAVIGATION
REMOVAL 139
INSTALLATION 139
ANTENNA-REAR GLASS INTEGRAL
DESCRIPTION 140
OPERATION 140
DIAGNOSIS AND TESTING
REAR GLASS INTEGRAL ANTENNA 140
ANTENNA CABLE
REMOVAL 141
INSTALLATION 141
ANTENNA CABLE-INSTRUMENT PANEL
REMOVAL 142
INSTALLATION 142

page

MODULE-ANTENNA
DESCRIPTION 143
OPERATION 143
DIAGNOSIS AND TESTING
ANTENNA MODULE 143
REMOVAL 143
INSTALLATION 144
NOISE SUPPRESSION COMPONENTS-RADIO
DESCRIPTION 146
OPERATION 146
RADIO
DESCRIPTION 147
REMOVAL 147
INSTALLATION 148
RECEIVER-SATELLITE
REMOVAL 149
INSTALLATION 151
SPEAKER
DESCRIPTION 153
DIAGNOSIS AND TESTING
SPEAKER 153
REMOVAL 154
INSTALLATION 156
SWITCH-REMOTE RADIO
DESCRIPTION 159
REMOVAL 159
INSTALLATION 160

AUDIO/VIDEO - SERVICE INFORMATION

DESCRIPTION

Several radios are offered. The audio system uses a CAN B bus Ignition ON message so that the system will only operate when the ignition switch is in the RUN or ACCESSORY/ACCESSORY DELAY positions.

The audio system includes the following components:

- Amplifier
- Antenna (Radio, Navigation, Satellite)
- Radio noise suppression components
- Radio
- Speakers

Certain functions and features of the audio/video system rely upon resources shared with other electronic modules in the vehicle over the CAN bus network. For diagnosis of the CAN bus network, the use of a scan tool and the proper Diagnostic Procedures information is recommended.

For complete circuit diagrams, refer to the appropriate wiring information.

DIAGNOSIS AND TESTING

AUDIO/VIDEO

Any diagnosis of the Audio system should begin with the use of scan tool. For information on the use of the scan tool, refer to the appropriate Diagnostic Service information.

For complete circuit diagrams, refer to the appropriate wiring information.

WARNING: ON VEHICLES EQUIPPED WITH AIRBAGS, REFER TO ELECTRICAL, RESTRAINTS BEFORE ATTEMPTING ANY STEERING WHEEL, STEERING COLUMN, OR INSTRUMENT PANEL COMPONENT DIAGNOSIS OR SERVICE. FAILURE TO TAKE THE PROPER PRECAUTIONS COULD RESULT IN ACCIDENTAL AIRBAG DEPLOYMENT AND POSSIBLE PERSONAL INJURY.

AUDIO SYSTEM DIAGNOSIS

CONDITION	POSSIBLE CAUSE	CORRECTION
NO AUDIO.	1. FUSE INOPERATIVE.	1. CHECK RADIO FUSES IN INTEGRATED POWER MODULE (IPM). REPLACE FUSES, IF REQUIRED.
	2. RADIO CONNECTOR DAMAGED.	2. CHECK FOR LOOSE OR CORRODED RADIO CONNECTOR. REPAIR, IF REQUIRED.
	3. WIRING DAMAGED.	3. CHECK FOR BATTERY VOLTAGE AT RADIO CONNECTOR. REPAIR WIRING, IF REQUIRED.
	4. GROUND DAMAGED.	4. CHECK FOR CONTINUITY BETWEEN RADIO CHASSIS AND A KNOWN GOOD GROUND. THERE SHOULD BE CONTINUITY. REPAIR GROUND, IF REQUIRED.
	5. RADIO INOPERATIVE.	5. EXCHANGE OR REPLACE RADIO, IF REQUIRED.
	6. AMPLIFIER INOPERATIVE.	6. PERFORM DIAGNOSIS ON AMPLIFIER. REPLACE AS NECESSARY.
NO DISPLAY.	1. FUSE INOPERATIVE.	1. CHECK RADIO FUSES. REPLACE FUSES, IF REQUIRED.
	2. RADIO CONNECTOR DAMAGED.	2. CHECK FOR LOOSE OR CORRODED RADIO CONNECTOR. REPAIR, IF REQUIRED.
	3. WIRING DAMAGED.	3. CHECK FOR BATTERY VOLTAGE AT RADIO CONNECTOR. REPAIR WIRING, IF REQUIRED.

CONDITION	POSSIBLE CAUSE	CORRECTION
	4. GROUND DAMAGED.	4. CHECK FOR CONTINUITY BETWEEN RADIO CHASSIS AND A KNOWN GOOD GROUND. THERE SHOULD BE CONTINUITY. REPAIR GROUND, IF REQUIRED.
	5. RADIO INOPERATIVE.	5. EXCHANGE OR REPLACE RADIO, IF REQUIRED.
NO MEMORY.	1. FUSE INOPERATIVE.	1. CHECK IGNITION-OFF DRAW FUSE. REPLACE FUSE, IF REQUIRED.
	2. RADIO CONNECTOR DAMAGED.	2. CHECK FOR LOOSE OR CORRODED RADIO CONNECTOR. REPAIR, IF REQUIRED.
	3. WIRING DAMAGED.	3. CHECK FOR BATTERY VOLTAGE AT RADIO CONNECTOR. REPAIR WIRING, IF REQUIRED.
	4. GROUND DAMAGED.	4. CHECK FOR CONTINUITY BETWEEN RADIO CHASSIS AND A KNOWN GOOD GROUND. THERE SHOULD BE CONTINUITY. REPAIR GROUND, IF REQUIRED.
	5. RADIO INOPERATIVE.	5. EXCHANGE OR REPLACE RADIO, IF REQUIRED.
POOR RADIO RECEPTION.	1. ANTENNA OR CABLE DAMAGED OR INOPERATIVE.	1. REFER TO ANTENNA DIAGNOSIS. REPAIR OR REPLACE ANTENNA, IF REQUIRED.
	2. GROUND DAMAGED.	2. CHECK FOR CONTINUITY BETWEEN RADIO CHASSIS AND A KNOWN GOOD GROUND. THERE SHOULD BE CONTINUITY. REPAIR GROUND, IF REQUIRED.
	3. RADIO INOPERATIVE.	3. EXCHANGE OR REPLACE RADIO, IF REQUIRED.
	4. POOR ANTENNA CONNECTION AT RADIO OR IN LINE.	4. VERIFY PROPER CONNECTION.
SOUND DISTORTION (VIBRATION FROM SPEAKER AREA, BUZZING - HUMMING	1. DOOR TRIM PANEL LOOSE OR MISSING FASTENERS.	1. INSPECT DOOR TRIM PANEL AND CORRECT AS NECESSARY. REPLACE ANY MISSING FASTENERS.
	2. WATER SHIELD LOOSE OR MISALIGNED.	2. INSPECT WATER SHIELD AND ADJUST AS REQUIRED.
	3. ITEMS PLACED IN DOOR TRIM PANEL MAP POCKETS VIBRATING OR MOVING FROM SIDE TO SIDE.	3. REMOVE ITEMS FROM DOOR TRIM PANEL. ENSURE THAT VIBRATION IS NO LONGER PRESENT.
NO/POOR TAPE OPERATION.	1. TAPE DAMAGED.	1. INSERT KNOWN GOOD TAPE AND TEST OPERATION.
	2. FOREIGN OBJECTS BEHIND TAPE DOOR.	2. REMOVE FOREIGN OBJECTS AND TEST OPERATION.
	3. DIRTY CASSETTE TAPE HEAD.	3. CLEAN HEAD WITH MOPAR CASSETTE HEAD CLEANER.
	4. RADIO INOPERATIVE.	4. EXCHANGE OR REPLACE RADIO, IF REQUIRED.

CONDITION	POSSIBLE CAUSE	CORRECTION
NO COMPACT DISC OPERATION	1. CD DAMAGED.	1. INSERT KNOWN GOOD CD AND TEST OPERATION. AVOID THE USE OF ″HOME MAID″ CD'S WITH ADHESIVE LABELS. THE LABELS MAY CAUSE DISC TO BECOME JAMMED IN THE RADIO.
	2. FOREIGN MATERIAL ON CD.	2. CLEAN CD AND TEST OPERATION.
	3. CONDENSATION ON CD OR OPTICS.	3. ALLOW TEMPERATURE OF VEHICLE INTERIOR TO STABILIZE AND TEST OPERATION.
	4. RADIO INOPERATIVE.	4. EXCHANGE OR REPLACE RADIO, IF REQUIRED.

AMPLIFIER

DESCRIPTION

The amplifier (2) is available in two ratings: 288 watt (RD7), and 380 watt (RDF). The amplifier is mounted to the left of the steering column under the instrument panel.

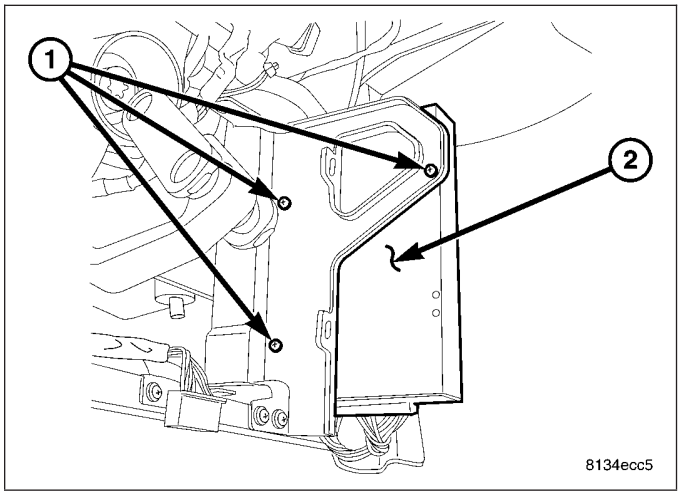

OPERATION

The amplifier receives fused battery current from a fuse in the rear Power Distribution Center (PDC) at all times. The internal circuitry of the amplifier switches the amplifier ON based upon a CAN bus message that is received from the radio receiver whenever the radio is turned on. The amplifier receives the sound signal inputs from the left and right rear outputs of the radio, then sends the amplified speaker outputs for each of those channels to the speakers.

DIAGNOSIS AND TESTING

AMPLIFIER

Any diagnosis of the Audio system should begin with the use of a scan tool and the appropriate Diagnostic Service information.

Refer to the appropriate wiring information.

The amplifier unit should be checked if there is no sound output noted from the speakers. For diagnosis of the power amplifier, (Refer to 8 - ELECTRICAL/AUDIO/SPEAKER - DIAGNOSIS AND TESTING).

REMOVAL

NOTE: A battery reconnect procedure must be performed anytime the battery has been disconnected. (Refer to 8 - ELECTRICAL/BATTERY SYSTEM - STANDARD PROCEDURE).

1. Disconnect and isolate battery negative cable.
2. Remove the instrument panel silencer.
3. Disconnect electrical harness connectors.

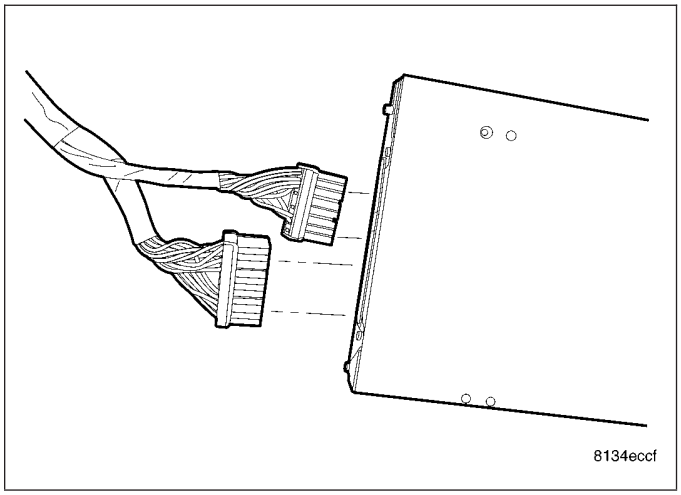

4. Remove the mounting fasteners (1).
5. Remove the amplifier (2).

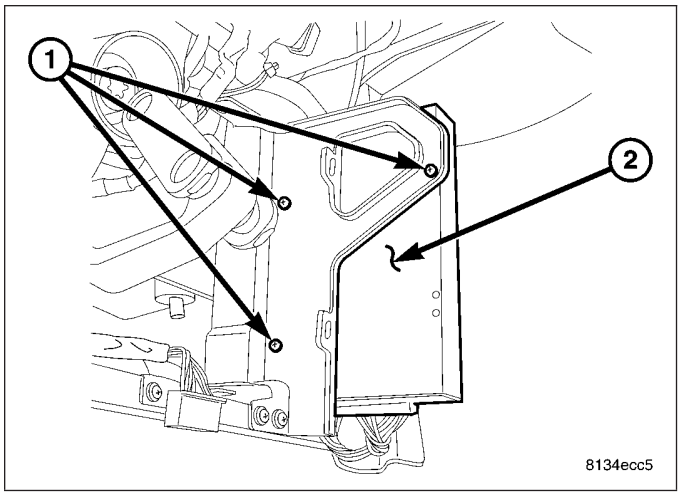

INSTALLATION

NOTE: A battery reconnect procedure must be performed anytime the battery has been disconnected. (Refer to 8 - ELECTRICAL/BATTERY SYSTEM - STANDARD PROCEDURE).

1. Position amplifier (2) into place.
2. Install mounting fasteners (1).

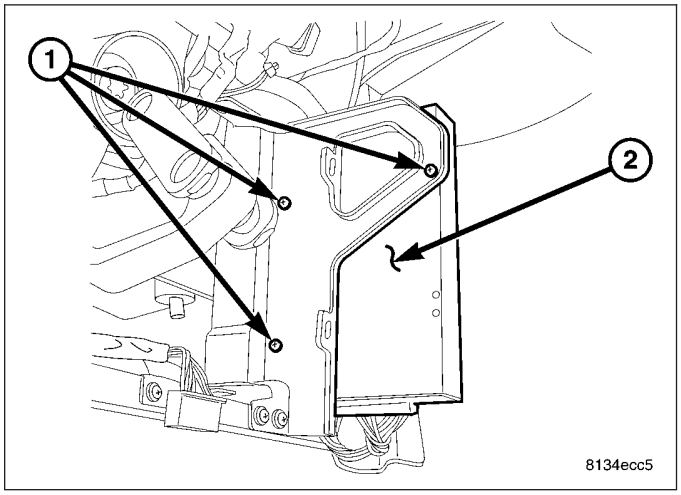

3. Connect electrical harness connectors.
4. Install instrument panel silencer.
5. Connect battery negative cable.

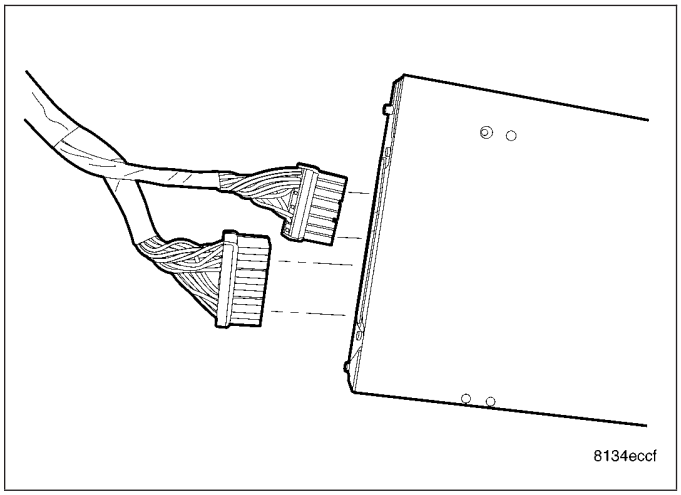

ANTENNA - SATELLITE RADIO

REMOVAL

NOTE: A battery reconnect procedure must be performed anytime the battery has been disconnected. (Refer to 8 - ELECTRICAL/BATTERY SYSTEM - STANDARD PROCEDURE).

1. Disconnect and isolate the battery negative cable.
2. Lower the rear portion of the headliner as necessary to access underside of antenna
3. Disconnect the wire harness connectors from the antenna.

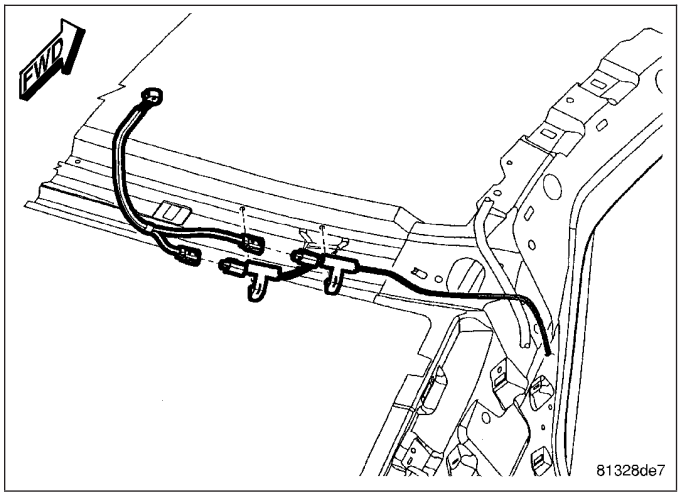

4. Remove the mounting fastener.
5. From inside the vehicle, and using a flat bladed tool, depress one of the retaining tabs on the antenna. Push up the one side of the antenna connector through the roof panel. Depress the other side of the connector and remove the antenna.

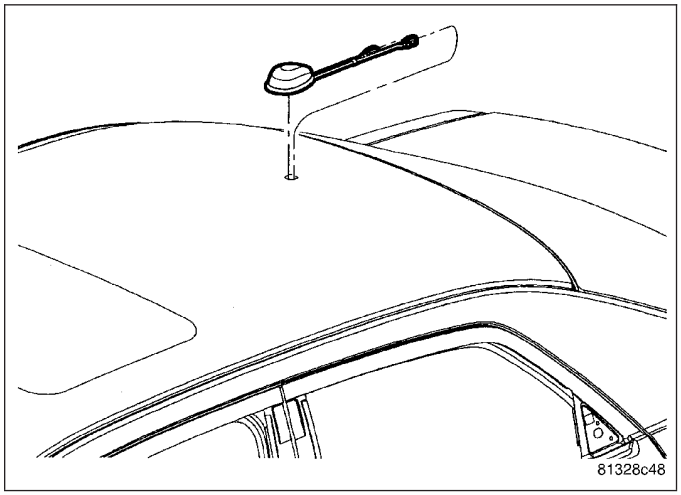

INSTALLATION

NOTE: A battery reconnect procedure must be performed anytime the battery has been disconnected. (Refer to 8 - ELECTRICAL/BATTERY SYSTEM - STANDARD PROCEDURE).

1. Insert wire harness through hole in roof panel. Press antenna into position until both retainers engage into position.
2. Install and tighten mounting fastener.

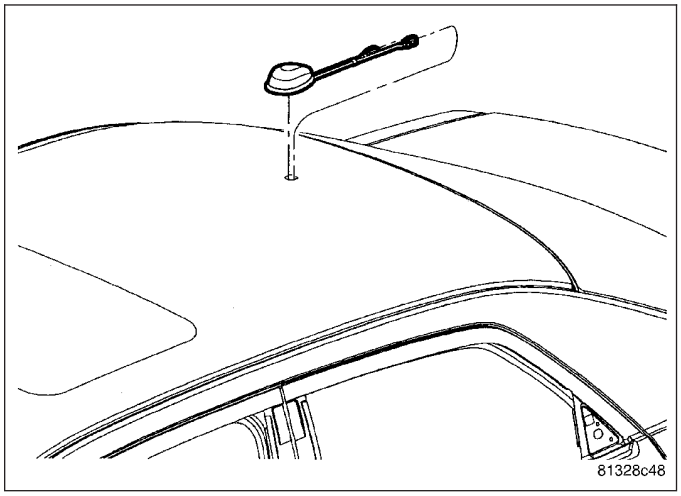

3. Connect wire harness connectors to antenna.
4. Install headliner.
5. Connect battery negative cable.

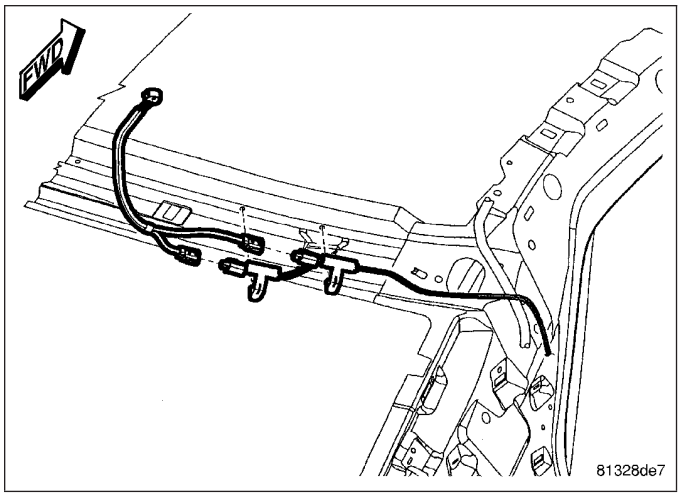

ANTENNA - NAVIGATION

REMOVAL

1. Remove the radio (Refer to 8 - ELECTRICAL/AUDIO/RADIO - REMOVAL).
2. Remove the instrument cluster (Refer to 8 - ELECTRICAL/INSTRUMENT CLUSTER - REMOVAL).
3. Remove the navigation antenna fasteners (1).
4. Remove the navigation antenna (2) from the vehicle.

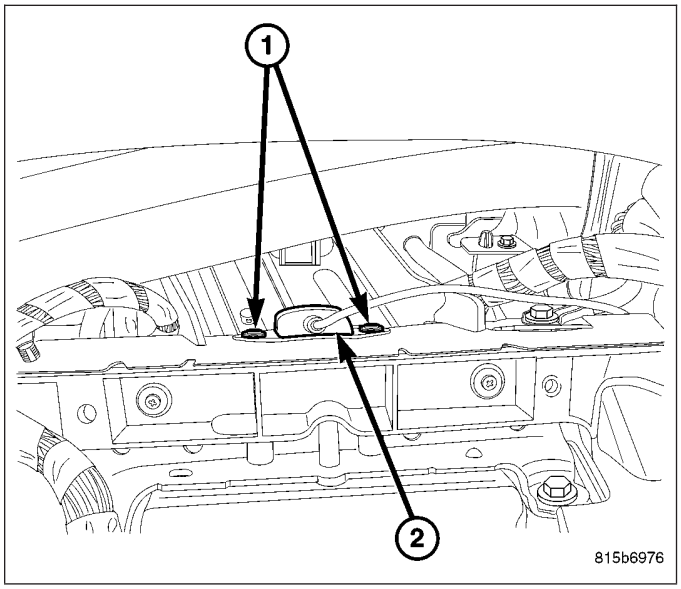

INSTALLATION

1. Install the navigation antenna (2) into the vehicle.
2. Install the navigation antenna fasteners (1).
3. Install the instrument cluster (Refer to 8 - ELECTRICAL/INSTRUMENT CLUSTER - INSTALLATION).
4. Install the radio (Refer to 8 - ELECTRICAL/AUDIO/RADIO - INSTALLATION).

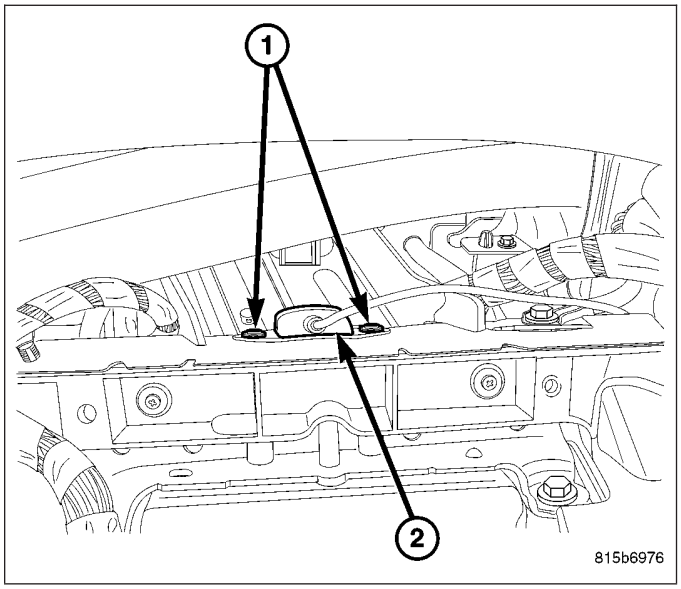

ANTENNA-REAR GLASS INTEGRAL

DESCRIPTION

The integral antenna element is bonded to the rear glass and is replaced with the glass assembly only.

OPERATION

The integral antenna receives radio frequencies and sends them to the antenna module for amplification.

DIAGNOSIS AND TESTING

REAR GLASS INTEGRAL ANTENNA

The antenna grid pattern is located above the EBL grid.

For circuit descriptions and diagrams, refer to the appropriate wiring information. To detect breaks in the integral antenna elements, the following procedure is required:

1. Disconnect the antenna module connector from the antenna terminals on the glass.
2. Using an ohmmeter, place a lead on one of the terminals and check each end of the grid pattern connected to this terminal for continuity. If continuity is present, move one lead through the grid in progression starting at the terminal with the other lead on the terminal until continuity is lost. Repeat procedure for the other terminal. A break in the antenna grid can be repaired using a Mopar Rear Window Defogger Repair Kit or equivalent.

ANTENNA CABLE

REMOVAL

NOTE: A battery reconnect procedure must be performed anytime the battery has been disconnected. (Refer to 8 - ELECTRICAL/BATTERY SYSTEM - STANDARD PROCEDURE).

1. Disconnect and isolate battery negative cable.
2. Remove right side cowl trim panel (Refer to 23 - BODY/INTERIOR/COWL TRIM COVER - REMOVAL).
3. Disconnect antenna cable from instrument panel antenna cable.
4. Remove right side front and rear door scuff plates (Refer to 23 - BODY/INTERIOR/DOOR SILL SCUFF PLATE - REMOVAL).
5. Remove right side C-pillar trim panel (Refer to 23 - BODY/INTERIOR/C-PILLAR TRIM - REMOVAL).
6. Disconnect antenna cable from antenna module.
7. Move floor carpet aside.
8. Remove antenna cable.

INSTALLATION

NOTE: A battery reconnect procedure must be performed anytime the battery has been disconnected. (Refer to 8 - ELECTRICAL/BATTERY SYSTEM - STANDARD PROCEDURE).

1. Position antenna cable and secure to wire harness.
2. Connect antenna cable to antenna module.
3. Connect antenna cable to instrument panel antenna cable.
4. Install right side C-pillar trim panel (Refer to 23 - BODY/INTERIOR/C-PILLAR TRIM - INSTALLATION).
5. Install right side front and rear door scuff plates (Refer to 23 - BODY/INTERIOR/DOOR SILL SCUFF PLATE - INSTALLATION).
6. Install right side cowl trim panel (Refer to 23 - BODY/INTERIOR/COWL TRIM COVER - INSTALLATION).
7. Connect battery negative cable.

ANTENNA CABLE-INSTRUMENT PANEL

REMOVAL

NOTE: A battery reconnect procedure must be performed anytime the battery has been disconnected. (Refer to 8 - ELECTRICAL/BATTERY SYSTEM - STANDARD PROCEDURE).

1. Disconnect and isolate the battery negative cable.
2. Remove the radio (Refer to 8 - ELECTRICAL/AUDIO/RADIO - REMOVAL).
3. Remove the glove box (Refer to 23 - BODY/INSTRUMENT PANEL/GLOVE BOX - REMOVAL).
4. Remove the right side cowl trim (Refer to 23 - BODY/INTERIOR/COWL TRIM COVER - REMOVAL).
5. Disconnect antenna cable at right side cowl area.
6. Remove cable from instrument panel.

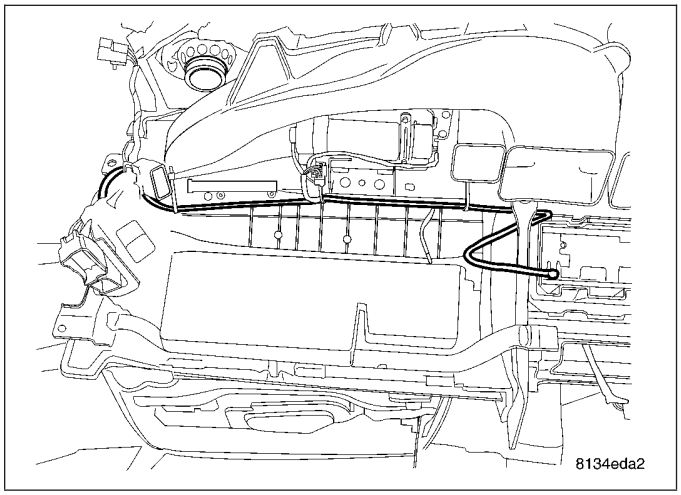

INSTALLATION

NOTE: A battery reconnect procedure must be performed anytime the battery has been disconnected. (Refer to 8 - ELECTRICAL/BATTERY SYSTEM - STANDARD PROCEDURE).

1. Install cable to instrument panel.
2. Connect antenna cable at right side cowl area.
3. Install the right side cowl trim (Refer to 23 - BODY/INTERIOR/COWL TRIM COVER - INSTALLATION).
4. Install the glove box (Refer to 23 - BODY/INSTRUMENT PANEL/GLOVE BOX - INSTALLATION).
5. Install the radio (Refer to 8 - ELECTRICAL/AUDIO/RADIO - INSTALLATION).
6. Connect the battery negative cable.

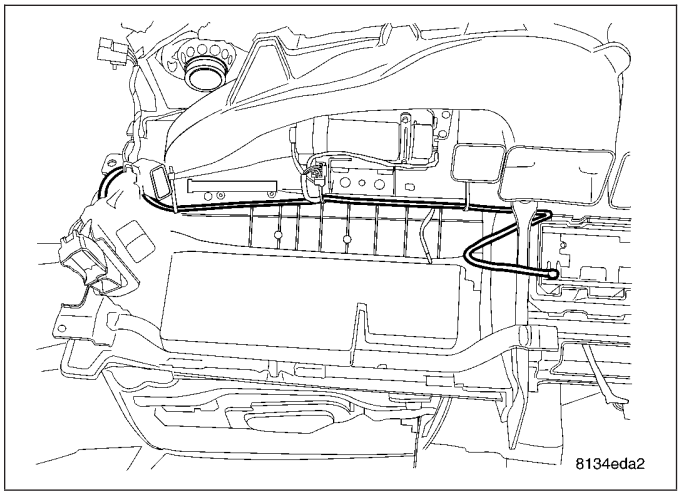

MODULE-ANTENNA

DESCRIPTION

The antenna module is an electronic circuit component designed to capture and enhance RF (Radio Frequency) signals in both the AM and FM broadcast bands. The antenna module is mounted to the right C-pillar (sedan) or rear liftgate (wagon). The module is grounded through the mounting bracket and fastener. The module has a two wire electrical connector that connects to the integral radio antenna and EBL grid, located on the rear window. There is also an electrical connector for battery voltage and a coax cable connector.

OPERATION

The antenna module receives both AM and FM radio signals supplied by the rear window integral radio antenna and selectively amplifies them. The amplified signal is then sent through the body length coax cable to the radio input.

DIAGNOSIS AND TESTING

ANTENNA MODULE

CONDITION	POSSIBLE CAUSES	CORRECTION
NO AM RECEPTION, WEAK FM RECEPTION	1. Antenna module to antenna connector open or disconnected.	1. Repair open or reconnect antenna module connector to glass mounted antenna.
	2. Cable open or disconnected.	2. Replace antenna cable or, reconnect cable.
	3. No battery power at antenna module.	3. Check fuse. If okay, repair open in battery voltage circuit.
	4. Antenna module disconnected from glass.	4. Connect module connector to glass.
NO AM OR FM RECEPTION	1. Coax disconnected at radio.	1. Reconnect coax.
	2. Coax shorted to ground.	2. Repair or Replace coax
WEAK OR NO AM/FM RECEPTION	1. Antenna Module inoperative.	1. Replace antenna module.

REMOVAL

SEDAN

1. Disconnect and isolate the battery negative cable.
2. Remove C-pillar upper trim.
3. Disconnect wire harness connectors and antenna cable.
4. Remove mounting fasteners and antenna module.

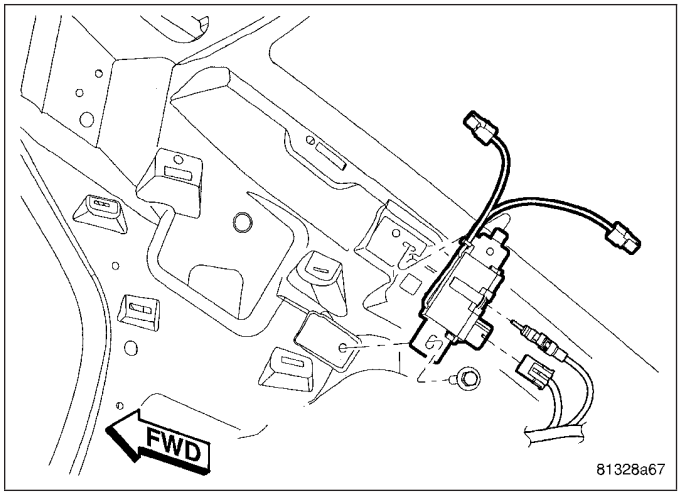

WAGON

NOTE: A battery reconnect procedure must be performed anytime the battery has been disconnected. (Refer to 8 - ELECTRICAL/BATTERY SYSTEM - STANDARD PROCEDURE).

1. Disconnect and isolate the battery negative cable.
2. Remove the liftgate trim.
3. Disconnect wire harness connectors and antenna cable.
4. Remove mounting fasteners and antenna module.

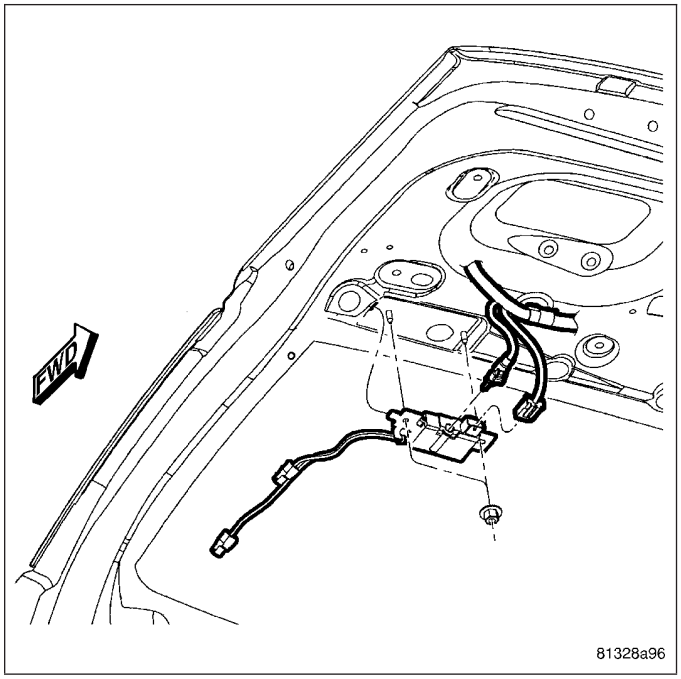

INSTALLATION

SEDAN

NOTE: A battery reconnect procedure must be performed anytime the battery has been disconnected. (Refer to 8 - ELECTRICAL/BATTERY SYSTEM - STANDARD PROCEDURE).

1. Position module into place.
2. Install and tighten mounting fasteners.
3. Connect wire harness connectors and antenna cable to antenna module.
4. Install C-pillar upper trim.
5. Connect battery negative cable.

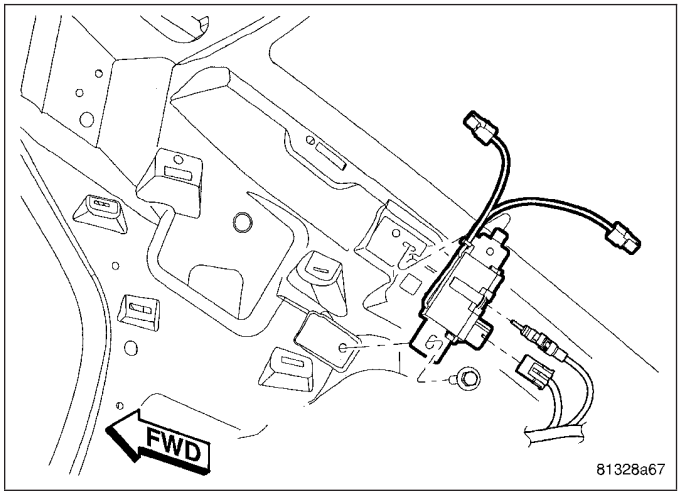

WAGON

1. Position module into place.
2. Install and tighten mounting fasteners.
3. Connect wire harness connectors and antenna cable to antenna module.
4. Install the liftgate trim.
5. Connect the battery negative cable.

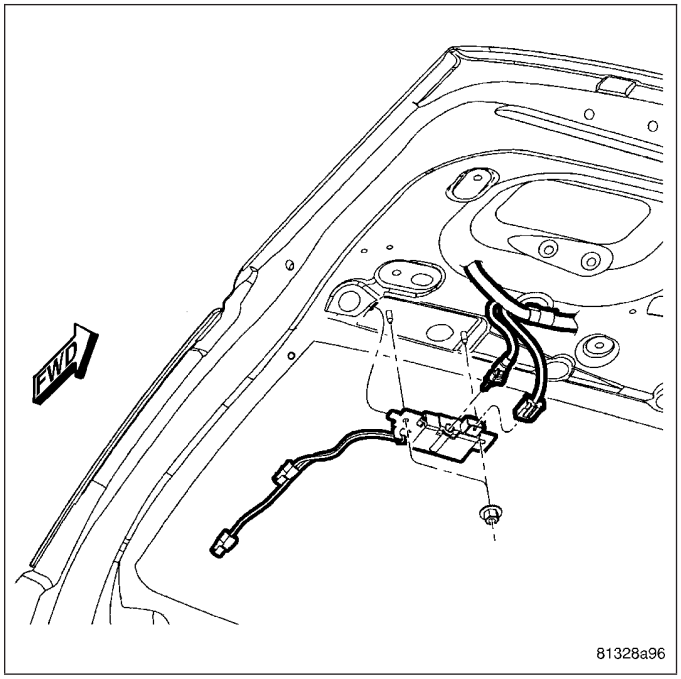

NOISE SUPPRESSION COMPONENTS-RADIO

DESCRIPTION

Radio noise suppression devices are installed on this vehicle. Radio Frequency Interference (RFI) and ElectroMagnetic Interference (EMI) can be produced by any on-board or external source of electromagnetic energy. These electromagnetic energy sources can radiate electromagnetic signals through the air, or conduct them through the vehicle electrical system.

When the audio system converts RFI or EMI to an audible acoustic wave form, it is referred to as radio noise. This undesirable radio noise is generally manifested in the form of “buzzing,” “hissing,” “popping,” “clicking,” “crackling,” and/or “whirring” sounds. In most cases, RFI and EMI radio noise can be suppressed using a combination of vehicle and component grounding, filtering and shielding techniques. This vehicle is equipped with radio noise suppression devices that were designed to minimize exposure to typical sources of RFI and EMI; thereby, minimizing radio noise complaints.

Radio noise suppression is accomplished primarily through circuitry or devices that are integral to the radios, audio power amplifiers and other on-board electrical components such as generators, wiper motors, blower motors, and fuel pumps that have been found to be potential sources of RFI or EMI. External radio noise suppression devices that are used on this vehicle to control RFI or EMI, and can be serviced, include the following:

- **Engine-to-frame ground strap** - This length of braided ground strap has an eyelet terminal connector crimped to each end. One end is secured to the engine cylinder heads. The other is secured to the frame.
- **Resistor-type spark plugs** - This type of spark plug has an internal resistor connected in series between the spark plug terminal and the center electrode to help reduce the production of electromagnetic radiation that can result in radio noise.
- **Exhaust-to-frame ground strap** - This length of braided ground strap has an eyelet terminal connector crimped to each end. One end is secured to the exhaust pipe. The other is secured to the frame.

OPERATION

There are two common strategies that can be used to suppress Radio Frequency Interference (RFI) and Electro-Magnetic Interference (EMI) radio noise. The first suppression strategy involves preventing the production of RFI and EMI electromagnetic signals at their sources. The second suppression strategy involves preventing the reception of RFI and EMI electromagnetic signals by the audio system components.

The use of braided ground straps in key locations is part of the RFI and EMI prevention strategy. These ground straps ensure adequate ground paths, particularly for high current components such as many of those found in the starting, charging, ignition, engine control and transmission control systems. An insufficient ground path for any of these high current components may result in radio noise caused by induced voltages created as the high current seeks alternative ground paths through components or circuits intended for use by, or in close proximity to the audio system components or circuits.

Preventing the reception of RFI and EMI is accomplished by ensuring that the audio system components are correctly installed in the vehicle. Loose, corroded or improperly soldered wire harness connections, improperly routed wiring and inadequate audio system component grounding can all contribute to the reception of RFI and EMI. A properly grounded antenna body and radio chassis, as well as a shielded antenna coaxial cable with clean and tight connections will each help reduce the potential for reception of RFI and EMI.

RADIO

DESCRIPTION

Available radios include:

- AM/FM/MP3/6 disc CD with full screen navigation (REC sales code)
- AM/FM/MP3/6 disc CD (RAQ sales code)
- AM/FM/cassette/6 disc CD/MP3 (RAK sales code)
- AM/FM/CD with changer control (REF sales code)
- AM/FM/6 disc CD/RDS (RAR sales code) - export only
- AM/FM/CD/RDS (REG sales code) - export only
- AM/FM with integrated display (REJ sales code) - export only

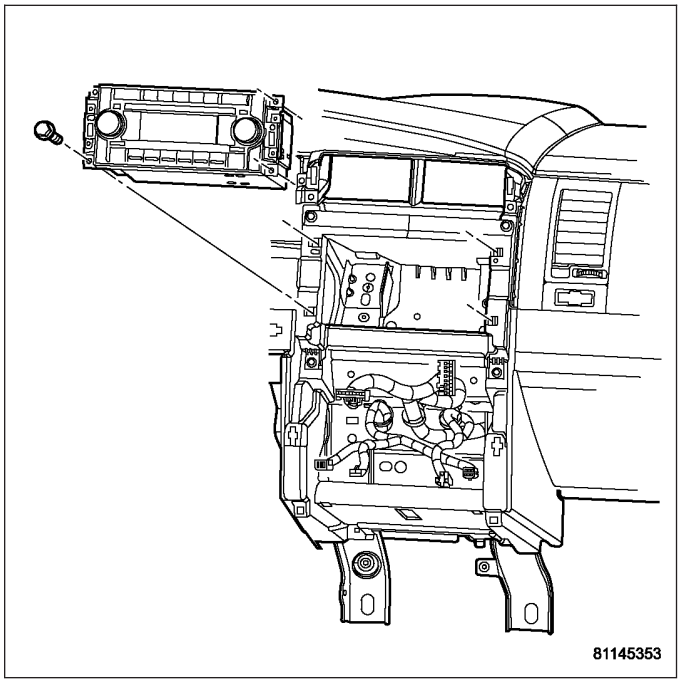

REMOVAL

NOTE: A battery reconnect procedure must be performed anytime the battery has been disconnected. (Refer to 8 - ELECTRICAL/BATTERY SYSTEM - STANDARD PROCEDURE).

1. Disconnect and isolate the battery negative cable.
2. Remove instrument panel center bezel (Refer to 23 - BODY/INSTRUMENT PANEL/INSTRUMENT PANEL CENTER BEZEL - REMOVAL).
3. Remove mounting fasteners.

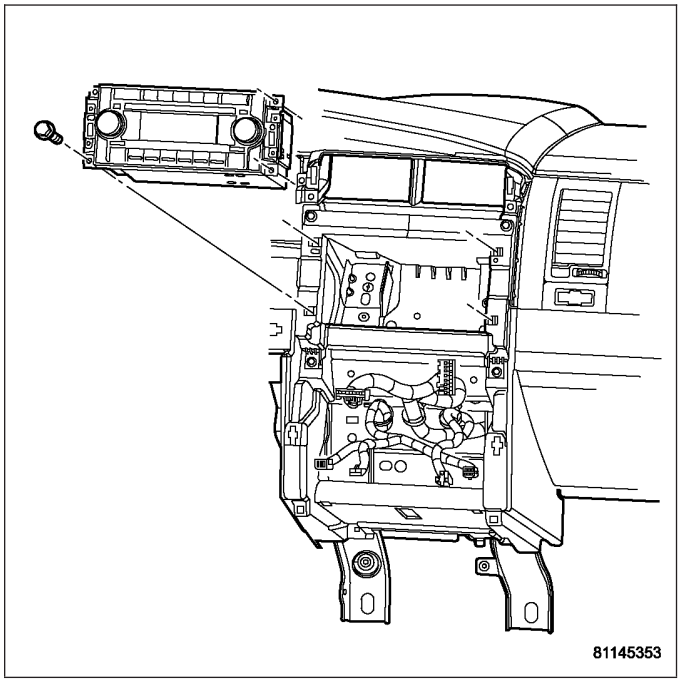

CAUTION: Pulling the antenna cable straight out of the radio without pulling on the locking antenna connector could damage the cable or radio.

4. Disconnect the antenna cable (3) by pulling the locking antenna connector (2) away from the radio (1).
5. Disconnect the electrical harness connector and remove radio.

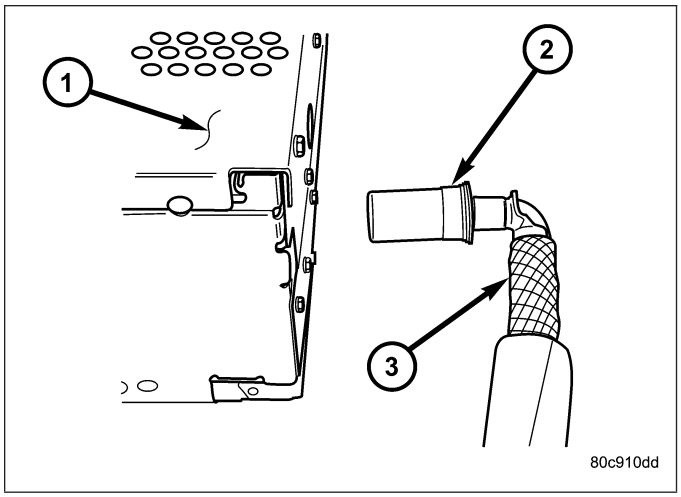

INSTALLATION

NOTE: A battery reconnect procedure must be performed anytime the battery has been disconnected. (Refer to 8 - ELECTRICAL/BATTERY SYSTEM - STANDARD PROCEDURE).

1. Connect the electrical harness and antenna cable (3) to radio (1).

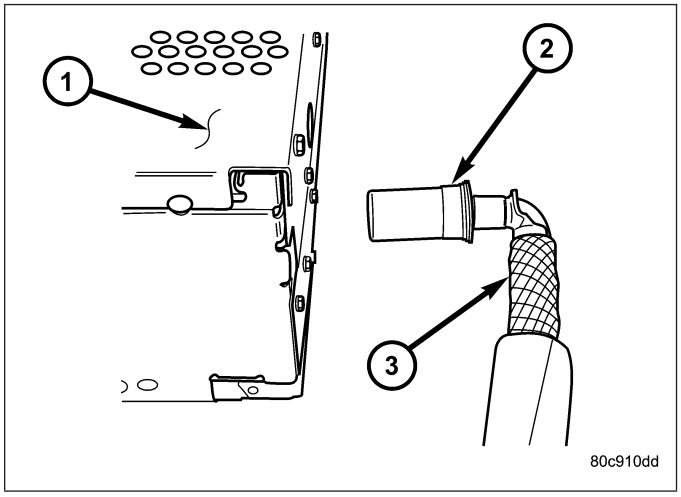

2. Position radio and install mounting fasteners.
3. Install instrument panel center bezel (Refer to 23 - BODY/INSTRUMENT PANEL/INSTRUMENT PANEL CENTER BEZEL - INSTALLATION).
4. Connect battery negative cable.

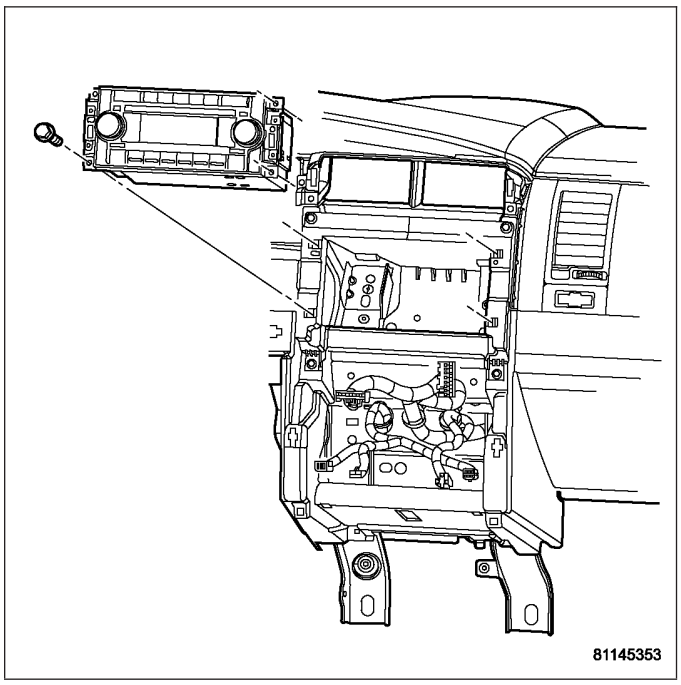

RECEIVER-SATELLITE

REMOVAL

NOTE:
If the owner's satellite service was active before the satellite receiver was replaced the new satellite receiver will have to be activated. The existing satellite receiver will have to be deactivated before the replacement satellite receiver can be activated.
To activate Sirius satellite radio service, call Sirius at their toll-free number. Please have the following information available when activating a system:

- **Electronic Serial Number / Sirius Identification Number (ESN/SID) of the unit to be replaced**
- **ESN/SID of the replacement receiver**
- **Vehicle Owner's name and address**
- **VIN**
  The ESN/SID number can be obtained through the radio display by following the steps in the satellite radio owners manual.
  The vehicle must be outside with the audio system powered on, in the satellite radio mode, to receive the activation signal.

SEDAN

NOTE: A battery reconnect procedure must be performed anytime the battery has been disconnected. (Refer to 8 - ELECTRICAL/BATTERY SYSTEM - STANDARD PROCEDURE).

1. Disconnect and isolate the battery negative cable.
2. Remove left side trunk trim.
3. Disconnect electrical harness connector (3).
4. Disconnect antenna harness connectors.
5. Remove mounting bracket fasteners (1).
6. Remove module to mounting bracket fasteners (2).

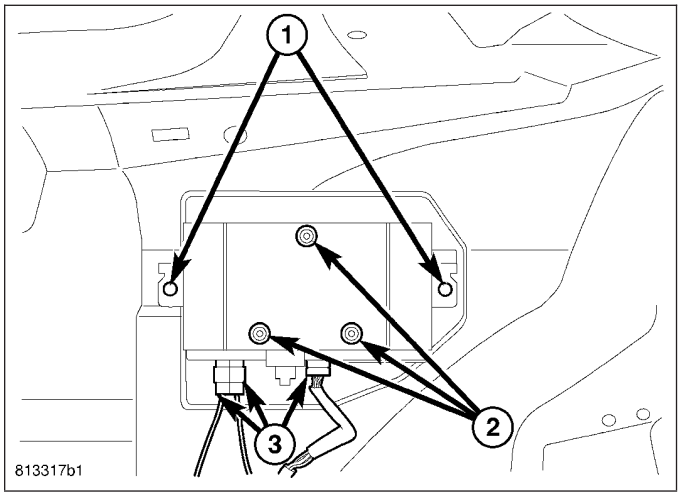

WAGON

NOTE:
If the owner's satellite service was active before the satellite receiver was replaced the new satellite receiver will have to be activated. The existing satellite receiver will have to be deactivated before the replacement satellite receiver can be activated.
To activate Sirius satellite radio service, call Sirius at their toll-free number. Please have the following information available when activating a system:

- **Electronic Serial Number / Sirius Identification Number (ESN/SID) of the unit to be replaced**
- **ESN/SID of the replacement receiver**
- **Vehicle Owner's name and address**
- **VIN**
  The ESN/SID number can be obtained through the radio display by following the steps in the satellite radio owners manual.
  The vehicle must be outside with the audio system powered on, in the satellite radio mode, to receive the activation signal.

NOTE: A battery reconnect procedure must be performed anytime the battery has been disconnected. (Refer to 8 - ELECTRICAL/BATTERY SYSTEM - STANDARD PROCEDURE).

1. Disconnect and isolate the battery negative cable.
2. Remove the left rear quarter trim panel.
3. Disconnect electrical harness connector.
4. Disconnect antenna harness connectors.

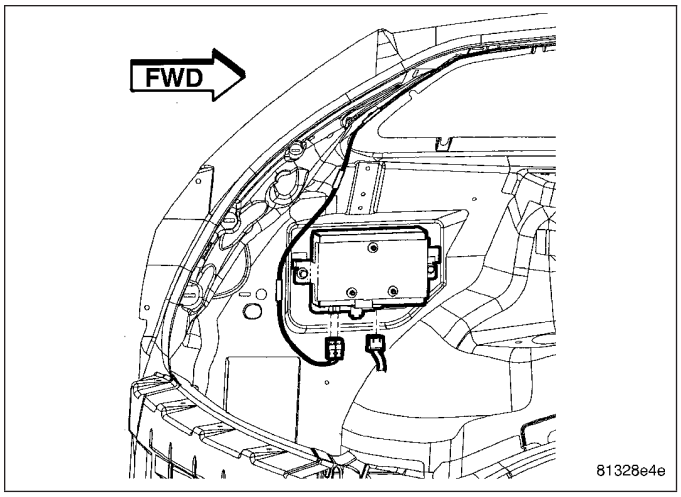

5. Remove mounting bracket fasteners

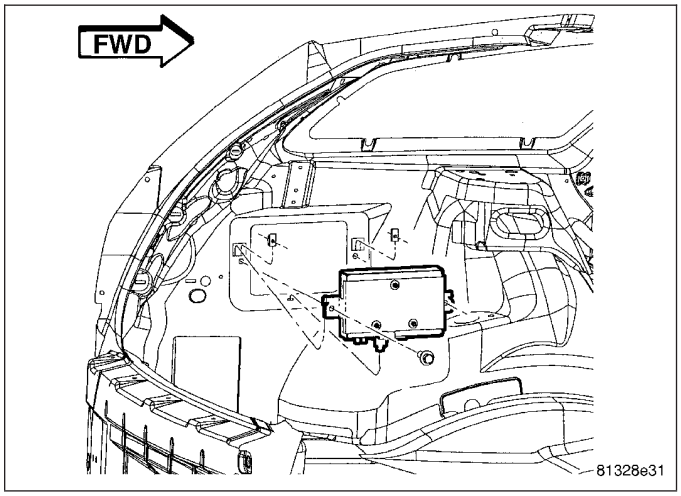

.

6. Remove module to mounting bracket fasteners (2).

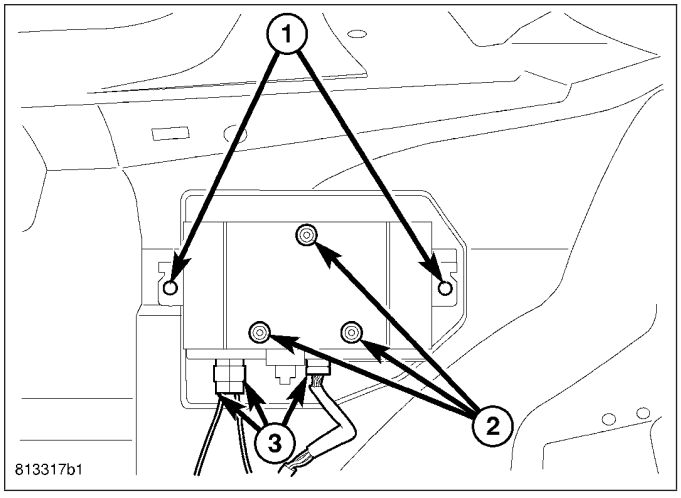

INSTALLATION

SEDAN

NOTE:
If the owner's satellite service was active before the satellite receiver was replaced the new satellite receiver will have to be activated. The existing satellite receiver will have to be deactivated before the replacement satellite receiver can be activated.
To activate Sirius satellite radio service, call Sirius at their toll-free number. Please have the following information available when activating a system:

- **Electronic Serial Number / Sirius Identification Number (ESN/SID) of the unit to be replaced**
- **ESN/SID of the replacement receiver**
- **Vehicle Owner's name and address**
- **VIN**
  The ESN/SID number can be obtained through the radio display by following the steps in the satellite radio owners manual.
  The vehicle must be outside with the audio system powered on, in the satellite radio mode, to receive the activation signal.

NOTE: A battery reconnect procedure must be performed anytime the battery has been disconnected. (Refer to 8 - ELECTRICAL/BATTERY SYSTEM - STANDARD PROCEDURE).

1. Install and tighten module to mounting bracket fasteners (2).
2. Position module into place.
3. Install and tighten mounting bracket fasteners (1).
4. Connect antenna harness connectors.
5. Connect electrical harness connectors (3).
6. Install left side trunk trim.
7. Connect battery negative cable.

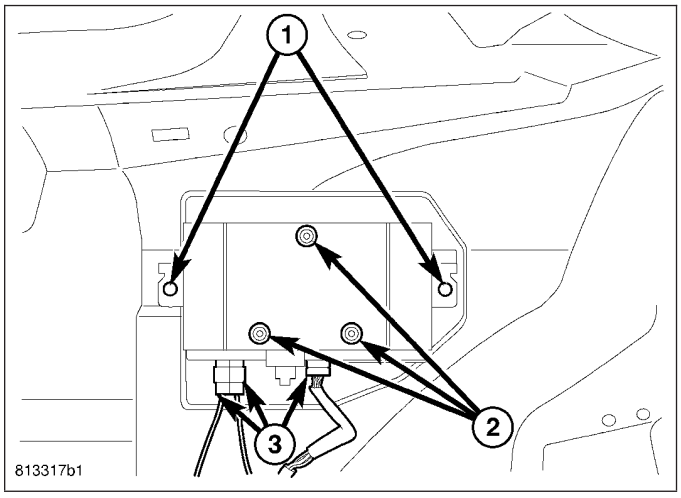

WAGON

NOTE:
If the owner's satellite service was active before the satellite receiver was replaced the new satellite receiver will have to be activated. The existing satellite receiver will have to be deactivated before the replacement satellite receiver can be activated.
To activate Sirius satellite radio service, call Sirius at their toll-free number. Please have the following information available when activating a system:

- **Electronic Serial Number / Sirius Identification Number (ESN/SID) of the unit to be replaced**
- **ESN/SID of the replacement receiver**
- **Vehicle Owner's name and address**
- **VIN**
  The ESN/SID number can be obtained through the radio display by following the steps in the satellite radio owners manual.
  The vehicle must be outside with the audio system powered on, in the satellite radio mode, to receive the activation signal.

NOTE: A battery reconnect procedure must be performed anytime the battery has been disconnected. (Refer to 8 - ELECTRICAL/BATTERY SYSTEM - STANDARD PROCEDURE).

1. Install and tighten module to mounting bracket fasteners (2).
2. Position module into place.

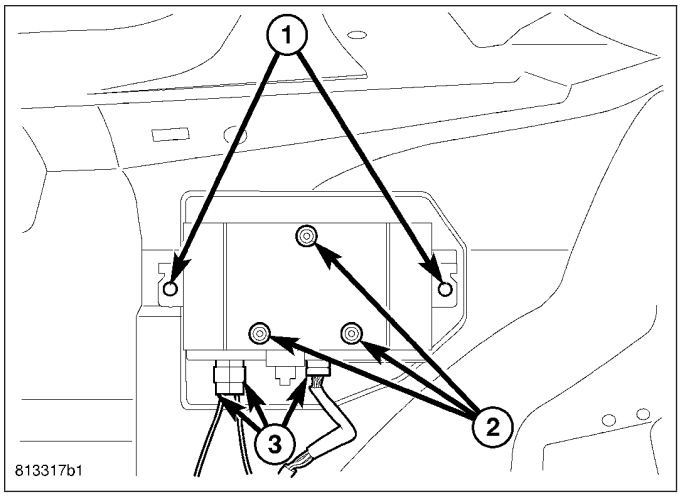

3. Install and tighten mounting bracket fasteners.

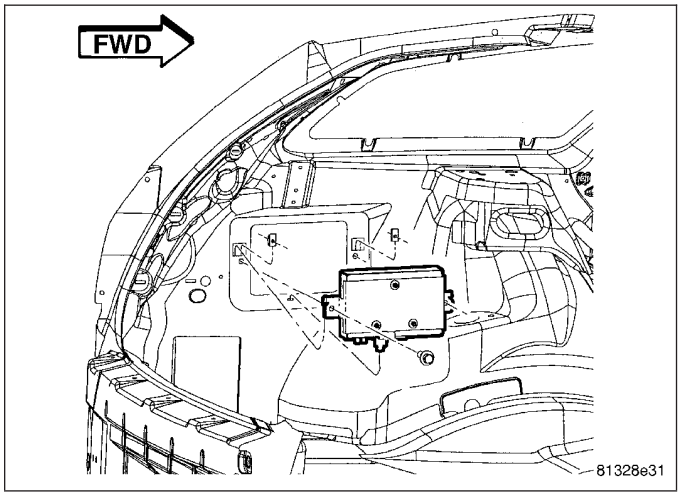

4. Connect antenna harness connectors.
5. Connect electrical harness connectors.
6. Install left rear quarter trim panel.
7. Connect battery negative cable.

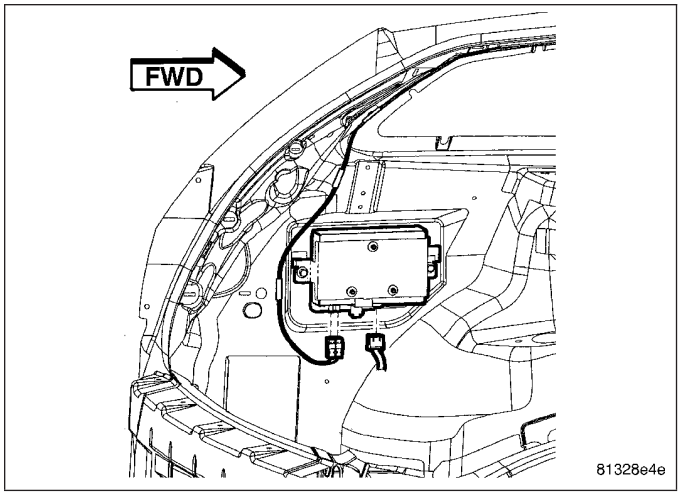

SPEAKER

DESCRIPTION

FOUR SPEAKER

The four speaker system includes four speakers in four locations. One 15.2 X 23 centimeter (6 X 9 inch) diameter speaker is located in each front door. There is also one 15.2 X 23 centimeter (6 X 9 inch) diameter speaker located on each side of the rear shelf.

SIX SPEAKER

The six speaker system features six speakers in six locations. One 15.2 X 23 centimeter (6 X 9 inch) diameter speaker is located in each front door. One 15.2 X 23 centimeter (6 X 9 inch) diameter speaker located on each side of the rear shelf. Two 8.9 centimeter (3.5 inch) speakers are located on the top portion of the instrument panel.

SIX SPEAKER - BOSTON ACOUSTICS

The six speaker system features six speakers in six locations. One 15.2 X 23 centimeter (6 X 9 inch) diameter speaker is located in each front door. One 15.2 X 23 centimeter (6 X 9 inch) diameter speaker located on each side of the rear shelf. Two 8.9 centimeter (3.5 inch) speakers are located on the top portion of the instrument panel. This speaker system also includes an amplifier. The total available power of the speaker system is 288 watts.

EIGHT SPEAKER - BOSTON ACOUSTICS

The eight speaker system features eight speakers in eight locations. One 16.5 centimeter (6 X 9 inch) diameter speaker is located in each front door. One 15.2 X 23 centimeter (6 X 9 inch) diameter speaker located on each side of the rear shelf. A subwoofer is located on the rear shelf (sedan only). Three 8.9 centimeter (3.5 inch) speakers are located on the top portion of the instrument panel. This speaker system also includes an amplifier. The total available power of the speaker system is 380 watts.

DIAGNOSIS AND TESTING

SPEAKER

Any diagnosis of the Audio system should begin with the use of a scan tool and the appropriate Diagnostic Service information.

Refer to the appropriate wiring information.

WARNING: DISABLE THE AIRBAG SYSTEM BEFORE ATTEMPTING ANY STEERING WHEEL, STEERING COLUMN, SEAT BELT TENSIONER, SIDE AIRBAG, OR INSTRUMENT PANEL COMPONENT DIAGNOSIS OR SERVICE. DISCONNECT AND ISOLATE THE BATTERY NEGATIVE (GROUND) CABLE, THEN WAIT TWO MINUTES FOR THE AIRBAG SYSTEM CAPACITOR TO DISCHARGE BEFORE PERFORMING FURTHER DIAGNOSIS OR SERVICE. THIS IS THE ONLY SURE WAY TO DISABLE THE AIRBAG SYSTEM. FAILURE TO TAKE THE PROPER PRECAUTIONS COULD RESULT IN ACCIDENTAL AIRBAG DEPLOYMENT AND POSSIBLE PERSONAL INJURY.

CAUTION: The speaker output of the radio is a “floating ground” system. Do not allow any speaker lead to short to ground, as damage to the radio may result.

1. If all speakers are inoperative, check the radio fuses in the junction block. If OK, go to Step 2. If not OK, repair the shorted circuit or component as required and replace the faulty fuse.
2. Check the amplifier fuse (if equipped) in the junction block. If OK, go to Step 3. If not OK, repair the shorted circuit or component as required and replace the faulty fuse.
3. Turn the ignition switch to the ON position. Turn the radio receiver ON. Adjust the balance and fader control controls to check the performance of each individual speaker. Note the speaker locations that are not performing correctly. Go to Step 4.
4. Turn the radio OFF. Turn the ignition OFF. Disconnect and isolate the battery negative cable. If vehicle is **not** equipped with a amplifier, remove the radio receiver. If the vehicle is equipped with an amplifier, disconnect the wire harness connectors. There are two connectors. The one on the body harness has body speakers only. The

other on the instrument panel harness has the instrument panel speakers, battery, ground, and CAN. Go to Step 5.

5. Check both the speaker feed (+) circuit and return (-) circuit cavities for the inoperative speaker at the wire harness connector for continuity to ground. There should be no continuity. If OK, go to Step 6. If not OK, repair the shorted speaker feed (+) and/or return (-) circuits(s) to the speaker as required.
6. Disconnect wire harness connector at the inoperative speaker. Check for continuity between the speaker feed (+) circuit cavities of the radio receiver wire harness connector or if equipped, the amplifier wire harness connector and the speaker wire harness connector. Repeat the check between the speaker return (-) circuit cavities of the radio receiver wire harness connector and the speaker wire harness connector. In each case, there should be continuity. If OK, replace the faulty speaker. If not OK, repair the open speaker feed (+) and/or return (-) circuits(s) as required.

REMOVAL

FRONT DOOR SPEAKER

NOTE: A battery reconnect procedure must be performed anytime the battery has been disconnected. (Refer to 8 - ELECTRICAL/BATTERY SYSTEM - STANDARD PROCEDURE).

1. Disconnect and isolate the battery negative cable.
2. Remove front door trim panel (Refer to 23 - BODY/ DOOR - FRONT/TRIM PANEL - REMOVAL).
3. Remove mounting fasteners.
4. Disconnect electrical harness connector and remove speaker.

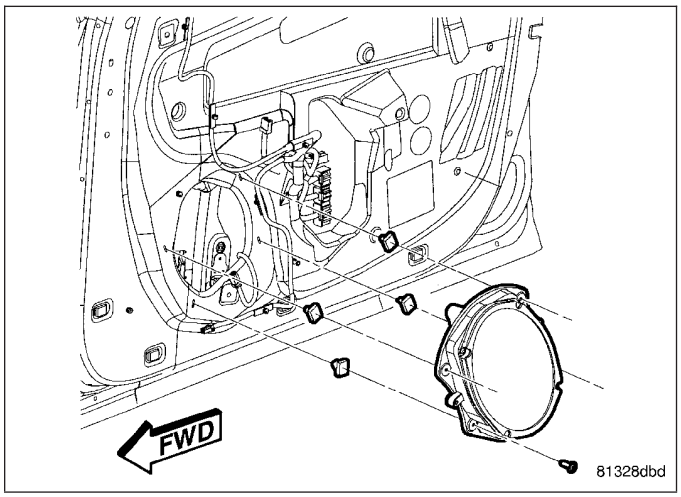

INSTRUMENT PANEL SIDE SPEAKER

NOTE: A battery reconnect procedure must be performed anytime the battery has been disconnected. (Refer to 8 - ELECTRICAL/BATTERY SYSTEM - STANDARD PROCEDURE).

1. Disconnect and isolate the battery negative cable.
2. Remove speaker cover from instrument panel.
3. Remove mounting fasteners.
4. Disconnect electrical harness connector and remove speaker.

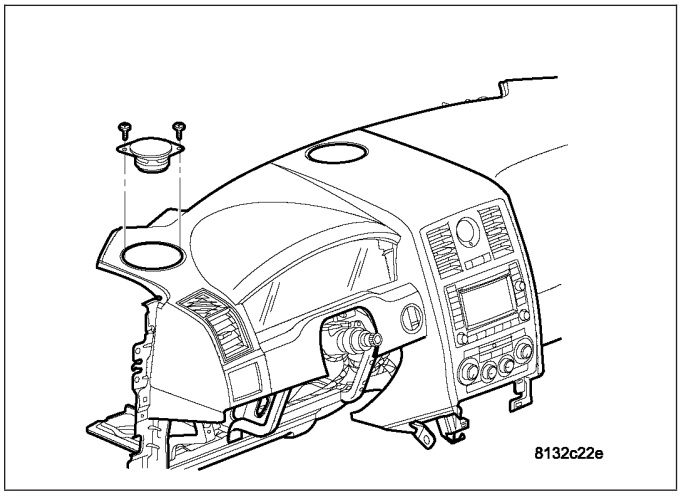

INSTRUMENT PANEL CENTER SPEAKER

NOTE: A battery reconnect procedure must be performed anytime the battery has been disconnected. (Refer to 8 - ELECTRICAL/BATTERY SYSTEM - STANDARD PROCEDURE).

1. Disconnect and isolate the battery negative cable.
2. Remove speaker cover from instrument panel.
3. Remove mounting fasteners.
4. Disconnect electrical harness connector and remove speaker.

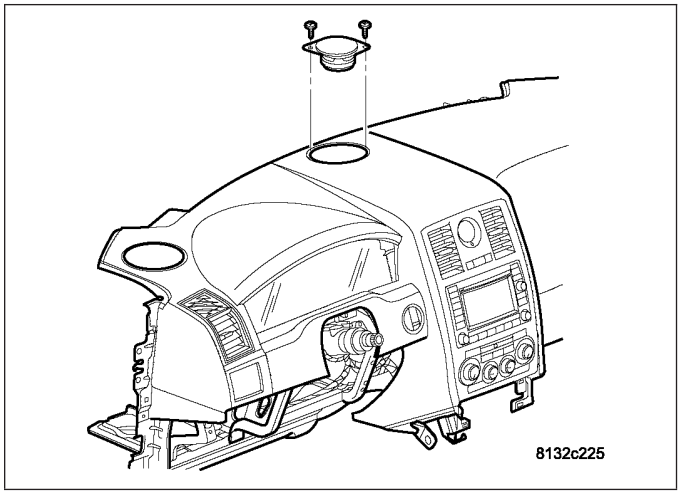

REAR SPEAKER - SEDAN

NOTE: A battery reconnect procedure must be performed anytime the battery has been disconnected. (Refer to 8 - ELECTRICAL/BATTERY SYSTEM - STANDARD PROCEDURE).

1. Disconnect and isolate the battery negative cable.
2. Remove upper C-pillar trim (Refer to 23 - BODY/INTERIOR/C-PILLAR TRIM - REMOVAL).
3. Remove the lower C-pillar trim (Refer to 23 - BODY/INTERIOR/C-PILLAR TRIM - REMOVAL).
4. Remove the rear shelf trim (Refer to 23 - BODY/INTERIOR/REAR SHELF TRIM PANEL - REMOVAL).
5. Remove the mounting fasteners.
6. Disconnect the electrical harness connector and remove speaker.

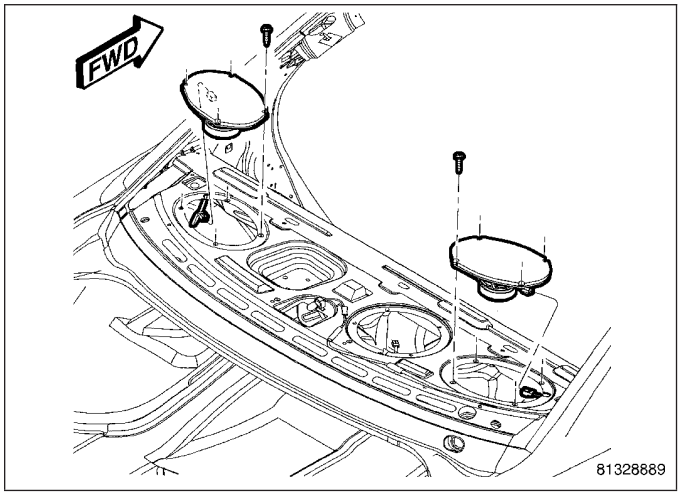

REAR SPEAKER - WAGON

NOTE: A battery reconnect procedure must be performed anytime the battery has been disconnected. (Refer to 8 - ELECTRICAL/BATTERY SYSTEM - STANDARD PROCEDURE).

1. Disconnect and isolate the battery negative cable.
2. Remove the quarter trim speaker cover (Refer to 23 - BODY/INTERIOR/SPEAKER BOX TRIM COVER - REMOVAL).
3. Remove the mounting fasteners.
4. Disconnect the electrical harness connector and remove speaker.

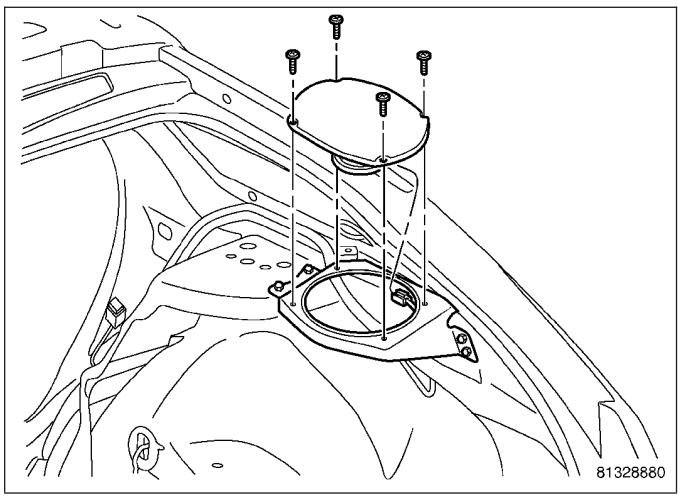

SUBWOOFER

NOTE: A battery reconnect procedure must be performed anytime the battery has been disconnected. (Refer to 8 - ELECTRICAL/BATTERY SYSTEM - STANDARD PROCEDURE).

1. Disconnect and isolate the battery negative cable.
2. Remove upper C-pillar trim (Refer to 23 - BODY/INTERIOR/C-PILLAR TRIM - REMOVAL).
3. Remove the lower C-pillar trim (Refer to 23 - BODY/INTERIOR/C-PILLAR TRIM - REMOVAL).
4. Remove the rear shelf trim (Refer to 23 - BODY/INTERIOR/REAR SHELF TRIM PANEL - REMOVAL).
5. Remove the mounting fasteners.
6. Disconnect the electrical harness connector and remove subwoofer.

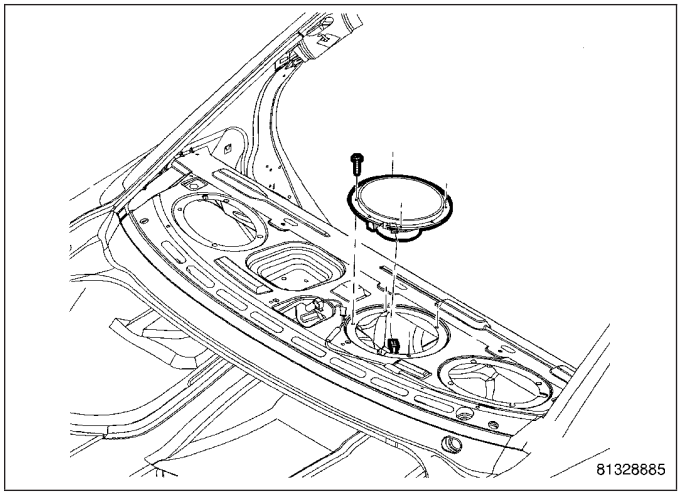

INSTALLATION

FRONT DOOR SPEAKER

NOTE: A battery reconnect procedure must be performed anytime the battery has been disconnected. (Refer to 8 - ELECTRICAL/BATTERY SYSTEM - STANDARD PROCEDURE).

1. Connect electrical harness connector and position speaker.
2. Install and tighten mounting fasteners.
3. Install front door trim panel (Refer to 23 - BODY/DOOR - FRONT/TRIM PANEL - INSTALLATION).
4. Connect battery negative cable.

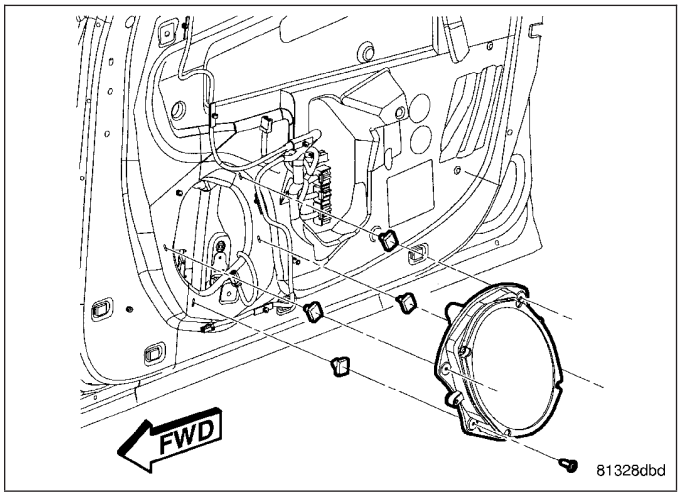

INSTRUMENT PANEL SIDE SPEAKER

NOTE: A battery reconnect procedure must be performed anytime the battery has been disconnected. (Refer to 8 - ELECTRICAL/BATTERY SYSTEM - STANDARD PROCEDURE).

1. Connect electrical harness connector and position speaker.
2. Install and tighten mounting fasteners.
3. Install speaker cover to instrument panel.
4. Connect battery negative cable.

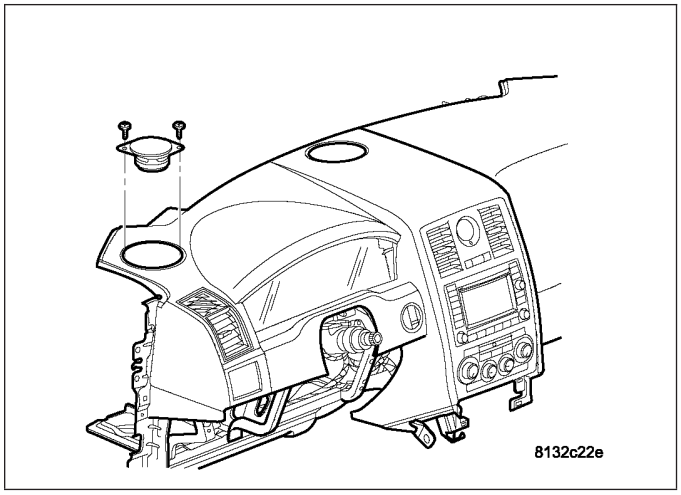

INSTRUMENT PANEL CENTER SPEAKER

NOTE: A battery reconnect procedure must be performed anytime the battery has been disconnected. (Refer to 8 - ELECTRICAL/BATTERY SYSTEM - STANDARD PROCEDURE).

1. Connect electrical harness connector and position speaker.
2. Install and tighten mounting fasteners.
3. Install speaker cover to instrument panel.
4. Connect battery negative cable.

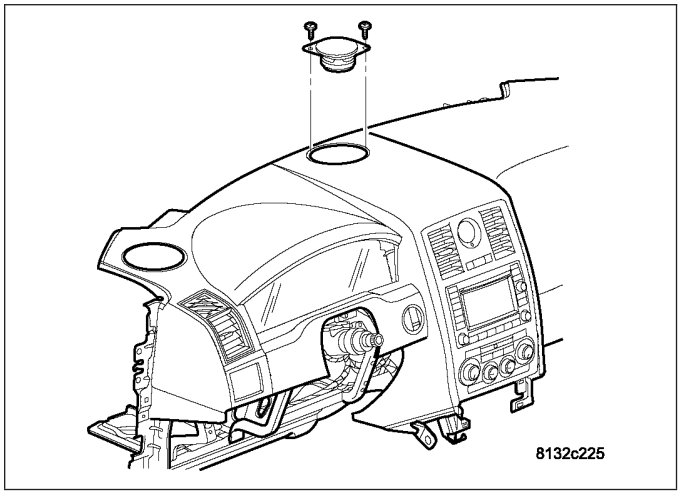

REAR SPEAKER - SEDAN

NOTE: A battery reconnect procedure must be performed anytime the battery has been disconnected. (Refer to 8 - ELECTRICAL/BATTERY SYSTEM - STANDARD PROCEDURE).

1. Connect electrical harness connector and position speaker.
2. Install and tighten mounting fasteners.
3. Install the rear shelf trim (Refer to 23 - BODY/INTERIOR/REAR SHELF TRIM PANEL - INSTALLATION).
4. Install the lower C-pillar trim (Refer to 23 - BODY/INTERIOR/C-PILLAR TRIM - INSTALLATION).
5. Install the upper C-pillar trim (Refer to 23 - BODY/INTERIOR/C-PILLAR TRIM - INSTALLATION).
6. Connect the battery negative cable.

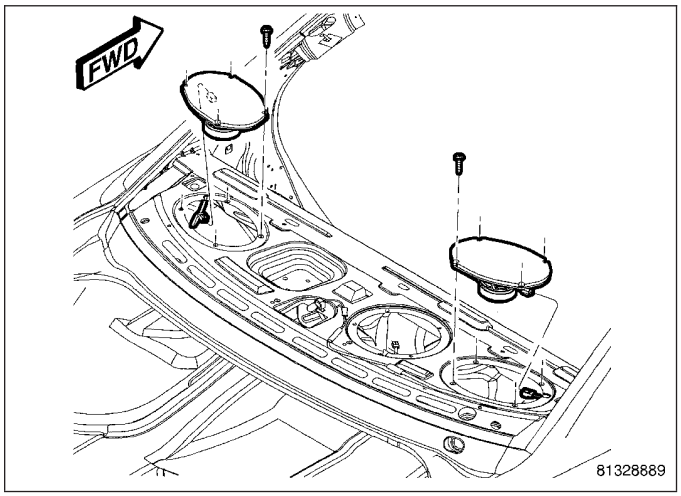

REAR SPEAKER - WAGON

NOTE: A battery reconnect procedure must be performed anytime the battery has been disconnected. (Refer to 8 - ELECTRICAL/BATTERY SYSTEM - STANDARD PROCEDURE).

1. Connect electrical harness connector and position speaker.
2. Install and tighten mounting fasteners.
3. Install the speaker grille trim (Refer to 23 - BODY/INTERIOR/SPEAKER BOX TRIM COVER - INSTALLATION).
4. Connect the battery negative cable.

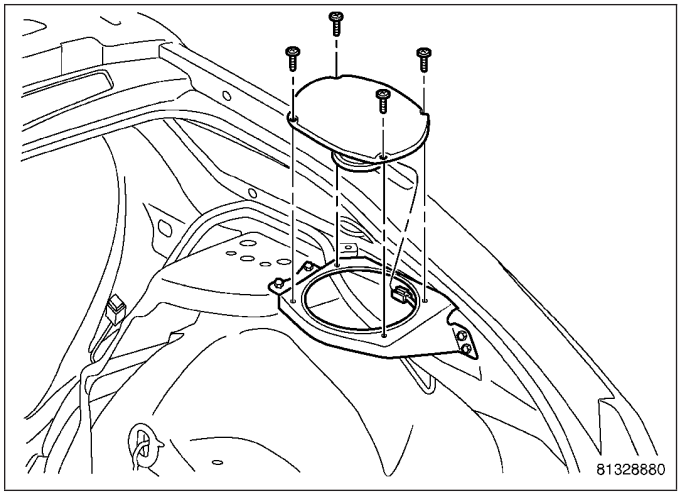

SUBWOOFER

NOTE: A battery reconnect procedure must be performed anytime the battery has been disconnected. (Refer to 8 - ELECTRICAL/BATTERY SYSTEM - STANDARD PROCEDURE).

1. Connect electrical harness connector and position subwoofer.
2. Install and tighten mounting fasteners.
3. Install the rear shelf trim (Refer to 23 - BODY/INTERIOR/REAR SHELF TRIM PANEL - INSTALLATION).
4. Install the lower C-pillar trim (Refer to 23 - BODY/INTERIOR/C-PILLAR TRIM - INSTALLATION).
5. Install the upper C-pillar trim (Refer to 23 - BODY/INTERIOR/C-PILLAR TRIM - INSTALLATION).
6. Connect the battery negative cable.

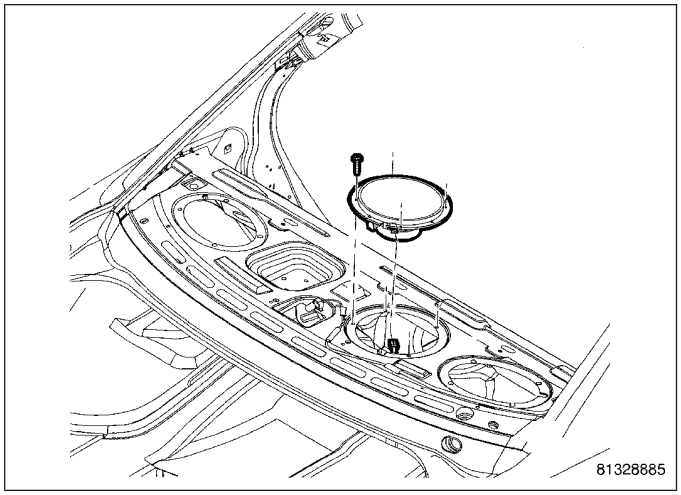

SWITCH-REMOTE RADIO

DESCRIPTION

Four rocker-type switches are mounted on the front of the steering wheel spokes.

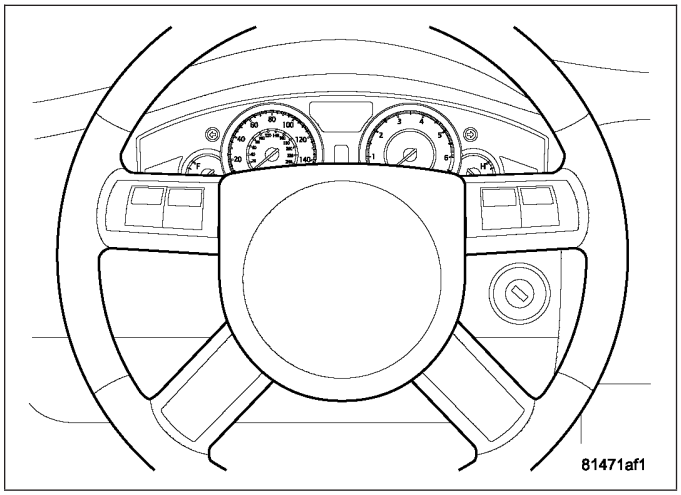

The left switches control the following functions:

- SCROLL - Controls the radio station seek up/down, CD change track, tape change side, satellite radio change channel, trip functions, navigation, system status messages, and personal settings
- FUNCTION SELECT - Controls the radio preset advance or disc change (in audio mode), reset or trip functions and scroll through warning messages, and personal feature selection (only when vehicle is in Park).
- AUDIO SYSTEM HOT KEY - Controls mode selection: AM, FM, Tape, CD, Satellite Radio

The right switches control the following:

- MENU - Controls trip functions, navigation, system status, personal settings, and telephone
- C/T - Compass/Temperature hot key
- AUDIO SYSTEM VOLUME - Controls the system volume level

REMOVAL

NOTE: A battery reconnect procedure must be performed anytime the battery has been disconnected. (Refer to 8 - ELECTRICAL/BATTERY SYSTEM - STANDARD PROCEDURE).

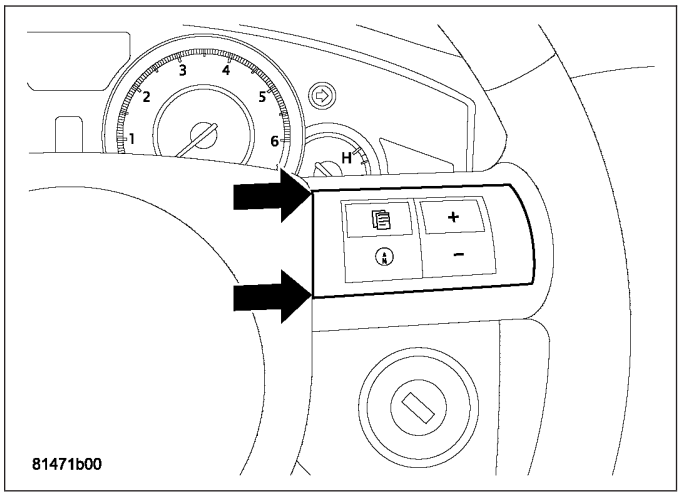

1. Disconnect and isolate the battery negative cable.
2. Remove the driver airbag (Refer to 8 - ELECTRICAL/RESTRAINTS/DRIVER AIRBAG - REMOVAL).
3. Using a trim stick, gently pry switch from steering wheel at locations shown.
4. Disconnect electrical connector.
5. Remove switch from steering wheel.

INSTALLATION

NOTE: A battery reconnect procedure must be performed anytime the battery has been disconnected. (Refer to 8 - ELECTRICAL/BATTERY SYSTEM - STANDARD PROCEDURE).

1. Connect electrical harness connector to switch.
2. Position switch and press into place.
3. Install the driver airbag (Refer to 8 - ELECTRICAL/ RESTRAINTS/DRIVER AIRBAG - INSTALLATION).
4. Connect battery negative cable.

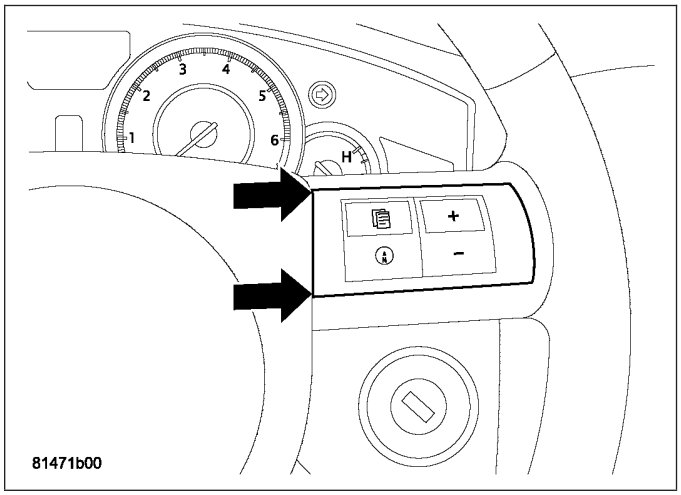

CHIME/BUZZER

TABLE OF CONTENTS

page

CHIME/BUZZER - ELECTRICAL DIAGNOSTICS . . . 1

page

CHIME/BUZZER - SERVICE INFORMATION 59

CHIME/BUZZER - ELECTRICAL DIAGNOSTICS

TABLE OF CONTENTS

page

CHIME/BUZZER - ELECTRICAL DIAGNOSTICS
DIAGNOSIS AND TESTING
B122C-PTS SENSOR 7 CIRCUIT LOW 4
B122E-PTS SENSOR 7 RING TIME TOO SHORT 9
B122F-PTS SENSOR 7 RING TIME TOO LONG. 10
B1231-PTS SENSOR 8 CIRCUIT LOW 11
B1233-PTS SENSOR 8 RING TIME TOO SHORT 16
B1234-PTS SENSOR 8 RING TIME TOO LONG. 17
B1236-PTS SENSOR 9 CIRCUIT LOW 18
B1238-PTS SENSOR 9 RING TIME TOO SHORT 22
B1239-PTS SENSOR 9 RING TIME TOO LONG. 23
B123B-PTS SENSOR 10 CIRCUIT LOW 24
B123D-PTS SENSOR 10 RING TIME TOO SHORT 28
B123E-PTS SENSOR 10 RING TIME TOO LONG. 29
B210D-BATTERY VOLTAGE LOW 30
B210E-BATTERY VOLTAGE HIGH 31
B2126-SENSOR SUPPLY VOLTAGE LOW 32
B2127-SENSOR SUPPLY VOLTAGE HIGH 36
B212A-PTS DISPLAY SUPPLY VOLTAGE LOW. 38
B222A-VEHICLE LINE MISMATCH 42
B2232-(PTS) PARKTRONICS INTERNAL 43
B2234-(PTS) PARKTRONICS REAR DISPLAY INTERNAL 44
U0423-IMPLAUSIBLE DATA RECEIVED FROM CLUSTER/CCN. 45
U0431-IMPLAUSIBLE DATA RECEIVED FROM FCM 47

page

U1002-PTS DISPLAY COMMUNICATION CIRCUIT LOW 48
U1101-LOST COMMUNICATION WITH PTS DISPLAY 52
U0141–LOST COMMUNICATION WITH FRONT CONTROL MODULE 55
U0151-LOST COMMUNICATION WITH OCCUPANT RESTRAINT CONTROLLER 55
U0154-LOST COMMUNICATION WITH OCCUPANT CLASSIFICATION MODULE 56
U0155-LOST COMMUNICATION WITH CLUSTER/CCN 56
U0159-LOST COMMUNICATION WITH PARKING ASSIST CONTROL MODULE 56
U0164-LOST COMMUNICATION WITH HVAC CONTROL MODULE 56
U0167-LOST COMMUNICATION WITH INTRUSION TRANSCEIVER CONTROL MODULE. 56
U0168-LOST COMMUNICATION WITH VEHICLE SECURITY CONTROL MODULE (SKREEM/WCM) 56
U0169-LOST COMMUNICATION WITH SUNROOF CONTROL MODULE. 56
U0184-LOST COMMUNICATION WITH RADIO 56
U0186-LOST COMMUNICATION WITH AUDIO AMPLIFIER 57
U0195-LOST COMMUNICATION WITH SDARS 57
U0196-LOST COMMUNICATION WITH VEHICLE ENTERTAINMENT CONTROL MODULE. 57
U0197-LOST COMMUNICATION WITH HANDS FREE PHONE MODULE 57
U0199-LOST COMMUNICATION WITH DRIVER DOOR MODULE. 57

U0200-LOST COMMUNICATION WITH PASSENGER DOOR MODULE 57
U0208-LOST COMMUNICATION WITH HEATED SEAT CONTROL MODULE 57
U0209-LOST COMMUNICATION WITH MEMORY SEAT CONTROL MODULE 57
U0212-LOST COMMUNICATION WITH SCCM-CAN-B. 58
U0231-LOST COMMUNICATION WITH RAIN SENSING MODULE 58
U0241-LOST COMMUNICATION WITH AUTO HIGHBEAM HEADLAMP CONTROL MODULE. 58

CHIME/BUZZER - ELECTRICAL DIAGNOSTICS

DIAGNOSIS AND TESTING

B122C-PTS SENSOR 7 CIRCUIT LOW

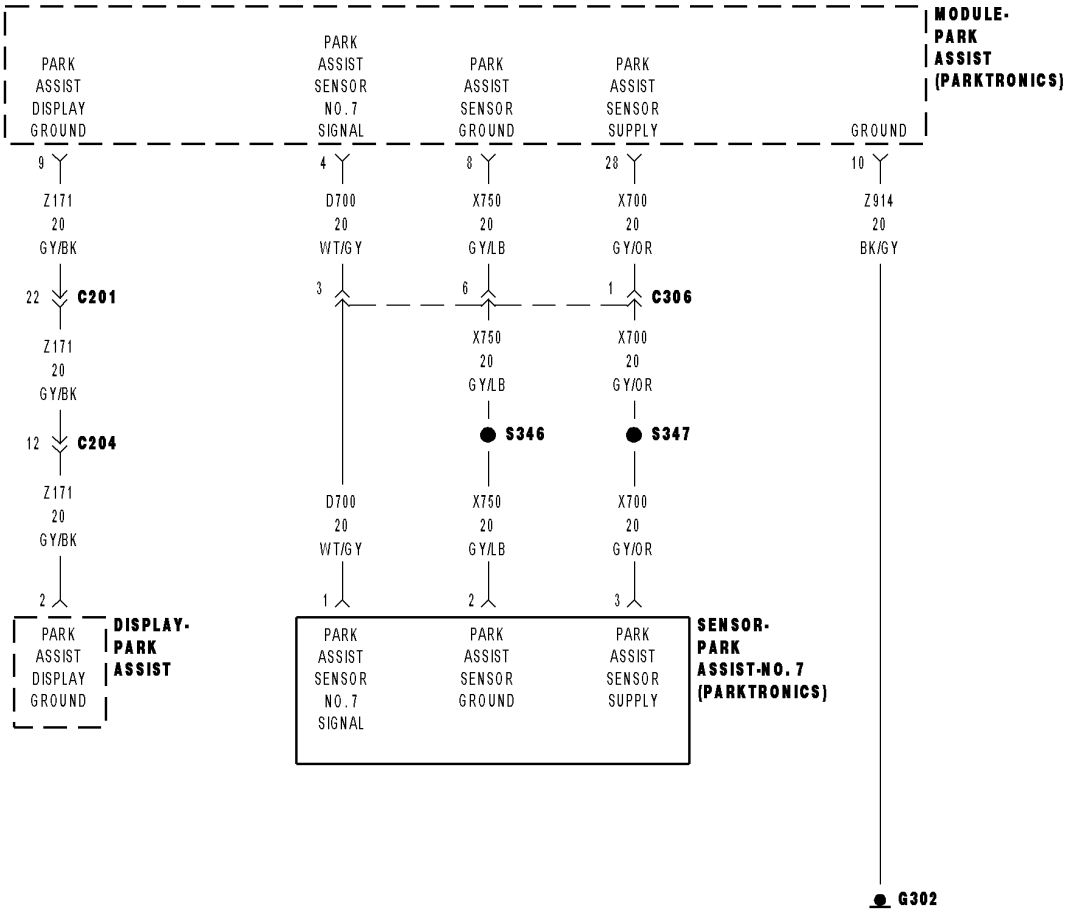

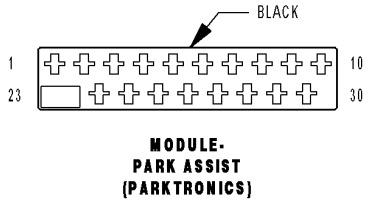

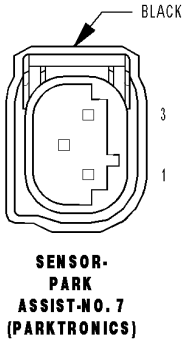

81373590

For a complete wiring diagram **Refer to Section 8W**.

- **When Monitored:**
  With the ignition in Run/Start, and the PRNDL in R, N, or D. (Late build vehicles will disable the Park Assist System in Neutral)
- **Set Condition:**
  Sensor ring down time is too short (700 µsecs).

Possible Causes
(D700) PARK ASSIST SENSOR NO. 7 SIGNAL CIRCUIT SHORTED TO (X750) PARK ASSIST SENSOR GROUND CIRCUIT
(D700) PARK ASSIST SENSOR NO. 7 SIGNAL CIRCUIT SHORTED TO (Z171) PARK ASSIST DISPLAY GROUND CIRCUIT
(D700) PARK ASSIST SENSOR NO. 7 SIGNAL CIRCUIT SHORTED TO (Z914) PARK ASSIST MODULE GROUND CIRCUIT
(D700) PARK ASSIST SENSOR NO. 7 SIGNAL CIRCUIT SHORTED TO GROUND
PARK ASSIST SENSOR NO. 7
PARK ASSIST MODULE

Diagnostic Test

1. CHECK FOR ACTIVE DTC: B122C-PTS SENSOR 7 CIRCUIT LOW

Turn the ignition on.
Apply the vehicle park brake.
Shift the transmission into reverse.
With the scan tool, record and erase Park Assist Module DTCs.
Wait 30 seconds.
With the scan tool, read Park Assist Module DTCs.

Is DTC: B122C-PTS SENSOR 7 CIRCUIT LOW active?

Yes >> Go To 2

No >> The condition that caused this code to set is not present at this time. Check for an intermittent condition by inspecting the related wiring harness for chaffed, pierced, pinched, and partially broken wires. Also inspect the related connectors for broken, bent, pushed out, spread, corroded, or contaminated terminals.
Perform BODY VERIFICATION TEST - VER 1. (Refer to BODY VERIFICATION TEST - VER 1).

2. CHECK PARK ASSIST SENSOR NO. 7 FOR A SHORT TO GROUND

Shift the transmission into park.
With the scan tool, erase DTCs.
Turn the ignition off.
Disconnect Park Assist Sensor No. 7.
Turn the ignition on.
Shift the transmission into reverse.
With the scan tool, read Park Assist Module DTCs.

Does the scan tool display: B122C-PTS SENSOR 7 CIRCUIT LOW?

Yes >> Go To 3

No >> Replace Park Assist Sensor No. 7 in accordance with the service information.
Perform BODY VERIFICATION TEST - VER 1. (Refer to BODY VERIFICATION TEST - VER 1).

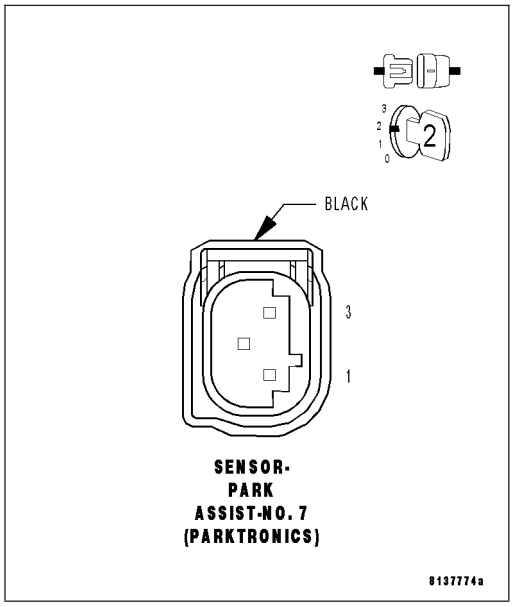

3. CHECK THE (D700) PARK ASSIST SENSOR NO. 7 SIGNAL CIRCUIT FOR A SHORT TO (X750) PARK ASSIST SENSOR GROUND CIRCUIT

Turn the ignition off.
Disconnect the Park Assist Module harness connector.
Measure the resistance between the (D700) Park Assist Sensor No. 7 Signal circuit and the (X750) Park Assist Sensor Ground circuit.

Is the resistance below 10K ohms?

Yes >> Repair the (D700) Park Assist Sensor No. 7 Signal circuit for a short to the (X750) Park Assist Sensor Ground circuit.
Perform BODY VERIFICATION TEST - VER 1. (Refer to BODY VERIFICATION TEST - VER 1).

No >> Go To 4

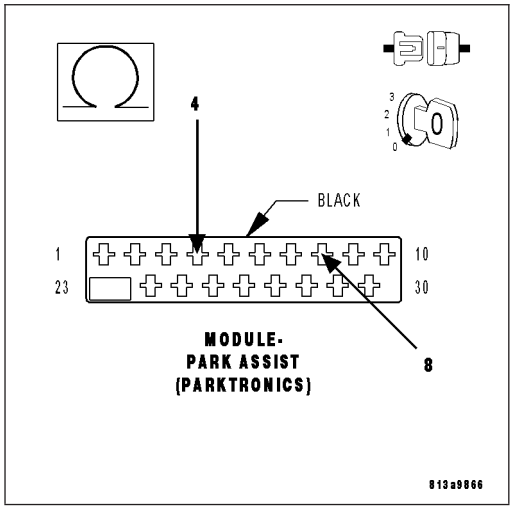

4. CHECK THE (D700) PARK ASSIST SENSOR NO. 7 SIGNAL CIRCUIT FOR A SHORT TO (Z171) PARK ASSIST DISPLAY GROUND CIRCUIT

Measure the resistance between the (D700) Park Assist Sensor No. 7 Signal circuit and the (Z171) Park Assist Display Ground circuit.

Is the resistance below 10K ohms?

Yes >> Repair the (D700) Park Assist Sensor No. 7 Signal circuit for a short to the (Z171) Park Assist Display Ground circuit. Perform BODY VERIFICATION TEST - VER 1. (Refer to BODY VERIFICATION TEST - VER 1).

No >> Go To 5

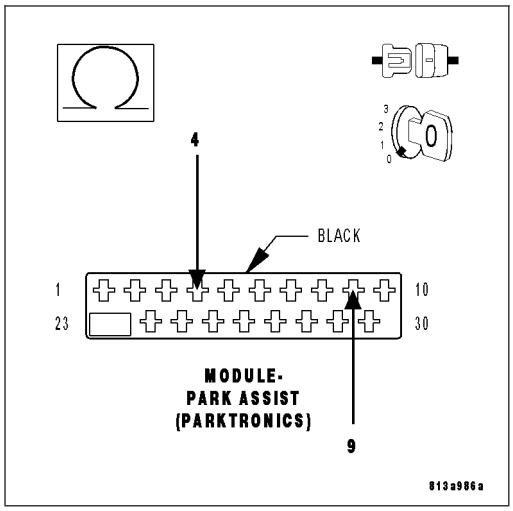

5. CHECK THE (D700) PARK ASSIST SENSOR NO. 7 SIGNAL CIRCUIT FOR A SHORT TO (Z914) PARK ASSIST MODULE GROUND CIRCUIT

Measure the resistance between the (D700) Park Assist Sensor No. 7 Signal circuit and the (Z914) Park Assist Module Ground circuit.

Is the resistance below 10K ohms?

Yes >> Repair the (D700) Park Assist Sensor No. 7 Signal circuit for a short to the (Z914) Park Assist Module Ground circuit. Perform BODY VERIFICATION TEST - VER 1. (Refer to BODY VERIFICATION TEST - VER 1).

No >> Go To 6

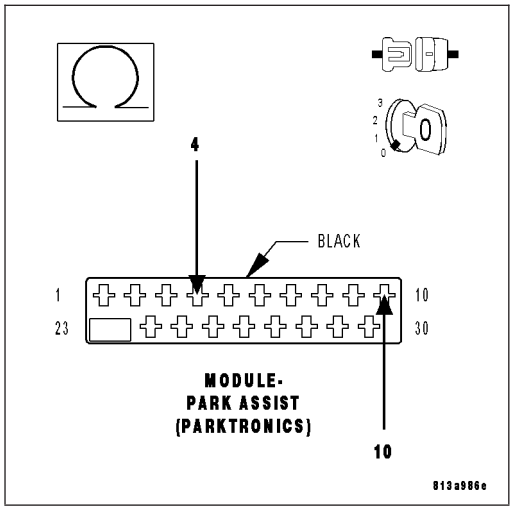

6. CHECK THE (D700) PARK ASSIST SENSOR NO. 7 SIGNAL CIRCUIT FOR A SHORT TO GROUND

Measure the resistance between ground and the (D700) Park Assist Sensor No. 7 Signal circuit.

Is the resistance below 10K ohms?

Yes >> Repair the (D700) Park Assist Sensor No. 7 Signal circuit for a short to ground.

Perform BODY VERIFICATION TEST - VER 1. (Refer to BODY VERIFICATION TEST - VER 1).

No >> Replace the Park Assist Module in accordance with the service information.

Perform BODY VERIFICATION TEST - VER 1. (Refer to BODY VERIFICATION TEST - VER 1).

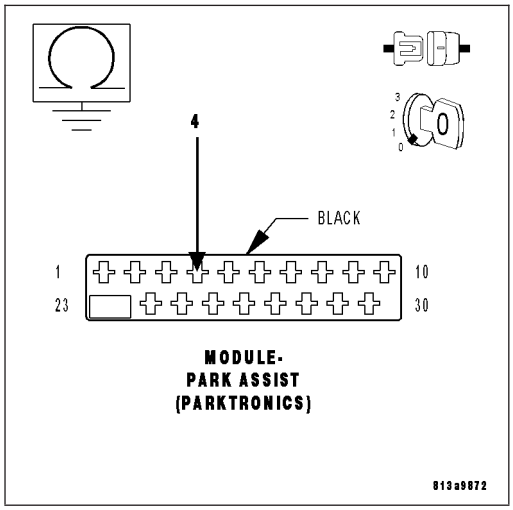

B122E-PTS SENSOR 7 RING TIME TOO SHORT

For a complete wiring diagram **Refer to Section 8W**.

- **When Monitored:**
  With the ignition on, transmission in reverse or neutral (Late build vehicles will disable the Park Assist System in Neutral).
- **Set Condition:**
  Sensor ring down time exceeds limit (greater than 1450 µsecs).

Possible Causes
PARK ASSIST SENSOR NO. 7

Diagnostic Test

1. CHECK FOR ACTIVE DTC: B122E-PTS SENSOR 7 RING TIME TOO SHORT

Turn the ignition on.

Apply the vehicle park brake.

Shift the transmission into reverse.

With the scan tool, record and erase Park Assist Module DTCs.

Wait 30 seconds.

With the scan tool, read Park Assist Module DTCs.

Is DTC: B122E-PTS SENSOR 7 RING TIME TOO SHORT active?

Yes >> Go To 2

No >> The condition that caused this code to set is not present at this time. Check for an intermittent condition by inspecting the related wiring harness for chaffed, pierced, pinched, and partially broken wires. Also inspect the related connectors for broken, bent, pushed out, spread, corroded, or contaminated terminals.

Perform BODY VERIFICATION TEST - VER 1. (Refer to BODY VERIFICATION TEST - VER 1).

2. REPLACE PARK ASSIST SENSOR NO. 7

View Repair

Repair

Replace Park Assist Sensor No. 7 in accordance with the service information.

Perform BODY VERIFICATION TEST - VER 1. (Refer to BODY VERIFICATION TEST - VER 1).

B122F-PTS SENSOR 7 RING TIME TOO LONG

For a complete wiring diagram **Refer to Section 8W**.

- **When Monitored:**
  With the ignition on, transmission in reverse or neutral (Late build vehicles will disable the Park Assist System in Neutral).
- **Set Condition:**
  Data line stuck at 0.

Possible Causes
PARK ASSIST SENSOR NO. 7

Diagnostic Test

1. CHECK FOR ACTIVE DTC: B122F-PTS SENSOR 7 RING TIME TOO LONG

Turn the ignition on.

Apply the vehicle park brake.

Shift the transmission into reverse.

With the scan tool, record and erase Park Assist Module DTCs.

Wait 30 seconds.

With the scan tool, read Park Assist Module DTCs.

Is DTC: B122F-PTS SENSOR 7 RING TIME TOO LONG active?

Yes >> Go To 2

No >> The condition that caused this code to set is not present at this time. Check for an intermittent condition by inspecting the related wiring harness for chaffed, pierced, pinched, and partially broken wires. Also inspect the related connectors for broken, bent, pushed out, spread, corroded, or contaminated terminals.

Perform BODY VERIFICATION TEST - VER 1. (Refer to BODY VERIFICATION TEST - VER 1).

2. REPLACE PARK ASSIST SENSOR NO 7.

View Repair

Repair

Replace Park Assist Sensor No. 7 in accordance with the service information.

Perform BODY VERIFICATION TEST - VER 1. (Refer to BODY VERIFICATION TEST - VER 1).

B1231-PTS SENSOR 8 CIRCUIT LOW

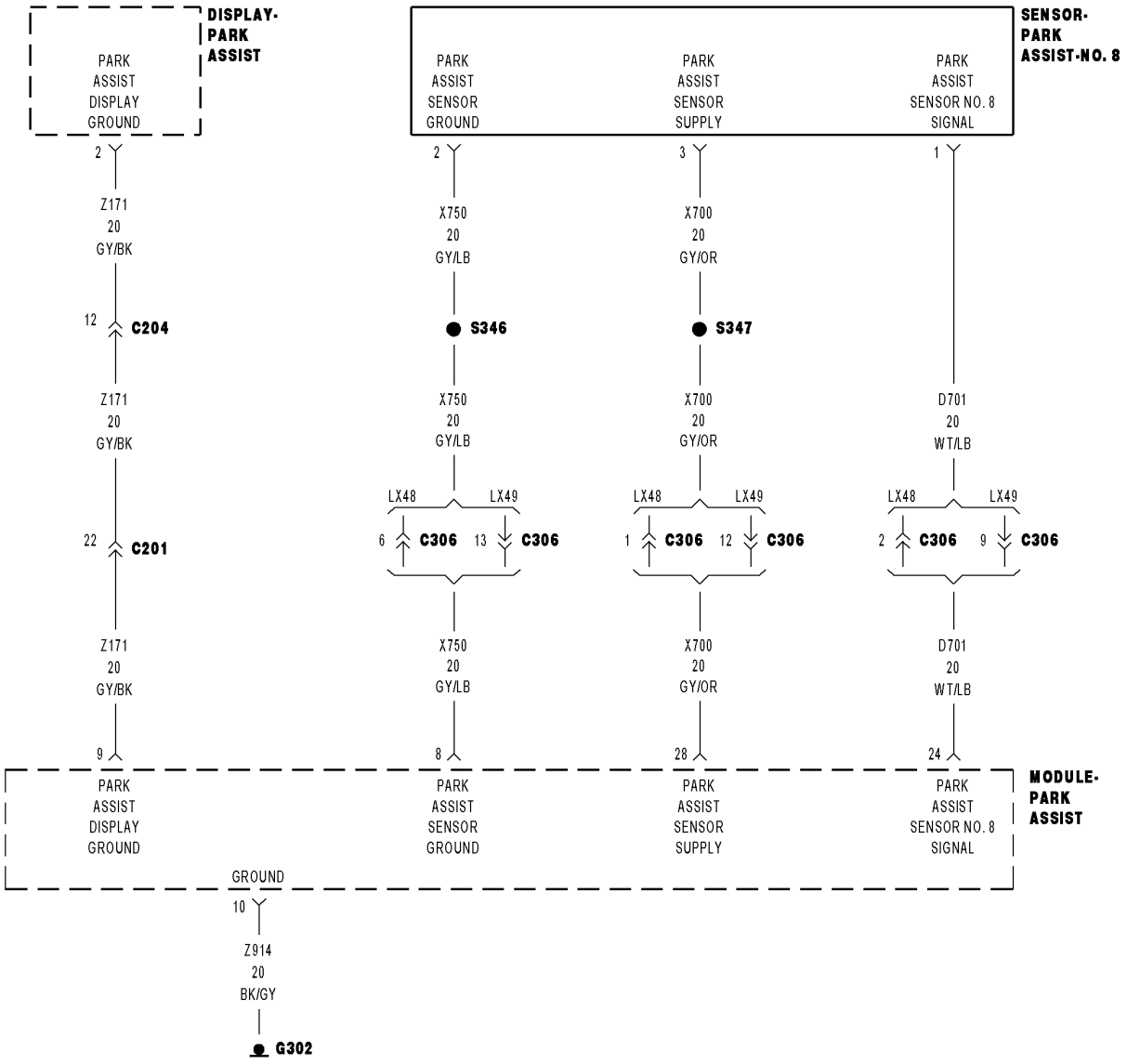

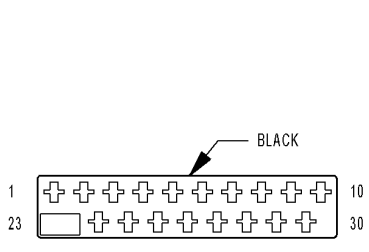

MODULE-PARK ASSIST (PARKTRONICS)

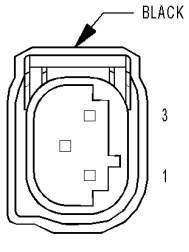

SENSOR-PARK ASSIST-NO. 8 (PARKTRONICS)

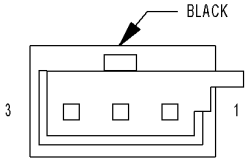

DISPLAY-PARK ASSIST (PARKTRONICS)

817bb135

For a complete wiring diagram **Refer to Section 8W**.

- **When Monitored:**
  With the ignition in Run/Start, and the PRNDL in R, N, or D (Late build vehicles will disable the Park Assist System in Neutral).
- **Set Condition:**
  Sensor ring down time is too short (700 µsecs).

Possible Causes
(D701) PARK ASSIST SENSOR NO. 8 SIGNAL CIRCUIT SHORTED TO (X750) PARK ASSIST SENSOR GROUND CIRCUIT
(D701) PARK ASSIST SENSOR NO. 8 SIGNAL CIRCUIT SHORTED TO (Z171) PARK ASSIST DISPLAY GROUND CIRCUIT
(D701) PARK ASSIST SENSOR NO. 8 SIGNAL CIRCUIT SHORTED TO (Z914) PARK ASSIST MODULE GROUND CIRCUIT
(D701) PARK ASSIST SENSOR NO. 8 SIGNAL CIRCUIT SHORTED TO GROUND
PARK ASSIST SENSOR NO. 8
PARK ASSIST MODULE

Diagnostic Test

1. CHECK FOR ACTIVE DTC: B1231-PTS SENSOR 8 CIRCUIT LOW

Turn the ignition on.

Apply the vehicle park brake.

Shift the transmission into reverse.

With the scan tool, record and erase Park Assist Module DTCs.

Wait 30 seconds.

With the scan tool, read Park Assist Module DTCs.

Is DTC: B1231-PTS SENSOR 8 CIRCUIT LOW active?

Yes >> Go To 2

No >> The condition that caused this code to set is not present at this time. Check for an intermittent condition by inspecting the related wiring harness for chaffed, pierced, pinched, and partially broken wires. Also inspect the related connectors for broken, bent, pushed out, spread, corroded, or contaminated terminals.

Perform BODY VERIFICATION TEST - VER 1. (Refer to BODY VERIFICATION TEST - VER 1).

2. CHECK PARK ASSIST SENSOR NO. 8 FOR A SHORT TO GROUND

Shift the transmission into park.
With the scan tool, erase DTCs.
Turn the ignition off.
Disconnect Park Assist Sensor No. 8.
Turn the ignition on.
Shift the transmission into reverse.
With the scan tool, read Park Assist Module DTCs.

Does the scan tool display: B1231-PTS SENSOR 8 CIRCUIT LOW?

Yes >> Go To 3

No >> Replace Park Assist Sensor No. 8 in accordance with the service information.
Perform BODY VERIFICATION TEST - VER 1. (Refer to BODY VERIFICATION TEST - VER 1).

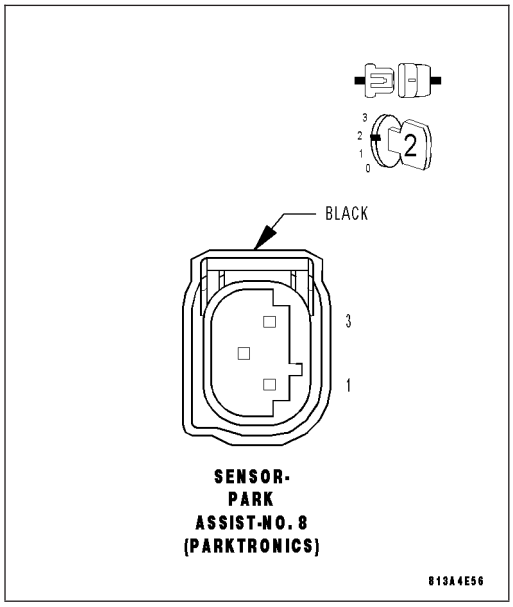

3. CHECK THE (D701) PARK ASSIST SENSOR NO. 8 SIGNAL CIRCUIT FOR A SHORT TO (X750) PARK ASSIST SENSOR GROUND CIRCUIT

Turn the ignition off.
Disconnect the Park Assist Module harness connector.
Measure the resistance between the (D701) Park Assist Sensor No. 8 Signal circuit and the (X750) Park Assist Sensor Ground circuit.

Is the resistance below 10K ohms?

Yes >> Repair the (D701) Park Assist Sensor No. 8 Signal circuit for a short to the (X750) Park Assist Sensor Ground circuit.
Perform BODY VERIFICATION TEST - VER 1. (Refer to BODY VERIFICATION TEST - VER 1).

No >> Go To 4

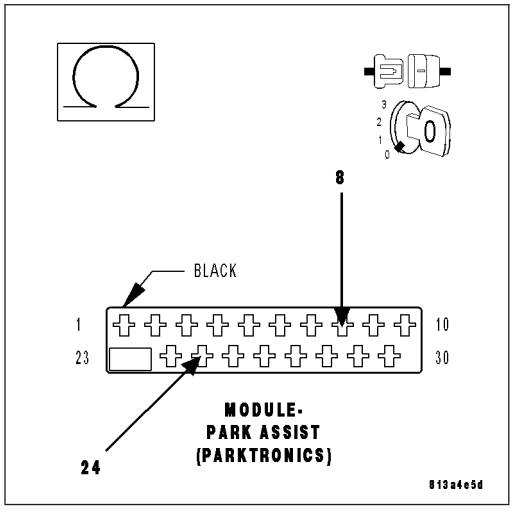

4. CHECK THE (D701) PARK ASSIST SENSOR NO. 8 SIGNAL CIRCUIT FOR A SHORT TO (Z171) PARK ASSIST DISPLAY GROUND CIRCUIT

Measure the resistance between the (D701) Park Assist Sensor No. 8 Signal circuit and the (Z171) Park Assist Display Ground circuit.

Is the resistance below 10K ohms?

Yes >> Repair the (D701) Park Assist Sensor No. 8 Signal circuit for a short to the (Z171) Park Assist Display Ground circuit. Perform BODY VERIFICATION TEST - VER 1. (Refer to BODY VERIFICATION TEST - VER 1).

No >> Go To 5

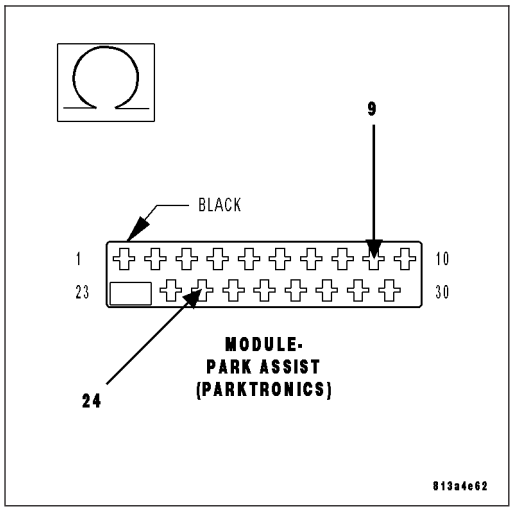

5. CHECK THE (D701) PARK ASSIST SENSOR NO. 8 SIGNAL CIRCUIT FOR A SHORT TO (Z914) PARK ASSIST MODULE GROUND CIRCUIT

Measure the resistance between the (D701) Park Assist Sensor No. 8 Signal circuit and the (Z914) Park Assist Module Ground circuit.

Is the resistance below 10K ohms?

Yes >> Repair the (D701) Park Assist Sensor No. 8 Signal circuit for a short to the (Z914) Park Assist Module Ground circuit. Perform BODY VERIFICATION TEST - VER 1. (Refer to BODY VERIFICATION TEST - VER 1).

No >> Go To 6

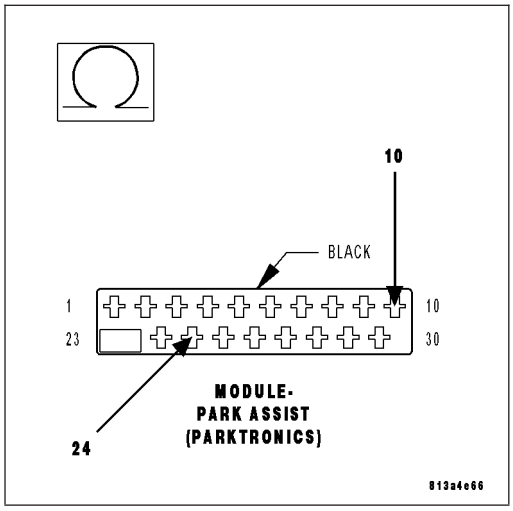

6. CHECK THE (D701) PARK ASSIST SENSOR NO. 8 SIGNAL CIRCUIT FOR A SHORT TO GROUND

Measure the resistance between ground and the (D701) Park Assist Sensor No. 8 Signal circuit.

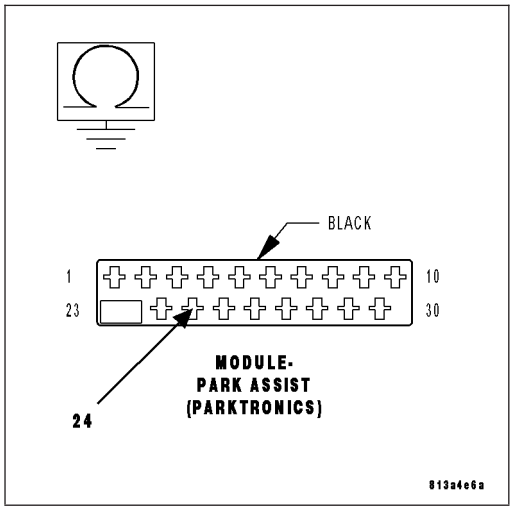

Is the resistance below 10K ohms?

Yes >> Repair the (D701) Park Assist Sensor No. 8 Signal circuit for a short to ground.

Perform BODY VERIFICATION TEST - VER 1. (Refer to BODY VERIFICATION TEST - VER 1).

No >> Replace the Park Assist Module in accordance with the service information.

Perform BODY VERIFICATION TEST - VER 1. (Refer to BODY VERIFICATION TEST - VER 1).

B1233-PTS SENSOR 8 RING TIME TOO SHORT

For a complete wiring diagram **Refer to Section 8W**.

- **When Monitored:**
  With the ignition on, transmission in reverse or neutral (Late build vehicles will disable the Park Assist System in Neutral).
- **Set Condition:**
  Sensor ring down time exceeds limit (greater than 1450 µsecs).

Possible Causes
PARK ASSIST SENSOR NO. 8

Diagnostic Test

1. CHECK FOR ACTIVE DTC: B1233-PTS SENSOR 8 RING TIME TOO SHORT

Turn the ignition on.

Apply the vehicle park brake.

Shift the transmission into Reverse.

With the scan tool, record and erase Park Assist Module DTCs.

Wait 30 seconds.

With the scan tool, read Park Assist Module DTCs.

Is DTC: B1233-PTS SENSOR 8 RING TIME TOO SHORT active?

Yes >> Go To 2

No >> The condition that caused this code to set is not present at this time. Check for an intermittent condition by inspecting the related wiring harness for chaffed, pierced, pinched, and partially broken wires. Also inspect the related connectors for broken, bent, pushed out, spread, corroded, or contaminated terminals.

Perform BODY VERIFICATION TEST - VER 1. (Refer to BODY VERIFICATION TEST - VER 1).

2. REPLACE PARK ASSIST SENSOR NO. 8

View Repair

Repair

Replace Park Assist Sensor No. 8 in accordance with the service information.

Perform BODY VERIFICATION TEST - VER 1. (Refer to BODY VERIFICATION TEST - VER 1).

B1234-PTS SENSOR 8 RING TIME TOO LONG

For a complete wiring diagram **Refer to Section 8W**.

- **When Monitored:**
  With the ignition on, transmission in reverse or neutral (Late build vehicles will disable the Park Assist System in neutral).
- **Set Condition:**
  Data line stuck at 0.

Possible Causes
PARK ASSIST SENSOR NO. 8

Diagnostic Test

1. CHECK FOR ACTIVE DTC: B1234-PTS SENSOR 8 RING TIME TOO LONG

Turn the ignition on.

Apply the vehicle park brake.

Shift the transmission into Reverse.

With the scan tool, record and erase Park Assist Module DTCs.

Wait 30 seconds.

With the scan tool, read Park Assist Module DTCs.

Is DTC: B1234-PTS SENSOR 8 RING TIME TOO LONG active?

Yes >> Go To 2

No >> The condition that caused this code to set is not present at this time. Check for an intermittent condition by inspecting the related wiring harness for chaffed, pierced, pinched, and partially broken wires. Also inspect the related connectors for broken, bent, pushed out, spread, corroded, or contaminated terminals.

Perform BODY VERIFICATION TEST - VER 1. (Refer to BODY VERIFICATION TEST - VER 1).

2. REPLACE PARK ASSIST SENSOR NO. 8

View Repair

Repair

Replace Park Assist Sensor No. 8 in accordance with the service information.

Perform BODY VERIFICATION TEST - VER 1. (Refer to BODY VERIFICATION TEST - VER 1).

B1236-PTS SENSOR 9 CIRCUIT LOW

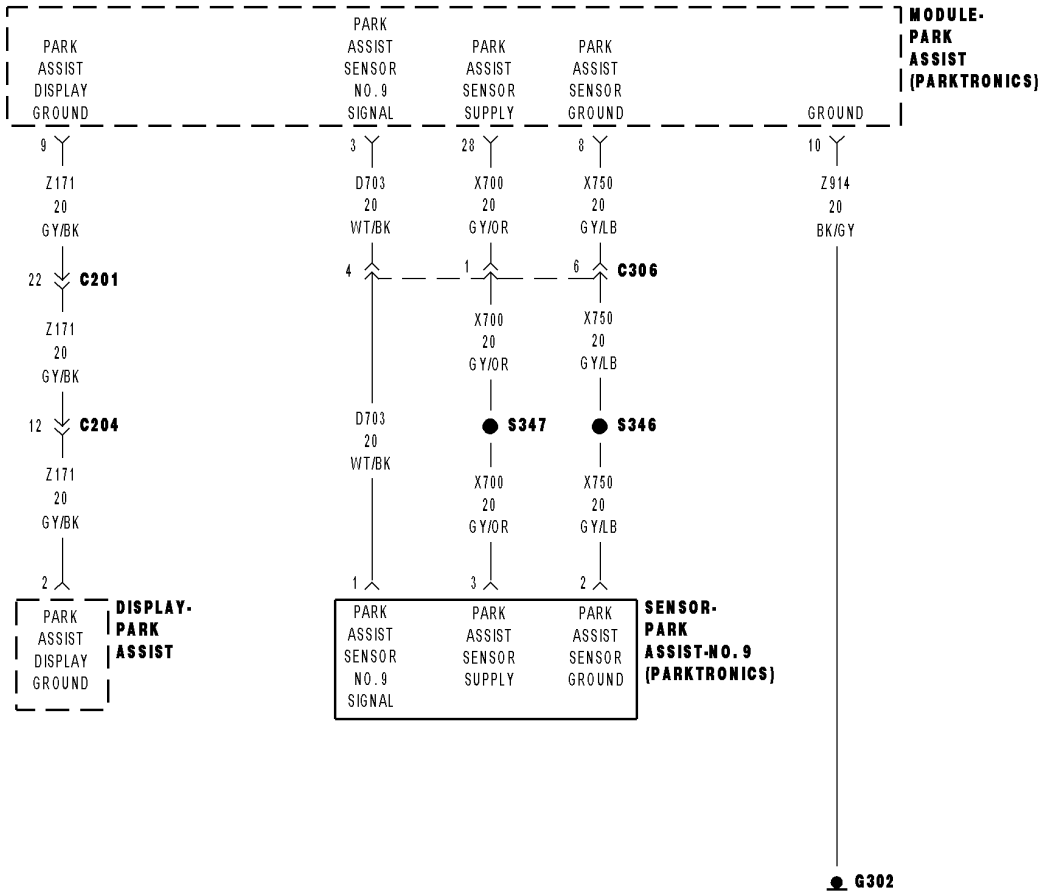

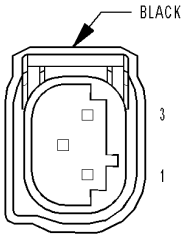

SENSOR-
PARK
ASSIST-NO. 9
(PARKTRONICS)

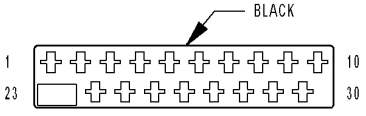

MODULE-
PARK ASSIST
(PARKTRONICS)

813a9992

For a complete wiring diagram **Refer to Section 8W**.

- **When Monitored:**
  With the ignition in Run/Start, and the PRNDL in R, N, or D (Late build vehicles will disable the Park Assist System in neutral).
- **Set Condition:**
  Sensor ring down time is too short (700 µsecs).

Possible Causes
(D703) PARK ASSIST SENSOR NO. 9 SIGNAL CIRCUIT SHORTED TO (X750) PARK ASSIST SENSOR GROUND CIRCUIT
(D703) PARK ASSIST SENSOR NO. 9 SIGNAL CIRCUIT SHORTED TO (Z171) PARK ASSIST DISPLAY GROUND CIRCUIT
(D703) PARK ASSIST SENSOR NO. 9 SIGNAL CIRCUIT SHORTED TO (Z914) PARK ASSIST MODULE GROUND CIRCUIT
(D703) PARK ASSIST SENSOR NO. 9 SIGNAL CIRCUIT SHORTED TO GROUND
PARK ASSIST SENSOR NO. 9
PARK ASSIST MODULE

Diagnostic Test

1. CHECK FOR ACTIVE DTC: B1236-PTS SENSOR 9 CIRCUIT LOW

Turn the ignition on.
Apply the vehicle park brake.
Shift the transmission into reverse.
With the scan tool, record and erase Park Assist Module DTCs.
Wait 30 seconds.
With the scan tool, read Park Assist Module DTCs.

Is DTC: B1236-PTS SENSOR 9 CIRCUIT LOW active?

Yes >> Go To 2

No >> The condition that caused this code to set is not present at this time. Check for an intermittent condition by inspecting the related wiring harness for chaffed, pierced, pinched, and partially broken wires. Also inspect the related connectors for broken, bent, pushed out, spread, corroded, or contaminated terminals.
Perform BODY VERIFICATION TEST - VER 1. (Refer to BODY VERIFICATION TEST - VER 1).

2. CHECK PARK ASSIST SENSOR NO. 9 FOR A SHORT TO GROUND

Shift the transmission into park.
With the scan tool, erase DTCs.
Turn the ignition off.
Disconnect Park Assist Sensor No. 9.
Turn the ignition on.
Shift the transmission into reverse.
With the scan tool, read Park Assist Module DTCs.

Does the scan tool display: B1236-PTS SENSOR 9 CIRCUIT LOW?

Yes >> Go To 3

No >> Replace Park Assist Sensor No. 9 in accordance with the service information.
Perform BODY VERIFICATION TEST - VER 1. (Refer to BODY VERIFICATION TEST - VER 1).

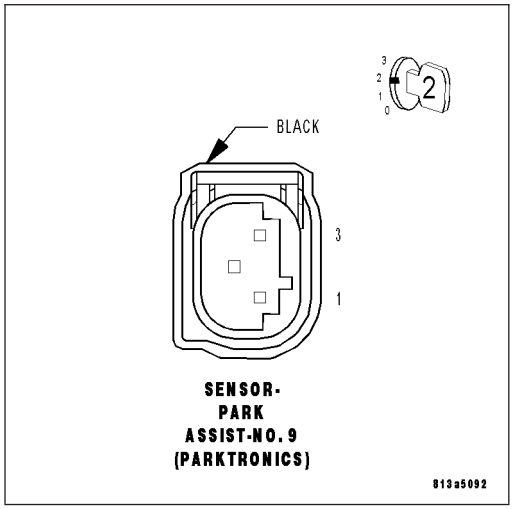

3. CHECK THE (D703) PARK ASSIST SENSOR NO. 9 SIGNAL CIRCUIT FOR A SHORT TO (X750) PARK ASSIST SENSOR GROUND CIRCUIT

Turn the ignition off.

Disconnect the Park Assist Module harness connector.

Measure the resistance between the (D703) Park Assist Sensor No. 9 Signal circuit and the (X750) Park Assist Sensor Ground circuit.

Is the resistance below 10K ohms?

Yes >> Repair the (D703) Park Assist Sensor No. 9 Signal circuit for a short to the (X750) Park Assist Sensor Ground circuit. Perform BODY VERIFICATION TEST - VER 1. (Refer to BODY VERIFICATION TEST - VER 1).

No >> Go To 4

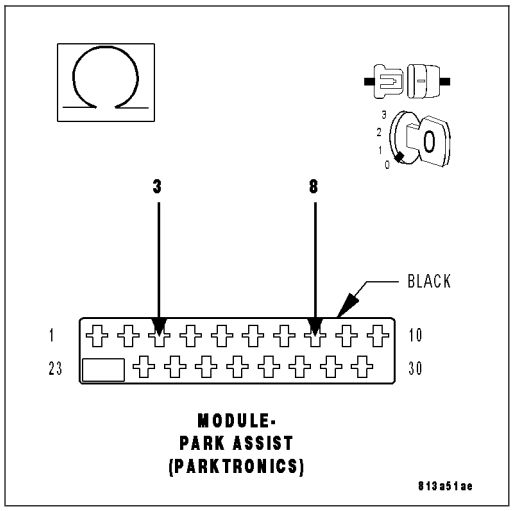

4. CHECK THE (D703) PARK ASSIST SENSOR NO. 9 SIGNAL CIRCUIT FOR A SHORT TO (Z171) PARK ASSIST DISPLAY GROUND CIRCUIT

Measure the resistance between the (D703) Park Assist Sensor No. 9 Signal circuit and the (Z171) Park Assist Display Ground circuit.

Is the resistance below 10K ohms?

Yes >> Repair the (D703) Park Assist Sensor No. 9 Signal circuit for a short to the (Z171) Park Assist Display Ground circuit. Perform BODY VERIFICATION TEST - VER 1. (Refer to BODY VERIFICATION TEST - VER 1).

No >> Go To 5

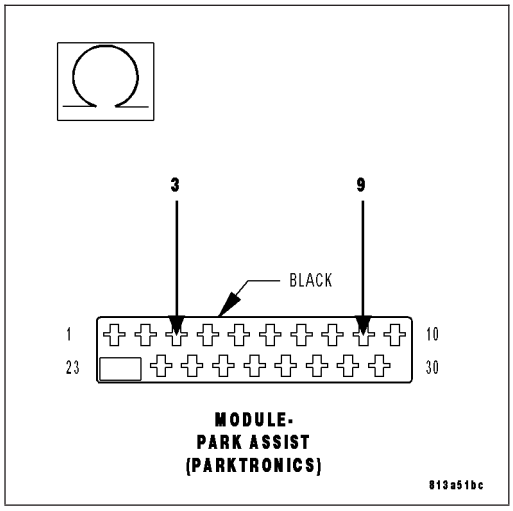

5. CHECK THE (D703) PARK ASSIST SENSOR NO. 9 SIGNAL CIRCUIT FOR A SHORT TO (Z914) PARK ASSIST MODULE GROUND CIRCUIT

Measure the resistance between the (D703) Park Assist Sensor No. 9 Signal circuit and the (Z914) Park Assist Module Ground circuit.

Is the resistance below 10K ohms?

Yes >> Repair the (D703) Park Assist Sensor No. 9 Signal circuit for a short to the (Z914) Park Assist Module Ground circuit.
Perform BODY VERIFICATION TEST - VER 1. (Refer to BODY VERIFICATION TEST - VER 1).

No >> Go To 6

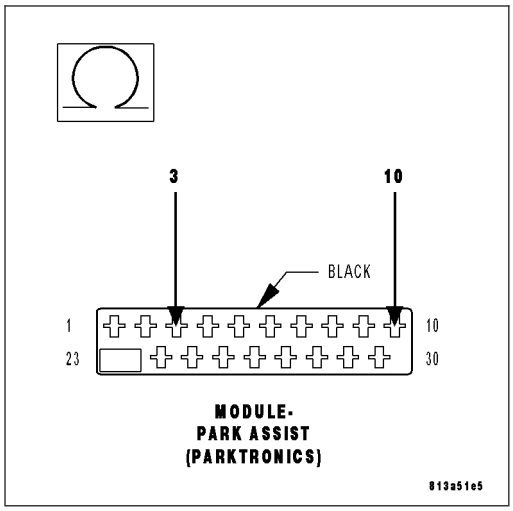

6. CHECK THE (D703) PARK ASSIST SENSOR NO. 9 SIGNAL CIRCUIT FOR A SHORT TO GROUND

Measure the resistance between ground and the (D703) Park Assist Sensor No. 9 Signal circuit.

Is the resistance below 10K ohms?

Yes >> Repair the (D703) Park Assist Sensor No. 9 Signal circuit for a short to ground.
Perform BODY VERIFICATION TEST - VER 1. (Refer to BODY VERIFICATION TEST - VER 1).

No >> Replace the Park Assist Module in accordance with the service information.
Perform BODY VERIFICATION TEST - VER 1. (Refer to BODY VERIFICATION TEST - VER 1).

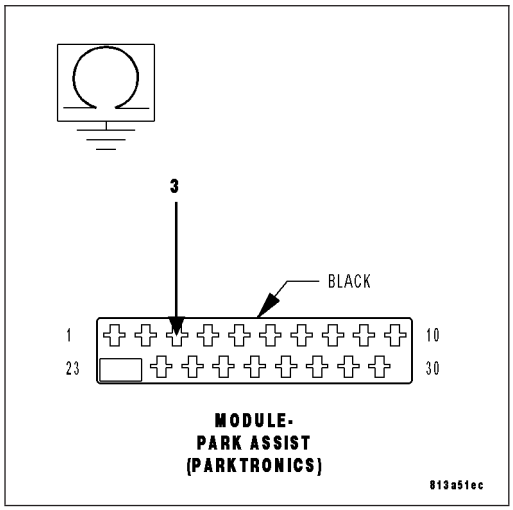

B1238-PTS SENSOR 9 RING TIME TOO SHORT

For a complete wiring diagram **Refer to Section 8W**.

- **When Monitored:**
  With the ignition on, transmission in reverse or neutral (Late build vehicles will disable the Park Assist System in neutral).
- **Set Condition:**
  Sensor ring down time exceeds limit (greater than 1450 µsecs).

Possible Causes
PARK ASSIST SENSOR NO. 9

Diagnostic Test

1. CHECK FOR ACTIVE DTC: B1238-PTS SENSOR 9 RING TIME TOO SHORT

Turn the ignition on.

Apply the vehicle park brake.

Shift the transmission into Reverse.

With the scan tool, record and erase Park Assist Module DTCs.

Wait 30 seconds.

With the scan tool, read Park Assist Module DTCs.

Is DTC: B1238-PTS SENSOR 9 RING TIME TOO SHORT active?

Yes >> Go To 2

No >> The condition that caused this code to set is not present at this time. Check for an intermittent condition by inspecting the related wiring harness for chaffed, pierced, pinched, and partially broken wires. Also inspect the related connectors for broken, bent, pushed out, spread, corroded, or contaminated terminals.

Perform BODY VERIFICATION TEST - VER 1. (Refer to BODY VERIFICATION TEST - VER 1).

2. REPLACE PARK ASSIST SENSOR NO. 9

View Repair

Repair

Replace Park Assist Sensor No. 9 in accordance with the service information.

Perform BODY VERIFICATION TEST - VER 1. (Refer to BODY VERIFICATION TEST - VER 1).

B1239-PTS SENSOR 9 RING TIME TOO LONG

For a complete wiring diagram **Refer to Section 8W**.

- **When Monitored:**
  With the ignition on, transmission in reverse or neutral (Late build vehicles will disable the Park Assist System in neutral).
- **Set Condition:**
  Data line stuck at 0.

Possible Causes
PARK ASSIST SENSOR N0. 9

Diagnostic Test

1. CHECK FOR ACTIVE DTC: B1239-PTS SENSOR 9 RING TIME TOO LONG

Turn the ignition on.

Apply the vehicle park brake.

Shift the transmission into Reverse.

With the scan tool, record and erase Park Assist Module DTCs.

Wait 30 seconds.

With the scan tool, read Park Assist Module DTCs.

Is DTC: B1239-PTS SENSOR 9 RING TIME TOO LONG active?

Yes >> Go To 2

No >> The condition that caused this code to set is not present at this time. Check for an intermittent condition by inspecting the related wiring harness for chaffed, pierced, pinched, and partially broken wires. Also inspect the related connectors for broken, bent, pushed out, spread, corroded, or contaminated terminals.

Perform BODY VERIFICATION TEST - VER 1. (Refer to BODY VERIFICATION TEST - VER 1).

2. REPLACE PARK ASSIST SENSOR NO. 9

View Repair

Repair

Replace Park Assist Sensor No. 9 in accordance with the service information.

Perform BODY VERIFICATION TEST - VER 1. (Refer to BODY VERIFICATION TEST - VER 1).

B123B-PTS SENSOR 10 CIRCUIT LOW

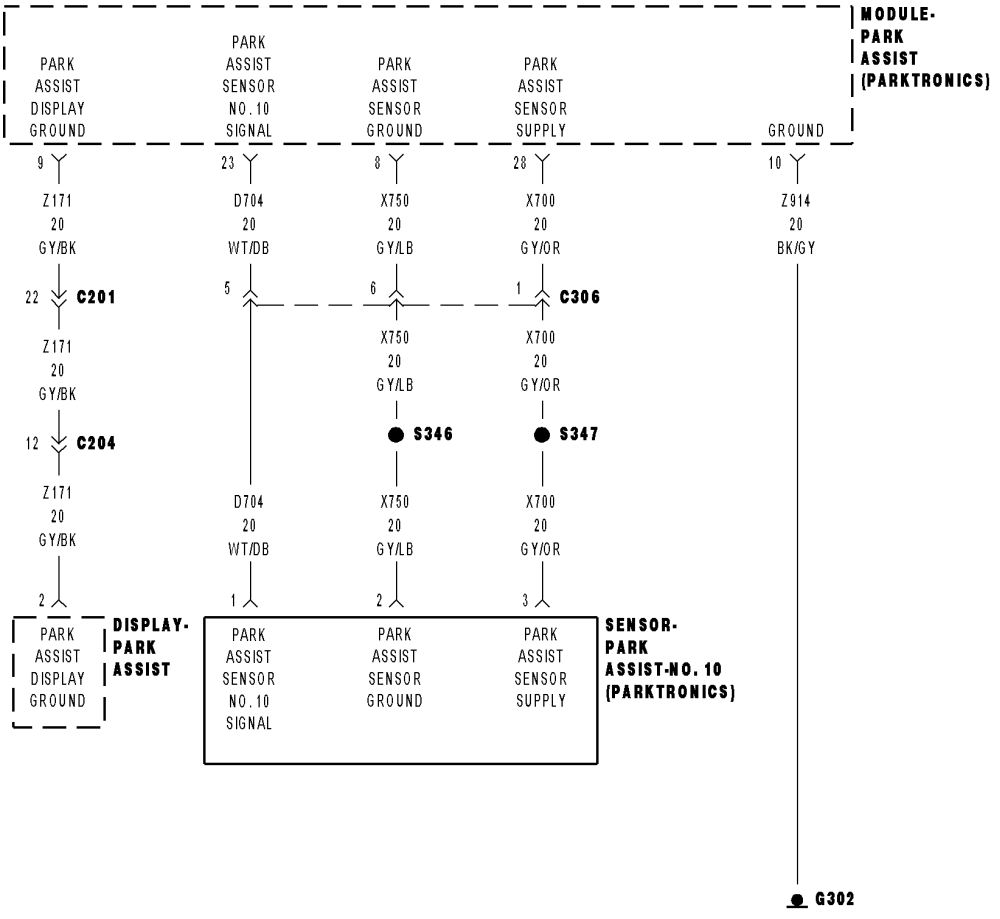

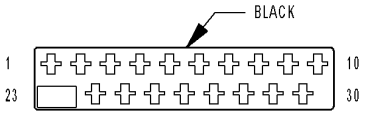

MODULE-
PARK ASSIST
(PARKTRONICS)

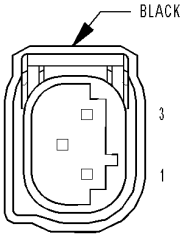

SENSOR-
PARK
ASSIST-NO. 10
(PARKTRONICS)

813a9aa6

For a complete wiring diagram **Refer to Section 8W**.

- **When Monitored:**
  With the ignition in Run/Start, and PRNDL in R, N, or D (Late build vehicles will disable the Park Assist System in neutral).
- **Set Condition:**
  Sensor ring down time is too short (700 µsecs).

Possible Causes
(D704) PARK ASSIST SENSOR NO. 10 SIGNAL CIRCUIT SHORTED TO (X750) PARK ASSIST SENSOR GROUND CIRCUIT
(D704) PARK ASSIST SENSOR NO. 10 SIGNAL CIRCUIT SHORTED TO (Z171) PARK ASSIST DISPLAY GROUND CIRCUIT
(D704) PARK ASSIST SENSOR NO. 10 SIGNAL CIRCUIT SHORTED TO (Z914) PARK ASSIST MODULE GROUND CIRCUIT
(D704) PARK ASSIST SENSOR NO. 10 SIGNAL CIRCUIT SHORTED TO GROUND
PARK ASSIST SENSOR NO. 10
PARK ASSIST MODULE

Diagnostic Test

1. CHECK FOR ACTIVE DTC: B123B-PTS SENSOR 10 CIRCUIT LOW

Turn the ignition on.
Apply the vehicle park brake.
Shift the transmission into reverse.
With the scan tool, record and erase Park Assist Module DTCs.
Wait 30 seconds.
With the scan tool, read Park Assist Module DTCs.

Is DTC: B123B-PTS SENSOR 10 CIRCUIT LOW active?

Yes >> Go To 2

No >> The condition that caused this code to set is not present at this time. Check for an intermittent condition by inspecting the related wiring harness for chaffed, pierced, pinched, and partially broken wires. Also inspect the related connectors for broken, bent, pushed out, spread, corroded, or contaminated terminals.
Perform BODY VERIFICATION TEST - VER 1. (Refer to BODY VERIFICATION TEST - VER 1).

2. CHECK PARK ASSIST SENSOR NO. 10 FOR A SHORT TO GROUND

Shift the transmission into park.
With the scan tool, erase DTCs.
Turn the ignition off.
Disconnect Park Assist Sensor No. 10.
Turn the ignition on.
Shift the transmission into reverse.
With the scan tool, read Park Assist Module DTCs.

Does the scan tool display: B123B-PTS SENSOR 10 CIRCUIT LOW?

Yes >> Go To 3

No >> Replace Park Assist Sensor No. 10 in accordance with the service information.
Perform BODY VERIFICATION TEST - VER 1. (Refer to BODY VERIFICATION TEST - VER 1).

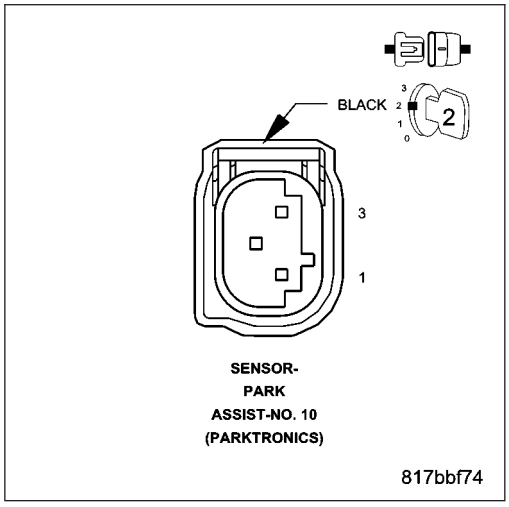

3. CHECK THE (D704) PARK ASSIST SENSOR NO. 10 SIGNAL CIRCUIT FOR A SHORT TO (X750) PARK ASSIST SENSOR GROUND CIRCUIT

Turn the ignition off.

Disconnect the Park Assist Module harness connector.

Measure the resistance between the (D704) Park Assist Sensor No. 10 Signal circuit and the (X750) Park Assist Sensor Ground circuit.

Is the resistance below 10K ohms?

Yes >> Repair the (D704) Park Assist Sensor No. 10 Signal circuit for a short to the (X750) Park Assist Sensor Ground circuit. Perform BODY VERIFICATION TEST - VER 1. (Refer to BODY VERIFICATION TEST - VER 1).

No >> Go To 4

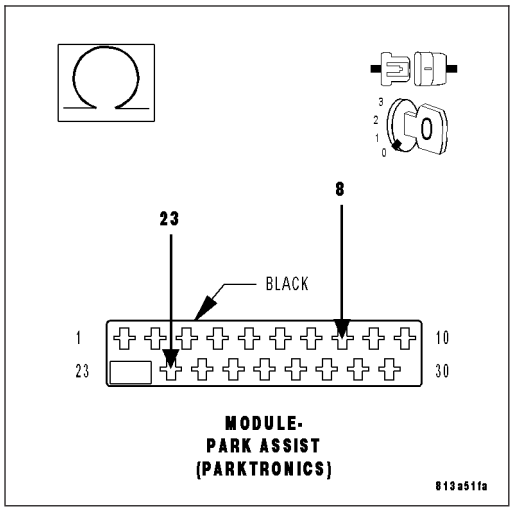

4. CHECK THE (D704) PARK ASSIST SENSOR NO. 10 SIGNAL CIRCUIT FOR A SHORT TO (Z171) PARK ASSIST DISPLAY GROUND CIRCUIT

Measure the resistance between the (D704) Park Assist Sensor No. 10 Signal circuit and the (Z171) Park Assist Display Ground circuit.

Is the resistance below 10K ohms?

Yes >> Repair the (D704) Park Assist Sensor No. 10 Signal circuit for a short to the (Z171) Park Assist Display Ground circuit. Perform BODY VERIFICATION TEST - VER 1. (Refer to BODY VERIFICATION TEST - VER 1).

No >> Go To 5

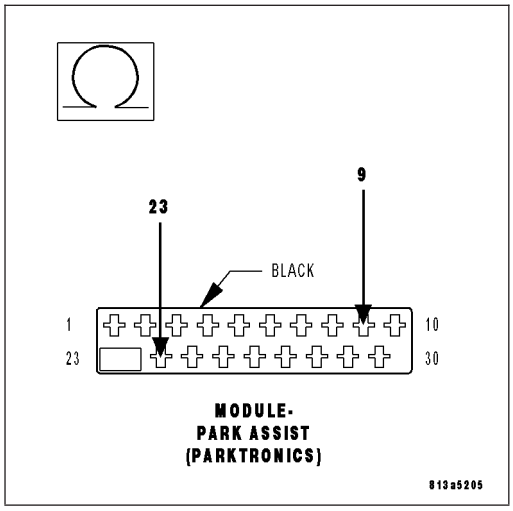

5. CHECK THE (D704) PARK ASSIST SENSOR NO. 10 SIGNAL CIRCUIT FOR A SHORT TO (Z914) PARK ASSIST MODULE GROUND CIRCUIT

Measure the resistance between the (D704) Park Assist Sensor No. 10 Signal circuit and the (Z914) Park Assist Module Ground circuit.

Is the resistance below 10K ohms?

Yes >> Repair the (D704) Park Assist Sensor No. 10 Signal circuit for a short to the (Z914) Park Assist Module Ground circuit.
Perform BODY VERIFICATION TEST - VER 1. (Refer to BODY VERIFICATION TEST - VER 1).

No >> Go To 6

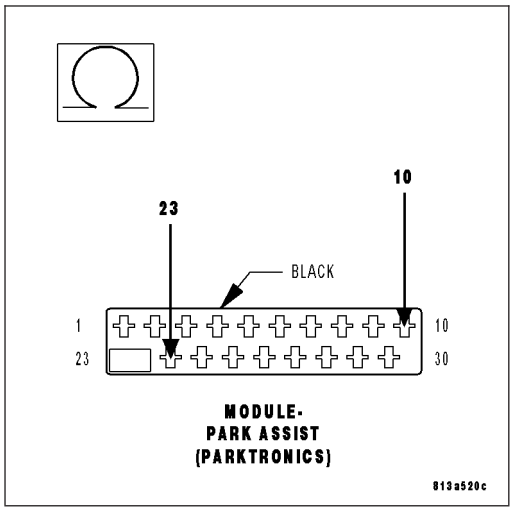

6. CHECK THE (D704) PARK ASSIST SENSOR NO. 10 SIGNAL CIRCUIT FOR A SHORT TO GROUND

Measure the resistance between ground and the (D704) Park Assist Sensor No. 10 Signal circuit and ground.

Is the resistance below 10K ohms?

Yes >> Repair the (D704) Park Assist Sensor No. 10 Signal circuit for a short to ground.
Perform BODY VERIFICATION TEST - VER 1. (Refer to BODY VERIFICATION TEST - VER 1).

No >> Replace the Park Assist Module in accordance with the service information.
Perform BODY VERIFICATION TEST - VER 1. (Refer to BODY VERIFICATION TEST - VER 1).

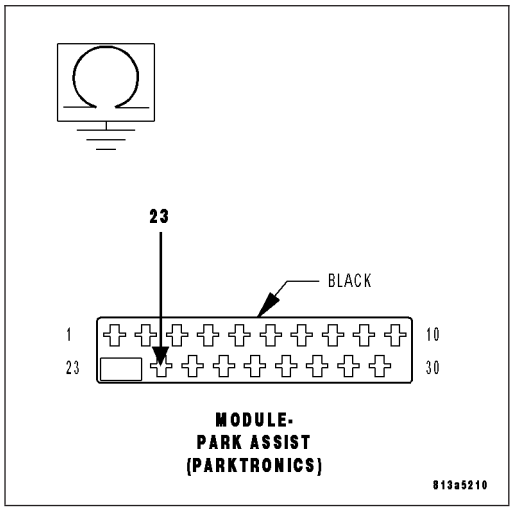

B123D-PTS SENSOR 10 RING TIME TOO SHORT

For a complete wiring diagram **Refer to Section 8W**.

- **When Monitored:**
  With the ignition on, transmission in reverse or neutral (Late build vehicles will disable the Park Assist System in neutral).
- **Set Condition:**
  Sensor ring down time exceeds limit (greater than 1450 µsecs).

Possible Causes
PARK ASSIST SENSOR NO. 10

Diagnostic Test

1. CHECK FOR ACTIVE DTC: B123D-PTS SENSOR 10 RING TIME TOO SHORT

Turn the ignition on.

Apply the vehicle park brake.

Shift the transmission into Reverse.

With the scan tool, record and erase Park Assist Module DTCs.

Wait 30 seconds.

With the scan tool, read Park Assist Module DTCs.

Is DTC: B123D-PTS SENSOR 10 RING TIME TOO SHORT active?

Yes >> Go To 2

No >> The condition that caused this code to set is not present at this time. Check for an intermittent condition by inspecting the related wiring harness for chaffed, pierced, pinched, and partially broken wires. Also inspect the related connectors for broken, bent, pushed out, spread, corroded, or contaminated terminals.

Perform BODY VERIFICATION TEST - VER 1. (Refer to BODY VERIFICATION TEST - VER 1).

2. REPLACE THE PARK ASSIST SENSOR N0. 10

View Repair

Repair

Replace Park Assist Sensor No. 10 in accordance with the service information.

Perform BODY VERIFICATION TEST - VER 1. (Refer to BODY VERIFICATION TEST - VER 1).

B123E-PTS SENSOR 10 RING TIME TOO LONG

For a complete wiring diagram **Refer to Section 8W**.

- **When Monitored:**
  With the ignition on, transmission in reverse or neutral (Late build vehicles will disable the Park Assist System in neutral).
- **Set Condition:**
  Data line stuck at 0.

Possible Causes
PARK ASSIST SENSOR NO. 10

Diagnostic Test

1. CHECK FOR ACTIVE DTC: B123E-PTS SENSOR 10 RING TIME TOO LONG

Turn the ignition on.

Apply the vehicle park brake.

Shift the transmission into reverse.

With the scan tool, record and erase Park Assist Module DTCs.

Wait 30 seconds.

With the scan tool, read Park Assist Module DTCs.

Is DTC B123E-PTS SENSOR 10 RING TIME TOO LONG active?

Yes >> Go To 2

No >> The condition that caused this code to set is not present at this time. Check for an intermittent condition by inspecting the related wiring harness for chaffed, pierced, pinched, and partially broken wires. Also inspect the related connectors for broken, bent, pushed out, spread, corroded, or contaminated terminals.

Perform BODY VERIFICATION TEST - VER 1. (Refer to BODY VERIFICATION TEST - VER 1).

2. REPLACE PARK ASSIST SENSOR NO. 10

View Repair

Repair

Replace Park Assist Sensor No. 10 in accordance with the service information.

Perform BODY VERIFICATION TEST - VER 1. (Refer to BODY VERIFICATION TEST - VER 1).

B210D-BATTERY VOLTAGE LOW

For a complete wiring diagram **Refer to Section 8W**.

- **When Monitored:**
  With the ignition on, transmission in reverse or neutral (Late build vehicles will disable the Park Assist System in neutral).
- **Set Condition:**
  Park Assist Module supply voltage less than 9.0 volts.

Possible Causes
VEHICLE CHARGING SYSTEM
PARK ASSIST MODULE

Diagnostic Test

1. CHECK FOR ACTIVE DTC: B210D-BATTERY VOLTAGE LOW

Turn the ignition on.

Apply the vehicle park brake.

Shift the transmission into reverse.

With the scan tool, record and erase Park Assist Module DTCs.

Wait 30 seconds.

With the scan tool, read Park Assist Module DTCs.

Is DTC: B210D-BATTERY VOLTAGE LOW active?

Yes >> Go To 2

No >> The condition that caused this code to set is not present at this time. Check for an intermittent condition by inspecting the related wiring harness for chaffed, pierced, pinched, and partially broken wires. Also inspect the related connectors for broken, bent, pushed out, spread, corroded, or contaminated terminals.
Perform BODY VERIFICATION TEST - VER 1. (Refer to BODY VERIFICATION TEST - VER 1).

2. VERIFY OPERATION OF THE VEHICLE CHARGING SYSTEM

NOTE: Troubleshoot any PCM charging/cranking DTCs before proceeding.

NOTE: Ensure the battery is fully charged.

Are any charging system DTCs present?

Yes >> (Refer to 9 - ENGINE - DIAGNOSIS AND TESTING) for the diagnostic test procedures.

No >> Replace the Park Assist Module in accordance with the service information.
Perform BODY VERIFICATION TEST - VER 1. (Refer to BODY VERIFICATION TEST - VER 1).

B210E-BATTERY VOLTAGE HIGH

For a complete wiring diagram **Refer to Section 8W**.

- **When Monitored:**
  With the ignition on, and the transmission in reverse or neutral (Late build vehicles will disable the Park Assist System in neutral).
- **Set Condition:**
  Park Assist Module supply voltage greater than 16.0 volts.

Possible Causes
VEHICLE CHARGING SYSTEM
PARK ASSIST MODULE

Diagnostic Test

1. CHECK FOR ACTIVE DTC: B210E-BATTERY VOLTAGE HIGH

Turn the ignition on.
Apply the vehicle park brake.
Shift the transmission into reverse.
With the scan tool, record and erase Park Assist Module DTCs.
Wait 30 seconds.
With the scan tool, read Park Assist Module DTCs.

Is DTC: B210E-BATTERY VOLTAGE HIGH active?

Yes >> Go To 2

No >> The condition that caused this code to set is not present at this time. Check for an intermittent condition by inspecting the related wiring harness for chaffed, pierced, pinched, and partially broken wires. Also inspect the related connectors for broken, bent, pushed out, spread, corroded, or contaminated terminals.
Perform BODY VERIFICATION TEST - VER 1. (Refer to BODY VERIFICATION TEST - VER 1).

2. VERIFY OPERATION OF THE VEHICLE CHARGING SYSTEM

NOTE: Troubleshoot any PCM charging/cranking DTCs before proceeding.

NOTE: Ensure the battery is fully charged.

Are any charging system DTCs present?

Yes >> (Refer to 9 - ENGINE - DIAGNOSIS AND TESTING) for the diagnostic test procedures.

No >> Replace the Park Assist Module in accordance with the service information.
Perform BODY VERIFICATION TEST - VER 1. (Refer to BODY VERIFICATION TEST - VER 1).

B2126-SENSOR SUPPLY VOLTAGE LOW

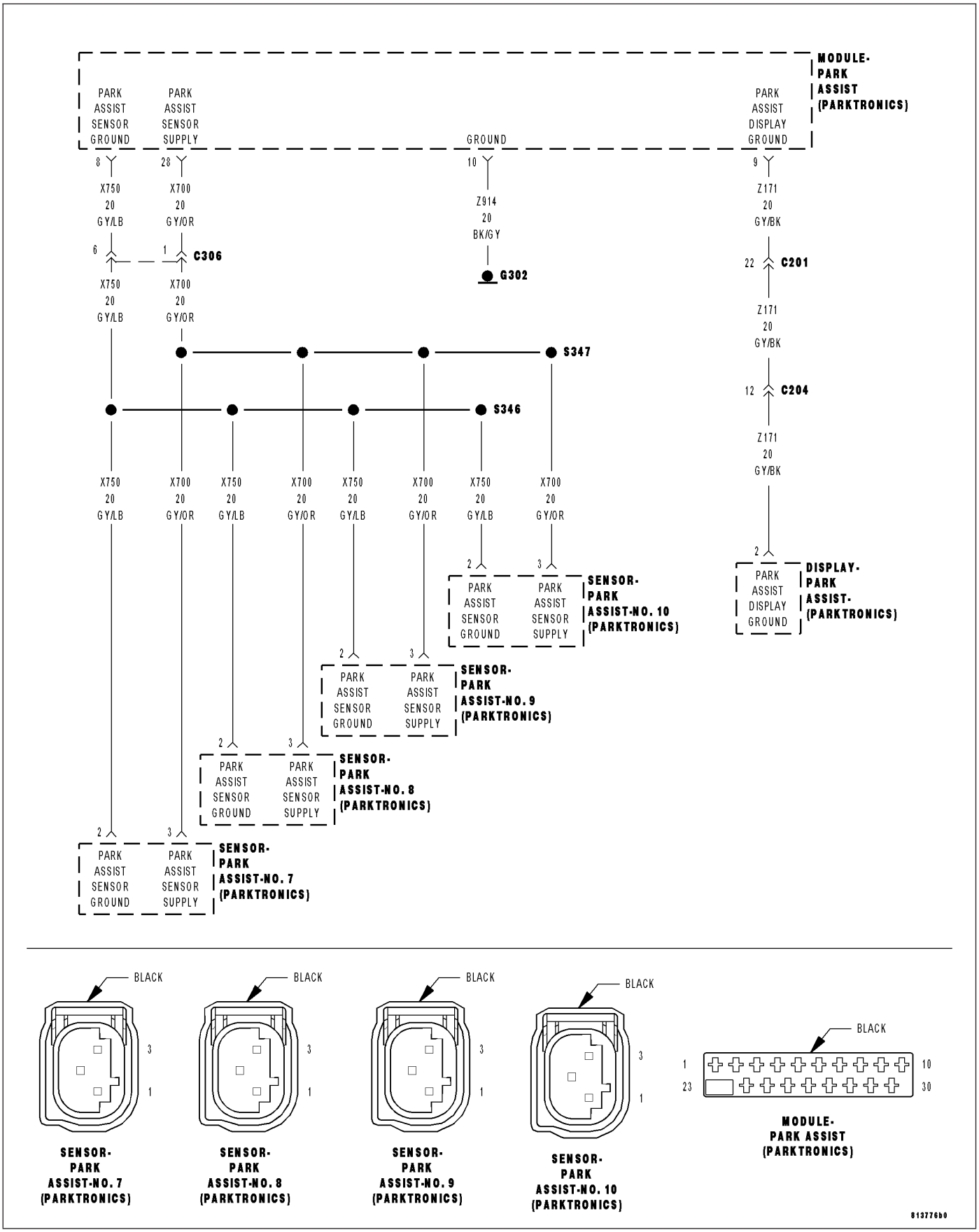

For a complete wiring diagram **Refer to Section 8W**.

- **When Monitored:**
  With the ignition in Run/Start, and the PRNDL in R, N, or D (Late build vehicles will disable the Park Assist System in neutral).
- **Set Condition:**
  Park assist Sensor supply voltage less than 7.2 volts.

Possible Causes
(X700) PARK ASSIST SENSOR SUPPLY CIRCUIT SHORTED TO (X750) PARK ASSIST SENSOR GROUND CIRCUIT
(X700) PARK ASSIST SENSOR SUPPLY CIRCUIT SHORTED TO (Z171) PARK ASSIST DISPLAY GROUND CIRCUIT
(X700) PARK ASSIST SENSOR SUPPLY CIRCUIT SHORTED TO (Z914) PARK ASSIST MODULE GROUND CIRCUIT
(X700) PARK ASSIST SENSOR SUPPLY CIRCUIT SHORTED TO GROUND
PARK ASSIST SENSOR
PARK ASSIST MODULE

Diagnostic Test

1. CHECK FOR AN ACTIVE DTC

Turn the ignition on.
Apply the park brake.
Shift the transmission into Reverse.
With the scan tool, record and erase DTCs.
Wait 30 seconds.
With the scan tool, read DTCs.

Is the DTC active?

Yes >> Go To 2

No >> The condition that caused this code to set is not present at this time. Check for an intermittent condition by inspecting the related wiring harness for chaffed, pierced, pinched, and partially broken wires. Also inspect the related connectors for broken, bent, pushed out, spread, corroded, or contaminated terminals.
Perform BODY VERIFICATION TEST - VER 1. (Refer to BODY VERIFICATION TEST - VER 1).

2. CHECK EACH PARK ASSIST SENSOR FOR A SHORT TO GROUND

Turn the ignition off.

Disconnect one Park Assist Sensor.

Turn the ignition on.

With the scan tool, read Park Assist Module DTCs. If DTC B2126 is still active, repeat this procedure by disconnecting another park assist sensor. However, if DTC B2126 changes from active to stored, or if all four sensors have been disconnected, proceed as follows:

Is B2126-SENSOR SUPPLY VOLTAGE LOW still active?

Yes >> Go To 3

No >> Replace the Park Assist Sensor that caused DTC B2126 to change from active to stored after disconnecting it in accordance with the service information.

Perform BODY VERIFICATION TEST - VER 1. (Refer to BODY VERIFICATION TEST - VER 1).

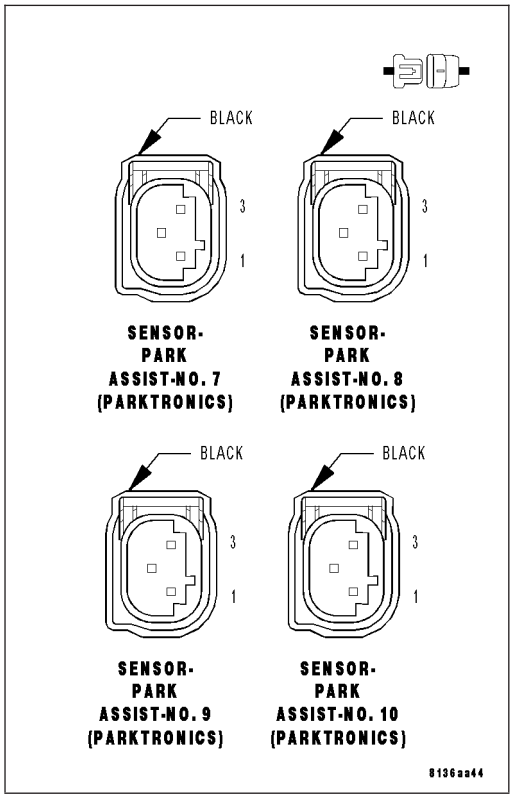

3. CHECK THE (X700) PARK ASSIST SENSOR SUPPLY CIRCUIT FOR A SHORT TO (X750) PARK ASSIST SENSOR GROUND CIRCUIT

NOTE: Perform this test with all Park Assist Sensors disconnected.

Turn the ignition off.

Disconnect the Park Assist Module harness connector.

Measure the resistance between the (X700) Park Assist Sensor Supply circuit and the (X750) Park Assist Sensor Ground circuit.

Is the resistance below 10K ohms?

Yes >> Repair the (X700) Park Assist Sensor Supply circuit for a short to the (X750) Park Assist Sensor Ground circuit.

Perform BODY VERIFICATION TEST - VER 1. (Refer to BODY VERIFICATION TEST - VER 1).

No >> Go To 4

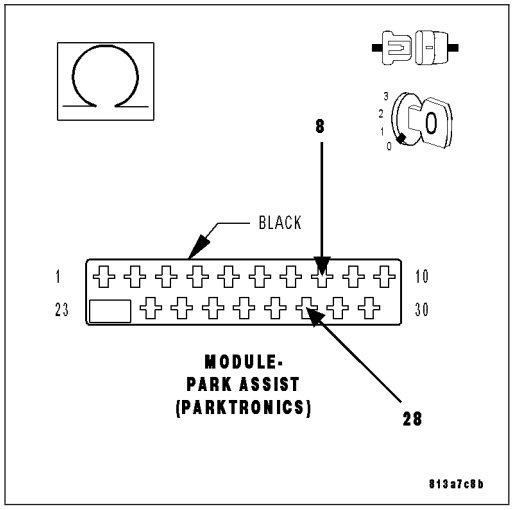

4. CHECK THE (X700) PARK ASSIST SENSOR SUPPLY CIRCUIT FOR A SHORT TO (Z171) PARK ASSIST DISPLAY GROUND CIRCUIT

NOTE: Perform this test with all Park Assist Sensors disconnected.
Measure the resistance between the (X700) Park Assist Sensor Supply circuit and the (Z171) Park Assist Display Ground circuit.

Is the resistance below 10K ohms?

Yes >> Repair the (X700) Park Assist Sensor Supply circuit for a short to the (Z171) Park Assist Display Ground circuit.
Perform BODY VERIFICATION TEST - VER 1. (Refer to BODY VERIFICATION TEST - VER 1).

No >> Go To 5

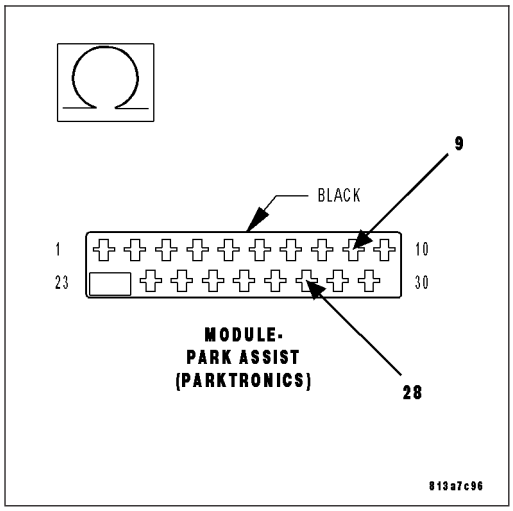

5. CHECK THE (X700) PARK ASSIST SENSOR SUPPLY CIRCUIT FOR A SHORT TO (Z914) PARK ASSIST MODULE GROUND CIRCUIT

NOTE: Perform this test with all Park Assist Sensors disconnected.
Measure the resistance between the (X700) Park Assist Sensor Supply circuit and the (Z914) Park Assist Module Ground circuit.

Is the resistance below 10K ohms?

Yes >> Repair the (X700) Park Assist Sensor Supply circuit for a short to the (Z914) Park Assist Module Ground circuit.
Perform BODY VERIFICATION TEST - VER 1. (Refer to BODY VERIFICATION TEST - VER 1).

No >> Go To 6

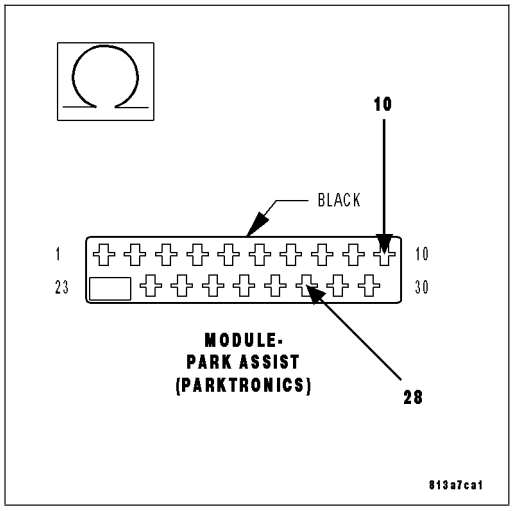

6. CHECK THE (X700) PARK ASSIST SENSOR SUPPLY CIRCUIT FOR A SHORT TO GROUND

NOTE: Perform this test with all Park Assist Sensors disconnected.
Measure the resistance between ground and the (X700) Park Assist Sensor Supply circuit.

Is the resistance below 10K ohms?

Yes >> Repair the (X700) Park Assist Sensor Supply circuit for a short to ground.
Perform BODY VERIFICATION TEST - VER 1. (Refer to BODY VERIFICATION TEST - VER 1).

No >> Replace the Park Assist Module in accordance with the service information.
Perform BODY VERIFICATION TEST - VER 1. (Refer to BODY VERIFICATION TEST - VER 1).

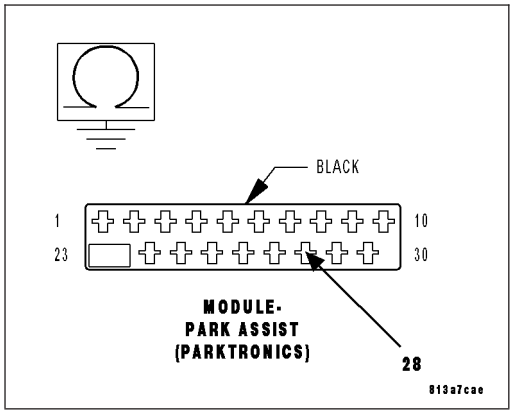

B2127-SENSOR SUPPLY VOLTAGE HIGH

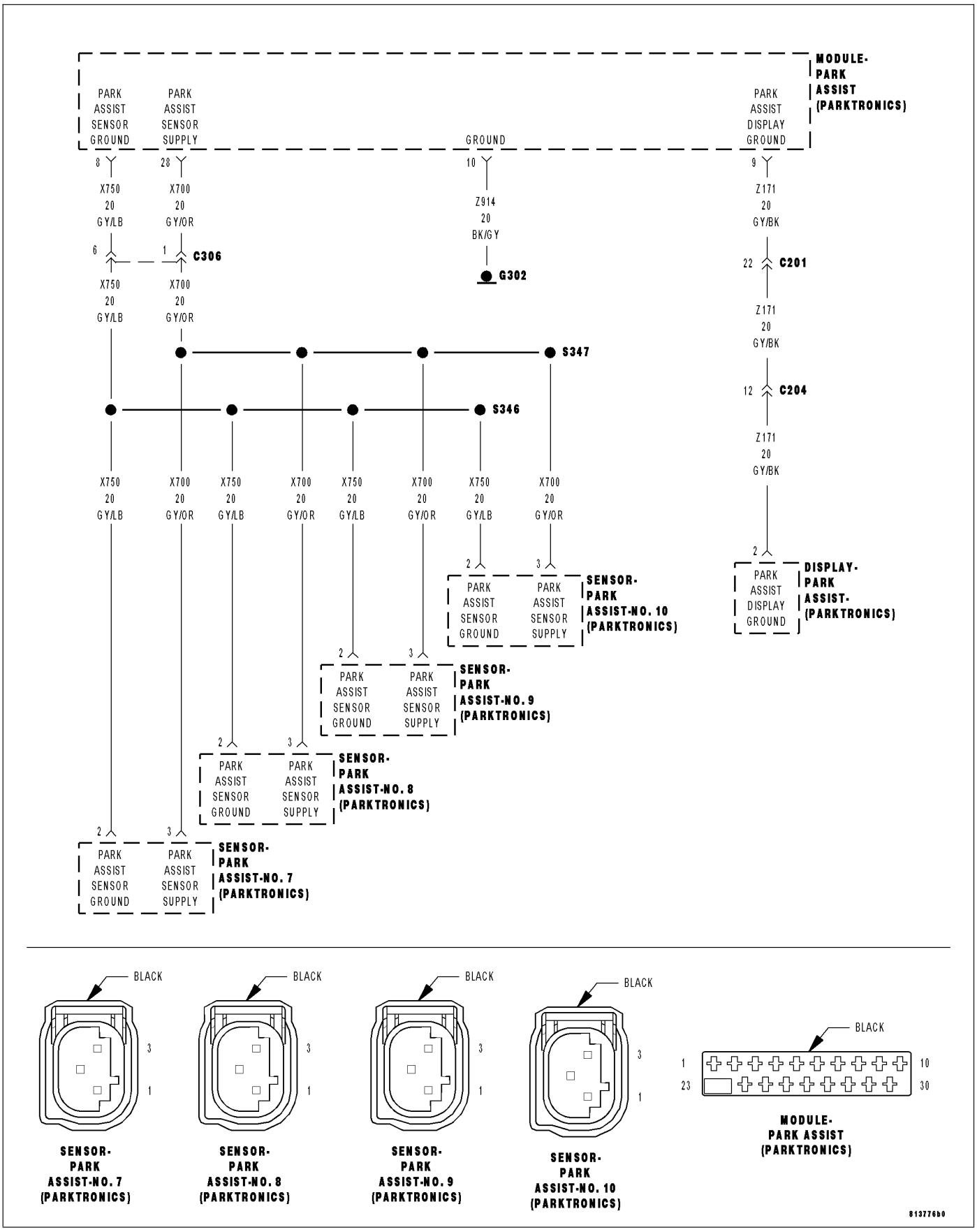

For a complete wiring diagram **Refer to Section 8W**.

- **When Monitored:**
  With the ignition in Run/Start, PRNDL in R, N, or D; vehicle speed less than 40 mph (Late build vehicles will disable the Park Assist System in neutral).
- **Set Condition:**
  Park Assist Sensor supply voltage greater than 9.2 volts.

Possible Causes
(X700) PARK ASSIST SENSOR SUPPLY CIRCUIT SHORT TO VOLTAGE
PARK ASSIST MODULE

Diagnostic Test

1. CHECK FOR ACTIVE DTC: B2127-SENSOR SUPPLY VOLTAGE HIGH

Turn the ignition on.
Apply the vehicle park brake.
Shift the transmission into Reverse.
With the scan tool, record and erase Park Assist Module DTCs.
Wait 30 seconds.
With the scan tool, read Park Assist Module DTCs.

Is DTC: B2127-SENSOR SUPPLY VOLTAGE HIGH active?

Yes >> Go To 2

No >> The condition that caused this code to set is not present at this time. Check for an intermittent condition by inspecting the related wiring harness for chaffed, pierced, pinched, and partially broken wires. Also inspect the related connectors for broken, bent, pushed out, spread, corroded, or contaminated terminals.
Perform BODY VERIFICATION TEST - VER 1. (Refer to BODY VERIFICATION TEST - VER 1).

2. CHECK THE (X700) PARK ASSIST SENSOR SUPPLY CIRCUIT FOR A SHORT TO VOLTAGE

Turn the ignition off.
Disconnect the Park Assist Module harness connector.
Turn the ignition on.
Measure the voltage on the (X700) Park Assist Sensor Supply circuit.

Is the voltage above 9.2 volts?

Yes >> Repair the (X700) Park Assist Sensor Supply circuit for a short to voltage.
Perform BODY VERIFICATION TEST - VER 1. (Refer to BODY VERIFICATION TEST - VER 1).

No >> Replace the Park Assist Module in accordance with the service information.
Perform BODY VERIFICATION TEST - VER 1. (Refer to BODY VERIFICATION TEST - VER 1).

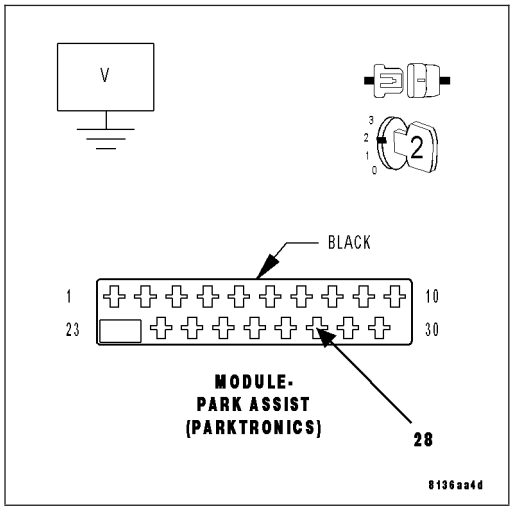

B212A-PTS DISPLAY SUPPLY VOLTAGE LOW

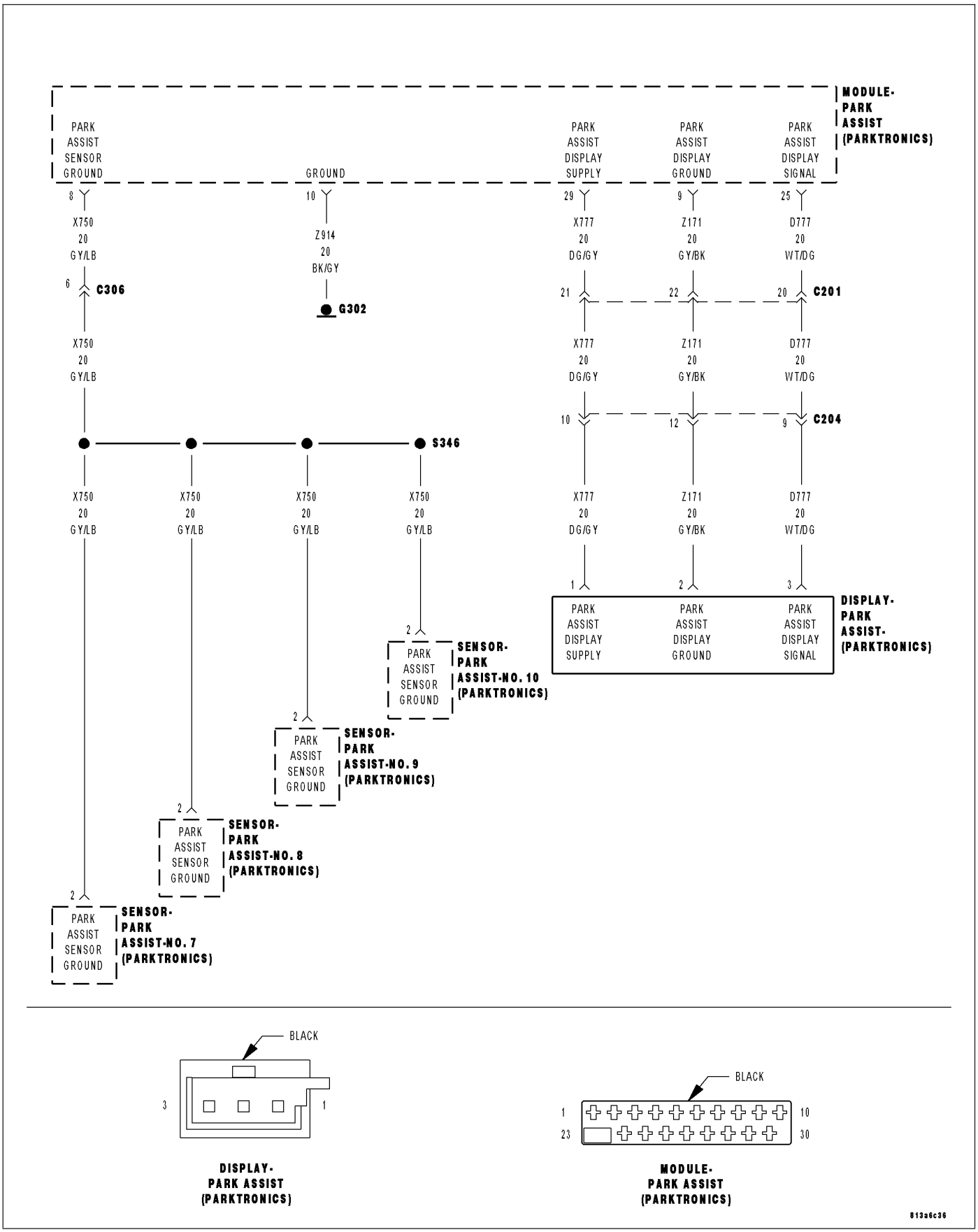

For a complete wiring diagram **Refer to Section 8W**.

- **When Monitored:**
  With the ignition in Run/Start, PRNDL in R, N, or D; vehicle speed less than 40 mph (Late build vehicles will disable the Park Assist System in neutral).
- **Set Condition:**
  Park Assist Sensor Display voltage less than 8.0 volts.

Possible Causes
(X777) PARK ASSIST DISPLAY SUPPLY CIRCUIT SHORT TO GROUND
(X777) PARK ASSIST DISPLAY SUPPLY CIRCUIT SHORT TO (Z171) PARK ASSIST DISPLAY GROUND CIRCUIT
(X777) PARK ASSIST DISPLAY SUPPLY CIRCUIT SHORT TO (Z914) PARK ASSIST MODULE GROUND CIRCUIT
(X777) PARK ASSIST DISPLAY SUPPLY CIRCUIT SHORT TO (X750) PARK ASSIST SENSOR GROUND CIRCUIT
PARK ASSIST DISPLAY
PARK ASSIST MODULE

Diagnostic Test

1. CHECK FOR ACTIVE DTC: B212A-PTS DISPLAY SUPPLY VOLTAGE LOW

Turn the ignition on.
Apply the vehicle park brake.
Shift the transmission into Reverse.
With the scan tool, record and erase Park Assist Module DTCs.
Wait 30 seconds.
With the scan tool, read Park Assist Module DTCs.

Is DTC: B212A-PTS DISPLAY SUPPLY VOLTAGE LOW active?

Yes >> Go To 2

No >> The condition that caused this code to set is not present at this time. Check for an intermittent condition by inspecting the related wiring harness for chaffed, pierced, pinched, and partially broken wires. Also inspect the related connectors for broken, bent, pushed out, spread, corroded, or contaminated terminals.
Perform BODY VERIFICATION TEST - VER 1. (Refer to BODY VERIFICATION TEST - VER 1).

2. CHECK PARK ASSIST MODULE FOR AN INTERNAL SHORT TO GROUND

Turn the ignition off.
Disconnect the Park Assist Module harness connector.
Measure the resistance between ground and the (X777) Park Assist Display Supply circuit.

Is the resistance below 10K ohms?

Yes >> Go To 3

No >> Replace the Park Assist Module in accordance with the service information.
Perform BODY VERIFICATION TEST - VER 1. (Refer to BODY VERIFICATION TEST - VER 1).

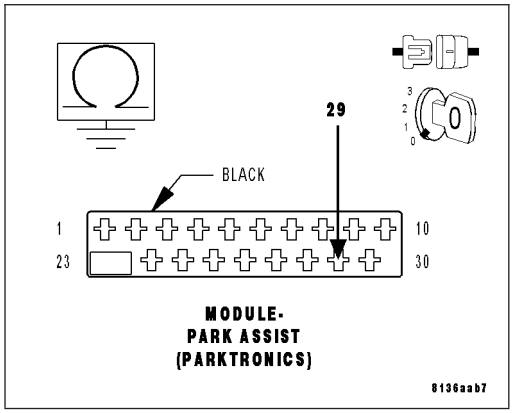

3. CHECK THE (X777) PARK ASSIST DISPLAY SUPPLY CIRCUIT FOR A SHORT TO THE (Z171) PARK ASSIST DISPLAY GROUND CIRCUIT

Disconnect the Park Assist Display harness connector.

Measure the resistance between the (X777) Park Assist Display Supply circuit and the (Z171) Park Assist Display Ground circuit.

Is the resistance below 10K ohms?

Yes >> Repair the (X777) Park Assist Display Supply circuit for a short to the (Z171) Park Assist Display Ground circuit.
Perform BODY VERIFICATION TEST - VER 1. (Refer to BODY VERIFICATION TEST - VER 1).

No >> Go To 4

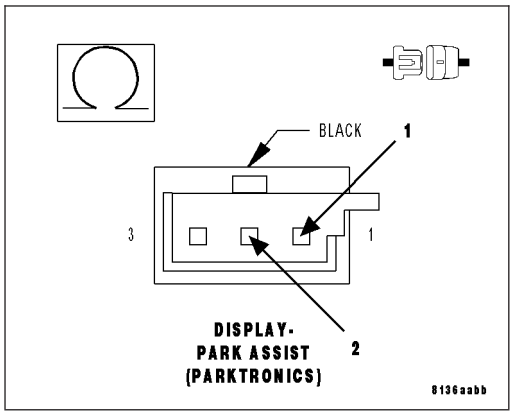

4. CHECK THE (X777) PARK ASSIST DISPLAY SUPPLY CIRCUIT FOR A SHORT TO THE (Z914) PARK ASSIST MODULE GROUND CIRCUIT

Measure the resistance between the (X777) Park Assist Display Supply circuit and the (Z914) Park Assist Module Ground circuit.

Is the resistance below 10K ohms?

Yes >> Repair the (X777) Park Assist Display Supply circuit for a short to the (Z914) Park Assist Module Ground circuit.
Perform BODY VERIFICATION TEST - VER 1. (Refer to BODY VERIFICATION TEST - VER 1).

No >> Go To 5

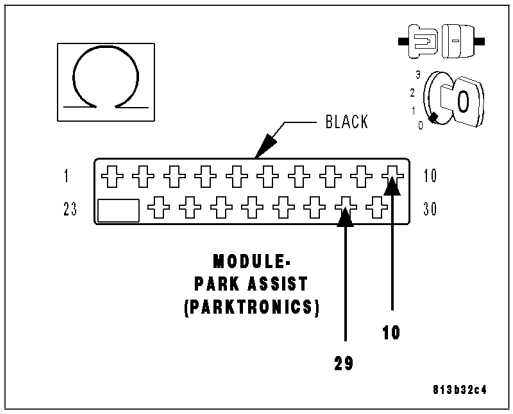

5. CHECK THE (X777) PARK ASSIST DISPLAY SUPPLY CIRCUIT FOR A SHORT TO THE (X750) PARK ASSIST SENSOR GROUND CIRCUIT

Measure the resistance between the (X777) Park Assist Display Supply circuit and the (X750) Park Assist Sensor Ground circuit.

Is the resistance below 10K ohms?

Yes >> Repair the (X777) Park Assist Display Supply circuit for a short to the (X750) Park Assist Sensor Ground circuit.
Perform BODY VERIFICATION TEST - VER 1. (Refer to BODY VERIFICATION TEST - VER 1).

No >> Go To 6

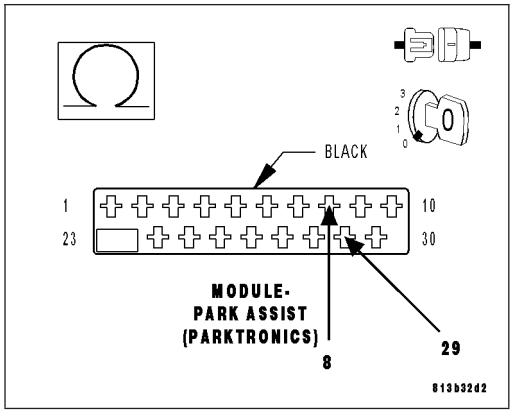

6. CHECK THE (X777) PARK ASSIST DISPLAY SUPPLY CIRCUIT FOR A SHORT TO GROUND

Measure the resistance between ground and the (X777) Park Assist Display Supply circuit.

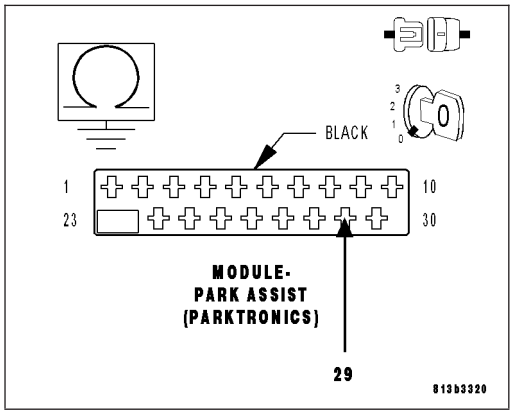

Is the resistance below 10K ohms?

Yes >> Repair the (X777) Park Assist Display Supply circuit for a short to ground.

Perform BODY VERIFICATION TEST - VER 1. (Refer to BODY VERIFICATION TEST - VER 1).

No >> Replace the Park Assist Display in accordance with the service information.

Perform BODY VERIFICATION TEST - VER 1. (Refer to BODY VERIFICATION TEST - VER 1).

B222A-VEHICLE LINE MISMATCH

For a complete wiring diagram **Refer to Section 8W**.

- **When Monitored:**
  With the ignition on.
- **Set Condition:**
  If the Vehicle Line data transmitted on the CAN B bus doesn't correspond with the data stored in the Park Assist Module.

Possible Causes
PARK ASSIST MODULE

Diagnostic Test

1. CHECK VEHICLE LINE IN THE PCM

With the scan tool, compare the vehicle line that is programmed in to the PCM to the vehicle line of the vehicle.

Does the vehicle line programmed into the PCM match the vehicle?

Yes >> Replace the Park Assist Module in accordance with the service information.
Perform BODY VERIFICATION TEST - VER 1. (Refer to BODY VERIFICATION TEST - VER 1).

No >> The condition that caused this code to set is not present at this time. Check for an intermittent condition by inspecting the related wiring harness for chaffed, pierced, pinched, and partially broken wires. Also inspect the related connectors for broken, bent, pushed out, spread, corroded, or contaminated terminals.
Perform (NGC) POWERTRAIN VERIFICATION TEST VER 5. (Refer to 9 - ENGINE - DIAGNOSIS AND TESTING)

B2232-(PTS) PARKTRONICS INTERNAL

For a complete wiring diagram **Refer to Section 8W**.

- **When Monitored:**
  With the ignition on.
- **Set Condition:**
  The Park Assist Module detects an internal failure.

Possible Causes
PARK ASSIST MODULE

Diagnostic Test

1. REPLACE THE PARK ASSIST MODULE

View Repair

Repair

Replace the Park Assist Module in accordance with the Service Information.
Perform BODY VERIFICATION TEST - VER 1. (Refer to BODY VERIFICATION TEST - VER 1).

B2234-(PTS) PARKTRONICS REAR DISPLAY INTERNAL

For a complete wiring diagram **Refer to Section 8W**.

- **When Monitored:**
  With the ignition in Run/Start, PRNDL in R, N, or D; vehicle speed less than 40 mph (Late build vehicles will disable the Park Assist System in neutral).
- **Set Condition:**
  The Park Assist Module detects an internal Park Assist Display failure.

Possible Causes
PARK ASSIST DISPLAY

Diagnostic Test

1. REPLACE THE PARK ASSIST DISPLAY

View Repair

Repair

Replace the Park Assist Display in accordance with the Service Information.
Perform BODY VERIFICATION TEST - VER 1. (Refer to BODY VERIFICATION TEST - VER 1).

U0423-IMPLAUSIBLE DATA RECEIVED FROM CLUSTER/CCN

For a complete wiring diagram **Refer to Section 8W**.

- **When Monitored:**
  Park Assist Module supply voltage between 9–16 volts. Ignition in Run/Start.
- **Set Condition:**
  Ignition status = 7h

Possible Causes
NO COMMUNICATION WITH INSTRUMENT CLUSTER
DTCS STORED OR ACTIVE IN THE INSTRUMENT CLUSTER
ACTIVE DTCS IN THE FCM
PARK ASSIST MODULE

Diagnostic Test

1. CHECK FOR ACTIVE DTC: U0423-IMPLAUSIBLE DATA RECEIVED FROM CLUSTER/CCN

Turn the ignition on.

With the scan tool, record and erase Park Assist Module DTCs.

Wait 30 seconds.

With the scan tool, read Park Assist Module DTCs.

Is DTC: U0423-IMPLAUSIBLE DATA RECEIVED FROM CLUSTER/CCN active?

Yes >> Go To 2

No >> The condition that caused this code to set is not present at this time. Check for an intermittent condition by inspecting the related wiring harness for chaffed, pierced, pinched, and partially broken wires. Also inspect the related connectors for broken, bent, pushed out, spread, corroded, or contaminated terminals.

Perform BODY VERIFICATION TEST - VER 1. (Refer to BODY VERIFICATION TEST - VER 1).

2. INSTRUMENT CLUSTER IS ACTIVE ON THE CAN B BUS

With the scan tool, select ECU View.

Verify that the Instrument Cluster is active on the bus.

Is the Instrument Cluster active on the bus?

Yes >> Go To 3

No >> (Refer to 8 - ELECTRICAL/ELECTRONIC CONTROL MODULES - DIAGNOSIS AND TESTING) for No Response diagnostic procedures.

Perform BODY VERIFICATION TEST - VER 1. (Refer to BODY VERIFICATION TEST - VER 1).

3. DTCS STORED OR ACTIVE IN THE INSTRUMENT CLUSTER

Check for Ignition Switch DTCs in the Instrument Cluster.

Are any DTCs active or stored in the Instrument Cluster?

Yes >> Refer to the appropriate section and perform the diagnostics for the DTCs.

Perform BODY VERIFICATION TEST - VER 1. (Refer to BODY VERIFICATION TEST - VER 1).

No >> Go to 4

4. ACTIVE DTCS IN THE FCM

With the scan tool, select ECU View and select FCM.
With the scan tool, read active DTCs.

Are any Communication DTCs active in the FCM Park Assist System?

Yes >> Refer to the appropriate section and perform the diagnostics for the DTCs.
Perform BODY VERIFICATION TEST - VER 1. (Refer to BODY VERIFICATION TEST - VER 1).

No >> Replace and program the Park Assist Module in accordance with the Service Information.
Perform BODY VERIFICATION TEST - VER 1. (Refer to BODY VERIFICATION TEST - VER 1).

U0431-IMPLAUSIBLE DATA RECEIVED FROM FCM

For a complete wiring diagram **Refer to Section 8W**.

- **When Monitored:**
  Park Assist Module supply voltage between 9–16 volts. Ignition in Run/Start.
- **Set Condition:**
  PRNDL = 7h, or vehicle speed greater than 511 km/hr.

Possible Causes
CAN B OPEN OR SHORTED
FRONT CONTROL MODULE
PARK ASSIST MODULE

Diagnostic Test

1. U0431-IMPLAUSIBLE DATA RECEIVED FROM FCM

Turn the ignition on.

With the scan tool, record and erase Park Assist Module DTCs.

Wait 30 seconds.

With the scan tool, read Park Assist Module DTCs.

Is DTC: U0423-IMPLAUSIBLE DATA RECEIVED FROM CLUSTER/CCN active?

Yes >> Go To 2

No >> The condition that caused this code to set is not present at this time. Check for an intermittent condition by inspecting the related wiring harness for chaffed, pierced, pinched, and partially broken wires. Also inspect the related connectors for broken, bent, pushed out, spread, corroded, or contaminated terminals.

Perform BODY VERIFICATION TEST - VER 1. (Refer to BODY VERIFICATION TEST - VER 1).

2. U0019-NO COMMUNICATION ON THE CAN B BUS CIRCUIT ALSO ACTIVE

With a scan tool check for DTCs in the FCM.

Is the U0019-NO COMMUNICATION ON THE CAN B BUS CIRCUIT active at this time?

Yes >> Refer to 8 - ELECTRICAL/ELECTRONIC CONTROL MODULES - DIAGNOSIS AND TESTING for the U0019-NO COMMUNICATION ON THE CAN B BUS CIRCUIT diagnostic procedures.

Perform BODY VERIFICATION TEST - VER 1. (Refer to BODY VERIFICATION TEST - VER 1).

No >> Replace and program the Park Assist Module according to the Service Information.

Perform BODY VERIFICATION TEST - VER 1. (Refer to BODY VERIFICATION TEST - VER 1).

U1002-PTS DISPLAY COMMUNICATION CIRCUIT LOW

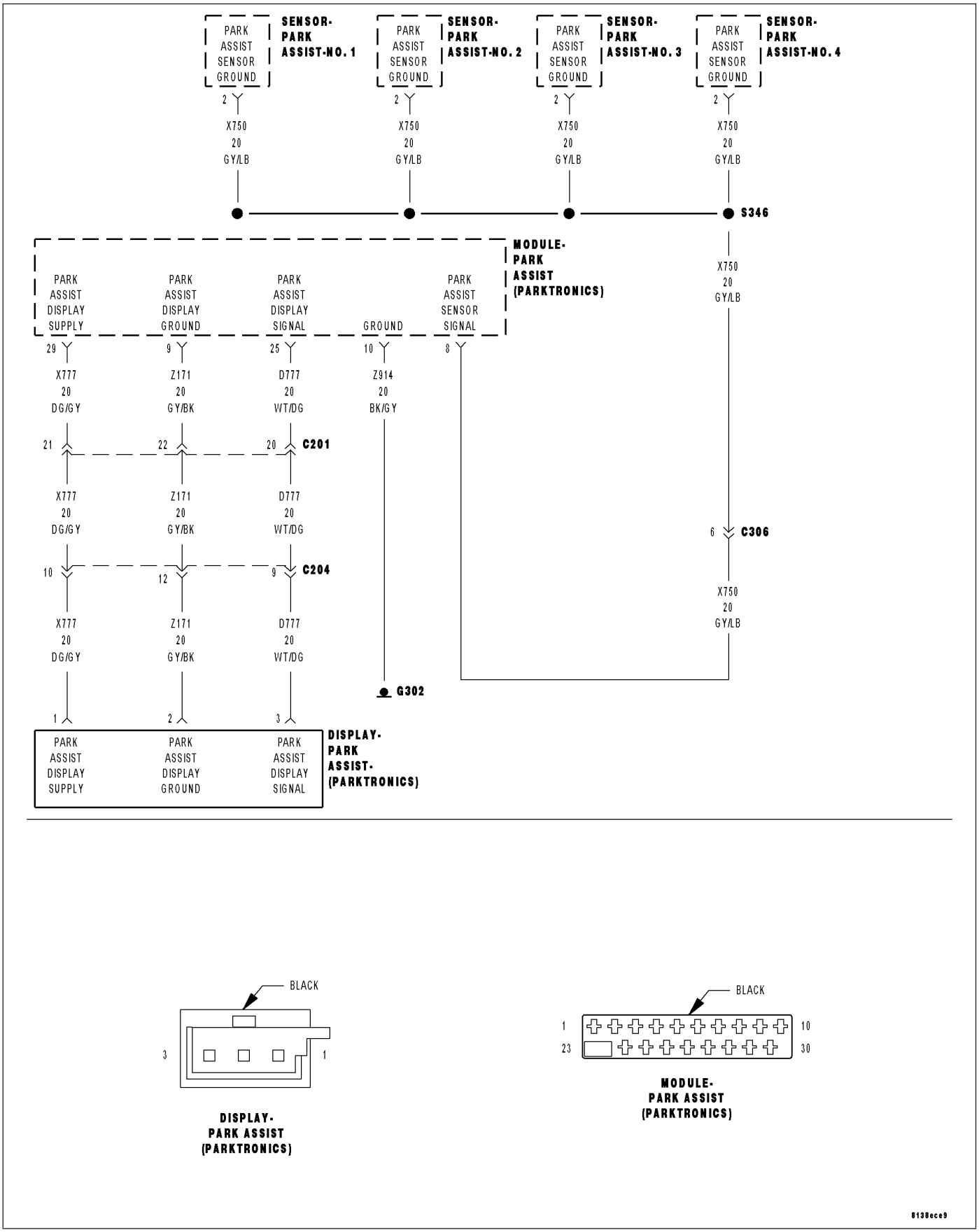

For a complete wiring diagram **Refer to Section 8W**.

- **When Monitored:**
  With the ignition in Run/Start, PRNDL in R, N, or D; vehicle speed less than 40 mph (Late build vehicles will disable the Park Assist System in neutral).
- **Set Condition:**
  Display data line low.

Possible Causes
(D777) PARK ASSIST DISPLAY SIGNAL CIRCUIT SHORT TO THE (Z171) PARK ASSIST DISPLAY GROUND CIRCUIT
(D777) PARK ASSIST DISPLAY SIGNAL CIRCUIT SHORT TO THE (X750) PARK ASSIST SENSOR GROUND CIRCUIT
(D777) PARK ASSIST DISPLAY SIGNAL CIRCUIT SHORT TO THE (Z914) PARK ASSIST MODULE GROUND CIRCUIT
(D777) PARK ASSIST DISPLAY SIGNAL CIRCUIT SHORT TO GROUND
PARK ASSIST DISPLAY
PARK ASSIST MODULE

Diagnostic Test

1. CHECK FOR ACTIVE DTC: U1002-PTS DISPLAY COMMUNICATION CIRCUIT LOW

Turn the ignition on.
Apply the vehicle park brake.
Shift the transmission into reverse.
With the scan tool, record and erase Park Assist Module DTCs.
Wait 30 seconds.
With the scan tool, read Park Assist Module DTCs.

Is DTC: U1002-PTS DISPLAY COMMUNICATION CIRCUIT LOW active?

Yes >> Go To 2

No >> The condition that caused this code to set is not present at this time. Check for an intermittent condition by inspecting the related wiring harness for chaffed, pierced, pinched, and partially broken wires. Also inspect the related connectors for broken, bent, pushed out, spread, corroded, or contaminated terminals.
Perform BODY VERIFICATION TEST - VER 1. (Refer to BODY VERIFICATION TEST - VER 1).

2. CHECK PARK ASSIST MODULE FOR AN INTERNAL SHORT TO GROUND

Turn the ignition off.
Disconnect the Park Assist Module harness connector.
Measure the resistance between ground and the (D777) Park Assist Display Signal circuit.

Is the resistance below 10K ohms?

Yes >> Go To 3

No >> Replace the Park Assist Module in accordance with the service information.
Perform BODY VERIFICATION TEST - VER 1. (Refer to BODY VERIFICATION TEST - VER 1).

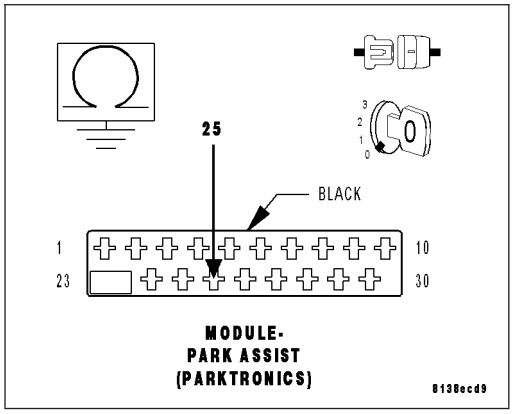

3. CHECK THE (D777) PARK ASSIST DISPLAY SIGNAL CIRCUIT FOR A SHORT TO THE (Z171) PARK ASSIST DISPLAY GROUND CIRCUIT

Disconnect the Park Assist Display harness connector.

Measure the resistance between the (D777) Park Assist Display Signal circuit and the (Z171) Park Assist Display Ground circuit.

Is the resistance below 10K ohms?

Yes >> Repair the (D777) Park Assist Display Signal circuit for a short to the (Z171) Park Assist Display Ground circuit.
Perform BODY VERIFICATION TEST - VER 1. (Refer to BODY VERIFICATION TEST - VER 1).

No >> Go To 4

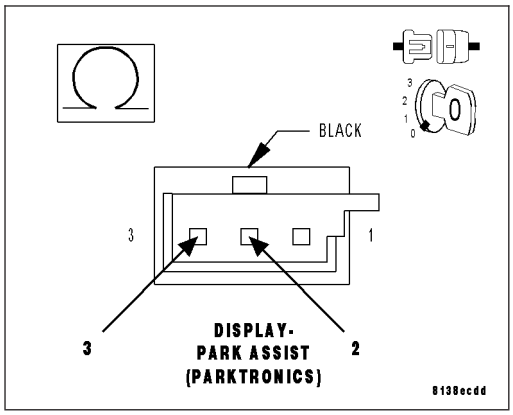

4. CHECK THE (D777) PARK ASSIST DISPLAY SIGNAL CIRCUIT FOR A SHORT TO THE (X750) PARK ASSIST SENSOR GROUND CIRCUIT

Measure the resistance between the (D777) Park Assist Display Signal circuit and the (X750) Park Assist Sensor Ground circuit.

Is the resistance below 10K ohms?

Yes >> Repair the (D777) Park Assist Display Signal circuit for a short to the (X750) Park Assist Sensor Ground circuit.
Perform BODY VERIFICATION TEST - VER 1. (Refer to BODY VERIFICATION TEST - VER 1).

No >> Go To 5

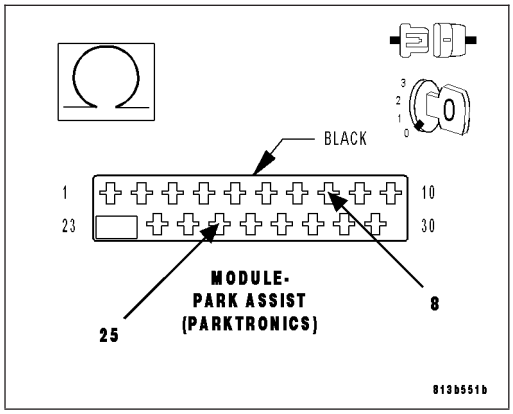

5. CHECK THE (D777) PARK ASSIST DISPLAY SIGNAL CIRCUIT FOR A SHORT TO THE (Z914) PARK ASSIST MODULE GROUND CIRCUIT

Measure the resistance between the (D777) Park Assist Display Signal circuit and the (Z914) Park Assist Module Ground circuit.

Is the resistance below 10K ohms?

Yes >> Repair the (D777) Park Assist Display Signal circuit for a short to the(Z914) Park Assist Module Ground circuit.
Perform BODY VERIFICATION TEST - VER 1. (Refer to BODY VERIFICATION TEST - VER 1).

No >> Go To 6

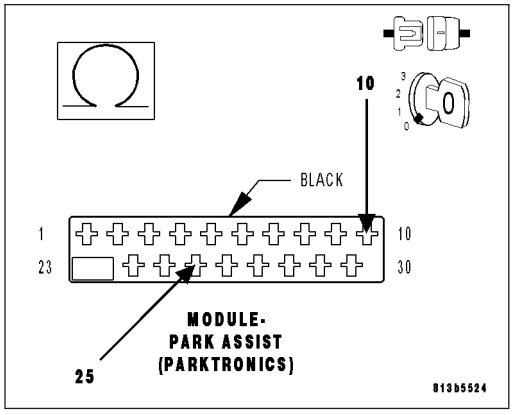

6. CHECK THE (D777) PARK ASSIST DISPLAY SIGNAL CIRCUIT FOR A SHORT TO GROUND

Measure the resistance between ground and the (D777) Park Assist Display Signal circuit.

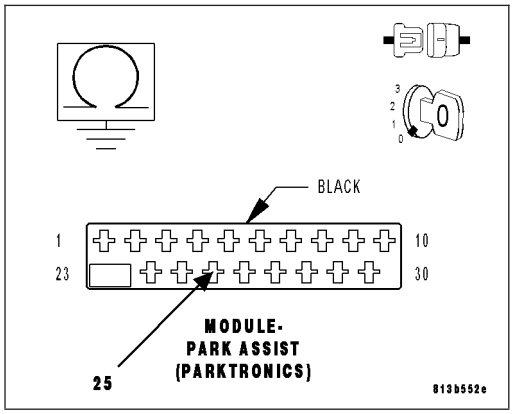

Is the resistance below 10K ohms?

Yes >> Repair the (D777) Park Assist Display Signal circuit for a short to ground.

Perform BODY VERIFICATION TEST - VER 1. (Refer to BODY VERIFICATION TEST - VER 1).

No >> Replace the Park Assist Display in accordance with the service information.

Perform BODY VERIFICATION TEST - VER 1. (Refer to BODY VERIFICATION TEST - VER 1).

U1101-LOST COMMUNICATION WITH PTS DISPLAY

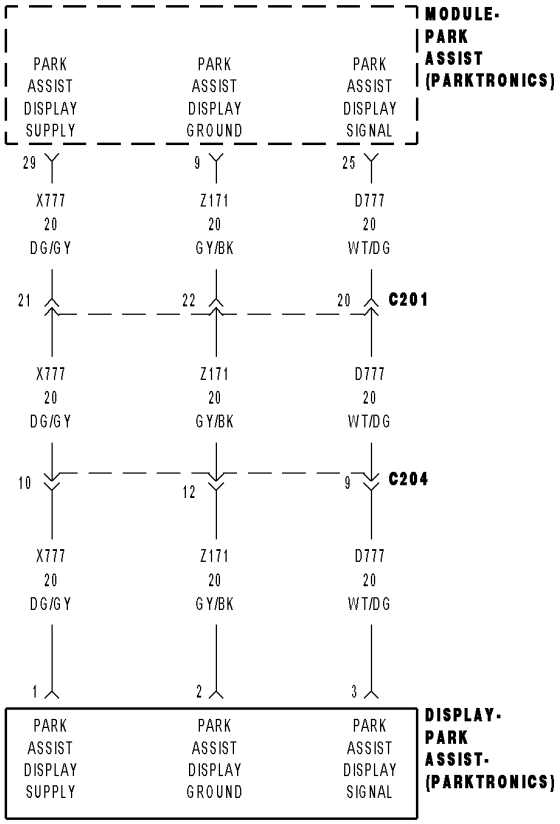

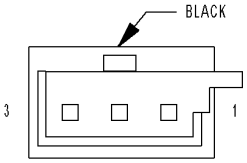

DISPLAY-
PARK ASSIST
(PARKTRONICS)

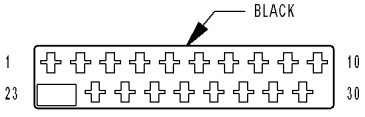

MODULE-
PARK ASSIST
(PARKTRONICS)

8138ecc5

For a complete wiring diagram **Refer to Section 8W**.

- **When Monitored:**
  With the ignition in Run/Start, PRNDL in R, N, or D; vehicle speed less than 40 mph (Late build vehicles will disable the Park Assist System in neutral).
- **Set Condition:**
  Data display line open.

Possible Causes
(D777) PARK ASSIST DISPLAY SIGNAL CIRCUIT OPEN
(X777) PARK ASSIST DISPLAY SUPPLY CIRCUIT OPEN
(Z171) PARK ASSIST DISPLAY GROUND CIRCUIT OPEN
PARK ASSIST DISPLAY
PARK ASSIST MODULE

Diagnostic Test

1. CHECK FOR ACTIVE DTC: U1101-LOST COMMUNICATION WITH PTS DISPLAY

Turn the ignition on.
Apply the vehicle park brake.
Shift the transmission into Reverse.
With the scan tool, record and erase Park Assist Module DTCs.
Wait 30 seconds.
With the scan tool, read Park Assist Module DTCs.

Is DTC: U1101-LOST COMMUNICATION WITH PTS DISPLAY active?

Yes >> Go To 2

No >> The condition that caused this code to set is not present at this time. Check for an intermittent condition by inspecting the related wiring harness for chaffed, pierced, pinched, and partially broken wires. Also inspect the related connectors for broken, bent, pushed out, spread, corroded, or contaminated terminals.
Perform BODY VERIFICATION TEST - VER 1. (Refer to BODY VERIFICATION TEST - VER 1).

2. CHECK THE (D777) PARK ASSIST DISPLAY SIGNAL CIRCUIT FOR AN OPEN

Turn the ignition off.

Disconnect the Park Assist Module harness connector.

Disconnect the Park Assist Display Module harness connector.

Measure the resistance of the (D777) Park Assist Display Signal circuit between the Park Assist Module harness connector and the Park Assist Display harness connector.

Is the resistance below 5.0 ohms?

Yes >> Go To 3

No >> Repair the (D777) Park Assist Display Signal circuit for an open.

Perform BODY VERIFICATION TEST - VER 1. (Refer to BODY VERIFICATION TEST - VER 1).

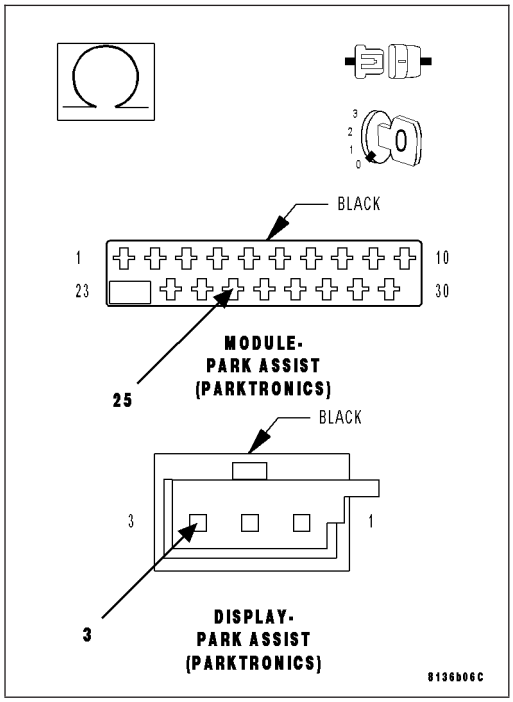

3. CHECK THE (X777) PARK ASSIST DISPLAY SUPPLY CIRCUIT FOR AN OPEN

Measure the resistance of the (X777) Park Assist Display Supply circuit between the Park Assist Module harness connector and the Park Assist Display harness connector.

Is the resistance below 5.0 ohms?

Yes >> Go To 4

No >> Repair the (X777) Park Assist Display Supply circuit for an open.

Perform BODY VERIFICATION TEST - VER 1. (Refer to BODY VERIFICATION TEST - VER 1).

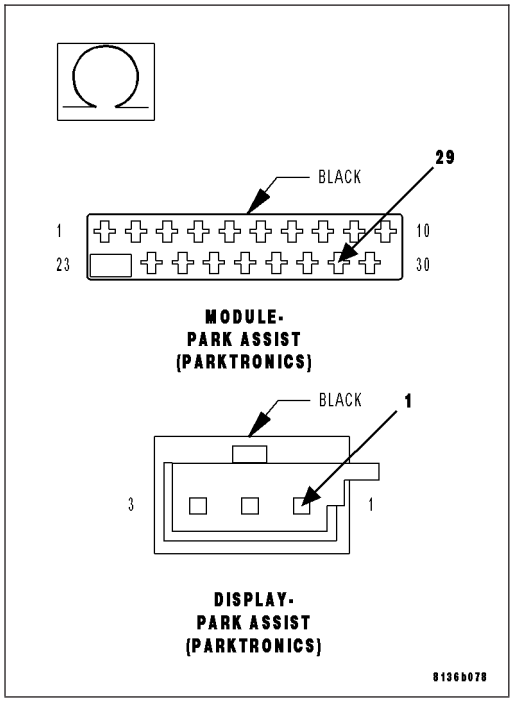

4. CHECK THE (Z171) PARK ASSIST DISPLAY GROUND CIRCUIT FOR AN OPEN

Measure the resistance of the (Z171) Park Assist Display Ground circuit between the Park Assist Module harness connector and the Park Assist Display harness connector.

Is the resistance below 5.0 ohms?

Yes >> Go To 5

No >> Repair the (Z171) Park Assist Display Ground circuit for an open.

Perform BODY VERIFICATION TEST - VER 1. (Refer to BODY VERIFICATION TEST - VER 1).

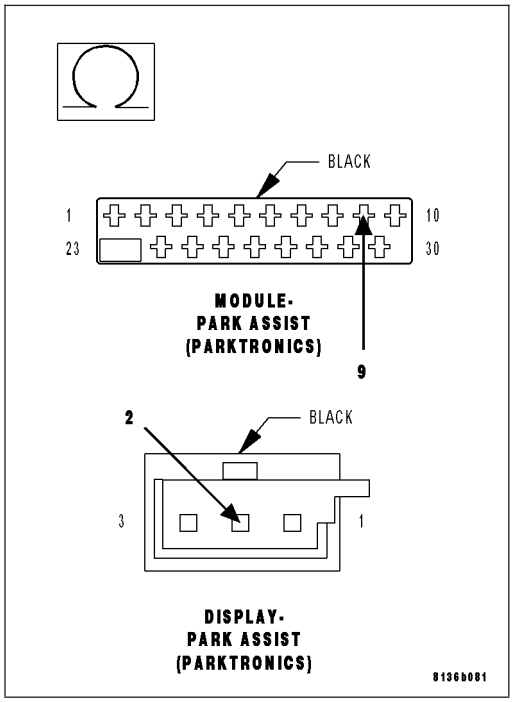

5. CHECK THE OPERATION OF THE PARK ASSIST DISPLAY

Replace the Park Assist Display in accordance with the service information.

Reconnect the Park Assist Module harness connector.

Turn the ignition on.

With the scan tool, read DTCs.

Does the scan tool display U1101-LOST COMMUNICATION WITH PTS DISPLAY?

Yes >> Replace the Park Assist Module in accordance with the service information.

Perform BODY VERIFICATION TEST - VER 1. (Refer to BODY VERIFICATION TEST - VER 1).

No >> Test Complete.

Perform BODY VERIFICATION TEST - VER 1. (Refer to BODY VERIFICATION TEST - VER 1).

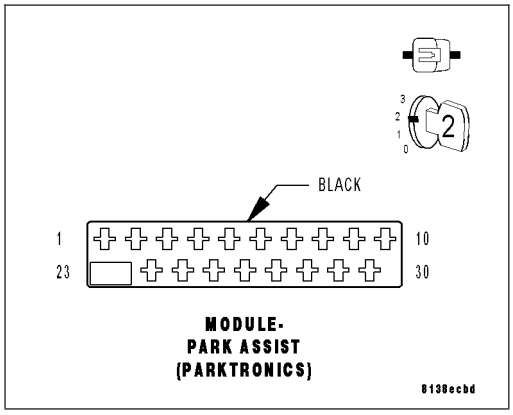

U0141–LOST COMMUNICATION WITH FRONT CONTROL MODULE

For a complete wiring diagram **Refer to Section 8W**.

(Refer to 8 - ELECTRICAL/ELECTRONIC CONTROL MODULES - DIAGNOSIS AND TESTING) for the diagnostic test procedure.

U0151-LOST COMMUNICATION WITH OCCUPANT RESTRAINT CONTROLLER

For a complete wiring diagram **Refer to Section 8W**.

(Refer to 8 - ELECTRICAL/ELECTRONIC CONTROL MODULES - DIAGNOSIS AND TESTING) for the diagnostic test procedure.

U0154-LOST COMMUNICATION WITH OCCUPANT CLASSIFICATION MODULE

For a complete wiring diagram **Refer to Section 8W**.

(Refer to 8 - ELECTRICAL/ELECTRONIC CONTROL MODULES - DIAGNOSIS AND TESTING) for the diagnostic test procedure.

U0155-LOST COMMUNICATION WITH CLUSTER/CCN

For a complete wiring diagram **Refer to Section 8W**.

(Refer to 8 - ELECTRICAL/ELECTRONIC CONTROL MODULES - DIAGNOSIS AND TESTING) for the diagnostic test procedure.

U0159-LOST COMMUNICATION WITH PARKING ASSIST CONTROL MODULE

For a complete wiring diagram **Refer to Section 8W**.

(Refer to 8 - ELECTRICAL/ELECTRONIC CONTROL MODULES - DIAGNOSIS AND TESTING) for the diagnostic test procedure.

U0164-LOST COMMUNICATION WITH HVAC CONTROL MODULE

For a complete wiring diagram **Refer to Section 8W**.

(Refer to 8 - ELECTRICAL/ELECTRONIC CONTROL MODULES - DIAGNOSIS AND TESTING) for the diagnostic test procedure.

U0167-LOST COMMUNICATION WITH INTRUSION TRANSCEIVER CONTROL MODULE

For a complete wiring diagram **Refer to Section 8W**.

(Refer to 8 - ELECTRICAL/ELECTRONIC CONTROL MODULES - DIAGNOSIS AND TESTING) for the diagnostic test procedure.

U0168-LOST COMMUNICATION WITH VEHICLE SECURITY CONTROL MODULE (SKREEM/WCM)

For a complete wiring diagram **Refer to Section 8W**.

(Refer to 8 - ELECTRICAL/ELECTRONIC CONTROL MODULES - DIAGNOSIS AND TESTING) for the diagnostic test procedure.

U0169-LOST COMMUNICATION WITH SUNROOF CONTROL MODULE

For a complete wiring diagram **Refer to Section 8W**.

(Refer to 8 - ELECTRICAL/ELECTRONIC CONTROL MODULES - DIAGNOSIS AND TESTING) for the diagnostic test procedure.

U0184-LOST COMMUNICATION WITH RADIO

For a complete wiring diagram **Refer to Section 8W**.

(Refer to 8 - ELECTRICAL/ELECTRONIC CONTROL MODULES - DIAGNOSIS AND TESTING) for the diagnostic test procedure.

U0186-LOST COMMUNICATION WITH AUDIO AMPLIFIER

For a complete wiring diagram **Refer to Section 8W**.

(Refer to 8 - ELECTRICAL/ELECTRONIC CONTROL MODULES - DIAGNOSIS AND TESTING) for the diagnostic test procedure.

U0195-LOST COMMUNICATION WITH SDARS

For a complete wiring diagram **Refer to Section 8W**.

(Refer to 8 - ELECTRICAL/ELECTRONIC CONTROL MODULES - DIAGNOSIS AND TESTING) for the diagnostic test procedure.

U0196-LOST COMMUNICATION WITH VEHICLE ENTERTAINMENT CONTROL MODULE

For a complete wiring diagram **Refer to Section 8W**.

(Refer to 8 - ELECTRICAL/ELECTRONIC CONTROL MODULES - DIAGNOSIS AND TESTING) for the diagnostic test procedure.

U0197-LOST COMMUNICATION WITH HANDS FREE PHONE MODULE

For a complete wiring diagram **Refer to Section 8W**.

(Refer to 8 - ELECTRICAL/ELECTRONIC CONTROL MODULES - DIAGNOSIS AND TESTING) for the diagnostic test procedure.

U0199-LOST COMMUNICATION WITH DRIVER DOOR MODULE

For a complete wiring diagram **Refer to Section 8W**.

(Refer to 8 - ELECTRICAL/ELECTRONIC CONTROL MODULES - DIAGNOSIS AND TESTING) for the diagnostic test procedure.

U0200-LOST COMMUNICATION WITH PASSENGER DOOR MODULE

For a complete wiring diagram **Refer to Section 8W**.

(Refer to 8 - ELECTRICAL/ELECTRONIC CONTROL MODULES - DIAGNOSIS AND TESTING) for the diagnostic test procedure.

U0208-LOST COMMUNICATION WITH HEATED SEAT CONTROL MODULE

For a complete wiring diagram **Refer to Section 8W**.

(Refer to 8 - ELECTRICAL/ELECTRONIC CONTROL MODULES - DIAGNOSIS AND TESTING) for the diagnostic test procedure.

U0209-LOST COMMUNICATION WITH MEMORY SEAT CONTROL MODULE

For a complete wiring diagram **Refer to Section 8W**.

(Refer to 8 - ELECTRICAL/ELECTRONIC CONTROL MODULES - DIAGNOSIS AND TESTING) for the diagnostic test procedure.

U0212-LOST COMMUNICATION WITH SCCM-CAN-B

For a complete wiring diagram **Refer to Section 8W**.

(Refer to 8 - ELECTRICAL/ELECTRONIC CONTROL MODULES - DIAGNOSIS AND TESTING) for the diagnostic test procedure.

U0231-LOST COMMUNICATION WITH RAIN SENSING MODULE

For a complete wiring diagram **Refer to Section 8W**.

(Refer to 8 - ELECTRICAL/ELECTRONIC CONTROL MODULES - DIAGNOSIS AND TESTING) for the diagnostic test procedure.

U0241-LOST COMMUNICATION WITH AUTO HIGHBEAM HEADLAMP CONTROL MODULE

For a complete wiring diagram **Refer to Section 8W**.

(Refer to 8 - ELECTRICAL/ELECTRONIC CONTROL MODULES - DIAGNOSIS AND TESTING) for the diagnostic test procedure.

CHIME/BUZZER - SERVICE INFORMATION

TABLE OF CONTENTS

page

CHIME/BUZZER - SERVICE INFORMATION
DESCRIPTION 60
OPERATION 60
MODULE-PARK ASSIST DISPLAY-FRONT
DESCRIPTION 63
OPERATION 63
REMOVAL 64
INSTALLATION 64
PARK ASSIST MODULE
DESCRIPTION 65

page

OPERATION 65
REMOVAL 66
INSTALLATION 67
PARK ASSIST SENSOR
DESCRIPTION 69
OPERATION 69
REMOVAL 70
INSTALLATION 70

CHIME/BUZZER - SERVICE INFORMATION

DESCRIPTION

CHIME WARNING SYSTEM

The chime warning system uses an electromechanical transducer and an electromechanical relay that are soldered onto the electronic circuit board inside of the ElectroMechanical Instrument Cluster (EMIC) to provide audible indications of various vehicle conditions that may require the attention of the vehicle operator or occupants. The EMIC also includes the hardware and software necessary to serve as the electronic body control module and is sometimes referred to as the Cab Compartment Node or CCN.

The electromechanical transducer generates beep tones and chime tones, while the electromechanical relay generates click tones to emulate the sounds associated with conventional turn signal and hazard warning flasher operation. The microprocessor-based EMIC utilizes electronic chime request messages received from other modules in the vehicle over the Controller Area Network (CAN) data bus along with hard wired inputs to monitor many sensors and switches throughout the vehicle. In response to those inputs, the circuitry and programming of the EMIC allow it to control the audible outputs that are produced through its on-board transducer and relay.

PARK ASSIST SYSTEM

The Park Assist System is an electronic parking aid that alerts the driver to obstacles which are located immediately behind the vehicle. Objects are sensed using ultrasonic sound waves. When an object is detected, the system will give the driver visual and audible warnings. The system is customer programmable through the Electronic Vehicle Information Center (EVIC) but will be enabled from the factory as a default.

The major components of the park assist system are:

- **Park Assist Module** - supplies voltage to the object detection sensors and park assist display. It triggers the sensors, analyzes the echo delay times and calculates obstacle distances. It sends display information to the park assist display, performs system diagnostics, and communicates via the Programmable Communication Interface (PCI) date bus network.
- **Park Assist Sensors** - there are four sensors located in the rear bumper that generate ultrasonic pulses when triggered by the park assist module. The sensors signal the park assist module when reflected ultrasonic pulses are received.
- **Park Assist Display** - there are sixteen Light Emitting Diode (LED) indicators which provide indication of relative distance to obstacles. When the system is engaged and no obstacles are detected, the two outermost yellow LED's are lit at reduced brightness to show the system is working. As the distance to a detected obstacle decreases, more yellow LED's towards the center of the display illuminate.

For diagnosis and testing of the park assist system, use a scan tool and the appropriate body diagnostic information.

OPERATION

CHIME WARNING SYSTEM

The chime warning system operates on battery voltage received through a fuse in the Junction Block (JB) on a non-switched fused B(+) circuit so that the system may operate regardless of the ignition switch position. The chime warning system also monitors the ignition switch position so that some chime features are functional only with the ignition switch in the On position, while others are functional regardless of the ignition switch position.

The chime warning system provides an audible indication to the vehicle operator or occupants under the following conditions:

- **Airbag Indicator Warning** - The ElectroMechanical Instrument Cluster (EMIC) transducer will generate one short chime when the ignition switch is in the On position, and an electronic message is received over the Controller Area Network (CAN) data bus from the Occupant Restraint Controller (ORC) requesting "Airbag" indicator illumination. This warning will only occur following completion of the "Airbag" indicator bulb test, and will only occur once during any ignition cycle.
- **Compass Mini-Trip Computer Global Reset** - The EMIC transducer will generate one short chime when the ignition switch is in the On position, and an electronic message is received over the CAN data bus from the optional Compass Mini-Trip Computer (CMTC) requesting that the CMTC average fuel economy, trip odometer

and distance to empty data be reset. The CMTC monitors hard wired inputs from the U.S./Metric and Reset button switches to determine the proper reset messages to send to the EMIC.

- **Door Ajar Indicator Warning** - The EMIC transducer will generate one short chime when the ignition switch is in the On position, a hard wired input is received indicating that the status of any door ajar switch has changed, and an electronic message is received over the CAN data bus indicating that the vehicle is moving.
- **Fasten Seat Belt Indicator Warning** - The EMIC transducer will generate repetitive chimes at a slow rate to announce that a hard wired input from the seat belt switch indicates that the driver side front seat belt is not fastened with the ignition switch in the On position. The chime warning system also supports the enhanced seat belt reminder (beltminder) when this feature is enabled.
- **Gate Ajar Indicator Warning** - The EMIC transducer will generate one short chime when the ignition switch is in the On position, a hard wired input is received indicating that the status of the liftgate ajar switch has changed, and an electronic message is received over the CAN data bus indicating that the vehicle is moving.
- **Head/Park Lamps-On Warning** - The EMIC transducer will generate repetitive chimes at a fast rate to indicate that hard wired inputs from the driver door ajar switch, the headlamp switch, and the ignition switch indicate that the exterior lamps are turned On with the driver side front door opened and the ignition switch in the Off position. The chimes will continue to sound until the exterior lamps are turned Off, the driver side front door is closed, or the ignition switch is turned to the On position, whichever occurs first.
- **Key-In-Ignition Warning** - The EMIC transducer will generate repetitive chimes at a fast rate to indicate that hard wired inputs from the driver door ajar switch, the ignition switch, and the key-in ignition switch circuitry of the ignition switch indicate that the key is in the ignition lock cylinder with the driver side front door open and the ignition switch in the Off position. The chimes will continue to sound until the key is removed from the ignition lock cylinder, the driver side front door is closed, or the ignition switch is turned to the On position, whichever occurs first.
- **Low Fuel Indicator Warning** - The EMIC transducer will generate one short chime when the low fuel indicator is illuminated by the instrument cluster circuitry. This chime will only occur once during any ignition cycle.
- **Low Wash Indicator Warning** - The EMIC transducer will generate one short chime when the low washer fluid indicator is illuminated by the instrument cluster circuitry. This chime will only occur once during any ignition cycle.
- **Overspeed Warning** - The EMIC transducer will generate repetitive chimes at a slow rate to indicate that the vehicle speed is over a pre-programmed speed value. The EMIC monitors electronic vehicle speed messages received over the CAN data bus. This feature is only enabled on an EMIC that has been programmed with a Middle East Gulf Coast Country (GCC) code.
- **Park Brake Reminder** - The EMIC transducer will generate one short chime to announce that the hard wired input from the park brake switch and a vehicle speed message input received over the CAN data bus indicate that the park brake is applied and the vehicle is moving. This chime will repeat each time the input conditions are met.
- **Sentry Key “Customer Learn” Mode Announcement** - The EMIC transducer will generate one short chime to confirm that an electronic “Customer Learn” mode message has been received over the CAN data bus to indicate that the Sentry Key Remote Entry Module (SKREEM) is prepared for programming additional sentry key transponders. This chime feature is only active on vehicles equipped with the optional Sentry Key system, and sold in a market where “Customer Learn” programming is an allowed feature.
- **Trans Overtemp Indicator Warning** - The EMIC transducer will generate repetitive chimes at a slow rate when the transmission overtemp indicator is illuminated by the instrument cluster for a high or critical transmission fluid temperature condition. This chime will repeat each time the trans overtemp indicator is cycled from Off to On.
- **Turn Signal/Hazard Warning Flasher Emulation** - The EMIC relay will generate repetitive clicks at a slow rate to emulate an electromechanical flasher when the turn signal or hazard warning system are operating. The EMIC relay will generate repetitive clicks at a fast rate to indicate that the right or left turn signal are operating with one or more bulbs inoperative. In either case, the clicks will continue until the turn signal and hazard warning systems are turned off.
- **Turn Signal On Warning** - The EMIC transducer will generate repetitive chimes at a slow rate to indicate that a turn signal has been active continuously for 1.6 kilometers (1 mile) with the vehicle speed greater than 22 kilometers-per-hour (15 miles-per hour). Vehicles built for markets other than the United States and Canada have a revised distance threshold of 4 kilometers for this feature. The chime will continue until the turn signal input becomes inactive or until the vehicle speed message indicates that the speed is less than 22 kilometers-per-hour (15 miles-per-hour), whichever occurs first. The hazard warning flashers will not activate this chime feature.

- **Warning Indicator Announcement** - The EMIC transducer will generate one short chime each time the check gauges indicator is illuminated by the instrument cluster circuitry. The check gauges indicator may be illuminated when any critical engine or transmission systems are operating outside of their normal parameters. The instrument cluster monitors electronic messages received over the CAN data bus to determine when to illuminate the check gauges indicator.

The EMIC provides chime service for all available features in the chime warning system. The EMIC relies upon its internal programming, numerous hard wired inputs, and electronic message inputs received from other modules over the CAN data bus network to provide the chime warning system features. The internal programming of the EMIC determines the priority of each chime request input that is received, as well as the rate and duration of each chime that is to be generated.

The hard wired chime warning system inputs to the EMIC may be diagnosed and tested using conventional diagnostic tools and procedures. However, conventional diagnostic methods may not prove conclusive in the diagnosis of the EMIC, the CAN data bus, or the electronic messages received by the EMIC from other modules. The most reliable, efficient and accurate means to diagnose the EMIC, the CAN data bus, or the electronic message inputs used for the chime warning system requires the use of a diagnostic scan tool. Refer to the appropriate diagnostic information.

PARK ASSIST SYSTEM

The Park Assist System display activates an audible tone that changes from intermittent to continuous as the final two Light Emitting Diodes (LED's) are illuminated on one side or both sides of the display.

The system detection length from the rear of the vehicle is 0.3 meters to 1.5 meters. This area extends around the rear side of the vehicle. The system detection height from the ground is 0.2 meters to about 1.5 meters. The radio mutes when the system activates its audible tone.

When the driver selects Reverse, the system scans for objects behind the vehicle using four sensors located in the rear bumper. A warning display above the rear window provides both visible and audible warnings indicating the range of the object.

The system is active only when the transmission gear selector is in reverse for vehicle speeds less than 16 Km/h (10 mph). If the vehicle's Parking/Emergency Brake is applied, the system is deactivated.

The display contains two sets of yellow and red Light Emitting Diode's (LED's) that the driver can see as they look over their shoulder while backing up. Each side of the vehicle has its own warning LED's. The system provides a visual warning by illuminating one or more yellow LED's as the vehicle gets closer to the object. As the vehicle continues to approach the object, one red LED is illuminated and the system emits a series of short beeps. The tone will remain constant and both red LED's are illuminated once the vehicle is within 12 inches (30.5 cm) of the object.

The system can be turned ON or OFF through the Electronic Vehicle Information Center (EVIC) when the vehicle is in PARK. If the park assist system is turned OFF, a single chime will sound and the EVIC will display the following message "REAR PARK ASSIST OFF", when the vehicle is in reverse.

- Ensure that the rear bumper is free of dirt and debris to keep the system operating properly.
- Jackhammers, large trucks, and other vibrations could affect the performance of the system.
- Ensure that the parking brake is not applied.

If "Service Park Assist System" appears in the EVIC after making sure the rear bumper is clean, proceed to diagnose the system using a scan tool and the appropriate diagnostic information.

MODULE-PARK ASSIST DISPLAY-FRONT

DESCRIPTION

The Park Assist Display is a molded plastic unit, housing Light Emitting Diodes (LED's) and a chime module.

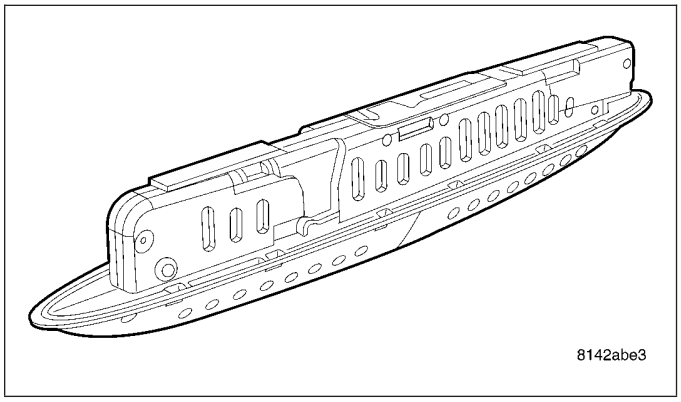

The Park Assist Display is located in the rear of vehicle, over the rear window in the headliner. Located in the rear of the vehicle for easy visual reference when the driver is backing up.

The display is used to alert the driver of any obstacles detected in the rear of the vehicle. The chime or audible signal also comes from the display unit.

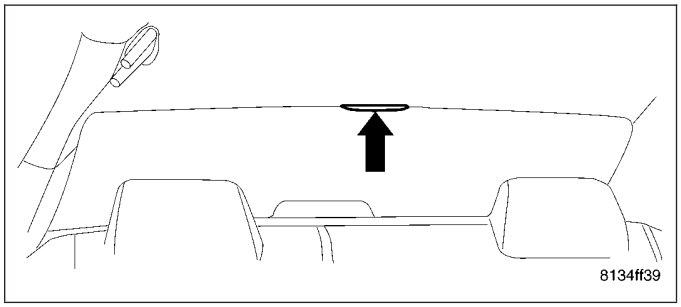

OPERATION

When the ignition is put in the RUN position, all the Light Emitting Diodes (LED's) will illuminate for approximately one second. This will be interrupted if the system senses an obstacle.

The ready status will be sensed by the outermost two yellow LED's (1) being illuminated. As the obstacle is sensed, the yellow LED's will start illuminating inward (6) until the object in approximately 40 cm (16 in.) away and then the inner red LED will light (3).

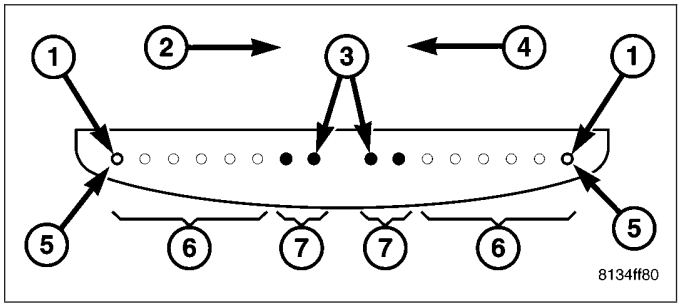

The display is sensitive to which side of the rear of the vehicle that the object is detected. If on the left rear, the left segments will light and the same for the right side of the vehicle.

CORRELATION OF LED SEGMENTS TO DISTANCE

DISPLAY LED	DISTANCE		LED COLOR	AUDIBLE SIGNAL
	REAR CORNERS	REAR CENTER		
1st LED		150 cm (59 in.)	Yellow	None
2nd LED		120 cm (47 in.)	Yellow	None
3rd LED		100 cm (39 in.)	Yellow	None
4th LED	80 cm (31.5 in.)	80 cm (31.5 in.)	Yellow	None
5th LED	65 cm (25.5 in.)	65 cm (25.5 in.)	Yellow	None
6th LED	50 cm (20 in.)	50 cm (20 in.)	Yellow	None
7th LED	40 cm (16 in.)	40 cm (16 in.)	Red	30 cm (12 in.) Intermittant

8th LED	15 cm (6 in.)	30 cm (12 in.)	Red	20 cm (8 in.) Continuous

There will be an audible tone when the object gets within 40 cm (16 in.) from the rear of the vehicle.

To diagnose and test the Park Assist System, use a scan tool and the appropriate diagnostic information.

REMOVAL

1. Disconnect and isolate the battery negative cable.
2. Lower the headliner (3) in the rear of the vehicle in the liftgate opening. Follow the headliner removal procedure for the rear of the headliner (Refer to 23 - BODY/INTERIOR/HEADLINER - REMOVAL).
3. Bend the retaining tabs (2) upwards to allow the park assist display (1) to drop out of the headliner (3) opening.
4. Disconnect the display electrical connector (4) and remove display (1) from vehicle.

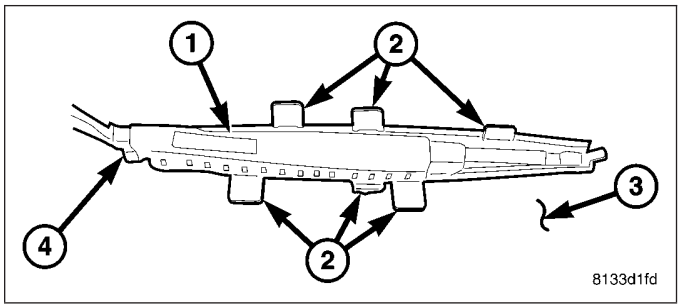

INSTALLATION

1. Position the Park Assist Display (1) in headliner (3) opening and connect the display electrical connector (4).
2. Bend the retaining tabs (2) down behind the headliner (3).
3. Raise the headliner in the rear of the vehicle in the liftgate opening (Refer to 23 - BODY/INTERIOR/HEADLINER - INSTALLATION).
4. Connect the battery negative cable.

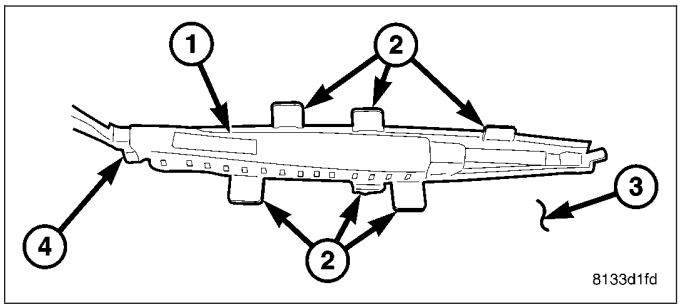

PARK ASSIST MODULE

DESCRIPTION

The Park Assist Module has a molded plastic housing which housing internal circuitry and two electrical connectors. There are four mounting tabs that affix the module to the right inner quarter trim panel with four screws.

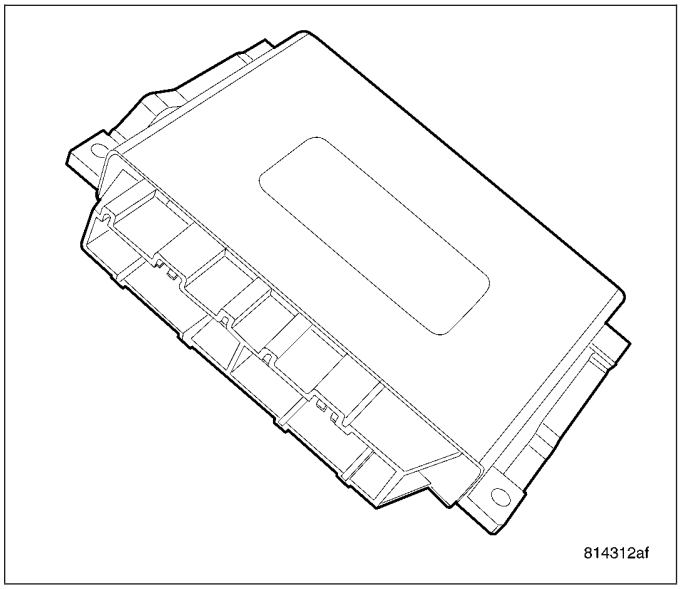

The Park Assist Module (2) is located on the right side of the vehicle, in the trunk compartment, behind the trunk carpet.

The module (2) has a number of functions:

- Supply voltage to the sensors and display.
- Disconnection of the display with bus idle and over voltage Vmax.
- Triggering the sensors.
- Analyze echo delay times and calculate obstacle distances.
- Bi-directional data communication to the display for diagnosis.
- System diagnostics - diagnosis and error handling (sensors, display, module).
- Data exchange over the Controller Area Network (CAN) data bus.

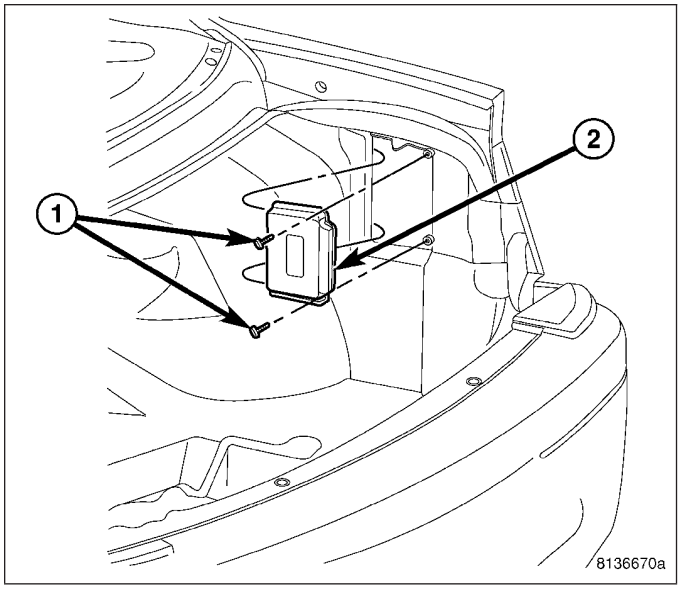

OPERATION

The system detection length from the rear of the vehicle is 0.3 meters to 1.5 meters. This area extends around the rear side of the vehicle. The system detection height from the ground is 0.2 meters to about 1.5 meters. The radio mutes when the system activates its audible tone.

When the driver selects Reverse, the system scans for objects behind the vehicle using four sensors located in the rear bumper. Objects can be detected from up to 1.5 meters. A warning display above the rear window provides both visible and audible warnings indicating the range of the object.

The system is active only when the vehicle is in reverse for vehicle speeds less than 16 Km/h (10 mph). If the vehicles Parking/Emergency Brake is applied, the system is deactivated.

The display contains two sets of yellow and red Light Emitting Diode's (LED's) that the driver can see as they look over their shoulder while backing up. Each side of the vehicle has its own warning LED's. The system provides a visual warning by illuminating one or more yellow LED's as the vehicle gets closer to the object. As the vehicle continues to approach the object, one red LED is illuminated and the system emits a series of short beeps. The

tone will remain constant and both red LED's are illuminated once the vehicle is within 12 inches (30.5 cm) of the object.

The system can be turned ON or OFF through the Electronic Vehicle Information Center (EVIC) when the vehicle is in PARK. If the park assist system is turned OFF, a single chime will sound and the EVIC will display the following message "REAR PARK ASSIST OFF", when the vehicle is in reverse.

- Ensure that the rear bumper is free of dirt and debris to keep the system operating properly.
- Jackhammers, large trucks, and other vibrations could affect the performance of the system.
- Ensure that the parking brake is not applied.

If "Service Park Assist System" appears in the EVIC after making sure the rear bumper is clean, proceed to diagnose the system using a scan tool and the appropriate diagnostic information.

To diagnose the Park Assist Module, use a scan tool and the appropriate body diagnostic information.

REMOVAL

1. Disconnect and isolate the battery negative cable.
2. Peel back the right inner trunk carpet to expose the Park Assist Module (2).
3. Remove the two attaching screws (1) and separate the module (2) from the vehicle.

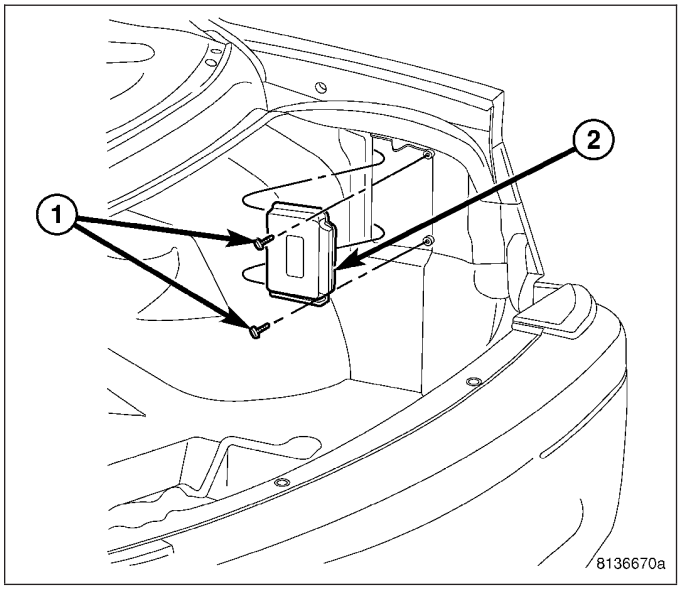

4. On the wagon, the module will be behind the right side D-pillar trim and is attached the same as the sedan.

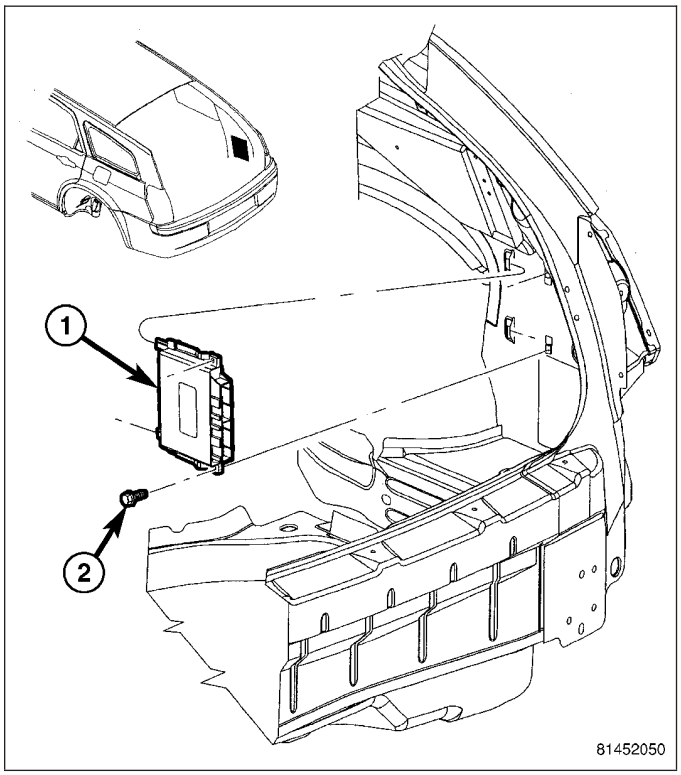

5. Disconnect the Park Assist Module (2) electrical connector (1).

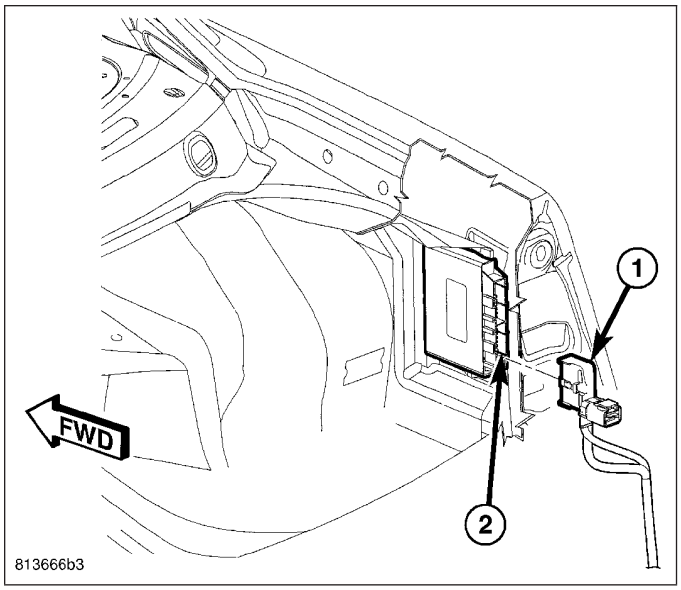

INSTALLATION

1. Connect the Park Assist Module electrical connector.

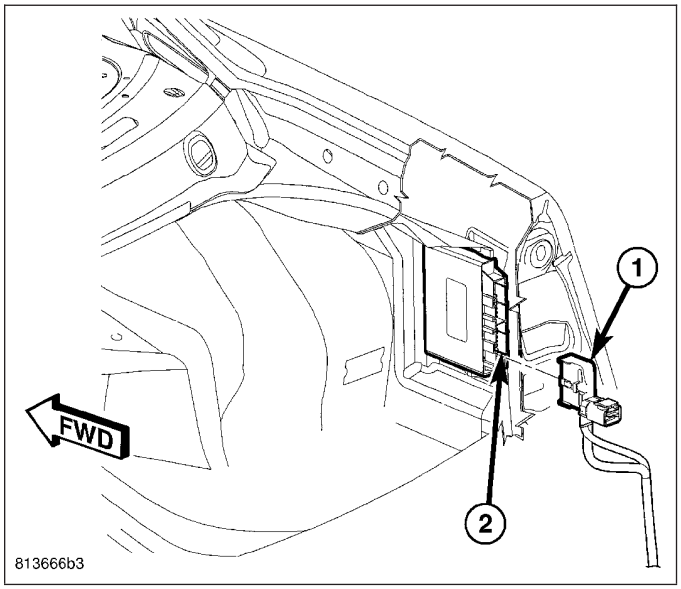

2. Position the Park Assist Module (2) and install the two attaching screws (1). Torque screws to 3.5 N·m (30 in. lbs.).
3. Reposition the trunk carpet.
4. Connect the battery negative cable.

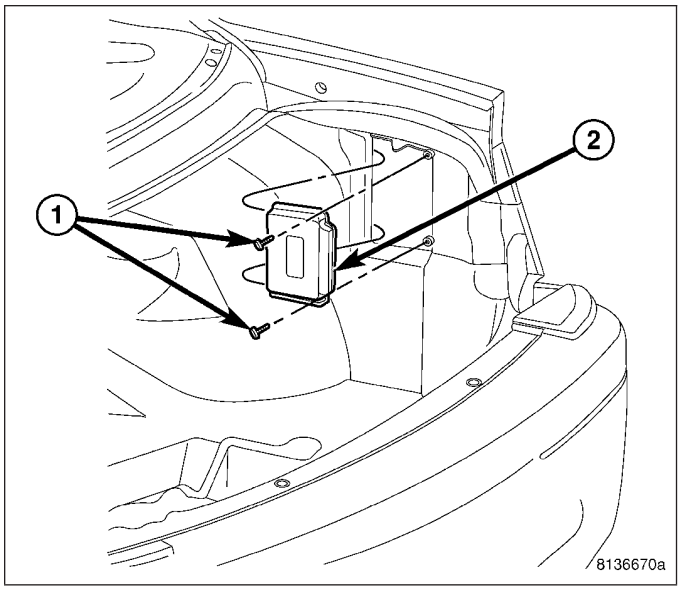

PARK ASSIST SENSOR

DESCRIPTION

The Park Assist Sensors generate ultrasonic pulses when triggered by the park assist module when an obstacle is detected. The sensors then signal the module when reflected ultrasonic pulses are received.

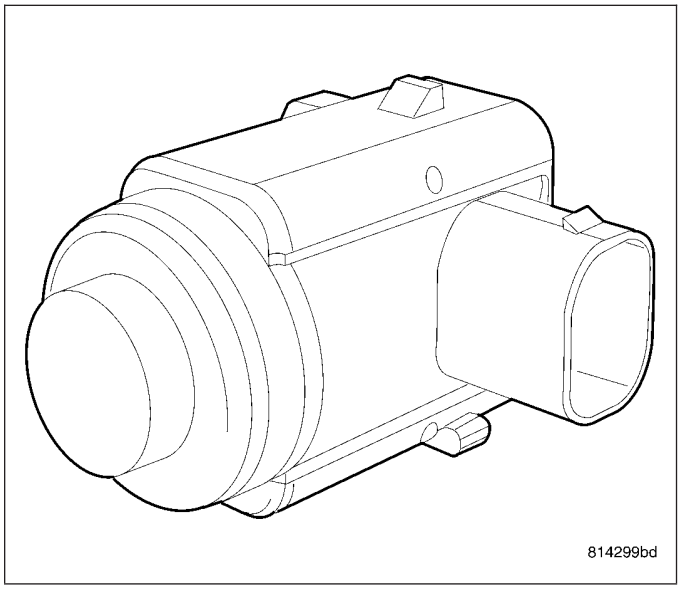

The Park Assist Sensors are located in the rear bumper fascia mounted equally apart. The sensors detect objects with an ultrasonic pulse that reflects off the object and then is sent to the module to determine the distance of the object.

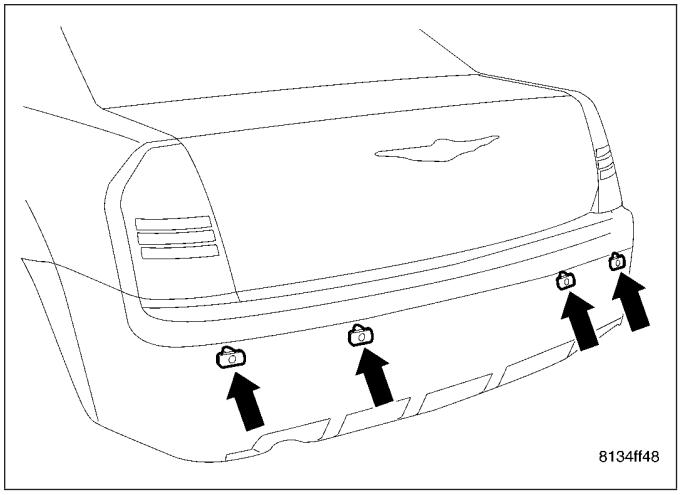

OPERATION

The Park Assist Sensors:

- Generate ultrasonic pulses when triggered by the Park Assist Module.
- Reception/filtering of ultrasonic energy received.
- Signalling the module of received ultrasonic pulses that meet threshold criteria.

The sensors are supplied power by the module. The sensor supply is enabled when the sensor function is necessary.

The sensors detection length from the rear of the vehicle is 0.3 meters to 1.5 meters. This area extends around the rear side of the vehicle. The sensor detection height from the ground is 0.2 meters to about 1.5 meters.

- Ensure that the rear bumper (sensors) is free of dirt and debris to keep the system operating properly.
- Jackhammers, large trucks, and other vibrations could affect the performance of the system.
- Ensure that the parking brake is not applied.

If “Service Park Assist System” appears in the EVIC after making sure the rear bumper is clean, proceed to diagnose the system using a scan tool and the appropriate diagnostic information.

REMOVAL

1. Disconnect and isolate the battery negative cable.
2. Remove rear fascia (Refer to 13 - FRAME & BUMPERS/BUMPERS/REAR FASCIA - REMOVAL).
3. Unsnap Park Assist Sensor from the retaining housing and remove from fascia.

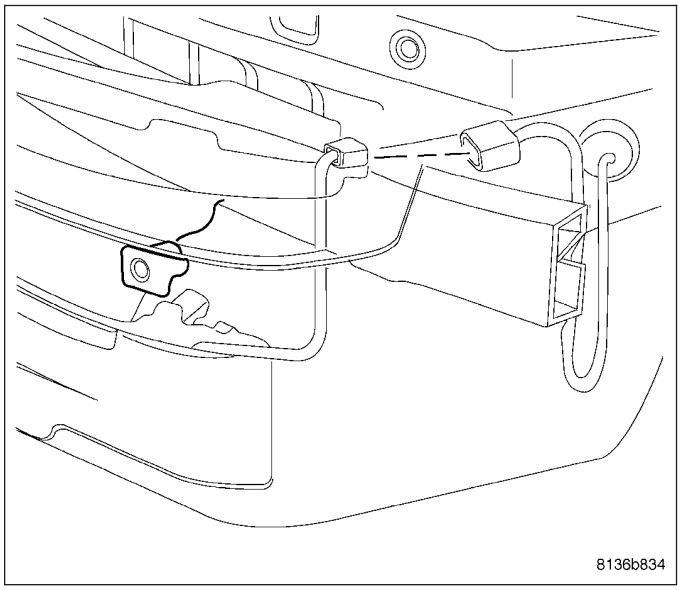

INSTALLATION

1. Position the Park Assist Sensor over the retaining housing and firmly snap into housing in rear fascia.
2. Install the rear fascia (Refer to 13 - FRAME & BUMPERS/BUMPERS/REAR FASCIA - INSTALLATION).
3. Connect the battery negative cable.

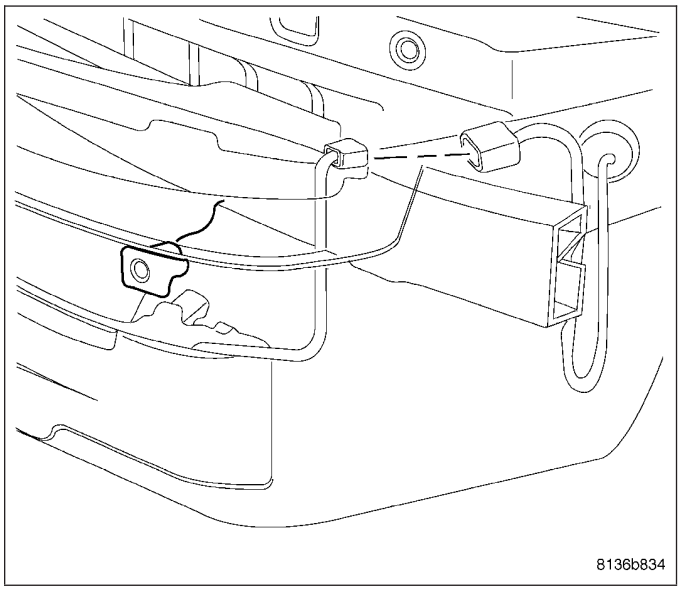

CLOCK

TABLE OF CONTENTS

page

CLOCK - SERVICE INFORMATION
DESCRIPTION 2
OPERATION 2
REMOVAL 3
INSTALLATION 4

CLOCK - SERVICE INFORMATION

DESCRIPTION

Some models include an analog clock. The time can be adjusted by pushing the set button until it reaches the desired time.

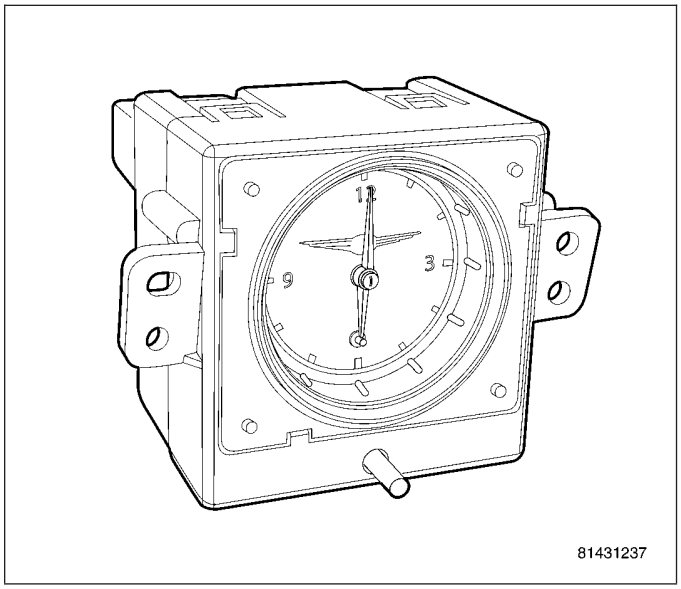

The analog clock is located in the instrument panel center bezel, between the air distribution outlets. It has one adjustment button for setting and no second hand.

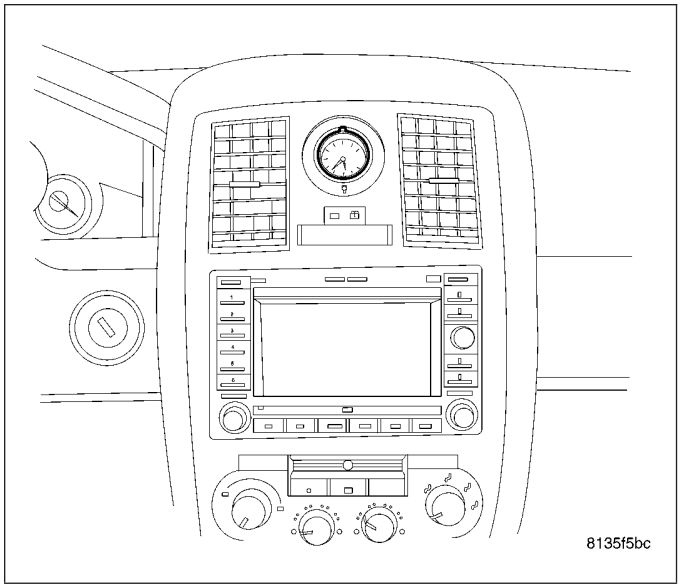

OPERATION

The analog clock is fed power through the M1 fuse. When installed, the clock, along with other noncritical options, will be functional.

To set the analog clock, press and hold the adjustment button until desired time is reached.

REMOVAL

1. Disconnect and isolate the battery negative cable.
2. Remove the Instrument Panel Center Bezel (Refer to 23 - BODY/INSTRUMENT PANEL/INSTRUMENT PANEL CENTER BEZEL - REMOVAL).

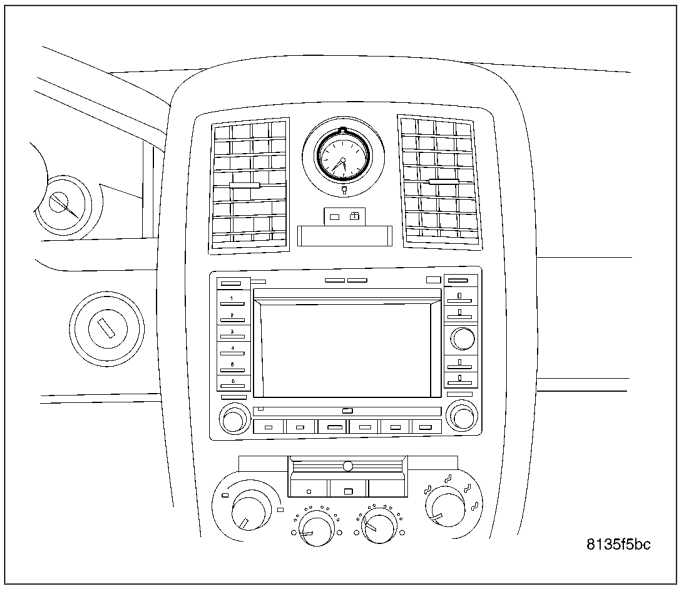

3. Remove the two retaining screws (1) holding the clock to the rear of the I/P Center Bezel.

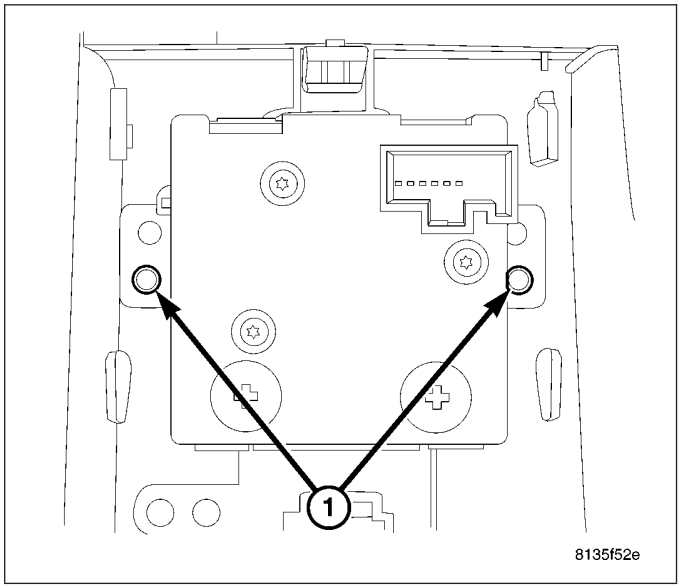

4. To replace the clock illumination lamps (1), turn sockets (1) counterclockwise to remove lamp and socket (1).

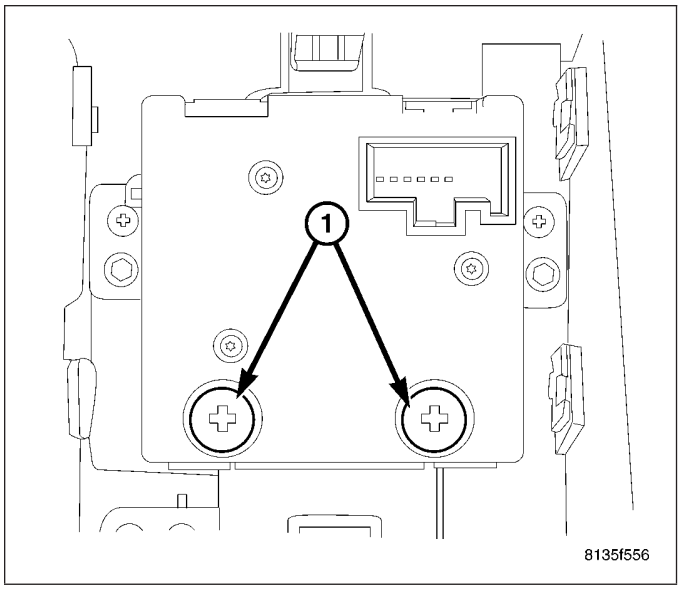

INSTALLATION

1. Place lamp and sockets (1) into opening and turn clockwise till detent is felt.

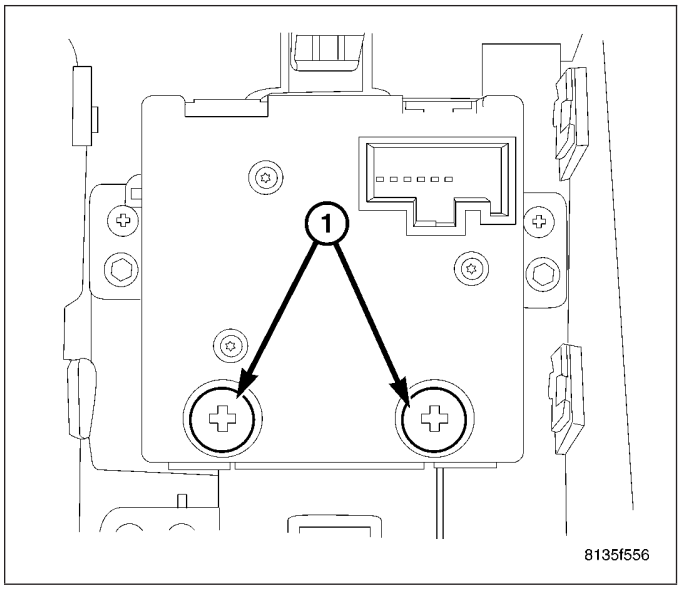

2. Place the clock into bezel opening and then install the two retaining screws (1).

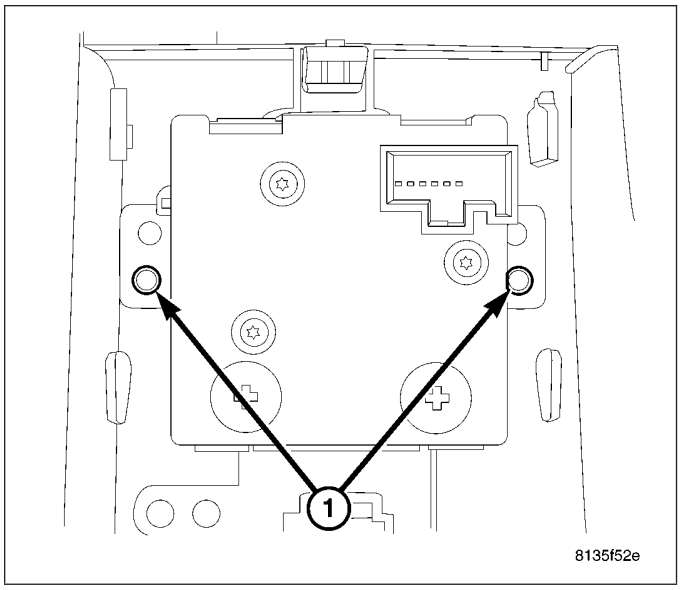

3. Install the Instrument Panel Center Bezel (Refer to 23 - BODY/INSTRUMENT PANEL/INSTRUMENT PANEL CENTER BEZEL - INSTALLATION).
4. Connect the battery negative cable.
5. Adjust clock to proper time.

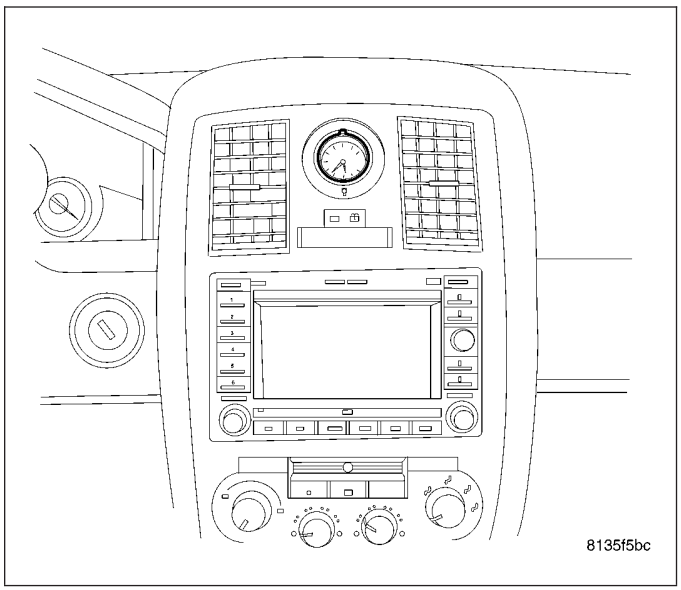

ELECTRONIC CONTROL MODULES

TABLE OF CONTENTS

page

ELECTRONIC CONTROL MODULES - ELECTRICAL DIAGNOSTICS 1

page

ELECTRONIC CONTROL MODULES - SERVICE INFORMATION 242

ELECTRONIC CONTROL MODULES - ELECTRICAL DIAGNOSTICS

TABLE OF CONTENTS

page

ELECTRONIC CONTROL MODULES - ELECTRICAL DIAGNOSTICS
DIAGNOSIS AND TESTING
B210D-BATTERY VOLTAGE LOW 4
B210E-BATTERY VOLTAGE HIGH 5
B2112-5 VOLT SUPPLY CIRCUIT LOW 6
B2113-5 VOLT SUPPLY CIRCUIT HIGH 8
B2206-CURRENT VIN MISSING/MISMATCH . . . 10
B2215-FRONT CONTROL MODULE INTERNAL. 11
B222C-VEHICLE CONFIGURATION NOT PROGRAMMED. 12
U0001-CAN C BUS 13
U0019-CAN B BUS 19
U0100-LOST COMMUNICATION WITH ECM/PCM 24
U0101-LOST COMMUNICATION WITH TCM . . . 27
U0103-LOST COMMUNICATION WITH ELECTRIC GEAR SHIFT MODULE 30
U0121-LOST COMMUNICATION WITH ANTI-LOCK BRAKE MODULE 33
U0141–LOST COMMUNICATION WITH FRONT CONTROL MODULE 36
U0143-LOST COMMUNICATION WITH MULTI-PURPOSE MODULE (POLICE AND TAXI INTERFACE MODULE) (PTIM) 39
U0151–LOST COMMUNICATION WITH OCCUPANT RESTRAINT CONTROLLER (ORC). 42
U0154–LOST COMMUNICATION WITH OCCUPANT CLASSIFICATION MODULE 45
U0155-LOST COMMUNICATION WITH CLUSTER/CCN 48
U0156–LOST COMMUNICATION WITH EOM . . 51

page

U0159-LOST COMMUNICATION WITH PARK ASSIST CONTROL MODULE. 54
U0164-LOST COMMUNICATION WITH HVAC CONTROL MODULE 57
U0167-LOST COMMUNICATION WITH INTRUSION TRANSCEIVER CONTROL MODULE. 60
U0168-LOST COMMUNICATION WITH VEHICLE SECURITY CONTROL MODULE (SKREEM/WCM) 63
U0169-LOST COMMUNICATION WITH SUNROOF CONTROL MODULE. 66
U0181-LOST COMMUNICATION WITH HEADLAMP LEVELING TRANSLATOR 69
U0184-LOST COMMUNICATION WITH RADIO 72
U0186-LOST COMMUNICATION WITH AUDIO AMPLIFIER 75
U0193-LOST COMMUNICATION WITH TRAFFIC INFORMATION RECEIVER MODULE. 78
U0195-LOST COMMUNICATION WITH SDARS 81
U0196-LOST COMMUNICATION WITH VEHICLE ENTERTAINMENT CONTROL MODULE. 84
U0197-LOST COMMUNICATION WITH HANDS FREE PHONE MODULE 87
U0199-LOST COMMUNICATION WITH DRIVER DOOR MODULE 90
U0200-LOST COMMUNICATION WITH PASSENGER DOOR MODULE 93
U0208-LOST COMMUNICATION WITH HEATED SEAT CONTROL MODULE 96

U0209-LOST COMMUNICATION WITH MEMORY SEAT CONTROL MODULE 99
U0212-LOST COMMUNICATION WITH SCCM - CAN B 102
U0231-LOST COMMUNICATION WITH RAIN SENSING MODULE 105
U1105-CAN B SIGNAL MISSING 108
U1106-CAN C SIGNAL MISSING 111
U1107-ECU IN SINGLE-WIRE MODE 117
U1108-ADDITIONAL CAN B ECU DETECTED . 122
U110A-LOST COMMUNICATION WITH SCCM - CAN C 123
*STORED LOST COMMUNICATION DTCS . . . 126
*CAN C DIAGNOSTIC (+) AND/OR CAN C DIAGNOSTIC (-) CIRCUITS HIGH 129
*CAN C DIAGNOSTIC (+) CIRCUIT LOW 131
*CAN C DIAGNOSTIC (-) CIRCUIT LOW 133
*CAN C DIAGNOSTIC (+) SHORTED TO CAN C DIAGNOSTIC (-) 135
*CAN C DIAGNOSTIC (-) CIRCUIT OPEN 137
*CAN C DIAGNOSTIC (+) CIRCUIT OPEN 139
*BOTH CAN C DIAGNOSTIC (+) AND CAN C DIAGNOSTIC (-) CIRCUITS OPEN. 141
*NO RESPONSE FROM ABS (ANTILOCK BRAKE MODULE). 144
*NO RESPONSE FROM AMP (AMPLIFIER) . . . 148
*NO RESPONSE FROM CCN (CLUSTER) 151
*NO RESPONSE FROM DDM (DRIVER DOOR MODULE) 155
*NO RESPONSE FROM ECM (ENGINE CONTROL MODULE) - DIESEL. 158
*NO RESPONSE FROM EOM (ELECTRONIC OVERHEAD MODULE) 161
*NO RESPONSE FROM ESM (ELECTRONIC SHIFT MODULE) (SHIFTER LEVER ASSEMBLY) - NAG1 164
*NO RESPONSE FROM ESM (ELECTRONIC SHIFT MODULE) - (COLUMN NAG1) 168
*NO RESPONSE FROM FCM (FRONT CONTROL MODULE). 172
*NO RESPONSE FROM HFM (HANDS FREE MODULE) 176
*NO RESPONSE FROM HIDT (HEADLAMP LEVELING MODULE). 179
*NO RESPONSE FROM HSM (HEATED SEAT MODULE) 182
*NO RESPONSE FROM HVAC (HEAT VENTILATION AND A/C) (ATC) 185
*NO RESPONSE FROM ITM (INTRUSION TRANSCEIVER MODULE) 188
*NO RESPONSE FROM LRSM (LIGHT/RAIN SENSOR MODULE) 191
*NO RESPONSE FROM MULTI-PURPOSE MODULE (POLICE AND TAXI INTERFACE MODULE-PTIM). 194
*NO RESPONSE FROM MSMD (MEMORY SEAT MODULE) 197
*NO RESPONSE FROM OCM (OCCUPANT CLASSIFICATION MODULE) 200
*NO RESPONSE FROM ORC (OCCUPANT RESTRAINT CONTROLLER MODULE). 204
*NO RESPONSE FROM PCM (POWERTRAIN CONTROL MODULE). 208
*NO RESPONSE FROM PDM (PASSENGER DOOR MODULE) 212
*NO RESPONSE FROM PTS (PARK ASSIST MODULE) 215
*NO RESPONSE FROM RADIO 218
*NO RESPONSE FROM SDAR (SATELLITE RECEIVER) 221
*NO RESPONSE FROM SCM (STEERING CONTROL MODULE). 224
*NO RESPONSE FROM SUNR (SUNROOF MOTOR/MODULE) 227
*NO RESPONSE FROM TCM (TRANSMISSION CONTROL MODULE) - NAG1. 230
*NO RESPONSE FROM TCM (TRANSMISSION CONTROL MODULE) – NGC. 234
*NO RESPONSE FROM VES (MONITOR/ DVD MEDIA SYSTEM). 236
*NO RESPONSE FROM WCM (WIRELESS CONTROL MODULE) – (SENTRY KEY REMOTE ENTRY MODULE) 239

ELECTRONIC CONTROL MODULES - ELECTRICAL DIAGNOSTICS

DIAGNOSIS AND TESTING

B210D-BATTERY VOLTAGE LOW

For a complete wiring diagram **Refer to Section 8W**.

- **When Monitored:**
  With the ignition on.
- **Set Condition:**
  Battery voltage less than 9 volts for approximately 5 to 6 seconds.

Possible Causes
RESISTANCE IN THE BATTERY POSITIVE CIRCUIT
RESISTANCE IN THE GENERATOR CASE GROUND
GENERATOR OPERATION
(K20) GENERATOR FIELD CONTROL CIRCUIT OPEN
(K20) GENERATOR FIELD CONTROL CIRCUIT SHORTED TO GROUND
GROUND CIRCUIT OPEN
PCM

Diagnostic Test

1. CHECK FOR ANY POWERTRAIN CONTROL MODULES DTCS

NOTE: Make sure the Battery is in good condition. Using the Midtronics Battery Tester, test the Battery before continuing.

NOTE: Inspect the vehicle for after market accessories that may exceed the Generator System output.

NOTE: Make sure the generator drive belt is in good operating condition.

NOTE: Inspect the fuses in the IPM. If an open fuse is found, use the wire diagram/schematic as a guide, inspect the wiring and connectors for damage.

Turn the ignition on.

With the scan tool, read active PCM DTC's.

Does the scan tool display any active PCM DTC's?

Yes >> (Refer to 9 - ENGINE - DIAGNOSIS AND TESTING) for the diagnostic test procedure.

No >> Check the above conditions that can cause a low voltage condition. Repair as necessary. Perform BODY VERIFICATION TEST – VER 1. (Refer to BODY VERIFICATION TEST – VER 1).

B210E-BATTERY VOLTAGE HIGH

For a complete wiring diagram **Refer to Section 8W**.

- **When Monitored:**
  With the ignition on.
- **Set Condition:**
  Battery voltage greater than 16 volts for approximately 5 to 6 seconds.

Possible Causes
(K20) GENERATOR FIELD CONTROL CIRCUIT SHORTED TO BATTERY VOLTAGE
GENERATOR
PCM

Diagnostic Test

1. CHECK FOR ANY POWERTRAIN CONTROL MODULES DTCS

NOTE: Make sure the Battery is in good condition. Using the Midtronics Battery Tester, test the Battery before continuing.

NOTE: Inspect the vehicle for after market accessories that may exceed the Generator System output.

NOTE: Make sure the generator drive belt is in good operating condition.

NOTE: Inspect the fuses in the IPM. If an open fuse is found, use the wire diagram/schematic as a guide, inspect the wiring and connectors for damage.

Turn the ignition on.

With the scan tool, read active PCM DTC's.

Does the scan tool display any active PCM DTC's?

Yes >> (Refer to 9 - ENGINE - DIAGNOSIS AND TESTING) for the diagnostic test procedure.

No >> Check the above conditions that can cause a high voltage condition. Repair as necessary.
Perform BODY VERIFICATION TEST – VER 1. (Refer to BODY VERIFICATION TEST – VER 1).

B2112-5 VOLT SUPPLY CIRCUIT LOW

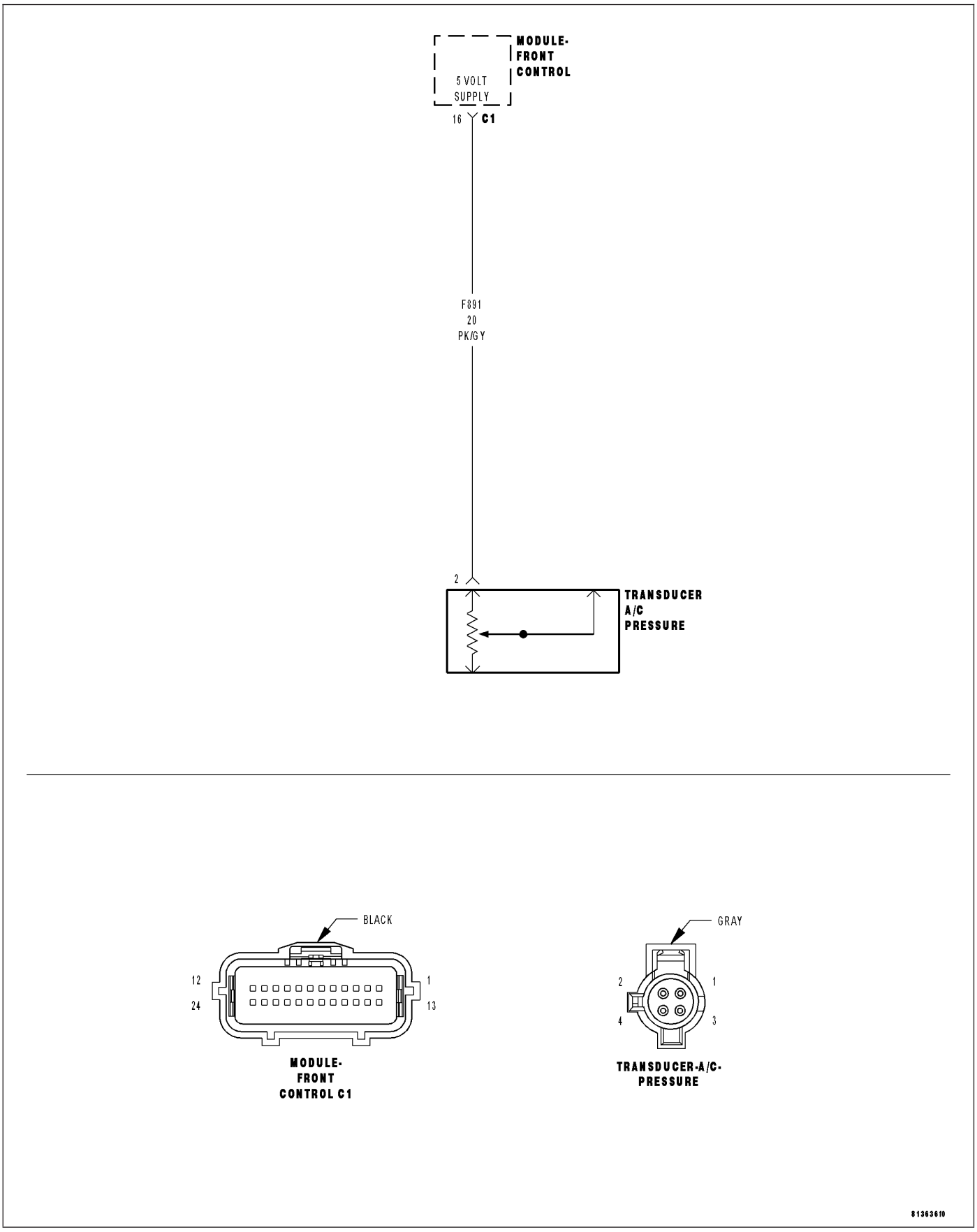

For a complete wiring diagram **Refer to Section 8W**.

- **When Monitored:**
  With the ignition on.
- **Set Condition:**
  The Front Control Module detects the (F891) 5 volt supply circuit voltage below 4 volts.

Possible Causes
(F891) 5 VOLT SUPPLY CIRCUIT SHORTED TO GROUND
A/C PRESSURE TRANSDUCER
FRONT CONTROL MODULE

Diagnostic Test

1. CHECK FOR ACTIVE DTC

With the scan tool, read the active DTC's.
Cycle the ignition switch from off to on, leaving the ignition on for a minimum of 90 seconds.
With the scan tool, read the active DTC's.

Does the scan tool display this DTC as active?

Yes >> Go To 2

No >> If the DTC is stored, check for an intermittent condition. Visually inspect the related wiring harness connectors. Look for broken, bent, pushed out, or corroded terminals.

2. A/C PRESSURE TRANSDUCER

Turn the ignition off.
Disconnect the A/C Pressure Transducer harness connector.
Cycle the ignition switch from off to on, leaving the ignition on for a minimum of 90 seconds.
With the scan tool, read the active DTC's.

Does the scan tool display this DTC as active?

Yes >> Go To 3

No >> Replace the A/C Pressure Transducer in accordance with the service information.
Perform BODY VERIFICATION TEST – VER 1. (Refer to BODY VERIFICATION TEST – VER 1).

3. (F891) 5 VOLT SUPPLY CIRCUIT SHORTED TO GROUND

Turn the ignition off.
Disconnect the FCM C1 harness connector.
Measure the resistance between ground and the (F891) 5 Volt Supply circuit.

Is the resistance below 1000.0 ohms?

Yes >> Repair the (F891) 5 Volt Supply circuit for a short to ground.
Perform BODY VERIFICATION TEST – VER 1. (Refer to BODY VERIFICATION TEST – VER 1).

No >> Inspect the wiring and connectors for damage or shorted circuits. If ok, replace and program the Front Control Module in accordance with the service information.
Perform BODY VERIFICATION TEST – VER 1. (Refer to BODY VERIFICATION TEST – VER 1).

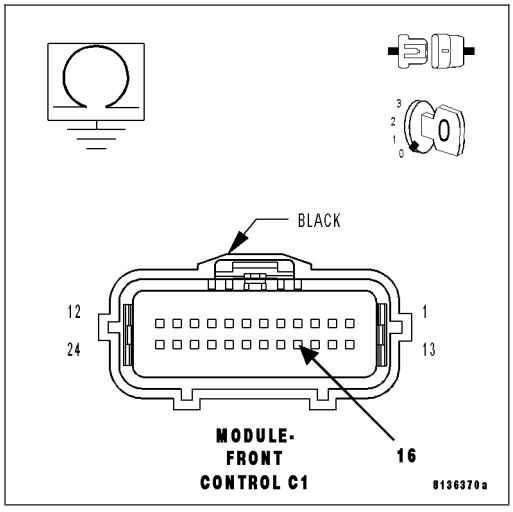

B2113-5 VOLT SUPPLY CIRCUIT HIGH

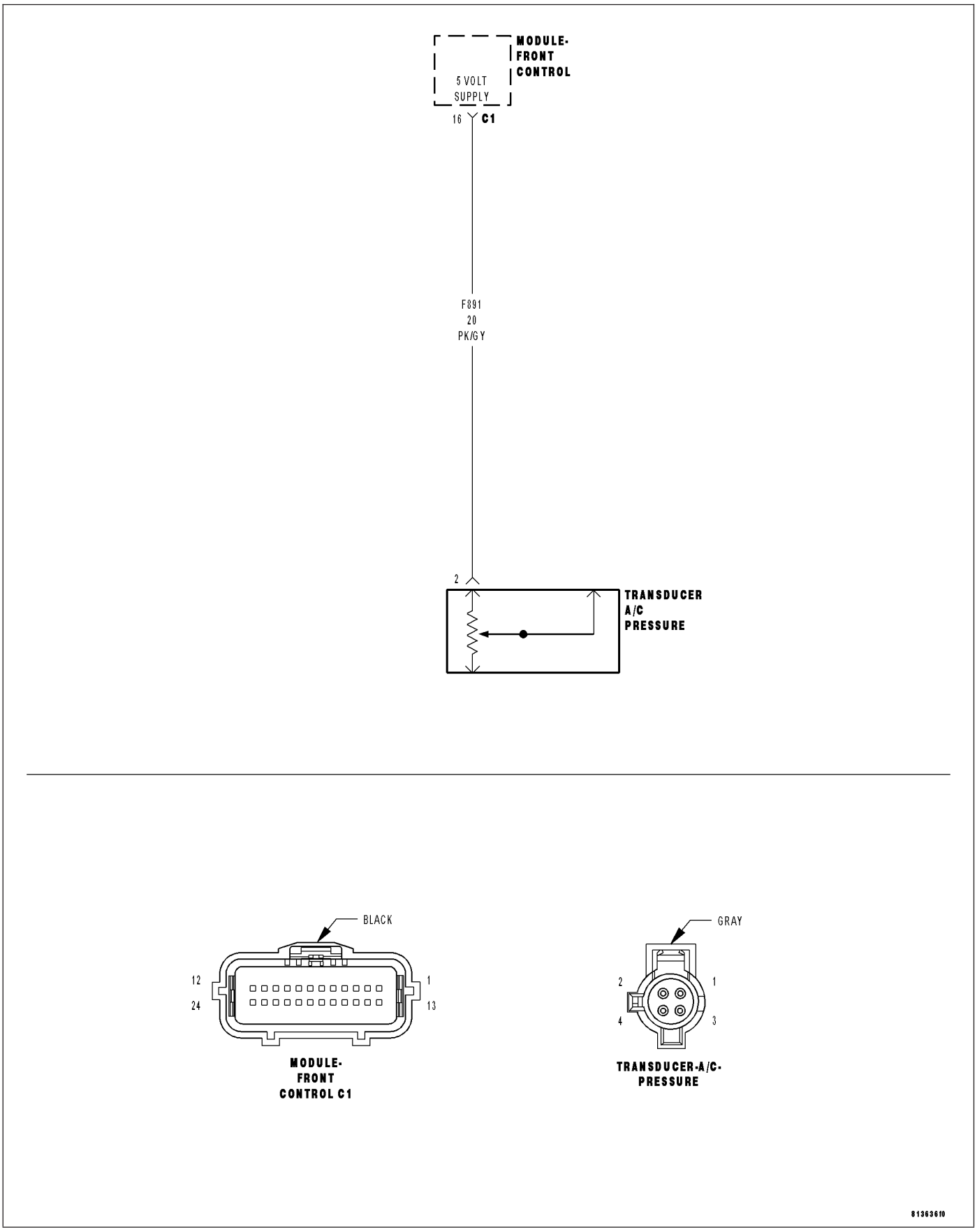

For a complete wiring diagram **Refer to Section 8W**.

- **When Monitored:**
  With the ignition on.
- **Set Condition:**
  The Front Control Module detects the (F891) 5 volt supply circuit voltage above 5.0 volts.

Possible Causes
(F891) 5 VOLT SUPPLY CIRCUIT SHORTED TO VOLTAGE
A/C PRESSURE TRANSDUCER
FRONT CONTROL MODULE

Diagnostic Test

1. CHECK FOR ACTIVE DTC

With the scan tool, read the active DTC's.
Cycle the ignition switch from off to on, leaving the ignition on for a minimum of 90 seconds.
With the scan tool, read the active DTC's.

Does the scan tool display this DTC as active?

Yes >> Go To 2

No >> If the DTC is stored, check for an intermittent condition. Visually inspect the related wiring harness connectors. Look for broken, bent, pushed out, or corroded terminals.

2. A/C PRESSURE TRANSDUCER

Turn the ignition off.
Disconnect the A/C Pressure Transducer harness connector.
Cycle the ignition switch from off to on, leaving the ignition on for a minimum of 90 seconds.
With the scan tool, read the active DTC's.

Does the scan tool display this DTC as active?

Yes >> Go To 3

No >> Replace the A/C Pressure Transducer in accordance with the service information.
Perform BODY VERIFICATION TEST – VER 1. (Refer to BODY VERIFICATION TEST – VER 1).

3. (F891) 5 VOLT SUPPLY CIRCUIT SHORTED TO VOLTAGE

Turn the ignition off.
Disconnect the FCM C1 harness connector.
Turn the ignition on.
Measure the voltage of the (F891) 5 Volt Supply circuit.

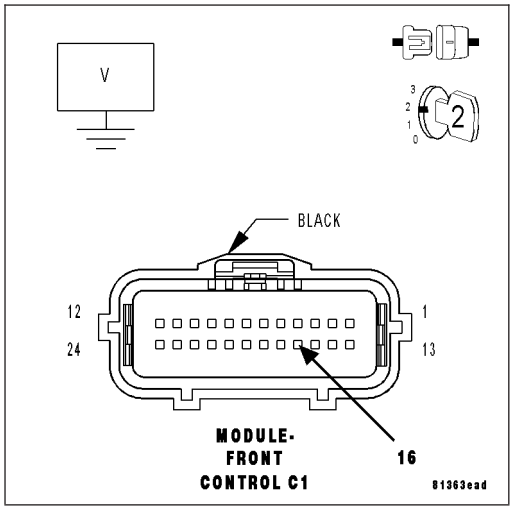

Is the voltage above 5.5 volts?

Yes >> Repair the (F891) 5 Volt Supply circuit for a short to voltage.
Perform BODY VERIFICATION TEST – VER 1. (Refer to BODY VERIFICATION TEST – VER 1).

No >> Inspect the wiring and connectors for damage or shorted circuits. If ok, replace and program the Front Control Module in accordance with the service information.
Perform BODY VERIFICATION TEST – VER 1. (Refer to BODY VERIFICATION TEST – VER 1).

B2206-CURRENT VIN MISSING/MISMATCH

For a complete wiring diagram **Refer to Section 8W**.

- **When Monitored:**
  With the ignition on.
- **Set Condition:**
  The Front Control Module will receive and monitor the VIN message from the PCM and record the VIN if different from the last VIN.

Possible Causes
INCORRECT VIN PROGRAMMED IN PCM
FRONT CONTROL MODULE

Diagnostic Test

1. CHECK FOR ACTIVE DTC

With the scan tool, read the active DTC's.

Cycle the ignition switch from off to on at least 5 times, leaving the ignition on for a minimum of 90 seconds per cycle.

With the scan tool, read the active DTC's.

Does the scan tool display this DTC as active?

Yes >> Go To 2

No >> If the DTC is stored, check for an intermittent condition. Visually inspect the related wiring harness connectors. Look for broken, bent, pushed out, or corroded terminals.

2. CHECK VIN IN PCM

With the scan tool compare the VIN that is programmed into the PCM to the VIN on the vehicle.

Does the VIN programmed into the PCM match the vehicles VIN?

Yes >> Inspect the wiring and connectors for damage or shorted circuits. If ok, replace and program the Front Control Module in accordance with the service information.
Perform BODY VERIFICATION TEST – VER 1. (Refer to BODY VERIFICATION TEST – VER 1).

No >> Program the correct VIN in the PCM and retest.

B2215-FRONT CONTROL MODULE INTERNAL

For a complete wiring diagram **Refer to Section 8W**.

- **When Monitored:**
  Continuously.
- **Set Condition:**
  The Front Control Module detects an internal fault.

Possible Causes
FRONT CONTROL MODULE

Diagnostic Test

1. REPLACE THE FRONT CONTROL MODULE IF DTC IS ACTIVE

With the scan tool, read the active FCM DTC's.

Does the scan tool display this DTC as active?

Yes >> Replace and program the Front Control Module in accordance with the service information.
Perform BODY VERIFICATION TEST – VER 1. (Refer to BODY VERIFICATION TEST – VER 1).

No >> If the DTC is stored, check for an intermittent condition. Visually inspect the related wiring harness connectors. Look for broken, bent, pushed out, or corroded terminals.

B222C-VEHICLE CONFIGURATION NOT PROGRAMMED

For a complete wiring diagram **Refer to Section 8W**.

- **When Monitored:**
  With the ignition on.
- **Set Condition:**
  The Front Control Module is not configured correctly to the vehicle.

Possible Causes
FRONT CONTROL MODULE NOT CONFIGURED CORRECTLY
FRONT CONTROL MODULE

Diagnostic Test

1. CHECK FOR ACTIVE DTC

With the scan tool, read the active DTC's.

Cycle the ignition switch from off to on at least 5 times, leaving the ignition on for a minimum of 90 seconds per cycle.

With the scan tool, read the active DTC's.

Does the scan tool display this DTC as active?

Yes >> Go To 2

No >> If the DTC is stored, check for an intermittent condition. Visually inspect the related wiring harness connectors. Look for broken, bent, pushed out, or corroded terminals.

2. CONFIGURE THE FCM TO THE VEHICLE

With the scan tool enter program network configuration and program the FCM to the vehicle configuration.

With the scan tool, erase FCM DTC's.

Cycle the ignition switch from off to on at least 5 times, leaving the ignition on for a minimum of 90 seconds per cycle.

With the scan tool, read the active DTC's.

Does the scan tool display this DTC as active?

Yes >> Inspect the wiring and connectors for damage or shorted circuits. If ok, replace and program the Front Control Module in accordance with the service information.
Perform BODY VERIFICATION TEST – VER 1. (Refer to BODY VERIFICATION TEST – VER 1).

No >> Repair is complete.

U0001-CAN C BUS

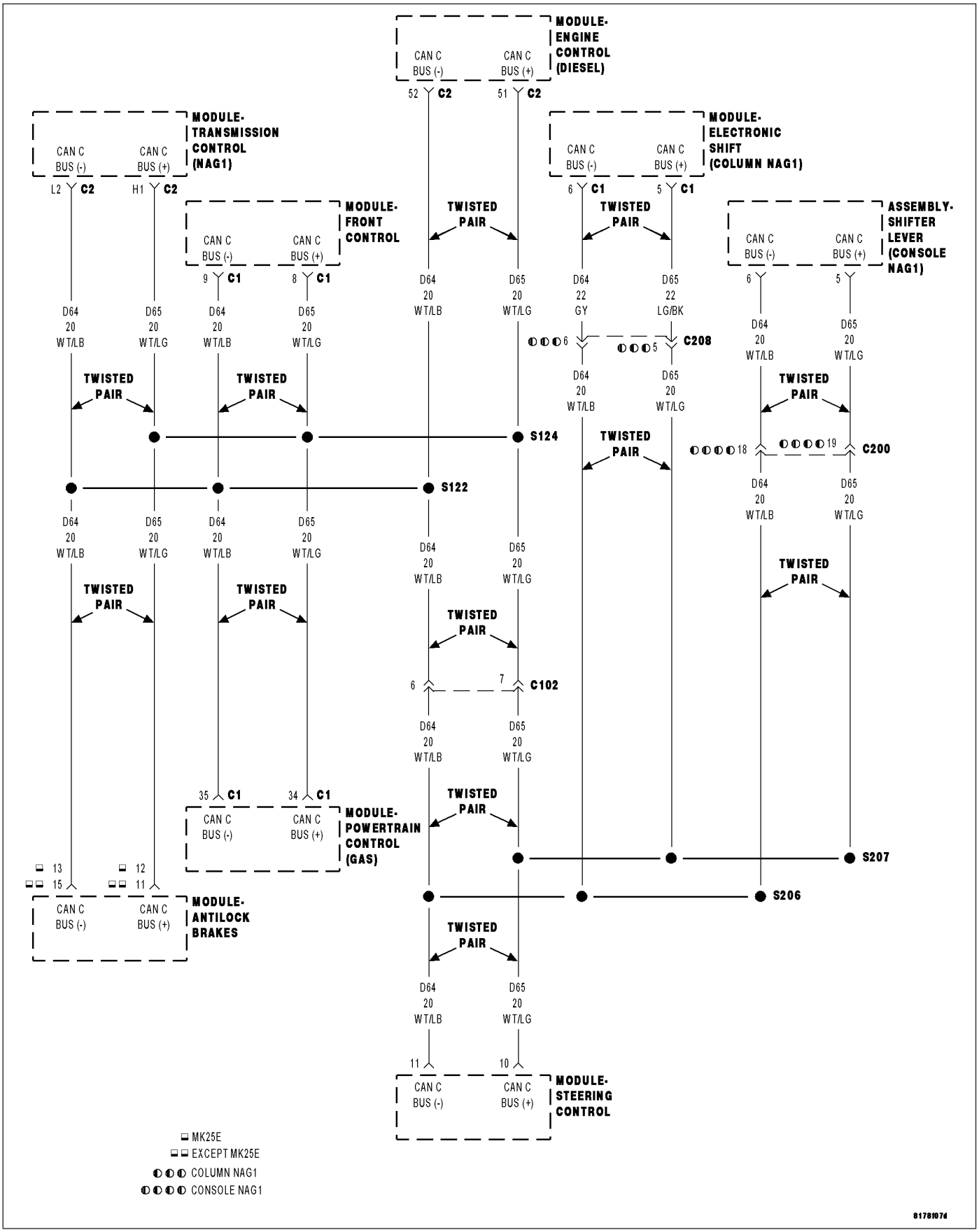

For a complete wiring diagram **Refer to Section 8W**.

- **When Monitored:**
  With the ignition on.
- **Set Condition:**
  The FCM detects a short in either CAN C Bus circuit.

Possible Causes
(D65) CAN C BUS (+) CIRCUIT SHORTED TO GROUND
(D64) CAN C BUS (-) CIRCUIT SHORTED TO GROUND
(D65) CAN C BUS (+) CIRCUIT SHORTED TO VOLTAGE
(D64) CAN C BUS (-) CIRCUIT SHORTED TO VOLTAGE
(D65) CAN C BUS (+) CIRCUIT SHORTED TO (D64) CAN C BUS (-) CIRCUIT
ANTILOCK BRAKE MODULE
POWERTRAIN CONTROL MODULE
SHIFTER LEVER ASSEMBLY (NAG1 ONLY)
ELECTRONIC SHIFT MODULE (COLUMN NAG1)
TRANSMISSION CONTROL MODULE (NAG1 ONLY)
ENGINE CONTROL MODULE (DIESEL)
STEERING CONTROL MODULE
FRONT CONTROL MODULE

Diagnostic Test

1. TEST FOR INTERMITTENT CONDITION

Turn the ignition on.
With the scan tool, record and erase FCM DTC's.
Cycle the ignition from on to off 3 times.
Turn the ignition on.
With the scan tool, read active FCM DTC's.

Does the scan tool display U0001–CAN C BUS as active?

Yes >> Go To 2

No >> The conditions that caused this code to set are not present at this time. Using the wiring diagram/schematic as a guide, inspect the wiring and connectors.

2. ANTILOCK BRAKE MODULE — INTERNAL SHORT

Turn the ignition off.
Disconnect the Antilock Brake Module harness connector.
Turn the ignition on.
With the scan tool, record and erase FCM DTC's.
Cycle the ignition from on to off 3 times.
Turn the ignition on.
With the scan tool, read active FCM DTC's.

Does the scan tool display U0001–CAN C BUS as active?

Yes >> Go To 3

No >> Inspect the wiring and connectors for damage or shorted circuits. If ok, replace the Antilock Brake Module in accordance with the service information.
Perform ABS VERIFICATION TEST — VER 1.

3. POWERTRAIN CONTROL MODULE — INTERNAL SHORT

Turn the ignition off.
Disconnect the Powertrain Control Module C1 harness connector.
Turn the ignition on.
With the scan tool, record and erase FCM DTC's.
Cycle the ignition from on to off 3 times.
Turn the ignition on.
With the scan tool, read active FCM DTC's.

Does the scan tool display U0001–CAN C BUS as active?

Yes, with Floor Shift
Go To 4

Yes, with Column Shift
Go To 5

No >> Inspect the wiring and connectors for damage or shorted circuits. If ok, replace and program the Powertrain Control Module in accordance with the service information.
Perform (NGC) POWERTRAIN VERIFICATION TEST VER - 5.

4. SHIFTER LEVER ASSEMBLY (NAG1 ONLY)— INTERNAL SHORT

Turn the ignition off.

NOTE: If the vehicle is not equipped with a NAG1 controller then skip this step.
Disconnect the Shifter Lever Assembly harness connector.
Turn the ignition on.
With the scan tool, record and erase FCM DTC's.
Cycle the ignition from on to off 3 times.
Turn the ignition on.
With the scan tool, read active FCM DTC's.

Does the scan tool display U0001–CAN C BUS as active?

Yes >> Go To 6

No >> Inspect the wiring and connectors for damage or shorted circuits. If ok, replace and program the Shifter Lever Assembly in accordance with the service information.
Perform NAG1 TRANSMISSION VERIFICATION TEST - VER 1.

5. ELECTRONIC SHIFT MODULE (COLUMN NAG1)— INTERNAL SHORT

Turn the ignition off.

NOTE: If the vehicle is not equipped with a NAG1 controller then skip this step.
Disconnect the Electronic Shift Module harness connector.
Turn the ignition on.
With the scan tool, record and erase FCM DTC's.
Cycle the ignition from on to off 3 times.
Turn the ignition on.
With the scan tool, read active FCM DTC's.

Does the scan tool display U0001–CAN C BUS as active?

Yes >> Go To 6

No >> Inspect the wiring and connectors for damage or shorted circuits. If ok, replace and program the Electronic Shift Module in accordance with the service information.
Perform NAG1 TRANSMISSION VERIFICATION TEST - VER 1.

6. TRANSMISSION CONTROL MODULE (NAG1 ONLY)— INTERNAL SHORT

Turn the ignition off.

NOTE: If the vehicle is not equipped with a NAG1 controller then skip this step.
Disconnect the Transmission Control Module C2 harness connector.
Turn the ignition on.
With the scan tool, record and erase FCM DTC's.
Cycle the ignition from on to off 3 times.
Turn the ignition on.
With the scan tool, read active FCM DTC's.

Does the scan tool display U0001–CAN C BUS as active?

Yes >> Go To 7

No >> Inspect the wiring and connectors for damage or shorted circuits. If ok, replace and program the Transmission Control Module in accordance with the service information.
Perform NAG1 TRANSMISSION VERIFICATION TEST - VER 1.

7. ENGINE CONTROL MODULE (DIESEL)— INTERNAL SHORT

Turn the ignition off.
Disconnect the Engine Control Module C2 harness connector.
Turn the ignition on.
With the scan tool, record and erase FCM DTC's.
Cycle the ignition from on to off 3 times.
Turn the ignition on.
With the scan tool, read active FCM DTC's.

Does the scan tool display U0001–CAN C BUS as active?

Yes >> Go To 8

No >> Inspect the wiring and connectors for damage or shorted circuits. If ok, replace and program the Engine Control Module in accordance with the service information.
Perform the ECM VERIFICATION TEST.

8. STEERING CONTROL MODULE — INTERNAL SHORT

Turn the ignition off.
Remove the Steering Control Module.
Turn the ignition on.
With the scan tool, record and erase FCM DTC's.
Cycle the ignition from on to off 3 times.
Turn the ignition on.
With the scan tool, read active FCM DTC's.

Does the scan tool display U0001–CAN C BUS as active?

Yes >> Go To 9

No >> Inspect the wiring and connectors for damage or shorted circuits. If ok, replace and program the Steering Control Module in accordance with the service information.
Perform BODY VERIFICATION TEST – VER 1. (Refer to BODY VERIFICATION TEST – VER 1).

9. (D65) CAN C BUS (+) CIRCUIT SHORTED TO VOLTAGE

Turn the ignition off.

Disconnect the Front Control Module C1 harness connector.

Turn the ignition on.

Measure the voltage between the (D65) CAN C Bus (+) circuit and ground.

Is there any voltage present?

Yes >> Repair the (D65) CAN C Bus (+) circuit for a short to voltage.
Perform BODY VERIFICATION TEST – VER 1. (Refer to BODY VERIFICATION TEST – VER 1).

No >> Go To 10

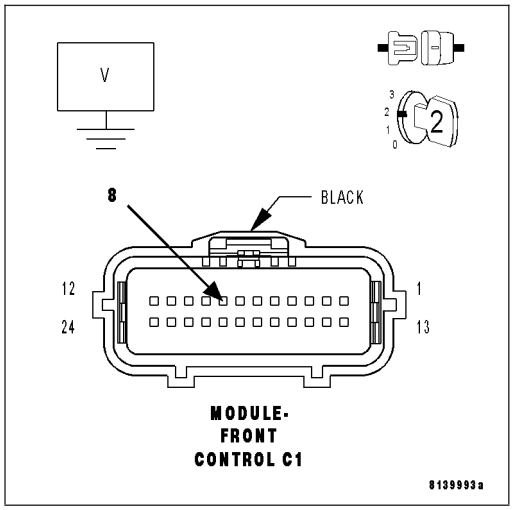

10. (D64) CAN C BUS (-) CIRCUIT SHORTED TO VOLTAGE

Measure the voltage between the (D64) CAN C Bus (-) circuit and ground.

Is there any voltage present?

Yes >> Repair the (D64) CAN C Bus (-) circuit for a short to voltage.
Perform BODY VERIFICATION TEST – VER 1. (Refer to BODY VERIFICATION TEST – VER 1).

No >> Go To 11

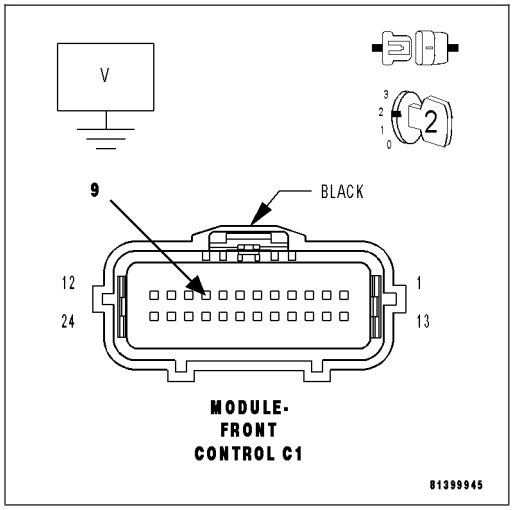

11. (D65) CAN C BUS (+) CIRCUIT SHORTED TO GROUND

Turn the ignition off.

Measure the resistance between ground and the (D65) CAN C Bus (+) circuit.

Is any resistance present?

Yes >> Repair the (D65) CAN C Bus (+) circuit for a short to ground.
Perform BODY VERIFICATION TEST – VER 1. (Refer to BODY VERIFICATION TEST – VER 1).

No >> Go To 12

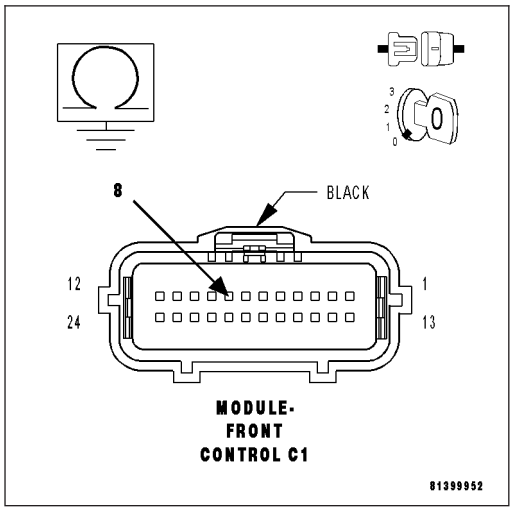

12. (D64) CAN C BUS (-) CIRCUIT SHORTED TO GROUND

Measure the resistance between ground and the (D64) CAN C Bus (-) circuit.

Is any resistance present?

Yes >> Repair the (D64) CAN C Bus (-) circuit for a short to ground.

Perform BODY VERIFICATION TEST – VER 1. (Refer to BODY VERIFICATION TEST – VER 1).

No >> Go To 13

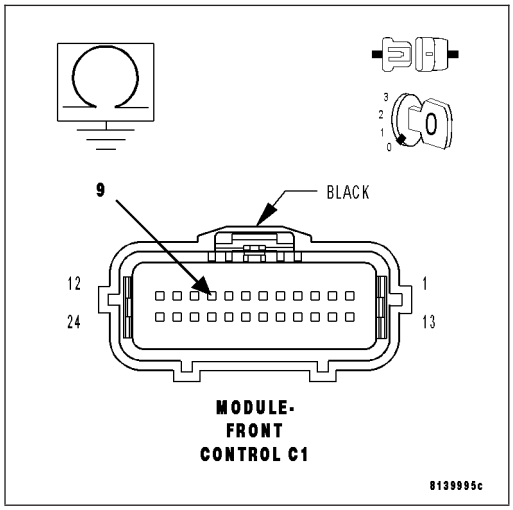

13. (D65) CAN C BUS (+) CIRCUIT SHORTED TO (D64) CAN C BUS (-) CIRCUIT

Measure the resistance between the (D65) CAN C Bus (+) circuit and the (D64) CAN C Bus (-) circuit.

Is any resistance present?

Yes >> Repair the (D65) CAN C Bus (+) circuit for a short to the (D64) CAN C Bus (-) circuit.

Perform BODY VERIFICATION TEST – VER 1. (Refer to BODY VERIFICATION TEST – VER 1).

No >> Inspect the wiring and connectors for damage or shorted circuits. If ok, replace and program the Front Control Module in accordance with the service information.

Perform BODY VERIFICATION TEST – VER 1. (Refer to BODY VERIFICATION TEST – VER 1).

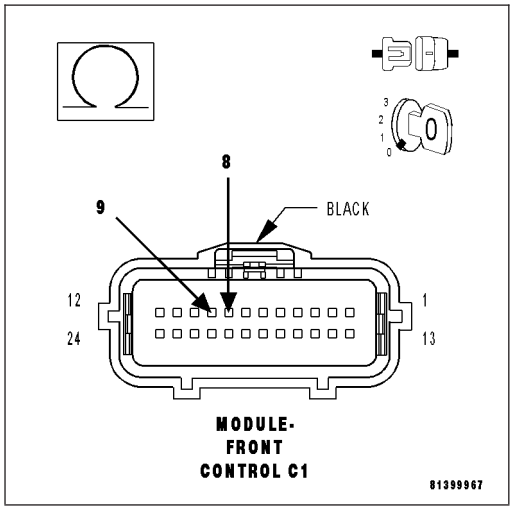

U0019-CAN B BUS

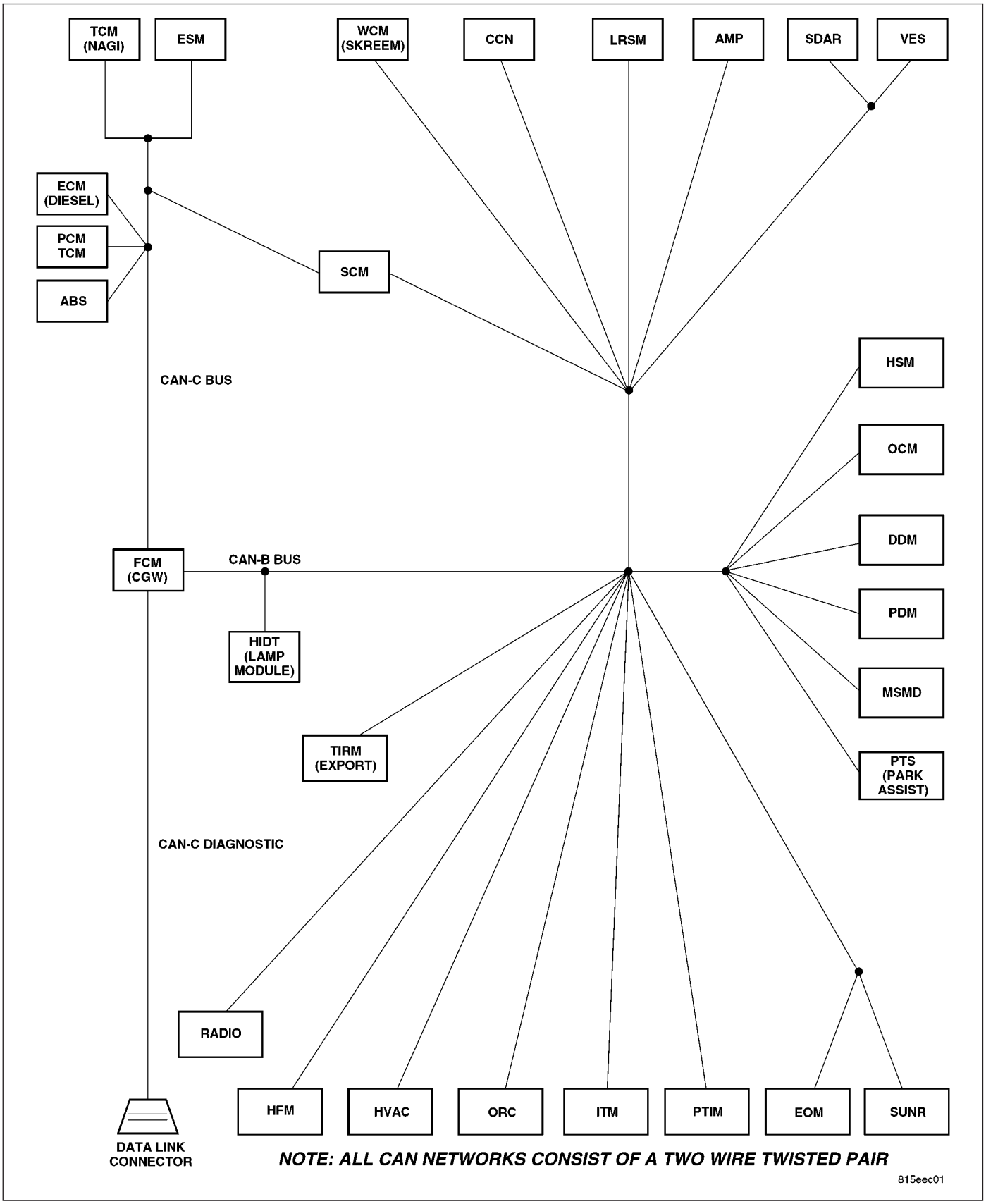

For a complete wiring diagram **Refer to Section 8W**.

- **When Monitored:**
  With the ignition on.
- **Set Condition:**
  The FCM detects an open, a short high, a short low or a short together in either of the CAN B Bus circuits.

Possible Causes
(D55) CAN B BUS (+) CIRCUIT OPEN
(D54) CAN B BUS (-) CIRCUIT OPEN
(D55) CAN B BUS (+) CIRCUIT SHORTED TO VOLTAGE
(D54) CAN B BUS (-) CIRCUIT SHORTED TO VOLTAGE
(D55) CAN B BUS (+) CIRCUIT SHORTED TO GROUND
(D54) CAN B BUS (-) CIRCUIT SHORTED TO GROUND
(D55) CAN B BUS (+) CIRCUIT SHORTED TO (D54) CAN B BUS (-) CIRCUIT
ANY CAN B BUS MODULE

Diagnostic Test

1. TEST FOR INTERMITTENT CONDITION

Turn the ignition on.
With the scan tool, record and erase FCM DTC's.
Cycle the ignition from on to off 3 times.
Turn the ignition on.
With the scan tool, read active FCM DTC's.

Does the scan tool display this DTC as active?

Yes >> Go To 2

No >> The conditions that caused this code to set are not present at this time. Using the wiring diagram/schematic as a guide, inspect the wiring and connectors.

2. MEASURE VOLTAGE AT FCM

Gain access to the Front Control Module C1 harness connector, but do not disconnect.
Backprobe and measure the voltage on both the (D55) CAN B Bus (+) and the (D54) CAN B (-) circuits.

Does the voltage read approximately 4.65 - 4.98 volts on the (D54) CAN B Bus (-) and 0.39 - 0.46 volts on the (D55) CAN B (+) circuits?

Yes >> Go To 3

No - Voltage Between 0.3 - 0.7 Volts on Both Circuits
Go To 9

No - Voltage Reads 0 Volts on Either Circuit
Go To 7

No - Voltage Above 10 Volts on Either Circuit
Go To 5

3. (D55) CAN B BUS (+) CIRCUIT OPEN

Turn the ignition on.

With the scan tool select ECU View.

Using a fused jumper wire, connect one end to ground and with the other end backprobe the (D54) CAN B Bus (-) circuit at the FCM C1 harness connector.

NOTE: A red "X" will appear next to modules that can no longer communicate on the Bus.

Did a red "X" appear next to any modules on the scan tool?

Yes >> Using the Wiring Diagrams to further isolate the open in the circuit, repair the (D55) CAN B Bus (+) circuit for an open. Perform the BODY VERIFICATION TEST – VER 1. (Refer to BODY VERIFICATION TEST – VER 1).

No >> Go To 4

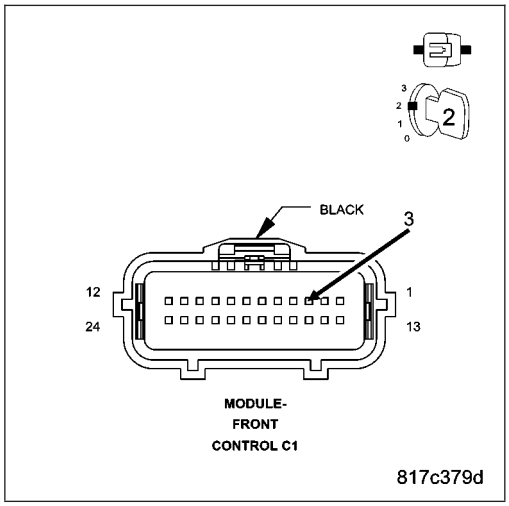

4. (D54) CAN B BUS (-) CIRCUIT OPEN

With the scan tool select ECU View.

Using a fused jumper wire, connect one end to ground and with the other end backprobe the (D55) CAN B Bus (+) circuit at the FCM C1 harness connector.

NOTE: A red "X" will appear next to modules that can no longer communicate on the Bus.

Did a red "X" appear next to any modules on the scan tool?

Yes >> Using the Wiring Diagrams to further isolate the open in the circuit, repair the (D54) CAN B Bus (-) circuit for an open. Perform the BODY VERIFICATION TEST – VER 1. (Refer to BODY VERIFICATION TEST – VER 1).

No >> Inspect the wiring and connectors for damage. If ok, replace and program the Front Control Module in accordance with the service information. Perform the BODY VERIFICATION TEST – VER 1. (Refer to BODY VERIFICATION TEST – VER 1).

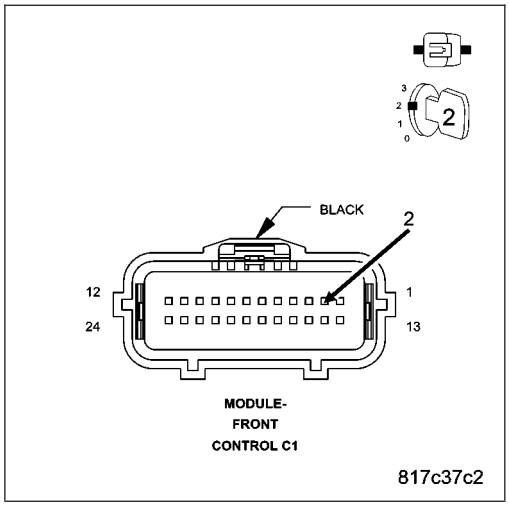

5. (D55) CAN B BUS (+) CIRCUIT FOR A SHORT TO VOLTAGE

Turn the ignition off.

Disconnect the Front Control Module C1 harness connector.

Turn the ignition on.

Measure the voltage between the (D55) CAN B Bus (+) circuit and ground.

Is the voltage above 10.0 volts?

Yes >> Disconnect each CAN B Bus module one at a time while observing the voltage to determine if the short is caused by an internal short within a module. Replace the module, in accordance with the service information, that when disconnected eliminates the short to voltage. If the short condition is still present with all CAN B Bus modules disconnected

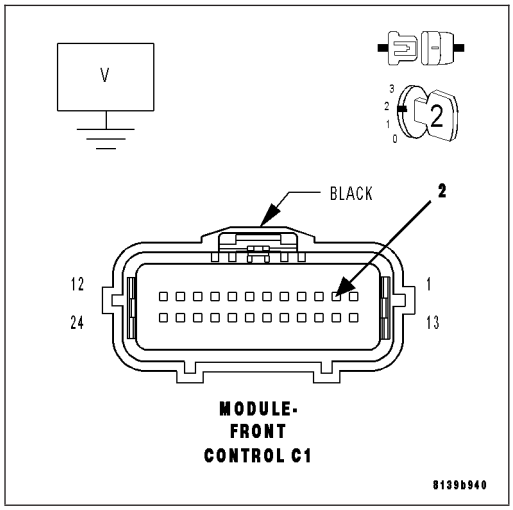

use the Wiring Diagrams to help isolate and repair the (D55) CAN B Bus (+) circuit for a short to voltage.

Perform the BODY VERIFICATION TEST – VER 1. (Refer to BODY VERIFICATION TEST – VER 1).

No >> Go To 6

6. (D54) CAN B BUS (-) CIRCUIT FOR A SHORT TO VOLTAGE

Measure the voltage between the (D54) CAN B Bus (-) circuit and ground.

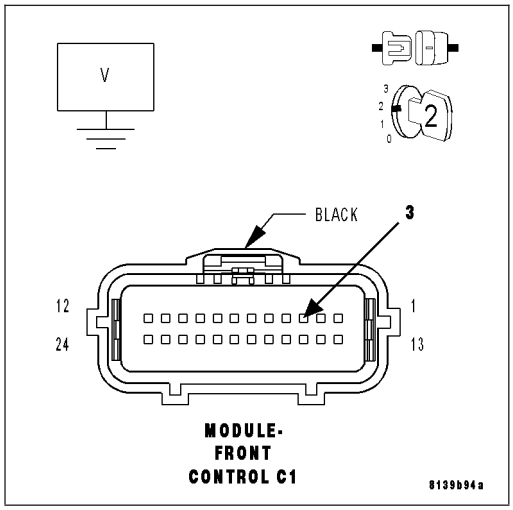

Is the voltage above 10.0 volts?

Yes >> Disconnect each CAN B Bus module one at a time while observing the voltage to determine if the short is caused by an internal short within a module. Replace the module, in accordance with the service information, that when disconnected eliminates the short to voltage. If the short condition is still present with all CAN B Bus modules disconnected use the Wiring Diagrams to help isolate and repair the (D54) CAN B Bus (-) circuit for a short to voltage.

Perform the BODY VERIFICATION TEST – VER 1. (Refer to BODY VERIFICATION TEST – VER 1).

No >> Inspect the wiring and connectors for damage. If ok, replace and program the Front Control Module in accordance with the service information. Perform the BODY VERIFICATION TEST – VER 1. (Refer to BODY VERIFICATION TEST – VER 1).

7. (D55) CAN B BUS (+) CIRCUIT FOR A SHORT TO GROUND

Turn the ignition off.

Disconnect the Front Control Module C1 harness connector.

Measure the resistance between ground and the (D55) CAN B Bus (+) circuit.

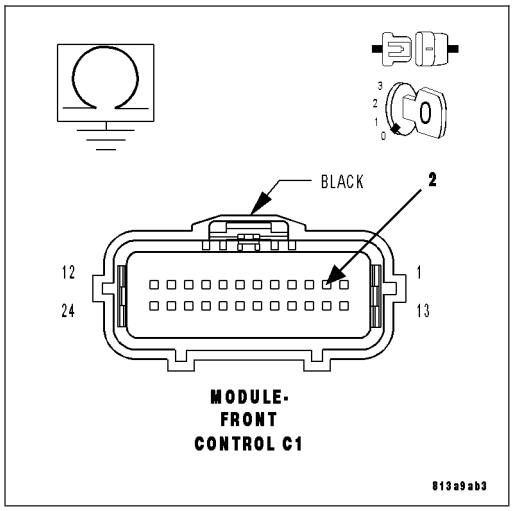

Is the resistance above 1000.0 ohms?

Yes >> Go To 8

No >> Disconnect each CAN B Bus module one at a time while observing the resistance to determine if the short is caused by an internal short within a module. Replace the module, in accordance with the service information, that when disconnected eliminates the short to ground. If the short condition is still present with all CAN B Bus modules disconnected use the Wiring Diagrams to help isolate and repair the (D55) CAN B Bus (+) circuit for a short to ground.

Perform the BODY VERIFICATION TEST – VER 1. (Refer to BODY VERIFICATION TEST – VER 1).

8. (D54) CAN B BUS (-) CIRCUIT FOR A SHORT TO GROUND

Measure the resistance between ground and the (D54) CAN B Bus (-) circuit.

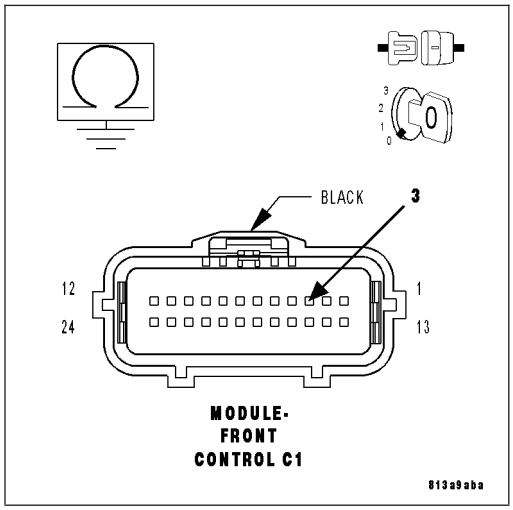

Is the resistance above 1000.0 ohms?

Yes >> Inspect the wiring and connectors for damage. If ok, replace and program the Front Control Module in accordance with the service information. Perform the BODY VERIFICATION TEST – VER 1. (Refer to BODY VERIFICATION TEST – VER 1).

No >> Disconnect each CAN B Bus module one at a time while observing the resistance to determine if the short is caused by an internal short within a module. Replace the module, in accordance with the service information, that when disconnected eliminates the short to ground. If the short condition is still present with all CAN B Bus modules disconnected use the Wiring Diagrams to help isolate and repair the (D54) CAN B Bus (-) circuit for a short to ground.

Perform the BODY VERIFICATION TEST – VER 1. (Refer to BODY VERIFICATION TEST – VER 1).

9. (D55) CAN B BUS (+) CIRCUIT SHORTED TO THE (D54) CAN B BUS (-) CIRCUIT

Turn the ignition off.

Disconnect the Front Control Module C1 harness connector.

Measure the resistance between the (D55) CAN B Bus (+) circuit and (D54) CAN B Bus (-) circuit.

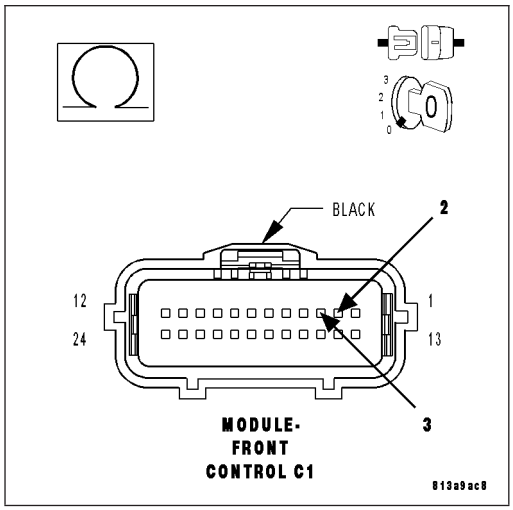

Is any resistance present?

Yes >> Disconnect each CAN B Bus module one at a time while observing the resistance to determine if the short is caused by an internal short within a module. Replace the module, in accordance with the service information, that when disconnected eliminates the short between the two circuits. If the short condition is still present with all CAN B Bus modules disconnected use the Wiring Diagrams to help isolate and repair the (D55) CAN B Bus (+) circuit for a short to the (D54) CAN B Bus (-) circuit.

Perform the BODY VERIFICATION TEST – VER 1. (Refer to BODY VERIFICATION TEST – VER 1).

No >> Inspect the wiring and connectors for damage. If ok, replace and program the Front Control Module in accordance with the service information. Perform the BODY VERIFICATION TEST – VER 1. (Refer to BODY VERIFICATION TEST – VER 1).

U0100-LOST COMMUNICATION WITH ECM/PCM

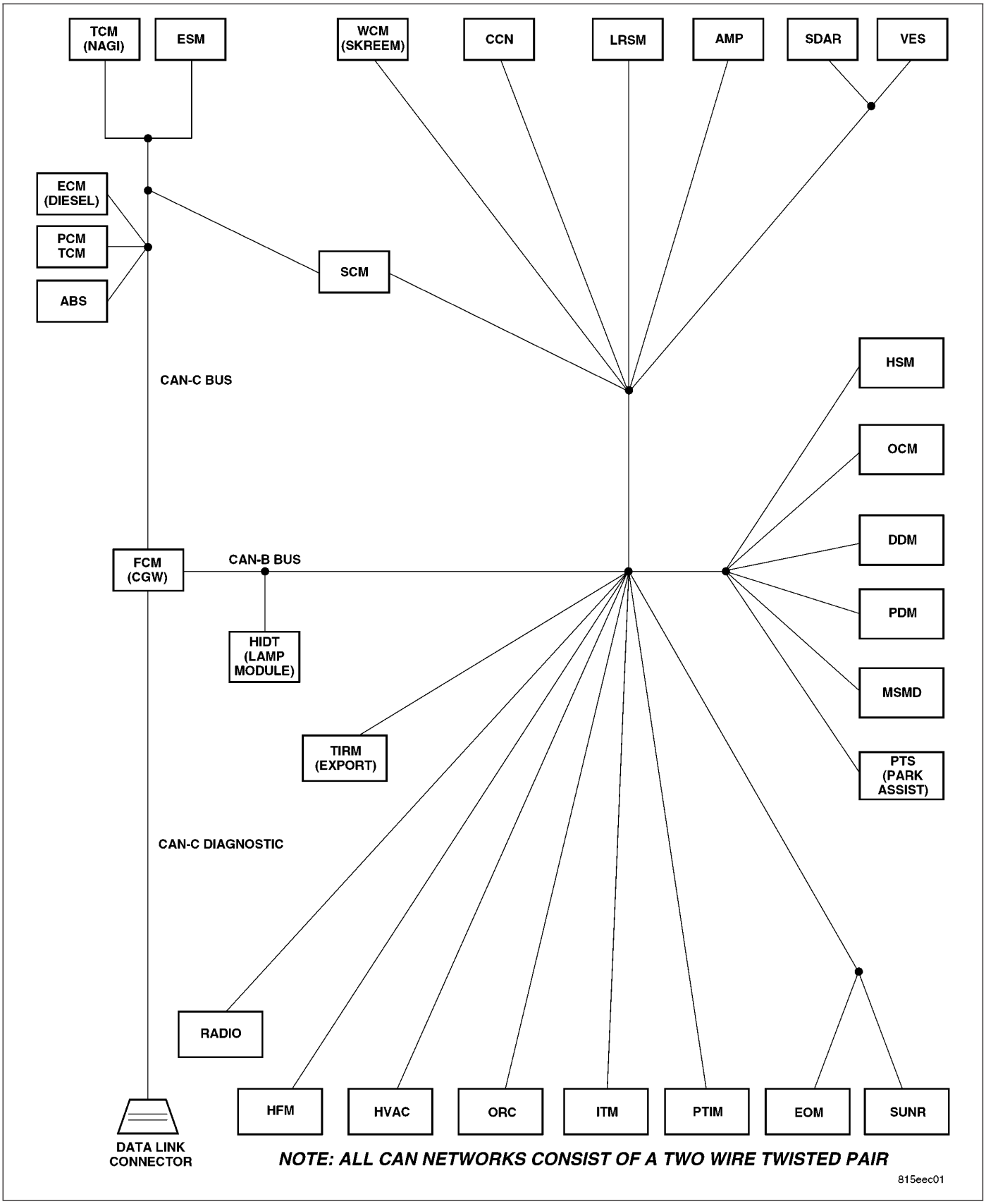

For a complete wiring diagram **Refer to Section 8W**.

- **When Monitored:**
  - With the ignition on
  - Battery voltage between 10 and 16 volts
  - IOD fuse installed
  - FCM is configured correctly
- **Set Condition:**
  Bus messages not received from the ECM/PCM for approximately 500ms.

Possible Causes
CAN B OR CAN C BUS CIRCUITS OPEN OR SHORTED
DTCS RELATED TO BATTERY VOLTAGE, IGNITION, OR VIN MESSAGES
FCM NOT CONFIGURED CORRECTLY
ECM/PCM
ECM/PCM POWER AND GROUND
MODULE THAT SET THIS DTC

Diagnostic Test

1. VERIFY DTC IS ACTIVE

NOTE: Ensure the IOD fuse is installed and battery voltage is between 10 and 16 volts before proceeding.
With the scan tool, read active DTCs.

Is this DTC active?

Yes >> Go To 2

No >> Refer to the Stored Lost Communication test procedure. Refer to the table of contents in this section. Perform BODY VERIFICATION TEST – VER 1. (Refer to BODY VERIFICATION TEST – VER 1).

2. CHECK FOR ANY OF THE FOLLOWING ACTIVE DTCS

With the scan tool, read all active DTCs from all modules.

NOTE: Check for FCM configuration, CAN B or C hardware electrical, VIN Missing/Mismatch, battery or ignition related DTCs.

Does the scan tool display any active DTCs to the conditions listed above?

Yes >> Diagnose and repair the DTC. Refer to the Table of Contents for a complete list of the symptoms. Perform BODY VERIFICATION TEST – VER 1. (Refer to BODY VERIFICATION TEST – VER 1).

No >> Go To 3

3. VERIFY THAT THE ECM/PCM IS ACTIVE ON THE BUS

Turn the ignition on.
With the scan tool, select ECU View.
Verify that the ECM/PCM is active on the bus.

Is the ECM/PCM active on the bus?

Yes >> Go To 4

No >> Refer to the Table of Contents located in this section for a no response test procedure. Perform BODY VERIFICATION TEST – VER 1. (Refer to BODY VERIFICATION TEST – VER 1).

4. CHECK FOR ADDITIONAL COMMUNICATION RELATED DTCS

With the scan tool, select Network View and select Advanced.

Is there more than one module with active DTCs “Logged Against” the ECM/PCM?

Yes >> Replace/update the ECM/PCM in accordance with the service information.
Perform BODY VERIFICATION TEST – VER 1. (Refer to BODY VERIFICATION TEST – VER 1).

No >> Replace/update the module that set this DTC in accordance with the service information.
Perform BODY VERIFICATION TEST – VER 1. (Refer to BODY VERIFICATION TEST – VER 1).

U0101-LOST COMMUNICATION WITH TCM

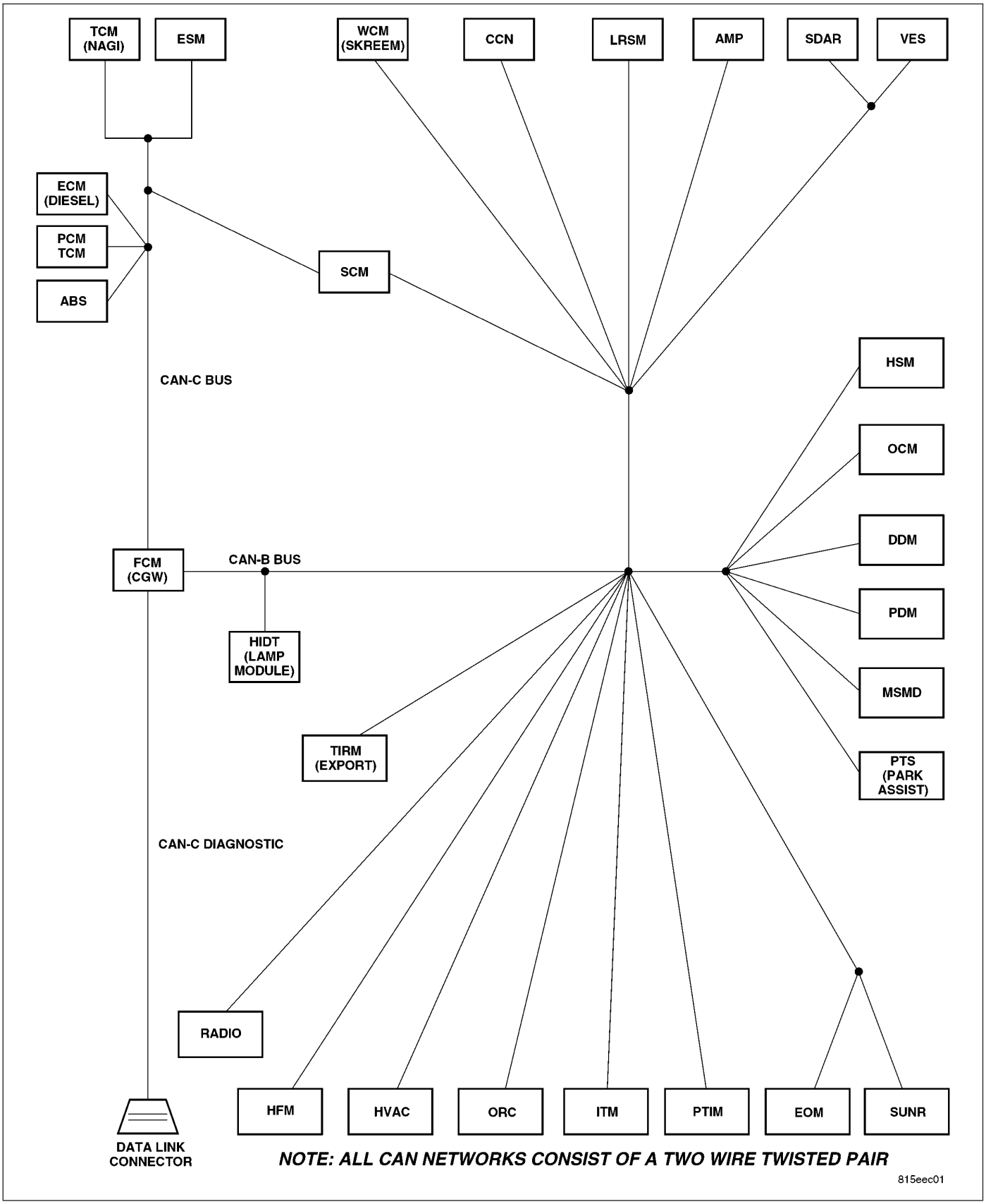

For a complete wiring diagram **Refer to Section 8W**.

- **When Monitored:**
  - With the ignition on
  - Battery voltage between 10 and 16 volts
  - IOD fuse installed
  - FCM is configured correctly
- **Set Condition:**
  Bus messages not received from the TCM for approximately 500ms.

Possible Causes
CAN B OR CAN C BUS CIRCUITS OPEN OR SHORTED
DTCS RELATED TO BATTERY VOLTAGE, IGNITION, OR VIN MESSAGES
FCM NOT CONFIGURED CORRECTLY
TCM
TCM POWER AND GROUND
MODULE THAT SET THIS DTC

Diagnostic Test

1. VERIFY DTC IS ACTIVE

NOTE: Ensure the IOD fuse is installed and battery voltage is between 10 and 16 volts before proceeding.
With the scan tool, read active DTCs.

Is this DTC active?

Yes >> Go To 2

No >> Refer to the Stored Lost Communication test procedure. Refer to the table of contents in this section. Perform BODY VERIFICATION TEST – VER 1. (Refer to BODY VERIFICATION TEST – VER 1).

2. CHECK FOR ANY OF THE FOLLOWING ACTIVE DTCS

With the scan tool, read all active DTCs from all modules.

NOTE: Check for FCM configuration, CAN B or C hardware electrical, VIN Missing/Mismatch, battery or ignition related DTCs.

Does the scan tool display any active DTCs to the conditions listed above?

Yes >> Diagnose and repair the DTC. Refer to the Table of Contents for a complete list of the symptoms. Perform BODY VERIFICATION TEST – VER 1. (Refer to BODY VERIFICATION TEST – VER 1).

No >> Go To 3

3. VERIFY THAT THE TCM IS ACTIVE ON THE BUS

Turn the ignition on.
With the scan tool, select ECU View.
Verify that the TCM is active on the bus.

Is the TCM active on the bus?

Yes >> Go To 4

No >> Refer to the Table of Contents located in this section for a no response test procedure. Perform BODY VERIFICATION TEST – VER 1. (Refer to BODY VERIFICATION TEST – VER 1).

4. CHECK FOR ADDITIONAL COMMUNICATION RELATED DTCS

With the scan tool, select Network View and select Advanced.

Is there more than one module with active DTCs "Logged Against" the TCM?

Yes >> Replace/update the TCM in accordance with the service information.
Perform BODY VERIFICATION TEST – VER 1. (Refer to BODY VERIFICATION TEST – VER 1).

No >> Replace/update the module that set this DTC in accordance with the service information.
Perform BODY VERIFICATION TEST – VER 1. (Refer to BODY VERIFICATION TEST – VER 1).

U0103-LOST COMMUNICATION WITH ELECTRIC GEAR SHIFT MODULE

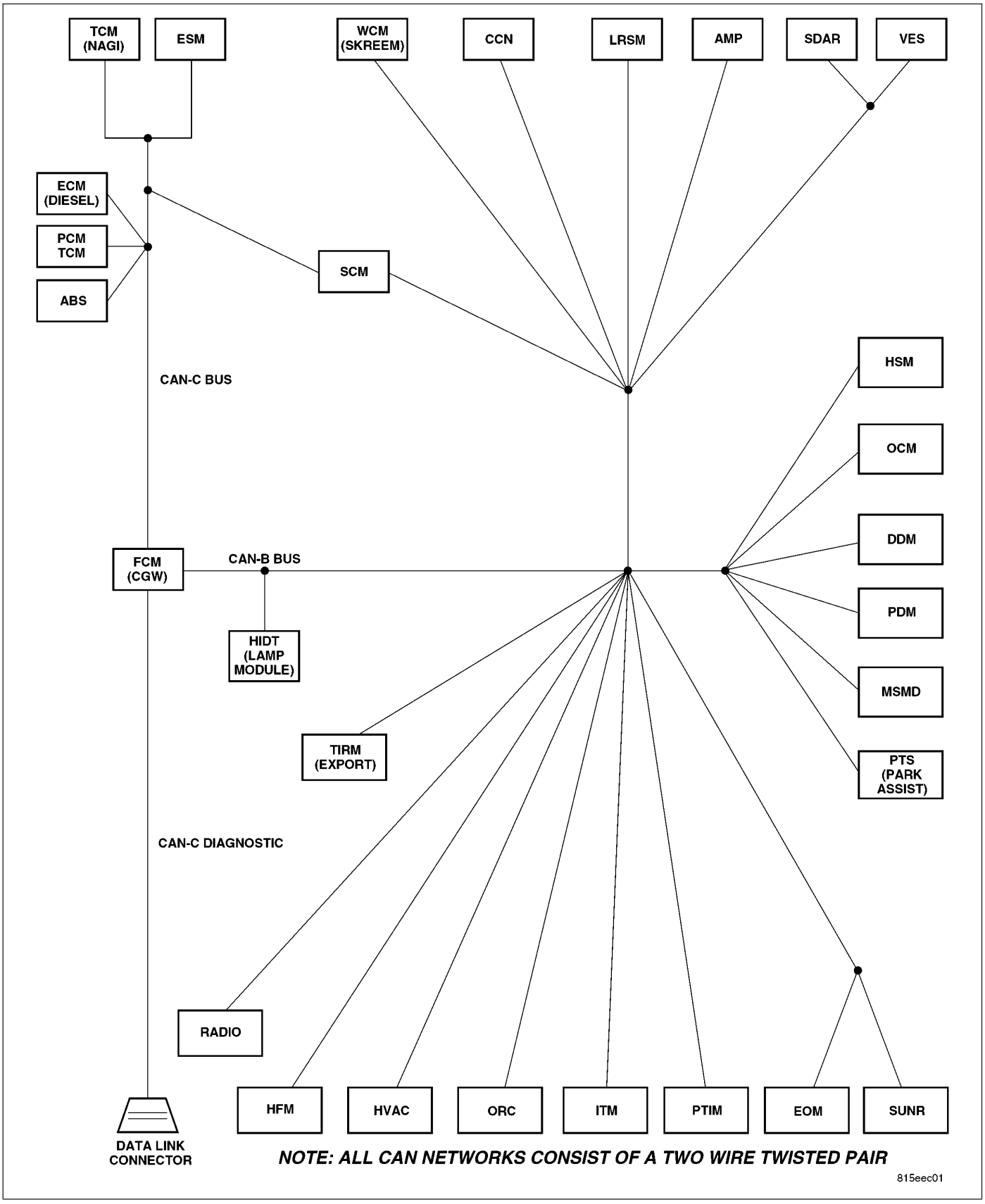

For a complete wiring diagram **Refer to Section 8W**.

- **When Monitored:**
  - With the ignition on
  - Battery voltage between 10 and 16 volts
  - IOD fuse installed
  - FCM is configured correctly
- **Set Condition:**
  Bus messages not received from the Electric Gear Shift Module (shifter lever assembly) for approximately 500ms.

Possible Causes
CAN B OR CAN C BUS CIRCUITS OPEN OR SHORTED
DTCS RELATED TO BATTERY VOLTAGE, IGNITION, OR VIN MESSAGES
FCM NOT CONFIGURED CORRECTLY
SHIFTER LEVER ASSEMBLY (NAG1 ONLY)
SHIFTER LEVER ASSEMBLY (NAG1 ONLY) POWER AND GROUND
ELECTRONIC SHIFT MODULE (COLUMN NAG1)
ELECTRONIC SHIFT MODULE (COLUMN NAG1) POWER AND GROUND
MODULE THAT SET THIS DTC

Diagnostic Test

1. VERIFY DTC IS ACTIVE

NOTE: Ensure the IOD fuse is installed and battery voltage is between 10 and 16 volts before proceeding. With the scan tool, read active DTCs.

Is this DTC active?

Yes >> Go To 2

No >> Refer to the Stored Lost Communication test procedure. Refer to the table of contents in this section. Perform BODY VERIFICATION TEST – VER 1. (Refer to BODY VERIFICATION TEST – VER 1).

2. CHECK FOR ANY OF THE FOLLOWING ACTIVE DTCS

With the scan tool, read all active DTCs from all modules.

NOTE: Check for FCM configuration, CAN B or C hardware electrical, VIN Missing/Mismatch, battery or ignition related DTCs.

Does the scan tool display any active DTCs to the conditions listed above?

Yes >> Diagnose and repair the DTC. Refer to the Table of Contents for a complete list of the symptoms. Perform BODY VERIFICATION TEST – VER 1. (Refer to BODY VERIFICATION TEST – VER 1).

No >> Go To 3

3. VERIFY THAT THE SHIFTER LEVER ASSEMBLY (NAG 1 ONLY) OR IF APPLICABLE THE ELECTRONIC SHIFT MODULE (COLUMN NAG 1) IS ACTIVE ON THE BUS

Turn the ignition on.

With the scan tool, select ECU View.

Verify that the Shifter Lever Assembly (NAG 1 Only) or if applicable the Electronic Shift Module (Column NAG 1) is active on the bus.

Is the Shifter Lever Assembly (NAG 1 Only) or if applicable the Electronic Shift Module (Column NAG 1) active on the bus?

Yes >> Go To 4

No >> Refer to the Table of Contents located in this section for a no response test procedure.
Perform BODY VERIFICATION TEST – VER 1. (Refer to BODY VERIFICATION TEST – VER 1).

4. CHECK FOR ADDITIONAL COMMUNICATION RELATED DTCS

With the scan tool, select Network View and select Advanced.

Is there more than one module with active DTCs “Logged Against” the Shifter Lever Assembly (NAG 1 Only) or if applicable the Electronic Shift Module (Column NAG 1)?

Yes >> Replace/update the Shifter Lever Assembly (NAG 1 Only) or if applicable the Electronic Shift Module (Column NAG 1) in accordance with the service information.
Perform BODY VERIFICATION TEST – VER 1. (Refer to BODY VERIFICATION TEST – VER 1).

No >> Replace/update the module that set this DTC in accordance with the service information.
Perform BODY VERIFICATION TEST – VER 1. (Refer to BODY VERIFICATION TEST – VER 1).

U0121-LOST COMMUNICATION WITH ANTI-LOCK BRAKE MODULE

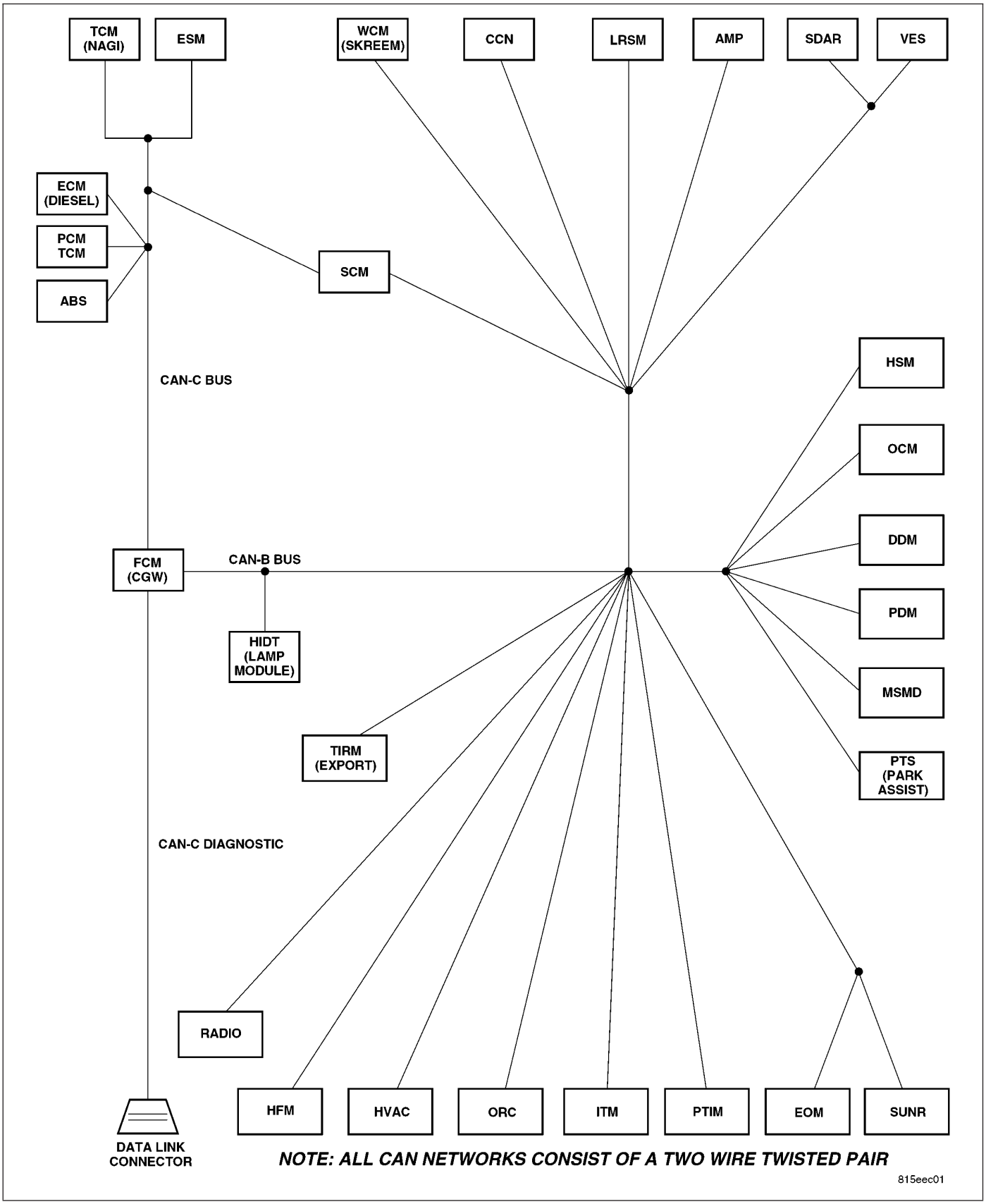

For a complete wiring diagram **Refer to Section 8W**.

- **When Monitored:**
  - With the ignition on
  - Battery voltage between 10 and 16 volts
  - IOD fuse installed
  - FCM is configured correctly
- **Set Condition:**
  Bus messages not received from the Antilock Brake Module for approximately 500ms.

Possible Causes
CAN B OR CAN C BUS CIRCUITS OPEN OR SHORTED
DTCS RELATED TO BATTERY VOLTAGE, IGNITION, OR VIN MESSAGES
FCM NOT CONFIGURED CORRECTLY
ANTILOCK BRAKE MODULE POWER AND GROUND
ANTILOCK BRAKE MODULE
MODULE THAT SET THIS DTC

Diagnostic Test

1. VERIFY DTC IS ACTIVE

NOTE: Ensure the IOD fuse is installed and battery voltage is between 10 and 16 volts before proceeding.
With the scan tool, read active DTCs.

Is this DTC active?

Yes >> Go To 2

No >> Refer to the Stored Lost Communication test procedure. Refer to the table of contents in this section. Perform BODY VERIFICATION TEST – VER 1. (Refer to BODY VERIFICATION TEST – VER 1).

2. CHECK FOR ANY OF THE FOLLOWING ACTIVE DTCS

With the scan tool, read all active DTCs from all modules.

NOTE: Check for FCM configuration, CAN B or C hardware electrical, VIN Missing/Mismatch, battery or ignition related DTCs.

Does the scan tool display any active DTCs to the conditions listed above?

Yes >> Diagnose and repair the DTC. Refer to the Table of Contents for a complete list of the symptoms. Perform BODY VERIFICATION TEST – VER 1. (Refer to BODY VERIFICATION TEST – VER 1).

No >> Go To 3

3. VERIFY THAT THE ABS IS ACTIVE ON THE BUS

Turn the ignition on.
With the scan tool, select ECU View.
Verify that the ABS is active on the bus.

Is the ABS active on the bus?

Yes >> Go To 4

No >> Refer to the Table of Contents located in this section for a no response test procedure. Perform BODY VERIFICATION TEST – VER 1. (Refer to BODY VERIFICATION TEST – VER 1).

4. CHECK FOR ADDITIONAL COMMUNICATION RELATED DTCS

With the scan tool, select Network View and select Advanced.

Is there more than one module with active DTCs "Logged Against" the ABS?

Yes >> Replace/update the Antilock Brake Module in accordance with the service information.
Perform BODY VERIFICATION TEST – VER 1. (Refer to BODY VERIFICATION TEST – VER 1).

No >> Replace/update the module that set this DTC in accordance with the service information
Perform BODY VERIFICATION TEST – VER 1. (Refer to BODY VERIFICATION TEST – VER 1).

U0141–LOST COMMUNICATION WITH FRONT CONTROL MODULE

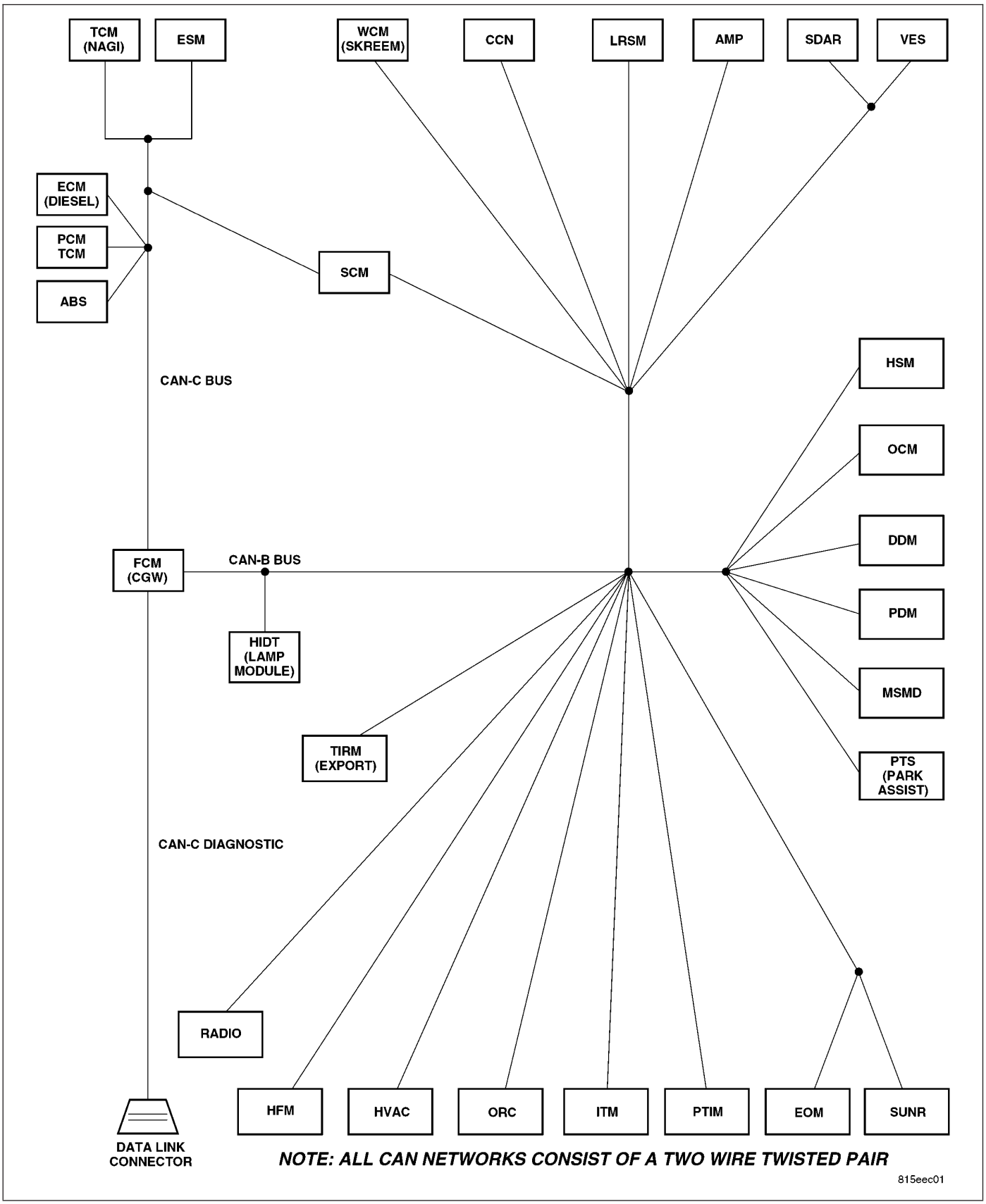

For a complete wiring diagram **Refer to Section 8W**.

- **When Monitored:**
  - With the ignition on
  - Battery voltage between 10 and 16 volts
  - IOD fuse installed
  - FCM is configured correctly
- **Set Condition:**
  Bus messages not received from the Front Control Module for approximately 2 to 5 seconds.

Possible Causes
CAN B BUS CIRCUITS OPEN OR SHORTED
DTCS RELATED TO BATTERY VOLTAGE, IGNITION, OR VIN MESSAGES
FCM NOT CONFIGURED CORRECTLY
FRONT CONTROL MODULE
FRONT CONTROL MODULES POWER AND GROUND
MODULE THAT SET THIS DTC

Diagnostic Test

1. VERIFY DTC IS ACTIVE

NOTE: Ensure the IOD fuse is installed and battery voltage is between 10 and 16 volts before proceeding.
With the scan tool, read active DTCs.

Is this DTC active?

Yes >> Go To 2

No >> Refer to the Stored Lost Communication test procedure. Refer to the table of contents in this section. Perform BODY VERIFICATION TEST – VER 1. (Refer to BODY VERIFICATION TEST – VER 1).

2. CHECK FOR ANY OF THE FOLLOWING ACTIVE DTCS

With the scan tool, read all active DTCs from all modules.

NOTE: Check for FCM configuration, CAN B or C hardware electrical, VIN Missing/Mismatch, battery or ignition related DTCs.

Does the scan tool display any active DTCs to the conditions listed above?

Yes >> Diagnose and repair the DTC. Refer to the Table of Contents for a complete list of the symptoms. Perform BODY VERIFICATION TEST – VER 1. (Refer to BODY VERIFICATION TEST – VER 1).

No >> Go To 3

3. VERIFY THAT THE FCM IS ACTIVE ON THE BUS

Turn the ignition on.
With the scan tool, select ECU View.
Verify that the FCM is active on the bus.

Is the FCM active on the bus?

Yes >> Go To 4

No >> Refer to the Table of Contents located in this section for a no response test procedure. Perform BODY VERIFICATION TEST – VER 1. (Refer to BODY VERIFICATION TEST – VER 1).

4. CHECK FOR ADDITIONAL COMMUNICATION RELATED DTCS

With the scan tool, select Network View and select Advanced.

Is there more than one module with active DTCs “Logged Against” the FCM?

Yes >> Replace/update the Front Control Module in accordance with the service information.
Perform BODY VERIFICATION TEST – VER 1. (Refer to BODY VERIFICATION TEST – VER 1).

No >> Replace/update the module that set this DTC in accordance with the service information
Perform BODY VERIFICATION TEST – VER 1. (Refer to BODY VERIFICATION TEST – VER 1).

U0143-LOST COMMUNICATION WITH MULTI-PURPOSE MODULE (POLICE AND TAXI INTERFACE MODULE) (PTIM)

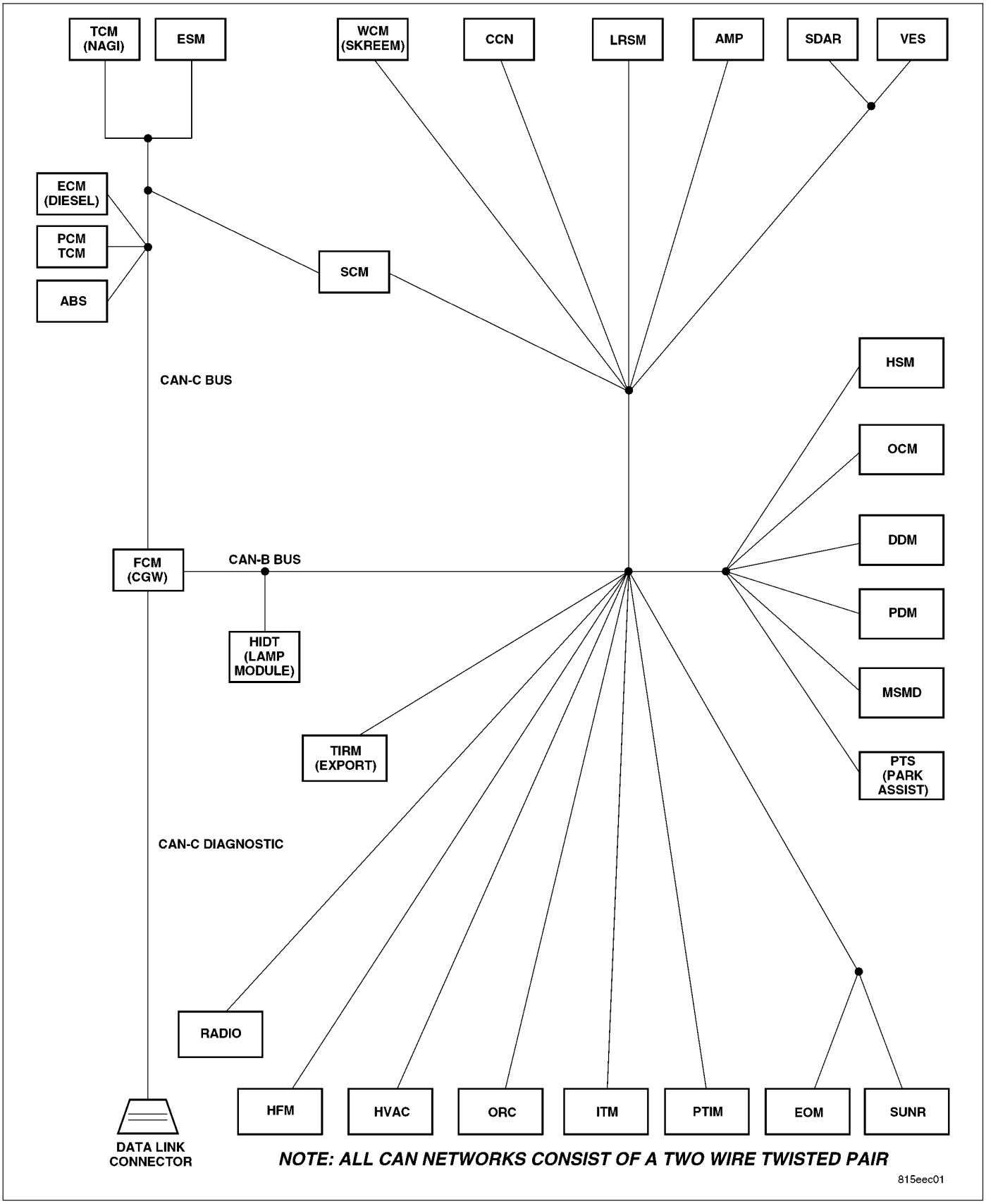

For a complete wiring diagram **Refer to Section 8W**.

- **When Monitored:**
  - With the ignition on
  - Battery voltage between 10 and 16 volts
  - IOD fuse installed
  - FCM is configured correctly
- **Set Condition:**
  Bus messages not received from the MPM (PTIM) for approximately 2 to 5 seconds.

Possible Causes
CAN B BUS CIRCUITS OPEN OR SHORTED
DTCS RELATED TO BATTERY VOLTAGE, IGNITION, OR VIN MESSAGES
FCM NOT CONFIGURED CORRECTLY
MULTI-PURPOSE MODULE (PTIM)
MULTI-PURPOSE MODULE (PTIM) POWER AND GROUND
MODULE THAT SET THIS DTC

Diagnostic Test

1. VERIFY DTC IS ACTIVE

NOTE: Ensure the IOD fuse is installed and battery voltage is between 10 and 16 volts before proceeding.
With the scan tool, read active DTCs.

Is this DTC active?

Yes >> Go To 2

No >> Refer to the Stored Lost Communication test procedure. Refer to the table of contents in this section. Perform BODY VERIFICATION TEST – VER 1. (Refer to BODY VERIFICATION TEST – VER 1).

2. CHECK FOR ANY OF THE FOLLOWING ACTIVE DTCS

With the scan tool, read active DTCs from all modules.

NOTE: Check for FCM configuration, CAN B or C hardware electrical, VIN Missing/Mismatch, battery or ignition related DTCs.

Does the scan tool display any active DTCs to the conditions listed above?

Yes >> Diagnose and repair the DTC. Refer to the Table of Contents for a complete list of the symptoms. Perform BODY VERIFICATION TEST – VER 1. (Refer to BODY VERIFICATION TEST – VER 1).

No >> Go To 3

3. VERIFY THAT THE MPM (PTIM) IS ACTIVE ON THE BUS

Turn the ignition on.
With the scan tool, select ECU View.
Verify that the MPM (PTIM) is active on the bus.

Is the MPM (PTIM) active on the bus?

Yes >> Go To 4

No >> Refer to the Table of Contents located in this section for a no response test procedure. Perform BODY VERIFICATION TEST – VER 1. (Refer to BODY VERIFICATION TEST – VER 1).

4. CHECK FOR ADDITIONAL COMMUNICATION RELATED DTCS

With the scan tool, select Network View and select Advanced.

Is there more than one module with active DTCs "Logged Against" the MPM (PTIM)?

Yes >> Replace/update the Multi-Purpose Module (PTIM) in accordance with the service information. Perform BODY VERIFICATION TEST – VER 1. (Refer to BODY VERIFICATION TEST – VER 1).

No >> Replace/update the module that set this DTC in accordance with the service information. Perform BODY VERIFICATION TEST – VER 1. (Refer to BODY VERIFICATION TEST – VER 1).

U0151–LOST COMMUNICATION WITH OCCUPANT RESTRAINT CONTROLLER (ORC)

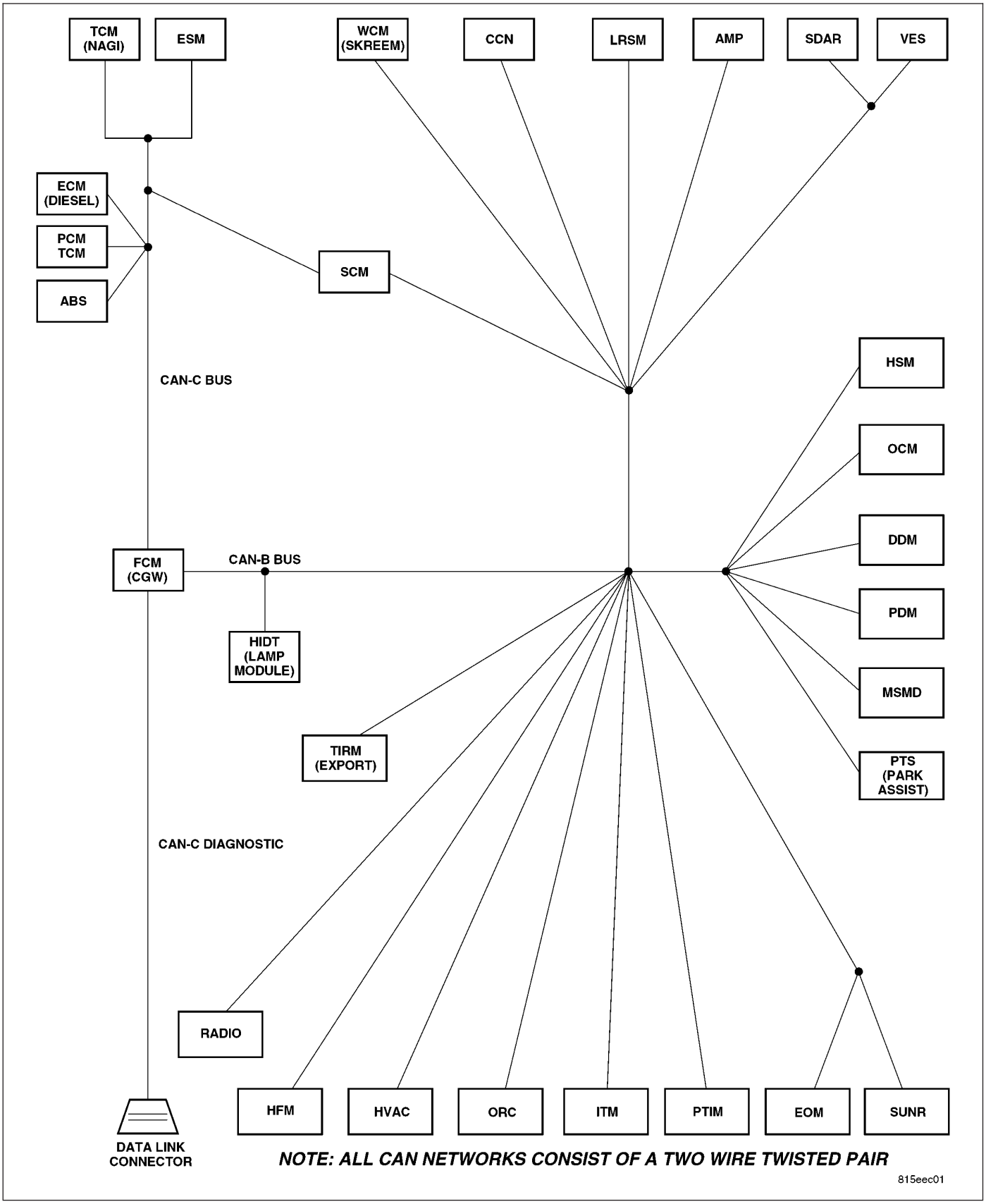

For a complete wiring diagram **Refer to Section 8W**.

- **When Monitored:**
  - With the ignition on
  - Battery voltage between 10 and 16 volts
  - IOD fuse installed
  - FCM is configured correctly
- **Set Condition:**
  Bus messages not received from the Occupant Restraint Controller for approximately 2 to 5 seconds.

Possible Causes
CAN B BUS CIRCUITS OPEN OR SHORTED
DTCS RELATED TO BATTERY VOLTAGE, IGNITION, OR VIN MESSAGES
FCM NOT CONFIGURED CORRECTLY
OCCUPANT RESTRAINT CONTROLLER
OCCUPANT RESTRAINT CONTROLLER POWER AND GROUND
MODULE THAT SET THIS DTC

Diagnostic Test

1. VERIFY DTC IS ACTIVE

NOTE: Ensure the IOD fuse is installed and battery voltage is between 10 and 16 volts before proceeding.
With the scan tool, read active DTCs.

Is this DTC active?

Yes >> Go To 2

No >> Refer to the Stored Lost Communication test procedure. Refer to the table of contents in this section. Perform BODY VERIFICATION TEST – VER 1. (Refer to BODY VERIFICATION TEST – VER 1).

2. CHECK FOR ANY OF THE FOLLOWING ACTIVE DTCS

With the scan tool, read all active DTCs from all modules.

NOTE: Check for FCM configuration, CAN B or C hardware electrical, VIN Missing/Mismatch, battery or ignition related DTCs.

Does the scan tool display any active DTCs to the conditions listed above?

Yes >> Diagnose and repair the DTC. Refer to the Table of Contents for a complete list of the symptoms. Perform BODY VERIFICATION TEST – VER 1. (Refer to BODY VERIFICATION TEST – VER 1).

No >> Go To 3

3. VERIFY THAT THE ORC IS ACTIVE ON THE BUS

Turn the ignition on.
With the scan tool, select ECU View.
Verify that the ORC is active on the bus.

Is the ORC active on the bus?

Yes >> Go To 4

No >> Refer to the Table of Contents located in this section for a no response test procedure. Perform BODY VERIFICATION TEST – VER 1. (Refer to BODY VERIFICATION TEST – VER 1).

4. CHECK FOR ADDITIONAL COMMUNICATION RELATED DTCS

With the scan tool, select Network View and select Advanced.

Is there more than one module with active DTCs "Logged Against" the ORC?

Yes >> Replace/update the Occupant Restraint Controller in accordance with the service information. Perform AIRBAG VERIFICATION TEST – VER 1.

No >> Replace/update the module that set this DTC in accordance with the service information Perform BODY VERIFICATION TEST – VER 1. (Refer to BODY VERIFICATION TEST – VER 1).

U0154–LOST COMMUNICATION WITH OCCUPANT CLASSIFICATION MODULE

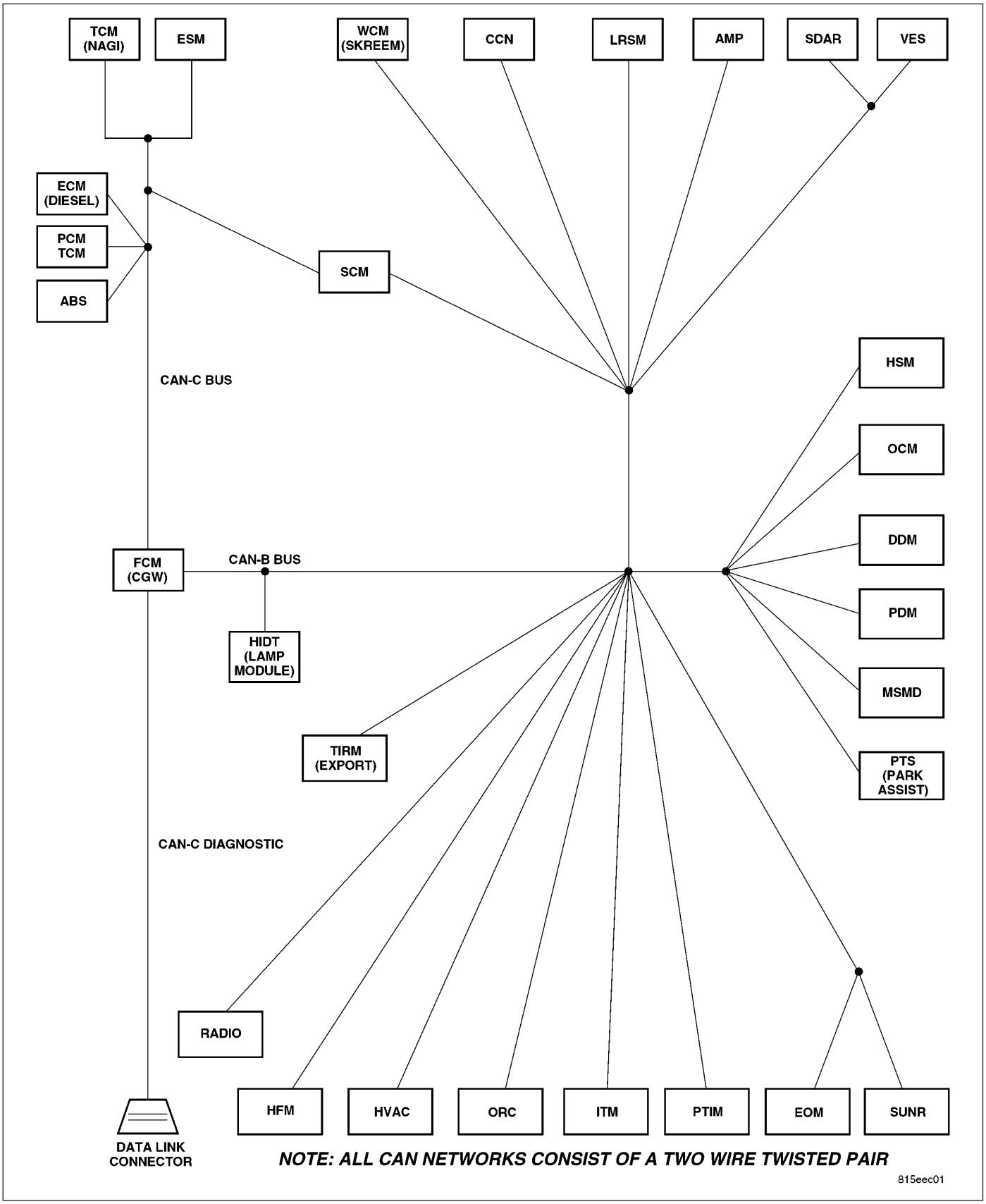

For a complete wiring diagram **Refer to Section 8W**.

- **When Monitored:**
  - With the ignition on
  - Battery voltage between 10 and 16 volts
  - IOD fuse installed
  - FCM is configured correctly
- **Set Condition:**
  Bus messages not received from the Occupant Classification Module for approximately 2 to 5 seconds.

Possible Causes
CAN B BUS CIRCUITS OPEN OR SHORTED
DTCS RELATED TO BATTERY VOLTAGE, IGNITION, OR VIN MESSAGES
FCM NOT CONFIGURED CORRECTLY
OCCUPANT CLASSIFICATION MODULE
OCCUPANT CLASSIFICATION MODULE POWER AND GROUND
MODULE THAT SET THIS DTC

Diagnostic Test

1. VERIFY DTC IS ACTIVE

NOTE: Ensure the IOD fuse is installed and battery voltage is between 10 and 16 volts before proceeding.
With the scan tool, read active DTCs.

Is this DTC active?

Yes >> Go To 2

No >> Refer to the Stored Lost Communication test procedure. Refer to the table of contents in this section. Perform BODY VERIFICATION TEST – VER 1. (Refer to BODY VERIFICATION TEST – VER 1).

2. CHECK FOR ANY OF THE FOLLOWING ACTIVE DTCS

With the scan tool, read active DTCs from all modules.

NOTE: Check for FCM configuration, CAN B or C hardware electrical, VIN Missing/Mismatch, battery or ignition related DTCs.

Does the scan tool display any active DTCs to the conditions listed above?

Yes >> Diagnose and repair the DTC. Refer to the Table of Contents for a complete list of the symptoms. Perform BODY VERIFICATION TEST – VER 1. (Refer to BODY VERIFICATION TEST – VER 1).

No >> Go To 3

3. VERIFY THAT THE OCM IS ACTIVE ON THE BUS

Turn the ignition on.
With the scan tool, select ECU View.
Verify that the OCM is active on the bus.

Is the OCM active on the bus?

Yes >> Go To 4

No >> Refer to the Table of Contents located in this section for a no response test procedure. Perform BODY VERIFICATION TEST – VER 1. (Refer to BODY VERIFICATION TEST – VER 1).

4. CHECK FOR ADDITIONAL COMMUNICATION RELATED DTCS

With the scan tool, select Network View and select Advanced.

Is there more than one module with active DTCs "Logged Against" the OCM?

Yes >> Replace/update the Occupant Classification Module in accordance with the service information. Perform AIRBAG VERIFICATION TEST – VER 1.

No >> Replace/update the module that set this DTC in accordance with the service information Perform BODY VERIFICATION TEST – VER 1. (Refer to BODY VERIFICATION TEST – VER 1).

U0155-LOST COMMUNICATION WITH CLUSTER/CCN

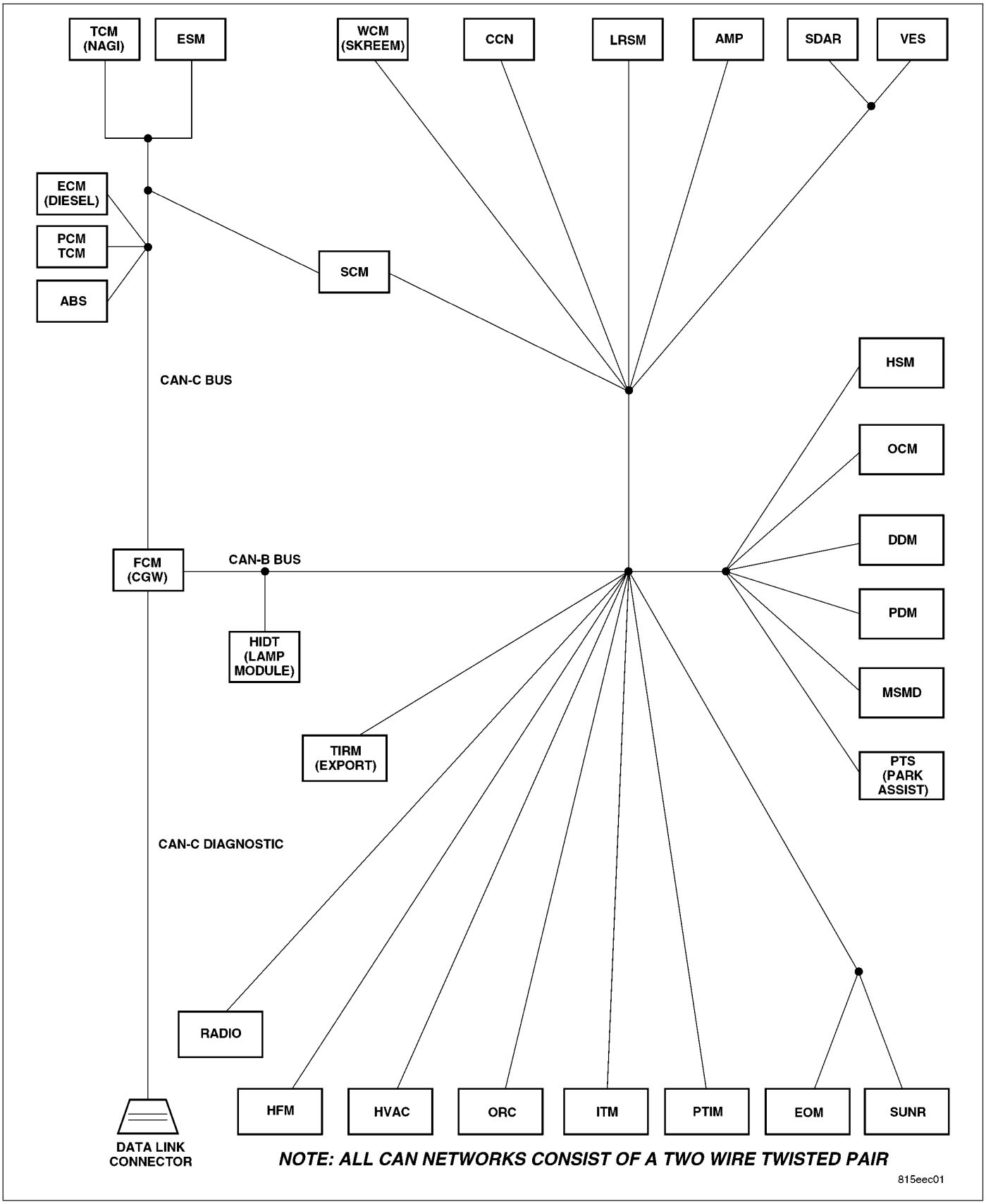

For a complete wiring diagram **Refer to Section 8W**.

- **When Monitored:**
  - With the ignition on
  - Battery voltage between 10 and 16 volts
  - IOD fuse installed
  - FCM is configured correctly
- **Set Condition:**
  Bus messages not received from the Cluster/CCN for approximately 2 to 5 seconds.

Possible Causes
CAN B BUS CIRCUITS OPEN OR SHORTED
DTCS RELATED TO BATTERY VOLTAGE, IGNITION, OR VIN MESSAGES
FCM NOT CONFIGURED CORRECTLY
CLUSTER/CCN
CLUSTER/CCN POWER AND GROUND
MODULE THAT SET THE DTC

Diagnostic Test

1. VERIFY DTC IS ACTIVE

NOTE: Ensure the IOD fuse is installed and battery voltage is between 10 and 16 volts before proceeding.
With the scan tool, read active DTCs.

Is this DTC active?

Yes >> Go To 2

No >> Refer to the Stored Lost Communication test procedure. Refer to the table of contents in this section. Perform BODY VERIFICATION TEST – VER 1. (Refer to BODY VERIFICATION TEST – VER 1).

2. CHECK FOR ANY OF THE FOLLOWING ACTIVE DTCS

With the scan tool, read active DTCs from all modules.

NOTE: Check for FCM configuration, CAN B or C hardware electrical, VIN Missing/Mismatch, battery or ignition related DTCs.

Does the scan tool display any active DTCs to the conditions listed above?

Yes >> Diagnose and repair the DTC. Refer to the Table of Contents for a complete list of the symptoms. Perform BODY VERIFICATION TEST – VER 1. (Refer to BODY VERIFICATION TEST – VER 1).

No >> Go To 3

3. VERIFY THAT THE CCN IS ACTIVE ON THE BUS

Turn the ignition on.
With the scan tool, select ECU View.
Verify that the CCN is active on the bus.

Is the CCN active on the bus?

Yes >> Go To 4

No >> Refer to the Table of Contents located in this section for a no response test procedure. Perform BODY VERIFICATION TEST – VER 1. (Refer to BODY VERIFICATION TEST – VER 1).

4. CHECK FOR ADDITIONAL COMMUNICATION RELATED DTCS

With the scan tool, select Network View and select Advanced.

Is there more than one module with active DTCs “Logged Against” the CCN?

Yes >> Replace/update the Cluster (CCN) in accordance with the service information.
Perform BODY VERIFICATION TEST – VER 1. (Refer to BODY VERIFICATION TEST – VER 1).

No >> Replace/update the module that set this DTC in accordance with the service information.
Perform BODY VERIFICATION TEST – VER 1. (Refer to BODY VERIFICATION TEST – VER 1).

U0156–LOST COMMUNICATION WITH EOM

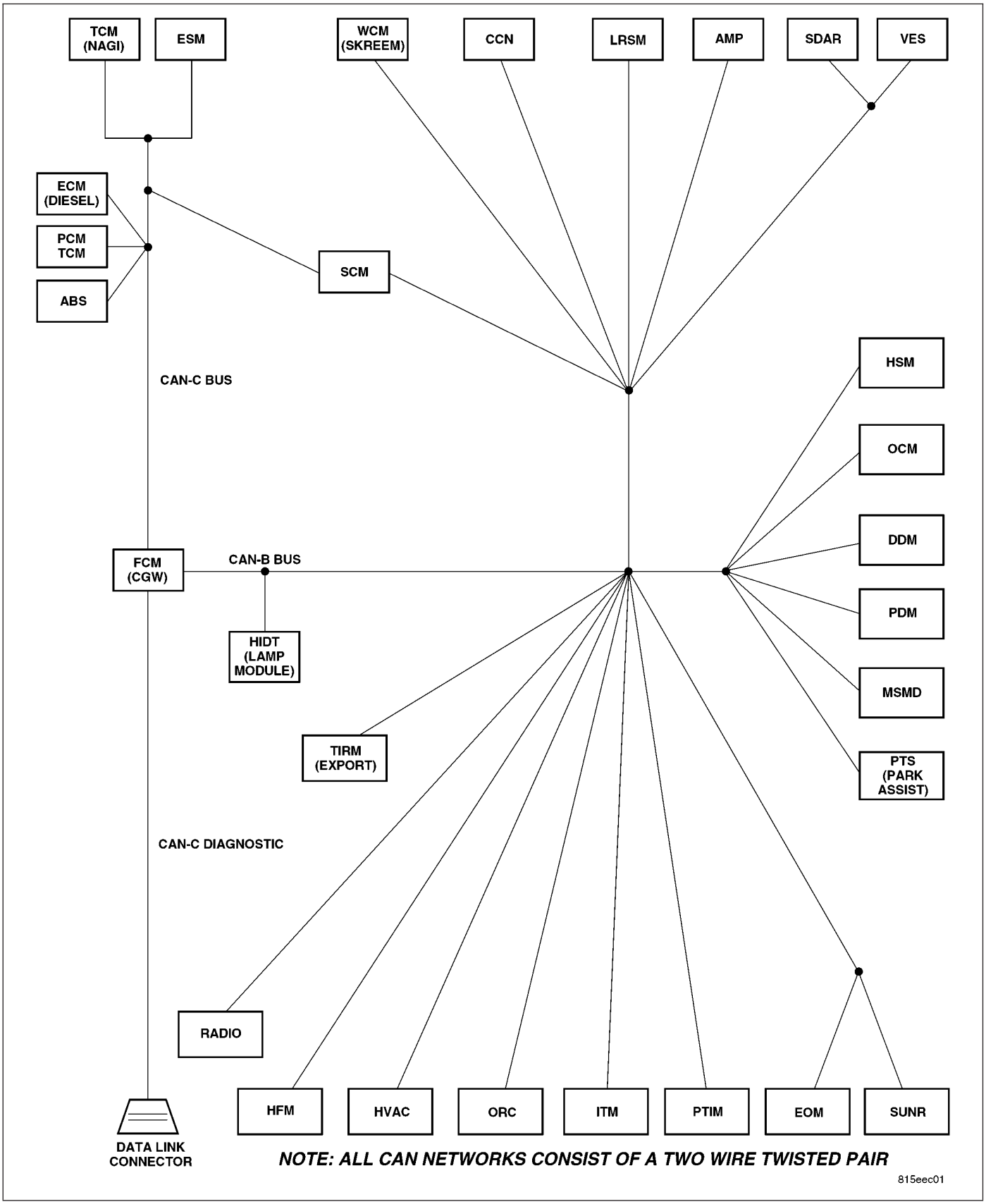

For a complete wiring diagram **Refer to Section 8W**.

- **When Monitored:**
  - With the ignition on
  - Battery voltage between 10 and 16 volts
  - IOD fuse installed
  - FCM is configured correctly
- **Set Condition:**
  Bus messages not received from the Electronic Overhead Module (EOM) for approximately 2 to 5 seconds.

Possible Causes
CAN B BUS CIRCUITS OPEN OR SHORTED
DTCS RELATED TO BATTERY VOLTAGE, IGNITION, OR VIN MESSAGES
FCM NOT CONFIGURED CORRECTLY
ELECTRONIC OVERHEAD MODULE POWER OR GROUND
ELECTRONIC OVERHEAD MODULE
MODULE THAT SET THIS DTC

Diagnostic Test

1. VERIFY DTC IS ACTIVE

NOTE: Ensure the IOD fuse is installed and battery voltage is between 10 and 16 volts before proceeding.
With the scan tool, read active DTCs.

Is this DTC active?

Yes >> Go To 2

No >> Refer to the Stored Lost Communication test procedure. Refer to the table of contents in this section. Perform BODY VERIFICATION TEST – VER 1. (Refer to BODY VERIFICATION TEST – VER 1).

2. CHECK FOR ANY OF THE FOLLOWING ACTIVE DTCS

With the scan tool, read all active DTCs from all modules.

NOTE: Check for FCM configuration, CAN B or C hardware electrical, VIN Missing/Mismatch, battery or ignition related DTCs.

Does the scan tool display any active DTCs to the conditions listed above?

Yes >> Diagnose and repair the DTC. Refer to the Table of Contents for a complete list of the symptoms. Perform BODY VERIFICATION TEST – VER 1. (Refer to BODY VERIFICATION TEST – VER 1).

No >> Go To 3

3. VERIFY THAT THE EOM IS ACTIVE ON THE BUS

Turn the ignition on.
With the scan tool, select ECU View.
Verify that the EOM is active on the bus.

Is the EOM active on the bus?

Yes >> Go To 4

No >> Refer to the Table of Contents located in this section for a no response test procedure. Perform BODY VERIFICATION TEST – VER 1. (Refer to BODY VERIFICATION TEST – VER 1).

4. CHECK FOR ADDITIONAL COMMUNICATION RELATED DTCS

With the scan tool, select Network View and select Advanced.

Is there more than one module with active DTCs "Logged Against" the EOM?

Yes >> Replace/update the Electronic Overhead Module (EOM) in accordance with the service information. Perform BODY VERIFICATION TEST – VER 1. (Refer to BODY VERIFICATION TEST – VER 1).

No >> Replace/update the module that set this DTC in accordance with the service information Perform BODY VERIFICATION TEST – VER 1. (Refer to BODY VERIFICATION TEST – VER 1).

U0159-LOST COMMUNICATION WITH PARK ASSIST CONTROL MODULE

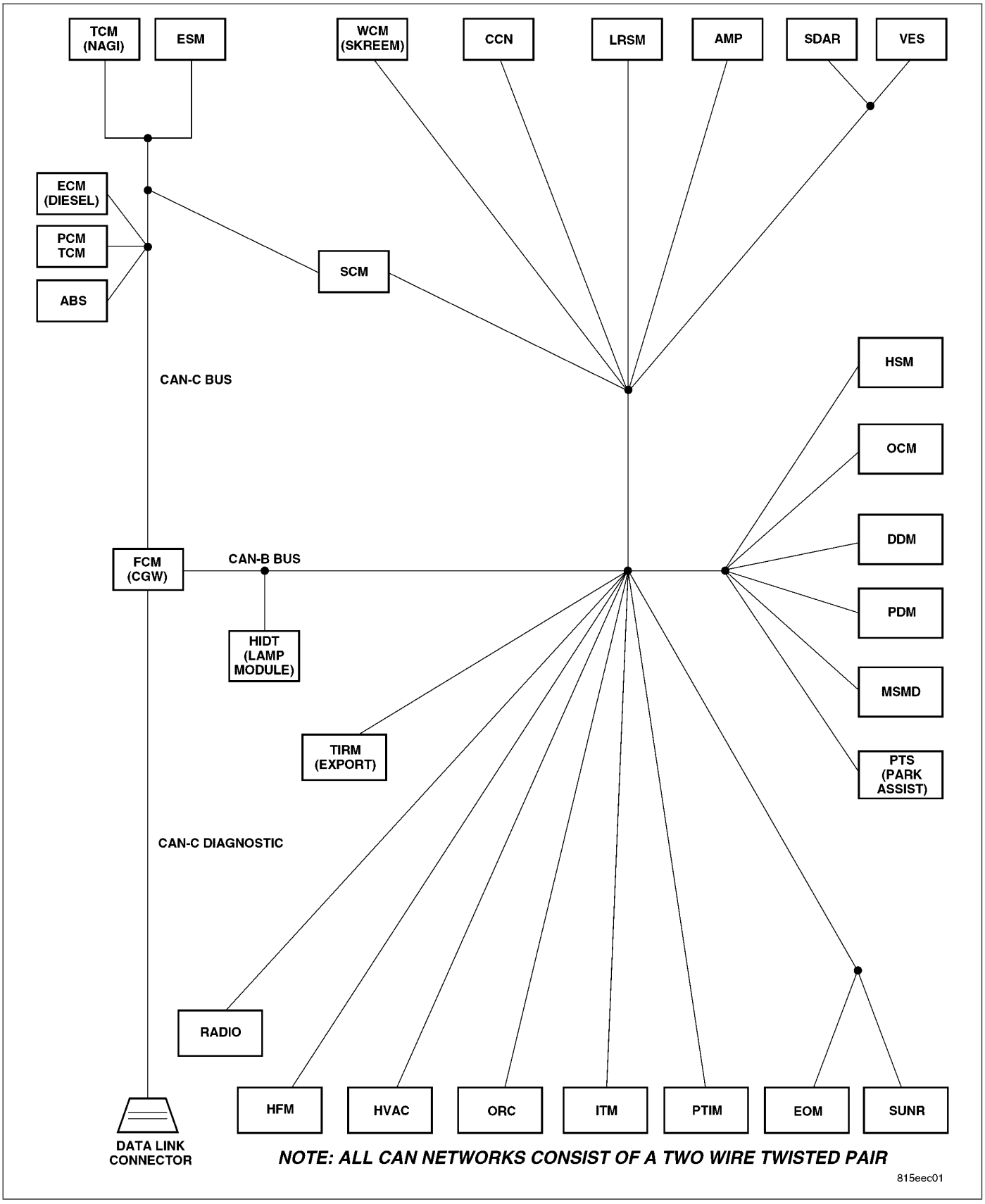

For a complete wiring diagram **Refer to Section 8W**.

- **When Monitored:**
  - With the ignition on
  - Battery voltage between 10 and 16 volts
  - IOD fuse installed
  - FCM is configured correctly
- **Set Condition:**
  Bus messages not received from the Park Assist Module (PTS) for approximately 2 to 5 seconds.

Possible Causes
CAN B BUS CIRCUITS OPEN OR SHORTED
DTCS RELATED TO BATTERY VOLTAGE, IGNITION, OR VIN MESSAGES
FCM NOT CONFIGURED CORRECTLY
PARK ASSIST MODULE
PARK ASSIST MODULE POWER OR GROUND
MODULE THAT SET THIS DTC

Diagnostic Test

1. VERIFY DTC IS ACTIVE

NOTE: Ensure the IOD fuse is installed and battery voltage is between 10 and 16 volts before proceeding.
With the scan tool, read active DTCs.

Is this DTC active?

Yes >> Go To 2

No >> Refer to the Stored Lost Communication test procedure. Refer to the table of contents in this section. Perform BODY VERIFICATION TEST – VER 1. (Refer to BODY VERIFICATION TEST – VER 1).

2. CHECK FOR ANY OF THE FOLLOWING ACTIVE DTCS

With the scan tool, read all active DTCs from all modules.

NOTE: Check for FCM configuration, CAN B or C hardware electrical, VIN Missing/Mismatch, battery or ignition related DTCs.

Does the scan tool display any active DTCs to the conditions listed above?

Yes >> Diagnose and repair the DTC. Refer to the Table of Contents for a complete list of the symptoms. Perform BODY VERIFICATION TEST – VER 1. (Refer to BODY VERIFICATION TEST – VER 1).

No >> Go To 3

3. VERIFY THAT THE PTS IS ACTIVE ON THE BUS

Turn the ignition on.
With the scan tool, select ECU View.
Verify that the PTS is active on the bus.

Is the PTS active on the bus?

Yes >> Go To 4

No >> Refer to the Table of Contents located in this section for a no response test procedure. Perform BODY VERIFICATION TEST – VER 1. (Refer to BODY VERIFICATION TEST – VER 1).

4. CHECK FOR ADDITIONAL COMMUNICATION RELATED DTCS

With the scan tool, select Network View and select Advanced.

Is there more than one module with active DTCs “Logged Against” the PTS?

Yes >> Replace/update the Park Assist Module (PTS) in accordance with the service information.
Perform BODY VERIFICATION TEST – VER 1. (Refer to BODY VERIFICATION TEST – VER 1).

No >> Replace/update the module that set this DTC in accordance with the service information
Perform BODY VERIFICATION TEST – VER 1. (Refer to BODY VERIFICATION TEST – VER 1).

U0164-LOST COMMUNICATION WITH HVAC CONTROL MODULE

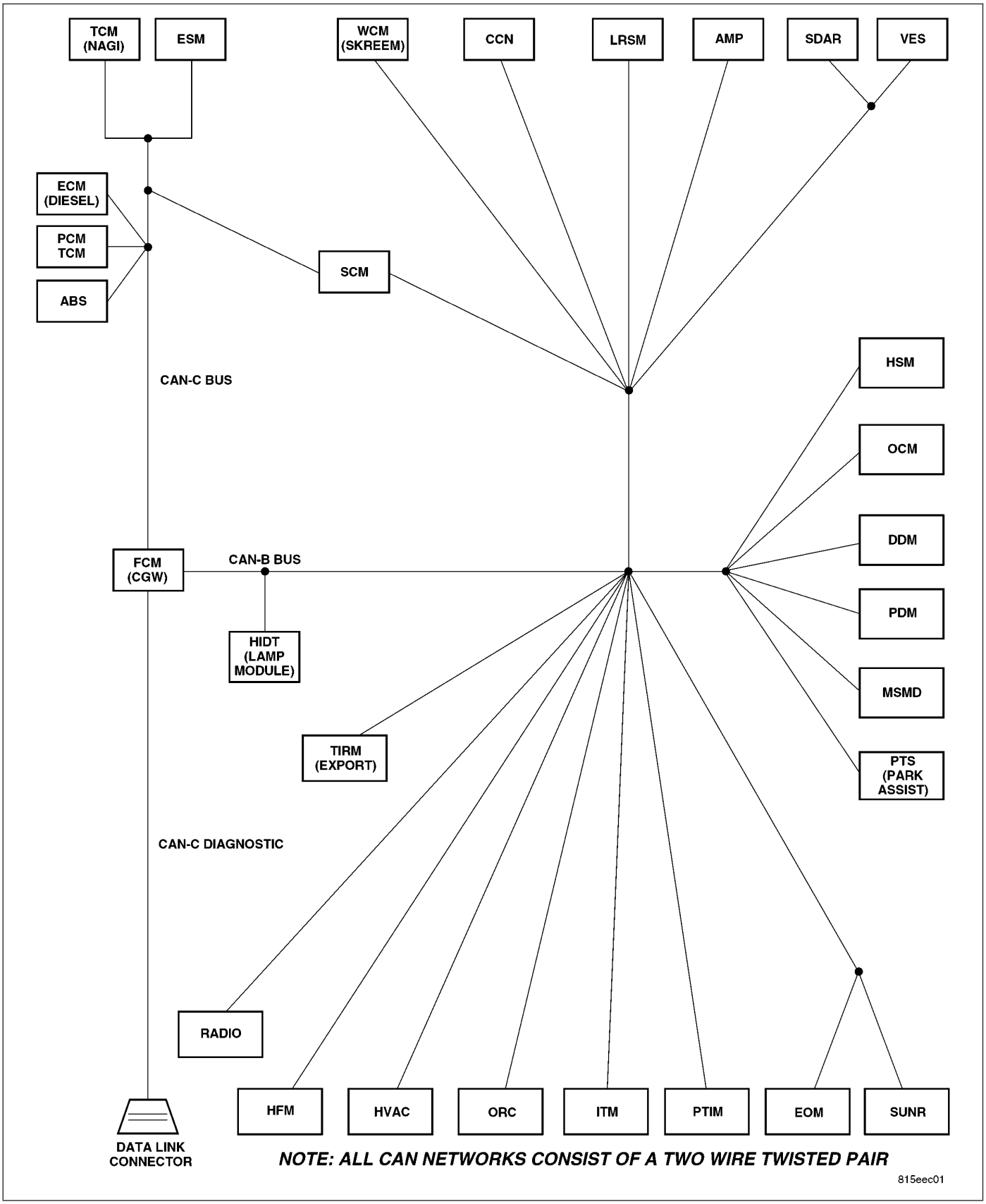

For a complete wiring diagram **Refer to Section 8W**.

- **When Monitored:**
  - With the ignition on
  - Battery voltage between 10 and 16 volts
  - IOD fuse installed
  - FCM is configured correctly
- **Set Condition:**
  Bus messages not received from the A/C Heater Control (HVAC) for approximately 2 to 5 seconds.

Possible Causes
CAN B BUS CIRCUITS OPEN OR SHORTED
DTCS RELATED TO BATTERY VOLTAGE, IGNITION, OR VIN MESSAGES
FCM NOT CONFIGURED CORRECTLY
A/C HEATER CONTROL
A/C HEATER CONTROL POWER AND GROUND
MODULE THAT SET THIS DTC

Diagnostic Test

1. VERIFY DTC IS ACTIVE

NOTE: Ensure the IOD fuse is installed and battery voltage is between 10 and 16 volts before proceeding.
With the scan tool, read active DTCs.

Is this DTC active?

Yes >> Go To 2

No >> Refer to the Stored Lost Communication test procedure. Refer to the table of contents in this section. Perform BODY VERIFICATION TEST – VER 1. (Refer to BODY VERIFICATION TEST – VER 1).

2. CHECK FOR ANY OF THE FOLLOWING ACTIVE DTCS

With the scan tool, read active DTCs from all modules.

NOTE: Check for FCM configuration, CAN B or C hardware electrical, VIN Missing/Mismatch, battery or ignition related DTCs.

Does the scan tool display any active DTCs to the conditions listed above?

Yes >> Diagnose and repair the DTC. Refer to the Table of Contents for a complete list of the symptoms. Perform BODY VERIFICATION TEST – VER 1. (Refer to BODY VERIFICATION TEST – VER 1).

No >> Go To 3

3. VERIFY THAT THE HVAC IS ACTIVE ON THE BUS

Turn the ignition on.
With the scan tool, select ECU View.
Verify that the HVAC is active on the bus.

Is the HVAC active on the bus?

Yes >> Go To 4

No >> Refer to the Table of Contents located in this section for a no response test procedure. Perform BODY VERIFICATION TEST – VER 1. (Refer to BODY VERIFICATION TEST – VER 1).

4. CHECK FOR ADDITIONAL COMMUNICATION RELATED DTCS

With the scan tool, select Network View and select Advanced.

Is there more than one module with active DTCs "Logged Against" the HVAC?

Yes >> Replace/update the A/C Heater Control in accordance with the service information.
Perform BODY VERIFICATION TEST – VER 1. (Refer to BODY VERIFICATION TEST – VER 1).

No >> Replace/update the module that set the DTC in accordance with the service information
Perform BODY VERIFICATION TEST – VER 1. (Refer to BODY VERIFICATION TEST – VER 1).

U0167-LOST COMMUNICATION WITH INTRUSION TRANSCEIVER CONTROL MODULE

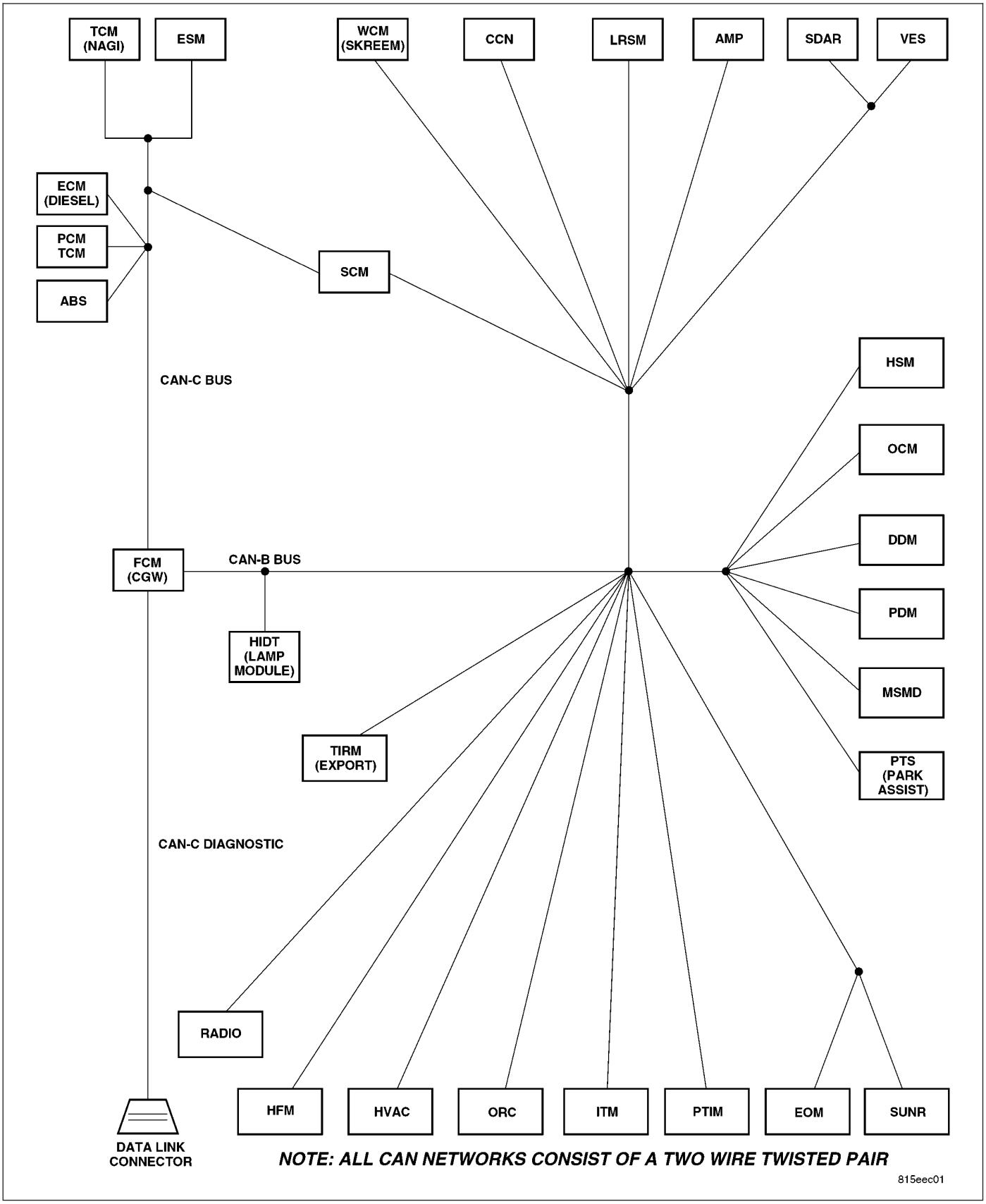

For a complete wiring diagram **Refer to Section 8W**.

- **When Monitored:**
  - With the ignition on
  - Battery voltage between 10 and 16 volts
  - IOD fuse installed
  - FCM is configured correctly
- **Set Condition:**
  Bus messages not received from the Intrusion Transceiver Control Module (ITM) for approximately 2 to 5 seconds.

Possible Causes
CAN B BUS CIRCUITS OPEN OR SHORTED
DTCS RELATED TO BATTERY VOLTAGE, IGNITION, OR VIN MESSAGES
FCM NOT CONFIGURED CORRECTLY
INTRUSION TRANSCEIVER CONTROL MODULE POWER AND GROUND
INTRUSION TRANSCEIVER CONTROL MODULE
MODULE THAT SET THIS DTC

Diagnostic Test

1. VERIFY DTC IS ACTIVE

NOTE: Ensure the IOD fuse is installed and battery voltage is between 10 and 16 volts before proceeding.
With the scan tool, read active DTCs.

Is this DTC active?

Yes >> Go To 2

No >> Refer to the Stored Lost Communication test procedure. Refer to the table of contents in this section.

2. CHECK FOR ANY OF THE FOLLOWING ACTIVE DTCS

With the scan tool, read active DTCs from all modules.

NOTE: Check for FCM configuration, CAN B or C hardware electrical, VIN Missing/Mismatch, battery or ignition related DTCs.

Does the scan tool display any active DTCs to the conditions listed above?

Yes >> Diagnose and repair the DTC. Refer to the Index for a complete list of the symptoms.

No >> Go To 3

3. VERIFY THAT THE ITM IS ACTIVE ON THE BUS

Turn the ignition on.
With the scan tool, select ECU View.
Verify that the ITM is active on the bus.

Is the ITM active on the bus?

Yes >> Go To 4

No >> Refer to the No Response test procedure. Refer to the table of contents in this section.

4. CHECK FOR ADDITIONAL COMMUNICATION RELATED DTCS

With the scan tool, select Network View and select Advanced.

Is there more than one module with active DTCs “Logged Against” the ITM?

Yes >> Replace/update the Intrusion Transceiver Control Module in accordance with the service information.
Perform BODY VERIFICATION TEST – VER 1. (Refer to 8 - ELECTRICAL/ELECTRONIC CONTROL MODULES - STANDARD PROCEDURE).

No >> Replace/update the module that set the DTC in accordance with the service information
Perform the appropriate VERIFICATION TEST.

U0168-LOST COMMUNICATION WITH VEHICLE SECURITY CONTROL MODULE (SKREEM/WCM)

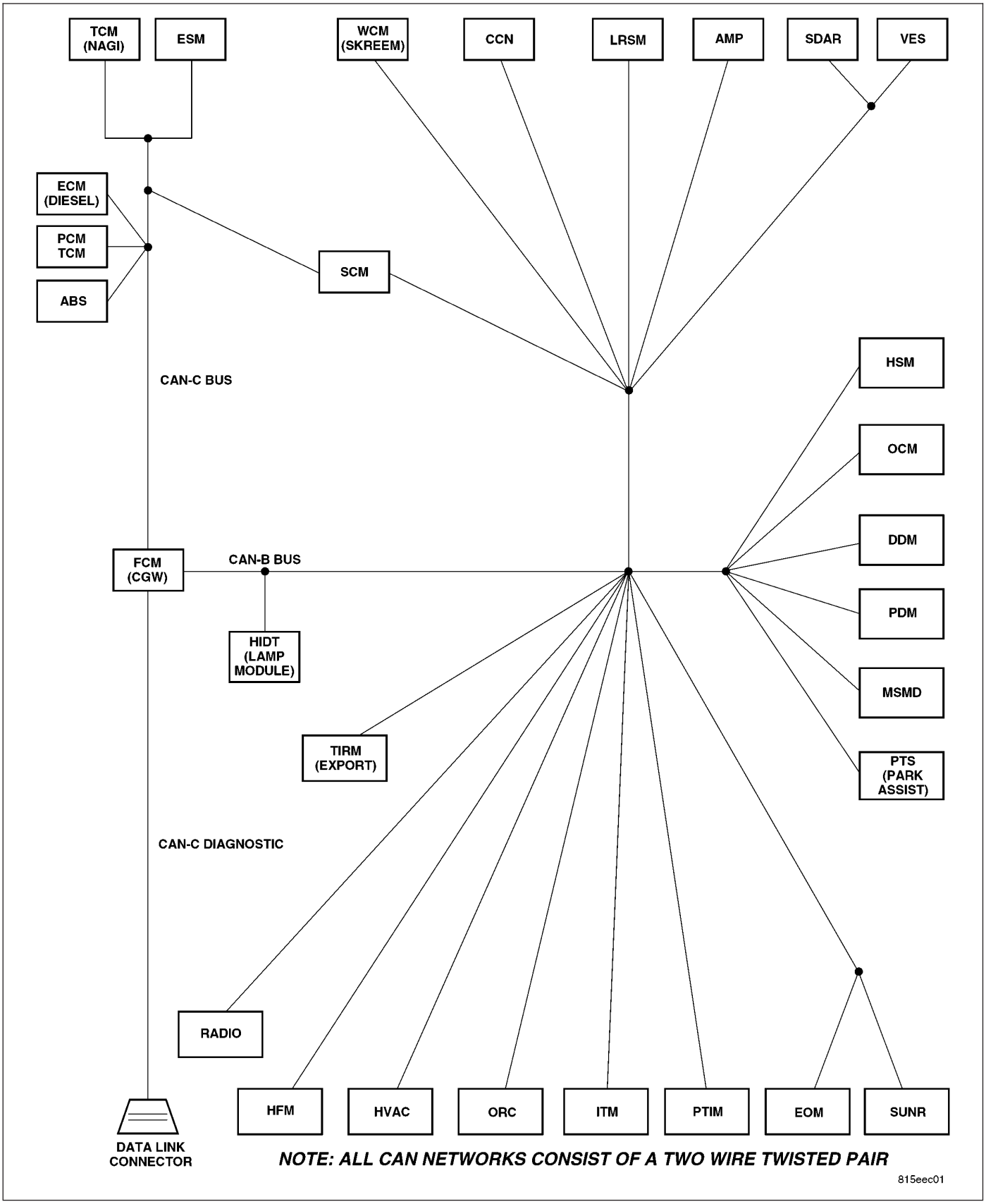

For a complete wiring diagram **Refer to Section 8W**.

- **When Monitored:**
  - With the ignition on
  - Battery voltage between 10 and 16 volts
  - IOD fuse installed
  - FCM is configured correctly
- **Set Condition:**
  Bus messages not received from the Sentry Key Remote Entry Module (WCM) for approximately 2 to 5 seconds.

Possible Causes
CAN B BUS CIRCUITS OPEN OR SHORTED
DTCS RELATED TO BATTERY VOLTAGE, IGNITION, OR VIN MESSAGES
FCM NOT CONFIGURED CORRECTLY
SENTRY KEY REMOTE ENTRY MODULE
SENTRY KEY REMOTE ENTRY MODULE POWER AND GROUND
MODULE THAT SET THIS DTC

Diagnostic Test

1. VERIFY DTC IS ACTIVE

NOTE: Ensure the IOD fuse is installed and battery voltage is between 10 and 16 volts before proceeding.
With the scan tool, read active DTCs.

Is this DTC active?

Yes >> Go To 2

No >> Refer to the Stored Lost Communication test procedure. Refer to the table of contents in this section. Perform BODY VERIFICATION TEST – VER 1. (Refer to BODY VERIFICATION TEST – VER 1).

2. CHECK FOR ANY OF THE FOLLOWING ACTIVE DTCS

With the scan tool, read active DTCs from all modules.

NOTE: Check for FCM configuration, CAN B or C hardware electrical, VIN Missing/Mismatch, battery or ignition related DTCs.

Does the scan tool display any active DTCs to the conditions listed above?

Yes >> Diagnose and repair the DTC. Refer to the Table of Contents for a complete list of the symptoms. Perform BODY VERIFICATION TEST – VER 1. (Refer to BODY VERIFICATION TEST – VER 1).

No >> Go To 3

3. VERIFY THAT THE WCM IS ACTIVE ON THE BUS

Turn the ignition on.
With the scan tool, select ECU View.
Verify that the WCM is active on the bus.

Is the WCM active on the bus?

Yes >> Go To 4

No >> Refer to the Table of Contents located in this section for a no response test procedure. Perform BODY VERIFICATION TEST – VER 1. (Refer to BODY VERIFICATION TEST – VER 1).

4. CHECK FOR ADDITIONAL COMMUNICATION RELATED DTCS

With the scan tool, select Network View and select Advanced.

Is there more than one module with active DTCs "Logged Against" the WCM?

Yes >> Replace/update the Sentry Key Remote Entry Module in accordance with the service information. Perform BODY VERIFICATION TEST – VER 1. (Refer to BODY VERIFICATION TEST – VER 1).

No >> Replace/update the module that set this DTC in accordance with the service information. Perform BODY VERIFICATION TEST – VER 1. (Refer to BODY VERIFICATION TEST – VER 1).

U0169-LOST COMMUNICATION WITH SUNROOF CONTROL MODULE

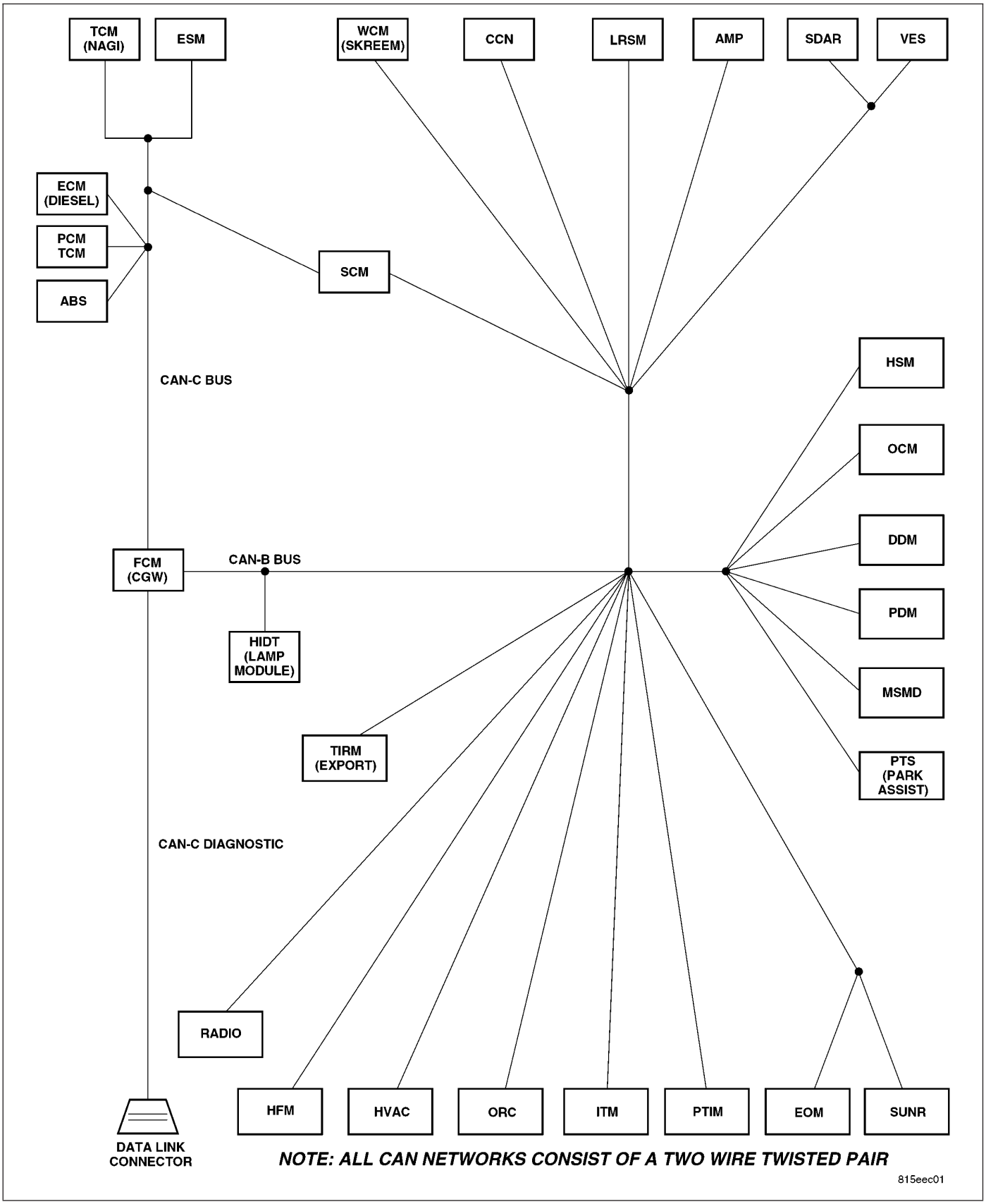

For a complete wiring diagram **Refer to Section 8W**.

- **When Monitored:**
  - With the ignition on
  - Battery voltage between 10 and 16 volts
  - IOD fuse installed
  - FCM is configured correctly
- **Set Condition:**
  Bus messages not received from the Sunroof Control Module (SUNR) for approximately 2 to 5 seconds.

Possible Causes
CAN B BUS CIRCUITS OPEN OR SHORTED
DTCS RELATED TO BATTERY VOLTAGE, IGNITION, OR VIN MESSAGES
FCM NOT CONFIGURED CORRECTLY
SUNROOF CONTROL MODULE
SUNROOF CONTROL MODULE POWER AND GROUND
MODULE THAT SET THIS DTC

Diagnostic Test

1. VERIFY DTC IS ACTIVE

NOTE: Ensure the IOD fuse is installed and battery voltage is between 10 and 16 volts before proceeding.
With the scan tool, read active DTCs.

Is this DTC active?

Yes >> Go To 2

No >> Refer to the Stored Lost Communication test procedure. Refer to the table of contents in this section. Perform BODY VERIFICATION TEST – VER 1. (Refer to BODY VERIFICATION TEST – VER 1).

2. CHECK FOR ANY OF THE FOLLOWING ACTIVE DTCS

With the scan tool, read active DTCs from all modules.

NOTE: Check for FCM configuration, CAN B or C hardware electrical, VIN Missing/Mismatch, battery or ignition related DTCs.

Does the scan tool display any active DTCs to the conditions listed above?

Yes >> Diagnose and repair the DTC. Refer to the Table of Contents for a complete list of the symptoms. Perform BODY VERIFICATION TEST – VER 1. (Refer to BODY VERIFICATION TEST – VER 1).

No >> Go To 3

3. VERIFY THAT THE SUNR IS ACTIVE ON THE BUS

Turn the ignition on.
With the scan tool, select ECU View.
Verify that the SUNR is active on the bus.

Is the SUNR active on the bus?

Yes >> Go To 4

No >> Refer to the Table of Contents located in this section for a no response test procedure. Perform BODY VERIFICATION TEST – VER 1. (Refer to BODY VERIFICATION TEST – VER 1).

4. CHECK FOR ADDITIONAL COMMUNICATION RELATED DTCS

With the scan tool, select Network View and select Advanced.

Is there more than one module with active DTCs “Logged Against” the SUNR?

Yes >> Replace/update the Sunroof Control Module in accordance with the service information.
Perform BODY VERIFICATION TEST – VER 1. (Refer to BODY VERIFICATION TEST – VER 1).

No >> Replace/update the module that set this DTC in accordance with the service information.
Perform BODY VERIFICATION TEST – VER 1. (Refer to BODY VERIFICATION TEST – VER 1).

U0181-LOST COMMUNICATION WITH HEADLAMP LEVELING TRANSLATOR

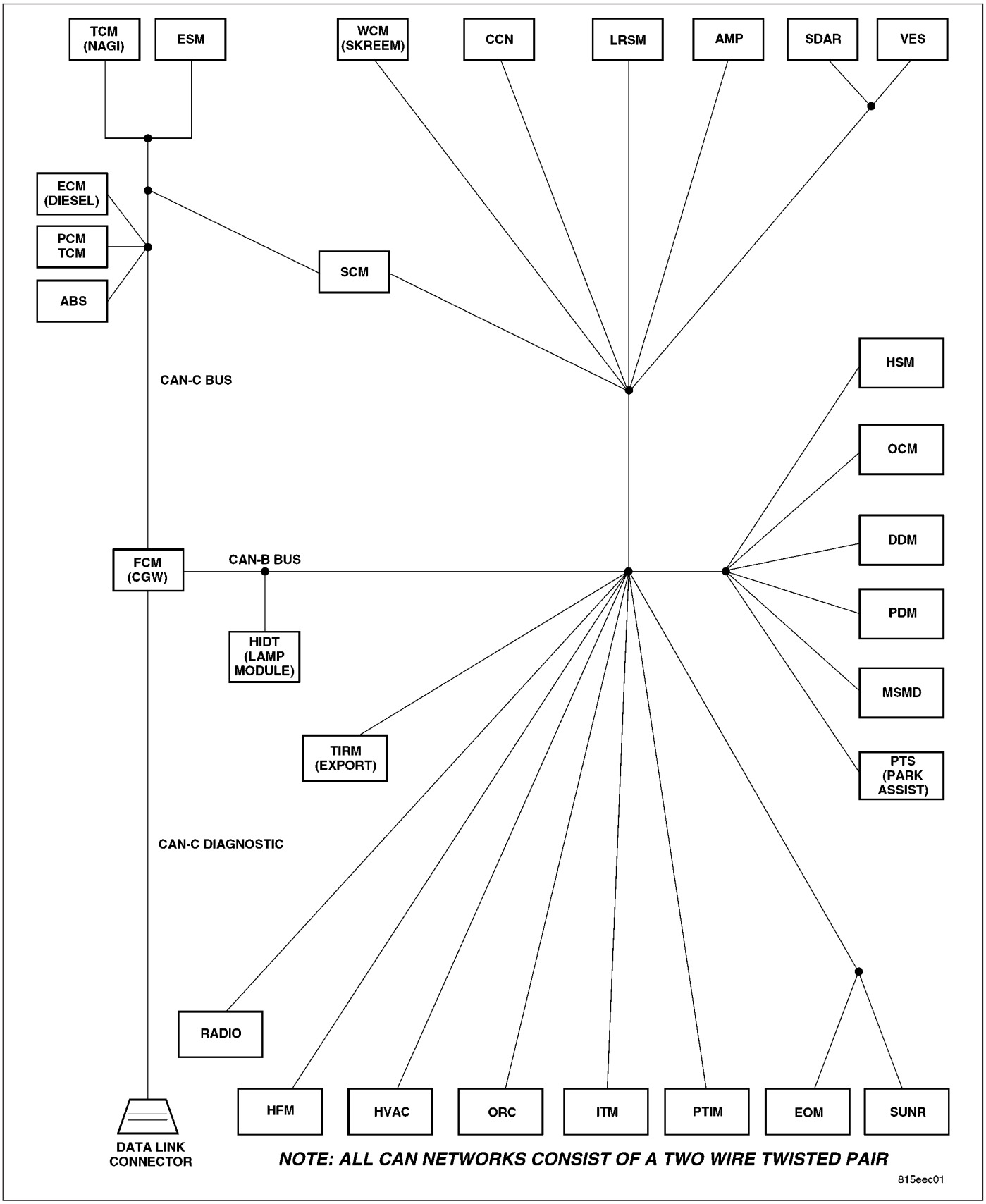

For a complete wiring diagram **Refer to Section 8W**.

- **When Monitored:**
  - With the ignition on
  - Battery voltage between 10 and 16 volts
  - IOD fuse installed
  - FCM is configured correctly
- **Set Condition:**
  Bus messages not received from the Headlamp Leveling Module for approximately 2 to 5 seconds.

Possible Causes
CAN B BUS CIRCUITS OPEN OR SHORTED
DTCS RELATED TO BATTERY VOLTAGE, IGNITION, OR VIN MESSAGES
FCM NOT CONFIGURED CORRECTLY
HEADLAMP LEVELING MODULE
HEADLAMP LEVELING MODULE POWER AND GROUND
MODULE THAT SET THIS DTC

Diagnostic Test

1. VERIFY DTC IS ACTIVE

NOTE: Ensure the IOD fuse is installed and battery voltage is between 10 and 16 volts before proceeding.
With the scan tool, read active DTCs.

Is this DTC active?

Yes >> Go To 2

No >> Refer to the Stored Lost Communication test procedure. Refer to the table of contents in this section. Perform BODY VERIFICATION TEST – VER 1. (Refer to BODY VERIFICATION TEST – VER 1).

2. CHECK FOR ANY OF THE FOLLOWING ACTIVE DTCS

With the scan tool, read active DTCs from all modules.

NOTE: Check for FCM configuration, CAN B or C hardware electrical, VIN Missing/Mismatch, battery or ignition related DTCs.

Does the scan tool display any active DTCs to the conditions listed above?

Yes >> Diagnose and repair the DTC. Refer to the Table of Contents for a complete list of the symptoms. Perform BODY VERIFICATION TEST – VER 1. (Refer to BODY VERIFICATION TEST – VER 1).

No >> Go To 3

3. VERIFY THAT THE HIDT IS ACTIVE ON THE BUS

Turn the ignition on.
With the scan tool, select ECU View.
Verify that the HIDT is active on the bus.

Is the HIDT active on the bus?

Yes >> Go To 4

No >> Refer to the Table of Contents located in this section for a no response test procedure. Perform BODY VERIFICATION TEST – VER 1. (Refer to BODY VERIFICATION TEST – VER 1).

4. CHECK FOR ADDITIONAL COMMUNICATION RELATED DTCS

With the scan tool, select Network View and select Advanced.

Is there more than one module with active DTCs "Logged Against" the HIDT?

Yes >> Replace/update the Headlamp Leveling Module in accordance with the service information. Perform BODY VERIFICATION TEST – VER 1. (Refer to BODY VERIFICATION TEST – VER 1).

No >> Replace/update the module that set this DTC in accordance with the service information. Perform BODY VERIFICATION TEST – VER 1. (Refer to BODY VERIFICATION TEST – VER 1).

U0184-LOST COMMUNICATION WITH RADIO

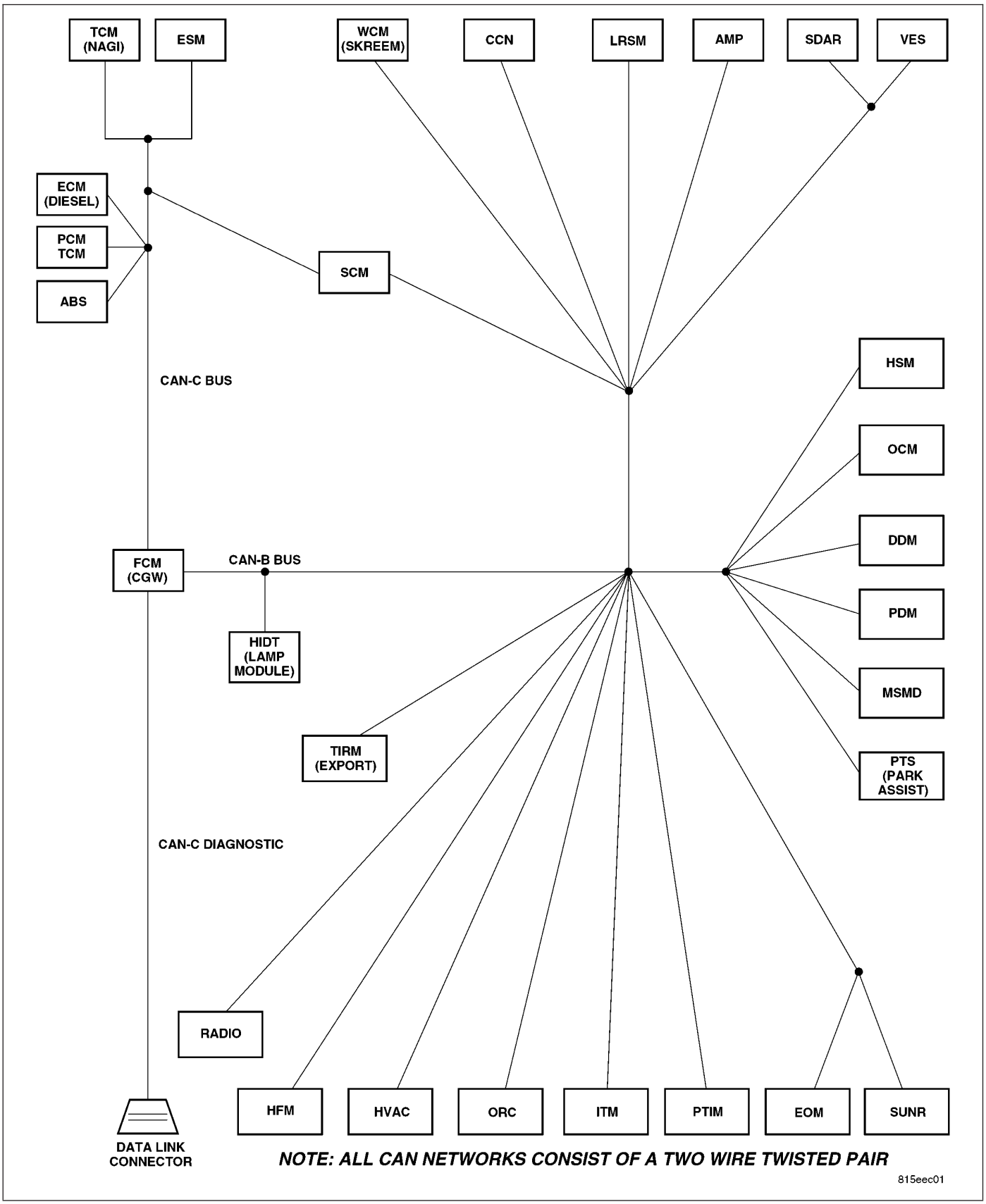

For a complete wiring diagram **Refer to Section 8W**.

- **When Monitored:**
  - With the ignition on
  - Battery voltage between 10 and 16 volts
  - IOD fuse installed
  - FCM is configured correctly
- **Set Condition:**
  Bus messages not received from the Radio for approximately 2 to 5 seconds.

Possible Causes
CAN B BUS CIRCUITS OPEN OR SHORTED
DTCS RELATED TO BATTERY VOLTAGE, IGNITION, OR VIN MESSAGES
FCM NOT CONFIGURED CORRECTLY
RADIO
RADIO POWER AND GROUND
MODULE THAT SET THIS DTC

Diagnostic Test

1. VERIFY DTC IS ACTIVE

NOTE: Ensure the IOD fuse is installed and battery voltage is between 10 and 16 volts before proceeding.
With the scan tool, read active DTCs.

Is this DTC active?

Yes >> Go To 2

No >> Refer to the Stored Lost Communication test procedure. Refer to the table of contents in this section. Perform BODY VERIFICATION TEST – VER 1. (Refer to BODY VERIFICATION TEST – VER 1).

2. CHECK FOR ANY OF THE FOLLOWING ACTIVE DTCS

With the scan tool, read active DTCs from all modules.

NOTE: Check for FCM configuration, CAN B or C hardware electrical, VIN Missing/Mismatch, battery or ignition related DTCs.

Does the scan tool display any active DTCs to the conditions listed above?

Yes >> Diagnose and repair the DTC. Refer to the Table of Contents for a complete list of the symptoms. Perform BODY VERIFICATION TEST – VER 1. (Refer to BODY VERIFICATION TEST – VER 1).

No >> Go To 3

3. VERIFY THAT THE RADIO IS ACTIVE ON THE BUS

Turn the ignition on.
With the scan tool, select ECU View.
Verify that the Radio is active on the bus.

Is the Radio active on the bus?

Yes >> Go To 4

No >> Refer to the Table of Contents located in this section for a no response test procedure. Perform BODY VERIFICATION TEST – VER 1. (Refer to BODY VERIFICATION TEST – VER 1).

4. CHECK FOR ADDITIONAL COMMUNICATION RELATED DTCS

With the scan tool, select Network View and select Advanced.

Is there more than one module with active DTCs “Logged Against” the Radio?

Yes >> Replace/update the Radio in accordance with the service information.
Perform BODY VERIFICATION TEST – VER 1. (Refer to BODY VERIFICATION TEST – VER 1).

No >> Replace/update the module that set this DTC in accordance with the service information.
Perform BODY VERIFICATION TEST – VER 1. (Refer to BODY VERIFICATION TEST – VER 1).

U0186-LOST COMMUNICATION WITH AUDIO AMPLIFIER

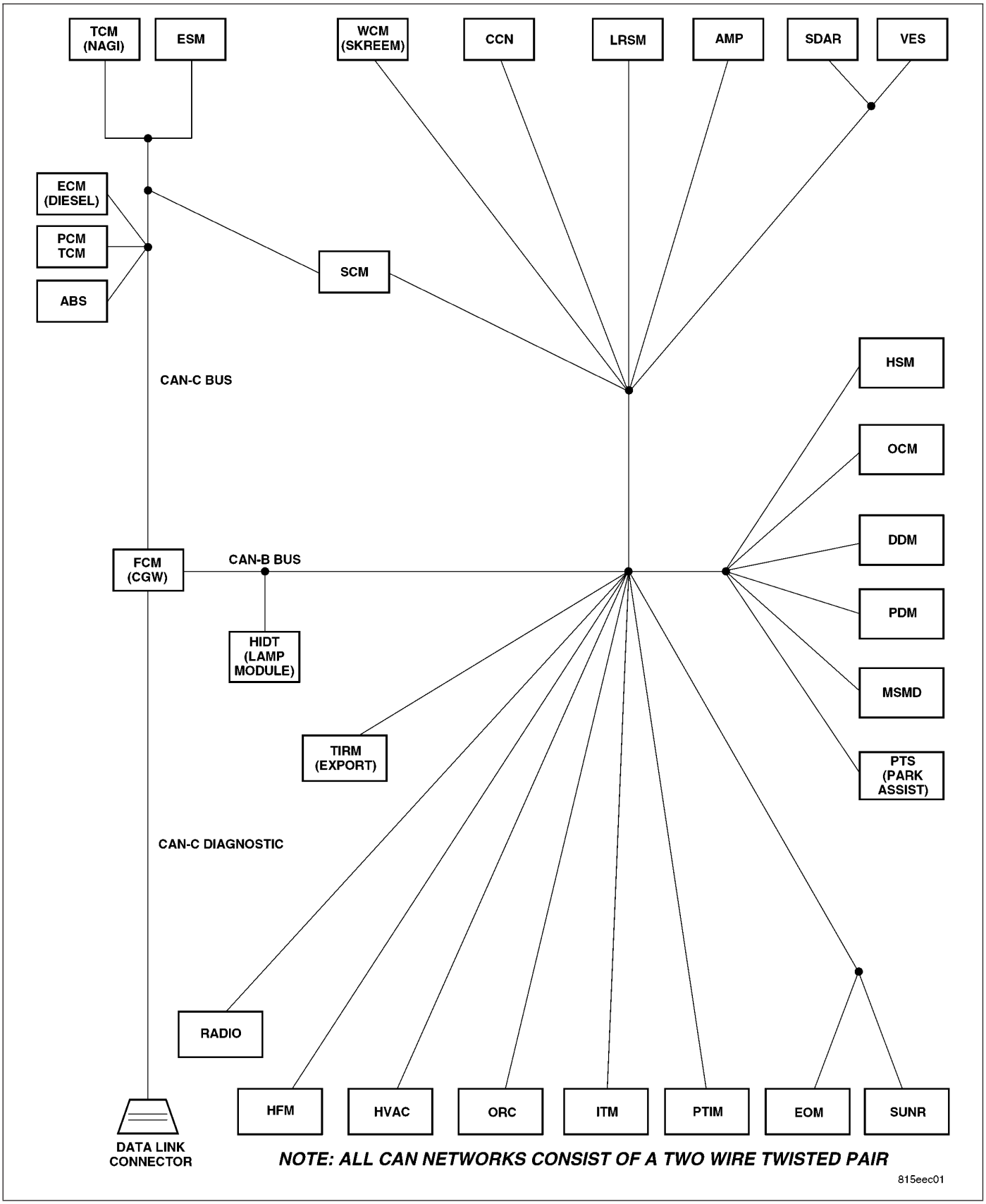

For a complete wiring diagram **Refer to Section 8W**.

- **When Monitored:**
  - With the ignition on
  - Battery voltage between 10 and 16 volts
  - IOD fuse installed
  - FCM is configured correctly
- **Set Condition:**
  Bus messages not received from the Amplifier for approximately 2 to 5 seconds.

Possible Causes
CAN B BUS CIRCUITS OPEN OR SHORTED
DTCS RELATED TO BATTERY VOLTAGE, IGNITION, OR VIN MESSAGES
FCM NOT CONFIGURED CORRECTLY
AMPLIFIER
AMPLIFIER POWER AND GROUND
MODULE THAT SET THIS DTC

Diagnostic Test

1. VERIFY DTC IS ACTIVE

NOTE: Ensure the IOD fuse is installed and battery voltage is between 10 and 16 volts before proceeding.
With the scan tool, read active DTCs.

Is this DTC active?

Yes >> Go To 2

No >> Refer to the Stored Lost Communication test procedure. Refer to the table of contents in this section. Perform BODY VERIFICATION TEST – VER 1. (Refer to BODY VERIFICATION TEST – VER 1).

2. CHECK FOR ANY OF THE FOLLOWING ACTIVE DTCS

With the scan tool, read active DTCs from all modules.

NOTE: Check for FCM configuration, CAN B or C hardware electrical, VIN Missing/Mismatch, battery or ignition related DTCs.

Does the scan tool display any active DTCs to the conditions listed above?

Yes >> Diagnose and repair the DTC. Refer to the Table of Contents for a complete list of the symptoms. Perform BODY VERIFICATION TEST – VER 1. (Refer to BODY VERIFICATION TEST – VER 1).

No >> Go To 3

3. VERIFY THAT THE AMPLIFIER IS ACTIVE ON THE BUS

Turn the ignition on.
With the scan tool, select ECU View.
Verify that the Amplifier is active on the bus.

Is the Amplifier active on the bus?

Yes >> Go To 4

No >> Refer to the Table of Contents located in this section for a no response test procedure. Perform BODY VERIFICATION TEST – VER 1. (Refer to BODY VERIFICATION TEST – VER 1).

4. CHECK FOR ADDITIONAL COMMUNICATION RELATED DTCS

With the scan tool, select Network View and select Advanced.

Is there more than one module with active DTCs "Logged Against" the Amplifier?

Yes >> Replace/update the Amplifier in accordance with the service information.
Perform BODY VERIFICATION TEST – VER 1. (Refer to BODY VERIFICATION TEST – VER 1).

No >> Replace/update the module that set this DTC in accordance with the service information
Perform BODY VERIFICATION TEST – VER 1. (Refer to BODY VERIFICATION TEST – VER 1).

U0193-LOST COMMUNICATION WITH TRAFFIC INFORMATION RECEIVER MODULE

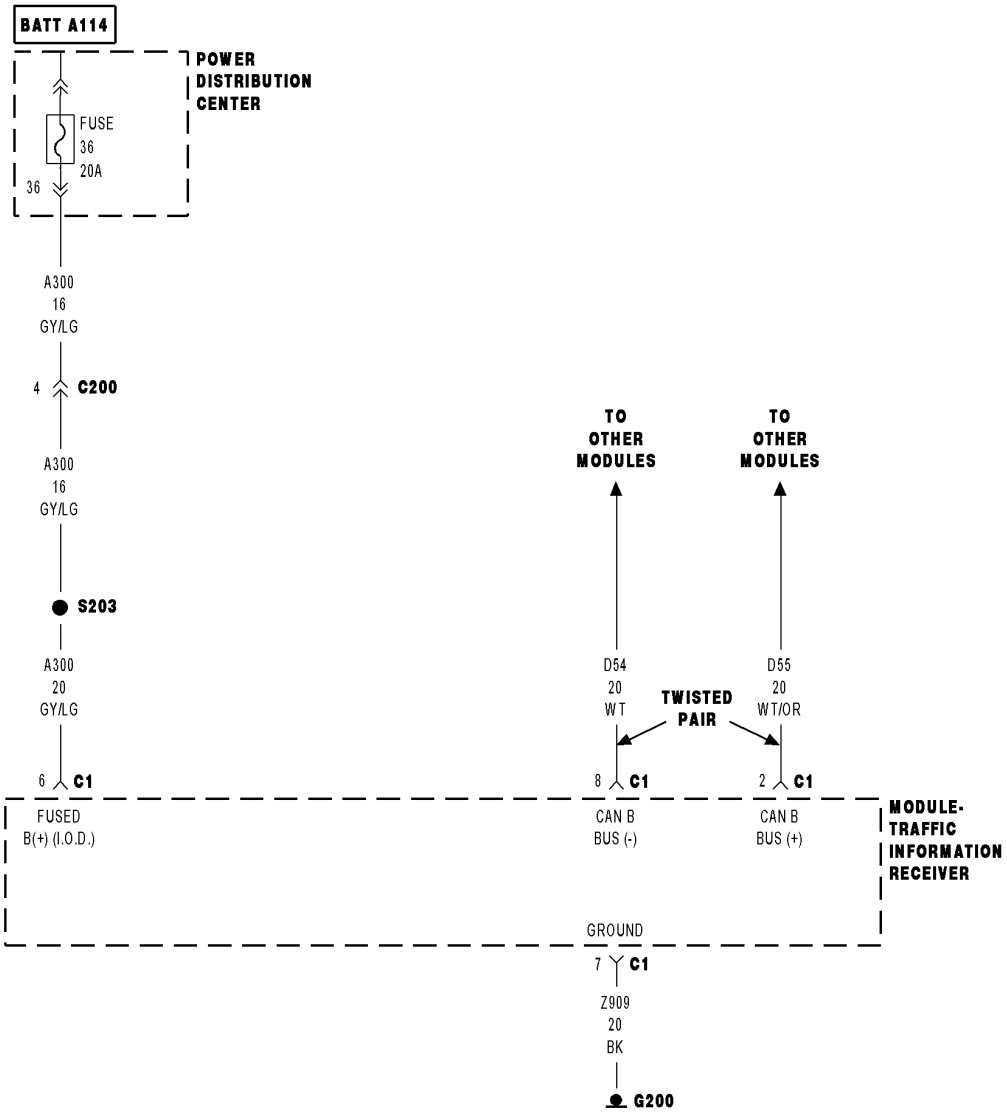

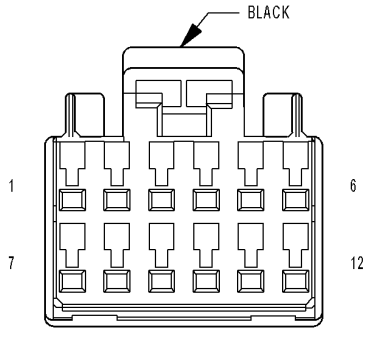

MODULE- TRAFFIC INFORMATION RECEIVER C1 (EXPORT)

817987e3

For a complete wiring diagram **Refer to Section 8W**.

- **When Monitored:**
  - With the ignition on
  - Battery voltage between 10 and 16 volts
  - IOD fuse installed
  - FCM is configured correctly
- **Set Condition:**
  Bus messages not received from the Traffic Information Receiver Module (TIRM) for approximately 2 to 5 seconds.

Possible Causes
CAN B BUS CIRCUITS OPEN
DTCS RELATED TO BATTERY VOLTAGE, IGNITION, OR VIN MESSAGES
FCM NOT CONFIGURED CORRECTLY
(A300) FUSED B(+) CIRCUIT OPEN OR SHORTED
(Z909) GROUND CIRCUIT OPEN
TRAFFIC INFORMATION RECEIVER MODULE (TIRM)
FRONT CONTROL MODULE

Diagnostic Test

1. VERIFY DTC IS ACTIVE

NOTE: Ensure the IOD fuse is installed and battery voltage is between 10 and 16 volts before proceeding.
With the scan tool, read active DTCs.

Is this DTC active?

Yes >> Go To 2

No >> Refer to the Stored Lost Communication test procedure. Refer to the table of contents in this section.

2. CHECK FOR ANY OF THE FOLLOWING ACTIVE DTCS

With the scan tool, read active DTCs from all modules.

NOTE: Check for FCM configuration, CAN B or C hardware electrical, VIN Missing/Mismatch, battery or ignition related DTCs.

Does the scan tool display any active DTCs to the conditions listed above?

Yes >> Diagnose and repair the DTC. Refer to the Index for a complete list of the symptoms.

No >> Go To 3

3. VERIFY THAT THE TIRM IS ACTIVE ON THE BUS

Turn the ignition on.
With the scan tool, select ECU View.

NOTE: A red X will be next to the module that is not communicating, indicating that the module is not active on the Bus network. A green check indicates that the module is active on the Bus network.
Verify that the TIRM is active on the bus.

Is the TIRM active on the bus?

Yes >> Replace and program the Front Control Module in accordance with the service information.
Perform BODY VERIFICATION TEST – VER 1. (Refer to BODY VERIFICATION TEST – VER 1).

No >> Go To 4

4. (A300) FUSED B(+) CIRCUIT OPEN

Turn the ignition off.

Disconnect the Traffic Information Receiver Module harness connector.

Using a 12-volt test light connected to ground, check the (A300) Fused B(+) circuit.

Does the test light illuminate brightly?

Yes >> Go To 5

No >> Repair the (A300) Fused B(+) circuit for an open or short.
Perform BODY VERIFICATION TEST – VER 1. (Refer to BODY VERIFICATION TEST – VER 1).

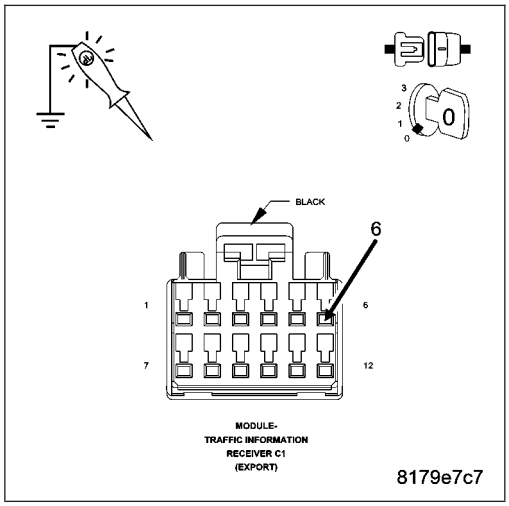

5. (Z909) GROUND CIRCUIT OPEN

Using a 12-volt test light connected to 12-volts, check the (Z909) ground circuit.

Does the test light illuminate brightly?

Yes >> Go To 6

No >> Repair the (Z909) ground circuit for an open.
Perform BODY VERIFICATION TEST – VER 1. (Refer to BODY VERIFICATION TEST – VER 1).

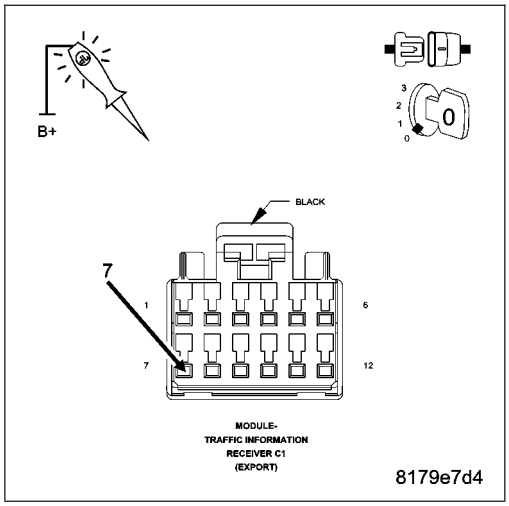

6. (D55) AND (D54) CAN B BUS CIRCUITS OPEN

NOTE: One open circuit will not cause this condition.

Measure the voltage between the (D54) CAN B Bus (-) circuit and ground.

Measure the voltage between the (D55) CAN B Bus (+) circuit and ground.

Is there any voltage present on either circuit?

Yes >> Replace the Traffic Information Receiver Module in accordance with the service information.
Perform BODY VERIFICATION TEST – VER 1. (Refer to BODY VERIFICATION TEST – VER 1).

No >> Repair the (D55) and (D54) CAN B Bus circuits for an open. Inspect the connector for damage.
Perform BODY VERIFICATION TEST – VER 1. (Refer to BODY VERIFICATION TEST – VER 1).

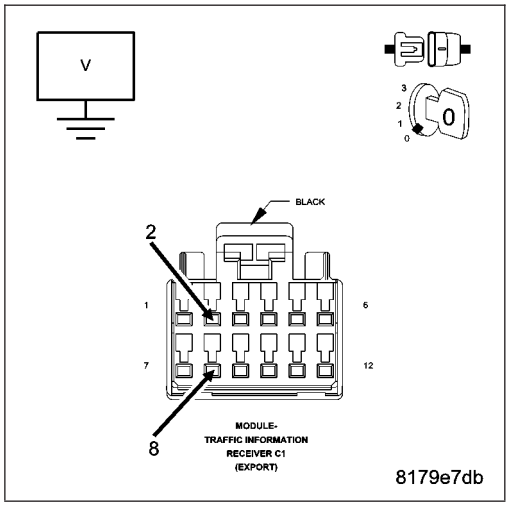

U0195-LOST COMMUNICATION WITH SDARS

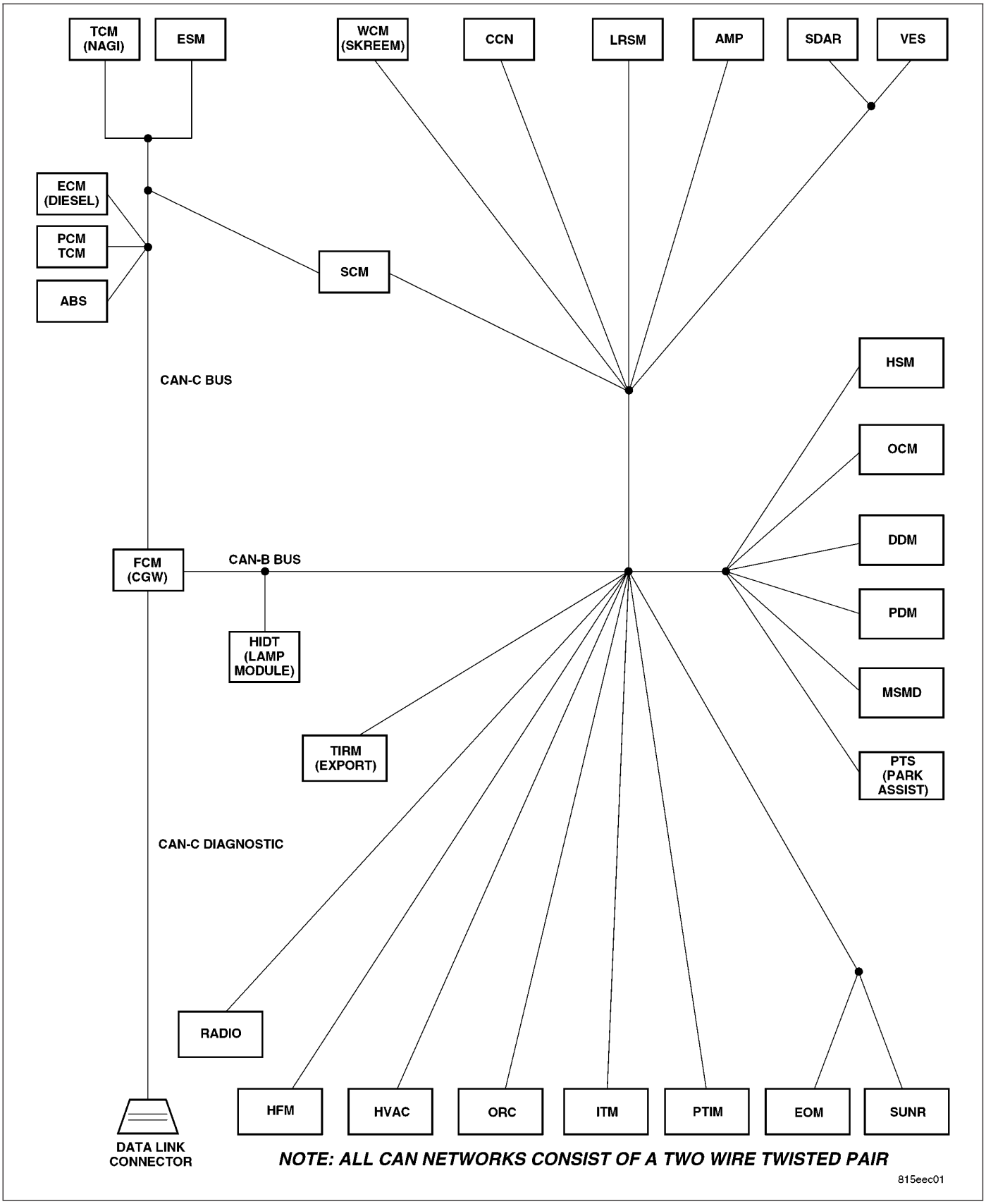

For a complete wiring diagram **Refer to Section 8W**.

- **When Monitored:**
  - With the ignition on
  - Battery voltage between 10 and 16 volts
  - IOD fuse installed
  - FCM is configured correctly
- **Set Condition:**
  Bus messages not received from the Satellite Receiver (SDAR) for approximately 2 to 5 seconds.

Possible Causes
CAN B BUS CIRCUITS OPEN OR SHORTED
DTCS RELATED TO BATTERY VOLTAGE, IGNITION, OR VIN MESSAGES
FCM NOT CONFIGURED CORRECTLY
SATELLITE RECEIVER
SATELLITE RECEIVER POWER AND GROUND
MODULE THAT SET THIS DTC

Diagnostic Test

1. VERIFY DTC IS ACTIVE

NOTE: Ensure the IOD fuse is installed and battery voltage is between 10 and 16 volts before proceeding.
With the scan tool, read active DTCs.

Is this DTC active?

Yes >> Go To 2

No >> Refer to the Stored Lost Communication test procedure. Refer to the table of contents in this section. Perform BODY VERIFICATION TEST – VER 1. (Refer to BODY VERIFICATION TEST – VER 1).

2. CHECK FOR ANY OF THE FOLLOWING ACTIVE DTCS

With the scan tool, read active DTCs from all modules.

NOTE: Check for FCM configuration, CAN B or C hardware electrical, VIN Missing/Mismatch, battery or ignition related DTCs.

Does the scan tool display any active DTCs to the conditions listed above?

Yes >> Diagnose and repair the DTC. Refer to the Table of Contents for a complete list of the symptoms. Perform BODY VERIFICATION TEST – VER 1. (Refer to BODY VERIFICATION TEST – VER 1).

No >> Go To 3

3. VERIFY THAT THE SATELLITE RECEIVER IS ACTIVE ON THE BUS

Turn the ignition on.
With the scan tool, select ECU View.
Verify that the SDARS is active on the bus.

Is the SDARS active on the bus?

Yes >> Go To 4

No >> Refer to the Table of Contents located in this section for a no response test procedure. Perform BODY VERIFICATION TEST – VER 1. (Refer to BODY VERIFICATION TEST – VER 1).

4. CHECK FOR ADDITIONAL COMMUNICATION RELATED DTCS

With the scan tool, select Network View and select Advanced.

Is there more than one module with active DTCs "Logged Against" the SDARS?

Yes >> Replace/update the Satellite Receiver in accordance with the service information.
Perform BODY VERIFICATION TEST – VER 1. (Refer to BODY VERIFICATION TEST – VER 1).

No >> Replace/update the module that set the DTC in accordance with the service information
Perform BODY VERIFICATION TEST – VER 1. (Refer to BODY VERIFICATION TEST – VER 1).

U0196-LOST COMMUNICATION WITH VEHICLE ENTERTAINMENT CONTROL MODULE

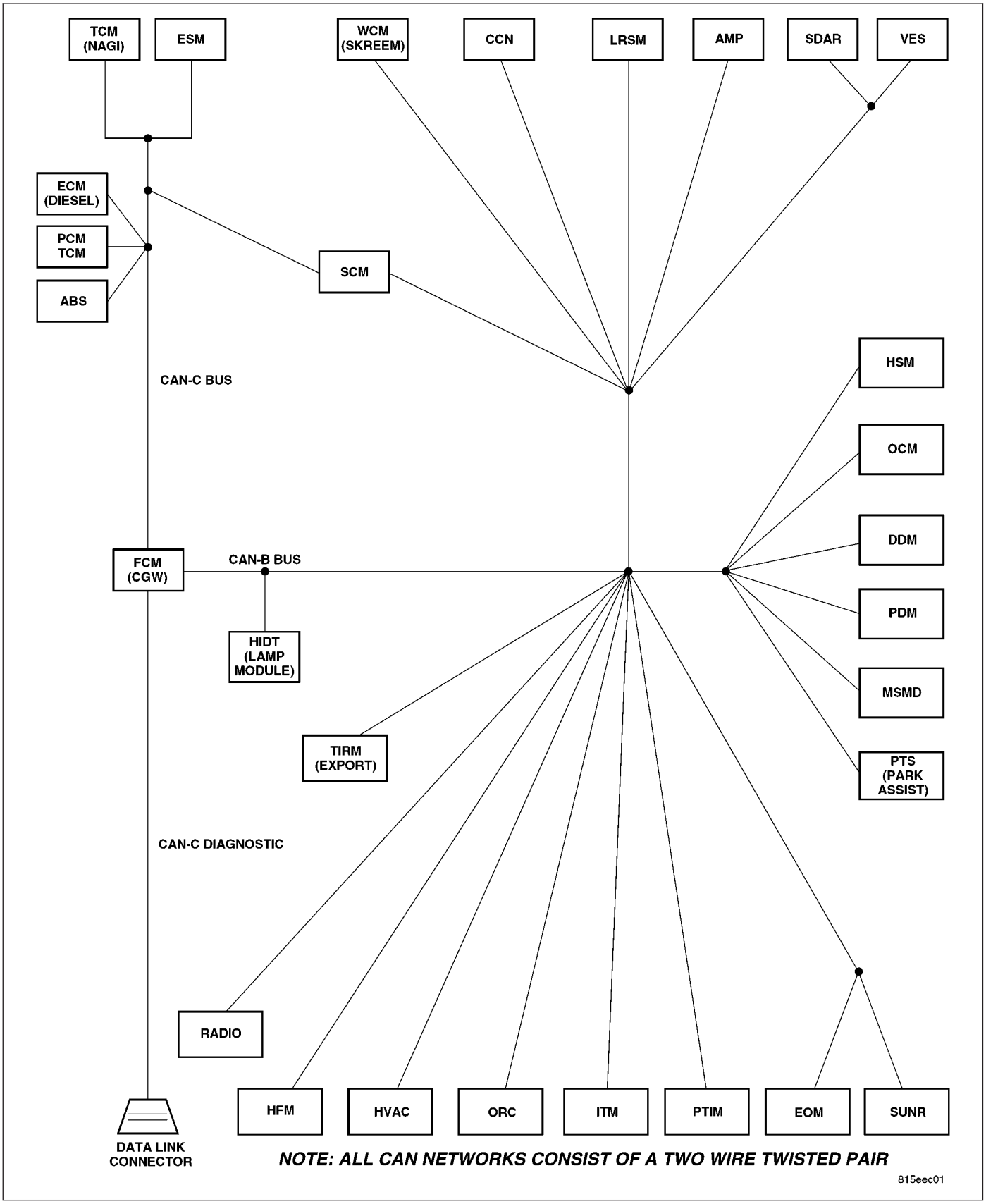

For a complete wiring diagram **Refer to Section 8W**.

- **When Monitored:**
  - With the ignition on
  - Battery voltage between 10 and 16 volts
  - IOD fuse installed
  - FCM is configured correctly
- **Set Condition:**
  Bus messages not received from the vehicle entertainment system (DVD player) for approximately 2 to 5 seconds.

Possible Causes
CAN B BUS CIRCUITS OPEN OR SHORTED
DTCS RELATED TO BATTERY VOLTAGE, IGNITION, OR VIN MESSAGES
FCM NOT CONFIGURED CORRECTLY
MONITOR/DVD MEDIA SYSTEM
MONITOR/DVD MEDIA SYSTEM POWER AND GROUND
MODULE THAT SET THIS DTC

Diagnostic Test

1. VERIFY DTC IS ACTIVE

NOTE: Ensure the IOD fuse is installed and battery voltage is between 10 and 16 volts before proceeding.
With the scan tool, read active DTCs.

Is this DTC active?

Yes >> Go To 2

No >> Refer to the Stored Lost Communication test procedure. Refer to the table of contents in this section. Perform BODY VERIFICATION TEST – VER 1. (Refer to BODY VERIFICATION TEST – VER 1).

2. CHECK FOR ANY OF THE FOLLOWING ACTIVE DTCS

With the scan tool, read active DTCs from all modules.

NOTE: Check for FCM configuration, CAN B or C hardware electrical, VIN Missing/Mismatch, battery or ignition related DTCs.

Does the scan tool display any active DTCs to the conditions listed above?

Yes >> Diagnose and repair the DTC. Refer to the Table of Contents for a complete list of the symptoms. Perform BODY VERIFICATION TEST – VER 1. (Refer to BODY VERIFICATION TEST – VER 1).

No >> Go To 3

3. VERIFY THAT THE VES IS ACTIVE ON THE BUS

Turn the ignition on.
With the scan tool, select ECU View.
Verify that the VES is active on the bus.

Is the VES active on the bus?

Yes >> Go To 4

No >> Refer to the No Response test procedure. Refer to the table of contents in this section. Perform BODY VERIFICATION TEST – VER 1. (Refer to BODY VERIFICATION TEST – VER 1).

4. CHECK FOR ADDITIONAL COMMUNICATION RELATED DTCS

With the scan tool, select Network View and select Advanced.

Is there more than one module with active DTCs “Logged Against” the VES?

Yes >> Replace/update the Monitor/DVD Media System in accordance with the service information. Perform BODY VERIFICATION TEST – VER 1. (Refer to BODY VERIFICATION TEST – VER 1).

No >> Replace/update the module that set this DTC in accordance with the service information. Perform BODY VERIFICATION TEST – VER 1. (Refer to BODY VERIFICATION TEST – VER 1).

U0197-LOST COMMUNICATION WITH HANDS FREE PHONE MODULE

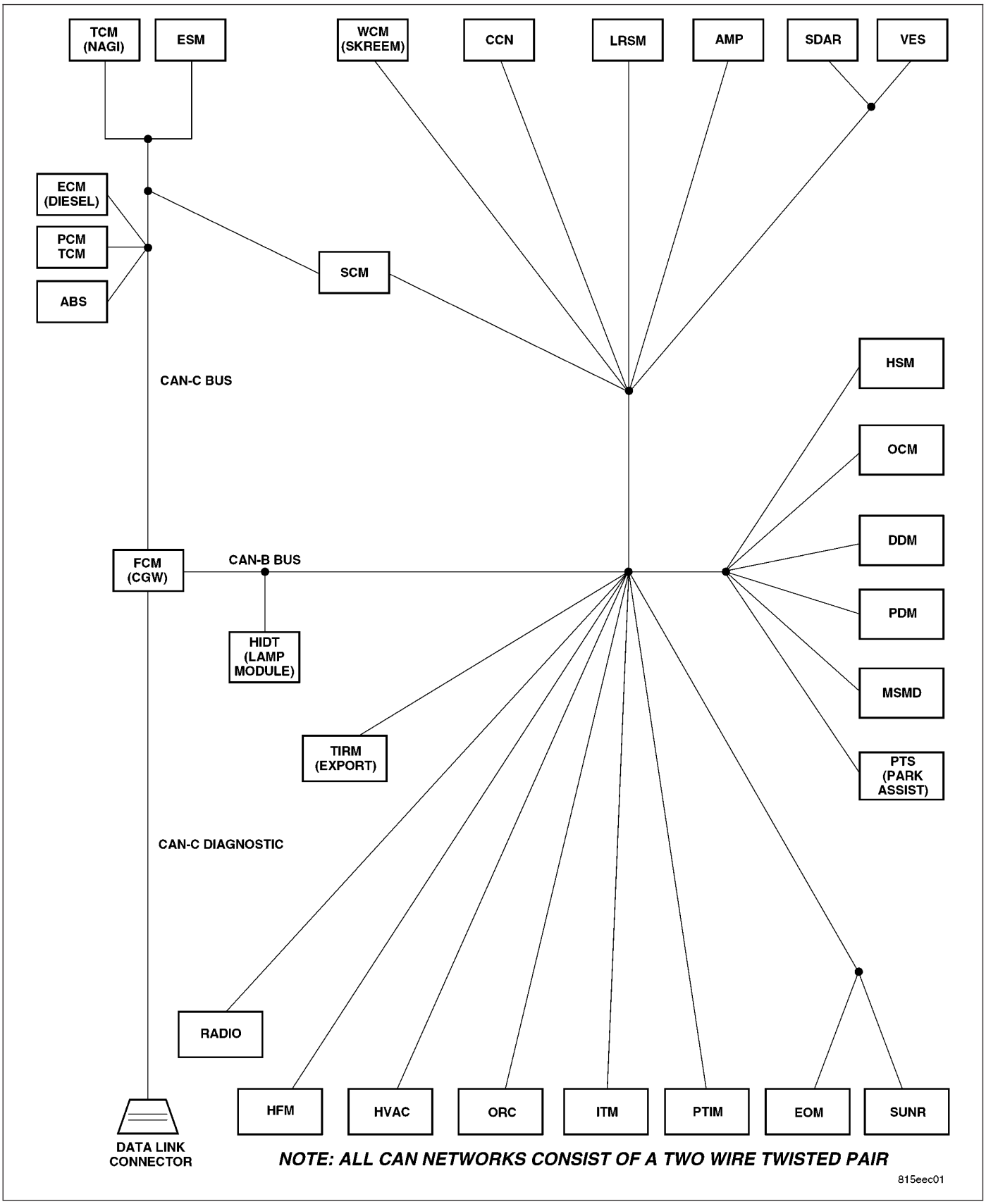

For a complete wiring diagram **Refer to Section 8W**.

- **When Monitored:**
  - With the ignition on
  - Battery voltage between 10 and 16 volts
  - IOD fuse installed
  - FCM is configured correctly
- **Set Condition:**
  Bus messages not received from the HFM for approximately 2 to 5 seconds.

Possible Causes
CAN B BUS CIRCUITS OPEN OR SHORTED
DTCS RELATED TO BATTERY VOLTAGE, IGNITION, OR VIN MESSAGES
FCM NOT CONFIGURED CORRECTLY
HANDS FREE MODULE
HANDS FREE MODULE POWER AND GROUND
MODULE THAT SET THIS DTC

Diagnostic Test

1. VERIFY DTC IS ACTIVE

NOTE: Ensure the IOD fuse is installed and battery voltage is between 10 and 16 volts before proceeding.
With the scan tool, read active DTCs.

Is this DTC active?

Yes >> Go To 2

No >> Refer to the Stored Lost Communication test procedure. Refer to the table of contents in this section. Perform BODY VERIFICATION TEST – VER 1. (Refer to BODY VERIFICATION TEST – VER 1).

2. CHECK FOR ANY OF THE FOLLOWING ACTIVE DTCS

With the scan tool, read active DTCs from all modules.

NOTE: Check for FCM configuration, CAN B or C hardware electrical, VIN Missing/Mismatch, battery or ignition related DTCs.

Does the scan tool display any active DTCs to the conditions listed above?

Yes >> Diagnose and repair the DTC. Refer to the Table of Contents for a complete list of the symptoms. Perform BODY VERIFICATION TEST – VER 1. (Refer to BODY VERIFICATION TEST – VER 1).

No >> Go To 3

3. VERIFY THAT THE HFM IS ACTIVE ON THE BUS

Turn the ignition on.
With the scan tool, select ECU View.
Verify that the HFM is active on the bus.

Is the HFM active on the bus?

Yes >> Go To 4

No >> Refer to the Table of Contents located in this section for a no response test procedure. Perform BODY VERIFICATION TEST – VER 1. (Refer to BODY VERIFICATION TEST – VER 1).

4. CHECK FOR ADDITIONAL COMMUNICATION RELATED DTCS

With the scan tool, select Network View and select Advanced.

Is there more than one module with active DTCs "Logged Against" the HFM?

Yes >> Replace/update the Hands Free Module in accordance with the service information.
Perform BODY VERIFICATION TEST – VER 1. (Refer to BODY VERIFICATION TEST – VER 1).

No >> Replace/update the module that set this DTC in accordance with the service information.
Perform BODY VERIFICATION TEST – VER 1. (Refer to BODY VERIFICATION TEST – VER 1).

U0199-LOST COMMUNICATION WITH DRIVER DOOR MODULE

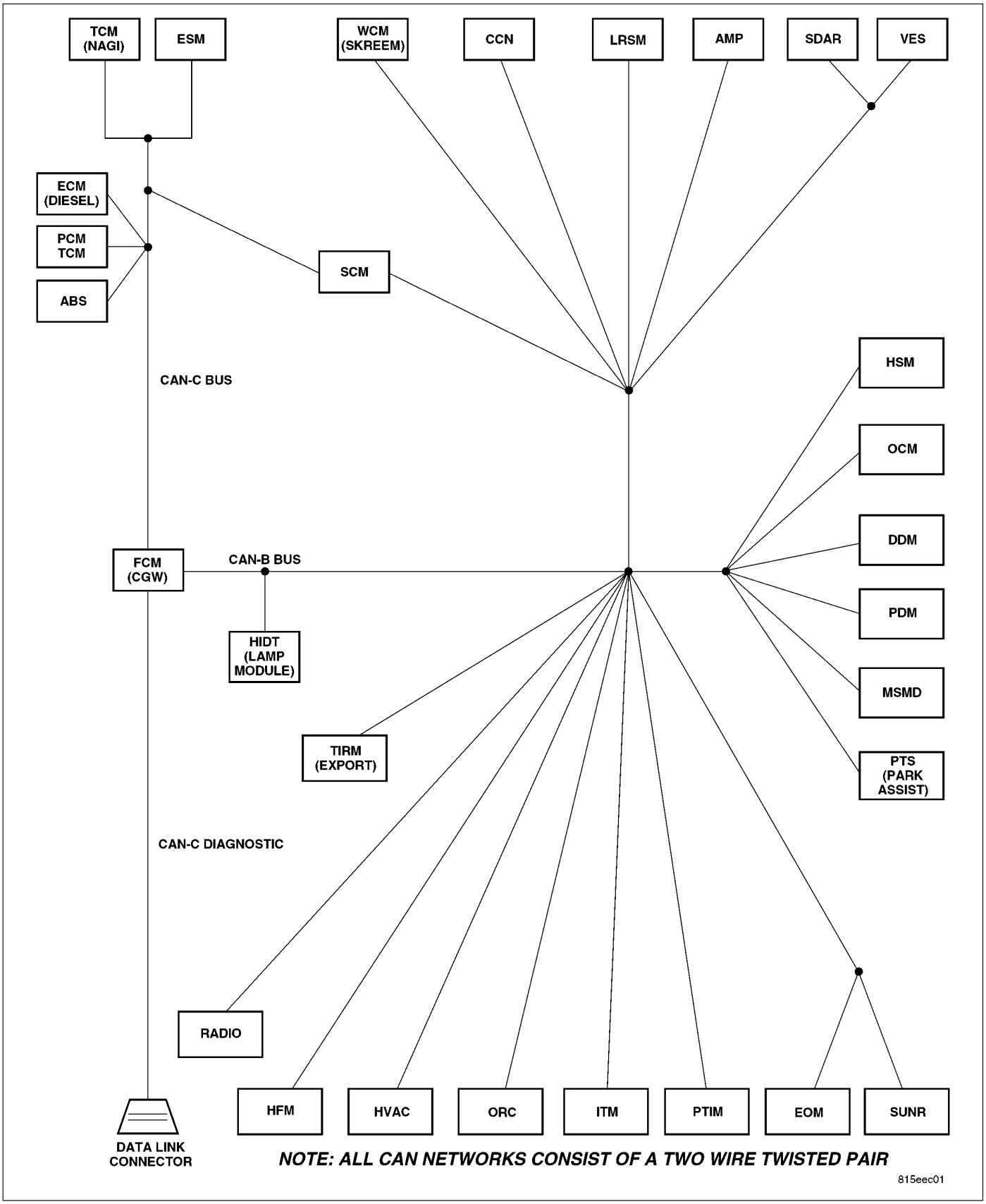

For a complete wiring diagram **Refer to Section 8W**.

- **When Monitored:**
  - With the ignition on
  - Battery voltage between 10 and 16 volts
  - IOD fuse installed
  - FCM is configured correctly
- **Set Condition:**
  Bus messages not received from the DDM for approximately 2 to 5 seconds.

Possible Causes
CAN B BUS CIRCUITS OPEN OR SHORTED
DTCS RELATED TO BATTERY VOLTAGE, IGNITION, OR VIN MESSAGES
FCM NOT CONFIGURED CORRECTLY
DRIVER DOOR MODULE
DRIVER DOOR MODULE POWER AND GROUND
MODULE THAT SET THE DTC

Diagnostic Test

1. VERIFY DTC IS ACTIVE

NOTE: Ensure the IOD fuse is installed and battery voltage is between 10 and 16 volts before proceeding.
With the scan tool, read active DTCs.

Is this DTC active?

Yes >> Go To 2

No >> Refer to the Stored Lost Communication test procedure. Refer to the table of contents in this section. Perform BODY VERIFICATION TEST – VER 1. (Refer to BODY VERIFICATION TEST – VER 1).

2. CHECK FOR ANY OF THE FOLLOWING ACTIVE DTCS

With the scan tool, read active DTCs from all modules.

NOTE: Check for FCM configuration, CAN B or C hardware electrical, VIN Missing/Mismatch, battery or ignition related DTCs.

Does the scan tool display any active DTCs to the conditions listed above?

Yes >> Diagnose and repair the DTC. Refer to the Table of Contents for a complete list of the symptoms. Perform BODY VERIFICATION TEST – VER 1. (Refer to BODY VERIFICATION TEST – VER 1).

No >> Go To 3

3. VERIFY THAT THE DDM IS ACTIVE ON THE BUS

Turn the ignition on.
With the scan tool, select ECU View.
Verify that the DDM is active on the bus.

Is the DDM active on the bus?

Yes >> Go To 4

No >> Refer to the Table of Contents located in this section for a no response test procedure. Perform BODY VERIFICATION TEST – VER 1. (Refer to BODY VERIFICATION TEST – VER 1).

4. CHECK FOR ADDITIONAL COMMUNICATION RELATED DTCS

With the scan tool, select Network View and select Advanced.

Is there more than one module with active DTCs “Logged Against” the DDM?

Yes >> Replace/update the Driver Door Module in accordance with the service information.
Perform BODY VERIFICATION TEST – VER 1. (Refer to BODY VERIFICATION TEST – VER 1).

No >> Replace/update the module that set this DTC in accordance with the service information.
Perform BODY VERIFICATION TEST – VER 1. (Refer to BODY VERIFICATION TEST – VER 1).

U0200-LOST COMMUNICATION WITH PASSENGER DOOR MODULE

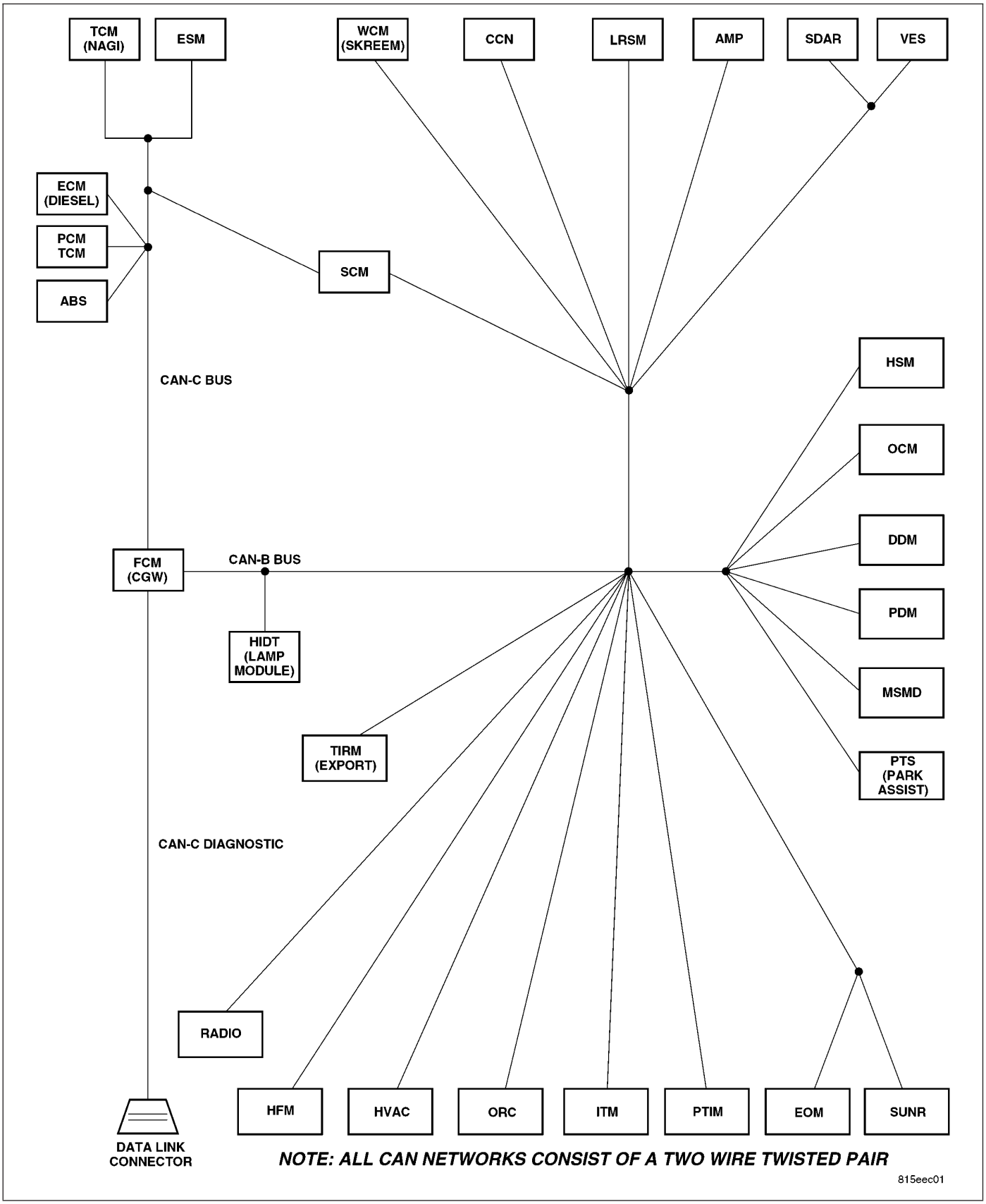

For a complete wiring diagram **Refer to Section 8W**.

- **When Monitored:**
  - With the ignition on
  - Battery voltage between 10 and 16 volts
  - IOD fuse installed
  - FCM is configured correctly
- **Set Condition:**
  Bus messages not received from the PDM for approximately 2 to 5 seconds.

Possible Causes
CAN B BUS CIRCUITS OPEN OR SHORTED
DTCS RELATED TO BATTERY VOLTAGE, IGNITION, OR VIN MESSAGES
FCM NOT CONFIGURED CORRECTLY
PASSENGER DOOR MODULE
PASSENGER DOOR MODULE POWER AND GROUND
MODULE THAT SET THIS DTC

Diagnostic Test

1. VERIFY DTC IS ACTIVE

NOTE: Ensure the IOD fuse is installed and battery voltage is between 10 and 16 volts before proceeding.
With the scan tool, read active DTCs.

Is this DTC active?

Yes >> Go To 2

No >> Refer to the Stored Lost Communication test procedure. Refer to the table of contents in this section. Perform BODY VERIFICATION TEST – VER 1. (Refer to BODY VERIFICATION TEST – VER 1).

2. CHECK FOR ANY OF THE FOLLOWING ACTIVE DTCS

With the scan tool, read active DTCs from all modules.

NOTE: Check for FCM configuration, CAN B or C hardware electrical, VIN Missing/Mismatch, battery or ignition related DTCs.

Does the scan tool display any active DTCs to the conditions listed above?

Yes >> Diagnose and repair the DTC. Refer to the Table of Contents for a complete list of the symptoms. Perform BODY VERIFICATION TEST – VER 1. (Refer to BODY VERIFICATION TEST – VER 1).

No >> Go To 3

3. VERIFY THAT THE PDM IS ACTIVE ON THE BUS

Turn the ignition on.
With the scan tool, select ECU View.
Verify that the PDM is active on the bus.

Is the PDM active on the bus?

Yes >> Go To 4

No >> Refer to the Table of Contents located in this section for a no response test procedure. Perform BODY VERIFICATION TEST – VER 1. (Refer to BODY VERIFICATION TEST – VER 1).

4. CHECK FOR ADDITIONAL COMMUNICATION RELATED DTCS

With the scan tool, select Network View and select Advanced.

Is there more than one module with active DTCs "Logged Against" the PDM?

Yes >> Replace/update the Passenger Door Module in accordance with the service information.
Perform BODY VERIFICATION TEST – VER 1. (Refer to BODY VERIFICATION TEST – VER 1).

No >> Replace/update the module that set this DTC in accordance with the service information
Perform BODY VERIFICATION TEST – VER 1. (Refer to BODY VERIFICATION TEST – VER 1).

U0208-LOST COMMUNICATION WITH HEATED SEAT CONTROL MODULE

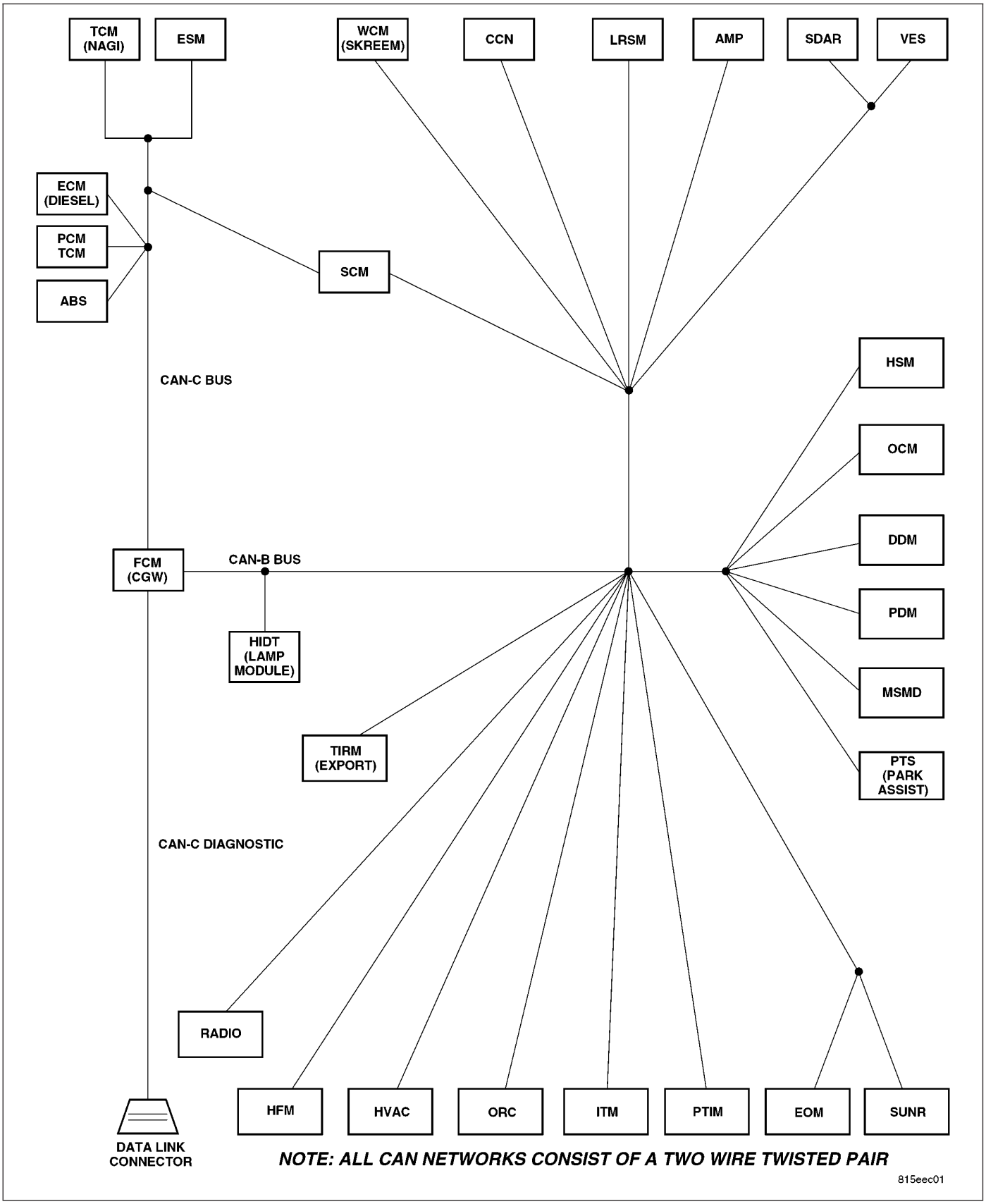

For a complete wiring diagram **Refer to Section 8W**.

- **When Monitored:**
  - With the ignition on
  - Battery voltage between 10 and 16 volts
  - IOD fuse installed
  - FCM is configured correctly
- **Set Condition:**
  Bus messages not received from the HSM for approximately 2 to 5 seconds.

Possible Causes
CAN B BUS CIRCUITS OPEN OR SHORTED
DTCS RELATED TO BATTERY VOLTAGE, IGNITION, OR VIN MESSAGES
FCM NOT CONFIGURED CORRECTLY
HEATED SEAT MODULE
HEATED SEAT MODULE POWER AND GROUND
MODULE THAT SET THIS DTC

Diagnostic Test

1. VERIFY DTC IS ACTIVE

NOTE: Ensure the IOD fuse is installed and battery voltage is between 10 and 16 volts before proceeding.
With the scan tool, read active DTCs.

Is this DTC active?

Yes >> Go To 2

No >> Refer to the Stored Lost Communication test procedure. Refer to the table of contents in this section. Perform BODY VERIFICATION TEST – VER 1. (Refer to BODY VERIFICATION TEST – VER 1).

2. CHECK FOR ANY OF THE FOLLOWING ACTIVE DTCS

With the scan tool, read active DTCs from all modules.

NOTE: Check for FCM configuration, CAN B or C hardware electrical, VIN Missing/Mismatch, battery or ignition related DTCs.

Does the scan tool display any active DTCs to the conditions listed above?

Yes >> Diagnose and repair the DTC. Refer to the Table of Contents for a complete list of the symptoms. Perform BODY VERIFICATION TEST – VER 1. (Refer to BODY VERIFICATION TEST – VER 1).

No >> Go To 3

3. VERIFY THAT THE HSM IS ACTIVE ON THE BUS

Turn the ignition on.
With the scan tool, select ECU View.
Verify that the HSM is active on the bus.

Is the HSM active on the bus?

Yes >> Go To 4

No >> Refer to the Table of Contents located in this section for a no response test procedure. Perform BODY VERIFICATION TEST – VER 1. (Refer to BODY VERIFICATION TEST – VER 1).

4. CHECK FOR ADDITIONAL COMMUNICATION RELATED DTCS

With the scan tool, select Network View and select Advanced.

Is there more than one module with active DTCs "Logged Against" the HSM?

Yes >> Replace/update the Heated Seat Module in accordance with the service information.
Perform BODY VERIFICATION TEST – VER 1. (Refer to BODY VERIFICATION TEST – VER 1).

No >> Replace/update the module that set this DTC in accordance with the service information.
Perform BODY VERIFICATION TEST – VER 1. (Refer to BODY VERIFICATION TEST – VER 1).

U0209-LOST COMMUNICATION WITH MEMORY SEAT CONTROL MODULE

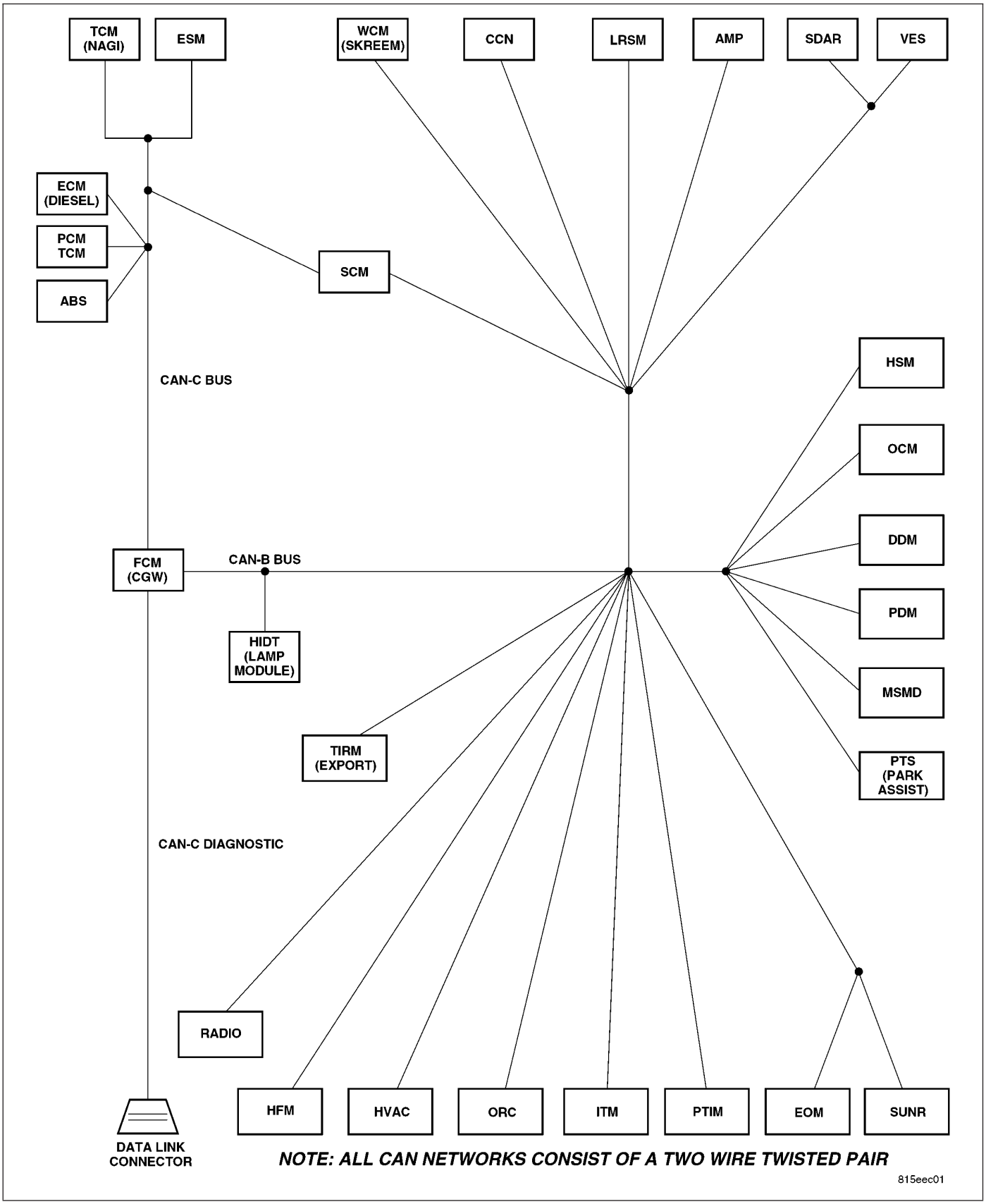

For a complete wiring diagram **Refer to Section 8W**.

- **When Monitored:**
  - With the ignition on
  - Battery voltage between 10 and 16 volts
  - IOD fuse installed
  - FCM is configured correctly
- **Set Condition:**
  Bus messages not received from the MSMD for approximately 2 to 5 seconds.

Possible Causes
CAN B BUS CIRCUITS OPEN OR SHORTED
DTCS RELATED TO BATTERY VOLTAGE, IGNITION, OR VIN MESSAGES
FCM NOT CONFIGURED CORRECTLY
MEMORY SEAT MODULE
MEMORY SEAT MODULE POWER AND GROUND
MODULE THAT SET THIS DTC

Diagnostic Test

1. VERIFY DTC IS ACTIVE

NOTE: Ensure the IOD fuse is installed and battery voltage is between 10 and 16 volts before proceeding.
With the scan tool, read active DTCs.

Is this DTC active?

Yes >> Go To 2

No >> Refer to the Stored Lost Communication test procedure. Refer to the table of contents in this section. Perform BODY VERIFICATION TEST – VER 1. (Refer to BODY VERIFICATION TEST – VER 1).

2. CHECK FOR ANY OF THE FOLLOWING ACTIVE DTCS

With the scan tool, read active DTCs from all modules.

NOTE: Check for FCM configuration, CAN B or C hardware electrical, VIN Missing/Mismatch, battery or ignition related DTCs.

Does the scan tool display any active DTCs to the conditions listed above?

Yes >> Diagnose and repair the DTC. Refer to the Table of Contents for a complete list of the symptoms. Perform BODY VERIFICATION TEST – VER 1. (Refer to BODY VERIFICATION TEST – VER 1).

No >> Go To 3

3. VERIFY THAT THE MSMD IS ACTIVE ON THE BUS

Turn the ignition on.
With the scan tool, select ECU View.
Verify that the MSMD is active on the bus.

Is the MSMD active on the bus?

Yes >> Go To 4

No >> Refer to the Table of Contents located in this section for a no response test procedure. Perform BODY VERIFICATION TEST – VER 1. (Refer to BODY VERIFICATION TEST – VER 1).

4. CHECK FOR ADDITIONAL COMMUNICATION RELATED DTCS

With the scan tool, select Network View and select Advanced.

Is there more than one module with active DTCs "Logged Against" the MSMD?

Yes >> Replace/update the Memory Seat Module in accordance with the service information.
Perform BODY VERIFICATION TEST – VER 1. (Refer to BODY VERIFICATION TEST – VER 1).

No >> Replace/update the module that set this DTC in accordance with the service information.
Perform BODY VERIFICATION TEST – VER 1. (Refer to BODY VERIFICATION TEST – VER 1).

U0212-LOST COMMUNICATION WITH SCCM - CAN B

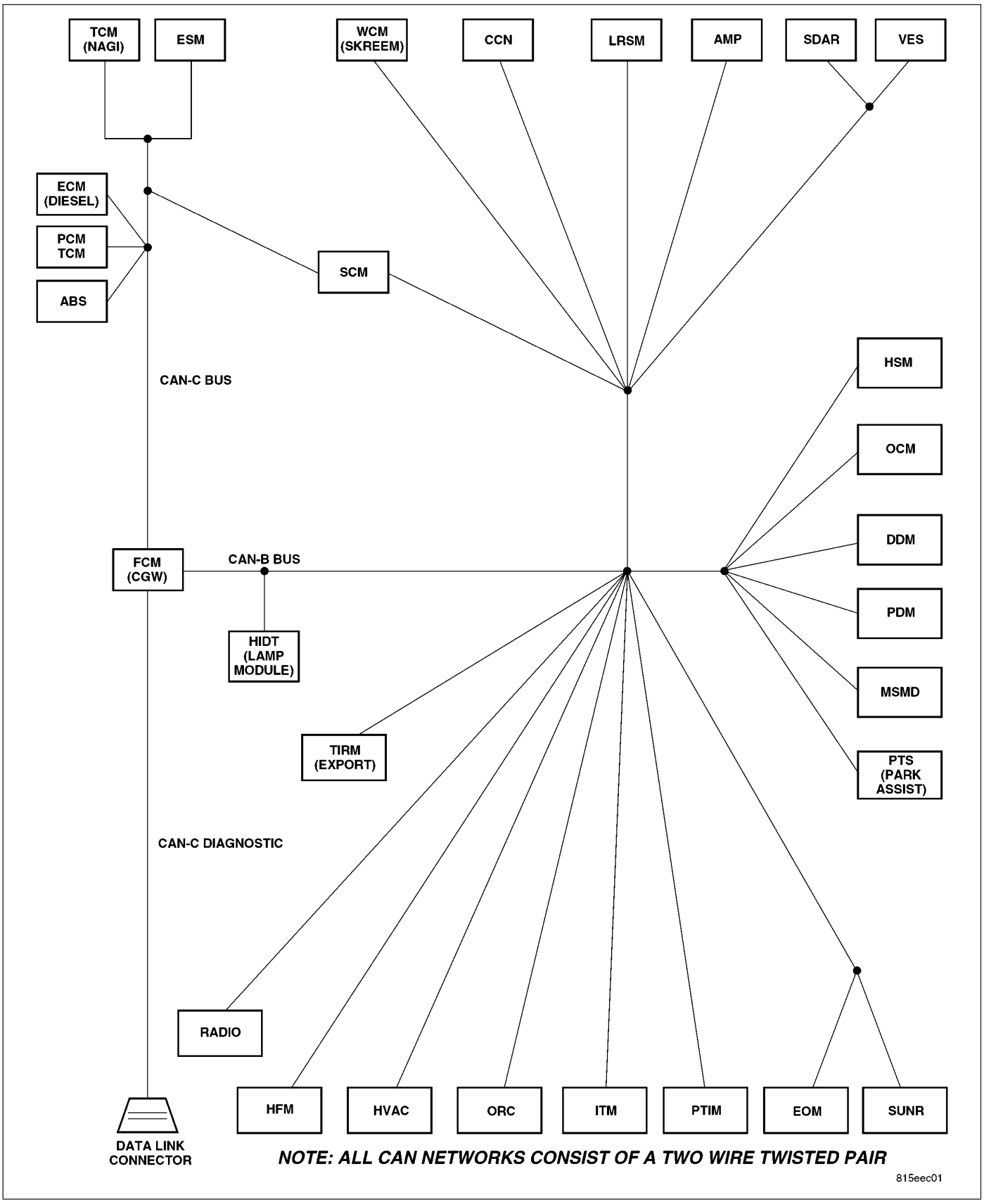

For a complete wiring diagram **Refer to Section 8W**.

- **When Monitored:**
  - With the ignition on
  - Battery voltage between 10 and 16 volts
  - IOD fuse installed
  - FCM is configured correctly
- **Set Condition:**
  Bus messages not received from the SCM (CAN B) for approximately 2 to 5 seconds.

Possible Causes
CAN B BUS CIRCUITS OPEN OR SHORTED
DTCS RELATED TO BATTERY VOLTAGE, IGNITION, OR VIN MESSAGES
FCM NOT CONFIGURED CORRECTLY
STEERING CONTROL MODULE
STEERING CONTROL MODULE POWER AND GROUND
MODULE THAT SET THIS DTC

Diagnostic Test

1. VERIFY DTC IS ACTIVE

NOTE: Ensure the IOD fuse is installed and battery voltage is between 10 and 16 volts before proceeding.
With the scan tool, read active DTCs.

Is this DTC active?

Yes >> Go To 2

No >> Refer to the Stored Lost Communication test procedure. Refer to the table of contents in this section. Perform BODY VERIFICATION TEST – VER 1. (Refer to BODY VERIFICATION TEST – VER 1).

2. CHECK FOR ANY OF THE FOLLOWING ACTIVE DTCS

With the scan tool, read active DTCs from all modules.

NOTE: Check for FCM configuration, CAN B or C hardware electrical, VIN Missing/Mismatch, battery or ignition related DTCs.

Does the scan tool display any active DTCs to the conditions listed above?

Yes >> Diagnose and repair the DTC. Refer to the Table of Contents for a complete list of the symptoms. Perform BODY VERIFICATION TEST – VER 1. (Refer to BODY VERIFICATION TEST – VER 1).

No >> Go To 3

3. VERIFY THAT THE SCM IS ACTIVE ON THE BUS

Turn the ignition on.
With the scan tool, select ECU View.
Verify that the SCM is active on the bus.

Is the SCM active on the bus?

Yes >> Go To 4

No >> Refer to the Table of Contents located in this section for a no response test procedure. Perform BODY VERIFICATION TEST – VER 1. (Refer to BODY VERIFICATION TEST – VER 1).

4. CHECK FOR ADDITIONAL COMMUNICATION RELATED DTCS

With the scan tool, select Network View and select Advanced.

Is there more than one module with active DTCs “Logged Against” the SCM?

Yes >> Replace/update the Steering Control Module in accordance with the service information.
Perform BODY VERIFICATION TEST – VER 1. (Refer to BODY VERIFICATION TEST – VER 1).

No >> Replace/update the module that set this DTC in accordance with the service information.
Perform BODY VERIFICATION TEST – VER 1. (Refer to BODY VERIFICATION TEST – VER 1).

U0231-LOST COMMUNICATION WITH RAIN SENSING MODULE

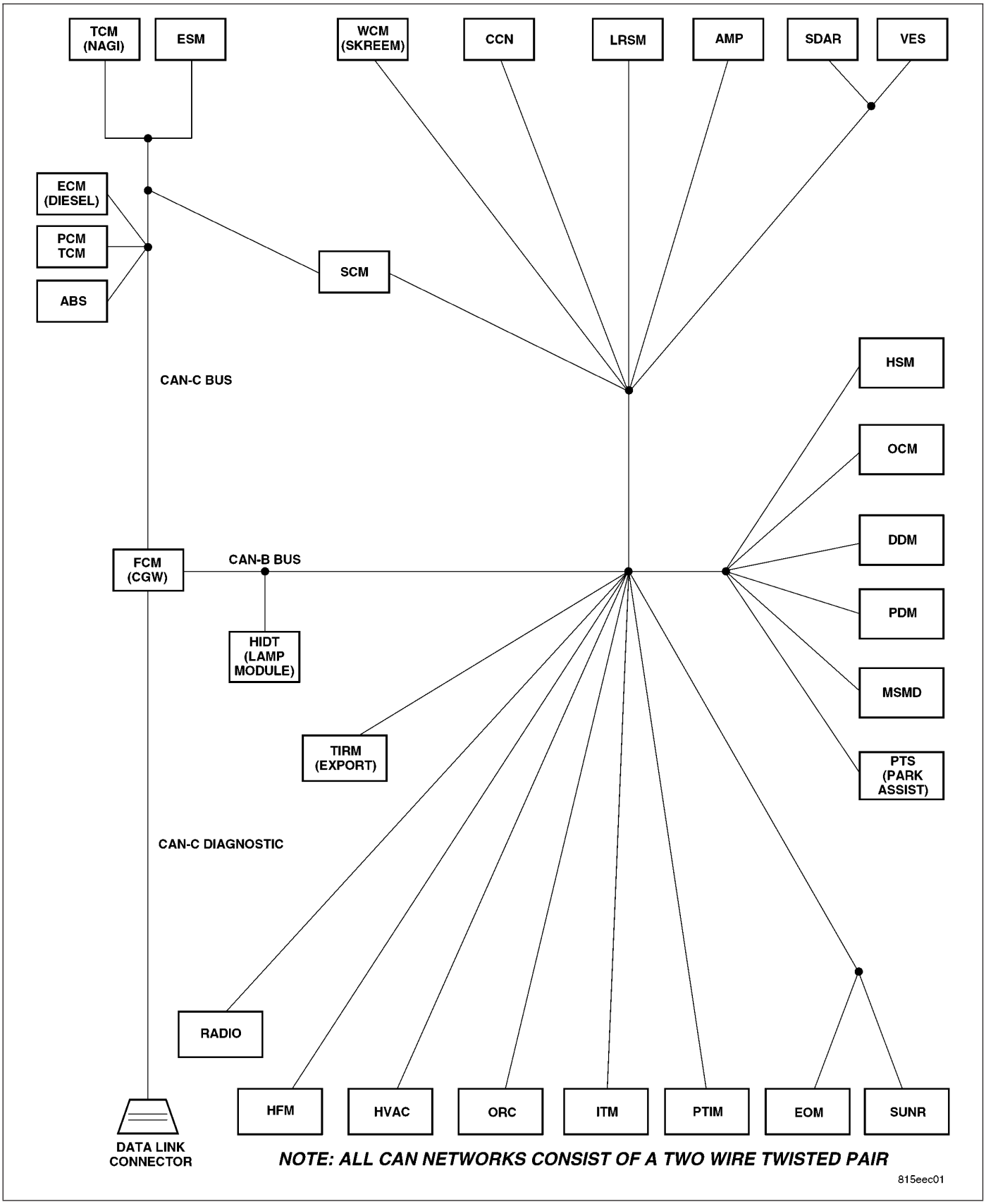

For a complete wiring diagram **Refer to Section 8W**.

- **When Monitored:**
  - With the ignition on
  - Battery voltage between 10 and 16 volts
  - IOD fuse installed
  - FCM is configured correctly
- **Set Condition:**
  Bus messages not received from the rain sensor (LRSM) for approximately 2 to 5 seconds.

Possible Causes
CAN B BUS CIRCUITS OPEN OR SHORTED
DTCS RELATED TO BATTERY VOLTAGE, IGNITION, OR VIN MESSAGES
FCM NOT CONFIGURED CORRECTLY
RAIN SENSOR
RAIN SENSOR POWER AND GROUND
MODULE THAT SET THIS DTC

Diagnostic Test

1. VERIFY DTC IS ACTIVE

NOTE: Ensure the IOD fuse is installed and battery voltage is between 10 and 16 volts before proceeding.
With the scan tool, read active DTCs.

Is this DTC active?

Yes >> Go To 2

No >> Refer to the Stored Lost Communication test procedure. Refer to the table of contents in this section. Perform BODY VERIFICATION TEST – VER 1. (Refer to BODY VERIFICATION TEST – VER 1).

2. CHECK FOR ANY OF THE FOLLOWING ACTIVE DTCS

With the scan tool, read active DTCs from all modules.

NOTE: Check for FCM configuration, CAN B or C hardware electrical, VIN Missing/Mismatch, battery or ignition related DTCs.

Does the scan tool display any active DTCs to the conditions listed above?

Yes >> Diagnose and repair the DTC. Refer to the Table of Contents for a complete list of the symptoms. Perform BODY VERIFICATION TEST – VER 1. (Refer to BODY VERIFICATION TEST – VER 1).

No >> Go To 3

3. VERIFY THAT THE LRSM IS ACTIVE ON THE BUS

Turn the ignition on.
With the scan tool, select ECU View.
Verify that the LRSM is active on the bus.

Is the LRSM active on the bus?

Yes >> Go To 4

No >> Refer to the Table of Contents located in this section for a no response test procedure. Perform BODY VERIFICATION TEST – VER 1. (Refer to BODY VERIFICATION TEST – VER 1).

4. CHECK FOR ADDITIONAL COMMUNICATION RELATED DTCS

With the scan tool, select Network View and select Advanced.

Is there more than one module with active DTCs “Logged Against” the LRSM?

Yes >> Replace/update the Rain Sensor in accordance with the service information.
Perform BODY VERIFICATION TEST – VER 1. (Refer to BODY VERIFICATION TEST – VER 1).

No >> Replace/update the module that set this DTC in accordance with the service information.
Perform BODY VERIFICATION TEST – VER 1. (Refer to BODY VERIFICATION TEST – VER 1).

U1105-CAN B SIGNAL MISSING

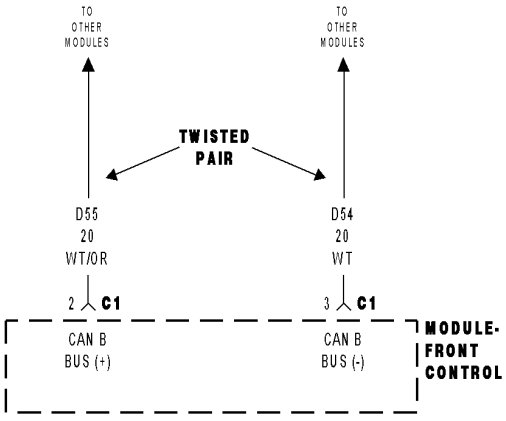

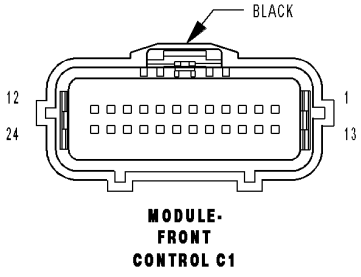

8139b91e

For a complete wiring diagram **Refer to Section 8W**.

- **When Monitored:**
  Continuously
- **Set Condition:**
  When the CAN B Bus messages are not received within 2 seconds.

Possible Causes
OTHER CAN B BUS DTC's SET IN FRONT CONTROL MODULE
(D55) CAN B BUS (+) CIRCUIT OPEN
(D54) CAN B BUS (-) CIRCUIT OPEN
FRONT CONTROL MODULE

Diagnostic Test

1. CHECK FOR ACTIVE DTCS

With the scan tool, read the active DTC's.

Cycle the ignition switch from off to on at least 5 times, leaving the ignition on for a minimum of 90 seconds per cycle.

With the scan tool, read the active DTC's.

Does the scan tool display this DTC as active?

Yes >> Go To 2

No >> If the DTC is stored, check for an intermittent condition. Visually inspect the related wiring harness connectors. Look for broken, bent, pushed out, or corroded terminals.

2. CHECK FRONT CONTROL MODULE FOR U0019 DTC

With the scan tool, read Front Control Module active DTC's

Does the scan tool display U0019 CAN B BUS – ACTIVE?

Yes >> Refer to the table of contents in this section and perform the U0019 diagnostic procedure.

No >> Go To 3

3. (D55) CAN B BUS (+) CIRCUIT OPEN

Turn the ignition off.

Disconnect the Front Control Module C1 connector.

Turn the ignition on.

Measure the voltage of the (D55) CAN B Bus (+) circuit.

Is any voltage present on this circuit?

Yes >> Go To 4

No >> Repair the (D55) CAN B Bus (+) circuit for an open.
Perform BODY VERIFICATION TEST – VER 1. (Refer to BODY VERIFICATION TEST – VER 1).

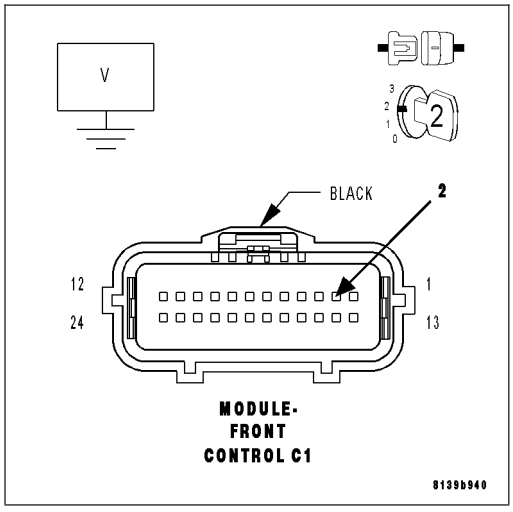

4. (D54) CAN B BUS (–) CIRCUIT OPEN

Measure the voltage of the (D54) CAN B Bus (-) circuit.

Is any voltage present on this circuit?

Yes >> Replace the Front Control Module in accordance with the service information.

Perform BODY VERIFICATION TEST – VER 1. (Refer to BODY VERIFICATION TEST – VER 1).

No >> Repair the (D54) CAN B Bus (–) circuit for an open.

Perform BODY VERIFICATION TEST – VER 1. (Refer to BODY VERIFICATION TEST – VER 1).

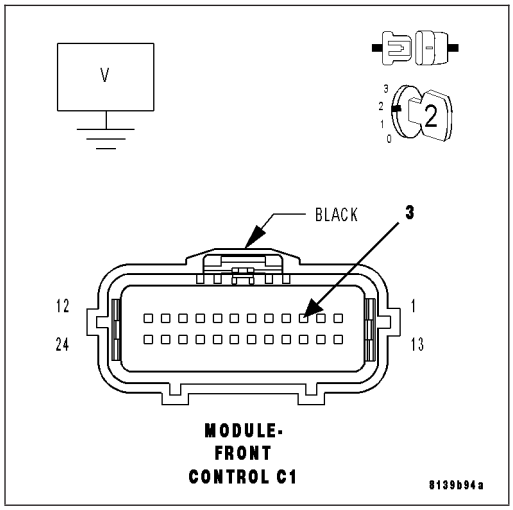

U1106-CAN C SIGNAL MISSING

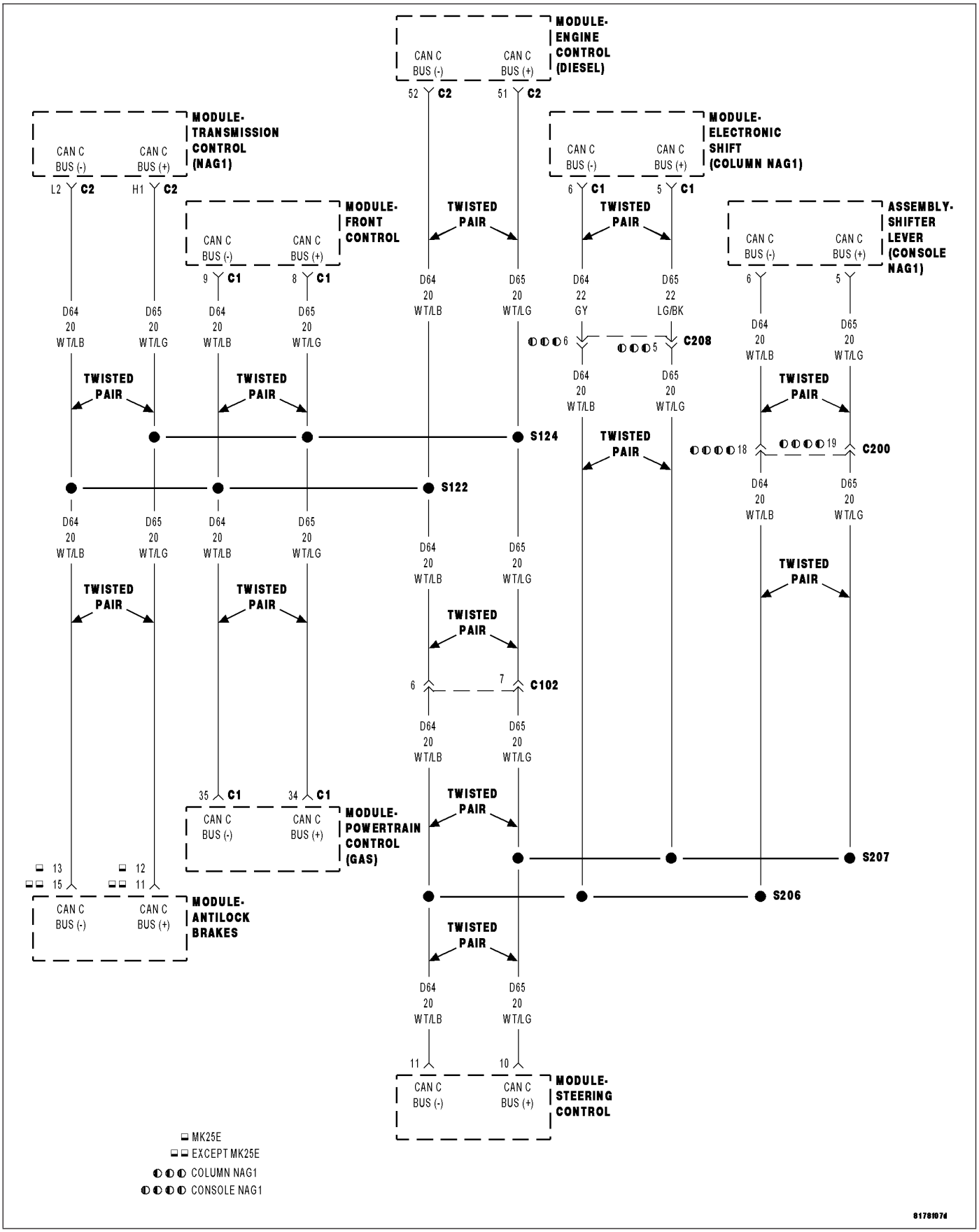

For a complete wiring diagram **Refer to Section 8W**.

- **When Monitored:**
  With the ignition on.
- **Set Condition:**
  The FCM detects a short in either CAN C Bus circuit.

Possible Causes
(D65) CAN C BUS (+) CIRCUIT SHORTED TO GROUND
(D64) CAN C BUS (-) CIRCUIT SHORTED TO GROUND
(D65) CAN C BUS (+) CIRCUIT SHORTED TO VOLTAGE
(D64) CAN C BUS (-) CIRCUIT SHORTED TO VOLTAGE
(D65) CAN C BUS (+) CIRCUIT SHORTED TO (D64) CAN C BUS (-) CIRCUIT
ANTILOCK BRAKE MODULE
POWERTRAIN CONTROL MODULE
SHIFTER LEVER ASSEMBLY (NAG1 ONLY)
ELECTRONIC SHIFT MODULE (COLUMN NAG1)
TRANSMISSION CONTROL MODULE (NAG1 ONLY)
ENGINE CONTROL MODULE (DIESEL)
STEERING CONTROL MODULE
FRONT CONTROL MODULE

Diagnostic Test

1. TEST FOR INTERMITTENT CONDITION

Turn the ignition on.
With the scan tool, record and erase FCM DTC's.
Cycle the ignition from on to off 3 times.
Turn the ignition on.
With the scan tool, read active FCM DTC's.

Does the scan tool display U1106–CAN C SIGNAL MISSING as active?

Yes >> Go To 2

No >> The conditions that caused this code to set are not present at this time. Using the wiring diagram/schematic as a guide, inspect the wiring and connectors.

2. ANTILOCK BRAKE MODULE — INTERNAL SHORT

Turn the ignition off.
Disconnect the Antilock Brake Module harness connector.
Turn the ignition on.
With the scan tool, record and erase FCM DTC's.
Cycle the ignition from on to off 3 times.
Turn the ignition on.
With the scan tool, read active FCM DTC's.

Does the scan tool display U1106–CAN C SIGNAL MISSING as active?

Yes >> Go To 3

No >> Inspect the wiring and connectors for damage or shorted circuits. If ok, replace the Antilock Brake Module in accordance with the service information.
Perform ABS VERIFICATION TEST — VER 1.

3. POWERTRAIN CONTROL MODULE — INTERNAL SHORT

Turn the ignition off.
Disconnect the Powertrain Control Module C1 harness connector.
Turn the ignition on.
With the scan tool, record and erase FCM DTC's.
Cycle the ignition from on to off 3 times.
Turn the ignition on.
With the scan tool, read active FCM DTC's.

Does the scan tool display U1106–CAN C SIGNAL MISSING as active?

Yes >> Go To 4

No >> Inspect the wiring and connectors for damage or shorted circuits. If ok, replace and program the Powertrain Control Module in accordance with the service information.
Perform (NGC) POWERTRAIN VERIFICATION TEST VER - 5.

4. SHIFTER LEVER ASSEMBLY (NAG1 ONLY) OR ELECTRONIC SHIFT MODULE (COLUMN NAG1)— INTERNAL SHORT

Turn the ignition off.

NOTE: If the vehicle is not equipped with a NAG1 controller then skip this step.
Disconnect the Shifter Lever Assembly or Electronic Shift Module harness connector.
Turn the ignition on.
With the scan tool, record and erase FCM DTC's.
Cycle the ignition from on to off 3 times.
Turn the ignition on.
With the scan tool, read active FCM DTC's.

Does the scan tool display U1106–CAN C SIGNAL MISSING as active?

Yes >> Go To 5

No >> Inspect the wiring and connectors for damage or shorted circuits. If ok, replace and program the Shifter Lever Assembly in accordance with the service information.
Perform NAG1 TRANSMISSION VERIFICATION TEST - VER 1.

5. TRANSMISSION CONTROL MODULE (NAG1 ONLY)— INTERNAL SHORT

Turn the ignition off.

NOTE: If the vehicle is not equipped with a NAG1 controller then skip this step.
Disconnect the Transmission Control Module C2 harness connector.
Turn the ignition on.
With the scan tool, record and erase FCM DTC's.
Cycle the ignition from on to off 3 times.
Turn the ignition on.
With the scan tool, read active FCM DTC's.

Does the scan tool display U1106–CAN C SIGNAL MISSING as active?

Yes >> Go To 7

No >> Inspect the wiring and connectors for damage or shorted circuits. If ok, replace and program the Transmission Control Module in accordance with the service information.
Perform NAG1 TRANSMISSION VERIFICATION TEST - VER 1.

6. ENGINE CONTROL MODULE (DIESEL)— INTERNAL SHORT

Turn the ignition off.
Disconnect the Engine Control Module C2 harness connector.
Turn the ignition on.
With the scan tool, record and erase FCM DTC's.
Cycle the ignition from on to off 3 times.
Turn the ignition on.
With the scan tool, read active FCM DTC's.

Does the scan tool display U0001–CAN C BUS as active?

Yes >> Go To 7

No >> Inspect the wiring and connectors for damage or shorted circuits. If ok, replace and program the Engine Control Module in accordance with the service information.
Perform the ECM VERIFICATION TEST.

7. STEERING CONTROL MODULE — INTERNAL SHORT

Turn the ignition off.
Disconnect the Steering Control Module harness connector.
Turn the ignition on.
With the scan tool, record and erase FCM DTC's.
Cycle the ignition from on to off 3 times.
Turn the ignition on.
With the scan tool, read active FCM DTC's.

Does the scan tool display U1106–CAN C SIGNAL MISSING as active?

Yes >> Go To 8

No >> Inspect the wiring and connectors for damage or shorted circuits. If ok, replace and program the Steering Control Module in accordance with the service information.
Perform BODY VERIFICATION TEST – VER 1. (Refer to BODY VERIFICATION TEST – VER 1).

8. (D65) CAN C BUS (+) CIRCUIT SHORTED TO VOLTAGE

Turn the ignition off.
Disconnect the Front Control Module C1 harness connector.
Turn the ignition on.
Measure the voltage between the (D65) CAN C Bus (+) circuit and ground.

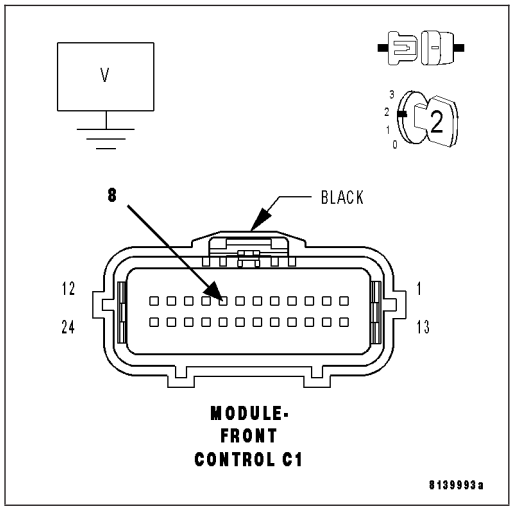

Is there any voltage present?

Yes >> Repair the (D65) CAN C Bus (+) circuit for a short to voltage.
Perform BODY VERIFICATION TEST – VER 1. (Refer to BODY VERIFICATION TEST – VER 1).

No >> Go To 9

9. (D64) CAN C BUS (-) CIRCUIT SHORTED TO VOLTAGE

Measure the voltage between the (D64) CAN C Bus (-) circuit and ground.

Is there any voltage present?

Yes >> Repair the (D64) CAN C Bus (-) circuit for a short to voltage.
Perform BODY VERIFICATION TEST – VER 1. (Refer to BODY VERIFICATION TEST – VER 1).

No >> Go To 10

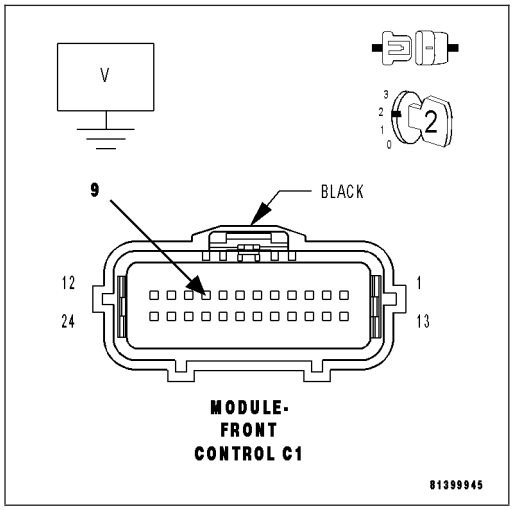

10. (D65) CAN C BUS (+) CIRCUIT SHORTED TO GROUND

Turn the ignition off.

Measure the resistance between ground and the (D65) CAN C Bus (+) circuit.

Is any resistance present?

Yes >> Repair the (D65) CAN C Bus (+) circuit for a short to ground.
Perform BODY VERIFICATION TEST – VER 1. (Refer to BODY VERIFICATION TEST – VER 1).

No >> Go To 11

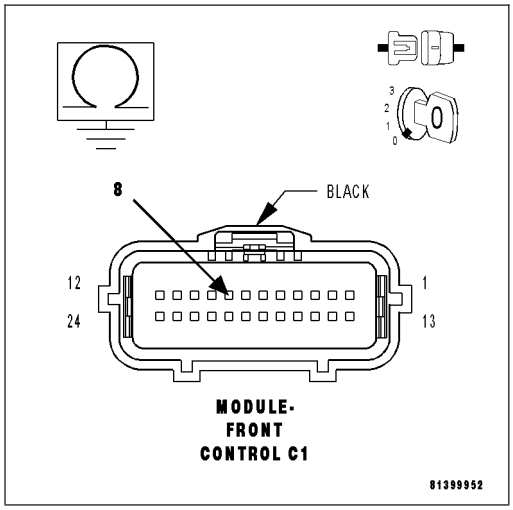

11. (D64) CAN C BUS (-) CIRCUIT SHORTED TO GROUND

Measure the resistance between ground and the (D64) CAN C Bus (-) circuit.

Is any resistance present?

Yes >> Repair the (D64) CAN C Bus (-) circuit for a short to ground.
Perform BODY VERIFICATION TEST – VER 1. (Refer to BODY VERIFICATION TEST – VER 1).

No >> Go To 12

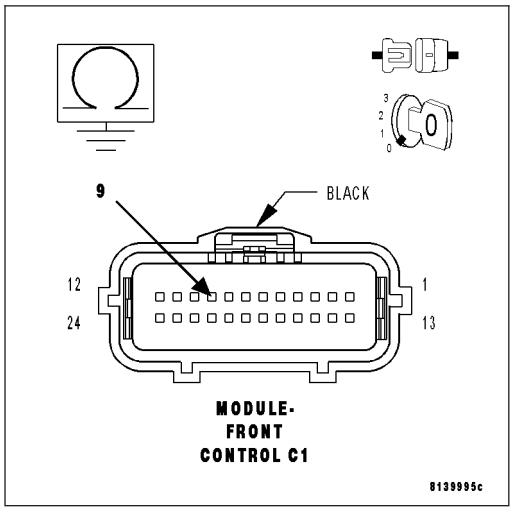

12. (D65) CAN C BUS (+) CIRCUIT SHORTED TO (D64) CAN C BUS (-) CIRCUIT

Measure the resistance between the (D65) CAN C Bus (+) circuit and the (D64) CAN C Bus (-) circuit.

Is any resistance present?

Yes >> Repair the (D65) CAN C Bus (+) circuit for a short to the (D64) CAN C Bus (-) circuit.

Perform BODY VERIFICATION TEST – VER 1. (Refer to BODY VERIFICATION TEST – VER 1).

No >> Inspect the wiring and connectors for damage or shorted circuits. If ok, replace and program the Front Control Module in accordance with the service information.

Perform BODY VERIFICATION TEST – VER 1. (Refer to BODY VERIFICATION TEST – VER 1).

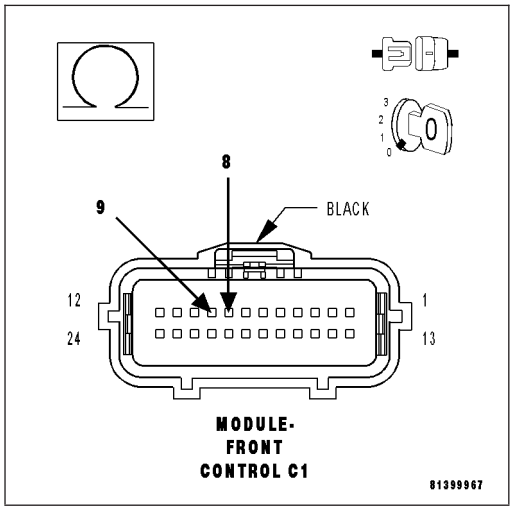

U1107-ECU IN SINGLE-WIRE MODE

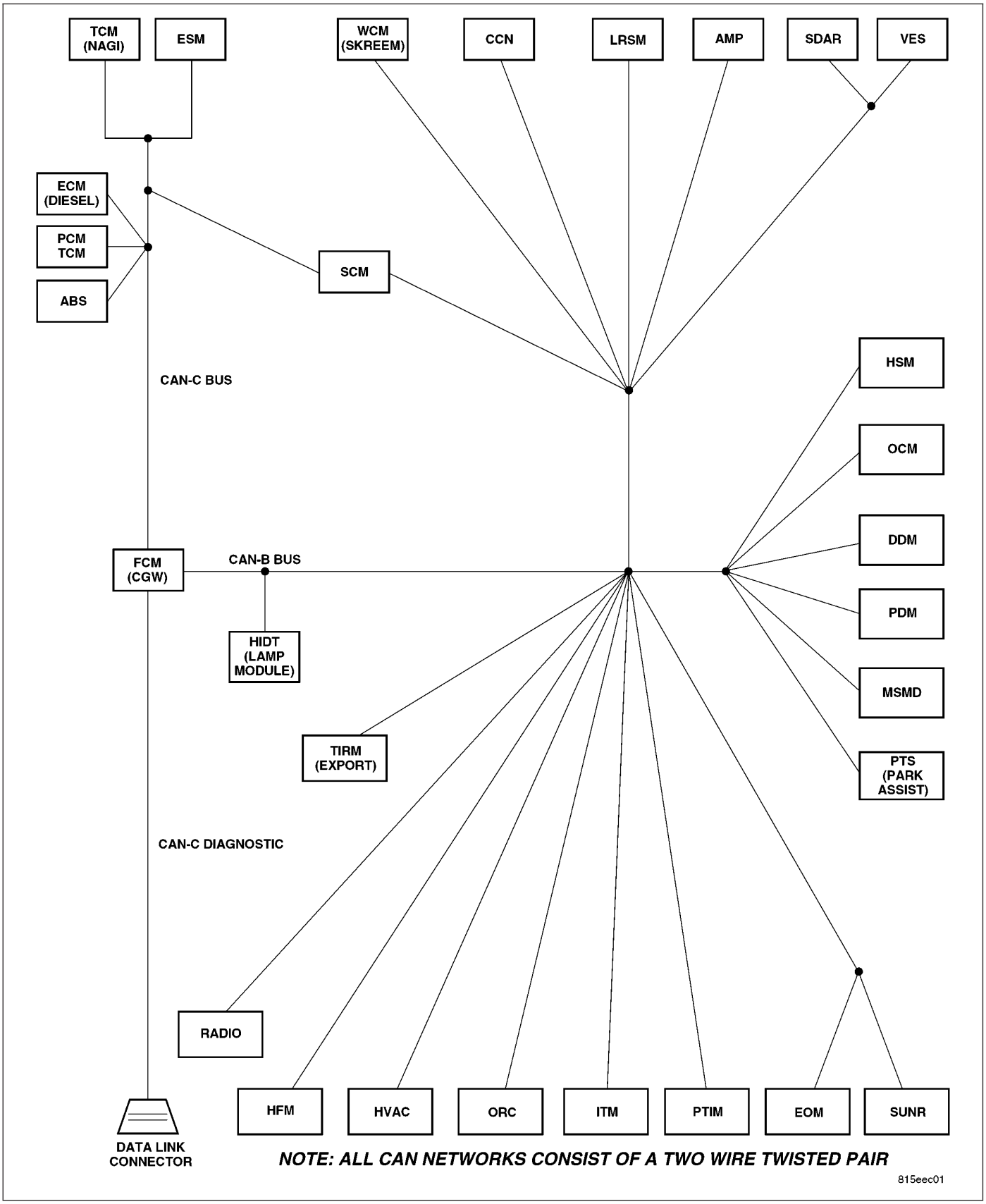

For a complete wiring diagram **Refer to Section 8W**.

- **When Monitored:**
  With the ignition on.
- **Set Condition:**
  The FCM detects an open, a short high, a short low or a short together in either of the CAN B Bus circuits.

Possible Causes
(D55) CAN B BUS (+) CIRCUIT SHORTED TO GROUND
(D54) CAN B BUS (-) CIRCUIT SHORTED TO GROUND
(D55) CAN B BUS (+) CIRCUIT SHORTED TO VOLTAGE
(D54) CAN B BUS (-) CIRCUIT SHORTED TO VOLTAGE
(D55) CAN B BUS (+) CIRCUIT SHORTED TO (D54) CAN B BUS (-) CIRCUIT
(D55) CAN B BUS (+) CIRCUIT OPEN
(D54) CAN B BUS (-) CIRCUIT OPEN
ANY CAN B BUS MODULE

Diagnostic Test

1. TEST FOR INTERMITTENT CONDITION

Turn the ignition on.
With the scan tool, record and erase FCM DTC's.
Cycle the ignition from on to off 3 times.
Turn the ignition on.
With the scan tool, read active FCM DTC's.

Does the scan tool display this DTC as active?

Yes >> Go To 2

No >> The conditions that caused this code to set are not present at this time. Using the wiring diagram/schematic as a guide, inspect the wiring and connectors.

2. ANY CAN B BUS MODULE— INTERNAL FAULT

Turn the ignition off.
With the scan tool, monitor the active FCM DTCs.
While monitoring the scan tool, disconnect each CAN B Bus module one at a time.

NOTE: When performing the above step, turn the ignition off (wait one minute) before disconnecting any module. When the module is disconnected turn the ignition on.

NOTE: This is to determine if the fault is internal within a module.
Check for this DTC to become active after disconnecting each CAN B Bus module the vehicle is equipped with.

NOTE: If the DTC becomes stored when a particular CAN B Bus module is disconnected, that module is causing the DTC to set.

With all the CAN B Bus modules disconnected did the FCM still set this DTC as active?

Yes >> Go To 3

No >> Replace the module that when disconnected the DTC became stored.
Perform BODY VERIFICATION TEST – VER 1. (Refer to BODY VERIFICATION TEST – VER 1).

3. (D55) CAN B BUS (+) CIRCUIT FOR A SHORT TO VOLTAGE

Turn the ignition off.

Disconnect the Front Control Module C1 harness connector.

NOTE: Ensure each CAN B Bus module is disconnected at this time.

Turn the ignition on.

Measure the voltage between the (D55) CAN B Bus (+) circuit and ground.

Is the voltage above 10.0 volts?

Yes >> Repair the (D55) CAN B Bus (+) circuit for a short to voltage.
Perform BODY VERIFICATION TEST – VER 1. (Refer to BODY VERIFICATION TEST – VER 1).

No >> Go To 4

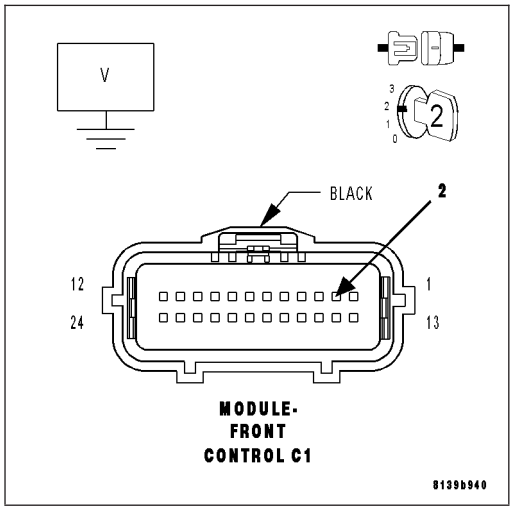

4. (D54) CAN B BUS (-) CIRCUIT FOR A SHORT TO VOLTAGE

NOTE: Ensure each CAN B Bus module is disconnected at this time.

Measure the voltage between the (D54) CAN B Bus (-) circuit and ground.

Is the voltage above 10.0 volts?

Yes >> Repair the (D54) CAN B Bus (-) circuit for a short to voltage.
Perform BODY VERIFICATION TEST – VER 1. (Refer to BODY VERIFICATION TEST – VER 1).

No >> Go To 5

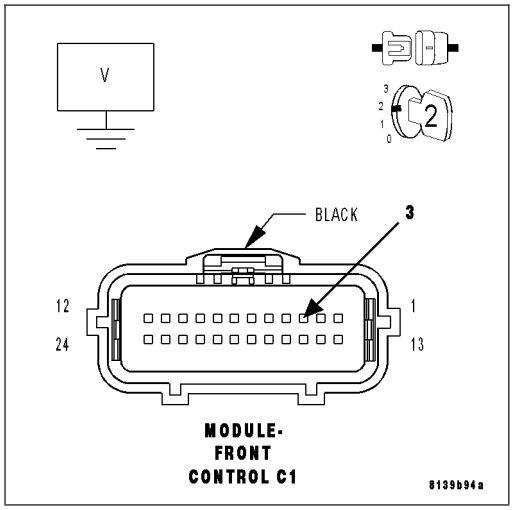

5. (D55) CAN B BUS (+) CIRCUIT FOR A SHORT TO GROUND

Turn the ignition off.

NOTE: Ensure each CAN B Bus module is disconnected at this time.

Measure the resistance between ground and the (D55) CAN B Bus (+) circuit.

Is the resistance above 1000.0 ohms?

Yes >> Go To 6

No >> Repair the (D55) CAN B Bus (+) circuit for a short to ground.
Perform BODY VERIFICATION TEST – VER 1. (Refer to BODY VERIFICATION TEST – VER 1).

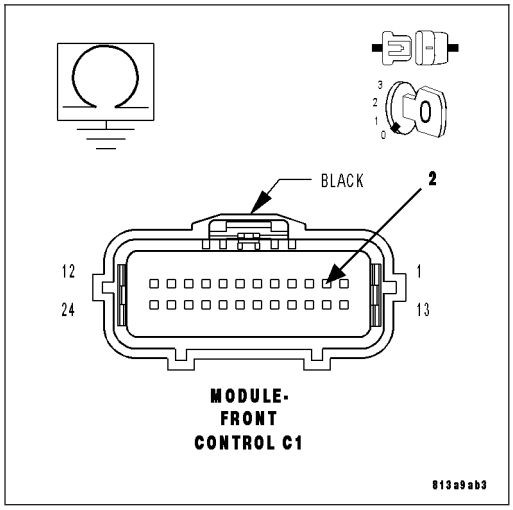

6. (D54) CAN B BUS (-) CIRCUIT FOR A SHORT TO GROUND

NOTE: Ensure each CAN B Bus module is disconnected at this time.

Measure the resistance between ground and the (D54) CAN B Bus (-) circuit.

Is the resistance above 1000.0 ohms?

Yes >> Go To 7

No >> Repair the (D54) CAN B Bus (-) circuit for a short to ground.

Perform BODY VERIFICATION TEST – VER 1. (Refer to BODY VERIFICATION TEST – VER 1).

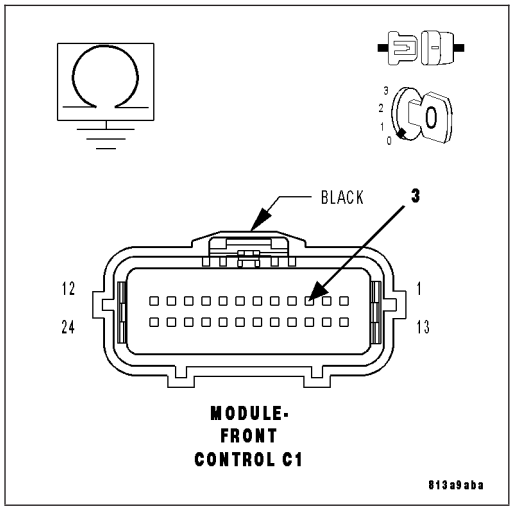

7. (D55) CAN B BUS (+) CIRCUIT SHORTED TO THE (D54) CAN B BUS (-) CIRCUIT

Measure the resistance between the (D55) CAN B Bus (+) circuit and (D54) CAN B Bus (-) circuit.

NOTE: Ensure each CAN B Bus module is disconnected at this time.

Is any resistance present?

Yes >> Repair the (D55) CAN B Bus (+) circuit for a short to the (D54) CAN B Bus (-) circuit.

Perform BODY VERIFICATION TEST – VER 1. (Refer to BODY VERIFICATION TEST – VER 1).

No >> Go To 8

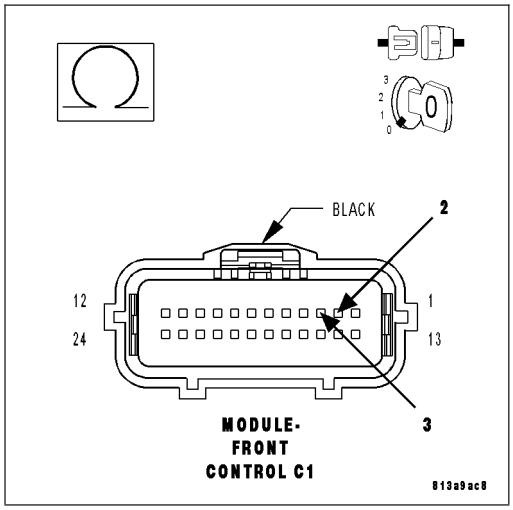

8. (D55) CAN B BUS (+) CIRCUIT OPEN

Measure the resistance of the (D55) CAN B Bus (+) circuit between the FCM connector and the Cluster connector.

Is the resistance above 10.0 ohms?

Yes >> Repair the (D55) CAN B Bus (+) circuit for an open or high resistance.

Perform BODY VERIFICATION TEST – VER 1. (Refer to BODY VERIFICATION TEST – VER 1).

No >> Go To 9

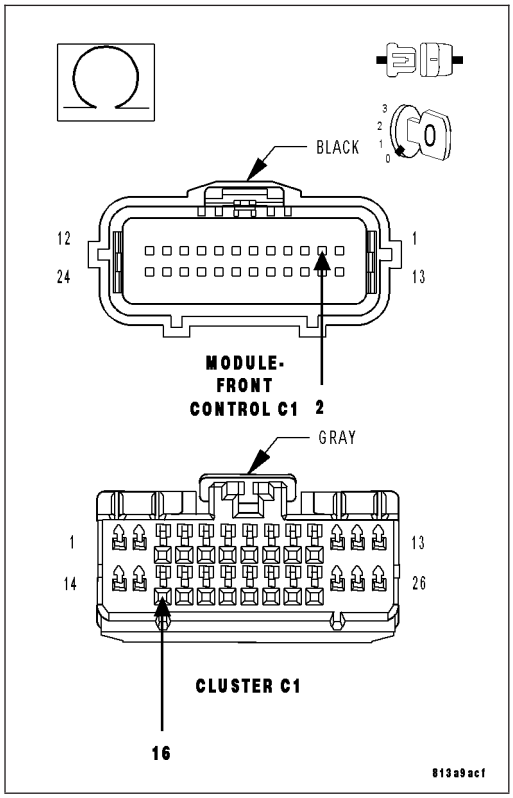

9. (D54) CAN B BUS (-) CIRCUIT OPEN

Measure the resistance of the (D54) CAN B Bus (-) circuit between the FCM connector and the Cluster connector.

Is the resistance above 10.0 ohms?

Yes >> Repair the (D54) CAN B Bus (-) circuit for an open or high resistance.

Perform BODY VERIFICATION TEST – VER 1. (Refer to BODY VERIFICATION TEST – VER 1).

No >> Replace and program the Front Control Module in accordance with the service information.

Perform BODY VERIFICATION TEST – VER 1. (Refer to BODY VERIFICATION TEST – VER 1).

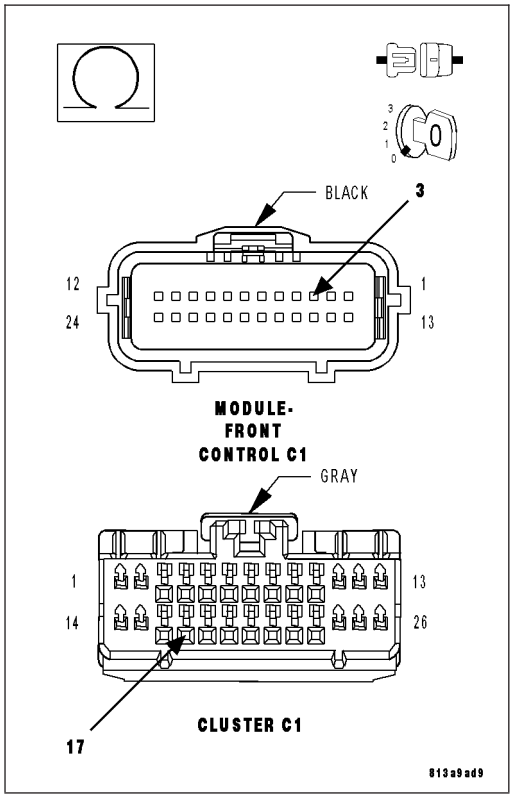

U1108-ADDITIONAL CAN B ECU DETECTED

For a complete wiring diagram **Refer to Section 8W**.

- **When Monitored:**
  Continuously.
- **Set Condition:**
  The Front Control Module detects an additional CAN B module and requires a re-configuration.

Possible Causes
ADDITIONAL MODULE ADDED/REMOVED FROM THE CAN B BUS NETWORK

Diagnostic Test

1. RECONFIGURE THE FRONT CONTROL MODULE

Turn the ignition on.

With the scan tool, select network view and press the gateway button. This will list the CAN modules on the vehicle. Read and record the listed modules.

With the scan tool, select FCM, miscellaneous functions then add/remove ECUs.

With the scan tool, add or remove the module that was not configured in the FCM.

With the scan tool, erase DTC's.

Cycle the ignition from on to off 3 times and read the active FCM DTC's.

Does the scan tool display this DTC as active?

Yes >> Retest system and attempt to reconfigure the FCM.
Perform BODY VERIFICATION TEST – VER 1. (Refer to BODY VERIFICATION TEST – VER 1).

No >> Repair is complete.
Perform BODY VERIFICATION TEST – VER 1. (Refer to BODY VERIFICATION TEST – VER 1).

U110A-LOST COMMUNICATION WITH SCCM - CAN C

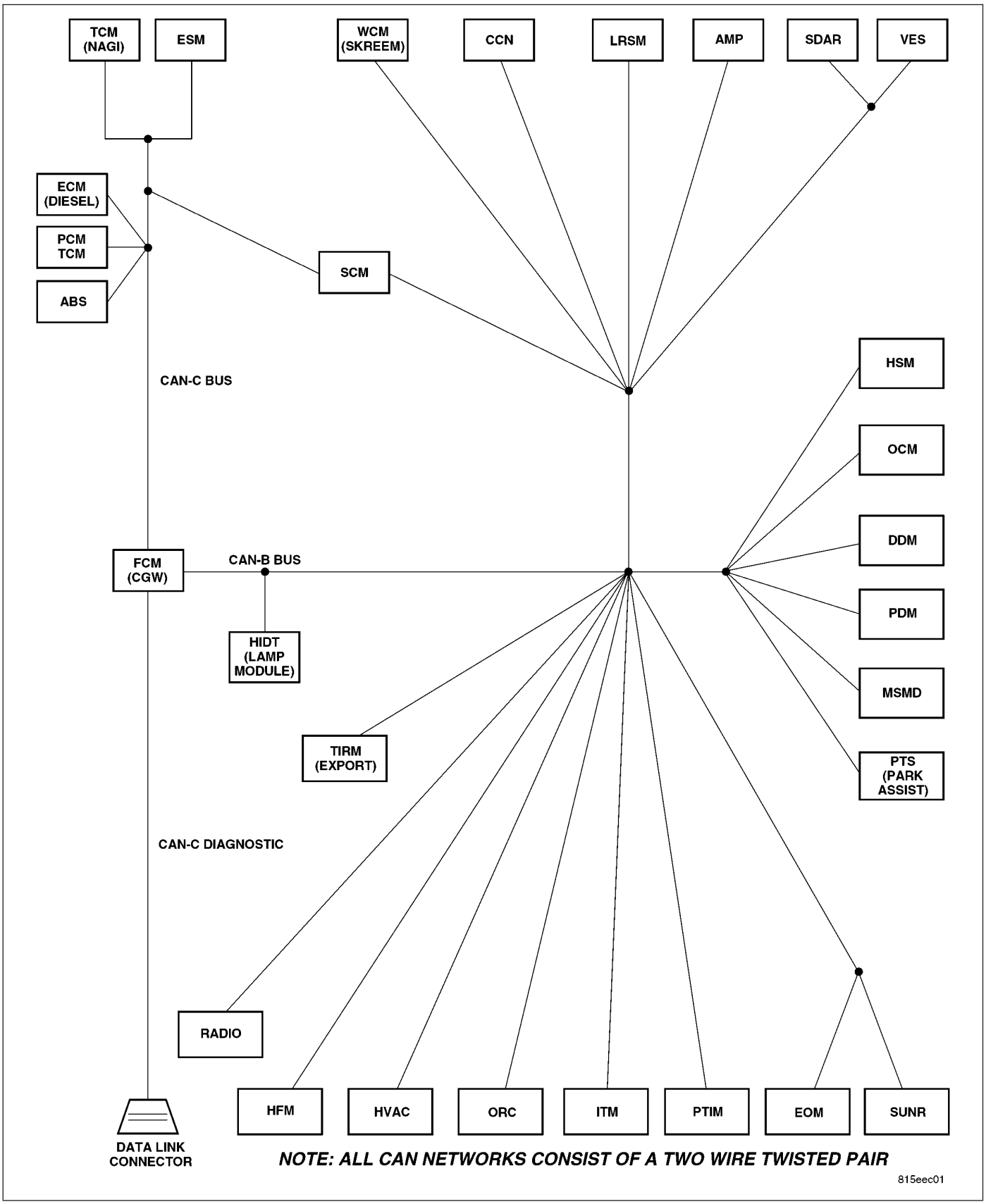

For a complete wiring diagram **Refer to Section 8W**.

- **When Monitored:**
  - With the ignition on
  - Battery voltage between 10 and 16 volts
  - IOD fuse installed
  - FCM is configured correctly
- **Set Condition:**
  Bus messages not received from the SCM (CAN C) for approximately 200ms.

Possible Causes
CAN B BUS CIRCUITS OPEN OR SHORTED
DTCS RELATED TO BATTERY VOLTAGE, IGNITION, OR VIN MESSAGES
FCM NOT CONFIGURED CORRECTLY
STEERING CONTROL MODULE
STEERING CONTROL MODULE POWER AND GROUND
MODULE THAT SET THIS DTC

Diagnostic Test

1. VERIFY DTC IS ACTIVE

NOTE: Ensure the IOD fuse is installed and battery voltage is between 10 and 16 volts before proceeding.
With the scan tool, read active DTCs.

Is this DTC active?

Yes >> Go To 2

No >> Refer to the Stored Lost Communication test procedure. Refer to the table of contents in this section. Perform BODY VERIFICATION TEST – VER 1. (Refer to BODY VERIFICATION TEST – VER 1).

2. CHECK FOR ANY OF THE FOLLOWING ACTIVE DTCS

With the scan tool, read active DTCs from all modules.

NOTE: Check for FCM configuration, CAN B or C hardware electrical, VIN Missing/Mismatch, battery or ignition related DTCs.

Does the scan tool display any active DTCs to the conditions listed above?

Yes >> Diagnose and repair the DTC. Refer to the Table of Contents for a complete list of the symptoms. Perform BODY VERIFICATION TEST – VER 1. (Refer to BODY VERIFICATION TEST – VER 1).

No >> Go To 3

3. VERIFY THAT THE SCM IS ACTIVE ON THE BUS

Turn the ignition on.
With the scan tool, select ECU View.
Verify that the SCM is active on the bus.

Is the SCM active on the bus?

Yes >> Go To 4

No >> Refer to the Table of Contents located in this section for a no response test procedure. Perform BODY VERIFICATION TEST – VER 1. (Refer to BODY VERIFICATION TEST – VER 1).

4. CHECK FOR ADDITIONAL COMMUNICATION RELATED DTCS

With the scan tool, select Network View and select Advanced.

Is there more than one module with active DTCs “Logged Against” the SCM?

Yes >> Replace/update the Steering Control Module in accordance with the service information.
Perform BODY VERIFICATION TEST – VER 1. (Refer to BODY VERIFICATION TEST – VER 1).

No >> Replace/update the module that set this DTC in accordance with the service information.
Perform BODY VERIFICATION TEST – VER 1. (Refer to BODY VERIFICATION TEST – VER 1).

*STORED LOST COMMUNICATION DTCS

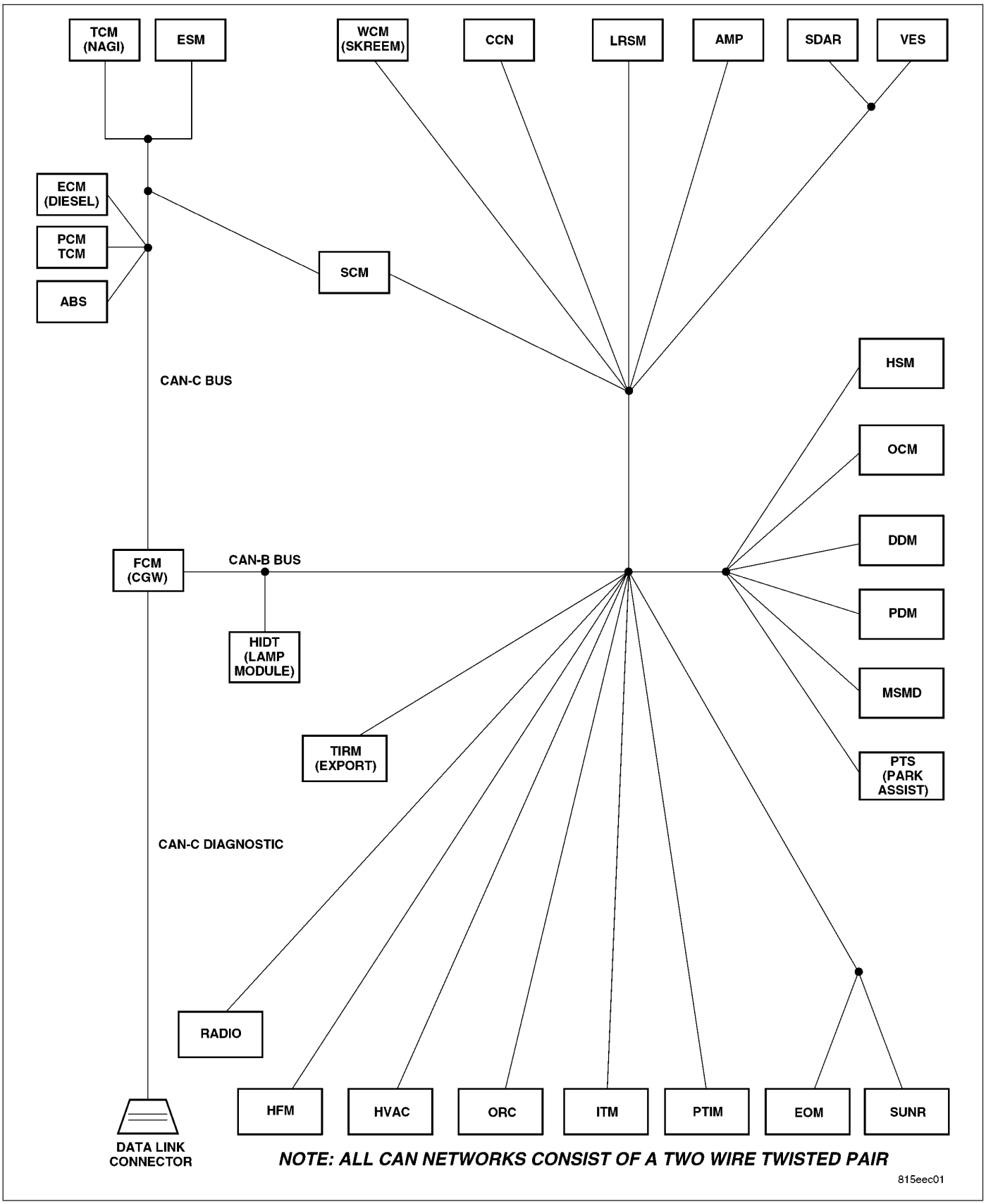

For a complete wiring diagram **Refer to Section 8W**.

- **When Monitored:**
  - With the ignition on
  - Battery voltage between 10 and 16 volts
  - IOD fuse installed
  - FCM is configured correctly
- **Set Condition:**
  Bus messages not received for approximately 2 to 5 seconds.

Possible Causes
CAN B BUS CIRCUITS OPEN OR SHORTED
DTCS RELATED TO BATTERY VOLTAGE, IGNITION, OR VIN MESSAGES
FCM NOT CONFIGURED CORRECTLY
POWER OR GROUND FROM THE REPORTING MODULE
MODULE THAT SET THIS DTC
PREVIOUS SERVICE PERFORMED WITHIN THE LAST 100 KEY CYCLES (FUSE/RELAYS REMOVED, WIRING SERVICE, BATTERY DISCONNECT)
LOW BATTERY/JUMP START CONDITION
IOD FUSE WAS REMOVED DURING SHIPPING
CHECK FOR RELATED TSBS

Diagnostic Test

1. VERIFY DTC IS STORED

NOTE: Stored faults may indicate a customer perceived intermittent condition.

NOTE: Ensure the IOD fuse is installed and battery voltage is between 10 and 16 volts before proceeding. With the scan tool, read stored DTCs.

Is this DTC stored?

Yes >> Go To 2

No >> Diagnose the active DTC. Refer to the table of contents for a list of the symptoms. Perform BODY VERIFICATION TEST – VER 1.

2. CHECK THE ENVIRONMENTAL DATA

With the scan tool, read the loss of communication environmental data.

Does the loss of communication environmental odometer data match up to any of the previous service procedures listed in the possible causes or are there any stored CAN B or C hardware electrical, battery, ignition voltage, VIN missing/mismatch, FCM configuration DTCs present with match environmental data?

Yes >> These DTCs may have been the result of other service procedures performed. Clear DTCs. Perform BODY VERIFICATION TEST – VER 1.

No >> Go To 3

3. VERIFY INTERMITTENT LOST COMMUNICATION DTC-WIRING CONCERNS

Turn the ignition on.

With the scan tool, select Network View and select Advanced.

Is there more than one ECU with stored DTCs "Logged Against" the module and one or more lost communication DTCs stored in the offending module?

Yes >> Verify if the vehicle was recently in for this type of service. Otherwise, visually inspect the related wiring harness for chafed, pierced, pinched, and partially broken wires and the wiring harness connectors for broken, bent, pushed out, and corroded terminals. Repair as necessary.

No >> Go To 4

4. VERIFY INTERMITTENT LOST COMMUNICATION DTC-OFFENDING MODULE

Turn the ignition on.

With the scan tool, select Network View and select Advanced.

Is there more than one ECU with stored DTCs "Logged Against" the module and NO lost communication DTCs stored in the offending module?

Yes >> Check for TSB related to this offending module.

No >> Go To 5

5. VERIFY INTERMITTENT LOST COMMUNICATION DTC-REPORTING MODULE

Turn the ignition on.

With the scan tool, select Network View and select Advanced.

Is there ONLY ONE ECU with stored DTCs "Logged Against" the module?

Yes >> Check for TSB related to the module that set this DTC.

No >> Verify if the vehicle was recently in for this type of service. Otherwise, visually inspect the related wiring harness for chafed, pierced, pinched, and partially broken wires and the wiring harness connectors for broken, bent, pushed out, and corroded terminals. Repair as necessary.

*CAN C DIAGNOSTIC (+) AND/OR CAN C DIAGNOSTIC (-) CIRCUITS HIGH

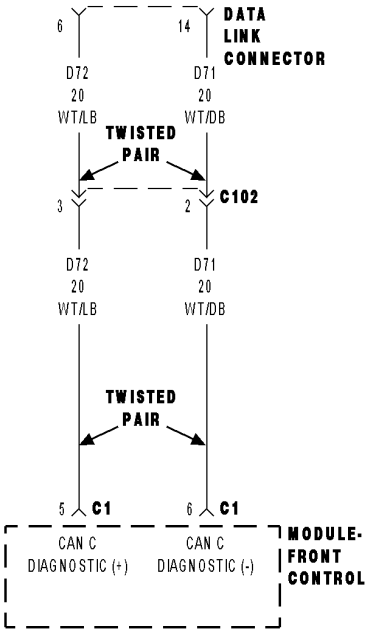

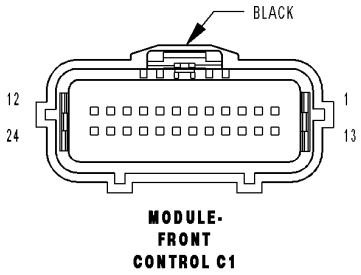

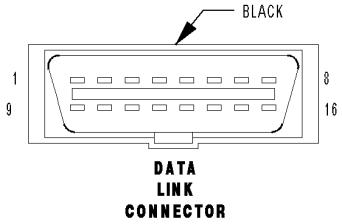

8131e475

For a complete wiring diagram **Refer to Section 8W**.

- **When Monitored:**
  When the scan tool queries the FCM.
- **Set Condition:**
  The scan tool has detected a shorted high condition on either or both CAN C Diagnostic circuits.

Possible Causes
(D72) CAN C DIAGNOSTIC (+) CIRCUIT SHORTED TO VOLTAGE
(D71) CAN C DIAGNOSTIC (-) CIRCUIT SHORTED TO VOLTAGE
FRONT CONTROL MODULE

Diagnostic Test

1. CHECK THE STATUS OF THE ERROR MESSAGE

NOTE: Ensure the vehicle being tested is a CAN BUS VEHICLE. If not, false error messages may be displayed.

NOTE: Ensure the scan tool is updated to the latest software.

With the scan tool, record the error message.

Disconnect the scan tool from the DLC.

Cycle the ignition from on to off 3 times.

Turn the ignition on.

Does the scan tool display this same error message?

Yes >> Go To 2

No >> The conditions that caused this error message to set are not present at this time. Using the wiring diagram/schematic as a guide, inspect the wiring and connectors.

2. CAN C DIAGNOSTIC CIRCUITS SHORTED TO VOLTAGE

Turn the ignition off.

Disconnect the Front Control Module C1 harness connector.

Disconnect the scan tool from the DLC.

Turn the ignition on.

Measure the voltage of the CAN C Diagnostic circuits.

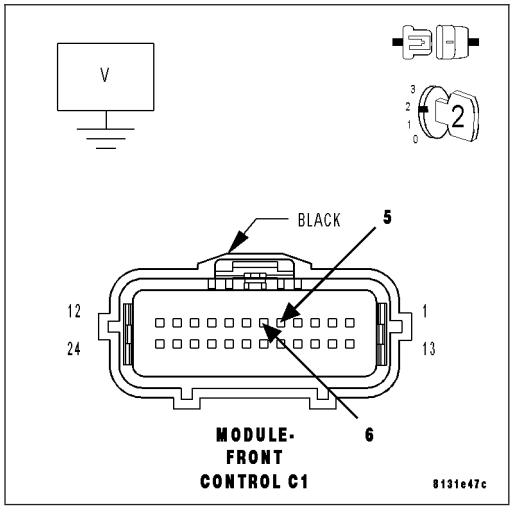

Is the voltage above 6.0 volts for either circuit?

Yes >> Repair the CAN C Diagnostic circuits for a short to voltage.
Perform BODY VERIFICATION TEST – VER 1. (Refer to BODY VERIFICATION TEST – VER 1).

No >> Inspect the wiring and connectors for damage or shorted circuits. If ok, replace the Front Control Module in accordance with the service information.
Perform BODY VERIFICATION TEST – VER 1. (Refer to BODY VERIFICATION TEST – VER 1).

*CAN C DIAGNOSTIC (+) CIRCUIT LOW

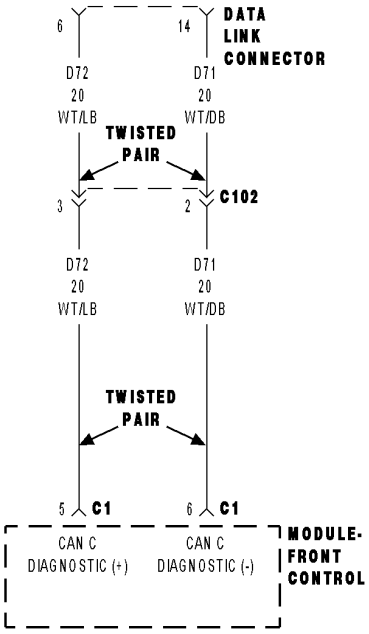

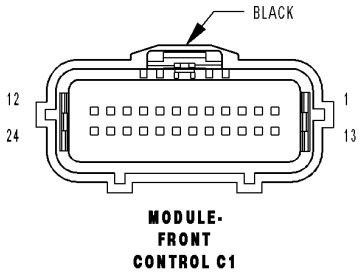

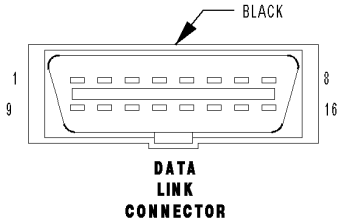

8131e475

For a complete wiring diagram **Refer to Section 8W**.

- **When Monitored:**
  When the scan tool queries the FCM.
- **Set Condition:**
  The scan tool has detected a shorted low condition on the (D72) CAN C Diagnostic (+) circuit.

Possible Causes
(D72) CAN C DIAGNOSTIC (+) CIRCUIT SHORTED TO GROUND
FRONT CONTROL MODULE

Diagnostic Test

1. CHECK THE STATUS OF THE ERROR MESSAGE

NOTE: Ensure the vehicle being tested is a CAN BUS VEHICLE. If not, false error messages may be displayed.

NOTE: Ensure the scan tool is updated to the latest software.

With the scan tool, record the error message.

Disconnect the scan tool from the DLC.

Cycle the ignition from on to off 3 times.

Turn the ignition on.

Does the scan tool display this same error message?

Yes >> Go To 2

No >> The conditions that caused this error message to set are not present at this time. Using the wiring diagram/schematic as a guide, inspect the wiring and connectors.

2. (D72) CAN C DIAGNOSTIC (+) CIRCUIT SHORTED TO GROUND

Turn the ignition off.

Disconnect the Front Control Module C1 harness connector.

Disconnect the scan tool from the DLC.

Measure the resistance between ground and the (D72) CAN C Diagnostic (+) circuit.

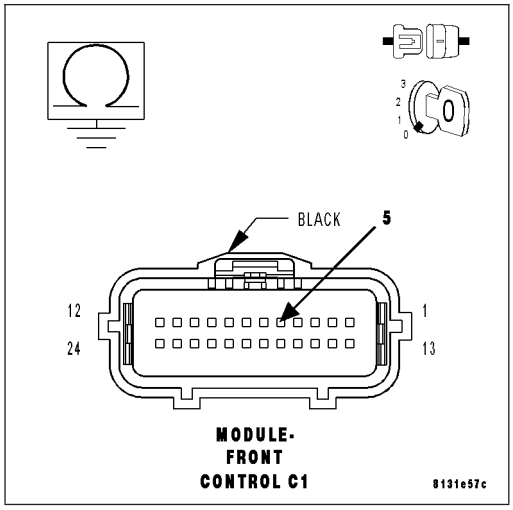

Is the resistance below 100.0 ohms?

Yes >> Repair the (D72) CAN C Diagnostic (+) circuit for a short to ground.
Perform BODY VERIFICATION TEST – VER 1. (Refer to BODY VERIFICATION TEST – VER 1).

No >> Inspect the wiring and connectors for damage or shorted circuits. If ok, replace the Front Control Module in accordance with the service information.
Perform BODY VERIFICATION TEST – VER 1. (Refer to BODY VERIFICATION TEST – VER 1).

*CAN C DIAGNOSTIC (-) CIRCUIT LOW

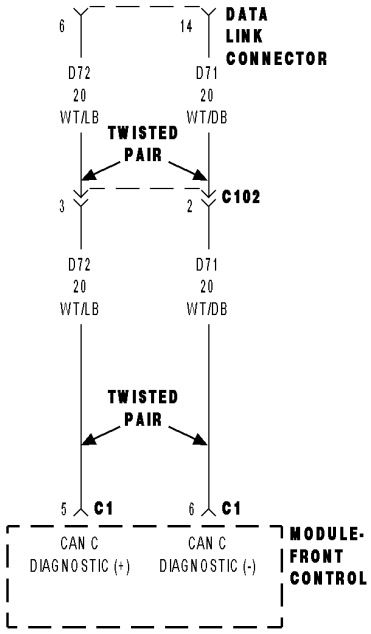

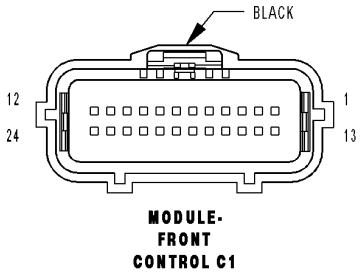

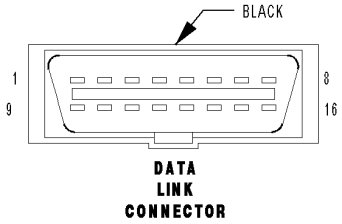

8131e475

For a complete wiring diagram **Refer to Section 8W**.

- **When Monitored:**
  When the scan tool queries the FCM.
- **Set Condition:**
  The scan tool has detected a shorted low condition on the (D71) CAN C Diagnostic (-) circuit.

Possible Causes
(D71) CAN C DIAGNOSTIC (-) CIRCUIT SHORTED TO GROUND
FRONT CONTROL MODULE

Diagnostic Test

1. CHECK THE STATUS OF THE ERROR MESSAGE

NOTE: Ensure the vehicle being tested is a CAN BUS VEHICLE. If not, false error messages may be displayed.

NOTE: Ensure the scan tool is updated to the latest software.

With the scan tool, record the error message.

Disconnect the scan tool from the DLC.

Cycle the ignition from on to off 3 times.

Turn the ignition on.

Does the scan tool display this same error message?

Yes >> Go To 2

No >> The conditions that caused this error message to set are not present at this time. Using the wiring diagram/schematic as a guide, inspect the wiring and connectors.

2. (D71) CAN C DIAGNOSTIC (-) CIRCUIT SHORTED TO GROUND

Turn the ignition off.

Disconnect the Front Control Module C1 harness connector.

Disconnect the scan tool from the DLC.

Measure the resistance between ground and the (D71) CAN C Diagnostic (-) circuit.

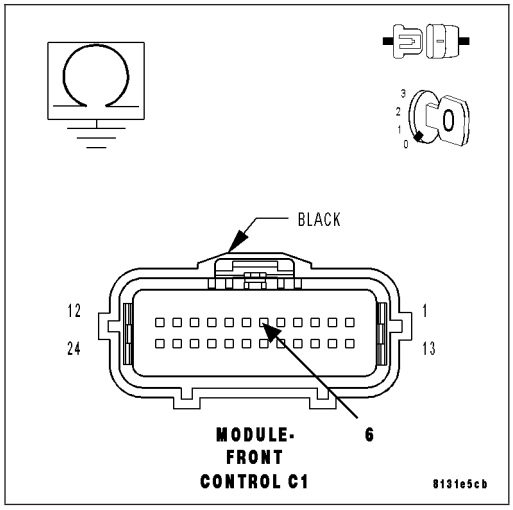

Is the resistance below 100.0 ohms?

Yes >> Repair the (D71) CAN C Diagnostic (-) circuit for a short to ground.
Perform BODY VERIFICATION TEST – VER 1. (Refer to BODY VERIFICATION TEST – VER 1).

No >> Inspect the wiring and connectors for damage or shorted circuits. If ok, replace the Front Control Module in accordance with the service information.
Perform BODY VERIFICATION TEST – VER 1. (Refer to BODY VERIFICATION TEST – VER 1).

*CAN C DIAGNOSTIC (+) SHORTED TO CAN C DIAGNOSTIC (-)

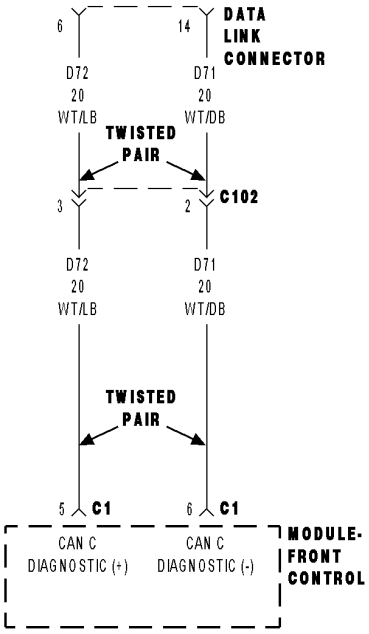

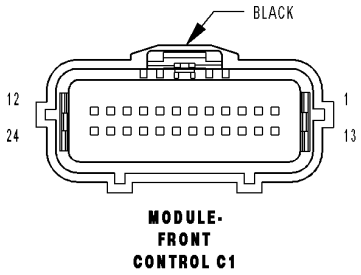

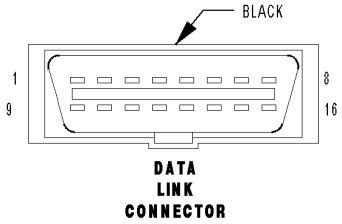

8131e475

For a complete wiring diagram **Refer to Section 8W**.

- **When Monitored:**
  When the scan tool queries the FCM.
- **Set Condition:**
  The scan tool has detected a shorted together condition on the CAN C Diagnostic circuits.

Possible Causes
(D72) CAN C DIAGNOSTIC (+) CIRCUIT SHORTED TO (D71) CAN C DIAGNOSTIC (-) CIRCUIT
FRONT CONTROL MODULE

Diagnostic Test

1. CHECK THE STATUS OF THE ERROR MESSAGE

NOTE: Ensure the vehicle being tested is a CAN BUS VEHICLE. If not, false error messages may be displayed.

NOTE: Ensure the scan tool is updated to the latest software.

With the scan tool, record the error message.

Disconnect the scan tool from the DLC.

Cycle the ignition from on to off 3 times.

Turn the ignition on.

Does the scan tool display this same error message?

Yes >> Go To 2

No >> The conditions that caused this error message to set are not present at this time. Using the wiring diagram/schematic as a guide, inspect the wiring and connectors.

2. (D72) CAN C DIAGNOSTIC (+) CIRCUIT SHORTED TO (D71) CAN C DIAGNOSTIC (-) CIRCUIT

Turn the ignition off.

Disconnect the Front Control Module C1 harness connector.

Disconnect the scan tool from the DLC.

Measure the resistance between the (D72) CAN C Diagnostic (+) circuit and the (D71) CAN C Diagnostic (-) circuit.

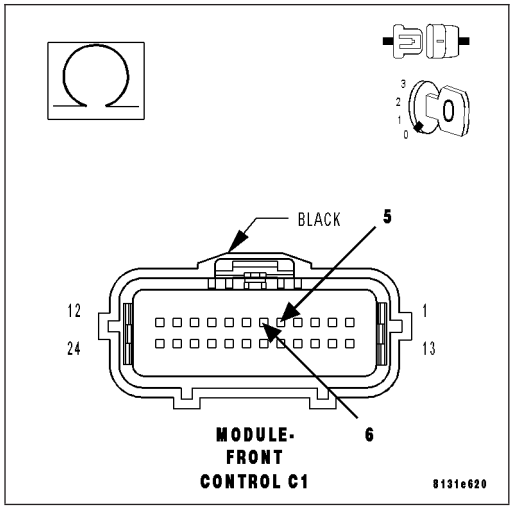

Is the resistance below 100.0 ohms?

Yes >> Repair the (D72) CAN C Diagnostic (+) circuit for a short to the (D71) CAN C Diagnostic (-) circuit.
Perform BODY VERIFICATION TEST – VER 1. (Refer to BODY VERIFICATION TEST – VER 1).

No >> Inspect the wiring and connectors for damage or shorted circuits. If ok, replace the Front Control Module in accordance with the service information.
Perform BODY VERIFICATION TEST – VER 1. (Refer to BODY VERIFICATION TEST – VER 1).

*CAN C DIAGNOSTIC (-) CIRCUIT OPEN

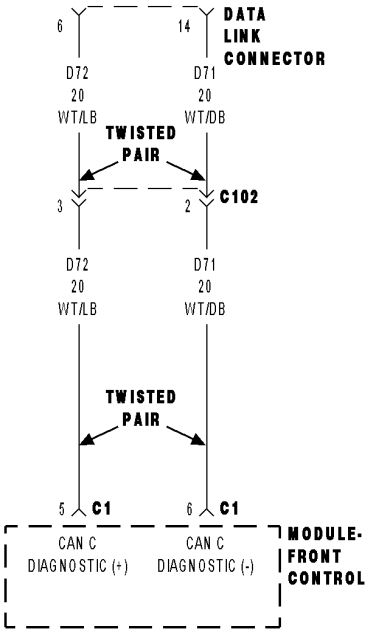

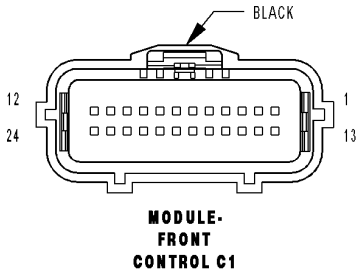

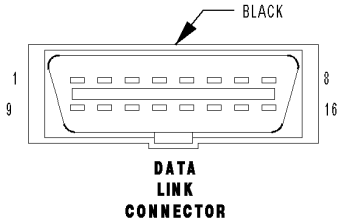

8131e475

For a complete wiring diagram **Refer to Section 8W**.

- **When Monitored:**
  When the scan tool queries the FCM.
- **Set Condition:**
  The scan tool has detected an open condition on the (D71) CAN C Diagnostic (-) circuit.

Possible Causes
(D71) CAN C DIAGNOSTIC (-) CIRCUIT OPEN
FRONT CONTROL MODULE

Diagnostic Test

1. CHECK THE STATUS OF THE ERROR MESSAGE

NOTE: Ensure the vehicle being tested is a CAN BUS VEHICLE. If not, false error messages may be displayed.

NOTE: Ensure the scan tool is updated to the latest software.

With the scan tool, record the error message.

Disconnect the scan tool from the DLC.

Cycle the ignition from on to off 3 times.

Turn the ignition on.

Does the scan tool display this same error message?

Yes >> Go To 2

No >> The conditions that caused this error message to set are not present at this time. Using the wiring diagram/schematic as a guide, inspect the wiring and connectors.

2. (D71) CAN C DIAGNOSTIC (-) CIRCUIT OPEN

Turn the ignition off.

Disconnect the Front Control Module C1 harness connector.

Disconnect the scan tool from the DLC.

Measure the resistance of the (D71) CAN C Diagnostic (-) circuit between the FCM connector and the DLC.

Is the resistance below 5.0 ohms?

Yes >> Inspect the wiring and connectors for damage or shorted circuits. If ok, replace the Front Control Module in accordance with the service information.
Perform BODY VERIFICATION TEST – VER 1. (Refer to BODY VERIFICATION TEST – VER 1).

No >> Repair the (D71) CAN C Diagnostic (-) circuit for an open.
Perform BODY VERIFICATION TEST – VER 1. (Refer to BODY VERIFICATION TEST – VER 1).

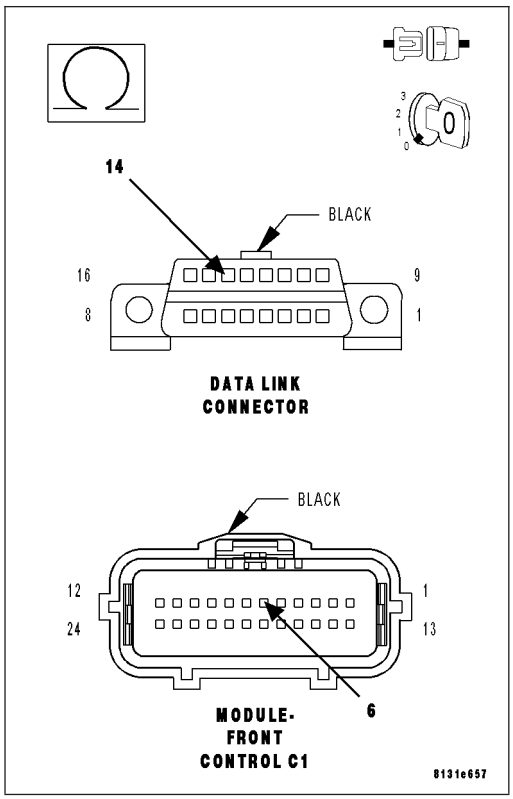

*CAN C DIAGNOSTIC (+) CIRCUIT OPEN

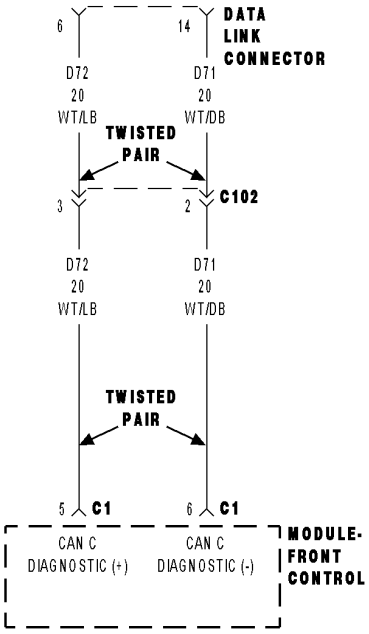

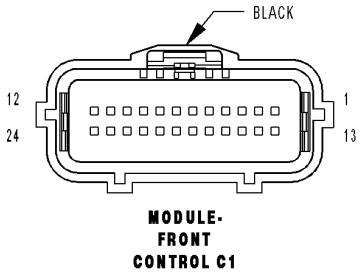

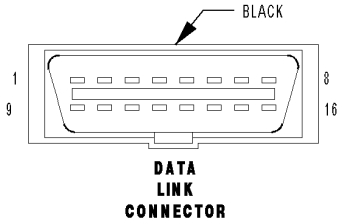

8131e475

For a complete wiring diagram **Refer to Section 8W**.

- **When Monitored:**
  When the scan tool queries the FCM.
- **Set Condition:**
  The scan tool has detected an open condition on the (D72) CAN C Diagnostic (+) circuit.

Possible Causes
(D72) CAN C DIAGNOSTIC (+) CIRCUIT OPEN
FRONT CONTROL MODULE

Diagnostic Test

1. CHECK THE STATUS OF THE ERROR MESSAGE

NOTE: Ensure the vehicle being tested is a CAN BUS VEHICLE. If not, false error messages may be displayed.

NOTE: Ensure the scan tool is updated to the latest software.

With the scan tool, record the error message.

Disconnect the scan tool from the DLC.

Cycle the ignition from on to off 3 times.

Turn the ignition on.

Does the scan tool display this same error message?

Yes >> Go To 2

No >> The conditions that caused this error message to set are not present at this time. Using the wiring diagram/schematic as a guide, inspect the wiring and connectors.

2. (D72) CAN C DIAGNOSTIC (+) CIRCUIT OPEN

Turn the ignition off.

Disconnect the Front Control Module C1 harness connector.

Disconnect the scan tool from the DLC.

Measure the resistance of the (D72) CAN C Diagnostic (+) circuit between the FCM connector and the DLC.

Is the resistance below 5.0 ohms?

Yes >> Inspect the wiring and connectors for damage or shorted circuits. If ok, replace the Front Control Module in accordance with the service information.
Perform BODY VERIFICATION TEST – VER 1. (Refer to BODY VERIFICATION TEST – VER 1).

No >> Repair the (D72) CAN C Diagnostic (+) circuit for an open.
Perform BODY VERIFICATION TEST – VER 1. (Refer to BODY VERIFICATION TEST – VER 1).

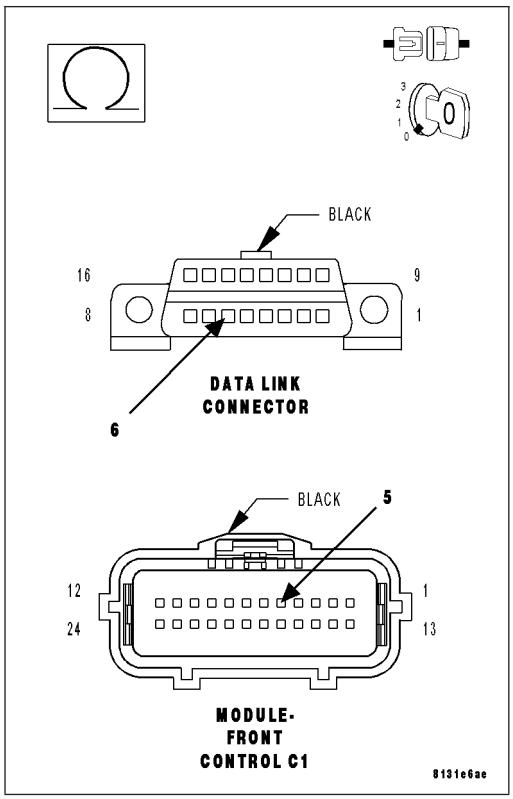

*BOTH CAN C DIAGNOSTIC (+) AND CAN C DIAGNOSTIC (-) CIRCUITS OPEN

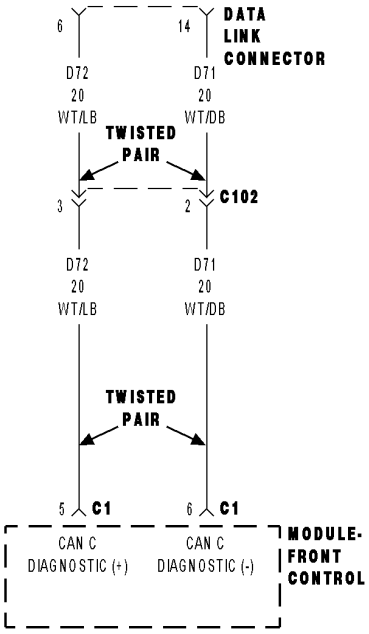

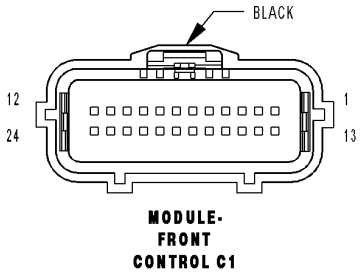

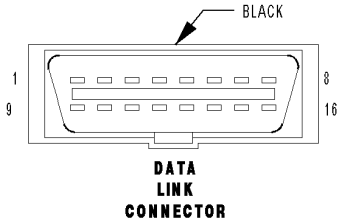

8131e475

For a complete wiring diagram **Refer to Section 8W**.

- **When Monitored:**
  When the scan tool queries the FCM.
- **Set Condition:**
  The scan tool has detected an open condition on both CAN C Diagnostic circuits.

Possible Causes
(D72) CAN C DIAGNOSTIC (+) CIRCUIT OPEN
(D71) CAN C DIAGNOSTIC (-) CIRCUIT OPEN
FRONT CONTROL MODULE

Diagnostic Test

1. CHECK THE STATUS OF THE ERROR MESSAGE

NOTE: Ensure the vehicle being tested is a CAN BUS VEHICLE. If not, false error messages may be displayed.

NOTE: Ensure the scan tool is updated to the latest software.
With the scan tool, record the error message.

Disconnect the scan tool from the DLC.

Cycle the ignition from on to off 3 times.

Turn the ignition on.

Does the scan tool display this same error message?

Yes >> Go To 2

No >> The conditions that caused this error message to set are not present at this time. Using the wiring diagram/schematic as a guide, inspect the wiring and connectors.

2. (D72) CAN C DIAGNOSTIC (+) CIRCUIT OPEN

Turn the ignition off.

Disconnect the Front Control Module C1 harness connector.

Disconnect the scan tool from the DLC.

NOTE: Check the connectors at both the DLC and the FCM.
Measure the resistance of the (D72) CAN C Diagnostic (+) circuit between the FCM connector and the DLC.

Is the resistance below 5.0 ohms?

Yes >> Go To 3

No >> Repair the (D72) CAN C Diagnostic (+) circuit for an open. Perform BODY VERIFICATION TEST – VER 1. (Refer to BODY VERIFICATION TEST – VER 1).

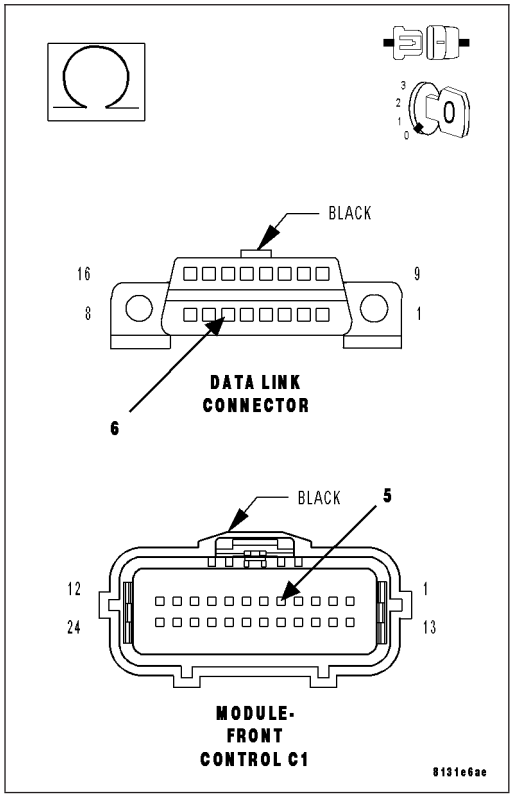

3. (D71) CAN C DIAGNOSTIC (-) CIRCUIT OPEN

Measure the resistance of the (D71) CAN C Diagnostic (-) circuit between the FCM connector and the DLC.

Is the resistance below 5.0 ohms?

Yes >> Inspect the wiring and connectors for damage or shorted circuits. If ok, replace the Front Control Module in accordance with the service information.

Perform BODY VERIFICATION TEST – VER 1. (Refer to BODY VERIFICATION TEST – VER 1).

No >> Repair the (D71) CAN C Diagnostic (-) circuit for an open.

Perform BODY VERIFICATION TEST – VER 1. (Refer to BODY VERIFICATION TEST – VER 1).

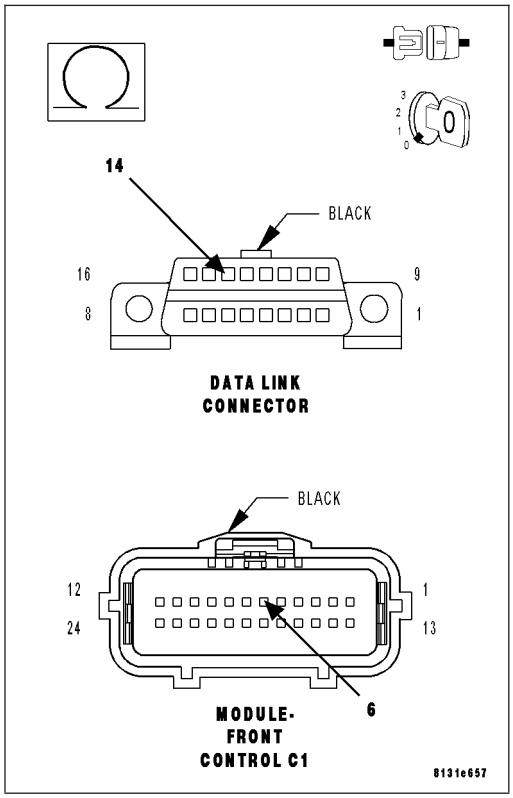

*NO RESPONSE FROM ABS (ANTILOCK BRAKE MODULE)

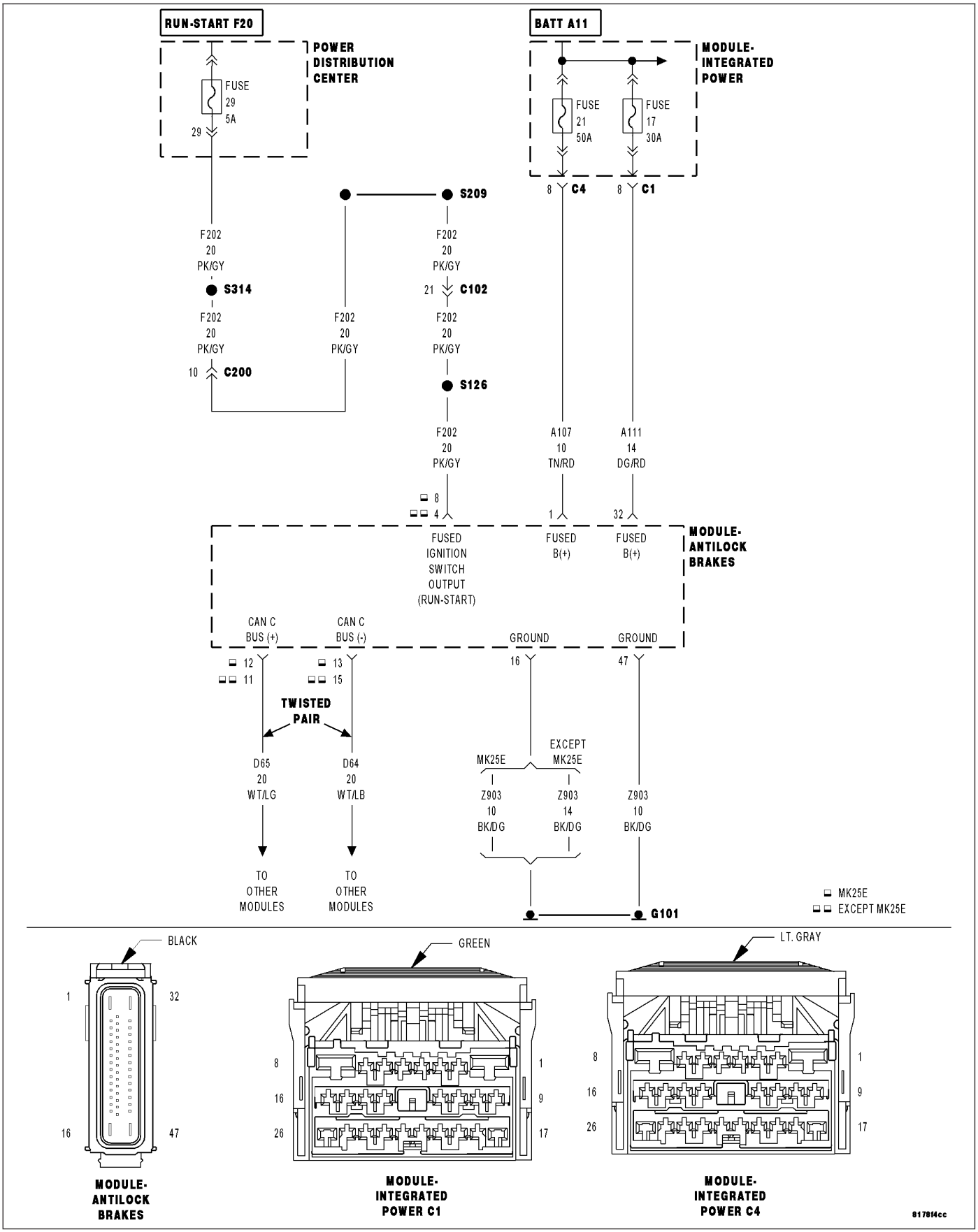

For a complete wiring diagram **Refer to Section 8W**.

Possible Causes
(A107) (A111) FUSED B(+) CIRCUIT OPEN OR SHORTED
(Z903) GROUND CIRCUIT OPEN
(F202) FUSED IGNITION SW OUTPUT CIRCUIT OPEN OR SHORTED
(D65) CAN C BUS (+) CIRCUIT OPEN
(D64) CAN C BUS (-) CIRCUIT OPEN
ANTILOCK BRAKE MODULE

Diagnostic Test

1. TEST FOR INTERMITTENT CONDITION

Turn the ignition on.

NOTE: Ensure the IOD fuse is installed and battery voltage is between 10.0 and 16.0 volts.
With the scan tool, select ECU View.

NOTE: A red X will be next to the module that is not communicating, indicating that the module is not active on the Bus network. A green check indicates that the module is active on the Bus network.

NOTE: Check the FCM for any active CAN C hardware DTCs, perform DTC before proceeding.

Does the scan tool display a red X next to the module?

Yes >> Go To 2

No >> The no response condition is not present at this time. Using the wiring diagram/schematic as a guide, inspect the wiring for chafed, pierced, pinched, and partially broken wires and the wiring harness connectors for broken, bent, pushed out, and corroded terminals.

2. (A107) (A111) FUSED B(+) CIRCUIT OPEN OR SHORTED

Turn the ignition off.

Disconnect the Antilock Brake Module harness connector.

Using a 12-volt test light connected to ground, check each (A107) and (A111) Fused B(+) circuit.

Does the test light illuminate brightly for each circuit?

Yes >> Go To 3

No >> Repair the Fused B(+) circuit for an open or short. Perform ABS VERIFICATION TEST - VER 1.

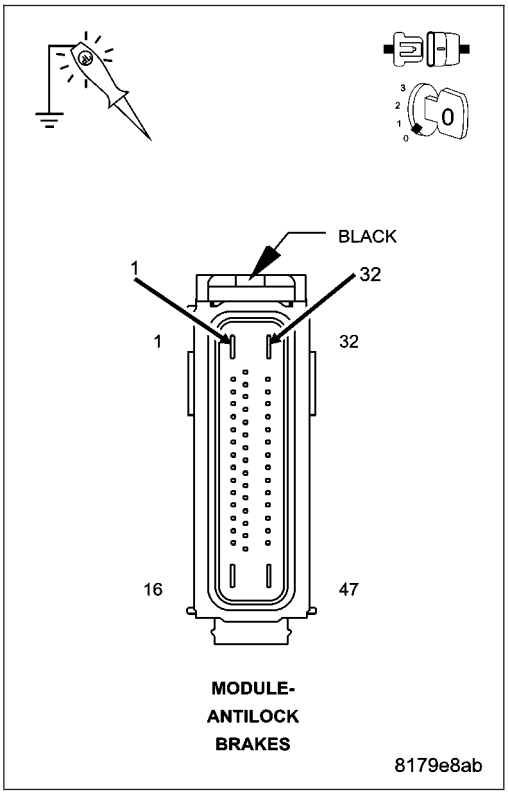

3. (Z903) GROUND CIRCUIT OPEN

Using a 12-volt test light connected to 12-volts, check the (Z903) ground circuit.

Does the test light illuminate brightly?

Yes >> Go To 4

No >> Repair the (Z903) ground circuit for an open.
Perform ABS VERIFICATION TEST - VER 1.

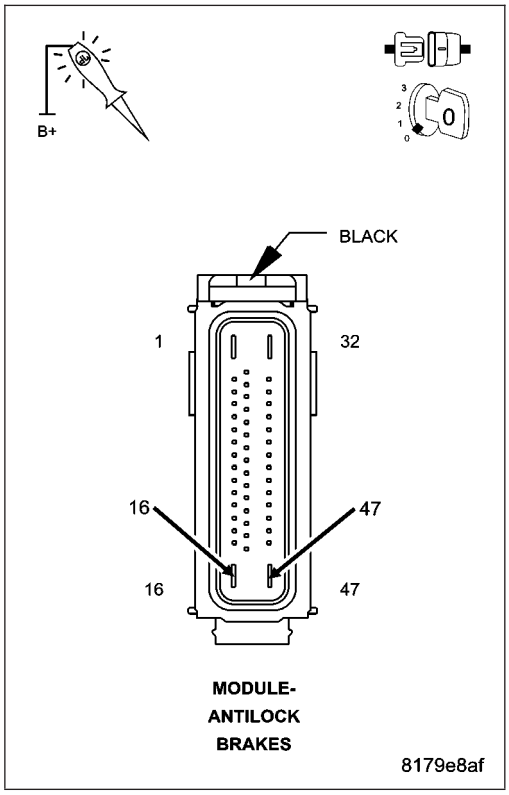

4. (F202) FUSED IGNITION SWITCH OUTPUT CIRCUIT OPEN OR SHORTED

Turn the ignition on.

Using a 12-volt test light connected to ground, check the (F202) Fused Ignition Switch Output circuit.

Does the test light illuminate brightly?

Yes >> Go To 5

No >> Repair the (F202) Fused Ignition Switch Output circuit for an open or short.
Perform ABS VERIFICATION TEST - VER 1.

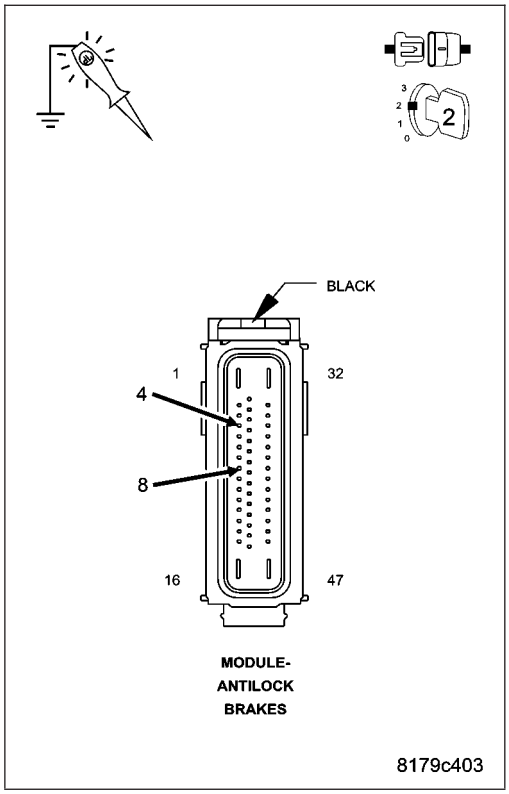

5. (D65) CAN C BUS (+) CIRCUIT OPEN

Turn the ignition off.

Disconnect the FCM C1 harness connector.

Measure the resistance of the (D65) CAN C Bus (+) circuit between the FCM connector and the Antilock Brake Module connector.

Is resistance below 5.0 ohms?

Yes >> Go To 6

No >> Repair the (D65) CAN C Bus (+) circuit for an open.
Perform ABS VERIFICATION TEST - VER 1.

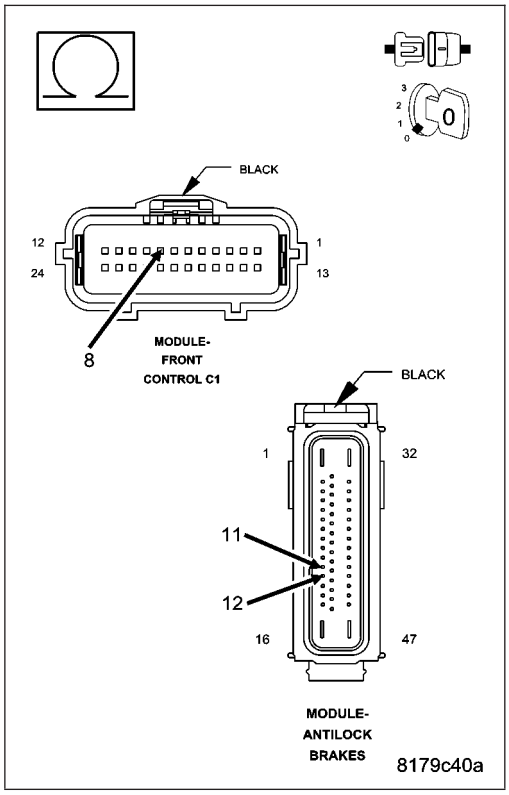

6. (D64) CAN C BUS (-) CIRCUIT OPEN

Measure the resistance of the (D64) CAN C Bus (-) circuit between the FCM connector and the Antilock Brake Module connector.

Is resistance below 5.0 ohms?

Yes >> Replace the Antilock Brake Module in accordance with the service information.
Perform ABS VERIFICATION TEST - VER 1.

No >> Repair the (D64) CAN C Bus (-) circuit for an open.
Perform ABS VERIFICATION TEST - VER 1.

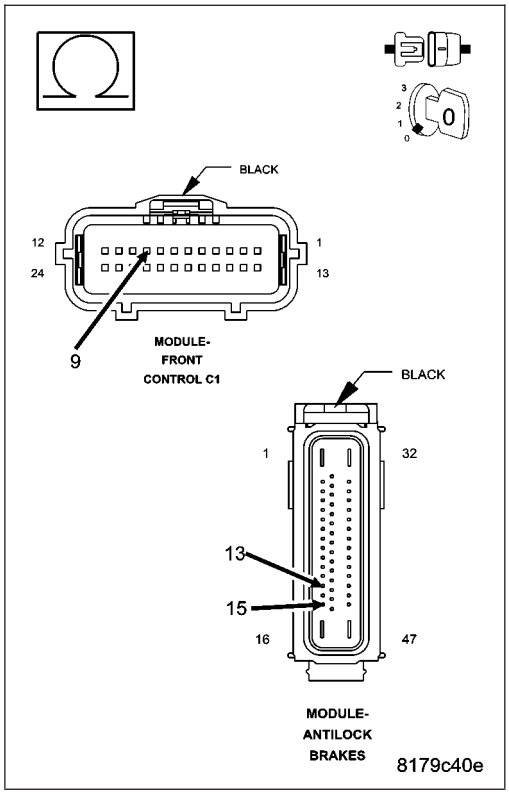

*NO RESPONSE FROM AMP (AMPLIFIER)

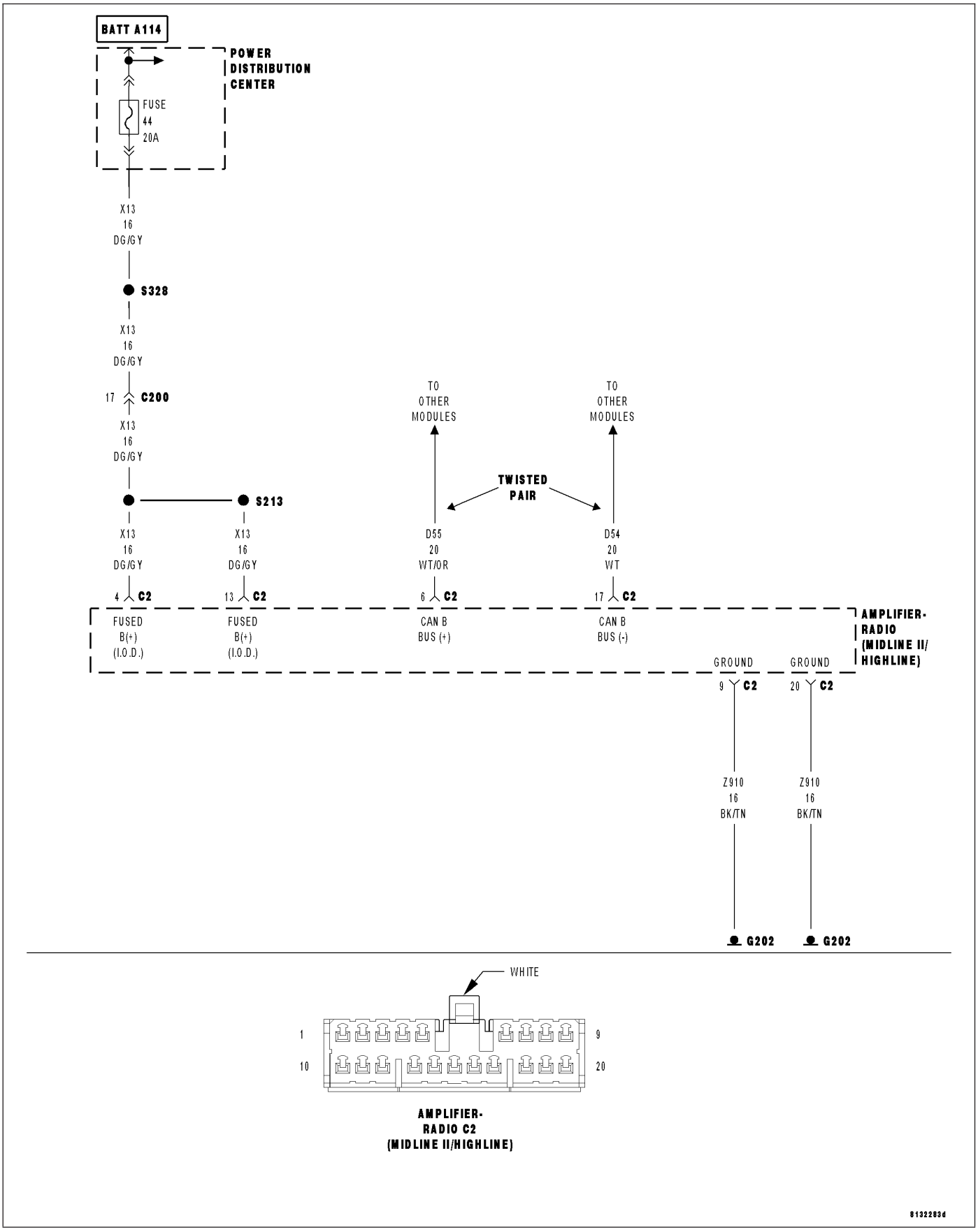

For a complete wiring diagram **Refer to Section 8W**.

Possible Causes
(X13) FUSED B (+) CIRCUIT OPEN OR SHORTED
(Z910) GROUND CIRCUIT OPEN
(D55) AND (D54) CAN B BUS CIRCUITS OPEN
AMPLIFIER

Diagnostic Test

1. TEST FOR INTERMITTENT CONDITION

Turn the ignition on.

NOTE: Ensure the IOD fuse is installed and battery voltage is between 10.0 and 16.0 volts.
With the scan tool, select ECU View.

NOTE: A red X will be next to the module that is not communicating, indicating that the module is not active on the Bus network. A green check indicates that the module is active on the Bus network.

Does the scan tool display a red X next to the module?

Yes >> Go To 2

No >> The no response condition is not present at this time. Using the wiring diagram/schematic as a guide, inspect the wiring for chafed, pierced, pinched, and partially broken wires and the wiring harness connectors for broken, bent, pushed out, and corroded terminals.

2. (X13) FUSED B(+) CIRCUIT OPEN OR SHORTED

Turn the ignition off.

Disconnect the Radio Amplifier C2 harness connector.

Using a 12-volt test light connected to ground, check each (X13) Fused B(+) circuit.

Does the test light illuminate brightly for each circuit?

Yes >> Go To 3

No >> Repair the (X13) Fused B(+) circuit for an open or short.
Perform BODY VERIFICATION TEST – VER 1. (Refer to BODY VERIFICATION TEST – VER 1).

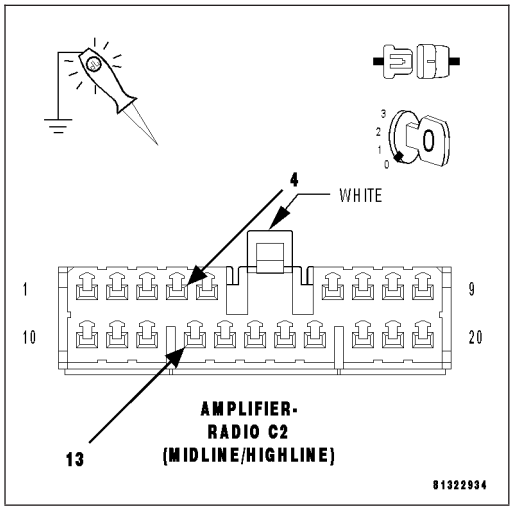

3. (Z910) GROUND CIRCUIT OPEN

Using a 12-volt test light connected to 12-volts, check each (Z910) ground circuit.

Does the test light illuminate brightly for each circuit?

Yes >> Go To 4

No >> Repair the (Z910) ground circuit for an open.
Perform BODY VERIFICATION TEST – VER 1. (Refer to BODY VERIFICATION TEST – VER 1).

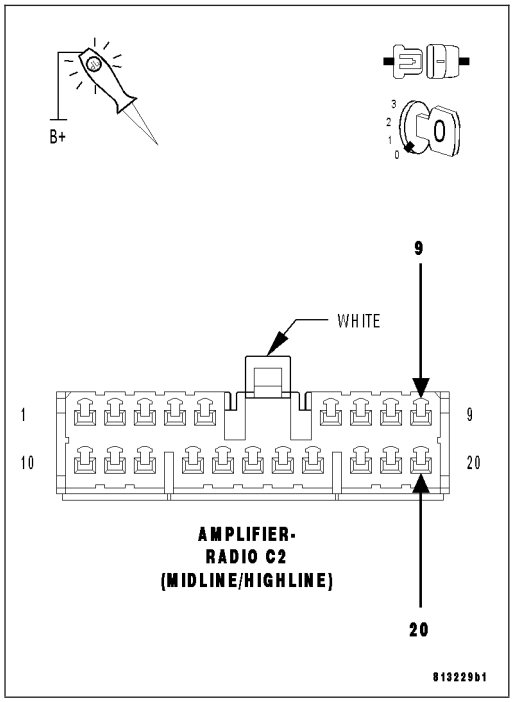

4. (D55) AND (D54) CAN B BUS CIRCUITS OPEN

NOTE: One open circuit will not cause this condition.
Measure the voltage between the (D54) CAN B Bus (-) circuit and ground.
Measure the voltage between the (D55) CAN B Bus (+) circuit and ground.

Is there any voltage present on either circuit?

Yes >> Replace the Radio Amplifier in accordance with the service information.
Perform BODY VERIFICATION TEST – VER 1. (Refer to BODY VERIFICATION TEST – VER 1).

No >> Repair the (D55) and (D54) CAN B Bus circuits for an open. Inspect the connector for damage.
Perform BODY VERIFICATION TEST – VER 1. (Refer to BODY VERIFICATION TEST – VER 1).

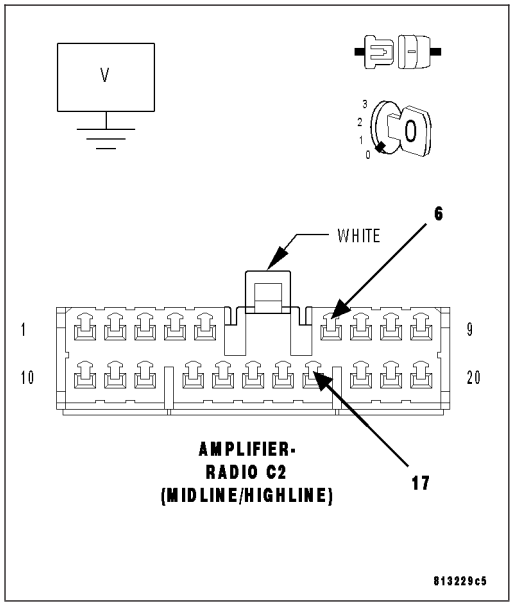

*NO RESPONSE FROM CCN (CLUSTER)

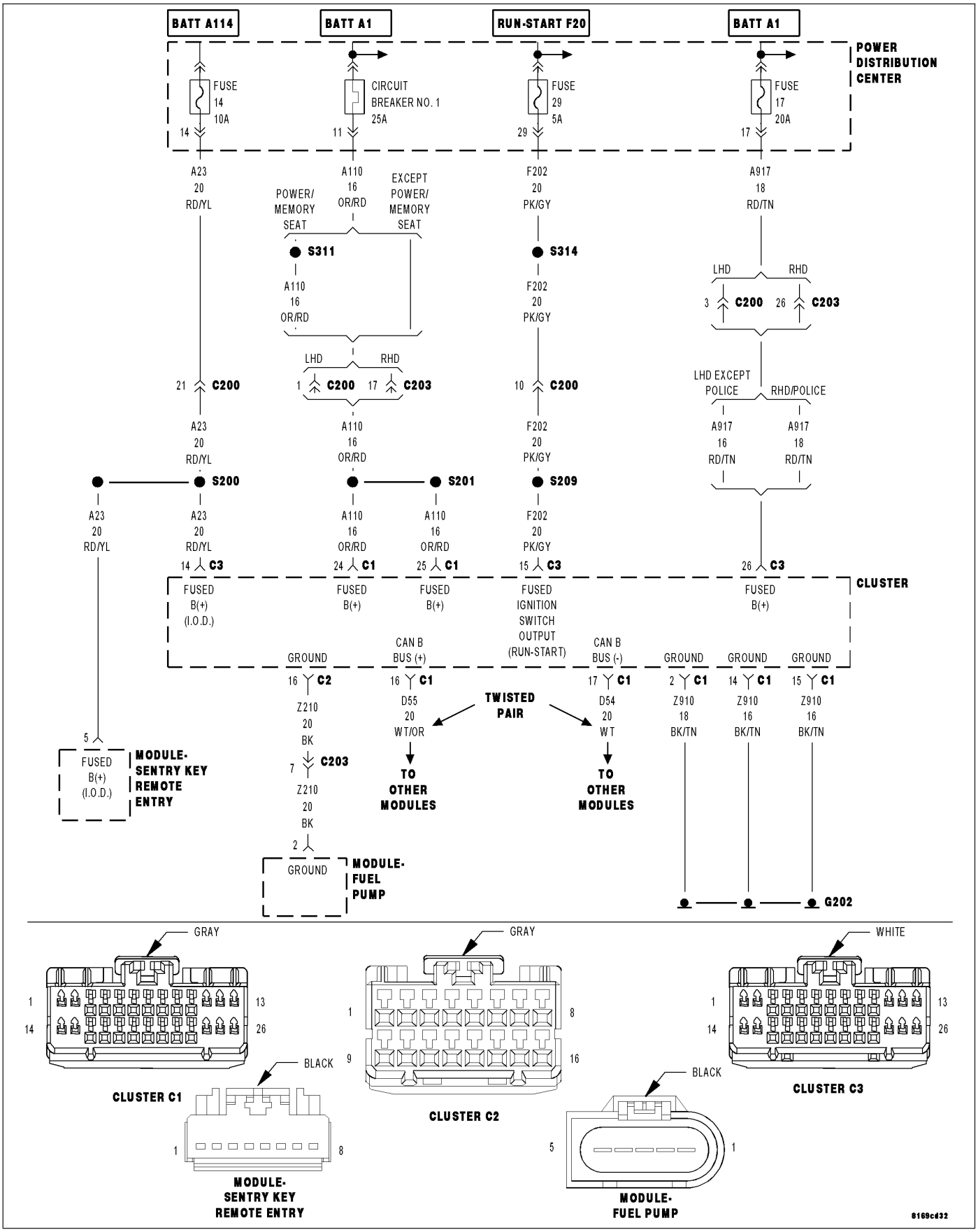

For a complete wiring diagram **Refer to Section 8W**.

Possible Causes
(A917) (A23) (A110) FUSED B(+) CIRCUITS OPEN OR SHORTED
(Z910) (Z210) GROUND CIRCUITS OPEN
(F202) FUSED IGNITION SWITCH OUTPUT CIRCUIT OPEN OR SHORTED
(D55) AND (D54) CAN B BUS CIRCUITS OPEN
CLUSTER (CCN)

Diagnostic Test

1. TEST FOR INTERMITTENT CONDITION

Turn the ignition on.

NOTE: Ensure the IOD fuse is installed and battery voltage is between 10.0 and 16.0 volts.
With the scan tool, select ECU View.

NOTE: A red X will be next to the module that is not communicating, indicating that the module is not active on the Bus network. A green check indicates that the module is active on the Bus network.

Does the scan tool display a red X next to the module?

Yes >> Go To 2

No >> The no response condition is not present at this time. Using the wiring diagram/schematic as a guide, inspect the wiring for chafed, pierced, pinched, and partially broken wires and the wiring harness connectors for broken, bent, pushed out, and corroded terminals.

2. (A917) (A23) (A110) FUSED B(+) CIRCUITS OPEN OR SHORTED

Turn the ignition off.

Disconnect the Cluster harness connectors.

Using a 12-volt test light connected to ground, check each (A917) (A23) (A110) Fused B(+) circuit.

Does the test light illuminate brightly for each circuit?

Yes >> Go To 3

No >> Repair the (A917) (A23) (A110) Fused B(+) circuit for an open or short.

Perform BODY VERIFICATION TEST – VER 1. (Refer to BODY VERIFICATION TEST – VER 1).

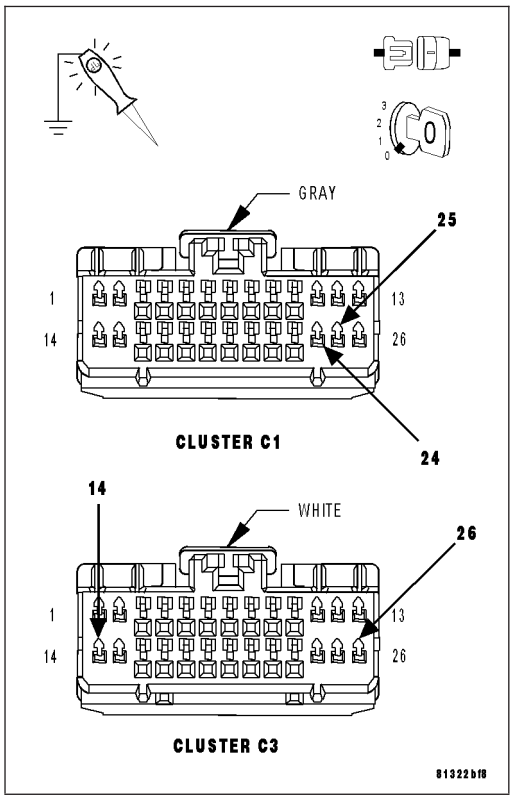

3. (Z910) (Z210) GROUND CIRCUITS OPEN

Using a 12-volt test light connected to 12-volts, check each (Z910) (Z210) ground circuit.

Does the test light illuminate brightly for each circuit?

Yes >> Go To 4

No >> Repair the (Z910) (Z210) ground circuit for an open.
Perform BODY VERIFICATION TEST – VER 1. (Refer to BODY VERIFICATION TEST – VER 1).

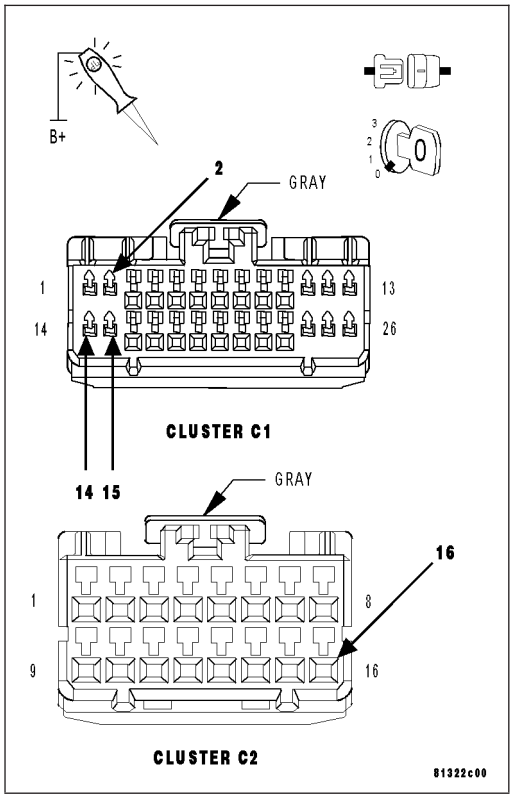

4. (F202) FUSED IGNITION SWITCH OUTPUT CIRCUIT OPEN OR SHORTED

Turn the ignition on.

Using a 12-volt test light connected to ground, check the (F202) Fused Ignition Switch Output circuit.

Does the test light illuminate brightly?

Yes >> Go To 5

No >> Repair the (F202) Fused Ignition Switch Output circuit for an open or short.
Perform BODY VERIFICATION TEST – VER 1. (Refer to BODY VERIFICATION TEST – VER 1).

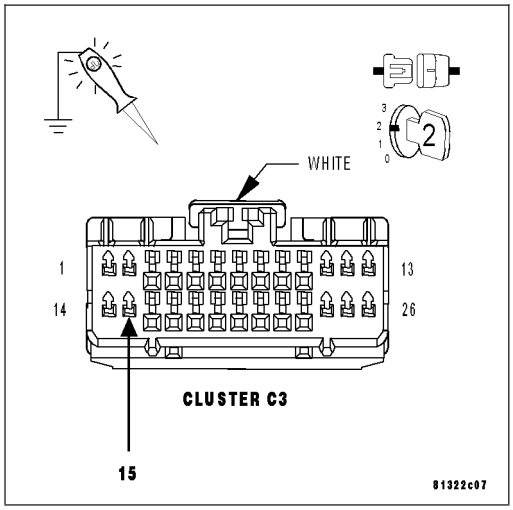

5. (D55) AND (D54) CAN B BUS CIRCUITS OPEN

NOTE: One open circuit will not cause this condition.

Measure the voltage between the (D54) CAN B Bus (-) circuit and ground.

Measure the voltage between the (D55) CAN B Bus (+) circuit and ground.

Is there any voltage present on either circuit?

Yes >> Replace the Cluster in accordance with the service information.

Perform BODY VERIFICATION TEST – VER 1. (Refer to BODY VERIFICATION TEST – VER 1).

No >> Repair the (D55) and (D54) CAN B Bus circuits for an open. Inspect the connector for damage.

Perform BODY VERIFICATION TEST – VER 1. (Refer to BODY VERIFICATION TEST – VER 1).

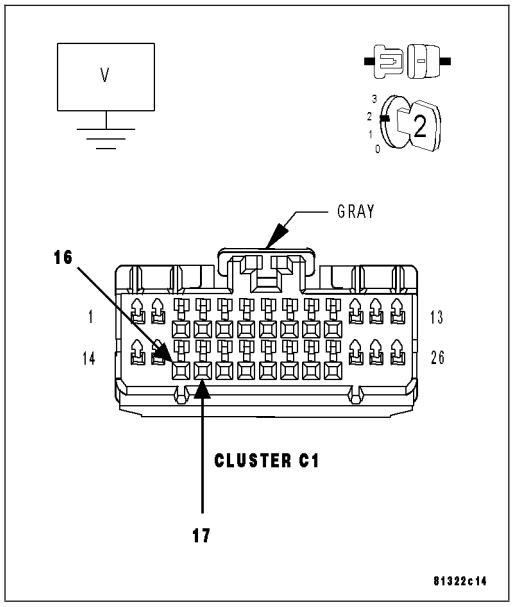

*NO RESPONSE FROM DDM (DRIVER DOOR MODULE)

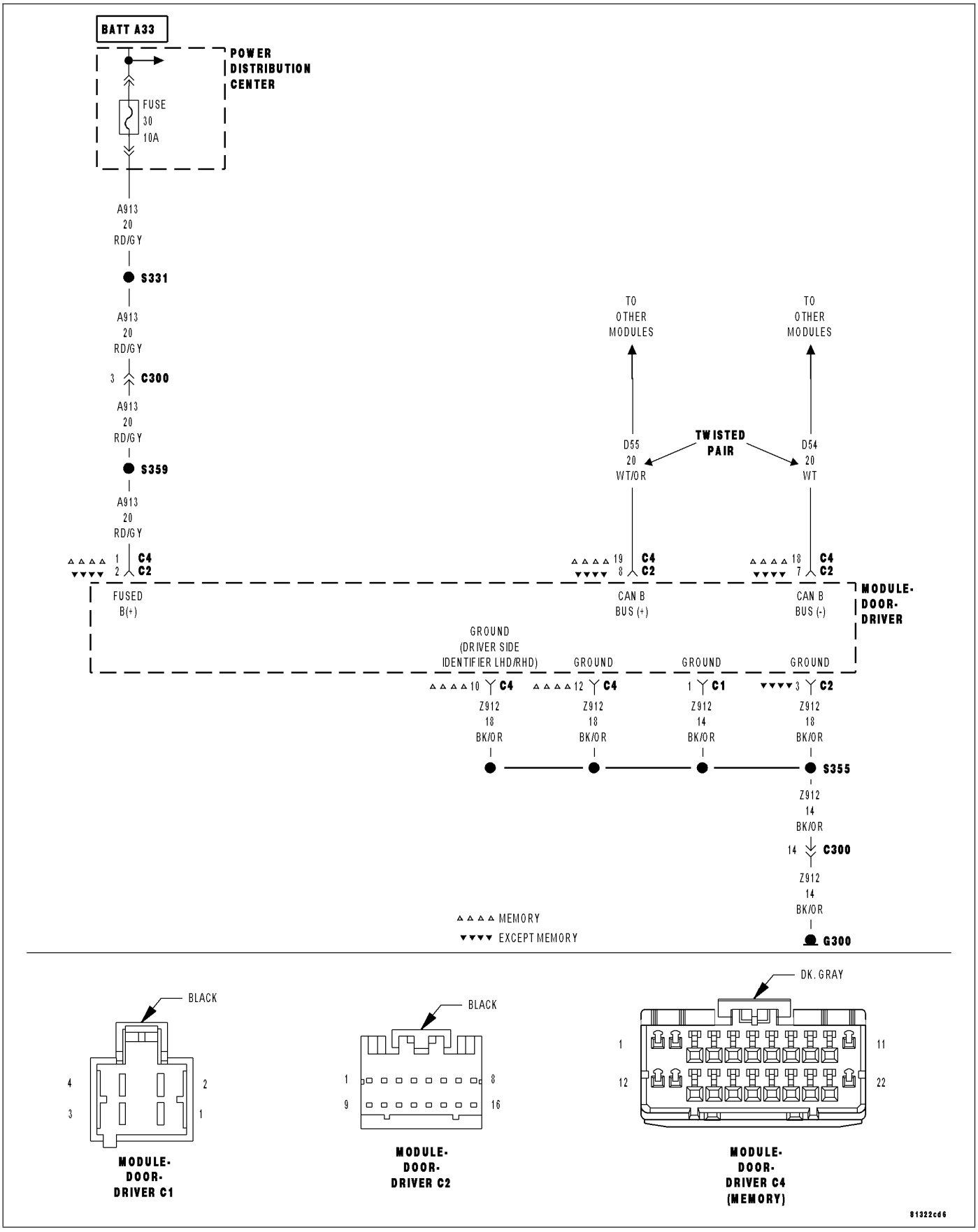

For a complete wiring diagram **Refer to Section 8W**.

Possible Causes
(A913) FUSED B (+) CIRCUIT OPEN OR SHORTED
(Z912) GROUND CIRCUIT OPEN
(D55) AND (D54) CAN B BUS CIRCUITS OPEN
DRIVER DOOR MODULE

Diagnostic Test

1. TEST FOR INTERMITTENT CONDITION

Turn the ignition on.

NOTE: Ensure the IOD fuse is installed and battery voltage is between 10.0 and 16.0 volts.
With the scan tool, select ECU View.

NOTE: A red X will be next to the module that is not communicating, indicating that the module is not active on the Bus network. A green check indicates that the module is active on the Bus network.

Does the scan tool display a red X next to the module?

Yes >> Go To 2

No >> The no response condition is not present at this time. Using the wiring diagram/schematic as a guide, inspect the wiring for chafed, pierced, pinched, and partially broken wires and the wiring harness connectors for broken, bent, pushed out, and corroded terminals.

2. (A913) FUSED B(+) CIRCUIT OPEN OR SHORTED

Turn the ignition off.

Disconnect the Driver Door Module harness connectors.

Using a 12-volt test light connected to ground, check the (A913) Fused B(+) circuit.

Does the test light illuminate brightly?

Yes >> Go To 3

No >> Repair the (A913) Fused B(+) circuit for an open or short. Perform BODY VERIFICATION TEST – VER 1. (Refer to BODY VERIFICATION TEST – VER 1).

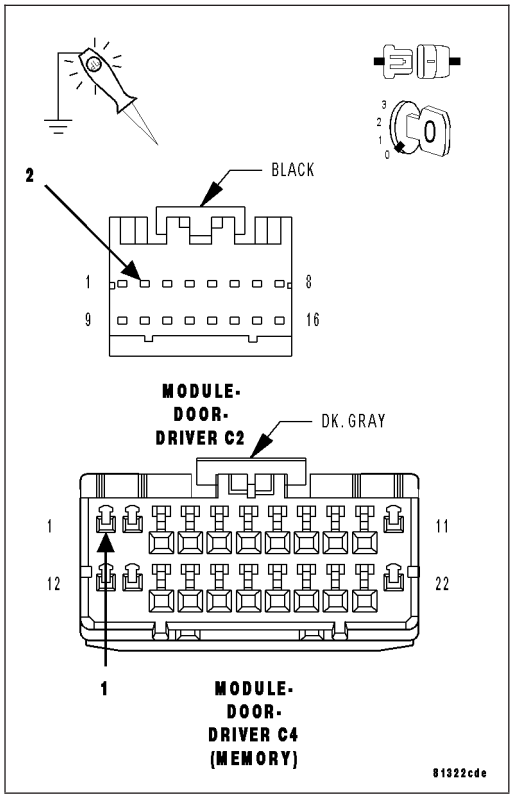

3. (Z912) GROUND CIRCUIT OPEN

Using a 12-volt test light connected to 12-volts, check each (Z912) ground circuit.

Does the test light illuminate brightly for each circuit?

Yes >> Go To 4

No >> Repair the (Z912) ground circuit for an open.
Perform BODY VERIFICATION TEST – VER 1. (Refer to BODY VERIFICATION TEST – VER 1).

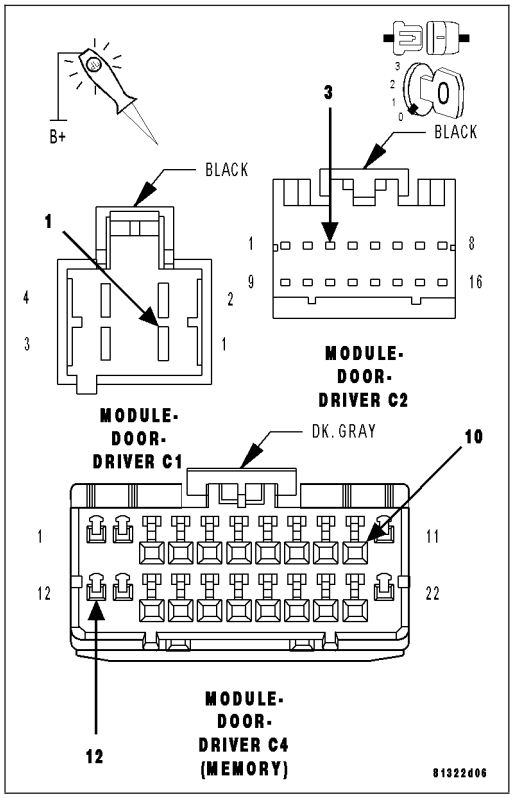

4. (D55) AND (D54) CAN B BUS CIRCUITS OPEN

NOTE: One open circuit will not cause this condition.
Measure the voltage between the (D54) CAN B Bus (-) circuit and ground.
Measure the voltage between the (D55) CAN B Bus (+) circuit and ground.

Is there any voltage present on either circuit?

Yes >> Replace the Driver Door Module in accordance with the service information.
Perform BODY VERIFICATION TEST – VER 1. (Refer to BODY VERIFICATION TEST – VER 1).

No >> Repair the (D55) and (D54) CAN B Bus circuits for an open. Inspect the connector for damage.
Perform BODY VERIFICATION TEST – VER 1. (Refer to BODY VERIFICATION TEST – VER 1).

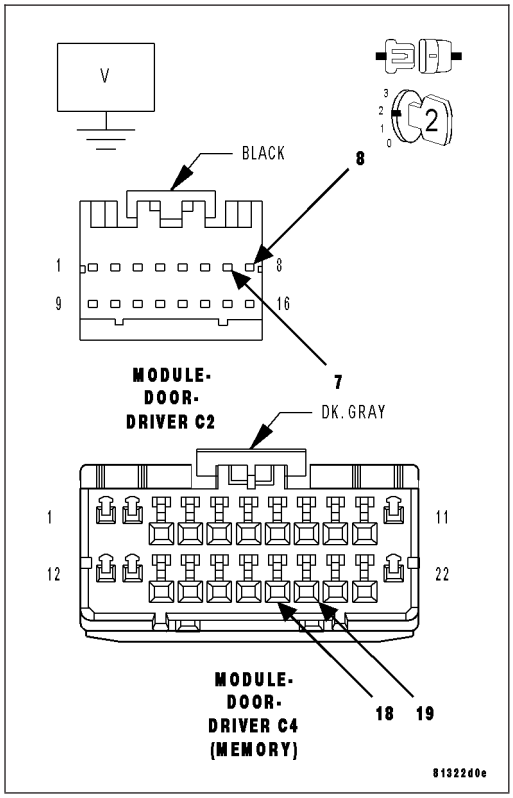

*NO RESPONSE FROM ECM (ENGINE CONTROL MODULE) - DIESEL

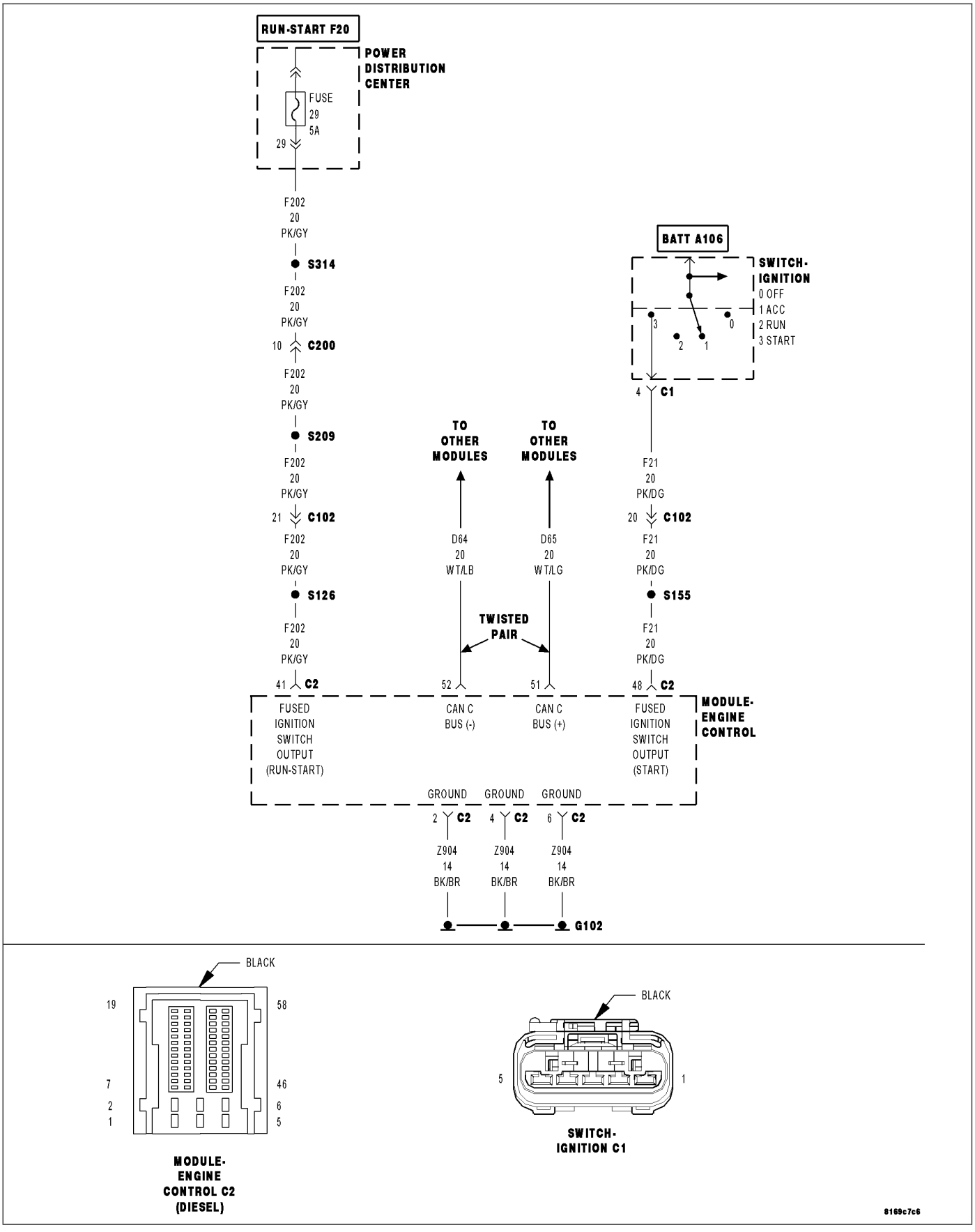

For a complete wiring diagram **Refer to Section 8W**.

Possible Causes
ENGINE CONTROL MODULE POWER AND GROUND
(D65) CAN C BUS (+) CIRCUIT OPEN
(D64) CAN C BUS (-) CIRCUIT OPEN
ENGINE CONTROL MODULE

Diagnostic Test

1. TEST FOR INTERMITTENT CONDITION

Turn the ignition on.

NOTE: Ensure the IOD fuse is installed and battery voltage is between 10.0 and 16.0 volts.
With the scan tool, select ECU View.

NOTE: A red X will be next to the module that is not communicating, indicating that the module is not active on the Bus network. A green check indicates that the module is active on the Bus network.

NOTE: Check the FCM for any active CAN C hardware and any ignition related DTCs, perform DTCs before proceeding.

Does the scan tool display a red X next to the module?

Yes >> Go To 2

No >> The no response condition is not present at this time. Using the wiring diagram/schematic as a guide, inspect the wiring for chafed, pierced, pinched, and partially broken wires and the wiring harness connectors for broken, bent, pushed out, and corroded terminals.

2. CHECK ECM POWER AND GROUND

Check the ECM power and ground circuits. Refer to 9 - ENGINE ELECTRICAL DIAGNOSTICS - DIESEL for the diagnostic test procedure.

Were any problems found?

Yes >> Repair as necessary.
Perform the ECM VERIFICATION TEST.

No >> Go To 3

3. (D65) CAN C BUS (+) CIRCUIT OPEN

Turn the ignition off.

Disconnect the FCM C1 harness connector.

Disconnect the ECM C2 harness connector.

Measure the resistance of the (D65) CAN C Bus (+) circuit between the FCM connector and the ECM connector.

Is resistance below 5.0 ohms?

Yes >> Go To 4

No >> Repair the (D65) CAN C Bus (+) circuit for an open.
Perform the ECM VERIFICATION TEST.

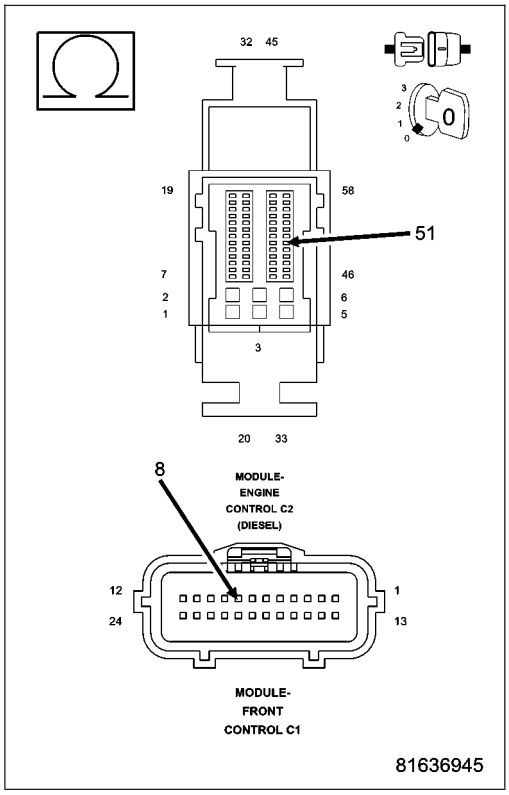

4. (D64) CAN C BUS (-) CIRCUIT OPEN

Measure the resistance of the (D64) CAN C Bus (-) circuit between the FCM connector and the ECM connector.

Is resistance below 5.0 ohms?

Yes >> Replace and program the Engine Control Module in accordance with the service information.
Perform the ECM VERIFICATION TEST.

No >> Repair the (D64) CAN C Bus (-) circuit for an open.
Perform the ECM VERIFICATION TEST.

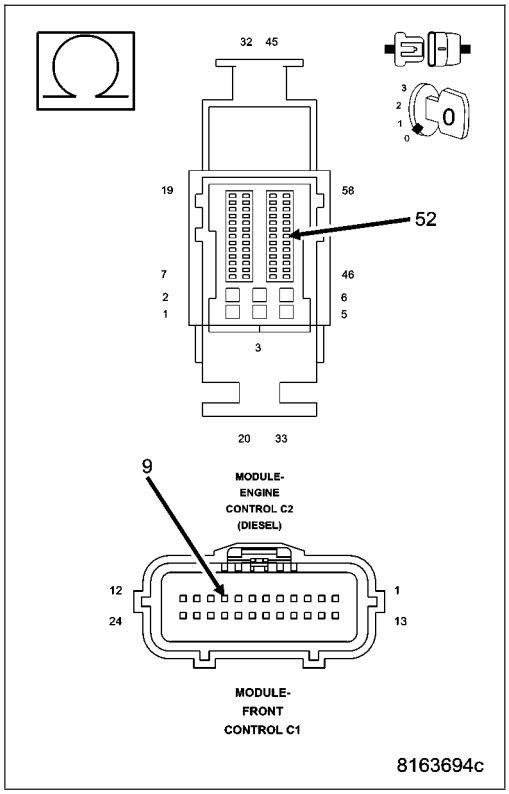

*NO RESPONSE FROM EOM (ELECTRONIC OVERHEAD MODULE)

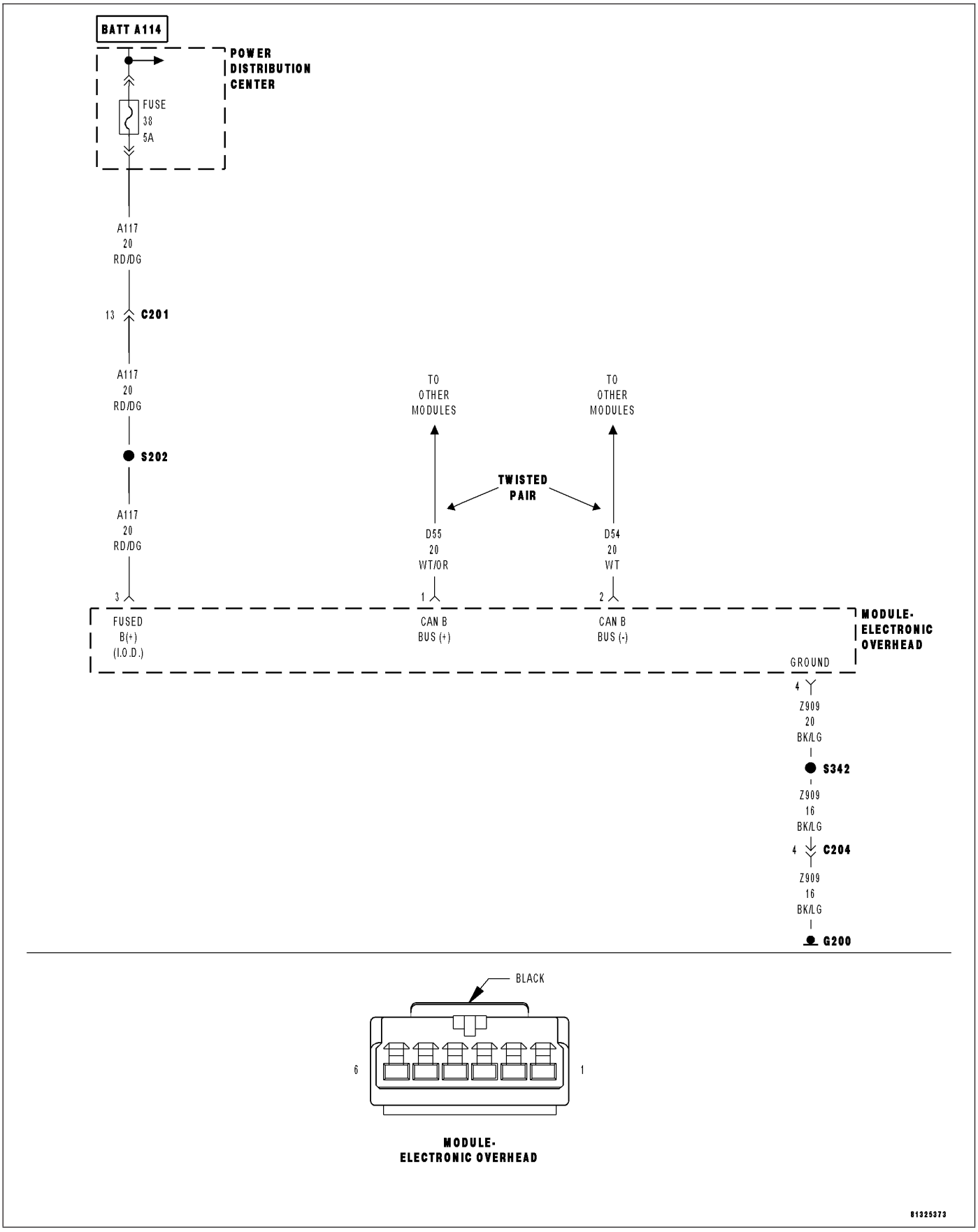

For a complete wiring diagram **Refer to Section 8W**.

Possible Causes
(A117) FUSED B(+) CIRCUIT OPEN OR SHORTED
(Z909) GROUND CIRCUIT OPEN
(D55) AND (D54) CAN B BUS CIRCUITS OPEN
ELECTRONIC OVERHEAD MODULE

Diagnostic Test

1. TEST FOR INTERMITTENT CONDITION

Turn the ignition on.

NOTE: Ensure the IOD fuse is installed and battery voltage is between 10.0 and 16.0 volts.
With the scan tool, select ECU View.

NOTE: A red X will be next to the module that is not communicating, indicating that the module is not active on the Bus network. A green check indicates that the module is active on the Bus network.

Does the scan tool display a red X next to the module?

Yes >> Go To 2

No >> The no response condition is not present at this time. Using the wiring diagram/schematic as a guide, inspect the wiring for chafed, pierced, pinched, and partially broken wires and the wiring harness connectors for broken, bent, pushed out, and corroded terminals.

2. (A117) FUSED B(+) CIRCUIT OPEN OR SHORTED

Turn the ignition off.

Disconnect the Electronic Overhead Module harness connector.

Using a 12-volt test light connected to ground, check the (A117) Fused B(+) circuit.

Does the test light illuminate brightly?

Yes >> Go To 3

No >> Repair the (A117) Fused B(+) circuit for an open or short. Perform BODY VERIFICATION TEST – VER 1. (Refer to BODY VERIFICATION TEST – VER 1).

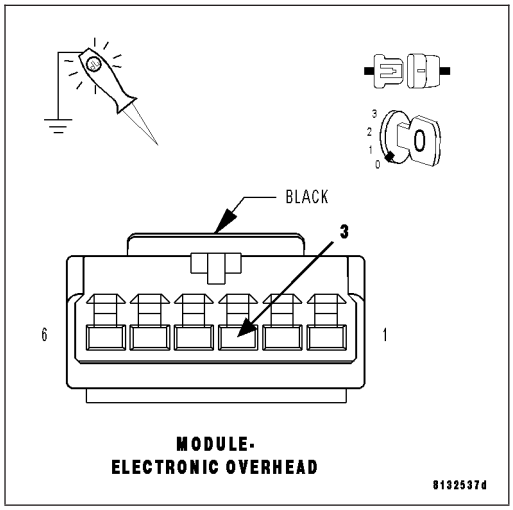

3. (Z909) GROUND CIRCUIT OPEN

Using a 12-volt test light connected to 12-volts, check the (Z909) ground circuit.

Does the test light illuminate brightly?

Yes >> Go To 4

No >> Repair the (Z909) ground circuit for an open.
Perform BODY VERIFICATION TEST – VER 1. (Refer to BODY VERIFICATION TEST – VER 1).

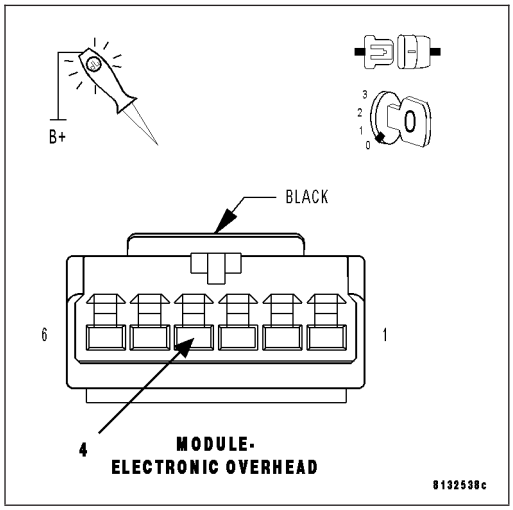

4. (D55) AND (D54) CAN B BUS CIRCUITS OPEN

NOTE: One open circuit will not cause this condition.
Measure the voltage between the (D54) CAN B Bus (-) circuit and ground.
Measure the voltage between the (D55) CAN B Bus (+) circuit and ground.

Is there any voltage present on either circuit?

Yes >> Replace the Electronic Overhead Module (EOM) in accordance with the service information.
Perform BODY VERIFICATION TEST – VER 1. (Refer to BODY VERIFICATION TEST – VER 1).

No >> Repair the (D55) and (D54) CAN B Bus circuits for an open. Inspect the connector for damage.
Perform BODY VERIFICATION TEST – VER 1. (Refer to BODY VERIFICATION TEST – VER 1).

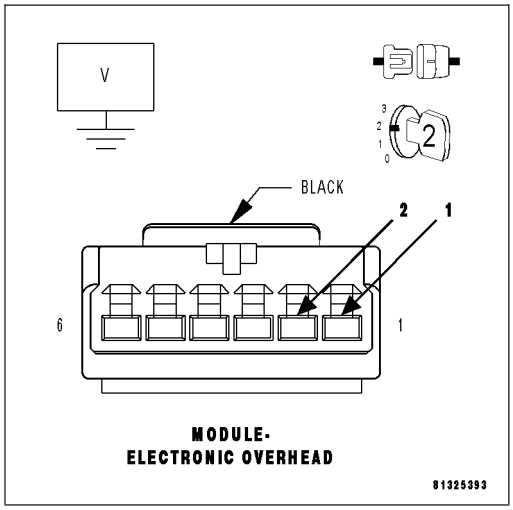

*NO RESPONSE FROM ESM (ELECTRONIC SHIFT MODULE) (SHIFTER LEVER ASSEMBLY) - NAG1

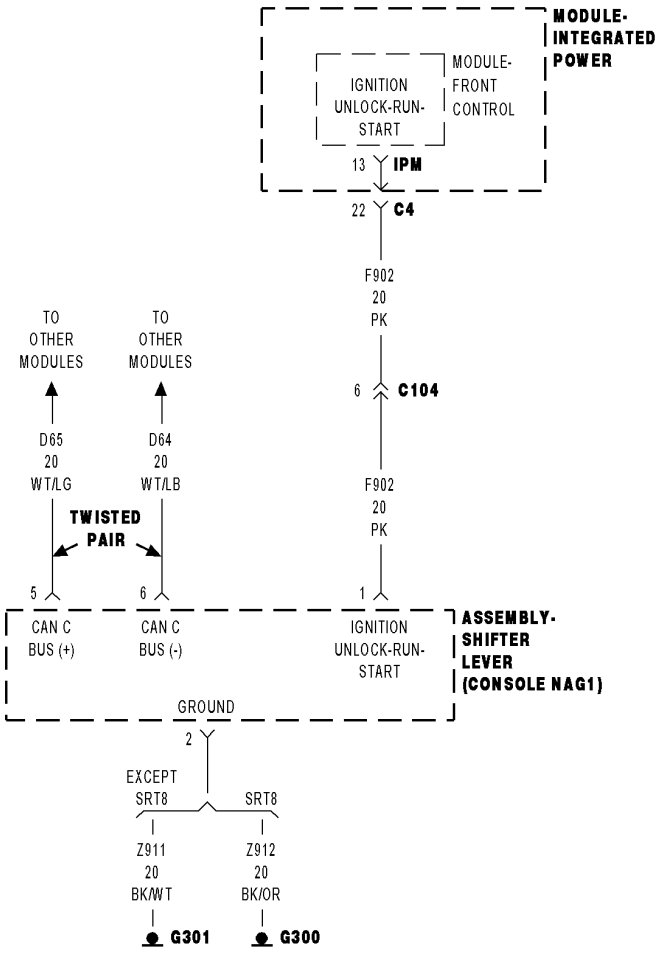

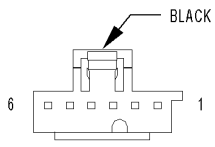

ASSEMBLY-
SHIFTER LEVER
(CONSOLE NAG1)

81781707

For a complete wiring diagram **Refer to Section 8W**.

Possible Causes
(Z911) OR (Z912) GROUND CIRCUITS OPEN
(F902) IGNITION UNLOCK-RUN-START CIRCUIT OPEN OR SHORTED
(D65) CAN C BUS (+) CIRCUIT OPEN
(D64) CAN C BUS (-) CIRCUIT OPEN
SHIFTER LEVER ASSEMBLY (ELECTRONIC SHIFT MODULE)

Diagnostic Test

1. TEST FOR INTERMITTENT CONDITION

Turn the ignition on.

NOTE: Ensure the IOD fuse is installed and battery voltage is between 10.0 and 16.0 volts.
With the scan tool, select ECU View.

NOTE: A red X will be next to the module that is not communicating, indicating that the module is not active on the Bus network. A green check indicates that the module is active on the Bus network.

NOTE: Check the FCM for any active CAN C hardware and any ignition related DTCs, perform DTCs before proceeding.

Does the scan tool display a red X next to the module?

Yes >> Go To 2

No >> The no response condition is not present at this time. Using the wiring diagram/schematic as a guide, inspect the wiring for chafed, pierced, pinched, and partially broken wires and the wiring harness connectors for broken, bent, pushed out, and corroded terminals.

2. CHECK THE (Z911) OR (Z912) GROUND CIRCUIT FOR AN OPEN

Turn the ignition off.

Disconnect the Shifter Lever Assembly harness connector.

Using a 12-volt test light connected to 12-volts, check the (Z911) or (Z912) ground circuit.

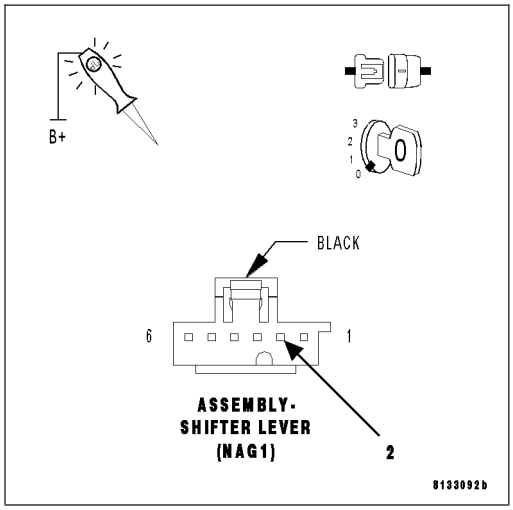

Does the test light illuminate brightly?

Yes >> Go To 3

No >> Repair the (Z911) or (Z912) ground circuit for an open. Perform NAG1 TRANSMISSION VERIFICATION TEST - VER 1.

3. (F902) IGNITION UNLOCK–RUN–START CIRCUIT OPEN OR SHORTED

Turn the ignition on.

Using a 12-volt test light connected to ground, check the (F902) Ignition Unlock–Run–Start circuit.

Does the test light illuminate brightly?

Yes >> Go To 4

No >> Repair the (F902) Ignition Unlock–Run–Start circuit for an open or short.
Perform NAG1 TRANSMISSION VERIFICATION TEST - VER 1.

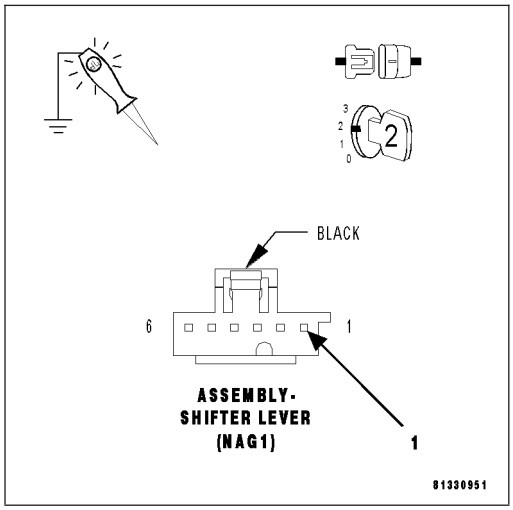

4. (D65) CAN C BUS (+) CIRCUIT OPEN

Turn the ignition off.

Disconnect the FCM C1 harness connector.

Measure the resistance of the (D65) CAN C Bus (+) circuit between the FCM connector and the Shifter Lever Assembly connector.

Is resistance below 5.0 ohms?

Yes >> Go To 5

No >> Repair the (D65) CAN C Bus (+) circuit for an open.
Perform NAG1 TRANSMISSION VERIFICATION TEST - VER 1.

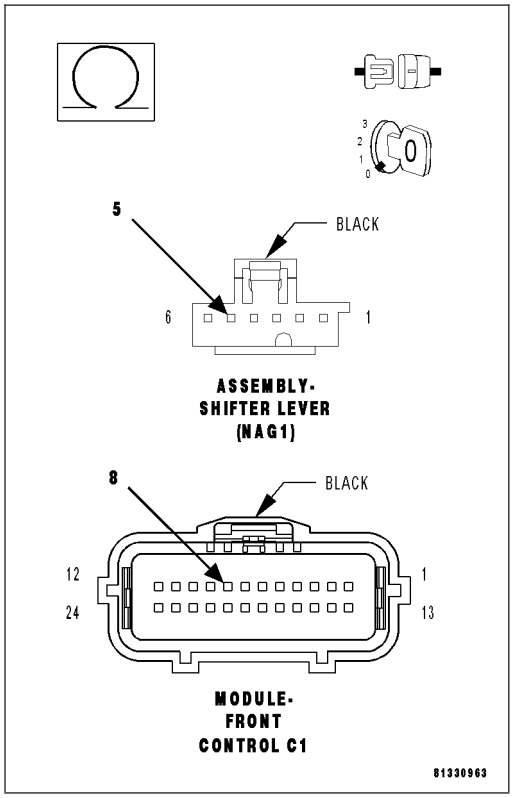

5. (D64) CAN C BUS (-) CIRCUIT OPEN

Measure the resistance of the (D64) CAN C Bus (-) circuit between the FCM connector and the Shifter Lever Assembly connector.

Is resistance below 5.0 ohms?

Yes >> Replace the Shifter Lever Assembly in accordance with the service information.
Perform NAG1 TRANSMISSION VERIFICATION TEST - VER 1.

No >> Repair the (D64) CAN C Bus (-) circuit for an open.
Perform NAG1 TRANSMISSION VERIFICATION TEST - VER 1.

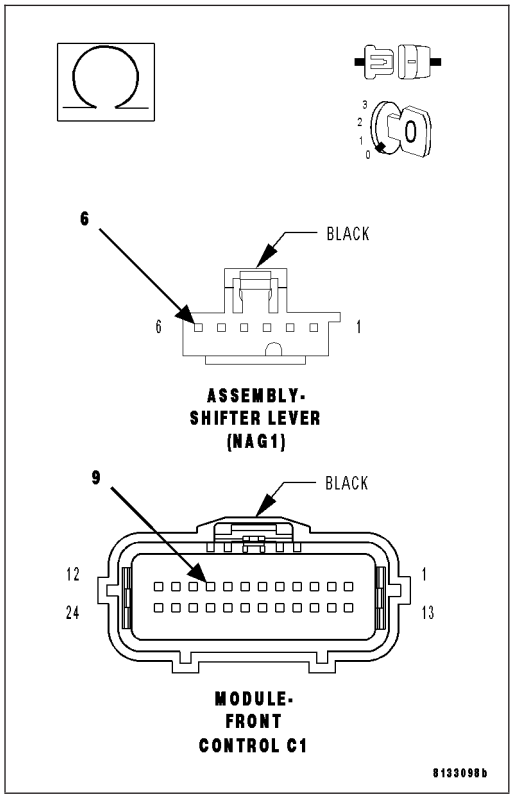

*NO RESPONSE FROM ESM (ELECTRONIC SHIFT MODULE) - (COLUMN NAG1)

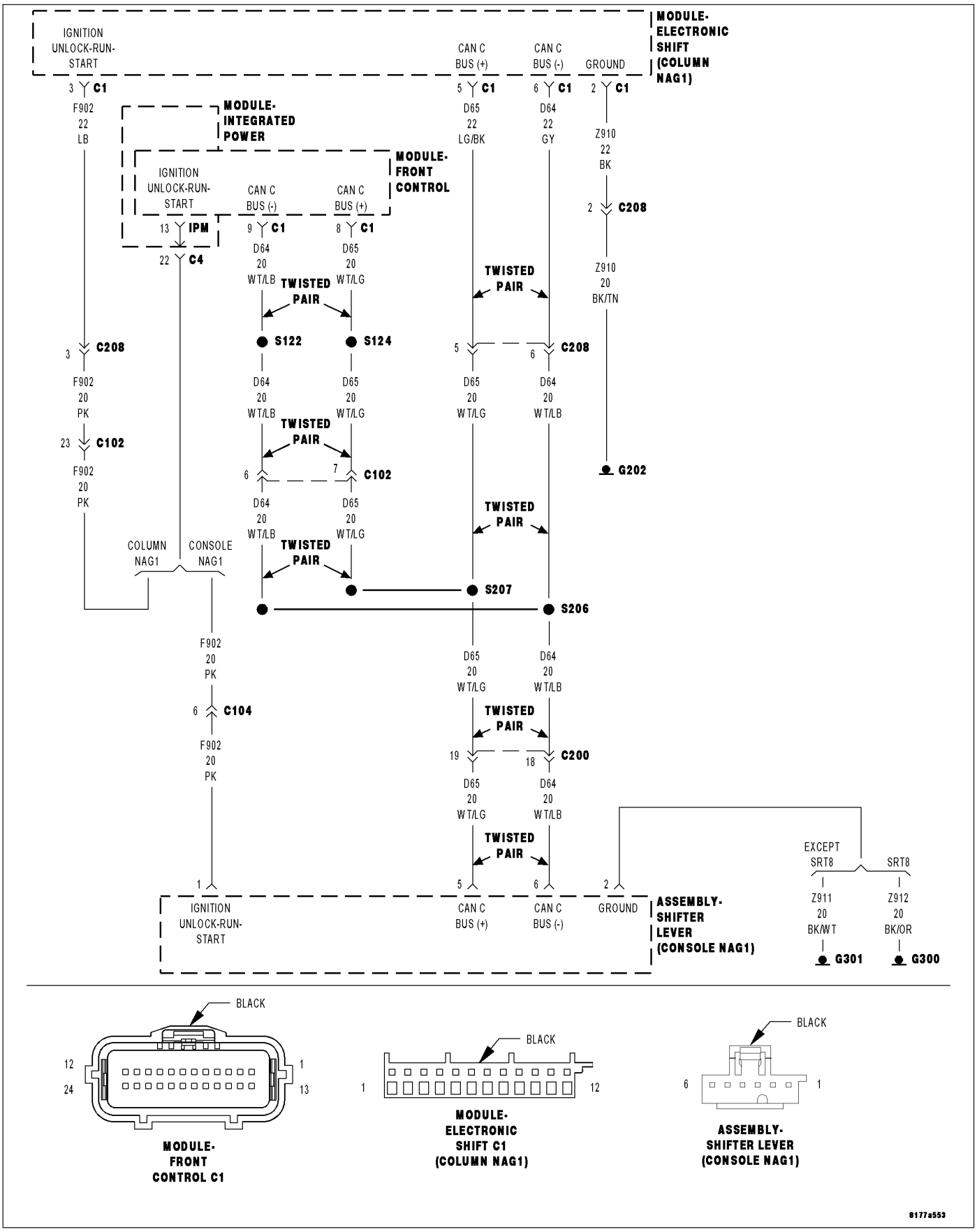

For a complete wiring diagram **Refer to Section 8W**.

Possible Causes
(Z910) GROUND CIRCUITS OPEN
(F902) IGNITION UNLOCK-RUN-START CIRCUIT OPEN OR SHORTED
(D65) CAN C BUS (+) CIRCUIT OPEN
(D64) CAN C BUS (-) CIRCUIT OPEN
ELECTRONIC SHIFT MODULE

Diagnostic Test

1. TEST FOR INTERMITTENT CONDITION

Turn the ignition on.

NOTE: Ensure the IOD fuse is installed and battery voltage is between 10.0 and 16.0 volts.
With the scan tool, select ECU View.

NOTE: A red X will be next to the module that is not communicating, indicating that the module is not active on the Bus network. A green check indicates that the module is active on the Bus network.

NOTE: Check the FCM for any active CAN C hardware and any ignition related DTCs, perform DTCs before proceeding.

Does the scan tool display a red X next to the module?

Yes >> Go To 2

No >> The no response condition is not present at this time. Using the wiring diagram/schematic as a guide, inspect the wiring for chafed, pierced, pinched, and partially broken wires and the wiring harness connectors for broken, bent, pushed out, and corroded terminals.

2. CHECK THE (Z910) GROUND CIRCUIT FOR AN OPEN

Turn the ignition off.

Disconnect the Electronic Shift Module harness connector.

Using a 12-volt test light connected to 12-volts, check the (Z910) ground circuit.

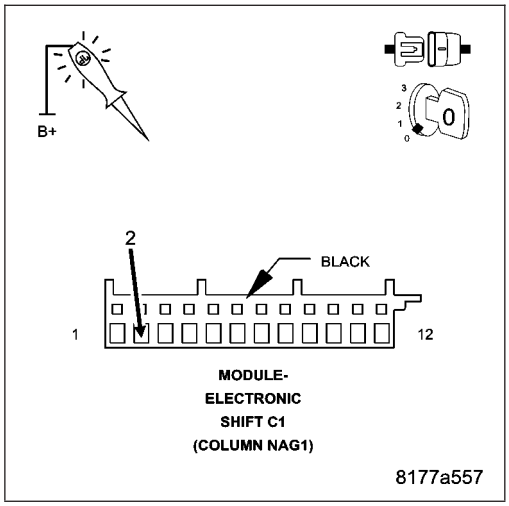

Does the test light illuminate brightly?

Yes >> Go To 3

No >> Repair the (Z910) ground circuit for an open.
Perform NAG1 TRANSMISSION VERIFICATION TEST - VER 1.

3. (F902) IGNITION UNLOCK–RUN–START CIRCUIT OPEN OR SHORTED

Turn the ignition on.

Using a 12-volt test light connected to ground, check the (F902) Ignition Unlock–Run–Start circuit.

Does the test light illuminate brightly?

Yes >> Go To 4

No >> Repair the (F902) Ignition Unlock–Run–Start circuit for an open or short.
Perform NAG1 TRANSMISSION VERIFICATION TEST - VER 1.

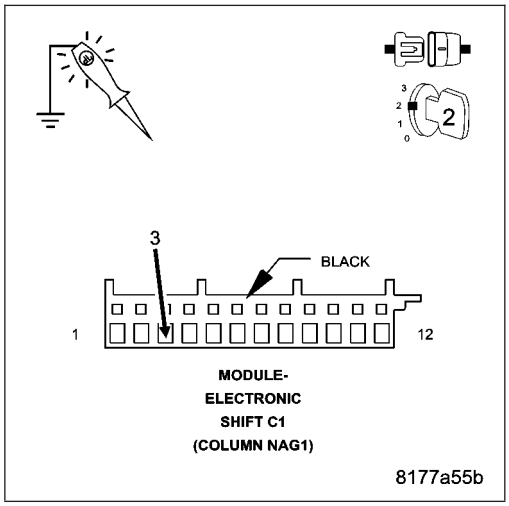

4. (D65) CAN C BUS (+) CIRCUIT OPEN

Turn the ignition off.

Disconnect the FCM C1 harness connector.

Measure the resistance of the (D65) CAN C Bus (+) circuit between the FCM connector and the Electronic Shift Module connector.

Is resistance below 5.0 ohms?

Yes >> Go To 5

No >> Repair the (D65) CAN C Bus (+) circuit for an open.
Perform NAG1 TRANSMISSION VERIFICATION TEST - VER 1.

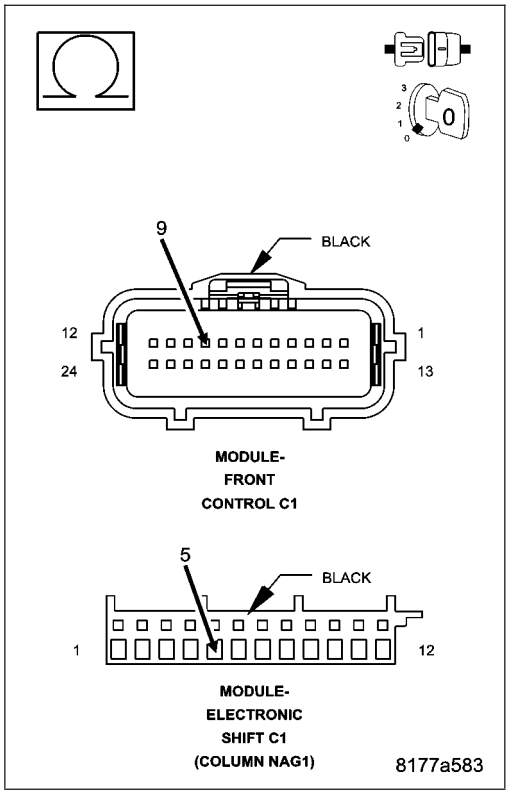

5. (D64) CAN C BUS (-) CIRCUIT OPEN

Measure the resistance of the (D64) CAN C Bus (-) circuit between the FCM connector and the Electronic Shift Module connector.

Is resistance below 5.0 ohms?

Yes >> Replace the Electronic Shift Module in accordance with the service information.

Perform NAG1 TRANSMISSION VERIFICATION TEST - VER 1.

No >> Repair the (D64) CAN C Bus (-) circuit for an open.

Perform NAG1 TRANSMISSION VERIFICATION TEST - VER 1.

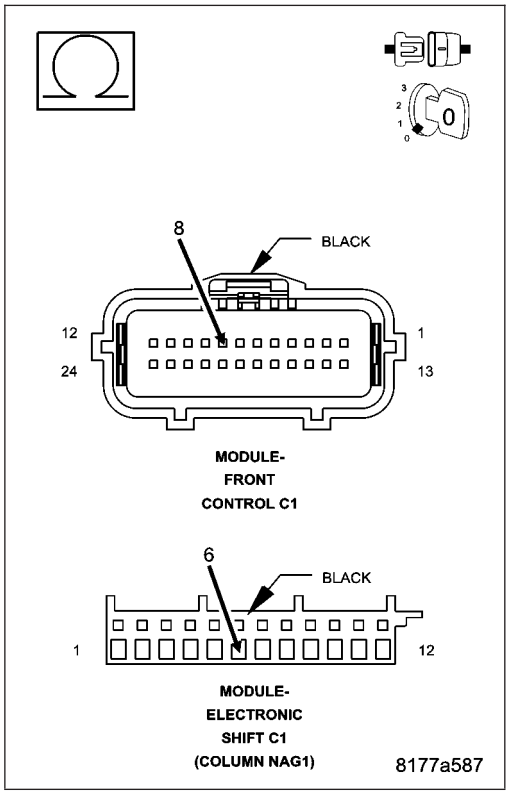

*NO RESPONSE FROM FCM (FRONT CONTROL MODULE)

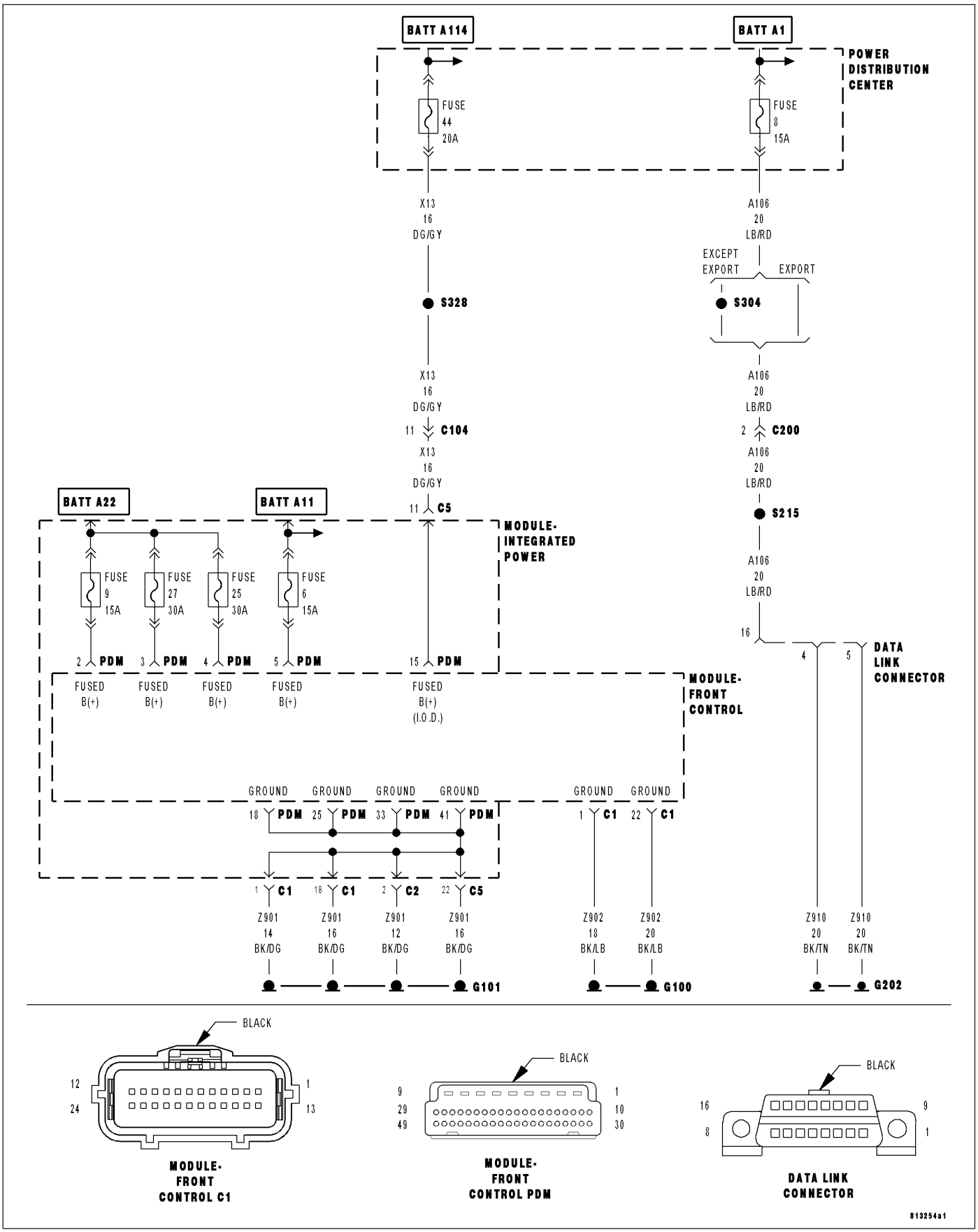

For a complete wiring diagram **Refer to Section 8W**.

Possible Causes
(A106) FUSED B (+) CIRCUIT OPEN AT DLC
(Z910) GROUND CIRCUIT OPEN AT DLC
GROUND CIRCUITS OPEN AT FCM
FUSED B+ CIRCUITS OPEN AT FCM
FRONT CONTROL MODULE

Diagnostic Test

1. TEST FOR INTERMITTENT CONDITION

Turn the ignition on.

NOTE: Ensure the IOD fuse is installed and battery voltage is between 10.0 and 16.0 volts.

NOTE: Ensure the scan tool is updated to the latest software.

NOTE: If the scan tool displays any error messages involving the CAN C Diagnostic circuits, diagnose and repair the error message before proceeding. Refer to the Table of Contents.

NOTE: A loss of communication with the FCM can cause the ECU View button on the scan tool to be inoperative (not highlighted).

With the scan tool, attempt to select ECU View.

Can the scan tool communicate with the FCM?

Yes >> The no response condition is not present at this time. Using the wiring diagram/schematic as a guide, inspect the wiring for chafed, pierced, pinched, and partially broken wires and the wiring harness connectors for broken, bent, pushed out, and corroded terminals.

No >> Go To 2

2. (A106) FUSED B(+) CIRCUIT OPEN AT DLC

Disconnect the scan tool from the DLC.

Using a 12-volt test light connected to ground, check the (A106) Fused B(+) circuit.

Does the test light illuminate brightly?

Yes >> Go To 3

No >> Repair the (A106) Fused B(+) circuit for an open or short. Perform BODY VERIFICATION TEST – VER 1. (Refer to BODY VERIFICATION TEST – VER 1).

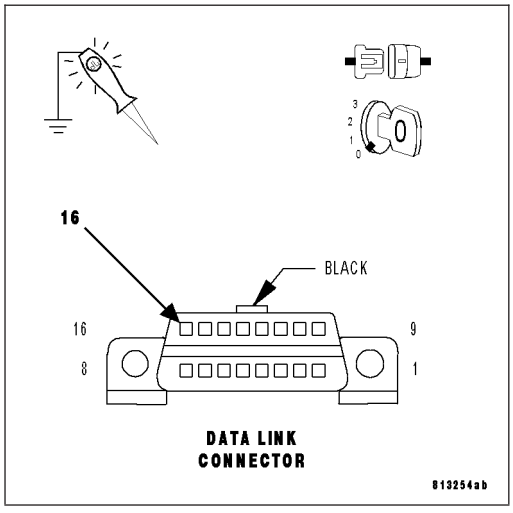

3. (Z910) GROUND CIRCUIT OPEN AT DLC

Using a 12-volt test light connected to 12-volts, check each (Z910) ground circuit.

Does the test light illuminate brightly for each circuit?

Yes >> Go To 4

No >> Repair the (Z910) ground circuit for an open.
Perform BODY VERIFICATION TEST – VER 1. (Refer to BODY VERIFICATION TEST – VER 1).

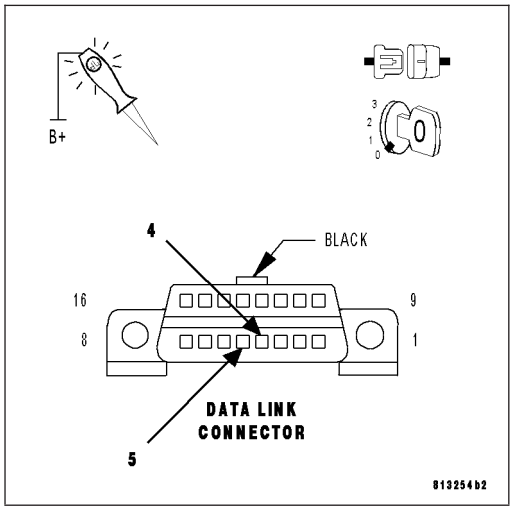

4. GROUND CIRCUITS OPEN AT FCM C1 CONNECTOR

Disconnect the FCM C1 harness connector.

Using a 12-volt test light connected to 12-volts, check each ground circuit.

Does the test light illuminate brightly for each circuit?

Yes >> Go To 5

No >> Repair the ground circuit for an open. Inspect the connector for damage.
Perform BODY VERIFICATION TEST – VER 1. (Refer to BODY VERIFICATION TEST – VER 1).

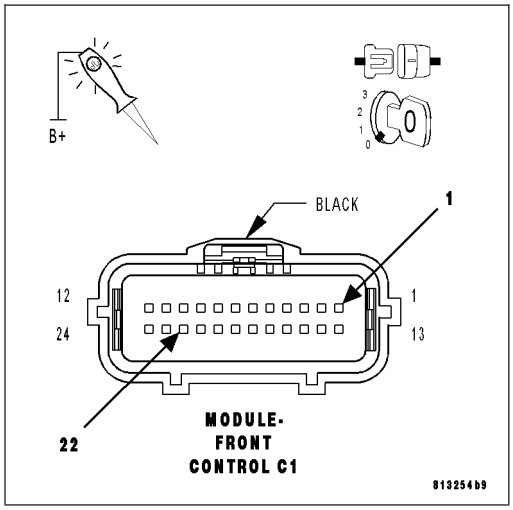

5. GROUND CIRCUITS OPEN AT FCM PDM CONNECTOR

Remove the FCM from the PDM.

Using a 12-volt test light connected to 12-volts, check each ground circuit.

Does the test light illuminate brightly for each circuit?

Yes >> Go To 6

No >> Repair the ground circuit for an open. Inspect the connector for damage.
Perform BODY VERIFICATION TEST – VER 1. (Refer to BODY VERIFICATION TEST – VER 1).

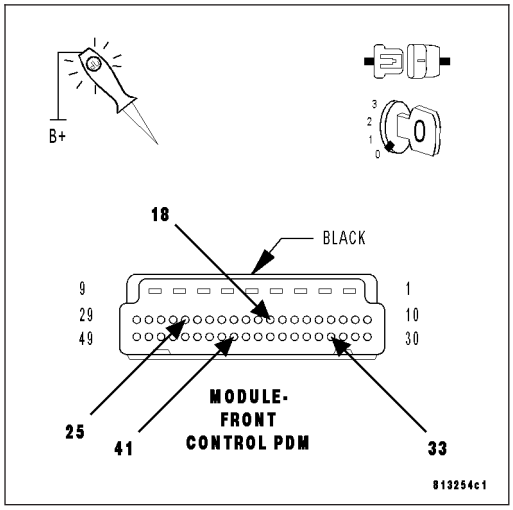

6. FUSED B(+) CIRCUITS OPEN AT FCM PDM CONNECTOR

Using a 12-volt test light connected to ground, check each Fused B(+) circuit.

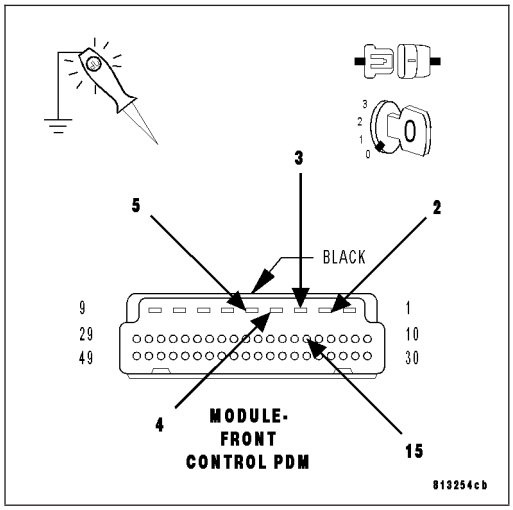

Does the test light illuminate brightly for each circuit?

Yes >> Replace and program the Front Control Module in accordance with the service information.

Perform BODY VERIFICATION TEST – VER 1. (Refer to BODY VERIFICATION TEST – VER 1).

No >> Repair the Fused B(+) circuit for an open. Inspect the connector for damage.

Perform BODY VERIFICATION TEST – VER 1. (Refer to BODY VERIFICATION TEST – VER 1).

*NO RESPONSE FROM HFM (HANDS FREE MODULE)

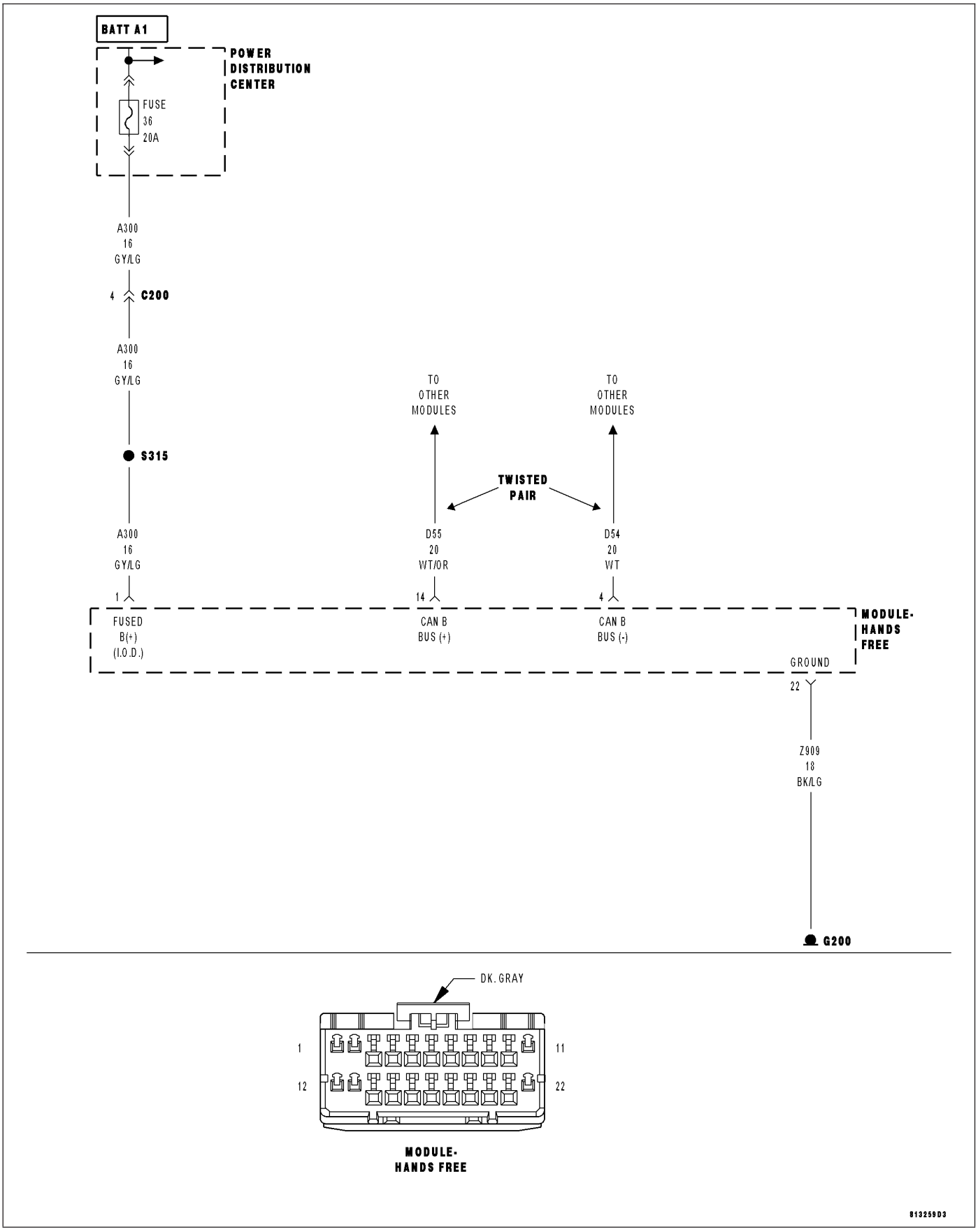

For a complete wiring diagram **Refer to Section 8W**.

Possible Causes
(A300) FUSED B(+) CIRCUIT OPEN OR SHORTED
(Z909) GROUND CIRCUIT OPEN
(D55) AND (D54) CAN B BUS CIRCUITS OPEN
HANDS FREE MODULE

Diagnostic Test

1. TEST FOR INTERMITTENT CONDITION

Turn the ignition on.

NOTE: Ensure the IOD fuse is installed and battery voltage is between 10.0 and 16.0 volts.
With the scan tool, select ECU View.

NOTE: A red X will be next to the module that is not communicating, indicating that the module is not active on the Bus network. A green check indicates that the module is active on the Bus network.

Does the scan tool display a red X next to the module?

Yes >> Go To 2

No >> The no response condition is not present at this time. Using the wiring diagram/schematic as a guide, inspect the wiring for chafed, pierced, pinched, and partially broken wires and the wiring harness connectors for broken, bent, pushed out, and corroded terminals.

2. (A300) FUSED B(+) CIRCUIT OPEN OR SHORTED

Turn the ignition off.

Disconnect the Hands Free Module harness connector.

Using a 12-volt test light connected to ground, check the (A300) Fused B(+) circuit.

Does the test light illuminate brightly?

Yes >> Go To 3

No >> Repair the (A300) Fused B(+) circuit for an open or short. Perform BODY VERIFICATION TEST – VER 1. (Refer to BODY VERIFICATION TEST – VER 1).

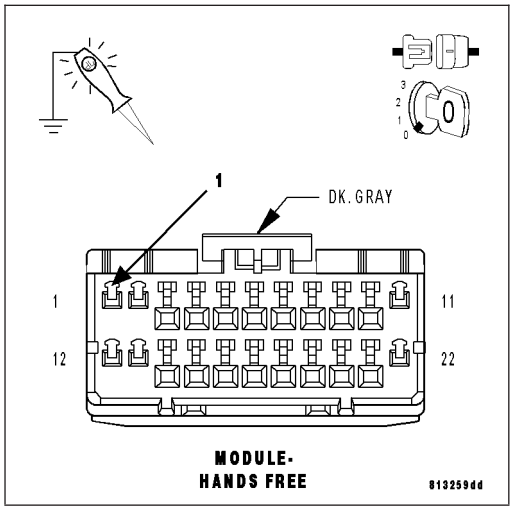

3. (Z909) GROUND CIRCUIT OPEN

Using a 12-volt test light connected to 12-volts, check the (Z909) ground circuit.

Does the test light illuminate brightly?

Yes >> Go To 4

No >> Repair the (Z909) ground circuit for an open.
Perform BODY VERIFICATION TEST – VER 1. (Refer to BODY VERIFICATION TEST – VER 1).

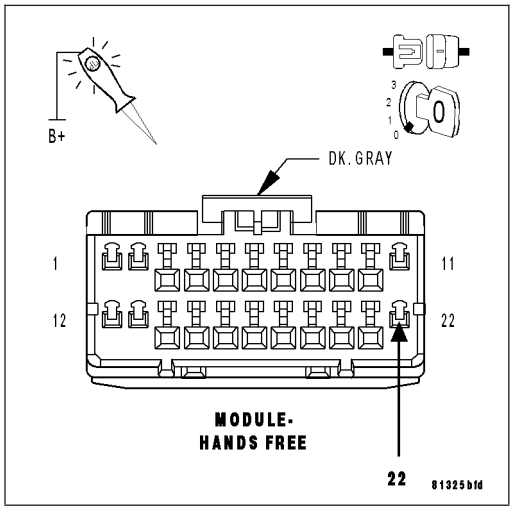

4. (D55) AND (D54) CAN B BUS CIRCUITS OPEN

NOTE: One open circuit will not cause this condition.
Measure the voltage between the (D54) CAN B Bus (-) circuit and ground.
Measure the voltage between the (D55) CAN B Bus (+) circuit and ground.

Is there any voltage present on either circuit?

Yes >> Replace the Hands Free Module in accordance with the service information.
Perform BODY VERIFICATION TEST – VER 1. (Refer to BODY VERIFICATION TEST – VER 1).

No >> Repair the (D55) and (D54) CAN B Bus circuits for an open. Inspect the connector for damage.
Perform BODY VERIFICATION TEST – VER 1. (Refer to BODY VERIFICATION TEST – VER 1).

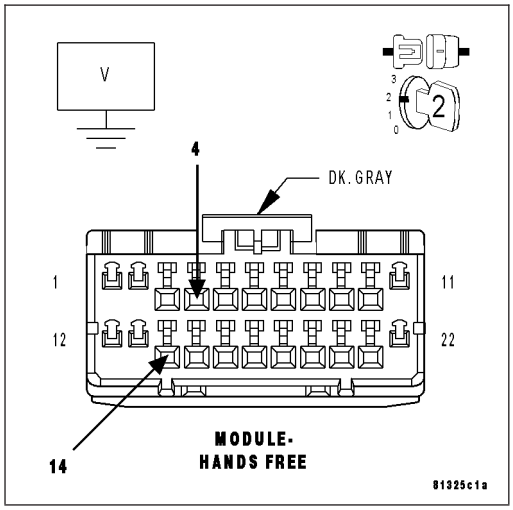

*NO RESPONSE FROM HIDT (HEADLAMP LEVELING MODULE)

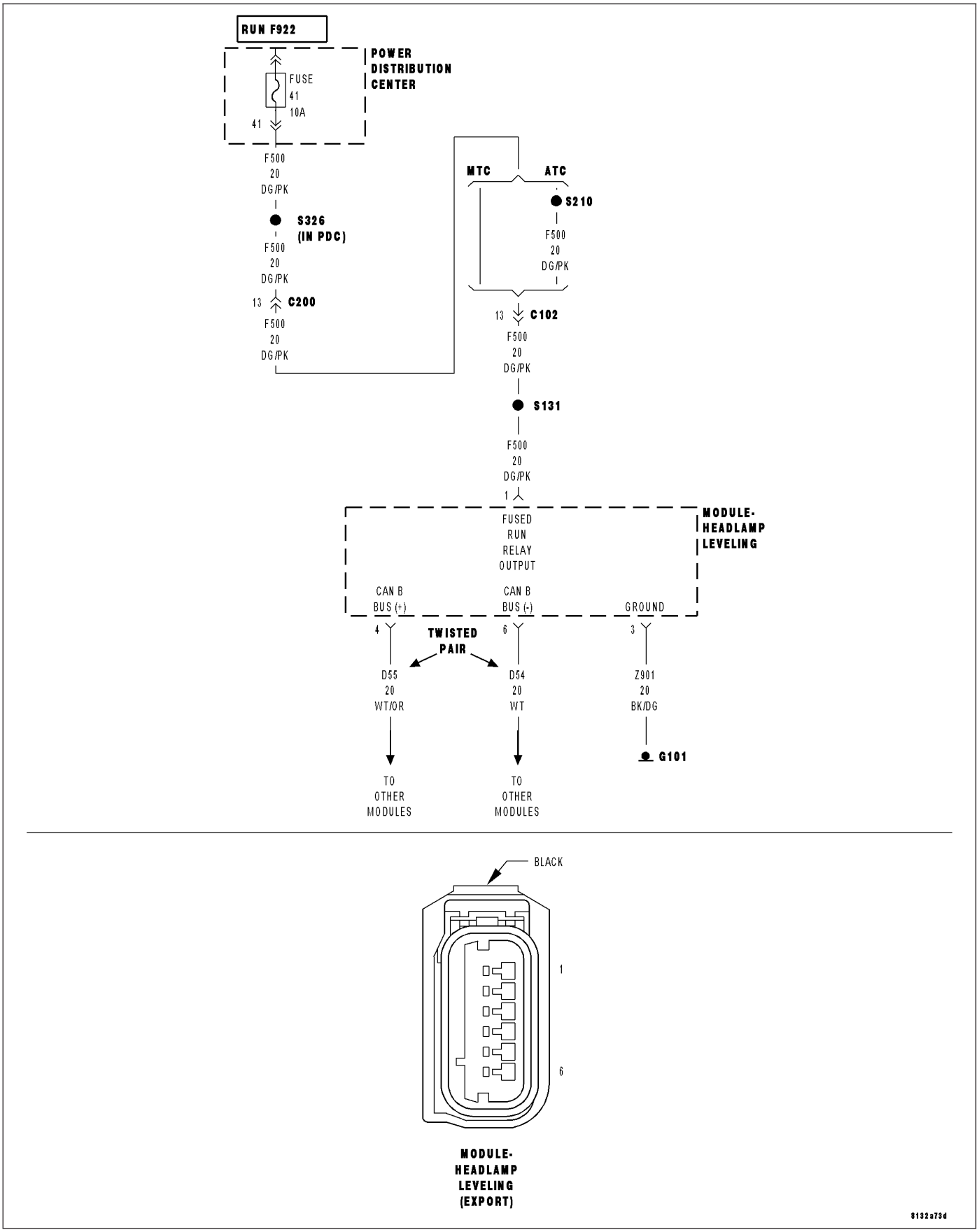

For a complete wiring diagram **Refer to Section 8W**.

Possible Causes
(F500) FUSED RUN RELAY OUTPUT CIRCUIT OPEN OR SHORTED
(Z901) GROUND CIRCUIT OPEN
(D55) AND (D54) CAN B BUS CIRCUITS OPEN
HEADLAMP LEVELING MODULE

Diagnostic Test

1. TEST FOR INTERMITTENT CONDITION

Turn the ignition on.

NOTE: Ensure the IOD fuse is installed and battery voltage is between 10.0 and 16.0 volts.
With the scan tool, select ECU View.

NOTE: A red X will be next to the module that is not communicating, indicating that the module is not active on the Bus network. A green check indicates that the module is active on the Bus network.

Does the scan tool display a red X next to the module?

Yes >> Go To 2

No >> The no response condition is not present at this time. Using the wiring diagram/schematic as a guide, inspect the wiring for chafed, pierced, pinched, and partially broken wires and the wiring harness connectors for broken, bent, pushed out, and corroded terminals.

2. (F500) FUSED RUN RELAY OUTPUT CIRCUIT OPEN OR SHORTED

NOTE: Check the FCM for any ignition related DTCs before proceeding. If set (Refer to 8 - ELECTRICAL/IGNITION CONTROL - DIAGNOSIS AND TESTING).
Turn the ignition off.
Disconnect the Headlamp Leveling Module harness connector.
Turn the ignition on.
Using a 12-volt test light connected to ground, check the (F500) Fused Run Relay Output circuit.

Does the test light illuminate brightly?

Yes >> Go To 3

No >> Repair the (F500) Fused Run Relay Output circuit for an open or short.
Perform BODY VERIFICATION TEST – VER 1. (Refer to BODY VERIFICATION TEST – VER 1).

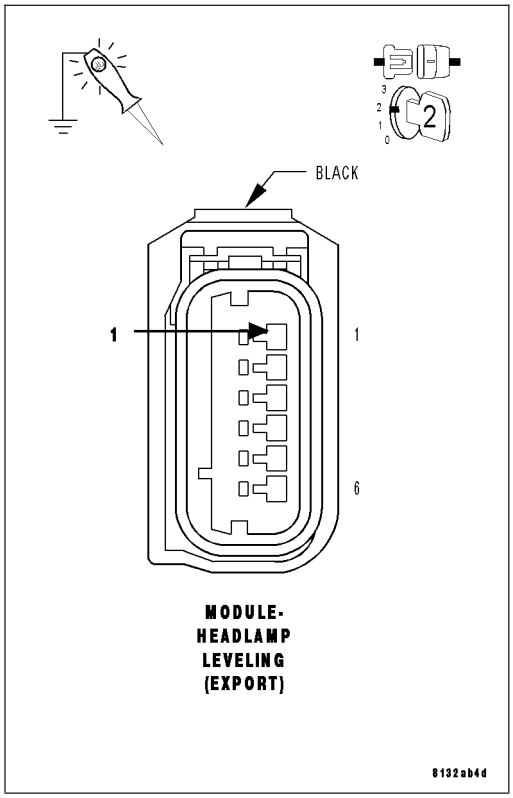

3. (Z901) GROUND CIRCUIT OPEN

Turn the ignition off.

Using a 12-volt test light connected to 12-volts, check the (Z901) ground circuit.

Does the test light illuminate brightly?

Yes >> Go To 4

No >> Repair the (Z901) ground circuit for an open.
Perform BODY VERIFICATION TEST – VER 1. (Refer to BODY VERIFICATION TEST – VER 1).

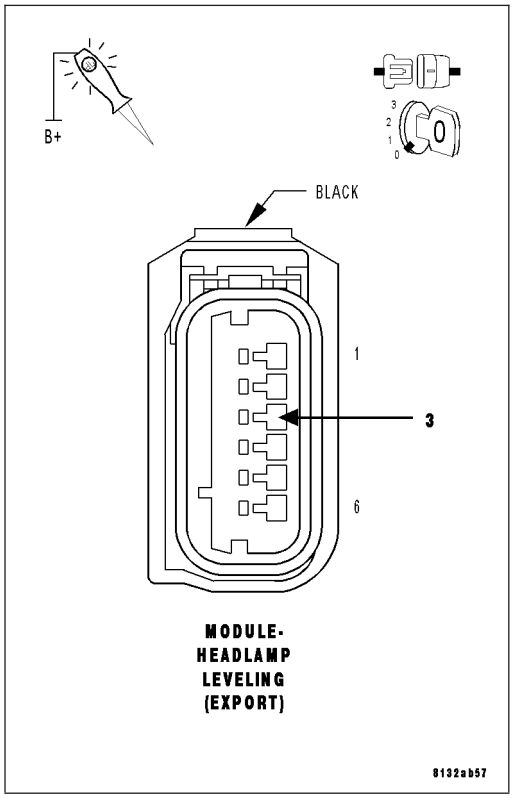

4. (D55) AND (D54) CAN B BUS CIRCUITS OPEN

NOTE: One open circuit will not cause this condition.

Measure the voltage between the (D54) CAN B Bus (-) circuit and ground.

Measure the voltage between the (D55) CAN B Bus (+) circuit and ground.

Is there any voltage present on either circuit?

Yes >> Replace the Headlamp Leveling Module in accordance with the service information.
Perform BODY VERIFICATION TEST – VER 1. (Refer to BODY VERIFICATION TEST – VER 1).

No >> Repair the (D55) and (D54) CAN B Bus circuits for an open. Inspect the connector for damage.
Perform BODY VERIFICATION TEST – VER 1. (Refer to BODY VERIFICATION TEST – VER 1).

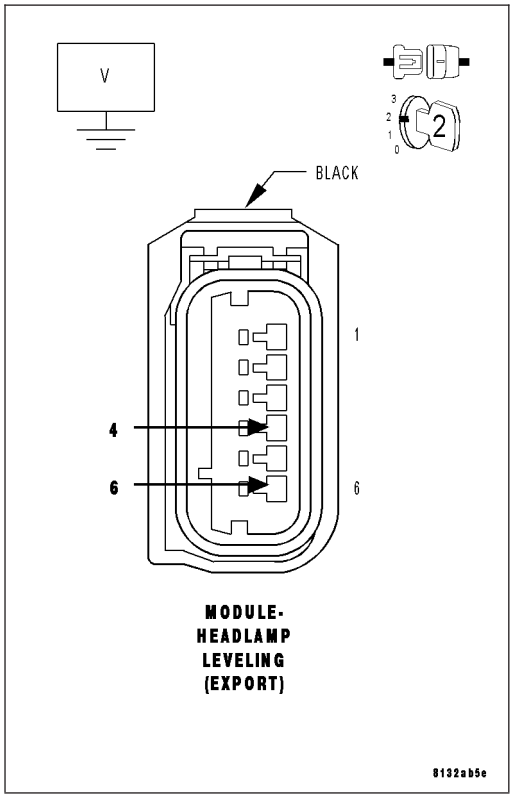

*NO RESPONSE FROM HSM (HEATED SEAT MODULE)

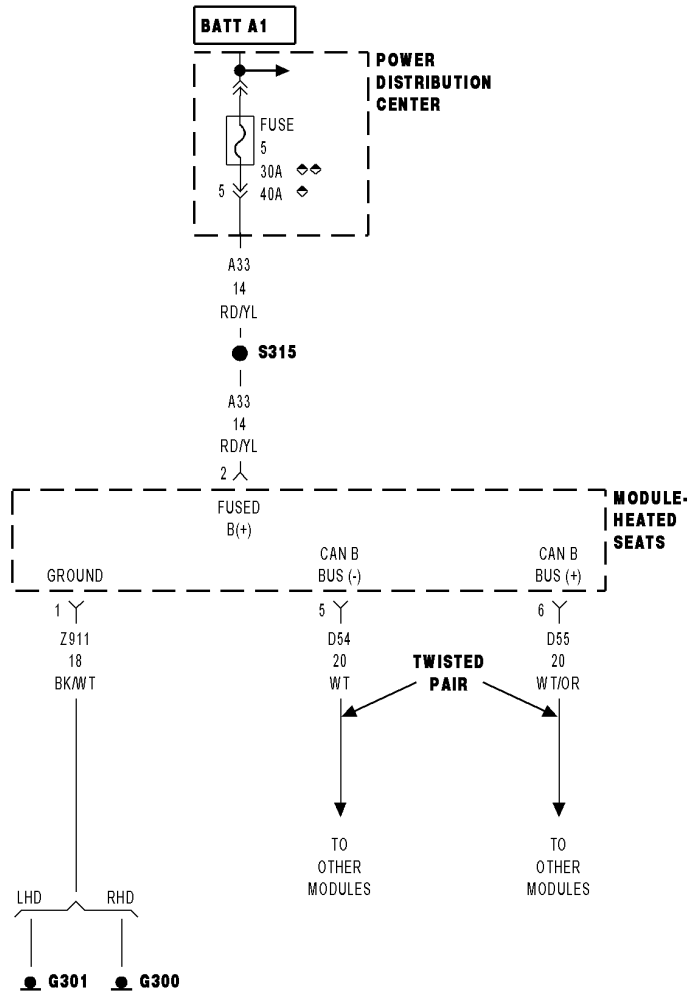

◆ SRT8
◆◆ EXCEPT SRT8

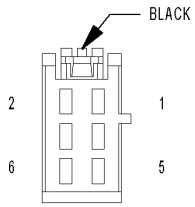

MODULE-HEATED SEATS

8178f82f

For a complete wiring diagram **Refer to Section 8W**.

Possible Causes
(A33) FUSED B (+) CIRCUIT OPEN OR SHORTED
(Z911) GROUND CIRCUIT OPEN
(D55) AND (D54) CAN B BUS CIRCUITS OPEN
HEATED SEAT MODULE

Diagnostic Test

1. TEST FOR INTERMITTENT CONDITION

Turn the ignition on.

NOTE: Ensure the IOD fuse is installed and battery voltage is between 10.0 and 16.0 volts.
With the scan tool, select ECU View.

NOTE: A red X will be next to the module that is not communicating, indicating that the module is not active on the Bus network. A green check indicates that the module is active on the Bus network.

Does the scan tool display a red X next to the module?

Yes >> Go To 2

No >> The no response condition is not present at this time. Using the wiring diagram/schematic as a guide, inspect the wiring for chafed, pierced, pinched, and partially broken wires and the wiring harness connectors for broken, bent, pushed out, and corroded terminals.

2. (A33) FUSED B(+) CIRCUIT OPEN OR SHORTED

Turn the ignition off.

Disconnect the Heated Seat Module harness connector.

Using a 12-volt test light connected to ground, check the (A33) Fused B(+) circuit.

Does the test light illuminate brightly?

Yes >> Go To 3

No >> Repair the (A33) Fused B(+) circuit for an open or short.
Perform BODY VERIFICATION TEST – VER 1. (Refer to BODY VERIFICATION TEST – VER 1).

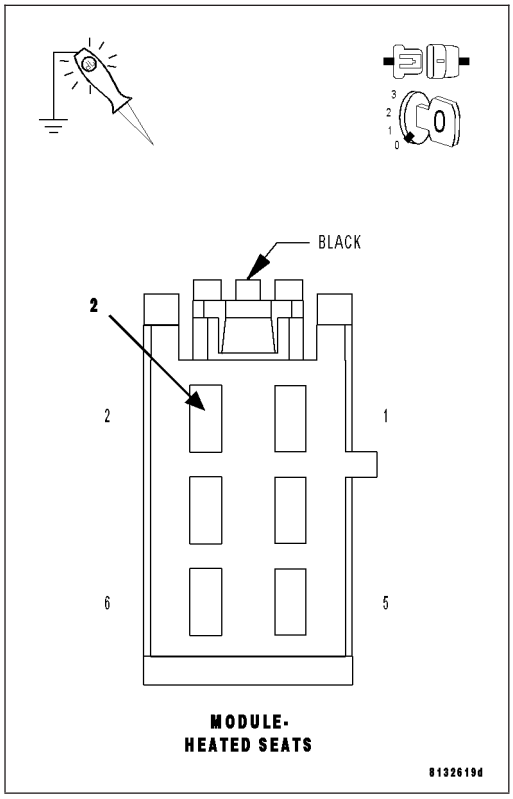

3. (Z911) GROUND CIRCUIT OPEN

Using a 12-volt test light connected to 12-volts, check the (Z911) ground circuit.

Does the test light illuminate brightly?

Yes >> Go To 4

No >> Repair the (Z911) ground circuit for an open.
Perform BODY VERIFICATION TEST – VER 1. (Refer to BODY VERIFICATION TEST – VER 1).

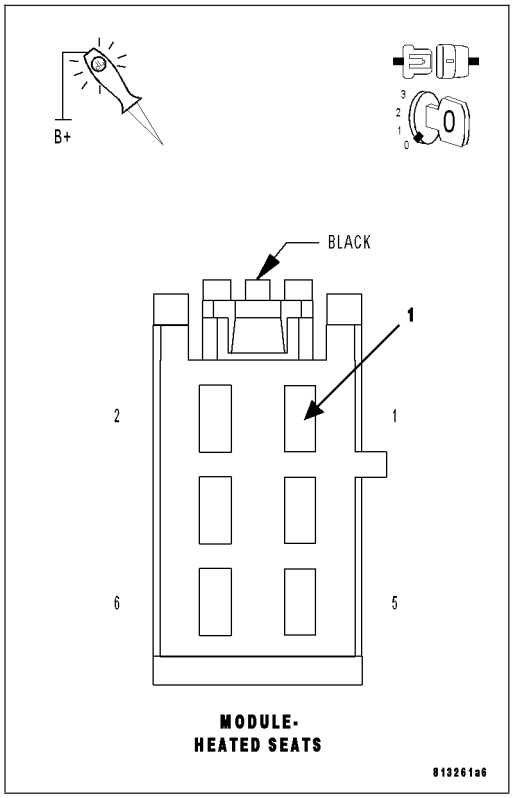

4. (D55) AND (D54) CAN B BUS CIRCUITS OPEN

NOTE: One open circuit will not cause this condition.
Measure the voltage between the (D54) CAN B Bus (-) circuit and ground.
Measure the voltage between the (D55) CAN B Bus (+) circuit and ground.

Is there any voltage present on either circuit?

Yes >> Replace the Heated Seat Module in accordance with the service information.
Perform BODY VERIFICATION TEST – VER 1. (Refer to BODY VERIFICATION TEST – VER 1).

No >> Repair the (D55) and (D54) CAN B Bus circuits for an open. Inspect the connector for damage.
Perform BODY VERIFICATION TEST – VER 1. (Refer to BODY VERIFICATION TEST – VER 1).

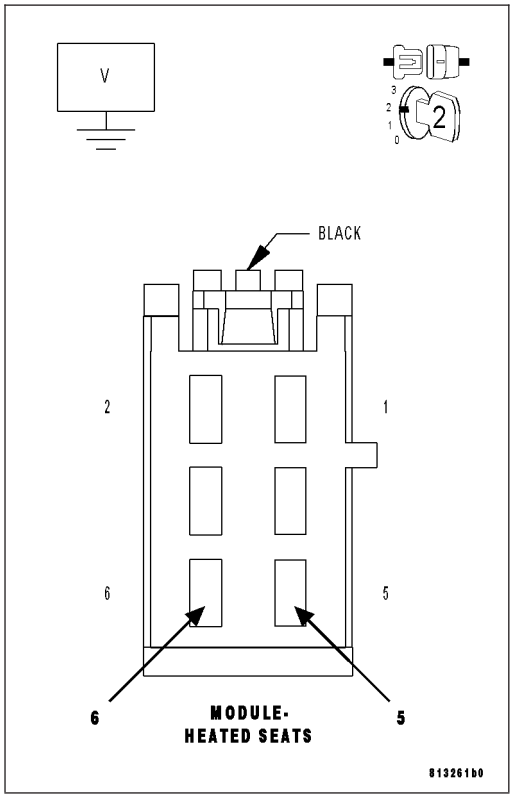

*NO RESPONSE FROM HVAC (HEAT VENTILATION AND A/C) (ATC)

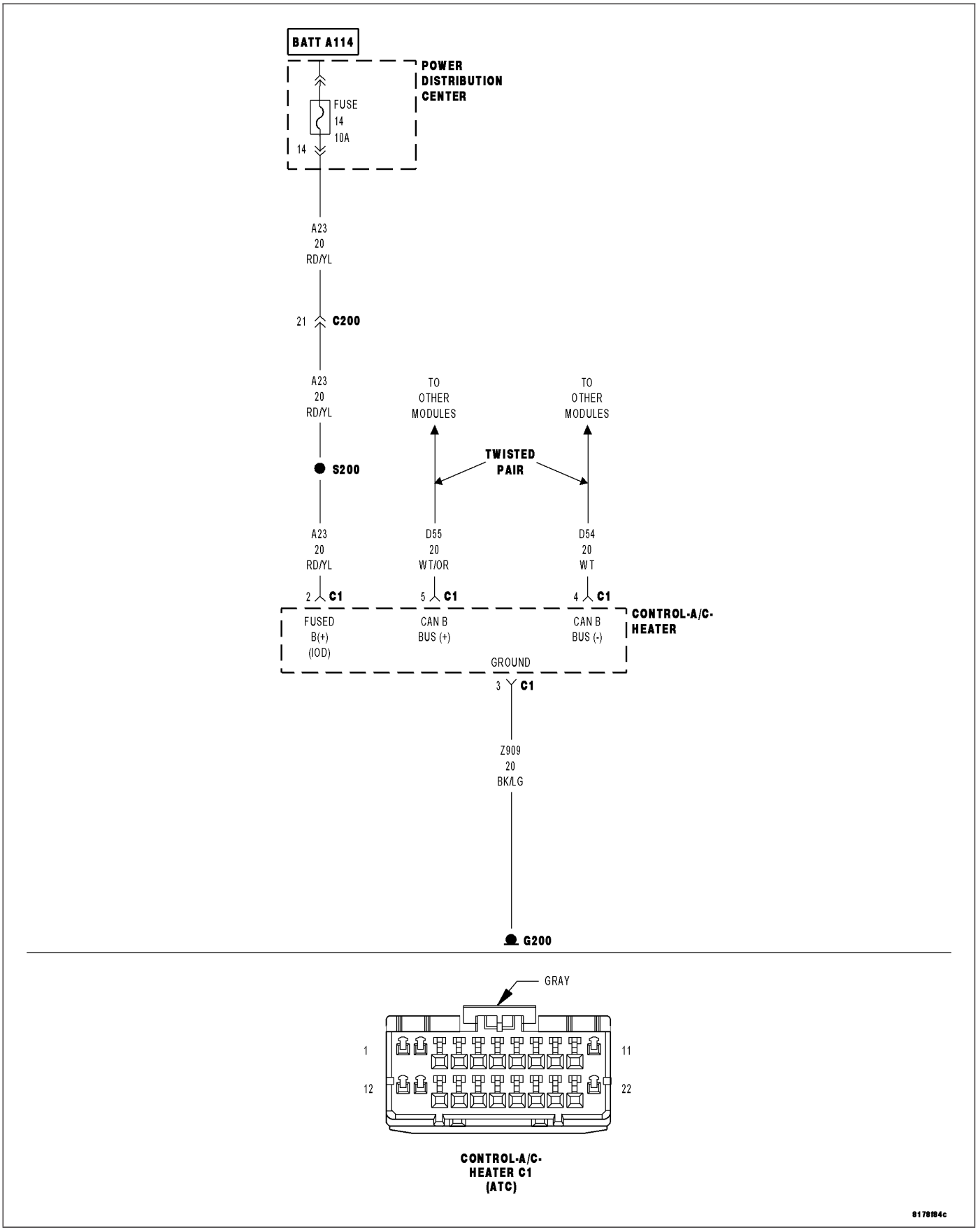

For a complete wiring diagram **Refer to Section 8W**.

Possible Causes
(A23) FUSED B (+) CIRCUIT OPEN OR SHORTED
(Z909) GROUND CIRCUIT OPEN
(D55) AND (D54) CAN B BUS CIRCUITS OPEN
HEAT VENTILATION AND A/C CONTROL (A/C HEATER CONTROL)

Diagnostic Test

1. TEST FOR INTERMITTENT CONDITION

Turn the ignition on.

NOTE: Ensure the IOD fuse is installed and battery voltage is between 10.0 and 16.0 volts.
With the scan tool, select ECU View.

NOTE: A red X will be next to the module that is not communicating, indicating that the module is not active on the Bus network. A green check indicates that the module is active on the Bus network.

Does the scan tool display a red X next to the module?

Yes >> Go To 2

No >> The no response condition is not present at this time. Using the wiring diagram/schematic as a guide, inspect the wiring for chafed, pierced, pinched, and partially broken wires and the wiring harness connectors for broken, bent, pushed out, and corroded terminals.

2. (A23) FUSED B(+) CIRCUIT OPEN OR SHORTED

Turn the ignition off.

Disconnect the A/C Heater Control C1 harness connector.

Using a 12-volt test light connected to ground, check the (A23) Fused B(+) circuit.

Does the test light illuminate brightly?

Yes >> Go To 3

No >> Repair the (A23) Fused B(+) circuit for an open or short. Perform BODY VERIFICATION TEST – VER 1. (Refer to BODY VERIFICATION TEST – VER 1).

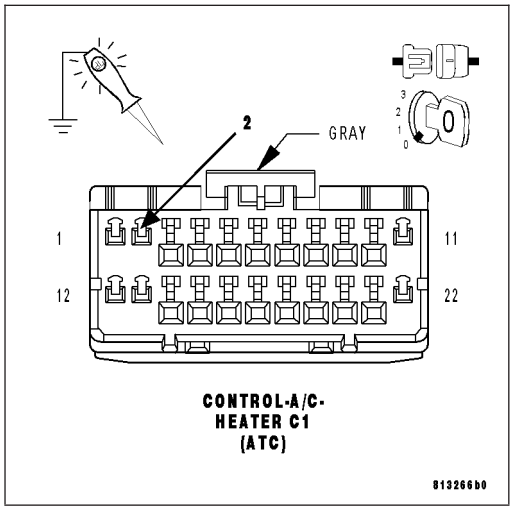

3. (Z909) GROUND CIRCUIT OPEN

Using a 12-volt test light connected to 12-volts, check the (Z909) ground circuit.

Does the test light illuminate brightly?

Yes >> Go To 4

No >> Repair the (Z909) ground circuit for an open.
Perform BODY VERIFICATION TEST – VER 1. (Refer to BODY VERIFICATION TEST – VER 1).

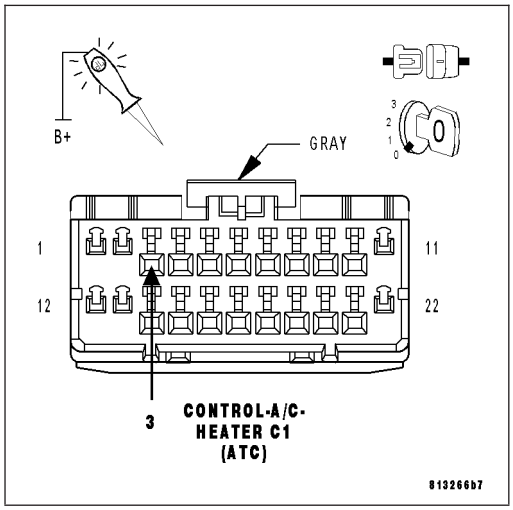

4. (D55) AND (D54) CAN B BUS CIRCUITS OPEN

NOTE: One open circuit will not cause this condition.
Measure the voltage between the (D54) CAN B Bus (-) circuit and ground.
Measure the voltage between the (D55) CAN B Bus (+) circuit and ground.

Is there any voltage present on either circuit?

Yes >> Replace the A/C Heater Control in accordance with the service information.
Perform BODY VERIFICATION TEST – VER 1. (Refer to BODY VERIFICATION TEST – VER 1).

No >> Repair the (D55) and (D54) CAN B Bus circuits for an open. Inspect the connector for damage.
Perform BODY VERIFICATION TEST – VER 1. (Refer to BODY VERIFICATION TEST – VER 1).

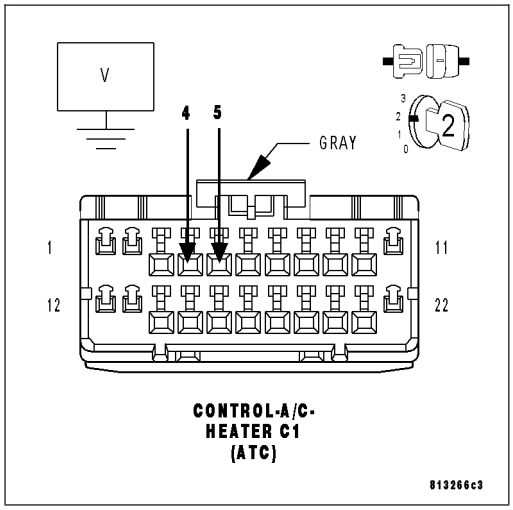

*NO RESPONSE FROM ITM (INTRUSION TRANSCEIVER MODULE)

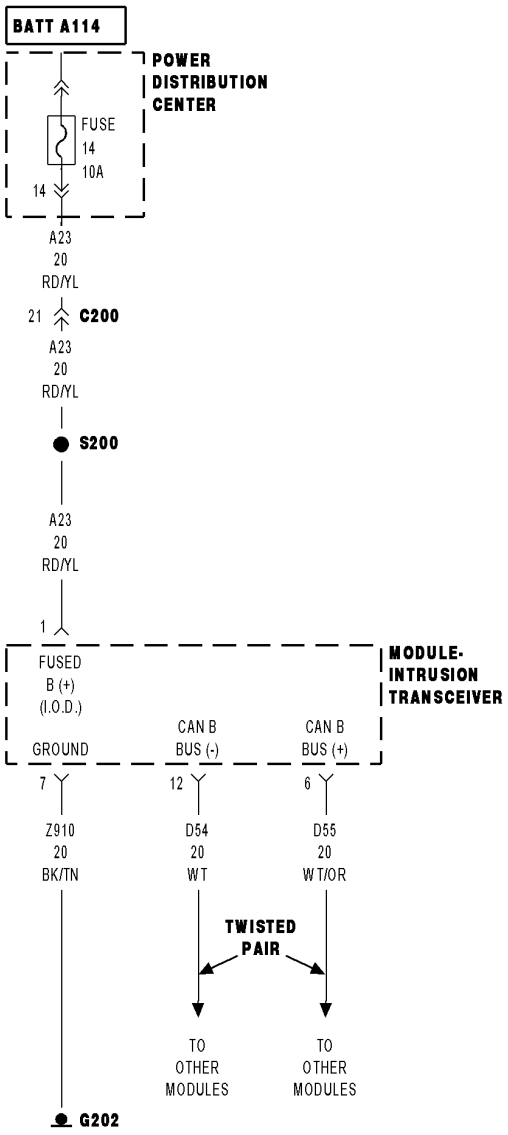

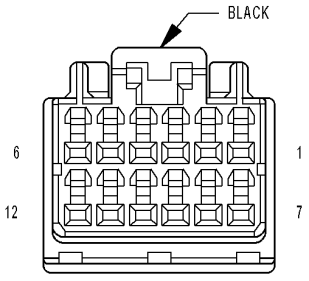

MODULE- INTRUSION TRANSCEIVER (RHD)

81790a6e

For a complete wiring diagram **Refer to Section 8W**.

Possible Causes
(A23) FUSED B (+) CIRCUIT OPEN OR SHORTED
(Z910) GROUND CIRCUIT OPEN
(D55) AND (D54) CAN B BUS CIRCUITS OPEN
INTRUSION TRANSCEIVER MODULE

Diagnostic Test

1. TEST FOR INTERMITTENT CONDITION

Turn the ignition on.

NOTE: Ensure the IOD fuse is installed and battery voltage is between 10.0 and 16.0 volts.
With the scan tool, select ECU View.

NOTE: A red X will be next to the module that is not communicating, indicating that the module is not active on the Bus network. A green check indicates that the module is active on the Bus network.

Does the scan tool display a red X next to the module?

Yes >> Go To 2

No >> The no response condition is not present at this time. Using the wiring diagram/schematic as a guide, inspect the wiring for chafed, pierced, pinched, and partially broken wires and the wiring harness connectors for broken, bent, pushed out, and corroded terminals.

2. (A23) FUSED B(+) CIRCUIT OPEN OR SHORTED

Turn the ignition off.

Disconnect the Intrusion Transceiver Module harness connector.

Using a 12-volt test light connected to ground, check the (A23) Fused B(+) circuit.

Does the test light illuminate brightly?

Yes >> Go To 3

No >> Repair the (A23) Fused B(+) circuit for an open or short. Perform BODY VERIFICATION TEST – VER 1. (Refer to BODY VERIFICATION TEST – VER 1).

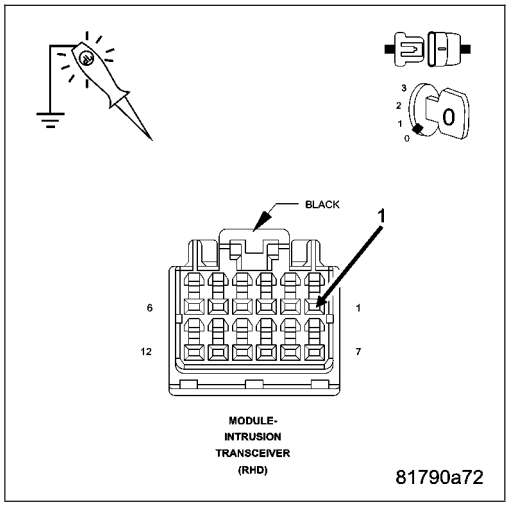

3. (Z910) GROUND CIRCUIT OPEN

Using a 12-volt test light connected to 12-volts, check the (Z910) ground circuit.

Does the test light illuminate brightly?

Yes >> Go To 4

No >> Repair the (Z910) ground circuit for an open.
Perform BODY VERIFICATION TEST – VER 1. (Refer to BODY VERIFICATION TEST – VER 1).

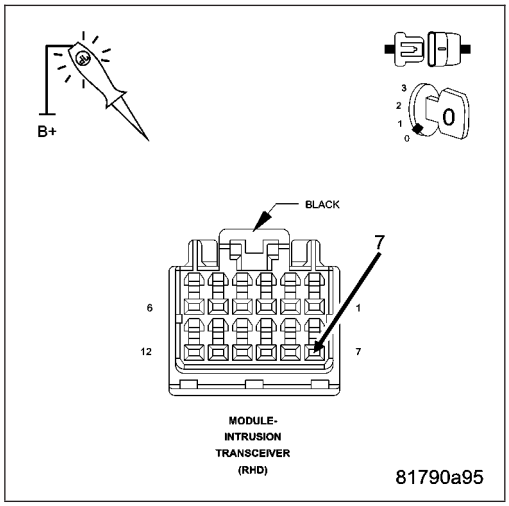

4. (D55) AND (D54) CAN B BUS CIRCUITS OPEN

NOTE: One open circuit will not cause this condition.
Measure the voltage between the (D54) CAN B Bus (-) circuit and ground.
Measure the voltage between the (D55) CAN B Bus (+) circuit and ground.

Is there any voltage present on either circuit?

Yes >> Replace the Intrusion Transceiver Module in accordance with the service information.
Perform BODY VERIFICATION TEST – VER 1. (Refer to BODY VERIFICATION TEST – VER 1).

No >> Repair the (D55) and (D54) CAN B Bus circuits for an open. Inspect the connector for damage.
Perform BODY VERIFICATION TEST – VER 1. (Refer to BODY VERIFICATION TEST – VER 1).

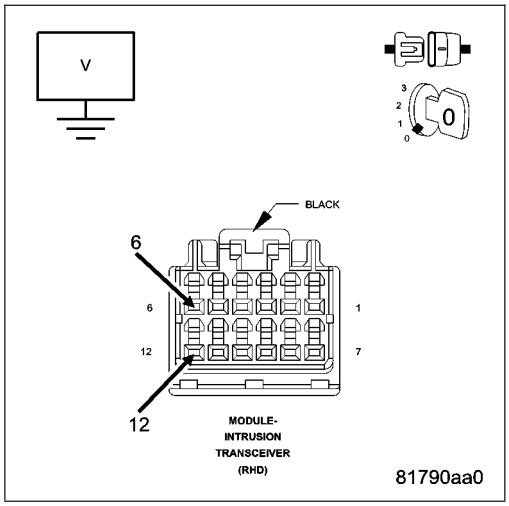

*NO RESPONSE FROM LRSM (LIGHT/RAIN SENSOR MODULE)

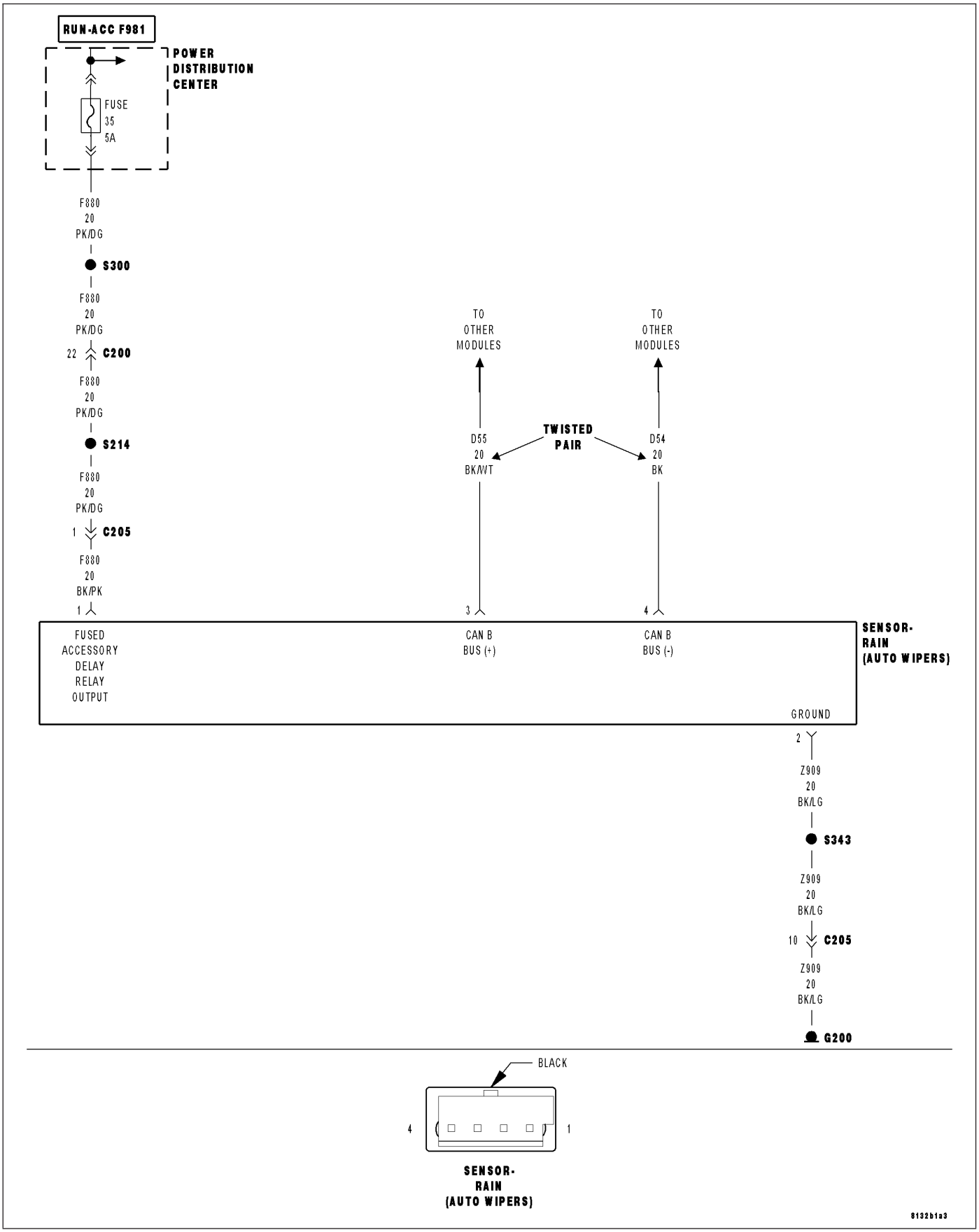

For a complete wiring diagram **Refer to Section 8W**.

Possible Causes
(F880) FUSED ACCESSORY DELAY RELAY OUTPUT CIRCUIT OPEN OR SHORTED
(Z909) GROUND CIRCUIT OPEN
(D55) AND (D54) CAN B BUS CIRCUITS OPEN
LIGHT/RAIN SENSOR MODULE

Diagnostic Test

1. TEST FOR INTERMITTENT CONDITION

Turn the ignition on.

NOTE: Ensure the IOD fuse is installed and battery voltage is between 10.0 and 16.0 volts.
With the scan tool, select ECU View.

NOTE: A red X will be next to the module that is not communicating, indicating that the module is not active on the Bus network. A green check indicates that the module is active on the Bus network.

Does the scan tool display a red X next to the module?

Yes >> Go To 2

No >> The no response condition is not present at this time. Using the wiring diagram/schematic as a guide, inspect the wiring for chafed, pierced, pinched, and partially broken wires and the wiring harness connectors for broken, bent, pushed out, and corroded terminals.

2. (F880) FUSED ACCESSORY DELAY RELAY OUTPUT CIRCUIT OPEN OR SHORTED

NOTE: Check the FCM for any ignition related DTCs before proceeding. If set (Refer to 8 - ELECTRICAL/IGNITION CONTROL - DIAGNOSIS AND TESTING).
Turn the ignition off.
Disconnect the Light/Rain Sensor harness connector.
Turn the ignition on.
Using a 12-volt test light connected to ground, check the (F880) Fused Accessory Delay Relay Output circuit.

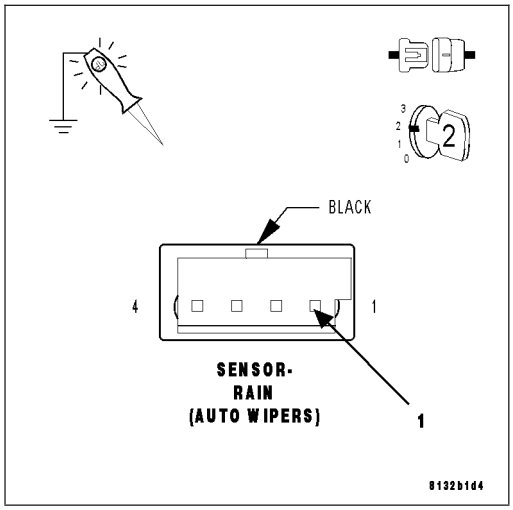

Does the test light illuminate brightly?

Yes >> Go To 3

No >> Repair the (F880) Fused Accessory Delay Relay Output circuit for an open or short.
Perform BODY VERIFICATION TEST – VER 1. (Refer to BODY VERIFICATION TEST – VER 1).

3. (Z909) GROUND CIRCUIT OPEN

Turn the ignition off.

Using a 12-volt test light connected to 12-volts, check the (Z909) ground circuit.

Does the test light illuminate brightly?

Yes >> Go To 4

No >> Repair the (Z909) ground circuit for an open.
Perform BODY VERIFICATION TEST – VER 1. (Refer to BODY VERIFICATION TEST – VER 1).

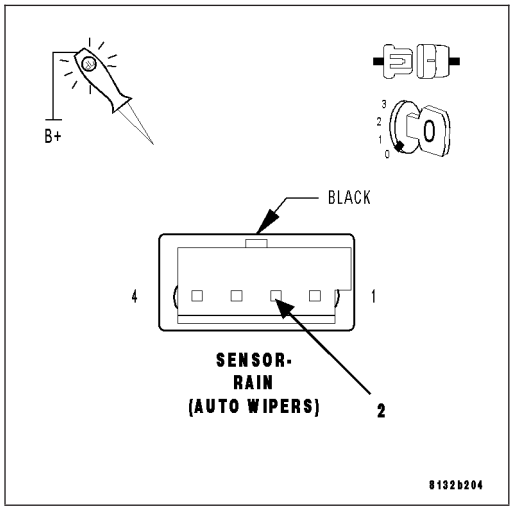

4. (D55) AND (D54) CAN B BUS CIRCUITS OPEN

NOTE: One open circuit will not cause this condition.

Measure the voltage between the (D54) CAN B Bus (-) circuit and ground.

Measure the voltage between the (D55) CAN B Bus (+) circuit and ground.

Is there any voltage present on either circuit?

Yes >> Replace the Light/Rain Sensor in accordance with the service information.
Perform BODY VERIFICATION TEST – VER 1. (Refer to BODY VERIFICATION TEST – VER 1).

No >> Repair the (D55) and (D54) CAN B Bus circuits for an open. Inspect the connector for damage.
Perform BODY VERIFICATION TEST – VER 1. (Refer to BODY VERIFICATION TEST – VER 1).

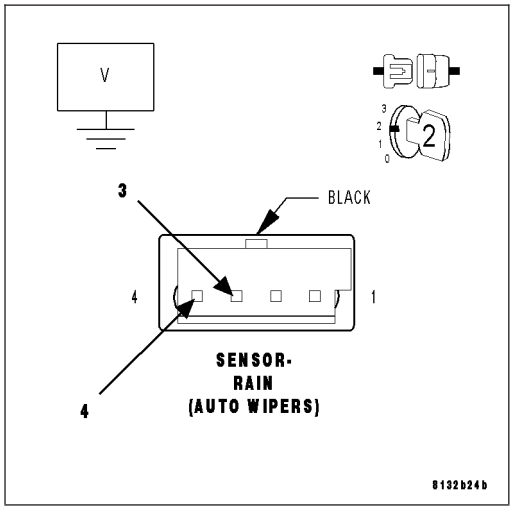

*NO RESPONSE FROM MULTI-PURPOSE MODULE (POLICE AND TAXI INTERFACE MODULE-PTIM)

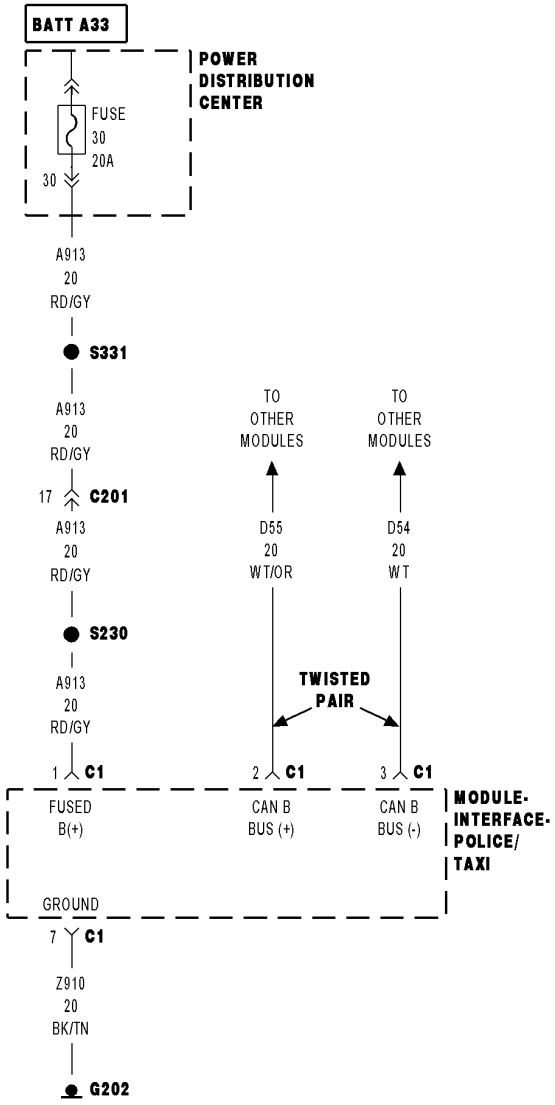

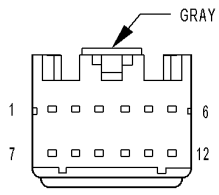

MODULE-INTERFACE-POLICE/TAXI C1

81790aab

For a complete wiring diagram **Refer to Section 8W**.

Possible Causes
(A913) FUSED B (+) CIRCUIT OPEN OR SHORTED
(Z910) GROUND CIRCUIT OPEN
(D55) AND (D54) CAN B BUS CIRCUITS OPEN
MULTI-PURPOSE MODULE (POLICE AND TAXI INTERFACE MODULE-PTIM)

Diagnostic Test

1. TEST FOR INTERMITTENT CONDITION

Turn the ignition on.

NOTE: Ensure the IOD fuse is installed and battery voltage is between 10.0 and 16.0 volts.
With the scan tool, select ECU View.

NOTE: A red X will be next to the module that is not communicating, indicating that the module is not active on the Bus network. A green check indicates that the module is active on the Bus network.

Does the scan tool display a red X next to the module?

Yes >> Go To 2

No >> The no response condition is not present at this time. Using the wiring diagram/schematic as a guide, inspect the wiring for chafed, pierced, pinched, and partially broken wires and the wiring harness connectors for broken, bent, pushed out, and corroded terminals.

2. (A913) FUSED B(+) CIRCUIT OPEN OR SHORTED

Turn the ignition off.

Disconnect the C1 Multi-Purpose Module (Police And Taxi Interface Module-PTIM) harness connector.

Using a 12-volt test light connected to ground, check the (A913) Fused B(+) circuit.

Does the test light illuminate brightly?

Yes >> Go To 3

No >> Repair the (A913) Fused B(+) circuit for an open or short. Perform BODY VERIFICATION TEST – VER 1. (Refer to BODY VERIFICATION TEST – VER 1).

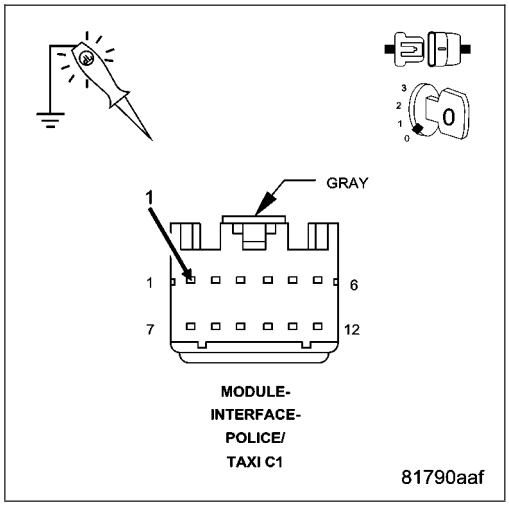

3. (Z910) GROUND CIRCUIT OPEN

Using a 12-volt test light connected to 12-volts, check the (Z910) ground circuit.

Does the test light illuminate brightly?

Yes >> Go To 4

No >> Repair the (Z910) ground circuit for an open.
Perform BODY VERIFICATION TEST – VER 1. (Refer to BODY VERIFICATION TEST – VER 1).

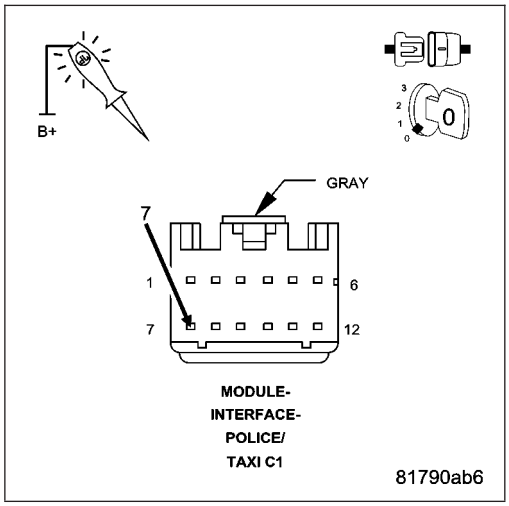

4. (D55) AND (D54) CAN B BUS CIRCUITS OPEN

NOTE: One open circuit will not cause this condition.
Measure the voltage between the (D54) CAN B Bus (-) circuit and ground.
Measure the voltage between the (D55) CAN B Bus (+) circuit and ground.

Is there any voltage present on either circuit?

Yes >> Replace the Multi-Purpose Module (Police And Taxi Interface Module-PTIM) in accordance with the service information.
Perform BODY VERIFICATION TEST – VER 1. (Refer to BODY VERIFICATION TEST – VER 1).

No >> Repair the (D55) and (D54) CAN B Bus circuits for an open. Inspect the connector for damage.
Perform BODY VERIFICATION TEST – VER 1. (Refer to BODY VERIFICATION TEST – VER 1).

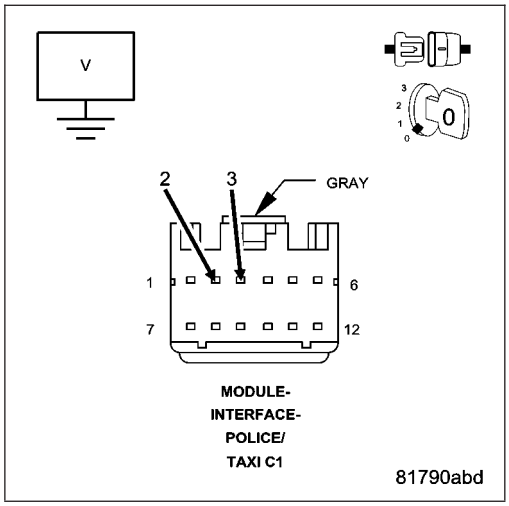

*NO RESPONSE FROM MSMD (MEMORY SEAT MODULE)

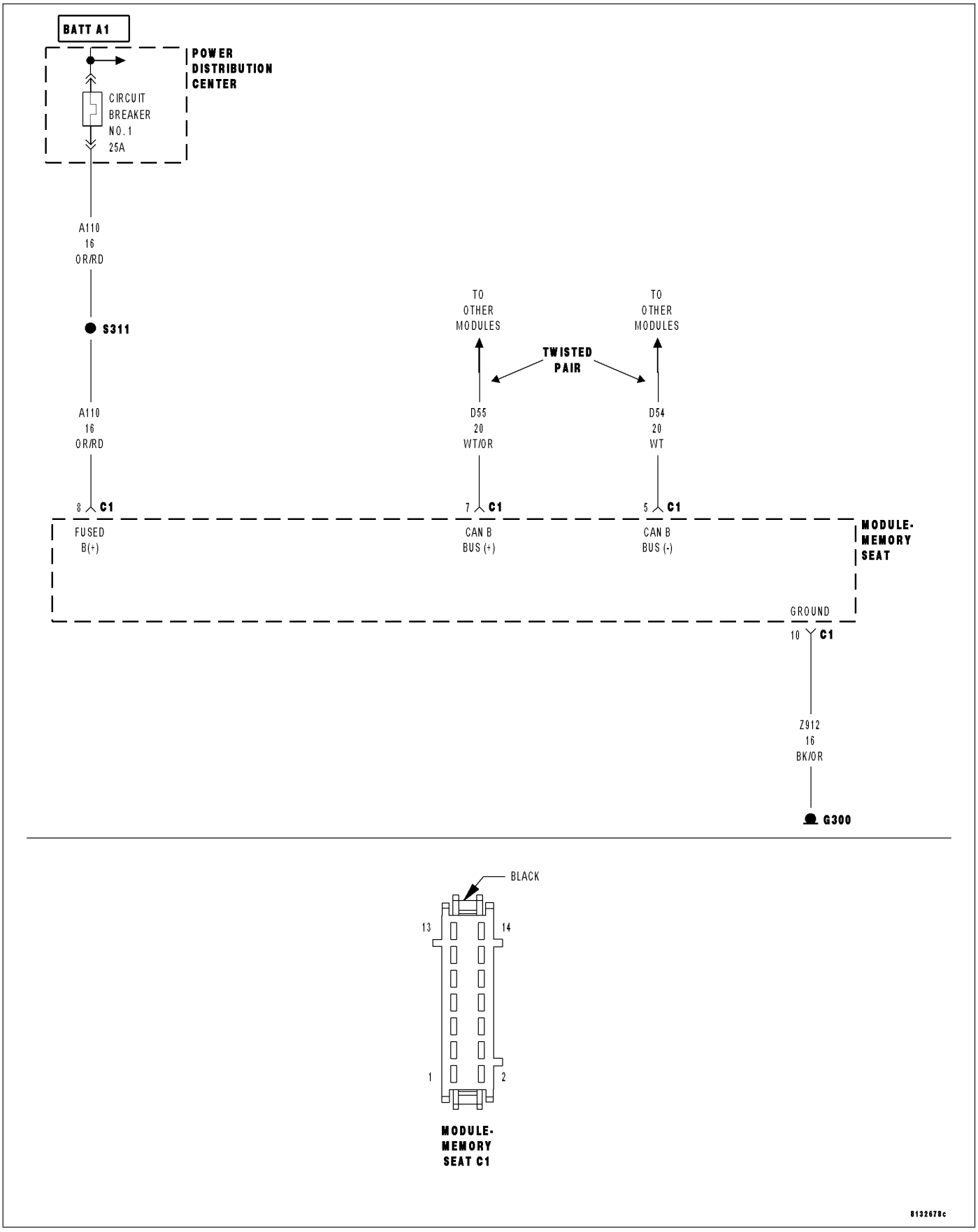

For a complete wiring diagram **Refer to Section 8W**.

Possible Causes
(A110) FUSED B (+) CIRCUIT OPEN OR SHORTED
(Z912) GROUND CIRCUIT OPEN
(D55) AND (D54) CAN B BUS CIRCUITS OPEN
MEMORY SEAT MODULE

Diagnostic Test

1. TEST FOR INTERMITTENT CONDITION

Turn the ignition on.

NOTE: Ensure the IOD fuse is installed and battery voltage is between 10.0 and 16.0 volts.
With the scan tool, select ECU View.

NOTE: A red X will be next to the module that is not communicating, indicating that the module is not active on the Bus network. A green check indicates that the module is active on the Bus network.

Does the scan tool display a red X next to the module?

Yes >> Go To 2

No >> The no response condition is not present at this time. Using the wiring diagram/schematic as a guide, inspect the wiring for chafed, pierced, pinched, and partially broken wires and the wiring harness connectors for broken, bent, pushed out, and corroded terminals.

2. (A110) FUSED B(+) CIRCUIT OPEN OR SHORTED

Turn the ignition off.

Disconnect the Memory Seat Module C1 harness connector.

Using a 12-volt test light connected to ground, check the (A110) Fused B(+) circuit.

Does the test light illuminate brightly?

Yes >> Go To 3

No >> Repair the (A110) Fused B(+) circuit for an open or short. Perform BODY VERIFICATION TEST – VER 1. (Refer to BODY VERIFICATION TEST – VER 1).

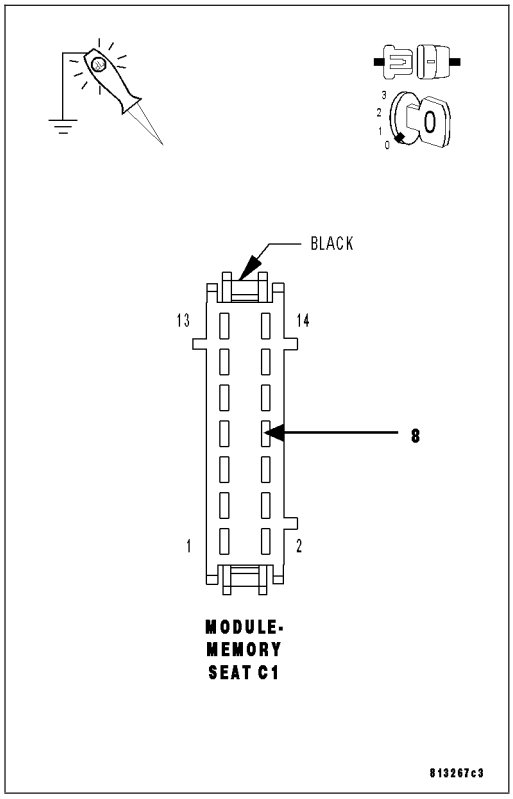

3. (Z912) GROUND CIRCUIT OPEN

Using a 12-volt test light connected to 12-volts, check the (Z912) ground circuit.

Does the test light illuminate brightly?

Yes >> Go To 4

No >> Repair the (Z912) ground circuit for an open.
Perform BODY VERIFICATION TEST – VER 1. (Refer to BODY VERIFICATION TEST – VER 1).

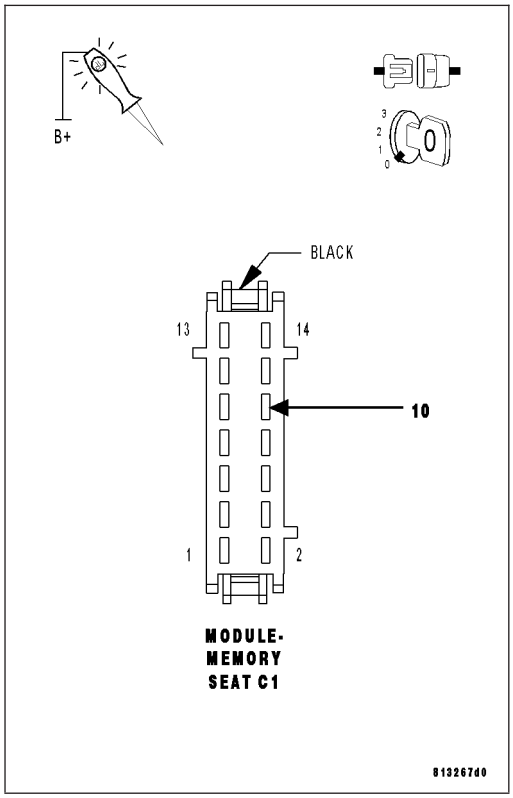

4. (D55) AND (D54) CAN B BUS CIRCUITS OPEN

NOTE: One open circuit will not cause this condition.
Measure the voltage between the (D54) CAN B Bus (-) circuit and ground.
Measure the voltage between the (D55) CAN B Bus (+) circuit and ground.

Is there any voltage present on either circuit?

Yes >> Replace the Memory Seat Module in accordance with the service information.
Perform BODY VERIFICATION TEST – VER 1. (Refer to BODY VERIFICATION TEST – VER 1).

No >> Repair the (D55) and (D54) CAN B Bus circuits for an open. Inspect the connector for damage.
Perform BODY VERIFICATION TEST – VER 1. (Refer to BODY VERIFICATION TEST – VER 1).

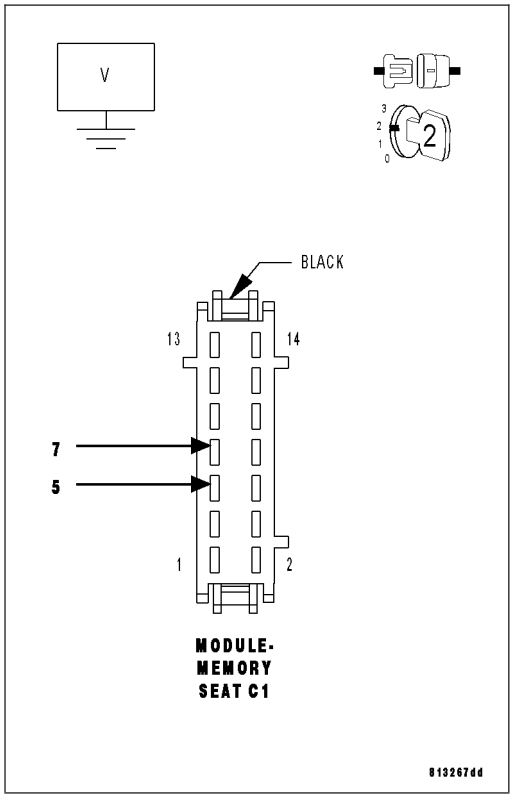

*NO RESPONSE FROM OCM (OCCUPANT CLASSIFICATION MODULE)

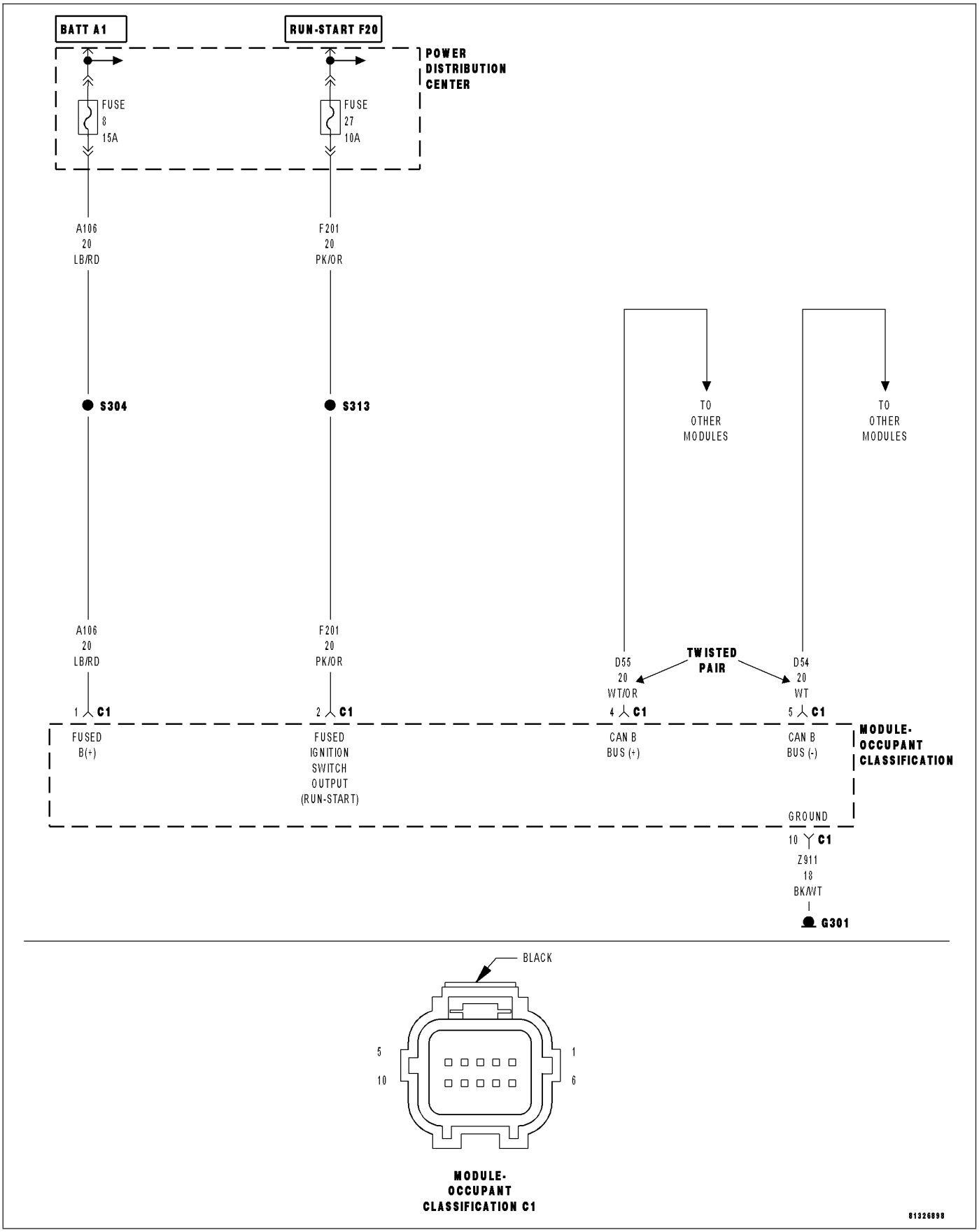

For a complete wiring diagram **Refer to Section 8W**.

Possible Causes
(A106) FUSED B(+) CIRCUIT OPEN OR SHORTED
(Z911) GROUND CIRCUIT OPEN
(F201) FUSED IGNITION SWITCH OUTPUT CIRCUIT OPEN OR SHORTED
(D55) AND (D54) CAN B BUS CIRCUITS OPEN
(R263) SEAT POSITION SENSOR VOLTAGE CIRCUIT FOR A SHORT TO GROUND
(R701) SEAT WEIGHT SENSOR 5 VOLTS CIRCUIT FOR A SHORT TO GROUND
OCCUPANT CLASSIFICATION MODULE

Diagnostic Test

1. TEST FOR INTERMITTENT CONDITION

Turn the ignition on.

NOTE: Ensure the IOD fuse is installed and battery voltage is between 10.0 and 16.0 volts.
With the scan tool, select ECU View.

NOTE: A red X will be next to the module that is not communicating, indicating that the module is not active on the Bus network. A green check indicates that the module is active on the Bus network.

Does the scan tool display a red X next to the module?

Yes >> Go To 2

No >> The no response condition is not present at this time. Using the wiring diagram/schematic as a guide, inspect the wiring for chafed, pierced, pinched, and partially broken wires and the wiring harness connectors for broken, bent, pushed out, and corroded terminals.

2. (A106) FUSED B(+) CIRCUIT OPEN OR SHORTED

WARNING: To avoid personal injury or death, turn the ignition off, disconnect the battery and wait two minutes before proceeding.
Disconnect the Occupant Classification Module C1 harness connector.

WARNING: To avoid personal injury or death, turn the ignition on, then reconnect the battery.
Using a 12-volt test light connected to ground, check the (A106) Fused B(+) circuit.

Does the test light illuminate brightly?

Yes >> Go To 3

No >> Repair the (A106) Fused B(+) circuit for an open or short. Perform the OCS VERIFICATION TEST-VER 1.

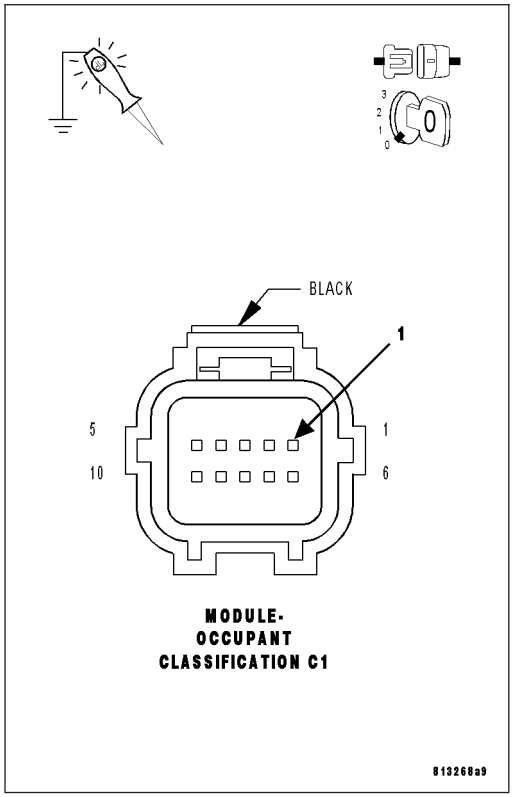

3. (Z911) GROUND CIRCUIT OPEN

Turn the ignition off.

Using a 12-volt test light connected to 12-volts, check the (Z911) ground circuit.

Does the test light illuminate brightly?

Yes >> Go To 4

No >> Repair the (Z911) ground circuit for an open.
Perform the OCS VERIFICATION TEST-VER 1.

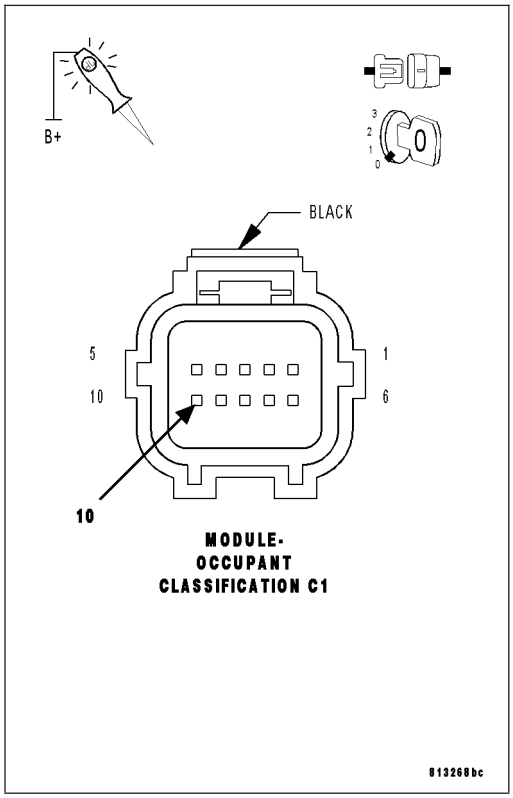

4. (F201) FUSED IGNITION SWITCH OUTPUT CIRCUIT OPEN OR SHORTED

Turn the ignition on.

Using a 12-volt test light connected to ground, check the (F201) Fused Ignition Switch Output circuit.

Does the test light illuminate brightly?

Yes >> Go To 5

No >> Repair the (F201) Fused Ignition Switch Output circuit for an open or short.
Perform the OCS VERIFICATION TEST-VER 1.

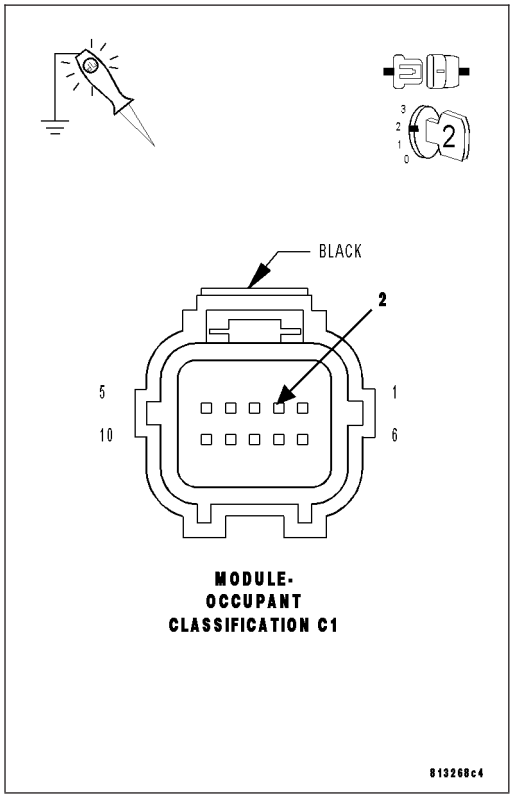

5. (D55) AND (D54) CAN B BUS CIRCUITS OPEN

WARNING: If the Occupant Classification Module is dropped at any time, it must be replaced. Failure to take the proper precautions could result in accidental airbag deployment and personal injury or death.

NOTE: One open circuit will not cause this condition.

Measure the voltage between the (D54) CAN B Bus (-) circuit and ground.

Measure the voltage between the (D55) CAN B Bus (+) circuit and ground.

Is there any voltage present on either circuit?

Yes >> Go To 6

No >> Repair the (D55) and (D54) CAN B Bus circuits for an open. Inspect the connector for damage.
Perform the OCS VERIFICATION TEST-VER 1.

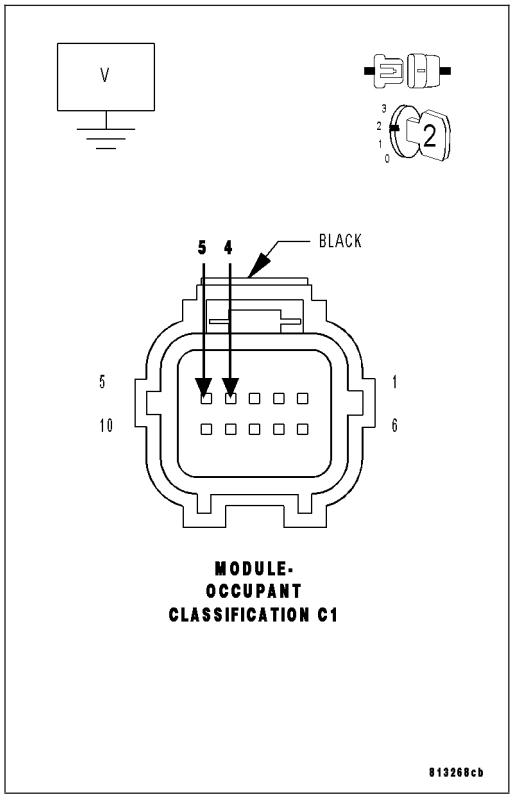

6. CHECK (R263) SEAT POSITION SENSOR VOLTAGE CIRCUIT FOR A SHORT TO GROUND

Turn the ignition off.

Measure the resistance between ground and the (R263) Seat Position Sensor Voltage circuit.

Is the resistance below 10k ohms?

Yes >>

NOTE: Do not attempt to repair the Seat Harness. Replace the Seat Harness if the condition inspecting or testing for is present in the Seat Harness.
Replace the OCM and Driver Seat Position Sensor Harness in accordance with the service information.
Perform the OCS VERIFICATION TEST-VER 1.

No >> Go To 7

7. CHECK (R701) SEAT WEIGHT SENSOR 5 VOLTS CIRCUIT FOR A SHORT TO GROUND

Disconnect the Occupant Classification Module C2 harness connector.

Measure the resistance between ground and the (R701) Seat Weight Sensor 5 volt circuit.

Is the resistance below 10k ohms?

Yes >>

NOTE: Do not attempt to repair the Seat Harness. Replace the Seat Harness if the condition inspecting or testing for is present in the Seat Harness.
Replace the OCM and Driver Seat Position Sensor Harness in accordance with the service information.
Perform the OCS VERIFICATION TEST-VER 1.

No >> Replace the Occupant Classification Module in accordance with the service information.
Perform the OCS VERIFICATION TEST-VER 1.

*NO RESPONSE FROM ORC (OCCUPANT RESTRAINT CONTROLLER MODULE)

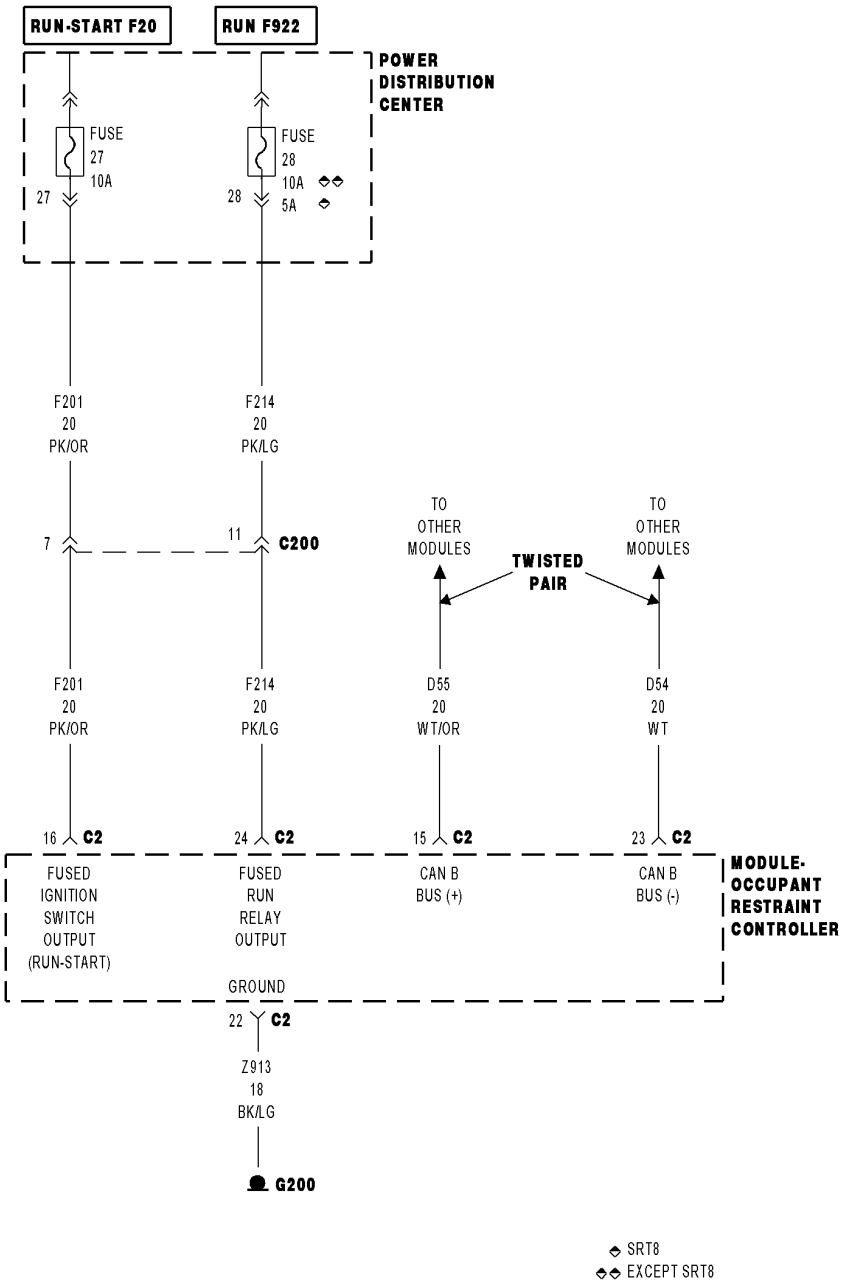

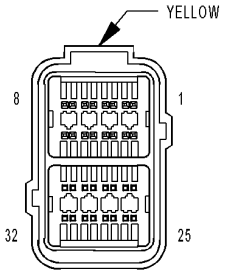

MODULE-OCCUPANT RESTRAINT CONTROLLER C2

81781857

For a complete wiring diagram **Refer to Section 8W**.

Possible Causes
(Z913) GROUND CIRCUIT OPEN
(F214) FUSED RUN RELAY OUTPUT CIRCUIT OPEN OR SHORTED
(F201) FUSED IGNITION SWITCH OUTPUT (RUN/START) CIRCUIT OPEN OR SHORTED
(D55) AND (D54) CAN B BUS CIRCUITS OPEN
OCCUPANT RESTRAINT CONTROLLER MODULE

Diagnostic Test

1. TEST FOR INTERMITTENT CONDITION

Turn the ignition on.

NOTE: Ensure the IOD fuse is installed and battery voltage is between 10.0 and 16.0 volts.
With the scan tool, select ECU View.

NOTE: A red X will be next to the module that is not communicating, indicating that the module is not active on the Bus network. A green check indicates that the module is active on the Bus network.

Does the scan tool display a red X next to the module?

Yes >> Go To 2

No >> The no response condition is not present at this time. Using the wiring diagram/schematic as a guide, inspect the wiring for chafed, pierced, pinched, and partially broken wires and the wiring harness connectors for broken, bent, pushed out, and corroded terminals.

2. (Z913) GROUND CIRCUIT OPEN

WARNING: To avoid personal injury or death, turn the ignition off, disconnect the battery and wait two minutes before proceeding.
Disconnect the Occupant Restraint Controller Module harness connectors.

Connect the appropriate Load Tool ACM Adaptor to the ORC connector.

Using a 12-volt test light connected to 12-volts, check the (Z913) ground circuit.

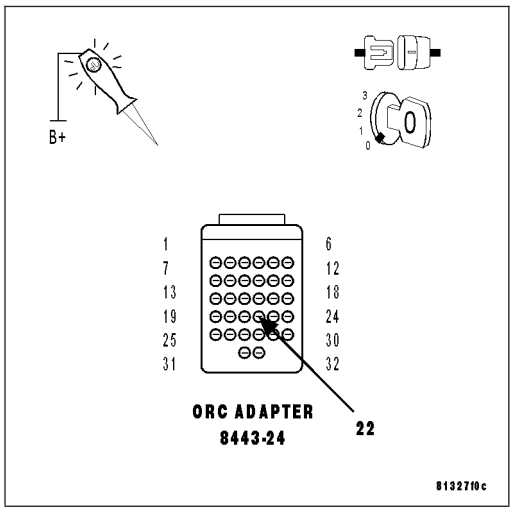

Does the test light illuminate brightly?

Yes >> Go To 3

No >> Repair the (Z913) ground circuit for an open.
Perform AIRBAG VERIFICATION TEST - VER 1.

3. (F214) FUSED RUN RELAY OUTPUT CIRCUIT OPEN OR SHORTED

NOTE: Check the FCM for any ignition related DTCs before proceeding. If set (Refer to 8 - ELECTRICAL/IGNITION CONTROL - DIAGNOSIS AND TESTING).

WARNING: To avoid personal injury or death, turn the ignition on, then reconnect the battery.

Using a 12-volt test light connected to ground, check the (F214) Fused Run Relay Output circuit.

Does the test light illuminate brightly?

Yes >> Go To 4

No >> Repair the (F214) Fused Run Relay Output circuit for an open or short.
Perform AIRBAG VERIFICATION TEST - VER 1.

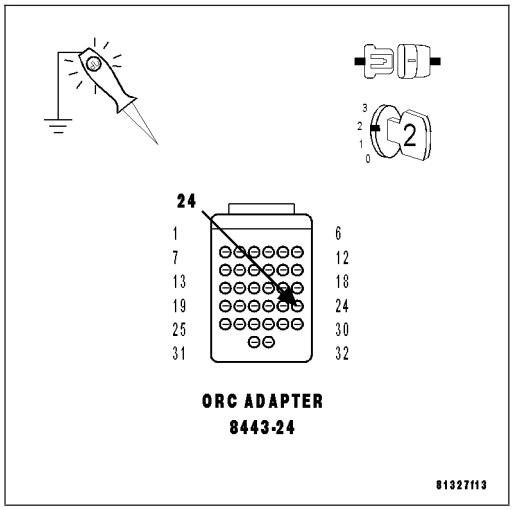

4. (F201) FUSED IGNITION SWITCH OUTPUT (RUN/START) CIRCUIT OPEN OR SHORTED

Using a 12-volt test light connected to ground, check the (F201) Fused Ignition Switch Output (RUN/START) circuit.

Does the test light illuminate brightly?

Yes >> Go To 5

No >> Repair the (F201) Fused Ignition Switch Output (RUN/START) circuit for an open or short.
Perform AIRBAG VERIFICATION TEST - VER 1.

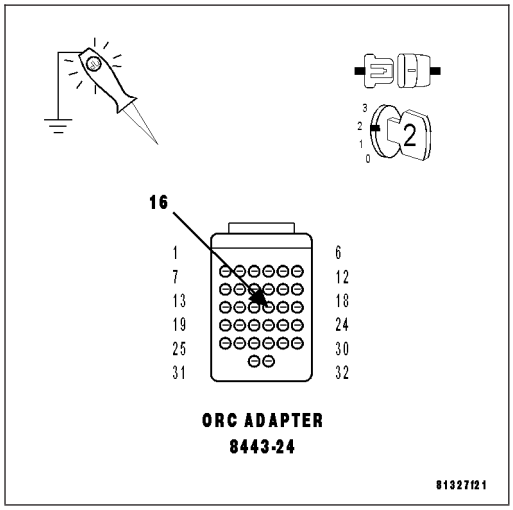

5. (D55) AND (D54) CAN B BUS CIRCUITS OPEN

WARNING: If the Occupant Restraint Controller is dropped at any time, it must be replaced. Failure to take the proper precautions could result in accidental airbag deployment and personal injury or death.

NOTE: One open circuit will not cause this condition.

Measure the voltage between the (D54) CAN B Bus (-) circuit and ground.

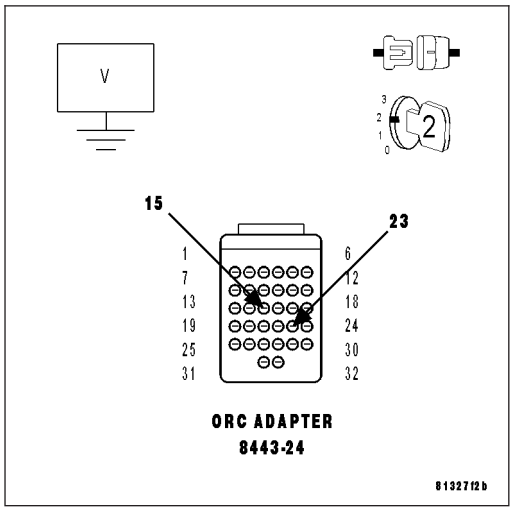

Measure the voltage between the (D55) CAN B Bus (+) circuit and ground.

Is there any voltage present on either circuit?

Yes >> Replace the Occupant Restraint Controller Module in accordance with the service information. Perform AIRBAG VERIFICATION TEST - VER 1.

No >> Repair the (D55) and (D54) CAN B Bus circuits for an open. Inspect the connector for damage. Perform AIRBAG VERIFICATION TEST - VER 1.

*NO RESPONSE FROM PCM (POWERTRAIN CONTROL MODULE)

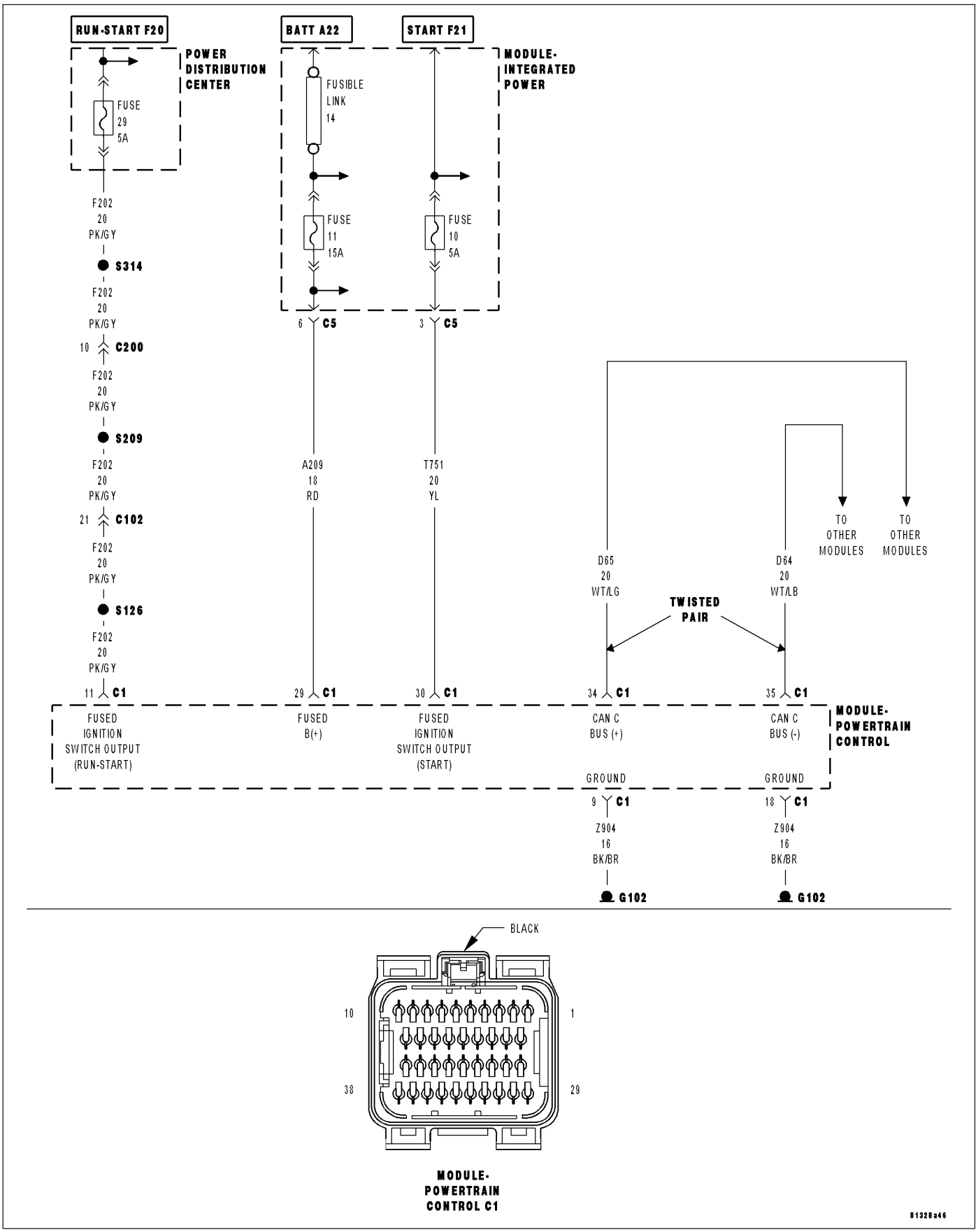

For a complete wiring diagram **Refer to Section 8W**.

Possible Causes
(A209) FUSED B(+) CIRCUIT OPEN OR SHORTED
(Z904) GROUND CIRCUIT OPEN
(F202) FUSED IGNITION SW OUTPUT CIRCUIT OPEN OR SHORTED
(D65) CAN C BUS (+) CIRCUIT OPEN
(D64) CAN C BUS (-) CIRCUIT OPEN
POWERTRAIN CONTROL MODULE

Diagnostic Test

1. TEST FOR INTERMITTENT CONDITION

Turn the ignition on.

NOTE: Ensure the IOD fuse is installed and battery voltage is between 10.0 and 16.0 volts.
With the scan tool, select ECU View.

NOTE: A red X will be next to the module that is not communicating, indicating that the module is not active on the Bus network. A green check indicates that the module is active on the Bus network.

NOTE: Check the FCM for any active CAN C hardware DTCs, perform DTC before proceeding.

Does the scan tool display a red X next to the module?

Yes >> Go To 2

No >> The no response condition is not present at this time. Using the wiring diagram/schematic as a guide, inspect the wiring for chafed, pierced, pinched, and partially broken wires and the wiring harness connectors for broken, bent, pushed out, and corroded terminals.

2. (A209) FUSED B(+) CIRCUIT OPEN OR SHORTED

Turn the ignition off.

Disconnect the PCM C1 harness connector.

CAUTION: Do not probe the PCM harness connectors. Probing the PCM harness connectors will damage the PCM terminals resulting in poor terminal to pin connection. Install Miller Special Tool #8815 to perform diagnosis.

Using a 12-volt test light connected to ground, check the (A209) Fused B(+) circuit.

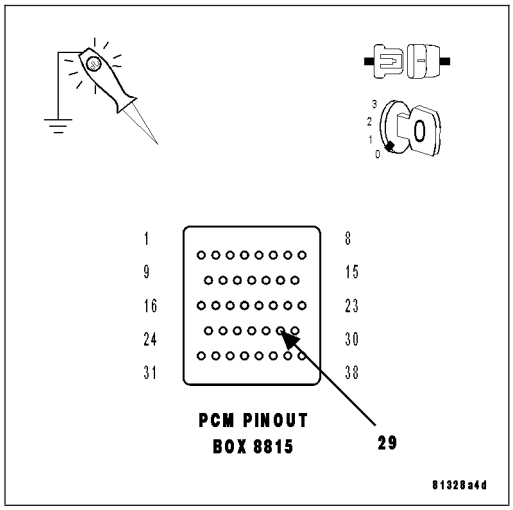

Does the test light illuminate brightly?

Yes >> Go To 3

No >> Repair the (A209) Fused B(+) circuit for an open or short. Perform (NGC) POWERTRAIN VERIFICATION TEST VER - 5.

3. (Z904) GROUND CIRCUIT OPEN

Using a 12-volt test light connected to 12-volts, check each (Z904) ground circuit.

Does the test light illuminate brightly for each circuit?

Yes >> Go To 4

No >> Repair the (Z904) ground circuit for an open.
Perform (NGC) POWERTRAIN VERIFICATION TEST VER - 5.

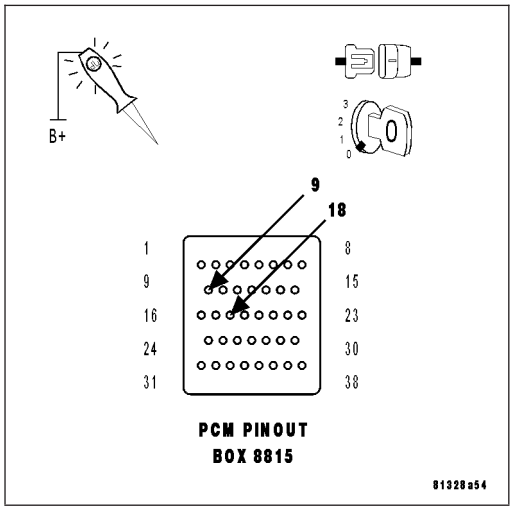

4. (F202) FUSED IGNITION SWITCH OUTPUT CIRCUIT OPEN OR SHORTED

Turn the ignition on.

Using a 12-volt test light connected to ground, check the (F202) Fused Ignition Switch Output circuit.

Does the test light illuminate brightly?

Yes >> Go To 5

No >> Repair the (F202) Fused Ignition Switch Output circuit for an open or short.
Perform (NGC) POWERTRAIN VERIFICATION TEST VER - 5.

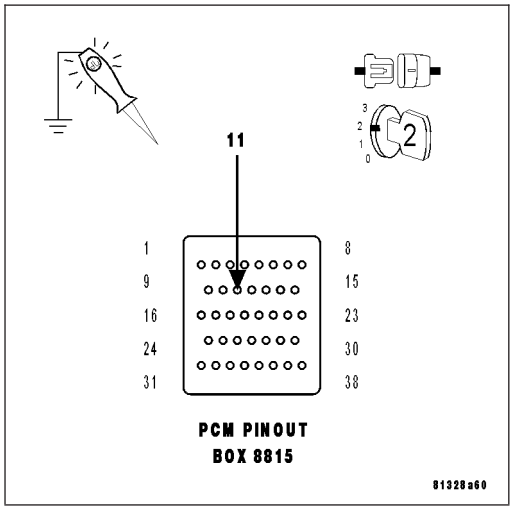

5. (D65) CAN C BUS (+) CIRCUIT OPEN

Turn the ignition off.

Disconnect the FCM C1 harness connector.

Measure the resistance of the (D65) CAN C Bus (+) circuit between the FCM connector and the appropriate terminal of the special tool #8815.

Is resistance below 5.0 ohms?

Yes >> Go To 6

No >> Repair the (D65) CAN C Bus (+) circuit for an open.
Perform (NGC) POWERTRAIN VERIFICATION TEST VER - 5.

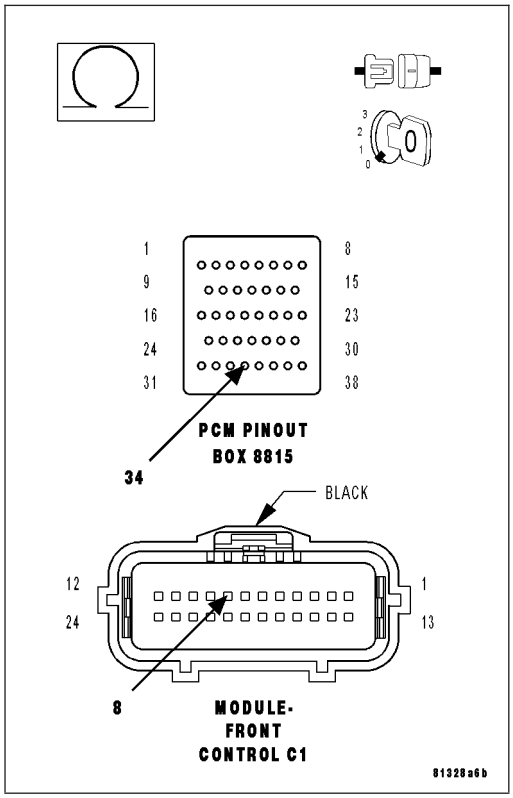

6. (D64) CAN C BUS (-) CIRCUIT OPEN

Measure the resistance of the (D64) CAN C Bus (-) circuit between the FCM connector and the appropriate terminal of the special tool #8815.

Is resistance below 5.0 ohms?

Yes >> Replace and program the Powertrain Control Module in accordance with the service information.
Perform (NGC) POWERTRAIN VERIFICATION TEST VER - 5.

No >> Repair the (D64) CAN C Bus (-) circuit for an open.
Perform (NGC) POWERTRAIN VERIFICATION TEST VER - 5.

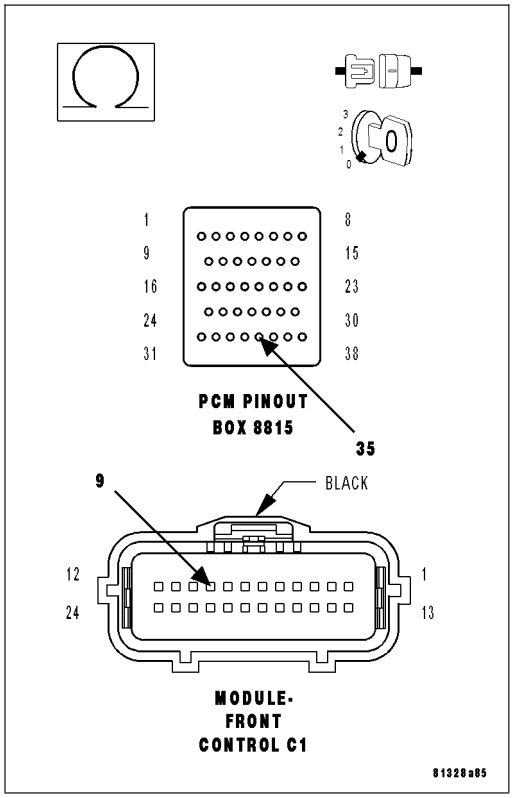

*NO RESPONSE FROM PDM (PASSENGER DOOR MODULE)

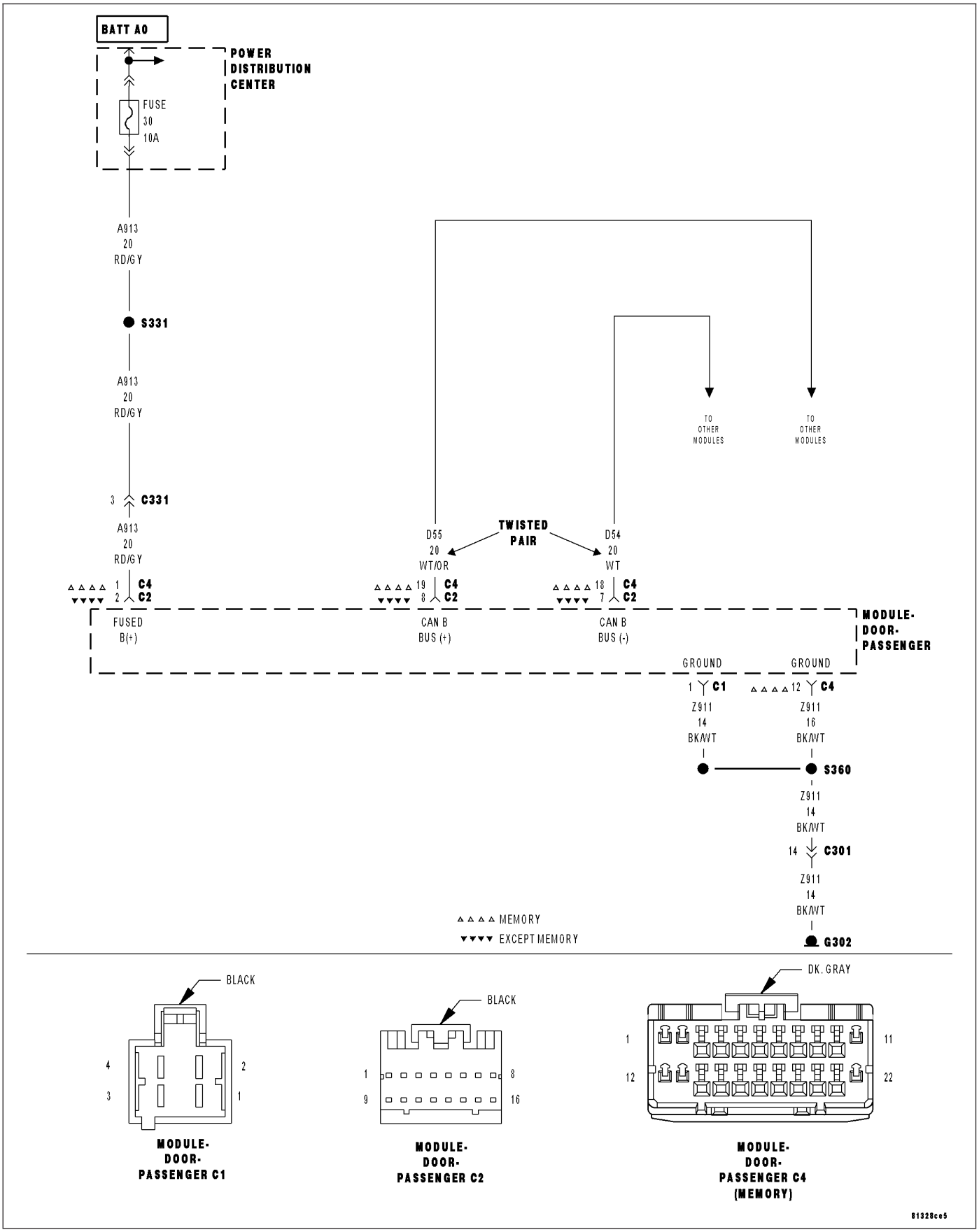

For a complete wiring diagram **Refer to Section 8W**.

Possible Causes
(A913) FUSED B (+) CIRCUIT OPEN OR SHORTED
(Z911) GROUND CIRCUIT OPEN
(D55) AND (D54) CAN B BUS CIRCUITS OPEN
PASSENGER DOOR MODULE

Diagnostic Test

1. TEST FOR INTERMITTENT CONDITION

Turn the ignition on.

NOTE: Ensure the IOD fuse is installed and battery voltage is between 10.0 and 16.0 volts.
With the scan tool, select ECU View.

NOTE: A red X will be next to the module that is not communicating, indicating that the module is not active on the Bus network. A green check indicates that the module is active on the Bus network.

Does the scan tool display a red X next to the module?

Yes >> Go To 2

No >> The no response condition is not present at this time. Using the wiring diagram/schematic as a guide, inspect the wiring for chafed, pierced, pinched, and partially broken wires and the wiring harness connectors for broken, bent, pushed out, and corroded terminals.

2. (A913) FUSED B(+) CIRCUIT OPEN OR SHORTED

Turn the ignition off.

Disconnect the Passenger Door Module harness connectors.

Using a 12-volt test light connected to ground, check the (A913) Fused B(+) circuit.

Does the test light illuminate brightly?

Yes >> Go To 3

No >> Repair the (A913) Fused B(+) circuit for an open or short. Perform BODY VERIFICATION TEST – VER 1. (Refer to BODY VERIFICATION TEST – VER 1).

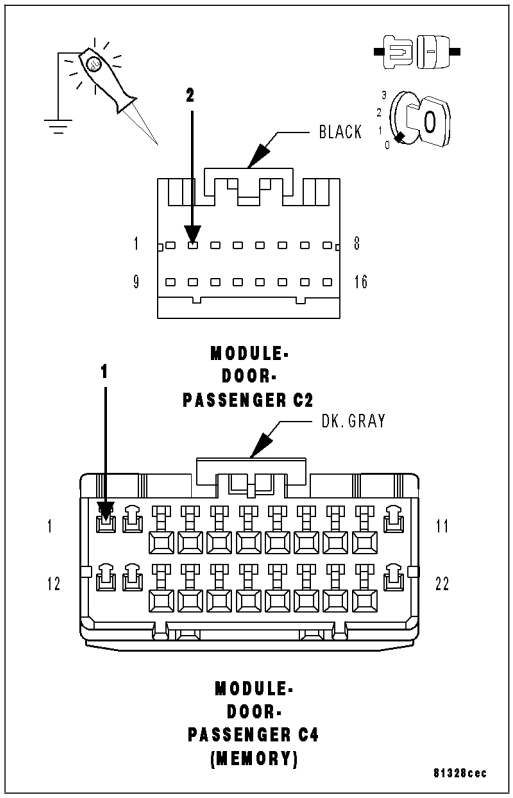

3. (Z911) GROUND CIRCUIT OPEN

Using a 12-volt test light connected to 12-volts, check the (Z911) ground circuit.

Does the test light illuminate brightly?

Yes >> Go To 4

No >> Repair the (Z911) ground circuit for an open.
Perform BODY VERIFICATION TEST – VER 1. (Refer to BODY VERIFICATION TEST – VER 1).

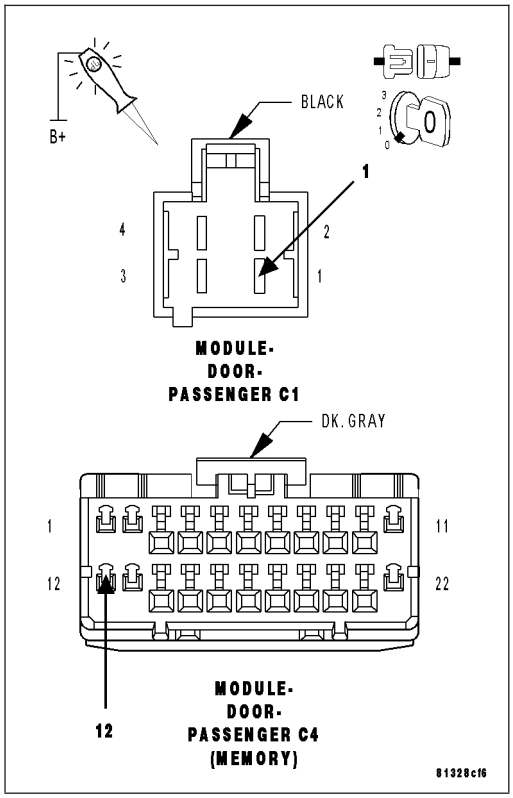

4. (D55) AND (D54) CAN B BUS CIRCUITS OPEN

NOTE: One open circuit will not cause this condition.
Measure the voltage between the (D54) CAN B Bus (-) circuit and ground.
Measure the voltage between the (D55) CAN B Bus (+) circuit and ground.

Is there any voltage present on either circuit?

Yes >> Replace the Passenger Door Module in accordance with the service information.
Perform BODY VERIFICATION TEST – VER 1. (Refer to BODY VERIFICATION TEST – VER 1).

No >> Repair the (D55) and (D54) CAN B Bus circuits for an open. Inspect the connector for damage.
Perform BODY VERIFICATION TEST – VER 1. (Refer to BODY VERIFICATION TEST – VER 1).

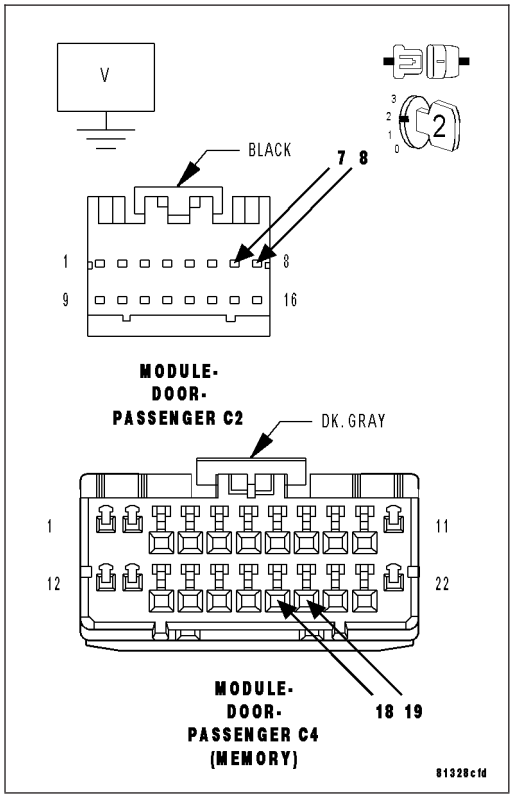

*NO RESPONSE FROM PTS (PARK ASSIST MODULE)

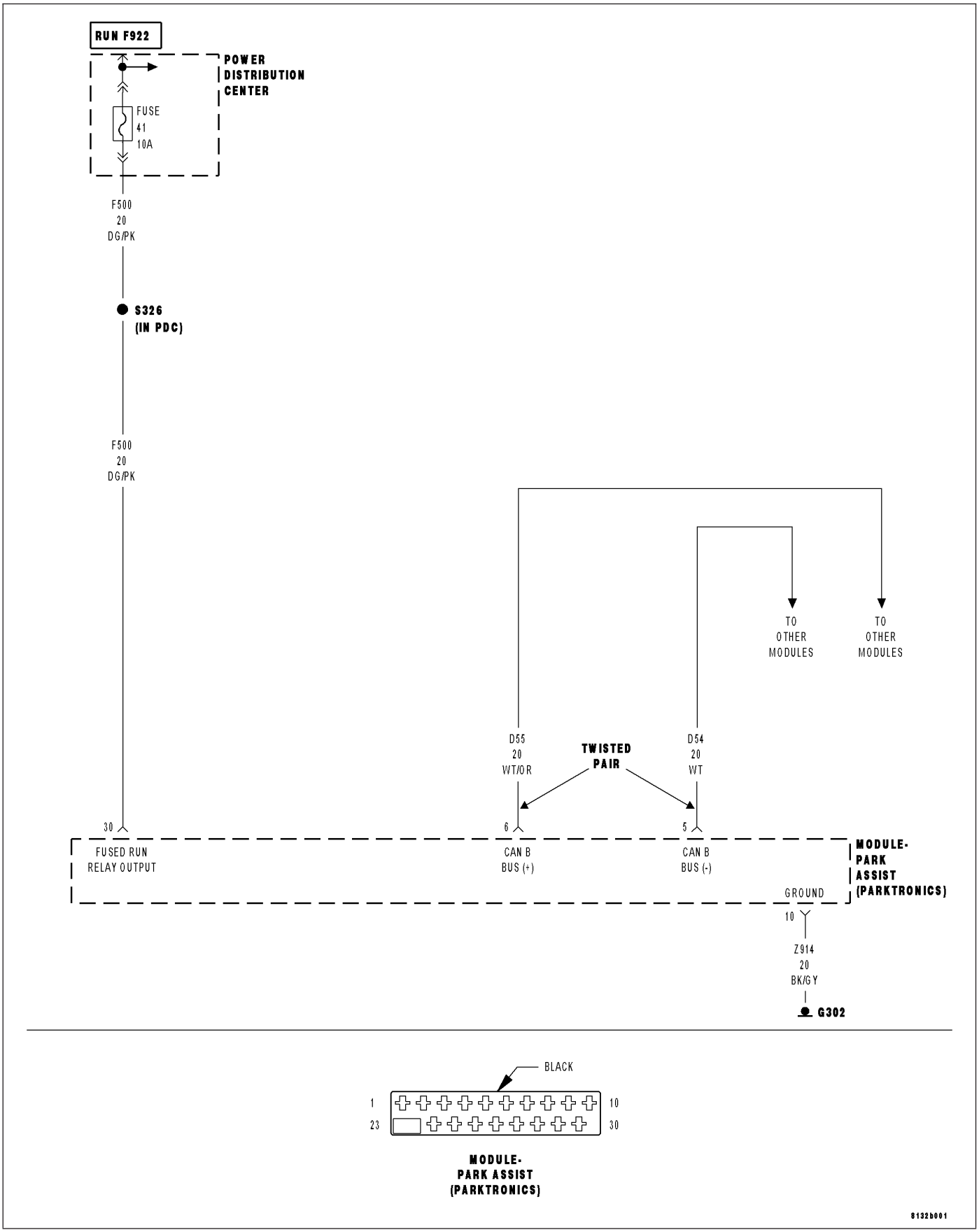

For a complete wiring diagram **Refer to Section 8W**.

Possible Causes
(F500) FUSED RUN RELAY OUTPUT CIRCUIT OPEN OR SHORTED
(Z914) GROUND CIRCUIT OPEN
(D55) AND (D54) CAN B BUS CIRCUITS OPEN
PARK ASSIST MODULE

Diagnostic Test

1. TEST FOR INTERMITTENT CONDITION

Turn the ignition on.

NOTE: Ensure the IOD fuse is installed and battery voltage is between 10.0 and 16.0 volts.
With the scan tool, select ECU View.

NOTE: A red X will be next to the module that is not communicating, indicating that the module is not active on the Bus network. A green check indicates that the module is active on the Bus network.

Does the scan tool display a red X next to the module?

Yes >> Go To 2

No >> The no response condition is not present at this time. Using the wiring diagram/schematic as a guide, inspect the wiring for chafed, pierced, pinched, and partially broken wires and the wiring harness connectors for broken, bent, pushed out, and corroded terminals.

2. (F500) FUSED RUN RELAY OUTPUT CIRCUIT OPEN OR SHORTED

NOTE: Check the FCM for any ignition related DTCs before proceeding. If set (Refer to 8 - ELECTRICAL/IGNITION CONTROL - DIAGNOSIS AND TESTING).
Turn the ignition off.
Disconnect the Park Assist Module harness connector.
Turn the ignition on.
Using a 12-volt test light connected to ground, check the (F500) Fused Run Relay Output circuit.

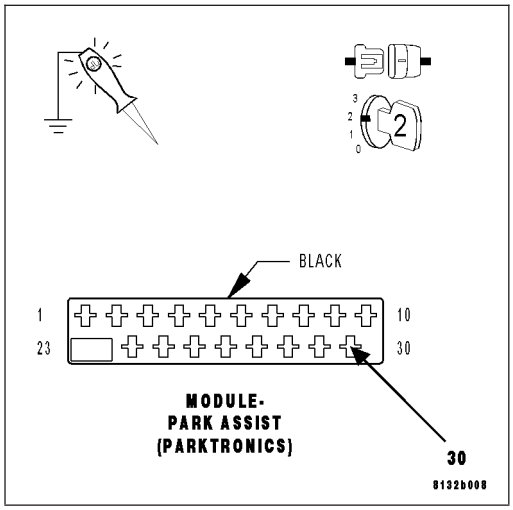

Does the test light illuminate brightly?

Yes >> Go To 3

No >> Repair the (F500) Fused Run Relay Output circuit for an open or short.
Perform BODY VERIFICATION TEST – VER 1. (Refer to BODY VERIFICATION TEST – VER 1).

3. (Z914) GROUND CIRCUIT OPEN

Turn the ignition off.

Using a 12-volt test light connected to 12-volts, check the (Z914) ground circuit.

Does the test light illuminate brightly?

Yes >> Go To 4

No >> Repair the (Z914) ground circuit for an open.
Perform BODY VERIFICATION TEST – VER 1. (Refer to BODY VERIFICATION TEST – VER 1).

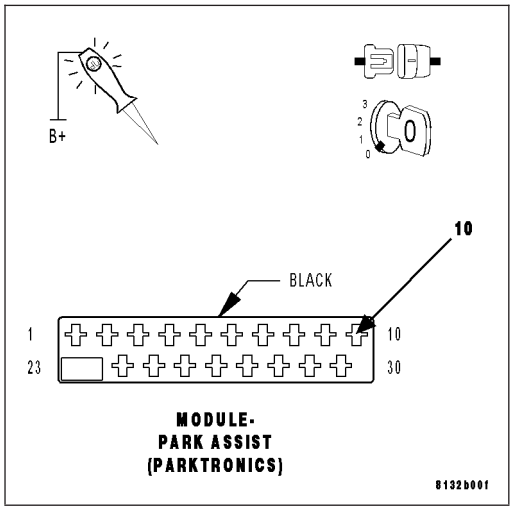

4. (D55) AND (D54) CAN B BUS CIRCUITS OPEN

NOTE: One open circuit will not cause this condition.

Measure the voltage between the (D54) CAN B Bus (-) circuit and ground.

Measure the voltage between the (D55) CAN B Bus (+) circuit and ground.

Is there any voltage present on either circuit?

Yes >> Replace the Park Assist Module in accordance with the service information.
Perform BODY VERIFICATION TEST – VER 1. (Refer to BODY VERIFICATION TEST – VER 1).

No >> Repair the (D55) and (D54) CAN B Bus circuits for an open. Inspect the connector for damage.
Perform BODY VERIFICATION TEST – VER 1. (Refer to BODY VERIFICATION TEST – VER 1).

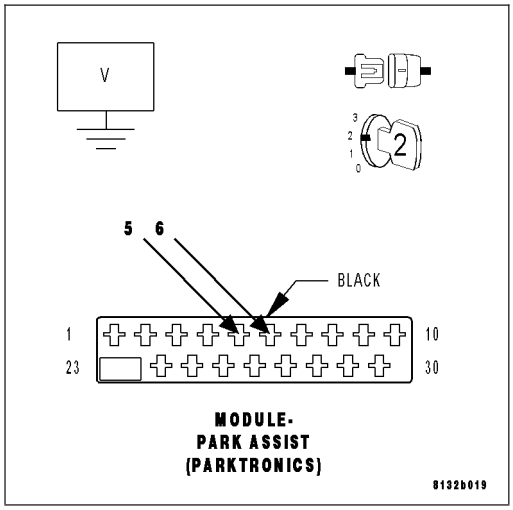

*NO RESPONSE FROM RADIO

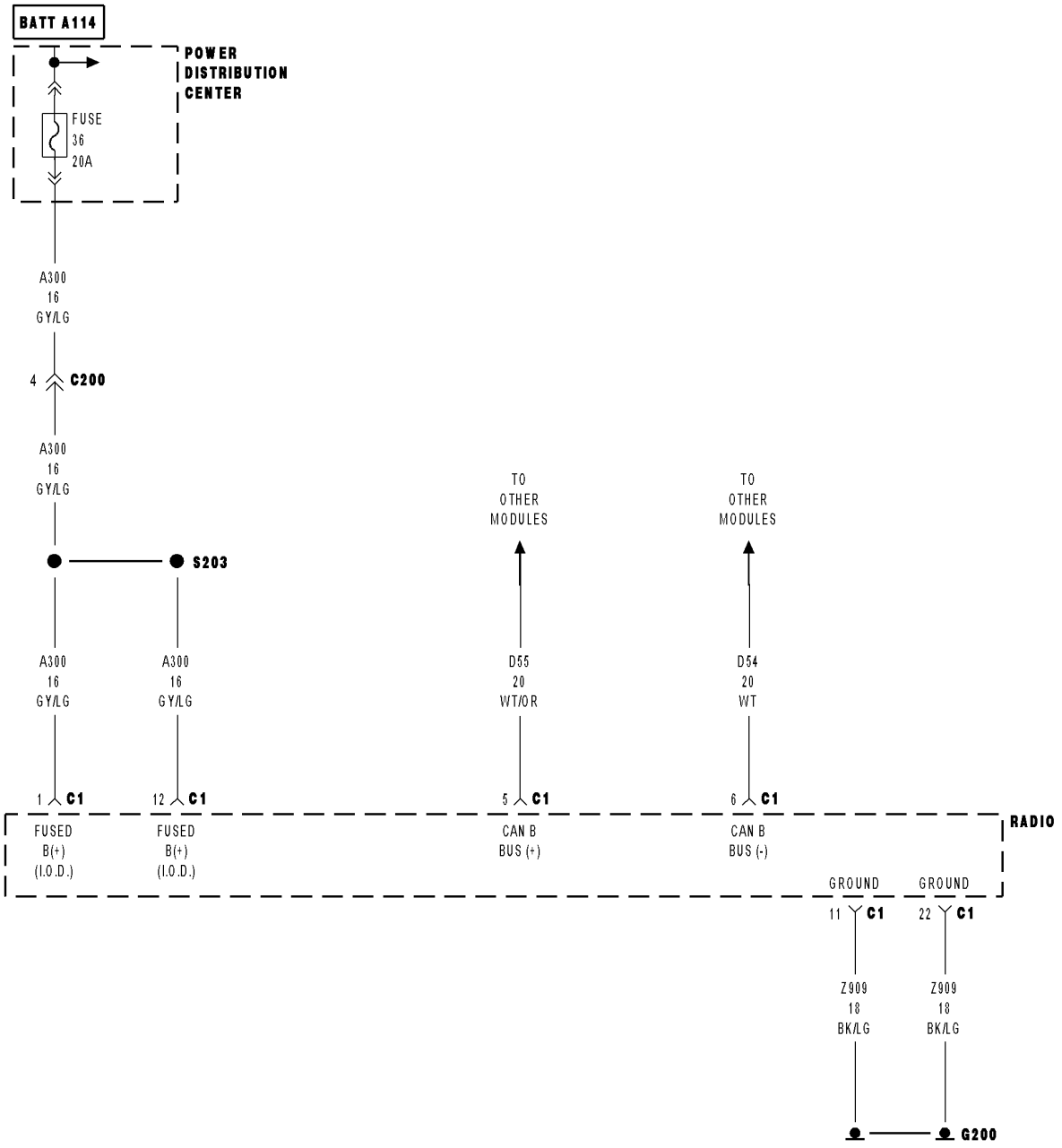

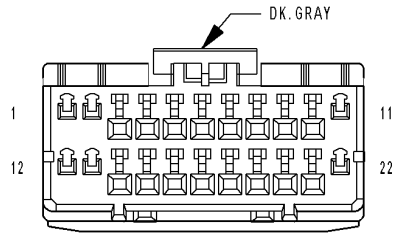

RADIO C1

8132931b

For a complete wiring diagram **Refer to Section 8W**.

Possible Causes
(A300) FUSED B (+) CIRCUIT OPEN OR SHORTED
(Z909) GROUND CIRCUIT OPEN
(D55) AND (D54) CAN B BUS CIRCUITS OPEN
RADIO

Diagnostic Test

1. TEST FOR INTERMITTENT CONDITION

Turn the ignition on.

NOTE: Ensure the IOD fuse is installed and battery voltage is between 10.0 and 16.0 volts.
With the scan tool, select ECU View.

NOTE: A red X will be next to the module that is not communicating, indicating that the module is not active on the Bus network. A green check indicates that the module is active on the Bus network.

Does the scan tool display a red X next to the module?

Yes >> Go To 2

No >> The no response condition is not present at this time. Using the wiring diagram/schematic as a guide, inspect the wiring for chafed, pierced, pinched, and partially broken wires and the wiring harness connectors for broken, bent, pushed out, and corroded terminals.

2. (A300) FUSED B(+) CIRCUIT OPEN OR SHORTED

Turn the ignition off.

Disconnect the Radio C1 harness connector.

Using a 12-volt test light connected to ground, check each (A300) Fused B(+) circuit.

Does the test light illuminate brightly for each circuit?

Yes >> Go To 3

No >> Repair the (A300) Fused B(+) circuit for an open or short. Perform BODY VERIFICATION TEST – VER 1. (Refer to BODY VERIFICATION TEST – VER 1).

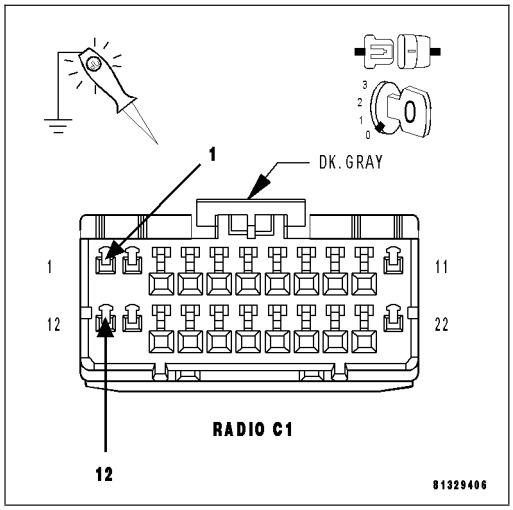

3. (Z909) GROUND CIRCUIT OPEN

Using a 12-volt test light connected to 12-volts, check each (Z909) ground circuit.

Does the test light illuminate brightly for each circuit?

Yes >> Go To 4

No >> Repair the (Z909) ground circuit for an open.
Perform BODY VERIFICATION TEST – VER 1. (Refer to BODY VERIFICATION TEST – VER 1).

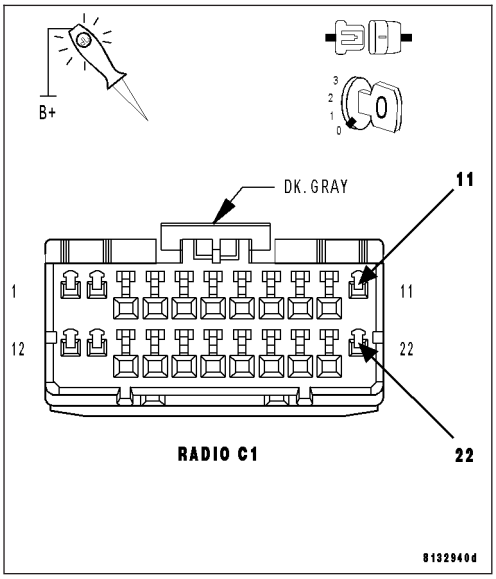

4. (D55) AND (D54) CAN B BUS CIRCUITS OPEN

NOTE: One open circuit will not cause this condition.
Measure the voltage between the (D54) CAN B Bus (-) circuit and ground.
Measure the voltage between the (D55) CAN B Bus (+) circuit and ground.

Is there any voltage present on either circuit?

Yes >> Replace the Radio in accordance with the service information.
Perform BODY VERIFICATION TEST – VER 1. (Refer to BODY VERIFICATION TEST – VER 1).

No >> Repair the (D55) and (D54) CAN B Bus circuits for an open. Inspect the connector for damage.
Perform BODY VERIFICATION TEST – VER 1. (Refer to BODY VERIFICATION TEST – VER 1).

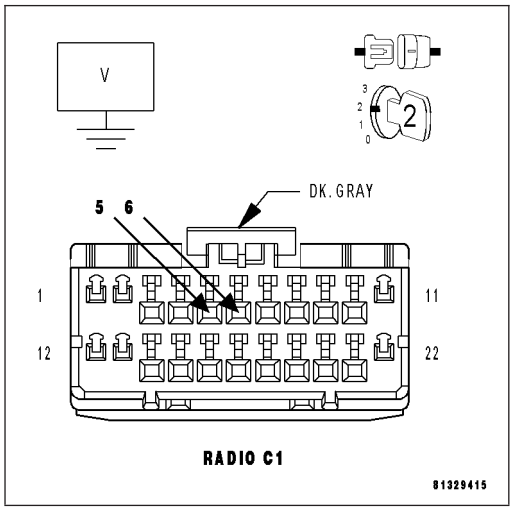

*NO RESPONSE FROM SDAR (SATELLITE RECEIVER)

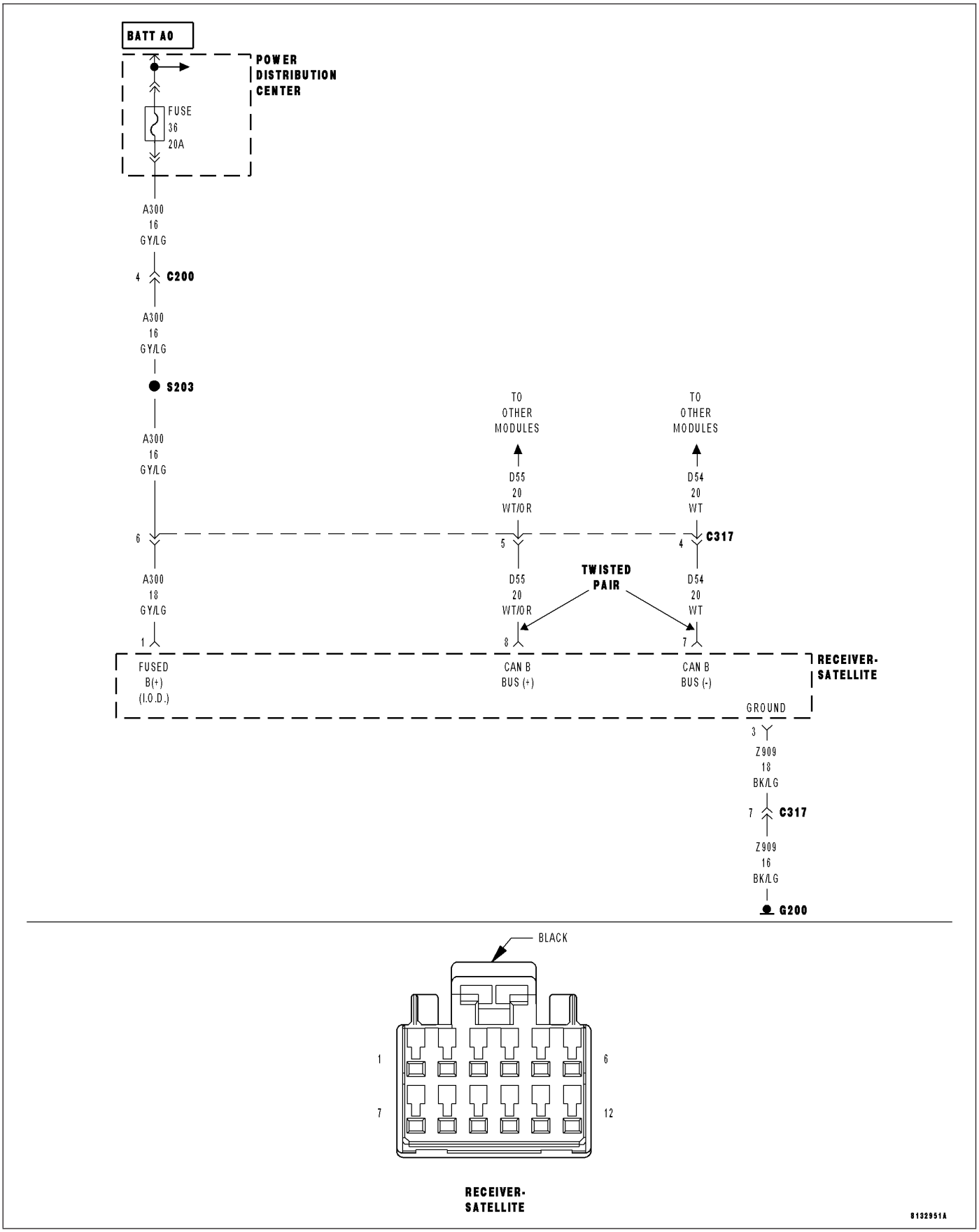

For a complete wiring diagram **Refer to Section 8W**.

Possible Causes
(A300) FUSED B (+) CIRCUIT OPEN OR SHORTED
(Z909) GROUND CIRCUIT OPEN
(D55) AND (D54) CAN B BUS CIRCUITS OPEN
SATELLITE RECEIVER

Diagnostic Test

1. TEST FOR INTERMITTENT CONDITION

Turn the ignition on.

NOTE: Ensure the IOD fuse is installed and battery voltage is between 10.0 and 16.0 volts.
With the scan tool, select ECU View.

NOTE: A red X will be next to the module that is not communicating, indicating that the module is not active on the Bus network. A green check indicates that the module is active on the Bus network.

Does the scan tool display a red X next to the module?

Yes >> Go To 2

No >> The no response condition is not present at this time. Using the wiring diagram/schematic as a guide, inspect the wiring for chafed, pierced, pinched, and partially broken wires and the wiring harness connectors for broken, bent, pushed out, and corroded terminals.

2. (A300) FUSED B(+) CIRCUIT OPEN OR SHORTED

Turn the ignition off.

Disconnect the Satellite Receiver harness connector.

Using a 12-volt test light connected to ground, check the (A300) Fused B(+) circuit.

Does the test light illuminate brightly?

Yes >> Go To 3

No >> Repair the (A300) Fused B(+) circuit for an open or short. Perform BODY VERIFICATION TEST – VER 1. (Refer to BODY VERIFICATION TEST – VER 1).

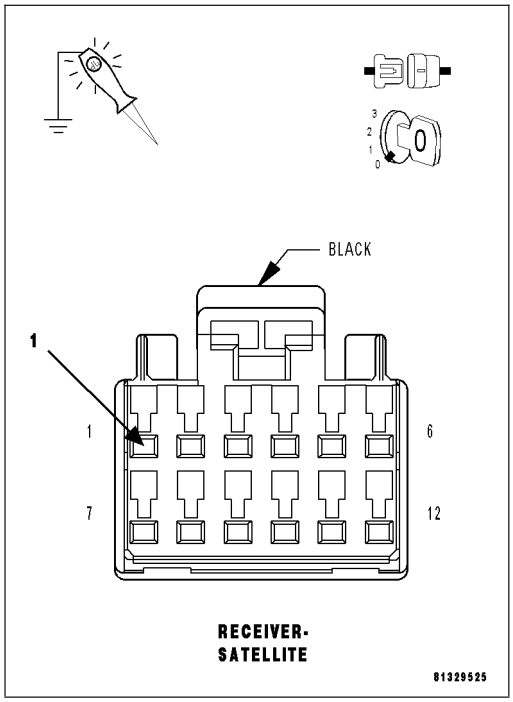

3. (Z909) GROUND CIRCUIT OPEN

Using a 12-volt test light connected to 12-volts, check the (Z909) ground circuit.

Does the test light illuminate brightly?

Yes >> Go To 4

No >> Repair the (Z909) ground circuit for an open.
Perform BODY VERIFICATION TEST – VER 1. (Refer to BODY VERIFICATION TEST – VER 1).

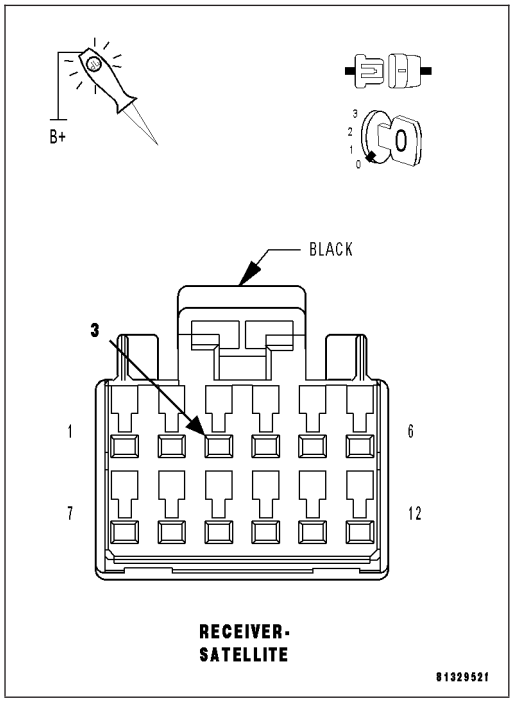

4. (D55) AND (D54) CAN B BUS CIRCUITS OPEN

NOTE: One open circuit will not cause this condition.
Measure the voltage between the (D54) CAN B Bus (-) circuit and ground.
Measure the voltage between the (D55) CAN B Bus (+) circuit and ground.

Is there any voltage present on either circuit?

Yes >> Replace the Satellite Receiver in accordance with the service information.
Perform BODY VERIFICATION TEST – VER 1. (Refer to BODY VERIFICATION TEST – VER 1).

No >> Repair the (D55) and (D54) CAN B Bus circuits for an open. Inspect the connector for damage.
Perform BODY VERIFICATION TEST – VER 1. (Refer to BODY VERIFICATION TEST – VER 1).

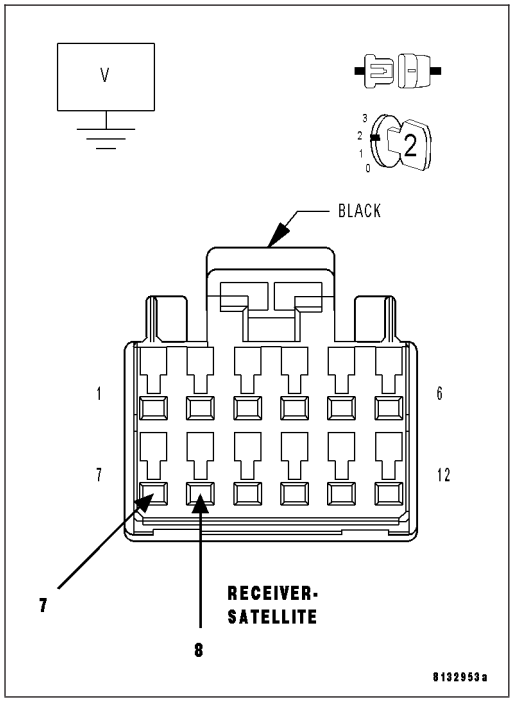

*NO RESPONSE FROM SCM (STEERING CONTROL MODULE)

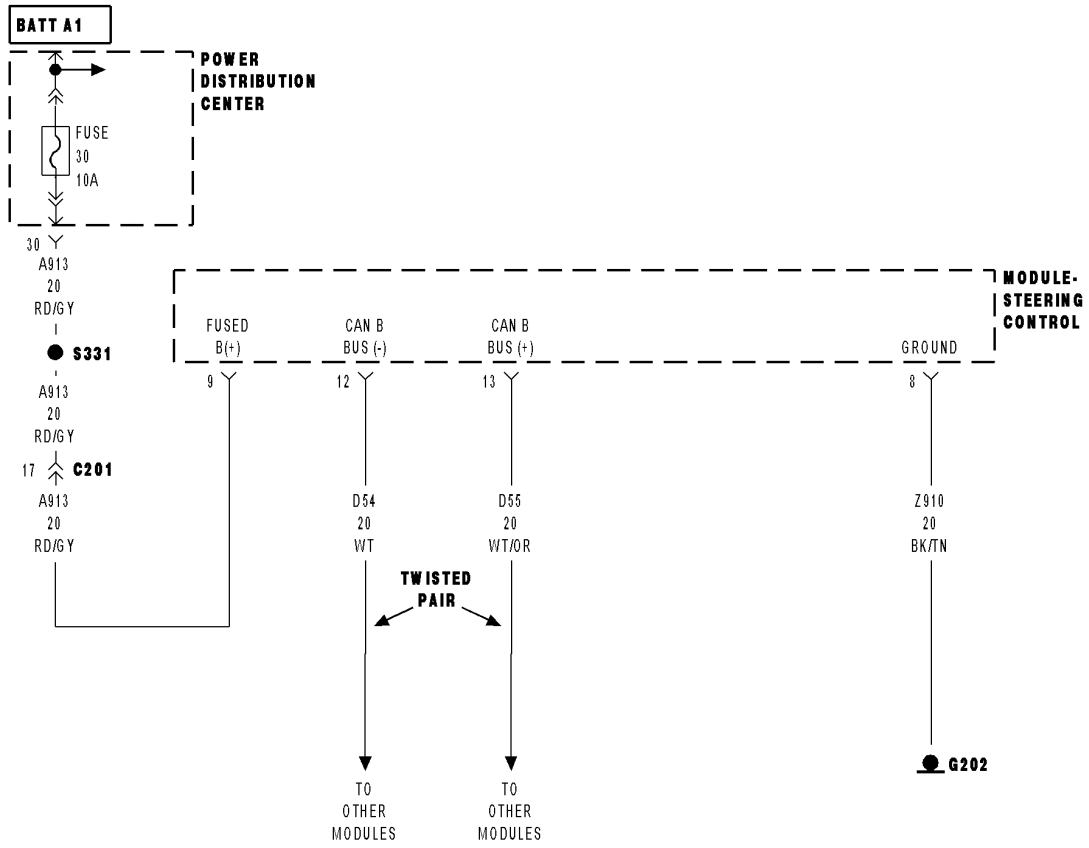

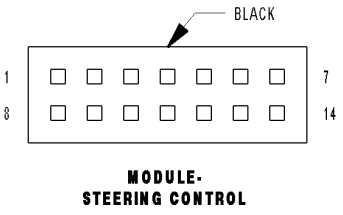

81365d4d

For a complete wiring diagram **Refer to Section 8W**.

Possible Causes
(A913) FUSED B(+) CIRCUIT OPEN OR SHORTED
(Z910) GROUND CIRCUIT OPEN
(D55) AND (D54) CAN B BUS CIRCUITS OPEN
STEERING CONTROL MODULE

Diagnostic Test

1. TEST FOR INTERMITTENT CONDITION

Turn the ignition on.

NOTE: Ensure the IOD fuse is installed and battery voltage is between 10.0 and 16.0 volts.
With the scan tool, select ECU View.

NOTE: A red X will be next to the module that is not communicating, indicating that the module is not active on the Bus network. A green check indicates that the module is active on the Bus network.

Does the scan tool display a red X next to the module?

Yes >> Go To 2

No >> The no response condition is not present at this time. Using the wiring diagram/schematic as a guide, inspect the wiring for chafed, pierced, pinched, and partially broken wires and the wiring harness connectors for broken, bent, pushed out, and corroded terminals.

2. (A913) FUSED B(+) CIRCUIT OPEN OR SHORTED

Turn the ignition off.

Disconnect/remove the Steering Control Module harness connector.

Using a 12-volt test light connected to ground, check the (A913) Fused B(+) circuit.

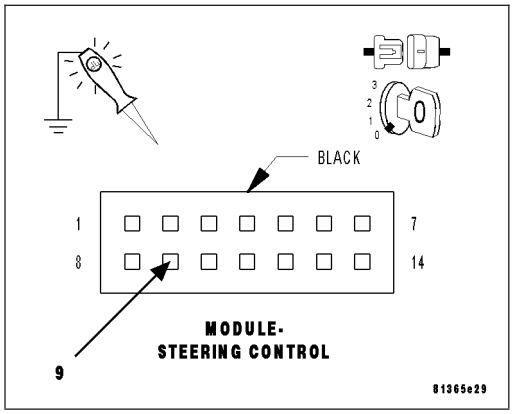

Does the test light illuminate brightly?

Yes >> Go To 3

No >> Repair the (A913) Fused B(+) circuit for an open or short. Perform BODY VERIFICATION TEST – VER 1. (Refer to BODY VERIFICATION TEST – VER 1).

3. (Z910) GROUND CIRCUIT OPEN

Using a 12-volt test light connected to 12-volts, check the (Z910) ground circuit.

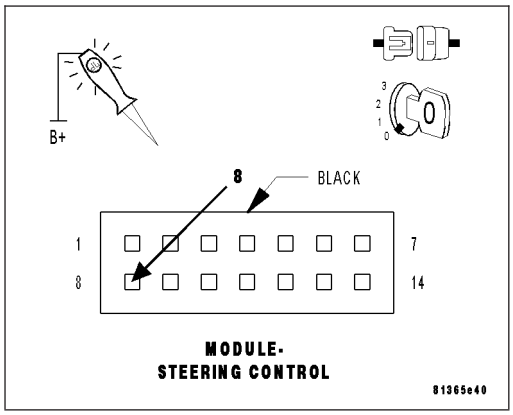

Does the test light illuminate brightly?

Yes >> Go To 4

No >> Repair the (Z910) ground circuit for an open. Perform BODY VERIFICATION TEST – VER 1. (Refer to BODY VERIFICATION TEST – VER 1).

4. (D55) AND (D54) CAN B BUS CIRCUITS OPEN

NOTE: One open circuit will not cause this condition.

Measure the voltage between the (D54) CAN B Bus (-) circuit and ground.

Measure the voltage between the (D55) CAN B Bus (+) circuit and ground.

Is there any voltage present on either circuit?

Yes >> Replace the Steering Control Module in accordance with the service information.

Perform BODY VERIFICATION TEST – VER 1. (Refer to BODY VERIFICATION TEST – VER 1).

No >> Repair the (D55) and (D54) CAN B Bus circuits for an open. Inspect the connector for damage.

Perform BODY VERIFICATION TEST – VER 1. (Refer to BODY VERIFICATION TEST – VER 1).

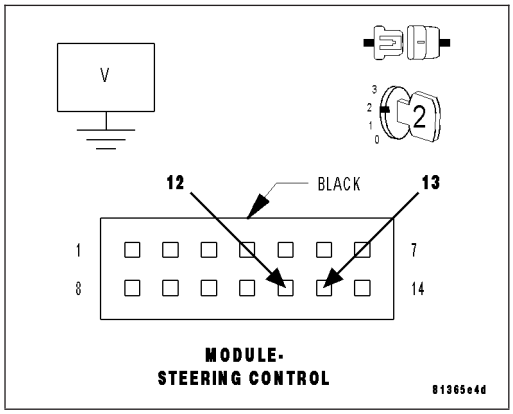

*NO RESPONSE FROM SUNR (SUNROOF MOTOR/MODULE)

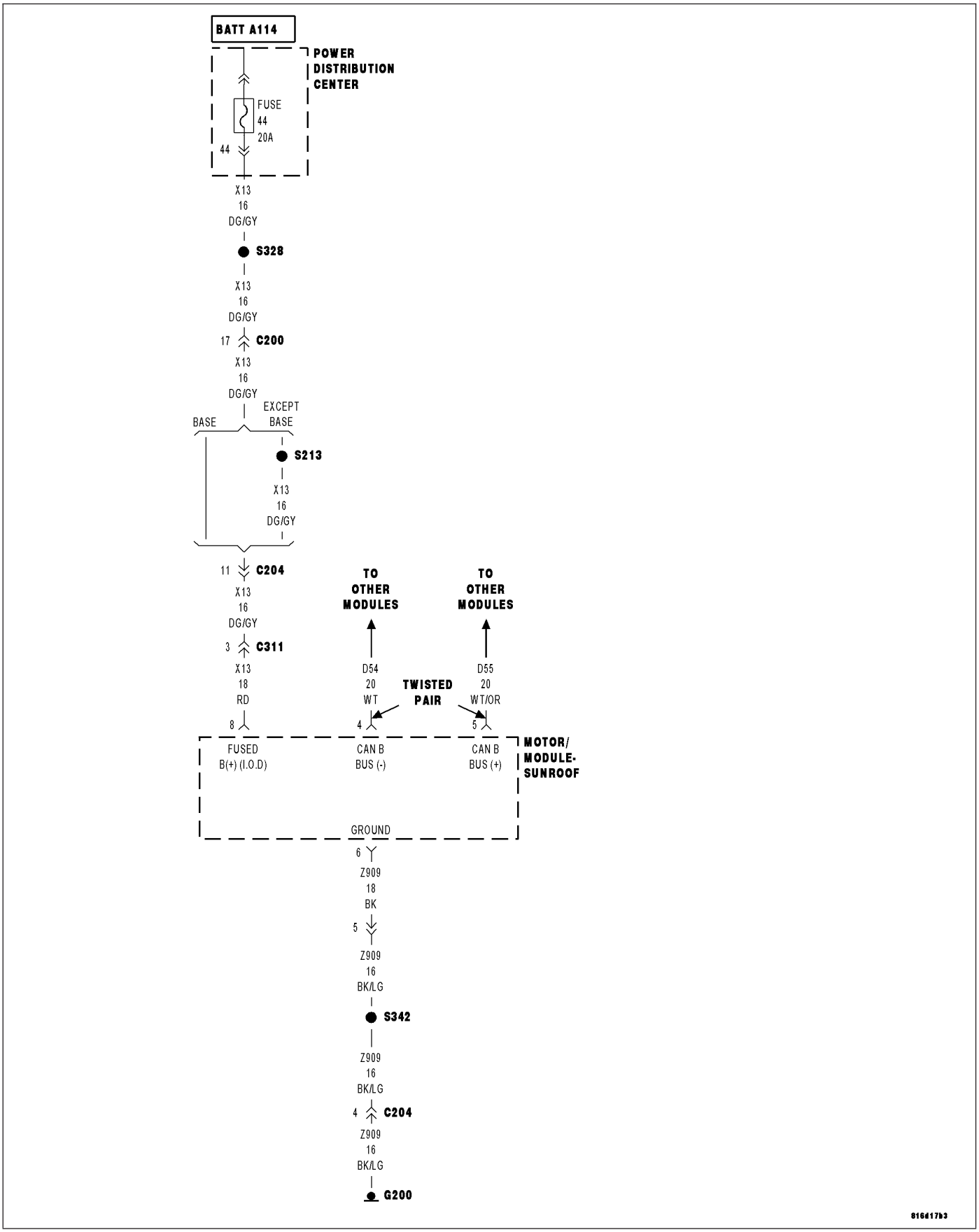

For a complete wiring diagram **Refer to Section 8W**.

Possible Causes
(X13) FUSED B (+) CIRCUIT OPEN OR SHORTED
(Z909) GROUND CIRCUIT OPEN
(D55) AND (D54) CAN B BUS CIRCUITS OPEN
SUNROOF MOTOR/MODULE

Diagnostic Test

1. TEST FOR INTERMITTENT CONDITION

Turn the ignition on.

NOTE: Ensure the IOD fuse is installed and battery voltage is between 10.0 and 16.0 volts.
With the scan tool, select ECU View.

NOTE: A red X will be next to the module that is not communicating, indicating that the module is not active on the Bus network. A green check indicates that the module is active on the Bus network.

Does the scan tool display a red X next to the module?

Yes >> Go To 2

No >> The no response condition is not present at this time. Using the wiring diagram/schematic as a guide, inspect the wiring for chafed, pierced, pinched, and partially broken wires and the wiring harness connectors for broken, bent, pushed out, and corroded terminals.

2. (X13) FUSED B(+) CIRCUIT OPEN OR SHORTED

Turn the ignition off.

Disconnect the Sunroof Motor/Module harness connector.

Using a 12-volt test light connected to ground, check the (X13) Fused B(+) circuit.

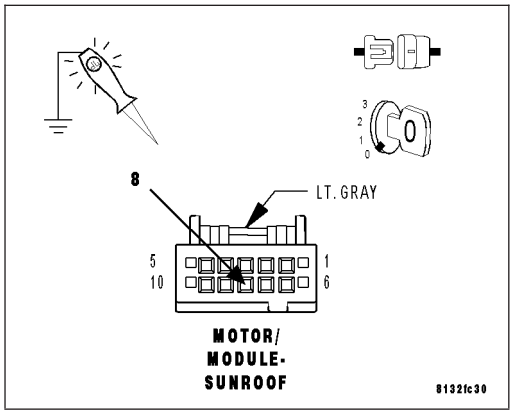

Does the test light illuminate brightly?

Yes >> Go To 3

No >> Repair the (X13) Fused B(+) circuit for an open or short.
Perform BODY VERIFICATION TEST – VER 1. (Refer to BODY VERIFICATION TEST – VER 1).

3. (Z909) GROUND CIRCUIT OPEN

Using a 12-volt test light connected to 12-volts, check the (Z909) ground circuit.

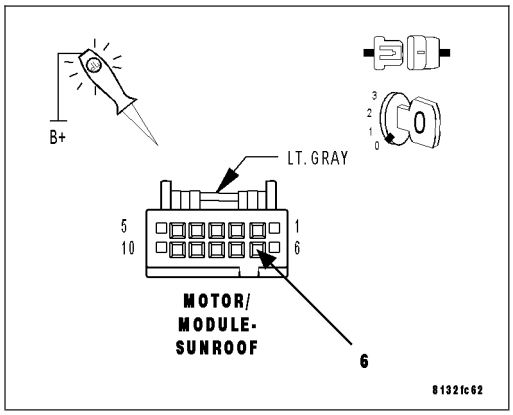

Does the test light illuminate brightly?

Yes >> Go To 4

No >> Repair the (Z909) ground circuit for an open.
Perform BODY VERIFICATION TEST – VER 1. (Refer to BODY VERIFICATION TEST – VER 1).

4. (D55) AND (D54) CAN B BUS CIRCUITS OPEN

NOTE: One open circuit will not cause this condition.

Measure the voltage between the (D54) CAN B Bus (-) circuit and ground.

Measure the voltage between the (D55) CAN B Bus (+) circuit and ground.

Is there any voltage present on either circuit?

Yes >> Replace the Sunroof Motor/Module in accordance with the service information.

Perform BODY VERIFICATION TEST – VER 1. (Refer to BODY VERIFICATION TEST – VER 1).

No >> Repair the (D55) and (D54) CAN B Bus circuits for an open. Inspect the connector for damage.

Perform BODY VERIFICATION TEST – VER 1. (Refer to BODY VERIFICATION TEST – VER 1).

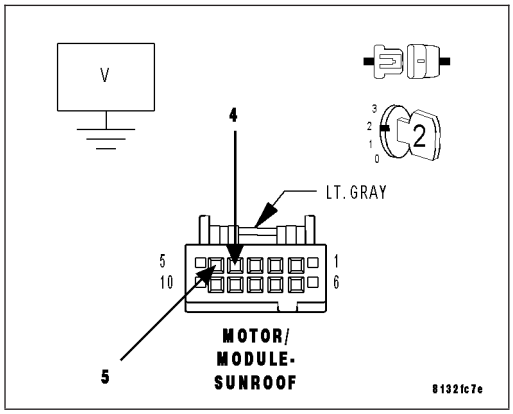

*NO RESPONSE FROM TCM (TRANSMISSION CONTROL MODULE) - NAG1

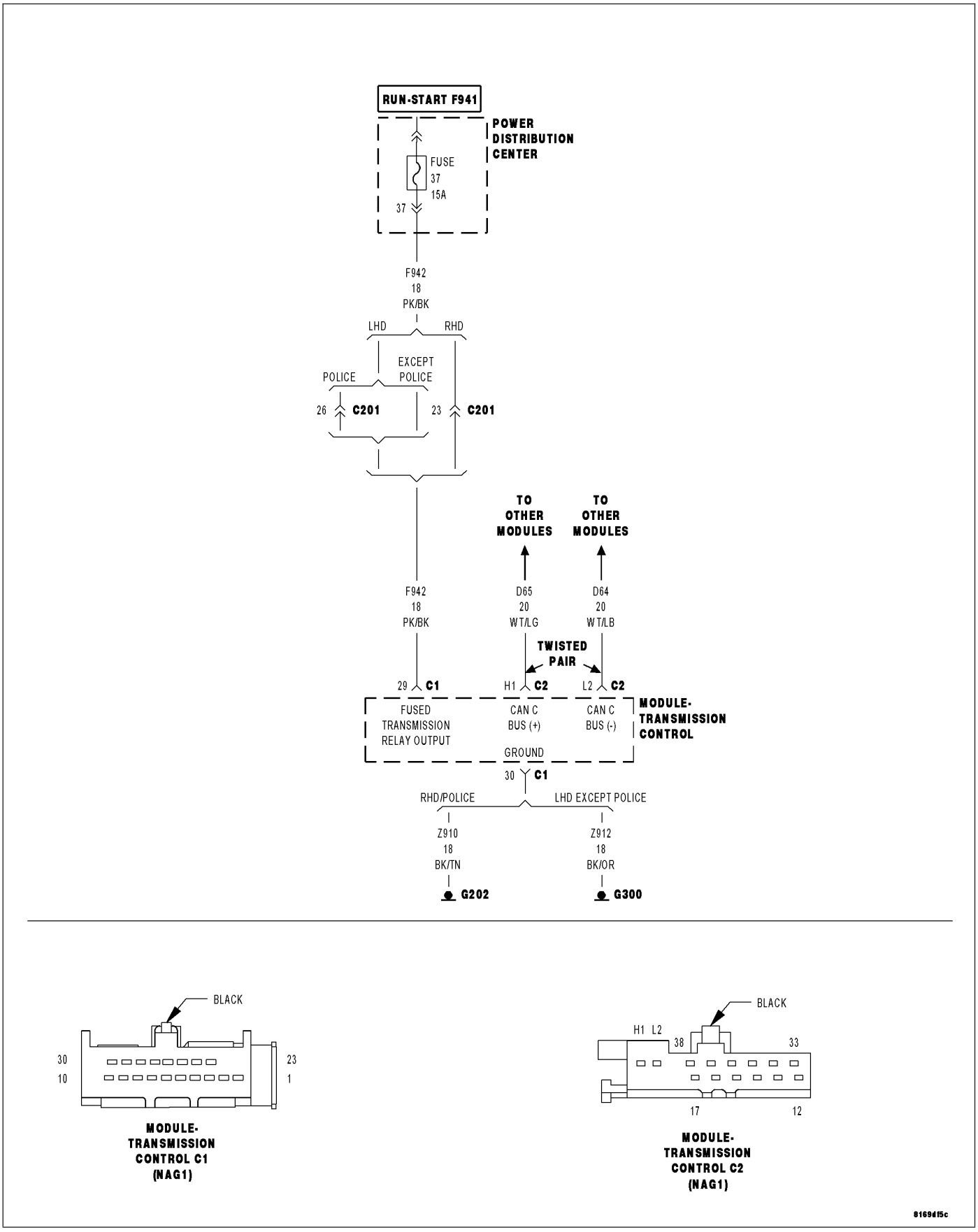

For a complete wiring diagram **Refer to Section 8W**.

Possible Causes
(Z910) or (Z912) GROUND CIRCUIT OPEN
(F942) FUSED TRANSMISSION RELAY OUTPUT CIRCUIT OPEN OR SHORT
(D65) CAN C BUS (+) CIRCUIT OPEN
(D64) CAN C BUS (-) CIRCUIT OPEN
TRANSMISSION CONTROL MODULE

Diagnostic Test

1. TEST FOR INTERMITTENT CONDITION

Turn the ignition on.

NOTE: Ensure the IOD fuse is installed and battery voltage is between 10.0 and 16.0 volts.
With the scan tool, select ECU View.

NOTE: A red X will be next to the module that is not communicating, indicating that the module is not active on the Bus network. A green check indicates that the module is active on the Bus network.

NOTE: Check the FCM for any active CAN C hardware and any ignition related DTCs, perform DTCs before proceeding.

Does the scan tool display a red X next to the module?

Yes >> Go To 2

No >> The no response condition is not present at this time. Using the wiring diagram/schematic as a guide, inspect the wiring for chafed, pierced, pinched, and partially broken wires and the wiring harness connectors for broken, bent, pushed out, and corroded terminals.

2. CHECK THE (Z910) OR (Z912) GROUND CIRCUIT FOR AN OPEN

Turn the ignition off.

Disconnect the Transmission Control Module C1 harness connector.

Using a 12-volt test light connected to 12-volts, check the (Z910) or (Z912) ground circuit.

Does the test light illuminate brightly?

Yes >> Go To 3

No >> Repair the (Z910) or (Z912) ground circuit for an open.
Perform NAG1 TRANSMISSION VERIFICATION TEST - VER 1.

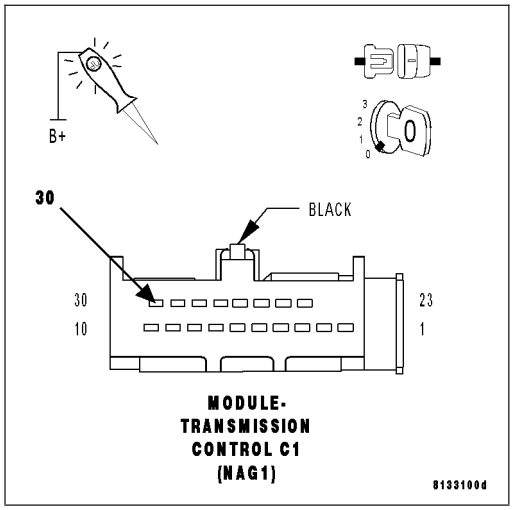

3. (F942) FUSED TRANSMISSION RELAY OUTPUT CIRCUIT OPEN OR SHORTED

Turn the ignition on.

Using a 12-volt test light connected to ground, check the (F942) Fused Transmission Relay Output circuit.

Does the test light illuminate brightly?

Yes >> Go To 4

No >> Repair the (F942) Fused Transmission Relay Output circuit for an open or short.
Perform NAG1 TRANSMISSION VERIFICATION TEST - VER 1.

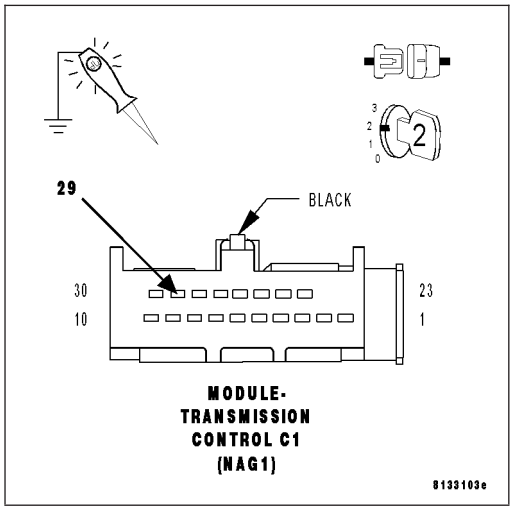

4. (D65) CAN C BUS (+) CIRCUIT OPEN

Turn the ignition off.

Disconnect the FCM C1 harness connector.

Disconnect the TCM C2 harness connector.

Measure the resistance of the (D65) CAN C Bus (+) circuit between the FCM connector and the TCM connector.

Is resistance below 5.0 ohms?

Yes >> Go To 5

No >> Repair the (D65) CAN C Bus (+) circuit for an open.
Perform NAG1 TRANSMISSION VERIFICATION TEST - VER 1.

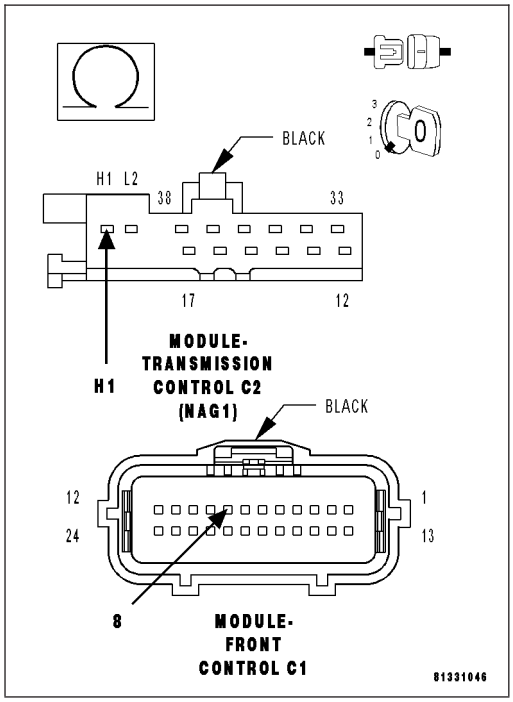

5. (D64) CAN C BUS (-) CIRCUIT OPEN

Measure the resistance of the (D64) CAN C Bus (-) circuit between the FCM connector and the TCM connector.

Is resistance below 5.0 ohms?

Yes >> Replace the Transmission Control Module in accordance with the service information.
Perform NAG1 TRANSMISSION VERIFICATION TEST - VER 1.

No >> Repair the (D64) CAN C Bus (-) circuit for an open.
Perform NAG1 TRANSMISSION VERIFICATION TEST - VER 1.

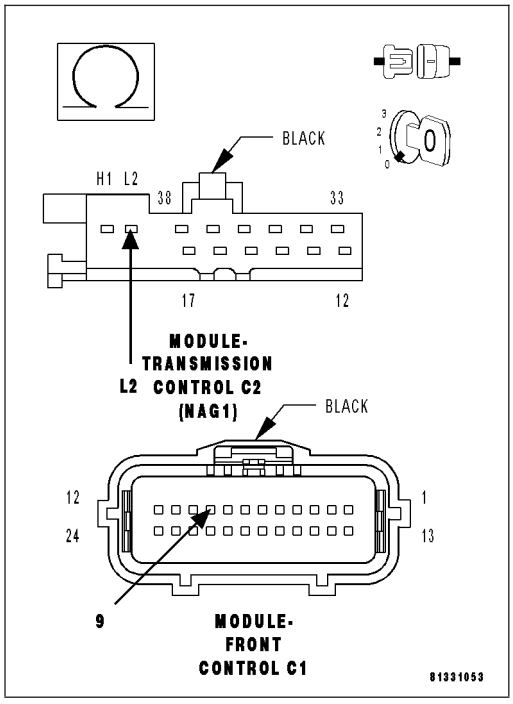

*NO RESPONSE FROM TCM (TRANSMISSION CONTROL MODULE) – NGC

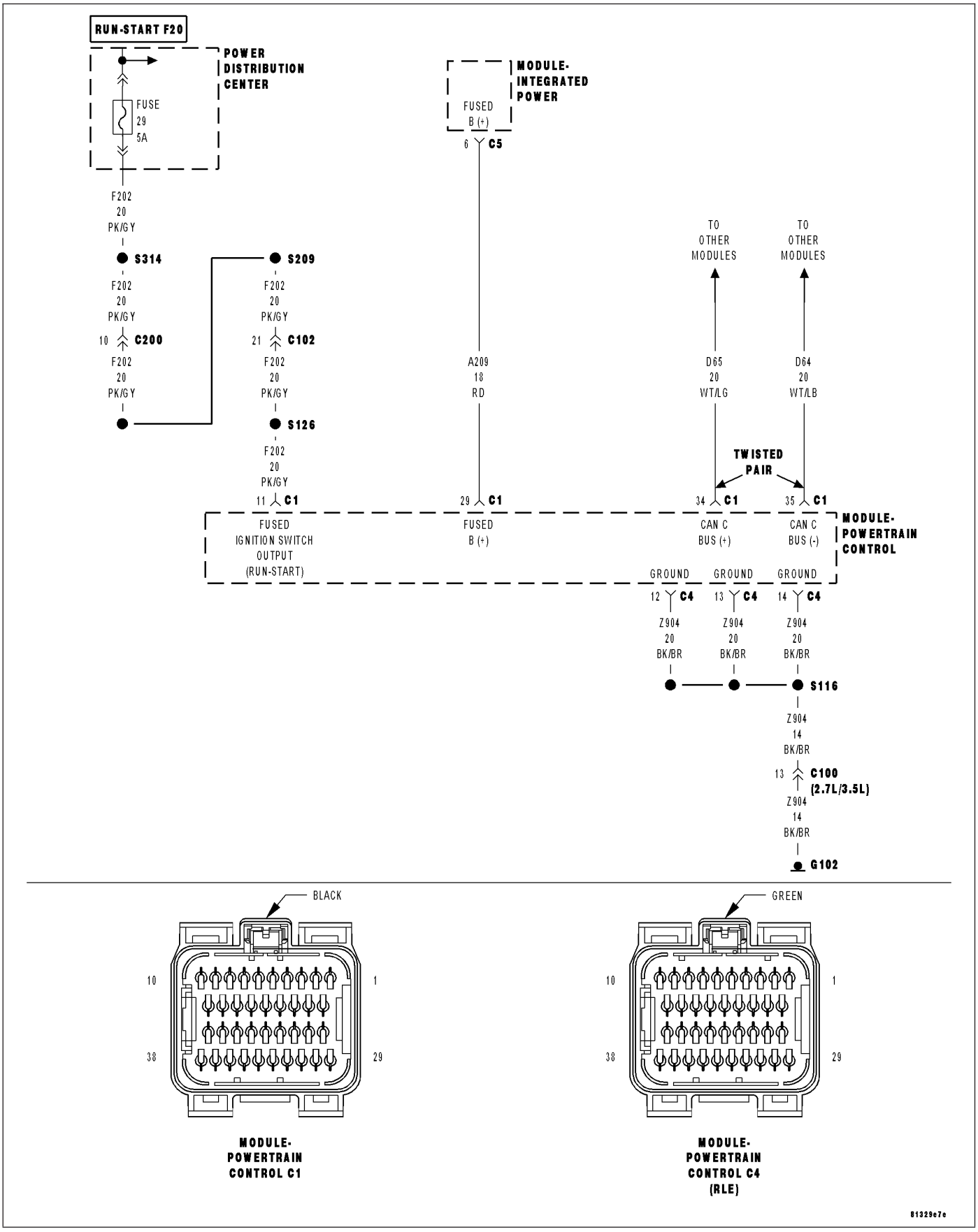

For a complete wiring diagram **Refer to Section 8W**.

Possible Causes
(A209) FUSED B(+) CIRCUIT OPEN OR SHORTED
(Z904) GROUND CIRCUIT OPEN
(F202) FUSED IGNITION SW OUTPUT CIRCUIT OPEN OR SHORTED
(D65) CAN C BUS (+) CIRCUIT OPEN
(D64) CAN C BUS (-) CIRCUIT OPEN
POWERTRAIN CONTROL MODULE

Diagnostic Test

1. TEST FOR INTERMITTENT CONDITION

Turn the ignition on.

NOTE: Ensure the IOD fuse is installed and battery voltage is between 10.0 and 16.0 volts.
With the scan tool, select ECU View.

NOTE: A red X will be next to the module that is not communicating, indicating that the module is not active on the Bus network. A green check indicates that the module is active on the Bus network.

NOTE: Check the FCM for any active CAN C hardware DTCs, perform DTC before proceeding.

Does the scan tool display a red X next to the module?

Yes >> Go To 2

No >> The no response condition is not present at this time. Using the wiring diagram/schematic as a guide, inspect the wiring for chafed, pierced, pinched, and partially broken wires and the wiring harness connectors for broken, bent, pushed out, and corroded terminals.

2. ATTEMPT TO COMMUNICATE WITH THE PCM

With the scan tool in ECU view, observe the status of the PCM.

Does the scan tool display a red X next to the PCM?

Yes >> Refer to the No Response From PCM test procedure. Refer to the table of contents in this section.

No >> Go To 3

3. (Z904) GROUND CIRCUIT OPEN

Turn the ignition off.

Disconnect the PCM C4 harness connector.

CAUTION: Do not probe the PCM harness connectors. Probing the PCM harness connectors will damage the PCM terminals resulting in poor terminal to pin connection. Install Miller Special Tool #8815 to perform diagnosis.

Using a 12-volt test light connected to 12-volts, check each (Z904) ground circuit.

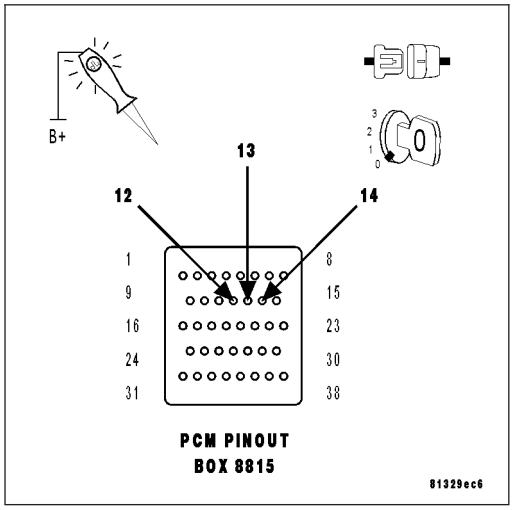

Does the test light illuminate brightly for each circuit?

Yes >> Replace and program the Powertrain Control Module in accordance with the service information.

No >> Repair the (Z904) ground circuit for an open.
Perform the appropriate TRANSMISSION VERIFICATION TEST.

*NO RESPONSE FROM VES (MONITOR/DVD MEDIA SYSTEM)

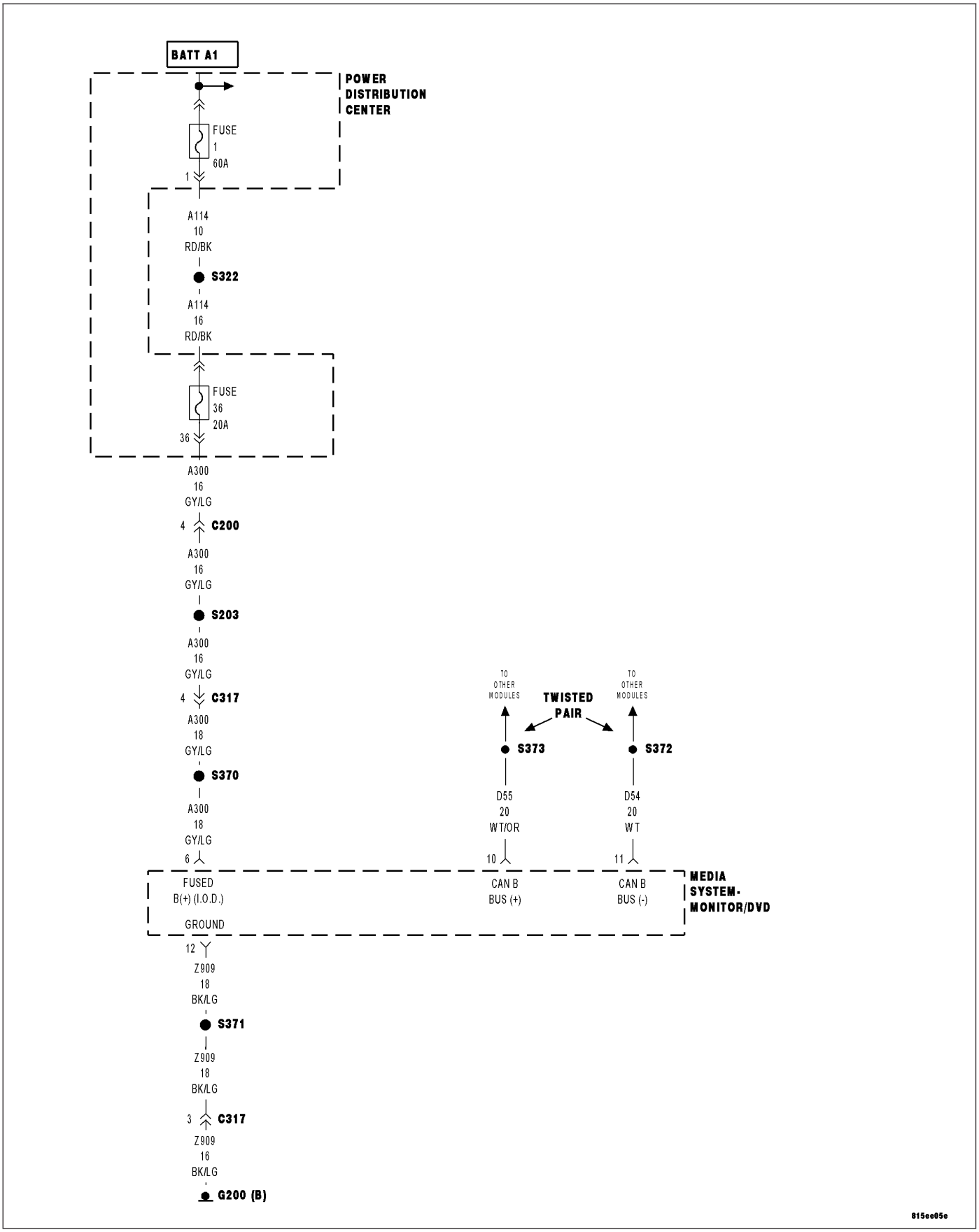

For a complete wiring diagram **Refer to Section 8W**.

Possible Causes
(A300) FUSED B (+) CIRCUIT OPEN OR SHORTED
(Z909) GROUND CIRCUIT OPEN
(D55) AND (D54) CAN B BUS CIRCUITS OPEN
MONITOR/DVD MEDIA SYSTEM

Diagnostic Test

1. TEST FOR INTERMITTENT CONDITION

Turn the ignition on.

NOTE: Ensure the IOD fuse is installed and battery voltage is between 10.0 and 16.0 volts.
With the scan tool, select ECU View.

NOTE: A red X will be next to the module that is not communicating, indicating that the module is not active on the Bus network. A green check indicates that the module is active on the Bus network.

Does the scan tool display a red X next to the module?

Yes >> Go To 2

No >> The no response condition is not present at this time. Using the wiring diagram/schematic as a guide, inspect the wiring for chafed, pierced, pinched, and partially broken wires and the wiring harness connectors for broken, bent, pushed out, and corroded terminals.

2. (A300) FUSED B(+) CIRCUIT OPEN OR SHORTED

Turn the ignition off.

Disconnect the Monitor/DVD Media System harness connector.

Using a 12-volt test light connected to ground, check the (A300) Fused B(+) circuit.

Does the test light illuminate brightly?

Yes >> Go To 3

No >> Repair the (A300) Fused B(+) circuit for an open or short. Perform BODY VERIFICATION TEST – VER 1. (Refer to BODY VERIFICATION TEST – VER 1).

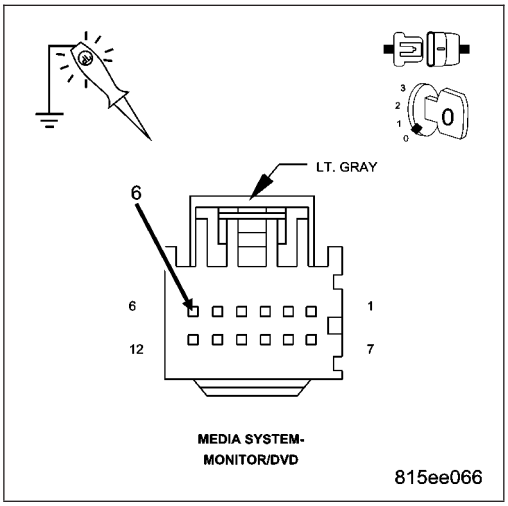

3. (Z909) GROUND CIRCUIT OPEN

Using a 12-volt test light connected to 12-volts, check the (Z909) ground circuit.

Does the test light illuminate brightly?

Yes >> Go To 4

No >> Repair the (Z909) ground circuit for an open.
Perform BODY VERIFICATION TEST – VER 1. (Refer to BODY VERIFICATION TEST – VER 1).

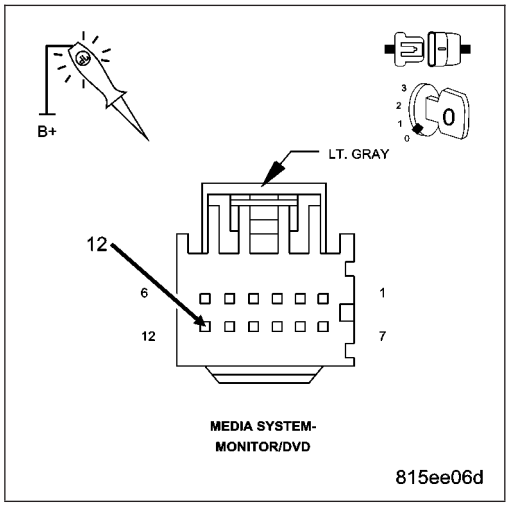

4. (D55) AND (D54) CAN B BUS CIRCUITS OPEN

NOTE: One open circuit will not cause this condition.
Measure the voltage between the (D54) CAN B Bus (-) circuit and ground.
Measure the voltage between the (D55) CAN B Bus (+) circuit and ground.

Is there any voltage present on either circuit?

Yes >> Replace the Monitor/DVD Media System in accordance with the service information.
Perform BODY VERIFICATION TEST – VER 1. (Refer to BODY VERIFICATION TEST – VER 1).

No >> Repair the (D55) and (D54) CAN B Bus circuits for an open. Inspect the connector for damage.
Perform BODY VERIFICATION TEST – VER 1. (Refer to BODY VERIFICATION TEST – VER 1).

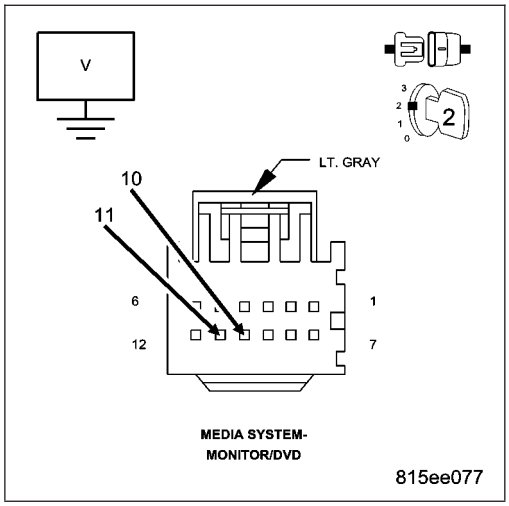

*NO RESPONSE FROM WCM (WIRELESS CONTROL MODULE) – (SENTRY KEY REMOTE ENTRY MODULE)

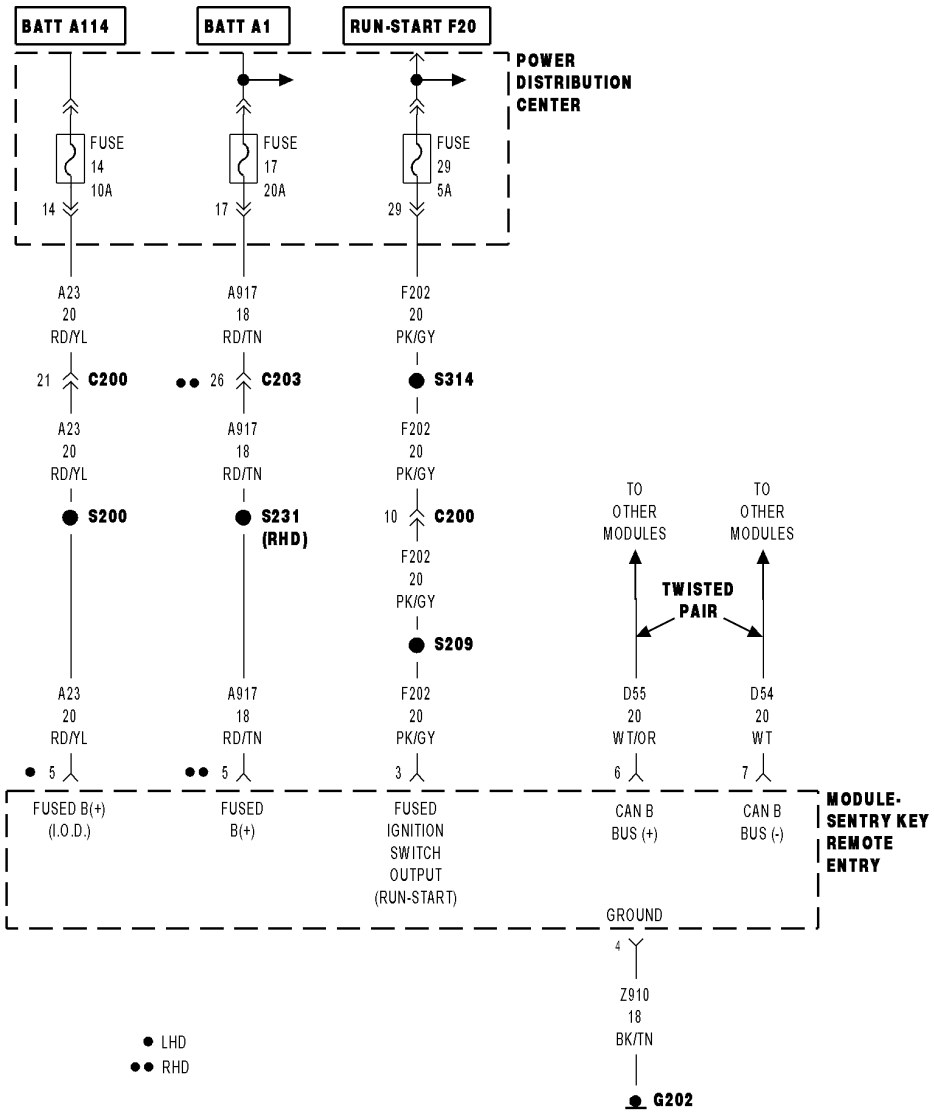

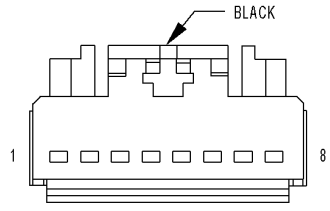

MODULE-SENTRY KEY REMOTE ENTRY

81781872

For a complete wiring diagram **Refer to Section 8W**.

Possible Causes
(A23), OR (A917) (RHD) FUSED B(+) CIRCUIT OPEN OR SHORTED
(Z910) GROUND CIRCUIT OPEN
(F202) FUSED IGNITION SWITCH OUTPUT CIRCUIT OPEN OR SHORTED
(D55) AND (D54) CAN B BUS CIRCUITS OPEN
SENTRY KEY REMOTE ENTRY MODULE

Diagnostic Test

1. TEST FOR INTERMITTENT CONDITION

Turn the ignition on.

NOTE: Ensure the IOD fuse is installed and battery voltage is between 10.0 and 16.0 volts.
With the scan tool, select ECU View.

NOTE: A red X will be next to the module that is not communicating, indicating that the module is not active on the Bus network. A green check indicates that the module is active on the Bus network.

Does the scan tool display a red X next to the module?

Yes >> Go To 2

No >> The no response condition is not present at this time. Using the wiring diagram/schematic as a guide, inspect the wiring for chafed, pierced, pinched, and partially broken wires and the wiring harness connectors for broken, bent, pushed out, and corroded terminals.

2. (A23) FUSED B(+) CIRCUIT OPEN OR SHORTED

Turn the ignition off.

Disconnect the Sentry Key Remote Entry Module harness connector.

Using a 12-volt test light connected to ground, check the (A23) or (A917) (RHD) Fused B(+) circuit.

Does the test light illuminate brightly?

Yes >> Go To 3

No >> Repair the (A23) or (A917) (RHD) Fused B(+) circuit for an open or short.
Perform SKREEM VERIFICATION TEST.

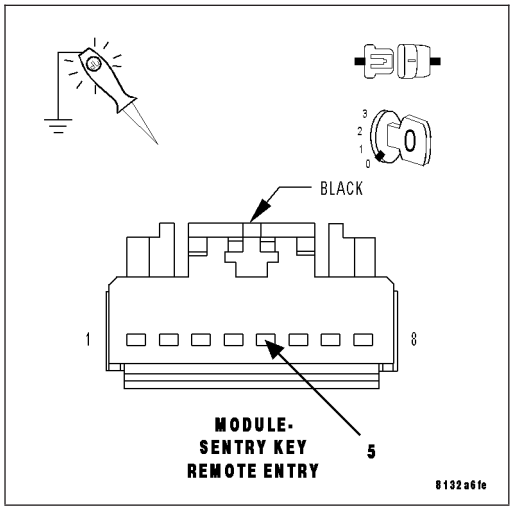

3. (Z910) GROUND CIRCUIT OPEN

Using a 12-volt test light connected to 12-volts, check the (Z910) ground circuit.

Does the test light illuminate brightly?

Yes >> Go To 4

No >> Repair the (Z910) ground circuit for an open.
Perform SKREEM VERIFICATION TEST.

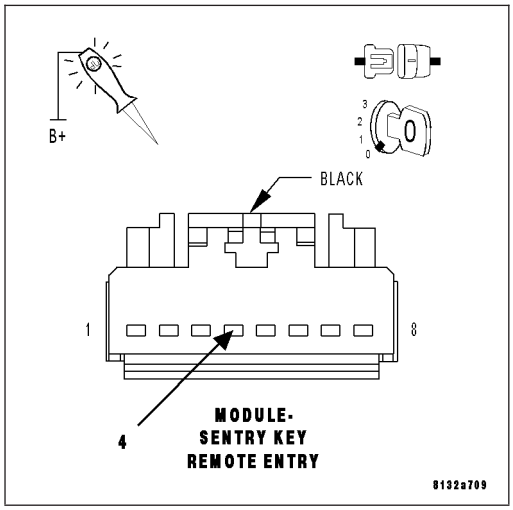

4. (F202) FUSED IGNITION SWITCH OUTPUT CIRCUIT OPEN OR SHORTED

Turn the ignition on.

Using a 12-volt test light connected to ground, check the (F202) Fused Ignition Switch Output circuit.

Does the test light illuminate brightly?

Yes >> Go To 5

No >> Repair the (F202) Fused Ignition Switch Output circuit for an open or short.
Perform SKREEM VERIFICATION TEST.

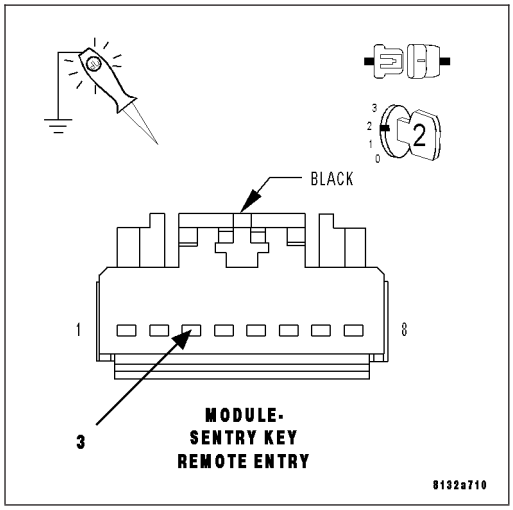

5. (D55) AND (D54) CAN B BUS CIRCUITS OPEN

NOTE: One open circuit will not cause this condition.

Measure the voltage between the (D54) CAN B Bus (-) circuit and ground.

Measure the voltage between the (D55) CAN B Bus (+) circuit and ground.

Is there any voltage present on either circuit?

Yes >> Replace the Sentry Key Remote Entry Module in accordance with the service information.
Perform SKREEM VERIFICATION TEST.

No >> Repair the (D55) and (D54) CAN B Bus circuits for an open. Inspect the connector for damage.
Perform SKREEM VERIFICATION TEST.

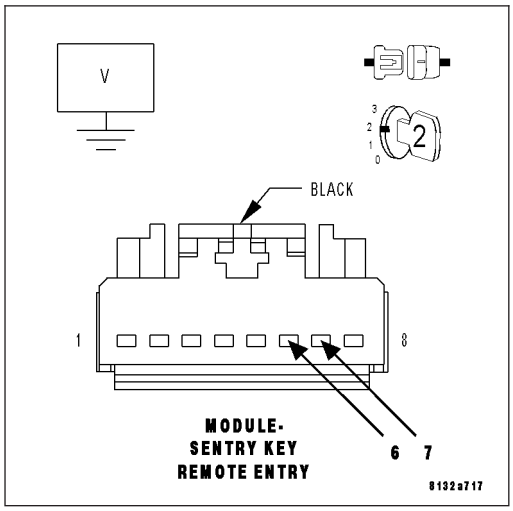

ELECTRONIC CONTROL MODULES - SERVICE INFORMATION

TABLE OF CONTENTS

page

ELECTRONIC CONTROL MODULES - SERVICE INFORMATION
STANDARD PROCEDURE
PCM/SKREEM PROGRAMMING 243
MODULE-ANTILOCK BRAKE - MK25
DESCRIPTION 245
OPERATION 245
REMOVAL 246
INSTALLATION 248
MODULE-ANTILOCK BRAKE - MK25E
DESCRIPTION 250
OPERATION 250
REMOVAL 251
INSTALLATION 254
COMMUNICATION
DESCRIPTION 258
OPERATION 258
MODULE-DOOR
DESCRIPTION 261
OPERATION 261
REMOVAL 262
INSTALLATION 262
MODULE-ENGINE CONTROL
DESCRIPTION 263
OPERATION 264
STANDARD PROCEDURE - ECM/SKIM PROGRAMMING - DIESEL 266
REMOVAL 268
INSTALLATION 269
MODULE-FRONT CONTROL
DESCRIPTION 270
OPERATION 270
DIAGNOSIS AND TESTING
BODY VERIFICATION TEST – VER 1 272
REMOVAL 273
INSTALLATION 273
MODULE-SEAT MEMORY
DESCRIPTION 274
OPERATION 274
DIAGNOSIS AND TESTING
MEMORY SEAT MODULE 275
REMOVAL 276
INSTALLATION 276
MODULE-STEERING CONTROL
DESCRIPTION 277
OPERATION 277
MODULE-POWERTRAIN CONTROL
DESCRIPTION
DESCRIPTION - PCM 278
MODES OF OPERATION 278
5 VOLT SUPPLIES 281
IGNITION CIRCUIT SENSE 281
POWER GROUNDS 281
SENSOR RETURN 282
OPERATION
OPERATION - PCM 282
5 VOLT SUPPLIES 283
OPERATION - IGNITION CIRCUIT SENSE 284
DIAGNOSIS AND TESTING
NGC POWERTRAIN VERIFICATION TEST VER - 1 285
NGC POWERTRAIN VERIFICATION TEST VER - 2 286
NGC POWERTRAIN VERIFICATION TEST VER - 3 287
NGC POWERTRAIN VERIFICATION TEST VER - 4 288
NGC POWERTRAIN VERIFICATION TEST VER - 5 290
NGC POWERTRAIN VERIFICATION TEST VER - 6 291
STANDARD PROCEDURE
TCM QUICK LEARN - 42RLE Only 291
TCM ADAPTATION - NAG1 Only 292
REMOVAL 292
INSTALLATION 294
MODULE-TRANSMISSION CONTROL
DESCRIPTION
TRANSMISSION CONTROL MODULE - 42RLE 296
TRANSMISSION CONTROL MODULE - NAG1 296
OPERATION
TRANSMISSION CONTROL MODULE - 42RLE 297
TRANSMISSION CONTROL MODULE - NAG1 299
STANDARD PROCEDURE
TCM QUICK LEARN - 42RLE Only 303
TCM ADAPTATION - NAG1 Only 303

ELECTRONIC CONTROL MODULES - SERVICE INFORMATION

STANDARD PROCEDURE

PCM/SKREEM PROGRAMMING

NOTE: Before replacing the Powertrain Control Module (PCM), be certain to check the related component/ circuit integrity for failures not detected due to a double fault in the circuit. Most PCM driver/control circuit failures are caused by internal component failures (i.e. relays and solenoids) and shorted circuits (i.e. pull-ups, drivers, and switched circuits). These failures are difficult to detect when a double fault has occurred and only one Diagnostic Trouble Code (DTC) has been set.

NOTE: After a SKREEM/WCM is replaced, the ignition/transponder keys need to be programmed to the new SKREEM/WCM. Follow the directions on the diagnostic scan tool. The transponder key for the SKREES/ SKIM and the RKE will both be programmed during this operation. There is no need to program the fob of the key for RKE functionality once the transponder key is programmed to the new SKREEM/WCM.

NOTE: When a PCM and the SKREEM/WCM are replaced at the same time, perform the following steps in order:

- Program the new PCM.
- Program the new SKREEM/WCM.
- Program all ignition/transponder keys to the new SKREEM/WCM.

(Refer to 8 - ELECTRICAL/ELECTRONIC CONTROL MODULES - STANDARD PROCEDURE - PCM/SKREEM PROGRAMMING).

PROGRAMMING THE PCM/SKREEM

The SKIS Secret Key is an ID code that is unique to each SKREEM/WCM. This code is programmed and stored in the SKREEM/WCM, the PCM, and each ignition key transponder chip. When the PCM or SKREEM/WCM is replaced, it is necessary to program the Secret Key into the new module using a diagnostic scan tool. Follow the programming steps outlined in the diagnostic scan tool for “PCM Replaced” or “WCM Replaced” under “Miscellaneous Functions” for the “WCM/Wireless Control Module” menu item as appropriate.

NOTE: Be certain to enter the correct country code for the SKREEM/WCM. If the incorrect country code is programmed into the SKREEM/WCM, it cannot be changed and the SKREEM/WCM must be replaced.

NOTE: If the PCM and the SKREEM/WCM are replaced at the same time, all vehicle ignition keys will need to be programmed into the new SKREEM/WCM.

NOTE: Programming the PCM or SKREEM/WCM is done using a diagnostic scan tool and a PIN to enter secure access mode. If three attempts are made to enter secure access mode using an incorrect PIN, secure access mode will be locked out for one hour. To exit this lockout mode, turn the ignition to the RUN position for one hour then enter the correct PIN. (Ensure all accessories are turned OFF. Also monitor the battery state and connect a battery charger if necessary).

PROGRAMMING IGNITION KEYS TO THE SKREEM/WCM

Each ignition key transponder also has a unique ID code that is assigned at the time the key is manufactured. When a key is programmed into the SKREEM/WCM, the transponder ID code is learned by the module and the transponder acquires the unique Secret Key ID code from the SKREEM/WCM. To program ignition keys into the SKREEM/WCM, follow the programming steps outlined in the diagnostic scan tool for “Program Ignition Keys or Key FOBs” under “Miscellaneous Functions” for the “WCM/Wireless Control Module” menu item.

NOTE: A maximum of eight keys can be learned to each SKREEM/WCM. Once a key is learned to a SKREEM/WCM, that key has acquired the Secret Key for that SKREEM/WCM and cannot be used on any other vehicle at the same time.

If ignition key programming is unsuccessful, the scan tool will display one of the following error messages:

- **Programming Not Attempted** - The scan tool attempts to read the programmed key status and there are no keys programmed into SKREEM memory.
- **Programming Key Failed (Possible Used Key From Wrong Vehicle)** - SKREEM/WCM is unable to program an ignition key transponder due to one of the following:
  - The ignition key transponder is faulty.
  - The ignition key transponder is or has been already programmed to another vehicle.
- **8 Keys Already Learned, Programming Not Done** - The SKREEM/FCM transponder ID memory is full.
- **Learned Key In Ignition** - The ID for the ignition key transponder currently in the ignition lock cylinder is already programmed into SKREEM/WCM memory.

MODULE-ANTILOCK BRAKE - MK25

DESCRIPTION

The Antilock Brake Module (ABM) is a microprocessor-based device which monitors the Antilock Brake System (ABS) during normal braking and controls it when the vehicle is in an ABS stop. The ABM also monitors the Electronic Stability Program (ESP) if so equipped.

The ABM (3) is mounted to the HCU (2) as part of the Integrated Control Unit (ICU). The ABM uses a 47-Way connector on the vehicle wiring harness. The power source for the ABM is through the ignition switch in the RUN or ON position. The ABM is on the CAN-C bus.

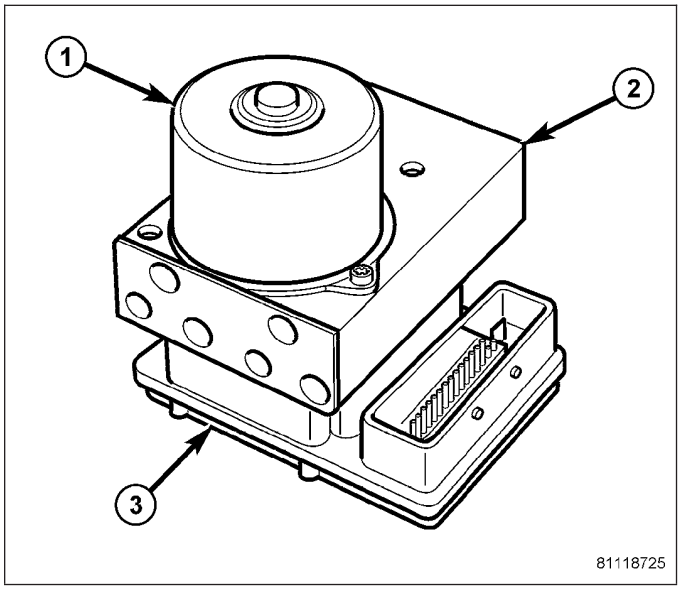

OPERATION

The primary functions of the Antilock Brake Module (ABM) are to:

- Monitor the Antilock Brake System (ABS) and Electronic Stability Program (ESP) for proper operation.
- Detect wheel locking or wheel slipping tendencies by monitoring the speed of all four wheels of the vehicle.
- Control fluid modulation to the wheel brakes while the system is in ABS or traction control mode.
- Modulates fluid pressure to the wheel brakes to control vehicle yaw rate in ESP mode.
- Store diagnostic information.
- Provide communication to the scan tool while in diagnostic mode.
- Illuminate the amber TCS/ESP indicator in the instrument cluster.

The ABM constantly monitors the ABS and ESP (if equipped) for proper operation. If the ABM detects a fault, it will turn on the amber TCS/ESP indicator and disable the ABS or ESP if so equipped. The normal base braking system will remain operational at that time.

The ABM continuously monitors the speed of each wheel through the signals generated by the wheel speed sensors to determine if any wheel is beginning to lock. When a wheel locking tendency is detected, the ABM commands the ABM solenoid coils to actuate. The coils then open and close the valves in the HCU that modulate brake fluid pressure in some or all of the hydraulic circuits. The ABM continues to control pressure in individual hydraulic circuits until a locking tendency is no longer present.

REMOVAL

1. Disconnect negative (-) battery cable (2) from battery post and isolate.

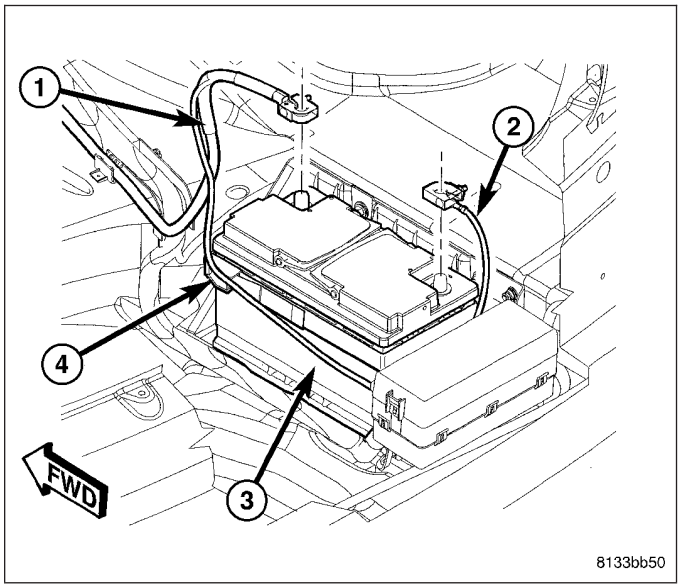

2. Disconnect 47-Way wiring connector (5) at ABM (6).

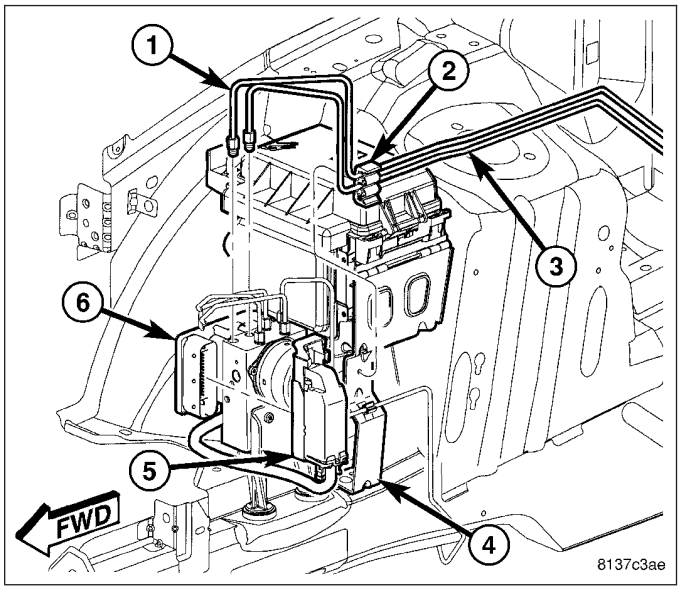

3. Unclip brake tubes (1, 2 and 10) from two routing clips (6) along upper radiator support.
4. Unclip brake tube (3) from routing clip (4) below Fuse And Relay Center.
5. Lift up on entire assembly (5) from mounting grommets (8) and move inboard allowing access to ABM attaching screws. **Do not force brake tubes. Move assembly just enough to access mounting screws.**

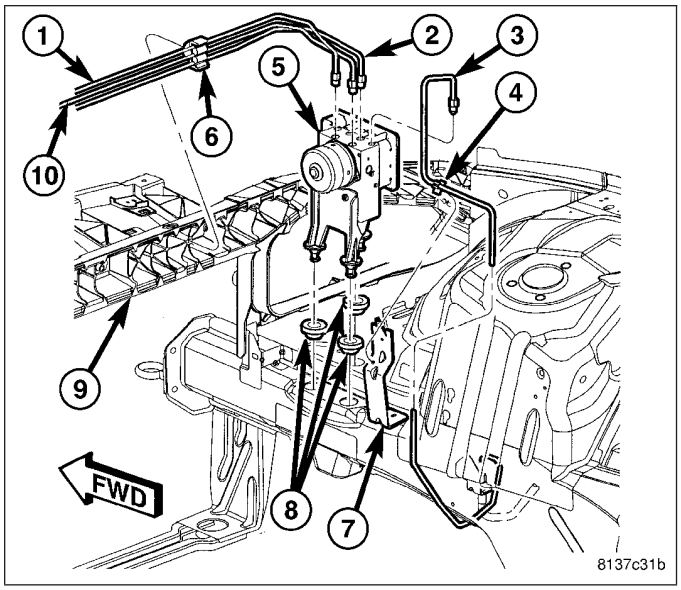

6. Remove three screws (2) attaching ABM (1).

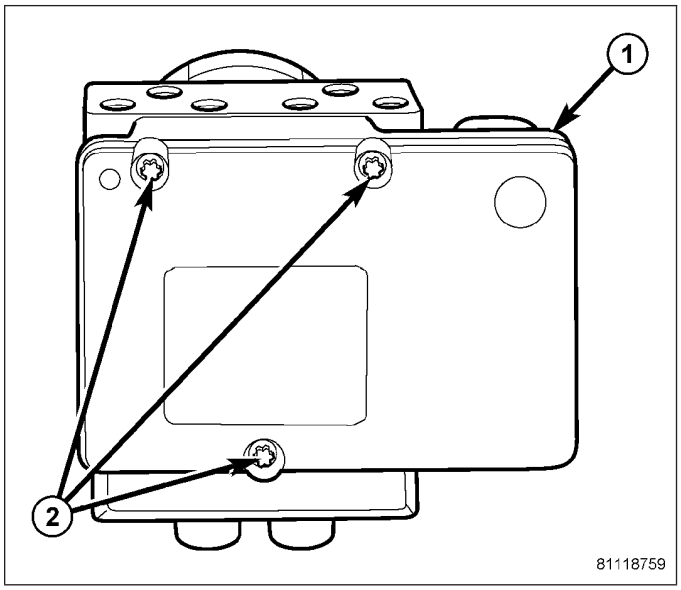

7. Slide ABM (1) off HCU (3).

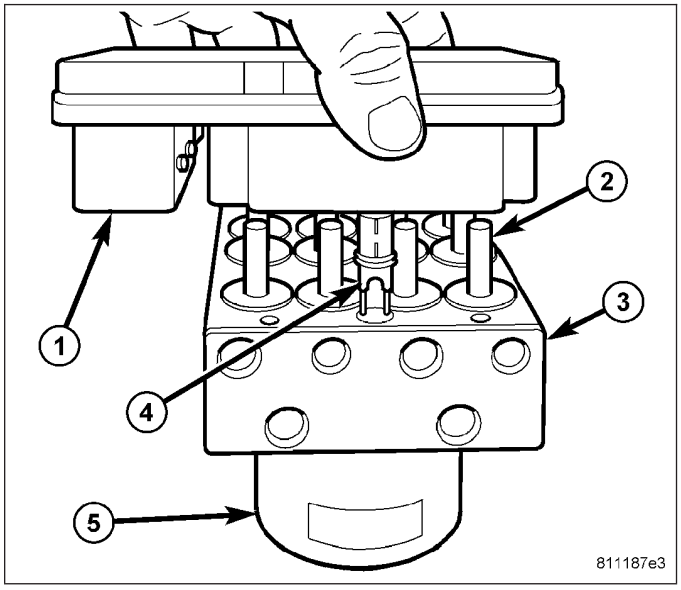

INSTALLATION

1. Align ABM solenoids and pump/motor wiring connector (4) with HCU valves (2) and connector passage. Slide ABM (1) onto HCU (3).

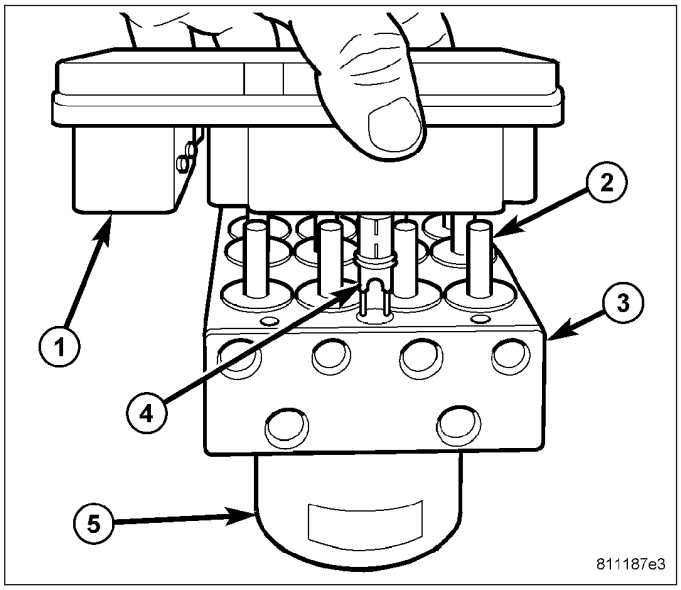

2. Install three screws (2) attaching ABM (1) to HCU. Tighten screws to 2 N·m (17 in. lbs.) torque.

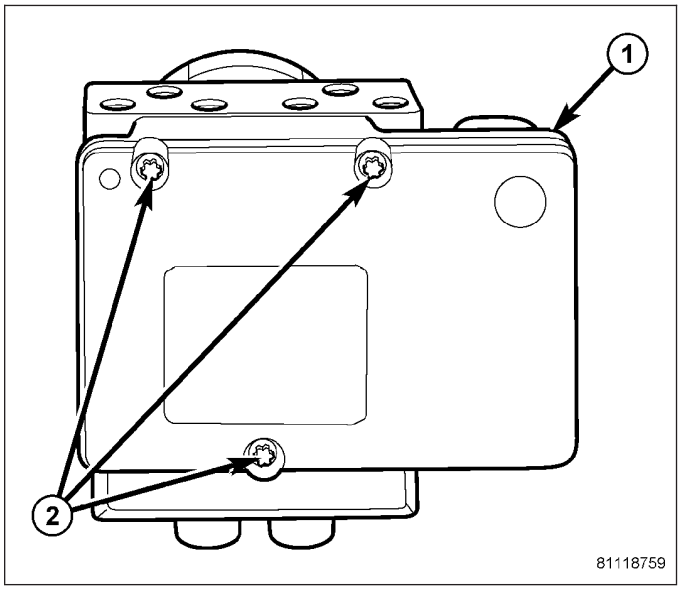

3. Position assembly (5) above mounting grommets (8) and press mounting bracket into place.
4. Clip brake tube (3) to routing clip (4) below Fuse And Relay Center.
5. Clip brake tubes (1, 2 and 10) to two routing clips (6) along upper radiator support.

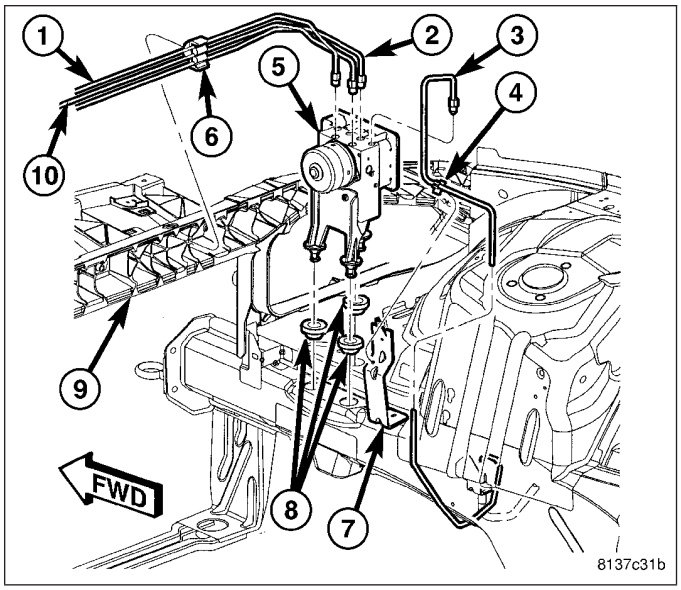

6. Connect 47-way wiring connector (5) at ABM (6).

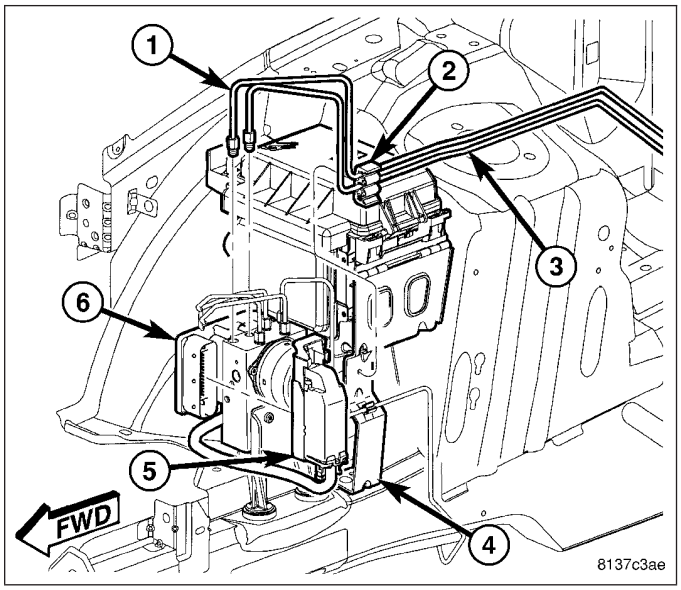

7. Connect battery negative cable (2) to battery post. It is important that this is performed properly. (Refer to 8 - ELECTRICAL/BATTERY SYSTEM - STANDARD PROCEDURE)
8. Perform Diagnostic Verification Test and clear any faults. (Refer to 5 - BRAKES - DIAGNOSIS AND TESTING)

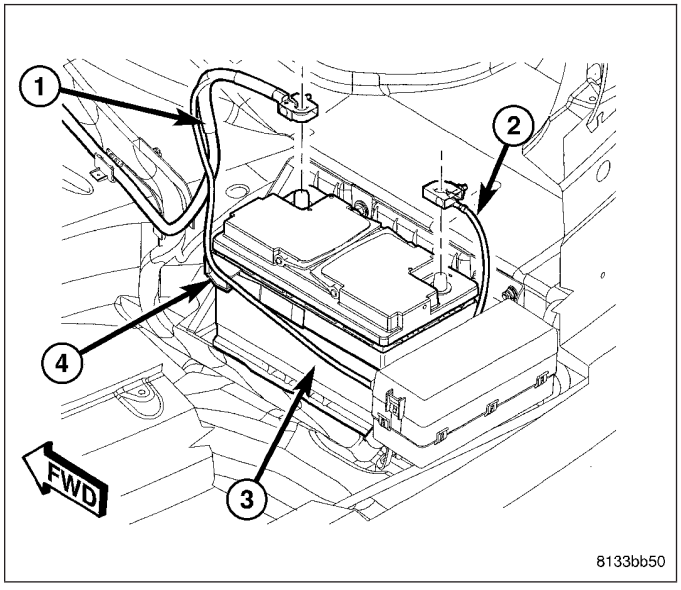

MODULE-ANTILOCK BRAKE - MK25E

DESCRIPTION

The Antilock Brake Module (ABM) is a microprocessor-based device which monitors the Antilock Brake System (ABS) during normal braking and controls it when the vehicle is in an ABS stop. The ABM also monitors the Electronic Stability Program (ESP) if so equipped.

The ABM (1) is mounted to the HCU (2) as part of the Integrated Control Unit (ICU). The ABM uses a 47-Way connector on the vehicle wiring harness. The power source for the ABM is through the ignition switch in the RUN or ON position. The ABM is on the CAN-C bus.

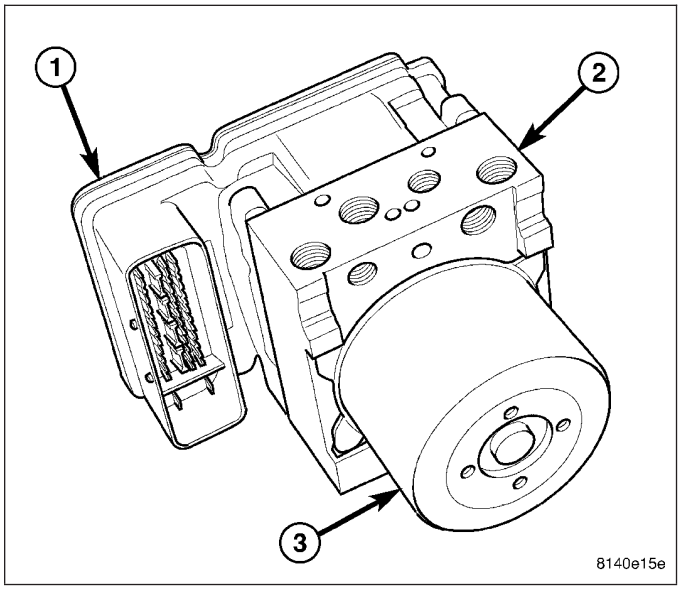

OPERATION

The primary functions of the Antilock Brake Module (ABM) are to:

- Monitor the Antilock Brake System (ABS) and Electronic Stability Program (ESP) for proper operation.
- Detect wheel locking or wheel slipping tendencies by monitoring the speed of all four wheels of the vehicle.
- Control fluid modulation to the wheel brakes while the system is in ABS or traction control mode.
- Modulates fluid pressure to the wheel brakes to control vehicle yaw rate in ESP mode.
- Store diagnostic information.
- Provide communication to the scan tool while in diagnostic mode.
- Illuminate the amber TCS/ESP indicator in the instrument cluster.

The ABM constantly monitors the ABS and ESP (if equipped) for proper operation. If the ABM detects a fault, it will turn on the amber TCS/ESP indicator and disable the ABS or ESP if so equipped. The normal base braking system will remain operational at that time.

The ABM continuously monitors the speed of each wheel through the signals generated by the wheel speed sensors to determine if any wheel is beginning to lock. When a wheel locking tendency is detected, the ABM commands the ABM solenoid coils to actuate. The coils then open and close the valves in the HCU that modulate brake fluid pressure in some or all of the hydraulic circuits. The ABM continues to control pressure in individual hydraulic circuits until a locking tendency is no longer present.

REMOVAL

1. Disconnect negative (-) battery cable (2) from battery post and isolate.

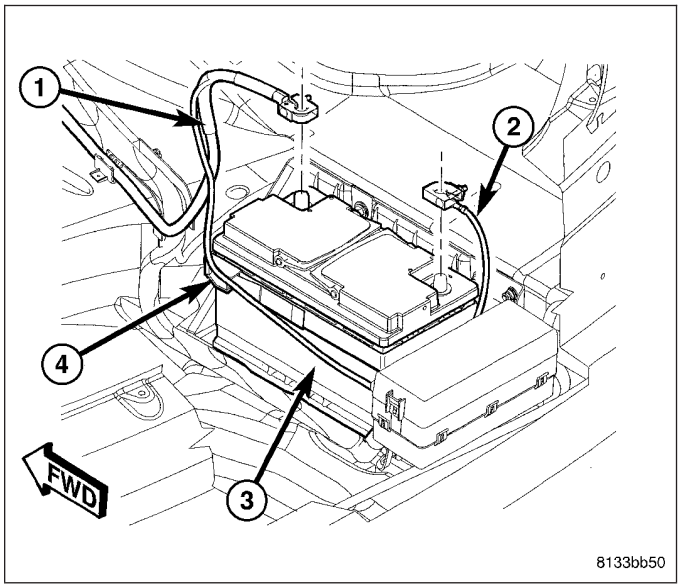

NOTE: Use this figure in the following step to release the ABM harness connector cover. It shows the location of the release tabs.

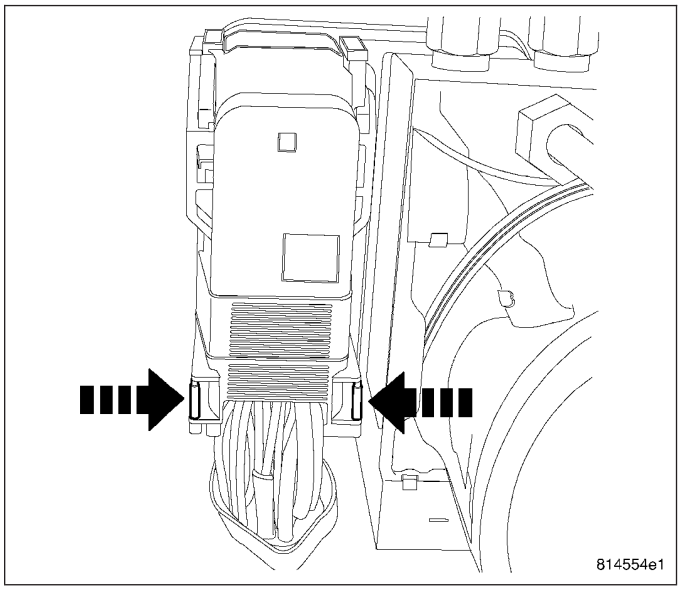

2. Disconnect ABM harness connector from antilock brake module (ABM). To do so:
   a. Depress tabs on each side of connector cover, then
   b. Pull outward and upward on lower half of cover until it locks into position pointing straight outward (2). Connector can then be pulled straight outward off ABM (1).

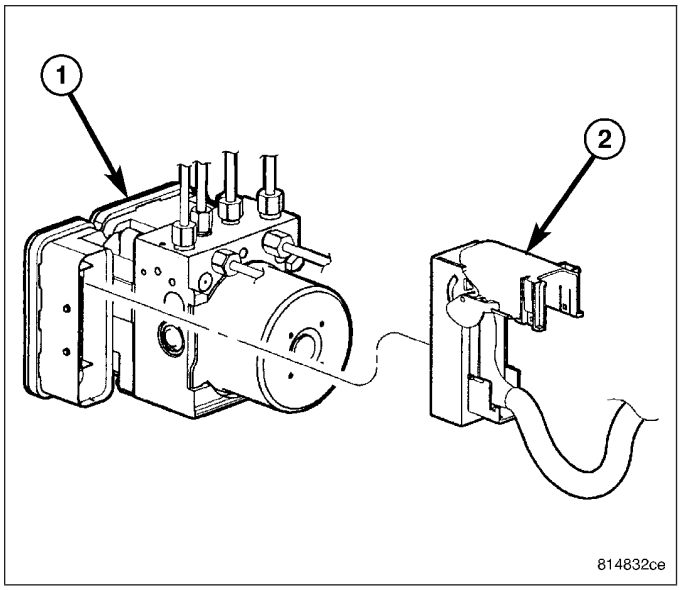

3. Unclip all brake tubes from two routing clips (1) along upper radiator support.
4. Unclip right front brake tube (3) from routing clip on bracket below Fuse And Relay Center.

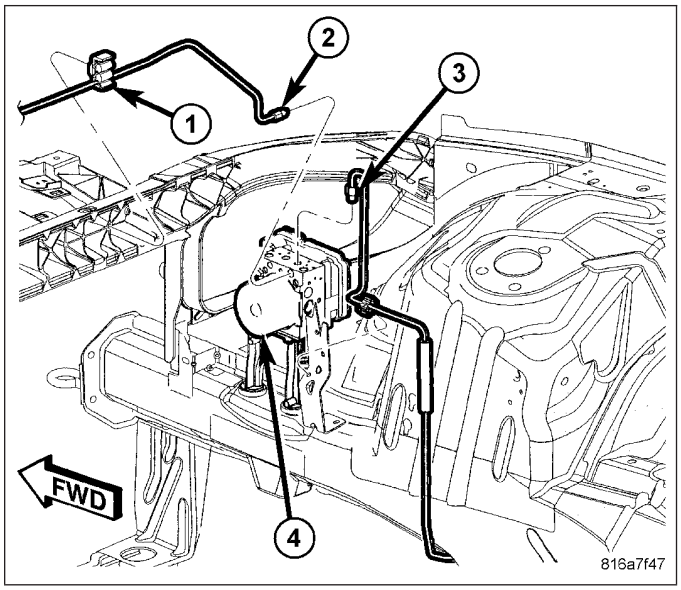

5. Unclip rear brake tubes (1, 2) from routing clip (3) on bracket below Fuse And Relay Center.

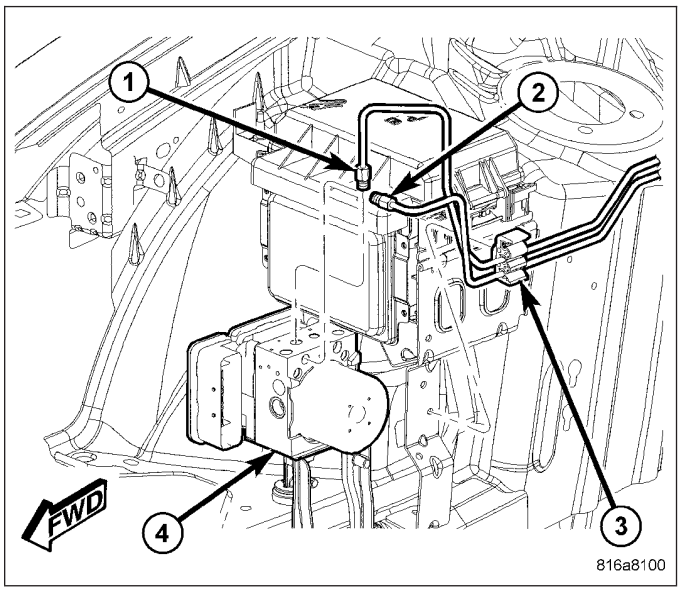

6. Lift ICU (1) from mounting grommets (2) and move inboard allowing access to ABM attaching screws. **Do not force brake tubes. Move assembly just enough to access mounting screws.**

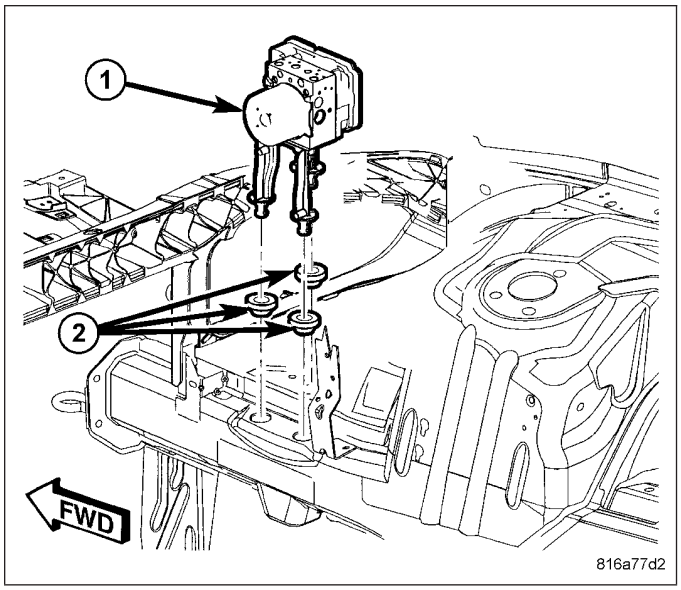

7. Remove four screws (1) attaching ABM (2) to HCU.

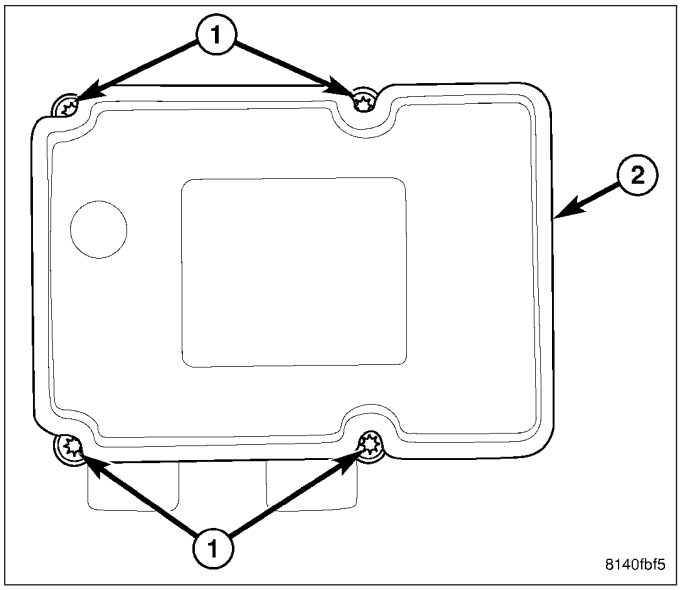

8. Slide ABM (1) off HCU (2).

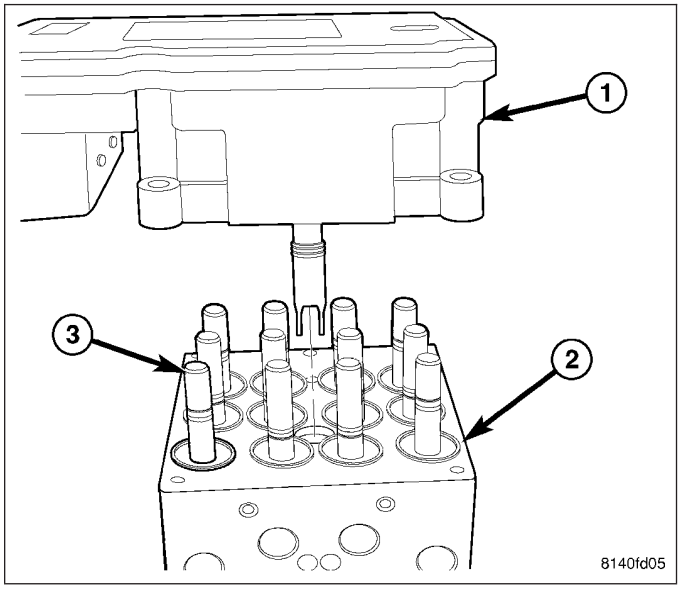

INSTALLATION

1. Clean any debris off the mating surfaces of the HCU and ABM.

CAUTION: When installing new O-rings or solenoid valve stem seals, do not use any type of lubricant.

2. If the seals (1) on the solenoid valve stems (2) are not new, replace them all. Each of the solenoid valve stem seals must be new to keep out moisture and debris; **do not reuse solenoid valve stem seals**.

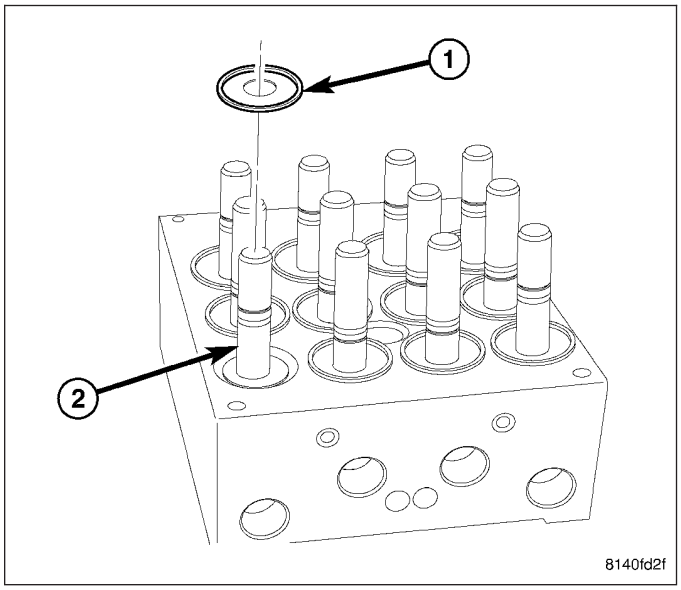

3. Replace the pump/motor connector O-ring (1) if it is not new. Be sure the O-ring is properly seated in the mounting groove (2).

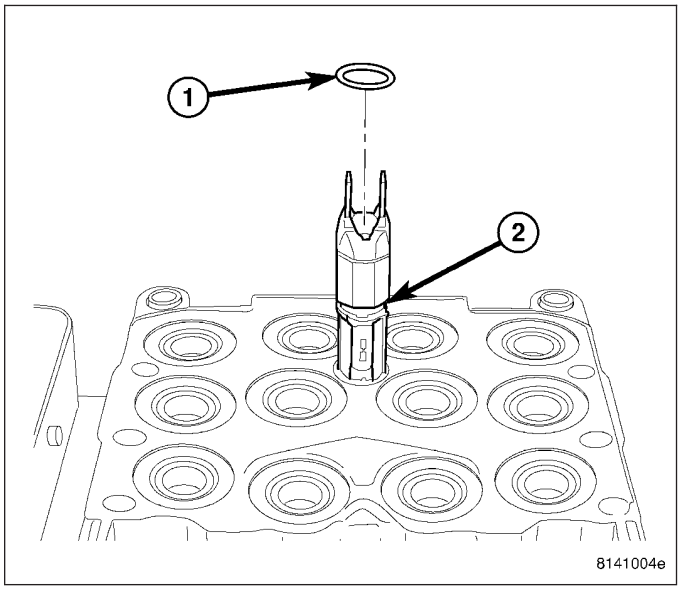

4. Align components and install the ABM (1) on the HCU (2).

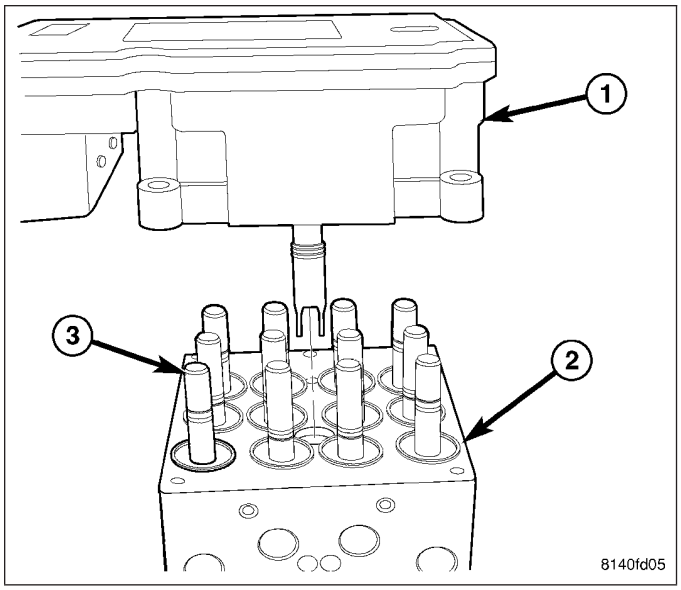

5. Install the four screws (1) attaching the ABM (2) to the HCU. Tighten the mounting screws to 2 N·m (17 in. lbs.).

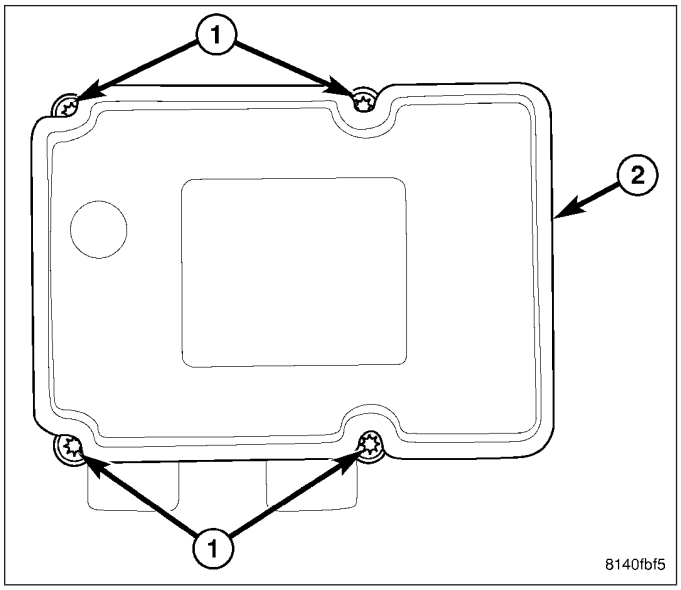

6. Position ICU (1) above mounting grommets (2) located in body side rail and press mounting bracket into place.

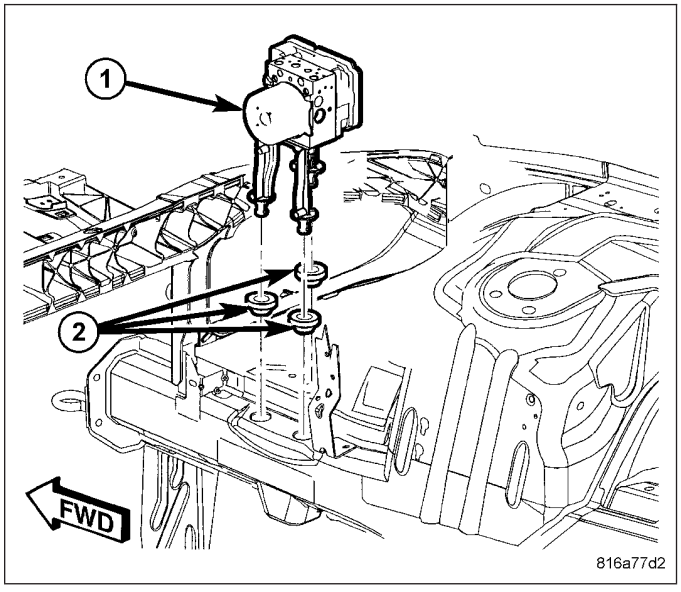

7. Clip rear brake tubes (1, 2) to routing clip (3) on bracket below Fuse And Relay Center.

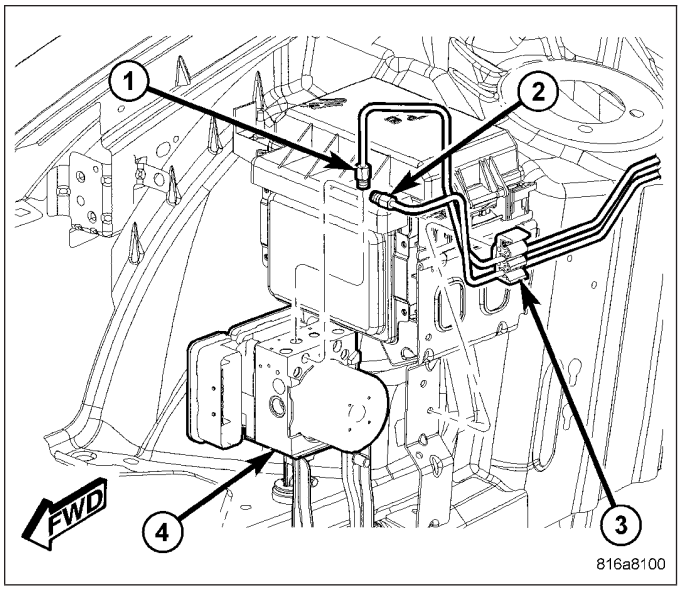

8. Clip right front brake tube (3) to routing clip on bracket below Fuse And Relay Center.
9. Clip brake tubes to two routing clips (1) along upper radiator support.

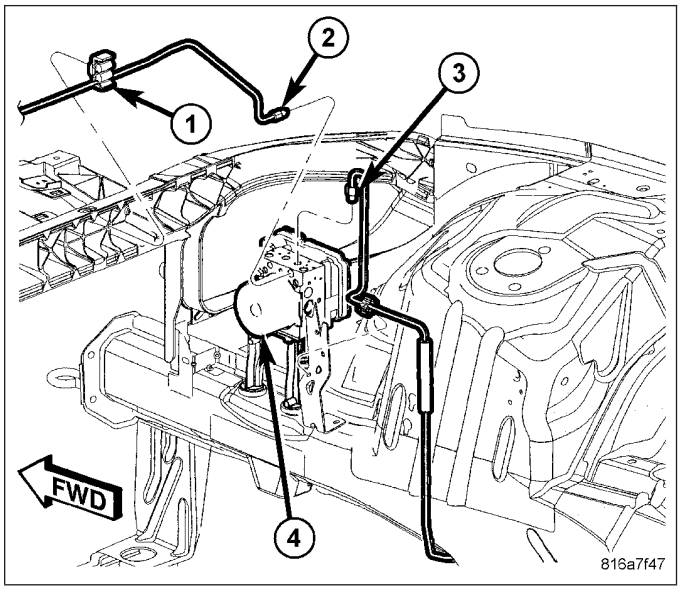

CAUTION: Before installing the ABM harness connector (2) on the ABM (1), be sure the seal is properly installed in the connector.

10. Insert ABM harness connector (2) into socket of ABM (1) and close cover, locking connector in place.

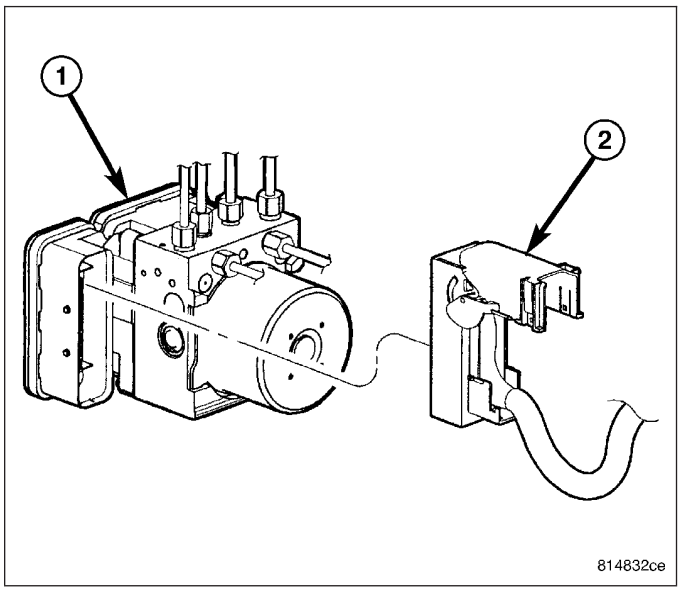

11. Connect battery negative cable (2) to battery post. It is important that this is performed properly. (Refer to 8 - ELECTRICAL/BATTERY SYSTEM - STANDARD PROCEDURE)
12. Perform Diagnostic Verification Test and clear any faults. (Refer to 5 - BRAKES - DIAGNOSIS AND TESTING)

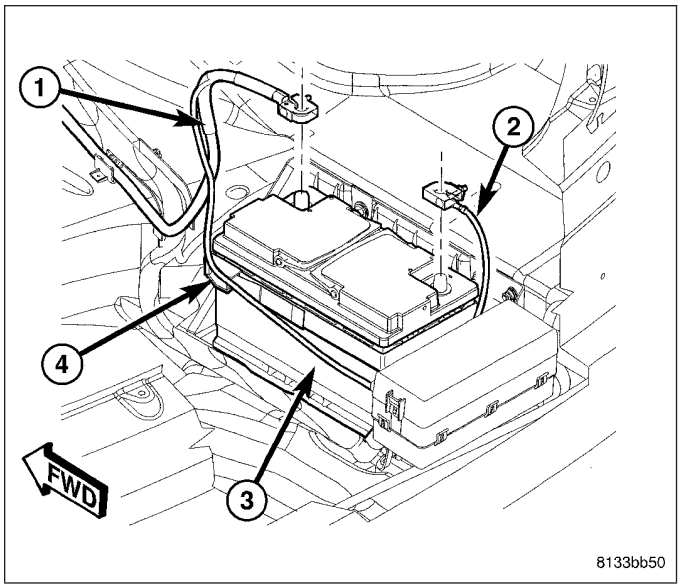

COMMUNICATION

DESCRIPTION

The primary on-board communication network between microprocessor-based electronic control modules in this vehicle is the Controller Area Network (CAN) data bus system. A data bus network minimizes redundant wiring connections; and, at the same time, reduces wire harness complexity, sensor current loads and controller hardware by allowing each sensing device to be connected to only one module (also referred to as a node). Each node reads, then broadcasts its sensor data over the bus for use by all other nodes requiring that data. Each node ignores the messages on the bus that it cannot use.

The CAN bus is a two-wire multiplex system. Multiplexing is any system that enables the transmission of multiple messages over a single channel or circuit. The CAN bus is used for communication between all vehicle nodes. However, in addition to the CAN bus network, certain nodes may also be equipped with a dedicated Serial Controller Interface (SCI) or a K-Line serial link bus to provide direct communication between that node and certain sensor inputs.

There are actually three separate CAN bus systems used in the vehicle. They are designated: the CAN-B, the CAN-C and the Diagnostic CAN-C. The CAN-B and CAN-C systems provide on-board communication between all nodes in the vehicle. The CAN-C is the faster of the two systems providing near real-time communication (500 Kbps), but is less fault tolerant than the CAN-B system. The CAN-C is used exclusively for communications between critical powertrain and chassis nodes. The slower (83.3 Kbps), but more fault tolerant CAN-B system is used for communications between body and interior nodes. The CAN-B fault tolerance comes from its ability to revert to a single wire communication mode if there is a fault in the bus wiring.

The added speed of the CAN data bus is many times faster than previous data bus systems. This added speed facilitates the addition of more electronic control modules or nodes and the incorporation of many new electrical and electronic features in the vehicle. The Diagnostic CAN-C bus is also capable of 500 Kbps communication, and is sometimes informally referred to as the CAN-D system to differentiate it from the other high speed CAN-C bus. The Diagnostic CAN-C is used exclusively for the transmission of diagnostic information between the Front Control Module/Central GateWay (FCM or FCMCGW) and a diagnostic scan tool connected to the industry-standard 16-way Data Link Connector (DLC) located beneath the instrument panel on the driver side of the vehicle.

The FCM is located on the Integrated Power Module (IPM), which is located in the engine compartment near the battery. The central CAN gateway or hub module integral to the FCM is connected to all three CAN buses. This gateway physically and electrically isolates the CAN buses from each other and coordinates the bi-directional transfer of messages between them.

OPERATION

The Controller Area Network (CAN) data bus allows all electronic modules or nodes connected to the bus to share information with each other. Regardless of whether a message originates from a module on the low speed CAN-B bus or on the high speed CAN-C or CAN-D bus, the message structure and layout is similar, which allows the Front Control Module/Central GateWay (FCM or FCMCGW) to process and transfer messages between the buses. The FCM also stores a Diagnostic Trouble Code (DTC) for certain bus network faults.

All modules (also referred to as nodes) transmit and receive messages over one of these buses. Data exchange between nodes is achieved by serial transmission of encoded data messages. Each node can both send and receive serial data simultaneously. Bus messages are carried over the data bus in the form of Variable Pulse Width Modulated (VPWM) signals which, when the high and low voltage pulses are strung together, form a message. Each node uses arbitration to sort the message priority if two competing messages are attempting to be broadcast at the same time.

The voltage network used to transmit messages requires biasing and termination. Each module on the bus network provides its own biasing and termination. Each node terminates the bus through a terminating resistor and a terminating capacitor. There are two types of nodes on the bus. The dominant node terminates the bus through a 1 KW resistor and a 3300 pF capacitor, typically resulting in about a 3300 ohm termination resistance. However, this resistance value may vary somewhat by application. The FCM (or FCMCGW) is the only dominant node in this network. A non-dominant (or recessive) node terminates the bus through an 11 KW resistor and a 330 pF capacitor, typically resulting in about a 10800 ohm termination resistance.

The communication protocol being used for the CAN data bus is a non-proprietary, open standard adopted from the Bosch CAN Specification 2.0b. The CAN-C is the faster of the two primary buses in the CAN bus system, providing near real-time communication (500 Kbps).

The CAN bus nodes are connected in parallel to the two-wire bus using a twisted pair, where the wires are wrapped around each other to provide shielding from unwanted electromagnetic induction, thus preventing interference with the relatively low voltage signals being carried through them. The twisted pairs have between 33 and 50 twists per meter. While the CAN bus is operating (active), one of the bus wires will carry a higher voltage and is referred to as the CAN High or CAN bus (+) wire, while the other bus wire will carry a lower voltage and is referred to as the CAN Low or CAN bus (–) wire. Refer to the CAN Bus Voltages table.

CAN Bus Voltages (Normal Operation)

CAN-C Bus Circuits	Sleep	Recessive (Bus Idle)	Dominant (Bus Active)	CAN-L Short to Ground	CAN-H Short to Ground	CAN-L Short to Battery	CAN-H Short to Battery	CAN-H Short to CAN-L
CAN-L (–)	0 V	2.4 - 2.5 V	1.3 - 2.3 V	0 V	0.3 - 0.5V	Battery Voltage	Battery Voltage Less 0.75 V	2.45 V
CAN-H (+)	0 V	2.4 - 2.5 V	2.6 - 3.5 V	0.02 V	0 V	Battery Voltage Less 0.75 V	Battery Voltage	2.45 V
CAN-B Bus Circuits	**Key-Off (Bus Asleep)**		**Key-On (Bus Active)**	**CAN-L Short to Ground**	**CAN-H Short to Ground**	**CAN-L Short to Battery**	**CAN-H Short to Battery**	**CAN-H Short to CAN-L**
CAN-L (–)	10.99 V		4.65 - 4.98 V	0 V	4.5 - 4.7 V	Battery Voltage	4.5 - 4.7 V	0.3 - 0.7 V
CAN-H (+)	0.0 V		0.39 - 0.46 V	0.3 - 0.7 V	0 V	0.3 - 0.7 V	Battery Voltage	0.3 - 0.7 V

Notes

All measurements taken between node ground and CAN terminal with a standard DVOM.

DVOM will display average network voltage.

Total resistance of CAN-C network can also be measured (60 ohms). Cannot measure total resistance of CAN-B network.

In order to minimize the potential effects of Ignition-Off Draw (IOD), the CAN-B network employs a sleep strategy. However, a network sleep strategy should not be confused with the sleep strategy of the individual nodes on that network, as they may differ. For example: The CAN-C bus network is awake only when the ignition switch is in the ON or START positions; however, the FCM, which is on the CAN-C bus, may still be awake with the ignition switch in the ACCESSORY or UNLOCK positions. The integrated circuitry of an individual node may be capable of processing certain sensor inputs and outputs without the need to utilize network resources.

The CAN-B bus network remains active until all nodes on that network are ready for sleep. This is determined by the network using tokens in a manner similar to polling. When the last node that is active on the network is ready for sleep, and it has already received a token indicating that all other nodes on the bus are ready for sleep, it broadcasts a **bus sleep acknowledgment** message that causes the network to sleep. Once the CAN-B bus network is asleep, any node on the bus can awaken it by transmitting a message on the network. The FCM will keep either the CAN-B or the CAN-C bus awake for a timed interval after it receives a diagnostic message for that bus over the Diagnostic CAN-C bus.

In the CAN system, available options are configured into the FCM at the assembly plant, but additional options can be added in the field using the diagnostic scan tool. The configuration settings are stored in non-volatile memory. The FCM also has two 64-bit registers, which track each of the **as-built** and **currently responding** nodes on the CAN-B and CAN-C buses. The FCM stores a Diagnostic Trouble Code (DTC) in one of two caches for any detected active or stored faults in the order in which they occur. One cache stores powertrain (P-Code), chassis (C-Code) and body (B-Code) DTCs, while the second cache is dedicated to storing network (U-Code) DTCs.

If there are intermittent or active faults in the CAN network, a diagnostic scan tool connected to the Diagnostic CAN-C bus through the 16-way Data Link Connector (DLC) may only be able to communicate with the FCM. To aid in CAN network diagnosis, the FCM will provide CAN-B and CAN-C network status information to the scan tool using certain diagnostic signals. In addition, the transceiver in each node on the CAN-C bus will identify a **bus off**

hardware failure, while the transceiver in each node on the CAN-B bus will identify a **general bus hardware failure**. The transceivers for some CAN-B nodes will also identify certain failures for both CAN-B bus signal wires.

MODULE-DOOR

DESCRIPTION

The door modules control the express up and down feature as well as normal window functions. It is used only on vehicles equipped with the express up feature. If equipped with memory system, the door module controls the memory mirror. The modules are attached to each front door trim panel.

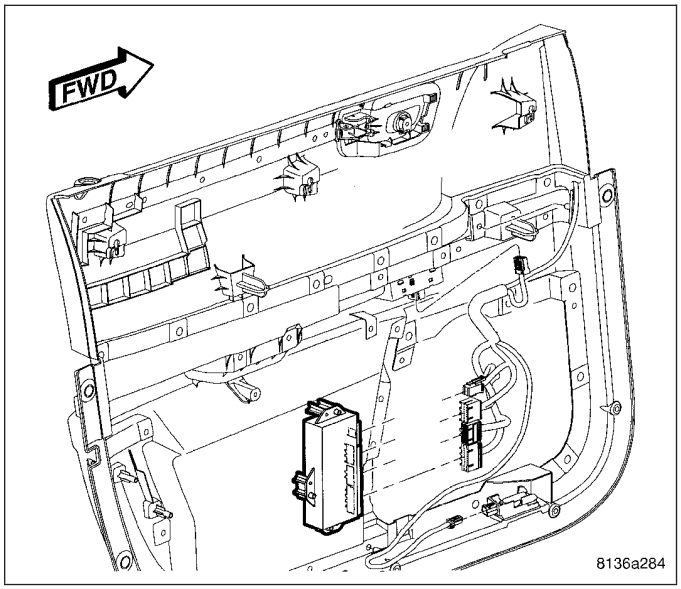

OPERATION

If the vehicle is equipped with the Express Up power window feature there will be a door module on each front door trim panel. The power window switches and motors are directly wired to the modules. If the vehicle is equipped with the Memory System, the exterior power mirrors and switches are also directly wired to the modules along with the rear door window switches. The modules are wired to the accessory delay relay which allows the operation of the windows and mirrors for a given period of time after the ignition is turned off and providing the doors are not opened. The modules communicate with each other and other modules on the vehicle via the CAN-B bus circuit. There are several Diagnostic Trouble Codes (DTC's) the modules will store if there are problems with the power window system or the memory power mirror system.

ANTI-PINCH

The ″Anti-Pinch″ function is a safety feature that senses obstacles at the top of the glass and anywhere on the seal where it meets the glass to close during the window closing operation. When a front window switch is pressed to the ″Auto-Up″ position and the closing window traps an object and the sense current passes its limit, the module will stop the motor and drive the window down approximately 200 millimeters. The pinch force is speed dependent which means that if the vehicle is going over 2km per hour the pinch force will be higher than if the vehicle is stopped.

PANIC MODE

If the window switch is held in the ″Auto-Up″ position and the closing window traps an object, the module will stop the motor and when the switch is released will drive the window in the opposite direction approximately 10 millimeters. If within 8 seconds after the switch was released to the neutral position, the switch is held again to the ″Auto-Up″ position, the module will enter the second panic mode. During the second panic mode, the module will drive the motor with full (stall) force and stop. If within 8 seconds after the switch is released again to the neutral position, the switch is held again to the ″Auto-Up″ position, the module will drive the motor again with full (stall) force and stop.

REMOVAL

NOTE: A battery reconnect procedure must be performed anytime the battery has been disconnected. (Refer to 8 - ELECTRICAL/BATTERY SYSTEM - STANDARD PROCEDURE).

1. Disconnect and isolate the battery negative cable.
2. Remove front door trim panel (Refer to 23 - BODY/DOOR - FRONT/TRIM PANEL - REMOVAL).
3. Disconnect electrical harness connectors.
4. Remove mounting fasteners and module.

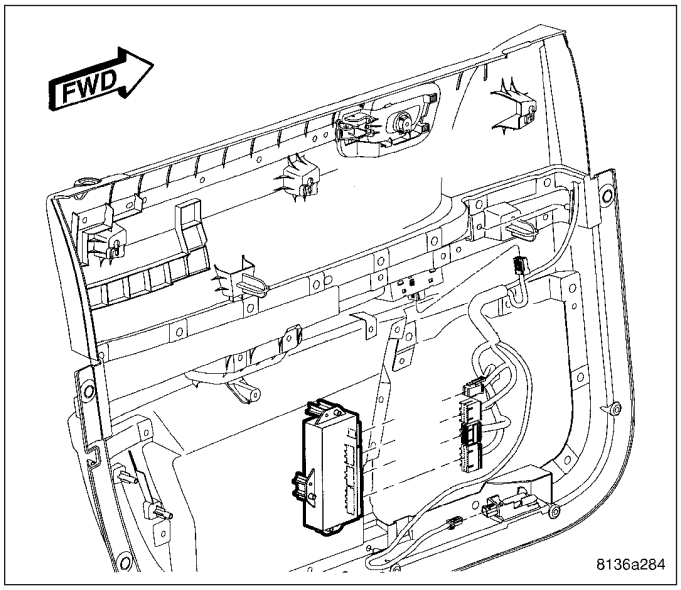

INSTALLATION

NOTE: A battery reconnect procedure must be performed anytime the battery has been disconnected. (Refer to 8 - ELECTRICAL/BATTERY SYSTEM - STANDARD PROCEDURE).

1. Position module.
2. Install and tighten mounting fasteners.
3. Connect electrical harness connectors.
4. Install door trim panel (Refer to 23 - BODY/DOOR - FRONT/TRIM PANEL - INSTALLATION).
5. Connect battery negative cable.

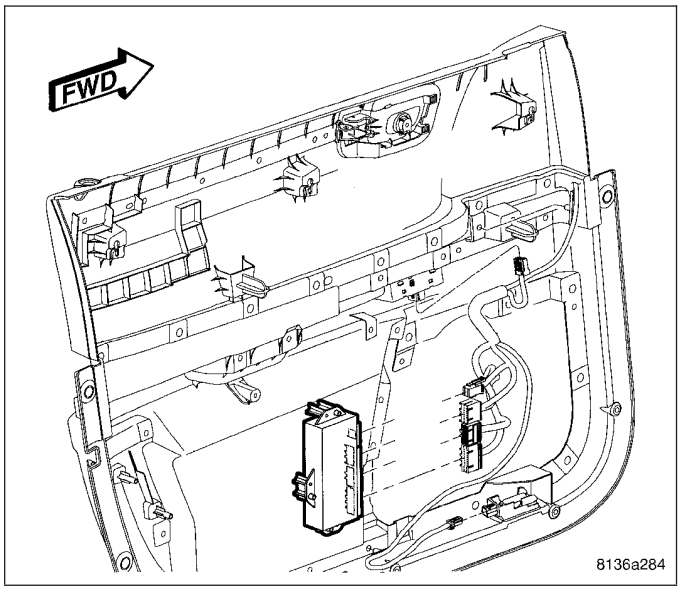

MODULE-ENGINE CONTROL

DESCRIPTION

The ECM is located in the left side of engine compartment attached to the left inner fender behind the battery.

The electrical circuits at the ECM are split into two separate wiring harnesses (vehicle and engine wiring harness). The 58-pin connector is used for the vehicle wiring harness. The 96-pin connector is for the engine wiring harness.

The ECM connectors use slide locks. To remove the ECM connectors, pull the slide locks sideways to the end of their travel and lift the connectors.

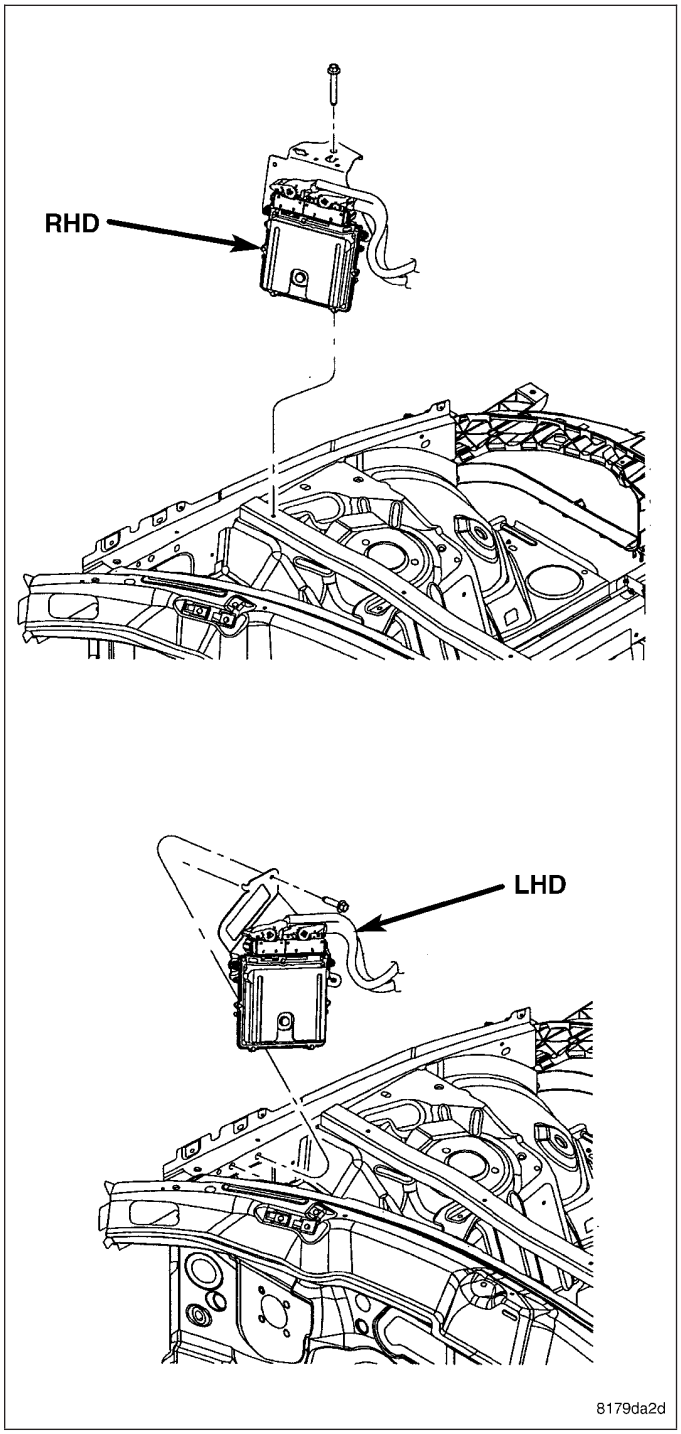

A 32-bit microprocessor uses control algorithms to process the input signals and calculates the injected fuel based on stored maps. The microprocessor triggers the driver stages for switching the output components. The ECM contains the following data storage elements:

1. Flash EPROM—stores engine-specific curves, engine-management maps, and variant coding (engine and equipment options).
2. EEPROM—stores immobilizer data, calibration and manufacturing data, adaptation values, operational faults and variant coding.
3. RAM—stores variable data such as calculations data and input values.

OPERATION

The ECM has been programmed to monitor different circuits of the diesel fuel injection system. This monitoring is called on-board diagnostics. Certain criteria must be met for a diagnostic trouble code to be entered into the ECM memory. The criteria may be a range of: engine rpm, engine temperature, time or other input signals to the ECM. If all of the criteria for monitoring a system or circuit are met, and a problem is sensed, then a DTC will be stored in the ECM memory. It is possible that a DTC for a monitored circuit may not be entered into the ECM memory, even though a malfunction has occurred. This may happen when the monitoring criteria have not been met. The ECM compares input signal voltages from each input device with specifications (the established high and low limits of the input range) that are programmed into it for that device. If the input voltage is not within the specifications and other trouble code criteria are met, a DTC will be stored in the ECM memory.

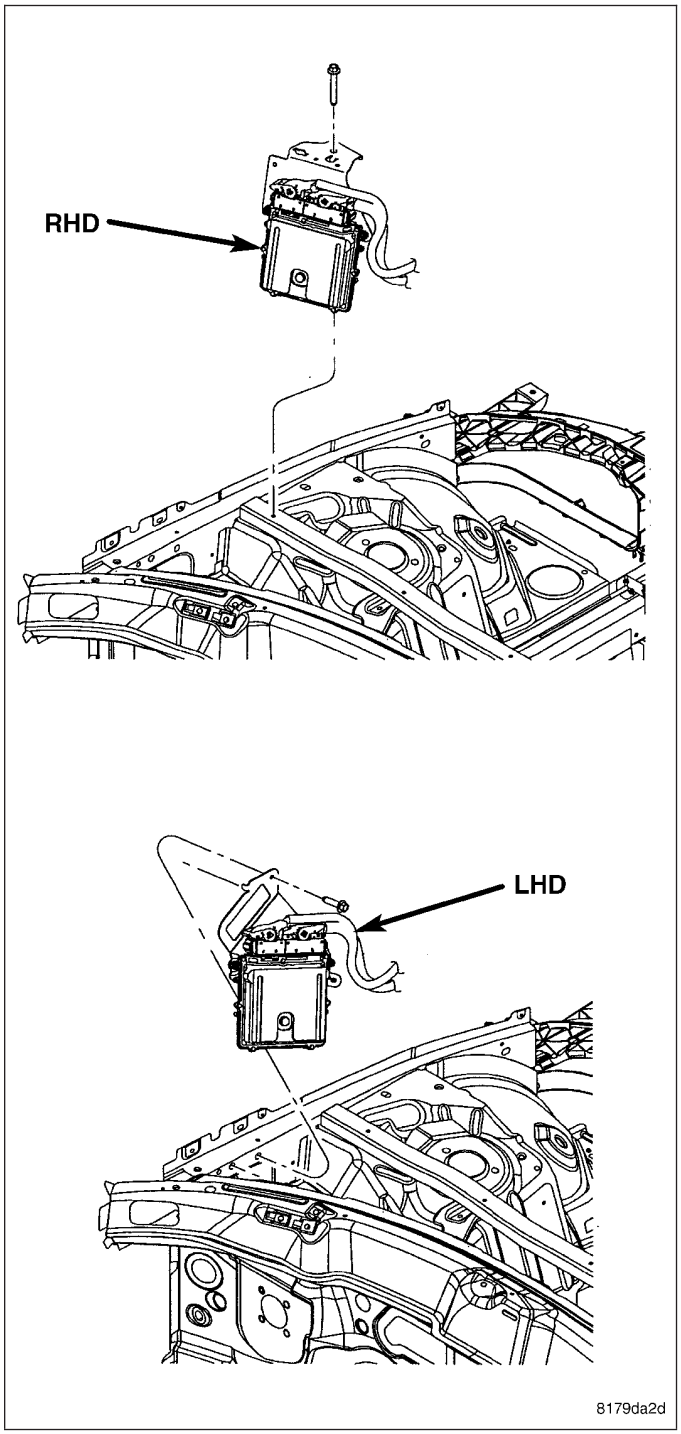

ECM OPERATING MODES

As input signals to the ECM change, the ECM adjusts its response to the output devices. For example, the ECM must calculate a different fuel quantity and fuel timing for engine idle condition than it would for a wide open throttle condition. There are several different modes of operation that determine how the ECM responds to the various input signals.

Ignition Switch On (Engine Off)

When the ignition is turned on, the ECM activates the glow plug relay for a time period that is determined by engine coolant temperature, atmospheric temperature and battery voltage.

Engine Start-Up Mode

The ECM uses the engine temperature sensor and the crankshaft position sensor (engine speed) inputs to determine fuel injection quantity.

Normal Driving Modes

Engine idle, warm-up, acceleration, deceleration and wide open throttle modes are controlled based on all of the sensor inputs to the ECM. The ECM uses these sensor inputs to adjust fuel quantity and fuel injector timing.

Limp-In Mode

If there is a fault detected with the accelerator pedal position sensor, the ECM will set the engine speed at 1100 RPM.

Overspeed Detection Mode

If the ECM detects engine RPM that exceeds 5200 RPM, the ECM will set a DTC in memory and illuminate the MIL until the DTC is cleared.

After-Run Mode

The ECM transfers RAM information to ROM and performs an Input/Output state check.

MONITORED CIRCUITS

The ECM is able to monitor and identify most driveability related trouble conditions. Some circuits are directly monitored through ECM feedback circuitry. In addition, the ECM monitors the voltage state of some circuits and compares those states with expected values. Other systems are monitored indirectly when the ECM conducts a rationality test to identify problems. Although most subsytems of the engine control module are either directly or indirectly monitored, there may be occasions when diagnostic trouble codes are not immediately identified. For a trouble code to set, a specific set of conditions must occur and unless these conditions occur, a DTC will not set.

DIAGNOSTIC TROUBLE CODES

Each diagnostic trouble code (DTC) is diagnosed by following a specific procedure. The diagnostic test procedure contains step-by-step instruction for determining the cause of the DTC as well as no trouble code problems. Refer to the appropriate Diesel Powertrain Diagnostic Manual for more information.

HARD CODE

A DTC that comes back within one cycle of the ignition key is a hard code. This means that the problem is current every time the ECM/SKIM checks that circuit or function. Procedures in this manual verify if the DTC is a hard code at the beginning of each test. When the fault is not a hard code, an intermittent test must be performed. NOTE: If the DRBIII® displays faults for multiple components (i.e. ECT, VSS, IAT sensors) identify and check the shared circuits for possible problems before continuing (i.e. sensor grounds or 5-volt supply circuits). Refer to the appropriate schematic to identify shared circuits. Refer to the appropriate Diesel Powertrain Diagnostic Manual for more information.

INTERMITTENT CODE

A DTC that is not current every time the ECM/SKIM checks the circuit or function is an intermittent code. Most intermittent DTCs are caused by wiring or connector problems. Problems that come and go like this are the most difficult to diagnose; they must be looked for under specific conditions that cause them. **NOTE: Electromagnetic (radio) interference can cause an intermittent system malfunction.** This interference can interrupt communication between the ignition key transponder and the SKIM. The following checks may assist you in identifying a possible intermittent problem:

- Visually inspect the related wire harness connectors. Look for broken, bent, pushed out or corroded terminals.
- Visually inspect the related wire harness. Look for chafed, pierced or partially broken wire.
- Refer to hotlines or technical service bulletins that may apply.

Refer to the appropriate Diesel Powertrain Diagnostic Manual for more information.

ECM DIAGNOSTIC TROUBLE CODES

IMPORTANT NOTE: Before replacing the ECM for a failed driver, control circuit or ground circuit, be sure to check the related component/circuit integrity for failures not detected due to a double fault in the circuit. Most ECM driver/control circuit failures are caused by internal failures to components (i.e. relays and solenoids) and shorted circuits (i.e. sensor pull-ups, drivers and ground circuits). These faults are difficult to detect when a double fault has occurred and only one DTC has set. If the DRBIII® displays faults for multiple components (i.e.VSS, ECT, Batt Temp, etc.) identify and check the shared circuits for possible problems before continuing (i.e. sensor grounds or 5-volt supply circuits). Refer to the appropriate wiring diagrams to identify shared circuits. Refer to the appropriate Diesel Powertrain Diagnostic Manual for more information.

STANDARD PROCEDURE - ECM/SKIM PROGRAMMING - DIESEL

NOTE: Before replacing the ECM for a failed driver, control circuit or ground circuit, be sure to check the related component/circuit integrity for failures not detected due to a double fault in the circuit. Most ECM driver/control circuit failures are caused by internal component failures (i.e. relay and solenoids) and shorted circuits (i.e. pull-ups, drivers and switched circuits). These failures are difficult to detect when a double fault has occurred and only one DTC has set.

ECM/SKIM PROGRAMMING

When a ECM and the SKIM are replaced at the same time perform the following steps in order:

1. Program the new ECM.
2. Program the new SKIM.
3. Replace all ignition keys and program them to the new SKIM.

ECM/SKIM PROGRAMMING

When an ECM and the SKIM are replaced at the same time perform the following steps in order:

1. Program the new SKIM.
2. Program the new ECM.

PROGRAMMING THE ECM (Bosch)

1. To program the VIN, connect the scan tool and turn the ignition on.
2. Select Engine from the main menu. The scan tool will require the VIN to be entered before continuing.
3. Select ENTER to update the VIN. The scan tool will display the updated VIN.
4. If the engine is equipped with air conditioning, the ECM A/C function must be enabled. Enable the ECM A/C function as follows:
   - Using the scan tool select ENGINE, MISCELLANEOUS, then ENABLE/DISABLE A/C
   - Push 1 to enable A/C, the scan tool screen should display A/C Activated.

PROGRAMMING THE SKIM

1. Turn the ignition switch on (transmission in park/neutral).
2. Use the scan tool and select THEFT ALARM, SKIM then MISCELLANEOUS.
3. Select ECM REPLACED (DIESEL ENGINE).
4. Program the vehicle four-digit PIN into SKIM.
5. Select COUNTRY CODE and enter the correct country.

NOTE: Be sure to enter the correct country code. If the incorrect country code is programmed into SKIM, the SKIM must be replaced.

6. Select YES to update VIN (the SKIM will learn the VIN from the PCM).
7. Press ENTER to transfer the secret key (the PCM will send the secret key to the SKIM).
8. Program ignition keys to SKIM.

NOTE: If the ECM and the SKIM are replaced at the same time, all vehicle keys will need to be replaced and programmed to the new SKIM.

PROGRAMMING IGNITION KEYS TO THE SKIM

1. Turn the ignition switch on (transmission in park/neutral).
2. Use the scan tool and select THEFT ALARM, SKIM then MISCELLANEOUS.
3. Select PROGRAM IGNITION KEY'S.
4. Enter secured access mode by entering the vehicle four-digit PIN.

NOTE: A maximum of eight keys can be learned to each SKIM. Once a key is learned to a SKIM it (the key) cannot be transferred to another vehicle.

If ignition key programming is unsuccessful, the scan tool will display one of the following messages:

Programming Not Attempted - The scan tool attempts to read the programmed key status and there are no keys programmed into SKIM memory.

Programming Key Failed (Possible Used Key From Wrong Vehicle) - SKIM is unable to program key due to one of the following:

- faulty ignition key transponder
- ignition key is programmed to another vehicle.

8 Keys Already Learned, Programming Not Done - SKIM transponder ID memory is full.

5. Obtain ignition keys to be programmed from customer (8 keys maximum).
6. Using the scan tool, erase all ignition keys by selecting MISCELLANEOUS and ERASE ALL CURRENT IGN. KEYS.
7. Program all ignition keys.

Learned Key In Ignition - Ignition key transponder ID is currently programmed in SKIM memory.

REMOVAL

1. Disconnect negative battery cable.
2. Disconnect ECM electrical connectors (1).
3. Remove ECM bracket to inner fender retaining nuts (5).
4. Remove ECM and bracket assembly from vehicle.
5. Separate ECM from bracket.

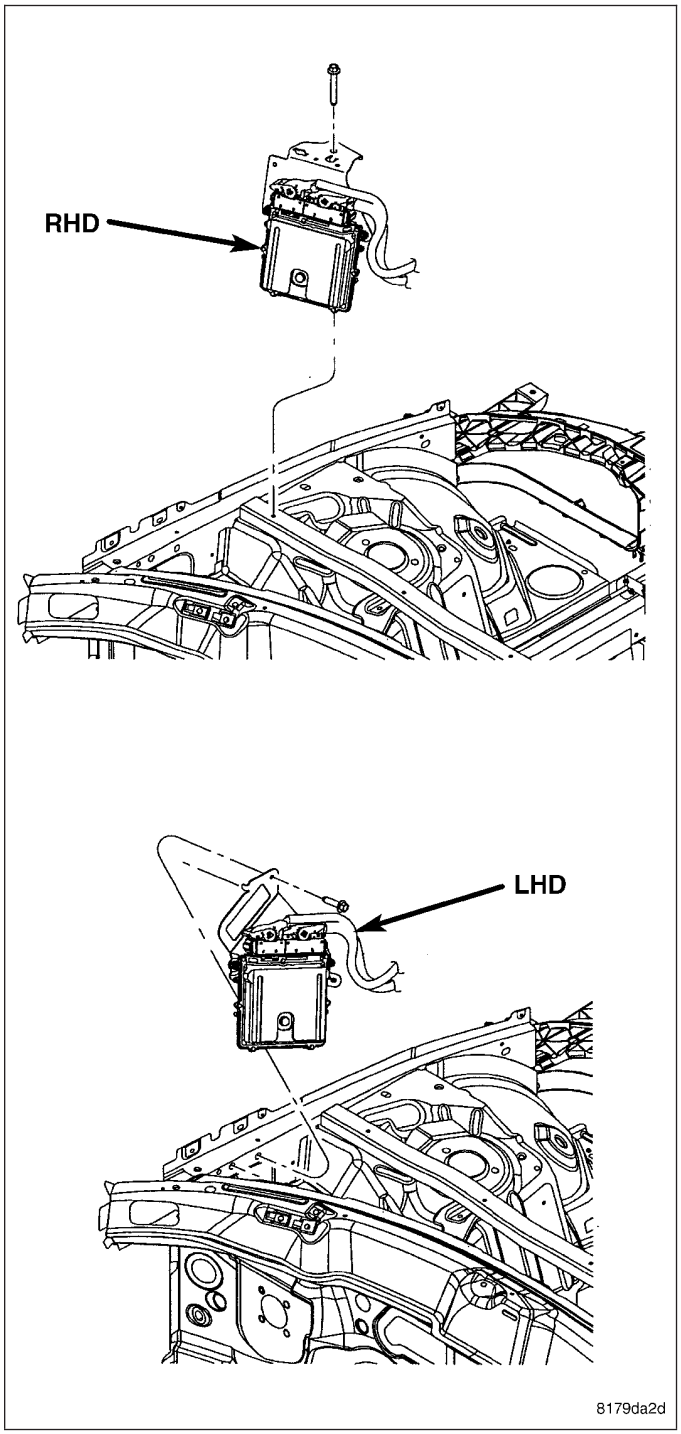

INSTALLATION

1. Install ECM on bracket (3).
2. Position ECM and bracket assembly in vehicle.
3. Install ECM bracket to inner fender retaining nuts (5).
4. Connect ECM electrical connectors (1).
5. Connect negative battery cable.

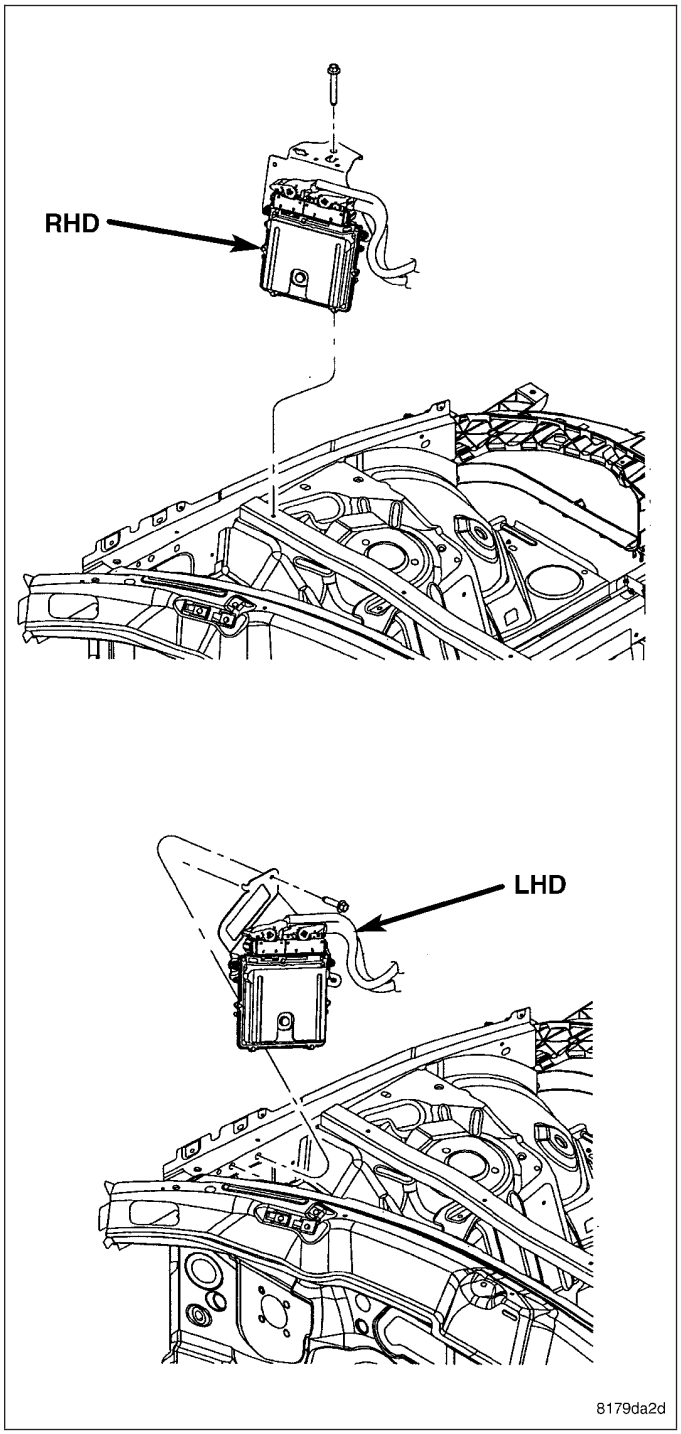

MODULE-FRONT CONTROL

DESCRIPTION

The Front Control Module (FCM) is a micro controller based module located in the right front corner of the engine compartment. The front control module mates to the power distribution center to form the Integrated Power Module (IPM). The IPM connects directly to the battery and provides the primary means of circuit protection and power distribution for all vehicle electrical systems. The FCM controls power to some of these vehicle systems electrical and electromechanical loads based on inputs received from hard wired switch inputs and data received on the CAN bus circuit.

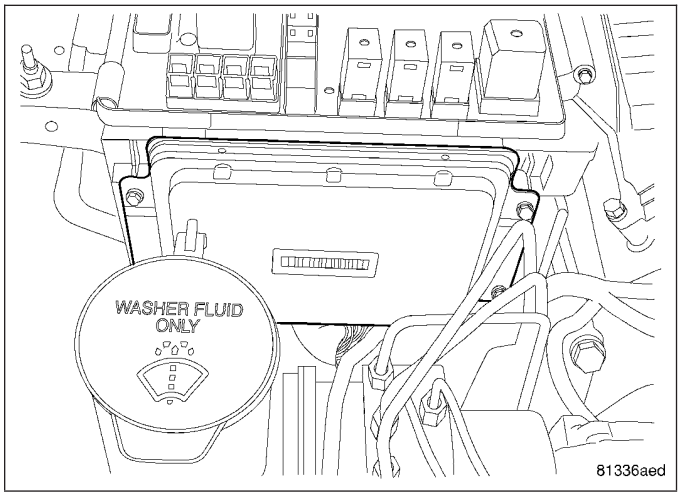

OPERATION

As messages are sent over the CAN bus circuit, the Front Control Module (FCM) reads these messages and controls power to some of the vehicles electrical systems by completing the circuit to ground (low side driver) or completing the circuit to 12 volt power (high side driver). The following functions are controlled by the FCM:

- Air conditioning condenser cooling fan
- Daytime running lamps - if equipped
- Fog Lamps
- Front and rear hazard warning lamps
- Front turn signals
- Headlamps
- Horn
- Radiator fans
- Rear window defroster power and timing
- Stop, turn signal and tail lamps
- Windshield and liftgate wiper and washer systems

The FCM provides the following features for the above function:

- Acts as a link between the CAN bus network for critical powertrain, anti-lock brake systems, electronic stability program systems and the network for body and interior modules.
- Controls the wipers based on messages on the CAN B bus from the rain sensor module (if equipped).
- Controls the adjustable pedal motor on non-memory equipped vehicles.
- Controls back-up lamps.
- Flashes lamps in response to turn signal, Remote Keyless Entry (RKE) and Vehicle Theft Security System (VTSS) inputs.
- Illuminated approach feature that turns the headlamps on when the vehicle is unlocked with the Remote Keyless Entry (RKE) transmitter.
- Minimizes voltage variations to the headlamps to extend bulb life and to equalize the light output from the lamps, which might otherwise differ due to variations in wiring resistance.
- Monitors battery voltage and turns off non-essential functions such as the fog lamps, rear window defogger, and heated seats if necessary to conserve battery power.
- Operates the high-beam headlamps at reduced intensity by pulse-width modulation of the power supply to provide the daytime running lamps.
- Protects the battery from discharge if the headlamps are left on, by automatically turning them off after eight minutes.

- Provides ambient temperature sensor information.
- Provides A/C pressure transducer information.
- Provides brake fluid level information.
- Provides washer fluid level information.
- Provides the variable delay intermittent windshield and liftgate wiper time delay features, and the vehicle speed sensitive windshield wiper delay variation.
- Sounds the horn in response to RKE and VTSS inputs.
- Turns off the horn in the event of excessively long operation that could otherwise damage the horn.
- Turns off the windshield washer motor after 10 seconds of continuous operation to protect the motor.
- Controls headlamp washers (if equipped).
- Provides wheel speed information on non-ABS equipped vehicles.
- Stores vehicle configuration data.

DIAGNOSIS AND TESTING

BODY VERIFICATION TEST – VER 1

Diagnostic Test

1. Perform Body Verification Test

1. Disconnect all jumper wires and reconnect all previously disconnected components and connectors.
2. Ensure that all accessories are turned off.
3. Ensure that the battery is fully charged. If the battery was disconnected for any reason, refer to (Refer to 8 - ELECTRICAL/BATTERY SYSTEM - STANDARD PROCEDURE - BATTERY RECONNECTION) for accessory calibration procedures.
4. If the FCM has been replaced, the Pinion Factor MUST be programmed into the FCM. Refer to the scan tool for program procedure.
5. Turn the ignition on.
6. With the scan tool, record and erase DTCs from all modules.
7. (Export only) If the Intrusion Transceiver Module (ITM) and/or Siren was replaced, select ITM from the from the scan tool ECU view menu then “Misc. Functions” and perform the applicable replacement procedure.
8. Perform this step only if diagnosing faults related to the HVAC system.
    - The Manual Temperature Control (MTC) is not on the Bus and not addressable with a scan tool. Perform the following to clear DTCs from the MTC: 1. Turn the blower control on. 2. Press the A/C mode switch down, turn the blower control to off, wait until both LEDs illuminate (approximately 5 seconds) and then release the A/C mode switch. 3. When the A/C status indicator begins flashing DTCs, set the Mode switch to the floor position, simultaneously press the A/C mode switch and the EBL mode switch down until both LEDs start flashing (approximately 5 seconds) and then release the mode switches.
    - For vehicles equipped with Automatic Temperature Control (ATC), if repairs were made to any of the HVAC doors, linkage, door actuators, or door actuator circuits, run the actuator calibration function by selecting the following from the scan tool menu: select HVAC, More Options, System Tests, Actuator Calibration Test, and Start. Follow the directions displayed by the scan tool. Allow the test to run to completion before proceeding.
    - For vehicles equipped with MTC, if repairs were made to any of the HVAC doors, linkage, door actuators, or door actuator circuits, run the door calibration function by performing the following: 1. Turn the ignition on. 2. Turn the blower control to off. 3. Press the EBL mode switch down, turn the blower control on, wait until the EBL LED starts flashing (approximately 5 seconds) and then release the mode switch. Wait approximately 90 seconds for the calibration process to run to completion before proceeding.
9. Turn the ignition off, wait 10 seconds, and then turn the ignition on.
10. Operate all functions of the system that caused the original concern. If a repair or module replacement was done to the power windows, operate the motor fully down and then to the full up position and stall it for 2 seconds.
11. With the scan tool, select ECU View and check for DTCs in the modules.
12. Perform this step only if diagnosing faults related to the MTC HVAC system.

NOTE: The A/C status indicator displays active DTCs when the EBL status indictor is not illuminated and stored DTCs when the EBL status indicator is illuminated.

- Perform the following to read DTCs from the MTC: 1. Turn the blower control on. 2. Press the A/C mode switch down, turn the blower control to off, wait until both LEDs illuminate (approximately 5 seconds) and then release the A/C mode switch. 3. Read the DTCs from the flashing A/C status indicator.

Are DTCs present in any of the modules or is the original condition still present?

Yes >> The repair is not complete. Refer to the related category for the DTC or symptom that is still present.

No >> The repair is complete.

REMOVAL

NOTE: A battery reconnect procedure must be performed anytime the battery has been disconnected. (Refer to 8 - ELECTRICAL/BATTERY SYSTEM - STANDARD PROCEDURE).

1. Disconnect and isolate the battery negative cable.
2. Remove mounting fasteners.
3. Disconnect electrical connectors and remove Front Control Module (FCM).

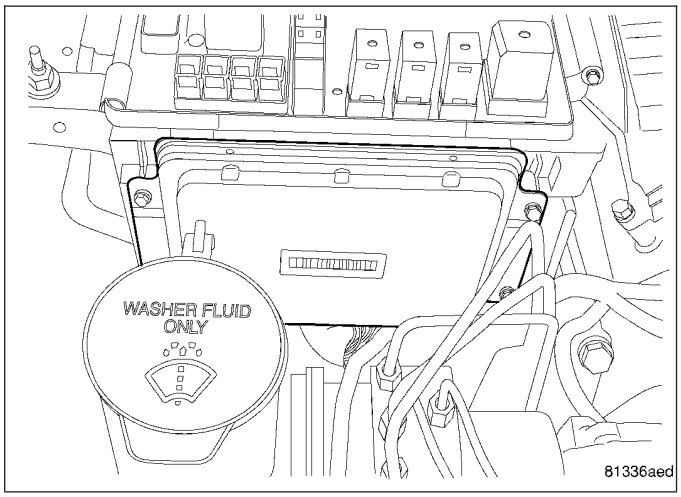

INSTALLATION

NOTE: A battery reconnect procedure must be performed anytime the battery has been disconnected. (Refer to 8 - ELECTRICAL/BATTERY SYSTEM - STANDARD PROCEDURE).

1. Position Front Control Module (FCM) and connect electrical connectors.
2. Install and tighten mounting fasteners.
3. Connect battery negative cable.

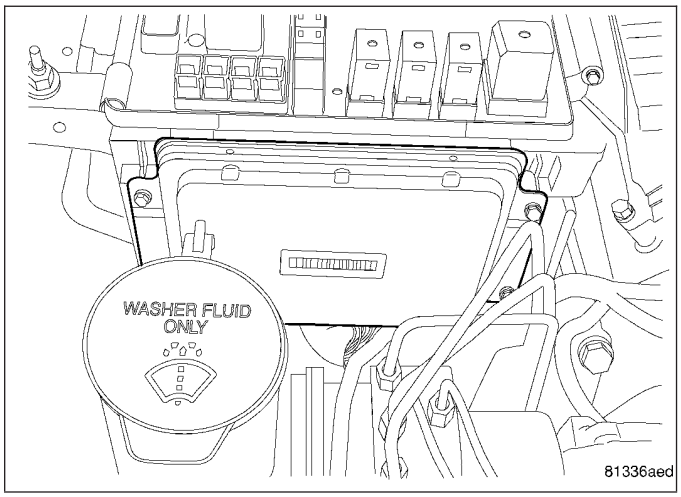

MODULE-SEAT MEMORY

DESCRIPTION

NOTE: The scan tool standardization process must be performed on the Memory Seat Module (MSM) any time a new module is installed or the existing module is reflashed.

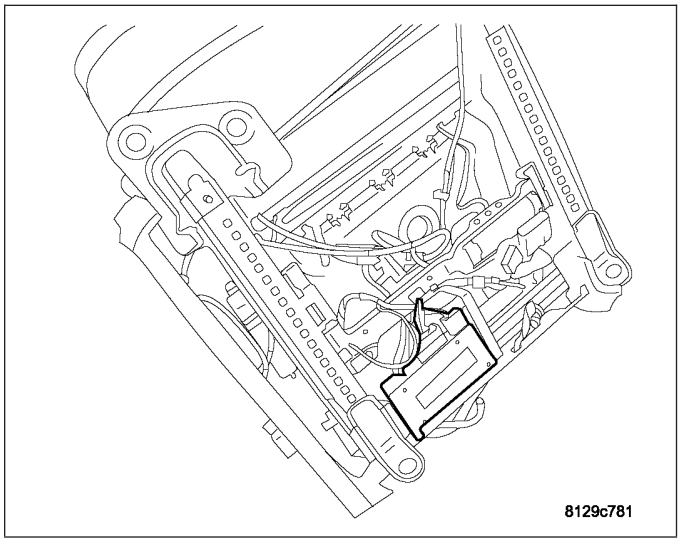

The Memory Seat Module (MSM) is located underneath the driver seat, towards the front and on the outboard side. It is used in conjunction with the other modules in the memory system to recall the driver seat to one of two preset seat positions (horizontal, vertical, and recliner). The switch for the memory seat programming and selection mounts on the driver door trim panel. The memory system is able to store and recall all driver side power seat positions, outside mirror positions, power tilt/telescopic steering column positions and power adjustable pedal position. The system can be set for two different drivers. On vehicles with a factory installed radio connected to the Controller Area Network (CAN) data bus network, the memory system is also able to store and recall up to twelve radio station presets (six AM and six FM), also for two drivers. The memory system will also store and recall the last station listened to for each driver, even if it is not one of the twelve preset stations.

The memory system will automatically recall all of these settings when a button of the memory switch is depressed, or when the doors are unlocked using the Remote Keyless Entry (RKE) transmitter (if the “RKE Linked to Memory” feature is enabled). If the vehicle has more than two drivers the RKE transmitter recall of memory features can be disabled. This is a customer programmable feature of the Electronic Vehicle Information Center (EVIC).

OPERATION

The Memory Seat Module (MSM) receives battery current through a 25 amp circuit breaker in the Power Distribution Center (PDC) so that the memory system remains operational, regardless of the ignition switch position. When the driver memory switch button is pushed, a resistance signal is sent to the MSM via the Controller Area Network (CAN) bus circuit. The MSM is responsible for the 12v battery feed and ground path to the power seat adjuster motor and other memory system components.

The MSM receives memory set/position switch input through the CAN bus circuit. The MSM also receives hard wired input from the hall effect sensors, mounted on each of the driver power seat adjuster motors and the driver side view mirror motor. The programmed software in the module allows it to know where the seat, adjustable pedals, and steering column tilt/telescope are located in its designed travel by a pulse count generated from the hall effect sensors. This way, when the memory switch is depressed the module will power these components until the correct preset location is achieved. The module will prevent the seat memory recall function from being initiated, if the transmission gear selector lever is not in the Park position, or if the vehicle is moving. These inputs are monitored over the Controller Area Network (CAN) bus circuit by the MSM.

A memory setting is saved by pressing the “set” button, then pressing either the memory “1” or “2” button within 5 seconds of pressing the “set” button.

A memory setting is recalled by pressing either the memory “1” or “2” button, or by pressing the unlock button on a “linked” Remote Keyless Entry (RKE) transmitter.

For driver safety, memorized settings can not be recalled if the transmission is in a position other than Park or the seat belt is latched.

The MSM performs the following functions:

- Positions the driver power seat (vertical, horizontal, and recliner positions).
- Positions the power adjustable pedals.
- Positions the power tilt/telescopic steering column positions.

- Sends the memory save or recall (#1 or #2) command over the CAN data bus circuit to the other memory system components, radio station pre-sets and power mirror positions.
- Provides for “linking” the key FOBs to memory.
- Provides for the easy entry/exit feature.
- Provides the tilt mirrors in reverse feature.

When a memory button is pressed (#1 or #2) on the memory switch, the Driver Door Module (DDM) sends a recall message to the MSM. The MSM will then position the memory system components to the preprogrammed location/ setting. When the Remote Keyless Entry (RKE) Transmitter button is pressed, depending on which transmitter (#1 or #2), the SKREEM (RKE Receiver) sends the recall request and FOB number (#1 or #2) data message. This RKE transmitter function depends on if the MSM is programmed to trigger the recall (linked FOBs).

A memory setting is saved by pressing the “set “ button, then pressing either the memory “1” or “2” button within 5 seconds of pressing the “set” button.

A memory setting is recalled by pressing either the memory “1” or “2” button, or by pressing the unlock button on a “linked” Remote Keyless Entry (RKE) transmitter.

For driver safety, memorized settings can not be recalled if the transmission is in any position other than park or the seat belt is latched.

A key FOB is “linked” to a memory setting by pressing the “set” button and then pressing either the memory “1” or “2” button within 5 seconds of pressing the set button, and then, with the key removed from the cylinder, pressing the “lock” button on the selected key FOB.

The memory system “Easy Entry and Exit” feature provides the driver with more room to enter or exit the vehicle. This is a customer programmable feature of the overhead console. When the seat is in a memorized position, it will move rearward 55 millimeters or to the end of its travel, whichever occurs first, when the key is removed from the ignition switch lock cylinder. A lock out zone of 60 millimeters has been established to protect rear passengers from injury. If the memorized seat position is within the lock out zone the Easy Exit/Entry seat glide feature is disabled. The seat will return to the memory position when the driver turns the vehicle’s ignition switch out of the LOCK position.

The memory system ″Tilt in Reverse″ feature tilts the outside mirrors down a fixed, incremental angle when the vehicle is shifted into REVERSE with the ignition switch in the RUN position. This feature provides the customer with a better view of the ground and vehicle in the area of the rear tires when backing up. The mirrors move back to their previous position when the vehicle is shifted out of REVERSE.

The memory system “learns” the seat and adjustable pedal motor maximum end positions when the motor reaches the limit of travel in any direction and stalls. Subsequently, movement will stop just short of that position to avoid extra stress on the motors and mechanisms. If the system learned a maximum position as a result of an obstruction, as for instance if a large object was placed on the floor behind the seat, the system can relearn the “true” maximum position through manually operating the power seat after the obstruction is removed.

NOTE: It is normal for the power accessories contained in the memory system to stop at the maximum “learned” position and then continue to the “true” maximum position when the control switch is released and then applied in the same direction a second time.

Certain functions and features of the memory system rely upon resources shared with other electronic modules in the vehicle over the Controller Area Network (CAN) bus. The CAN bus allows the sharing of sensor information. This helps to reduce wire harness complexity, internal controller hardware, and component sensor current loads. At the same time, this system provides increased reliability, enhanced diagnostics, and allows the addition of many new feature capabilities. For diagnosis of these electronic modules or of the CAN bus, the use of a scan tool and the proper diagnostic information are needed.

DIAGNOSIS AND TESTING

MEMORY SEAT MODULE

In order to obtain conclusive testing of the memory system, the Controller Area Network (CAN) data bus, and all of the electronic modules that provide inputs to, or receive outputs from the memory system components must be checked. **Any diagnosis of the memory system/module should begin with, the use of a scan tool and the appropriate diagnostic service information.**

Refer to the appropriate wiring information for complete circuit schematic or connector pin-out information.

NOTE: Vehicles equipped with the memory/heated seat option utilize a low voltage cut-off feature. This feature turns off the 12v power to the power seat system anytime vehicle voltage is below 11.7v. Be certain to check the vehicle electrical system for proper voltage anytime the power seat system appears inoperative.

Before any testing of the power seat system is attempted, the battery should be fully-charged.

REMOVAL

1. Disconnect and isolate the battery negative cable.
2. Remove the driver seat cushion/cover (2) (Refer to 23 - BODY/SEATS/SEAT CUSHION COVER - REMOVAL).
3. Pivot the module upward and disconnect the electrical connectors (1).
4. Unsnap the memory seat module (4) from the side brackets.
5. Pull the module rearward to remove it from the front of the seat frame (3).

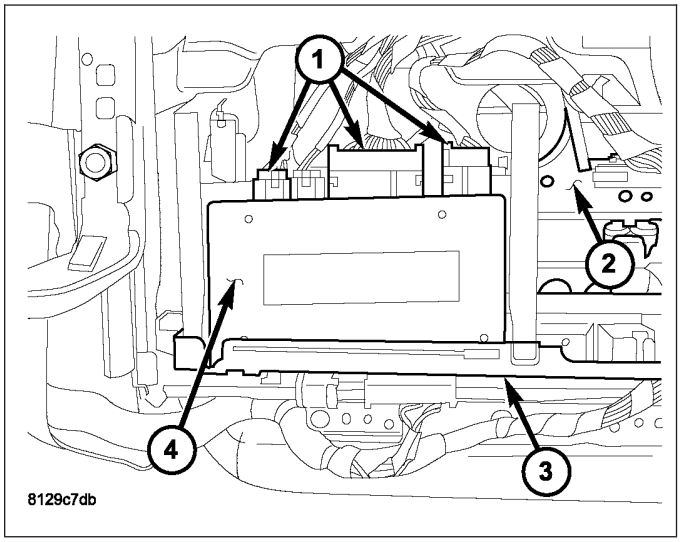

INSTALLATION

CAUTION: The Memory Seat Module (MSM) mounting tabs can be damaged during module installation. Use care to properly align tabs to prevent binding that could result in tab breakage.

1. Place the Memory Seat Module (MSM) (4) into position making sure the mounting tabs are properly aligned with the front bracket.
2. Push down on the rear of the MSM (4) snapping the retaining clips into place in the side brackets.
3. Connect the MSM rear harness connectors (1).
4. Connect the MSM front harness connectors.
5. Install the driver seat cushion/cover (2) (Refer to 23 - BODY/SEATS/SEAT CUSHION COVER - INSTALLATION).
6. Connect the battery negative cable.
7. Using an appropriate scan tool go to the MSM miscellaneous functions and perform the standardization routine.
8. Verify system and vehicle operation.

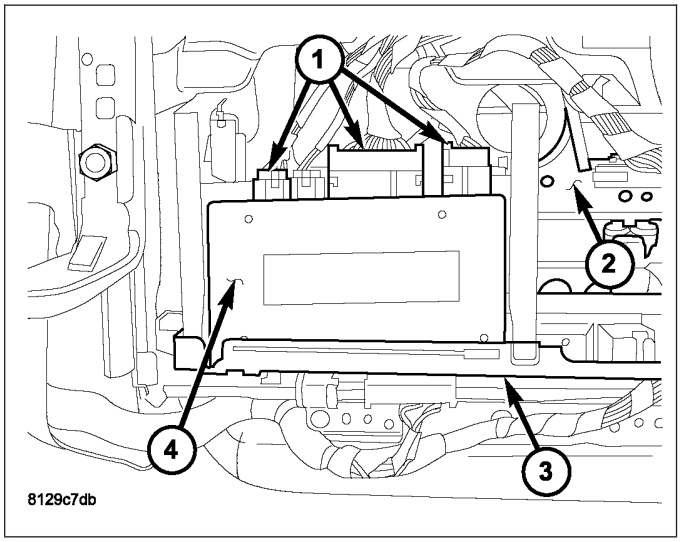

MODULE-STEERING CONTROL

DESCRIPTION

The Steering Control Module (SCM) is the module located in the bottom of the Steering Column Control Module (SCCM), retained by three screws, and is the mating point for all the switches (remote radio switches, horn, speed control, steering angle sensor, tilt/telescopic switch, multi-function switch, clockspring) located in the SCCM. The SCM is screwed directly to the bottom of the multi-function switch. All the other switches are mounted on top of the multi-function switch.

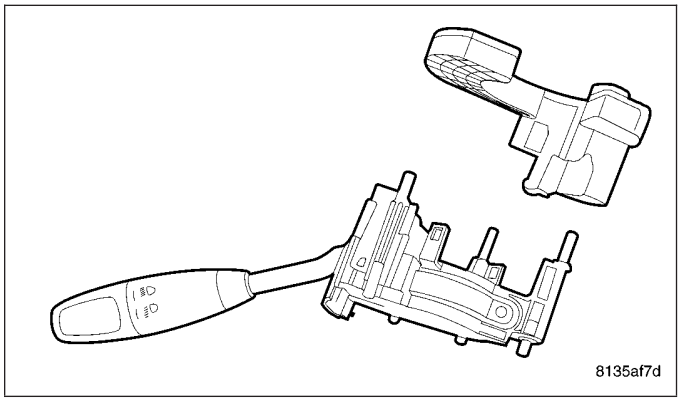

OPERATION

The Steering Control Module (SCM) communicates via the Local Interconnect Network (LIN) serial data bus. This is an ultra-low voltage serial data bus that allows the following components to communicate with the Controller Area Network (CAN) B and C data buses.

- Steering Wheel Switches
- Horn
- Speed Control Switch
- Multi-function Switch
- Tilt/Telescoping Switch (if equipped)
- Steering Angle Sensor (if equipped with Electronic Stability Program (ESP))
- Steering Control Module (SCM)

The SCM changes the LIN communication to CAN communication and also stores Diagnostic Trouble Codes (DTC's) for the switches within the SCCM.

For removal and installation, disassembly and assembly of the SCCM, refer to the following:

NOTE: For Steering Column Module (SCM) removal and installation, refer to the disassembly and assembly procedures for the Steering Column Control Module (SCCM).

- Removal of SCCM (Refer to 19 - STEERING/COLUMN/STEERING COLUMN CONTROL MODULE - REMOVAL).
- Disassembly of SCCM (Refer to 19 - STEERING/COLUMN/STEERING COLUMN CONTROL MODULE - DISASSEMBLY).
- Assembly of SCCM (Refer to 19 - STEERING/COLUMN/STEERING COLUMN CONTROL MODULE - ASSEMBLY).
- Installation of the SCCM (Refer to 19 - STEERING/COLUMN/STEERING COLUMN CONTROL MODULE - INSTALLATION).

The SCM is not serviceable and if found faulty, it must be replaced as a unit.

MODULE-POWERTRAIN CONTROL

DESCRIPTION

DESCRIPTION - PCM

The Powertrain Control Module (PCM) is located in the engine compartment. The PCM is referred to as NGC.

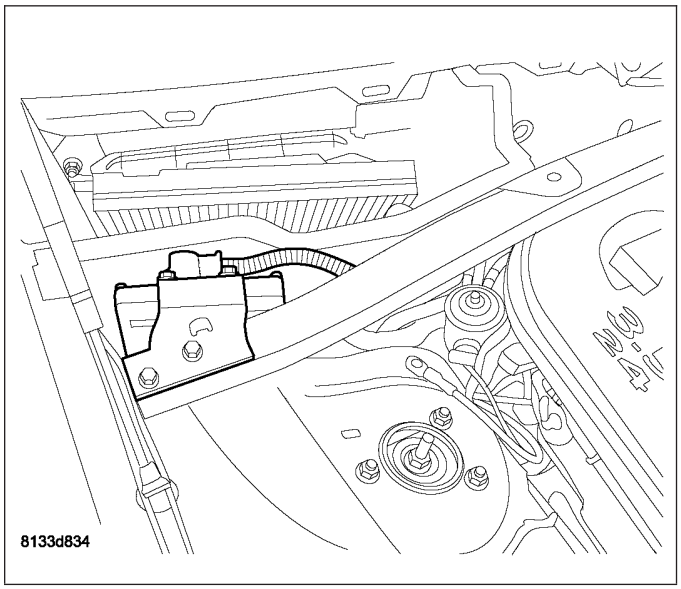

MODES OF OPERATION

As input signals to the Powertrain Control Module (PCM) change, the PCM adjusts its response to the output devices. For example, the PCM must calculate different injector pulse width and ignition timing for idle than it does for wide open throttle (WOT).

The PCM will operate in two different modes: **Open Loop and Closed Loop**.

During Open Loop modes, the PCM receives input signals and responds only according to preset PCM programming. Input from the oxygen (O2S) sensors is not monitored during Open Loop modes.

During Closed Loop modes, the PCM will monitor the oxygen (O2S) sensors input. This input indicates to the PCM whether or not the calculated injector pulse width results in the ideal air-fuel ratio. This ratio is 14.7 parts air-to-1 part fuel. By monitoring the exhaust oxygen content through the O2S sensor, the PCM can fine tune the injector pulse width. This is done to achieve optimum fuel economy combined with low emission engine performance.

The fuel injection system has the following modes of operation:

- Ignition switch ON
- Engine start-up (crank)
- Engine warm-up
- Idle
- Cruise
- Acceleration
- Deceleration
- Wide open throttle (WOT)
- Ignition switch OFF

The ignition switch On, engine start-up (crank), engine warm-up, acceleration, deceleration and wide open throttle modes are Open Loop modes. The idle and cruise modes, (with the engine at operating temperature) are Closed Loop modes.

IGNITION SWITCH (KEY-ON) MODE

This is an Open Loop mode. When the fuel system is activated by the ignition switch, the following actions occur:

- The PCM determines atmospheric air pressure from the MAP sensor input to determine basic fuel strategy.

- The PCM monitors the engine coolant temperature sensor input. The PCM modifies fuel strategy based on this input.
- Intake manifold air temperature sensor input is monitored.
- Throttle position sensor (TPS) is monitored.
- The auto shutdown (ASD) relay is energized by the PCM for approximately three seconds.
- The fuel pump is energized through the fuel pump relay by the PCM. The fuel pump will operate for approximately three seconds unless the engine is operating or the starter motor is engaged.
- The O2S sensor heater element is energized via the O2S relays. The O2S sensor input is not used by the PCM to calibrate air-fuel ratio during this mode of operation.

ENGINE START-UP MODE

This is an Open Loop mode. The following actions occur when the starter motor is engaged.

The PCM receives inputs from:

- Battery voltage
- Engine coolant temperature sensor
- Crankshaft position sensor
- Intake manifold air temperature sensor
- Manifold absolute pressure (MAP) sensor
- Throttle position sensor (TPS)
- Starter motor relay
- Camshaft position sensor signal

The PCM monitors the crankshaft position sensor. If the PCM does not receive a crankshaft position sensor signal within approximately 3 seconds of cranking the engine, it will shut down the fuel injection system.

The fuel pump is activated by the PCM through the fuel pump relay.

Voltage is applied to the fuel injectors with the ASD relay via the PCM. The PCM will then control the injection sequence and injector pulse width by turning the ground circuit to each individual injector on and off.

The PCM determines the proper ignition timing according to input received from the crankshaft position sensor.

ENGINE WARM-UP MODE

This is an Open Loop mode. During engine warm-up, the PCM receives inputs from:

- Battery voltage
- Crankshaft position sensor
- Engine coolant temperature sensor
- Intake manifold air temperature sensor
- Manifold absolute pressure (MAP) sensor
- Throttle position sensor (TPS)
- Camshaft position sensor signal
- Park/neutral switch (gear indicator signal—auto. trans. only)
- Air conditioning select signal (if equipped)
- Air conditioning request signal (if equipped)

Based on these inputs the following occurs:

- Voltage is applied to the fuel injectors with the ASD relay via the PCM. The PCM will then control the injection sequence and injector pulse width by turning the ground circuit to each individual injector on and off.
- The PCM adjusts engine idle speed through the idle air control (IAC) motor and adjusts ignition timing.
- The PCM operates the A/C compressor clutch through the clutch relay. This is done if A/C has been selected by the vehicle operator and requested by the A/C thermostat.
- When engine has reached operating temperature, the PCM will begin monitoring O2S sensor input. The system will then leave the warm-up mode and go into closed loop operation.

IDLE MODE

When the engine is at operating temperature, this is a Closed Loop mode. At idle speed, the PCM receives inputs from:

- Air conditioning select signal (if equipped)
- Air conditioning request signal (if equipped)
- Battery voltage
- Crankshaft position sensor
- Engine coolant temperature sensor
- Intake manifold air temperature sensor
- Manifold absolute pressure (MAP) sensor
- Throttle position sensor (TPS)
- Camshaft position sensor signal
- Battery voltage
- Park/neutral switch (gear indicator signal—auto. trans. only)
- Oxygen sensors

Based on these inputs, the following occurs:

- Voltage is applied to the fuel injectors with the ASD relay via the PCM. The PCM will then control injection sequence and injector pulse width by turning the ground circuit to each individual injector on and off.
- The PCM monitors the O2S sensor input and adjusts air-fuel ratio by varying injector pulse width. It also adjusts engine idle speed through the idle air control (IAC) motor.
- The PCM adjusts ignition timing by increasing and decreasing spark advance.
- The PCM operates the A/C compressor clutch through the clutch relay. This happens if A/C has been selected by the vehicle operator and requested by the A/C thermostat.

CRUISE MODE

When the engine is at operating temperature, this is a Closed Loop mode. At cruising speed, the PCM receives inputs from:

- Air conditioning select signal (if equipped)
- Air conditioning request signal (if equipped)
- Battery voltage
- Engine coolant temperature sensor
- Crankshaft position sensor
- Intake manifold air temperature sensor
- Manifold absolute pressure (MAP) sensor
- Throttle position sensor (TPS)
- Camshaft position sensor signal
- Park/neutral switch (gear indicator signal—auto. trans. only)
- Oxygen (O2S) sensors

Based on these inputs, the following occurs:

- Voltage is applied to the fuel injectors with the ASD relay via the PCM. The PCM will then adjust the injector pulse width by turning the ground circuit to each individual injector on and off.
- The PCM monitors the O2S sensor input and adjusts air-fuel ratio.
- The PCM adjusts ignition timing by turning the ground path to the coils on and off.
- The PCM operates the A/C compressor clutch through the clutch relay. This happens if A/C has been selected by the vehicle operator and requested by the A/C thermostat.

ACCELERATION MODE

This is an Open Loop mode. The PCM recognizes an abrupt increase in throttle position or MAP pressure as a demand for increased engine output and vehicle acceleration. The PCM increases injector pulse width in response to increased throttle opening.

DECELERATION MODE

When the engine is at operating temperature, this is an Open Loop mode. During hard deceleration, the PCM receives the following inputs.

- Air conditioning select signal (if equipped)
- Air conditioning request signal (if equipped)
- Battery voltage
- Engine coolant temperature sensor
- Crankshaft position sensor
- Intake manifold air temperature sensor
- Manifold absolute pressure (MAP) sensor
- Throttle position sensor (TPS)
- Camshaft position sensor signal
- Park/neutral switch (gear indicator signal—auto. trans. only)
- Vehicle speed

If the vehicle is under hard deceleration with the proper rpm and closed throttle conditions, the PCM will ignore the oxygen sensor input signal. The PCM will enter a fuel cut-off strategy in which it will not supply a ground to the injectors. If a hard deceleration does not exist, the PCM will determine the proper injector pulse width and continue injection.

The PCM adjusts ignition timing by turning the ground path to the coils on and off.

WIDE OPEN THROTTLE MODE

This is an Open Loop mode. During wide open throttle operation, the PCM receives the following inputs.

- Battery voltage
- Crankshaft position sensor
- Engine coolant temperature sensor
- Intake manifold air temperature sensor
- Manifold absolute pressure (MAP) sensor
- Throttle position sensor (TPS)
- Camshaft position sensor signal

During wide open throttle conditions, the following occurs:

- Voltage is applied to the fuel injectors with the ASD relay via the PCM. The PCM will then control the injection sequence and injector pulse width by turning the ground circuit to each individual injector on and off. The PCM ignores the oxygen sensor input signal and provides a predetermined amount of additional fuel. This is done by adjusting injector pulse width.
- The PCM adjusts ignition timing by turning the ground path to the coil on and off.

IGNITION SWITCH OFF MODE

When ignition switch is turned to OFF position, the PCM stops operating the injectors, ignition coil, ASD relay and fuel pump relay.

5 VOLT SUPPLIES

Two different Powertrain Control Module (PCM) five volt supply circuits are used; primary and secondary.

IGNITION CIRCUIT SENSE

This circuit ties the ignition switch to the Powertrain Control Module (PCM).

POWER GROUNDS

The Powertrain Control Module (PCM) has 2 main grounds. Both of these grounds are referred to as power grounds. All of the high-current, noisy, electrical devices are connected to these grounds as well as all of the sensor returns. The sensor return comes into the sensor return circuit, passes through noise suppression, and is then connected to the power ground.

The power ground is used to control ground circuits for the following PCM loads:

- Generator field winding
- Fuel injectors
- Ignition coil(s)
- Certain relays/solenoids
- Certain sensors

SENSOR RETURN

The Sensor Return circuits are internal to the Powertrain Control Module (PCM).

Sensor Return provides a low–noise ground reference for all engine control system sensors. Refer to Power Grounds for more information.

OPERATION

OPERATION - PCM

1. Also refer to Modes of Operation.

The PCM operates the fuel system. The PCM is a pre-programmed, triple microprocessor digital computer. It regulates ignition timing, air-fuel ratio, emission control devices, charging system, certain transmission features, speed control, air conditioning compressor clutch engagement and idle speed. The PCM can adapt its programming to meet changing operating conditions.

The PCM receives input signals from various switches and sensors. Based on these inputs, the PCM regulates various engine and vehicle operations through different system components. These components are referred to as Powertrain Control Module (PCM) Outputs. The sensors and switches that provide inputs to the PCM are considered Powertrain Control Module (PCM) Inputs.

The PCM adjusts ignition timing based upon inputs it receives from sensors that react to: engine rpm, manifold absolute pressure, engine coolant temperature, throttle position, transmission gear selection (automatic transmission), vehicle speed and the brake switch.

The PCM adjusts idle speed based on inputs it receives from sensors that react to: throttle position, vehicle speed, transmission gear selection, engine coolant temperature and from inputs it receives from the air conditioning clutch switch and brake switch.

Based on inputs that it receives, the PCM adjusts ignition coil dwell. The PCM also adjusts the generator charge rate through control of the generator field and provides speed control operation.

NOTE: PCM Inputs:

- A/C request
- Auto shutdown (ASD) sense
- Battery temperature
- Battery voltage
- Brake switch
- J1850 bus circuits
- Camshaft position sensor signal
- Crankshaft position sensor
- Data link connections for scan tool
- Engine coolant temperature sensor
- Five volts (primary)
- Five volts (secondary)
- Fuel level
- Generator (battery voltage) output
- Ignition circuit sense (ignition switch in on/off/crank/run position)
- Intake manifold air temperature sensor
- Leak detection pump (switch) sense (if equipped)

- Manifold absolute pressure (MAP) sensor
- Oil pressure
- Overdrive/override switch
- Oxygen sensors
- Park/neutral switch (auto. trans. only)
- Power ground
- Sensor return
- Signal ground
- Speed control multiplexed single wire input
- Throttle position sensor
- Transmission governor pressure sensor
- Transmission temperature sensor
- Vehicle speed (from ABS module)

NOTE: PCM Outputs:

- A/C clutch relay
- Auto shutdown (ASD) relay
- J1850 (+/-) circuits for: speedometer, voltmeter, fuel gauge, oil pressure gauge/lamp, engine temp. gauge and speed control warn. lamp
- Data link connection for scan tool
- EGR valve control solenoid (if equipped)
- EVAP canister purge solenoid
- Fuel injectors
- Fuel pump relay
- Generator field driver (-)
- Generator field driver (+)
- Generator lamp (if equipped)
- Ignition coil
- Natural Vacuum Leak detection Switch
- Malfunction indicator lamp (Check engine lamp). Driven through J1850 circuits.
- Overdrive indicator lamp (if equipped). Driven through J1850 circuits.
- Oxygen sensor heater relays (if equipped).
- Radiator cooling fan relay (pulse width modulated)
- Speed control source
- Speed control vacuum solenoid
- Speed control vent solenoid
- Tachometer (if equipped). Driven through J1850 circuits.
- Transmission convertor clutch circuit
- Transmission 3–4 shift solenoid
- Transmission relay
- Transmission temperature lamp (if equipped)
- Transmission variable force solenoid

5 VOLT SUPPLIES

Primary 5-volt supply:

- supplies the required 5 volt power source to the Crankshaft Position (CKP) sensor.
- supplies the required 5 volt power source to the Camshaft Position (CMP) sensor.
- supplies a reference voltage for the Manifold Absolute Pressure (MAP) sensor.
- supplies a reference voltage for the Throttle Position Sensor (TPS) sensor.

Secondary 5-volt supply:

- supplies the required 5 volt power source to the oil pressure sensor.
- supplies the required 5 volt power source for the Vehicle Speed Sensor (VSS) (if equipped).
- supplies the 5 volt power source to the transmission pressure sensor (if equipped with an RE automatic transmission).

OPERATION - IGNITION CIRCUIT SENSE

The ignition circuit sense input tells the PCM the ignition switch has energized the ignition circuit.

Battery voltage is also supplied to the PCM through the ignition switch when the ignition is in the RUN or START position. This is referred to as the ″ignition sense″ circuit and is used to ″wake up″ the PCM.

DIAGNOSIS AND TESTING

NGC POWERTRAIN VERIFICATION TEST VER - 1

For the Engine circuit diagram (Refer to 9 - ENGINE - SCHEMATICS AND DIAGRAMS).

For a complete wiring diagram **Refer to Section 8W**.

Diagnostic Test

1. NGC POWERTRAIN VERIFICATION TEST VER - 1

NOTE: 1. If this vehicle is equipped with an Electron Throttle Control system, and the APP Sensors, PCM, or Throttle Body Assembly have been replaced, use a scan tool to perform the ETC RELEARN function.

NOTE: 2. If the PCM or FCM have been replaced, the Pinion Factor MUST be programmed into the FCM. While programming the Pinion Factor into the FCM the scan tool will send the Pinion Factor information to the PCM at the same time. Refer to the scan tool for program procedure.

NOTE: 3. If the PCM has been replaced and the correct VIN and mileage have not been programmed, a DTC will set in the ABS Module, Airbag Module and the SKIM.

NOTE: 4. If the vehicle is equipped with a Sentry Key Immobilizer System, Secret Key data must be updated. Refer to the Service Information for the PCM, SKIM and the Transponder (ignition key) for programming information.

5. Inspect the vehicle to ensure that all components related to the repair are properly installed and connected.
6. Inspect the engine oil for fuel contamination. Replace the oil and filter as necessary.
7. Attempt to start the engine.
8. If the No Start condition is still present, refer to the Engine Electrical Diagnostic list and perform the diagnostic testing as necessary, refer to any Technical Service Bulletins that may apply.
9. Run the engine for one warm-up cycle to verify operation.
10. With the scan tool, confirm that no DTCs are present and that all components are functioning properly.

NOTE: The PCM can detect and compensate for variances in the engine and its components. To learn these variations, the PCM uses the input of the actual crankshaft rotation pattern and ideal crankshaft rotation pattern that has been calibrated into the PCM. The PCM then compares the two patterns. The variation between the two values is the Adaptive Numerator. If the Adaptive Numerator is not learned by the PCM, the misfire monitor will not run and the Multi-Cylinder Displacement System (MDS) will not operate. Without MDS operation, the customer will experience decreased fuel economy. If the customer experiences decrease fuel economy or after any repair use the scan tool to ensure that the Adaptive Numerator is learned.

Are any DTCs or symptoms remaining?

Yes >> Check for any related Technical Service Bulletins and/or refer to the appropriate Diagnostic Procedure.

No >> Repair is complete.

NGC POWERTRAIN VERIFICATION TEST VER - 2

For the Engine circuit diagram (Refer to 9 - ENGINE - SCHEMATICS AND DIAGRAMS).

For a complete wiring diagram **Refer to Section 8W**.

Diagnostic Test

1. NGC POWERTRAIN VERIFICATION TEST VER - 2

NOTE: 1. If this vehicle is equipped with a Electronic Throttle Control system, and the APP Sensors, PCM, or Throttle Body Assembly have been replaced, use a scan tool to perform the ETC RELEARN function.

NOTE: 2. If the PCM or FCM have been replaced, the Pinion Factor MUST be programmed into the FCM. While programming the Pinion Factor into the FCM the scan tool will send the Pinion Factor information to the PCM at the same time. Refer to the scan tool for program procedure.

NOTE: 3. If the PCM has been replaced and the correct VIN and mileage have not been programmed, a DTC will set in the ABS Module, Airbag Module and the SKIM.

NOTE: 4. If the vehicle is equipped with a Sentry Key Immobilizer System, Secret Key data must be updated. Refer to the Service Information for the PCM, SKIM and the Transponder (ignition key) for programming information.

5. Inspect the vehicle to make sure that all components related to the repair are properly installed and connected.
6. With a scan tool, clear DTCs and Reset Memory all engine values.
7. Run the engine for one warm-up cycle to verify proper operation.
8. Road test the vehicle. Use all accessories that may be related to this repair.
9. With the scan tool, confirm that no DTC's are present and that all components are functioning properly.
10. If this test is being performed after a No Trouble Code test, verify the symptom is no longer present.

NOTE: The PCM can detect and compensate for variances in the engine and its components. To learn these variations, the PCM uses the input of the actual crankshaft rotation pattern and ideal crankshaft rotation pattern that has been calibrated into the PCM. The PCM then compares the two patterns. The variation between the two values is the Adaptive Numerator. If the Adaptive Numerator is not learned by the PCM, the misfire monitor will not run and the Multi-Cylinder Displacement System (MDS) will not operate. Without MDS operation, the customer will experience decreased fuel economy. If the customer experiences decrease fuel economy or after any repair use the scan tool to ensure that the Adaptive Numerator is learned.

Are any DTCs or symptoms remaining?

Yes >> Check for any related Technical Service Bulletins and/or refer to the appropriate Diagnostic Procedure.

No >> Repair is complete.

NGC POWERTRAIN VERIFICATION TEST VER - 3

For the Engine circuit diagram (Refer to 9 - ENGINE - SCHEMATICS AND DIAGRAMS).

For a complete wiring diagram **Refer to Section 8W**.

Diagnostic Test

1. NGC POWERTRAIN VERIFICATION TEST VER - 3

1. If this vehicle is equipped with an Electronic Throttle Control system, and the APP Sensors, PCM, or Throttle Body Assembly has been replaced use a scan tool to perform the ETC RELEARN function.

NOTE: 2. After completing the Powertrain Verification Test the Transmission Verification Test must be performed.

NOTE: 3. If the PCM has been replaced and the correct VIN and mileage have not been programmed, a DTC will set in the ABS Module, Airbag Module and the SKIM.

NOTE: 4. If the vehicle is equipped with a Sentry Key Immobilizer System, Secret Key data must be updated. Refer to the Service Information for the PCM, SKIM and the Transponder (ignition key) for programming information.

5. Inspect the vehicle to make sure that all components related to the repair are properly installed and connected.
6. With the scan tool, clear DTCs.
7. Perform generator output test. Refer to the appropriate service information as necessary.
8. Start the engine and set engine speed to 2000 RPM for at least thirty seconds.
9. Cycle the ignition key off and on.
10. With the scan tool, read the DTCs.

NOTE: The PCM can detect and compensate for variances in the engine and its components. To learn these variations, the PCM uses the input of the actual crankshaft rotation pattern and ideal crankshaft rotation pattern that has been calibrated into the PCM. The PCM then compares the two patterns. The variation between the two values is the Adaptive Numerator. If the Adaptive Numerator is not learned by the PCM, the misfire monitor will not run and the Multi-Cylinder Displacement System (MDS) will not operate. Without MDS operation, the customer will experience decreased fuel economy. If the customer experiences decrease fuel economy or after any repair use the scan tool to ensure that the Adaptive Numerator is learned.

Are any DTCs or symptoms remaining?

Yes >> Check for any Technical Service Bulletins and/or refer to the appropriate Diagnostic Procedure.

No >> Repair is complete.

NGC POWERTRAIN VERIFICATION TEST VER - 4

For the Engine circuit diagram (Refer to 9 - ENGINE - SCHEMATICS AND DIAGRAMS).

For a complete wiring diagram **Refer to Section 8W**.

Diagnostic Test

1. NGC POWERTRAIN VERIFICATION TEST VER - 4

NOTE: If this vehicle is equipped with an Electronic Throttle Control system, and the APP Sensors, PCM, or Throttle Body Assembly have been replaced, use the scan tool to perform the ETC RELEARN function.

NOTE: 2. After completing the Powertrain Verification Test the Transmission Verification Test must be performed.

NOTE: 3. If the PCM has been replaced and the correct VIN and mileage have not been programmed, a DTC will set in the ABS Module, Airbag Module and the SKIM.

NOTE: 4. If the vehicle is equipped with a Sentry Key Immobilizer System, Secret Key data must be updated. Refer to the Service Information for the PCM, SKIM and the Transponder (ignition key) for programming information.

5. Inspect the vehicle to make sure that all engine components are properly installed and connected.
6. Connect the scan tool to the data link connector and erase all codes.
7. Turn the speed control ON (if equipped, cruise light will be on).
8. Depress and release the SET Switch when the vehicle speed is greater than 35 MPH. The speed control should engage and hold the selected speed.
9. Press and hold the RESUME/ACCEL Switch. The vehicle speed should increase by at least 2 MPH.
10. Press and hold the COAST switch. The vehicle speed should decrease.
11. Using caution, press and release the brake pedal. The speed control should disengage.
12. Bring the vehicle speed back up to 35 MPH.
13. Press the RESUME/ACCEL switch. The speed control should resume the previously set speed.
14. Hold down the SET switch. The vehicle should decelerate.
15. Make sure vehicle speed is greater than 35 mph and release the SET Switch. The vehicle should adjust and set a new vehicle speed.
16. Press and release the CANCEL switch. The speed control should disengage.
17. Bring the vehicle speed back up above 35 mph and engage speed control.
18. Turn the Speed Control Off. (Cruise light will be off). The speed control should disengage.

NOTE: OVERSHOOT/UNDERSHOOT FOLLOWING SPEED CONTROL SET.

20. If the vehicle operator repeatedly presses and releases the SET button with their foot off of the accelerator (referred to as ″lift foot set″), the vehicle may accelerate and exceed the desired set speed by up to 5 mph (8 km/h).
21. It may also decelerate to less than the desired set speed, before finally achieving the desired set speed.
22. The Speed Control System has an adaptive strategy that compensates for vehicle-to-vehicle variations in speed control cable lengths.
23. When the speed control is set with the vehicles operators foot off of the accelerator pedal, the speed control thinks there is excessive speed control cable slack and adapts accordingly.
24. If the ″lift foot sets″ are continually used, a speed control overshoot/undershoot condition will develop.
25. To ″unlearn″ the overshoot/undershoot condition, the vehicle operator has to press and release the set button while maintaining the desired set speed using the accelerator pedal (not decelerating or accelerating).
26. Then turn the cruise control switch to the OFF position (or press the CANCEL button if equipped) after waiting 10 seconds.
27. This procedure must be performed approximately 10-15 times to completely unlearn the overshoot/undershoot condition.

NOTE: The PCM can detect and compensate for variances in the engine and its components. To learn these variations, the PCM uses the input of the actual crankshaft rotation pattern and ideal crankshaft rotation pattern that has been calibrated into the PCM. The PCM then compares the two patterns. The variation between the two values is the Adaptive Numerator. If the Adaptive Numerator is not learned by the PCM, the misfire monitor will not run and the Multi-Cylinder Displacement System (MDS) will not operate. Without MDS operation, the customer will experience decreased fuel economy. If the customer experiences decrease fuel economy or after any repair use the scan tool to ensure that the Adaptive Numerator is learned.

Did the Speed Control pass the above test?

Yes >> Repair is complete.

No >> Check for any related Technical Service Bulletins and/or refer to the appropriate Diagnostic Procedure.

NGC POWERTRAIN VERIFICATION TEST VER - 5

For the Engine circuit diagram (Refer to 9 - ENGINE - SCHEMATICS AND DIAGRAMS).

For a complete wiring diagram **Refer to Section 8W**.

Diagnostic Test

1. NGC POWERTRAIN VERIFICATION TEST VER - 5

NOTE: 1. After completing the Powertrain Verification Test the Transmission Verification Test must be performed.

NOTE: 2. If the PCM has been replaced and the correct VIN and mileage have not been programmed, a DTC will set in the ABS Module, Airbag Module and the SKIM.

NOTE: 3. If the vehicle is equipped with a Sentry Key Immobilizer System, Secret Key data must be updated. Refer to the Service Information for the PCM, SKIM and the Transponder (ignition key) for programming information.

NOTE: 4. If this vehicle is equipped with an Electronic Throttle Control system, and the APP Sensors, PCM, or Throttle Body Assembly have been replaced, use the scan tool to perform the ETC RELEARN function.

NOTE: 5. When replacing an O2 Sensor, the PCM RAM memory must be cleared, either by disconnecting the PCM C-1 connector or momentarily disconnecting the Battery negative terminal.

6. The NGC learns the characteristics of each O2 heater element and these old values should be cleared when installing a new O2 sensor. The customer may experience driveability issues if this is not performed.

7. Inspect the vehicle to ensure that all engine components are properly installed and connected. Reassemble and reconnect components as necessary.

8. Connect the scan tool to the data link connector.

9. Make sure the fuel tank has at least a quarter tank of fuel. Turn off all accessories.

10. If the Catalyst was replaced, with the scan tool go to the Miscellaneous Menu Option ″Catalyst Replaced″ and press enter.

11. If a Comprehensive Component DTC was repaired, perform steps 12 - 14. If a Major OBDII Monitor DTC was repaired skip those steps and continue verification.

12. After the ignition has been off for at least 10 seconds, restart the vehicle and run 2 minutes.

13. With the scan tool, monitor the appropriate pre-test enabling conditions until all conditions have been met. Once the conditions have been met, switch screen to the appropriate OBDII monitor, (Audible beeps when the monitor is running).

14. If the repaired OBDII trouble code has reset or was seen in the monitor while on the road test, the repair is not complete. Check for any related technical service bulletins or flash updates and return to Engine Electrical Diagnostic List.

15. If the conditions cannot be duplicated, erase all DTCs with the Scan Tool.

16. If another DTC has set, return to the Engine Electrical Diagnostic List and follow the path specified for that DTC.

NOTE: The PCM can detect and compensate for variances in the engine and its components. To learn these variations, the PCM uses the input of the actual crankshaft rotation pattern and ideal crankshaft rotation pattern that has been calibrated into the PCM. The PCM then compares the two patterns. The variation between the two values is the Adaptive Numerator. If the Adaptive Numerator is not learned by the PCM, the misfire monitor will not run and the Multi-Cylinder Displacement System (MDS) will not operate. Without MDS operation, the customer will experience decreased fuel economy. If the customer experiences decrease fuel economy or after any repair use the scan tool to ensure that the Adaptive Numerator is learned.

Did the OBDII Monitor run successfully and has the Good Trip Counter changed to one or more?

Yes >> Repair is complete.

No >> Check for any related Technical Service Bulletins and/or refer to the appropriate Diagnostic Procedure.

NGC POWERTRAIN VERIFICATION TEST VER - 6

For the Engine circuit diagram (Refer to 9 - ENGINE - SCHEMATICS AND DIAGRAMS).

For a complete wiring diagram **Refer to Section 8W**.

Diagnostic Test

1. NGC POWERTRAIN VERIFICATION TEST VER - 6

1. Install the Miller Tool #8404 Evaporative Emission Leak Detector (EELD) according to the instructions in the previous DTC table.
2. Set the smoke/air control switch to AIR.
3. Insert the tester's AIR supply tip (clear hose) into the appropriate calibration orifice on the tester's control panel (based on DTC leak size).
4. Press the remote smoke/air start button.
5. Position the red flag on the air flow meter so it is aligned with the indicator ball.
6. When the calibration is complete, release the remote button. The EELD flow meter is now calibrated in liters per minute to the size of leak indicated by the DTC set in the PCM.
7. Install the service port adapter #8404-14 on the vehicle's service port.
8. Connect the Air supply hose from the EELD to the vehicle.
9. Press the remote button to activate AIR flow.

NOTE: 10. Larger volume fuel tanks, lower fuel levels or if the vehicle is equipped with a Flow Management Valve may indicate high flow and will require 4 to 5 minutes to fill.

11. Compare the flow meter indicator ball reading to the red flag.
12. ABOVE the red flag indicates a leak present.
13. BELOW the red flag indicates a sealed system.

NOTE: If this vehicle is equipped with an Electronic Throttle Control system, and the APP Sensors, PCM, or Throttle Body Assembly have been replaced, use the scan tool to perform the ETC RELEARN function.

15. If the indicator ball shows a leak present, perform the smoke test indicated in the previous test and identify the leak and repair. Perform this verification test when the repair is complete.

NOTE: The PCM can detect and compensate for variances in the engine and its components. To learn these variations, the PCM uses the input of the actual crankshaft rotation pattern and ideal crankshaft rotation pattern that has been calibrated into the PCM. The PCM then compares the two patterns. The variation between the two values is the Adaptive Numerator. If the Adaptive Numerator is not learned by the PCM, the misfire monitor will not run and the Multi-Cylinder Displacement System (MDS) will not operate. Without MDS operation, the customer will experience decreased fuel economy. If the customer experiences decrease fuel economy or after any repair use the scan tool to ensure that the Adaptive Numerator is learned.

Did the indicator ball indicate the a leak is present?

Yes >> Repeat the DTC test to identify the leak and repair.

No >> Repair is complete.

STANDARD PROCEDURE

TCM QUICK LEARN - 42RLE Only

The quick learn procedure requires the use of the appropriate scan tool.

This program allows the electronic transmission system to recalibrate itself. This will provide the proper transmission operation. The quick learn procedure should be performed if any of the following procedures are performed:

- Transmission Assembly Replacement
- Transmission Control Module Replacement
- Solenoid Pack Replacement
- Clutch Plate and/or Seal Replacement
- Valve Body Replacement or Recondition

To perform the Quick Learn Procedure, the following conditions must be met:

- The brakes must be applied
- The engine speed must be above 500 rpm
- The throttle angle (TPS) must be less than 3 degrees
- The shift lever position must stay in PARK until prompted to shift to overdrive
- The shift lever position must stay in overdrive after the Shift to Overdrive prompt until the scan tool indicates the procedure is complete.
- The calculated oil temperature must be above 60° and below 200°

TCM ADAPTATION - NAG1 Only

The adaptation procedure requires the use of the appropriate scan tool. This program allows the electronic transmission system to re-calibrate itself. This will provide the proper baseline transmission operation. The adaptation procedure should be performed if any of the following procedures are performed:

- Transmission Assembly Replacement
- Transmission Control Module Replacement
- Clutch Plate and/or Seal Replacement
- Electrohydraulic Unit Replacement or Recondition

1. With the scan tool, reset the Transmission adaptives. Resetting the adaptives will set the adaptives to factory settings.

NOTE: Perform the Coast Down Adaptations first. The Transmission Temperature must be greater than 60°C (140°F) and less than 70°C (158°F). Failure to stay within these temperature ranges will void the procedure.

2. Drive the vehicle until the transmission temperature is in the specified range.
3. Perform 4 to 5 coast downs from 5th to 4th gear and then 4th to 3rd gear.

NOTE: For Upshift adaptation, the Transmission temperature must be greater than 60°C (140°F) and less than 100°C (212°F). Failure to stay within these temperature ranges will void this procedure.

4. From a stop, moderately accelerate the vehicle and obtain all forward gear ranges while keeping the Engine RPM below 1800 RPM. Repeat this procedure 4 to 5 times.
5. Obtaining 5th gear may be difficult at 1800 RPM. Allow the transmission to shift into 5th gear at a higher RPM then lower the RPM to 1800 and perform manual shifts between 4th and 5th gears using the shift lever.
6. The TCM will store the adaptives every 10 minutes. After completion of the adaptation procedure make sure the vehicle stays running for at least 10 minutes.
7. It is possible to manually store the adaptives under the 10 minute time frame using the scan tool Store Adaptives procedure.

REMOVAL

USE THE SCAN TOOL TO REPROGRAM THE NEW POWERTRAIN CONTROL MODULE (PCM) WITH THE VEHICLES ORIGINAL IDENTIFICATION NUMBER (VIN) AND THE VEHICLES ORIGINAL MILEAGE. IF THIS STEP IS NOT DONE, A DIAGNOSTIC TROUBLE CODE (DTC) MAY BE SET.

To avoid possible voltage spike damage to PCM, ignition key must be off, and negative battery cable must be disconnected before unplugging PCM connectors.

1. Disconnect negative battery cable.

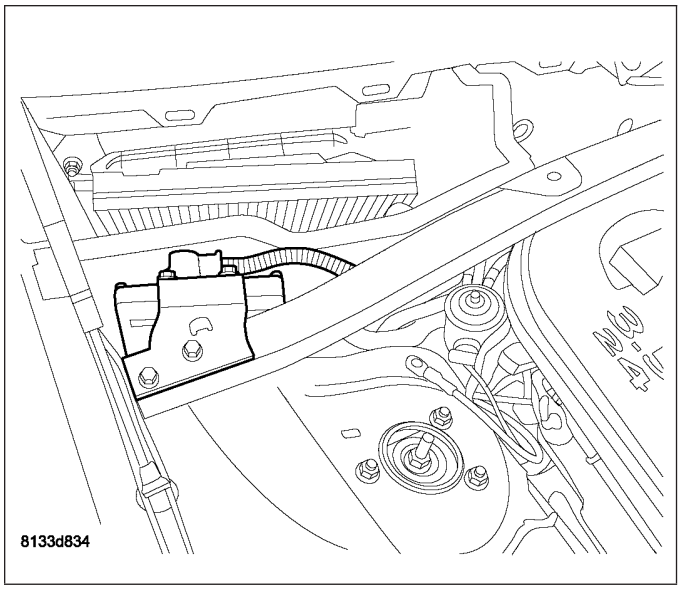

2. Remove PCM bracket-to-body mounting bolt.
3. Remove assembly from vehicle.
4. Unlock and disconnect the electrical connectors from PCM.

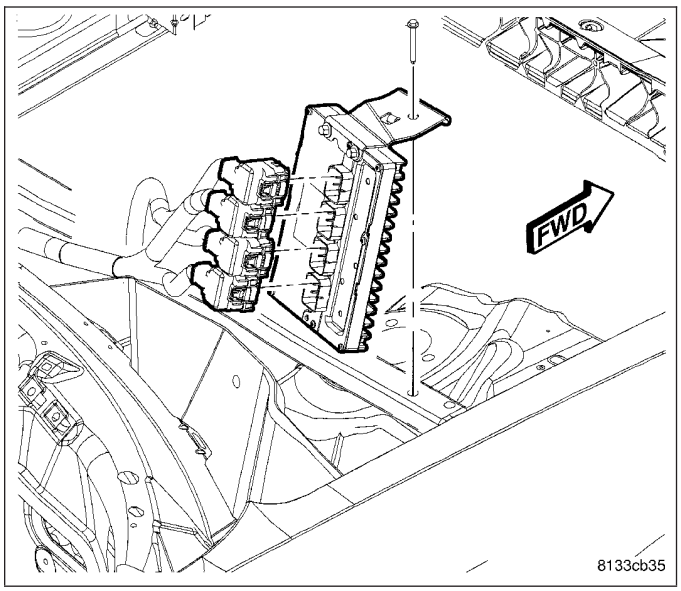

5. Remove bracket from PCM.

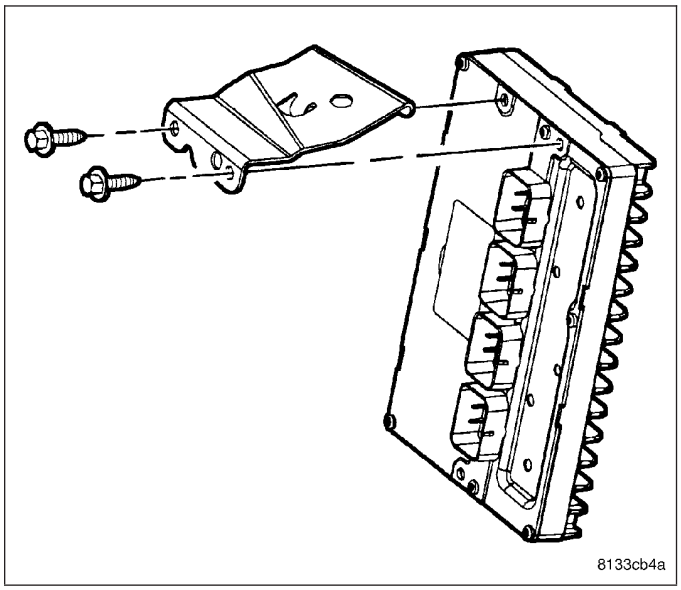

6. Remove the rubber bumper from PCM.

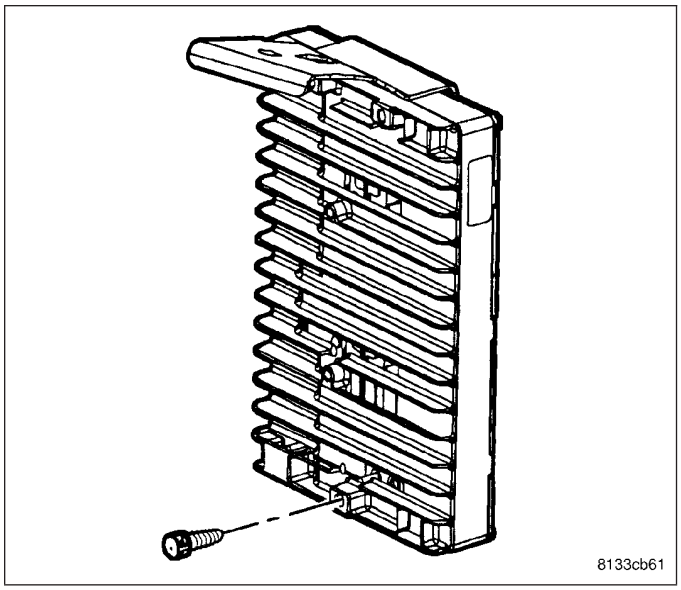

INSTALLATION

USE THE SCAN TOOL TO REPROGRAM THE NEW POWERTRAIN CONTROL MODULE (PCM) WITH THE VEHICLES ORIGINAL IDENTIFICATION NUMBER (VIN) AND THE VEHICLES ORIGINAL MILEAGE. IF THIS STEP IS NOT DONE, A DIAGNOSTIC TROUBLE CODE (DTC) MAY BE SET.

1. Install rubber bumper to PCM back.
2. Check pins in electrical connectors for damage. Repair as necessary.
3. Install electrical connectors to PCM.

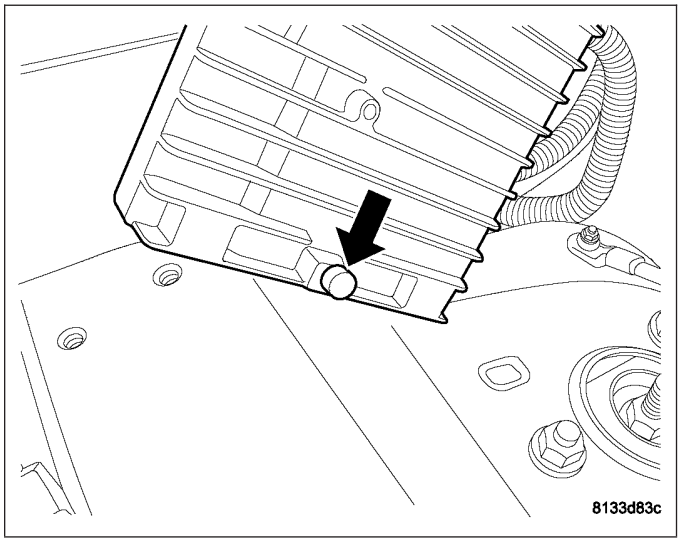

4. Install mounting bracket to PCM.

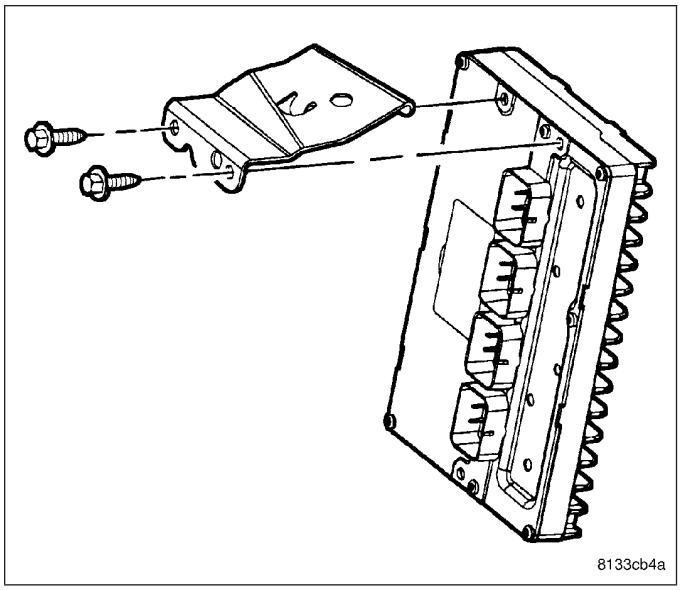

5. Install assembly to body. Install bolt and tighten 9 N·m (80 in. lbs.) torque.

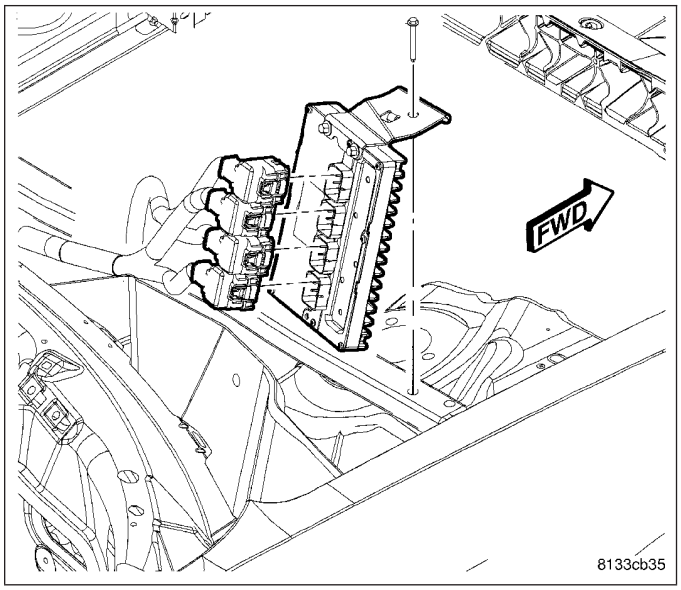

6. Connect negative cable to battery.
7. Use the scan tool to reprogram new PCM with vehicles original Identification Number (VIN) and original vehicle mileage.

MODULE-TRANSMISSION CONTROL

DESCRIPTION

TRANSMISSION CONTROL MODULE - 42RLE

The Transmission Control Module (TCM) is a sub-module within the Powertrain Control Module (PCM). The Powertrain Control Module (PCM) is located in the right rear of the engine compartment, just in front of the windshield.

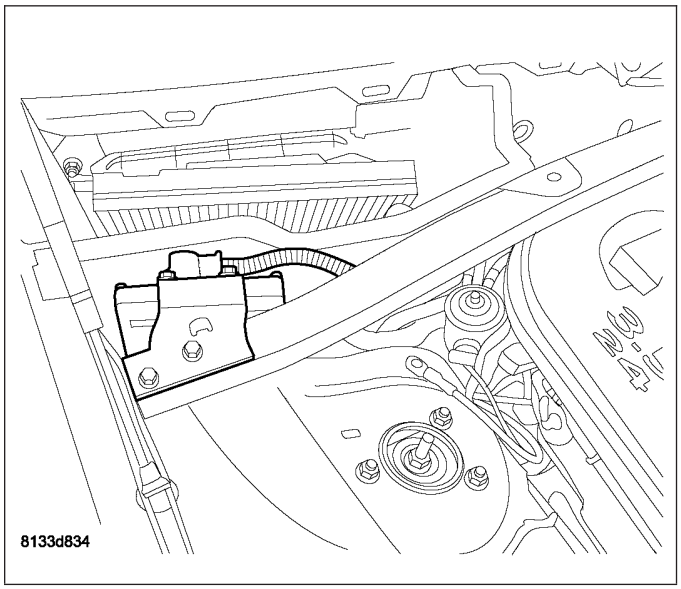

TRANSMISSION CONTROL MODULE - NAG1

The electronic control system consists of various components providing inputs to the transmission control module (TCM). The TCM monitors transmission sensors, shift lever position, and bus messages to determine transmission shift strategy. After shift strategies are determined, the TCM controls the actuation of transmission solenoids, which controls the routing of hydraulic fluid within the transmission, by moving a sequence of four valves to make a shift occur.

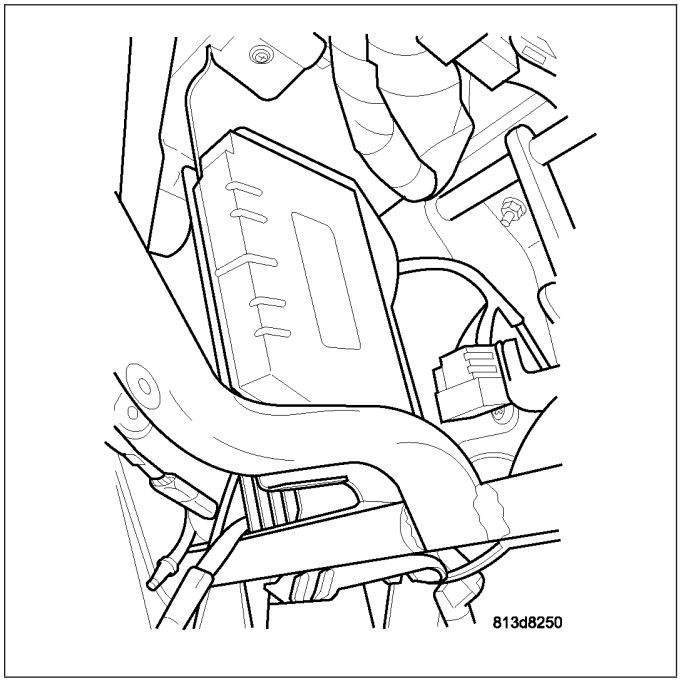

The NAG1 electronic transmission has a fully adaptive control system. The system performs its functions based on continuous real-time sensor feedback information. In addition the TCM receives information from the PCM (engine management) and ABS (chassis systems) controllers over the CAN bus. The CAN bus is a high-speed communication bus that allows real time control capability between various controllers. Most messages are sent every 20 milliseconds. This means critical information can be shared between the transmission, engine, and ABS controllers. The CAN bus is a two wire bus with a CAN Bus (+) circuit and a CAN Bus (-) circuit. These circuits are twisted pairs in the harness to reduce the potential of radio and noise interference.

The transmission control system automatically adapts to changes in engine performance, vehicle speed, and transmission temperature variations to provide consistent shift quality. The control system ensures that clutch operation during up-shifting and downshifting is more responsive without increased harshness. The TCM activates the solenoid valves and moves valves in the valve body to achieve the necessary gear changes. The required pressure level is calculated from the load condition, engine speed. Vehicle speed (from ABS module) and transmission oil temperature, matched to the torque to be transmitted. The TCM is located under the left side of the instrument panel

for left hand drive vehicles. For right hand drive vehicles, the TCM is located in the mirrored location under the right side of the instrument panel.

OPERATION

TRANSMISSION CONTROL MODULE - 42RLE

The Transmission Control Module (TCM) controls all electronic operations of the transmission. The TCM receives information regarding vehicle operation from both direct and indirect inputs, and selects the operational mode of the transmission. Direct inputs are hard wired to, and used specifically by the TCM. Indirect inputs are shared with the TCM via the vehicle communication bus.

Some examples of **direct inputs** to the TCM are:

- Battery (B+) voltage
- Ignition “ON” voltage
- Transmission Control Relay (Switched B+)
- Throttle Position Sensor
- Crankshaft Position Sensor
- Transmission Range Sensor
- Pressure Switches
- Transmission Temperature Sensor
- Input Shaft Speed Sensor
- Output Shaft Speed Sensor
- Line Pressure Sensor

Some examples of **indirect inputs** to the TCM are:

- Engine/Body Identification
- Manifold Pressure
- Target Idle
- Torque Reduction Confirmation
- Engine Coolant Temperature
- Ambient/Battery Temperature
- Scan Tool Communication

Based on the information received from these various inputs, the TCM determines the appropriate shift schedule and shift points, depending on the present operating conditions and driver demand. This is possible through the control of various direct and indirect outputs.

Some examples of TCM **direct outputs** are:

- Transmission Control Relay
- Solenoids
- Torque Reduction Request

Some examples of TCM **indirect outputs** are:

- Transmission Temperature (to PCM)
- PRNDL Position (to cluster/CCN)

In addition to monitoring inputs and controlling outputs, the TCM has other important responsibilities and functions:

- Storing and maintaining Clutch Volume Indexes (CVI)
- Storing and selecting appropriate Shift Schedules
- System self-diagnostics
- Diagnostic capabilities (with scan tool)

NOTE: If the TCM has been replaced, the “Quick Learn Procedure” must be performed. (Refer to 8 - ELECTRICAL/ELECTRONIC CONTROL MODULES/TRANSMISSION CONTROL MODULE - STANDARD PROCEDURE)

BATTERY FEED

A fused, direct battery feed to the TCM is used for continuous power. This battery voltage is necessary to retain memory in the TCM. When the battery (B+) is disconnected, this memory is lost. When the battery (B+) is restored, this memory loss is detected by the TCM and a Diagnostic Trouble Code (DTC) is set.

CLUTCH VOLUME INDEXES (CVI)

An important function of the TCM is to monitor Clutch Volume Indexes (CVI). CVIs represent the volume of fluid needed to compress a clutch pack.

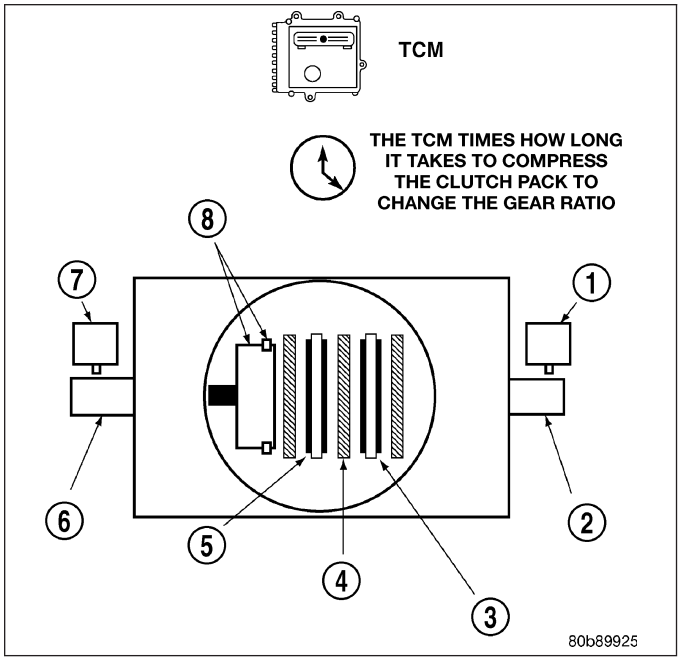

The TCM monitors gear ratio changes by monitoring the Input and Output Speed Sensors. The Input, or Turbine Speed Sensor sends an electrical signal to the TCM that represents input shaft rpm. The Output Speed Sensor provides the TCM with output shaft speed information.

By comparing the two inputs, the TCM can determine transmission gear position. This is important to the CVI calculation because the TCM determines CVIs by monitoring how long it takes for a gear change to occur.

Gear ratios can be determined by using the Scan Tool and reading the Input/Output Speed Sensor values in the “Monitors” display. Gear ratio can be obtained by dividing the Input Speed Sensor value by the Output Speed Sensor value.

For example, if the input shaft is rotating at 1000 rpm and the output shaft is rotating at 500 rpm, then the TCM can determine that the gear ratio is 2:1. In direct drive (3rd gear), the gear ratio changes to 1:1. The gear ratio changes as clutches are applied and released. By monitoring the length of time it takes for the gear ratio to change following a shift request, the TCM can determine the volume of fluid used to apply or release a friction element.

The volume of transmission fluid needed to apply the friction elements are continuously updated for adaptive controls. As friction material wears, the volume of fluid need to apply the element increases.

Certain mechanical problems within the input clutch assembly can cause inadequate or out-of-range element volumes. Also, defective Input/Output Speed Sensors and wiring can cause these conditions. The following chart identifies the appropriate clutch volumes and when they are monitored/updated:

CLUTCH VOLUMES		
Clutch	**When Updated**	**Proper Clutch Volume**
L/R	2-1 or 3-1 downshift	45 to 134
2C	3-2 kickdown shift	25 to 85
OD	2-3 upshift	30 to 100
4C	3-4 upshift	30 to 85
UD	4-3 kickdown shift	30 to 100

SHIFT SCHEDULES

As mentioned earlier, the TCM has programming that allows it to select a variety of shift schedules. Shift schedule selection is dependent on the following:

- Shift lever position
- Throttle position
- Engine load
- Fluid temperature
- Software level

As driving conditions change, the TCM appropriately adjusts the shift schedule. Refer to the following chart to determine the appropriate operation expected, depending on driving conditions.

Schedule	Condition	Expected Operation
Extreme Cold	Oil temperature below -16° F	-Park, Reverse, Neutral and 1st and 3rd gear only in D position, 2nd gear only in Manual 2 or L -No EMCC
Super Cold	Oil temperature between -12° F and 10° F	- Delayed 2-3 upshift - Delayed 3-4 upshift - Early 4-3 coastdown shift - High speed 4-2, 3-2, 2-1 kickdown shifts are prevented -Shifts at high throttle openings willl be early. - No EMCC
Cold	Oil temperature between 10° F and 36° F	-Shift schedule is the same as Super Cold except that the 2-3 upshifts are not delayed.
Warm	Oil temperature between 40° F and 80° F	- Normal operation (upshift, kickdowns, and coastdowns) - No EMCC
Hot	Oil temperature between 80° F and 240° F	- Normal operation (upshift, kickdowns, and coastdowns) - Normal EMCC operation
Overheat	Oil temperature above 240° F or engine coolant temperature above 244° F	- Delayed 2-3 upshift - Delayed 3-4 upshift - 3rd gear FEMCC from 30-48 mph - 3rd gear PEMCC above 35 mph - Above 25 mph the torque converter will not unlock unless the throttle is closed or if a wide open throttle 2nd PEMCC to 1 kickdown is made

TRANSMISSION CONTROL MODULE - NAG1

The transmission control module (TCM) determines the current operating conditions of the vehicle and controls the shifting process for shift comfort and driving situations. It receives this operating data from sensors and broadcast messages from other modules.

The TCM uses inputs from several sensors that are directly hardwired to the controller and it uses several indirect inputs that are used to control shifts. This information is used to actuate the proper solenoids in the valve body to achieve the desired gear.

The shift lever assembly (SLA) has sensors that are monitored by the TCM to calculate shift lever position. The reverse light switch, an integral part of the SLA, controls the reverse light relay control circuit. The Brake/Transmission Shift Interlock (BTSI) solenoid and the park lockout solenoid (also part of the SLA) are controlled by the TCM.

The PCM and ABS broadcast messages over the controller area network (CAN) bus for use by the TCM. The TCM uses this information, with other inputs, to determine the transmission operating conditions.

The TCM:

- determines the momentary operating conditions of the vehicle.
- controls all shift processes.

- considers shift comfort and the driving situation.

The TCM controls the solenoid valves for modulating shift pressures and gear changes. Relative to the torque being transmitted, the required pressures are calculated from load conditions, engine rpm, vehicle speed, and ATF temperature.

The following functions are contained in the TCM:

- Shift Program
- Downshift Safety
- Torque Converter Lock-Up Clutch.
- Adaptation.

The TCM continuously checks for electrical problems, mechanical problems, and some hydraulic problems. When a problem is sensed, the TCM stores a diagnostic trouble code (DTC). Some of these codes cause the transmission to go into ″Limp-In″ or ″default″ mode. Some DTCs cause permanent Limp-In and others cause temporary Limp-In. The NAG1 defaults in the current gear position if a DTC is detected, then after a key cycle the transmission will go into Limp-in, which is mechanical 2nd gear. Some DTCs may allow the transmission to resume normal operation (recover) if the detected problem goes away. A permanent Limp-In DTC will recover when the key is cycled, but if the same DTC is detected for three key cycles the system will not recover and the DTC must be cleared from the TCM with the appropriate scan tool.

NOTE: If the TCM has been replaced, the “TCM Adaptation Procedure” must be performed. (Refer to 8 - ELECTRICAL/ELECTRONIC CONTROL MODULES/TRANSMISSION CONTROL MODULE - STANDARD PROCEDURE)

TCM SIGNALS

The TCM registers one part of the input signals by direct inputs, the other part by CAN bus. In addition to the direct control of the actuators, the TCM sends various output signals by CAN bus to other control modules.

Selector Lever Position

A series of sensors in the SLA inform the TCM of the position of the selector lever.

The TCM monitors the SLA for all shift lever positions through five position circuits. The SLA provides a low-current 12-volt signal to the TCM. The TCM compares the on/off signals to programmed combinations to determine the exact position of the shift lever.

ATF Temperature Sensor

The ATF temperature sensor is a positive temperature co-efficient (PTC) thermistor. It measures the temperature of the transmission fluid and is a direct input signal for the TCM. The temperature of the ATF has an influence on the shifttime and resulting shift quality. As the temperature rises, resistance rises, and therefore, the probing voltage is decreasing. Because of its registration, the shifting process can be optimized in all temperature ranges.

The ATF temperature sensor is wired in series with the park/neutral contact. The temperature signal is transmitted to the TCM only when the reed contact of the park/neutral contact is closed because the TCM only reads ATF temperature while in any forward gear, or REVERSE. When the transmission is in PARK or NEUTRAL, the TCM will substitute the engine temperature for the ATF temperature.

Starter Interlock

The TCM monitors a contact switch wired in series with the transmission temperature sensor to determine PARK and NEUTRAL positions. The contact switch is open in PARK and NEUTRAL. The TCM senses transmission temperature as high (switch supply voltage), confirming switch status as open. The TCM then broadcasts a message over CAN bus to confirm switch status. The PCM receives this information and allows operation of the starter circuit.

N2 and N3 Speed Sensors

The N2 and N3 Input Speed Sensors are two Hall-effect speed sensors that are mounted internally in the transmission and are used by the TCM to calculate the transmission’s input speed. Since the input speed cannot be measured directly, two of the drive elements are measured. Two input speed sensors were required because both drive elements are not active in all gears.

CAN Bus Indirect Input Signals

A 2.5-volt bias (operating voltage) is present on the CAN bus any time the ignition switch is in the RUN position. Both the TCM and the ABS apply this bias. On this vehicle, the CAN bus is used for module data exchange only. The indirect inputs used on the NAG1 electronic control system are:

- Wheel Speed Sensors.
- Transfer Case Switch Status.
- Brake Switch.
- Engine RPM.
- Engine Temperature.
- Cruise Control Status.
- Gear Limit Request.
- Throttle Position - 0% at idle, 100% at WOT. If open, TCM assumes idle (0% throttle opening).
- Odometer Mileage
- Maximum Effective Torque.
- Engine in Limp-In Mode/Mileage Where DTC Was Set.

BRAKE TRANSMISSION SHIFT INTERLOCK (BTSI)

The BTSI solenoid prevents shifting out of the PARK position until the ignition key is in the RUN position and the brake pedal is pressed. The TCM controls the ground while the ignition switch supplies power to the BTSI solenoid. The PCM monitors the brake switch and broadcasts brake switch status messages over the CAN C bus. If the park brake is depressed and there is power (Run/Start) to SLA, the BTSI solenoid deactivates. The TCM monitors this for the SLA because the SLA does not communicate on the CAN bus.

SHIFT SCHEDULES

The basic shift schedule includes up and downshifts for all five gears. The TCM adapts the shift program according to driving style, accelerator pedal position and deviation of vehicle speed. Influencing factors are:

- Road Conditions.
- Incline, Decline and Altitude.
- Trailer Operation, Loading.
- Engine Coolant Temperature.
- Cruise Control Operation.
- Sporty Driving Style.
- Low and High ATF Temperature.

Upshift To:	1-2	2-3	3-4	4-5
Activated By Solenoid:	1-2/4-5	2-3	3-4	1-2/4-5
Shift Point (at 35.2% of throttle)	29 km/h (18 mph)	48 km/h (30 mph)	68 km/h (42 mph)	85 km/h (53 mph)

Downshift From:	5-4	4-3	3-2	2-1
Activated By Solenoid:	1-2/4-5	3-4	2-3	1-2/4-5
Shift Point	55.7 km/h (34.61 mph)	40.5 km/h (25.17 mph)	24.4 km/h (15.16 mph)	15.1 km/h (9.38 mph)

DOWNSHIFT SAFETY

Selector lever downshifts are not performed if inadmissible high engine rpm is sensed.

ADAPTATION

To equalize tolerances and wear, an automatic adaptation takes place for:

- Shift Time.
- Clutch Filling Time.
- Clutch Filling Pressure.
- Torque Converter Lock-Up Control.

Adaptation data may be stored permanently and to some extent, can be diagnosed.

Driving Style Adaptation

The shift point is modified in steps based on the information from the inputs. The control module looks at inputs such as:

- vehicle acceleration and deceleration (calculated by the TCM).
- rate of change as well as the position of the throttle pedal (fuel injection information from the PCM).
- lateral acceleration (calculated by the TCM).
- gear change frequency (how often the shift occurs).

Based on how aggressive the driver is, the TCM moves up the shift so that the present gear is held a little longer before the next upshift. If the driving style is still aggressive, the shift point is modified up to ten steps. If the driving returns to normal, then the shift point modification also returns to the base position.

This adaptation has no memory. The adaptation to driving style is nothing more than a shift point modification meant to assist an aggressive driver. The shift points are adjusted for the moment and return to base position as soon as the inputs are controlled in a more normal manner.

CONTROLLER MODES OF OPERATION

Permanent Limp-In Mode

When the TCM determines there is a non-recoverable condition present that does not allow proper transmission operation, it places the transmission in permanent Limp-In Mode. When the condition occurs the TCM turns off all solenoids as well as the solenoid supply output circuit. If this occurs while the vehicle is moving, the transmission remains in the current gear position until the ignition is turned off or the shifter is placed in the ″P″ position. When the shifter has been placed in ″P,″ the transmission only allows 2nd gear operation. If this occurs while the vehicle is not moving, the transmission only allows operation in 2nd gear.

Temporary Limp-In Mode

This mode is the same as the permanent Limp-In Mode except if the condition is no longer present, the system resumes normal operation.

Under Voltage Limp-In Mode

When the TCM detects that system voltage has dropped below 8.5 volts, it disables voltage-dependant diagnostics and places the transmission in the temporary Limp-In Mode. When the TCM senses that the voltage has risen above 9.0 volts, normal transmission operation is resumed.

Hardware Error Mode

When the TCM detects a major internal error, the transmission is placed in the permanent Limp-In Mode and ceases all communication over the CAN bus. When the TCM has entered this mode normal transmission operation does not resume until all DTCs are cleared from the TCM.

Loss of Drive

If the TCM detects a situation that has resulted or may result in a catastrophic engine or transmission problem, the transmission is placed in the neutral position. Improper Ratio, Input Sensor Overspeed or Engine Overspeed DTCs cause the loss of drive.

Controlled Limp-in Mode

When a failure does not require the TCM to shut down the solenoid supply, but the failure is severe enough that the TCM places the transmission into a predefined gear, there are several shift performance concerns. For instance, if the transmission is slipping, the controller tries to place the transmission into 3rd gear and maintain 3rd gear for all forward drive conditions.

STANDARD PROCEDURE

TCM QUICK LEARN - 42RLE Only

The quick learn procedure requires the use of the appropriate scan tool.

This program allows the electronic transmission system to recalibrate itself. This will provide the proper transmission operation. The quick learn procedure should be performed if any of the following procedures are performed:

- Transmission Assembly Replacement
- Transmission Control Module Replacement
- Solenoid Pack Replacement
- Clutch Plate and/or Seal Replacement
- Valve Body Replacement or Recondition

To perform the Quick Learn Procedure, the following conditions must be met:

- The brakes must be applied
- The engine speed must be above 500 rpm
- The throttle angle (TPS) must be less than 3 degrees
- The shift lever position must stay in PARK until prompted to shift to overdrive
- The shift lever position must stay in overdrive after the Shift to Overdrive prompt until the scan tool indicates the procedure is complete.
- The calculated oil temperature must be above 60° and below 200°

TCM ADAPTATION - NAG1 Only

The adaptation procedure requires the use of the appropriate scan tool. This program allows the electronic transmission system to re-calibrate itself. This will provide the proper baseline transmission operation. The adaptation procedure should be performed if any of the following procedures are performed:

- Transmission Assembly Replacement
- Transmission Control Module Replacement
- Clutch Plate and/or Seal Replacement
- Electrohydraulic Unit Replacement or Recondition

1. With the scan tool, reset the Transmission adaptives. Resetting the adaptives will set the adaptives to factory settings.

NOTE: Perform the Coast Down Adaptations first. The Transmission Temperature must be greater than 60°C (140°F) and less than 70°C (158°F). Failure to stay within these temperature ranges will void the procedure.

2. Drive the vehicle until the transmission temperature is in the specified range.
3. Perform 4 to 5 coast downs from 5th to 4th gear and then 4th to 3rd gear.

NOTE: For Upshift adaptation, the Transmission temperature must be greater than 60°C (140°F) and less than 100°C (212°F). Failure to stay within these temperature ranges will void this procedure.

4. From a stop, moderately accelerate the vehicle and obtain all forward gear ranges while keeping the Engine RPM below 1800 RPM. Repeat this procedure 4 to 5 times.
5. Obtaining 5th gear may be difficult at 1800 RPM. Allow the transmission to shift into 5th gear at a higher RPM then lower the RPM to 1800 and perform manual shifts between 4th and 5th gears using the shift lever.
6. The TCM will store the adaptives every 10 minutes. After completion of the adaptation procedure make sure the vehicle stays running for at least 10 minutes.

7. It is possible to manually store the adaptives under the 10 minute time frame using the scan tool Store Adaptives procedure.

ENGINE SYSTEMS

TABLE OF CONTENTS

page

BATTERY SYSTEM 1
CHARGING 41
STARTING 72

BATTERY SYSTEM

TABLE OF CONTENTS

page

BATTERY SYSTEM
DESCRIPTION 2
OPERATION 2
DIAGNOSIS AND TESTING
BATTERY SYSTEM 2
STANDARD PROCEDURE
BATTERY RECONNECTION 4
CLEANING 6
INSPECTION 7
SPECIFICATIONS
BATTERY 7
SPECIAL TOOLS
BATTERY SYSTEM SPECIAL TOOLS 8
BATTERY
DESCRIPTION 9
OPERATION 9
DIAGNOSIS AND TESTING
BATTERY 10
STANDARD PROCEDURE
BATTERY CHARGING 10
USING MICRO 420 BATTERY TESTER 12
OPEN-CIRCUIT VOLTAGE TEST 13
IGNITION-OFF DRAW TEST 14
REMOVAL 16
INSTALLATION 17
BATTERY HOLDDOWN
REMOVAL 19
INSTALLATION 19
BATTERY CABLES
DESCRIPTION 20
OPERATION 20
DIAGNOSIS AND TESTING
BATTERY CABLES 20
REMOVAL 25
INSTALLATION 32
BATTERY TRAY
REMOVAL 39
INSTALLATION 40

BATTERY SYSTEM

DESCRIPTION

This vehicle is equipped with a single 12-volt battery located in the rear floor area near the spare tire. The battery system for this vehicle covers the following related components:

- **Battery** - The storage battery provides a reliable means of storing a renewable source of electrical energy within the vehicle.
- **Battery Cables** - The battery cables connect the positive and negatively charged battery terminal posts to the vehicle electrical system.
- **Battery Holddown** - The battery holddown hardware secures the battery in the battery tray.
- **Battery Retention Strap** - The battery retention strap securely holds the battery in place in the event of a rear impact collision.
- **Battery Tray** - The battery tray provides a secure mounting location in the vehicle for the battery and an anchor point for the battery hold-down hardware.

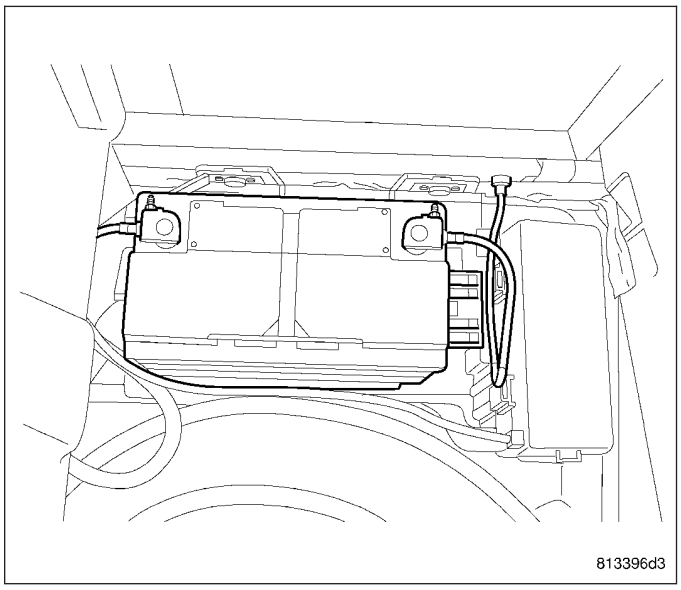

For battery system maintenance schedules (Refer to LUBRICATION & MAINTENANCE/MAINTENANCE SCHEDULES - DESCRIPTION). (Refer to LUBRICATION & MAINTENANCE/JUMP STARTING - STANDARD PROCEDURE) for the proper jump starting procedure. The battery must be fully-charged before any battery system diagnosis or testing procedures can be performed.

OPERATION

The battery system is designed to provide a safe, efficient, reliable and mobile means of delivering and storing electrical energy. This electrical energy is required to operate the engine starting system, as well as many of the other vehicle accessory systems for limited durations while the engine and/or the charging system are not operating. The battery system is also designed to provide a reserve of electrical energy to supplement the charging system for short durations while the engine is running and the electrical current demands of the vehicle exceed the output of the charging system. In addition to delivering, and storing electrical energy for the vehicle, the battery system serves as a capacitor and voltage stabilizer for the vehicle electrical system. It absorbs most abnormal or transient voltages caused by the switching of any of the electrical components or circuits in the vehicle.

DIAGNOSIS AND TESTING

BATTERY SYSTEM

The battery, starting, and charging systems in the vehicle operate with one another and must be tested as a complete system. In order for the engine to start and the battery to maintain its charge properly, all of the components that are used in these systems must perform within specifications. It is important that the battery, starting, and charging systems be thoroughly tested and inspected any time a battery needs to be charged or replaced. The cause of abnormal battery discharge, overcharging or early battery failure must be diagnosed and corrected before a battery is replaced and before a vehicle is returned to service. The service information for these systems has been separated within this service manual to make it easier to locate the specific information you are seeking. However, when attempting to diagnose any of these systems, it is important that you keep their interdependency in mind.

The diagnostic procedures used for the battery, starting, and charging systems include the most basic conventional diagnostic methods, to the more sophisticated On-Board Diagnostics (OBD) built into the Powertrain Control Module (PCM). Use of an induction-type milliampere ammeter, a volt/ohmmeter, a battery charger, a carbon pile rheostat (load tester) and a 12-volt test lamp may be required. All OBD-sensed systems are monitored by the PCM. Each

monitored circuit is assigned a Diagnostic Trouble Code (DTC). The PCM will store a DTC in electronic memory for any inoperative system it detects. (Refer to 9 - ENGINE - DIAGNOSIS AND TESTING) for the proper charging system on-board diagnostic test procedures.

MICRO 420 BATTERY TESTER

The Micro 420 automotive battery system tester is designed to help the dealership technicians diagnose the cause of a defective battery. (Refer to 8 - ELECTRICAL/BATTERY SYSTEM/BATTERY - STANDARD PROCEDURE) for directions on using the Micro 420 battery tester.

BATTERY SYSTEM DIAGNOSIS		
CONDITION	POSSIBLE CAUSES	CORRECTION
THE BATTERY SEEMS WEAK OR DEAD WHEN ATTEMPTING TO START THE ENGINE.	1. The electrical system ignition-off draw is excessive.	1. (Refer to 8 - ELECTRICAL/BATTERY SYSTEM/BATTERY - STANDARD PROCEDURE - IGNITION-OFF DRAW TEST) for the proper test procedures. Repair the excessive ignition-off draw, as required.
	2. The charging system is faulty.	2. Determine if the charging system is performing to specifications. Repair the faulty charging system, as required.
	3. The battery is discharged.	3. Determine the battery state-of-charge using the Micro 420 battery tester, (Refer to 8 - ELECTRICAL/BATTERY SYSTEM/BATTERY - STANDARD PROCEDURE). Charge the faulty battery as required.
	4. The battery terminal connections are loose or corroded.	4. (Refer to 8 - ELECTRICAL/BATTERY SYSTEM/CABLES - DIAGNOSIS AND TESTING). Clean and tighten the battery terminal connections, as required.
	5. The battery has an incorrect size or rating for this vehicle.	5. (Refer to 8 - ELECTRICAL/BATTERY SYSTEM - SPECIFICATIONS) for the proper size and rating. Replace an incorrect battery, as required.
	6. The battery is faulty.	6. Determine the battery cranking capacity using the Micro 420 battery tester, (Refer to 8 - ELECTRICAL/BATTERY SYSTEM/BATTERY - STANDARD PROCEDURE). Replace the faulty battery, as required.
	7. The starting system is faulty.	7. Determine if the starting system is performing to specifications. Repair the faulty starting system, as required.
	8. The battery is physically damaged.	8. Inspect the battery for loose terminal posts or a cracked and leaking case. Replace the damaged battery, as required.

BATTERY SYSTEM DIAGNOSIS		
CONDITION	POSSIBLE CAUSES	CORRECTION
THE BATTERY STATE OF CHARGE CANNOT BE MAINTAINED.	1. The battery has an incorrect size or rating for this vehicle.	1. (Refer to 8 - ELECTRICAL/BATTERY SYSTEM - SPECIFICATIONS) for the proper size and rating. Replace an incorrect battery, as required.
	2. The battery terminal connections are loose or corroded.	2. (Refer to 8 - ELECTRICAL/BATTERY SYSTEM/CABLES - DIAGNOSIS AND TESTING). Clean and tighten the battery terminal connections, as required.
	3. The electrical system ignition-off draw is excessive.	3. (Refer to 8 - ELECTRICAL/BATTERY SYSTEM/BATTERY - STANDARD PROCEDURE) for the proper test procedures. Repair the faulty electrical system, as required.
	4. The battery is faulty.	4. Test the battery using the Micro 420 battery tester, (Refer to 8 - ELECTRICAL/BATTERY SYSTEM/BATTERY - STANDARD PROCEDURE). Replace the faulty battery, as required.
	5. The starting system is faulty.	5. Determine if the starting system is performing to specifications. Repair the faulty starting system, as required.
	6. The charging system is faulty.	6. Determine if the charging system is performing to specifications. Repair the faulty charging system, as required.
	7. Electrical loads exceed the output of the charging system.	7. Inspect the vehicle for aftermarket electrical equipment which might cause excessive electrical loads.
	8. Slow driving or prolonged idling with high-amperage draw systems in use.	8. Advise the vehicle operator, as required.
THE BATTERY WILL NOT ACCEPT A CHARGE.	1. The battery is faulty.	1. Test the battery using the Micro 420 battery tester, (Refer to 8 - ELECTRICAL/BATTERY SYSTEM/BATTERY - STANDARD PROCEDURE). Replace the faulty battery, as required.

STANDARD PROCEDURE

BATTERY RECONNECTION

NOTE: This reconnection procedure is to be performed anytime the battery has been disconnected.

1. Connect the battery negative cable (2) to the battery post and tighten the clamp nut.
2. Install the rear compartment floor trim panel.

CAUTION: Once the battery has been connected, review and perform the following information as applicable.

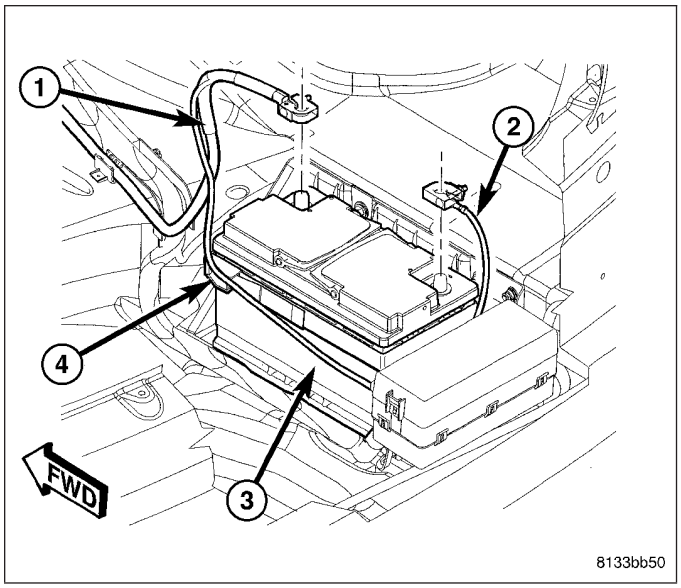

AUTO UP FRONT WINDOW

If the vehicle is equipped with the auto-up front window feature, once the battery is reconnected the door module needs to be calibrated. The door module requires calibration anytime the battery or door module has been disconnected for any length of time. To calibrate, perform the following:

1. Turn the Ignition to the Run position.
2. Regardless of current window position, move the driver side front window upward until the window stalls in the full up position. Allow the window motor to stall for at least 2 seconds before releasing the switch.
3. Move the driver side front window downward until the window stalls in the full down position. Allow the window motor to stall for at least 2 seconds before releasing the switch.
4. Move the driver side front window upward until the window stalls in the full up position. Allow the window motor to stall for at least 2 second before releasing the switch.
5. Repeat steps 2, 3 and 4 for the passenger side front window.
6. Verify the windows are properly calibrated by operating the express down and up features on the windows. Repeat this procedure if the calibration failed. If unable to properly calibrate after the second attempt, check the Driver's Door Module (DDM) and Passenger's Door Module (PDM) for Diagnostic Trouble Codes (DTCs) and correct as required.

ELECTRONIC STABILITY PROGRAM (ESP)

If the vehicle is equipped with ESP, once the battery is reconnected, the Steering Angle Sensor (SAS) needs to be calibrated. The SAS requires calibration anytime the battery or an ABS (ESP) component has been disconnected for any length of time. **If the SAS is not calibrated following battery reconnection, the ESP/BAS indicator lamp is illuminated following 5 ignition cycles indicating the need for calibration.**

To calibrate, perform the following:

1. Start the engine.
2. Center the steering wheel.
3. Turn the steering wheel all the way to the left until the internal stop in the steering gear is met, then turn the wheel all the way to the right until the opposite internal stop in the steering gear is met.
4. Center the steering wheel.
5. Stop the engine.

CLEANING

The following information details the recommended cleaning procedures for the battery and related components. In addition to the maintenance schedules found in this service manual, (Refer to LUBRICATION & MAINTENANCE/ MAINTENANCE SCHEDULES - DESCRIPTION) it is recommended that these procedures be performed any time the battery or related components must be removed for vehicle service.

1. Clean the battery cable terminal clamps (2) of all corrosion. Remove any corrosion using a wire brush or cleaning tool (1), and a sodium bicarbonate (baking soda) and warm water cleaning solution.

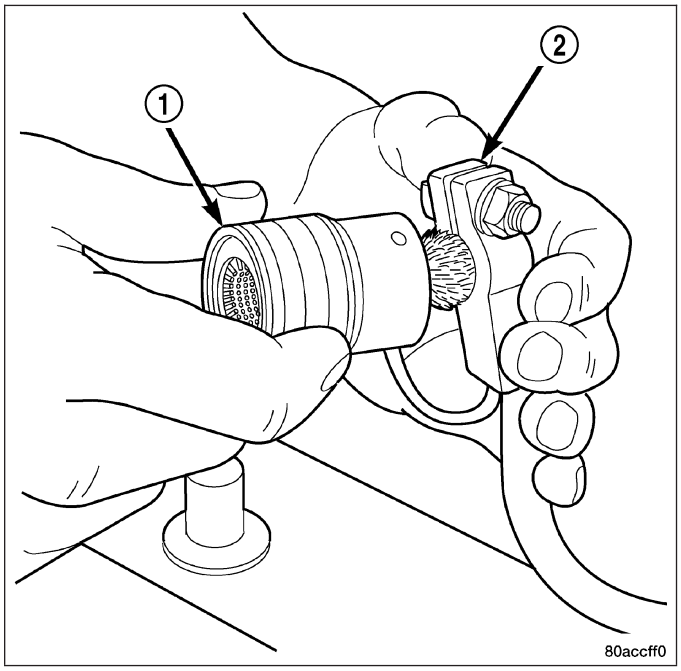

2. Clean the battery tray and battery holddown hardware using a stiff bristle parts cleaning brush and a sodium bicarbonate (baking soda) and warm water cleaning solution.
3. If the removed battery is to be reinstalled, clean the outside of the battery case and the top cover (3) with a sodium bicarbonate (baking soda) and warm water cleaning solution (2) using a stiff bristle parts cleaning brush (1) to remove any acid film. Rinse the battery with clean water. Ensure that the cleaning solution does not enter the battery cells through the vent holes. If the battery is being replaced, (Refer to 8 - ELECTRICAL/BATTERY SYSTEM - SPECIFICATIONS) for the factory-installed battery specifications. Confirm that the replacement battery is the correct size and has the correct ratings for the vehicle.

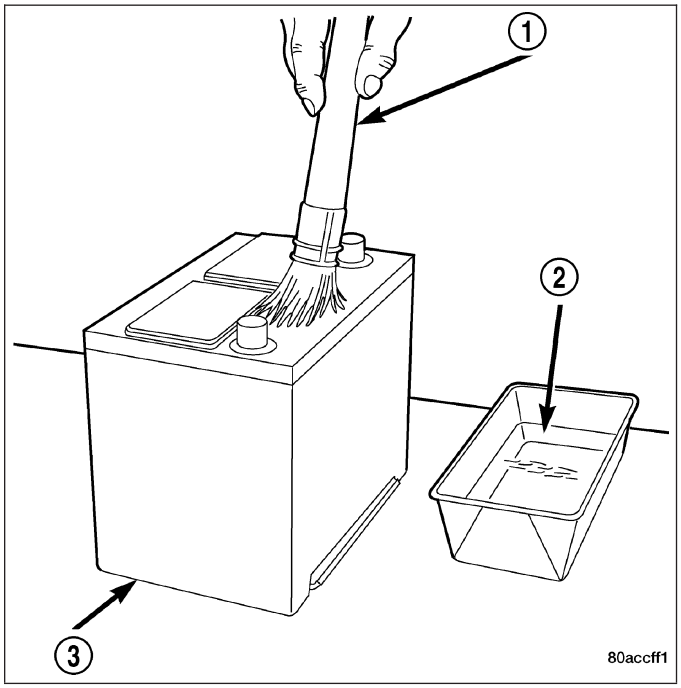

4. Clean any corrosion from the battery terminals with a wire brush or terminal cleaner (1), and a sodium bicarbonate (baking soda) and warm water cleaning solution.

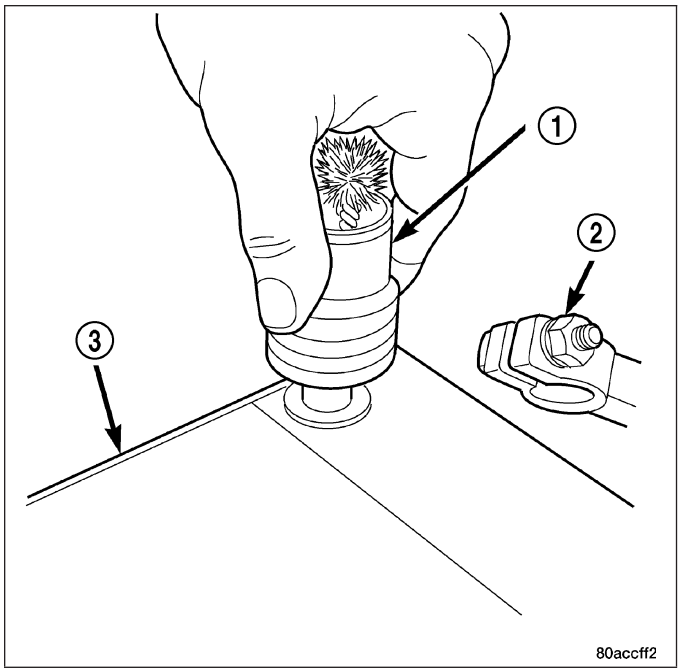

INSPECTION

The following information details the recommended inspection procedures for the battery and related components. In addition to the maintenance schedules, (Refer to LUBRICATION & MAINTENANCE/MAINTENANCE SCHEDULES - DESCRIPTION), it is recommended that these procedures be performed any time the battery or related components are removed for vehicle service.

1. Inspect the battery cable terminals for damage. Replace any battery cable that has a damaged or deformed terminal.
2. Inspect the battery tray and battery holddown hardware for damage. Replace any damaged parts.
3. Inspect the battery case for cracks or other damage that could result in electrolyte leaks. Also, check the battery terminals for looseness. Batteries with damaged cases or loose terminals must be replaced.
4. Inspect the battery built-in test indicator sight glass (if equipped) for an indication of the battery condition. If the battery is discharged, charge as required, (Refer to 8 - ELECTRICAL/BATTERY SYSTEM/BATTERY - STANDARD PROCEDURE - BATTERY CHARGING).

SPECIFICATIONS

BATTERY

The battery Group Size number, the Cold Cranking Amperage (CCA) rating, and the Reserve Capacity (RC) rating or Ampere-Hours (AH) rating can be found on the original equipment battery label. Be certain that a replacement battery has the correct Group Size number, as well as CCA, and RC or AH ratings that equal or exceed the original equipment specification for the vehicle being serviced. Battery sizes and ratings are discussed in more detail below.

- **Group Size** - The outside dimensions and terminal placement of the battery conform to standards established by the Battery Council International (BCI). Each battery is assigned a BCI Group Size number to help identify a correctly-sized replacement.
- **Cold Cranking Amperage** - The Cold Cranking Amperage (CCA) rating specifies how much current (in amperes) the battery can deliver for thirty seconds at -18° C (0° F). Terminal voltage must not fall below 7.2 volts during or after the thirty second discharge period. The CCA required is generally higher as engine displacement increases, depending also upon the starter current draw requirements.
- **Reserve Capacity** - The Reserve Capacity (RC) rating specifies the time (in minutes) it takes for battery terminal voltage to fall below 10.5 volts, at a discharge rate of 25 amperes. RC is determined with the battery fully-charged at 26.7° C (80° F). This rating estimates how long the battery might last after a charging system failure, under minimum electrical load.

- **Ampere-Hours** - The Ampere-Hours (AH) rating specifies the current (in amperes) that a battery can deliver steadily for twenty hours, with the voltage in the battery not falling below 10.5 volts. This rating is also sometimes identified as the twenty-hour discharge rating.

BATTERY CLASSIFICATIONS & RATINGS					
Part Number	BCI Group Size Classification	Cold Cranking Amperage	Reserve Capacity	Ampere - Hours	Load Test Amperage
04608719AC	H7	730	140 Minutes	72	250

SPECIAL TOOLS

BATTERY SYSTEM SPECIAL TOOLS

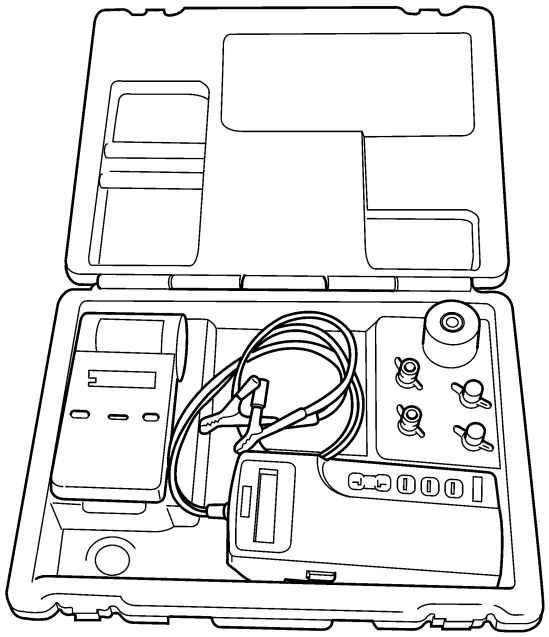

80c91c8d

BATTERY

DESCRIPTION

This vehicle is equipped with a single, 12-volt, maintenance-free battery located in the rear floor area near the spare tire. The battery is comprised of the following components:

- Positive Post (1)
- Vent (2)
- Cell Cap (3)
- Vent (4)
- Cell Cap (5)
- Vent (6)
- Negative Post (7)
- Indicator Eye (8) if equipped
- Electrolyte Level (9)
- Plate Groups (10)
- Maintenance Free Battery assembly (11)

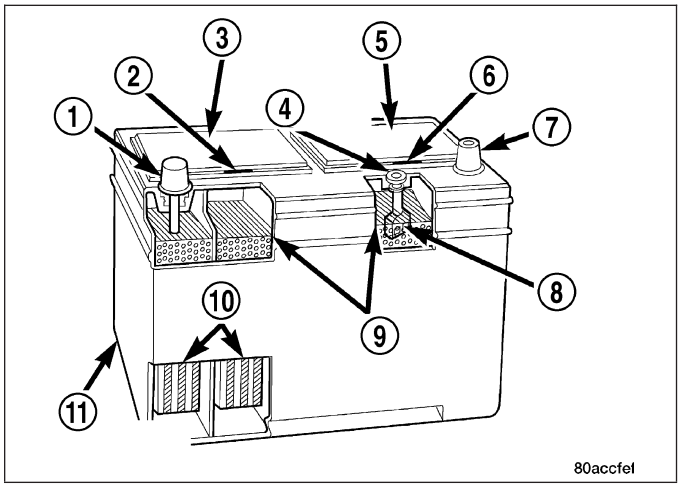

This battery is designed to provide a safe, efficient and reliable means of storing electrical energy in a chemical form. This means of energy storage allows the battery to produce the electrical energy required to operate the engine starting system, as well as to operate many of the other vehicle accessory systems for limited durations while the engine and/or the charging system are not operating. The battery is made up of six individual cells that are connected in series. Each cell contains positively charged plate groups that are connected with lead straps to the positive terminal post, and negatively charged plate groups that are connected with lead straps to the negative terminal post. Each plate consists of a stiff mesh framework or grid coated with lead dioxide (positive plate) or sponge lead (negative plate). Insulators or plate separators made of a non-conductive material are inserted between the positive and negative plates to prevent them from contacting or shorting against one another. These dissimilar metal plates are submerged in a sulfuric acid and water solution called an electrolyte.

The battery Group Size number, the Cold Cranking Amperage (CCA) rating, and the Reserve Capacity (RC) rating or Ampere-Hours (AH) rating can be found on the original equipment battery label. Be certain that a replacement battery has the correct Group Size number, as well as CCA, and RC or AH ratings that equal or exceed the original equipment specification for the vehicle being serviced. (Refer to 8 - ELECTRICAL/BATTERY SYSTEM - SPECIFICATIONS) for the proper factory-installed battery specifications.

OPERATION

The battery is designed to store electrical energy in a chemical form. When an electrical load is applied to the terminals of the battery, an electrochemical reaction occurs. This reaction causes the battery to discharge electrical current from its terminals. As the battery discharges, a gradual chemical change takes place within each cell. The sulfuric acid in the electrolyte combines with the plate materials, causing both plates to slowly change to lead sulfate. At the same time, oxygen from the positive plate material combines with hydrogen from the sulfuric acid, causing the electrolyte to become mainly water. The chemical changes within the battery are caused by the movement of excess or free electrons between the positive and negative plate groups. This movement of electrons produces a flow of electrical current through the load device attached to the battery terminals.

As the plate materials become more similar chemically, and the electrolyte becomes less acid, the voltage potential of each cell is reduced. However, by charging the battery with a voltage higher than that of the battery itself, the battery discharging process is reversed. Charging the battery gradually changes the sulfated lead plates back into sponge lead and lead dioxide, and the water back into sulfuric acid. This action restores the difference in the electron charges deposited on the plates, and the voltage potential of the battery cells. For a battery to remain useful, it must be able to produce high-amperage current over an extended period. A battery must also be able to accept a charge, so that its voltage potential may be restored.

The battery is vented to release excess hydrogen gas that is created when the battery is being charged or discharged. However, even with these vents, hydrogen gas can collect in or around the battery. If hydrogen gas is exposed to flame or sparks, it may ignite. If the electrolyte level is low, the battery may arc internally and explode. If the battery cell caps cannot be removed, the battery must be replaced if the electrolyte level becomes low.

DIAGNOSIS AND TESTING

BATTERY

The battery must be completely charged and the terminals should be properly cleaned and inspected before diagnostic procedures are performed. (Refer to 8 - ELECTRICAL/BATTERY SYSTEM - CLEANING) and (Refer to 8 - ELECTRICAL/BATTERY SYSTEM - INSPECTION) for the proper battery cleaning and inspection procedures. (Refer to 8 - ELECTRICAL/BATTERY SYSTEM/BATTERY - STANDARD PROCEDURE - BATTERY CHARGING) for the proper battery charging procedures.

MICRO 420 BATTERY TESTER

The Micro 420 automotive battery tester is designed to help the dealership technicians diagnose the cause of an inoperative battery. (Refer to 8 - ELECTRICAL/BATTERY SYSTEM/BATTERY - STANDARD PROCEDURE - USING MICRO 420 BATTERY TESTER) for instructions on the use of the Micro 420 battery tester.

WARNING: IF THE BATTERY SHOWS SIGNS OF FREEZING, LEAKING OR LOOSE POSTS, DO NOT TEST, ASSIST-BOOST, OR CHARGE. THE BATTERY MAY ARC INTERNALLY AND EXPLODE. PERSONAL INJURY AND/OR VEHICLE DAMAGE MAY RESULT.

WARNING: EXPLOSIVE HYDROGEN GAS FORMS IN AND AROUND THE BATTERY. DO NOT SMOKE, USE FLAME, OR CREATE SPARKS NEAR THE BATTERY. PERSONAL INJURY AND/OR VEHICLE DAMAGE MAY RESULT.

WARNING: THE BATTERY CONTAINS SULFURIC ACID, WHICH IS POISONOUS AND CAUSTIC. AVOID CONTACT WITH THE SKIN, EYES, OR CLOTHING. IN THE EVENT OF CONTACT, FLUSH WITH WATER AND CALL A PHYSICIAN IMMEDIATELY. KEEP OUT OF THE REACH OF CHILDREN.

A battery that will not accept a charge is inoperative, and must be replaced. Further testing is not required. A fully-charged battery must be load tested to determine its cranking capacity. A battery that is fully-charged, but does not pass the load test, is inoperative and must be replaced.

NOTE: Completely discharged batteries may take several hours to accept a charge. Refer to Standard Procedures for the proper battery charging procedures.

STANDARD PROCEDURE

BATTERY CHARGING

Battery charging is the means by which the battery can be restored to its full voltage potential. A battery is fully-charged when:

- Micro 420 electrical system tester indicates battery is OK.
- All of the battery cells are gassing freely during battery charging.
- Open-circuit voltage of the battery is 12.65 volts or above.

WARNING: NEVER EXCEED TWENTY AMPERES WHEN CHARGING A COLD (-1° C [30° F] OR LOWER) BATTERY. THE BATTERY MAY ARC INTERNALLY AND EXPLODE. PERSONAL INJURY AND/OR VEHICLE DAMAGE MAY RESULT.

WARNING: IF THE BATTERY SHOWS SIGNS OF FREEZING, LEAKING, LOOSE POSTS, DO NOT TEST, ASSIST-BOOST, OR CHARGE. THE BATTERY MAY ARC INTERNALLY AND EXPLODE. PERSONAL INJURY AND/OR VEHICLE DAMAGE MAY RESULT.

WARNING: EXPLOSIVE HYDROGEN GAS FORMS IN AND AROUND THE BATTERY. DO NOT SMOKE, USE FLAME, OR CREATE SPARKS NEAR THE BATTERY. PERSONAL INJURY AND/OR VEHICLE DAMAGE MAY RESULT.

WARNING: THE BATTERY CONTAINS SULFURIC ACID, WHICH IS POISONOUS AND CAUSTIC. AVOID CONTACT WITH THE SKIN, EYES, OR CLOTHING. IN THE EVENT OF CONTACT, FLUSH WITH WATER AND CALL A PHYSICIAN IMMEDIATELY. KEEP OUT OF THE REACH OF CHILDREN.

WARNING: IF THE BATTERY IS EQUIPPED WITH REMOVABLE CELL CAPS, BE CERTAIN THAT EACH OF THE CELL CAPS IS IN PLACE AND TIGHT BEFORE THE BATTERY IS RETURNED TO SERVICE. PERSONAL INJURY AND/OR VEHICLE DAMAGE MAY RESULT FROM LOOSE OR MISSING CELL CAPS.

CAUTION: Always disconnect and isolate the battery negative cable before charging a battery. Do not exceed sixteen volts while charging a battery. Damage to the vehicle electrical system components may result.

CAUTION: Battery electrolyte will bubble inside the battery case during normal battery charging. Electrolyte boiling or being discharged from the battery vents indicates a battery overcharging condition. Immediately reduce the charging rate or turn off the charger to evaluate the battery condition. Damage to the battery may result from overcharging.

CAUTION: The battery should not be hot to the touch. If the battery feels hot to the touch, turn off the charger and let the battery cool before continuing the charging operation. Damage to the battery may result.

After the battery has been charged to 12.65 volts or greater, perform a load test to determine the battery cranking capacity, (Refer to 8 - ELECTRICAL/BATTERY SYSTEM/BATTERY - STANDARD PROCEDURE - USING MICRO 420 BATTERY TESTER) for the proper battery load test procedures. If the battery will endure a load test, return the battery to service. If the battery will not endure a load test, it is inoperative and must be replaced.

Clean and inspect the battery hold downs, tray, terminals, posts, and top before completing battery service. (Refer to 8 - ELECTRICAL/BATTERY SYSTEM - CLEANING) and (Refer to 8 - ELECTRICAL/BATTERY SYSTEM - INSPECTION) for the proper battery system cleaning and inspection procedures.

CHARGING A COMPLETELY DISCHARGED BATTERY

The following procedure should be used to recharge a completely discharged battery. Unless this procedure is properly followed, a good battery may be needlessly replaced.

1. Measure the voltage at the battery posts with a voltmeter, accurate to 1/10 (0.10) volt. If the reading is below ten volts, the battery charging current will be low. It could take some time before the battery accepts a current greater than a few milliamperes. Such low current may not be detectable on the ammeters built into many battery chargers.
2. Disconnect and isolate the battery negative cable. Connect the battery charger leads. Some battery chargers are equipped with polarity-sensing circuitry. This circuitry protects the battery charger and the battery from being damaged if they are improperly connected. If the battery state-of-charge is too low for the polarity-sensing circuitry to detect, the battery charger will not operate. This makes it appear that the battery will not accept charging current. See the instructions provided by the manufacturer of the battery charger for details on how to bypass the polarity-sensing circuitry.
3. Battery chargers vary in the amount of voltage and current they provide. The amount of time required for a battery to accept measurable charging current at various voltages is shown in the Charge Rate Table. If the charging current is still not measurable at the end of the charging time, the battery is inoperative and must be replaced. If the charging current is measurable during the charging time, the battery may be good and the charging should be completed in the normal manner.

CHARGE RATE TABLE	
Voltage	Hours
16.0 volts maximum	up to 4 hours
14.0 to 15.9 volts	up to 8 hours
13.9 volts or less	up to 16 hours

CHARGING TIME REQUIRED

The time required to charge a battery will vary, depending upon the following factors:

- **Battery Capacity** - A completely discharged heavy-duty battery requires twice the charging time of a small capacity battery.
- **Temperature** - A longer time will be needed to charge a battery at -18° C (0° F) than at 27° C (80° F). When a fast battery charger is connected to a cold battery, the current accepted by the battery will be very low at first. As the battery warms, it will accept a higher charging current rate (amperage).
- **Charger Capacity** - A battery charger that supplies only five amperes will require a longer charging time. A battery charger that supplies twenty amperes or more will require a shorter charging time.
- **State-Of-Charge** - A completely discharged battery requires more charging time than a partially discharged battery. Electrolyte is nearly pure water in a completely discharged battery. At first, the charging current (amperage) will be low. As the battery charges, the specific gravity of the electrolyte will gradually rise.

The Battery Charging Time Table gives an indication of the time required to charge a typical battery at room temperature based upon the battery state-of-charge and the charger capacity.

BATTERY CHARGING TIME TABLE			
Charging Amperage	5 Amps	10 Amps	20 Amps
Open Circuit Voltage	Hours Charging @ 21° C (70° F)		
12.25 to 12.49	6 hours	3 hours	1.5 hours
12.00 to 12.24	10 hours	5 hours	2.5 hours
10.00 to 11.99	14 hours	7 hours	3.5 hours
Below 10.00	18 hours	9 hours	4.5 hours

USING MICRO 420 BATTERY TESTER

Always use the Micro 420 Instruction Manual that was supplied with the tester as a reference. If the Instruction Manual is not available the following procedure can be used:

WARNING: ALWAYS WEAR APPROPRIATE EYE PROTECTION AND USE EXTREME CAUTION WHEN WORKING WITH BATTERIES.

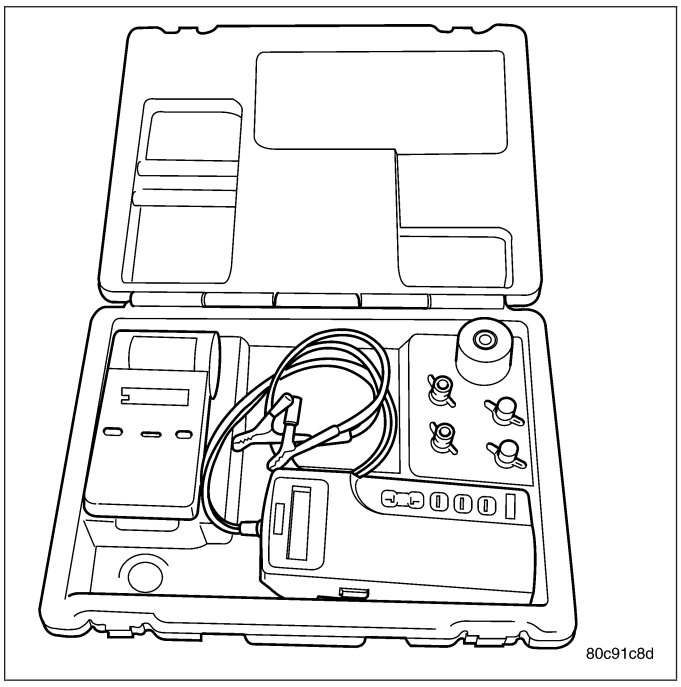

BATTERY TESTING

1. If testing the battery OUT-OF-VEHICLE, clean the battery terminals with a wire brush before testing, (Refer to 8 - ELECTRICAL/BATTERY SYSTEM - CLEANING).
2. If testing the battery IN-THE-VEHICLE, make certain all of the vehicle accessory loads are OFF, including the ignition. **The preferred test position is at the battery terminals**. If the battery is not accessible, you may test using both the positive and negative jumper posts. Select TESTING AT JUMPER POST when connecting to that location.
3. Connect the tester to the battery or jumper posts, the red clamp to positive (+) and the black clamp to negative (–).

NOTE: Multiple batteries connected in parallel must have the ground cable disconnected to perform a battery test. Failure to disconnect may result in false battery test readings.

4. Using the ARROW key select **in** or **out** of vehicle testing and press ENTER to make a selection.
5. If not selected, choose the Cold Cranking Amp (CCA) battery rating. Or select the appropriate battery rating for your area (see menu). The tester will then run its self programmed test of the battery and display the results. Refer to the test result table noted below.

CAUTION: If REPLACE BATTERY is the result of the test, this may mean a poor connection between the vehicle's cables and battery exists. After disconnecting the vehicle's battery cables from the battery, retest the battery using the OUT-OF-VEHICLE test before replacing.

6. While viewing the battery test result, press the CODE button and the tester will prompt you for the last 4 digits of the VIN. Use the UP/DOWN arrow buttons to scroll to the correct character; then press ENTER to select and move to the next digit. Then press the ENTER button to view the SERVICE CODE. Pressing the CODE button a second time will return you to the test results.

BATTERY TEST RESULTS	
GOOD BATTERY	Return to service
GOOD - RECHARGE	Fully charge battery and return to service
CHARGE & RETEST	Fully charge battery and retest battery
REPLACE BATTERY	Replace the battery and retest complete system
BAD-CELL REPLACE	Replace the battery and retest complete system

NOTE: The SERVICE CODE is required on every warranty claim submitted for battery replacement.

OPEN-CIRCUIT VOLTAGE TEST

A battery open-circuit voltage (no load) test will show the approximate state-of-charge of a battery. This test can be used in place of the hydrometer test when a hydrometer is not available, or for maintenance-free batteries with non-removable cell caps.

Before proceeding with this test, completely charge the battery, (Refer to 8 - ELECTRICAL/BATTERY SYSTEM/ BATTERY - STANDARD PROCEDURE - BATTERY CHARGING).

1. Before measuring the open-circuit voltage, the surface charge must be removed from the battery. Turn on the headlamps for fifteen seconds, then allow up to five minutes for the battery voltage to stabilize.
2. Disconnect and isolate both battery cables, negative cable first.

3. Using a voltmeter connected to the battery posts, measure the open-circuit voltage.

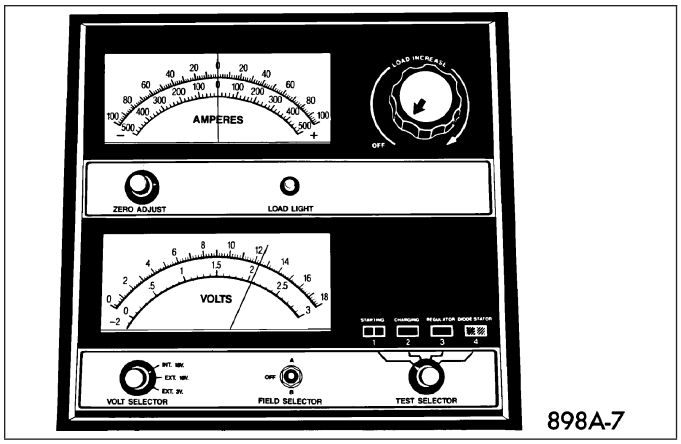

See the Open-Circuit Voltage Table. This voltage reading will indicate the battery state-of-charge, but will not reveal its cranking capacity. If a battery has an open-circuit voltage reading of 12.4 volts or greater, it may be load tested to reveal its cranking capacity, (Refer to 8 - ELECTRICAL/BATTERY SYSTEM/BATTERY - STANDARD PROCEDURE - USING MICRO 420 BATTERY TESTER).

OPEN CIRCUIT VOLTAGE TABLE	
Open Circuit Voltage	Charge Percentage
11.7 volts or less	0%
12.0 volts	25%
12.3 volts	50%
12.6 volts	75%
12.8 volts or more	100%

IGNITION-OFF DRAW TEST

The term Ignition-Off Draw (IOD) identifies a normal condition where power is being drained from the battery with the ignition switch in the Off position. A normal vehicle electrical system will draw from five to thirty-five milliamperes (0.005 to 0.035 ampere) with the ignition switch in the Off position, and all non-ignition controlled circuits in proper working order. Up to thirty-five milliamperes are needed to enable the memory functions for the Powertrain Control Module (PCM), digital clock, electronically tuned radio, and other modules which may vary with the vehicle equipment.

A vehicle that has not been operated for approximately twenty days, may discharge the battery to an inadequate level. When a vehicle will not be used for twenty days or more (stored), remove the IOD fuse from the Junction Block (JB). This will reduce battery discharging.

Excessive IOD can be caused by:

- Electrical items left on.
- Inoperative or improperly adjusted switches.
- Inoperative or shorted electronic modules and components.
- An internally shorted generator.
- Intermittent shorts in the wiring.

If the IOD is over thirty-five milliamperes, the problem must be found and corrected before replacing a battery. In most cases, the battery can be charged and returned to service after the excessive IOD condition has been corrected.

1. Verify that all electrical accessories are off. Turn off all lamps, remove the ignition key, and close all doors. If the vehicle is equipped with an illuminated entry system or an electronically tuned radio, allow the electronic timer function of these systems to automatically shut off (time out). This may take up to three minutes. See the Electronic Module Ignition-Off Draw Table for more information.

ELECTRONIC MODULE IGNITION-OFF DRAW (IOD) TABLE			
Module	Time Out? (If Yes, Interval And Wake-Up Input)	IOD	IOD After Time Out
Radio	No	1 to 3 milliamperes	N/A
Audio Power Amplifier	No	up to 1 milliampere	N/A
Central Timer Module (CTM)	No	4.75 milliamperes (max.)	N/A
Powertrain Control Module (PCM)	No	0.95 milliampere	N/A
ElectroMechanical Instrument Cluster (EMIC)	No	0.44 milliampere	N/A
Combination Flasher	No	0.08 milliampere	N/A

2. Determine that the underhood lamp is operating properly, then disconnect the lamp wire harness connector or remove the lamp bulb.
3. Disconnect the battery negative cable.
4. Set an electronic digital multi-meter to its highest amperage scale. Connect the multi-meter between the disconnected battery negative cable terminal clamp and the battery negative terminal post. Make sure that the doors remain closed so that the illuminated entry system is not activated. The multi-meter amperage reading may remain high for up to three minutes, or may not give any reading at all while set in the highest amperage scale, depending upon the electrical equipment in the vehicle. The multi-meter leads must be securely clamped to the battery negative cable terminal clamp and the battery negative terminal post. If continuity between the battery negative terminal post and the negative cable terminal clamp is lost during any part of the IOD test, the electronic timer function will be activated and all of the tests will have to be repeated.
5. After about three minutes, the high-amperage IOD reading on the multi-meter should become very low or nonexistent, depending upon the electrical equipment in the vehicle. If the amperage reading remains high, remove and replace each fuse or circuit breaker in the Power Distribution Center (PDC) and then in the Junction Block (JB), one at a time until the amperage reading becomes very low, or nonexistent. Refer to the appropriate wiring information for complete PDC and JB fuse, circuit breaker, and circuit identification. This will isolate each circuit and identify the circuit that is the source of the high-amperage IOD. If the amperage reading remains high after removing and replacing each fuse and circuit breaker, disconnect the wire harness from the generator. If the amperage reading now becomes very low or nonexistent, diagnose and repair the Charging System as necessary. After the high-amperage IOD has been corrected, switch the multi-meter to progressively lower amperage scales and, if necessary, repeat the fuse and circuit breaker remove-and-replace process to identify and correct all sources of excessive IOD. It is now safe to select the lowest milliampere scale of the multi-meter to check the low-amperage IOD.

CAUTION: Do not open any doors, or turn on any electrical accessories with the lowest milliampere scale selected, or the multi-meter may be damaged.

6. Observe the multi-meter reading. The low-amperage IOD should not exceed thirty-five milliamperes (0.035 ampere). If the current draw exceeds thirty-five milliamperes, isolate each circuit using the fuse and circuit breaker remove-and-replace process in Step 5. The multi-meter reading will drop to within the acceptable limit when the source of the excessive current draw is disconnected. Repair this circuit as required; whether a wiring short, incorrect switch adjustment, or an inoperative component is the cause.

REMOVAL

WARNING: A SUITABLE PAIR OF HEAVY DUTY RUBBER GLOVES AND SAFETY GLASSES SHOULD BE WORN WHEN REMOVING OR SERVICING A BATTERY.

WARNING: REMOVE METALLIC JEWELRY TO AVOID INJURY BY ACCIDENTAL ARCING OF BATTERY CURRENT.

1. Make sure ignition switch is in OFF position and all accessories are turned OFF.
2. Remove the rear compartment floor, trim panel to gain access to the battery.
3. Disconnect the battery negative cable (2) from the battery terminal.
4. Disconnect the battery positive cable (1) from the battery terminal.
5. Unlatch the battery retention strap (4).

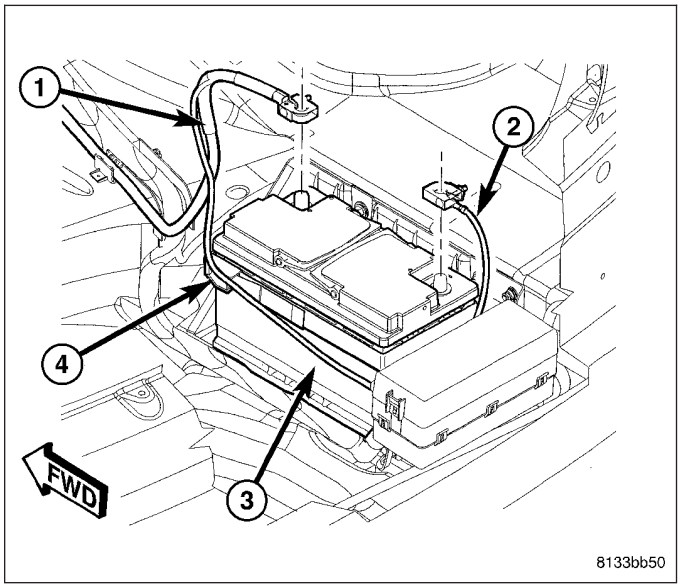

CAUTION: Use care when disconnecting the battery vent tube from the battery. The vent tube nipple is made of plastic and is easily damaged if not disconnected properly.

6. Gently disconnect the battery vent tube from the battery nipple.

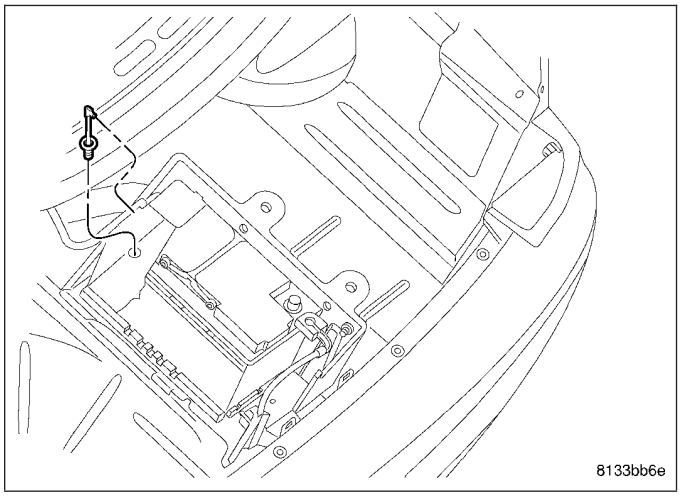

7. Remove the battery hold down clamp and remove the battery from the vehicle.

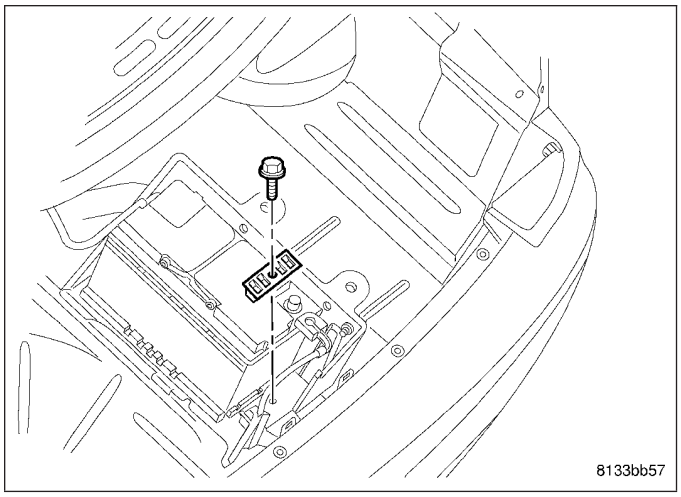

INSTALLATION

WARNING: A SUITABLE PAIR OF HEAVY DUTY RUBBER GLOVES AND SAFETY GLASSES SHOULD BE WORN WHEN REMOVING OR SERVICING A BATTERY.

WARNING: REMOVE METALLIC JEWELRY TO AVOID INJURY BY ACCIDENTAL ARCING OF BATTERY CURRENT.

1. Position the battery in the battery tray.

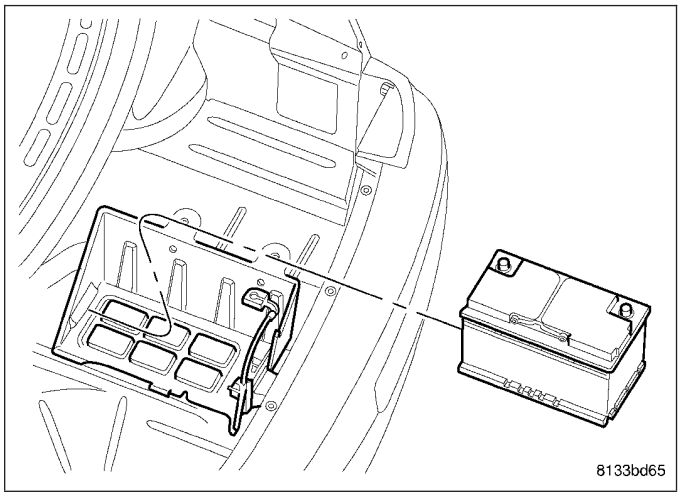

2. Install the battery hold down clamp and bolt. Torque the bolt to 4 N·m (35 in. lbs.).

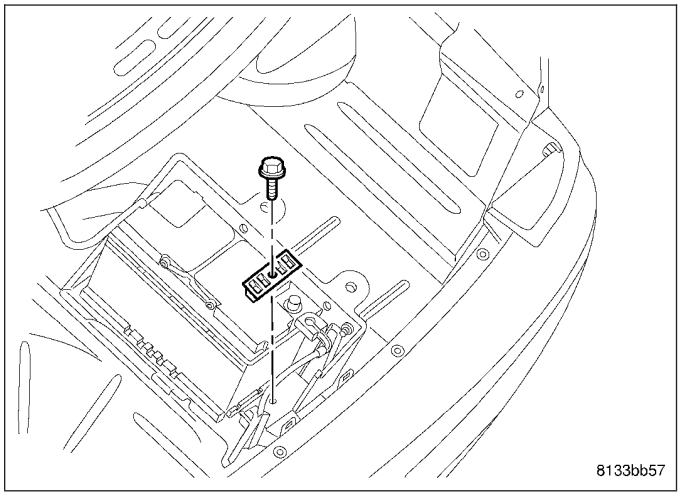

CAUTION: Use care when connecting the battery vent tube to the battery. The vent tube nipple is made of plastic and is easily damaged if not connected properly.

3. Gently connect the battery vent tube to the battery nipple.

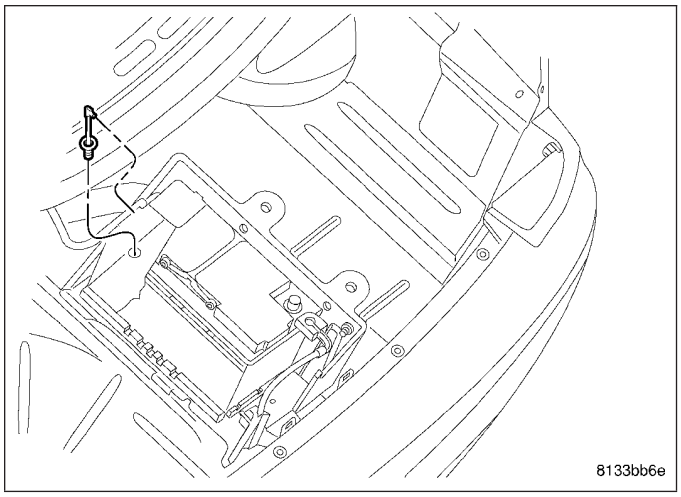

4. Latch the battery retention strap (4).
5. Connect the battery positive cable (1).
6. Connect the battery negative cable (2).
7. Install the rear compartment floor trim panel.

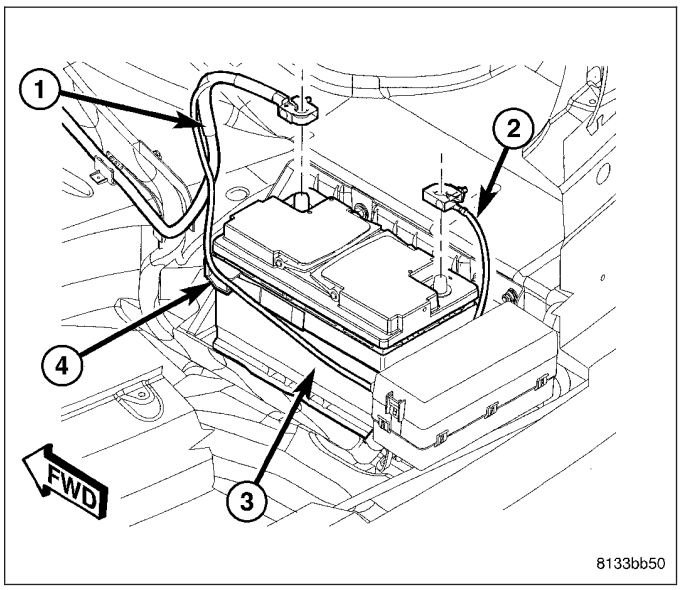

BATTERY HOLDDOWN

REMOVAL

1. Verify that the ignition switch and all accessories are OFF.
2. Remove the rear compartment floor, trim panel to gain access to the battery.
3. Disconnect and isolate the battery negative cable.
4. Remove the bolt from the battery hold down and remove the hold down.

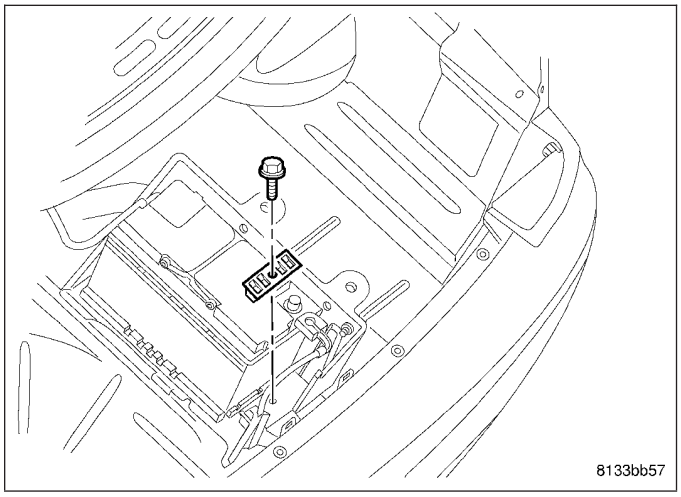

INSTALLATION

1. Install the battery hold down clamp and bolt. Torque the bolt to 4 N·m (35 in. lbs.).
2. Connect the battery negative cable.
3. Install the rear compartment floor trim panel.

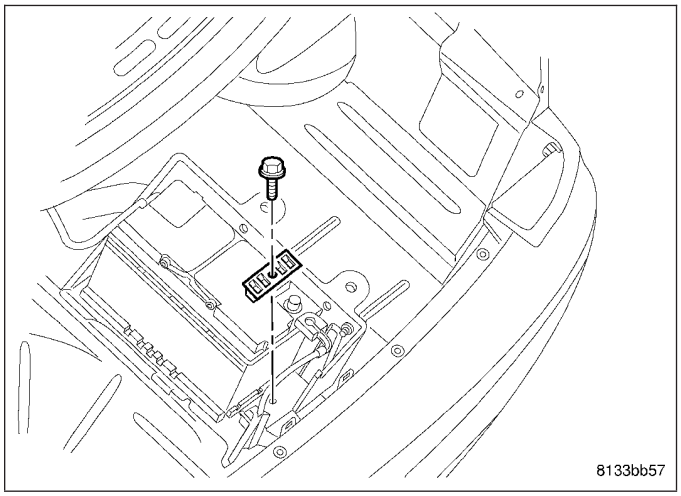

BATTERY CABLES

DESCRIPTION

The battery cables (1) and (2) are large gauge, stranded copper wires sheathed within a heavy plastic or synthetic rubber insulating jacket. The wire used in the battery cables combines excellent flexibility and reliability with high electrical current carrying capacity. The battery cables feature a stamped brass clamping type female battery terminal crimped onto one end of the battery cable wire and then solder-dipped. A square headed pinch-bolt and hex nut are installed at the open end of the female battery terminal clamp. Large eyelet type terminals are crimped onto the opposite end of the battery cable wire and then solder-dipped. The battery positive cable wires (1) have a red insulating jacket to provide visual identification and feature a larger female battery terminal clamp to allow connection to the larger battery positive terminal post. The battery negative cable wires (2) have a black insulating jacket and a smaller female battery terminal clamp.

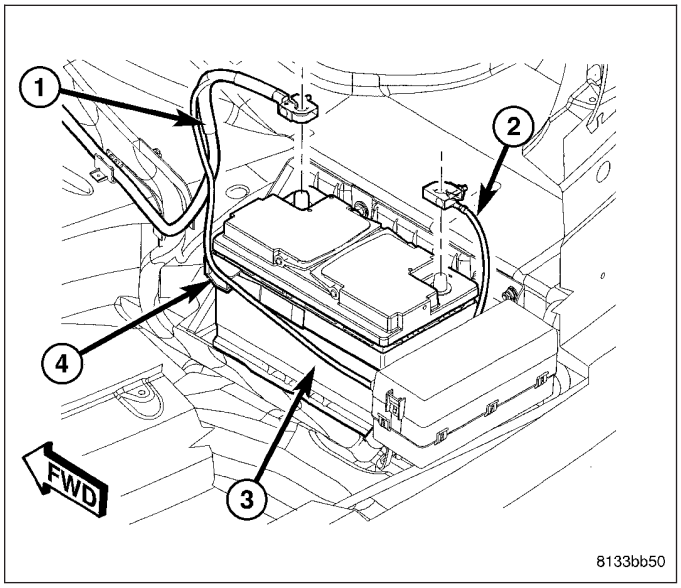

The battery cables cannot be repaired and, if damaged or faulty they must be replaced. Both the battery positive and negative cables are available for service replacement only as a unit with the battery wire harness, which may include portions of the wiring circuits for the generator and other components on some models. Refer to the appropriate wiring information for the location of the proper battery cable wire harness diagrams. The wiring information also includes proper wire and connector repair procedures, further details on wire harness routing and retention, as well as pin-out and location views for the various wire harness connectors, splices and grounds.

OPERATION

The battery cables connect the battery terminal posts to the vehicle electrical system. These cables also provide a path back to the battery for electrical current generated by the charging system for restoring the voltage potential of the battery. The female battery terminal clamps on the ends of the battery cable wires provide a strong and reliable connection of the battery cable to the battery terminal posts. The terminal pinch bolts allow the female terminal clamps to be tightened around the male terminal posts on the top of the battery. The eyelet terminals secured to the opposite ends of the battery cable wires from the female battery terminal clamps provide secure and reliable connection of the battery cables to the vehicle electrical system.

DIAGNOSIS AND TESTING

BATTERY CABLES

A voltage drop test will determine if there is excessive resistance in the battery cable terminal connections or the battery cable. If excessive resistance is found in the battery cable connections, the connection point should be disassembled, cleaned of all corrosion or foreign material, then reassembled. Following reassembly, check the voltage drop for the battery cable connection and the battery cable again to confirm repair.

When performing the voltage drop test, it is important to remember that the voltage drop is giving an indication of the resistance between the two points at which the voltmeter probes are attached. **EXAMPLE:** When testing the resistance of the battery positive cable, touch the voltmeter leads to the battery positive cable terminal clamp and to the battery positive cable eyelet terminal at the starter solenoid B(+) terminal stud. If you probe the battery positive terminal post and the battery positive cable eyelet terminal at the starter solenoid B(+) terminal stud, you are reading the combined voltage drop in the battery positive cable terminal clamp-to-terminal post connection and the battery positive cable.

VOLTAGE DROP TEST

The following operation will require a voltmeter accurate to 1/10 (0.10) volt. Before performing this test, be certain that the following procedures are accomplished:

- The battery is fully-charged, (Refer to 8 - ELECTRICAL/BATTERY SYSTEM/BATTERY - STANDARD PROCEDURE - BATTERY CHARGING) for the proper battery charging procedure.
- The battery has successfully passed a load test, (Refer to 8 - ELECTRICAL/BATTERY SYSTEM/BATTERY - STANDARD PROCEDURE - USING MICRO 420 BATTERY TESTER) for the proper load test procedure.
- Fully engage the parking brake.
- If the vehicle is equipped with an automatic transmission, place the gearshift selector lever in the Park position. If the vehicle is equipped with a manual transmission, place the gearshift selector lever in the Neutral position and block the clutch pedal in the fully depressed position.
- Verify that all lamps and accessories are turned off.
- To prevent the engine from starting, remove the Automatic Shut Down (ASD) relay. The ASD relay is located in the Power Distribution Center (PDC), in the engine compartment. See the fuse and relay layout label affixed to the underside of the PDC cover for ASD relay identification and location.

1. Remove the spare tire cover to gain access to the battery. Connect the positive lead of the voltmeter to the battery negative terminal post. Connect the negative lead of the voltmeter to the battery negative cable terminal clamp. Rotate and hold the ignition switch in the Start position. Observe the voltmeter. If voltage is detected, correct the poor connection between the battery negative cable terminal clamp and the battery negative terminal post.

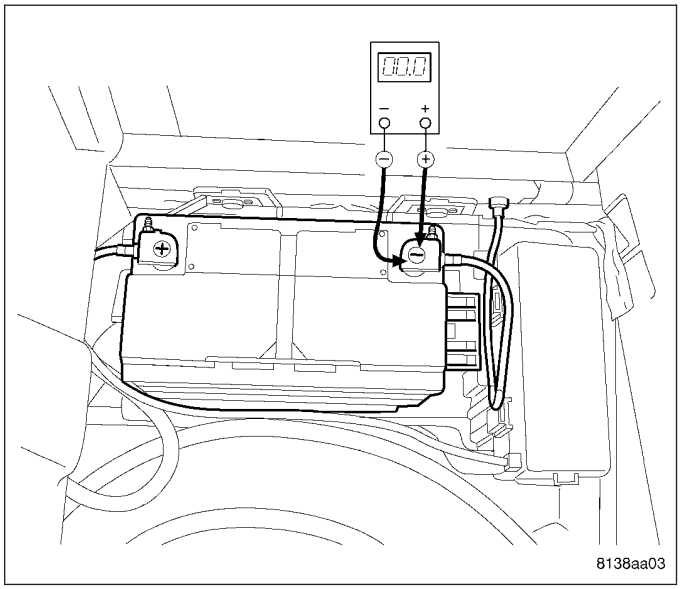

2. Connect the positive lead of the voltmeter to the battery positive terminal post. Connect the negative lead of the voltmeter to the battery positive cable terminal clamp. Rotate and hold the ignition switch in the Start position. Observe the voltmeter. If voltage is detected, correct the poor connection

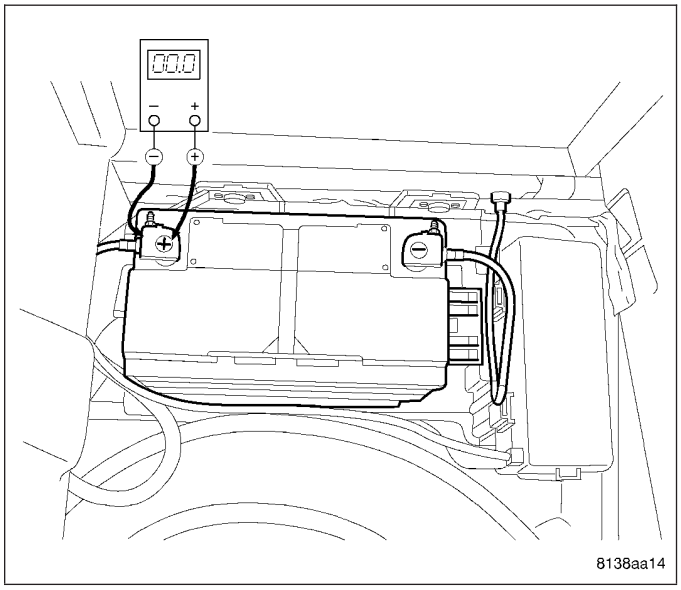

between the battery positive cable terminal clamp and the battery positive terminal post.

3. Using a suitable jumper wire, connect the voltmeter to measure between the battery negative cable terminal clamp and a good clean ground on the engine block. Rotate and hold the ignition switch in the Start position. Observe the voltmeter. If the reading is above 0.2 volt, clean and tighten the battery negative cable eyelet terminal connection at the transmission housing. Repeat the test. If the reading is still above 0.2 volt, perform Step 4 and Step 5.

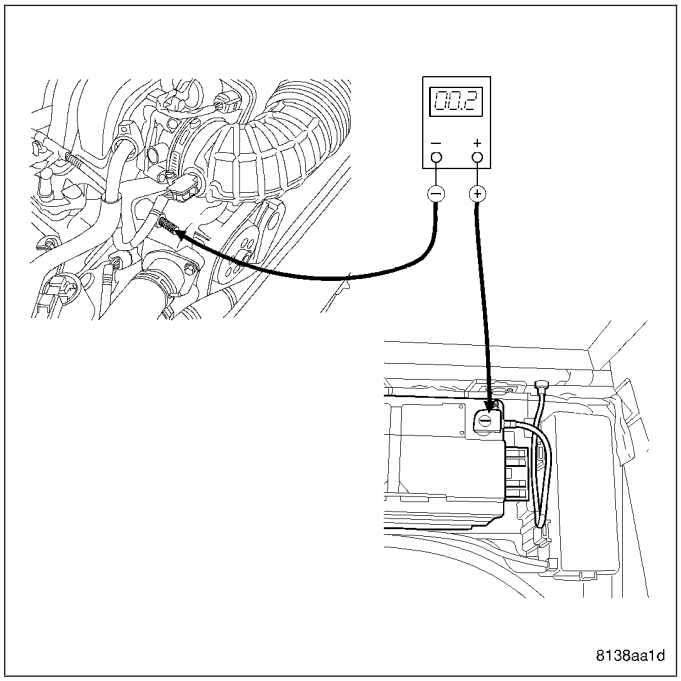

4. Connect the voltmeter to measure between the battery negative cable terminal clamp and the battery negative cable eyelet terminal connection at the vehicle body. Rotate and hold the ignition switch in the Start position. Observe the voltmeter. If the reading is above 0.2 volt, clean and tighten the battery negative cable eyelet terminal connection at the vehicle body. Repeat the test. If the reading is still above 0.2 volt, replace the battery rear nega-

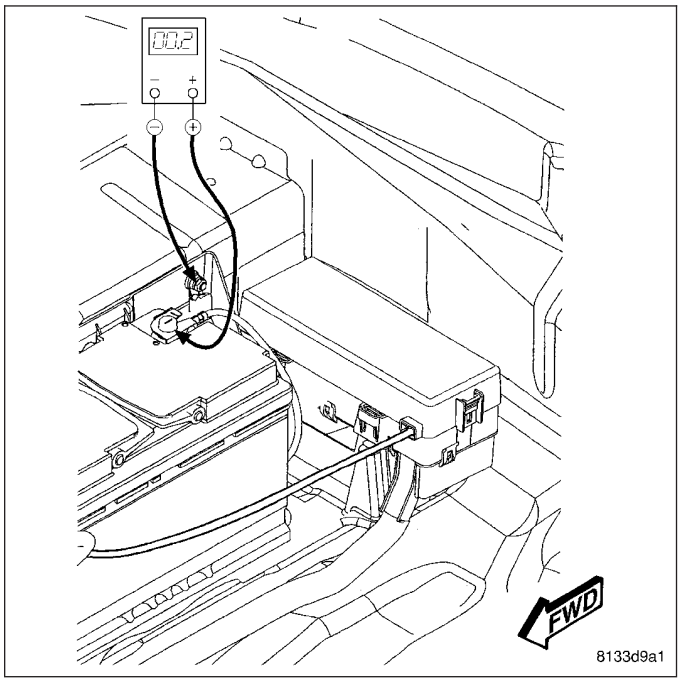

tive cable, (Refer to 8 - ELECTRICAL/BATTERY SYSTEM/CABLES - REMOVAL).

5. Connect the voltmeter to measure between the battery negative cable eyelet terminal connection at the right front strut tower and the battery negative cable eyelet terminal connection at the transmission housing. Rotate and hold the ignition switch in the Start position. Observe the voltmeter. If the reading is above 0.2 volt, clean and tighten the battery negative cable eyelet terminal connection at the right front strut tower. Repeat the test. If the reading is still above 0.2 volt, replace the battery

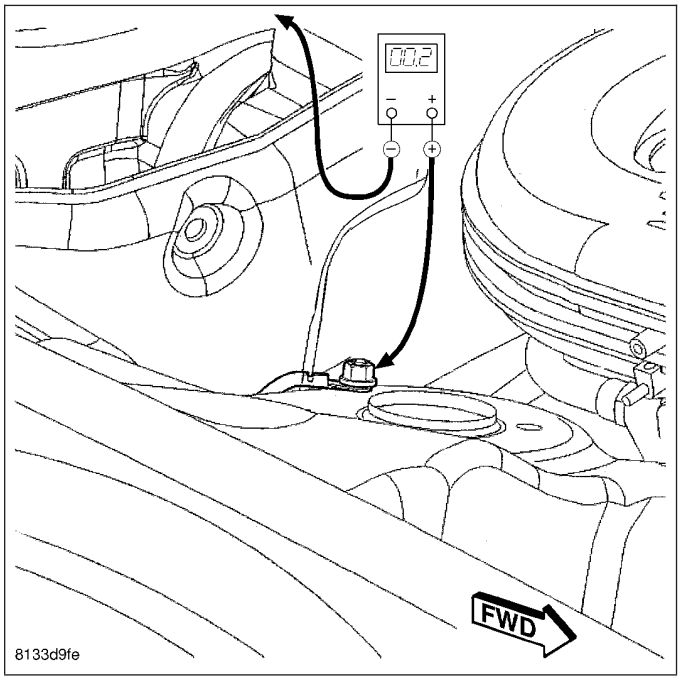

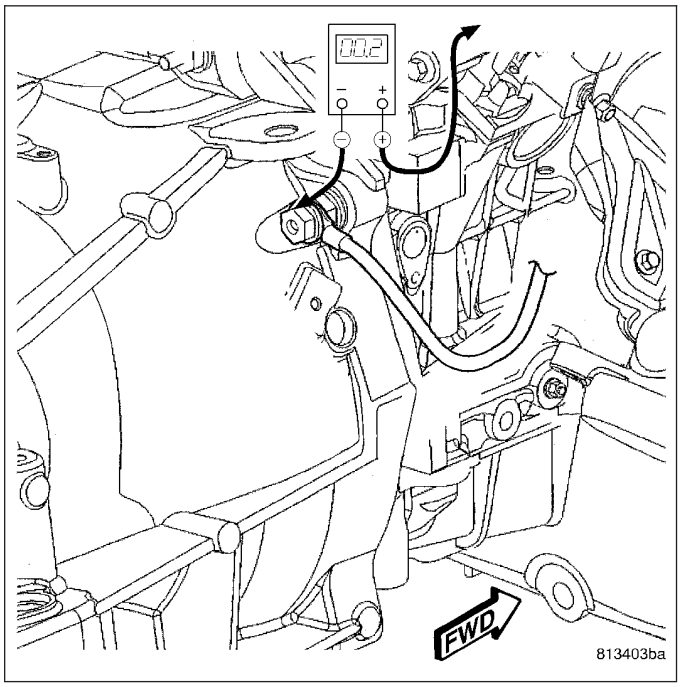

front negative cable, (Refer to 8 - ELECTRICAL/BATTERY SYSTEM/CABLES - REMOVAL).

6. Using a suitable jumper wire, connect the voltmeter to measure between the battery positive cable terminal clamp and the starter solenoid B(+) terminal stud. Rotate and hold the ignition switch in the Start position. Observe the voltmeter. If the reading is above 0.2 volt, clean and tighten the battery positive cable eyelet terminal connection at the starter solenoid B(+) terminal stud. Repeat the test. If the reading is still above 0.2 volt, perform Step 7 and Step 8.

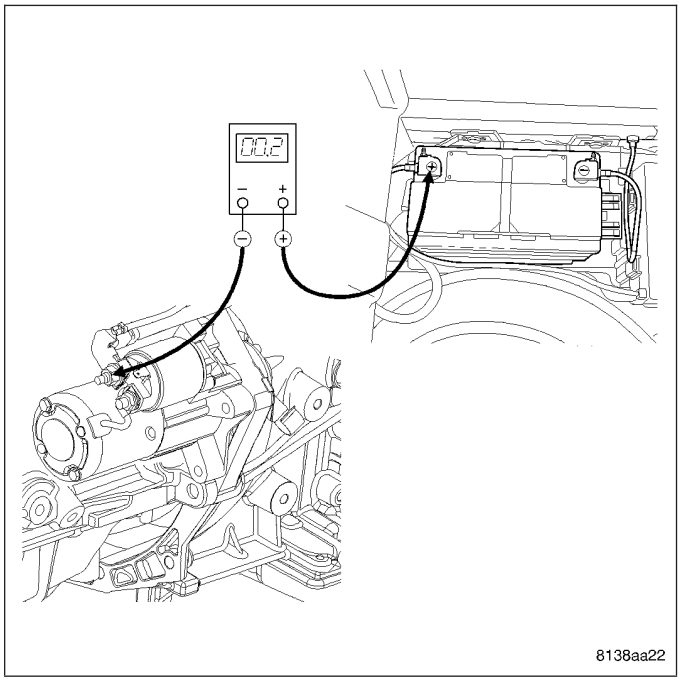

7. Remove the right front wheelhouse splash shield to gain access to the battery positive cable bulkhead outside terminal, (Refer to 23 - BODY/EXTERIOR/RF WHEELHOUSE SPLASH SHIELD - REMOVAL). Connect the voltmeter to measure between the battery positive cable bulkhead outside terminal and the starter solenoid B(+) terminal stud. Rotate and hold the ignition switch in the Start position. Observe the voltmeter. If the reading is above 0.2 volt, clean and tighten the battery positive cable bulkhead outside terminal connection. Repeat the test. If the reading is still above 0.2 volt, replace the battery front positive cable, (Refer

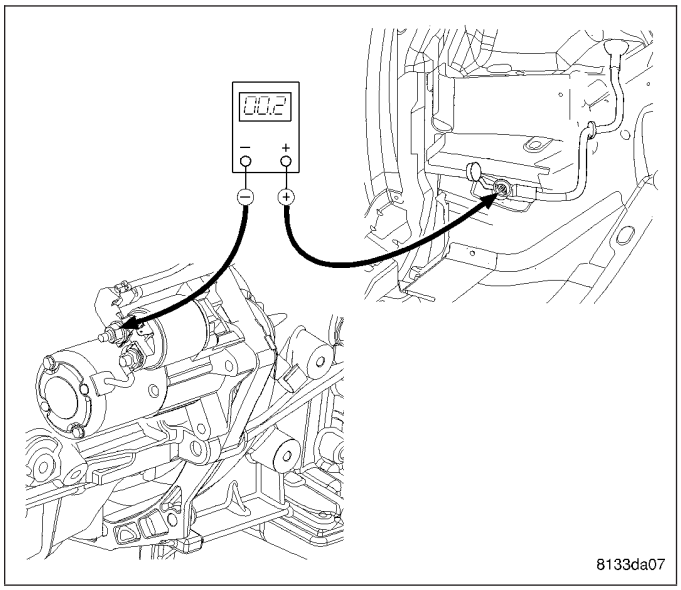

to 8 - ELECTRICAL/BATTERY SYSTEM/CABLES - REMOVAL).

8. Remove the right front carpet to gain access to the battery positive cable bulkhead inside terminal. Connect the voltmeter to measure between the battery positive cable terminal clamp and the battery positive cable bulkhead inside terminal connection. Rotate and hold the ignition switch in the Start position. Observe the voltmeter. If the reading is above 0.2 volt, clean and tighten the battery positive cable bulkhead inside terminal connection. Repeat the test. If the reading is still above 0.2 volt, replace the battery rear positive cable, (Refer to 8 - ELECTRICAL/BATTERY SYSTEM/CABLES - REMOVAL).

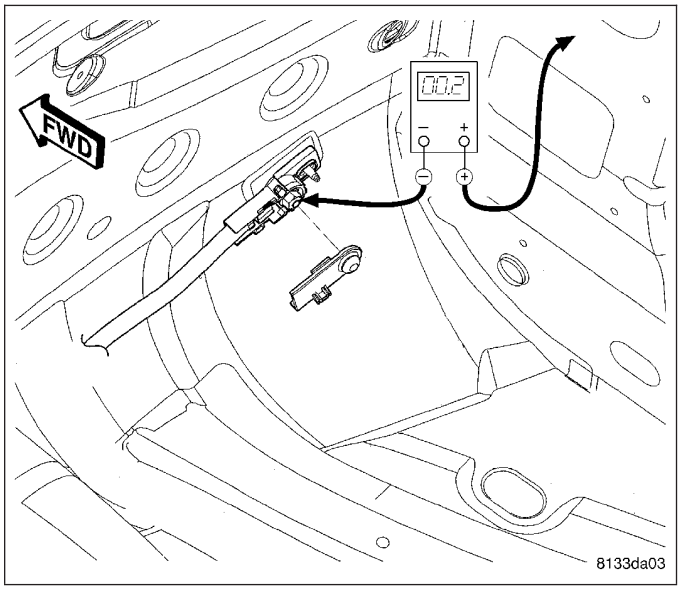

REMOVAL

NEGATIVE - ENGINE COMPARTMENT

1. Turn the ignition switch to the Off position. Be certain that all electrical accessories are turned off.
2. Remove the spare tire cover to gain access to the battery.
3. Disconnect and isolate the battery negative cable.
4. Remove the fastener securing the battery negative cable to the right front strut tower.

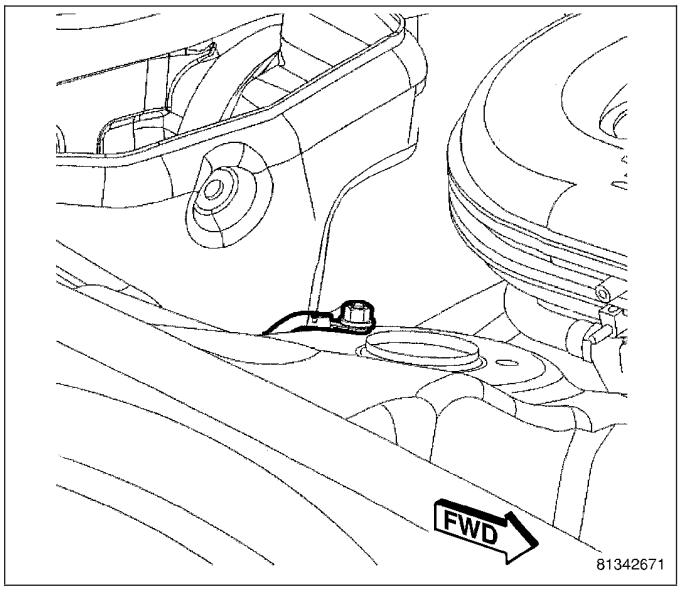

5. Raise vehicle on hoist, (Refer to LUBRICATION & MAINTENANCE/HOISTING - STANDARD PROCEDURE).
6. Remove the fastener securing the battery negative cable to the transmission housing.

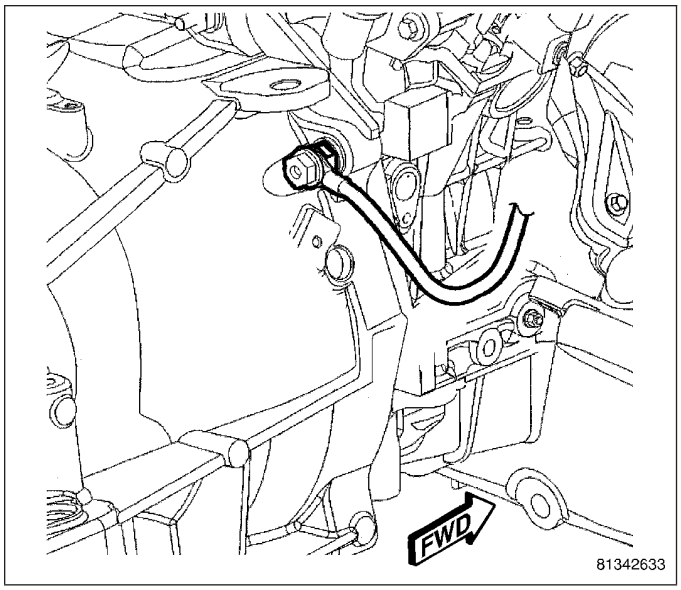

7. One at a time, remove the battery cable retaining pushpins, fasteners and routing clips until the cable is free from the vehicle.
8. Remove the battery cable from the engine compartment.

NEGATIVE - REAR COMPARTMENT

1. Turn the ignition switch to the Off position. Be certain that all electrical accessories are turned off.
2. Remove the spare tire cover to gain access to the battery.
3. Disconnect and isolate the battery negative cable (3).
4. Remove the fastener (4) securing the battery negative cable to the body.
5. Remove the cable from the vehicle.

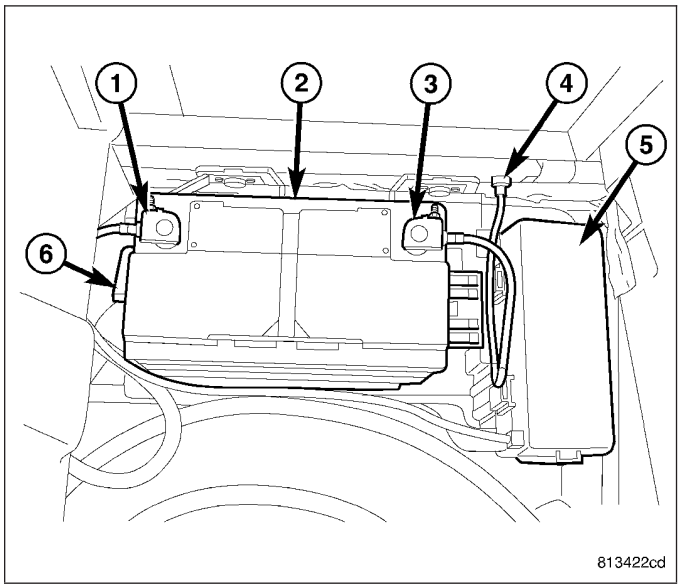

POSITIVE - BATTERY TO BULKHEAD

1. Turn the ignition switch to the Off position. Be certain that all electrical accessories are turned off.
2. Remove the spare tire cover to gain access to the battery.
3. Disconnect and isolate the battery negative cable (3).
4. Disconnect the battery positive cable (1).

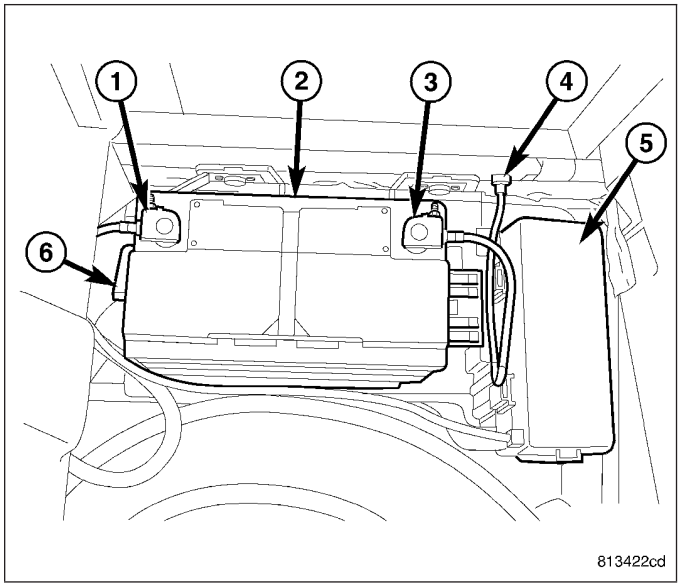

5. Remove the Power Distribution Center (PDC) cover (2).
6. Remove the battery positive cable to rear PDC fastener (3).

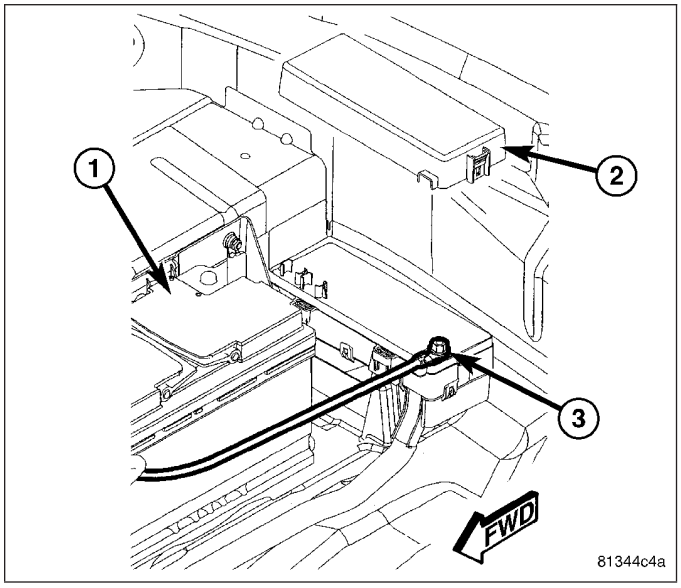

7. One at a time, free the battery positive cable from the routing clips located in the rear compartment area.

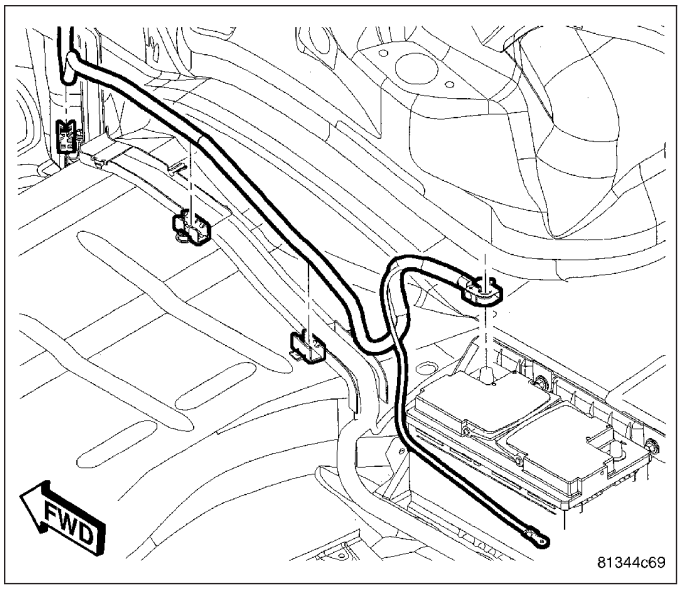

8. Remove the right, front seat, (Refer to 23 - BODY/SEATS/SEAT - REMOVAL).
9. Remove the right, rear seat cushion. Pull upward at forward edge of each retainer loop of the rear seat cushion to disengage retainer loops from cups in floor.
10. Remove the right, front and rear door sill trim panels.
11. Remove the right, B - pillar lower trim panel, (Refer to 23 - BODY/INTERIOR/B-PILLAR TRIM - REMOVAL).
12. position carpet aside to gain access to the battery positive cable.
13. One at a time, free the battery positive cable from the routing clips located in the rear seat area.

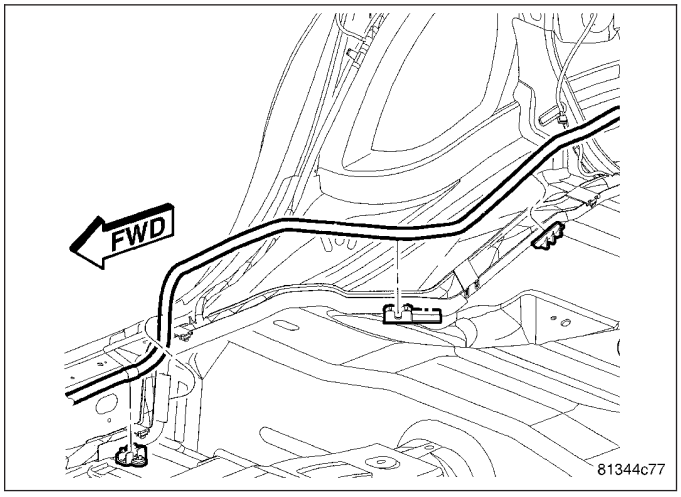

14. Position the bulkhead insulator aside to gain access to the battery positive cable bulkhead fastener.
15. Remove the battery positive cable to bulkhead fastener.

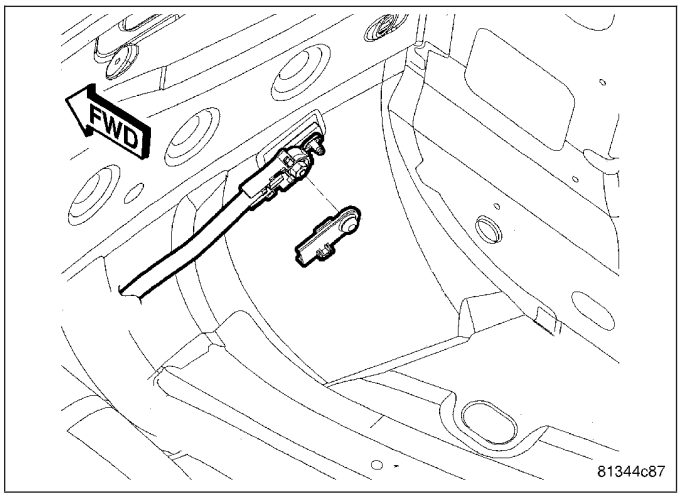

16. Remove the battery positive cable from the vehicle making note of the cable routing under the floor cross members.

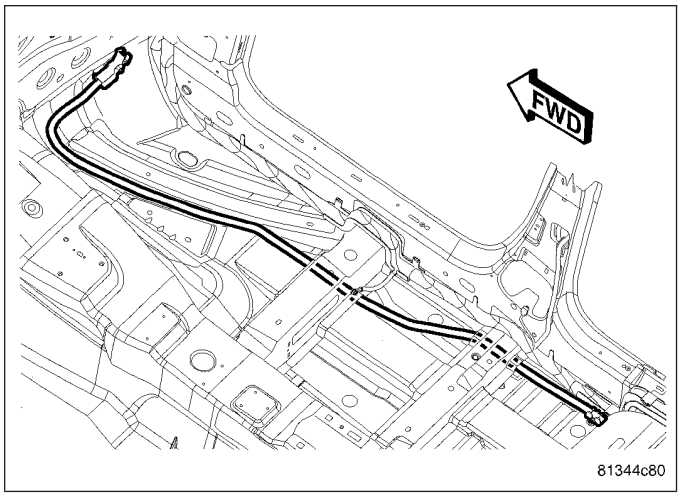

POSITIVE - ENGINE COMPARTMENT

1. Turn the ignition switch to the Off position. Be certain that all electrical accessories are turned off.
2. Remove the spare tire cover to gain access to the battery.
3. Disconnect and isolate the battery negative cable (3).

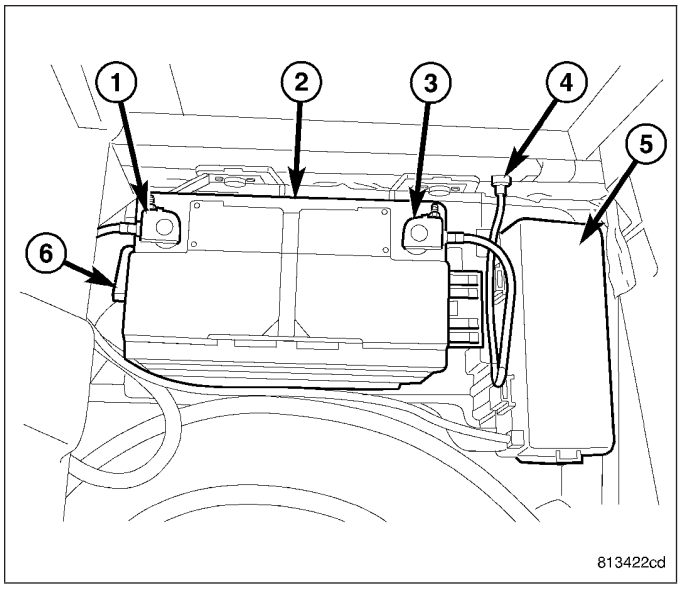

4. Raise vehicle on hoist, (Refer to LUBRICATION & MAINTENANCE/HOISTING - STANDARD PROCEDURE).
5. Remove the right front wheelhouse splash shield to gain access to the battery positive cable bulkhead outside terminal, (Refer to 23 - BODY/EXTERIOR/RF WHEELHOUSE SPLASH SHIELD - REMOVAL).

6. Remove the battery positive cable to bulkhead fastener.

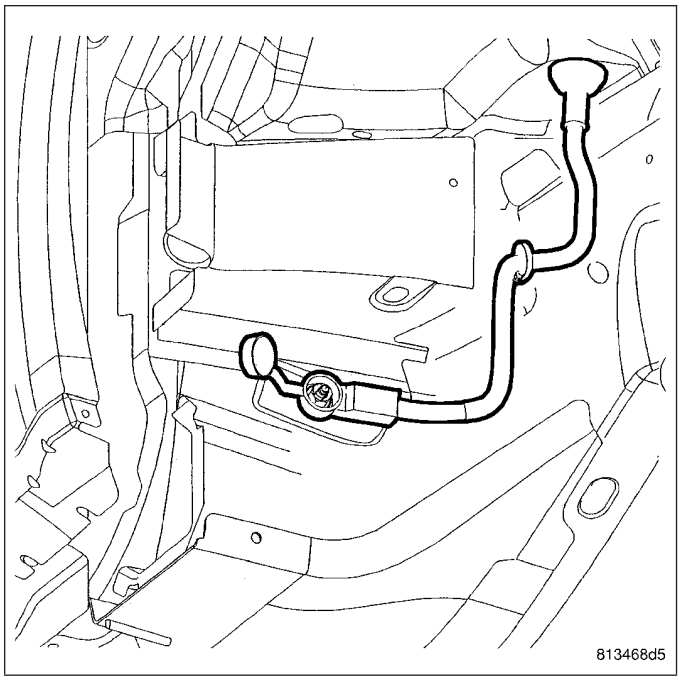

7. Remove the battery positive cable to starter fastener.

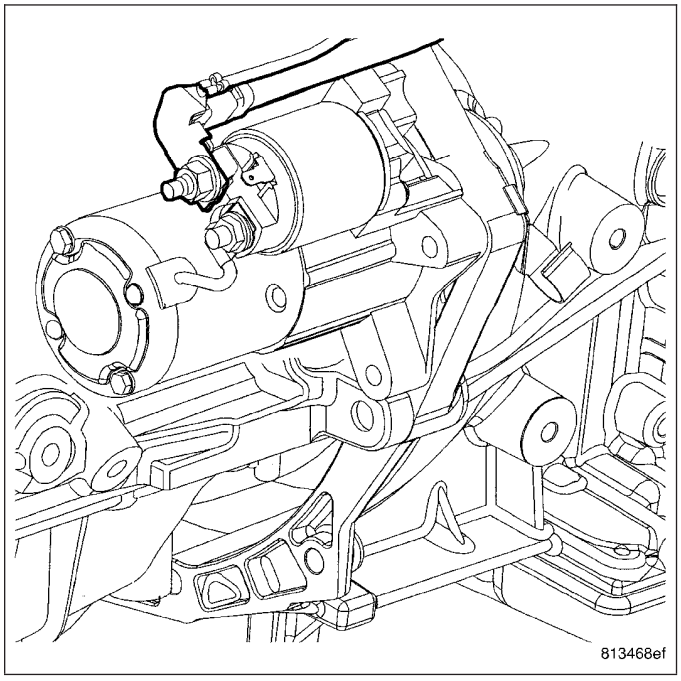

8. On the 2.7L and 3.5L free the battery positive cable from the routing clips located at the back of the engine.

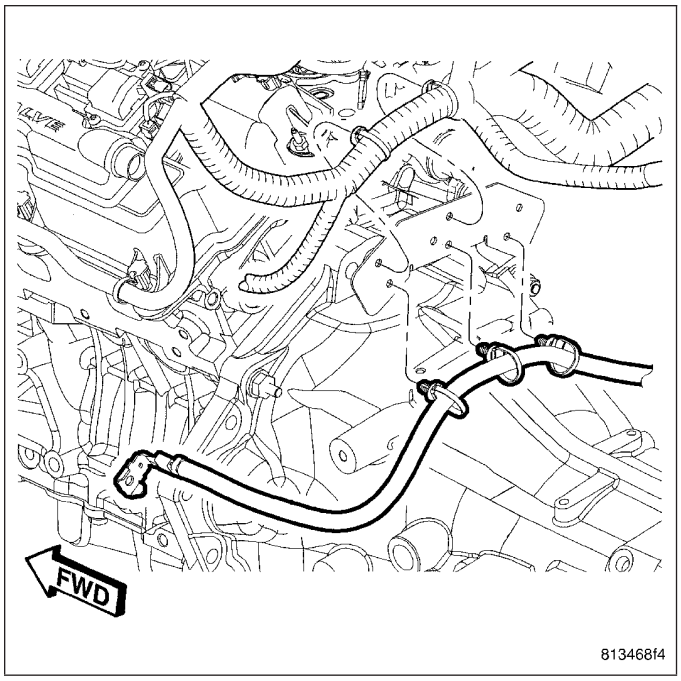

9. On the 5.7L free the battery positive cable from the routing clip located at the back of the starter.
10. Remove the battery positive cable from the vehicle making note of the cable routing.

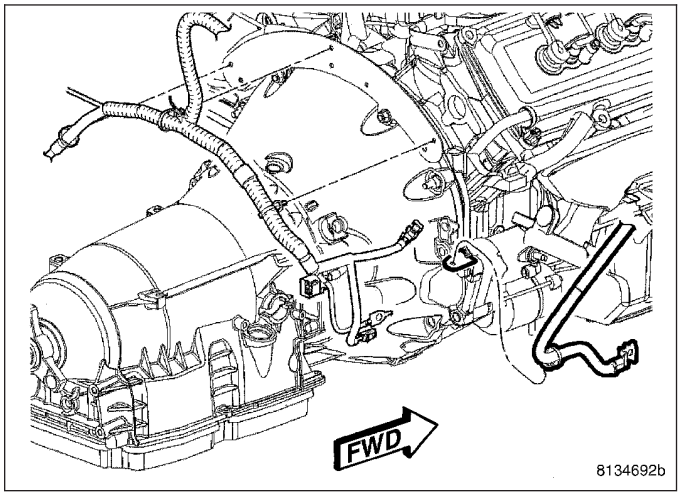

INSTALLATION

NEGATIVE - ENGINE COMPARTMENT

1. Position the battery negative cable in the engine compartment.
2. Raise vehicle on hoist, (Refer to LUBRICATION & MAINTENANCE/HOISTING - STANDARD PROCEDURE).
3. Install the fastener securing the battery negative cable to the transmission housing. Torque the bolt to 11 N·m (8 ft. lbs.).

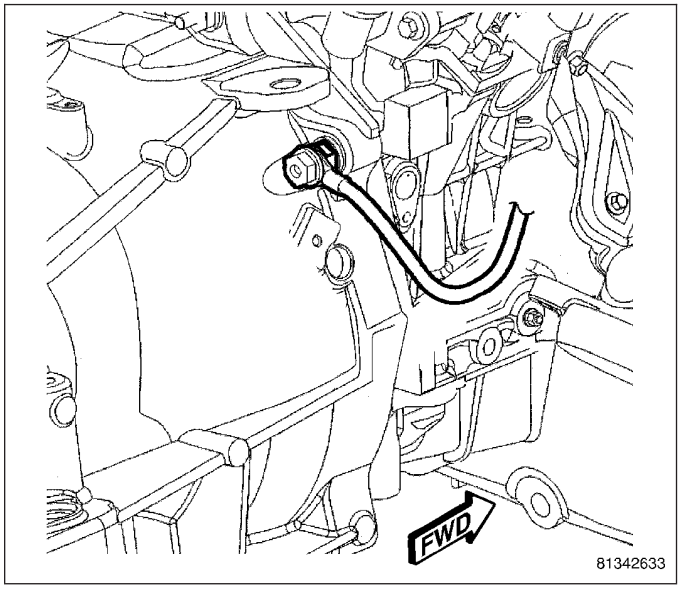

4. One at a time, install the battery cable retaining pushpins, fasteners and routing clips until the cable is installed exactly where it was in the vehicle.
5. Lower vehicle.
6. Install the fastener securing the battery negative cable to the right front strut tower.

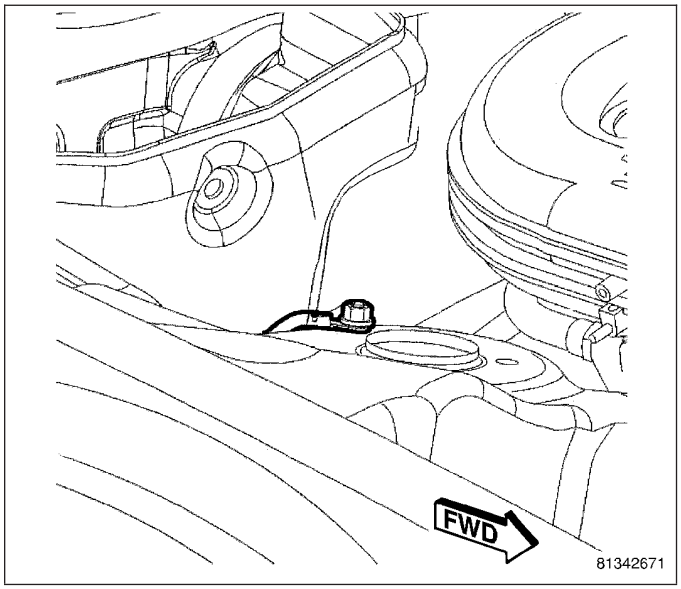

7. Connect the battery negative cable.
8. Install the spare tire cover.

NEGATIVE - REAR COMPARTMENT

1. Position the battery negative cable in the vehicle.
2. Install the fastener (4) securing the battery negative cable to the body.
3. Connect the battery negative cable (3).
4. Install the spare tire cover.

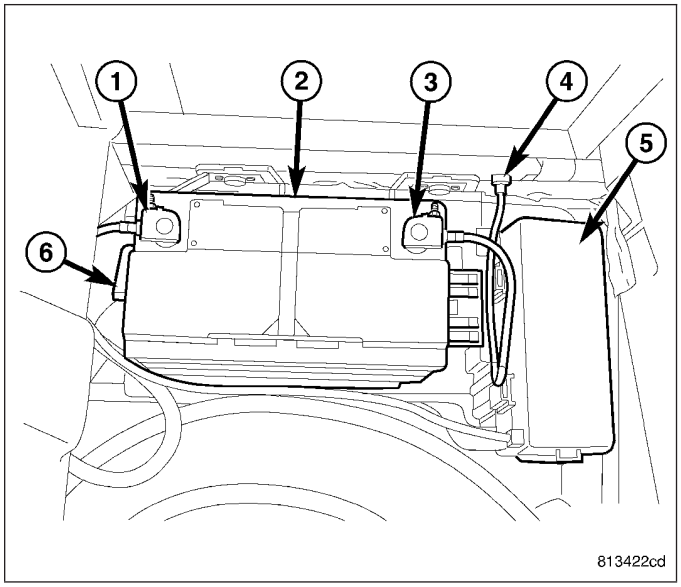

POSITIVE - BATTERY TO BULKHEAD

1. Position the battery positive cable in the vehicle taking care to route the cable under the floor cross members.

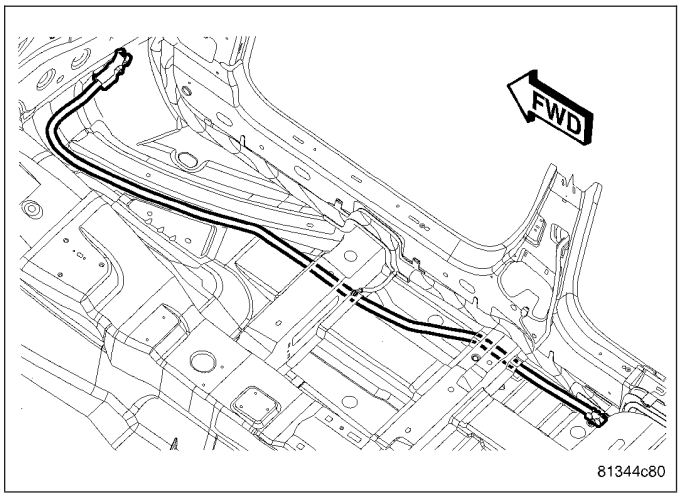

2. Position the bulkhead insulator aside to gain access to the battery positive cable bulkhead fastener.
3. Install the battery positive cable to bulkhead fastener.
4. Position the bulkhead insulator back to the normal position.

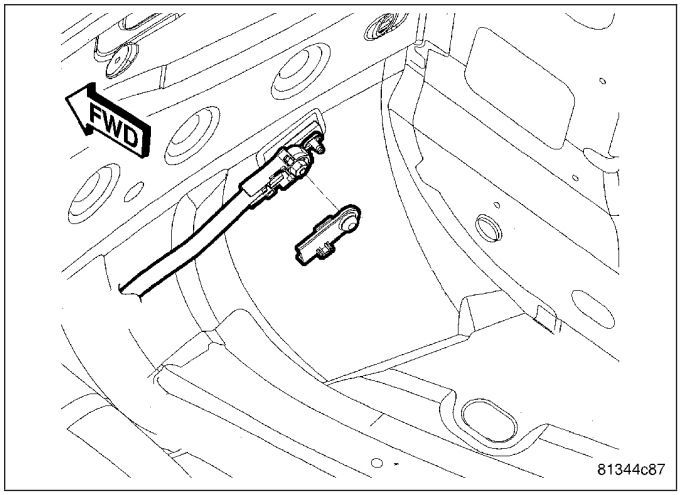

1. One at a time, secure the battery positive cable to the routing clips located in the rear seat area.

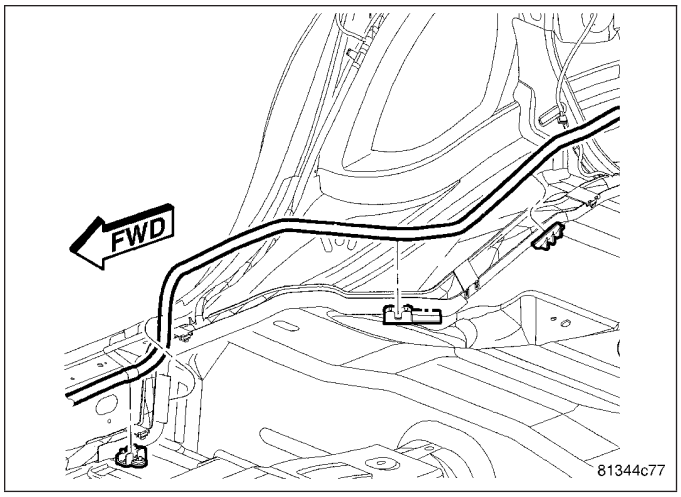

2. One at a time, secure the battery positive cable to the routing clips located in the rear compartment area.

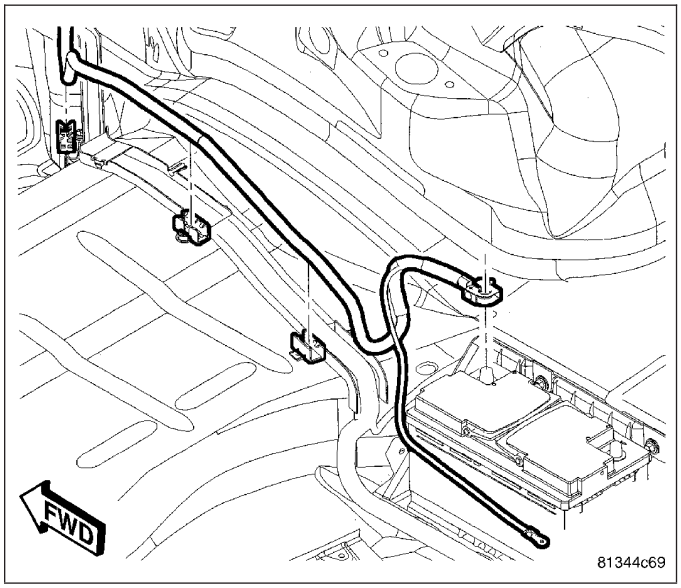

3. Position the carpet back to the normal position.
4. Install the right, B - pillar lower trim panel, (Refer to 23 - BODY/INTERIOR/B-PILLAR TRIM - INSTALLATION).
5. Install the right, front and rear door sill trim panels.
6. Install the right, rear seat cushion. Engage retainer loops into cup on floor kick up. Push downward at forward edge at each retainer loop of the rear seat cushion to engage retainers.
7. Install the right, front seat, (Refer to 23 - BODY/SEATS/SEAT - INSTALLATION).

8. Install the battery positive cable to rear Power Distribution Center (PDC) fastener (3).

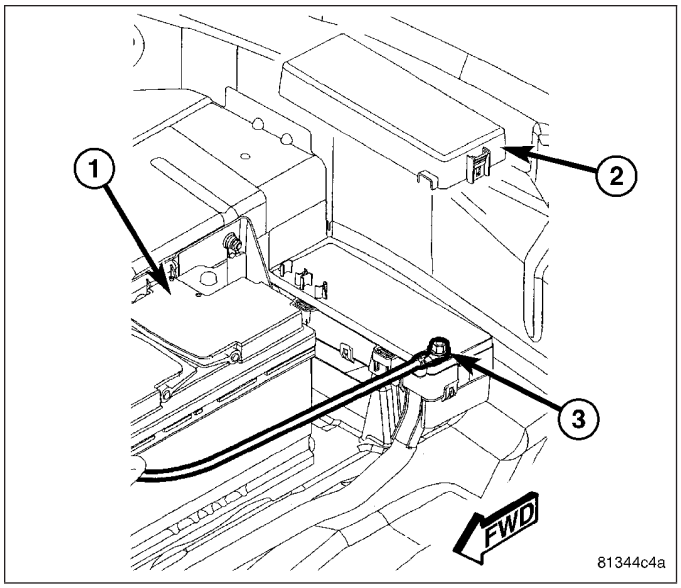

9. Install the PDC cover (5).
10. Connect the battery positive cable (1).
11. Connect the battery negative cable (3).
12. Install the spare tire cover.

POSITIVE - ENGINE COMPARTMENT

1. Position the battery positive cable in the engine compartment.

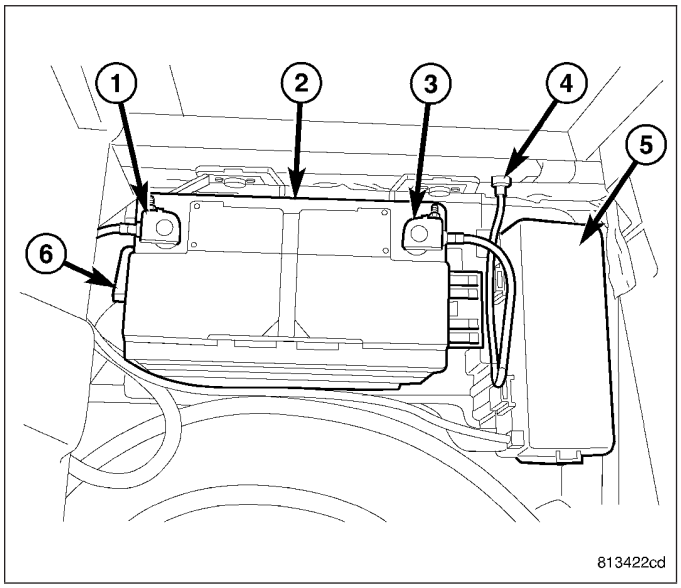

2. On the 2.7L and 3.5L secure the battery positive cable to the routing clips located at the back of the engine.

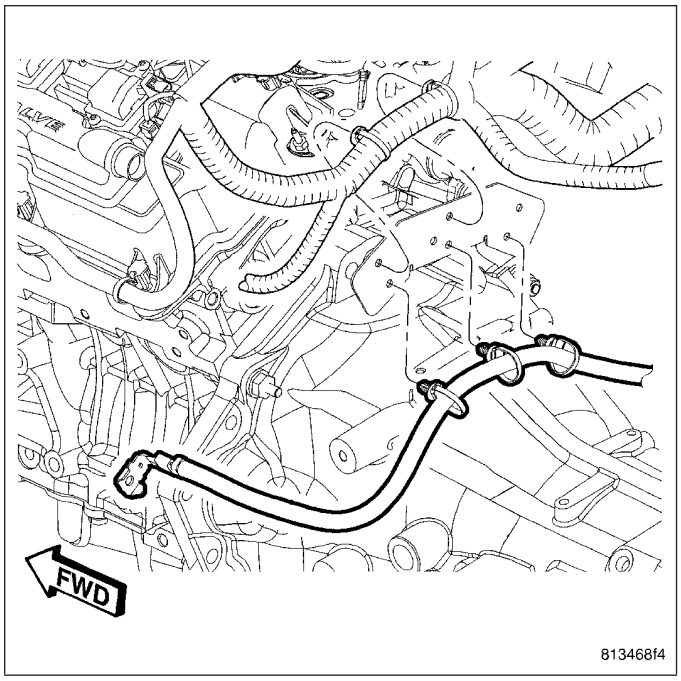

3. On the 5.7L secure the battery positive cable to the routing clip located at the back of the starter.

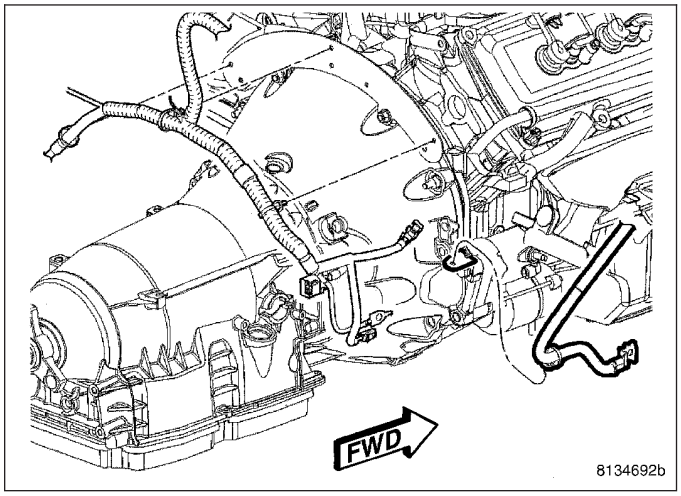

4. Install the battery positive cable to starter fastener.

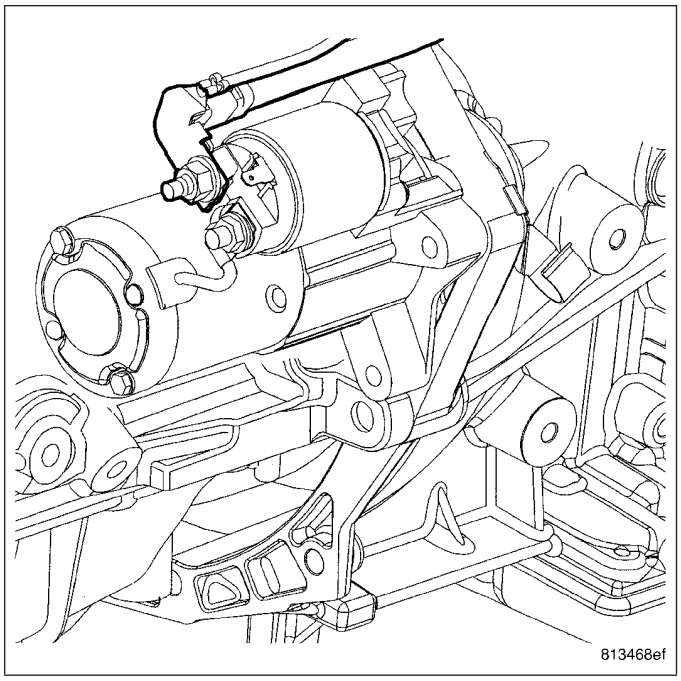

5. Install the battery positive cable to bulkhead fastener.

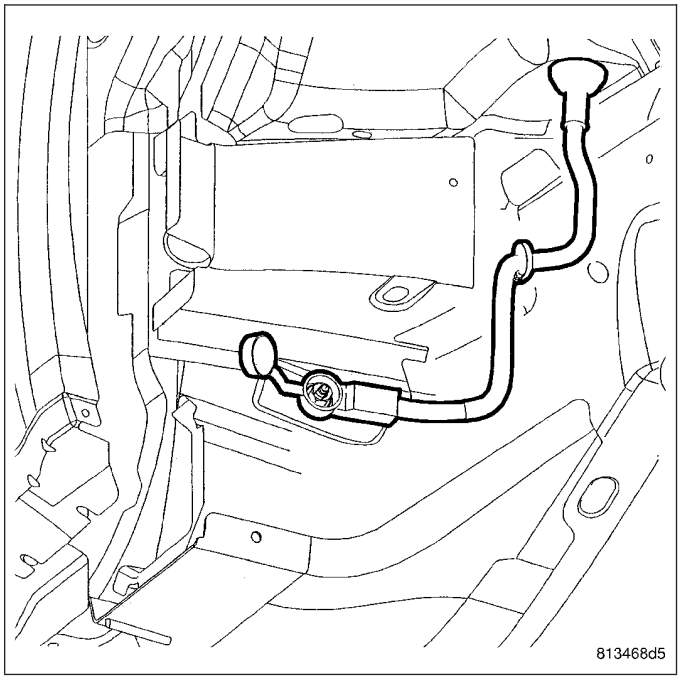

6. Install the right front wheelhouse splash shield, (Refer to 23 - BODY/EXTERIOR/RF WHEELHOUSE SPLASH SHIELD - INSTALLATION).
7. Lower vehicle.

8. Connect the battery negative cable (3).
9. Install the spare tire cover.

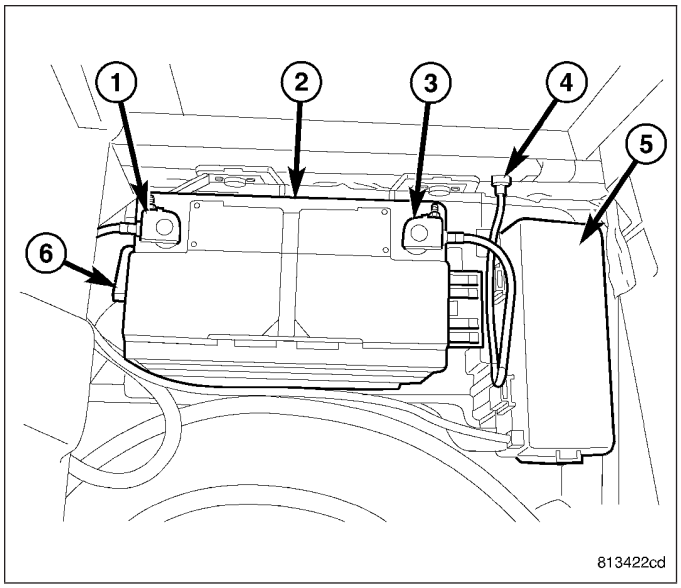

BATTERY TRAY

REMOVAL

1. Remove the battery, (Refer to 8 - ELECTRICAL/BATTERY SYSTEM/BATTERY - REMOVAL).
2. Using a small flat bladed tool, gently release the two mounting tabs that secure the Power Distribution Center (PDC) to the battery tray. Position the PDC aside.

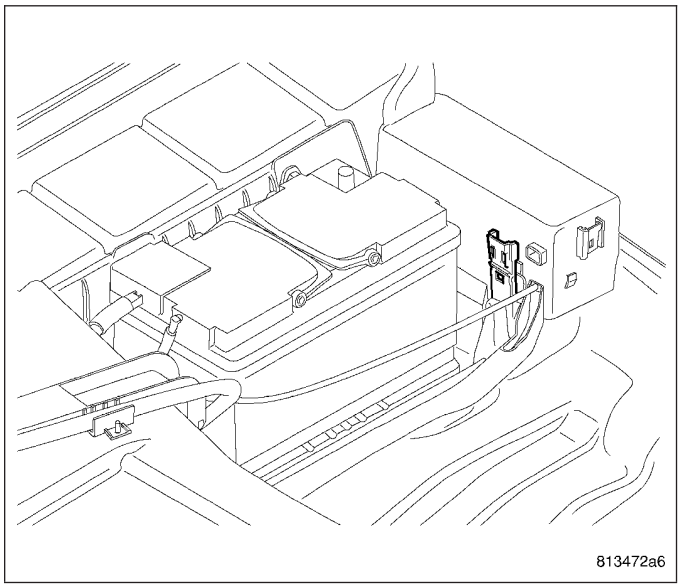

3. Remove the battery tray mounting fasteners and remove the battery tray from the vehicle.

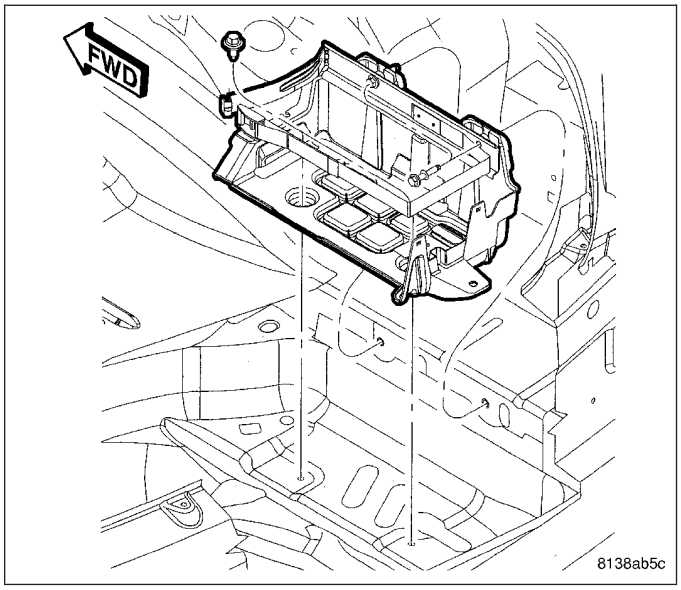

INSTALLATION

1. Position the battery tray in the vehicle and install the mounting fasteners.

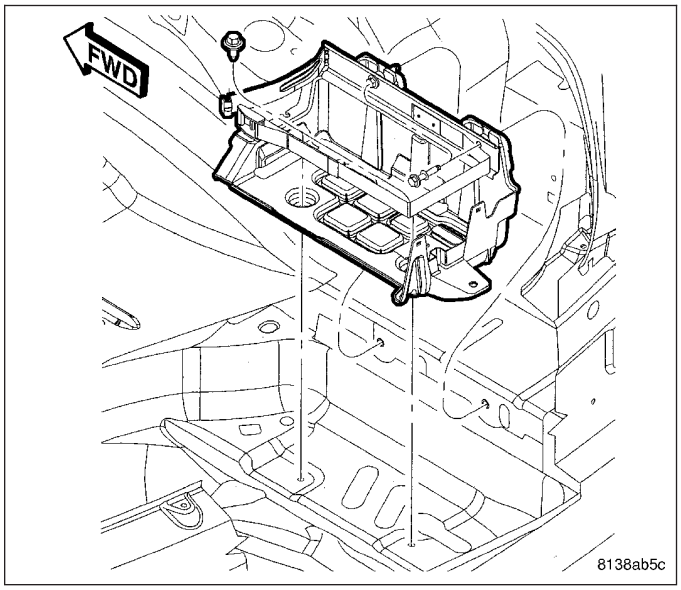

2. Position the Power Distribution Center (PDC) onto the battery tray mounting tabs. Gently apply downward pressure on the PDC until it snaps into place.

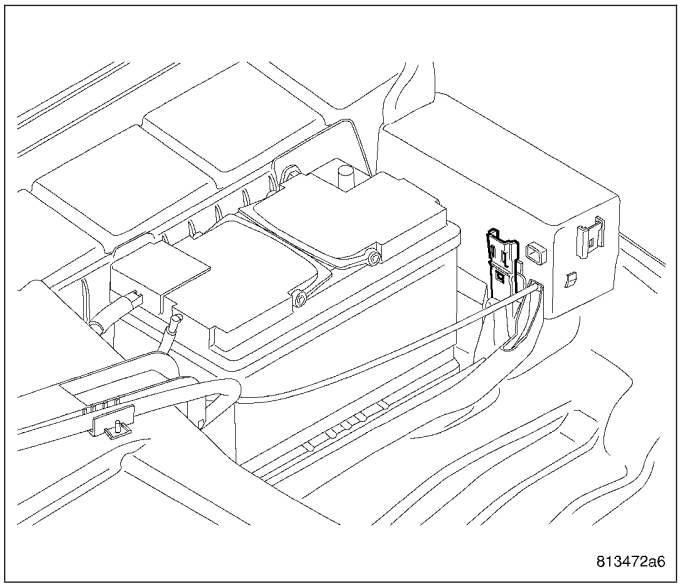

3. Install the battery, (Refer to 8 - ELECTRICAL/BATTERY SYSTEM/BATTERY - INSTALLATION).

CHARGING

TABLE OF CONTENTS

page

CHARGING
- DESCRIPTION - CHARGING SYSTEM 42
- OPERATION - CHARGING SYSTEM 42
- DIAGNOSIS AND TESTING
  - ON-BOARD DIAGNOSTIC SYSTEM 43
- SPECIFICATIONS
  - TORQUE 44

GENERATOR
- DESCRIPTION 45
- OPERATION 45
- REMOVAL
  - 2.7L 45
  - 3.0L DIESEL 47
  - 3.5L 53
  - 6.1L 55
  - 5.7L 57
- INSTALLATION
  - 2.7L 58
  - 3.0L DIESEL 60
  - 3.5L 67
  - 6.1L 68
  - 5.7L 70

VOLTAGE REGULATOR
- DESCRIPTION 71
- OPERATION 71

CHARGING

DESCRIPTION - CHARGING SYSTEM

The charging system consists of:

- Generator
- Decoupler Pulley (If equipped)
- Electronic Voltage Regulator (EVR) circuitry within the Powertrain Control Module (PCM)
- Ignition switch (refer to the Ignition System section for information)
- Battery (refer to the Battery section for information)
- Ambient Air Temperature (If equipped)
- Inlet Air Temperature (calculated battery temperature)(If equipped)
- Voltmeter (refer to the Instrument Cluster section for information if equipped)
- Wiring harness and connections (refer to the Wiring section for information)
- Accessory drive belt (refer to the Cooling section for more information)
- Battery Temperature sensor (if equipped)

OPERATION - CHARGING SYSTEM

The charging system is turned on and off with the ignition switch. The system is on when the engine is running and the ASD relay is energized. The ASD relay is energized when the PCM grounds the ASD control circuit. This voltage is connected through the PCM or IPM (intelligent power module) (if equipped) and supplied to one of the generator field terminals (Gen. Source +) at the back of the generator.

The generator is driven by the engine through a serpentine belt and pulley or decoupler pulley arrangement.

The amount of DC current produced by the generator is controlled by the EVR (field control) circuitry contained within the PCM. This circuitry is connected in series with the second rotor field terminal and ground.

An Ambient air temperature sensor is mounted on the bumper used to calculate the temperature near the battery. This temperature data, along with data from monitored line voltage (battery voltage sense circuit), is used by the PCM to vary the battery charging rate. This is done by cycling the feed path to control the strength of the rotor magnetic field. The PCM then compensates and regulates generator current output accordingly to maintain system voltage at the targeted system voltage based on battery temperature.

All vehicles are equipped with On-Board Diagnostics (OBD). All OBD-sensed systems, including EVR (field control) circuitry, are monitored by the PCM. Each monitored circuit is assigned a Diagnostic Trouble Code (DTC). The PCM will store a DTC in electronic memory for certain failures it detects and illuminate the (MIL) lamp. Refer to On-Board Diagnostics in the Electronic Control Modules (Refer to 8 - ELECTRICAL/ELECTRONIC CONTROL MODULES/ POWERTRAIN CONTROL MODULE - DESCRIPTION) section for more DTC information.

The Charging system “Battery” light indicates problems with the charging system (voltage too high/low, generator failure, etc.). If an extreme condition is indicated, the lamp will be illuminated. The signal to activate the lamp is sent via the PCI bus circuits. The lamp is located on the instrument panel. Refer to the Instrument Cluster section for additional information.

The PCM uses the inlet air temperature sensor or ambient temperature sensor to control the charge system voltage. This temperature, along with data from monitored line voltage, is used by the PCM to vary the battery charging rate. The system voltage is higher at cold temperatures and is gradually reduced as the calculated battery temperature increases.

The ambient temperature sensor is used to control the battery voltage based upon ambient temperature (approximation of battery temperature). The PCM maintains the optimal output of the generator by monitoring battery voltage and controlling it to a range of 13.5 - 14.7 volts based on battery temperature.

DIAGNOSIS AND TESTING

ON-BOARD DIAGNOSTIC SYSTEM

The Powertrain Control Module (PCM) monitors critical input and output circuits of the charging system, making sure they are operational. A Diagnostic Trouble Code (DTC) is assigned to each input and output circuit monitored by the OBD system. Some circuits are checked continuously and some are checked only under certain conditions.

If the OBD system senses that a monitored circuit is bad, it will put a DTC into electronic memory. The DTC will stay in electronic memory as long as the circuit continues to be bad. The PCM is programmed to clear the memory after 40 good trip if the problem does not occur again.

DIAGNOSTIC TROUBLE CODES

A DTC description can be read using the DRBIII® scan tool. Refer to the appropriate Powertrain Diagnostic Procedures manual for information.

A DTC does not identify which component in a circuit is bad. Thus, a DTC should be treated as a symptom, not as the cause for the problem. In some cases, because of the design of the diagnostic test procedure, a DTC can be the reason for another DTC to be set. Therefore, it is important that the test procedures be followed in sequence, to understand what caused a DTC to be set.

ERASING DIAGNOSTIC TROUBLE CODES

The DRBIII® Scan Tool must be used to erase a DTC.

The following procedures may be used to diagnose the charging system if:

- the check gauges lamp or battery lamp is illuminated with the engine running
- the voltmeter (if equipped) does not register properly
- an undercharged or overcharged battery condition occurs.

Remember that an undercharged battery is often caused by:

- accessories being left on with the engine not running
- a faulty or improperly adjusted switch that allows a lamp to stay on. Refer to Ignition-Off Draw Test (Refer to 8 - ELECTRICAL/BATTERY SYSTEM/BATTERY - STANDARD PROCEDURE)
- loose generator belt.

INSPECTION

The Powertrain Control Module (PCM) monitors critical input and output circuits of the charging system, making sure they are operational. A Diagnostic Trouble Code (DTC) is assigned to each input and output circuit monitored by the On-Board Diagnostic (OBD) system. Some charging system circuits are checked continuously, and some are checked only under certain conditions.

Refer to Diagnostic Trouble Codes in; Powertrain Diagnostic manual for more DTC information. This will include a complete list of DTC's including DTC's for the charging system.

To perform a complete test of the charging system, refer to the appropriate Powertrain Diagnostic Procedures service manual and the DRBIII® scan tool. Perform the following inspections before attaching the scan tool.

1. Inspect the battery condition. Refer to the Battery section (Refer to 8 - ELECTRICAL/BATTERY SYSTEM - DIAGNOSIS AND TESTING) for procedures.
2. Inspect condition of battery cable terminals, battery posts, connections at engine block, starter solenoid and relay. They should be clean and tight. Repair as required.
3. Inspect all fuses in both the fuseblock and Power Distribution Center (PDC) or IPM (if equipped) for tightness in receptacles. They should be properly installed and tight. Repair or replace as required.
4. Inspect generator mounting bolts for tightness. Replace or tighten bolts if required. Refer to the Generator Removal/Installation section of this group for torque specifications (Refer to 8 - ELECTRICAL/CHARGING - SPECIFICATIONS).
5. Inspect generator drive belt condition and tension. Tighten or replace belt as required. Refer to Belt Tension Specifications (Refer to 7 - COOLING/ACCESSORY DRIVE - SPECIFICATIONS).
6. Inspect decoupler pulley (if equipped). Ensure decoupler pulley is driving the alternator rotor.
7. Inspect automatic belt tensioner (if equipped). Refer to the Cooling System for more information.

8. Inspect generator electrical connections at generator field, battery output, and ground terminal (if equipped). Also check generator ground wire connection at engine (if equipped). They should all be clean and tight. Repair as required.

SPECIFICATIONS

TORQUE

DESCRIPTION	N·m	Ft. Lbs.	In. Lbs.
Generator Mounting Bolts - 2.7L	65	48	-
Generator Mounting Bolts - 3.5L	65	48	-
Generator Mounting Bolts - 5.7L	65	48	-
Generator Support Bracket Bolt/Nuts - 5.7L	41	30	-
Generator B+ Output Cable Terminal Nut	13	-	115

GENERATOR

DESCRIPTION

The generator is belt-driven by the engine. It is serviced only as a complete assembly. If the generator fails for any reason, the entire assembly must be replaced. The generator produces DC voltage.

OPERATION

As the energized rotor begins to rotate within the generator, the spinning magnetic field induces a current into the windings of the stator coil.

The Y type stator winding connections deliver the induced AC current to 6 positive and 6 negative diodes for rectification. From the diodes, rectified DC current is delivered to the vehicles electrical system through the generator, battery, and ground terminals.

Noise emitting from the generator may be caused by:

- Worn, loose or defective bearings
- Loose or defective drive pulley
- Incorrect, worn, damaged or misadjusted drive belt
- Loose mounting bolts
- Misaligned drive pulley
- Defective stator or diode
- Damaged internal fins

REMOVAL

2.7L

1. Disconnect negative battery cable.
2. Remove generator drive belt. Refer to the Cooling System section.

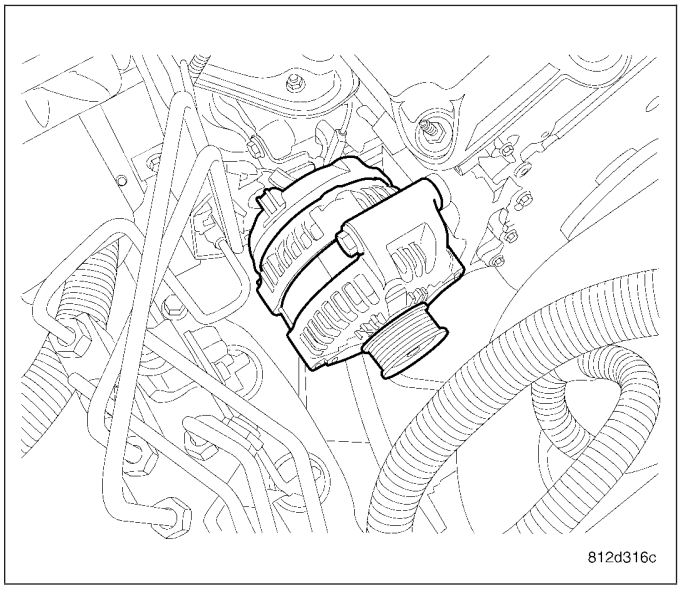

3. Disconnect generator field circuit plug.
4. Remove B+ terminal nut and wire.

5. Remove 2 lower mounting bolts.

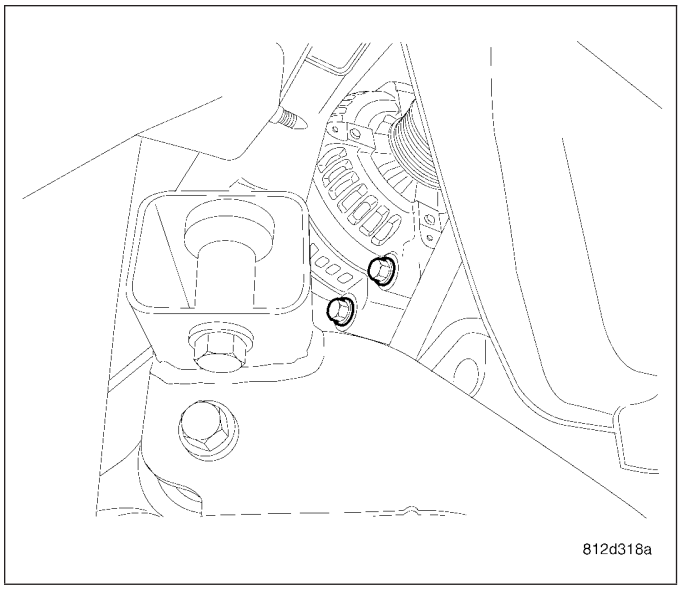

6. Remove upper bolt.

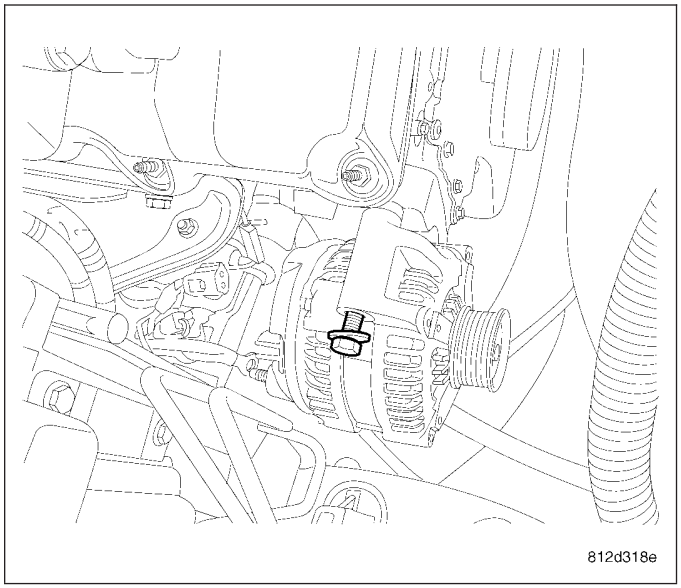

7. Remove generator.

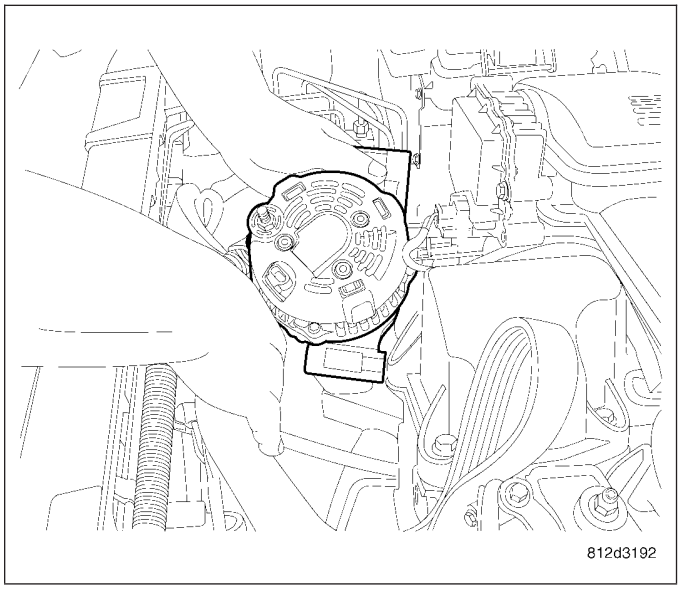

3.0L DIESEL

1. Disconnect negative battery cable.
2. Raise vehicle and support.
3. Remove front belly pan.

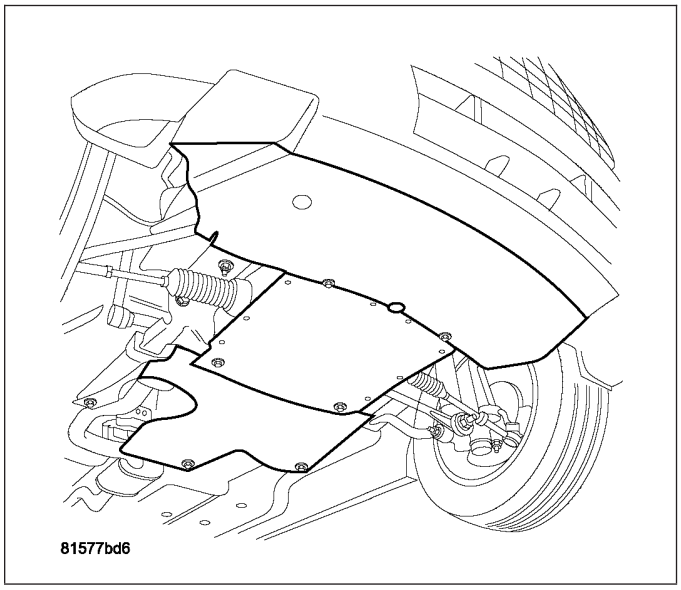

4. Remove middle belly pan.
5. Remove rear belly pan.

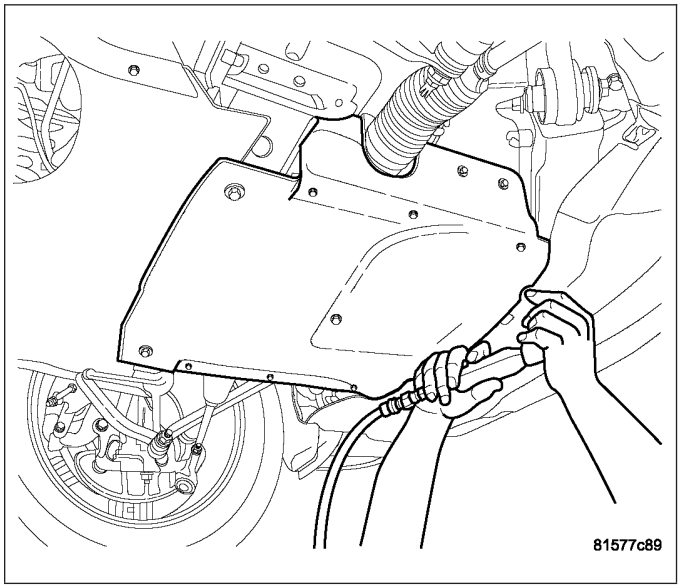

6. Remove side covers.

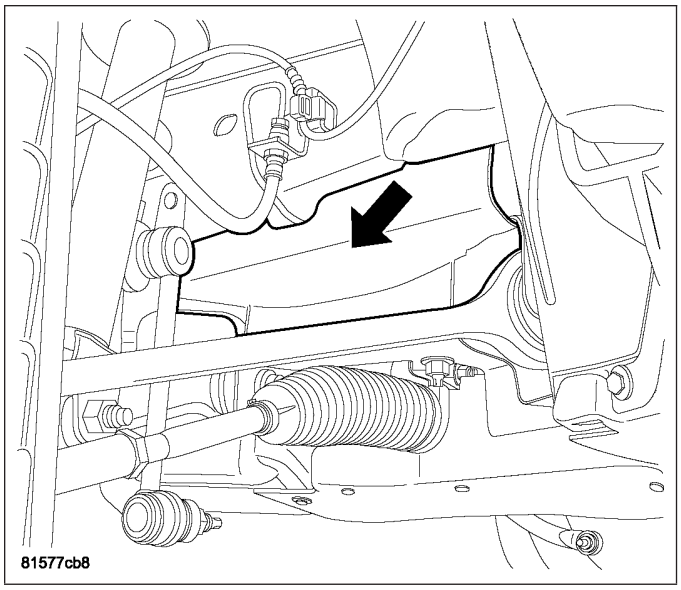

7. Remove sway bar heat shields.

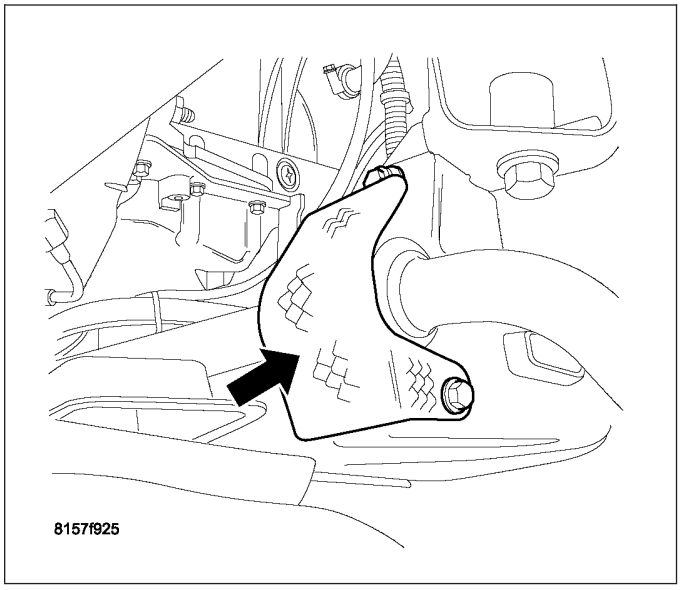

8. Remove sway bar brackets.

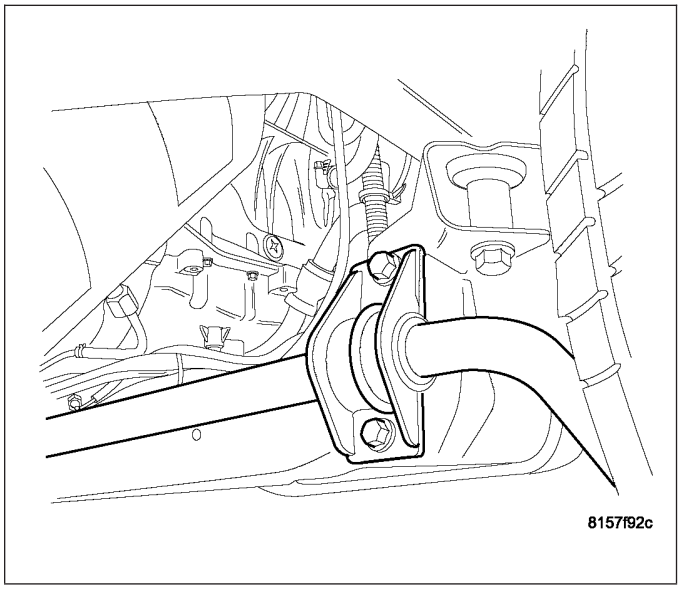

9. Swing sway bar down and out of the way.

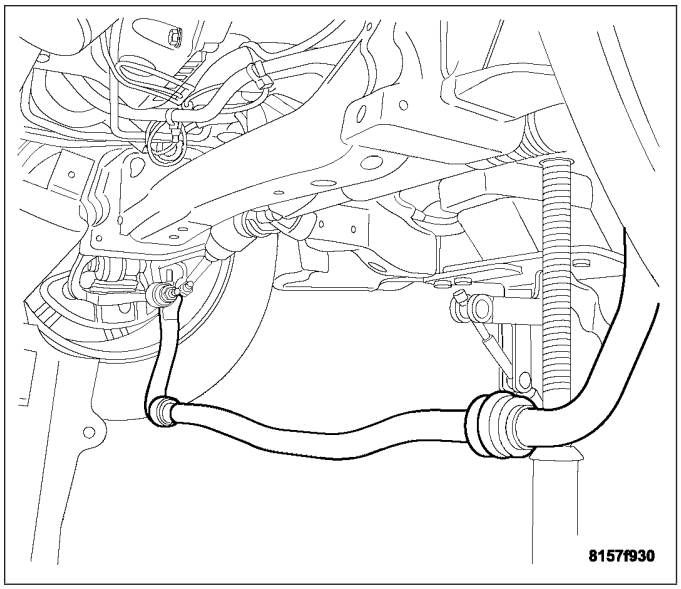

10. Clamp front heater hose.

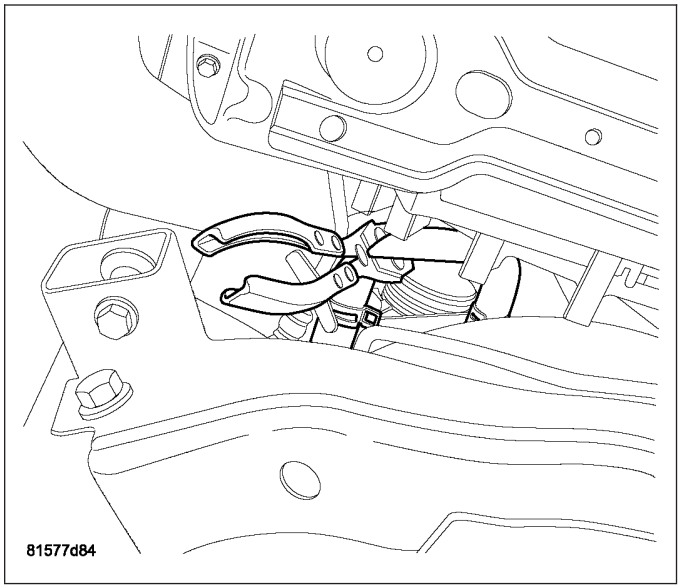

11. Clamp rear heater hose.

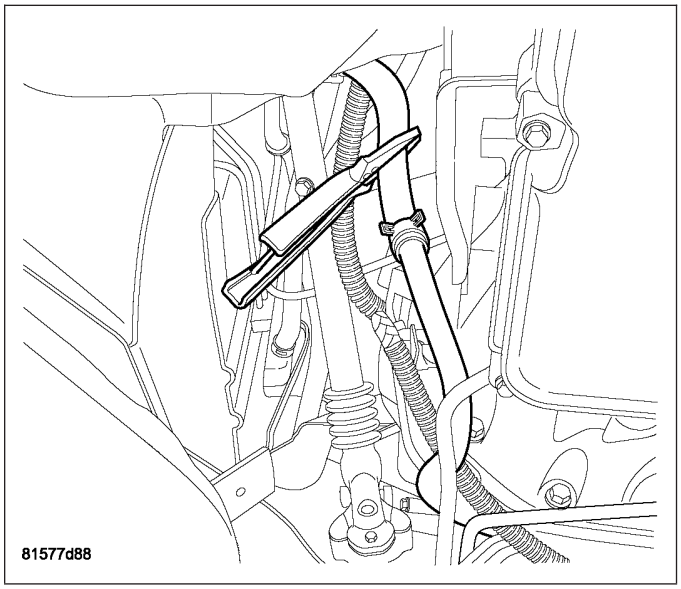

12. Disconnect heater tube connection. There will be some coolant loss.

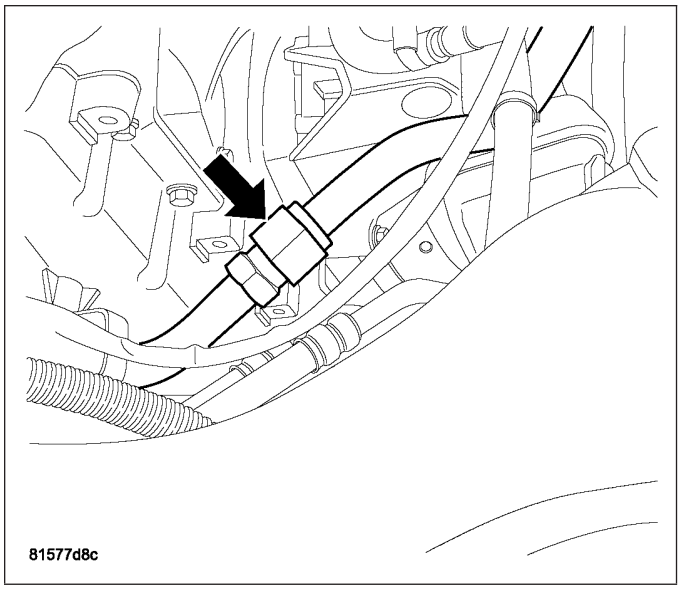

13. Support engine.
14. Remove heat shield from motor mount.

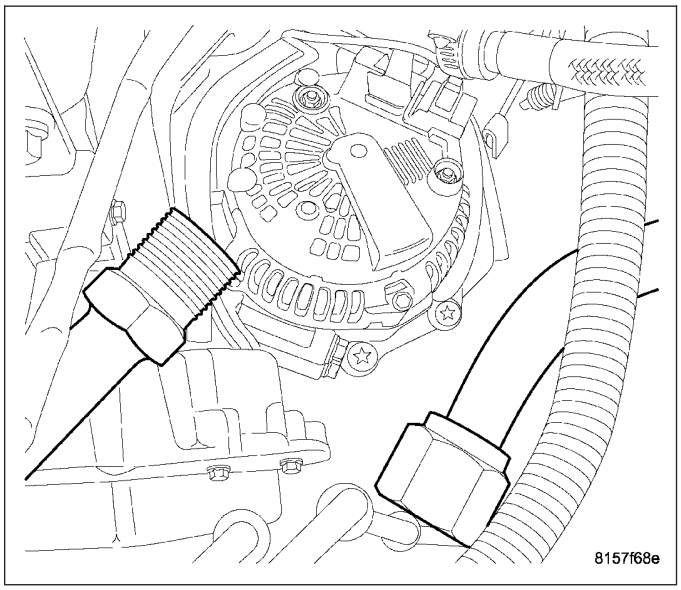

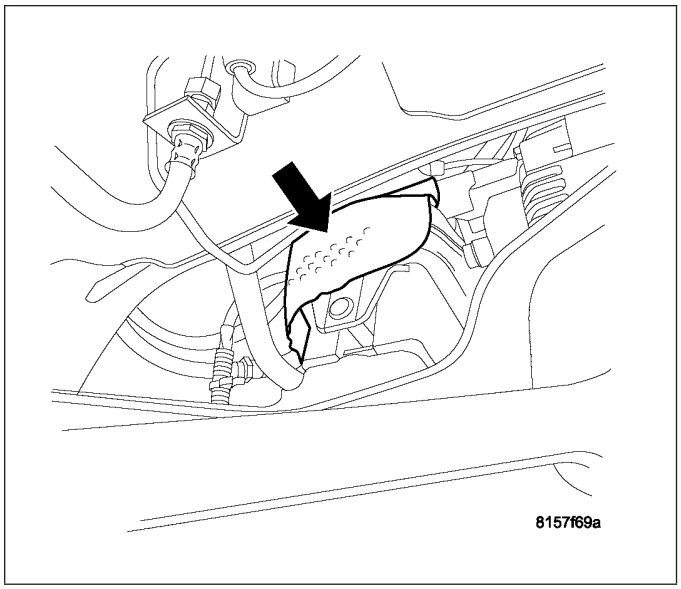

15. Remove lower engine mount bolts.

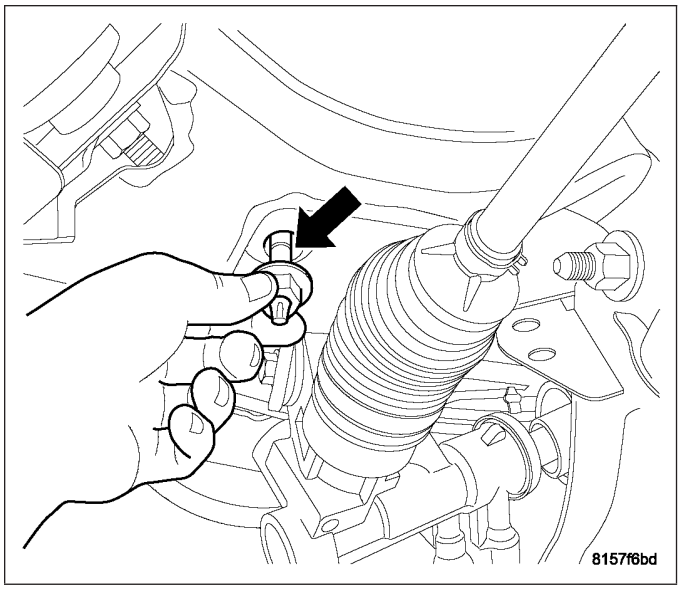

16. Remove upper engine mount bolts.

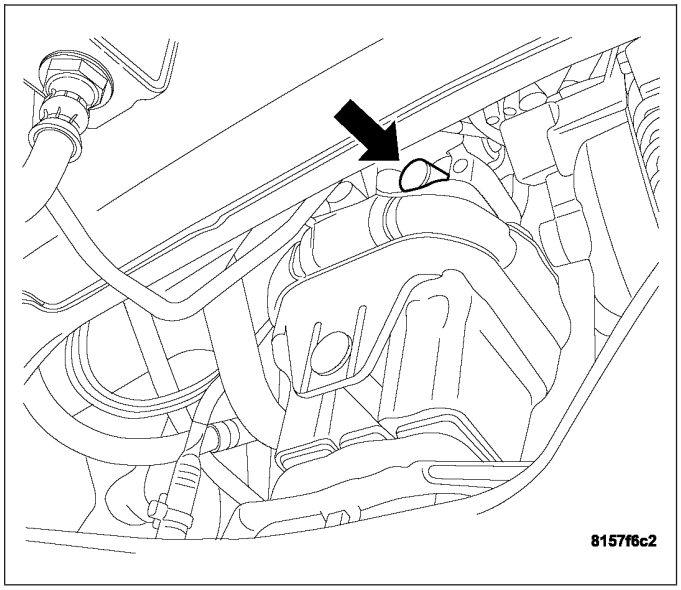

17. Raise engine and remove motor mount.

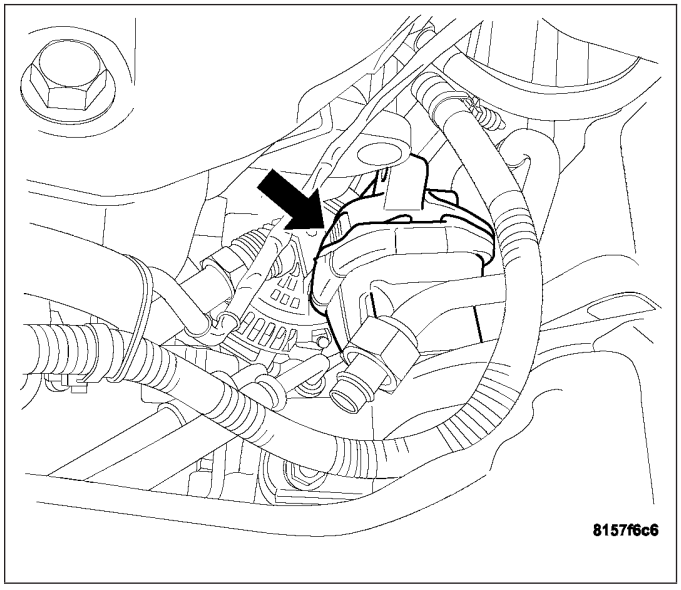

18. Disconnect fuel line bracket from engine mount bracket.

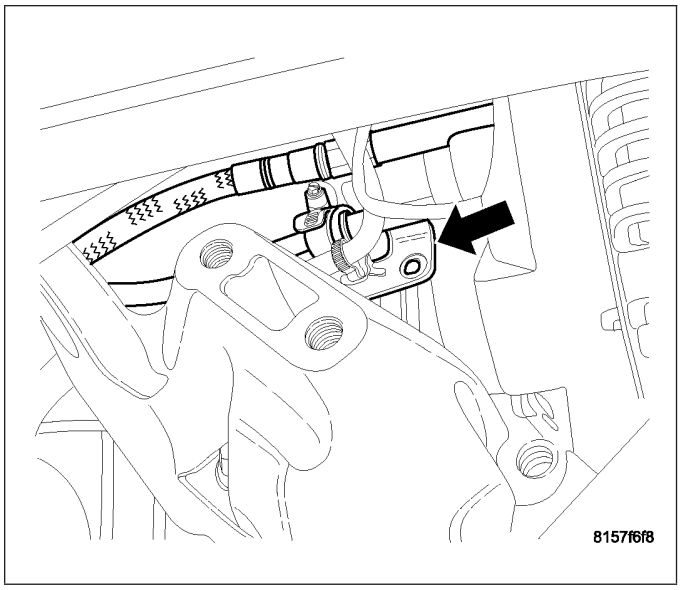

19. Remove engine mount bracket from vehicle. Fuel line bracket mounting hole (1), engine mount holes (2), Bracket mounting holes (3).

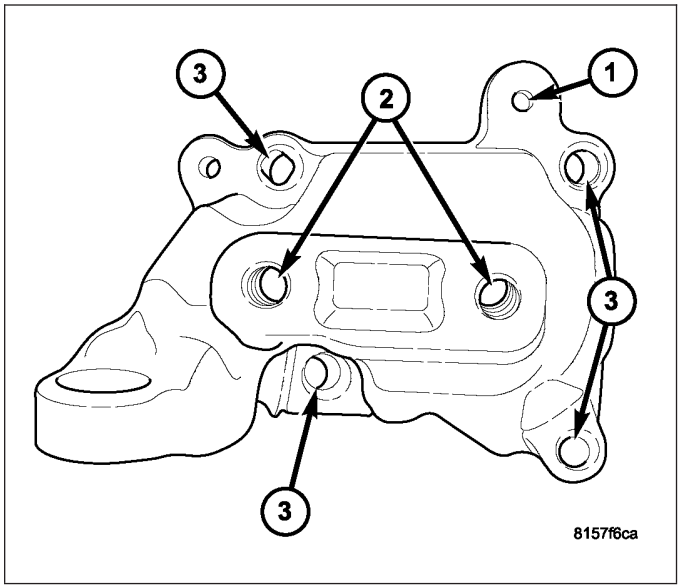

20. Lower engine.
21. Disconnect electrical connectors from generator.

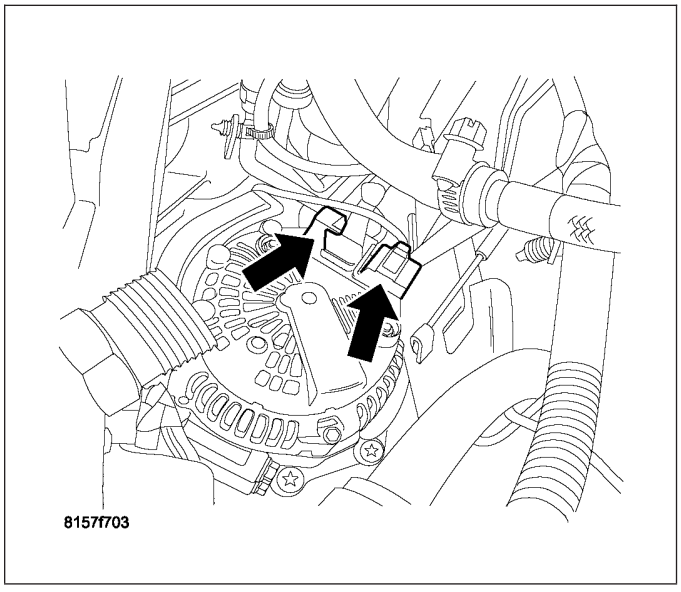

22. Loosen upper mounting bolts.
23. Loosen lower mounting bolts.
24. Relocate heater tube.

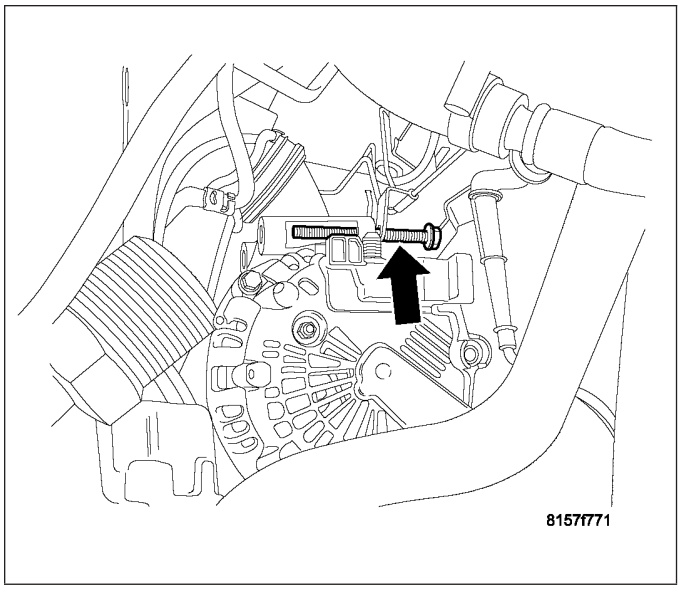

25. Remove generator from vehicle.

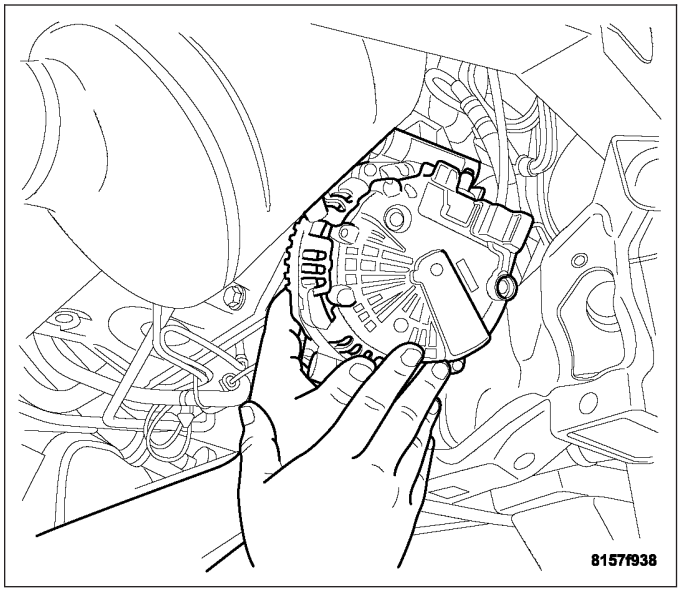

3.5L

1. Disconnect negative battery cable.
2. Remove generator drive belt. Refer to the Cooling System section.

3. Remove bracket bolts.
4. Remove upper mounting bolt.

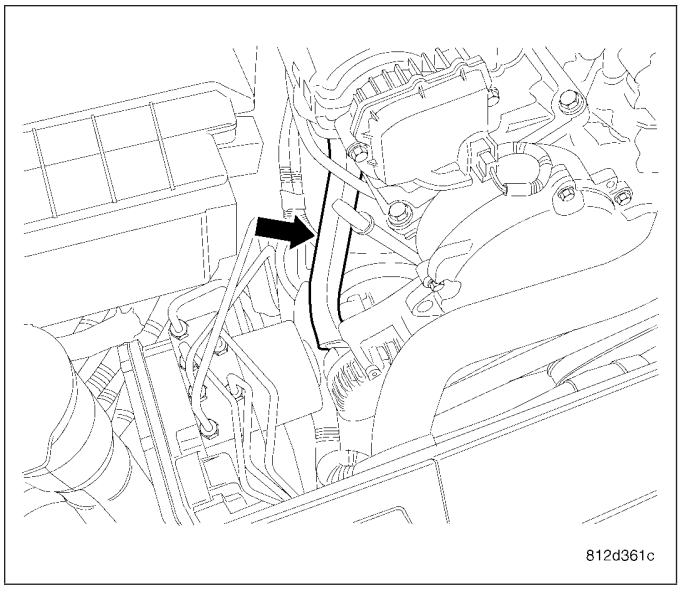

5. Raise and support vehicle.
6. Remove middle splash pan.
7. Disconnect generator field circuit plug.
8. Remove B+ terminal nut and wire.

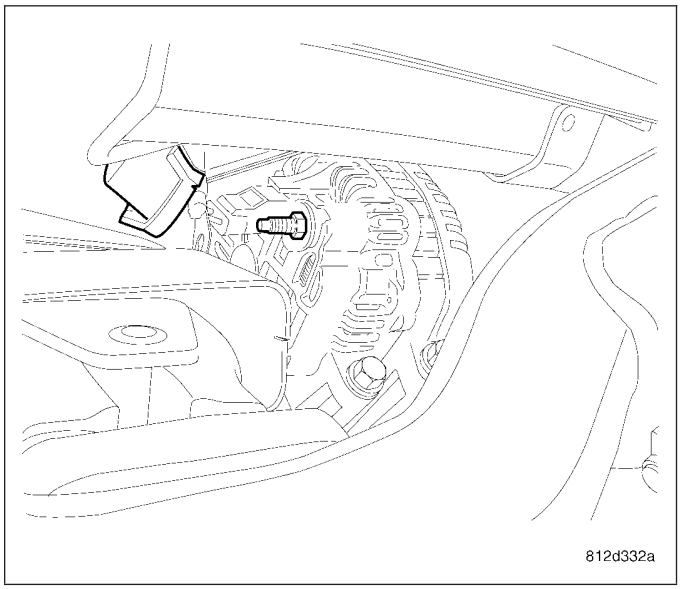

9. Remove lower mounting bolts.

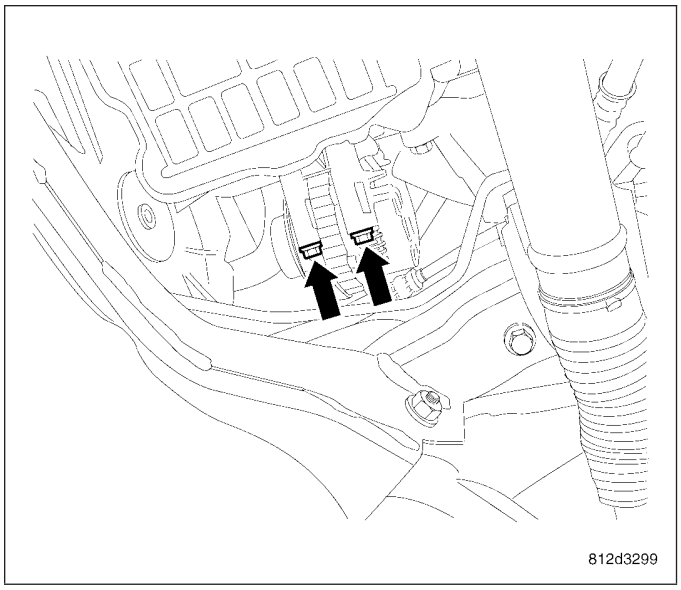

10. Remove generator.

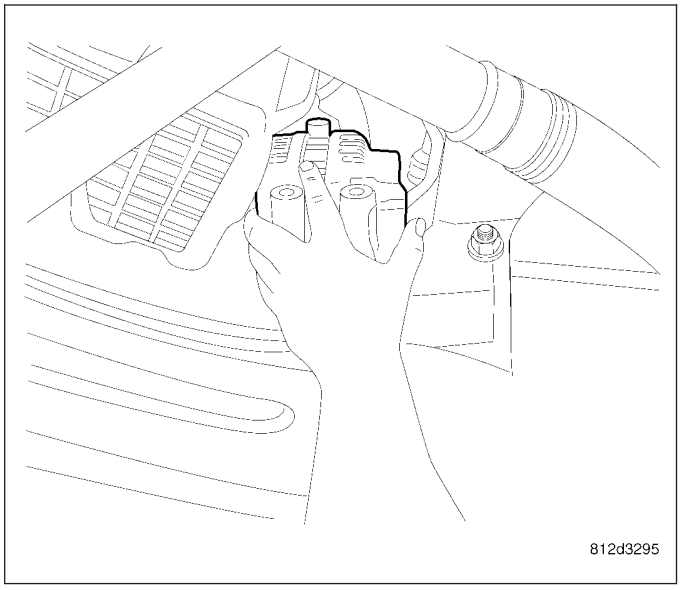

6.1L

WARNING: DISCONNECT NEGATIVE CABLE FROM BATTERY BEFORE REMOVING BATTERY OUTPUT WIRE (B+ WIRE) FROM GENERATOR. FAILURE TO DO SO CAN RESULT IN INJURY OR DAMAGE TO ELECTRICAL SYSTEM.

1. Disconnect negative battery cable at battery.
2. Raise and support vehicle.

3. A heat shield (1) is used over the right engine mount (3). Remove two heat shield mounting bolts (2). The heat shield must be removed to gain access to generator support bracket nut (refer to following step).

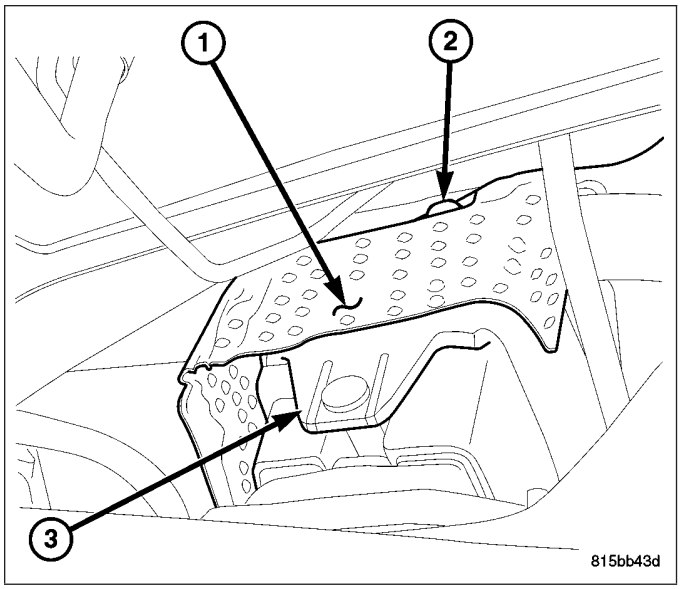

4. Loosen, but do not remove generator support bracket nut (4).
5. Remove bolt (3).
6. Unsnap plastic insulator cap from B+ output terminal.
7. Remove B+ terminal mounting nut at rear of generator. Disconnect terminal from generator.
8. Disconnect field wire connector at rear of generator by pushing on connector tab.
9. Lower vehicle.
10. Remove generator drive belt. Refer to 7, Cooling System for procedure.

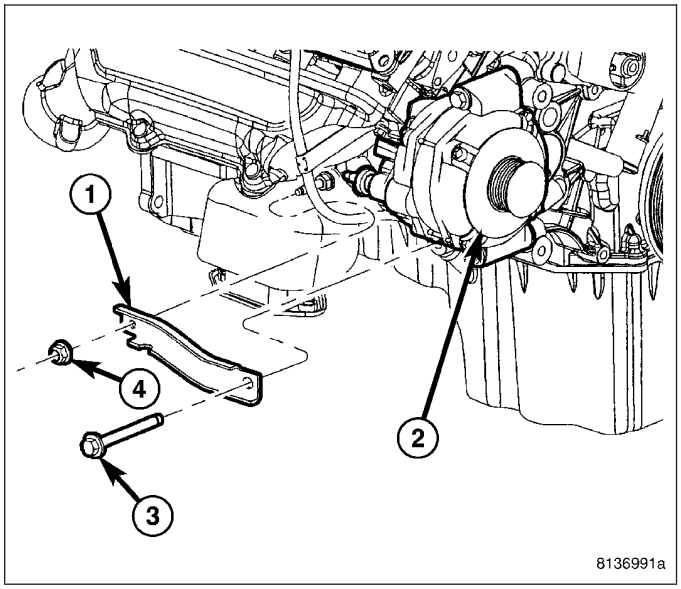

11. Partially drain some engine coolant and remove upper radiator hose.
12. Remove two generator mounting bolts (1).
13. Remove generator (2) from vehicle.

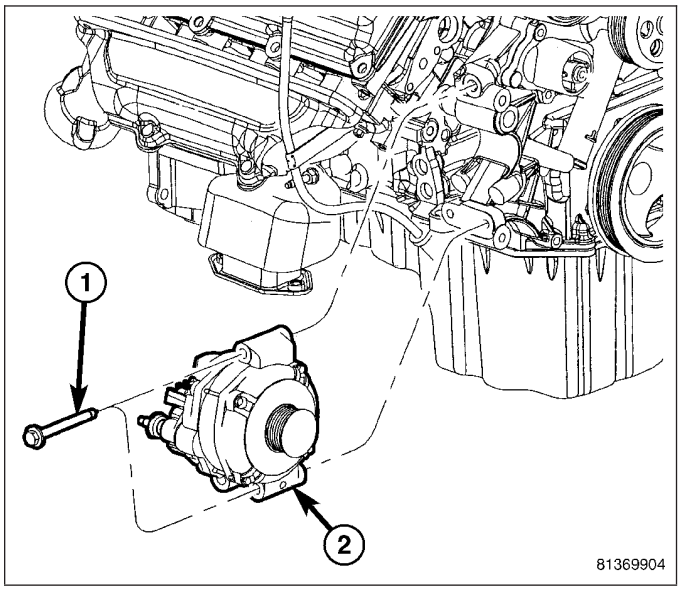

5.7L

WARNING: DISCONNECT NEGATIVE CABLE FROM BATTERY BEFORE REMOVING BATTERY OUTPUT WIRE (B+ WIRE) FROM GENERATOR. FAILURE TO DO SO CAN RESULT IN INJURY OR DAMAGE TO ELECTRICAL SYSTEM.

1. Disconnect negative battery cable at battery.
2. Remove generator drive belt. Refer to 7, Cooling System for procedure.
3. Raise and support vehicle.
4. Unsnap plastic insulator cap from B+ output terminal.
5. Remove B+ terminal mounting nut at rear of generator. Disconnect terminal from generator.
6. Disconnect field wire connector at rear of generator by pushing on connector tab.
7. Remove generator support bracket nut (4) and bolt (3). Remove support bracket (1).

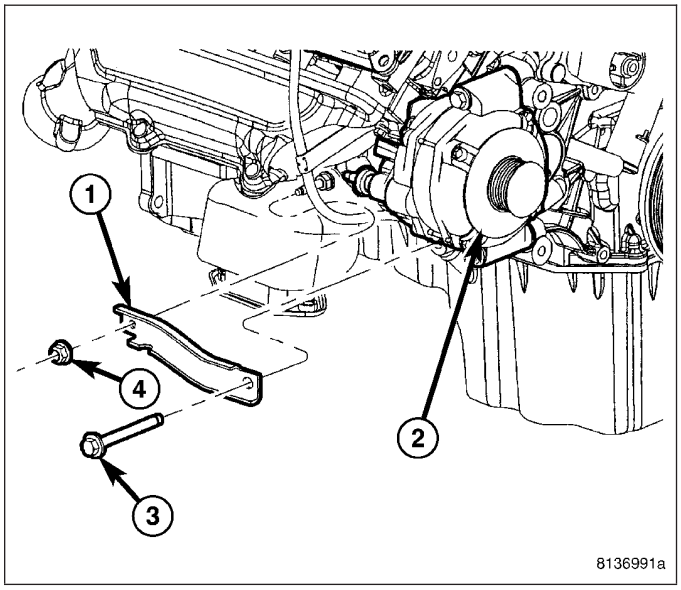

8. Remove 2 generator mounting bolts (1).
9. Remove generator (2) from vehicle.

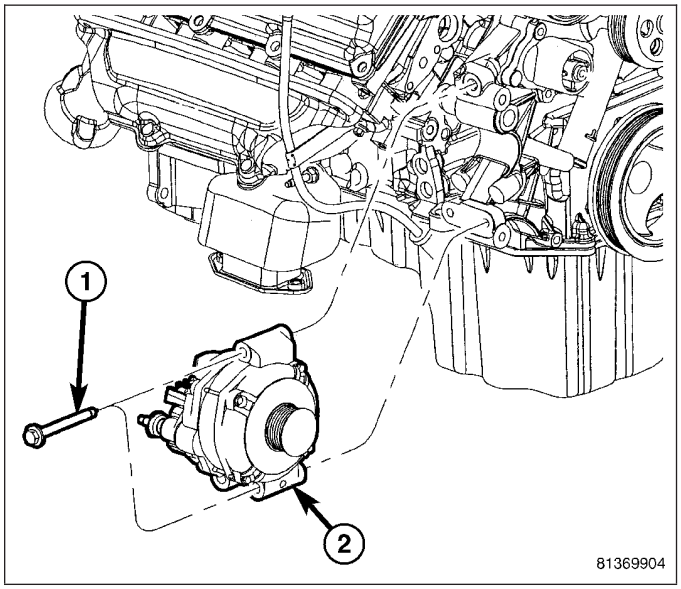

INSTALLATION

2.7L

1. Install generator.

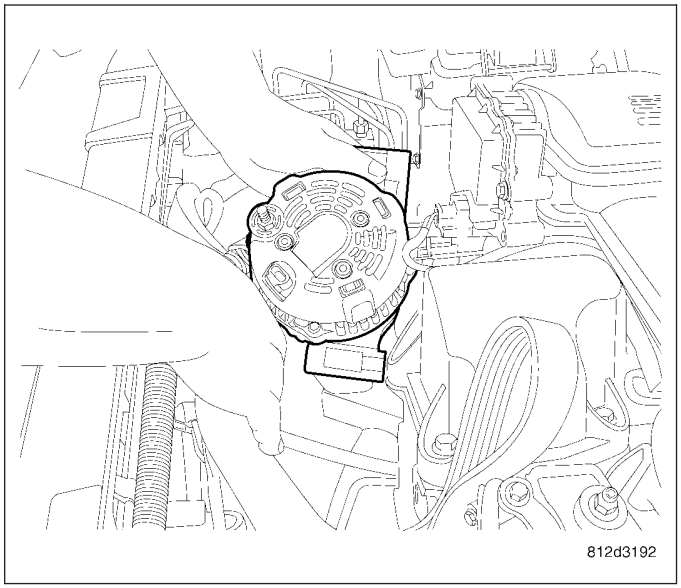

2. Install upper bolt mounting bolt.

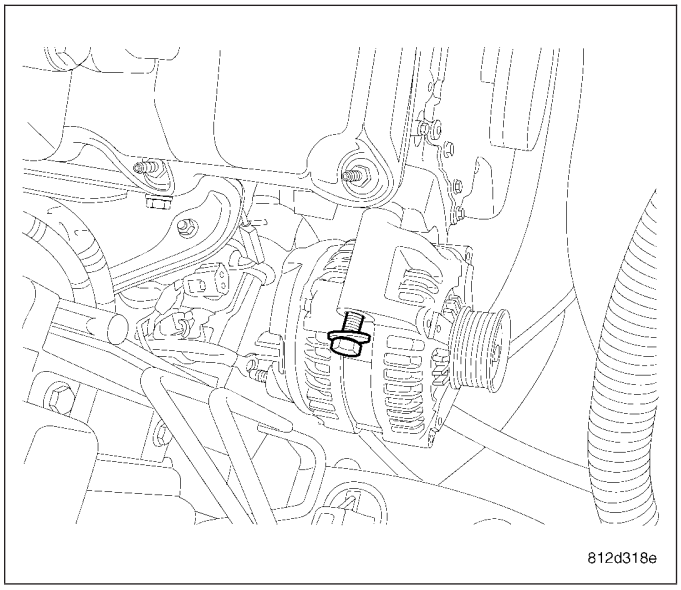

3. Install 2 lower mounting bolts.
4. Tighten bolts to 65 N·m (48 ft. lbs.).

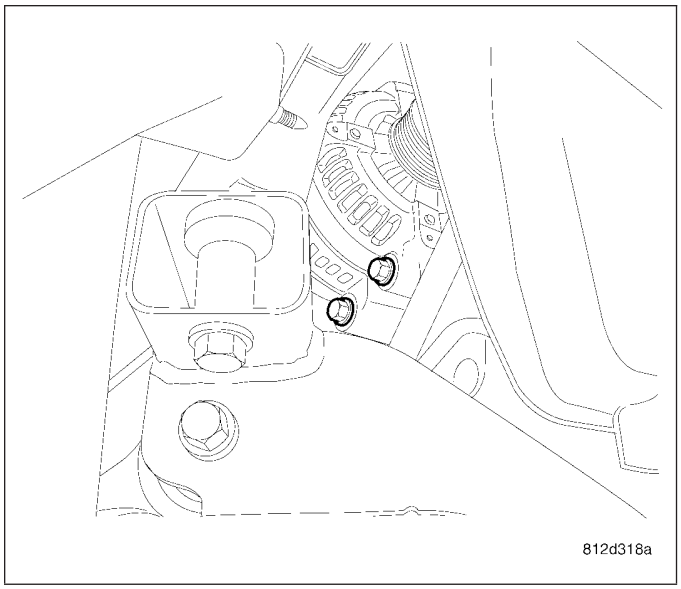

5. Install B+ terminal nut and wire. Tighten nut to 13 N·m (115 in. lbs.).
6. Connect generator field circuit plug.
7. Install generator drive belt. Refer to the Cooling System section.

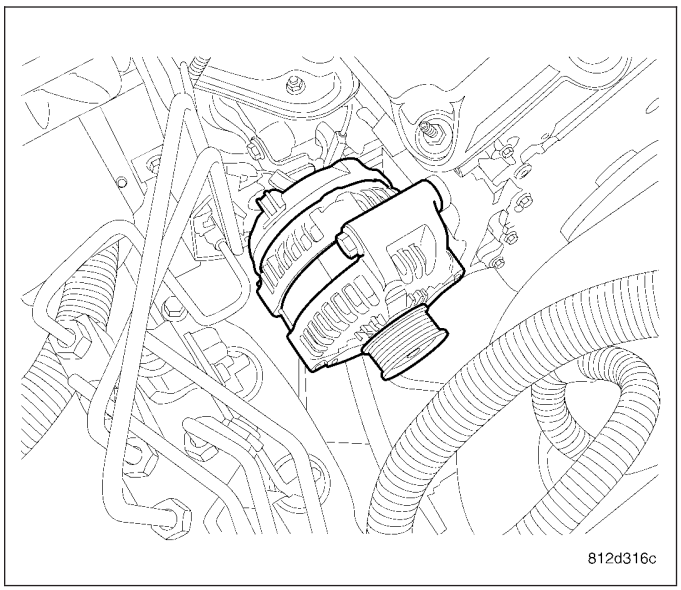

8. Connect negative battery cable.

3.0L DIESEL

1. Install the 2 upper bolts into generator. Install generator to vehicle.

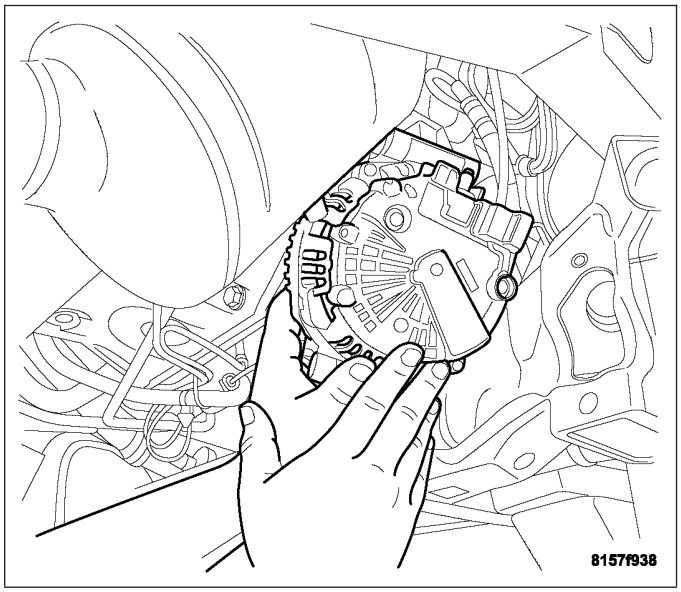

2. Hand start the 2 upper bolts.
3. Start the 2 lower bolts.
4. Torque bolts to 50 N·m (37 ft. lbs.).

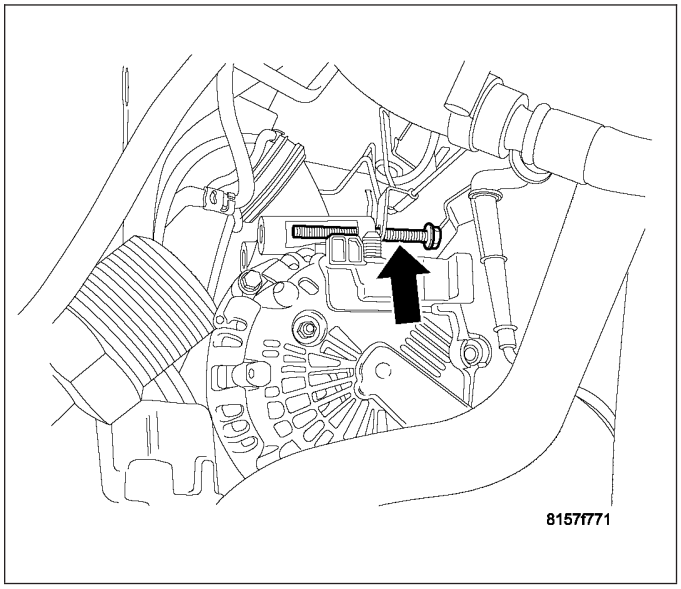

5. Connect the electrical connectors.

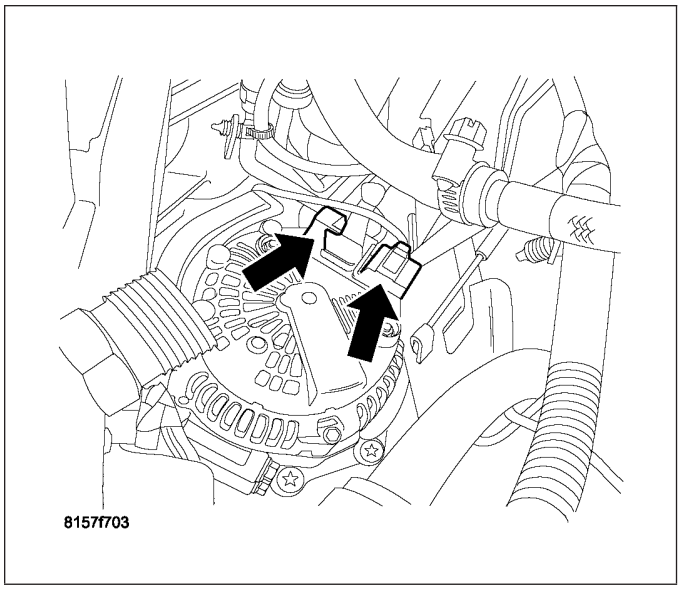

6. Install the engine mount bracket to engine.
7. Torque bolts to 30 N·m (22 ft. lbs.).

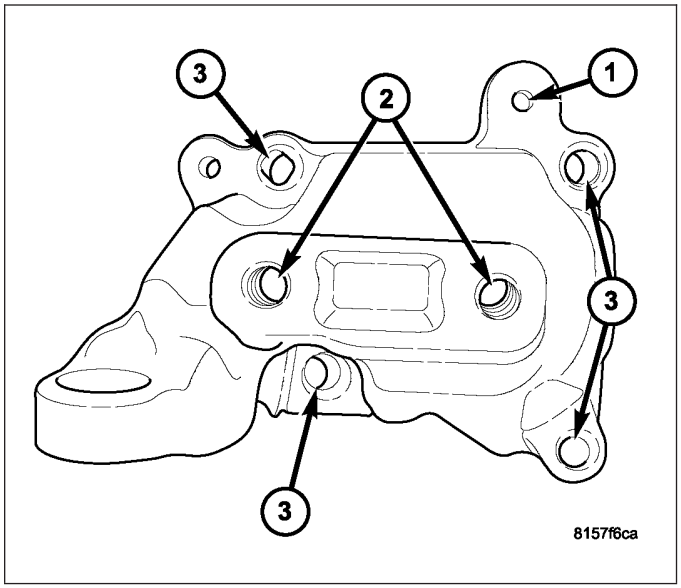

8. Install fuel line bracket and tighten bolt.

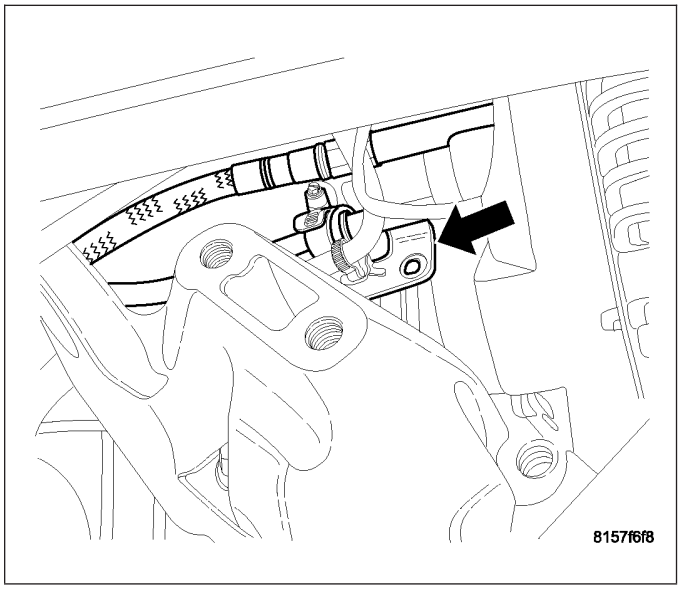

9. Loose install engine mount.

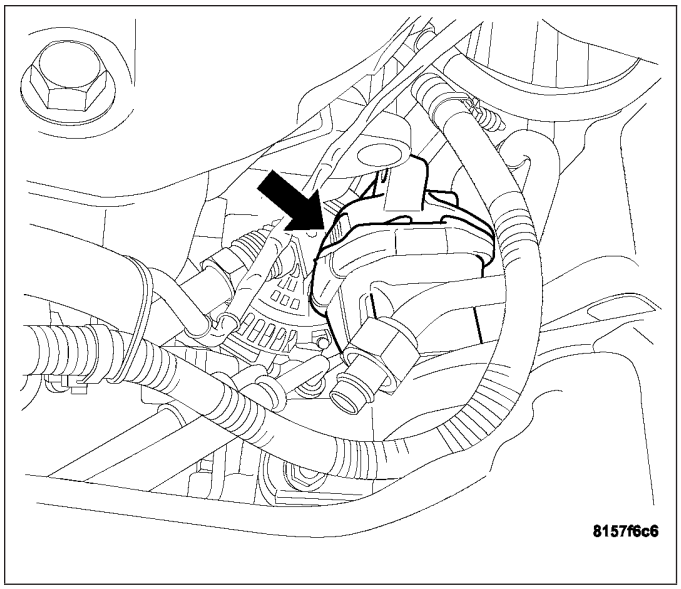

10. Hand start engine mount upper bolts.

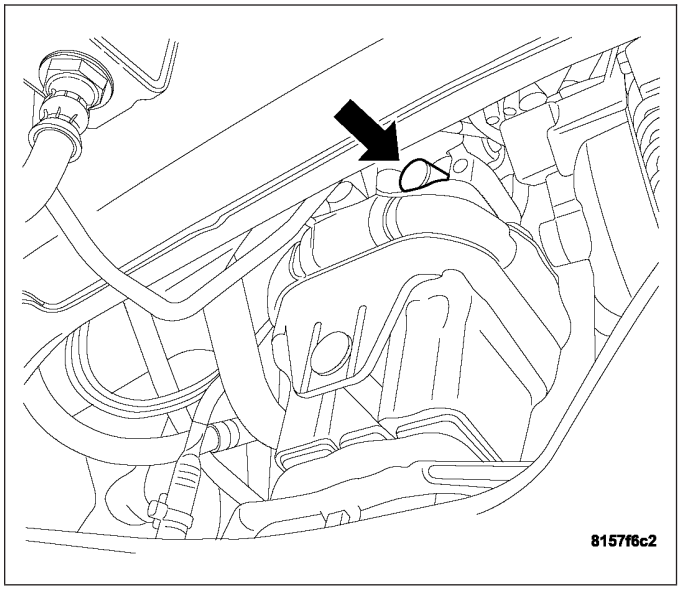

11. Lower engine.
12. Install lower engine mount bolts. Torque bolts to 50 N·m (37 ft. lbs.).

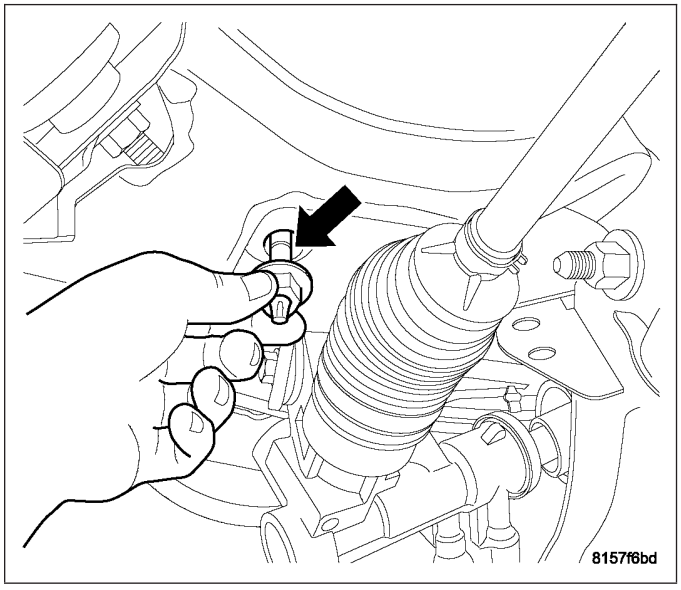

13. Install engine mount heat shield and tighten bolt.

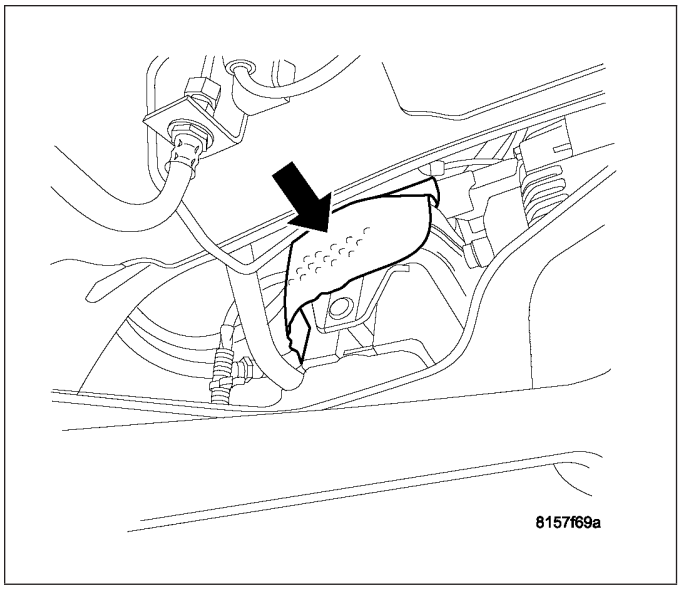

14. Connect heater tube and start tube nut.

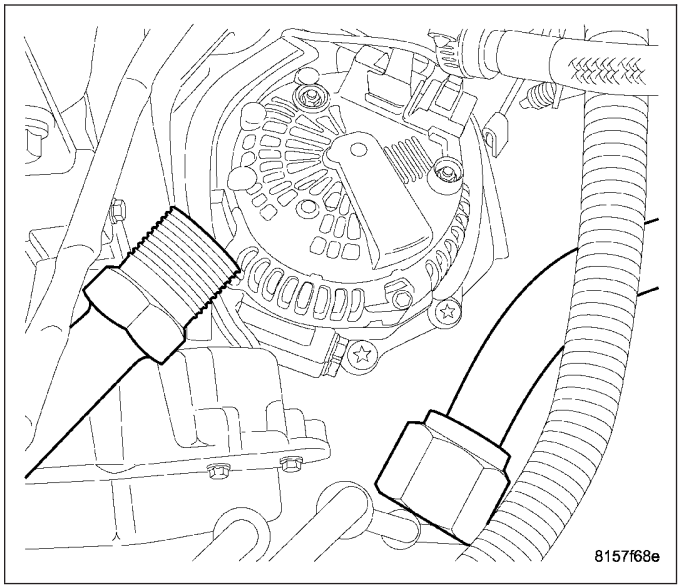

15. Tighten tube nut.

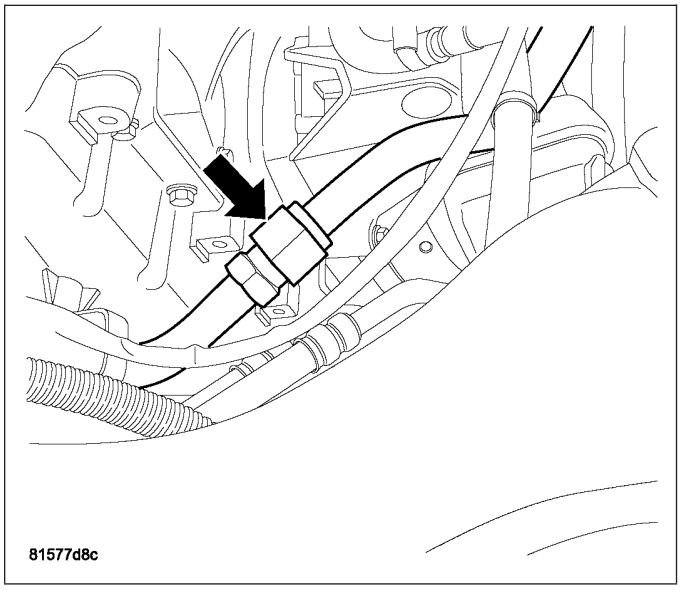

16. Release rear heater tube clamp.

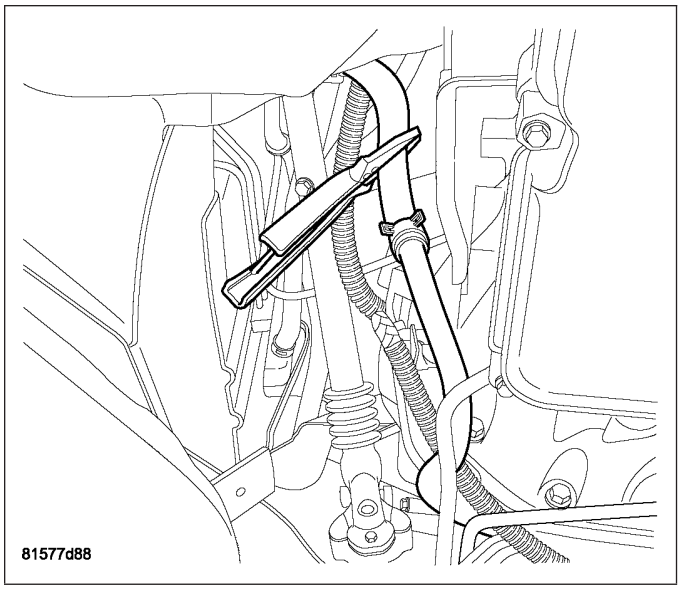

17. Release front heater tube clamp.

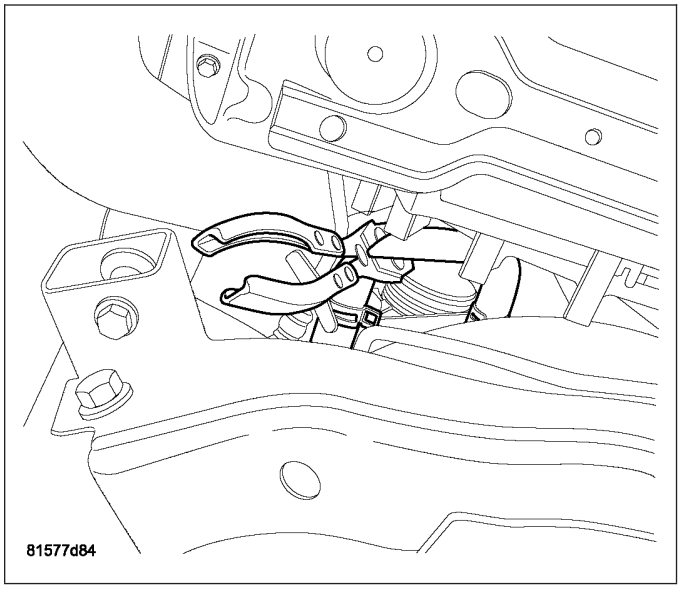

18. Swing sway bar up and into place.

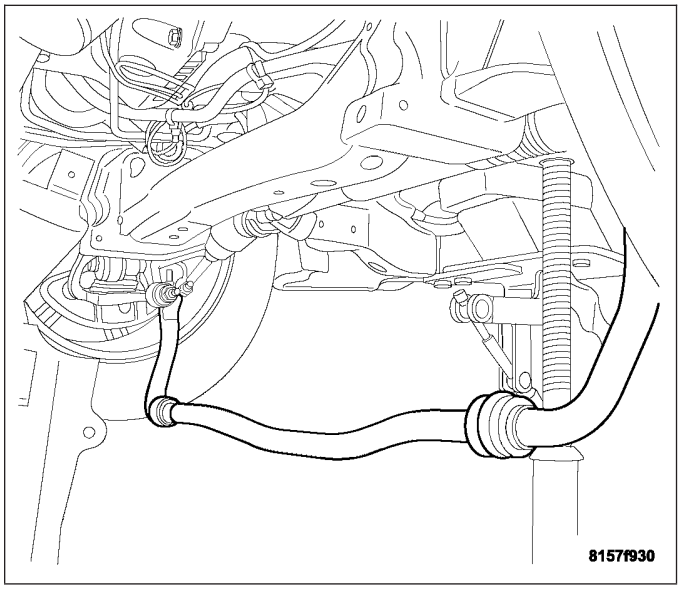

19. Install mounting brackets and tighten bolts to 60 N·m (44 ft. lbs.).

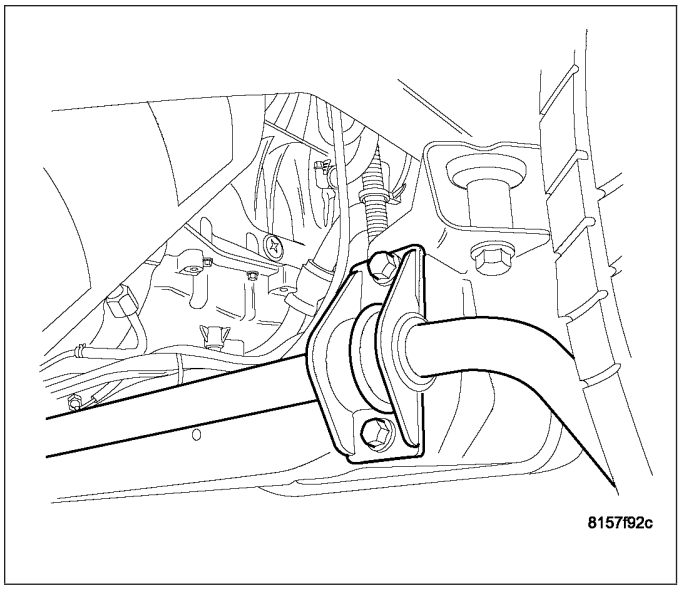

20. Install sway bar mounting bracket heat shields.

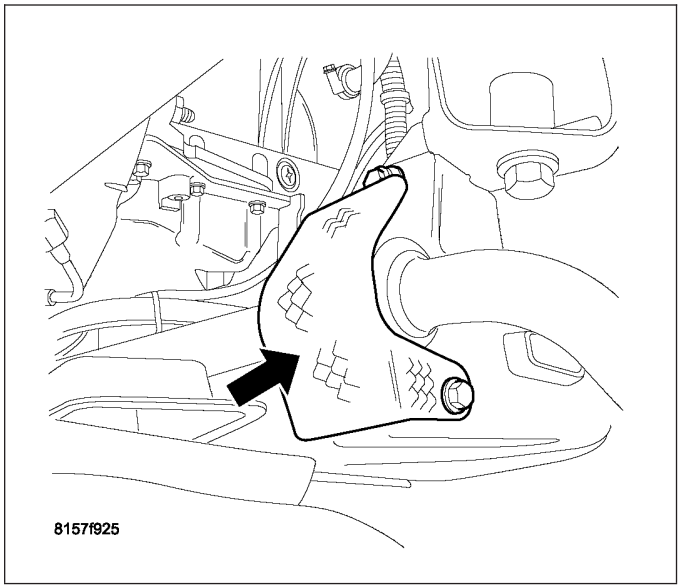

21. Install drive belt.

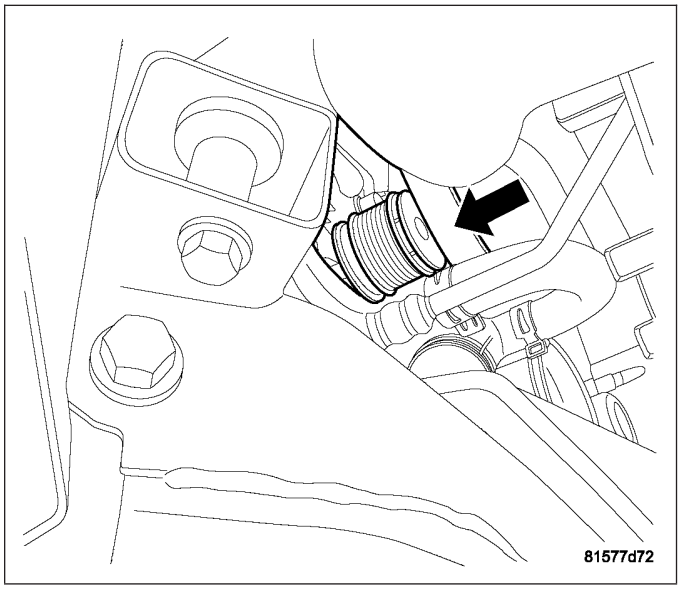

22. Install rear belly pan.

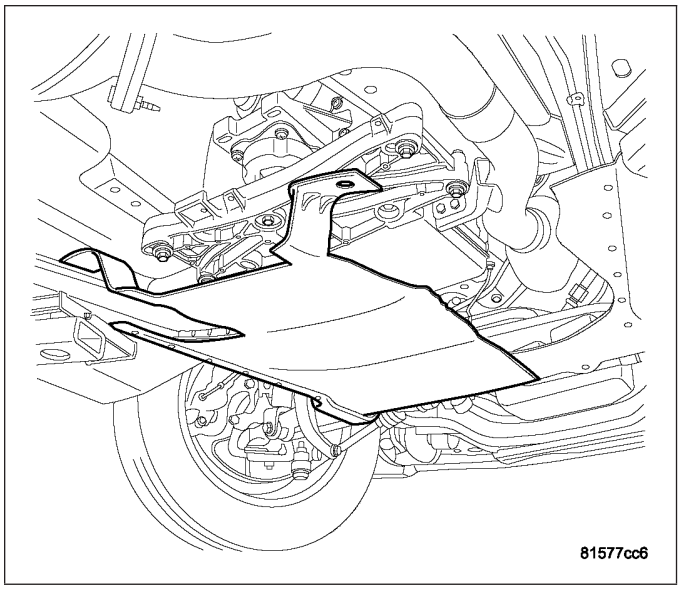

23. Install middle belly pan.

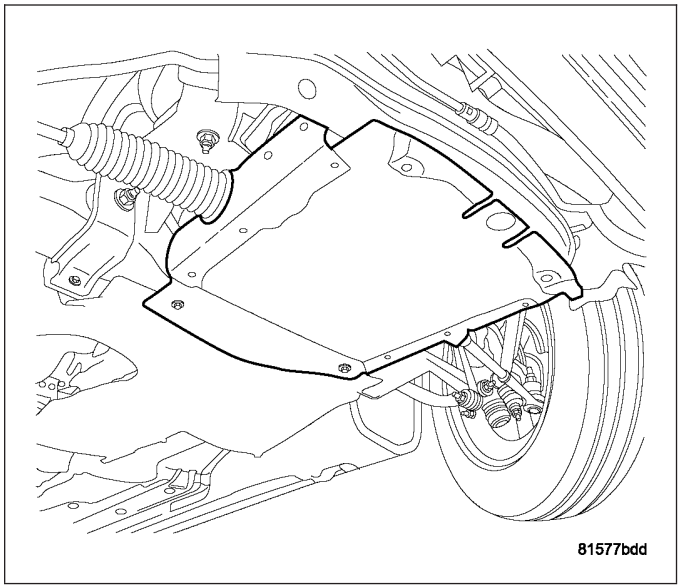

24. Install front belly pan.

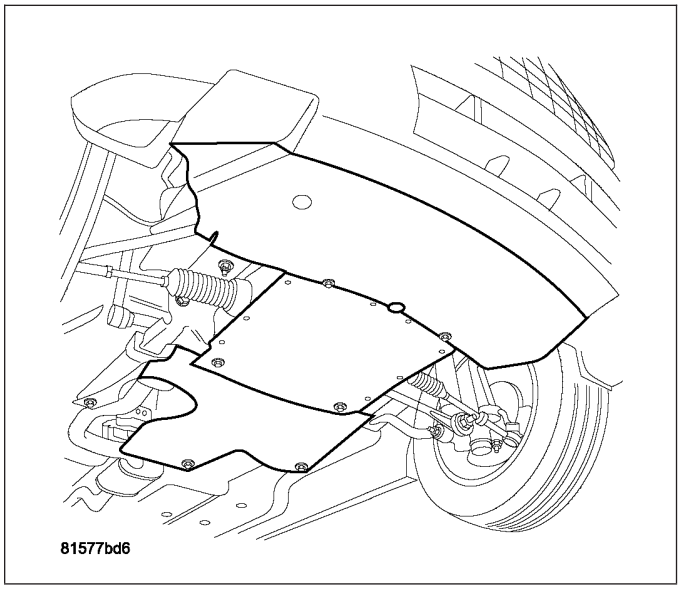

25. Install belly pan side shield.
26. Lower vehicle.
27. Connect negative battery cable.
28. Check coolant level and refill if necessary.

3.5L

1. Install generator.

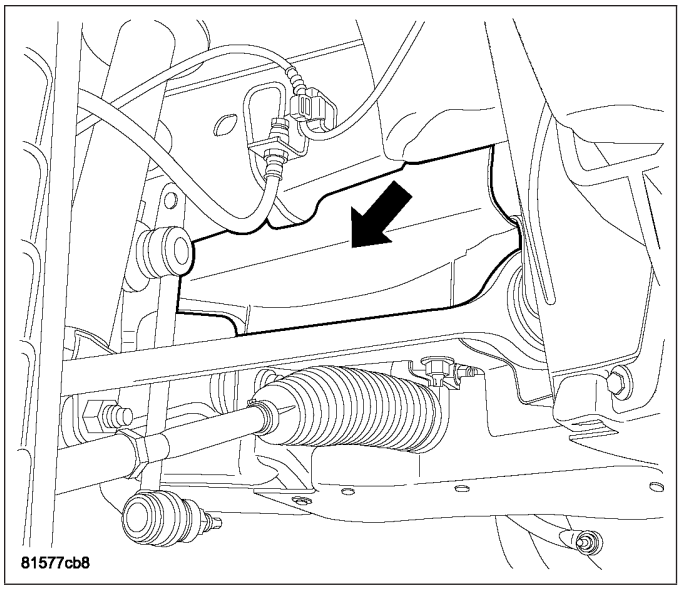

2. Install lower mounting bolts (3). Loosen install the upper mounting bolt (4).
3. Tighten lower mounting bolts to 65 N·m (48 ft. lbs.).

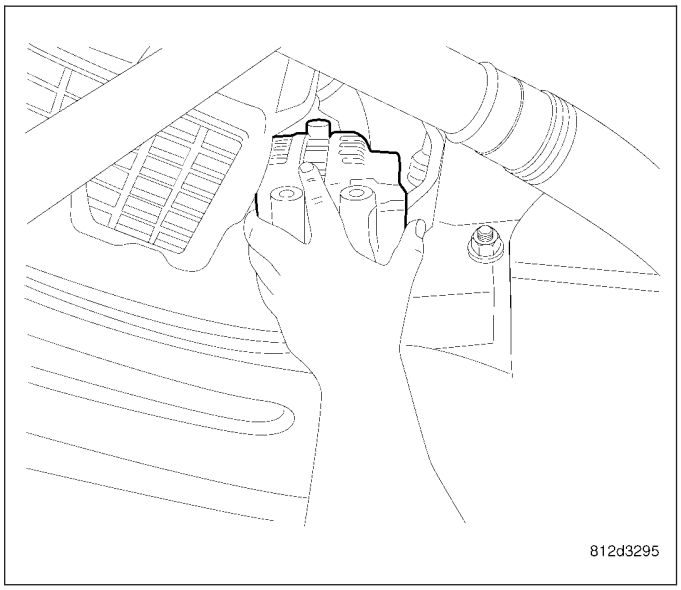

4. Connect generator field circuit plug.
5. Install B+ terminal nut and wire. Tighten nut to 13 N·m (115 in. lbs.).
6. Install middle splash pan.
7. Lower vehicle.

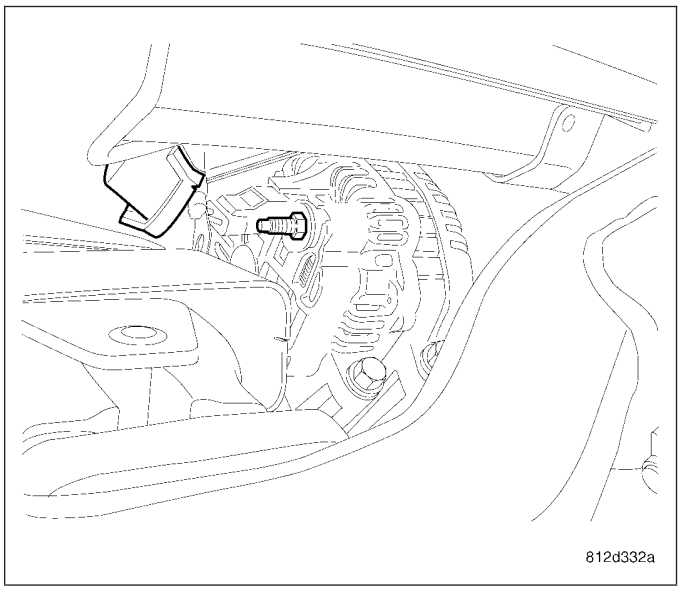

8. Remove loose installed upper bolt (4).
9. Install bracket (2) and bracket bolt (1).
10. Install upper mounting bolt (4) and bracket (2).
11. Tighten upper mounting bolt to 65 N·m (48 ft. lbs.).
12. Tighten Bracket bolt to 54 N·m (40 ft. lbs.).
13. Install generator drive belt. Refer to the Cooling System section.
14. Connect negative battery cable.

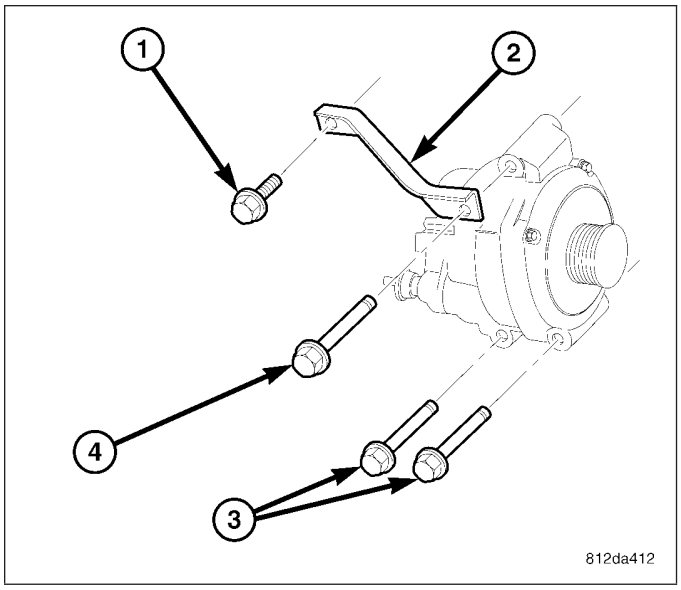

6.1L

Rear Wheel Drive (RWD)

1. Position generator (2) to engine and install 2 mounting bolts (1). Do not tighten bolts (1) at this time.
2. Raise and support vehicle.

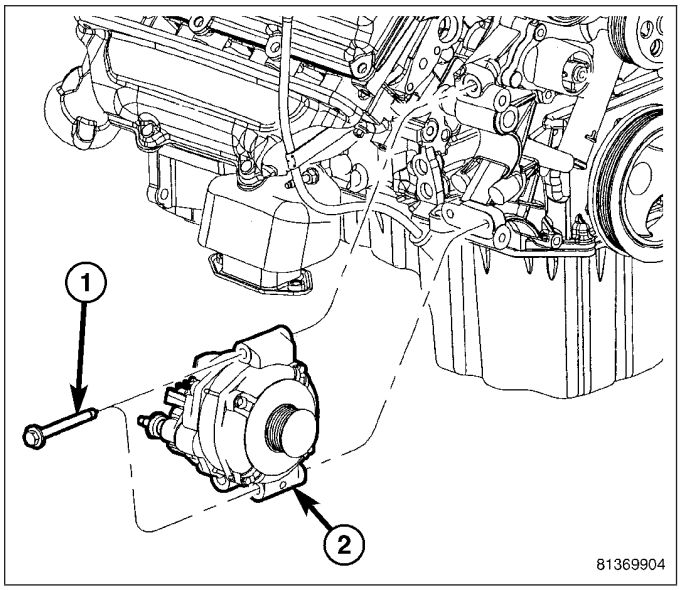

3. Position support bracket (1) to generator and install bolt (3). Tighten all bolts / nut. Refer to Torque Specifications.

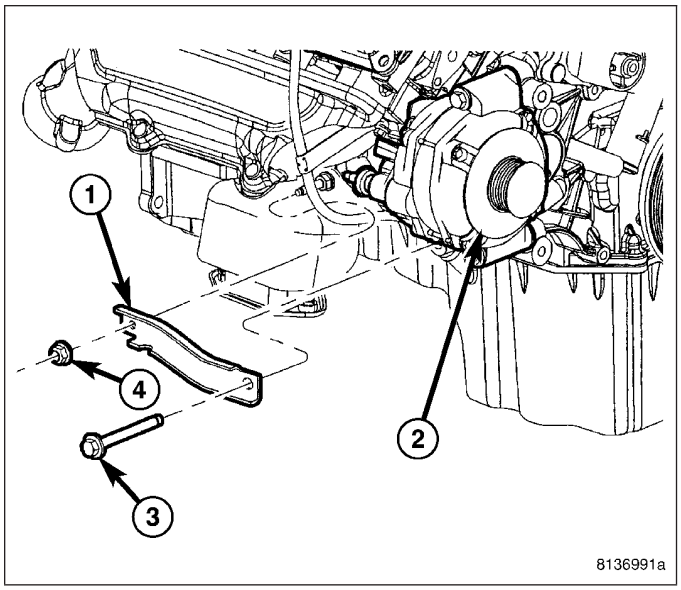

4. Install heat shield (1) and two heat shield mounting bolts (2).
5. Snap field wire connector into rear of generator.
6. Install B+ terminal eyelet to generator output stud. Tighten mounting nut. Refer to Torque Specifications.
7. Lower vehicle.

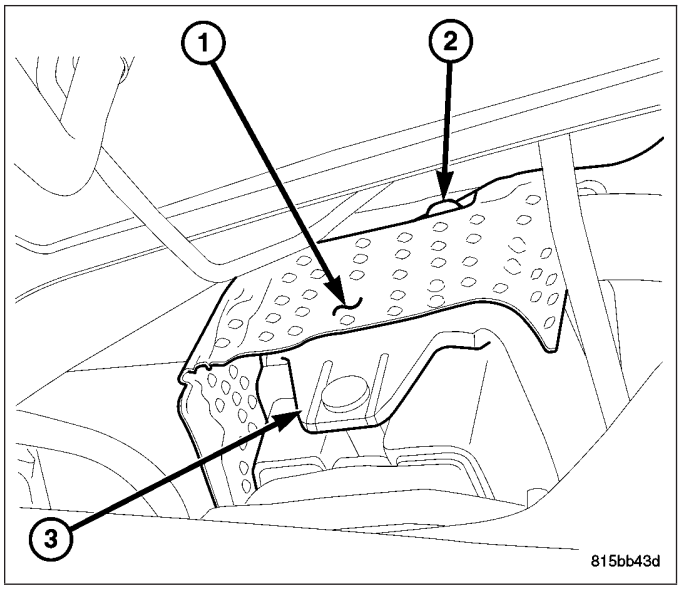

CAUTION: Never force a belt over a pulley rim using a screwdriver. The synthetic fiber of the belt can be damaged.

CAUTION: When installing a serpentine accessory drive belt, the belt MUST be routed correctly. The water pump may be rotating in the wrong direction if the belt is installed incorrectly, causing the engine to overheat. Refer to belt routing label in engine compartment, or refer to Belt Schematics in 7, Cooling System.

8. Install generator drive belt. Refer to 7, Cooling System for procedure.
9. Install upper radiator hose and fill cooling system with coolant.
10. Install negative battery cable to battery.

5.7L

1. Position generator (2) to engine and install 2 mounting bolts (1).
2. Tighten bolts. Refer to Torque Specifications.

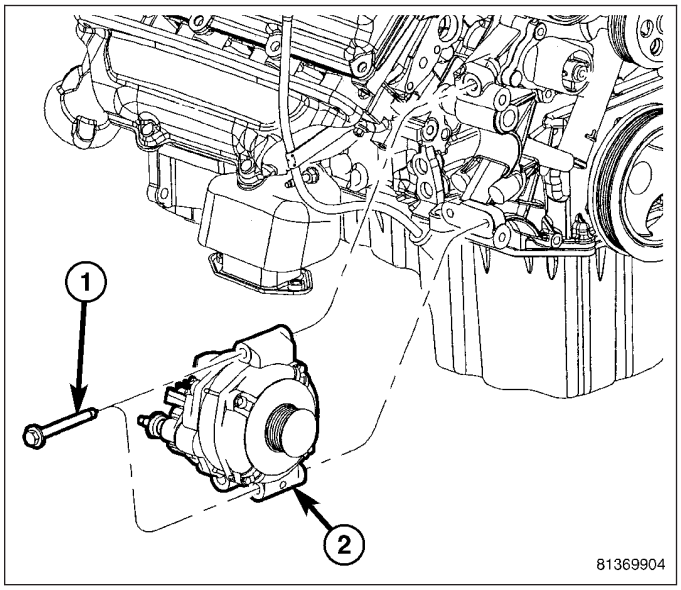

3. Position support bracket (1) to generator and install bolt (3) and nut (4). Tighten bolt / nut. Refer to Torque Specifications.

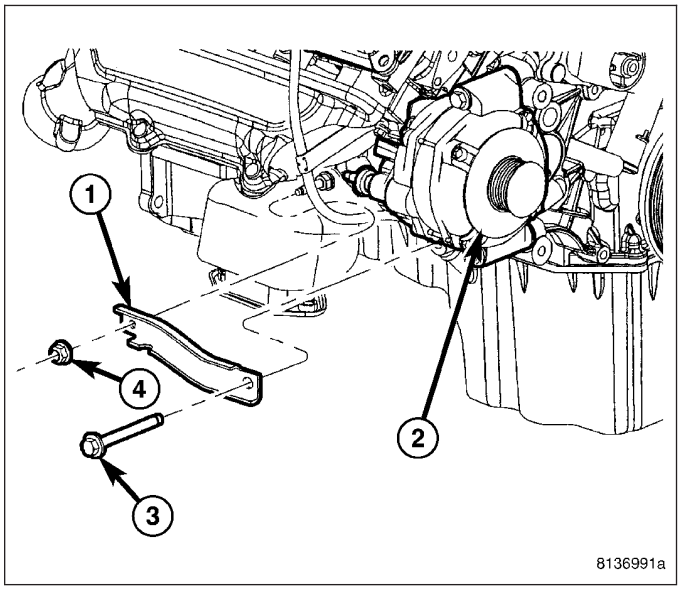

4. Snap field wire connector into rear of generator.
5. Install B+ terminal eyelet to generator output stud. Tighten mounting nut. Refer to Torque Specifications.
6. Lower vehicle.

CAUTION: Never force a belt over a pulley rim using a screwdriver. The synthetic fiber of the belt can be damaged.

CAUTION: When installing a serpentine accessory drive belt, the belt MUST be routed correctly. The water pump may be rotating in the wrong direction if the belt is installed incorrectly, causing the engine to overheat. Refer to belt routing label in engine compartment, or refer to Belt Schematics in 7, Cooling System.

7. Install generator drive belt. Refer to 7, Cooling System for procedure.
8. Install negative battery cable to battery.

VOLTAGE REGULATOR

DESCRIPTION

The Electronic Voltage Regulator (EVR) is not a separate component. It is actually a voltage regulating circuit located within the Powertrain Control Module (PCM). The EVR is not serviced separately. If replacement is necessary, the PCM must be replaced.

OPERATION

The amount of DC current produced by the generator is controlled by EVR circuitry contained within the PCM. This circuitry is connected in series with the generators second rotor field terminal and its ground.

Voltage is regulated within the PCM on the NGC vehicles, to control the strength of the rotor magnetic field. The EVR circuitry monitors system line voltage at the PDC and calculated battery temperature or inlet air temperature sensor (refer to Inlet Air Temperature Sensor, if equipped, for more information). It then determines a target charging voltage. If sensed battery voltage is lower than the target voltage, the PCM feeds the field winding until sensed battery voltage is at the target voltage. A circuit in the PCM cycles the feed side of the generator field at 250 times per second (250Hz), but has the capability to feed the field control wire 100% of the time (full field) to achieve the target voltage. If the charging rate cannot be monitored (limp-in), a duty cycle of 20% is used by the PCM in order to have some generator output. Also refer to Charging System Operation for additional information.

STARTING

TABLE OF CONTENTS

page

STARTING
DESCRIPTION 73
OPERATION 73
DIAGNOSIS AND TESTING
DIAGNOSIS AND TESTING - STARTING SYSTEM TEST 73
DIAGNOSIS AND TESTING - FEED CIRCUIT RESISTANCE TEST 75
DIAGNOSIS AND TESTING - CONTROL CIRCUIT TEST 76
SPECIFICATIONS
TORQUE 78
STARTER MOTOR
REMOVAL
2.7L 79
3.0L DIESEL 83
3.5L 85
5.7L 89
REMOVAL - 6.1L 90
INSTALLATION
2.7L 91
3.0L diesel 95
3.5L 97
INSTALLATION - 6.1L 101
5.7L 102

STARTING

DESCRIPTION

The starting system consists of:

- Starter relay
- Starter motor (including an integral starter solenoid)

Other components to be considered as part of starting system are:

- Battery
- Battery cables
- Ignition switch and key lock cylinder
- Clutch pedal position switch (manual transmission)
- Park/neutral position switch (automatic transmission)
- Wire harnesses and connections.

The Battery, Starting, and Charging systems operate in conjunction with one another, and must be tested as a complete system. For correct operation of starting/charging systems, all components used in these 3 systems must perform within specifications. When attempting to diagnose any of these systems, it is important that you keep their interdependency in mind.

The diagnostic procedures used in each of these groups include the most basic conventional diagnostic methods, to the more sophisticated On-Board Diagnostics (OBD) built into the Powertrain Control Module (PCM). Use of an induction-type milliampere ammeter, volt/ohmmeter, battery charger, carbon pile rheostat (load tester), and 12-volt test lamp may be required.

OPERATION

These components form two separate circuits. A high amperage circuit that feeds the starter motor up to 300+ amps, and a control circuit that operates on less than 20 amps.

The PCM controls a double start over-ride safety that does not allow the starter to be engaged if the engine is already running.

DIAGNOSIS AND TESTING

DIAGNOSIS AND TESTING - STARTING SYSTEM TEST

For circuit descriptions and diagrams, refer to the Wiring Diagrams.

WARNING: ON VEHICLES EQUIPPED WITH AIRBAGS, REFER TO THE PASSIVE RESTRAINT SYSTEMS BEFORE ATTEMPTING STEERING WHEEL, STEERING COLUMN, OR INSTRUMENT PANEL COMPONENT DIAGNOSIS OR SERVICE. FAILURE TO TAKE THE PROPER PRECAUTIONS COULD RESULT IN ACCIDENTAL AIRBAG DEPLOYMENT AND POSSIBLE PERSONAL INJURY.

INSPECTION

Before removing any unit from the starting system for repair or diagnosis, perform the following inspections:

- **Battery** - Visually inspect the battery for indications of physical damage and loose or corroded cable connections. Determine the state-of-charge and cranking capacity of the battery. Charge or replace the battery, if required. Refer to the Battery section for more information.
- **Ignition Switch** - Visually inspect the ignition switch for indications of physical damage and loose or corroded wire harness connections.
- **Transmission Range Sensor or Park/Neutral Switch** - Visually inspect the transmission range sensor for indications of physical damage and loose or corroded wire harness connections.
- **Starter Relay** - Visually inspect the starter relay for indications of physical damage and loose or corroded wire harness connections.
- **Starter Motor** - Visually inspect the starter motor for indications of physical damage and loose or corroded wire harness connections.

- **Starter Solenoid** - Visually inspect the starter solenoid for indications of physical damage and loose or corroded wire harness connections.
- **Wiring** - Visually inspect the wire harness for damage. Repair or replace any faulty wiring, as required. Check for loose or corroded wire harness connections at main engine ground and remote jump post.
- **Power Distribution Center (PDC)** - Visually inspect the B+ connections at the PDC for physical damage and loose or corroded harness connections.

STARTING SYSTEM DIAGNOSIS

CONDITION	POSSIBLE CAUSE	CORRECTION
STARTER FAILS TO ENGAGE.	1. BATTERY DISCHARGED OR FAULTY.	1. REFER TO THE BATTERY SECTION FOR MORE INFORMATION. CHARGE OR REPLACE BATTERY, IF REQUIRED.
	2. STARTING CIRCUIT WIRING FAULTY.	2. REFER TO FEED CIRCUIT RESISTANCE TEST AND FEED CIRCUIT TEST IN THIS SECTION.
	3. STARTER RELAY FAULTY.	3. REFER TO RELAY TEST, IN THIS SECTION. REPLACE RELAY, IF NECESSARY.
	4. IGNITION SWITCH FAULTY.	4. REFER TO IGNITION SWITCH TEST, IN THE STEERING SECTION OR 8 WIRING DIAGRAMS. REPLACE SWITCH, IF NECESSARY.
	5. PARK/NEUTRAL POSITION SWITCH (AUTO TRANS) FAULTY OR MIS-ADJUSTED.	5. REFER PARK/NEUTRAL POSITION SWITCH TEST, IN THE TRANSAXLE. SECTION FOR MORE INFORMATION. REPLACE SWITCH, IF NECESSARY.
	6. CLUTCH INTERLOCK SWITCH (MAN TRANS) FAULTY.	6. REFER TO CLUTCH PEDAL POSITION SWITCH TEST, IN THE CLUTCH. SECTION. REPLACE SWITCH, IF NECESSARY.
	7. STARTER SOLENOID FAULTY.	7. REFER TO SOLENOID TEST, IN THIS SECTION. REPLACE STARTER ASSEMBLY, IF NECESSARY.
	8. STARTER ASSEMBLY FAULTY.	8. IF ALL OTHER STARTING SYSTEM COMPONENTS AND CIRCUITS CHECK OK, REPLACE STARTER ASSEMBLY.
	9. FAULTY TEETH ON RING GEAR.	9. ROTATE FLYWHEEL 360°, AND INSPECT TEETH AND RING GEAR REPLACED IF DAMAGED.
	10. PCM DOUBLE START OVERRIDE OUTPUT FAILURE.	10. REFER TO PCM DIAGNOSTIC. CHECK FOR CONTINUITY BETWEEN PCM AND TERMINAL 85. REPAIR OPEN CIRCUIT AS REQUIRED. IF OK, PCM MAY BE DEFECTIVE.
STARTER ENGAGES, FAILS TO TURN ENGINE.	1. BATTERY DISCHARGED OR FAULTY.	1. REFER TO THE BATTERY SECTION FOR MORE INFORMATION. CHARGE OR REPLACE BATTERY AS NECESSARY.
	2. STARTING CIRCUIT WIRING FAULTY.	2. REFER TO THE FEED CIRCUIT RESISTANCE TEST AND THE FEED CIRCUIT TEST IN THIS SECTION. REPAIR AS NECESSARY.
	3. STARTER ASSEMBLY FAULTY.	3. IF ALL OTHER STARTING SYSTEM COMPONENTS AND CIRCUITS CHECK OK, REPLACE STARTER ASSEMBLY.
	4. ENGINE SEIZED.	4. REFER TO THE ENGINE SECTION, FOR DIAGNOSTIC AND SERVICE PROCEDURES.
	5. LOOSE CONNECTION AT BATTERY, PDC, STARTER, OR ENGINE GROUND.	5. INSPECT FOR LOOSE CONNECTIONS.

CONDITION	POSSIBLE CAUSE	CORRECTION
	6. FAULTY TEETH ON RING GEAR.	6. ROTATE FLYWHEEL 360°, AND INSPECT TEETH AND RING GEAR REPLACED IF DAMAGED.
STARTER ENGAGES, SPINS OUT BEFORE ENGINE STARTS.	1. BROKEN TEETH ON STARTER RING GEAR.	1. REMOVE STARTER. INSPECT RING GEAR AND REPLACE IF NECESSARY.
	2. STARTER ASSEMBLY FAULTY.	2. IF ALL OTHER STARTING SYSTEM COMPONENTS AND CIRCUITS CHECK OK, REPLACE STARTER ASSEMBLY.
STARTER DOES NOT DISENGAGE.	1. STARTER IMPROPERLY INSTALLED.	1. INSTALL STARTER. TIGHTEN STARTER MOUNTING HARDWARE TO CORRECT TORQUE SPECIFICATIONS.
	2. STARTER RELAY FAULTY.	2. REFER TO RELAY TEST, IN THIS SECTION. REPLACE RELAY, IF NECESSARY.
	3. IGNITION SWITCH FAULTY.	3. REFER TO IGNITION SWITCH TEST, IN THE STEERING SECTION. REPLACE SWITCH, IF NECESSARY.
	4. STARTER ASSEMBLY FAULTY.	4. IF ALL OTHER STARTING SYSTEM COMPONENTS AND CIRCUITS CHECK OK, REPLACE STARTER ASSEMBLY.
	5. FAULTY TEETH ON RING GEAR.	5. ROTATE FLYWHEEL 360°, AND INSPECT TEETH AND RING GEAR REPLACED IF DAMAGED.

DIAGNOSIS AND TESTING - FEED CIRCUIT RESISTANCE TEST

Before proceeding with this operation, review Diagnostic Preparation and Starter Feed Circuit Tests. The following operation will require a voltmeter, accurate to 1/10 of a volt.

CAUTION: Ignition and Fuel systems must be disabled to prevent engine start while performing the following tests.

1. To disable the Ignition and Fuel systems, disconnect the Automatic Shutdown Relay (ASD). The ASD relay is located in the Power Distribution Center (PDC). Refer to the PDC cover for proper relay location.
2. Gain access to battery terminals.
3. With all wiring harnesses and components properly connected, perform the following:
   a. Connect the negative lead of the voltmeter to the battery negative post, and positive lead to the battery negative cable clamp. Rotate and hold the ignition switch in the START position. Observe the voltmeter. If voltage is detected, correct poor contact between cable clamp and post.
   b. Connect positive lead of the voltmeter to the battery positive post, and negative lead to the battery positive cable clamp. Rotate and hold the ignition switch key in the START position. Observe the voltmeter. If voltage is detected, correct poor contact between the cable clamp and post.
   c. Connect negative lead of voltmeter to battery negative terminal, and positive lead to engine block near the battery cable attaching point. Rotate and hold the ignition switch in the START position. If voltage reads above 0.2 volt, correct poor contact at ground cable attaching point. If voltage reading is still above 0.2 volt after correcting poor contacts, replace ground cable.
4. Connect positive voltmeter lead to the starter motor housing and the negative lead to the battery negative terminal. Hold the ignition switch key in the START position. If voltage reads above 0.2 volt, correct poor starter to engine ground.
   a. Connect the positive voltmeter lead to the battery positive terminal, and negative lead to battery cable terminal on starter solenoid. Rotate and hold the ignition switch in the START position. If voltage reads above 0.2 volt, correct poor contact at battery cable to solenoid connection. If reading is still above 0.2 volt after correcting poor contacts, replace battery positive cable.

b. If resistance tests do not detect feed circuit failures, replace the starter motor.

DIAGNOSIS AND TESTING - CONTROL CIRCUIT TEST

The starter control circuit has:

- Starter motor with integral solenoid
- Starter relay
- Transmission range sensor, or Park/Neutral Position switch with automatic transmissions
- Ignition switch
- Battery
- All related wiring and connections
- Powertrain Control Module (PCM)

CAUTION: Before performing any starter tests, the ignition and fuel systems must be disabled.

- To disable ignition and fuel systems, disconnect the Automatic Shutdown Relay (ASD). The ASD relay is located in the Power Distribution Center (PDC). Refer to the PDC cover for the proper relay location.

STARTER SOLENOID

WARNING: CHECK TO ENSURE THAT THE TRANSMISSION IS IN THE PARK POSITION WITH THE PARKING BRAKE APPLIED. THIS MAY RESULT IN PERSONAL INJURY OR DEATH.

1. Verify battery condition. Battery must be in good condition with a full charge before performing any starter tests. Refer to Battery Tests.
2. Perform Starter Solenoid test BEFORE performing the starter relay test.
3. Perform a visual inspection of the starter/starter solenoid for corrosion, loose connections or faulty wiring.
4. Locate and remove the starter relay from the Power Distribution Center (PDC). Refer to the PDC label for relay identification and location.
5. Connect a remote starter switch or a jumper wire between the remote battery positive post and terminal 87 of the starter relay connector.
   a. If engine cranks, starter/starter solenoid is good. Go to the Starter Relay Test.
   b. If engine does not crank or solenoid chatters, check wiring and connectors from starter relay to starter solenoid and from the battery positive terminal to starter post for loose or corroded connections. Particularly at starter terminals.
   c. Repeat test. If engine still fails to crank properly, trouble is within starter or starter mounted solenoid, and replace starter. Inspect the ring gear teeth.

STARTER RELAY

WARNING: CHECK TO ENSURE THAT THE TRANSMISSION IS IN THE PARK/NEUTRAL POSITION WITH THE PARKING BRAKE APPLIED. THIS MAY RESULT IN PERSONAL INJURY OR DEATH.

RELAY TEST

The starter relay is located in the Power Distribution Center (PDC) in the engine compartment. Refer to the PDC label for relay identification and location.

Remove the starter relay from the PDC as described in this group to perform the following tests:

1. A relay in the de-energized position should have continuity between terminals 87A and 30, and no continuity between terminals 87 and 30. If OK, go to Step 2. If not OK, replace the faulty relay.
2. Resistance between terminals 85 and 86 (electromagnet) should be 75 ±5 ohms. If OK, go to Step 3. If not OK, replace the faulty relay.

3. Connect a battery B+ lead to terminals 85 and a ground lead to terminal 86 to energize the relay. The relay should click. Also test for continuity between terminals 30 and 87, and no continuity between terminals 87A and 30. If OK, refer to Relay Circuit Test procedure. If not OK, replace the faulty relay.

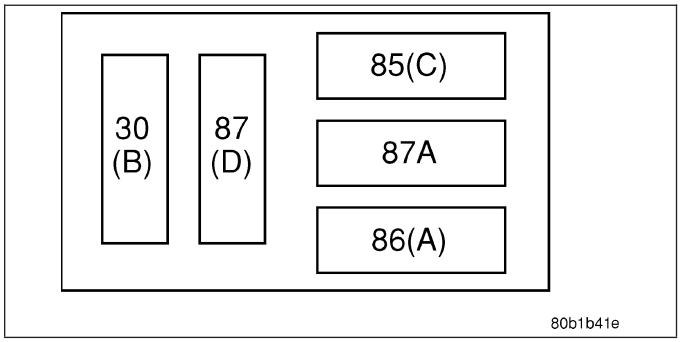

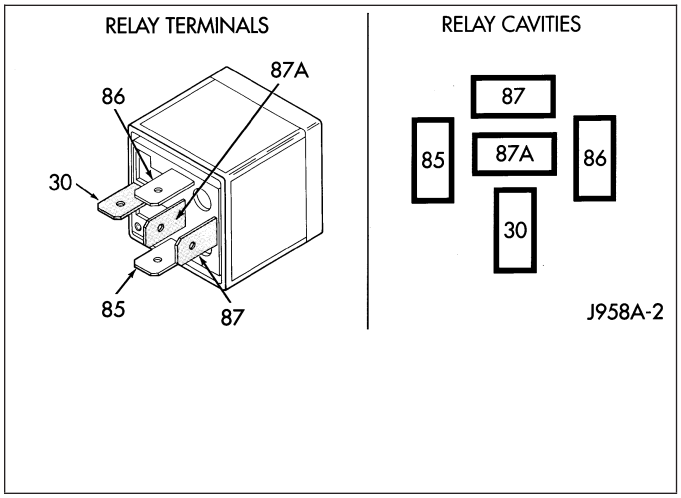

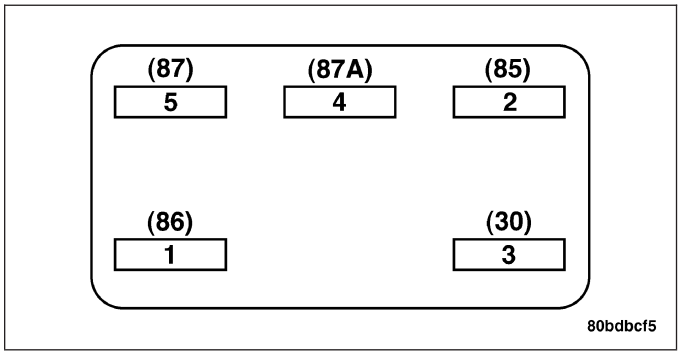

CAV	FUNCTION
30	B (+)
85	IGNITION SWITCH OUTPUT
86	PCM-CONTROLLED GROUND
87	STARTER RELAY OUTPUT
87A	NO CONNECT

RELAY CIRCUIT TEST

1. The relay common feed terminal cavity (30) is connected to battery voltage and should be hot at all times. If OK, go to Step 2. If not OK, repair the open circuit to the PDC fuse as required.
2. The relay normally closed terminal (87A) is connected to terminal 30 in the de-energized position, but is not used for this application. Go to Step 3.

3. The relay normally open terminal (87) is connected to the common feed terminal (30) in the energized position. This terminal supplies battery voltage to the starter solenoid field coils. There should be continuity between the cavity for relay terminal 87 and the starter solenoid terminal at all times. If OK, go to Step 4. If not OK, repair the open circuit to the starter solenoid as required.
4. The coil battery terminal (85) is connected to the electromagnet in the relay. It is energized when the ignition switch is held in the Start position and the clutch pedal is depressed (manual trans). Check for battery voltage at the cavity for relay terminal 86 with the ignition switch in the Start position and the clutch pedal is depressed (manual trans), and no voltage when the ignition switch is released to the On position. If OK, go to Step 5. If not OK, check for an open or short circuit to the ignition switch and repair, if required. If the circuit to the ignition switch is OK, see the Ignition Switch Test procedure in this group.
5. The coil ground terminal (86) is connected to the electromagnet in the relay. It is grounded by the PCM if the conditions are right to start the car. For automatic trans. cars the PCM must see Park Neutral switch low and near zero engine speed (rpm). For manual trans. cars the PCM only needs to see near zero engine speed (rpm) and low clutch interlock input and see near zero engine speed (rpm). To diagnose the Park Neutral switch of the trans range sensor refer to the transaxle section. Check for continuity to ground while the ignition switch is in the start position and if equipped the clutch pedal depressed. If not OK and the vehicle has an automatic trans. verify Park Neutral switch operation. If that checks OK check for continuity between PCM and the terminal 86. Repair open circuit as required. Also check the clutch interlock switch operation if equipped with a manual transmission. If OK, the PCM may be defective.

SAFETY SWITCHES

For diagnostics of the Transmission Range Sensor, refer to the Transaxle section for more information.

If equipped with Clutch Interlock/Upstop Switch, refer to Diagnosis and Testing in the Clutch section.

IGNITION SWITCH

After testing starter solenoid and relay, test ignition switch and wiring. Refer to the Ignition Section or Wiring Diagrams for more information. Check all wiring for opens or shorts, and all connectors for being loose or corroded.

BATTERY

For battery diagnosis and testing, refer to the Battery section for procedures.

ALL RELATED WIRING AND CONNECTORS

Refer to Wiring Diagrams for more information.

SPECIFICATIONS

TORQUE

DESCRIPTION	N·m	Ft. Lbs.	In. Lbs.
2.7L Starter Mounting bolts	54.2	40	-
3.5L Starter Mounting bolts	54.2	40	-
5.7L Starter Mounting bolts	54.2	40	-
3.0L Diesel Starter Mounting bolts	54.2	40	-
Intermediate Shaft Pinch Bolt	43	32	-
Starter B+ Nut	11	-	97.4

STARTER MOTOR

REMOVAL

2.7L

1. Disconnect negative battery cable
2. Install steering wheel holder locking steering wheel in straight-ahead position.
3. Raise vehicle and support.
4. Remove the underbody splash shield.
5. Starter assembly.

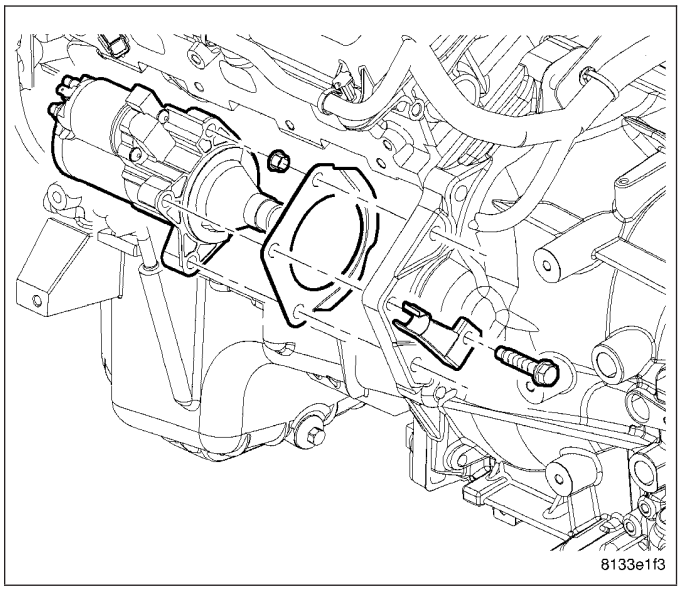

6. Remove the intermediate steering shaft center bolt.

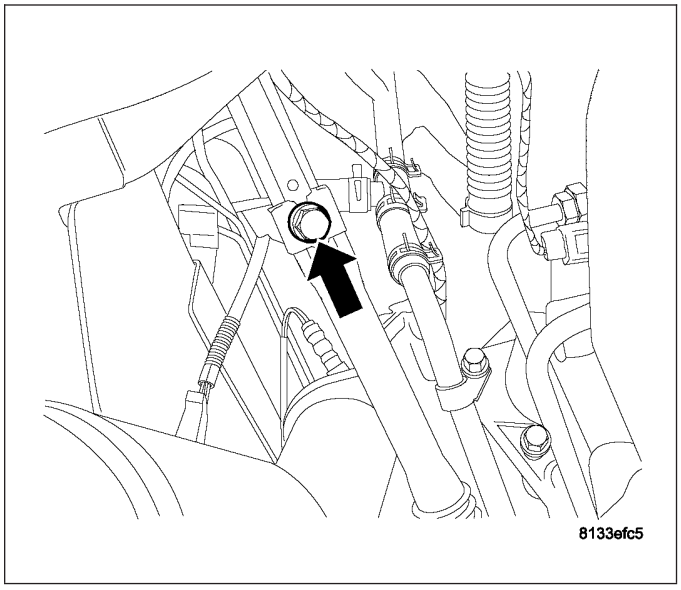

7. Bolt removed.

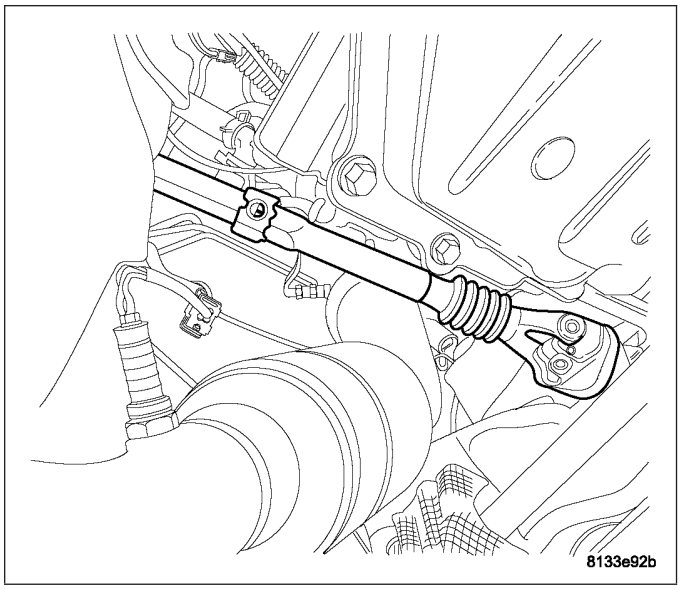

8. Separate the intermediate steering shaft upper and lower shaft.

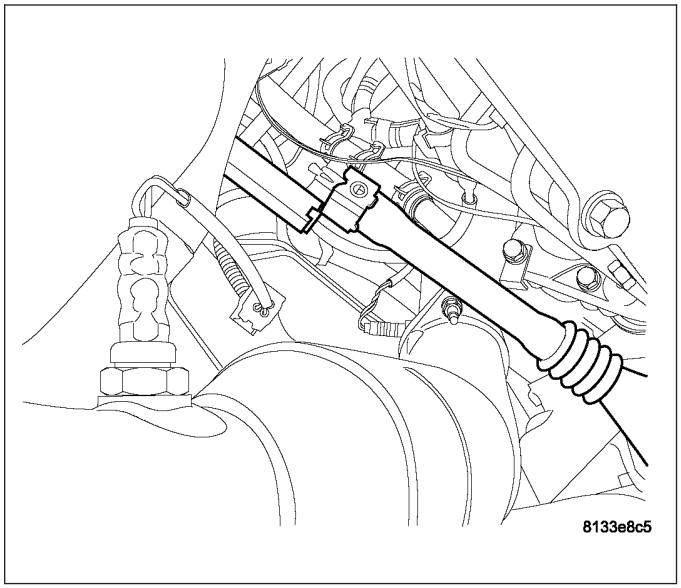

9. Disconnect the electrical connection from the starter.

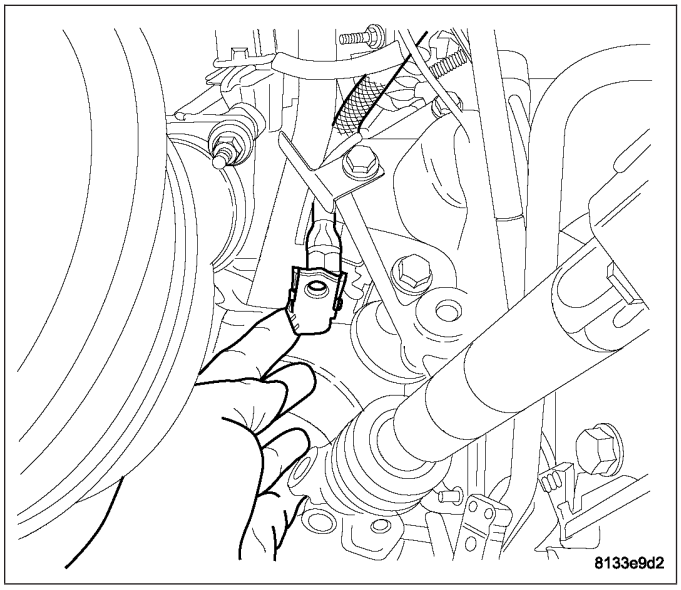

10. Remove the 3 starter mounting bolts and wiring clip.

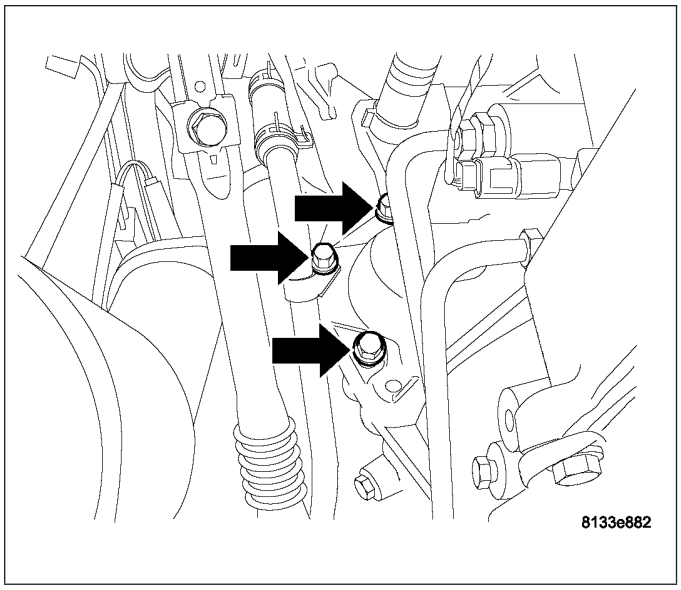

11. Pull starter forward and down.

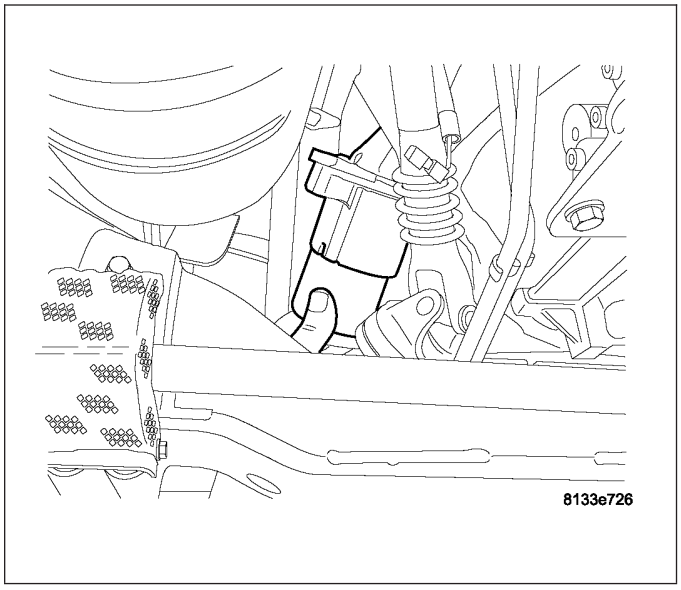

12. Work starter up and around exhaust.

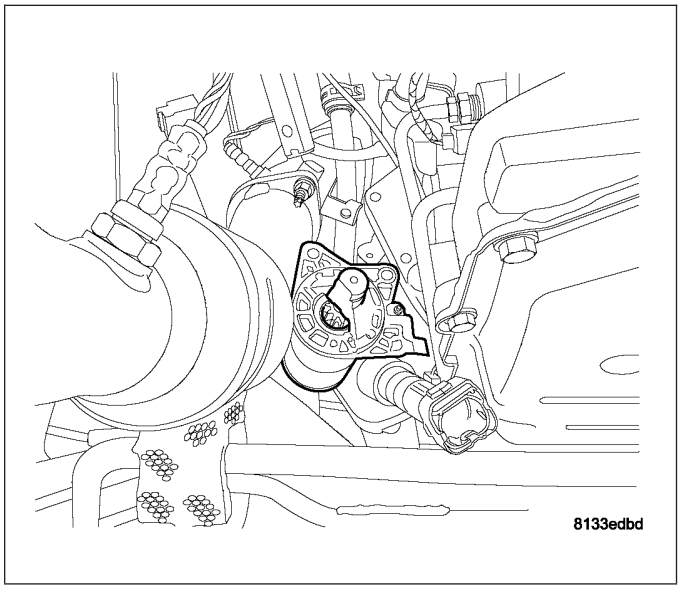

13. Work starter past the intermediate steering shaft.

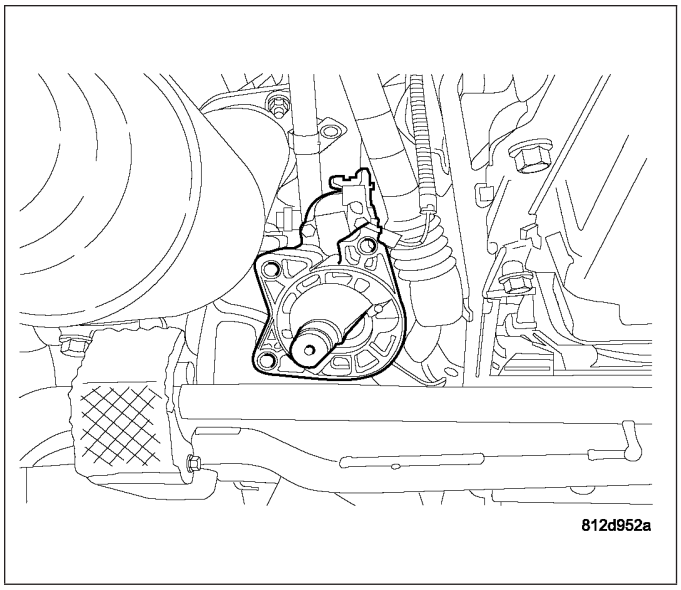

14. Remove starter from vehicle.

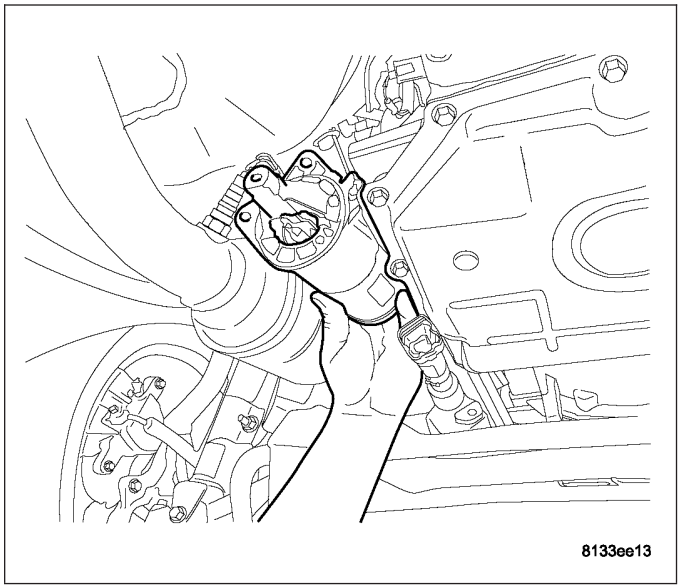

3.0L DIESEL

1. Disconnect negative battery cable.
2. Raise vehicle and support.

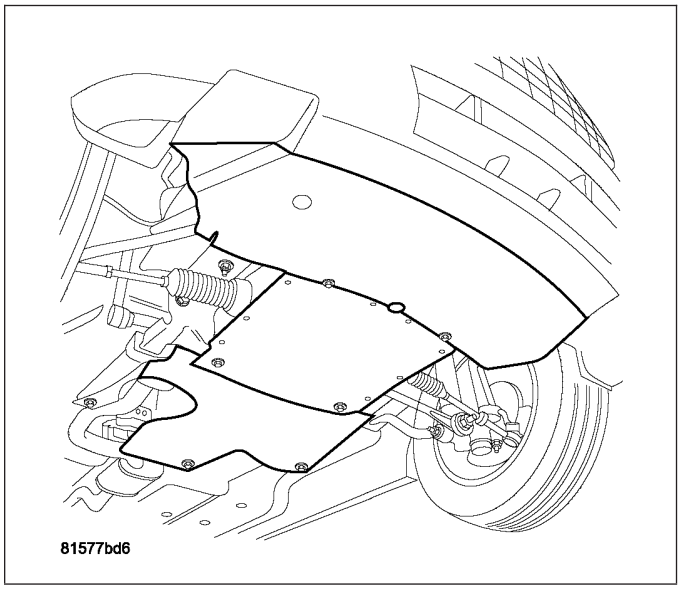

3. Remove the rear belly pan.
4. Remove the middle belly pan.

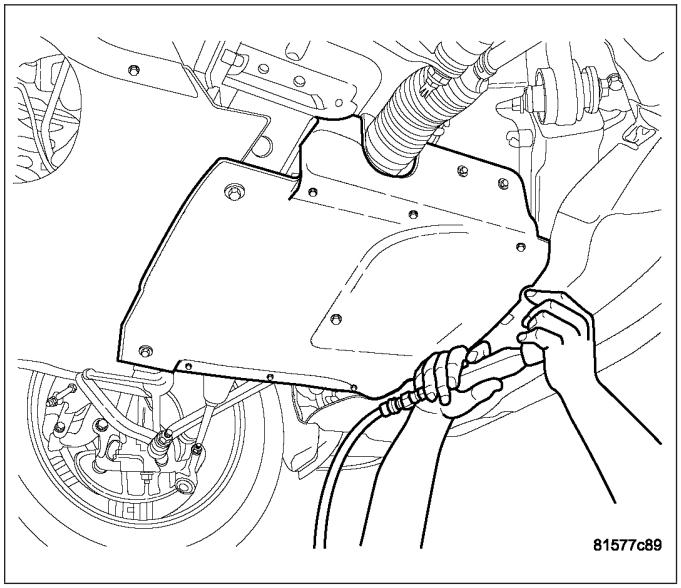

5. Disconnect the battery connection.

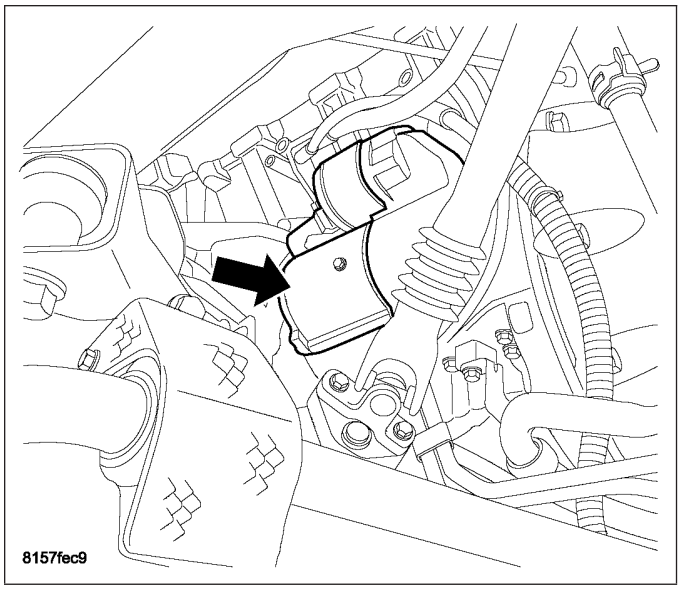

6. Disconnect the solenoid connection.

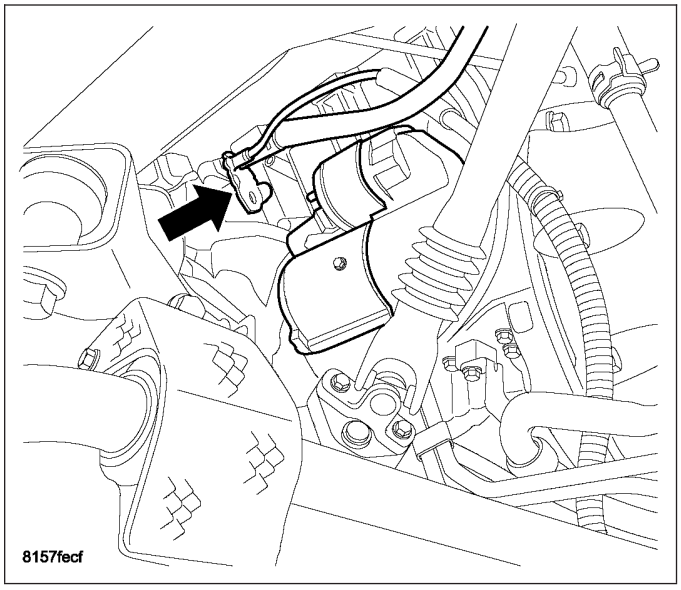

7. Remove the 2 mounting bolts.

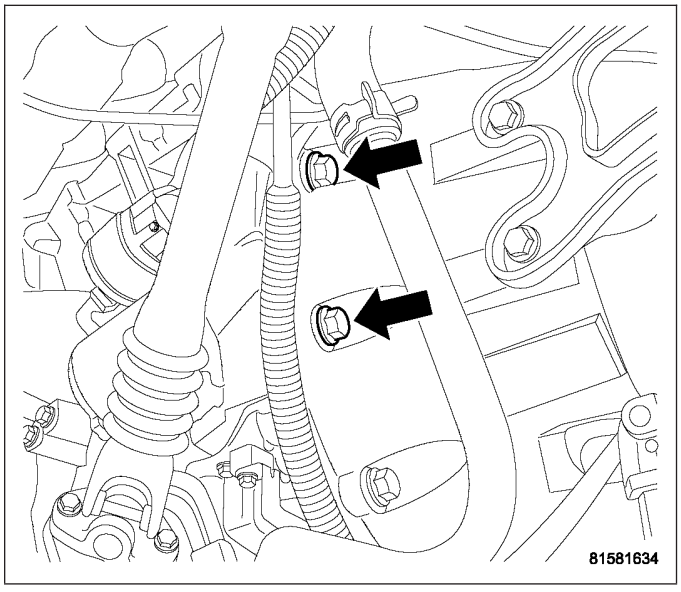

8. Remove starter from vehicle.

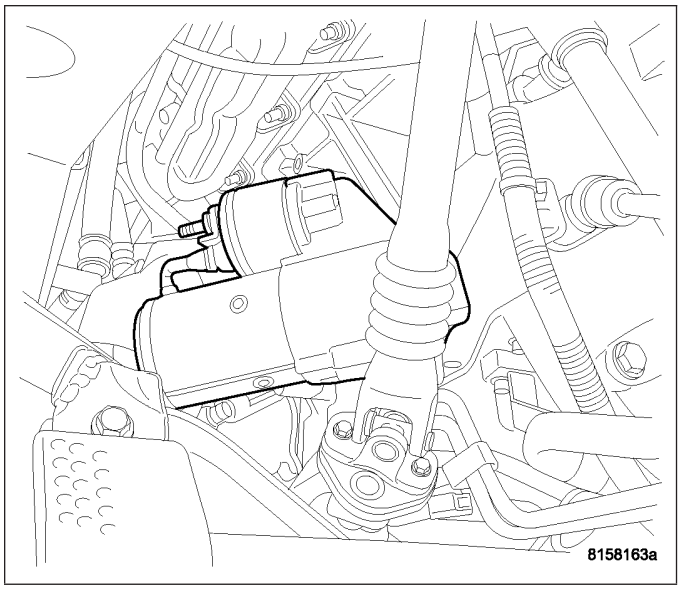

3.5L

1. Disconnect negative battery cable
2. Install steering wheel holder locking steering wheel in straight-ahead position.
3. Raise vehicle and support.
4. Remove the underbody splash shield.
5. Starter assembly.

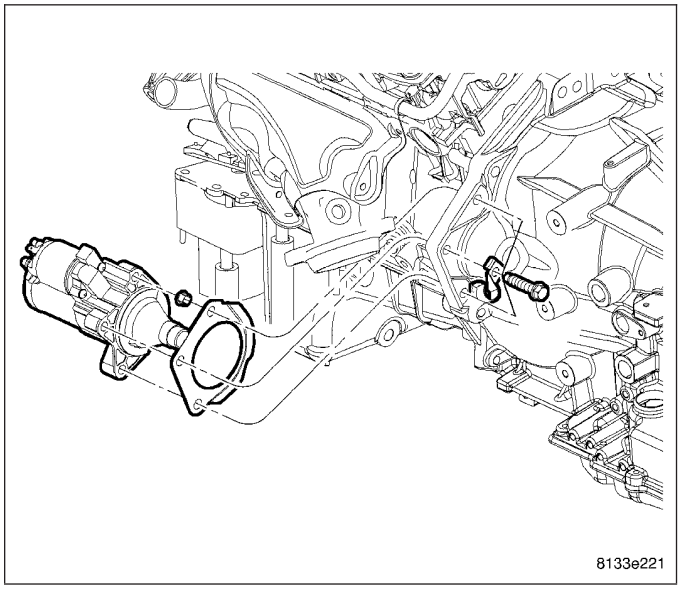

6. Remove the intermediate steering shaft center bolt.

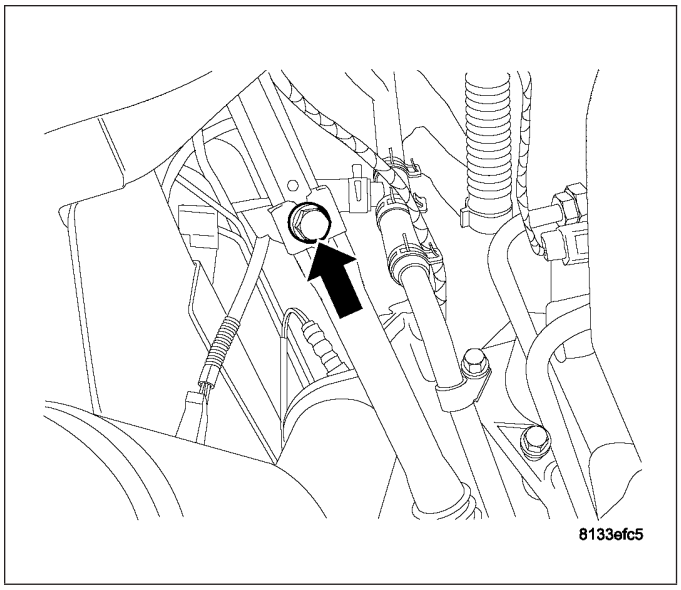

7. Bolt removed.

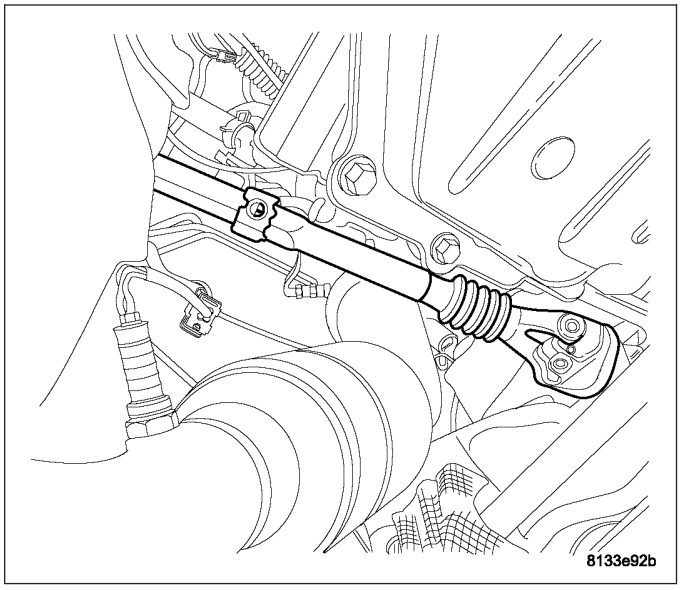

8. Separate the intermediate steering shaft upper and lower shaft.

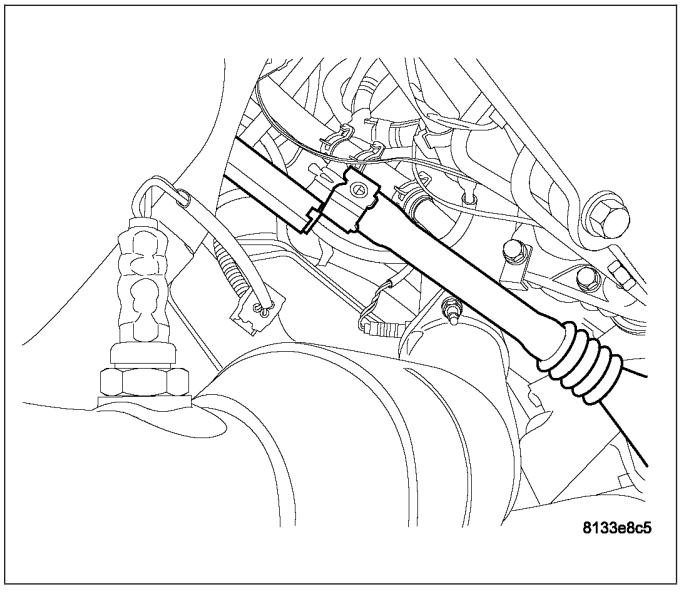

9. Disconnect the electrical connection from the starter.

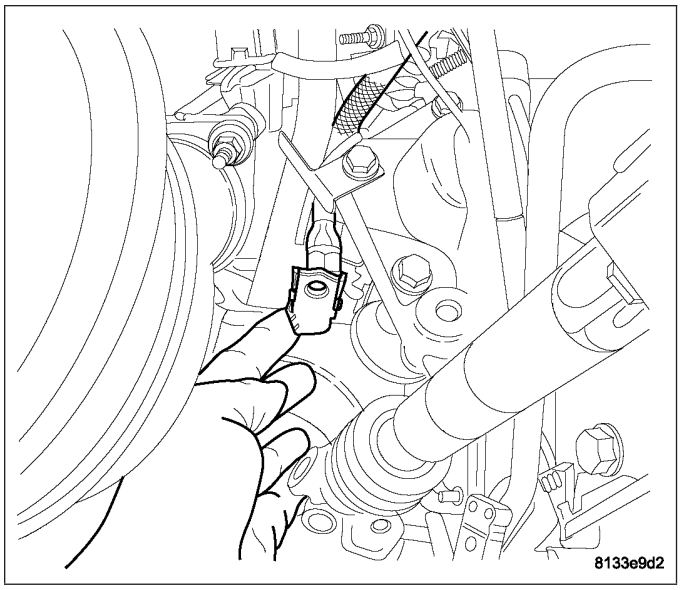

10. Remove the 3 starter mounting bolts and wiring clip.

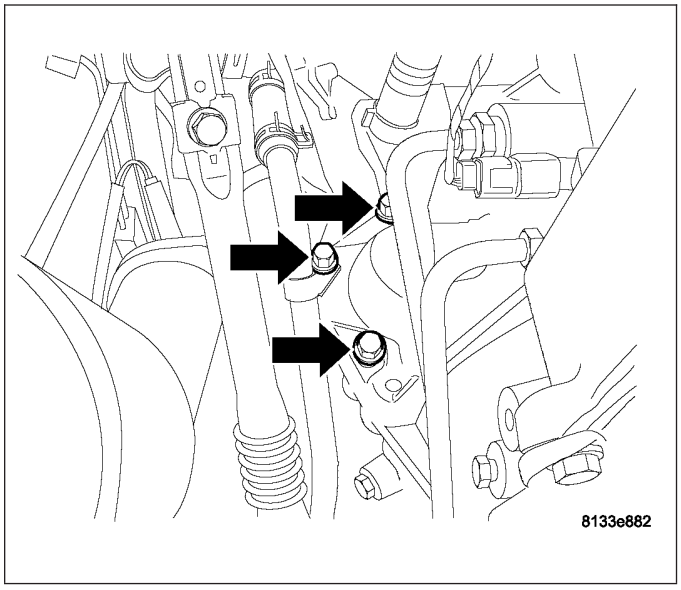

11. Pull starter forward and down.

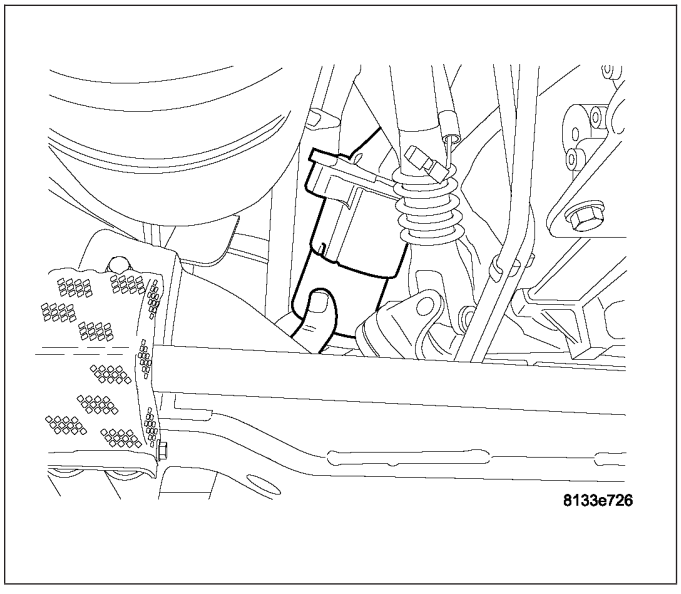

12. Work starter up and around exhaust.

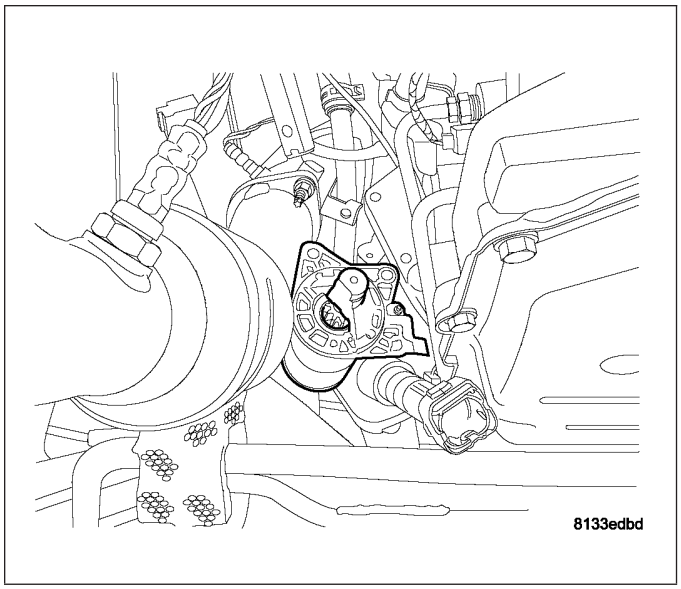

13. Work starter past the intermediate steering shaft.

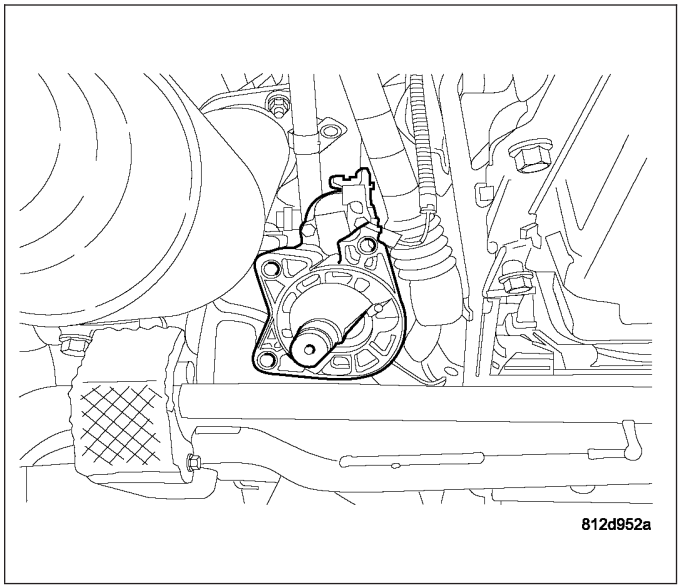

14. Remove starter from vehicle.

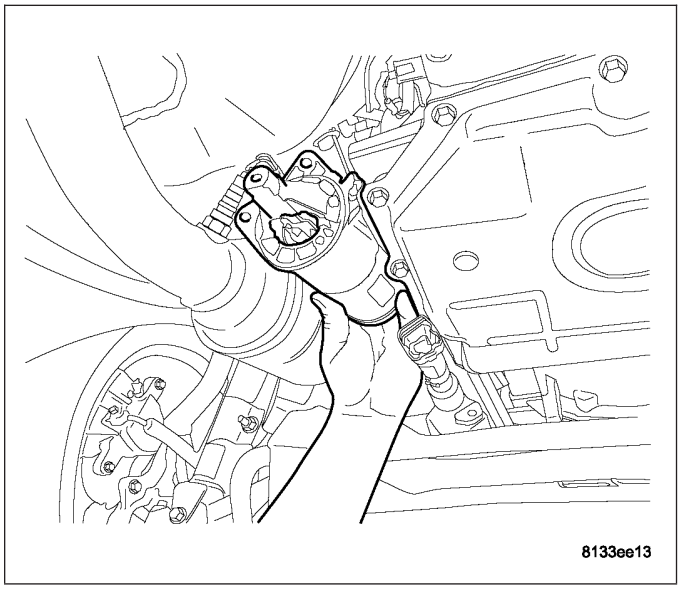

5.7L

REAR WHEEL DRIVE (RWD)

1. Disconnect and isolate negative battery cable.
2. Raise and support vehicle.
3. Remove three starter mounting bolts (1).
4. Move starter motor (2) towards front of vehicle far enough for nose of starter to clear. Always support starter motor (2) during this process. Do not let starter motor hang from wire harness.
5. Remove battery cable-to-solenoid nut.
6. Remove solenoid wire from solenoid stud.
7. Remove starter motor.

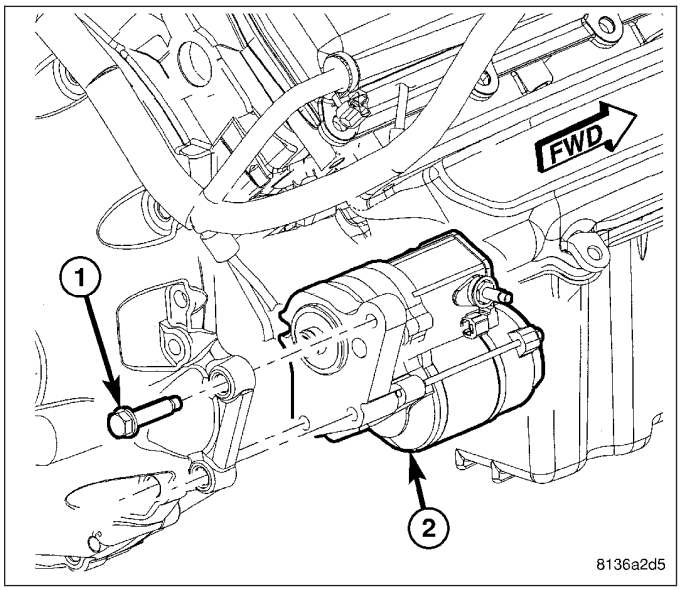

ALL WHEEL DRIVE (AWD)

1. Disconnect and isolate negative battery cable.
2. Raise and support vehicle.

The steering gear assembly must be partially lowered to gain access to starter. Do not disconnect any hydraulic hoses or remove any steering linkage. Proceed.

3. Remove coupling bolt (pinch bolt) securing steering gear to steering column.
4. Remove three steering gear mounting bolts and slightly lower gear. Temporarily support the steering gear.
5. Remove steering gear heat-shield.
6. Remove two starter mounting bolts (2).
7. Move starter motor (1) towards front of vehicle far enough for nose of starter to clear. Always support starter motor (1) during this process. Do not let starter motor hang from wire harness.
8. Remove battery cable-to-solenoid nut.
9. Remove solenoid wire from solenoid stud.
10. Remove starter motor.

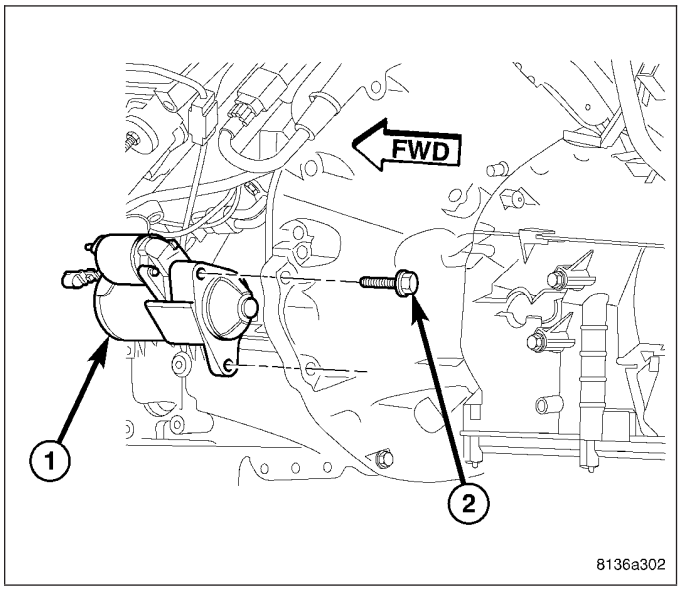

REMOVAL - 6.1L

REAR WHEEL DRIVE (RWD)

1. Disconnect and isolate negative battery cable.
2. Raise and support vehicle.
3. Remove two heat shield nuts (2) and remove heat shield (3).

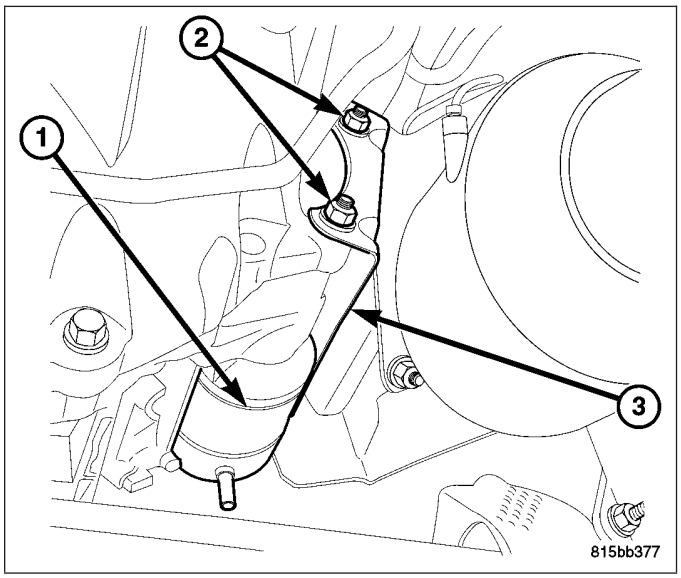

4. Remove three starter mounting bolts (1).
5. Move starter motor (2) towards front of vehicle far enough for nose of starter to clear. Always support starter motor (2) during this process. Do not let starter motor hang from wire harness.
6. Remove battery cable-to-solenoid nut.
7. Remove solenoid wire from solenoid stud.
8. Remove starter motor.

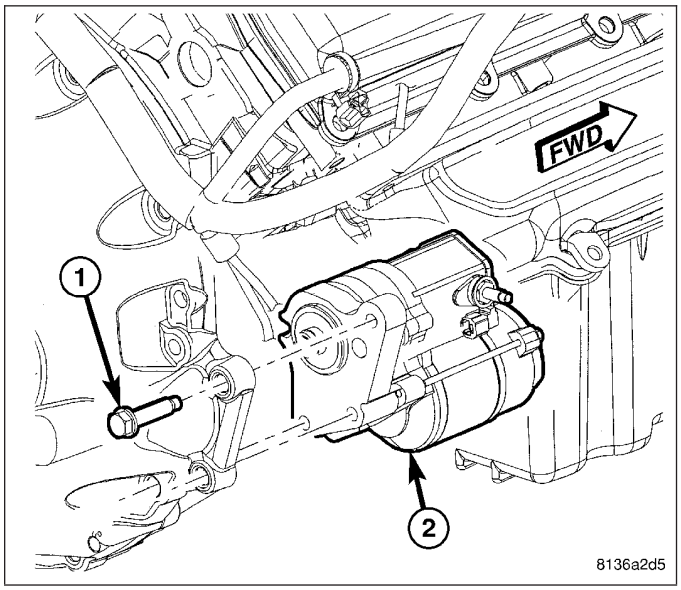

INSTALLATION

2.7L

1. Work starter up and pass the transmission and exhaust.

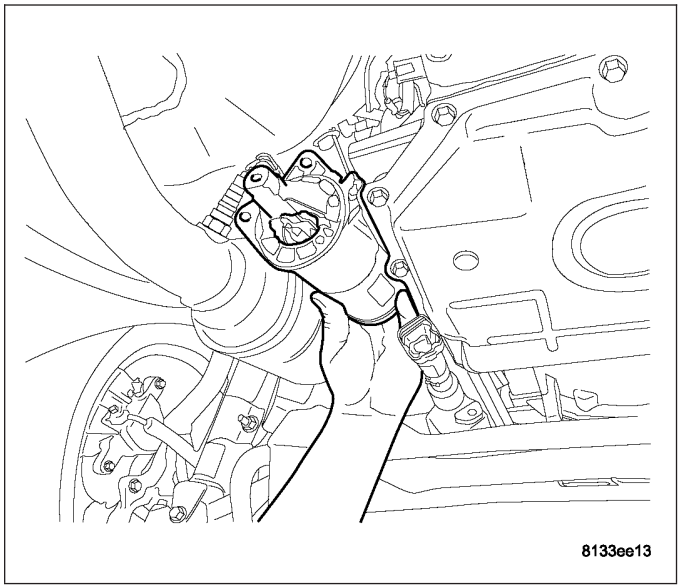

2. Work starter up and pass the intermediate shafts.

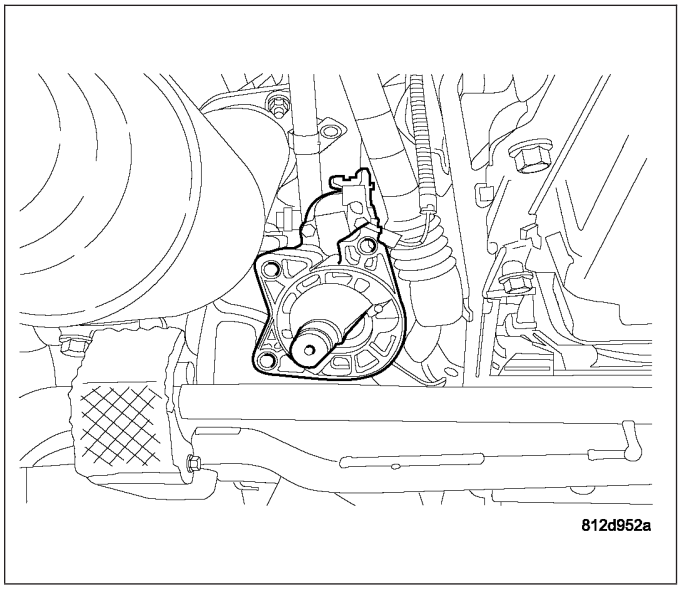

3. Starter pass the intermediate shaft.

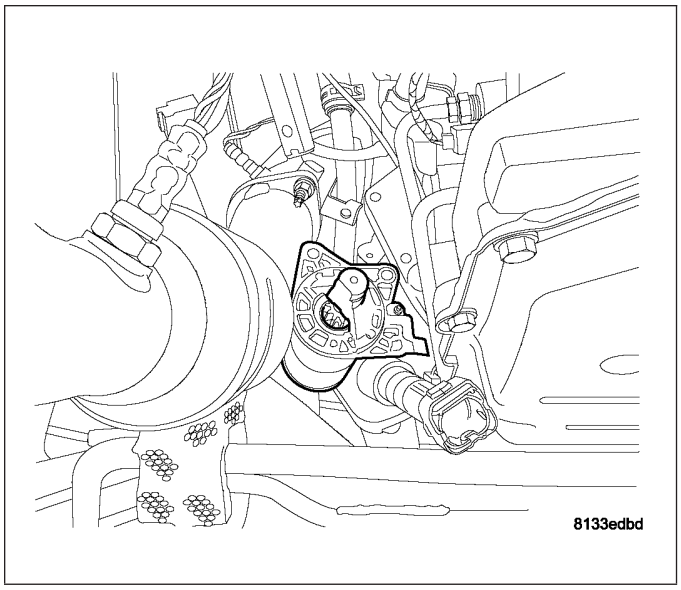

4. Angle starter up toward engine.

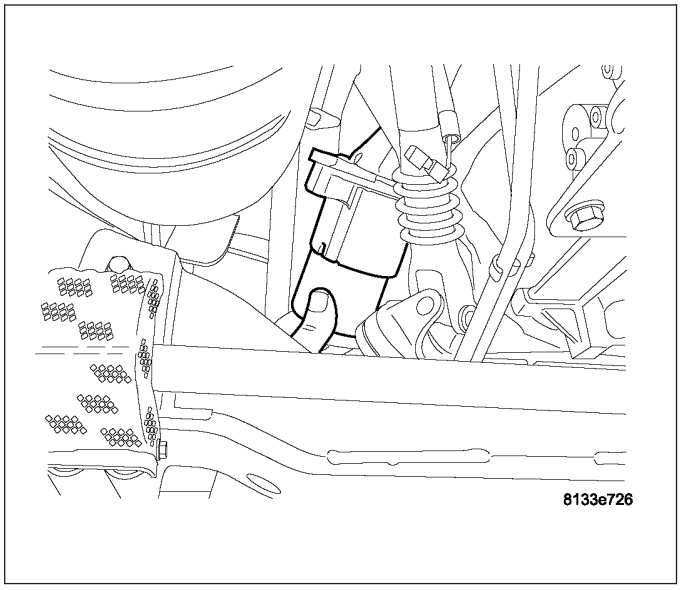

5. Install plastic retainer into starter dust shield. The dust shield has TOP marked on it and the plastic retainer goes in the hole.

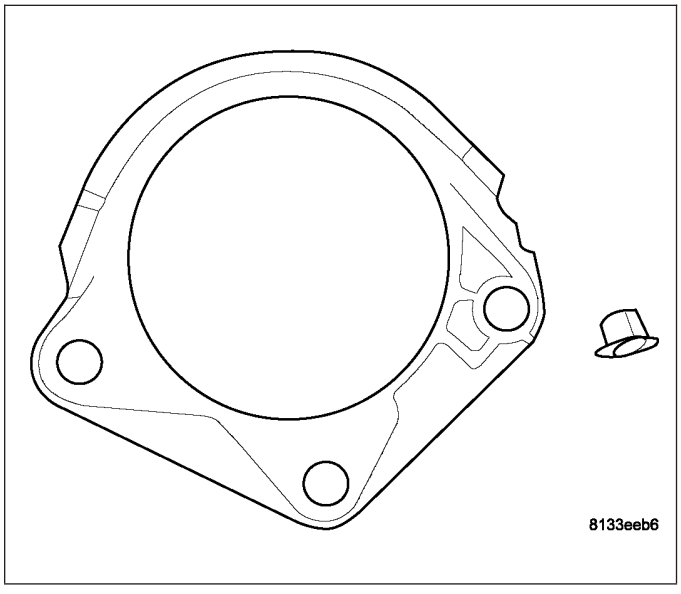

6. Plastic retainer installed.
7. Install dust shield to the engine block using the plastic retainer to hold dust shield in place.

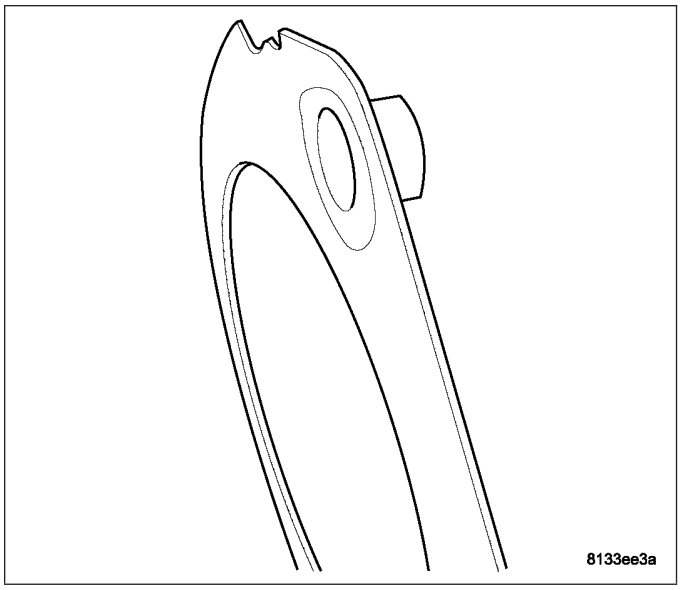

8. Install starter.
9. Install starter bolts.
10. Tighten bolts to 54.2 N·m (40 ft. lbs.).

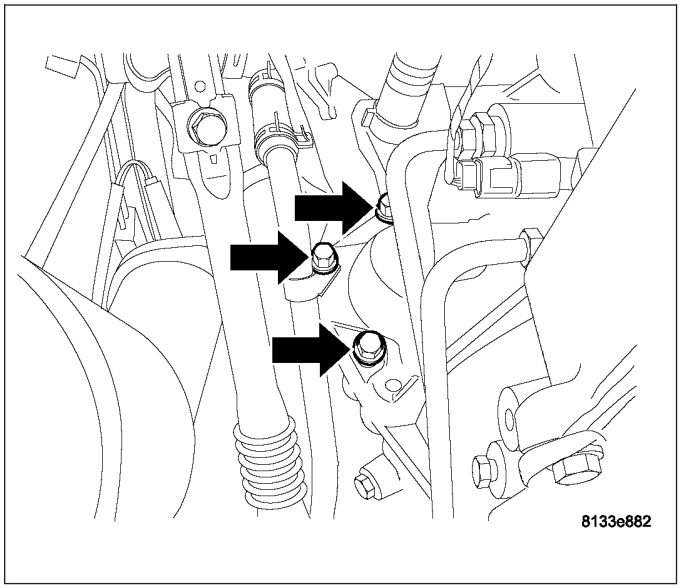

11. Install electrical connection to starter.

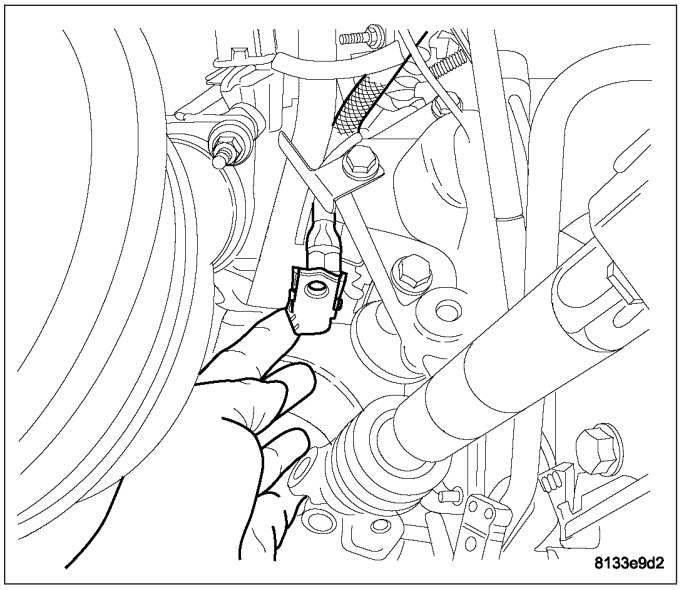

12. Match flats inside intermediate shaft with that in intermediate shaft extension, then slide intermediate shaft onto extension.

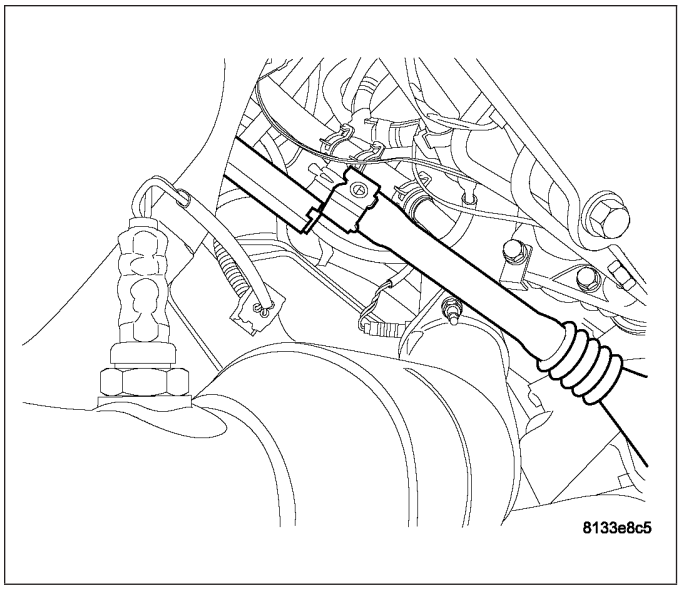

13. Aline the hole in the shafts.

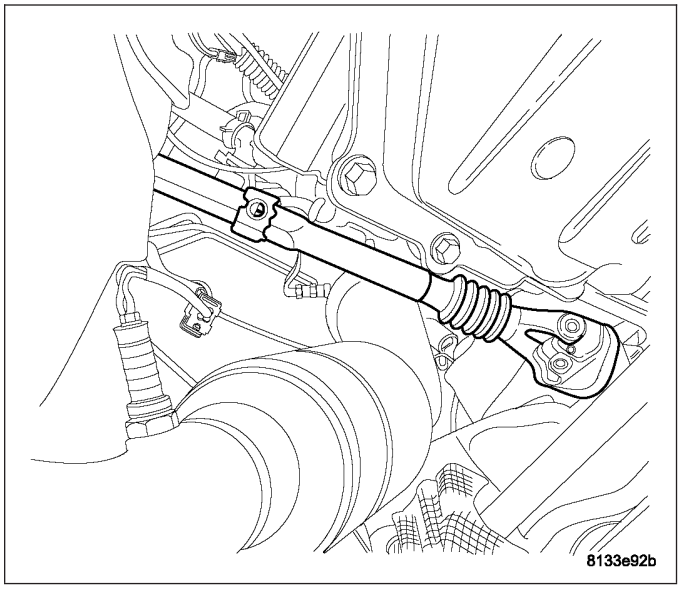

14. Install pinch bolt fastening intermediate shaft to intermediate shaft extension.
15. Tighten pinch bolt to 43 N·m (32 ft. lbs.).
16. Install the underbody splash shield.
17. Lower vehicle.
18. Remove the steering wheel holder.
19. Connect negative battery cable.

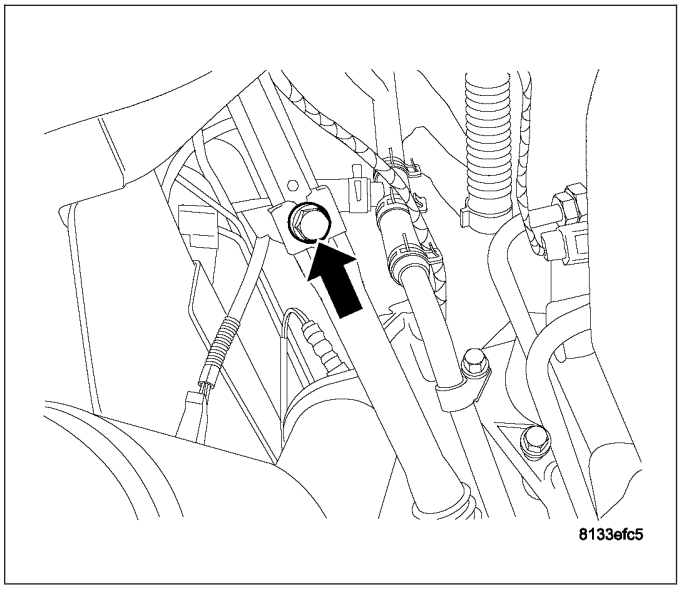

3.0L diesel

1. Install starter to vehicle.

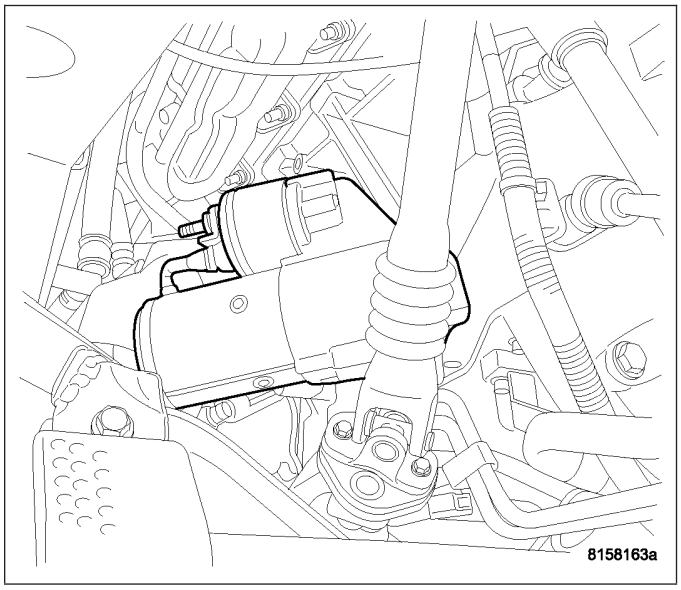

2. Install the 2 mounting bolts. Torque fasteners to 54.2 N·m (40 ft. lbs.).

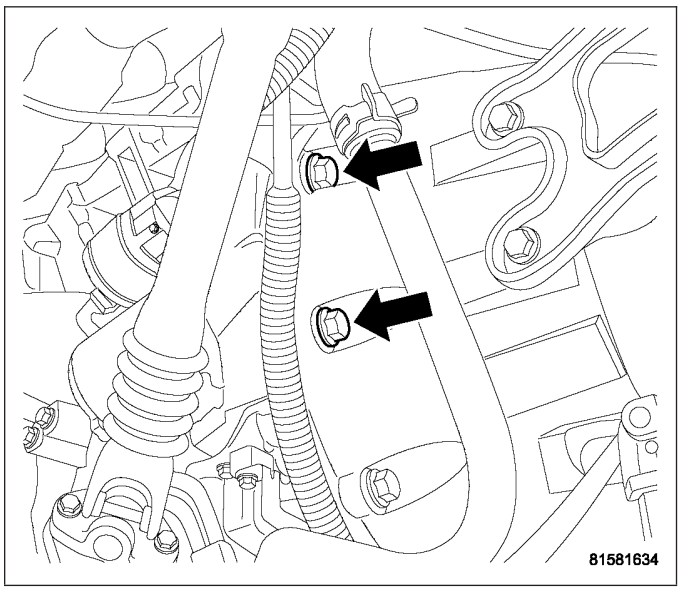

3. Connect battery connection.
4. Connect solenoid connection.

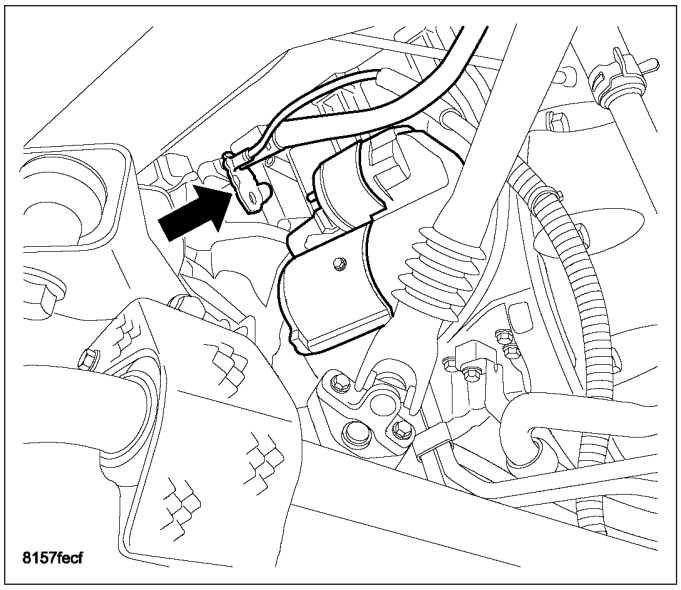

5. Starter installed.

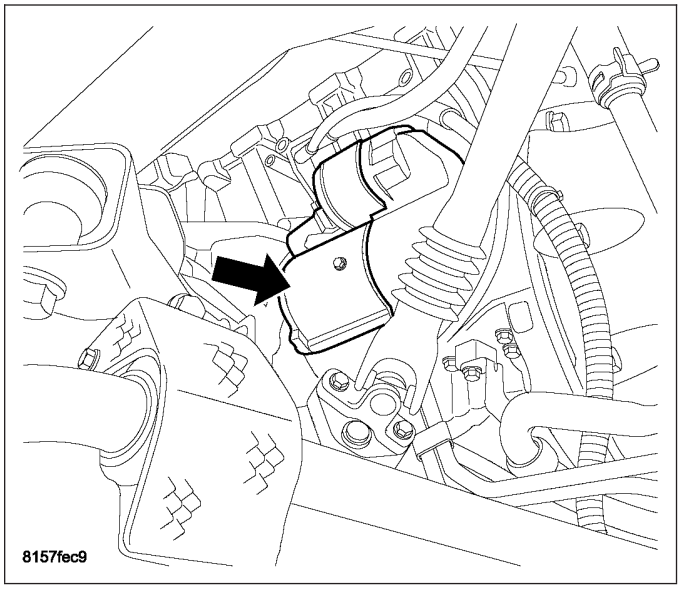

6. Install the rear belly pan.

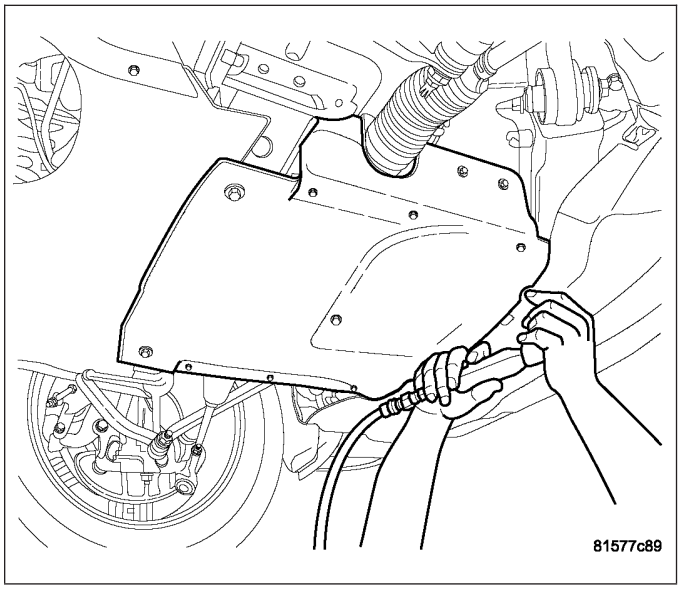

7. Install the middle belly pan.
8. Lower vehicle.
9. Connect negative battery cable.

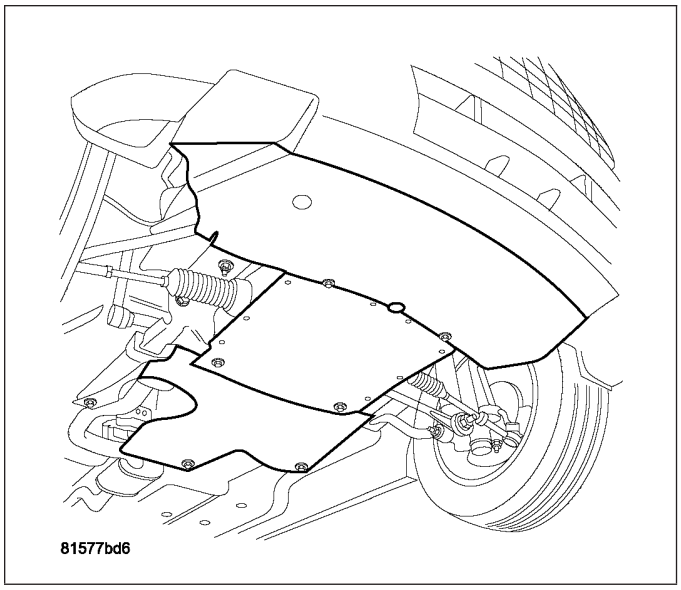

3.5L

1. Work starter up and pass the transmission and exhaust.

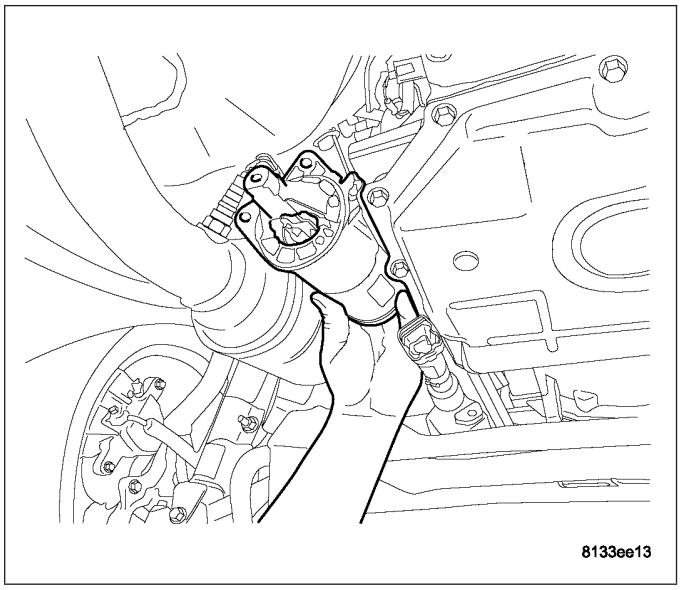

2. Work starter up and pass the intermediate shafts.

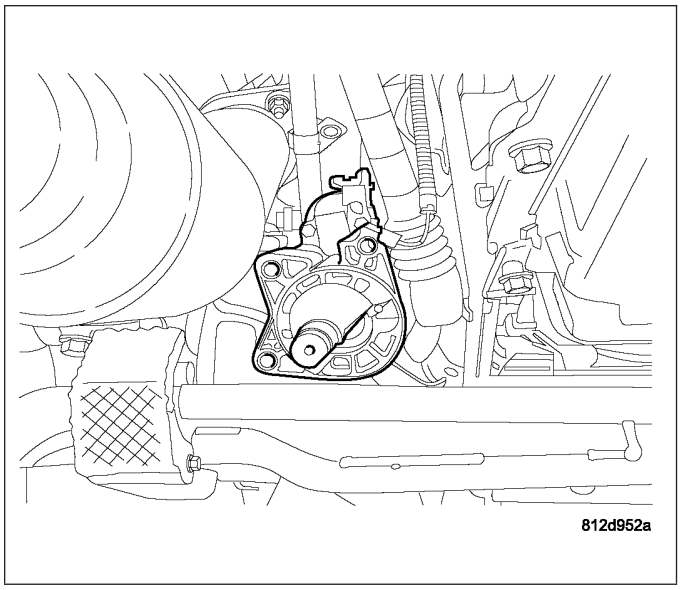

3. Starter pass the intermediate shaft.

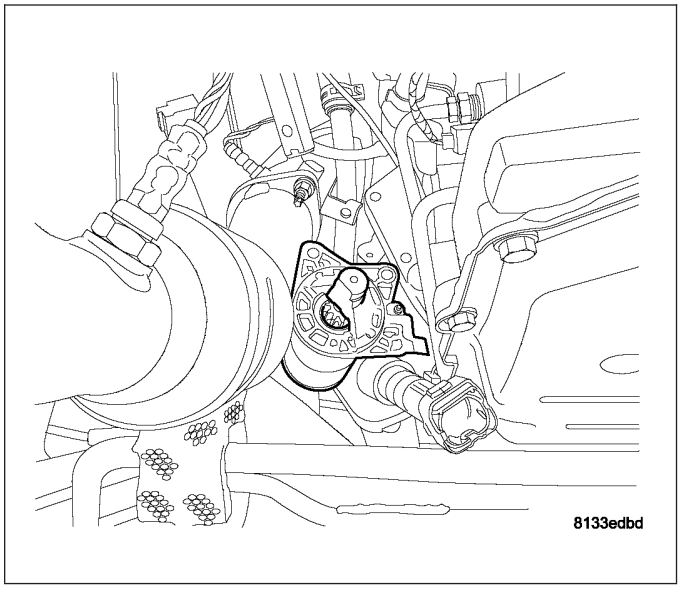

4. Angle starter up toward engine.

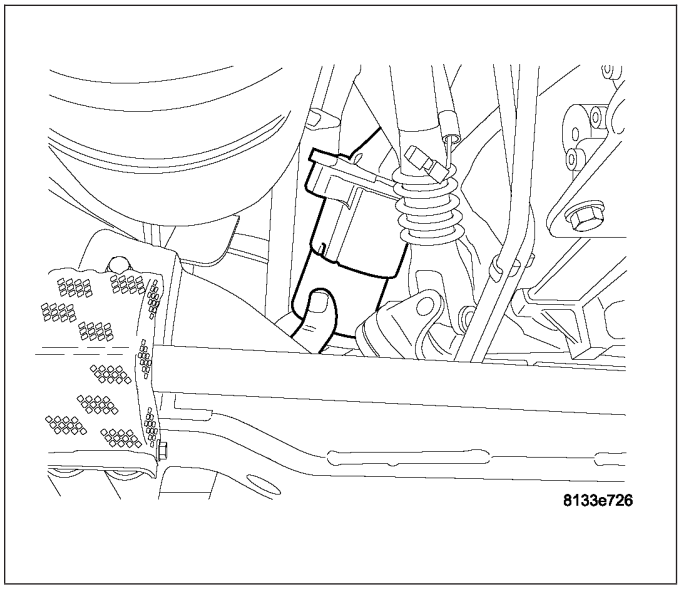

5. Install plastic retainer into starter dust shield. The dust shield has TOP marked on it and the plastic retainer goes in the hole.

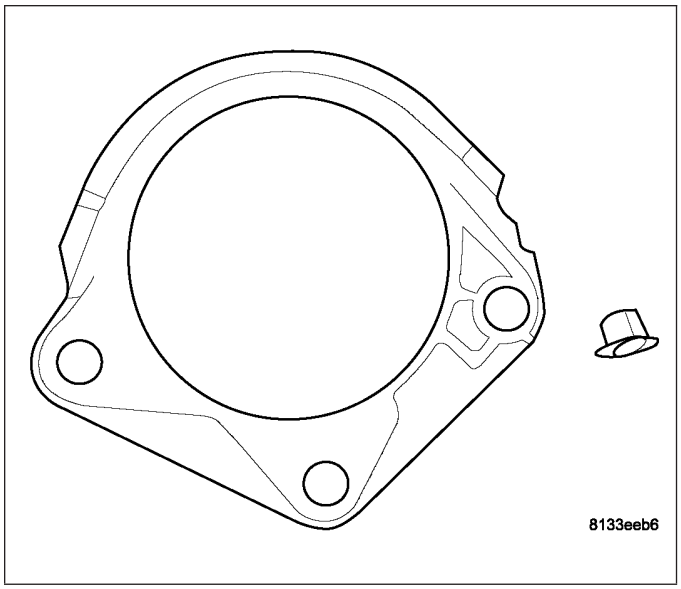

6. Plastic retainer installed.
7. Install dust shield to the engine block using the plastic retainer to hold dust shield in place.

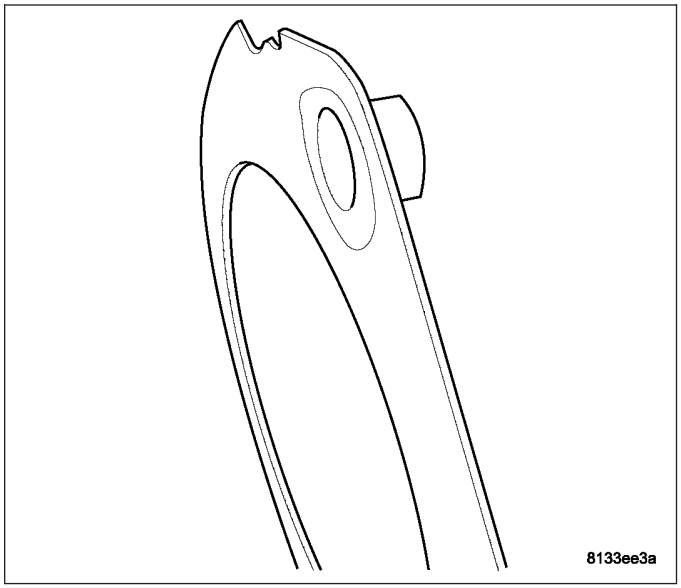

8. Install starter.
9. Install starter bolts.
10. Tighten bolts to 54.2 N·m (40 ft. lbs.).

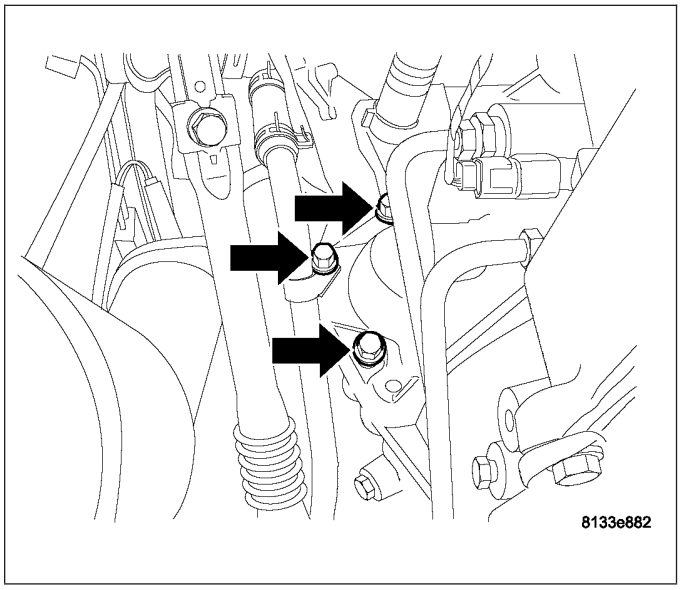

11. Install electrical connection to starter.

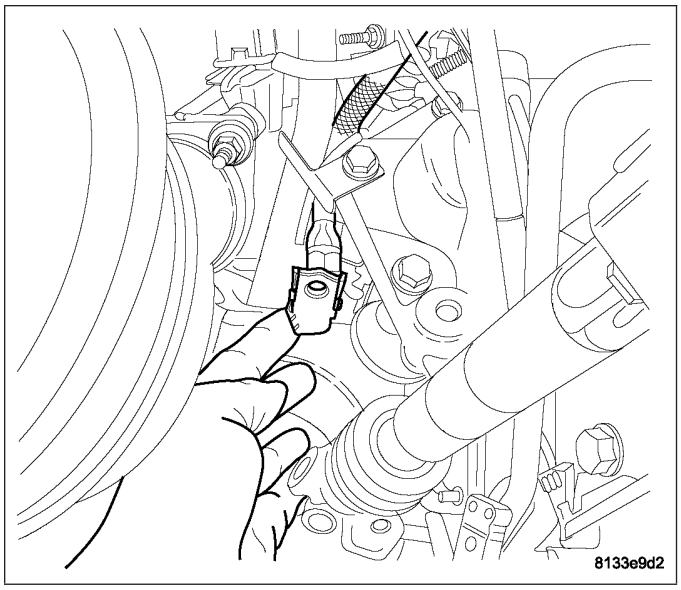

12. Match flats inside intermediate shaft with that in intermediate shaft extension, then slide intermediate shaft onto extension.

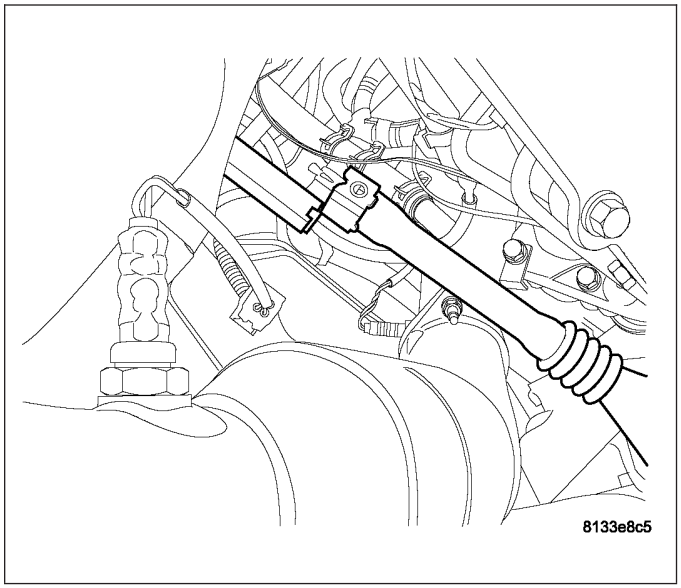

13. Aline the hole in the shafts.

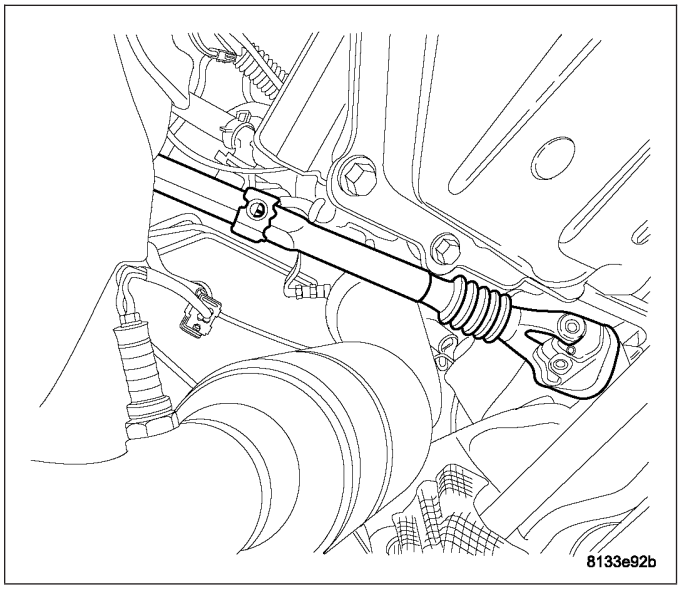

14. Install pinch bolt fastening intermediate shaft to intermediate shaft extension.
15. Tighten pinch bolt to 43 N·m (32 ft. lbs.).
16. Install the underbody splash shield.
17. Lower vehicle.
18. Remove the steering wheel holder.
19. Connect negative battery cable.

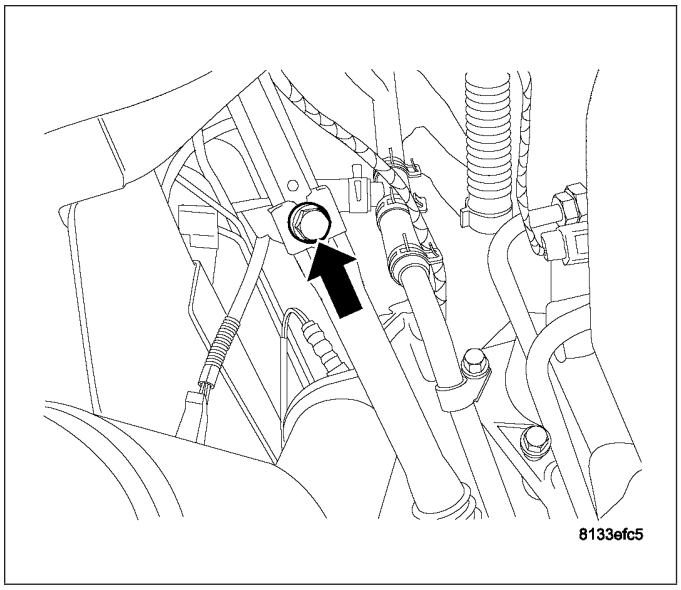

INSTALLATION - 6.1L

REAR WHEEL DRIVE (RWD)

1. Position starter (2) into transmission but do not install bolts.
2. Connect solenoid wire to starter motor (snaps on).
3. Position battery cable to solenoid stud. Install and tighten battery cable eyelet nut. Refer to Torque Specifications. Do not allow starter motor to hang from wire harness.
4. Install and tighten three mounting bolts (1). Refer to Torque Specifications.

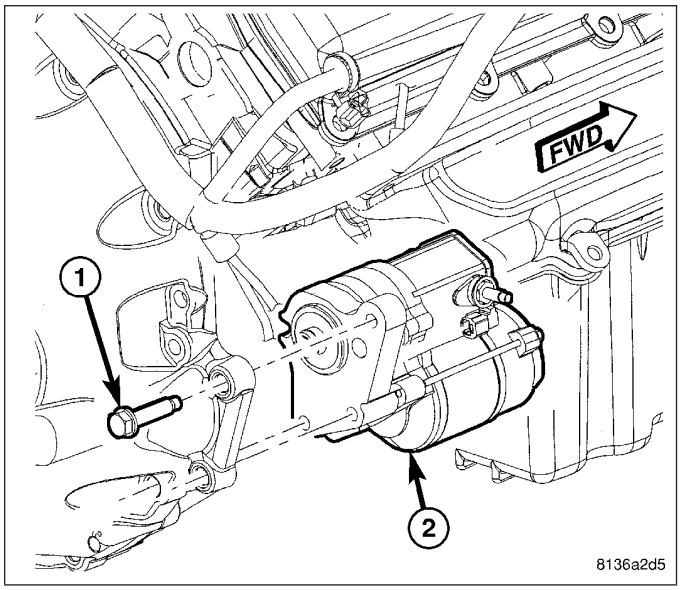

5. Position heat shield (3) and install two shield mounting nuts (2).
6. Lower vehicle.
7. Connect negative battery cable.

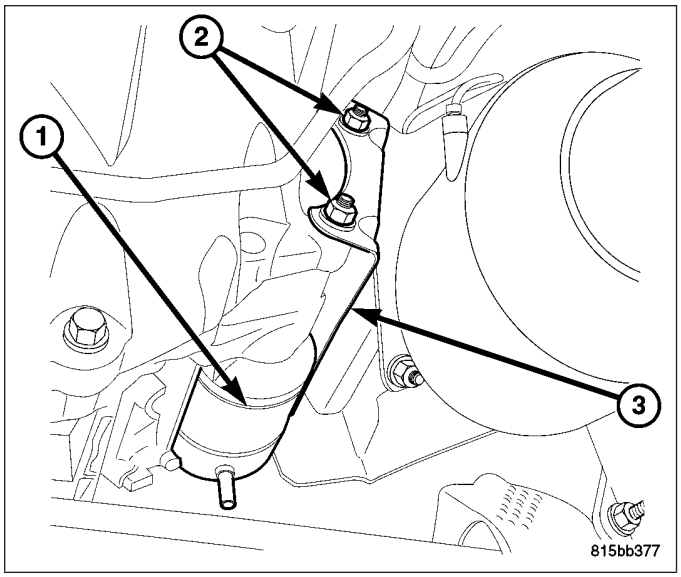

5.7L

REAR WHEEL DRIVE (RWD)

1. Position starter (2) into transmission but do not install bolts.
2. Connect solenoid wire to starter motor (snaps on).
3. Position battery cable to solenoid stud. Install and tighten battery cable eyelet nut. Refer to Torque Specifications. Do not allow starter motor to hang from wire harness.
4. Install and tighten three mounting bolts (1). Refer to Torque Specifications.
5. Lower vehicle.
6. Connect negative battery cable.

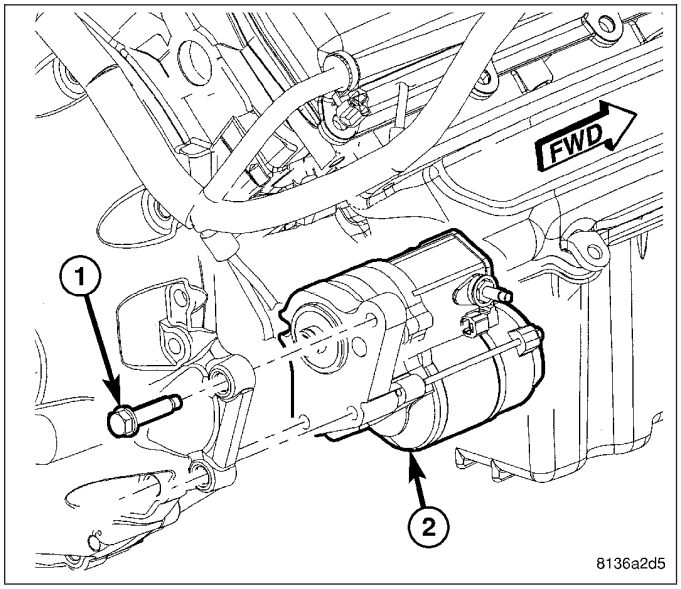

ALL WHEEL DRIVE (AWD)

1. Position starter (1) into transmission but do not install bolts.
2. Connect solenoid wire to starter motor (snaps on).
3. Position battery cable to solenoid stud. Install and tighten battery cable eyelet nut. Refer to Torque Specifications. Do not allow starter motor to hang from wire harness.
4. Install and tighten both mounting bolts (2). Refer to Torque Specifications.
5. Install steering gear assembly and mounting bolts. Install steering column coupling bolt (pinch bolt). Refer to Steering section for torque specifications.
6. Install steering gear heat-shield.
7. Lower vehicle.
8. Connect negative battery cable.

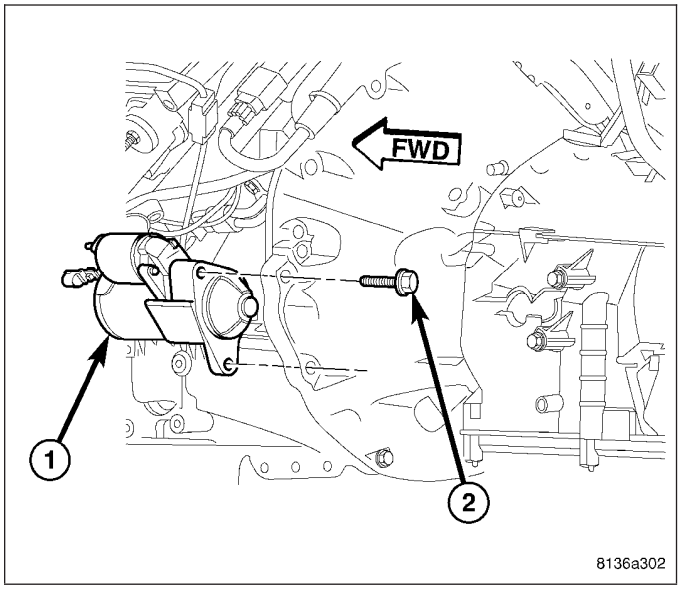

HEATED SYSTEMS

TABLE OF CONTENTS

page

HEATED GLASS - SERVICE INFORMATION 1
HEATED MIRRORS - SERVICE INFORMATION . . . 8

page

HEATED SEATS - ELECTRICAL DIAGNOSTICS . . . 10
HEATED SEATS - SERVICE INFORMATION 73

HEATED GLASS - SERVICE INFORMATION

TABLE OF CONTENTS

page

HEATED GLASS - SERVICE INFORMATION
DESCRIPTION 2
OPERATION 2
DIAGNOSIS AND TESTING
ELECTRIC BACKLIGHT (EBL) SYSTEM 3
GRID-REAR WINDOW DEFOGGER
STANDARD PROCEDURE
GRID LINE AND TERMINAL REPAIR 4

page

RELAY-REAR WINDOW DEFOGGER
DESCRIPTION 5
OPERATION 5
REMOVAL 6
INSTALLATION 6
SWITCH-REAR WINDOW DEFOGGER
DESCRIPTION 7
OPERATION 7

HEATED GLASS - SERVICE INFORMATION

DESCRIPTION

CAUTION: Grid lines can be damaged or scraped off with sharp instruments. Care should be taken in cleaning glass or removing foreign materials, decals or stickers. Normal glass cleaning solvents or hot water used with rags or toweling is recommended.

The rear window defogger system, also known as electric backlight (EBL), consists of two vertical bus bars (1) linked by a series of grid lines (2) fired onto the inside surface of the rear window (3).

The EBL system is turned On or Off by a switch and timing circuit integral to the A/C-heater control located at the center of the instrument panel.

Circuit protection is provided by two cartridge fuses located in the power distribution center (PDC). One fuse is for the heated rear window grid circuit and the other fuse is for the heated outside mirror grid circuit, when equipped.

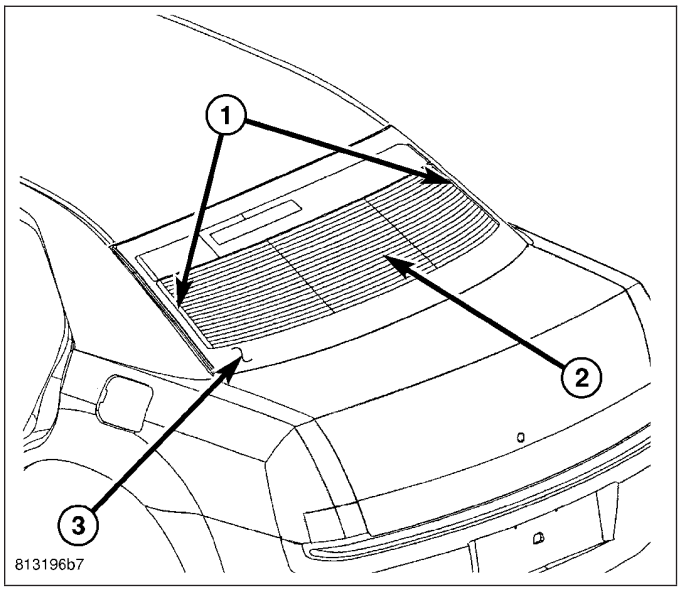

OPERATION

The electric backlight (EBL) system is controlled by a momentary switch (1) located in the A/C-heater control (2) on the instrument panel. When the rear window defogger switch is pressed to the On position, the A/C-heater control energizes the rear window defogger (EBL) relay and battery current is then directed through the relay and to the rear window defogger grid lines and the heated outside rear view mirrors, when equipped. The grid lines heat the glass to help clear the rear window and outside mirror surfaces of fog or frost.

An amber indicator (3) in the rear window defogger switch will illuminate to indicate when the EBL system is turned on. The A/C-heater control contains the EBL system control circuitry including the timer logic.

NOTE: The EBL system turns off automatically after ten minutes of initial operation. Each following activation cycle of the EBL system will last five minutes.

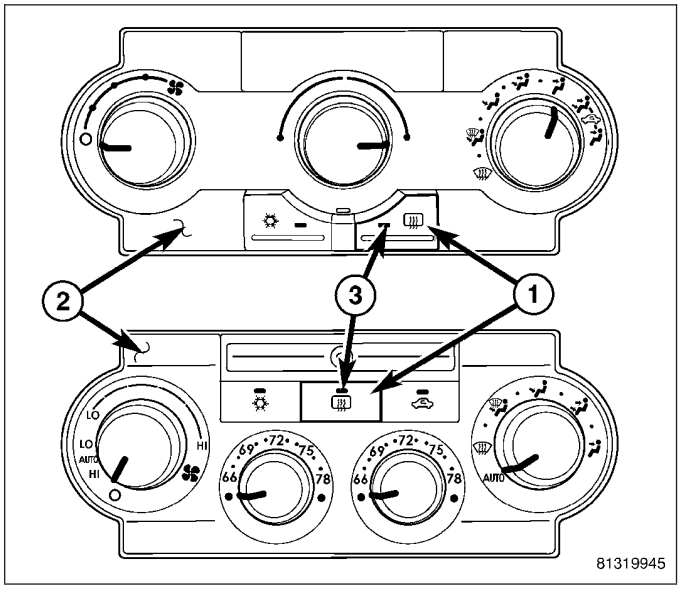

The EBL system will be automatically turned off after an initial programmed time interval of about ten minutes. After the initial time interval has expired, if the rear window defogger switch is turned on again during the same ignition cycle, the EBL system will automatically turn off after about five minutes. The EBL system will automatically shut off if the ignition switch is turned to the Off position, or it can be turned off manually by pressing the rear window defogger switch a second time.

Repair of the rear window defogger grid lines, bus bars, terminals or pigtail wires can be accomplished using the Mopar Rear Window Defogger Repair Kit (Part Number 04549275) or equivalent (Refer to 8 - ELECTRICAL/

HEATED GLASS/REAR WINDOW DEFOGGER GRID - STANDARD PROCEDURE - GRID LINE AND TERMINAL REPAIR).

DIAGNOSIS AND TESTING

ELECTRIC BACKLIGHT (EBL) SYSTEM

NOTE: Illumination of the defogger switch indicator lamp does not necessary mean that electrical current is reaching the rear glass heating grid lines.

NOTE: For circuit descriptions and diagrams of the rear window defogger system, refer to 8W - WIRING DIAGRAM INFORMATION.

Operation of the electric backlight (EBL) system can be confirmed by the following:

1. If equipped with the automatic temperature control (ATC) heating-A/C system, use a scan tool and check for diagnostic trouble codes (DTCs) related to the A/C-heater control. If equipped with the manual temperature control (MTC) heating-A/C system, use the A/C-heater control to check for diagnostic trouble codes (DTCs) related to the A/C-heater control (Refer to 24 - HEATING & AIR CONDITIONING - DIAGNOSIS AND TESTING - HVAC SELF DIAGNOSTICS). If no DTCs are found, go to Step 2. If any DTCs are found, repair as required, then proceed to Step 2

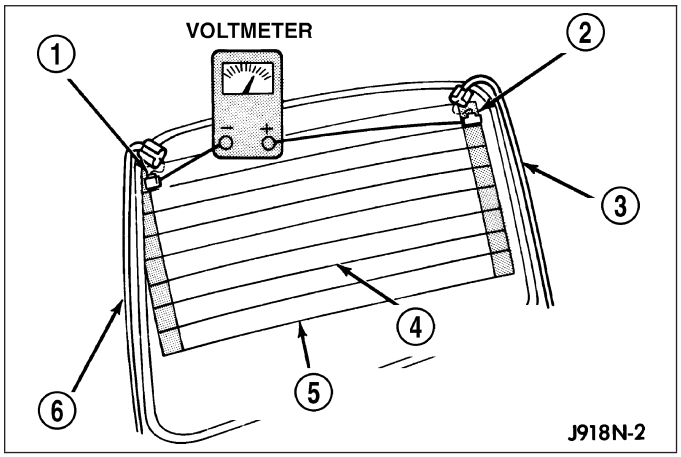

2. Turn the ignition switch to the On position. Set the rear window defogger switch in the On position. The rear window defogger operation can be checked by feeling the rear window or outside rear view mirror glass surfaces. A distinct difference in temperature between the grid lines (4 and 5) and the adjacent clear glass or the mirror glass should be detected within three to four minutes of operation.
3. If a temperature difference is not detected, use a 12-volt DC voltmeter and contact the rear glass heating grid terminal A (1) with the negative lead, and terminal B (2) with the positive lead. The voltmeter should read battery voltage. If the voltmeter does not read battery voltage, check the following:
   - Confirm that the ignition switch is in the On position.
   - Make sure that the rear glass heating grid feed wire (3) and ground wire (6) are connected to the terminals. Confirm that the ground wire has continuity to ground.
   - Check the EBL relay and fuses located in the power distribution center (PDC) in the engine compartment. The relay and fuses must be tight in their receptacles and all electrical connections must be secure.

When the above steps have been completed and the rear glass heating grid is still inoperative, one or more of the following is faulty:

- Rear window defogger switch in the A/C-heater control.
- Rear window defogger grid lines (all grid lines would have to be broken, or the power feed or the ground wire disconnected, for the entire heating grid to be inoperative).

4. If the EBL system operation has been verified but the rear window defogger LED indicator does not illuminate, replace the A/C-heater control (Refer to 24 - HEATING & AIR CONDITIONING/CONTROLS/CONTROL-A/C HEATER - REMOVAL).

GRID-REAR WINDOW DEFOGGER

STANDARD PROCEDURE

GRID LINE AND TERMINAL REPAIR

WARNING: Materials contained in the Repair Kit (Part Number 04549275) may cause skin or eye irritation. The kit contains epoxy resin and amine type hardener, which are harmful if swallowed. Avoid contact with the skin and eyes. For skin contact, wash the affected areas with soap and water. For contact with the eyes, flush with plenty of water. Do not take internally. If taken internally, induce vomiting and call a physician immediately. Use with adequate ventilation. Do not use near fire or flame. Contains flammable solvents. Keep out of the reach of children. Failure to follow the warnings could result in possible personal injury or death.

Repair of the rear glass heating grid lines, bus bars, terminals or pigtail wires can be accomplished using the Mopar Rear Window Defogger Repair Kit (Part Number 04549275) or equivalent.

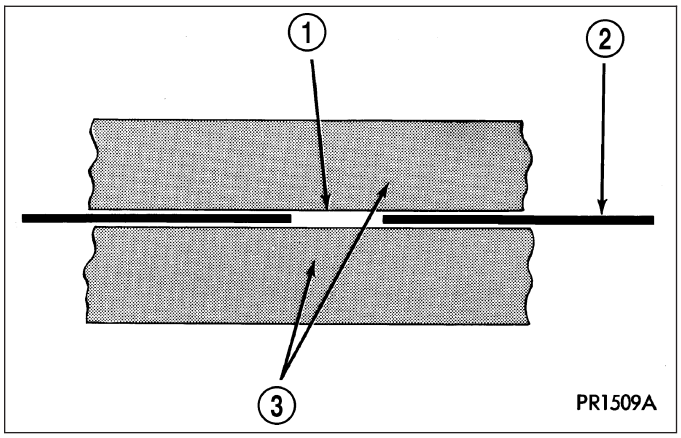

1. Mask the repair area with masking tape (3) so that the conductive epoxy can be applied neatly. Extend the epoxy application onto the grid line (2) or the bus bar on each side of the break (1).
2. Follow the instructions in the repair kit for preparing the damaged area.
3. Remove the package separator clamp and mix the two conductive epoxy components thoroughly within the packaging. Fold the package in half and cut the center corner to dispense the epoxy.
4. For grid line repairs, mask the area to be repaired with masking tape or use a template.
5. Apply the epoxy through the slit in the masking tape or template. Overlap both ends of the break by at least 19 millimeters (0.75 inch).
6. For a terminal or pigtail wire replacement, mask the adjacent areas so the epoxy can be extended onto the adjacent grid line as well as the bus bar. Apply a thin layer of epoxy to the area where the terminal or pigtail wire was fastened and onto the adjacent grid line.
7. Apply a thin layer of conductive epoxy to the terminal or bare wire end of the pigtail and place it in the proper location on the bus bar. To prevent the terminal or pigtail wire from moving while the epoxy is curing, it must be wedged or clamped.
8. Carefully remove the masking tape or template.

CAUTION: Do not allow the glass surface to exceed 204° C (400° F) when using a heat gun, or the glass may fracture.

9. Allow the epoxy to cure 24 hours at room temperature, or carefully use a heat gun for fifteen minutes. When using a heat gun, hold it approximately 25.4 centimeters (10 inches) from the repair and do not allow the glass surface to exceed 204° C (400° F).
10. After the conductive epoxy is properly cured, remove the wedge or clamp from the terminal or pigtail wire.
11. Connect the wire harness leads to the grid terminals or pigtail wires and verify EBL operation.

RELAY-REAR WINDOW DEFOGGER

DESCRIPTION

The rear window defogger (EBL) relay (1) is a International Standards Organization (ISO)-type relay. Relays conforming to the ISO specifications have common physical dimensions, current capacities, terminal functions and patterns (2). The EBL relay is a electromechanical device that switches battery current through a fuse in the power distribution center (PDC) to the rear window defogger grid and when equipped, switches battery current through a fuse in the PDC to the heated outside rear view mirrors. The EBL relay is energized when the relay coil is provided a ground path by the control circuitry within the A/C-heater control.

The EBL relay is located in the PDC at the rear of the vehicle, near the battery.

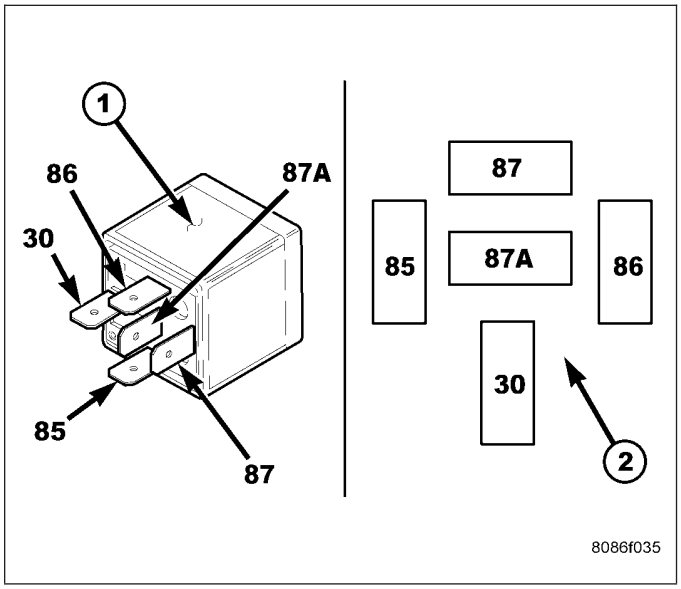

OPERATION

The ISO-standard rear window defogger (EBL) micro-relay is an electromechanical switch that uses a low current input controlled by the A/C-heater control to control the high current output to the rear window defogger grid lines. The movable, common feed relay contact is held against the fixed, normally closed relay contact by spring pressure. When the electromagnetic relay coil is energized, it draws the movable common feed relay contact away from the fixed, normally closed relay contact and, holds it against the fixed, normally open relay contact. This action allows high current to flow to the rear window defogger grid lines.

When the relay coil is de-energized, spring pressure returns the movable relay contact back against the fixed, normally closed contact point. The resistor or diode is connected in parallel with the relay coil, and helps to dissipate voltage spikes and electromagnetic interference that can be generated as the electromagnetic field of the relay coil collapses.

The EBL relay terminals are connected to the vehicle electrical system through a receptacle in the power distribution center (PDC). The inputs and outputs of the EBL relay include:

- The common feed terminal (30) receives a battery current input from a fused B(+) circuit at all times.
- The coil ground terminal (85) receives a ground through the EBL relay control circuit only when the A/C-heater control electronically pulls the circuit to ground.
- The coil battery terminal (86) receives a battery current input from a fused B(+) circuit at all times.
- The normally open terminal (87) provides battery current to the rear window defogger grid through the EBL relay output circuit and a fuse located in the PDC only when the EBL relay coil is energized.
- The normally closed terminal (87A) is not connected to any circuit in this application, but provides a battery current output only when the EBL relay coil is de-energized.

The EBL micro-relay cannot be repaired and, if faulty or damaged, it must be replaced. Refer to the appropriate wiring information for diagnosis and testing of the ISO-standard micro-relay and for complete rear window defogger (EBL) wiring diagrams.

REMOVAL

1. Disconnect and isolate the negative battery cable.
2. Open the cover of the power distribution center (PDC) (1) located at the rear of the vehicle near the battery (2).
3. Remove the EBL relay (3) from the PDC.

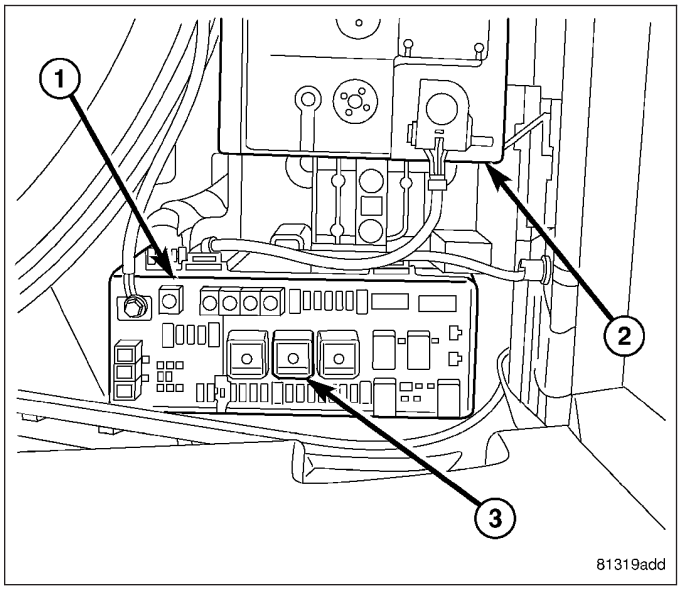

INSTALLATION

1. Position the EBL relay (3) into the proper receptacle of the power distribution center (PDC) (1) located at the rear of the vehicle near the battery (2).
2. Align the EBL relay terminals with the terminal cavities in the PDC receptacle and push down firmly on the relay until the terminals are fully seated.
3. Close the cover of the PDC.
4. Reconnect the negative battery cable.

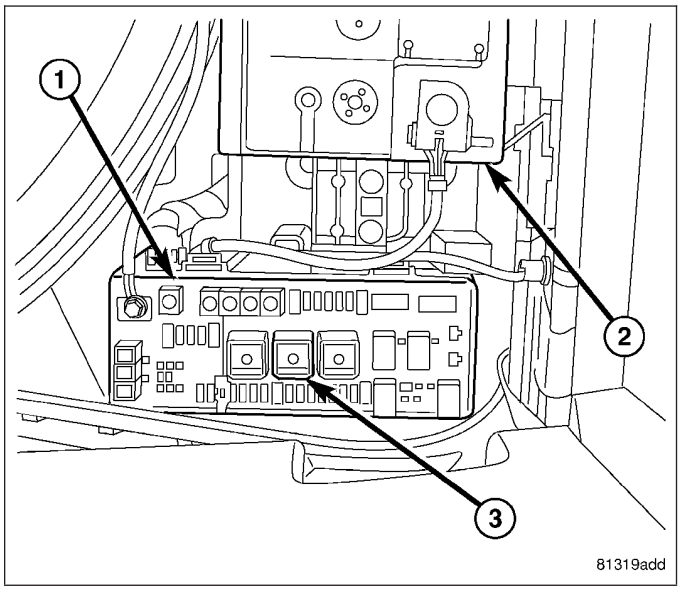

SWITCH-REAR WINDOW DEFOGGER

DESCRIPTION

The switch for the rear window defogger (EBL) system (1) is integrated into the A/C-heater control (2), which is located in the center of the instrument panel. When the rear window defogger switch is activated, the timing circuit integral to the A/C-heater control operates the rear window defogger (EBL) relay. An amber indicator (3) in the rear window defogger switch will illuminate to indicate when the EBL system is turned on.

When the EBL relay is activated, current is directed to the rear window defogger grid lines and when equipped, to the heated outside rear view mirrors. The grid lines heat the window and mirror glass to help clear the surfaces of fog or frost.

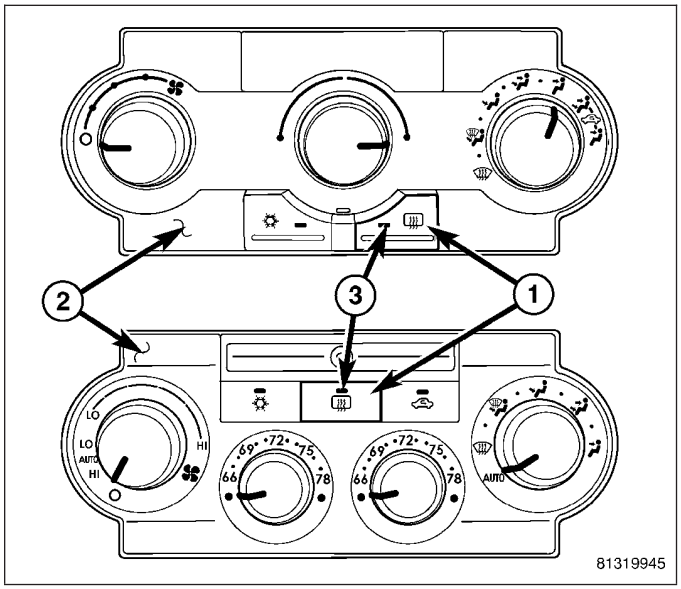

OPERATION

An LED indicator will illuminate when the rear window defogger switch is activated. When the switch is activated, the A/C-heater control operates the rear window defogger (EBL) relay. The EBL relay controls the current flow to the heating grid of the rear window and when equipped, the heated outside rear view mirrors.

NOTE: The EBL system turns off automatically after ten minutes of initial operation. Each following activation cycle of the EBL system will last five minutes.

The EBL system will initially be on for approximately ten minutes or until the rear window defogger switch or the ignition switch is turned off. After the initial time interval has expired, if the defogger switch is turned On again during the same ignition cycle, the EBL system will automatically turn off after about five minutes.

NOTE: ATC A/C-heater controls are NOT interchangeable between other model years or other vehicle lines. If replacement of the A/C-heater control is required, only use the control designed for the vehicle being serviced.

The rear window defogger switch and the rear window defogger LED indicator cannot be repaired and, if faulty or damaged, the A/C-heater control must be replaced (Refer to 24 - HEATING & AIR CONDITIONING/CONTROLS/ CONTROL-A/C HEATER - REMOVAL).

HEATED MIRRORS - SERVICE INFORMATION

TABLE OF CONTENTS

page

HEATED MIRRORS - SERVICE INFORMATION
DESCRIPTION 9
OPERATION 9

HEATED MIRRORS - SERVICE INFORMATION

DESCRIPTION

The optional heated mirror system is controlled by the momentary rear window defogger switch (1) which is integral to the A/C-heater control (2). An amber indicator lamp in the switch (3) will illuminate to indicate when the rear window defogger (EBL) system is turned on.

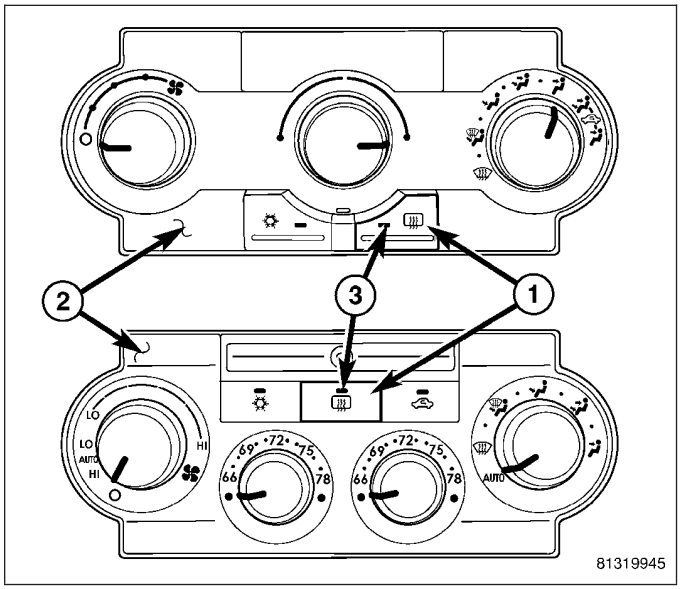

The heated mirror system only operates in concert with the EBL system, and will be automatically shut off after a programmed time interval of about ten minutes. After the initial time interval has expired, if the defogger switch is turned on again during the same ignition cycle, the heated mirror system will automatically shut off after about five minutes.

The heated mirror system will automatically shut off if the ignition switch is turned to the Off position, or it can be shut off manually by pressing the rear window defogger switch a second time.

OPERATION

When the rear window defogger switch is pressed, the rear window defogger (EBL) system becomes activated and an electric heater grid located behind the glass of each of the outside rear view mirrors is energized. When energized, each of these heater grids produce heat to help clear the outside rear view mirrors of ice, snow, or fog.

If the outside mirror heating grids are both inoperative, refer to 8 - ELECTRICAL/HEATED GLASS - DIAGNOSIS AND TESTING in this group. If only one of the outside mirror heating grids is inoperative, refer to 8 - ELECTRICAL/ POWER MIRRORS - DIAGNOSIS AND TESTING.

The heating grid behind each outside mirror glass cannot be repaired and, if faulty or damaged, the mirror glass must be replaced (Refer to 23 - BODY/EXTERIOR/MIRROR-SIDE VIEW - GLASS - REMOVAL).

HEATED SEATS - ELECTRICAL DIAGNOSTICS

TABLE OF CONTENTS

page

HEATED SEATS - ELECTRICAL DIAGNOSTICS
DIAGNOSIS AND TESTING
B1084-LEFT HEATED SEAT SWITCH INPUT CIRCUIT/PERFORMANCE 12
B1087-RIGHT HEATED SEAT SWITCH INPUT CIRCUIT/PERFORMANCE 15
B1092-FRONT LEFT SEAT HEATER CONTROL CIRCUIT LOW. 18
B1094-FRONT LEFT SEAT HEATER CONTROL CIRCUIT OPEN. 22
B1096-FRONT RIGHT SEAT HEATER CONTROL CIRCUIT LOW. 26
B1098-FRONT RIGHT SEAT HEATER CONTROL CIRCUIT OPEN. 30
B120E-LEFT HEATED SEAT HI INDICATOR CONTROL CIRCUIT HIGH 34
B120F-LEFT HEATED SEAT HI INDICATOR CONTROL CIRCUIT OPEN. 37
B1216-LEFT HEATED SEAT LO INDICATOR CONTROL CIRCUIT HIGH 41
B1217-LEFT HEATED SEAT LO INDICATOR CONTROL CIRCUIT OPEN. 44
B121A-RIGHT HEATED SEAT HI INDICATOR CONTROL CIRCUIT HIGH 48
B121B-RIGHT HEATED SEAT HI INDICATOR CONTROL CIRCUIT OPEN. 51
B1222-RIGHT HEATED SEAT LO INDICATOR CONTROL CIRCUIT HIGH 55
B1223-RIGHT HEATED SEAT LO INDICATOR CONTROL CIRCUIT OPEN. 58
B210D-BATTERY VOLTAGE LOW 62
B210E-BATTERY VOLTAGE HIGH 64
B221A-HEATED SEAT MODULE INTERNAL . . . 66
U0019–CAN B BUS – HSM 67
U0141–LOST COMMUNICATION WITH FRONT CONTROL MODULE 70

page

U0151-LOST COMMUNICATION WITH OCCUPANT RESTRAINT CONTROLLER 70
U0154-LOST COMMUNICATION WITH OCCUPANT CLASSIFICATION MODULE 70
U0155-LOST COMMUNICATION WITH CLUSTER/CCN 70
U0156-LOST COMMUNICATION WITH EOM . . . 70
U0159-LOST COMMUNICATION WITH PARKING ASSIST CONTROL MODULE 70
U0164-LOST COMMUNICATION WITH HVAC CONTROL MODULE 70
U0168-LOST COMMUNICATION WITH VEHICLE SECURITY CONTROL MODULE (SKREEM/WCM) 70
U0169-LOST COMMUNICATION WITH SUNROOF CONTROL MODULE. 70
U0181-LOST COMMUNICATION WITH HEADLAMP LEVELING TRANSLATOR 71
U0184-LOST COMMUNICATION WITH RADIO 71
U0186-LOST COMMUNICATION WITH AUDIO AMPLIFIER 71
U0195-LOST COMMUNICATION WITH SDARS 71
U0197-LOST COMMUNICATION WITH HFM . . . 71
U0199-LOST COMMUNICATION WITH DRIVER DOOR MODULE 71
U0200-LOST COMMUNICATION WITH PASSENGER DOOR MODULE 71
U0209-LOST COMMUNICATION WITH MEMORY SEAT CONTROL MODULE 71
U0212-LOST COMMUNICATION WITH SCCM - CAN B 71
U0231-LOST COMMUNICATION WITH RAIN SENSING MODULE 72

HEATED SEATS - ELECTRICAL DIAGNOSTICS

DIAGNOSIS AND TESTING

B1084-LEFT HEATED SEAT SWITCH INPUT CIRCUIT/PERFORMANCE

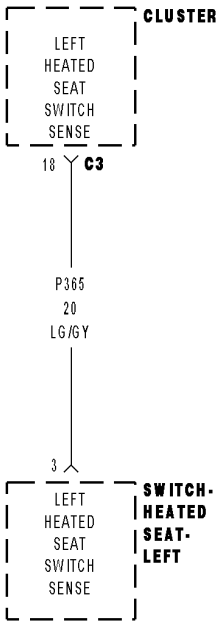

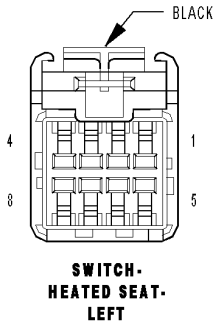

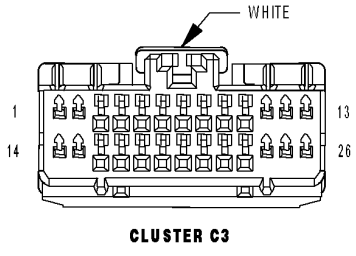

81337ebe

For a complete wiring diagram **Refer to Section 8W**.

- **When Monitored:**Ignition on, during the heated seat operation.
- **Set Condition:**This code is set after the Cluster detects the heated seat switch sense circuit low for a predetermined amount of time.

Possible Causes
(P365) LEFT HEATED SEAT SWITCH SENSE SHORTED TO GROUND
LEFT HEATED SEAT SWITCH
CLUSTER

Diagnostic Test

1. VERIFY THAT DTC B1084-LEFT HEATED SEAT SWITCH INPUT CIRCUIT/PERFORMANCE IS ACTIVE

With the scan tool, record and erase DTC's
Operate the Heated Seat Switch in both positions several times.
With the scan tool, read DTC's.

Is the DTC B1084 LEFT HEATED SEAT SWITCH INPUT CIRCUIT/ PERFORMANCE active?

Yes >> Go To 2

No >> The conditions that caused this code to set are not present at this time. Using the wiring diagram/schematic as a guide, inspect the wiring and connectors.
Perform BODY VERIFICATION TEST – VER 1. (Refer to BODY VERIFICATION TEST – VER 1).

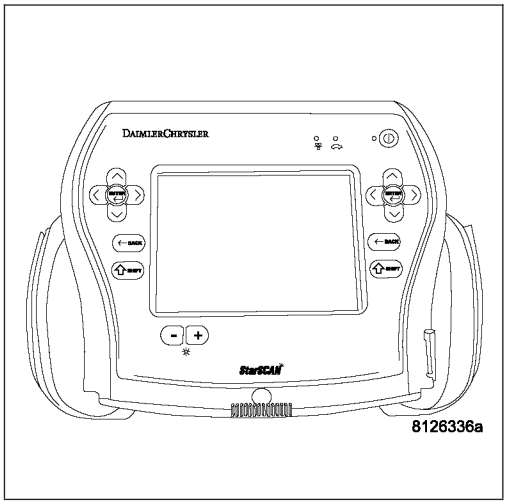

2. DISCONNECT THE LEFT HEATED SEAT SWITCH CONNECTOR AND CHECK SWITCH STATUS

Turn the ignition switch off.
Disconnect the Left Heated Seat Switch connector.

NOTE: Check connectors - Clean and repair as necessary.
Turn the ignition on.
With the scan tool in CCN Inputs/Outputs, read the Left Heated Seat state.

Does the switch state display Not Set?

Yes >> Replace the Left Heated Seat Switch.
Perform BODY VERIFICATION TEST – VER 1. (Refer to BODY VERIFICATION TEST – VER 1).

No >> Go To 3

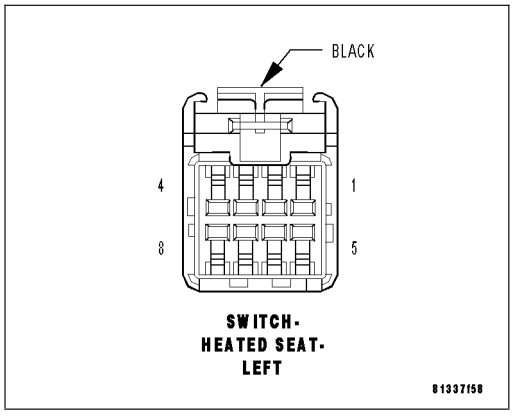

3. CHECK THE (P365) LEFT HEATED SEAT SWITCH SENSE CIRCUIT FOR A SHORT TO GROUND

Turn the ignition switch off.

Disconnect the Cluster C3 connector.

Measure the resistance between ground and the (P365) Left Heated Seat Switch sense circuit.

Was the resistance below 5.0 ohms?

Yes >> Repair the (P365) Left Heated Seat Switch sense circuit for a short to ground

Perform BODY VERIFICATION TEST – VER 1. (Refer to BODY VERIFICATION TEST – VER 1).

No >> Replace the Cluster in accordance with the Service Information.

Perform BODY VERIFICATION TEST – VER 1. (Refer to BODY VERIFICATION TEST – VER 1).

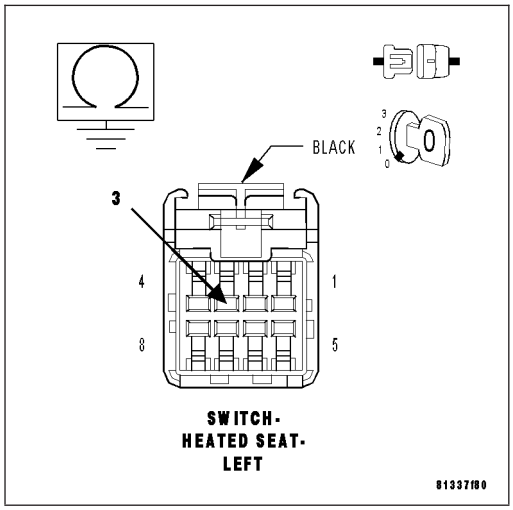

B1087-RIGHT HEATED SEAT SWITCH INPUT CIRCUIT/PERFORMANCE

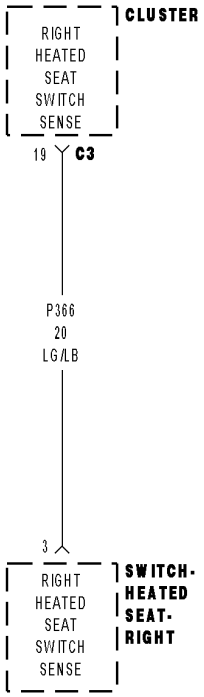

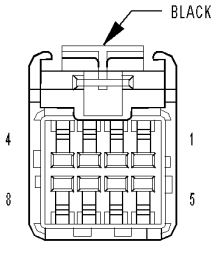

SWITCH-HEATED SEAT-RIGHT

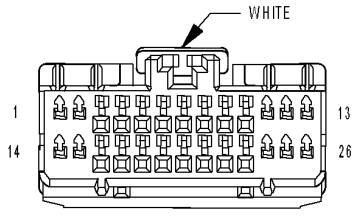

CLUSTER C3

81378833

For a complete wiring diagram **Refer to Section 8W**.

- **When Monitored:**Ignition on, during the heated seat operation.
- **Set Condition:**This code is set after the Cluster detects the heated seat switch sense circuit low for a predetermined amount of time.

Possible Causes
(P366) RIGHT HEATED SEAT SWITCH SENSE SHORTED TO GROUND
RIGHT HEATED SEAT SWITCH
CLUSTER

Diagnostic Test

1. VERIFY THAT DTC B1087-RIGHT HEATED SEAT SWITCH INPUT CIRCUIT/PERFORMANCE IS ACTIVE

With the scan tool, record and erase DTC's
Operate the Heated Seat Switch in both positions several times.
With the scan tool, read DTC's.

Is the DTC B1087 RIGHT HEATED SEAT SWITCH INPUT CIRCUIT/PERFORMANCE active?

Yes >> Go To 2

No >> The conditions that caused this code to set are not present at this time. Using the wiring diagram/schematic as a guide, inspect the wiring and connectors.
Perform BODY VERIFICATION TEST – VER 1. (Refer to BODY VERIFICATION TEST – VER 1).

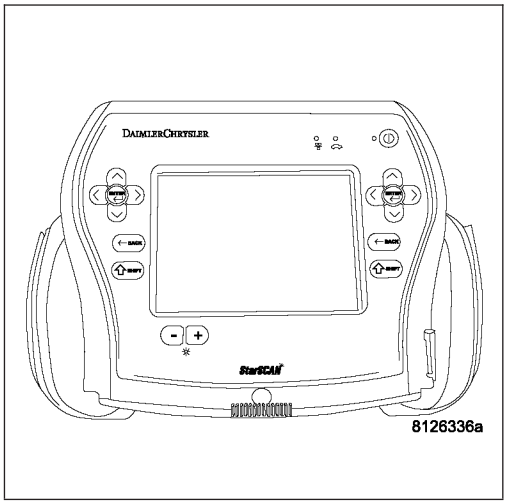

2. DISCONNECT THE RIGHT HEATED SEAT SWITCH CONNECTOR AND CHECK SWITCH STATUS

Turn the ignition switch off.
Disconnect the Right Heated Seat Switch connector.

NOTE: Check connectors - Clean and repair as necessary.
Turn the ignition on.
With the scan tool in CCN Inputs/Outputs, read the Right Heated Seat state.

Does the switch state display Not Set?

Yes >> Replace the Right Heated Seat Switch.
Perform BODY VERIFICATION TEST – VER 1. (Refer to BODY VERIFICATION TEST – VER 1).

No >> Go To 3

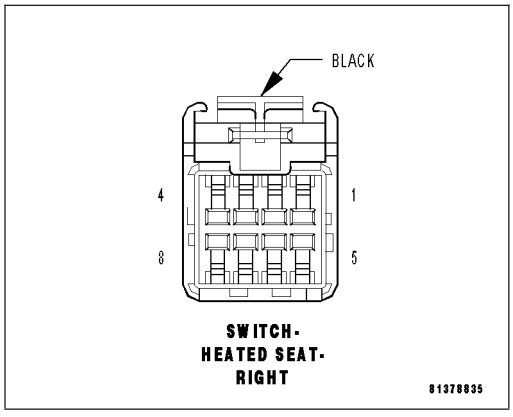

3. CHECK THE (P366) RIGHT HEATED SEAT SWITCH SENSE CIRCUIT FOR A SHORT TO GROUND

Turn the ignition switch off.

Disconnect the Cluster C3 connector.

Measure the resistance between ground and the (P366) Right Heated Seat Switch sense circuit.

Was the resistance below 5.0 ohms?

Yes >> Repair the (P366) Right Heated Seat Switch sense circuit for a short to ground

Perform BODY VERIFICATION TEST – VER 1. (Refer to BODY VERIFICATION TEST – VER 1).

No >> Replace the Cluster in accordance with the Service Information.

Perform BODY VERIFICATION TEST – VER 1. (Refer to BODY VERIFICATION TEST – VER 1).

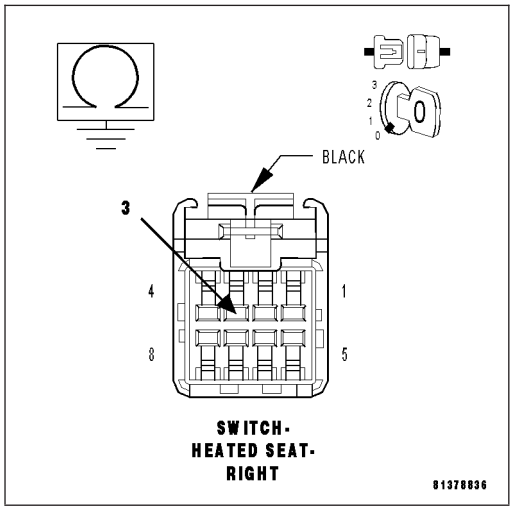

B1092-FRONT LEFT SEAT HEATER CONTROL CIRCUIT LOW

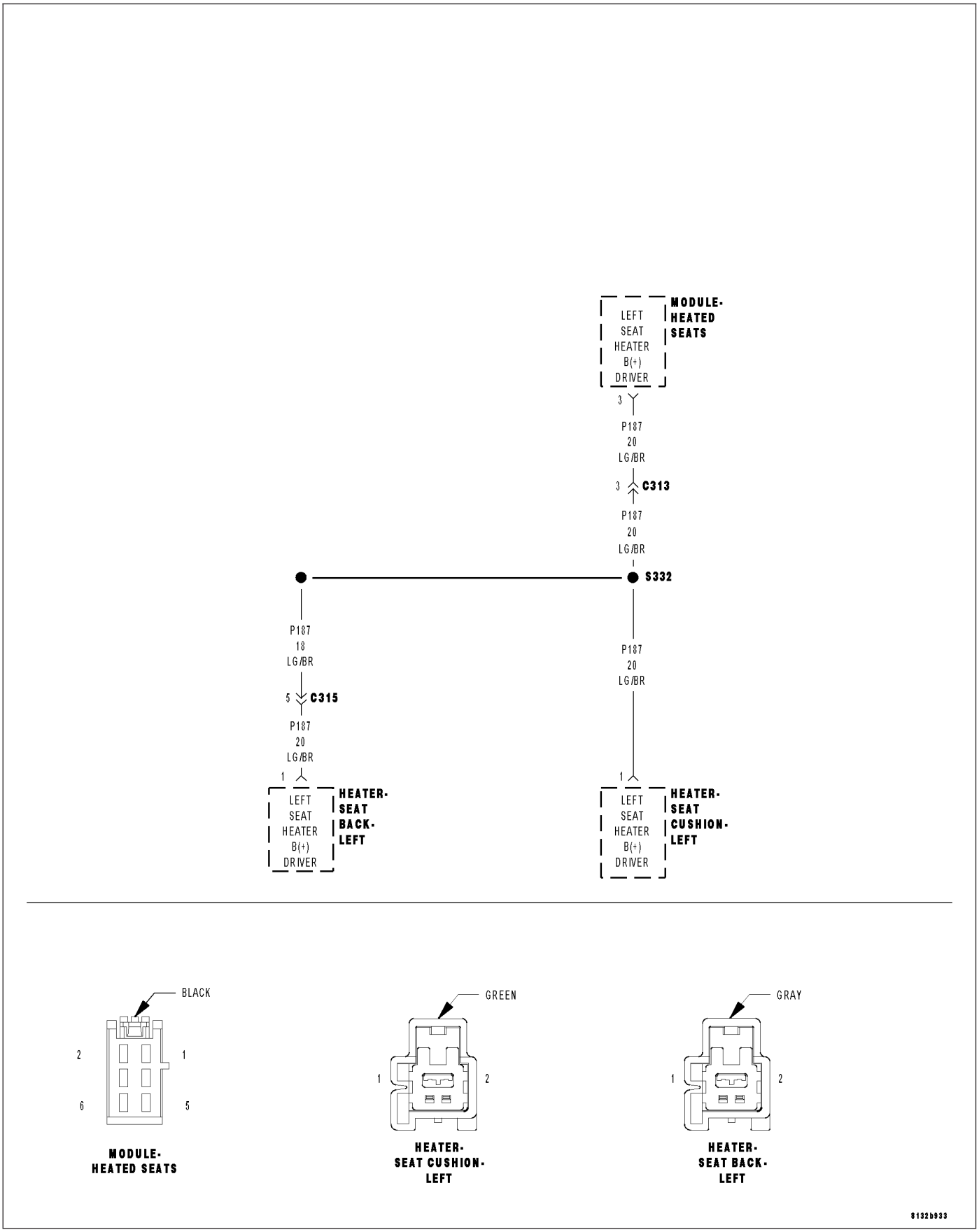

For a complete wiring diagram **Refer to Section 8W**.

- **When Monitored:**Ignition on, during the heated seat operation.
- **Set Condition:**This code is set immediately after the Heated Seat Module detects the control circuit shorted to ground.

Possible Causes
(P187) DRIVER SEAT HEATER B(+) DRIVER SHORTED TO GROUND
SEAT HEATER ELEMENT PIGTAIL HARNESS SHORTED
SEAT CUSHION HEATER ELEMENT SHORTED
SEAT BACK HEATER ELEMENT SHORTED
HEATED SEAT MODULE

Diagnostic Test

1. VERIFY THAT DTC B1092-FRONT LEFT SEAT HEATER CONTROL CIRCUIT LOW IS ACTIVE

With the scan tool, record and erase DTC's
Operate the Heated Seat Switch in both positions several times.
With the scan tool, read DTC's.

Does the DTC B1092 FRONT LEFT SEAT HEATER CONTROL CIRCUIT LOW reset?

Yes >> Go To 2

No >> The conditions that caused this code to set are not present at this time. Using the wiring diagram/schematic as a guide, inspect the wiring and connectors.
Perform BODY VERIFICATION TEST – VER 1. (Refer to BODY VERIFICATION TEST – VER 1).

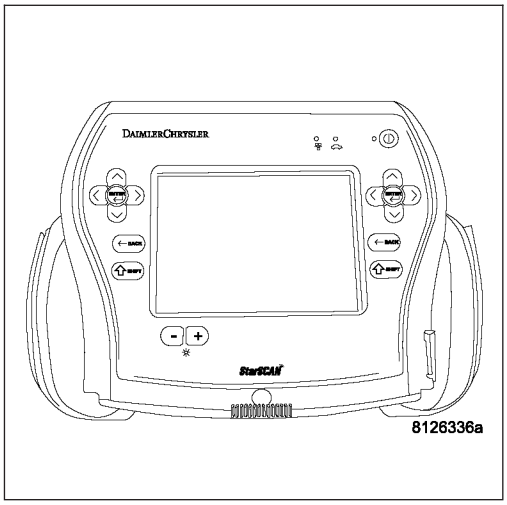

2. DISCONNECT LEFT CUSHION HEATER 2-WAY CONNECTOR AND READ DTC'S

Disconnect the Left Seat Cushion Heater connector.

NOTE: Check connectors - Clean and repair as necessary.
With the scan tool, erase HSM DTC's
Operate the Heated Seat Switch in both positions several times.
With the scan tool, read DTC's.

Does the scan tool display the same DTC?

Yes >> Go To 7

No >> Go To 3

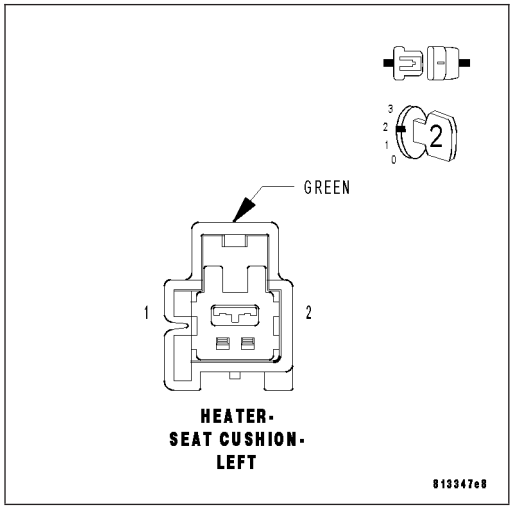

3. CHECK THE LEFT SEAT BACK HEATER RESISTANCE

Disconnect the Left Seat Back Heater connector.

NOTE: Check connectors - Clean and repair as necessary.
Check the resistance of the seat back heater element by measuring between the (P187) Left Seat Heater B(+) Driver and the Ground circuit at the Left seat back heater connector.

Is the resistance below 4.0 ohms?

No >> Go To 4

Yes >> Replace the seat back heater element as necessary.
Perform BODY VERIFICATION TEST – VER 1 (Refer to BODY VERIFICATION TEST – VER 1).

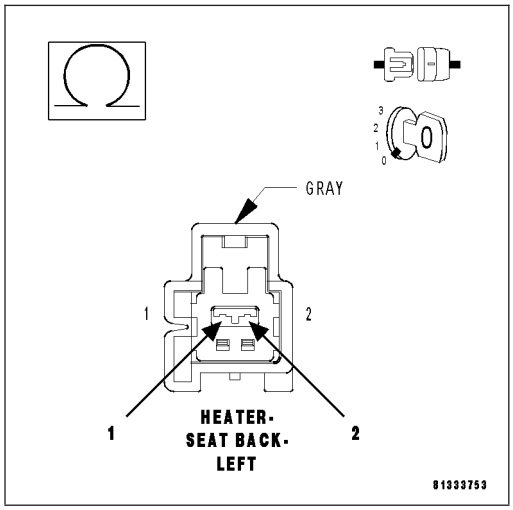

4. CHECK THE LEFT SEAT BACK HEATER FOR A SHORT TO GROUND

Measure between the (P187) Left Seat Heater B(+) Driver circuit at the Left seat back heater connector and the seat frame for a short to ground.

Is the resistance below 1000 ohms?

Yes >> Repair the pigtail harness for a short to ground condition or replace the seat back heater element as necessary.
Perform BODY VERIFICATION TEST – VER 1. (Refer to BODY VERIFICATION TEST – VER 1).

No >> Go To 5

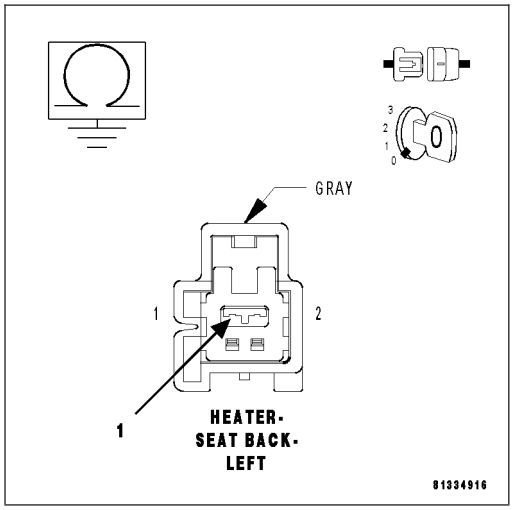

5. CHECK THE LEFT CUSHION HEATER RESISTANCE

Check the resistance of the cushion heater element by measuring between the (P187) Left Seat Heater B(+) Driver and the Ground circuit at the Left seat cushion heater connector.

Was the resistance below 3.5 ohms?

No >> Go To 6

Yes >> Replace the heater element as necessary.
Perform BODY VERIFICATION TEST – VER 1. (Refer to BODY VERIFICATION TEST – VER 1).

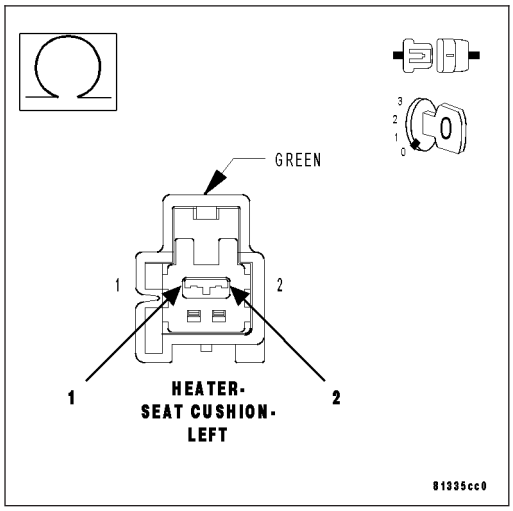

6. CHECK THE LEFT CUSHION HEATER FOR A SHORT TO GROUND

Measure between the (P187) Left Seat Heater B(+) Driver circuit at the Left seat cushion heater connector and the seat frame for a short to ground.

Is the resistance below 1000 ohms?

Yes >> Repair the pigtail harness or replace the heater element as necessary.
Perform BODY VERIFICATION TEST – VER 1. (Refer to BODY VERIFICATION TEST – VER 1).

No >> Using the wiring diagram/schematic as a guide, inspect the wiring and connectors for an intermittent short to ground.
Perform BODY VERIFICATION TEST – VER 1. (Refer to BODY VERIFICATION TEST – VER 1).

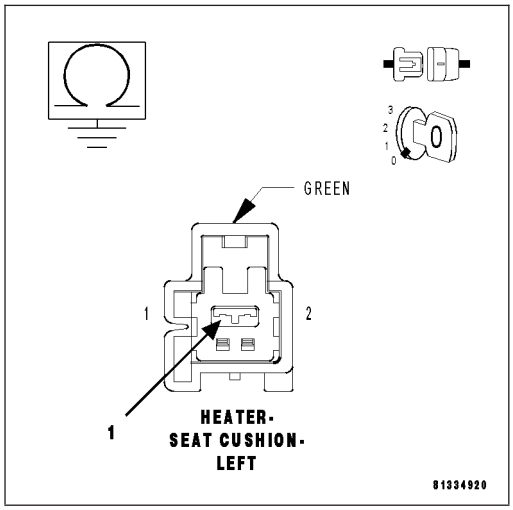

7. Check the (P187) Left Seat Heater B(+) Driver circuit for a short to ground

Disconnect the Heat Seat Module connector.

NOTE: Check connectors - Clean and repair as necessary.
Measure the (P187) Left Seat Heater B(+) Driver circuit to ground at the HSM connector.

Is the resistance below 5.0 ohms?

Yes >> Repair the (P187) Left Seat Heater B(+) Driver circuit for a short to ground.
Perform BODY VERIFICATION TEST – VER 1. (Refer to BODY VERIFICATION TEST – VER 1).

No >> Replace the Heated Seat Module.
Perform BODY VERIFICATION TEST – VER 1. (Refer to BODY VERIFICATION TEST – VER 1).

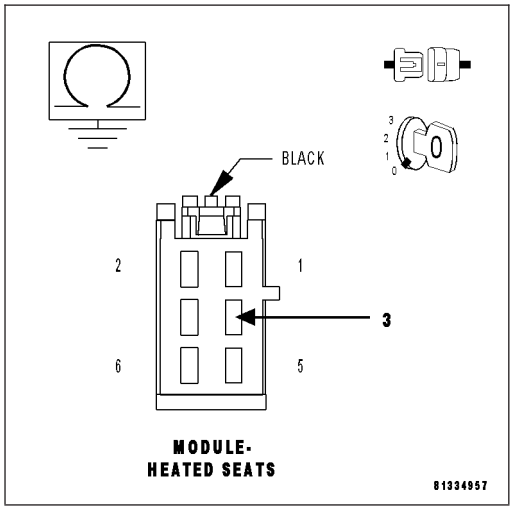

B1094-FRONT LEFT SEAT HEATER CONTROL CIRCUIT OPEN

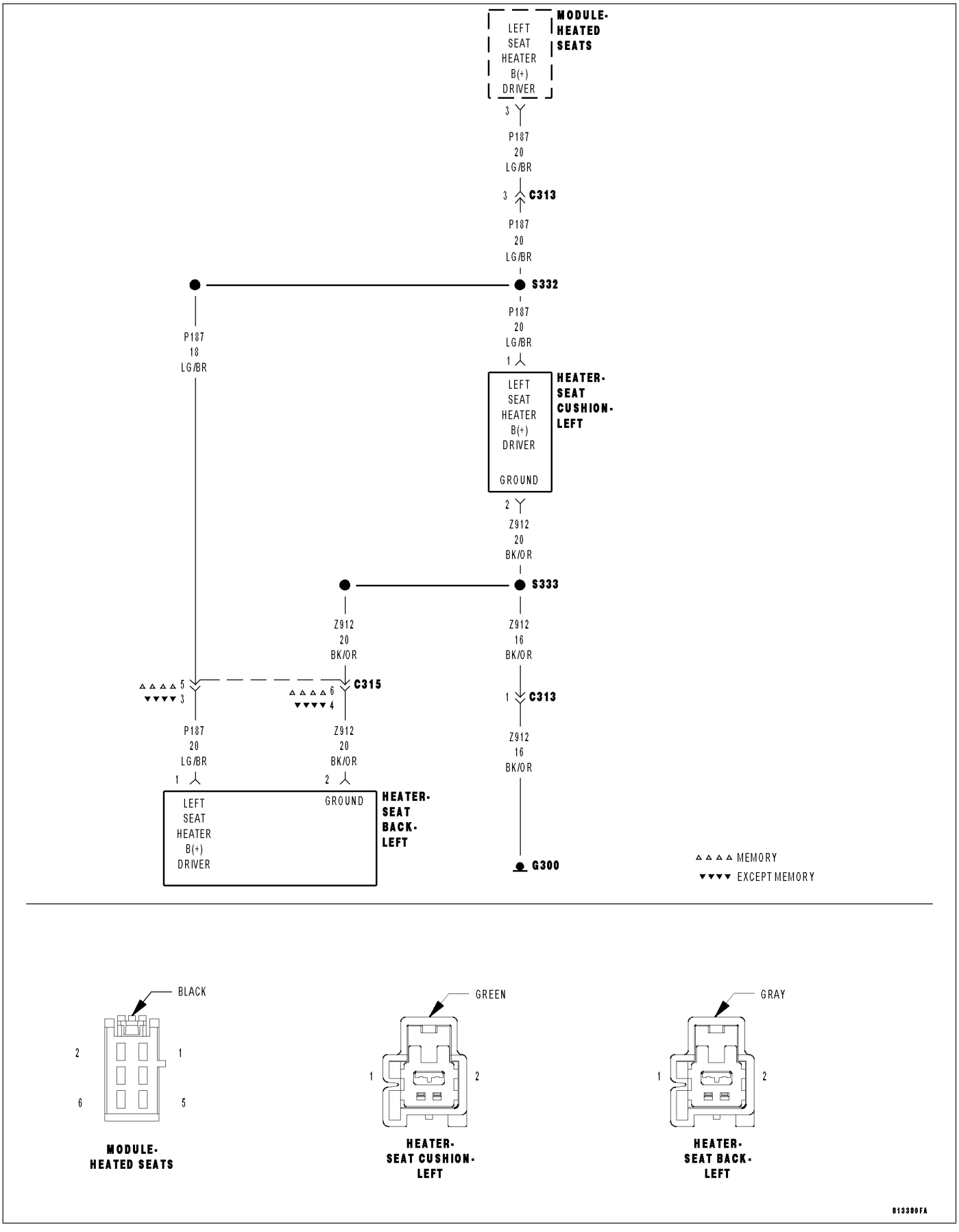

For a complete wiring diagram **Refer to Section 8W**.

- **When Monitored:**Ignition on, during the heated seat operation.
- **Set Condition:**This code is set immediately after the Heated Seat Module detects an open in the seat heater B(+) driver circuit.

Possible Causes
(P187) LEFT SEAT HEATER B(+) DRIVER WIRE OPEN
(Z912) GROUND WIRE OPEN
SEAT CUSHION HEATER ELEMENT OPEN
SEAT BACK HEATER ELEMENT OPEN
HEATED SEAT MODULE

Diagnostic Test

1. VERIFY THAT DTC B1094-FRONT LEFT SEAT HEATER CONTROL CIRCUIT OPEN IS ACTIVE

With the scan tool, record and erase DTC's
Operate the Heated Seat Switch in both positions several times.
With the scan tool, read DTC's.

Does the DTC B1094 FRONT LEFT SEAT HEATER CONTROL CIRCUIT OPEN reset?

Yes >> Go To 2

No >> The conditions that caused this code to set are not present at this time. Using the wiring diagram/schematic as a guide, inspect the wiring and connectors.
Perform BODY VERIFICATION TEST – VER 1. (Refer to BODY VERIFICATION TEST – VER 1).

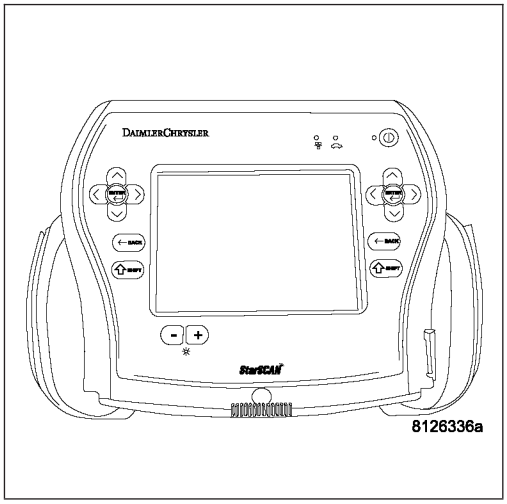

2. CHECK FOR AN OPEN SEAT HEATER ELEMENT

Disconnect the Left Seat Cushion Heater 2 – way connector.

NOTE: Check connectors - Clean and repair as necessary.
Measure the total resistance of the cushion and seat back heater elements at the Left Seat Cushion 2 – way connector (seat side).

Is the total resistance 2.5 ohms + or – .5 ohms?

Yes >> Go To 4

No >> Go To 3

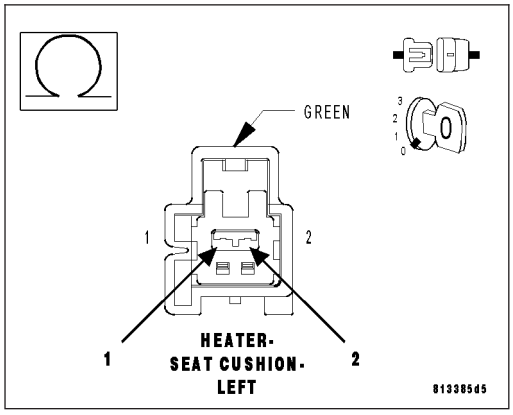

3. CHECK THE LEFT SEAT BACK HEATER RESISTANCE

Disconnect the Left Seat Back Heater 2 – way connector.

NOTE: Check connectors - Clean and repair as necessary.
Check the resistance of the seat back heater element by measuring between the (P187) Left Seat Heater B(+) Driver and the Ground circuit at the connector.

Is the resistance above 5.8 ohms?

Yes >> Repair the open pigtail harness or replace the seat back heater element as necessary.
Perform BODY VERIFICATION TEST – VER 1. (Refer to BODY VERIFICATION TEST – VER 1).

No >> Repair the open pigtail harness or replace the seat cushion heater element as necessary.
Perform BODY VERIFICATION TEST – VER 1. (Refer to BODY VERIFICATION TEST – VER 1).

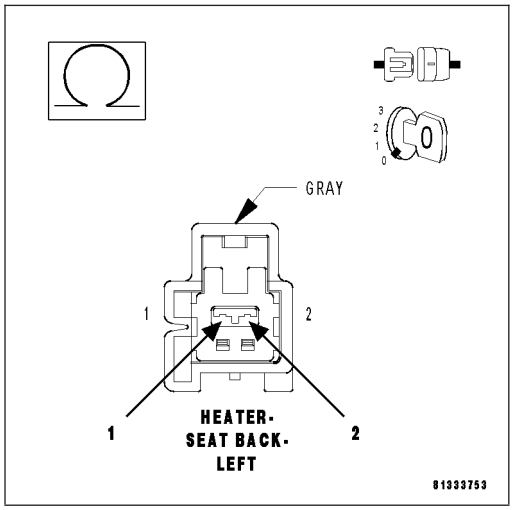

4. CHECK THE LEFT SEAT HEATER GROUND CIRCUIT RESISTANCE

Measure the resistance of the Ground circuit at the Left Seat Heater Cushion 2 – way connector.

Was the resistance below 5.0 ohms?

Yes >> Go To 5

No >> Repair the open ground circuit.
Perform BODY VERIFICATION TEST – VER 1. (Refer to BODY VERIFICATION TEST – VER 1).

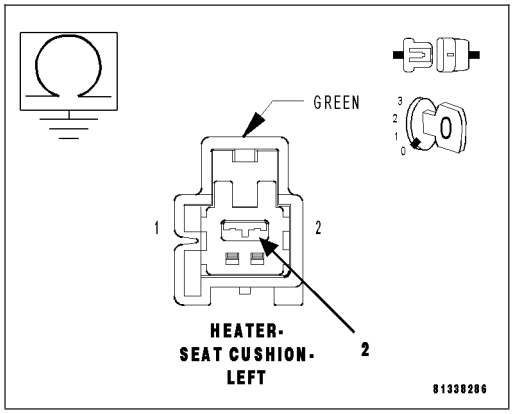

5. Check the (P187) Left Seat Heater B(+) Driver circuit for an open.

Disconnect the Heated Seat Module connector.

NOTE: Check connectors - Clean and repair as necessary.
Measure the (P187) Left Seat Heater B(+) Driver circuit from the Left Seat Cushion Heater 2–way connector (harness side) to the HSM connector.

Is the resistance below 5.0 ohms?

Yes >> Replace the Heated Seat Module.
Perform BODY VERIFICATION TEST – VER 1. (Refer to BODY VERIFICATION TEST – VER 1).

No >> Repair the (P187) Left Seat Heater B(+) Driver circuit for an open.
Perform BODY VERIFICATION TEST – VER 1. (Refer to BODY VERIFICATION TEST – VER 1).

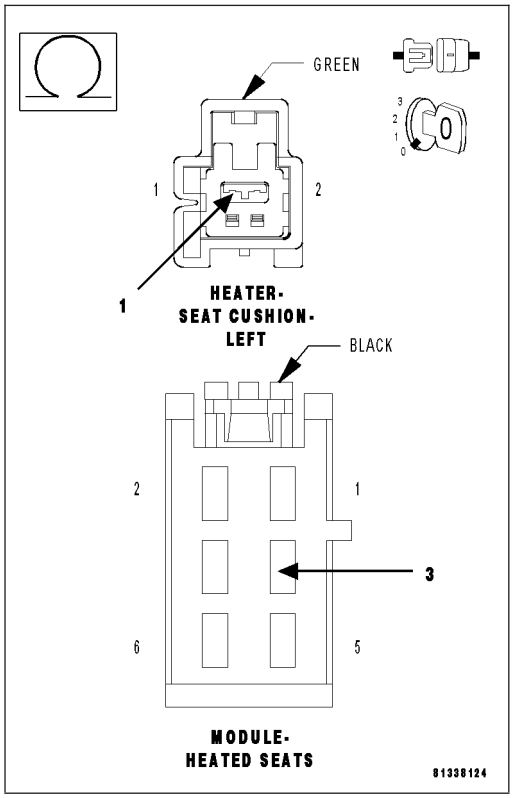

B1096-FRONT RIGHT SEAT HEATER CONTROL CIRCUIT LOW

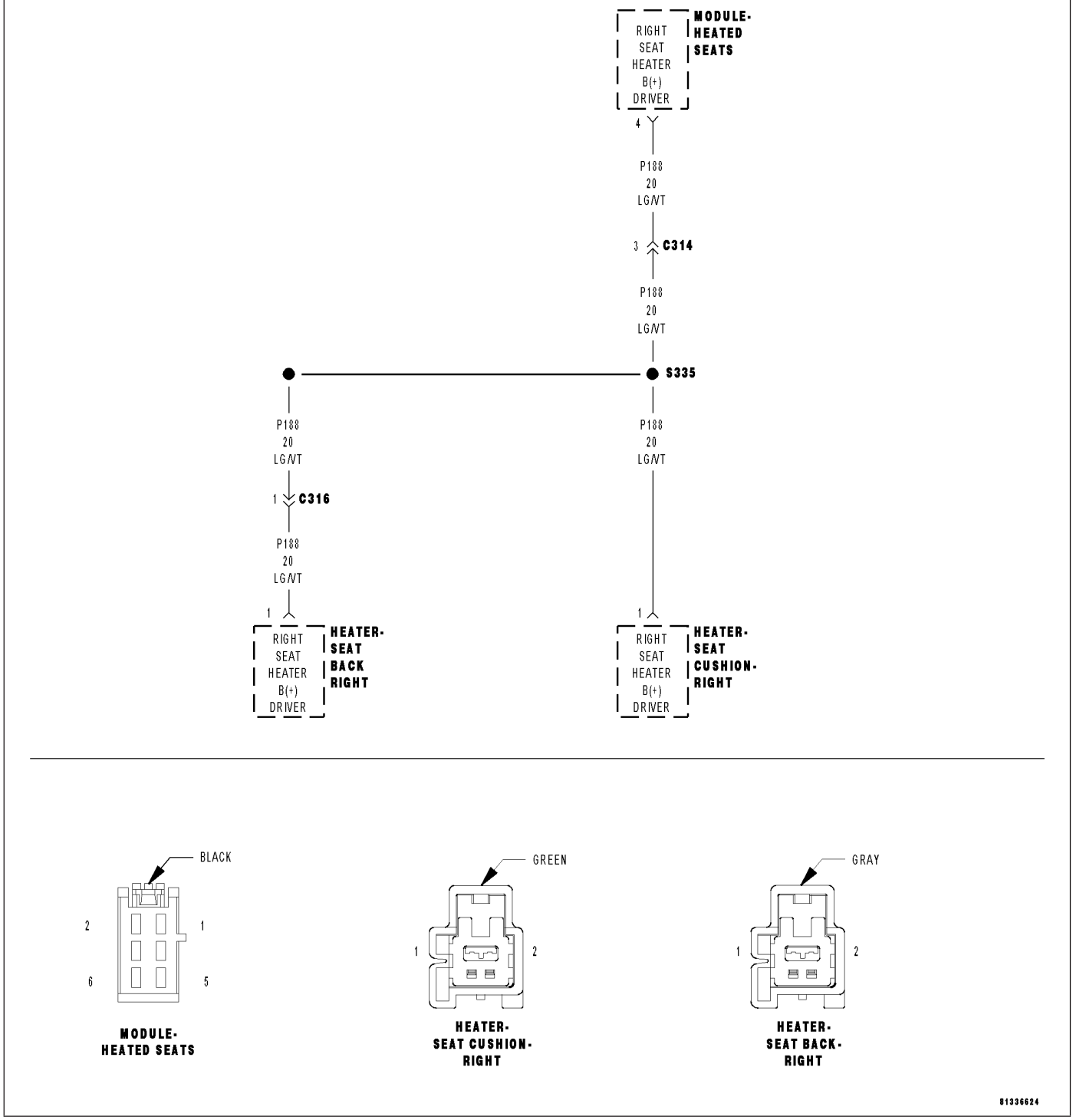

For a complete wiring diagram **Refer to Section 8W**.

- **When Monitored:**Ignition on, during the heated seat operation.
- **Set Condition:**This code is set immediately after the Heated Seat Module detects the seat heater B(+) driver circuit shorted to ground.

Possible Causes
(P188) RIGHT SEAT HEATER B(+) DRIVER SHORTED TO GROUND
SEAT HEATER ELEMENT PIGTAIL HARNESS SHORTED
SEAT CUSHION HEATER ELEMENT SHORTED
SEAT BACK HEATER ELEMENT SHORTED
HEATED SEAT MODULE

Diagnostic Test

1. VERIFY THAT DTC B1096-FRONT RIGHT SEAT HEATER CONTROL CIRCUIT LOW IS ACTIVE

With the scan tool, record and erase DTC's
Operate the Heated Seat Switch in both positions several times.
With the scan tool, read DTC's.

Does the DTC B1096-FRONT RIGHT SEAT HEATER CONTROL CIRCUIT LOW reset?

Yes >> Go To 2

No >> The conditions that caused this code to set are not present at this time. Using the wiring diagram/schematic as a guide, inspect the wiring and connectors.
Perform BODY VERIFICATION TEST – VER 1. (Refer to BODY VERIFICATION TEST – VER 1).

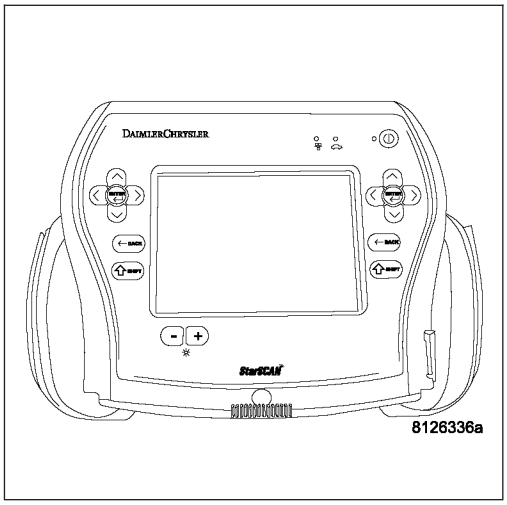

2. DISCONNECT RIGHT SEAT CUSHION HEATER 2-WAY CONNECTOR AND READ DTC'S

Disconnect the Right Seat Cushion Heater connector.

NOTE: Check connectors - Clean and repair as necessary.
With the scan tool, erase HSM DTC's
Operate the Heated Seat Switch in both positions several times.
With the scan tool, read DTC's.

Does the scan tool display the same DTC?

Yes >> Go To 7

No >> Go To 3

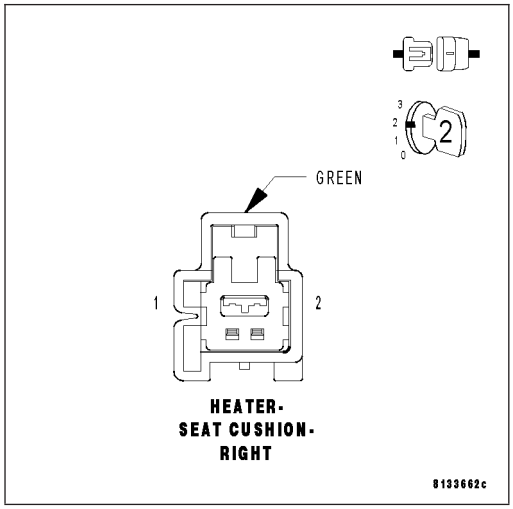

3. CHECK THE RIGHT SEAT BACK HEATER RESISTANCE

Disconnect the Right Seat Back Heater connector.

NOTE: Check connectors - Clean and repair as necessary.
Check the resistance of the seat back heater element by measuring between the (P188) Right Seat Heater B(+) Driver and the Ground circuit at the Right seat back heater connector.

Is the resistance below 4.0 ohms?

No >> Go To 4

Yes >> Replace the seat back heater element as necessary.
Perform BODY VERIFICATION TEST – VER 1. (Refer to BODY VERIFICATION TEST – VER 1).

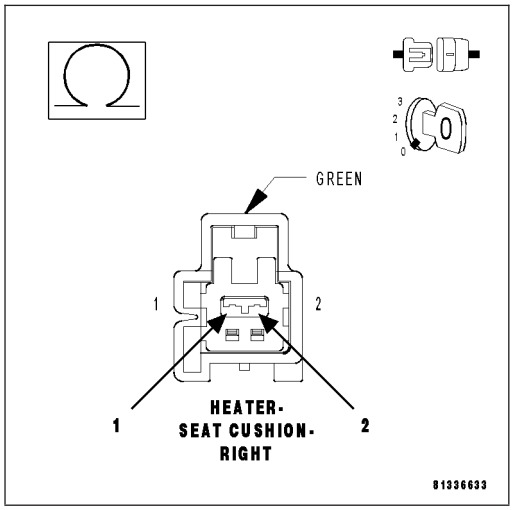

4. CHECK THE RIGHT SEAT BACK HEATER FOR A SHORT TO GROUND

Measure between the (P188) Right Seat Heater B(+) Driver circuit at the Right Seat Back Heater connector and the seat frame for a short to ground.

Is the resistance below 1000 ohms?

Yes >> Repair the pigtail harness for a short to ground condition or replace the seat back heater element as necessary.
Perform BODY VERIFICATION TEST – VER 1. (Refer to BODY VERIFICATION TEST – VER 1).

No >> Go To 5

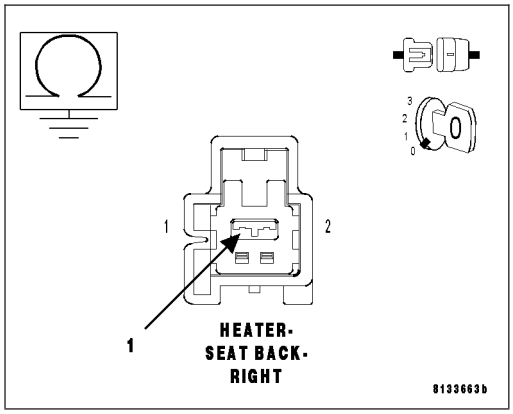

5. CHECK THE RIGHT SEAT CUSHION HEATER RESISTANCE

Check the resistance of the cushion heater element by measuring between the (P188) Right Seat Heater B(+) Driver and the Ground circuit at the Right seat cushion heater connector.

Was the resistance below 3.5 ohms?

No >> Go To 6

Yes >> Replace the heater element as necessary.
Perform BODY VERIFICATION TEST – VER 1. (Refer to BODY VERIFICATION TEST – VER 1).

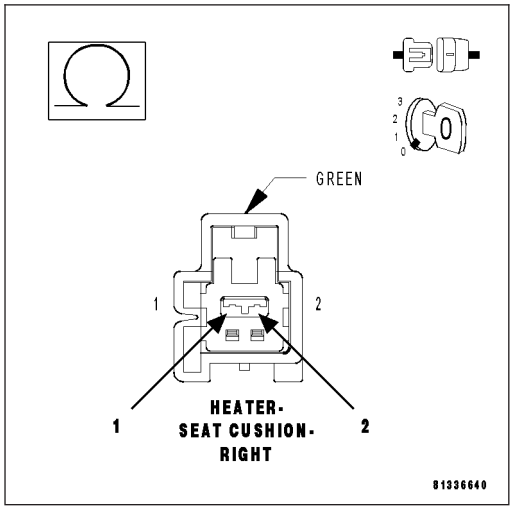

6. CHECK THE RIGHT SEAT CUSHION HEATER FOR A SHORT TO GROUND

Measure between the (P188) Right Seat Heater B(+) Driver circuit at the Right Seat Cushion Heater connector and the seat frame for a short to ground.

Is the resistance below 1000 ohms?

Yes >> Repair the pigtail harness or replace the heater element as necessary.
Perform BODY VERIFICATION TEST – VER 1. (Refer to BODY VERIFICATION TEST – VER 1).

No >> Using the wiring diagram/schematic as a guide, inspect the wiring and connectors for an intermittent short to ground.
Perform BODY VERIFICATION TEST – VER 1. (Refer to BODY VERIFICATION TEST – VER 1).

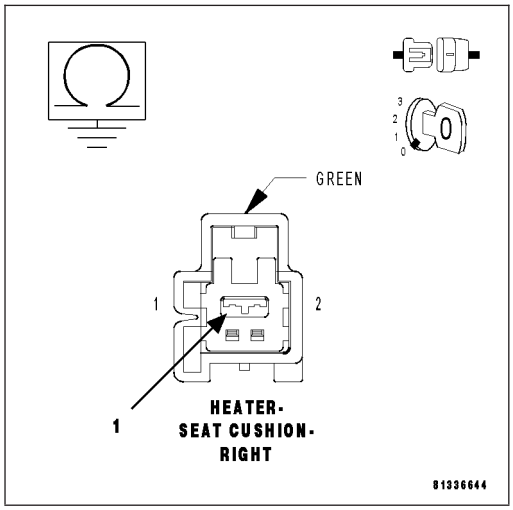

7. Check the (P188) Right Seat Heater B(+) Driver circuit for a short to ground

Disconnect the Heated Seat Module connector.

NOTE: Check connectors - Clean and repair as necessary.
Measure the (P188) Right Seat Heater B(+) Driver circuit to ground at the HSM connector.

Is the resistance below 5.0 ohms?

Yes >> Repair the (P188) Right Seat Heater B(+) Driver circuit for a short to ground.
Perform BODY VERIFICATION TEST – VER 1. (Refer to BODY VERIFICATION TEST – VER 1).

No >> Replace the Heated Seat Module.
Perform BODY VERIFICATION TEST – VER 1. (Refer to BODY VERIFICATION TEST – VER 1).

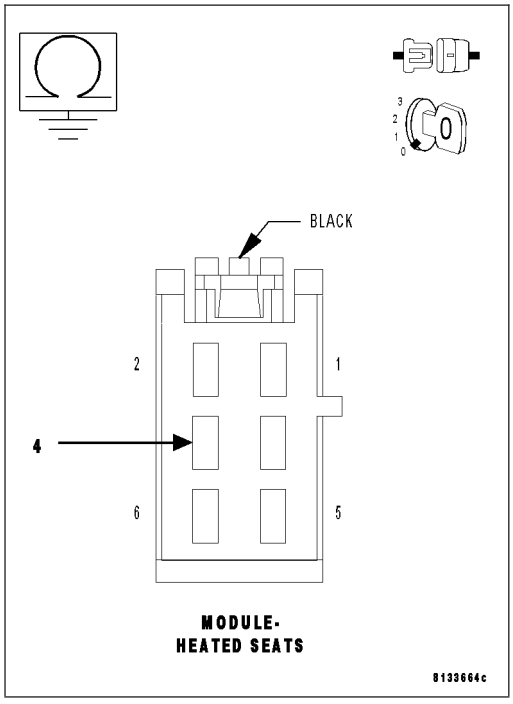

B1098-FRONT RIGHT SEAT HEATER CONTROL CIRCUIT OPEN

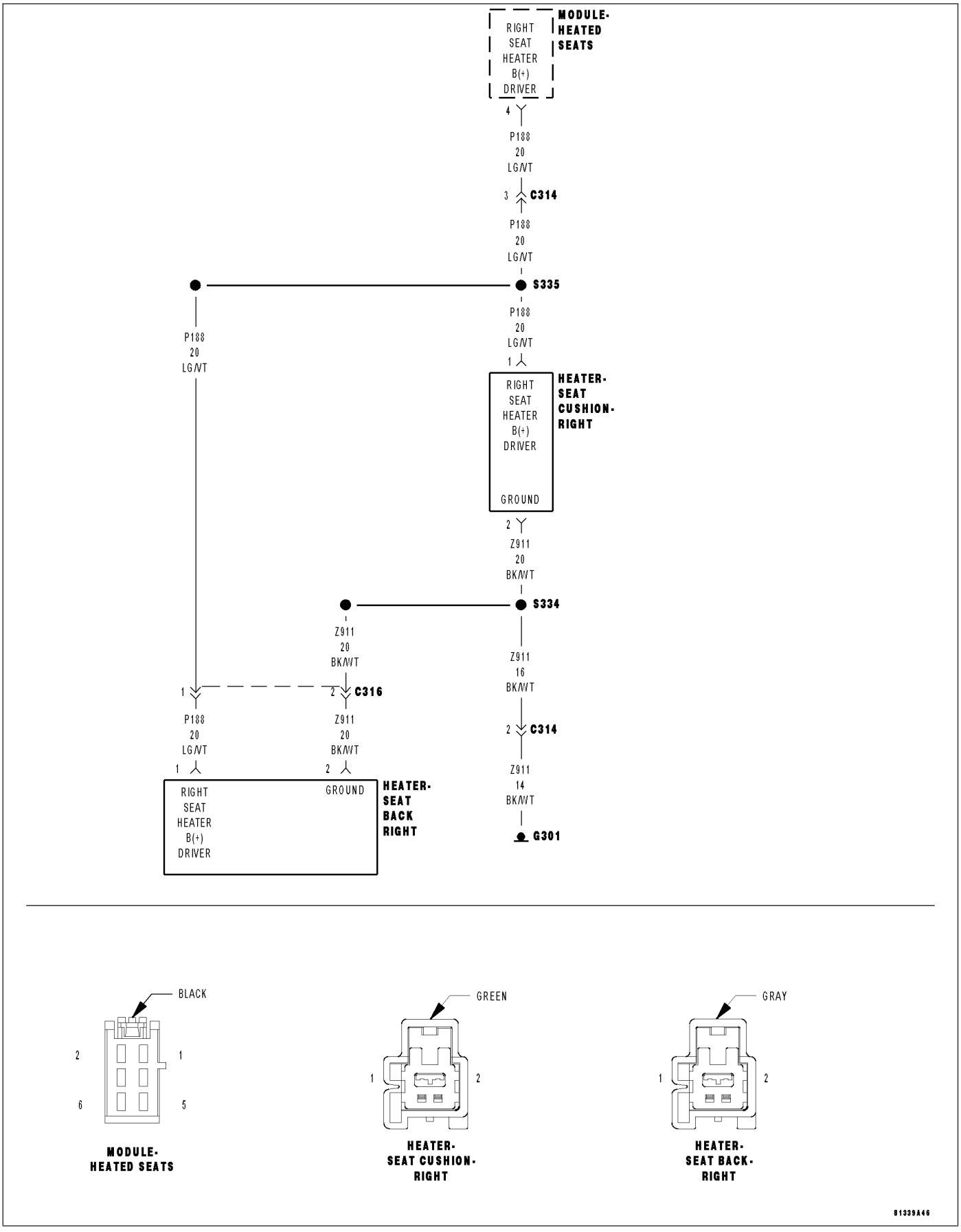

For a complete wiring diagram **Refer to Section 8W**.

- **When Monitored:**Ignition on, during the heated seat operation.
- **Set Condition:**This code is set immediately after the Heated Seat Module detects an open in the seat heat B(+) driver circuit.

Possible Causes
(P188) PASSENGER SEAT HEATER B(+) DRIVER WIRE OPEN
(Z911) GROUND WIRE OPEN
SEAT CUSHION HEATER ELEMENT OPEN
SEAT BACK HEATER ELEMENT OPEN
HEATED SEAT MODULE

Diagnostic Test

1. VERIFY THAT DTC B1098-FRONT RIGHT SEAT HEATER CONTROL CIRCUIT OPEN IS ACTIVE

With the scan tool, record and erase DTC's
Operate the Heated Seat Switch in both positions several times.
With the scan tool, read DTC's.

Does the DTC B1098 FRONT RIGHT SEAT HEATER CONTROL CIRCUIT OPEN reset?

Yes >> Go To 2

No >> The conditions that caused this code to set are not present at this time. Using the wiring diagram/schematic as a guide, inspect the wiring and connectors.
Perform BODY VERIFICATION TEST – VER 1. (Refer to BODY VERIFICATION TEST – VER 1).

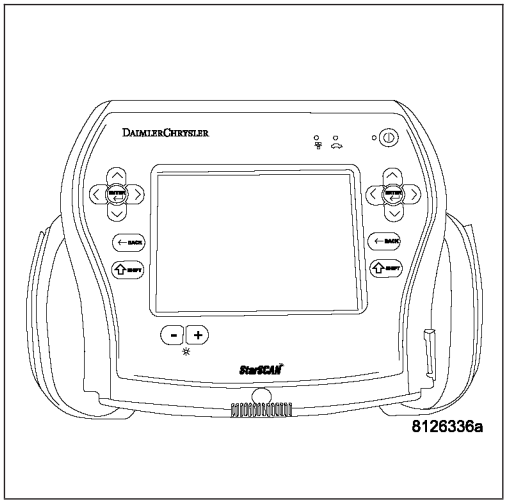

2. CHECK FOR AN OPEN SEAT HEATER ELEMENT

Disconnect the Right Seat Cushion Heater 2 – way connector.

NOTE: Check connectors - Clean and repair as necessary.
Measure the total resistance of the cushion and seat back heater elements at the Right Seat Cushion Heater 2 – way connector (seat side).

Is the total resistance 2.5 ohms + or – .5 ohms?

Yes >> Go To 4

No >> Go To 3

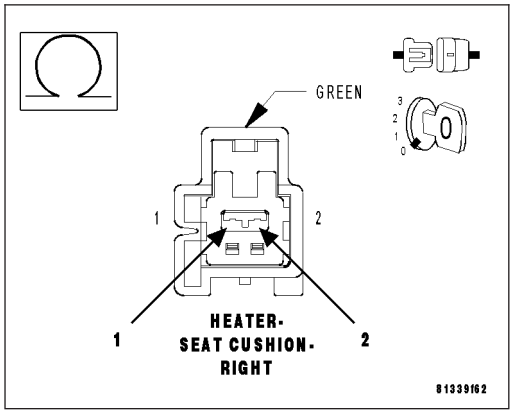

3. CHECK THE RIGHT SEAT BACK PAD HEATER RESISTANCE

Disconnect the Right Seat Back Heater 2 – way connector.

NOTE: Check connectors - Clean and repair as necessary.
Check the resistance of the seat back heater element by measuring between the (P188) Right Seat Heater B(+) Driver and the Ground circuit at the Right seat back heater connector.

Is the resistance above 5.8 ohms?

Yes >> Repair the open pigtail harness or replace the seat back heater element as necessary.
Perform BODY VERIFICATION TEST – VER 1. (Refer to BODY VERIFICATION TEST – VER 1).

No >> Repair the open pigtail harness or replace the seat cushion heater element as necessary.
Perform BODY VERIFICATION TEST – VER 1. (Refer to BODY VERIFICATION TEST – VER 1).

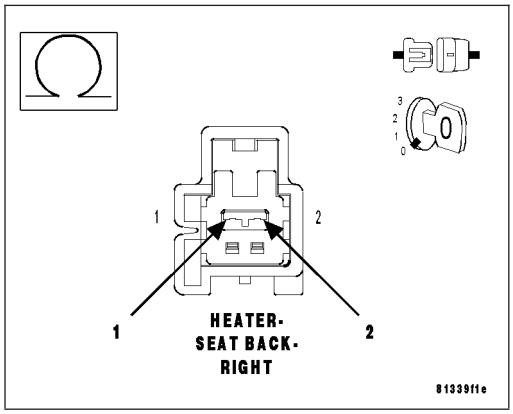

4. CHECK THE RIGHT SEAT HEATER GROUND CIRCUIT RESISTANCE

Measure the resistance of the Ground circuit at the Right Seat Cushion Heater 2 – way connector (harness side).

Was the resistance below 5.0 ohms?

Yes >> Go To 5

No >> Repair the open ground circuit.
Perform BODY VERIFICATION TEST – VER 1. (Refer to BODY VERIFICATION TEST – VER 1).

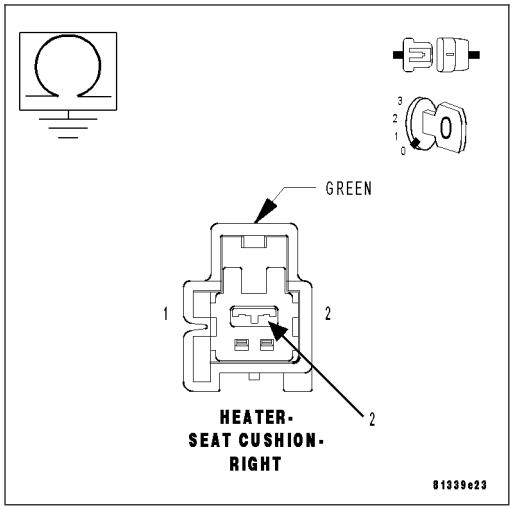

5. Check the (P188) Right Seat Heater B(+) Driver circuit for an open.

Disconnect the Heated Seat Module connector.

NOTE: Check connectors - Clean and repair as necessary.
Measure the (P188) Right Seat Heater B(+) Driver circuit from the Right Seat Cushion Heater connector to the HSM connector.

Is the resistance below 5.0 ohms?

Yes >> Replace the Heated Seat Module.
Perform BODY VERIFICATION TEST – VER 1. (Refer to BODY VERIFICATION TEST – VER 1).

No >> Repair the (P188) Right Seat Heater B(+) Driver circuit for an open.
Perform BODY VERIFICATION TEST – VER 1. (Refer to BODY VERIFICATION TEST – VER 1).

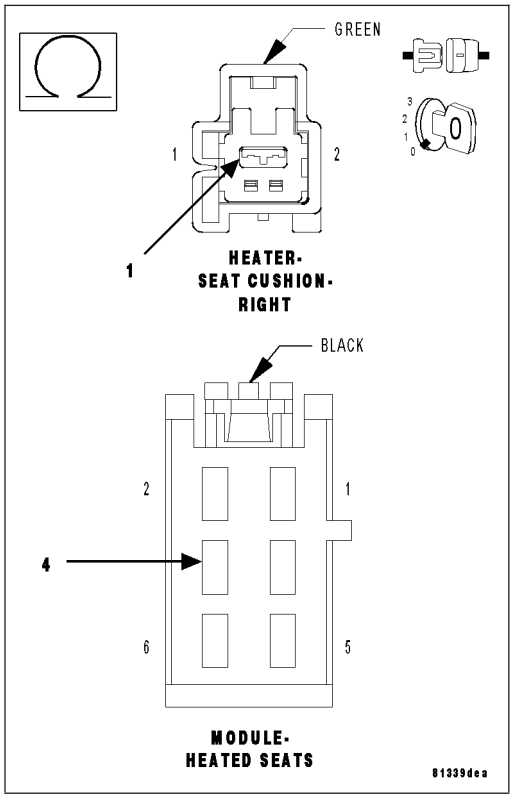

B120E-LEFT HEATED SEAT HI INDICATOR CONTROL CIRCUIT HIGH

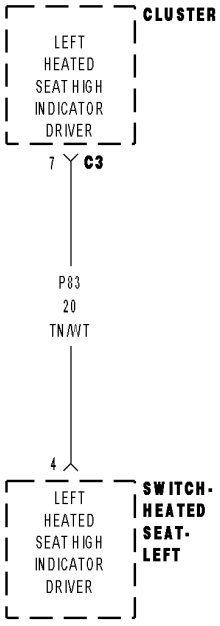

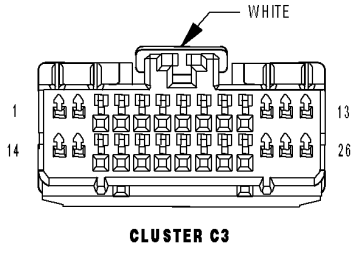

CLUSTER C3

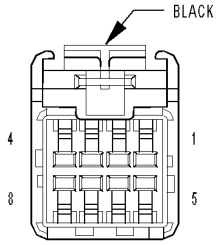

SWITCH-HEATED SEAT-LEFT

8137C586

For a complete wiring diagram **Refer to Section 8W**.

- **When Monitored:**Continously with the ignition on.
- **Set Condition:**This code is set immediately when the Cluster detects excessive voltage on the heated seat indicator control circuit.

Possible Causes
(P83) LEFT HEATED SEAT HIGH INDICATOR DRIVER CIRCUIT SHORTED TO BATTERY
LEFT HEATED SEAT SWITCH
CLUSTER

Diagnostic Test

1. VERIFY THAT DTC B120E-LEFT HEATED SEAT SWITCH HI INDICATOR CONTROL CIRCUIT HIGH IS ACTIVE

With the scan tool, record and erase DTC's
Operate the Heated Seat Switch in both positions several times.
With the scan tool, read DTC's.

Does the DTC B120E-LEFT HEATED SEAT HI INDICATOR CONTROL CIRCUIT HIGH reset?

Yes >> Go To 2

No >> The conditions that caused this code to set are not present at this time. Using the wiring diagram/schematic as a guide, inspect the wiring and connectors.
Perform BODY VERIFICATION TEST – VER 1. (Refer to BODY VERIFICATION TEST – VER 1).

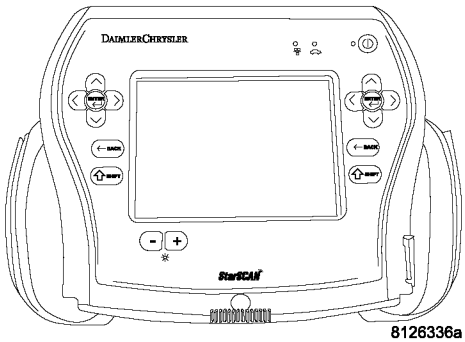

2. DISCONNECT THE LEFT HEATED SEAT SWITCH AND RE-READ DTC

Disconnect the Left Heated Seat Switch connector.
With the scan tool erase DTC's
Cycle the ignition switch off then back on.
With the scan tool, read DTC's.

Does the DTC B120E-LEFT HEATED SEAT HI INDICATOR CONTROL CIRCUIT HIGH reset?

Yes >> Go To 3

No >> Replace the Left Heated Seat switch.
Perform BODY VERIFICATION TEST – VER 1. (Refer to BODY VERIFICATION TEST – VER 1).

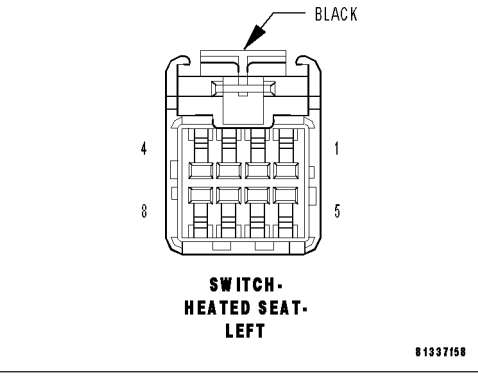

3. DISCONNECT THE CLUSTER C3 CONNECTOR AND CHECK FOR VOLTAGE

Disconnect the Cluster C3 connector.

NOTE: Check connectors - Clean and repair as necessary.

Turn the ignition on.

Measure the voltage at the (P83) Left Heated Seat High Indicator Driver circuit at the Cluster C3 connector.

Is there any voltage present?

Yes >> Repair the (P83) Left Heated Seat High Indicator Driver circuit for a short to battery.

Perform BODY VERIFICATION TEST – VER 1. (Refer to BODY VERIFICATION TEST – VER 1).

No >> Replace the Cluster in accordance with the Service Information.

Perform BODY VERIFICATION TEST – VER 1. (Refer to BODY VERIFICATION TEST – VER 1).

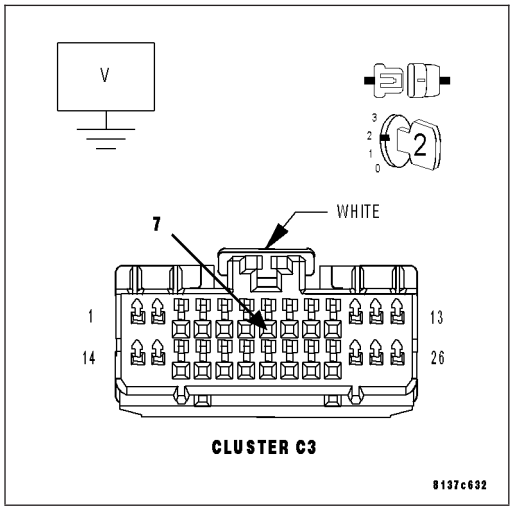

B120F-LEFT HEATED SEAT HI INDICATOR CONTROL CIRCUIT OPEN

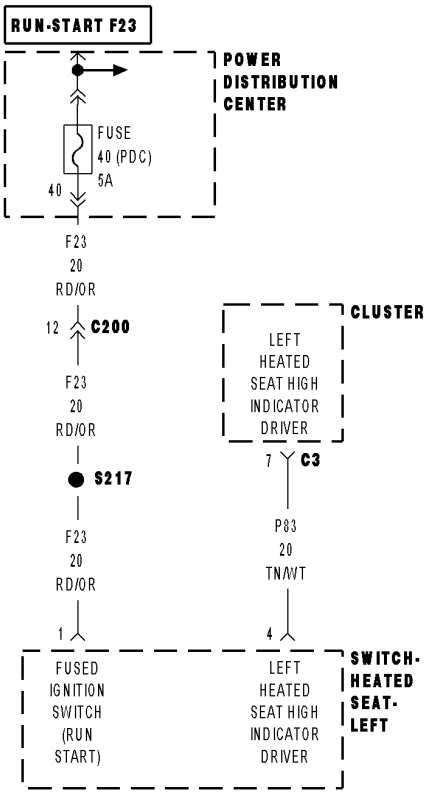

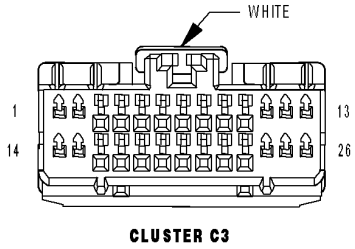

CLUSTER C3

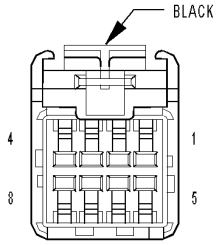

SWITCH- HEATED SEAT- LEFT

8137ab58

For a complete wiring diagram **Refer to Section 8W**.

- **When Monitored:**Continously with the ignition on.
- **Set Condition:**This code is set immediately when the Cluster detects low voltage on the heated seat indicator control circuit.

Possible Causes
PDC FUSE #8
PDC FUSE #40
(F23) FUSED IGNITION SWITCH OUTPUT (RUN-START) CIRCUIT OPEN
(P83) LEFT HEATED SEAT HIGH INDICATOR DRIVER CIRCUIT OPEN/SHORTED TO GROUND
LEFT HEATED SEAT SWITCH
CLUSTER

Diagnostic Test

1. VERIFY THAT DTC B120F-LEFT HEATED SEAT HI INDICATOR CONTROL CIRCUIT OPEN IS ACTIVE

With the scan tool, record and erase DTC's
Operate the Heated Seat Switch in both positions several times.
With the scan tool, read DTC's.

Does the DTC B120F-LEFT HEATED SEAT HI INDICATOR CONTROL CIRCUIT OPEN reset?

Yes >> Go To 2

No >> The conditions that caused this code to set are not present at this time. Using the wiring diagram/schematic as a guide, inspect the wiring and connectors.
Perform BODY VERIFICATION TEST – VER 1. (Refer to BODY VERIFICATION TEST – VER 1).

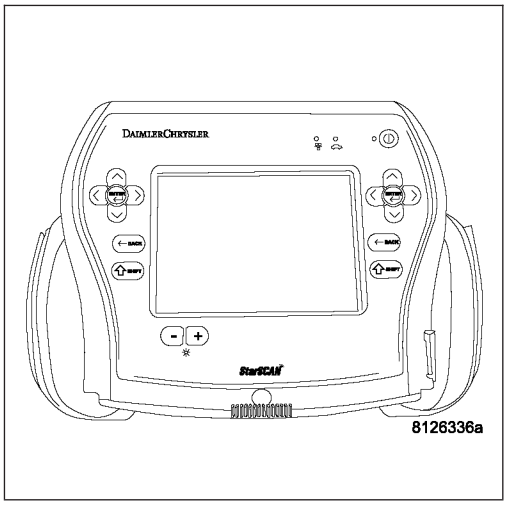

2. INSPECT PDC FUSES

Check PDC fuses #8 and #40.

Is either fuse open?

Yes >> Check for a possible short to ground on the (F23) Fused Ignition Switch Output (Run-Start) Circuit and replace the fuse as necessary.
Perform BODY VERIFICATION TEST – VER 1. (Refer to BODY VERIFICATION TEST – VER 1).

No >> Go To 3

3. DISCONNECT THE CLUSTER C3 CONNECTOR AND CHECK FOR VOLTAGE

Reinstall fuse if removed in previous test.

Disconnect the Cluster C3 connector.

NOTE: Check connectors - Clean and repair as necessary.

Turn the ignition on.

Measure the voltage at the (P83) Left Heated Seat High Indicator Driver circuit at the Cluster C3 connector.

Is the voltage above 10.0 volts?

Yes >> Replace the Cluster in accordance with the Service Information.

Perform BODY VERIFICATION TEST – VER 1. (Refer to BODY VERIFICATION TEST – VER 1).

No >> Go To 4

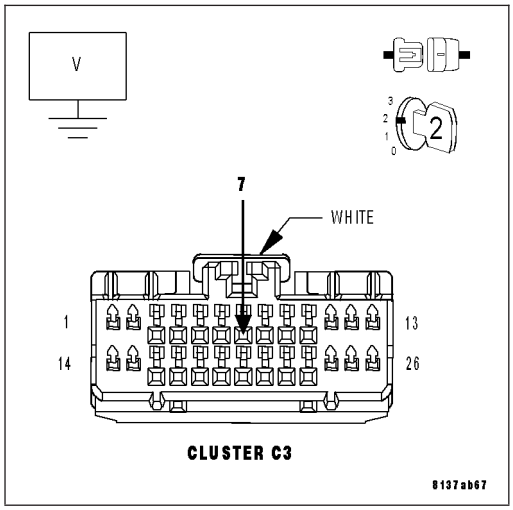

4. CHECK THE (F23) FUSED IGNITION SWITCH OUTPUT (RUN-START)

Disconnect the Left Heated Seat switch connector.

NOTE: Check connectors - Clean and repair as necessary.

Turn the ignition on.

Measure the voltage of the (F23) Fused Ignition Switch Output (Run-Start) circuit at the Left Heated Seat Switch connector.

Is the voltage above 10.0 volts ?

Yes >> Go To 5

No >> Repair the (F23) Fused Ignition Switch Output (Run-Start) circuit for an open.

Perform BODY VERIFICATION TEST – VER 1. (Refer to BODY VERIFICATION TEST – VER 1).

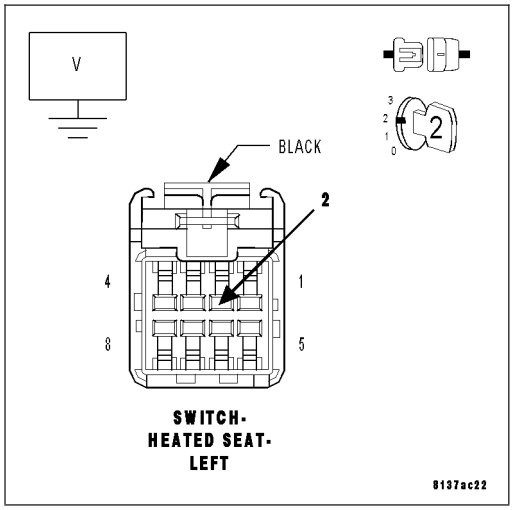

5. CHECK THE (P83) LEFT HEATED SEAT HIGH INDICATOR DRIVER CIRCUIT FOR A SHORT TO GROUND

Measure the resistance between ground and the (P83) Left Heated Seat High Indicator Driver circuit.

Was the resistance below 5.0 ohms?

Yes >> Repair the (P83) Left Heated Seat High Indicator Driver circuit for a short to ground

Perform BODY VERIFICATION TEST – VER 1. (Refer to BODY VERIFICATION TEST – VER 1).

No >> Go To 6

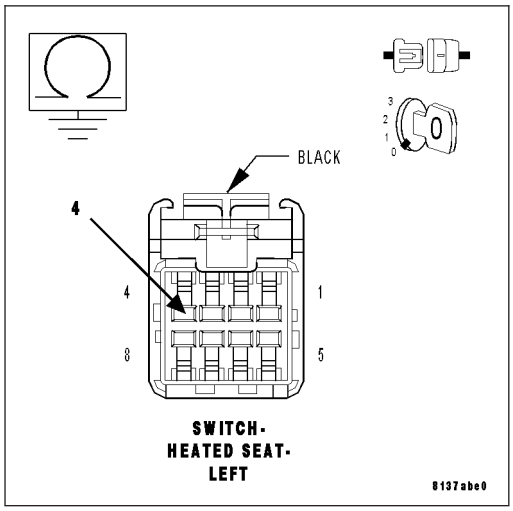

6. CHECK THE (P83) LEFT HEATED SEAT HIGH INDICATOR DRIVER CIRCUIT FOR AN OPEN

Measure the resistance of the (P83) Left Heated Seat High Indicator Driver circuit between the Cluster C3 connector and the Left Heated Seat Switch connector.

Is the resistance below 5.0 ohms?

Yes >> Replace the Left Heated Seat Switch.
Perform BODY VERIFICATION TEST – VER 1. (Refer to BODY VERIFICATION TEST – VER 1).

No >> Repair the (P83) Left Heated Seat High Indicator Driver circuit for an open.
Perform BODY VERIFICATION TEST – VER 1. (Refer to BODY VERIFICATION TEST – VER 1).

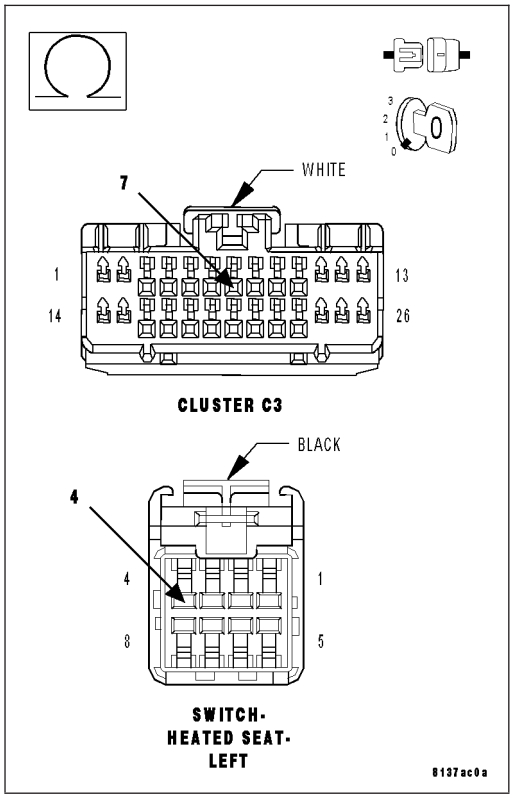

B1216-LEFT HEATED SEAT LO INDICATOR CONTROL CIRCUIT HIGH

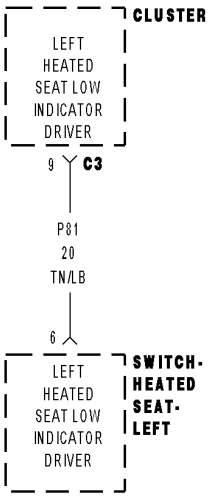

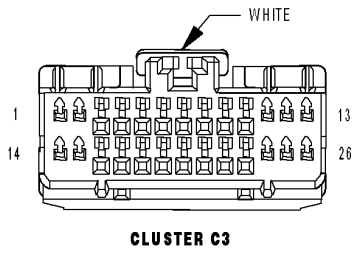

CLUSTER C3

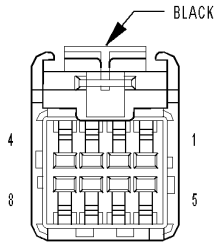

SWITCH-HEATED SEAT-LEFT

8137CF8A

For a complete wiring diagram **Refer to Section 8W**.

- **When Monitored:**Continously with the ignition on.
- **Set Condition:**This code is set immediately when the Cluster detects excessive voltage on the heated seat indicator control circuit.

Possible Causes
(P81) LEFT HEATED SEAT LO INDICATOR DRIVER CIRCUIT SHORTED TO BATTERY
LEFT HEATED SEAT SWITCH
CLUSTER

Diagnostic Test

1. VERIFY THAT DTC B1216-LEFT HEATED SEAT SWITCH LO INDICATOR CONTROL CIRCUIT HIGH IS ACTIVE

With the scan tool, record and erase DTC's
Operate the Heated Seat Switch in both positions several times.
With the scan tool, read DTC's.

Does the DTC B1216-LEFT HEATED SEAT LO INDICATOR CONTROL CIRCUIT HIGH reset?

Yes >> Go To 2

No >> The conditions that caused this code to set are not present at this time. Using the wiring diagram/schematic as a guide, inspect the wiring and connectors.
Perform BODY VERIFICATION TEST – VER 1. (Refer to BODY VERIFICATION TEST – VER 1).

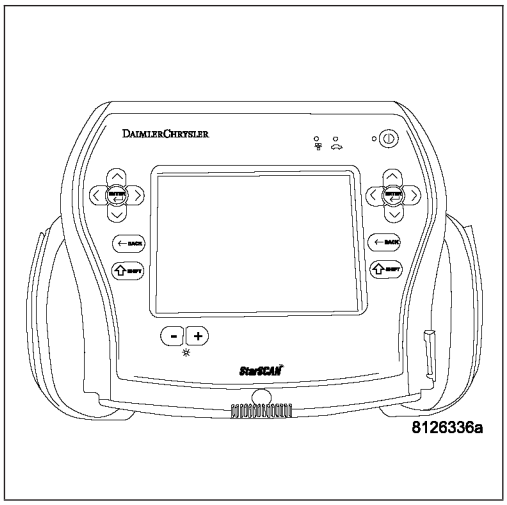

2. DISCONNECT THE DRIVER HEATED SEAT SWITCH AND RE-READ DTC

Disconnect the Left Heated Seat Switch connector.
With the scan tool erase DTC's
Cycle the ignition switch off then back on.
With the scan tool, read DTC's.

Does the DTC B1216-LEFT HEATED SEAT LO INDICATOR CONTROL CIRCUIT HIGH reset?

Yes >> Go To 3

No >> Replace the Left Heated Seat switch.
Perform BODY VERIFICATION TEST – VER 1. (Refer to BODY VERIFICATION TEST – VER 1).

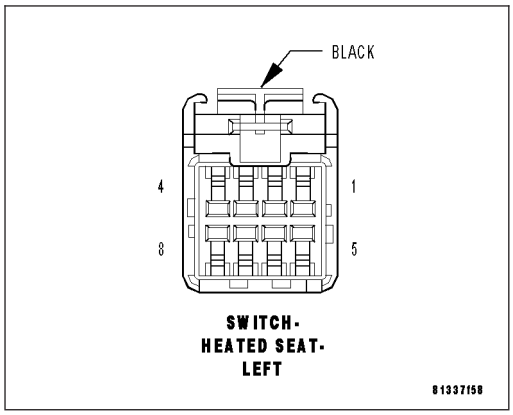

3. DISCONNECT THE CLUSTER C3 CONNECTOR AND CHECK FOR VOLTAGE

Disconnect the Cluster C3 connector.

NOTE: Check connectors - Clean and repair as necessary.

Turn the ignition on.

Measure the voltage at the (P81) Left Heated Seat Low Indicator Driver circuit at the Cluster C3 connector.

Is there any voltage present?

Yes >> Repair the (P81) Left Heated Seat Low Indicator Driver circuit for a short to battery.

Perform BODY VERIFICATION TEST – VER 1. (Refer to BODY VERIFICATION TEST – VER 1).

No >> Replace the Cluster in accordance with the Service Information.

Perform BODY VERIFICATION TEST – VER 1. (Refer to BODY VERIFICATION TEST – VER 1).

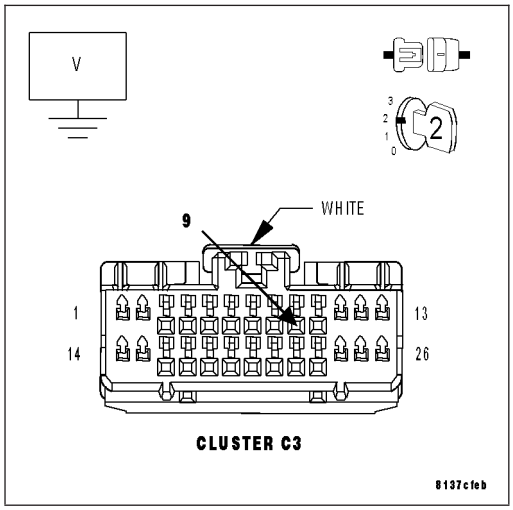

B1217-LEFT HEATED SEAT LO INDICATOR CONTROL CIRCUIT OPEN

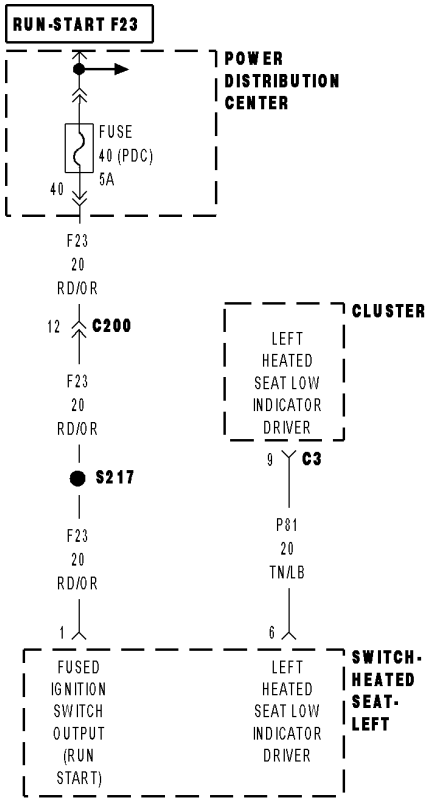

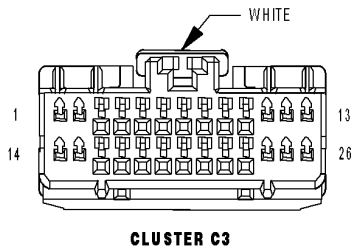

CLUSTER C3

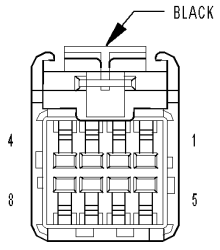

SWITCH-HEATED SEAT-LEFT

8137d1a8

For a complete wiring diagram **Refer to Section 8W**

- **When Monitored:**Continously with the ignition on.
- **Set Condition:**This code is set immediately when the Cluster detects low voltage on the heated seat indicator control circuit.

Possible Causes
PDC FUSE #8
PDC FUSE #40
(F23) FUSED IGNITION SWITCH OUTPUT (RUN-START) CIRCUIT OPEN
(P81) LEFT HEATED SEAT LOW INDICATOR DRIVER CIRCUIT OPEN/SHORTED TO GROUND
LEFT HEATED SEAT SWITCH
CLUSTER

Diagnostic Test

1. VERIFY THAT DTC B1217-LEFT HEATED SEAT LO INDICATOR CONTROL CIRCUIT OPEN IS ACTIVE

With the scan tool, record and erase DTC's
Operate the Heated Seat Switch in both positions several times.
With the scan tool, read DTC's.

Does the DTC B1217-LEFT HEATED SEAT LO INDICATOR CONTROL CIRCUIT OPEN reset?

Yes >> Go To 2

No >> The conditions that caused this code to set are not present at this time. Using the wiring diagram/schematic as a guide, inspect the wiring and connectors.
Perform BODY VERIFICATION TEST – VER 1. (Refer to BODY VERIFICATION TEST - VER 1).

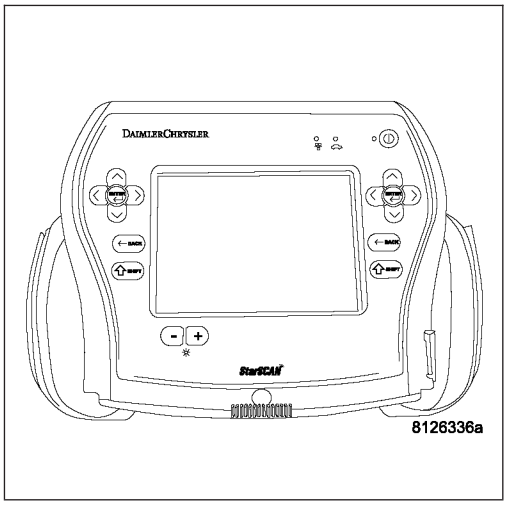

2. INSPECT PDC FUSES

Check PDC fuses #8 and #40.

Is either fuse open?

Yes >> Check for a possible short to ground on the (F23) Fused Ignition Switch Output (Run-Start) Circuit and replace the fuse as necessary.
Perform BODY VERIFICATION TEST – VER 1. (Refer to BODY VERIFICATION TEST - VER 1).

No >> Go To 3

3. DISCONNECT THE CLUSTER C3 CONNECTOR AND CHECK FOR VOLTAGE

Reinstall fuse if removed in previous test.

Disconnect the Cluster C3 connector.

NOTE: Check connectors - Clean and repair as necessary.

Turn the ignition on.

Measure the voltage at the (P81) Left Heated Seat Low Indicator Driver circuit at the Cluster C3 connector.

Is the voltage above 10.0 volts?

Yes >> Replace the Cluster in accordance with the Service Information.

Perform BODY VERIFICATION TEST – VER 1. (Refer to BODY VERIFICATION TEST - VER 1).

No >> Go To 4

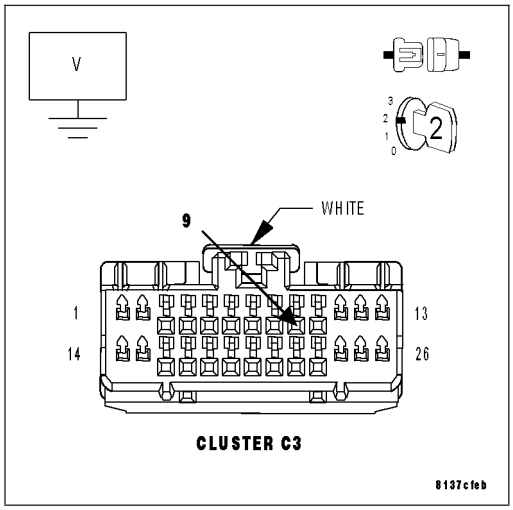

4. CHECK THE (F23) FUSED IGNITION SWITCH OUTPUT (RUN-START)

Disconnect the Left Heated Seat switch connector.

NOTE: Check connectors - Clean and repair as necessary.

Turn the ignition on.

Measure the voltage of the (F23) Fused Ignition Switch Output (Run-Start) circuit at the Left Heated Seat Switch connector.

Is the voltage above 10.0 volts ?

Yes >> Go To 5

No >> Repair the (F23) Fused Ignition Switch Output (Run-Start) circuit for an open.

Perform BODY VERIFICATION TEST – VER 1. (Refer to BODY VERIFICATION TEST - VER 1).

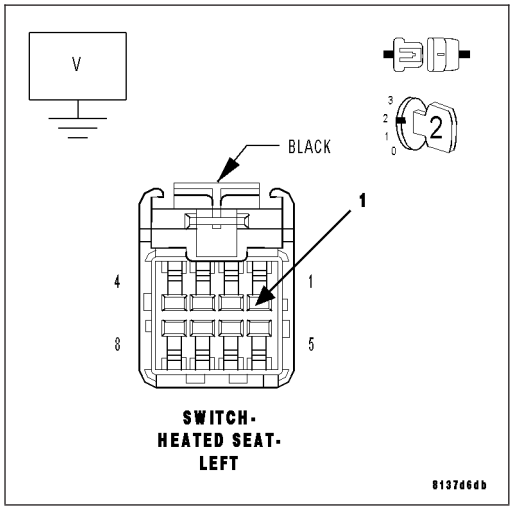

5. CHECK THE (P81) LEFT HEATED SEAT LO INDICATOR DRIVER CIRCUIT FOR A SHORT TO GROUND

Measure the resistance between ground and the (P81) Left Heated Seat Lo Indicator Driver circuit.

Was the resistance below 5.0 ohms?

Yes >> Repair the (P81) Left Heated Seat Lo Indicator Driver circuit for a short to ground

Perform BODY VERIFICATION TEST – VER 1. (Refer to BODY VERIFICATION TEST - VER 1).

No >> Go To 6

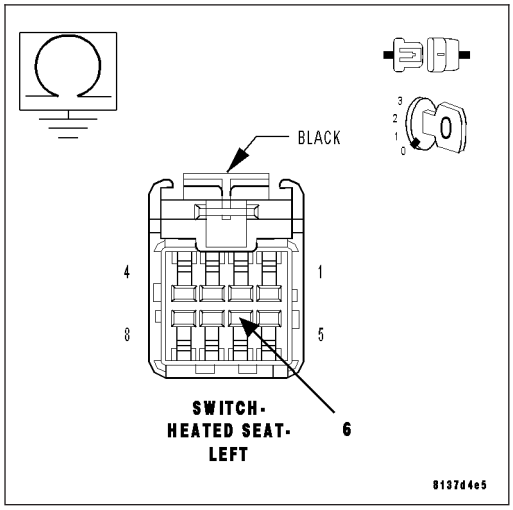

6. CHECK THE (P81) LEFT HEATED SEAT LO INDICATOR DRIVER CIRCUIT FOR AN OPEN

Measure the resistance of the (P81) Left Heated Seat Lo Indicator Driver circuit between the Cluster C3 connector and the Driver Heated Seat Switch connector.

Is the resistance below 5.0 ohms?

Yes >> Replace the Left Heated Seat Switch.
Perform BODY VERIFICATION TEST – VER 1. (Refer to BODY VERIFICATION TEST - VER 1).

No >> Repair the (P81) Left Heated Seat Lo Indicator Driver circuit for an open.
Perform BODY VERIFICATION TEST – VER 1. (Refer to BODY VERIFICATION TEST - VER 1).

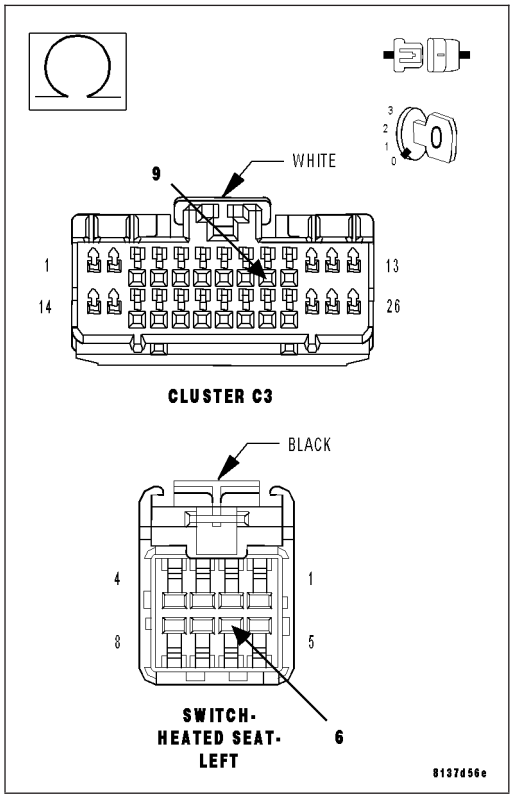

B121A-RIGHT HEATED SEAT HI INDICATOR CONTROL CIRCUIT HIGH

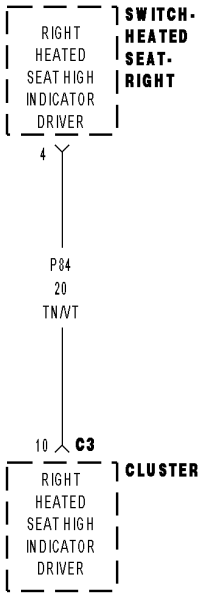

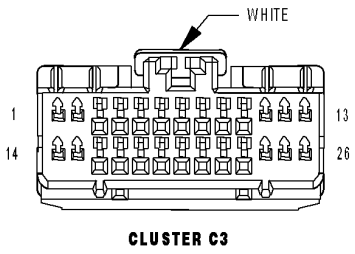

CLUSTER C3

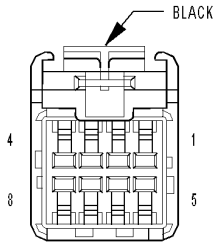

SWITCH-
HEATED SEAT-
RIGHT

81387a1e

For a complete wiring diagram **Refer to Section 8W**.

- **When Monitored:**Continously with the ignition on.
- **Set Condition:**This code is set immediately when the Cluster detects excessive voltage on the heated seat indicator control circuit.

Possible Causes
(P84) RIGHT HEATED SEAT HIGH INDICATOR DRIVER CIRCUIT SHORTED TO BATTERY
RIGHT HEATED SEAT SWITCH
CLUSTER

Diagnostic Test

1. VERIFY THAT DTC B121A-RIGHT HEATED SEAT SWITCH HI INDICATOR CONTROL CIRCUIT HIGH IS ACTIVE

With the scan tool, record and erase DTC's
Operate the Heated Seat Switch in both positions several times.
With the scan tool, read DTC's.

Does the DTC B121A-RIGHT HEATED SEAT HI INDICATOR CONTROL CIRCUIT HIGH reset?

Yes >> Go To 2

No >> The conditions that caused this code to set are not present at this time. Using the wiring diagram/schematic as a guide, inspect the wiring and connectors.
Perform BODY VERIFICATION TEST – VER 1. (Refer to BODY VERIFICATION TEST - VER 1).

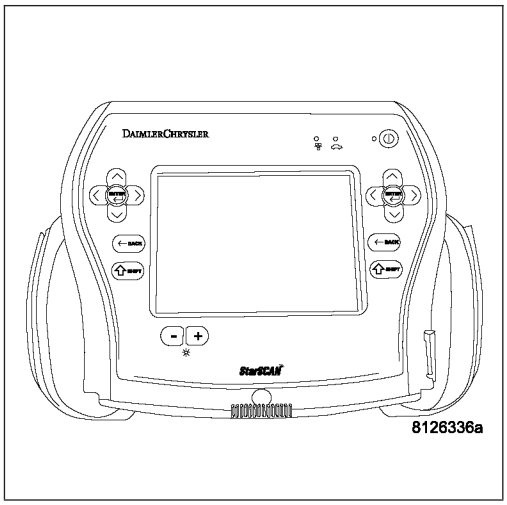

2. DISCONNECT THE RIGHT HEATED SEAT SWITCH AND RE-READ DTC

Disconnect the Right Heated Seat Switch connector.
With the scan tool erase DTC's
Cycle the ignition switch off then back on.
With the scan tool, read DTC's.

Does the DTC B121A-RIGHT HEATED SEAT HI INDICATOR CONTROL CIRCUIT HIGH reset?

Yes >> Go To 3

No >> Replace the Right Heated Seat switch.
Perform BODY VERIFICATION TEST – VER 1. (Refer to BODY VERIFICATION TEST - VER 1).

3. DISCONNECT THE CLUSTER C–3 CONNECTOR AND CHECK FOR VOLTAGE

Disconnect the Cluster C-3 connector.

NOTE: Check connectors - Clean and repair as necessary.

Turn the ignition on.

Measure the voltage at the (P84) Right Heated Seat High Indicator Driver circuit at the Cluster C-3 connector.

Is there any voltage present?

Yes >> Repair the (P84) Right Heated Seat High Indicator Driver circuit for a short to battery.

Perform BODY VERIFICATION TEST – VER 1. (Refer to BODY VERIFICATION TEST - VER 1).

No >> Replace the Cluster in accordance with the Service Information.

Perform BODY VERIFICATION TEST – VER 1. (Refer to BODY VERIFICATION TEST - VER 1).

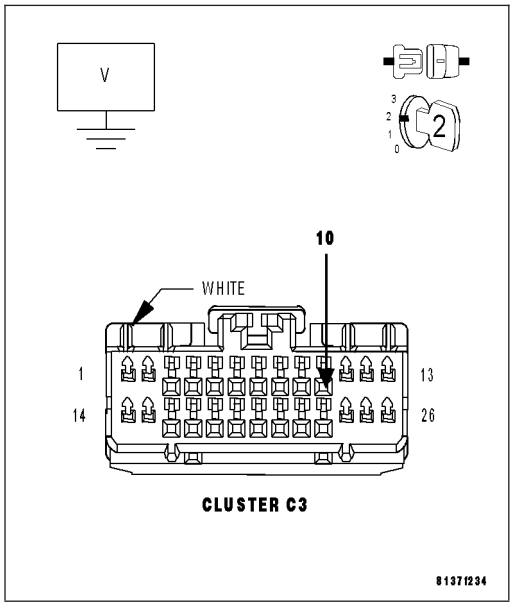

B121B-RIGHT HEATED SEAT HI INDICATOR CONTROL CIRCUIT OPEN

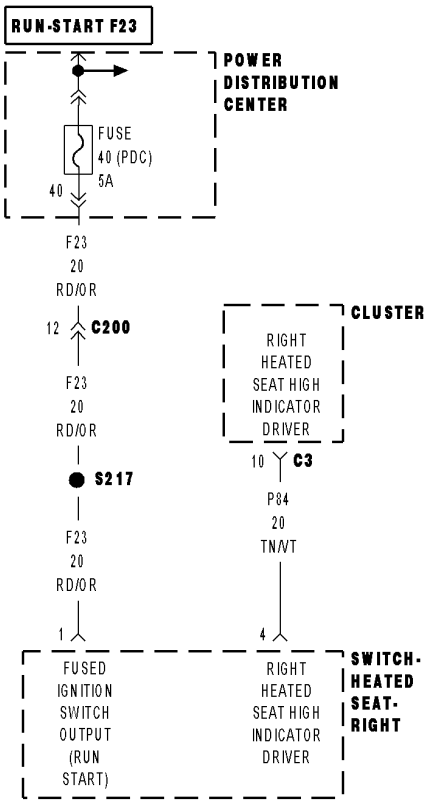

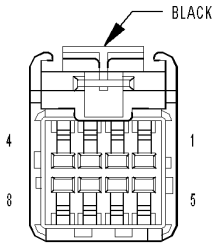

SWITCH- HEATED SEAT- RIGHT

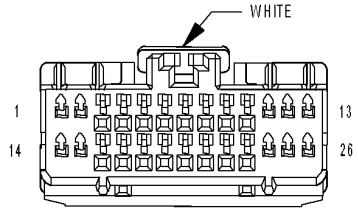

CLUSTER C3

8137efbc

For a complete wiring diagram **Refer to Section 8W**.

- **When Monitored:**Continously with the ignition on.
- **Set Condition:**This code is set immediately when the Cluster detects low voltage on the heated seat indicator control circuit.

Possible Causes
PDC FUSE #8
PDC FUSE #40
(F23) FUSED IGNITION SWITCH OUTPUT (RUN-START) CIRCUIT OPEN
(P84) RIGHT HEATED SEAT HIGH INDICATOR DRIVER CIRCUIT OPEN/SHORTED TO GROUND
RIGHT HEATED SEAT SWITCH
CLUSTER

Diagnostic Test

1. VERIFY THAT DTC B121B-RIGHT HEATED SEAT HI INDICATOR CONTROL CIRCUIT OPEN IS ACTIVE

With the scan tool, record and erase DTC's

Operate the Heated Seat Switch in both positions several times.

With the scan tool, read DTC's.

Does the DTC B121B-RIGHT HEATED SEAT HI INDICATOR CONTROL CIRCUIT OPEN reset?

Yes >> Go To 2

No >> The conditions that caused this code to set are not present at this time. Using the wiring diagram/schematic as a guide, inspect the wiring and connectors.

Perform BODY VERIFICATION TEST – VER 1. (Refer to BODY VERIFICATION TEST - VER 1).

2. INSPECT PDC FUSES

Check PDC fuses #8 and #40.

Is either fuse open?

Yes >> Check for a possible short to ground on the (F23) Fused Ignition Switch Output (Run-Start) Circuit and replace the fuse as necessary.

Perform BODY VERIFICATION TEST – VER 1. (Refer to BODY VERIFICATION TEST - VER 1).

No >> Go To 3

3. DISCONNECT THE CLUSTER C3 CONNECTOR AND CHECK FOR VOLTAGE

Reinstall fuse if removed in previous test.

Disconnect the Cluster C3 connector.

NOTE: Check connectors - Clean and repair as necessary.

Turn the ignition on.

Measure the voltage at the (P84) Right Heated Seat High Indicator Driver circuit at the Cluster C3 connector.

Is the voltage above 10.0 volts?

Yes >> Replace the Cluster in accordance with the Service Information.

Perform BODY VERIFICATION TEST – VER 1. (Refer to BODY VERIFICATION TEST - VER 1).

No >> Go To 4

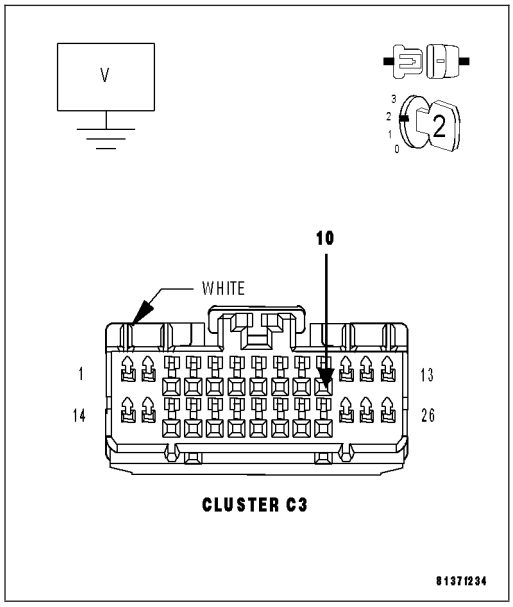

4. CHECK THE (F23) FUSED IGNITION SWITCH OUTPUT (RUN-START)

Disconnect the Right Heated Seat switch connector.

NOTE: Check connectors - Clean and repair as necessary.

Turn the ignition on.

Measure the voltage of the (F23) Fused Ignition Switch Output (Run-Start) circuit at the Right Heated Seat Switch connector.

Is the voltage above 10.0 volts ?

Yes >> Go To 5

No >> Repair the (F23) Fused Ignition Switch Output (Run-Start) circuit for an open.

Perform BODY VERIFICATION TEST – VER 1. (Refer to BODY VERIFICATION TEST - VER 1).

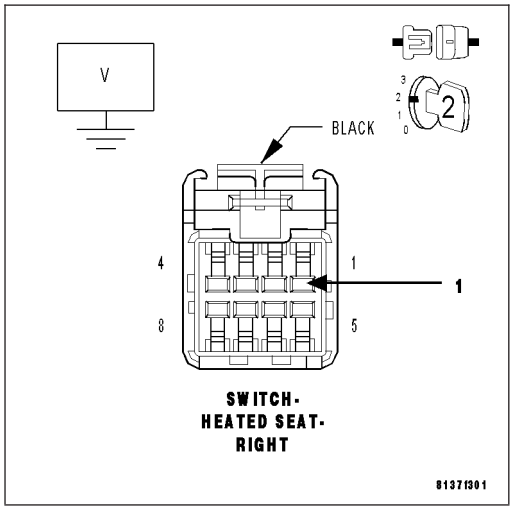

5. CHECK THE (P84) RIGHT HEATED SEAT HIGH INDICATOR DRIVER CIRCUIT FOR A SHORT TO GROUND

Measure the resistance between ground and the (P84) Right Heated Seat High Indicator Driver circuit.

Was the resistance below 5.0 ohms?

Yes >> Repair the (P84) Right Heated Seat High Indicator Driver circuit for a short to ground

Perform BODY VERIFICATION TEST – VER 1. (Refer to BODY VERIFICATION TEST - VER 1).

No >> Go To 6

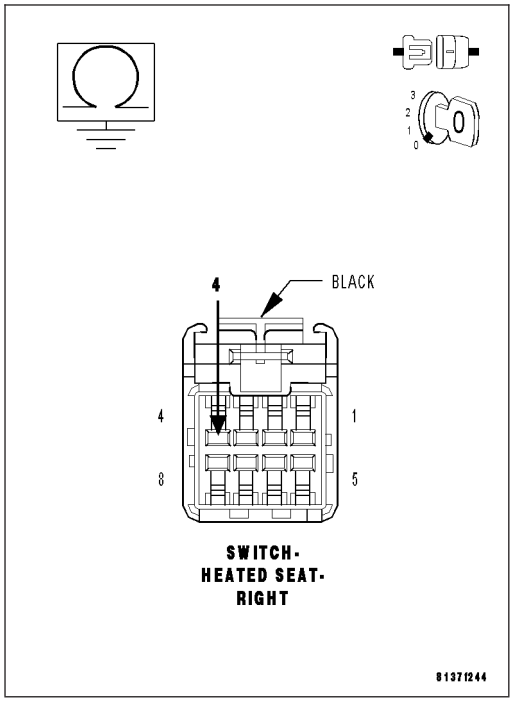

6. CHECK THE (P84) RIGHT HEATED SEAT HIGH INDICATOR DRIVER CIRCUIT FOR AN OPEN

Measure the resistance of the (P84) Right Heated Seat High Indicator Driver circuit between the Cluster C3 connector and the Right Heated Seat Switch connector.

Is the resistance below 5.0 ohms?

Yes >> Replace the Right Heated Seat Switch.

Perform BODY VERIFICATION TEST – VER 1. (Refer to BODY VERIFICATION TEST - VER 1).

No >> Repair the (P84) Right Heated Seat High Indicator Driver circuit for an open.

Perform BODY VERIFICATION TEST – VER 1. (Refer to BODY VERIFICATION TEST - VER 1).

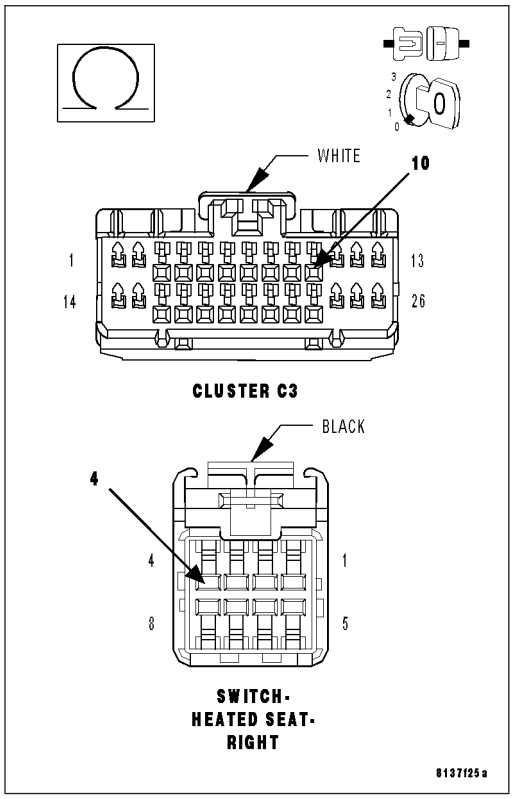

B1222-RIGHT HEATED SEAT LO INDICATOR CONTROL CIRCUIT HIGH

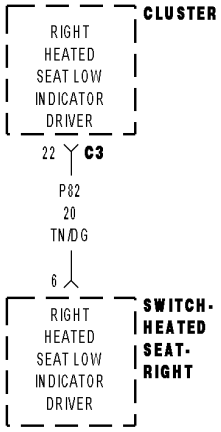

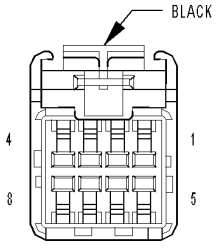

SWITCH- HEATED SEAT- RIGHT

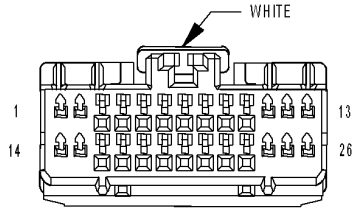

CLUSTER C3

8138cc34

For a complete wiring diagram **Refer to Section 8W**.

- **When Monitored:**Continously with the ignition on.
- **Set Condition:**This code is set immediately when the Cluster detects excessive voltage on the heated seat indicator control circuit.

Possible Causes
(P82) RIGHT HEATED SEAT LOW INDICATOR DRIVER CIRCUIT SHORTED TO BATTERY
RIGHT HEATED SEAT SWITCH
CLUSTER

Diagnostic Test

1. VERIFY THAT DTC B1222-RIGHT HEATED SEAT SWITCH LO INDICATOR CONTROL CIRCUIT HIGH IS ACTIVE

With the scan tool, record and erase DTC's
Operate the Heated Seat Switch in both positions several times.
With the scan tool, read DTC's.

Does the DTC B1222-RIGHT HEATED SEAT LO INDICATOR CONTROL CIRCUIT HIGH reset?

Yes >> Go To 2

No >> The conditions that caused this code to set are not present at this time. Using the wiring diagram/schematic as a guide, inspect the wiring and connectors.
Perform BODY VERIFICATION TEST – VER 1. (Refer to BODY VERIFICATION TEST - VER 1).

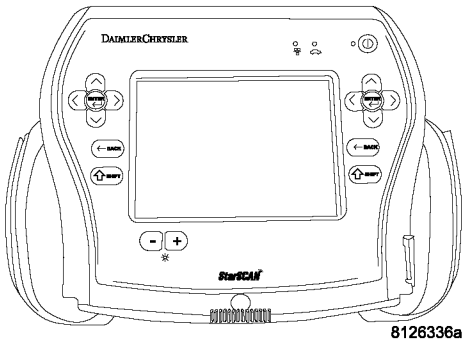

2. DISCONNECT THE PASSENGER HEATED SEAT SWITCH AND RE-READ DTC

Disconnect the Right Heated Seat Switch connector.
With the scan tool erase DTC's
Cycle the ignition switch off then back on.
With the scan tool, read DTC's.

Does the DTC B1222-RIGHT HEATED SEAT LO INDICATOR CONTROL CIRCUIT HIGH reset?

Yes >> Go To 3

No >> Replace the Right Heated Seat switch.
Perform BODY VERIFICATION TEST – VER 1. (Refer to BODY VERIFICATION TEST - VER 1).

3. DISCONNECT THE CLUSTER C–3 CONNECTOR AND CHECK FOR VOLTAGE

Disconnect the Cluster C-3 connector.

NOTE: Check connectors - Clean and repair as necessary.

Turn the ignition on.

Measure the voltage at the (P82) Right Heated Seat Low Indicator Driver circuit at the Cluster C-3 connector.

Is there any voltage present?

Yes >> Repair the (P82) Right Heated Seat Low Indicator Driver circuit for a short to battery.

Perform BODY VERIFICATION TEST – VER 1. (Refer to 8 - ELECTRICAL/ELECTRONIC CONTROL MODULES/ FRONT CONTROL MODULE - DIAGNOSIS AND TESTING)

No >> Replace the Cluster in accordance with the Service Information.

Perform BODY VERIFICATION TEST – VER 1. (Refer to BODY VERIFICATION TEST - VER 1).

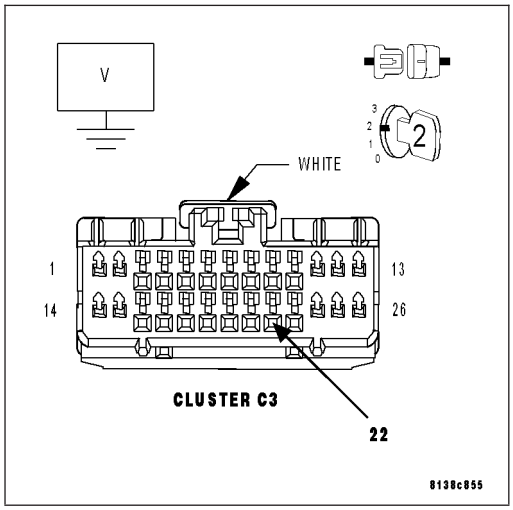

B1223-RIGHT HEATED SEAT LO INDICATOR CONTROL CIRCUIT OPEN

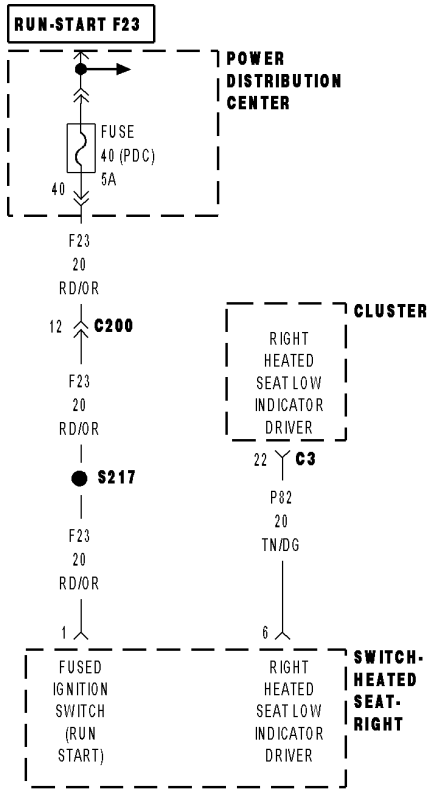

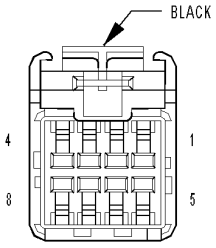

SWITCH- HEATED SEAT- RIGHT

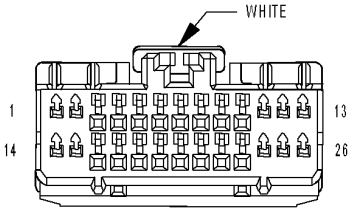

CLUSTER C3

8138c806

For a complete wiring diagram **Refer to Section 8W**

- **When Monitored:**Continously with the ignition on.
- **Set Condition:**This code is set immediately when the Cluster detects low voltage on the heated seat indicator control circuit.

Possible Causes
PDC FUSE #8
PDC FUSE #40
(F23) FUSED IGNITION SWITCH OUTPUT (RUN-START) CIRCUIT OPEN
(P82) RIGHT HEATED SEAT LOW INDICATOR DRIVER CIRCUIT OPEN/SHORTED TO GROUND
RIGHT HEATED SEAT SWITCH
CLUSTER

Diagnostic Test

1. VERIFY THAT DTC B1223-RIGHT HEATED SEAT LO INDICATOR CONTROL CIRCUIT OPEN IS ACTIVE

With the scan tool, record and erase DTC's
Operate the Heated Seat Switch in both positions several times.
With the scan tool, read DTC's.

Does the DTC B1223-RIGHT HEATED SEAT LO INDICATOR CONTROL CIRCUIT OPEN reset?

Yes >> Go To 2

No >> The conditions that caused this code to set are not present at this time. Using the wiring diagram/schematic as a guide, inspect the wiring and connectors.
Perform BODY VERIFICATION TEST – VER 1. (Refer to BODY VERIFICATION TEST - VER 1).

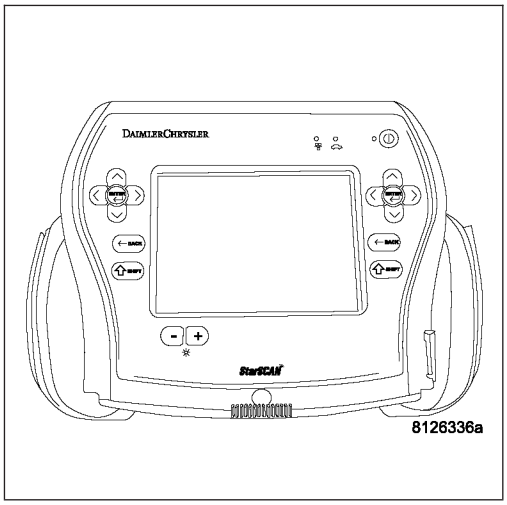

2. INSPECT PDC FUSES

Check PDC fuses #8 and #40.

Is either fuse open?

Yes >> Check for a possible short to ground on the (F23) Fused Ignition Switch Output (Run-Start) Circuit and replace the fuse as necessary.
Perform BODY VERIFICATION TEST – VER 1. (Refer to BODY VERIFICATION TEST - VER 1).

No >> Go To 3

3. DISCONNECT THE CLUSTER C–3 CONNECTOR AND CHECK FOR VOLTAGE

Reinstall fuse if removed in previous test.

Disconnect the Cluster C-3 connector.

NOTE: Check connectors - Clean and repair as necessary.

Turn the ignition on.

Measure the voltage at the (P82) Right Heated Seat Low Indicator Driver circuit at the Cluster C-3 connector.

Is the voltage above 10.0 volts?

Yes >> Replace the Cluster in accordance with the Service Information.

Perform BODY VERIFICATION TEST – VER 1. (Refer to BODY VERIFICATION TEST - VER 1).

No >> Go To 4

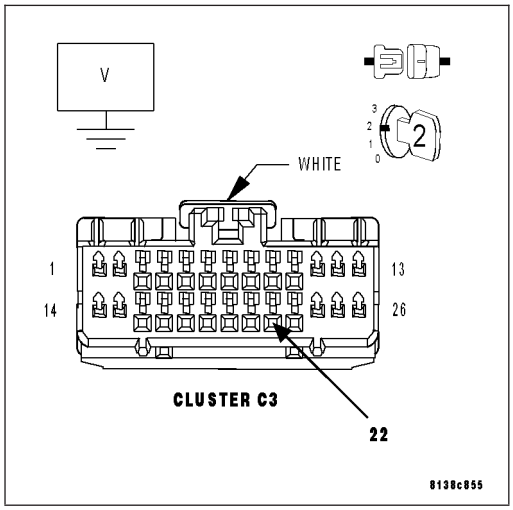

4. CHECK THE (F23) FUSED IGNITION SWITCH OUTPUT (RUN-START)

Disconnect the Right Heated Seat switch connector.

NOTE: Check connectors - Clean and repair as necessary.

Turn the ignition on.

Measure the voltage of the (F23) Fused Ignition Switch Output circuit at the Right Heated Seat Switch connector.

Is the voltage above 10.0 volts ?

Yes >> Go To 5

No >> Repair the (F23) Fused Ignition Switch Output circuit for an open.

Perform BODY VERIFICATION TEST – VER 1. (Refer to BODY VERIFICATION TEST - VER 1).

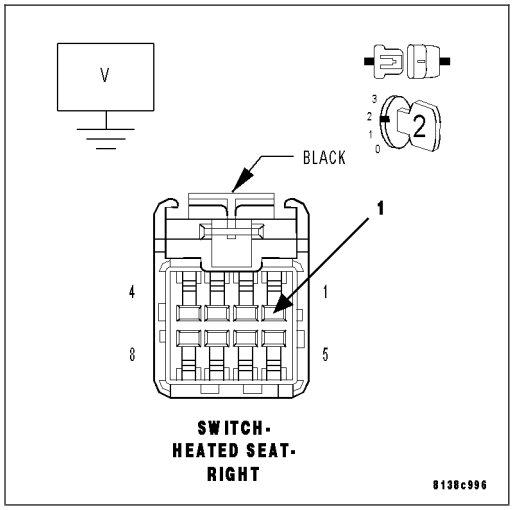

5. CHECK THE (P82) RIGHT HEATED SEAT LO INDICATOR DRIVER CIRCUIT FOR A SHORT TO GROUND

Measure the resistance between ground and the (P82) Right Heated Seat Lo Indicator Driver circuit.

Was the resistance below 5.0 ohms?

Yes >> Repair the (P82) Right Heated Seat Lo Indicator Driver circuit for a short to ground

Perform BODY VERIFICATION TEST – VER 1. (Refer to BODY VERIFICATION TEST - VER 1).

No >> Go To 6

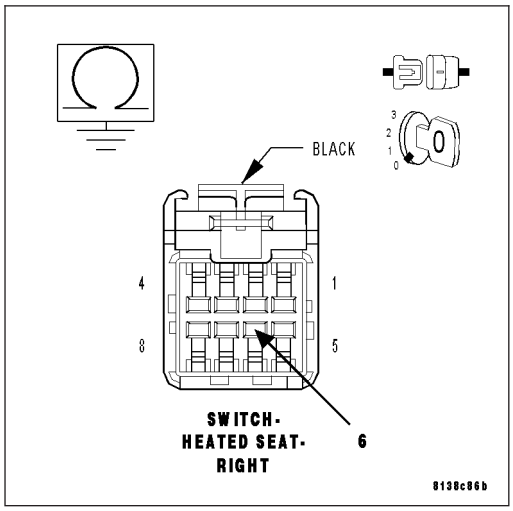

6. CHECK THE (P82) RIGHT HEATED SEAT LO INDICATOR DRIVER CIRCUIT FOR AN OPEN

Measure the resistance of the (P82) Right Heated Seat Lo Indicator Driver circuit between the Cluster C-3 connector and the Right Heated Seat Switch connector.

Is the resistance below 5.0 ohms?

Yes >> Replace the Right Heated Seat Switch.
Perform BODY VERIFICATION TEST – VER 1. (Refer to BODY VERIFICATION TEST - VER 1).

No >> Repair the (P82) Right Heated Seat Lo Indicator Driver circuit for an open.
Perform BODY VERIFICATION TEST – VER 1. (Refer to BODY VERIFICATION TEST - VER 1).

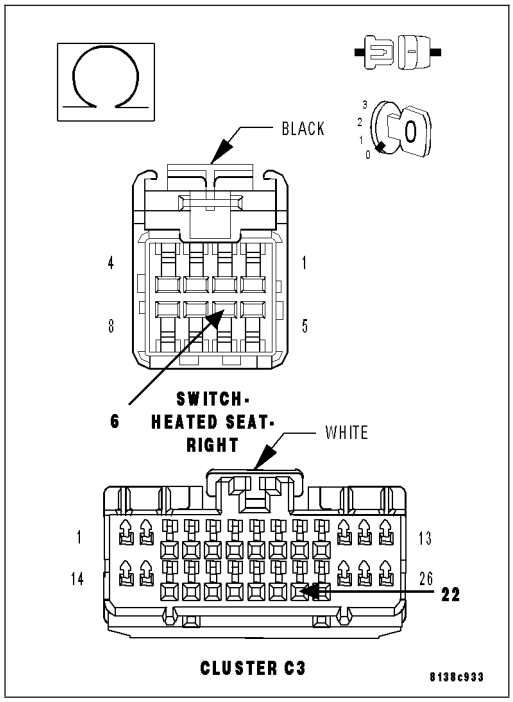

B210D-BATTERY VOLTAGE LOW

For a complete wiring diagram **Refer to Section 8W**.

- **When Monitored:**Engine running, during heated seat operation.
- **Set Condition:**This code is set immediately after the Heated Seat Module receives a low charging system voltage message over the CAN B Bus or detects voltage under 11.3 volts on the (A33) Fused B(+) circuit.

Possible Causes
CHARGING SYSTEM VOLAGE LOW
(A33) FUSED B(+) CIRCUIT
HEATED SEAT MODULE

Diagnostic Test

1. CHECK PCM FOR CHARGING SYSTEM DTC

With the scan tool, read Powertrain Control Module DTC's.

Are there any Charging System DTC's set in the Powertrain Control Module?

Yes >> (Refer to 8 - ELECTRICAL/CHARGING - DIAGNOSIS AND TESTING) for Charging System diagnostic procedures.

No >> Go To 2

Perform BODY VERIFICATION TEST – VER 1. (Refer to BODY VERIFICATION TEST - VER 1).

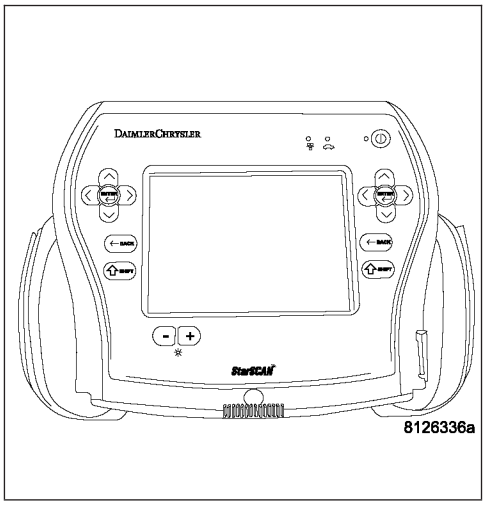

2. VERIFY THAT DTC B210D-BATTERY VOLTAGE LOW IS ACTIVE

With the scan tool, record and erase DTC's

Turn the ignition switch to the Off position then start the engine and let run for one minute.

With the scan tool, read DTC's.

Does the DTC B210D-BATTERY VOLTAGE LOW reset?

Yes >> Go To 3

No >> The conditions that caused this code to set are not present at this time. Using the wiring diagram/schematic as a guide, inspect the wiring and connectors.

Perform BODY VERIFICATION TEST – VER 1. (Refer to BODY VERIFICATION TEST - VER 1).

3. CHECK THE VOLTAGE ON THE (A33) FUSED B(+) CIRCUIT

Disconnect the Heated Seat Module connector.

NOTE: Check connectors - Clean and repair as necessary.
Start the engine and let idle.

Measure the voltage on the (A33) Fused B(+) circuit at the HSM connector and compare to voltage at the vehicle battery.

Is the voltage at the HSM connector the same as measured at the battery?

Yes >> Replace the Heated Seat Module in accordance with the service information.
Perform BODY VERIFICATION TEST – VER 1. (Refer to BODY VERIFICATION TEST - VER 1).

No >> Repair the (A33) Fused B(+) circuit as necessary.
Perform BODY VERIFICATION TEST – VER 1. (Refer to BODY VERIFICATION TEST - VER 1).

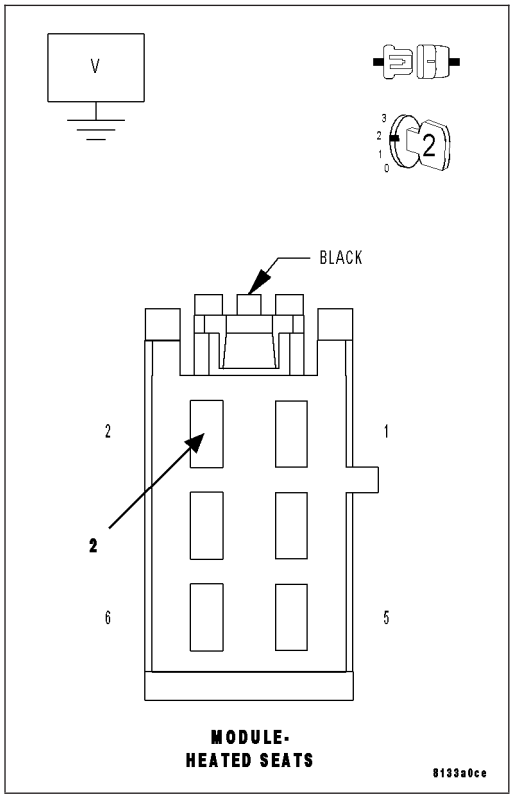

B210E-BATTERY VOLTAGE HIGH

For a complete wiring diagram **Refer to Section 8W**.

- **When Monitored:**Engine running, during heated seat operation.
- **Set Condition:**This code is set immediately after the Heated Seat Module receives a high charging system voltage message over the CAN B Bus or detects voltage over 15 volts on the (A33) Fused B(+) circuit.

Possible Causes
CHARGING SYSTEM VOLAGE HIGH
(A33) FUSED B(+) CIRCUIT
HEATED SEAT MODULE

Diagnostic Test

1. CHECK PCM FOR CHARGING SYSTEM DTC

With the scan tool, read Powertrain Control Module DTC's.

Are there any Charging System DTC's set in the Powertrain Control Module?

Yes >> (Refer to 8 - ELECTRICAL/CHARGING - DIAGNOSIS AND TESTING) for Charging System diagnostic procedures.

No >> Go To 2

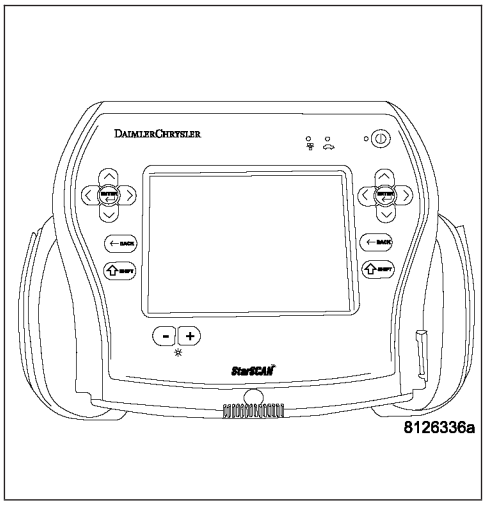

2. VERIFY THAT DTC B210E-BATTERY VOLTAGE HIGH IS ACTIVE

With the scan tool, record and erase DTC's

Turn the ignition switch to the Off position then start the engine and let run for one minute.

Attempt to operate the heated seats.

With the scan tool, read DTC's.

Does the DTC B210E-BATTERY VOLTAGE HIGH reset?

Yes >> Go To 3

No >> The conditions that caused this code to set are not present at this time. Using the wiring diagram/schematic as a guide, inspect the wiring and connectors.

Perform BODY VERIFICATION TEST – VER 1. (Refer to BODY VERIFICATION TEST - VER 1).

3. CHECK THE VOLTAGE ON THE (A33) FUSED B(+) CIRCUIT

Disconnect the Heated Seat Module connector.

NOTE: Check connectors - Clean and repair as necessary.

Start the engine and let idle.

Measure the voltage on the (A33) Fused B(+) circuit at the HSM connector and compare to voltage at the vehicles battery.

Is the voltage at the HSM connector the same as measured at the battery?

Yes >> Replace the Heated Seat Module in accordance with the service information.

Perform BODY VERIFICATION TEST – VER 1. (Refer to BODY VERIFICATION TEST - VER 1).

No >> Repair the (A33) Fused B(+) circuit as necessary.

Perform BODY VERIFICATION TEST – VER 1. (Refer to BODY VERIFICATION TEST - VER 1).

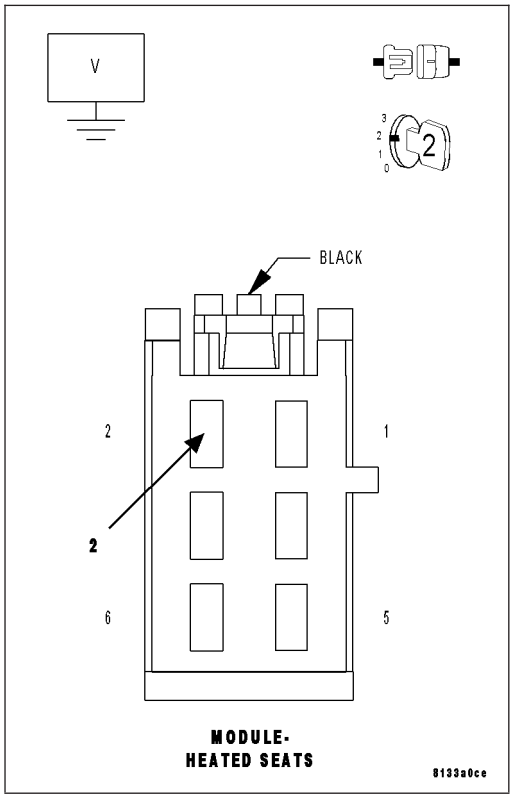

B221A-HEATED SEAT MODULE INTERNAL

For a complete wiring diagram **Refer to Section 8W**.

- **When Monitored:**Ignition on.
- **Set Condition:**This code is set immediately if the Heated Seat Module internal self test fails.

Possible Causes
HEATED SEAT MODULE

Diagnostic Test

1. VERIFY THAT DTC B221A-HEATED SEAT MODULE INTERNAL IS ACTIVE

With the scan tool, record and erase DTC's
Cycle the ignition switch off then back on.
With the scan tool, read DTC's.

Does the DTC B221A-HEATED SEAT MODULE INTERNAL reset?

Yes >> Replace the Heated Seat Module.
Perform BODY VERIFICATION TEST – VER 1. (Refer to BODY VERIFICATION TEST - VER 1).

No >> The conditions that caused this code to set are not present at this time. Using the wiring diagram/schematic as a guide, inspect the wiring and connectors.
Perform BODY VERIFICATION TEST – VER 1. (Refer to BODY VERIFICATION TEST - VER 1).

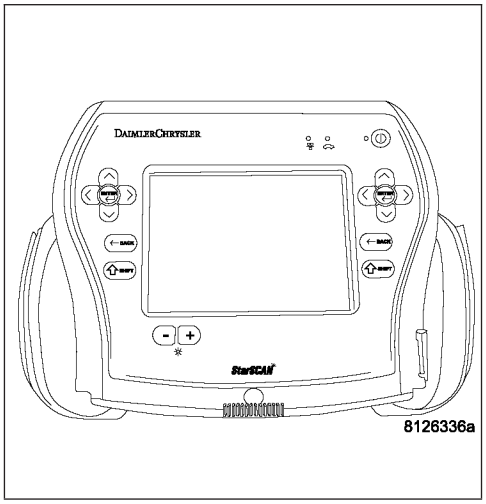

U0019–CAN B BUS – HSM

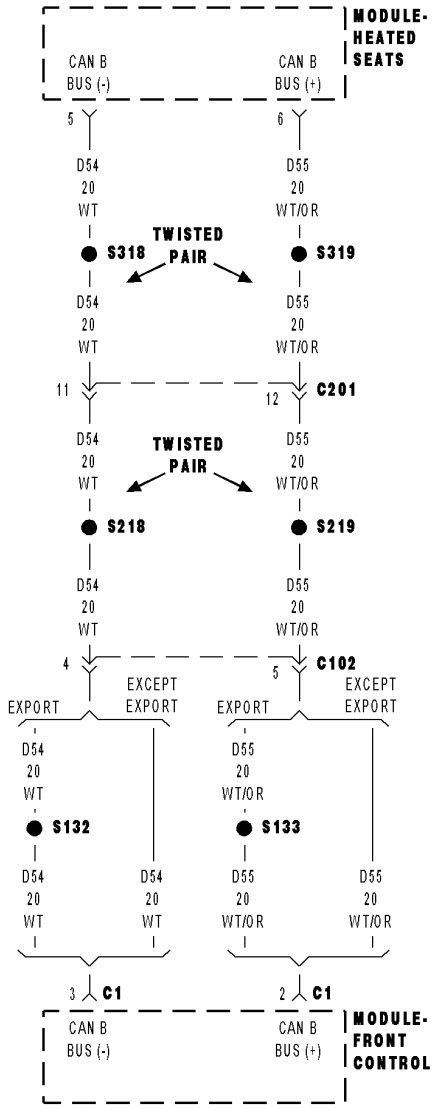

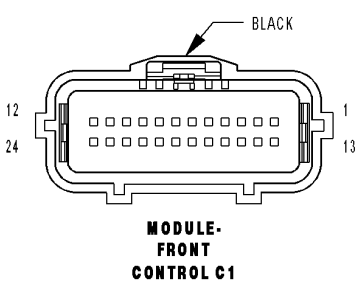

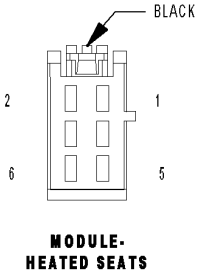

8133b09a

For a complete wiring diagram **Refer to Section 8W**.

- **When Monitored:**
  Continuously
- **Set Condition:**
  Whenever the Can B Bus (+) or B Bus (–) circuit is open, shorted to voltage or shorted to ground, this code will set.

Possible Causes
CAN B BUS DTC's IN FRONT CONTROL MODULE
(D54) CAN B BUS (–) CIRCUIT OPEN
(D55) CAN B BUS (+) CIRCUIT OPEN
HEATED SEAT MODULE

Diagnostic Test

1. TEST FOR INTERMITTENT CONDITION

Turn the ignition on.
With the scan tool, record and erase DTC's
Cycle the ignition from on to off 3 times.
Turn the ignition on.
With the scan tool, read DTC's.

Does the scan tool display U0019 CAN B BUS CIRCUIT?

Yes >> Go To 2

No >> The conditions that caused this code to set are not present at this time. Using the wiring diagram/schematic as a guide, inspect the wiring and connectors.

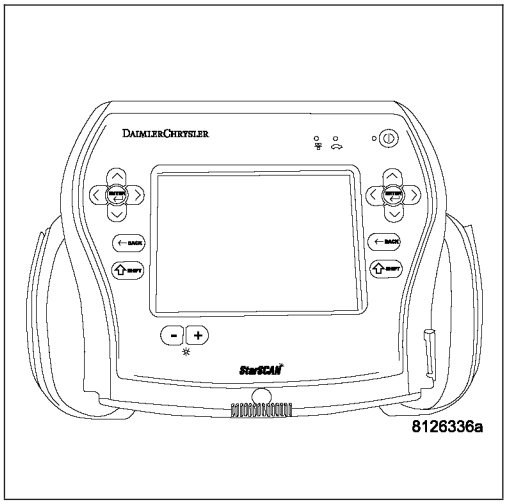

2. CHECK FRONT CONTROL MODULE DTC's

With the scan tool, read Front Control Module DTC's

Does the scan tool display any CAN B BUS DTC's – ACTIVE?

Yes >> Refer to the symptom list for problems related to Communication in the ELECTRICAL.– ELECTRONIC CONTROL MODULES – ELECTRICAL DIAGNOSES section.

No >> Go to 3

3. CAN B BUS (+) CIRCUIT OPEN

Turn the ignition off.

Disconnect the Heated Seat Module connector.

Disconnect the Front Control Module C1 connector.

Measure the resistance of the (D55) Can B Bus (+) circuit between the Front Control Module C1 connector and the Heated Seat Module connector.

Is the resistance below 2.0 ohms?

Yes >> Go To 4

No >> Repair the Can B Bus (+) circuit for an open.
Perform BODY VERIFICATION TEST - VER 1. (Refer to BODY VERIFICATION TEST - VER 1).

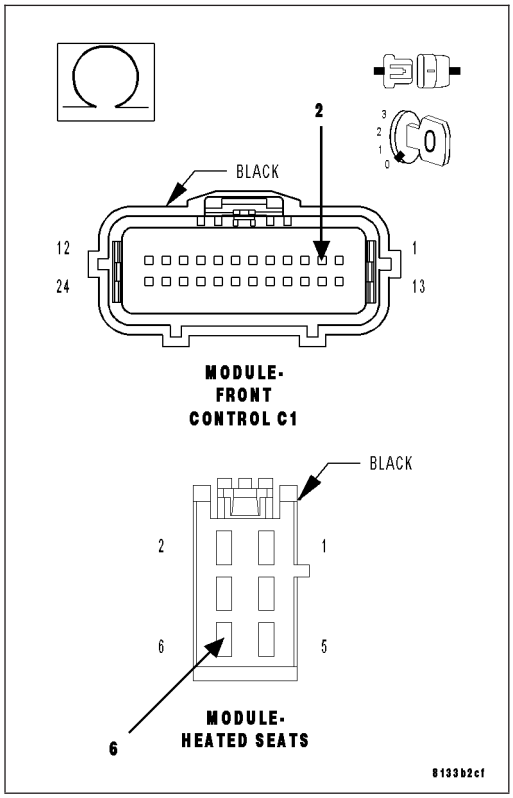

4. CAN B BUS (–) CIRCUIT OPEN

Measure the resistance of the (D54) Can B Bus (–) circuit between the Front Control Module C1 connector and the Heated Seat Module connector.

Is the resistance below 2.0 ohms?

Yes >> Replace the Heated Seat Module.
Perform BODY VERIFICATION TEST - VER 1. (Refer to BODY VERIFICATION TEST - VER 1).

No >> Repair the Can B Bus (–) circuit for an open.
Perform BODY VERIFICATION TEST - VER 1. (Refer to BODY VERIFICATION TEST - VER 1).

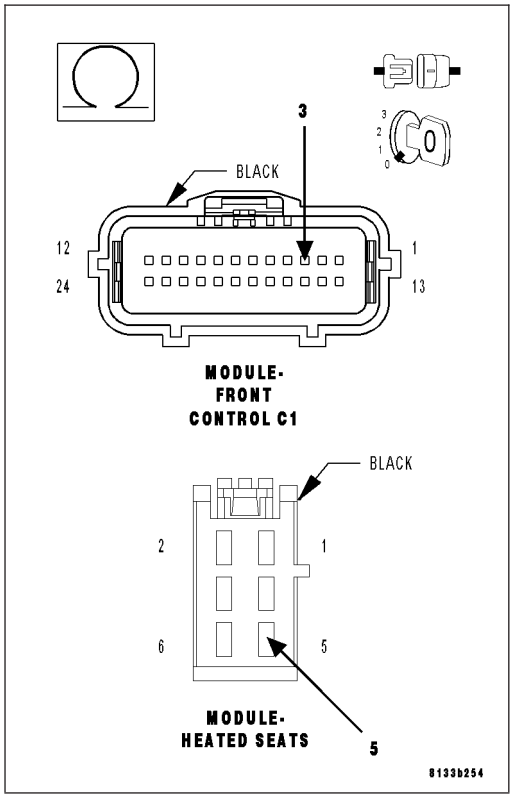

U0141–LOST COMMUNICATION WITH FRONT CONTROL MODULE

For a complete wiring diagram **Refer to Section 8W**.

(Refer to 8 - ELECTRICAL/ELECTRONIC CONTROL MODULES - DIAGNOSIS AND TESTING) for the diagnostic test procedure.

U0151-LOST COMMUNICATION WITH OCCUPANT RESTRAINT CONTROLLER

For a complete wiring diagram **Refer to Section 8W**.

(Refer to 8 - ELECTRICAL/ELECTRONIC CONTROL MODULES - DIAGNOSIS AND TESTING) for the diagnostic test procedure.

U0154-LOST COMMUNICATION WITH OCCUPANT CLASSIFICATION MODULE

For a complete wiring diagram **Refer to Section 8W**.

(Refer to 8 - ELECTRICAL/ELECTRONIC CONTROL MODULES - DIAGNOSIS AND TESTING) for the diagnostic test procedure.

U0155-LOST COMMUNICATION WITH CLUSTER/CCN

For a complete wiring diagram **Refer to Section 8W**.

(Refer to 8 - ELECTRICAL/ELECTRONIC CONTROL MODULES - DIAGNOSIS AND TESTING) for the diagnostic test procedure.

U0156-LOST COMMUNICATION WITH EOM

For a complete wiring diagram **Refer to Section 8W**.

(Refer to 8 - ELECTRICAL/ELECTRONIC CONTROL MODULES - DIAGNOSIS AND TESTING) for the diagnostic test procedure.

U0159-LOST COMMUNICATION WITH PARKING ASSIST CONTROL MODULE

For a complete wiring diagram **Refer to Section 8W**.

(Refer to 8 - ELECTRICAL/ELECTRONIC CONTROL MODULES - DIAGNOSIS AND TESTING) for the diagnostic test procedure.

U0164-LOST COMMUNICATION WITH HVAC CONTROL MODULE

For a complete wiring diagram **Refer to Section 8W**.

(Refer to 8 - ELECTRICAL/ELECTRONIC CONTROL MODULES - DIAGNOSIS AND TESTING) for the diagnostic test procedure.

U0168-LOST COMMUNICATION WITH VEHICLE SECURITY CONTROL MODULE (SKREEM/WCM)

For a complete wiring diagram **Refer to Section 8W**.

(Refer to 8 - ELECTRICAL/ELECTRONIC CONTROL MODULES - DIAGNOSIS AND TESTING) for the diagnostic test procedure.

U0169-LOST COMMUNICATION WITH SUNROOF CONTROL MODULE

For a complete wiring diagram **Refer to Section 8W**.

(Refer to 8 - ELECTRICAL/ELECTRONIC CONTROL MODULES - DIAGNOSIS AND TESTING) for the diagnostic test procedure.

U0181-LOST COMMUNICATION WITH HEADLAMP LEVELING TRANSLATOR

For a complete wiring diagram **Refer to Section 8W**.

(Refer to 8 - ELECTRICAL/ELECTRONIC CONTROL MODULES - DIAGNOSIS AND TESTING) for the diagnostic test procedure.

U0184-LOST COMMUNICATION WITH RADIO

For a complete wiring diagram **Refer to Section 8W**.

(Refer to 8 - ELECTRICAL/ELECTRONIC CONTROL MODULES - DIAGNOSIS AND TESTING) for the diagnostic test procedure.

U0186-LOST COMMUNICATION WITH AUDIO AMPLIFIER

For a complete wiring diagram **Refer to Section 8W**.

(Refer to 8 - ELECTRICAL/ELECTRONIC CONTROL MODULES - DIAGNOSIS AND TESTING) for the diagnostic test procedure.

U0195-LOST COMMUNICATION WITH SDARS

For a complete wiring diagram **Refer to Section 8W**.

(Refer to 8 - ELECTRICAL/ELECTRONIC CONTROL MODULES - DIAGNOSIS AND TESTING) for the diagnostic test procedure.

U0197-LOST COMMUNICATION WITH HFM

For a complete wiring diagram **Refer to Section 8W**.

(Refer to 8 - ELECTRICAL/ELECTRONIC CONTROL MODULES - DIAGNOSIS AND TESTING) for the diagnostic test procedure.

U0199-LOST COMMUNICATION WITH DRIVER DOOR MODULE

For a complete wiring diagram **Refer to Section 8W**.

(Refer to 8 - ELECTRICAL/ELECTRONIC CONTROL MODULES - DIAGNOSIS AND TESTING) for the diagnostic test procedure.

U0200-LOST COMMUNICATION WITH PASSENGER DOOR MODULE

For a complete wiring diagram **Refer to Section 8W**.

(Refer to 8 - ELECTRICAL/ELECTRONIC CONTROL MODULES - DIAGNOSIS AND TESTING) for the diagnostic test procedure.

U0209-LOST COMMUNICATION WITH MEMORY SEAT CONTROL MODULE

For a complete wiring diagram **Refer to Section 8W**.

(Refer to 8 - ELECTRICAL/ELECTRONIC CONTROL MODULES - DIAGNOSIS AND TESTING) for the diagnostic test procedure.

U0212-LOST COMMUNICATION WITH SCCM - CAN B

For a complete wiring diagram **Refer to Section 8W**.

(Refer to 8 - ELECTRICAL/ELECTRONIC CONTROL MODULES - DIAGNOSIS AND TESTING) for the diagnostic test procedure.

U0231-LOST COMMUNICATION WITH RAIN SENSING MODULE

For a complete wiring diagram **Refer to Section 8W**.

(Refer to 8 - ELECTRICAL/ELECTRONIC CONTROL MODULES - DIAGNOSIS AND TESTING) for the diagnostic test procedure.

HEATED SEATS - SERVICE INFORMATION

TABLE OF CONTENTS

page

HEATED SEATS - SERVICE INFORMATION
DESCRIPTION 74
OPERATION 74
DIAGNOSIS AND TESTING
HEATED SEAT SYSTEM 75
HEATER-CUSHION PAD
DESCRIPTION 76
OPERATION 76
DIAGNOSIS AND TESTING
HEATED SEAT ELEMENT 76
REMOVAL 77
INSTALLATION 77
MODULE-HEATED SEATS
DESCRIPTION 79

page

OPERATION 79
DIAGNOSIS AND TESTING
HEATED SEAT MODULE 79
REMOVAL 80
INSTALLATION 80
SWITCH-HEATED SEAT
DESCRIPTION 82
OPERATION 82
DIAGNOSIS AND TESTING
HEATED SEAT SWITCH 83
REMOVAL 83
INSTALLATION 83

HEATED SEATS - SERVICE INFORMATION

DESCRIPTION

WARNING: The front passenger seat assembly contains critical components that affect the front passenger airbag deployment. Correctly functioning front passenger seat components are critical for the Occupant Classification System (OCS) to properly classify the front passenger and calculate the proper airbag deployment. Unapproved modifications or service procedures to the front passenger seat assembly, its related components, or trim cover may inadvertently change the airbag deployment in case of a frontal crash. This could result in death or serious injury to the front seat passenger if the vehicle is involved in an accident. The following requirements must be strictly adhered to:

- **Do not modify the front passenger seat assembly or components in any way.**
- **Do not modify the front seat center console or center position seat in any way.**
- **Do not use prior or future model year seat trim covers not designated for the specific model being repaired. Always use the correct seat trim cover specified for the vehicle.**
- **Do not replace the seat trim cover with an aftermarket trim cover.**
- **Do not add a secondary trim cover other than those approved by DaimlerChrysler/Mopar.**
- **At no time should any Supplemental Restraint System (SRS) component or SRS related component or fastener be modified or replaced with any part except those which are approved by DaimlerChrysler/Mopar.**

Vehicles with the heated seat option can be visually identified by the two heated seat switches (1) located in the center stack of the instrument panel. The heated seat system allows the driver and front seat passenger to select from two different levels of electrical seat heating (HI/LO). The heated seat system for this vehicle includes the following major components, which are described in further detail later in this section:

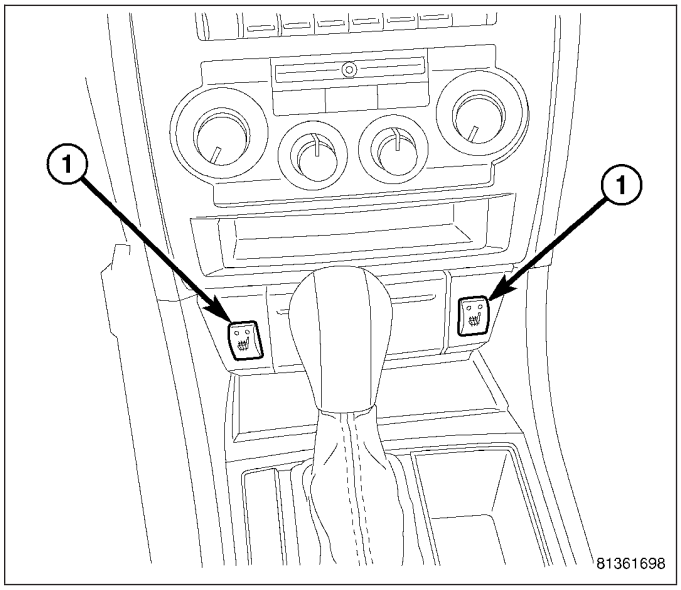

- **Heated Seat Elements** - Four heated seat elements are used per vehicle. Two heated seat elements are integral to each seat, one in the seat back and the other in the seat cushion.
- **Heated Seat Module** - One heated seat module is used per vehicle. The Heated Seat Module is mounted under the right front seat. This module contains the control logic and software for the front heated seat system. The module communicates on the Controller Area Network (CAN) data bus.
- **Heated Seat Switches** - Two heated seat switches are used per vehicle, one for each heated seat. Both switches are mounted in the instrument panel center stack.
- **Instrument Cluster (CCN)** - A Cab Compartment Node (CCN) is part of the instrument cluster on this vehicle. The CCN utilizes integrated software and information carried on the CAN data bus. The CCN serves as the link between the heated seat switches and the heated seat module.

OPERATION

The heated seat system operates on battery current received through a fuse in the Integrated Power Module (IPM). Fused ignition switch output (run) circuits are used, so that the heated seat system will only operate when the ignition switch is in the On position. The heated seat system will turn Off automatically whenever the ignition switch is turned to any position except On.

A Heated Seat Module is used to control the heated seat system. The module responds to heated seat switch messages and ignition switch status inputs by controlling the 12v output to the front seat heating elements through integral solid-state relays.

When either of the heated seat switches are depressed a resistance signal is sent to the Cab Compartment Node (CCN) or instrument cluster. The CCN then sends a message via the Controller Area Network (CAN) data bus to the

heated seat module, signaling the module to energize the heating element for the selected seat. Amber Light Emitting Diodes LEDS) in the top portion of each switch indicate the level of heat in use: Two LEDs are illuminated for high, one for low, and none for off. Pressing the switch once will select high-level heating. Pressing the switch a second time will select low-level heating. Pressing the switch a third time will shut the heating elements off.

The heated seat module energizes an integral solid-state relay, which supplies battery current to the heating elements. When high-temperature heating is selected, the heaters provide a boosted heat level during the first four minutes of operation after heating is activated. The heat output then drops to the normal high-temperature level. If high-level heating is selected, the control system will automatically switch to the low level after two hours of continuous operation. At that time, the number of illuminated LEDs changes from two to one, indicating the change. Operation on the low setting also turns off automatically after two hours.

The module will automatically turn off the heating elements if it detects an OPEN or LOW short in the heating element circuit.

DIAGNOSIS AND TESTING

HEATED SEAT SYSTEM

In order to obtain conclusive testing, the heated seat system and the Controller Area Network (CAN) data bus circuit must be checked. **Any diagnosis of the heated seat system should begin with, the use of a scan tool and the appropriate diagnostic service information.**

Refer to the appropriate wiring information for complete circuit schematic or connector pin-out information.

NOTE: Vehicles equipped with the heated seat option utilize a low voltage cut-off feature. This feature turns off power to the heated seat system anytime vehicle voltage is below 11.1v or above 15.5v. Be certain to check the vehicle electrical system for proper voltage anytime the power seat system appears inoperative.

Before any testing of the power seat system is attempted, the battery should be fully-charged.

HEATER-CUSHION PAD

DESCRIPTION

Vehicles equipped with the optional heated seat system have two, carbon fiber heated seat elements, located in each front seat. One heating element is used for each seat cushion and another for each seat back.

Each of the heated seat element consists of multiple heating circuits operating in parallel throughout the carbon fiber element. The heated seat elements are captured between the leather trim cover and the seat cushion assembly. If a malfunction occurs in one or more of the individual carbon fiber circuits, the others will continue to provide heat.

The heated seat elements cannot be repaired. If found to be damaged or inoperative, a new heating element assembly must be installed.

OPERATION

One end of the heated seat element is connected to ground at all times through a splice under the seat. Battery current is directed to the other end of the heated seat element by the heated seat module. The heated seat module will energize the heated seat element when the heated seat switch is depressed in the Low or High position.

As electrical current passes through the heated seat element, the resistance of the wire used in the element disperses some of the electrical current in the form of heat. The heat produced by the heated seat element then radiates through the underside of the seat cushion and seat back trim covers, warming the seat cover and its occupant.

DIAGNOSIS AND TESTING

HEATED SEAT ELEMENT

Refer to the appropriate wiring information for complete circuit schematic or connector pin-out information.

The wire harness connectors (2&3) for the heating elements are located under the seat (1).

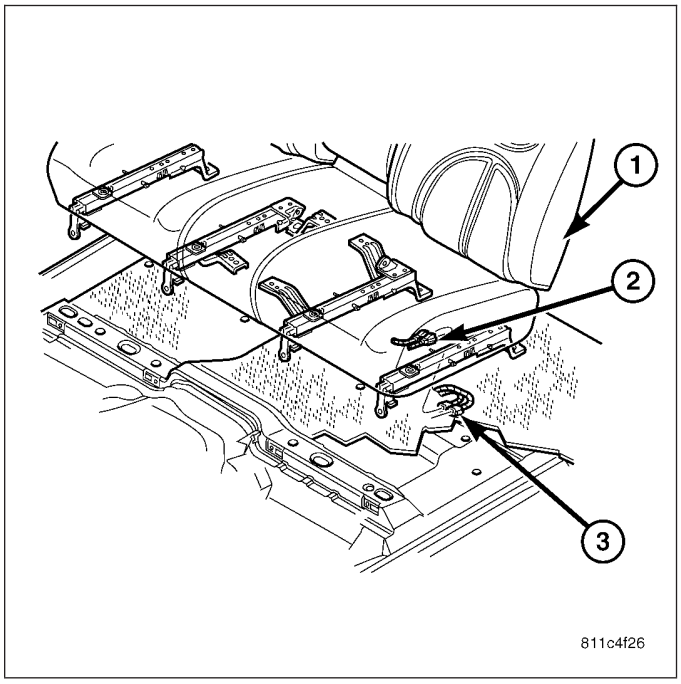

NOTE: When checking heated seat elements for continuity, be certain to move the heating element being checked. Moving the element, such as sitting in the seat will eliminate the possibility of an intermittent open in the element which would only be evident if the element was in a certain position. Failure to check the element in various positions could result in an incomplete test.

1. Locate and disconnect the seat electrical connector.
2. Check the resistance between the circuit leading in and out of the suspect heated seat element. The resistance should be between 3.8 - 4.8 ohms for a seat cushion element and 4.3 - 5.4 ohms for a seat back element. If OK, (Refer to 8 - ELECTRICAL/ HEATED SEATS - DIAGNOSIS AND TESTING). If not OK, replace the inoperative heated seat element.

REMOVAL

NOTE: Do not remove the factory installed heating elements (3) from the seat or seat back cushions. The original element is permanently attached and cannot be removed without permanent damage. The replacement heating element is designed to be applied directly on top of the inoperative factory installed heating element.

1. Disconnect and isolate the battery negative cable.
2. Remove the appropriate seat cushion, (Refer to 23 - BODY/SEATS/SEAT CUSHION COVER - REMOVAL) or seat back trim cover, (Refer to 23 - BODY/SEATS/SEAT BACK CUSHION / COVER - REMOVAL).
3. Disconnect the inoperative heated seat cushion or seat back element electrical connectors (2).
4. Locate the wires leading from the inoperative heating element and cut them off flush with the edge of the original heating element.

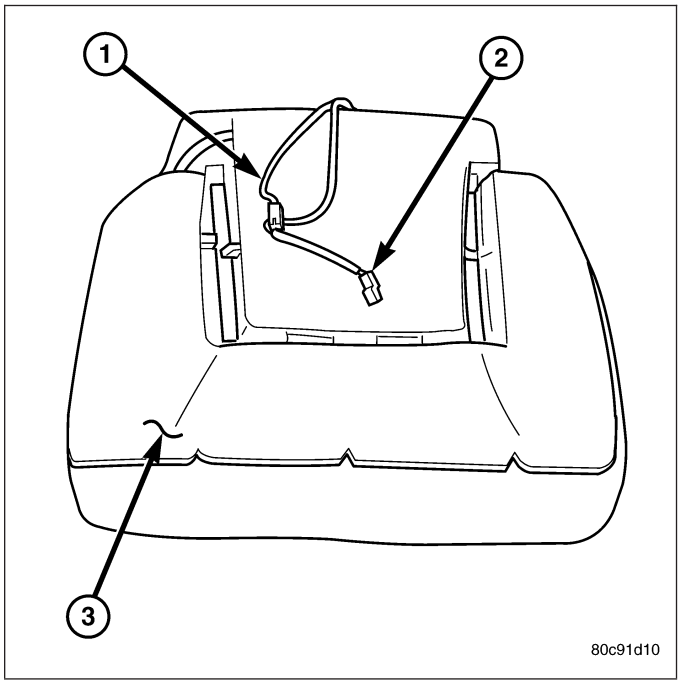

INSTALLATION

1. Peel off the adhesive backing on the back of the replacement heating element (2) and stick directly on top of the factory installed heating element (1).

CAUTION: During the installation of the replacement heating element, be careful not to fold or crease the element assembly. Folds or creases will cause premature failure.

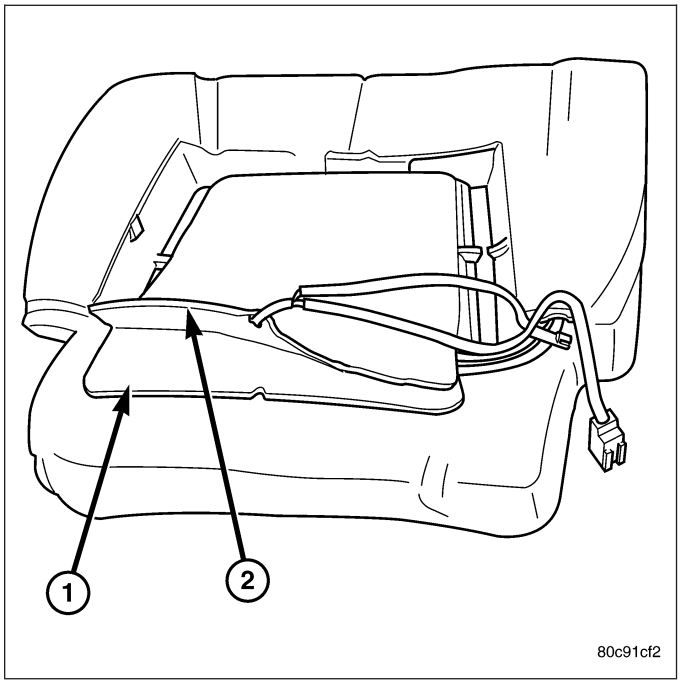

2. Connect the new heating element electrical connectors (3&4).
3. Connect the battery negative cable.
4. Verify heated seat system operation.
5. Install the appropriate seat cushion, (Refer to 23 - BODY/SEATS/SEAT CUSHION COVER - INSTALLATION) or seat back trim cover, (Refer to 23 - BODY/SEATS/SEAT BACK CUSHION / COVER - INSTALLATION).

NOTE: Make certain the seat wire harness is correctly routed through the seat and seat back. The excess wire between the cushion and back elements should be securely tucked between the rear of the cushion foam and the rear carpet flap of the trim cover.

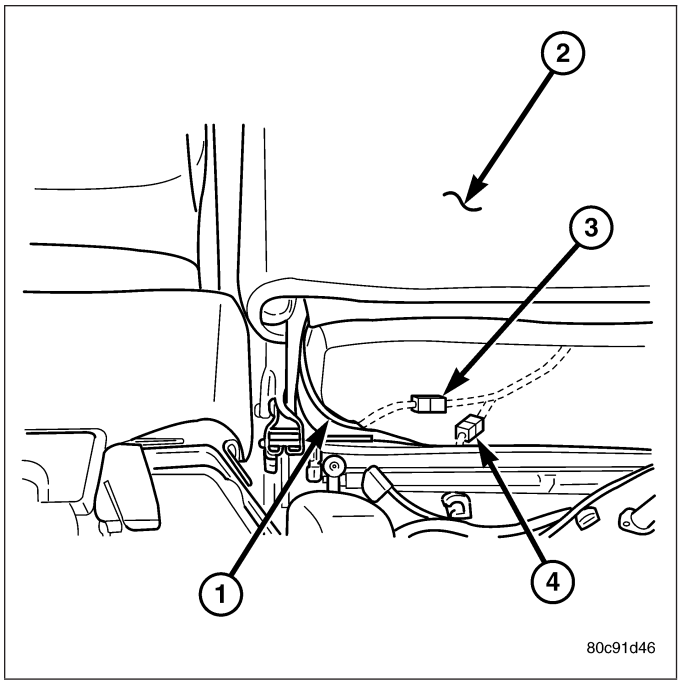

MODULE-HEATED SEATS

DESCRIPTION

The heated seat module (1) is located under the right front seat. It has a single electrical connector (3) and four locking tabs (2) that secure it to the floor cross member. The module can be accessed through the separation between the front and rear carpet assemblies.

The heated seat module is a microprocessor designed to use Controller Area Network (CAN) data bus messages from the instrument cluster also known as the Cabin Compartment Node (CCN). The CCN receives inputs from the heated seat switches and in turn signals the heated seat module to operate the heated seat elements for both front seats.

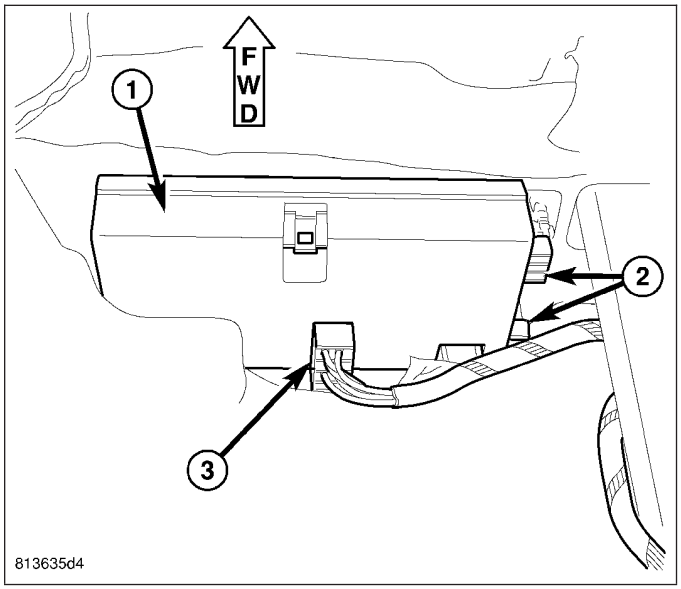

OPERATION

The heated seat module operates on fused battery current received from the ignition switch. The module is grounded to the body at all times through the electrical connector. Inputs to the module include Controller Area Network (CAN) data bus messages and standard hardwired 12volt power and ground. In response to the CAN inputs the heated seat module will control the battery current to the appropriate heated seat elements.

When a heated seat switch CAN data bus signal is received by the heated seat module, the module energizes the selected heated seat element. The Low heat set point is about 38C (100.4°F), and the High heat set point is about 42C (107.6°F).

If the heated seat module detects a heated seat element OPEN or SHORT circuit, it will record and store the appropriate diagnostic trouble code (DTC).

DIAGNOSIS AND TESTING

HEATED SEAT MODULE

In order to obtain conclusive testing, the heated seat system and the Controller Area Network (CAN) data bus circuit must be checked. **Any diagnosis of the heated seat system should begin with, the use of a scan tool and the appropriate diagnostic service information.**

Refer to the appropriate wiring information for complete circuit schematic or connector pin-out information.

NOTE: Vehicles equipped with the heated seat option utilize a low voltage cut-off feature. This feature turns off power to the heated seat system anytime vehicle voltage is below 11.0v or above 15.5v. Be certain to check the vehicle electrical system for proper voltage anytime the power seat system appears inoperative.

Before any testing of the power seat system is attempted, the battery should be fully-charged.

REMOVAL

1. Disconnect and isolate the battery negative cable.
2. Remove the right front seat from the vehicle, (Refer to 23 - BODY/SEATS/SEAT - REMOVAL).
3. Reposition the front carpet assembly aside to gain access to the heated seat module (1).
4. Disconnect the wire harness connector (3) from the heated seat module (1).
5. Unsnap the heated seat module retaining clips (2) from the floor crossmember.
6. Remove the heated seat module (1) from the vehicle.

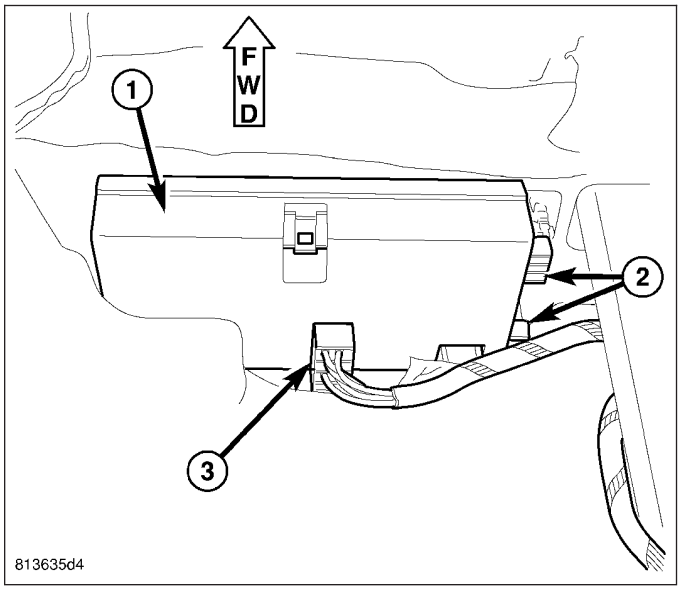

INSTALLATION

1. Install the heated seat module (3) in the vehicle.
2. Position the retaining clips (2) with the retaining holes (1) in the floor cross member. Firmly apply even pressure to the module (3) until all four retaining clips (2) snap into place.

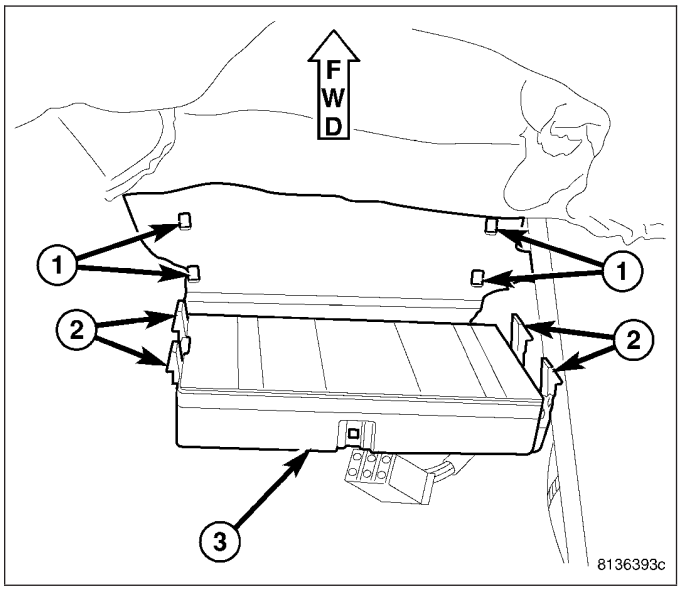

3. Connect the wire harness connector (3) to the heated seat module (1).
4. Reposition the front carpet assembly to the original position.
5. Install the right, front seat, (Refer to 23 - BODY/ SEATS/SEAT - INSTALLATION).
6. Connect the battery negative cable.
7. Check for proper heated seat system operation.

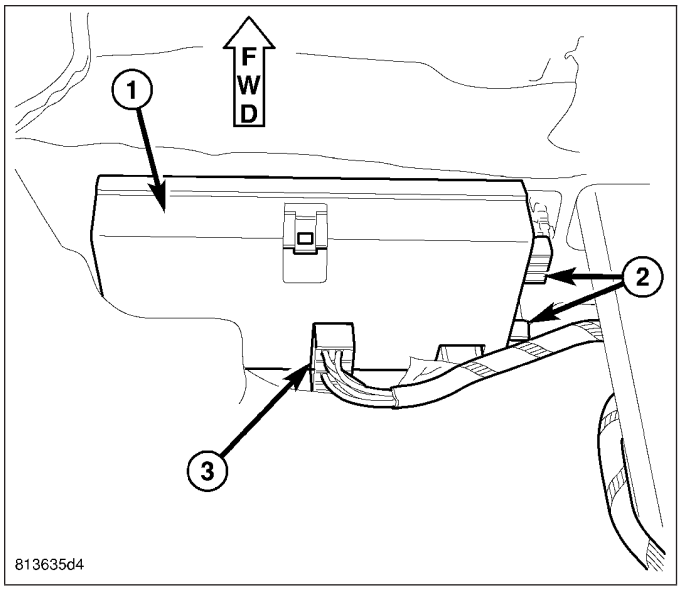

SWITCH-HEATED SEAT

DESCRIPTION

The heated seat switches (1) are both mounted in the instrument panel. The two switches are snapped into mounting holes in the instrument panel center bezel. The two heated seat switches are identical in appearance and construction.

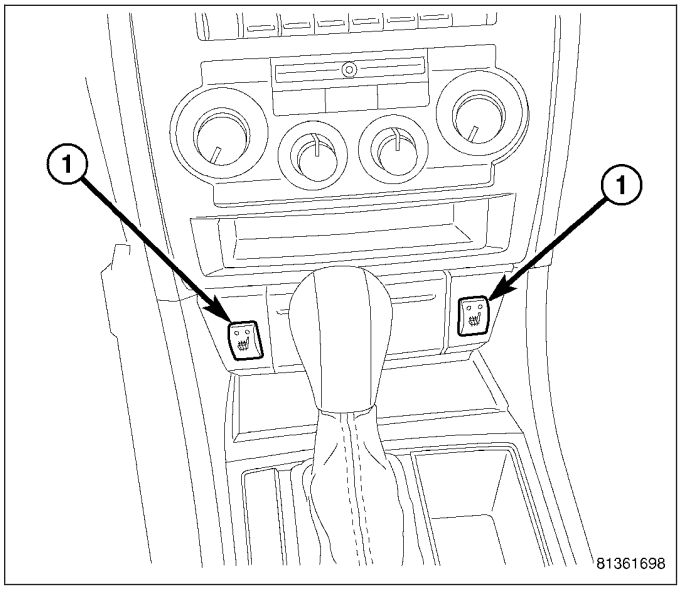

Each heated seat switch provides a resistor-multiplexed signal to the Cab Compartment Node (CCN). Amber Light Emitting Diodes LEDS) in the top portion of each switch indicate the level of heat in use: Two LEDs are illuminated for high, one for low, and none for off. Pressing the switch once will select high-level heating. Pressing the switch a second time will select low-level heating. Pressing the switch a third time will shut the heating elements off.

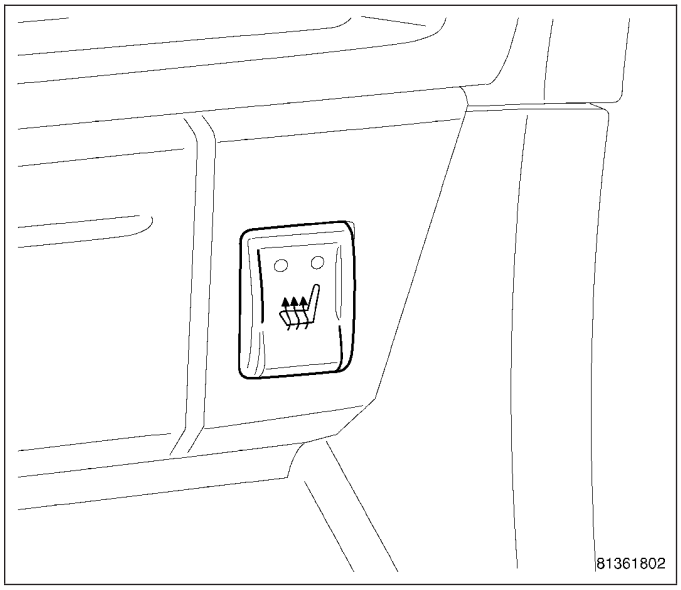

The LED indicator lamps in each heated seat switch cannot be repaired. If the LED lamps are inoperative or damaged, or the switch is inoperative or damaged the individual heated seat switch assembly must be replaced.

OPERATION

The heated seat switches receive battery current through a fused ignition switch output (run) circuit when the ignition switch is in the On position. Depressing the heated seat switch provides a hard-wired resistor multiplexed signal to the Cabin Compartment Node (CCN). The CCN is responsible for supplying the Controller Area Network (CAN) data bus message to the heated seat module, signaling the module to power the heated seat element of the selected seat and maintain the temperature setting.

If the heated seat switch is depressed to a different position (Low or High) than the currently selected state, the CCN will go through the process again to change the temperature setting. If a heated seat switch is depressed a second time to the same position as the currently selected state, the CCN and heated seat module interprets the second input as a request to turn the seat heater OFF. The CCN will then signal the heated seat module to turn the heated seat elements for that seat off.

DIAGNOSIS AND TESTING

HEATED SEAT SWITCH

In order to obtain conclusive testing, the heated seat system and the Controller Area Network (CAN) data bus circuit must be checked. **Any diagnosis of the heated seat system should begin with, the use of a scan tool and the appropriate diagnostic service information.**

Refer to the appropriate wiring information for complete circuit schematic or connector pin-out information.

NOTE: Vehicles equipped with the heated seat option utilize a low voltage cut-off feature. This feature turns off power to the heated seat system anytime vehicle voltage is below 11.0v or above 15.5v. Be certain to check the vehicle electrical system for proper voltage anytime the power seat system appears inoperative.

Before any testing of the power seat system is attempted, the battery should be fully-charged.

REMOVAL

1. Disconnect and isolate the battery negative cable.
2. Remove the ash receiver (1) from the instrument panel, (Refer to 23 - BODY/INSTRUMENT PANEL/ ASH RECEIVER - REMOVAL).
3. Disconnect the heated seat switch connector (2) from the heated seat switch (3).
4. From the back of the ash receiver (1), gently pry the switch (3) free and push the heated seat switch out through the front of the bezel.

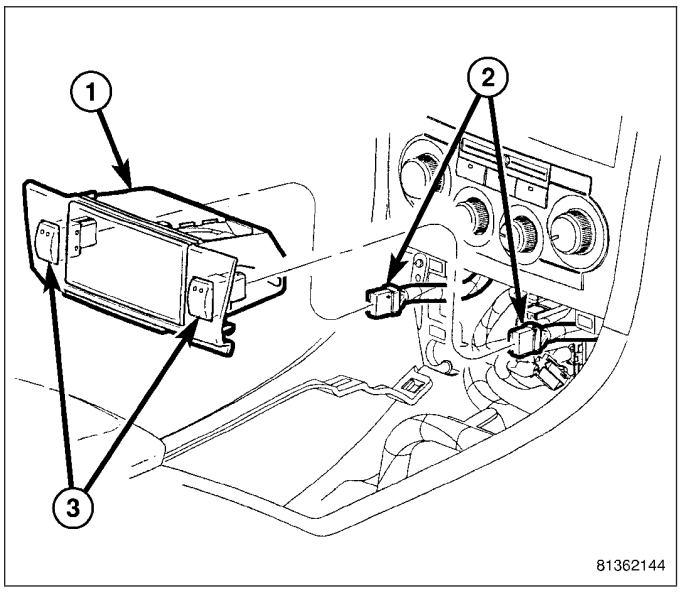

INSTALLATION

1. From the front of the ash receiver (1), gently push the heated seat switch (3) in through the front of the bezel.
2. Connect the heated seat switch connector (2) onto the heated seat switch (3).
3. Install the ash receiver (1) into the instrument panel, (Refer to 23 - BODY/INSTRUMENT PANEL/ ASH RECEIVER - INSTALLATION).
4. Connect the battery negative cable.
5. Verify heated seat system operation.

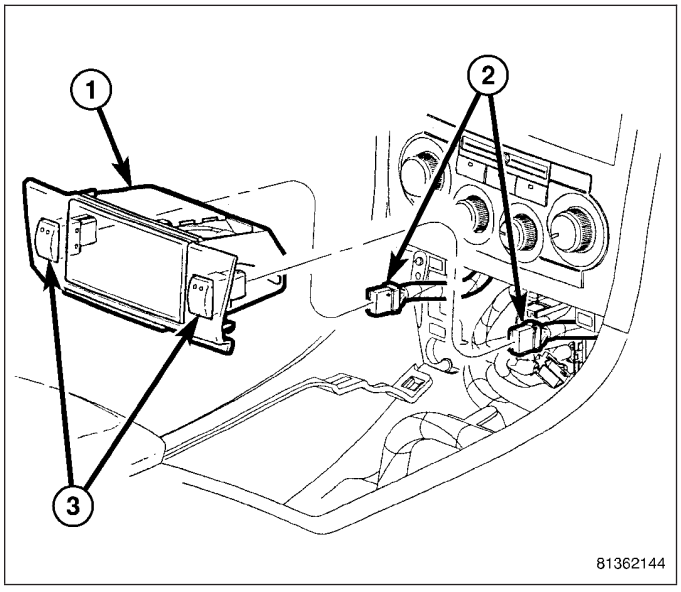

HORN

TABLE OF CONTENTS

page

HORN - ELECTRICAL DIAGNOSTICS 1

page

HORN SYSTEM- SERVICE INFORMATION 16

HORN - ELECTRICAL DIAGNOSTICS

TABLE OF CONTENTS

page

HORN - ELECTRICAL DIAGNOSTICS
DIAGNOSIS AND TESTING
B2332–HORN SWITCH INPUT CIRCUIT/ PERFORMANCE 3
B2336–HORN CONTROL CIRCUIT LOW – FCM 7

page

B2337–HORN CONTROL CIRCUIT HIGH – FCM 10
B2338–HORN CONTROL CIRCUIT OPEN – FCM 13

HORN - ELECTRICAL DIAGNOSTICS

DIAGNOSIS AND TESTING

B2332–HORN SWITCH INPUT CIRCUIT/PERFORMANCE

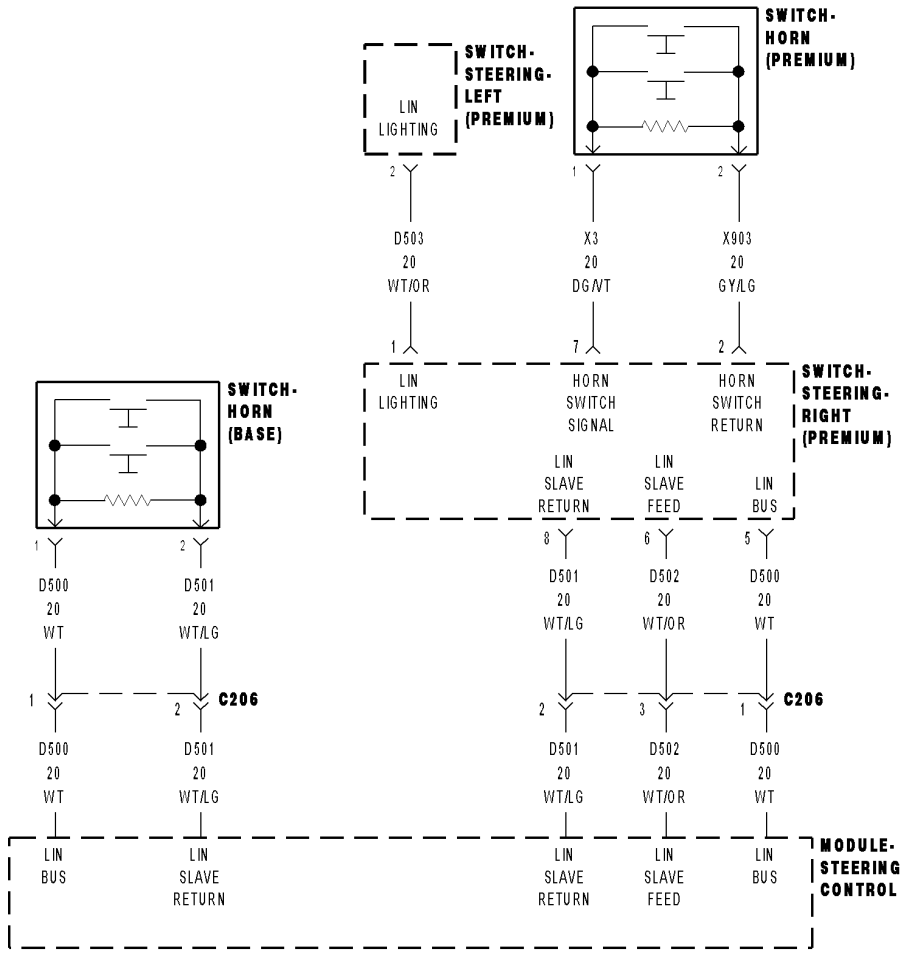

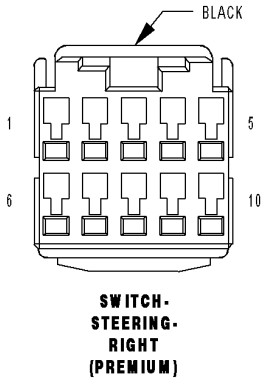

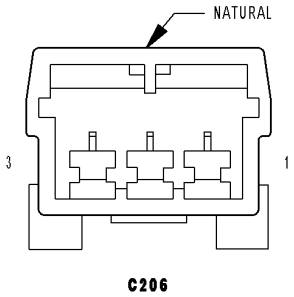

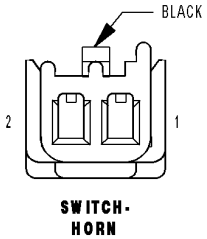

8132ab1c

For a complete wiring diagram **Refer to Section 8W**.

Theory of Operation

The Horn Switch is connected to the Right Steering Switch. The switching status is transferred to the Steering Column Control Module (SCCM) by way of the LIN bus, a serial sub-bus. The SCCM converts the data to CAN(B) and sends the message to the corresponding module on the bus.

- **When Monitored:**
  Continuously with the ignition on.
- **Set Condition:**
  The Steering Column Control Module senses that the Horn Switch is in the Set position for greater than 50 seconds.

Possible Causes
INTERMITTENT HORN SWITCH INPUT CIRCUIT/PERFORMANCE DTC
(X3) HORN SWITCH SIGNAL CIRCUIT SHORT TO (X903) HORN SWITCH RETURN CIRCUIT
(X3) HORN SWITCH SIGNAL CIRCUIT SHORT TO GROUND
HORN SWITCH
RIGHT STEERING SWITCH
STEERING COLUMN CONTROL MODULE (SCCM)

Diagnostic Test

1. DTC IS ACTIVE

NOTE: If P0562–BATTERY VOLTAGE LOW or P0563–BATTERY VOLTAGE HIGH is set along with this DTC, diagnose the battery voltage DTC first.

Ignition on, engine not running.

With the Scan Tool, select View DTCs in the Steering Column Control Module.

Is the DTC status Active at this time?

Yes >> Go to 2

No >> Go to 7

2. (X3) HORN SWITCH SIGNAL CIRCUIT SHORT TO (X903) HORN SWITCH RETURN CIRCUIT

Turn the ignition off.

Remove the Driver Airbag in accordance with the Service information.

Disconnect the Horn Switch harness connector.

Disconnect the Right Steering Switch harness connector.

NOTE: Before proceeding, thoroughly inspect the wiring harness and connectors between the Horn Switch and the Right Steering Switch for a short to ground or any other circuit.

Measure the resistance between the (X3) Horn Switch circuit and the (X903) Horn Switch Return circuit.

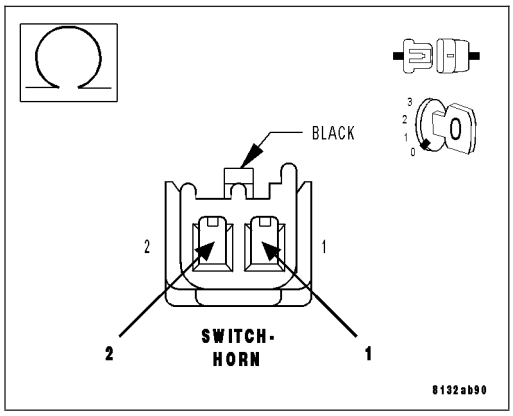

Is the resistance below 5.0 ohms?

Yes >> Repair the (X3) Horn Switch circuit for a short to the (X903) Horn Switch Return circuit.
Perform the VERIFICATION TEST-VER 1.

No >> Go to 3

3. (X3) HORN SWITCH SIGNAL CIRCUIT SHORT TO GROUND

NOTE: Before proceeding, thoroughly inspect the wiring harness and connectors between the Horn Switch and the Right Steering Switch for a short to ground or to any other circuit.
Measure the resistance between the (X3) Horn Switch circuit at the harness connector to the Right Switch and ground (include the metal casing at the back side of the Airbag).

Is the resistance below 5.0 ohms?

Yes >> Repair the (X3) Horn Switch circuit for a short to ground.

No >> Go to 4

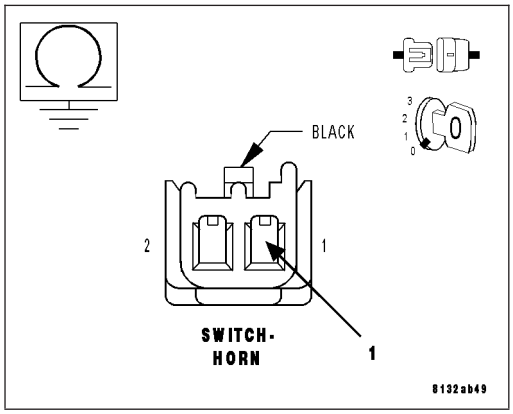

4. HORN SWITCH

Measure the resistance between the (X3) Horn Switch circuit and the (X903) Horn Switch Return circuit at the harness connector to the horn switch.

Is the resistance below 5.0 ohms?

Yes >> Replace the Horn Switch in accordance with the Service Information.

No >> Go to 5

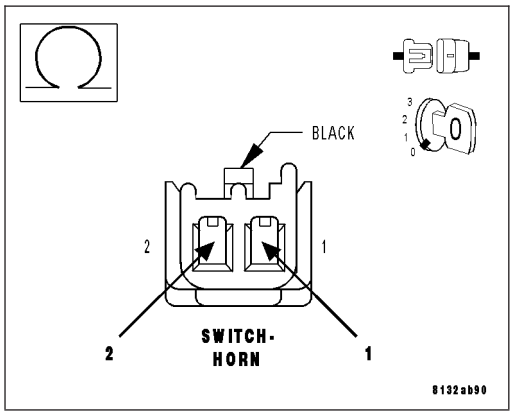

5. RIGHT STEERING SWITCH

Turn the ignition off.
Replace the Right Steering Switch in accordance with the Service Information.
Turn the ignition on.

NOTE: The C206 (LIN bus) connector must be connected for this test.
Press and release the Horn Switch several times.
With the Scan Tool, Clear Stored DTCs in the Steering Column Control Module.
With the Scan Tool, select Data Display and view the Horn switch data.
While monitoring the Horn switch data, press and release the Horn Switch several times.

Does the Horn switch data change from Set to Not Set when the switch is pressed and released?

Yes >> Test Complete.

No >> Go to 6

6. STEERING COLUMN CONTROL MODULE (SCCM)

View repair.

Repair

Replace the Steering Column Control Module (SCCM) in accordance with the Service Information.

7. INTERMITTENT HORN SWITCH INPUT CIRCUIT/PERFORMANCE DTC

The conditions necessary to set this DTC are not present at this time.
Using the wiring diagram/schematic as a guide, inspect the wiring and connectors.
While monitoring the scan tool data relative to this circuit, wiggle test the wiring and connectors.
Look for the data to change or for the DTC to reset during the wiggle test.

Were any problems found?

Yes >> Repair as necessary.

No >> Test complete.

B2336–HORN CONTROL CIRCUIT LOW – FCM

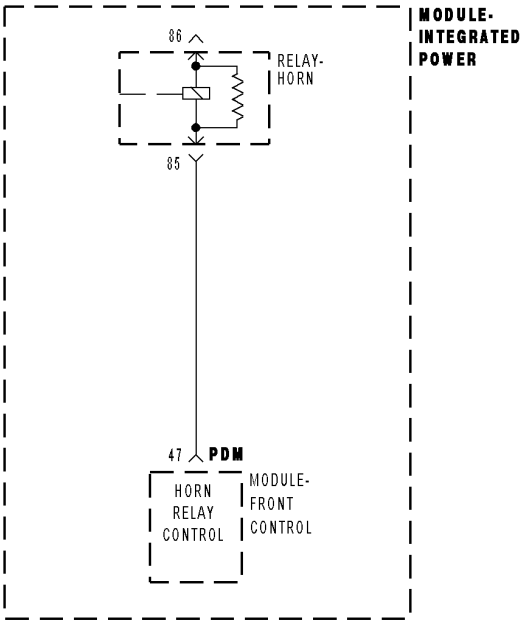

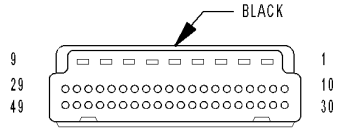

MODULE-
FRONT
CONTROL PDM

813b892c

For a complete wiring diagram **Refer to Section 8W**.

- **When Monitored:**
  Continuously
- **Set Condition:**
  When the Front Control Module detects a shorted low condition on the Horn Relay Control circuit this DTC will set.

Possible Causes
HORN FUSE
(A905) FUSED B(+) OPEN
RELAY
POWER DISTRIBUTION CENTER
FRONT CONTROL MODULE

Diagnostic Test

1. TEST FOR INTERMITTENT CONDITION

With the scan tool, record and erase DTC's
Operate the Horn Switch several times.
Cycle the ignition from on to off 3 times and leave on.
With the scan tool, read DTC's.

Does the scan tool display B2336 – HORN CONTROL CIRCUIT LOW?

Yes >> Go To 2

No >> The conditions that caused this code to set are not present at this time. Using the wiring diagram/schematic as a guide, inspect the wiring and connectors.
Perform BODY VERIFICATION TEST - VER 1. (Refer to BODY VERIFICATION TEST - VER 1).

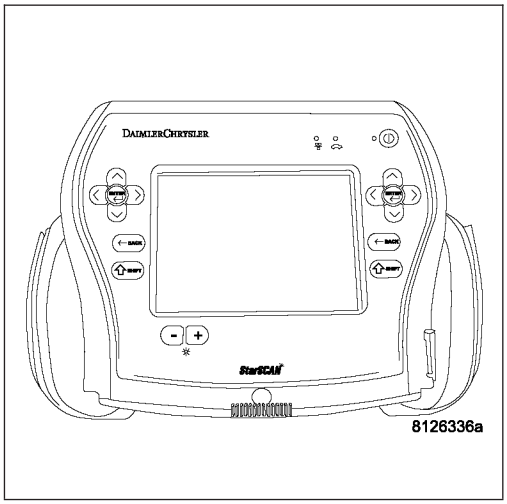

2. HORN FUSE

Using a 12-volt test light connected to ground, check the Horn fuse.

Does the test light illuminate and was the fuse OK?

No >> Replace the horn fuse if open and check for a short to ground on the Horn Relay Output circuit or correct the open B(+) circuit to the fuse.
Perform BODY VERIFICATION TEST - VER 1. (Refer to BODY VERIFICATION TEST - VER 1).

Yes >> Go To 3

3. OPEN (A905) FUSED B(+) TO RELAY

Remove the Horn Relay from the PDC.

Using a 12-volt test light connected to ground, check the Fused B(+) circuit at the relay connector.

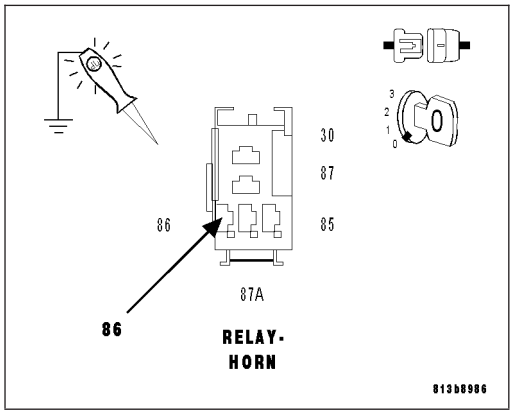

Does the test light illuminate?

No >> Replace the Power Distribution Center.
Perform BODY VERIFICATION TEST - VER 1. (Refer to BODY VERIFICATION TEST - VER 1).

Yes >> Go To 4

4. HORN RELAY

Install a known good relay in place of the Horn Relay.

With the scan tool erase DTC's

Operate the Horn Switch several times.

Cycle the ignition from on to off 3 times and leave on.

With the scan tool, read DTC's.

Does the scan tool display B2336 – HORN CONTROL CIRCUIT LOW?

No >> Replace the original Horn Relay.
Perform BODY VERIFICATION TEST - VER 1. (Refer to BODY VERIFICATION TEST - VER 1).

Yes >> Go To 5

5. (X4) HORN RELAY CONTROL SHORTED

Remove the Horn Relay.

Disconnect the Front Control Module from the PDC 49 – way connector.

Measure the resistance between ground and the (X4) Horn Relay Control circuit at the relay.

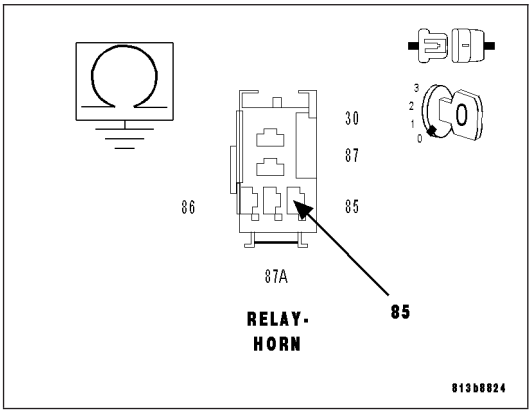

Is the resistance below 1000.0 ohms?

Yes >> Replace the Power Distribution Center.
Perform BODY VERIFICATION TEST - VER 1.

No >> Replace the Front Control Module.
Perform BODY VERIFICATION TEST - VER 1. (Refer to BODY VERIFICATION TEST - VER 1).

B2337–HORN CONTROL CIRCUIT HIGH – FCM

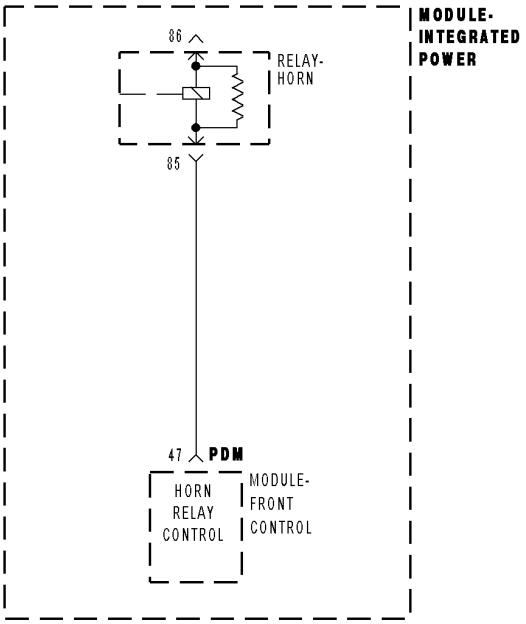

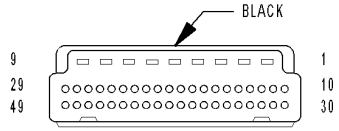

MODULE-
FRONT
CONTROL PDM

813b892c

For a complete wiring diagram **Refer to Section 8W**.

- **When Monitored:**
  Continuously
- **Set Condition:**
  When the Front Control Module detects excessive current on the Horn Relay Control circuit.

Possible Causes
HORN RELAY
POWER DISTRIBUTION CENTER
FRONT CONTROL MODULE

Diagnostic Test

1. TEST FOR INTERMITTENT CONDITION

With the scan tool, record and erase DTC's
Operate the Horn Switch several times.
Cycle the ignition from on to off 3 times and leave on.
With the scan tool, read DTC's.

Does the scan tool display B2337 – HORN CONTROL CIRCUIT HIGH?

Yes >> Go To 2

No >> The conditions that caused this code to set are not present at this time. Using the wiring diagram/schematic as a guide, inspect the wiring and connectors.
Perform BODY VERIFICATION TEST - VER 1.

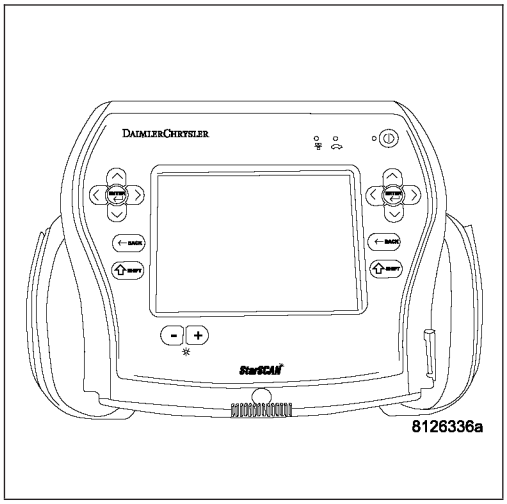

2. HORN RELAY

Turn the ignition off.
Install a known good relay in place of the Horn Relay.
With the scan tool erase DTC's
Operate the Horn Switch several times.
Cycle the ignition from on to off 3 times and leave on.
With the scan tool, read DTC's.

Does the scan tool display B2337 – HORN CONTROL CIRCUIT HIGH?

No >> Replace the original Horn Relay.
Perform BODY VERIFICATION TEST - VER 1. (Refer to BODY VERIFICATION TEST - VER 1).

Yes >> Go To 3

3. SHORTED POWER DISTRIBUTION CENTER

Remove the Horn Relay.

Disconnect the Front Control Module from the PDC 49 – way connector.

Turn the ignition on.

Measure the voltage between (X4) Horn Relay Control circuit and ground.

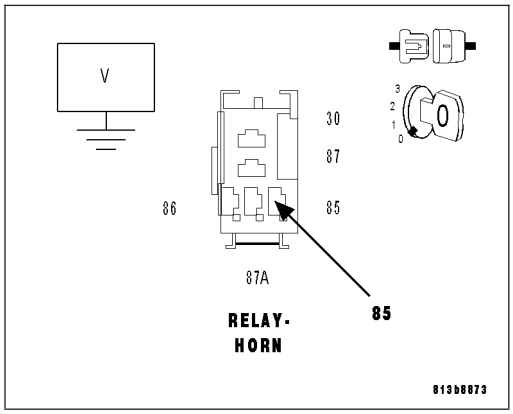

Is there any voltage present?

Yes >> Replace the Power Distribution Center.
Perform BODY VERIFICATION TEST - VER 1. (Refer to BODY VERIFICATION TEST - VER 1).

No >> Replace the Front Control Module.
Perform BODY VERIFICATION TEST - VER 1. (Refer to BODY VERIFICATION TEST - VER 1).

B2338–HORN CONTROL CIRCUIT OPEN – FCM

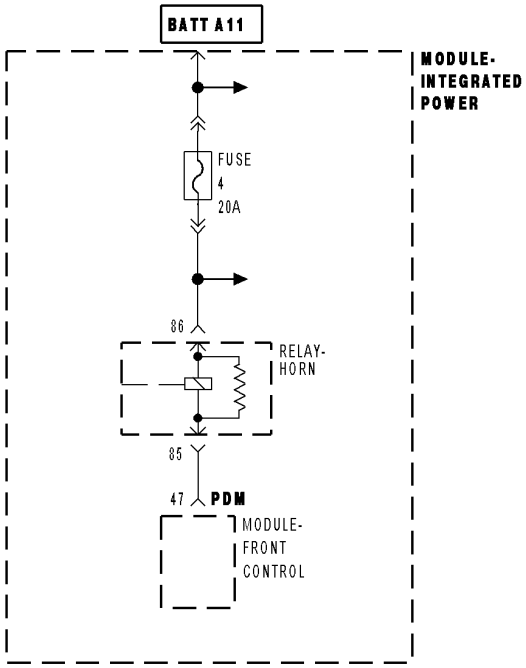

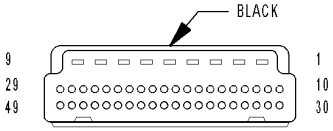

MODULE-
FRONT
CONTROL PDM

813b892c

For a complete wiring diagram **Refer to Section 8W**.

- **When Monitored:**
  Continuously
- **Set Condition:**
  When the Front Control Module does not detect voltage on the Horn Relay Control circuit.

Possible Causes
HORN FUSE
B(+) OPEN
RELAY
POWER DISTRIBUTION CENTER
FRONT CONTROL MODULE

Diagnostic Test

1. TEST FOR INTERMITTENT CONDITION

With the scan tool, record and erase DTC's
Operate the Horn Switch several times.
Cycle the ignition from on to off 3 times and leave on.
With the scan tool, read DTC's.

Does the scan tool display B2338 – HORN CONTROL CIRCUIT OPEN?

Yes >> Go To 2

No >> The conditions that caused this code to set are not present at this time. Using the wiring diagram/schematic as a guide, inspect the wiring and connectors.
Perform BODY VERIFICATION TEST - VER 1. (Refer to BODY VERIFICATION TEST - VER 1).

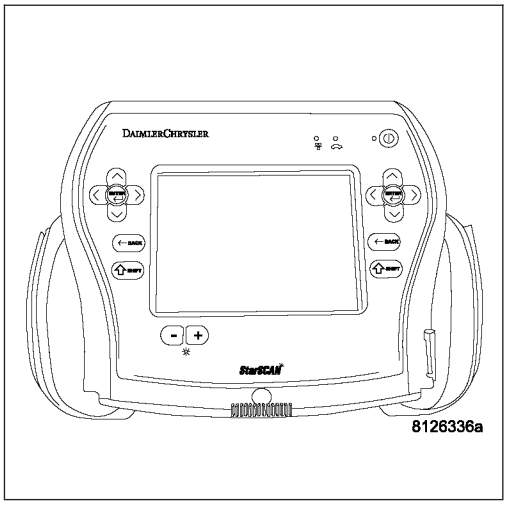

2. HORN FUSE

Using a 12-volt test light connected to ground, check the Horn fuse.

Does the test light illuminate and was the fuse OK?

No >> Replace the horn fuse if open and check for a short to ground on the Horn Relay Output circuit or correct the open B(+) circuit to the fuse.
Perform BODY VERIFICATION TEST - VER 1. (Refer to BODY VERIFICATION TEST - VER 1).

Yes >> Go To 3

3. OPEN FUSED B(+) TO RELAY

Remove the Horn Relay from the PDC.

Using a 12-volt test light connected to ground, check the Fused B(+) circuit at the relay connector.

Does the test light illuminate?

No >> Replace the Power Distribution Center.
Perform BODY VERIFICATION TEST - VER 1. (Refer to BODY VERIFICATION TEST - VER 1).

Yes >> Go To 4

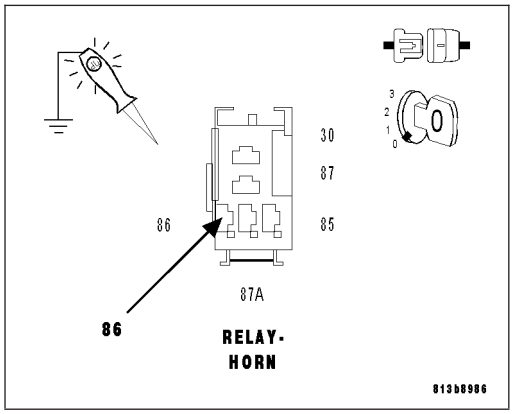

4. HORN RELAY

Install a known good relay in place of the Horn Relay.

With the scan tool erase DTC's

Operate the Horn Switch several times.

Cycle the ignition from on to off 3 times and leave on.

With the scan tool, read DTC's.

Does the scan tool display B2338 – HORN CONTROL CIRCUIT OPEN?

No >> Replace the original Horn Relay.
Perform BODY VERIFICATION TEST - VER 1. (Refer to BODY VERIFICATION TEST - VER 1).

Yes >> Go To 5

5. (X4)HORN RELAY CONTROL OPEN

Measure the resistance of the (X4)Horn Relay Control circuit from the relay connector to FCM connector.

Is the resistance below 3.0 ohms?

Yes >> Replace the Front Control Module.
Perform BODY VERIFICATION TEST - VER 1. (Refer to BODY VERIFICATION TEST - VER 1).

No >> Replace the Power Distribution Center.
Perform BODY VERIFICATION TEST - VER 1. (Refer to BODY VERIFICATION TEST - VER 1).

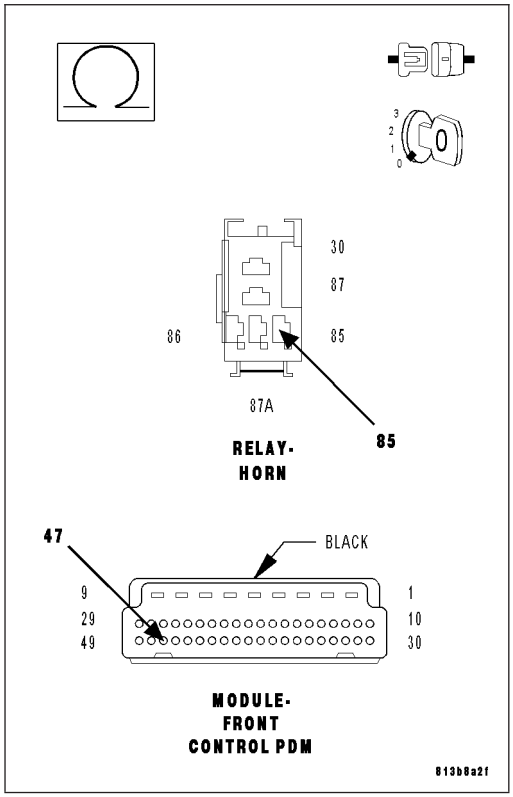

HORN SYSTEM- SERVICE INFORMATION

TABLE OF CONTENTS

page

HORN SYSTEM- SERVICE INFORMATION
DESCRIPTION 17
OPERATION 17
DIAGNOSIS AND TESTING - HORN SYSTEM . . . 17
HORN
REMOVAL 18
INSTALLATION 18
SWITCH-HORN
DESCRIPTION 19
DIAGNOSIS AND TESTING
HORN SWITCH 19

HORN SYSTEM- SERVICE INFORMATION

DESCRIPTION

The dual-note horn system features two electromagnetic horn units. The horn system includes the following major components:

- **Horn** - The two horns are located behind the grille below a trim cover.
- **Horn Switch** - The horn switch is molded into the driver airbag trim cover.

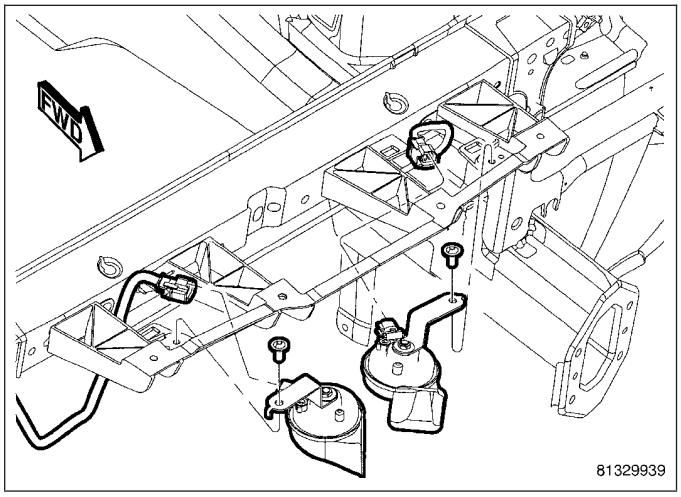

OPERATION

The horn system operates on battery current received through a fuse in the Integrated Power Module (IPM). The horn system circuit is designed so that the system will remain operational, regardless of the ignition switch position.

DIAGNOSIS AND TESTING - HORN SYSTEM

The most reliable, efficient, and accurate means to diagnose the horn system requires the use of a scan tool and the proper Diagnostic Procedures information.

Refer to the appropriate wiring information.

In most cases, any problem involving continually sounding horns can be quickly alleviated by removing the horn fuse from the Integrated Power Module (IPM).

WARNING: DISABLE THE AIRBAG SYSTEM BEFORE ATTEMPTING ANY STEERING WHEEL, STEERING COLUMN, SEAT BELT TENSIONER, SIDE AIRBAG, OR INSTRUMENT PANEL COMPONENT DIAGNOSIS OR SERVICE. DISCONNECT AND ISOLATE THE BATTERY NEGATIVE (GROUND) CABLE, THEN WAIT TWO MINUTES FOR THE AIRBAG SYSTEM CAPACITOR TO DISCHARGE BEFORE PERFORMING FURTHER DIAGNOSIS OR SERVICE. THIS IS THE ONLY SURE WAY TO DISABLE THE AIRBAG SYSTEM. FAILURE TO TAKE THE PROPER PRECAUTIONS COULD RESULT IN ACCIDENTAL AIRBAG DEPLOYMENT AND POSSIBLE PERSONAL INJURY.

HORN

REMOVAL

NOTE: A battery reconnect procedure must be performed anytime the battery has been disconnected. (Refer to 8 - ELECTRICAL/BATTERY SYSTEM - STANDARD PROCEDURE).

1. Disconnect and isolate the battery negative cable.
2. Remove cover above horn.
3. Disconnect electrical harness connector.
4. Remove mounting fastener and remove horn.

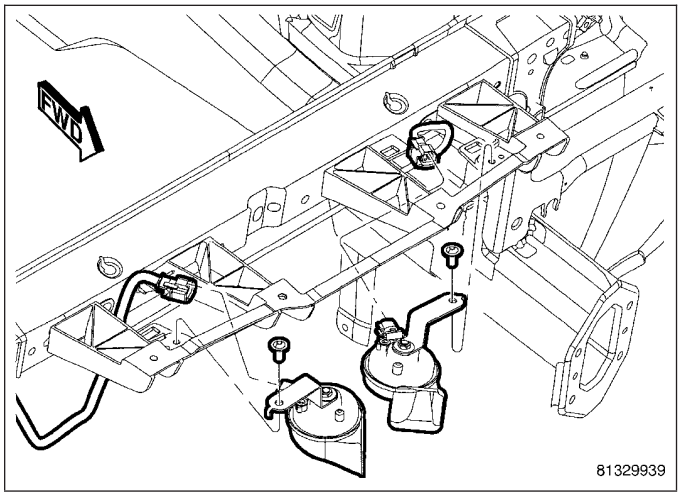

INSTALLATION

NOTE: A battery reconnect procedure must be performed anytime the battery has been disconnected. (Refer to 8 - ELECTRICAL/BATTERY SYSTEM - STANDARD PROCEDURE).

1. Position horn. Install and tighten mounting fasteners.
2. Connect electrical harness connector.
3. Install cover above horn.
4. Connect battery negative cable.

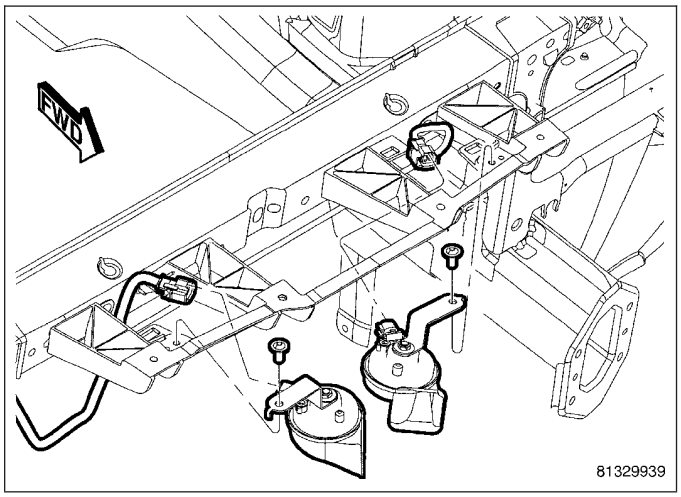

SWITCH-HORN

DESCRIPTION

The horn switch is molded into the driver airbag cover. The horn switch can not be serviced separately. (Refer to 8 - ELECTRICAL/RESTRAINTS/DRIVER AIRBAG - REMOVAL).

DIAGNOSIS AND TESTING

HORN SWITCH

The most reliable, efficient, and accurate means to diagnose the horn system requires the use of a scan tool and the proper Diagnostic Procedures information.

For complete circuit diagrams, refer to the appropriate wiring information.

WARNING: DISABLE THE AIRBAG SYSTEM BEFORE ATTEMPTING ANY STEERING WHEEL, STEERING COLUMN, SEAT BELT TENSIONER, SIDE AIRBAG, OR INSTRUMENT PANEL COMPONENT DIAGNOSIS OR SERVICE. DISCONNECT AND ISOLATE THE BATTERY NEGATIVE (GROUND) CABLE, THEN WAIT TWO MINUTES FOR THE AIRBAG SYSTEM CAPACITOR TO DISCHARGE BEFORE PERFORMING FURTHER DIAGNOSIS OR SERVICE. THIS IS THE ONLY SURE WAY TO DISABLE THE AIRBAG SYSTEM. FAILURE TO TAKE THE PROPER PRECAUTIONS COULD RESULT IN ACCIDENTAL AIRBAG DEPLOYMENT AND POSSIBLE PERSONAL INJURY.

IGNITION CONTROL

TABLE OF CONTENTS

page

IGNITION SYSTEM - ELECTRICAL DIAGNOSTICS 1

page

IGNITION SYSTEM - SERVICE INFORMATION . . . 31

IGNITION SYSTEM - ELECTRICAL DIAGNOSTICS

TABLE OF CONTENTS

page

IGNITION SYSTEM - ELECTRICAL DIAGNOSTICS
DIAGNOSIS AND TESTING
B2100-IGNITION RUN/START INPUT CIRCUIT PERFORMANCE 3
B2104-IGNITION UNLOCK RUN/START CONTROL CIRCUIT LOW 6
B2105-IGNITION UNLOCK RUN/START CONTROL CIRCUIT HIGH 9
B211E–IGNITION RUN/ACC/PAD CONTROL CIRCUIT LOW 12

page

B211F–IGNITION RUN/ACC/PAD CONTROL CIRCUIT HIGH 15
B2120–IGNITION RUN/ACC/PAD CONTROL CIRCUIT OPEN 17
B2122-IGNITION RUN CONTROL CIRCUIT LOW 20
B2123-IGNITION RUN CONTROL CIRCUIT HIGH 24
B2124-IGNITION RUN CONTROL CIRCUIT OPEN 27

IGNITION SYSTEM - ELECTRICAL DIAGNOSTICS

DIAGNOSIS AND TESTING

B2100-IGNITION RUN/START INPUT CIRCUIT PERFORMANCE

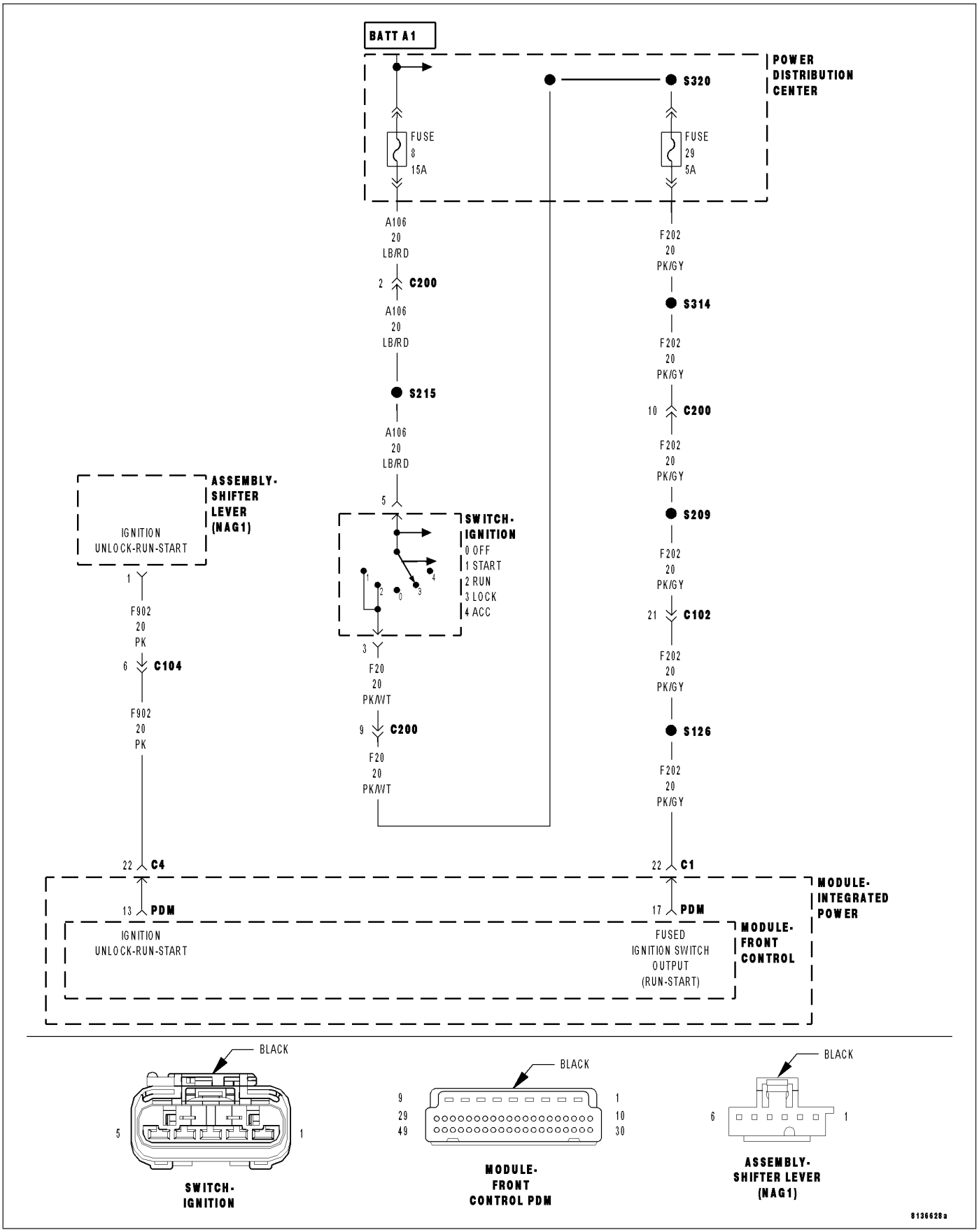

For a complete wiring diagram **Refer to Section 8W**.

- **When Monitored:**
  Anytime the ignition input is compared against the CAN B Bus ignition status message.
- **Set Condition:**
  The Front Control Module will set this DTC if the CAN bus message and the hardwired ignition circuit do not match.

Possible Causes
ACTIVE IGNITION RELATED FCM DTCS
(A106) FUSED B+ CIRCUIT OPEN
(F20) FUSED IGNITION SWITCH OUTPUT CIRCUIT OPEN
(F202) FUSED IGNITION SWITCH OUTPUT CIRCUIT OPEN
REAR PDC FUSE
IGNITION SWITCH
FRONT CONTROL MODULE

Diagnostic Test

1. CHECK FOR ACTIVE DTC

NOTE: If B2104 or B2105 are active, perform those tests first before proceeding.

NOTE: Check the rear PDC fuses. An open fuse can cause this DTC to set. If open refer to the wiring diagrams to help isolate a possible shorted circuit.

With the scan tool, read the active DTC's.

Cycle the ignition switch from off to on, leaving the ignition on for a minimum of 90 seconds.

With the scan tool, read the active DTC's.

Does the scan tool display this DTC as active?

Yes >> Go To 2

No >> If the DTC is stored, check for an intermittent condition. Visually inspect the related wiring harness connectors. Look for broken, bent, pushed out, or corroded terminals.

2. CHECK THE (F20) FUSED IGNITION SWITCH OUTPUT CIRCUIT FOR AN OPEN

Turn the ignition off.

Remove the Fuse 29 from the rear PDC.

Turn the ignition on.

Measure the voltage of the (F20) Fused Ignition Switch Output circuit (input side of fuse).

Is the voltage above 10.0 volts?

Yes >> Go To 3

No >> Go To 4

3. (F202) FUSED IGNITION SWITCH OUTPUT CIRCUIT OPEN

Turn the ignition off.

NOTE: Check Fuse 29 and 8 in the rear PDC for an open.
Remove the FCM from the IPM.

NOTE: Install the fuse in the rear PDC.
Turn the ignition on.

Measure the voltage of the (F202) Fused Ignition Switch Output circuit.

Is the voltage above 10.0 volts?

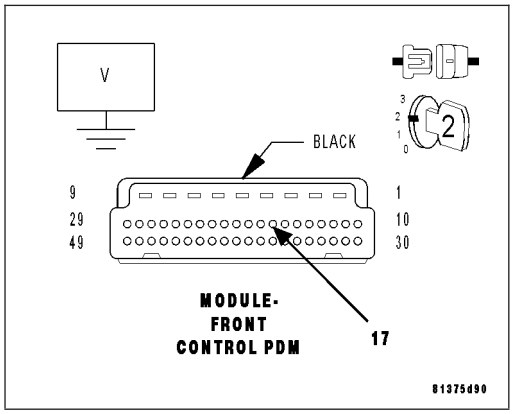

Yes >> Inspect the wiring and connectors for damage or shorted circuits. If ok, replace and program the Front Control Module in accordance with the service information.
Perform BODY VERIFICATION TEST – VER 1. (Refer to BODY VERIFICATION TEST – VER 1).

No >> Repair the (F202) Ignition Switch Output circuit for an open between the rear PDC and the IPM.
Perform BODY VERIFICATION TEST – VER 1. (Refer to BODY VERIFICATION TEST – VER 1).

4. (A106) FUSED B+ CIRCUIT OPEN

Turn the ignition off.

NOTE: Check Fuse 8 in the rear PDC for an open.
Disconnect the Ignition Switch harness connector.

Measure the voltage of the (A106) Fused B+ circuit.

Is the voltage above 10.0 volts?

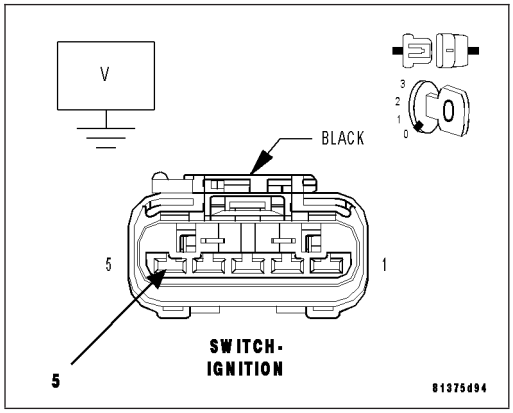

Yes >> Repair the (F20) Fused Ignition Switch Output circuit for an open between the Ignition Switch and the rear PDC. If ok, replace the Ignition Switch in accordance with the service information.
Perform BODY VERIFICATION TEST – VER 1. (Refer to BODY VERIFICATION TEST – VER 1).

No >> Repair the (A106) Fused B+ circuit for an open.
Perform BODY VERIFICATION TEST – VER 1. (Refer to BODY VERIFICATION TEST – VER 1).

B2104-IGNITION UNLOCK RUN/START CONTROL CIRCUIT LOW

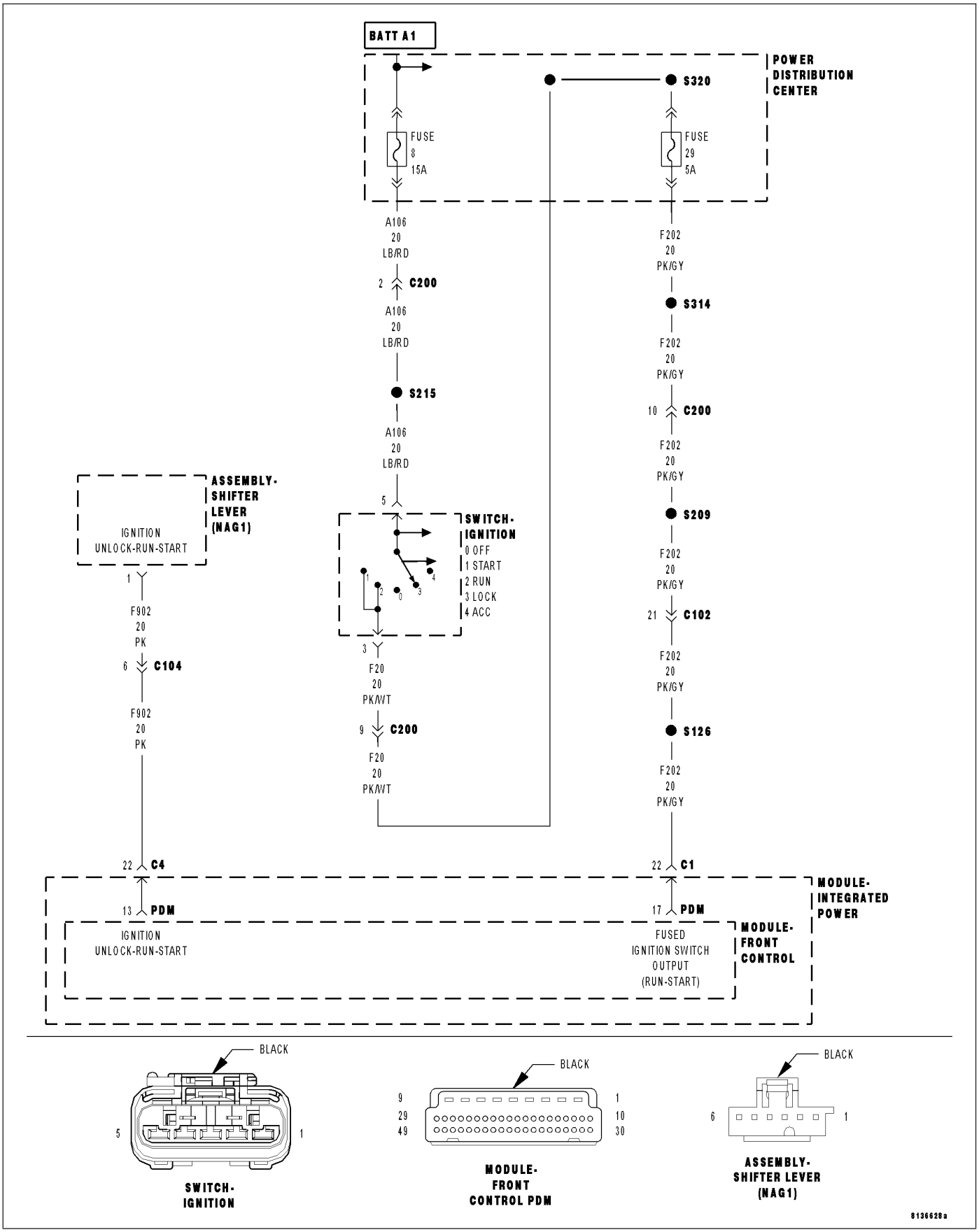

For a complete wiring diagram **Refer to Section 8W**.

- **When Monitored:**
  With the ignition on.
- **Set Condition:**
  The Front Control Module will set this DTC within 500ms if the ignition unlock run/start circuit voltage is less than the expected value.

Possible Causes
(F902) IGNITION UNLOCK RUN START CIRCUIT SHORTED TO GROUND
SHIFTER LEVER ASSEMBLY
FRONT CONTROL MODULE

Diagnostic Test

1. CHECK FOR ACTIVE DTC

With the scan tool, read the active DTC's.

Cycle the ignition switch from off to on, leaving the ignition on for a minimum of 90 seconds.

With the scan tool, read the active DTC's.

Does the scan tool display this DTC as active?

Yes >> Go To 2

No >> If the DTC is stored, check for an intermittent condition. Visually inspect the related wiring harness connectors. Look for broken, bent, pushed out, or corroded terminals.

2. SHIFTER LEVER ASSEMBLY

Turn the ignition off.

Disconnect the Shifter Lever Assembly harness connector.

Cycle the ignition switch from off to on, leaving the ignition on for a minimum of 90 seconds.

With the scan tool, read the active FCM DTC's.

Does the scan tool display this DTC as active?

Yes >> Go To 3

No >> Replace the Shifter Lever Assembly in accordance with the service information.
Perform BODY VERIFICATION TEST – VER 1. (Refer to BODY VERIFICATION TEST – VER 1).

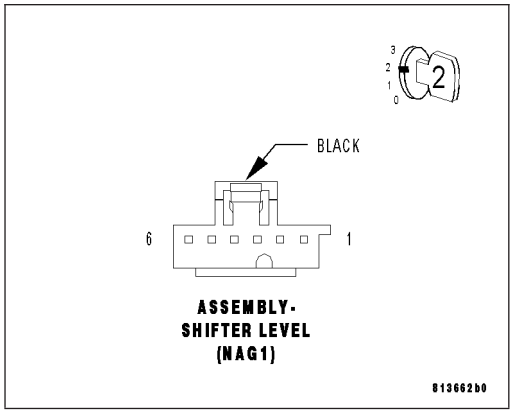

3. (F902) IGNITION UNLOCK RUN START CIRCUIT SHORTED TO GROUND

Turn the ignition off.

Remove the FCM from the IPM.

Measure the resistance between ground and the (F902) Ignition Unlock Run Start circuit.

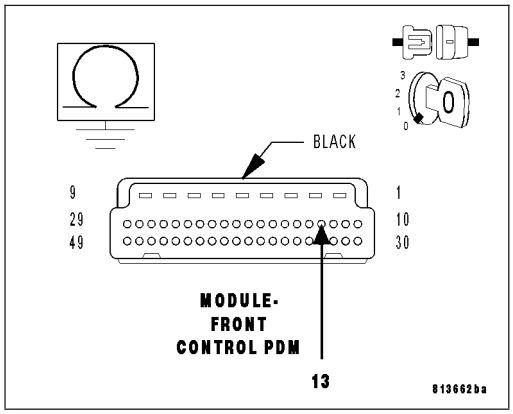

Is the resistance below 100.0 ohms?

Yes >> Repair the (F902) Ignition Unlock Run Start circuit for a short to ground.

Perform BODY VERIFICATION TEST – VER 1. (Refer to BODY VERIFICATION TEST – VER 1).

No >> Inspect the wiring and connectors for damage or shorted circuits. If ok, replace and program the Front Control Module in accordance with the service information.

Perform BODY VERIFICATION TEST – VER 1. (Refer to BODY VERIFICATION TEST – VER 1).

B2105-IGNITION UNLOCK RUN/START CONTROL CIRCUIT HIGH

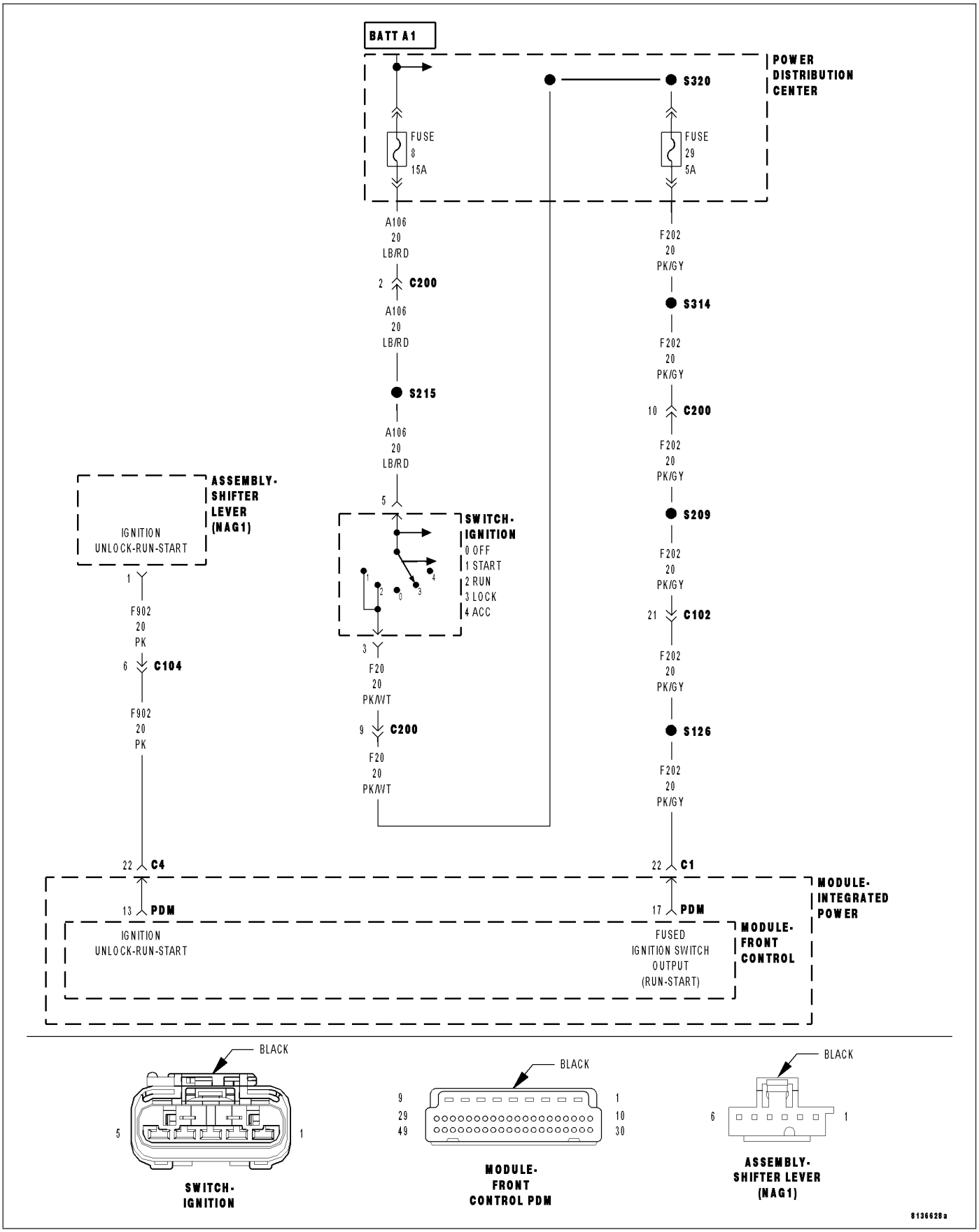

For a complete wiring diagram **Refer to Section 8W**.

- **When Monitored:**
  With the ignition on or off and with the FCM awake.
- **Set Condition:**
  The Front Control Module will set this DTC within 2 seconds if the ignition unlock run/start circuit voltage is not what the expected value should be.

Possible Causes
(F902) IGNITION UNLOCK RUN START CIRCUIT OPEN
(F902) IGNITION UNLOCK RUN START CIRCUIT SHORTED TO VOLTAGE
SHIFTER LEVER ASSEMBLY
FRONT CONTROL MODULE

Diagnostic Test

1. CHECK FOR ACTIVE DTC

With the scan tool, read the active DTC's.

Cycle the ignition switch from off to on, leaving the ignition on for a minimum of 90 seconds then turn the ignition off.

With the scan tool, read the active DTC's.

Does the scan tool display this DTC as active?

Yes >> Go To 2

No >> If the DTC is stored, check for an intermittent condition. Visually inspect the related wiring harness connectors. Look for broken, bent, pushed out, or corroded terminals.

2. (F902) IGNITION UNLOCK RUN START CIRCUIT SHORTED TO VOLTAGE

Disconnect the Shifter Lever Assembly harness connector.

Cycle the ignition switch from off to on then back to off.

NOTE: The ignition switch must be in the off position when performing the following step.

Using a 12–volt test light connected to ground, check the (F902) Ignition Unlock Run Start circuit.

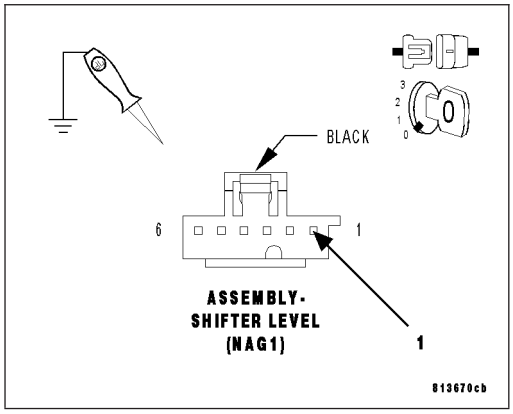

Does the test light illuminate brightly?

Yes >> Repair the (F902) Ignition Unlock Run Start circuit for a short to voltage.
Perform BODY VERIFICATION TEST – VER 1. (Refer to BODY VERIFICATION TEST – VER 1).

No >> Go To 3

3. SHIFTER LEVER ASSEMBLY

Turn the ignition on.

With the test light still connected from the previous step, check the (F902) Ignition Unlock Run Start circuit.

Does the test light illuminate brightly?

Yes >> Replace the Shifter Lever Assembly in accordance with the service information.

Perform BODY VERIFICATION TEST – VER 1. (Refer to BODY VERIFICATION TEST – VER 1).

No >> Go To 4

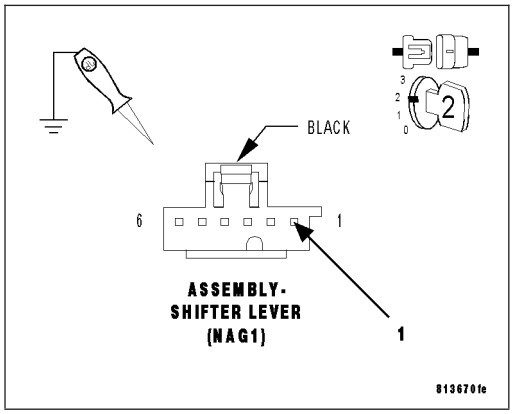

4. (F902) IGNITION UNLOCK RUN START CIRCUIT OPEN

Turn the ignition off.

Remove the FCM from the IPM.

Measure the resistance of the (F902) Ignition Unlock Run Start circuit between the Shifter Lever Assembly and the FCM-PDM connector.

Is the resistance below 5.0 ohms?

Yes >> Inspect the wiring and connectors for damage or shorted circuits. If ok, replace and program the Front Control Module in accordance with the service information.

Perform BODY VERIFICATION TEST – VER 1. (Refer to BODY VERIFICATION TEST – VER 1).

No >> Repair the (F902) Ignition Unlock Run Start circuit for an open.

Perform BODY VERIFICATION TEST – VER 1. (Refer to BODY VERIFICATION TEST – VER 1).

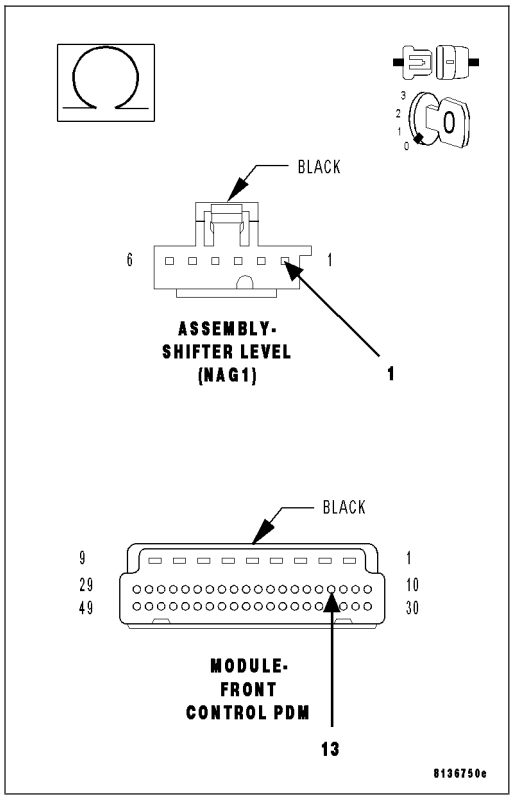

B211E–IGNITION RUN/ACC/PAD CONTROL CIRCUIT LOW

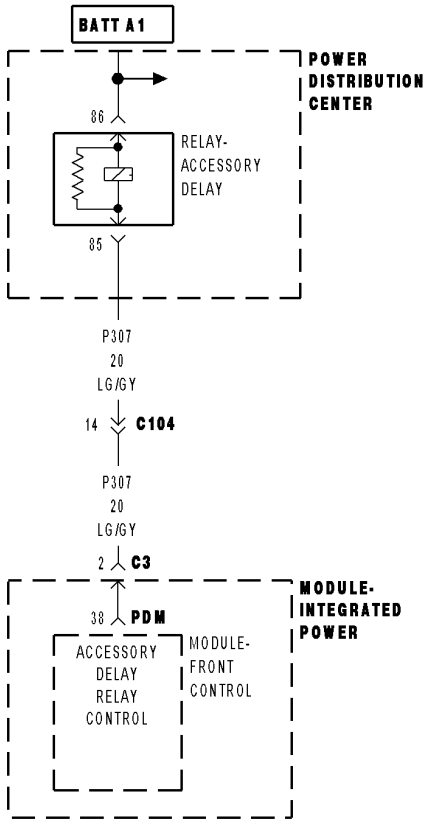

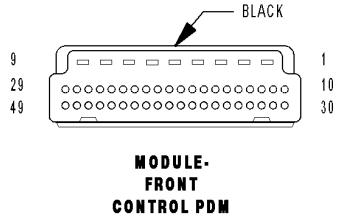

813771c4

For a complete wiring diagram **Refer to Section 8W**.

- **When Monitored:**
  With the ignition on.
- **Set Condition:**
  The Front Control Module will set this DTC within 500ms if the (P307) Accessory Delay Relay Control circuit is open or shorted to ground.

Possible Causes
(P307) ACCESSORY DELAY RELAY CONTROL CIRCUIT OPEN
(P307) ACCESSORY DELAY RELAY CONTROL CIRCUIT SHORTED TO GROUND
ACCESSORY DELAY RELAY
FRONT CONTROL MODULE

Diagnostic Test

1. CHECK FOR ACTIVE DTC

With the scan tool, read the active DTC's.
Cycle the ignition switch from off to on, leaving the ignition on for a minimum of 90 seconds.
With the scan tool, read the active DTC's.

Does the scan tool display this DTC as active?

Yes >> Go To 2

No >> If the DTC is stored, check for an intermittent condition. Visually inspect the related wiring harness connectors. Look for broken, bent, pushed out, or corroded terminals.

2. ACCESSORY DELAY RELAY

Turn the ignition off.
Install a substitute relay in place of the original Accessory Delay Relay.
Cycle the ignition switch from off to on, leaving the ignition on for a minimum of 90 seconds.
With the scan tool, read the active FCM DTC's.

Does the scan tool display this DTC as active?

Yes >> Go To 3

No >> Replace the original Accessory Delay Relay.
Perform BODY VERIFICATION TEST – VER 1. (Refer to BODY VERIFICATION TEST – VER 1).

3. (P307) ACCESSORY DELAY RELAY CONTROL CIRCUIT OPEN

Turn the ignition off.

Remove the FCM from the IPM.

Remove the Accessory Delay Relay from the Rear Power Distribution Module.

Measure the resistance of the Accessory Delay Relay Control circuit from the Front Control Module PDM connector to the Relay connector.

Is the resistance below 10.0 ohms?

Yes >> Go To 4

No >> Repair the Accessory Delay Relay Control circuit for an open.

Perform BODY VERIFICATION TEST – VER 1. (Refer to BODY VERIFICATION TEST – VER 1).

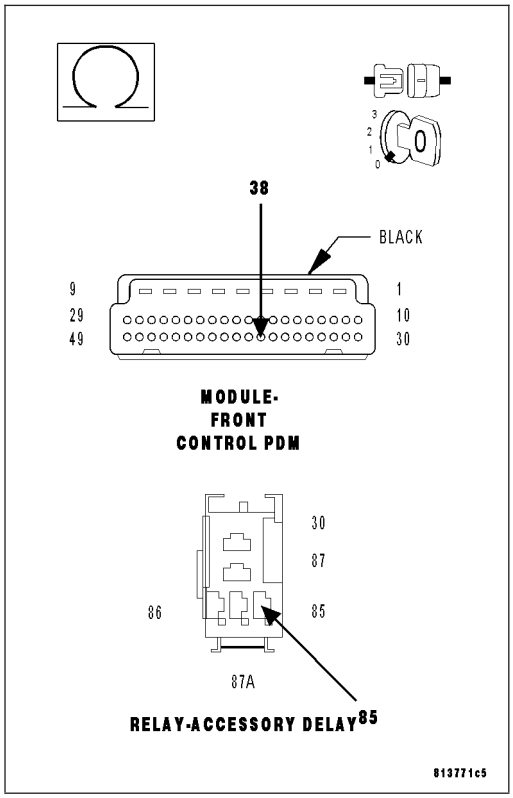

4. (P307) ACCESSORY DELAY RELAY CONTROL CIRCUIT SHORTED TO GROUND

Measure the resistance between ground and the (P307) Accessory Delay Relay Control circuit at the relay cavity (85).

Is the resistance below 100.0 ohms?

Yes >> Repair the (P307) Accessory Delay Relay Control circuit for a short to ground.

Perform BODY VERIFICATION TEST – VER 1. (Refer to BODY VERIFICATION TEST – VER 1).

No >> Inspect the wiring and connectors for damage or shorted circuits. If ok, replace and program the Front Control Module in accordance with the service information.

Perform BODY VERIFICATION TEST – VER 1. (Refer to BODY VERIFICATION TEST – VER 1).

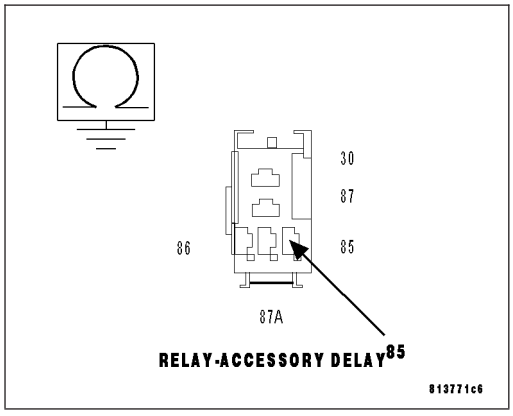

B211F–IGNITION RUN/ACC/PAD CONTROL CIRCUIT HIGH

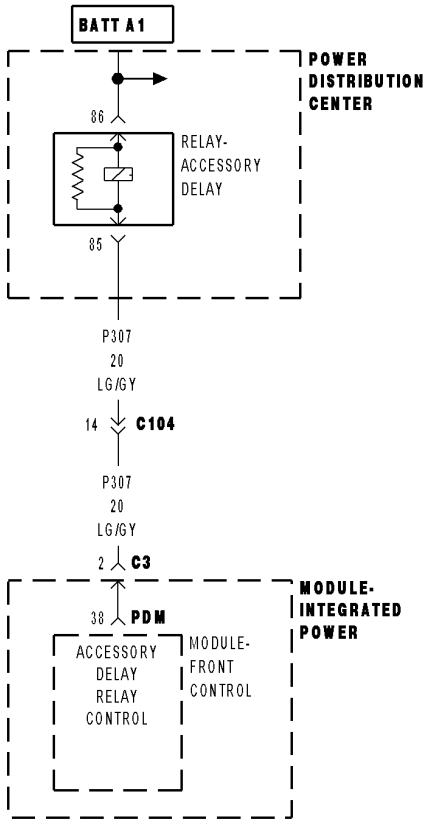

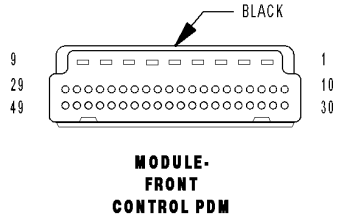

813771c4

For a complete wiring diagram **Refer to Section 8W**.

- **When Monitored:**
  With the ignition on.
- **Set Condition:**
  The Front Control Module will set this DTC within 500ms if the (P307) Accessory Delay Relay Control circuit is shorted to voltage.

Possible Causes
(P307) ACCESSORY DELAY RELAY CONTROL CIRCUIT SHORTED TO VOLTAGE
ACCESSORY DELAY RELAY
FRONT CONTROL MODULE

Diagnostic Test

1. CHECK FOR ACTIVE DTC

With the scan tool, read the active DTC's.
Cycle the ignition switch from off to on, leaving the ignition on for a minimum of 90 seconds.
With the scan tool, read the active DTC's.

Does the scan tool display this DTC as active?

Yes >> Go To 2

No >> If the DTC is stored, check for an intermittent condition. Visually inspect the related wiring harness connectors. Look for broken, bent, pushed out, or corroded terminals.

2. ACCESSORY DELAY RELAY

Turn the ignition off.
Install a substitute relay in place of the original Accessory Delay Relay.
Cycle the ignition switch from off to on, leaving the ignition on for a minimum of 90 seconds.
With the scan tool, read the active FCM DTC's.

Does the scan tool display this DTC as active?

Yes >> Go To 3

No >> Replace the original Accessory Delay Relay.
Perform BODY VERIFICATION TEST – VER 1. (Refer to BODY VERIFICATION TEST – VER 1).

3. (P307) ACCESSORY DELAY RELAY CONTROL CIRCUIT SHORTED TO VOLTAGE

Turn the ignition off.
Remove the FCM from the IPM.
Remove the Accessory Delay Relay from the Rear Power Distribution Module.
Turn the ignition on.
Measure the voltage of the (P307) Accessory Delay Relay Control circuit at the relay connector (cavity 85).

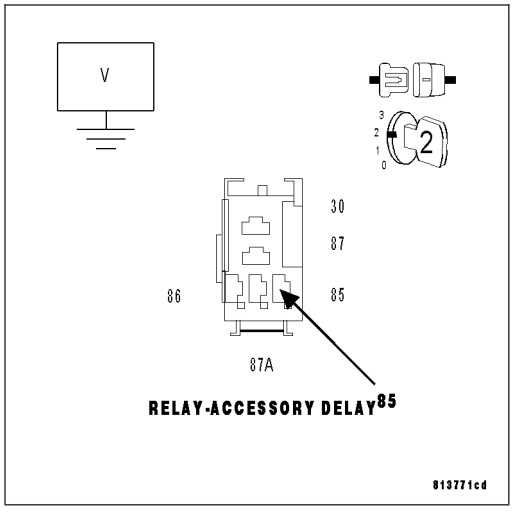

Is there any voltage present?

Yes >> Repair the (P307) Accessory Delay Relay Control circuit for a short to voltage.
Perform BODY VERIFICATION TEST – VER 1. (Refer to BODY VERIFICATION TEST – VER 1).

No >> Inspect the wiring and connectors for damage or shorted circuits. If OK, replace and program the Front Control Module in accordance with the service information.
Perform BODY VERIFICATION TEST – VER 1. (Refer to BODY VERIFICATION TEST – VER 1).

B2120–IGNITION RUN/ACC/PAD CONTROL CIRCUIT OPEN

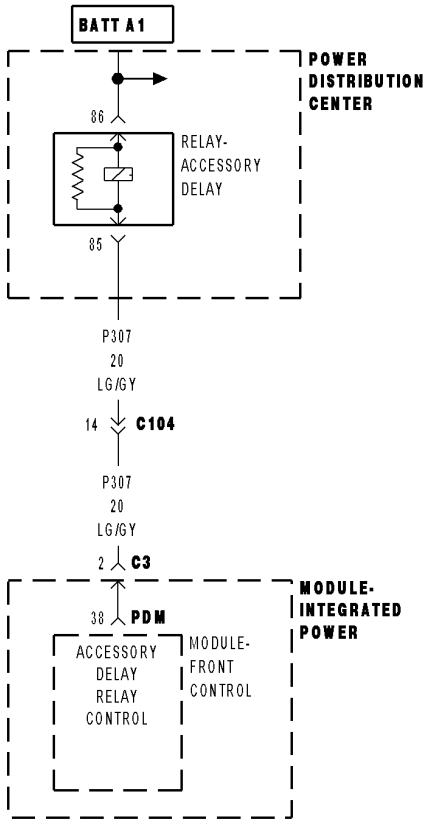

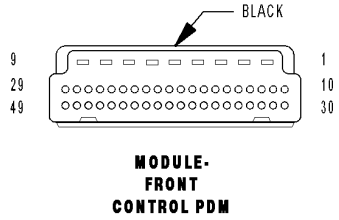

813771c4

For a complete wiring diagram **Refer to Section 8W**.

- **When Monitored:**
  With the ignition on.
- **Set Condition:**
  The Front Control Module will set this DTC within 500ms if the (P307) Accessory Delay Relay Control circuit is open.

Possible Causes
(P307) ACCESSORY DELAY RELAY CONTROL CIRCUIT OPEN
ACCESSORY DELAY RELAY
FRONT CONTROL MODULE

Diagnostic Test

1. CHECK FOR ACTIVE DTC

With the scan tool, read the active DTC's.
Cycle the ignition switch from off to on, leaving the ignition on for a minimum of 90 seconds.
With the scan tool, read the active DTC's.

Does the scan tool display this DTC as active?

Yes >> Go To 2

No >> If the DTC is stored, check for an intermittent condition. Visually inspect the related wiring harness connectors. Look for broken, bent, pushed out, or corroded terminals.

2. ACCESSORY DELAY RELAY

Turn the ignition off.
Install a substitute relay in place of the original Accessory Delay Relay.
Cycle the ignition switch from off to on, leaving the ignition on for a minimum of 90 seconds.
With the scan tool, read the active FCM DTC's.

Does the scan tool display this DTC as active?

Yes >> Go To 3

No >> Replace the original Accessory Delay Relay.
Perform BODY VERIFICATION TEST – VER 1. (Refer to BODY VERIFICATION TEST – VER 1).

3. (P307) ACCESSORY DELAY RELAY CONTROL CIRCUIT OPEN

Turn the ignition off.

Remove the FCM from the IPM.

Remove the Accessory Delay Relay from the Rear Power Distribution Module.

Measure the resistance of the Accessory Delay Relay Control circuit from the Front Control Module PDM connector to the relay connector.

Is the resistance below 10.0 ohms?

No >> Repair the Accessory Delay Relay Control circuit for an open.

Perform BODY VERIFICATION TEST – VER 1. (Refer to BODY VERIFICATION TEST – VER 1).

Yes >> Inspect the wiring and connectors for damage or shorted circuits. If OK, replace and program the Front Control Module in accordance with the service information.

Perform BODY VERIFICATION TEST – VER 1. (Refer to BODY VERIFICATION TEST – VER 1).

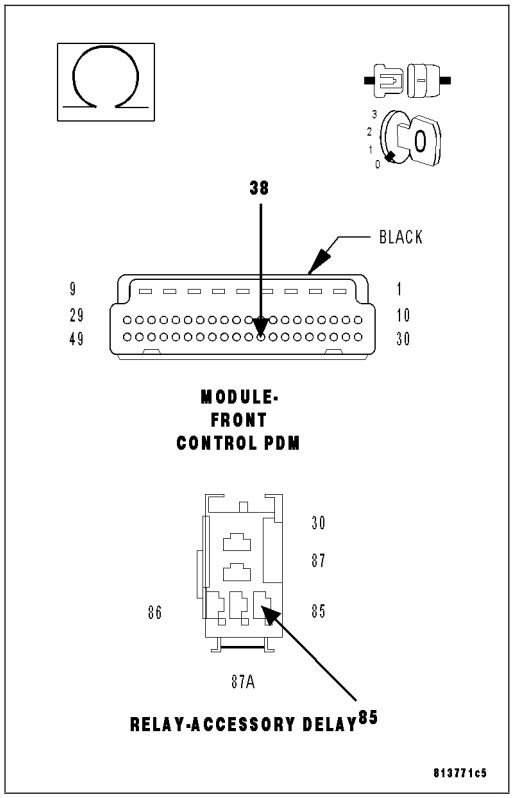

B2122-IGNITION RUN CONTROL CIRCUIT LOW

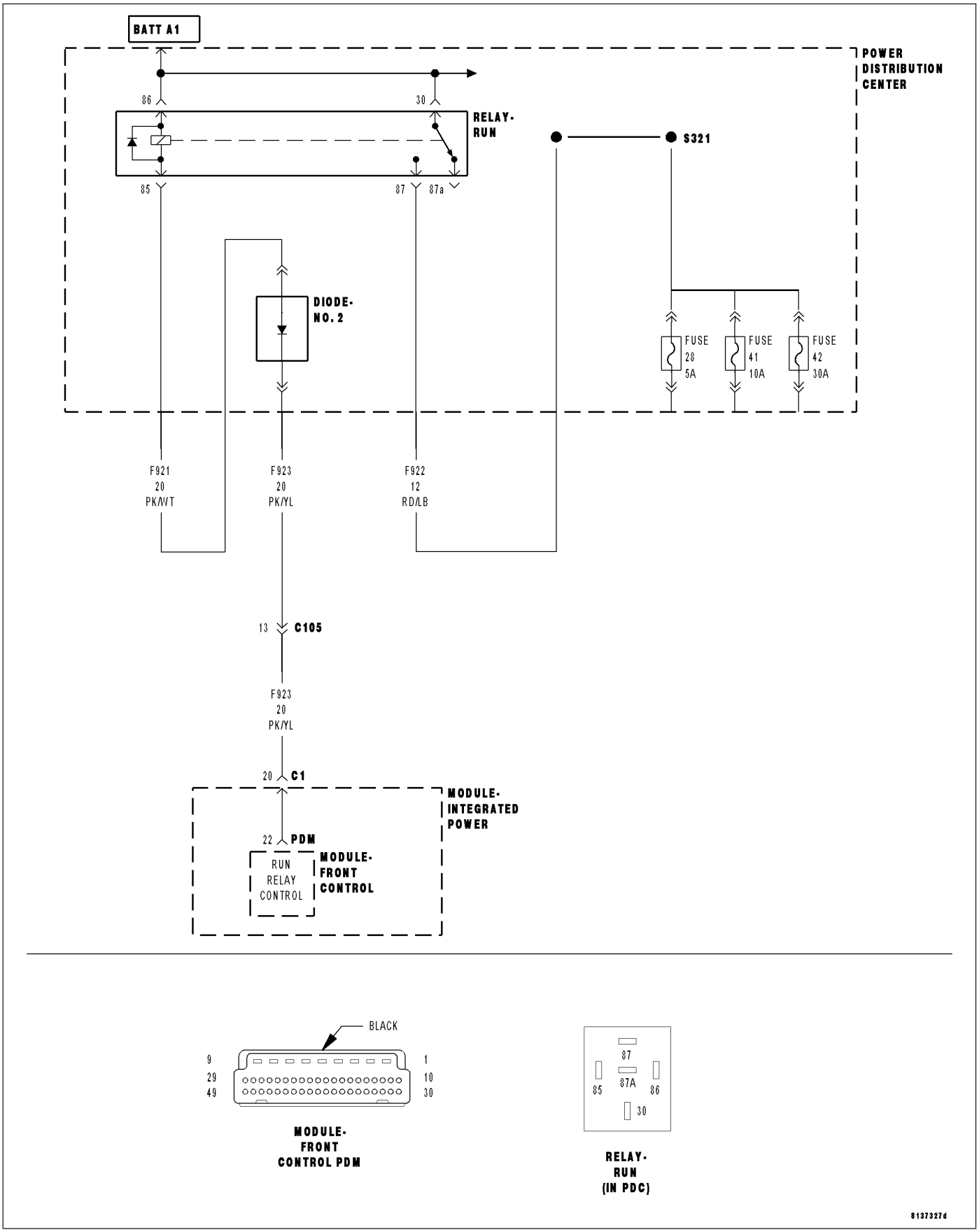

For a complete wiring diagram **Refer to Section 8W**.

- **When Monitored:**
  With the ignition on.
- **Set Condition:**
  The Front Control Module will set this DTC within 500ms if the (F921) or (F923) Run Relay Control circuit voltage is open or shorted to ground.

Possible Causes
(F921) or (F923) RUN RELAY CONTROL CIRCUIT OPEN OR SHORTED TO GROUND
RUN RELAY
FRONT CONTROL MODULE

Diagnostic Test

1. CHECK FOR ACTIVE DTC

With the scan tool, read the active DTC's.
Cycle the ignition switch from off to on, leaving the ignition on for a minimum of 90 seconds.
With the scan tool, read the active DTC's.

Does the scan tool display this DTC as active?

Yes >> Go To 2

No >> If the DTC is stored, check for an intermittent condition. Visually inspect the related wiring harness connectors. Look for broken, bent, pushed out, or corroded terminals.

2. RUN RELAY

Turn the ignition off.
Install a substitute Run Relay in place of the original Run Relay.
Cycle the ignition switch from off to on, leaving the ignition on for a minimum of 90 seconds.
With the scan tool, read the active FCM DTC's.

Does the scan tool display this DTC as active?

Yes >> Go To 3

No >> Replace the original Run Relay.
Perform BODY VERIFICATION TEST – VER 1. (Refer to BODY VERIFICATION TEST – VER 1).

3. (F921) or (F923) RUN RELAY CONTROL CIRCUIT OPEN

Turn the ignition off.

Remove the FCM from the IPM.

Remove the Run Relay from the Rear Power Distribution Module.

NOTE: This circuit contains a diode. When checking resistance of this circuit the red ohmmeter lead must be connected to the Run Relay cavity (85) and the black ohmmeter lead must be connected to the FCM–PDM connector.

NOTE: Ensure the diode is installed correctly in the Rear Power Distribution Module.

Measure the resistance of the Run Relay Control circuit.

Is the resistance below 10.0 ohms?

Yes >> Go To 4

No >> Repair the Run Relay Control circuit for an open.

Perform BODY VERIFICATION TEST – VER 1. (Refer to BODY VERIFICATION TEST – VER 1).

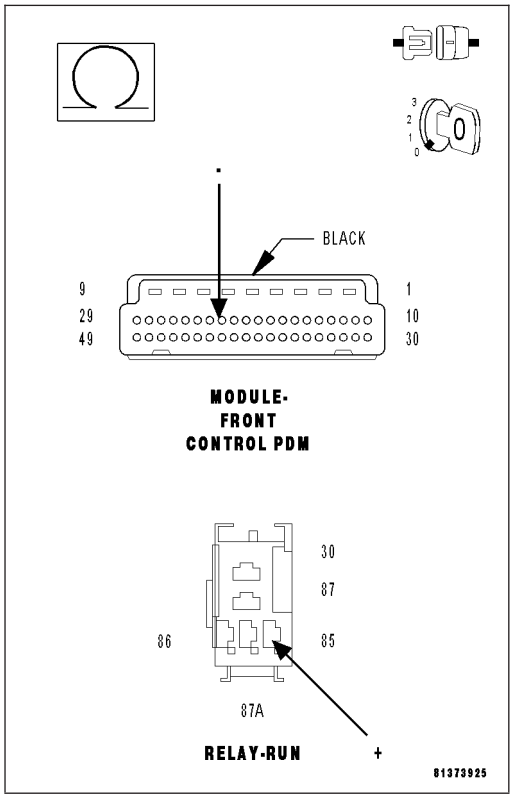

4. (F921) RUN RELAY CONTROL CIRCUIT SHORTED TO GROUND

NOTE: This circuit contains a diode. When checking for a short to ground you must check both sides of the diode.

NOTE: Ensure the diode is installed correctly in the Rear Power Distribution Module.

Measure the resistance between ground and the (F921) Run Relay Control circuit at the Run Relay cavity (85).

Is the resistance below 10.0 ohms?

Yes >> Repair the (F921) Run Relay Control circuit for a short to ground.

Perform BODY VERIFICATION TEST – VER 1. (Refer to BODY VERIFICATION TEST – VER 1).

No >> Go To 5

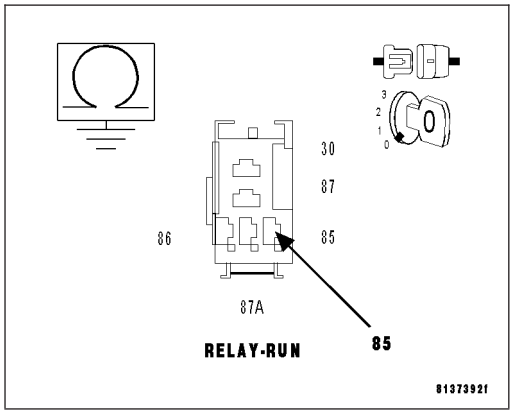

5. (F923) RUN RELAY CONTROL CIRCUIT SHORTED TO GROUND

NOTE: This circuit contains a diode. When checking for a short to ground you must check both sides of the diode.

NOTE: Ensure the diode is installed correctly in the Rear Power Distribution Module.

Measure the resistance between ground and the (F923) Run Relay Control circuit at the FCM–PDM connector.

Is the resistance below 10.0 ohms?

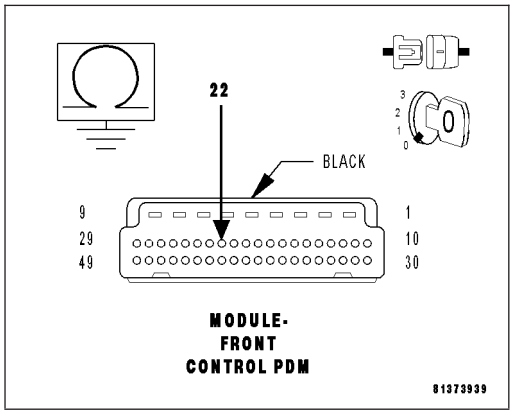

Yes >> Repair the (F923) Run Relay Control circuit for a short to ground.

Perform BODY VERIFICATION TEST – VER 1. (Refer to BODY VERIFICATION TEST – VER 1).

No >> Inspect the wiring and connectors for damage or shorted circuits. If ok, replace and program the Front Control Module in accordance with the service information.

Perform BODY VERIFICATION TEST – VER 1. (Refer to BODY VERIFICATION TEST – VER 1).

B2123-IGNITION RUN CONTROL CIRCUIT HIGH

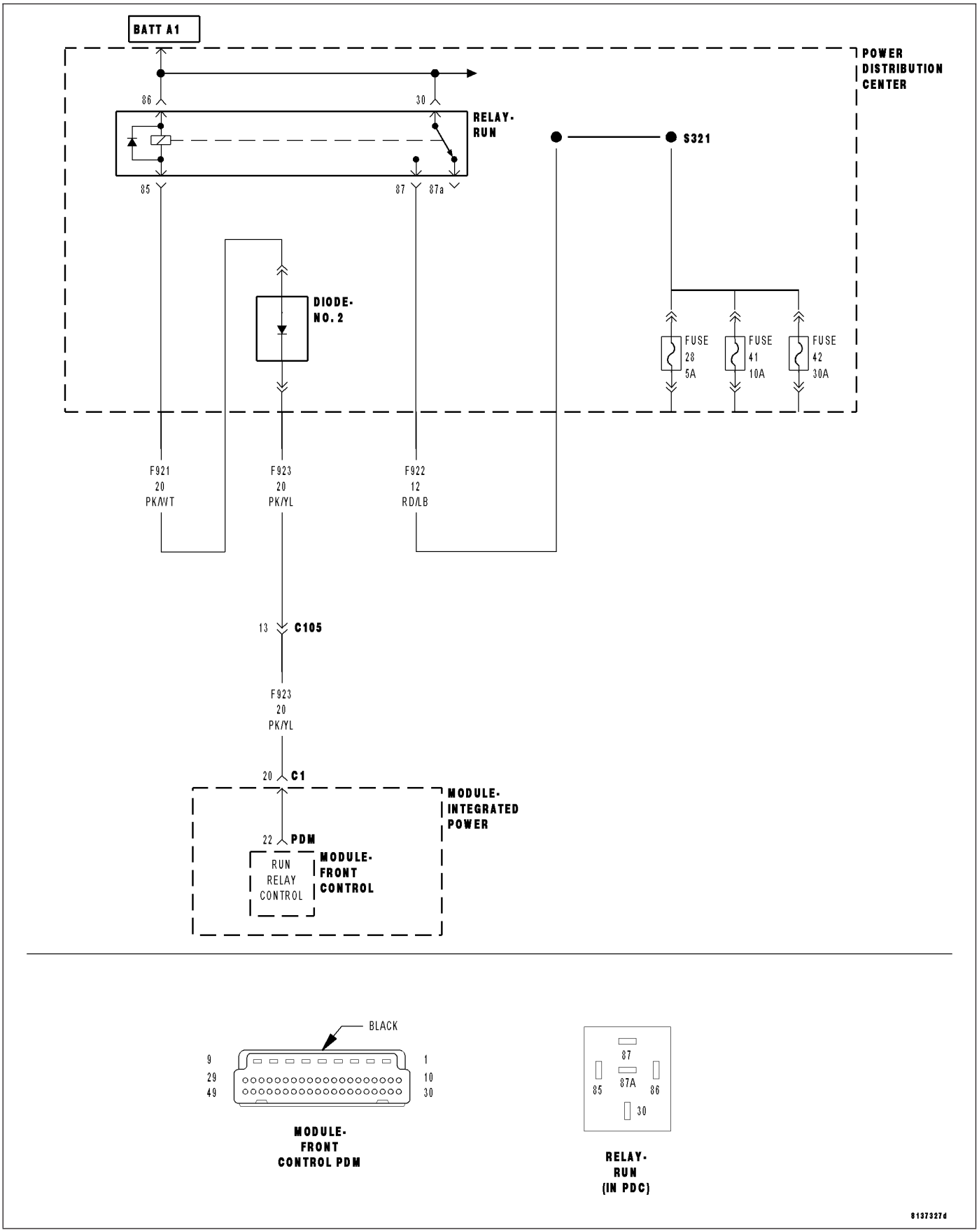

For a complete wiring diagram **Refer to Section 8W**.

- **When Monitored:**
  With the ignition on.
- **Set Condition:**
  The Front Control Module will set this DTC within 500ms if the (F921) or (F923) Run Relay Control circuit voltage is shorted to voltage.

Possible Causes
(F921) or (F923) RUN RELAY CONTROL CIRCUIT SHORTED TO VOLTAGE
RUN RELAY
FRONT CONTROL MODULE

Diagnostic Test

1. CHECK FOR ACTIVE DTC

With the scan tool, read the active DTC's.
Cycle the ignition switch from off to on, leaving the ignition on for a minimum of 90 seconds.
With the scan tool, read the active DTC's.

Does the scan tool display this DTC as active?

Yes >> Go To 2

No >> If the DTC is stored, check for an intermittent condition. Visually inspect the related wiring harness connectors. Look for broken, bent, pushed out, or corroded terminals.

2. RUN RELAY

Turn the ignition off.
Install a substitute Run Relay in place of the original Run Relay.
Cycle the ignition switch from off to on, leaving the ignition on for a minimum of 90 seconds.
With the scan tool, read the active FCM DTC's.

Does the scan tool display this DTC as active?

Yes >> Go To 3

No >> Replace the original Run Relay.
Perform BODY VERIFICATION TEST – VER 1. (Refer to BODY VERIFICATION TEST – VER 1).

3. (F921) RUN RELAY CONTROL CIRCUIT SHORTED TO VOLTAGE

NOTE: This circuit contains a diode. When checking for a short to voltage you must check both sides of the diode.

NOTE: Ensure the diode is installed correctly in the Rear Power Distribution Module.

Turn the ignition off.
Remove the FCM from the IPM.
Remove the Run Relay from the Rear Power Distribution Module.
Turn the ignition on.
Measure the voltage of the (F921) Run Relay Control circuit at the Run Relay cavity (85).

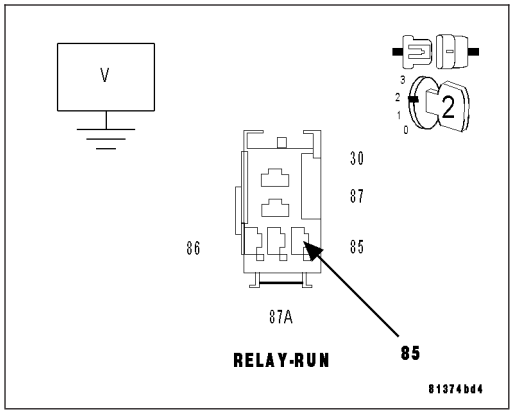

Is the voltage above 10.0 volts?

Yes >> Repair the (F921) Run Relay Control circuit for a short to voltage.
Perform BODY VERIFICATION TEST – VER 1. (Refer to BODY VERIFICATION TEST – VER 1).

No >> Go To 4

4. (F923) RUN RELAY CONTROL CIRCUIT SHORTED TO VOLTAGE

NOTE: This circuit contains a diode. When checking for a short to voltage you must check both sides of the diode.

NOTE: Ensure the diode is installed correctly in the Rear Power Distribution Module.

Measure the voltage of the (F923) Run Relay Control circuit at the FCM–PDM connector.

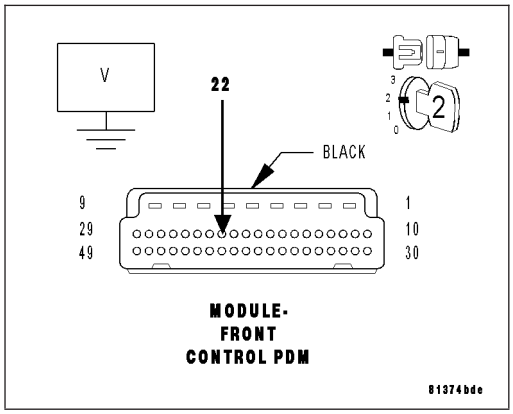

Is the voltage above 10.0 volts?

Yes >> Repair the (F923) Run Relay Control circuit for a short to voltage.

Perform BODY VERIFICATION TEST – VER 1. (Refer to BODY VERIFICATION TEST – VER 1).

No >> Inspect the wiring and connectors for damage or shorted circuits. If ok, replace and program the Front Control Module in accordance with the service information.

Perform BODY VERIFICATION TEST – VER 1. (Refer to BODY VERIFICATION TEST – VER 1).

B2124-IGNITION RUN CONTROL CIRCUIT OPEN

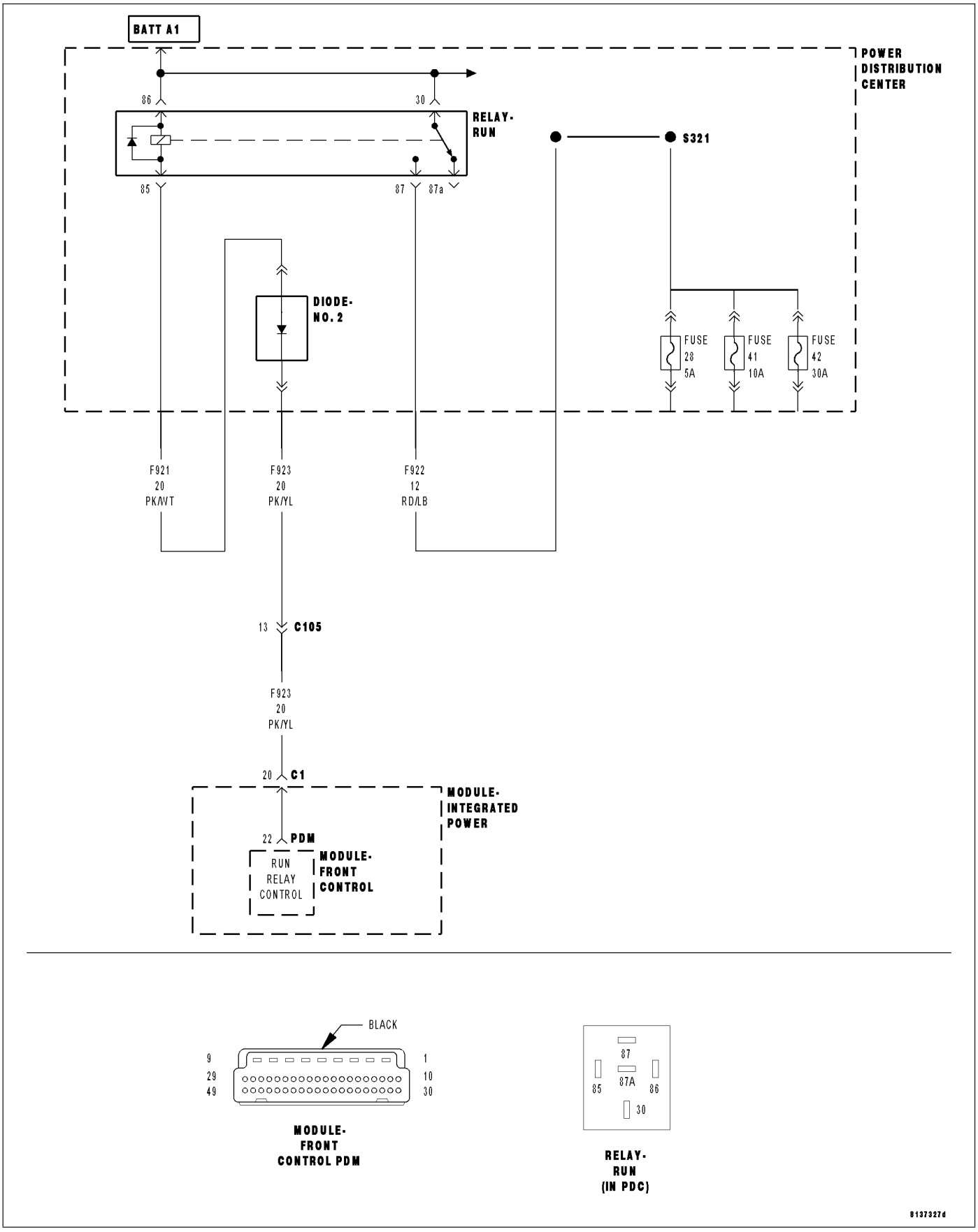

For a complete wiring diagram **Refer to Section 8W**.

- **When Monitored:**
  With the ignition on.
- **Set Condition:**
  The Front Control Module will set this DTC within 500ms if the (F921) or (F923) Run Relay Control circuit voltage is open or shorted to ground.

Possible Causes
(F921) or (F923) RUN RELAY CONTROL CIRCUIT OPEN OR SHORTED TO GROUND
RUN RELAY
FRONT CONTROL MODULE

Diagnostic Test

1. CHECK FOR ACTIVE DTC

With the scan tool, read the active DTC's.
Cycle the ignition switch from off to on, leaving the ignition on for a minimum of 90 seconds.
With the scan tool, read the active DTC's.

Does the scan tool display this DTC as active?

Yes >> Go To 2

No >> If the DTC is stored, check for an intermittent condition. Visually inspect the related wiring harness connectors. Look for broken, bent, pushed out, or corroded terminals.

2. RUN RELAY

Turn the ignition off.
Install a substitute Run Relay in place of the original Run Relay.
Cycle the ignition switch from off to on, leaving the ignition on for a minimum of 90 seconds.
With the scan tool, read the active FCM DTC's.

Does the scan tool display this DTC as active?

Yes >> Go To 3

No >> Replace the original Run Relay.
Perform BODY VERIFICATION TEST – VER 1. (Refer to BODY VERIFICATION TEST – VER 1).

3. (F921) or (F923) RUN RELAY CONTROL CIRCUIT OPEN

Turn the ignition off.

Remove the FCM from the IPM.

Remove the Run Relay from the Rear Power Distribution Module.

NOTE: This circuit contains a diode. When checking resistance of this circuit the red ohmmeter lead must be connected to the run relay cavity (85) and the black ohmmeter lead must be connected to the FCM–PDM connector.

NOTE: Ensure the diode is installed correctly in the Rear Power Distribution Module.

Measure the resistance of the Run Relay Control circuit.

Is the resistance below 10.0 ohms?

Yes >> Go To 4

No >> Repair the Run Relay Control circuit for an open.

Perform BODY VERIFICATION TEST – VER 1. (Refer to BODY VERIFICATION TEST – VER 1).

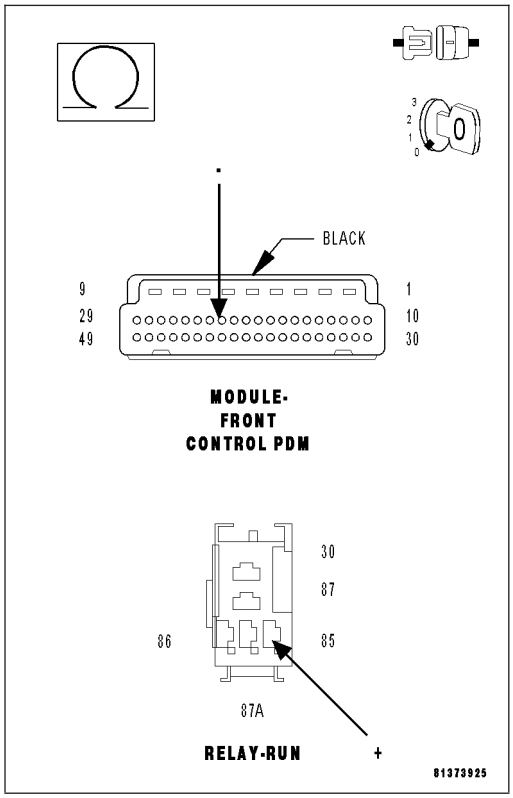

4. (F921) RUN RELAY CONTROL CIRCUIT SHORTED TO GROUND

NOTE: This circuit contains a diode. When checking for a short to ground you must check both sides of the diode.

NOTE: Ensure the diode is installed correctly in the Rear Power Distribution Module.

Measure the resistance between ground and the (F921) Run Relay Control circuit at the Run Relay cavity (85).

Is the resistance below 10.0 ohms?

Yes >> Repair the (F921) Run Relay Control circuit for a short to ground.

Perform BODY VERIFICATION TEST – VER 1. (Refer to BODY VERIFICATION TEST – VER 1).

No >> Go To 5

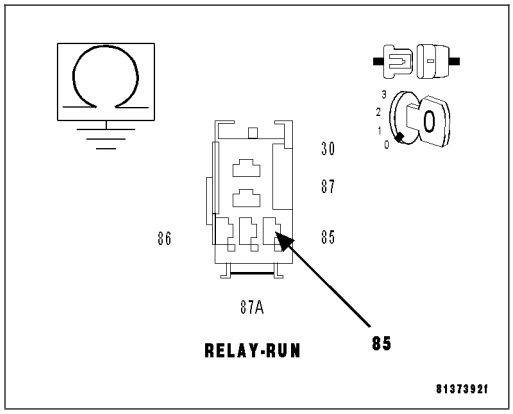

5. (F923) RUN RELAY CONTROL CIRCUIT SHORTED TO GROUND

NOTE: This circuit contains a diode. When checking for a short to ground you must check both sides of the diode.

NOTE: Ensure the diode is installed correctly in the Rear Power Distribution Module.

Measure the resistance between ground and the (F923) Run Relay Control circuit at the FCM–PDM connector.

Is the resistance below 10.0 ohms?

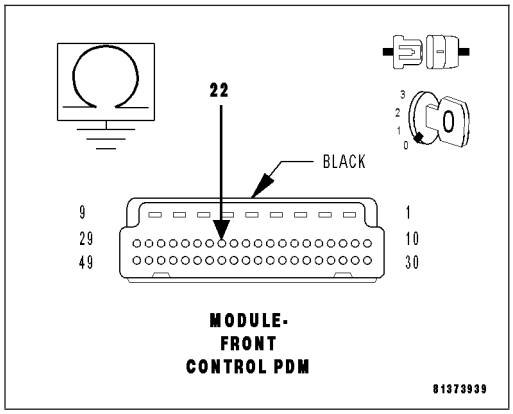

Yes >> Repair the (F923) Run Relay Control circuit for a short to ground.

Perform BODY VERIFICATION TEST – VER 1. (Refer to BODY VERIFICATION TEST – VER 1).

No >> Inspect the wiring and connectors for damage or shorted circuits. If ok, replace and program the Front Control Module in accordance with the service information.

Perform BODY VERIFICATION TEST – VER 1. (Refer to BODY VERIFICATION TEST – VER 1).

IGNITION SYSTEM - SERVICE INFORMATION

TABLE OF CONTENTS

page

IGNITION SYSTEM - SERVICE INFORMATION
DESCRIPTION
IGNITION SYSTEM 32
OPERATION - IGNITION SYSTEM 32
SPECIFICATIONS
TORQUE 32
SPARK PLUGS 33
SENSOR-CAMSHAFT POSITION
REMOVAL
2.7L 34
3.5L 35
5.7L 36
6.1L 37
INSTALLATION
2.7L 37
3.5L 38
5.7L 40
6.1L 40
COIL-IGNITION
REMOVAL
2.7L 41
3.5L 42
5.7/6.1L 43
INSTALLATION
2.7L 44
3.5L 45
5.7/6.1L 46
CAPACITOR-IGNITION COIL
REMOVAL
2.7/3.5L 48
6.1L 48
INSTALLATION
2.7/3.5L 49
6.1L 49
SWITCH-IGNITION
REMOVAL 50

page

INSTALLATION 54
CYLINDER-IGNITION KEY AND LOCK
REMOVAL 60
INSTALLATION 61
SENSOR-KNOCK
REMOVAL
2.7L 63
3.5L 63
5.7L 64
6.1L 65
INSTALLATION
2.7L 66
3.5L 67
5.7L 68
6.1L 69
PLUG-GLOW
DESCRIPTION 70
OPERATION 70
REMOVAL 70
INSTALLATION 70
RELAY-GLOW PLUG
DESCRIPTION 71
OPERATION 71
DIAGNOSIS AND TESTING - GLOW PLUG RELAYS 71
PLUG-SPARK
DESCRIPTION - PLATINUM PLUGS 72
REMOVAL
2.7L 73
3.5L 73
5.7L/6.1L 73
INSTALLATION
2.7L 74
3.5L 74
5.7L/6.1L 74

IGNITION SYSTEM - SERVICE INFORMATION

DESCRIPTION

IGNITION SYSTEM

NOTE: All engines use a fixed ignition timing system. Basic ignition timing is not adjustable. All spark advance is determined by the Powertrain Control Module (PCM).

The ignition system used on these engines is referred to as the Direct Ignition System (DIS). The system's three main components are the coils, crankshaft position sensor, and camshaft position sensor. If equipped with the coil on plug ignition system it utilizes an ignition coil for every cylinder, it is mounted directly over the each spark plug.

OPERATION - IGNITION SYSTEM

The crankshaft position sensor and camshaft position sensor are hall effect devices. The camshaft position sensor and crankshaft position sensor generate pulses that are inputs to the PCM. The PCM determines engine position from these sensors. The PCM calculates injector sequence and ignition timing from crankshaft & camshaft position. For a description of both sensors, refer to Camshaft Position Sensor and Crankshaft Position Sensor.

SPECIFICATIONS

TORQUE

DESCRIPTION	N·m	Ft. Lbs.	In. Lbs.
Camshaft Position Sensor - 2.7L	12	-	105
Camshaft Position Sensor - 3.5L	12	-	105
Camshaft Position Sensor - 5.7L V-8 Engine	12	9	105
Crankshaft Position Sensor - 2.7L	12	-	105
Crankshaft Position Sensor - 3.5L	12	-	105
Crankshaft Position Sensor - 5.7L V-8 Engine	12	9	105
Ignition Coil Mounting - 2.7L	6.2	-	55
Ignition Coil Mounting - 3.5L	6.7	-	60
Ignition Coil Mounting - 5.7L V-8 Engine	12	9	105 (± 20)
Ignition Coil Mounting - 6.1L V-8 Engine	6 - 8	-	53 - 71 in. lbs.
Knock Sensor - 2.7L	10	-	83
Knock Sensor - 3.5L	20	15.2	-
* Knock Sensor - 5.7/6.1L V-8 Engine	20	15	176
Spark Plugs - 2.7L	17	-	150
Spark Plugs - 3.5L	28	20	-
** Spark Plugs - 5.7L V-8 Engine	18 (± 3)	13 (± 2)	-

DESCRIPTION	N·m	Ft. Lbs.	In. Lbs.
** Spark Plugs - 6.1L V-8 Engine	15 - 20	11 - 15	-
Capacitor Nut	12	8.8	106
* Do not apply any sealant, thread-locker or adhesive to bolts. Poor sensor performance may result.			
** Torque critical tapered design. Do not exceed 15 ft. lbs.			

SPARK PLUGS

ENGINE	PLUG TYPE	ELECTRODE GAP
2.7L	RE10PMC5	0.048 TO 0.058 in.
3.5L	ZFR5LP-13G	0.048 TO 0.058 in.
5.7L Hemi V-8	Champion - RE14MCC4	1.14 mm (0.045 in.)
6.1L Hemi V-8	NGK PLZTR5A-13	1.3 mm (0.050 in.)

SENSOR-CAMSHAFT POSITION

REMOVAL

2.7L

1. Disconnect negative battery cable.
2. Unlock and disconnect electrical connector.

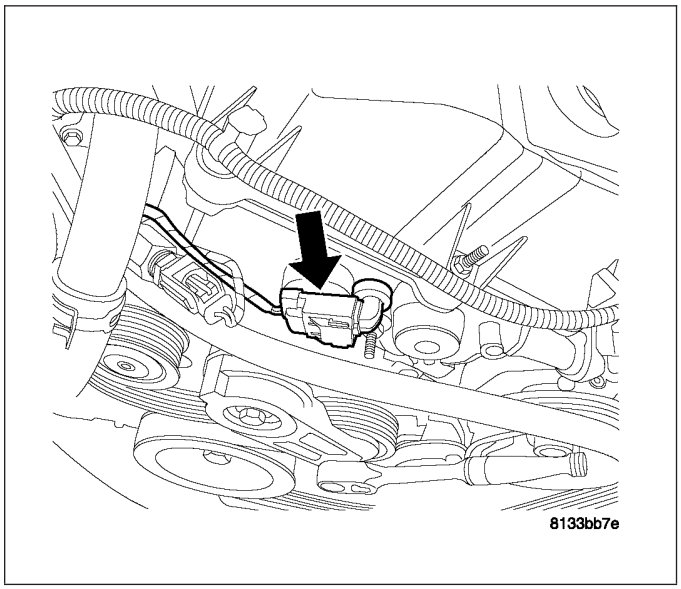

3. Remove mounting bolt.
4. Remove sensor.

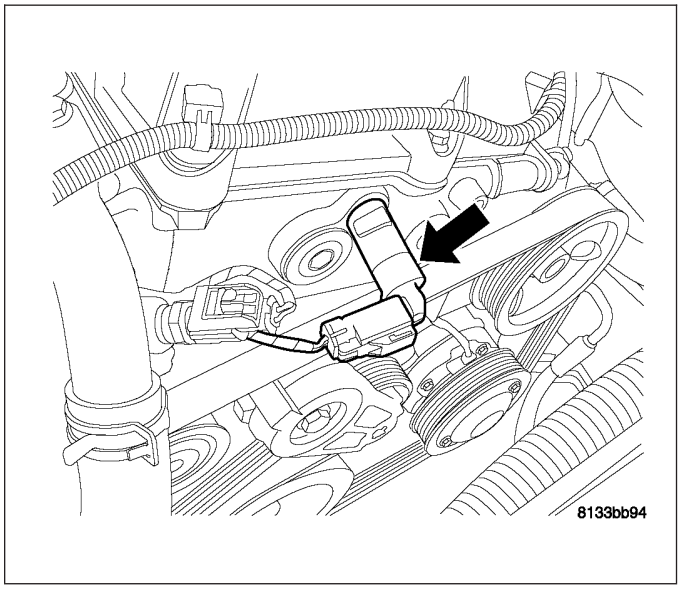

3.5L

1. Camshaft Position Sensor location.
2. Disconnect negative battery cable.

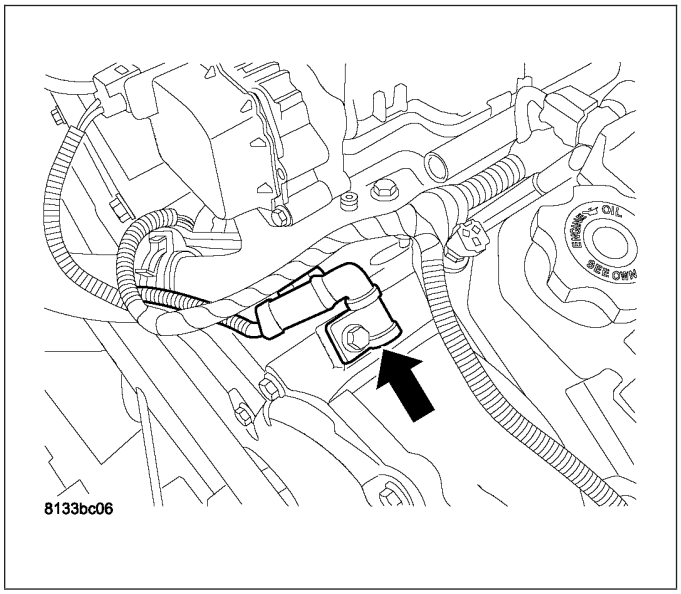

3. Unlock electrical connector.
4. Remove electrical connector.

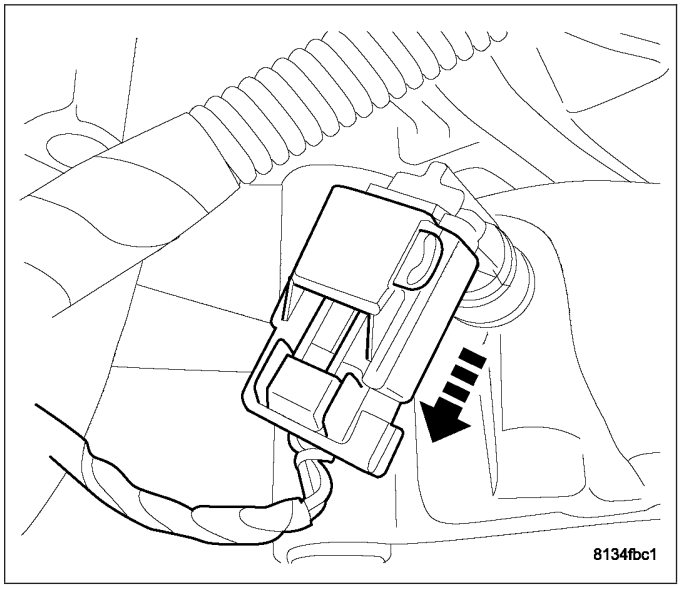

5. Remove mounting bolt.
6. Remove sensor.

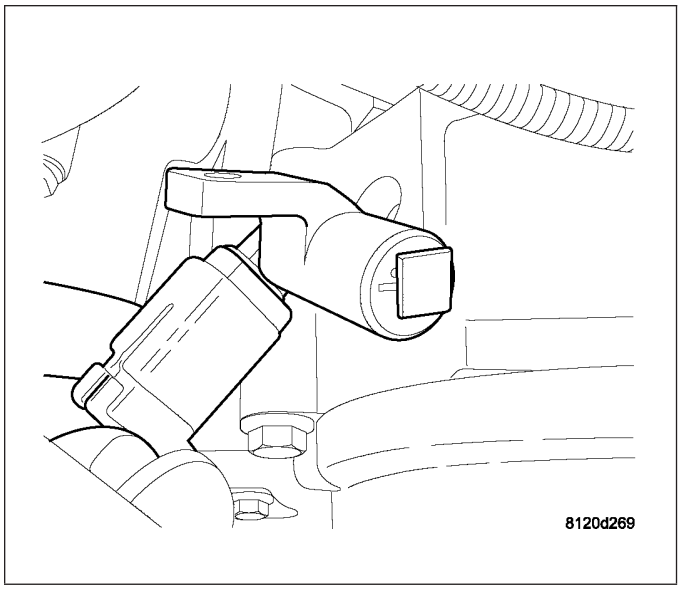

5.7L

The Camshaft Position Sensor (CMP) on the 5.7L V-8 engine (1) is bolted to the front/top of the timing chain cover (2).

1. Disconnect electrical connector (4) at CMP sensor.
2. Remove sensor mounting bolt (3).
3. Carefully twist sensor from timing chain cover.
4. Check condition of sensor o-ring.

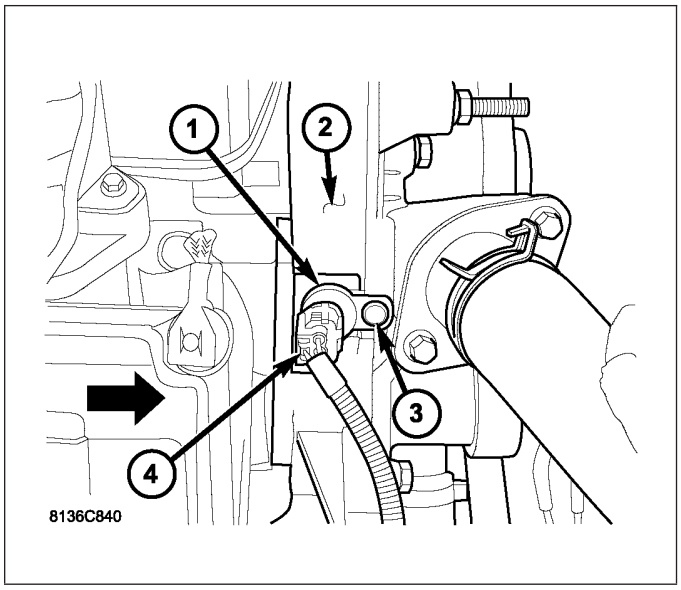

6.1L

The Camshaft Position Sensor (CMP) on the 6.1L V-8 engine (1) is bolted to the front/top of the timing chain cover (2).

1. Disconnect electrical connector (4) at CMP sensor.
2. Remove sensor mounting bolt (3).
3. Carefully twist sensor from timing chain cover.
4. Check condition of sensor o-ring.

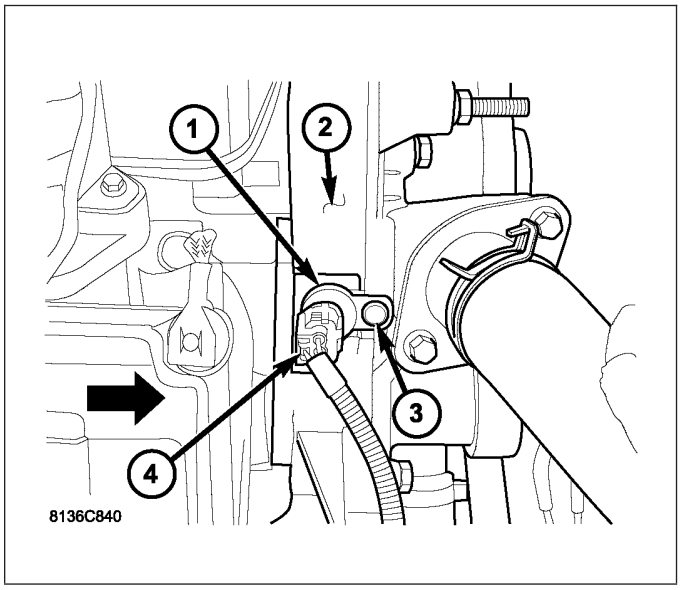

INSTALLATION

2.7L

1. Install sensor.
2. Install mounting bolt.
3. Tighten bolt to 12 N·m (105 in. lbs.).

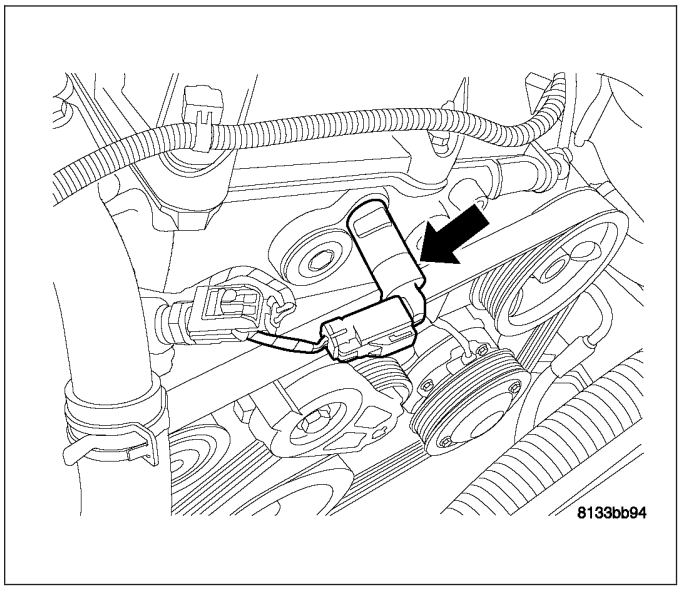

4. Connect electrical connector and lock.
5. Connect negative battery cable.

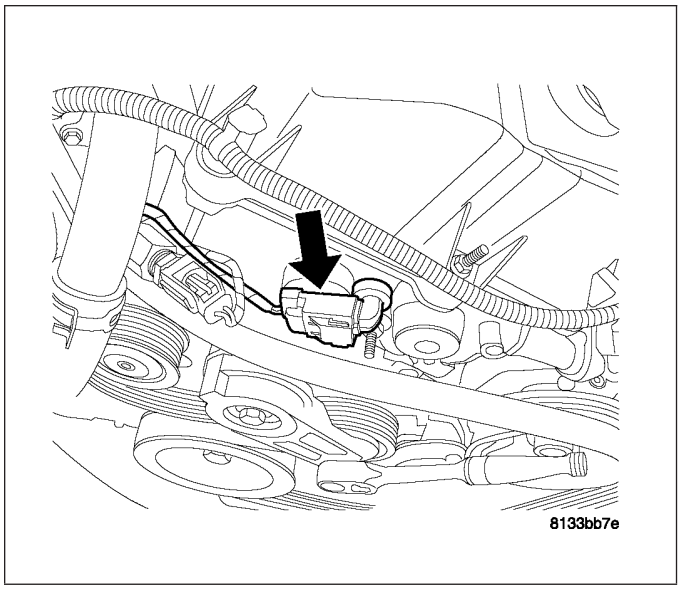

3.5L

1. Install new spacer to sensor if installing the old sensor or new sensor will have the spacer installed.

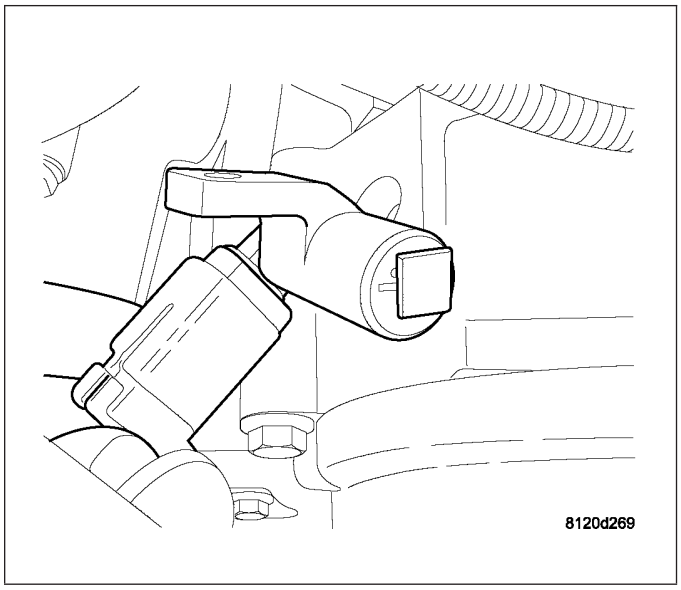

2. Install sensor and insert until sensor makes contact with tone wheel.
3. Install mounting bolt.
4. Tighten mounting bolt to 12 N·m (105 in. lbs.).

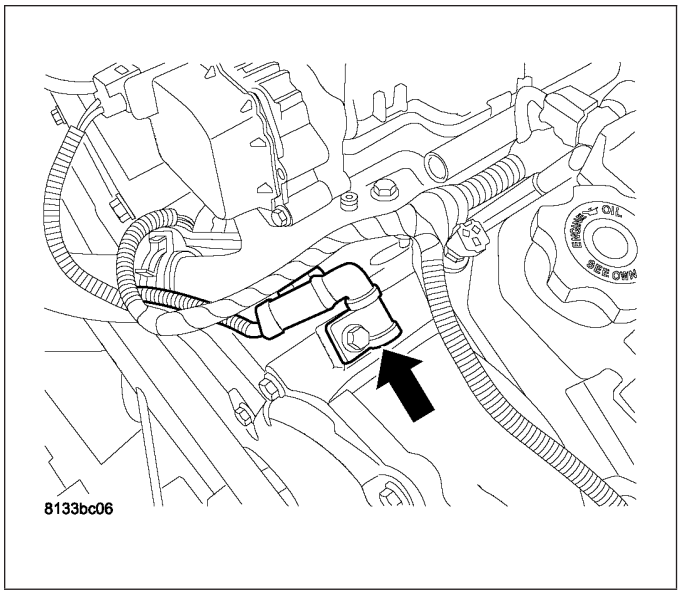

5. Install electrical connector.
6. Lock connector.
7. Connect negative battery cable.

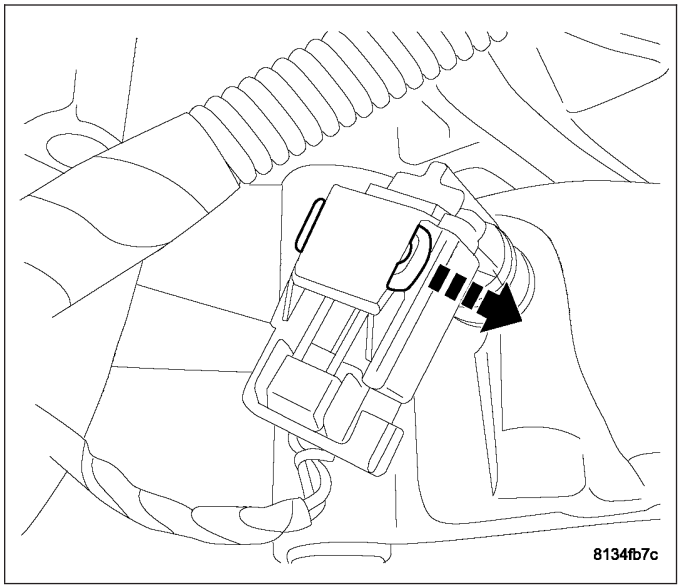

5.7L

1. Clean out machined hole in timing chain cover.
2. Apply a small amount of engine oil to sensor o-ring.
3. Install sensor (1) into timing chain cover (2) with a slight rocking action. Do not twist sensor into position as damage to o-ring may result.

CAUTION: Before tightening sensor mounting bolt, be sure sensor is completely flush to timing chain cover. If sensor is not flush, damage to sensor mounting tang may result.

4. Install mounting bolt (3) and tighten to 12 N·m (105 in. lbs.)
5. Connect electrical connector (4) to sensor.

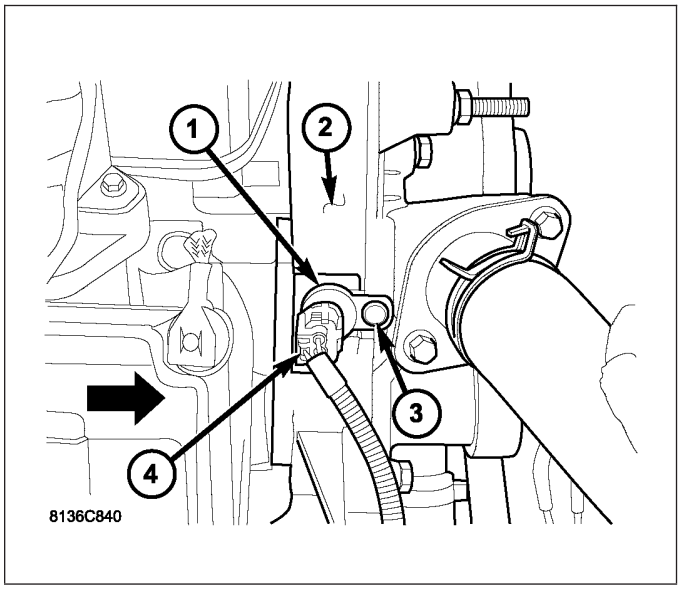

6.1L

1. Clean out machined hole in timing chain cover.
2. Apply a small amount of engine oil to sensor o-ring.
3. Install sensor (1) into timing chain cover (2) with a slight rocking action. Do not twist sensor into position as damage to o-ring may result.

CAUTION: Before tightening sensor mounting bolt, be sure sensor is completely flush to timing chain cover. If sensor is not flush, damage to sensor mounting tang may result.

4. Install mounting bolt (3) and tighten to 12 N·m (105 in. lbs.)
5. Connect electrical connector (4) to sensor.

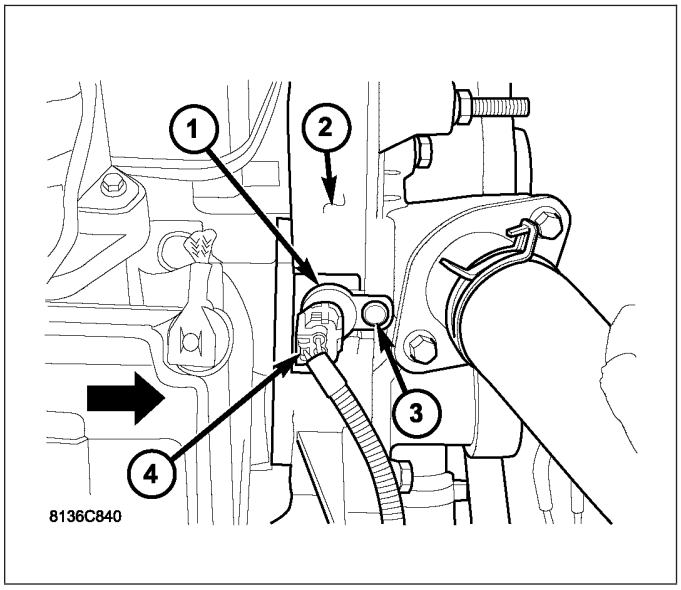

COIL-IGNITION

REMOVAL

2.7L

1. Disconnect negative battery cable.
2. Remove the intake manifold, (Refer to 9 - ENGINE/ MANIFOLDS/INTAKE MANIFOLD - REMOVAL)
3. Prior to removing the ignition coils, spray compressed air around the coil area and spark plug.

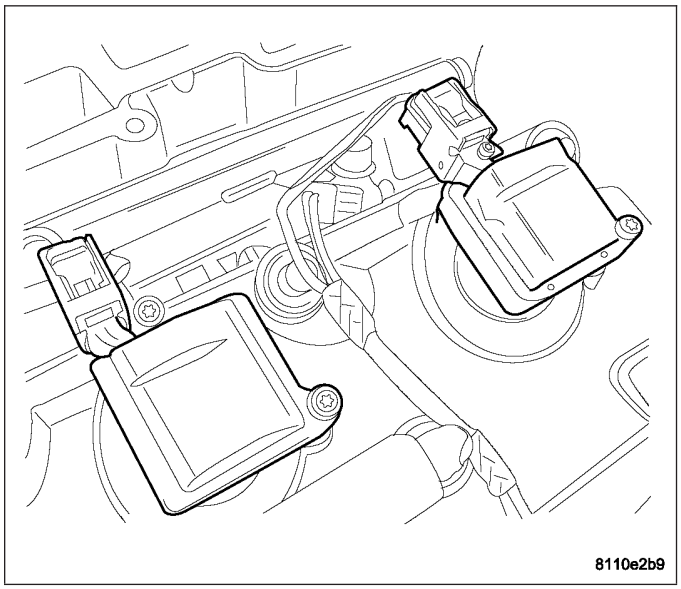

4. Remove electrical connector from ignition coil.
5. Remove 2 fasteners from ignition coil assembly.
6. Remove ignition coil assembly.

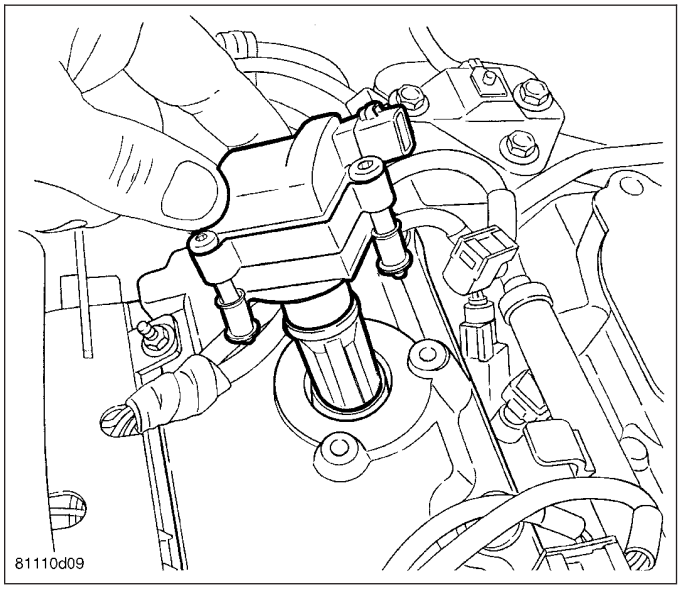

3.5L

1. Disconnect negative battery cable.
2. Remove the intake manifold, (Refer to 9 - ENGINE/ MANIFOLDS/INTAKE MANIFOLD - REMOVAL)
3. Prior to removing the ignition coils, spray compressed air around the coil area.
4. Unlock and remove electrical connector from ignition coil.

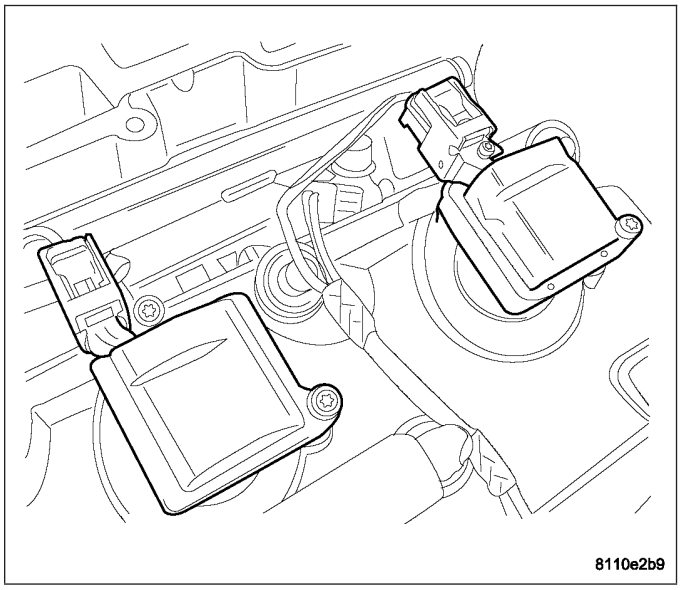

On 3.5L engines, it is necessary to loosen the screws by alternating back and forth. Do not lose the spacers under the coil when loosening the screws.

5. Remove 2 fasteners from ignition coil assembly.
6. Remove ignition coil assembly.

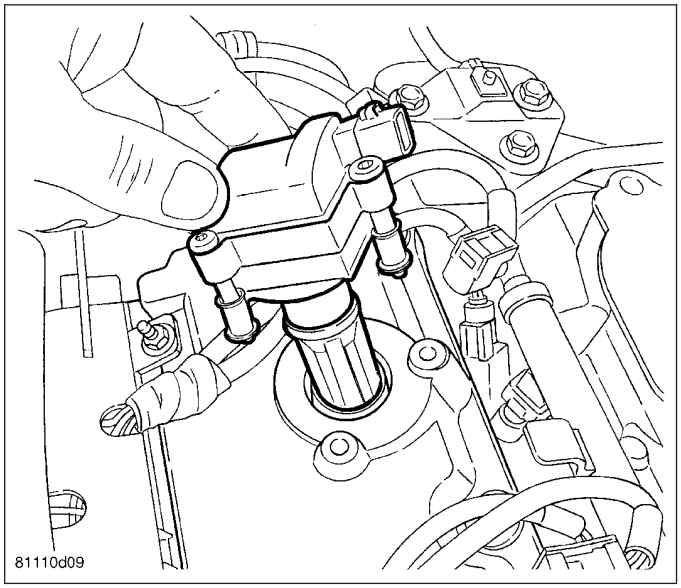

5.7/6.1L

A separate ignition coil (1), mounted to the valve cover is used for each cylinder. Each coil fires the two spark plugs at times predetermined by the Powertrain Control Module (PCM).

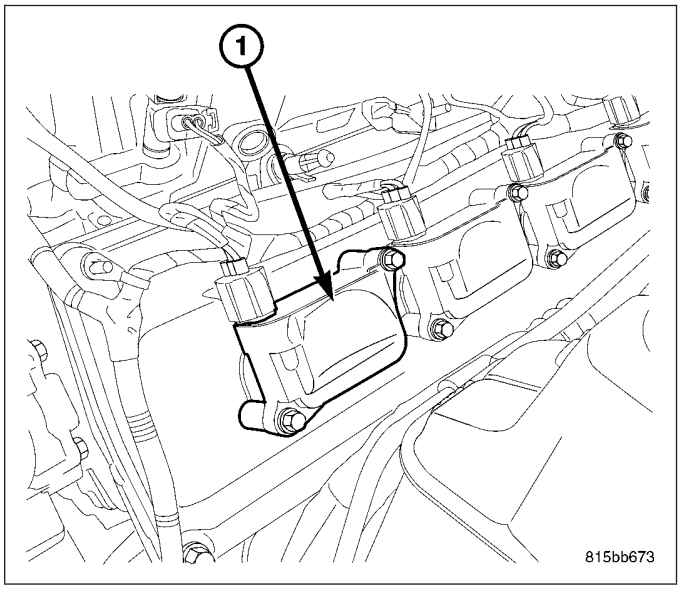

1. Unlock electrical connector (1) by pressing on tab while pulling electrical connector from coil.
2. Remove two coil mounting bolts (3).

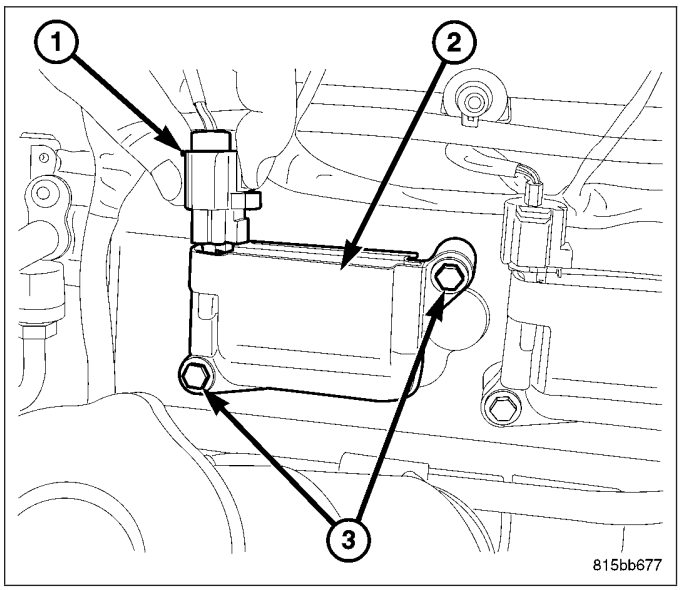

3. Carefully pull up coil from cylinder head opening with a slight twisting action. Twisting will help break loose boots (1) from spark plugs.

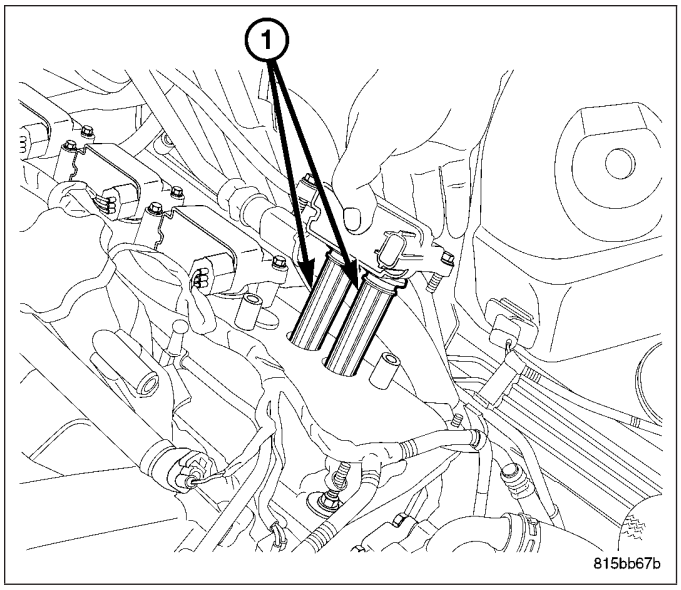

INSTALLATION

2.7L

1. Install ignition coil assembly to spark plug.
2. Install coil screws and tighten: 2.7L engine to 6.2 N·m (55 in. lbs.).
3. Connect the electrical connector and lock.

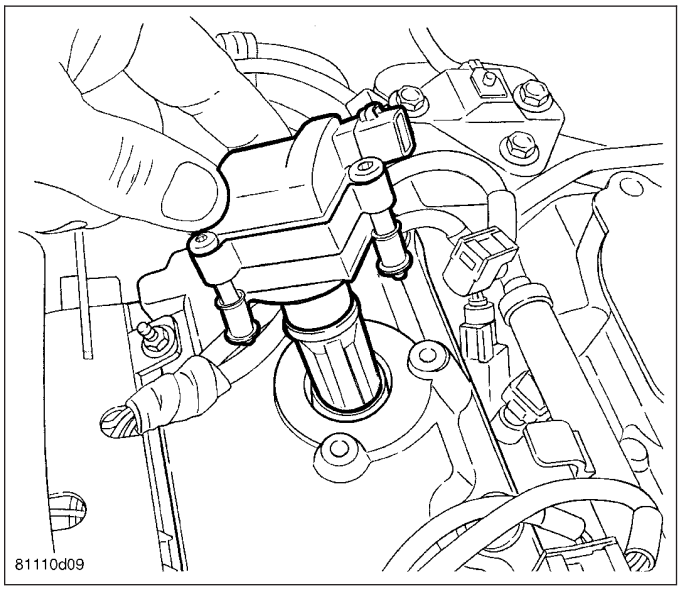

4. Install the intake manifold, (Refer to 9 - ENGINE/ MANIFOLDS/INTAKE MANIFOLD - INSTALLATION)
5. Connect negative battery cable.

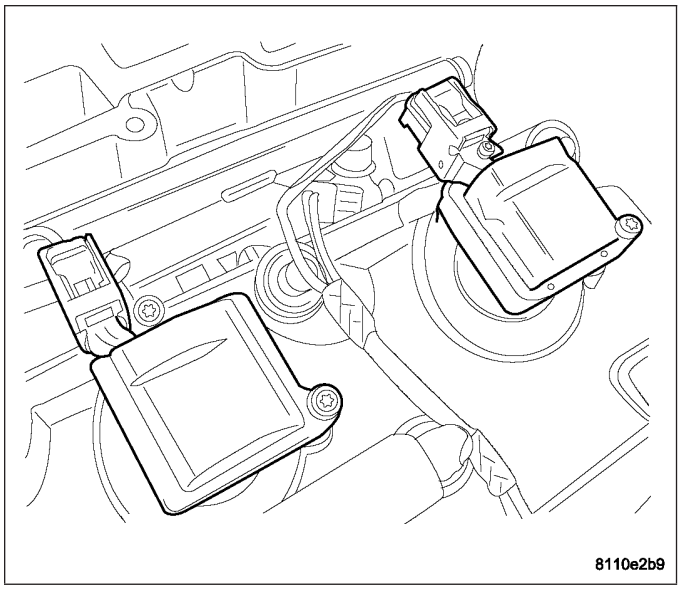

3.5L

On 3.5L engines, it is necessary to tighten the screws by alternating back and forth. Do not lose the spacers under the coil when installing ignition coils.

1. Install ignition coil assembly to spark plug.
2. Install coil screws and tighten 3.5L engines to 6.7 N·m (60 in. lbs.).
3. Connect the electrical connector and lock.

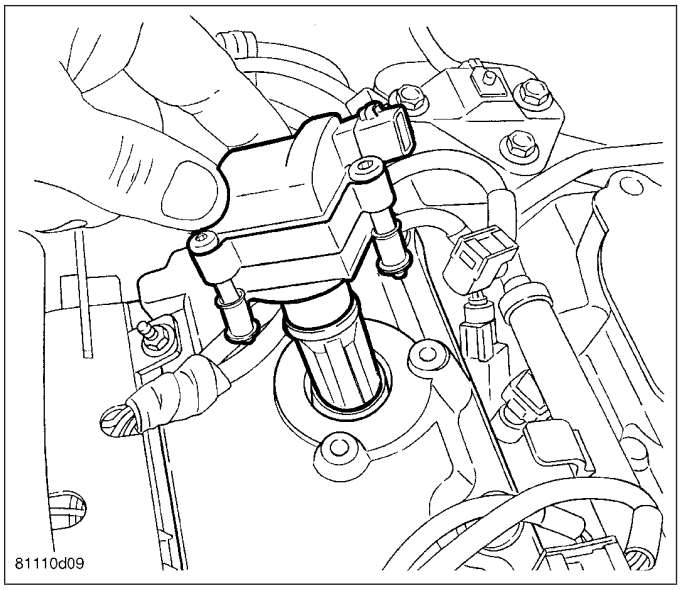

4. Install the intake manifold, (Refer to 9 - ENGINE/ MANIFOLDS/INTAKE MANIFOLD - INSTALLATION)
5. Connect negative battery cable.

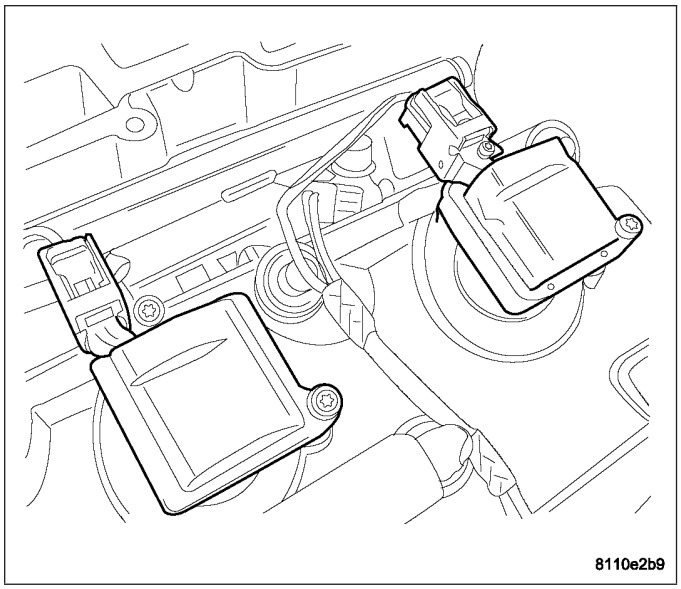

5.7/6.1L

1. Before installing coil(s), apply dielectric grease to inside of spark plug boots (1).

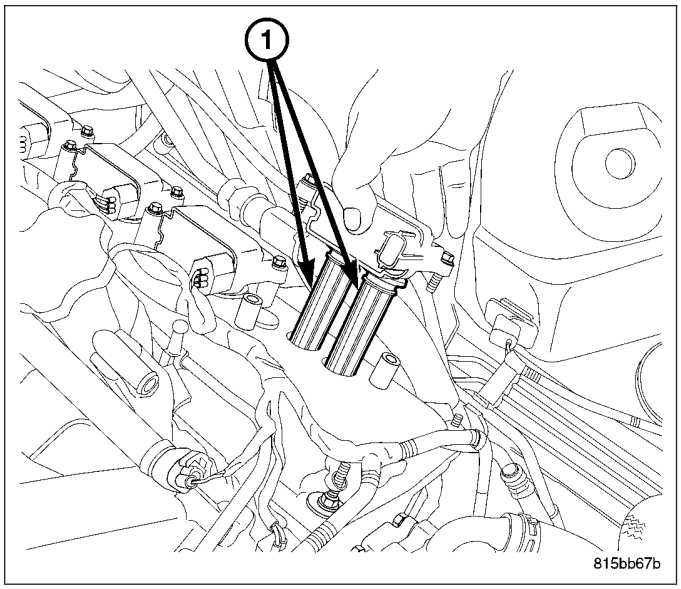

2. Position ignition coil into valve cover and push both spark plug boots onto each spark plug.
3. Install two coil mounting bolts (3) and tighten to 12 N·m (105 in. lbs.).
4. Connect electrical connector (1) to coil and lock connector.

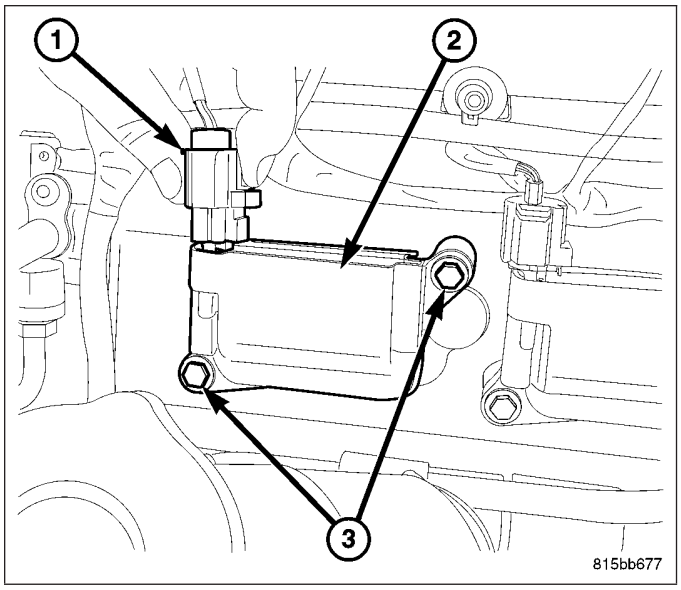

CAPACITOR-IGNITION COIL

REMOVAL

2.7/3.5L

1. Remove the negative battery cable.
2. Disconnect the electrical connector.
3. Remove nut and capacitor.

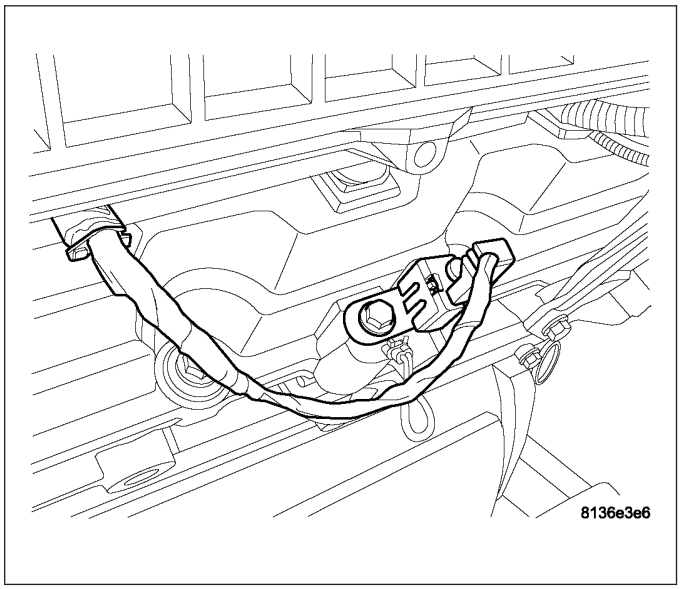

6.1L

The ignition capacitor (1) is attached to the left-rear corner of the intake manifold (3).

1. Remove electrical connector (2).
2. Remove mounting nut (4) and remove capacitor.

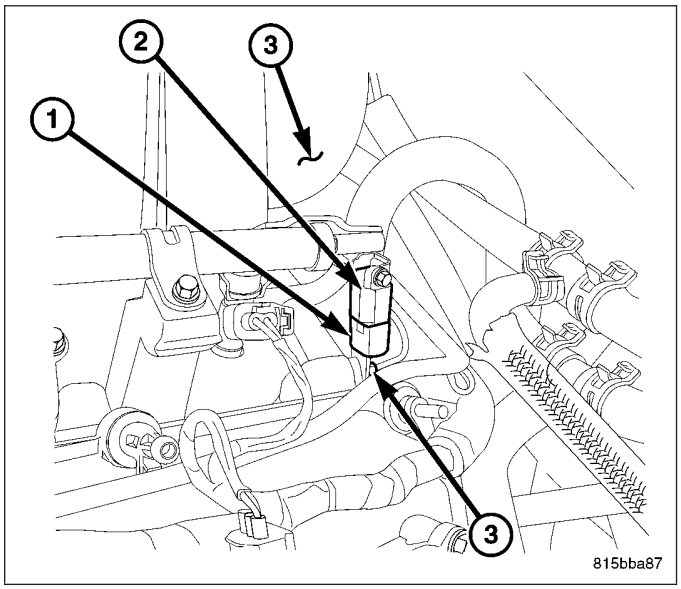

INSTALLATION

2.7/3.5L

1. Install capacitor and tighten nut.
2. Attach electrical connector to capacitor.
3. Install the negative battery cable.

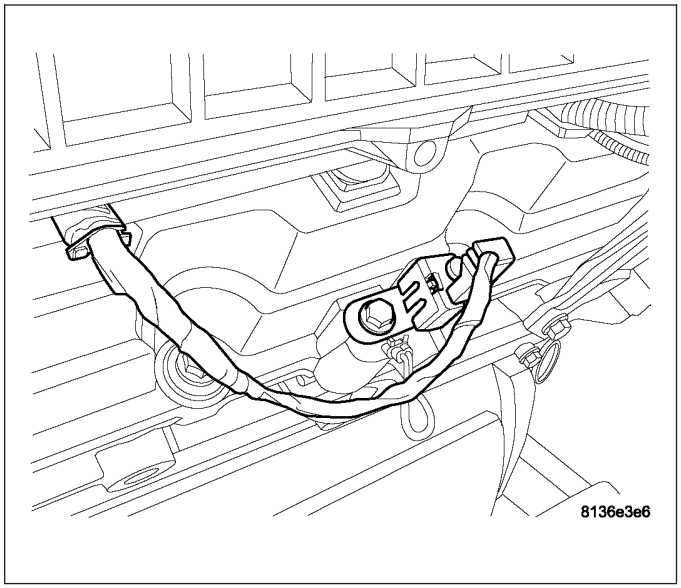

6.1L

1. Install sensor (1) to mounting stud.
2. Install and tighten nut (4).
3. Install electrical connector (2).

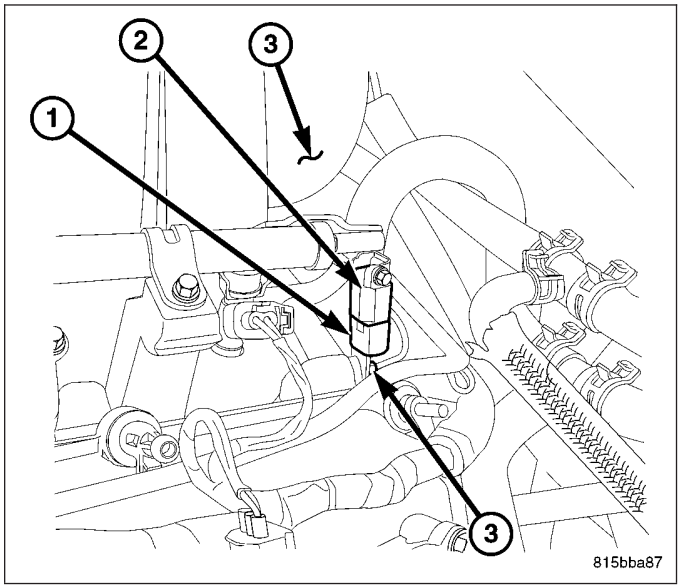

SWITCH-IGNITION

REMOVAL

The ignition switch attaches to the lock cylinder housing on the end opposite the lock cylinder. For ignition switch terminal and circuit identification, refer to the Wiring Diagrams section.

1. Disconnect negative cable from battery.
2. Remove the Instrument Panel Center Bezel, (Refer to 23 - BODY/INSTRUMENT PANEL/CLUSTER BEZEL - REMOVAL) Chrysler and (Refer to 23 - BODY/INSTRUMENT PANEL/CLUSTER BEZEL - REMOVAL) Dodge.

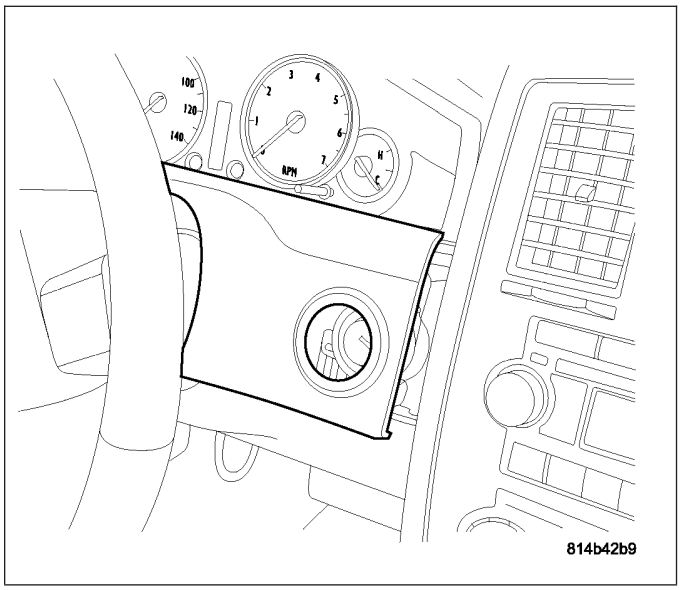

3. Bezel cluster removed.

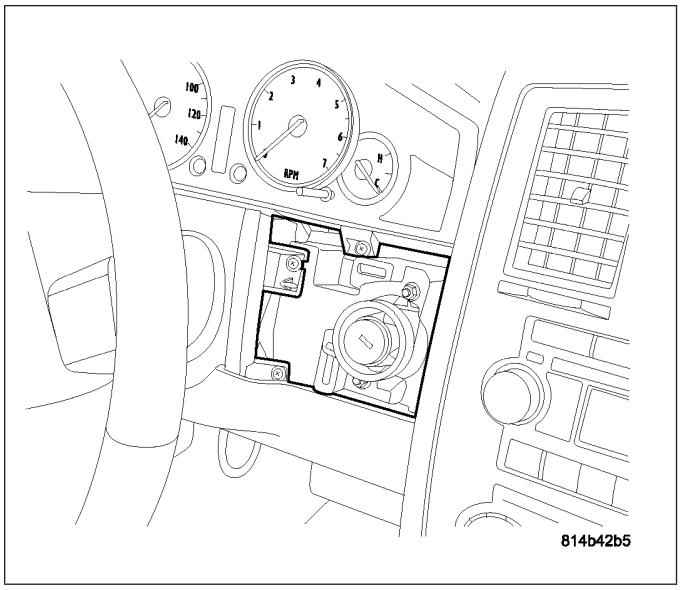

4. Remove side trim panel to steering column cover.

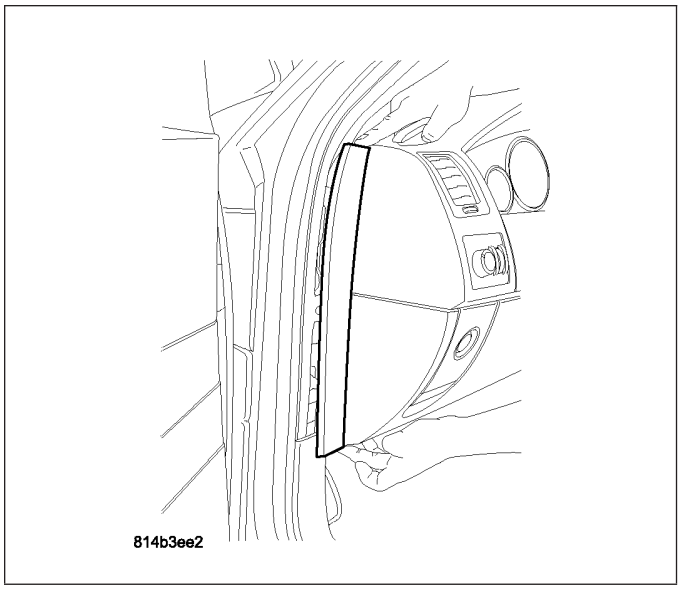

5. Remove the screws that secure the steering column cover to the instrument panel and relocate panel.
6. Pull the steering column cover rearward at the top and right side of the cover to release the snap retainers from the instrument panel.
7. Remove the screws that secure the instrument panel steering column cover reinforcement to bracket and remove reinforcement from the vehicle.

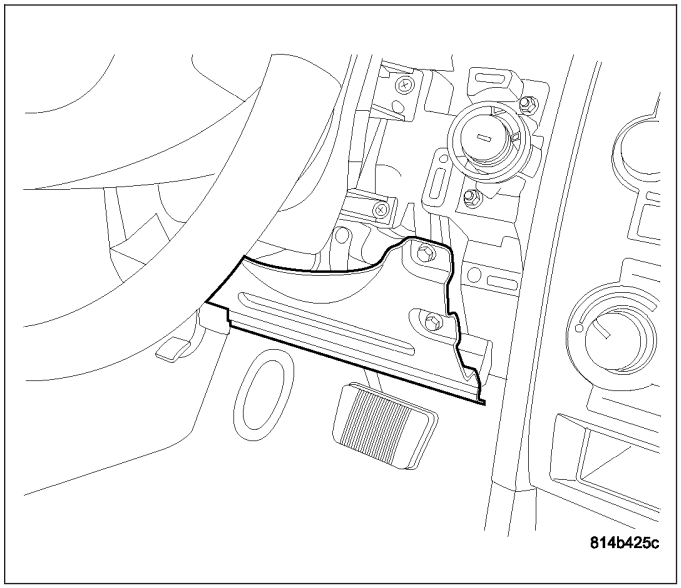

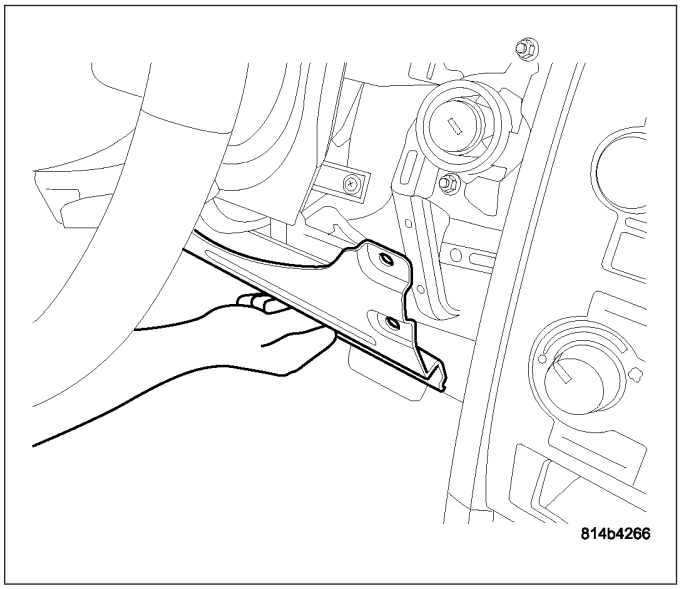

8. Remove the 2 front mounting nuts.

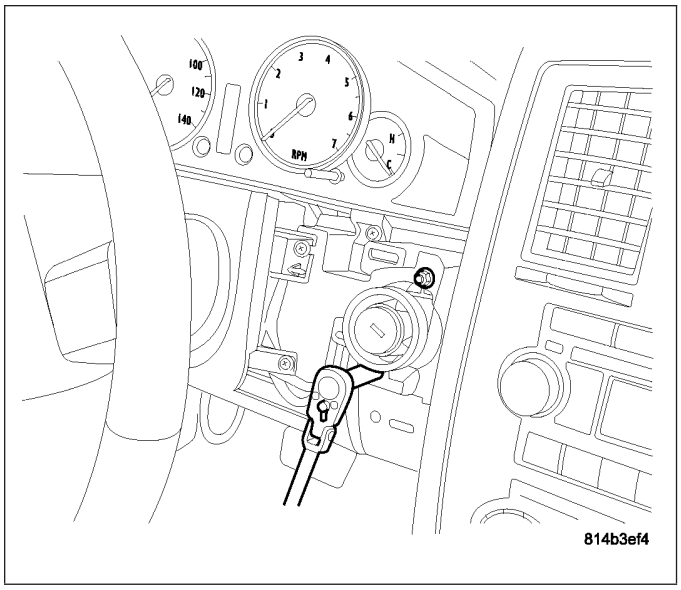

9. Remove the lower mounting nut.

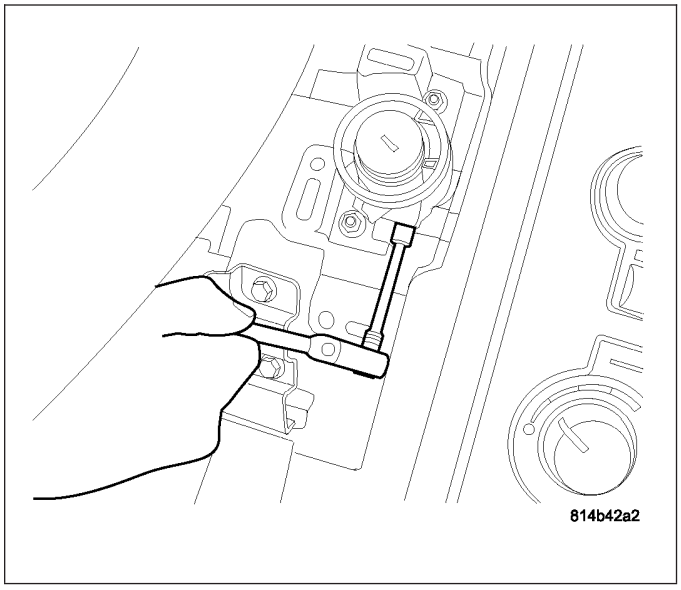

10. Slide the assembly rearward into the instrument panel and down to gain access to switch.

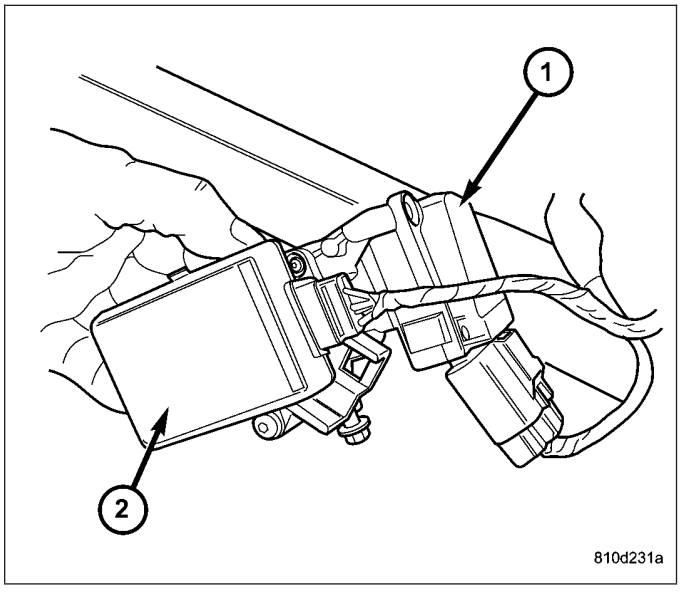

11. Disconnect the electrical connector from the ignition Switch and SKREEM Module.

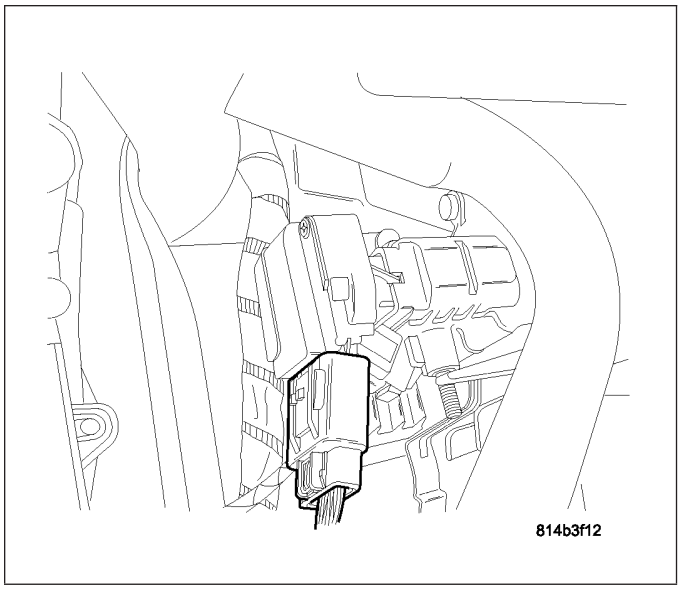

12. Remove the interlock cable by depressing the locking tab and pulling straight out.

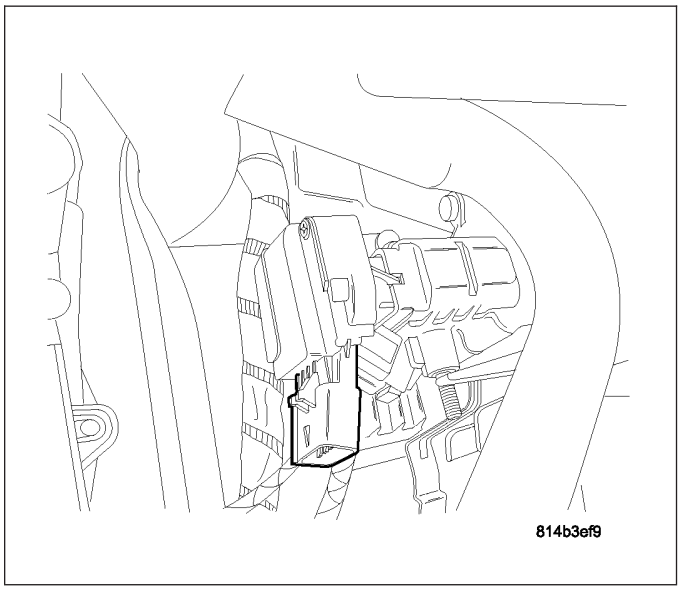

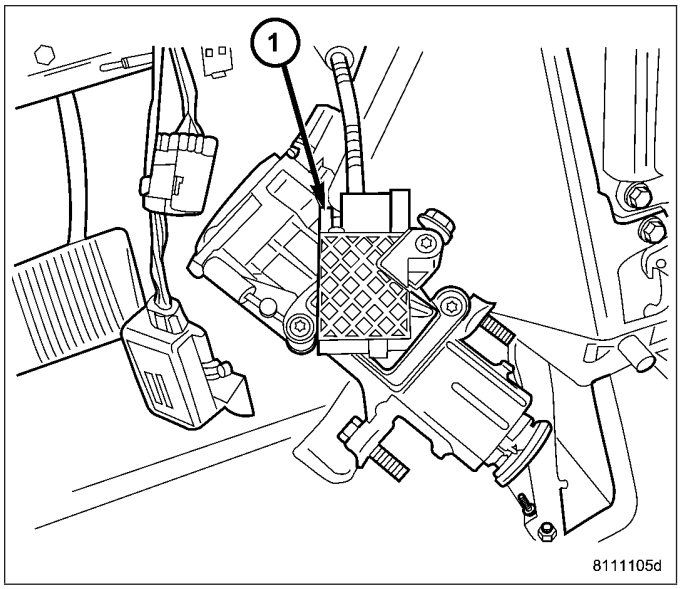

13. Interlocking cable removed.

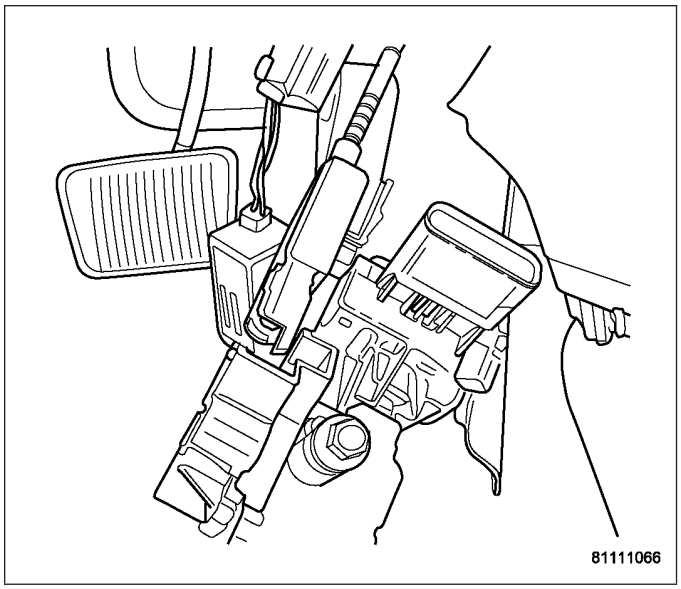

14. Remove ignition switch mounting screw.
15. Squeeze the 2 locking tabs to remove ignition switch from the lockhousing.

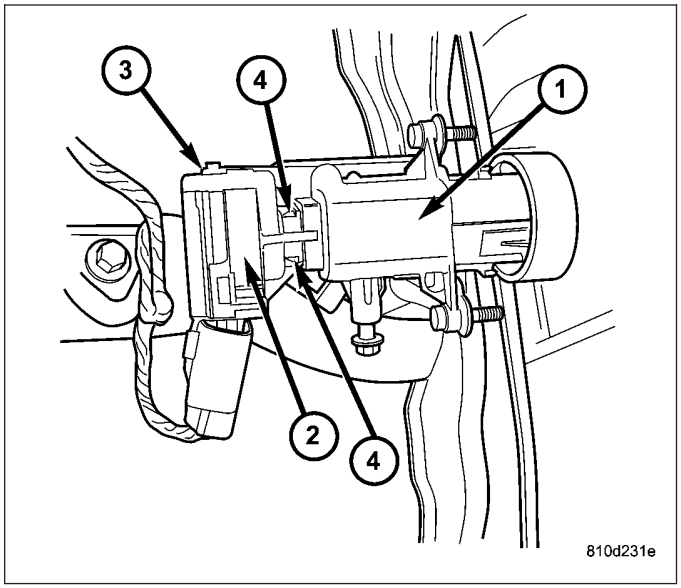

1 - Ignition Key Housing
2 - Ignition Switch
3 - Ignition Switch Mounting Screws
4 - Locking Tabs

INSTALLATION

The ignition switch attaches to the lock cylinder housing on the end opposite the lock cylinder. For ignition switch terminal and circuit identification, refer to the Wiring Diagrams section.

1. A tab on the ignition switch indexes to a notch in the lock cylinder housing. Also, a slot in the end of the ignition switch fits over the shaft in the end of the lock cylinder housing. Use the ignition key to rotate the lock cylinder to align the ignition switch with lock cylinder housing. Insert ignition switch into lock housing until locking tabs are seated into openings on lock housing.
2. Install ignition switch mounting screw.

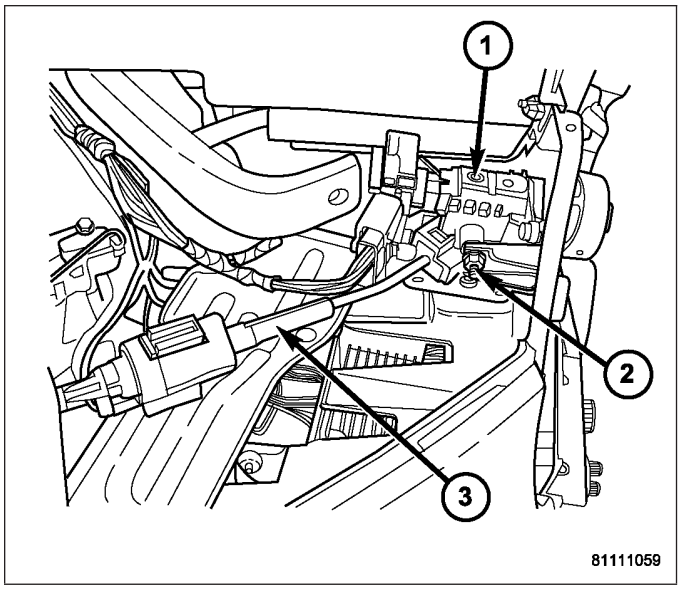

3. Install the interlock cable into the switch assembly.

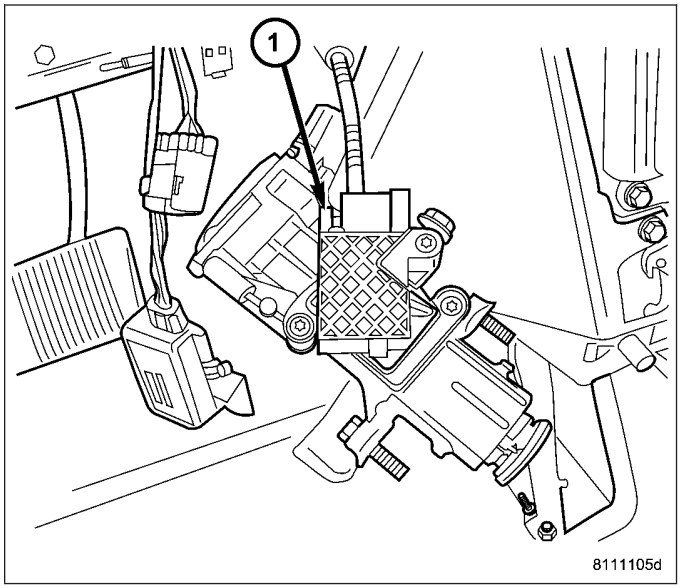

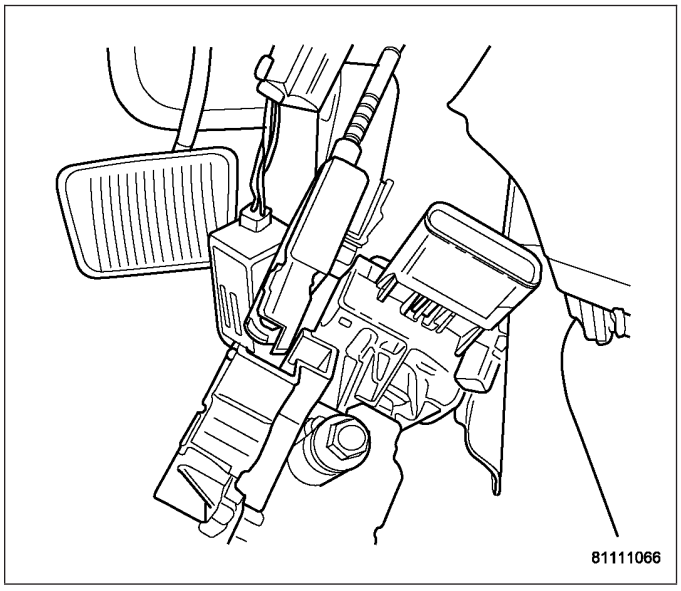

4. Attach electrical connector to SKREEM Module.

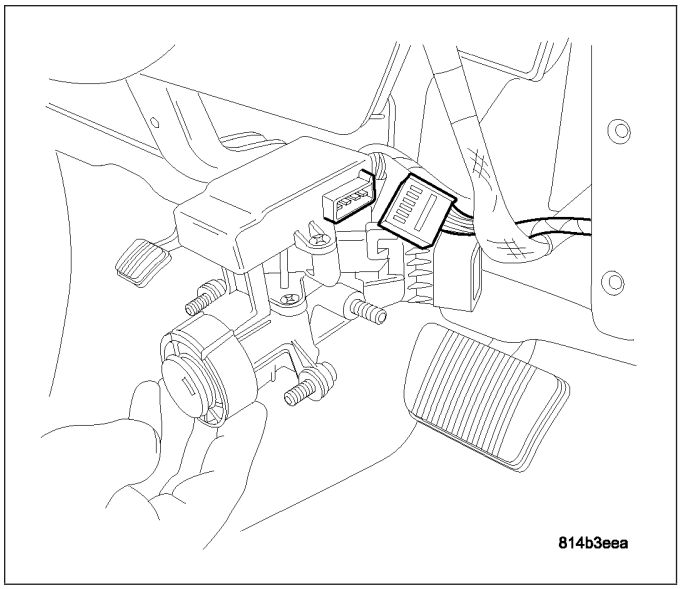

5. Install switch assembly into Instrument Panel.

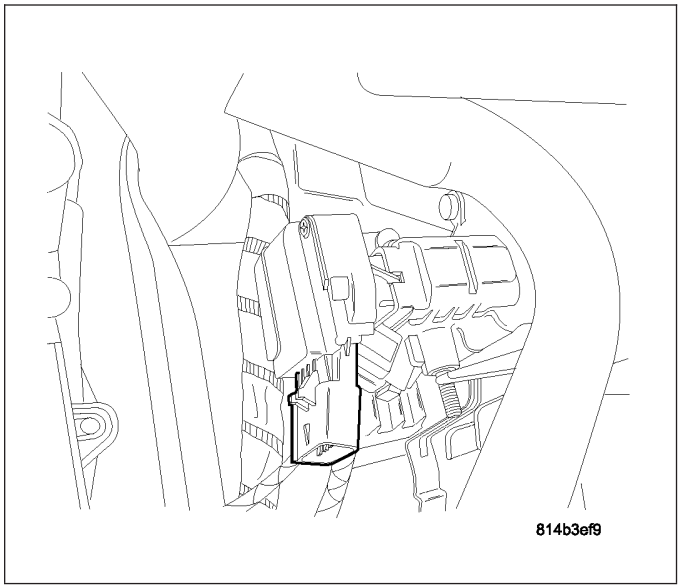

6. Attach electrical connector to ignition switch.

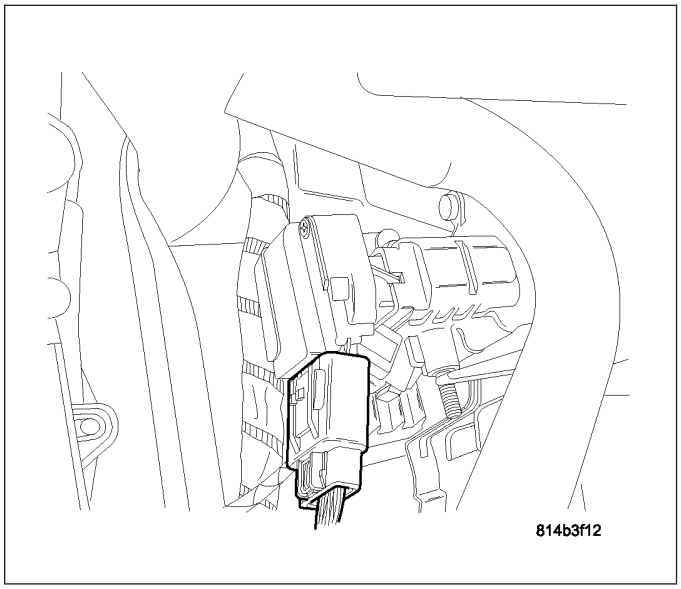

7. Tighten the 2 mounting nuts.

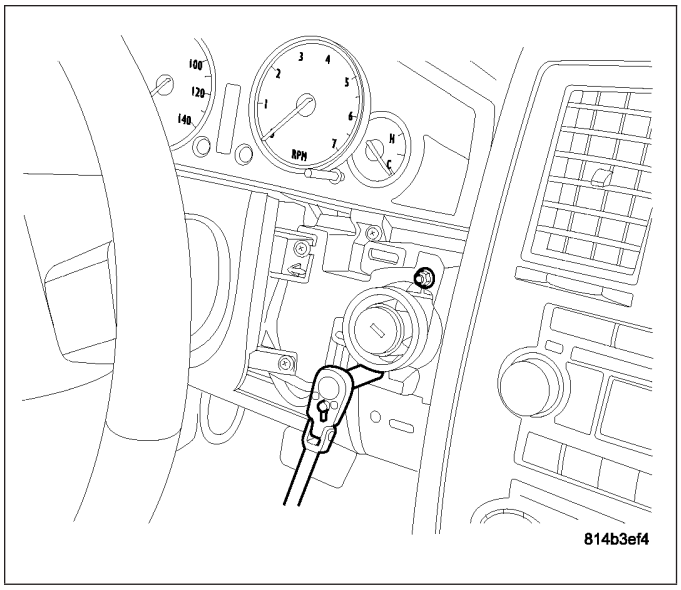

8. Tighten the lower mounting nut.

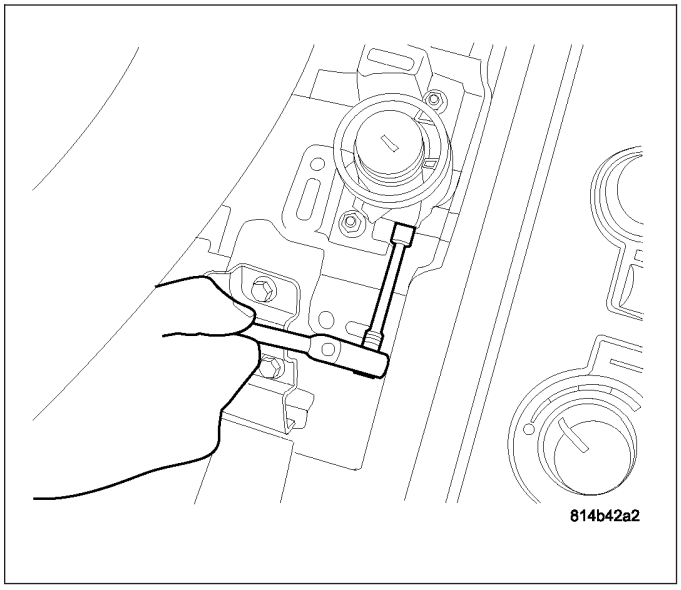

9. Install steering column reinforcement.

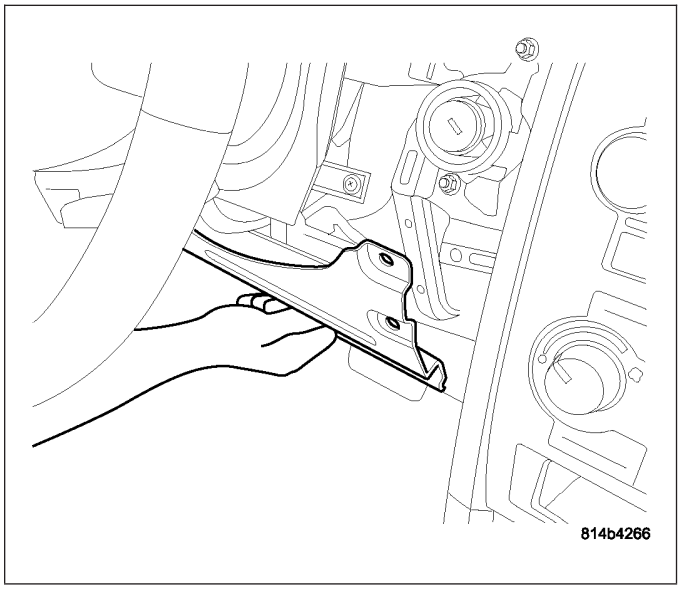

10. Steering column reinforcement installed.

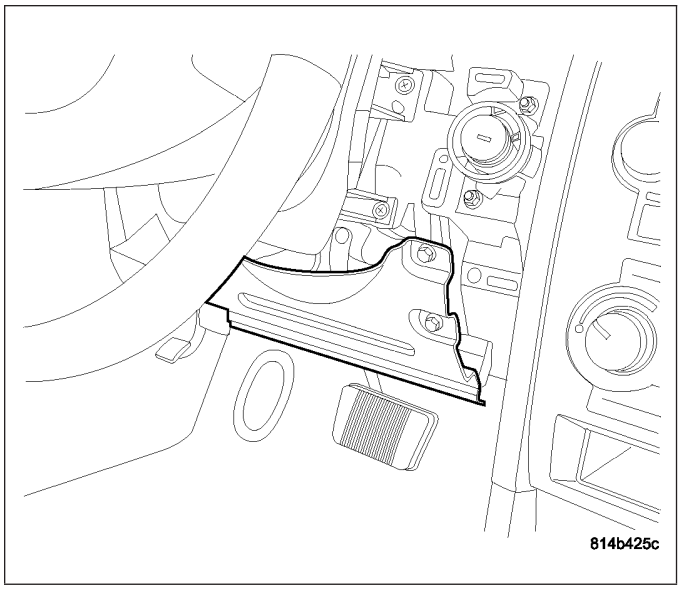

11. Install the Steering column reinforcement cover.
12. Install trim panel end.

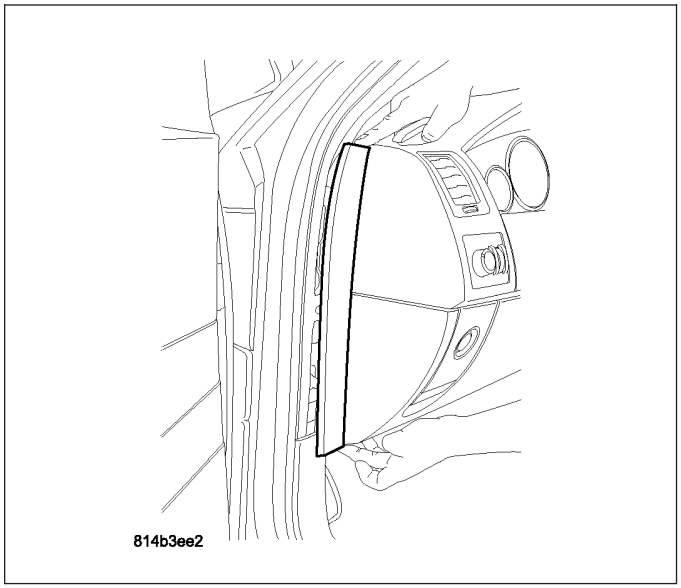

13. Install the Bezel cluster.

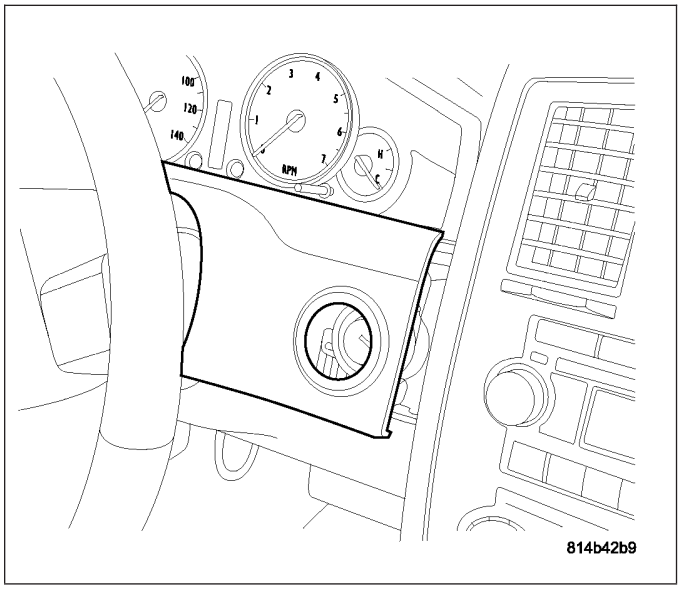

14. Install the ignition switch bezel ring.
15. Connect the negative battery cable.

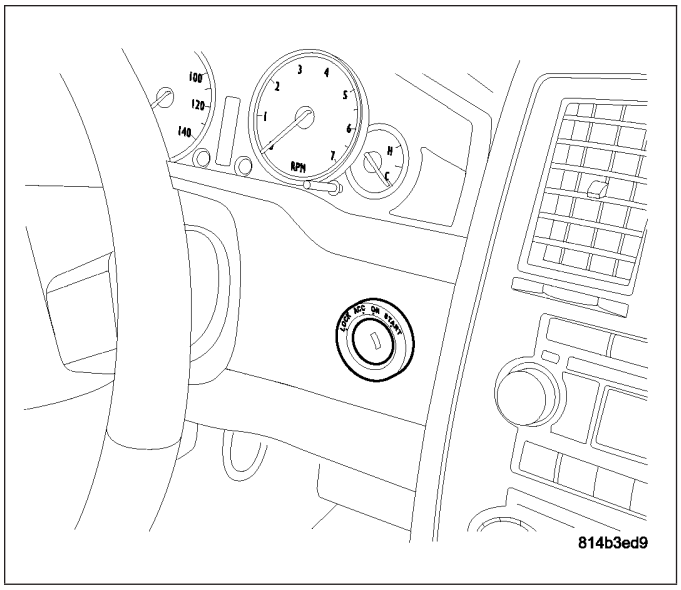

CYLINDER-IGNITION KEY AND LOCK

REMOVAL

1. Disconnect the negative battery cable.
2. Remove bezel ignition switch ring.
3. Pull center console bezel loose from instrument panel.
4. Insert ignition key and turn to the “ON” position.
5. Depress the locking tab on the ignition switch housing.
6. Pull the key cylinder from the ignition switch housing.

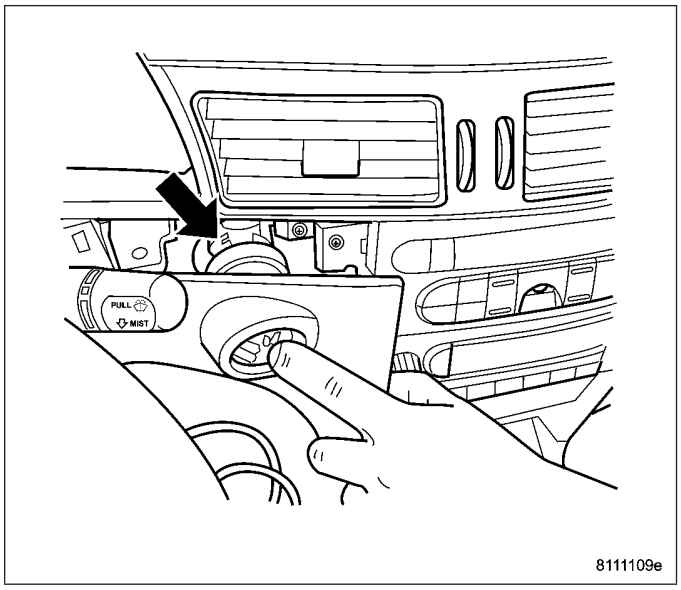

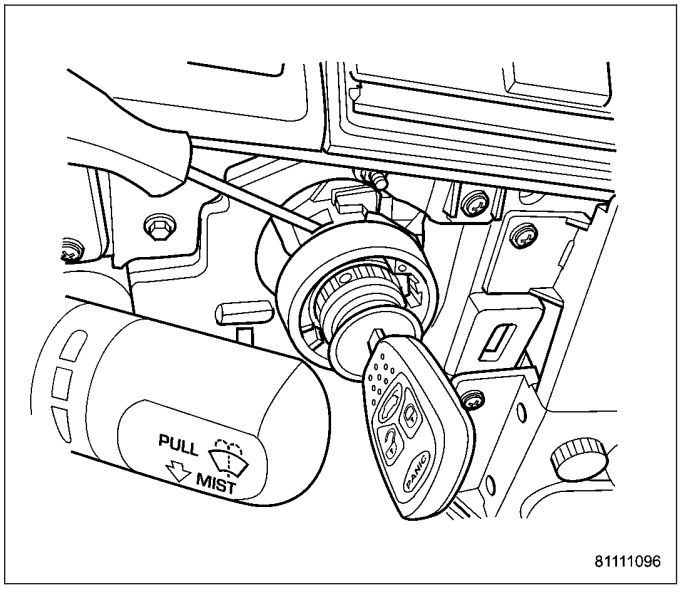

INSTALLATION

1. Install key in lock cylinder. Turn key to “ON” position (retaining tab on lock cylinder can be depressed).
2. The shaft at the end of the lock cylinder aligns with the socket in the end of the housing. To align the socket with the lock cylinder, ensure the socket is in the “ON” position.
3. Align the lock cylinder with the grooves in the housing. Slide the lock cylinder into the housing until the tab sticks through the opening in the housing.

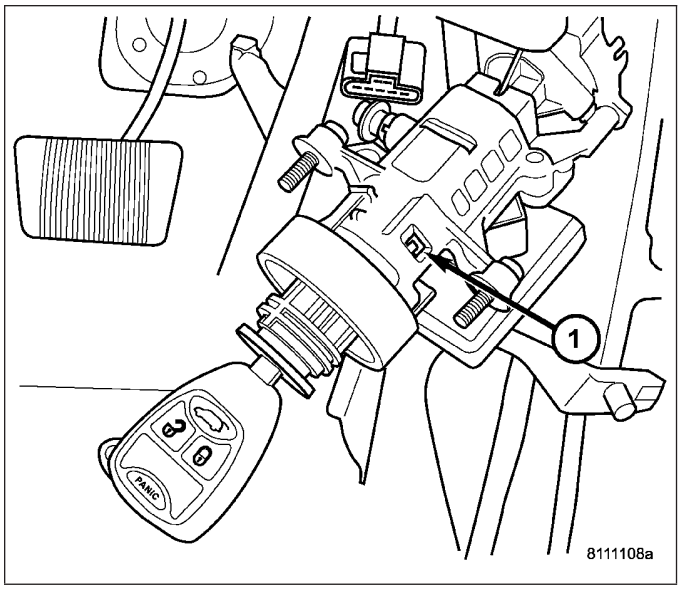

4. Turn key to Off position and remove key.

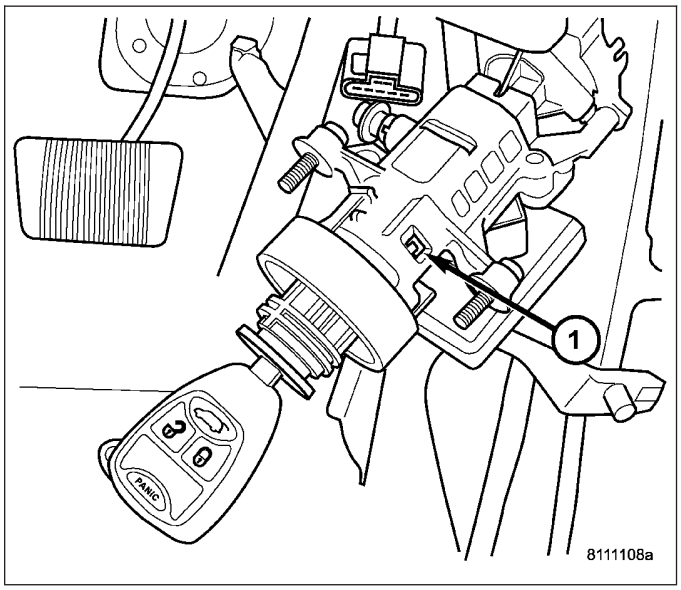

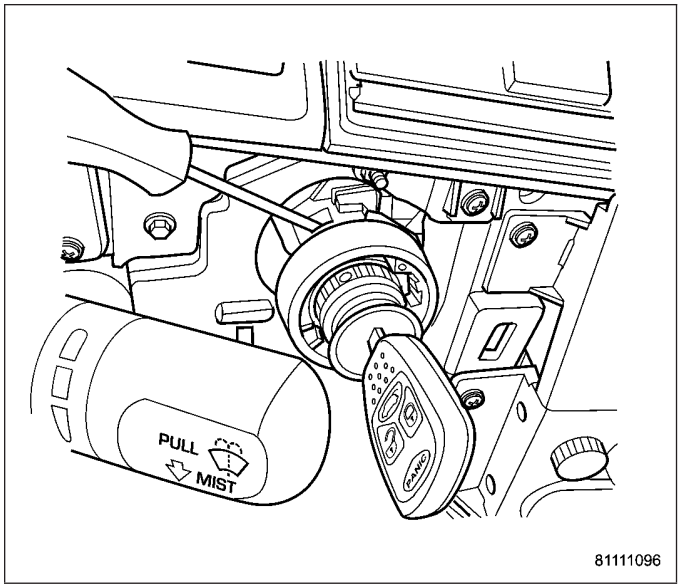

5. Install center console bezel to instrument panel.
6. Install bezel ignition switch ring.
7. Connect the negative battery cable.

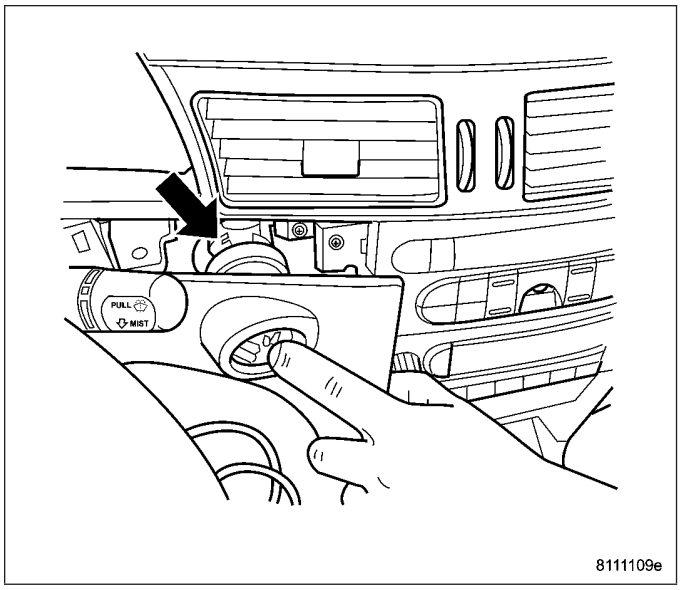

SENSOR-KNOCK

REMOVAL

2.7L

1. Disconnect negative battery cable.

The sensors screws into the cylinder block, directly below the intake manifold.

2. Remove intake manifold, (Refer to 9 - ENGINE/MANIFOLDS/INTAKE MANIFOLD - REMOVAL)
3. Remove the passenger side cylinder head, refer to the Engine section (Refer to 9 - ENGINE/CYLINDER HEAD - REMOVAL).
4. Disconnect electrical connector from knock sensor.
5. Use a crows foot socket to remove the knock sensors.

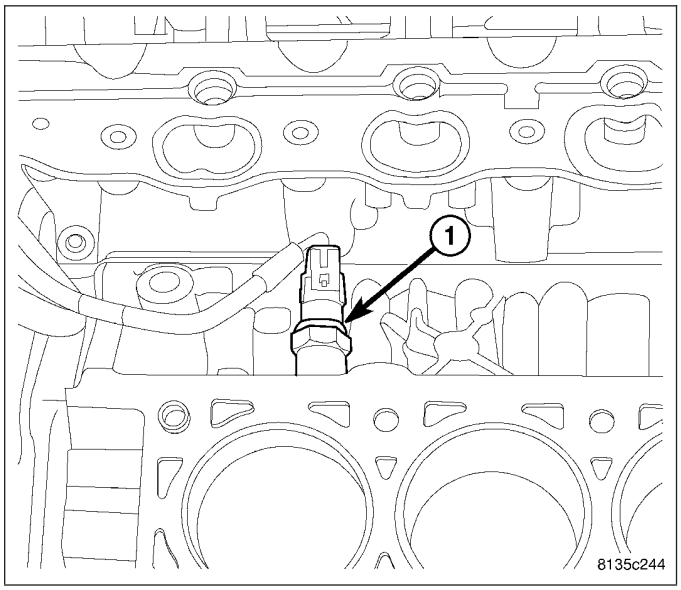

3.5L

1. Disconnect the negative battery cable.
2. Remove the upper intake manifold, (Refer to 9 - ENGINE/MANIFOLDS/INTAKE MANIFOLD - REMOVAL)
3. Disconnect the electrical connector.

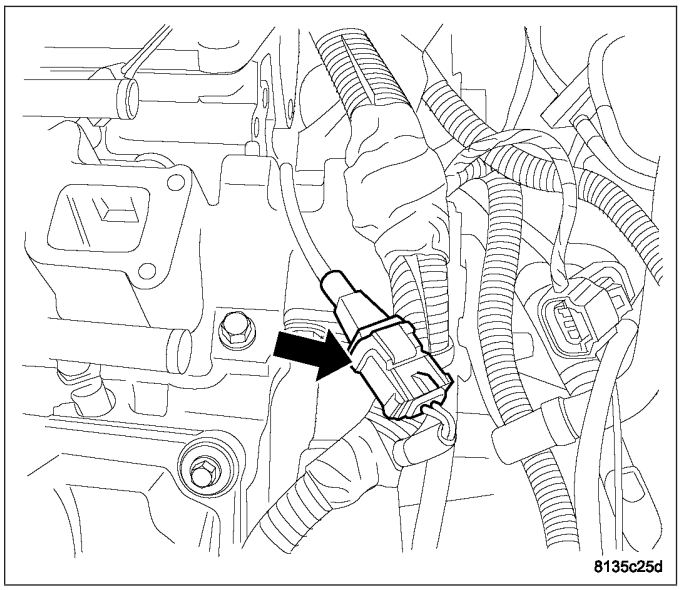

4. Remove the knock sensor.

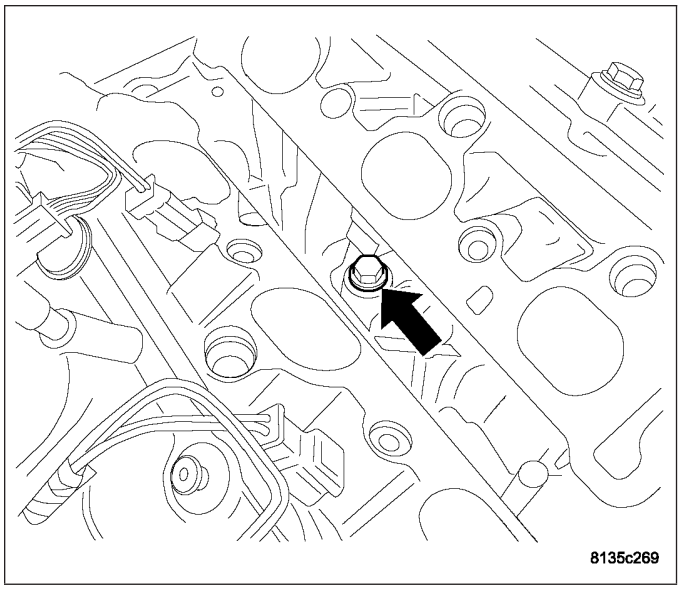

5.7L

Two sensors (1) are used. Each sensor is bolted to the outside of cylinder block below the exhaust manifold (3).

1. Raise vehicle.
2. Disconnect knock sensor electrical connector (5).
3. Remove sensor mounting bolt (2). Note foam strip on bolt threads. This foam is used only to retain the bolts to sensors for plant assembly. It is not used as a sealant. Do not apply any adhesive, sealant or thread locking compound to these bolts.
4. Remove sensor from engine.

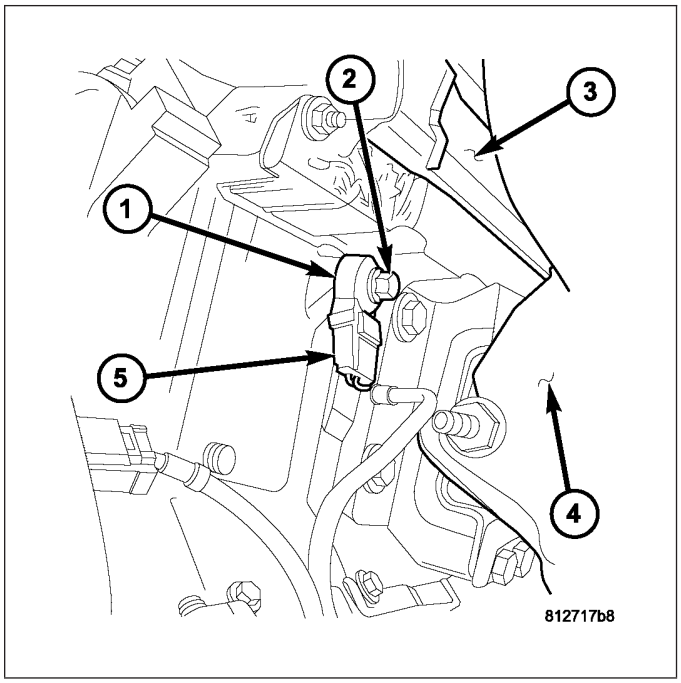

6.1L

Two knock sensors (1) are used. Each sensor is bolted to the outside of cylinder block below the exhaust manifold (3).

1. Raise vehicle.

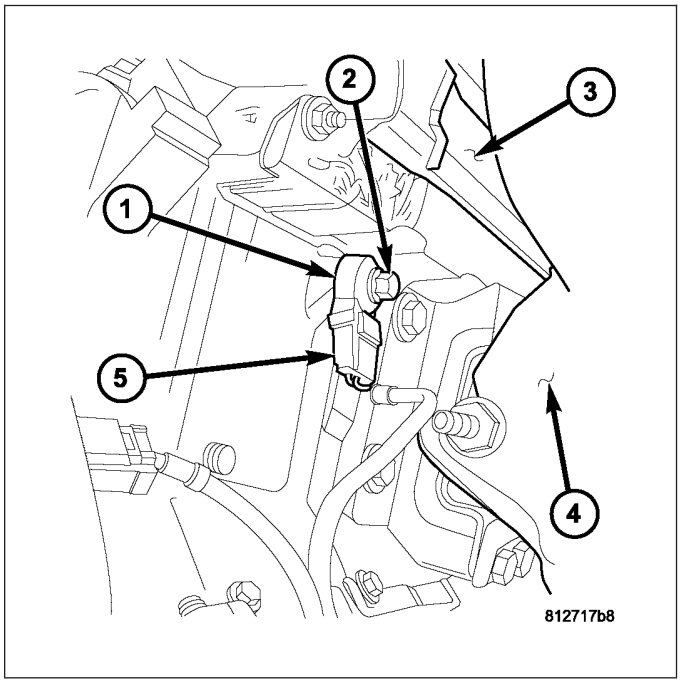

2. Remove heat shield (1) from knock sensor. Shield snaps to sensor.

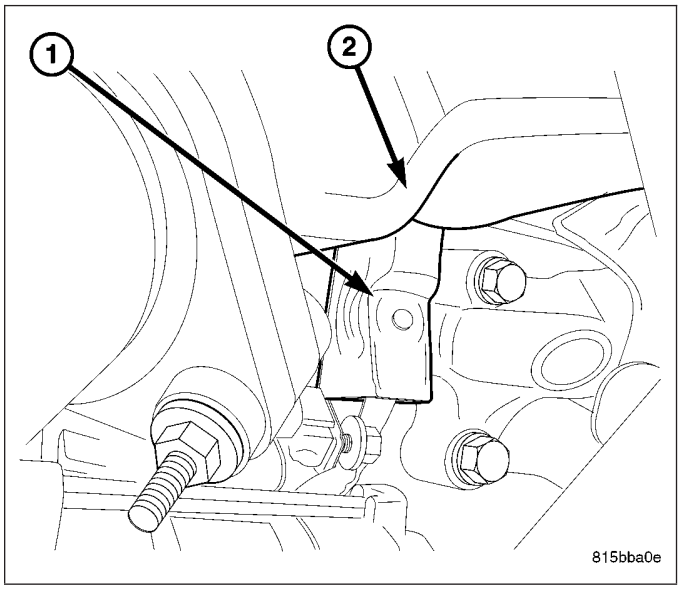

3. Disconnect knock sensor electrical connector (5).
4. Remove sensor mounting bolt (2). Note foam strip on bolt threads. This foam is used only to retain the bolts to sensors for plant assembly. It is not used as a sealant. Do not apply any adhesive, sealant or thread locking compound to these bolts.
5. Remove sensor from engine.

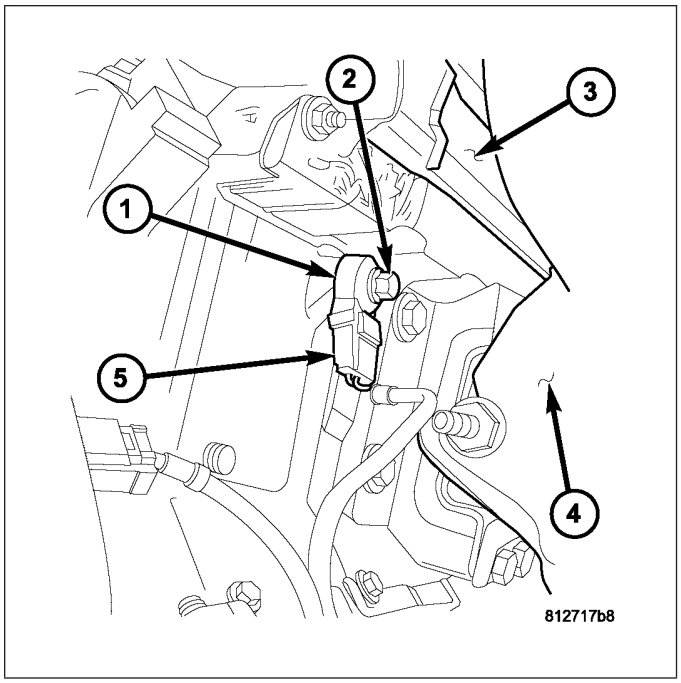

INSTALLATION

2.7L

The sensors screws into the cylinder block, directly below the intake manifold.

1. Install knock sensor. Tighten knock sensor to 10 N·m (7 ft. lbs.) torque. **Over or under tightening effects knock sensor performance resulting in possible improper spark control.**
2. Attach electrical connector to knock sensor.
3. Install the passenger side cylinder head, (Refer to 9 - ENGINE/CYLINDER HEAD - INSTALLATION)
4. Install intake manifold, (Refer to 9 - ENGINE/MANIFOLDS/INTAKE MANIFOLD - INSTALLATION)
5. connect negative battery cable.

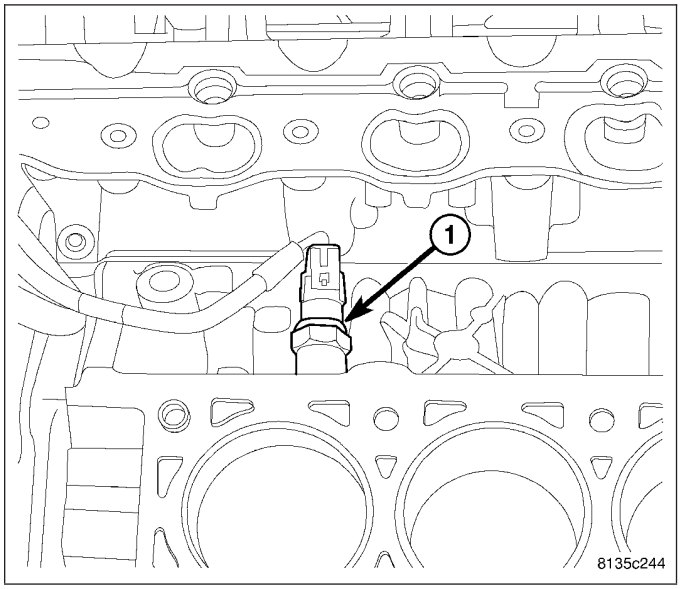

3.5L

1. Install knock sensor. Tighten knock sensor to 20 N·m (15.2 in. lbs.) torque. **Over or under tightening effects knock sensor performance, possibly causing improper spark control.**

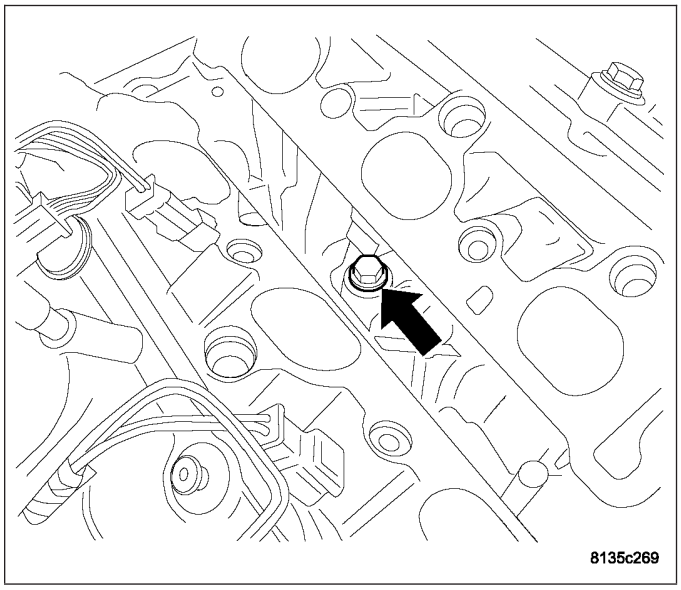

2. Route the knock sensor wire in the proper location.
3. Install the intake manifold, (Refer to 9 - ENGINE/ MANIFOLDS/INTAKE MANIFOLD - INSTALLATION)

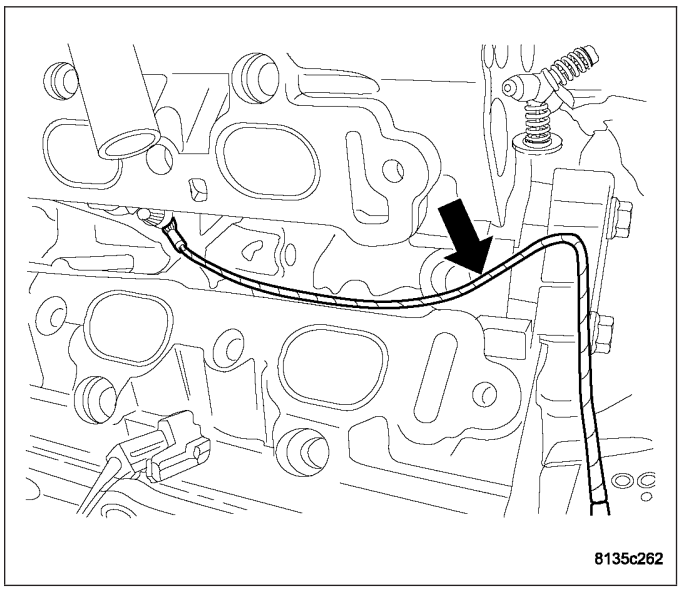

4. Connect electrical connector.
5. Connect negative battery cable.

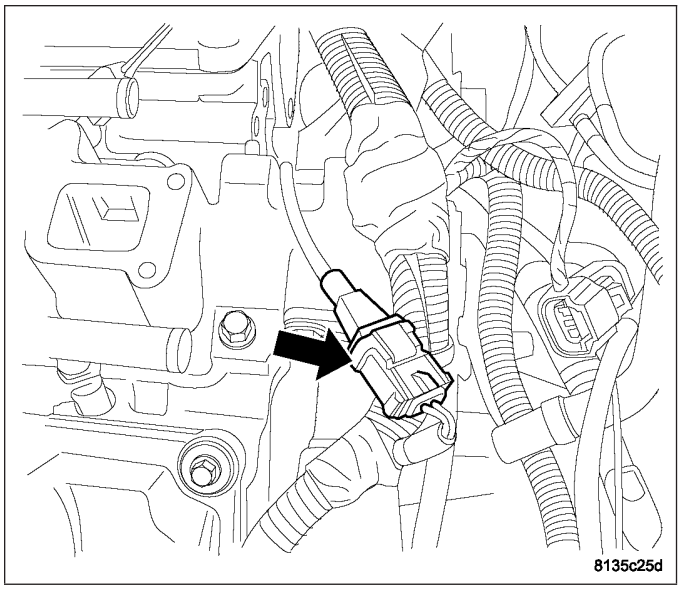

5.7L

1. Thoroughly clean knock sensor mounting hole.
2. Install sensor (1) into cylinder block.

NOTE: Over or under tightening the sensor mounting bolts will affect knock sensor performance, possibly causing improper spark control. Always use the specified torque when installing the knock sensors. The torque for the knock senor bolt is relatively light for an 8mm bolt.

NOTE: Note foam strip on bolt threads. This foam is used only to retain the bolts to sensors for plant assembly. It is not used as a sealant. Do not apply any adhesive, sealant or thread locking compound to these bolts.

3. Install and tighten mounting bolt (2). Refer to torque specification.
4. Install electrical connector to sensor.

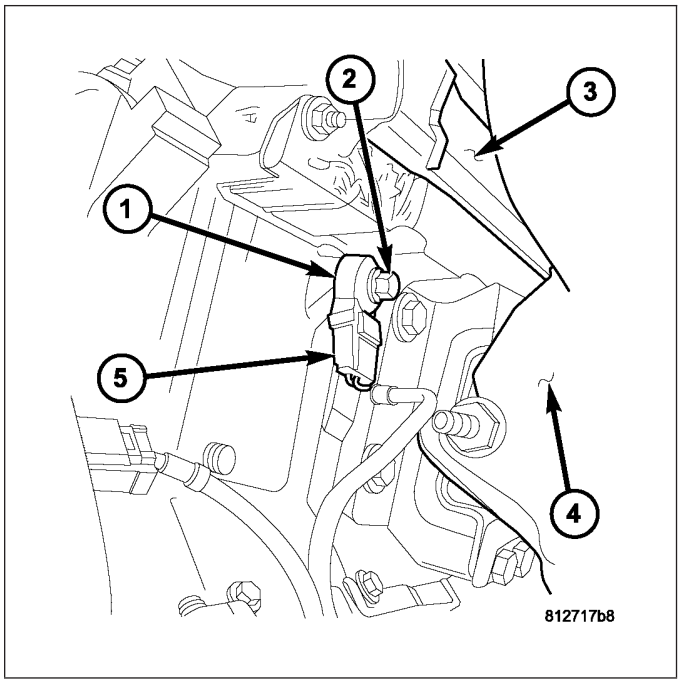

6.1L

1. Thoroughly clean knock sensor mounting hole.
2. Install sensor (1) onto cylinder block.

NOTE: Over or under tightening the sensor mounting bolts will affect knock sensor performance, possibly causing improper spark control. Always use the specified torque when installing the knock sensors. The torque for the knock senor bolt is relatively light for an 8mm bolt.

NOTE: Note foam strip on bolt threads. This foam is used only to retain the bolts to sensors for plant assembly. It is not used as a sealant. Do not apply any adhesive, sealant or thread locking compound to these bolts.

3. Install and tighten mounting bolt (2). Refer to torque specification.
4. Install electrical connector (5) to sensor.

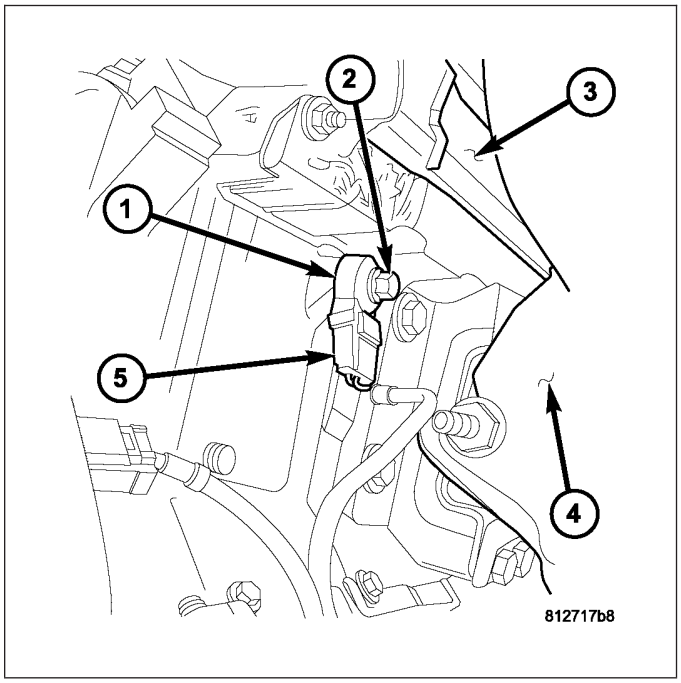

5. Install heat shield (1) to sensor (shield snaps on).

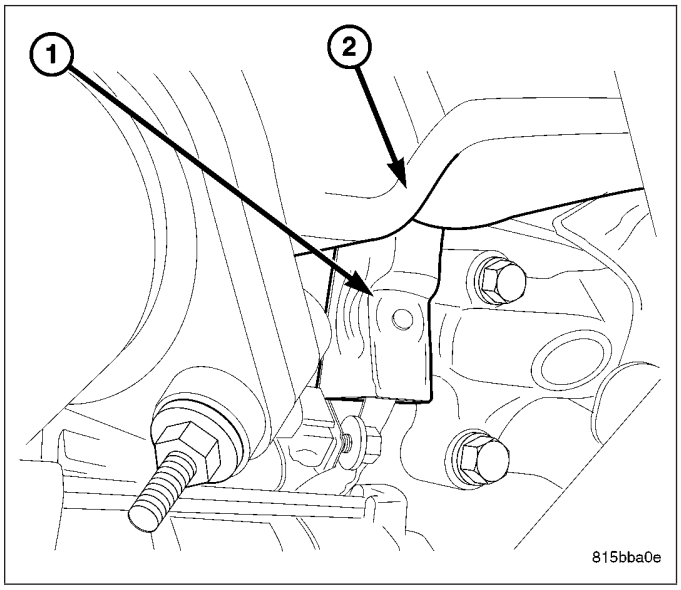

PLUG-GLOW

DESCRIPTION

Glow plugs are used to help start a cold or cool engine. The glow plugs will heat up and glow to heat the combustion chamber of each cylinder. An individual glow plug is used for each cylinder. Each glow plug is threaded into the side of the cylinder head below the cylinder head cover.

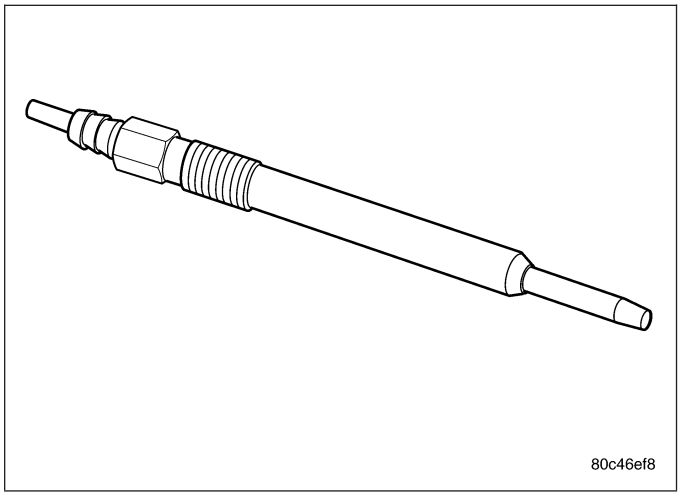

OPERATION

The glow plugs are used to preheat the combustion chambers in order to achieve the ignition temperature required for the fuel-air mixture.

The glow plug consists of a housing with a female thread and an interference-fit rod. The heating element is integrated in the glow rod. It consists of a heating winding and a control winding connected in series.

When the glow plug system is switched “ON”, a current of about 30 ampere flows to each glow plug. The heating winding heats the glow plug. The control winding increases its resistance as the temperature rises and limits the current to approximately 15-25 ampere. The glow plug is protected this way from overloads.

REMOVAL

CAUTION: Engine temperature must be at least 90°C (194°F) before removing glow plugs. If cylinder head is already removed, warm cylinder head to 90°C (194°F) before removing glow plugs.

1. Disconnect negative battery cable.
2. Remove engine cover (Refer to 9 - ENGINE - REMOVAL).
3. Disconnect glow plug electrical connector (1).

WARNING: Risk of injury to skin and eyes from handling hot or glowing objects. Wear protective gloves, clothing and eye wear.

4. Remove glow plugs and clean glow plug bay.

INSTALLATION

1. Clean glow plug bay and install glow plug. Tighten glow plugs to 12 N·m (106 lbs. in.).
2. Connect glow plug electrical connector (1).
3. Install engine cover (Refer to 9 - ENGINE - INSTALLATION).
4. Connect negative battery cable.

RELAY-GLOW PLUG

DESCRIPTION

There are two glow plug relays. These relays are located in the Power Distribution Center (PDC) in the engine compartment.

OPERATION

When the ignition (key) switch is place in the ON position, a signal is sent to the ECM relating current engine coolant temperature. This signal is sent from the engine coolant temperature sensor.

After receiving this signal, the ECM will determine if, when and for how long of a period the glow plug relays should be activated. This is done before, during and after the engine is started. Whenever the glow plug relays are activated, it will control the 12 volt 100 amp circuit for the operation of the four glow plugs. Each relay control two glow plugs.

The Glow Plug lamp is tied to this circuit. Lamp operation is also controlled by the ECM.

With a cold engine, the glow plug relays and glow plugs may be activated for a maximum time of 200 seconds. Refer to the following Glow Plug Control chart for a temperature/time comparison of the glow plug relay operation.

In this chart, Pre-Heat and Post-Heat times are mentioned. Pre-Heat is the amount of time the glow plug relay control circuit is activated when the ignition (key) is switched ON, without the engine running. Post-Heat is the amount of time the glow plug relay control circuit is activated after the engine is operated. The Glow Plug lamp will not be activated during the post-heat cycle.

Engine Coolant Temperature ″Key ON″	Wait-To Start Lamp ″ON″ (Seconds)	Pre-Heat Cycle (Glow Plugs On Seconds)	Post-Heat Cycle (Seconds)
-30C	20 SEC.	35 SEC.	200 SEC.
-10C	8 SEC.	23 SEC.	180 SEC.
+10C	6 SEC.	21 SEC.	160 SEC.
+30C	5 SEC.	20 SEC.	140 SEC.
+40C	4 SEC.	19 SEC.	70 SEC.
+70C	1 SEC.	16 SEC.	20 SEC.

DIAGNOSIS AND TESTING - GLOW PLUG RELAYS

Refer to the appropriate Diesel Powertrain Diagnosis Manual for information on diagnosing the glow plug relays.

PLUG-SPARK

DESCRIPTION - PLATINUM PLUGS

The V6 engines use platinum resistor spark plugs. They have resistance values of 6,000 to 20,000 ohms when checked with at least a 1000 volt tester. For spark plug identification and specifications, Refer to the Specifications section.

Do not use an ohm meter to check the resistance of the spark plugs. This will give an inaccurate reading.

When the spark plugs use a single or double platinum tips and they have a recommended service life of 100,000 miles for normal driving conditions per schedule A in this manual. The spark plugs have a recommended service life of 75,000 miles for severe driving conditions per schedule B in this manual. A thin platinum pad is welded to both or just the center electrode end(s). Extreme care must be used to prevent spark plug cross threading, mis-gapping and ceramic insulator damage during plug removal and installation.

CAUTION: Cleaning of the platinum plug may damage the platinum tip.

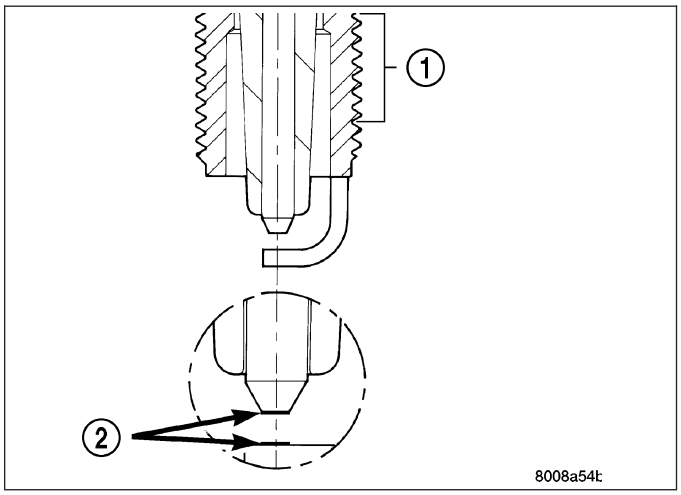

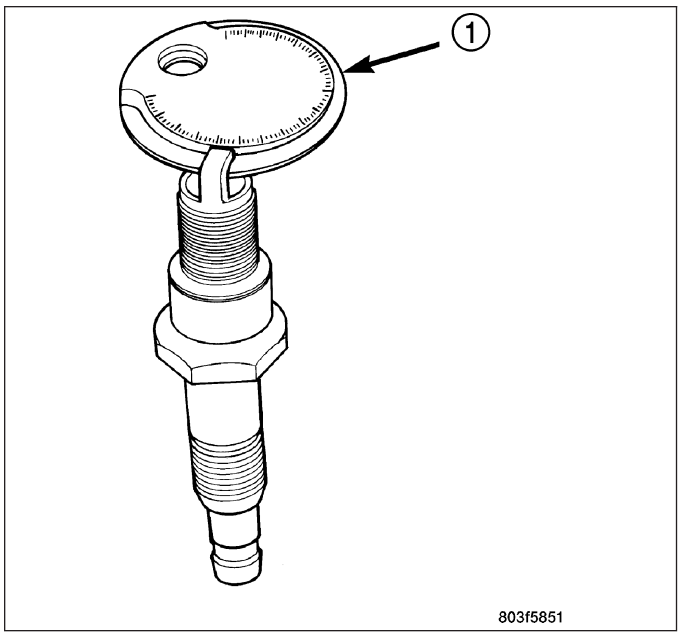

REMOVAL

2.7L

Always remove the ignition coil assembly by grasping at the spark plug boot, turning the assembly 1/2 turn and pulling straight back in a steady motion.

1. Disconnect the negative battery cable.
2. Remove the intake manifold, (Refer to 9 - ENGINE/ MANIFOLDS/INTAKE MANIFOLD - REMOVAL).
3. Prior to removing the ignition coils, spray compressed air around the coil area and spark plug or contaminates from spark plug tube..

On 3.5L engines, it is necessary to loosen the screws by alternating back and forth. Do not lose the spacers under the coil when loosening the screws.

4. Remove the ignitions coil.
5. Remove the spark plug using a quality socket with a rubber or foam insert.
6. Inspect the spark plug condition.

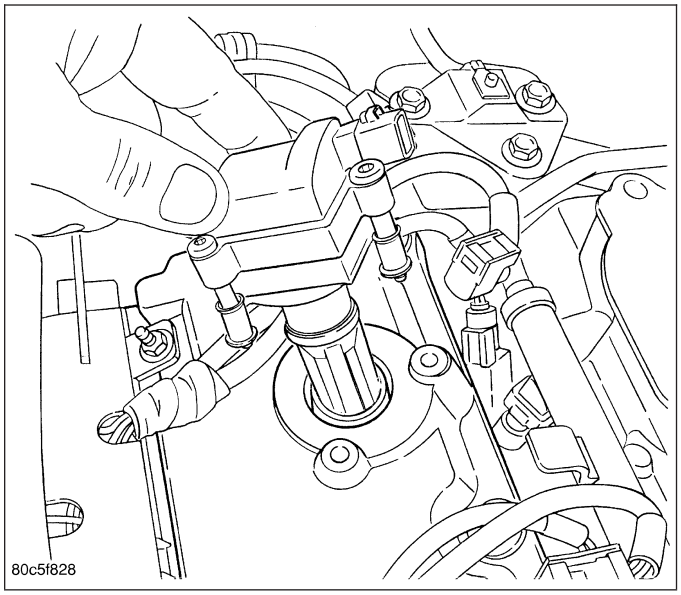

3.5L

Always remove the ignition coil assembly by grasping at the spark plug boot, turning the assembly 1/2 turn and pulling straight back in a steady motion.

1. Disconnect the negative battery cable.
2. Remove the intake manifold, (Refer to 9 - ENGINE/ MANIFOLDS/INTAKE MANIFOLD - REMOVAL).
3. Prior to removing the ignition coils, spray compressed air around the coil area and spark plug or contaminates from spark plug tube..

On 3.5L engines, it is necessary to loosen the screws by alternating back and forth. Do not lose the spacers under the coil when loosening the screws.

4. Remove the ignitions coil.
5. Remove the spark plug using a quality socket with a rubber or foam insert.
6. Inspect the spark plug condition.

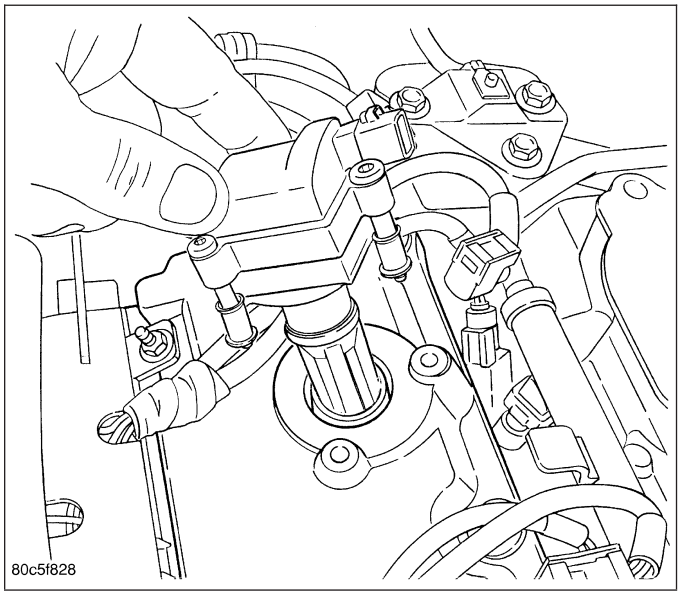

5.7L/6.1L

Each individual spark plug is located under each ignition coil. Each individual ignition coil must be removed to gain access to each spark plug. Refer to Ignition Coil Removal/Installation.

1. Remove necessary air filter tubing at throttle body.
2. Prior to removing ignition coil, spray compressed air around coil base at cylinder head.
3. Prior to removing spark plug, spray compressed air into cylinder head opening. This will help prevent foreign material from entering combustion chamber.
4. Remove spark plug from cylinder head using a quality socket with a rubber or foam insert. Also check condition of ignition coil o-ring and replace as necessary.
5. Inspect spark plug condition.

INSTALLATION

2.7L

1. To avoid cross threading, start the spark plug into the cylinder head by hand.
2. Tighten spark plugs. Tighten to 17 N·m (12.5 ft. lbs.).
3. Install ignition coil assembly onto spark plug.
4. Hand tighten coil screws.
5. Tighten ignition coil screws to 6.7 N·m (60 in. lbs.).
6. Connect and lock the electrical connector.
7. Install the intake manifold, (Refer to 9 - ENGINE/ MANIFOLDS/INTAKE MANIFOLD - INSTALLATION)
8. Connect the negative battery cable.

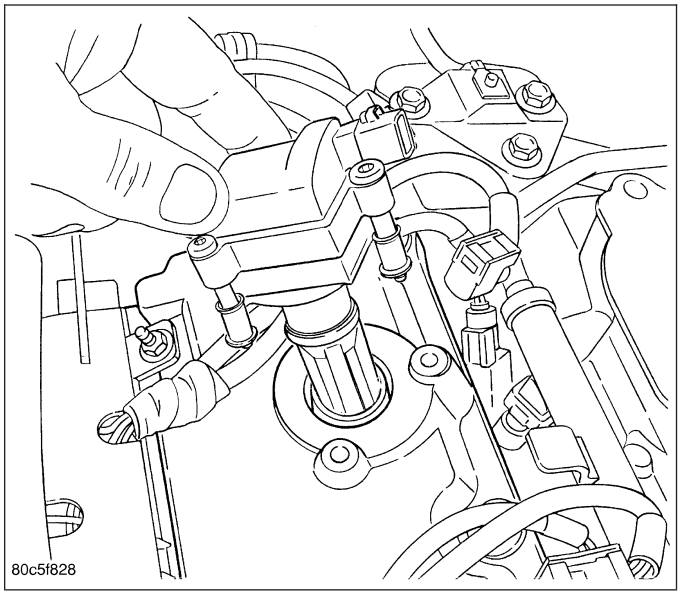

3.5L

1. To avoid cross threading, start the spark plug into the cylinder head by hand.
2. Tighten spark plugs. Tighten to 28 N·m (20 ft. lbs.).
3. Install ignition coil assembly onto spark plug.
4. Hand tighten coil screws.
5. Tighten ignition coil screws to 6.7 N·m (60 in. lbs.).
6. Connect and lock the electrical connector.
7. Install the intake manifold, (Refer to 9 - ENGINE/ MANIFOLDS/INTAKE MANIFOLD - INSTALLATION)
8. Connect the negative battery cable.

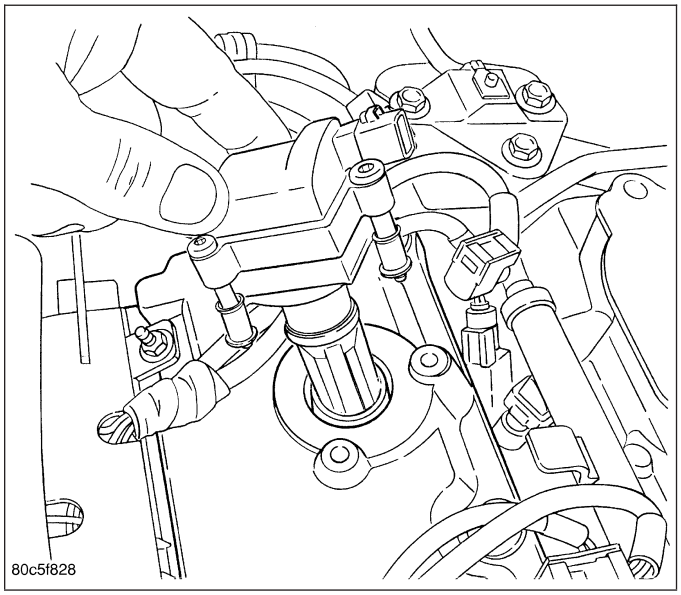

5.7L/6.1L

Special care should be taken when installing spark plugs into the cylinder head spark plug wells. Be sure the plugs do not drop into the plug wells as electrodes can be damaged.

Always tighten spark plugs to the specified torque. Over tightening can cause distortion resulting in a change in the spark plug gap or a cracked porcelain insulator.

1. Start the spark plug into the cylinder head by hand to avoid cross threading.
2. Tighten spark plugs. Refer to torque specifications.
3. Before installing ignition coil(s), check condition of coil o-ring and replace as necessary. To aid in coil installation, apply silicone to coil o-ring.
4. Install ignition coil(s). Refer to Ignition Coil Removal/Installation.

INSTRUMENT CLUSTER

TABLE OF CONTENTS

page

INSTRUMENT CLUSTER - ELECTRICAL DIAGNOSTICS 1

page

INSTRUMENT CLUSTER - SERVICE INFORMATION 45

INSTRUMENT CLUSTER - ELECTRICAL DIAGNOSTICS

TABLE OF CONTENTS

page

INSTRUMENT CLUSTER - ELECTRICAL DIAGNOSTICS
DIAGNOSIS AND TESTING
B1200-AIRBAG WARNING INDICATOR CIRCUIT LOW 3
B1202-AIRBAG WARNING INDICATOR CIRCUIT OPEN 4
B1225-REAR WIPER INDICATOR CONTROL CIRCUIT LOW 5
B1226-REAR WIPER INDICATOR CONTROL CIRCUIT HIGH. 8
B160A-PANEL DIMMER INPUT CIRCUIT LOW. 10
B160B-PANEL DIMMER INPUT CIRCUIT HIGH 13
B1613-PANEL ILLUMINATION CONTROL CIRCUIT LOW 17
B1614-PANEL ILLUMINATION CONTROL CIRCUIT HIGH. 22
B1694-ACCESSORY DIMMING CONTROL CIRCUIT HIGH. 24
B1695-ACCESSORY DIMMING CONTROL CIRCUIT OPEN 26
B2107-IGNITION SWITCH SENSE INPUT CIRCUIT/PERFORMANCE 28
B2108-IGNITION SWITCH SENSE INPUT CIRCUIT LOW 32
B2109-IGNITION SWITCH SENSE INPUT CIRCUIT HIGH. 35

page

B2213–CCN INTERNAL 39
U0019–CAN B BUS 40
U0141–LOST COMMUNICATION WITH FRONT CONTROL MODULE 43
U0151-LOST COMMUNICATION WITH OCCUPANT RESTRAINT CONTROLLER 43
U0159-LOST COMMUNICATION WITH PARKING ASSIST CONTROL MODULE 43
U0164-LOST COMMUNICATION WITH HVAC CONTROL MODULE 43
U0167-LOST COMMUNICATION WITH INTRUSION TRANSCEIVER CONTROL MODULE. 43
U0168-LOST COMMUNICATION WITH VEHICLE SECURITY CONTROL MODULE (SKREEM/WCM) 43
U0184-LOST COMMUNICATION WITH RADIO 43
U0195-LOST COMMUNICATION WITH SDARS 43
U0197-LOST COMMUNICATION WITH HANDS FREE PHONE MODULE 43
U0208-LOST COMMUNICATION WITH HEATED SEAT CONTROL MODULE 44
U0209-LOST COMMUNICATION WITH MEMORY SEAT CONTROL MODULE 44
U0212-LOST COMMUNICATION WITH SCCM-CAN-B. 44

INSTRUMENT CLUSTER - ELECTRICAL DIAGNOSTICS

DIAGNOSIS AND TESTING

B1200-AIRBAG WARNING INDICATOR CIRCUIT LOW

For a complete wiring diagram **Refer to Section 8W**.

- **When Monitored:**
  With the ignition on and when requested to turn on by the Occupant Restraint Controller (ORC).
- **Set Condition:**
  The Instrument Cluster software detects the voltage across the Airbag Lamp is below 0.5 volts when ON.

Possible Causes
INSTRUMENT CLUSTER

Diagnostic Test

1. CHECK FOR ACTIVE DTC

NOTE: The Instrument Cluster performs internal tests on the Airbag Lamp during each ignition cycle.

With the scan tool, erase DTCs.

Turn the ignition off, wait 10 seconds, then turn the ignition on.

Wait for the Instrument Cluster to perform the bulb check.

With the scan tool, read DTCs.

Is the DTC active?

Yes >> Replace and program the Instrument Cluster in accordance with the Service Information.
Perform BODY VERIFICATION TEST - VER 1. (Refer to BODY VERIFICATION TEST - VER 1).

No >> Test complete.

B1202-AIRBAG WARNING INDICATOR CIRCUIT OPEN

For a complete wiring diagram **Refer to Section 8W**.

- **When Monitored:**
  With the ignition on and when requested to turn on by the Occupant Restraint Controller (ORC).
- **Set Condition:**
  The Instrument Cluster software detects the voltage across the Airbag Lamp is above 4.0 volts when ON.

Possible Causes
INSTRUMENT CLUSTER

Diagnostic Test

1. CHECK FOR AN ACTIVE DTC

NOTE: The Instrument Cluster performs internal tests on the Airbag Lamp during each ignition cycle.
With the scan tool, erase DTCs.
Turn the ignition off, wait 10 seconds, then turn the ignition on.
Wait for the Instrument Cluster to perform the bulb check.
With the scan tool, read DTCs.

Is the DTC active?

Yes >> Replace and program the Instrument Cluster in accordance with the Service Information.
Perform BODY VERIFICATION TEST - VER 1. (Refer to BODY VERIFICATION TEST - VER 1).

No >> Test complete.

B1225-REAR WIPER INDICATOR CONTROL CIRCUIT LOW

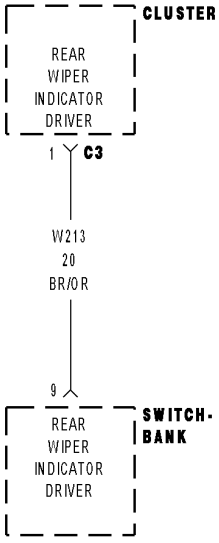

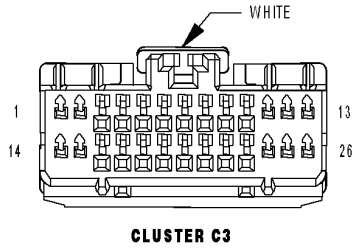

CLUSTER C3

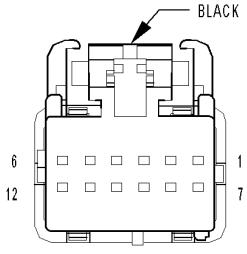

SWITCH-
BANK

8131dc71

For a complete wiring diagram **Refer to Section 8W**.

- **When Monitored:**
  Ignition Run-Start transition to on.
- **Set Condition:**
  Rear Wiper Output status HIGH.

Possible Causes
(W213) REAR WIPER INDICATOR DRIVER CIRCUIT OPEN
SWITCH BANK
INSTRUMENT CLUSTER

Diagnostic Test

1. CHECK FOR AN ACTIVE DTC

Turn the ignition on.

With the scan tool, record and erase DTCs.

Activate the rear wiper switch.

Wait 30 seconds.

With the scan tool, read DTCs.

Is the DTC active?

Yes >> Go To 2

No >> The condition that caused this code to set is not present at this time. Check for an intermittent condition by inspecting the related wiring harness for chafed, pierced, pinched, and partially broken wires. Also inspect the related connectors for broken, bent, pushed out, spread, corroded, or contaminated terminals.

Perform BODY VERIFICATION TEST - VER 1. (Refer to BODY VERIFICATION TEST - VER 1).

2. CHECK THE (W213) REAR WIPER INDICATOR DRIVER CIRCUIT FOR AN OPEN

Turn the ignition off.

Disconnect the Instrument Cluster C3 harness connector.

Measure the resistance of the (W213) Rear Wiper Indicator Driver Circuit between the Instrument Cluster Harness connector and the Switch Bank harness connector.

Is the resistance above 5.0 ohms?

Yes >> Repair the (W213) Rear Wiper Indicator Driver Circuit for an open.

Perform BODY VERIFICATION TEST - VER 1. (Refer to BODY VERIFICATION TEST - VER 1).

No >> Go To 3

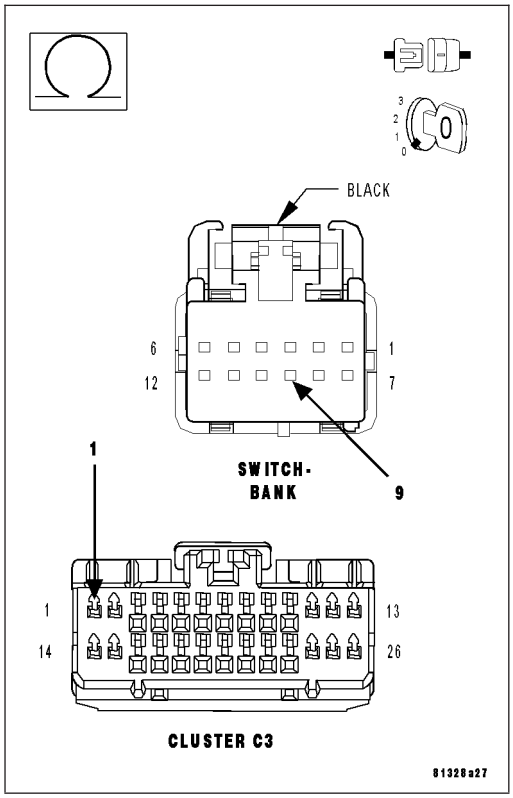

3. CHECK THE OPERATION OF THE REAR WIPER SWITCH

Turn the ignition on.

Reconnect the Switch Bank harness connector.

Measure the voltage on the (W213) Rear Wiper Indicator Driver Circuit at the Instrument Cluster C3 harness connector.

Is the voltage above 10.0 volts?

Yes >> Replace the Instrument Cluster in accordance with the service information.

Perform BODY VERIFICATION TEST - VER 1. (Refer to BODY VERIFICATION TEST - VER 1).

No >> Replace the Switch Bank in accordance with the service information.

Perform BODY VERIFICATION TEST - VER 1. (Refer to BODY VERIFICATION TEST - VER 1).

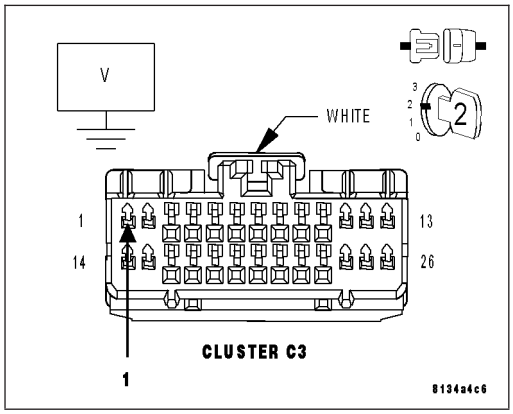

B1226-REAR WIPER INDICATOR CONTROL CIRCUIT HIGH

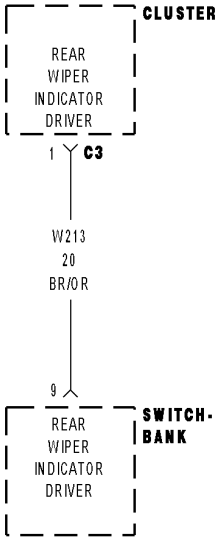

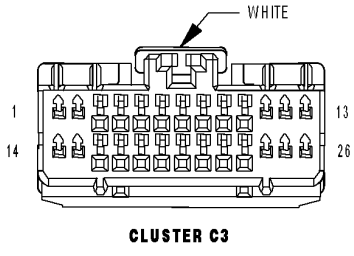

CLUSTER C3

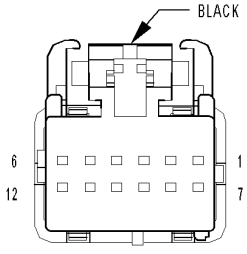

SWITCH-
BANK

8131dc15

For a complete wiring diagram **Refer to Section 8W**.

- **When Monitored:**
  Ignition Run-Start transition to on.
- **Set Condition:**
  Rear Wiper Output status LOW.

Possible Causes
(W213) REAR WIPER INDICATOR DRIVER CIRCUIT SHORT TO VOLTAGE
SWITCH BANK
INSTRUMENT CLUSTER

Diagnostic Test

1. CHECK FOR AN ACTIVE DTC

Turn the ignition on.
With the scan tool, record and erase DTCs.
Activate the rear wiper switch.
Wait 30 seconds.
With the scan tool, read DTCs.

Is the DTC active?

Yes >> Go To 2

No >> The condition that caused this code to set is not present at this time. Check for an intermittent condition by inspecting the related wiring harness for chafed, pierced, pinched, and partially broken wires. Also inspect the related connectors for broken, bent, pushed out, spread, corroded, or contaminated terminals.

Perform BODY VERIFICATION TEST - VER 1. (Refer to BODY VERIFICATION TEST - VER 1).

2. CHECK THE (W213) REAR WIPER INDICATOR DRIVER CIRCUIT FOR A SHORT TO VOLTAGE

Turn the ignition off.
Disconnect Switch Bank harness connector.
Disconnect the Instrument Cluster C3 harness connector.
Turn the ignition on.
Measure the voltage on the (W213) Rear Wiper Indicator Driver circuit.

Is the voltage above 5 volts?

Yes >> Repair the (W213) Rear Wiper Indicator Driver circuit for a short to voltage.

Perform BODY VERIFICATION TEST - VER 1. (Refer to BODY VERIFICATION TEST - VER 1).

No >> Replace the Instrument Cluster in accordance with the service information.

Perform BODY VERIFICATION TEST - VER 1. (Refer to BODY VERIFICATION TEST - VER 1).

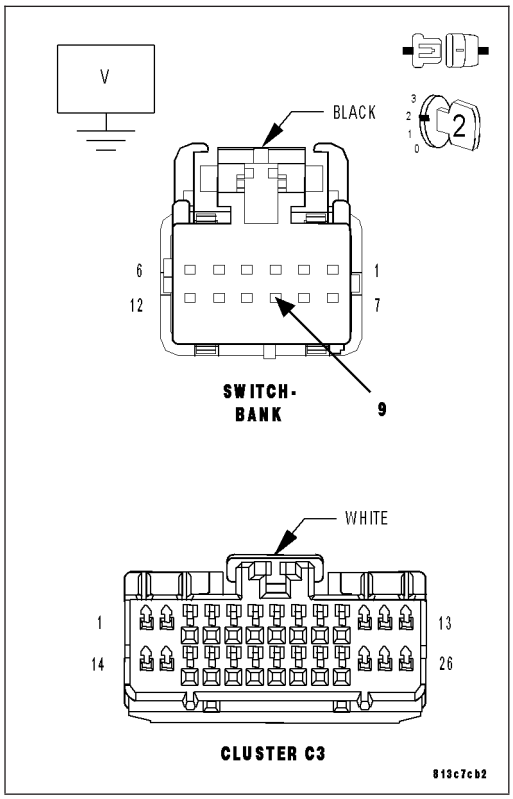

B160A-PANEL DIMMER INPUT CIRCUIT LOW

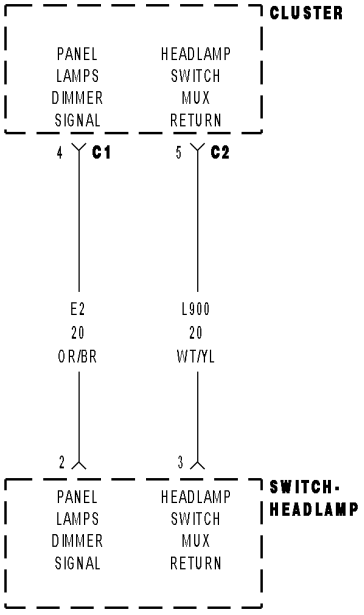

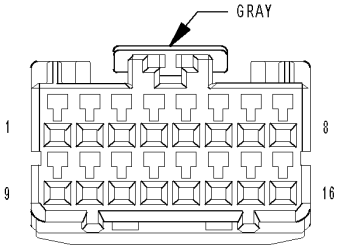

CLUSTER C2

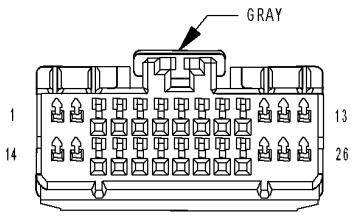

CLUSTER C1

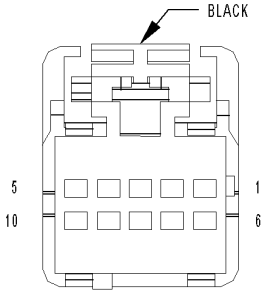

SWITCH-HEADLAMP

8131dfce

For a complete wiring diagram **Refer to Section 8W**.

- **When Monitored:**
  With the Instrument Cluster awake.
- **Set Condition:**
  Panel Dimmer Input less than 0.5 volts.

Possible Causes
(E2) PANEL LAMPS DIMMER SIGNAL CIRCUIT SHORTED TO GROUND
HEADLAMP SWITCH
INSTRUMENT CLUSTER

Diagnostic Test

1. CHECK FOR AN ACTIVE DTC

Turn the ignition on.
With the scan tool, record and erase DTCs.
Activate the Panel Dimmer Switch.
Wait 30 seconds.
With the scan tool, read DTCs.

Is the DTC active?

Yes >> Go To 2

No >> The condition that caused this code to set is not present at this time. Check for an intermittent condition by inspecting the related wiring harness for chafed, pierced, pinched, and partially broken wires. Also inspect the related connectors for broken, bent, pushed out, spread, corroded, or contaminated terminals.

Perform BODY VERIFICATION TEST - VER 1. (Refer to BODY VERIFICATION TEST - VER 1).

2. CHECK OPERATION OF HEADLAMP SWITCH

Disconnect the Headlamp Switch harness connector.
With the scan tool, read Instrument Cluster DTCs.

Does the scan tool display-B160B-PANEL DIMMER INPUT CIRCUIT HIGH?

Yes >> Replace the Headlamp Switch in accordance with the service information.

Perform BODY VERIFICATION TEST - VER 1. (Refer to BODY VERIFICATION TEST - VER 1).

No >> Go To 3

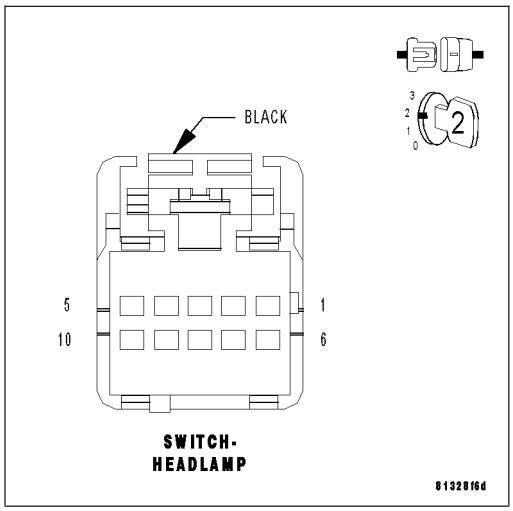

3. CHECK THE (E2) PANEL LAMPS DIMMER SIGNAL CIRCUIT FOR A SHORT TO GROUND

Turn the ignition off.

Disconnect the Instrument Cluster C1 harness connector.

Measure the resistance between ground and the (E2) Panel Lamps Dimmer Signal Circuit.

Is the resistance below 10K ohms?

Yes >> Repair the (E2) Panel Lamps Dimmer Signal Circuit for a short to ground.

Perform BODY VERIFICATION TEST - VER 1. (Refer to BODY VERIFICATION TEST - VER 1).

No >> Replace the Instrument Cluster in accordance with the service information.

Perform BODY VERIFICATION TEST - VER 1. (Refer to BODY VERIFICATION TEST - VER 1).

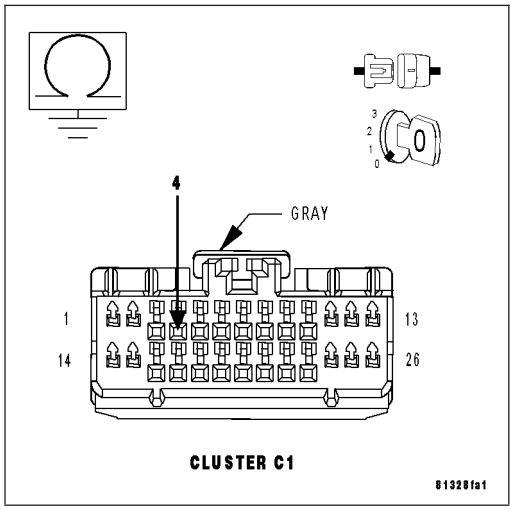

B160B-PANEL DIMMER INPUT CIRCUIT HIGH

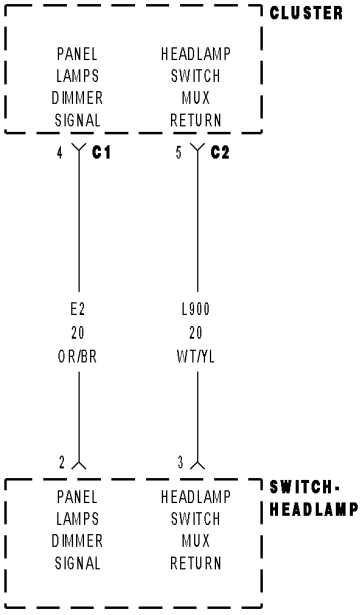

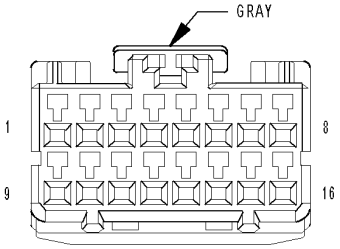

CLUSTER C2

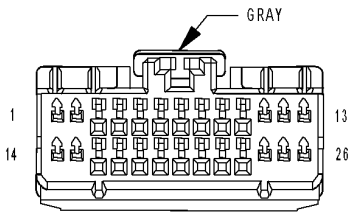

CLUSTER C1

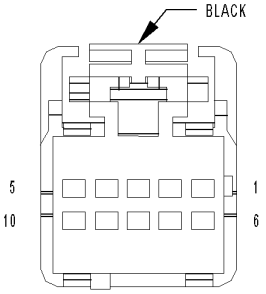

SWITCH-HEADLAMP

8131dfce

For a complete wiring diagram **Refer to Section 8W**.

- **When Monitored:**
  With the Instrument Cluster awake.
- **Set Condition:**
  Panel Dimmer Input greater than 4.8 volts.

Possible Causes
(E2) PANEL LAMPS DIMMER SIGNAL CIRCUIT SHORTED TO VOLTAGE
(L900) HEADLAMP SWITCH MUX RETURN CIRCUIT SHORTED TO VOLTAGE
(L900) HEADLAMP SWITCH MUX RETURN CIRCUIT OPEN
(E2) PANEL LAMPS DIMMER SIGNAL CIRCUIT OPEN
HEADLAMP SWITCH

Diagnostic Test

1. CHECK FOR AN ACTIVE DTC

Turn the ignition on.

With the scan tool, record and erase DTCs.

Activate the Panel Dimmer Switch.

Wait 30 seconds.

With the scan tool, read DTCs.

Is the DTC active?

Yes >> Go To 2

No >> The condition that caused this code to set is not present at this time. Check for an intermittent condition by inspecting the related wiring harness for chafed, pierced, pinched, and partially broken wires. Also inspect the related connectors for broken, bent, pushed out, spread, corroded, or contaminated terminals.

Perform BODY VERIFICATION TEST - VER 1. (Refer to BODY VERIFICATION TEST - VER 1).

2. CHECK THE (E2) PANEL LAMPS DIMMER SIGNAL CIRCUIT, AND THE (L900) HEADLAMP SWITCH MUX RETURN CIRCUIT FOR A SHORT TO VOLTAGE

Disconnect the Headlamp Switch harness connector.

Turn the ignition on.

Using a test light, measure for voltage on the (E2) Panel Lamps Dimmer Signal circuit.

Using a test light, measure for voltage on the (L900) Headlamp Switch MUX Return circuit.

Is voltage present on the E2 or L900 circuit?

Yes >> Repair the E2 or the L900 for a short to voltage.

Perform BODY VERIFICATION TEST - VER 1. (Refer to BODY VERIFICATION TEST - VER 1).

No >> Go To 3

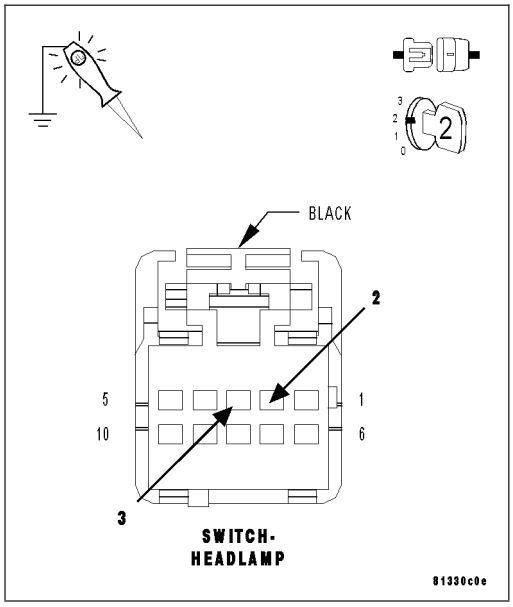

3. CHECK THE OPERATION OF THE PANEL LAMPS DIMMER SWITCH

Connect a jumper wire at the Headlamp Switch harness connector between the (E2) Panel Lamps Dimmer Signal circuit and the (L900) Headlamp Switch MUX Return circuit.

With the scan tool, read DTCs.

Does the Scan tool display-B160A-PANEL DIMMER INPUT CIRCUIT LOW?

Yes >> Replace the Headlamp Switch in accordance with the service information.

Perform BODY VERIFICATION TEST - VER 1. (Refer to BODY VERIFICATION TEST - VER 1).

No >> Go To 4

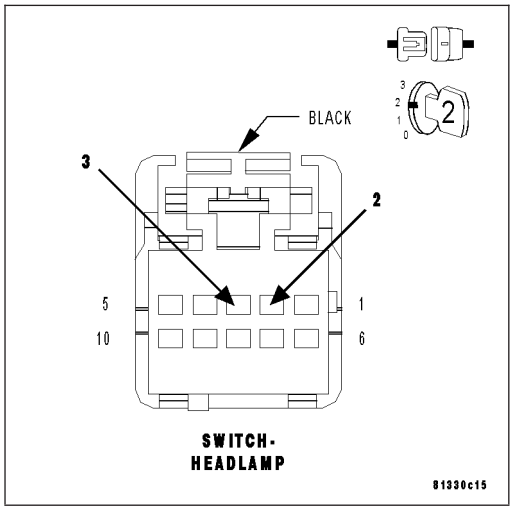

4. CHECK THE (L900) HEADLAMP SWITCH MUX RETURN CIRCUIT FOR AN OPEN

Turn the ignition off.

Disconnect the Instrument Cluster C2 harness connector.

Measure the resistance of the (L900) Headlamp Switch MUX Return circuit between the Instrument Cluster C2 harness connector and the Headlamp Switch harness connector.

Is the resistance above 5.0 ohms?

Yes >> Repair the (L900) Headlamp Switch MUX Return circuit for an open.

Perform BODY VERIFICATION TEST - VER 1. (Refer to BODY VERIFICATION TEST - VER 1).

No >> Go To 5

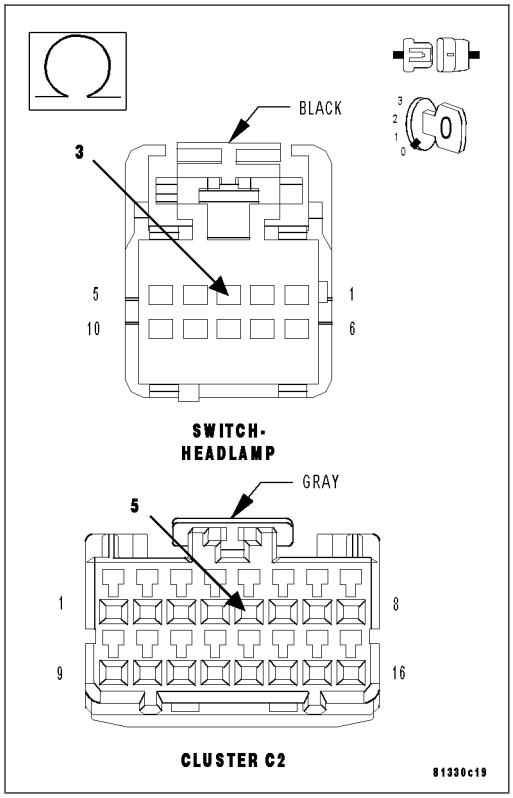

5. CHECK THE (E2) PANEL LAMPS DIMMER SIGNAL CIRCUIT FOR AN OPEN

Disconnect the Instrument Cluster C1 harness connector.

Measure the resistance of the (E2) Panel Lamps Dimmer Signal circuit between the Instrument Cluster C1 harness connector and the Headlamp Switch harness connector.

Is the resistance above 5.0 ohms?

Yes >> Repair the (E2) Panel Lamps Dimmer Signal circuit for an open.

Perform BODY VERIFICATION TEST - VER 1. (Refer to BODY VERIFICATION TEST - VER 1).

No >> Replace the Instrument Cluster in accordance with the service information.

Perform BODY VERIFICATION TEST - VER 1. (Refer to BODY VERIFICATION TEST - VER 1).

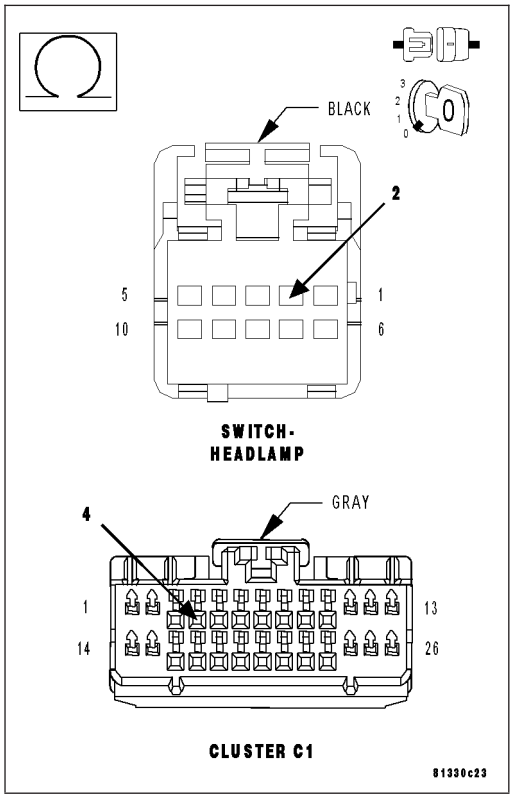

B1613-PANEL ILLUMINATION CONTROL CIRCUIT LOW

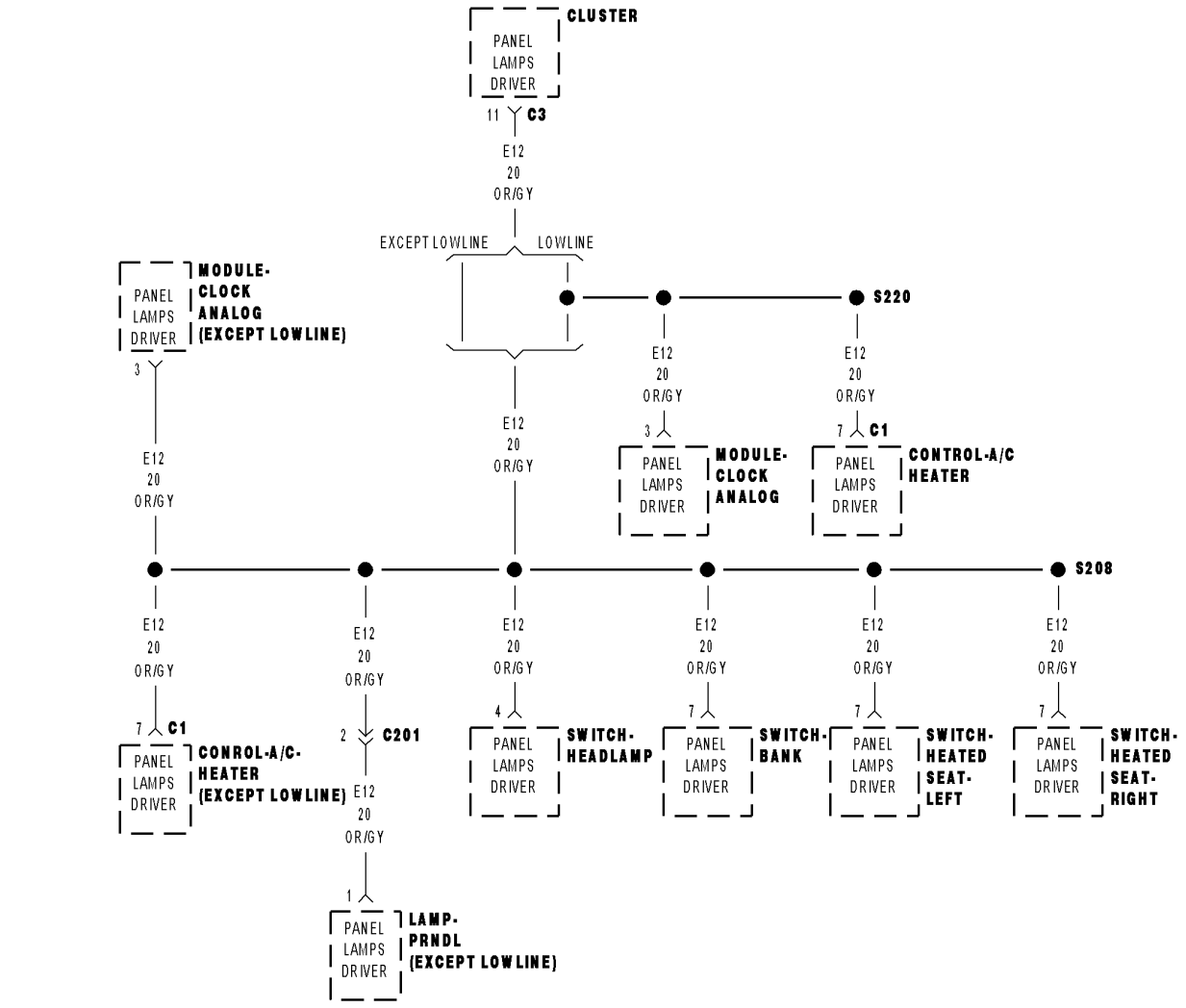

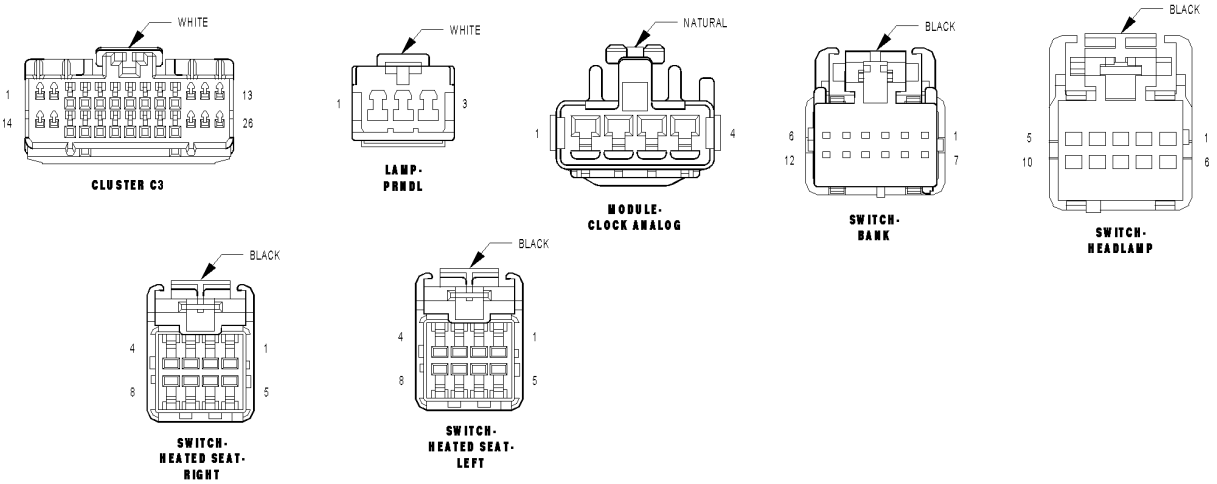

For a complete wiring diagram **Refer to Section 8W**.

- **When Monitored:**
  With the Ignition on, and the Panel Illumination active.
- **Set Condition:**
  Panel Illumination Status HIGH.

Possible Causes
(E12) PANEL LAMPS DRIVER CIRCUIT SHORTED TO GROUND
HEADLAMP SWITCH SHORTED TO GROUND
DRIVER HEATED SEAT SWITCH SHORTED TO GROUND
PASSENGER HEATED SEAT SWITCH SHORTED TO GROUND
CLOCK MODULE SHORTED TO GROUND
PRNDL LAMP SHORTED TO GROUND
SWITCH BANK SHORTED TO GROUND
INSTRUMENT CLUSTER

Diagnostic Test

1. CHECK FOR AN ACTIVE DTC

Turn the ignition on.
With the scan tool, record and erase DTCs.
Activate the Panel Illumination.
Wait 30 seconds.
With the scan tool, read DTCs.

Is the DTC active?

Yes >> Go To 2

No >> The condition that caused this code to set is not present at this time. Check for an intermittent condition by inspecting the related wiring harness for chafed, pierced, pinched, and partially broken wires. Also inspect the related connectors for broken, bent, pushed out, spread, corroded, or contaminated terminals.
Perform BODY VERIFICATION TEST - VER 1. (Refer to BODY VERIFICATION TEST - VER 1).

2. CHECK THE SWITCH BANK FOR A SHORT TO GROUND

Turn the ignition off.
Disconnect the Switch Bank harness connector.
Turn the ignition on.
Activate the Panel Illumination.
With the scan tool, read DTCs.

Does the scan tool display-B1614–PANEL ILLUMINATION CONTROL CIRCUIT HIGH?

Yes >> Replace the Switch Bank in accordance with the service information.
Perform BODY VERIFICATION TEST - VER 1. (Refer to BODY VERIFICATION TEST - VER 1).

No >> Go To 3

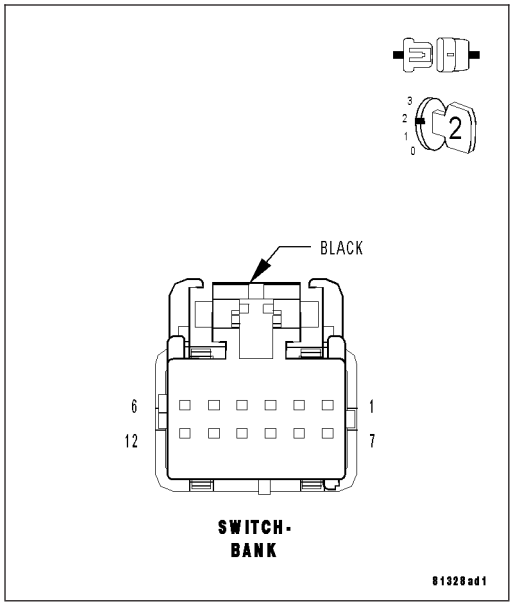

3. CHECK THE HEADLAMP SWITCH FOR A SHORT TO GROUND

Turn the ignition off.
Disconnect the Headlamp Switch harness connector.
Turn the ignition on.
Activate the Panel Illumination.
With the scan tool, read DTCs.

Does the scan tool display-B1614–PANEL ILLUMINATION CONTROL CIRCUIT HIGH?

Yes >> Replace the Headlamp Switch in accordance with the service information.
Perform BODY VERIFICATION TEST - VER 1. (Refer to BODY VERIFICATION TEST - VER 1).

No >> Go To 4

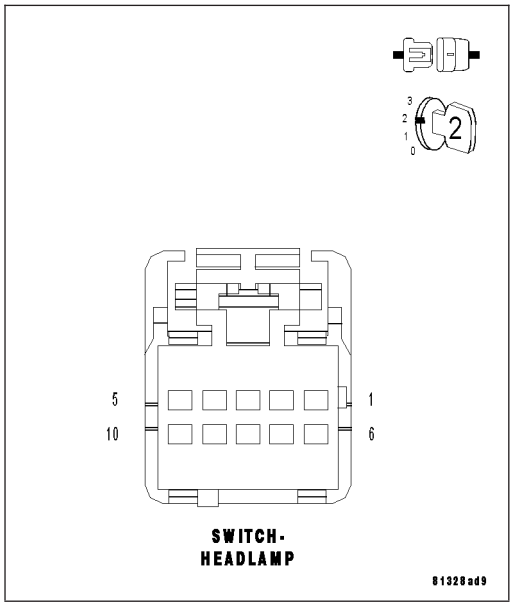

4. CHECK THE DRIVER HEATED SEAT SWITCH FOR A SHORT TO GROUND

Turn the ignition off.
Disconnect the Driver Heated Seat Switch harness connector.
Turn the ignition on.
Activate the Panel Illumination.
With the scan tool, read DTCs.

Does the scan tool display-B1614–PANEL ILLUMINATION CONTROL CIRCUIT HIGH?

Yes >> Replace the Driver Heated Seat Switch in accordance with the service information.
Perform BODY VERIFICATION TEST - VER 1. (Refer to BODY VERIFICATION TEST - VER 1).

No >> Go To 5

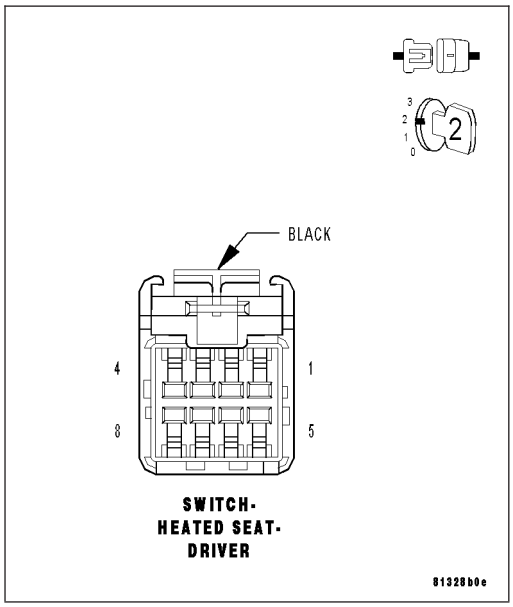

5. CHECK THE PASSENGER HEATED SEAT SWITCH FOR A SHORT TO GROUND

Turn the ignition off.
Disconnect the Passenger Heated Seat Switch harness connector.
Turn the ignition on.
Activate the Panel Illumination.
With the scan tool, read DTCs.

Does the scan tool display-B1614–PANEL ILLUMINATION CONTROL CIRCUIT HIGH?

Yes >> Replace the Passenger Heated Seat Switch in accordance with the service information.
Perform BODY VERIFICATION TEST - VER 1. (Refer to BODY VERIFICATION TEST - VER 1).

No >> Go To 6

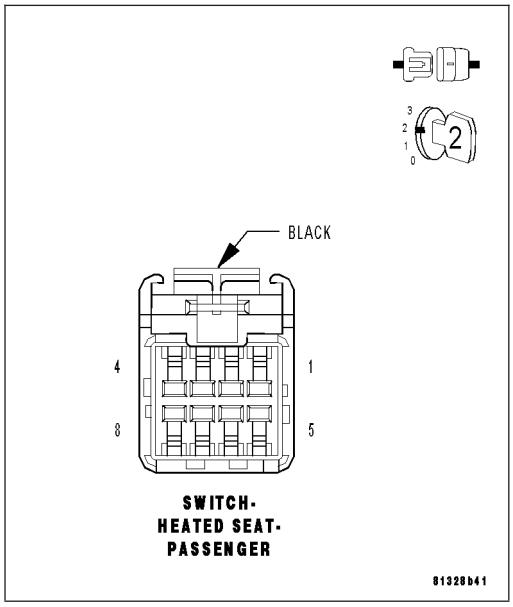

6. CHECK THE CLOCK MODULE FOR A SHORT TO GROUND

Turn the ignition off.
Disconnect the Clock Module harness connector.
Turn the ignition on.
Activate the Panel Illumination.
With the scan tool, read DTCs.

Does the scan tool display-B1614–PANEL ILLUMINATION CONTROL CIRCUIT HIGH?

Yes >> Replace the Clock Module in accordance with the service information.
Perform BODY VERIFICATION TEST - VER 1. (Refer to BODY VERIFICATION TEST - VER 1).

No >> Go To 7

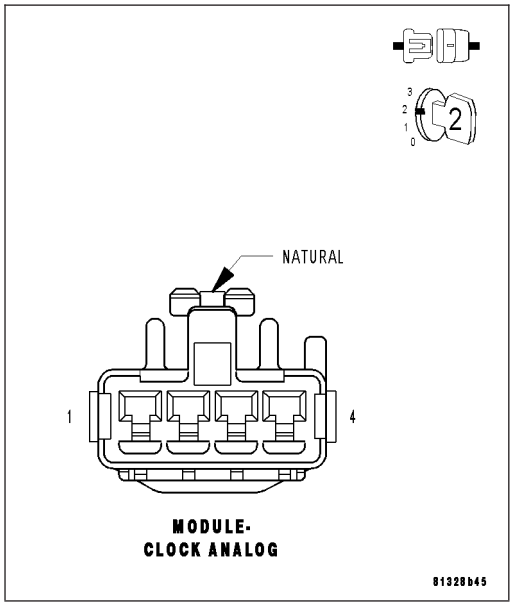

7. CHECK THE PRNDL LAMP FOR A SHORT TO GROUND

Turn the ignition off.

Disconnect the PRNDL Lamp harness connector.

Turn the ignition on.

Activate the Panel Illumination.

With the scan tool, read DTCs.

Does the scan tool display-B1614–PANEL ILLUMINATION CONTROL CIRCUIT HIGH?

Yes >> Replace the PRNDL Lamp in accordance with the service information.

Perform BODY VERIFICATION TEST - VER 1. (Refer to BODY VERIFICATION TEST - VER 1).

No >> Go To 8

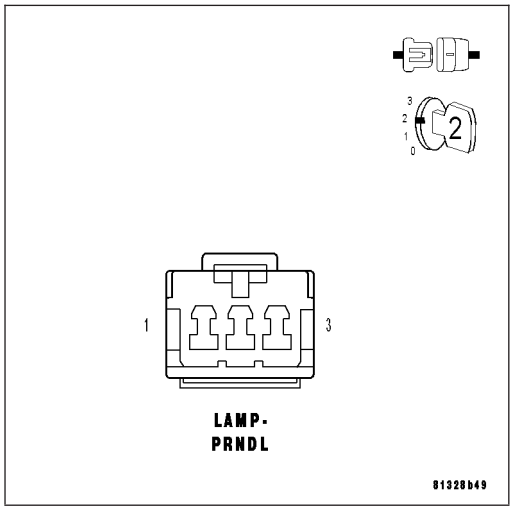

8. CHECK THE (E12) PANEL LAMPS DRIVER CIRCUIT FOR A SHORT TO GROUND

Turn the ignition off.

Disconnect the Instrument Cluster C3 harness connector.

With all the above components disconnected, measure the resistance to ground of the (E12) Panel Lamps Driver Circuit from the Instrument Cluster C3 harness connector.

Is the resistance less than 10K ohms?

Yes >> Repair the (E12) Panel Lamps Driver circuit for a short to ground.

Perform BODY VERIFICATION TEST - VER 1. (Refer to BODY VERIFICATION TEST - VER 1).

No >> Replace the Instrument Cluster in accordance with the service information.

Perform BODY VERIFICATION TEST - VER 1. (Refer to BODY VERIFICATION TEST - VER 1).

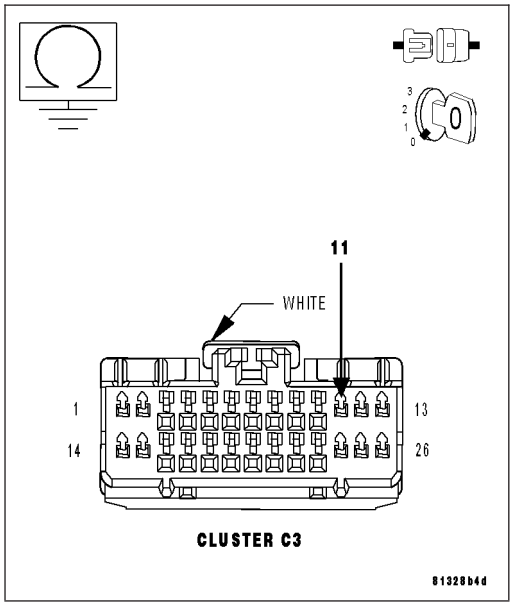

B1614-PANEL ILLUMINATION CONTROL CIRCUIT HIGH

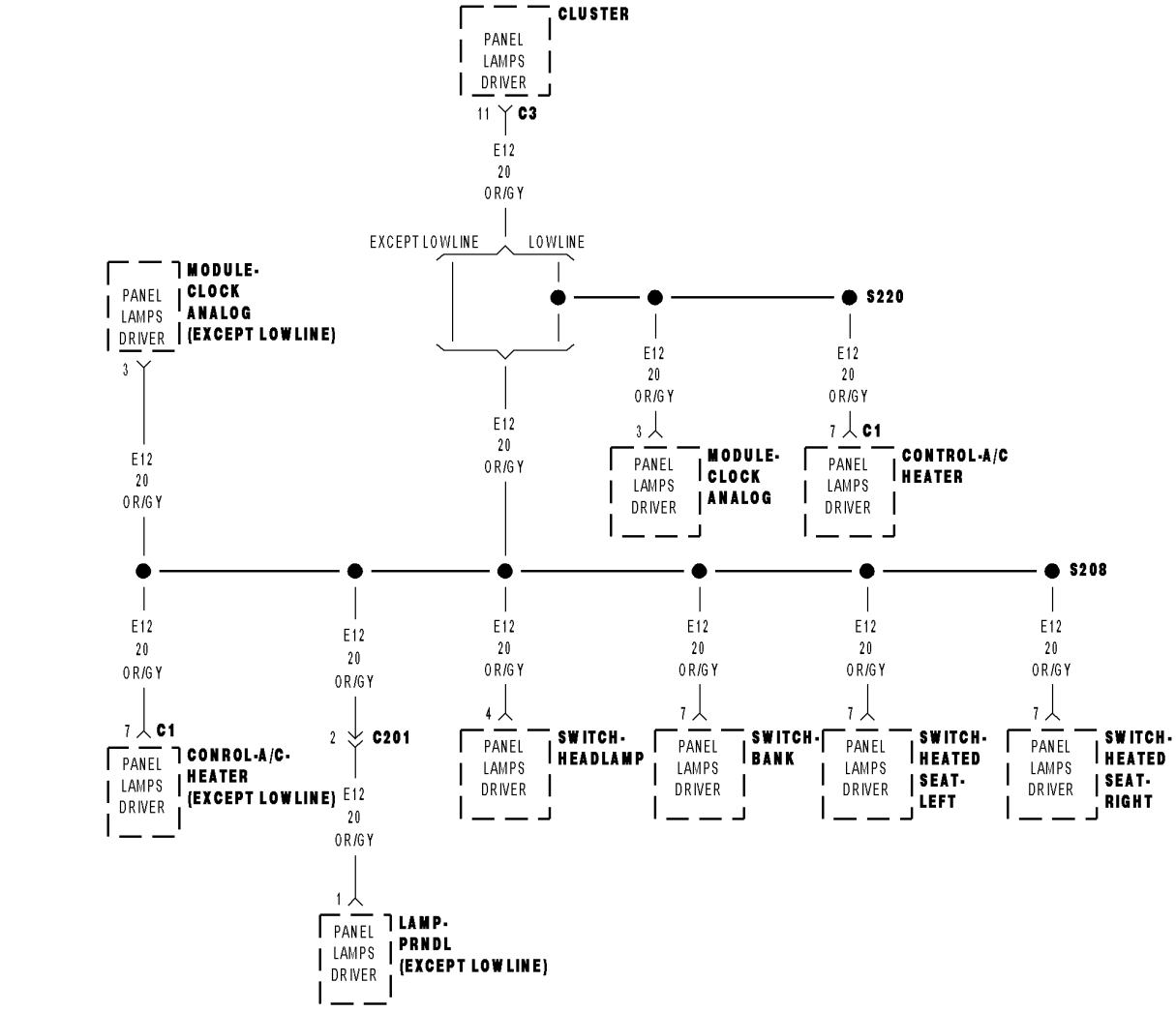

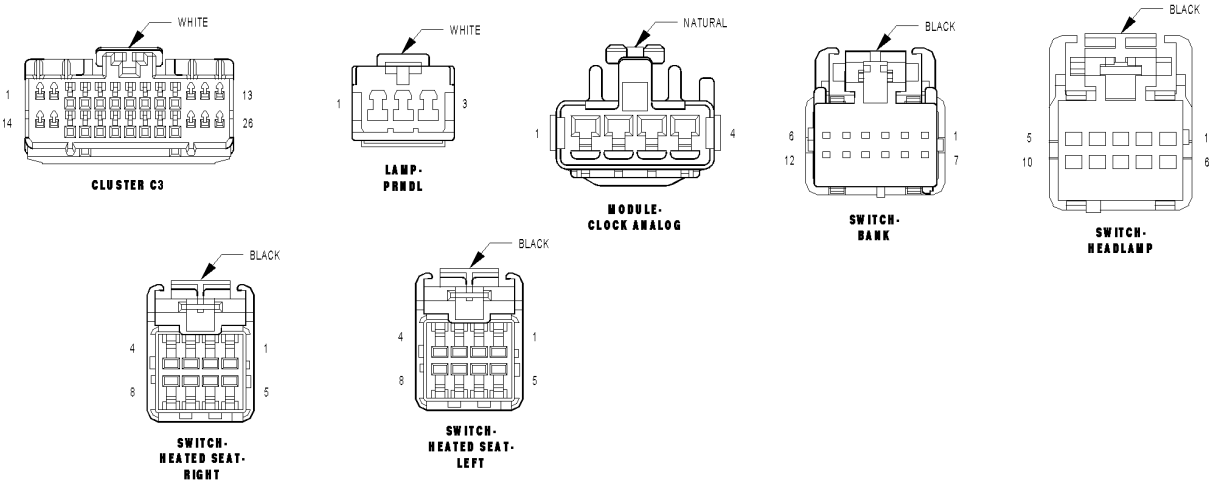

8131e082

For a complete wiring diagram **Refer to Section 8W**.

- **When Monitored:**
  With the Ignition on, and the Panel Illumination not active.
- **Set Condition:**
  Panel Illumination status HIGH.

Possible Causes
(E12) PANEL LAMPS DRIVER CIRCUIT FOR AN OPEN
INSTRUMENT CLUSTER

Diagnostic Test

1. CHECK FOR AN ACTIVE DTC

Turn the ignition on.

With the scan tool, record and erase DTCs.

Activate the Panel Illumination.

Wait 30 seconds.

With the scan tool, read DTCs.

Is the DTC active?

Yes >> Go To 2

No >> The condition that caused this code to set is not present at this time. Check for an intermittent condition by inspecting the related wiring harness for chafed, pierced, pinched, and partially broken wires. Also inspect the related connectors for broken, bent, pushed out, spread, corroded, or contaminated terminals.

Perform BODY VERIFICATION TEST - VER 1. (Refer to BODY VERIFICATION TEST - VER 1).

2. CHECK (E12) PANEL LAMPS DRIVER CIRCUIT FOR AN OPEN

Turn the ignition off.

Disconnect the Instrument Cluster C3 harness connector.

Disconnect the Headlamp Switch harness connector.

Measure the resistance of the (E12) Panel Lamps Driver Circuit between the Instrument Cluster C3 harness connector and the Headlamp Switch harness connector.

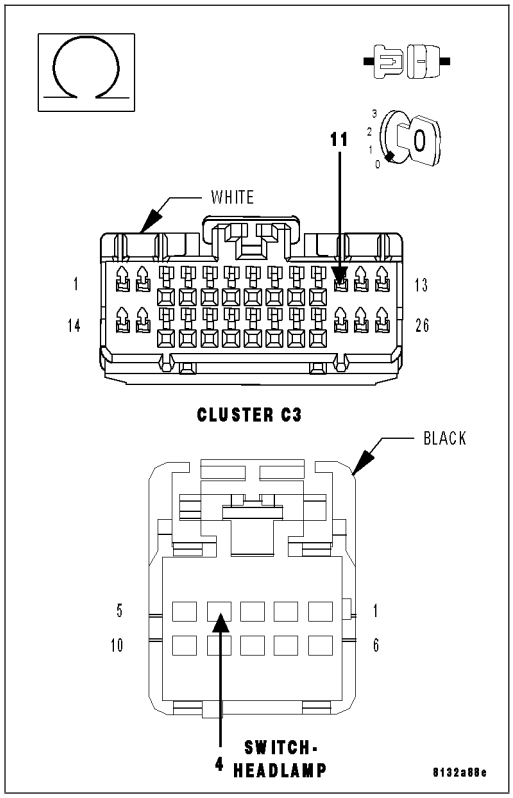

Is the resistance above 5.0 ohms?

Yes >> Repair the (E12) Panel Lamps Driver Circuit for an open.

Perform BODY VERIFICATION TEST - VER 1. (Refer to BODY VERIFICATION TEST - VER 1).

No >> Replace the Instrument Cluster in accordance with the service information.

Perform BODY VERIFICATION TEST - VER 1. (Refer to BODY VERIFICATION TEST - VER 1).

B1694-ACCESSORY DIMMING CONTROL CIRCUIT HIGH

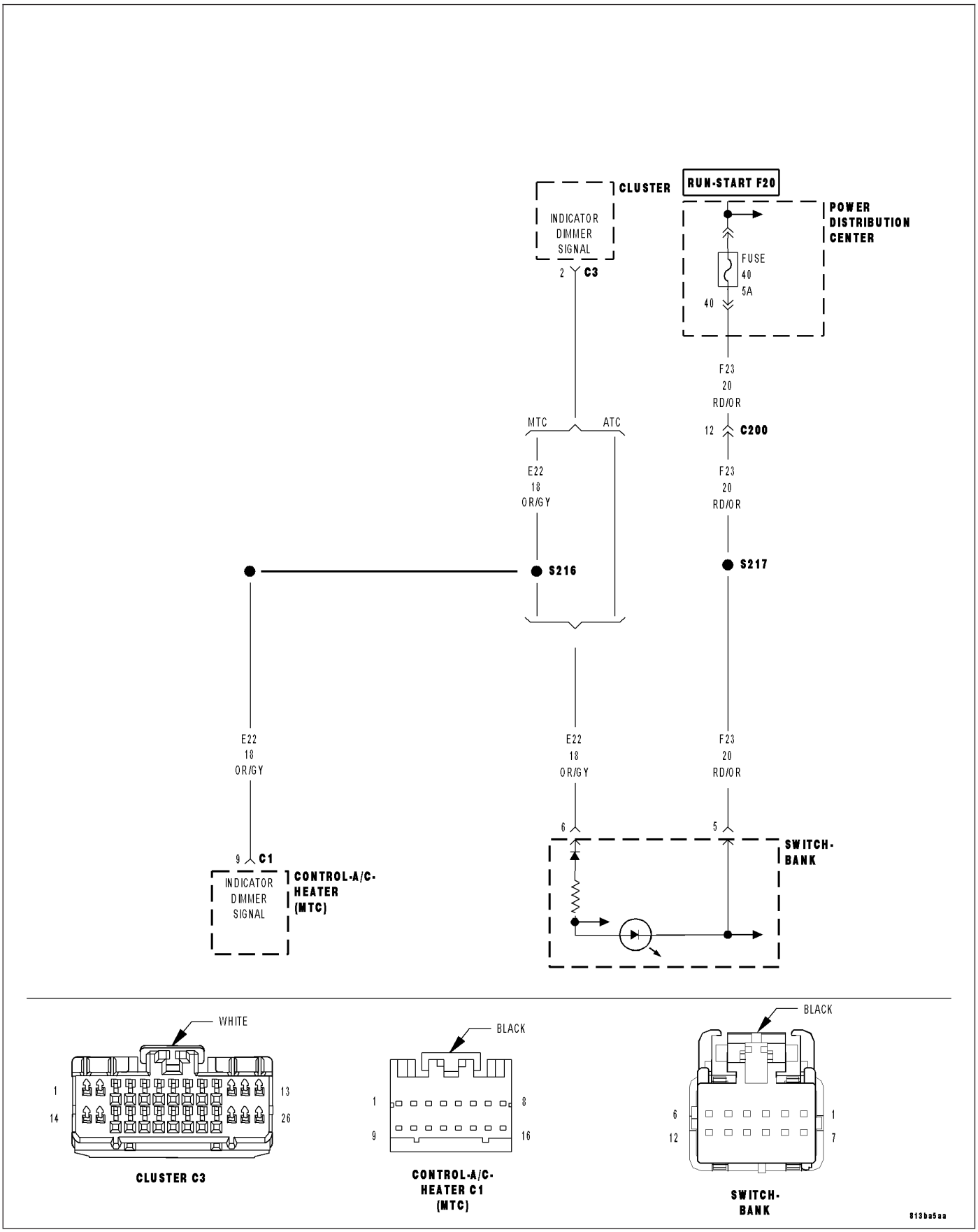

For a complete wiring diagram **Refer to Section 8W**.

- **When Monitored:**
  Indicator Dimming Signal active. ATC not present.
- **Set Condition:**
  Indicator Dimmer Signal Output status LOW.

Possible Causes
(E22) INDICATOR DIMMER SIGNAL CIRCUIT SHORTED TO VOLTAGE
INSTRUMENT CLUSTER

Diagnostic Test

1. CHECK FOR AN ACTIVE DTC

Turn the ignition on.
With the scan tool, record and erase DTCs.
Activate the Accessory Dimming.
With the scan tool, read DTCs.

Is the DTC active?

Yes >> Go To 2

No >> The condition that caused this code to set is not present at this time. Check for an intermittent condition by inspecting the related wiring harness for chafed, pierced, pinched, and partially broken wires. Also inspect the related connectors for broken, bent, pushed out, spread, corroded, or contaminated terminals.
Perform BODY VERIFICATION TEST - VER 1. (Refer to BODY VERIFICATION TEST - VER 1).

2. CHECK (E22) INDICATOR DIMMER SIGNAL CIRCUIT FOR A SHORT TO VOLTAGE

Turn the ignition off.
Disconnect the Instrument Cluster C3 harness connector.
Disconnect the Switch Bank harness connector.
Disconnect the A/C Heater Control C1 (MTC) harness connector.
Turn the ignition on.
Check the voltage on the (E22) Indicator Dimmer Signal circuit.

Is the voltage above 0.5 volts?

Yes >> Repair the (E22) Indicator Dimmer Signal circuit for a short to voltage.
Perform BODY VERIFICATION TEST - VER 1. (Refer to BODY VERIFICATION TEST - VER 1).

No >> Replace the Instrument Cluster in accordance with the service information.
Perform BODY VERIFICATION TEST - VER 1. (Refer to BODY VERIFICATION TEST - VER 1).

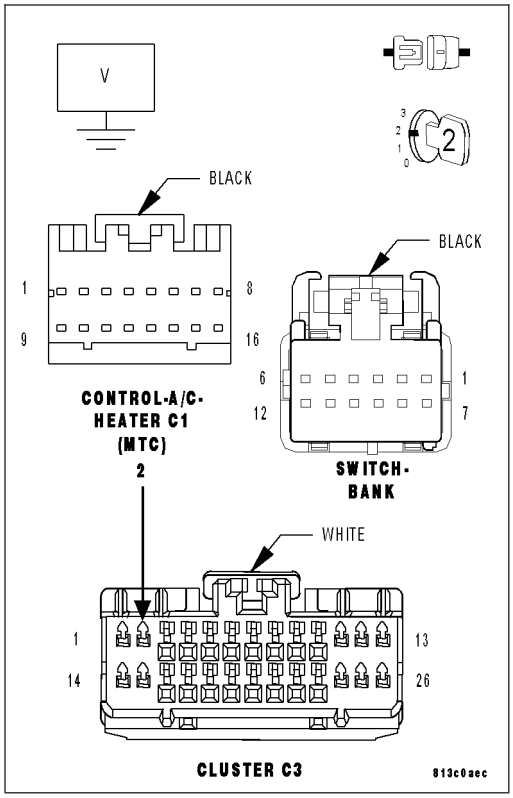

B1695-ACCESSORY DIMMING CONTROL CIRCUIT OPEN

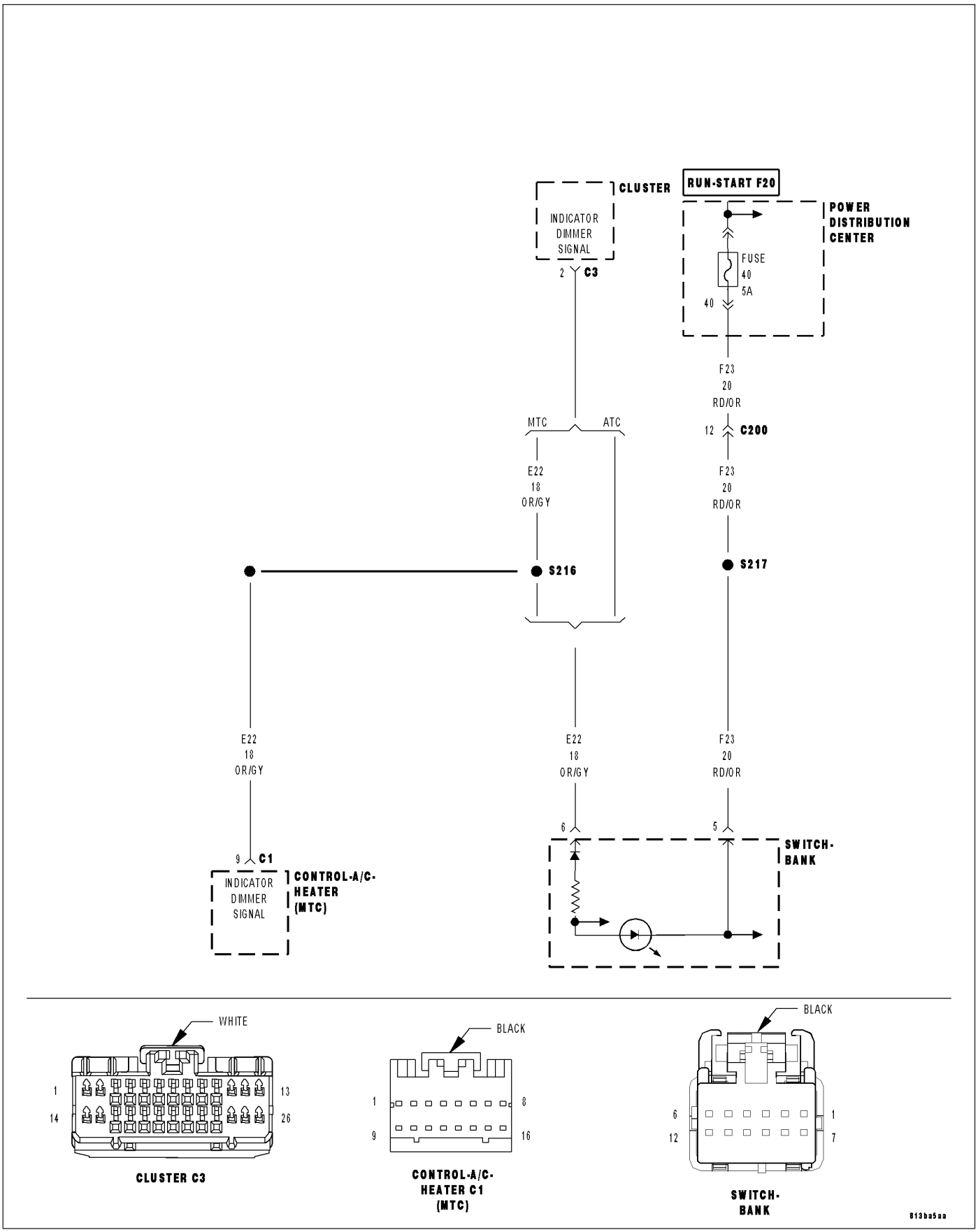

For a complete wiring diagram **Refer to Section 8W**.

- **When Monitored:**
  Ignition Run/Start transition to on, and ATC not present.
- **Set Condition:**
  Input Dimmer Signal Output status HIGH.

Possible Causes
(E22) INDICATOR DIMMER SIGNAL CIRCUIT OPEN
INSTRUMENT CLUSTER

Diagnostic Test

1. CHECK FOR AN ACTIVE DTC

Turn the ignition on.

With the scan tool, record and erase DTCs.

Activate the rear wiper switch.

With the scan tool, read DTCs.

Is the DTC active?

Yes >> Go To 2

No >> The condition that caused this code to set is not present at this time. Check for an intermittent condition by inspecting the related wiring harness for chafed, pierced, pinched, and partially broken wires. Also inspect the related connectors for broken, bent, pushed out, spread, corroded, or contaminated terminals.

Perform BODY VERIFICATION TEST - VER 1. (Refer to BODY VERIFICATION TEST - VER 1).

2. CHECK THE (E22) INDICATOR DIMMER SIGNAL CIRCUIT FOR AN OPEN

Turn the ignition off.

Disconnect the Instrument Cluster C3 harness connector.

Disconnect the Switch Bank harness connector.

Measure the resistance of the (E22) Indicator Dimmer Signal Circuit between the Instrument Cluster C3 Harness connector and the Switch Bank harness connector.

Is the resistance above 5.0 ohms?

Yes >> Repair the (E22) Indicator Dimmer Signal Circuit for an open.

Perform BODY VERIFICATION TEST - VER 1. (Refer to BODY VERIFICATION TEST - VER 1).

No >> Replace the Instrument Cluster in accordance with the service information.

Perform BODY VERIFICATION TEST - VER 1. (Refer to BODY VERIFICATION TEST - VER 1).

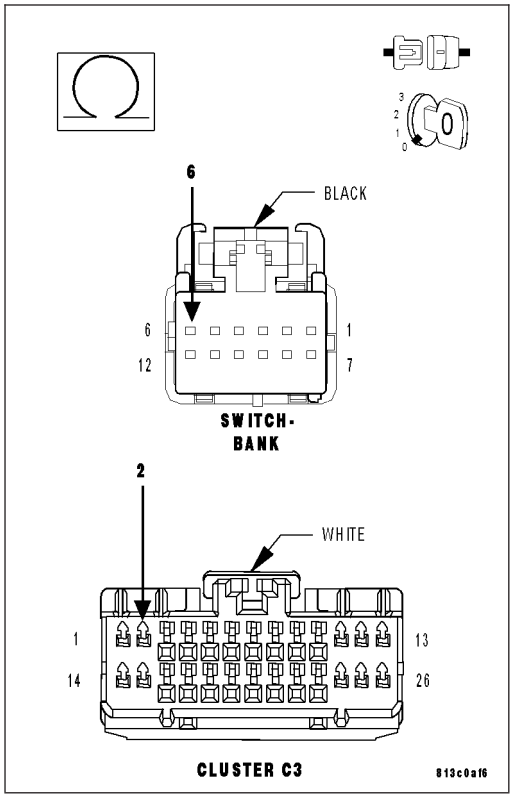

B2107-IGNITION SWITCH SENSE INPUT CIRCUIT/PERFORMANCE

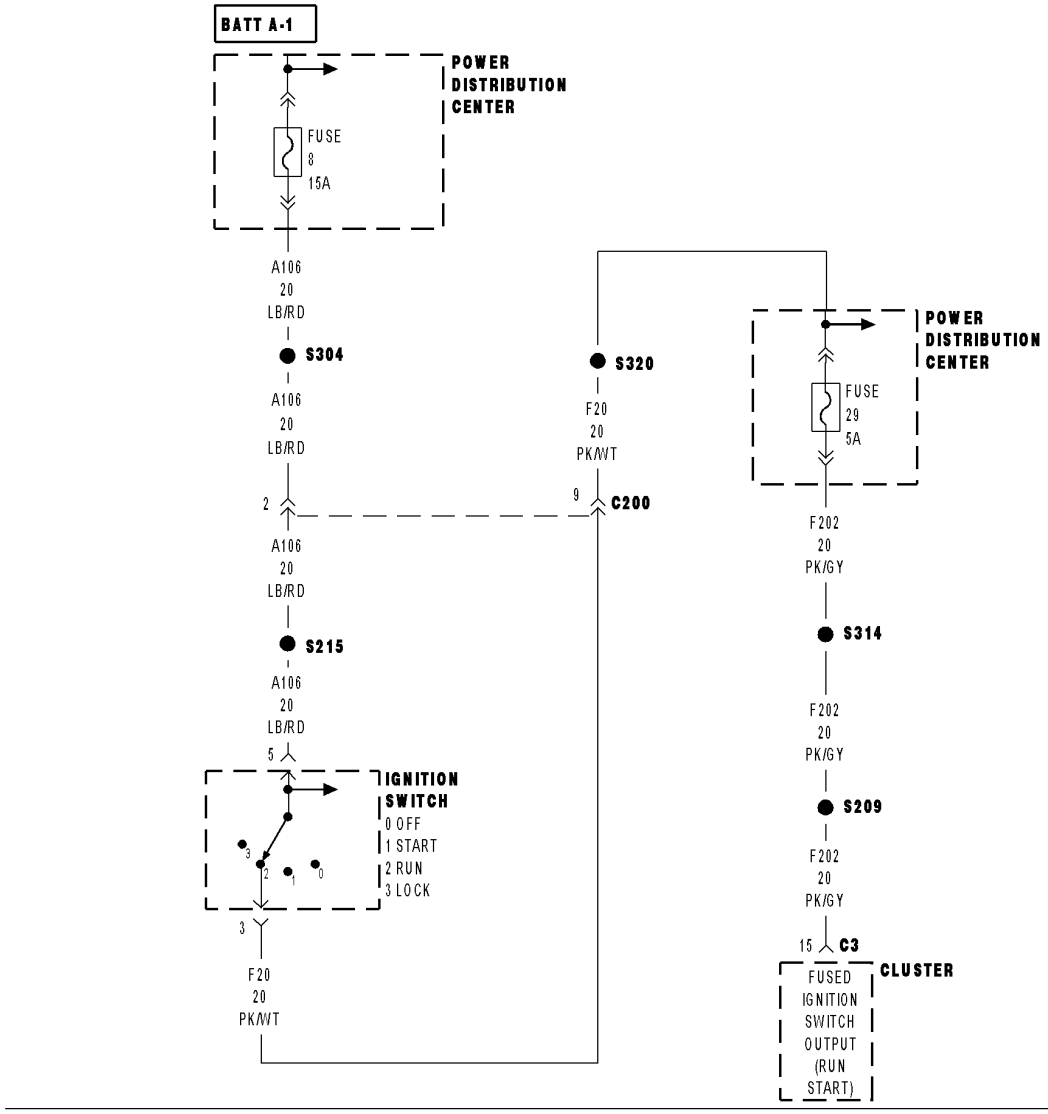

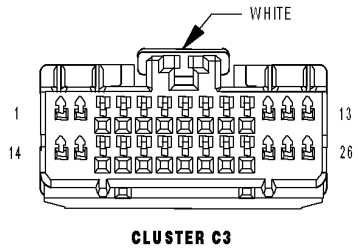

CLUSTER C3

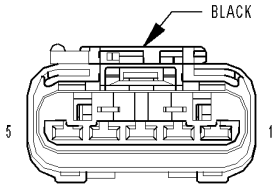

SWITCH-IGNITION

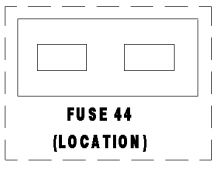

8131e207

For a complete wiring diagram **Refer to Section 8W**.

- **When Monitored:**
  With the Instrument Cluster awake.
- **Set Condition:**
  Ignition switch in RUN or START, and Ignition RUN/START LOW. Ignition Switch in LOCK or UNLOCK, and Ignition RUN/START HIGH.

Possible Causes
FUSED IGNITION SWITCH FUSES
(F202) FUSED IGNITION SWITCH OUTPUT (RUN-START) OPEN
(A106) FUSED B+ CIRCUIT OPEN
IGNITION SWITCH
INSTRUMENT CLUSTER

Diagnostic Test

1. CHECK FOR AN ACTIVE DTC

Turn the ignition on.

With the scan tool, record and erase DTCs.

Wait 30 seconds.

With the scan tool, read DTCs.

Is the DTC active?

Yes >> Go To 2

No >> The condition that caused this code to set is not present at this time. Check for an intermittent condition by inspecting the related wiring harness for chafed, pierced, pinched, and partially broken wires. Also inspect the related connectors for broken, bent, pushed out, spread, corroded, or contaminated terminals.

Perform BODY VERIFICATION TEST - VER 1. (Refer to BODY VERIFICATION TEST - VER 1).

2. CHECK PDC FUSES

Inspect PDC fuses #8, and #29 in the PDC.

Is either fuse open?

Yes >> Using the wiring diagram/schematic as a guide, inspect the wiring and connectors for a short to ground condition.

Perform BODY VERIFICATION TEST - VER 1. (Refer to BODY VERIFICATION TEST - VER 1).

No >> Go To 3

3. CHECK FOR VOLTAGE ON THE (F202) FUSED IGNITION SWITCH OUTPUT (RUN-START) CIRCUIT

Turn the ignition off.

Disconnect the Instrument Cluster C3 harness connector.

Turn the ignition on.

Measure the voltage of the (F202) Fused Ignition Switch Output (Run-Start) circuit.

Is the voltage above 10.0 volts?

Yes >> Replace the Instrument Cluster in accordance with the service information.
Perform BODY VERIFICATION TEST - VER 1. (Refer to BODY VERIFICATION TEST - VER 1).

No >> Go To 4

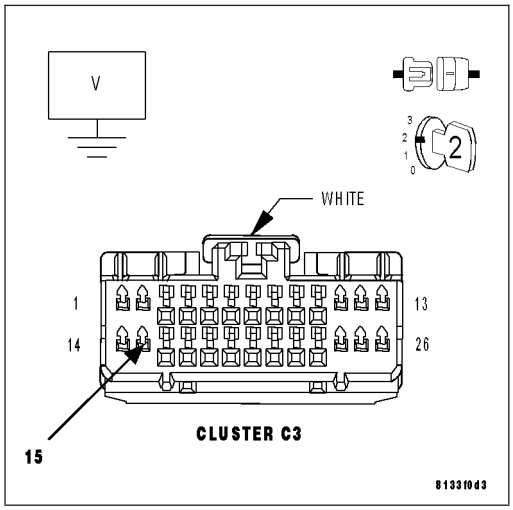

4. CHECK THE (F202, F20) FUSED IGNITION SWITCH OUTPUT (RUN-START) CIRCUIT FOR AN OPEN

Disconnect the Ignition Switch harness connector.

Measure the resistance of the (F202, F20) Fused Ignition Switch Output (Run-Start) circuit between the Instrument Cluster C3 harness connector and the Ignition Switch harness connector.

Is the resistance above 5.0 ohms?

Yes >> Repair the (F202, F20) Fused Ignition Switch Output (Run-Start) circuit for an open.
Perform BODY VERIFICATION TEST - VER 1. (Refer to BODY VERIFICATION TEST - VER 1).

No >> Go To 5

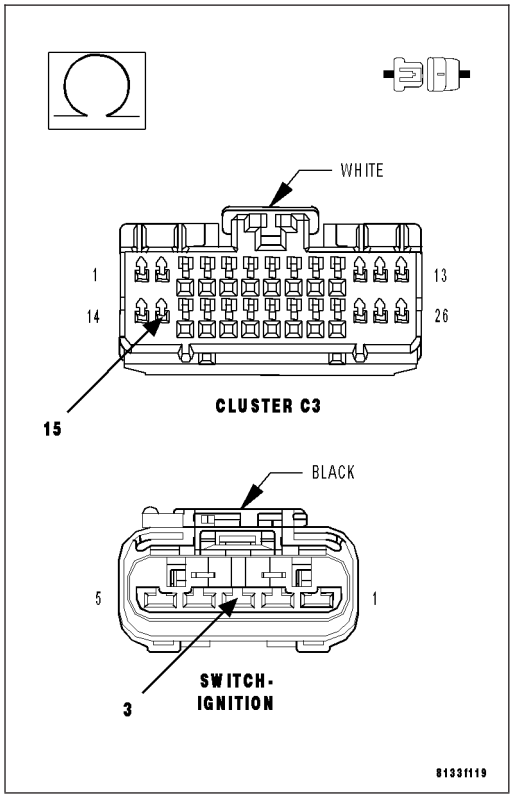

5. CHECK THE (A106) FUSED B+ CIRCUIT FOR AN OPEN

Measure the voltage on the (A106) Fused B+ circuit at the Ignition Switch harness connector.

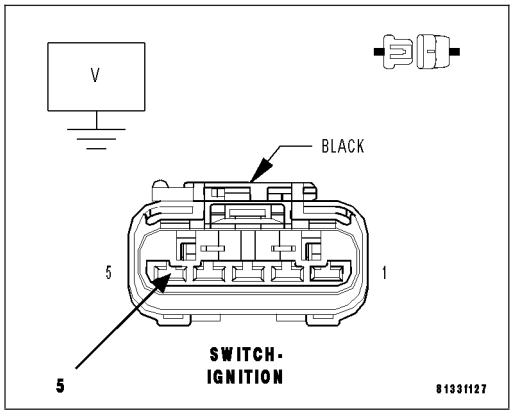

Is the voltage above 10.0 volts?

Yes >> Replace the Ignition Switch in accordance with the service information.

Perform BODY VERIFICATION TEST - VER 1. (Refer to BODY VERIFICATION TEST - VER 1).

No >> Repair the (A106) Fused B+ circuit for an open.

Perform BODY VERIFICATION TEST - VER 1. (Refer to BODY VERIFICATION TEST - VER 1).

B2108-IGNITION SWITCH SENSE INPUT CIRCUIT LOW

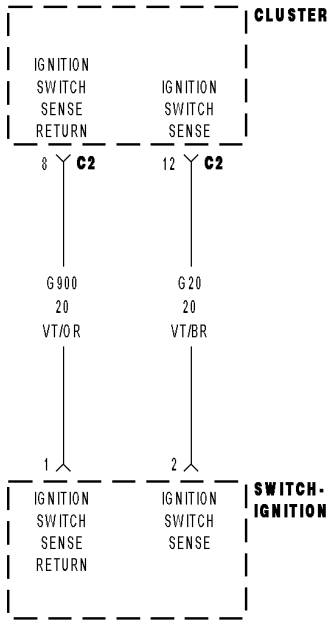

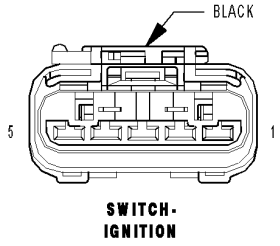

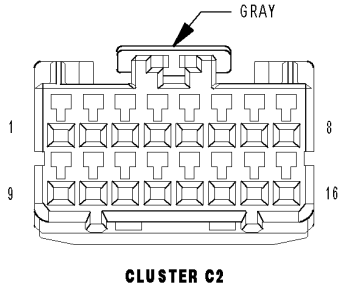

8131e3dd

For a complete wiring diagram **Refer to Section 8W**.

- **When Monitored:**
  With the Instrument Cluster awake.
- **Set Condition:**
  Ignition Switch Sense circuit voltage less than .3 volts.

Possible Causes
(G20) IGNITION SWITCH SENSE CIRCUIT FOR A SHORT TO GROUND
(G20) IGNITION SWITCH SENSE CIRCUIT SHORT TO (G900) IGNITION SWITCH SENSE RETURN CIRCUIT
IGNITION SWITCH
INSTRUMENT CLUSTER

Diagnostic Test

1. CHECK FOR AN ACTIVE DTC

Turn the ignition on.

With the scan tool, record and erase DTCs.

Wait 30 seconds.

With the scan tool, read DTCs.

Is the DTC active?

Yes >> Go To 2

No >> The condition that caused this code to set is not present at this time. Check for an intermittent condition by inspecting the related wiring harness for chafed, pierced, pinched, and partially broken wires. Also inspect the related connectors for broken, bent, pushed out, spread, corroded, or contaminated terminals.

Perform BODY VERIFICATION TEST - VER 1. (Refer to BODY VERIFICATION TEST - VER 1).

2. CHECK OPERATION OF IGNITION SWITCH

Turn the ignition off.

Disconnect the Ignition Switch harness connector.

Connect a jumper wire between Ignition Switch harness connector cavities 3 and 5.

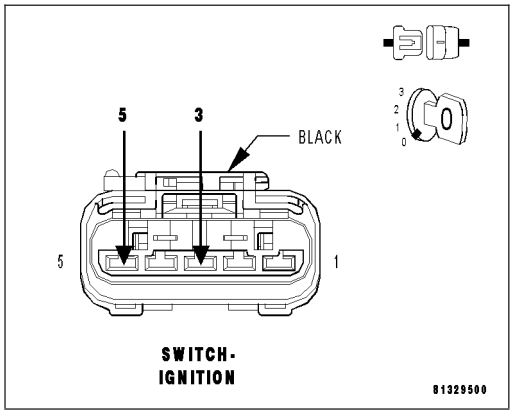

NOTE: This will provide power to the vehicle systems with the ignition switch disconnected.

With the scan tool, erase Instrument Cluster DTCs.

Wait 30 seconds.

With the scan tool, read Instrument Cluster DTCs.

Does the scan tool display-B2109-IGNITION SWITCH SENSE INPUT CIRCUIT HIGH?

Yes >> Replace the Ignition Switch in accordance with the service information.

Perform BODY VERIFICATION TEST - VER 1. (Refer to BODY VERIFICATION TEST - VER 1).

No >> Go To 3

3. CHECK THE (G20) IGNITION SWITCH SENSE CIRCUIT FOR A SHORT TO THE (G900) IGNITION SWITCH SENSE RETURN CIRCUIT

Remove the jumper wire between Ignition Switch harness connector cavities 3 and 5.

Disconnect the Instrument Cluster C2 harness connector.

Measure the resistance between the (G20) Ignition Switch Sense Circuit and the (G900) Ignition Switch Sense Return circuit.

Is the resistance below 10K ohms?

Yes >> Repair the (G20) Ignition Switch Sense Circuit for a short to the (G900) Ignition Switch Sense Return circuit.

Perform BODY VERIFICATION TEST - VER 1. (Refer to BODY VERIFICATION TEST - VER 1).

No >> Go To 4

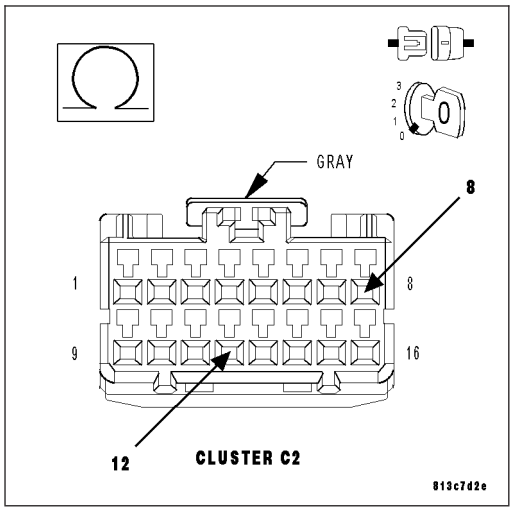

4. CHECK THE (G20) IGNITION SWITCH SENSE CIRCUIT FOR A SHORT TO GROUND

Measure the resistance between ground and the (G20) Ignition Switch Sense Circuit.

Is the resistance below 10K ohms?

Yes >> Repair the (G20) Ignition Switch Sense Circuit for a short to ground.

Perform BODY VERIFICATION TEST - VER 1. (Refer to BODY VERIFICATION TEST - VER 1).

No >> Replace the Instrument Cluster in accordance with the service information.

Perform BODY VERIFICATION TEST - VER 1. (Refer to BODY VERIFICATION TEST - VER 1).

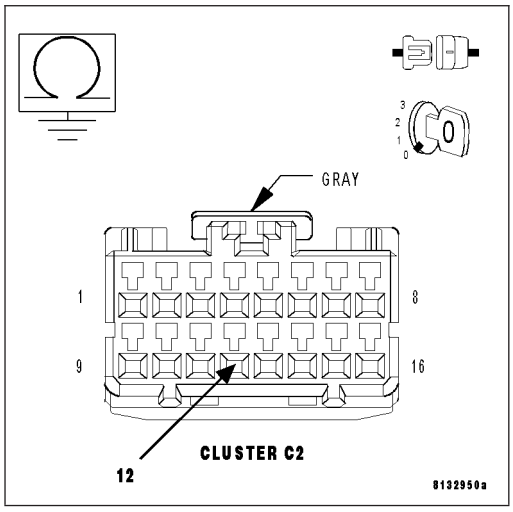

B2109-IGNITION SWITCH SENSE INPUT CIRCUIT HIGH

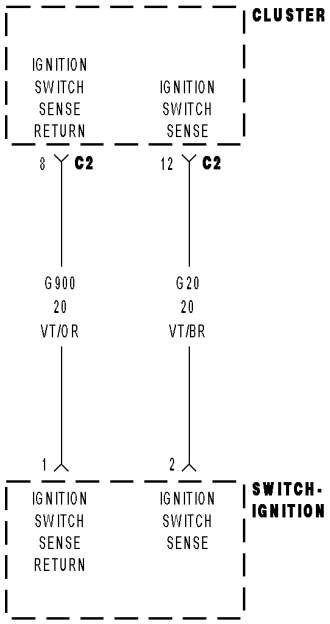

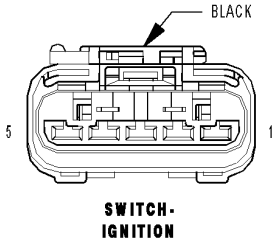

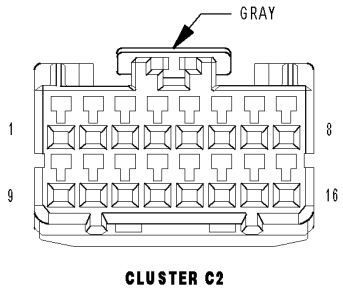

8131e3dd

For a complete wiring diagram **Refer to Section 8W**.

- **When Monitored:**
  With the Instrument Cluster awake.
- **Set Condition:**
  Ignition Switch Sense circuit voltage greater than 4.7 volts.

Possible Causes
(G20) IGNITION SWITCH SENSE CIRCUIT OPEN
(G900) IGNITION SWITCH SENSE RETURN CIRCUIT OPEN
IGNITION SWITCH
INSTRUMENT CLUSTER

Diagnostic Test

1. CHECK FOR AN ACTIVE DTC

Turn the ignition on.

With the scan tool, record and erase DTCs

Wait 30 seconds.

With the scan tool, read DTCs.

Is the DTC active?

Yes >> Go To 2

No >> The condition that caused this code to set is not present at this time. Check for an intermittent condition by inspecting the related wiring harness for chafed, pierced, pinched, and partially broken wires. Also inspect the related connectors for broken, bent, pushed out, spread, corroded, or contaminated terminals.

Perform BODY VERIFICATION TEST - VER 1. (Refer to BODY VERIFICATION TEST - VER 1).

2. CHECK THE (G20) IGNITION SWITCH SENSE CIRCUIT FOR A SHORT TO VOLTAGE

Turn the ignition off.

Disconnect the Ignition Switch harness connector.

Connect a jumper wire between Ignition Switch harness connector cavities 3 and 5.

NOTE: This will provide power to the vehicle systems with the ignition switch disconnected.

Measure the voltage on the (G20) Ignition Switch Sense circuit.

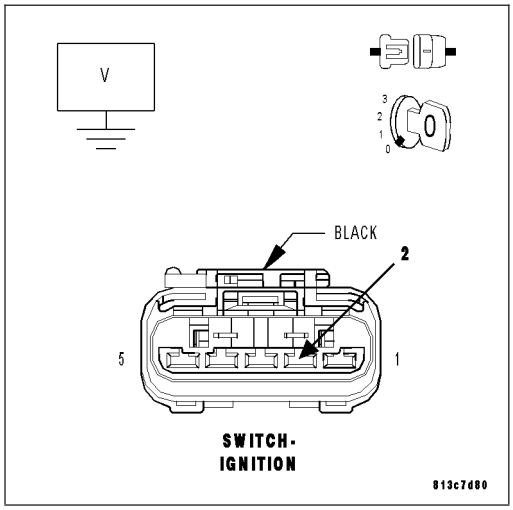

Is the voltage above 5.4 volts?

Yes >> Go To 3

No >> Go To 4

3. CHECK THE (G20) IGNITION SWITCH SENSE CIRCUIT FOR A SHORT TO VOLTAGE

Remove the jumper wire between Ignition Switch harness connector cavities 3 and 5.

Disconnect the Instrument Cluster C2 harness connector.

Measure the voltage of the (G20) Ignition Switch Sense Circuit.

Is the voltage above 5.4 volts?

Yes >> Repair the (G20) Ignition Switch Sense circuit for a short to voltage.

Perform BODY VERIFICATION TEST - VER 1. (Refer to BODY VERIFICATION TEST - VER 1).

No >> Replace the Instrument Cluster in accordance with the service information.

Perform BODY VERIFICATION TEST - VER 1. (Refer to BODY VERIFICATION TEST - VER 1).

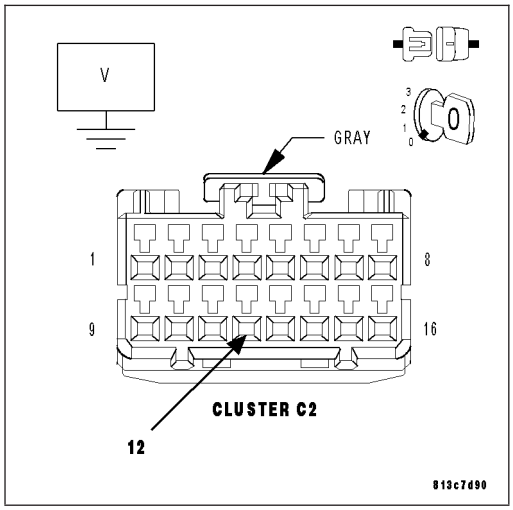

4. CHECK OPERATION OF IGNITION SWITCH

Turn the ignition off.

Disconnect the Ignition Switch harness connector.

Connect a jumper wire between Ignition Switch harness connector cavities 3 and 5.

NOTE: This will provide power to the vehicle systems with the ignition switch disconnected.

Connect a jumper wire between Ignition Switch harness connector cavities 1 and 2.

With the scan tool, erase Instrument Cluster DTCs.

Wait 30 seconds.

With the scan tool, read Instrument Cluster DTCs.

Does the scan tool display-B2108-IGNITION SWITCH SENSE INPUT CIRCUIT LOW?

Yes >> Replace the Ignition Switch in accordance with the service information.

Perform BODY VERIFICATION TEST - VER 1. (Refer to BODY VERIFICATION TEST - VER 1).

No >> Go To 5

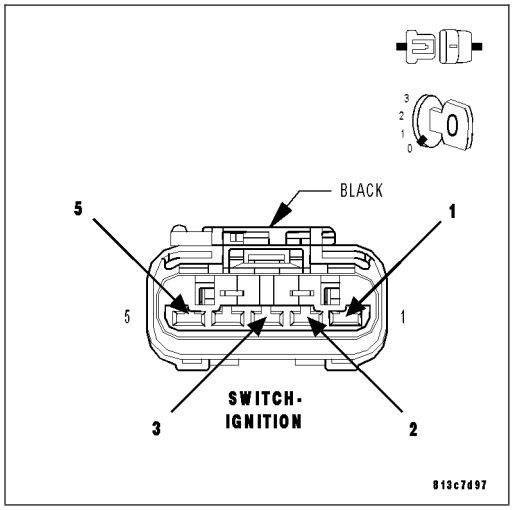

5. CHECK THE (G900) IGNITION SWITCH SENSE RETURN CIRCUIT FOR AN OPEN.

Remove the jumper wire between Ignition Switch harness connector cavities 3 and 5.

Disconnect the Instrument Cluster C2 harness connector.

Measure the resistance of the (G900) Ignition Switch Sense Return circuit between the Instrument Cluster C2 harness connector and the Ignition Switch Harness connector.

Is the resistance greater than 5 ohms?

Yes >> Repair the (G900) Ignition Switch Sense Return circuit for an open.

Perform BODY VERIFICATION TEST - VER 1. (Refer to BODY VERIFICATION TEST - VER 1).

No >> Replace the Instrument Cluster in accordance with the service information.

Perform BODY VERIFICATION TEST - VER 1. (Refer to BODY VERIFICATION TEST - VER 1).

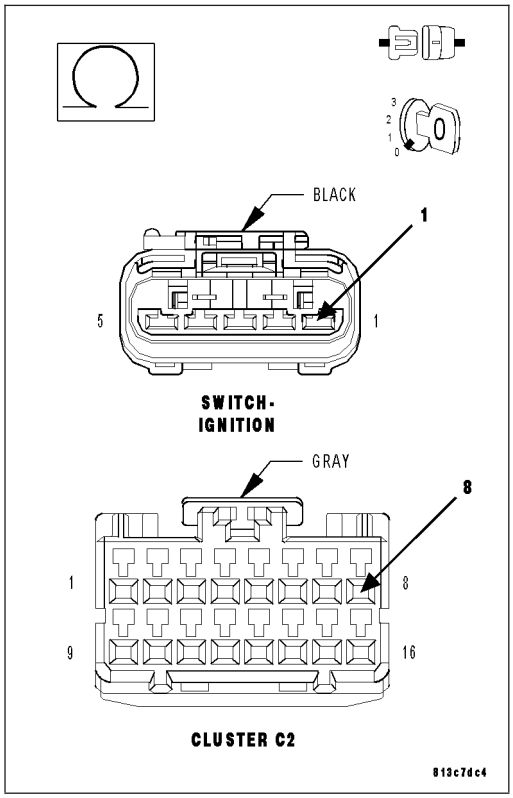

B2213–CCN INTERNAL

For a complete wiring diagram **Refer to Section 8W**.

- **When Monitored:**
  With the Instrument Cluster awake.
- **Set Condition:**
  The Instrument Cluster detects an internal failure.

Possible Causes
INSTRUMENT CLUSTER

Diagnostic Test

1. VERIFY INSTRUMENT CLUSTER OPERATION

With the scan tool, read Cluster DTCs.

Is DTC: B2213–CABIN COMPARTMENT NODE/CLUSTER INTERNAL active?

YES >> Replace the Instrument Cluster in accordance with the service information.
Perform BODY VERIFICATION TEST - VER 1. (Refer to BODY VERIFICATION TEST - VER 1).

NO >> Test complete.

U0019–CAN B BUS

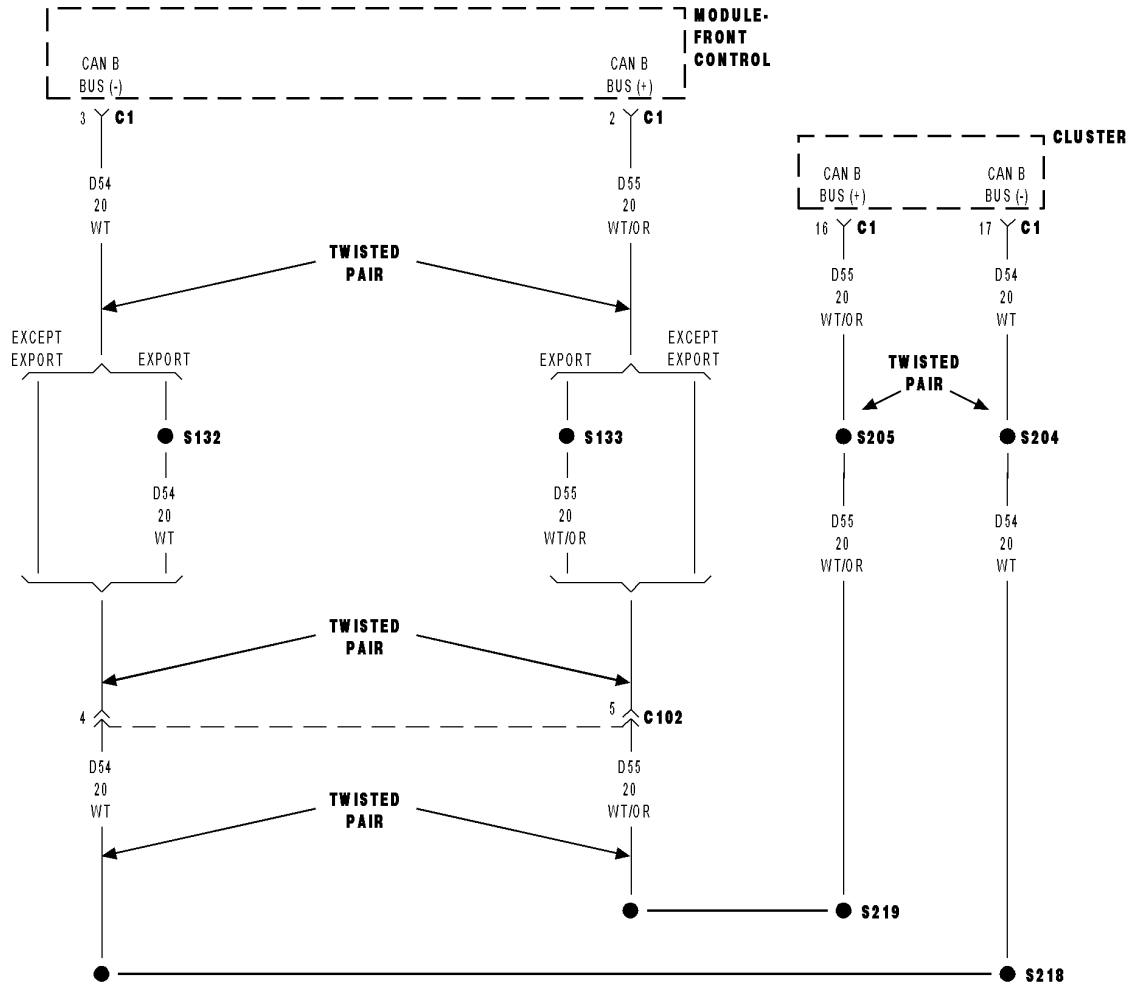

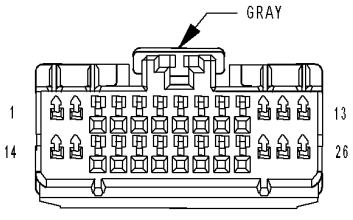

CLUSTER C1

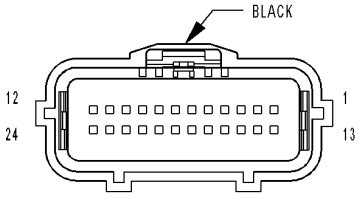

MODULE-
FRONT
CONTROL C1

8138F773

For a complete wiring diagram **Refer to Section 8W**.

- **When Monitored:**
  With the Instrument Cluster awake.
- **Set Condition:**
  Whenever the Can B Bus (+) or B Bus (–) circuit is open, shorted to voltage or shorted to ground, this code will set.

Possible Causes
CAN B BUS DTCs IN FRONT CONTROL MODULE
(D54) CAN B BUS (–) CIRCUIT OPEN
(D55) CAN B BUS (+) CIRCUIT OPEN
INSTRUMENT CLUSTER

Diagnostic Test

1. CHECK FOR AN ACTIVE DTC

Turn the ignition on.
With the scan tool, record and erase DTCs.
Cycle the ignition from on to off 3 times.
Turn the ignition on.
With the scan tool, read DTCs.

Is the DTC active?

Yes >> Go To 2

No >> The condition that caused this code to set is not present at this time. Check for an intermittent condition by inspecting the related wiring harness for chafed, pierced, pinched, and partially broken wires. Also inspect the related connectors for broken, bent, pushed out, spread, corroded, or contaminated terminals.
Perform BODY VERIFICATION TEST - VER 1. (Refer to BODY VERIFICATION TEST - VER 1).

2. CHECK FRONT CONTROL MODULE DTCs

With the scan tool, read Front Control Module DTCs.

Does the scan tool display the U0019–CAN B BUS DTC?

Yes >> Refer to the symptom list for problems related to Communication in the ELECTRICAL.– ELECTRONIC CONTROL MODULES – ELECTRICAL DIAGNOSES section.

No >> Go to 3
Perform BODY VERIFICATION TEST - VER 1. (Refer to BODY VERIFICATION TEST - VER 1).

3. CAN B BUS (+) CIRCUIT OPEN

Turn the ignition off.

Disconnect the Instrument Cluster C1 harness connector.

Disconnect the Front Control Module C1 harness connector.

Measure the resistance of the (D55) Can B Bus (+) circuit between the Front Control Module C1 harness connector and the Instrument Cluster C1 harness connector.

Is the resistance below 2.0 ohms?

Yes >> Go To 4

No >> Repair the Can B Bus (+) circuit for an open.
Perform BODY VERIFICATION TEST - VER 1. (Refer to BODY VERIFICATION TEST - VER 1).

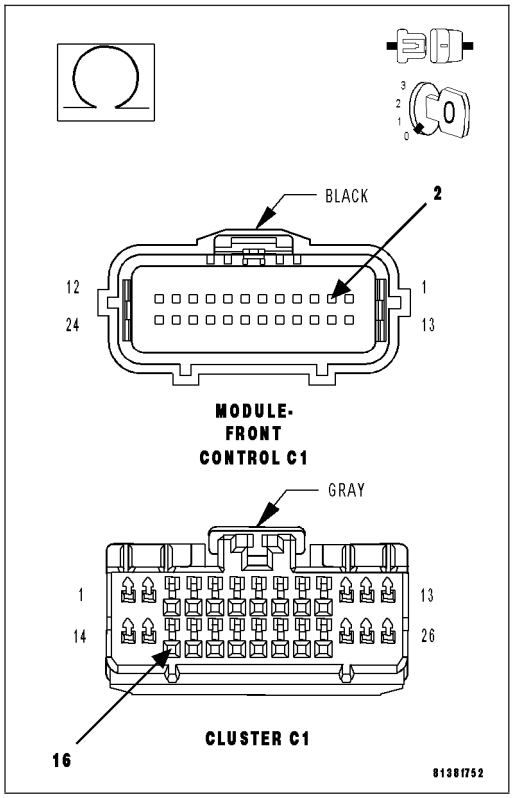

4. CAN B BUS (–) CIRCUIT OPEN

Measure the resistance of the (D54) Can B Bus (–) circuit between the Front Control Module C1 harness connector and the Instrument Cluster C1 harness connector.

Is the resistance below 2.0 ohms?

Yes >> Replace the Instrument Cluster in accordance with the service information.
Perform BODY VERIFICATION TEST - VER 1. (Refer to BODY VERIFICATION TEST - VER 1).

No >> Repair the Can B Bus (–) circuit for an open.
Perform BODY VERIFICATION TEST - VER 1. (Refer to BODY VERIFICATION TEST - VER 1).

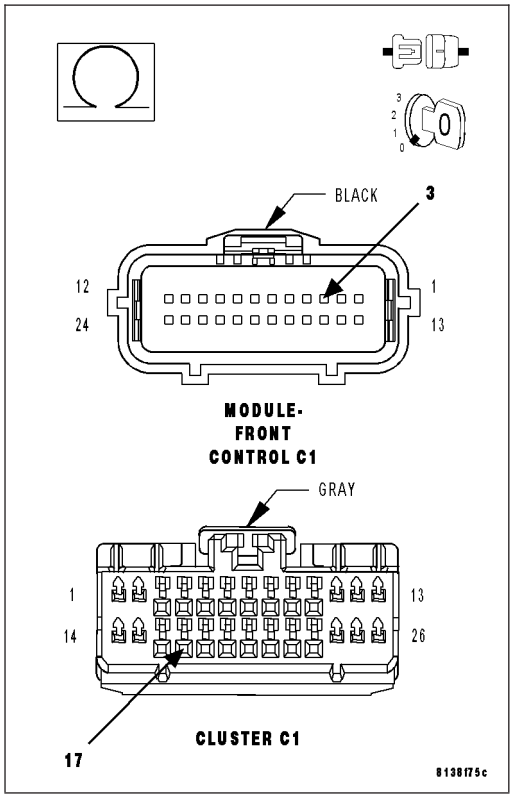

U0141–LOST COMMUNICATION WITH FRONT CONTROL MODULE

For a complete wiring diagram **Refer to Section 8W**.

(Refer to 8 - ELECTRICAL/ELECTRONIC CONTROL MODULES - DIAGNOSIS AND TESTING) for the diagnostic test procedure.

U0151-LOST COMMUNICATION WITH OCCUPANT RESTRAINT CONTROLLER

For a complete wiring diagram **Refer to Section 8W**.

(Refer to 8 - ELECTRICAL/ELECTRONIC CONTROL MODULES - DIAGNOSIS AND TESTING) for the diagnostic test procedure.

U0159-LOST COMMUNICATION WITH PARKING ASSIST CONTROL MODULE

For a complete wiring diagram **Refer to Section 8W**.

(Refer to 8 - ELECTRICAL/ELECTRONIC CONTROL MODULES - DIAGNOSIS AND TESTING) for the diagnostic test procedure.

U0164-LOST COMMUNICATION WITH HVAC CONTROL MODULE

For a complete wiring diagram **Refer to Section 8W**.

(Refer to 8 - ELECTRICAL/ELECTRONIC CONTROL MODULES - DIAGNOSIS AND TESTING) for the diagnostic test procedure.

U0167-LOST COMMUNICATION WITH INTRUSION TRANSCEIVER CONTROL MODULE

For a complete wiring diagram **Refer to Section 8W**.

(Refer to 8 - ELECTRICAL/ELECTRONIC CONTROL MODULES - DIAGNOSIS AND TESTING) for the diagnostic test procedure.

U0168-LOST COMMUNICATION WITH VEHICLE SECURITY CONTROL MODULE (SKREEM/WCM)

For a complete wiring diagram **Refer to Section 8W**.

(Refer to 8 - ELECTRICAL/ELECTRONIC CONTROL MODULES - DIAGNOSIS AND TESTING) for the diagnostic test procedure.

U0184-LOST COMMUNICATION WITH RADIO

For a complete wiring diagram **Refer to Section 8W**.

(Refer to 8 - ELECTRICAL/ELECTRONIC CONTROL MODULES - DIAGNOSIS AND TESTING) for the diagnostic test procedure.

U0195-LOST COMMUNICATION WITH SDARS

For a complete wiring diagram **Refer to Section 8W**.

(Refer to 8 - ELECTRICAL/ELECTRONIC CONTROL MODULES - DIAGNOSIS AND TESTING) for the diagnostic test procedure.

U0197-LOST COMMUNICATION WITH HANDS FREE PHONE MODULE

For a complete wiring diagram **Refer to Section 8W**.

(Refer to 8 - ELECTRICAL/ELECTRONIC CONTROL MODULES - DIAGNOSIS AND TESTING) for the diagnostic test procedure.

U0208-LOST COMMUNICATION WITH HEATED SEAT CONTROL MODULE

For a complete wiring diagram **Refer to Section 8W**.

(Refer to 8 - ELECTRICAL/ELECTRONIC CONTROL MODULES - DIAGNOSIS AND TESTING) for the diagnostic test procedure.

U0209-LOST COMMUNICATION WITH MEMORY SEAT CONTROL MODULE

For a complete wiring diagram **Refer to Section 8W**.

(Refer to 8 - ELECTRICAL/ELECTRONIC CONTROL MODULES - DIAGNOSIS AND TESTING) for the diagnostic test procedure.

U0212-LOST COMMUNICATION WITH SCCM-CAN-B

For a complete wiring diagram **Refer to Section 8W**.

(Refer to 8 - ELECTRICAL/ELECTRONIC CONTROL MODULES - DIAGNOSIS AND TESTING) for the diagnostic test procedure.

INSTRUMENT CLUSTER - SERVICE INFORMATION

TABLE OF CONTENTS

page

INSTRUMENT CLUSTER - SERVICE INFORMATION
DESCRIPTION 46
OPERATION 52
DIAGNOSIS AND TESTING
INSTRUMENT CLUSTER 67
STANDARD PROCEDURE
ENHANCED SEATBELT REMINDER PROGRAMMING 68
REMOVAL 69
INSTALLATION 69
CLUSTER LENS
REMOVAL 70
INSTALLATION 70
INSTRUMENT PANEL SWITCH POD
DESCRIPTION 71
OPERATION 72
REMOVAL 73
INSTALLATION 74

INSTRUMENT CLUSTER - SERVICE INFORMATION

DESCRIPTION

The instrument cluster is an ElectroMechanical Instrument Cluster (EMIC) that is located in the instrument panel above the steering column opening, directly in front of the driver. The remainder of the EMIC, including the mounts and the electrical connections, are concealed within the instrument panel behind the cluster bezel. Besides analog gauges and indicators, the EMIC module incorporates two blue-green digital Vacuum Fluorescent Display (VFD) units for displaying odometer/trip odometer information, engine hours, automatic transmission gear selector position (PRNDL), several warning or reminder indications and certain diagnostic information. The instrument cluster also includes the hardware and software necessary to serve as the electronic body control module and is sometimes referred to as the Cab Compartment Node or CCN.

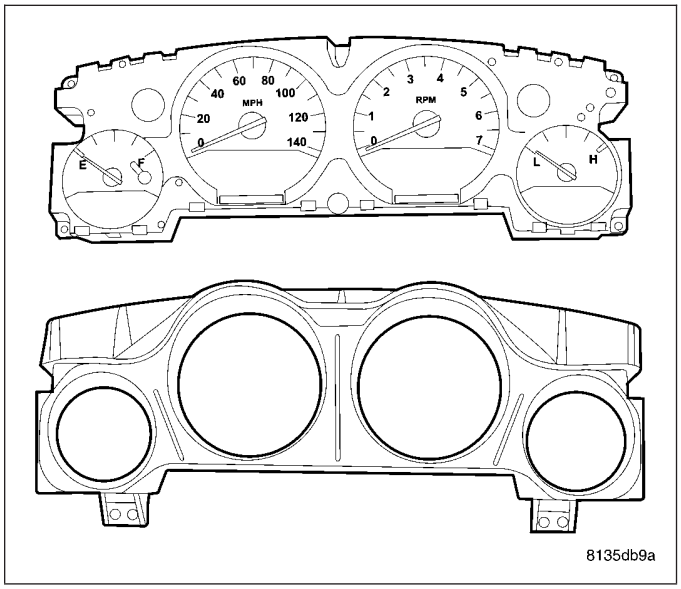

Besides typical instrument cluster gauge and indicator support, the electronic functions and features that the EMIC supports or controls include the following:

- **Accessory Power Delay Relay Control** - The EMIC provides timing and control for the accessory power delay relay based upon inputs from both the ignition switch and the door ajar switches.
- **Audible Warnings** - The EMIC electronic circuit board is equipped with an audible tone transducer and programming that allows it to provide various audible alerts to the vehicle operator, including chime tones and beep tones. An electromechanical relay is also soldered onto the circuit board to produce audible clicks that emulate the sound of a conventional turn signal or hazard warning flasher. (Refer to 8 - ELECTRICAL/CHIME/BUZZER - DESCRIPTION).
- **Automatic Headlamps Control** - On models equipped with optional automatic headlamps, the EMIC monitors inputs from both the headlamp switch and a sun load sensor located on the top of the instrument panel to provide automatic headlamps.
- **Brake Lamp Control** - The EMIC provides electronic brake lamp request messages to the Front Control Module (FCM) located on the Integrated Power Module (IPM) for brake lamp control, excluding control of the Center High Mounted Stop Lamp (CHMSL), which remains controlled by a direct hard wired output of the brake lamp switch.
- **Brake Transmission Shift Interlock Control** - The EMIC monitors inputs from the brake lamp switch, ignition switch, and the Transmission Range Sensor (TRS), then controls a high-side driver output to operate the Brake Transmission Shift Interlock (BTSI) solenoid that locks and unlocks the automatic transmission gearshift selector lever on the steering column.
- **Compass Mini Trip Computer Support** - The EMIC provides support for the optional Compass Mini Trip Computer (CMTC) by calculating average fuel economy, distance to empty and outside temperature values and storing trip odometer and elapsed ignition on time data. The EMIC receives data and reset requests from the CMTC and transmits the appropriate information for the CMTC to display using electronic messaging.
- **Enhanced Accident Response Support** - The EMIC monitors an input from the Occupant Restraint Controller (ORC) and, following an airbag deployment, will immediately disable the power lock output, unlock all doors by activating the power unlock output, then enables the power lock output if the power lock switch input remains inactive for two seconds. The EMIC also monitors an input from the Powertrain Control Module (PCM) to automatically turn on the interior lighting after an airbag deployment event, ten seconds after the vehicle speed is zero. The interior lighting remains illuminated until the ignition switch is turned to the Off position, at which time the interior lighting returns to normal operation and control. These Enhanced Accident Response System (EARS) features are each dependent upon a functional vehicle electrical system following the vehicle impact event.

- **Exterior Lamp Load Shedding** - The EMIC provides a battery saver feature which will automatically turn off all exterior lamps that remain on with the ignition switch in the Off position after a timed interval of about five minutes.
- **Exterior Lighting Control** - The EMIC provides electronic head lamp and/or park lamp request messages to the Front Control Module (FCM) located on the Integrated Power Module (IPM) for the appropriate exterior lamp control of standard head and park lamps, as well as optional front fog lamps. This includes support for headlamp beam selection and the optical horn feature, also known as flash-to-pass.
- **Exterior Lighting Fail-safe** - In the absence of a headlamp switch input, the EMIC will turn on the cluster illumination lamps and provide electronic headlamp low beam and park lamp request messages to the Front Control Module (FCM) located on the Integrated Power Module (IPM) for default exterior lamp operation. The FCM will also provide default park lamp and headlamp low beam operation and the EMIC will turn on the cluster general illumination lighting if there is a failure of the electronic data bus communication between the EMIC and the FCM.
- **Fuel Level Data Support** - The EMIC provides a current source for and receives a hard wired analog input from the fuel level sending unit located on the fuel pump module in the fuel tank. The EMIC uses this input to calculate the proper fuel gauge needle position and low fuel indicator operation. Based upon this input, the EMIC also calculates fuel level, average fuel economy and distance to empty data, then uses electronic messaging to transmit this data over the CAN data bus for use by other electronic modules in the vehicle.
- **Heated Seat Control** - The EMIC monitors inputs from the ignition switch and electronic engine speed messages from the Powertrain Control Module (PCM) to control a high side driver output to the heated seat switch Light Emitting Diode (LED) indicators. This input allows the heated seat switches to wake up the heated seat module if the switch is actuated. The EMIC will de-energize the heated seat switch LED indicators, which deactivates the heated seat system, if the ignition switch is turned to any position except On or Start, or if the engine speed message indicates zero. (Refer to 8 - ELECTRICAL/HEATED SEATS - DESCRIPTION).
- **Horn Control** - The EMIC monitors an input from the horn switch and provides electronic horn request messages to the Front Control Module (FCM) located on the Integrated Power Module (IPM) for horn relay control. The EMIC also controls horn relay operation in this manner to provide the horn features of the optional Remote Keyless Entry (RKE) or Vehicle Theft Security System (VTSS).
- **Interior Lamp Load Shedding** - The EMIC provides a battery saver feature which will automatically turn off all interior lamps that remain on after a timed interval of about fifteen minutes.
- **Interior Lighting Control** - The EMIC monitors inputs from the interior lighting switch, the door ajar switches, the reading lamp switches, and the Sentry Key Remote Entry Module (SKREEM) to provide courtesy lamp control. This includes support for timed illuminated entry with theater-style fade-to-off and courtesy illumination defeat features.
- **Panel Lamps Dimming Control** - The EMIC monitors hard wired multiplexed inputs from the headlamp switch on the instrument panel, then provides a hard wired 12-volt Pulse-Width Modulated (PWM) output that synchronizes the dimming level of all panel lamps dimmer controlled lamps with that of the cluster illumination lighting.
- **Power Locks** - The EMIC monitors inputs from the power lock switches and the Sentry Key REmote Entry Module (SKREEM) to provide control of the power lock motors through high side driver outputs to the motors. This includes support for rolling door locks (also known as automatic door locks), automatic door unlock, briefcase lock mode, door lock inhibit mode, and central locking (with the optional Vehicle Theft Security System only). (Refer to 8 - ELECTRICAL/POWER LOCKS - DESCRIPTION).
- **Remote Keyless Entry** - The EMIC supports the standard Remote Keyless Entry (RKE) system features, including support for the RKE Lock, Unlock (with optional driver-door-only unlock, and unlock-all-doors), Panic, audible chirp, optical chirp, illuminated entry modes, an RKE programming mode, as well as optional Vehicle Theft Security System (VTSS) arming (when the proper VTSS arming conditions are met) and disarming.
- **Remote Radio Switch Interface** - The EMIC monitors inputs from the optional remote radio switches and then provides the appropriate electronic data bus messages to the radio to select the radio operating mode, volume control, preset station scan and station seek features.
- **Turn Signal & Hazard Warning Lamp Control** - The EMIC monitors hard wired multiplexed inputs from the multi-function switch on the steering column, then provides electronic turn and hazard lamp request messages to the Front Control Module (FCM) located on the Integrated Power Module (IPM) for turn and hazard lamp control. The EMIC also provides an audible click at one of two rates to emulate normal and bulb out turn or hazard flasher operation based upon electronic lamp outage messages from the FCM, and provides an audible turn signal on chime warning if a turn is signalled continuously for more than about 1.6 kilometers (one mile) and the vehicle speed remains greater than about twenty-four kilometers-per-hour (fifteen miles-per-hour).

- **Vacuum Fluorescent Display Synchronization** - The EMIC monitors hard wired multiplexed inputs from the headlamp switch on the instrument panel, then transmits electronic panel lamp dimming level messages which allows all other electronic modules on the CAN data bus with Vacuum Fluorescent Display (VFD) units to coordinate their illumination intensity with that of the EMIC VFD units. This includes a parade mode (also known as funeral mode) that allows all VFD units in the vehicle to be illuminated at full (daytime) intensity while driving during daylight hours with the exterior lamps turned On.
- **Vehicle Theft Security System Control** - The EMIC monitors inputs from the door ajar switches, the liftgate ajar switch, the ignition switch, and the Sentry Key REmote Entry Module (SKREEM), then provides electronic horn and lighting request messages to the Front Control Module (FCM) located on the Integrated Power Module (IPM) for the appropriate VTSS alarm output features.
- **Wiper/Washer System Control** - The EMIC monitors both hard wired multiplexed inputs from the front wiper and washer switches in the multi-function switch on the steering column and electronic messages from the rear wiper and washer switches in the heater and air conditioner control on the instrument panel. The EMIC then provides electronic wiper and/or washer request messages to the Front Control Module (FCM) located on the Integrated Power Module (IPM) for the appropriate front or rear wiper and washer system features. (Refer to 8 - ELECTRICAL/WIPERS/WASHERS - DESCRIPTION).

ELECTRONIC VEHICLE INFORMATION CENTER

Eight switches mounted on the steering wheel control the Electronic Vehicle Information Center (EVIC). Pressing the switches, conveniently selects from a variety of useful information. Personal settings, hands-free system communication system screens, Navigation system screens, trip computer functions, outside temperature, compass headings, audio modes and System Status messages including Tire Pressure Monitor System warnings can be displayed in the EVIC. For more detailed information (Refer to 8 - ELECTRICAL/OVERHEAD CONSOLE/ELECTRONIC VEHICLE INFORMATION CENTER - DESCRIPTION).

CHRYSLER INSTRUMENT CLUSTERS

Three clusters are offered on Chrysler 300 sedans.

300 AND 300 TOURING EDITION

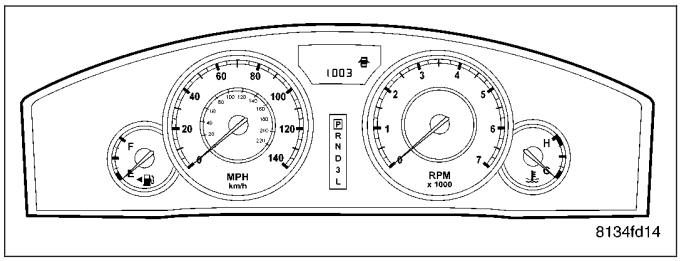

The Chrysler 300 and base 300 Touring Edition model instrument clusters include the following features:

- Four large easy to read gauges: Fuel, speedometer, tachometer and engine temperature.
- Electroluminescent silhouette-lit alabaster gauges (gauge faces glow blue-green when headlamps are on). Electroluminescent lighting is totally uniform and glare free for optimum driver visibility.
- Black gauge pointers.
- Vertical vacuum-fluorescent transmission shift-range indicator.
- Up to 19 warning indicators depending on equipment level.
- Chrome gauge rings.
- 140-mph speedometer.
- Vacuum-fluorescent odometer with outside temperature indicator and three warning indicators: Trunk Ajar, Low Washer Fluid, and Door Ajar.

300 TOURING LUXURY, LUXURY SPORT, AND SRT8

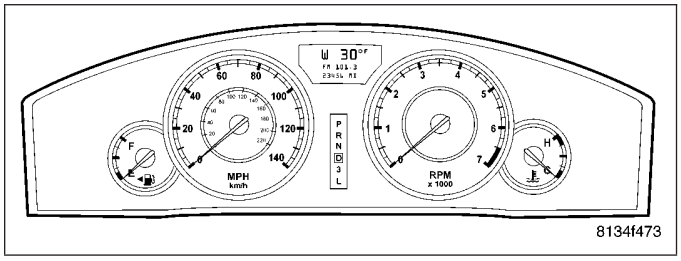

Instrument clusters on Chrysler 300 Touring Edition with Luxury or Luxury Sport packages include the following features:

- Four large easy to read gauges: Fuel, speedometer, tachometer and engine temperature.
- Electroluminescent silhouette-lit alabaster gauges (gauge faces glow blue-green when headlamps are on). Electroluminescent lighting is totally uniform and glare free for optimum driver visibility.

- Black gauge pointers.
- Vertical vacuum-fluorescent transmission shift-range indicator.
- Up to 19 warning indicators depending on equipment level.
- Chrome gauge rings.
- Electronic Vehicle Information Center with driver-interactive three-line dot-matrix display controlled by steering wheel switches.
- 180-mph speedometer on SRT8.

HEMI C AND EXPORT 300C

The Chrysler 300Hemi C and Export 300C instrument cluster include the following features:

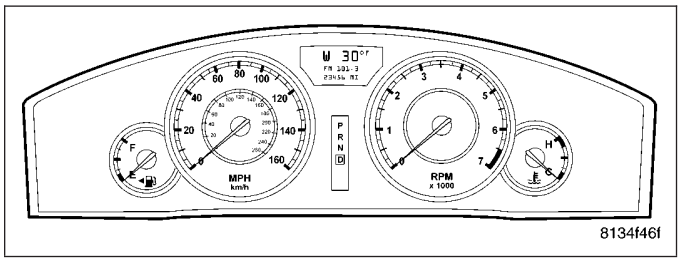

- Four large easy to read gauges: Fuel, speedometer, tachometer and engine temperature.
- Electroluminescent silhouette-lit alabaster gauges (gauge faces glow blue-green when headlamps are on). Electroluminescent lighting is totally uniform and glare free for optimum driver visibility.
- Black gauge pointers.
- Vertical vacuum-fluorescent transmission shift-range indicator.
- Up to 19 warning indicators depending on equipment level.
- Chrome gauge rings.
- Electronic Vehicle Information Center with driver-interactive three-line dot-matrix display controlled by steering wheel switches.
- 160-mph speedometer.

APPEARANCE AND LIGHTING

Alabaster gauge faces with black nomenclature and black pointers provide excellent visibility in daylight. With the headlamps on, the electroluminescent gauges glow blue-green. The lighting intensity of the gauges can be adjusted to suit the driver's preference, using the thumbwheel dimmer control that is part of the headlamp switch. Electroluminescent lighting is totally uniform and glare free for optimum driver visibility.

FIXED SEGMENT DISPLAYS

The standard cluster features two fixed—segment vacuum fluorescent digital displays to show transmission range and odometer reading. The fixed-segment odometer display also includes the following indicators:

ODOMETER DISPLAY INDICATORS

INDICATOR	DISPLAY	COLOR
Trunk Ajar	ISO	Blue/Green
Low Wash	ISO	Blue/Green
Door Ajar	ISO	Blue/Green
Outside Temperature	Numeric	Blue/Green

INDICATOR LAMPS

The following indicator lamps are included in all instrument clusters. Actual usage depends on how the vehicle is equipped.

INDICATOR LAMPS

INDICATOR	DISPLAY	COLOR
Right Turn	ISO	Green
Left Turn	ISO	Green
Front Fog Lamps	ISO	Green
Rear Fog (Export Only)	ISO	Amber
High Beam	ISO	Blue
Brake	Word U.S. only/ISO Export	Red
Seat Belt	ISO	Red
Airbag	ISO	Red
Electronic Throttle Control	ISO	Red
Low Oil Pressure	ISO	Red
Engine Temperature	ISO	Red
Charge	ISO	Red
VTA (Vehicle Theft Alarm)	Dot	Red
ABS	ISO	Amber
Check Engine	ISO	Amber
BAS (Brake Assist)	ISO	Amber
ASR/ESP (Anti-Slip Regulation/Electronic Stability Program)	ISO	Amber
Low Fuel	ISO	Amber
TPM (Tire Pressure Monitor)	ISO	Amber

DODGE INSTRUMENT CLUSTERS

Two clusters are offered on the Dodge Magnum Sports Tourer.

DODGE MAGNUM SE AND SXT

The Magnum SE and SXT instrument clusters include the following features:

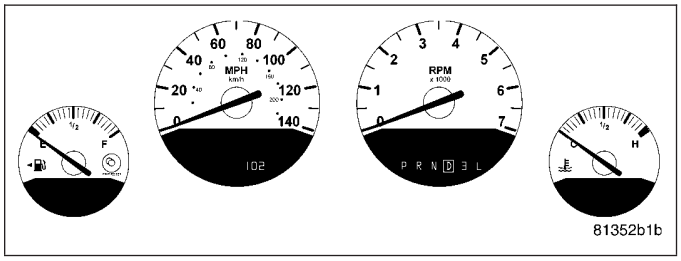

- Horizontal odometer with outside temperature indicator and four blue-green ISO messages (fixed segment display).
- Vertical transmission shift-range indicator.
- White mask and lens assembly for individual gauges.
- Electroluminescent silhouette-lit white gauges (gauges glow white when headlamps are on).
- Four large easy to read gauges: Fuel, 140-mph speedometer, tachometer and engine temperature.
- Non-lit orange pointers.

DODGE MAGNUM RT

The Magnum RT instrument cluster includes the following features:

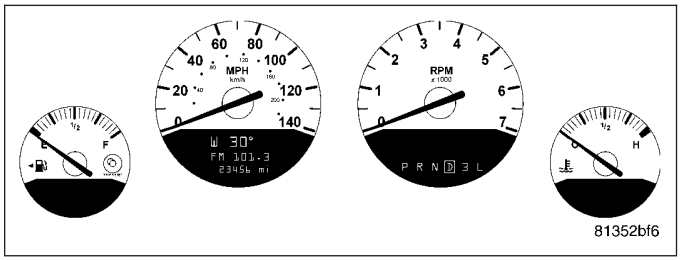

- Vertical transmission shift-range indicator.
- White mask and lens assembly for individual gauges.
- Electroluminescent silhouette-lit white gauges (gauges glow white when headlamps are on).

- Four large easy to read gauges: Fuel, 140-mph speedometer, tachometer and engine temperature.
- Non-lit orange pointers.
- Dot-matrix Electronic Vehicle Information Center with Driver-Interactive Display.
- 160-mph speedometer.

APPEARANCE AND LIGHTING

White gauge faces with black nomenclature provide excellent visibility in daylight. Pointers are non-lit orange. With the headlamps on, the electroluminescent gauges glow white. The lighting intensity of the gauges can be adjusted to suit the driver's preference, using the thumbwheel dimmer control that is part of the headlamp switch. Electroluminescent lighting is uniform and glare free for optimum driver visibility.

FIXED SEGMENT DISPLAYS

The standard cluster features two fixed—segment vacuum fluorescent digital displays to show transmission range and odometer reading. The fixed-segment odometer display also includes the following indicators:

ODOMETER DISPLAY INDICATORS

INDICATOR	DISPLAY	COLOR
Hatch Ajar	ISO	Blue/Green
Low Wash	ISO	Blue/Green
Door Ajar	ISO	Blue/Green
Outside Temperature	Numeric	Blue/Green

INDICATOR LAMPS

The following indicator lamps are included in all instrument clusters. Actual usage depends on how the vehicle is equipped.

INDICATOR LAMPS

INDICATOR	DISPLAY	COLOR
Right Turn	ISO	Green
Left Turn	ISO	Green
Front Fog Lamps	ISO	Green
High Beam	ISO	Blue
Brake	Word U.S. only/ISO Export	Red
Seat Belt	ISO	Red
Airbag	ISO	Red
Electronic Throttle Control	ISO	Red
Low Oil Pressure	ISO	Red
Engine Temperature	ISO	Red
Charge	ISO	Red
VTA (Vehicle Theft Alarm)	Dot	Red
ABS	ISO	Amber
Check Engine	ISO	Amber
BAS (Brake Assist)	ISO	Amber
ASR/ESP (Anti-Slip Regulation/Electronic Stability Program)	ISO	Amber
Low Fuel	ISO	Amber
TPM (Tire Pressure Monitor)	ISO	Amber

OPERATION

The microprocessor-based EMIC hardware and software uses various inputs to control the gauges and indicators visible on the face of the cluster. Some of these inputs are hard wired, but most are in the form of electronic messages that are transmitted by other electronic modules over the Controller Area Network (CAN) data bus. (Refer to 8 - ELECTRICAL/ELECTRONIC CONTROL MODULES/COMMUNICATION - OPERATION).

The EMIC microprocessor smooths the input data using algorithms to provide gauge readings that are accurate, stable and responsive to operating conditions. These algorithms are designed to provide gauge readings during normal operation that are consistent with customer expectations. However, when abnormal conditions exist such as high coolant temperature, the algorithm can drive the gauge pointer to an extreme position and the microprocessor can sound a chime through the on-board audible tone transducer to provide distinct visual and audible indications of a problem to the vehicle operator. The EMIC may also produce audible warnings for other electronic modules in the vehicle based upon electronic tone request messages received over the CAN data bus. Each audible warning is intended to provide the vehicle operator with an audible alert to supplement a visual indication.

The EMIC circuitry operates on battery current received through a fused B(+) fuse on a non-switched fused B(+) circuit, and on battery current received through a fused ignition switch output (run-start) fuse on a fused ignition switch output (run-start) circuit. This arrangement allows the EMIC to provide some features regardless of the ignition switch position, while other features will operate only with the ignition switch in the On or Start positions. The EMIC circuitry is grounded through a ground circuit of the instrument panel wire harness.

The EMIC also has a self-diagnostic actuator test capability (Refer to 8 - ELECTRICAL/INSTRUMENT CLUSTER - DIAGNOSIS AND TESTING), which will test each of the CAN bus message-controlled functions of the cluster by lighting the appropriate indicators, positioning the gauge needles at several predetermined calibration points across the gauge faces, and illuminating all segments of the odometer/trip odometer and gear selector indicator Vacuum-Fluorescent Display (VFD) units.

GAUGES

All gauges receive battery current through the EMIC circuitry only when the ignition switch is in the On or Start positions. With the ignition switch in the Off position battery current is not supplied to any gauges, and the EMIC circuitry is programmed to move all of the gauge needles back to the low end of their respective scales. Therefore, the gauges do not accurately indicate any vehicle condition unless the ignition switch is in the On or Start positions.

All of the EMIC gauges are air core magnetic units. Two fixed electromagnetic coils are located within each gauge. These coils are wrapped at right angles to each other around a movable permanent magnet. The movable magnet is suspended within the coils on one end of a pivot shaft, while the gauge needle is attached to the other end of the shaft. One of the coils has a fixed current flowing through it to maintain a constant magnetic field strength. Current flow through the second coil changes, which causes changes in its magnetic field strength. The current flowing through the second coil is changed by the EMIC circuitry in response to messages received over the CAN data bus. The gauge needle moves as the movable permanent magnet aligns itself to the changing magnetic fields created around it by the electromagnets.

ENGINE COOLANT TEMPERATURE GAUGE

This gauge is controlled by the instrument cluster circuit board based upon cluster programming and electronic messages received by the cluster from the Powertrain Control Module (PCM) over the Controller Area Network (CAN) data bus.

The engine coolant temperature gauge is an air core magnetic unit that receives battery current on the instrument cluster electronic circuit board through the fused ignition switch output (run-start) circuit whenever the ignition switch is in the On or Start positions. The cluster is programmed to move the gauge needle back to the low end of the scale after the ignition switch is turned to the Off position. The instrument cluster circuitry controls the gauge needle position and provides the following features:

- **Engine Temperature Message** - Each time the cluster receives a message from the PCM indicating the engine coolant temperature is between the low end of normal [about 54° C (130° F)] and the high end of normal [about 122° C (252° F)], the gauge needle is moved to the actual relative temperature position on the gauge scale.
- **Engine Temperature Low Message** - Each time the cluster receives a message from the PCM indicating the engine coolant temperature is below the low end of normal [about 54° C (130° F)], the gauge needle is held at the “C” increment at low end of the gauge scale. The gauge needle remains at the low end of the gauge

scale until the cluster receives a message from the PCM indicating that the engine temperature is above about 54° C (130° F), or until the ignition switch is turned to the Off position, whichever occurs first.

- **Engine Temperature High Message** - Each time the cluster receives a message from the PCM indicating the engine coolant temperature is above about 122° C (252° F), the gauge needle is moved into the red zone on the gauge scale, the engine temperature indicator is illuminated, and a single chime tone is sounded. The gauge needle remains in the red zone and the engine temperature indicator remains illuminated until the cluster receives a message from the PCM indicating that the engine temperature is below about 122° C (252° F), or until the ignition switch is turned to the Off position, whichever occurs first. The chime tone feature will only repeat during the same ignition cycle if the engine temperature indicator is cycled off and then on again by the appropriate engine temperature messages from the PCM.
- **Communication Error** - If the cluster fails to receive an engine temperature message, it will hold the gauge needle at the last indication for about five seconds or until the ignition switch is turned to the Off position, whichever occurs first. After five seconds, the cluster will move the gauge needle to the low end of the gauge scale.
- **Actuator Test** - Each time the cluster is put through the actuator test, the engine coolant temperature gauge needle will be swept to several calibration points on the gauge scale in a prescribed sequence in order to confirm the functionality of the gauge and the cluster control circuitry.

The PCM continually monitors the engine coolant temperature sensor to determine the engine operating temperature. The PCM then sends the proper engine coolant temperature messages to the instrument cluster. For further diagnosis of the engine coolant temperature gauge or the instrument cluster circuitry that controls the gauge, (Refer to 8 - ELECTRICAL/INSTRUMENT CLUSTER - DIAGNOSIS AND TESTING). If the instrument cluster turns on the engine temperature indicator due to a high engine temperature gauge reading, it may indicate that the engine or the engine cooling system requires service. The engine coolant temperature gauge is serviced as a unit with the instrument cluster.

FUEL GAUGE

The fuel gauge gives an indication to the vehicle operator of the level of fuel in the fuel tank. This gauge is controlled by the instrument cluster circuit board based upon cluster programming and a hard wired input received by the cluster from the fuel level sending unit on the fuel pump module in the fuel tank.

The fuel gauge is an air core magnetic unit that receives battery current on the instrument cluster electronic circuit board through the fused ignition switch output (run-start) circuit whenever the ignition switch is in the On or Start positions. The cluster is programmed to move the gauge needle back to the low end of the scale after the ignition switch is turned to the Off position. The instrument cluster circuitry controls the gauge needle position and provides the following features:

- **Fuel Level Sending Unit Input** - The cluster provides a constant current source to the fuel level sending unit and monitors a return input on a fuel level sense circuit. The resistance through the fuel level sending unit increases as the fuel level falls and decreases as the fuel level rises causing changes in the sense input voltage. The cluster programming applies an algorithm to calculate the proper fuel gauge needle position based upon the fuel level sense input, then moves the gauge needle to the proper relative position on the gauge scale. This algorithm is used to dampen gauge needle movement against the negative effect that fuel sloshing within the fuel tank can have on accurate inputs from the fuel tank sending unit to the cluster.
- **Less Than Ten Percent Tank Full Input** - Each time the fuel level sense input to the cluster indicates the fuel tank is about ten percent full or less for ten consecutive seconds and the vehicle speed is zero, or for sixty consecutive seconds and the vehicle speed is greater than zero, the gauge needle is moved to about the one-eighth graduation on the gauge scale, the low fuel indicator is illuminated, and a single chime tone is sounded. The low fuel indicator remains illuminated until the fuel level sense input indicates that the fuel tank is greater than about thirteen percent full for ten consecutive seconds and the vehicle speed is zero, or for sixty consecutive seconds and the vehicle speed is greater than zero, or until the ignition switch is turned to the Off position, whichever occurs first. The chime tone feature will only repeat during the same ignition cycle if the low fuel indicator is cycled off and then on again by the appropriate inputs from the fuel level sending unit.
- **Less Than Empty Stop Input** - Each time the cluster receives a fuel level sense input that indicates the fuel level in the fuel tank is less than the Empty gauge needle stop position, the gauge needle is moved to the low end of the gauge scale and the low fuel indicator is illuminated immediately. This input would indicate that the fuel level sense input to the cluster is a short circuit.
- **More Than Full Stop Input** - Each time the cluster receives a fuel level sense input that indicates the fuel level in the fuel tank is more than the Full gauge needle stop position, the gauge needle is moved to the low

end of the gauge scale and the low fuel indicator is illuminated immediately. This input would indicate that the fuel level sense input to the cluster is an open circuit.

- **Actuator Test** - Each time the cluster is put through the actuator test, the fuel gauge needle will be swept to several calibration points on the gauge scale in a prescribed sequence in order to confirm the functionality of the gauge and the cluster control circuitry.

The instrument cluster continually monitors the fuel tank sending unit to determine the level of fuel in the fuel tank. The cluster then sends the proper fuel level messages to other electronic modules in the vehicle over the Controller Area Network (CAN) data bus. For further diagnosis of the fuel gauge or the instrument cluster circuitry that controls the gauge, (Refer to 8 - ELECTRICAL/INSTRUMENT CLUSTER - DIAGNOSIS AND TESTING). The fuel gauge is serviced as a unit with the instrument cluster.

SPEEDOMETER

The speedometer gives an indication to the vehicle operator of the vehicle road speed. This gauge is controlled by the instrument cluster circuit board based upon cluster programming and electronic messages received by the cluster from the Powertrain Control Module (PCM) over the Controller Area Network (CAN) data bus.

The speedometer is an air core magnetic unit that receives battery current on the instrument cluster electronic circuit board through the fused ignition switch output (run-start) circuit whenever the ignition switch is in the On or Start positions. The cluster is programmed to move the gauge needle back to the low end of the scale after the ignition switch is turned to the Off position. The instrument cluster circuitry controls the gauge needle position and provides the following features:

- **Vehicle Speed Message** - Each time the cluster receives a vehicle speed message from the PCM it will calculate the correct vehicle speed reading and position the gauge needle at that relative speed position on the gauge scale. The cluster will receive a new vehicle speed message and reposition the gauge pointer accordingly about every 88 milliseconds. The gauge needle will continually be positioned at the relative vehicle speed position on the gauge scale until the vehicle stops moving, or until the ignition switch is turned to the Off position, whichever occurs first.
- **Communication Error** - If the cluster fails to receive a speedometer message, it will hold the gauge needle at the last indication for about three seconds, or until the ignition switch is turned to the Off position, whichever occurs first. After three seconds, the gauge needle will return to the left end of the gauge scale.
- **Actuator Test** - Each time the cluster is put through the actuator test, the speedometer needle will be swept to several calibration points on the gauge scale in a prescribed sequence in order to confirm the functionality of the gauge and the cluster control circuitry.

The PCM continually monitors the vehicle speed sensor to determine the vehicle road speed. The PCM then sends the proper vehicle speed messages to the instrument cluster. For further diagnosis of the speedometer or the instrument cluster circuitry that controls the gauge, (Refer to 8 - ELECTRICAL/INSTRUMENT CLUSTER - DIAGNOSIS AND TESTING). The speedometer is serviced as a unit with the instrument cluster.

TACHOMETER

The tachometer gives an indication to the vehicle operator of the engine speed. This gauge is controlled by the instrument cluster circuit board based upon cluster programming and electronic messages received by the cluster from the Powertrain Control Module (PCM) over the Controller Area Network (CAN) data bus.

The tachometer is an air core magnetic unit that receives battery current on the instrument cluster electronic circuit board through the fused ignition switch output (run-start) circuit whenever the ignition switch is in the On or Start positions. The cluster is programmed to move the gauge needle back to the low end of the scale after the ignition switch is turned to the Off position. The instrument cluster circuitry controls the gauge needle position and provides the following features:

- **Engine Speed Message** - Each time the cluster receives an engine speed message from the PCM it will calculate the correct engine speed reading and position the gauge needle at that relative speed position on the gauge scale. The cluster will receive a new engine speed message and reposition the gauge pointer accordingly about every 88 milliseconds. The gauge needle will continually be repositioned at the relative engine speed position on the gauge scale until the engine stops running, or until the ignition switch is turned to the Off position, whichever occurs first.
- **Communication Error** - If the cluster fails to receive an engine speed message, it will hold the gauge needle at the last indication for about three seconds, or until the ignition switch is turned to the Off position, whichever occurs first. After three seconds, the gauge needle will return to the left end of the gauge scale.

- **Actuator Test** - Each time the cluster is put through the actuator test, the tachometer needle will be swept to several calibration points on the gauge scale in a prescribed sequence in order to confirm the functionality of the gauge and the cluster control circuitry.

The PCM continually monitors the crankshaft position sensor to determine the engine speed. The PCM then sends the proper engine speed messages to the instrument cluster. For further diagnosis of the tachometer or the instrument cluster circuitry that controls the gauge, (Refer to 8 - ELECTRICAL/INSTRUMENT CLUSTER - DIAGNOSIS AND TESTING). The tachometer is serviced as a unit with the instrument cluster.

The gauges are diagnosed using the EMIC self-diagnostic actuator test (Refer to 8 - ELECTRICAL/INSTRUMENT CLUSTER - DIAGNOSIS AND TESTING). Proper testing of the CAN data bus and the electronic data bus message inputs to the EMIC that control each gauge require the use of a diagnostic scan tool. Refer to the appropriate diagnostic information.

VACUUM-FLUORESCENT DISPLAYS

The Vacuum-Fluorescent Display (VFD) units are soldered to the EMIC electronic circuit board. With the ignition switch in the Off or Accessory positions, the odometer display is activated when the driver door is opened (Rental Car mode) and is deactivated when the driver door is closed. Otherwise, both display units are active when the ignition switch is in the On or Start positions, and inactive when the ignition switch is in the Off or Accessory positions.

The illumination intensity of the VFD units is controlled by the EMIC circuitry based upon an input from the headlamp switch and a dimming level input received from the panel dimmer switch. The EMIC synchronizes the illumination intensity of other VFD units with that of the units in the EMIC by sending electronic dimming level messages to other electronic modules in the vehicle over the CAN data bus.

While in the odometer mode with the ignition switch in the On position and the engine not running, depressing the odometer/trip odometer switch for about six seconds will display the engine hours information. Holding this switch depressed while turning the ignition switch from the Off position to the On position will initiate the EMIC self-diagnostic actuator test. Refer to the instrument cluster diagnosis and testing service information for additional details on this cluster function. The EMIC microprocessor remembers which display mode is active when the ignition switch is turned to the Off position, and returns the VFD display to that mode when the ignition switch is turned On again.

The VFD units are diagnosed using the EMIC self-diagnostic actuator test (Refer to 8 - ELECTRICAL/INSTRUMENT CLUSTER - DIAGNOSIS AND TESTING). Proper testing of the CAN data bus and the electronic data bus message inputs to the EMIC that control some of the VFD functions requires the use of a diagnostic scan tool. Refer to the appropriate diagnostic information.

TRANSMISSION RANGE INDICATOR

The electronic transmission range indicator gives an indication to the vehicle operator of the transmission gear that has been selected with the automatic transmission gear selector lever. This indicator is controlled by the instrument cluster circuit board based upon cluster programming and electronic messages received from the Powertrain Control Module (PCM) over the Controller Area Network (CAN) data bus.

The transmission range indicator information is displayed by a dedicated Vacuum Fluorescent Display (VFD) unit soldered onto the instrument cluster electronic circuit board, and the VFD will not display the transmission range indicator information after the ignition switch is turned to the Off position. Each time the cluster is disconnected from battery current for more than about five minutes, it must configure itself for the automatic transmission model that is in the vehicle once it is reconnected to battery current. The instrument cluster circuitry operates the transmission range indicator VFD to provide the following features:

- **Selected Gear Message** - Each time the cluster receives a selected gear message from the PCM, a box will be illuminated around the appropriate character in the gear selector indicator VFD. The box will remain illuminated until the cluster receives a different selected gear message, or until the ignition switch is turned to the Off position, whichever occurs first.
- **Communication Error** - If the cluster fails to receive a selected gear message from the PCM within three seconds, the instrument cluster circuitry will display all gear selector positions boxed (selected) until a valid selected gear message is received or until the ignition switch is turned to the Off position, whichever occurs first.
- **Actuator Test** - Each time the cluster is put through the actuator test, the gear selector indicator VFD will display all of its characters at once, then step through each character segment individually during the VFD portion of the test to confirm the functionality of the VFD and the cluster control circuitry.

The PCM continually monitors a hard wired multiplex input from the Transmission Range Sensor (TRS), then sends the proper selected gear messages to the instrument cluster. For further diagnosis of the transmission range indicator or the instrument cluster circuitry that controls this function, (Refer to 8 - ELECTRICAL/INSTRUMENT CLUSTER - DIAGNOSIS AND TESTING). The Transmission Range indicator is serviced with the instrument cluster.

INDICATORS

Indicators are located in various positions within the EMIC and are all connected to the EMIC electronic circuit board. The various EMIC indicators are controlled by different strategies; some receive fused ignition switch output from the EMIC circuitry and have a switched ground, while others are grounded through the EMIC circuitry and have a switched battery feed. However, all indicators are completely controlled by the EMIC microprocessor based upon various hard wired and electronic message inputs. All indicators except those located within the VFD units are illuminated at a fixed intensity, which is not affected by the selected illumination intensity of the electro-luminescent EMIC general illumination lamp. The illumination intensity of those within the VFD units is synchronized with that of the EMIC general illumination lamp.

In addition, certain indicators in this instrument cluster are automatically configured or self-configured. This feature allows the configurable indicators to be enabled by the EMIC circuitry for compatibility with certain optional equipment. The EMIC defaults for the ABS indicator and airbag indicator are enabled, and these configuration settings must be programmatically disabled in the EMIC using a diagnostic scan tool for vehicles that do not have this equipment. The automatically configured or self-configured indicators remain latent in each EMIC at all times and will be active only when the EMIC receives the appropriate CAN message inputs for that optional system or equipment.

ABS INDICATOR



The ABS indicator gives an indication to the vehicle operator when the ABS system is faulty or inoperative. This indicator is controlled by a transistor on the instrument cluster circuit board based upon cluster programming and electronic messages received by the cluster from the Controller Antilock Brake (CAB) over the Controller Area Network (CAN) data bus.

The ABS indicator Light Emitting Diode (LED) is completely controlled by the instrument cluster logic circuit, and that logic will only allow this indicator to operate when the instrument cluster receives a battery current input on the fused ignition switch output (run-start) circuit. Therefore, the LED will always be off when the ignition switch is in any position except On or Start. The LED only illuminates when it is provided a path to ground by the instrument cluster transistor. The instrument cluster will turn on the ABS indicator for the following reasons:

- **Bulb Test** - Each time the ignition switch is turned to the On position the ABS indicator is illuminated for about four seconds as a bulb test. The entire bulb test is a function of the CAB.
- **ABS Lamp-On Message** - Each time the cluster receives a lamp-on message from the CAB, the ABS indicator will be illuminated. The indicator remains illuminated until the cluster receives a lamp-off message from the CAB, or until the ignition switch is turned to the Off position, whichever occurs first.
- **Communication Error** - If the cluster receives no lamp-on or lamp-off messages from the CAB for five consecutive message cycles, the ABS indicator is illuminated. The indicator remains illuminated until the cluster receives a valid message from the CAB, or until the ignition switch is turned to the Off position, whichever occurs first.
- **Actuator Test** - Each time the instrument cluster is put through the actuator test, the ABS indicator will be turned on, then off again during the bulb check portion of the test to confirm the functionality of the LED and the cluster control circuitry.
- **ABS Diagnostic Test** - The ABS indicator is blinked on and off by lamp-on and lamp-off messages from the CAB during the performance of the ABS diagnostic tests.

The CAB continually monitors the ABS circuits and sensors to decide whether the system is in good operating condition. The CAB then sends the proper lamp-on or lamp-off messages to the instrument cluster. If the CAB sends a lamp-on message after the bulb test, it indicates that the CAB has detected a system malfunction and/or that the ABS system has become inoperative. The CAB will store a Diagnostic Trouble Code (DTC) for any malfunction it detects. Each time the ABS indicator fails to light due to an open or short in the cluster ABS indicator circuit, the cluster sends a message notifying the CAB of the condition, then the instrument cluster and the CAB will each store a DTC. The ABS indicator is serviced with the instrument cluster.

AIRBAG INDICATOR



The airbag indicator gives an indication to the vehicle operator when the airbag system is faulty or inoperative. The airbag indicator is controlled by a transistor on the instrument cluster circuit board based upon cluster programming and electronic messages received by the cluster from the Occupant Restraint Controller (ORC) over the Controller Area Network (CAN) data bus.

The airbag indicator Light Emitting Diode (LED) is completely controlled by the instrument cluster logic circuit, and that logic will only allow this indicator to operate when the instrument cluster receives a battery current input on the fused ignition switch output (run-start) circuit. Therefore, the LED will always be off when the ignition switch is in any position except On or Start. The LED only illuminates when it is provided a path to ground by the instrument cluster transistor. The instrument cluster will turn on the airbag indicator for the following reasons:

- **Bulb Test** - Each time the ignition switch is turned to the On position the airbag indicator is illuminated for about six to eight seconds. The entire bulb test is a function of the ORC.
- **ORC Lamp-On Message** - Each time the cluster receives a lamp-on message from the ORC, the airbag indicator will be illuminated. The indicator remains illuminated for about twelve seconds or until the cluster receives a lamp-off message from the ORC, whichever is longer.
- **Communication Error** - If the cluster receives no airbag messages for ten consecutive message cycles, the airbag indicator is illuminated. The indicator remains illuminated until the cluster receives a single lamp-off message from the ORC.
- **Actuator Test** - Each time the cluster is put through the actuator test, the airbag indicator will be turned on, then off again during the bulb check portion of the test to confirm the functionality of the LED and the cluster control circuitry. The actuator test illumination of the airbag indicator is a function of the instrument cluster.

The ORC continually monitors the airbag system circuits and sensors to decide whether the system is in good operating condition. The ORC then sends the proper lamp-on or lamp-off messages to the instrument cluster. If the ORC sends a lamp-on message after the bulb test, it indicates that the ORC has detected a system malfunction and/or that the airbags and seat belt tensioners may not deploy when required, or may deploy when not required. The ORC will store a Diagnostic Trouble Code (DTC) for any malfunction it detects. Each time the airbag indicator fails to illuminate due to an open or short in the cluster airbag indicator circuit, the cluster sends a message notifying the ORC of the condition, the instrument cluster and the ORC will each store a DTC, and the cluster will flash the seat belt indicator on and off as a backup to notify the vehicle operator. The Airbag indicator is serviced with the instrument cluster.

BRAKE/PARK BRAKE INDICATOR



The brake indicator gives an indication to the vehicle operator when the parking brake is applied, when there are certain brake hydraulic system malfunctions as indicated by a low brake hydraulic fluid level condition, or when the brake fluid level switch is disconnected. The brake indicator can also give an indication when certain faults are detected in the Antilock Brake System (ABS). This indicator is controlled by a transistor on the instrument cluster circuit board based upon cluster programming, electronic messages received by the cluster from the Controller Antilock Brake (CAB) over the Controller Area Network (CAN) data bus, and a hard wired input from the park brake switch.

The brake indicator Light Emitting Diode (LED) is completely controlled by the instrument cluster logic circuit, and that logic will only allow this indicator to operate when the instrument cluster receives a battery current input on the fused ignition switch output (run-start) circuit. Therefore, the LED will always be off when the ignition switch is in any position except On or Start. The LED only illuminates when it is provided a path to ground by the instrument cluster transistor. The instrument cluster will turn on the brake indicator for the following reasons:

- **Bulb Test** - Each time the ignition switch is turned to the On position the brake indicator is illuminated for about four seconds as a bulb test. The entire bulb test is a function of the CAB.
- **Brake Lamp-On Message** - Each time the cluster receives a lamp-on message from the CAB, the brake indicator will be illuminated. The CAB can also send brake lamp-on messages as feedback during ABS diagnostic procedures. The indicator remains illuminated until the cluster receives a lamp-off message from the CAB, or until the ignition switch is turned to the Off position, whichever occurs first.

- **Park Brake Switch Input** - Each time the cluster detects ground on the park brake switch sense circuit (park brake switch closed = park brake applied or not fully released) while the ignition switch is in the On position, the brake indicator flashes on and off. The indicator continues to flash until the park brake switch sense input to the cluster is an open circuit (park brake switch open = park brake fully released), or until the ignition switch is turned to the Off position, whichever occurs first.
- **Actuator Test** - Each time the instrument cluster is put through the actuator test, the brake indicator will be turned on, then off again during the bulb check portion of the test to confirm the functionality of the LED and the cluster control circuitry.

The park brake switch on the park brake pedal mechanism provides a hard wired ground input to the instrument cluster circuitry through the park brake switch sense circuit whenever the park brake is applied or not fully released. The CAB continually monitors the ABS system circuits and sensors, including the brake fluid level switch on the brake master cylinder reservoir, to decide whether the system is in good operating condition. The CAB then sends the proper lamp-on or lamp-off messages to the instrument cluster. If the CAB sends a lamp-on message after the bulb test, it indicates that the CAB has detected a brake hydraulic system malfunction and/or that the ABS system has become inoperative. The CAB will store a Diagnostic Trouble Code (DTC) for any malfunction it detects. The Brake/Park Brake indicator is serviced with the instrument cluster.

CHARGING INDICATOR

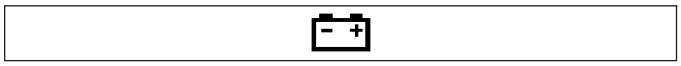

The charging indicator gives an indication to the vehicle operator when the electrical system voltage is too low or too high. This indicator is controlled by a transistor on the instrument cluster circuit board based upon cluster programming and electronic messages received by the cluster from the Powertrain Control Module (PCM) over the Controller Area Network (CAN) data bus.

The charging indicator Light Emitting Diode (LED) is completely controlled by the instrument cluster logic circuit, and that logic will only allow this indicator to operate when the instrument cluster receives a battery current input on the fused ignition switch output (run-start) circuit. Therefore, the LED will always be off when the ignition switch is in any position except On or Start. The LED only illuminates when it is provided a path to ground by the instrument cluster transistor. The instrument cluster will turn on the charging indicator for the following reasons:

- **Bulb Test** - Each time the ignition switch is turned to the On position the charging indicator is illuminated by the instrument cluster for about two seconds as a bulb test.
- **Voltage Low Message** - Each time the cluster receives a message from the PCM indicating the electrical system voltage is low (less than about 11.5 volts is a charge fail condition), the charging indicator will be illuminated. The indicator remains illuminated until the cluster receives a message from the PCM indicating the electrical system voltage is normal (greater than about 12.0 volts, but less than 16.0 volts), or until the ignition switch is turned to the Off position, whichever occurs first.
- **Voltage High Message** - Each time the cluster receives a message from the PCM indicating the electrical system voltage is high (greater than about 16.0 volts), the charging indicator will be illuminated. The indicator remains illuminated until the cluster receives a message from the PCM indicating the electrical system voltage is normal (less than about 15.5 volts, but greater than 11.5 volts), or until the ignition switch is turned to the Off position, whichever occurs first.
- **Actuator Test** - Each time the cluster is put through the actuator test, the charging indicator will be turned on, then off again during the bulb check portion of the test to confirm the functionality of the LED and the cluster control circuitry.

The PCM continually monitors the electrical system voltage to control the generator output. The PCM then sends the proper system voltage messages to the instrument cluster. If the instrument cluster turns on the charging indicator due to a charge fail or voltage high condition, it may indicate that the charging system requires service. For further diagnosis of the charging indicator or the instrument cluster circuitry that controls the indicator, (Refer to 8 - ELECTRICAL/INSTRUMENT CLUSTER - DIAGNOSIS AND TESTING). The Charging indicator is serviced with the instrument cluster.

ENGINE TEMPERATURE INDICATOR



The engine temperature indicator gives an indication to the vehicle operator when the engine temperature gauge reading reflects a condition requiring immediate attention. This indicator is controlled by a transistor on

the instrument cluster circuit board based upon cluster programming and electronic messages received by the cluster from the Powertrain Control Module (PCM) over the Controller Area Network (CAN) data bus.

The engine temperature indicator Light Emitting Diode (LED) is completely controlled by the instrument cluster logic circuit, and that logic will only allow this indicator to operate when the instrument cluster receives a battery current input on the fused ignition switch output (run-start) circuit. Therefore, the LED will always be off when the ignition switch is in any position except On or Start. The LED only illuminates when it is provided a path to ground by the instrument cluster transistor. The instrument cluster will turn on the engine temperature indicator for the following reasons:

- **Bulb Test** - Each time the ignition switch is turned to the On position the engine temperature indicator is illuminated for about two seconds as a bulb test. The entire bulb test is a function of the PCM.
- **Engine Temperature High Message** - Each time the cluster receives a message from the PCM indicating the engine coolant temperature is above about 122° C (252° F), the engine temperature indicator will be illuminated and a single chime tone is sounded. The indicator remains illuminated until the cluster receives a message from the PCM indicating that the engine coolant temperature is below about 119° C (246° F), or until the ignition switch is turned to the Off position, whichever occurs first. The chime tone feature will only repeat during the same ignition cycle if the engine temperature indicator is cycled off and then on again by the appropriate engine temperature messages from the PCM.
- **Actuator Test** - Each time the cluster is put through the actuator test, the engine temperature indicator will be turned on, then off again during the bulb check portion of the test to confirm the functionality of the LED and the cluster control circuitry.

The PCM continually monitors the engine coolant temperature sensor to determine the engine operating temperature. The PCM then sends the proper engine coolant temperature messages to the instrument cluster. For further diagnosis of the engine temperature indicator or the instrument cluster circuitry that controls the LED, (Refer to 8 - ELECTRICAL/INSTRUMENT CLUSTER - DIAGNOSIS AND TESTING). If the instrument cluster turns on the engine temperature indicator due to a high engine temperature gauge reading, it may indicate that the engine or the engine cooling system requires service. The Engine Temperature indicator is serviced with the instrument cluster.

ELECTRONIC THROTTLE CONTROL INDICATOR



The Electronic Throttle Control (ETC) indicator gives an indication to the vehicle operator when the ETC system is faulty or inoperative. The ETC indicator is controlled by a transistor on the instrument cluster circuit board based upon cluster programming and electronic messages received by the cluster from the Powertrain Control Module (PCM) over the Controller Area Network (CAN) data bus.

The ETC indicator Light Emitting Diode (LED) is completely controlled by the instrument cluster logic circuit, and that logic will only allow this indicator to operate when the instrument cluster receives a battery current input on the fused ignition switch output (run-start) circuit. Therefore, the LED will always be off when the ignition switch is in any position except On or Start. The LED only illuminates when it is provided a path to ground by the instrument cluster transistor. The instrument cluster will turn on the ETC indicator for the following reasons:

- **Bulb Test** - Each time the ignition switch is turned to the On position the ETC indicator is illuminated for about fifteen seconds. The entire bulb test is a function of the PCM.
- **ETC Lamp-On Message** - Each time the cluster receives a lamp-on message from the PCM, the ETC indicator will be illuminated. The indicator can be flashed on and off, or illuminated solid, as dictated by the PCM message. The indicator remains illuminated solid or continues to flash for about twelve seconds or until the cluster receives a lamp-off message from the PCM, whichever is longer. If the indicator is illuminated solid with the engine running the vehicle will usually remain drivable. If the indicator is flashing with the engine running the vehicle may require towing. A flashing indicator means the ETC system requires immediate service.
- **Actuator Test** - Each time the cluster is put through the actuator test, the ETC indicator will be turned on, then off again during the bulb check portion of the test to confirm the functionality of the LED and the cluster control circuitry. The actuator test illumination of the ETC indicator is a function of the PCM.

The PCM continually monitors the ETC system circuits and sensors to decide whether the system is in good operating condition. The PCM then sends the proper lamp-on or lamp-off messages to the instrument cluster. If the PCM sends a lamp-on message after the bulb test, it indicates that the PCM has detected an ETC system malfunction and/or that the ETC system is inoperative. The PCM will store a Diagnostic Trouble Code (DTC) for any malfunction it detects. Each time the ETC indicator fails to illuminate due to an open or short in the cluster ETC indicator circuit,

the cluster sends a message notifying the PCM of the condition, the instrument cluster and the PCM will each store a DTC. The Electronic Throttle Control indicator is serviced with the instrument cluster.

FOG LAMP INDICATOR



The fog lamp indicator gives an indication to the vehicle operator whenever the optional fog lamps are illuminated. This indicator is controlled by a transistor on the instrument cluster circuit board based upon cluster programming and electronic messages received by the cluster from the Front Control Module (FCM) (also known as the Integrated Power Module/IPM) over the Controller Area Network (CAN) data bus.

The fog lamp indicator Light Emitting Diode (LED) is completely controlled by the instrument cluster logic circuit, and that logic will allow this indicator to operate whenever the instrument cluster receives a battery current input on the fused B(+) circuit. Therefore, the LED can be illuminated regardless of the ignition switch position. The LED only illuminates when it is provided a path to ground by the instrument cluster transistor. The instrument cluster will turn on the fog lamp indicator for the following reasons:

- **Fog Lamp-On Message** - Each time the cluster receives a fog lamp-on message from the FCM indicating the fog lamp relay is energized, the fog lamp indicator will be illuminated. The indicator remains illuminated until the cluster receives a fog lamp-off message from the FCM.
- **Actuator Test** - Each time the cluster is put through the actuator test, the fog lamp indicator will be turned on, then off again during the bulb check portion of the test to confirm the functionality of the LED and the cluster control circuitry.

The instrument cluster continually monitors a hard wired input from the headlamp switch to determine the selected fog lamp switch status. The instrument cluster then sends the proper fog lamp-on and lamp-off messages to the FCM over the CAN data bus. The FCM activates the fog lamp relay then sends the proper fog lamp indicator lamp-on and lamp-off messages to the instrument cluster. For further diagnosis of the fog lamp indicator or the instrument cluster circuitry that controls the indicator, (Refer to 8 - ELECTRICAL/INSTRUMENT CLUSTER - DIAGNOSIS AND TESTING). The Fog Lamp indicator is serviced with the instrument cluster.

HIGH BEAM INDICATOR



The high beam indicator gives an indication to the vehicle operator whenever the headlamp high beams are illuminated. This indicator is controlled by a transistor on the instrument cluster circuit board based upon cluster programming and a hard wired multiplex input received by the cluster from the headlamp beam select switch circuitry of the multi-function switch on the washer/beam select switch mux circuit.

The high beam indicator Light Emitting Diode (LED) is completely controlled by the instrument cluster logic circuit, and that logic will allow this indicator to operate whenever the instrument cluster receives a battery current input on the fused B(+) circuit. Therefore, the LED can be illuminated regardless of the ignition switch position. The LED only illuminates when it is provided a path to ground by the instrument cluster transistor. The instrument cluster will turn on the high beam indicator for the following reasons:

- **High Beam Headlamps-On Input** - Each time the cluster detects a high beam headlamps-on input from the headlamp beam select switch circuitry of the multi-function switch on the washer/beam select switch mux circuit, the headlamp high beams and the high beam indicator will be illuminated. The headlamp high beams and the high beam indicator remain illuminated until the cluster receives a high beam headlamps-off input from the multi-function switch, or until the exterior lamp load shedding (battery saver) timed interval expires, whichever occurs first.
- **Actuator Test** - Each time the cluster is put through the actuator test, the high beam indicator will be turned on, then off again during the bulb check portion of the test to confirm the functionality of the LED and the cluster control circuitry.

The instrument cluster continually monitors the headlamp switch and the multi-function switch to determine the proper headlamp low beam and high beam control. The instrument cluster then sends the proper low beam and high beam lamp-on and lamp-off messages to the Front Control Module (FCM) over the Controller Area Network (CAN) data bus and turns the high beam indicator on or off accordingly. For further diagnosis of the high beam indicator or the instrument cluster circuitry that controls the indicator, (Refer to 8 - ELECTRICAL/INSTRUMENT CLUSTER - DIAGNOSIS AND TESTING). The High Beam indicator is serviced with the instrument cluster.

LOW FUEL INDICATOR



The low fuel indicator gives an indication to the vehicle operator when the level of fuel in the fuel tank becomes low. This indicator is controlled by a transistor on the instrument cluster circuit board based upon cluster programming and a hard wired input received by the cluster from the fuel level sending unit on the fuel pump module in the fuel tank.

The low fuel indicator Light Emitting Diode (LED) is completely controlled by the instrument cluster logic circuit, and that logic will only allow this indicator to operate when the instrument cluster receives a battery current input on the fused ignition switch output (run-start) circuit. Therefore, the LED will always be off when the ignition switch is in any position except On or Start. The LED only illuminates when it is provided a path to ground by the instrument cluster transistor. The instrument cluster will turn on the low fuel indicator for the following reasons:

- **Bulb Test** - Each time the ignition switch is turned to the On position the low fuel indicator is illuminated for about two seconds as a bulb test.
- **Less Than Ten Percent Tank Full Input** - The cluster provides a constant current source to the fuel level sending unit and monitors a return input on a fuel level sense circuit. The resistance through the fuel level sending unit increases as the fuel level falls and decreases as the fuel level rises causing changes in the sense input voltage. Each time the fuel level sense input to the cluster indicates the fuel tank is about ten percent full or less for ten consecutive seconds and the vehicle speed is zero, or for sixty consecutive seconds and the vehicle speed is greater than zero, the fuel gauge needle is moved to about the one-eighth graduation on the gauge scale, the low fuel indicator is illuminated, and a single chime tone is sounded. The low fuel indicator remains illuminated until the fuel level sense input indicates that the fuel tank is greater than about thirteen percent full for ten consecutive seconds and the vehicle speed is zero, or for sixty consecutive seconds and the vehicle speed is greater than zero, or until the ignition switch is turned to the Off position, whichever occurs first. The chime tone feature will only repeat during the same ignition cycle if the low fuel indicator is cycled off and then on again by the appropriate inputs from the fuel level sending unit.
- **Less Than Empty Stop Input** - Each time the cluster receives a fuel level sense input that indicates the fuel level in the fuel tank is less than the Empty gauge needle stop position, the gauge needle is moved to the low end of the gauge scale and the low fuel indicator is illuminated immediately. This input would indicate that the fuel level sense input to the cluster is a short circuit.
- **More Than Full Stop Input** - Each time the cluster receives a fuel level sense input that indicates the fuel level in the fuel tank is more than the Full gauge needle stop position, the gauge needle is moved to the low end of the gauge scale and the low fuel indicator is illuminated immediately. This input would indicate that the fuel level sense input to the cluster is an open circuit.
- **Actuator Test** - Each time the cluster is put through the actuator test, the low fuel indicator will be turned on, then off again during the bulb check portion of the test to confirm the functionality of the LED and the cluster control circuitry.

The instrument cluster continually monitors the fuel tank sending unit to determine the level of fuel in the fuel tank. The cluster then sends the proper fuel level messages to other electronic modules in the vehicle over the Controller Area Network (CAN) data bus. For further diagnosis of the low fuel indicator or the instrument cluster circuitry that controls the LED, (Refer to 8 - ELECTRICAL/INSTRUMENT CLUSTER - DIAGNOSIS AND TESTING). The Low Fuel indicator is serviced with the instrument cluster.

LOW OIL PRESSURE INDICATOR



The low oil pressure indicator gives an indication to the vehicle operator when the engine oil pressure reading reflects a condition requiring immediate attention. This indicator is controlled by a transistor on the instrument cluster circuit board based upon cluster programming and electronic messages received by the cluster from the Powertrain Control Module (PCM) over the Controller Area Network (CAN) data bus.

The low oil pressure indicator Light Emitting Diode (LED) is completely controlled by the instrument cluster logic circuit, and that logic will only allow this indicator to operate when the instrument cluster receives a battery current input on the fused ignition switch output (run-start) circuit. Therefore, the LED will always be off when the ignition switch is in any position except On or Start. The LED only illuminates when it is provided a path to ground by the instrument cluster transistor. The instrument cluster will turn on the low oil pressure indicator for the following reasons:

- **Engine Oil Pressure Low Message** - Each time the cluster receives a message from the PCM indicating the engine oil pressure is about 6.9 kPa (1 psi) or lower, the low oil pressure indicator will be illuminated. The indicator remains illuminated until the cluster receives a message from the PCM indicating that the engine oil pressure is above about 6.9 kPa (1 psi), or until the ignition switch is turned to the Off position, whichever occurs first. The cluster will only turn the indicator on in response to an engine oil pressure low message if the engine speed is greater than zero.
- **Actuator Test** - Each time the cluster is put through the actuator test, the low oil pressure indicator will be turned on, then off again during the bulb check portion of the test to confirm the functionality of the LED and the cluster control circuitry.

The PCM continually monitors the engine oil pressure sensor to determine the engine oil pressure. The PCM then sends the proper engine oil pressure messages to the instrument cluster. For further diagnosis of the low oil pressure indicator or the instrument cluster circuitry that controls the LED, (Refer to 8 - ELECTRICAL/INSTRUMENT CLUSTER - DIAGNOSIS AND TESTING). The Low Oil Pressure indicator is serviced with the instrument cluster.

MALFUNCTION INDICATOR LAMP

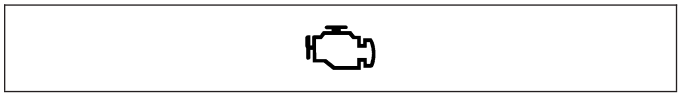

The Malfunction Indicator Lamp (MIL) gives an indication to the vehicle operator when the Powertrain Control Module (PCM) has recorded a Diagnostic Trouble Code (DTC) for an On-Board Diagnostics II (OBDII) emissions-related circuit or component malfunction. The MIL is controlled by a transistor on the instrument cluster circuit board based upon cluster programming and electronic messages received by the cluster from the PCM over the Controller Area Network (CAN) data bus.

The MIL Light Emitting Diode (LED) is completely controlled by the instrument cluster logic circuit, and that logic will only allow this indicator to operate when the instrument cluster receives a battery current input on the fused ignition switch output (run-start) circuit. Therefore, the LED will always be off when the ignition switch is in any position except On or Start. The LED only illuminates when it is provided a path to ground by the instrument cluster transistor. The instrument cluster will turn on the MIL for the following reasons:

- **Bulb Test** - Each time the ignition switch is turned to the On position the indicator is illuminated for about fifteen seconds as a bulb test. The entire bulb test is a function of the PCM.
- **MIL Lamp-On Message** - Each time the cluster receives a MIL lamp-on message from the PCM, the indicator will be illuminated. The indicator can be flashed on and off, or illuminated solid, as dictated by the PCM message. For some DTC's, if a problem does not recur, the PCM will send a lamp-off message automatically. Other DTC's may require that a fault be repaired and the PCM be reset before a lamp-off message will be sent. For more information on the PCM, and the DTC set and reset parameters, (Refer to 25 - EMISSIONS CONTROL - OPERATION).
- **Communication Error** - If the cluster receives no messages from the PCM for ten consecutive message cycles, the MIL is illuminated by the instrument cluster to indicate a loss of bus communication. The indicator remains controlled and illuminated by the cluster until a valid message is received from the PCM.
- **Actuator Test** - Each time the cluster is put through the actuator test, the MIL indicator will be turned on during the bulb check portion of the test to confirm the functionality of the LED and the cluster control circuitry.

The PCM continually monitors the fuel and emissions system circuits and sensors to decide whether the system is in good operating condition. The PCM then sends the proper lamp-on or lamp-off messages to the instrument cluster. For further diagnosis of the MIL or the instrument cluster circuitry that controls the LED, (Refer to 8 - ELECTRICAL/INSTRUMENT CLUSTER - DIAGNOSIS AND TESTING). If the instrument cluster turns on the MIL after the bulb test, it may indicate that a malfunction has occurred and that the fuel and emissions systems may require service. The Malfunction Indicator Lamp is serviced with the instrument cluster.

SEAT BELT INDICATOR



The seat belt indicator gives an indication to the vehicle operator of the status of the driver side front seat belt. This indicator is controlled by a transistor on the instrument cluster circuit board based upon cluster programming and a hard wired input from the seat belt switch in the driver side front seat belt retractor through the seat belt indicator driver circuit.

The seat belt indicator also includes a programmable enhanced seat belt reminder or “beltminder” feature that is enabled when the vehicle is shipped from the factory. This beltminder feature can be disabled and enabled by the customer using a specific programming event sequence, or by the dealer using a diagnostic scan tool.

The seat belt indicator Light Emitting Diode (LED) is completely controlled by the instrument cluster logic circuit, and that logic will only allow this indicator to operate when the instrument cluster receives a battery current input on the fused ignition switch output (run-start) circuit. Therefore, the LED will always be off when the ignition switch is in any position except On or Start. The LED only illuminates when it is provided a path to ground by the instrument cluster transistor. The instrument cluster will turn on the seat belt indicator for the following reasons:

- **Seat Belt Reminder Function** - Each time the cluster receives a battery current input on the fused ignition switch output (run-start) circuit, the indicator will be illuminated as a seat belt reminder for about six seconds, or until the ignition switch is turned to the Off position, whichever occurs first. This reminder function will occur regardless of the status of the seat belt switch input to the cluster.
- **Driver Side Front Seat Belt Not Buckled - Beltminder Active** - Following the seat belt reminder function, each time the cluster detects an open circuit on the seat belt indicator driver circuit (seat belt switch open = seat belt unbuckled) with the ignition switch in the Start or On positions, the indicator will be illuminated. In addition, if the driver side front seat belt remains unbuckled about sixty seconds after the conclusion of the seat belt reminder function with the vehicle speed greater than about 8 kilometers-per-hour (5 miles-per-hour), the seat belt indicator will begin to cycle between flashing on and off for three seconds, then lighting solid for two seconds. The seat belt indicator will continue to cycle between flashing and solid illumination for thirteen complete cycles, until the seat belt indicator driver input to the cluster is closed to ground (seat belt switch closed = seat belt buckled), or until the ignition switch is turned to the Off position, whichever occurs first.
- **Driver Side Front Seat Belt Not Buckled - Beltminder Inactive** - Following the seat belt reminder function, each time the cluster detects an open circuit on the seat belt indicator driver circuit (seat belt switch open = seat belt unbuckled) with the ignition switch in the Start or On positions, the indicator will be illuminated. The seat belt indicator remains illuminated until the seat belt indicator driver input to the cluster is closed to ground (seat belt switch closed = seat belt buckled), or until the ignition switch is turned to the Off position, whichever occurs first.
- **Airbag Indicator Backup** - If the instrument cluster detects a fault in the airbag indicator circuit it will send a message indicating the fault to the Occupant Restraint Controller (ORC), then flash the seat belt indicator on and off. The cluster will continue to flash the seat belt indicator until the airbag indicator circuit fault is resolved, or until the ignition switch is turned to the Off position, whichever occurs first.
- **Actuator Test** - Each time the cluster is put through the actuator test, the seat belt indicator will be turned on, then off again during the bulb check portion of the test to confirm the functionality of the LED and the cluster control circuitry.

The seat belt switch is connected in series between ground and the seat belt indicator driver input to the instrument cluster. The seat belt switch input to the instrument cluster circuitry may be diagnosed using conventional diagnostic tools and methods. Refer to the appropriate wiring information. The Seat Belt indicator is serviced with the instrument cluster.

SECURITY INDICATOR

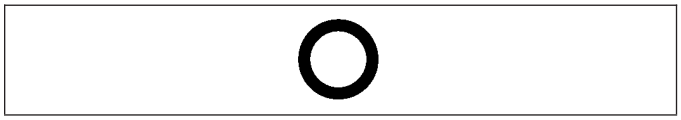

The security indicator gives an indication to the vehicle operator when the Vehicle Theft Security System (VTSS) is arming or is armed. On models equipped with the Sentry Key Immobilizer System (SKIS), the security indicator also gives an indication to the vehicle operator of the status of the SKIS. This indicator is controlled by a transistor on the instrument cluster circuit board based upon cluster programming, hard wired inputs to the cluster from the various security system components, electronic messages received by the cluster from the Sentry Key REmote Entry Module (SKREEM) over the Controller Area Network (CAN) data bus.

The security indicator Light Emitting Diode (LED) is completely controlled by the instrument cluster logic circuit, and that logic will allow this indicator to operate whenever the instrument cluster receives a battery current input on the fused B(+) circuit. Therefore, the LED can be illuminated regardless of the ignition switch position. The LED only illuminates when it is provided a path to ground by the instrument cluster transistor. The instrument cluster will turn on the security indicator for the following reasons:

- **Bulb Test** - Each time the ignition switch is turned to the On position the security indicator illuminates for about two seconds as a bulb test. The entire bulb test is a function of the SKREEM.

- **VTSS Indication** - During the sixteen second VTSS arming function, the cluster will flash the security indicator on and off repeatedly at a steady, fast rate to indicate that the VTSS is in the process of arming. Following successful VTSS arming, the cluster flashes the security indicator on and off continuously at a slower rate to indicate that the VTSS is armed. The security indicator continues flashing at the slower rate until the VTSS is disarmed or triggered. If the VTSS has alarmed and rearmed, the cluster will flash the security indicator at a steady, slow rate for about thirty seconds after the VTSS is disarmed.
- **SKIS Lamp-On Message** - Each time the cluster receives a SKIS lamp-on message from the SKREEM, the security indicator will be illuminated. The indicator can be flashed on and off, or illuminated solid, as dictated by the SKREEM message. The indicator remains illuminated solid or continues to flash until the cluster receives a SKIS lamp-off message from the SKREEM, or until the ignition switch is turned to the Off position, whichever occurs first. For more information on the SKIS and the security indicator control parameters, (Refer to 8 - ELECTRICAL/VEHICLE THEFT SECURITY/SENTRY KEY IMMOBILIZER SYSTEM - OPERATION).
- **Communication Error** - If the cluster receives no SKIS lamp-on or lamp-off messages from the SKREEM for ten consecutive message cycles, the security indicator is illuminated by the instrument cluster. The indicator remains controlled and illuminated by the cluster until a valid SKIS lamp-on or lamp-off message is received from the SKREEM.
- **Actuator Test** - Each time the instrument cluster is put through the actuator test, the security indicator will be turned on, then off again during the bulb check portion of the test to confirm the functionality of the LED and the cluster control circuitry.

The instrument cluster circuitry controls the security indicator whenever the ignition switch is in the Off position and the VTSS is arming, armed, or alarming. Whenever the ignition switch is in the On or Start positions, the SKREEM performs a self-test to decide whether the SKIS is in good operating condition and whether a valid key is present in the ignition lock cylinder. The SKREEM then sends the proper lamp-on or lamp-off messages to the instrument cluster. For further diagnosis of the security indicator or the instrument cluster circuitry that controls the indicator, (Refer to 8 - ELECTRICAL/INSTRUMENT CLUSTER - DIAGNOSIS AND TESTING). If the instrument cluster flashes the security indicator upon ignition On, or turns on the security indicator solid after the bulb test, it indicates that a SKIS malfunction has occurred or that the SKIS is inoperative. The Security indicator is serviced with the instrument cluster.

TRACTION CONTROL INDICATOR

The traction control indicator gives an indication to the vehicle operator when the electronic Traction Control System (TCS) has been activated. This indicator is controlled by the instrument cluster circuit board based upon cluster programming and electronic messages received by the cluster from the Controller Antilock Brake (CAB) over the Controller Area Network (CAN) data bus.

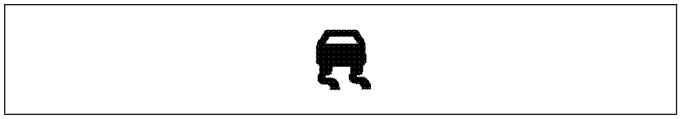

The traction control indicator is completely controlled by the instrument cluster logic circuit, and that logic will only allow this indicator to operate when the instrument cluster receives a battery current input on the fused ignition switch output (run-start) circuit. Therefore, the indicator will always be off when the ignition switch is in any position except On or Start. The indicator only illuminates when it is switched to ground by the instrument cluster circuitry. The instrument cluster will turn on the traction control indicator for the following reasons:

- **Bulb Test** - Each time the ignition switch is turned to the On position the traction control indicator is illuminated for about four seconds as a bulb test. The entire bulb test is a function of the CAB.
- **Traction Control Lamp-On Message** - Each time the cluster receives a traction control lamp-on message from the CAB indicating that the TCS has been activated, the traction control indicator will be illuminated. The indicator remains illuminated until the cluster receives a traction control lamp-off message from the CAB, or until the ignition switch is turned to the Off position, whichever occurs first.
- **Actuator Test** - Each time the cluster is put through the actuator test, the traction control indicator will be turned on, then off again during the bulb check portion of the test to confirm the functionality of the LED and the cluster control circuitry.

The CAB continually monitors the traction control switch to determine the proper outputs to the components of the Antilock Brake System (ABS). The CAB then sends the proper traction control lamp-on and lamp-off messages to the instrument cluster. For further diagnosis of the traction control indicator or the instrument cluster circuitry that controls the indicator, (Refer to 8 - ELECTRICAL/INSTRUMENT CLUSTER - DIAGNOSIS AND TESTING). The Traction Control indicator is serviced with the instrument cluster.

TURN SIGNAL INDICATORS

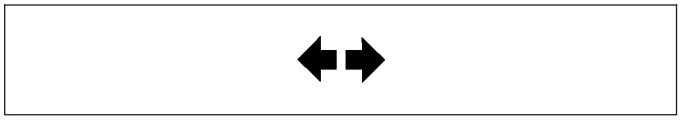

The turn signal indicators give an indication to the vehicle operator that the turn signal (left or right indicator flashing) or hazard warning (both left and right indicators flashing) have been selected and are operating. These indicators are controlled by transistors on the instrument cluster electronic circuit board based upon the cluster programming, a hard wired multiplex input received by the cluster from the turn signal and hazard warning switch circuitry of the multi-function switch on the turn/hazard switch mux circuit, and electronic messages received from the Front Control Module (FCM) (also known as the Integrated Power Module/IPM) over the Controller Area Network (CAN) data bus.

Each turn signal indicator Light Emitting Diode (LED) is completely controlled by the instrument cluster logic circuit, and that logic will allow this indicator to operate whenever the instrument cluster receives a battery current input on the fused B(+) circuit. Therefore, each LED can be illuminated regardless of the ignition switch position. The LED only illuminates when it is provided a path to ground by the instrument cluster transistor. The instrument cluster will turn on the turn signal indicators for the following reasons:

- **Turn Signal-On Input** - Each time the cluster detects a turn signal-on input from the turn signal switch circuitry of the multi-function switch on the turn/hazard switch mux circuit, it sends the appropriate electronic turn signal switch status messages to the FCM over the CAN data bus. The FCM responds to these messages by controlling a battery voltage output and the flash rate for either the right or left turn signal lamps. The FCM also sends the appropriate electronic messages back to the EMIC to control the illumination and flash rate of the right or left turn signal indicators, as well as to control the click rate of an electromechanical relay soldered onto the EMIC electronic circuit board that emulates the sound emitted by a conventional turn signal flasher. The turn signals and the turn signal indicators continue to flash on and off until the cluster receives a turn signal-off input from the multi-function switch, or until the ignition switch is turned to the Off position, whichever occurs first.
- **Hazard Warning-On Input** - Each time the cluster detects a hazard warning-on input from the hazard warning switch circuitry of the multi-function switch on the turn/hazard switch mux circuit, it sends the appropriate electronic hazard switch status messages to the FCM over the CAN data bus. The FCM responds to these messages by controlling a battery voltage output and the flash rate for each of the right and left turn signal lamps. The FCM also sends the appropriate electronic messages back to the EMIC to control the illumination and flash rate of the right and left turn signal indicators, as well as to control the click rate of an electromechanical relay soldered onto the EMIC electronic circuit board that emulates the sound emitted by a conventional hazard warning flasher. The turn signals and the turn signal indicators continue to flash on and off until the cluster receives a hazard warning-off input from the multi-function switch.
- **Lamp Out Mode** - The instrument cluster also sends electronic turn signal on and off messages to the FCM over the CAN data bus, and the FCM flashes the appropriate exterior turn signal lamps. If the FCM detects an inoperative turn signal lamp or circuit, it increases the flash rate for the remaining operative turn signals and sends an electronic message back to the instrument cluster. The instrument cluster then increases the flash rate of the turn signal indicator(s) and the clicking rate of the electromechanical relay to provide an indication of the problem to the vehicle operator.
- **Actuator Test** - Each time the cluster is put through the actuator test, the turn signal indicators will be turned on, then off again during the bulb check portion of the test to confirm the functionality of each LED and the cluster control circuitry.

The instrument cluster continually monitors the multi-function switch and electronic messages from the FCM to determine the proper turn signal and hazard warning system control. For further diagnosis of the turn signal indicators or the instrument cluster circuitry that controls the indicators, (Refer to 8 - ELECTRICAL/INSTRUMENT CLUSTER - DIAGNOSIS AND TESTING). The Turn Signal indicators are serviced with the instrument cluster.

CLUSTER ILLUMINATION

The EMIC has a single electro-luminescent lamp that provides cluster back lighting whenever the exterior lighting is turned On. The illumination intensity of this lamp is adjusted when the interior lighting thumbwheel on the headlamp switch is rotated (down to dim, up to brighten) to one of six available minor detent positions. The EMIC monitors a resistor multiplexed input from the headlamp switch on a dimmer input circuit. In response to that input, the EMIC electronic circuitry converts a fused 12-volt input it receives on a hard wired panel lamps dimmer switch signal circuit into a 12-volt Pulse Width Modulated (PWM) output.

The EMIC uses this PWM output to control the illumination intensity of the electro-luminescent cluster illumination lamp and the VFD units on the EMIC circuit board, then provides a synchronized PWM output on various hard wired fused panel lamps dimmer switch signal circuits to control and synchronize the illumination intensity of other incandescent illumination lamps in the vehicle. The EMIC also transmits electronic dimming level messages over the CAN data bus to other electronic modules in the vehicle to control and synchronize the illumination intensity of their VFD units to that of the EMIC VFD units.

In addition, the thumbwheel on the headlamp switch has a Parade Mode position to provide a parade or funeral mode. The EMIC monitors the request for this mode from the headlamp switch, then transmits an electronic dimming level message to illuminate all VFD units in the vehicle at full (daytime) intensity for easier visibility when driving in daylight with the exterior lighting turned On.

The electro-luminescent lamp unit consists of layers of phosphor, carbon, idium tin oxide, and dielectric applied by a silk-screen process between two polyester membranes and includes a short pigtail wire and connector. The lamp pigtail wire is connected to a connector receptacle on the EMIC circuit board. The EMIC powers this lamp with an Alternating Current (AC) rated at 80 volts rms (root mean squared) and 415 Hertz produced by a transformer on the circuit board, which excites the phosphor particles causing them to luminesce.

ELECTRONIC VEHICLE INFORMATION CENTER

The following Modes allow the driver to access and display the driver- interactive features:

TRIP MODE

Provides a choice of units displayed in English or metric. The following information can be displayed at the top of the screen: Average MPG, distance to empty (DTE), Trip A and Trip B odometers, and elapsed time. The odometer is displayed at the bottom of the screen. If warnings exist, they will replace the odometer in the display. The driver can scroll to view multiple warnings.

COMPASS, TEMPERATURE AND AUDIO MODE

Compass heading and outside temperature are displayed at the top of the screen. On the lower half of the screen the audio mode is displayed along with the odometer.

TELEPHONE MODE

Provides the following information and features for the optional hands-free communications system:

- Phone status: idle, voice mail, roaming, battery strength and signal strength in increments of 20 percent.
- Call status: Incoming call, connecting, connected, air time in minutes and seconds, call ended, busy, call failed, roaming and no phone connection.
- Caller ID phone number display.

NAVIGATION MODE

Displays Turn-by-Turn directions that appear in the display as the vehicle approaches a designated turn within a programmed route.

PERSONAL SETTINGS MODE

Allows the driver to set and recall features when the transmission is in Park.

SYSTEM STATUS MODE

Displays warnings and user interaction messages. Initial warnings will be displayed full-screen for three seconds, then override the odometer and show text warnings on the bottom line of the display. Critical text warnings will be displayed until the failure is corrected. Non-critical text warnings will be displayed for 60 seconds. The driver can scroll to view multiple messages. A single chime sounds for all warnings.

For a more detailed operation of the EVIC (Refer to 8 - ELECTRICAL/OVERHEAD CONSOLE/ELECTRONIC VEHICLE INFO CENTER - OPERATION).

DIAGNOSIS AND TESTING

INSTRUMENT CLUSTER

WARNING: To avoid personal injury or death, on vehicles equipped with airbags, disable the supplemental restraint system before attempting any steering wheel, steering column, airbag, occupant classification system, seat belt tensioner, impact sensor, or instrument panel component diagnosis or service. Disconnect and isolate the battery negative (ground) cable, then wait two minutes for the system capacitor to discharge before performing further diagnosis or service. This is the only sure way to disable the supplemental restraint system. Failure to take the proper precautions could result in accidental airbag deployment, personal injury or death.

If all of the instrument cluster gauges and indicators are inoperative, be certain to check the instrument cluster fused B(+) fuse and the instrument cluster fused B(+) and ground circuits for shorts or opens. Refer to the appropriate wiring information. The wiring information includes wiring diagrams, proper wire and connector repair procedures, details of wire harness routing and retention, connector pin-out information and location views for the various wire harness connectors, splices and grounds.

If an individual hard wired gauge or indicator is inoperative, refer to the diagnosis and testing service information for that specific gauge or indicator. If an individual Controller Area Network (CAN) data bus message-controlled gauge or indicator is inoperative, perform the Actuator Test as follows:

CAUTION: Instrument clusters used in this model automatically configure themselves for compatibility with the features and optional equipment in the vehicle in which they are initially installed. The instrument cluster is programmed to do this by embedding the Vehicle Identification Number (VIN) and other information critical to proper cluster operation into electronic memory. This embedded information is learned through electronic messages received from other electronic modules in the vehicle over the Controller Area Network (CAN) data bus, and through certain hard wired inputs received when the cluster is connected to the vehicle electrically. Once configured, the instrument cluster memory may be irreparably damaged and certain irreversible configuration errors may occur if the cluster is connected electrically to another vehicle; or, if an electronic module from another vehicle is connected that provides data to the instrument cluster (including odometer values) that conflicts with that which was previously learned and stored. Therefore, the practice of exchanging (swapping) instrument clusters and other electronic modules in this vehicle with those removed from another vehicle must always be avoided. Failure to observe this caution may result in instrument cluster damage, which is not reimbursable under the terms of the product warranty. Service replacement instrument clusters are provided with the correct VIN, and the certified odometer and engine hours values embedded into cluster memory, but will otherwise be automatically configured for compatibility with the features and optional equipment in the vehicle in which they are initially installed.

NOTE: Certain indicators in this instrument cluster are automatically configured. This feature allows those indicators to be activated or deactivated for compatibility with certain optional equipment. If the problem being diagnosed involves improper illumination of the cruise indicator, the electronic throttle control indicator, the tow/haul indicator, the service four-wheel drive indicator, the four-wheel drive low indicator, the four-wheel drive lock indicator, the transmission overtemp indicator, the security indicator or the gear selector indicator, disconnect and isolate the battery negative cable. After about five minutes, reconnect the battery negative cable and turn the ignition switch to the On position. The instrument cluster should automatically relearn the equipment in the vehicle and properly configure the configurable indicators accordingly.

ACTUATOR TEST

The instrument cluster actuator test will put the instrument cluster into its self-diagnostic mode. In this mode the instrument cluster can perform a self-diagnostic test that will confirm that the instrument cluster circuitry, the gauges, and the indicators are capable of operating as designed. During the actuator test the instrument cluster circuitry will position each of the gauge needles at various calibration points and illuminate all of the segments in the Vacuum Fluorescent Display (VFD) units.

Successful completion of the actuator test will confirm that the instrument cluster is operational. However, there may still be a problem with the CAN data bus, the Powertrain Control Module (PCM), the Front Control Module (FCM),

the Transmission Control Module (TCM), the Occupant Restraint Controller (ORC), the Controller Anti-lock Brake (CAB), or the hard wired inputs to one of these electronic control modules. Use a diagnostic scan tool to diagnose these components. Refer to the appropriate diagnostic information.

1. Begin the test with the ignition switch in the Off position.
2. Depress the odometer/trip odometer switch button.
3. While still holding the odometer/trip odometer switch button depressed, turn the ignition switch to the On position, but do not start the engine.
4. Release the odometer/trip odometer switch button.
5. The instrument cluster will simultaneously begin to illuminate all of the operational segments in both VFD units, and perform a bulb check of each operational LED indicator. The VFD segments and LED indicators remain illuminated as each gauge needle is swept to several calibration points and back. If a VFD segment or an LED indicator fails to illuminate, or if a gauge needle fails to sweep through the calibration points and back during this test, the instrument cluster must be replaced.
6. The actuator test is now completed. The instrument cluster will automatically exit the self-diagnostic mode and return to normal operation at the completion of the test. The actuator test will be aborted if the ignition switch is turned to the Off position, or if a vehicle speed message indicating that the vehicle is moving is received from the PCM over the CAN data bus during the test.
7. Go back to Step 1 to repeat the test, if necessary.

STANDARD PROCEDURE

ENHANCED SEATBELT REMINDER PROGRAMMING

The seatbelt indicator also includes a programmable enhanced seatbelt reminder or “beltminder” feature that is enabled when the vehicle is shipped from the factory. This beltminder feature provides extended and modified visual seatbelt indicator and audible chime warning responses to an unbuckled driver side front seat belt. The beltminder feature may be disabled or enabled by the customer using the programming sequence that follows, or by the dealer using a diagnostic scan tool. The following sequence of events must occur within sixty (60) seconds of the ignition switch being placed in the On position in order for the programming to be completed successfully.

1. With the ignition switch in any position except On or Start, buckle the driver side front seat belt.
2. Turn the ignition switch to the On position and wait for the seatbelt indicator reminder function to conclude (about six seconds).
3. Unbuckle and buckle the driver side front seat belt three or more times, ending with the belt buckled.
4. Turn the ignition switch to any position except On or Start to toggle the beltminder feature from its current setting (from active to inactive, or from inactive to active). A single chime tone will provide an audible confirmation that the programming sequence has been successfully completed.

REMOVAL

1. Disconnect and isolate the battery negative cable.
2.

WARNING: Wait two minutes for the airbag system reserve capacitor to discharge before beginning any airbag system or component service. Failure to do so may result in accidental airbag deployment, personal injury or death.

3. Remove the instrument cluster bezel (Refer to 23 - BODY/INSTRUMENT PANEL/CLUSTER BEZEL - REMOVAL).
4. Remove the four cluster retaining screws.
5. Disconnect the cluster electrical connectors.
6. Remove cluster from instrument panel.

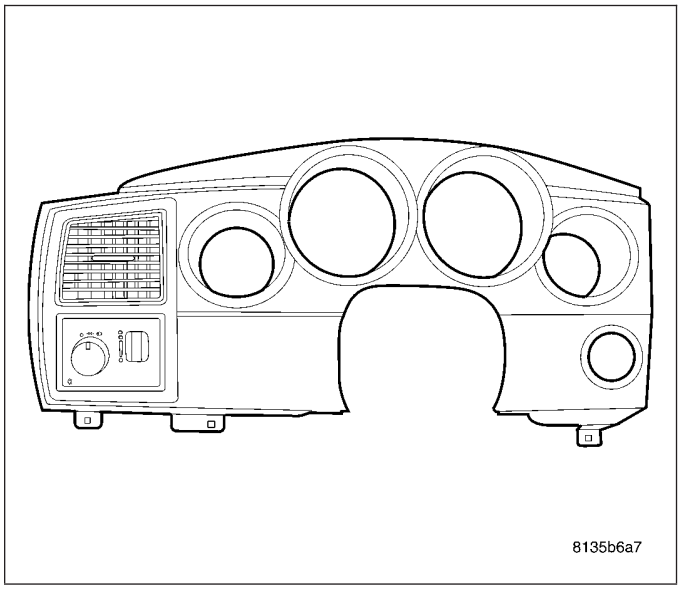

INSTALLATION

1. Position cluster into instrument panel opening.
2. Connect the cluster electrical connectors.
3. Install the four cluster retaining screws.
4. Install the cluster bezel (Refer to 23 - BODY/INSTRUMENT PANEL/CLUSTER BEZEL - INSTALLATION).
5. Connect the battery negative cable.

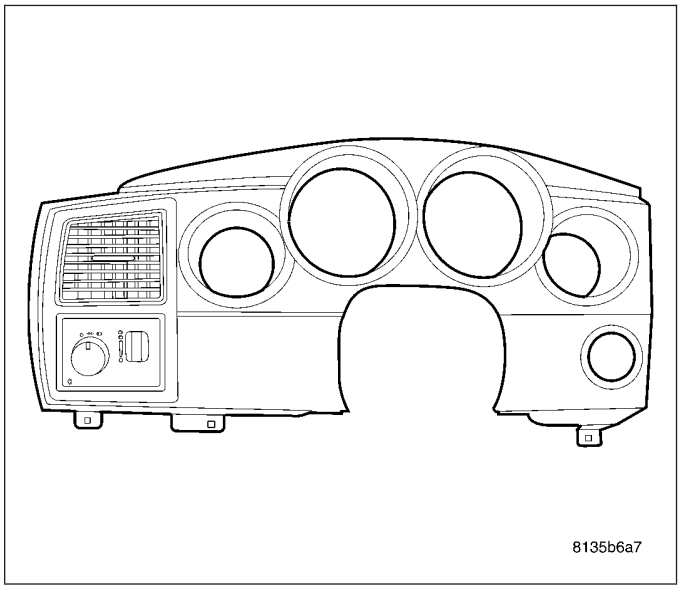

CLUSTER LENS

REMOVAL

1. Disconnect and isolate the battery negative cable.
2.

WARNING: Wait two minutes for the airbag system reserve capacitor to discharge before beginning any airbag system or component service. Failure to do so may result in accidental airbag deployment, personal injury or death.

3. Remove the instrument cluster bezel (Refer to 23 - BODY/INSTRUMENT PANEL/CLUSTER BEZEL - REMOVAL).
4. Remove the cluster lens retaining screws.
5. Separate the cluster lens from the cluster and remove from Instrument panel.

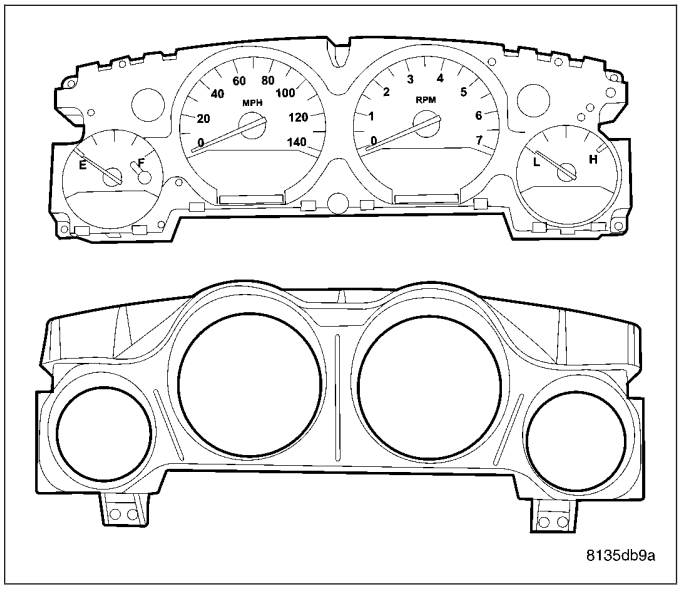

INSTALLATION

1. Place cluster lens into position on cluster.
2. Install the cluster lens screws.
3. Install the cluster bezel (Refer to 23 - BODY/INSTRUMENT PANEL/CLUSTER BEZEL - INSTALLATION).
4. Connect the battery negative cable.

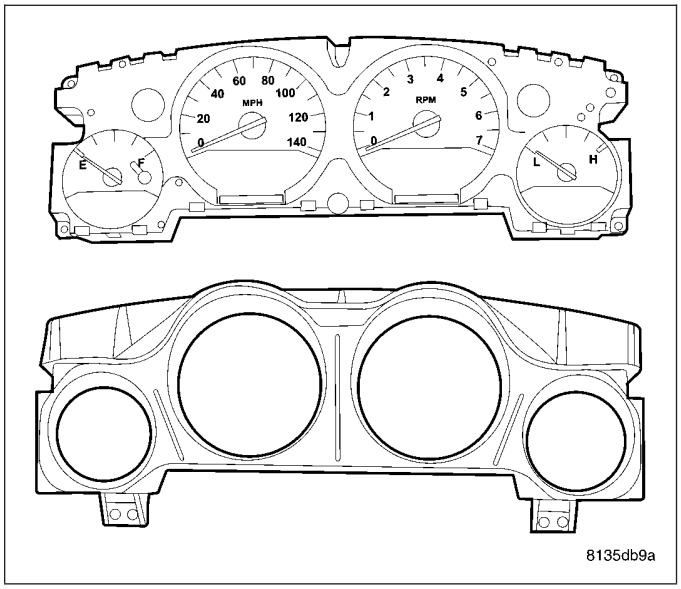

INSTRUMENT PANEL SWITCH POD

DESCRIPTION

The Instrument Panel Switch Pod includes push button controls for the Hazard Flashers, Electronic Stability Program (ESP) or Anti-Slip Regulation (ASR) Off switch, and on Dodge models Rear Wiper/Washer. Also the Passenger Airbag Disabled (PAD) Indicator is located within the switch pod. The switch pod is a single unit with one wire connector and two mounting tabs and cannot be taken apart or serviced. If one or more of the switches, or illumination is inoperative, the entire pod must be replaced.

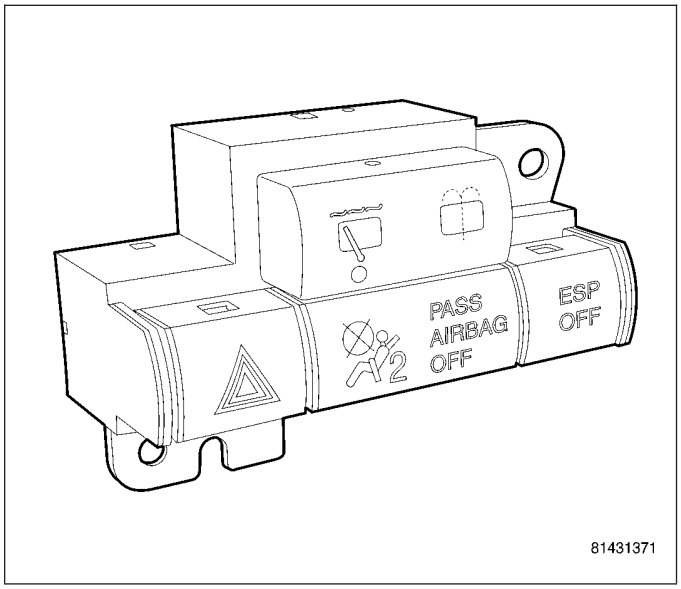

The Instrument Panel Switch Pod is located in the instrument panel center bezel just above the radio, and between the A/C outlet ducts.

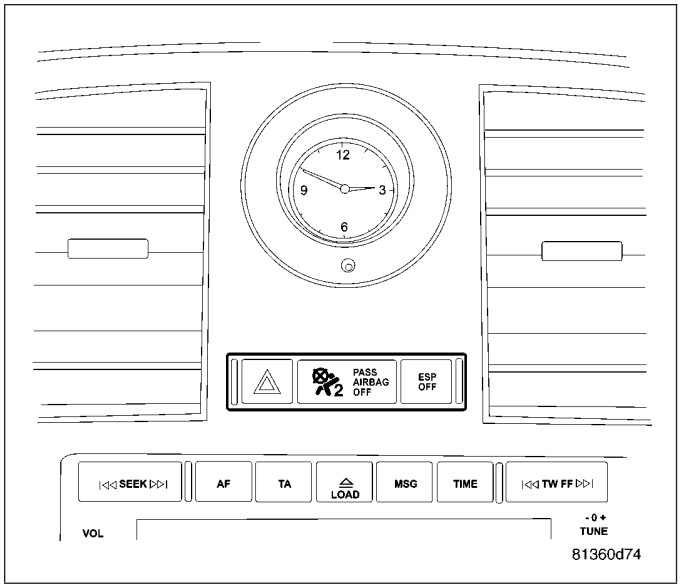

There a different configurations depending on the model and country.

DOMESTIC SEDAN

The sedan for sale in North America will have a Hazard Switch , Passenger Airbag Disabled (PAD) Indicator, and Electronic Stability Program (ESP) Off Switch.

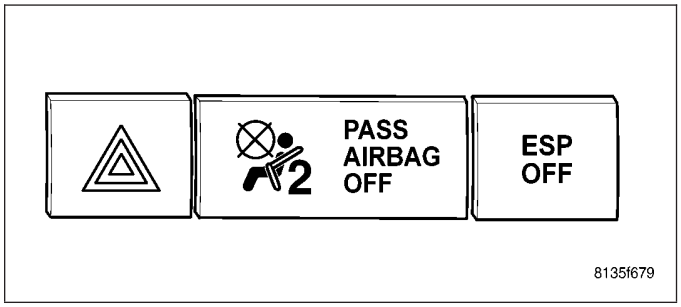

If equipped with Anti-Lock brakes, but not with ESP, the vehicle will be equipped with the Traction Control System (TCS).

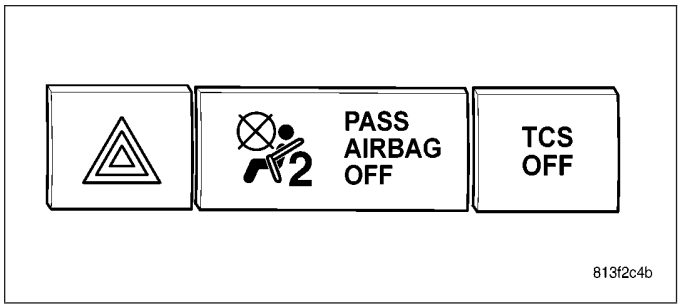

DOMESTIC WAGON

The wagon for sale in North America will have Rear Wipe/Wash Switch, Hazard Switch, Passenger Airbag Disabled (PAD) Indicator, and Electronic Stability Program (ESP) Off Switch.

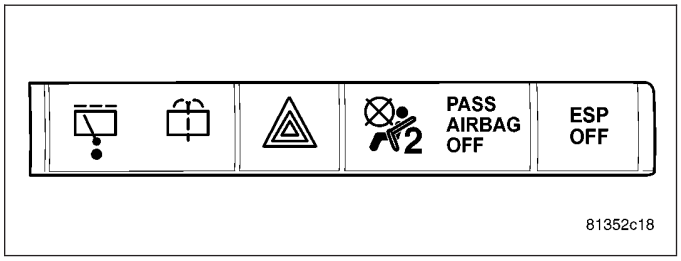

EXPORT WAGON

The wagon for sale outside North America will have Rear Wipe/Wash Switch, Hazard Switch, Passenger Airbag Disabled (PAD) Indicator, and Electronic Stability Program (ESP) Off Switch.

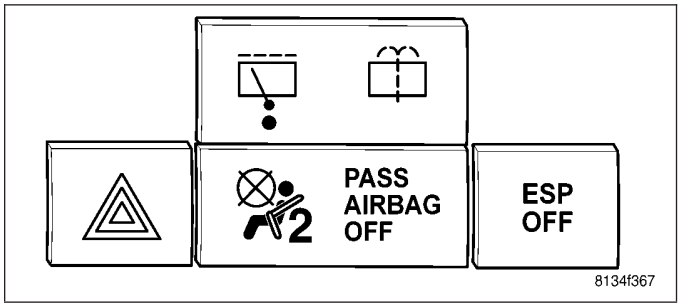

Export wagons may also have Rear Wipe/Wash Switch, Hazard Switch, Passenger Airbag Disabled (PAD) Indicator, and Anti-Slip Regulation (ASR) Off Switch.

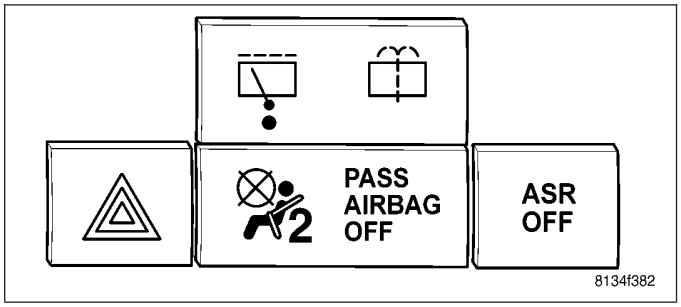

OPERATION

LIFTGATE WIPER AND WASHER SWITCH

A liftgate wiper and washer rocker switch provides intermittent wiper operation as well as rear washer operation. Pressing one side of the rocker switch knob actuates the washer system, while pressing the other side of the rocker switch knob turns the intermittent rear wiper ON and OFF. When the rear intermittent wiper is ON, an indicator in the switch knob is illuminated. Refer to Wipers/Washers for description and operation of the Rear WiperWasher Switch.

HAZARD WARNING SWITCH

A latching push-button hazard-warning switch is placed in the instrument panel switch pod. This is an ergonomic place for the switch where it can be conveniently reached. Refer to Lamps/Lighting - Exterior for description and operation of the hazard warning switch.

PASSENGER AIRBAG DISABLED (PAD) INDICATOR

The indicator is placed in the instrument panel switch pod. This is an ergonomic place for the indicator where it can be conveniently seen by all interior occupants. Refer to Restraints for description and operation of the Passenger Airbag Disabled (PAD) Indicator.

ELECTRONIC STABILITY PROGRAM (ESP) OFF SWITCH

A momentary contact, push-button ESP switch is placed in the instrument panel switch pod. This is an ergonomic place for the switch where it can be conveniently reached. Refer to Brakes for description and operation of the ESP system and ESP off switch.

ANTI-SLIP REGULATION (ASR) OFF SWITCH

A momentary contact, push-button ASR switch is placed in the instrument panel switch pod. This is an ergonomic place for the switch where it can be conveniently reached. Refer to Brakes for description and operation of the ASR system and ASR off switch.

REMOVAL

1. Disconnect and isolate the battery negative cable.
2.

WARNING: Wait two minutes for the airbag system reserve capacitor to discharge before beginning any airbag system or component service. Failure to do so may result in accidental airbag deployment, personal injury or death.

3. Remove the instrument panel center bezel (Refer to 23 - BODY/INSTRUMENT PANEL/INSTRUMENT PANEL CENTER BEZEL - REMOVAL).
4. Remove the two screws (1) from the rear of the switch pod.
5. Separate switch from center bezel.

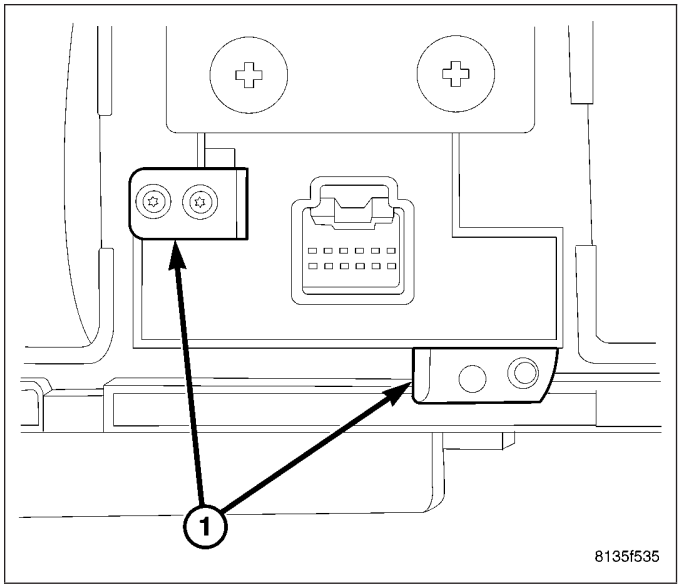

INSTALLATION

1. Place the switch pod in the bezel opening and install the two screws (1).
2. Install the instrument panel ceter bezel (Refer to 23 - BODY/INSTRUMENT PANEL/INSTRUMENT PANEL CENTER BEZEL - INSTALLATION).
3. Connect the battery negative cable.

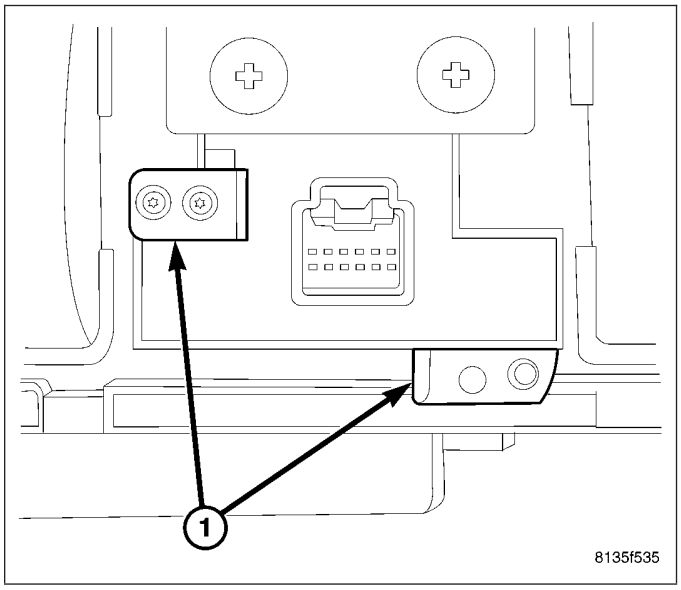

LAMPS

TABLE OF CONTENTS

page

LAMPS/LIGHTING - EXTERIOR - ELECTRICAL DIAGNOSTICS 1
LAMPS/LIGHTING - EXTERIOR - SERVICE INFORMATION 72

page

LAMPS/LIGHTING - INTERIOR - ELECTRICAL DIAGNOSTICS 144
LAMPS/LIGHTING - INTERIOR - SERVICE INFORMATION 151

LAMPS/LIGHTING - EXTERIOR - ELECTRICAL DIAGNOSTICS

TABLE OF CONTENTS

page

LAMPS/LIGHTING - EXTERIOR - ELECTRICAL DIAGNOSTICS
DIAGNOSIS AND TESTING
B162B-LEFT LOW BEAM CONTROL CIRCUIT LOW 3
B162F-RIGHT LOW BEAM CONTROL CIRCUIT LOW 5
B1630-RIGHT LOW BEAM CONTROL CIRCUIT HIGH. 7
B1633-LEFT HI BEAM CONTROL CIRCUIT LOW 9
B1634-LEFT HI BEAM CONTROL CIRCUIT HIGH 11
B1637-RIGHT HI BEAM CONTROL CIRCUIT LOW. 13
B1638-RIGHT HI BEAM CONTROL CIRCUIT HIGH 15
B163B-FRONT LEFT TURN CONTROL CIRCUIT LOW 17
B163C-FRONT LEFT TURN CONTROL CIRCUIT HIGH. 20
B163F-FRONT RIGHT TURN CONTROL CIRCUIT LOW 23
B1640-FRONT RIGHT TURN CONTROL CIRCUIT HIGH. 26
B1643-REAR LEFT TURN CONTROL CIRCUIT LOW 29
B1644-REAR LEFT TURN CONTROL CIRCUIT HIGH. 32
B1647-REAR RIGHT TURN CONTROL CIRCUIT LOW 35

page

B1648-REAR RIGHT TURN CONTROL CIRCUIT HIGH. 38
B1659-FRONT FOG LAMP CONTROL CIRCUIT LOW 41
B1660-FRONT FOG LAMP CONTROL CIRCUIT HIGH. 43
B1661-FRONT FOG LAMP CONTROL CIRCUIT OPEN 45
B168F-FRONT FOG LAMP SWITCH STUCK . . . 47
B165C-PARK LAMP CONTROL CIRCUIT LOW. 50
B165D-PARK LAMP CONTROL CIRCUIT HIGH 52
B1667-REVERSE LAMP CONTROL CIRCUIT LOW. 54
B1668-REVERSE LAMP CONTROL CIRCUIT HIGH 56
B1607-HEADLAMP SWITCH INPUT CIRCUIT LOW. 59
B1608-HEADLAMP SWITCH INPUT CIRCUIT HIGH 62
B167A-LEFT FRONT HEADLAMP LIGHT SOURCE CIRCUIT 65
B167B-RIGHT FRONT HEADLAMP LIGHT SOURCE CIRCUIT 67
B2235-LEFT FRONT HEADLAMP BALLAST ECU INTERNAL. 69
B2236-RIGHT FRONT HEADLAMP BALLAST ECU INTERNAL. 70
B2239-HID LEVELING TRANSLATOR ECU INTERNAL 71

LAMPS/LIGHTING - EXTERIOR - ELECTRICAL DIAGNOSTICS

DIAGNOSIS AND TESTING

B162B-LEFT LOW BEAM CONTROL CIRCUIT LOW

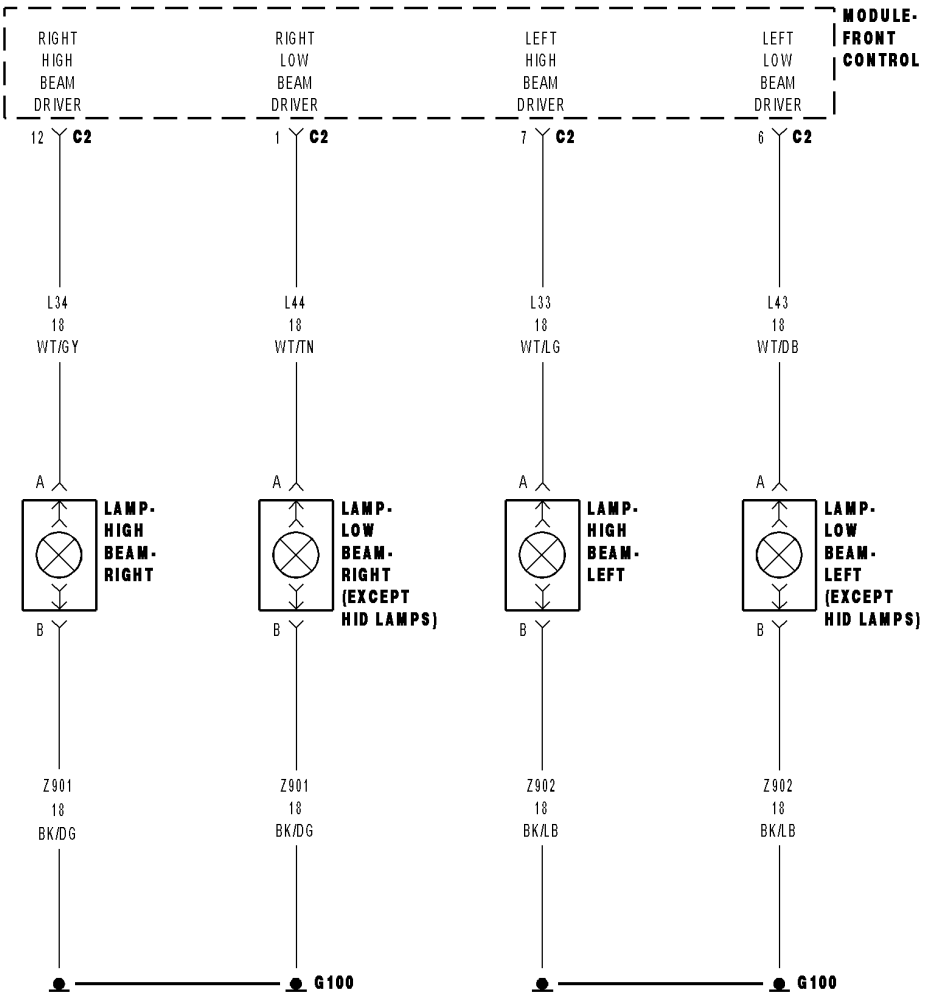

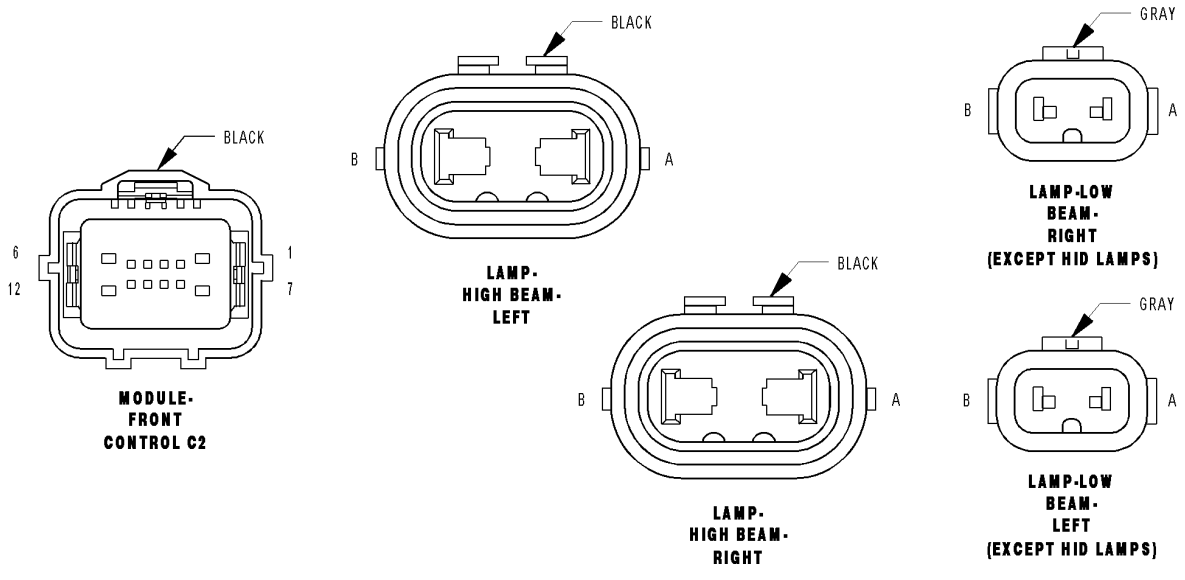

For a complete wiring diagram **Refer to Section 8W**.

- **When Monitored:**
- With the Headlamps activated.
- **Set Condition:**
- When the FCM detects a LOW condition.

Possible Causes
(L43) LEFT LOW BEAM CONTROL CIRCUIT
FRONT CONTROL MODULE

Diagnostic Test

1. INTERMITTENT CONDITION

Turn the ignition on.
With the Scan Tool, clear all FCM DTC's.
Turn the Headlamps on.
With the Scan Tool read the DTC information.

Does the Scan Tool read: B162B-LEFT LOW BEAM CONTROL CIRCUIT LOW?

Yes >> Go To 2

No >> The condition that caused the symptom is currently not present. Inspect the related wiring for a possible intermittent condition. Look for any chafed, pierced, pinched, or partially broken wires.
Perform the BODY VERIFICATION TEST - VER 1.

2. (L43) LEFT LOW BEAM CONTROL CIRCUIT

Turn the ignition off.
Disconnect the FCM C2 harness connector.
Measure the resistance between ground and the (L43) Left Low Beam Control circuit.

Is the resistance below 5.0 ohms?

Yes >> Replace the Front Control Module (FCM) in accordance with the service information.
Perform the BODY VERIFICATION TEST - VER 1.

No >> Repair the (L43) Left Low Beam Control circuit for a short to ground condition.
Perform the BODY VERIFICATION TEST - VER 1.

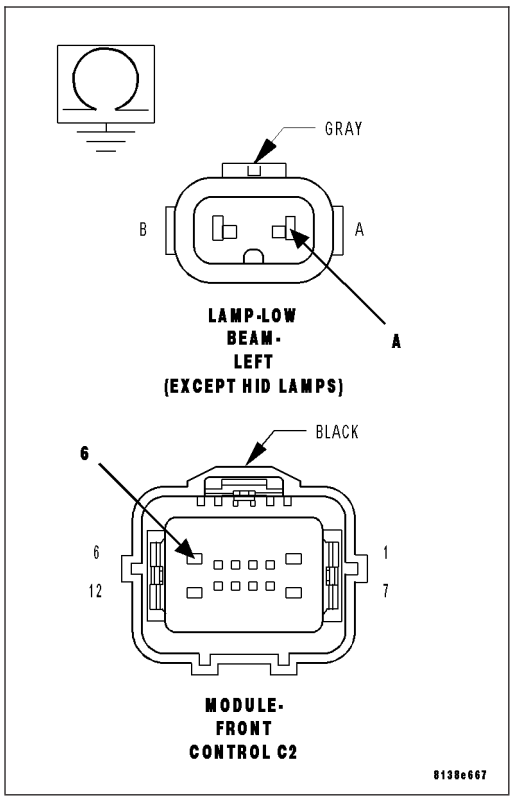

B162F-RIGHT LOW BEAM CONTROL CIRCUIT LOW

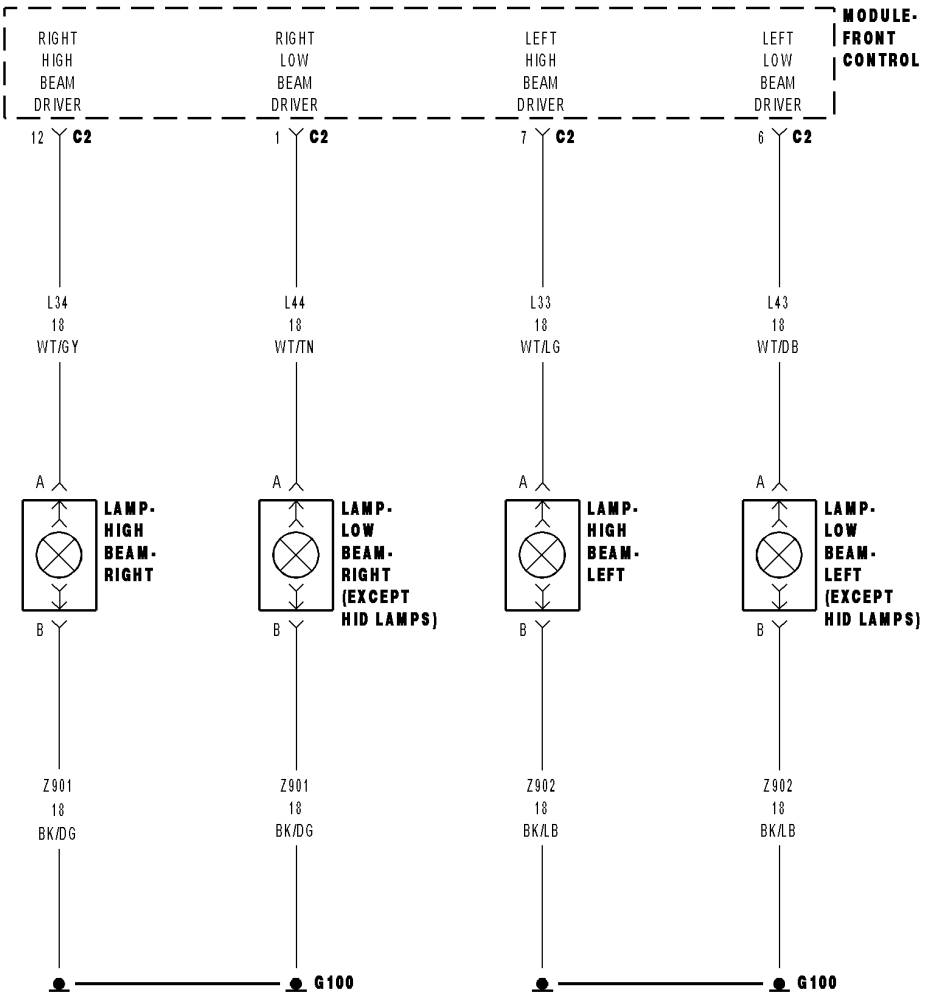

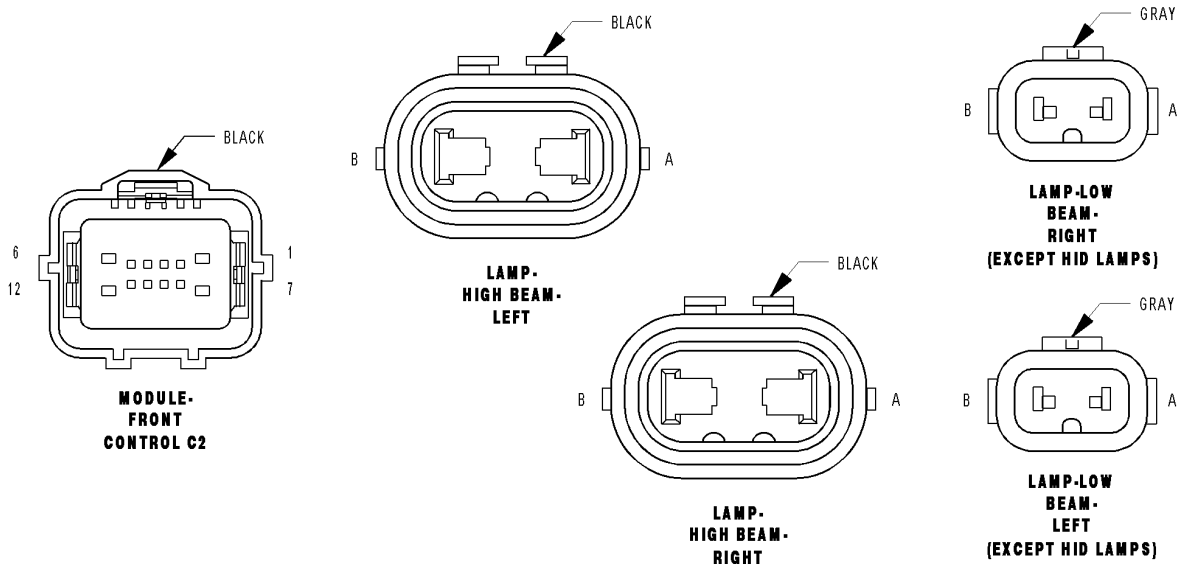

For a complete wiring diagram **Refer to Section 8W**.

- **When Monitored:**
- With the Headlamps activated.
- **Set Condition:**
- When the FCM detects a LOW condition.

Possible Causes
(L44) RIGHT LOW BEAM CONTROL CIRCUIT
FRONT CONTROL MODULE

Diagnostic Test

1. INTERMITTENT CONDITION

Turn the ignition on.

With the Scan Tool, clear all FCM DTC's.

Turn the Headlamps on.

With the Scan Tool read the DTC information.

Does the Scan Tool read: B162F-RIGHT LOW BEAM CONTROL CIRCUIT LOW?

Yes >> Go To 2

No >> The condition that caused the symptom is currently not present. Inspect the related wiring for a possible intermittent condition. Look for any chafed, pierced, pinched, or partially broken wires.
Perform the BODY VERIFICATION TEST - VER 1.

2. (L44) RIGHT LOW BEAM CONTROL CIRCUIT

Turn the ignition off.

Disconnect the FCM C2 harness connector.

Measure the resistance between ground and the (L44) Right Low Beam Control circuit.

Is the resistance below 5.0 ohms?

Yes >> Replace the Front Control Module (FCM) in accordance with the service information.
Perform the BODY VERIFICATION TEST - VER 1.

No >> Repair the (L44) Right Low Beam Control circuit for a short to ground condition.
Perform the BODY VERIFICATION TEST - VER 1.

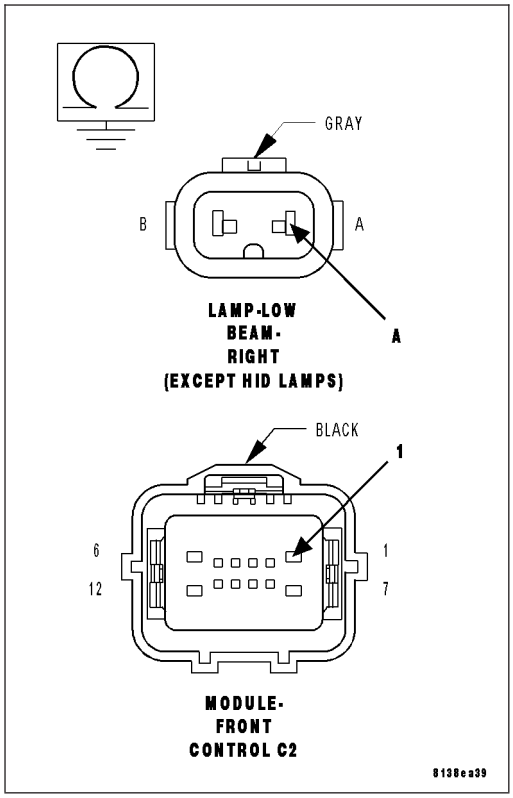

B1630-RIGHT LOW BEAM CONTROL CIRCUIT HIGH

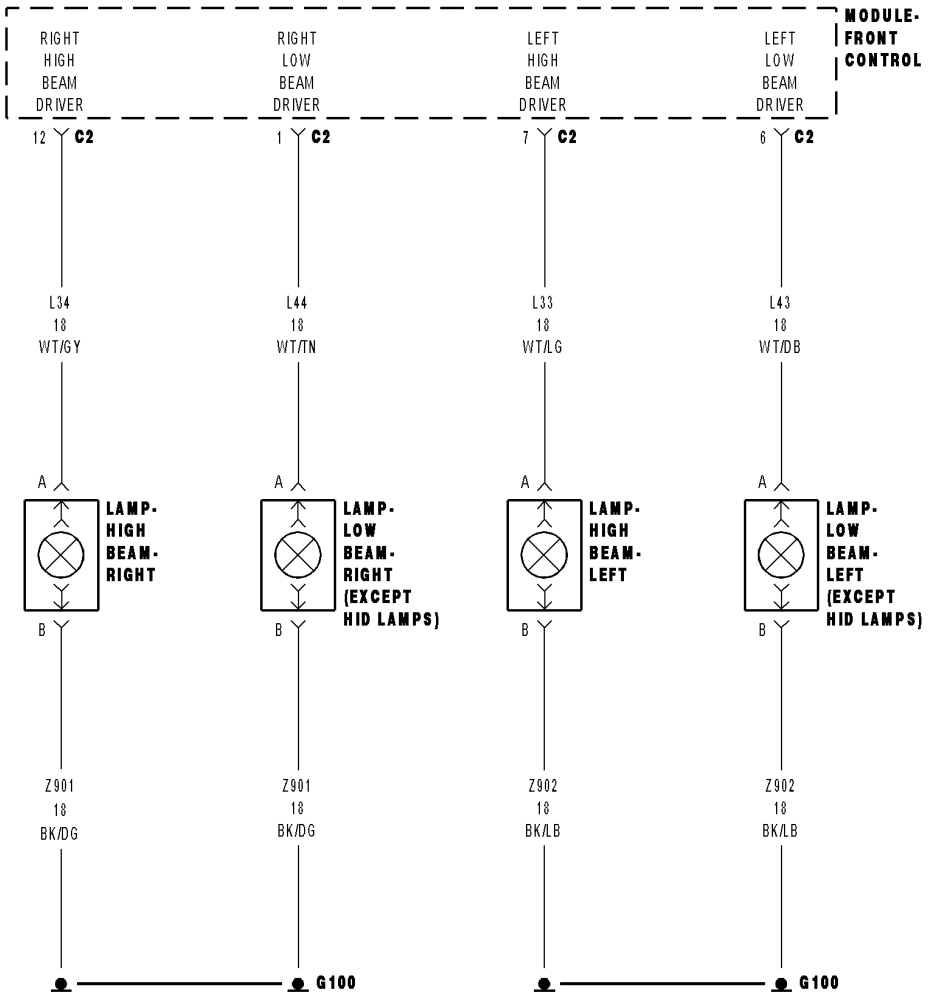

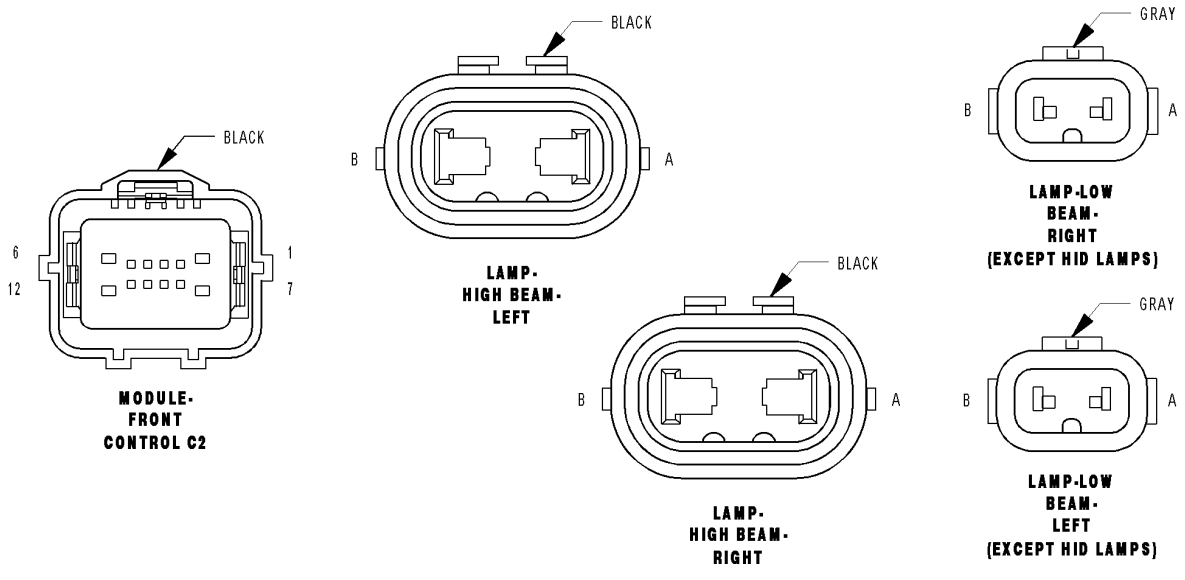

For a complete wiring diagram **Refer to Section 8W**.

- **When Monitored:**
- With the Headlamps activated.
- **Set Condition:**
- When the FCM detects a HIGH condition.

Possible Causes
(L44) RIGHT LOW BEAM CONTROL CIRCUIT
FRONT CONTROL MODULE

Diagnostic Test

1. INTERMITTENT CONDITION

Turn the ignition on.
With the Scan Tool, clear all FCM DTC's.
Turn the Headlamps on.
With the Scan Tool read the DTC information.

Does the Scan Tool read: B1630-RIGHT LOW BEAM CONTROL CIRCUIT HIGH?

Yes >> Go To 2

No >> The condition that caused the symptom is currently not present. Inspect the related wiring for a possible intermittent condition. Look for any chafed, pierced, pinched, or partially broken wires.
Perform the BODY VERIFICATION TEST - VER 1.

2. (L44) RIGHT LOW BEAM CONTROL CIRCUIT

Turn the ignition off.
Disconnect the FCM C2 harness connector.
Measure the resistance of the (L44) Right Low Beam Control circuit.

Is the resistance above 5.0 ohms?

Yes >> Repair the (L44) Right Low Beam Control circuit for a short to battery condition.
Perform the BODY VERIFICATION TEST - VER 1.

No >> Replace the Front Control Module (FCM) in accordance with the service information.
Perform the BODY VERIFICATION TEST - VER 1.

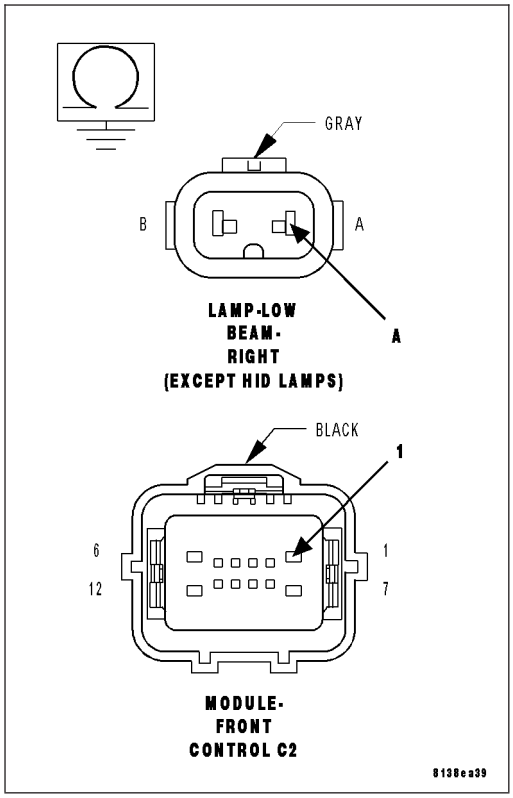

B1633-LEFT HI BEAM CONTROL CIRCUIT LOW

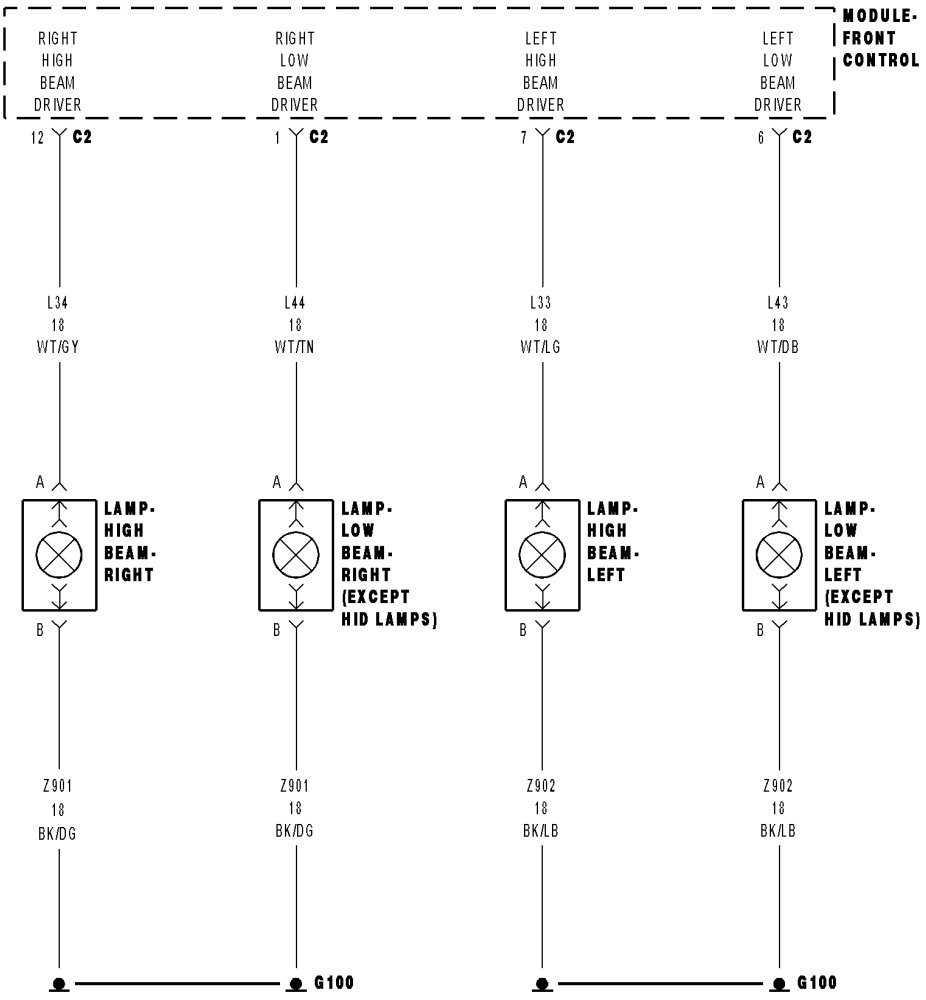

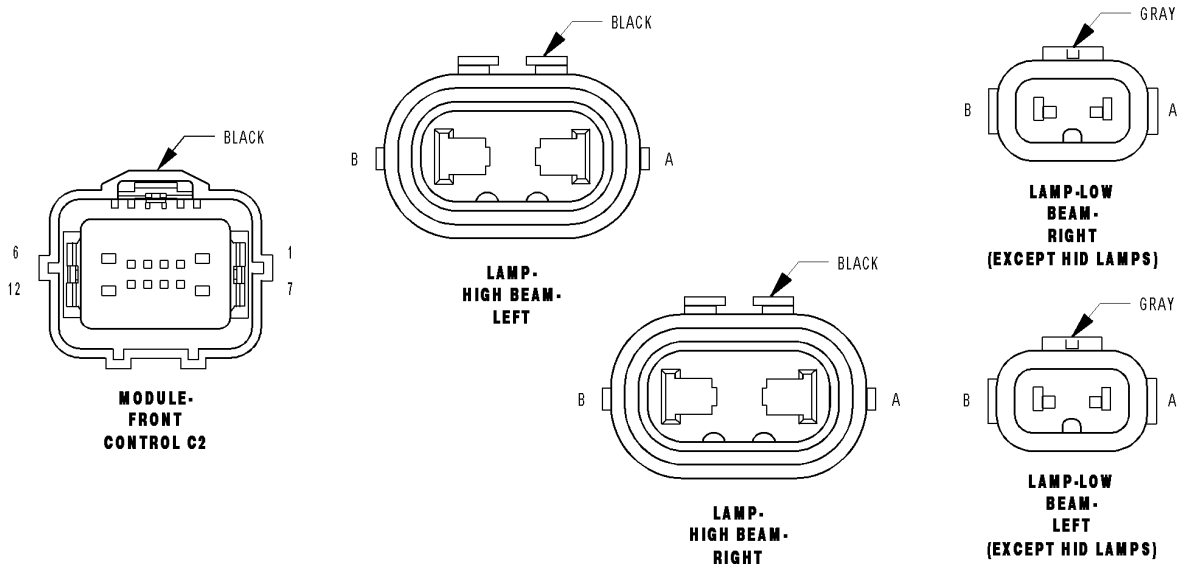

For a complete wiring diagram **Refer to Section 8W**.

- **When Monitored:**
- With the Headlamps activated.
- **Set Condition:**
- When the FCM detects a LOW condition.

Possible Causes
(L33) LEFT HIGHBEAM OUTPUT CIRCUIT
FRONT CONTROL MODULE

Diagnostic Test

1. INTERMITTENT CONDITION

Turn the ignition on.
With the Scan Tool, clear all FCM DTC's.
Turn the Highbeam Headlamps on.
With the Scan Tool read the DTC information.

Does the Scan Tool read: B1633-LEFT HI BEAM CONTROL CIRCUIT LOW?

Yes >> Go To 2

No >> The condition that caused the symptom is currently not present. Inspect the related wiring for a possible intermittent condition. Look for any chafed, pierced, pinched, or partially broken wires.
Perform the BODY VERIFICATION TEST - VER 1.

2. (L33) LEFT HIGHBEAM OUTPUT CIRCUIT

Turn the ignition off.
Disconnect the FCM C2 harness connector.
Measure the resistance between ground and the (L33) Left Highbeam Output circuit.

Is the resistance below 5.0 ohms?

Yes >> Replace the Front Control Module (FCM) in accordance with the service information.
Perform the BODY VERIFICATION TEST - VER 1.

No >> Repair the (L33) Left Highbeam Output circuit for a short to ground condition.
Perform the BODY VERIFICATION TEST - VER 1.

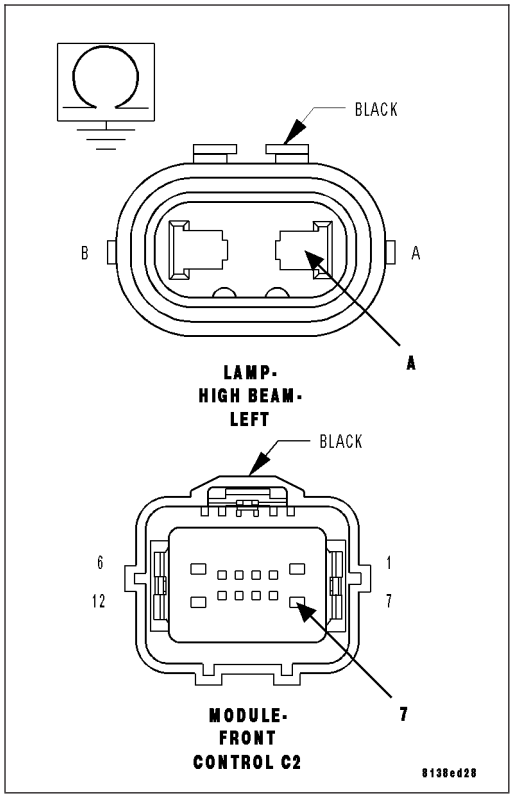

B1634-LEFT HI BEAM CONTROL CIRCUIT HIGH

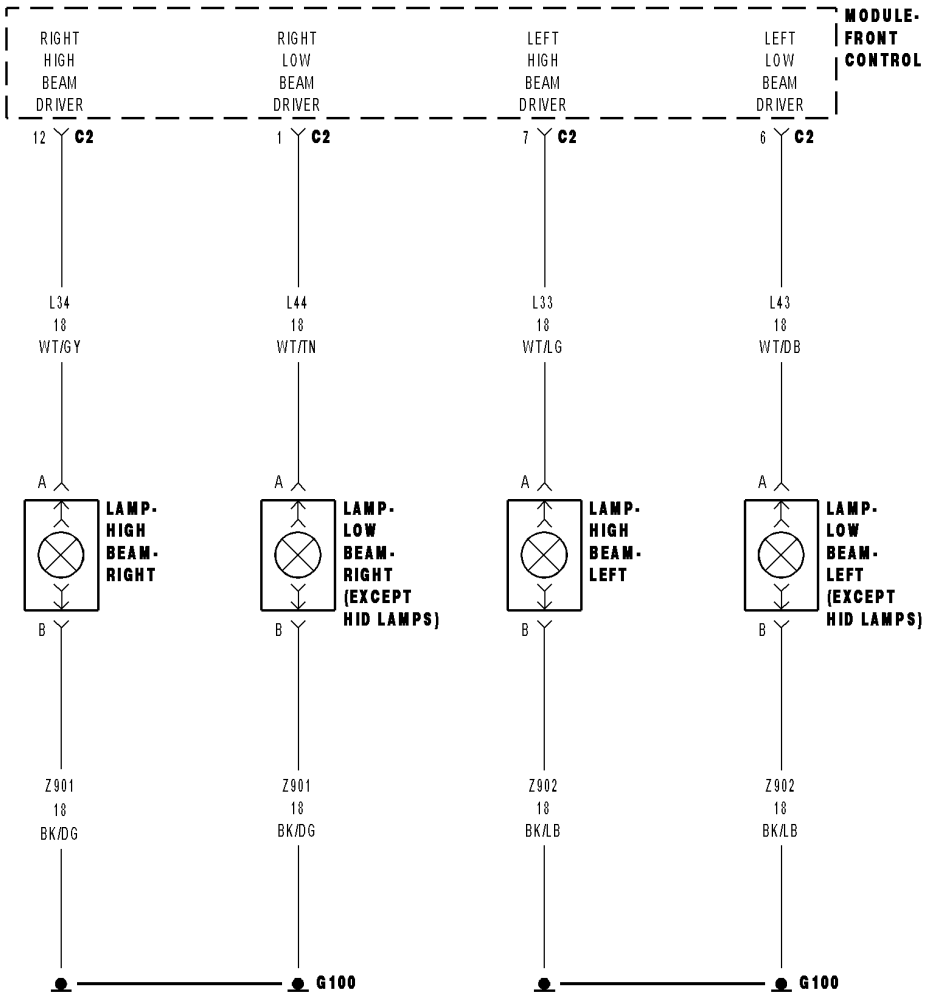

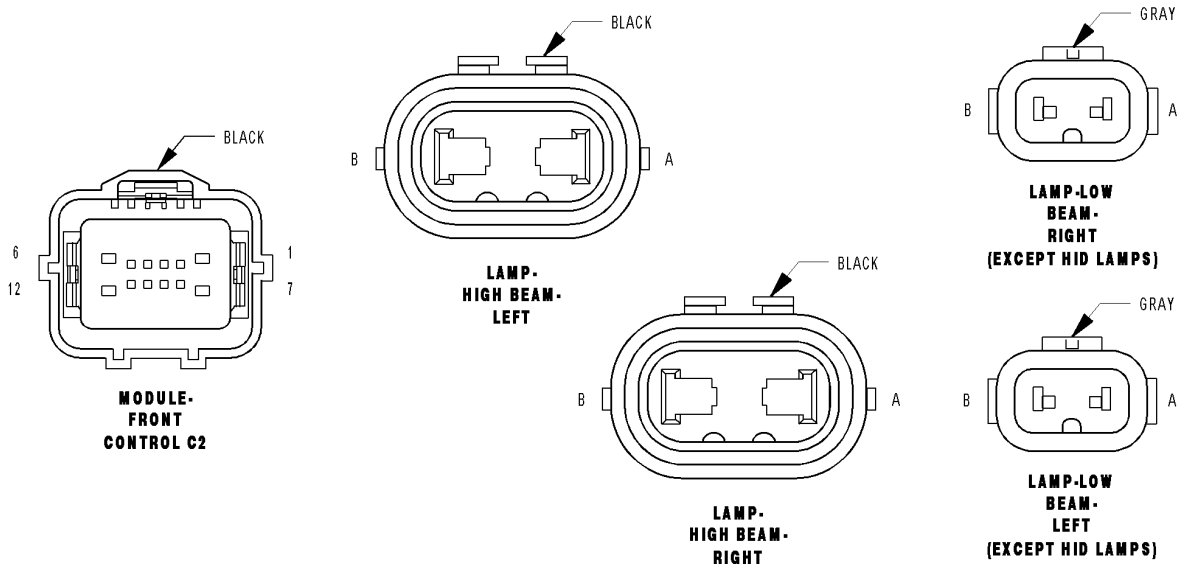

For a complete wiring diagram **Refer to Section 8W**.

- **When Monitored:**
- With the Headlamps activated.
- **Set Condition:**
- When the FCM detects a HIGH condition.

Possible Causes
(L33) LEFT HIGH BEAM CONTROL CIRCUIT
FRONT CONTROL MODULE

Diagnostic Test

1. INTERMITTENT CONDITION

Turn the ignition on.
With the Scan Tool, clear all FCM DTC's.
Turn the Headlamps on.
With the Scan Tool read the DTC information.

Does the Scan Tool read: B1634-LEFT HI BEAM CONTROL CIRCUIT HIGH?

Yes >> Go To 2

No >> The condition that caused the symptom is currently not present. Inspect the related wiring for a possible intermittent condition. Look for any chafed, pierced, pinched, or partially broken wires.
Perform the BODY VERIFICATION TEST - VER 1.

2. (L33) HIGH BEAM CONTROL CIRCUIT

Turn the ignition off.
Disconnect the FCM C2 harness connector.
Measure the resistance of the (L33) Left High Beam Control circuit.

Is the resistance above 5.0 ohms?

Yes >> Repair the (L33) Left High Beam Control circuit for a short to battery condition.
Perform the BODY VERIFICATION TEST - VER 1.

No >> Replace the Front Control Module (FCM) in accordance with the service information.
Perform the BODY VERIFICATION TEST - VER 1.

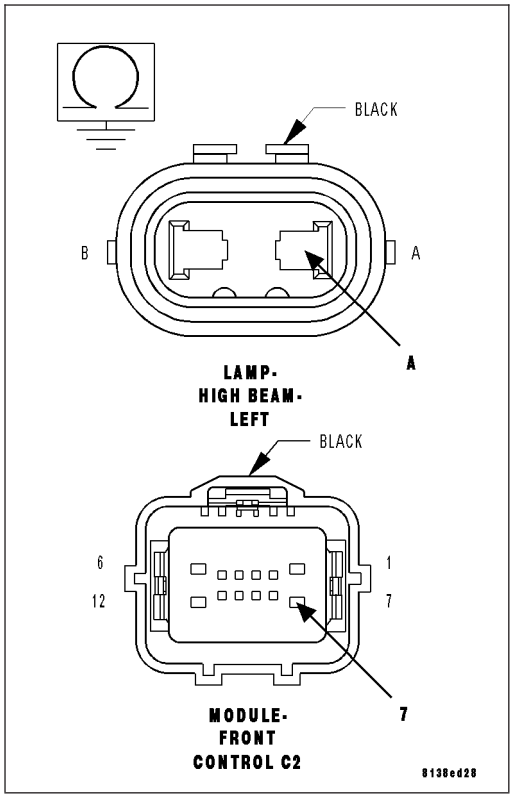

B1637-RIGHT HI BEAM CONTROL CIRCUIT LOW

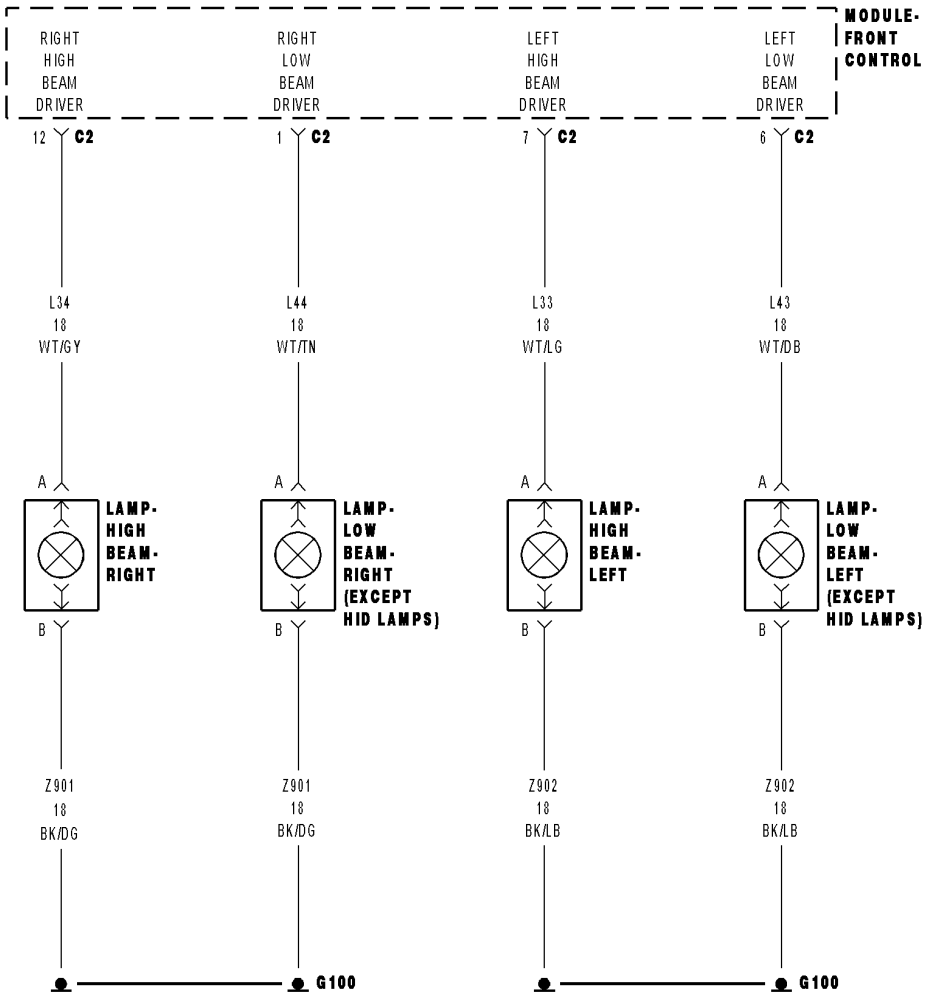

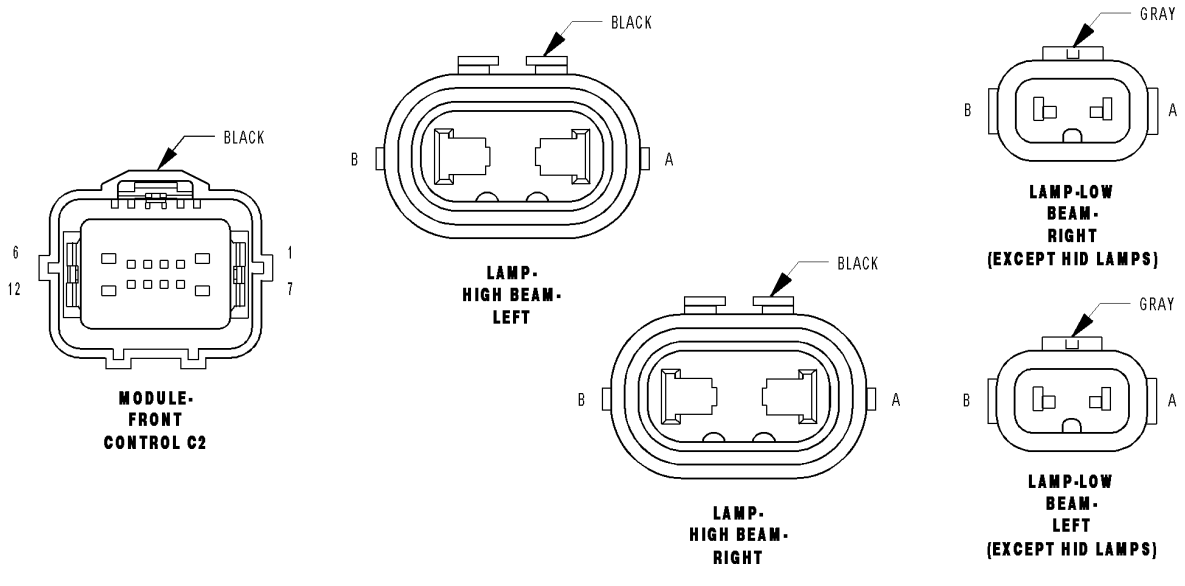

For a complete wiring diagram **Refer to Section 8W**.

- **When Monitored:**
- With the Highbeam Headlamps activated.
- **Set Condition:**
- When the FCM detects a High condition.

Possible Causes
(L34) RIGHT HIGHBEAM OUTPUT CIRCUIT
FRONT CONTROL MODULE

Diagnostic Test

1. INTERMITTENT CONDITION

Turn the ignition on.

With the Scan Tool, clear all FCM DTC's.

Turn the Highbeam Headlamps on.

With the Scan Tool read the DTC information.

Does the Scan Tool read: B1637-RIGHT HI BEAM CONTROL CIRCUIT LOW?

Yes >> Go To 2

No >> The condition that caused the symptom is currently not present. Inspect the related wiring for a possible intermittent condition. Look for any chafed, pierced, pinched, or partially broken wires.
Perform the BODY VERIFICATION TEST - VER 1.

2. (L34) RIGHT HIGHBEAM OUTPUT CIRCUIT

Turn the ignition off.

Disconnect the FCM C2 harness connector.

Measure the resistance between ground and the (L34) Right Highbeam Output circuit.

Is the resistance below 5.0 ohms?

Yes >> Replace the Front Control Module (FCM) in accordance with the service information.
Perform the BODY VERIFICATION TEST - VER 1.

No >> Repair the (L34) Right Highbeam Output circuit for a short to ground condition.
Perform the BODY VERIFICATION TEST - VER 1.

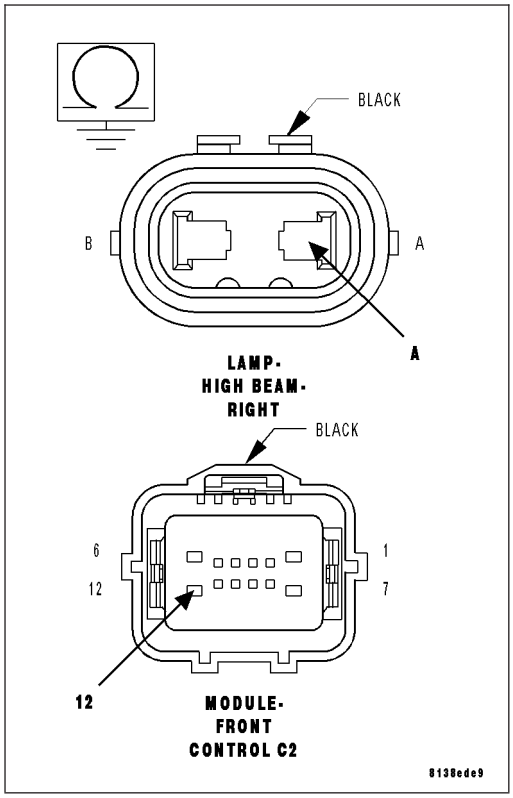

B1638-RIGHT HI BEAM CONTROL CIRCUIT HIGH

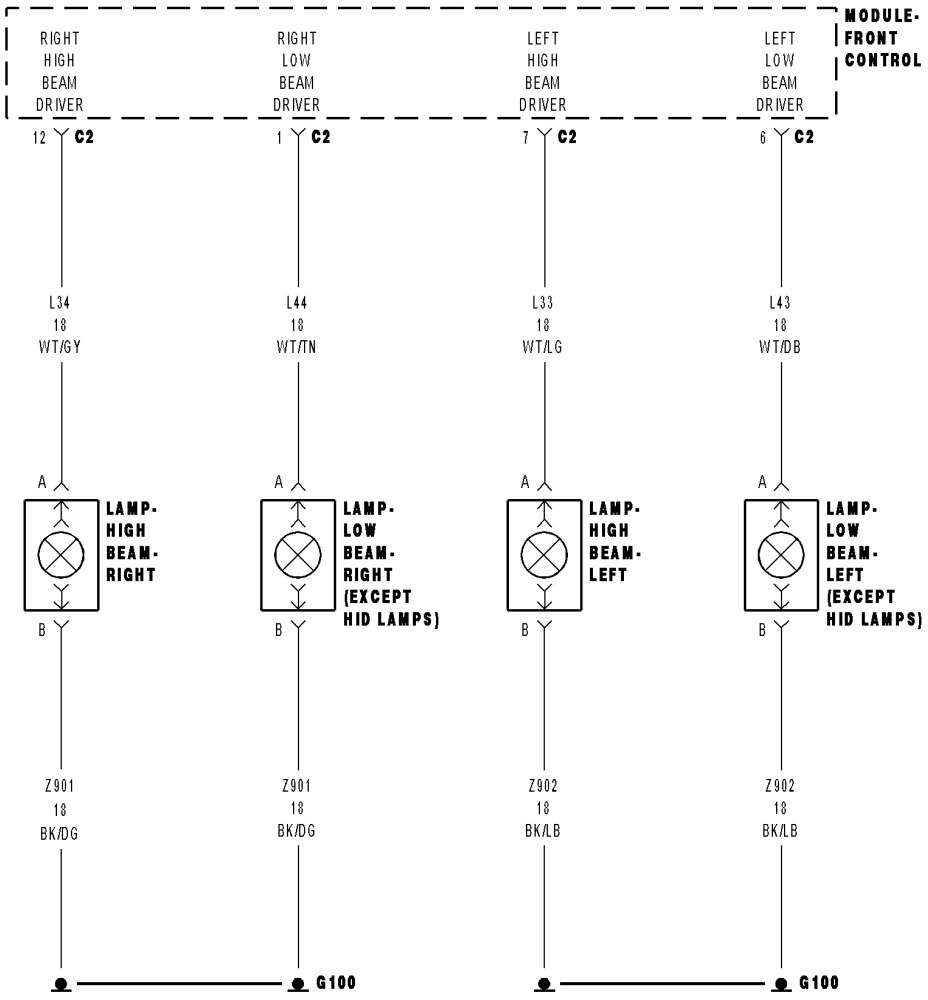

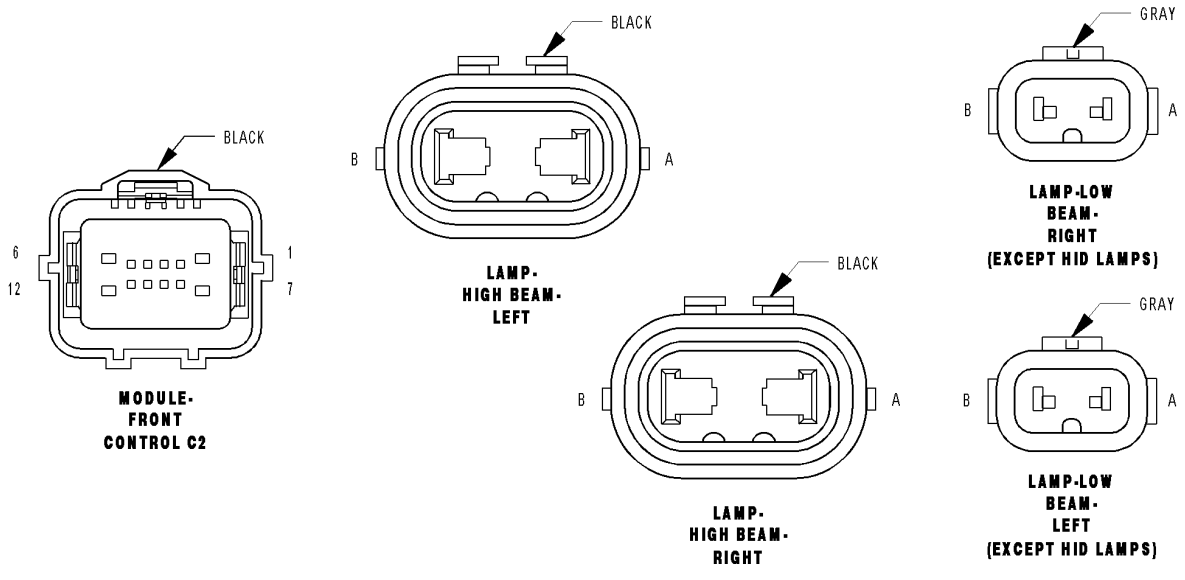

For a complete wiring diagram **Refer to Section 8W**.

- **When Monitored:**
- With the Headlamps activated.
- **Set Condition:**
- When the FCM detects a HIGH condition.

Possible Causes
(L34) RIGHT HIGH BEAM CONTROL CIRCUIT
FRONT CONTROL MODULE

Diagnostic Test

1. INTERMITTENT CONDITION

Turn the ignition on.
With the Scan Tool, clear all FCM DTC's.
Turn the Headlamps on.
With the Scan Tool read the DTC information.

Does the Scan Tool read: B1638-RIGHT HI BEAM CONTROL CIRCUIT HIGH?

Yes >> Go To 2

No >> The condition that caused the symptom is currently not present. Inspect the related wiring for a possible intermittent condition. Look for any chafed, pierced, pinched, or partially broken wires.
Perform the BODY VERIFICATION TEST - VER 1.

2. (L34) RIGHT HIGH BEAM CONTROL CIRCUIT

Turn the ignition off.
Disconnect the FCM C2 harness connector.
Measure the resistance of the (L34) Right High Beam Control circuit.

Is the resistance above 5.0 ohms?

Yes >> Repair the (L34) Right High Beam Control circuit for a short to battery condition.
Perform the BODY VERIFICATION TEST - VER 1.

No >> Replace the Front Control Module (FCM) in accordance with the service information.
Perform the BODY VERIFICATION TEST - VER 1.

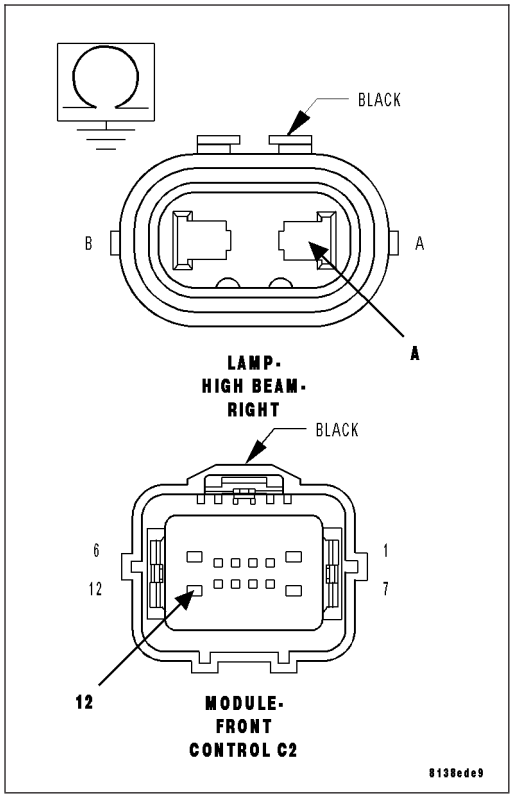

B163B-FRONT LEFT TURN CONTROL CIRCUIT LOW

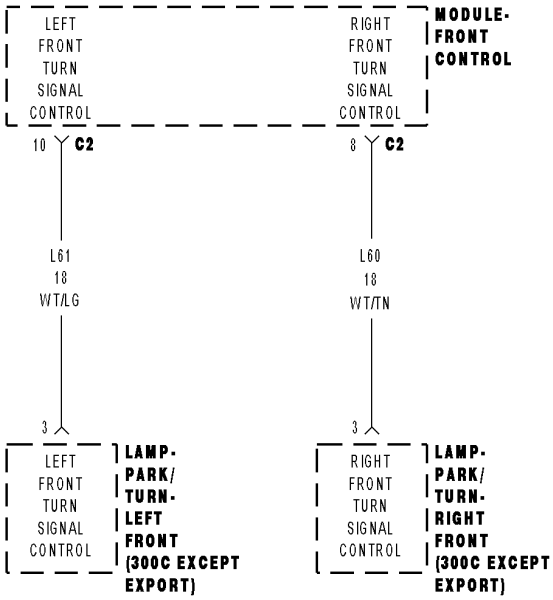

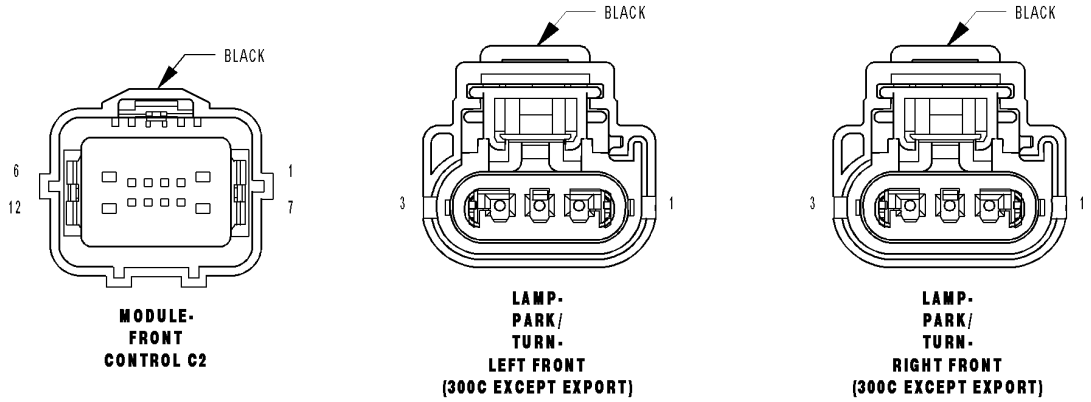

8138f112

For a complete wiring diagram **Refer to Section 8W**.

Possible Causes
(L61) FRONT LEFT TURN SIGNAL CONTROL CIRCUIT
POWER DISTRIBUTION CENTER
FRONT CONTROL MODULE

Diagnostic Test

1. INTERMITTENT CONDITION

Turn the ignition on.

With the Scan Tool, clear all FCM DTC's.

Turn the Left Turn Signals on.

With the Scan Tool read the DTC information.

Does the Scan Tool read: B163B-FRONT LEFT TURN CONTROL CIRCUIT LOW?

Yes >> Go To 2

No >> The condition that caused the symptom is currently not present. Inspect the related wiring for a possible intermittent condition. Look for any chafed, pierced, pinched, or partially broken wires.

Perform the BODY VERIFICATION TEST - VER 1.

2. L61 FRONT LEFT TURN SIGNAL CONTROL CIRCUIT

Turn the ignition off.

Disconnect the FCM C2 connector.

Measure the resistance between ground and the (L61) Front Left Turn Signal Control circuit.

Is the resistance below 5.0 ohms?

Yes >> Go To 3

No >> Repair the (L61) Front Left Turn Signal Control circuit for a short to ground.

Perform the BODY VERIFICATION TEST - VER 1.

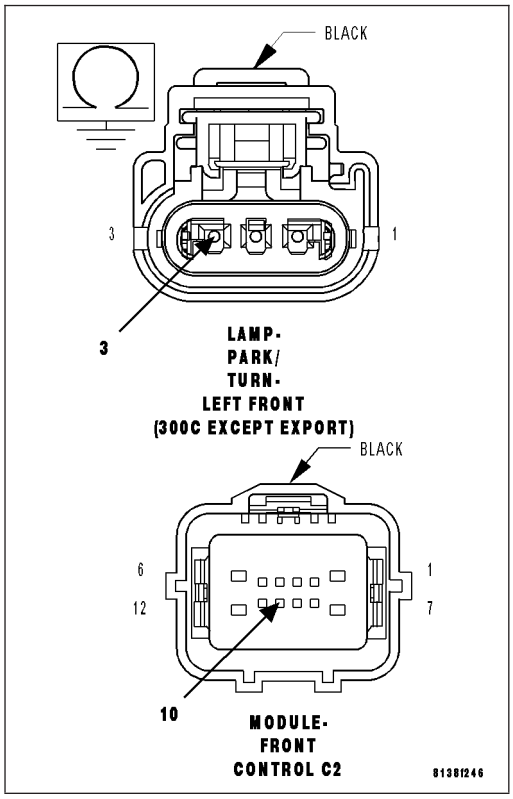

3. FRONT CONTROL MODULE

Turn the ignition off.

Disconnect the FCM C2 connector.

Measure the resistance between ground and the (L61) Front Left Turn Signal Control circuit in the FCM.

Is the resistance below 5.0 ohms?

Yes >> Replace the Power Distribution Center in accordance with the service information.
Perform the BODY VERIFICATION TEST - VER 1.

No >> Replace the Front Control Module in accordance with the service information.
Perform the BODY VERIFICATION TEST - VER 1.

B163C-FRONT LEFT TURN CONTROL CIRCUIT HIGH

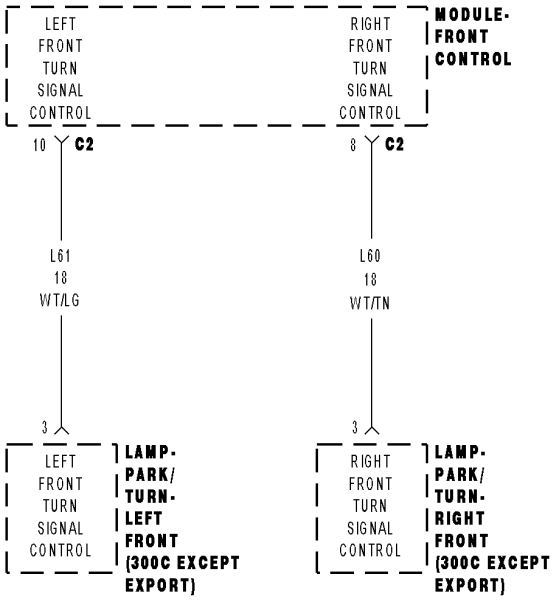

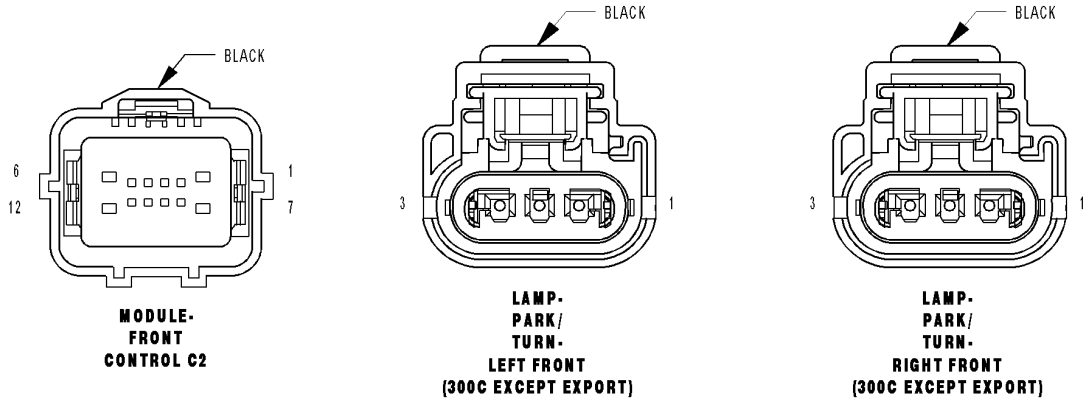

8138f112

For a complete wiring diagram **Refer to Section 8W**.

- **When Monitored:**
- Continuously
- **Set Condition:**
- When the Front Control Module detects a short to battery on the Control circuit.

Possible Causes
(L61) TURN SIGNAL CONTROL CIRCUIT
POWER DISTRIBUTION CENTER
FRONT CONTROL MODULE

Diagnostic Test

1. TEST FOR INTERMITTENT CONDITION

Turn the ignition on.
Clear all FCM DTC's
Turn the Left Turn Signal on.
With the scan tool, read DTC's.

Does the scan tool read: B163C-FRONT LEFT TURN CONTROL CIRCUIT HIGH?

Yes >> Go To 2

No >> The conditions that caused this code to set are not present at this time. Using the wiring diagram/schematic as a guide, inspect the wiring and connectors.
Perform BODY VERIFICATION TEST - VER 1.

2. L61 LEFT TURN SIGNAL CONTROL CIRCUIT

Turn the ignition off.
Disconnect the FCM C2 connector.
Measure the resistance of the (L61) Front Left Turn Signal Control circuit.

Is the resistance above 5.0 ohms?

No >> Repair the (L61) Turn Signal Control circuit.
Perform BODY VERIFICATION TEST - VER 1.

Yes >> Go To 3

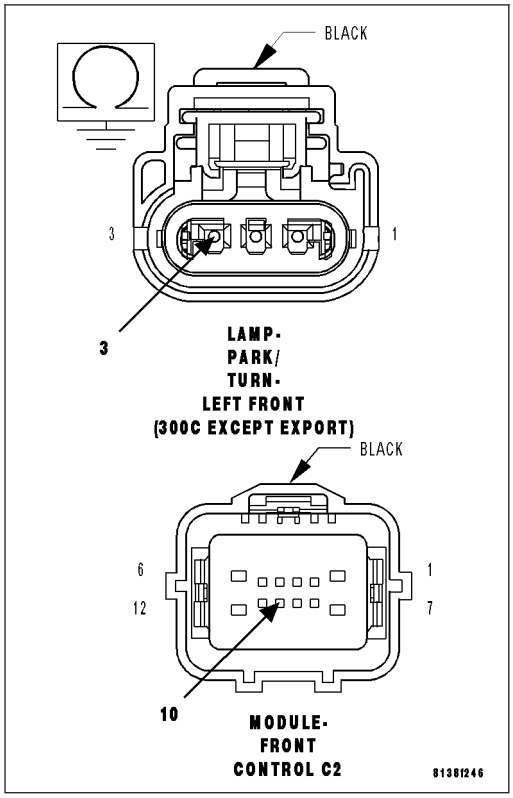

3. FRONT CONTROL MODULE

Turn the ignition off.

Disconnect the Front Control Module from the PDC 49-way connector.

Measure the voltage between (L61) Front Left Turn Signal Control circuit and ground.

Is there any voltage present?

Yes >> Replace the Power Distribution Center in accordance with the service information. Perform BODY VERIFICATION TEST - VER 1.

No >> Replace the Front Control Module in accordance with the service information. Perform BODY VERIFICATION TEST - VER 1.

B163F-FRONT RIGHT TURN CONTROL CIRCUIT LOW

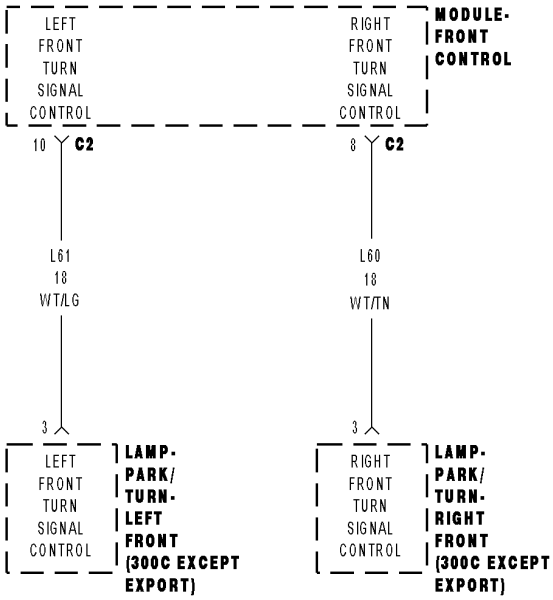

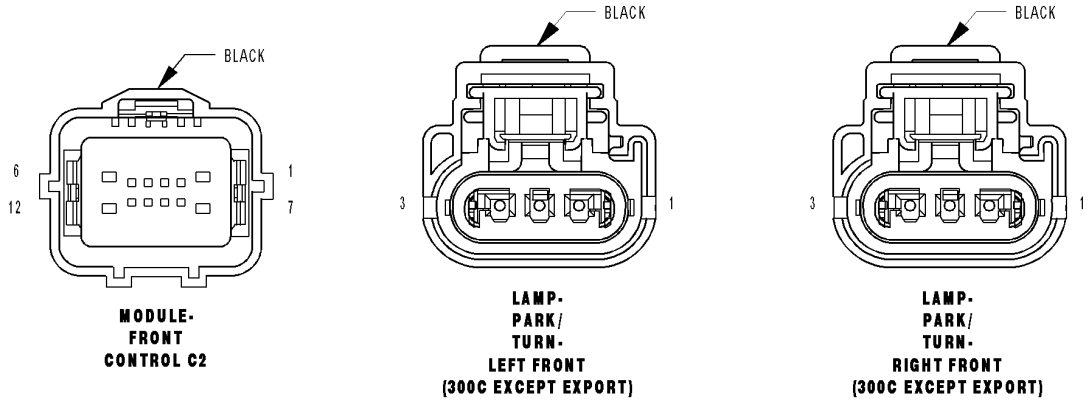

8138f112

For a complete wiring diagram **Refer to Section 8W**.

Possible Causes
(L60) FRONT RIGHT TURN SIGNAL CONTROL CIRCUIT
FRONT CONTROL MODULE

Diagnostic Test

1. INTERMITTENT CONDITION

Turn the ignition on.
With the Scan Tool, clear all FCM DTC's.
Turn the Right Turn Signals on.
With the Scan Tool read the DTC information.

Does the Scan Tool read: B163F-FRONT RIGHT TURN CONTROL CIRCUIT LOW?

Yes >> Go To 2

No >> The condition that caused the symptom is currently not present. Inspect the related wiring for a possible intermittent condition. Look for any chafed, pierced, pinched, or partially broken wires.
Perform the BODY VERIFICATION TEST - VER 1.

2. L60 FRONT RIGHT TURN SIGNAL CONTROL CIRCUIT

Turn the ignition off.
Disconnect the FCM C2 harness connector.
Measure the resistance between ground and the (L60) Front Right Turn Signal Control circuit.

Is the resistance below 5.0 ohms?

Yes >> Go To 3

No >> Repair the (L60) Front Right Turn Signal Control circuit for a short to ground.
Perform the BODY VERIFICATION TEST - VER 1.

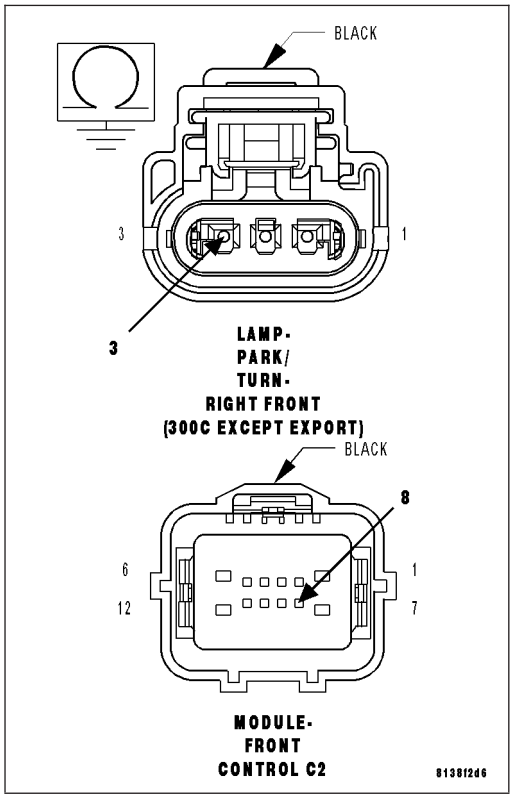

3. FRONT CONTROL MODULE

Turn the ignition off.

Disconnect the FCM connector.

Measure the resistance between ground and the (L60) Front Right Turn Signal Control circuit in the FCM.

Is the resistance below 5.0 ohms?

Yes >> Replace the Power Distribution Center in accordance with the service information.
Perform the BODY VERIFICATION TEST - VER 1.

No >> Replace the Front Control Module in accordance with the service information.
Perform the BODY VERIFICATION TEST - VER 1.

B1640-FRONT RIGHT TURN CONTROL CIRCUIT HIGH

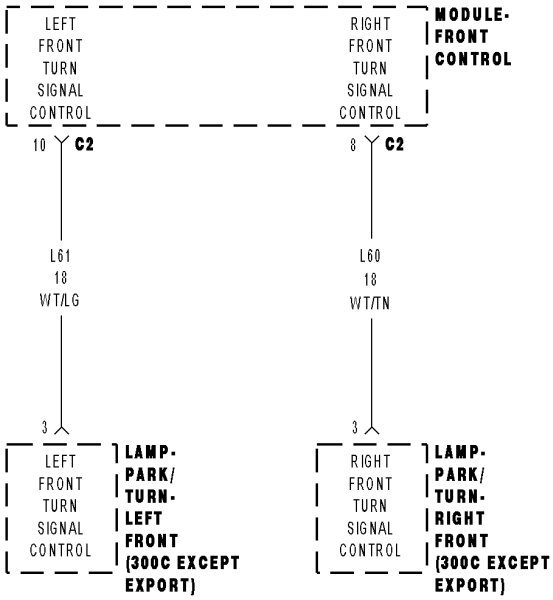

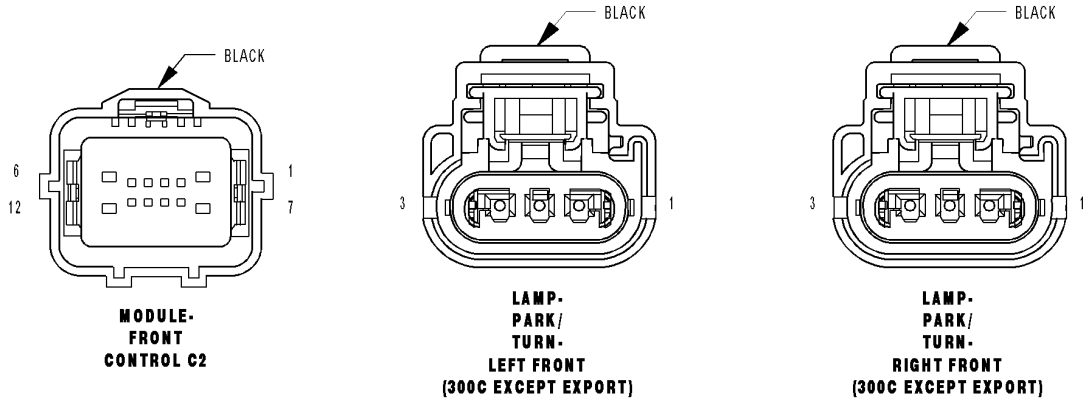

8138f112

For a complete wiring diagram **Refer to Section 8W**.

- **When Monitored:**
- Continuously
- **Set Condition:**
- When the Front Control Module detects a short to battery on the Control circuit.

Possible Causes
(L60) FRONT RIGHT TURN SIGNAL CONTROL CIRCUIT
POWER DISTRIBUTION CENTER
FRONT CONTROL MODULE

Diagnostic Test

1. TEST FOR INTERMITTENT CONDITION

Turn the ignition on.
Clear all FCM DTC's
Turn the Right Turn Signal on.
With the scan tool, read DTC's.

Does the scan tool read: B1640-FRONT RIGHT TURN CONTROL CIRCUIT HIGH?

Yes >> Go To 2

No >> The conditions that caused this code to set are not present at this time. Using the wiring diagram/schematic as a guide, inspect the wiring and connectors.
Perform BODY VERIFICATION TEST - VER 1.

2. L60 FRONT RIGHT TURN SIGNAL CONTROL CIRCUIT

Turn the ignition off.
Disconnect the PDC connector from the FCM.
Measure the resistance of the (L60) Front Right Turn Signal Control circuit.

Is the resistance above 5.0 ohms?

No >> Repair the (L60) Front Right Turn Signal Control circuit.
Perform BODY VERIFICATION TEST - VER 1.

Yes >> Go To 3

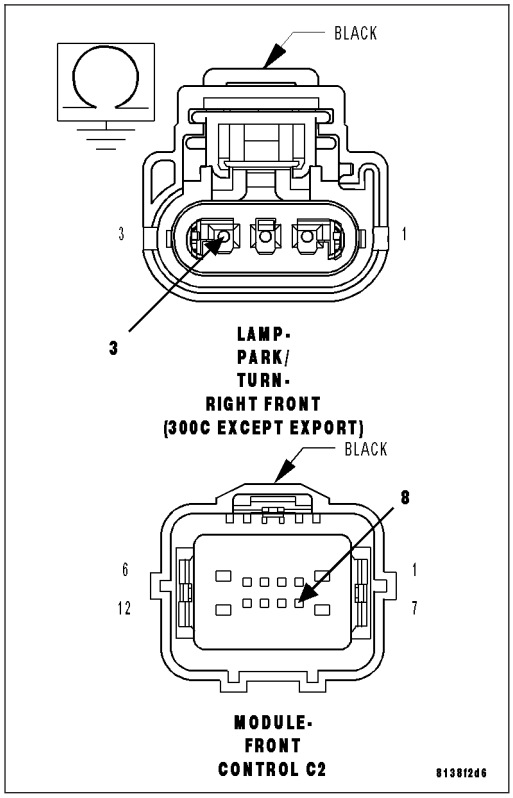

3. FRONT CONTROL MODULE

Turn the ignition off.

Disconnect the Front Control Module from the PDC 49 way connector.

Measure the voltage between (L60) Front Right Turn Signal Control circuit and ground.

Is there any voltage present?

Yes >> Replace the Power Distribution Center.
Perform BODY VERIFICATION TEST - VER 1.

No >> Replace the Front Control Module.
Perform BODY VERIFICATION TEST - VER 1.

B1643-REAR LEFT TURN CONTROL CIRCUIT LOW

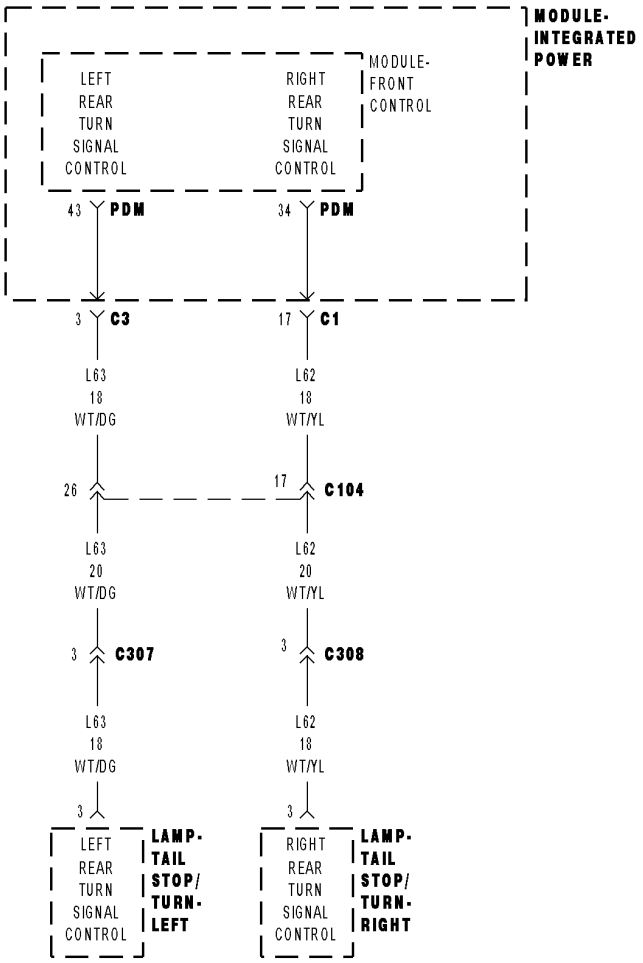

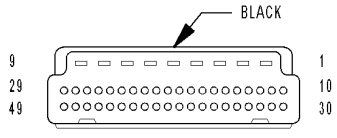

MODULE-
FRONT
CONTROL PDM

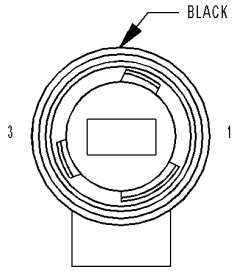

LAMP-
TAIL STOP/
TURN-
LEFT
(300T)

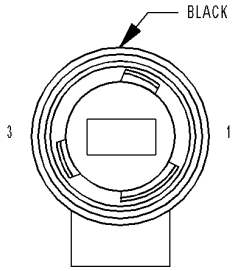

LAMP-
TAIL STOP/
TURN-
RIGHT
(300T)

81381dc

For a complete wiring diagram **Refer to Section 8W**.

Possible Causes
(L63) REAR LEFT TURN SIGNAL CONTROL CIRCUIT
MODULE POWER DISTRIBUTION CENTER
FRONT CONTROL MODULE

Diagnostic Test

1. INTERMITTENT CONDITION

Turn the ignition on.
With the Scan Tool, clear all FCM DTC's.
Turn the Left Turn Signals on.
With the Scan Tool read the DTC information.

Does the Scan Tool read: B1643-REAR LEFT TURN CONTROL CIRCUIT LOW?

Yes >> Go To 2

No >> The condition that caused the symptom is currently not present. Inspect the related wiring for a possible intermittent condition. Look for any chafed, pierced, pinched, or partially broken wires.
Perform the BODY VERIFICATION TEST-VER1.

2. L63 REAR LEFT TURN SIGNAL CONTROL CIRCUIT

Turn the ignition off.
Disconnect the FCM PDM connector.
Measure the resistance between ground and the (L63) Rear Left Turn Signal Control circuit.

Is the resistance below 5.0 ohms?

Yes >> Go To 3

No >> Repair the (L63) Rear Left Turn Signal Control circuit for a short to ground.
Perform the BODY VERIFICATION TEST-VER1.

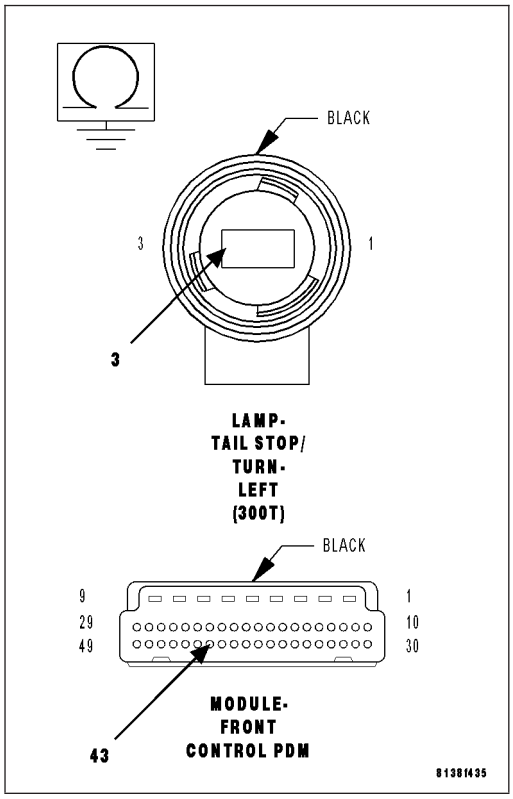

3. FRONT CONTROL MODULE

Turn the ignition off.
Disconnect the FCM connector.
Disconnect the PDM connector.
Measure the resistance between ground and the (L63) Rear Left Turn Signal Control circuit in the PDM.

Is the resistance below 5.0 ohms?

Yes >> Replace the Module Power Distribution Center in accordance with the service information.
Perform the BODY VERIFICATION TEST-VER1.

No >> Replace the Front Control Module in accordance with the service information.
Perform the BODY VERIFICATION TEST-VER1.

B1644-REAR LEFT TURN CONTROL CIRCUIT HIGH

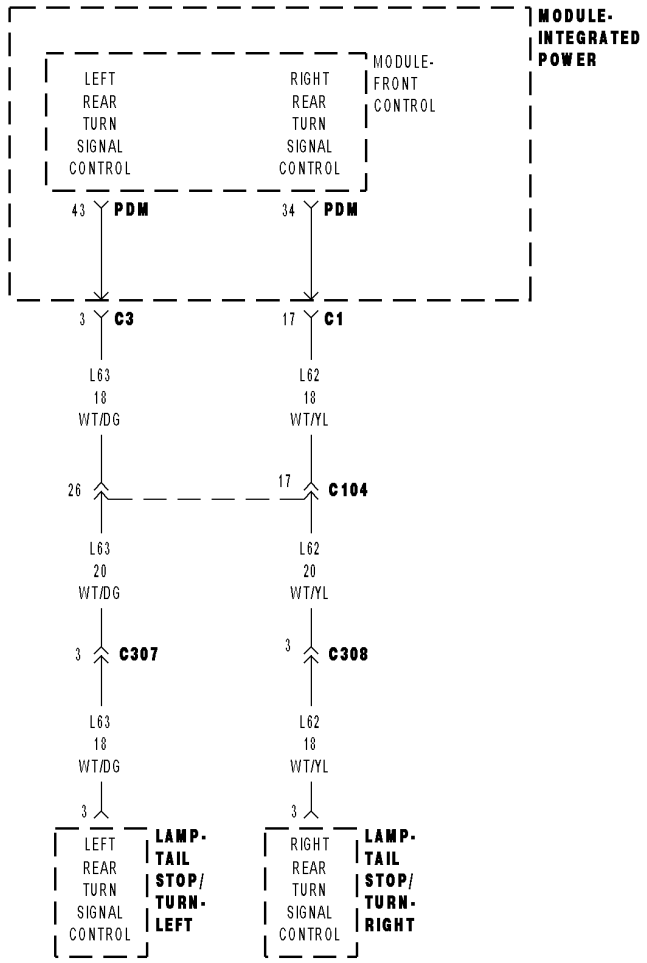

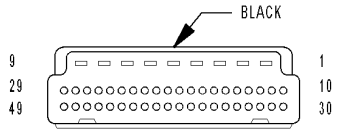

MODULE-
FRONT
CONTROL PDM

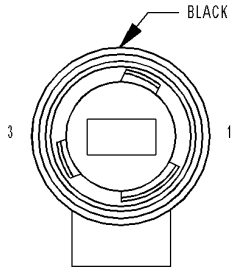

LAMP-
TAIL STOP/
TURN-
LEFT
(300T)

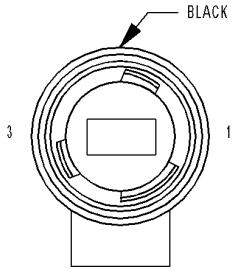

LAMP-
TAIL STOP/
TURN-
RIGHT
(300T)

81381dc

For a complete wiring diagram **Refer to Section 8W**.

- **When Monitored:**
- Continuously
- **Set Condition:**
- When the Front Control Module detects a short to battery on the Control circuit.

Possible Causes
(L63) REAR LEFT TURN SIGNAL CONTROL CIRCUIT
POWER DISTRIBUTION CENTER
FRONT CONTROL MODULE

Diagnostic Test

1. TEST FOR INTERMITTENT CONDITION

Turn the ignition on.
Clear all FCM DTC's
Turn the Left Turn Signal on.
With the scan tool, read DTC's.

Does the scan tool read: B1644-REAR LEFT TURN CONTROL CIRCUIT HIGH?

Yes >> Go To 2

No >> The conditions that caused this code to set are not present at this time. Using the wiring diagram/schematic as a guide, inspect the wiring and connectors.
Perform BODY VERIFICATION TEST - VER 1.

2. L63 REAR LEFT TURN SIGNAL CONTROL CIRCUIT

Turn the ignition off.
Disconnect the PDM connector from the FCM.
Measure the resistance of the (L63) Rear Left Turn Signal Control circuit.

Is the resistance above 5.0 ohms?

No >> Repair the (L63) Rear Left Turn Signal Control circuit.
Perform BODY VERIFICATION TEST - VER 1.

Yes >> Go To 3

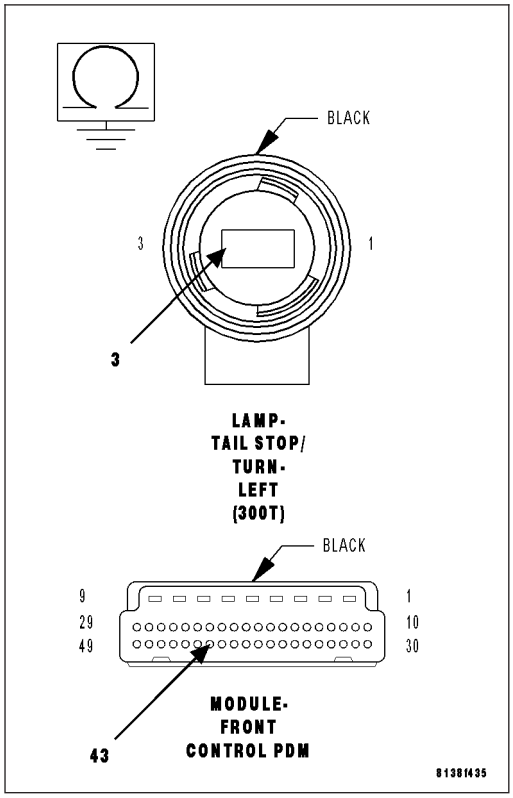

3. FRONT CONTROL MODULE

Turn the ignition off.

Disconnect the Front Control Module from the PDM 49 way connector.

Measure the voltage between (L63) Rear Left Turn Signal Control circuit and ground.

Is there any voltage present?

Yes >> Replace the Power Distribution Center.
Perform BODY VERIFICATION TEST - VER 1.

No >> Replace the Front Control Module.
Perform BODY VERIFICATION TEST - VER 1.

B1647-REAR RIGHT TURN CONTROL CIRCUIT LOW

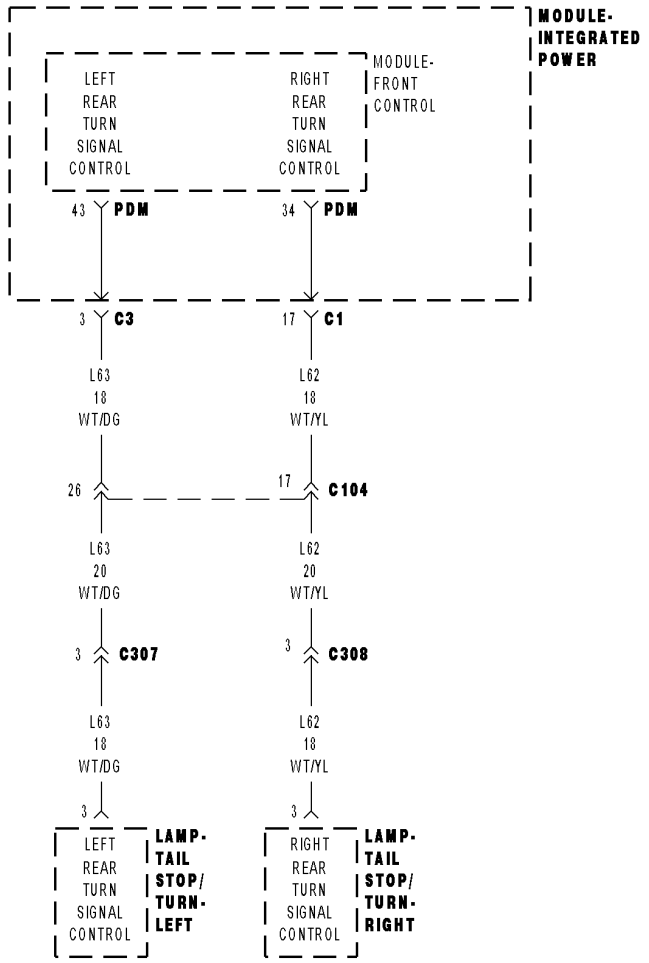

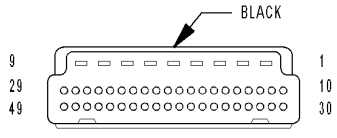

MODULE-
FRONT
CONTROL PDM

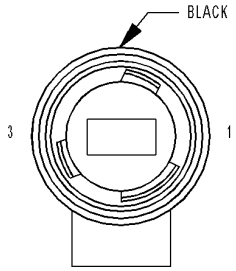

LAMP-
TAIL STOP/
TURN-
LEFT
(300T)

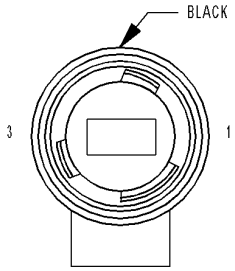

LAMP-
TAIL STOP/
TURN-
RIGHT
(300T)

81381dc

For a complete wiring diagram **Refer to Section 8W**.

Possible Causes
(L62) REAR RIGHT TURN SIGNAL CONTROL CIRCUIT
MODULE POWER DISTRIBUTION CENTER
FRONT CONTROL MODULE

Diagnostic Test

1. INTERMITTENT CONDITION

Turn the ignition on.
With the Scan Tool, clear all FCM DTC's.
Turn the Right Turn Signals on.
With the Scan Tool read the DTC information.

Does the Scan Tool read: B1647-REAR RIGHT TURN CONTROL CIRCUIT LOW?

Yes >> Go To 2

No >> The condition that caused the symptom is currently not present. Inspect the related wiring for a possible intermittent condition. Look for any chafed, pierced, pinched, or partially broken wires.
Perform the BODY VERIFICATION TEST-VER1.

2. L62 REAR RIGHT TURN SIGNAL CONTROL CIRCUIT

Turn the ignition off.
Disconnect the FCM PDM connector.
Measure the resistance between ground and the (L62) Rear Right Turn Signal Control circuit.

Is the resistance below 5.0 ohms?

Yes >> Go To 3

No >> Repair the (L62) Rear Right Turn Signal Control circuit for a short to ground.
Perform the BODY VERIFICATION TEST-VER1.

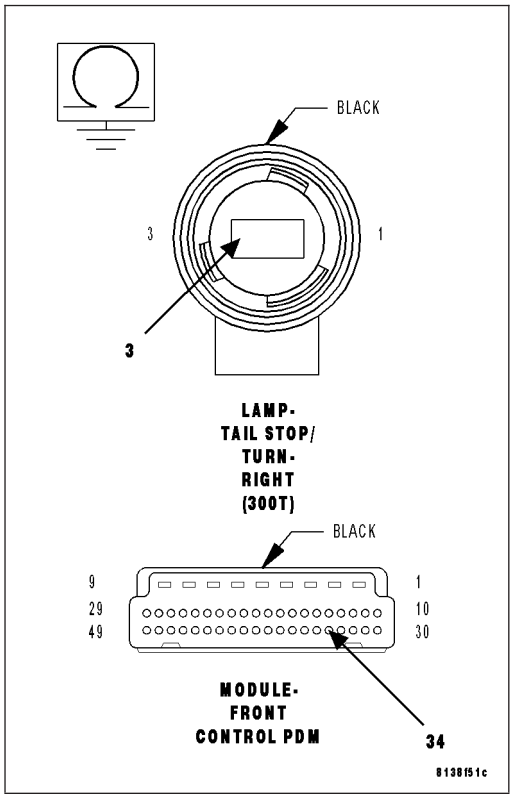

3. FRONT CONTROL MODULE

Turn the ignition off.
Disconnect the FCM connector.
Disconnect the PDM connector.
Measure the resistance between ground and the (L62) Rear Right Turn Signal Control circuit in the PDM.

Is the resistance below 5.0 ohms?

Yes >> Replace the Module Power Distribution Center in accordance with the service information.
Perform the BODY VERIFICATION TEST-VER1.

No >> Replace the Front Control Module in accordance with the service information.
Perform the BODY VERIFICATION TEST-VER1.

B1648-REAR RIGHT TURN CONTROL CIRCUIT HIGH

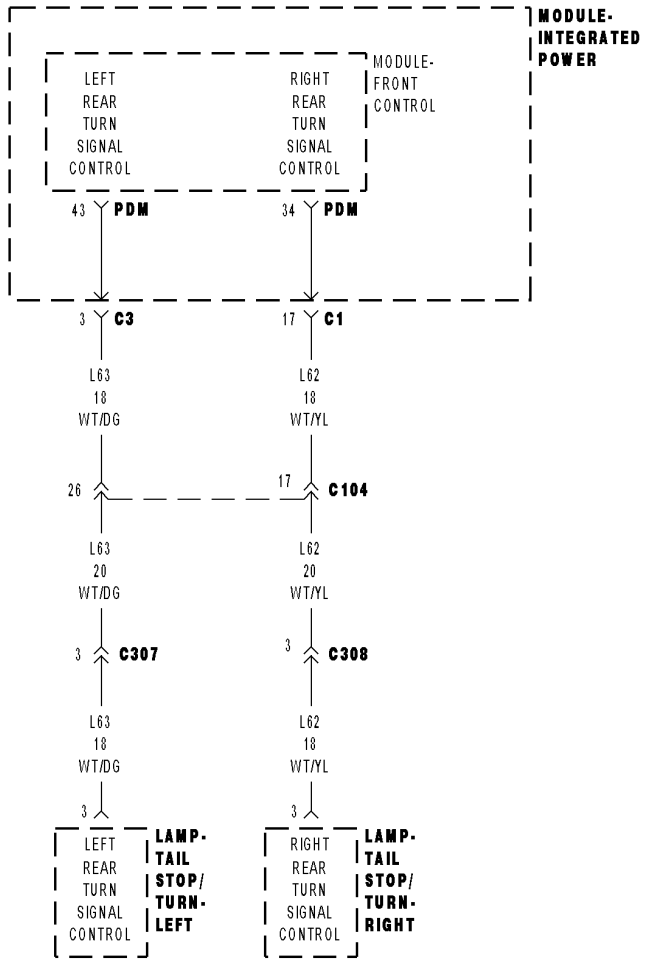

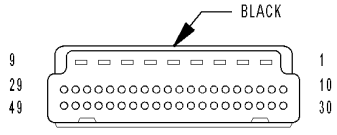

MODULE-
FRONT
CONTROL PDM

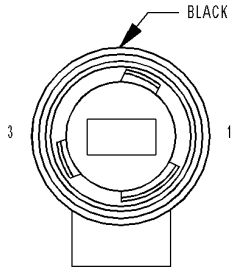

LAMP-
TAIL STOP/
TURN-
LEFT
(300T)

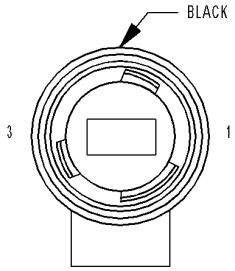

LAMP-
TAIL STOP/
TURN-
RIGHT
(300T)

81381dc

For a complete wiring diagram **Refer to Section 8W**.

- **When Monitored:**
- Continuously
- **Set Condition:**
- When the Front Control Module detects a short to battery on the Control circuit.

Possible Causes
(L62) REAR RIGHT TURN SIGNAL CONTROL CIRCUIT
POWER DISTRIBUTION CENTER
FRONT CONTROL MODULE

Diagnostic Test

1. TEST FOR INTERMITTENT CONDITION

Turn the ignition on.
Clear all FCM DTC's
Turn the Right Turn Signal on.
With the scan tool, read DTC's.

Does the scan tool read: B1648-REAR RIGHT TURN CONTROL CIRCUIT HIGH?

Yes >> Go To 2

No >> The conditions that caused this code to set are not present at this time. Using the wiring diagram/schematic as a guide, inspect the wiring and connectors.
Perform BODY VERIFICATION TEST - VER 1.

2. L62 REAR RIGHT TURN SIGNAL CONTROL CIRCUIT

Turn the ignition off.
Disconnect the PDM connector from the FCM.
Measure the resistance of the (L62) Rear Right Turn Signal Control circuit.

Is the resistance above 5.0 ohms?

No >> Repair the (L62) Rear Right Turn Signal Control circuit.
Perform BODY VERIFICATION TEST - VER 1.

Yes >> Go To 3

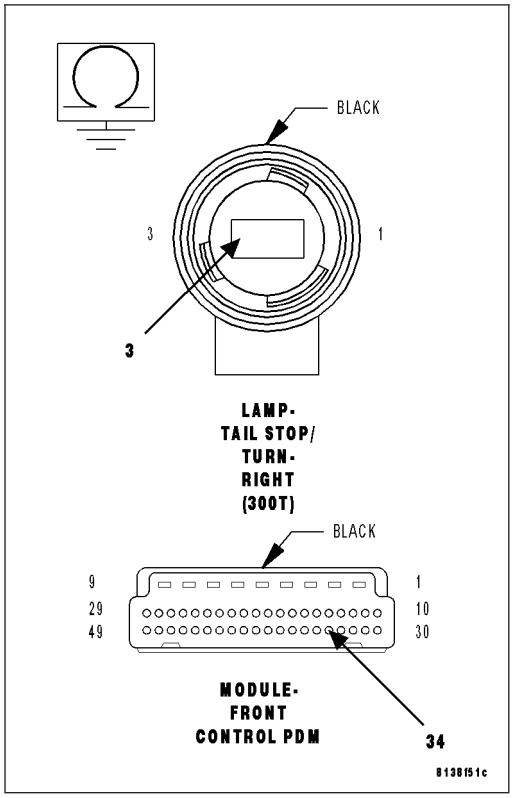

3. FRONT CONTROL MODULE

Turn the ignition off.

Disconnect the Front Control Module from the PDM 49 way connector.

Measure the voltage between (L62) Rear Right Turn Signal Control circuit and ground.

Is there any voltage present?

Yes >> Replace the Power Distribution Center.
Perform BODY VERIFICATION TEST - VER 1.

No >> Replace the Front Control Module.
Perform BODY VERIFICATION TEST - VER 1.

B1659-FRONT FOG LAMP CONTROL CIRCUIT LOW

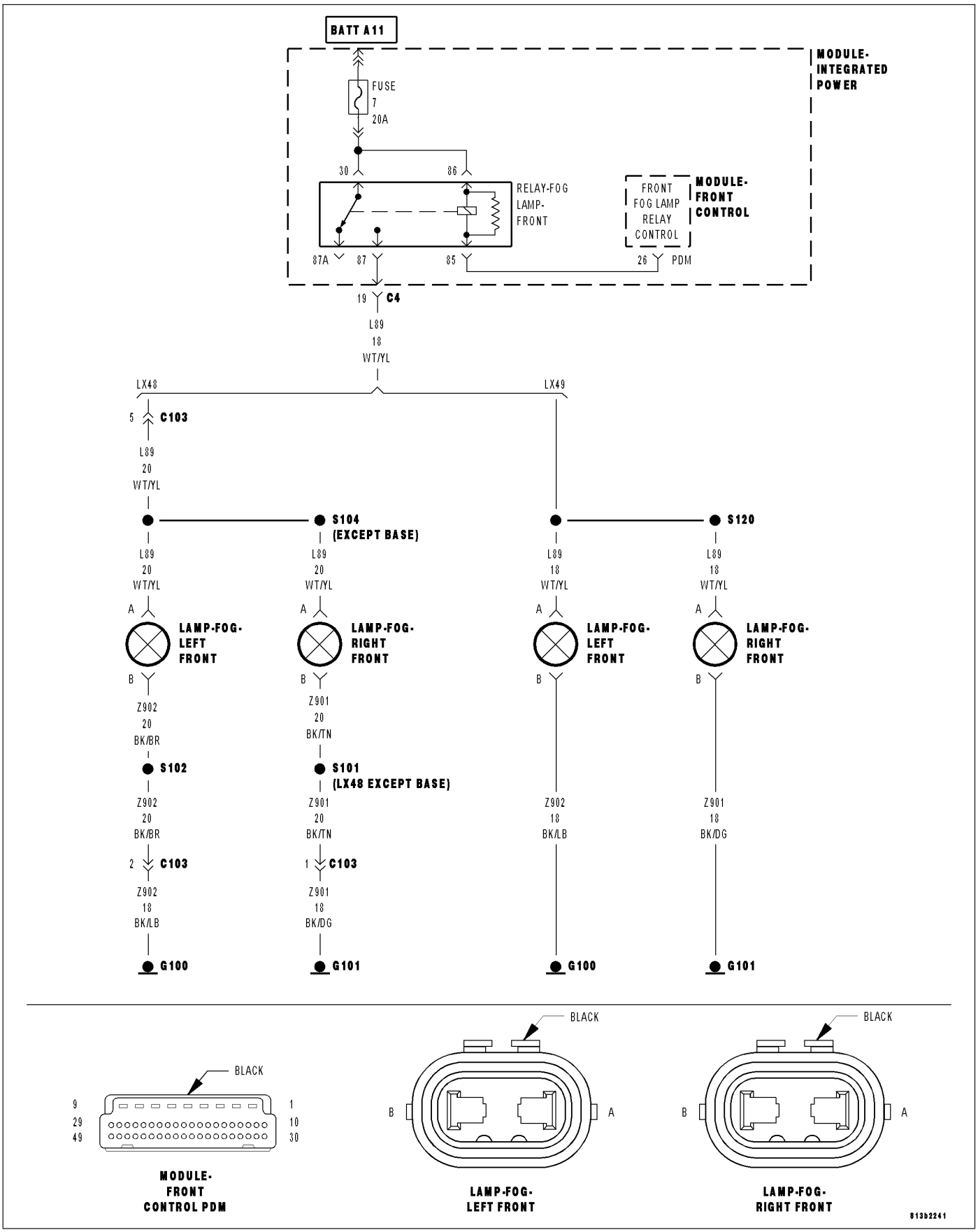

For a complete wiring diagram **Refer to Section 8W**.

- **When Monitored:**
- With the Fog Lamps activated.
- **Set Condition:**
- When the FCM detects a LOW condition.

Possible Causes
(L89) FOG LAMP CONTROL CIRCUIT
FRONT CONTROL MODULE

Diagnostic Test

1. INTERMITTENT CONDITION

Turn the ignition on.
With the Scan Tool, clear all FCM DTC's.
Turn the Fog Lamps on.
With the Scan Tool read the DTC information.

Does the Scan Tool read: B1659-FRONT FOG LAMP CONTROL CIRCUIT LOW?

Yes >> Go To 2

No >> The condition that caused the symptom is currently not present. Inspect the related wiring for a possible intermittent condition. Look for any chafed, pierced, pinched, or partially broken wires.
Perform the BODY VERIFICATION TEST-VER1.

2. (L89) FOG LAMP CONTROL CIRCUIT

Turn the ignition off.
Disconnect the FCM PDM harness connector.
Measure the resistance between ground and the (L89) Fog Lamp Control circuit.

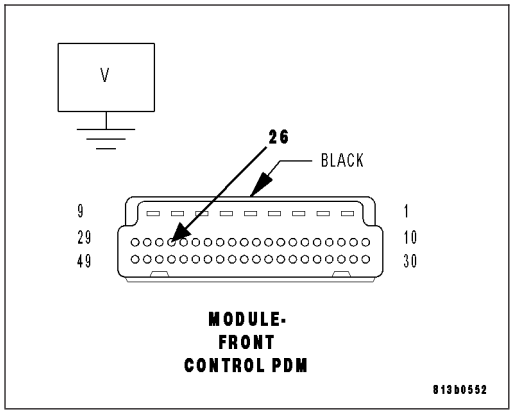

Is the resistance below 5.0 ohms?

Yes >> Replace the Front Control Module (FCM) in accordance with the service information.
Perform the BODY VERIFICATION TEST VER1.

No >> Repair the (L89) Fog Lamp Control circuit for a short to ground condition.
Perform the BODY VERIFICATION TEST VER1.

B1660-FRONT FOG LAMP CONTROL CIRCUIT HIGH

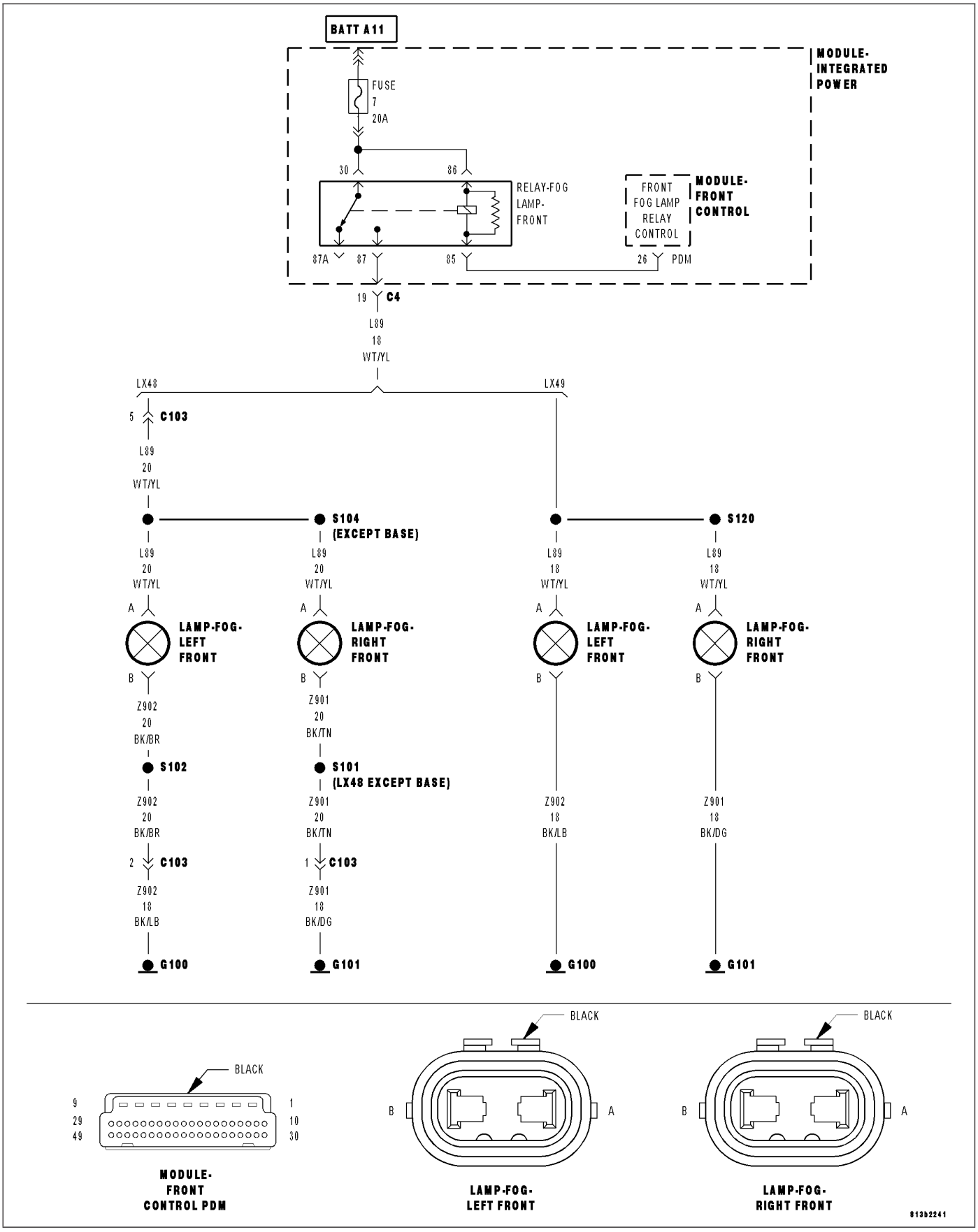

For a complete wiring diagram **Refer to Section 8W**.

- **When Monitored:**
- With the Front Fog Lamps activated.
- **Set Condition:**
- When the FCM detects a HIGH condition.

Possible Causes
FRONT FOG LAMP RELAY
MODULE-POWER DISTRIBUTION
FRONT CONTROL MODULE

Diagnostic Test

1. INTERMITTENT CONDITION

Turn the ignition on.
With the Scan Tool, clear all FCM DTC's.
Actuate the Front Fog Lamps.
With the Scan Tool read the DTC information.

Does the Scan Tool read: B1660-FRONT FOG LAMP CONTROL CIRCUIT HIGH?

Yes >> Go To 2

No >> The condition that caused the symptom is currently not present. Inspect the related wiring for a possible intermittent condition. Look for any chafed, pierced, pinched, or partially broken wires.
Perform the BODY VERIFICATION TEST-VER1.

2. FRONT FOG LAMP RELAY

Turn the ignition off.
Remove and install a known good relay in place of the Front Fog Lamp Relay.

Do the Front Fog Lamps operate normally?

Yes >> Replace the Front Fog Lamp Relay in accordance with the service information.
Perform the BODY VERIFICATION TEST VER1.

No >> Go To 3

3. FRONT CONTROL MODULE

Turn the ignition off.
Remove the Front Fog Lamp Relay from the MPD.
Remove the FCM from the Module Power Distribution.
Measure the voltage of the (L89) Front Fog Lamp Relay Output circuit and ground.

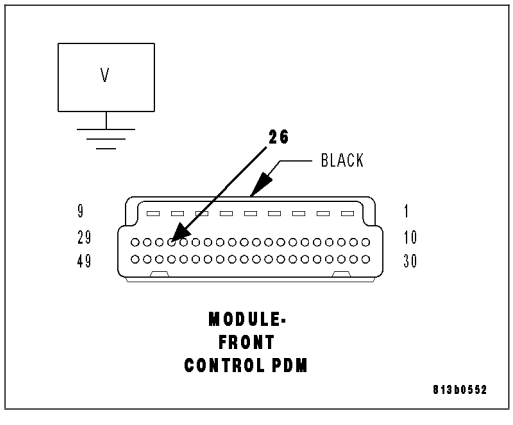

Is the voltage above 1.0 volts?

Yes >> Replace the Module Power Distribution center in accordance with the service information.
Perform the BODY VERIFICATION TEST-VER1.

No >> Replace the Module Front Control in accordance with the service information.
Perform the BODY VERIFICATION TEST-VER1.

B1661-FRONT FOG LAMP CONTROL CIRCUIT OPEN

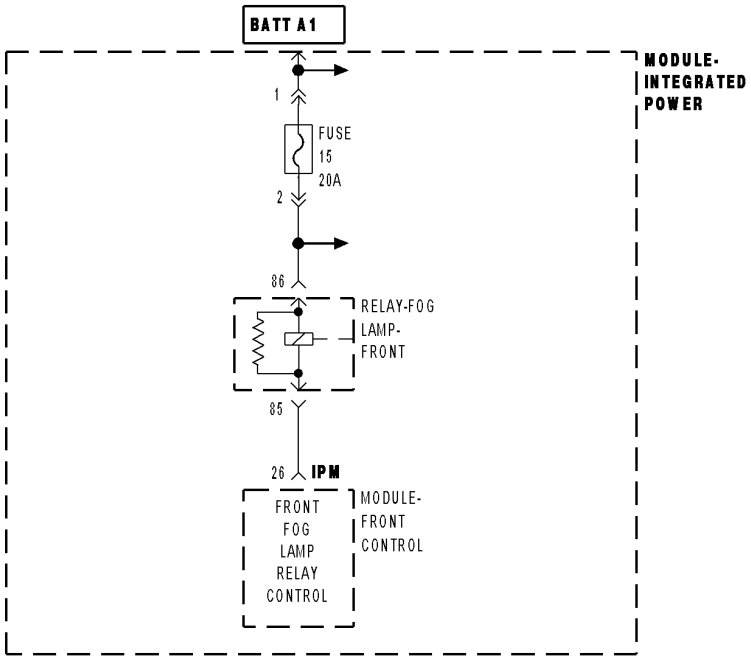

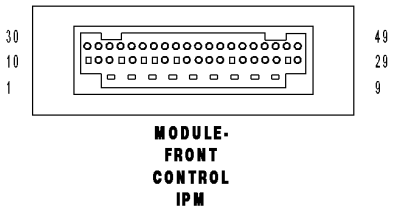

814e5714

For a complete wiring diagram **Refer to Section 8W**.

- **When Monitored:**
- With the Fog Lamps activated.
- **Set Condition:**
- When the IPM detects an OPEN condition.

Possible Causes
INTEGRATED POWER MODULE

Diagnostic Test

1. INTEGRATED POWER MODULE

Turn the ignition off.
Replace the Fog Lamp relay with and known good relay.
With the Scan Tool, clear all IPM DTC's.
Turn the Fog Lamps ON then OFF.
With the Scan Tool, read the DTC's.

Does the Scan Tool read: B1661-FRONT FOG LAMP CONTROL CIRCUIT OPEN?

Yes >> Replace the Integrated Power Module in accordance with the service information.
Perform the BODY VERIFICATION TEST — VER 1. (Refer to 8 - ELECTRICAL/ELECTRONIC CONTROL MODULES - STANDARD PROCEDURE)

No >> Test complete.
Perform the BODY VERIFICATION TEST — VER 1. (Refer to 8 - ELECTRICAL/ELECTRONIC CONTROL MODULES - STANDARD PROCEDURE)

B168F-FRONT FOG LAMP SWITCH STUCK

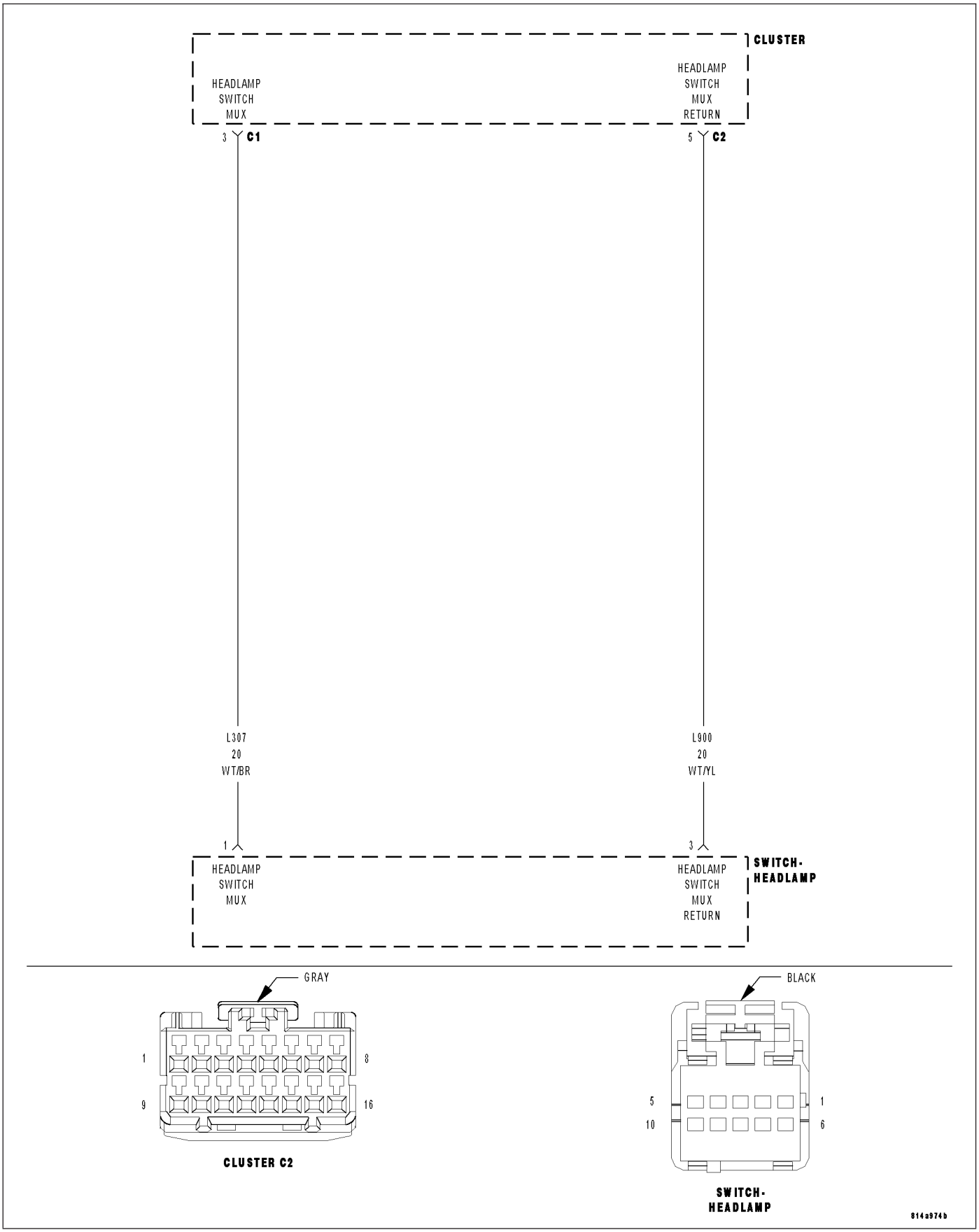

For a complete wiring diagram **Refer to Section 8W**.

- **When Monitored:**
- With the Fog Lamps on.
- **Set Condition:**
- When the CCN detects a Fog Lamp Switch Stuck message on the BUS.

Possible Causes
HEADLAMP SWITCH
(L307) SWITCH MUX CIRCUIT SHORT TO THE (L900) SWITCH RETURN CIRCUIT
(L307) HEADLAMP SWITCH MUX SHORT TO GROUND
INSTRUMENT CLUSTER

Diagnostic Test

1. TEST FOR INTERMITTENT CONDITION

With the scan tool, record and erase DTC's
Operate the Fog Lamp Switch several times.
Turn the ignition on and wait 30 seconds.
With the scan tool, read DTC's.

Does the scan tool display: B168F-FRONT FOG LAMP SWITCH STUCK?

Yes >> Go To 2

No >> The conditions that caused this code to set are not present at this time. Using the wiring diagram/schematic as a guide, inspect the wiring and connectors.
Perform BODY VERIFICATION TEST - VER 1. (Refer to BODY VERIFICATION TEST – VER 1).

2. HEADLAMP SWITCH SHORTED

With the scan tool, erase DTC's.
Disconnect the Headlamp Switch connector.
With the scan tool, read DTC's.

Does the scan tool display: B168F-FRONT FOG LAMP SWITCH STUCK?

No >> Replace the Headlamp Switch in accordance with the service information.
Perform BODY VERIFICATION TEST - VER 1. (Refer to BODY VERIFICATION TEST – VER 1).

Yes >> Go To 3

3. (L307) HEADLAMP SWITCH MUX CIRCUIT SHORT TO GROUND

Turn the ignition off.
Disconnect the Cluster C1 connector.
Measure the resistance between ground and the (L307) Headlamp Switch Mux circuit.

Is the resistance below 10000.0 ohms?

Yes >> Repair the (L307) Headlamp Switch Mux circuit for a short to ground.
Perform BODY VERIFICATION TEST - VER 1. (Refer to BODY VERIFICATION TEST – VER 1).

No >> Go To 4

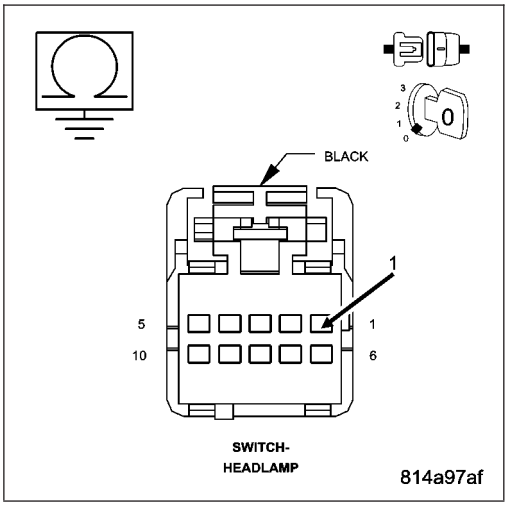

4. (L307) SWITCH MUX CIRCUIT SHORT TO (L900) SWITCH RETURN CIRCUIT

Disconnect the Cluster C2 connector.

Measure the resistance between the (L307) Switch Mux circuit and the (L900) Switch Return circuit.

Is the resistance below 10000.0 ohms?

Yes >> Repair the (L307) Switch Mux circuit for a short to the (L900) Switch Return circuit.

Perform BODY VERIFICATION TEST - VER 1. (Refer to BODY VERIFICATION TEST – VER 1).

No >> Replace the Instrument Cluster.

Perform BODY VERIFICATION TEST - VER 1. (Refer to BODY VERIFICATION TEST – VER 1).

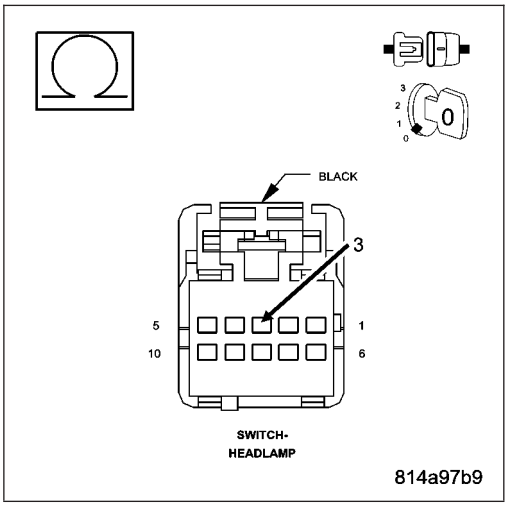

B165C-PARK LAMP CONTROL CIRCUIT LOW

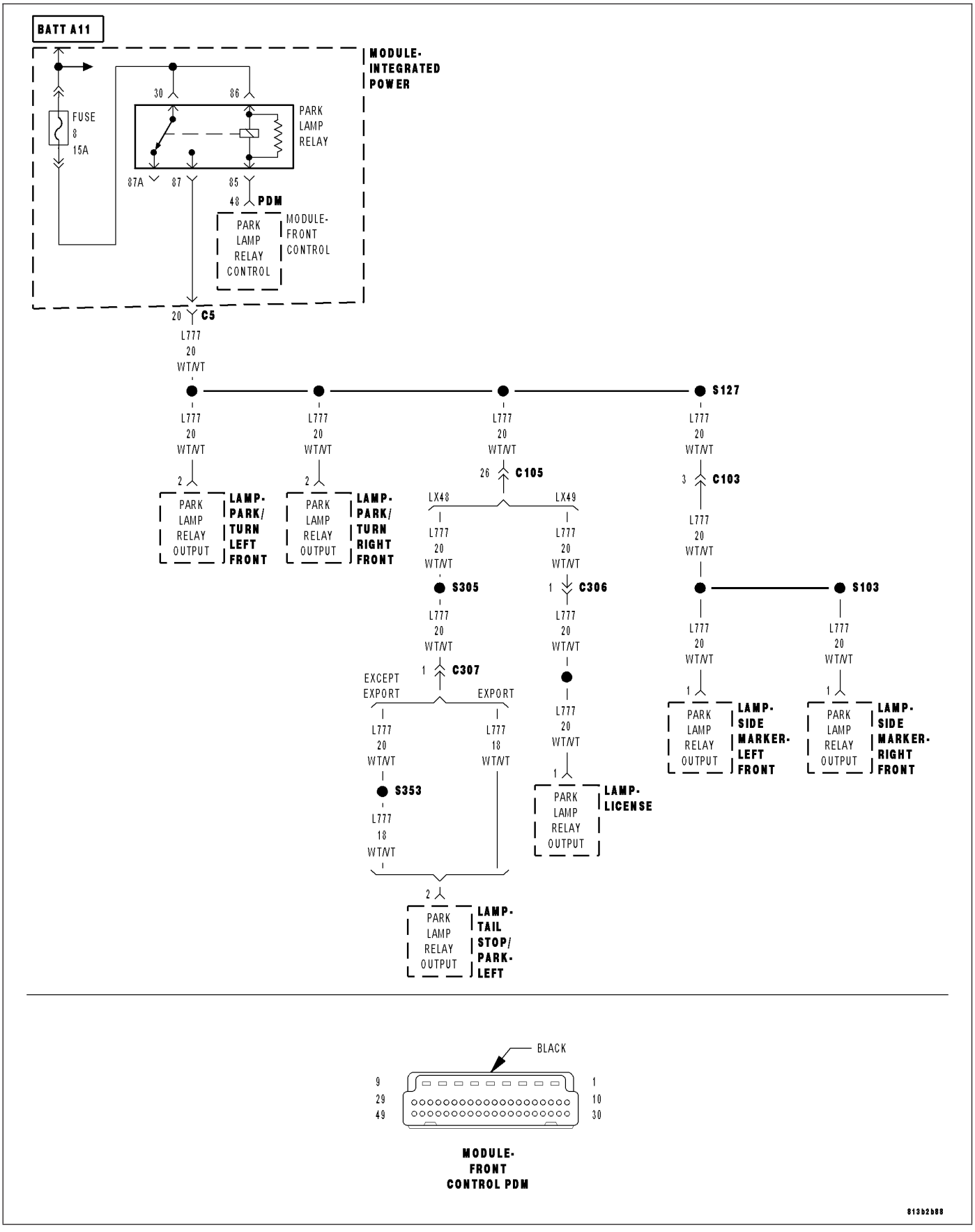

For a complete wiring diagram **Refer to Section 8W**.

- **When Monitored:**
- With the Park Lamps activated.
- **Set Condition:**
- When the FCM detects a LOW condition.

Possible Causes
(L177) PARK LAMP CONTROL CIRCUIT
FRONT CONTROL MODULE

Diagnostic Test

1. INTERMITTENT CONDITION

Turn the ignition on.
With the Scan Tool, clear all FCM DTC's.
Turn the Park Lamps on.
With the Scan Tool read the DTC information.

Does the Scan Tool read: B165C-PARK LAMP CONTROL CIRCUIT LOW?

Yes >> Go To 2

No >> The condition that caused the symptom is currently not present. Inspect the related wiring for a possible intermittent condition. Look for any chafed, pierced, pinched, or partially broken wires.
Perform the BODY VERIFICATION TEST-VER1.

2. (L177) PARK LAMP CONTROL CIRCUIT

Turn the ignition off.
Disconnect the FCM PDM harness connector.
Measure the resistance between ground and the (L177) Park Lamp Control circuit.

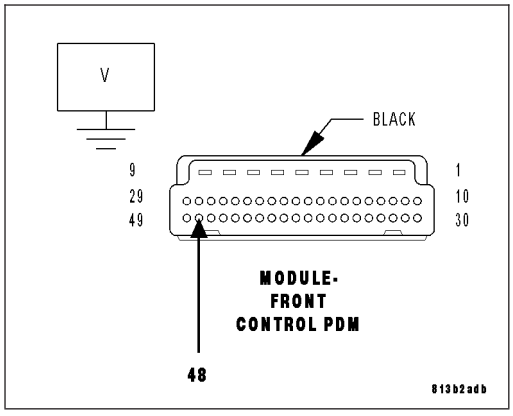

Is the resistance below 5.0 ohms?

Yes >> Replace the Front Control Module (FCM) in accordance with the service information.
Perform the BODY VERIFICATION TEST VER1.

No >> Repair the (L177) Park Lamp Control circuit for a short to ground condition.
Perform the BODY VERIFICATION TEST VER1.

B165D-PARK LAMP CONTROL CIRCUIT HIGH

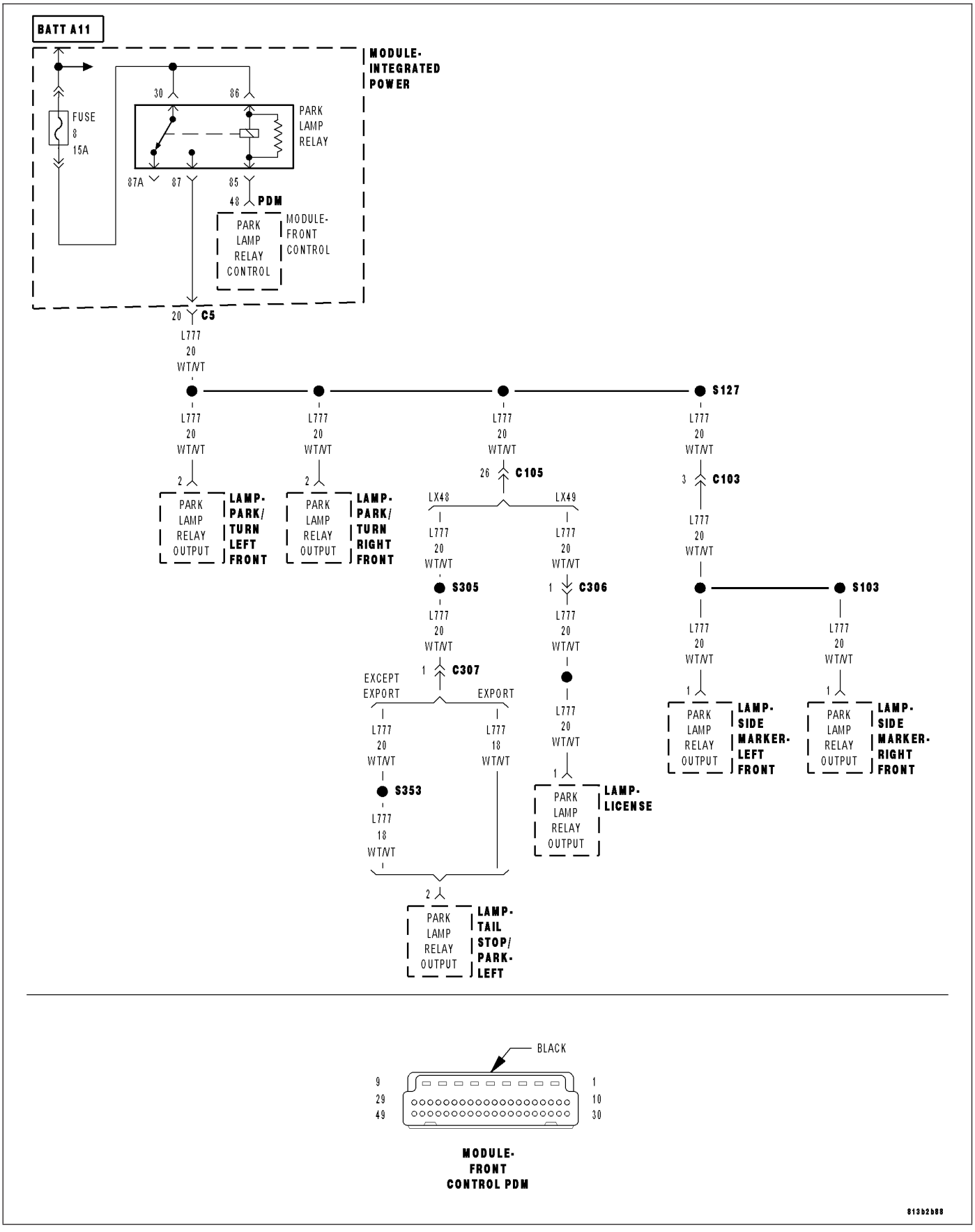

For a complete wiring diagram **Refer to Section 8W**.

- **When Monitored:**
- With the Front Fog Lamps activated.
- **Set Condition:**
- When the FCM detects a HIGH condition.

Possible Causes
PARK LAMP RELAY
MODULE-POWER DISTRIBUTION
FRONT CONTROL MODULE

Diagnostic Test

1. INTERMITTENT CONDITION

Turn the ignition on.
With the Scan Tool, clear all FCM DTC's.
Actuate the Park Lamps.
With the Scan Tool read the DTC information.

Does the Scan Tool read: B165D-PARK LAMP CONTROL CIRCUIT HIGH?

Yes >> Go To 2

No >> The condition that caused the symptom is currently not present. Inspect the related wiring for a possible intermittent condition. Look for any chafed, pierced, pinched, or partially broken wires.
Perform the BODY VERIFICATION TEST-VER1.

2. PARK LAMP RELAY

Turn the ignition off.
Remove and install a known good relay in place of the Park Lamp Relay.

Do the Front Fog Lamps operate normally?

Yes >> Replace the Park Lamp Relay in accordance with the service information.
Perform the BODY VERIFICATION TEST VER1.

No >> Go To 3

3. FRONT CONTROL MODULE

Turn the ignition off.
Remove the Park Lamp Relay from the MPD.
Remove the FCM from the Module Power Distribution.
Measure the voltage of the (L177) Park Lamp Relay Control circuit and ground.

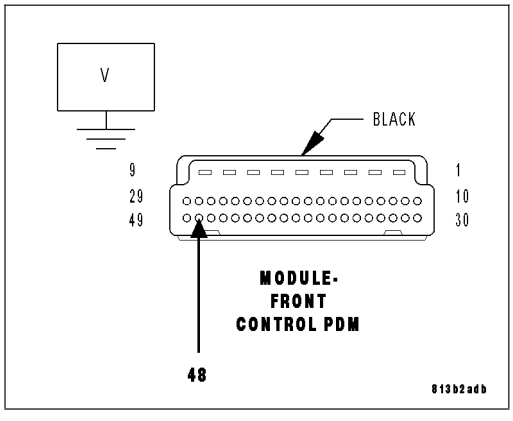

Is the voltage above 1.0 volts?

Yes >> Replace the Module Power Distribution center in accordance with the service information.
Perform the BODY VERIFICATION TEST-VER1.

No >> Replace the Module Front Control in accordance with the service information.
Perform the BODY VERIFICATION TEST-VER1.

B1667-REVERSE LAMP CONTROL CIRCUIT LOW

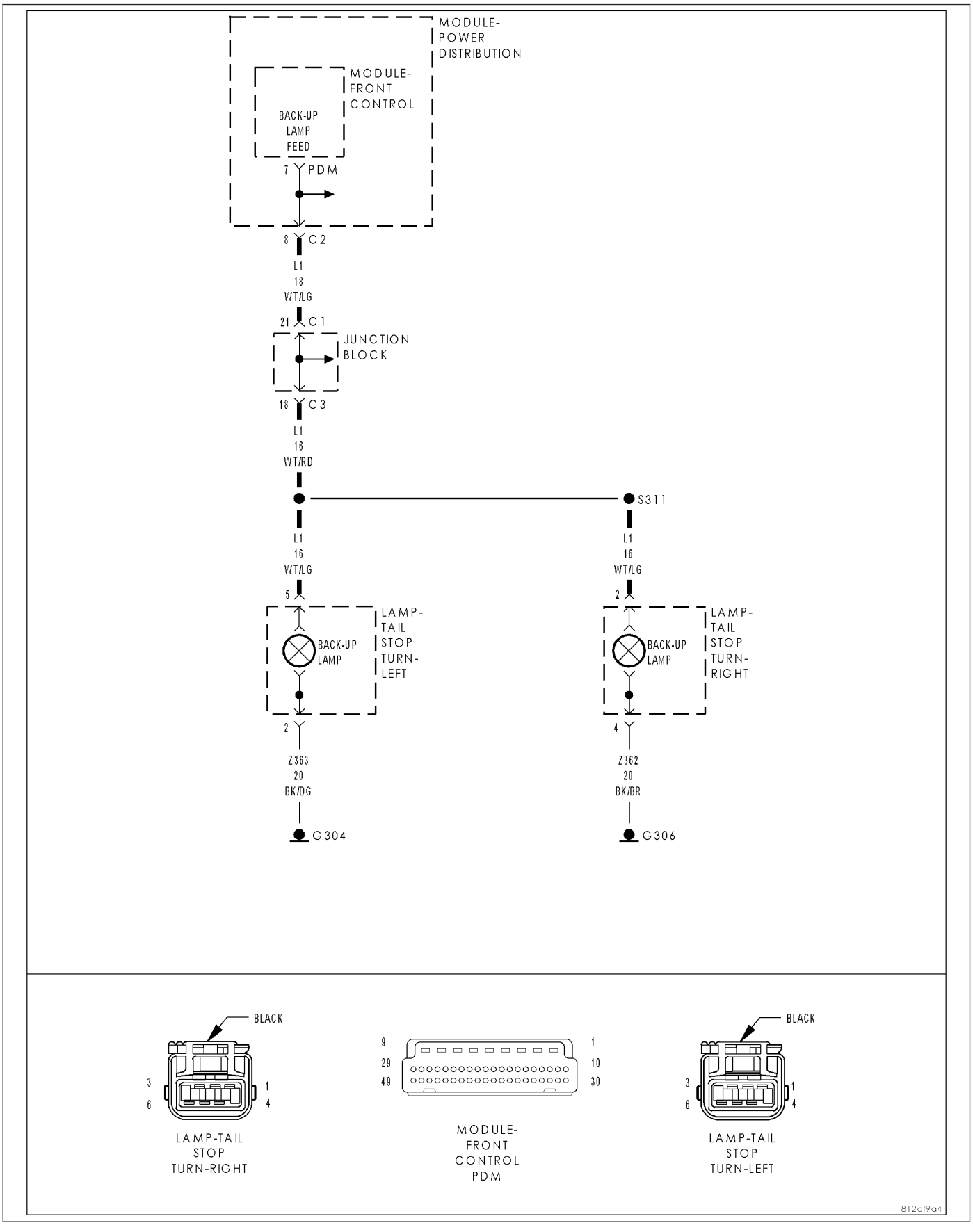

For a complete wiring diagram **Refer to Section 8W**.

Possible Causes
(L1) BACKUP LAMPS FEED CIRCUIT
INTEGRATED POWER MODULE
FRONT CONTROL MODULE

Diagnostic Test

1. INTERMITTENT CONDITION

Turn the ignition on.
With the Scan Tool, clear all FCM DTC's.
Turn the Reverse Lamps on.
With the Scan Tool read the DTC information.

Does the Scan Tool read: B1667-REVERSE LAMP CONTROL CIRCUIT LOW?

Yes >> Go To 2

No >> The condition that caused the symptom is currently not present. Inspect the related wiring for a possible intermittent condition. Look for any chafed, pierced, pinched, or partially broken wires.
Perform the BODY VERIFICATION TEST-VER1.

2. L1 BACKUP LAMPS FEED CIRCUIT

Turn the ignition off.
Disconnect the FCM PDM connector.
Measure the resistance between ground and the (L1) Backup Lamps Feed circuit.

Is the resistance below 5.0 ohms?

Yes >> Go To 3

No >> Repair the (L1) Backup Lamps Control circuit for a short to ground.
Perform the BODY VERIFICATION TEST-VER1.

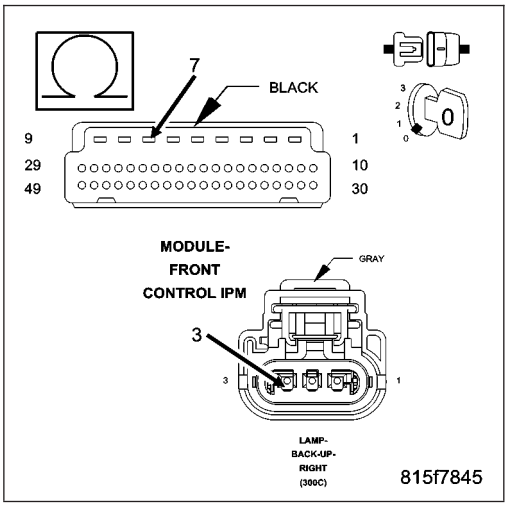

3. FRONT CONTROL MODULE

Turn the ignition off.
Disconnect the FCM from the IPM connector.
Measure the resistance between ground and the (L1) Backup Lamps Feed circuit in the IPM.

Is the resistance below 5.0 ohms?

Yes >> Replace the Module Power Distribution Center in accordance with the service information.
Perform the BODY VERIFICATION TEST-VER1.

No >> Replace the Front Control Module in accordance with the service information.
Perform the BODY VERIFICATION TEST-VER1.

B1668-REVERSE LAMP CONTROL CIRCUIT HIGH

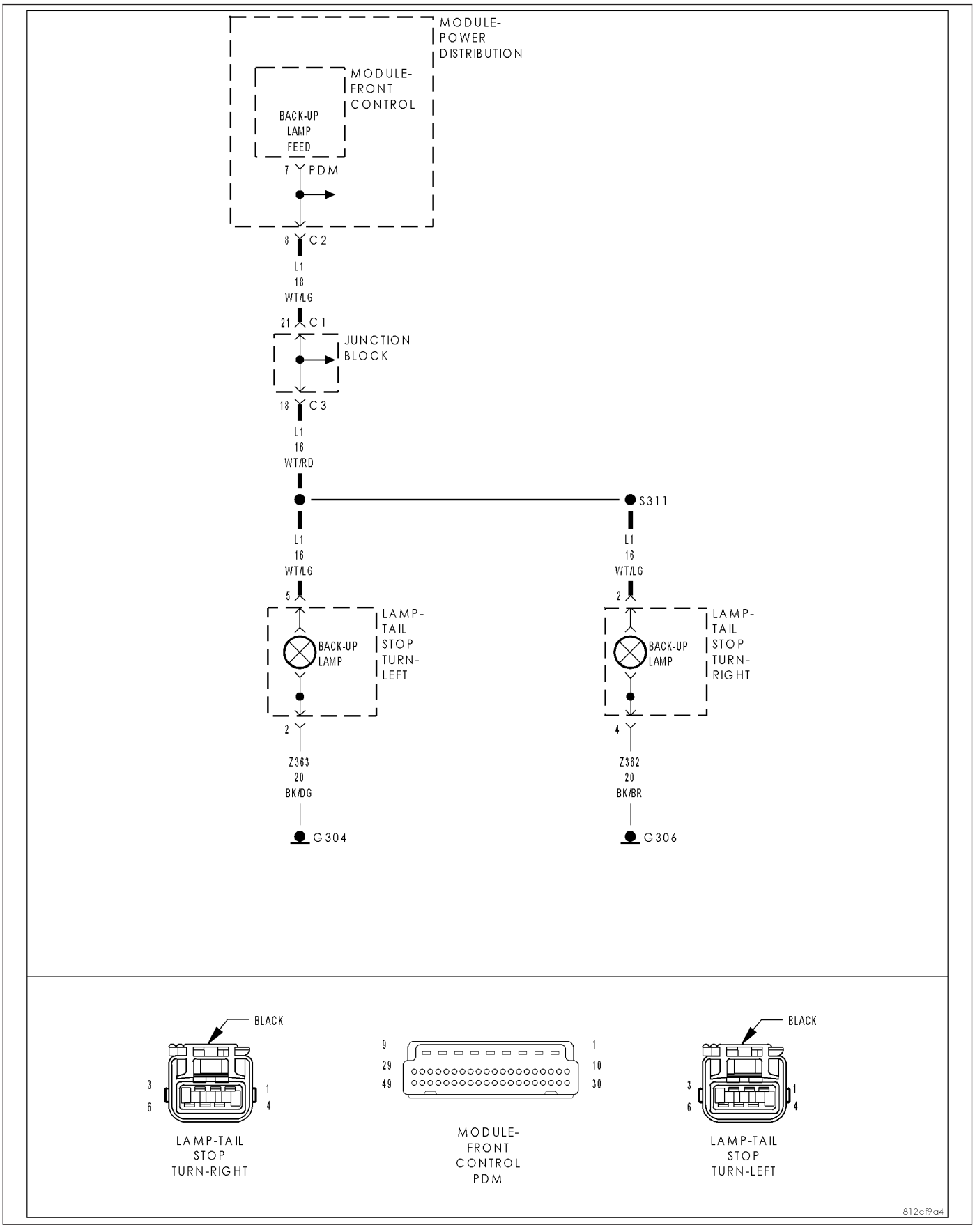

For a complete wiring diagram **Refer to Section 8W**.

- **When Monitored:**
- Continuously
- **Set Condition:**
- When the Front Control Module detects a short to battery on the Control circuit.

Possible Causes
(L1) BACKUP LAMPS CONTROL CIRCUIT
POWER DISTRIBUTION CENTER
FRONT CONTROL MODULE

Diagnostic Test

1. TEST FOR INTERMITTENT CONDITION

Turn the ignition on.
Clear all FCM DTC's
Turn the Right Turn Signal on.
With the scan tool, read DTC's.

Does the scan tool read: B1668-REVERSE LAMP CONTROL CIRCUIT HIGH?

Yes >> Go To 2

No >> The conditions that caused this code to set are not present at this time. Using the wiring diagram/schematic as a guide, inspect the wiring and connectors.
Perform BODY VERIFICATION TEST - VER 1.

2. L1 BACKUP LAMPS CONTROL CIRCUIT

Turn the ignition off.
Disconnect the PDM connector from the FCM.
Measure the resistance of the (L1) Backup Lamps Control circuit.

Is the resistance above 5.0 ohms?

No >> Repair the (L1) Backup Lamps Control circuit.
Perform BODY VERIFICATION TEST - VER 1.

Yes >> Go To 3

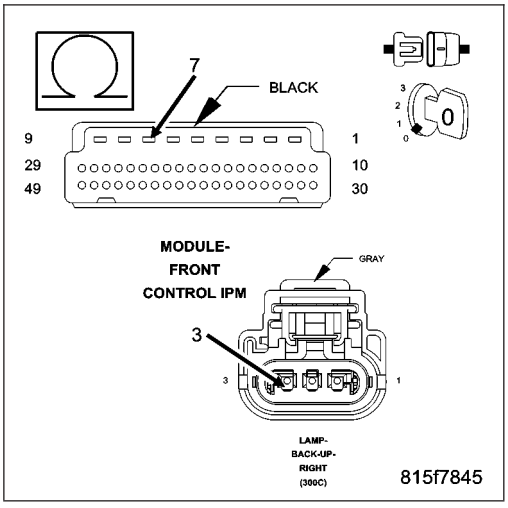

3. FRONT CONTROL MODULE

Turn the ignition off.

Disconnect the Front Control Module from the PDM 49 way connector.

Measure the voltage between (L1) Backup Lamps Control circuit and ground.

Is there any voltage present?

Yes >> Replace the Power Distribution Center.
Perform BODY VERIFICATION TEST - VER 1.

No >> Replace the Front Control Module.
Perform BODY VERIFICATION TEST - VER 1.

B1607-HEADLAMP SWITCH INPUT CIRCUIT LOW

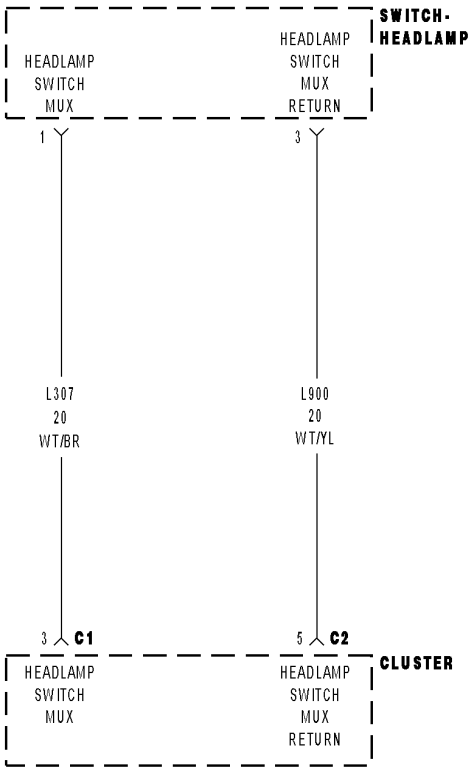

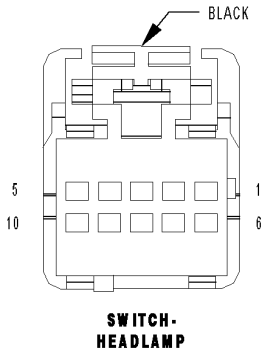

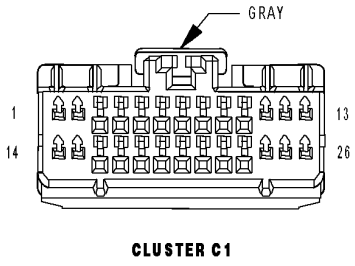

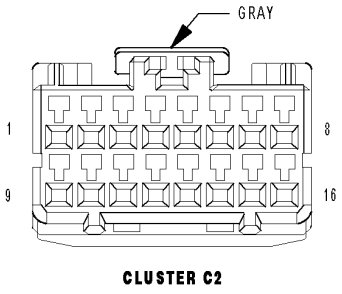

813b3586

For a complete wiring diagram **Refer to Section 8W**.

Possible Causes
HEADLAMP SWITCH
(L900) MUX RETURN CIRCUIT
INSTRUMENT CLUSTER

Diagnostic Test

1. INTERMITTENT CONDITION

Turn the ignition on.
With the Scan Tool, clear all CCN DTC's.
Turn the Headlamps on.
With the Scan Tool, read the DTC information.

Does the Scan Tool read: B1607-HEADLAMP SWITCH INPUT CIRCUIT LOW?

Yes >> Go To 2

No >> The condition that caused the symptom is currently not present. Inspect the related wiring for a possible intermittent condition. Look for any chafed, pierced, pinched, or partially broken wires.
Perform the BODY VERIFICATION TEST — VER 1.

2. HEADLAMP SWITCH

Disconnect the Headlamp Switch connector.
Turn the ignition on.
Measure the voltage of the (L900) MUX Return circuit.

Does the voltage read 5.0 volts?

Yes >> Go To 3
Perform the BODY VERIFICATION TEST — VER 1.

No >> Replace the Headlamp Switch in accordance with the service information.
Perform the BODY VERIFICATION TEST — VER 1.

3. (L900) MUX RETURN CIRCUIT

Turn the ignition off.
Disconnect the Headlamp Switch connector.
Disconnect the Instrument Cluster C2 connector.
Measure the resistance of the (L900) MUX Return circuit to ground.

Is the resistance below 5.0 ohms?

Yes >> Repair the (L900) Headlamp MUX return circuit.
Perform the BODY VERIFICATION TEST — VER 1.

No >> Replace the Instrument Cluster in accordance with the service information.
Perform the BODY VERIFICATION TEST — VER 1.

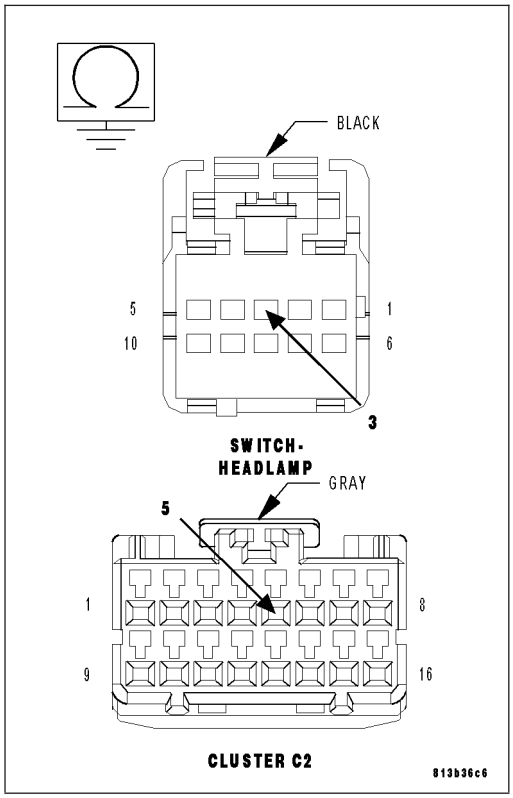

B1608-HEADLAMP SWITCH INPUT CIRCUIT HIGH

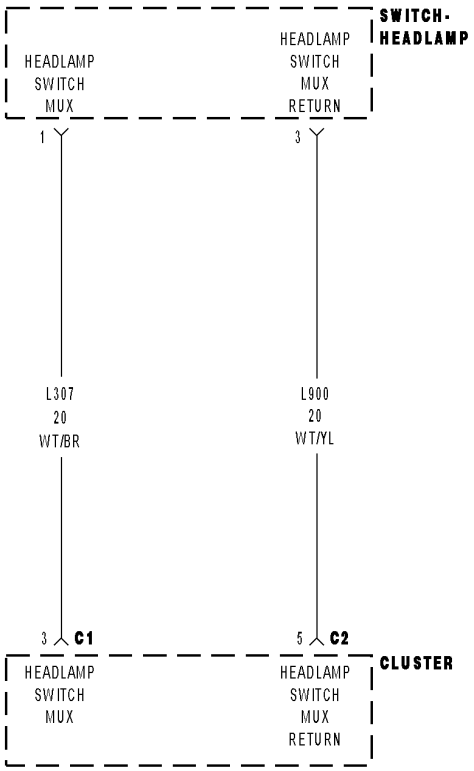

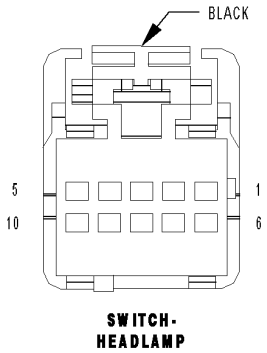

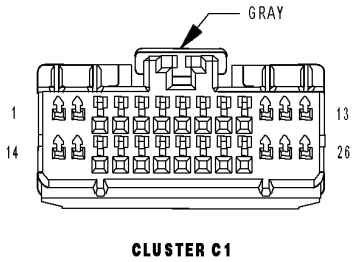

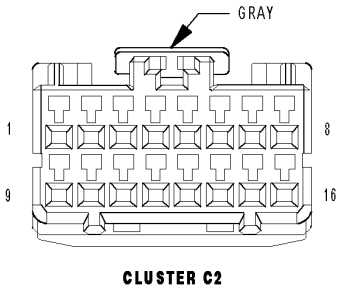

813b3586

For a complete wiring diagram **Refer to Section 8W**.

Possible Causes
HEADLAMP SWITCH
(L900) HEADLAMP MUX RETURN CIRCUIT
(L307) HEADLAMP MUX INPUT CIRCUIT
INSTRUMENT CLUSTER

Diagnostic Test

1. INTERMITTENT CONDITION

Turn the ignition on.
With the Scan Tool, clear all CCN DTC's.
Turn the Headlamps on.
With the Scan Tool, read the DTC information.

Does the Scan Tool read: B1608-HEADLAMP SWITCH INPUT CIRCUIT HIGH?

Yes >> Go To 2

No >> The condition that caused the symptom is currently not present. Inspect the related wiring for a possible intermittent condition. Look for any chafed, pierced, pinched, or partially broken wires.
Perform the BODY VERIFICATION TEST — VER 1.

2. HEADLAMP SWITCH

Disconnect the Headlamp Switch connector.
Turn the ignition on.
Measure the voltage between the (L900) Headlamp MUX Return circuit and (L307) Headlamp Input MUX circuit.

Does the voltage read 0.0 volts?

Yes >> Replace the Headlamp Switch in accordance with the service information.
Perform the BODY VERIFICATION TEST — VER 1.

No >> Go To 3

3. (L900) MUX RETURN CIRCUIT

Turn the ignition off.
Disconnect the Headlamp Switch connector.
Disconnect the Instrument Cluster C2 connector.
Measure the resistance of the (L900) Headlamp MUX Return circuit.

Is the resistance below 5.0 ohms?

Yes >> Go To 4

No >> Repair the (L900) Headlamp MUX Return circuit.
Perform the BODY VERIFICATION TEST — VER 1.

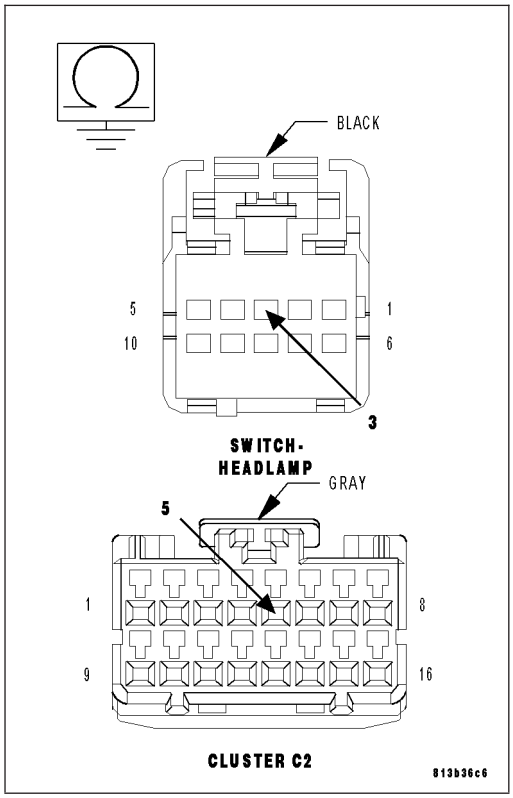

4. INSTRUMENT CLUSTER

Turn the ignition off.
Disconnect the Headlamp Switch connector.
Disconnect the Instrument Cluster C1 connector.
Measure the resistance of the (L307) Headlamp MUX circuit.

Is the resistance below 5.0 ohms?

Yes >> Replace the instrument Cluster in accordance with the service information.
Perform the BODY VERIFICATION TEST — VER 1.

No >> Repair the (L307) Headlamp MUX circuit.
Perform the BODY VERIFICATION TEST — VER 1.

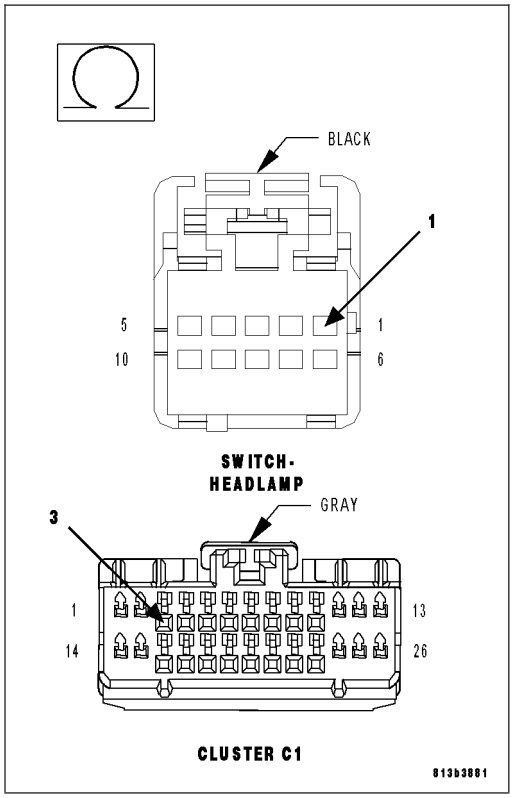

B167A-LEFT FRONT HEADLAMP LIGHT SOURCE CIRCUIT

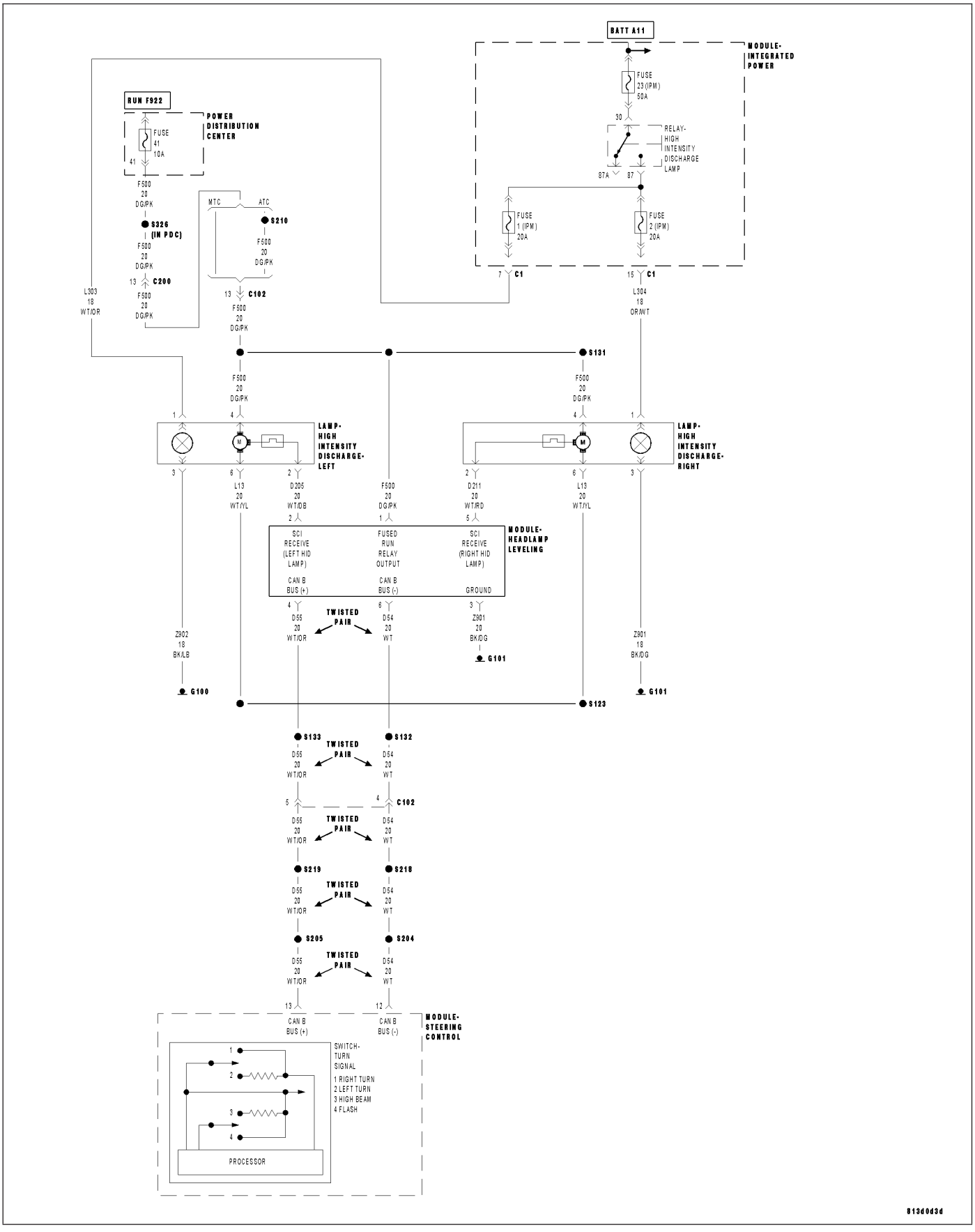

For a complete wiring diagram **Refer to Section 8W**.

- **When Monitored:**
- Continuously with the ignition on.
- **Set Condition:**
- The code will set when the HID Module detects an INOP Headlamp Source.

Possible Causes
HEADLAMP SOURCE

Diagnostic Test

1. Verify DTC B167A-LEFT FRONT HEADLAMP LIGHT SOURCE CIRCUIT IS ACTIVE

NOTE: If a DTC is set, erase the DTC and attempt to reset the DTC. If the DTC resets, follow test.
This is a Headlamp Source failure
View repair

Does the DTC reset and read B167A-LEFT FRONT HEADLAMP LIGHT SOURCE CIRCUIT?

Repair

Replace the appropriate Headlamp Source in accordance with the service information.
Perform the BODY VERIFICATION TEST — VER 1.

B167B-RIGHT FRONT HEADLAMP LIGHT SOURCE CIRCUIT

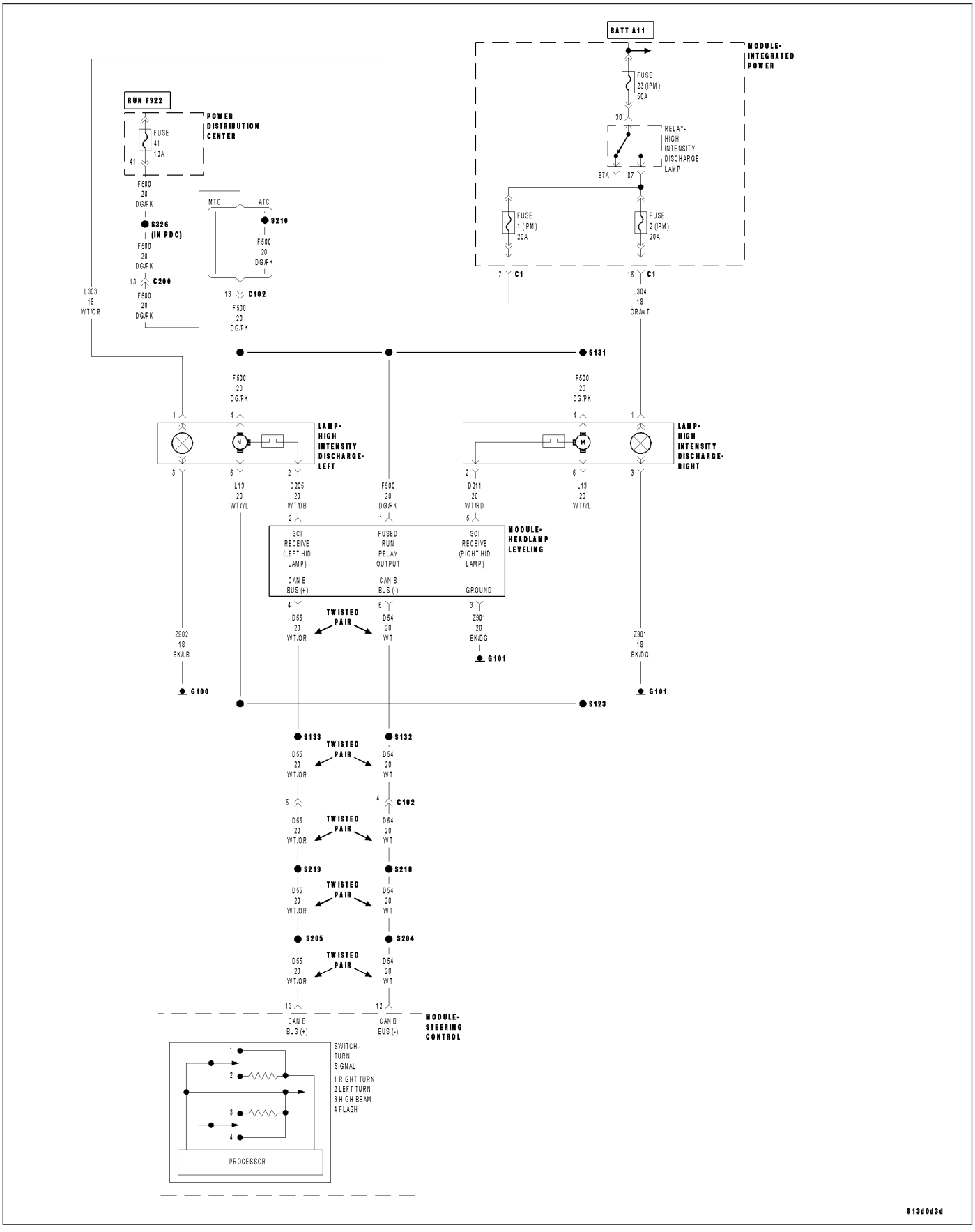

For a complete wiring diagram **Refer to Section 8W**.

- **When Monitored:**
- Continuously with the ignition on.
- **Set Condition:**
- The code will set when the HID Module detects an INOP Headlamp Source.

Possible Causes
HEADLAMP SOURCE

Diagnostic Test

1. Verify DTC B167B-RIGHT FRONT HEADLAMP LIGHT SOURCE CIRCUIT IS ACTIVE

NOTE: If a DTC is set, erase the DTC and attempt to reset the DTC. If the DTC resets, follow test.
This is a Headlamp Source failure
View repair

Does the DTC reset and read B167B-RIGHT FRONT HEADLAMP LIGHT SOURCE CIRCUIT?

Repair

Replace the appropriate Headlamp Source in accordance with the service information.
Perform the BODY VERIFICATION TEST — VER 1.

B2235-LEFT FRONT HEADLAMP BALLAST ECU INTERNAL

For a complete wiring diagram **Refer to Section 8W**.

- **When Monitored:**
- Continuously with the Headlamps on.
- **Set Condition:**
- The code will set when a Check Sum error is detected.

Possible Causes
LEFT HEADLAMP BALLAST ECU FAILURE

Diagnostic Test

1. Verify DTC B2235-LEFT FRONT HEADLAMP BALLAST ECU INTERNAL IS ACTIVE

NOTE: If a DTC is set, erase the DTC and attempt to reset the DTC. If the DTC resets, follow test.
This is an internal Ballast ECU failure
View repair

Does the DTC reset and read B2235-LEFT FRONT HEADLAMP BALLAST ECU INTERNAL?

Repair

Replace the Left Side Headlamp Ballast ECU in accordance with the service information.
Perform the BODY VERIFICATION TEST — VER 1.

B2236-RIGHT FRONT HEADLAMP BALLAST ECU INTERNAL

For a complete wiring diagram **Refer to Section 8W**.

- **When Monitored:**
- Continuously with the Headlamps on.
- **Set Condition:**
- The code will set when a Check Sum error is detected.

Possible Causes
RIGHT HEADLAMP BALLAST ECU FAILURE

Diagnostic Test

1. Verify DTC B2236-RIGHT FRONT HEADLAMP BALLAST ECU INTERNAL IS ACTIVE

NOTE: If a DTC is set, erase the DTC and attempt to reset the DTC. If the DTC resets, follow test.
This is an internal Headlamp Ballast ECU failure
View repair

Does the DTC reset and read B2236-RIGHT FRONT HEADLAMP BALLAST ECU INTERNAL?

Repair

Replace the Right Side Headlamp Ballast ECU in accordance with the service information.
Perform the BODY VERIFICATION TEST — VER 1.

B2239-HID LEVELING TRANSLATOR ECU INTERNAL

For a complete wiring diagram **Refer to Section 8W**.

- **When Monitored:**
- Continuously with the ignition on.
- **Set Condition:**
- The code will set when the HID Module detects an internal failure.

Possible Causes
MODULE INTERNAL FAILURE

Diagnostic Test

1. Verify DTC B2239-HID LEVELING TRANSLATOR ECU INTERNAL IS ACTIVE

NOTE: If a DTC is set, erase the DTC and attempt to reset the DTC. If the DTC resets, follow test.
This is an internal module failure
View repair

Does the DTC reset and read B2239-HID LEVELING TRANSLATOR ECU INTERNAL?

Repair

Replace the HID Translator Module in accordance with the service information.
Perform the BODY VERIFICATION TEST — VER 1.

LAMPS/LIGHTING - EXTERIOR - SERVICE INFORMATION

TABLE OF CONTENTS

page

LAMPS/LIGHTING - EXTERIOR - SERVICE INFORMATION
DESCRIPTION . . . 73
OPERATION . . . 73
WARNING . . . 74
STANDARD PROCEDURE
FRONT LAMP AIMING . . . 74
SPECIFICATIONS
EXTERIOR LAMPS . . . 78
AUTO HEADLAMP SENSOR
REMOVAL . . . 80
INSTALLATION . . . 81
CENTER HIGH MOUNTED STOP LAMP
REMOVAL . . . 82
INSTALLATION . . . 83
FOG LAMP UNIT
REMOVAL . . . 85
INSTALLATION . . . 86
FRONT SIDE MARKER LAMP
REMOVAL . . . 87
INSTALLATION . . . 88
FRONT SIDE MARKER LAMP UNIT - CHARGER
REMOVAL . . . 90
INSTALLATION . . . 90
FRONT PARK/TURN SIGNAL LAMP
REMOVAL . . . 91
INSTALLATION . . . 91
HEADLAMP
DESCRIPTION . . . 92
OPERATION . . . 92
DIAGNOSIS AND TESTING
HIGH INTENSITY DISCHARGE HEADLAMPS . . 94
REMOVAL . . . 95
INSTALLATION . . . 100
HEADLAMP LEVELING MODULE - EXPORT
DESCRIPTION . . . 106
OPERATION . . . 106
REMOVAL . . . 107
INSTALLATION . . . 107
HEADLAMP LEVEL SENSOR - EXPORT
DESCRIPTION . . . 108
OPERATION . . . 109
REMOVAL . . . 110
INSTALLATION . . . 111

page

SWITCH-HEADLAMP
REMOVAL . . . 112
INSTALLATION . . . 112
HEADLAMP UNIT
REMOVAL - 300C AND MAGNUM . . . 113
INSTALLATION - 300C AND MAGNUM . . . 116
LICENSE PLATE LAMP UNIT
REMOVAL . . . 119
INSTALLATION . . . 120
MULTI-FUNCTION SWITCH
DESCRIPTION . . . 122
OPERATION . . . 123
REPEATER LAMP - EXPORT
REMOVAL . . . 124
INSTALLATION . . . 124
SWITCH - STOP LAMP
DESCRIPTION . . . 125
OPERATION . . . 125
DIAGNOSIS AND TESTING
STOP LAMP SWITCH . . . 125
REMOVAL . . . 127
INSTALLATION . . . 127
ADJUSTMENTS
STOP LAMP SWITCH ADJUSTMENT . . . 128
TAIL LAMP UNIT
REMOVAL . . . 129
INSTALLATION . . . 132
SPOT LAMP - POLICE
REMOVAL . . . 134
INSTALLATION . . . 134
SPOT LAMP ASSEMBLY - POLICE
DESCRIPTION . . . 135
OPERATION . . . 135
DIAGNOSIS AND TESTING
SPOT LAMP ASSEMBLY - POLICE . . . 135
REMOVAL . . . 136
INSTALLATION . . . 138
UNDERHOOD LAMP - POLICE
REMOVAL . . . 141
INSTALLATION . . . 141
UNDERHOOD LAMP UNIT - POLICE
REMOVAL . . . 143
INSTALLATION . . . 143

LAMPS/LIGHTING - EXTERIOR - SERVICE INFORMATION

DESCRIPTION

The exterior lighting system for this model includes the following exterior lamp units:

- **Center High Mounted Stop Lamp** - A Center High Mounted Stop Lamp (CHMSL) is centered on the rear shelf trim panel at the base of the backlite on sedans, and on the liftgate spoiler just above the liftgate glass opening at the rear of the vehicle on the wagon.
- **Front Fog Lamps** - Vehicles equipped with this option have a fog lamp unit mounted near each outboard end of the front bumper support, behind the lower portion of the front fascia.
- **Front Headlamp Units** - A front headlamp unit is mounted to the front of each front fender panel on either side of the grille opening.
- **License Plate Lamp** - A rear license plate lamp unit is mounted to the rear fascia, just above the license plate tub.
- **Tail Lamp Units** - A tail lamp unit is mounted to the rear of each quarter panel on either side of the liftgate opening.

These exterior lighting lamps and their controls are combined to provide the following exterior lighting features:

- **Automatic Headlamps** - Vehicles with the automatic headlamps option are equipped with a unique headlamp switch that includes an automatic position and a sun load sensor located on the top of the instrument panel to sense ambient light levels. When the Auto position of the headlamp switch is selected, the headlamps are turned On automatically when ambient light levels are low.
- **Daytime Running Lamps** - Vehicles manufactured for sale in Canada illuminate the low beam filament of the headlamp bulb in each front lamp unit to serve as the Daytime Running Lamps (DRL). Fleet vehicles manufactured for sale in the United States illuminate the high beam filament of the headlamp bulb in each front lamp unit to serve as the DRL.

Other components of the exterior lighting system for this model include:

- **Backup Lamp Switch** - A Transmission Range Sensor (TRS) integral to the solenoid pack on the valve body of the electronic automatic transmission performs the backup lamp switch function for this model.
- **Brake Lamp Switch** - A plunger-type brake lamp switch is located on the steering column support bracket under the instrument panel and is actuated by the brake pedal arm.
- **Front Control Module** - The Front Control Module (FCM) is integral to the Integrated Power Module (IPM). The FCM/IPM is located in the engine compartment, near the battery and the Power Distribution Center (PDC). (Refer to 8 - ELECTRICAL/POWER DISTRIBUTION - DESCRIPTION).
- **Headlamp Switch** - A headlamp switch is located on the left side of the instrument panel, below and outboard of the steering column. The headlamp switch includes a rotary knob for the park lamps and headlamps On or Off, and a push button switch for selecting the front fog lamps on vehicles so equipped. The headlamp switch also features a vertical thumbwheel for selecting the panel lamps dimming level, a Parade mode to illuminate all Vacuum Fluorescent Display (VFD) units at full brightness for visibility when driving in daylight with the exterior lighting turned On, and for interior lighting control.
- **Instrument Cluster** - The ElectroMechanical Instrument Cluster (EMIC) is also known as the Cab Control Node (CCN) in this vehicle. The EMIC/CCN is located in the instrument panel above the steering column opening, directly in front of the driver. (Refer to 8 - ELECTRICAL/INSTRUMENT CLUSTER - DESCRIPTION).
- **Multi-Function Switch** - The multi-function switch is located on the steering column, just below the steering wheel. A control stalk that extends from the left side of the switch is used to select the turn signal lamps (right or left) and to select the headlamp beam (low, high or optical horn).

OPERATION

DAYTIME RUNNING LAMPS

Power is reduced using pulse-width modulation (PWM) to the high beams, where by the power is switched on and off rapidly instead of remaining on continuously. The duration and interval of the power pulses is programmed into the IPM.

AUTOMATIC HEADLAMP SYSTEM

Automatic headlamps are controlled by the Cab Compartment Node (CCN). With the headlamp switch in the AUTO position, the CCN will control the headlamp, parking, side marker, tail and instrumentation lamps based on ambient light levels. Ambient light levels are monitored by the CCN using the ambient light signal present. Ambient light readings are averaged to limit cycling the lamps ON and OFF when passing through areas with varying light levels. The automatic headlamps will only function when the engine is running with the RPM greater than 300. When the headlamp switch is in the AUTO position (Automatic mode), the Headlamp Time Delay system will function when the ignition switch is placed in any position other than run/start.

HEADLAMP TIME DELAY SYSTEM

The headlamp time delay system is activated by turning the headlamps ON (high or low beam) while the engine is running, turning the ignition switch OFF, and then turning the headlamp switch OFF. The Cab Compartment Node (CCN) will allow the headlamps to remain ON for 90 seconds (configurable) before they automatically turn off (If the key is in the ignition during the headlamp time delay mode, then both the headlamps and park lamps (including panel dimming) will be ON). Refer to the Owner's Manual for more information.

If the headlamp switch is in the Auto Headlamp Position, the headlamps are ON due to the night signal from the ambient light sensor and the ignition switch is in any position other than run/start, the CCN shall enter a 90 second (configurable) Auto Headlamps time delay mode. If the key is in the ignition during the headlamp time delay mode, then both the headlamps and park lamps (including panel dimming) will be ON. If the key is not in the ignition, then only the headlamps will be ON. The CCN will allow the headlamps to remain ON for 90 seconds before they automatically turn OFF. Refer to the Owner's Manual for more information.

WARNING

Eye protection should be used when servicing glass components. Personal injury or death could result.

This vehicle contains mercury added devices added by the manufacturer: High Intensity Discharge (HID) headlamps. Remove devices before vehicle disposal. Upon removal of devices, please reuse, recycle, or dispose of as hazardous waste.

Do not back probe any connectors or pierce any wiring to the HID headlamp system. High voltage (a/c voltage) is used in this system and component and personal injury or death could result (Refer to 8 - ELECTRICAL/LAMPS/LIGHTING - EXTERIOR/HEADLAMP - DIAGNOSIS AND TESTING - HID HEADLAMPS).

Do not power up the headlamp assembly with the headlamp access cover off. A high voltage a/c (alternating current) shock may occur causing personal injury or death.

On vehicles equipped with airbags, disable the airbag system before attempting any steering wheel, steering column, or instrument panel component diagnosis or service. Disconnect and isolate the battery negative cable, then wait two minutes for the airbag system capacitor to discharge before performing further diagnosis or service. Failure to take the proper precautions could result in accidental airbag deployment and possible personal injury or death.

Do not touch the glass of halogen bulbs with fingers or other possibly oily surface, reduced bulb life will result. Do not use bulbs other than those indicated in the bulb application table. Damage to lamp and/or daytime running lamp module can result. Do not use fuses, circuit breakers or relays having greater amperage value than indicated on the fuse panel or in the owners manual.

Do not use bulbs other than those listed in the bulb application table. Damage to lamp can result. Do not touch bulbs with fingers or other oily surfaces. Bulb life will be reduced.

STANDARD PROCEDURE

FRONT LAMP AIMING

VEHICLE PREPARATION FOR LAMP ALIGNMENT

1. Check for and correct any burnt out bulbs.
2. Repair or replace any faulty, worn or damaged body or suspension components that could hinder proper lamp alignment.
3. Verify proper tire inflation pressures.
4. Remove any accumulations of mud, snow or ice from the vehicle underbody and clean the front lamp lenses.

5. Verify that there is no load in the vehicle (cargo or passengers), except for the driver.
6. The fuel tank should be Full. Add 2.94 kilograms (6.5 pounds) of weight over the fuel tank for each estimated gallon of missing fuel.
7. Verify correct vehicle suspension height.

LAMP ALIGNMENT SCREEN PREPARATION

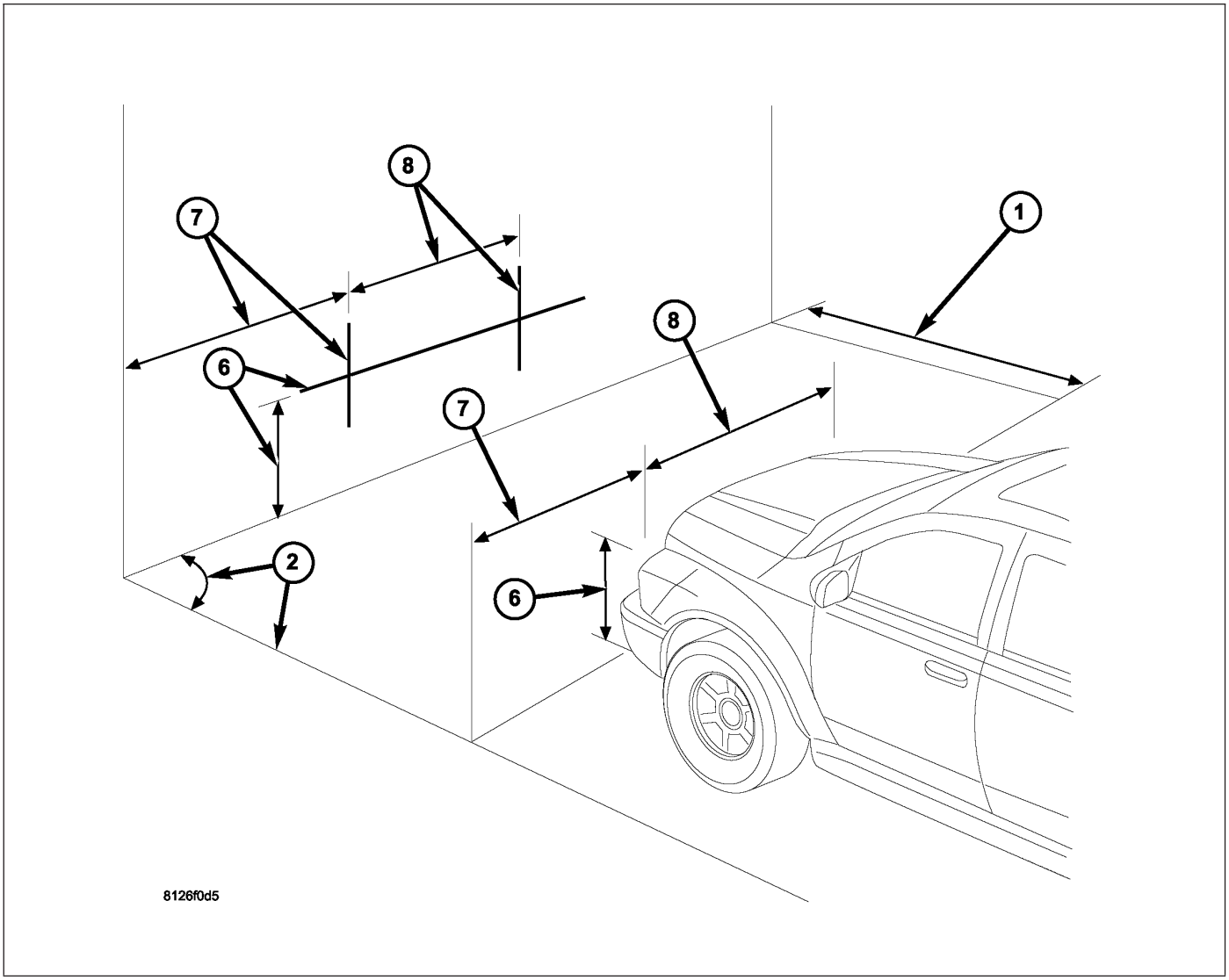

The procedure that follows will prepare a suitable front lamp alignment screen.

1. Tape a line on a level floor 7.62 meters (25 feet) away from and parallel to the flat wall that will be used as the lamp alignment screen. The level floor will be used as the horizontal zero reference.
2. An adjacent wall or floor member that is perpendicular to the alignment screen can be used as the vertical zero reference. If there is no adjacent wall or floor member that is perpendicular to the screen, tape a second line on the floor perpendicular to both the alignment screen and the first line, and outboard of either side of where the vehicle will be positioned. This will be used as the vertical zero reference.
3. Position the vehicle so that the side of the vehicle is parallel to the vertical zero reference, and so that the front of the lamp lenses are in the vertical plane of the parallel line taped on the floor 7.62 meters (25 feet) away from the screen.
4. Rock the vehicle side-to-side three times to allow the suspension to stabilize.
5. Jounce the front suspension three times by pushing downward on the front bumper and releasing.
6. Measure the distance between the optical center of one of the lamps being aimed (head or fog) and the floor (horizontal zero reference). Transfer this measurement to the alignment screen with a piece of tape placed horizontally to the floor. This line will be used as the lamp horizontal reference.

7. Measure the distance between the vertical zero reference and the optical center of the nearest lamp being aimed (head or fog). Transfer this measurement to the alignment screen with a piece of tape placed vertically across the appropriate (head or fog) lamp horizontal reference. This is the centerline reference for the first lamp.
8. Measure the distance on center between the first and the second lamp being aimed. Transfer this measurement to the alignment screen with a second piece of tape placed vertically across the appropriate (head or fog) lamp horizontal reference. This is the centerline reference for the second lamp.

HEADLAMP ALIGNMENT

There are three different kinds of headlamp aiming procedures:

- **Visual Aim Optical Left (VOL)** - 300C with halogen and 300C w/HID.
- **Visual Aim Optical Right (VOR)** - 300/300 Touring and Dodge Magnum.
- **Export** - 300C w/HID - Export vehicles.

The VOL or VOR is embossed on the lower front of each headlamp unit.

VOL HEADLAMP AIMING

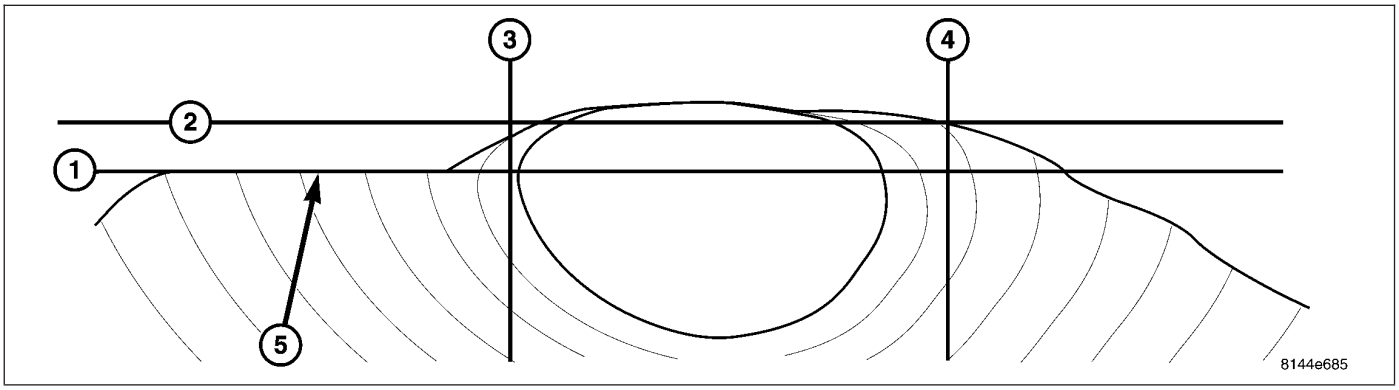

With the horizontal centerline of the headlamp (2) transferred on the wall, measure down 53 mm (2.1 in). This line (1) will be the vertical aiming mark. Using the left side of the headlamp vertical centerline (3), adjust the headlamp unit so the residual light from the headlamp, not the hot spot, is even with the line (1) that was marked previously 53 mm (2.1 in) below the horizontal centerline (2). The ideal alignment should be (5). The right headlamp aiming will be the same, but using the area left of right headlamp vertical centerline (not shown).

1. Turn the headlamps On and select the Low beams.
2. Rotate the headlamp vertical adjustment screw (and horizontal on export) on each lamp to adjust the beam height as required.

VOR HEADLAMP AIMING

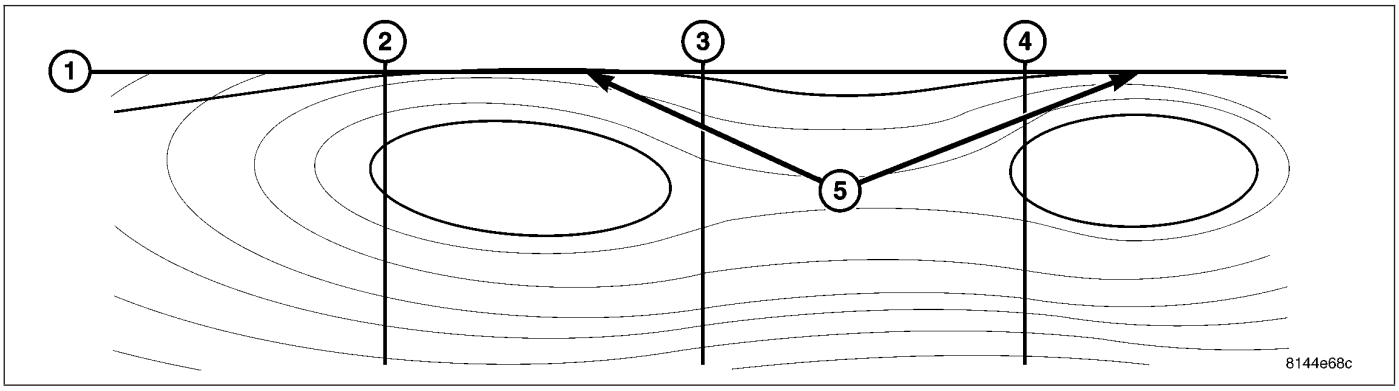

With the horizontal centerline of the headlamp (1) transferred on the wall, this line (1) will be the vertical aiming mark. Using the right side of the headlamp vertical centerline (2 for the left and 4 for the right), adjust the headlamp unit so the residual light from the headlamp is even with the horizontal centerline (1). The ideal alignment should be (5).

1. Turn the headlamps On and select the Low beams.

2. Rotate the headlamp vertical adjustment screw (and horizontal on export) on each lamp to adjust the beam height as required.

EXPORT HEADLAMP AIMING

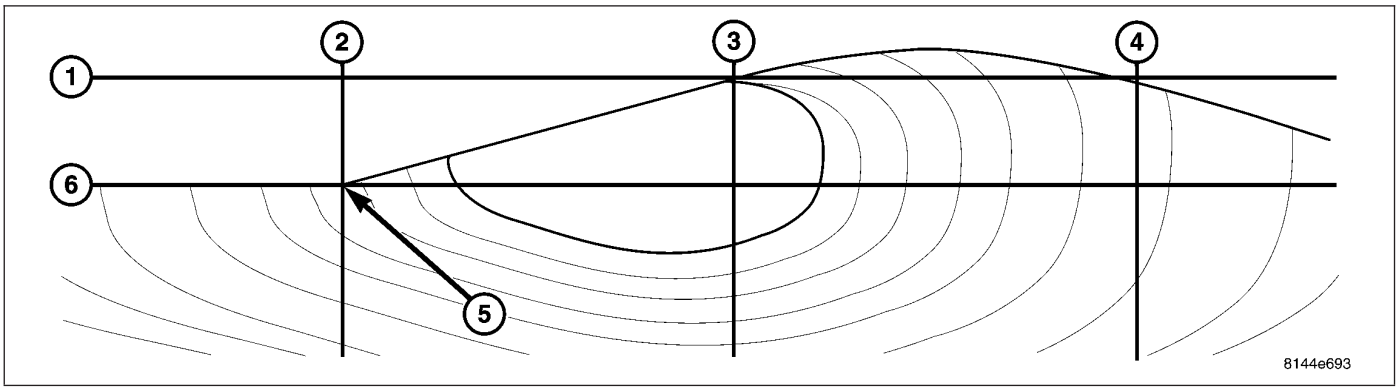

With the horizontal centerline of the headlamp (1) transferred on the wall, measure down 76 mm (3 in). This line (6) will be the vertical aiming mark. Using the intersecting point (5) of the horizontal centerline (6) and the vertical centerline (2) for the left headlamp, adjust the headlamp unit horizontally and vertically so (5) is the intersecting point at lines (6 and 2). For the right headlamp unit, cover up the left headlamp and follow the same procedure but intersecting at (6 and 4).

1. Turn the headlamps On and select the Low beams.
2. Rotate the headlamp vertical adjustment screw (and horizontal on export) on each lamp to adjust the beam height as required.

FOG LAMP ALIGNMENT

A properly aimed front fog lamp will project a pattern on the alignment screen 100 millimeters (4 inches) below the fog lamp centerline and straight ahead of the lamp.

1. Turn the fog lamps On.
2. Rotate the fog lamp vertical adjustment screw (2) on each lamp to adjust the beam height as required.

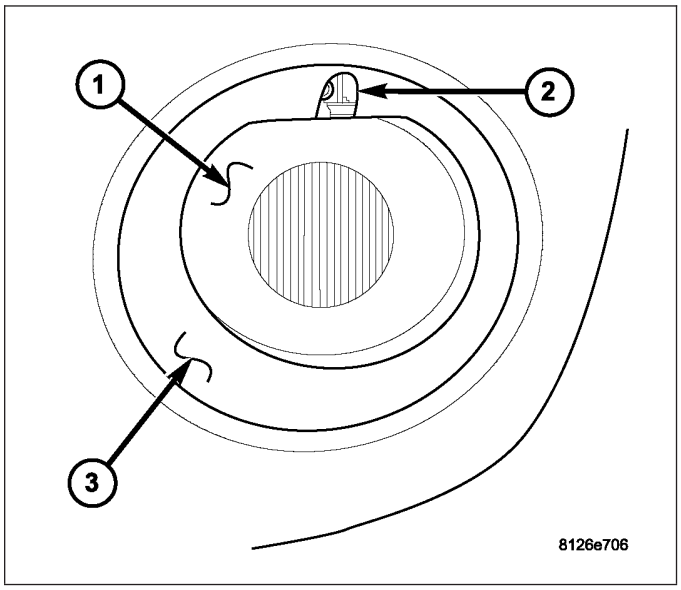

SPECIFICATIONS

EXTERIOR LAMPS

BULB APPLICATION TABLE

LAMP	BULB
CHRYSLER 300/300 TOURING	
Back-Up	3057
CHMSL	LED (Replace as unit)
Front Fog	9145/H10
Front Park/Turn	3757AK
Front Sidemarker	W5W
High Beam Headlamp	9005
License	168
Low Beam Headlamp	9006
Rear Sidemarker	168
Tail/Stop/Turn	3057
CHRYSLER 300C	
Back-Up	3057
CHMSL	LED (Replace as unit)
Front Fog	9145/H10
Front Park/Turn	3157AK
Front Sidemarker	W5W
High Beam Headlamp	9005
License	W5W
Low Beam Headlamp (Halogen)	9006XS
Low Beam Headlamp (HID)	DIS
Tail/Stop/Turn	3057
DODGE MAGNUM	
Back-Up	921/W16W
CHMSL	LED (Replace as unit)
Front Fog	9145/H10
Front Park/Turn	3457AK
Front Sidemarker	194NA
High Beam Headlamp	9005
License	W5W
Low Beam Headlamp	9006
Rear Sidemarker	3757APY27/7W
Spot Lamp - Police	H3
Tail/Stop/Turn	3157KP27/7W
DODGE CHARGER	
Back-Up	921
CHMSL	LED (Replaced as unit)
Front Fog	9145/H10
Front Park/Turn	3157NAK
Front Sidemarker	194

LAMP	BULB
High Beam Headlamp	9005
License	168
Low Beam Headlamp	9006
Rear Sidemarker	168
Spot Lamp - Police	H3
Tail/Stop/Turn	3057

AUTO HEADLAMP SENSOR

REMOVAL

1. Disconnect and isolate the battery negative cable.
2. Remove the defroster grille (Refer to 23 - BODY/ INSTRUMENT PANEL/DEFROSTER GRILLE - REMOVAL).

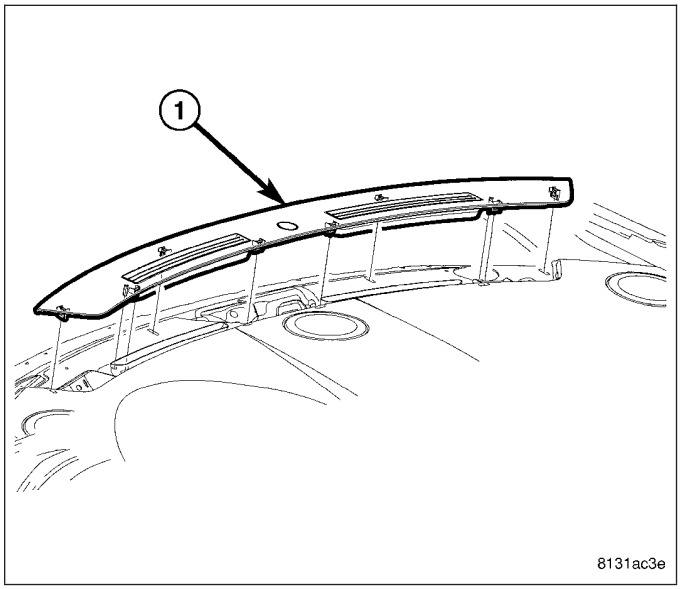

3. Using a trim stick (special tool #C-4755) or equivalent, gently pry up on the auto headlamp sensor (1).
4. Pull the sensor from the top of the instrument panel.
5. Disconnect the one electrical connector.

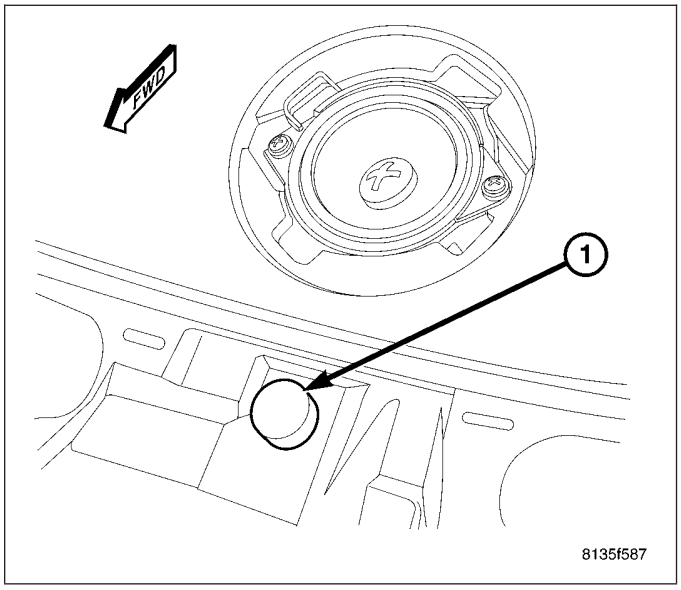

INSTALLATION

1. Connect the one electrical connector.
2. Position the auto headlamp sensor (1) in instrument panel and press firmly down to snap into place.

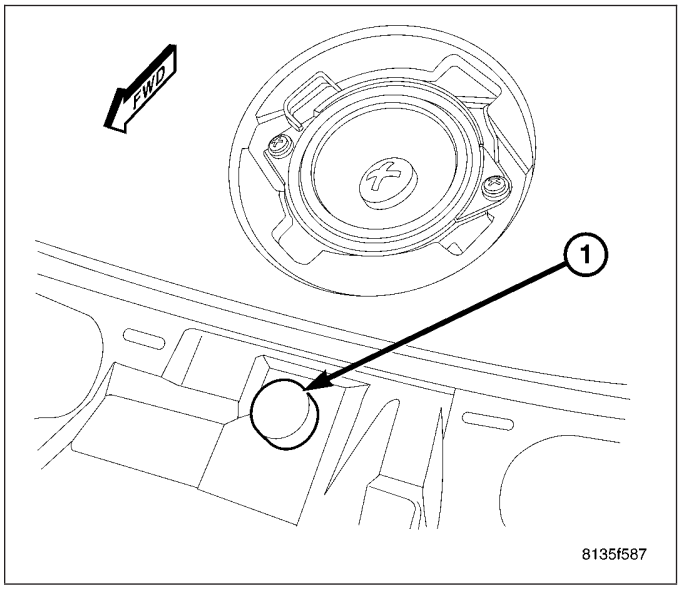

3. Install the defroster grille (Refer to 23 - BODY/INSTRUMENT PANEL/DEFROSTER GRILLE - INSTALLATION).
4. Connect the battery negative cable.

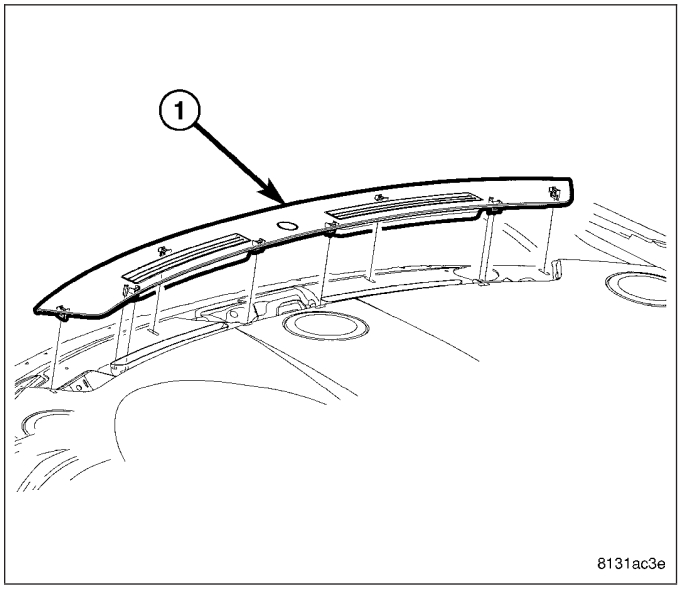

CENTER HIGH MOUNTED STOP LAMP

REMOVAL

SEDAN

1. Disconnect and isolate the battery negative cable.
2. Remove the rear shelf trim panel (Refer to 23 - BODY/INTERIOR/REAR SHELF TRIM PANEL - REMOVAL).

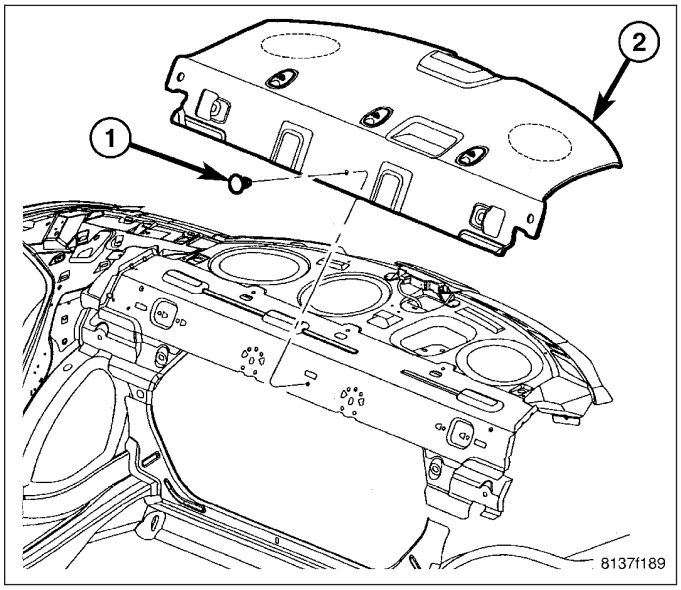

3. Disconnect the CHMSL electrical connector (1).

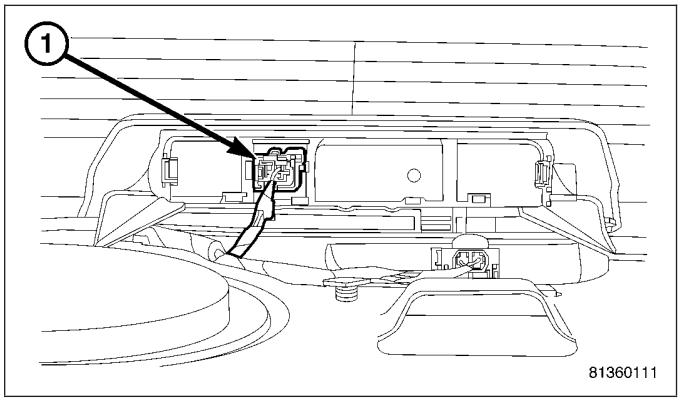

4. Remove the two mounting fasteners (3) to the CHMSL (2).

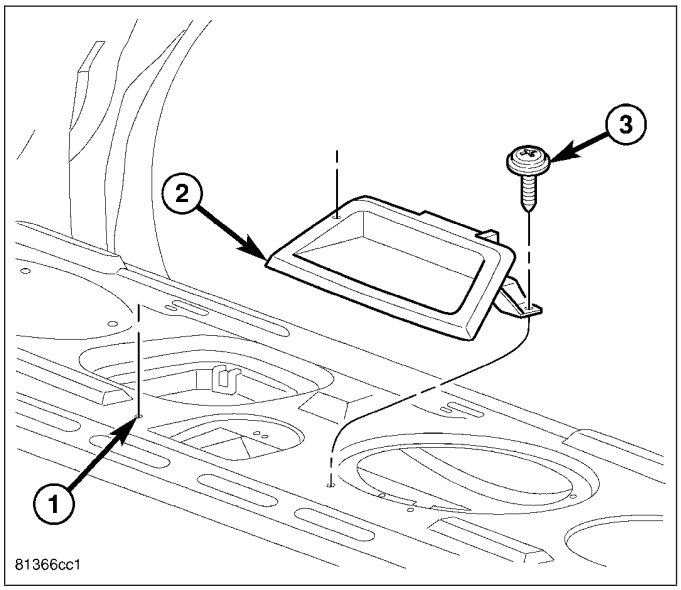

WAGON

1. Remove the rear spoiler (Refer to 23 - BODY/EXTERIOR/SPOILER - REMOVAL).
2. With the rear spoiler on bench, remove the fasteners and electrical connector from the CHMSL.

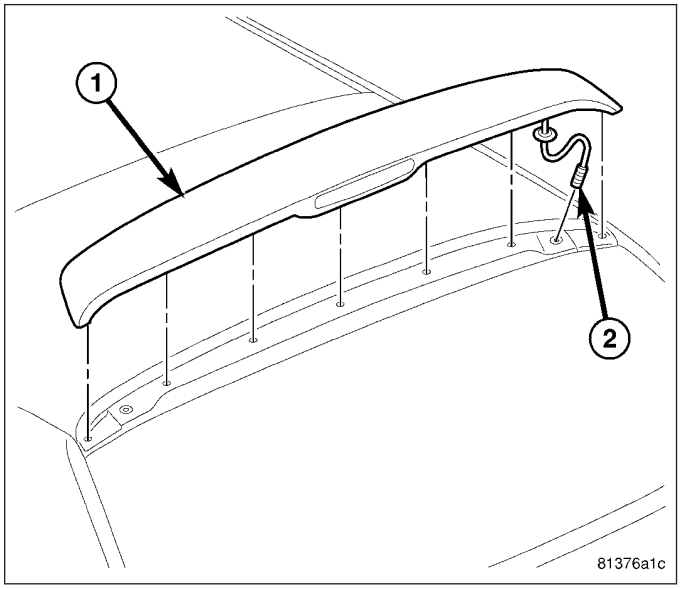

INSTALLATION

SEDAN

1. Place the center high mounted stop lamp (2) into position at the bottom of the backlite.
2. Install and tighten the mounting fasteners (3).

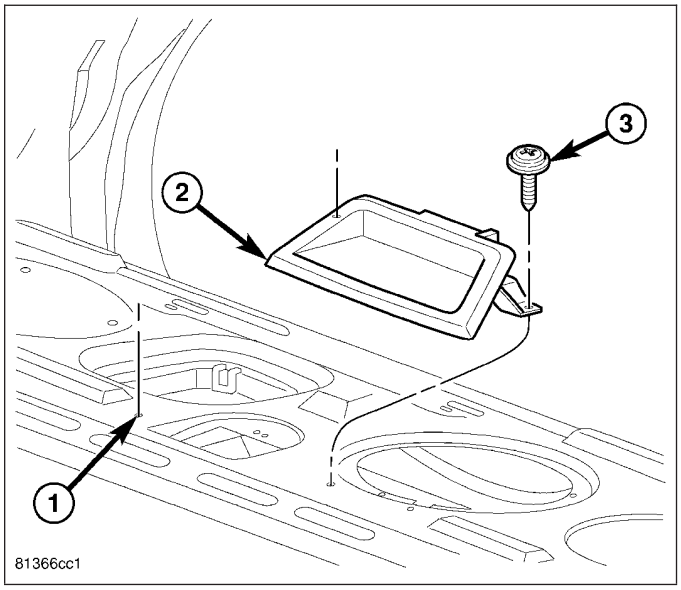

3. Connect the electrical connector (1).

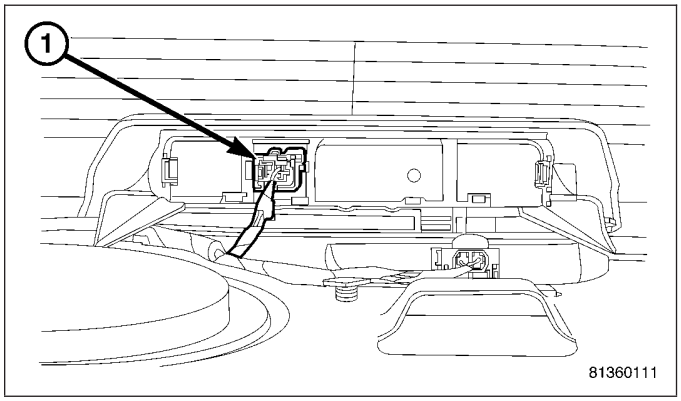

4. Install the rear shelf trim (Refer to 23 - BODY/INTERIOR/REAR SHELF TRIM PANEL - INSTALLATION).
5. Connect the battery negative cable.

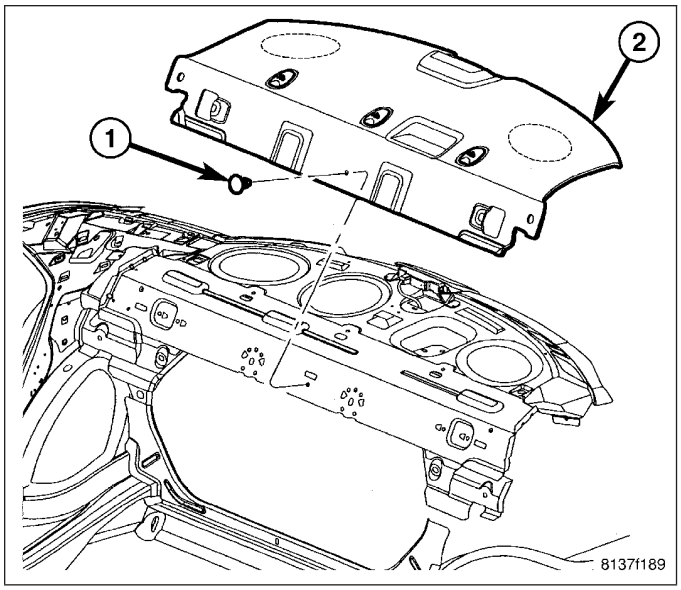

WAGON

1. Place the CHMSL on the spoiler (1) and install and tighten the mounting fasteners.
2. Install the spoiler (Refer to 23 - BODY/EXTERIOR/SPOILER - INSTALLATION).

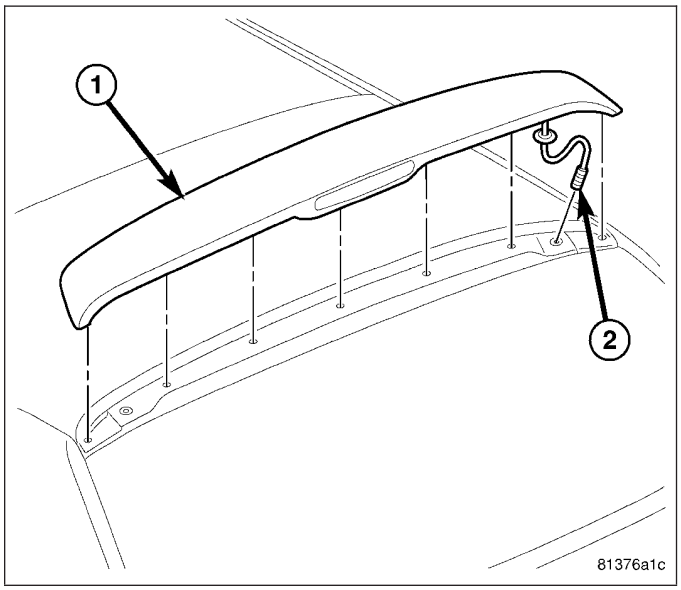

FOG LAMP UNIT

REMOVAL

1. Disconnect and isolate the battery negative cable.
2. Open hood and remove the upper radiator closeout panel (2 and 4).
3. Remove the six upper fascia retaining fasteners (Refer to 13 - FRAME & BUMPERS/BUMPERS/FRONT FASCIA - REMOVAL).

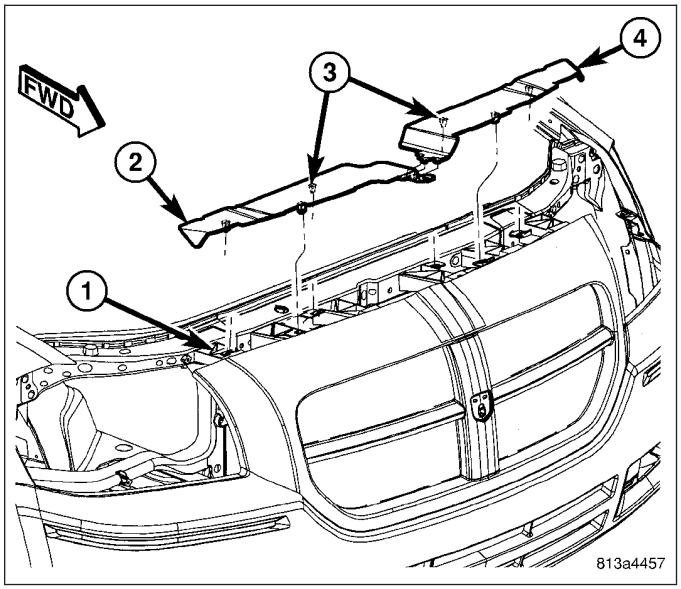

4. Remove the headlamp unit (Refer to 8 - ELECTRICAL/LAMPS/LIGHTING - EXTERIOR/HEADLAMP UNIT - REMOVAL).

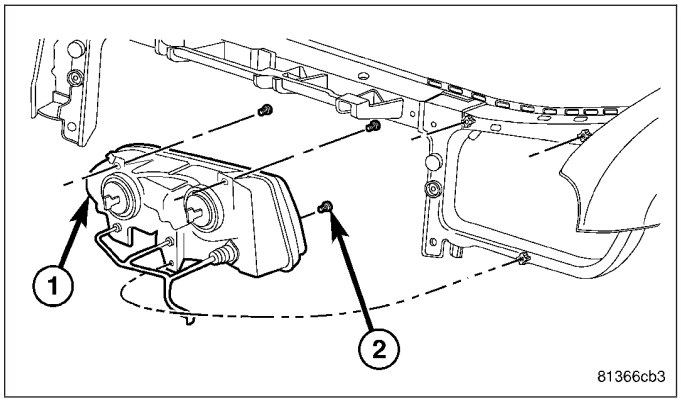

5. From behind the bumper fascia, disconnect the harness connector.
6. Remove two fog lamp unit mounting fasteners.
7. Remove fog lamp unit (1).

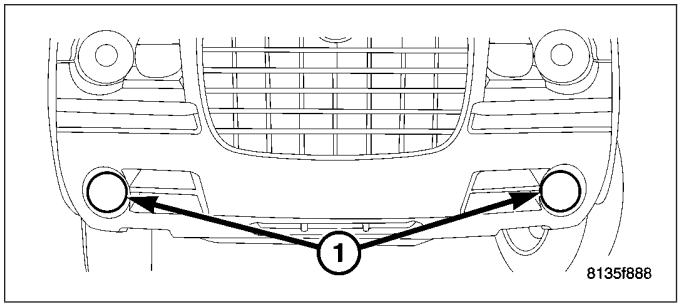

INSTALLATION

1. Position the fog lamp unit (1) in fascia opening.
2. Install the two fog lamp unit mounting fasteners.
3. Connect the harness connector.

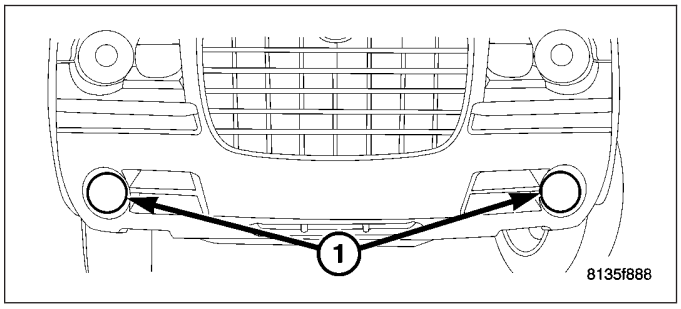

4. Install the headlamp unit (Refer to 8 - ELECTRICAL/LAMPS/LIGHTING - EXTERIOR/HEADLAMP UNIT - INSTALLATION).

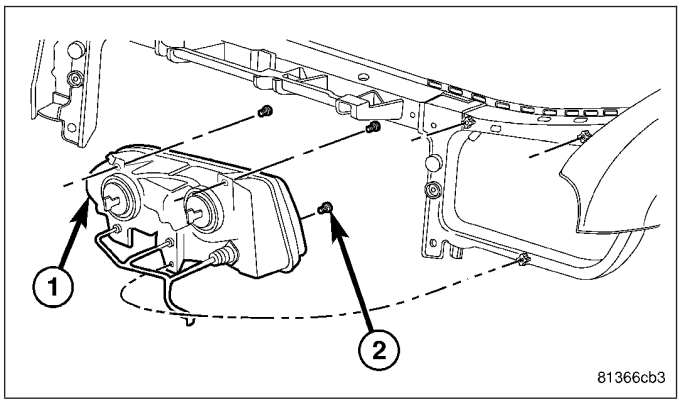

5. Install the six upper fascia retaining fasteners (Refer to 13 - FRAME & BUMPERS/BUMPERS/FRONT FASCIA - INSTALLATION).
6. Install the upper radiator closeout panel (2 and 4).
7. Connect the battery negative cable.

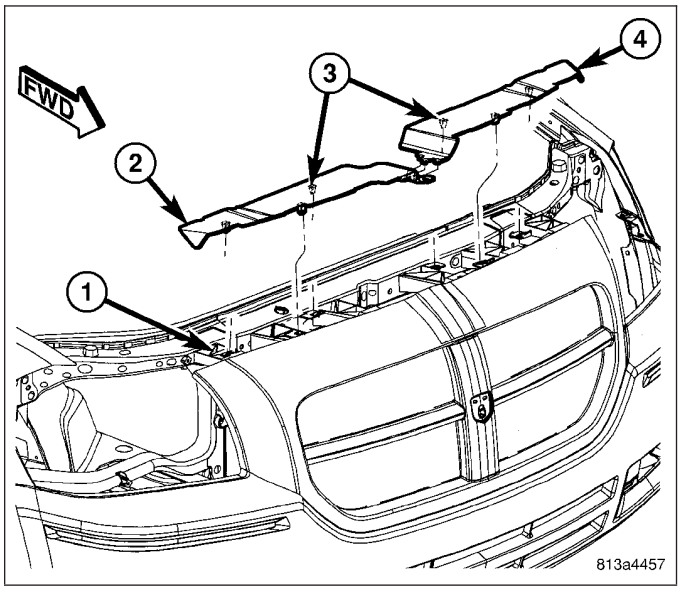

FRONT SIDE MARKER LAMP

REMOVAL

CHRYSLER

1. Disconnect and isolate the battery negative cable.
2. Remove the headlamp unit (Refer to 8 - ELECTRICAL/LAMPS/LIGHTING - EXTERIOR/HEADLAMP UNIT - REMOVAL).

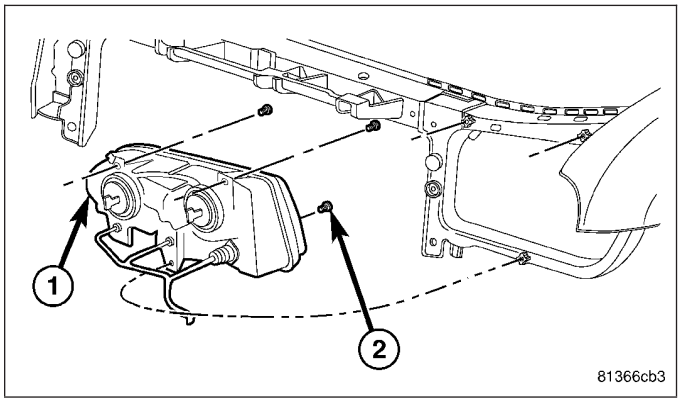

3. It may be necessary to loosen the fascia (1) to gain access to the side marker lamp (Refer to 13 - FRAME & BUMPERS/BUMPERS/FRONT FASCIA - REMOVAL).
4. Remove side marker lamp from side marker lamp unit by twisting lamp socket.

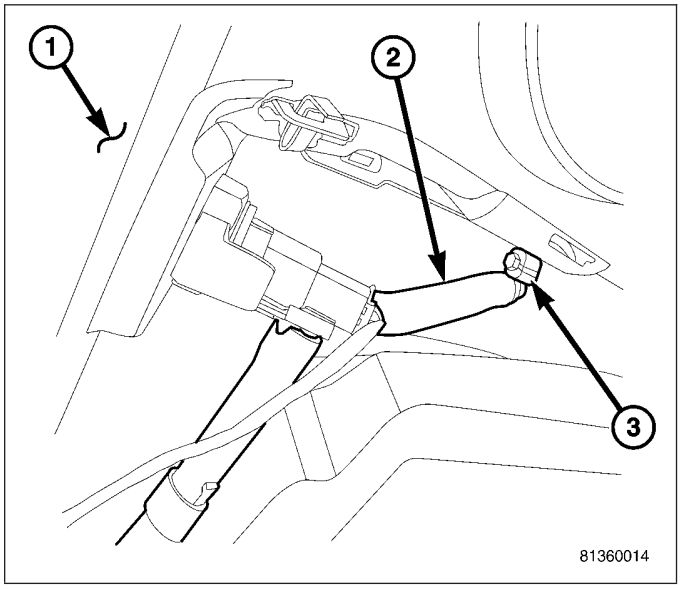

DODGE

1. Disconnect and isolate the battery negative cable.
2. Remove the headlamp unit (Refer to 8 - ELECTRICAL/LAMPS/LIGHTING - EXTERIOR/HEADLAMP UNIT - REMOVAL).

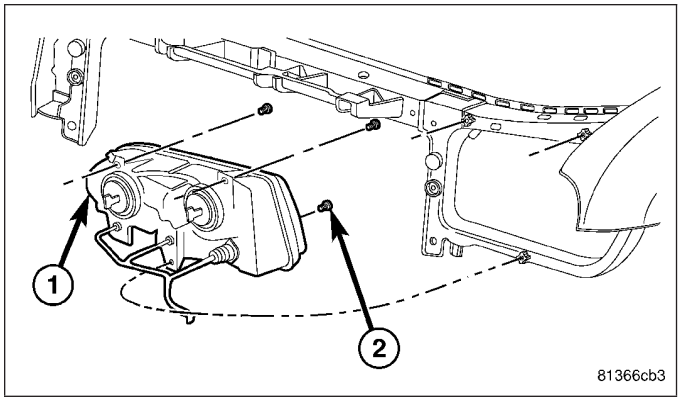

3. Remove the front side marker lamp from the headlamp unit.

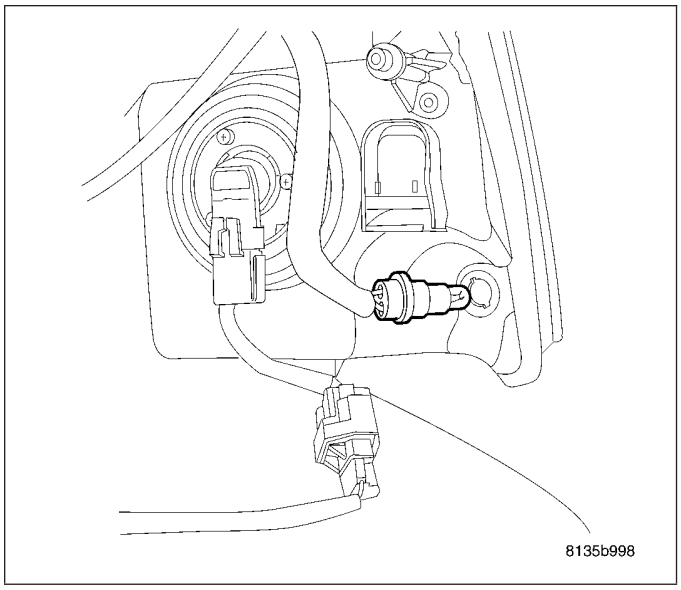

INSTALLATION

CHRYSLER

1. Install the side marker lamp into side marker lamp unit by twisting lamp socket.
2. If the fascia (1) was loosened to gain access to the side marker lamp, install the fascia (Refer to 13 - FRAME & BUMPERS/BUMPERS/FRONT FASCIA - INSTALLATION).

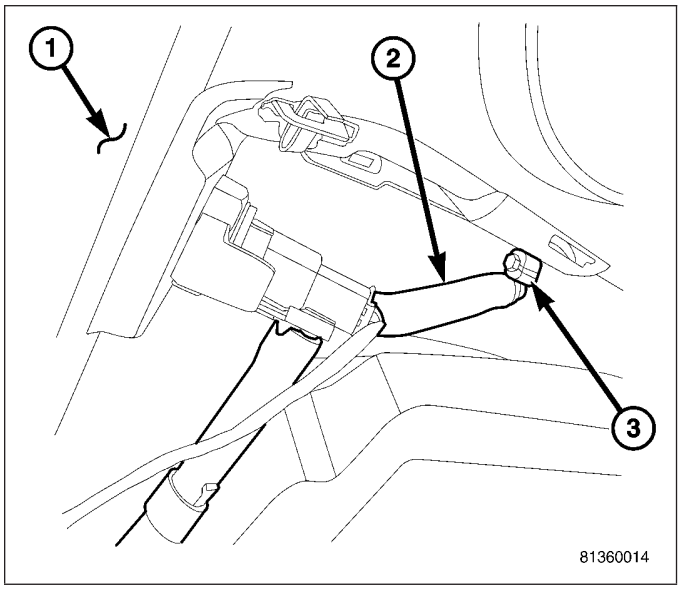

3. Install the headlamp unit (Refer to 8 - ELECTRICAL/LAMPS/LIGHTING - EXTERIOR/HEADLAMP UNIT - INSTALLATION).
4. Connect the battery negative cable.

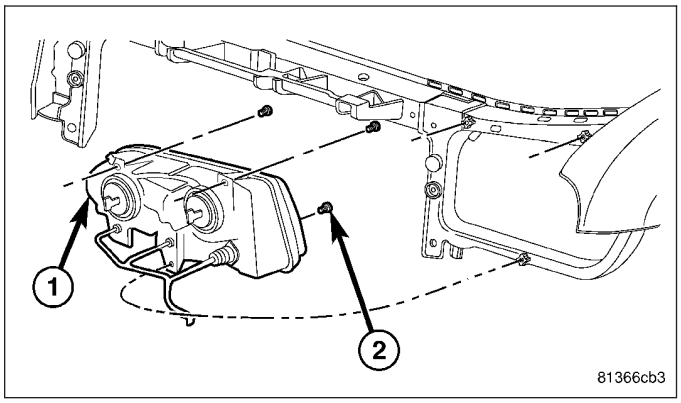

DODGE

1. Install the front side marker lamp into the headlamp unit.

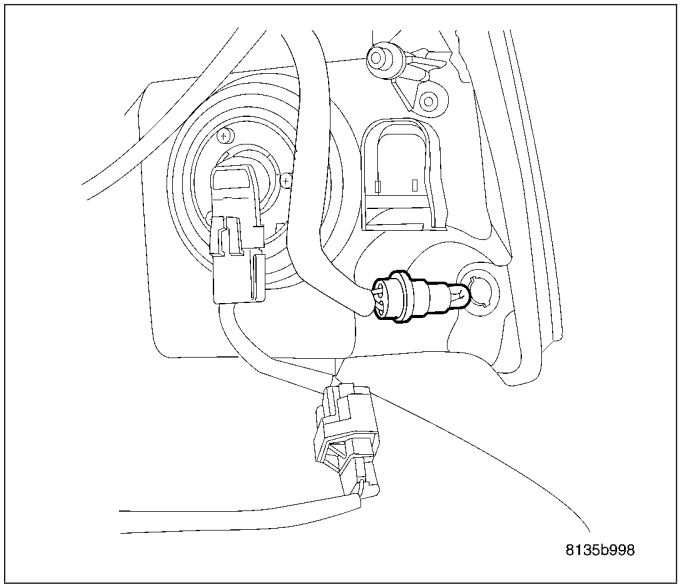

2. Install the headlamp unit (Refer to 8 - ELECTRICAL/LAMPS/LIGHTING - EXTERIOR/HEADLAMP UNIT - INSTALLATION).
3. Connect the battery negative cable.

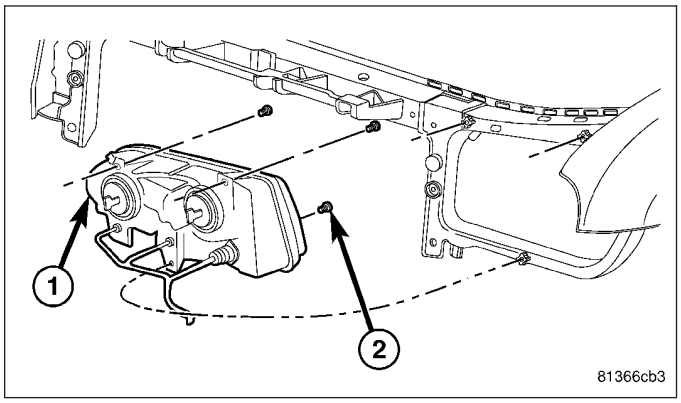

FRONT SIDE MARKER LAMP UNIT - CHARGER

REMOVAL

1. Open hood, disconnect and isolate the battery negative cable.
2. If removing the left front side marker lamp unit, the air cleaner housing must be removed to gain access to the release tabs (Refer to 9 - ENGINE/ AIR INTAKE SYSTEM - REMOVAL). The right side is accessible without removing any components.
3. Reach in behind the headlamp unit and on the outboard side of the unit, find and pinch together the release tabs (1) of the front side marker lamp unit (2).
4. Push the unit (2) forward and out of the front fascia.
5. Disconnect the side marker lamp unit connector by releasing the retaining tab and pull it out of the lamp unit.

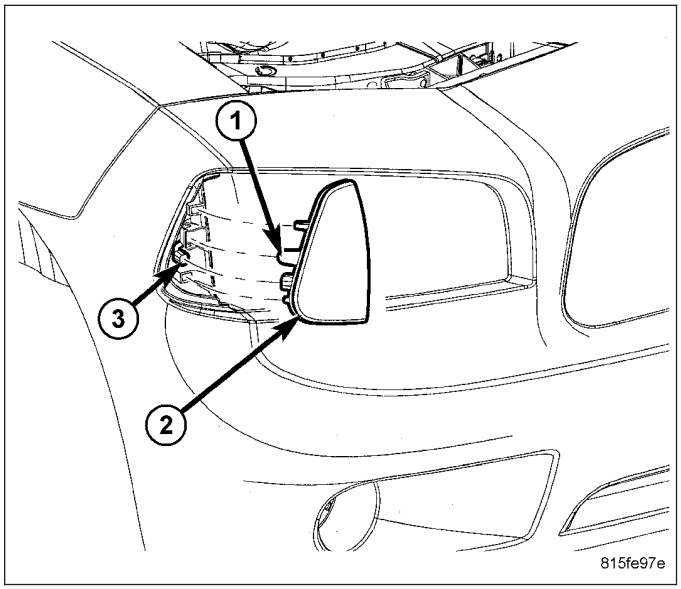

INSTALLATION

1. Connect the side marker lamp unit (2) electrical connector.
2. Push the unit (2) rearward making sure that the alignment dowel (3) is lined up and firmly push into place until it seats with a snap.
3. If the left front side marker lamp unit was replaced, the air cleaner housing must be reinstalled (Refer to 9 - ENGINE/AIR INTAKE SYSTEM - INSTALLATION).
4. Connect the battery negative cable and close hood.

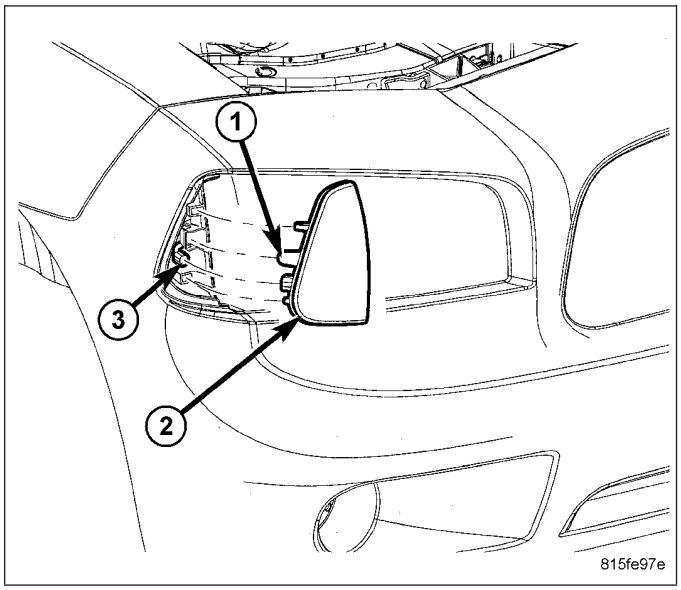

FRONT PARK/TURN SIGNAL LAMP

REMOVAL

1. Disconnect and isolate the battery negative cable.
2. From atop the headlamp unit, reach behind and just below the upper radiator crossmember and twist the park/turn signal lamp socket out.
3. Remove the lamp from the socket.

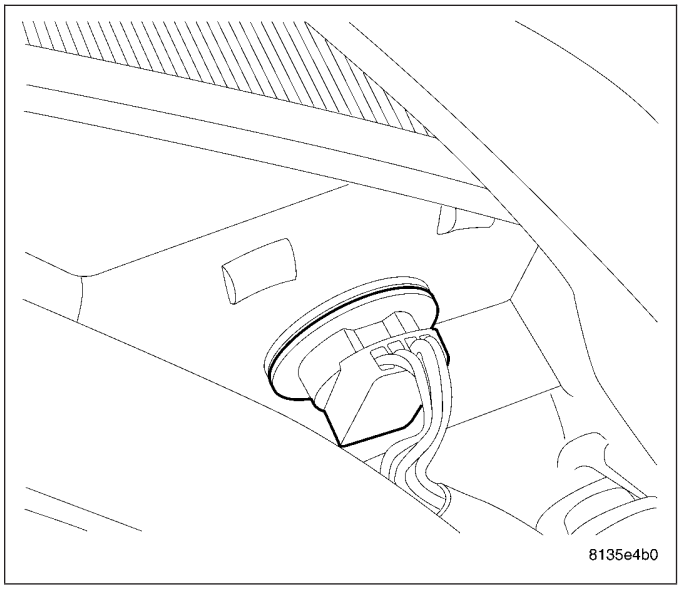

INSTALLATION

1. Install lamp into socket.
2. Install lamp socket (1) into the headlamp unit. Twist sochet clockwise.
3. Connect the battery negative cable.

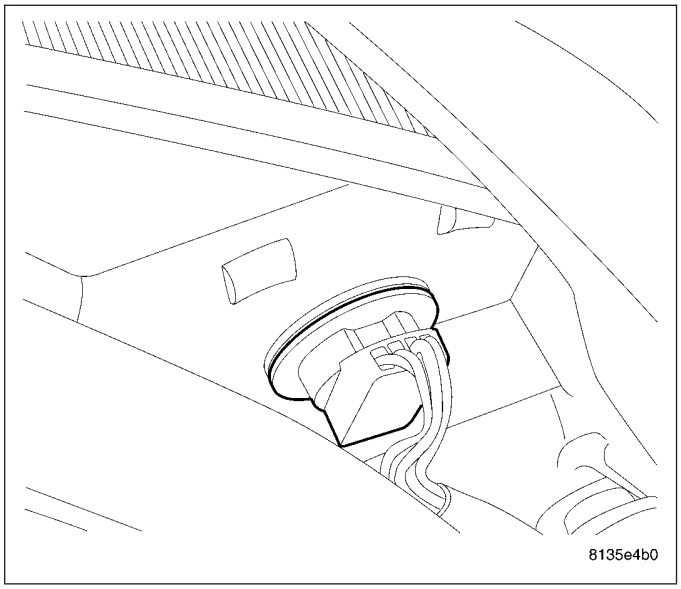

HEADLAMP

DESCRIPTION

Quad headlamps are standard equipment on this model. They are halogen headlamps, both low and high beams.

This vehicle may be equipped with optional **High Intensity Discharge (HID)** low beams. The HID type lamp is used in place of the conventional halogen low beam lamp. High beam lamps remain the same halogen type.

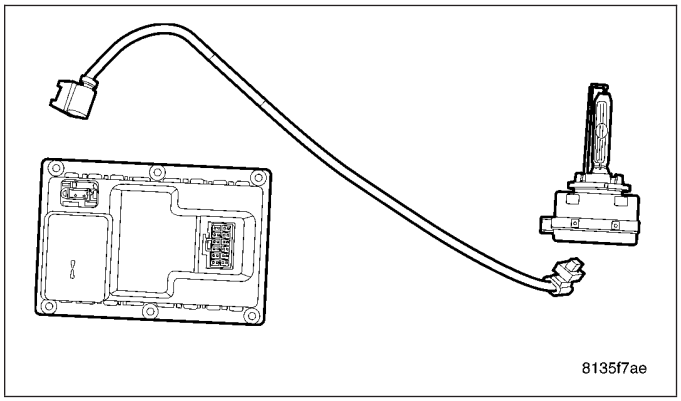

HID lamps get their name from the intense white light produced by the electrical discharge. The light produced by the HID lamps appears as a white color as opposed to the yellow color of the standard halogen lamps.

HID lighting provides about three times the light output of standard halogen lamps while using less energy. The lamps are also designed to last 10 times longer than standard halogen lamps.

OPERATION

To turn on the headlamps, turn the left knob of the headlamp switch clockwise to the first detent for parking lamp and instrument panel lamp operation. Turn to the second detent for headlamp, park lamp and instrument panel lamp operation.

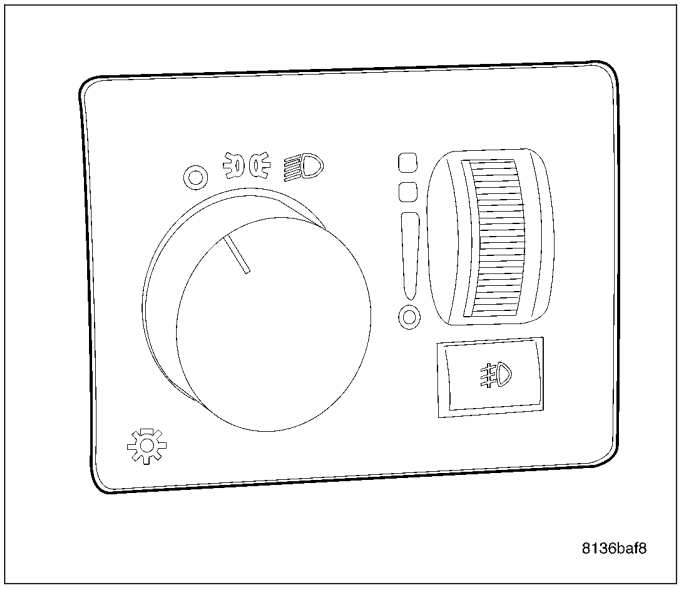

High Intensity Discharge Headlamps (HID) rely on an AC (alternating current) electrical charge to ignite xenon gas contained in a sealed beam lamp. The HID lamps are similar in operation to common vapor filled street headlamps. Instead of using a filament to produce light, the gas inside the lamp is ignited by creating an arc between two electrodes.

The color of the light source is classified as its color temperature. As the color temperature increases, the color of the light moves from yellow to blue-white to white. The light produced by the HID lamps appears as a white color as opposed to the yellow color of the standard (halogen) lamps. HID lamps provide light as a higher color temperature than standard halogen lamps.

For the color temperature of different lamp types, refer to the COLOR TEMPERATURE table. As a point of reference, typical sunlight at noon has a color temperature of 4977° C (8990° F).

COLOR TEMPERATURE

LAMP	TEMPERATURE
INCANDESCENT LAMPS	2527° C (4580° F)
HALOGEN LAMPS	2927° C (5300° F)
HID LAMPS	3827° C (6920° F)

There are three components to each of the HID headlamps:

1. **Ballast Module** - The 12 volt Direct Current (DC) power supplied by the low beam relay is converted to Alternating Current (AC) power by the ballast module. Each lamp requires its own ballast module. The ballast converts and steps up the low beam relay output to 800 volts AC, and supplies the lamp assembly via a cable connected to the igniter.

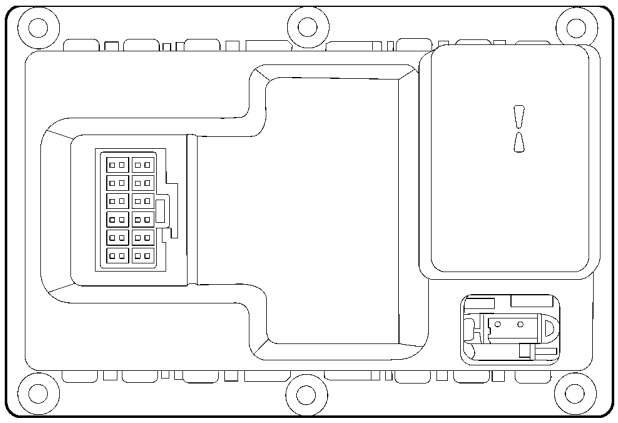

2. **Lamp/Igniter** - The lamp contains electrodes and xenon gas. The lamp takes about 10-15 seconds of warm-up time to reach full operation. The light appears blue during warm-up and then turns to white. The igniter controls the voltage applied to the lamp electrodes. The igniter uses the voltage supplied by the ballast module and momentarily steps up the voltage to 25,000 volts to start the lamp. Once ignited, it will reduce the voltage to 85 volts.

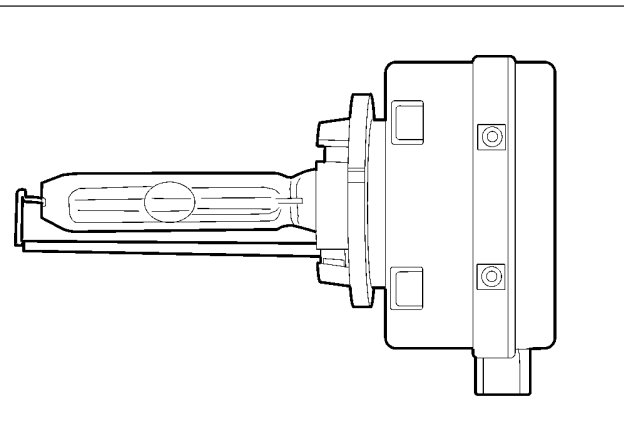

3. **Cable** - The cable is used to transfer the high voltage produced by the ballast module to the lamp/igniter.

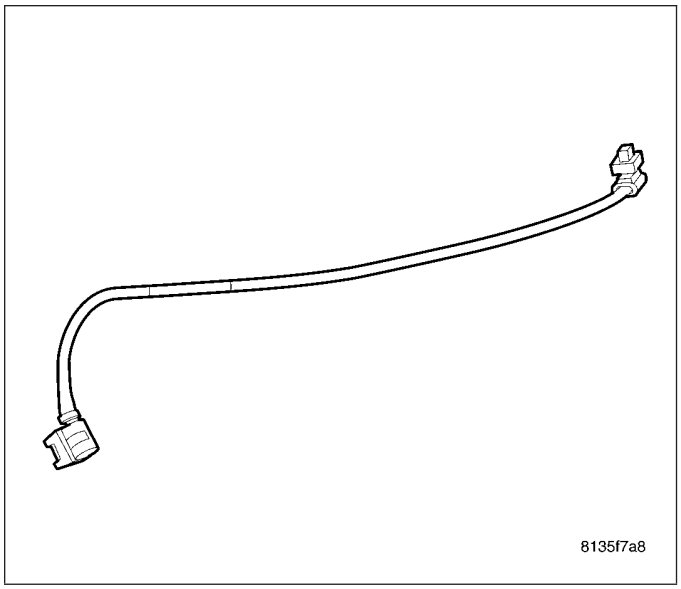

DIAGNOSIS AND TESTING

HIGH INTENSITY DISCHARGE HEADLAMPS

The High Intensity Discharge (HID) headlamps are supplied B+ voltage and ground, the same as normal halogen low beam lamps. The low beam system is different from there forward. The ballast module is mounted to the bottom of the headlamp unit. The ballast module has internal circuit protection to prevent module damage in case of an open or shorted circuit. The module has overcharge and undercharge circuit protection. If either is sensed, the module will not illuminate the headlamps for that key cycle or until the fault is corrected. Recycle the ignition and headlamp switch if both headlamps do not illuminate. Before determining the headlamp assembly is faulty, check the connector at the headlamp and check if there is voltage coming from the IPM pin providing the power to the respective headlamp. If the module senses a short or open circuit condition, it will not operate the lamp/igniter.

WARNING: The headlamp unit must be removed to perform these tests (Refer to 8 - ELECTRICAL/LAMPS/LIGHTING - EXTERIOR/HEADLAMP UNIT - REMOVAL). Failure to do so could result in personal injury or death.

1. Inspect lamp for a burned out lamp. If lamp is burned out it will appear black or smoky, similar to a normal halogen bulb. If lamp looks OK, go to Step 2.
2. Check for B+ battery voltage at the connector going into the ballast module. Refer to Wiring Diagrams for connector location. If battery voltage and a good ground are present, go to Step 3. If B+ voltage and a good ground are not present, refer to Wiring Diagrams for circuit and connector locations to find short or open circuit.
3. Plug in a known good ballast module and check for lamp operation. If lamp lights, replace ballast module. If lamp still fails to light, replace igniter assembly.

REMOVAL

HALOGEN HEADLAMP

NOTE: If replacing the left low or high beam headlamp, the air box has to be removed first (Refer to 9 - ENGINE/AIR INTAKE SYSTEM - REMOVAL).

1. Disconnect and isolate the battery negative cable.
2. Disconnect the lamp electrical connector.
3. Twist lamp (1 and 2) out of headlamp housing.

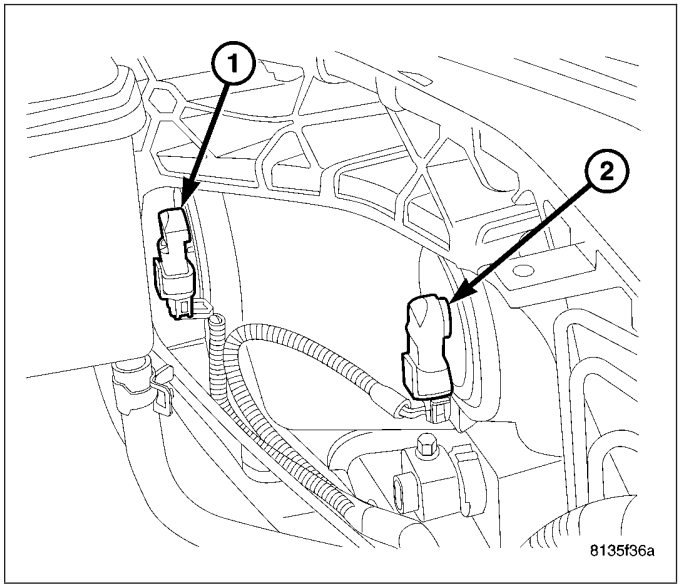

HIGH INTENSITY DISCHARGE (HID) HEADLAMPS (IF EQUIPPED) - LOW BEAM

HEADLAMP

NOTE: If replacing the left front low beam HID headlamp, the air box has to be removed first (Refer to 9 - ENGINE/AIR INTAKE SYSTEM - REMOVAL).

1. Disconnect and isolate the battery negative cable.
2. Remove the rubber boot (1) protecting the lamp/igniter from the elements.

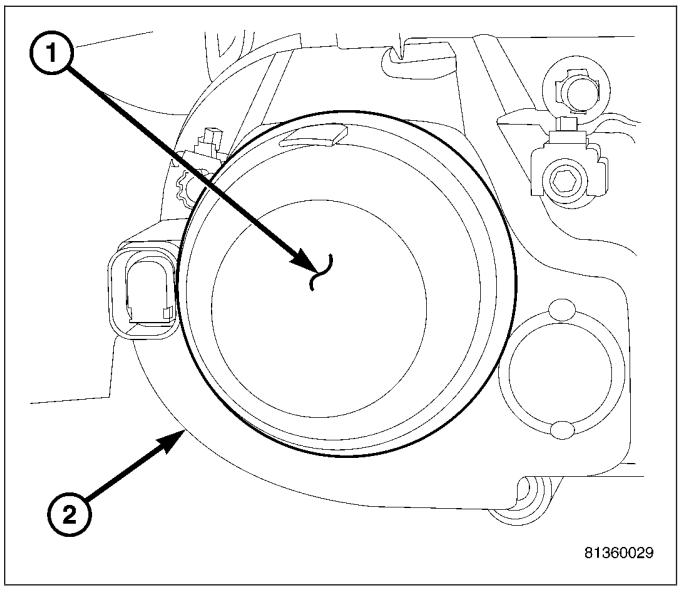

3. Disconnect the electrical cable connector to the lamp/igniter by pulling straight down.

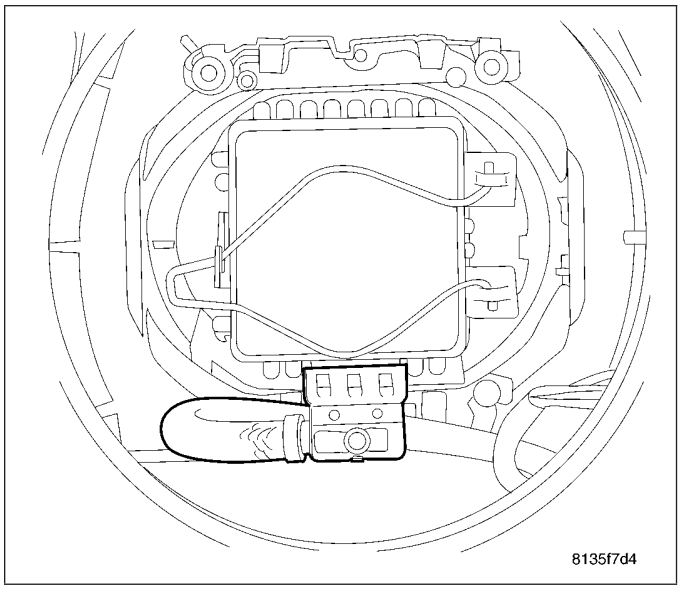

4. Release the retaining wire clip on the back of the lamp/igniter.
5. Grab the igniter by pulling rearward and rocking it slightly as you pull.
6. Pull the igniter straight out of the headlamp unit. The lamp is integral to the igniter and cannot be separated.

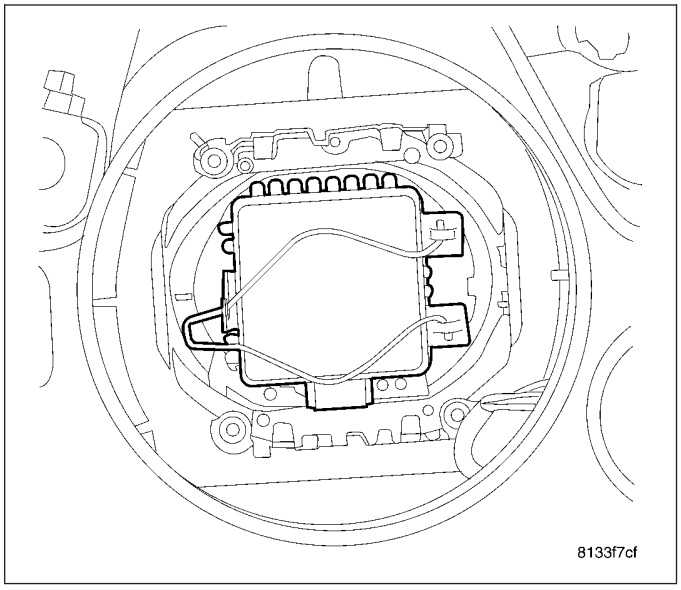

BALLAST MODULE

1. Remove the headlamp unit (Refer to 8 - ELECTRICAL/LAMPS/LIGHTING - EXTERIOR/HEADLAMP UNIT - REMOVAL).

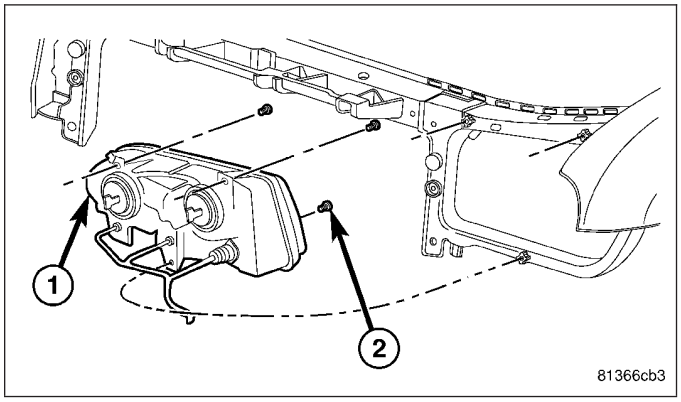

2. From the underside of the headlamp unit, remove the six retaining screws (1).

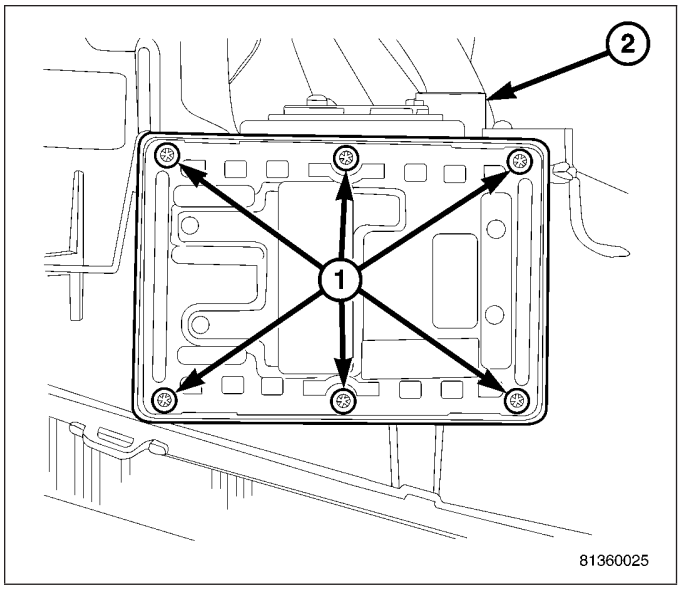

3. Pull the ballast module out of headlamp unit.
4. Disconnect the two electrical connectors (1 and 2).
   - One of the connectors (1) will be a standard push tab to release connector.
   - The second connector (2) has a lever that must be rotated away or down from the wire of the cable and connector.
5. Separate ballast module from headlamp unit.

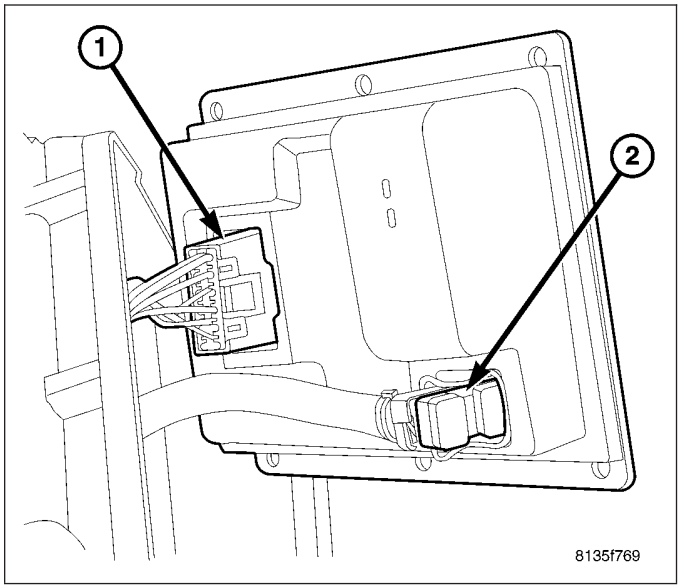

CABLE

1. Remove the headlamp unit (Refer to 8 - ELECTRICAL/LAMPS/LIGHTING - EXTERIOR/HEADLAMP UNIT - REMOVAL).

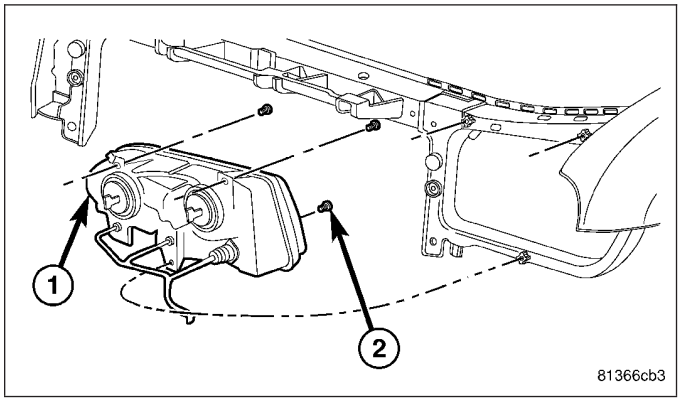

2. From the underside of the headlamp unit, remove the six retaining screws (1).

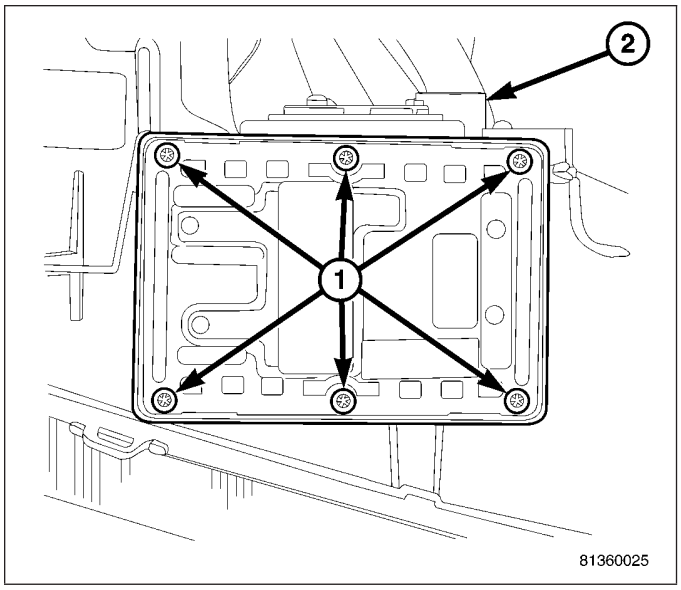

3. Pull the ballast module out of headlamp unit.
4. Disconnect the cable connector (2) Move the lever away or down from the wire of the cable and connector.

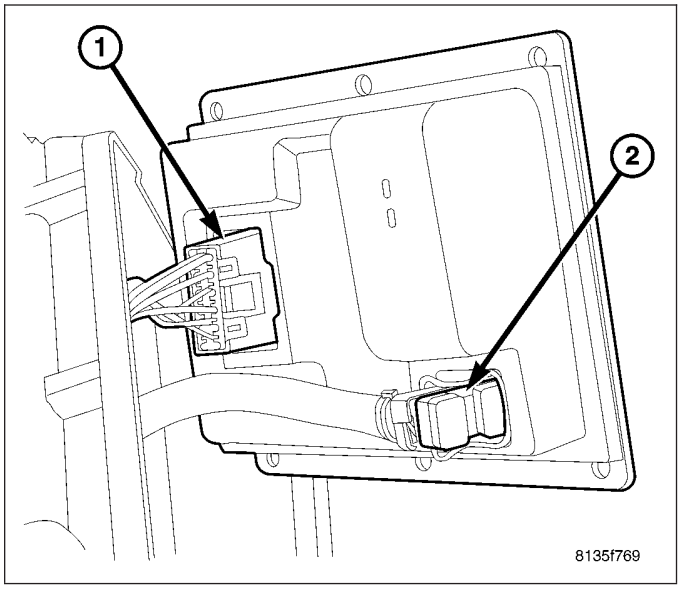

5. Remove the rubber boot (1) protecting the lamp/igniter from the elements.

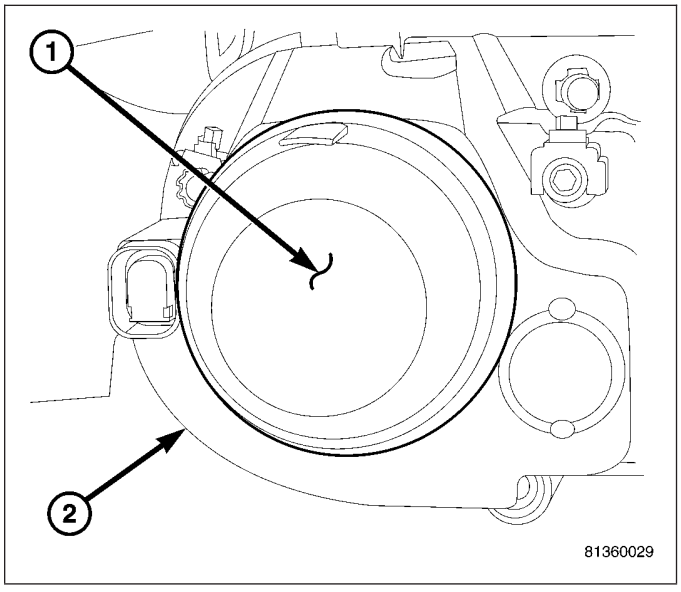

6. Disconnect the electrical cable connector to the lamp/igniter by pulling straight down.

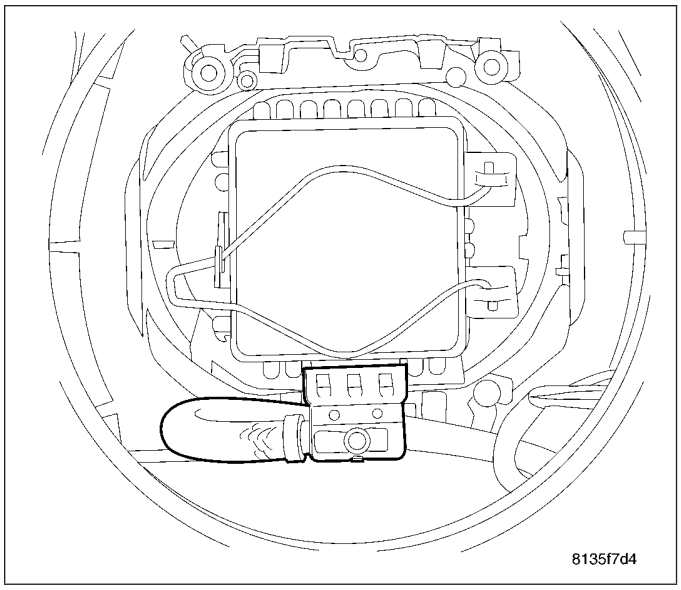

7. Maneuver cable through headlamp unit to separate.

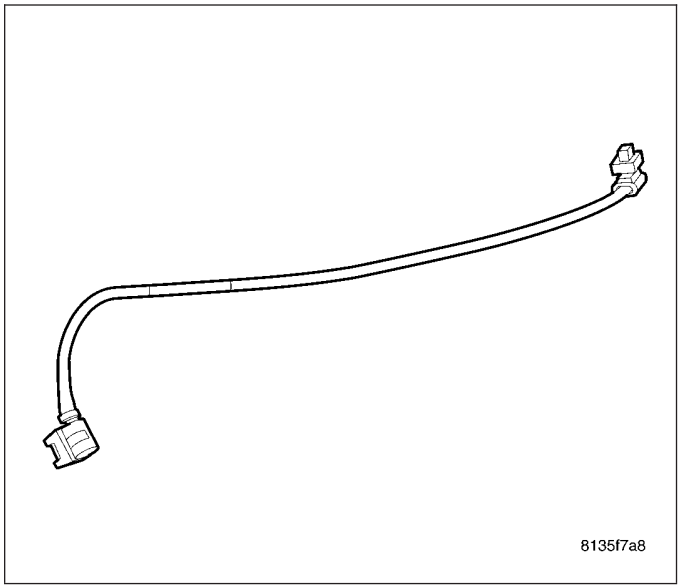

INSTALLATION

HALOGEN HEADLAMP

1. Twist lamp (1 or 2) into headlamp housing clockwise.
2. Connect the lamp electrical connector.
3. Connect the battery negative cable.

NOTE: If replacing the left low or high beam headlamp, the air box has to be reinstalled (Refer to 9 - ENGINE/AIR INTAKE SYSTEM - INSTALLATION).

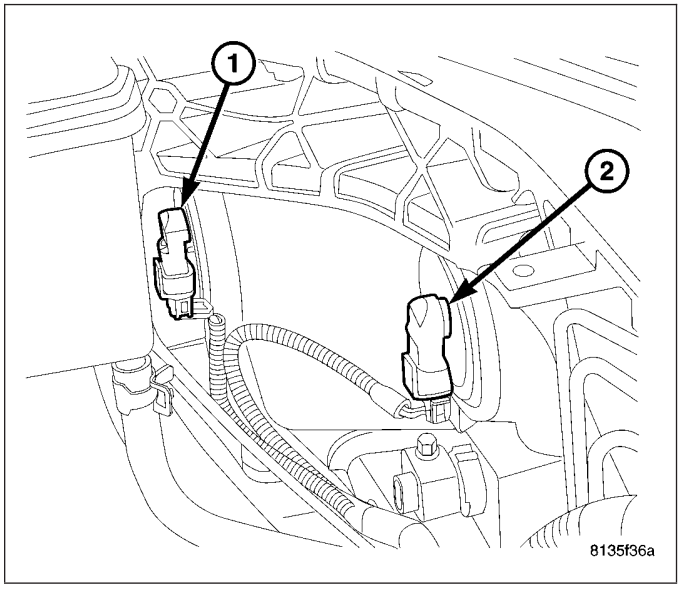

HIGH INTENSITY DISCHARGE (HID) HEADLAMPS (IF EQUIPPED) - LOW BEAM

HEADLAMP

1. Push the igniter straight into the headlamp unit with the connector pointing straight down. The lamp is integral to the igniter.
2. Put the retaining wire clip on the back of the lamp/igniter.

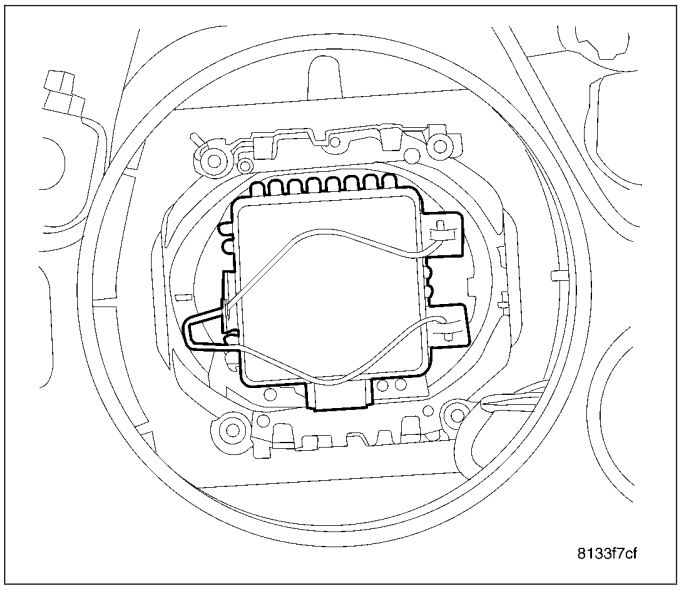

3. Connect the electrical cable connector to the lamp/igniter.

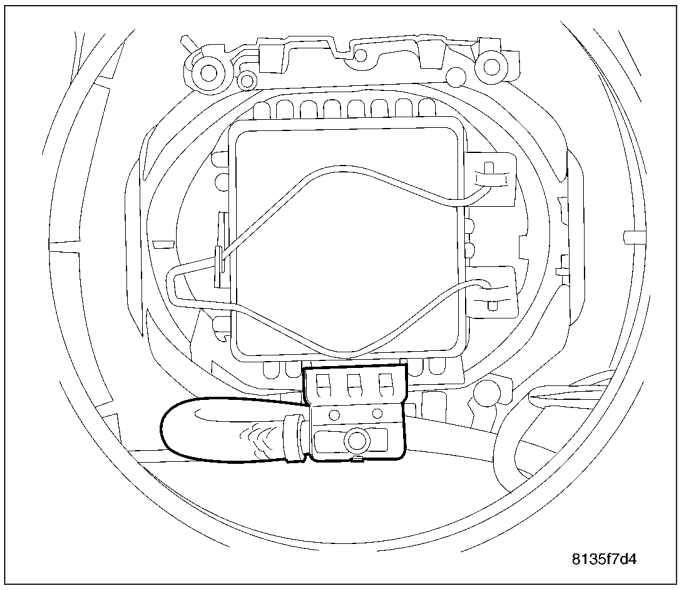

4. Install the rubber boot (1) protecting the lamp/igniter from the elements.
5. Connect the battery negative cable.

NOTE: If replacing the left low beam headlamp, the air box has to be reinstalled (Refer to 9 - ENGINE/ AIR INTAKE SYSTEM - INSTALLATION).

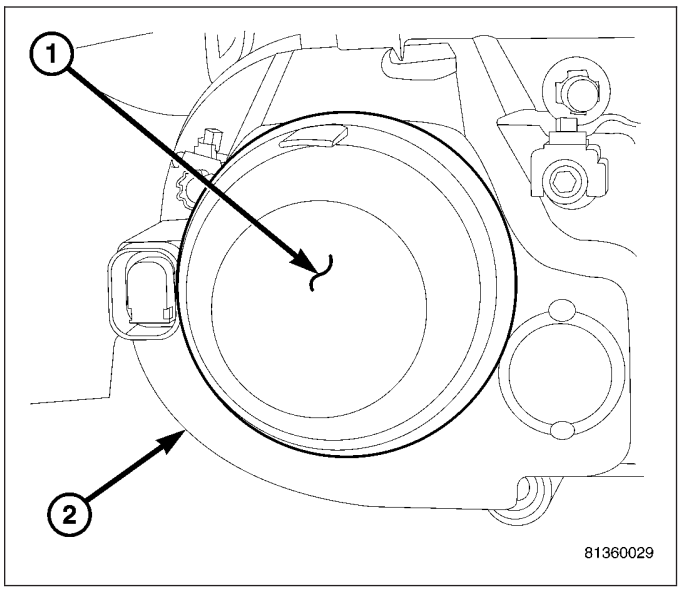

BALLAST MODULE

1. Connect the two electrical connectors (1 and 2).
   - One of the connectors (1) will be a standard push tab to release connector.
   - The second connector (2) has a lever that must be locked when connected.
2. Position the ballast module in of headlamp unit.

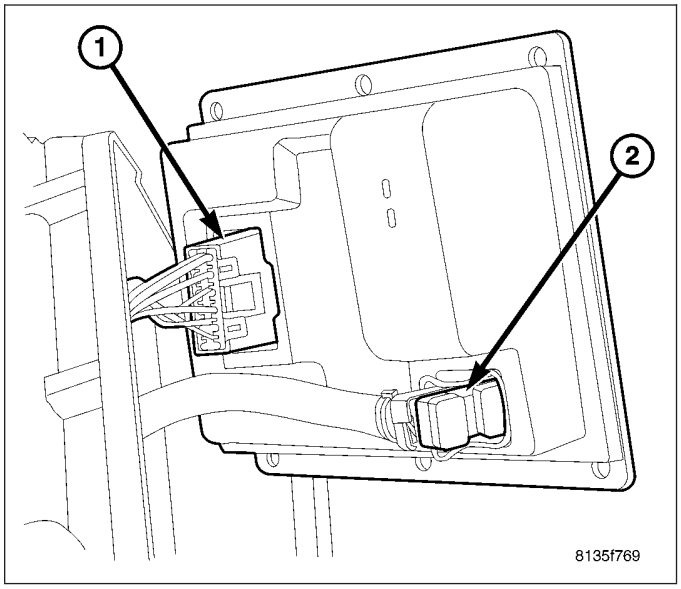

3. From the underside of the headlamp unit, install the six retaining screws (1).

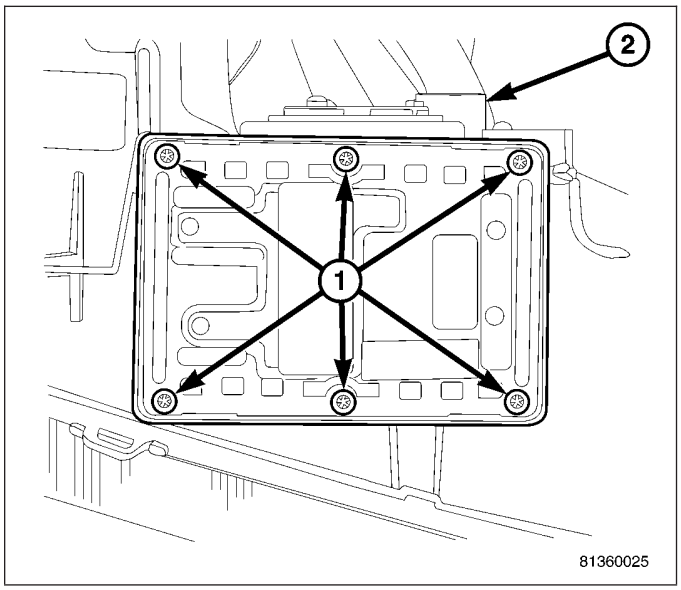

4. Install the headlamp unit (Refer to 8 - ELECTRICAL/LAMPS/LIGHTING - EXTERIOR/HEADLAMP UNIT - INSTALLATION).

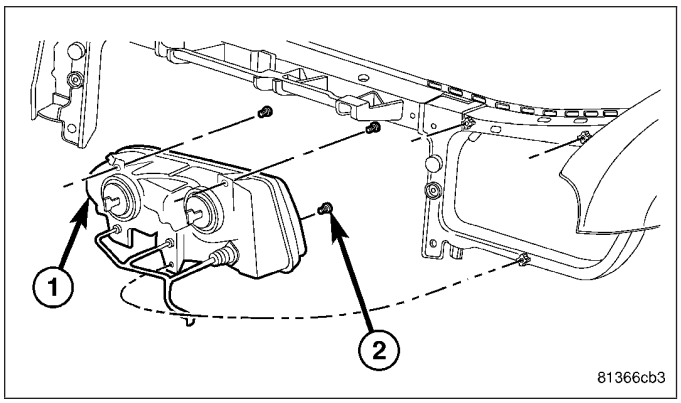

CABLE

1. Maneuver cable through headlamp unit.

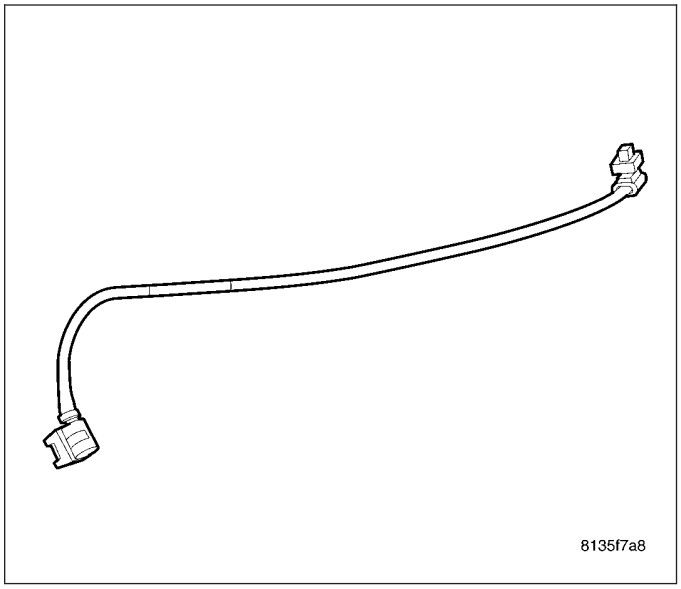

2. Connect the cable electrical connectors (2). The connector (2) has a lever that must be locked when connected.

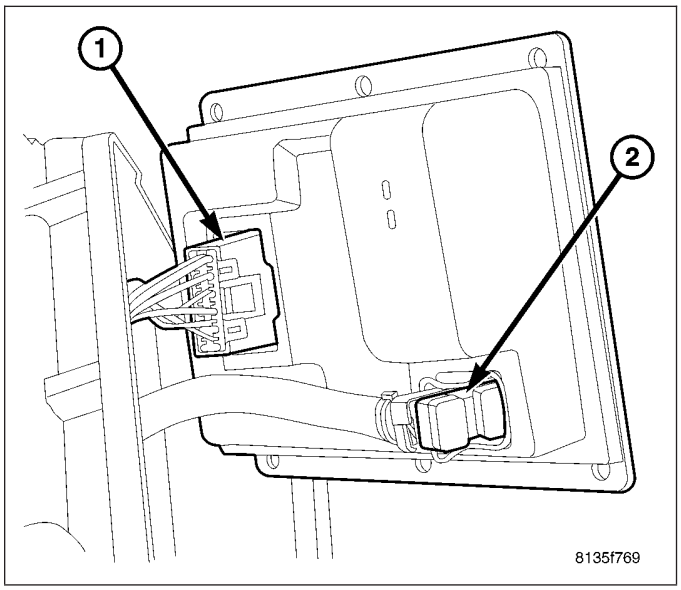

3. From the underside of the headlamp unit, install the six retaining screws (1).

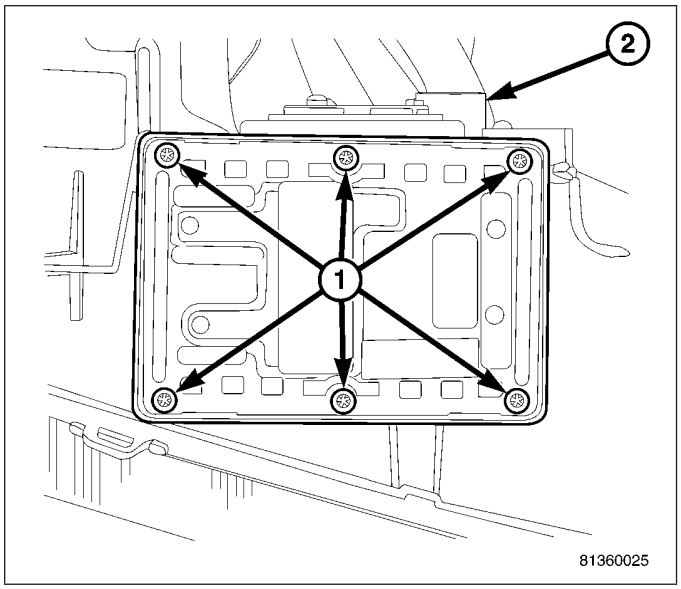

4. Connect the electrical cable connector to the lamp/igniter.

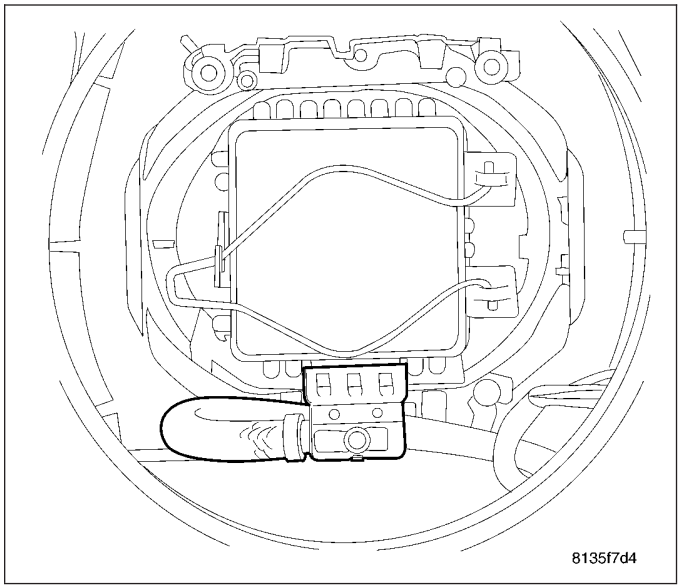

5. Install the rubber boot (1) protecting the lamp/igniter from the elements.

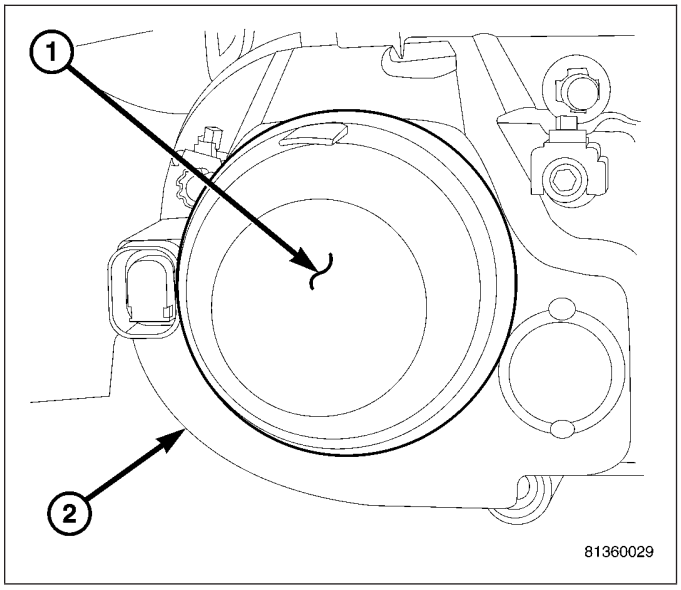

6. Install the headlamp unit (Refer to 8 - ELECTRICAL/LAMPS/LIGHTING - EXTERIOR/HEADLAMP UNIT - INSTALLATION).

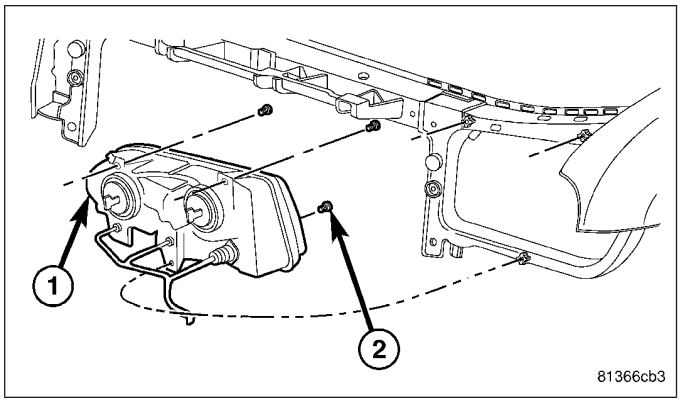

HEADLAMP LEVELING MODULE - EXPORT

DESCRIPTION

The Headlamp Leveling Module or HID Translator Module is the remote electronic sub-component of the headlamp leveling system. The HID translator module is used to translate communication of the headlamps leveling system. The sensors communicate over a K-Line to the headlamp stepper motors, then to the translator module. To enable the scan tool to read system inputs and outputs, and to retrieve Diagnostic Trouble Codes (DTC's), the translator module must convert this K-Line data into Controller Area Network (CAN) data.

The HID translator module is located inside the right front engine compartment, just behind the headlamp unit. It is mounted to a stamped steel bracket by one fastener and has one electrical connector that connects it to the wiring harness.

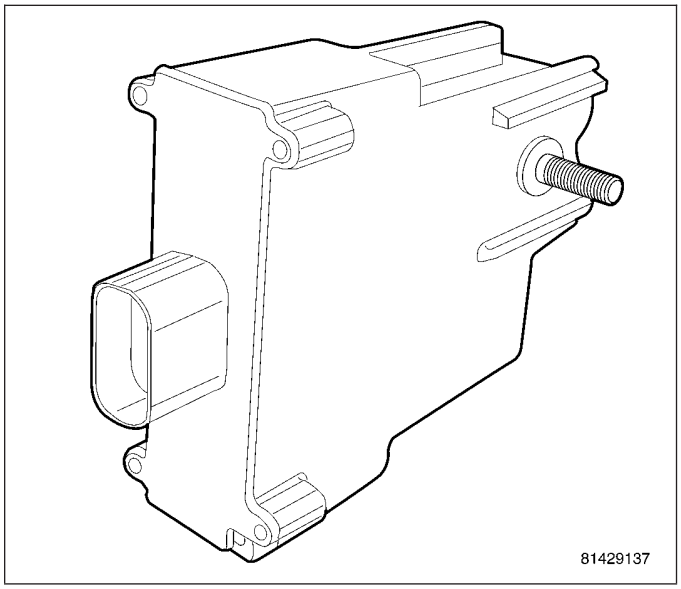

OPERATION

The system is designed to automatically level the vehicles headlamps, regardless of cargo or passenger loads or road conditions. When the vehicle is loaded with passengers and/or cargo, as the ignition is turned to RUN, the system will look at the front and rear sensors and make an adjustment based upon feedback from the sensor to see if it has approximately 27.5 degrees from its zero or neutral position. The headlamp stepper motor then adjusts the headlamp up or down for proper headlamp aiming. The system is dynamic. The headlamp level will be adjusted while driving if required based on sensor inputs.

NOTE: If the headlamp leveling module (HID translator module) or sensors are replaced, the system needs to be calibrated using a Scan Tool.

When in calibration mode, the key in the RUN position, the vehicle doors, trunk/liftgate, and hood must be closed. In addition, no one is seated in vehicle, the vehicle may not be touched (bounced or bumped) until the calibration is complete. The headlamps must be ON to power the stepper motors. The approximate calibration time is 12 - 15 seconds. The scan tool will display a "status of calibration" message. These being either "still in progress", "passed", or "failed."

If a system fault occurs, the translator module will store the Diagnostic Trouble Code (DTC) and enable it to be read using the scan tool and assist in diagnosing the headlamp leveling system.

REMOVAL

1. Disconnect and isolate the battery negative cable.
2. Disconnect the one electrical connector to the HID translator module (1).
3. Remove the one nut (2) holding the module (1) to the bracket.

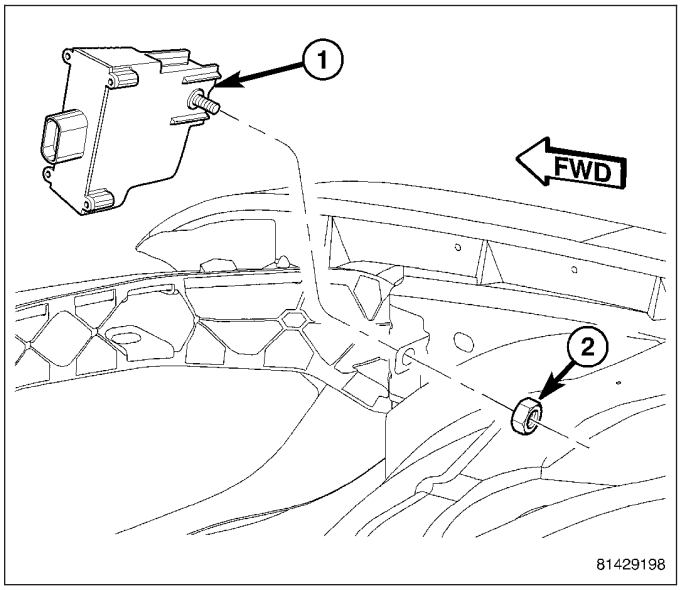

INSTALLATION

WARNING: When replacing the headlamp leveling module/HID translator module, the system must be calibrated using a Scan Tool.

1. Install the one nut (2) holding the module (1) to the bracket.
2. Connect the one electrical connector to the HID translator module.
3. Connect the battery negative cable.
4. Using a Scan Tool, calibrate the headlamp levelling system.

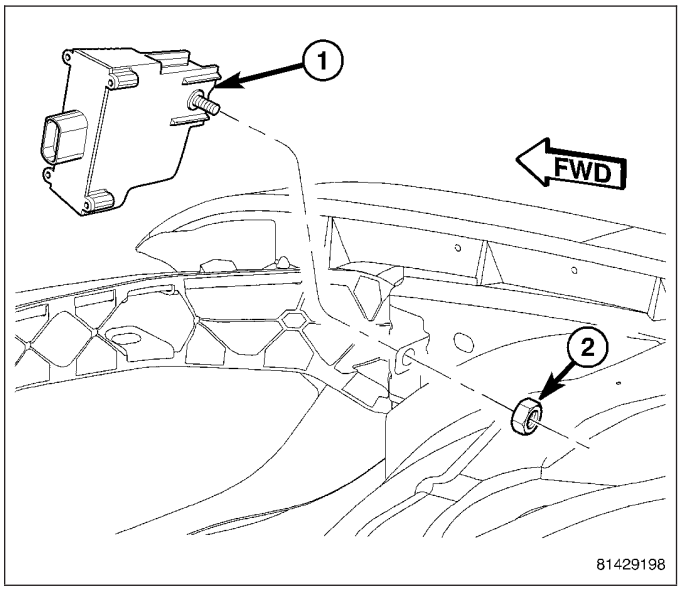

HEADLAMP LEVEL SENSOR - EXPORT

DESCRIPTION

The headlamp leveling system uses two headlamp level sensors to determine when the vehicle has had its ride height or angle changes, due to passenger/ cargo additions and road conditions.

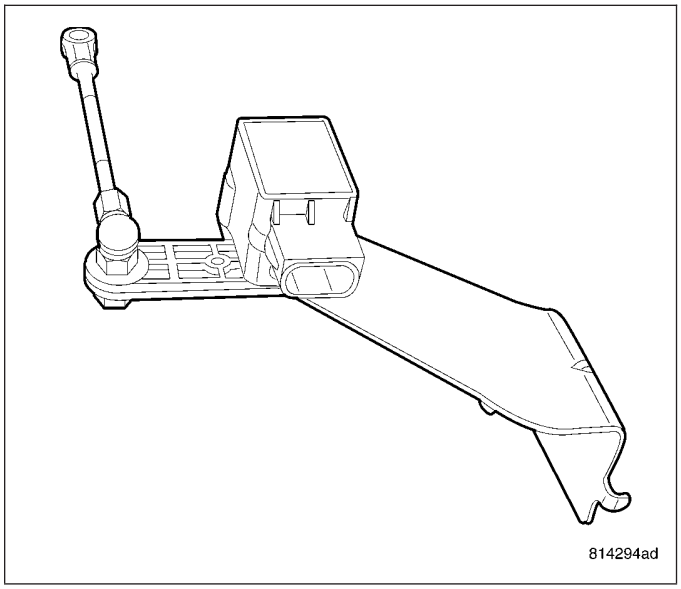

There is one sensor (1) mounted on the spring link (3) on the right side of the rear suspension.

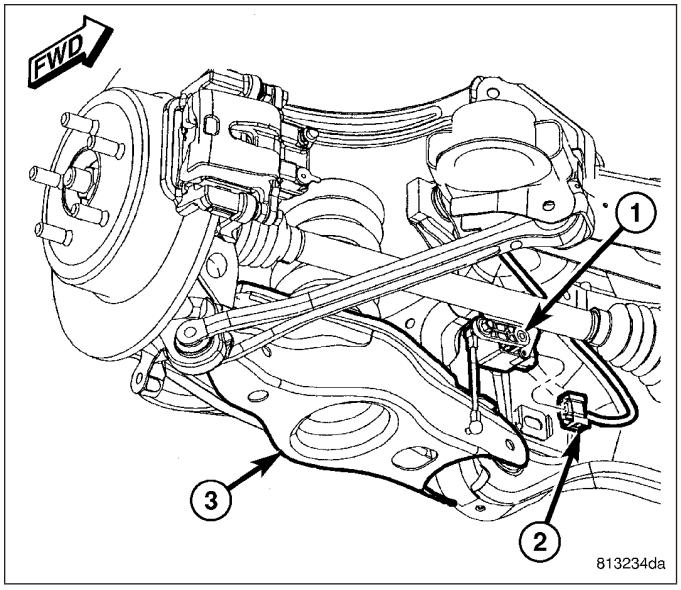

There is a second sensor (2) mounted on the upper control arm (1) on the right side, in the front of the vehicle.

Each sensor has a link that is connected to the suspension and to the sensor, one electrical connector that connects the sensor to the vehicles electrical system wiring harness, and one bracket that mounts with one nut to the vehicle.

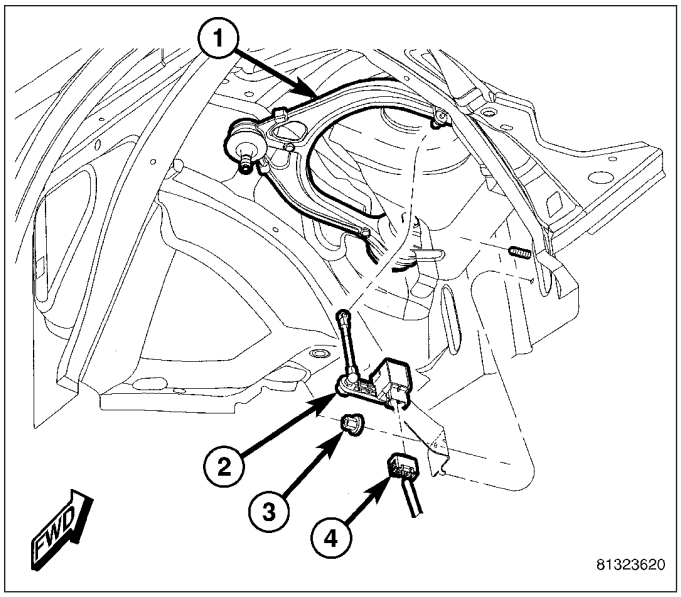

OPERATION

The system is designed to automatically level the headlamps, regardless of cargo/passenger loads or road conditions. When the vehicle is loaded with passengers and/or cargo, as the ignition is turned to RUN, the system will look at the front and rear sensors and make an adjustment to the headlamp stepper motors based upon feedback from the sensor to see if it has moved approximately 27.5 degrees from its zero or neutral position. The headlamp stepper motor then adjusts the headlamp up or down for proper headlamp aiming.

The headlamp level sensors act like a potentiometer to relay information via the data bus to the HID translator module when the vehicle has changed its angle or ride height in either the front or rear of the vehicle.

NOTE: If the headlamp leveling module (HID translator module) or sensors are replaced, the system needs to be calibrated using a Scan Tool.

When in calibration mode, the vehicle doors, trunk/liftgate, and hood must be closed. In addition, the vehicle may not be touched (bounced or bumped) until the calibration is complete. The headlamps must be ON to power the stepper motors. The approximate calibration time is 12 - 15 seconds. The scan tool will display a “status of calibration” message. These being either “still in progress”, “passed”, or “failed.”

If a system fault occurs, the translator module will store the Diagnostic Trouble Code (DTC) and enable it to be read using the scan tool and assist in diagnosing the headlamp leveling system.

REMOVAL

FRONT

1. Disconnect and isolate the battery negative cable.
2. Hoist vehicle.
3. Unsnap the sensor link from the upper control arm (front) (1).
4. Disconnect the one electrical connector (4).
5. Remove the two speed nuts (3) to remove sensor and bracket (2).

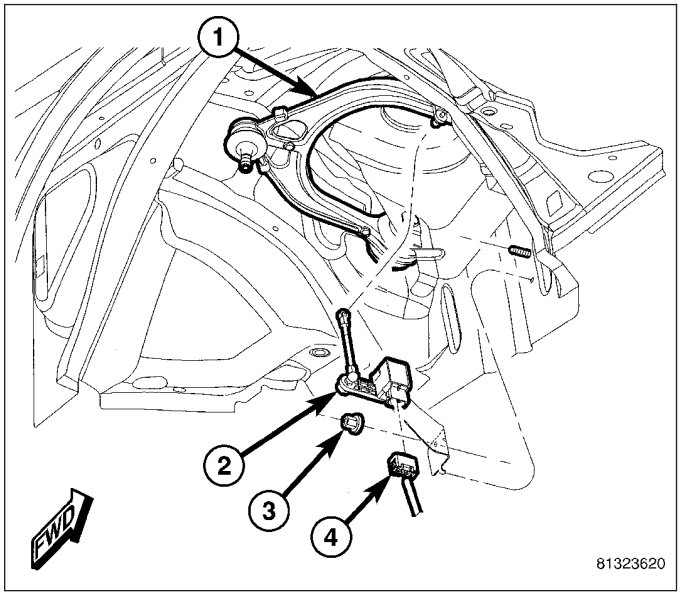

REAR

1. Disconnect and isolate the battery negative cable.
2. Hoist vehicle.
3. Unsnap the sensor link from the spring link (rear) (3).
4. Disconnect the electrical connector (2).
5. Remove the two fasteners to the sensor and bracket (1).

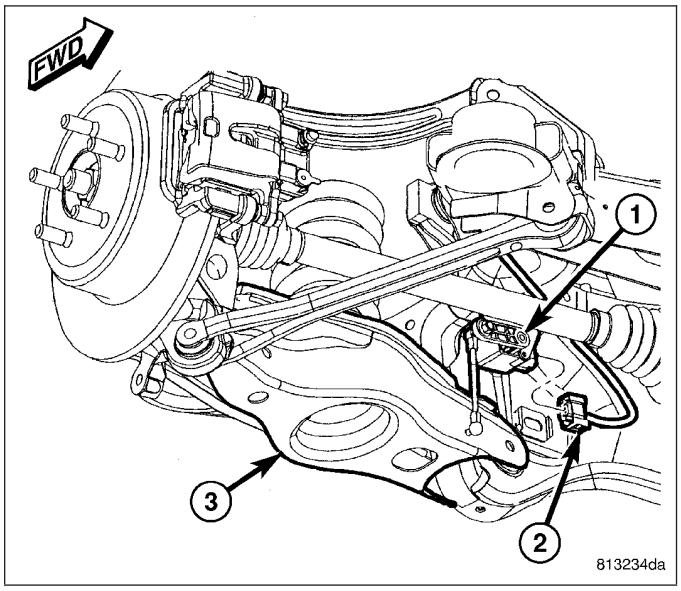

INSTALLATION

FRONT

1. Install the two retaining nuts (3) to the sensor and bracket (2).
2. Connect the one electrical connector (4).
3. Snap the sensor link onto the upper control arm (front) (1).
4. Remove the vehicle from the hoist.
5. Connect the battery negative cable.
6. Using a Scan Tool, calibrate the headlamp leveling system.

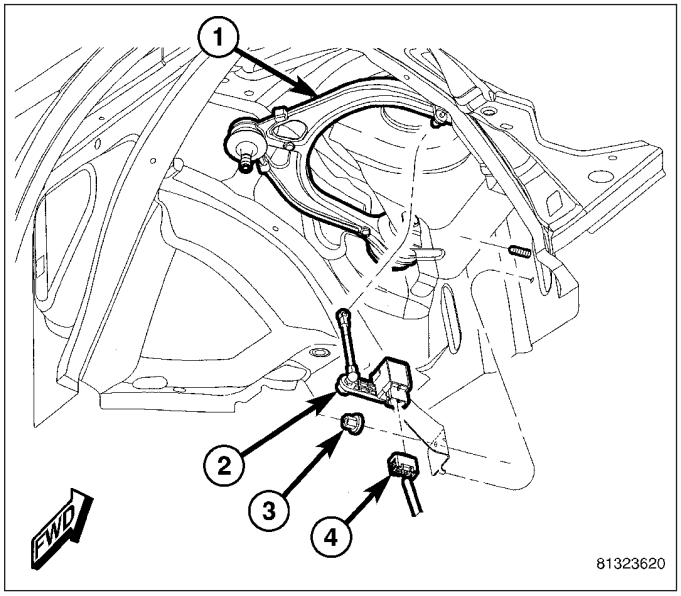

REAR

1. Install the fasteners to the sensor and bracket (1).
2. Connect the electrical connector (2).
3. Snap the sensor link onto the spring link (rear) (3).
4. Remove the vehicle from the hoist.
5. Connect the battery negative cable.
6. Using a Scan Tool, calibrate the headlamp leveling system.

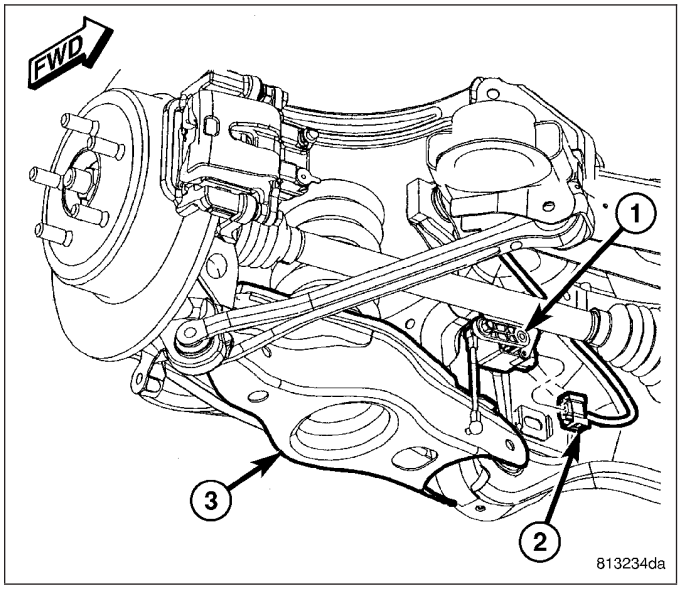

SWITCH-HEADLAMP

REMOVAL

1. Disconnect and isolate the battery negative cable.

WARNING: Wait two minutes for the airbag system reserve capacitor to discharge before beginning any airbag system or component service. Failure to do so may result in accidental airbag deployment, personal injury or death.

2. Remove steering column opening cover (Refer to 23 - BODY/INSTRUMENT PANEL/STEERING COLUMN OPENING COVER - REMOVAL).
3. From underneath and behind the instrument panel, push up on the lower clip on headlamp switch then wiggle it down and out of instrument panel.
4. Disconnect the headlamp switch electrical connector.

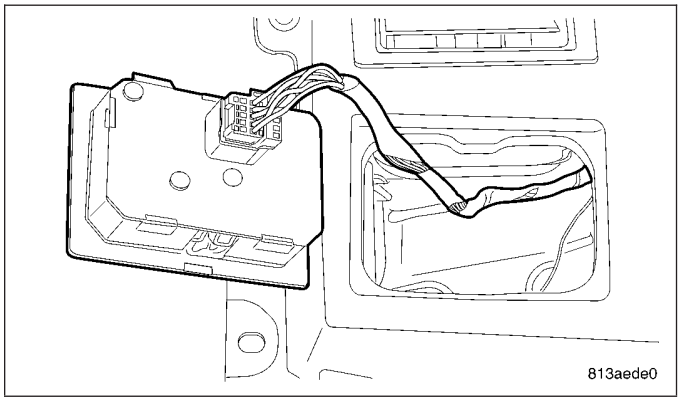

INSTALLATION

1. Connect the headlamp switch electrical connector.
2. Position headlamp switch in instrument panel and firmly snap into place.
3. Install the steering column opening cover (Refer to 23 - BODY/INSTRUMENT PANEL/STEERING COLUMN OPENING COVER - INSTALLATION).

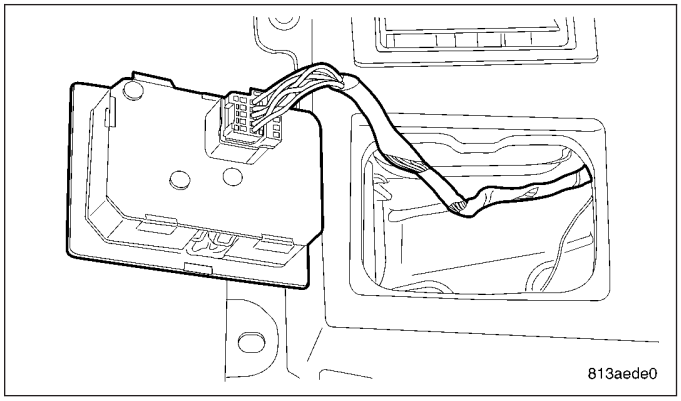

HEADLAMP UNIT

REMOVAL - 300C AND MAGNUM

1. Disconnect and isolate the battery negative cable.
2. Open hood and remove the two upper headlamp unit mounting screws.

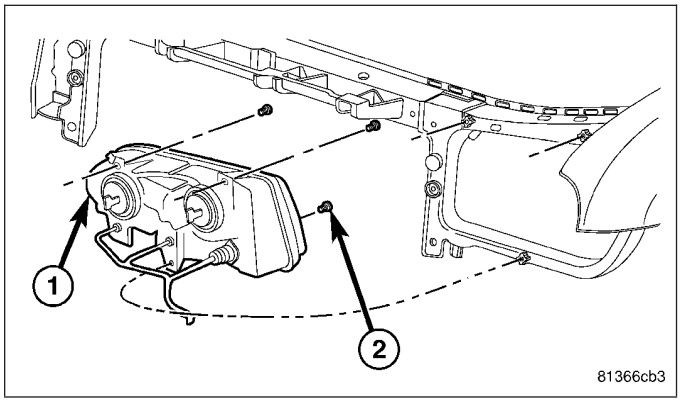

3. The two upper retaining screws (1) are located just in front of the upper radiator cross-member.

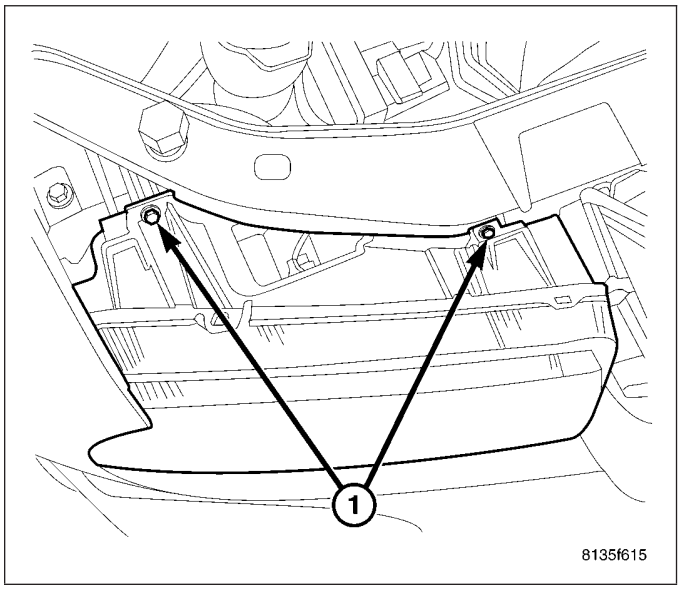

NOTE: It may be necessary to loosen the side of the fascia to access the lower headlamp unit retaining screw (Refer to 13 - FRAME & BUMPERS/ BUMPERS/FRONT FASCIA - REMOVAL).

4. Remove the one lower headlamp unit retaining screw.

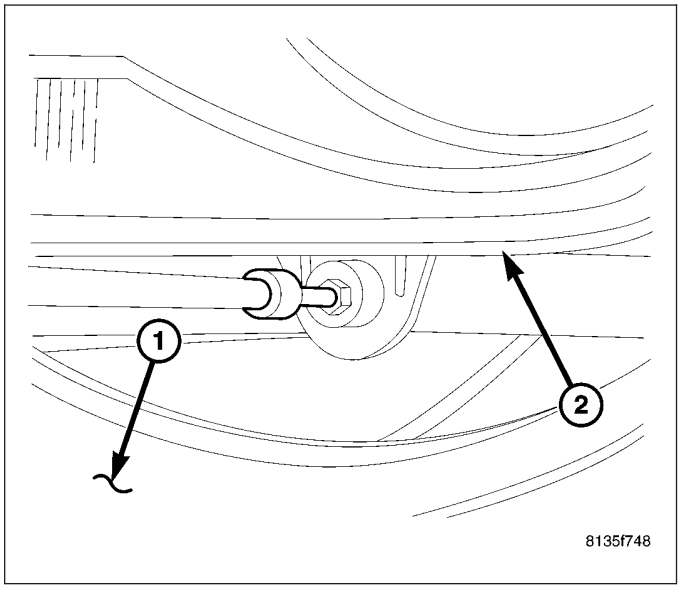

5. Disconnect the electrical connectors.
6. Separate headlamp unit from vehicle.

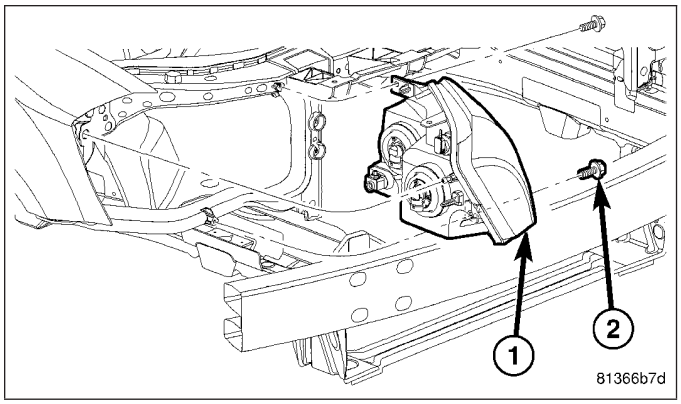

REMOVAL - CHARGER

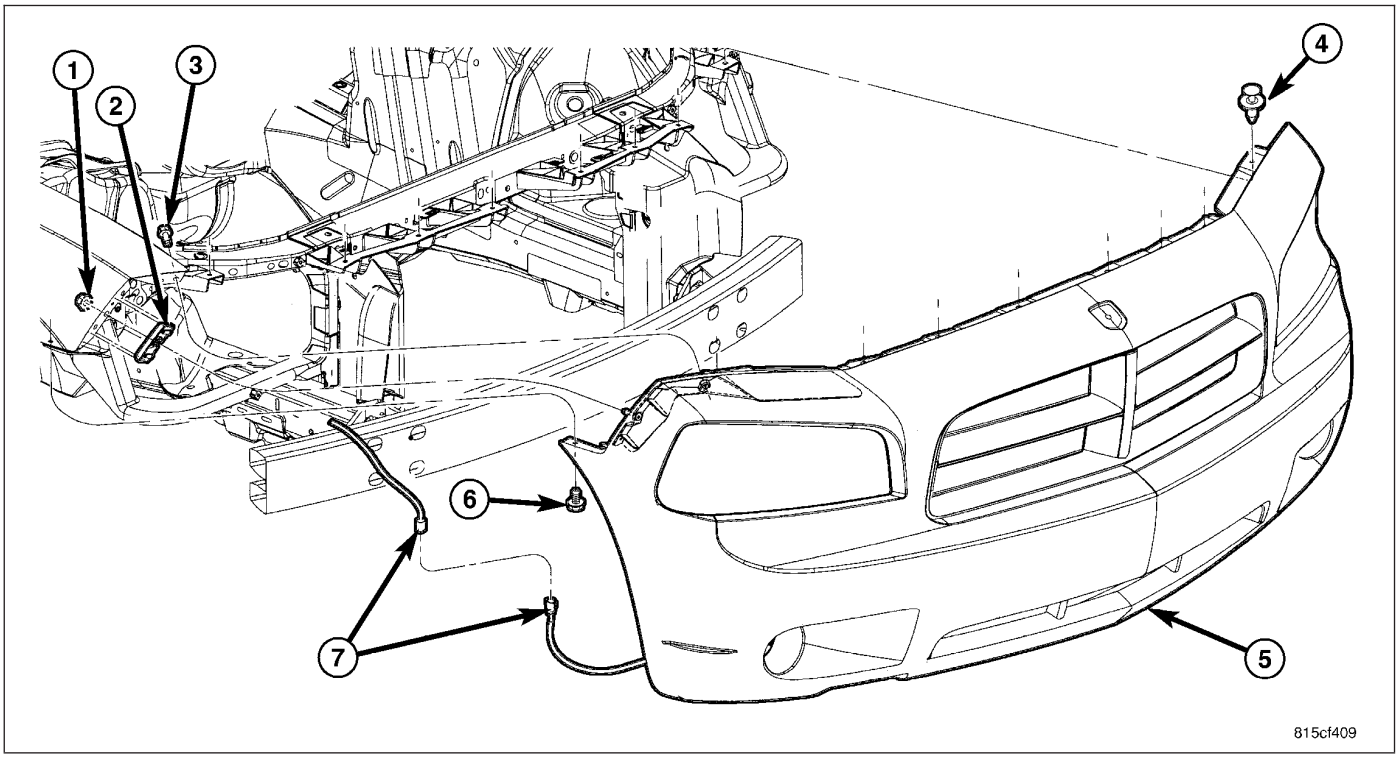

1. On Charger models, the fascia must first be removed to gain access for the removal of headlamp unit and fasteners (Refer to 13 - FRAME & BUMPERS/BUMPERS/FRONT FASCIA - REMOVAL).
2. Disconnect and isolate the battery negative cable.
3. Open hood and remove the two upper headlamp unit mounting screws.

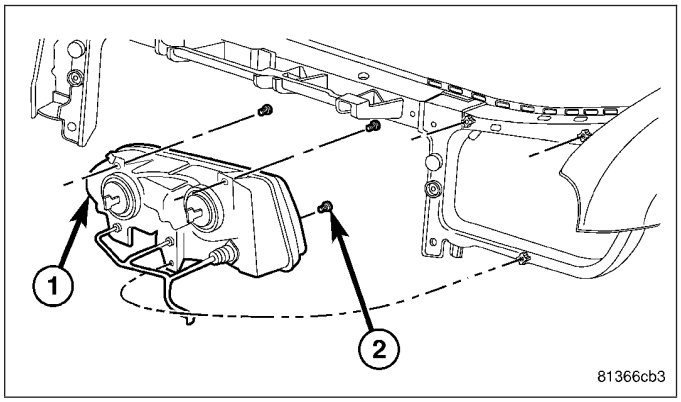

4. The two upper retaining screws (1) are located just in front of the upper radiator cross-member.

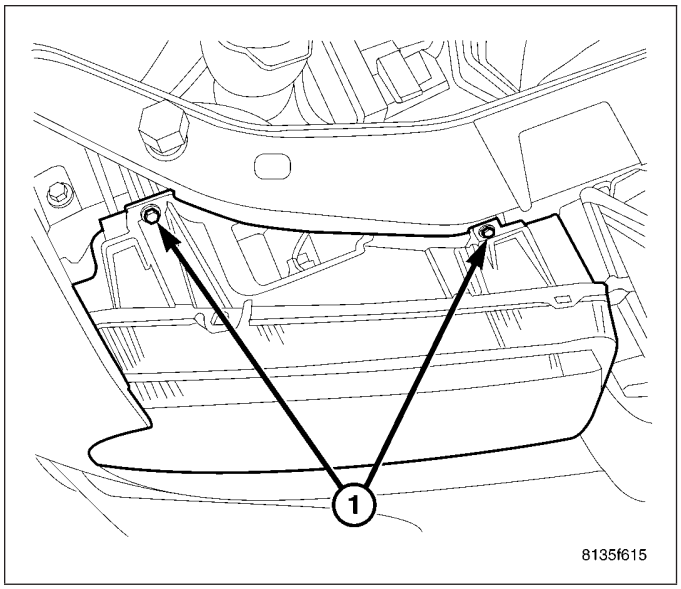

5. Remove the one lower headlamp unit retaining screw.

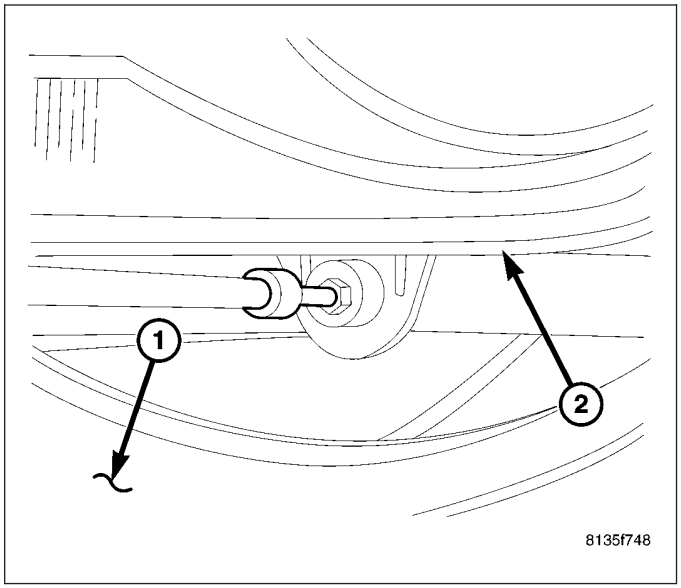

6. Disconnect the electrical connectors.
7. Separate headlamp unit from vehicle.

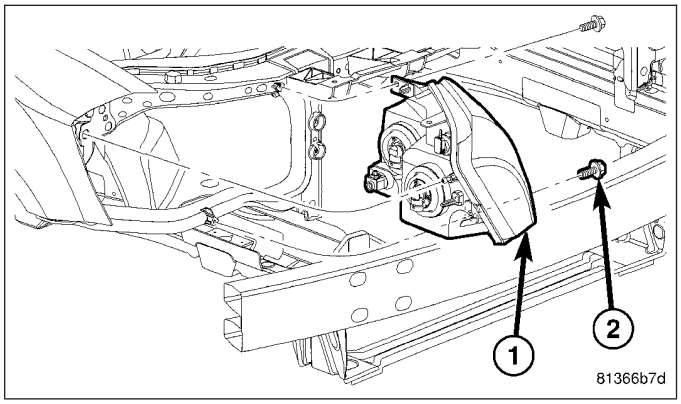

INSTALLATION - 300C AND MAGNUM

1. Position the headlamp unit in the opening in the headlamp mounting cross-member.
2. Connect the electrical connector.

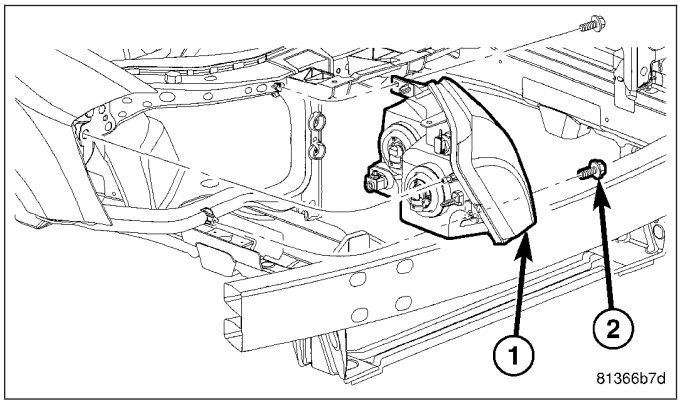

3. Install the one lower headlamp unit retaining screw.

NOTE: If the fascia was loosened, reattach it (Refer to 13 - FRAME & BUMPERS/BUMPERS/ FRONT FASCIA - INSTALLATION).

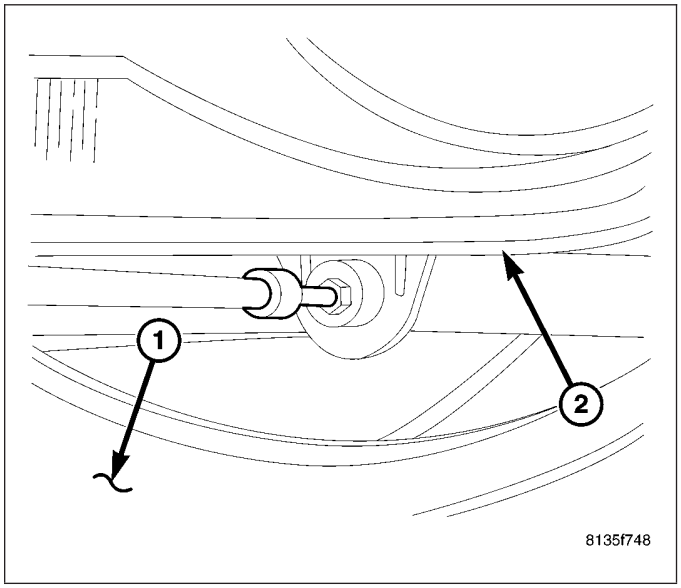

4. Install the two upper retaining screws (1).
5. Connect the battery negative cable.

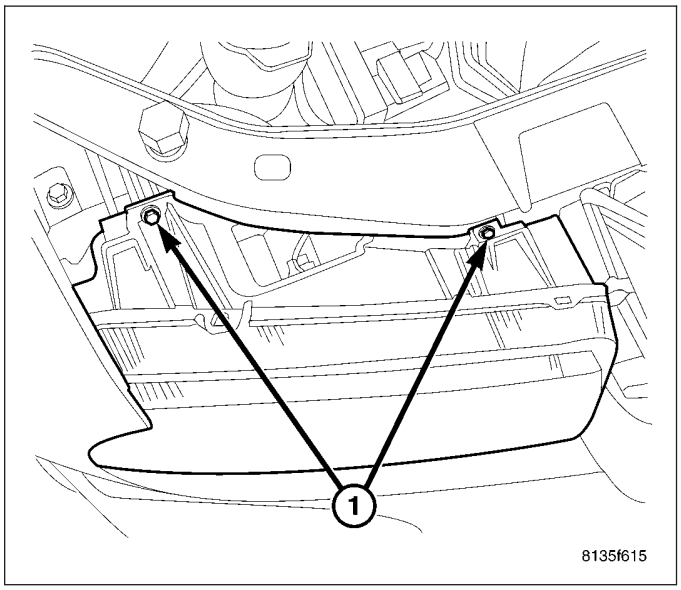

INSTALLATION - CHARGER

1. Position the headlamp unit in the opening in the headlamp mounting cross-member.
2. Connect the electrical connector.

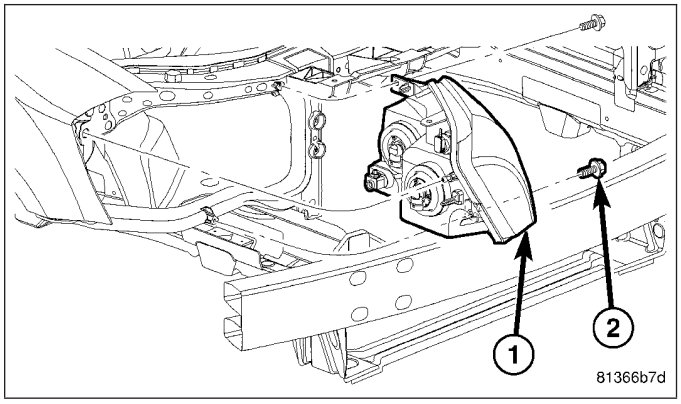

3. Install the one lower headlamp unit retaining screw.

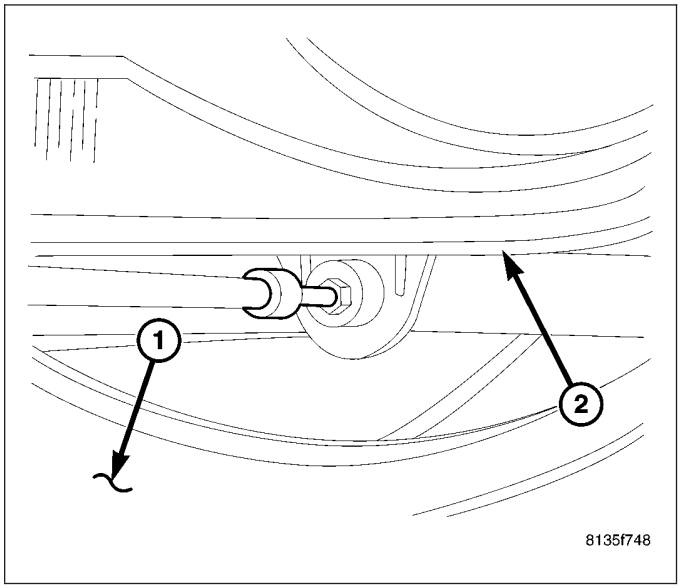

4. Install the two upper retaining screws (1).

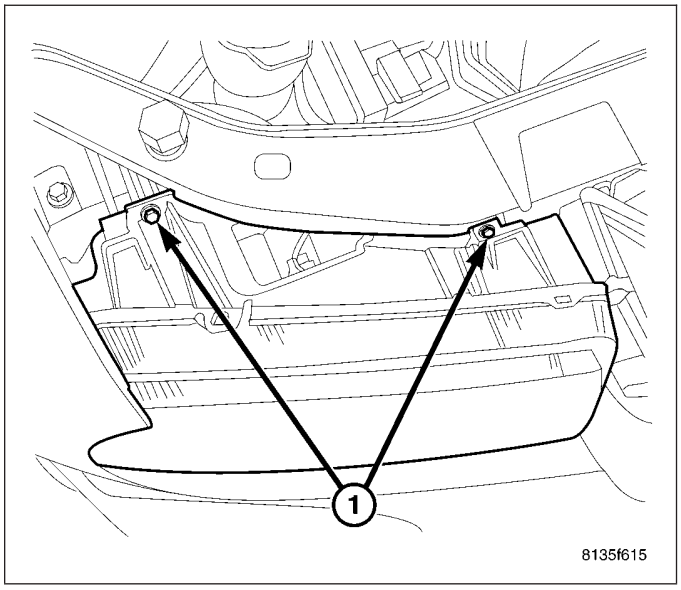

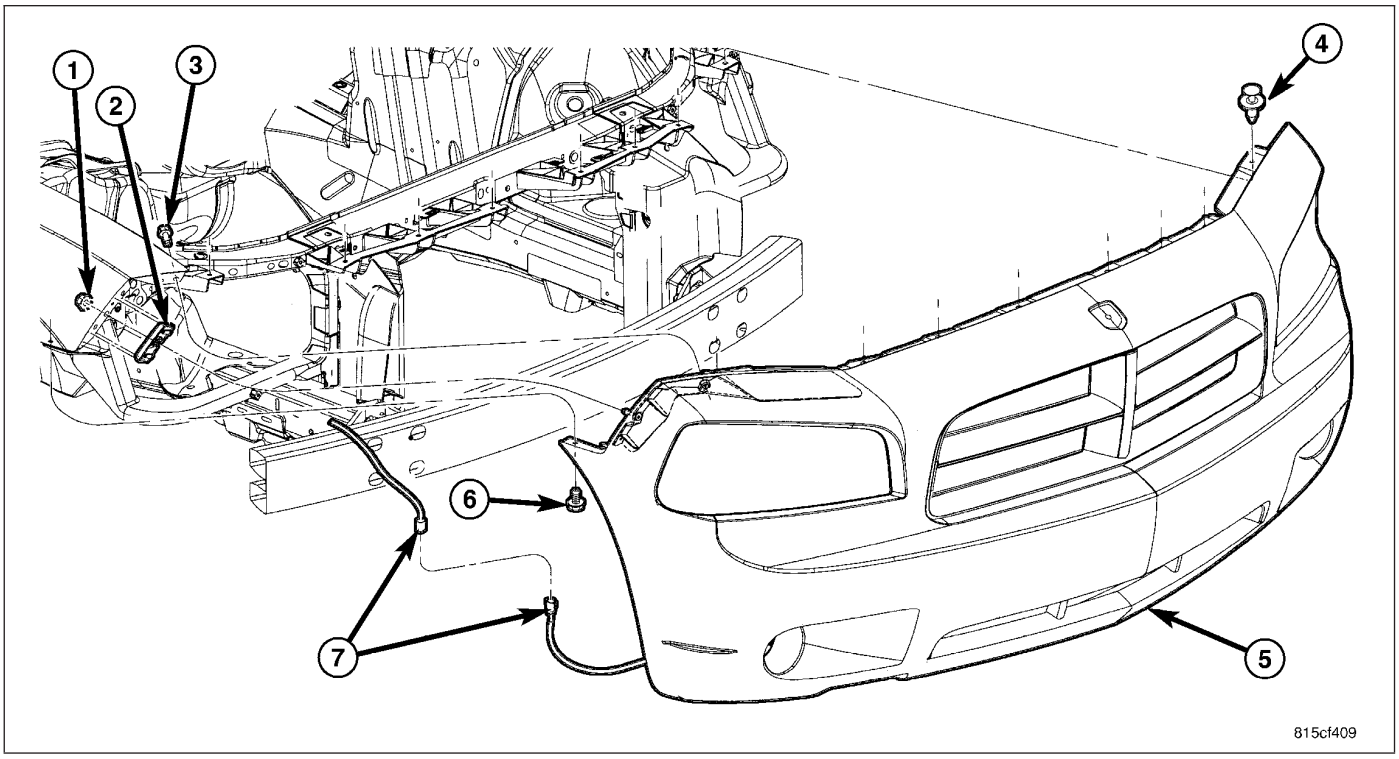

5. Install front fascia (Refer to 13 - FRAME & BUMPERS/BUMPERS/FRONT FASCIA - INSTALLATION).
6. Connect the battery negative cable.

LICENSE PLATE LAMP UNIT

REMOVAL

1. Remove the two mounting screws (1) to the license lamp unit.

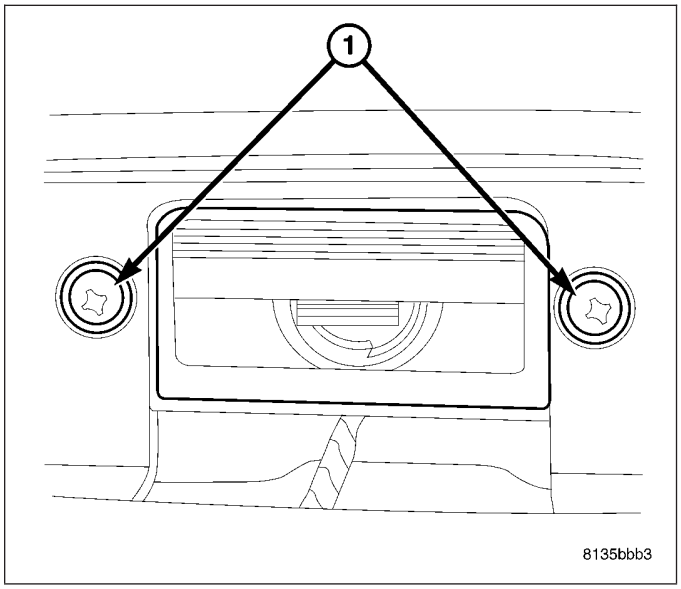

2. Remove the lamp socket from the lamp unit by twisting socket counterclockwise.

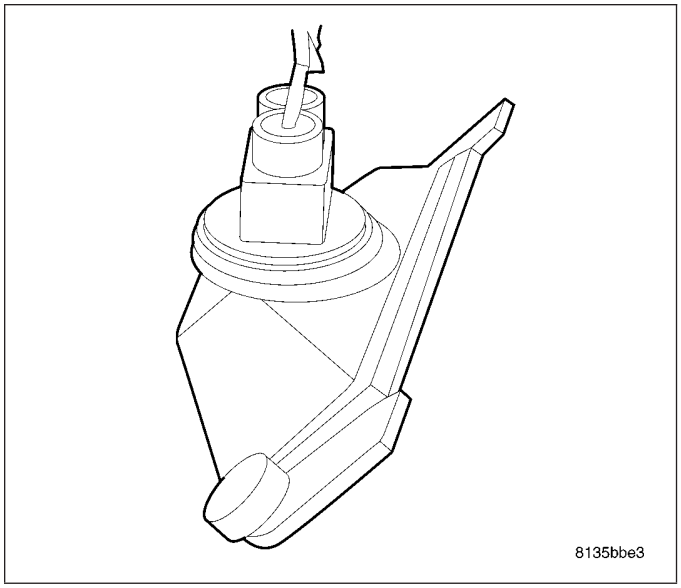

3. Separate socket from lamp.

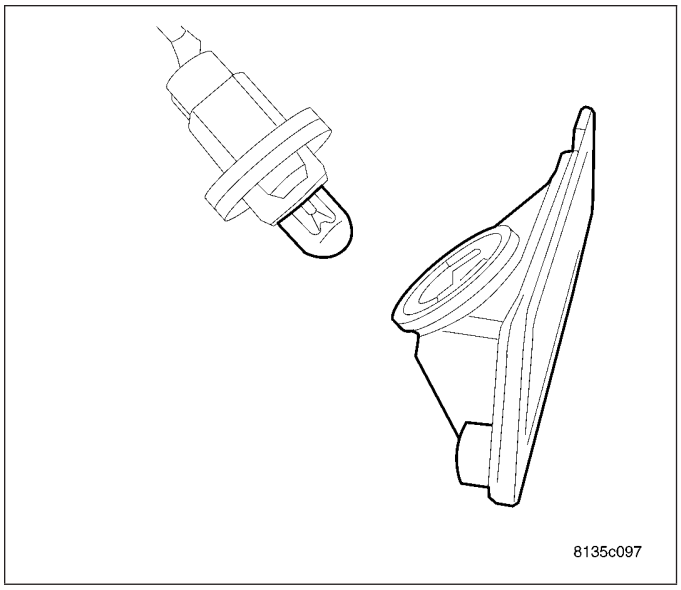

INSTALLATION

1. Position lamp socket into lamp unit.

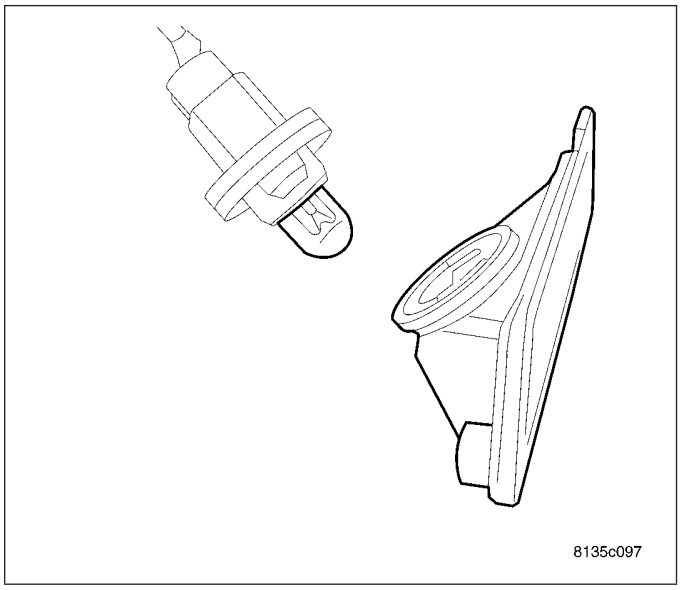

2. Twist the socket clockwise until stops.

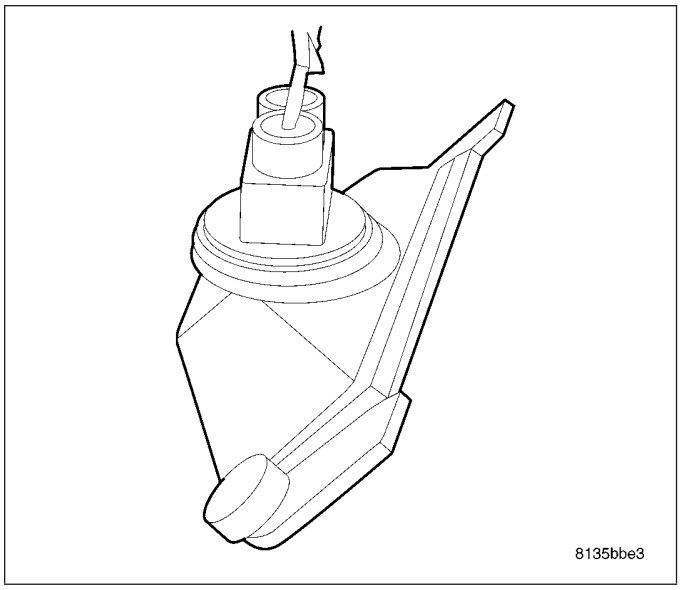

3. Maneuver the lamp unit up into rear fascia and install the two retaining screws (1).

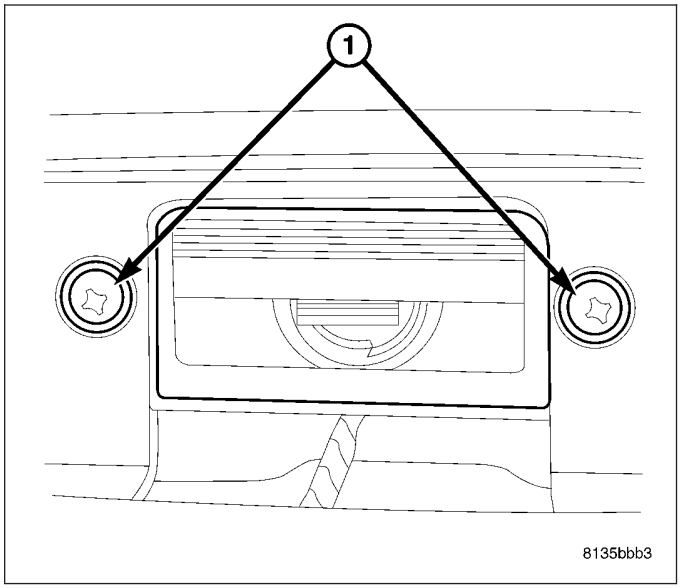

MULTI-FUNCTION SWITCH

DESCRIPTION

The multi-function switch (2) is located on the steering column, just below the steering wheel, within the Steering Column Control Module (SCCM).

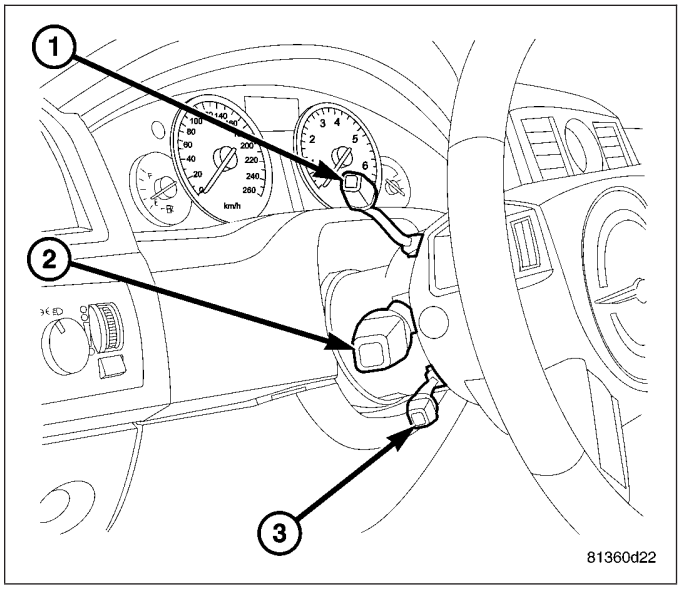

The only visible components of the multi-function switch are the control stalk and control knob that extend through the SCCM on the left side of the column. The remainder of the switch including its mounting provisions, its electrical connection, and the turn signal cancel actuator are concealed within the SCCM.

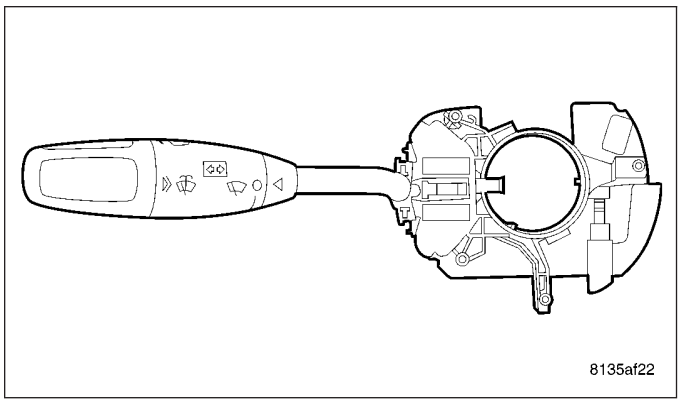

Each of the switch controls has white International Control and Display Symbol graphics applied to it, which clearly identify its many functions. Three integral locating posts on the switch housing, slide into channels in a receptacle in the circuit board within the SCCM. A single integral connector receptacle in the circuit board connects the switch to the vehicle electrical system through the instrument panel wire harness.

The multi-function switch provides the vehicle operator with a control interface for the following functions:

- **Front Washer Control** - The multi-function switch control knob provides a momentary position for front washer system operation.
- **Front Wiper Control** - The multi-function switch control knob provides two continuous front wipe switch positions, low speed or high speed; and, an intermittent front wipe mode with six delay interval positions.
- **Headlamp Beam Selection** - The multi-function switch control stalk provides detent switching for selection of the headlamp high or low beams. There is also an intermediate momentary position that allows the headlamp high beam circuits to be momentarily flashed to provide an optical horn feature (sometimes referred to as flash-to-pass) as an optical signalling device.
- **Turn Signal Control** - The multi-function switch control stalk provides momentary non-detent (lane change) switching and detent switching with automatic cancellation for both the left and right turn signal lamps.

The multi-function switch cannot be adjusted or repaired. If any function of the switch is faulty, or if the switch is damaged, the entire switch must be replaced as a unit (Refer to 19 - STEERING/COLUMN/STEERING COLUMN CONTROL MODULE - DISASSEMBLY).

OPERATION

The multi-function switch operates as follows:

- **Front Washer Control** - The control knob on the end of the multi-function switch control stalk is depressed towards the steering column to momentarily activate the washer pump in the front washer mode. The washer pump will continue to operate in the front washer mode until the control knob is released. The multi-function switch provides an output by sending electronic front washer switch status messages to the Front Control Module (FCM) over the Controller Area Network (CAN) data bus. The FCM responds by energizing or de-energizing the washer pump in the front washer mode.
- **Front Wiper Control** - The control knob on the end of the multi-function switch control stalk is rotated to one of the continuous front wiper detents, to one of six intermittent (or auto wipe sensitivity positions if so equipped) wiper detents, or to the Off position to select the front wiper mode. The multi-function switch provides an output by sending electronic front wiper switch status messages to the FCM over the CAN data bus. The FCM responds by energizing or de-energizing the wiper on/off and high/low relays in the Power Distribution Center (PDC) for front wiper system control.
- **Headlamp Beam Selection** - The control stalk of the multi-function switch is pushed toward the instrument panel for a latching high beam selection. Pulling the stalk rearward toward the steering wheel for a latching low beam selection. Each time the control stalk is actuated to the momentary position with the headlamps turned off, the headlamp high beams will be illuminated for as long as the control stalk is held in this position. The multi-function switch provides an output to the FCM over the CAN data bus. The FCM energizes or de-energizes the selected low or high beam circuits.
- **Turn Signal Control** - The control stalk of the multi-function switch is moved upward to activate the right turn signal circuitry, and, downward to activate the left turn signal circuitry. The turn signal switch has a detent position in each direction that provides turn signals with automatic cancellation, and an intermediate, momentary position in each direction that provides turn signals only until the control stalk is released. When the control stalk is moved to a turn signal switch detent position, the cancel actuator extends toward the center of the steering column. A turn signal cancel cam that is integral to the clockspring rotates with the steering wheel and the cam lobes contact the cancel actuator when it is extended from the multi-function switch. When the steering wheel is rotated during a turning maneuver, one of the two turn signal cancel cam lobes will contact the turn signal cancel actuator. The cancel actuator latches against the cancel cam rotation in the direction opposite that which is signaled. If the left turn signal detent is selected, the lobes of the cancel cam will ratchet past the cancel actuator when the steering wheel is rotated to the left, but will unlatch the cancel actuator as the steering wheel rotates to the right and returns to center, which will cancel the turn signal event and release the control stalk from the detent so it returns to the neutral Off position. When a turn signal is activated, the multi-function switch provides an output to the FCM over the CAN data bus. In addition, the message is sent to the CCN via the CAN bus to activate the proper signal within the EMIC. The FCM energizes and flashes or de-energizes the selected left or right turn signal circuits.

The multi-function switch can be diagnosed using a diagnostic scan tool and the appropriate diagnostic information.

The multi-function switch cannot be adjusted or repaired. If any function of the switch is faulty, or if the switch is damaged, the entire switch must be replaced as a unit (Refer to 19 - STEERING/COLUMN/STEERING COLUMN CONTROL MODULE - DISASSEMBLY).

REPEATER LAMP - EXPORT

REMOVAL

1. Push lamp (3) to the left and disengage lamp by rotating it out of the metal around its left edge.
2. Remove lamp.
3. Rotate Socket out.
4. Remove Bulb.

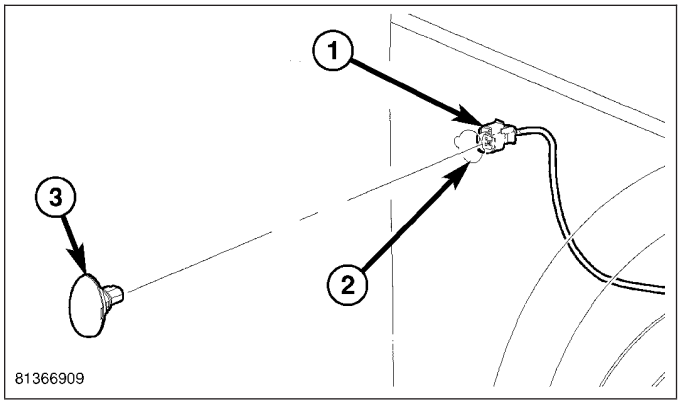

INSTALLATION

1. Replace Bulb.
2. Engage right hook of lamp (3) into the sheet metal (2 - note correct orientation of lettering on lens).
3. Rotate lamp in place until left side engages (light audible click).

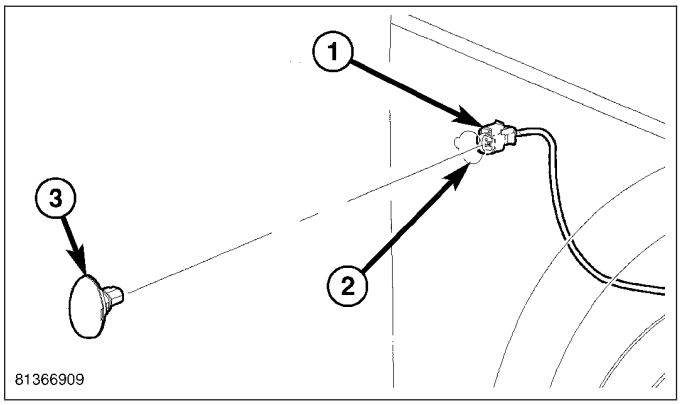

SWITCH - STOP LAMP

DESCRIPTION

The stop lamp switch (2) is located under the instrument panel at the brake pedal arm. This switch contains three internal switches controlling various functions of the vehicle, one of them controls operation of the vehicle's brake lamps. Other functions of the internal switches include speed control deactivation and brake sense for the ABS and the brake transmission shift interlock.

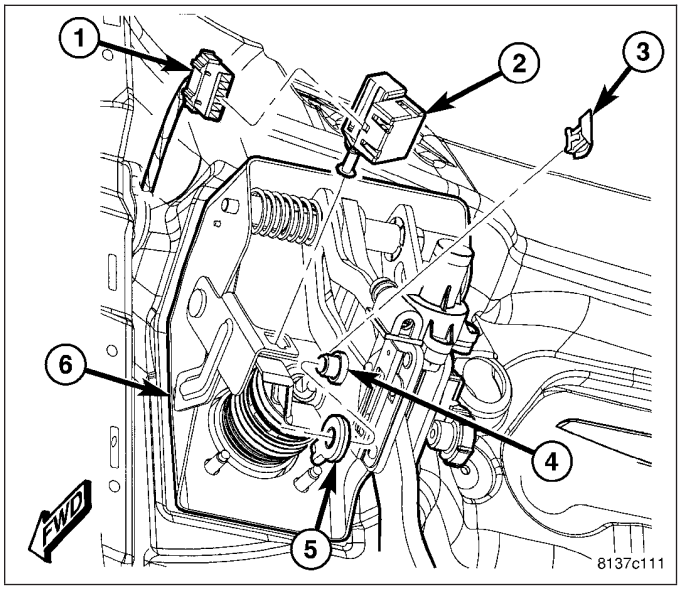

OPERATION

The stop lamp switch has three internal switches used for various functions. Among these are:

- Brake lamp actuation
- Speed control deactivation, and
- Brake sense for ABS and brake transmission shift interlock

When the brake pedal is in the released position, the plunger on the outside of the stop lamp switch is pushed inward by the brake pedal. In this position, the electrical contacts for one internal switch are open while the electrical contacts for other two internal switches are closed.

When the brake pedal is pressed, the plunger on the outside of the stop lamp switch extends outward. This action closes the electrical contacts for the one internal switch and opens the contacts for the remaining two switches within the stop lamp switch. The internal switch which closes when the brake pedal is pressed completes the circuit to the brake lamps at the rear of the vehicle, thus allowing illumination of the brake lamps and the center-high-mounted stop lamp (CHMSL).

DIAGNOSIS AND TESTING

STOP LAMP SWITCH

NOTE: Before proceeding with this diagnostic test, verify the adjustment of the stop lamp switch to rule out misadjustment. (Refer to 8 - ELECTRICAL/LAMPS/LIGHTING - EXTERIOR/STOP LAMP SWITCH - ADJUSTMENTS)

If the electrical circuit has been tested and the stop lamp switch is suspected of being faulty, it can be tested using the following method.

1. Remove the switch from the vehicle. (Refer to 8 - ELECTRICAL/LAMPS/LIGHTING - EXTERIOR/STOP LAMP SWITCH - REMOVAL)
2. With the switch in the released position (plunger extended), use an ohmmeter to test each of the three internal switches as shown. You should achieve the results as indicated in the figure.

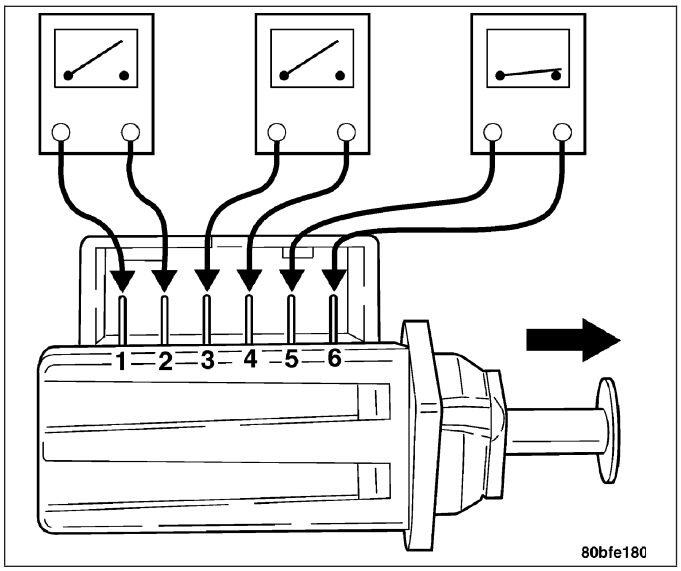

3. Gently push the plunger on the stop lamp switch in until it stops.
4. With the switch in the depressed position (plunger pushed in), use an ohmmeter to test each of the three internal switches as shown. You should achieve the results as indicated in the figure.

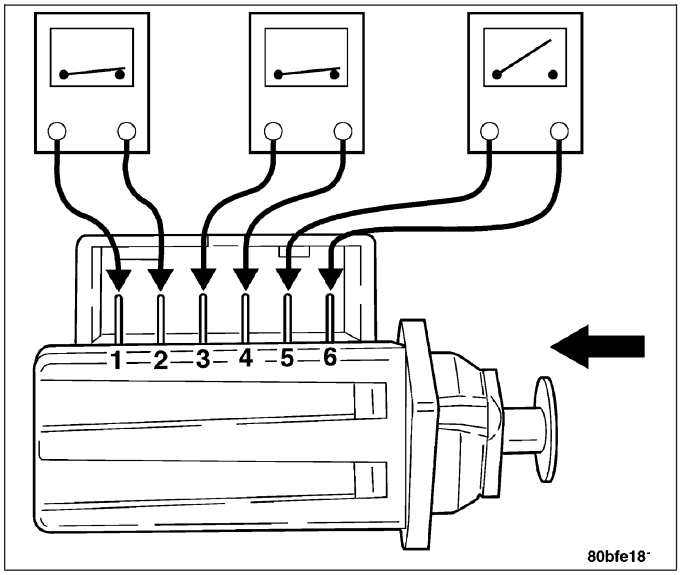

If you do not achieve the results as indicated in both figures, the switch is faulty and must be replaced.

5. Install the switch in the vehicle. (Refer to 8 - ELECTRICAL/LAMPS/LIGHTING - EXTERIOR/STOP LAMP SWITCH - INSTALLATION)

REMOVAL

1. Depress and hold the brake pedal.
2. Remove the stop lamp switch (2) from it's bracket on the brake pedal assembly (6). To do so, rotate the stop lamp switch in a counterclockwise direction approximately 30 degrees from its proper mounting position. Pull the switch rearward and remove it from its mounting bracket.
3. Disconnect the wiring harness connector (1) from the switch.

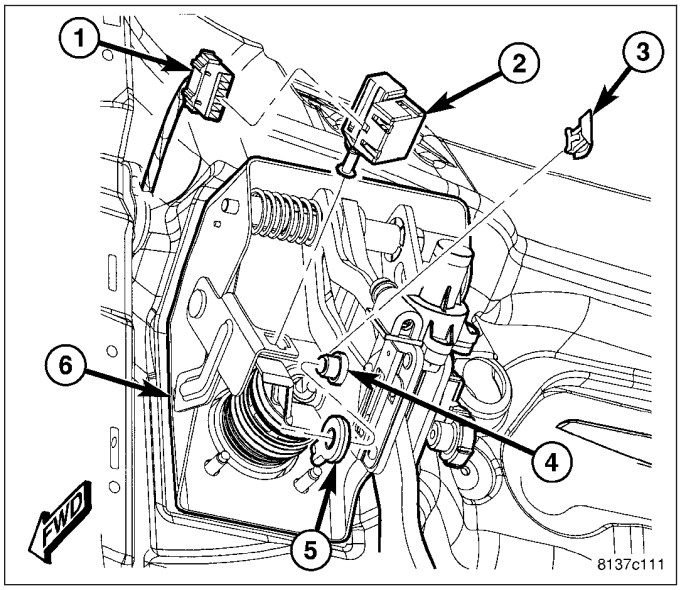

INSTALLATION

NOTE: Prior to installing the stop lamp switch into its bracket, the plunger must be moved to its fully extended position using the procedure described in Step 1.

1. Hold the stop lamp switch firmly in one hand. Using your other hand, pull outward on the plunger of the switch until it has ratcheted out to its fully extended position.
2. Connect the wiring harness connector (1) to the stop lamp switch (2).
3. Mount the stop lamp switch into the bracket on the brake pedal assembly (6) as follows: Depress the brake pedal as far down as possible. Install the switch in its bracket by aligning the index key on switch with the notch in the square mounting hole of the mounting bracket. Once the switch is fully seated, rotate the switch clockwise approximately 30 degrees to lock the switch into the bracket.

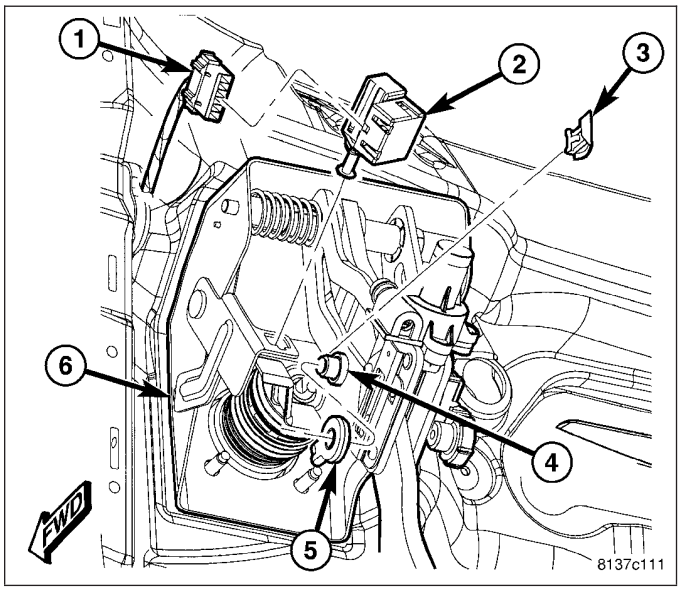

CAUTION: Do not use excessive force when pulling back on the brake pedal to adjust the stop lamp switch. If to much force is used, damage to the stop lamp switch or striker can result.

4. Gently pull back on brake pedal until the pedal stops moving. This will cause the switch plunger to ratchet backward to the correct position.
5. Check for proper operation of the brake lamps and speed control.

ADJUSTMENTS

STOP LAMP SWITCH ADJUSTMENT

1. Depress and hold the brake pedal.
2. Remove the stop switch from its bracket. To do so, rotate the stop lamp switch in a counterclockwise direction approximately 30 degrees from its proper mounting position. Pull the switch rearward and remove it from it's mounting bracket.
3. Hold the stop lamp switch firmly in one hand. Using your other hand, pull outward on the plunger of the switch until it has ratcheted out to its fully extended position.
4. Mount the stop lamp switch into the bracket as follows: Depress the brake pedal as far down as possible. Install the switch in its bracket by aligning the index key on switch with the notch in the square mounting hole of the mounting bracket. Once the switch is fully seated, rotate the switch clockwise approximately 30 degrees to lock the switch into the bracket.

CAUTION: Do not use excessive force when pulling back on the brake pedal to adjust the stop lamp switch. If to much force is used, damage to the stop lamp switch or striker can result.

5. Gently pull back on brake pedal until the pedal stops moving. This will cause the switch plunger to ratchet backward to the correct position.
6. Check for proper operation of the brake lamps and speed control.

TAIL LAMP UNIT

REMOVAL

SEDAN

1. Disconnect and isolate the battery negative cable.
2. From inside the trunk, peel back the trunk trim and disconnect the electrical connector.

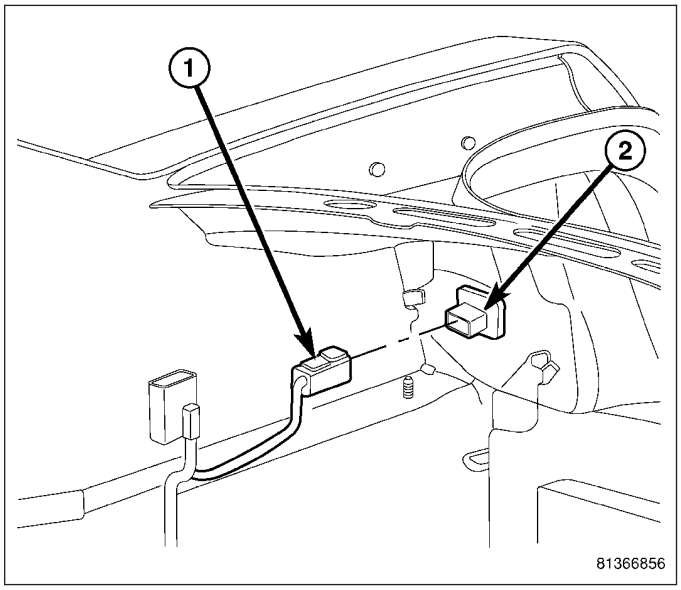

3. Remove the three plastic wing nuts (3).
4. Pull the tail lamp unit (1) straight out of the rear of the quarter trim panel.

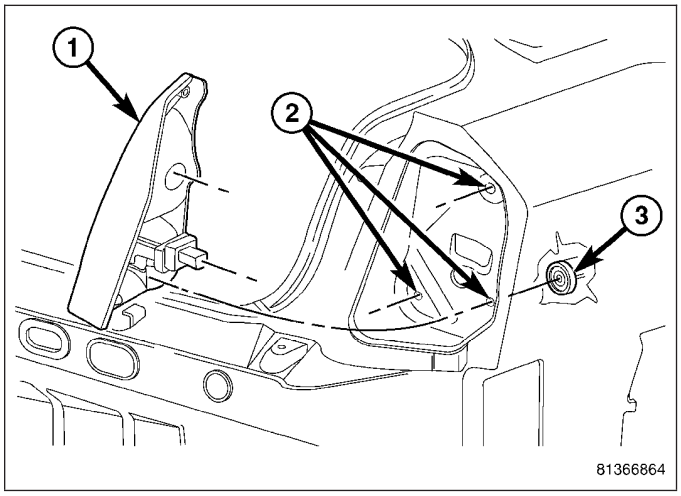

WAGON

1. Disconnect and isolate the battery negative cable.
2. Remove the two push fasteners (1) in the liftgate opening.

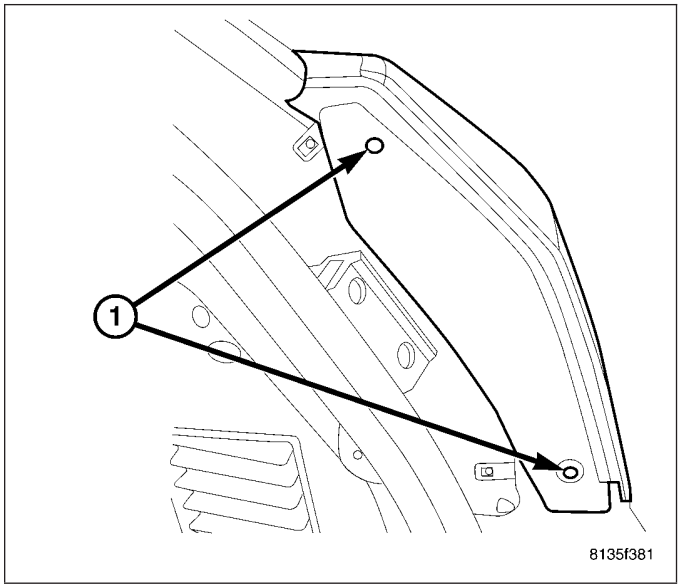

3. From inside the cargo area, using a trim stick (special tool #C-4755) or equivalent, gently pry the access panel off the rear of the quarter trim panel.
4. Remove the one plastic wing nut.

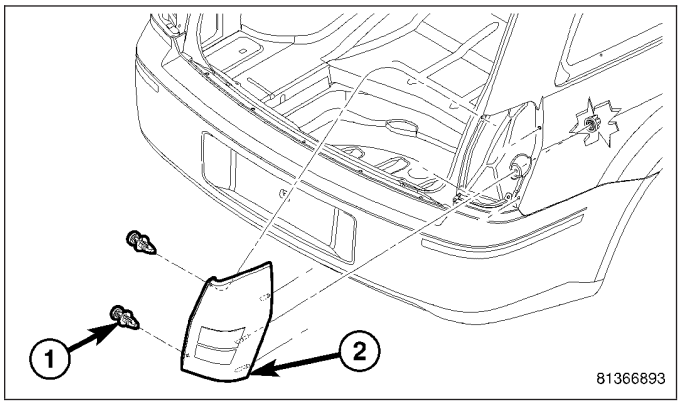

5. Pulling rearward, release the mounting tabs of the tail lamp unit (1).

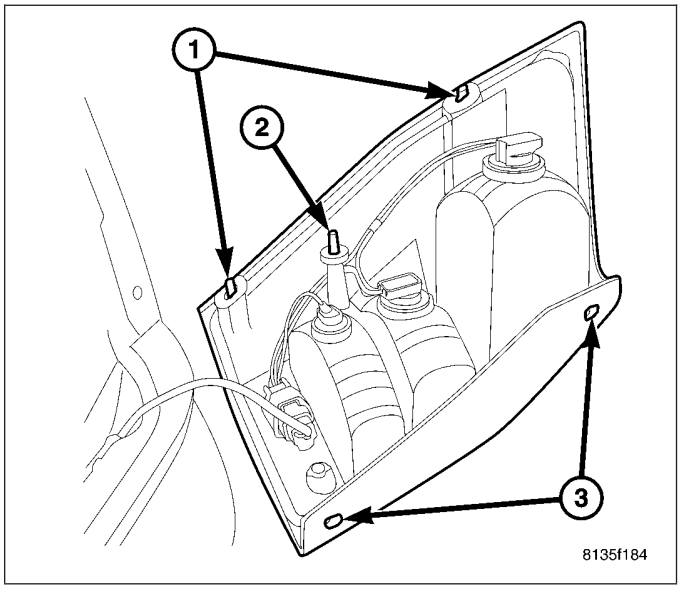

6. Disconnect the electrical connector (3) from tail lamp unit (1).

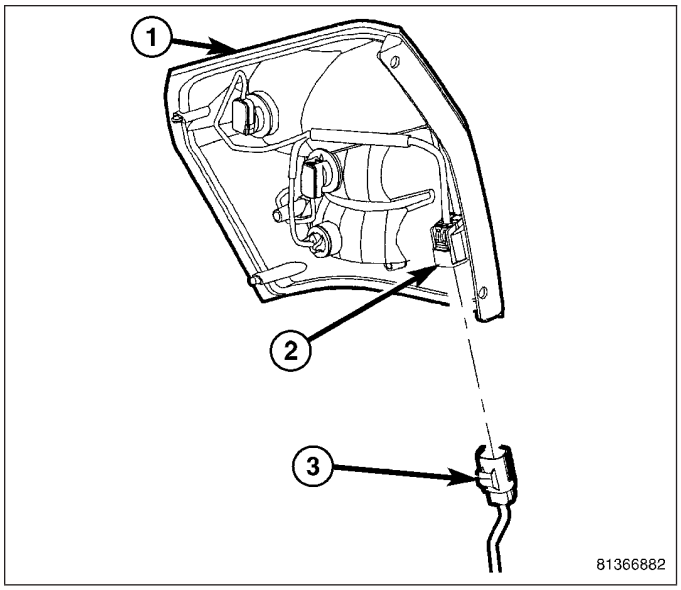

1. Twist counterclockwise to remove the Stop (1), Turn Signal (2), or Back-Up lamps.

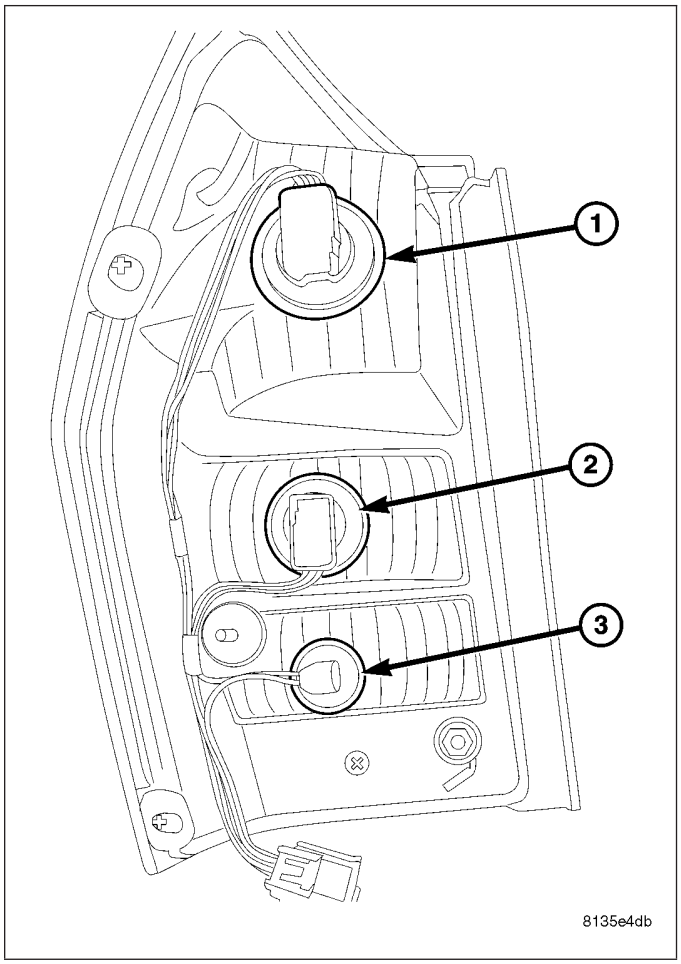

INSTALLATION

SEDAN

1. Position the tail lamp unit (1) in the rear quarter panel of vehicle.
2. Install and tighten the three plastic wing nuts (3).

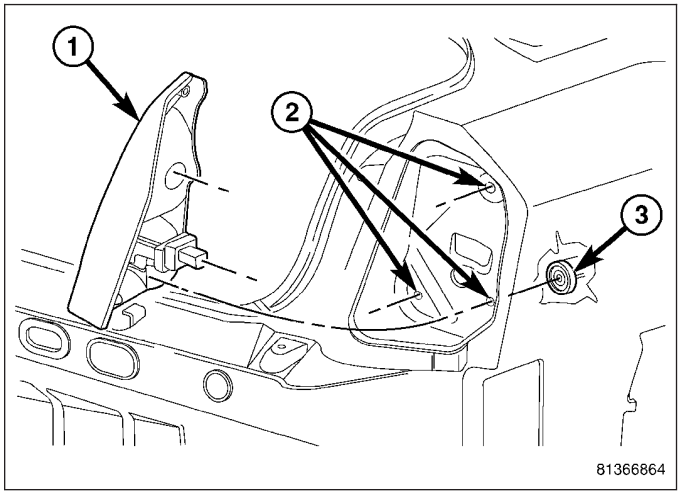

3. From within the trunk, connect the electrical connector (1) to tail lamp unit (2).
4. Replace trunk carpeting.
5. Connect the battery negative cable.

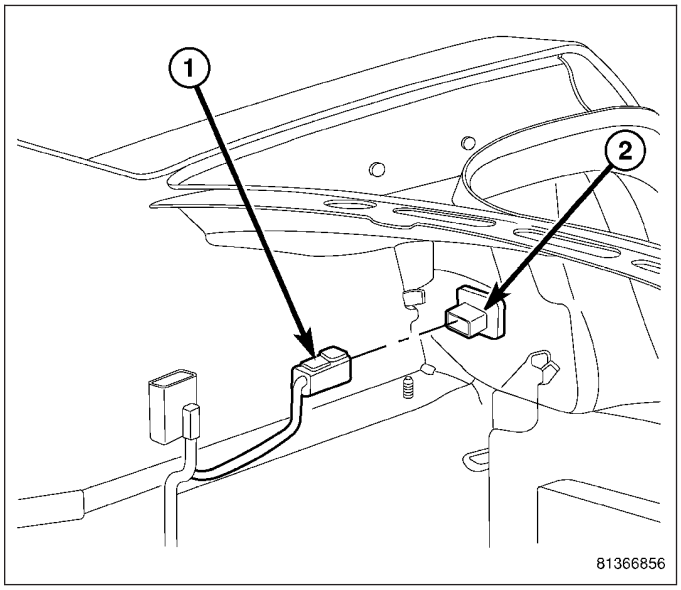

WAGON

1. Connect the electrical connector (3) to the tail lamp unit (2).

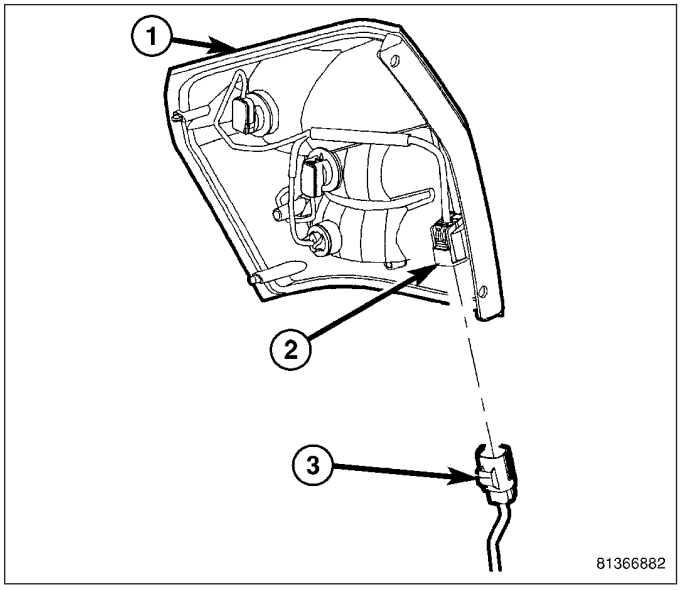

2. Position the tail lamp unit (2) in quarter panel opening.
3. Give a firm push forward to seat the indexing pins.
4. Install and tighten the one plastic wing nut.

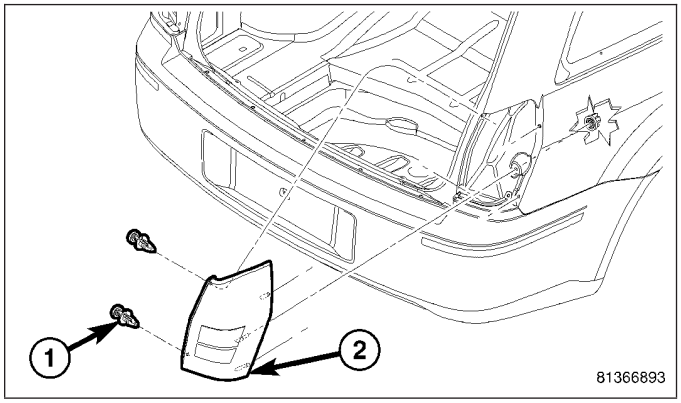

5. Install the two push pin fasteners (1) in the liftgate opening.
6. Connect the battery negative cable.

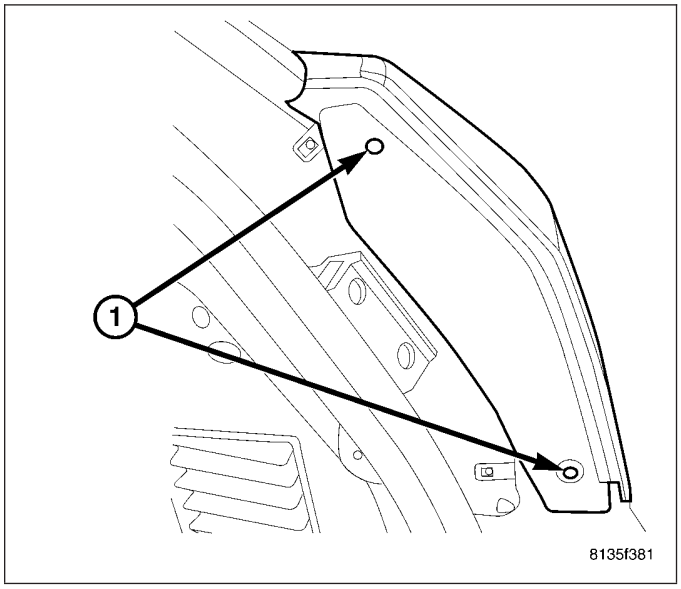

SPOT LAMP - POLICE

REMOVAL

1. Remove the PDC cover and pull the fuse, depending on which spot lamp is being serviced.
2. Raise the spot lamp from the stowed to the operating position.
3. Support the spot lamp sealed beam in position.
4. Remove the screws (1) retaining the bezel to the spot lamp head assembly.
5. Remove the bezel from the spot lamp head assembly.
6. Tilt the sealed beam (2) away from the spot lamp head assembly.
7. Disconnect the electrical connector to the spot lamp head assembly.
8. Remove the bulb from the lamp housing by moving the hold downs.
9. Remove bulb from lamp.

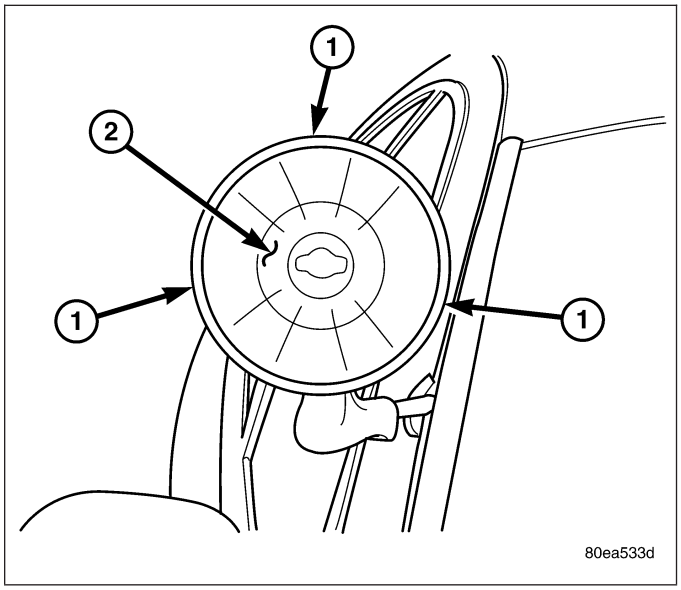

INSTALLATION

1. Position bulb into spot lamp assembly.
2. Install the hold downs.
3. Connect the electrical connector to the spot lamp head assembly.
4. Tilt the sealed beam (2) toward the spot lamp head assembly.
5. Install the bezel to the spot lamp head assembly.
6. Install the screws (1) retaining the bezel to the spot lamp head assembly.
7. Lower the spot lamp from the operating to stowed position.
8. Install the fuse and PDC cover.

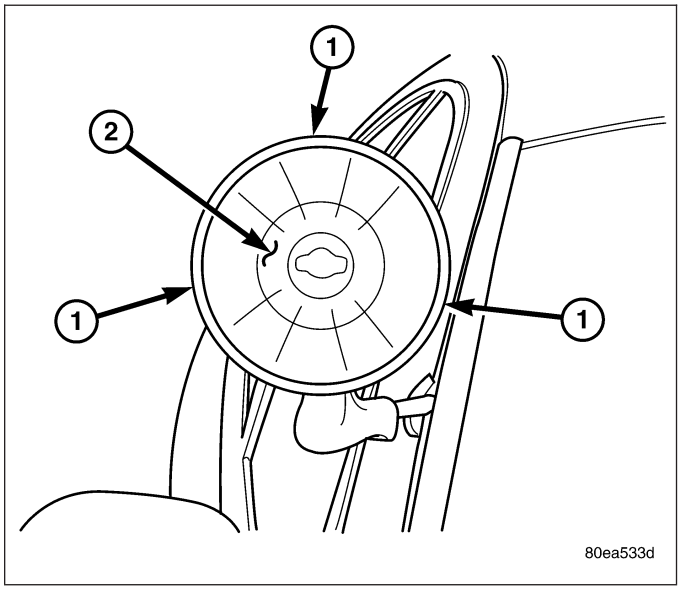

SPOT LAMP ASSEMBLY - POLICE

DESCRIPTION

This vehicle may be equipped with up to two spot lamp assemblies attached to the A-Pillars. The spot lamp assembly switch is located on the handle just above the rotating handle grip.

Each spot lamp assembly contains a 100 watt halogen bulb. The spot lamp assemblies are fused individually and powered hot at all times. There are three fuses in the Power Distribution Center (PDC) that control the spot lamp assemblies:

The parts available for service are:

- Complete spot lamp assembly.
- H3 100 watt halogen bulb.
- Inside control handle w/switch.

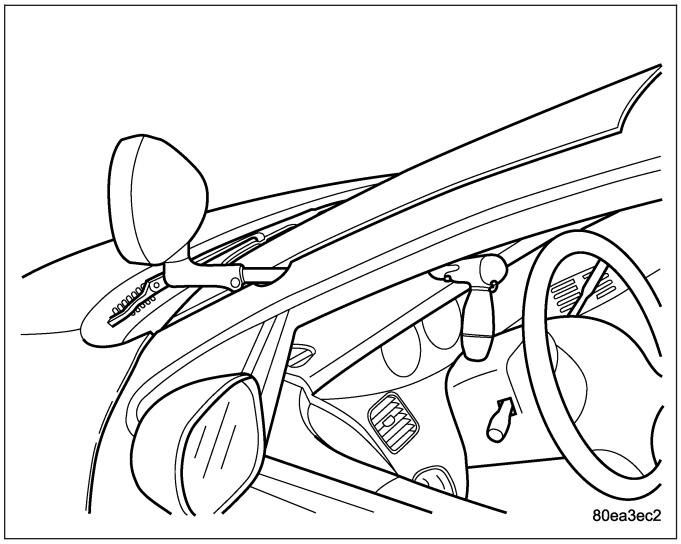

OPERATION

Use this switch (1) to turn the spot lamp assembly ON and OFF. Rotate and twist the handle to adjust the position of the spot lamp assembly.

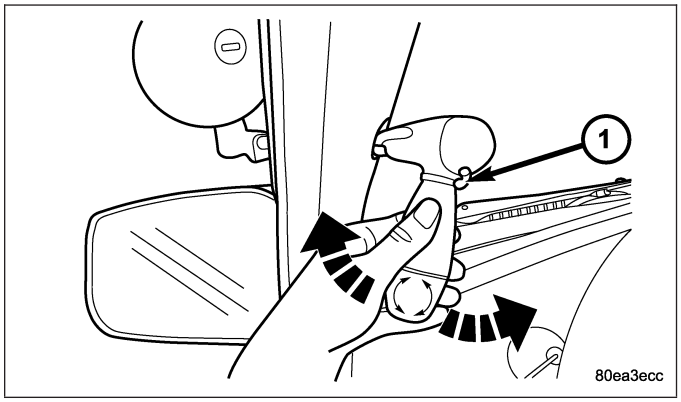

DIAGNOSIS AND TESTING

SPOT LAMP ASSEMBLY - POLICE

IF SPOT LAMP DOES NOT LIGHT

1. If both spot lamps are inoperative, check spot lamp master fuse. Refer to Wiring Diagrams for fuse locations. If fuse is OK, refer to Step 4. If fuse is damaged or inoperative, replace as necessary.
2. If the left spot lamp is inoperative, check fuse. If fuse is OK, refer to Step 4. If fuse is damaged or inoperative, replace as necessary. If fuse blows again, find short to ground. Refer to Wiring Diagrams for circuit information.
3. If the right spot lamp is inoperative, check fuse. If fuse is OK, refer to Step 4. If fuse is damaged or inoperative, replace as necessary. If fuse blows again, find short to ground. Refer to Wiring Diagrams for circuit information.
4. Check for B+ power at the spot lamp bulb with switch turned ON (Refer to 8 - ELECTRICAL/LAMPS/LIGHTING - EXTERIOR/SPOT LAMP - REMOVAL). If there is B+ power at the spot lamp bulb connector, replace bulb. If there is not B+ power present, refer to Step 5.
5. If there is not B+ power present at the spot lamp with the switch turned on, check circuit for an open. Possibly the connector in the A-pillar. Refer to Wiring Diagrams for circuit information.

6. If there is B+ power at the spot lamp connector, and no B+ power at the spot lamp bulb, then the switch is damaged or inoperative within the spot lamp assembly and the entire unit must be replaced. (Refer to 8 - ELECTRICAL/LAMPS/LIGHTING - EXTERIOR/SPOT LAMP - REMOVAL).
7. If lamp still does not light, remove the handle (Refer to 8 - ELECTRICAL/LAMPS/LIGHTING - EXTERIOR/SPOT LAMP - REMOVAL), and check the contact on the shaft end of the head assembly into the handle to make sure the contact is not damaged.

IF SPOT LAMP IS HARD TO TURN

1. Check that the head housing clamping screw creates just enough drag to hold the spot lamp head in position in windy conditions. Extreme drag will require more force on the handle to move the spot lamp head and cause damage.

REMOVAL

CAUTION: Make sure that the master spot lamp feed or either the left or right spot lamp feed are removed from the Power Distribution Center (PDC) before performing service on the spot lamps.

1. Remove the fuse cover and pull the fuse, depending on which spot lamp is being serviced.
2. Raise the spot lamp from the stowed to the operating position.
3. Using a trim stick or equivalent, gently pry out on the A-pillar trim to release it. This will allow access to the spot lamp electrical connector.
4. Remove the instrument panel end cap.
5. Disconnect the spot lamp electrical connector (located behind the instrument panel end-cap).

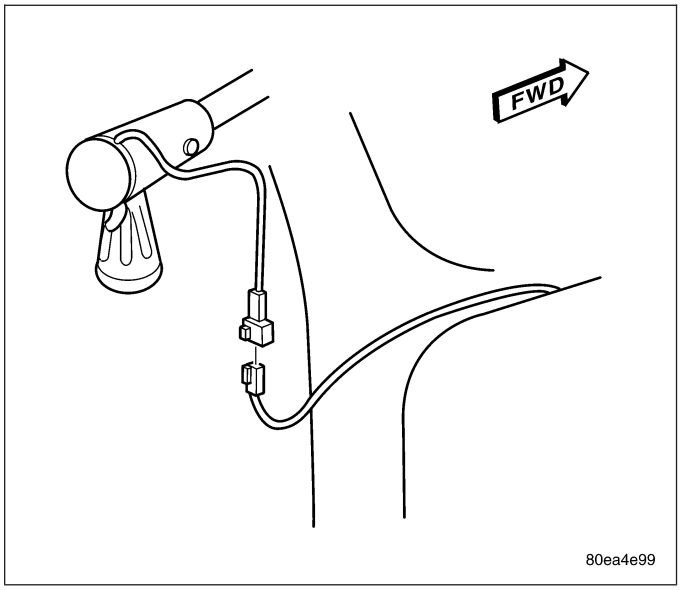

6. Loosen, but do not remove the bolt (1) retaining the handle to the outer tube.

NOTE: Do not remove the bolt all the way.

7. Using a plastic tipped hammer, gently tap the head of the handle retaining bolt and the opposing wedge nut.
8. Remove the handle from the outer tube.
9. Remove the A-pillar trim from the spot lamp outer tube.

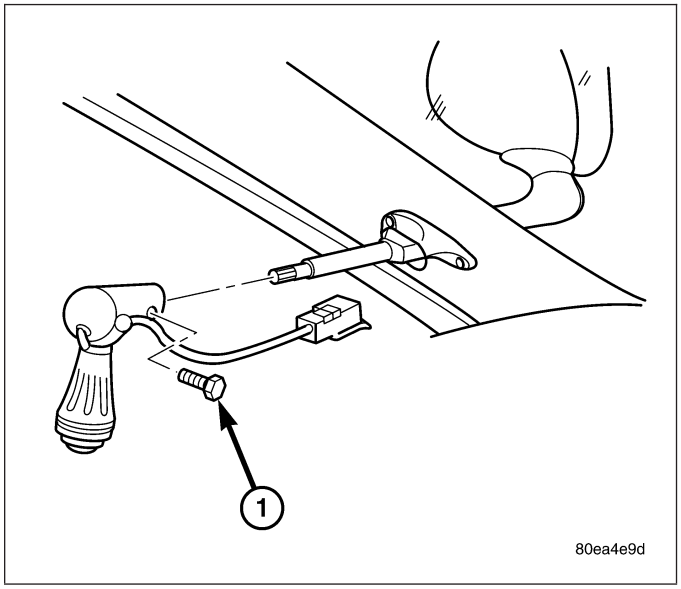

CAUTION: Support the head of the spot lamp while loosening the head assembly clamp screw.

10. Loosen the clamp screw (1) at the base of the spot lamp head assembly.

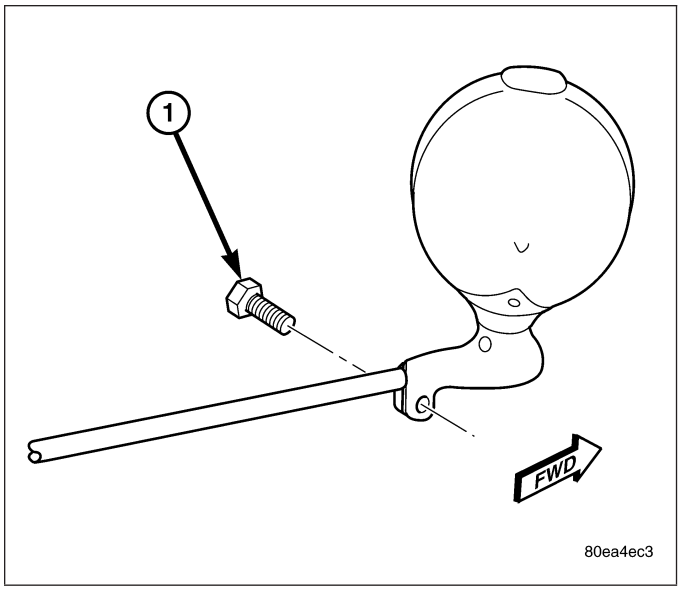

11. Carefully remove the spot lamp head with the intermediate and inner shafts from the outer tube and mounting bracket.

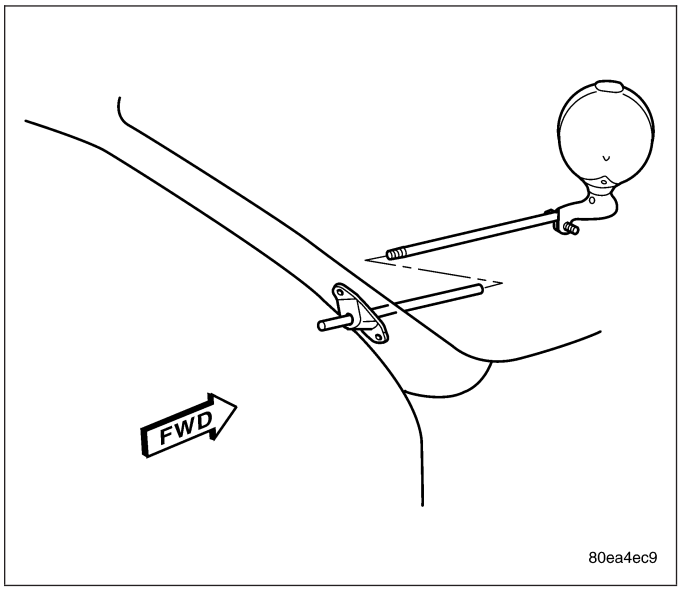

12. Remove the screws retaining the spot lamp mounting bracket to the A-pillar.
13. Remove the spot lamp outer tube and mounting bracket from the A-pillar.

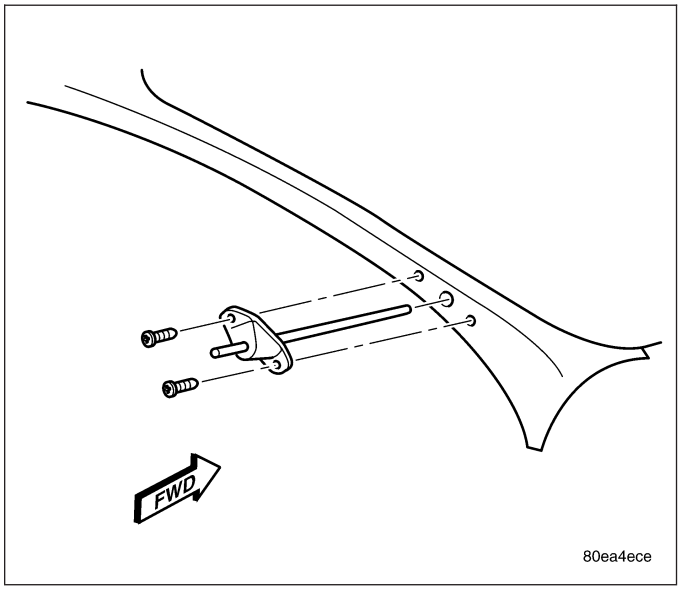

INSTALLATION

CAUTION: Make sure that the master spot lamp feed or either the left or right spot lamp feed are removed from the Power Distribution Center (PDC) before performing service on the spot lamps.

1. Install the spot lamp outer tube and mounting bracket to the A-pillar.
2. Install the screws retaining the spot lamp mounting bracket to the A-pilla and tighten to 33 N·m (29 in. lbs.).
3. Carefully lift the edge of the secondary door seal along the windshield pillar to expose the spot lamp outer tube and apply a small amount of clear silicone sealer to the base of the outer tube.

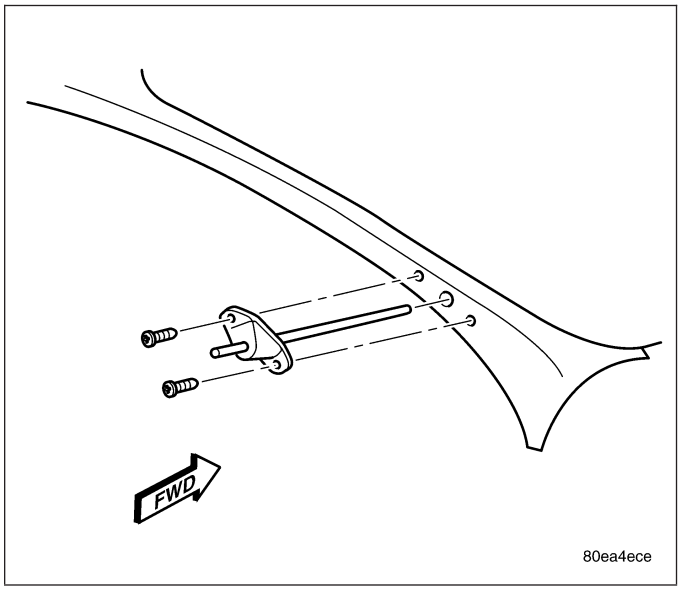

4. Carefully install the spot lamp head with the intermediate and inner shafts to the outer tube and mounting bracket until the head assembly bottoms out on the outer tube.

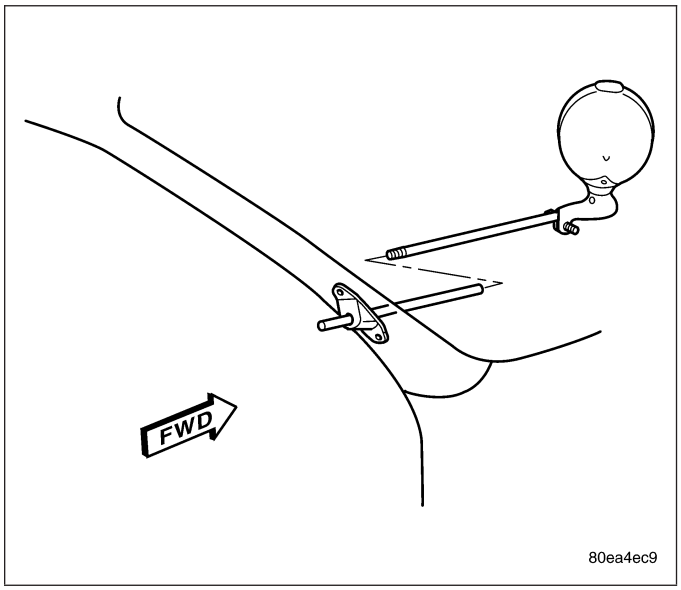

5. Tighten the clamp screw (1) at the base of the spot lamp head assembly in small increments while testing the effort required to rotate the spot lamp between the stowed and operating positions. Stop tightening the clamp screw when the spot lamp can maintain any desired position.

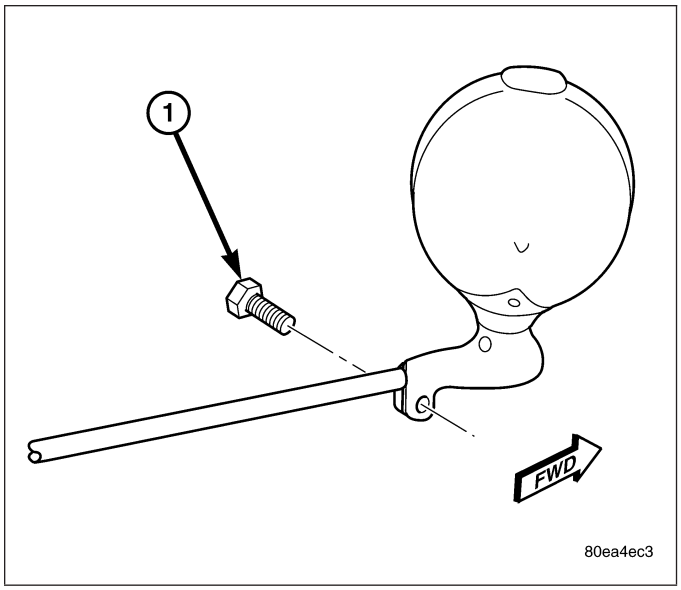

6. Position the A-pillar trim to the spot lamp outer tube.

CAUTION: Support the head of the spot lamp while tightening the head assembly clamp screw. Maintain an operating or vertical position.

7. Install the handle to the outer tube.
   a. Position the spot lamp handle in the operating (downward close to vertical) position to the outer tube.
   b. There are two detent positions to which the handle must line up and engage. Rotate the knob of the handle and the handle base to aid in engaging each of the detents. Using the wedge nut opening on the handle for visual aid, rotate the handle as necessary while installing, in order to bring the flat detent on the intermediate shaft into view along the bottom of the opening.

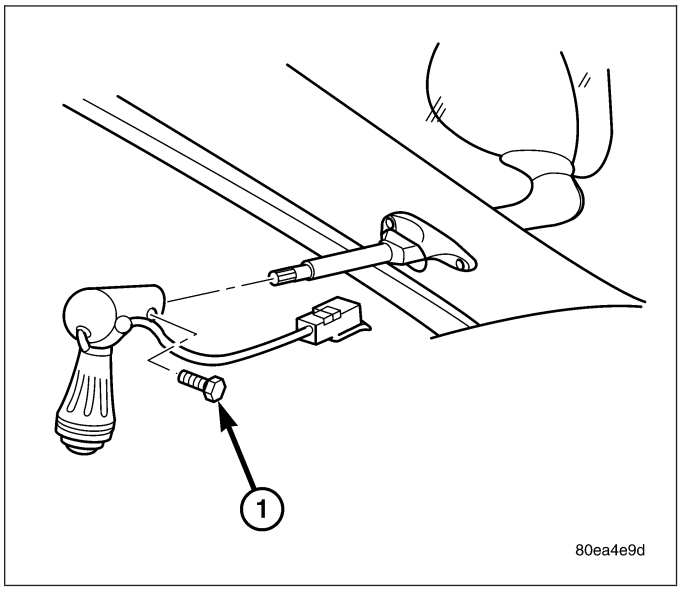

8. Tighten the bolt (1) retaining the handle to the outer tub and tighten to 6.5 N·m (58 in. lbs.).

9. Connect the spot lamp electrical connector.
10. Install the instrument panel end-cap.
11. Install the A-pillar trim.
12. Install the fuse, depending on which spot lamp is being serviced.

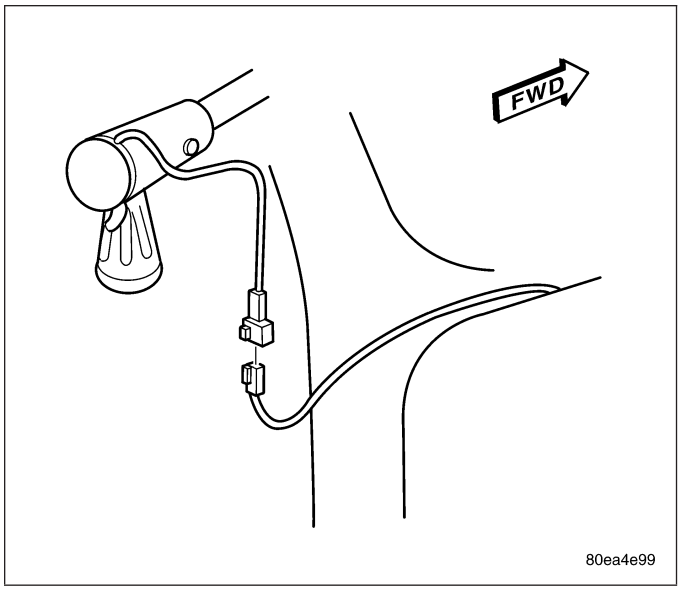

13. Inspect the operation of the spot lamp to ensure that the range of movement is correct.
    - Using the handle, rotate the spot lamp from the operating position to the stowed position and back. Ensure that the lamp will maintain the desired position. The stowed position should be just above the windshield and the operating position should be vertical to slightly outboard.
    - Using the knob of the handle, rotate the head of the spot lamp around on its axis. The spot lamp must rotate 360 degrees on its axis.
14. If the spot lamp head does not rotate 360 degrees on its axis, or if excessive effort is required to rotate the lamp head on its axis, perform the following:
    a. Remove the handle and inspect for damage to the inner shaft and the gears in the handle. Repair or replace as necessary.
    b. If no damage is present to the inner shaft or the gears in the handle, reinstall the handle and reinspect the operation of the lamp.
    c. If the spot lamp head still does not properly rotate 360 degrees on its axis, remove the cover from the end of the spot lamp head assembly and inspect for damage to the gears in the head assembly. Repair or replace as necessary.
15. Lower the spot lamp to the stowed position.

UNDERHOOD LAMP - POLICE

REMOVAL

1. Open hood, disconnect and isolate the battery negative remote terminal or pull fuse in the PDC.
2. Insert a small flat blade in access slot between the lamp base (1) and lamp lens (2).
3. Lift the lamp lens (2) upward and remove the lamp lens (2).

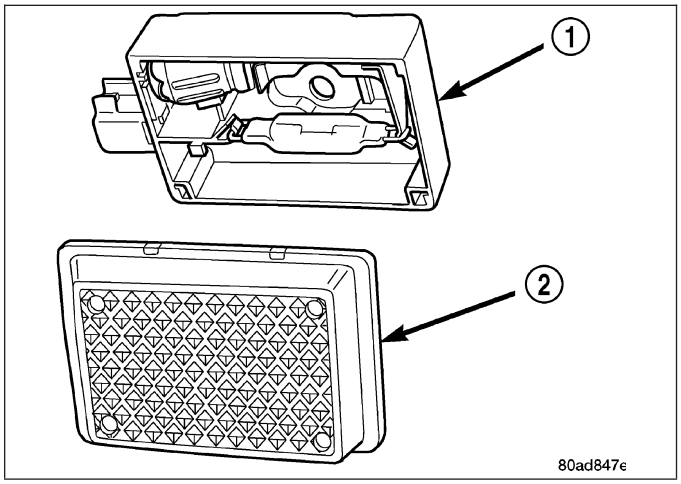

4. Depress bulb terminal (2) inward to release bulb (1).

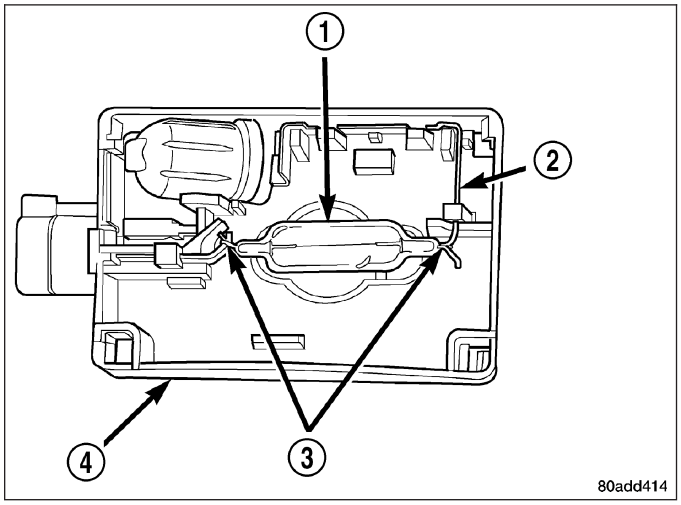

INSTALLATION

1. Engage the replacement bulb wire loop (3) to terminal closest to lamp base (4) wire connector.
2. Depress the opposite terminal inward and engage the remaining bulb wire loop (3).

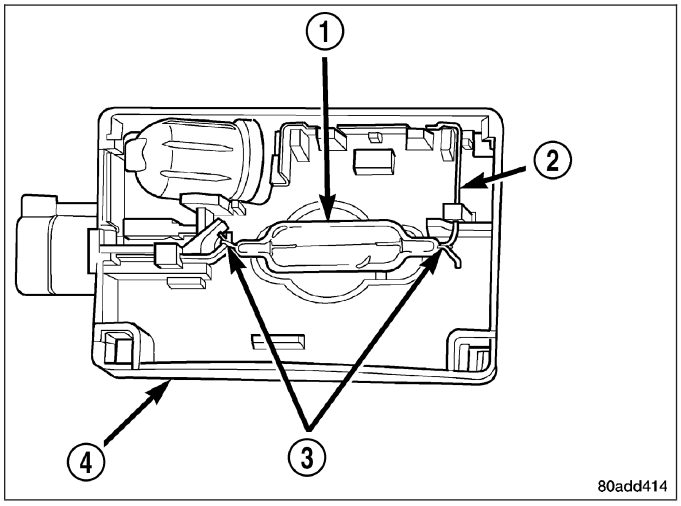

3. Position the lamp lens (2) on the lamp base (1) and firmly snap into place.
4. Connect the battery negative remote cable or insert fuse in the PDC.

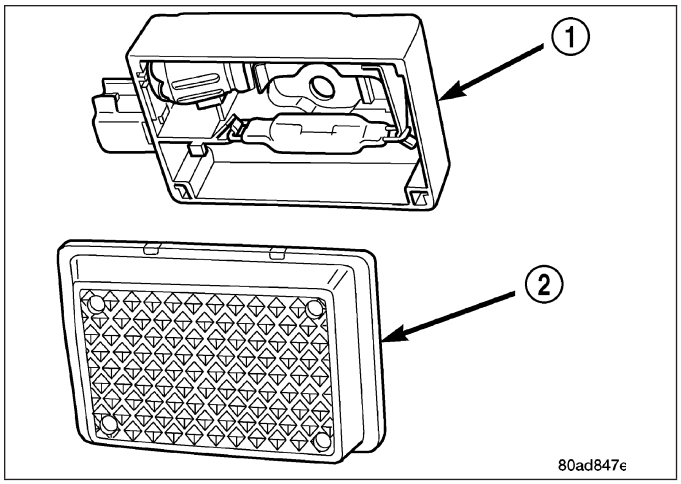

UNDERHOOD LAMP UNIT - POLICE

REMOVAL

1. Open hood, disconnect and isolate the battery negative remote terminal or pull fuse in the PDC.
2. Disconnect the wire harness connector (1) from lamp unit (2).
3. Remove the push-pin fastener attaching underhood lamp unit (2) to inner hood panel.
4. Remove the underhood lamp unit (2) from the vehicle.

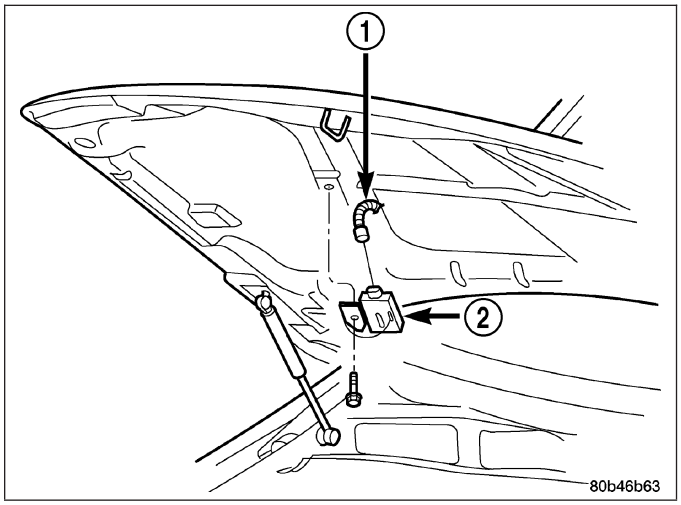

INSTALLATION

1. Position the underhood lamp unit (2) on the hood inner panel.
2. Install the push-pin fastener attaching the lamp unit base (2) to the inner hood panel.
3. Connect the wire harness connector (1).
4. Connect the battery negative remote cable or reinsert fuse in the PDC.
5. Close hood.

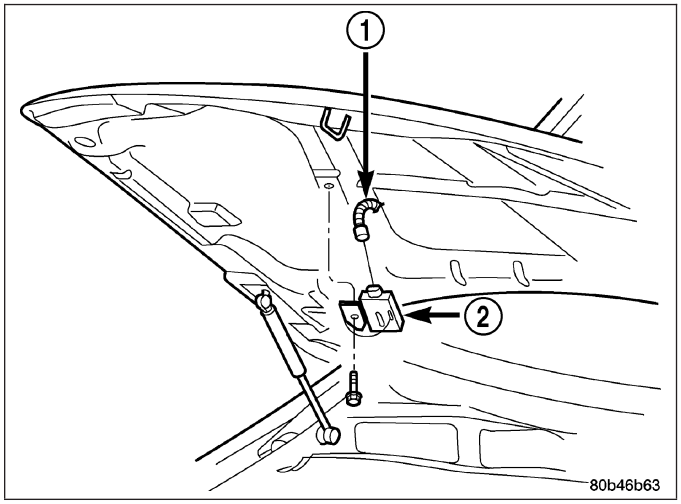

LAMPS/LIGHTING - INTERIOR - ELECTRICAL DIAGNOSTICS

TABLE OF CONTENTS

page

LAMPS/LIGHTING - INTERIOR - ELECTRICAL DIAGNOSTICS
DIAGNOSIS AND TESTING
B161B-COURTESY/DOME LAMP CONTROL CIRCUIT LOW 146
B161F-READING LAMP CONTROL CIRCUIT LOW 148

LAMPS/LIGHTING - INTERIOR - ELECTRICAL DIAGNOSTICS

DIAGNOSIS AND TESTING

B161B-COURTESY/DOME LAMP CONTROL CIRCUIT LOW

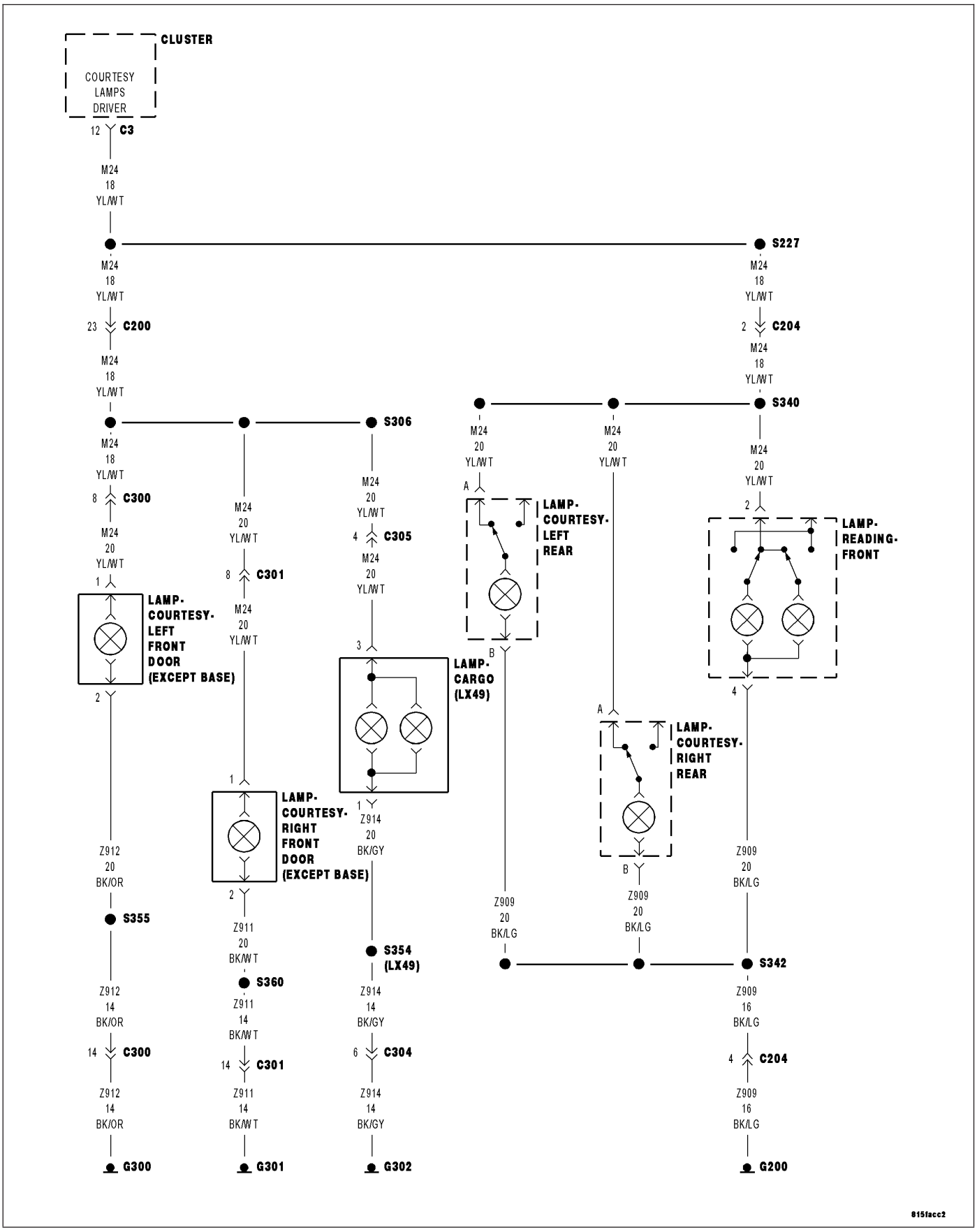

For a complete wiring diagram **Refer to Section 8W**.

- **When Monitored:**
  With the ignition on.
- **Set Condition:**
  The Cluster detects a Short to Ground on the (M24) Courtesy Lamps Driver circuit.

Possible Causes
(M24) COURTESY LAMPS DRIVER CIRCUIT SHORT TO GROUND
INSTRUMENT CLUSTER

Diagnostic Test

1. INTERMITTENT CONDITION

Turn the ignition on.

Clear all Cluster DTCs.

Turn the Courtesy Lamps on.

With the Scan Tool, read the Cluster DTCs.

Does the Scan Tool read: B161B-COURTESY/DOME LAMP OUTPUT CIRCUIT SHORT TO GROUND?

Yes >> Go To 2

No >> The conditions that caused this code to set are not present at this time. Using the wiring diagram/schematic as a guide, inspect the wiring and connectors.
Perform the BODY VERIFICATION TEST — VER 1. (Refer to 8 - ELECTRICAL/ELECTRONIC CONTROL MODULES/FRONT CONTROL MODULE - DIAGNOSIS AND TESTING)

2. (M24) COURTESY LAMPS DRIVER CIRCUIT SHORT TO GROUND

Turn the ignition on.

Disconnect the Instrument Cluster C3 connector.

Measure the resistance of the (M24) Courtesy Lamp Driver circuit to ground.

Is the resistance below 5.0 ohms?

Yes >> Repair the (M24) Courtesy lamp Driver circuit for a short to ground.
Perform the BODY VERIFICATION TEST — VER 1. (Refer to 8 - ELECTRICAL/ELECTRONIC CONTROL MODULES/FRONT CONTROL MODULE - DIAGNOSIS AND TESTING)

No >> Replace the Instrument Cluster in accordance with the service information.
Perform the BODY VERIFICATION TEST — VER 1. (Refer to 8 - ELECTRICAL/ELECTRONIC CONTROL MODULES/FRONT CONTROL MODULE - DIAGNOSIS AND TESTING)

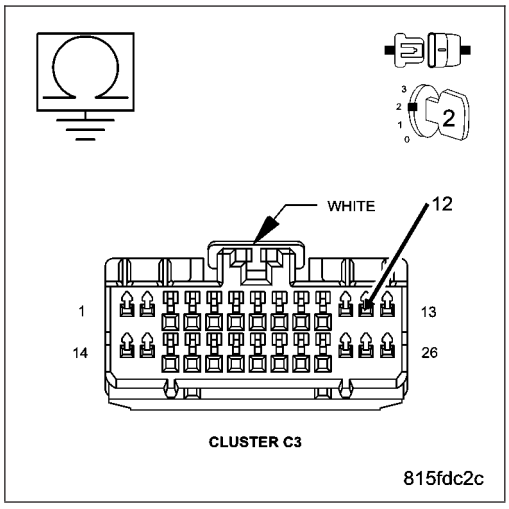

B161F-READING LAMP CONTROL CIRCUIT LOW

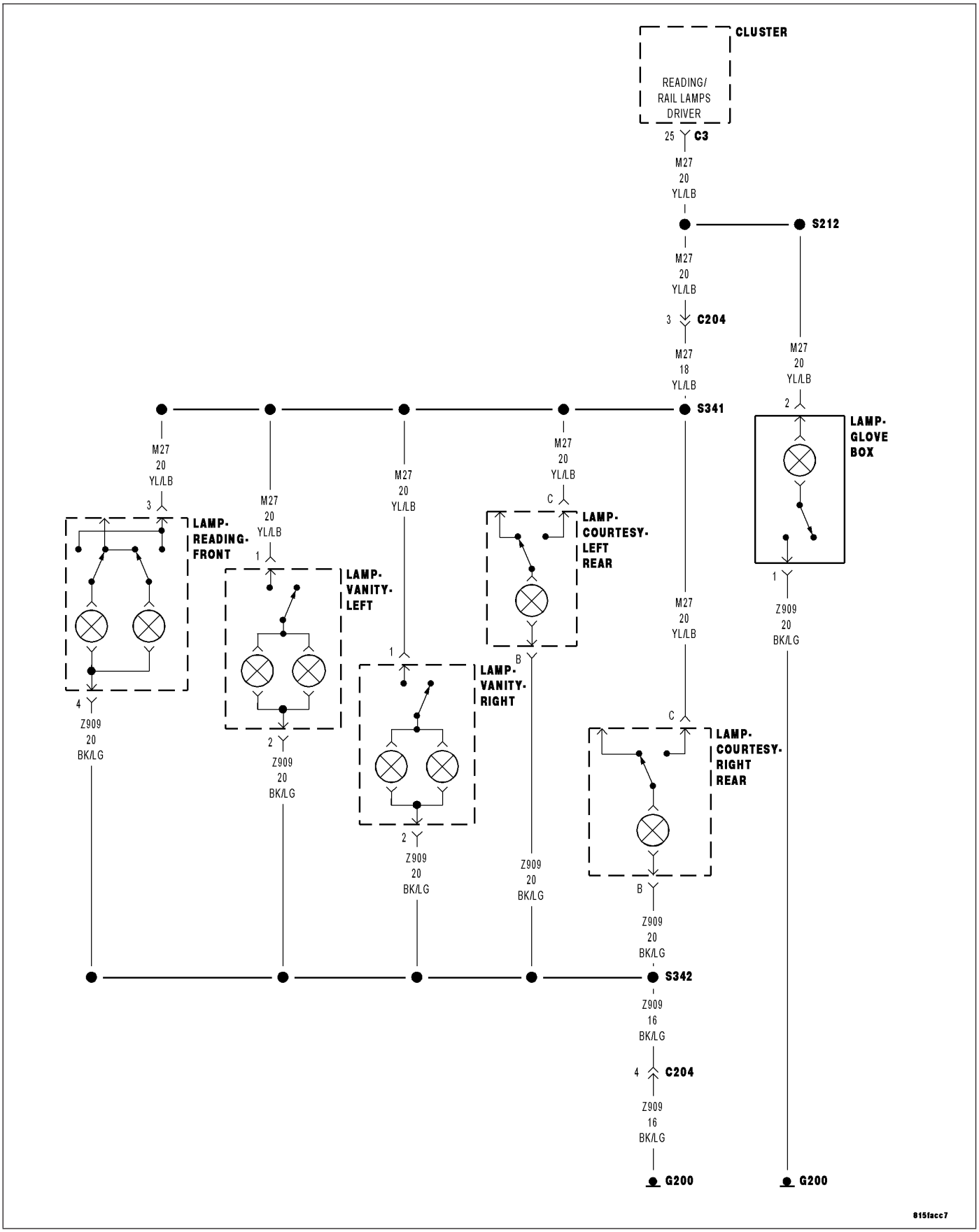

For a complete wiring diagram **Refer to Section 8W**.

- **When Monitored:**
  With the ignition on.
- **Set Condition:**
  The Cluster detects a short to ground on the (M27) Reading/Rail Lamps Driver circuit.

Possible Causes
(M27) READING/RAIL LAMPS DRIVER
INSTRUMENT CLUSTER

Diagnostic Test

1. INTERMITTENT CONDITION

Turn the ignition on.

Clear all Cluster DTCs.

Turn the Driver Reading Lamps on.

With the Scan Tool read the DTC information.

Does the Scan Tool read: B161F-READING LAMP CONTROL CIRCUIT LOW?

Yes >> Go To 2

No >> The condition that caused the symptom is currently not present. Inspect the related wiring for a possible intermittent condition. Look for any chafed, pierced, pinched, or partially broken wires.

Perform the BODY VERIFICATION TEST-VER1. (Refer to 8 - ELECTRICAL/ELECTRONIC CONTROL MODULES/FRONT CONTROL MODULE - DIAGNOSIS AND TESTING)

2. (M27) READING/RAIL LAMPS DRIVER

Turn the ignition off.

Disconnect the Cluster C3 harness connector.

Measure the resistance between ground and the (M27) Reading/Rail Lamps Driver circuit.

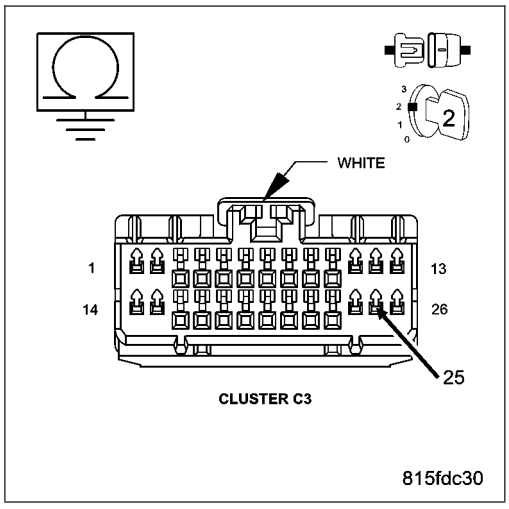

Is the resistance below 5.0 ohms?

Yes >> Repair the (M27) Reading/Rail Lamps Driver circuit for a short to ground.

Perform the BODY VERIFICATION TEST-VER1. (Refer to 8 - ELECTRICAL/ELECTRONIC CONTROL MODULES/FRONT CONTROL MODULE - DIAGNOSIS AND TESTING)

No >> Relpace the Cluster in accordance with the service information.

Perform the BODY VERIFICATION TEST-VER1. (Refer to 8 - ELECTRICAL/ELECTRONIC CONTROL MODULES/FRONT CONTROL MODULE - DIAGNOSIS AND TESTING)

LAMPS/LIGHTING - INTERIOR - SERVICE INFORMATION

TABLE OF CONTENTS

page

LAMPS/LIGHTING - INTERIOR - SERVICE INFORMATION
SPECIFICATIONS
INTERIOR LAMPS 152
DOME LAMP - POLICE
DESCRIPTION 153
REMOVAL
LAMP BULB 153
DOME LAMP UNIT 153
INSTALLATION
LAMP BULB 153
DOME LAMP UNIT 153
DOOR COURTESY LAMP
REMOVAL 154
INSTALLATION 155
LIFTGATE LAMP
REMOVAL 156
INSTALLATION 156
READING LAMP
REMOVAL 158
INSTALLATION 160

LAMPS/LIGHTING - INTERIOR - SERVICE INFORMATION

SPECIFICATIONS

INTERIOR LAMPS

BULB APPLICATION TABLE

LAMP	BULB
CHRYSLER	
Door Courtesy	562
Glove Box	194
Overhead Console	578
Rear Courtesy	W5W
Shift Indicator	JKLE14140
Trunk	579
Visor Vanity	A6220
DODGE	
Door Courtesy	562
Glove Box	194
Liftgate	578
Overhead Console	578
Rear Courtesy	W5W
Shift Indicator	JKLE14140
Trunk	562
Visor Vanity	A6220

DOME LAMP - POLICE

DESCRIPTION

The dome lamp is B+ battery-fed, fused, and operates independently of the standard factory installed dome lamp switch. It features duel switched white incandescent and red Light Emitting Diode (LED) lights. The lamp is mounted on the headliner at the longitudinal center-line, rearward of the factory installed overheard console, approximately 19.5 inches from the front windshield header. The police package, optioned dome lamp has a three way switch mounted on the rear side of the lamp assembly. One position for the incandescent light, one position or the red LED, and one middle position for OFF. When the when the vehicle is put into stealth mode, this lamp will still be operational. It must be shut off manually due to its direct battery feed.

REMOVAL

LAMP BULB

1. Disconnect and isolate the battery negative cable.
2. Gently pull off the dome lamp cover.
3. Reach up into the lamp unit and pull down on the lamp bulb.

DOME LAMP UNIT

1. Disconnect and isolate the battery negative cable.
2. Slide the dome lamp unit towards the right rear of the vehicle. There is lip on the retaining bracket that will slide out of the headliner opening to allow for removal.
3. Pull down gently on the left front of the dome lamp unit and then slide the unit toward the left front of the vehicle. This will allow for the retaining bracket to release from the headliner.
4. Disconnect the dome lamp unit electrical connector.

INSTALLATION

LAMP BULB

1. Place lamp bulb into lamp unit.
2. Position dome lamp unit cover over unit and firmly snap into place.
3. Connect the battery negative cable.

DOME LAMP UNIT

1. Connect the dome lamp unit electrical connector.
2. Position the lamp unit into the headliner mounting hole.
3. Slide the longer of the two bracket tabs up into the headliner toward the right rear.
4. Slide the dome lamp unit toward the left front of the vehicle until you feel the bracket take a seat in the headliner.
5. Connect the battery negative cable.

DOOR COURTESY LAMP

REMOVAL

1. Disconnect and isolate the battery negative cable.
2. Remove the front door trim panel (Refer to 23 - BODY/DOOR - FRONT/TRIM PANEL - REMOVAL).

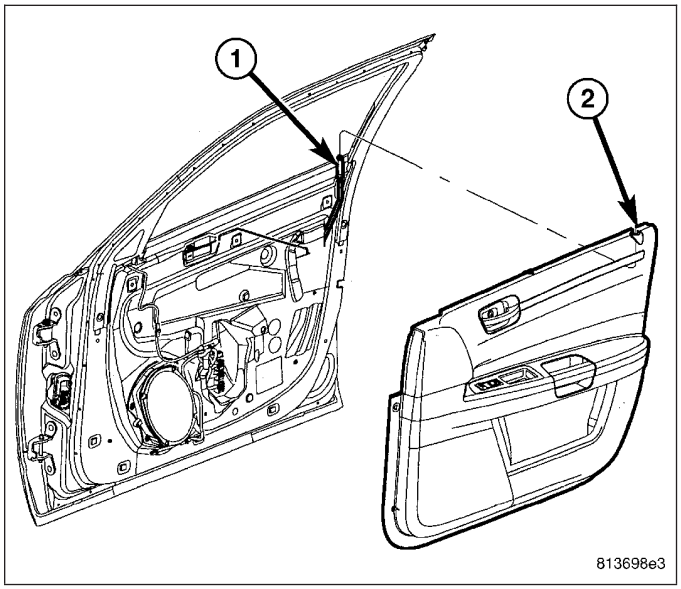

3. With the trim panel on bench, gently pull the door courtesy lamp (1) out of courtesy lamp unit.

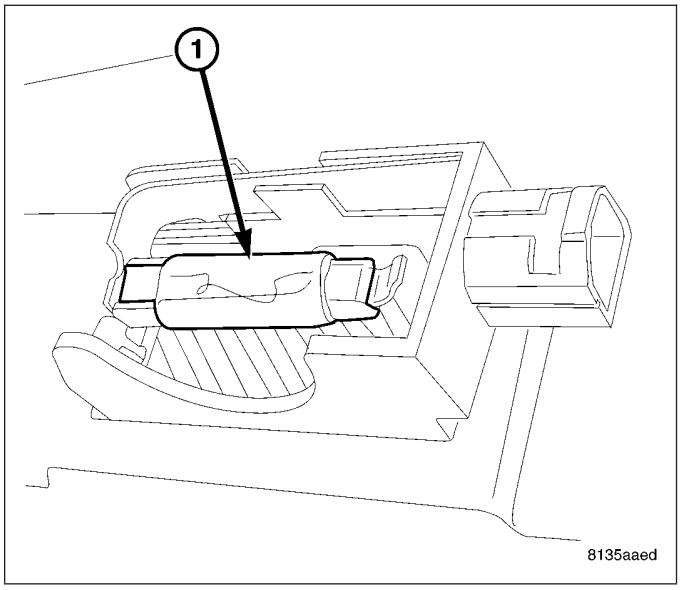

INSTALLATION

1. Place the door courtesy lamp (1) into the courtesy lamp unit.

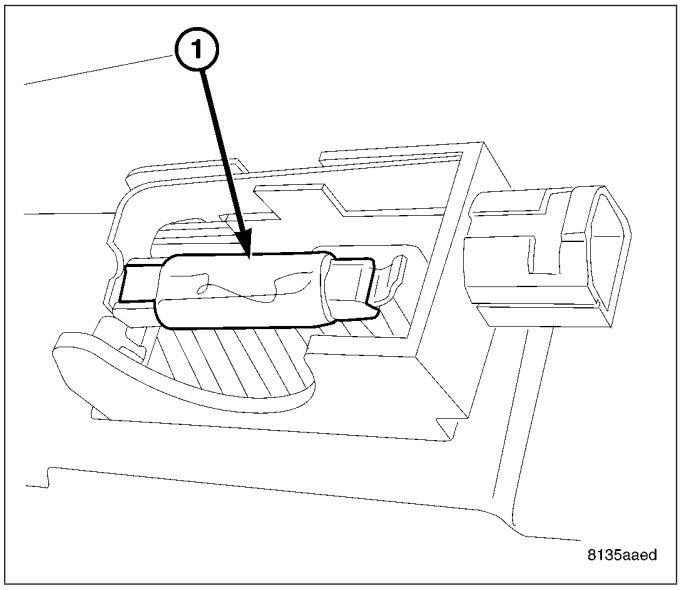

2. Install the front door trim panel (Refer to 23 - BODY/DOOR - FRONT/TRIM PANEL - INSTALLATION).
3. Connect the battery negative cable.

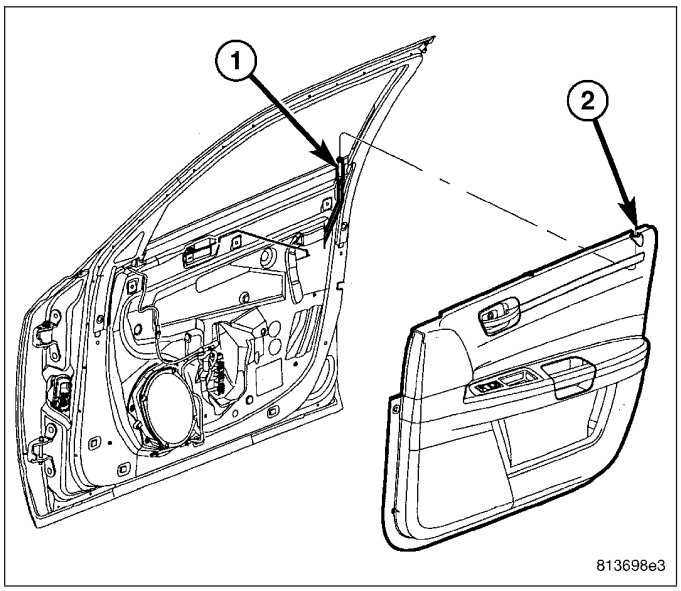

LIFTGATE LAMP

REMOVAL

1. Disconnect and isolate the battery negative cable.
2. Open liftgate.
3. Using a trim stick (3) (special tool #C-4755) or equivalent, gently pry out on liftgate lamp lens (2) and remove from trim panel (1).

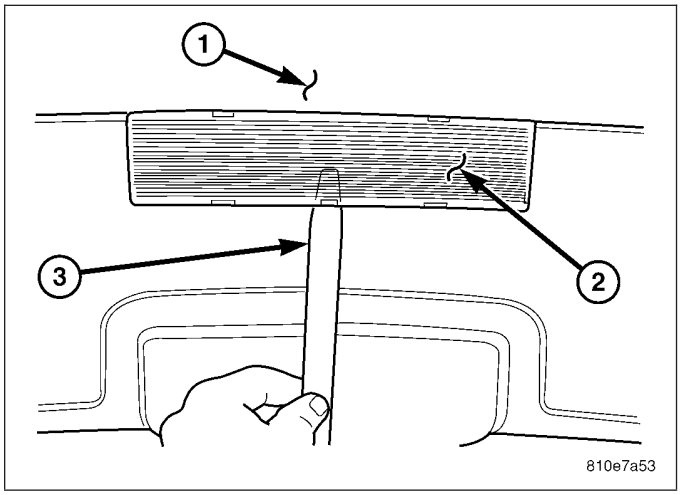

4. Gently pry up on the edge of the affected lamp and pull out of the liftgate lamp unit to remove.

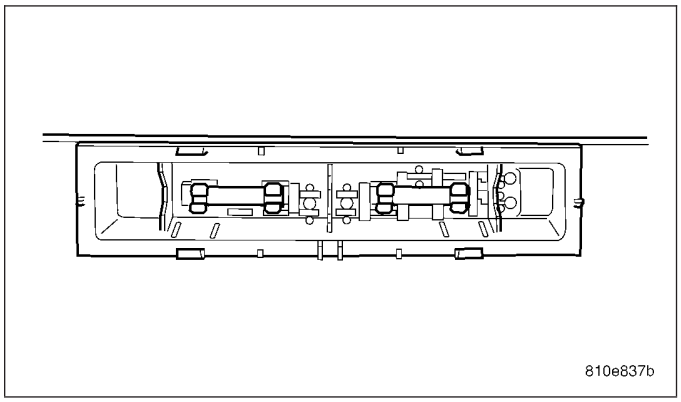

INSTALLATION

1. Place new lamp over retaining clips in liftgate lamp unit retaining clips and firmly snap into place.

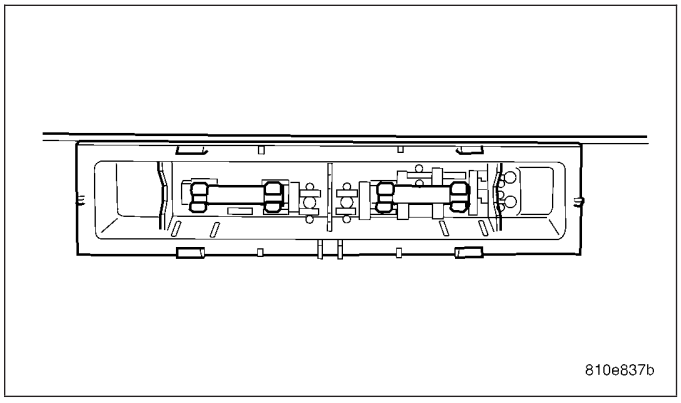

2. Place the liftgate lamp lens (2) over the retaining pins making sure that they are lined up and then firmly snap into place.
3. Connect the battery negative cable.

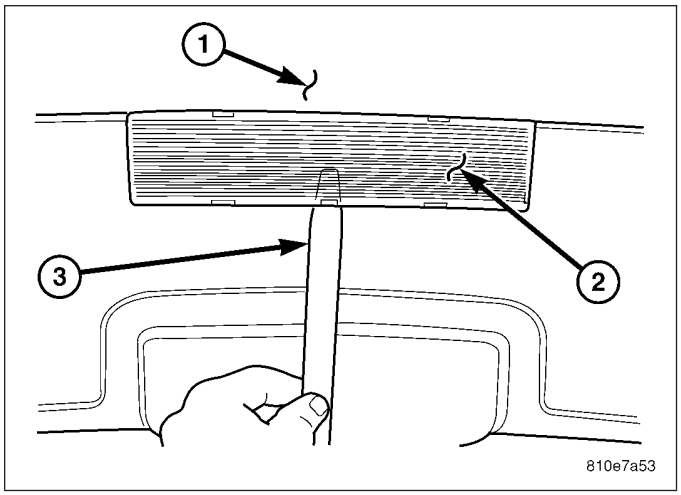

READING LAMP

REMOVAL

OVERHEAD CONSOLE

1. Disconnect and isolate the battery negative cable.
2. Using a trim stick (special tool #C-4755) or equivalent, gently pry out the top (toward windshield) side of the reading lamp lens.

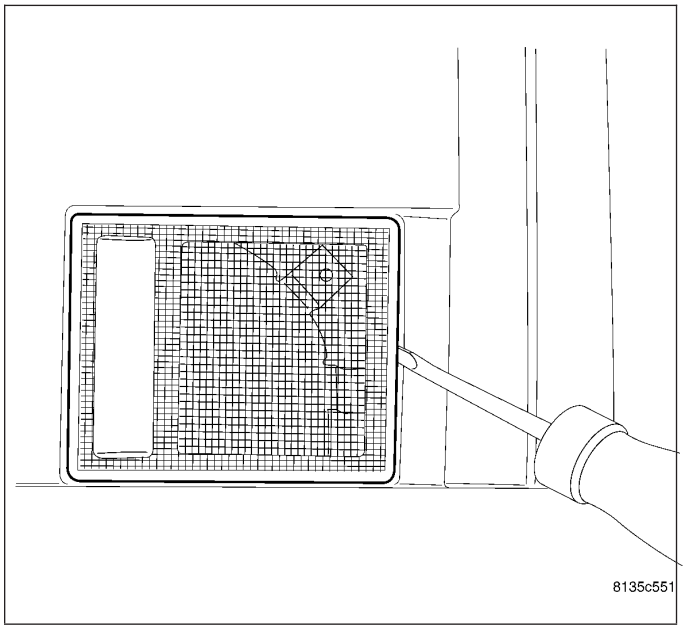

3. Lift the top of the lens up and slide forward (toward windshield) until the tab is released from the overhead console.
4. Gently pull the lamp out of the overhead console.

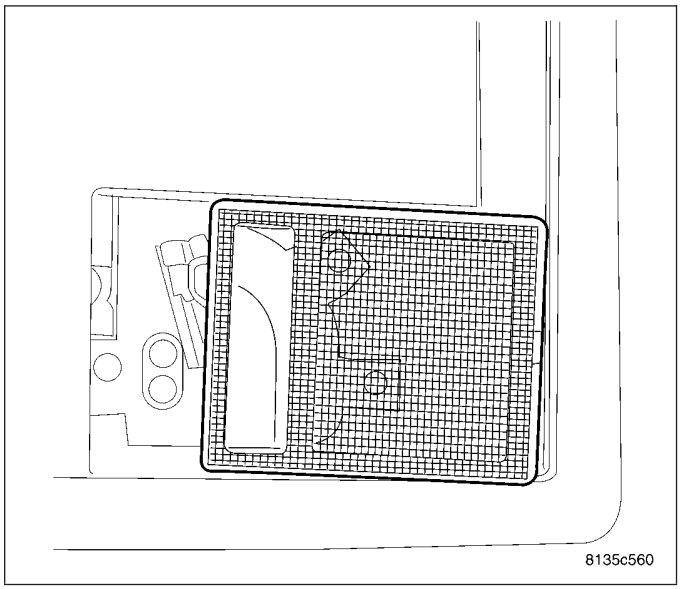

REAR

1. Disconnect and isolate the battery negative cable.
2. Using a trim stick (special tool #C-4755) or equivalent, gently pry out the edge of the reading lamp lens. There will be a small slot on the side of the lens that should be used. Looking at the unit it will be on the left side of the lens.

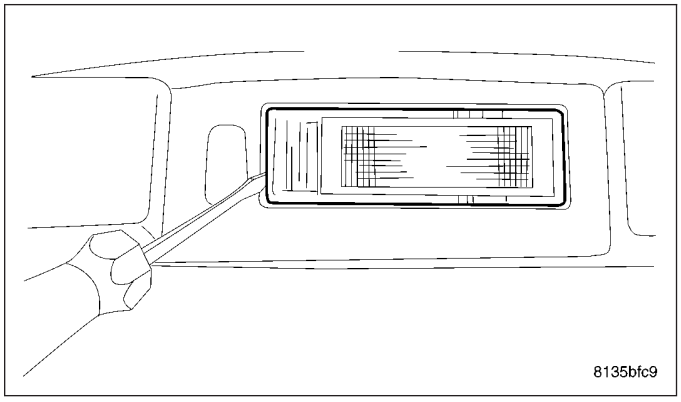

3. Lift out on the lens and slide the lens to the left so that the retaining tabs are exposed and the lens can be then removed.

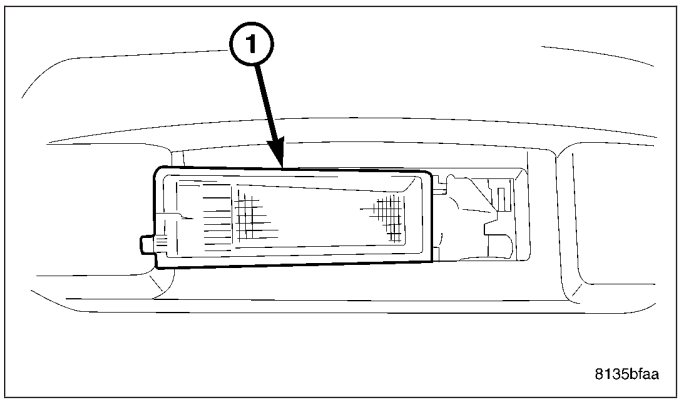

4. Grasp lamp with fingers and firmly pull lamp (1) from unit.

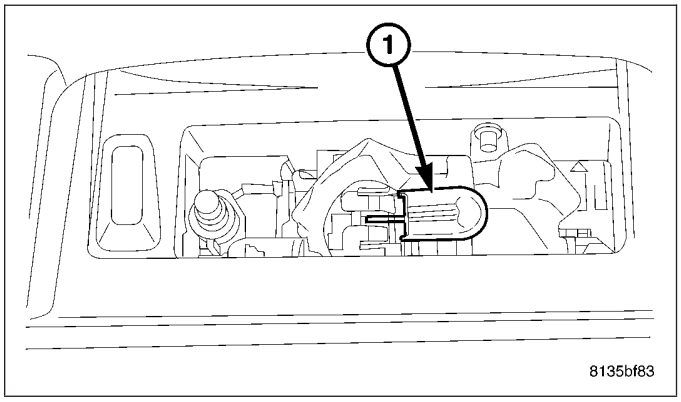

INSTALLATION

OVERHEAD CONSOLE

1. Firmly push the lamp into the overhead console.
2. Place the tab inside the rear edge of the overhead console. Carefully push down on the side of the lens opposite from the tab side, making sure to snap in both sides of the lens.
3. Connect the battery negative cable.

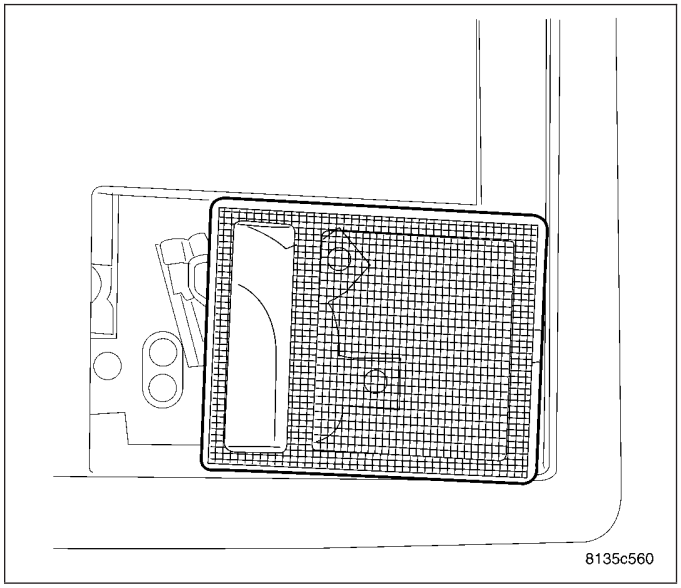

REAR

1. Firmly push the lamp (1) into the reading lamp unit.

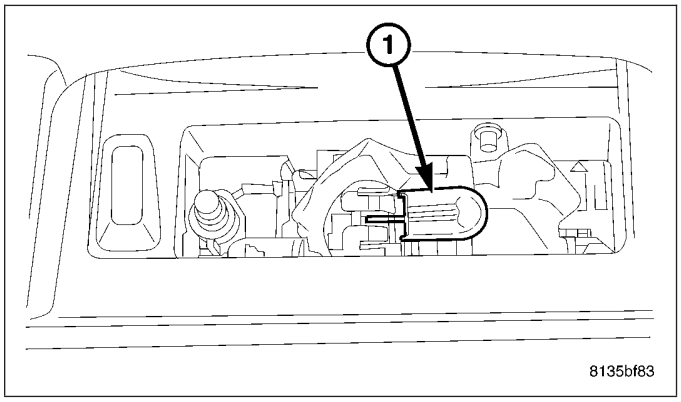

2. Looking at the lamp unit place the right side in first and make sure the tabs are under the lip of the unit. Slide right and then firmly snap lens (1) into place.
3. Connect the battery negative cable.

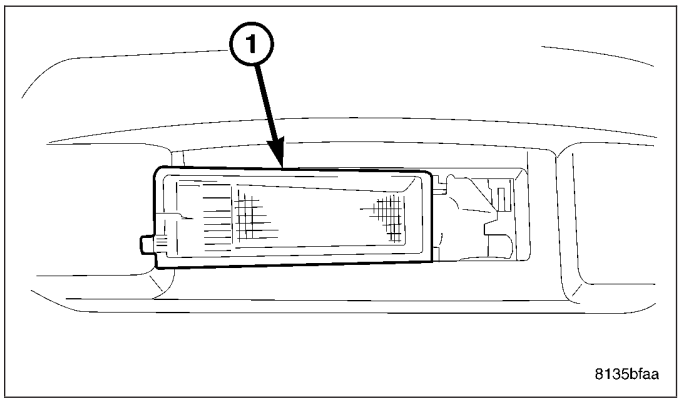

MESSAGE SYSTEMS

TABLE OF CONTENTS

page

MESSAGE CENTER - ELECTRICAL DIAGNOSTICS 1
MESSAGE CENTER - SERVICE INFORMATION . 136
OVERHEAD CONSOLE - ELECTRICAL DIAGNOSTICS 141
OVERHEAD CONSOLE - SERVICE INFORMATION 155

MESSAGE CENTER - ELECTRICAL DIAGNOSTICS

TABLE OF CONTENTS

page

MESSAGE CENTER - ELECTRICAL DIAGNOSTICS
DIAGNOSIS AND TESTING
P1462 — FUEL LEVEL OUTPUT CIRCUIT LOW 4
P1463 — FUEL LEVEL OUTPUT CIRCUIT HIGH 7
P1504 — VEHICLE SPEED OUTPUT CIRCUIT LOW 11
P1505 — VEHICLE SPEED OUTPUT CIRCUIT HIGH. 14
P164A — MIL OUTPUT CIRCUIT LOW 18
P164B — MIL OUTPUT CIRCUIT HIGH 21
P170A — PARK/NEUTRAL OUTPUT CIRCUIT LOW 25
P170B — PARK/NEUTRAL OUTPUT CIRCUIT HIGH. 28
P170C — ENGINE RPM OUTPUT CIRCUIT LOW. 32
P170D — ENGINE RPM OUTPUT CIRCUIT HIGH 35
C1088 — BRAKE LAMP SWITCH OUTPUT CIRCUIT LOW 39
C1089 — BRAKE LAMP OUTPUT CIRCUIT HIGH 42
B1693 — ACCESSORY DIMMING CONTROL CIRCUIT LOW 46
B1694 — ACCESSORY DIMMING CONTROL CIRCUIT HIGH. 49
B17CF — EMERGENCY FLASHING LAMP REQUEST 1 CIRCUIT HIGH 53
B17D2 — EMERGENCY FLASHING LAMP REQUEST 2 CIRCUIT HIGH 57
B17D4 — HEADLAMP STATUS OUTPUT CIRCUIT LOW 61
B17D5 — HEADLAMP STATUS OUTPUT CIRCUIT HIGH. 64
B19B4 — DRIVER DOOR AJAR OUTPUT CIRCUIT LOW 68
P19B5 — DRIVER DOOR AJAR OUTPUT CIRCUIT HIGH. 71
P1A5B — PANIC ALARM MUTE REQUEST CIRCUIT HIGH. 75
B1A5D — PANIC ALARM ACTIVATION OUTPUT CIRCUIT LOW 79
B1A5E — PANIC ALARM ACTIVATION STATUS CIRCUIT HIGH 82
B1CC1 — DEPLOYMENT NOTIFICATION OUTPUT CIRCUIT LOW 86
B1CC2 — DEPLOYMENT NOTIFICATION OUTPUT CIRCUIT HIGH. 90
B210D-BATTERY VOLTAGE LOW 95
B210E-BATTERY VOLTAGE HIGH 98
B237C — DATA COMMUNICATION RADIO INPUT CIRCUIT HIGH. 100
B237F — HORN MUTE REQUEST CIRCUIT HIGH 104
B2381 — DRIVER SEAT BELT OUTPUT CIRCUIT LOW. 108
B2382 — DRIVER SEAT BELT OUTPUT CIRCUIT HIGH. 111
B2384 — HORN SWITCH OUTPUT CIRCUIT LOW. 115
B2385 — HORN SWITCH OUTPUT CIRCUIT HIGH 118
U0021 — CAN B BUS (+) CIRCUIT OPEN 122

U0022 CAN B BUS (+) CIRCUIT LOW 124
U0023 — CAN B BUS (+) CIRCUIT HIGH 126
U0024 — CAN B BUS (-) CIRCUIT OPEN 128
U0025 CAN B BUS (-) CIRCUIT LOW 130
U0026 — CAN B BUS (-) CIRCUIT HIGH 132
U0141 — LOST COMMUNICATION WITH IPM (FCM/TIPM) 134
U0151 — LOST COMMUNICATION WITH OCCUPANT RESTRAINT CONTROLLER (ORC) 134
U0156 — LOST COMMUNICATION WITH ELECTRONIC OVERHEAD MODULE 134
U0159-LOST COMMUNICATION WITH PARK ASSIST CONTROL MODULE. 134
U0164-LOST COMMUNICATION WITH HVAC CONTROL MODULE 134
U0167-LOST COMMUNICATION WITH INTRUSION TRANSCEIVER CONTROL MODULE. 134
U0168-LOST COMMUNICATION WITH VEHICLE SECURITY CONTROL MODULE (SKREEM/WCM) 134
U0184-LOST COMMUNICATION WITH RADIO 134
U0195-LOST COMMUNICATION WITH SDARS 135
U0197-LOST COMMUNICATION WITH HANDS FREE PHONE MODULE 135
U0208-LOST COMMUNICATION WITH HEATED SEAT CONTROL MODULE 135
U0209-LOST COMMUNICATION WITH MEMORY SEAT CONTROL MODULE 135
U0212-LOST COMMUNICATION WITH STEERING COLUMN CONTROL MODULE . . 135

MESSAGE CENTER - ELECTRICAL DIAGNOSTICS

DIAGNOSIS AND TESTING

P1462 — FUEL LEVEL OUTPUT CIRCUIT LOW

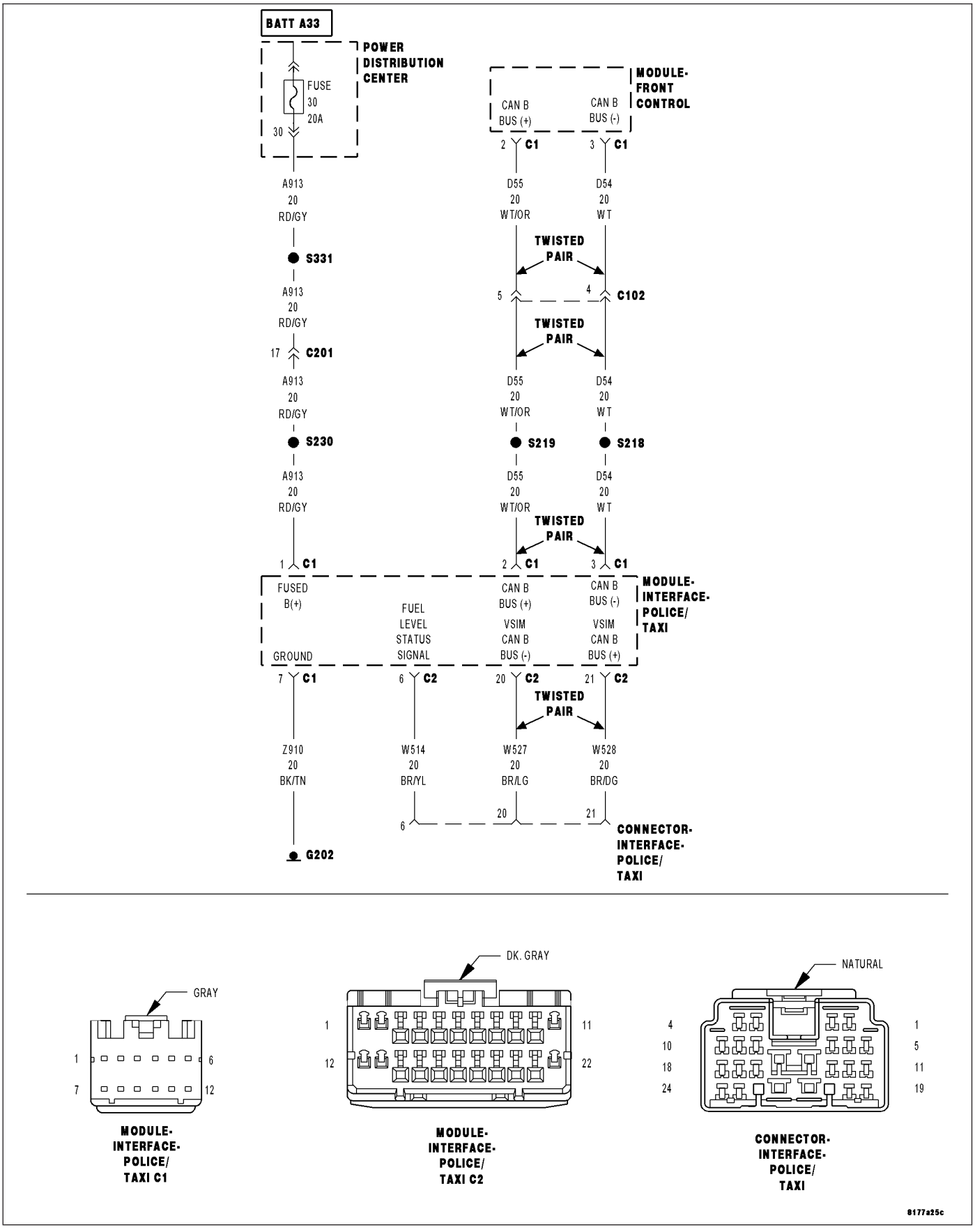

For a complete wiring diagram **Refer to Section 8W**.

- **When Monitored:**
  With the ignition switch on.
- **Set Condition:**
  The Multi-Purpose Module (Police And Taxi Interface Module-PTIM) has detected the Fuel Level Status Signal circuit below a calibrated value.

Possible Causes
(W514) FUEL LEVEL STATUS SIGNAL CIRCUIT SHORTED TO GROUND
AFTERMARKET LIGHT/SIREN CONTROLLER
MULTI-PURPOSE MODULE (POLICE AND TAXI INTERFACE MODULE-PTIM)

1. CHECK FOR ANY OF THE FOLLOWING ACTIVE DTCS

With the scan tool, read all active DTCs from all modules.

NOTE: Check for FCM configuration, CAN B or C hardware electrical, VIN Missing/Mismatch, battery or ignition related DTCs.

Does the scan tool display any active DTCs to the conditions listed above?

Yes >> Diagnose and repair the DTC. Refer to the Table of Contents in ELECTRONIC CONTROL MODULES - ELECTRICAL DIAGNOSTICS for a complete list of the symptoms.
Perform BODY VERIFICATION TEST – VER 1. (Refer to BODY VERIFICATION TEST – VER 1).

No >> Go To 2. Diagnostic Test

2. CHECK FOR ACTIVE DTC

With the scan tool, read the active DTCs.

Erase the DTCs.

Turn the ignition off, wait 10 seconds, then turn the ignition on.

With the scan tool, read the active DTC's.

Does the scan tool display this DTC as active?

Yes >> Go To 3.

No >> If the DTC is stored, check for an intermittent condition. Visually inspect the related wiring harness connectors. Look for broken, bent, pushed out, or corroded terminals, and repair any obvious problems.
Perform BODY VERIFICATION TEST – VER 1. (Refer to BODY VERIFICATION TEST – VER 1).

3. CHECK THE (W514) FUEL LEVEL STATUS SIGNAL CIRCUIT FOR A SHORT TO GROUND

Turn the ignition off.

Disconnect the Multi-Purpose Module (Police And Taxi Interface Module-PTIM) C2 harness connector.

Measure the resistance of the (W514) Fuel Level Status Signal circuit between ground and the Multi-Purpose Module (Police And Taxi Interface Module-PTIM) C2 harness connector.

Is the resistance below 5.0 ohms?

Yes >> Go To 4.

No >> Go To 5.

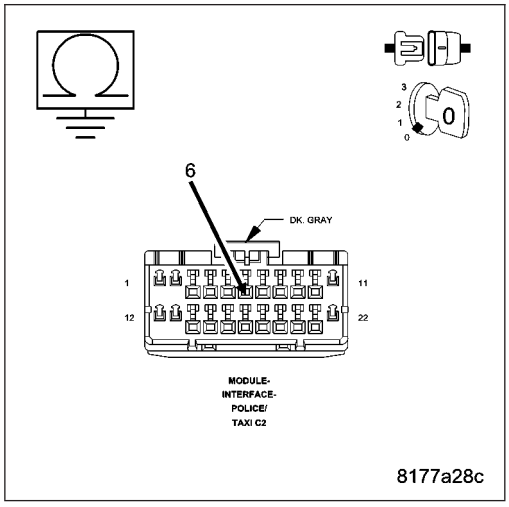

4. ISOLATE THE SHORT TO GROUND IN THE (W514) CHECK THE FUEL LEVEL STATUS SIGNAL CIRCUIT

Turn the ignition off.

Disconnect the Multi-Purpose Module (Police And Taxi Interface Module-PTIM) 24 way harness connector (aftermarket light/siren controller side).

Measure the resistance of the (W514) Fuel Level Status Signal circuit between ground and the Multi-Purpose Module (Police And Taxi Interface Module-PTIM) C2 harness connector.

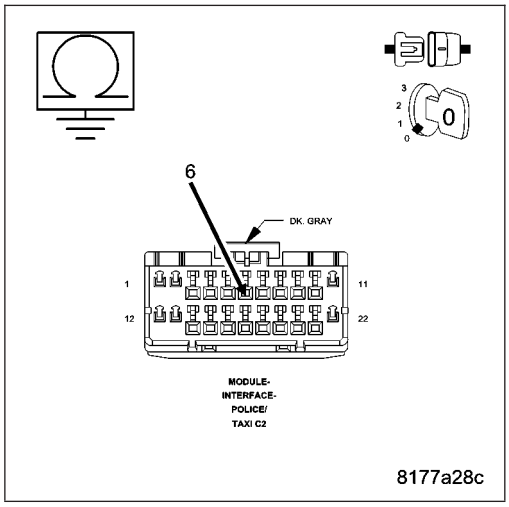

Is the resistance below 5.0 ohms?

Yes >> Repair the (W514) Fuel Level Status Signal circuit for a short to ground.

Perform BODY VERIFICATION TEST – VER 1. (Refer to BODY VERIFICATION TEST – VER 1).

No >> Refer to electrical diagnostics for the aftermarket light/siren controller, and repair or replace the aftermarket light/siren controller in accordance with the manufacturer's service information.

Perform BODY VERIFICATION TEST – VER 1. (Refer to BODY VERIFICATION TEST – VER 1).

5. CHECK THE MULTI-PURPOSE MODULE (POLICE AND TAXI INTERFACE MODULE-PTIM)

Turn the ignition off.

Disconnect all Multi-Purpose Module (Police And Taxi Interface Module-PTIM) and aftermarket light/siren controller electrical connectors.

Check for damaged or corroded pins, pinched wires, or damaged connectors, and repair any obvious problems.

Connect all Multi-Purpose Module (Police And Taxi Interface Module-PTIM) and aftermarket light/siren controller electrical connectors.

Turn the ignition on.

With the scan tool monitor active codes as you work through the following step.

Wiggle the wiring harness and connectors of the Multi-Purpose Module (Police And Taxi Interface Module-PTIM) and aftermarket light/siren controller.

If only stored codes return continue the test until the problem area has been isolated, and repair any obvious problems.

Is DTC P1462 — FUEL LEVEL OUTPUT CIRCUIT LOW still displayed?

Yes >> Replace the Multi-Purpose Module (Police And Taxi Interface Module-PTIM) in accordance with the service information.

Perform BODY VERIFICATION TEST – VER 1. (Refer to BODY VERIFICATION TEST – VER 1).

No >> Repair is complete. The problem may have been caused by a loose or corroded terminal.

Perform BODY VERIFICATION TEST – VER 1. (Refer to BODY VERIFICATION TEST – VER 1).

P1463 — FUEL LEVEL OUTPUT CIRCUIT HIGH

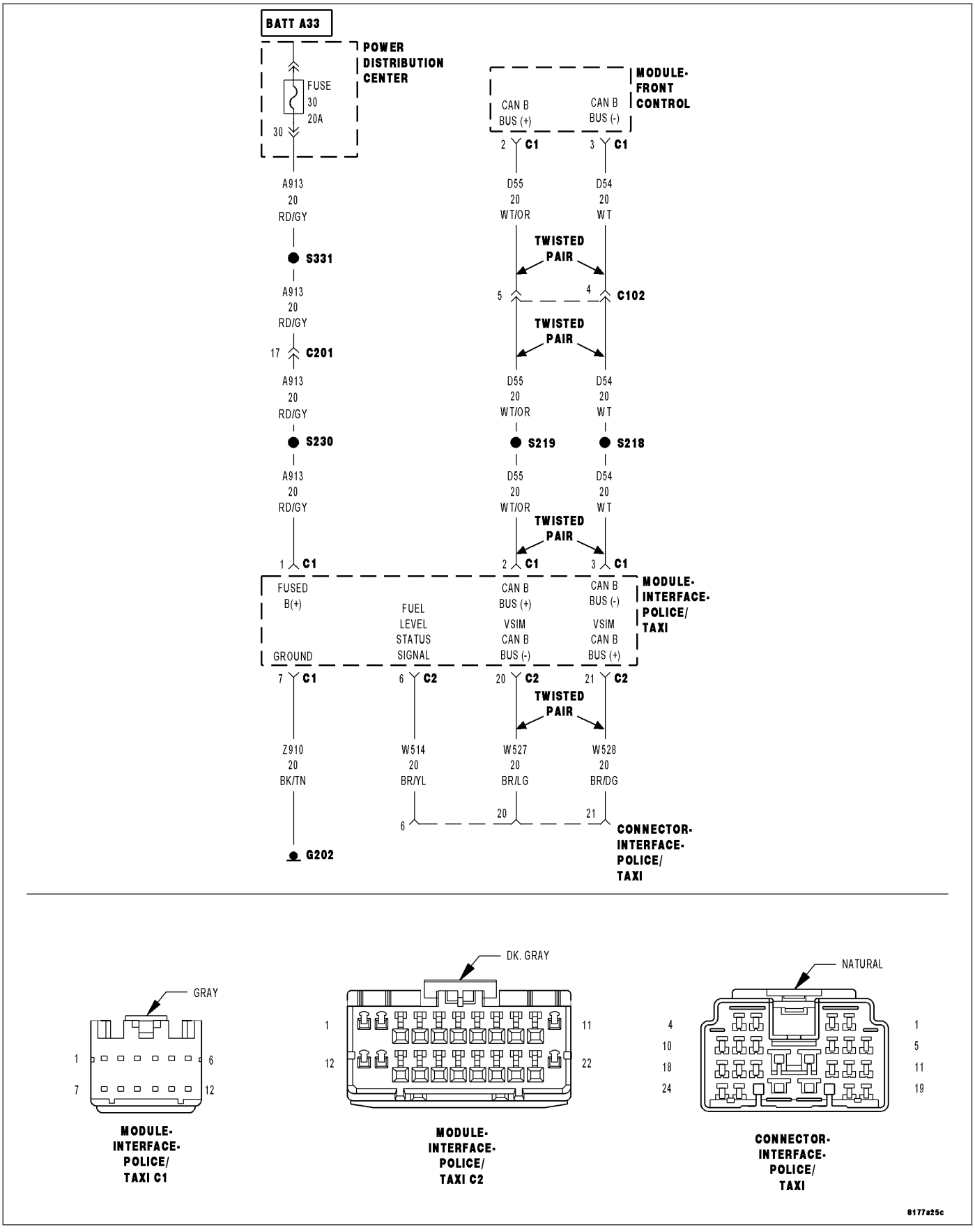

For a complete wiring diagram **Refer to Section 8W**.

- **When Monitored:**
  With the ignition switch on.
- **Set Condition:**
  The Multi-Purpose Module (Police And Taxi Interface Module-PTIM) has detected the Fuel Level Status Signal circuit above a calibrated value.

Possible Causes
(W514) FUEL LEVEL STATUS SIGNAL CIRCUIT OPEN OR SHORTED TO VOLTAGE
AFTERMARKET LIGHT/SIREN CONTROLLER
MULTI-PURPOSE MODULE (POLICE AND TAXI INTERFACE MODULE-PTIM)

1. CHECK FOR ANY OF THE FOLLOWING ACTIVE DTCS

With the scan tool, read all active DTCs from all modules.

NOTE: Check for FCM configuration, CAN B or C hardware electrical, VIN Missing/Mismatch, battery or ignition related DTCs.

Does the scan tool display any active DTCs to the conditions listed above?

Yes >> Diagnose and repair the DTC. Refer to the Table of Contents in ELECTRONIC CONTROL MODULES - ELECTRICAL DIAGNOSTICS for a complete list of the symptoms.
Perform BODY VERIFICATION TEST – VER 1. (Refer to BODY VERIFICATION TEST – VER 1).

No >> Go To 2. Diagnostic Test

2. CHECK FOR ACTIVE DTC

With the scan tool, read the active DTCs.

Erase the DTCs.

Turn the ignition off, wait 10 seconds, then turn the ignition on.

With the scan tool, read the active DTC's.

Does the scan tool display this DTC as active?

Yes >> Go To 3.

No >> If the DTC is stored, check for an intermittent condition. Visually inspect the related wiring harness connectors. Look for broken, bent, pushed out, or corroded terminals, and repair any obvious problems.
Perform BODY VERIFICATION TEST – VER 1. (Refer to BODY VERIFICATION TEST – VER 1).

3. CHECK THE (W514) FUEL LEVEL STATUS SIGNAL CIRCUIT FOR A SHORT TO VOLTAGE

Turn the ignition off.

Disconnect the Multi-Purpose Module (Police And Taxi Interface Module-PTIM) C2 harness connector.

Turn the ignition on.

Measure the voltage of the (W514) Fuel Level Status Signal circuit between ground and the Multi-Purpose Module (Police And Taxi Interface Module-PTIM) C2 harness connector.

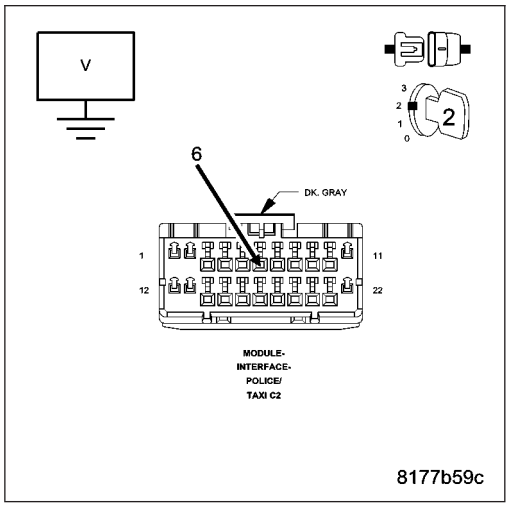

Is there any voltage present?

Yes >> Go To 4.

No >> Go To 5.

4. ISOLATE THE SHORT TO VOLTAGE IN THE (W514) FUEL LEVEL STATUS SIGNAL

Turn the ignition off.

Disconnect Multi-Purpose Module (Police And Taxi Interface Module-PTIM) 24 way harness connector (aftermarket light/siren controller side).

Turn the ignition on.

Measure the voltage of the (W514) Fuel Level Status Signal circuit between ground and the Multi-Purpose Module (Police And Taxi Interface Module-PTIM) C2 harness connector.

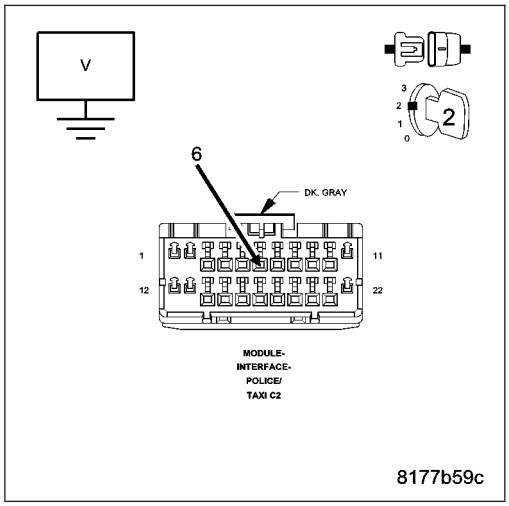

Is there any voltage present?

Yes >> Repair the (W514) Fuel Level Status Signal circuit for a short to voltage.

Perform BODY VERIFICATION TEST – VER 1. (Refer to BODY VERIFICATION TEST – VER 1).

No >> Refer to electrical diagnostics for the aftermarket light/siren controller, and repair or replace the aftermarket light siren controller in accordance with the manufacturer's service information.

Perform BODY VERIFICATION TEST – VER 1. (Refer to BODY VERIFICATION TEST – VER 1).

5. CHECK THE (W514) FUEL LEVEL STATUS SIGNAL CIRCUIT FOR AN OPEN

Turn the ignition off.

Disconnect the Multi-Purpose Module (Police And Taxi Interface Module-PTIM) 24 way harness connector (aftermarket light/siren controller side).

Measure the resistance of the (W514) Fuel Level Status Signal circuit between the Multi-Purpose Module (Police And Taxi Interface Module-PTIM) 24 way and the (Police And Taxi Interface Module-PTIM) C2 harness connectors.

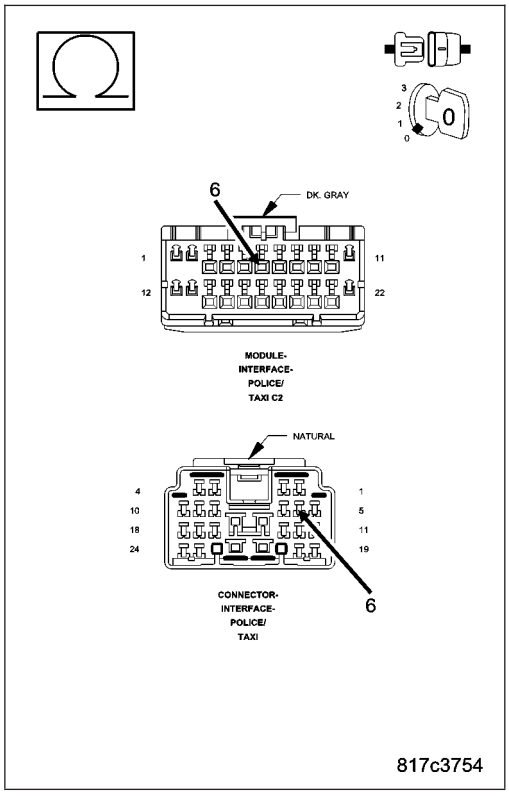

Is the resistance below 5.0 ohms?

Yes >> Go To 6.

No >> Repair the (W514) Fuel Level Status Signal circuit for an open or high resistance.

Perform BODY VERIFICATION TEST – VER 1. (Refer to BODY VERIFICATION TEST – VER 1).

6. CHECK THE MULTI-PURPOSE MODULE (POLICE AND TAXI INTERFACE MODULE-PTIM)

Turn the ignition off.

Disconnect all Multi-Purpose Module (Police And Taxi Interface Module-PTIM) and aftermarket light/siren controller harness connectors.

Check for damaged or corroded pins, pinched wires, or damaged connectors, and repair any obvious problems.

Connect all Multi-Purpose Module (Police And Taxi Interface Module-PTIM) and aftermarket light/siren controller harness connectors.

Turn the ignition on.

With the scan tool monitor active codes as you work through the following step.

Wiggle the wiring harness and connectors of the Multi-Purpose Module (Police And Taxi Interface Module-PTIM) and aftermarket light/siren controller.

If only stored codes return continue the test until the problem area has been isolated, and repair any obvious problems.

Is DTC P1463 — FUEL LEVEL OUTPUT CIRCUIT HIGH still displayed?

Yes >> Replace the Multi-Purpose Module (Police And Taxi Interface Module-PTIM) in accordance with the service information.
Perform BODY VERIFICATION TEST – VER 1. (Refer to BODY VERIFICATION TEST – VER 1).

No >> Repair is complete. The problem may have been caused by a loose or corroded terminal.
Perform BODY VERIFICATION TEST – VER 1. (Refer to BODY VERIFICATION TEST – VER 1).

P1504 — VEHICLE SPEED OUTPUT CIRCUIT LOW

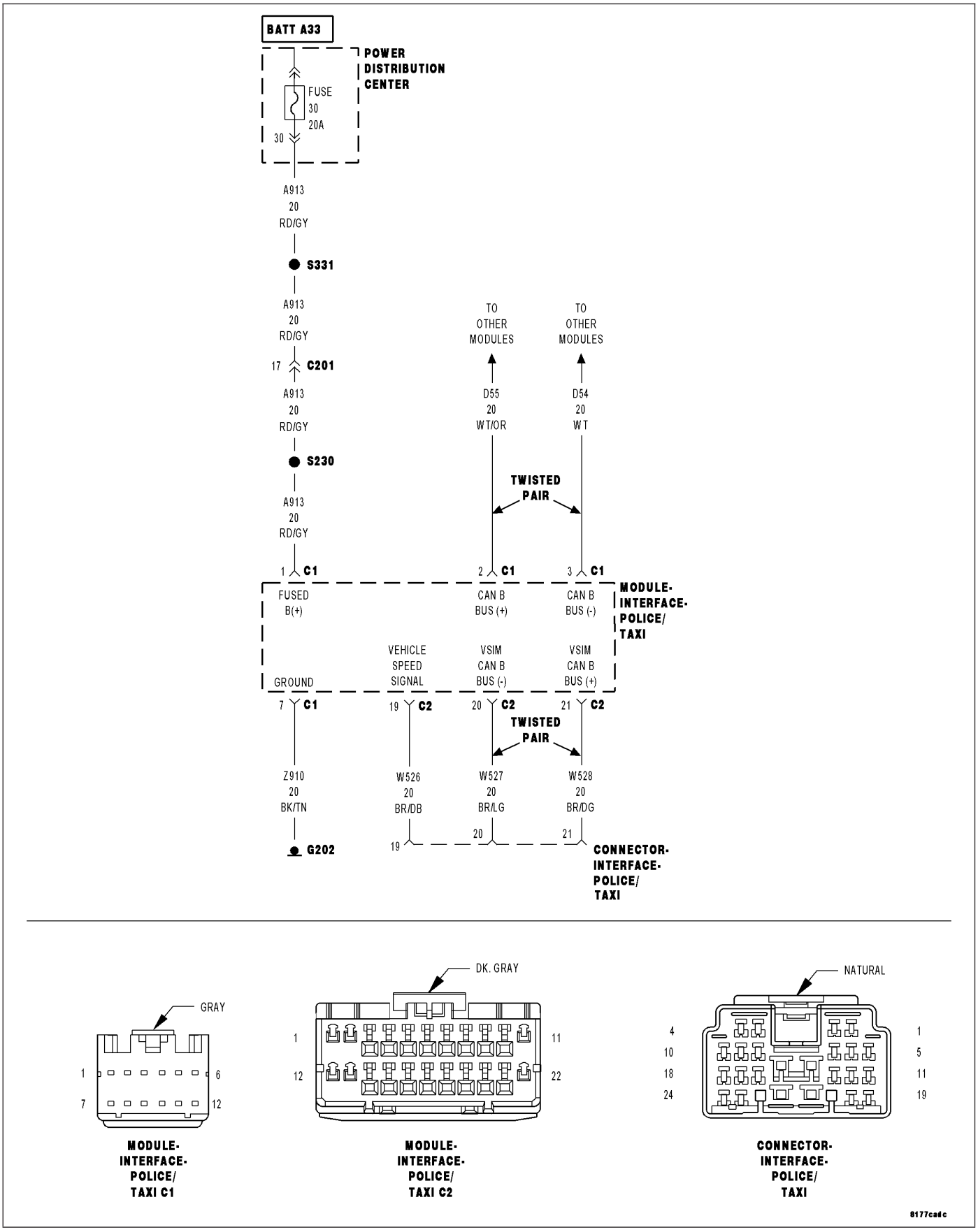

For a complete wiring diagram **Refer to Section 8W**.

- **When Monitored:**
  With the ignition switch on.
- **Set Condition:**
  The Multi-Purpose Module (Police And Taxi Interface Module-PTIM) has detected the Vehicle Speed Signal circuit below a calibrated value.

Possible Causes
(W526) VEHICLE SPEED SIGNAL CIRCUIT SHORTED TO GROUND
AFTERMARKET LIGHT/SIREN CONTROLLER
MULTI-PURPOSE MODULE (POLICE AND TAXI INTERFACE MODULE-PTIM)

1. CHECK FOR ANY OF THE FOLLOWING ACTIVE DTCS

With the scan tool, read all active DTCs from all modules.

NOTE: Check for FCM configuration, CAN B or C hardware electrical, VIN Missing/Mismatch, battery or ignition related DTCs.

Does the scan tool display any active DTCs to the conditions listed above?

Yes >> Diagnose and repair the DTC. Refer to the Table of Contents in ELECTRONIC CONTROL MODULES - ELECTRICAL DIAGNOSTICS for a complete list of the symptoms.
Perform BODY VERIFICATION TEST – VER 1. (Refer to BODY VERIFICATION TEST – VER 1).

No >> Go To 2. Diagnostic Test

2. CHECK FOR ACTIVE DTC

With the scan tool, read the active DTCs.

Erase the DTCs.

Turn the ignition off, wait 10 seconds, then turn the ignition on.

With the scan tool, read the active DTC's.

Does the scan tool display this DTC as active?

Yes >> Go To 3.

No >> If the DTC is stored, check for an intermittent condition. Visually inspect the related wiring harness connectors. Look for broken, bent, pushed out, or corroded terminals, and repair any obvious problems.
Perform BODY VERIFICATION TEST – VER 1. (Refer to BODY VERIFICATION TEST – VER 1).

3. CHECK THE (W526) VEHICLE SPEED SIGNAL CIRCUIT FOR A SHORT TO GROUND

Turn the ignition off.

Disconnect the Multi-Purpose Module (Police And Taxi Interface Module-PTIM) C2 electrical connector.

Measure the resistance of the (W526) Vehicle Speed Signal circuit between ground and the Multi-Purpose Module (Police And Taxi Interface Module-PTIM) C2 electrical connector.

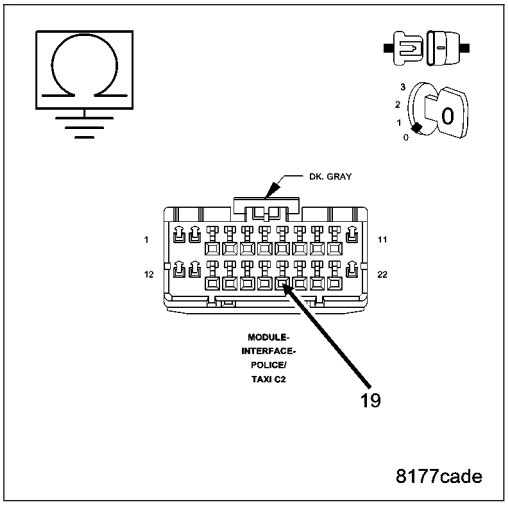

Is the resistance below 5.0 ohms?

Yes >> Go To 4.

No >> Go To 5.

4. ISOLATE THE SHORT TO GROUND IN THE (W526) THE VEHICLE SPEED SIGNAL

Turn the ignition off.

Disconnect the Multi-Purpose Module (Police And Taxi Interface Module-PTIM) 24 way harness connector (aftermarket light/siren controller side).

Measure the resistance of the (W526) Vehicle Speed Signal circuit between ground and the Multi-Purpose Module (Police And Taxi Interface Module-PTIM) C2 harness connector.

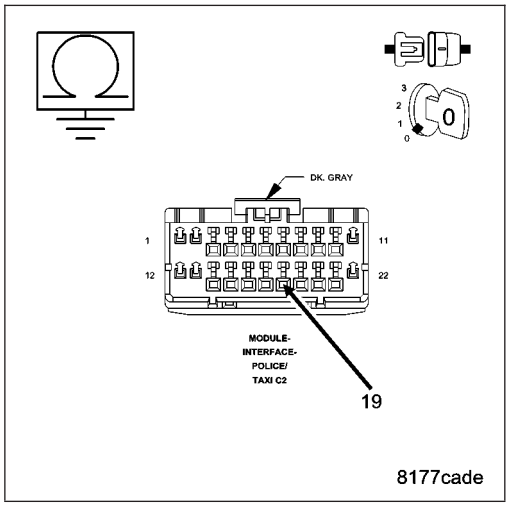

Is the resistance below 5.0 ohms?

Yes >> Repair the (W526) Vehicle Speed Signal circuit for a short to ground.

Perform BODY VERIFICATION TEST – VER 1. (Refer to BODY VERIFICATION TEST – VER 1).

No >> Refer to electrical diagnostics for the aftermarket light/siren controller, and repair or replace the aftermarket light siren/ controller in accordance with the manufacturer's service information.

Perform BODY VERIFICATION TEST – VER 1. (Refer to BODY VERIFICATION TEST – VER 1).

5. CHECK THE MULTI-PURPOSE MODULE (POLICE AND TAXI INTERFACE MODULE-PTIM)

Turn the ignition off.

Disconnect all Multi-Purpose Module (Police And Taxi Interface Module-PTIM) and aftermarket light/siren controller harness connectors.

Check for damaged or corroded pins, pinched wires, or damaged connectors, and repair any obvious problems.

Connect all Multi-Purpose Module (Police And Taxi Interface Module-PTIM) and aftermarket light/siren controller harness connectors.

Turn the ignition on.

With the scan tool monitor active codes as you work through the following step.

Wiggle the wiring harness and connectors of the Multi-Purpose Module (Police And Taxi Interface Module-PTIM) and aftermarket light/siren controller.

If only stored codes return continue the test until the problem area has been isolated, and repair any obvious problems.

Is DTC P1504 —VEHICLE SPEED OUTPUT CIRCUIT LOW still displayed?

Yes >> Replace the Multi-Purpose Module (Police And Taxi Interface Module-PTIM) in accordance with the service information.

Perform BODY VERIFICATION TEST – VER 1. (Refer to BODY VERIFICATION TEST – VER 1).

No >> Repair is complete. The problem may have been caused by a loose or corroded terminal.

Perform BODY VERIFICATION TEST – VER 1. (Refer to BODY VERIFICATION TEST – VER 1).

P1505 — VEHICLE SPEED OUTPUT CIRCUIT HIGH

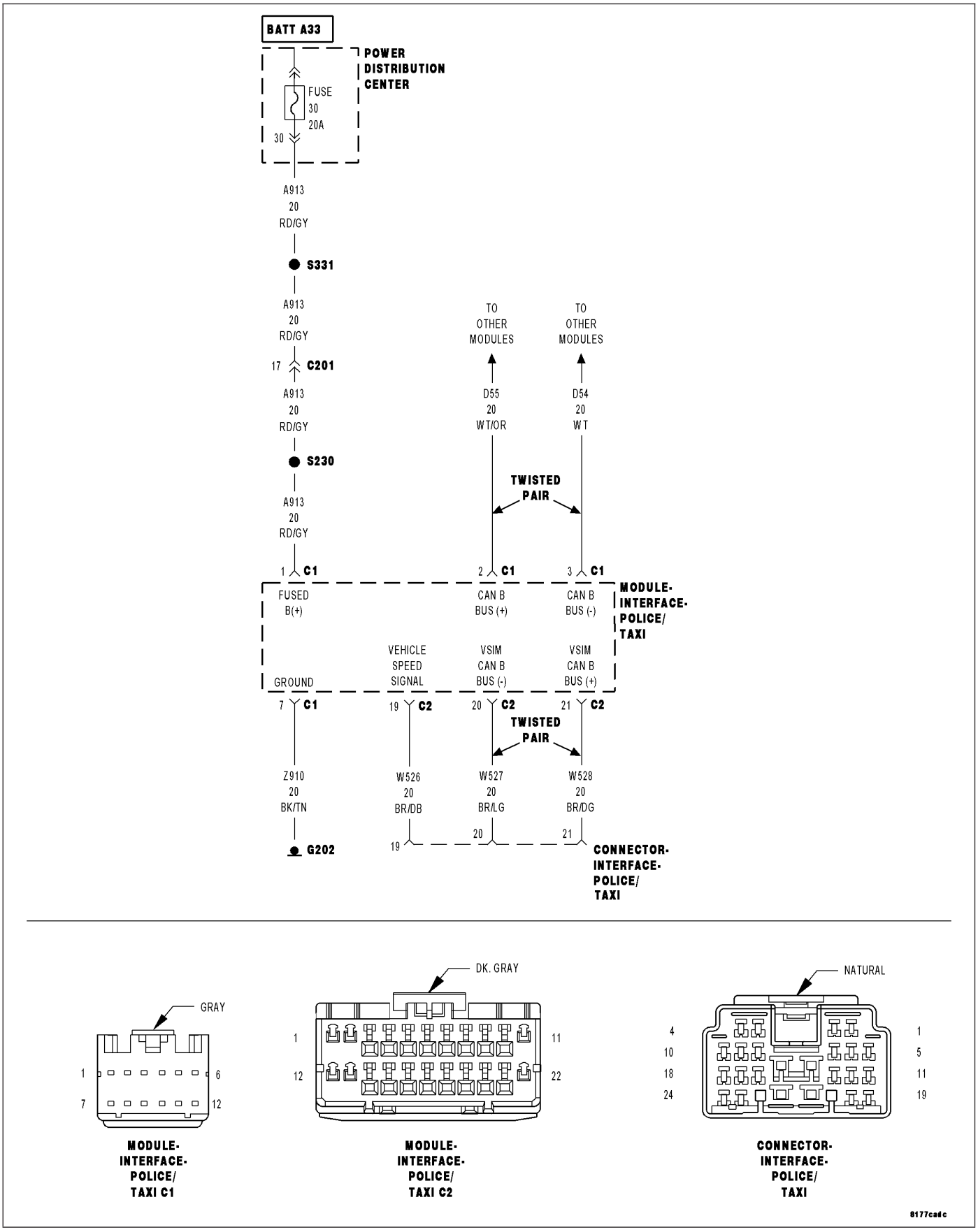

For a complete wiring diagram **Refer to Section 8W**.

- **When Monitored:**
  With the ignition switch on.
- **Set Condition:**
  The Multi-Purpose Module (Police And Taxi Interface Module-PTIM) has detected the Vehicle Speed Signal circuit above a calibrated value.

Possible Causes
(W526) VEHICLE SPEED SIGNAL CIRCUIT OPEN OR SHORTED TO VOLTAGE
AFTERMARKET LIGHT/SIREN CONTROLLER
MULTI-PURPOSE MODULE (POLICE AND TAXI INTERFACE MODULE-PTIM)

1. CHECK FOR ANY OF THE FOLLOWING ACTIVE DTCS

With the scan tool, read all active DTCs from all modules.

NOTE: Check for FCM configuration, CAN B or C hardware electrical, VIN Missing/Mismatch, battery or ignition related DTCs.

Does the scan tool display any active DTCs to the conditions listed above?

Yes >> Diagnose and repair the DTC. Refer to the Table of Contents in ELECTRONIC CONTROL MODULES - ELECTRICAL DIAGNOSTICS for a complete list of the symptoms.
Perform BODY VERIFICATION TEST – VER 1. (Refer to BODY VERIFICATION TEST – VER 1).

No >> Go To 2. Diagnostic Test

2. CHECK FOR ACTIVE DTC

With the scan tool, read the active DTCs.

Erase the DTCs.

Turn the ignition off, wait 10 seconds, then turn the ignition on.

With the scan tool, read the active DTC's.

Does the scan tool display this DTC as active?

Yes >> Go To 3.

No >> If the DTC is stored, check for an intermittent condition. Visually inspect the related wiring harness connectors. Look for broken, bent, pushed out, or corroded terminals, and repair any obvious problems.
Perform BODY VERIFICATION TEST – VER 1. (Refer to BODY VERIFICATION TEST – VER 1).

3. CHECK THE (W526) VEHICLE SPEED SIGNAL CIRCUIT FOR A SHORT TO POWER

Turn the ignition off.

Disconnect the Multi-Purpose Module (Police And Taxi Interface Module-PTIM) C2 harness connector.

Turn the ignition on.

Measure the voltage of the (W526) Vehicle Speed Signal circuit between ground and the Multi-Purpose Module (Police And Taxi Interface Module-PTIM) C2 harness connector.

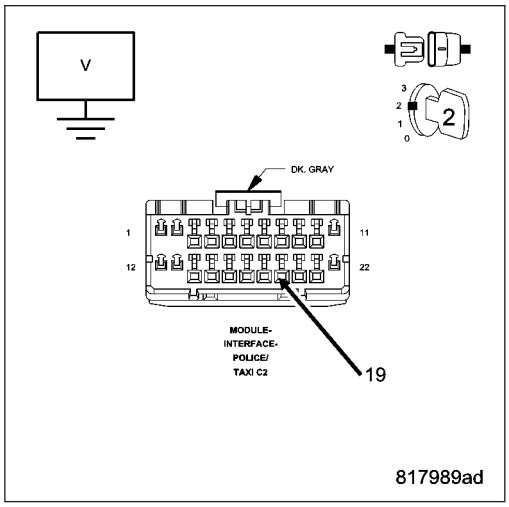

Is there any voltage present?

Yes >> Go To 4.

No >> Go To 5.

4. ISOLATE THE SHORT TO VOLTAGE IN THE (W526) VEHICLE SPEED SIGNAL CIRCUIT

Turn the ignition off.

Disconnect the Multi-Purpose Module (Police And Taxi Interface Module-PTIM) 24 way harness connector (aftermarket light/siren controller side).

Turn the ignition on.

Measure the voltage of the (W526) Vehicle Speed Signal circuit between ground and the Multi-Purpose Module (Police And Taxi Interface Module-PTIM) C2 harness connector.

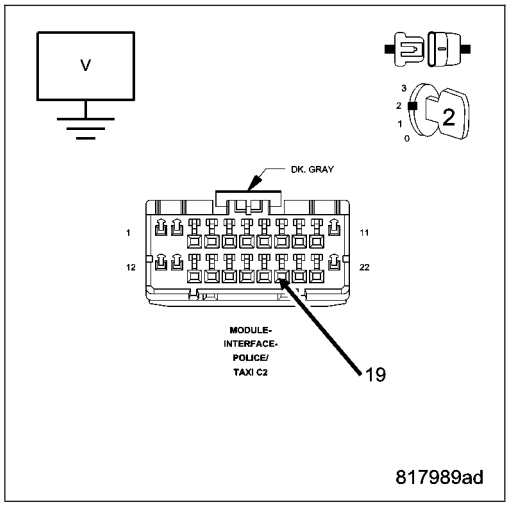

Is there any voltage present?

Yes >> Repair the (W526) Vehicle Speed Signal circuit for a short to power.

Perform BODY VERIFICATION TEST – VER 1. (Refer to BODY VERIFICATION TEST – VER 1).

No >> Refer to electrical diagnostics for the aftermarket light/siren controller, and repair or replace the aftermarket light siren controller in accordance with the manufacturer's service information.

Perform BODY VERIFICATION TEST – VER 1. (Refer to BODY VERIFICATION TEST – VER 1).

5. CHECK THE (W526) VEHICLE SPEED SIGNAL CIRCUIT FOR AN OPEN

Turn the ignition off.

Disconnect the Multi-Purpose Module (Police And Taxi Interface Module-PTIM) 24 way harness connector (aftermarket light/siren controller side).

Measure the resistance of the (W526) Vehicle Speed Signal circuit between the Multi-Purpose Module (Police And Taxi Interface Module-PTIM) 24 way and the Multi-Purpose Module (Police And Taxi Interface Module-PTIM) C2 harness connectors.

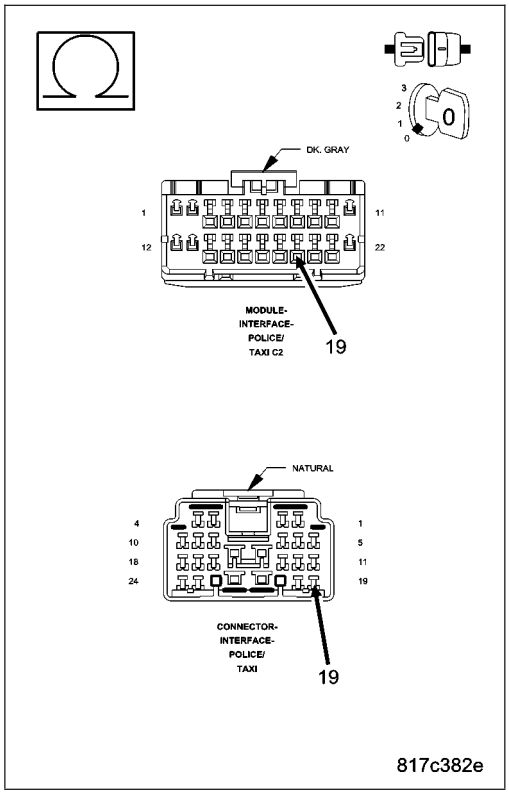

Is the resistance below 5.0 ohms?

Yes >> Go To 6.

No >> Repair the (W526) Vehicle Speed Signal for an open or high resistance.

Perform BODY VERIFICATION TEST – VER 1. (Refer to BODY VERIFICATION TEST – VER 1).

6. CHECK THE MULTI-PURPOSE MODULE (POLICE AND TAXI INTERFACE MODULE-PTIM)

Turn the ignition off.

Disconnect all Multi-Purpose Module (Police And Taxi Interface Module-PTIM) and aftermarket light/siren controller harness connectors.

Check for damaged or corroded pins, pinched wires, or damaged connectors, and repair any obvious problems.

Connect all Multi-Purpose Module (Police And Taxi Interface Module-PTIM) and aftermarket light/siren controller harness connectors.

Turn the ignition on.

With the scan tool monitor active codes as you work through the following step.

Wiggle the wiring harness and connectors of the Multi-Purpose Module (Police And Taxi Interface Module-PTIM) and aftermarket light/siren controller.

If only stored codes return continue the test until the problem area has been isolated, and repair any obvious problems.

Is DTC P1505 — VEHICLE SPEED OUTPUT CIRCUIT HIGH still displayed?

Yes >> Replace the Multi-Purpose Module (Police And Taxi Interface Module-PTIM) in accordance with the service information.
Perform BODY VERIFICATION TEST – VER 1. (Refer to BODY VERIFICATION TEST – VER 1).

No >> Repair is complete. The problem may have been caused by a loose or corroded terminal.
Perform BODY VERIFICATION TEST – VER 1. (Refer to BODY VERIFICATION TEST – VER 1).

P164A — MIL OUTPUT CIRCUIT LOW

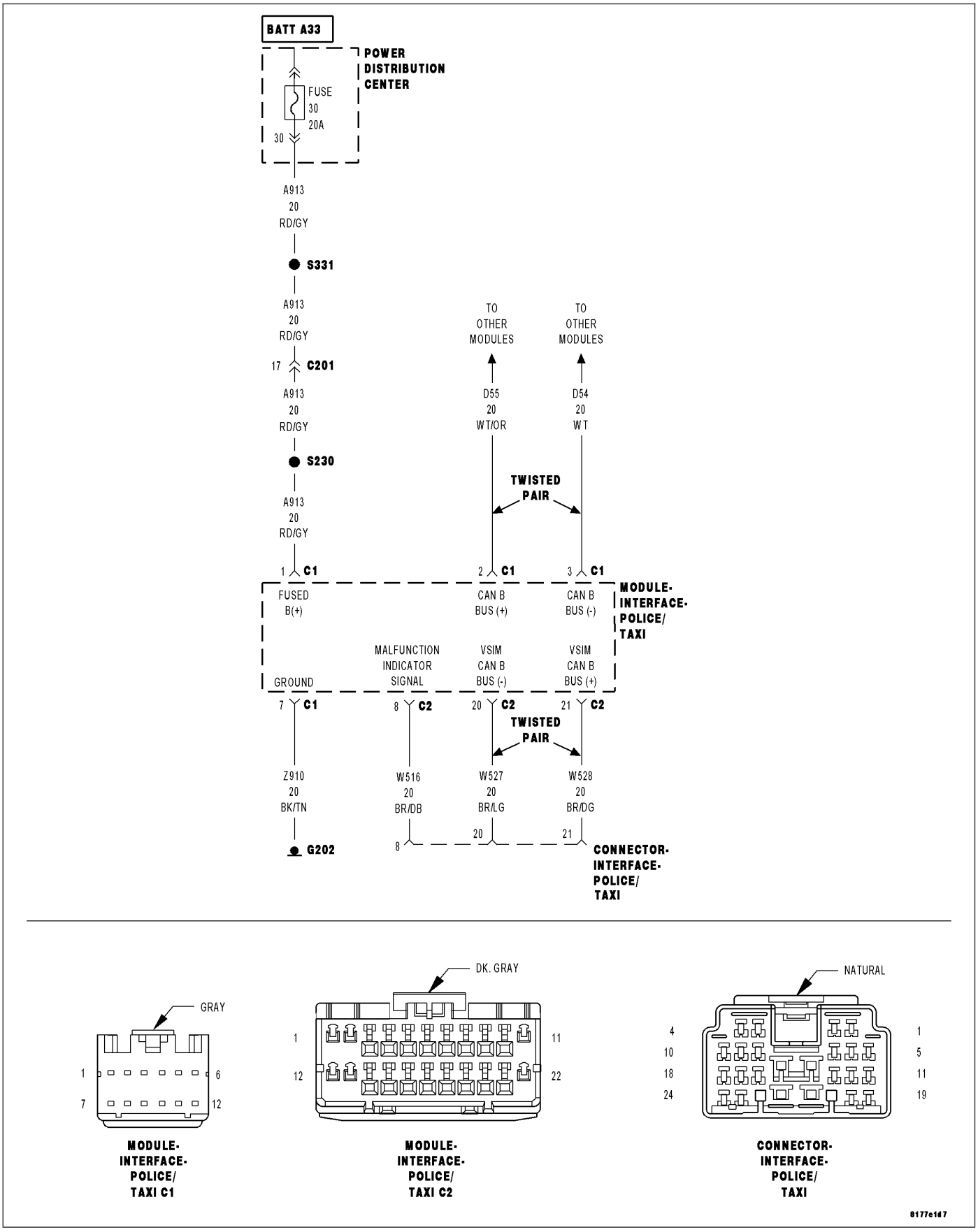

For a complete wiring diagram **Refer to Section 8W**.

- **When Monitored:**
  With the ignition switch on.
- **Set Condition:**
  The Multi-Purpose Module (Police And Taxi Interface Module-PTIM) has detected the Malfunction Indicator Signal circuit below a calibrated value.

Possible Causes
(W516) MALFUNCTION INDICATOR SIGNAL CIRCUIT SHORTED TO GROUND
AFTERMARKET LIGHT/SIREN CONTROLLER
MULTI-PURPOSE MODULE (POLICE AND TAXI INTERFACE MODULE-PTIM)

1. CHECK FOR ANY OF THE FOLLOWING ACTIVE DTCS

With the scan tool, read all active DTCs from all modules.

NOTE: Check for FCM configuration, CAN B or C hardware electrical, VIN Missing/Mismatch, battery or ignition related DTCs.

Does the scan tool display any active DTCs to the conditions listed above?

Yes >> Diagnose and repair the DTC. Refer to the Table of Contents in ELECTRONIC CONTROL MODULES - ELECTRICAL DIAGNOSTICS for a complete list of the symptoms.
Perform BODY VERIFICATION TEST – VER 1. (Refer to BODY VERIFICATION TEST – VER 1).

No >> Go To 2. Diagnostic Test

2. CHECK FOR ACTIVE DTC

With the scan tool, read the active DTCs.

Erase the DTCs.

Turn the ignition off, wait 10 seconds, then turn the ignition on.

With the scan tool, read the active DTC's.

Does the scan tool display this DTC as active?

Yes >> Go To 3.

No >> If the DTC is stored, check for an intermittent condition. Visually inspect the related wiring harness connectors. Look for broken, bent, pushed out, or corroded terminals, and repair any obvious problems.
Perform BODY VERIFICATION TEST – VER 1. (Refer to BODY VERIFICATION TEST – VER 1).

3. CHECK THE (W516) MALFUNCTION INDICATOR SIGNAL CIRCUIT FOR A SHORT TO GROUND

Turn the ignition off.

Disconnect the Multi-Purpose Module (Police And Taxi Interface Module-PTIM) C2 harness connector.

Measure the resistance of the (W516) Malfunction Indicator Signal circuit between ground and the Multi-Purpose Module (Police And Taxi Interface Module-PTIM) C2 harness connector.

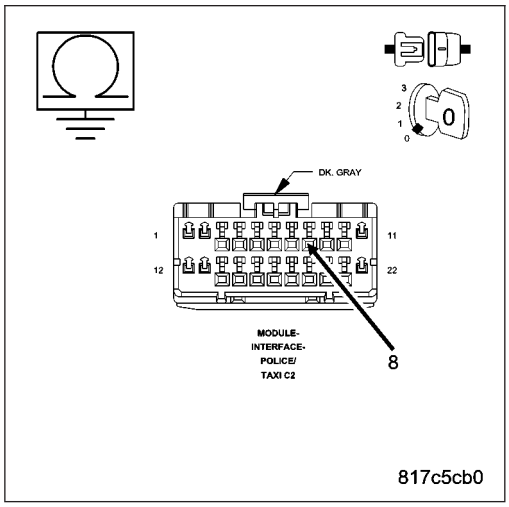

Is the resistance below 5.0 ohms?

Yes >> Go To 4.

No >> Go To 5.

4. ISOLATE THE SHORT TO GROUND IN THE (W516) MALFUNCTION INDICATOR SIGNAL CIRCUIT

Turn the ignition off.

Disconnect the Multi-Purpose Module (Police And Taxi Interface Module-PTIM) 24 way harness connector (aftermarket light/siren controller side).

Measure the resistance of the (W516) Malfunction Indicator Signal circuit between ground and the Multi-Purpose Module (Police And Taxi Interface Module-PTIM) C2 harness connector.

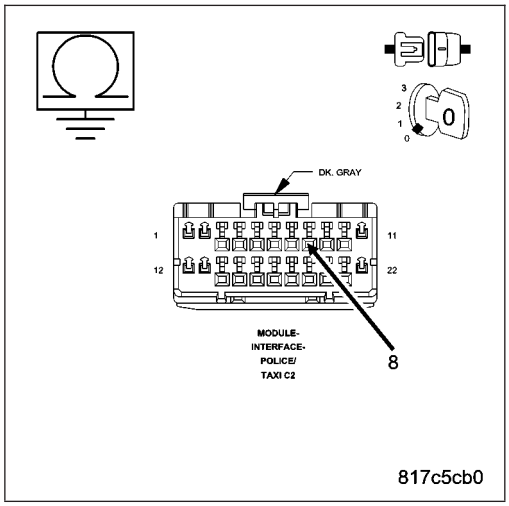

Is the resistance below 5.0 ohms?

Yes >> Repair the (W516) Malfunction Indicator Signal circuit for a short to ground.

Perform BODY VERIFICATION TEST – VER 1. (Refer to BODY VERIFICATION TEST – VER 1).

No >> Refer to electrical diagnostics for the aftermarket light/siren controller, and repair or replace the aftermarket light/siren controller in accordance with the manufacturer's service information.

Perform BODY VERIFICATION TEST – VER 1. (Refer to BODY VERIFICATION TEST – VER 1).

5. CHECK THE MULTI-PURPOSE MODULE (POLICE AND TAXI INTERFACE MODULE-PTIM)

Turn the ignition off.

Disconnect all Multi-Purpose Module (Police And Taxi Interface Module-PTIM) and aftermarket light/siren controller harness connectors.

Check for damaged or corroded pins, pinched wires, or damaged connectors, and repair any obvious problems.

Connect all Multi-Purpose Module (Police And Taxi Interface Module-PTIM) and aftermarket light/siren controller harness connectors.

Turn the ignition on.

With the scan tool monitor active codes as you work through the following step.

Wiggle the wiring harness and connectors of the Multi-Purpose Module (Police And Taxi Interface Module-PTIM) and aftermarket light/siren controller.

If only stored codes return continue the test until the problem area has been isolated, and repair any obvious problems.

Is DTC P164A — MIL OUTPUT CIRCUIT LOW still displayed?

Yes >> Replace the Multi-Purpose Module (Police And Taxi Interface Module-PTIM) in accordance with the service information.

Perform BODY VERIFICATION TEST – VER 1. (Refer to BODY VERIFICATION TEST – VER 1).

No >> Repair is complete. The problem may have been caused by a loose or corroded terminal.

Perform BODY VERIFICATION TEST – VER 1. (Refer to BODY VERIFICATION TEST – VER 1).

P164B — MIL OUTPUT CIRCUIT HIGH

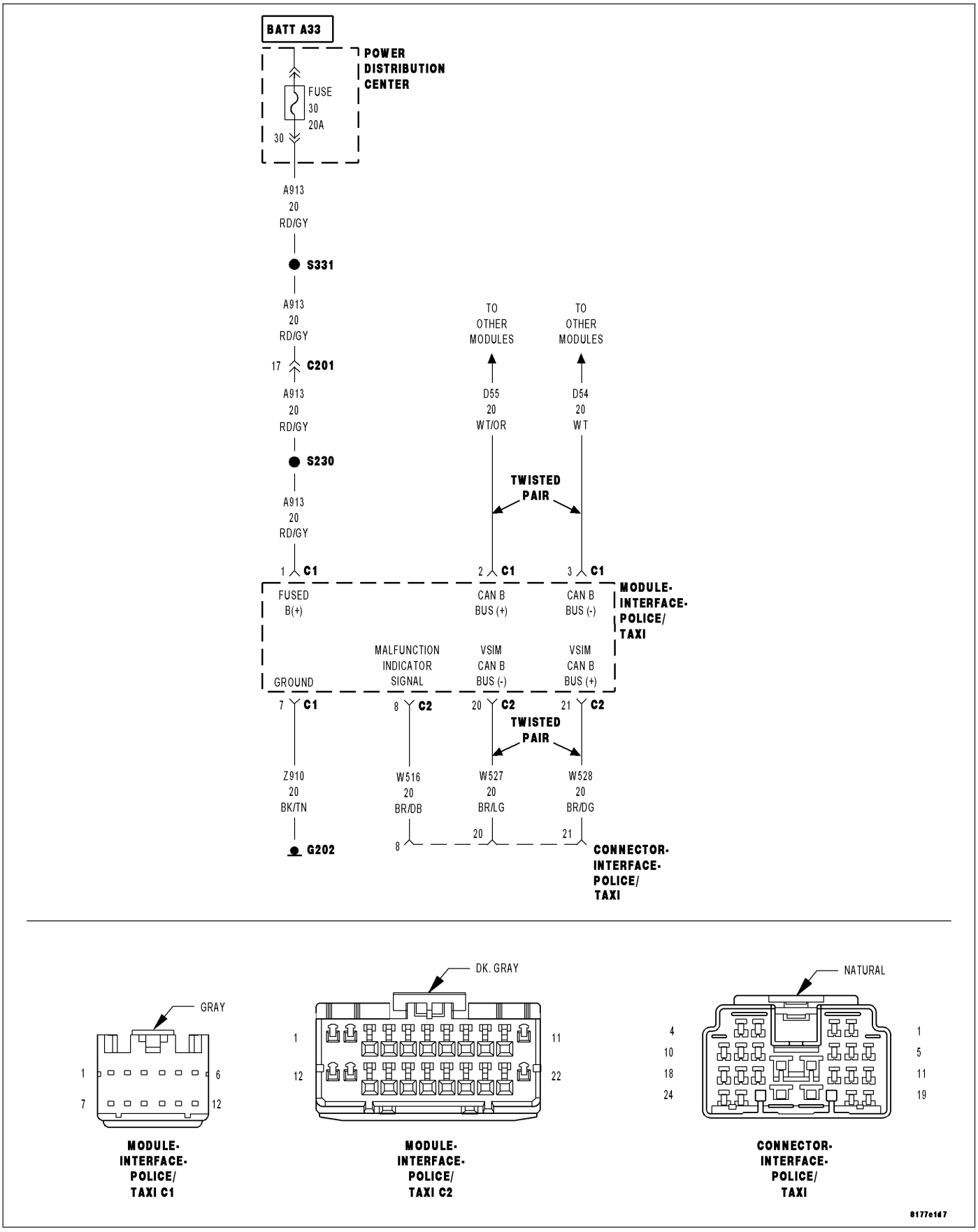

For a complete wiring diagram **Refer to Section 8W**.

- **When Monitored:**
  With the ignition switch on.
- **Set Condition:**
  The Multi-Purpose Module (Police And Taxi Interface Module-PTIM) has detected the Malfunction Indicator Signal circuit above a calibrated value.

Possible Causes
(W516) MALFUNCTION INDICATOR SIGNAL CIRCUIT OPEN OR SHORTED TO POWER
AFTERMARKET LIGHT/SIREN CONTROLLER
MULTI-PURPOSE MODULE (POLICE AND TAXI INTERFACE MODULE-PTIM)

1. CHECK FOR ANY OF THE FOLLOWING ACTIVE DTCS

With the scan tool, read all active DTCs from all modules.

NOTE: Check for FCM configuration, CAN B or C hardware electrical, VIN Missing/Mismatch, battery or ignition related DTCs.

Does the scan tool display any active DTCs to the conditions listed above?

Yes >> Diagnose and repair the DTC. Refer to the Table of Contents in ELECTRONIC CONTROL MODULES - ELECTRICAL DIAGNOSTICS for a complete list of the symptoms.
Perform BODY VERIFICATION TEST – VER 1. (Refer to BODY VERIFICATION TEST – VER 1).

No >> Go To 2. Diagnostic Test

2. CHECK FOR ACTIVE DTC

With the scan tool, read the active DTCs.

Erase the DTCs.

Turn the ignition off, wait 10 seconds, then turn the ignition on.

With the scan tool, read the active DTC's.

Does the scan tool display this DTC as active?

Yes >> Go To 3.

No >> If the DTC is stored, check for an intermittent condition. Visually inspect the related wiring harness connectors. Look for broken, bent, pushed out, or corroded terminals, and repair any obvious problems.
Perform BODY VERIFICATION TEST – VER 1. (Refer to BODY VERIFICATION TEST – VER 1).

3. CHECK THE (W516) MALFUNCTION INDICATOR SIGNAL CIRCUIT FOR A SHORT TO POWER

Turn the ignition off.

Disconnect the Multi-Purpose Module (Police And Taxi Interface Module-PTIM) C2 harness connector.

Turn the ignition on.

Measure the voltage of the (W516) Malfunction Indicator Signal circuit between ground and the Multi-Purpose Module (Police And Taxi Interface Module-PTIM) C2 harness connector.

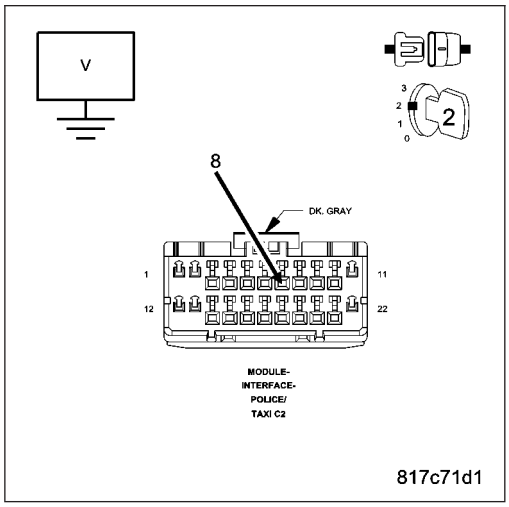

Is there any voltage present?

Yes >> Go To 4.

No >> Go To 5.

4. ISOLATE THE SHORT TO VOLTAGE IN THE (W516) MALFUNCTION INDICATOR SIGNAL CIRCUIT

Turn the ignition off.

Disconnect the Multi-Purpose Module (Police And Taxi Interface Module-PTIM) 24 way harness connector (aftermarket light/siren controller side).

Turn the ignition on.

Measure the voltage of the (W516) Malfunction Indicator Signal circuit between ground and the Multi-Purpose Module (Police And Taxi Interface Module-PTIM) C2 harness connector.

Is there any voltage present?

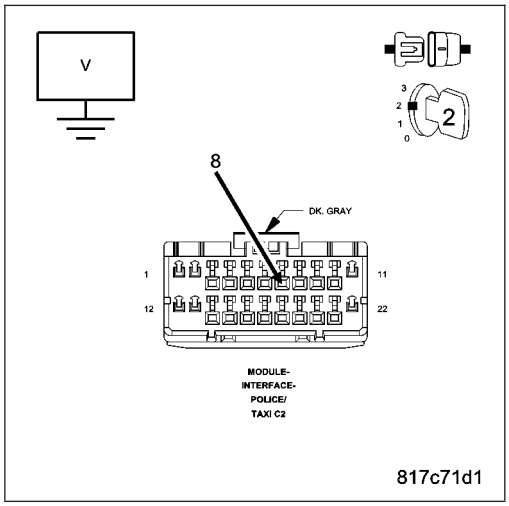

Yes >> Repair the (W516) Malfunction Indicator Signal circuit for a short to power.

Perform BODY VERIFICATION TEST – VER 1. (Refer to BODY VERIFICATION TEST – VER 1).

No >> Refer to electrical diagnostics for the aftermarket light/siren controller, and repair or replace the aftermarket light siren controller in accordance with the manufacturer's service information.

Perform BODY VERIFICATION TEST – VER 1. (Refer to BODY VERIFICATION TEST – VER 1).

5. CHECK THE (W516) MALFUNCTION INDICATOR SIGNAL CIRCUIT FOR AN OPEN

Turn the ignition off.

Disconnect the Multi-Purpose Module (Police And Taxi Interface Module-PTIM) 24 way harness connector (aftermarket light/siren controller side).

Measure the resistance of the (W516) Malfunction Indicator Signal circuit between the Multi-Purpose Module (Police And Taxi Interface Module-PTIM) 24 way and the Multi-Purpose Module (Police And Taxi Interface Module-PTIM) C2 harness connectors.

Is the resistance below 5.0 ohms?

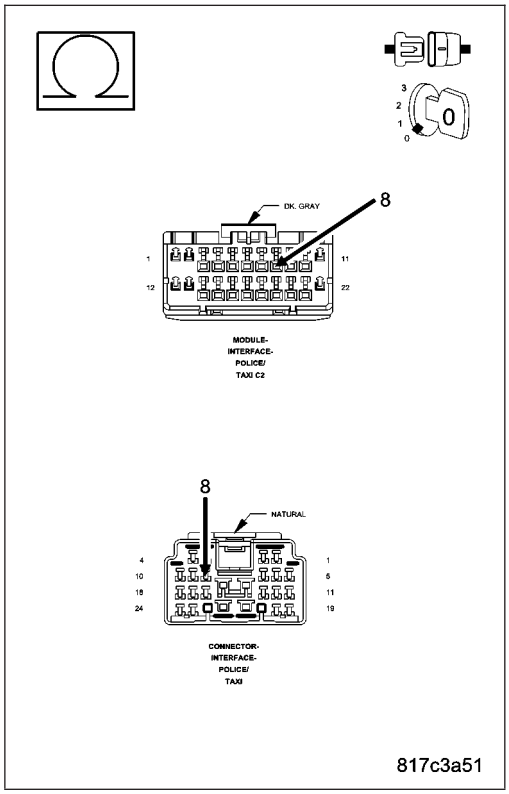

Yes >> Go To 6.

No >> Repair the (W516) Malfunction Indicator Signal circuit for an open or high resistance.

Perform BODY VERIFICATION TEST – VER 1. (Refer to BODY VERIFICATION TEST – VER 1).

6. CHECK THE MULTI-PURPOSE MODULE (POLICE AND TAXI INTERFACE MODULE-PTIM)

Turn the ignition off.

Disconnect all Multi-Purpose Module (Police And Taxi Interface Module-PTIM) and aftermarket light/siren controller harness connectors.

Check for damaged or corroded pins, pinched wires, or damaged connectors, and repair any obvious problems.

Connect all Multi-Purpose Module (Police And Taxi Interface Module-PTIM) and aftermarket light/siren controller harness connectors.

Turn the ignition on.

With the scan tool monitor active codes as you work through the following step.

Wiggle the wiring harness and connectors of the Multi-Purpose Module (Police And Taxi Interface Module-PTIM) and aftermarket light/siren controller.

If only stored codes return continue the test until the problem area has been isolated, and repair any obvious problems.

Is DTC P164B — MIL OUTPUT CIRCUIT HIGH still displayed?

Yes >> Replace the Multi-Purpose Module (Police And Taxi Interface Module-PTIM) in accordance with the service information.
Perform BODY VERIFICATION TEST – VER 1. (Refer to BODY VERIFICATION TEST – VER 1).

No >> Repair is complete. The problem may have been caused by a loose or corroded terminal.
Perform BODY VERIFICATION TEST – VER 1. (Refer to BODY VERIFICATION TEST – VER 1).

P170A — PARK/NEUTRAL OUTPUT CIRCUIT LOW

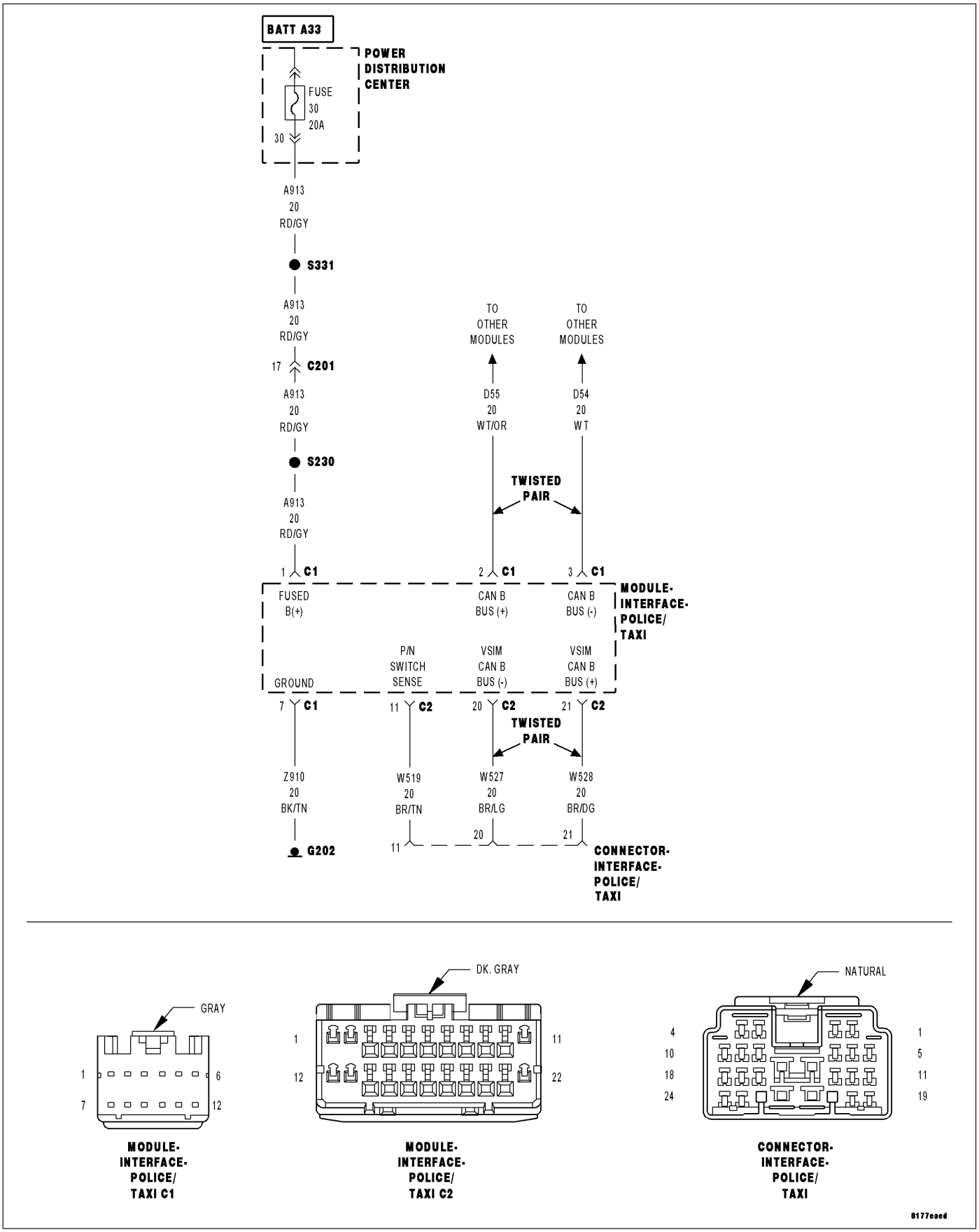

For a complete wiring diagram **Refer to Section 8W**.

- **When Monitored:**
  With the ignition switch on.
- **Set Condition:**
  The Multi-Purpose Module (Police And Taxi Interface Module-PTIM) has detected the P/N Switch Sense circuit below a calibrated value.

Possible Causes
(W519) P/N SWITCH SENSE CIRCUIT SHORTED TO GROUND
AFTERMARKET LIGHT/SIREN CONTROLLER
MULTI-PURPOSE MODULE (POLICE AND TAXI INTERFACE MODULE-PTIM)

1. CHECK FOR ANY OF THE FOLLOWING ACTIVE DTCS

With the scan tool, read all active DTCs from all modules.

NOTE: Check for FCM configuration, CAN B or C hardware electrical, VIN Missing/Mismatch, battery or ignition related DTCs.

Does the scan tool display any active DTCs to the conditions listed above?

Yes >> Diagnose and repair the DTC. Refer to the Table of Contents in ELECTRONIC CONTROL MODULES - ELECTRICAL DIAGNOSTICS for a complete list of the symptoms.
Perform BODY VERIFICATION TEST – VER 1. (Refer to BODY VERIFICATION TEST – VER 1).

No >> Go To 2. Diagnostic Test

2. CHECK FOR ACTIVE DTC

With the scan tool, read the active DTCs.

Erase the DTCs.

Turn the ignition off, wait 10 seconds, then turn the ignition on.

With the scan tool, read the active DTC's.

Does the scan tool display this DTC as active?

Yes >> Go To 3.

No >> If the DTC is stored, check for an intermittent condition. Visually inspect the related wiring harness connectors. Look for broken, bent, pushed out, or corroded terminals, and repair any obvious problems.
Perform BODY VERIFICATION TEST – VER 1. (Refer to BODY VERIFICATION TEST – VER 1).

3. CHECK THE (W519) P/N SWITCH SENSE CIRCUIT FOR A SHORT TO GROUND

Turn the ignition off.

Disconnect the Multi-Purpose Module (Police And Taxi Interface Module-PTIM) C2 harness connector.

Measure the resistance of the (W519) P/N Switch Sense circuit between ground and the Multi-Purpose Module (Police And Taxi Interface Module-PTIM) C2 harness connector.

Is the resistance below 5.0 ohms?

Yes >> Go To 4.

No >> Go To 5.

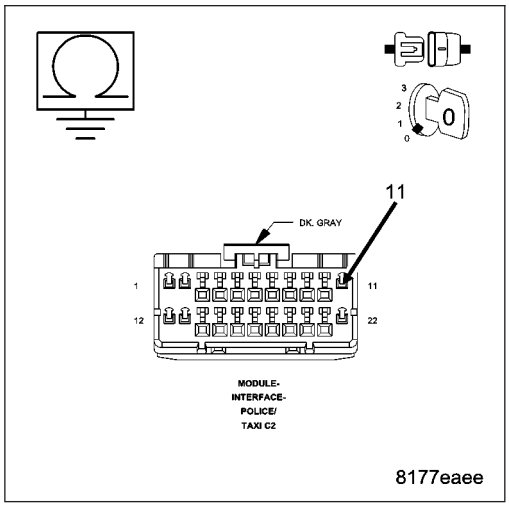

4. ISOLATE THE SHORT TO GROUND IN THE (W519) P/N SWITCH SENSE CIRCUIT

Turn the ignition off.

Disconnect the Multi-Purpose Module (Police And Taxi Interface Module-PTIM) 24 way harness connector (aftermarket light/siren controller side).

Measure the resistance of the (W519) P/N Switch Sense circuit between ground and the Multi-Purpose Module (Police And Taxi Interface Module-PTIM) C2 harness connector.

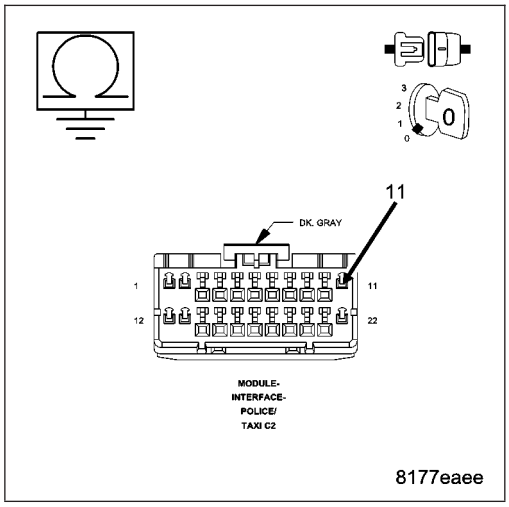

Is the resistance below 5.0 ohms?

Yes >> Repair the (W519) P/N Switch Sense circuit for a short to ground.

Perform BODY VERIFICATION TEST – VER 1. (Refer to BODY VERIFICATION TEST – VER 1).

No >> Refer to electrical diagnostics for the aftermarket light/siren controller, and repair or replace the aftermarket light/siren controller in accordance with the manufacturer's service information.

Perform BODY VERIFICATION TEST – VER 1. (Refer to BODY VERIFICATION TEST – VER 1).

5. CHECK THE MULTI-PURPOSE MODULE (POLICE AND TAXI INTERFACE MODULE-PTIM)

Turn the ignition off.

Disconnect all Multi-Purpose Module (Police And Taxi Interface Module-PTIM) and aftermarket light/siren controller harness connectors.

Check for damaged or corroded pins, pinched wires, or damaged connectors, and repair any obvious problems.

Connect all Multi-Purpose Module (Police And Taxi Interface Module-PTIM) and aftermarket light/siren controller harness connectors.

Turn the ignition on.

With the scan tool monitor active codes as you work through the following step.

Wiggle the wiring harness and connectors of the Multi-Purpose Module (Police And Taxi Interface Module-PTIM) and aftermarket light/siren controller.

If only stored codes return continue the test until the problem area has been isolated, and repair any obvious problems.

Is DTC P170A — PARK/NEUTRAL OUTPUT CIRCUIT LOW still displayed?

Yes >> Replace the Multi-Purpose Module (Police And Taxi Interface Module-PTIM) in accordance with the service information.

Perform BODY VERIFICATION TEST – VER 1. (Refer to BODY VERIFICATION TEST – VER 1).

No >> Repair is complete. The problem may have been caused by a loose or corroded terminal.

Perform BODY VERIFICATION TEST – VER 1. (Refer to BODY VERIFICATION TEST – VER 1).

P170B — PARK/NEUTRAL OUTPUT CIRCUIT HIGH

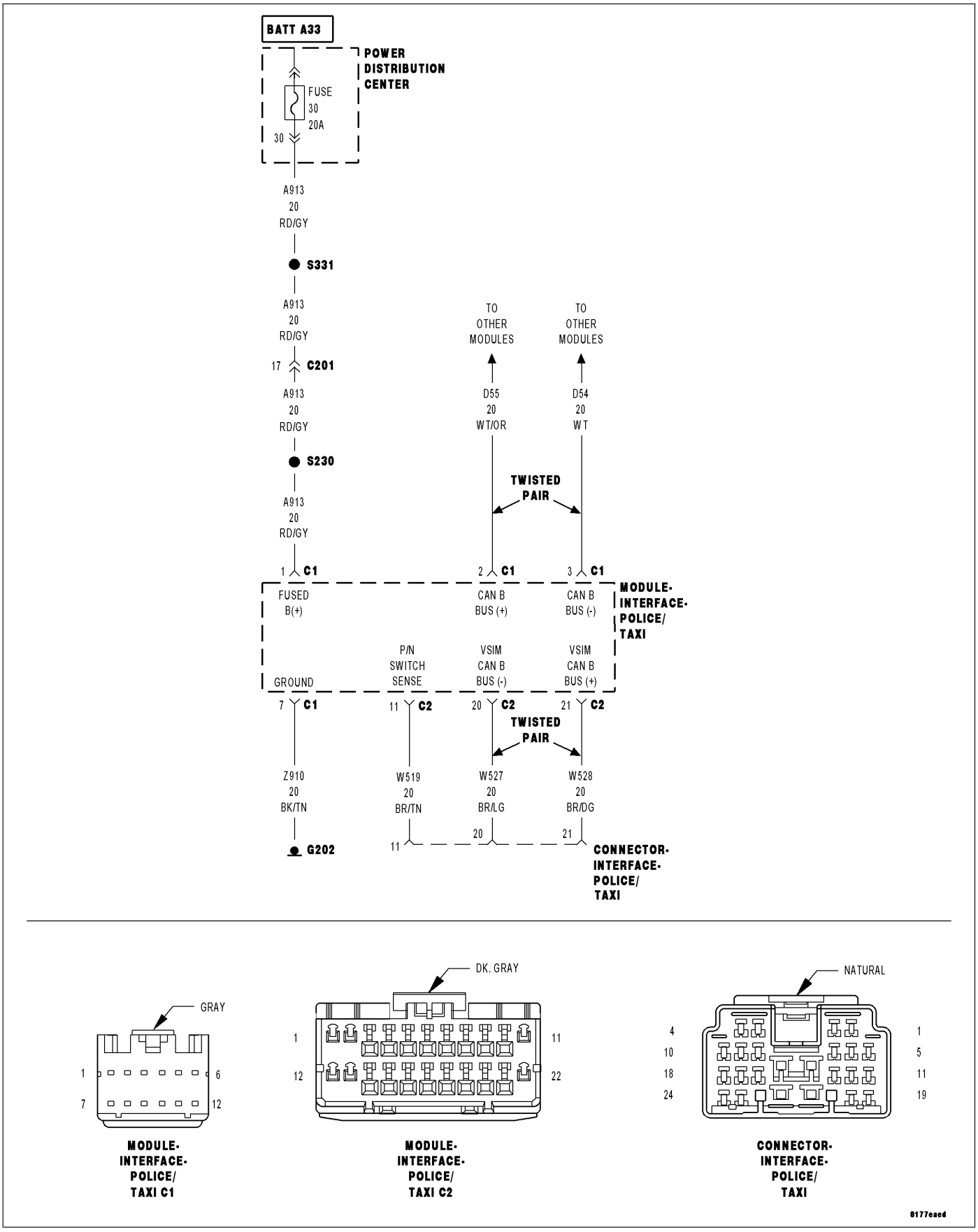

For a complete wiring diagram **Refer to Section 8W**.

- **When Monitored:**
  With the ignition switch on.
- **Set Condition:**
  The Multi-Purpose Module (Police And Taxi Interface Module-PTIM) has detected the P/N Switch Sense circuit above a calibrated value.

Possible Causes
(W519) P/N SWITCH SENSE CIRCUIT OPEN OR SHORTED TO VOLTAGE
AFTERMARKET LIGHT/SIREN CONTROLLER
MULTI-PURPOSE MODULE (POLICE AND TAXI INTERFACE MODULE-PTIM)

1. CHECK FOR ANY OF THE FOLLOWING ACTIVE DTCS

With the scan tool, read all active DTCs from all modules.

NOTE: Check for FCM configuration, CAN B or C hardware electrical, VIN Missing/Mismatch, battery or ignition related DTCs.

Does the scan tool display any active DTCs to the conditions listed above?

Yes >> Diagnose and repair the DTC. Refer to the Table of Contents in ELECTRONIC CONTROL MODULES - ELECTRICAL DIAGNOSTICS for a complete list of the symptoms.
Perform BODY VERIFICATION TEST – VER 1. (Refer to BODY VERIFICATION TEST – VER 1).

No >> Go To 2. Diagnostic Test

2. CHECK FOR ACTIVE DTC

With the scan tool, read the active DTCs.

Erase the DTCs.

Turn the ignition off, wait 10 seconds, then turn the ignition on.

With the scan tool, read the active DTC's.

Does the scan tool display this DTC as active?

Yes >> Go To 3.

No >> If the DTC is stored, check for an intermittent condition. Visually inspect the related wiring harness connectors. Look for broken, bent, pushed out, or corroded terminals, and repair any obvious problems.
Perform BODY VERIFICATION TEST – VER 1. (Refer to BODY VERIFICATION TEST – VER 1).

3. CHECK THE (W519) P/N SWITCH SENSE CIRCUIT FOR A SHORT TO VOLTAGE

Turn the ignition off.

Disconnect the Multi-Purpose Module (Police And Taxi Interface Module-PTIM) C2 harness connector.

Turn the ignition on.

Measure the voltage of the (W519) P/N Switch Sense circuit between ground and the Multi-Purpose Module (Police And Taxi Interface Module-PTIM) C2 harness connector.

Is there any voltage present?

Yes >> Go To 4.

No >> Go To 5.

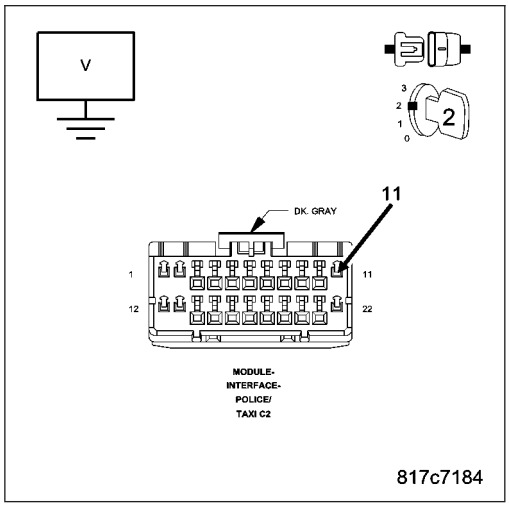

4. ISOLATE THE SHORT TO VOLTAGE IN THE (W519) P/N SWITCH SENSE CIRCUIT

Turn the ignition off.

Disconnect the Multi-Purpose Module (Police And Taxi Interface Module-PTIM) 24 way harness connector (aftermarket light/siren controller side).

Turn the ignition on.

Measure the voltage of the (W519) P/N Switch Sense circuit between ground and the Multi-Purpose Module (Police And Taxi Interface Module-PTIM) C2 harness connector.

Is there any voltage present?

Yes >> Repair the (W519) P/N Switch Sense circuit for a short to voltage.

Perform BODY VERIFICATION TEST – VER 1. (Refer to BODY VERIFICATION TEST – VER 1).

No >> Refer to electrical diagnostics for the aftermarket light/siren controller, and repair or replace the aftermarket light siren controller in accordance with the manufacturer's service information.

Perform BODY VERIFICATION TEST – VER 1. (Refer to BODY VERIFICATION TEST – VER 1).

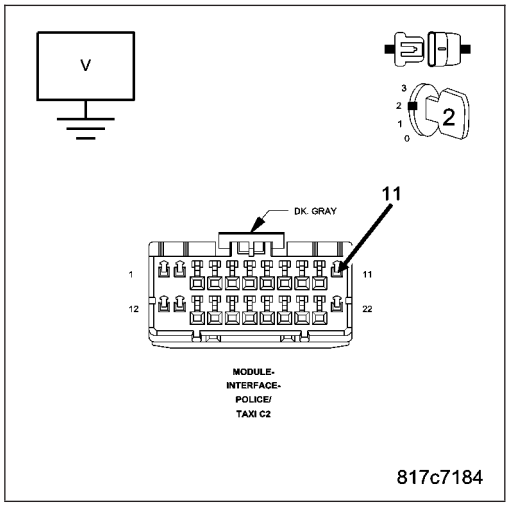

5. CHECK THE (W519) PARK/NEUTRAL OUTPUT CIRCUIT FOR AN OPEN

Turn the ignition off.

Disconnect the Multi-Purpose Module (Police And Taxi Interface Module-PTIM) 24 way harness connector (aftermarket light/siren controller side).

Measure the resistance of the (W519) P/N Switch Sense circuit between the Multi-Purpose Module (Police And Taxi Interface Module-PTIM) 24 way and the Multi-Purpose Module (Police And Taxi Interface Module-PTIM) C2 harness connectors.

Is the resistance below 5.0 ohms?

Yes >> Go To 6.

No >> Repair the (W519) P/N Switch Sense circuit for an open or high resistance.

Perform BODY VERIFICATION TEST – VER 1. (Refer to BODY VERIFICATION TEST – VER 1).

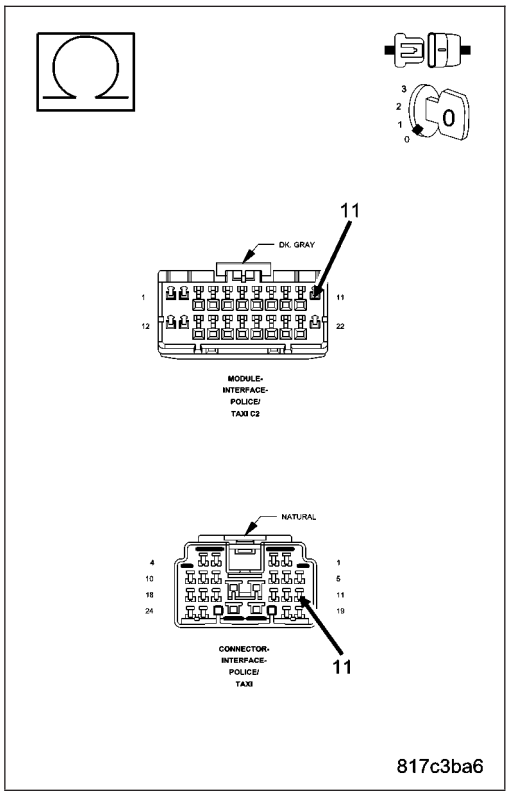

6. CHECK THE MULTI-PURPOSE MODULE (POLICE AND TAXI INTERFACE MODULE-PTIM)

Turn the ignition off.

Disconnect all Multi-Purpose Module (Police And Taxi Interface Module-PTIM) and aftermarket light/siren controller harness connectors.

Check for damaged or corroded pins, pinched wires, or damaged connectors, and repair any obvious problems.

Connect all Multi-Purpose Module (Police And Taxi Interface Module-PTIM) and aftermarket light/siren controller harness connectors.

Turn the ignition on.

With the scan tool monitor active codes as you work through the following step.

Wiggle the wiring harness and connectors of the Multi-Purpose Module (Police And Taxi Interface Module-PTIM) and aftermarket light/siren controller.

If only stored codes return continue the test until the problem area has been isolated, and repair any obvious problems.

Is DTC P170B — PARK/NEUTRAL OUTPUT CIRCUIT HIGH still displayed?

Yes >> Replace the Multi-Purpose Module (Police And Taxi Interface Module-PTIM) in accordance with the service information.
Perform BODY VERIFICATION TEST – VER 1. (Refer to BODY VERIFICATION TEST – VER 1).

No >> Repair is complete. The problem may have been caused by a loose or corroded terminal.
Perform BODY VERIFICATION TEST – VER 1. (Refer to BODY VERIFICATION TEST – VER 1).

P170C — ENGINE RPM OUTPUT CIRCUIT LOW

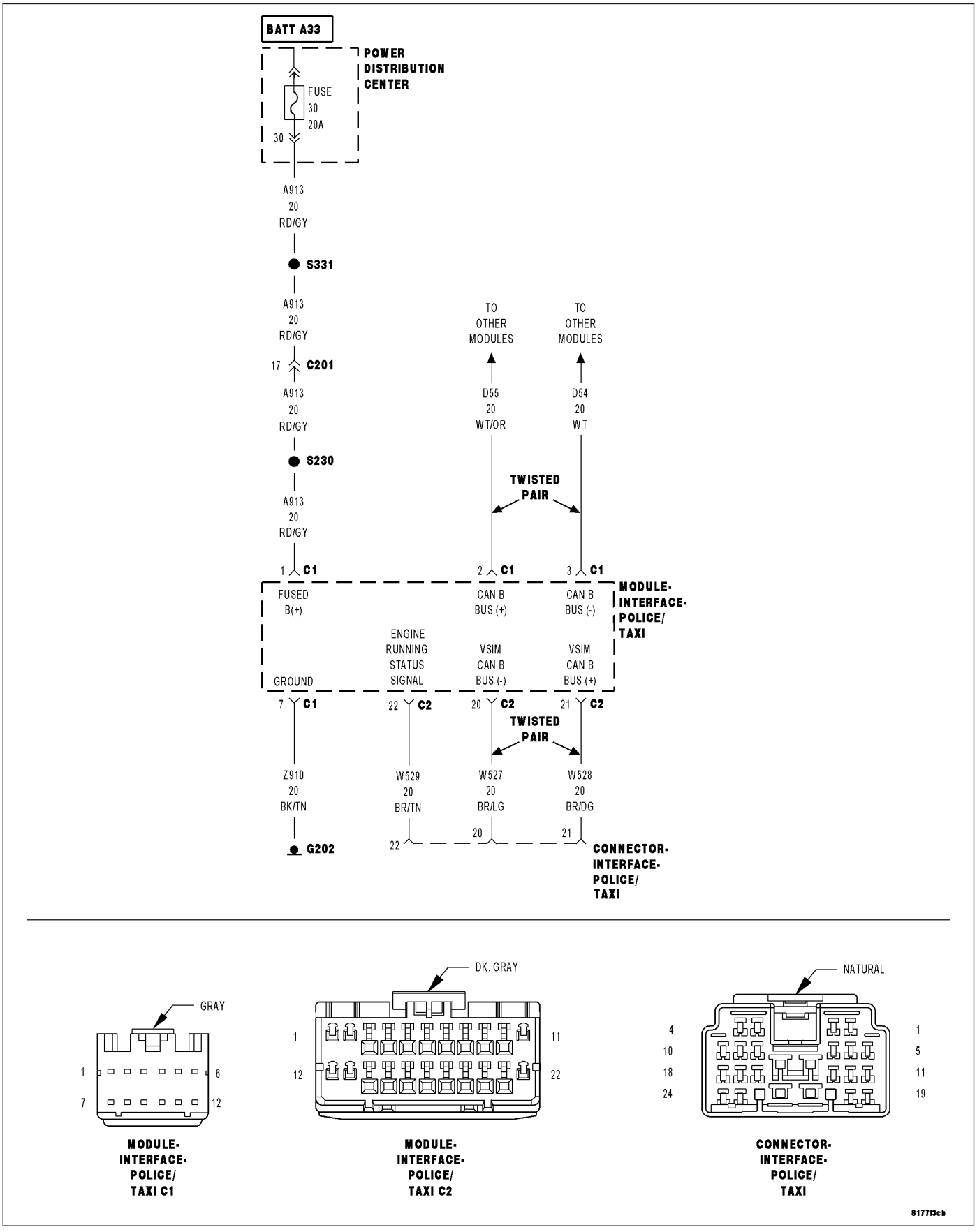

For a complete wiring diagram **Refer to Section 8W**.

- **When Monitored:**
  With the ignition switch on.
- **Set Condition:**
  The Multi-Purpose Module (Police And Taxi Interface Module-PTIM) has detected the Engine Running Status Signal circuit below a calibrated value.

Possible Causes
(W529) ENGINE RUNNING STATUS SIGNAL CIRCUIT SHORTED TO GROUND
AFTERMARKET LIGHT/SIREN CONTROLLER
MULTI-PURPOSE MODULE (POLICE AND TAXI INTERFACE MODULE-PTIM)

1. CHECK FOR ANY OF THE FOLLOWING ACTIVE DTCS

With the scan tool, read all active DTCs from all modules.

NOTE: Check for FCM configuration, CAN B or C hardware electrical, VIN Missing/Mismatch, battery or ignition related DTCs.

Does the scan tool display any active DTCs to the conditions listed above?

Yes >> Diagnose and repair the DTC. Refer to the Table of Contents in ELECTRONIC CONTROL MODULES - ELECTRICAL DIAGNOSTICS for a complete list of the symptoms.
Perform BODY VERIFICATION TEST – VER 1. (Refer to BODY VERIFICATION TEST – VER 1).

No >> Go To 2. Diagnostic Test

2. CHECK FOR ACTIVE DTC

With the scan tool, read the active DTCs.

Erase the DTCs.

Turn the ignition off, wait 10 seconds, then turn the ignition on.

With the scan tool, read the active DTC's.

Does the scan tool display this DTC as active?

Yes >> Go To 3.

No >> If the DTC is stored, check for an intermittent condition. Visually inspect the related wiring harness connectors. Look for broken, bent, pushed out, or corroded terminals, and repair any obvious problems.
Perform BODY VERIFICATION TEST – VER 1. (Refer to BODY VERIFICATION TEST – VER 1).

3. CHECK THE (W529) ENGINE RUNNING STATUS SIGNAL CIRCUIT FOR A SHORT TO GROUND

Turn the ignition off.

Disconnect the Multi-Purpose Module (Police And Taxi Interface Module-PTIM) C2 harness connector.

Measure the resistance of the (W529) Engine Running Status Signal circuit between ground and the Multi-Purpose Module (Police And Taxi Interface Module-PTIM) C2 harness connector.

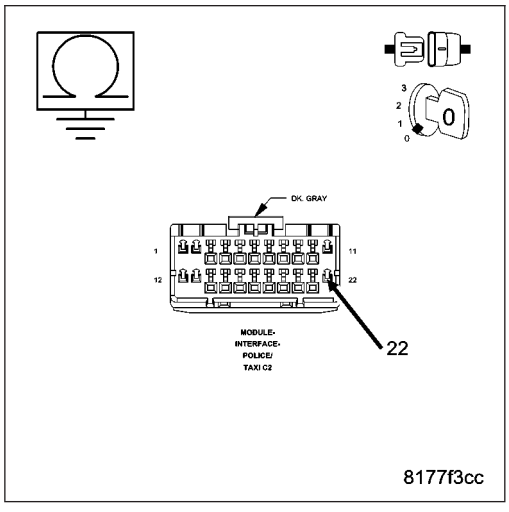

Is the resistance below 5.0 ohms?

Yes >> Go To 4.

No >> Go To 5.

4. ISOLATE THE SHORT TO GROUND IN THE (W529) ENGINE RUNNING STATUS SIGNAL CIRCUIT

Turn the ignition off.

Disconnect the Multi-Purpose Module (Police And Taxi Interface Module-PTIM) 24 way harness connector (aftermarket light/siren controller side).

Measure the resistance of the (W529) Engine Running Status Signal circuit between ground and the Multi-Purpose Module (Police And Taxi Interface Module-PTIM) C2 harness connector.

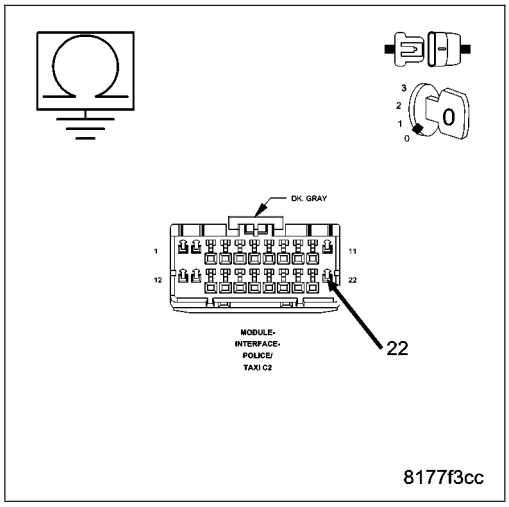

Is the resistance below 5.0 ohms?

Yes >> Repair the (W529) Engine RPM Output circuit for a short to ground.

Perform BODY VERIFICATION TEST – VER 1. (Refer to BODY VERIFICATION TEST – VER 1).

No >> Refer to electrical diagnostics for the aftermarket light/siren controller, and repair or replace the aftermarket light siren controller in accordance with the manufacturer's service information.

Perform BODY VERIFICATION TEST – VER 1. (Refer to BODY VERIFICATION TEST – VER 1).

5. CHECK THE MULTI-PURPOSE MODULE (POLICE AND TAXI INTERFACE MODULE-PTIM)

Turn the ignition off.

Disconnect all Multi-Purpose Module (Police And Taxi Interface Module-PTIM) and aftermarket light/siren controller harness connectors.

Check for damaged or corroded pins, pinched wires, or damaged connectors, and repair any obvious problems.

Connect all Multi-Purpose Module (Police And Taxi Interface Module-PTIM) and aftermarket light/siren controller harness connectors.

Turn the ignition on.

With the scan tool monitor active codes as you work through the following step.

Wiggle the wiring harness and connectors of the Multi-Purpose Module (Police And Taxi Interface Module-PTIM) and aftermarket light/siren controller.

If only stored codes return continue the test until the problem area has been isolated, and repair any obvious problems.

Is DTC P170C — ENGINE RPM OUTPUT CIRCUIT LOW still displayed?

Yes >> Replace the Multi-Purpose Module (Police And Taxi Interface Module-PTIM) in accordance with the service information.

Perform BODY VERIFICATION TEST – VER 1. (Refer to BODY VERIFICATION TEST – VER 1).

No >> Repair is complete. The problem may have been caused by a loose or corroded terminal.

Perform BODY VERIFICATION TEST – VER 1. (Refer to BODY VERIFICATION TEST – VER 1).

P170D — ENGINE RPM OUTPUT CIRCUIT HIGH

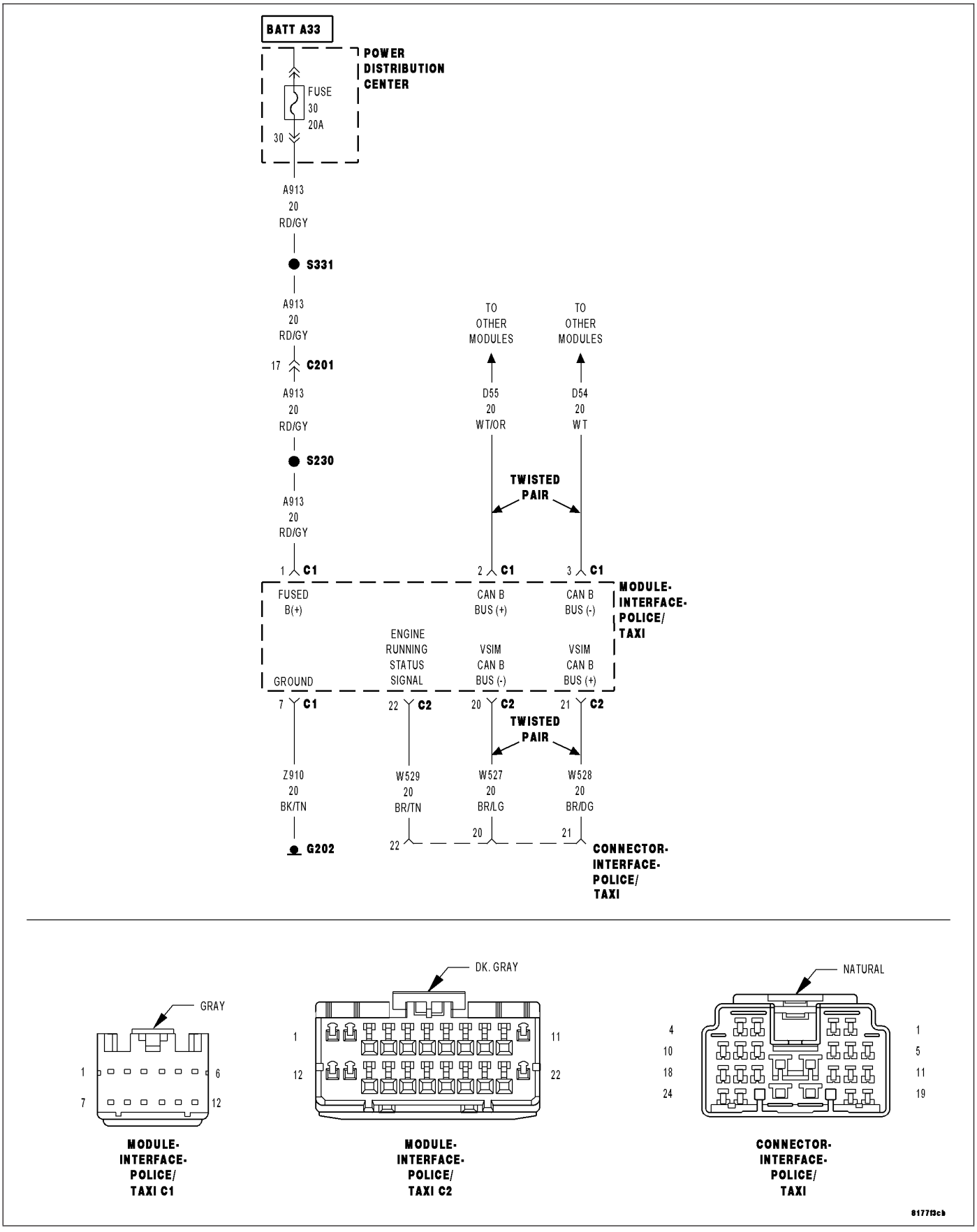

For a complete wiring diagram **Refer to Section 8W**.

- **When Monitored:**
  With the ignition switch on.
- **Set Condition:**
  The Multi-Purpose Module (Police And Taxi Interface Module-PTIM) has detected the Engine Running Status Signal above a calibrated value.

Possible Causes
(W529) ENGINE RUNNING STATUS SIGNAL OPEN OR SHORTED TO VOLTAGE
AFTERMARKET LIGHT/SIREN CONTROLLER
MULTI-PURPOSE MODULE (POLICE AND TAXI INTERFACE MODULE-PTIM)

1. CHECK FOR ANY OF THE FOLLOWING ACTIVE DTCS

With the scan tool, read all active DTCs from all modules.

NOTE: Check for FCM configuration, CAN B or C hardware electrical, VIN Missing/Mismatch, battery or ignition related DTCs.

Does the scan tool display any active DTCs to the conditions listed above?

Yes >> Diagnose and repair the DTC. Refer to the Table of Contents in ELECTRONIC CONTROL MODULES - ELECTRICAL DIAGNOSTICS for a complete list of the symptoms.
Perform BODY VERIFICATION TEST – VER 1. (Refer to BODY VERIFICATION TEST – VER 1).

No >> Go To 2. Diagnostic Test

2. CHECK FOR ACTIVE DTC

With the scan tool, read the active DTCs.

Erase the DTCs.

Turn the ignition off, wait 10 seconds, then turn the ignition on.

With the scan tool, read the active DTC's.

Does the scan tool display this DTC as active?

Yes >> Go To 3.

No >> If the DTC is stored, check for an intermittent condition. Visually inspect the related wiring harness connectors. Look for broken, bent, pushed out, or corroded terminals, and repair any obvious problems.
Perform BODY VERIFICATION TEST – VER 1. (Refer to BODY VERIFICATION TEST – VER 1).

3. CHECK THE (W529) ENGINE RUNNING STATUS SIGNAL CIRCUIT FOR A SHORT TO VOLTAGE

Turn the ignition off.

Disconnect the Multi-Purpose Module (Police And Taxi Interface Module-PTIM) C2 harness connector.

Turn the ignition on.

Measure the voltage of the (W529) Engine Running Status Signal circuit between ground and the Multi-Purpose Module (Police And Taxi Interface Module-PTIM) C2 harness connector.

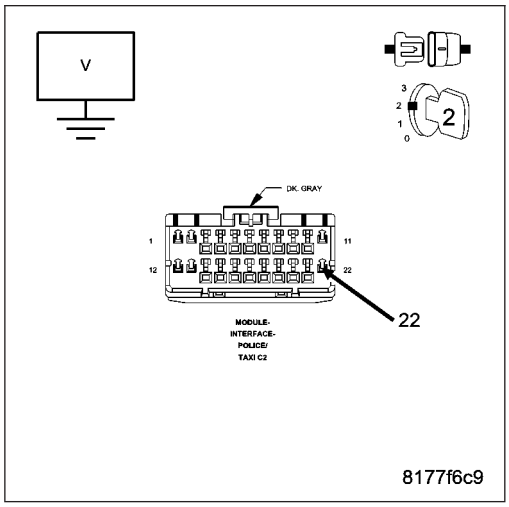

Is there any voltage present?

Yes >> Go To 4.

No >> Go To 5.

4. ISOLATE THE SHORT TO VOLTAGE IN THE (W529) ENGINE RUNNING STATUS SIGNAL CIRCUIT

Turn the ignition off.

Disconnect the Multi-Purpose Module (Police And Taxi Interface Module-PTIM) 24 way harness connector (aftermarket light/siren controller side).

Turn the ignition on.

Measure the voltage of the (W529) Engine Running Status Signal circuit between ground and the Multi-Purpose Module (Police And Taxi Interface Module-PTIM) C2 harness connector.

Is there any voltage present?

Yes >> Repair the (W529) Engine Running Status Signal circuit for a short to voltage.

Perform BODY VERIFICATION TEST – VER 1. (Refer to BODY VERIFICATION TEST – VER 1).

No >> Refer to electrical diagnostics for the aftermarket light/siren controller, and repair or replace the aftermarket light siren controller in accordance with the manufacturer's service information.

Perform BODY VERIFICATION TEST – VER 1. (Refer to BODY VERIFICATION TEST – VER 1).

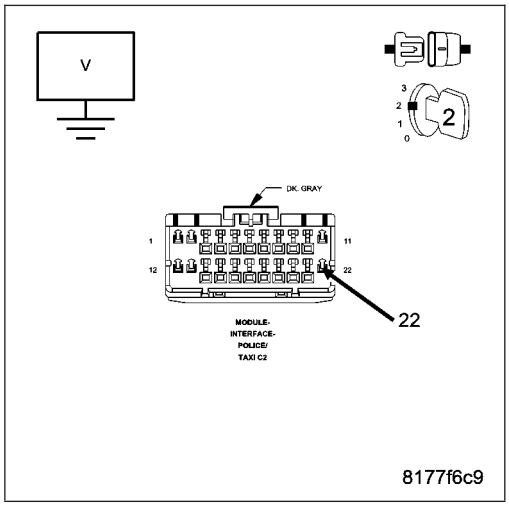

5. CHECK THE (W529) ENGINE RUNNING STATUS SIGNAL CIRCUIT FOR AN OPEN

Turn the ignition off.

Disconnect the Multi-Purpose Module (Police And Taxi Interface Module-PTIM) 24 way harness connector (aftermarket light/siren controller side).

Measure the resistance of the (W529) Engine Running Status Signal circuit between the PTIM 24 way and the Multi-Purpose Module (Police And Taxi Interface Module-PTIM) C2 harness connectors.

Is the resistance below 5.0 ohms?

Yes >> Go To 6.

No >> Repair the (W529) Engine Running Status Signal circuit for an open or high resistance.

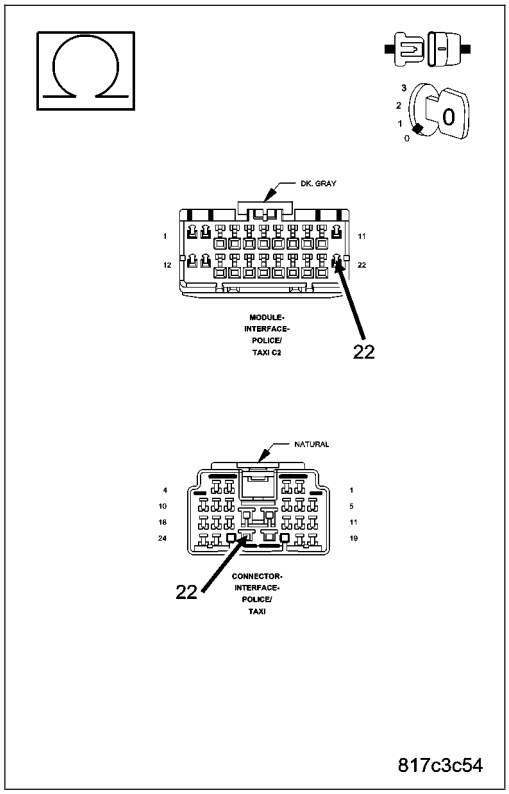

Perform BODY VERIFICATION TEST – VER 1. (Refer to BODY VERIFICATION TEST – VER 1).

6. CHECK THE MULTI-PURPOSE MODULE (POLICE AND TAXI INTERFACE MODULE-PTIM)

Turn the ignition off.

Disconnect all Multi-Purpose Module (Police And Taxi Interface Module-PTIM) and aftermarket light/siren controller harness connectors.

Check for damaged or corroded pins, pinched wires, or damaged connectors, and repair any obvious problems.

Connect all Multi-Purpose Module (Police And Taxi Interface Module-PTIM) and aftermarket light/siren controller harness connectors.

Turn the ignition on.

With the scan tool monitor active codes as you work through the following step.

Wiggle the wiring harness and connectors of the Multi-Purpose Module (Police And Taxi Interface Module-PTIM) and aftermarket light/siren controller.

If only stored codes return continue the test until the problem area has been isolated, and repair any obvious problems.

Is DTC P170D — ENGINE RPM OUTPUT CIRCUIT HIGH still displayed?

Yes >> Replace the Multi-Purpose Module (Police And Taxi Interface Module-PTIM) in accordance with the service information.
Perform BODY VERIFICATION TEST – VER 1. (Refer to BODY VERIFICATION TEST – VER 1).

No >> Repair is complete. The problem may have been caused by a loose or corroded terminal.
Perform BODY VERIFICATION TEST – VER 1. (Refer to BODY VERIFICATION TEST – VER 1).

C1088 — BRAKE LAMP SWITCH OUTPUT CIRCUIT LOW

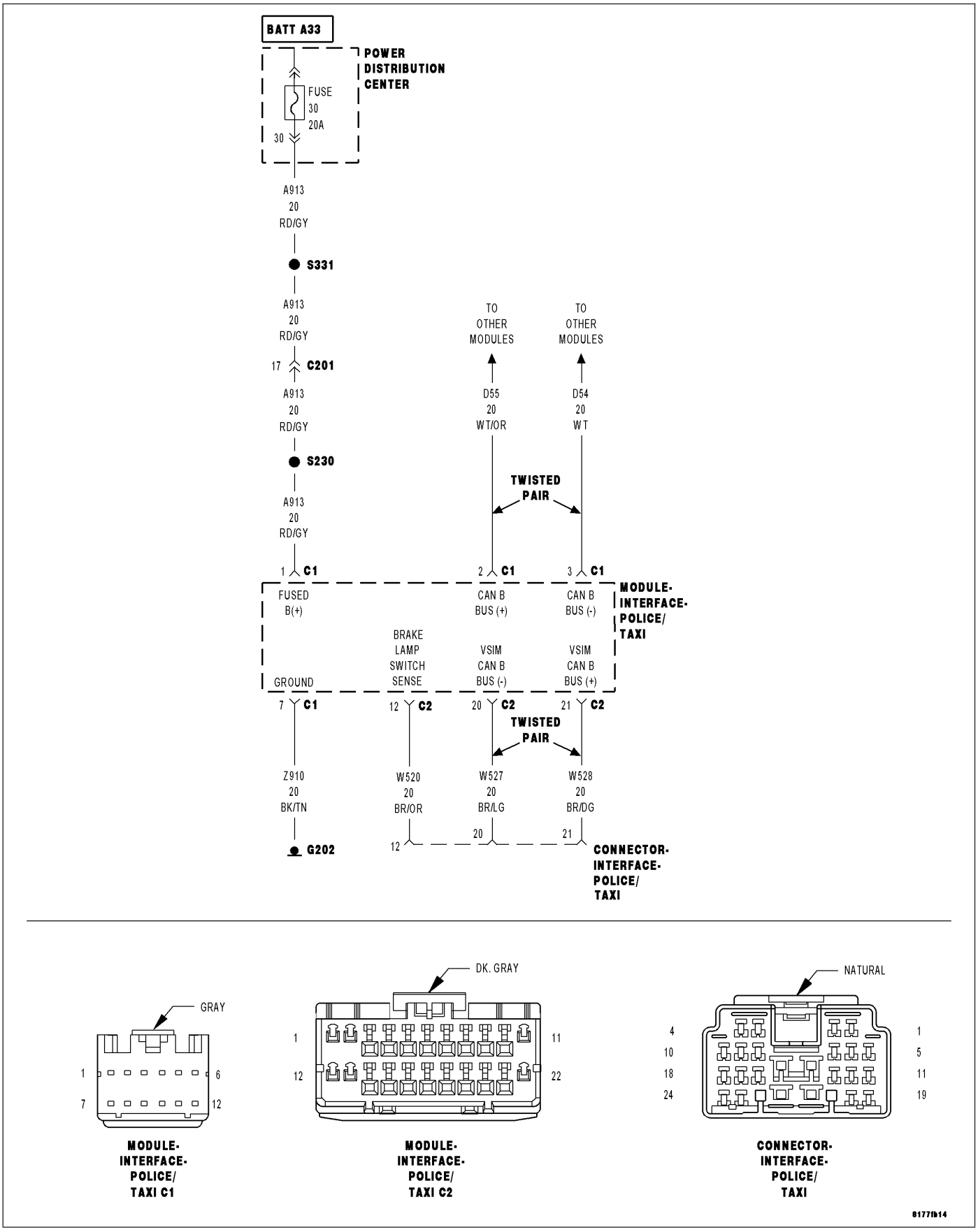

For a complete wiring diagram **Refer to Section 8W**.

- **When Monitored:**
  With the ignition switch on.
- **Set Condition:**
  The Multi-Purpose Module (Police And Taxi Interface Module-PTIM) has detected the Brake Lamp Switch Sense circuit below a calibrated value.

Possible Causes
(W520) BRAKE LAMP SWITCH SENSE CIRCUIT SHORTED TO GROUND
AFTERMARKET LIGHT/SIREN CONTROLLER
MULTI-PURPOSE MODULE (POLICE AND TAXI INTERFACE MODULE-PTIM)

1. CHECK FOR ANY OF THE FOLLOWING ACTIVE DTCS

With the scan tool, read all active DTCs from all modules.

NOTE: Check for FCM configuration, CAN B or C hardware electrical, VIN Missing/Mismatch, battery or ignition related DTCs.

Does the scan tool display any active DTCs to the conditions listed above?

Yes >> Diagnose and repair the DTC. Refer to the Table of Contents in ELECTRONIC CONTROL MODULES - ELECTRICAL DIAGNOSTICS for a complete list of the symptoms.
Perform BODY VERIFICATION TEST – VER 1. (Refer to BODY VERIFICATION TEST – VER 1).

No >> Go To 2. Diagnostic Test

2. CHECK FOR ACTIVE DTC

With the scan tool, read the active DTCs.

Erase the DTCs.

Turn the ignition off, wait 10 seconds, then turn the ignition on.

With the scan tool, read the active DTC's.

Does the scan tool display this DTC as active?

Yes >> Go To 3.

No >> If the DTC is stored, check for an intermittent condition. Visually inspect the related wiring harness connectors. Look for broken, bent, pushed out, or corroded terminals, and repair any obvious problems.
Perform BODY VERIFICATION TEST – VER 1. (Refer to BODY VERIFICATION TEST – VER 1).

3. CHECK THE (W520) BRAKE LAMP SWITCH SENSE CIRCUIT FOR A SHORT TO GROUND

Turn the ignition off.

Disconnect the Multi-Purpose Module (Police And Taxi Interface Module-PTIM) C2 harness connector.

Measure the resistance of the (W520) Brake Lamp Switch Sense circuit between ground and the Multi-Purpose Module (Police And Taxi Interface Module-PTIM) C2 harness connector.

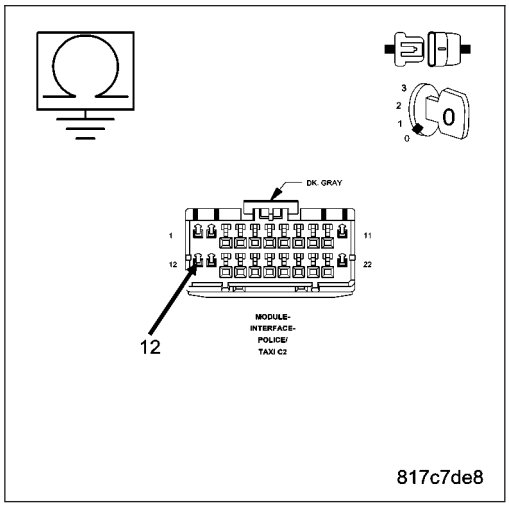

Is the resistance below 5.0 ohms?

Yes >> Go To 4.

No >> Go To 5.

4. ISOLATE THE SHORT TO GROUND IN THE (W520) BRAKE LAMP SWITCH SENSE CIRCUIT

Turn the ignition off.

Disconnect the Multi-Purpose Module (Police And Taxi Interface Module-PTIM) 24 way harness connector (aftermarket light/siren controller side).

Measure the resistance of the (W520) Brake Lamp Switch Sense circuit between ground and the Multi-Purpose Module (Police And Taxi Interface Module-PTIM) C2 harness connector.

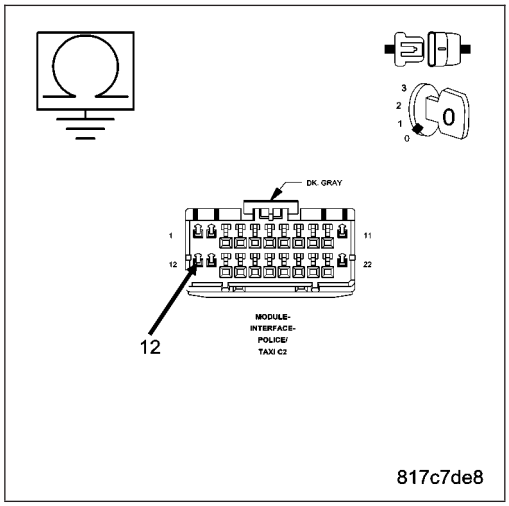

Is the resistance below 5.0 ohms?

Yes >> Repair the (W520) Brake Lamp Switch Sense circuit for a short to ground.

Perform BODY VERIFICATION TEST – VER 1. (Refer to BODY VERIFICATION TEST – VER 1).

No >> Refer to electrical diagnostics for the aftermarket light/siren controller, and repair or replace the aftermarket light/siren controller in accordance with the manufacturer's service information.

Perform BODY VERIFICATION TEST – VER 1. (Refer to BODY VERIFICATION TEST – VER 1).

5. CHECK THE MULTI-PURPOSE MODULE (POLICE AND TAXI INTERFACE MODULE-PTIM)

Turn the ignition off.

Disconnect all Multi-Purpose Module (Police And Taxi Interface Module-PTIM) and aftermarket light/siren controller harness connectors.

Check for damaged or corroded pins, pinched wires, or damaged connectors, and repair any obvious problems.

Connect all Multi-Purpose Module (Police And Taxi Interface Module-PTIM) and aftermarket light/siren controller harness connectors.

Turn the ignition on.

With the scan tool monitor active codes as you work through the following step.

Wiggle the wiring harness and connectors of the Multi-Purpose Module (Police And Taxi Interface Module-PTIM) and aftermarket light/siren controller.

If only stored codes return continue the test until the problem area has been isolated, and repair any obvious problems.

Is DTC C1088 — BRAKE LAMP SWITCH OUTPUT CIRCUIT LOW still displayed?

Yes >> Replace the Multi-Purpose Module (Police And Taxi Interface Module-PTIM) in accordance with the service information.

Perform BODY VERIFICATION TEST – VER 1. (Refer to BODY VERIFICATION TEST – VER 1).

No >> Repair is complete. The problem may have been caused by a loose or corroded terminal.

Perform BODY VERIFICATION TEST – VER 1. (Refer to BODY VERIFICATION TEST – VER 1).

C1089 — BRAKE LAMP OUTPUT CIRCUIT HIGH

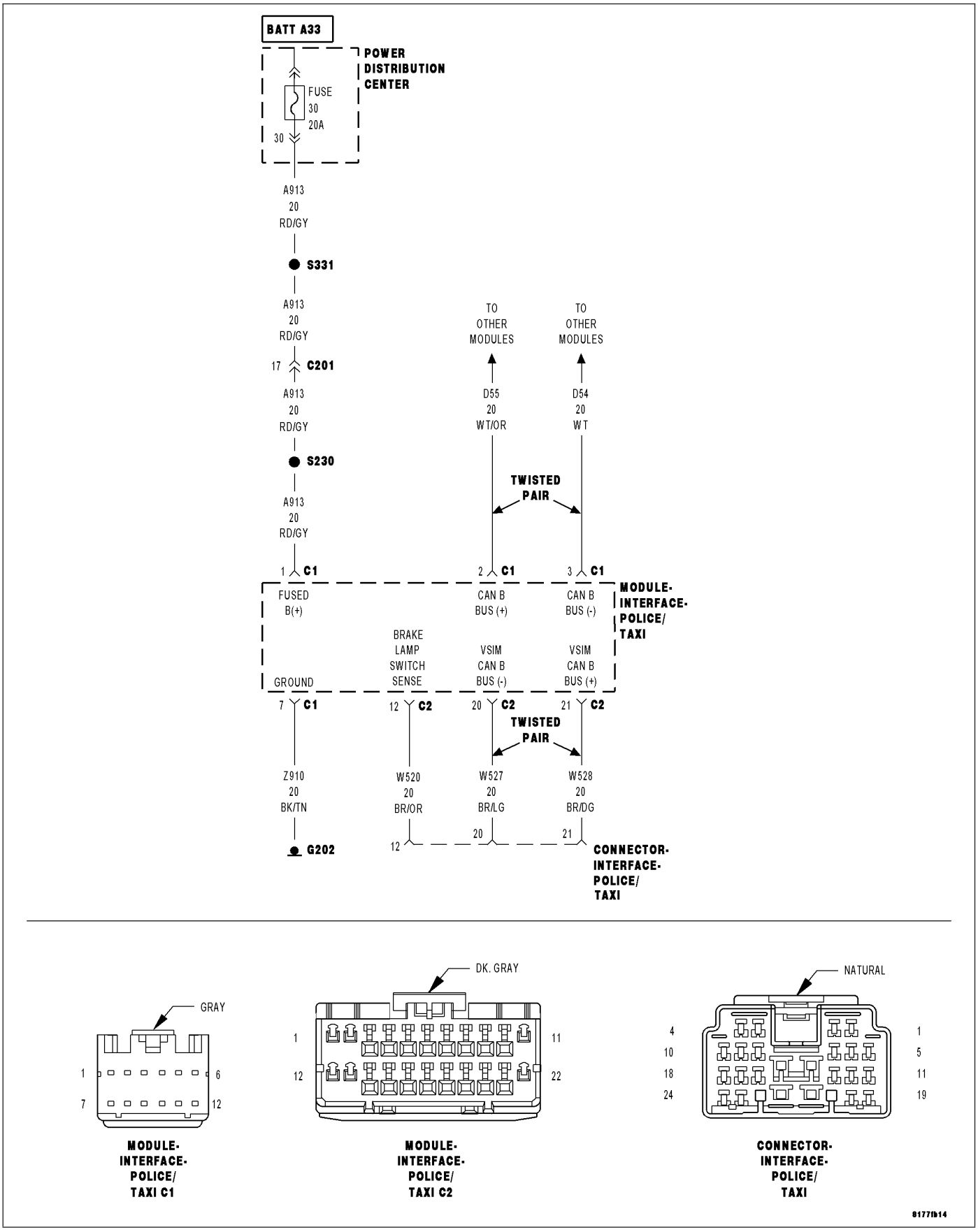

For a complete wiring diagram **Refer to Section 8W**.

- **When Monitored:**
  With the ignition switch on.
- **Set Condition:**
  The Multi-Purpose Module (Police And Taxi Interface Module-PTIM) has detected the Brake Lamp Switch Sense circuit above a calibrated value.

Possible Causes
(W520) BRAKE LAMP SWITCH SENSE CIRCUIT OPEN OR SHORTED TO POWER
AFTERMARKET LIGHT/SIREN CONTROLLER
MULTI-PURPOSE MODULE (POLICE AND TAXI INTERFACE MODULE-PTIM)

1. CHECK FOR ANY OF THE FOLLOWING ACTIVE DTCS

With the scan tool, read all active DTCs from all modules.

NOTE: Check for FCM configuration, CAN B or C hardware electrical, VIN Missing/Mismatch, battery or ignition related DTCs.

Does the scan tool display any active DTCs to the conditions listed above?

Yes >> Diagnose and repair the DTC. Refer to the Table of Contents in ELECTRONIC CONTROL MODULES - ELECTRICAL DIAGNOSTICS for a complete list of the symptoms.
Perform BODY VERIFICATION TEST – VER 1. (Refer to BODY VERIFICATION TEST – VER 1).

No >> Go To 2. Diagnostic Test

2. CHECK FOR ACTIVE DTC

With the scan tool, read the active DTCs.

Erase the DTCs.

Turn the ignition off, wait 10 seconds, then turn the ignition on.

With the scan tool, read the active DTC's.

Does the scan tool display this DTC as active?

Yes >> Go To 3.

No >> If the DTC is stored, check for an intermittent condition. Visually inspect the related wiring harness connectors. Look for broken, bent, pushed out, or corroded terminals, and repair any obvious problems.
Perform BODY VERIFICATION TEST – VER 1. (Refer to BODY VERIFICATION TEST – VER 1).

3. CHECK THE (W520) BRAKE LAMP SWITCH SENSE CIRCUIT FOR A SHORT TO VOLTAGE

Turn the ignition off.

Disconnect the Multi-Purpose Module (Police And Taxi Interface Module-PTIM) C2 harness connector.

Turn the ignition on.

Measure the voltage of the (W520) Brake Lamp Switch Sense circuit between ground and the Multi-Purpose Module (Police And Taxi Interface Module-PTIM) C2 harness connector.

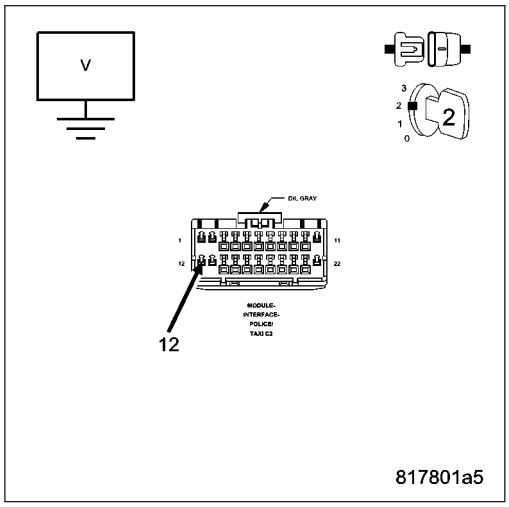

Is there any voltage present?

Yes >> Go To 4.

No >> Go To 5.

4. ISOLATE THE SHORT TO VOLTAGE IN THE (W520) BRAKE LAMP SWITCH SENSE CIRCUIT

Turn the ignition off.

Disconnect the Multi-Purpose Module (Police And Taxi Interface Module-PTIM) 24 way harness connector (aftermarket light/siren controller side).

Turn the ignition on.

Measure the voltage of the (W520) Brake Lamp Switch Sense circuit between ground and the Multi-Purpose Module (Police And Taxi Interface Module-PTIM) C2 harness connector.

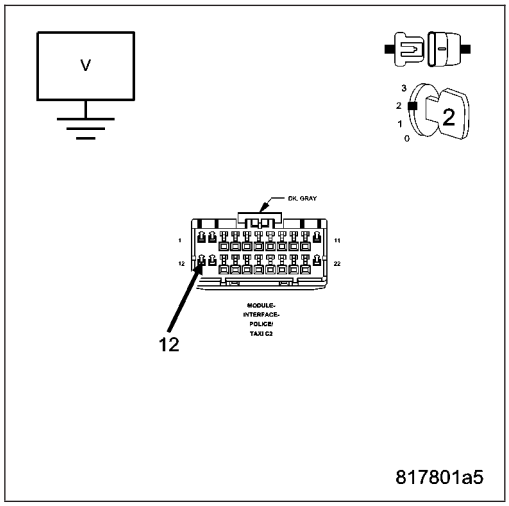

Is there any voltage present?

Yes >> Repair the (W520) Brake Lamp Switch Sense circuit for a short to power.

Perform BODY VERIFICATION TEST – VER 1. (Refer to BODY VERIFICATION TEST – VER 1).

No >> Refer to electrical diagnostics for the aftermarket light/siren controller, and repair or replace the aftermarket light siren controller in accordance with the manufacturer's service information.

Perform BODY VERIFICATION TEST – VER 1. (Refer to BODY VERIFICATION TEST – VER 1).

5. CHECK THE (W520) BRAKE LAMP SWITCH SENSE CIRCUIT FOR AN OPEN

Turn the ignition off.

Disconnect the Multi-Purpose Module (Police And Taxi Interface Module-PTIM) 24 way harness connector (aftermarket light/siren controller side).

Measure the resistance of the (W520) Brake Lamp Switch Sense circuit between the Multi-Purpose Module (Police And Taxi Interface Module-PTIM) 24 way and the Multi-Purpose Module (Police And Taxi Interface Module-PTIM) C2 harness connectors.

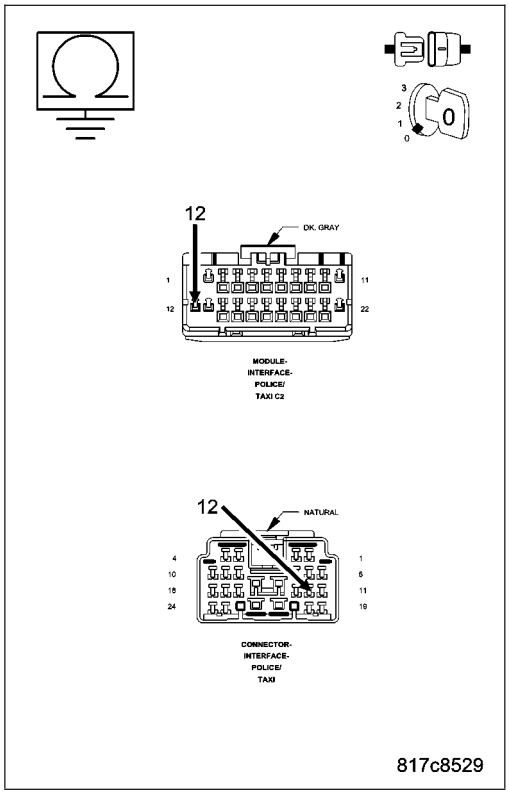

Is the resistance below 5.0 ohms?

Yes >> Go To 6.

No >> Repair the (W520) Brake Lamp Switch Sense circuit for an open or high resistance.

Perform BODY VERIFICATION TEST – VER 1. (Refer to BODY VERIFICATION TEST – VER 1).

6. CHECK THE MULTI-PURPOSE MODULE (POLICE AND TAXI INTERFACE MODULE-PTIM)

Turn the ignition off.

Disconnect all Multi-Purpose Module (Police And Taxi Interface Module-PTIM) and aftermarket light/siren controller harness connectors.

Check for damaged or corroded pins, pinched wires, or damaged connectors, and repair any obvious problems.

Connect all Multi-Purpose Module (Police And Taxi Interface Module-PTIM) and aftermarket light/siren controller harness connectors.

Turn the ignition on.

With the scan tool monitor active codes as you work through the following step.

Wiggle the wiring harness and connectors of the Multi-Purpose Module (Police And Taxi Interface Module-PTIM) and aftermarket light/siren controller.

If only stored codes return continue the test until the problem area has been isolated, and repair any obvious problems.

Is DTC C1089 — BRAKE LAMP OUTPUT CIRCUIT HIGH still displayed?

Yes >> Replace the Multi-Purpose Module (Police And Taxi Interface Module-PTIM) in accordance with the service information.
Perform BODY VERIFICATION TEST – VER 1. (Refer to BODY VERIFICATION TEST – VER 1).

No >> Repair is complete. The problem may have been caused by a loose or corroded terminal.
Perform BODY VERIFICATION TEST – VER 1. (Refer to BODY VERIFICATION TEST – VER 1).

B1693 — ACCESSORY DIMMING CONTROL CIRCUIT LOW

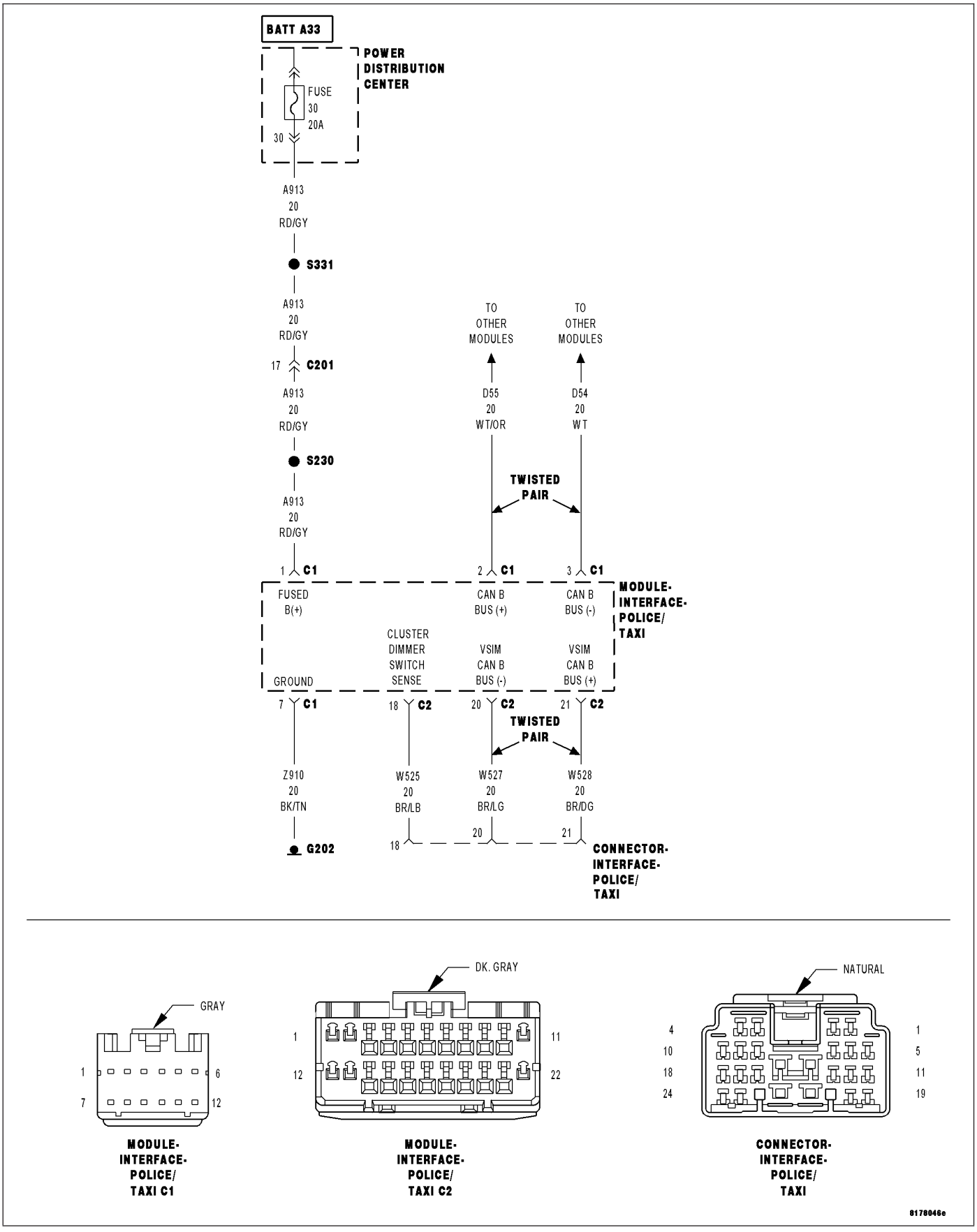

For a complete wiring diagram **Refer to Section 8W**.

- **When Monitored:**
  With the ignition switch on.
- **Set Condition:**
  The Multi-Purpose Module (Police And Taxi Interface Module-PTIM) has detected the Cluster Dimmer Switch Sense circuit below a calibrated value.

Possible Causes
(W525) CLUSTER DIMMER SWITCH SENSE CIRCUIT SHORTED TO GROUND
AFTERMARKET LIGHT/SIREN CONTROLLER
MULTI-PURPOSE MODULE (POLICE AND TAXI INTERFACE MODULE-PTIM)

1. CHECK FOR ANY OF THE FOLLOWING ACTIVE DTCS

With the scan tool, read all active DTCs from all modules.

NOTE: Check for FCM configuration, CAN B or C hardware electrical, VIN Missing/Mismatch, battery or ignition related DTCs.

Does the scan tool display any active DTCs to the conditions listed above?

Yes >> Diagnose and repair the DTC. Refer to the Table of Contents in ELECTRONIC CONTROL MODULES - ELECTRICAL DIAGNOSTICS for a complete list of the symptoms.
Perform BODY VERIFICATION TEST – VER 1. (Refer to BODY VERIFICATION TEST – VER 1).

No >> Go To 2. Diagnostic Test

2. CHECK FOR ACTIVE DTC

With the scan tool, read the active DTCs.

Erase the DTCs.

Turn the ignition off, wait 10 seconds, then turn the ignition on.

With the scan tool, read the active DTC's.

Does the scan tool display this DTC as active?

Yes >> Go To 3.

No >> If the DTC is stored, check for an intermittent condition. Visually inspect the related wiring harness connectors. Look for broken, bent, pushed out, or corroded terminals, and repair any obvious problems.
Perform BODY VERIFICATION TEST – VER 1. (Refer to BODY VERIFICATION TEST – VER 1).

3. CHECK THE (W525) CLUSTER DIMMER SWITCH SENSE CIRCUIT FOR A SHORT TO GROUND

Turn the ignition off.

Disconnect the Multi-Purpose Module (Police And Taxi Interface Module-PTIM) C2 harness connector.

Measure the resistance of the (W525) Cluster Dimmer Switch circuit between ground and the Multi-Purpose Module (Police And Taxi Interface Module-PTIM) C2 harness connector.

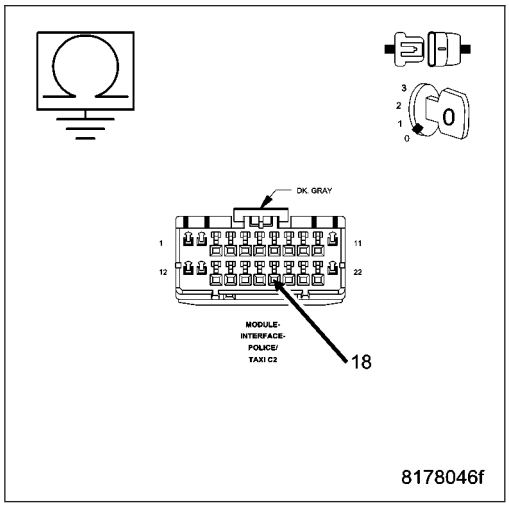

Is the resistance below 5.0 ohms?

Yes >> Go To 4.

No >> Go To 5.

4. ISOLATE THE SHORT TO GROUND IN THE (W525) CLUSTER DIMMER SWITCH SENSE CIRCUIT

Turn the ignition off.

Disconnect the Multi-Purpose Module (Police And Taxi Interface Module-PTIM) 24 way harness connector (aftermarket light/siren controller side).

Measure the resistance of the (W525) Cluster Dimmer Switch circuit between ground and the Multi-Purpose Module (Police And Taxi Interface Module-PTIM) 22 way harness connector.

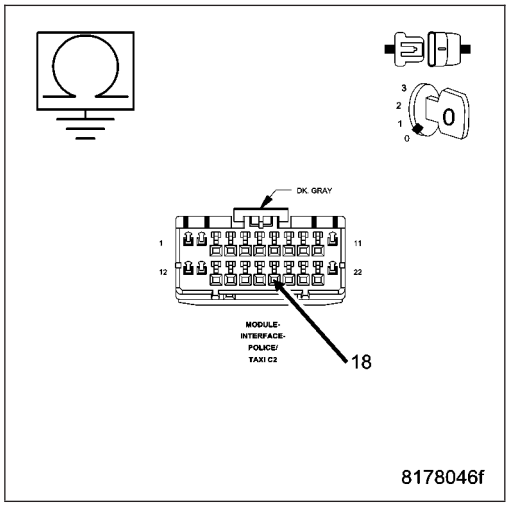

Is the resistance below 5.0 ohms?

Yes >> Repair the (W525) Cluster Dimmer Switch circuit for a short to ground.

Perform BODY VERIFICATION TEST – VER 1. (Refer to BODY VERIFICATION TEST – VER 1).

No >> Refer to electrical diagnostics for the aftermarket light/siren controller, and repair or replace the aftermarket light siren controller in accordance with the manufacturer's service information.

Perform BODY VERIFICATION TEST – VER 1. (Refer to BODY VERIFICATION TEST – VER 1).

5. CHECK THE MULTI-PURPOSE MODULE (POLICE AND TAXI INTERFACE MODULE-PTIM)

Turn the ignition off.

Disconnect all Multi-Purpose Module (Police And Taxi Interface Module-PTIM) and aftermarket light/siren controller harness connectors.

Check for damaged or corroded pins, pinched wires, or damaged connectors, and repair any obvious problems.

Connect all Multi-Purpose Module (Police And Taxi Interface Module-PTIM) and aftermarket light/siren controller harness connectors.

Turn the ignition on.

With the scan tool monitor active codes as you work through the following step.

Wiggle the wiring harness and connectors of the Multi-Purpose Module (Police And Taxi Interface Module-PTIM) and aftermarket light/siren controller.

If only stored codes return continue the test until the problem area has been isolated, and repair any obvious problems.

Is DTC B1693 — ACCESSORY DIMMING CONTROL CIRCUIT LOW still displayed?

Yes >> Replace the Multi-Purpose Module (Police And Taxi Interface Module-PTIM) in accordance with the service information.

Perform BODY VERIFICATION TEST – VER 1. (Refer to BODY VERIFICATION TEST – VER 1).

No >> Repair is complete. The problem may have been caused by a loose or corroded terminal.

Perform BODY VERIFICATION TEST – VER 1. (Refer to BODY VERIFICATION TEST – VER 1).

B1694 — ACCESSORY DIMMING CONTROL CIRCUIT HIGH

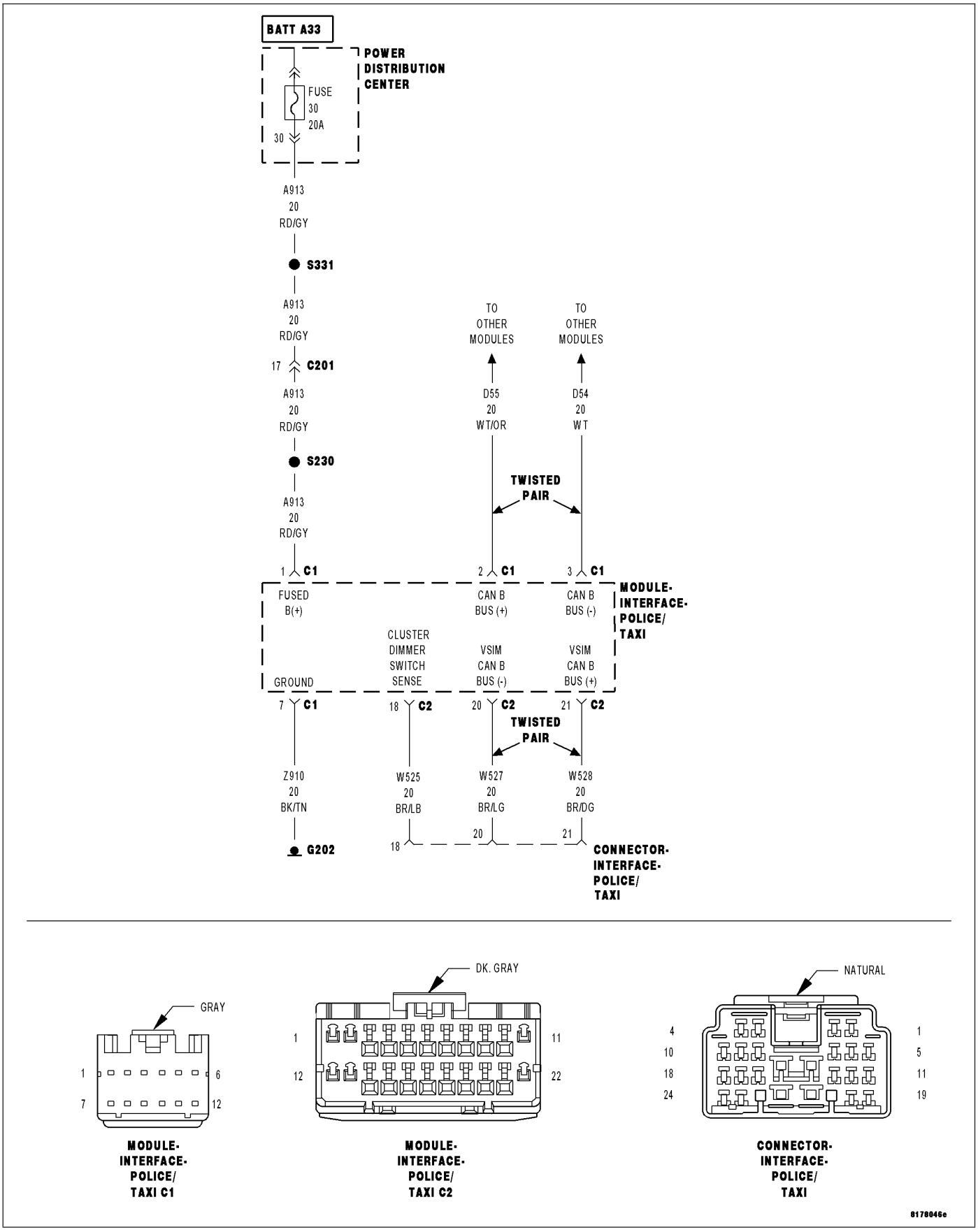

For a complete wiring diagram **Refer to Section 8W**.

- **When Monitored:**
  With the ignition switch on.
- **Set Condition:**
  The Multi-Purpose Module (Police And Taxi Interface Module-PTIM) has detected the Cluster Dimmer Switch Sense circuit below a calibrated value.

Possible Causes
(W525) CLUSTER DIMMER SWITCH SENSE CIRCUIT OPEN OR SHORTED TO VOLTAGE
AFTERMARKET LIGHT/SIREN CONTROLLER
MULTI-PURPOSE MODULE (POLICE AND TAXI INTERFACE MODULE-PTIM)

1. CHECK FOR ANY OF THE FOLLOWING ACTIVE DTCS

With the scan tool, read all active DTCs from all modules.

NOTE: Check for FCM configuration, CAN B or C hardware electrical, VIN Missing/Mismatch, battery or ignition related DTCs.

Does the scan tool display any active DTCs to the conditions listed above?

Yes >> Diagnose and repair the DTC. Refer to the Table of Contents in ELECTRONIC CONTROL MODULES - ELECTRICAL DIAGNOSTICS for a complete list of the symptoms.
Perform BODY VERIFICATION TEST – VER 1. (Refer to BODY VERIFICATION TEST – VER 1).

No >> Go To 2. Diagnostic Test

2. CHECK FOR ACTIVE DTC

With the scan tool, read the active DTCs.

Erase the DTCs.

Turn the ignition off, wait 10 seconds, then turn the ignition on.

With the scan tool, read the active DTC's.

Does the scan tool display this DTC as active?

Yes >> Go To 3.

No >> If the DTC is stored, check for an intermittent condition. Visually inspect the related wiring harness connectors. Look for broken, bent, pushed out, or corroded terminals, and repair any obvious problems.
Perform BODY VERIFICATION TEST – VER 1. (Refer to BODY VERIFICATION TEST – VER 1).

3. CHECK THE (W525) CLUSTER DIMMER SWITCH SENSE CIRCUIT FOR A SHORT TO VOLTAGE

Turn the ignition off.

Disconnect the Multi-Purpose Module (Police And Taxi Interface Module-PTIM) C2 electrical connector.

Turn the ignition on.

Measure the voltage of the (W525) Cluster Dimmer Switch Sense circuit between ground and the Multi-Purpose Module (Police And Taxi Interface Module-PTIM) C2 electrical connector.

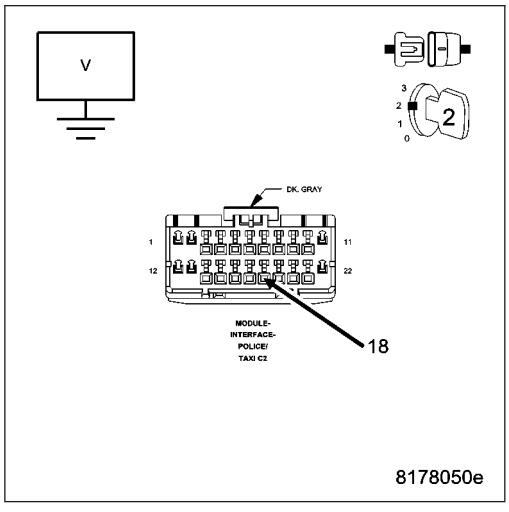

Is there any voltage present?

Yes >> Go To 4.

No >> Go To 5.

4. ISOLATE THE SHORT TO VOLTAGE IN THE (W525) CLUSTER DIMMER SWITCH SENSE CIRCUIT

Turn the ignition off.

Disconnect the Multi-Purpose Module (Police And Taxi Interface Module-PTIM) 24 way electrical connector (aftermarket light/siren controller side).

Turn the ignition on.

Measure the voltage of the (W525) Cluster Dimmer Switch Sense circuit between ground and the Multi-Purpose Module (Police And Taxi Interface Module-PTIM) C2 electrical connector.

Is there any voltage present?

Yes >> Repair the (W525) Cluster Dimmer Switch Sense circuit for a short to ground.

Perform BODY VERIFICATION TEST – VER 1. (Refer to BODY VERIFICATION TEST – VER 1).

No >> Refer to electrical diagnostics for the aftermarket light/siren controller, and repair or replace the aftermarket light siren controller in accordance with the manufacturer's service information.

Perform BODY VERIFICATION TEST – VER 1. (Refer to BODY VERIFICATION TEST – VER 1).

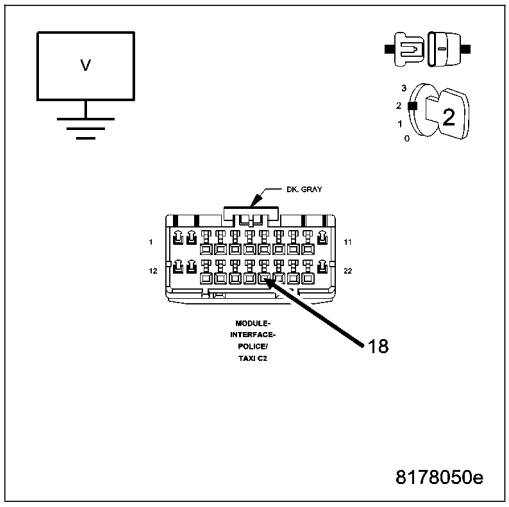

5. CHECK THE (W525) CLUSTER DIMMER SWITCH SENSE CIRCUIT FOR AN OPEN

Turn the ignition off.

Disconnect the Multi-Purpose Module (Police And Taxi Interface Module-PTIM) 24 way connector.

Measure the resistance of the (W525) Cluster Dimmer Switch Sense circuit between the Multi-Purpose Module (Police And Taxi Interface Module-PTIM) 24 way and the Multi-Purpose Module (Police And Taxi Interface Module-PTIM) C2 electrical connectors.

Is the resistance below 5.0 ohms?

Yes >> Go To 6.

No >> Repair the (W525) Cluster Dimmer Switch Sense circuit for an open or high resistance.

Perform BODY VERIFICATION TEST – VER 1. (Refer to BODY VERIFICATION TEST – VER 1).

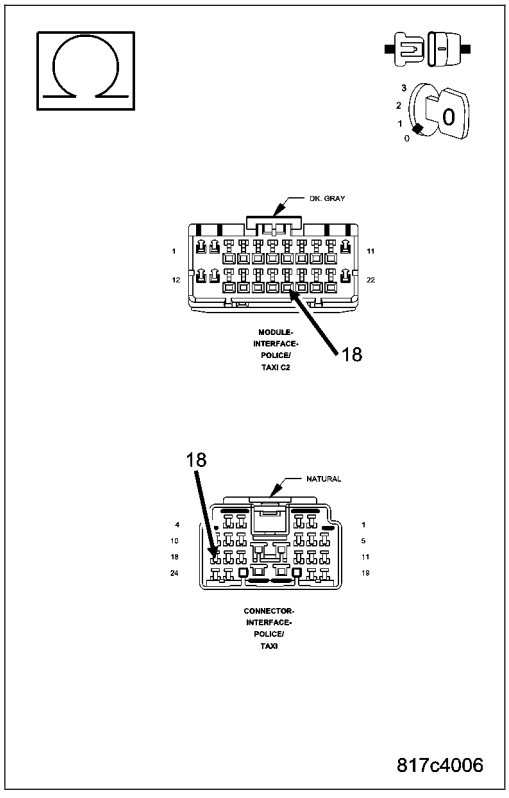

6. CHECK THE MULTI-PURPOSE MODULE (POLICE AND TAXI INTERFACE MODULE-PTIM)

Turn the ignition off.

Disconnect all Multi-Purpose Module (Police And Taxi Interface Module-PTIM) and aftermarket light/siren controller electrical connectors.

Check for damaged or corroded pins, pinched wires, or damaged connectors, and repair any obvious problems.

Connect all Multi-Purpose Module (Police And Taxi Interface Module-PTIM) and aftermarket light/siren controller electrical connectors.

Turn the ignition on.

With the scan tool monitor active codes as you work through the following step.

Wiggle the wiring harness and connectors of the Multi-Purpose Module (Police And Taxi Interface Module-PTIM) and aftermarket light/siren controller.

If only stored codes return continue the test until the problem area has been isolated, and repair any obvious problems.

Is B1694 — ACCESSORY DIMMING CONTROL CIRCUIT HIGH still displayed?

Yes >> Replace the Multi-Purpose Module (Police And Taxi Interface Module-PTIM) in accordance with the service information.
Perform BODY VERIFICATION TEST – VER 1. (Refer to BODY VERIFICATION TEST – VER 1).

No >> Repair is complete. The problem may have been caused by a loose or corroded terminal.
Perform BODY VERIFICATION TEST – VER 1. (Refer to BODY VERIFICATION TEST – VER 1).

B17CF — EMERGENCY FLASHING LAMP REQUEST 1 CIRCUIT HIGH

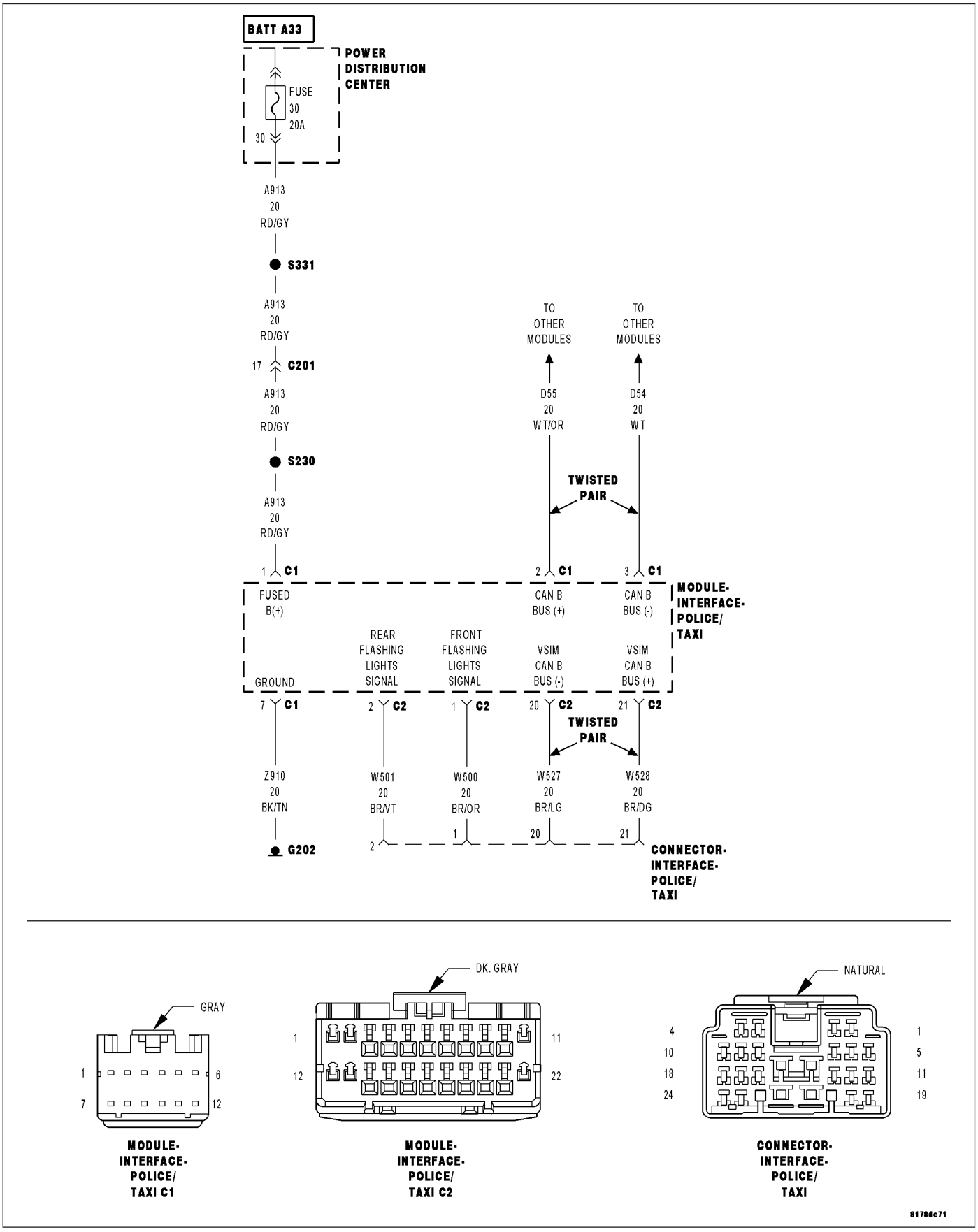

For a complete wiring diagram **Refer to Section 8W**.

- **When Monitored:**
  With the ignition switch on.
- **Set Condition:**
  The Multi-Purpose Module (Police And Taxi Interface Module-PTIM) has detected the Front Flashing Lights Signal circuit above a calibrated value.

Possible Causes
(W500) FRONT FLASHING LIGHTS SIGNAL CIRCUIT OPEN OR SHORTED TO POWER
AFTERMARKET LIGHT/SIREN CONTROLLER
MULTI-PURPOSE MODULE (POLICE AND TAXI INTERFACE MODULE-PTIM)

1. CHECK FOR ANY OF THE FOLLOWING ACTIVE DTCS

With the scan tool, read all active DTCs from all modules.

NOTE: Check for FCM configuration, CAN B or C hardware electrical, VIN Missing/Mismatch, battery or ignition related DTCs.

Does the scan tool display any active DTCs to the conditions listed above?

Yes >> Diagnose and repair the DTC. Refer to the Table of Contents in ELECTRONIC CONTROL MODULES - ELECTRICAL DIAGNOSTICS for a complete list of the symptoms.
Perform BODY VERIFICATION TEST – VER 1. (Refer to BODY VERIFICATION TEST – VER 1).

No >> Go To 2. Diagnostic Test

2. CHECK FOR ACTIVE DTC

With the scan tool, read the active DTCs.

Erase the DTCs.

Turn the ignition off, wait 10 seconds, then turn the ignition on.

With the scan tool, read the active DTC's.

Does the scan tool display this DTC as active?

Yes >> Go To 3.

No >> If the DTC is stored, check for an intermittent condition. Visually inspect the related wiring harness connectors. Look for broken, bent, pushed out, or corroded terminals, and repair any obvious problems.
Perform BODY VERIFICATION TEST – VER 1. (Refer to BODY VERIFICATION TEST – VER 1).

3. CHECK THE (W500) FRONT FLASHING LIGHTS SIGNAL CIRCUIT FOR A SHORT TO POWER

Turn the ignition off.

Disconnect the Multi-Purpose Module (Police And Taxi Interface Module-PTIM) C2 harness connector.

Turn the ignition on.

Measure the voltage of the (W500) Front Flashing Lights Signal circuit between ground and the Multi-Purpose Module (Police And Taxi Interface Module-PTIM) C2 harness connector.

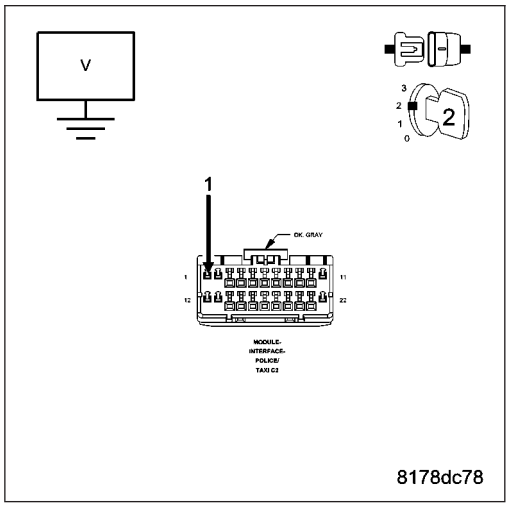

Is there any voltage present?

Yes >> Go To 4.

No >> Go To 5.

4. ISOLATE THE SHORT TO VOLTAGE IN THE (W500) FRONT FLASHING LIGHTS SIGNAL CIRCUIT

Turn the ignition off.

Disconnect the Multi-Purpose Module (Police And Taxi Interface Module-PTIM) 24 way harness connector (aftermarket light/siren controller side).

Turn the ignition on.

Measure the voltage of the (W500) Front Flashing Lights Signal circuit between ground and the Multi-Purpose Module (Police And Taxi Interface Module-PTIM) C2 harness connector.

Is there any voltage present?

Yes >> Repair the (W500) Front Flashing Lights Signal circuit for a short to power.

Perform BODY VERIFICATION TEST – VER 1. (Refer to BODY VERIFICATION TEST – VER 1).

No >> Refer to electrical diagnostics for the aftermarket light/siren controller, and repair or replace the aftermarket light siren controller in accordance with the manufacturer's service information.

Perform BODY VERIFICATION TEST – VER 1. (Refer to BODY VERIFICATION TEST – VER 1).

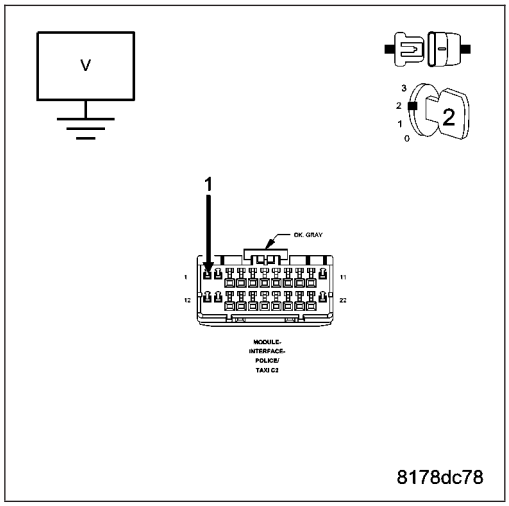

5. CHECK THE (W500) FRONT FLASHING LIGHTS SIGNAL CIRCUIT FOR AN OPEN

Turn the ignition off.

Disconnect the Multi-Purpose Module (Police And Taxi Interface Module-PTIM) 24 way harness connector (aftermarket light/siren controller side).

Measure the resistance of the (W500) Front Flashing Lights Signal circuit between the Multi-Purpose Module (Police And Taxi Interface Module-PTIM) 24 way and the Multi-Purpose Module (Police And Taxi Interface Module-PTIM) C2 harness connectors.

Is the resistance below 5.0 ohms?

Yes >> Go To 6.

No >> Repair the (W500) Front Flashing Lights Signal circuit for an open or high resistance.

Perform BODY VERIFICATION TEST – VER 1. (Refer to BODY VERIFICATION TEST – VER 1).

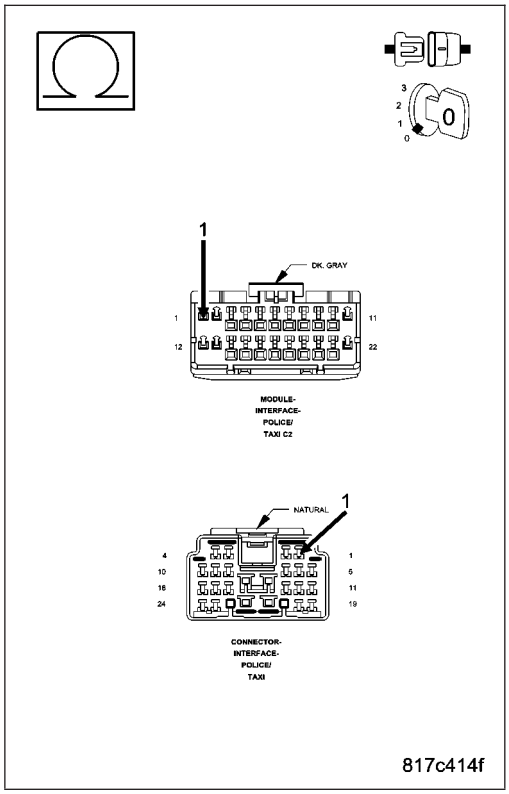

6. CHECK THE MULTI-PURPOSE MODULE (POLICE AND TAXI INTERFACE MODULE-PTIM)

Turn the ignition off.

Disconnect all Multi-Purpose Module (Police And Taxi Interface Module-PTIM) and aftermarket light/siren controller harness connectors.

Check for damaged or corroded pins, pinched wires, or damaged connectors, and repair any obvious problems.

Connect all Multi-Purpose Module (Police And Taxi Interface Module-PTIM) and aftermarket light/siren controller harness connectors.

Turn the ignition on.

With the scan tool monitor active codes as you work through the following step.

Wiggle the wiring harness and connectors of the Multi-Purpose Module (Police And Taxi Interface Module-PTIM) and aftermarket light/siren controller.

If only stored codes return continue the test until the problem area has been isolated, and repair any obvious problems.

Is B17CF — EMERGENCY FLASHING LAMP REQUEST 1 CIRCUIT HIGH still displayed?

Yes >> Replace the Multi-Purpose Module (Police And Taxi Interface Module-PTIM) in accordance with the service information.
Perform BODY VERIFICATION TEST – VER 1. (Refer to BODY VERIFICATION TEST – VER 1).

No >> Repair is complete. The problem may have been caused by a loose or corroded terminal.
Perform BODY VERIFICATION TEST – VER 1. (Refer to BODY VERIFICATION TEST – VER 1).

B17D2 — EMERGENCY FLASHING LAMP REQUEST 2 CIRCUIT HIGH

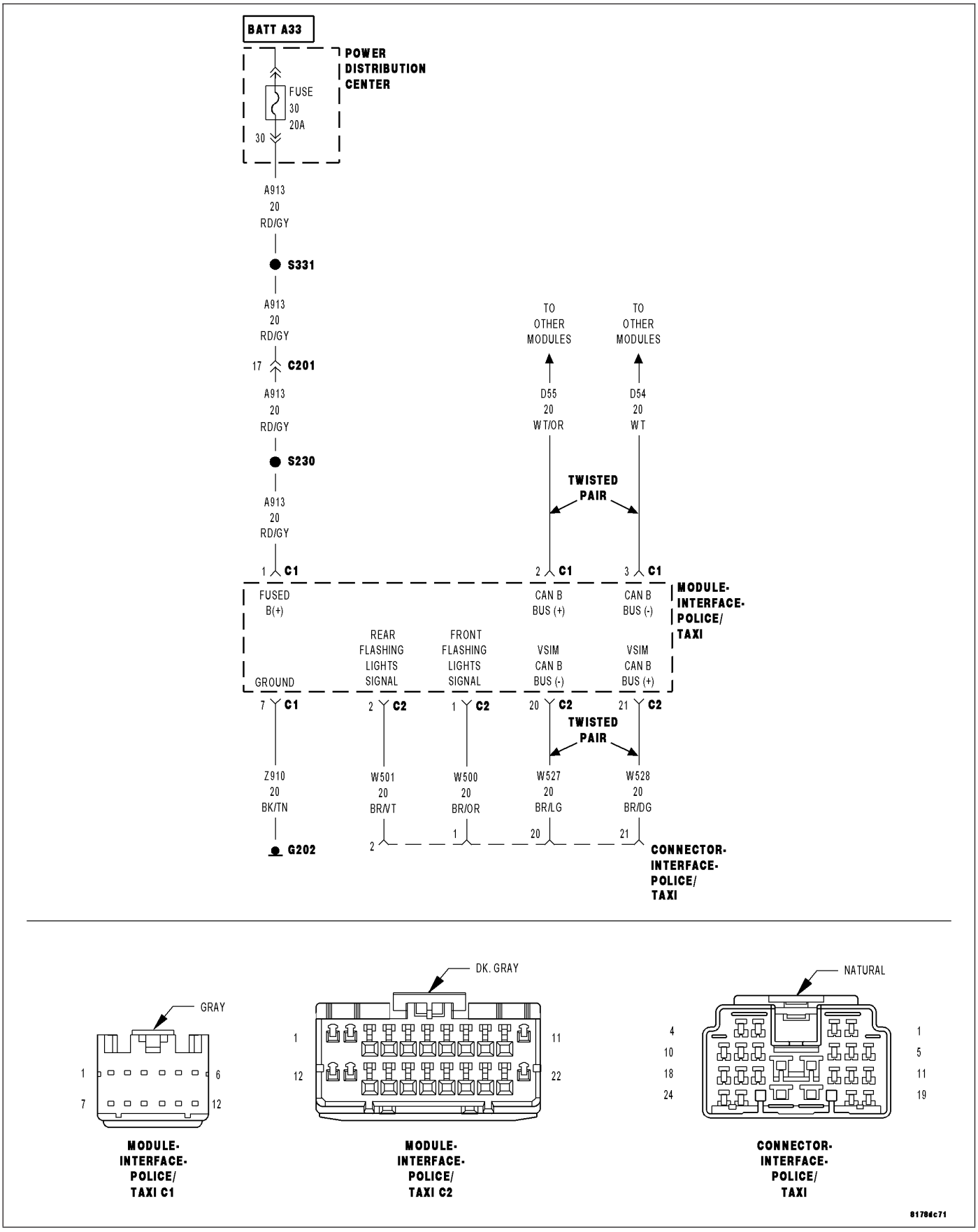

For a complete wiring diagram **Refer to Section 8W**.

- **When Monitored:**
  With the ignition switch on.
- **Set Condition:**
  The Multi-Purpose Module (Police And Taxi Interface Module-PTIM) has detected the Rear Flashing Lights Signal circuit above a calibrated value.

Possible Causes
(W501) REAR FLASHING LIGHTS SIGNAL CIRCUIT OPEN OR SHORTED TO VOLTAGE
AFTERMARKET LIGHT/SIREN CONTROLLER
MULTI-PURPOSE MODULE (POLICE AND TAXI INTERFACE MODULE-PTIM)

1. CHECK FOR ANY OF THE FOLLOWING ACTIVE DTCS

With the scan tool, read all active DTCs from all modules.

NOTE: Check for FCM configuration, CAN B or C hardware electrical, VIN Missing/Mismatch, battery or ignition related DTCs.

Does the scan tool display any active DTCs to the conditions listed above?

Yes >> Diagnose and repair the DTC. Refer to the Table of Contents in ELECTRONIC CONTROL MODULES - ELECTRICAL DIAGNOSTICS for a complete list of the symptoms.
Perform BODY VERIFICATION TEST – VER 1. (Refer to BODY VERIFICATION TEST – VER 1).

No >> Go To 2. Diagnostic Test

2. CHECK FOR ACTIVE DTC

With the scan tool, read the active DTCs.

Erase the DTCs.

Turn the ignition off, wait 10 seconds, then turn the ignition on.

With the scan tool, read the active DTC's.

Does the scan tool display this DTC as active?

Yes >> Go To 3.

No >> If the DTC is stored, check for an intermittent condition. Visually inspect the related wiring harness connectors. Look for broken, bent, pushed out, or corroded terminals, and repair any obvious problems.
Perform BODY VERIFICATION TEST – VER 1. (Refer to BODY VERIFICATION TEST – VER 1).

3. CHECK THE (W501) REAR FLASHING LIGHTS SIGNAL CIRCUIT FOR A SHORT TO VOLTAGE

Turn the ignition off.

Disconnect the Multi-Purpose Module (Police And Taxi Interface Module-PTIM) C2 harness connector.

Turn the ignition on.

Measure the voltage of the (W501) Rear Flashing Lights Signal circuit between ground and the Multi-Purpose Module (Police And Taxi Interface Module-PTIM) C2 harness connector.

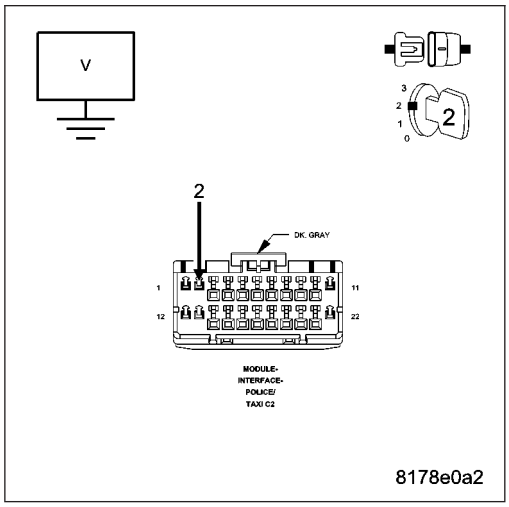

Is there any voltage present?

Yes >> Go To 4.

No >> Go To 5.

4. ISOLATE THE SHORT TO VOLTAGE IN THE (W501) REAR FLASHING LIGHTS SIGNAL CIRCUIT

Turn the ignition off.

Disconnect the Multi-Purpose Module (Police And Taxi Interface Module-PTIM) 24 way harness connector (aftermarket light/siren controller side).

Turn the ignition on.

Measure the voltage of the (W501) Rear Flashing Lights Signal circuit between ground and the Multi-Purpose Module (Police And Taxi Interface Module-PTIM) C2 harness connector.

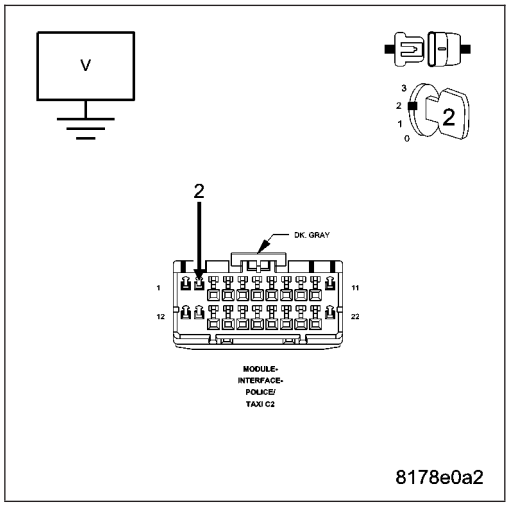

Is there any voltage present?

Yes >> Repair the (W501) Rear Flashing Lights Signal circuit for a short to voltage.

Perform BODY VERIFICATION TEST – VER 1. (Refer to BODY VERIFICATION TEST – VER 1).

No >> Refer to electrical diagnostics for the aftermarket light/siren controller, and repair or replace the aftermarket light siren controller in accordance with the manufacturer's service information.

Perform BODY VERIFICATION TEST – VER 1. (Refer to BODY VERIFICATION TEST – VER 1).

5. CHECK THE (W501) REAR FLASHING LIGHTS SIGNAL CIRCUIT FOR AN OPEN

Turn the ignition off.

Disconnect the Multi-Purpose Module (Police And Taxi Interface Module-PTIM) 24 way harness connector (aftermarket light/siren controller side).

Measure the resistance of the (W501) Rear Flashing Lights Signal circuit between the Multi-Purpose Module (Police And Taxi Interface Module-PTIM) 24 way and the Multi-Purpose Module (Police And Taxi Interface Module-PTIM) C2 harness connectors.

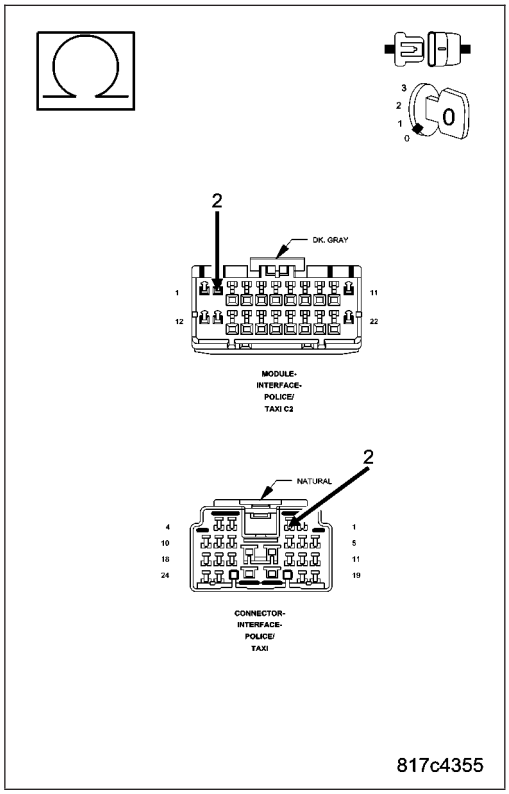

Is the resistance below 5.0 ohms?

Yes >> Go To 6.

No >> Repair the (W501) Rear Flashing Lights Signal circuit for an open or high resistance.

Perform BODY VERIFICATION TEST – VER 1. (Refer to BODY VERIFICATION TEST – VER 1).

6. CHECK THE MULTI-PURPOSE MODULE (POLICE AND TAXI INTERFACE MODULE-PTIM)

Turn the ignition off.

Disconnect all Multi-Purpose Module (Police And Taxi Interface Module-PTIM) and aftermarket light/siren controller harness connectors.

Check for damaged or corroded pins, pinched wires, or damaged connectors, and repair any obvious problems.

Connect all Multi-Purpose Module (Police And Taxi Interface Module-PTIM) and aftermarket light/siren controller harness connectors.

Turn the ignition on.

With the scan tool monitor active codes as you work through the following step.

Wiggle the wiring harness and connectors of the Multi-Purpose Module (Police And Taxi Interface Module-PTIM) and aftermarket light/siren controller.

If only stored codes return continue the test until the problem area has been isolated, and repair any obvious problems.

Is B17D2 — EMERGENCY FLASHING LAMP REQUEST 2 CIRCUIT HIGH still displayed?

Yes >> Replace the Multi-Purpose Module (Police And Taxi Interface Module-PTIM) in accordance with the service information.
Perform BODY VERIFICATION TEST – VER 1. (Refer to BODY VERIFICATION TEST – VER 1).

No >> Repair is complete. The problem may have been caused by a loose or corroded terminal.
Perform BODY VERIFICATION TEST – VER 1. (Refer to BODY VERIFICATION TEST – VER 1).

B17D4 — HEADLAMP STATUS OUTPUT CIRCUIT LOW

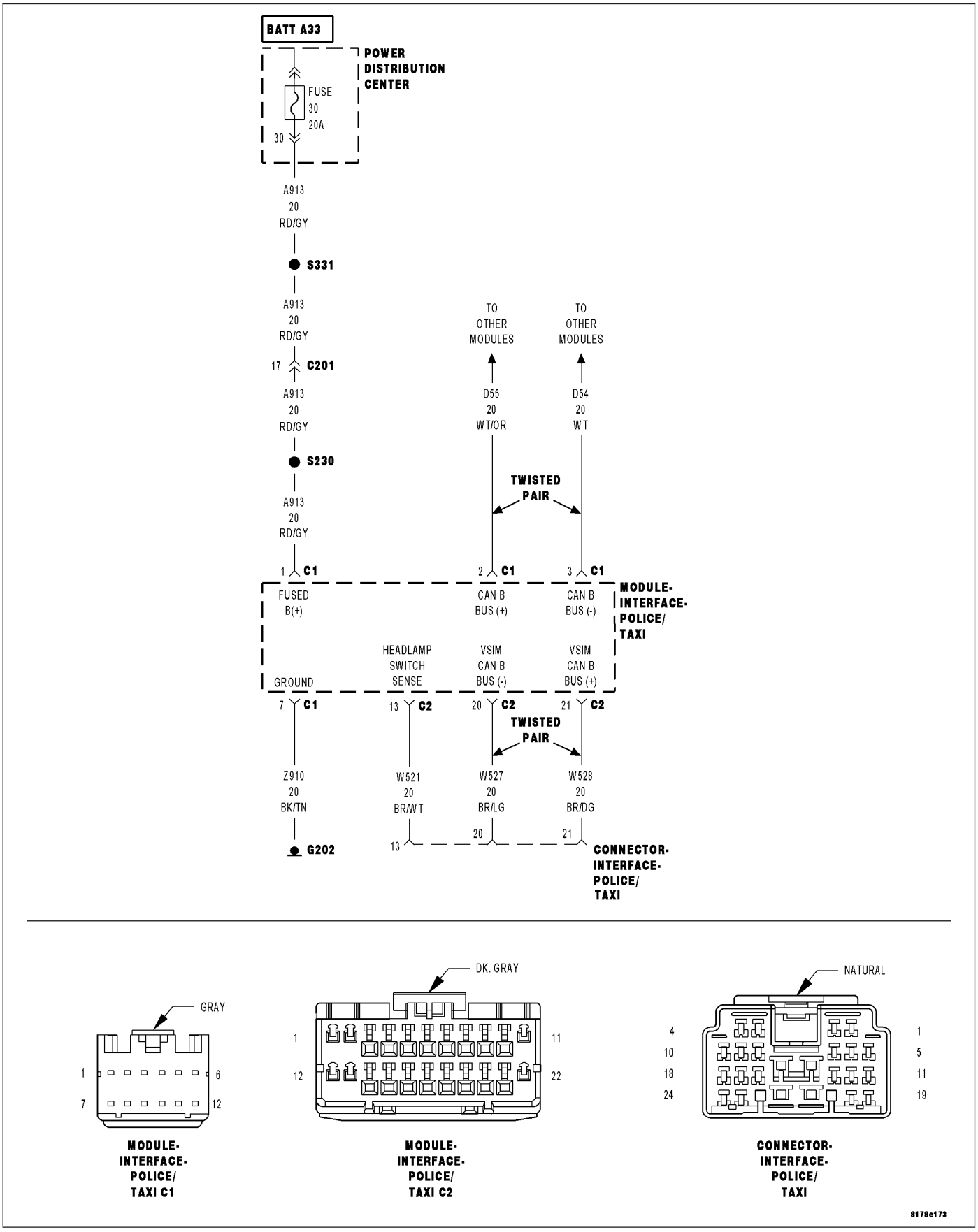

For a complete wiring diagram **Refer to Section 8W**.

- **When Monitored:**
  With the ignition switch on.
- **Set Condition:**
  The Multi-Purpose Module (Police And Taxi Interface Module-PTIM) has detected the Headlamp Switch Sense circuit below a calibrated value.

Possible Causes
(W521) HEADLAMP SWITCH SENSE CIRCUIT SHORTED TO GROUND
AFTERMARKET LIGHT/SIREN CONTROLLER
MULTI-PURPOSE MODULE (POLICE AND TAXI INTERFACE MODULE-PTIM)

1. CHECK FOR ANY OF THE FOLLOWING ACTIVE DTCS

With the scan tool, read all active DTCs from all modules.

NOTE: Check for FCM configuration, CAN B or C hardware electrical, VIN Missing/Mismatch, battery or ignition related DTCs.

Does the scan tool display any active DTCs to the conditions listed above?

Yes >> Diagnose and repair the DTC. Refer to the Table of Contents in ELECTRONIC CONTROL MODULES - ELECTRICAL DIAGNOSTICS for a complete list of the symptoms.
Perform BODY VERIFICATION TEST – VER 1. (Refer to BODY VERIFICATION TEST – VER 1).

No >> Go To 2. Diagnostic Test

2. CHECK FOR ACTIVE DTC

With the scan tool, read the active DTCs.

Erase the DTCs.

Turn the ignition off, wait 10 seconds, then turn the ignition on.

With the scan tool, read the active DTC's.

Does the scan tool display this DTC as active?

Yes >> Go To 3.

No >> If the DTC is stored, check for an intermittent condition. Visually inspect the related wiring harness connectors. Look for broken, bent, pushed out, or corroded terminals, and repair any obvious problems.
Perform BODY VERIFICATION TEST – VER 1. (Refer to BODY VERIFICATION TEST – VER 1).

3. CHECK THE (W521) HEADLAMP SWITCH SENSE CIRCUIT FOR A SHORT TO GROUND

Turn the ignition off.

Disconnect the Multi-Purpose Module (Police And Taxi Interface Module-PTIM) C2 harness connector.

Measure the resistance of the (W521) Headlamp Switch Sense circuit between ground and the Multi-Purpose Module (Police And Taxi Interface Module-PTIM) C2 harness connector.

Is the resistance below 5.0 ohms?

Yes >> Go To 4.

No >> Go To 5.

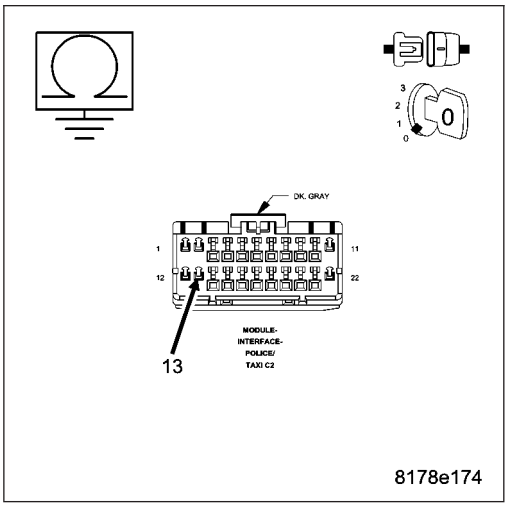

4. ISOLATE THE SHORT TO GROUND IN THE (W521) HEADLAMP SWITCH SENSE CIRCUIT

Turn the ignition off.

Disconnect the Multi-Purpose Module (Police And Taxi Interface Module-PTIM) 24 way harness connector (aftermarket light/siren controller side).

Measure the resistance of the (W521) Headlamp Switch Sense circuit between ground and the Multi-Purpose Module (Police And Taxi Interface Module-PTIM) C2 harness connector.

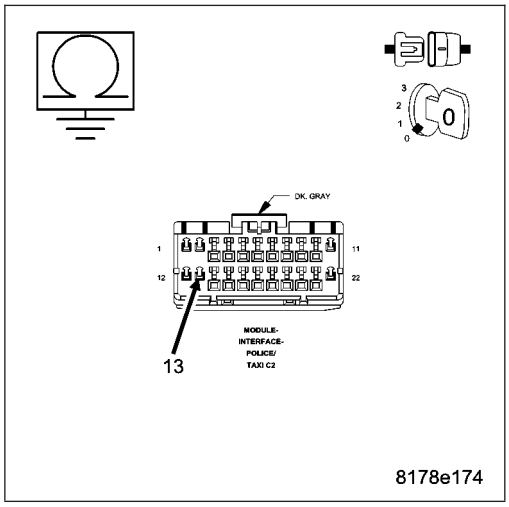

Is the resistance below 5.0 ohms?

Yes >> Repair the (W521) Headlamp Switch Sense circuit for a short to ground.

Perform BODY VERIFICATION TEST – VER 1. (Refer to BODY VERIFICATION TEST – VER 1).

No >> Refer to electrical diagnostics for the aftermarket light/siren controller, and repair or replace the aftermarket light siren controller in accordance with the manufacturer's service information.

Perform BODY VERIFICATION TEST – VER 1. (Refer to BODY VERIFICATION TEST – VER 1).

5. CHECK THE MULTI-PURPOSE MODULE (POLICE AND TAXI INTERFACE MODULE-PTIM)

Turn the ignition off.

Disconnect all Multi-Purpose Module (Police And Taxi Interface Module-PTIM) and aftermarket light/siren controller harness connectors.

Check for damaged or corroded pins, pinched wires, or damaged connectors, and repair any obvious problems.

Connect all Multi-Purpose Module (Police And Taxi Interface Module-PTIM) and aftermarket light/siren controller harness connectors.

Turn the ignition on.

With the scan tool monitor active codes as you work through the following step.

Wiggle the wiring harness and connectors of the Multi-Purpose Module (Police And Taxi Interface Module-PTIM) and aftermarket light/siren controller.

If only stored codes return continue the test until the problem area has been isolated, and repair any obvious problems.

Is B17D4 — HEADLAMP STATUS OUTPUT CIRCUIT LOW still displayed?

Yes >> Replace the Multi-Purpose Module (Police And Taxi Interface Module-PTIM) in accordance with the service information.

Perform BODY VERIFICATION TEST – VER 1. (Refer to BODY VERIFICATION TEST – VER 1).

No >> Repair is complete. The problem may have been caused by a loose or corroded terminal.

B17D5 — HEADLAMP STATUS OUTPUT CIRCUIT HIGH

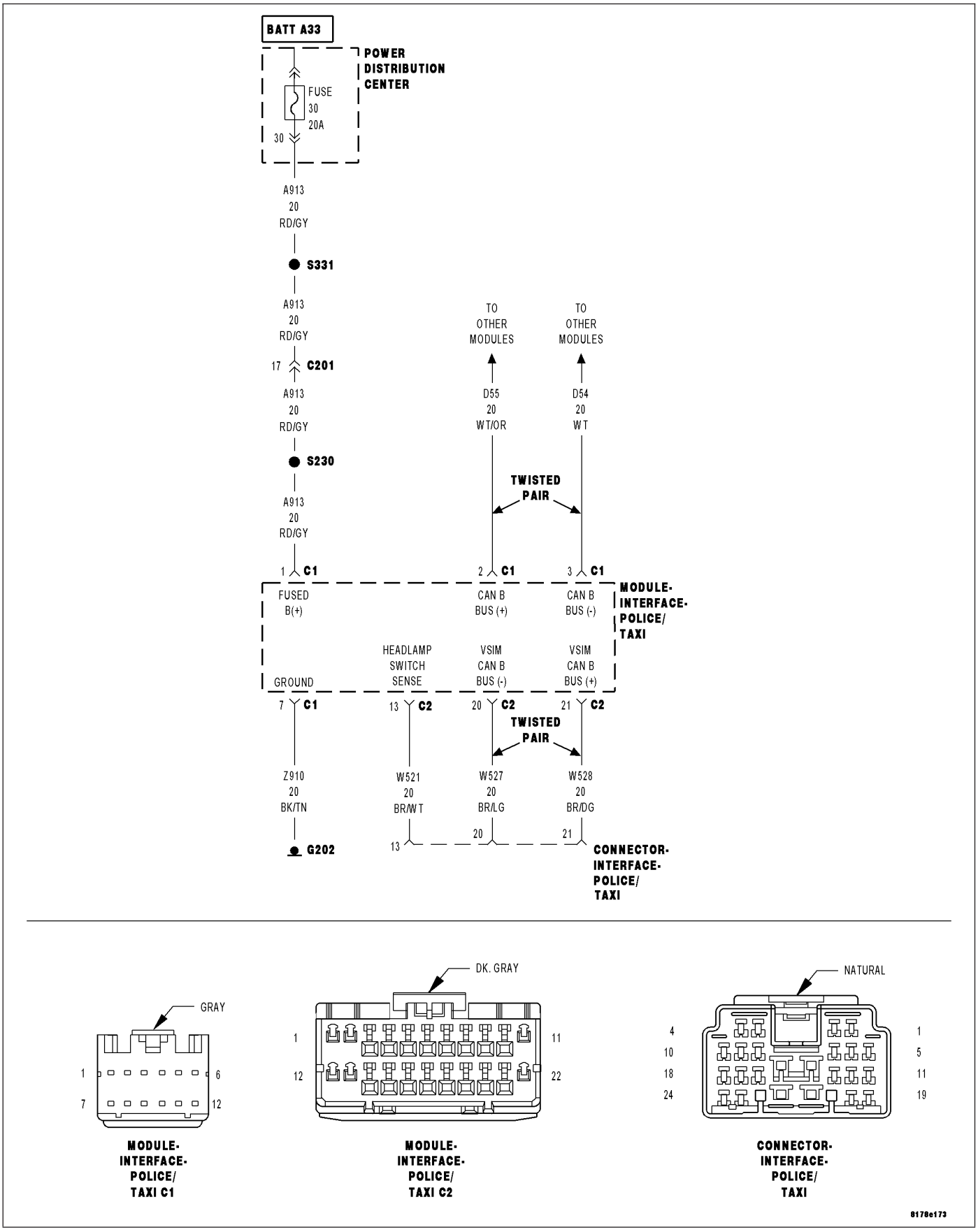

For a complete wiring diagram **Refer to Section 8W**.

- **When Monitored:**
  With the ignition switch on.
- **Set Condition:**
  The Multi-Purpose Module (Police And Taxi Interface Module-PTIM) has detected the Headlamp Switch Sense circuit above a calibrated value.

Possible Causes
(W521) HEADLAMP SWITCH SENSE CIRCUIT OPEN OR SHORTED TO VOLTAGE
AFTERMARKET LIGHT/SIREN CONTROLLER
MULTI-PURPOSE MODULE (POLICE AND TAXI INTERFACE MODULE-PTIM)

1. CHECK FOR ANY OF THE FOLLOWING ACTIVE DTCS

With the scan tool, read all active DTCs from all modules.

NOTE: Check for FCM configuration, CAN B or C hardware electrical, VIN Missing/Mismatch, battery or ignition related DTCs.

Does the scan tool display any active DTCs to the conditions listed above?

Yes >> Diagnose and repair the DTC. Refer to the Table of Contents in ELECTRONIC CONTROL MODULES - ELECTRICAL DIAGNOSTICS for a complete list of the symptoms.
Perform BODY VERIFICATION TEST – VER 1. (Refer to BODY VERIFICATION TEST – VER 1).

No >> Go To 2. Diagnostic Test

2. CHECK FOR ACTIVE DTC

With the scan tool, read the active DTCs.

Erase the DTCs.

Turn the ignition off, wait 10 seconds, then turn the ignition on.

With the scan tool, read the active DTC's.

Does the scan tool display this DTC as active?

Yes >> Go To 3.

No >> If the DTC is stored, check for an intermittent condition. Visually inspect the related wiring harness connectors. Look for broken, bent, pushed out, or corroded terminals, and repair any obvious problems.
Perform BODY VERIFICATION TEST – VER 1. (Refer to BODY VERIFICATION TEST – VER 1).

3. CHECK THE (W521) HEADLAMP SWITCH SENSE CIRCUIT FOR A SHORT TO VOLTAGE

Turn the ignition off.

Disconnect the Multi-Purpose Module (Police And Taxi Interface Module-PTIM) C2 harness connector.

Turn the ignition on.

Measure the voltage of the (W521) Headlamp Switch Sense circuit between ground and the Multi-Purpose Module (Police And Taxi Interface Module-PTIM) C2 harness connector.

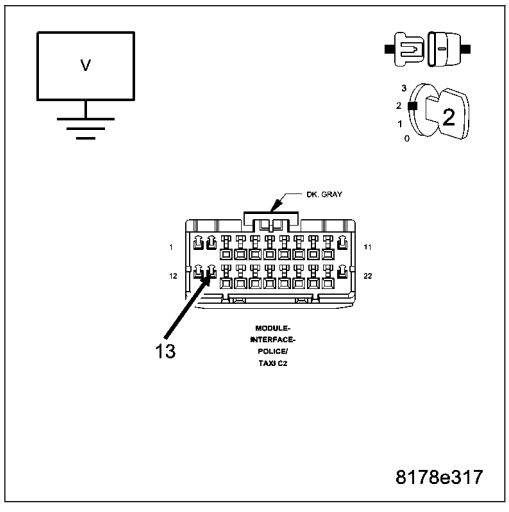

Is there any voltage present?

Yes >> Go To 4.

No >> Go To 5.

4. ISOLATE THE SHORT TO VOLTAGE IN THE (W521) HEADLAMP SWITCH SENSE CIRCUIT

Turn the ignition off.

Disconnect the Multi-Purpose Module (Police And Taxi Interface Module-PTIM) 24 way harness connector (aftermarket light/siren controller side).

Turn the ignition on.

Measure the voltage of the (W521) Headlamp Switch Sense circuit between ground and the Multi-Purpose Module (Police And Taxi Interface Module-PTIM) C2 harness connector.

Is there any voltage present?

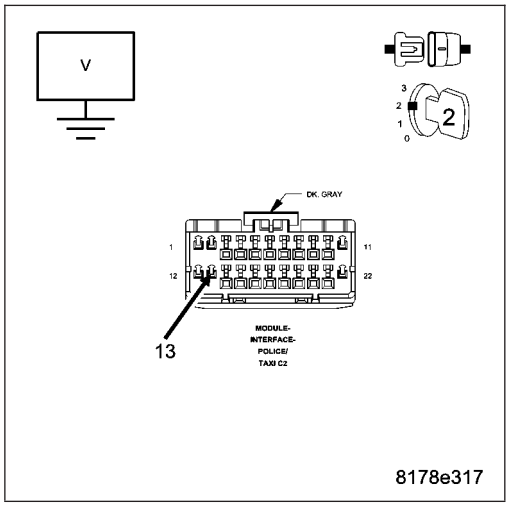

Yes >> Repair the (W521) Headlamp Switch Sense circuit for a short to power.

Perform BODY VERIFICATION TEST – VER 1. (Refer to BODY VERIFICATION TEST – VER 1).

No >> Refer to electrical diagnostics for the aftermarket light/siren controller, and repair or replace the aftermarket light siren controller in accordance with the manufacturer's service information.

Perform BODY VERIFICATION TEST – VER 1. (Refer to BODY VERIFICATION TEST – VER 1).

5. CHECK THE (W521) HEADLAMP SWITCH SENSE CIRCUIT FOR AN OPEN

Turn the ignition off.

Disconnect the Multi-Purpose Module (Police And Taxi Interface Module-PTIM) 24 way harness connector (aftermarket light/siren controller side).

Measure the resistance of the (W521) Headlamp Switch Sense circuit between the Multi-Purpose Module (Police And Taxi Interface Module-PTIM) 24 way and the Multi-Purpose Module (Police And Taxi Interface Module-PTIM) C2 harness connectors.

Is the resistance below 5.0 ohms?

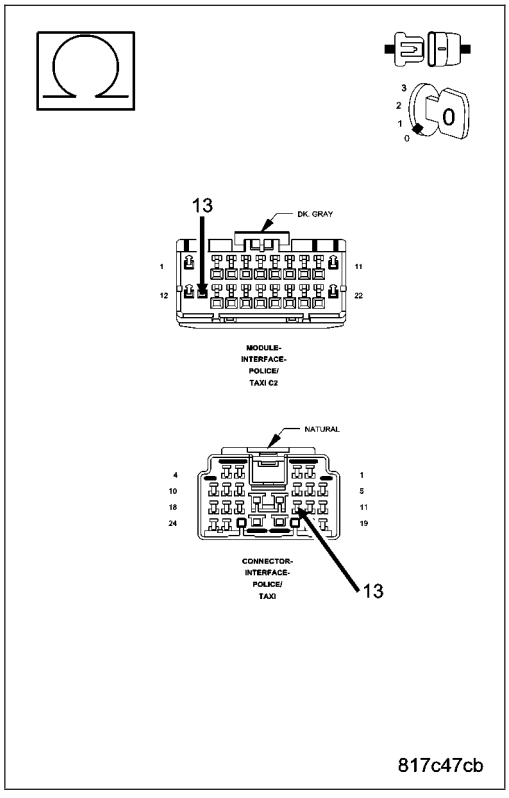

Yes >> Go To 6.

No >> Repair the (W521) Headlamp Switch Sense circuit for an open or high resistance.

Perform BODY VERIFICATION TEST – VER 1. (Refer to BODY VERIFICATION TEST – VER 1).

6. CHECK THE MULTI-PURPOSE MODULE (POLICE AND TAXI INTERFACE MODULE-PTIM)

Turn the ignition off.

Disconnect all Multi-Purpose Module (Police And Taxi Interface Module-PTIM) and aftermarket light/siren controller harness connectors.

Check for damaged or corroded pins, pinched wires, or damaged connectors, and repair any obvious problems.

Connect all Multi-Purpose Module (Police And Taxi Interface Module-PTIM) and aftermarket light/siren controller harness connectors.

Turn the ignition on.

With the scan tool monitor active codes as you work through the following step.

Wiggle the wiring harness and connectors of the Multi-Purpose Module (Police And Taxi Interface Module-PTIM) and aftermarket light/siren controller.

If only stored codes return continue the test until the problem area has been isolated, and repair any obvious problems.

Is P17D5 — HEADLAMP STATUS OUTPUT CIRCUIT HIGH still displayed?

Yes >> Replace the Multi-Purpose Module (Police And Taxi Interface Module-PTIM) in accordance with the service information.
Perform BODY VERIFICATION TEST – VER 1. (Refer to BODY VERIFICATION TEST – VER 1).

No >> Repair is complete. The problem may have been caused by a loose or corroded terminal.
Perform BODY VERIFICATION TEST – VER 1. (Refer to BODY VERIFICATION TEST – VER 1).

B19B4 — DRIVER DOOR AJAR OUTPUT CIRCUIT LOW

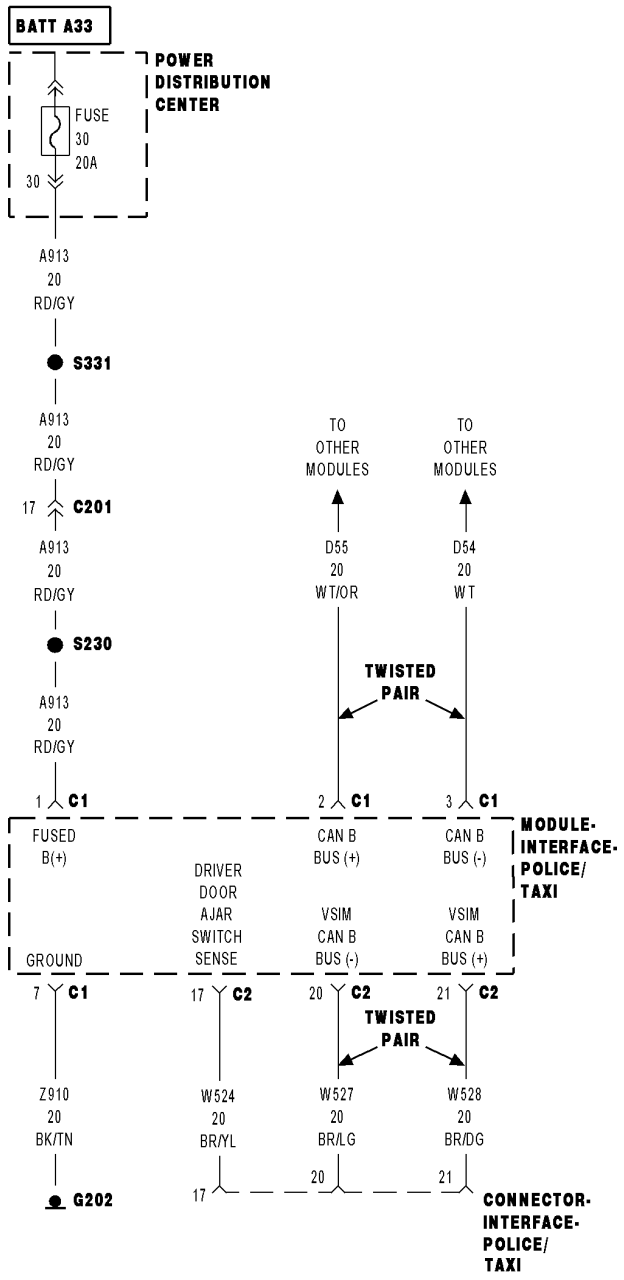

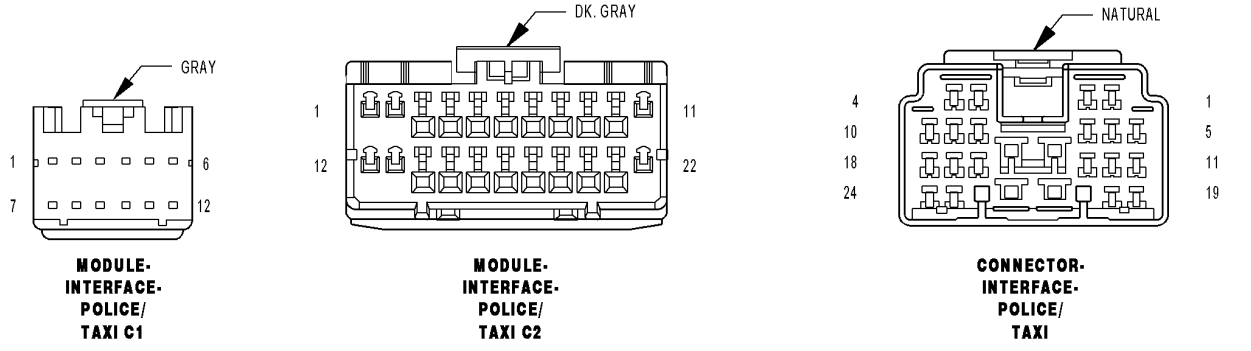

For a complete wiring diagram **Refer to Section 8W**.

- **When Monitored:**
  With the ignition switch on.
- **Set Condition:**
  The Multi-Purpose Module (Police And Taxi Interface Module-PTIM) has detected the Driver Door Ajar Switch Sense circuit below a calibrated value.

Possible Causes
(W524) DRIVER DOOR AJAR SWITCH SENSE CIRCUIT SHORTED TO GROUND
AFTERMARKET LIGHT/SIREN CONTROLLER
MULTI-PURPOSE MODULE (POLICE AND TAXI INTERFACE MODULE-PTIM)

1. CHECK FOR ANY OF THE FOLLOWING ACTIVE DTCS

With the scan tool, read all active DTCs from all modules.

NOTE: Check for FCM configuration, CAN B or C hardware electrical, VIN Missing/Mismatch, battery or ignition related DTCs.

Does the scan tool display any active DTCs to the conditions listed above?

Yes >> Diagnose and repair the DTC. Refer to the Table of Contents in ELECTRONIC CONTROL MODULES - ELECTRICAL DIAGNOSTICS for a complete list of the symptoms.
Perform BODY VERIFICATION TEST – VER 1. (Refer to BODY VERIFICATION TEST – VER 1).

No >> Go To 2. Diagnostic Test

2. CHECK FOR ACTIVE DTC

With the scan tool, read the active DTCs.

Erase the DTCs.

Turn the ignition off, wait 10 seconds, then turn the ignition on.

With the scan tool, read the active DTC's.

Does the scan tool display this DTC as active?

Yes >> Go To 3.

No >> If the DTC is stored, check for an intermittent condition. Visually inspect the related wiring harness connectors. Look for broken, bent, pushed out, or corroded terminals, and repair any obvious problems.
Perform BODY VERIFICATION TEST – VER 1. (Refer to BODY VERIFICATION TEST – VER 1).

3. CHECK THE (W524) DRIVER DOOR AJAR SWITCH SENSE CIRCUIT FOR A SHORT TO GROUND

Turn the ignition off.

Disconnect the Multi-Purpose Module (Police And Taxi Interface Module-PTIM) C2 harness connector.

Measure the resistance of the (W524) Driver Door Ajar Switch Sense circuit between ground and the Multi-Purpose Module (Police And Taxi Interface Module-PTIM) C2 harness connector.

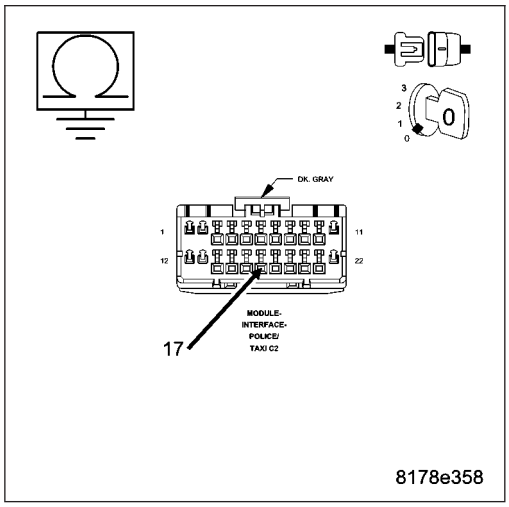

Is the resistance below 5.0 ohms?

Yes >> Go To 4.

No >> Go To 5.

4. ISOLATE THE SHORT TO GROUND IN THE (W524) DRIVER DOOR AJAR SWITCH SENSE CIRCUIT

Turn the ignition off.

Disconnect the Multi-Purpose Module (Police And Taxi Interface Module-PTIM) 24 way harness connector (aftermarket light/siren controller side).

Measure the resistance of the (W524) Driver Door Ajar Switch Sense circuit between ground and the Multi-Purpose Module (Police And Taxi Interface Module-PTIM) C2 harness connector.

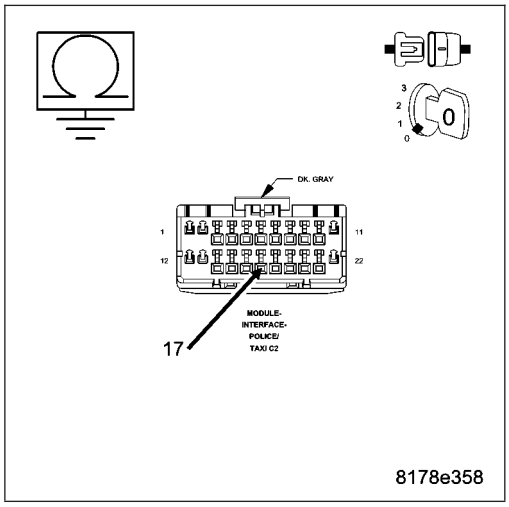

Is the resistance below 5.0 ohms?

Yes >> Repair the (W524) Driver Door Ajar Switch Sense circuit for a short to ground.

Perform BODY VERIFICATION TEST – VER 1. (Refer to BODY VERIFICATION TEST – VER 1).

No >> Refer to electrical diagnostics for the aftermarket light/siren controller, and repair or replace the aftermarket light siren controller in accordance with the manufacturer's service information.

Perform BODY VERIFICATION TEST – VER 1. (Refer to BODY VERIFICATION TEST – VER 1).

5. CHECK THE MULTI-PURPOSE MODULE (POLICE AND TAXI INTERFACE MODULE-PTIM)

Turn the ignition off.

Disconnect all Multi-Purpose Module (Police And Taxi Interface Module-PTIM) and aftermarket light/siren controller harness connectors.

Check for damaged or corroded pins, pinched wires, or damaged connectors, and repair any obvious problems.

Connect all Multi-Purpose Module (Police And Taxi Interface Module-PTIM) and aftermarket light/siren controller harness connectors.

Turn the ignition on.

With the scan tool monitor active codes as you work through the following step.

Wiggle the wiring harness and connectors of the Multi-Purpose Module (Police And Taxi Interface Module-PTIM) and aftermarket light/siren controller.

If only stored codes return continue the test until the problem area has been isolated, and repair any obvious problems.

Is B19B4 — DRIVER DOOR AJAR OUTPUT CIRCUIT LOW still displayed?

Yes >> Replace the Multi-Purpose Module (Police And Taxi Interface Module-PTIM) in accordance with the service information.

Perform BODY VERIFICATION TEST – VER 1. (Refer to BODY VERIFICATION TEST – VER 1).

No >> Repair is complete. The problem may have been caused by a loose or corroded terminal.

P19B5 — DRIVER DOOR AJAR OUTPUT CIRCUIT HIGH

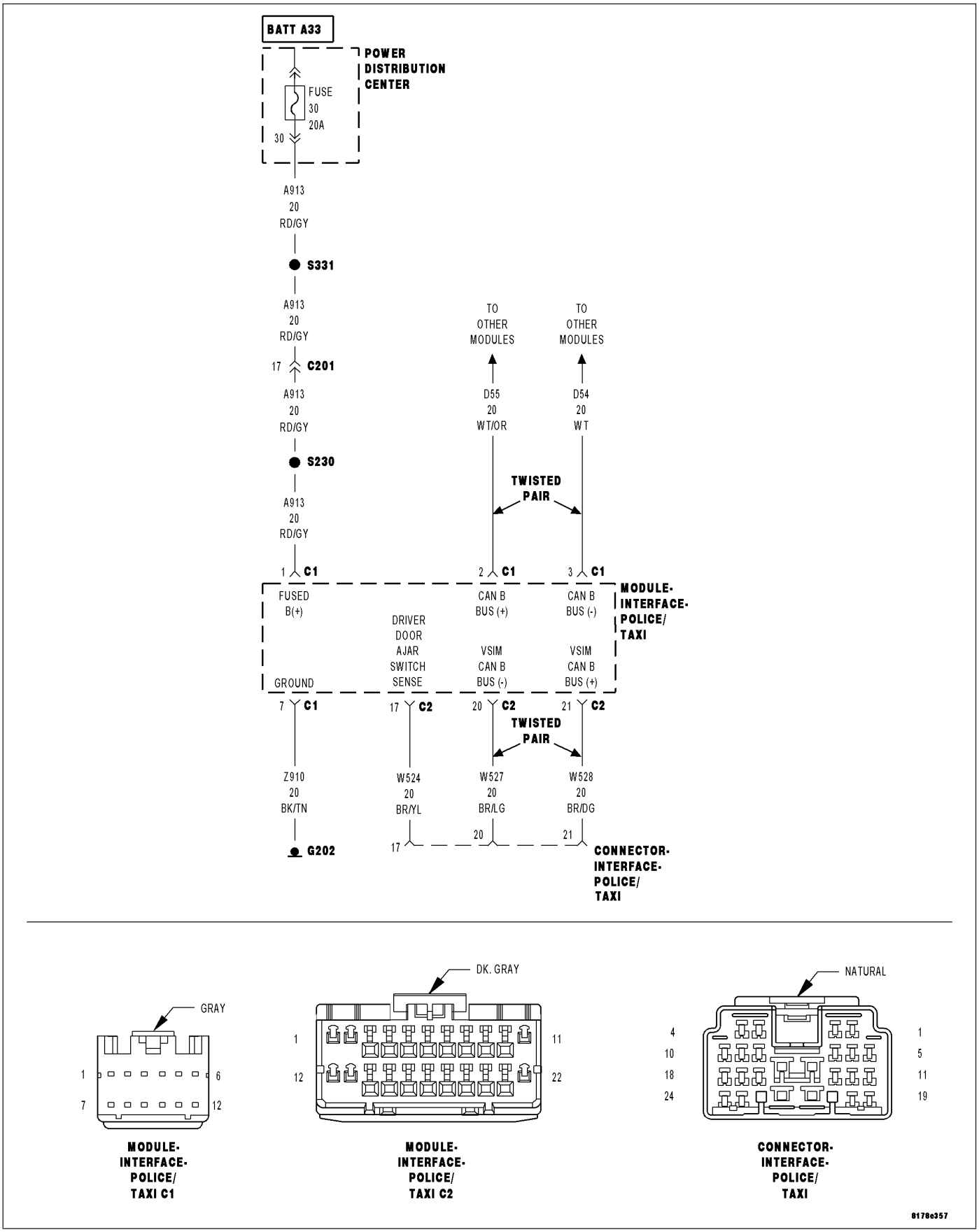

For a complete wiring diagram **Refer to Section 8W**.

- **When Monitored:**
  With the ignition switch on.
- **Set Condition:**
  The Multi-Purpose Module (Police And Taxi Interface Module-PTIM) has detected the Driver Door Ajar Switch Sense circuit above a calibrated value.

Possible Causes
(W524) DRIVER DOOR AJAR SWITCH SENSE CIRCUIT OPEN OR SHORTED TO VOLTAGE
AFTERMARKET LIGHT/SIREN CONTROLLER
MULTI-PURPOSE MODULE (POLICE AND TAXI INTERFACE MODULE-PTIM)

1. CHECK FOR ANY OF THE FOLLOWING ACTIVE DTCS

With the scan tool, read all active DTCs from all modules.

NOTE: Check for FCM configuration, CAN B or C hardware electrical, VIN Missing/Mismatch, battery or ignition related DTCs.

Does the scan tool display any active DTCs to the conditions listed above?

Yes >> Diagnose and repair the DTC. Refer to the Table of Contents in ELECTRONIC CONTROL MODULES - ELECTRICAL DIAGNOSTICS for a complete list of the symptoms.
Perform BODY VERIFICATION TEST – VER 1. (Refer to BODY VERIFICATION TEST – VER 1).

No >> Go To 2. Diagnostic Test

2. CHECK FOR ACTIVE DTC

With the scan tool, read the active DTCs.

Erase the DTCs.

Turn the ignition off, wait 10 seconds, then turn the ignition on.

With the scan tool, read the active DTC's.

Does the scan tool display this DTC as active?

Yes >> Go To 3.

No >> If the DTC is stored, check for an intermittent condition. Visually inspect the related wiring harness connectors. Look for broken, bent, pushed out, or corroded terminals, and repair any obvious problems.
Perform BODY VERIFICATION TEST – VER 1. (Refer to BODY VERIFICATION TEST – VER 1).

3. CHECK THE (W524) DRIVER DOOR AJAR SWITCH SENSE CIRCUIT FOR A SHORT TO VOLTAGE

Turn the ignition off.

Disconnect the Multi-Purpose Module (Police And Taxi Interface Module-PTIM) C2 harness connector.

Turn the ignition on.

Measure the voltage of the (W524) Driver Door Ajar Switch Sense circuit between ground and the Multi-Purpose Module (Police And Taxi Interface Module-PTIM) C2 harness connector.

Is there any voltage present?

Yes >> Go To 4.

No >> Go To 5.

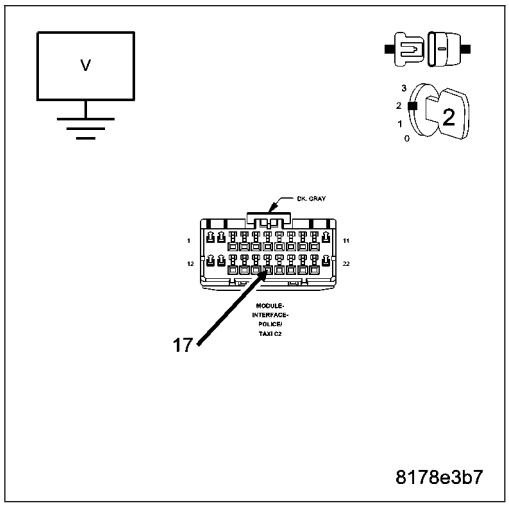

4. ISOLATE THE SHORT TO VOLTAGE IN THE (W524) DRIVER DOOR AJAR SWITCH SENSE CIRCUIT

Turn the ignition off.

Disconnect the Multi-Purpose Module (Police And Taxi Interface Module-PTIM) 24 way harness connector (aftermarket light/siren controller side).

Turn the ignition on.

Measure the voltage of the (W524) Driver Door Ajar Switch Sense circuit between ground and the Multi-Purpose Module (Police And Taxi Interface Module-PTIM) C2 harness connector.

Is there any voltage present?

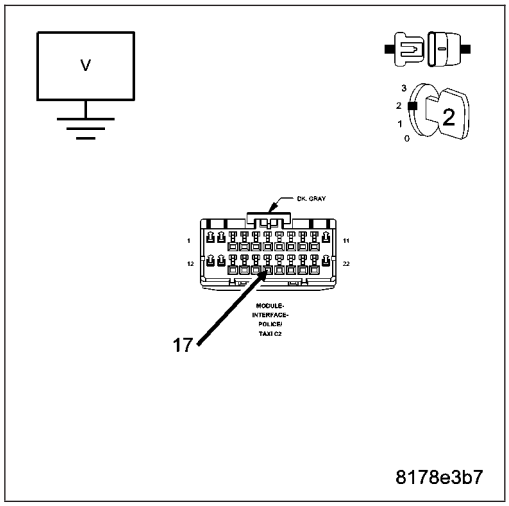

Yes >> Repair the (W524) Driver Door Ajar Switch Sense circuit for a short to voltage.

Perform BODY VERIFICATION TEST – VER 1. (Refer to BODY VERIFICATION TEST – VER 1).

No >> Refer to electrical diagnostics for the aftermarket light/siren controller, and repair or replace the aftermarket light siren controller in accordance with the manufacturer's service information.

Perform BODY VERIFICATION TEST – VER 1. (Refer to BODY VERIFICATION TEST – VER 1).

5. CHECK THE (W524) DRIVER DOOR AJAR SWITCH SENSE CIRCUIT FOR AN OPEN

Turn the ignition off.

Disconnect the Multi-Purpose Module (Police And Taxi Interface Module-PTIM) 24 way harness connector (aftermarket light/siren controller side).

Measure the resistance of the (W524) Driver Door Ajar Switch Sense circuit between the Multi-Purpose Module (Police And Taxi Interface Module-PTIM) 24 way and the Multi-Purpose Module (Police And Taxi Interface Module-PTIM) C2 harness connectors.

Is the resistance below 5.0 ohms?

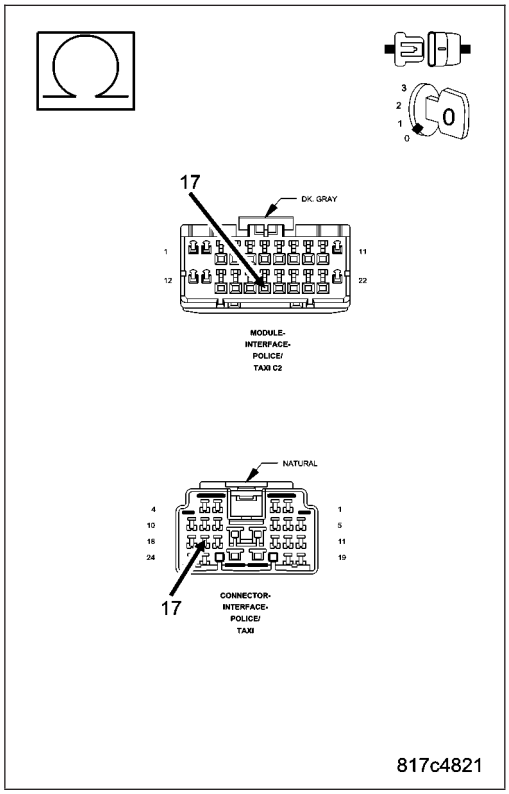

Yes >> Go To 6.

No >> Repair the (W524) Driver Door Ajar Switch Sense circuit for an open or high resistance.

6. CHECK THE MULTI-PURPOSE MODULE (POLICE AND TAXI INTERFACE MODULE-PTIM)

Turn the ignition off.

Disconnect all Multi-Purpose Module (Police And Taxi Interface Module-PTIM) and aftermarket light/siren controller harness connectors.

Check for damaged or corroded pins, pinched wires, or damaged connectors, and repair any obvious problems.

Connect all Multi-Purpose Module (Police And Taxi Interface Module-PTIM) and aftermarket light/siren controller harness connectors.

Turn the ignition on.

With the scan tool monitor active codes as you work through the following step.

Wiggle the wiring harness and connectors of the Multi-Purpose Module (Police And Taxi Interface Module-PTIM) and aftermarket light/siren controller.

If only stored codes return continue the test until the problem area has been isolated, and repair any obvious problems.

Is P19B5 — DRIVER DOOR AJAR OUTPUT CIRCUIT HIGH still displayed?

Yes >> Replace the Multi-Purpose Module (Police And Taxi Interface Module-PTIM) in accordance with the service information.
Perform BODY VERIFICATION TEST – VER 1. (Refer to BODY VERIFICATION TEST – VER 1).

No >> Repair is complete. The problem may have been caused by a loose or corroded terminal.
Perform BODY VERIFICATION TEST – VER 1. (Refer to BODY VERIFICATION TEST – VER 1).

P1A5B — PANIC ALARM MUTE REQUEST CIRCUIT HIGH

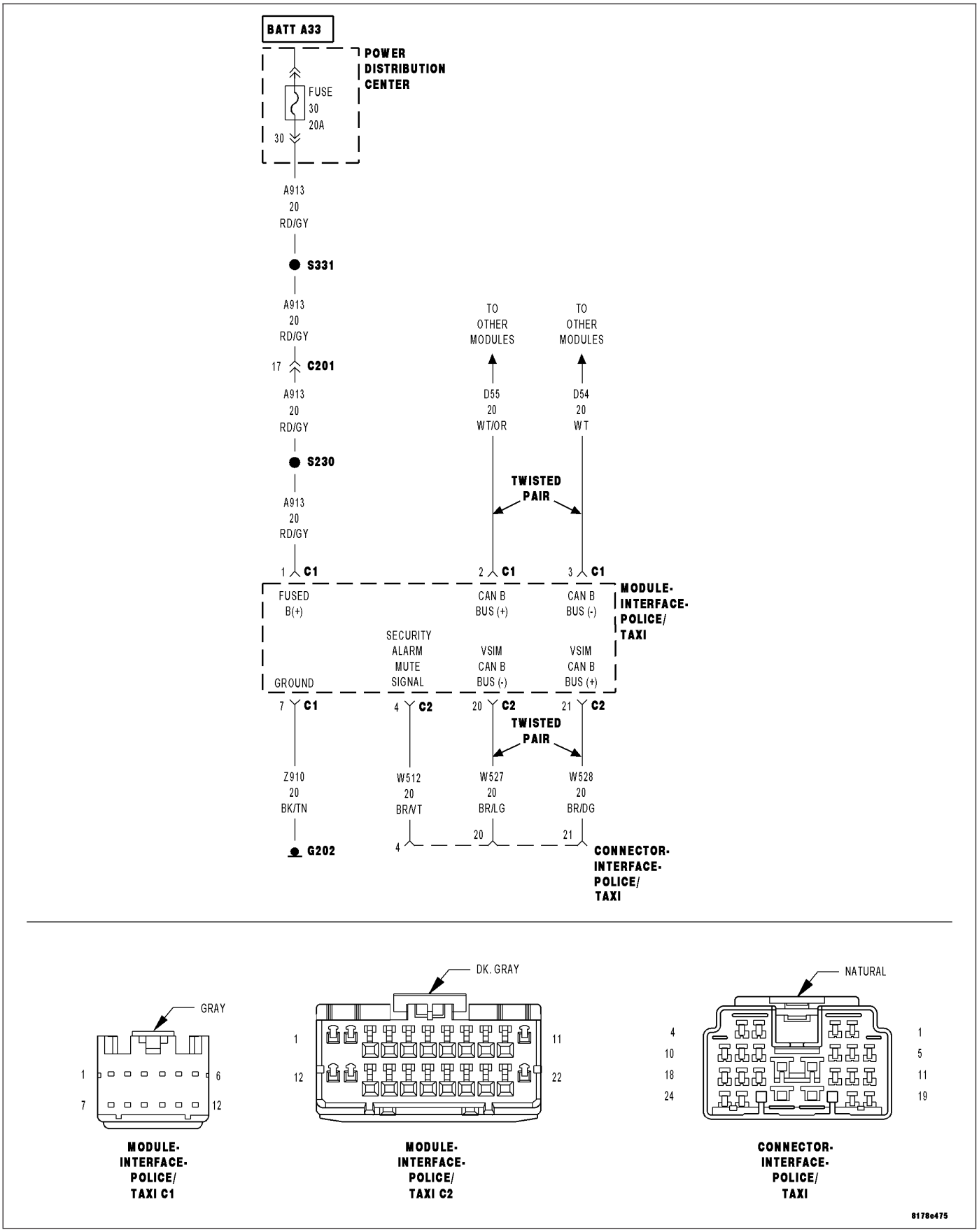

For a complete wiring diagram **Refer to Section 8W**.

- **When Monitored:**
  With the ignition switch on.
- **Set Condition:**
  The Multi-Purpose Module (Police And Taxi Interface Module-PTIM) has detected the Security Alarm Mute Signal circuit above a calibrated value.

Possible Causes
(W512) SECURITY ALARM MUTE SIGNAL CIRCUIT OPEN OR SHORTED TO VOLTAGE
AFTERMARKET LIGHT/SIREN CONTROLLER
MULTI-PURPOSE MODULE (POLICE AND TAXI INTERFACE MODULE-PTIM)

1. CHECK FOR ANY OF THE FOLLOWING ACTIVE DTCS

With the scan tool, read all active DTCs from all modules.

NOTE: Check for FCM configuration, CAN B or C hardware electrical, VIN Missing/Mismatch, battery or ignition related DTCs.

Does the scan tool display any active DTCs to the conditions listed above?

Yes >> Diagnose and repair the DTC. Refer to the Table of Contents in ELECTRONIC CONTROL MODULES - ELECTRICAL DIAGNOSTICS for a complete list of the symptoms.
Perform BODY VERIFICATION TEST – VER 1. (Refer to BODY VERIFICATION TEST – VER 1).

No >> Go To 2. Diagnostic Test

2. CHECK FOR ACTIVE DTC

With the scan tool, read the active DTCs.

Erase the DTCs.

Turn the ignition off, wait 10 seconds, then turn the ignition on.

With the scan tool, read the active DTC's.

Does the scan tool display this DTC as active?

Yes >> Go To 3.

No >> If the DTC is stored, check for an intermittent condition. Visually inspect the related wiring harness connectors. Look for broken, bent, pushed out, or corroded terminals, and repair any obvious problems.
Perform BODY VERIFICATION TEST – VER 1. (Refer to BODY VERIFICATION TEST – VER 1).

3. CHECK THE (W512) SECURITY ALARM MUTE SIGNAL CIRCUIT FOR A SHORT TO POWER

Turn the ignition off.

Disconnect the Multi-Purpose Module (Police And Taxi Interface Module-PTIM) C2 harness connector.

Turn the ignition on.

Measure the voltage of the (W512) Security Alarm Mute Signal circuit between ground and the Multi-Purpose Module (Police And Taxi Interface Module-PTIM) C2 harness connector.

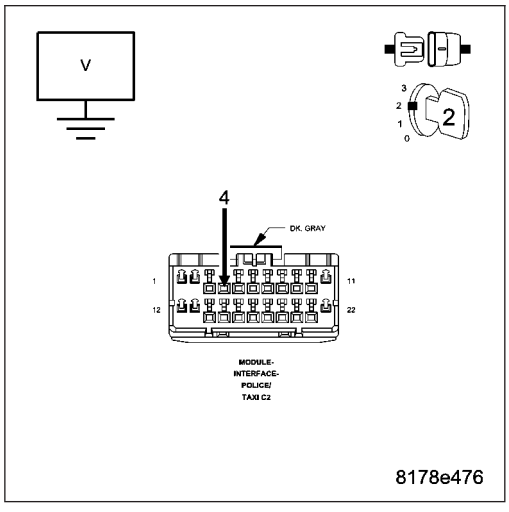

Is there any voltage present?

Yes >> Go To 4.

No >> Go To 5.

4. ISOLATE THE SHORT TO VOLTAGE IN THE (W512) SECURITY ALARM MUTE SIGNAL CIRCUIT

Turn the ignition off.

Disconnect the Multi-Purpose Module (Police And Taxi Interface Module-PTIM) 24 way harness connector (aftermarket light/siren controller side).

Turn the ignition on.

Measure the voltage of the (W512) Security Alarm Mute Signal circuit between ground and the PTIM C2 harness connector.

Is there any voltage present?

Yes >> Repair the (W512) Security Alarm Mute Signal circuit for a short to voltage.

Perform BODY VERIFICATION TEST – VER 1. (Refer to BODY VERIFICATION TEST – VER 1).

No >> Refer to electrical diagnostics for the aftermarket light/siren controller, and repair or replace the aftermarket light siren controller in accordance with the manufacturer's service information.

Perform BODY VERIFICATION TEST – VER 1. (Refer to BODY VERIFICATION TEST – VER 1).

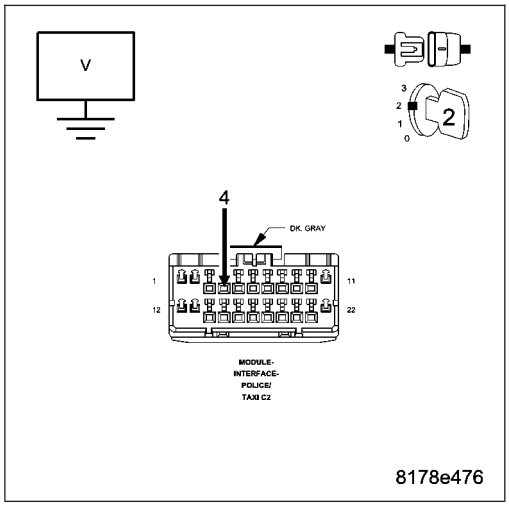

5. CHECK THE (W512) SECURITY ALARM MUTE SIGNAL CIRCUIT FOR AN OPEN

Turn the ignition off.

Disconnect the Multi-Purpose Module (Police And Taxi Interface Module-PTIM) 24 way harness connector (aftermarket light/siren controller side).

Measure the resistance of the (W512) Security Alarm Mute Signal circuit between the Multi-Purpose Module (Police And Taxi Interface Module-PTIM) 24 way and the Multi-Purpose Module (Police And Taxi Interface Module-PTIM) C2 harness connectors.

Is the resistance below 5.0 ohms?

Yes >> Go To 6.

No >> Repair the (W512) Security Alarm Mute Signal circuit for an open or high resistance.

Perform BODY VERIFICATION TEST – VER 1. (Refer to BODY VERIFICATION TEST – VER 1).

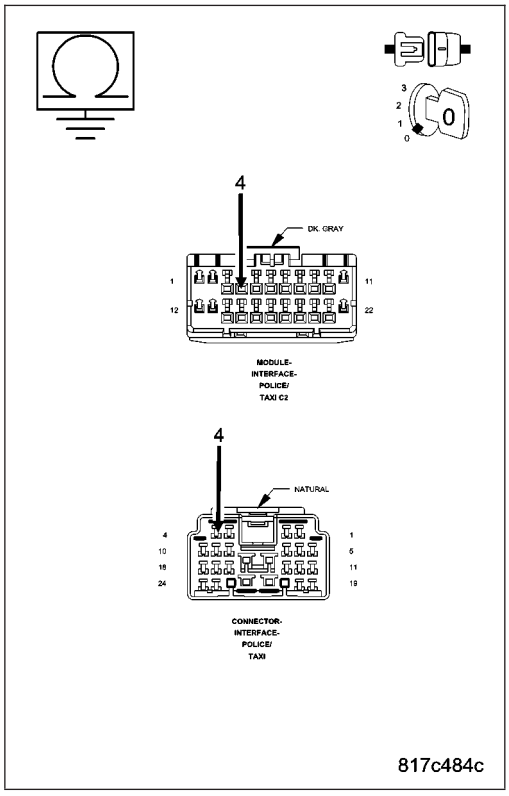

6. CHECK THE MULTI-PURPOSE MODULE (POLICE AND TAXI INTERFACE MODULE-PTIM)

Turn the ignition off.

Disconnect all Multi-Purpose Module (Police And Taxi Interface Module-PTIM) and aftermarket light/siren controller harness connectors.

Check for damaged or corroded pins, pinched wires, or damaged connectors, and repair any obvious problems.

Connect all Multi-Purpose Module (Police And Taxi Interface Module-PTIM) and aftermarket light/siren controller harness connectors.

Turn the ignition on.

With the scan tool monitor active codes as you work through the following step.

Wiggle the wiring harness and connectors of the Multi-Purpose Module (Police And Taxi Interface Module-PTIM) and aftermarket light/siren controller.

If only stored codes return continue the test until the problem area has been isolated, and repair any obvious problems.

Is P1A5B — PANIC ALARM MUTE REQUEST CIRCUIT HIGH still displayed?

Yes >> Replace the Multi-Purpose Module (Police And Taxi Interface Module-PTIM) in accordance with the service information.
Perform BODY VERIFICATION TEST – VER 1. (Refer to BODY VERIFICATION TEST – VER 1).

No >> Repair is complete. The problem may have been caused by a loose or corroded terminal.
Perform BODY VERIFICATION TEST – VER 1. (Refer to BODY VERIFICATION TEST – VER 1).

B1A5D — PANIC ALARM ACTIVATION OUTPUT CIRCUIT LOW

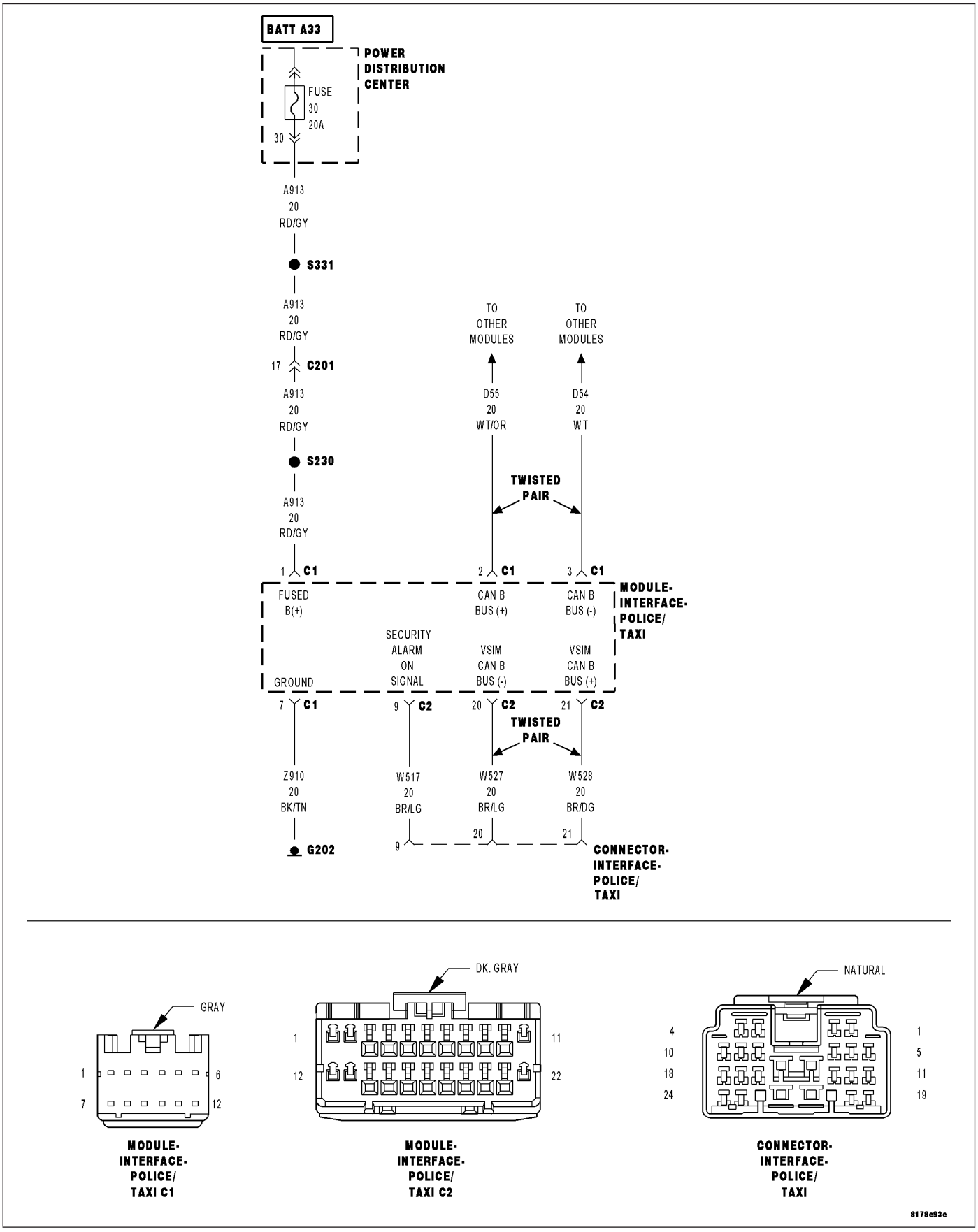

For a complete wiring diagram **Refer to Section 8W**.

- **When Monitored:**
  With the ignition switch on.
- **Set Condition:**
  The Multi-Purpose Module (Police And Taxi Interface Module-PTIM) has detected the Security Alarm On Signal circuit below a calibrated value.

Possible Causes
(W517) SECURITY ALARM ON SIGNAL CIRCUIT SHORTED TO GROUND
AFTERMARKET LIGHT/SIREN CONTROLLER
MULTI-PURPOSE MODULE (POLICE AND TAXI INTERFACE MODULE-PTIM)

1. CHECK FOR ANY OF THE FOLLOWING ACTIVE DTCS

With the scan tool, read all active DTCs from all modules.

NOTE: Check for FCM configuration, CAN B or C hardware electrical, VIN Missing/Mismatch, battery or ignition related DTCs.

Does the scan tool display any active DTCs to the conditions listed above?

Yes >> Diagnose and repair the DTC. Refer to the Table of Contents in ELECTRONIC CONTROL MODULES - ELECTRICAL DIAGNOSTICS for a complete list of the symptoms.
Perform BODY VERIFICATION TEST – VER 1. (Refer to BODY VERIFICATION TEST – VER 1).

No >> Go To 2. Diagnostic Test

2. CHECK FOR ACTIVE DTC

With the scan tool, read the active DTCs.

Erase the DTCs.

Turn the ignition off, wait 10 seconds, then turn the ignition on.

With the scan tool, read the active DTC's.

Does the scan tool display this DTC as active?

Yes >> Go To 3.

No >> If the DTC is stored, check for an intermittent condition. Visually inspect the related wiring harness connectors. Look for broken, bent, pushed out, or corroded terminals, and repair any obvious problems.
Perform BODY VERIFICATION TEST – VER 1. (Refer to BODY VERIFICATION TEST – VER 1).

3. CHECK THE (W517) SECURITY ALARM ON SIGNAL OUTPUT CIRCUIT FOR A SHORT TO GROUND

Turn the ignition off.

Disconnect the Multi-Purpose Module (Police And Taxi Interface Module-PTIM) C2 harness connector.

Measure the resistance of the (W517) Security Alarm On Signal circuit between ground and the Multi-Purpose Module (Police And Taxi Interface Module-PTIM) C2 harness connector.

Is the resistance below 5.0 ohms?

Yes >> Go To 4.

No >> Go To 5.

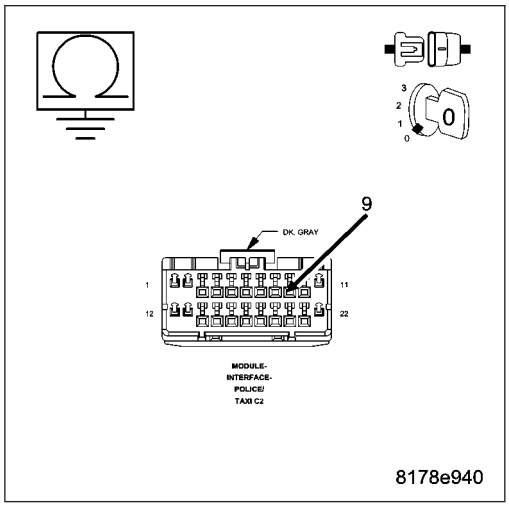

4. ISOLATE THE SHORT TO GROUND IN THE (W517) SECURITY ALARM ON SIGNAL OUTPUT CIRCUIT

Turn the ignition off.

Disconnect the Multi-Purpose Module (Police And Taxi Interface Module-PTIM) 24 way harness connector (aftermarket light/siren controller side).

Measure the resistance of the (W517) Security Alarm On Signal circuit between ground and the Multi-Purpose Module (Police And Taxi Interface Module-PTIM) C2 harness connector.

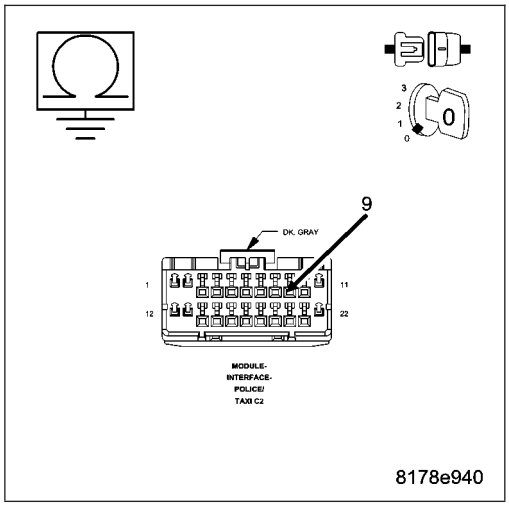

Is the resistance below 5.0 ohms?

Yes >> Repair the (W517) Security Alarm On Signal circuit for a short to ground.

Perform BODY VERIFICATION TEST – VER 1. (Refer to BODY VERIFICATION TEST – VER 1).

No >> Refer to electrical diagnostics for the aftermarket light/siren controller, and repair or replace the aftermarket light siren controller in accordance with the manufacturer's service information.

Perform BODY VERIFICATION TEST – VER 1. (Refer to BODY VERIFICATION TEST – VER 1).

5. CHECK THE MULTI-PURPOSE MODULE (POLICE AND TAXI INTERFACE MODULE-PTIM)

Turn the ignition off.

Disconnect all Multi-Purpose Module (Police And Taxi Interface Module-PTIM) and aftermarket light/siren controller harness connectors.

Check for damaged or corroded pins, pinched wires, or damaged connectors, and repair any obvious problems.

Connect all Multi-Purpose Module (Police And Taxi Interface Module-PTIM) and aftermarket light/siren controller harness connectors.

Turn the ignition on.

With the scan tool monitor active codes as you work through the following step.

Wiggle the wiring harness and connectors of the Multi-Purpose Module (Police And Taxi Interface Module-PTIM) and aftermarket light/siren controller.

If only stored codes return continue the test until the problem area has been isolated, and repair any obvious problems.

Is B1A5D — PANIC ALARM ACTIVATION OUTPUT CIRCUIT LOW still displayed?

Yes >> Replace the Multi-Purpose Module (Police And Taxi Interface Module-PTIM) in accordance with the service information.

Perform BODY VERIFICATION TEST – VER 1. (Refer to BODY VERIFICATION TEST – VER 1).

No >> Repair is complete. The problem may have been caused by a loose or corroded terminal.

B1A5E — PANIC ALARM ACTIVATION STATUS CIRCUIT HIGH

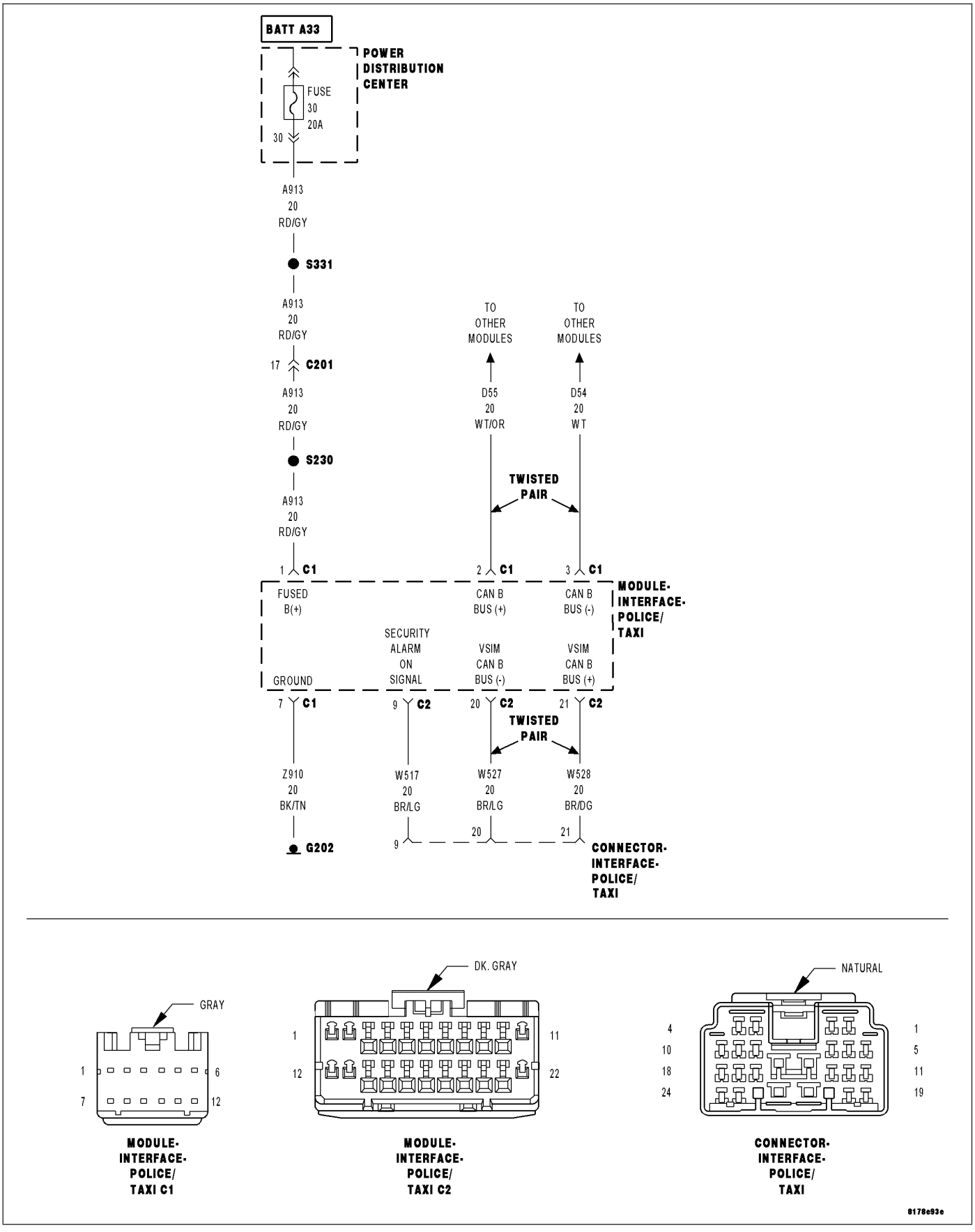

For a complete wiring diagram **Refer to Section 8W**.

- **When Monitored:**
  With the ignition switch on.
- **Set Condition:**
  The Multi-Purpose Module (Police And Taxi Interface Module-PTIM) has detected the Security Alarm On Signal circuit above a calibrated value.

Possible Causes
(W517) SECURITY ALARM ON SIGNAL CIRCUIT OPEN OR SHORTED TO VOLTAGE
AFTERMARKET LIGHT/SIREN CONTROLLER
MULTI-PURPOSE MODULE (POLICE AND TAXI INTERFACE MODULE-PTIM)

1. CHECK FOR ANY OF THE FOLLOWING ACTIVE DTCS

With the scan tool, read all active DTCs from all modules.

NOTE: Check for FCM configuration, CAN B or C hardware electrical, VIN Missing/Mismatch, battery or ignition related DTCs.

Does the scan tool display any active DTCs to the conditions listed above?

Yes >> Diagnose and repair the DTC. Refer to the Table of Contents in ELECTRONIC CONTROL MODULES - ELECTRICAL DIAGNOSTICS for a complete list of the symptoms.
Perform BODY VERIFICATION TEST – VER 1. (Refer to BODY VERIFICATION TEST – VER 1).

No >> Go To 2. Diagnostic Test

2. CHECK FOR ACTIVE DTC

With the scan tool, read the active DTCs.

Erase the DTCs.

Turn the ignition off, wait 10 seconds, then turn the ignition on.

With the scan tool, read the active DTC's.

Does the scan tool display this DTC as active?

Yes >> Go To 3.

No >> If the DTC is stored, check for an intermittent condition. Visually inspect the related wiring harness connectors. Look for broken, bent, pushed out, or corroded terminals, and repair any obvious problems.
Perform BODY VERIFICATION TEST – VER 1. (Refer to BODY VERIFICATION TEST – VER 1).

3. CHECK THE (W517) SECURITY ALARM ON SIGNAL CIRCUIT FOR A SHORT TO VOLTAGE

Turn the ignition off.

Disconnect the Multi-Purpose Module (Police And Taxi Interface Module-PTIM) C2 harness connector.

Turn the ignition on.

Measure the voltage of the (W517) Security Alarm On Signal circuit between ground and the Multi-Purpose Module (Police And Taxi Interface Module-PTIM) C2 harness connector.

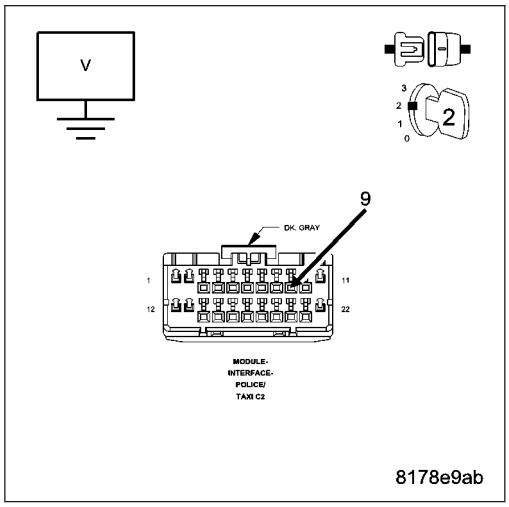

Is there any voltage present?

Yes >> Go To 4.

No >> Go To 5.

4. ISOLATE THE SHORT TO VOLTAGE IN THE (W517) SECURITY ALARM ON SIGNAL CIRCUIT

Turn the ignition off.

Disconnect the Multi-Purpose Module (Police And Taxi Interface Module-PTIM) 24 way harness connector (aftermarket light/siren controller side).

Turn the ignition on.

Measure the voltage of the (W517) Security Alarm On Signal circuit between ground and the Multi-Purpose Module (Police And Taxi Interface Module-PTIM) C2 harness connector.

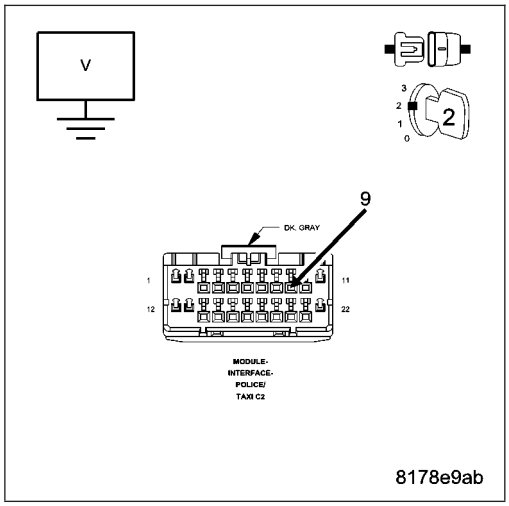

Is there any voltage present?

Yes >> Repair the (W517) Security Alarm On Signal circuit for a short to voltage.

Perform BODY VERIFICATION TEST – VER 1. (Refer to BODY VERIFICATION TEST – VER 1).

No >> Refer to electrical diagnostics for the aftermarket light/siren controller, and repair or replace the aftermarket light siren controller in accordance with the manufacturer's service information.

Perform BODY VERIFICATION TEST – VER 1. (Refer to BODY VERIFICATION TEST – VER 1).

5. CHECK THE (W517) SECURITY ALARM ON SIGNAL CIRCUIT FOR AN OPEN

Turn the ignition off.

Disconnect the Multi-Purpose Module (Police And Taxi Interface Module-PTIM) 24 way harness connector (aftermarket light/siren controller side).

Measure the resistance of the (W517) Security Alarm On Signal circuit between the Multi-Purpose Module (Police And Taxi Interface Module-PTIM) 24 way and the Multi-Purpose Module (Police And Taxi Interface Module-PTIM) C2 harness connectors.

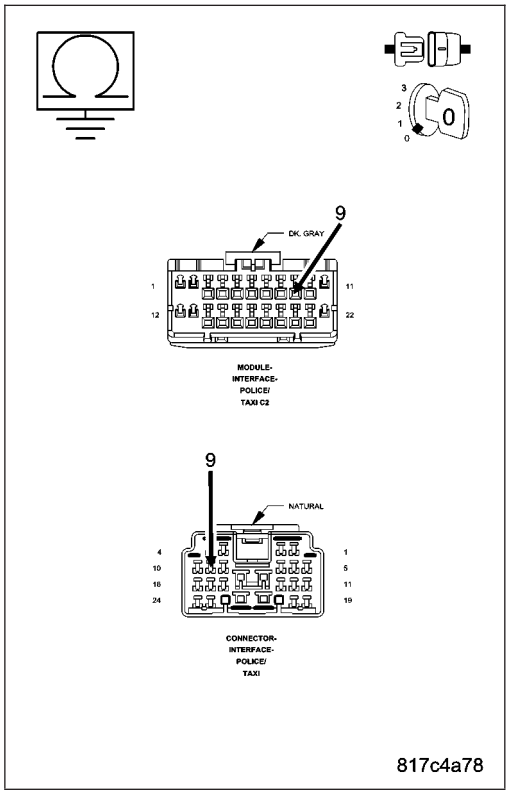

Is the resistance below 5.0 ohms?

Yes >> Go To 6.

No >> Repair the (W517) Security Alarm On Signal circuit for an open or high resistance.

6. CHECK THE MULTI-PURPOSE MODULE (POLICE AND TAXI INTERFACE MODULE-PTIM)

Turn the ignition off.

Disconnect all Multi-Purpose Module (Police And Taxi Interface Module-PTIM) and aftermarket light/siren controller harness connectors.

Check for damaged or corroded pins, pinched wires, or damaged connectors, and repair any obvious problems.

Connect all Multi-Purpose Module (Police And Taxi Interface Module-PTIM) and aftermarket light/siren controller harness connectors.

Turn the ignition on.

With the scan tool monitor active codes as you work through the following step.

Wiggle the wiring harness and connectors of the Multi-Purpose Module (Police And Taxi Interface Module-PTIM) and aftermarket light/siren controller.

If only stored codes return continue the test until the problem area has been isolated, and repair any obvious problems.

Is P1A5E — PANIC ALARM ACTIVATION STATUS CIRCUIT HIGH still displayed?

Yes >> Replace the Multi-Purpose Module (Police And Taxi Interface Module-PTIM) in accordance with the service information.
Perform BODY VERIFICATION TEST – VER 1. (Refer to BODY VERIFICATION TEST – VER 1).

No >> Repair is complete. The problem may have been caused by a loose or corroded terminal.
Perform BODY VERIFICATION TEST – VER 1. (Refer to BODY VERIFICATION TEST – VER 1).

B1CC1 — DEPLOYMENT NOTIFICATION OUTPUT CIRCUIT LOW

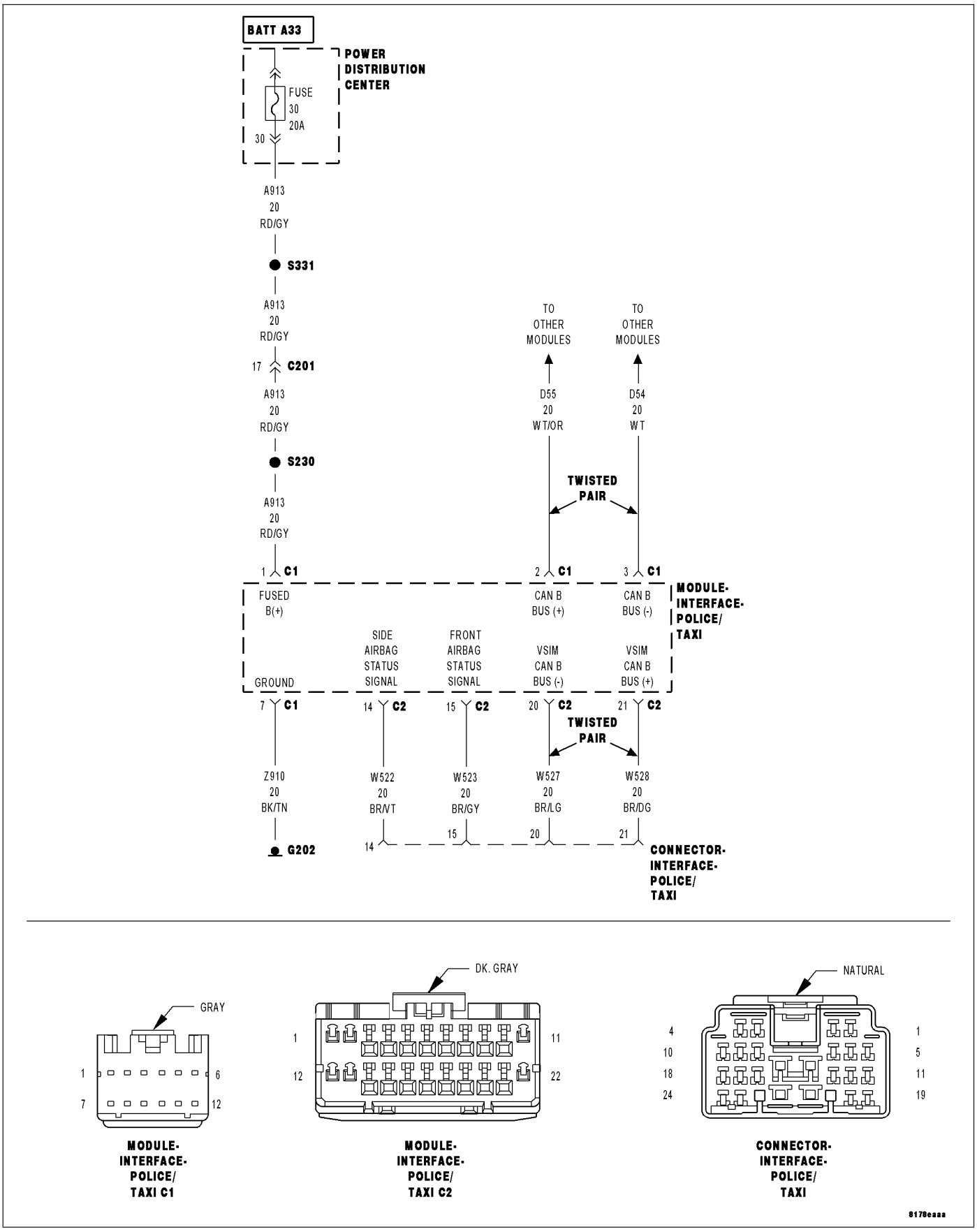

For a complete wiring diagram **Refer to Section 8W**.

- **When Monitored:**
  With the ignition switch on.
- **Set Condition:**
  The Multi-Purpose Module (Police And Taxi Interface Module-PTIM) has detected the Front or Side Airbag Status Signal circuits below a calibrated value.

Possible Causes
(W523) FRONT AIRBAG STATUS SIGNAL CIRCUIT SHORTED TO GROUND
(W522) SIDE AIRBAG STATUS SIGNAL CIRCUIT SHORTED TO GROUND
AFTERMARKET LIGHT/SIREN CONTROLLER
MULTI-PURPOSE MODULE (POLICE AND TAXI INTERFACE MODULE-PTIM)

1. CHECK FOR ANY OF THE FOLLOWING ACTIVE DTCS

With the scan tool, read all active DTCs from all modules.

NOTE: Check for FCM configuration, CAN B or C hardware electrical, VIN Missing/Mismatch, battery or ignition related DTCs.

Does the scan tool display any active DTCs to the conditions listed above?

Yes >> Diagnose and repair the DTC. Refer to the Table of Contents in ELECTRONIC CONTROL MODULES - ELECTRICAL DIAGNOSTICS for a complete list of the symptoms.
Perform BODY VERIFICATION TEST – VER 1. (Refer to BODY VERIFICATION TEST – VER 1).

No >> Go To 2. Diagnostic Test

2. CHECK FOR ACTIVE DTC

With the scan tool, read the active DTCs.

Erase the DTCs.

Turn the ignition off, wait 10 seconds, then turn the ignition on.

With the scan tool, read the active DTC's.

Does the scan tool display this DTC as active?

Yes >> Go To 3.

No >> If the DTC is stored, check for an intermittent condition. Visually inspect the related wiring harness connectors. Look for broken, bent, pushed out, or corroded terminals, and repair any obvious problems.
Perform BODY VERIFICATION TEST – VER 1. (Refer to BODY VERIFICATION TEST – VER 1).

3. CHECK THE (W523) FRONT AIRBAG STATUS SIGNAL CIRCUIT FOR A SHORT TO GROUND

Turn the ignition off.

Disconnect the Multi-Purpose Module (Police And Taxi Interface Module-PTIM) C2 harness connector.

Measure the resistance of the (W523) Front Airbag Status Signal circuit between ground and the Multi-Purpose Module (Police And Taxi Interface Module-PTIM) C2 harness connector.

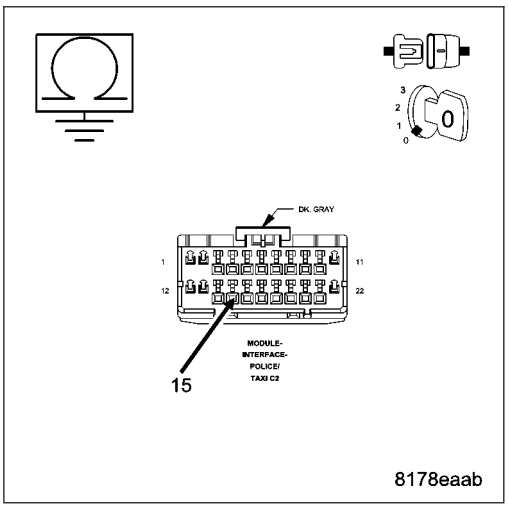

Is the resistance below 5.0 ohms?

Yes >> If the vehicle is equipped with a side airbag, go to 4. Otherwise, go to 5.

No >> Go To 7.

4. CHECK THE (W522) SIDE AIRBAG DEPLOYMENT NOTIFICATION OUTPUT CIRCUIT FOR A SHORT TO GROUND

Turn the ignition off.

Disconnect the Multi-Purpose Module (Police And Taxi Interface Module-PTIM) C2 harness connector.

Measure the resistance of the (W522) Side Airbag Deployment Notification Output circuit between ground and the Multi-Purpose Module (Police And Taxi Interface Module-PTIM) C2 harness connector.

Is the resistance below 5.0 ohms?

Yes >> Go to 7.

No >> Go To 6.

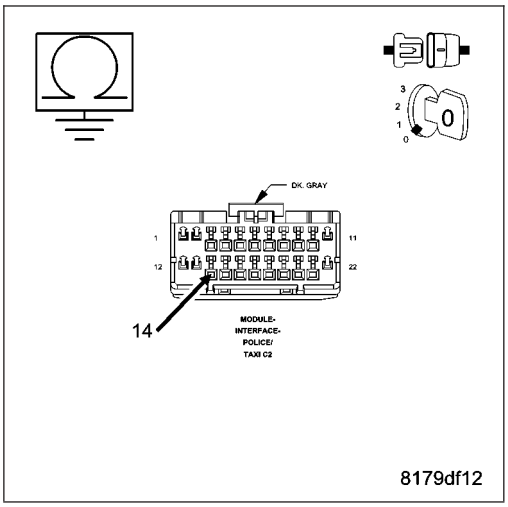

5. ISOLATE THE SHORT TO GROUND IN THE (W523) FRONT AIRBAG STATUS SIGNAL CIRCUIT

Turn the ignition off.

Disconnect the Multi-Purpose Module (Police And Taxi Interface Module-PTIM) 24 way harness connector (aftermarket light/siren controller side).

Measure the resistance of the (W523) Front Airbag Status Signal circuit between ground and the Multi-Purpose Module (Police And Taxi Interface Module-PTIM) C2 harness connector.

Is the resistance below 5.0 ohms?

Yes >> Repair the (W523) Front Airbag Status Signal circuit for a short to ground.

Perform BODY VERIFICATION TEST – VER 1. (Refer to BODY VERIFICATION TEST – VER 1).

No >> Refer to electrical diagnostics for the aftermarket light/siren controller, and repair or replace the aftermarket light siren controller in accordance with the manufacturer's service information.

Perform BODY VERIFICATION TEST – VER 1. (Refer to BODY VERIFICATION TEST – VER 1).

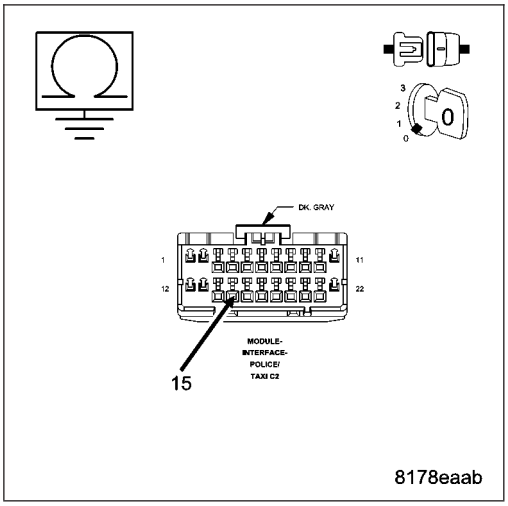

6. ISOLATE THE SHORT TO GROUND IN THE (W522) SIDE AIRBAG STATUS SIGNAL CIRCUIT

Turn the ignition off.

Disconnect the Multi-Purpose Module (Police And Taxi Interface Module-PTIM) 24 way harness connector (aftermarket light/siren controller side).

Measure the resistance of the (W522) Side Airbag Status Signal circuit between ground and the Multi-Purpose Module (Police And Taxi Interface Module-PTIM) C2 harness connector.

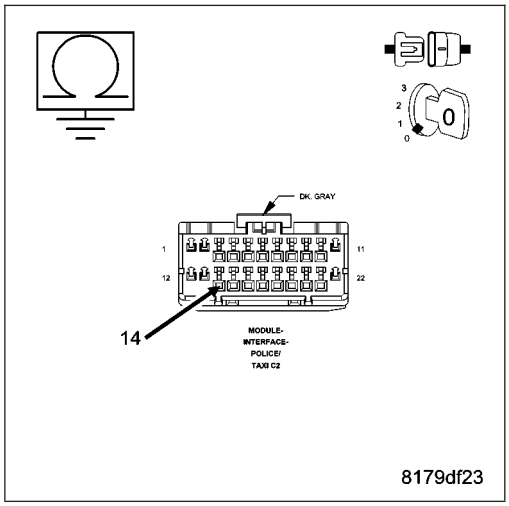

Is the resistance below 5.0 ohms?

Yes >> Repair the (W522) Side Airbag Status Signal circuit for a short to ground.

Perform BODY VERIFICATION TEST – VER 1. (Refer to BODY VERIFICATION TEST – VER 1).

No >> Refer to electrical diagnostics for the aftermarket light/siren controller, and repair or replace the aftermarket light siren controller in accordance with the manufacturer's service information.

Perform BODY VERIFICATION TEST – VER 1. (Refer to BODY VERIFICATION TEST – VER 1).

7. CHECK THE MULTI-PURPOSE MODULE (POLICE AND TAXI INTERFACE MODULE-PTIM)

Turn the ignition off.

Disconnect all Multi-Purpose Module (Police And Taxi Interface Module-PTIM) and aftermarket light/siren controller harness connectors.

Check for damaged or corroded pins, pinched wires, or damaged connectors, and repair any obvious problems.

Connect all Multi-Purpose Module (Police And Taxi Interface Module-PTIM) and aftermarket light/siren controller harness connectors.

Turn the ignition on.

With the scan tool monitor active codes as you work through the following step.

Wiggle the wiring harness and connectors of the Multi-Purpose Module (Police And Taxi Interface Module-PTIM) and aftermarket light/siren controller.

If only stored codes return continue the test until the problem area has been isolated, and repair any obvious problems.

Is B1CC1 — DEPLOYMENT NOTIFICATION OUTPUT CIRCUIT LOW still displayed?

Yes >> Replace the Multi-Purpose Module (Police And Taxi Interface Module-PTIM) in accordance with the service information.

Perform BODY VERIFICATION TEST – VER 1. (Refer to BODY VERIFICATION TEST – VER 1).

No >> Repair is complete. The problem may have been caused by a loose or corroded terminal.

B1CC2 — DEPLOYMENT NOTIFICATION OUTPUT CIRCUIT HIGH

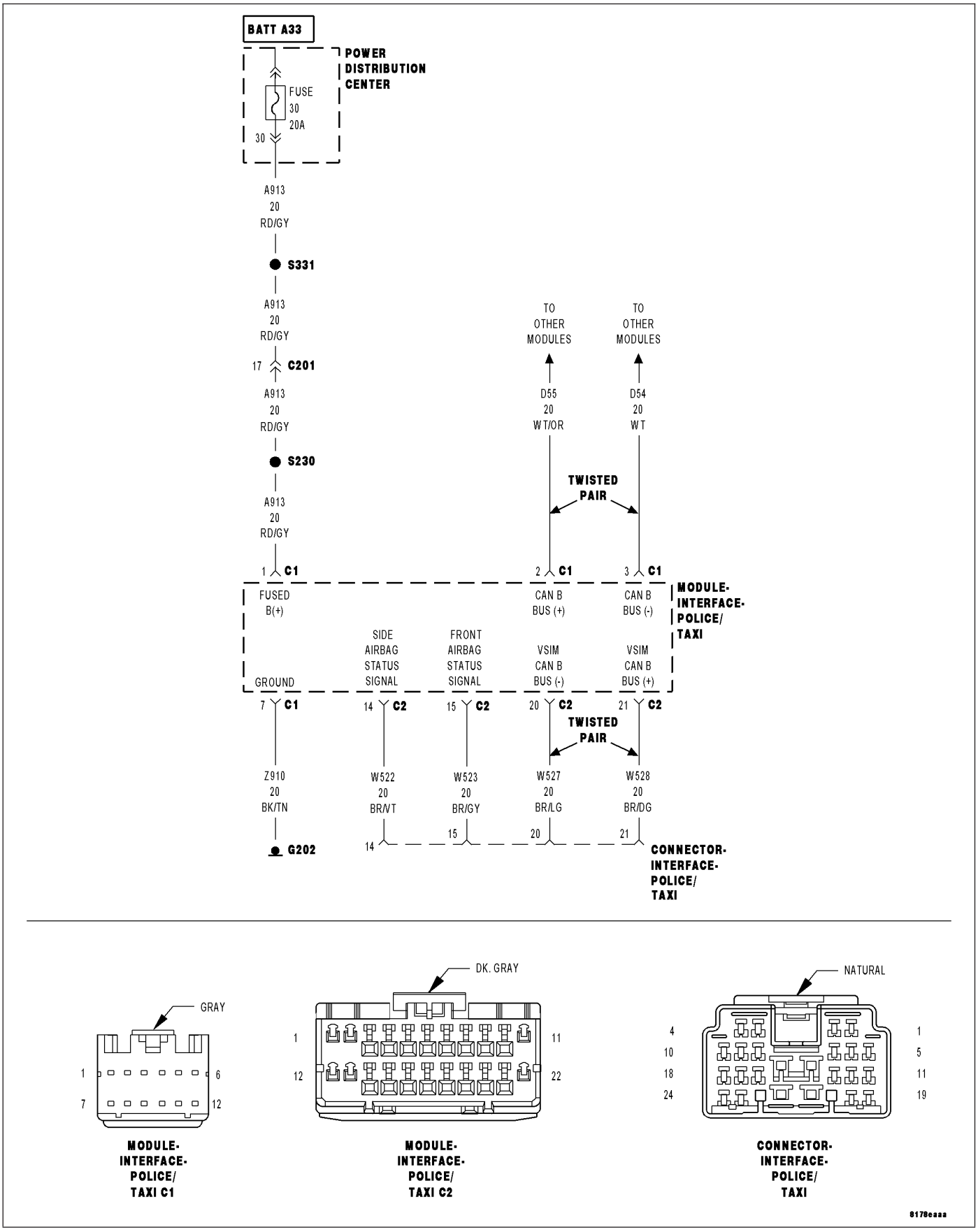

For a complete wiring diagram **Refer to Section 8W**.

- **When Monitored:**
  With the ignition switch on.
- **Set Condition:**
  The Multi-Purpose Module (Police And Taxi Interface Module-PTIM) has detected the Front or Side Airbag Status Signal circuits above a calibrated value.

Possible Causes
(W523) FRONT AIRBAG STATUS SIGNAL CIRCUIT SHORTED TO VOLTAGE
(W522) SIDE AIRBAG STATUS SIGNAL CIRCUIT SHORTED TO VOLTAGE
AFTERMARKET LIGHT/SIREN CONTROLLER
MULTI-PURPOSE MODULE (POLICE AND TAXI INTERFACE MODULE-PTIM)

1. CHECK FOR ANY OF THE FOLLOWING ACTIVE DTCS

With the scan tool, read all active DTCs from all modules.

NOTE: Check for FCM configuration, CAN B or C hardware electrical, VIN Missing/Mismatch, battery or ignition related DTCs.

Does the scan tool display any active DTCs to the conditions listed above?

Yes >> Diagnose and repair the DTC. Refer to the Table of Contents in ELECTRONIC CONTROL MODULES - ELECTRICAL DIAGNOSTICS for a complete list of the symptoms.
Perform BODY VERIFICATION TEST – VER 1. (Refer to BODY VERIFICATION TEST – VER 1).

No >> Go To 2. Diagnostic Test

2. CHECK FOR ACTIVE DTC

With the scan tool, read the active DTCs.

Erase the DTCs.

Turn the ignition off, wait 10 seconds, then turn the ignition on.

With the scan tool, read the active DTC's.

Does the scan tool display this DTC as active?

Yes >> Go To 3.

No >> If the DTC is stored, check for an intermittent condition. Visually inspect the related wiring harness connectors. Look for broken, bent, pushed out, or corroded terminals, and repair any obvious problems.
Perform BODY VERIFICATION TEST – VER 1. (Refer to BODY VERIFICATION TEST – VER 1).

3. CHECK THE (W523) FRONT AIRBAG STATUS SIGNAL CIRCUIT FOR A SHORT TO VOLTAGE

Turn the ignition off.

Disconnect the Multi-Purpose Module (Police And Taxi Interface Module-PTIM) C2 harness connector.

Turn the ignition on.

Measure the voltage of the (W523) Front Airbag Status Signal circuit between ground and the Multi-Purpose Module (Police And Taxi Interface Module-PTIM) C2 harness connector.

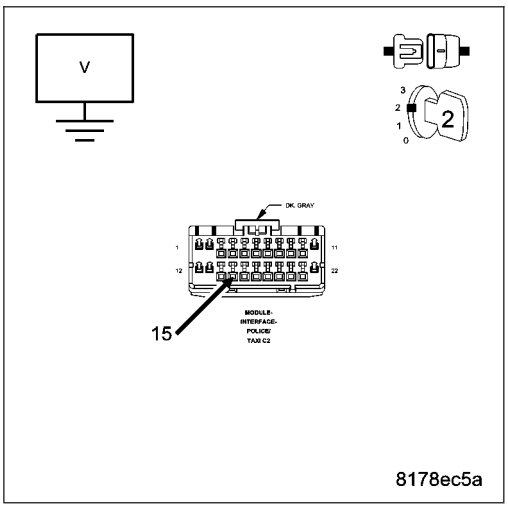

Is there any voltage present?

Yes >> Go To 5.

No >> If equipped with a side airbag, go to 4. Otherwise, Go To 8.

4. CHECK THE (W522) SIDE AIRBAG STATUS SIGNAL CIRCUIT FOR A SHORT TO VOLTAGE

Turn the ignition off.

Disconnect the Multi-Purpose Module (Police And Taxi Interface Module-PTIM) C2 harness connector.

Turn the ignition on.

Measure the voltage of the (W522) Side Airbag Status Signal circuit between ground and the Multi-Purpose Module (Police And Taxi Interface Module-PTIM) C2 harness connector.

Is there any voltage present?

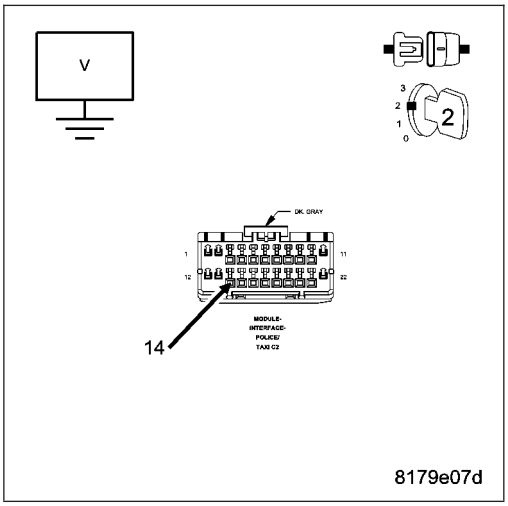

Yes >> Go To 6.

No >> Go To 7.

5. ISOLATE THE SHORT TO VOLTAGE IN THE (W523) FRONT AIRBAG STATUS SIGNAL CIRCUIT

Turn the ignition off.

Disconnect the Multi-Purpose Module (Police And Taxi Interface Module-PTIM) 24 way harness connector (aftermarket light/siren controller side).

Turn the ignition on.

Measure the voltage of the (W523) Front Airbag Status Signal circuit between ground and the Multi-Purpose Module (Police And Taxi Interface Module-PTIM) C2 harness connector.

Is there any voltage present?

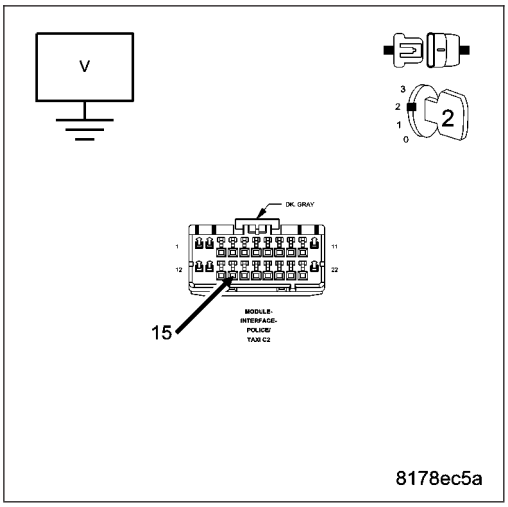

Yes >> Repair the (W523) Front Airbag Status Signal circuit for a short to power.

Perform BODY VERIFICATION TEST – VER 1. (Refer to BODY VERIFICATION TEST – VER 1).

No >> Refer to electrical diagnostics for the aftermarket light/siren controller, and repair or replace the aftermarket light siren controller in accordance with the manufacturer's service information.

Perform BODY VERIFICATION TEST – VER 1. (Refer to BODY VERIFICATION TEST – VER 1).

6. ISOLATE THE SHORT TO VOLTAGE IN THE (W522) SIDE AIRBAG STATUS SIGNAL CIRCUIT

Turn the ignition off.

Disconnect the Multi-Purpose Module (Police And Taxi Interface Module-PTIM) 24 way harness connector (aftermarket light/siren controller side).

Turn the ignition on.

Measure the voltage of the (W522) Side Airbag Status Signal circuit between ground and the Multi-Purpose Module (Police And Taxi Interface Module-PTIM) C2 harness connector.

Is there any voltage present?

Yes >> Repair the (W522) Side Airbag Deployment Notification Output circuit for a short to voltage.

Perform BODY VERIFICATION TEST – VER 1. (Refer to BODY VERIFICATION TEST – VER 1).

No >> Refer to electrical diagnostics for the aftermarket light/siren controller, and repair or replace the aftermarket light siren controller in accordance with the manufacturer's service information.

Perform BODY VERIFICATION TEST – VER 1. (Refer to BODY VERIFICATION TEST – VER 1).

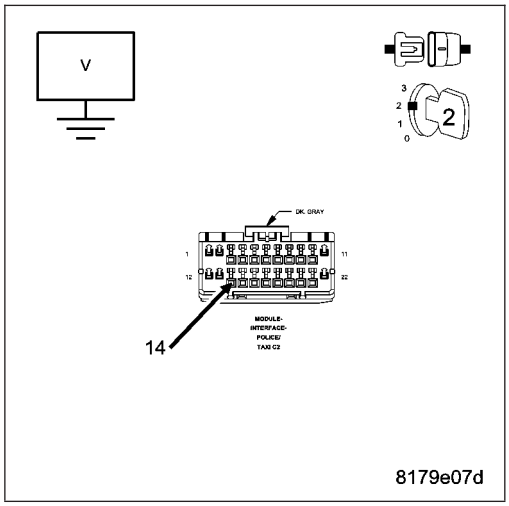

7. CHECK THE (W522) SIDE AIRBAG STATUS SIGNAL CIRCUIT FOR AN OPEN

Turn the ignition off.

Disconnect the Multi-Purpose Module (Police And Taxi Interface Module-PTIM) 24 way harness connector (aftermarket light/siren controller side).

Measure the resistance of the (W522) Side Airbag Status Signal circuit between the Multi-Purpose Module (Police And Taxi Interface Module-PTIM) 24 way and the Multi-Purpose Module (Police And Taxi Interface Module-PTIM) C2 harness connectors.

Is the resistance below 5.0 ohms?

Yes >> Go To 9.

No >> Repair the (W522) Side Airbag Status Signal circuit for an open or high resistance.

Perform BODY VERIFICATION TEST – VER 1. (Refer to BODY VERIFICATION TEST – VER 1).

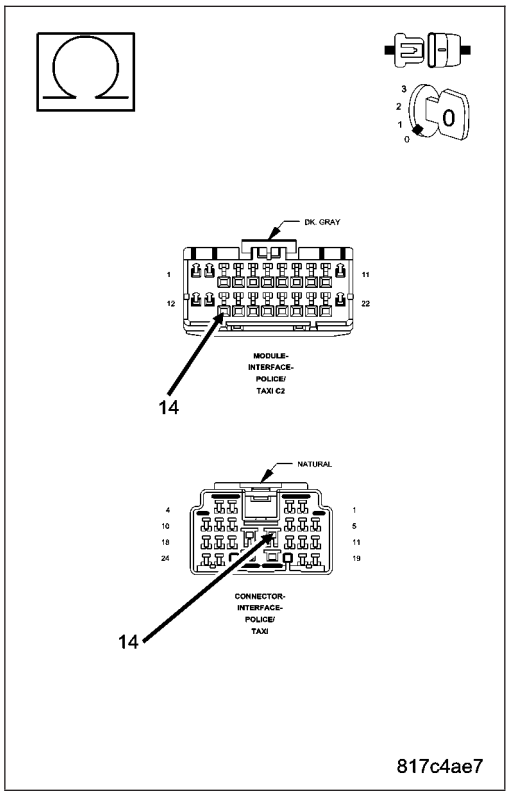

8. CHECK THE (W523) FRONT AIRBAG STATUS SIGNAL CIRCUIT FOR AN OPEN

Turn the ignition off.

Disconnect the Multi-Purpose Module (Police And Taxi Interface Module-PTIM) 24 way harness connector (aftermarket light/siren controller side).

Measure the resistance of the (W523) Front Airbag Status Signal circuit between the Multi-Purpose Module (Police And Taxi Interface Module-PTIM) 24 way and the Multi-Purpose Module (Police And Taxi Interface Module-PTIM) C2 harness connectors.

Is the resistance below 5.0 ohms?

Yes >> Go To 9.

No >> Repair the (W523) Front Airbag Status Signal circuit for an open or high resistance.
Perform BODY VERIFICATION TEST – VER 1. (Refer to BODY VERIFICATION TEST – VER 1).

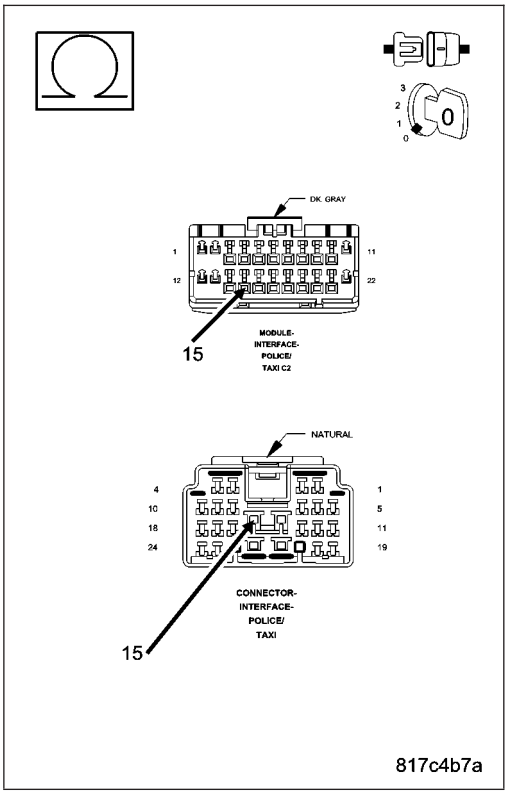

9. CHECK THE MULTI-PURPOSE MODULE (POLICE AND TAXI INTERFACE MODULE-PTIM)

Turn the ignition off.

Disconnect all Multi-Purpose Module (Police And Taxi Interface Module-PTIM) and aftermarket light/siren controller harness connectors.

Check for damaged or corroded pins, pinched wires, or damaged connectors, and repair any obvious problems.

Connect all Multi-Purpose Module (Police And Taxi Interface Module-PTIM) and aftermarket light/siren controller harness connectors.

Turn the ignition on.

With the scan tool monitor active codes as you work through the following step.

Wiggle the wiring harness and connectors of the Multi-Purpose Module (Police And Taxi Interface Module-PTIM) and aftermarket light/siren controller.

If only stored codes return continue the test until the problem area has been isolated, and repair any obvious problems.

Is B1CC2 — DEPLOYMENT NOTIFICATION OUTPUT CIRCUIT HIGH still displayed?

Yes >> Replace the Multi-Purpose Module (Police And Taxi Interface Module-PTIM) in accordance with the service information.
Perform BODY VERIFICATION TEST – VER 1. (Refer to BODY VERIFICATION TEST – VER 1).

No >> Repair is complete. The problem may have been caused by a loose or corroded terminal.
Perform BODY VERIFICATION TEST – VER 1. (Refer to BODY VERIFICATION TEST – VER 1).

B210D-BATTERY VOLTAGE LOW

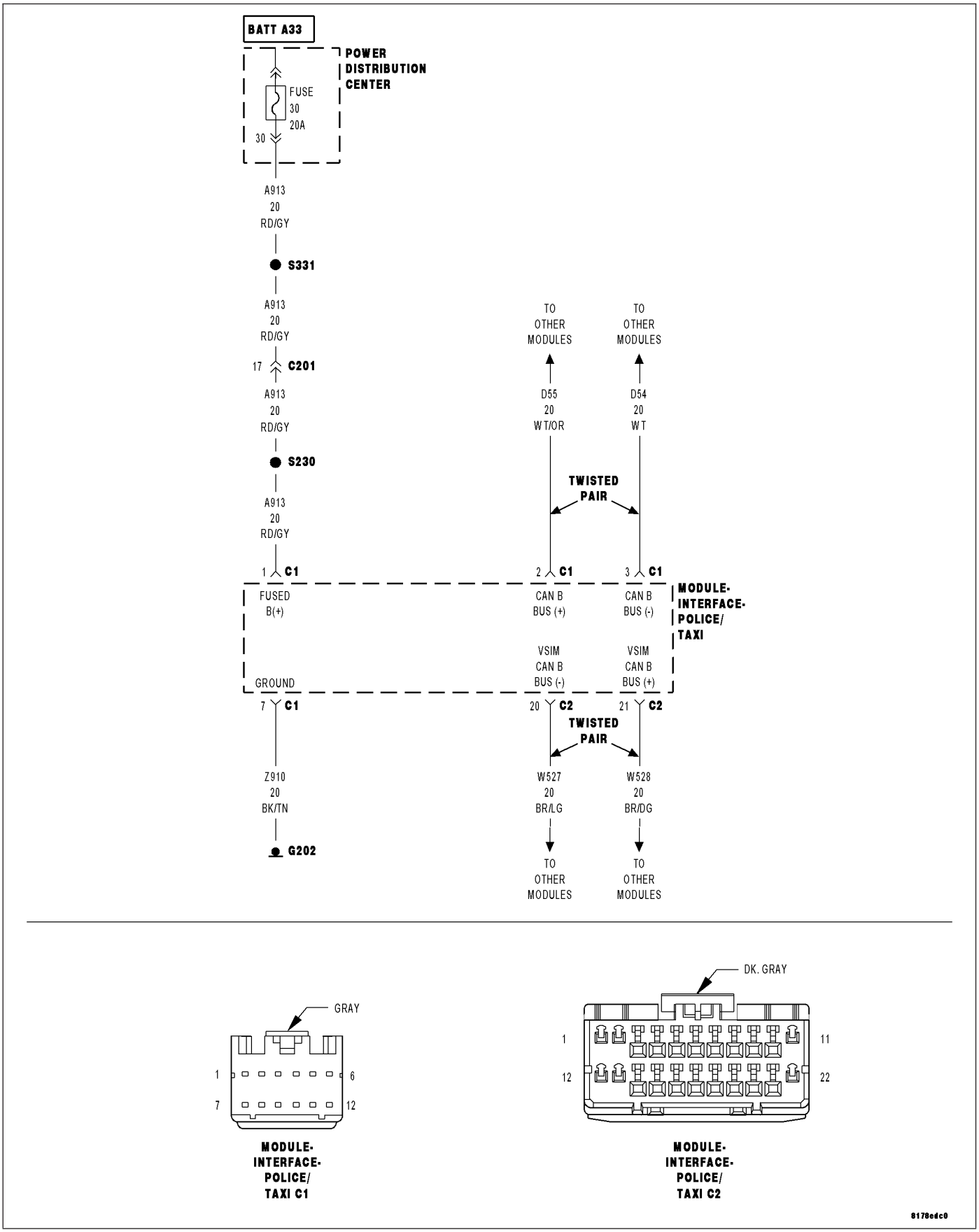

For a complete wiring diagram **Refer to Section 8W**.

- **When Monitored:**
  With the ignition switch on.
- **Set Condition:**
  The Multi-Purpose Module (Police And Taxi Interface Module-PTIM) has detected the Fused (B+) input voltage below a calibrated value.

Possible Causes
(A913) FUSED (B+) CIRCUIT OPEN
VEHICLE CHARGING SYSTEM
MULTI-PURPOSE MODULE (POLICE AND TAXI INTERFACE MODULE-PTIM)

Diagnostic Test

1. CHECK FOR ACTIVE DTC

With the scan tool, read the active DTCs.

Erase the DTCs.

Turn the ignition off, wait 10 seconds, then turn the ignition on.

With the scan tool, read the active DTC's.

Does the scan tool display this DTC as active?

Yes >> Go To 2.

No >> If the DTC is stored, check for an intermittent condition. Visually inspect the related wiring harness connectors. Look for broken, bent, pushed out, or corroded terminals, and repair any obvious problems.
Perform BODY VERIFICATION TEST – VER 1. (Refer to BODY VERIFICATION TEST – VER 1).

2. VERIFY OPERATION OF THE VEHICLE CHARGING SYSTEM

NOTE: Repair any PCM charging/cranking DTCs before proceeding with this test.

NOTE: Verify the battery is fully charged.

Are any charging system DTCs present?

Yes >> (Refer to 8 - ELECTRICAL/ELECTRONIC CONTROL MODULES/FRONT CONTROL MODULE - DIAGNOSIS AND TESTING)

No >> Go To 3.

3. CHECK (A913) FUSED (B+) CIRCUIT FOR AN OPEN

Turn the ignition off.

Disconnect the Multi-Purpose Module (Police And Taxi Interface Module-PTIM) C1 harness connector.

Turn the ignition on.

Measure the voltage of the (A913) Fused (B+) circuit in the Multi-Purpose Module (Police And Taxi Interface Module-PTIM) harness connector.

Is the voltage above 10.0 volts?

Yes >> Go to 4.

No >> Repair the (A913) Fused (B+) circuit for an open.
Perform BODY VERIFICATION TEST – VER 1. (Refer to 8 - ELECTRICAL/ELECTRONIC CONTROL MODULES/ FRONT CONTROL MODULE - DIAGNOSIS AND TESTING).

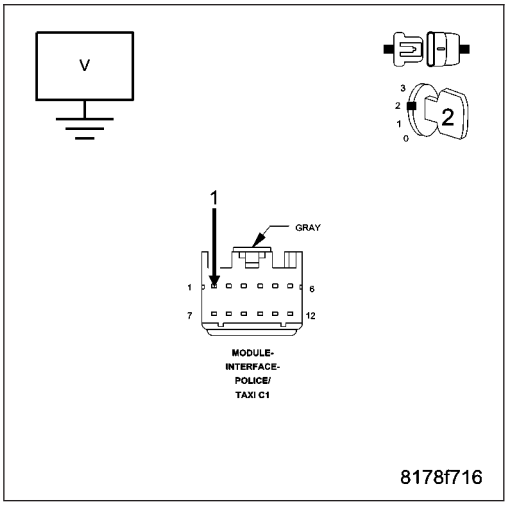

4. CHECK THE MULTI-PURPOSE MODULE (POLICE AND TAXI INTERFACE MODULE-PTIM)

Turn the ignition off.

Disconnect all Multi-Purpose Module (Police And Taxi Interface Module-PTIM) and aftermarket light/siren controller electrical connectors.

Check for damaged or corroded pins, pinched wires, or damaged connectors, and repair any obvious problems.

Connect all Multi-Purpose Module (Police And Taxi Interface Module-PTIM) and aftermarket light/siren controller electrical connectors.

Turn the ignition on.

With the scan tool monitor active codes as you work through the following step.

Wiggle the wiring harness and connectors of the Multi-Purpose Module (Police And Taxi Interface Module-PTIM) and aftermarket light/siren controller.

If only stored codes return continue the test until the problem area has been isolated, and repair any obvious problems.

Is B210D-BATTERY VOLTAGE LOW still displayed?

Yes >> Replace the Multi-Purpose Module (Police And Taxi Interface Module-PTIM) in accordance with the service information.
Perform BODY VERIFICATION TEST – VER 1. (Refer to BODY VERIFICATION TEST – VER 1).

No >> Repair is complete. The problem may have been caused by a loose or corroded terminal.
Perform BODY VERIFICATION TEST – VER 1. (Refer to BODY VERIFICATION TEST – VER 1).

B210E-BATTERY VOLTAGE HIGH

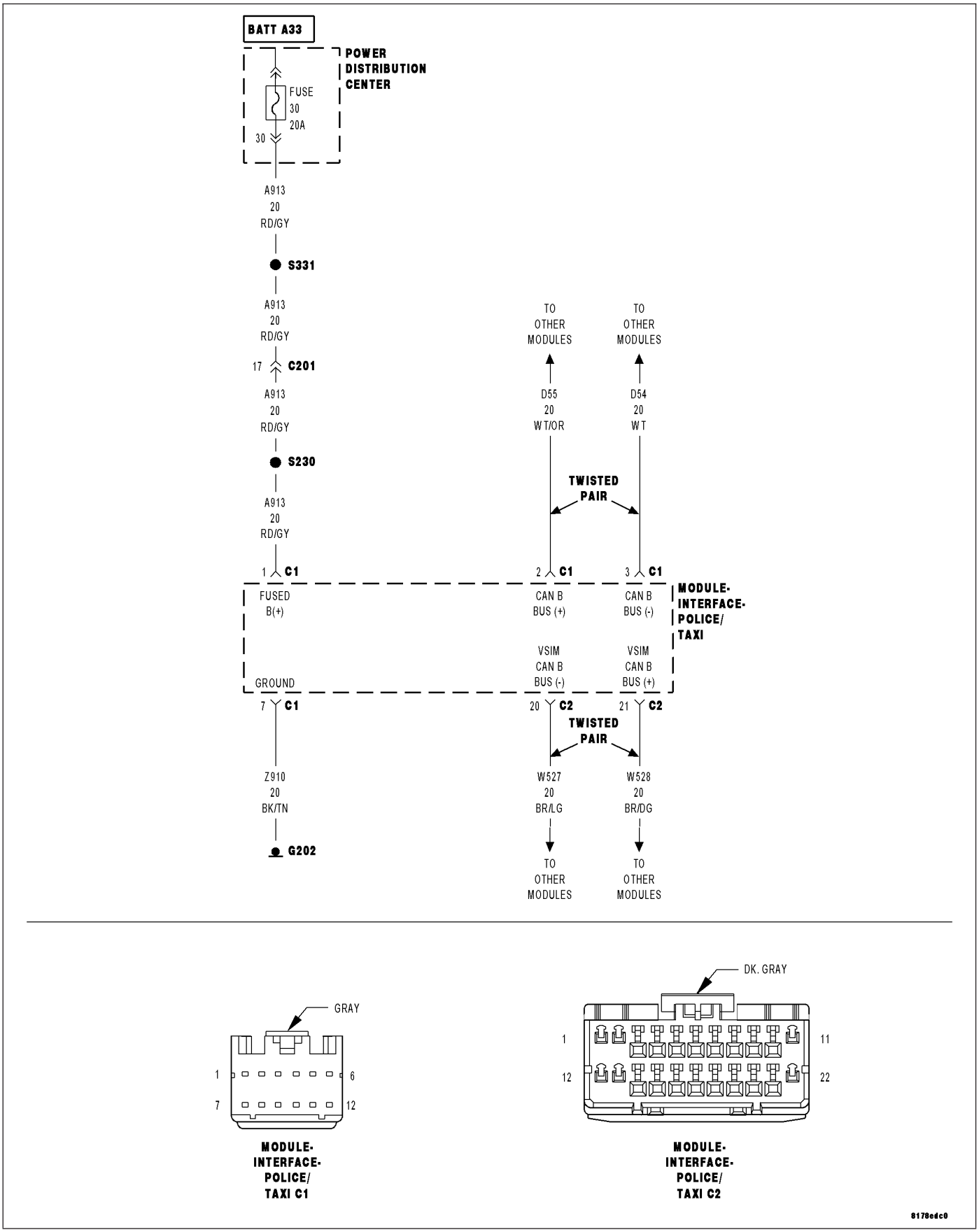

For a complete wiring diagram **Refer to Section 8W**.

- **When Monitored:**
  With the ignition switch on.
- **Set Condition:**
  The Multi-Purpose Module (Police And Taxi Interface Module-PTIM) has detected the Fused (B+) input voltage above a calibrated value.

Possible Causes
VEHICLE CHARGING SYSTEM
MULTI-PURPOSE MODULE (POLICE AND TAXI INTERFACE MODULE-PTIM)

Diagnostic Test

1. CHECK FOR ACTIVE DTC

With the scan tool, read the active DTCs.

Erase the DTCs.

Turn the ignition off, wait 10 seconds, then turn the ignition on.

With the scan tool, read the active DTC's.

Does the scan tool display this DTC as active?

Yes >> Go To 2.

No >> If the DTC is stored, check for an intermittent condition. Visually inspect the related wiring harness connectors. Look for broken, bent, pushed out, or corroded terminals, and repair any obvious problems.
Perform BODY VERIFICATION TEST – VER 1. (Refer to BODY VERIFICATION TEST – VER 1).

2. VERIFY OPERATION OF THE VEHICLE CHARGING SYSTEM

NOTE: Repair any PCM charging/cranking DTCs before proceeding with this test.

NOTE: Verify the battery is fully charged.

Are any charging system DTCs present?

Yes >> (Refer to 8 - ELECTRICAL/ELECTRONIC CONTROL MODULES/FRONT CONTROL MODULE - DIAGNOSIS AND TESTING)

No >> Go To 3.

3. CHECK THE MULTI-PURPOSE MODULE (POLICE AND TAXI INTERFACE MODULE-PTIM)

Turn the ignition off.

Disconnect all Multi-Purpose Module (Police And Taxi Interface Module-PTIM) and aftermarket light/siren controller electrical connectors.

Check for damaged or corroded pins, pinched wires, or damaged connectors, and repair any obvious problems.

Connect all Multi-Purpose Module (Police And Taxi Interface Module-PTIM) and aftermarket light/siren controller electrical connectors.

Is B210E-BATTERY VOLTAGE HIGH still displayed?

Yes >> Replace the Multi-Purpose Module (Police And Taxi Interface Module-PTIM) in accordance with the service information.
Perform BODY VERIFICATION TEST – VER 1. (Refer to BODY VERIFICATION TEST – VER 1).

No >> Repair is complete. The problem may have been caused by a loose or corroded terminal.
Perform BODY VERIFICATION TEST – VER 1. (Refer to BODY VERIFICATION TEST – VER 1).

B237C — DATA COMMUNICATION RADIO INPUT CIRCUIT HIGH

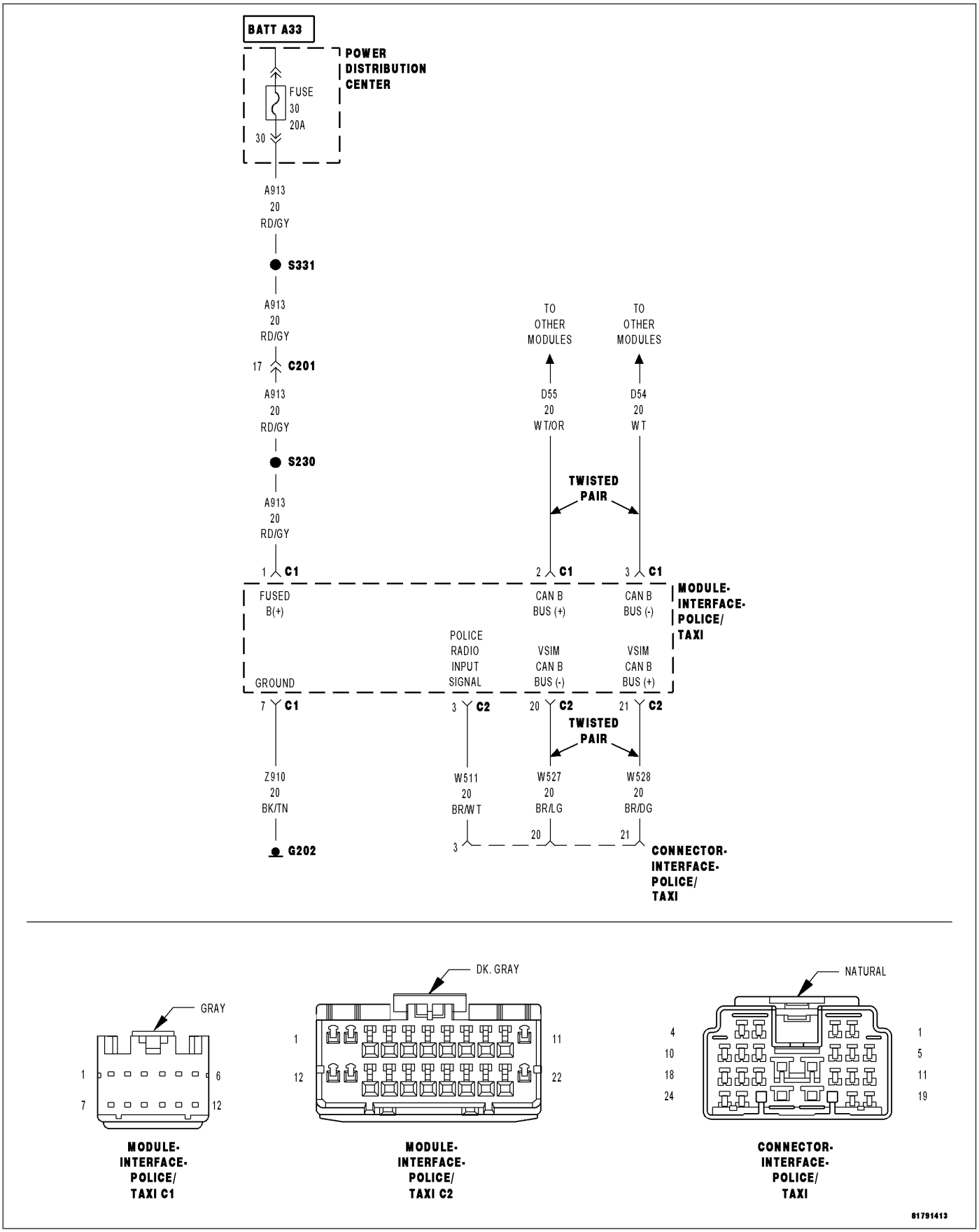

For a complete wiring diagram **Refer to Section 8W**.

- **When Monitored:**
  With the ignition switch on.
- **Set Condition:**
  The Multi-Purpose Module (Police And Taxi Interface Module-PTIM) has detected the Police Radio Input Signal circuit above a calibrated value.

Possible Causes
(W511) POLICE RADIO INPUT SIGNAL CIRCUIT OPEN OR SHORTED TO VOLTAGE
AFTERMARKET LIGHT/SIREN CONTROLLER
MULTI-PURPOSE MODULE (POLICE AND TAXI INTERFACE MODULE-PTIM)

1. CHECK FOR ANY OF THE FOLLOWING ACTIVE DTCS

With the scan tool, read all active DTCs from all modules.

NOTE: Check for FCM configuration, CAN B or C hardware electrical, VIN Missing/Mismatch, battery or ignition related DTCs.

Does the scan tool display any active DTCs to the conditions listed above?

Yes >> Diagnose and repair the DTC. Refer to the Table of Contents in ELECTRONIC CONTROL MODULES - ELECTRICAL DIAGNOSTICS for a complete list of the symptoms.
Perform BODY VERIFICATION TEST – VER 1. (Refer to BODY VERIFICATION TEST – VER 1).

No >> Go To 1. Diagnostic Test

2. CHECK FOR ACTIVE DTC

With the scan tool, read the active DTCs.

Erase the DTCs.

Turn the ignition off, wait 10 seconds, then turn the ignition on.

With the scan tool, read the active DTC's.

Does the scan tool display this DTC as active?

Yes >> Go To 3.

No >> If the DTC is stored, check for an intermittent condition. Visually inspect the related wiring harness connectors. Look for broken, bent, pushed out, or corroded terminals, and repair any obvious problems.
Perform BODY VERIFICATION TEST – VER 1. (Refer to BODY VERIFICATION TEST – VER 1).

3. CHECK THE (W511) POLICE RADIO INPUT SIGNAL CIRCUIT FOR A SHORT TO VOLTAGE

Turn the ignition off.

Disconnect the Multi-Purpose Module (Police And Taxi Interface Module-PTIM) C2 harness connector.

Turn the ignition on.

Measure the voltage of the (W511) Police Radio Input Signal circuit between ground and the Multi-Purpose Module (Police And Taxi Interface Module-PTIM) C2 harness connector.

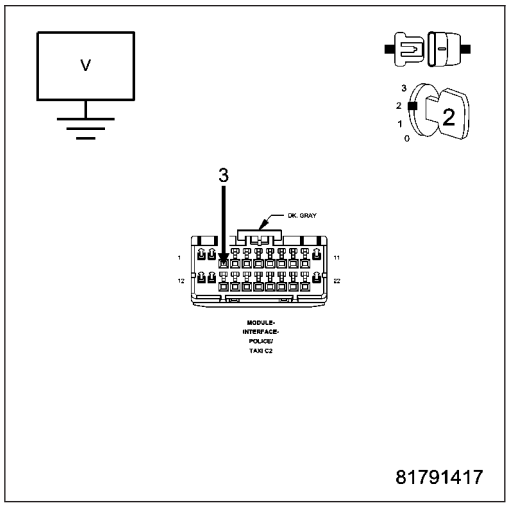

Is there any voltage present?

Yes >> Go To 4.

No >> Go To 5.

4. ISOLATE THE SHORT TO VOLTAGE IN THE (W511) POLICE RADIO INPUT SIGNAL CIRCUIT

Turn the ignition off.

Disconnect the Multi-Purpose Module (Police And Taxi Interface Module-PTIM) 24 way harness connector (aftermarket light/siren controller side).

Turn the ignition on.

Measure the voltage of the (W511) Police Radio Input Signal circuit between ground and the Multi-Purpose Module (Police And Taxi Interface Module-PTIM) C2 harness connector.

Is there any voltage present?

Yes >> Repair the (W511) Police Radio Input Signal circuit for a short to power.

Perform BODY VERIFICATION TEST – VER 1. (Refer to BODY VERIFICATION TEST – VER 1).

No >> Refer to electrical diagnostics for the aftermarket light/siren controller, and repair or replace the aftermarket light siren controller in accordance with the manufacturer's service information.

Perform BODY VERIFICATION TEST – VER 1. (Refer to BODY VERIFICATION TEST – VER 1).

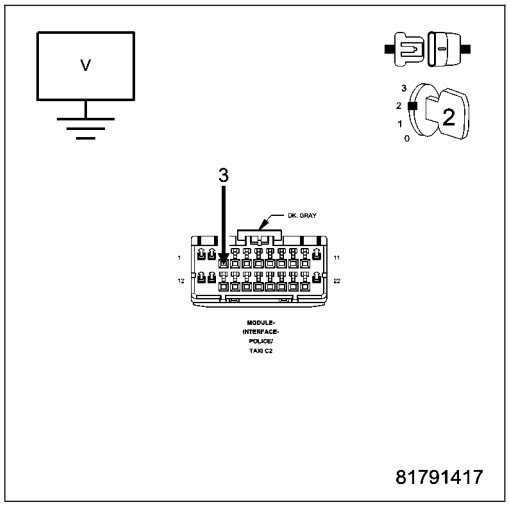

5. CHECK THE (W511) POLICE RADIO INPUT SIGNAL CIRCUIT FOR AN OPEN

Turn the ignition off.

Disconnect the Multi-Purpose Module (Police And Taxi Interface Module-PTIM) 24 way harness connector (aftermarket light/siren controller side).

Measure the resistance of the (W511) Police Radio Input Signal circuit between the Multi-Purpose Module (Police And Taxi Interface Module-PTIM) 24 way and the PTIM C2 harness connectors.

Is the resistance below 5.0 ohms?

Yes >> Go To 6.

No >> Repair the (W511) Police Radio Input Signal circuit for an open or high resistance.

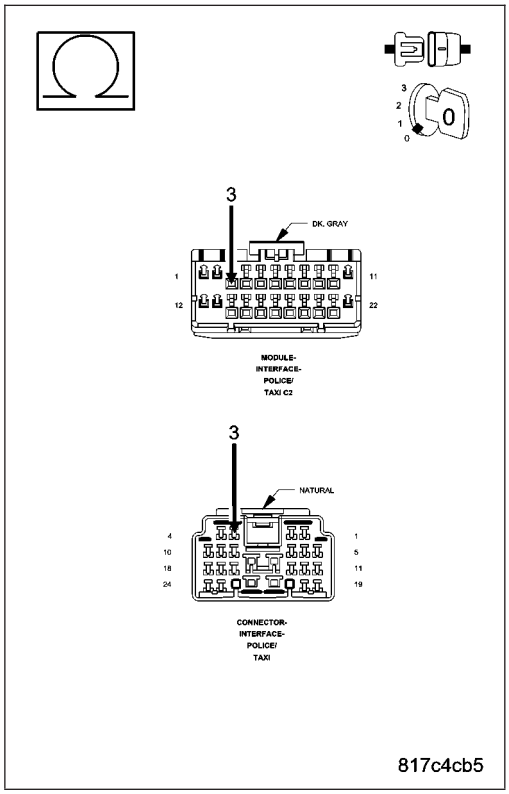

6. CHECK THE MULTI-PURPOSE MODULE (POLICE AND TAXI INTERFACE MODULE-PTIM)

Turn the ignition off.

Disconnect all Multi-Purpose Module (Police And Taxi Interface Module-PTIM) and aftermarket light/siren controller harness connectors.

Check for damaged or corroded pins, pinched wires, or damaged connectors, and repair any obvious problems.

Connect all Multi-Purpose Module (Police And Taxi Interface Module-PTIM) and aftermarket light/siren controller harness connectors.

Turn the ignition on.

With the scan tool monitor active codes as you work through the following step.

Wiggle the wiring harness and connectors of the Multi-Purpose Module (Police And Taxi Interface Module-PTIM) and aftermarket light/siren controller.

If only stored codes return continue the test until the problem area has been isolated, and repair any obvious problems.

Is B237C — DATA COMMUNICATION RADIO INPUT CIRCUIT HIGH still displayed?

Yes >> Replace the Multi-Purpose Module (Police And Taxi Interface Module-PTIM) in accordance with the service information.
Perform BODY VERIFICATION TEST – VER 1. (Refer to BODY VERIFICATION TEST – VER 1).

No >> Repair is complete. The problem may have been caused by a loose or corroded terminal.
Perform BODY VERIFICATION TEST – VER 1. (Refer to BODY VERIFICATION TEST – VER 1).

B237F — HORN MUTE REQUEST CIRCUIT HIGH

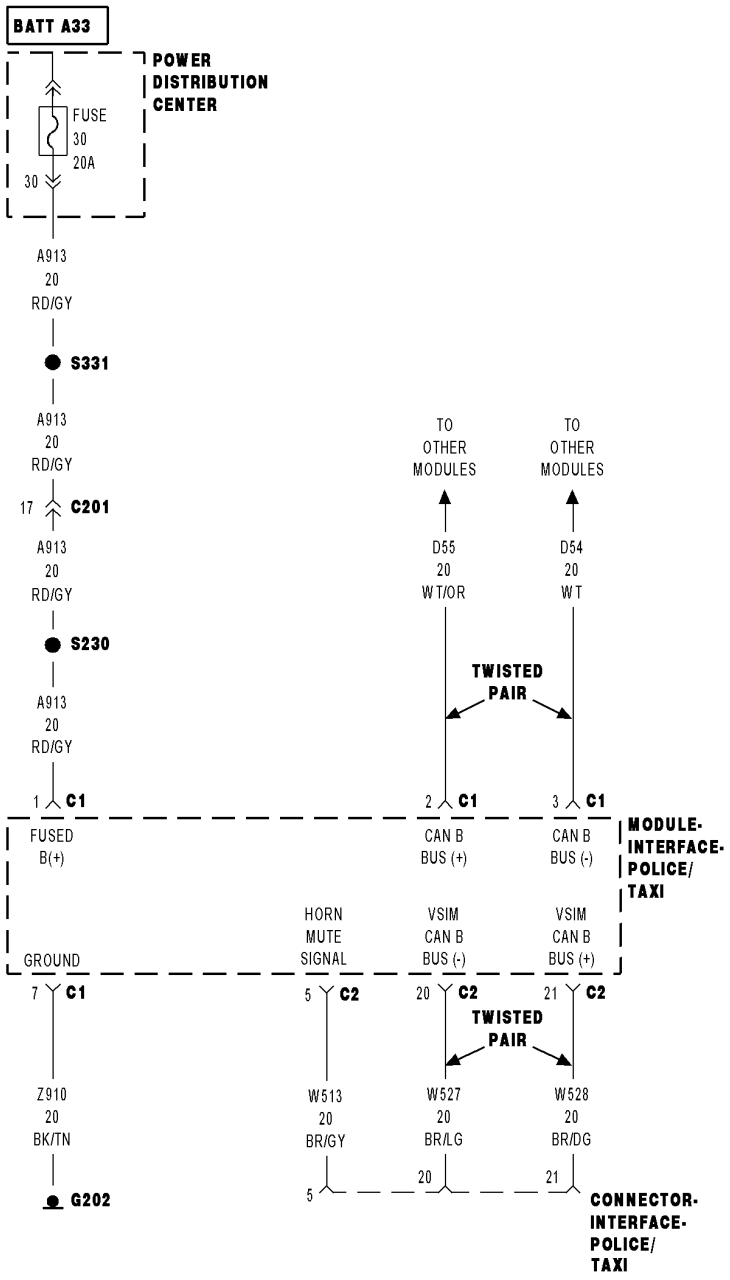

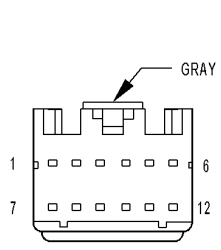

MODULE-INTERFACE-POLICE/TAXI C1

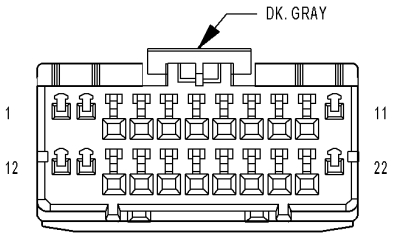

MODULE-INTERFACE-POLICE/TAXI C2

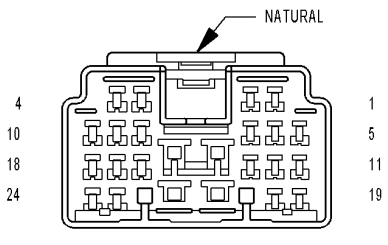

CONNECTOR-INTERFACE-POLICE/TAXI

81791d79

For a complete wiring diagram **Refer to Section 8W**.

- **When Monitored:**
  With the ignition switch on.
- **Set Condition:**
  The Multi-Purpose Module (Police And Taxi Interface Module-PTIM) has detected the Horn Mute Signal circuit above a calibrated value.

Possible Causes
(W513) HORN MUTE SIGNAL CIRCUIT OPEN OR SHORTED TO VOLTAGE
AFTERMARKET LIGHT/SIREN CONTROLLER
MULTI-PURPOSE MODULE (POLICE AND TAXI INTERFACE MODULE-PTIM)

1. CHECK FOR ANY OF THE FOLLOWING ACTIVE DTCS

With the scan tool, read all active DTCs from all modules.

NOTE: Check for FCM configuration, CAN B or C hardware electrical, VIN Missing/Mismatch, battery or ignition related DTCs.

Does the scan tool display any active DTCs to the conditions listed above?

Yes >> Diagnose and repair the DTC. Refer to the Table of Contents in ELECTRONIC CONTROL MODULES - ELECTRICAL DIAGNOSTICS for a complete list of the symptoms.
Perform BODY VERIFICATION TEST – VER 1. (Refer to BODY VERIFICATION TEST – VER 1).

No >> Go To 2. Diagnostic Test

2. CHECK FOR ACTIVE DTC

With the scan tool, read the active DTCs.

Erase the DTCs.

Turn the ignition off, wait 10 seconds, then turn the ignition on.

With the scan tool, read the active DTC's.

Does the scan tool display this DTC as active?

Yes >> Go To 3.

No >> If the DTC is stored, check for an intermittent condition. Visually inspect the related wiring harness connectors. Look for broken, bent, pushed out, or corroded terminals, and repair any obvious problems.
Perform BODY VERIFICATION TEST – VER 1. (Refer to BODY VERIFICATION TEST – VER 1).

3. CHECK THE (W513) HORN MUTE REQUEST SIGNAL CIRCUIT FOR A SHORT TO VOLTAGE

Turn the ignition off.

Disconnect the Multi-Purpose Module (Police And Taxi Interface Module-PTIM) C2 harness connector.

Turn the ignition on.

Measure the voltage of the (W513) Horn Mute Request Signal circuit between ground and the Multi-Purpose Module (Police And Taxi Interface Module-PTIM) C2 harness connector.

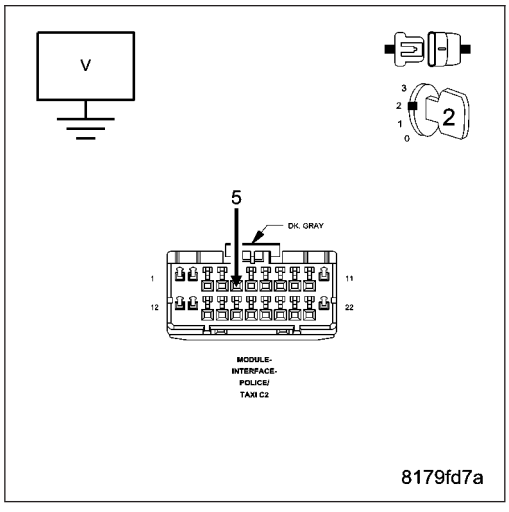

Is there any voltage present?

Yes >> Go To 4.

No >> Go To 5.

4. ISOLATE THE SHORT TO VOLTAGE IN THE (W513) HORN MUTE REQUEST SIGNAL CIRCUIT

Turn the ignition off.

Disconnect the Multi-Purpose Module (Police And Taxi Interface Module-PTIM) 24 way harness connector (aftermarket light/siren controller side).

Turn the ignition on.

Measure the voltage of the (W513) Horn Mute Request Signal circuit between ground and the Multi-Purpose Module (Police And Taxi Interface Module-PTIM) C2 harness connector.

Is there any voltage present?

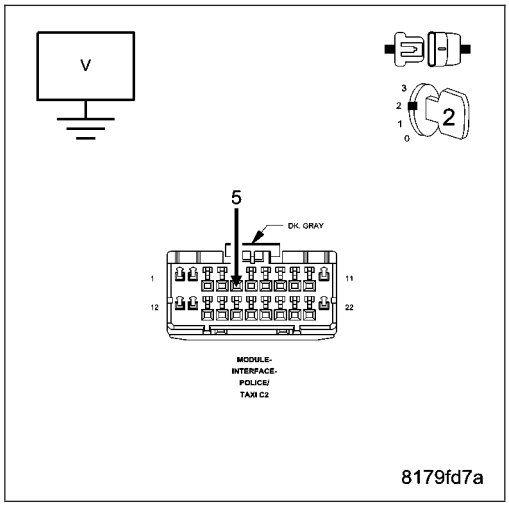

Yes >> Repair the (W513) Horn Mute Request Signal circuit for a short to voltage.

Perform BODY VERIFICATION TEST – VER 1. (Refer to BODY VERIFICATION TEST – VER 1).

No >> Refer to electrical diagnostics for the aftermarket light/siren controller, and repair or replace the aftermarket light siren controller in accordance with the manufacturer's service information.

Perform BODY VERIFICATION TEST – VER 1. (Refer to BODY VERIFICATION TEST – VER 1).

5. CHECK THE (W513) HORN MUTE REQUEST SIGNAL CIRCUIT FOR AN OPEN

Turn the ignition off.

Disconnect the Multi-Purpose Module (Police And Taxi Interface Module-PTIM) 24 way harness connector (aftermarket light/siren controller side).

Measure the resistance of the (W513) Horn Mute Request Signal circuit between the Multi-Purpose Module (Police And Taxi Interface Module-PTIM) 24 way and the PTIM C2 harness connectors.

Is the resistance below 5.0 ohms?

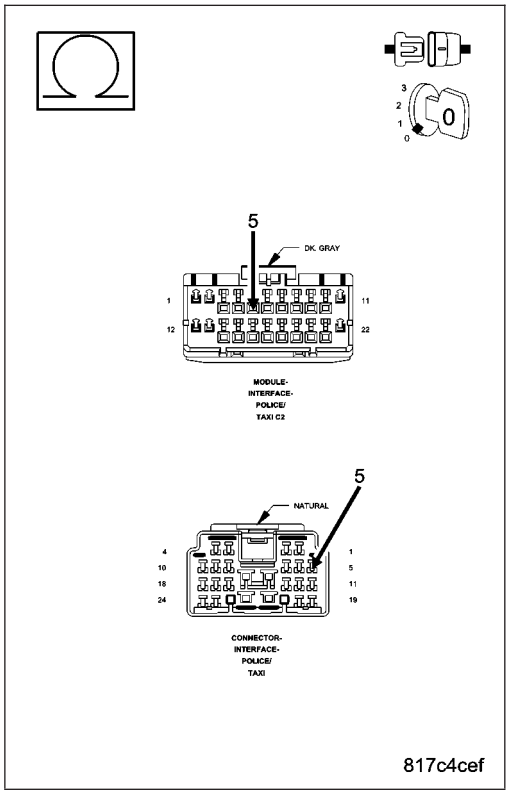

Yes >> Go To 6.

No >> Repair the (W513) Horn Mute Request Signal circuit for an open or high resistance.

6. CHECK THE MULTI-PURPOSE MODULE (POLICE AND TAXI INTERFACE MODULE-PTIM)

Turn the ignition off.

Disconnect all Multi-Purpose Module (Police And Taxi Interface Module-PTIM) and aftermarket light/siren controller harness connectors.

Check for damaged or corroded pins, pinched wires, or damaged connectors, and repair any obvious problems.

Connect all Multi-Purpose Module (Police And Taxi Interface Module-PTIM) and aftermarket light/siren controller harness connectors.

Turn the ignition on.

With the scan tool monitor active codes as you work through the following step.

Wiggle the wiring harness and connectors of the Multi-Purpose Module (Police And Taxi Interface Module-PTIM) and aftermarket light/siren controller.

If only stored codes return continue the test until the problem area has been isolated, and repair any obvious problems.

Is B237F — HORN MUTE REQUEST CIRCUIT HIGH still displayed?

Yes >> Replace the Multi-Purpose Module (Police And Taxi Interface Module-PTIM) in accordance with the service information.
Perform BODY VERIFICATION TEST – VER 1. (Refer to BODY VERIFICATION TEST – VER 1).

No >> Repair is complete. The problem may have been caused by a loose or corroded terminal.
Perform BODY VERIFICATION TEST – VER 1. (Refer to BODY VERIFICATION TEST – VER 1).

B2381 — DRIVER SEAT BELT OUTPUT CIRCUIT LOW

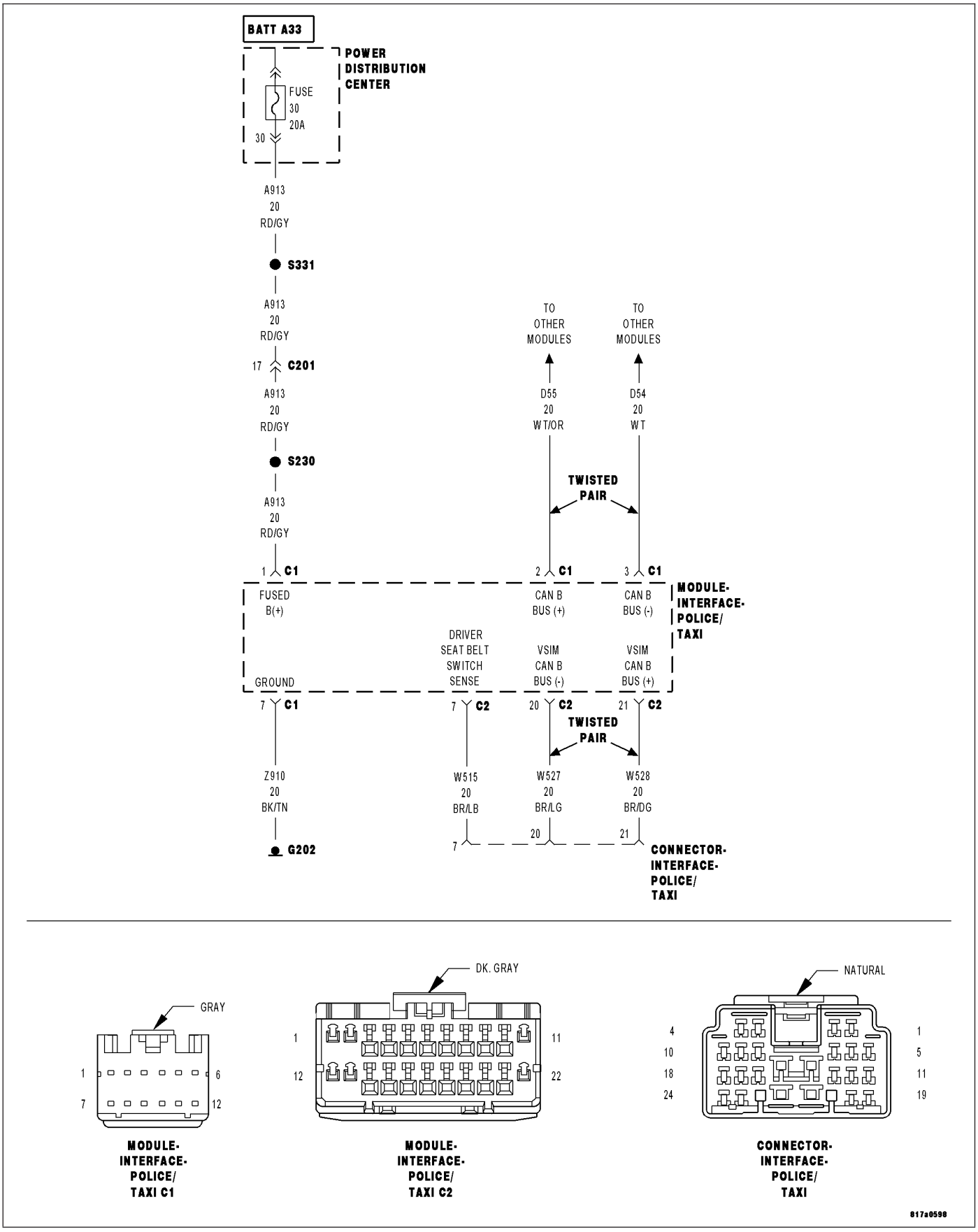

For a complete wiring diagram **Refer to Section 8W**.

- **When Monitored:**
  With the ignition switch on.
- **Set Condition:**
  The Multi-Purpose Module (Police And Taxi Interface Module-PTIM) has detected the Driver Seat Belt Switch Sense circuit below a calibrated value.

Possible Causes
(W515) DRIVER SEAT BELT SWITCH SENSE CIRCUIT SHORTED TO GROUND
AFTERMARKET LIGHT/SIREN CONTROLLER
MULTI-PURPOSE MODULE (POLICE AND TAXI INTERFACE MODULE-PTIM)

1. CHECK FOR ANY OF THE FOLLOWING ACTIVE DTCS

With the scan tool, read all active DTCs from all modules.

NOTE: Check for FCM configuration, CAN B or C hardware electrical, VIN Missing/Mismatch, battery or ignition related DTCs.

Does the scan tool display any active DTCs to the conditions listed above?

Yes >> Diagnose and repair the DTC. Refer to the Table of Contents in ELECTRONIC CONTROL MODULES - ELECTRICAL DIAGNOSTICS for a complete list of the symptoms.
Perform BODY VERIFICATION TEST – VER 1. (Refer to BODY VERIFICATION TEST – VER 1).

No >> Go To 2. Diagnostic Test

2. CHECK FOR ACTIVE DTC

With the scan tool, read the active DTCs.

Erase the DTCs.

Turn the ignition off, wait 10 seconds, then turn the ignition on.

With the scan tool, read the active DTC's.

Does the scan tool display this DTC as active?

Yes >> Go To 3.

No >> If the DTC is stored, check for an intermittent condition. Visually inspect the related wiring harness connectors. Look for broken, bent, pushed out, or corroded terminals, and repair any obvious problems.
Perform BODY VERIFICATION TEST – VER 1. (Refer to BODY VERIFICATION TEST – VER 1).

3. CHECK THE (W515) DRIVER SEAT BELT SWITCH SENSE CIRCUIT FOR A SHORT TO GROUND

Turn the ignition off.

Disconnect the Multi-Purpose Module (Police And Taxi Interface Module-PTIM) C2 harness connector.

Measure the resistance of the (W515) Driver Seat Belt Switch Sense circuit between ground and the Multi-Purpose Module (Police And Taxi Interface Module-PTIM) C2 harness connector.

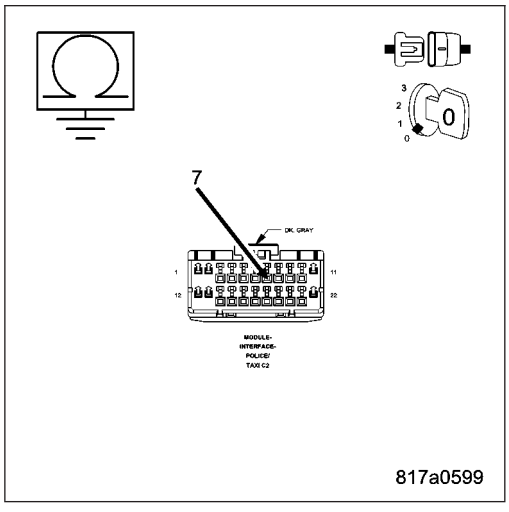

Is the resistance below 5.0 ohms?

Yes >> Go To 4.

No >> Go To 5.

4. ISOLATE THE SHORT TO GROUND IN THE (W515) DRIVER SEAT BELT SWITCH SENSE CIRCUIT

Turn the ignition off.

Disconnect the Multi-Purpose Module (Police And Taxi Interface Module-PTIM) 24 way harness connector (aftermarket light/siren controller side).

Measure the resistance of the (W515) Driver Seat Belt Switch Sense circuit between ground and the Multi-Purpose Module (Police And Taxi Interface Module-PTIM) C2 harness connector.

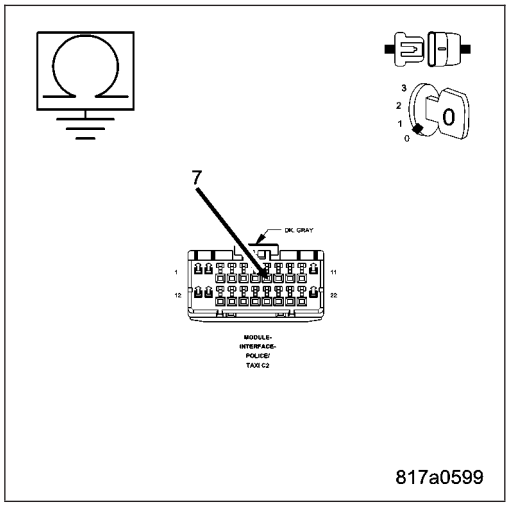

Is the resistance below 5.0 ohms?

Yes >> Repair the (W515) Driver Seat Belt Switch Sense circuit for a short to ground.

Perform BODY VERIFICATION TEST – VER 1. (Refer to BODY VERIFICATION TEST – VER 1).

No >> Refer to electrical diagnostics for the aftermarket light/siren controller, and repair or replace the aftermarket light siren controller in accordance with the manufacturer's service information.

Perform BODY VERIFICATION TEST – VER 1. (Refer to BODY VERIFICATION TEST – VER 1).

5. CHECK THE MULTI-PURPOSE MODULE (POLICE AND TAXI INTERFACE MODULE-PTIM)

Turn the ignition off.

Disconnect all Multi-Purpose Module (Police And Taxi Interface Module-PTIM) and aftermarket light/siren controller harness connectors.

Check for damaged or corroded pins, pinched wires, or damaged connectors, and repair any obvious problems.

Connect all Multi-Purpose Module (Police And Taxi Interface Module-PTIM) and aftermarket light/siren controller harness connectors.

Turn the ignition on.

With the scan tool monitor active codes as you work through the following step.

Wiggle the wiring harness and connectors of the Multi-Purpose Module (Police And Taxi Interface Module-PTIM) and aftermarket light/siren controller.

If only stored codes return continue the test until the problem area has been isolated, and repair any obvious problems.

Is B2381 — DRIVER SEAT BELT OUTPUT CIRCUIT LOW still displayed?

Yes >> Replace the Multi-Purpose Module (Police And Taxi Interface Module-PTIM) in accordance with the service information.

Perform BODY VERIFICATION TEST – VER 1. (Refer to BODY VERIFICATION TEST – VER 1).

No >> Repair is complete. The problem may have been caused by a loose or corroded terminal.

B2382 — DRIVER SEAT BELT OUTPUT CIRCUIT HIGH

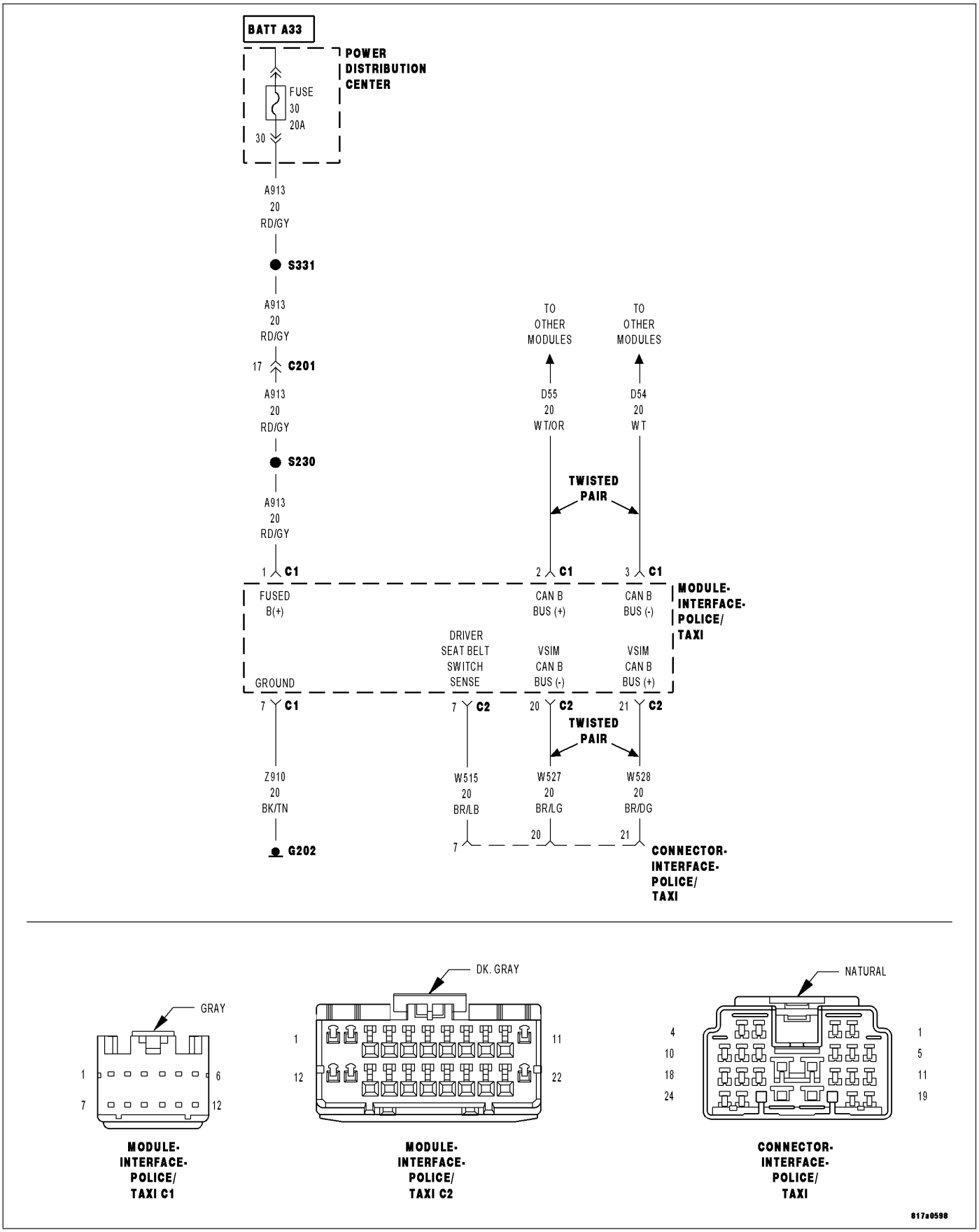

For a complete wiring diagram **Refer to Section 8W**.

- **When Monitored:**
  With the ignition switch on.
- **Set Condition:**
  The Multi-Purpose Module (Police And Taxi Interface Module-PTIM) has detected the Driver Seat Belt Switch Sense circuit above a calibrated value.

Possible Causes
(W515) DRIVER SEAT BELT SWITCH SENSE CIRCUIT OPEN OR SHORTED TO VOLTAGE
AFTERMARKET LIGHT/SIREN CONTROLLER
MULTI-PURPOSE MODULE (POLICE AND TAXI INTERFACE MODULE-PTIM)

1. CHECK FOR ANY OF THE FOLLOWING ACTIVE DTCS

With the scan tool, read all active DTCs from all modules.

NOTE: Check for FCM configuration, CAN B or C hardware electrical, VIN Missing/Mismatch, battery or ignition related DTCs.

Does the scan tool display any active DTCs to the conditions listed above?

Yes >> Diagnose and repair the DTC. Refer to the Table of Contents in ELECTRONIC CONTROL MODULES - ELECTRICAL DIAGNOSTICS for a complete list of the symptoms.
Perform BODY VERIFICATION TEST – VER 1. (Refer to BODY VERIFICATION TEST – VER 1).

No >> Go To 2. Diagnostic Test

2. CHECK FOR ACTIVE DTC

With the scan tool, read the active DTCs.

Erase the DTCs.

Turn the ignition off, wait 10 seconds, then turn the ignition on.

With the scan tool, read the active DTC's.

Does the scan tool display this DTC as active?

Yes >> Go To 3.

No >> If the DTC is stored, check for an intermittent condition. Visually inspect the related wiring harness connectors. Look for broken, bent, pushed out, or corroded terminals, and repair any obvious problems.
Perform BODY VERIFICATION TEST – VER 1. (Refer to BODY VERIFICATION TEST – VER 1).

3. CHECK THE (W515) DRIVER SEAT BELT SWITCH SENSE CIRCUIT FOR A SHORT TO VOLTAGE

Turn the ignition off.

Disconnect the Multi-Purpose Module (Police And Taxi Interface Module-PTIM) C2 harness connector.

Turn the ignition on.

Measure the voltage of the (W515) Driver Seat Belt Switch Sense circuit between ground and the Multi-Purpose Module (Police And Taxi Interface Module-PTIM) C2 harness connector.

Is there any voltage present?

Yes >> Go To 4.

No >> Go To 5.

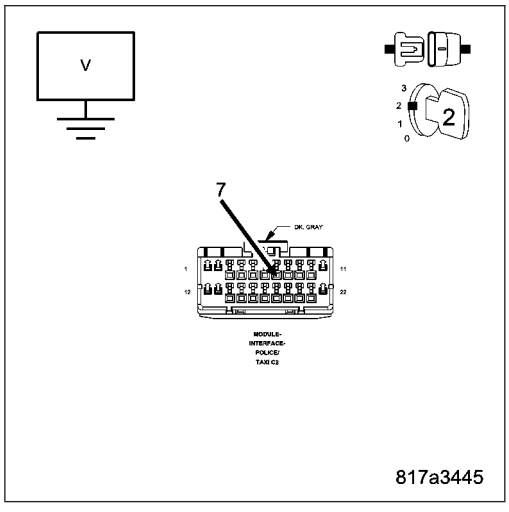

4. ISOLATE THE SHORT TO VOLTAGE IN THE (W515) DRIVER SEAT BELT SWITCH SENSE CIRCUIT

Turn the ignition off.

Disconnect the Multi-Purpose Module (Police And Taxi Interface Module-PTIM) 24 way harness connector (aftermarket light/siren controller side).

Turn the ignition on.

Measure the voltage of the (W515) Driver Seat Belt Switch Sense circuit between ground and the Multi-Purpose Module (Police And Taxi Interface Module-PTIM) C2 harness connector.

Is there any voltage present?

Yes >> Repair the (W515) Driver Seat Belt Switch Sense circuit for a short to power.

Perform BODY VERIFICATION TEST – VER 1. (Refer to BODY VERIFICATION TEST – VER 1).

No >> Refer to electrical diagnostics for the aftermarket light/siren controller, and repair or replace the aftermarket light siren controller in accordance with the manufacturer's service information.

Perform BODY VERIFICATION TEST – VER 1. (Refer to BODY VERIFICATION TEST – VER 1).

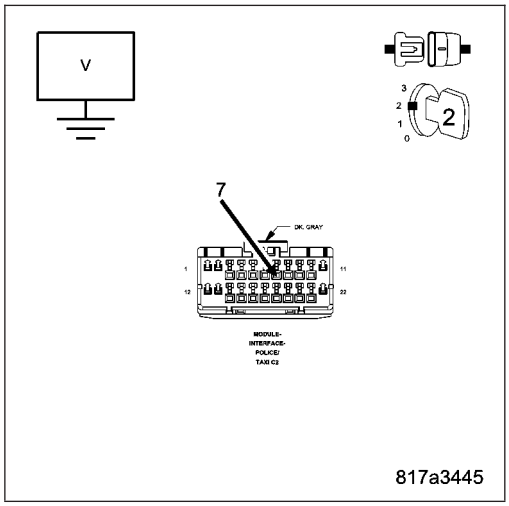

5. CHECK THE (W515) DRIVER SEAT BELT SWITCH SENSE CIRCUIT FOR AN OPEN

Turn the ignition off.

Disconnect the Multi-Purpose Module (Police And Taxi Interface Module-PTIM) 24 way harness connector (aftermarket light/siren controller side).

Measure the resistance of the (W515) Driver Seat Belt Switch Sense circuit between the Multi-Purpose Module (Police And Taxi Interface Module-PTIM) 24 way and the PTIM C2 harness connectors.

Is the resistance below 5.0 ohms?

Yes >> Go To 6.

No >> Repair the (W515) Driver Seat Belt Switch Sense circuit for an open or high resistance.

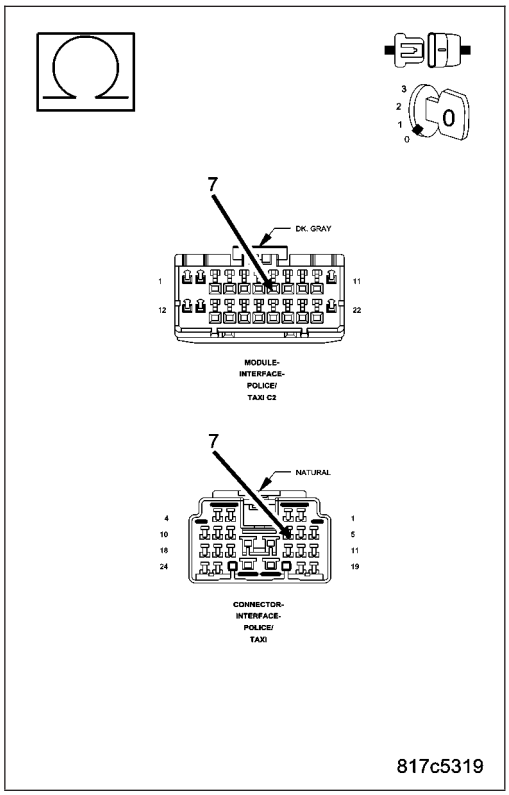

6. CHECK THE MULTI-PURPOSE MODULE (POLICE AND TAXI INTERFACE MODULE-PTIM)

Turn the ignition off.

Disconnect all Multi-Purpose Module (Police And Taxi Interface Module-PTIM) and aftermarket light/siren controller harness connectors.

Check for damaged or corroded pins, pinched wires, or damaged connectors, and repair any obvious problems.

Connect all Multi-Purpose Module (Police And Taxi Interface Module-PTIM) and aftermarket light/siren controller harness connectors.

Turn the ignition on.

With the scan tool monitor active codes as you work through the following step.

Wiggle the wiring harness and connectors of the Multi-Purpose Module (Police And Taxi Interface Module-PTIM) and aftermarket light/siren controller.

If only stored codes return continue the test until the problem area has been isolated, and repair any obvious problems.

Is B2382 — DRIVER SEAT BELT OUTPUT CIRCUIT HIGH still displayed?

Yes >> Replace the Multi-Purpose Module (Police And Taxi Interface Module-PTIM) in accordance with the service information.
Perform BODY VERIFICATION TEST – VER 1. (Refer to BODY VERIFICATION TEST – VER 1).

No >> Repair is complete. The problem may have been caused by a loose or corroded terminal.
Perform BODY VERIFICATION TEST – VER 1. (Refer to BODY VERIFICATION TEST – VER 1).

B2384 — HORN SWITCH OUTPUT CIRCUIT LOW

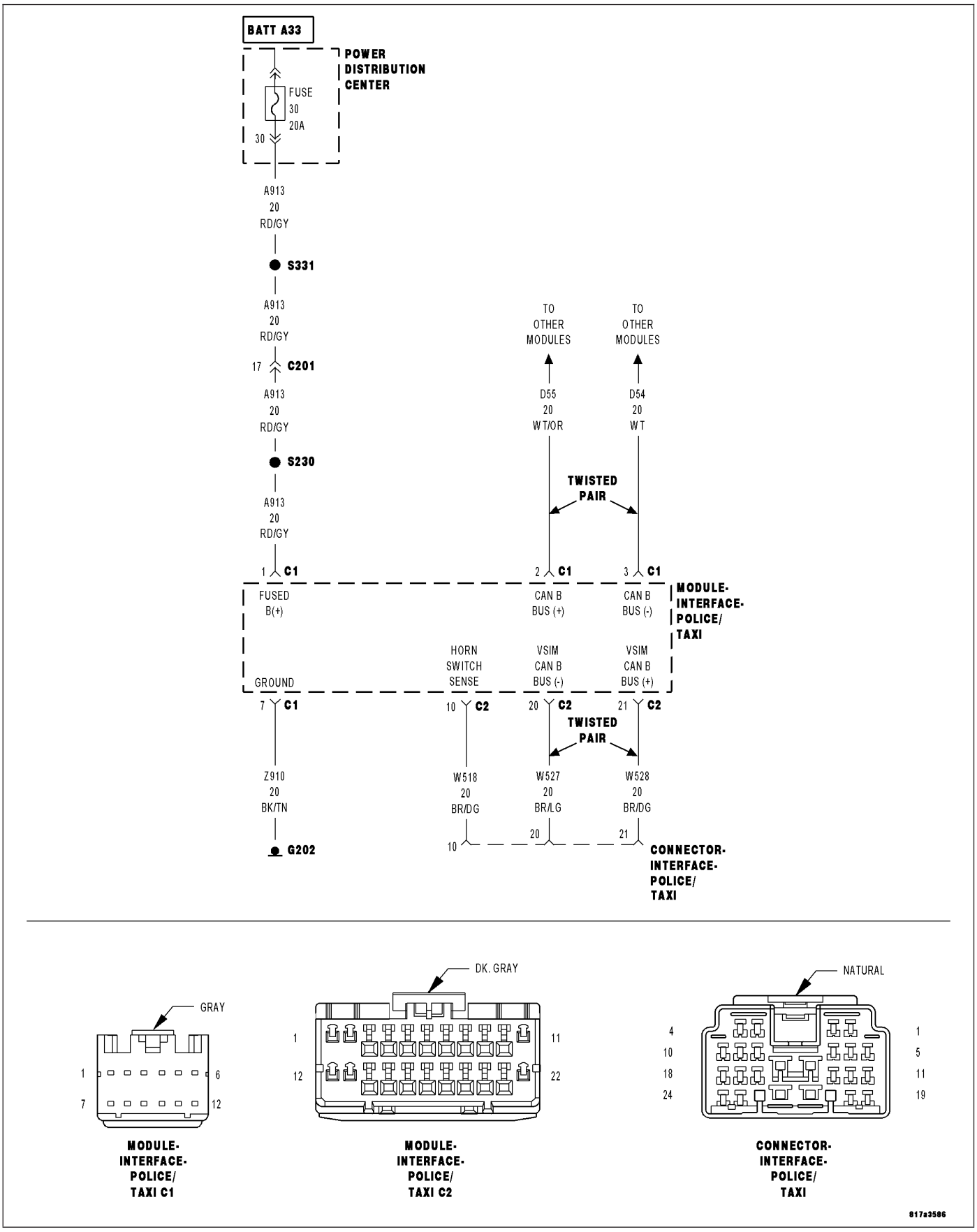

For a complete wiring diagram **Refer to Section 8W**.

- **When Monitored:**
  With the ignition switch on.
- **Set Condition:**
  The Multi-Purpose Module (Police And Taxi Interface Module-PTIM) has detected the Horn Switch Sense circuit below a calibrated value.

Possible Causes
(W518) HORN SWITCH SENSE CIRCUIT SHORTED TO GROUND
AFTERMARKET LIGHT/SIREN CONTROLLER
MULTI-PURPOSE MODULE (POLICE AND TAXI INTERFACE MODULE-PTIM)

1. CHECK FOR ANY OF THE FOLLOWING ACTIVE DTCS

With the scan tool, read all active DTCs from all modules.

NOTE: Check for FCM configuration, CAN B or C hardware electrical, VIN Missing/Mismatch, battery or ignition related DTCs.

Does the scan tool display any active DTCs to the conditions listed above?

Yes >> Diagnose and repair the DTC. Refer to the Table of Contents in ELECTRONIC CONTROL MODULES - ELECTRICAL DIAGNOSTICS for a complete list of the symptoms.
Perform BODY VERIFICATION TEST – VER 1. (Refer to BODY VERIFICATION TEST – VER 1).

No >> Go To 2. Diagnostic Test

2. CHECK FOR ACTIVE DTC

With the scan tool, read the active DTCs.

Erase the DTCs.

Turn the ignition off, wait 10 seconds, then turn the ignition on.

With the scan tool, read the active DTC's.

Does the scan tool display this DTC as active?

Yes >> Go To 3.

No >> If the DTC is stored, check for an intermittent condition. Visually inspect the related wiring harness connectors. Look for broken, bent, pushed out, or corroded terminals, and repair any obvious problems.
Perform BODY VERIFICATION TEST – VER 1. (Refer to BODY VERIFICATION TEST – VER 1).

3. CHECK THE (W518) HORN SWITCH SENSE CIRCUIT FOR A SHORT TO GROUND

Turn the ignition off.

Disconnect the Multi-Purpose Module (Police And Taxi Interface Module-PTIM) C2 harness connector.

Measure the resistance of the (W518) Horn Switch Sense circuit between ground and the Multi-Purpose Module (Police And Taxi Interface Module-PTIM) C2 harness connector.

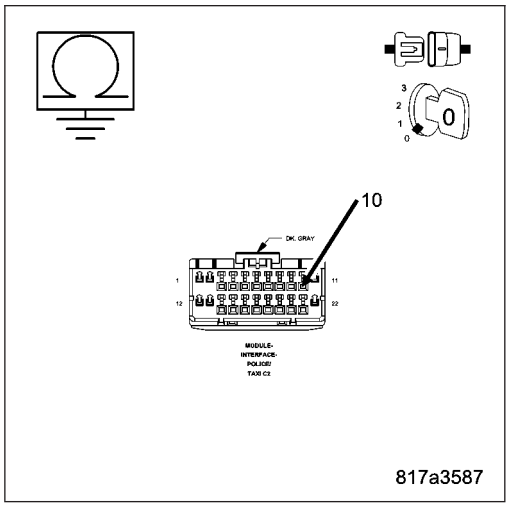

Is the resistance below 5.0 ohms?

Yes >> Go To 4.

No >> Go To 5.

4. ISOLATE THE SHORT TO GROUND IN THE (W518) HORN SWITCH SENSE CIRCUIT

Turn the ignition off.

Disconnect the Multi-Purpose Module (Police And Taxi Interface Module-PTIM) 24 way harness connector (aftermarket light/siren controller side).

Measure the resistance of the (W518) Horn Switch Sense circuit between ground and the Multi-Purpose Module (Police And Taxi Interface Module-PTIM) C2 harness connector.

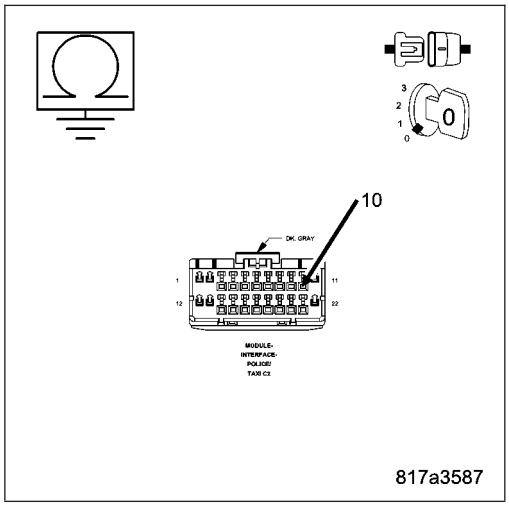

Is the resistance below 5.0 ohms?

Yes >> Repair the (W515) Driver Seat Belt Sense circuit for a short to ground.

Perform BODY VERIFICATION TEST – VER 1. (Refer to BODY VERIFICATION TEST – VER 1).

No >> Refer to electrical diagnostics for the aftermarket light/siren controller, and repair or replace the aftermarket light siren controller in accordance with the manufacturer's service information.

Perform BODY VERIFICATION TEST – VER 1. (Refer to BODY VERIFICATION TEST – VER 1).

5. CHECK THE MULTI-PURPOSE MODULE (POLICE AND TAXI INTERFACE MODULE-PTIM)

Turn the ignition off.

Disconnect all Multi-Purpose Module (Police And Taxi Interface Module-PTIM) and aftermarket light/siren controller harness connectors.

Check for damaged or corroded pins, pinched wires, or damaged connectors, and repair any obvious problems.

Connect all Multi-Purpose Module (Police And Taxi Interface Module-PTIM) and aftermarket light/siren controller harness connectors.

Turn the ignition on.

With the scan tool monitor active codes as you work through the following step.

Wiggle the wiring harness and connectors of the Multi-Purpose Module (Police And Taxi Interface Module-PTIM) and aftermarket light/siren controller.

If only stored codes return continue the test until the problem area has been isolated, and repair any obvious problems.

Is B2384 — HORN SWITCH OUTPUT CIRCUIT LOW still displayed?

Yes >> Replace the Multi-Purpose Module (Police And Taxi Interface Module-PTIM) in accordance with the service information.

Perform BODY VERIFICATION TEST – VER 1. (Refer to BODY VERIFICATION TEST – VER 1).

No >> Repair is complete. The problem may have been caused by a loose or corroded terminal.

B2385 — HORN SWITCH OUTPUT CIRCUIT HIGH

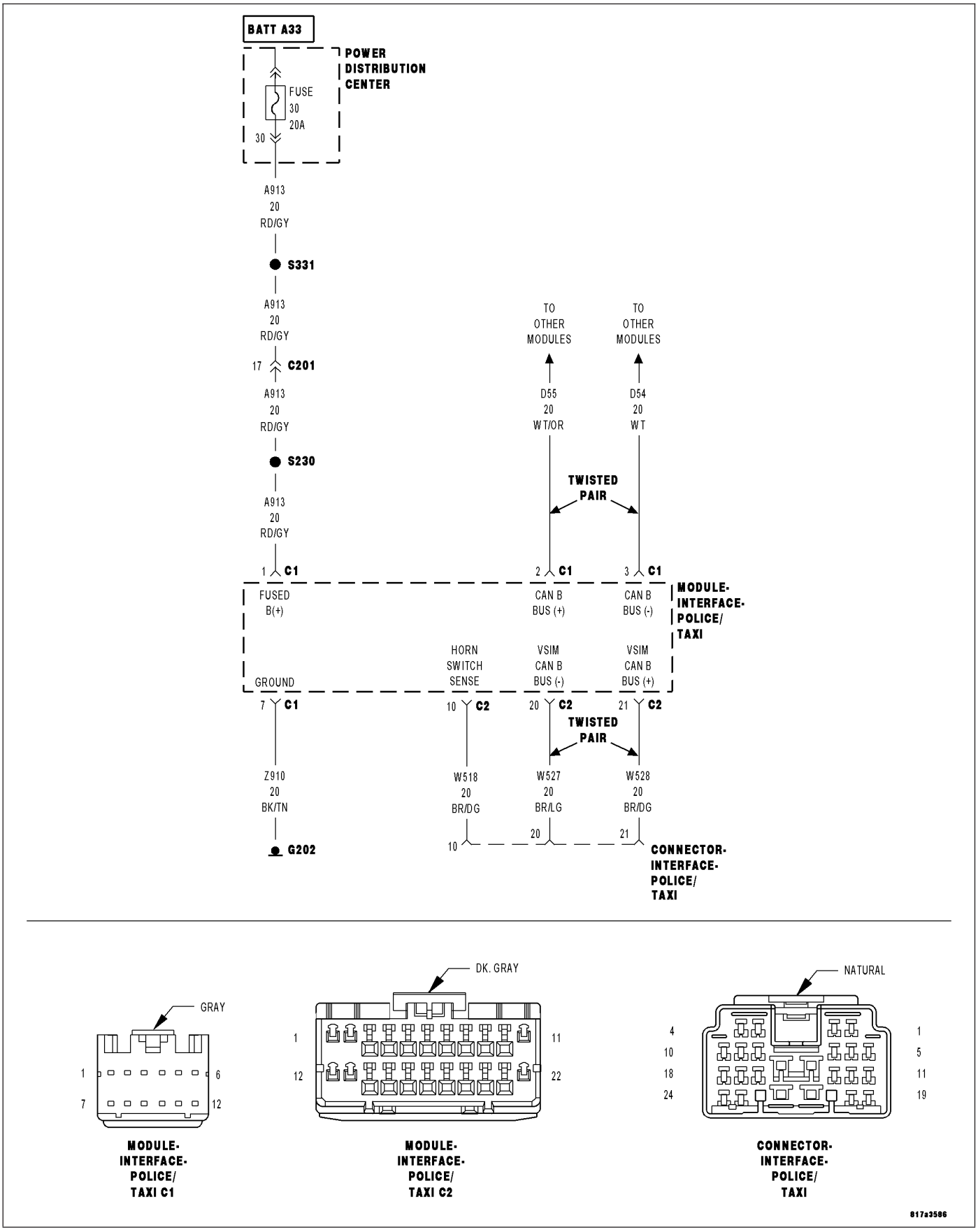

For a complete wiring diagram **Refer to Section 8W**.

- **When Monitored:**
  With the ignition switch on.
- **Set Condition:**
  The Multi-Purpose Module (Police And Taxi Interface Module-PTIM) has detected the Horn Switch Sense circuit above a calibrated value.

Possible Causes
(W518) HORN SWITCH SENSE CIRCUIT OPEN OR SHORTED TO VOLTAGE
AFTERMARKET LIGHT/SIREN CONTROLLER
MULTI-PURPOSE MODULE (POLICE AND TAXI INTERFACE MODULE-PTIM)

1. CHECK FOR ANY OF THE FOLLOWING ACTIVE DTCS

With the scan tool, read all active DTCs from all modules.

NOTE: Check for FCM configuration, CAN B or C hardware electrical, VIN Missing/Mismatch, battery or ignition related DTCs.

Does the scan tool display any active DTCs to the conditions listed above?

Yes >> Diagnose and repair the DTC. Refer to the Table of Contents in ELECTRONIC CONTROL MODULES - ELECTRICAL DIAGNOSTICS for a complete list of the symptoms.
Perform BODY VERIFICATION TEST – VER 1. (Refer to BODY VERIFICATION TEST – VER 1).

No >> Go To 2. Diagnostic Test

2. CHECK FOR ACTIVE DTC

With the scan tool, read the active DTCs.

Erase the DTCs.

Turn the ignition off, wait 10 seconds, then turn the ignition on.

With the scan tool, read the active DTC's.

Does the scan tool display this DTC as active?

Yes >> Go To 3.

No >> If the DTC is stored, check for an intermittent condition. Visually inspect the related wiring harness connectors. Look for broken, bent, pushed out, or corroded terminals, and repair any obvious problems.
Perform BODY VERIFICATION TEST – VER 1. (Refer to BODY VERIFICATION TEST – VER 1).

3. CHECK THE (W518) HORN SWITCH SENSE CIRCUIT FOR A SHORT TO VOLTAGE

Turn the ignition off.

Disconnect the Multi-Purpose Module (Police And Taxi Interface Module-PTIM) C2 harness connector.

Turn the ignition on.

Measure the voltage of the (W518) Horn Switch Sense circuit between ground and the Multi-Purpose Module (Police And Taxi Interface Module-PTIM) C2 harness connector.

Is there any voltage present?

Yes >> Go To 4.

No >> Go To 5.

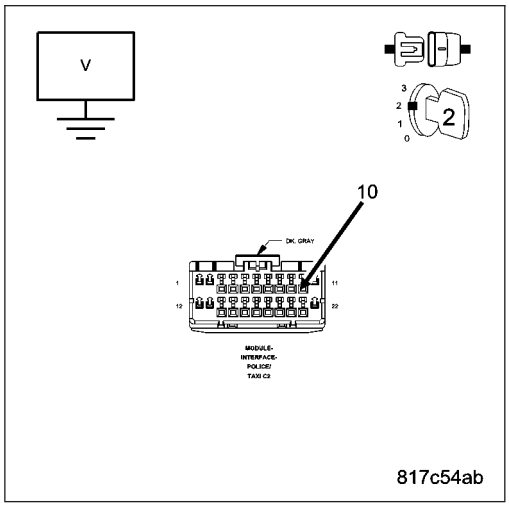

4. ISOLATE THE SHORT TO VOLTAGE IN THE (W518) HORN SWITCH SENSE CIRCUIT

Turn the ignition off.

Disconnect the Multi-Purpose Module (Police And Taxi Interface Module-PTIM) 24 way harness connector (aftermarket light/siren controller side).

Turn the ignition on.

Measure the voltage of the (W518) Horn Switch Sense circuit between ground and the Multi-Purpose Module (Police And Taxi Interface Module-PTIM) C2 harness connector.

Is there any voltage present?

Yes >> Repair the (W518) Horn Switch Sense circuit for a short to voltage.

Perform BODY VERIFICATION TEST – VER 1. (Refer to BODY VERIFICATION TEST – VER 1).

No >> Refer to electrical diagnostics for the aftermarket light/siren controller, and repair or replace the aftermarket light siren controller in accordance with the manufacturer's service information.

Perform BODY VERIFICATION TEST – VER 1. (Refer to BODY VERIFICATION TEST – VER 1).

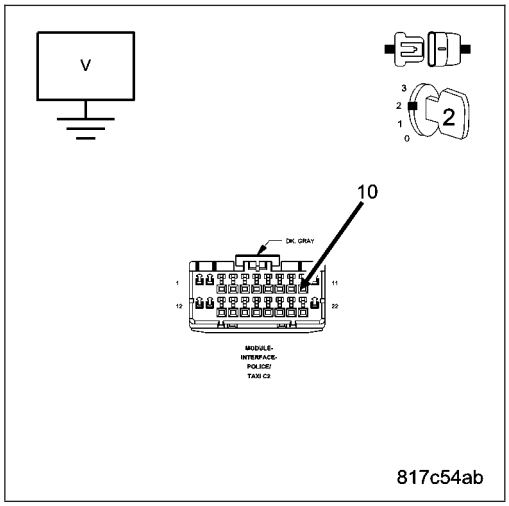

5. CHECK THE (W518) HORN SWITCH SENSE CIRCUIT FOR AN OPEN

Turn the ignition off.

Disconnect the Multi-Purpose Module (Police And Taxi Interface Module-PTIM) 24 way harness connector (aftermarket light/siren controller side).

Measure the resistance of the (W518) Horn Switch Sense circuit between the Multi-Purpose Module (Police And Taxi Interface Module-PTIM) 24 way and the PTIM C2 harness connectors.

Is the resistance below 5.0 ohms?

Yes >> Go To 6.

No >> Repair the (W518) Horn Switch Sense circuit for an open or high resistance.

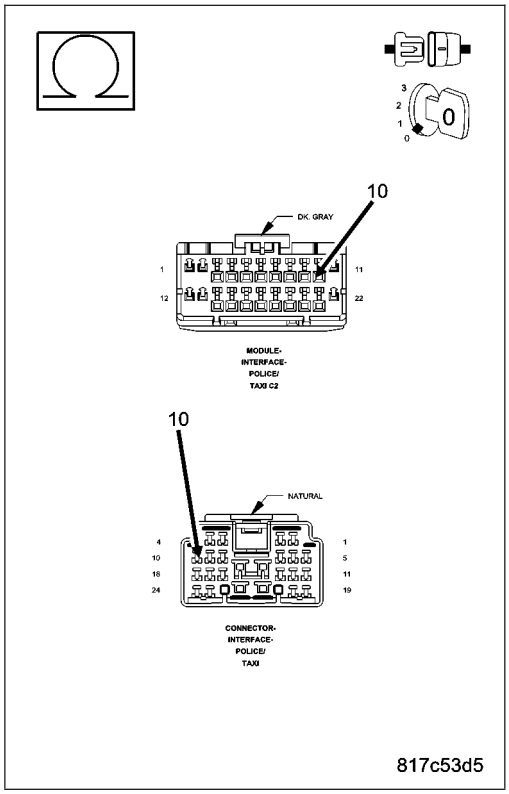

6. CHECK THE MULTI-PURPOSE MODULE (POLICE AND TAXI INTERFACE MODULE-PTIM)

Turn the ignition off.

Disconnect all Multi-Purpose Module (Police And Taxi Interface Module-PTIM) and aftermarket light/siren controller harness connectors.

Check for damaged or corroded pins, pinched wires, or damaged connectors, and repair any obvious problems.

Connect all Multi-Purpose Module (Police And Taxi Interface Module-PTIM) and aftermarket light/siren controller harness connectors.

Turn the ignition on.

With the scan tool monitor active codes as you work through the following step.

Wiggle the wiring harness and connectors of the Multi-Purpose Module (Police And Taxi Interface Module-PTIM) and aftermarket light/siren controller.

If only stored codes return continue the test until the problem area has been isolated, and repair any obvious problems.

Is B2385 — HORN SWITCH OUTPUT CIRCUIT HIGH still displayed?

Yes >> Replace the Multi-Purpose Module (Police And Taxi Interface Module-PTIM) in accordance with the service information.
Perform BODY VERIFICATION TEST – VER 1. (Refer to BODY VERIFICATION TEST – VER 1).

No >> Repair is complete. The problem may have been caused by a loose or corroded terminal.
Perform BODY VERIFICATION TEST – VER 1. (Refer to BODY VERIFICATION TEST – VER 1).

U0021 — CAN B BUS (+) CIRCUIT OPEN

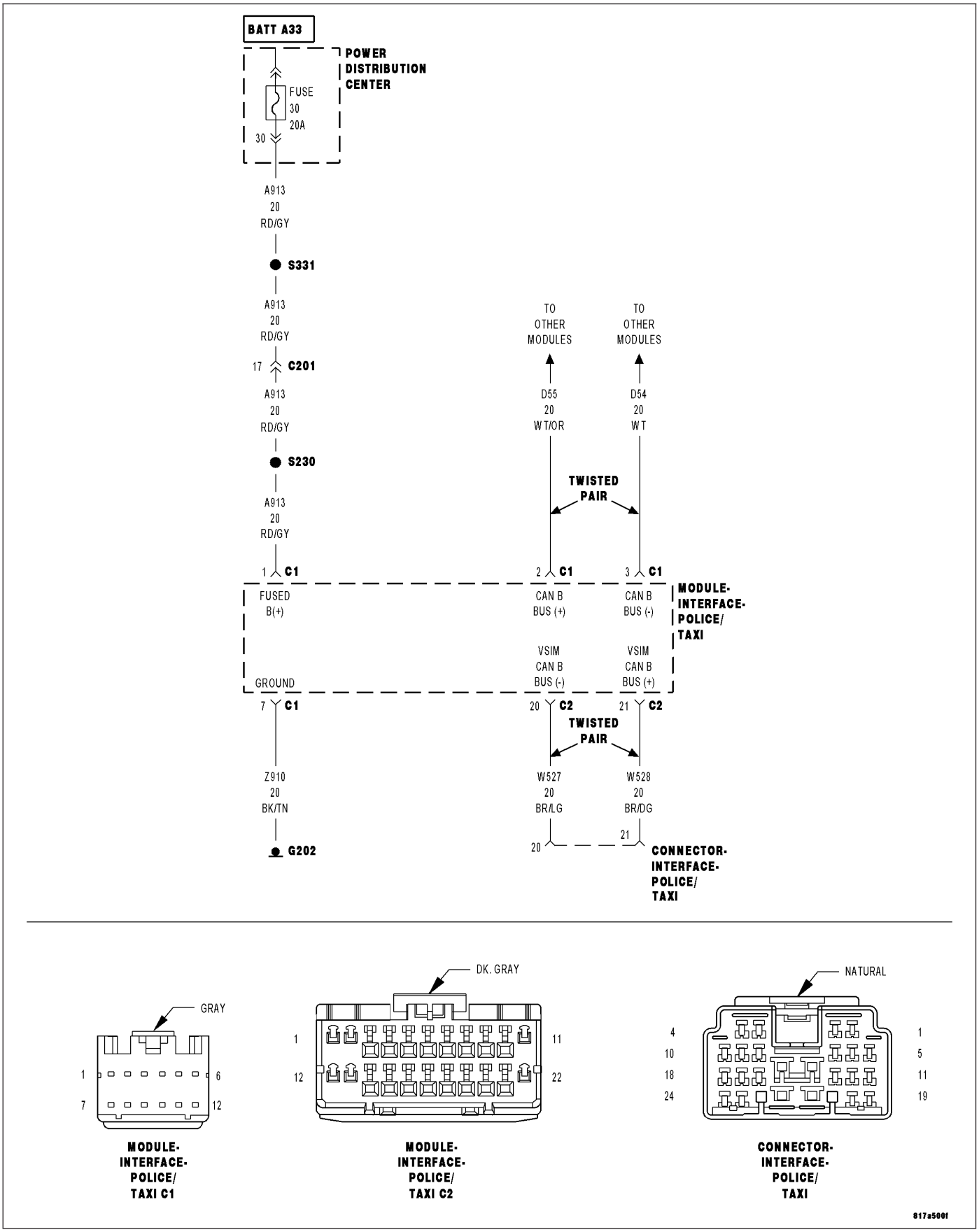

For a complete wiring diagram **Refer to Section 8W**.

- **When Monitored:**
  With the ignition switch on.
- **Set Condition:**
  The Multi-Purpose Module (Police And Taxi Interface Module-PTIM) has detected an open condition on the (W527) VSIM CAN B Bus (+) circuit.

Possible Causes
(W527) VSIM CAN B BUS (+) CIRCUIT OPEN
Multi-Purpose Module (Police And Taxi Interface Module-PTIM)

Diagnostic Test

1. CHECK FOR ACTIVE DTC

With the scan tool, read the active DTCs.

Erase the DTCs.

Turn the ignition off, wait 10 seconds, then turn the ignition on.

With the scan tool, read the active DTC's.

Does the scan tool display this DTC as active?

Yes >> Go To 2.

No >> If the DTC is stored, check for an intermittent condition. Visually inspect the related wiring harness connectors. Look for broken, bent, pushed out, or corroded terminals, and repair any obvious problems.
Perform BODY VERIFICATION TEST – VER 1. (Refer to BODY VERIFICATION TEST – VER 1).

2. CHECK THE (W527) VSIM CAN B BUS (+) CIRCUIT FOR AN OPEN

Turn the ignition off.

Disconnect the Multi-Purpose Module (Police And Taxi Interface Module-PTIM) C1 harness connector.

Disconnect the Multi-Purpose Module (Police And Taxi Interface Module-PTIM) 24 way harness connector (aftermarket light/siren controller side).

Measure the resistance of the (W527) VSIM CAN B Bus (+) circuit between the Multi-Purpose Module (Police And Taxi Interface Module-PTIM) C2 connector and the Multi-Purpose Module (Police And Taxi Interface Module-PTIM) 24 way harness connector (aftermarket light/siren controller side).

Is the resistance below 5.0 ohms?

Yes >> Inspect the wiring and connectors for damage or shorted circuits. If ok, replace the Front Control Module in accordance with the service information.
Perform BODY VERIFICATION TEST – VER 1. (Refer to BODY VERIFICATION TEST – VER 1).

No >> Repair the (W527) Multi-Purpose Module (Police And Taxi Interface Module-PTIM) CAN B Bus (+) circuit for an open.
Perform BODY VERIFICATION TEST – VER 1. (Refer to BODY VERIFICATION TEST – VER 1).

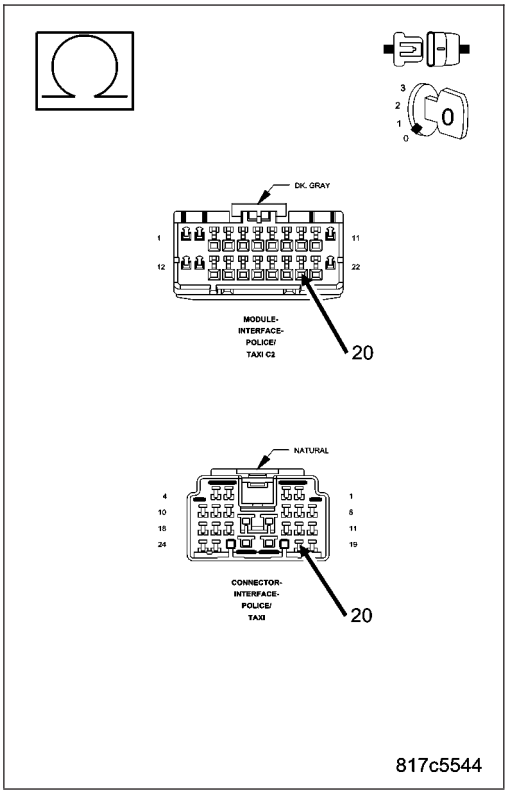

U0022 CAN B BUS (+) CIRCUIT LOW

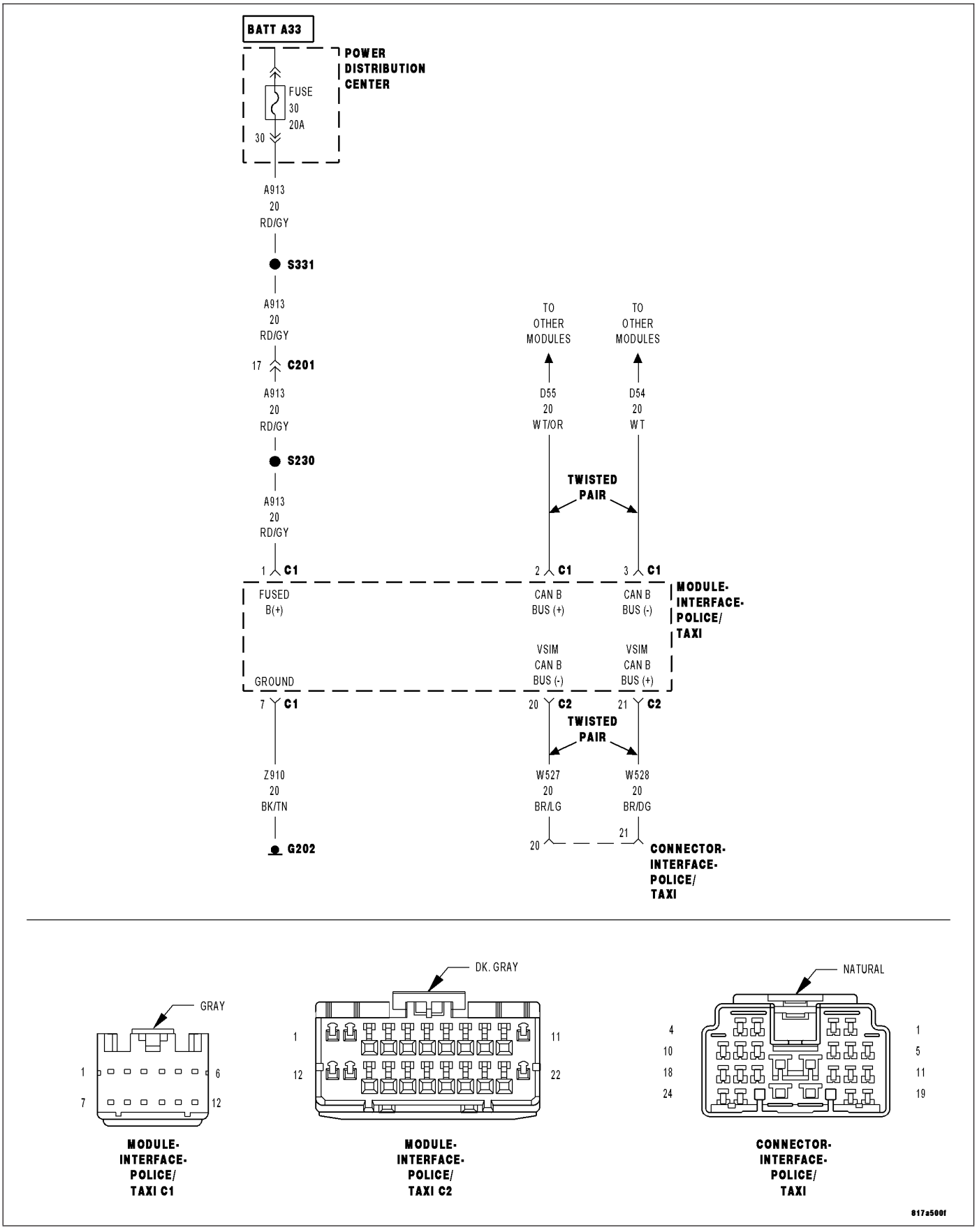

For a complete wiring diagram **Refer to Section 8W**.

- **When Monitored:**
  With the ignition switch on.
- **Set Condition:**
  The Multi-Purpose Module (Police And Taxi Interface Module-PTIM) has detected the (W527) VSIM CAN B Bus (+) circuit is below a calibrated value.

Possible Causes
(W527) VSIM CAN B BUS (+) CIRCUIT SHORTED TO GROUND
MULTI-PURPOSE MODULE (POLICE AND TAXI INTERFACE MODULE-PTIM)

Diagnostic Test

1. CHECK FOR ACTIVE DTC

With the scan tool, read the active DTCs.

Erase the DTCs.

Turn the ignition off, wait 10 seconds, then turn the ignition on.

With the scan tool, read the active DTC's.

Does the scan tool display this DTC as active?

Yes >> Go To 2.

No >> If the DTC is stored, check for an intermittent condition. Visually inspect the related wiring harness connectors. Look for broken, bent, pushed out, or corroded terminals, and repair any obvious problems.
Perform BODY VERIFICATION TEST – VER 1. (Refer to BODY VERIFICATION TEST – VER 1).

2. CHECK (W527) VSIM CAN B BUS (+) CIRCUIT FOR A SHORT TO GROUND

Turn the ignition off.

Disconnect the Multi-Purpose Module (Police And Taxi Interface Module-PTIM) C2 harness connector.

Disconnect the Multi-Purpose Module (Police And Taxi Interface Module-PTIM) 24 way harness connector (aftermarket light/siren controller side).

Disconnect the scan tool from the DLC.

Measure the resistance between ground and the (W527) VSIM CAN B Bus (+) circuit.

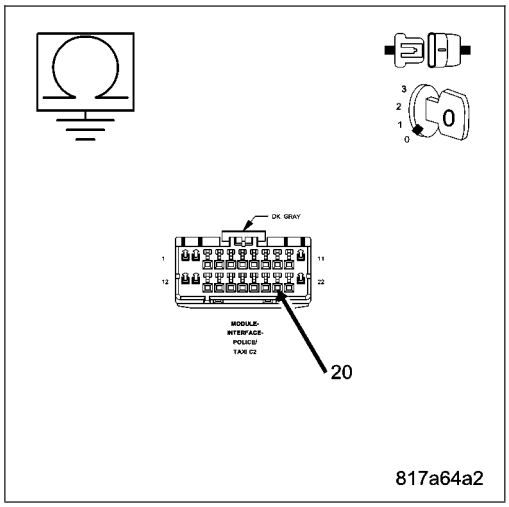

Is the resistance below 5.0 ohms?

Yes >> Repair the (W527) VSIM CAN B Bus (+) circuit for a short to ground.
Perform BODY VERIFICATION TEST – VER 1. (Refer to BODY VERIFICATION TEST – VER 1).

No >> Inspect the wiring and connectors for damage or shorted circuits. If ok, replace the Multi-Purpose Module (Police And Taxi Interface Module-PTIM) in accordance with the service information.
Perform BODY VERIFICATION TEST – VER 1. (Refer to BODY VERIFICATION TEST – VER 1).

U0023 — CAN B BUS (+) CIRCUIT HIGH

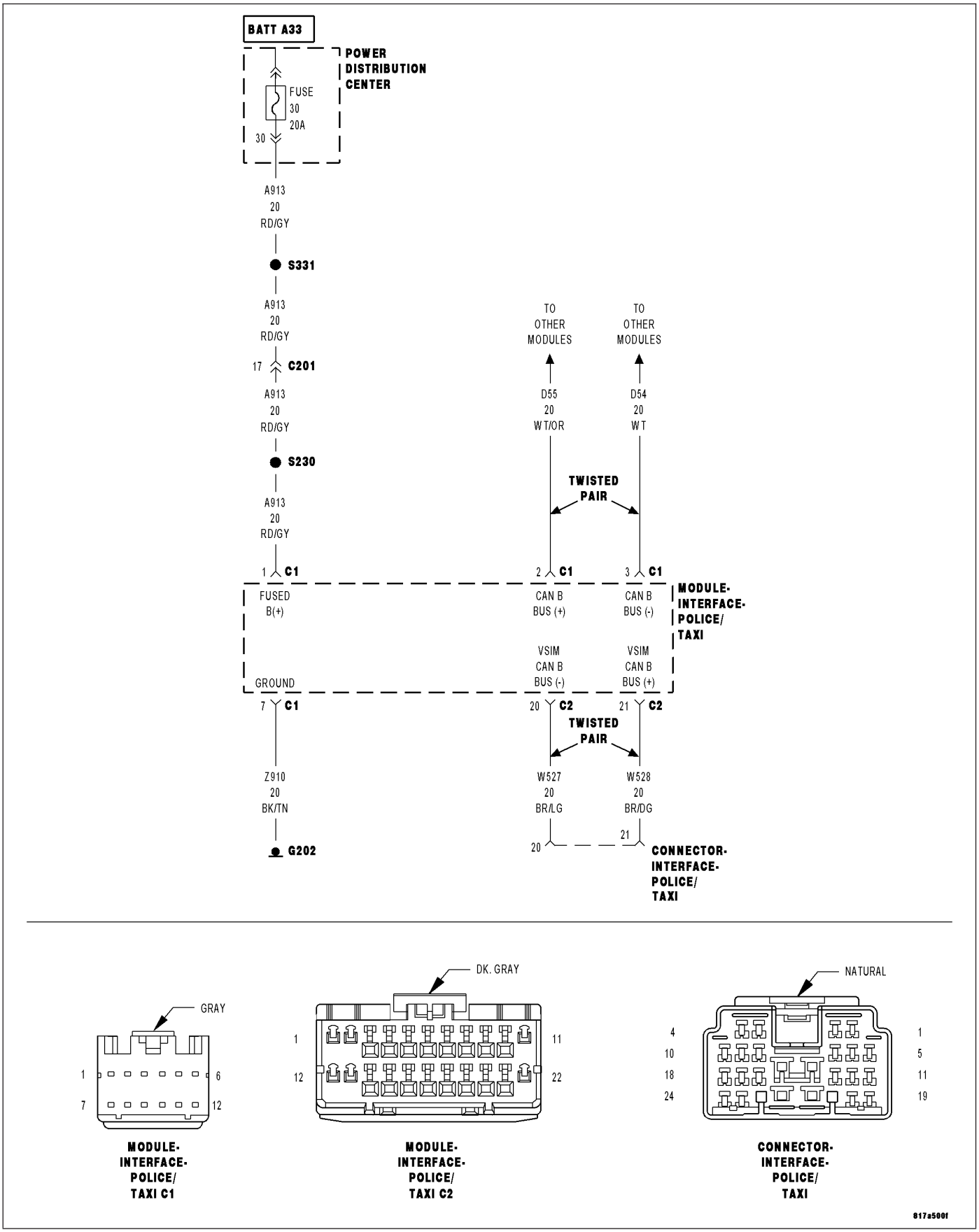

For a complete wiring diagram **Refer to Section 8W**.

- **When Monitored:**
  With the ignition switch on.
- **Set Condition:**
  The Multi-Purpose Module (Police And Taxi Interface Module-PTIM) has detected the (W527) VSIM CAN B Bus (+) circuit is above a calibrated value.

Possible Causes
(W527) VSIM CAN B BUS (+) CIRCUIT SHORTED TO VOLTAGE
(W528) VSIM CAN B BUS (-) CIRCUIT SHORTED TO VOLTAGE
MULTI-PURPOSE MODULE (POLICE AND TAXI INTERFACE MODULE-PTIM)

Diagnostic Test

1. CHECK FOR ACTIVE DTC

With the scan tool, read the active DTCs.

Erase the DTCs.

Turn the ignition off, wait 10 seconds, then turn the ignition on.

With the scan tool, read the active DTC's.

Does the scan tool display this DTC as active?

Yes >> Go To 2.

No >> If the DTC is stored, check for an intermittent condition. Visually inspect the related wiring harness connectors. Look for broken, bent, pushed out, or corroded terminals, and repair any obvious problems.
Perform BODY VERIFICATION TEST – VER 1. (Refer to BODY VERIFICATION TEST – VER 1).

2. VSIM CAN B BUS CIRCUITS SHORTED TO VOLTAGE

Turn the ignition off.

Disconnect the Multi-Purpose Module (Police And Taxi Interface Module-PTIM) C2 harness connector.

Disconnect the scan tool from the DLC.

Turn the ignition on.

Measure the voltage of the VSIM CAN B Bus circuits.

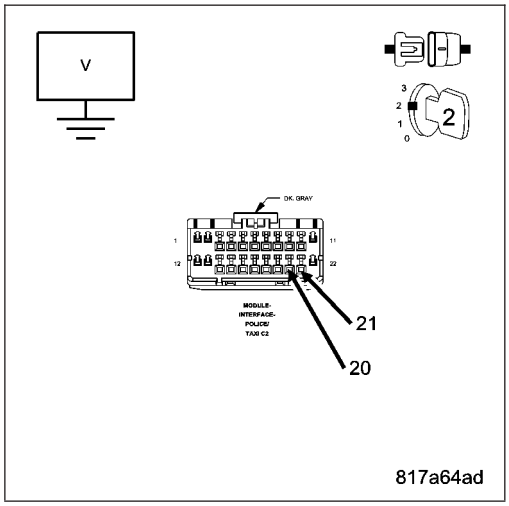

Is the voltage above 6.0 volts for either circuit?

Yes >> Repair the VSIM CAN B Bus circuit(s) for a short to voltage.
Perform BODY VERIFICATION TEST – VER 1. (Refer to BODY VERIFICATION TEST – VER 1).

No >> Inspect the wiring and connectors for damage or shorted circuits. If ok, replace the Multi-Purpose Module (Police And Taxi Interface Module-PTIM) in accordance with the service information.
Perform BODY VERIFICATION TEST – VER 1. (Refer to BODY VERIFICATION TEST – VER 1).

U0024 — CAN B BUS (-) CIRCUIT OPEN

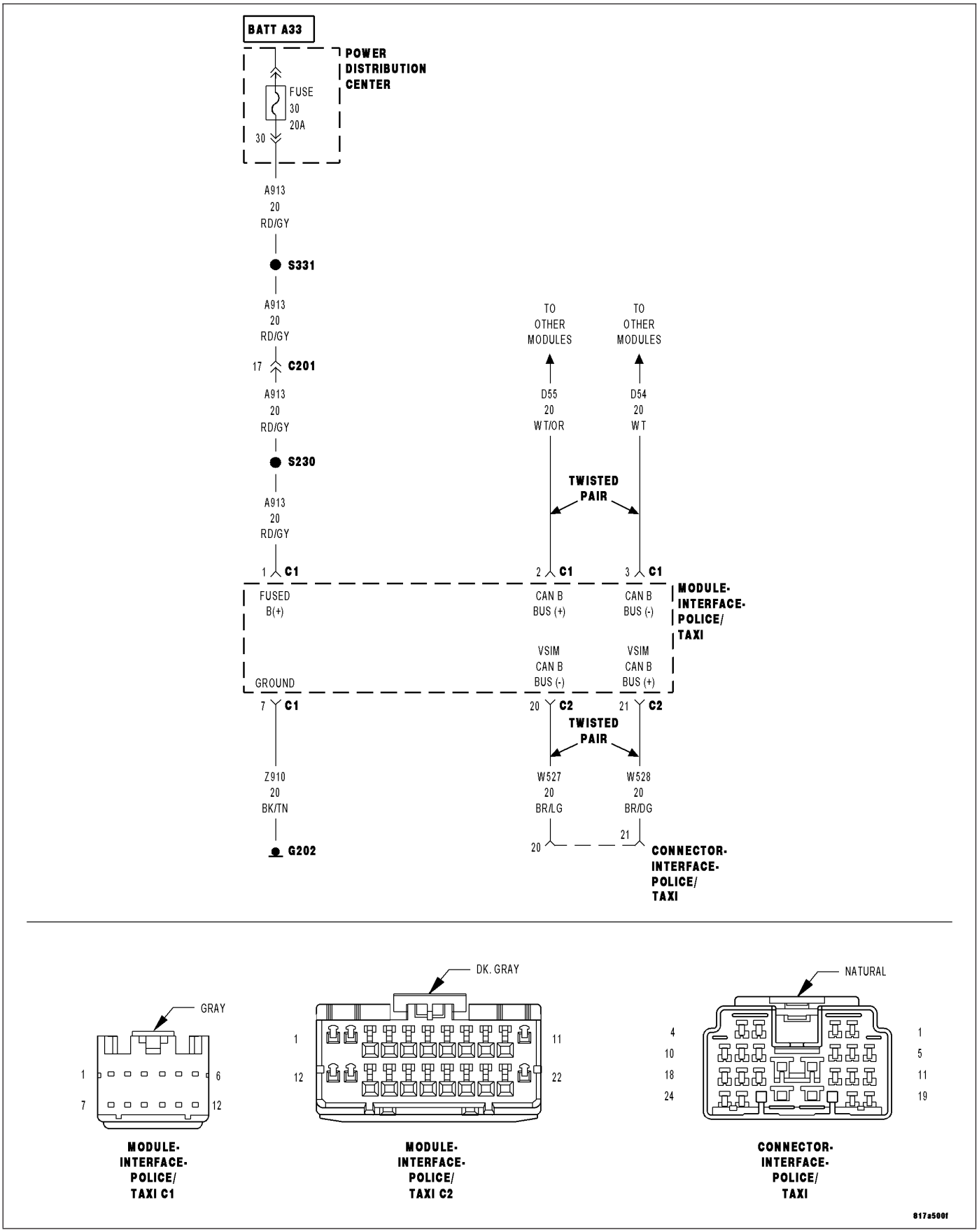

For a complete wiring diagram **Refer to Section 8W**.

- **When Monitored:**
  With the ignition switch on.
- **Set Condition:**
  The Multi-Purpose Module (Police And Taxi Interface Module-PTIM) has detected an open condition on the (W527) VSIM CAN B Bus (-) circuit.

Possible Causes
(W527) VSIM CAN B BUS (-) CIRCUIT OPEN
Multi-Purpose Module (Police And Taxi Interface Module-PTIM)

Diagnostic Test

1. CHECK FOR ACTIVE DTC

With the scan tool, read the active DTCs.

Erase the DTCs.

Turn the ignition off, wait 10 seconds, then turn the ignition on.

With the scan tool, read the active DTC's.

Does the scan tool display this DTC as active?

Yes >> Go To 2.

No >> If the DTC is stored, check for an intermittent condition. Visually inspect the related wiring harness connectors. Look for broken, bent, pushed out, or corroded terminals, and repair any obvious problems.
Perform BODY VERIFICATION TEST – VER 1. (Refer to BODY VERIFICATION TEST – VER 1).

2. CHECK THE (W527) VSIM CAN B BUS (-) CIRCUIT FOR AN OPEN

Turn the ignition off.

Disconnect the Multi-Purpose Module (Police And Taxi Interface Module-PTIM) C1 harness connector.

Disconnect the Multi-Purpose Module (Police And Taxi Interface Module-PTIM) 24 way harness connector (aftermarket light/siren controller side).

Measure the resistance of the (W527) VSIM CAN B Bus (-) circuit between the Multi-Purpose Module (Police And Taxi Interface Module-PTIM) C2 connector and the Multi-Purpose Module (Police And Taxi Interface Module-PTIM) 24 way harness connector (aftermarket light/siren controller side).

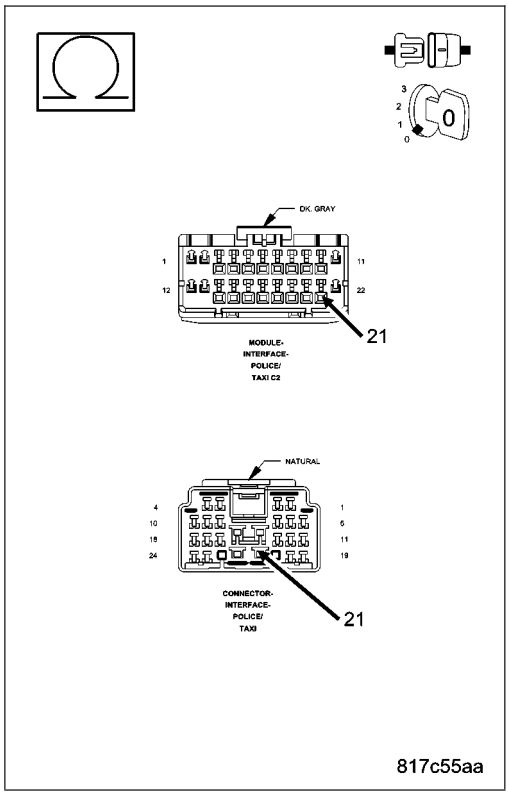

Is the resistance below 5.0 ohms?

Yes >> Inspect the wiring and connectors for damage or shorted circuits. If ok, replace the Front Control Module in accordance with the service information.
Perform BODY VERIFICATION TEST – VER 1. (Refer to BODY VERIFICATION TEST – VER 1).

No >> Repair the (W528) Multi-Purpose Module (Police And Taxi Interface Module-PTIM) CAN B Bus (-) circuit for an open.
Perform BODY VERIFICATION TEST – VER 1. (Refer to BODY VERIFICATION TEST – VER 1).

U0025 CAN B BUS (-) CIRCUIT LOW

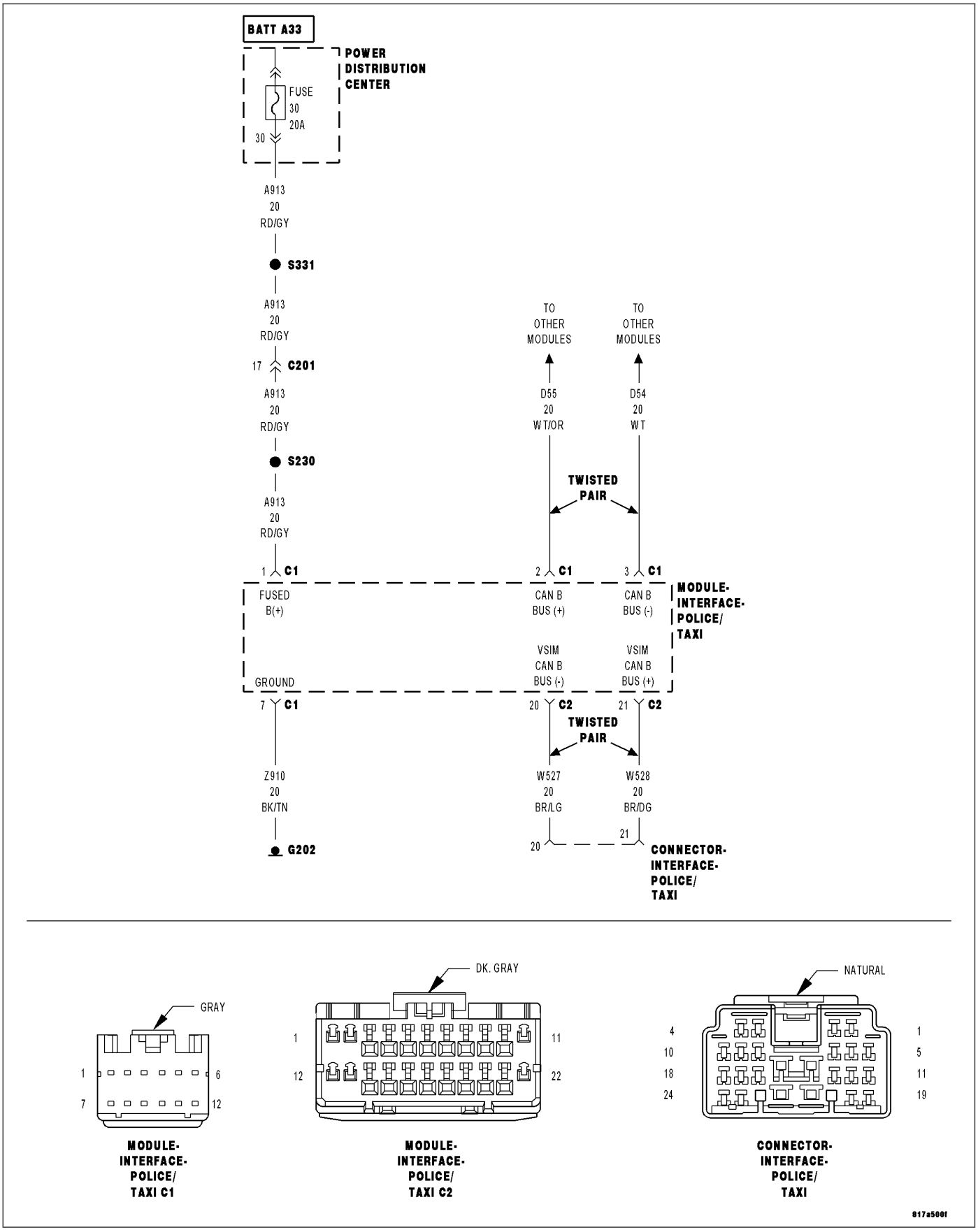

For a complete wiring diagram **Refer to Section 8W**.

- **When Monitored:**
  With the ignition switch on.
- **Set Condition:**
  The Multi-Purpose Module (Police And Taxi Interface Module-PTIM) has detected the (W527) VSIM CAN B Bus (-) circuit is below a calibrated value.

Possible Causes
(W527) VSIM CAN B BUS (-) CIRCUIT SHORTED TO GROUND
MULTI-PURPOSE MODULE (POLICE AND TAXI INTERFACE MODULE-PTIM)

Diagnostic Test

1. CHECK FOR ACTIVE DTC

With the scan tool, read the active DTCs.

Erase the DTCs.

Turn the ignition off, wait 10 seconds, then turn the ignition on.

With the scan tool, read the active DTC's.

Does the scan tool display this DTC as active?

Yes >> Go To 2.

No >> If the DTC is stored, check for an intermittent condition. Visually inspect the related wiring harness connectors. Look for broken, bent, pushed out, or corroded terminals, and repair any obvious problems.
Perform BODY VERIFICATION TEST – VER 1. (Refer to BODY VERIFICATION TEST – VER 1).

2. CHECK (W527) VSIM CAN B BUS (-) CIRCUIT FOR A SHORT TO GROUND

Turn the ignition off.

Disconnect the Multi-Purpose Module (Police And Taxi Interface Module-PTIM) C2 harness connector.

Disconnect the Multi-Purpose Module (Police And Taxi Interface Module-PTIM) 24 way harness connector (aftermarket light/siren controller side).

Disconnect the scan tool from the DLC.

Measure the resistance between ground and the (W527) VSIM CAN B Bus (-) circuit.

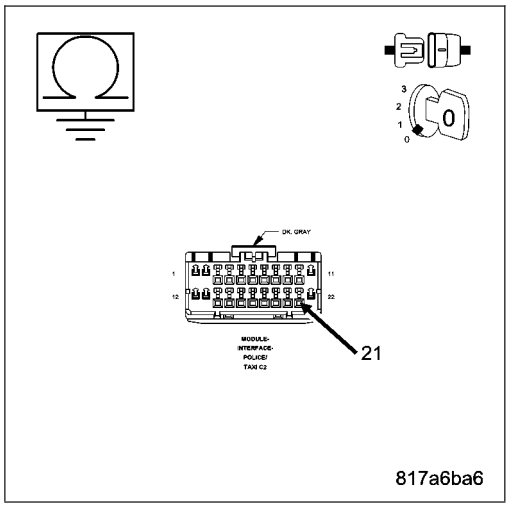

Is the resistance below 5.0 ohms?

Yes >> Repair the (W527) VSIM CAN B Bus (+) circuit for a short to ground.
Perform BODY VERIFICATION TEST – VER 1. (Refer to BODY VERIFICATION TEST – VER 1).

No >> Inspect the wiring and connectors for damage or shorted circuits. If ok, replace the Multi-Purpose Module (Police And Taxi Interface Module-PTIM) in accordance with the service information.
Perform BODY VERIFICATION TEST – VER 1. (Refer to BODY VERIFICATION TEST – VER 1).

U0026 — CAN B BUS (-) CIRCUIT HIGH

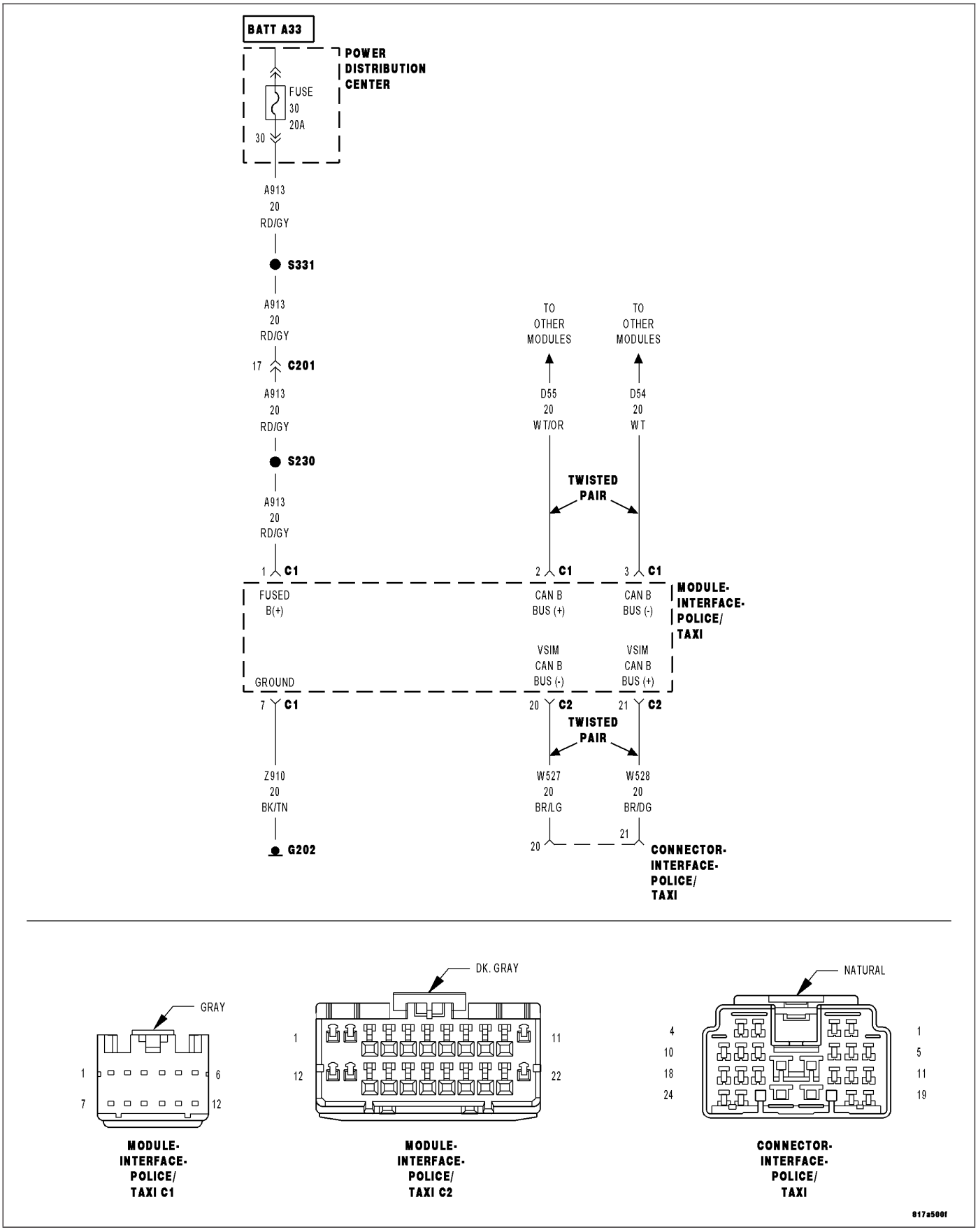

For a complete wiring diagram **Refer to Section 8W**.

- **When Monitored:**
  With the ignition switch on.
- **Set Condition:**
  The Multi-Purpose Module (Police And Taxi Interface Module-PTIM) has detected the (W527) VSIM CAN B Bus (-) circuit is above a calibrated value.

Possible Causes
(W528) VSIM CAN B BUS (+) CIRCUIT SHORTED TO VOLTAGE
(W527) VSIM CAN B BUS (-) CIRCUIT SHORTED TO VOLTAGE
MULTI-PURPOSE MODULE (POLICE AND TAXI INTERFACE MODULE-PTIM)

Diagnostic Test

1. CHECK FOR ACTIVE DTC

With the scan tool, read the active DTCs.

Erase the DTCs.

Turn the ignition off, wait 10 seconds, then turn the ignition on.

With the scan tool, read the active DTC's.

Does the scan tool display this DTC as active?

Yes >> Go To 2.

No >> If the DTC is stored, check for an intermittent condition. Visually inspect the related wiring harness connectors. Look for broken, bent, pushed out, or corroded terminals, and repair any obvious problems.
Perform BODY VERIFICATION TEST – VER 1. (Refer to BODY VERIFICATION TEST – VER 1).

2. VSIM CAN B BUS CIRCUITS SHORTED TO VOLTAGE

Turn the ignition off.

Disconnect the Multi-Purpose Module (Police And Taxi Interface Module-PTIM) C2 harness connector.

Disconnect the scan tool from the DLC.

Turn the ignition on.

Measure the voltage of the VSIM CAN B Bus circuits.

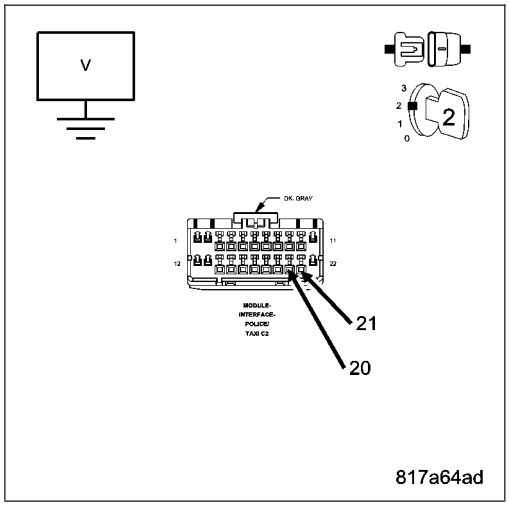

Is the voltage above 6.0 volts for either circuit?

Yes >> Repair the VSIM CAN B Bus circuit(s) for a short to voltage.
Perform BODY VERIFICATION TEST – VER 1. (Refer to BODY VERIFICATION TEST – VER 1).

No >> Inspect the wiring and connectors for damage or shorted circuits. If ok, replace the Multi-Purpose Module (Police And Taxi Interface Module-PTIM) in accordance with the service information.
Perform BODY VERIFICATION TEST – VER 1. (Refer to BODY VERIFICATION TEST – VER 1).

U0141 — LOST COMMUNICATION WITH IPM (FCM/TIPM)

For a complete wiring diagram **Refer to Section 8W**.

(Refer to 8 - ELECTRICAL/ELECTRONIC CONTROL MODULES - DIAGNOSIS AND TESTING) for the diagnostic test procedure.

U0151 — LOST COMMUNICATION WITH OCCUPANT RESTRAINT CONTROLLER (ORC)

For a complete wiring diagram **Refer to Section 8W**.

(Refer to 8 - ELECTRICAL/ELECTRONIC CONTROL MODULES - DIAGNOSIS AND TESTING) for the diagnostic test procedure.

U0156 — LOST COMMUNICATION WITH ELECTRONIC OVERHEAD MODULE

For a complete wiring diagram **Refer to Section 8W**.

(Refer to 8 - ELECTRICAL/ELECTRONIC CONTROL MODULES - DIAGNOSIS AND TESTING) for the diagnostic test procedure.

U0159-LOST COMMUNICATION WITH PARK ASSIST CONTROL MODULE

For a complete wiring diagram **Refer to Section 8W**.

(Refer to 8 - ELECTRICAL/ELECTRONIC CONTROL MODULES - DIAGNOSIS AND TESTING) for the diagnostic test procedure.

U0164-LOST COMMUNICATION WITH HVAC CONTROL MODULE

For a complete wiring diagram **Refer to Section 8W**.

(Refer to 8 - ELECTRICAL/ELECTRONIC CONTROL MODULES - DIAGNOSIS AND TESTING) for the diagnostic test procedure.

U0167-LOST COMMUNICATION WITH INTRUSION TRANSCEIVER CONTROL MODULE

For a complete wiring diagram **Refer to Section 8W**.

(Refer to 8 - ELECTRICAL/ELECTRONIC CONTROL MODULES - DIAGNOSIS AND TESTING) for the diagnostic test procedure.

U0168-LOST COMMUNICATION WITH VEHICLE SECURITY CONTROL MODULE (SKREEM/WCM)

For a complete wiring diagram **Refer to Section 8W**.

(Refer to 8 - ELECTRICAL/ELECTRONIC CONTROL MODULES - DIAGNOSIS AND TESTING) for the diagnostic test procedure.

U0184-LOST COMMUNICATION WITH RADIO

For a complete wiring diagram **Refer to Section 8W**.

(Refer to 8 - ELECTRICAL/ELECTRONIC CONTROL MODULES - DIAGNOSIS AND TESTING) for the diagnostic test procedure.

U0195-LOST COMMUNICATION WITH SDARS

For a complete wiring diagram **Refer to Section 8W**.

(Refer to 8 - ELECTRICAL/ELECTRONIC CONTROL MODULES - DIAGNOSIS AND TESTING) for the diagnostic test procedure.

U0197-LOST COMMUNICATION WITH HANDS FREE PHONE MODULE

For a complete wiring diagram **Refer to Section 8W**.

(Refer to 8 - ELECTRICAL/ELECTRONIC CONTROL MODULES - DIAGNOSIS AND TESTING) for the diagnostic test procedure.

U0208-LOST COMMUNICATION WITH HEATED SEAT CONTROL MODULE

For a complete wiring diagram **Refer to Section 8W**.

(Refer to 8 - ELECTRICAL/ELECTRONIC CONTROL MODULES - DIAGNOSIS AND TESTING) for the diagnostic test procedure.

U0209-LOST COMMUNICATION WITH MEMORY SEAT CONTROL MODULE

For a complete wiring diagram **Refer to Section 8W**.

(Refer to 8 - ELECTRICAL/ELECTRONIC CONTROL MODULES - DIAGNOSIS AND TESTING) for the diagnostic test procedure.

U0212-LOST COMMUNICATION WITH STEERING COLUMN CONTROL MODULE

For a complete wiring diagram **Refer to Section 8W**.

(Refer to 8 - ELECTRICAL/ELECTRONIC CONTROL MODULES - DIAGNOSIS AND TESTING) for the diagnostic test procedure.

MESSAGE CENTER - SERVICE INFORMATION

TABLE OF CONTENTS

page

MODULE
DESCRIPTION 137
DIAGNOSIS AND TESTING
MODULE - POLICE/TAXI INTERFACE 137
REMOVAL 137
INSTALLATION 139

MODULE

DESCRIPTION

The Police/Taxi Interface Module (PTIM) (1) serves as an interface between the “aftermarket module” and various control modules of the vehicle. It is located in the instrument panel center stack (2) where the ash receiver is normally located on non-fleet equipped vehicles. Depending on the request from the “aftermarket module”, the PTIM retrieves information from the Front Control Module (FCM), Sentry Key Remote Entry Module (SKREEM)/Wireless Control Module (WCM), Occupant restraint controller (ORC), Cabin Compartment Node (CCN), and Steering Column Module (SCM) via the Controller Area Network (CAN)-B data bus and makes them available for specific applications that the “aftermarket module” may apply. This microprocessor based module shall be in “sleep mode” or “wake-up mode” based on the status of the CAN BUS. The PTIM is operational when battery power is supplied independent of the ignition switch power.

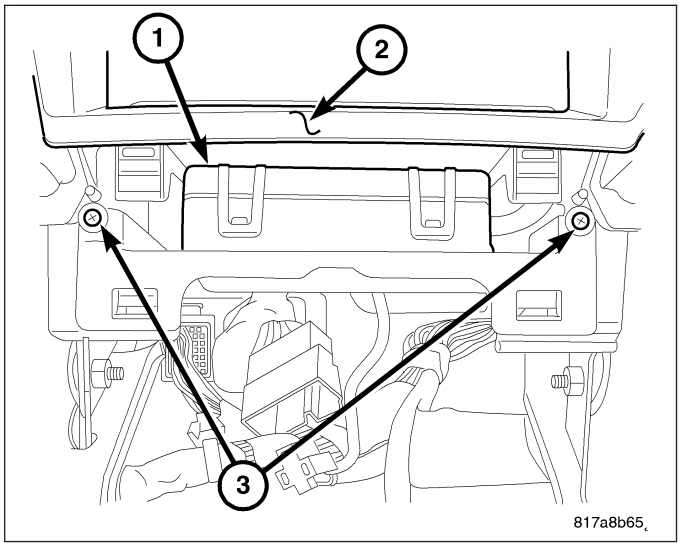

DIAGNOSIS AND TESTING

MODULE - POLICE/TAXI INTERFACE

Any diagnosis of the Police/Taxi Interface Module (PTIM) should begin with the use of a scan tool and the proper Diagnostic Procedures Information. The scan tool can provide confirmation that the Controller Area Network (CAN) Data Bus is functional and that all of the electronic modules are sending and receiving the proper messages on the CAN Data Bus.

For complete circuit diagrams, refer to the appropriate wiring information. The wiring information includes wiring diagrams, proper wire and connector repair procedures, details of wire harness routing and retention, connector pin-out information and location views for the various wire harness connectors, splices and grounds.

Refer to the appropriate diagnostic information.

REMOVAL

1. Disconnect the battery negative cable.
2. Using an appropriate flat bladed tool, remove the console cubby bin (1).
3. Remove the nuts (2) and screws (4) that secure the accessory mounting bracket (3). Remove the accessory mounting bracket (3) from the vehicle.

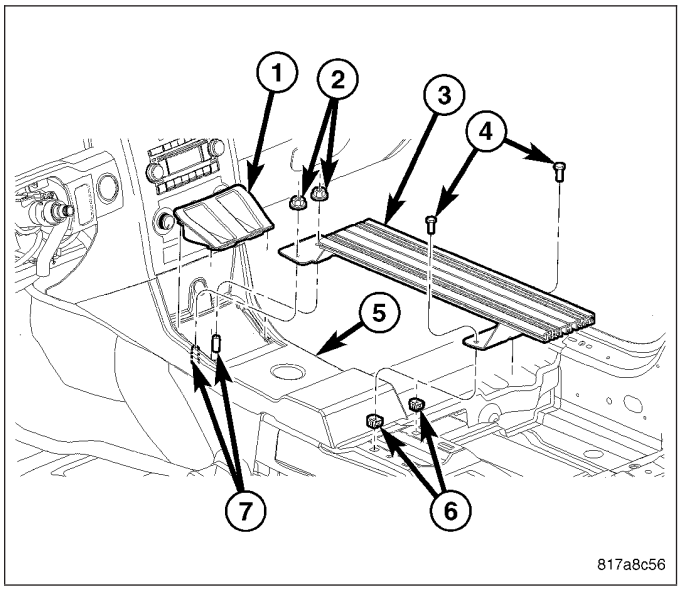

4. Remove the nut (2) securing the console (3) to the mounting stud (5).
5. Lift the console (3) off the mounting stud (5) and pull rearward to release the console mounting clips from the instrument panel (1).
6. Disconnect the power outlet (4) electrical connector (6) and remove the console (3) from the vehicle.

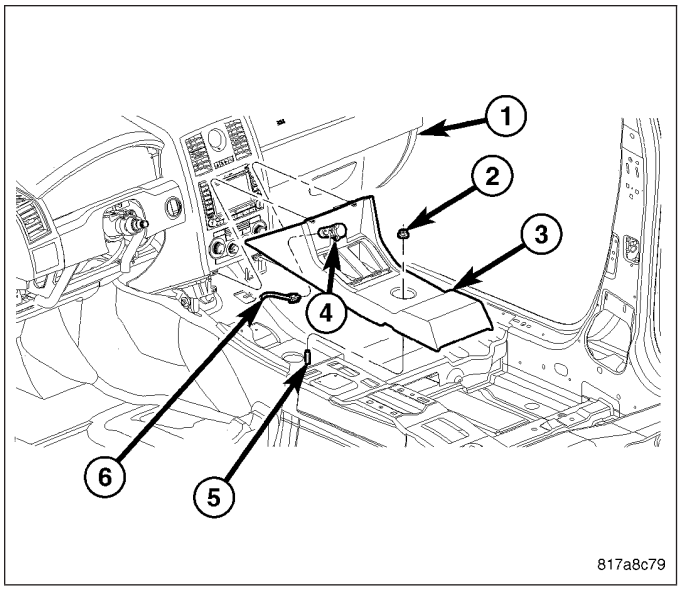

7. Remove the Police/Taxi Interface Module (PTIM) retaining screws (3).
8. Pull the PTIM (1) rearward to release the PTIM mounting bracket from the instrument panel center stack (2).

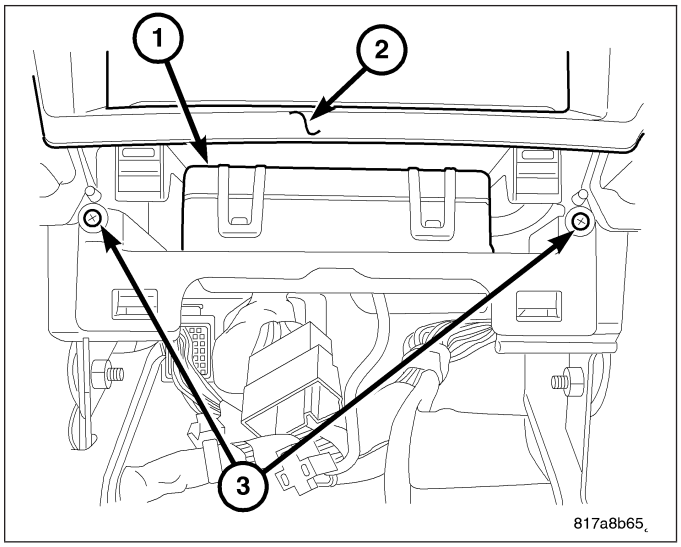

9. Disconnect the electrical connectors (2) from the PTIM (3) and remove it from the vehicle.

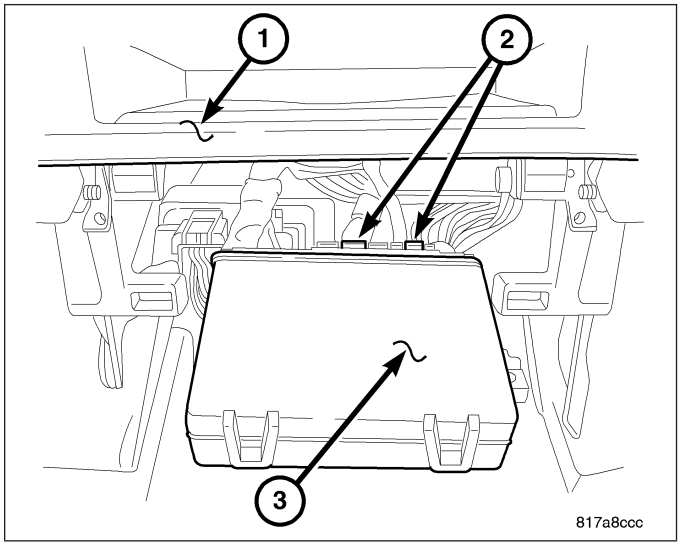

10. Remove the PTIM (1) from the mounting bracket (5) by releasing the retaining clip (4) and rotating the PTIM upward releasing the locating tab (2) from the bracket.

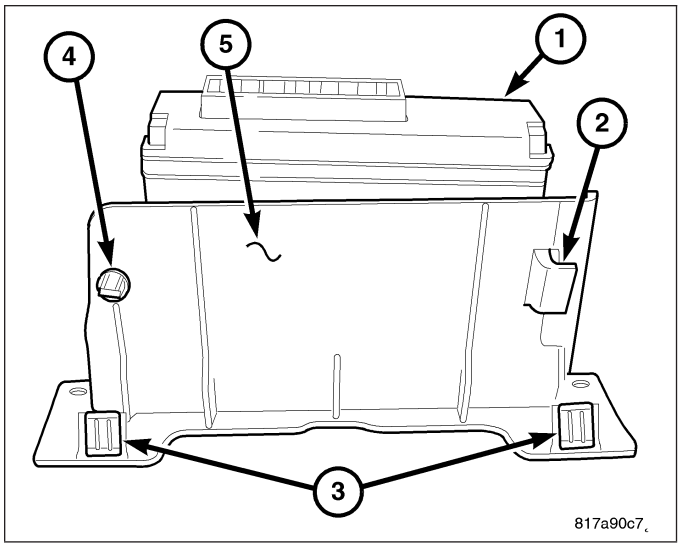

INSTALLATION

1. Install the Police/Taxi Interface Module (PTIM) (1) onto the mounting bracket (5) by inserting the locating tab (2) and rotating the PTIM downward until the retaining clip (4) is securely snapped into place.

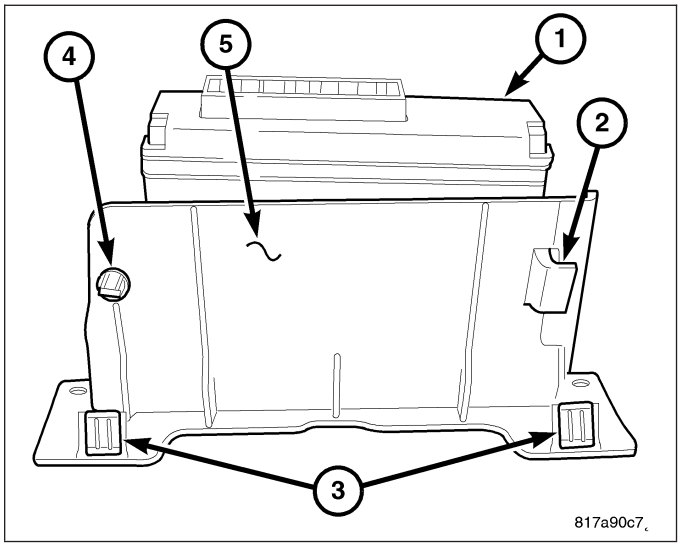

2. Position the PTIM (3) into the vehicle and connect the electrical connectors (2).

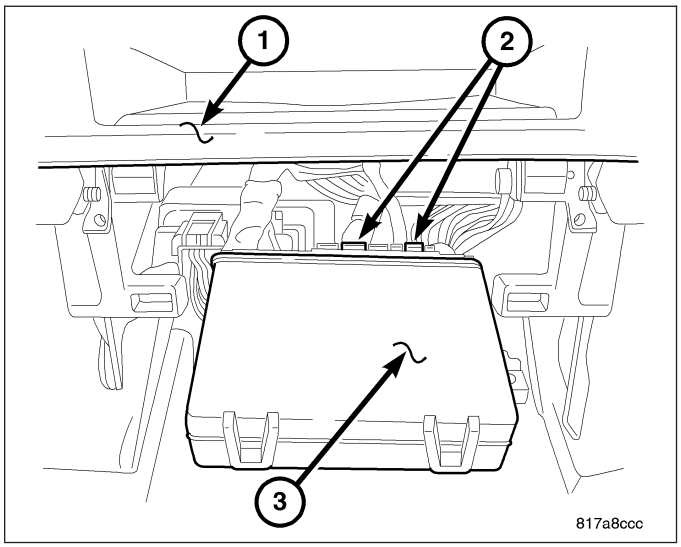

3. Push the PTIM (1) forward to insert the PTIM mounting bracket clips into the instrument panel center stack (2).
4. Install the retaining screws (3).

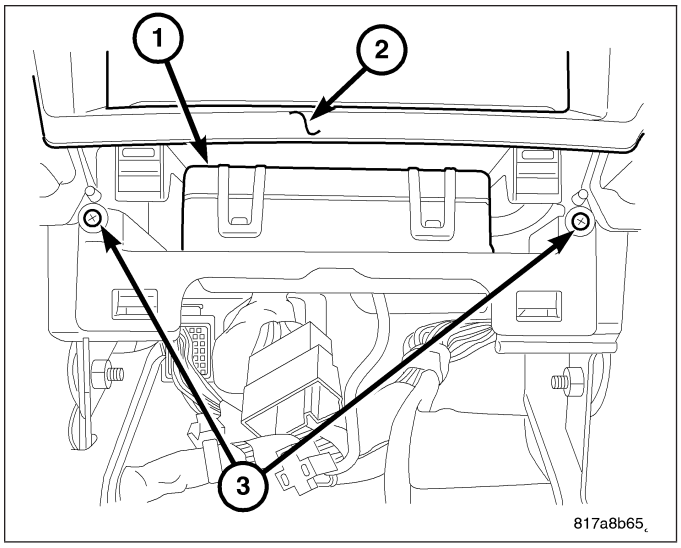

5. Position the console into the vehicle.
6. Connect the power outlet (4) electrical connector (6)
7. Push forward to insert the console mounting clips into the instrument panel (1). Lower the console (3) onto the mounting stud (5) and install the retaining nut (2).

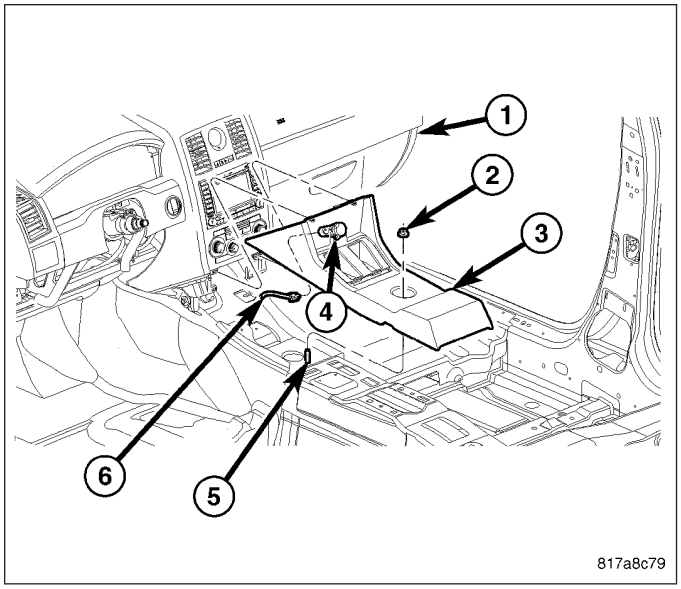

8. Position the accessory mounting bracket (3) into the vehicle and onto the mounting studs (7).
9. Install the nuts (2) and screws (4) that secure the accessory mounting bracket (3).
10. Install the console cubby bin (1).
11. Connect the battery negative cable.

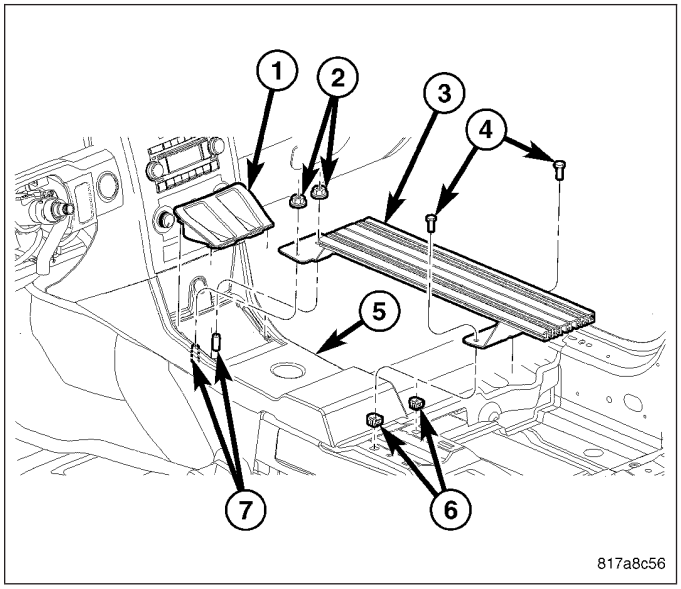

OVERHEAD CONSOLE - ELECTRICAL DIAGNOSTICS

TABLE OF CONTENTS

page

OVERHEAD CONSOLE - ELECTRICAL DIAGNOSTICS
DIAGNOSIS AND TESTING
B1A32-UNIVERSAL GARAGE DOOR SWITCH 1 STUCK 143
B1A33-UNIVERSAL GARAGE DOOR SWITCH 2 STUCK 144
B1A34-UNIVERSAL GARAGE DOOR SWITCH 3 STUCK 145
B2217 - EVIC/EOM/CMTC INTERNAL 146
B222D - ECU UNABLE TO CONFIGURE / CONFIGURATION NOT LEARNED. 147
B2331–VEHICLE NEEDS DEGAUSSED 148
U0019–CAN B BUS 149
U0141–LOST COMMUNICATION WITH FRONT CONTROL MODULE. 152
U0151-LOST COMMUNICATION WITH OCCUPANT RESTRAINT CONTROLLER 152
U0154-LOST COMMUNICATION WITH OCCUPANT CLASSIFICATION MODULE 152
U0155-LOST COMMUNICATION WITH CLUSTER/CCN 152
U0159-LOST COMMUNICATION WITH PARKING ASSIST CONTROL MODULE 152
U0164-LOST COMMUNICATION WITH HVAC CONTROL MODULE 152
U0167-LOST COMMUNICATION WITH INTRUSION TRANSCEIVER CONTROL MODULE. 152
U0168-LOST COMMUNICATION WITH VEHICLE SECURITY CONTROL MODULE (SKREEM/WCM) 152

page

U0169-LOST COMMUNICATION WITH SUNROOF CONTROL MODULE. 152
U0184-LOST COMMUNICATION WITH RADIO 153
U0186-LOST COMMUNICATION WITH AUDIO AMPLIFIER. 153
U0195-LOST COMMUNICATION WITH SDARS 153
U0196-LOST COMMUNICATION WITH VEHICLE ENTERTAINMENT CONTROL MODULE. 153
U0197-LOST COMMUNICATION WITH HANDS FREE PHONE MODULE 153
U0199-LOST COMMUNICATION WITH DRIVER DOOR MODULE. 153
U0200-LOST COMMUNICATION WITH PASSENGER DOOR MODULE 153
U0208-LOST COMMUNICATION WITH HEATED SEAT CONTROL MODULE 153
U0209-LOST COMMUNICATION WITH MEMORY SEAT CONTROL MODULE 154
U0212-LOST COMMUNICATION WITH SCCM-CAN-B 154
U0231-LOST COMMUNICATION WITH RAIN SENSING MODULE 154
U0241-LOST COMMUNICATION WITH AUTO HIGHBEAM HEADLAMP CONTROL MODULE. 154

OVERHEAD CONSOLE - ELECTRICAL DIAGNOSTICS

DIAGNOSIS AND TESTING

B1A32-UNIVERSAL GARAGE DOOR SWITCH 1 STUCK

For a complete wiring diagram **Refer to Section 8W**.

- **When Monitored:**
  With the ignition on.
- **Set Condition:**
  The Electronic Overhead Module detects the UGDO switch in the closed position for more than 2 minutes.

Possible Causes
ELECTRONIC OVERHEAD MODULE

Diagnostic Test

1. REPLACE THE ELECTRONIC OVERHEAD MODULE

When this code is set, the Electronic Overhead Module must be replaced.

Repair

Replace the Electronic Overhead Module in accordance with the Service Information.
Perform BODY VERIFICATION TEST - VER 1. (Refer to BODY VERIFICATION TEST - VER 1).

B1A33-UNIVERSAL GARAGE DOOR SWITCH 2 STUCK

For a complete wiring diagram **Refer to Section 8W**.

- **When Monitored:**
  With the ignition on.
- **Set Condition:**
  The Electronic Overhead Module detects the UGDO switch in the closed position for more than 2 minutes.

Possible Causes
ELECTRONIC OVERHEAD MODULE

Diagnostic Test

1. REPLACE THE ELECTRONIC OVERHEAD MODULE

When this code is set, the Electronic Overhead Module must be replaced.

Repair

Replace the Electronic Overhead Module in accordance with the Service Information.
Perform BODY VERIFICATION TEST - VER 1. (Refer to BODY VERIFICATION TEST - VER 1).

B1A34-UNIVERSAL GARAGE DOOR SWITCH 3 STUCK

For a complete wiring diagram **Refer to Section 8W**.

- **When Monitored:**
  With the ignition on.
- **Set Condition:**
  The Electronic Overhead Module detects the UGDO switch in the closed position for more than 2 minutes.

Possible Causes
ELECTRONIC OVERHEAD MODULE

Diagnostic Test

1. REPLACE THE ELECTRONIC OVERHEAD MODULE

When this code is set, the Electronic Overhead Module must be replaced.

Repair

Replace the Electronic Overhead Module in accordance with the Service Information.
Perform BODY VERIFICATION TEST - VER 1. (Refer to BODY VERIFICATION TEST - VER 1).

B2217 - EVIC/EOM/CMTC INTERNAL

For a complete wiring diagram **Refer to Section 8W**.

- **When Monitored:**
  With the ignition on, internal self test routine running.
- **Set Condition:**
  The Electronic Overhead Module fails one of seven internal tests.

Possible Causes
ELECTRONIC OVERHEAD MODULE

Diagnostic Test

1. VERIFY OPERATION OF THE ELECTRONIC OVERHEAD MODULE

Turn the ignition on.
With the scan tool, erase Electronic Overhead Module DTCs.
With the scan tool, activate the Electronic Overhead Module self test.
Wait for self test to complete.
With the scan tool, read Electronic Overhead Module DTCs.

Does the scan tool display: B2217–EVIC/EOM/CMTC INTERNAL?

YES >> Replace the Electronic Overhead Module in accordance with the service information.
Perform BODY VERIFICATION TEST - VER 1. (Refer to BODY VERIFICATION TEST - VER 1).

NO >> Test complete.
Perform BODY VERIFICATION TEST - VER 1. (Refer to BODY VERIFICATION TEST - VER 1).

B222D - ECU UNABLE TO CONFIGURE / CONFIGURATION NOT LEARNED

For a complete wiring diagram **Refer to Section 8W**.

- **When Monitored:**
  With the ignition on.
- **Set Condition:**
  The Electronic Overhead Module does not receive the configuration information from the Front Control Module.

POSSIBLE CAUSES
NO COMMUNICATION WITH FRONT CONTROL MODULE
ACTIVE FCM DTCs

Diagnostic Test

1. CHECK FOR AN ACTIVE DTC

Turn the ignition on.

With the scan tool, record and erase any Electronic Overhead Module DTCs.

Turn the ignition off, wait 30 seconds then turn the ignition on.

With the scan tool, read DTCs.

Is the DTC active?

Yes >> Go To 2

No >> The condition that caused this code to set is not present at this time. Using the wiring diagram as a guide, inspect the wiring and connectors for an intermittent condition. Operate the system several times and recheck for active DTCs.

Perform BODY VERIFICATION TEST - VER 1. (Refer to BODY VERIFICATION TEST - VER 1).

2. CHECK COMMUNICATION TO THE FRONT CONTROL MODULE

With the scan tool, check to see if the Front Control Module is active on the bus.

Is the scan tool able to communicate with the Front Control Module?

Yes >> Replace the Electronic Overhead Module in accordance with the Service Information.

Perform BODY VERIFICATION TEST - VER 1. (Refer to BODY VERIFICATION TEST - VER 1).

No >> Refer to the symptom list for problems related to Communication. (Refer to 8 - ELECTRICAL/ELECTRONIC CONTROL MODULES - DIAGNOSIS AND TESTING)

Perform BODY VERIFICATION TEST - VER 1. (Refer to BODY VERIFICATION TEST - VER 1).

B2331–VEHICLE NEEDS DEGAUSSED

For a complete wiring diagram **Refer to Section 8W**.

- **When Monitored:**
  Vehicle speed greater than 10 mph.
- **Set Condition:**
  The magnetic field around the vehicle is greater than 2.4 guass.

Diagnostic Test

1. PERFORM THE VEHICLE DEMAGNITIZING PROCEDURE

NOTE: A blank compass display indicates that vehicle degaussing is required.

NOTE: After demagnitizing, the vehicle will enter Auto Fast-Cal when the ignition is turned on.

NOTE: Ensure that the correct compass variance is stored in the compass memory. See "Setting Compass Variance" in the Service Information.

View repair.

Repair

Refer to the Service Information and perform the Compass Demagnitizing Standard Procedure.
Perform BODY VERIFICATION TEST - VER 1. (Refer to BODY VERIFICATION TEST - VER 1).

U0019–CAN B BUS

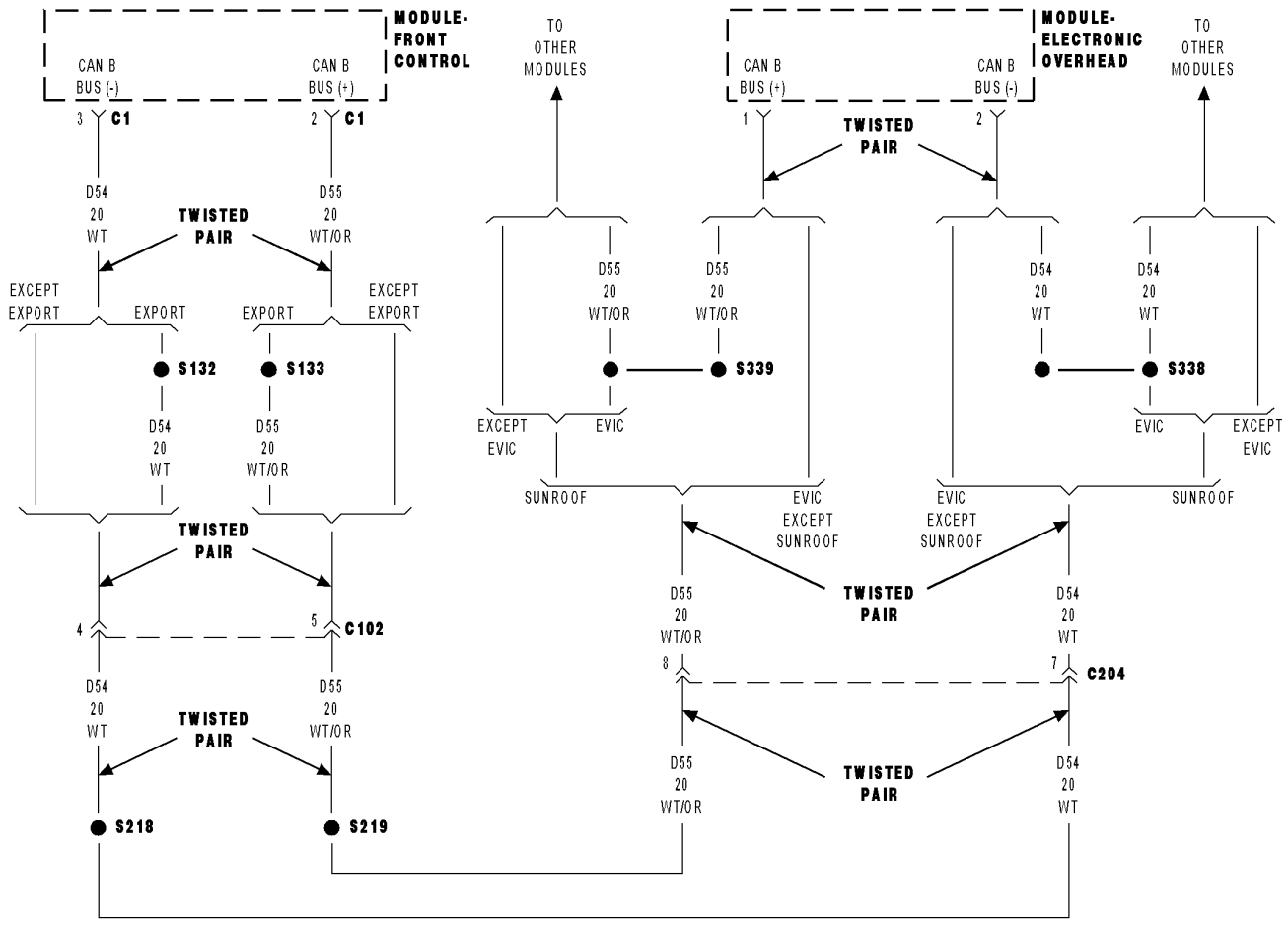

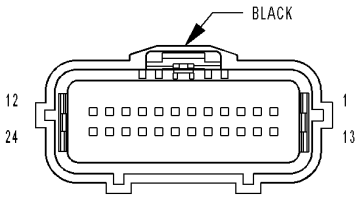

MODULE-
FRONT
CONTROL C1

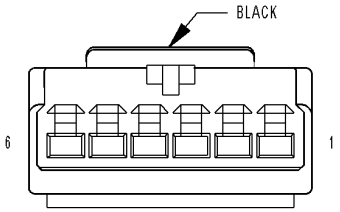

MODULE-
ELECTRONIC OVERHEAD

8131db6c

For a complete wiring diagram **Refer to Section 8W**.

- **When Monitored:**
  Continuously.
- **Set Condition:**
  If the Can B Bus (+) or B Bus (–) circuit is open, shorted to voltage, or shorted to ground.

Possible Causes
CAN B BUS DTCs IN FRONT CONTROL MODULE
(D55) CAN B BUS (+) CIRCUIT OPEN
(D54) CAN B BUS (–) CIRCUIT OPEN
ELECTRONIC OVERHEAD MODULE

Diagnostic Test

1. CHECK FOR ACTIVE DTC U0019–CAN B BUS

Turn the ignition on.

With the scan tool, record and erase any Electronic Overhead Module DTCs.

Turn the ignition off, wait 30 seconds then turn the ignition on.

With the scan tool, read DTCs.

Is DTC U0019–CAN B BUS active?

Yes >> Go To 2

No >> The condition that caused this code to set is not present at this time. Check for an intermittent condition by inspecting the related wiring harness for chafed, pierced, pinched, and partially broken wires. Also inspect the related connectors for broken, bent, pushed out, spread, corroded, or contaminated terminals.

Perform BODY VERIFICATION TEST - VER 1. (Refer to BODY VERIFICATION TEST - VER 1).

2. CHECK FOR ACTIVE CAN B BUS RELATED DTCS IN THE FRONT CONTROL MODULE

With the scan tool, read Front Control Module DTCs

Does the scan tool display any active CAN B BUS related DTCs?

Yes >> Diagnose and repair the DTC(s). (Refer to 8 - ELECTRICAL/ELECTRONIC CONTROL MODULES - DIAGNOSIS AND TESTING)

No >> Go to 3

3. CHECK (D55) CAN B BUS (+) CIRCUIT FOR AN OPEN

Turn the ignition off.

Disconnect the negative battery cable.

Disconnect the Electronic Overhead Module harness connector.

Disconnect the Front Control Module C1 harness connector.

Measure the resistance of the (D55) Can B Bus (+) circuit between the Front Control Module C1 harness connector and the Electronic Overhead Module harness connector.

Is the resistance below 2.0 ohms?

Yes >> Go To 4

No >> Repair the Can B Bus (+) circuit for an open.
Perform BODY VERIFICATION TEST - VER 1. (Refer to BODY VERIFICATION TEST - VER 1).

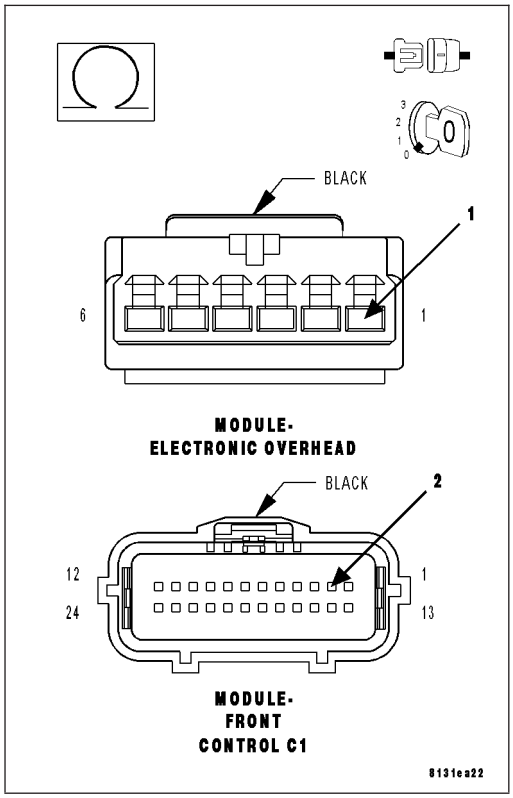

4. CHECK THE (D54) CAN B BUS (–) CIRCUIT FOR AN OPEN

Measure the resistance of the (D54) Can B Bus (–) circuit between the Front Control Module C1 harness connector and the Electronic Overhead Module harness connector.

Is the resistance below 2.0 ohms?

Yes >> Replace the Electronic Overhead Module in accordance with the service information.
Perform BODY VERIFICATION TEST - VER 1. (Refer to BODY VERIFICATION TEST - VER 1).

No >> Repair the Can B Bus (–) circuit for an open.
Perform BODY VERIFICATION TEST - VER 1. (Refer to BODY VERIFICATION TEST - VER 1).

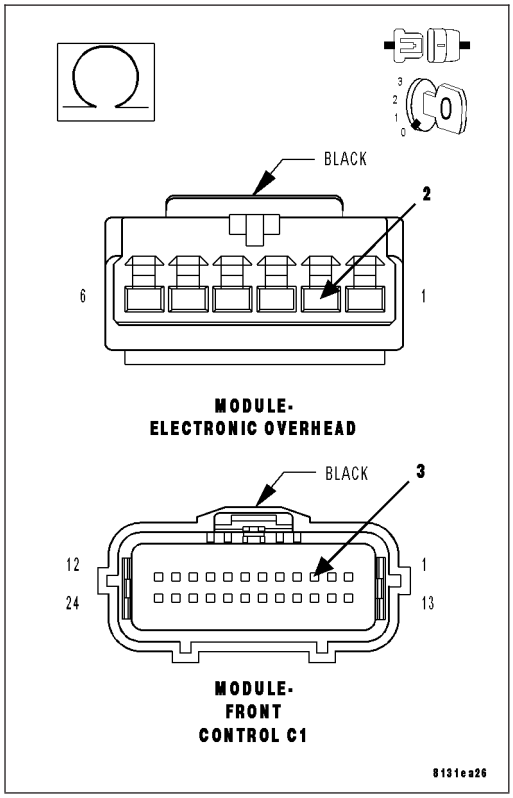

U0141–LOST COMMUNICATION WITH FRONT CONTROL MODULE

For a complete wiring diagram **Refer to Section 8W**.

(Refer to 8 - ELECTRICAL/ELECTRONIC CONTROL MODULES - DIAGNOSIS AND TESTING) for the diagnostic test procedure.

U0151-LOST COMMUNICATION WITH OCCUPANT RESTRAINT CONTROLLER

For a complete wiring diagram **Refer to Section 8W**.

(Refer to 8 - ELECTRICAL/ELECTRONIC CONTROL MODULES - DIAGNOSIS AND TESTING) for the diagnostic test procedure.

U0154-LOST COMMUNICATION WITH OCCUPANT CLASSIFICATION MODULE

For a complete wiring diagram **Refer to Section 8W**.

(Refer to 8 - ELECTRICAL/ELECTRONIC CONTROL MODULES - DIAGNOSIS AND TESTING) for the diagnostic test procedure.

U0155-LOST COMMUNICATION WITH CLUSTER/CCN

For a complete wiring diagram **Refer to Section 8W**.

(Refer to 8 - ELECTRICAL/ELECTRONIC CONTROL MODULES - DIAGNOSIS AND TESTING) for the diagnostic test procedure.

U0159-LOST COMMUNICATION WITH PARKING ASSIST CONTROL MODULE

For a complete wiring diagram **Refer to Section 8W**.

(Refer to 8 - ELECTRICAL/ELECTRONIC CONTROL MODULES - DIAGNOSIS AND TESTING) for the diagnostic test procedure.

U0164-LOST COMMUNICATION WITH HVAC CONTROL MODULE

For a complete wiring diagram **Refer to Section 8W**.

(Refer to 8 - ELECTRICAL/ELECTRONIC CONTROL MODULES - DIAGNOSIS AND TESTING) for the diagnostic test procedure.

U0167-LOST COMMUNICATION WITH INTRUSION TRANSCEIVER CONTROL MODULE

For a complete wiring diagram **Refer to Section 8W**.

(Refer to 8 - ELECTRICAL/ELECTRONIC CONTROL MODULES - DIAGNOSIS AND TESTING) for the diagnostic test procedure.

U0168-LOST COMMUNICATION WITH VEHICLE SECURITY CONTROL MODULE (SKREEM/WCM)

For a complete wiring diagram **Refer to Section 8W**.

(Refer to 8 - ELECTRICAL/ELECTRONIC CONTROL MODULES - DIAGNOSIS AND TESTING) for the diagnostic test procedure.

U0169-LOST COMMUNICATION WITH SUNROOF CONTROL MODULE

For a complete wiring diagram **Refer to Section 8W**.

(Refer to 8 - ELECTRICAL/ELECTRONIC CONTROL MODULES - DIAGNOSIS AND TESTING) for the diagnostic test procedure.

U0184-LOST COMMUNICATION WITH RADIO

For a complete wiring diagram **Refer to Section 8W**.

(Refer to 8 - ELECTRICAL/ELECTRONIC CONTROL MODULES - DIAGNOSIS AND TESTING) for the diagnostic test procedure.

U0186-LOST COMMUNICATION WITH AUDIO AMPLIFIER

For a complete wiring diagram **Refer to Section 8W**.

(Refer to 8 - ELECTRICAL/ELECTRONIC CONTROL MODULES - DIAGNOSIS AND TESTING) for the diagnostic test procedure.

U0195-LOST COMMUNICATION WITH SDARS

For a complete wiring diagram **Refer to Section 8W**.

(Refer to 8 - ELECTRICAL/ELECTRONIC CONTROL MODULES - DIAGNOSIS AND TESTING) for the diagnostic test procedure.

U0196-LOST COMMUNICATION WITH VEHICLE ENTERTAINMENT CONTROL MODULE

For a complete wiring diagram **Refer to Section 8W**.

(Refer to 8 - ELECTRICAL/ELECTRONIC CONTROL MODULES - DIAGNOSIS AND TESTING) for the diagnostic test procedure.

U0197-LOST COMMUNICATION WITH HANDS FREE PHONE MODULE

For a complete wiring diagram **Refer to Section 8W**.

(Refer to 8 - ELECTRICAL/ELECTRONIC CONTROL MODULES - DIAGNOSIS AND TESTING) for the diagnostic test procedure.

U0199-LOST COMMUNICATION WITH DRIVER DOOR MODULE

For a complete wiring diagram **Refer to Section 8W**.

(Refer to 8 - ELECTRICAL/ELECTRONIC CONTROL MODULES - DIAGNOSIS AND TESTING) for the diagnostic test procedure.

U0200-LOST COMMUNICATION WITH PASSENGER DOOR MODULE

For a complete wiring diagram **Refer to Section 8W**.

(Refer to 8 - ELECTRICAL/ELECTRONIC CONTROL MODULES - DIAGNOSIS AND TESTING) for the diagnostic test procedure.

U0208-LOST COMMUNICATION WITH HEATED SEAT CONTROL MODULE

For a complete wiring diagram **Refer to Section 8W**.

(Refer to 8 - ELECTRICAL/ELECTRONIC CONTROL MODULES - DIAGNOSIS AND TESTING) for the diagnostic test procedure.

U0209-LOST COMMUNICATION WITH MEMORY SEAT CONTROL MODULE

For a complete wiring diagram **Refer to Section 8W**.

(Refer to 8 - ELECTRICAL/ELECTRONIC CONTROL MODULES - DIAGNOSIS AND TESTING) for the diagnostic test procedure.

U0212-LOST COMMUNICATION WITH SCCM-CAN-B

For a complete wiring diagram **Refer to Section 8W**.

(Refer to 8 - ELECTRICAL/ELECTRONIC CONTROL MODULES - DIAGNOSIS AND TESTING) for the diagnostic test procedure.

U0231-LOST COMMUNICATION WITH RAIN SENSING MODULE

For a complete wiring diagram **Refer to Section 8W**.

(Refer to 8 - ELECTRICAL/ELECTRONIC CONTROL MODULES - DIAGNOSIS AND TESTING) for the diagnostic test procedure.

U0241-LOST COMMUNICATION WITH AUTO HIGHBEAM HEADLAMP CONTROL MODULE

For a complete wiring diagram **Refer to Section 8W**.

(Refer to 8 - ELECTRICAL/ELECTRONIC CONTROL MODULES - DIAGNOSIS AND TESTING) for the diagnostic test procedure.

OVERHEAD CONSOLE - SERVICE INFORMATION

TABLE OF CONTENTS

page

OVERHEAD CONSOLE - SERVICE INFORMATION
DESCRIPTION 156
REMOVAL 156
INSTALLATION 157
ELECTRONIC VEHICLE INFORMATION CENTER
DESCRIPTION 158
OPERATION 158
DIAGNOSIS AND TESTING
ELECTRONIC VEHICLE INFORMATION CENTER 161
STANDARD PROCEDURE
COMPASS CALIBRATION 161
COMPASS DEMAGNETIZING 163
COMPASS VARIATION ADJUSTMENT 163
UNIVERSAL TRANSMITTER
DESCRIPTION 166

page

DIAGNOSIS AND TESTING
UNIVERSAL TRANSMITTER 166
STANDARD PROCEDURE
PROGRAMMING TRANSMITER CODES 167
ERASING TRANSMITTER CODES 168
REPROGAMMING TRANSMITTER CODES . . . 168
REMOVAL 169
INSTALLATION 169
SENSOR-AMBIENT AIR TEMPERATURE
DESCRIPTION 170
OPERATION 170
DIAGNOSIS AND TESTING
AMBIENT TEMPERATURE SENSOR 170
REMOVAL 171
INSTALLATION 172

OVERHEAD CONSOLE - SERVICE INFORMATION

DESCRIPTION

An overhead console is standard on this vehicle and includes the following components:

- Overhead storage compartment (1)
- Front map/reading lamps (2)
- Power sunroof switch (3) - if equipped
- Universal transmitter (4)
- Electronic Overhead Module

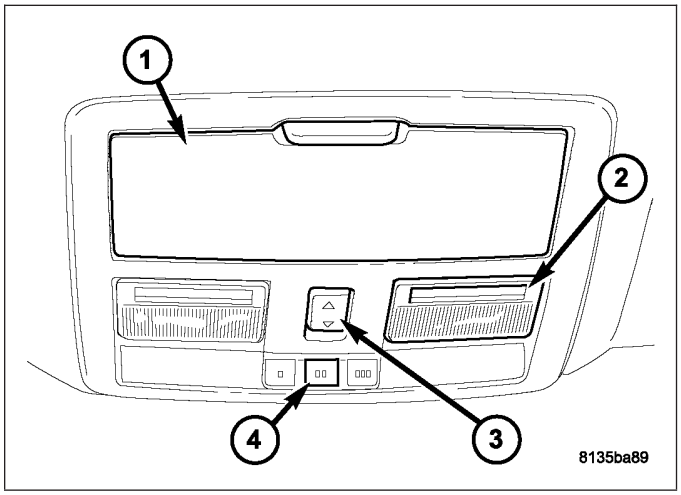

The overhead console assembly is mounted by three snap clips (1) securing it to a molded plastic retainer bracket located above the headliner. The Electronic Overhead Module is secured to the overhead console with screws (2).

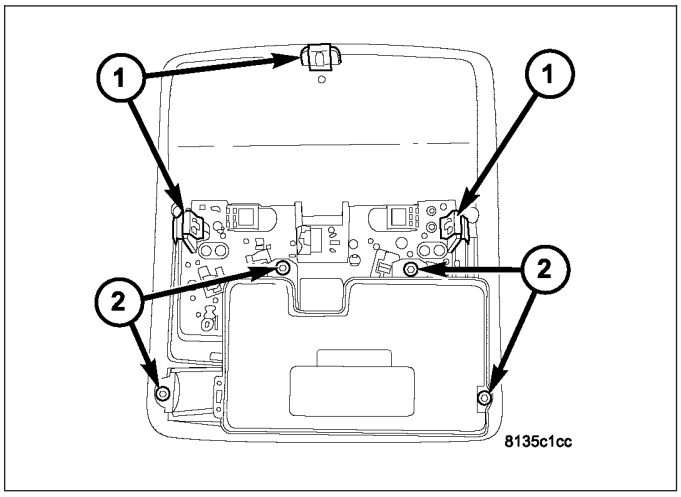

REMOVAL

1. Disconnect and isolate the battery negative cable.
2. Pull downward on the sides of the overhead console housing firmly and evenly to disengage the snap clips from the overhead console bracket.

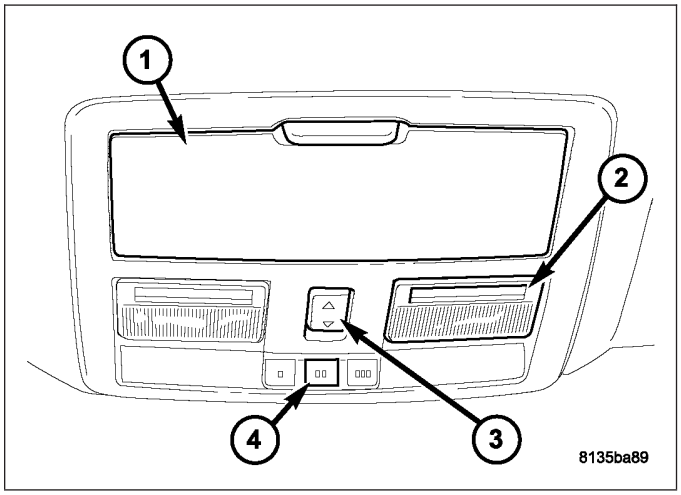

3. Lower the overhead console from the headliner far enough to access the wire harness connectors (2).
4. Disconnect the roof wire harness connectors (2) from the overhead console wire harness connector.
5. Remove the overhead console from the headliner.

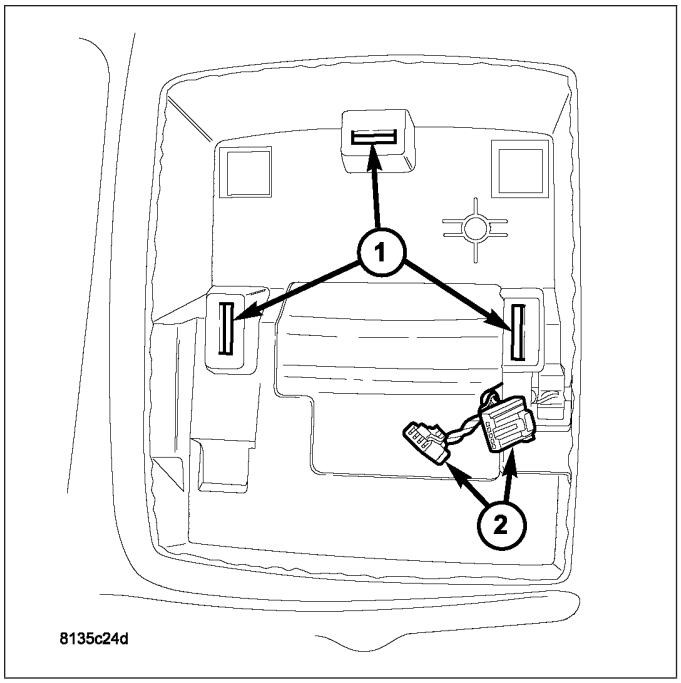

INSTALLATION

1. Position the overhead console near the mounting location on the headliner.
2. Reconnect the roof wire harness connectors (2) to the overhead console.
3. Align the snap clips on the overhead console housing with their receptacles (1) in the overhead console bracket.
4. Push upward firmly and evenly on the sides of the overhead console housing over the snap clip locations until the snap clip is fully engaged with its receptacle in the overhead console bracket.
5. Reconnect the battery negative cable.

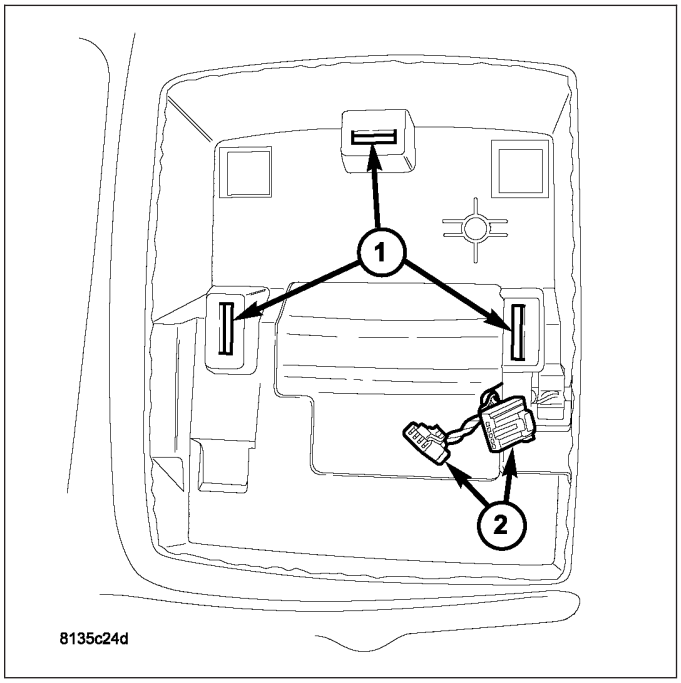

ELECTRONIC VEHICLE INFORMATION CENTER

DESCRIPTION

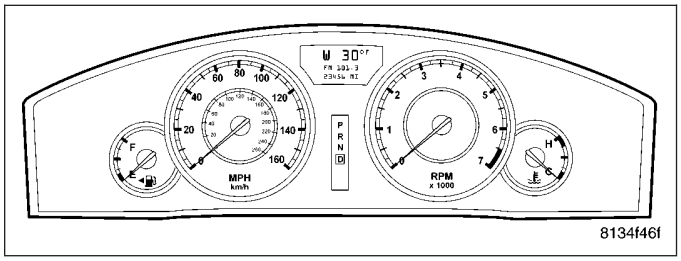

The Electronic Vehicle Information Center (EVIC) features a driver-interactive display. The display is located in the upper part of the instrument cluster between the speedometer and tachometer. This system conveniently allows the driver to select a variety of useful information by pressing the switches mounted on the steering wheel. The EVIC displays information related to the following:

- System Status
- Vehicle information warning message displays
- Tire Pressure Monitor System — If Equipped
- Personal Settings (customer programmable features)
- Compass display
- Outside temperature display
- Trip computer functions
- UConnect™ hands-free communication system displays — If Equipped
- Navigation system screens — If Equipped
- Audio mode display

The EVIC system is comprised of several different components. Those components are:

- Instrument Cluster
- Steering Wheel Switches
- Ambient Temperature Sensor
- Electronic Overhead Module
- Controller Area Network (CAN) Data Bus
- Local Interface Network (LIN) Data Bus

The EVIC display is part of the Instrument Cluster assembly and is not serviced as a separate component. If the display is inoperative the complete Instrument Cluster assembly must be replaced, (Refer to 8 - ELECTRICAL/INSTRUMENT CLUSTER - REMOVAL). If the steering wheel switches are inoperative and require replacement, (Refer to 8 - ELECTRICAL/AUDIO/REMOTE SWITCHES - REMOVAL) for the appropriate procedure. If the compass position sensor (Electronic Overhead Module) is inoperative and requires replacement, (Refer to 8 - ELECTRICAL/OVERHEAD CONSOLE/UNIVERSAL TRANSMITTER - REMOVAL) for the appropriate procedure.

OPERATION

The Electronic Vehicle Information Center (EVIC) uses both non-switched and ignition switched sources of battery current so that some of its features remain operational at any time, while others may only operate with the ignition switch in the On position. When the ignition switch is turned to the On position, the EVIC display will return to the last function being displayed before the ignition was turned to the Off position.

The EVIC system is comprised of several different components that communicate over the Controller Area Network (CAN) and Local Interface Network (LIN) Data Buses. If the system is inoperative a scan tool and the appropriate diagnostic information must be used to diagnose the system.

The steering wheel switches are used to operate the different functions of the EVIC system. Pressing and releasing the MENU button (1) will change the mode displayed between Trip Functions, Navigation (If Equipped), System Status, Personal Settings, and Telephone (If Equipped). Pressing and releasing the C/T (compass/thermometer) button (3) will cause the EVIC to return to the compass/thermometer/trip computer display mode from any other mode.

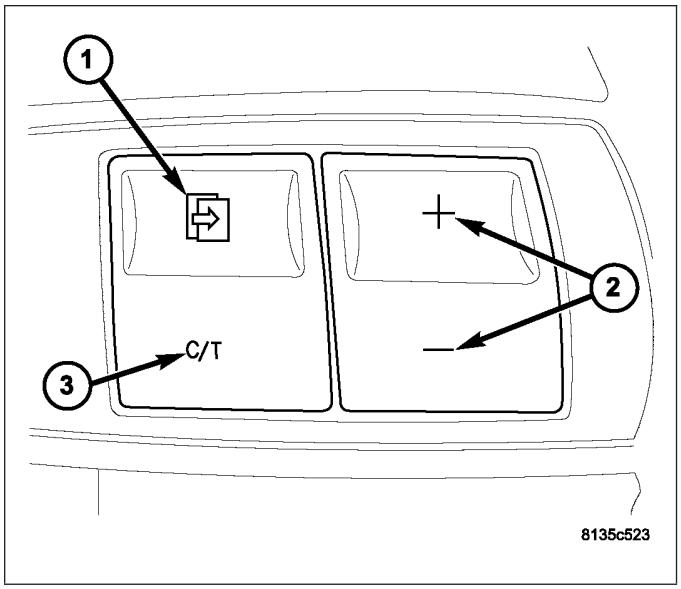

The SCROLL buttons (3) are used to scroll through Trip Functions, Navigation (If Equipped), System Status Messages, and Personal Settings (Customer Programmable Features). Pressing and releasing the FUNCTION SELECT button (1) accepts a selected choice. The AUDIO MODE SELECT button (2) changes the mode of the radio from AM to FM to Tape to CD, or to Satellite (SAT) depending on which radio is in the vehicle. This button can also be used to return to a previous navigation menu selection.

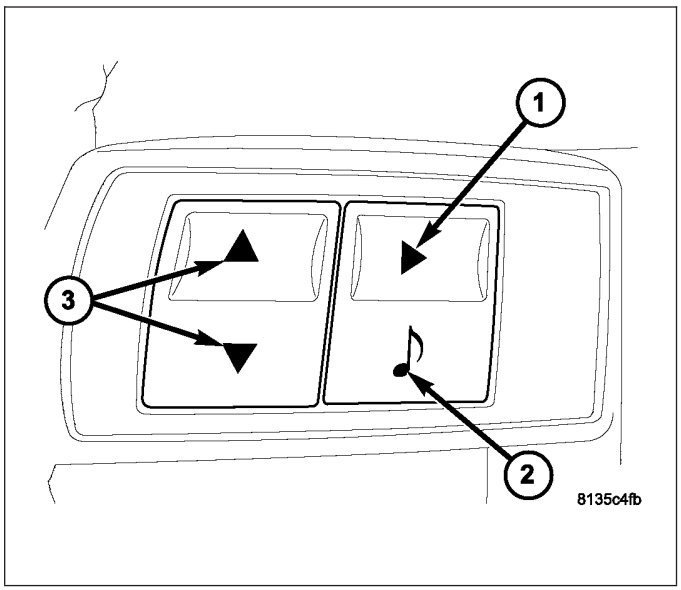

EVIC DISPLAY MODES

SYSTEM STATUS MODE

Displays warnings and user interaction messages. Initial warnings will be displayed full-screen for three seconds, then override the odometer and show text warnings on the bottom line of the display. Critical text warnings will be displayed until the failure is corrected. Non-critical text warnings will be displayed for 60 seconds. The driver can scroll to view multiple messages by using the SCROLL buttons.

When the appropriate conditions exist, the EVIC displays the following messages:

- Turn Signal On (with a continuous warning chime)
- Left Front Turn Signal Lamp Out
- Left Rear Turn Signal Lamp Out
- Right Front Turn Signal Lamp Out
- Right Rear Turn Signal Lamp Out
- RKE Battery Low (with a single chime)
- Memory 1/2 Profile Set
- Memory 1/2 Profile Recall
- Memory System Disabled – Vehicle Not In Park (with a single chime)

- Memory System Disabled – Seat Belt Buckled (with a single chime)
- Personal Settings Not Available – Vehicle Not in Park
- Left/Right Front Door Ajar (one or more, with a single chime if speed is above 1 mph)
- Left/Right Rear Door Ajar (one or more, with a single chime if speed is above 1 mph)
- Door (S) Ajar (with a single chime if vehicle is in motion)
- Trunk Ajar (with a single chime)
- Low Washer Fluid (with a single chime)
- Adjustable Pedals Disabled – Cruise Engaged
- Adjustable Pedals Disabled – Vehicle In Reverse
- Channel 1, 2, OR 3 Transmit
- Channel 1, 2, OR 3 Training
- Channel 1, 2, OR 3 Trained
- Clearing Channels
- Channels Cleared
- Channels Defaulted
- Did Not Train
- Left Front Tire Low Pressure
- Left Rear Tire Low Pressure
- Right Front Tire Low Pressure
- Right Rear Tire Low Pressure
- Check Tire Pressure Monitoring (TPM) System
- Service Park Assist System

TRIP MODE

Provides a choice of units displayed in English or metric. The following information can be displayed at the top of the screen:

- Average Miles Per Gallon (MPG)
- Distance to empty (DTE)
- Trip A odometer
- Trip B odometer
- Elapsed time

The EVIC trip computer features several functions that can be reset. Pressing and releasing the FUNCTION SELECT button once will clear the resettable function currently being displayed. Reset will only occur if a resettable function is currently being displayed. To reset all resettable functions, press and release the FUNCTION SELECT button a second time within 3 seconds of resetting the currently displayed function (>Reset ALL will be displayed during this 3 second window).

The odometer is displayed at the bottom of the screen. If warnings exist, they will replace the odometer in the display. The driver can scroll to view information in the EVIC by using the SCROLL buttons.

COMPASS, TEMPERATURE AND AUDIO MODE

Compass heading and outside temperature are displayed at the top of the screen. On the lower half of the screen the audio mode is displayed along with the odometer. Eight-point compass headings are displayed (N, S, E, W, NE, NW, SE, SW) and up to 15 compass variance settings can be set and recalled. Outside temperature is displayed in °C (degrees Celsius) or °F (degrees Fahrenheit). Audio mode can display any one of 12 radio station preset frequencies, CD disc number, CD track number, tape, and one of 200 Satellite Radio Channels - if equipped.

TELEPHONE MODE - IF EQUIPPED

Provides the following information and features for the optional hands-free communications system:

- Phone status: idle, voice mail, roaming, battery strength and signal strength in increments of 20 percent
- Call status: Incoming call, connecting, connected, air time in minutes and seconds, call ended, busy, call failed, roaming and no phone connection
- Caller ID phone number display

NAVIGATION MODE - IF EQUIPPED

When the Navigation System is On, the steering wheel buttons can be used to select the Map or Menu display on the Navigation Unit. When the Menu display is active, the SCROLL buttons can be used to scroll through the list, the FUNCTION SELECT button can be used to select an item, and the AUDIO MODE SELECT button can be used to return to the previous menu. When the Map display is active, pressing the FUNCTION SELECT button will change the Navigation Unit Display to the Menu.

If Turn by Turn Navigation is enabled through Personal Settings, the Navigation System will provide turn by turn directions to the programmed destination in the EVIC display. The name of the approaching road is displayed at the top of the screen, followed by an arrow to show the direction of the turn and the remaining distance to the turn counted down.

PERSONAL SETTINGS MODE (CUSTOMER PROGRAMMABLE FEATURES)

Allows the driver to set and recall features when the transmission is in Park by pressing and releasing the MENU button until Personal Settings is displayed in the EVIC. The following personal settings can be set and recalled:

- Language: English, Spanish, German, Italian or French
- Display units in English or Metric
- Lock doors automatically at 15 mph (24 Kph), On or Off
- Unlock door automatically on exit, On or Off
- Remote Keyless Entry unlock driver door on first press or unlock all doors on first press
- Recall Memory with Remote Keyless Entry Unlock, On or Off
- Sound horn with Remote Keyless Entry Lock, On or Off
- Delay turning headlamps off for 0, 30, 60 or 90 seconds
- Headlamps on with wipers, On or Off
- Rain Sensing Intermittent Wipers, On or Off
- Automatically move seat back on exit, On or Off
- Tilt mirrors down and in when transmission is shifted to Reverse, On or Off
- Delay Power off to accessories until exit off, 45-seconds maximum, 5-minute maximum, 10-minute maximum or 60-minute maximum
- Turn headlamps on with Remote Keyless Entry Lock, On or Off
- Turn headlamps on with Remote Keyless Entry Unlock, Off or 30 seconds
- Park Assist System, On or Off
- Confirmation of Voice Commands, On or Off
- Turn-by-Turn Navigation, On or Off

DIAGNOSIS AND TESTING

ELECTRONIC VEHICLE INFORMATION CENTER

The Electronic Vehicle Information Center (EVIC) data is obtained from several components on the Controller Area Network (CAN) Data Bus circuit. The EVIC will not function properly if the bus messages from any of these components is not received. If no EVIC data is displayed, check the CAN Data Bus circuit communications, the Instrument Cluster functions and the Front Control Module (FCM).

The use of a scan tool and the proper diagnostic procedures information are recommended for further testing of the EVIC and the CAN Data Bus circuit. Refer to the appropriate wiring information for complete circuit schematic or connector pin-out information.

STANDARD PROCEDURE

COMPASS CALIBRATION

CAUTION: Do not place any external magnets, such as magnetic roof mount antennas, in the vicinity of the compass. Do not use magnetic tools when servicing the overhead console.

The electronic compass unit features a self-calibrating design, which simplifies the calibration procedure. This feature automatically updates the compass calibration while the vehicle is being driven. This allows the compass unit to compensate for small changes in the residual magnetism that the vehicle may acquire during normal use. If the compass readings appear to be erratic or the Electronic Vehicle Information Center (EVIC) displays “CAL”, perform the following calibration procedure. Also, any time EVIC service replacement components are installed, they must be calibrated using this procedure. Do not attempt to calibrate the compass near large metal objects such as other vehicles, large buildings, or bridges; or, near overhead or underground power lines.

Calibrate the compass manually as follows:

1. Turn the ignition switch to the On position.
2. Depress and hold the C/T push button (3) for approximately two seconds.

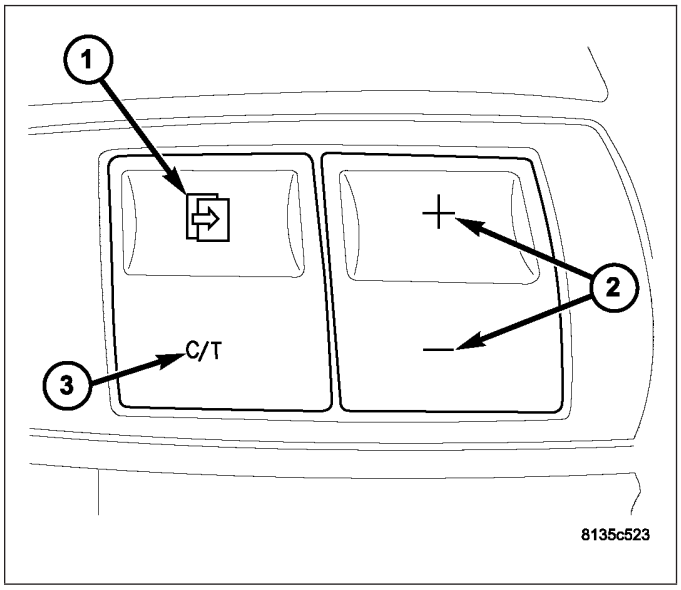

3. Use the SCROLL buttons (3) until MANUAL COMPASS CALIBRATION is highlighted.
4. Press and release the FUNCTION SELECT button (1) to start the calibration. The message “CAL” will appear in the EVIC display.
5. Drive the vehicle on a level surface, away from large metal objects and power lines, through one or two **complete** circles in not less than 16 seconds. The “CAL” message will disappear from the display to indicate that the compass is now calibrated.

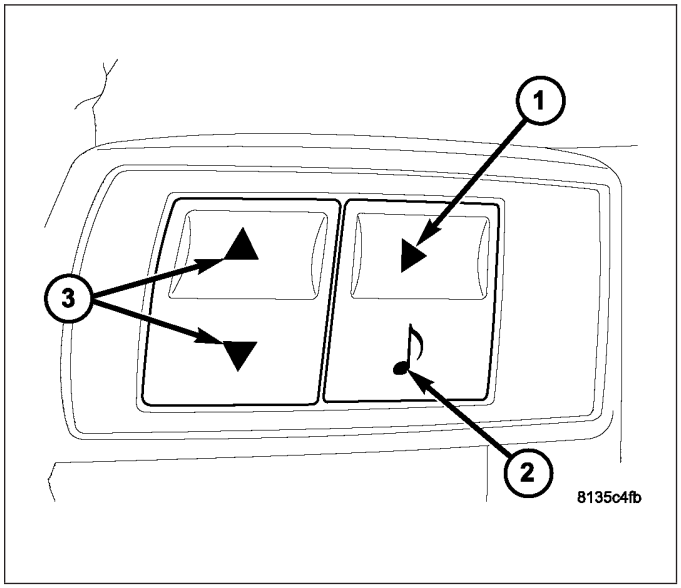

NOTE: A blank compass display indicates that vehicle degaussing (demagnetizing) is necessary.

NOTE: If the “CAL” message remains in the display, either there is excessive magnetism near the compass, or the unit is inoperative. Repeat the calibration procedure at least one more time.

NOTE: If the wrong direction is still indicated in the compass display, the area selected for calibration may be too close to a strong magnetic field. Repeat the calibration procedure in another location.

COMPASS DEMAGNETIZING

A degaussing tool (Special Tool 6029) is used to demagnetize, or degauss, the roof panel above the overhead console. Equivalent units must be rated as continuous duty for 110/115 volts and 60 Hz. They must also have a field strength of over 350 gauss at 7 millimeters (0.25 inch) beyond the tip of the probe.

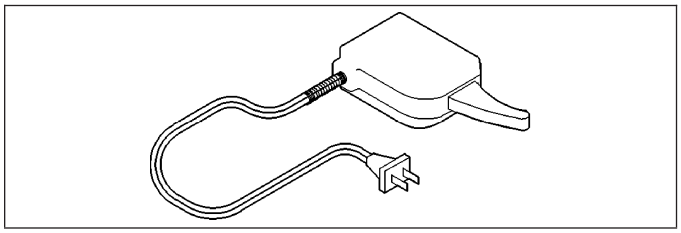

To demagnetize the roof panel proceed as follows:

1. Be certain that the ignition switch is in the Off position, before you begin the demagnetizing procedure.
2. Place a piece of paper approximately 22 by 28 centimeters (8.5 by 11 inches), oriented on the vehicle lengthwise from front to rear, on the center line of the roof at the windshield header. The purpose of the paper is to protect the roof panel from scratches, and to define the area to be demagnetized.
3. Connect the degaussing tool to an electrical outlet, while keeping the tool at least 61 centimeters (2 feet) away from the compass unit.
4. Slowly approach the center line of the roof panel at the windshield header, with the degaussing tool connected.
5. Contact the roof panel with the plastic coated tip of the degaussing tool. Be sure that the template is in place to avoid scratching the roof panel. Using a slow, back-and-forth sweeping motion, and allowing 13 millimeters (0.50 inch) between passes, move the tool at least 11 centimeters (4 inches) to each side of the roof center line, and 28 centimeters (11 inches) back from the windshield header.
6. With the degaussing tool still energized, slowly back it away from the roof panel. When the tip of the tool is at least 61 centimeters (2 feet) from the roof panel, disconnect the tool.

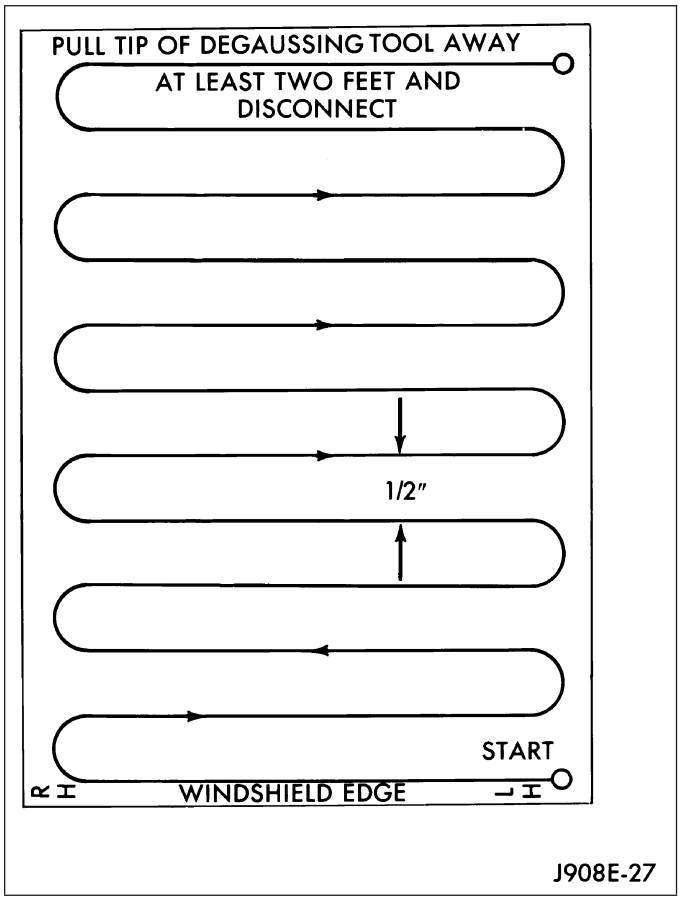

7. Calibrate the compass, (Refer to 8 - ELECTRICAL/OVERHEAD CONSOLE/ELECTRONIC VEHICLE INFO CENTER - STANDARD PROCEDURE - COMPASS CALIBRATION) and adjust the compass variance, (Refer to 8 - ELECTRICAL/OVERHEAD CONSOLE/ELECTRONIC VEHICLE INFO CENTER - STANDARD PROCEDURE - COMPASS VARIATION ADJUSTMENT).

COMPASS VARIATION ADJUSTMENT

Compass variance, also known as magnetic declination, is the difference in angle between magnetic north and true geographic north. In some geographic locations, the difference between magnetic and geographic north is great enough to cause the compass to give false readings. If this problem occurs, the compass variance setting may need to be changed.

To set the compass variance:

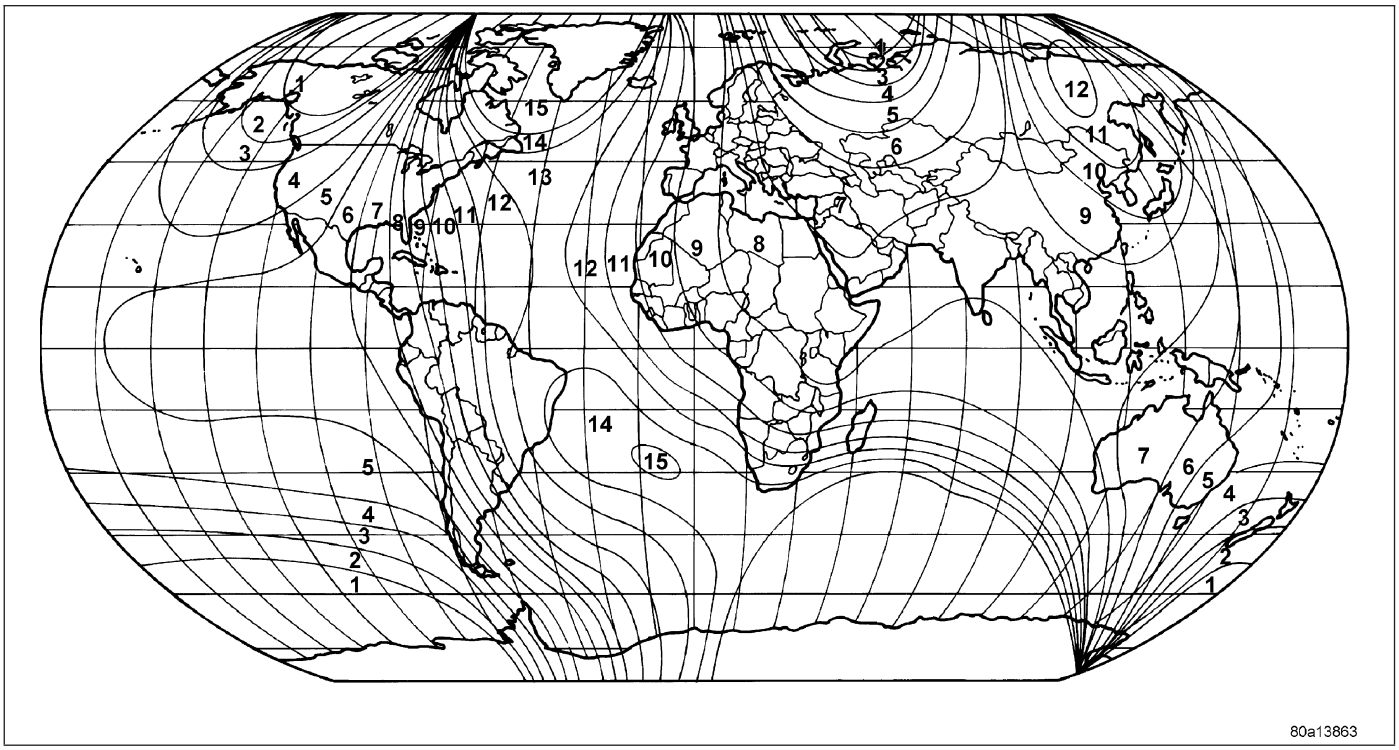

1. Using the Variance Settings map, find your geographic location and note the zone number.
2. Turn the ignition switch to the On position.
3. Depress and hold the C/T push button (3) for approximately two seconds.

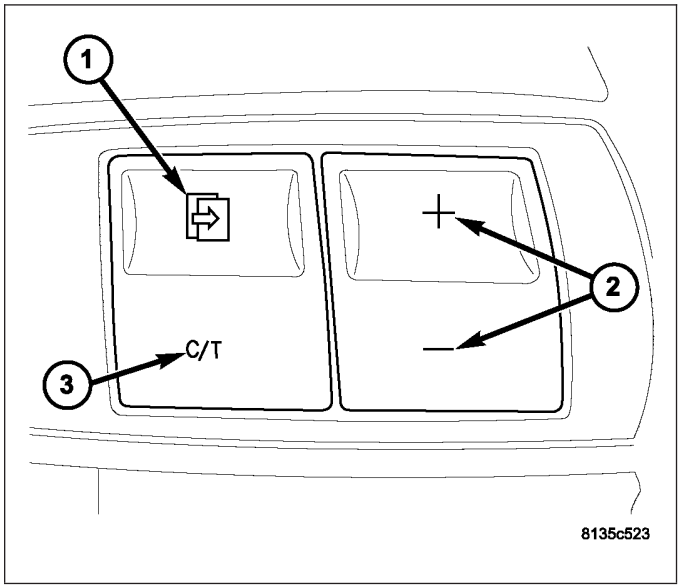

4. Use the SCROLL buttons (3) until COMPASS VARIANCE is highlighted. The “COMPASS VARIANCE” message and the last variance zone number will be displayed.
5. Press and release the FUNCTION SELECT button (1) until the zone number for your geographic location appears in the display.

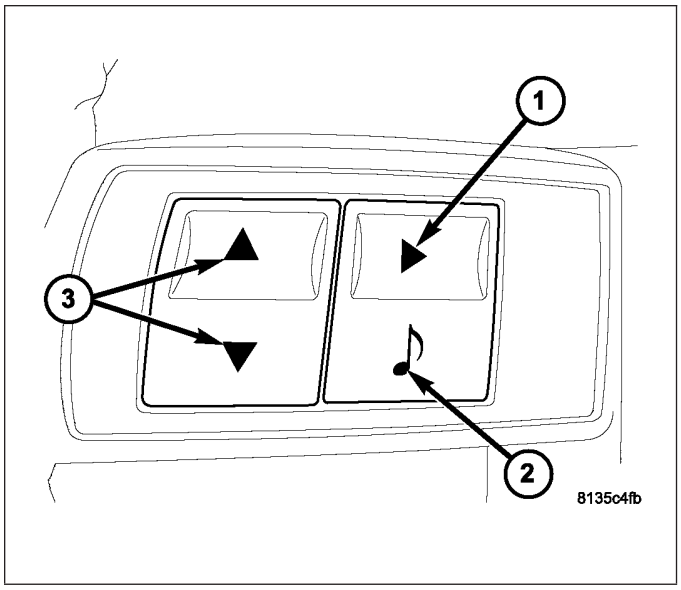

6. Depress and release the C/T push button (3) to exit.
7. Confirm that the correct directions are now indicated by the compass.

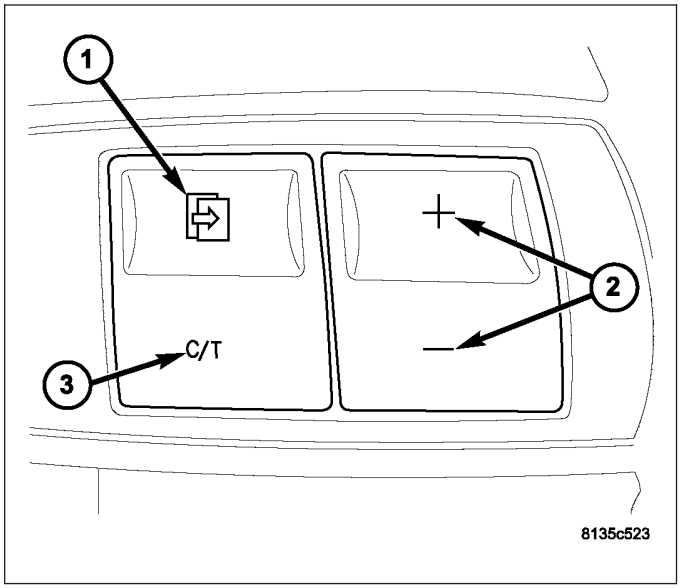

UNIVERSAL TRANSMITTER

DESCRIPTION

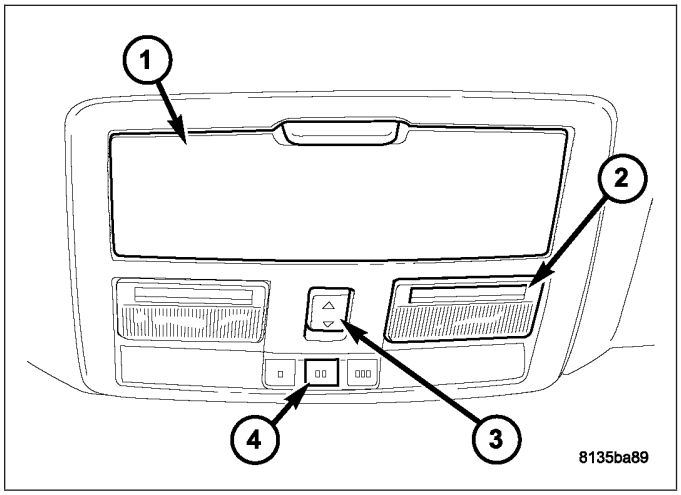

The universal transmitter transceiver is integral to the overhead console. The only visible component of the universal transmitter are the three transmitter push buttons (4) at the front of the overhead console. The buttons are marked with one, two or three illuminated dots, respectively, for identification of each channel.

Each of the three universal transmitter push buttons controls an independent radio transmitter channel. Each of these three channels can be trained to transmit a different radio frequency signal for the remote operation of garage door openers, motorized gate openers, home or office lighting, security systems or just about any other device that can be equipped with a radio receiver in the 286 to 399 MegaHertz (MHz) frequency range for remote operation. The universal transmitter is capable of operating systems using either rolling code or non-rolling code technology. The system will not transmit operating signals if the Vehicle Theft Security System is armed.

The universal transmitter cannot be repaired, and is available for service only as a unit. This unit includes the push button switches and the plastic module.

DIAGNOSIS AND TESTING

UNIVERSAL TRANSMITTER

If the Universal Transmitter is inoperative, but the Electronic Vehicle Information Center (EVIC) is operating normally, (Refer to 8 - ELECTRICAL/OVERHEAD CONSOLE/UNIVERSAL TRANSMITTER - STANDARD PROCEDURE) for instructions on training the Transmitter. Retrain the Transmitter with a known good transmitter as instructed and test the Transmitter operation again.

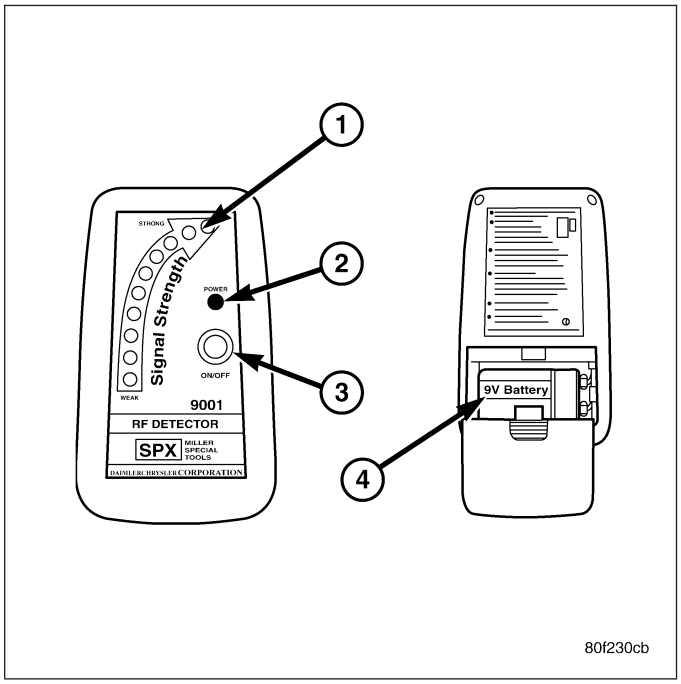

If the unit is still inoperative, test the universal transmitter with Radio Frequency Detector special tool as described below:

1. Turn the Radio Frequency (RF) Detector ON. A “chirp” will sound and the green power LED will light. If the green LED does not light, replace the battery.
2. Hold the RF detector within one inch of the TRAINED universal transmitter and press any of the transmitters buttons.
3. The red signal detection LEDs will light and the tool will beep if a radio signal is detected. Repeat this test for each button. If any button is inoperative, replace the universal transmitter assembly, (Refer to 8 - ELECTRICAL/OVERHEAD CONSOLE/UNIVERSAL TRANSMITTER - REMOVAL).

If both the Transmitter and the EVIC module are inoperative, (Refer to 8 - ELECTRICAL/OVERHEAD CONSOLE/ELECTRONIC VEHICLE INFO CENTER - DIAGNOSIS AND TESTING) for further diagnosis. Refer to the appropriate wiring information for complete circuit schematic or connector pin-out information.

STANDARD PROCEDURE

PROGRAMMING TRANSMITER CODES

CAUTION: Vehicle exhaust contains carbon monoxide, a dangerous gas. Do not run the vehicle's exhaust while training the transceiver. Exhaust gas can cause serious injury or death.

CAUTION: Your motorized door or gate will open and close while you are training the Universal Transceiver. Do not train the transceiver if people or pets are in the path of the door or gate. A moving door or gate can cause serious injury or death to people and pets or damage to objects.

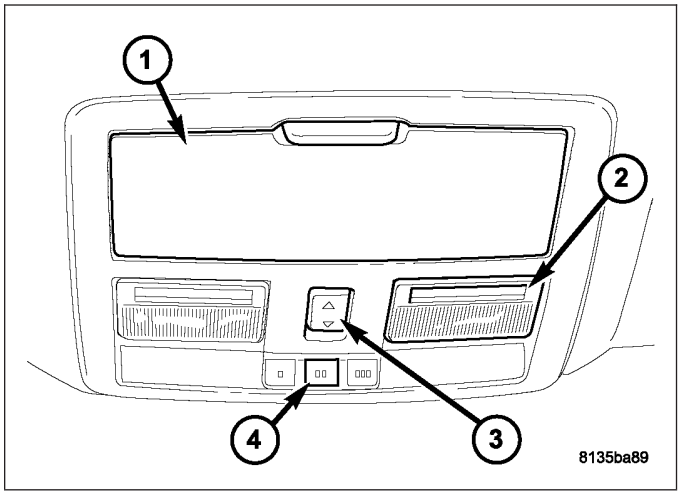

The Electronic Vehicle Information Center (EVIC) features a driver-interactive display which includes HomeLink® system messages. The EVIC is located in the upper part of the cluster between the speedometer and tachometer.

1. Press and hold the two outer HomeLink® buttons (4), and release only when the EVIC display shows "Channels Cleared" (after 20 seconds). **Do not** hold the buttons for longer than 30 seconds and **do not** repeat step one to program a second and/or third hand-held transmitter to the remaining two HomeLink® buttons.
2. Position the end of your hand-held transmitter 1-3 inches (3-8 cm) away from the HomeLink® buttons.
3. Simultaneously press and hold both the HomeLink® button that you want to train and the hand-held transmitter buttons. **Do not release the buttons until step 4 has been completed.**
4. The EVIC display will show "Channel X Training" (where X is Channel 1, 2, or 3). Release both buttons after the EVIC display shows "Channel X Trained".

NOTE: If the EVIC display shows "Did Not Train" repeat steps 2–4.

5. Press and hold the just trained HomeLink® button and observe the EVIC display. If the EVIC display shows "Channel X Transmit" (where X is Channel 1, 2, or 3), programming is complete and your device should activate when the HomeLink® button is pressed and released.

NOTE: To program the remaining two HomeLink® buttons, begin with "Programming" step two. Do not repeat step one.

NOTE: If your hand-held transmitter appears to program the universal transceiver, but your garage door does not operate using the transmitter and your garage door opener was manufactured after 1995, your garage door opener may have a multiple security code system (rolling code system). Please proceed to steps 6–8 to complete the programming of a rolling code equipped device (most common garage door openers require this step.

6. At the garage door opener receiver (motor-head unit) in the garage, locate the "learn" or "smart" button. This can usually be found where the hanging antenna wire is attached to the motor-head unit.
7. Firmly press and release the "learn" or "smart" button. (The name and color of the button may vary by manufacturer.)

NOTE: There are 30 seconds in which to initiate step eight.

8. Return to the vehicle and firmly **press, hold for two seconds and release** the programmed HomeLink® button. Repeat the **"press/hold/release"** sequence a second time, and, depending on the brand of the garage door opener (or other rolling code equipped device), repeat this sequence a third time to complete the programming.
9. HomeLink® should now activate your rolling code equipped device.

10. To program the remaining two HomeLink® buttons, begin with “Programming” **step two. Do not repeat step one.**

ERASING TRANSMITTER CODES

NOTE: Individual channels cannot be erased. Erasing the transmitter codes will erase ALL programmed codes.

To erase programming from the three buttons (individual buttons cannot be erased but can be “reprogrammed” - note below), follow the step noted:

- Press and hold the two outer HomeLink® buttons and release only when the Electronic Vehicle Information Center (EVIC) display shows “Channels Cleared” (after 20 seconds). Release both buttons. Do not hold for longer that 30 seconds. HomeLink® is now in the train (or learning) mode and can be programmed at any time, (Refer to 8 - ELECTRICAL/OVERHEAD CONSOLE/UNIVERSAL TRANSMITTER - STANDARD PROCEDURE).

REPROGAMMING TRANSMITTER CODES

CAUTION: Vehicle exhaust contains carbon monoxide, a dangerous gas. Do not run the vehicle’s exhaust while training the transceiver. Exhaust gas can cause serious injury or death.

CAUTION: Your motorized door or gate will open and close while you are training the Universal Transceiver. Do not train the transceiver if people or pets are in the path of the door or gate. A moving door or gate can cause serious injury or death to people and pets or damage to objects.

To program a device to HomeLink® using a HomeLink® button previously trained, follow these steps:

1. Press and hold the desired HomeLink® button (4). **Do NOT** release the button.
2. The EVIC display will show “Channel X Transmit” (where X is Channel 1, 2, or 3) for 20 seconds and then change to “Channel X Training”. Without releasing the HomeLink® button, proceed to step 3.
3. Position the end of your hand-held transmitter 1-3 inches (3-8 cm) away from the HomeLink® buttons.
4. Simultaneously press and hold both the HomeLink® button that you want to train and the hand-held transmitter buttons. **Do not release the buttons until step 4 has been completed.**
5. Press and hold the just trained HomeLink® button and observe the EVIC display. If the EVIC display shows “Channel X Transmit” (where X is Channel 1, 2, or 3), programming is complete and your device should activate when the HomeLink® button is pressed and released.

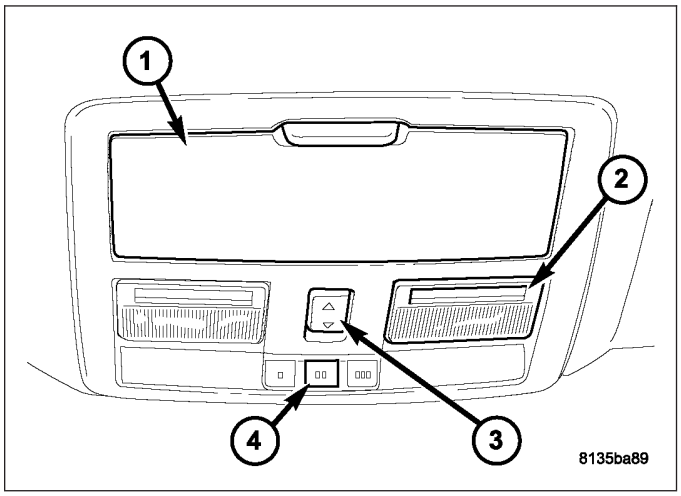

NOTE: To program the remaining two HomeLink® buttons, begin with “Programming” step two. Do not repeat step one.

NOTE: If your hand-held transmitter appears to program the universal transceiver, but your garage door does not operate using the transmitter and your garage door opener was manufactured after 1995, your garage door opener may have a multiple security code system (rolling code system). Please proceed to steps 6–8 to complete the programming of a rolling code equipped device (most common garage door openers require this step).

6. At the garage door opener receiver (motor-head unit) in the garage, locate the “learn” or “smart” button. This can usually be found where the hanging antenna wire is attached to the motor-head unit.

7. Firmly press and release the “learn” or “smart” button. (The name and color of the button may vary by manufacturer.)

NOTE: There are 30 seconds in which to initiate step eight.

8. Return to the vehicle and firmly **press, hold for two seconds and release** the programmed HomeLink® button. Repeat the **“press/hold/release”** sequence a second time, and, depending on the brand of the garage door opener (or other rolling code equipped device), repeat this sequence a third time to complete the programming.
9. HomeLink® should now activate your rolling code equipped device.

REMOVAL

1. Disconnect and isolate the battery negative cable.
2. Remove the overhead console assembly, (Refer to 8 - ELECTRICAL/OVERHEAD CONSOLE - REMOVAL).
3. Remove the universal transmitter retaining screws (2) and separate the transmitter from the overhead console.

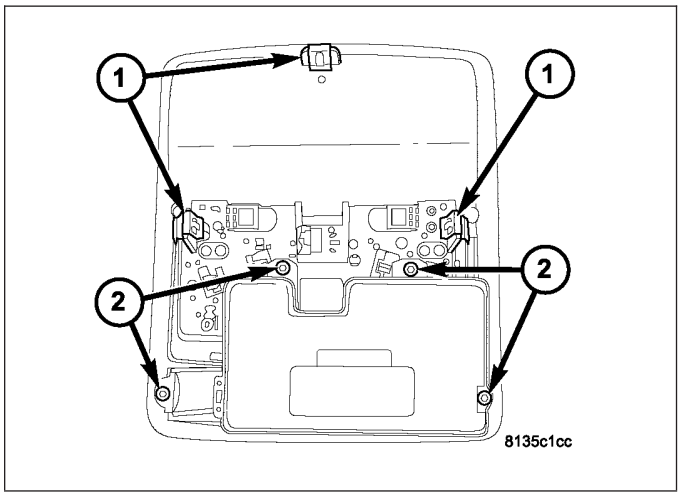

INSTALLATION

NOTE: In addition to the Universal Transmitter operation the Electronic Overhead Module is responsible for some of the compass functions. Anytime the Electronic Overhead Module is replaced the compass variance value must be set, (Refer to 8 - ELECTRICAL/OVERHEAD CONSOLE/ ELECTRONIC VEHICLE INFO CENTER - STANDARD PROCEDURE - COMPASS VARIATION ADJUSTMENT).

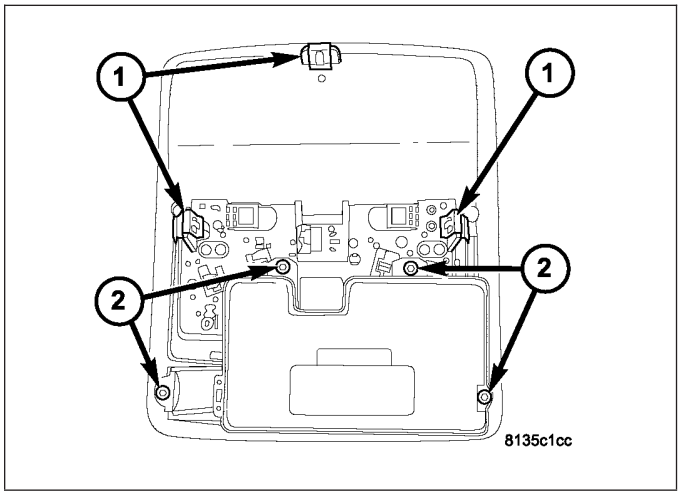

1. Position the universal transmitter onto the overhead console assembly and install the retaining screws (2).
2. Install the overhead console assembly, (Refer to 8 - ELECTRICAL/OVERHEAD CONSOLE - INSTALLATION).
3. Connect the battery negative cable.
4. Program the universal transmitter codes, (Refer to 8 - ELECTRICAL/OVERHEAD CONSOLE/UNIVERSAL TRANSMITTER - STANDARD PROCEDURE).

SENSOR-AMBIENT AIR TEMPERATURE

DESCRIPTION

The ambient temperature sensor is a variable resistor type sensor. it is mounted to the lower front fascia behind the radiator grille and in front of the engine compartment.

The ambient temperature sensor cannot be adjusted or repaired and, if inoperative or damaged, it must be replaced.

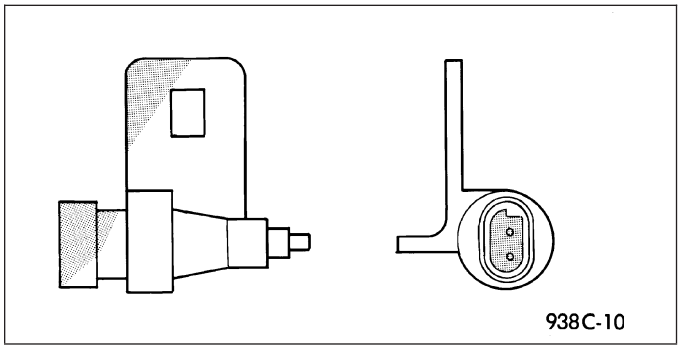

OPERATION

The ambient temperature sensor is a variable resistor that operates on a five-volt reference signal sent by the Front Control Module (FCM). The resistance in the sensor changes as temperature changes, changing the temperature sensor signal circuit voltage to the FCM. Based upon the resistance in the sensor, the FCM senses a specific voltage on the temperature sensor signal circuit. The FCM then translates the voltage into a temperature reading that it sent over the Controller Area Network (CAN) data bus to other modules utilizing temperature information.

DIAGNOSIS AND TESTING

AMBIENT TEMPERATURE SENSOR

The temperature function is supported by the ambient temperature sensor, a wiring circuit, and the Front Control Module (FCM). If any portion of the ambient temperature sensor circuit fails or if the Controller Area Network (CAN) data bus information is missing, a (– –) will appear in the Electronic Vehicle Information Center (EVIC) display in place of the temperature. When the sensor is exposed to temperatures above 55° C (130° F), or if the sensor circuit is shorted, 55° C (130° F) will appear in the EVIC display in place of the temperature. When the sensor is exposed to temperatures below - 40° C (- 40° F) or if the sensor circuit is open, - 40° C (- 40° F) will appear in the EVIC display.

The ambient temperature sensor circuit can also be diagnosed using the following Sensor Test, and Sensor Circuit Test. If the temperature sensor and circuit are confirmed to be OK, but the temperature display is inoperative or incorrect, test the EVIC operation, (Refer to 8 - ELECTRICAL/OVERHEAD CONSOLE/ELECTRONIC VEHICLE INFO CENTER - DIAGNOSIS AND TESTING).

SENSOR TEST

1. Turn the ignition switch to the Off position. Disconnect and isolate the battery negative cable. Disconnect the ambient temperature sensor harness connector.
2. Measure the resistance of the ambient temperature sensor. At - 40° C (- 40° F), the sensor resistance is 336 kilohms. At 55° C (130° F), the sensor resistance is 2.488 kilohms. The sensor resistance should read between these two values. If OK, refer to Sensor Circuit Test in this group. If not OK, replace the inoperative ambient temperature sensor.

SENSOR CIRCUIT TEST

Refer to the appropriate wiring information for complete circuit schematic or connector pin-out information.

1. Turn the ignition switch to the Off position. Disconnect and isolate the battery negative cable. Disconnect the wire harness connectors from the ambient temperature sensor and the FCM.
2. Connect a jumper wire between the two terminals in the body half of the ambient temperature sensor harness connector.
3. Check for continuity between the sensor return circuit and the ambient temperature sensor signal circuit cavities of the FCM harness connector. There should be continuity. If OK, go to Step 4. If not OK, repair the open sensor return circuit or ambient temperature sensor signal circuit to the ambient temperature sensor as required.

4. Check for continuity between the ambient temperature sensor signal circuit cavity of the FCM harness connector and a good ground. There should be no continuity. If OK, test the EVIC operation, (Refer to 8 - ELECTRICAL/ OVERHEAD CONSOLE/ELECTRONIC VEHICLE INFO CENTER - DIAGNOSIS AND TESTING). If not OK, repair the shorted ambient temperature sensor signal circuit as required.

REMOVAL

1. Disconnect and isolate the battery negative cable.
2. Remove the belly pan, (Refer to 23 - BODY/EXTERIOR/BELLY PAN - REMOVAL).
3. Disconnect the wire harness connector (1) from the ambient temperature sensor (2).

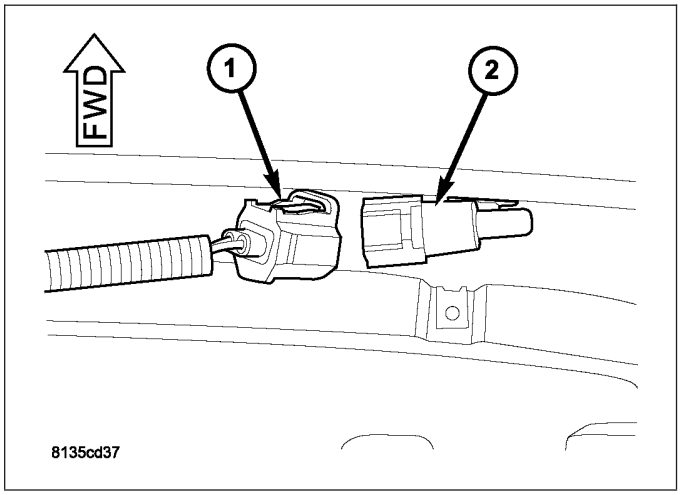

4. Remove the fastener that secures the ambient temperature sensor bracket to the front fascia.
5. Remove the ambient temperature sensor from the vehicle.

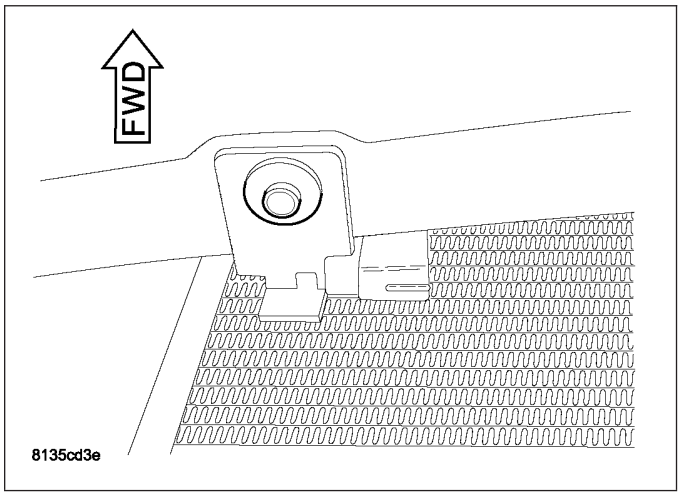

INSTALLATION

1. Position the ambient temperature sensor in the vehicle.
2. Install the fastener that secures the ambient temperature sensor to the front fascia.

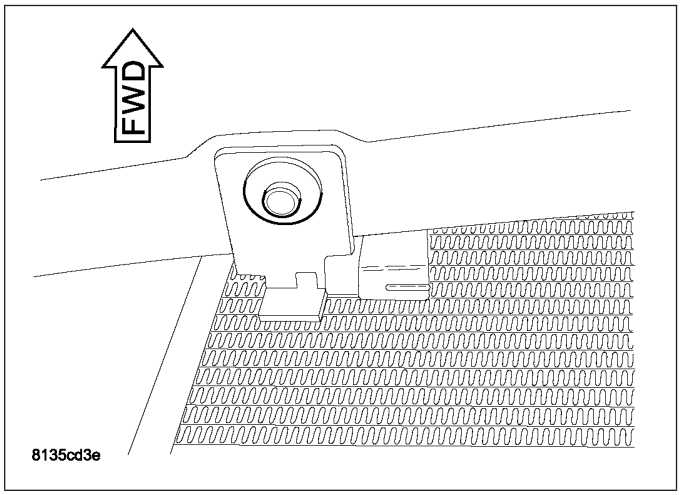

3. Connect the wire harness connector (1) to the ambient temperature sensor (2).
4. Install the belly pan, (Refer to 23 - BODY/EXTERIOR/BELLY PAN - INSTALLATION).
5. Connect the battery negative cable.

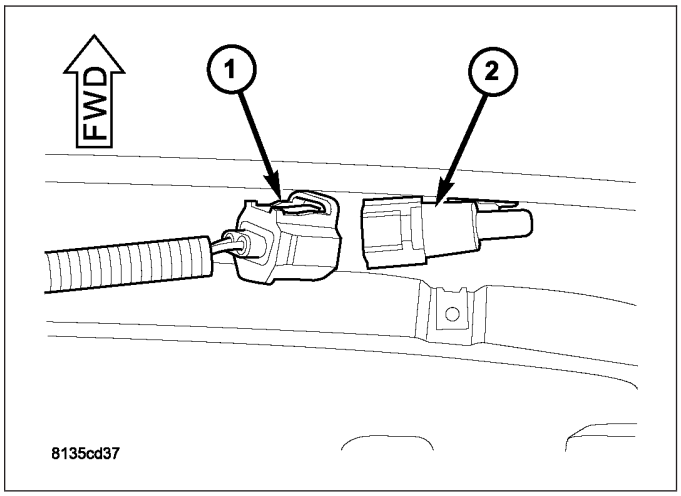

POWER SYSTEMS

TABLE OF CONTENTS

page

POWER LOCKS - ELECTRICAL DIAGNOSTICS.... 1
POWER LOCKS - SERVICE INFORMATION 50
POWER MIRRORS - ELECTRICAL DIAGNOSTICS 58
POWER MIRRORS - SERVICE INFORMATION.. 114
POWER SEATS - ELECTRICAL DIAGNOSTICS.. 119

page

POWER SEATS - SERVICE INFORMATION..... 184
POWER TOP - ELECTRICAL DIAGNOSIS 201
POWER TOP - SUNROOF SERVICE INFO 220
POWER WINDOWS - ELECTRICAL DIAGNOSTICS 228
POWER WINDOWS - SERVICE INFORMATION . 290

POWER LOCKS - ELECTRICAL DIAGNOSTICS

TABLE OF CONTENTS

page

POWER LOCKS - ELECTRICAL DIAGNOSTICS
DIAGNOSIS AND TESTING
B1801–DRIVER DOOR LOCK/UNLOCK SWITCH CIRCUIT LOW — CLUSTER 3
B1803–DRIVER DOOR LOCK/UNLOCK SWITCH CIRCUIT STUCK LOCK— CLUSTER 6
B1804–DRIVER DOOR LOCK/UNLOCK SWITCH CIRCUIT STUCK UNLOCK— CLUSTER 9
B1806–PASSENGER DOOR LOCK/UNLOCK SWITCH CIRCUIT LOW — CLUSTER 12
B1808–PASSENGER DOOR LOCK/UNLOCK SWITCH CIRCUIT STUCK LOCK — CLUSTER 15
B1809–PASSENGER DOOR LOCK/UNLOCK SWITCH CIRCUIT STUCK UNLOCK — CLUSTER 18

page

B1826–TRUNK RELEASE SWITCH INPUT CIRCUIT LOW 21
*DECKLID/LIFTGATE RELEASE INOPERATIVE 24
*ALL DOORS FAIL TO LOCK 32
*PASSENGER DOORS FAIL TO UNLOCK 35
*RIGHT DOOR LOCKS INOPERATIVE – (LHD ONLY) 37
*LEFT DOOR LOCKS INOPERATIVE – (LHD ONLY) 40
*DRIVER DOOR LOCK INOPERATIVE 43
*ONE PASSENGER DOOR LOCK INOPERATIVE 46

POWER LOCKS - ELECTRICAL DIAGNOSTICS

DIAGNOSIS AND TESTING

B1801–DRIVER DOOR LOCK/UNLOCK SWITCH CIRCUIT LOW — CLUSTER

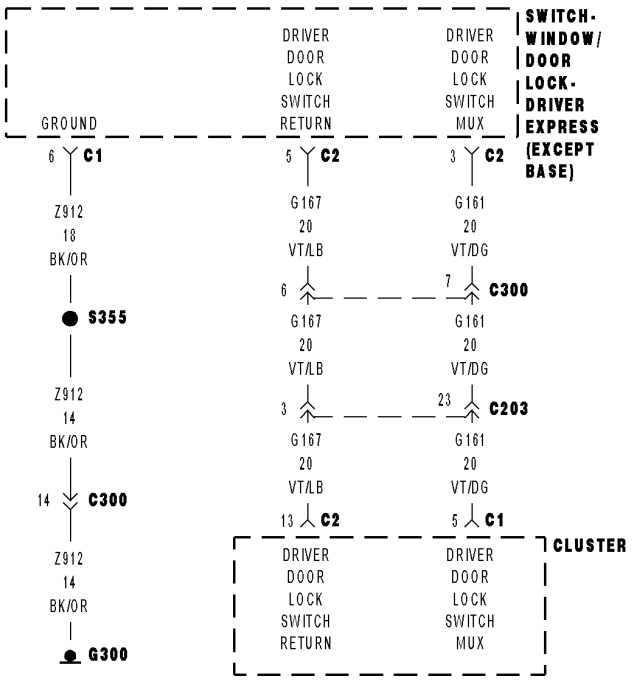

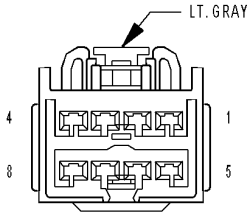

SWITCH-WINDOW/DOOR LOCK-DRIVER EXPRESS C1 (EXCEPT BASE)

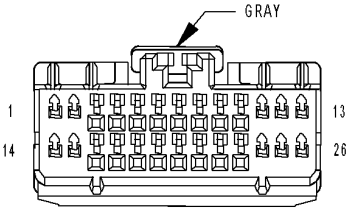

CLUSTER C1

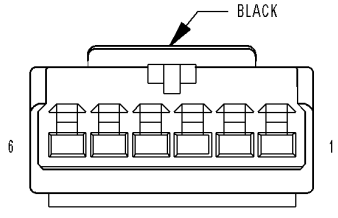

SWITCH-WINDOW/DOOR LOCK-DRIVER EXPRESS C2 (EXCEPT BASE)

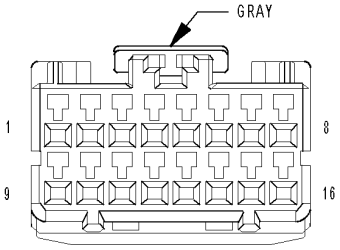

CLUSTER C2

81328d08

For a complete wiring diagram **Refer to Section 8W**.

- **When Monitored:**
  Continuously.
- **Set Condition:**
  When the Driver Door Lock Switch Mux circuit is below 0.15 volts for over 10 seconds.

Possible Causes
(G161) DRIVER DOOR LOCK SWITCH MUX CIRCUIT SHORT TO GROUND
(G161) DRIVER DOOR LOCK SWITCH MUX CIRCUIT SHORT TO THE (G167) DRIVER DOOR LOCK SWITCH RETURN CIRCUIT
DOOR LOCK SWITCH SHORT TO GROUND
INSTRUMENT CLUSTER

Diagnostic Test

1. TEST FOR INTERMITTENT CONDITION

With the scan tool, record and erase DTC's
Operate the Driver Door Lock Switch in all positions several times.
Turn the ignition on and wait 30 seconds.
With the scan tool, read DTC's.

Does the scan tool display B1801–DRIVER DOOR LOCK/UNLOCK SWITCH CIRCUIT LOW?

Yes >> Go To 2

No >> The conditions that caused this code to set are not present at this time. Using the wiring diagram/schematic as a guide, inspect the wiring and connectors.
Perform BODY VERIFICATION TEST - VER 1. (Refer to BODY VERIFICATION TEST - VER 1).

2. DOOR LOCK SWITCH SHORTED

With the scan tool, erase DTC's.
Disconnect the Driver Window/Door Lock Switch C1 and C2 connectors.
With the scan tool, read DTC's.

Does the scan tool display B1801–DRIVER DOOR LOCK/UNLOCK SWITCH CIRCUIT LOW?

No >> Replace the Driver Express Window/Door Lock Switch.
Perform BODY VERIFICATION TEST - VER 1. (Refer to BODY VERIFICATION TEST – VER 1.

Yes >> Go To 3

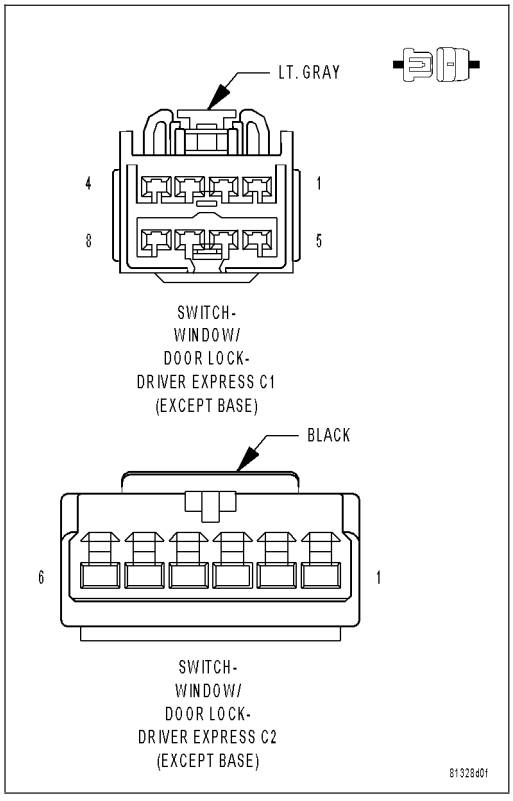

3. (G161) DRIVER DOOR LOCK SWITCH MUX CIRCUIT SHORT TO GROUND

Turn the ignition off.

Disconnect the Cluster C1 connector.

Measure the resistance between ground and the (G161) Driver Door Lock Switch Mux circuit.

Is the resistance below 10000.0 ohms?

Yes >> Repair the (G161) Driver Door Lock Switch Mux circuit for a short to ground.
Perform BODY VERIFICATION TEST - VER 1. (Refer to BODY VERIFICATION TEST – VER 1.

No >> Go To 4

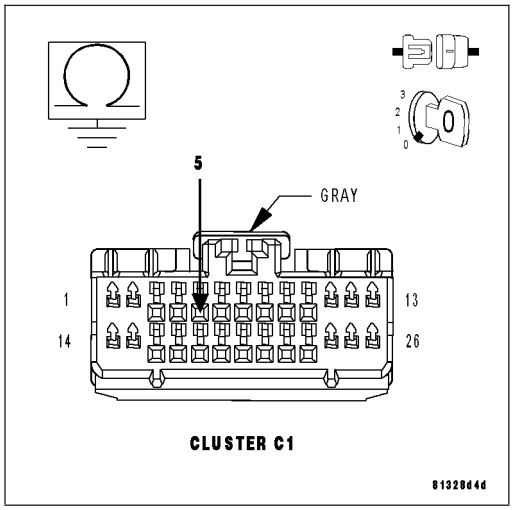

4. (G161) DRIVER DOOR LOCK SWITCH MUX CIRCUIT SHORT TO (G167) DRIVER DOOR LOCK SWITCH RETURN CIRCUIT

Disconnect the Cluster C2 connector.

Measure the resistance between the (G161) Driver Door Lock Switch Mux circuit (in the C1 connector) and the (G167) Driver Door Lock Switch Return circuit (in the C2 connector).

Is the resistance below 10000.0 ohms?

Yes >> Repair the (G161) Driver Door Lock Switch Mux circuit for a short to the (G167) Driver Door Lock Switch Return circuit.
Perform BODY VERIFICATION TEST - VER 1. (Refer to BODY VERIFICATION TEST – VER 1.

No >> Replace the Instrument Cluster.
Perform BODY VERIFICATION TEST - VER 1. (Refer to BODY VERIFICATION TEST - VER 1).

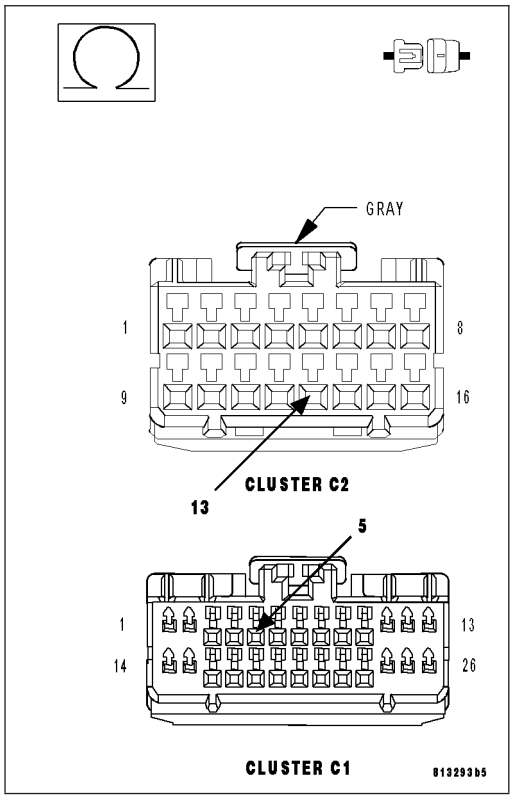

B1803–DRIVER DOOR LOCK/UNLOCK SWITCH CIRCUIT STUCK LOCK— CLUSTER

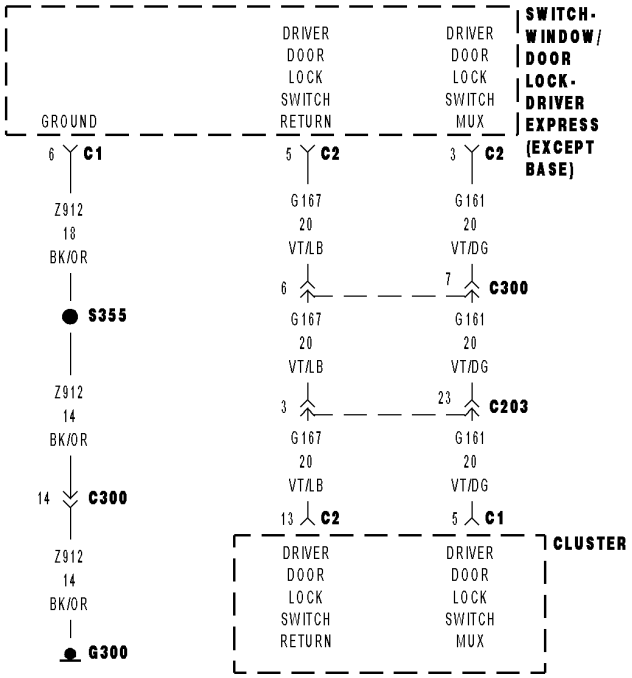

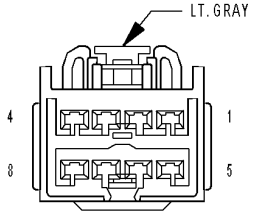

SWITCH-WINDOW/DOOR LOCK-DRIVER EXPRESS C1 (EXCEPT BASE)

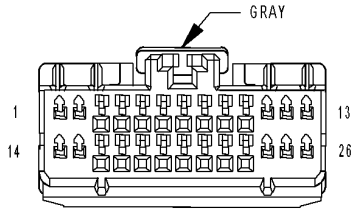

CLUSTER C1

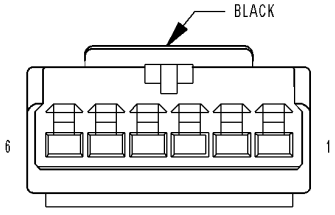

SWITCH-WINDOW/DOOR LOCK-DRIVER EXPRESS C2 (EXCEPT BASE)

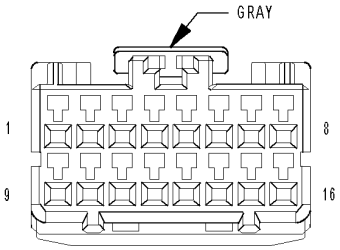

CLUSTER C2

81328d08

For a complete wiring diagram **Refer to Section 8W**.

- **When Monitored:**
  Continuously.
- **Set Condition:**
  When the Driver Door Lock Switch Mux circuit is between 0.8 and 1.5 volts for over 30 seconds.

Possible Causes
(G161) DRIVER DOOR LOCK SWITCH MUX CIRCUIT SHORT TO GROUND
(G161) DRIVER DOOR LOCK SWITCH MUX CIRCUIT SHORT TO THE (G167) DRIVER DOOR LOCK SWITCH RETURN CIRCUIT
DOOR LOCK SWITCH SHORT TO GROUND
INSTRUMENT CLUSTER

Diagnostic Test

1. TEST FOR INTERMITTENT CONDITION

With the scan tool, record and erase DTC's

Operate the Driver Door Lock Switch in all positions several times.

Turn the ignition on and wait 30 seconds.

With the scan tool, read DTC's.

Does the scan tool display B1803–DRIVER DOOR LOCK/UNLOCK SWITCH CIRCUIT STUCK LOCK?

Yes >> Go To 2

No >> The conditions that caused this code to set are not present at this time. Using the wiring diagram/schematic as a guide, inspect the wiring and connectors.
Perform BODY VERIFICATION TEST - VER 1. (Refer to BODY VERIFICATION TEST – VER 1).

2. DOOR LOCK SWITCH SHORTED

With the scan tool, erase DTC's.

Disconnect the Driver Window/Door Lock Switch C1 and C2 connectors.

With the scan tool, read DTC's.

Does the scan tool display B1803–DRIVER DOOR LOCK/UNLOCK SWITCH CIRCUIT STUCK LOCK?

No >> Replace the Driver Express Window/Door Lock Switch.
Perform BODY VERIFICATION TEST - VER 1. (Refer to BODY VERIFICATION TEST – VER 1).

Yes >> Go To 3

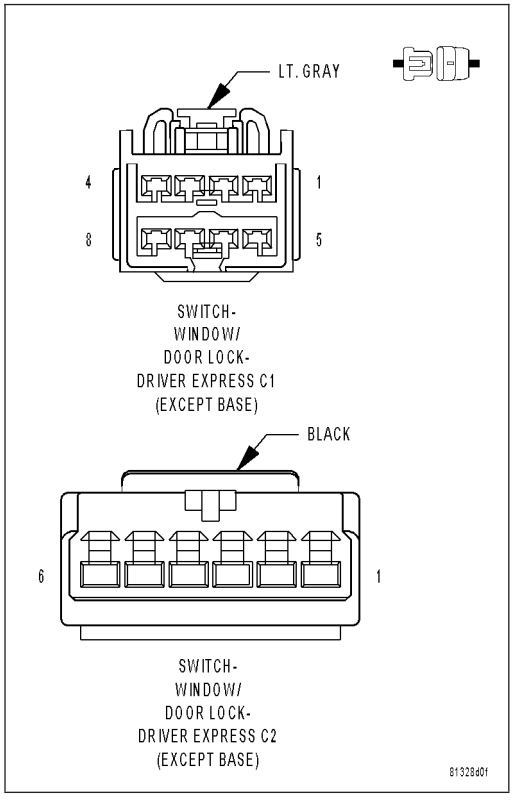

3. (G161) DRIVER DOOR LOCK SWITCH MUX CIRCUIT SHORT TO GROUND

Turn the ignition off.

Disconnect the Cluster C1 connector.

Measure the resistance between ground and the (G161) Driver Door Lock Switch Mux circuit.

Is the resistance below 10000.0 ohms?

Yes >> Repair the (G161) Driver Door Lock Switch Mux circuit for a short to ground.
Perform BODY VERIFICATION TEST - VER 1. (Refer to BODY VERIFICATION TEST – VER 1).

No >> Go To 4

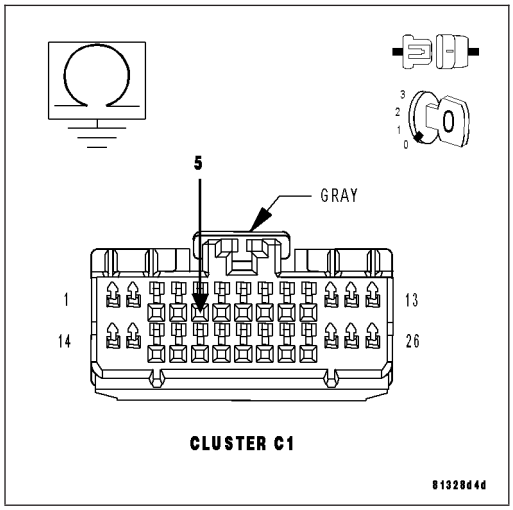

4. (G161) DRIVER DOOR LOCK SWITCH MUX CIRCUIT SHORT TO (G167) DRIVER DOOR LOCK SWITCH RETURN CIRCUIT

Disconnect the Cluster C2 connector.

Measure the resistance between the (G161) Driver Door Lock Switch Mux circuit and the (G167) Driver Door Lock Switch Return circuit in the Cluster C2 connector.

Is the resistance below 10000.0 ohms?

Yes >> Repair the (G161) Driver Door Lock Switch Mux circuit for a short to the (G167) Driver Door Lock Switch Return circuit.
Perform BODY VERIFICATION TEST - VER 1. (Refer to BODY VERIFICATION TEST – VER 1).

No >> Replace the Instrument Cluster.
Perform BODY VERIFICATION TEST - VER 1. (Refer to BODY VERIFICATION TEST – VER 1).

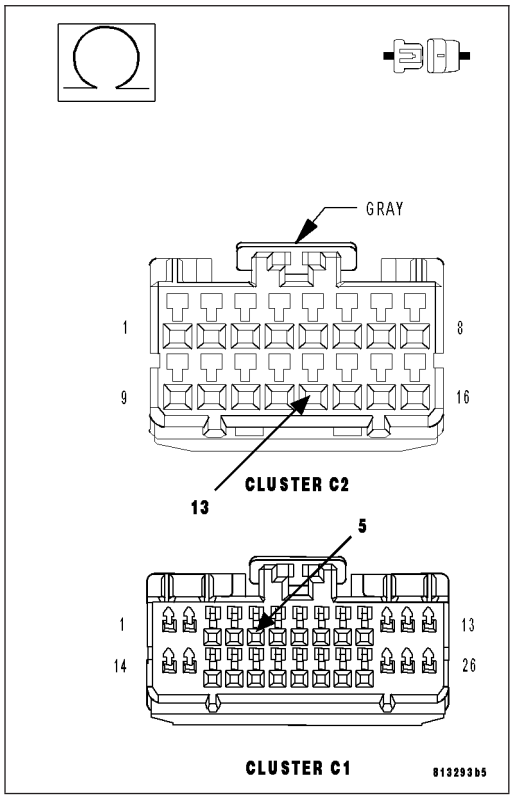

B1804–DRIVER DOOR LOCK/UNLOCK SWITCH CIRCUIT STUCK UNLOCK—CLUSTER

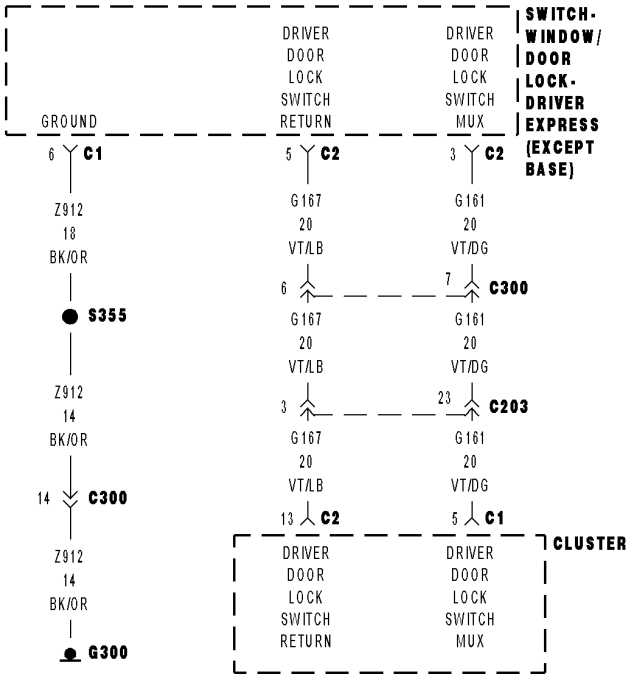

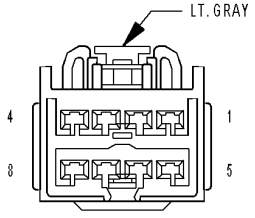

SWITCH-WINDOW/DOOR LOCK-DRIVER EXPRESS C1 (EXCEPT BASE)

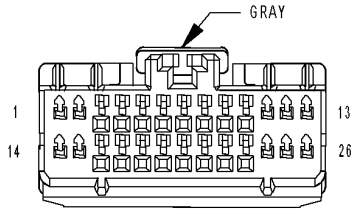

CLUSTER C1

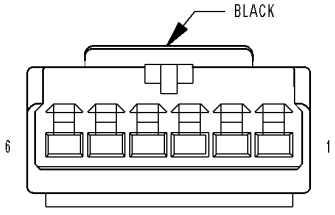

SWITCH-WINDOW/DOOR LOCK-DRIVER EXPRESS C2 (EXCEPT BASE)

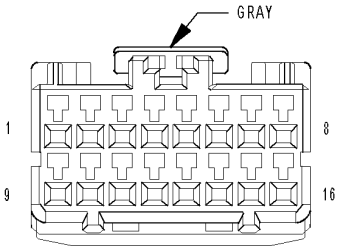

CLUSTER C2

81328d08

For a complete wiring diagram **Refer to Section 8W**.

- **When Monitored:**
  Continuously.
- **Set Condition:**
  When the Driver Door Lock Switch Mux circuit is between 0.15 and 0.8 volts for over 30 seconds.

Possible Causes
(G161) DRIVER DOOR LOCK SWITCH MUX CIRCUIT SHORT TO GROUND
(G161) DRIVER DOOR LOCK SWITCH MUX CIRCUIT SHORT TO THE (G167) DRIVER DOOR LOCK SWITCH RETURN CIRCUIT
DOOR LOCK SWITCH SHORT TO GROUND
INSTRUMENT CLUSTER

Diagnostic Test

1. TEST FOR INTERMITTENT CONDITION

With the scan tool, record and erase DTC's

Operate the Driver Door Lock Switch in all positions several times.

Turn the ignition on and wait 30 seconds.

With the scan tool, read DTC's.

Does the scan tool display B1804–DRIVER DOOR LOCK/UNLOCK SWITCH CIRCUIT STUCK UNLOCK?

Yes >> Go To 2

No >> The conditions that caused this code to set are not present at this time. Using the wiring diagram/schematic as a guide, inspect the wiring and connectors.
Perform BODY VERIFICATION TEST - VER 1. (Refer to BODY VERIFICATION TEST – VER 1).

2. DOOR LOCK SWITCH SHORTED

With the scan tool, erase DTC's.

Disconnect the Driver Window/Door Lock Switch C1 and C2 connectors.

With the scan tool, read DTC's.

Does the scan tool display B1804–DRIVER DOOR LOCK/UNLOCK SWITCH CIRCUIT STUCK UNLOCK?

No >> Replace the Driver Express Window/Door Lock Switch.
Perform BODY VERIFICATION TEST - VER 1. (Refer to BODY VERIFICATION TEST – VER 1).

Yes >> Go To 3

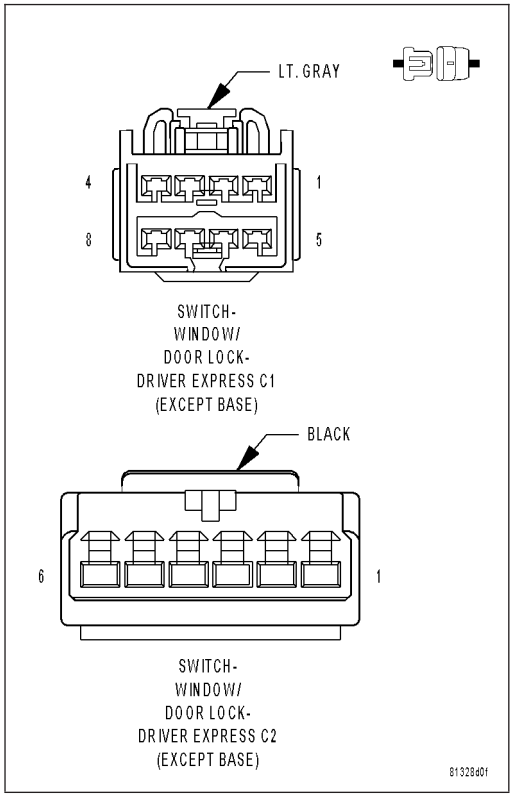

3. (G161) DRIVER DOOR LOCK SWITCH MUX CIRCUIT SHORT TO GROUND

Turn the ignition off.

Disconnect the Cluster C1 connector.

Measure the resistance between ground and the (G161) Driver Door Lock Switch Mux circuit.

Is the resistance below 10000.0 ohms?

Yes >> Repair the (G161) Driver Door Lock Switch Mux circuit for a short to ground.
Perform BODY VERIFICATION TEST - VER 1. (Refer to BODY VERIFICATION TEST – VER 1).

No >> Go To 4

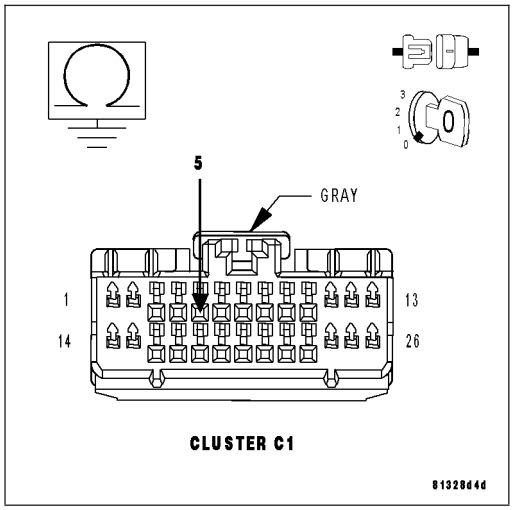

4. (G161) DRIVER DOOR LOCK SWITCH MUX CIRCUIT SHORT TO (G167) DRIVER DOOR LOCK SWITCH RETURN CIRCUIT

Disconnect the Cluster C2 connector.

Measure the resistance between the (G161) Driver Door Lock Switch Mux circuit and the (G167) Driver Door Lock Switch Return circuit in the Cluster C2 connector.

Is the resistance below 10000.0 ohms?

Yes >> Repair the (G161) Driver Door Lock Switch Mux circuit for a short to the (G167) Driver Door Lock Switch Return circuit.
Perform BODY VERIFICATION TEST - VER 1. (Refer to BODY VERIFICATION TEST – VER 1).

No >> Replace the Instrument Cluster.
Perform BODY VERIFICATION TEST - VER 1. (Refer to BODY VERIFICATION TEST – VER 1).

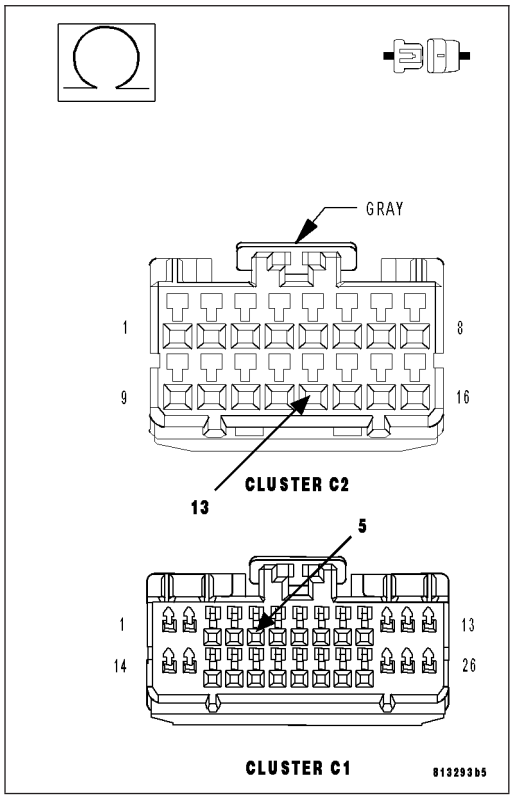

B1806–PASSENGER DOOR LOCK/UNLOCK SWITCH CIRCUIT LOW — CLUSTER

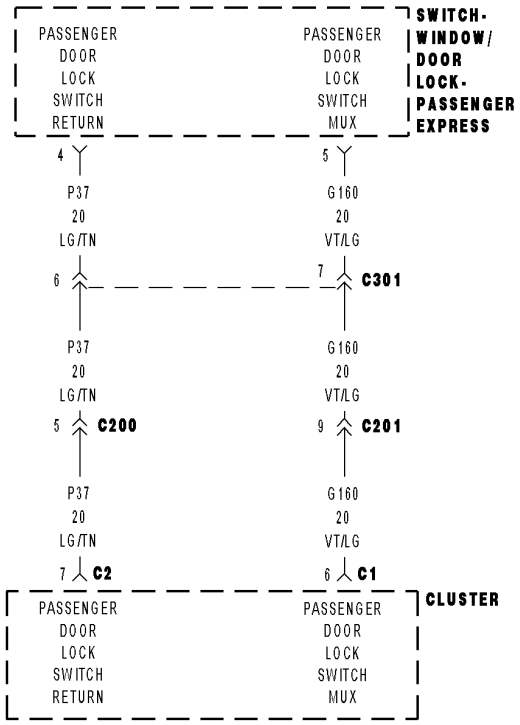

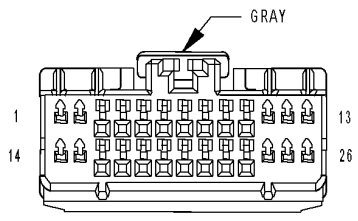

CLUSTER C1

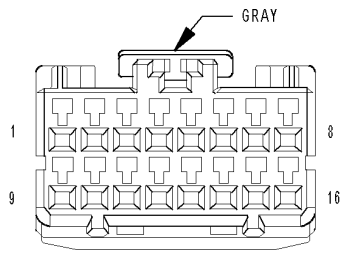

CLUSTER C2

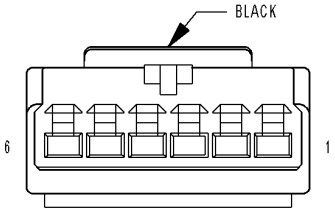

SWITCH-
WINDOW/
DOOR LOCK-
PASSENGER
EXPRESS
(EXCEPT BASE)

8132f115

For a complete wiring diagram **Refer to Section 8W**.

- **When Monitored:**
  Continuously.
- **Set Condition:**
  When the Passenger Door Lock Switch Mux circuit is below 0.15 volts for over 10 seconds.

Possible Causes
(G160) PASSENGER DOOR LOCK SWITCH MUX CIRCUIT SHORT TO GROUND
(G160) PASSENGER DOOR LOCK SWITCH MUX CIRCUIT SHORT TO THE (P37) PASSENGER DOOR LOCK SWITCH RETURN CIRCUIT
DOOR LOCK SWITCH SHORT TO GROUND
INSTRUMENT CLUSTER

Diagnostic Test

1. TEST FOR INTERMITTENT CONDITION

With the scan tool, record and erase DTC's
Operate the Passenger Door Lock Switch in all positions several times.
Turn the ignition on and wait 30 seconds.
With the scan tool, read DTC's.

Does the scan tool display B1806–PASSENGER DOOR LOCK/UNLOCK SWITCH CIRCUIT LOW?

Yes >> Go To 2

No >> The conditions that caused this code to set are not present at this time. Using the wiring diagram/schematic as a guide, inspect the wiring and connectors.
Perform BODY VERIFICATION TEST - VER 1. (Refer to BODY VERIFICATION TEST – VER 1).

2. DOOR LOCK SWITCH SHORTED

With the scan tool, erase DTC's.
Disconnect the Passenger Express Window/Door Lock Switch connector.
With the scan tool, read DTC's.

Does the scan tool display B1806–PASSENGER DOOR LOCK/ UNLOCK SWITCH CIRCUIT LOW?

No >> Replace the Passenger Express Window/Door Lock Switch.
Perform BODY VERIFICATION TEST - VER 1. (Refer to BODY VERIFICATION TEST – VER 1).

Yes >> Go To 3

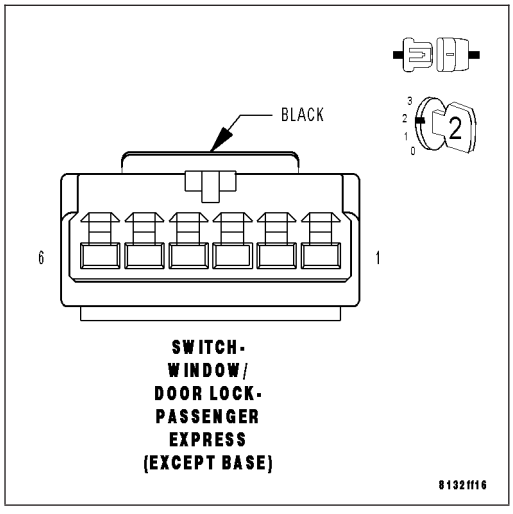

3. (G160) PASSENGER DOOR LOCK SWITCH MUX CIRCUIT SHORT TO GROUND

Turn the ignition off.

Disconnect the Cluster C1 connector.

Measure the resistance between ground and the (G160) Passenger Door Lock Switch Mux circuit.

Is the resistance below 10000.0 ohms?

Yes >> Repair the (G160) Passenger Door Lock Switch Mux circuit for a short to ground.
Perform BODY VERIFICATION TEST - VER 1. (Refer to BODY VERIFICATION TEST – VER 1).

No >> Go To 4

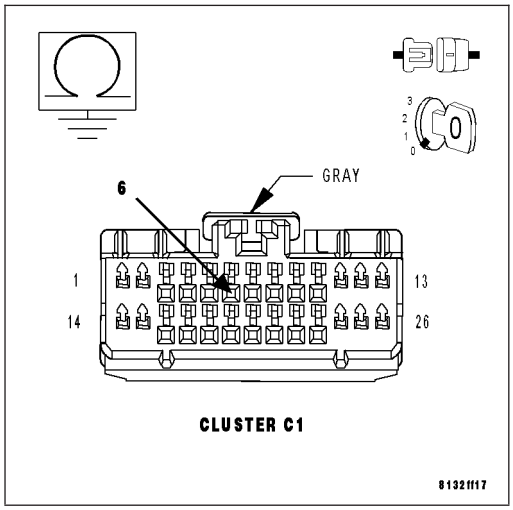

4. (G160) PASSENGER DOOR LOCK SWITCH MUX CIRCUIT SHORT TO (P37) PASSENGER DOOR LOCK SWITCH RETURN CIRCUIT

Disconnect the Cluster C2 connector.

Measure the resistance between the (G160) Passenger Door Lock Switch Mux circuit and the (P37) Passenger Door Lock Switch Return circuit.

Is the resistance below 10000.0 ohms?

Yes >> Repair the (G160) Passenger Door Lock Switch Mux circuit for a short to the (P37) Passenger Door Lock Switch Return circuit.
Perform BODY VERIFICATION TEST - VER 1. (Refer to BODY VERIFICATION TEST – VER 1).

No >> Replace the Instrument Cluster.
Perform BODY VERIFICATION TEST - VER 1. (Refer to BODY VERIFICATION TEST – VER 1).

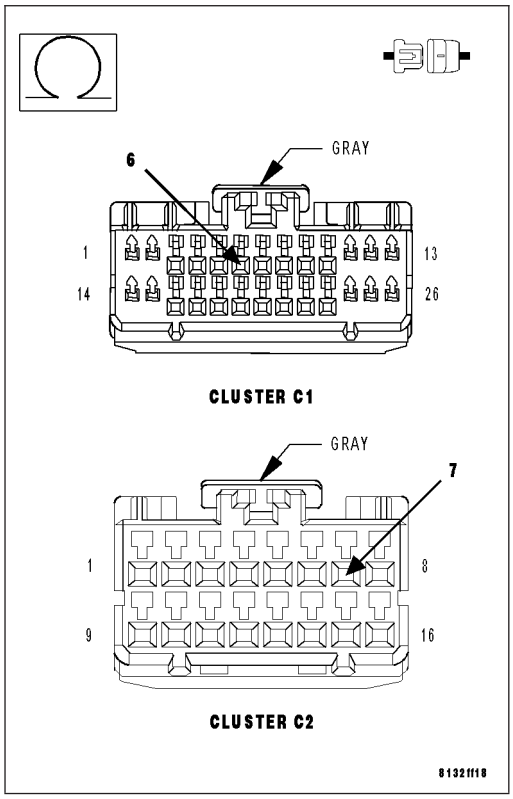

B1808–PASSENGER DOOR LOCK/UNLOCK SWITCH CIRCUIT STUCK LOCK — CLUSTER

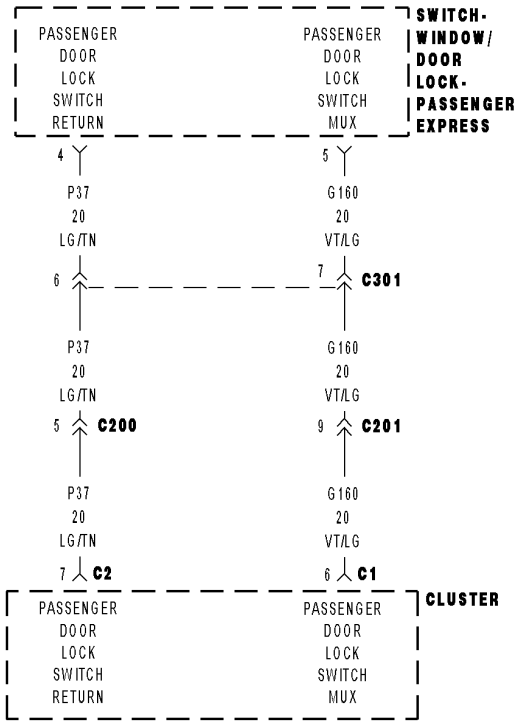

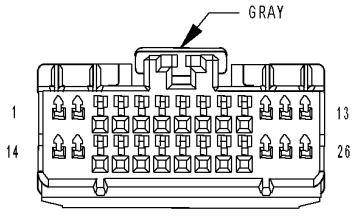

CLUSTER C1

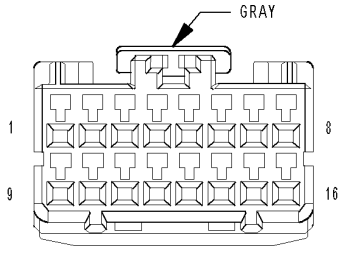

CLUSTER C2

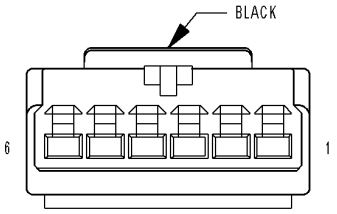

SWITCH-
WINDOW/
DOOR LOCK-
PASSENGER
EXPRESS
(EXCEPT BASE)

8132ff15

For a complete wiring diagram **Refer to Section 8W**.

- **When Monitored:**
  Continuously.
- **Set Condition:**
  When the Passenger Door Lock Switch Mux circuit is between 0.8 and 1.5 volts for over 30 seconds.

Possible Causes
(G160) PASSENGER DOOR LOCK SWITCH MUX CIRCUIT SHORT TO GROUND
(G160) PASSENGER DOOR LOCK SWITCH MUX CIRCUIT SHORT TO THE (P37) PASSENGER DOOR LOCK SWITCH RETURN CIRCUIT
DOOR LOCK SWITCH SHORT TO GROUND
INSTRUMENT CLUSTER

Diagnostic Test

1. TEST FOR INTERMITTENT CONDITION

With the scan tool, record and erase DTC's

Operate the Passenger Door Lock Switch in all positions several times.

Turn the ignition on and wait 30 seconds.

With the scan tool, read DTC's.

Does the scan tool display B1808–PASSENGER DOOR LOCK/UNLOCK SWITCH CIRCUIT STUCK LOCK?

Yes >> Go To 2

No >> The conditions that caused this code to set are not present at this time. Using the wiring diagram/schematic as a guide, inspect the wiring and connectors.
Perform BODY VERIFICATION TEST - VER 1 (Refer to BODY VERIFICATION TEST – VER 1).

2. DOOR LOCK SWITCH SHORTED

With the scan tool, erase DTC's.

Disconnect the Passenger Express Window/Door Lock Switch connector.

With the scan tool, read DTC's.

Does the scan tool display B1808–PASSENGER DOOR LOCK/ UNLOCK SWITCH CIRCUIT STUCK LOCK?

No >> Replace the Passenger Express Window/Door Lock Switch.
Perform BODY VERIFICATION TEST - VER 1 (Refer to BODY VERIFICATION TEST – VER 1).

Yes >> Go To 3

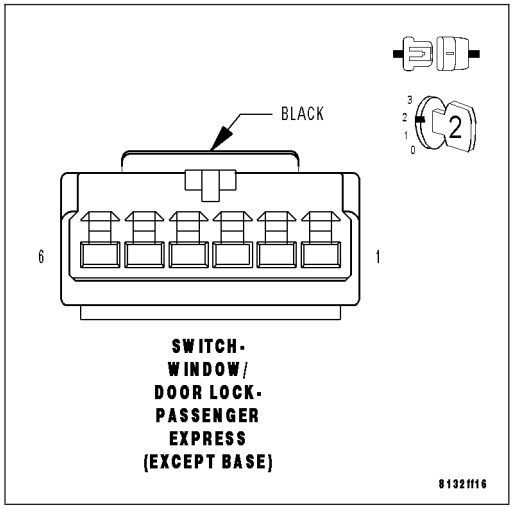

3. (G160) PASSENGER DOOR LOCK SWITCH MUX CIRCUIT SHORT TO GROUND

Turn the ignition off.

Disconnect the Cluster C1 connector.

Measure the resistance between ground and the (G160) Passenger Door Lock Switch Mux circuit.

Is the resistance below 10000.0 ohms?

Yes >> Repair the (G160) Passenger Door Lock Switch Mux circuit for a short to ground.

Perform BODY VERIFICATION TEST - VER 1 (Refer to BODY VERIFICATION TEST – VER 1).

No >> Go To 4

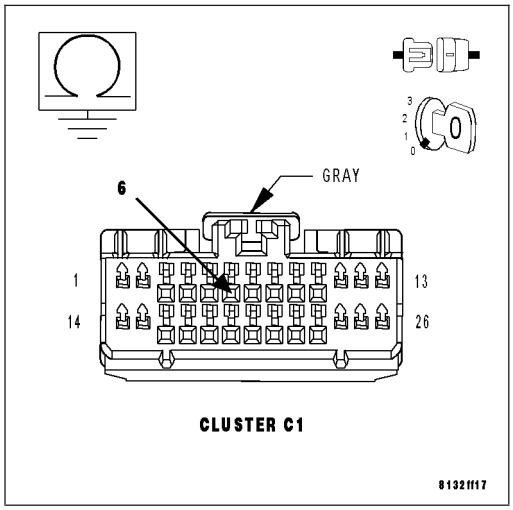

4. (G160) PASSENGER DOOR LOCK SWITCH MUX CIRCUIT SHORT TO (P37) PASSENGER DOOR LOCK SWITCH RETURN CIRCUIT

Disconnect the Cluster C2 connector.

Measure the resistance between the (G160) Passenger Door Lock Switch Mux circuit and the (P37) Passenger Door Lock Switch Return circuit.

Is the resistance below 10000.0 ohms?

Yes >> Repair the (G160) Passenger Door Lock Switch Mux circuit for a short to the (P37) Passenger Door Lock Switch Return circuit.

Perform BODY VERIFICATION TEST - VER 1 (Refer to BODY VERIFICATION TEST – VER 1).

No >> Replace the Instrument Cluster.

Perform BODY VERIFICATION TEST - VER 1 (Refer to BODY VERIFICATION TEST – VER 1).

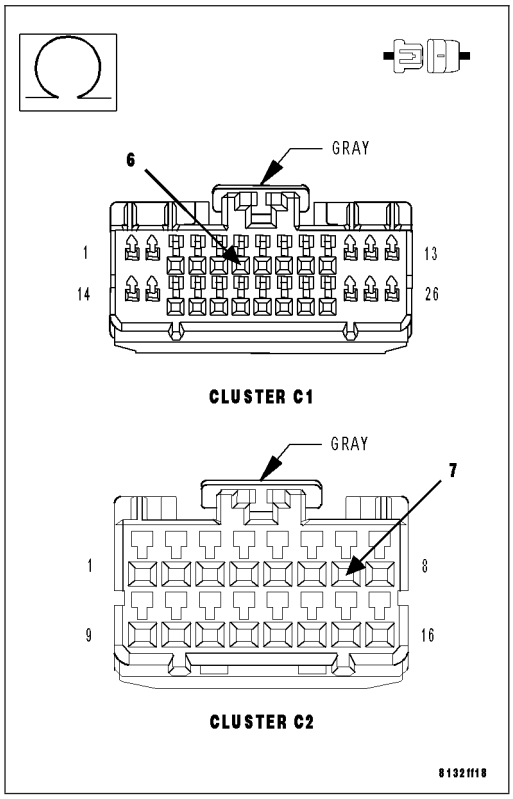

B1809–PASSENGER DOOR LOCK/UNLOCK SWITCH CIRCUIT STUCK UNLOCK — CLUSTER

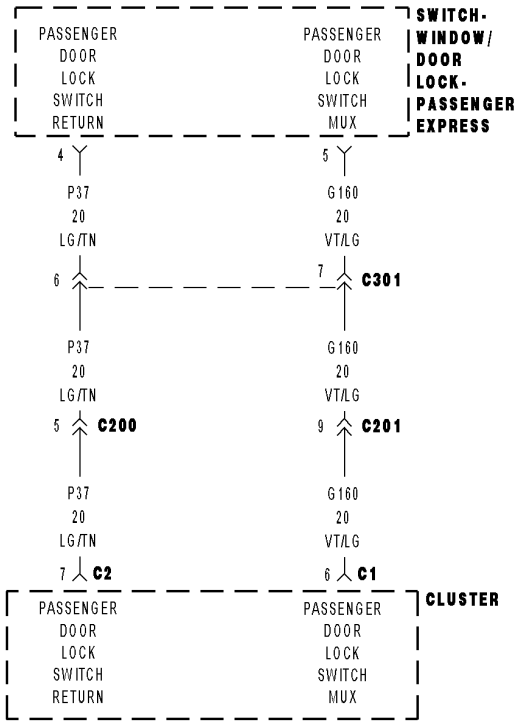

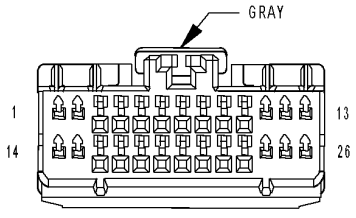

CLUSTER C1

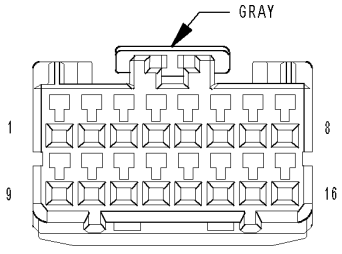

CLUSTER C2

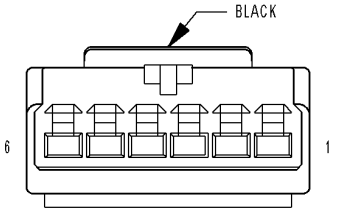

SWITCH-
WINDOW/
DOOR LOCK-
PASSENGER
EXPRESS
(EXCEPT BASE)

8132ff15

For a complete wiring diagram **Refer to Section 8W**.

- **When Monitored:**
  Continuously.
- **Set Condition:**
  When the Passenger Door Lock Switch Mux circuit is between 0.15 and 0.8 volts for over 30 seconds.

Possible Causes
(G160) PASSENGER DOOR LOCK SWITCH MUX CIRCUIT SHORT TO GROUND
(G160) PASSENGER DOOR LOCK SWITCH MUX CIRCUIT SHORT TO THE (P37) PASSENGER DOOR LOCK SWITCH RETURN CIRCUIT
DOOR LOCK SWITCH SHORT TO GROUND
INSTRUMENT CLUSTER

Diagnostic Test

1. TEST FOR INTERMITTENT CONDITION

With the scan tool, record and erase DTC's

Operate the Passenger Door Lock Switch in all positions several times.

Turn the ignition on and wait 30 seconds.

With the scan tool, read DTC's.

Does the scan tool display B1809–PASSENGER DOOR LOCK/UNLOCK SWITCH CIRCUIT STUCK UNLOCK?

Yes >> Go To 2

No >> The conditions that caused this code to set are not present at this time. Using the wiring diagram/schematic as a guide, inspect the wiring and connectors.
Perform BODY VERIFICATION TEST - VER 1. (Refer to BODY VERIFICATION TEST – VER 1).

2. DOOR LOCK SWITCH SHORTED

With the scan tool, erase DTC's.

Disconnect the Passenger Express Window/Door Lock Switch connector.

With the scan tool, read DTC's.

Does the scan tool display B1809–PASSENGER DOOR LOCK/ UNLOCK SWITCH CIRCUIT STUCK UNLOCK?

No >> Replace the Passenger Express Window/Door Lock Switch.
Perform BODY VERIFICATION TEST - VER 1. (Refer to BODY VERIFICATION TEST – VER 1).

Yes >> Go To 3

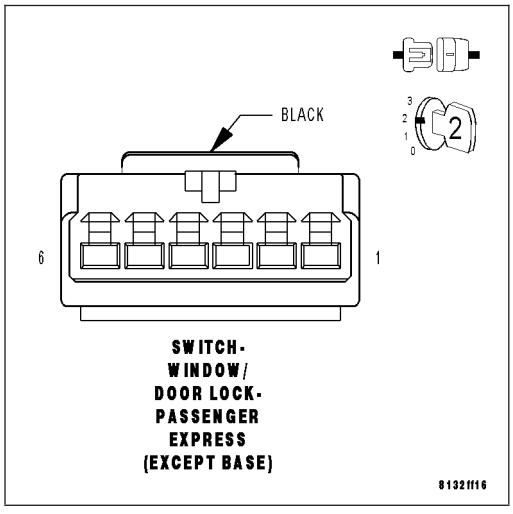

3. (G160) PASSENGER DOOR LOCK SWITCH MUX CIRCUIT SHORT TO GROUND

Turn the ignition off.

Disconnect the Cluster C1 connector.

Measure the resistance between ground and the (G160) Passenger Door Lock Switch Mux circuit.

Is the resistance below 10000.0 ohms?

Yes >> Repair the (G160) Passenger Door Lock Switch Mux circuit for a short to ground.
Perform BODY VERIFICATION TEST - VER 1. (Refer to BODY VERIFICATION TEST – VER 1).

No >> Go To 4

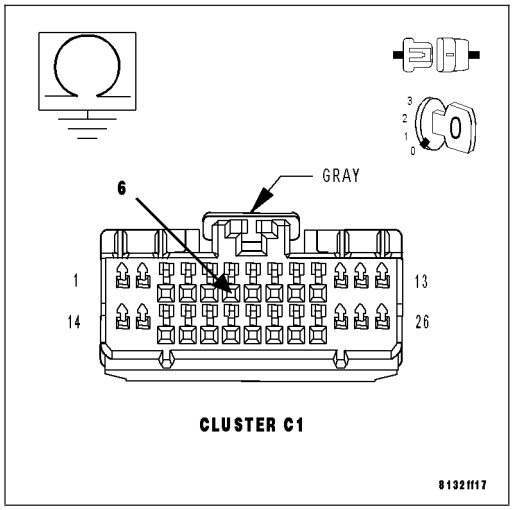

4. (G160) PASSENGER DOOR LOCK SWITCH MUX CIRCUIT SHORT TO (P37) PASSENGER DOOR LOCK SWITCH RETURN CIRCUIT

Disconnect the Cluster C2 connector.

Measure the resistance between the (G160) Passenger Door Lock Switch Mux circuit and the (P37) Passenger Door Lock Switch Return circuit.

Is the resistance below 10000.0 ohms?

Yes >> Repair the (G160) Passenger Door Lock Switch Mux circuit for a short to the (P37) Passenger Door Lock Switch Return circuit.
Perform BODY VERIFICATION TEST - VER 1. (Refer to BODY VERIFICATION TEST – VER 1).

No >> Replace the Instrument Cluster.
Perform BODY VERIFICATION TEST - VER 1. (Refer to BODY VERIFICATION TEST – VER 1).

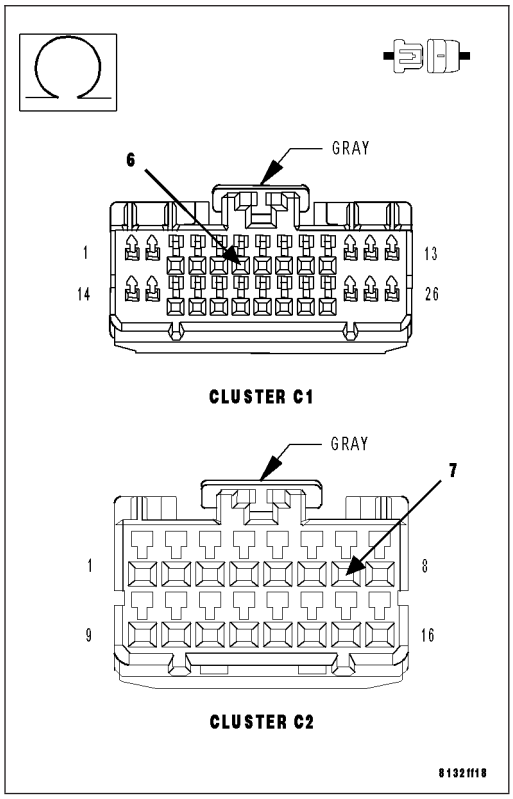

B1826–TRUNK RELEASE SWITCH INPUT CIRCUIT LOW

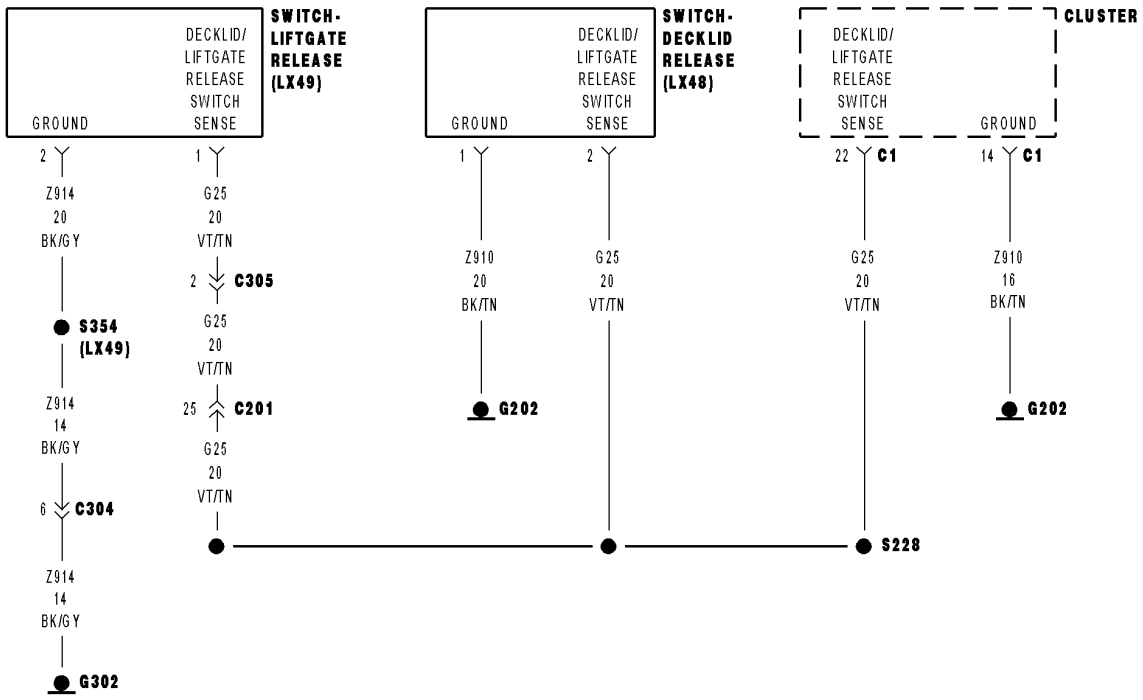

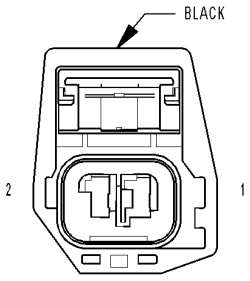

SWITCH- LIFTGATE RELEASE (LX49)

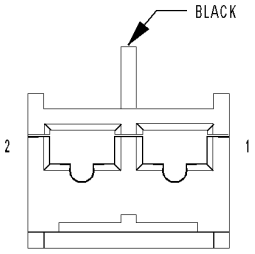

SWITCH- DECKLID RELEASE (LX48)

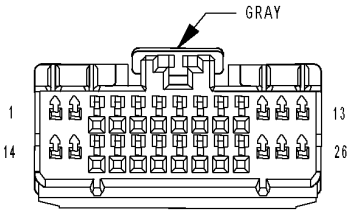

CLUSTER C1

8134d49e

For a complete wiring diagram **Refer to Section 8W**.

- **When Monitored:**
  Whenever the module is awake.
- **Set Condition:**
  When the (G25) Decklid/Liftgate Release Switch Sense circuit is shorted low for over 30 seconds.

Possible Causes
(G25) DECKLID/LIFTGATE RELEASE SWITCH SENSE CIRCUIT SHORT TO GROUND
DECKLID OR LIFTGATE SWITCH SHORTED TO GROUND
INSTRUMENT CLUSTER

Diagnostic Test

1. TEST FOR INTERMITTENT CONDITION

With the scan tool, record and erase DTC's
Operate the Decklid or Liftgate Switch several times.
Turn the ignition on and wait 30 seconds.
With the scan tool, read DTC's.

Does the scan tool display B1826–TRUNK RELEASE SWITCH INPUT CIRCUIT LOW?

Yes >> Go To 2

No >> The conditions that caused this code to set are not present at this time. Using the wiring diagram/schematic as a guide, inspect the wiring and connectors.
Perform BODY VERIFICATION TEST - VER 1 (Refer to BODY VERIFICATION TEST – VER 1).

2. TRUNK SWITCH SHORTED

Disconnect the Decklid or Liftgate Release Switch connector.
With the scan tool, record and erase DTC's
Cycle the ignition from on to off three times.
Turn the ignition on.
With the scan tool, read DTC's.

Does the scan tool display B1826–TRUNK RELEASE SWITCH INPUT CIRCUIT LOW?

No >> Replace the decklid or liftgate switch.
Perform BODY VERIFICATION TEST - VER 1 (Refer to BODY VERIFICATION TEST - VER 1).

Yes >> Go To 3

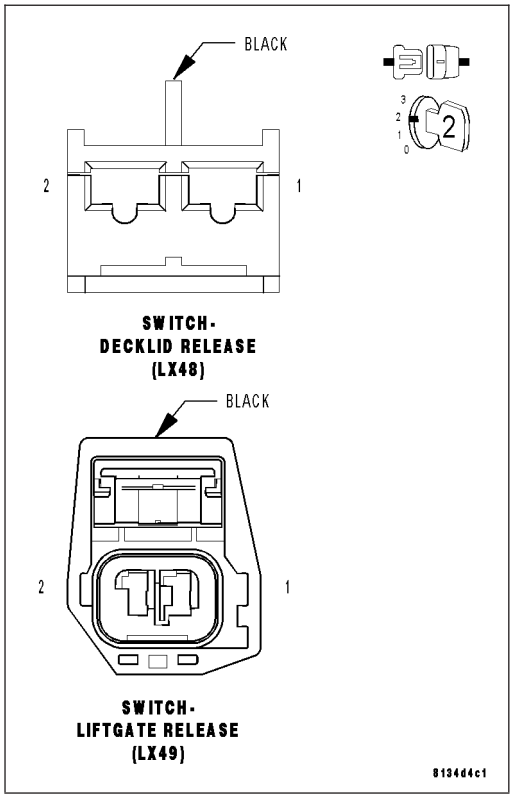

3. (P25) DECKLID/LIFTGATE RELEASE SWITCH SENSE CIRCUIT SHORT TO GROUND.

Turn the ignition off.

Disconnect the Cluster C1 connector.

Measure the resistance between Ground and the (G25) Decklid/Liftgate Release Switch sense circuit.

Is the resistance below 1000.0 ohms?

Yes >> Repair the (G25) Decklid/Liftgate Release Switch Sense circuit for a short to ground.
Perform BODY VERIFICATION TEST - VER 1 (Refer to BODY VERIFICATION TEST - VER 1).

No >> Replace the Instrument Cluster
Perform BODY VERIFICATION TEST - VER 1 (Refer to BODY VERIFICATION TEST - VER 1).

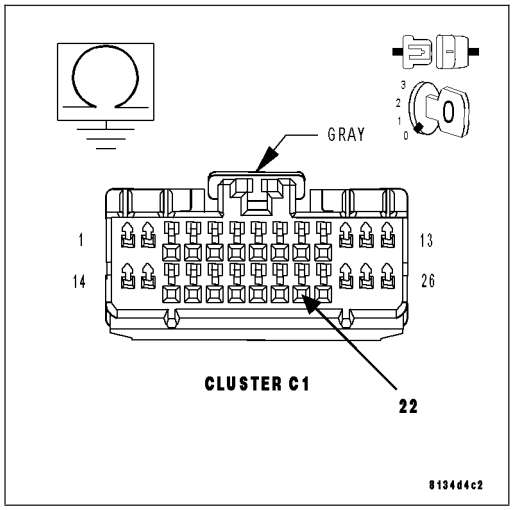

*DECKLID/LIFTGATE RELEASE INOPERATIVE

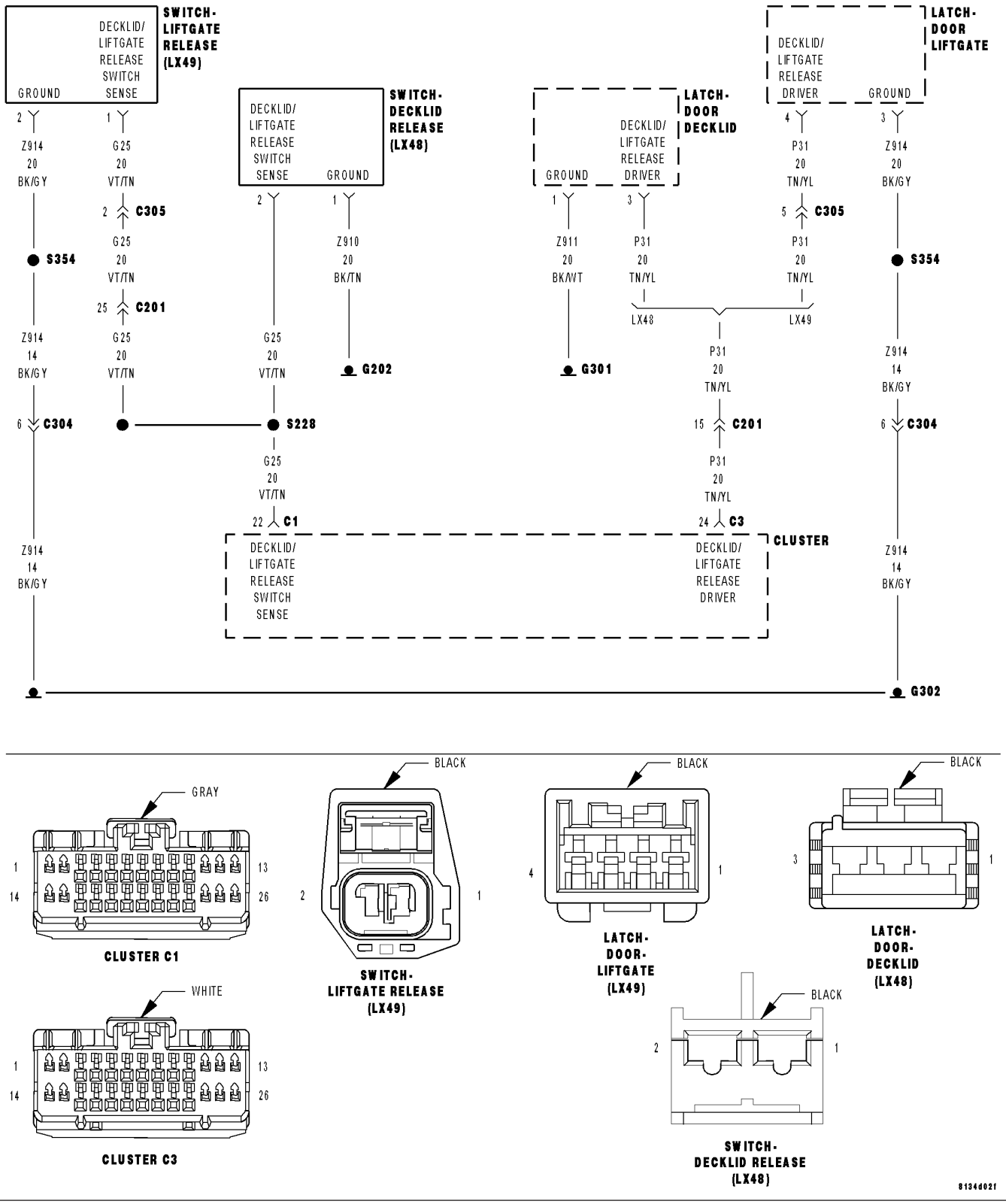

For a complete wiring diagram **Refer to Section 8W**.

Possible Causes
(P31) DECKLID/LIFTGATE RELEASE DRIVER CIRCUIT SHORT TO GROUND
(P31) DECKLID/LIFTGATE RELEASE DRIVER CIRCUIT SHORT TO VOLTAGE
(P31) DECKLID/LIFTGATE RELEASE DRIVER CIRCUIT OPEN
DECKLID/LIFTGATE RELEASE GROUND CIRCUIT OPEN
(G25) DECKLID/LIFTGATE RELEASE SWITCH SENSE CIRCUIT SHORT TO GROUND
(G25) DECKLID/LIFTGATE SWITCH SENSE CIRCUIT OPEN
DECKLID OR LIFTGATE SWITCH GROUND CIRCUIT OPEN
DECKLID OR LIFTGATE SWITCH INOPERATIVE
DECKLID OR LIFTGATE LATCH INOPERATIVE
INSTRUMENT CLUSTER

Diagnostic Test

1. DECKLID/LIFTGATE OPERATIONAL FROM RKE ONLY

Is the Decklid Or Liftgate operational from the RKE only?

No >> Go To 2

Yes >> Go To 7

2. DECKLID OR LIFTGATE LATCH INOPERATIVE

NOTE: Ensure all fuses are good before proceeding.

Disconnect the liftgate or decklid latch connector.

Connect a test light between the (P31) Decklid/Liftgate Release Driver circuit and the Ground circuit.

Turn the ignition on.

Operate the decklid or liftgate and observe the test light.

Does the testlight illuminate brightly for approximately 300 ms. when the decklid or liftgate is operated?

Yes >> Replace the Decklid or Liftgate Latch.
Perform BODY VERIFICATION TEST - VER 1 (Refer to BODY VERIFICATION TEST - VER 1).

No >> Go To 3

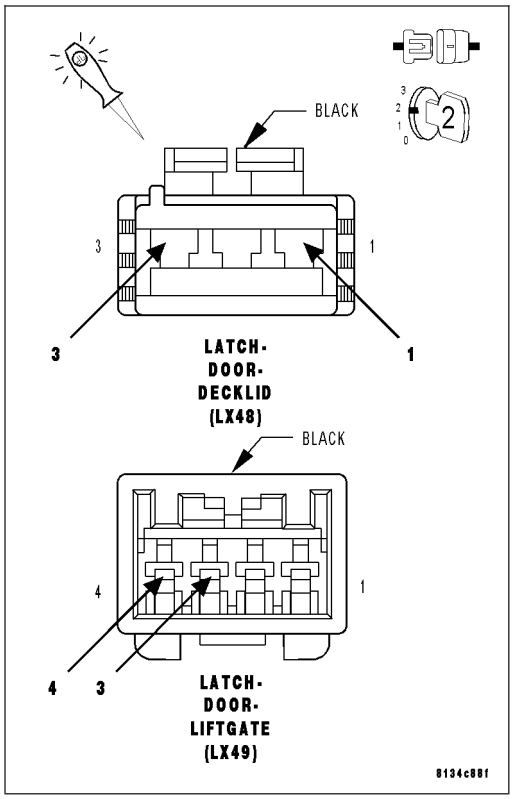

3. OPEN GROUND CIRCUIT.

Using a 12-volt test light connected to 12-volts, check the Ground circuit in the latch connector.

Does the test light illuminate brightly?

No >> Repair the Ground circuit for an open.
Perform BODY VERIFICATION TEST - VER 1 (Refer to BODY VERIFICATION TEST - VER 1).

Yes >> Go To 4

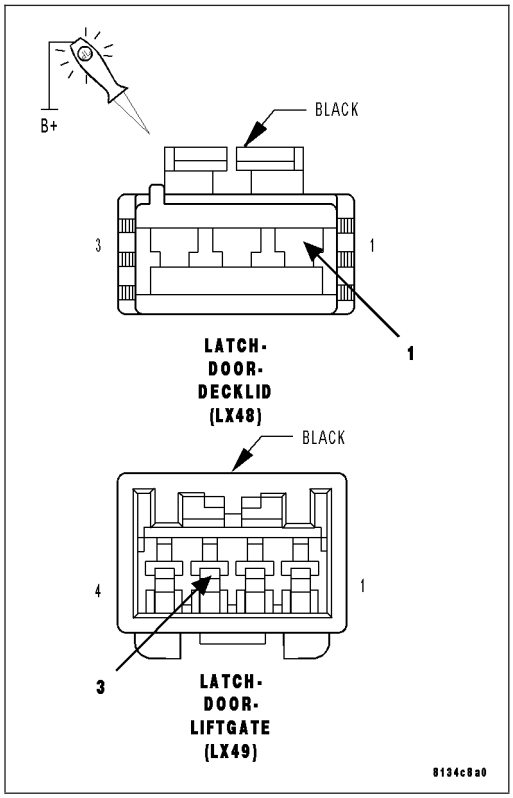

4. (P31) DECKLID/LIFTGATE RELEASE DRIVER CIRCUIT SHORT TO GROUND.

Turn the ignition off.

Disconnect the Cluster C3 connector.

Measure the resistance between Ground and the (P31) Decklid/Liftgate Release Driver circuit.

Is the resistance below 1000.0 ohms?

Yes >> Repair the (P31) Decklid/Liftgate Release Driver circuit for a short to ground.
Perform BODY VERIFICATION TEST - VER 1 (Refer to BODY VERIFICATION TEST - VER 1).

No >> Go To 5

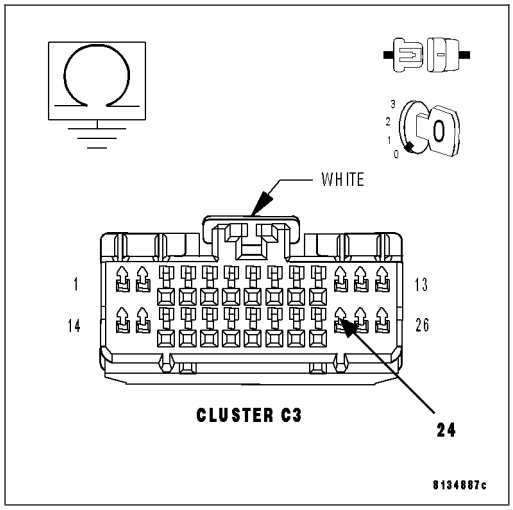

5. (P31) DECKLID/LIFTGATE RELEASE DRIVER CIRCUIT SHORT TO VOLTAGE.

Turn the ignition on.

Measure the voltage between Ground and the (P31) Decklid/Liftgate Release Driver circuit.

Is there any voltage present?

Yes >> Repair the (P31) Decklid/Liftgate Release Driver circuit for a short to voltage.
Perform BODY VERIFICATION TEST - VER 1 (Refer to BODY VERIFICATION TEST - VER 1).

No >> Go To 6

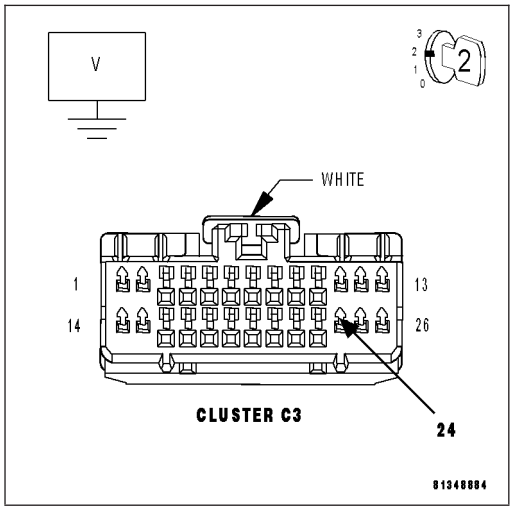

6. (P31) DECKLID/LIFTGATE RELEASE DRIVER CIRCUIT OPEN.

Turn the ignition off.

Measure the resistance of the (P31) Decklid/Liftgate Release Driver circuit between the Latch connector and the Cluster C3 connector.

Is the resistance below 5.0 ohms?

No >> Repair the (P31) Decklid/Liftgate Release Driver circuit for an open.
Perform BODY VERIFICATION TEST - VER 1 (Refer to BODY VERIFICATION TEST - VER 1).

Yes >> Replace the Instrument Cluster.
Perform BODY VERIFICATION TEST - VER 1 (Refer to BODY VERIFICATION TEST - VER 1).

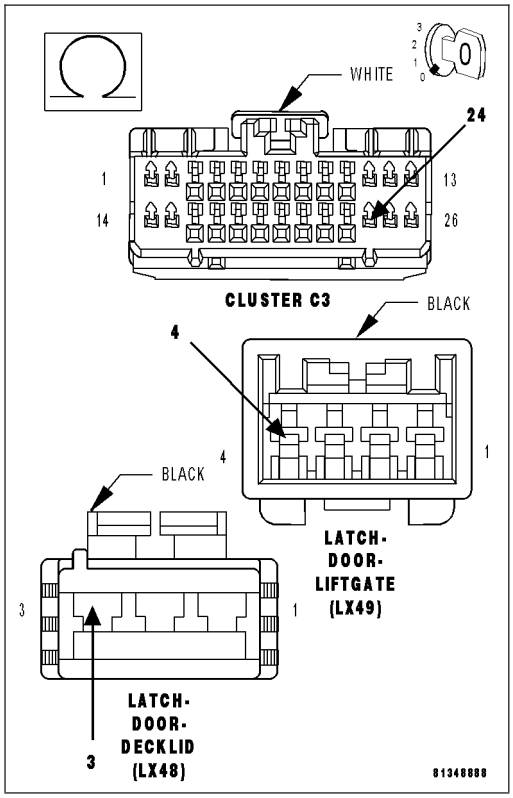

7. IS THIS VEHICLE A 4 DOOR SEDAN?

Is this vehicle a 4 door sedan?

Yes >> Go To 8

No >> Go To 12

8. DECKLID SWITCH INOPERATIVE.

NOTE: Ensure the Decklid Latch is connected before proceeding.
Disconnect the Decklid Release Switch connector.

Turn the Ignition On.

Momentarily connect a jumper wire between the (G25) Decklid/Liftgate Release Switch Sense circuit and the Ground circuit.

Did the decklid open?

Yes >> Replace the decklid switch.
Perform BODY VERIFICATION TEST - VER 1 (Refer to BODY VERIFICATION TEST - VER 1).

No >> Go To 9

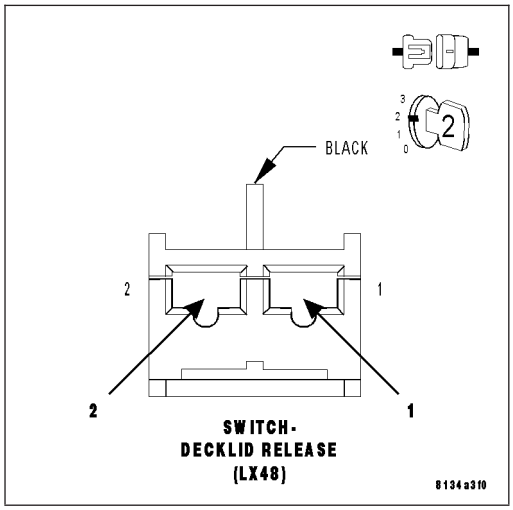

9. SWITCH GROUND CIRCUIT OPEN

Using a 12-volt test light connected to 12-volts, check the Ground circuit.

Does the test light illuminate brightly?

No >> Repair the Ground circuit for an open.
Perform BODY VERIFICATION TEST - VER 1 (Refer to BODY VERIFICATION TEST - VER 1).

Yes >> Go To 10

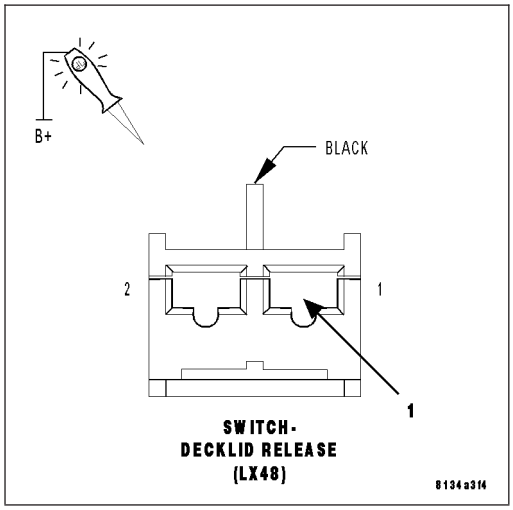

10. (P25) DECKLID/LIFTGATE RELEASE SWITCH SENSE CIRCUIT SHORT TO GROUND.

Turn the ignition off.

Disconnect the Cluster C1 connector.

Measure the resistance between Ground and the (G25) Decklid/Liftgate Release Switch sense circuit.

Is the resistance below 1000.0 ohms?

Yes >> Repair the (G25) Decklid/Liftgate Release Switch Sense circuit for a short to ground.
Perform BODY VERIFICATION TEST - VER 1 (Refer to BODY VERIFICATION TEST - VER 1).

No >> Go To 11

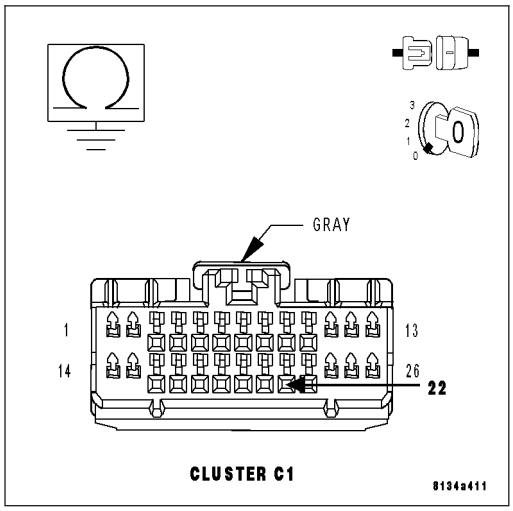

11. (P25) DECKLID/LIFTGATE RELEASE SWITCH SENSE CIRCUIT OPEN.

Measure the resistance of the (G25) Decklid/Liftgate Release Switch sense circuit between the Switch connector and the Cluster C1 connector.

Is the resistance below 5.0 ohms?

No >> Repair the (G25) Decklid/Liftgate Release Switch Sense circuit for an open.
Perform BODY VERIFICATION TEST - VER 1 (Refer to BODY VERIFICATION TEST - VER 1).

Yes >> Replace the Instrument Cluster
Perform BODY VERIFICATION TEST - VER 1 (Refer to BODY VERIFICATION TEST - VER 1).

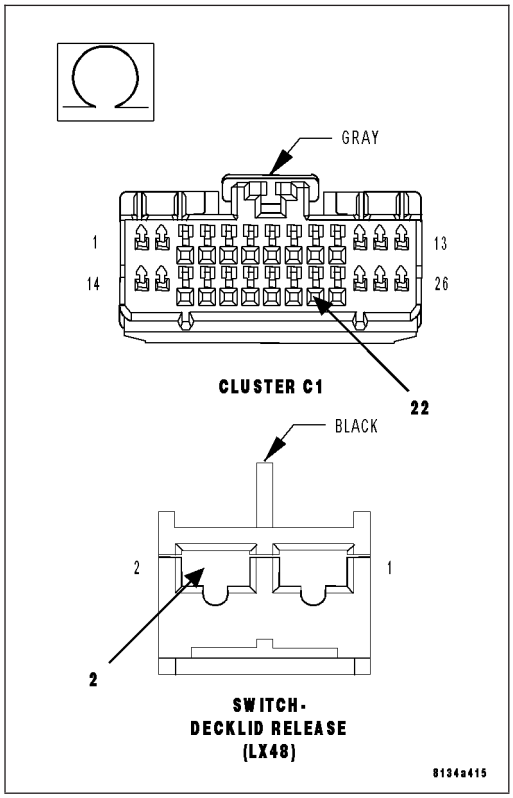

12. LIFTGATE SWITCH INOPERATIVE.

Turn the Ignition Off.
Disconnect the Liftgate Release Switch connector.
Connect an ohmmeter between the terminals of the switch connector (Switch Side).
Press and hold the switch closed while measuring the resistance of the switch.

Is the resistance approximately 4700.0 ohms?

No >> Replace the liftgate switch.
Perform BODY VERIFICATION TEST - VER 1 (Refer to BODY VERIFICATION TEST - VER 1).

Yes >> Go TO 13

13. SWITCH GROUND CIRCUIT OPEN

Using a 12-volt test light connected to 12-volts, check the Ground circuit in the Liftgate Release Switch harness connector.

Does the test light illuminate brightly?

No >> Repair the Ground circuit for an open.Perform BODY VERIFICATION TEST - VER 1 (Refer to BODY VERIFICATION TEST - VER 1).

Yes >> Go To 14

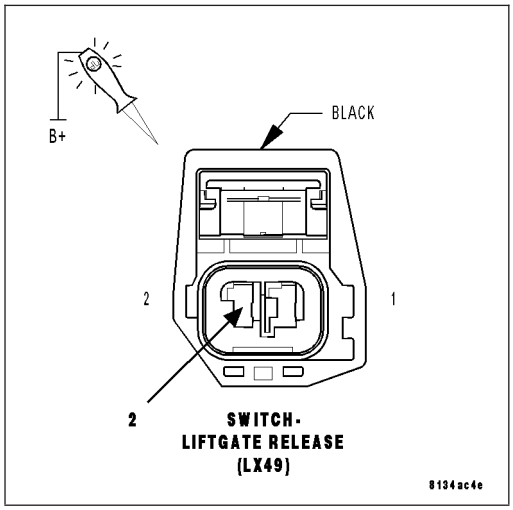

14. (P25) DECKLID/LIFTGATE RELEASE SWITCH SENSE CIRCUIT SHORT TO GROUND.

Disconnect the Cluster C1 connector.

Measure the resistance between Ground and the (G25) Decklid/Liftgate Release Switch sense circuit.

Is the resistance below 1000.0 ohms?

Yes >> Repair the (G25) Decklid/Liftgate Release Switch Sense circuit for a short to ground.

Perform BODY VERIFICATION TEST - VER 1 (Refer to BODY VERIFICATION TEST - VER 1).

No >> Go To 11

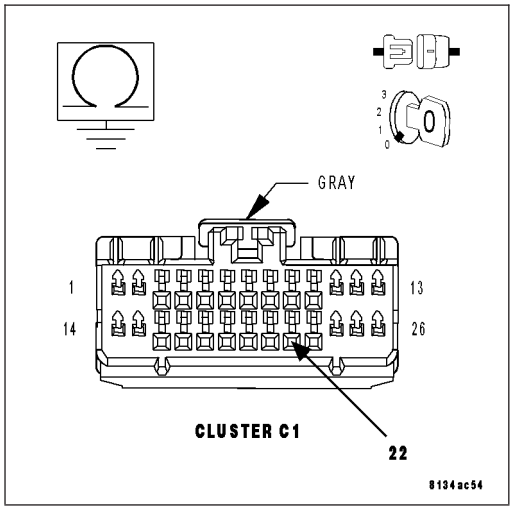

15. (P25) DECKLID/LIFTGATE RELEASE SWITCH SENSE CIRCUIT OPEN.

Measure the resistance of the (G25) Decklid/Liftgate Release Switch sense circuit between the Switch connector and the Cluster C1 connector.

Is the resistance below 5.0 ohms?

No >> Repair the (G25) Decklid/Liftgate Release Switch Sense circuit for an open.
Perform BODY VERIFICATION TEST - VER 1 (Refer to BODY VERIFICATION TEST - VER 1).

Yes >> Replace the Instrument Cluster
Perform BODY VERIFICATION TEST - VER 1 (Refer to BODY VERIFICATION TEST - VER 1).

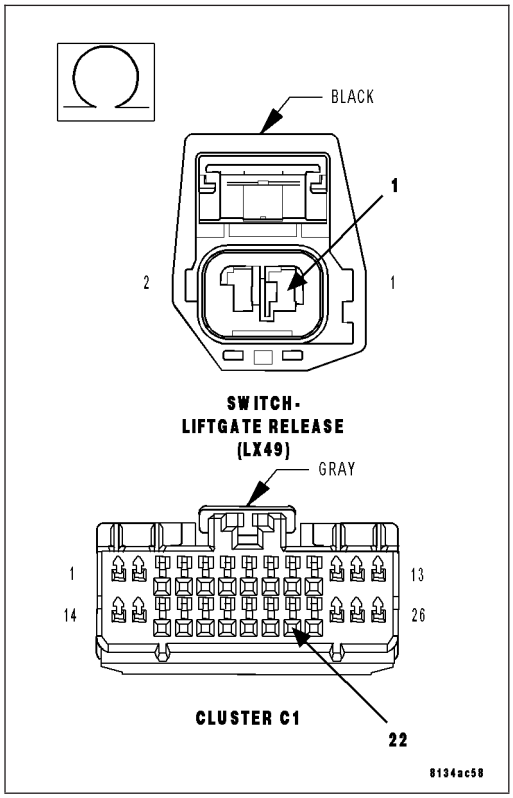

*ALL DOORS FAIL TO LOCK

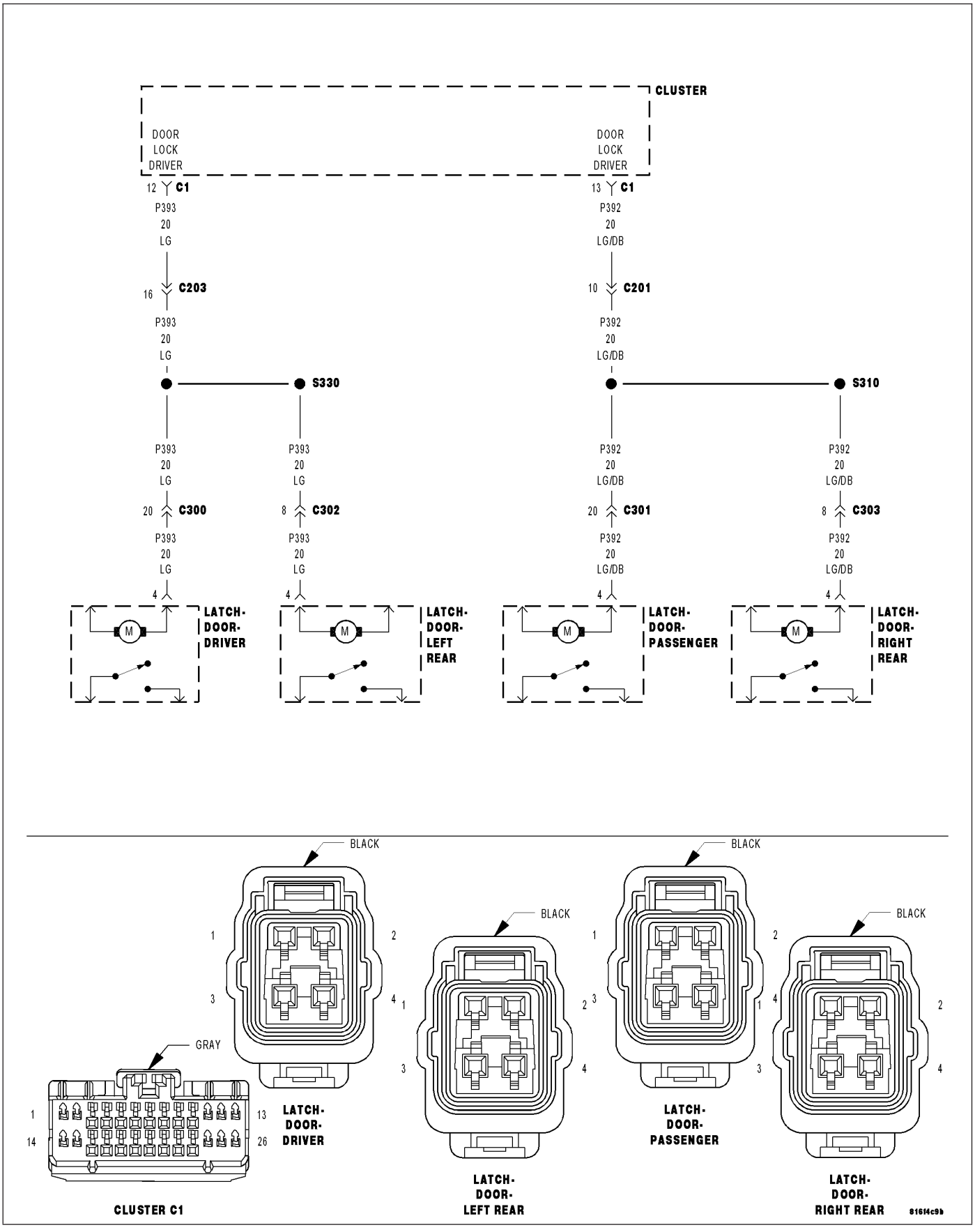

For a complete wiring diagram **Refer to Section 8W**.

Theory of Operation

Both the Door Lock Driver circuits (P392 and P393) are connected together inside the Cluster. Therefore either circuit shorted will affect all door locks. Depending on where the short is, some doors may lock.

Possible Causes
(P392) DOOR LOCK DRIVER CIRCUIT SHORT TO GROUND
(P393) DOOR LOCK DRIVER CIRCUIT SHORT TO GROUND
CLUSTER

Diagnostic Test

1. CHECK FOR DOOR LOCK DTC'S

Turn the ignition on.

With the scan tool, record and erase DTC's.

Turn the ignition off, wait 10 seconds then turn the ignition on.

Try to operate the door locks several times.

With the scan tool, read active DTC's.

Does the scan tool display any Door Lock System DTC's?

No >> Go To 2

Yes >> Refer to symptom list for problems related to POWER DOOR LOCKS.

2. CHECK (P392) DOOR LOCK DRIVER RIGHT DOORS CIRCUIT FOR A SHORT TO GROUND

NOTE: If only one motor is inoperative when the door locks are actuated, disconnect that motor and retest to see if the other doors lock properly. If they do, replace the defective motor.

NOTE: Ensure the door lock inhibit (key in ignition) and the door ajar systems are operating properly before proceeding. These systems affect the door lock locking functions if they are not working as they should.

Turn the ignition off.

Disconnect the Cluster C1 connector.

Measure the resistance between ground and the (P392) Door Lock Driver circuit.

Is the resistance below 1000.0 ohms?

No >> Go To 3

Yes >> Repair the (P392) Door Lock Driver circuit for a short to ground.
Perform BODY VERIFICATION TEST - VER 1. (Refer to BODY VERIFICATION TEST – VER 1).

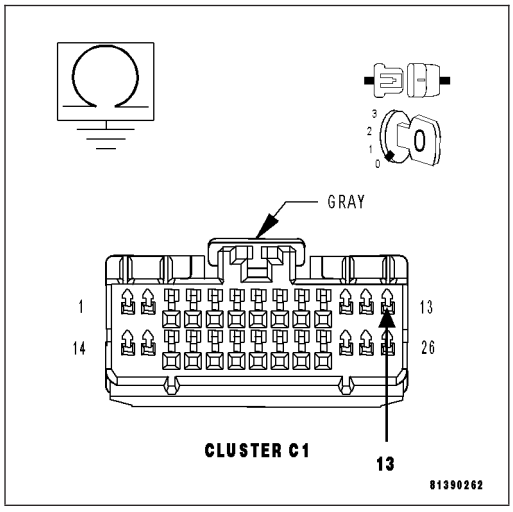

3. CHECK (P393) DOOR LOCK DRIVER CIRCUIT FOR A SHORT TO GROUND

Measure the resistance between ground and the (P393) Door Lock Driver circuit.

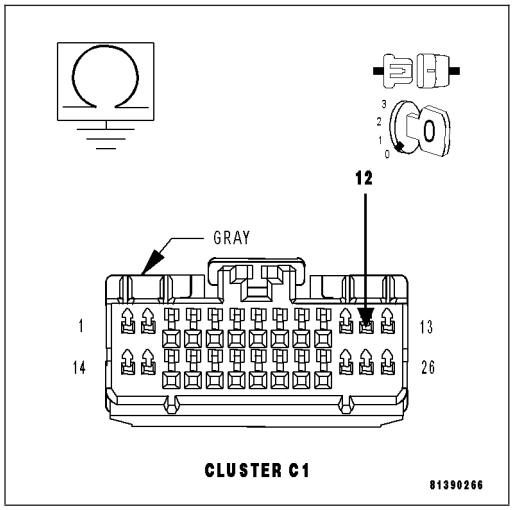

Is the resistance below 1000.0 ohms?

No >> Replace the Cluster in accordance with service information.
Perform BODY VERIFICATION TEST - VER 1. (Refer to BODY VERIFICATION TEST – VER 1).

Yes >> Repair the (P393) Door Lock Driver circuit for a short to ground.
Perform BODY VERIFICATION TEST - VER 1. (Refer to BODY VERIFICATION TEST – VER 1).

*PASSENGER DOORS FAIL TO UNLOCK

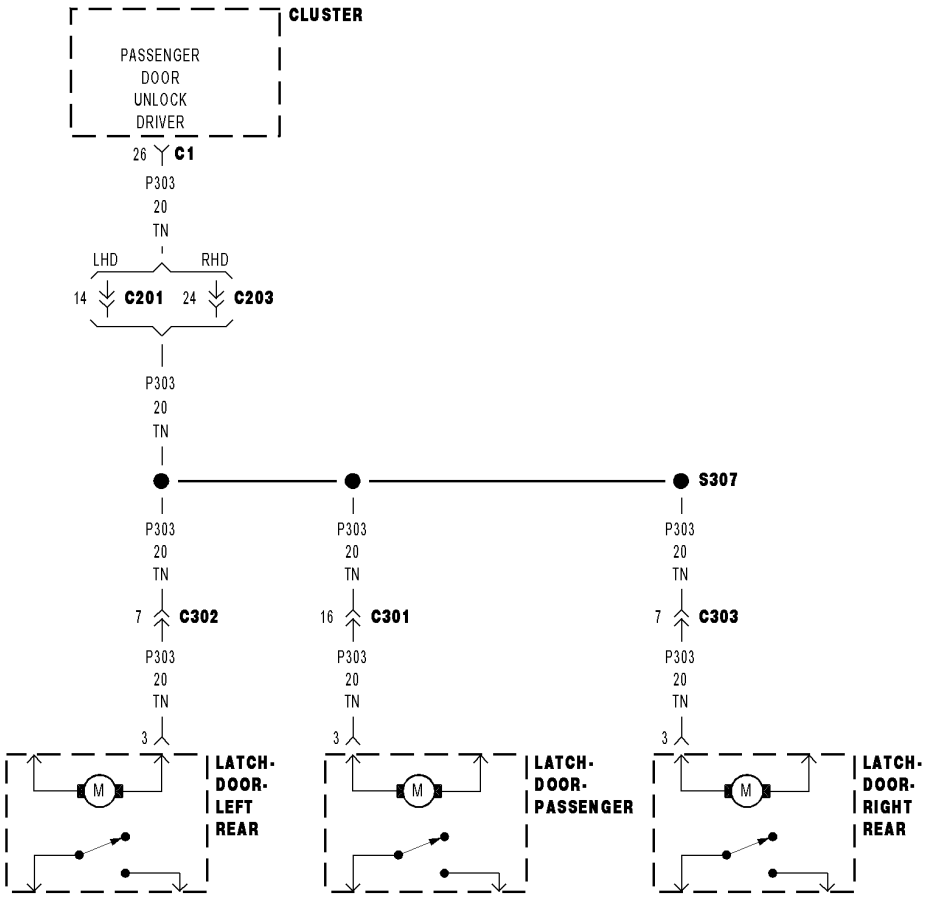

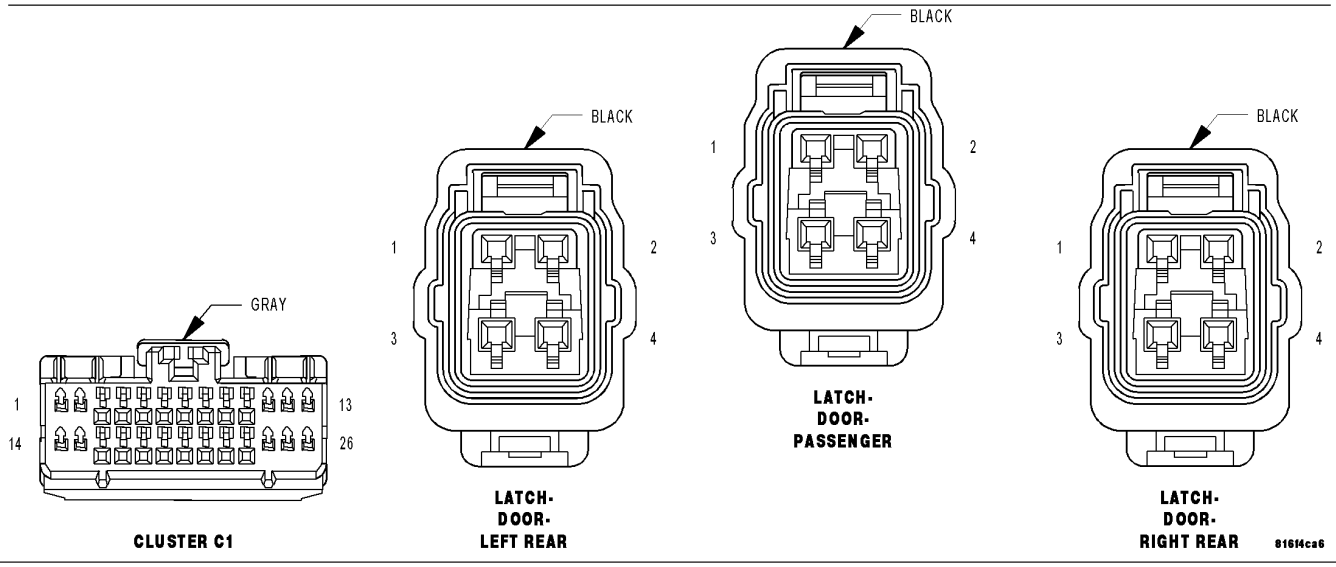

For a complete wiring diagram **Refer to Section 8W**.

Possible Causes
(P303) PASSENGER DOORS UNLOCK DRIVER CIRCUIT SHORT TO GROUND
CLUSTER

Diagnostic Test

1. (P303) PASSENGER DOORS UNLOCK DRIVER CIRCUIT SHORT TO GROUND

NOTE: If only one motor fails to unlock when the door locks are actuated, disconnect that motor and retest to see if the other doors unlock properly. If they do, replace the defective motor.

Turn the ignition off.

Disconnect the Cluster C1 connector.

Measure the resistance between ground and the (P303) Passenger Doors Unlock Driver circuit.

Is the resistance below 1000.0 ohms?

No >> Replace the Cluster in accordance with service information.
Perform BODY VERIFICATION TEST - VER 1. (Refer to BODY VERIFICATION TEST – VER 1).

Yes >> Repair the (P303) Passenger Doors Unlock Driver circuit for a short to ground.
Perform BODY VERIFICATION TEST - VER 1. (Refer to BODY VERIFICATION TEST – VER 1).

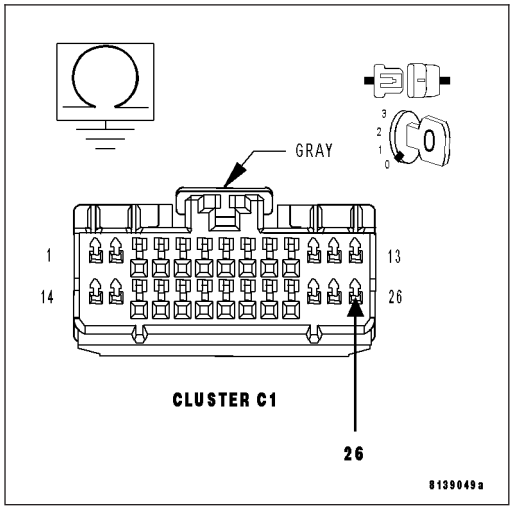

*RIGHT DOOR LOCKS INOPERATIVE – (LHD ONLY)

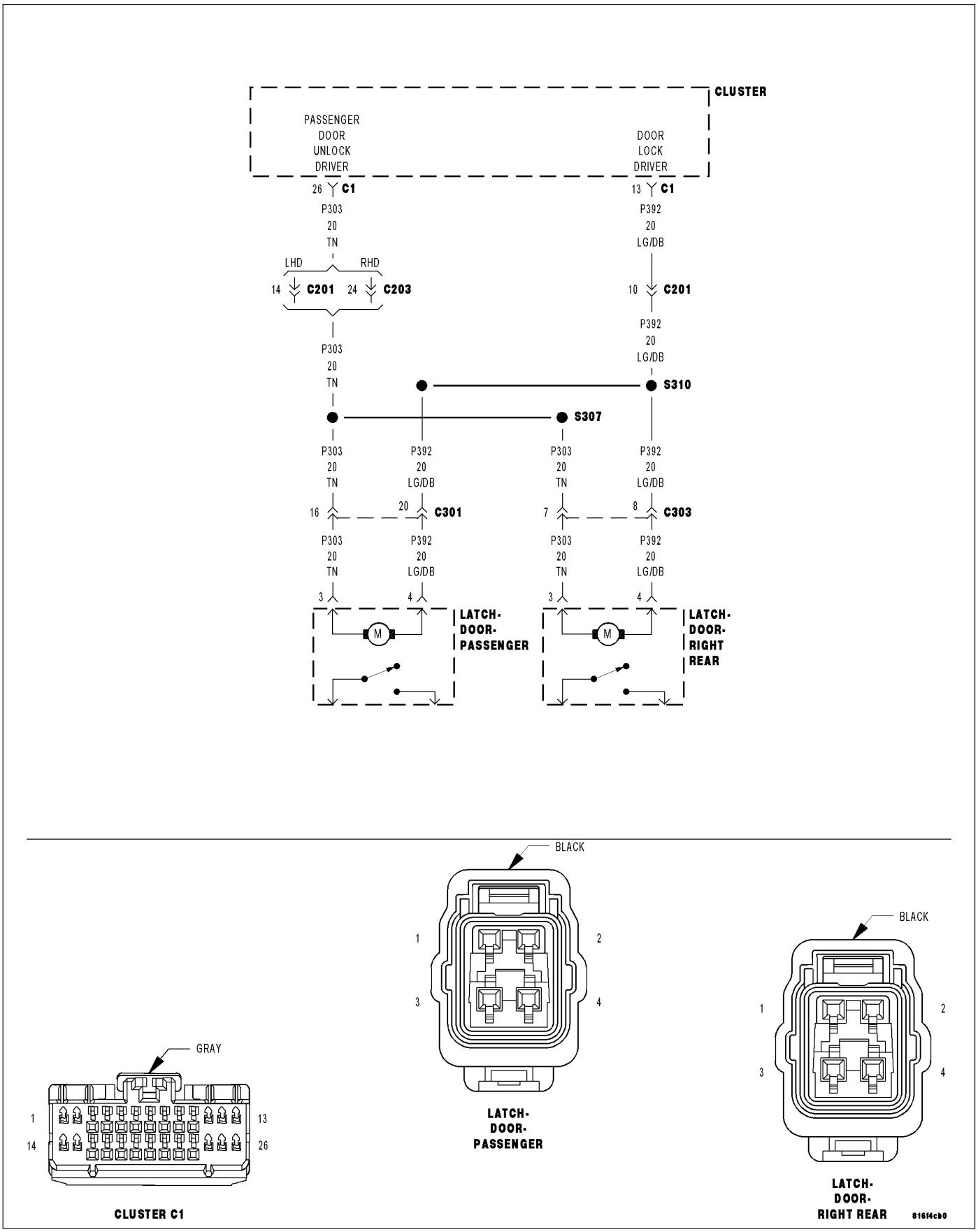

For a complete wiring diagram **Refer to Section 8W**.

Possible Causes
(P392) DOOR LOCK DRIVER CIRCUIT OPEN
(P303) PASSENGER DOOR UNLOCK DRIVER CIRCUIT OPEN
CLUSTER

Theory of Operation

This test is only for Left Hand Drive vehicles because on the Right Hand Drive vehicles the Right Rear door lock is connected with the Left Front door and the Left Rear door lock is connected with the Right Front (driver) door.

Diagnostic Test

1. CHECK (P392) DOOR LOCK DRIVER CIRCUIT FOR AN OPEN

NOTE: Graphics show Right Front Latch, Right Rear is similar.

Turn the ignition off.

Remove either right door inner trim panels to gain access to the door latch connector.

Disconnect the Right Door Latch connector.

Disconnect the Instrument Cluster C1 connector.

Measure the resistance of the (P392) Door Lock Driver circuit between the Cluster C1 connector and the Right Door Latch connector.

Is the resistance below 2.0 ohms?

Yes >> Go To 2

No >> Repair the (P392) Door Lock Driver circuit for an open. Perform BODY VERIFICATION TEST - VER 1. (Refer to BODY VERIFICATION TEST – VER 1).

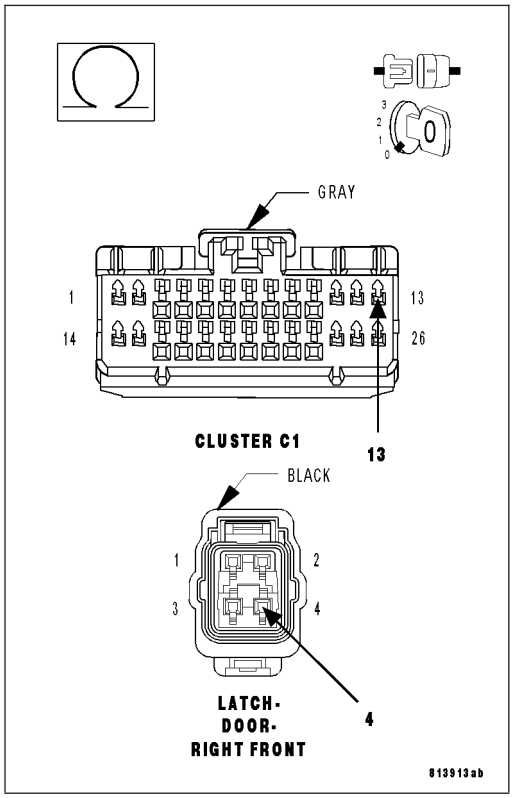

2. CHECK (P303) PASSENGER DOORS UNLOCK DRIVER CIRCUIT FOR AN OPEN

Measure the resistance of the (P303) Passenger Doors Unlock Driver circuit.

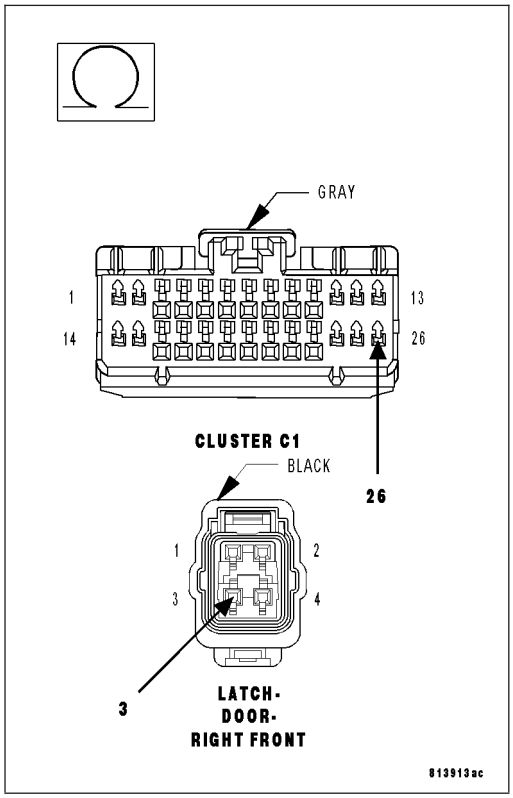

Is the resistance below 2.0 ohms?

Yes >> Replace the Cluster in accordance with service information.
Perform BODY VERIFICATION TEST - VER 1. (Refer to BODY VERIFICATION TEST – VER 1).

No >> Repair the (P303) Passenger Doors Unlock Driver circuit for an open.
Perform BODY VERIFICATION TEST - VER 1. (Refer to BODY VERIFICATION TEST – VER 1).

*LEFT DOOR LOCKS INOPERATIVE – (LHD ONLY)

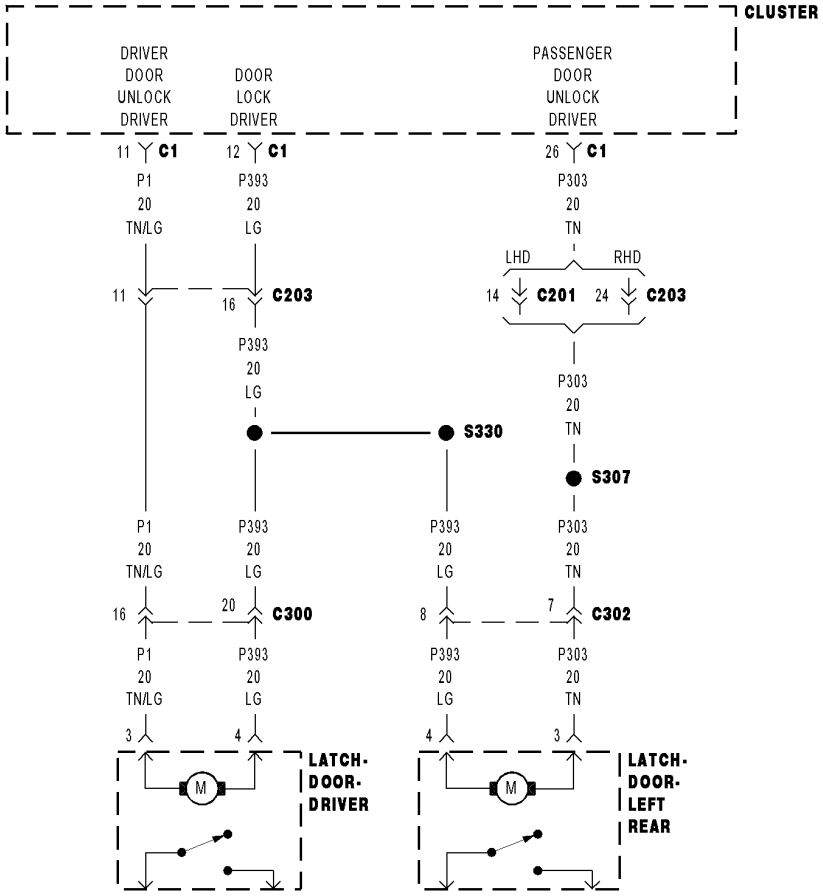

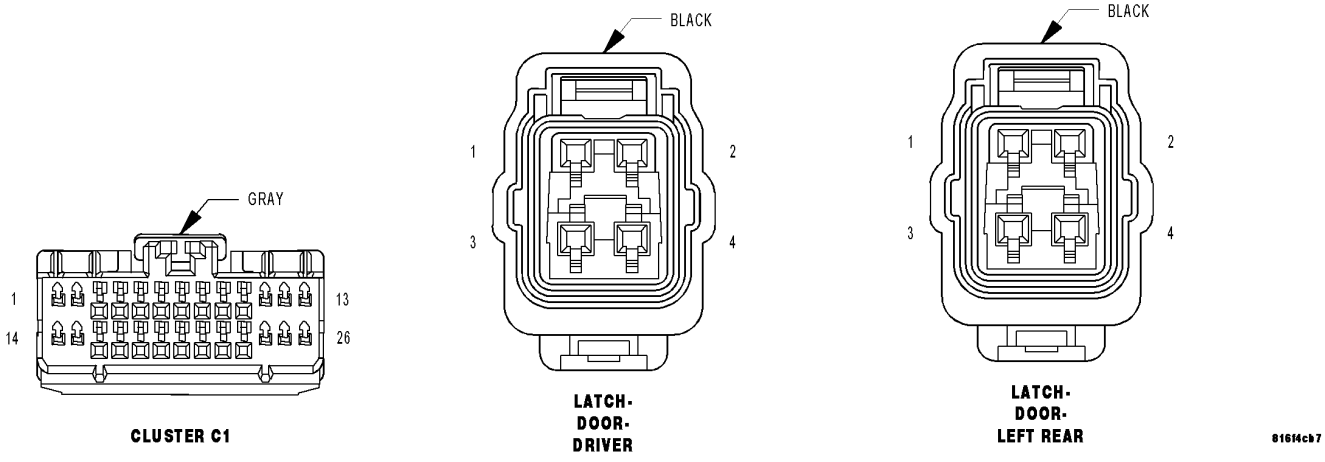

For a complete wiring diagram **Refer to Section 8W**.

Possible Causes
(P393) DOOR LOCK DRIVER CIRCUIT OPEN
(P303) PASSENGER DOOR UNLOCK DRIVER CIRCUIT OPEN
CLUSTER

Theory of Operation

This test is only for Left Hand Drive vehicles because on the Right Hand Drive vehicles the Right Rear door lock is connected with the Left Front door and the Left Rear door lock is connected with the Right Front (driver) door.

Diagnostic Test

1. CHECK (P393) DOOR LOCK DRIVER CIRCUIT FOR AN OPEN

Turn the ignition off.

Remove the left door inner trim panel to gain access to the door latch connector.

Disconnect the Left Rear Door Latch connector.

Disconnect the Instrument Cluster C1 connector.

Measure the resistance of the (P393) Door Lock Driver circuit between the Cluster C1 connector and the Left Rear Door Latch connector.

Is the resistance below 2.0 ohms?

Yes >> Go To 2

No >> Repair the (P393) Door Lock Driver circuit for an open. Perform BODY VERIFICATION TEST - VER 1. (Refer to BODY VERIFICATION TEST – VER 1).

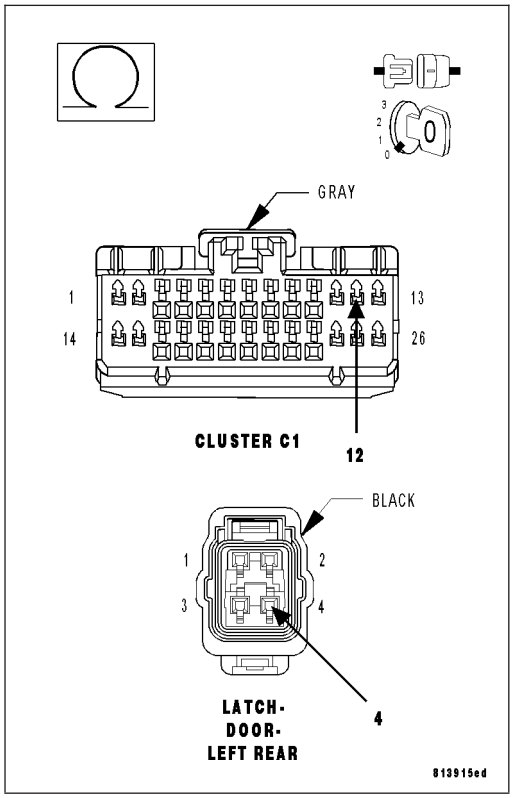

2. CHECK (P303) PASSENGER DOORS UNLOCK DRIVER CIRCUIT FOR AN OPEN

Measure the resistance of the (P303) Passenger Doors Unlock Driver circuit between the Cluster C1 connector and the Left Rear Door Latch connector.

Is the resistance below 2.0 ohms?

Yes >> Replace the Cluster in accordance with service information.
Perform BODY VERIFICATION TEST - VER 1. (Refer to BODY VERIFICATION TEST – VER 1).

No >> Repair the (P303) Passenger Doors Unlock Driver circuit for an open.
Perform BODY VERIFICATION TEST - VER 1. (Refer to BODY VERIFICATION TEST – VER 1).

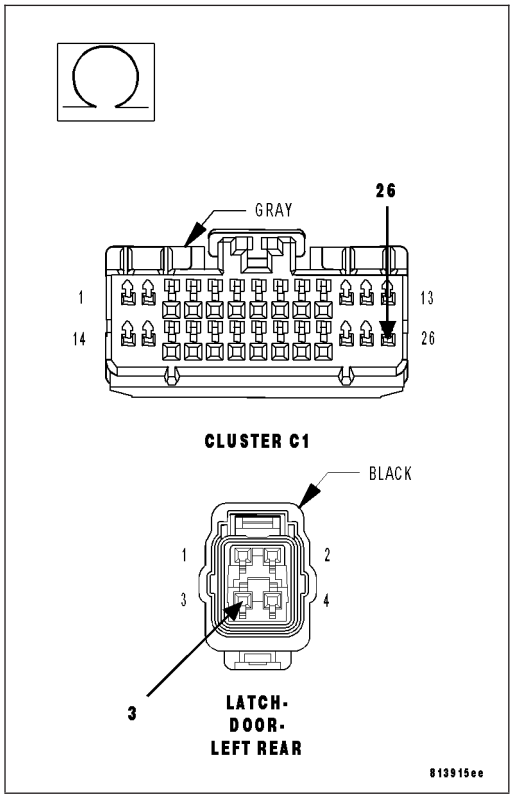

*DRIVER DOOR LOCK INOPERATIVE

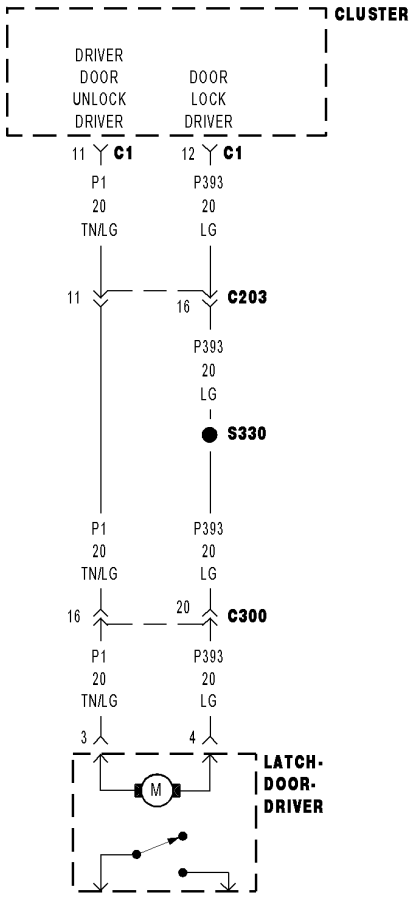

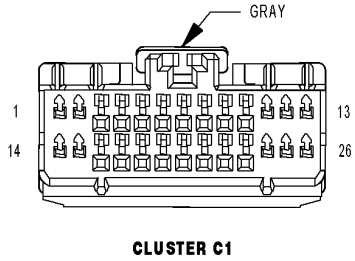

CLUSTER C1

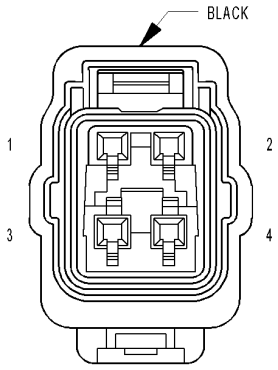

LATCH-DOOR-DRIVER

81615325

For a complete wiring diagram **Refer to Section 8W**.

Possible Causes
(P393) DOOR LOCK DRIVER CIRCUIT OPEN
(P393) DOOR LOCK DRIVER CIRCUIT SHORT TO GROUND
(P1) DRIVER DOOR UNLOCK DRIVER CIRCUIT OPEN
(P1) DRIVER DOOR UNLOCK DRIVER CIRCUIT SHORT TO GROUND
DRIVER DOOR LATCH
CLUSTER

Diagnostic Test

1. DRIVER DOOR LATCH INOPERATIVE

Disconnect the Driver Door Latch connector.

Connect a test light between the (P393) Door Lock Driver circuit and the (P1) Driver Door Unlock Driver circuit.

Close the front doors or trip the door latches to the closed position.

Operate the door locks in both positions and observe the test light.

Does the test light illuminate brightly for approximately 300 ms. when the door locks are actuated?

Yes >> Replace the Driver Door Latch.
Perform BODY VERIFICATION TEST - VER 1 (Refer to BODY VERIFICATION TEST - VER 1).

No >> Go To 2

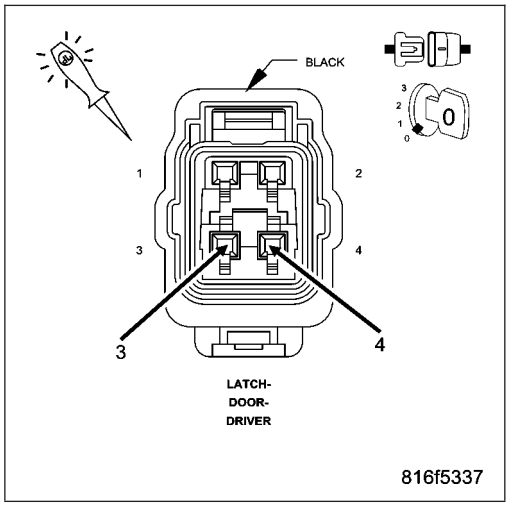

2. CHECK (P1) DRIVER DOOR UNLOCK DRIVER CIRCUIT FOR AN OPEN

Disconnect the Cluster C1 connector.

Measure the resistance of the (P1) Driver Door Unlock Driver circuit between the Latch connector and the Cluster C1 connector.

Is the resistance below 2.0 ohms?

No >> Repair the (P1) Driver Door Unlock Driver circuit for an open.
Perform BODY VERIFICATION TEST - VER 1. (Refer to BODY VERIFICATION TEST – VER 1).

Yes >> Go To 3

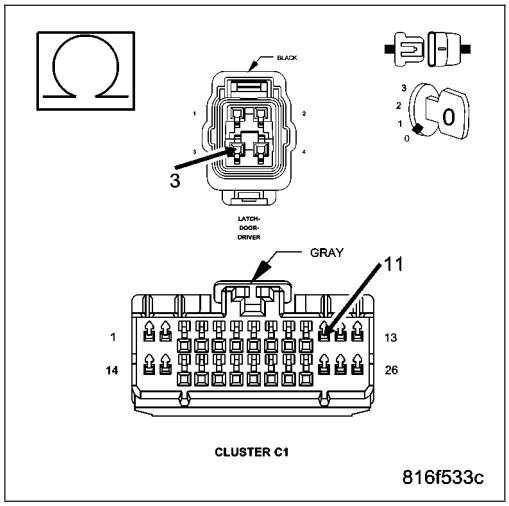

3. CHECK (P1) DRIVER DOOR UNLOCK DRIVER CIRCUIT FOR A SHORT TO GROUND

Measure the resistance between Ground and the (P1) Driver Door Unlock Driver circuit.

Is the resistance below 1000.0 ohms?

Yes >> Repair the (P1) Driver Door Unlock Driver circuit for a short to ground.
Perform BODY VERIFICATION TEST - VER 1. (Refer to BODY VERIFICATION TEST – VER 1).

No >> Go To 4

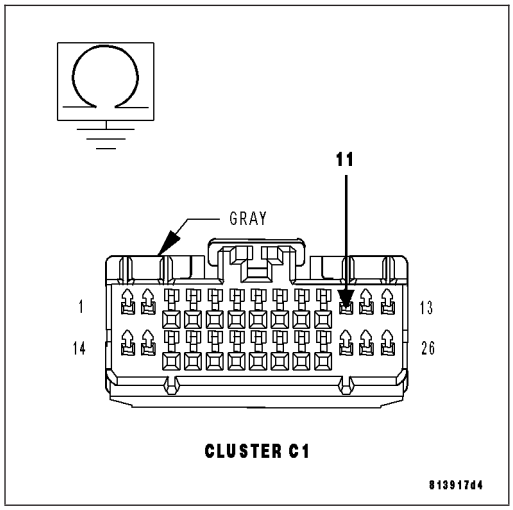

4. CHECK (P393) DOOR LOCK DRIVER CIRCUIT FOR AN OPEN

Measure the resistance of the (P393) Door Lock Driver circuit between the Cluster C1 connector and the Driver Door Latch connector.

Is the resistance below 2.0 ohms?

Yes >> Go To 5

No >> Repair the (P393) Door Lock Driver circuit for an open.
Perform BODY VERIFICATION TEST - VER 1. (Refer to BODY VERIFICATION TEST – VER 1).

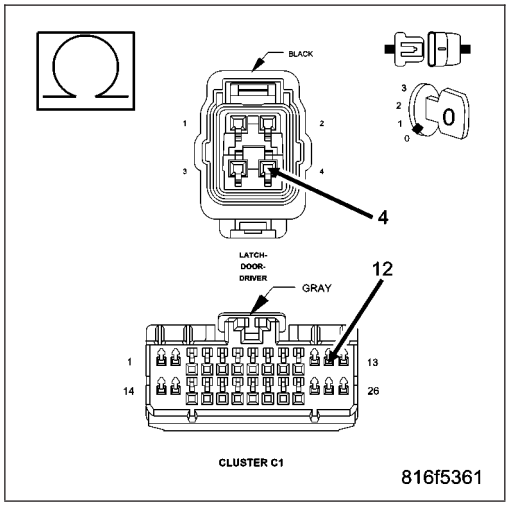

5. CHECK (P393) DOOR LOCK DRIVER CIRCUIT FOR A SHORT TO GROUND

Measure the resistance between Ground and the (P393) Door Lock Driver circuit.

Is the resistance below 1000.0 ohms?

Yes >> Repair the (P393) Door Lock Driver circuit for a short to ground.
Perform BODY VERIFICATION TEST - VER 1. (Refer to BODY VERIFICATION TEST – VER 1).

No >> Replace the Instrument Cluster in accordance with service information.
Perform BODY VERIFICATION TEST - VER 1. (Refer to BODY VERIFICATION TEST – VER 1).

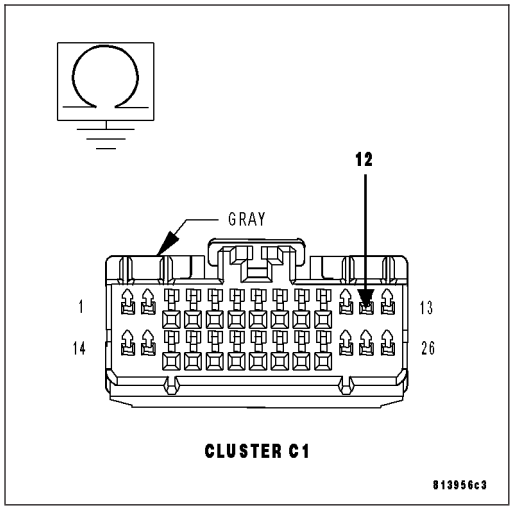

*ONE PASSENGER DOOR LOCK INOPERATIVE

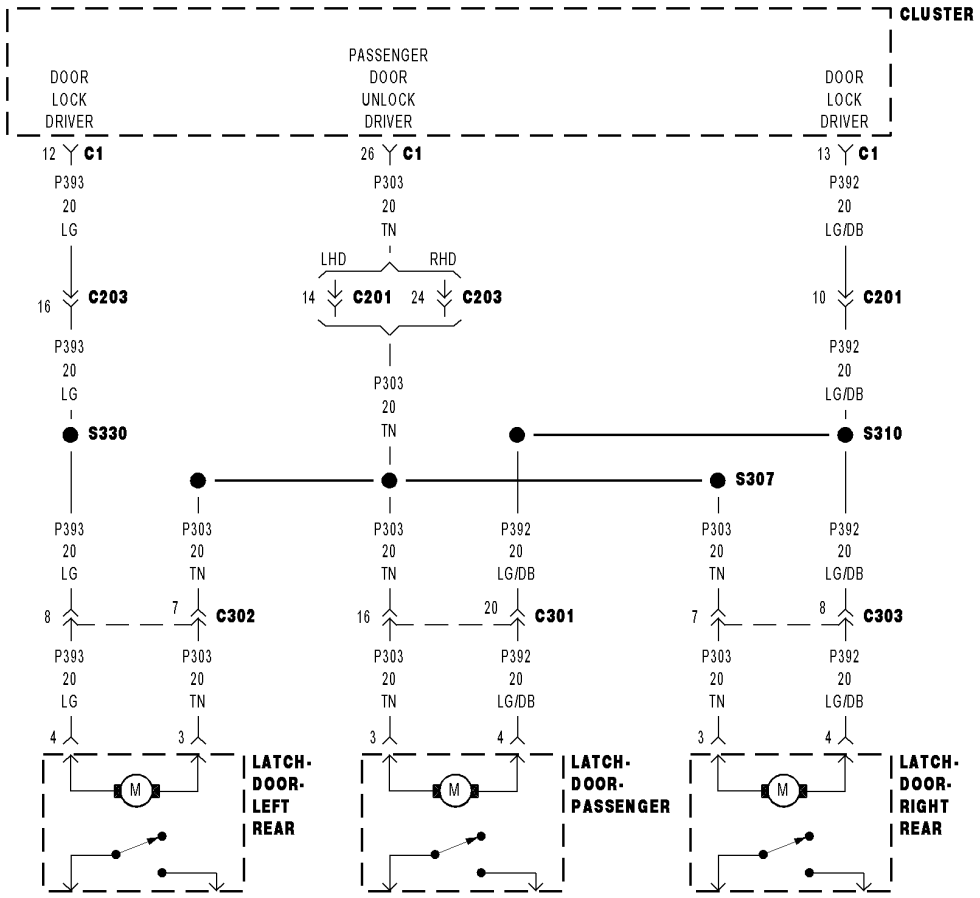

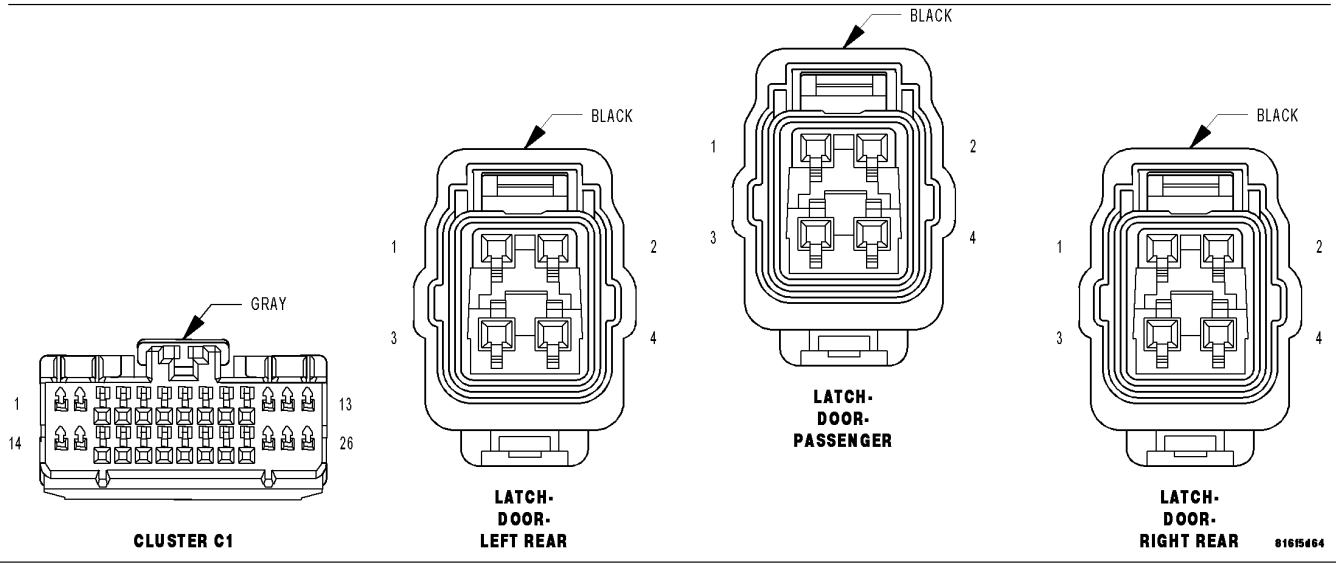

For a complete wiring diagram **Refer to Section 8W**.

Possible Causes
(P392) OR (P393) DOOR LOCK DRIVER CIRCUIT OPEN
(P392) OR (P393) DOOR LOCK DRIVER CIRCUIT SHORT TO GROUND
(P303) PASSENGER DOOR UNLOCK DRIVER CIRCUIT OPEN
(P303) PASSENGER DOOR UNLOCK DRIVER CIRCUIT SHORT TO GROUND
DOOR LATCH

Diagnostic Test

1. PASSENGER DOOR LATCH INOPERATIVE

NOTE: Graphics in this test show Passenger Front Latch (LHD) but the other 2 passenger latches are identical. They are also similar for RHD.

Turn the ignition off.

Disconnect the inoperative Passenger Door latch connector.

Connect a test light between the (P392/3) Door Lock Driver circuit and the (P303) Passenger Door Unlock Driver circuit.

Close the front doors or trip the door latches to the closed position.

Operate the door locks in both positions and observe the test light.

Does the test light illuminate brightly for approximately 300 ms. when the door locks are actuated?

Yes >> Replace the Passenger Door Latch.
Perform BODY VERIFICATION TEST - VER 1 (Refer to BODY VERIFICATION TEST - VER 1).

No >> Go To 2

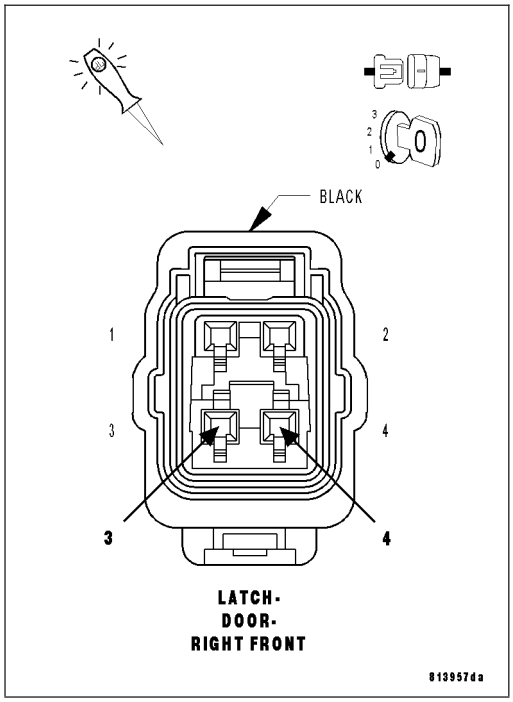

2. CHECK (P303) PASSENGER DOOR UNLOCK DRIVER CIRCUIT FOR AN OPEN

Disconnect the Cluster C1 connector.

Measure the resistance of the (P303) Passenger Door Unlock Driver circuit between the Latch connector and the Cluster C1 connector.

Is the resistance below 2.0 ohms?

No >> Repair the (P303) Passenger Door Unlock Driver circuit for an open.
Perform BODY VERIFICATION TEST - VER 1. (Refer to BODY VERIFICATION TEST – VER 1).

Yes >> Go To 3

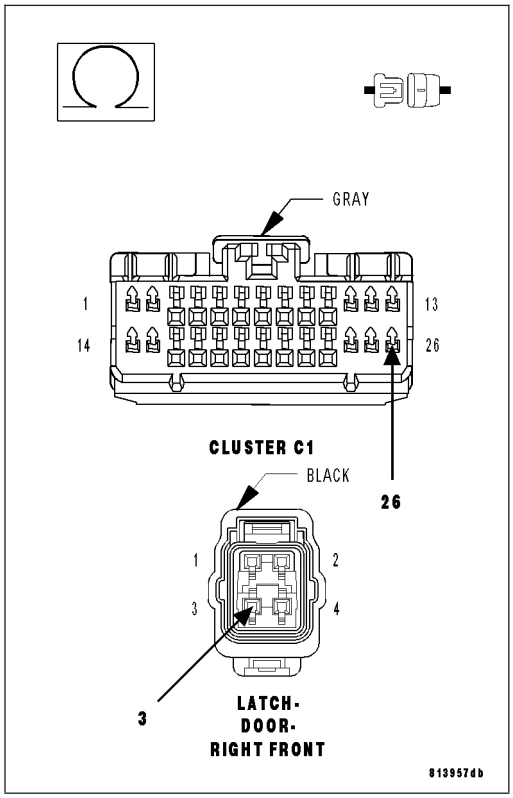

3. CHECK (P303) PASSENGER DOOR UNLOCK DRIVER CIRCUIT FOR A SHORT TO GROUND

Measure the resistance between Ground and the (P303) Passenger Door Unlock Driver circuit.

Is the resistance below 1000.0 ohms?

Yes >> Repair the (P303) Passenger Door Unlock Driver circuit for a short to ground.
Perform BODY VERIFICATION TEST - VER 1. (Refer to BODY VERIFICATION TEST – VER 1).

No >> Go To 4

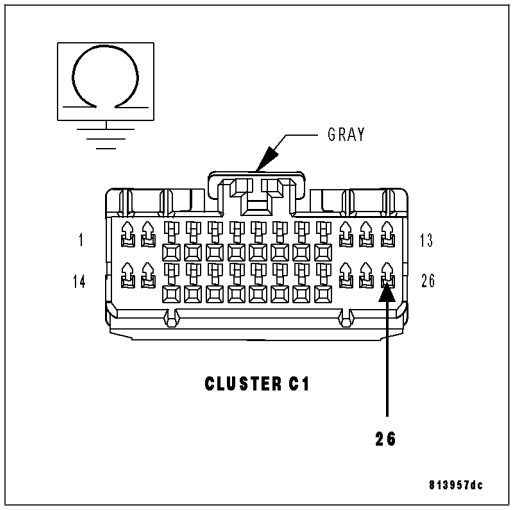

4. CHECK (P392/3) DOOR LOCK DRIVER CIRCUIT FOR AN OPEN

Measure the resistance of the (P392/3) Door Lock Driver circuit between the Cluster C1 connector and the Passenger Door Latch connector.

Is the resistance below 2.0 ohms?

Yes >> Repair the (P392/3) Door Lock Driver circuit for a short to ground.

No >> Repair the (P392/3) Door Lock Driver circuit for an open. Perform BODY VERIFICATION TEST - VER 1. (Refer to BODY VERIFICATION TEST – VER 1).

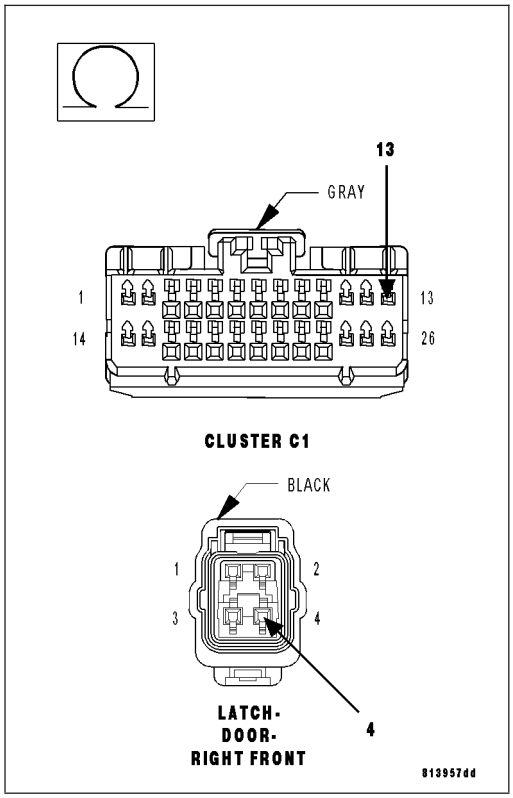

POWER LOCKS - SERVICE INFORMATION

TABLE OF CONTENTS

page

POWER LOCKS - SERVICE INFORMATION
DESCRIPTION 51
OPERATION 52
DIAGNOSIS AND TESTING
POWER LOCKS 52
SWITCH-WINDOW/DOOR LOCK
DESCRIPTION 54
OPERATION 54
REMOVAL 55
INSTALLATION 55
REMOTE KEYLESS ENTRY TRANSMITTER
DIAGNOSIS AND TESTING
REMOTE KEYLESS ENTRY TRANSMITTER . . . 56

page

STANDARD PROCEDURE
REMOTE KEYLESS ENTRY CUSTOMER PREFERENCES 56
REMOTE KEYLESS ENTRY TRANSMITTER BATTERIES 56
REMOTE KEYLESS ENTRY TRANSMITTER PROGRAMMING 57
SPECIFICATIONS
REMOTE KEYLESS ENTRY TRANSMITTER . . . 57

POWER LOCKS - SERVICE INFORMATION

DESCRIPTION

POWER LOCKS

The power lock system allows all of the doors and liftgate to be locked or unlocked electrically by operating a switch on either front door trim panel. The power lock system receives non-switched battery current through a fuse in the Junction Block (JB), so that the power locks remain operational, regardless of the ignition switch position.

The instrument cluster locks the doors automatically when the vehicle speed exceeds 25.7 Km/h (15 mph), all doors are closed, and the accelerator pedal is depressed. The rolling door lock feature can be disabled through the EVIC.

This vehicle also offers several customer programmable features, which allows the selection of several optional electronic features to suit individual preferences.

The power lock system for this vehicle can also be operated remotely using the Remote Keyless Entry (RKE) transmitters.

CENTRAL LOCKING/UNLOCKING

The central locking system controls powered operation of the door and liftgate locks and the illuminated entry system. Central locking includes the following features:

- Automatic locking of the doors and liftgate when the vehicle speed exceeds approximately 25 km/h (15 mph).
- Locking prevention with a door lock switch or the RKE transmitter if the key is in the ignition switch and the driver's door is open.
- Driver selectable unlocking mode: Unlock only the driver's door or all doors and the liftgate with one press of the RKE transmitter unlock button. The driver's door cylinder can also be used to unlock the door. One turn of the cylinder will unlock the driver's door, two turns within five seconds will unlock all doors.
- Automatic illumination of interior courtesy lamps when the vehicle is unlocked.
- Locking all doors and the liftgate by pressing the lock button on the RKE transmitter, or by pressing a lock switch on one of the front doors.

DOOR LOCK MOTORS

The lock mechanisms are actuated by a reversible electric motor mounted within each door. The power lock motors are integral to the door latch units.

The power lock motors cannot be adjusted or repaired. If inoperative or damaged, the door latch unit must be replaced.

REMOTE KEYLESS ENTRY

The Remote Keyless Entry (RKE) system locks and unlocks the doors and liftgate, turns on interior lamps, and arms and disarms the Vehicle Theft Security System (if equipped). The RKE system operates on non-switched battery current through a fuse in the Integrated Power Module (IPM), so that the system remains operational regardless of the ignition switch position.

The RKE transmitters are also equipped with a Panic button. If the Panic button on the RKE transmitter is depressed, the horn will sound and the exterior lights will flash on the vehicle for about three minutes or until the Panic button is depressed a second time. A vehicle speed of approximately 25.7 kilometers-per-hour (15 miles-per-hour) will also cancel the panic event.

The RKE system can also perform other functions on this vehicle. If the vehicle is equipped with the optional Vehicle Theft Security System (VTSS), the RKE transmitter will arm the VTSS when the Lock button is depressed and disarm the VTSS when the Unlock button is depressed.

The RKE system includes two transmitters when the vehicle is shipped from the factory, but the system can retain the vehicle access codes of up to a total of eight transmitters. The transmitter codes are retained in the RKE module memory, even if the battery is disconnected. If an RKE transmitter is faulty or lost, new transmitter vehicle access codes can be programmed into the system using a scan tool.

This vehicle also offers several customer programmable features, which allows the selection of several optional electronic features to suit individual preferences. Customer programmable feature options affecting the RKE system include:

- **Remote Unlock Sequence** - Allows the option of having only the driver side front door unlock when the RKE transmitter Unlock button is depressed the first time. The remaining doors unlock when the button is depressed a second time within five seconds of the first unlock press. Another option is having all doors and liftgate unlock upon the first depression of the RKE transmitter Unlock button.
- **Sound Horn on Lock** - Allows the option of having the horn sound a short chirp as an audible verification that the RKE system received a valid Lock request from the RKE transmitter, or having no audible verification.
- **Flash Lights with Lock and Unlock** - Allows the option of having the park lamps flash as an optical verification that the RKE system received a valid Lock request or Unlock request from the RKE transmitter, or having no optical verification.
- **Programming Additional Transmitters** - Allows up to a total of eight transmitter vehicle access codes to be stored in the receiver memory.

Certain functions and features of the RKE system rely upon resources shared with other electronic modules in the vehicle over the CAN data bus network. For diagnosis of these electronic modules or of the data bus network, the use of a scan tool and the appropriate diagnostic information are required.

OPERATION

POWER LOCKS

The instrument cluster locks or unlocks the doors when an actuation input signal from a door lock switch or Remote Keyless Entry (RKE) transmitter is received. The instrument cluster turns on the output drivers and provides a voltage level to the door lock motor for a specified time. All passenger doors can be locked or unlocked using a mechanical button mounted on the door trim panel. The drivers door can be locked or unlocked by using the key cylinder.

DOOR LOCK MOTORS

The door lock motors are controlled by the instrument cluster. A positive and negative battery connection to the two motor terminals will cause the motor to move in one direction. Reversing the current will cause the motor to move in the opposite direction.

REMOTE KEYLESS ENTRY

- **LOCK**: Pressing the LOCK button locks all doors, sounds horn (chirp) once if enabled, flashes the park lamps once if enabled, and arms the Vehicle Theft Security System (VTSS), if enabled. The chirp verifies that the instrument cluster has sent a message for door lock operation. If a door has not been closed before pressing the LOCK button, the vehicle may not be secured and the VTSS (if equipped) will not arm until the door is closed.
- **UNLOCK**: Pressing the UNLOCK button once will unlock the driver's door first if enabled, flashes the park lamps twice if enabled, activates the illuminated entry system, and disarms the Vehicle Theft Security System (VTSS), if equipped. Pressing the UNLOCK button twice within five seconds will unlock all doors, if driver's door first is enabled.
- **PANIC**: Pressing the PANIC button sounds the horns at half second intervals, flashes the exterior lamps, and turns ON the interior lamps. The panic alarm will remain on for three minutes or until either the PANIC button is actuated again or the vehicle speed exceeds 25.7 Km/h (15 mph) which will cancel the panic event.

DIAGNOSIS AND TESTING

POWER LOCKS

The most reliable, efficient, and accurate means to diagnose the power lock system requires the use of a scan tool and the proper Diagnostic Procedures information.

Refer to the appropriate wiring information.

Following are tests that will help to diagnose the hard wired components and circuits of the power lock system. However, these tests may not prove conclusive in the diagnosis of this system. In order to obtain conclusive testing of the power lock system, the CAN data bus network must be checked.

PRELIMINARY DIAGNOSIS

As a preliminary diagnosis for the power lock system, note the system operation while you actuate both the Lock and Unlock functions with the power lock switches and with the Remote Keyless Entry (RKE) transmitter. Then, proceed as follows:

- If the entire power lock system fails to function with either the power lock switches or the RKE transmitter, check the fuse in the Junction Block (JB).
- If the power lock system functions with both power lock switches, but not with the RKE transmitter, proceed to diagnosis of the Remote Keyless Entry (RKE) system.
- If the power lock system functions with the RKE transmitter, but not with one or both power lock switches, proceed to diagnosis of the door lock switches.
- If the driver side power lock switch operates only the driver side front door power lock motor, but all other power lock motors operate with the passenger side power lock switch or the RKE transmitter, use a scan tool and the appropriate diagnostic information to diagnose the CAN data bus.
- If only one power lock motor fails to operate with both power lock switches and the RKE transmitter, use a scan tool and the appropriate diagnostic information to diagnose the CAN data bus.

SWITCH-WINDOW/DOOR LOCK

DESCRIPTION

A window/lock switch located in each front door trim panel. The driver's side window/lock switch includes the following:

- **Power Lock Switch** - A two-way, momentary, resistor multiplexed switch to control the power lock system.
- **Power Window Lockout Switch** - A two-way, latching, push-button switch allows the vehicle operator to lock out the power window switches on each passenger door so that the passenger door power windows may be operated only from the master switches.
- **Power Window Switches** - A two-way, momentary power window switch for the driver side front door also has a second detent in the Down direction and internal circuitry to provide an Auto-Down feature for the driver side front door power window. In addition to the power window switch for its own door, the window/lock switch houses individual master switches for each passenger door power window.

The passenger side window/lock switch includes the following:

- **Power Lock Switch** - A two-way, momentary, resistor multiplexed switch to control the power lock system.
- **Power Window Switch** - A two-way, momentary power window switch for the passenger side front door.

OPERATION

The driver side window/lock switch combines a power lock switch, a driver power window switch with an Auto-down feature, master switches for each passenger door power window, a power window lockout switch, a power mirror selector switch, and four power mirror adjustment switches in a single assembly. The switches in the window/lock switch can be diagnosed using conventional diagnostic tools and methods.

Power Lock Switch

The power lock switch circuitry is connected in series between ground and the driver door switch mux input of the instrument cluster (without memory). If equipped with the memory system, the circuitry is connected to the memory mirror module. Each power lock switch position (Lock, Unlock, and Neutral) provides a different resistance value to the instrument cluster or memory mirror input, which allows the instrument cluster or memory module to sense the switch position. Based upon the power lock switch input, the instrument cluster or memory module controls the battery and ground feed outputs to the individual power lock motors to lock or unlock the door latches. The Light-Emitting Diode (LED) in the power lock switch is connected to battery current through the power window circuit breaker in the Integrated Power Module (IPM) on a fused ignition switch output (run-acc) circuit so that the switch will be illuminated whenever the ignition switch is in the On or Accessory positions.

Power Window Switches

The power window switch circuitry is connected to battery current through a circuit breaker in the Integrated Power Module (IPM) on a fused ignition switch output (run-acc) circuit so that the power windows will operate whenever the ignition switch is in the On or Accessory positions. Each two-way, momentary master passenger power window switch in the window/lock switch provides battery current and ground to the individual power window switches on each passenger door so that the power window switch controls the battery current and ground feeds to its respective power window motor. The switch for the driver side front door power window includes an auto-down feature. When this switch is depressed to a second momentary detent position and released, the driver door power window is automatically operated through an internal circuit and relay to its fully lowered position. The Auto-down event is cancelled if the switch paddle is depressed a second time in either the Up or Down direction. When the two position window lockout switch in the window/lock switch is depressed and latched in the lockout position, the battery current feed to each of the individual passenger power window switches is interrupted so that the passenger door power windows can only be operated from the switches in the window/lock switch. The window lockout switch also controls the battery current feed for the LED in each passenger power window switch so that the switch will not be illuminated when it is locked out.

REMOVAL

NOTE: A battery reconnect procedure must be performed anytime the battery has been disconnected. (Refer to 8 - ELECTRICAL/BATTERY SYSTEM - STANDARD PROCEDURE).

1. Disconnect and isolate the battery negative cable.
2. Remove the door trim panel (Refer to 23 - BODY/DOOR - FRONT/TRIM PANEL - REMOVAL).
3. Using a flat bladed tool, remove the window/lock switch (2) from the door trim panel.

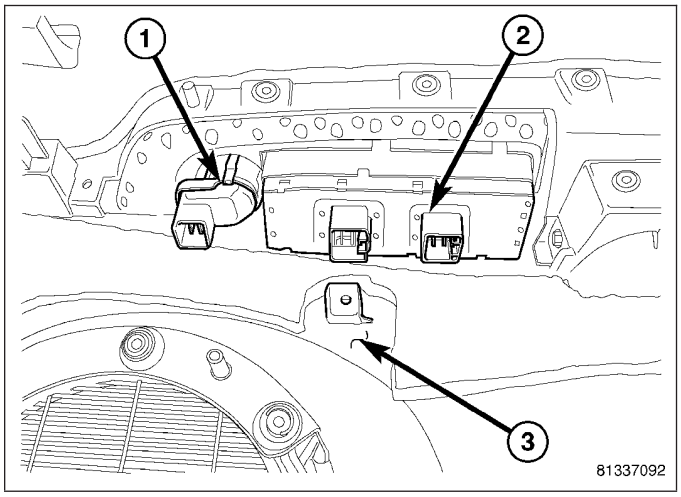

INSTALLATION

NOTE: A battery reconnect procedure must be performed anytime the battery has been disconnected. (Refer to 8 - ELECTRICAL/BATTERY SYSTEM - STANDARD PROCEDURE).

1. Install window/lock switch (2) to door trim panel and snap into place.
2. Install door trim panel (Refer to 23 - BODY/DOOR - FRONT/TRIM PANEL - INSTALLATION).
3. Connect battery negative cable.

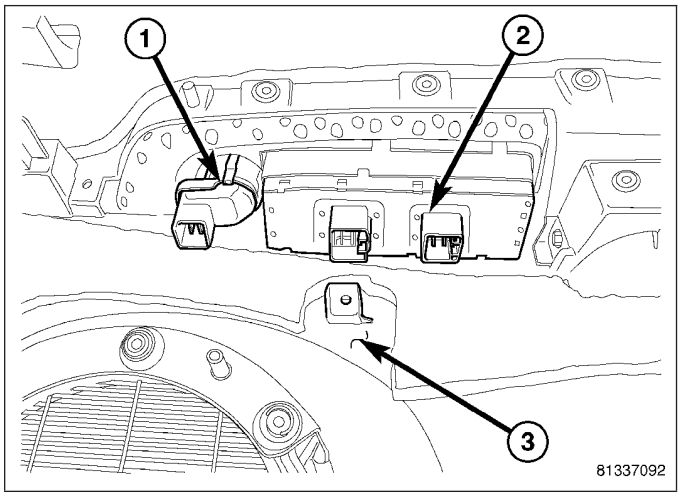

REMOTE KEYLESS ENTRY TRANSMITTER

DIAGNOSIS AND TESTING

REMOTE KEYLESS ENTRY TRANSMITTER

Using special tool 9001, first test to ensure that the transmitter is functioning. Typical testing distance is 2.5 centimeters (1 inch) for Asian transmitters and 30.5 centimeters (12 inches) for all others. To test, position the transmitter as shown. Press any transmitter button, then test each button individually. The tool will beep if a radio signal strength that lights five or more LED's is detected. Repeat this test three times. If transmitter fails any of the test refer to the proper Diagnostic Procedures information.

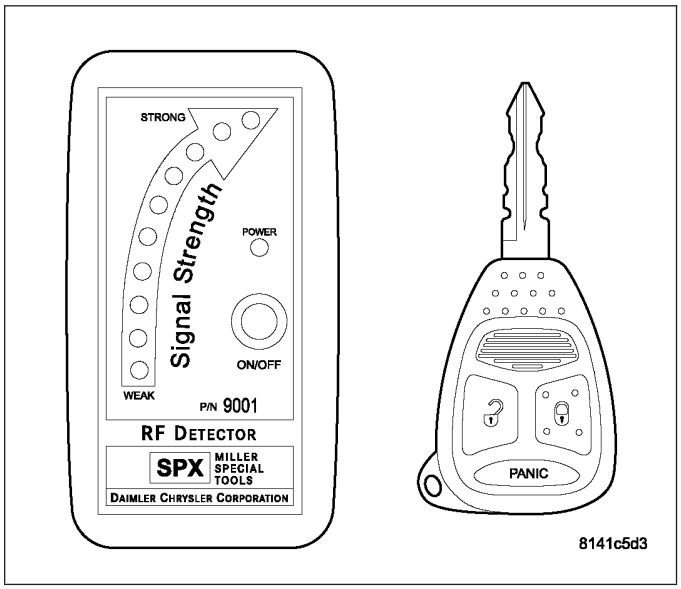

STANDARD PROCEDURE

REMOTE KEYLESS ENTRY CUSTOMER PREFERENCES

HORN CHIRP DISABLING/ENABLING

The horn chirp can be toggled using a scan tool or by using the Remote Keyless Entry (RKE) transmitter.

To DISABLE (cancel) the horn chirp feature: With the ignition in the ON position, press and hold the transmitter LOCK button for four seconds. While pressing the LOCK button in, press the PANIC button within six seconds. Release both buttons when a single chime is heard.

To ENABLE the horn chirp feature, repeat the above procedure.

UNLOCK SEQUENCE

The unlock sequence can be toggled using a scan tool or by using the following procedure.

1. Place the key in the ignition.
2. Within 10 seconds, cycle the key from the OFF position to the ON position four times, ending in the ON position (Do not start the engine).
3. Within 30 seconds, press the driver's door lock switch in the UNLOCK direction. A single chime will be heard to indicate the feature has been disabled.

This will toggle between Driver door first and Unlock all doors function.

To ENABLE this feature, repeat the above procedure.

REMOTE KEYLESS ENTRY TRANSMITTER BATTERIES

The Remote Keyless Entry (RKE) transmitter case snaps open and shut for battery access. To replace the RKE transmitter batteries:

1. Using a trim stick or a thin coin, gently pry at the notch in the center seam of the RKE transmitter case halves located near the key ring until the two halves unsnap.
2. Lift the back half of the transmitter case off of the RKE transmitter.
3. Remove the two batteries from the RKE transmitter.

4. Replace the battery with a new CR2032. Be certain that the battery is installed with the polarity correctly oriented.
5. Align the two RKE transmitter case halves with each other, and squeeze them firmly and evenly together using hand pressure until they snap back into place.

REMOTE KEYLESS ENTRY TRANSMITTER PROGRAMMING

If vehicle is not equipped with Sentry Key Theft Deterrent, new Remote Keyless Entry (RKE) transmitters can be programed using a scan tool and the proper Diagnostic Information. If vehicle is equipped with Sentry Key Theft Deterrent, (Refer to 8 - ELECTRICAL/ELECTRONIC CONTROL MODULES - STANDARD PROCEDURE).

SPECIFICATIONS

REMOTE KEYLESS ENTRY TRANSMITTER

Normal operation range is up to 20 meters (60 feet) away from the vehicle. Range may be better or worse depending on the environment around the vehicle.

POWER MIRRORS - ELECTRICAL DIAGNOSTICS

TABLE OF CONTENTS

page

POWER MIRRORS - ELECTRICAL DIAGNOSTICS
DIAGNOSIS AND TESTING
B1D04–MIRROR ADJUST SWITCH INPUT CIRCUIT/PERFORMANCE – DRIVER DOOR MODULE 60
B1D07–MIRROR ADJUST SWITCH INPUT CIRCUIT STUCK– DRIVER DOOR MODULE 64
B1D09,B1D12–MIRROR POSITION SENSOR POWER SUPPLY CIRCUIT LOW – MEMORY MIRROR MODULE 66
B1D0A,B1D13–MIRROR POSITION SENSOR POWER SUPPLY CIRCUIT HIGH – DOOR MODULE 70
B1D0C,B1D15–MIRROR VERTICAL POSITION SENSOR INPUT CIRCUIT LOW – DOOR MODULE 74
B1D0D,B1D16–MIRROR VERTICAL POSITION SENSOR INPUT CIRCUIT HIGH – DOOR MODULE 78
B1D0F,B1D18–MIRROR HORIZONTAL POSITION SENSOR INPUT CIRCUIT LOW – DOOR MODULE 82
B1D10,B1D19–MIRROR HORIZONTAL POSITION SENSOR INPUT CIRCUIT HIGH – DOOR MODULE 86
B1D1E,B1D2A–MIRROR VERTICAL MOTOR CONTROL CIRCUIT/PERFORMANCE – DOOR MODULE 90
B1D22,B1D2E–MIRROR HORIZONTAL MOTOR CONTROL CIRCUIT/ PERFORMANCE – DOOR MODULE 94
B1D4D–MEMORY SWITCH INPUT CIRCUIT STUCK – DOOR MODULE 98
B210D-BATTERY VOLTAGE LOW 101
B210E-BATTERY VOLTAGE HIGH 102
B2218,B2219-DOOR MODULE INTERNAL 104
U0019–CAN B BUS – DRIVER DOOR MODULE 105

page

U0019–CAN B BUS – PASSENGER DOOR MODULE 108
U0141–LOST COMMUNICATION WITH FRONT CONTROL MODULE 111
U0151-LOST COMMUNICATION WITH OCCUPANT RESTRAINT CONTROLLER 111
U0154-LOST COMMUNICATION WITH OCCUPANT CLASSIFICATION MODULE 111
U0155-LOST COMMUNICATION WITH CLUSTER/CCN 111
U0156-LOST COMMUNICATION WITH EOM . . 111
U0159-LOST COMMUNICATION WITH PARKING ASSIST CONTROL MODULE 111
U0164-LOST COMMUNICATION WITH HVAC CONTROL MODULE 111
U0168-LOST COMMUNICATION WITH VEHICLE SECURITY CONTROL MODULE (SKREEM/WCM) 111
U0169-LOST COMMUNICATION WITH SUNROOF CONTROL MODULE 111
U0169-LOST COMMUNICATION WITH SUNROOF CONTROL MODULE 112
U0184-LOST COMMUNICATION WITH RADIO 112
U0186-LOST COMMUNICATION WITH AUDIO AMPLIFIER 112
U0195-LOST COMMUNICATION WITH SDARS 112
U0197-LOST COMMUNICATION WITH HANDS FREE PHONE 112
U0200-LOST COMMUNICATION WITH PASSENGER DOOR MODULE 112
U0208-LOST COMMUNICATION WITH HEATED SEAT CONTROL MODULE 112
U0209-LOST COMMUNICATION WITH MEMORY SEAT CONTROL MODULE 112
U0212-LOST COMMUNICATION WITH SCCM - CAN B 112
U0231-LOST COMMUNICATION WITH RAIN SENSING MODULE 113

POWER MIRRORS - ELECTRICAL DIAGNOSTICS

DIAGNOSIS AND TESTING

B1D04–MIRROR ADJUST SWITCH INPUT CIRCUIT/PERFORMANCE – DRIVER DOOR MODULE

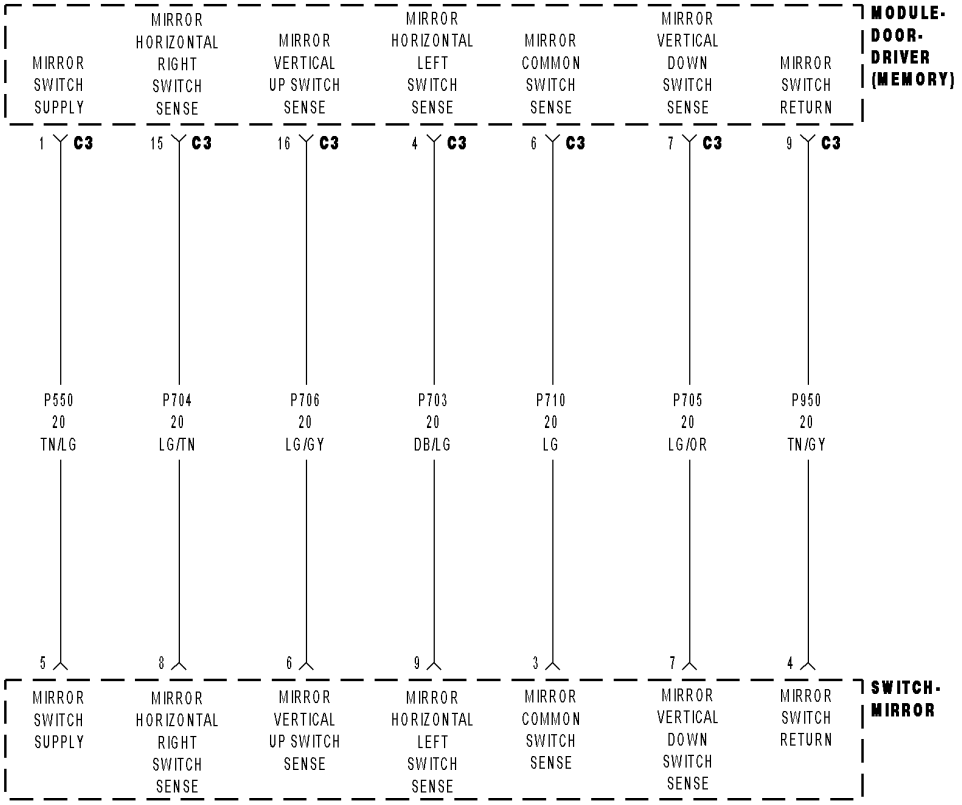

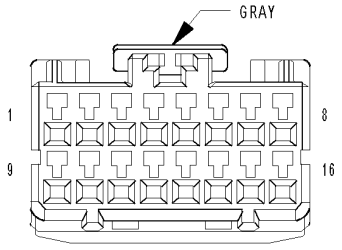

MODULE-DOOR-DRIVER C3 (MEMORY)

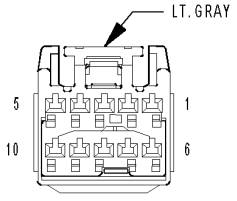

SWITCH-MIRROR

81397573

For a complete wiring diagram **Refer to Section 8W**.

- **When Monitored:**
  Continuously.
- **Set Condition:**
  When the Driver Door Module receives a mirror movement command from the switch but then senses an open or shorted circuit on one of the switch sense circuits for over 100 ms., this code will set.

Possible Causes
(P703) MIRROR HORIZONTAL LEFT SWITCH SENSE OPEN
(P703) MIRROR HORIZONTAL LEFT SWITCH SENSE SHORT TO GROUND
(P703) MIRROR HORIZONTAL LEFT SWITCH SENSE CIRCUIT SHORTED TO ANOTHER SWITCH SENSE CIRCUIT
(P704) MIRROR HORIZONTAL RIGHT SWITCH SENSE OPEN
(P704) MIRROR HORIZONTAL RIGHT SWITCH SENSE SHORT TO GROUND
(P704) MIRROR HORIZONTAL RIGHT SWITCH SENSE CIRCUIT SHORTED TO ANOTHER SWITCH SENSE CIRCUIT
(P705) MIRROR VERTICAL DOWN SWITCH SENSE OPEN
(P705) MIRROR VERTICAL DOWN SWITCH SENSE SHORT TO GROUND
(P705) MIRROR VERTICAL DOWN SWITCH SENSE CIRCUIT SHORTED TO ANOTHER SWITCH SENSE CIRCUIT
(P706) MIRROR VERTICAL UP SWITCH SENSE OPEN
(P706) MIRROR VERTICAL UP SWITCH SENSE SHORT TO GROUND
(P706) MIRROR VERTICAL UP SWITCH SENSE CIRCUIT SHORTED TO ANOTHER SWITCH SENSE CIRCUIT
(P710) MIRROR COMMON SWITCH SENSE OPEN
(P710) MIRROR COMMON SWITCH SENSE SHORT TO GROUND
(P710) MIRROR COMMON SWITCH SENSE CIRCUIT SHORTED TO ANOTHER SWITCH SENSE CIRCUIT
MIRROR SWITCH
DRIVER DOOR MODULE

Theory of Operation

This code will only set in vehicles that have the Memory System. The supply circuit for the Memory Mirrors are supplied by the Driver Door Module.

Diagnostic Test

1. TEST FOR INTERMITTENT CONDITION

Turn the ignition on.
With the scan tool, record and erase DTC's
Press the Mirror Switch in all directions several times.
Cycle the ignition from on to off three times.
Turn the ignition on.
With the scan tool, read DTC's.

Does the scan tool display B1D04–MIRROR ADJUST SWITCH INPUT CIRCUIT/PERFORMANCE?

Yes >> Go To 2

No >> The conditions that caused this code to set are not present at this time. Using the wiring diagram/schematic as a guide, inspect the wiring and connectors. If the conditions returns, replace the switch.
Perform BODY VERIFICATION TEST - VER 1. (Refer to BODY VERIFICATION TEST - VER 1).

2. TEST THE SWITCH

Turn the ignition off.

Remove the Driver Window/Door Lock Switch assembly.

Test the Mirror Switch in all positions by using the procedure in SERVICE INFORMATION / POWER LOCKS / WINDOW/LOCK SWITCH / DIAGNOSING & TESTING / WINDOW/LOCK SWITCH.

Does the switch pass the test in all positions

No >> Replace the Mirror Switch.
Perform BODY VERIFICATION TEST - VER 1. (Refer to BODY VERIFICATION TEST - VER 1).

Yes >> Go to 3

3. TEST FOR SWITCH SENSE WIRE SHORT TO GROUND

Disconnect the Driver Door Module C3 connector.

Measure the resistance between Ground and the (P703) Mirror Horizontal Left Switch Sense circuit in the Driver Door Module connector.

Measure the resistance between Ground and the (P704) Mirror Horizontal Right Switch Sense circuit in the Driver Door Module connector.

Measure the resistance between Ground and the (P705) Mirror Vertical Down Switch Sense circuit in the Driver Door Module connector.

Measure the resistance between Ground and the (P706) Mirror Vertical Up Switch Sense circuit in the Driver Door Module connector.

Measure the resistance between Ground and the (P710) Mirror Common Switch Sense circuit in the Driver Door Mirror Module connector.

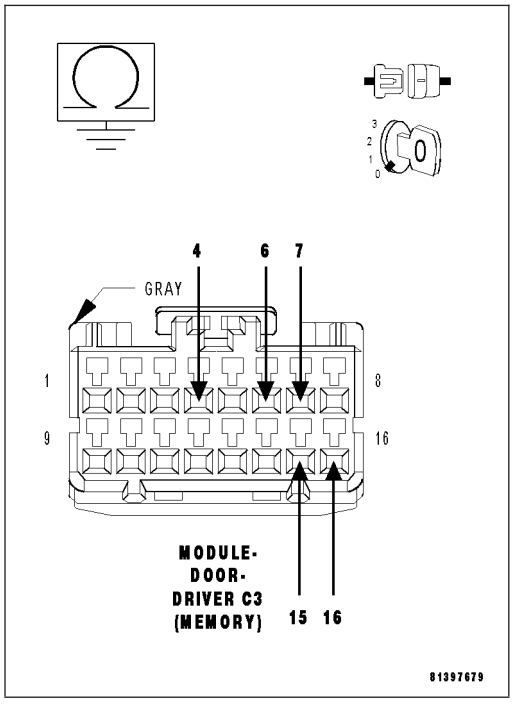

Is the resistance below 5000.0 ohms in any of the circuits?

Yes >> Repair the Appropriate Switch Sense circuit for a short to ground.
Perform BODY VERIFICATION TEST - VER 1. (Refer to BODY VERIFICATION TEST - VER 1).

No >> Go to 4

4. TEST FOR SWITCH SENSE CIRCUIT OPEN

Disconnect the Mirror Switch connector.

Measure the resistance of the (P703) Mirror Horizontal Left Switch Sense circuit between the Driver Door Module connector and the Mirror Switch connector.

Measure the resistance of the (P704) Mirror Horizontal Right Switch Sense circuit between the Driver Door Module connector and the Mirror Switch connector.

Measure the resistance of the (P705) Mirror Vertical Down Switch Sense circuit between the Driver Door Module connector and the Mirror Switch connector.

Measure the resistance of the (P706) Mirror Vertical Up Switch Sense circuit between the Driver Door Module connector and the Mirror Switch connector.

Measure the resistance of the (P710) Mirror Common Switch Sense circuit between the Driver Door Module connector and the Mirror Switch connector.

Is the resistance below 2.0 ohms in all of the Switch Sense circuits?

No >> Repair the Appropriate Switch Sense circuit for an open.
Perform BODY VERIFICATION TEST - VER 1. (Refer to BODY VERIFICATION TEST - VER 1).

Yes >> Go to 5

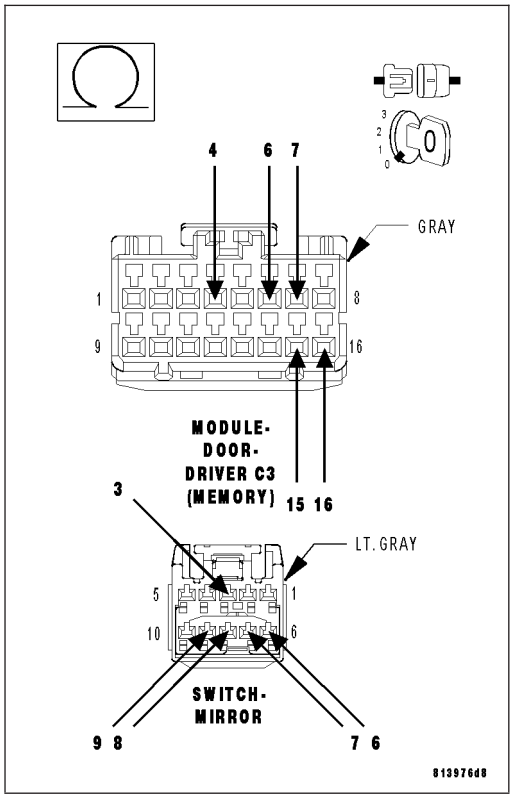

5. TEST FOR A SWITCH SENSE CIRCUIT SHORTED TO ANOTHER SWITCH SENSE CIRCUIT

Measure the resistance between each of the switch sense circuits to each of the other switch sense circuits.

Is the resistance below 10000.0 ohms between any of the switch sense circuits?

Yes >> Repair the appropriate switch sense circuit for a short to the other switch sense circuits.
Perform the BODY VERIFICATION TEST - VER 1. (Refer to BODY VERIFICATION TEST - VER 1).

No >> Replace the Driver Door Module.
Perform BODY VERIFICATION TEST - VER 1. (Refer to BODY VERIFICATION TEST - VER 1).

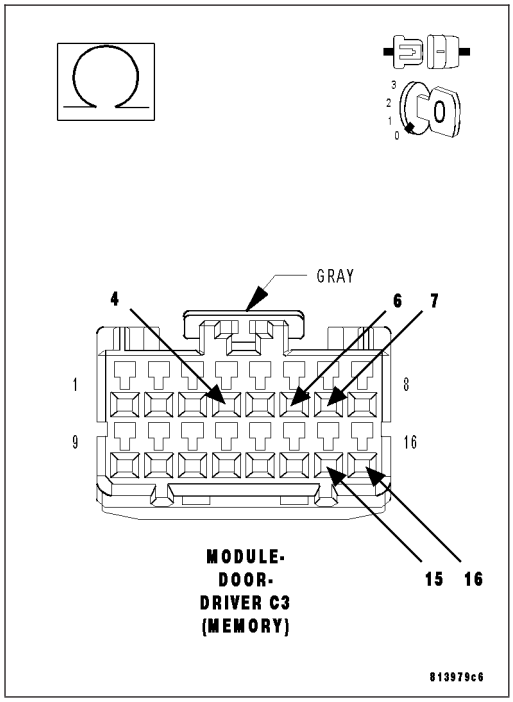

B1D07–MIRROR ADJUST SWITCH INPUT CIRCUIT STUCK– DRIVER DOOR MODULE

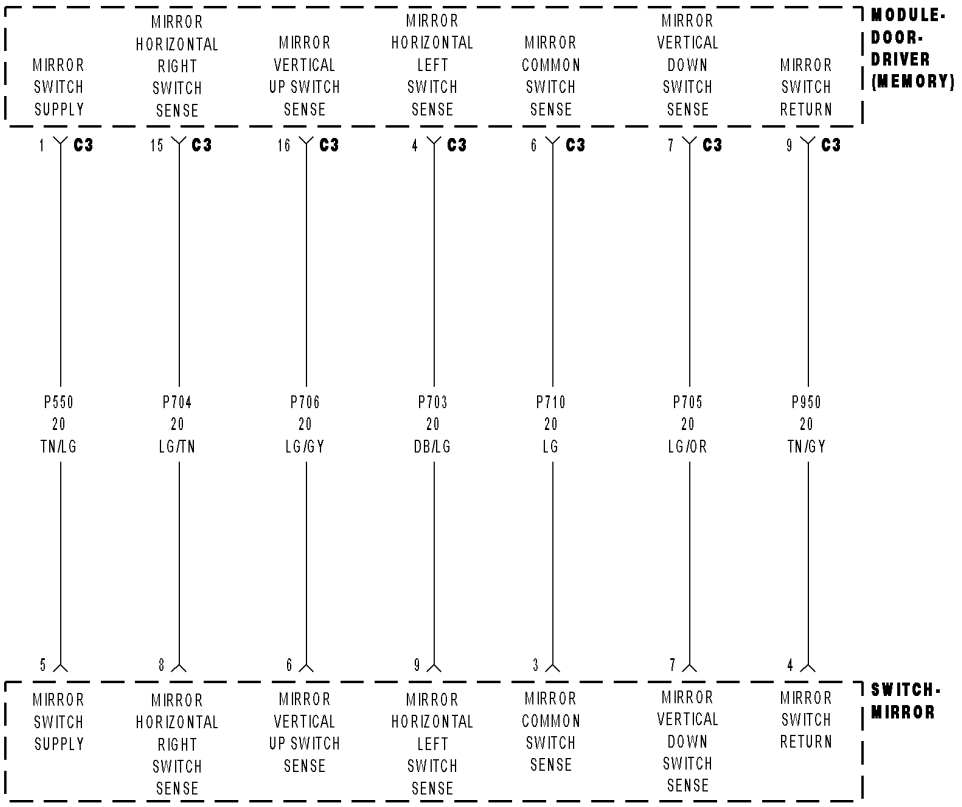

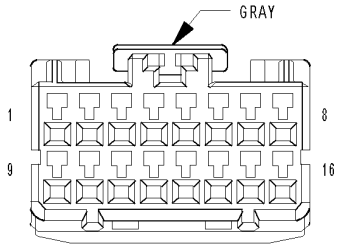

MODULE-
DOOR-
DRIVER C3
(MEMORY)

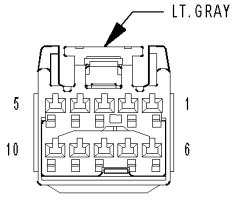

SWITCH-
MIRROR

81397573

For a complete wiring diagram **Refer to Section 8W**.

- **When Monitored:**
  Continuously.
- **Set Condition:**
  When the Driver Door Module receives a mirror movement command from the switch for over 30 seconds, this code will set.

Possible Causes
MIRROR SWITCH
DRIVER DOOR MODULE

Diagnostic Test

1. TEST FOR INTERMITTENT CONDITION

Turn the ignition on.
With the scan tool, record and erase DTC's
Press the Mirror Switch in all directions several times.
Cycle the ignition from on to off three times.
Turn the ignition on.
With the scan tool, read DTC's.

Does the scan tool display B1D07–MIRROR ADJUST SWITCH INPUT CIRCUIT STUCK?

Yes >> Go To 2

No >> The conditions that caused this code to set are not present at this time. Using the wiring diagram/schematic as a guide, inspect the wiring and connectors. If the conditions returns, replace the switch.
Perform BODY VERIFICATION TEST - VER 1. (Refer to BODY VERIFICATION TEST - VER 1).

2. TEST THE SWITCH

Turn the ignition off.
Remove the Driver Window/Door Lock Switch assembly.
Remove the Mirror Switch.
Test the Mirror Switch in all positions by using the procedure in SERVICE INFORMATION / POWER LOCKS / WINDOW/LOCK SWITCH / DIAGNOSING & TESTING / WINDOW/LOCK SWITCH.

Does the switch pass the test in all positions

No >> Replace the Mirror Switch.
Perform BODY VERIFICATION TEST - VER 1. (Refer to BODY VERIFICATION TEST - VER 1).

Yes >> Replace the Driver Door Module.
Perform BODY VERIFICATION TEST - VER 1 (Refer to BODY VERIFICATION TEST - VER 1).

B1D09,B1D12–MIRROR POSITION SENSOR POWER SUPPLY CIRCUIT LOW – MEMORY MIRROR MODULE

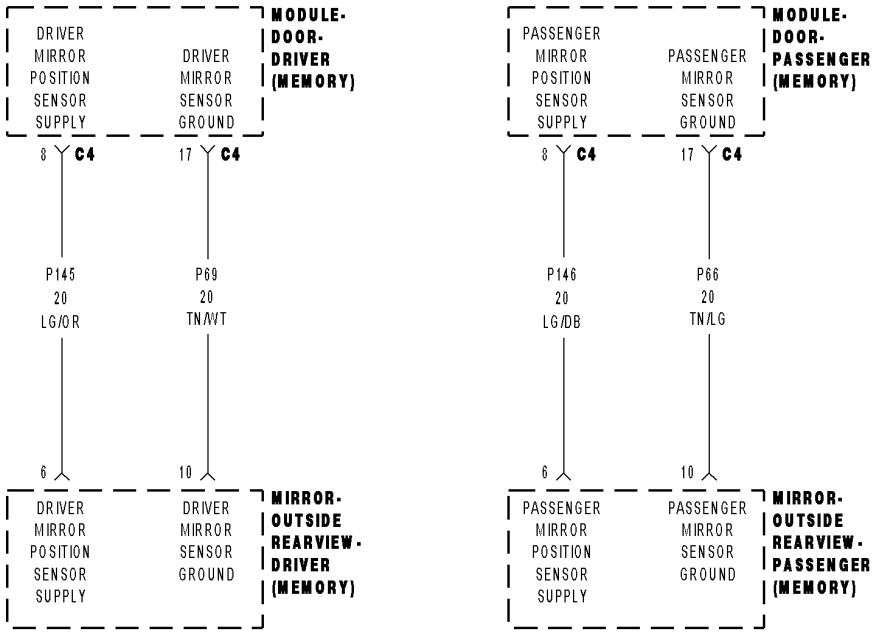

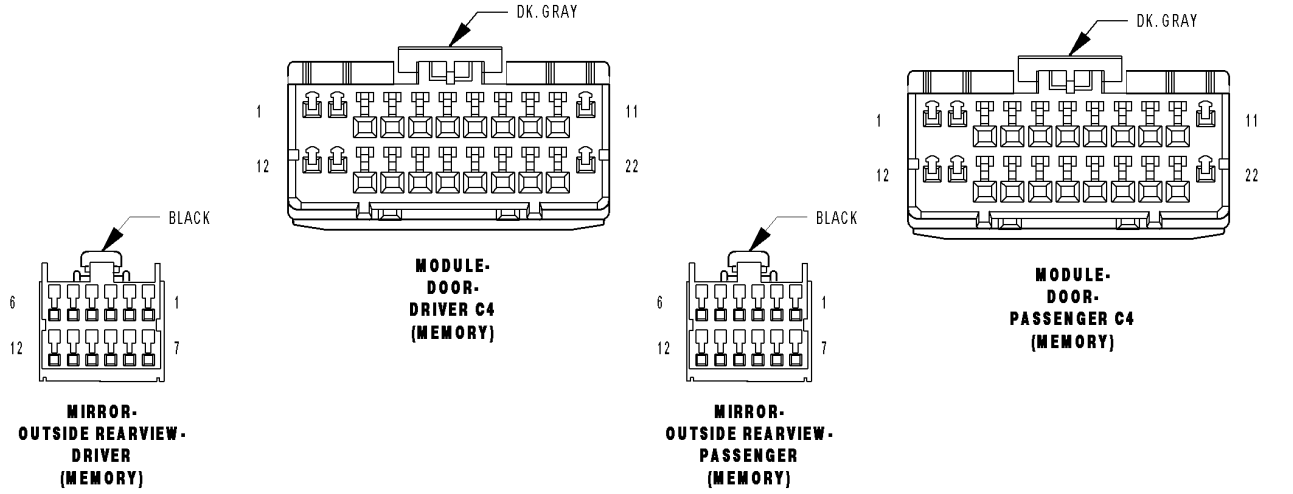

8139c86d

For a complete wiring diagram **Refer to Section 8W**.

- **When Monitored:**
  Continuously.
- **Set Condition:**
  When the Driver Door Module senses voltage below 4.3 volts on the Mirror Position Sensor Supply circuit for over 30 ms., this code will set.**NOTE: This test covers both the Driver and Passenger code depending on the side the code appeared in.**

Possible Causes
(P145) OR (P146) MIRROR POSITION SENSOR SUPPLY CIRCUIT SHORT TO GROUND
(P145) OR (P146) MIRROR POSITION SENSOR SUPPLY CIRCUIT SHORTED TO (P69) OR (P66) MIRROR SENSOR GROUND CIRCUIT
MIRROR SHORTED
DRIVER OR PASSENGER DOOR MODULE

Diagnostic Test

1. TEST FOR INTERMITTENT CONDITION

Turn the ignition on.

With the scan tool, record and erase DTC's

Operate the Mirror Switch in all directions several times.

Cycle the ignition from on to off three times.

Turn the ignition on.

With the scan tool, read DTC's.

Does the scan tool display B1D09 or B1D12–MIRROR POSITION SENSOR POWER SUPPLY CIRCUIT LOW?

Yes >> Go To 2

No >> The conditions that caused this code to set are not present at this time. Using the wiring diagram/schematic as a guide, inspect the wiring and connectors.
Perform BODY VERIFICATION TEST - VER 1. (Refer to BODY VERIFICATION TEST - VER 1).

2. TEST FOR A SHORTED MIRROR

Turn the ignition off.

Disconnect the appropriate mirror connector.

Turn the ignition on.

Measure the voltage between the (P145) or (P146) Mirror Position Sensor Supply circuit and the ((P69) or (P66) Mirror Sensor Ground circuit.

Is the voltage above 4.6 volts?

Yes >> Replace the Mirror.
Perform BODY VERIFICATION TEST - VER 1. (Refer to BODY VERIFICATION TEST - VER 1).

No >> Go to 3

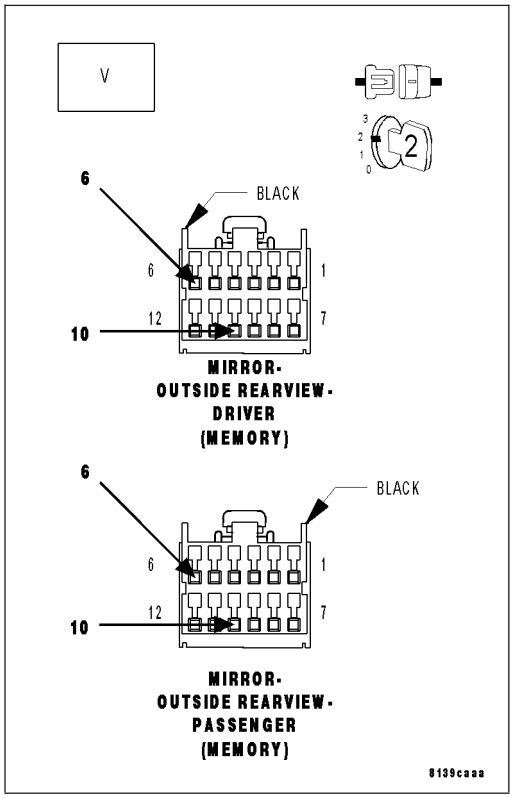

3. TEST THE (P145) OR (P146) MIRROR POSITION SENSOR SUPPLY WIRE

Turn the ignition off.

Disconnect the appropriate Driver Door Module connector.

Measure the resistance between ground and the (P145) or (P146) Mirror Position Sensor Supply circuit.

Is the resistance below 5000.0 ohms?

Yes >> Repair the (P145) or (P146) Mirror Position Sensor Supply circuit for a short to ground.
Perform BODY VERIFICATION TEST - VER 1. (Refer to BODY VERIFICATION TEST - VER 1).

No >> Go to 4

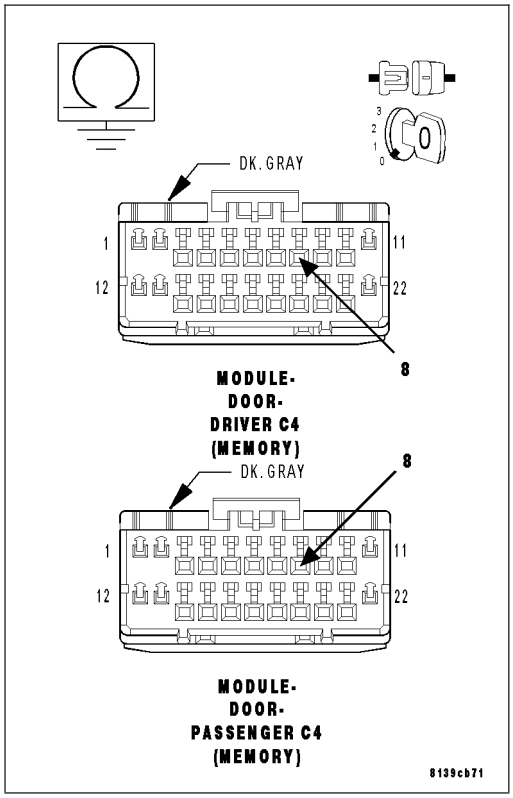

4. TEST THE (P145) OR (P146) MIRROR POSITION SENSOR SUPPLY WIRE SHORTED TO THE (P69) OR (P66) MIRROR SENSOR GROUND CIRCUIT.

Measure the resistance between the (P145) or (P146) Mirror Position Sensor Supply circuit and the (P69) or (P66) Mirror Sensor Ground circuit.

Is the resistance below 5000.0 ohms?

Yes >> Repair the (P145) or (P146) Mirror Position Sensor Supply circuit for a short to the (P69) or (P66) Sensor Ground Circuit.

Perform BODY VERIFICATION TEST - VER 1. (Refer to BODY VERIFICATION TEST - VER 1).

No >> Replace the appropriate Driver Door Module.

Perform BODY VERIFICATION TEST - VER 1 (Refer to BODY VERIFICATION TEST - VER 1)..

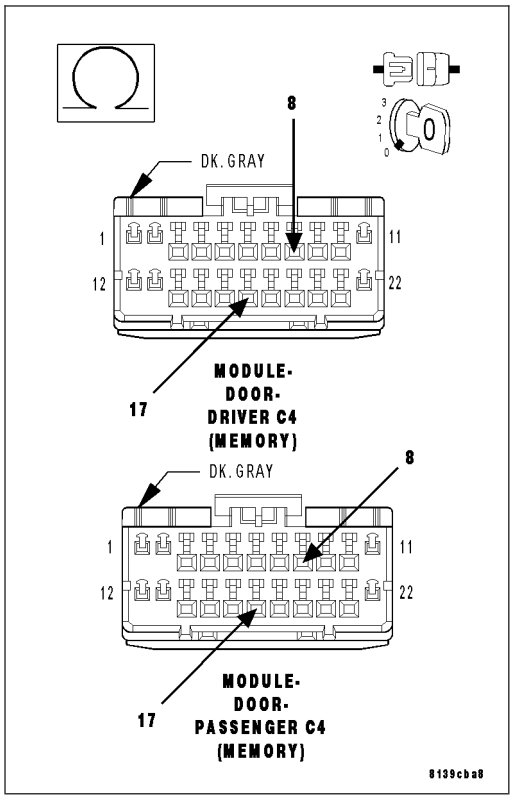

B1D0A,B1D13–MIRROR POSITION SENSOR POWER SUPPLY CIRCUIT HIGH – DOOR MODULE

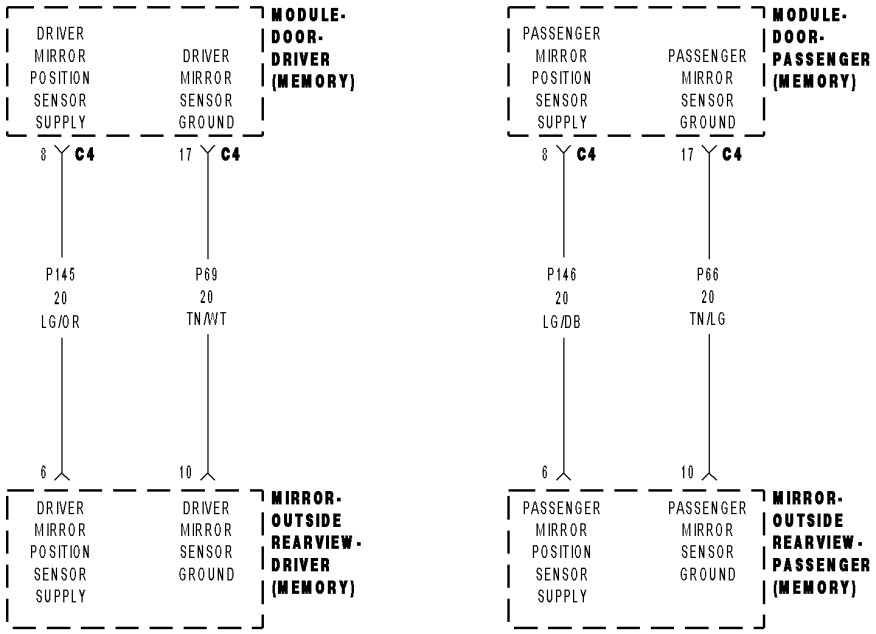

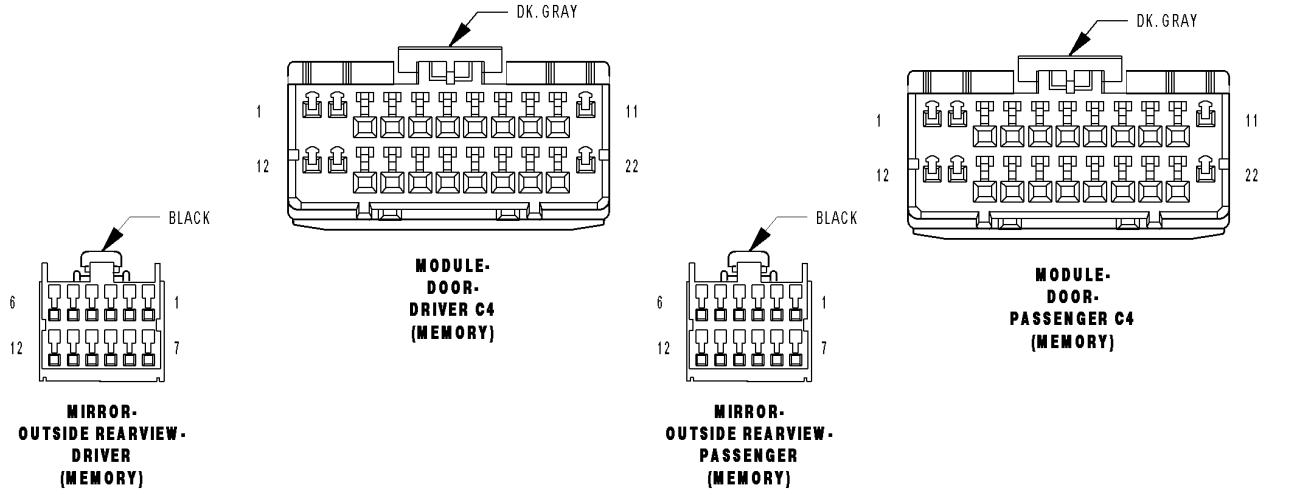

8139c86d

For a complete wiring diagram **Refer to Section 8W**.

- **When Monitored:**
  Continuously.
- **Set Condition:**
  When the Driver/Passenger Door Module senses voltage above 5.5 volts on the Mirror Position Sensor Supply circuit for over 30 ms., this code will set.**NOTE: This test covers both the Driver and Passenger code depending on the side the code appeared in.**

Possible Causes
(P145) OR (P146) MIRROR POSITION SENSOR SUPPLY CIRCUIT OPEN
(P145) OR (P146) MIRROR POSITION SENSOR SUPPLY CIRCUIT SHORT TO VOLTAGE
(P69) R (P66) MIRROR SENSOR GROUND CIRCUIT OPEN
MIRROR OPEN
DRIVER/PASSENGER DOOR MODULE

Diagnostic Test

1. TEST FOR INTERMITTENT CONDITION

Turn the ignition on.
With the scan tool, record and erase DTC's
Operate the Mirror Switch in all directions several times.
Cycle the ignition from on to off three times.
Turn the ignition on.
With the scan tool, read DTC's.

Does the scan tool display B1D0A or B1d13–MIRROR POSITION SENSOR POWER SUPPLY CIRCUIT HIGH?

Yes >> Go To 2

No >> The conditions that caused this code to set are not present at this time. Using the wiring diagram/schematic as a guide, inspect the wiring and connectors.
Perform BODY VERIFICATION TEST - VER 1. (Refer to BODY VERIFICATION TEST - VER 1).

2. TEST FOR AN OPEN MIRROR

Turn the ignition off.

Disconnect the appropriate mirror connector.

Turn the ignition on.

Measure the voltage between the (P145) or (P146) Mirror Position Sensor Supply circuit and the ((P69) or (P66) Mirror Sensor Ground circuit.

Is the voltage between 4.8 and 5.2 volts?

Yes >> Replace the Mirror.
Perform BODY VERIFICATION TEST - VER 1. (Refer to BODY VERIFICATION TEST - VER 1).

No >> Go to 3

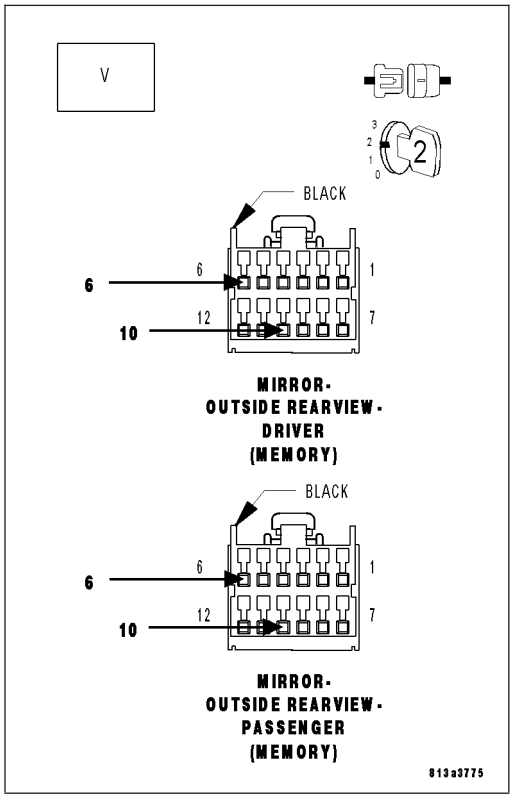

3. TEST THE (P145) OR (P146) MIRROR POSITION SENSOR SUPPLY WIRE FOR AN OPEN

Turn the ignition off.

Disconnect the appropriate Door Module C4 connector.

Measure the resistance between of the (P145) or (P146) Mirror Position Sensor Supply circuit between the Module connector and the Mirror connector.

Is the resistance below 2.0 ohms?

No >> Repair the (P145) or (P146) Mirror Position Sensor Supply circuit for an open.
Perform BODY VERIFICATION TEST - VER 1. (Refer to BODY VERIFICATION TEST - VER 1).

Yes >> Go to 4

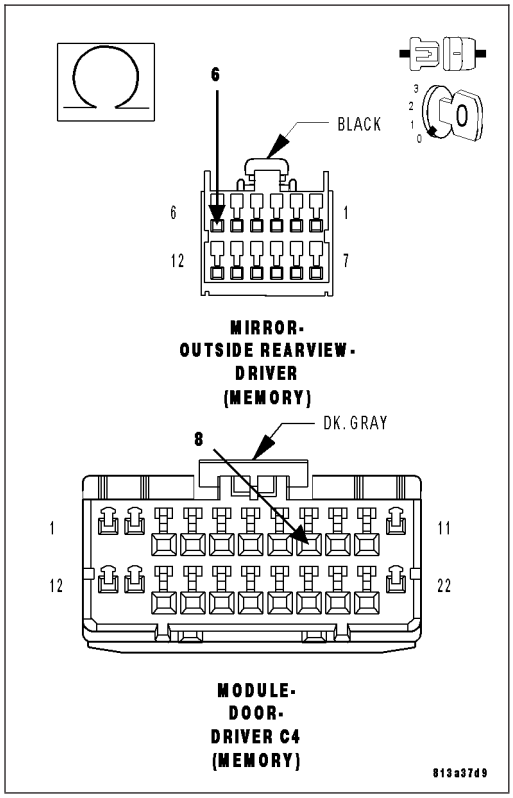

4. TEST THE (P69) OR (P66) MIRROR SENSOR GROUND WIRE FOR AN OPEN

Measure the resistance of the ((P69) or (P66) Mirror Sensor Ground circuit between the Module connector and the Mirror connector.

Is the resistance below 2.0 ohms?

No >> Repair the (P69) or (P66) Mirror Sensor Ground circuit for an open.
Perform BODY VERIFICATION TEST - VER 1. (Refer to BODY VERIFICATION TEST - VER 1).

Yes >> Go to 5
Perform BODY VERIFICATION TEST - VER 1. (Refer to BODY VERIFICATION TEST - VER 1).

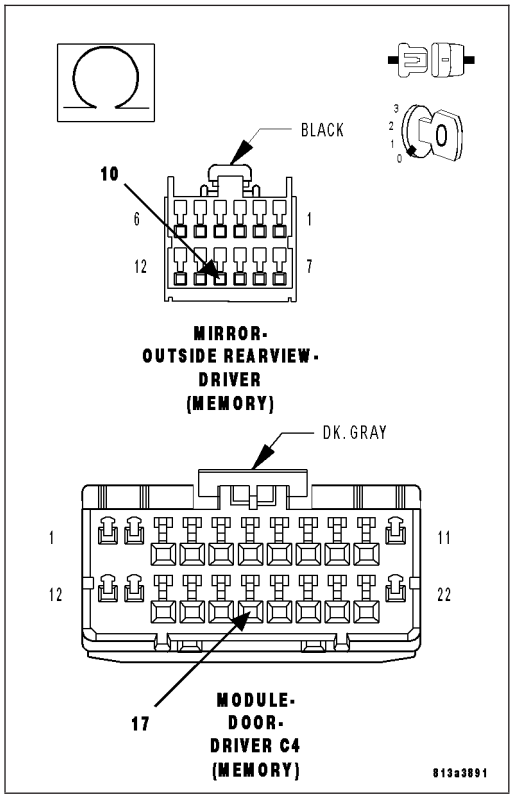

5. TEST THE (P145) OR (P146) MIRROR POSITION SENSOR SUPPLY WIRE SHORTED TO VOLTAGE

Turn the ignition on.

Measure the voltage between ground and the (P145) or (P146) Mirror Position Sensor Supply circuit.

Is there any voltage present?

Yes >> Repair the (P145) or (P146) Mirror Position Sensor Supply circuit for a short to voltage.
Perform BODY VERIFICATION TEST - VER 1. (Refer to BODY VERIFICATION TEST - VER 1).

No >> Replace the appropriate Door Module.
Perform BODY VERIFICATION TEST - VER 1. (Refer to BODY VERIFICATION TEST - VER 1).

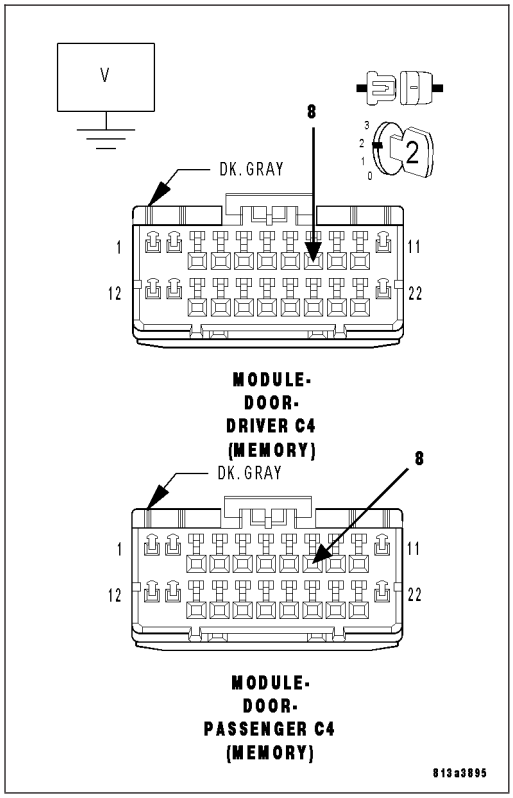

B1D0C,B1D15–MIRROR VERTICAL POSITION SENSOR INPUT CIRCUIT LOW – DOOR MODULE

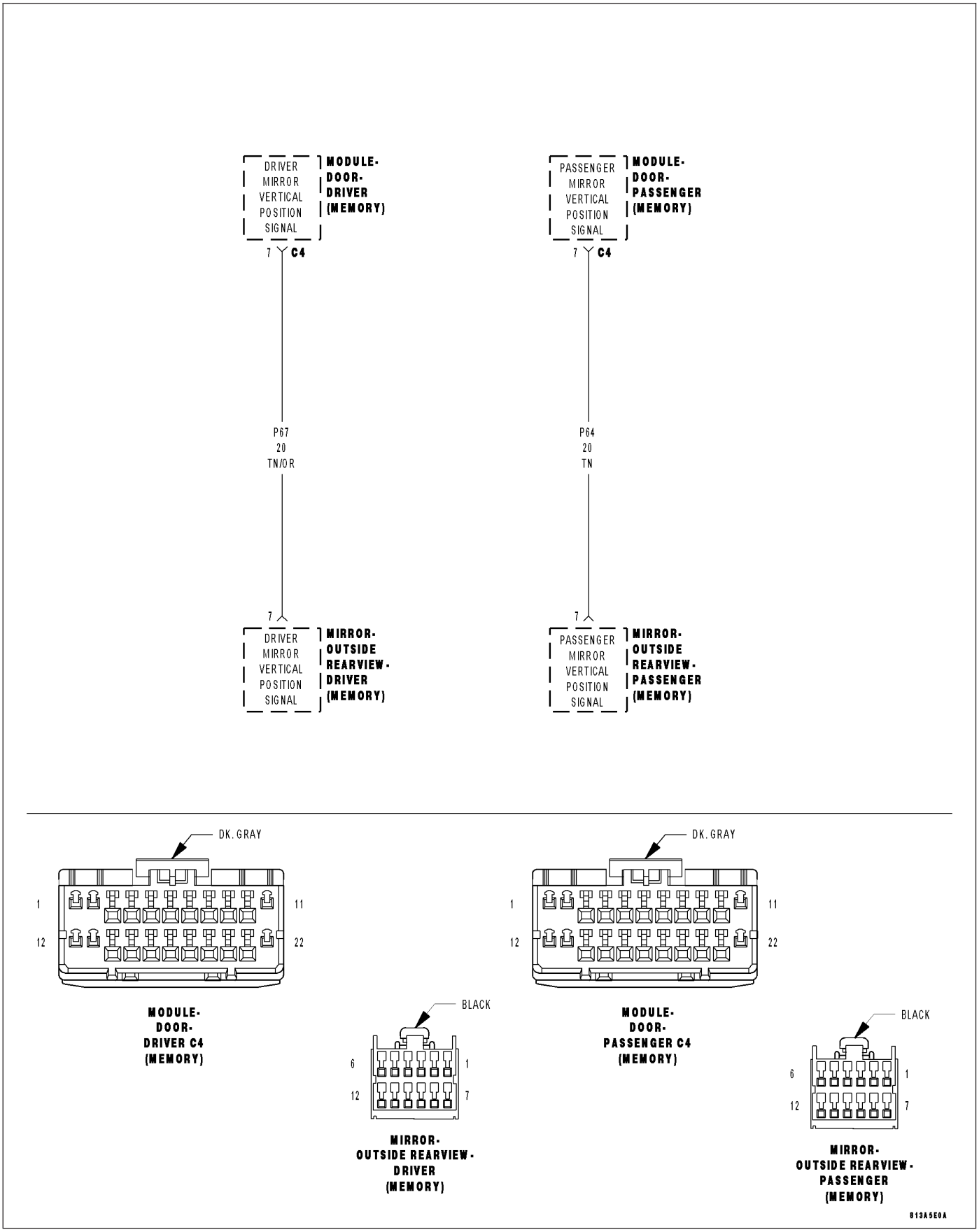

For a complete wiring diagram **Refer to Section 8W**.

- **When Monitored:**
  Continuously.
- **Set Condition:**
  When the Driver/Passenger Door Module senses a value below the parameter of the mirror sensor on the Mirror Vertical Position Signal circuit for over 60 ms., this code will set.**NOTE: This test covers both the Driver and Passenger code depending on the side the code appeared in.**

Possible Causes
(P67) OR (P64) MIRROR VERTICAL POSITION SIGNAL CIRCUIT SHORT TO GROUND
(P67) OR (P64) MIRROR VERTICAL POSITION SIGNAL CIRCUIT SHORTED TO (P69) OR (P66) MIRROR SENSOR GROUND CIRCUIT
MIRROR SHORTED
DRIVER/PASSENGER DOOR MODULE

Diagnostic Test

1. TEST FOR INTERMITTENT CONDITION

Turn the ignition on.

With the scan tool, record and erase DTC's

Operate the Mirror Switch in all directions several times.

Cycle the ignition from on to off three times.

Turn the ignition on.

With the scan tool, read DTC's.

Does the scan tool display B1D0C or B1D15–MIRROR VERTICAL POSITION SENSOR INPUT CIRCUIT LOW?

Yes >> Go To 2

No >> The conditions that caused this code to set are not present at this time. Using the wiring diagram/schematic as a guide, inspect the wiring and connectors.
Perform BODY VERIFICATION TEST - VER 1. (Refer to BODY VERIFICATION TEST - VER 1).

2. TEST FOR A SHORTED MIRROR

Disconnect the appropriate mirror connector.
With the scan tool, erase DTC's.
Operate the Mirror Switch in all directions several times.
Cycle the ignition from on to off three times.
Turn the ignition on.
With the scan tool, read DTC's.

Does the scan tool display B1D0C or B1D15–MIRROR VERTICAL POSITION SENSOR INPUT CIRCUIT LOW?

No >> Replace the Mirror.
Perform BODY VERIFICATION TEST - VER 1. (Refer to BODY VERIFICATION TEST - VER 1).

Yes >> Go to 3

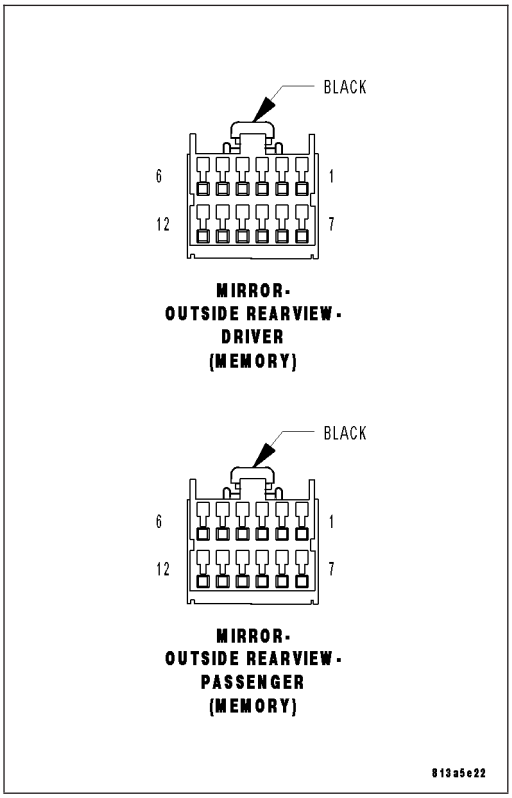

3. TEST THE (P67) OR (P64) MIRROR VERTICAL POSITION SIGNAL WIRE FOR A SHORT TO GROUND

Turn the ignition off.
Disconnect the appropriate Door Module C4 connector.
Measure the resistance between ground and the (P67) or (P64) Mirror Vertical Position Signal circuit.

Is the resistance below 5000.0 ohms?

Yes >> Repair the (P67) or (P64) Mirror Vertical Position Signal circuit for a short to ground.
Perform BODY VERIFICATION TEST - VER 1. (Refer to BODY VERIFICATION TEST - VER 1).

No >> Go to 4

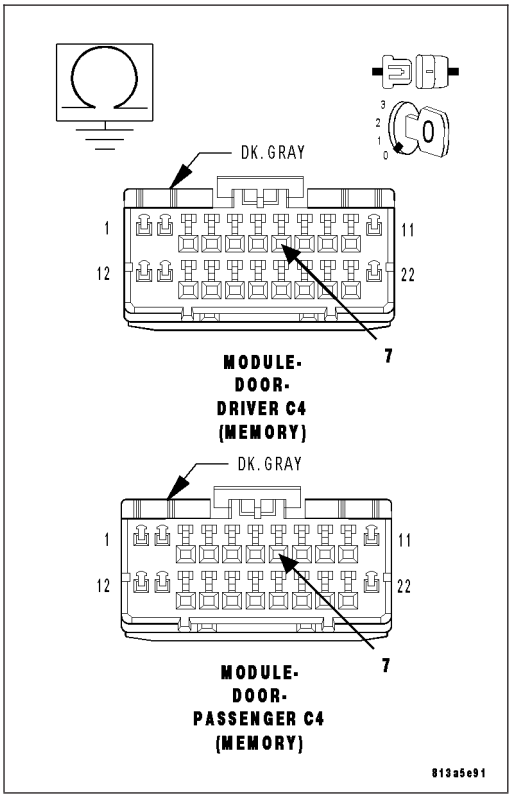

4. TEST THE (P67) OR (P64) MIRROR VERTICAL POSITION SIGNAL CIRCUIT SHORTED TO THE (P69) OR (P66) MIRROR SENSOR GROUND CIRCUIT.

Measure the resistance between the (P67) or (P64) Mirror Vertical Position Signal circuit and the (P69) or (P66) Mirror Sensor Ground circuit.

Is the resistance below 5000.0 ohms?

Yes >> Repair the (P67) or (P64) Mirror Vertical Position Signal circuit for a short to the (P69) or (P66) Sensor Ground Circuit.
Perform BODY VERIFICATION TEST - VER 1. (Refer to BODY VERIFICATION TEST - VER 1).

No >> Replace the appropriate Door Module.
Perform BODY VERIFICATION TEST - VER 1. (Refer to BODY VERIFICATION TEST - VER 1).

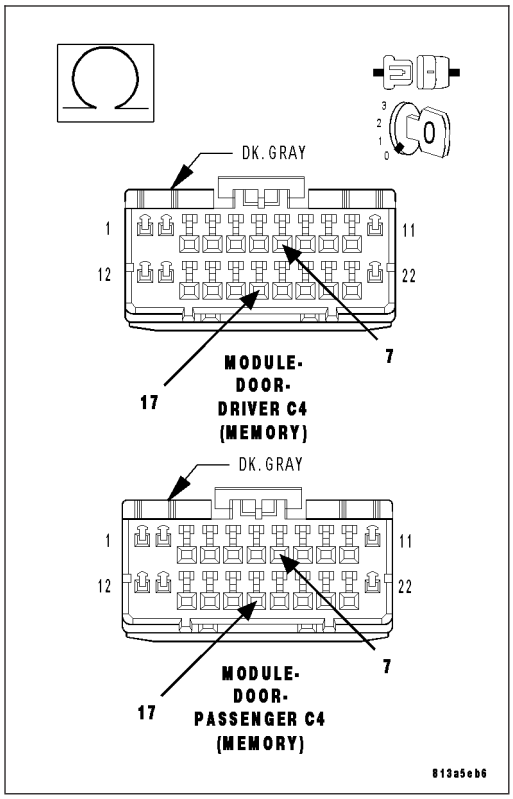

B1D0D,B1D16–MIRROR VERTICAL POSITION SENSOR INPUT CIRCUIT HIGH – DOOR MODULE

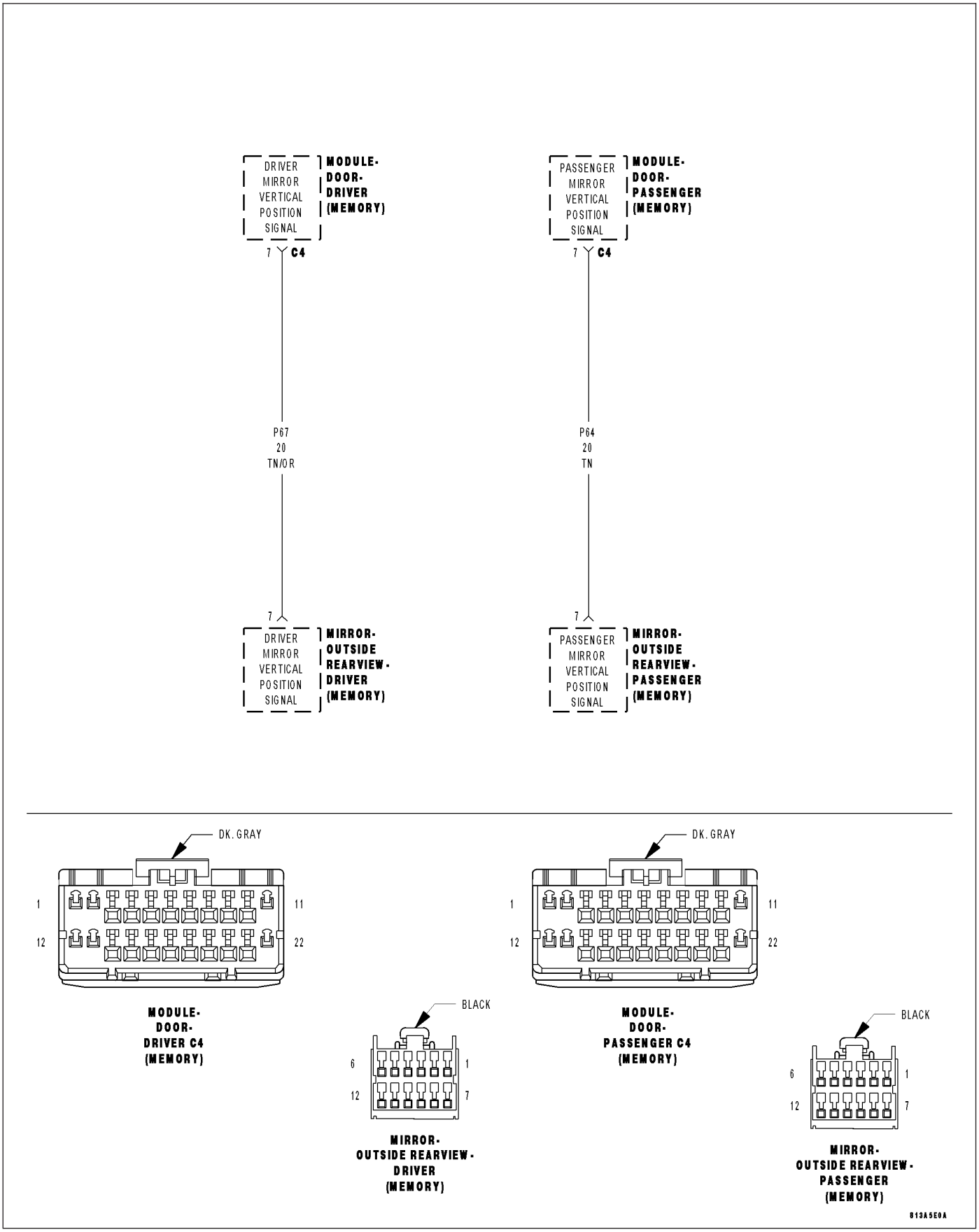

For a complete wiring diagram **Refer to Section 8W**.

- **When Monitored:**
  Continuously.
- **Set Condition:**
  When the Driver/Passenger Door Module senses a value above the parameter of the mirror sensor on the Mirror Vertical Position Signal circuit for over 60 ms., this code will set.**NOTE: This test covers both the Driver and Passenger code depending on the side the code appeared in.**

Possible Causes
(P67) OR (P64) MIRROR VERTICAL POSITION SIGNAL CIRCUIT SHORT TO VOLTAGE
(P67) OR (P64) MIRROR VERTICAL POSITION SIGNAL CIRCUIT OPEN
(P69) OR (P66) MIRROR SENSOR GROUND CIRCUIT OPEN
MIRROR SHORTED
DRIVER/PASSENGER DOOR MODULE

Diagnostic Test

1. TEST FOR INTERMITTENT CONDITION

Turn the ignition on.
With the scan tool, record and erase DTC's
Operate the Mirror Switch in all directions several times.
Cycle the ignition from on to off three times.
Turn the ignition on.
With the scan tool, read DTC's.

Does the scan tool display B1D0D or B1D16–MIRROR VERTICAL POSITION SENSOR INPUT CIRCUIT HIGH?

Yes >> Go To 2

No >> The conditions that caused this code to set are not present at this time. Using the wiring diagram/schematic as a guide, inspect the wiring and connectors.
Perform BODY VERIFICATION TEST - VER 1. (Refer to BODY VERIFICATION TEST - VER 1).

2. TEST FOR A SHORTED MIRROR

Disconnect the appropriate mirror connector.
With the scan tool, erase DTC's.
Operate the Mirror Switch in all directions several times.
Cycle the ignition from on to off three times.
Turn the ignition on.
With the scan tool, read DTC's.

Does the scan tool display B1D0D or B1D16–MIRROR VERTICAL POSITION SENSOR INPUT CIRCUIT HIGH?

No >> Replace the Mirror.
Perform BODY VERIFICATION TEST - VER 1. (Refer to BODY VERIFICATION TEST - VER 1).

Yes >> Go to 3

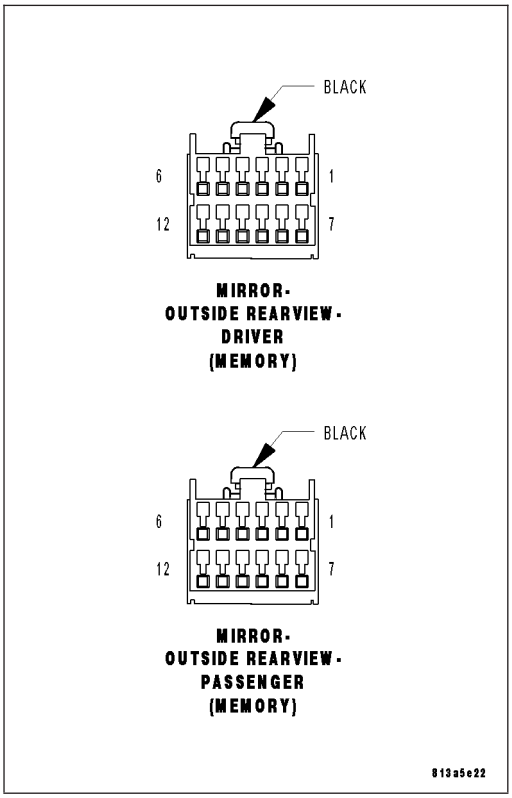

3. TEST THE (P67) OR (P64) MIRROR VERTICAL POSITION SIGNAL WIRE FOR A SHORT TO VOLTAGE

Turn the ignition off.
Disconnect the appropriate Door Module C4 connector.
Measure the voltage between the (P67) or (P64) Mirror Vertical Position Signal circuit and ground.

Is there any voltage present?

Yes >> Repair the (P67) or (P64) Mirror Vertical Position Signal circuit for a short to voltage.
Perform BODY VERIFICATION TEST - VER 1. (Refer to BODY VERIFICATION TEST - VER 1).

No >> Go to 4

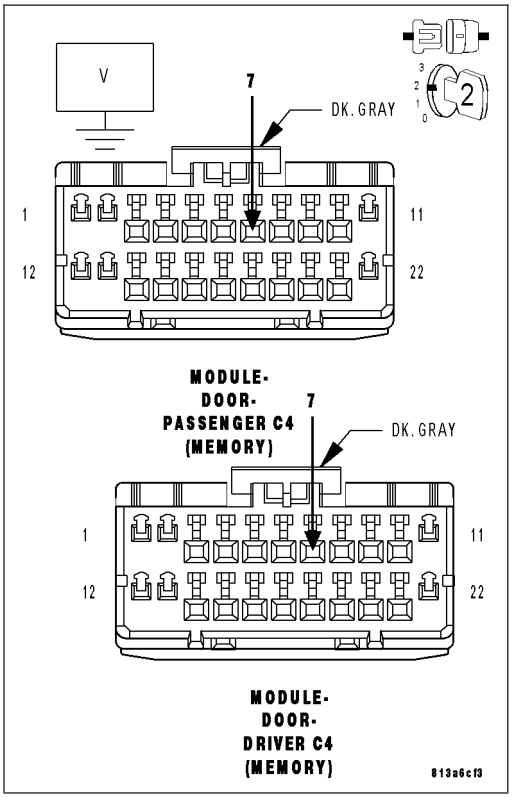

4. TEST THE (P69) OR (P66) MIRROR SENSOR GROUND WIRE FOR AN OPEN

Measure the resistance of the (P69) or (P66) Mirror Sensor Ground circuit between the Module connector and the Mirror connector.

Is the resistance below 2.0 ohms?

No >> Repair the (P69) or (P66) Mirror Sensor Ground circuit for an open.
Perform BODY VERIFICATION TEST - VER 1. (Refer to BODY VERIFICATION TEST - VER 1).

Yes >> Go to 5

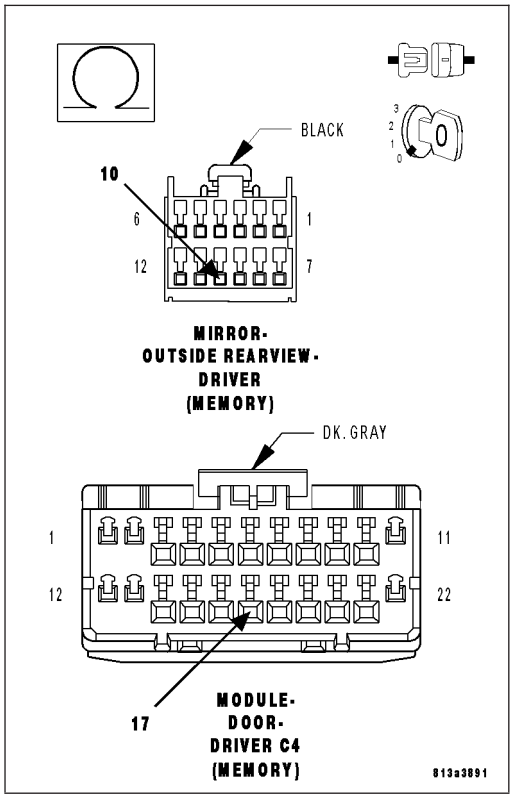

5. TEST THE (P67) OR (P64) MIRROR VERTICAL POSITION SIGNAL WIRE FOR AN OPEN

Measure the resistance of the (P67) or (P64) Mirror Vertical Position Signal circuit between the Module connector and the Mirror connector.

Is the resistance below 2.0 ohms?

No >> Repair the (P67) or (P64) Mirror Vertical Position Signal circuit for an open.
Perform BODY VERIFICATION TEST - VER 1. (Refer to BODY VERIFICATION TEST - VER 1).

Yes >> Replace the appropriate Door Module.
Perform BODY VERIFICATION TEST - VER 1. (Refer to BODY VERIFICATION TEST - VER 1).

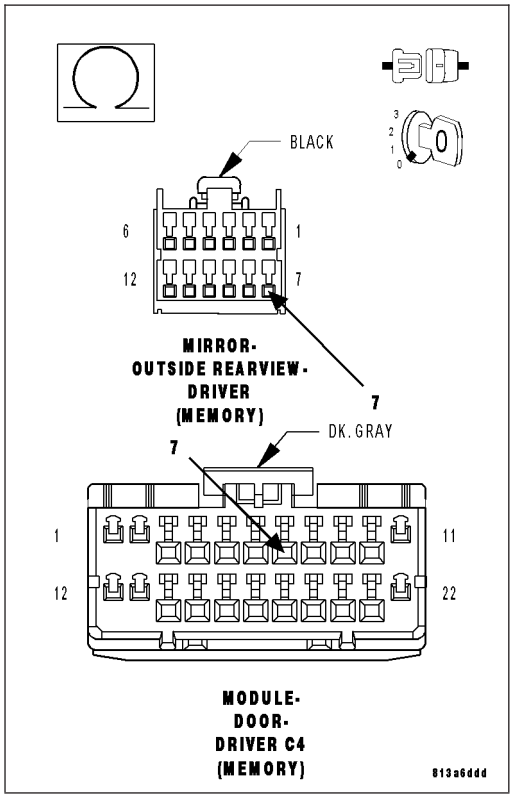

B1D0F,B1D18–MIRROR HORIZONTAL POSITION SENSOR INPUT CIRCUIT LOW – DOOR MODULE

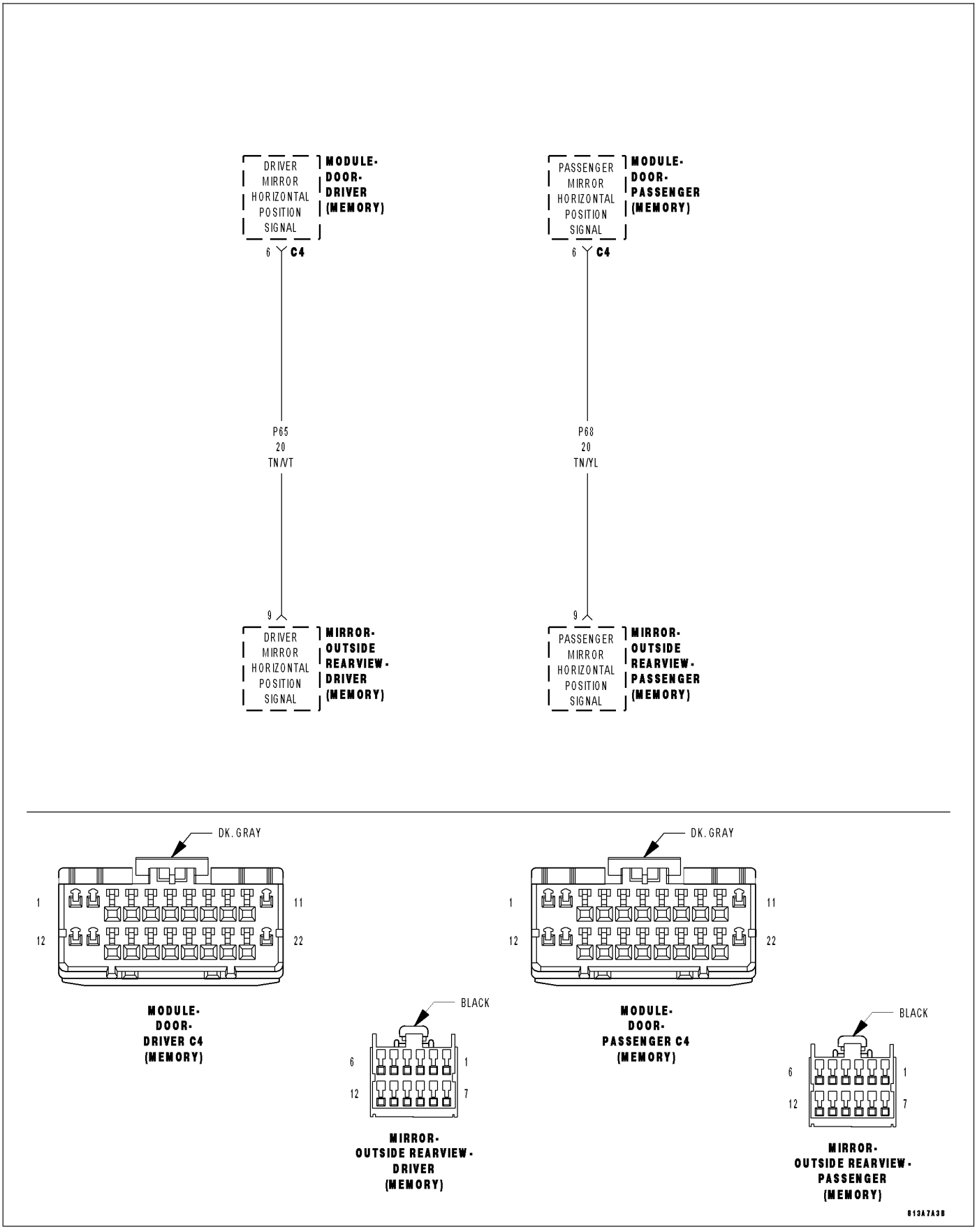

For a complete wiring diagram **Refer to Section 8W**.

- **When Monitored:**
  Continuously.
- **Set Condition:**
  When the Driver/Passenger Door Module senses a value below the parameter of the mirror sensor on the Mirror Horizontal Position Signal circuit for over 60 ms., this code will set.**NOTE: This test covers both the Driver and Passenger code depending on the side the code appeared in.**

Possible Causes
(P65) OR (P68) MIRROR HORIZONTAL POSITION SIGNAL CIRCUIT SHORT TO GROUND
(P65) OR (P68) MIRROR HORIZONTAL POSITION SIGNAL CIRCUIT SHORTED TO (P69) OR (P66) MIRROR SENSOR GROUND CIRCUIT
MIRROR SHORTED
DRIVER/PASSENGER DOOR MODULE

Diagnostic Test

1. TEST FOR INTERMITTENT CONDITION

Turn the ignition on.
With the scan tool, record and erase DTC's
Operate the Mirror Switch in all directions several times.
Cycle the ignition from on to off three times.
Turn the ignition on.
With the scan tool, read DTC's.

Does the scan tool display B1D0F or B1D18–MIRROR HORIZONTAL POSITION SENSOR INPUT CIRCUIT LOW?

Yes >> Go To 2

No >> The conditions that caused this code to set are not present at this time. Using the wiring diagram/schematic as a guide, inspect the wiring and connectors.
Perform BODY VERIFICATION TEST - VER 1. (Refer to BODY VERIFICATION TEST - VER 1).

2. TEST FOR A SHORTED MIRROR

Disconnect the appropriate mirror connector.
With the scan tool, erase DTC's.
Operate the Mirror Switch in all directions several times.
Cycle the ignition from on to off three times.
Turn the ignition on.
With the scan tool, read DTC's.

Does the scan tool display B1D0F or B1D18–MIRROR HORIZONTAL POSITION SENSOR INPUT CIRCUIT LOW?

No >> Replace the Mirror.
Perform BODY VERIFICATION TEST - VER 1. (Refer to BODY VERIFICATION TEST - VER 1).

Yes >> Go to 3

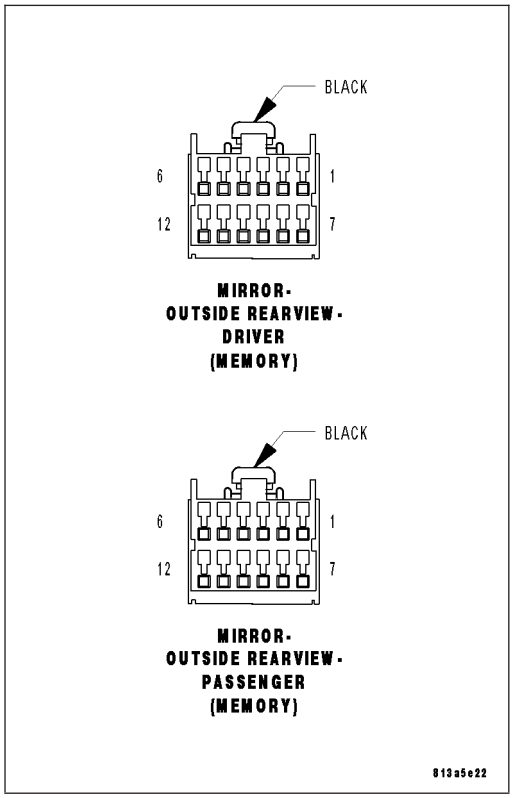

3. TEST THE (P65) OR (P68) MIRROR HORIZONTAL POSITION SIGNAL WIRE FOR A SHORT TO GROUND

Turn the ignition off.
Disconnect the appropriate Door Module C4 connector.
Measure the resistance between ground and the (P65) or (P68) Mirror Horizontal Position Signal circuit.

Is the resistance below 5000.0 ohms?

Yes >> Repair the (P65) or (P68) Mirror Horizontal Position Signal circuit for a short to ground.
Perform BODY VERIFICATION TEST - VER 1. (Refer to BODY VERIFICATION TEST - VER 1).

No >> Go to 4

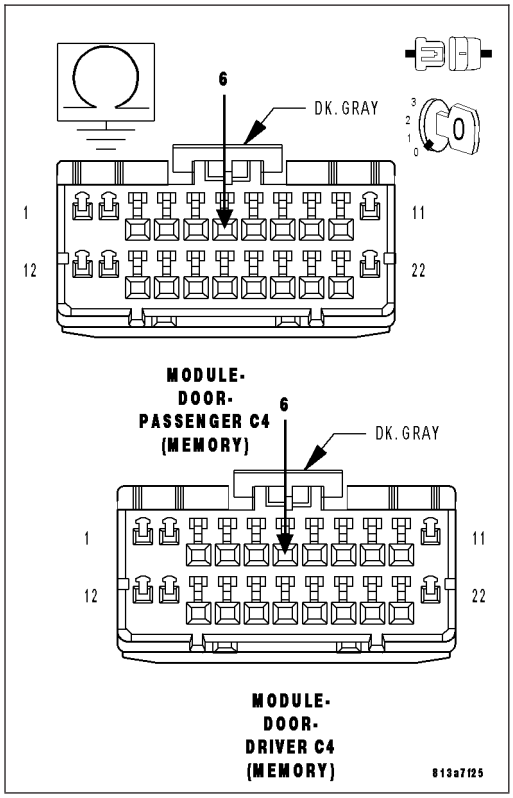

4. TEST THE (P65) OR (P68) MIRROR HORIZONTAL POSITION SIGNAL CIRCUIT SHORTED TO THE (P69) OR (P66) MIRROR SENSOR GROUND CIRCUIT.

Measure the resistance between the (P65) or (P68) Mirror Horizontal Position Signal circuit and the (P69) or (P66) Mirror Sensor Ground circuit.

Is the resistance below 5000.0 ohms?

Yes >> Repair the (P65) or (P68) Mirror Horizontal Position Signal circuit for a short to the (P69) or (P66) Sensor Ground Circuit.

Perform BODY VERIFICATION TEST - VER 1. (Refer to BODY VERIFICATION TEST - VER 1).

No >> Replace the appropriate Door Module.

Perform BODY VERIFICATION TEST - VER 1. (Refer to BODY VERIFICATION TEST - VER 1).

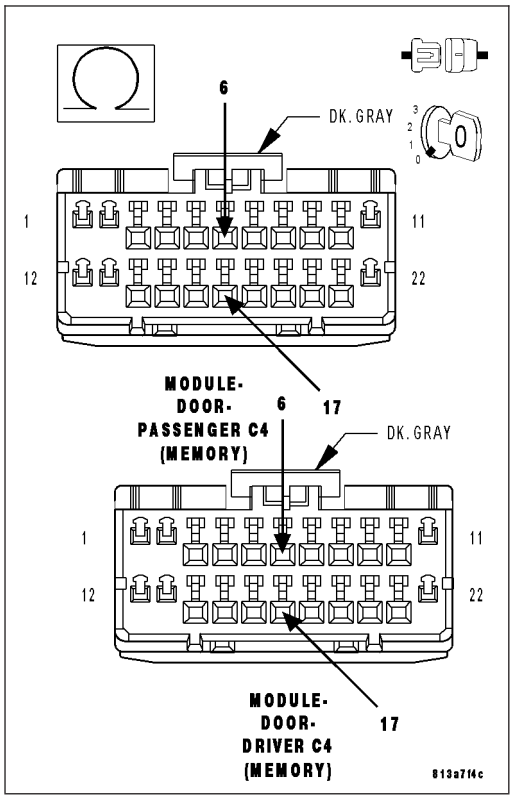

B1D10,B1D19–MIRROR HORIZONTAL POSITION SENSOR INPUT CIRCUIT HIGH – DOOR MODULE

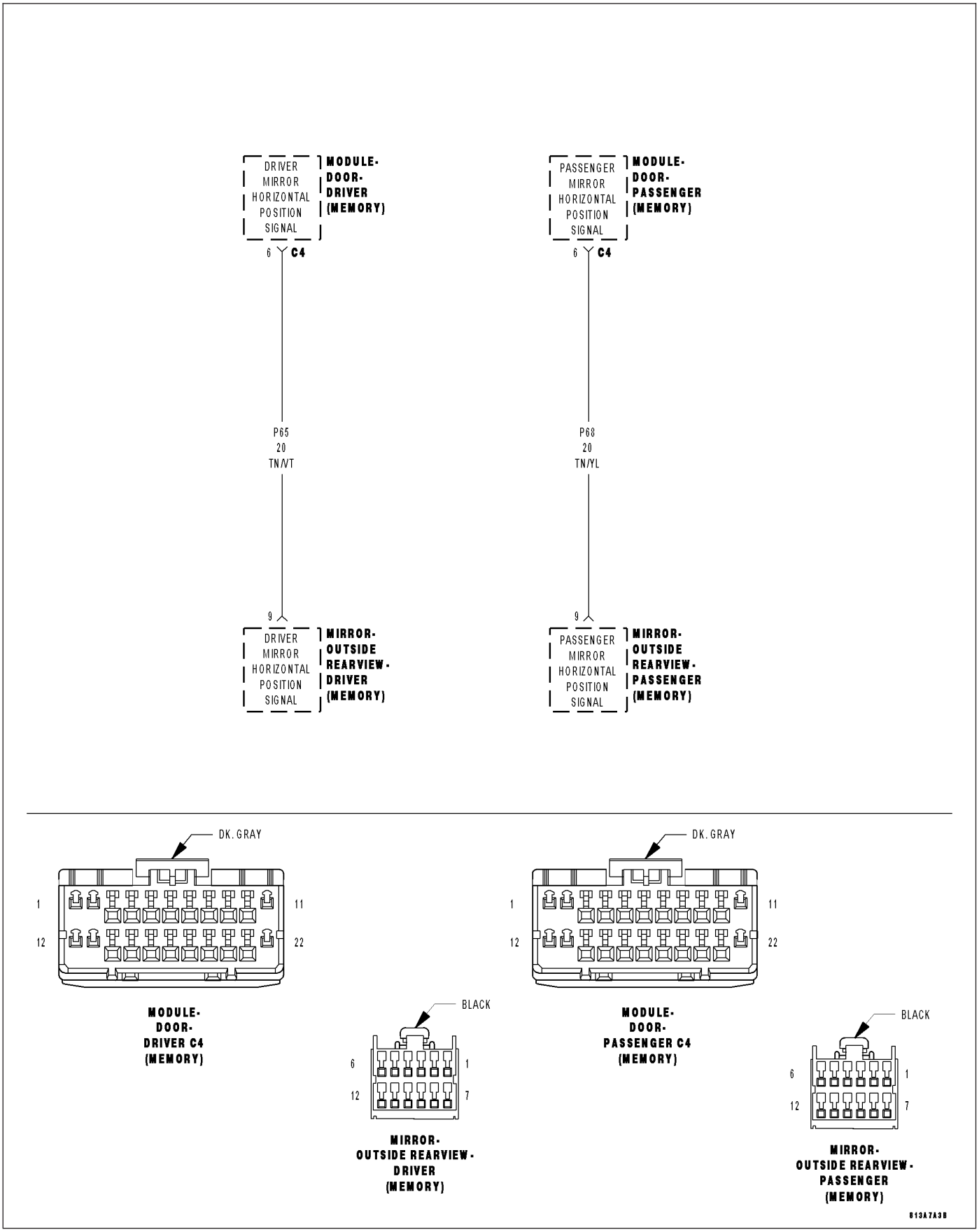

For a complete wiring diagram **Refer to Section 8W**.

- **When Monitored:**
  Continuously.
- **Set Condition:**
  When the Driver/Passenger Door Module senses a value above the parameter of the mirror sensor on the Mirror Horizontal Position Signal circuit for over 60 ms., this code will set.**NOTE: This test covers both the Driver and Passenger code depending on the side the code appeared in.**

Possible Causes
(P65) OR (P68) MIRROR HORIZONTAL POSITION SIGNAL CIRCUIT SHORT TO VOLTAGE
(P65) OR (P68) MIRROR HORIZONTAL POSITION SIGNAL CIRCUIT OPEN
(P69) OR (P66) MIRROR SENSOR GROUND CIRCUIT OPEN
MIRROR OPEN
DRIVER/PASSENGER DOOR MODULE

Diagnostic Test

1. TEST FOR INTERMITTENT CONDITION

Turn the ignition on.
With the scan tool, record and erase DTC's
Operate the Mirror Switch in all directions several times.
Cycle the ignition from on to off three times.
Turn the ignition on.
With the scan tool, read DTC's.

Does the scan tool display B1D10 or B1D19–MIRROR HORIZONTAL POSITION SENSOR INPUT CIRCUIT HIGH?

Yes >> Go To 2

No >> The conditions that caused this code to set are not present at this time. Using the wiring diagram/schematic as a guide, inspect the wiring and connectors.
Perform BODY VERIFICATION TEST - VER 1. (Refer to BODY VERIFICATION TEST - VER 1).

2. TEST FOR AN OPEN MIRROR

Disconnect the appropriate mirror connector.

Turn the ignition on.

Measure the voltage between the (P65) or (P68) Mirror Horizontal Position Signal circuit and the (P69) or (P66) Mirror Sensor Ground circuit.

Is the voltage between 4.8 and 5.2 volts?

Yes >> Replace the Mirror.
Perform BODY VERIFICATION TEST - VER 1. (Refer to BODY VERIFICATION TEST - VER 1).

No >> Go to 3

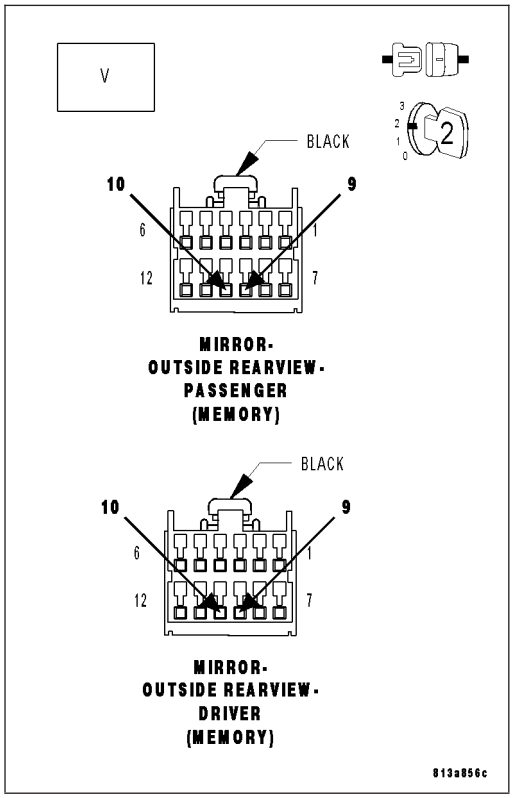

3. TEST THE (P65) OR (P68) MIRROR HORIZONTAL POSITION SIGNAL WIRE FOR A SHORT TO VOLTAGE

Turn the ignition off.

Disconnect the appropriate Door Module C4 connector.

Turn the ignition on.

Measure the voltage between the (P65) or (P68) Mirror Horizontal Position Signal circuit and ground.

Is there any voltage present?

Yes >> Repair the (P65) or (P68) Mirror Horizontal Position Signal circuit for a short to voltage.
Perform BODY VERIFICATION TEST - VER 1. (Refer to BODY VERIFICATION TEST - VER 1).

No >> Go to 4

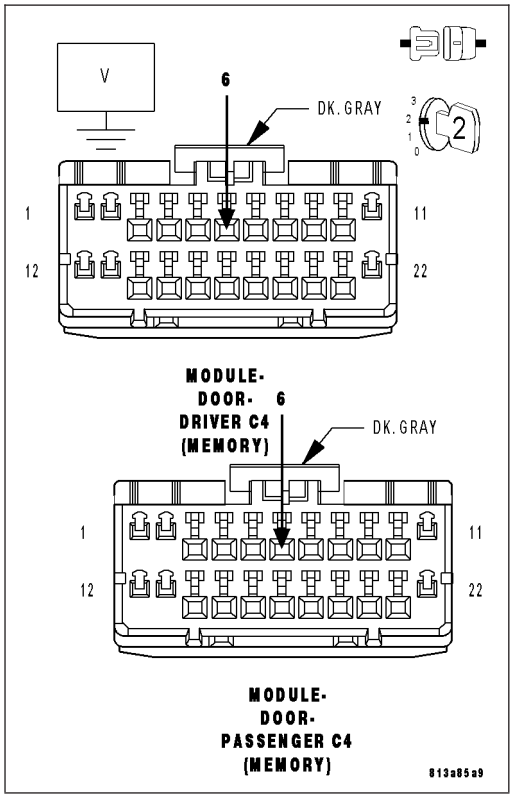

4. TEST THE (P69) OR (P66) MIRROR SENSOR GROUND WIRE FOR AN OPEN

Turn the ignition off.

Measure the resistance of the (P69) or (P66) Mirror Sensor Ground circuit between the Module connector and the Mirror connector.

Is the resistance below 2.0 ohms?

No >> Repair the (P69) or (P66) Mirror Sensor Ground circuit for an open.
Perform BODY VERIFICATION TEST - VER 1. (Refer to BODY VERIFICATION TEST - VER 1).

Yes >> Go to 5

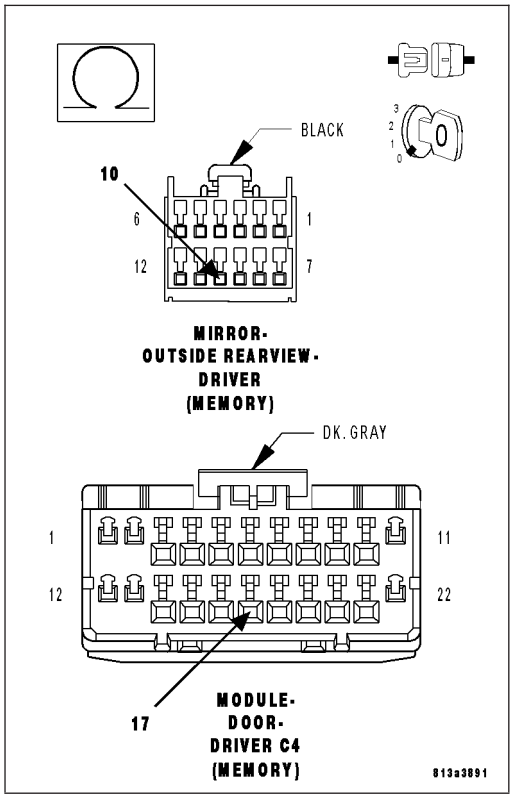

5. TEST THE (P65) OR (P68) MIRROR HORIZONTAL POSITION SIGNAL WIRE FOR AN OPEN

Measure the resistance of the (P65) or (P68) Mirror Horizontal Position Signal circuit between the Module connector and the Mirror connector.

Is the resistance below 2.0 ohms?

No >> Repair the (P65) or (P68) Mirror Horizontal Position Signal circuit for an open.
Perform BODY VERIFICATION TEST - VER 1. (Refer to BODY VERIFICATION TEST - VER 1).

Yes >> Replace the appropriate Door Module.
Perform BODY VERIFICATION TEST - VER 1. (Refer to BODY VERIFICATION TEST - VER 1).

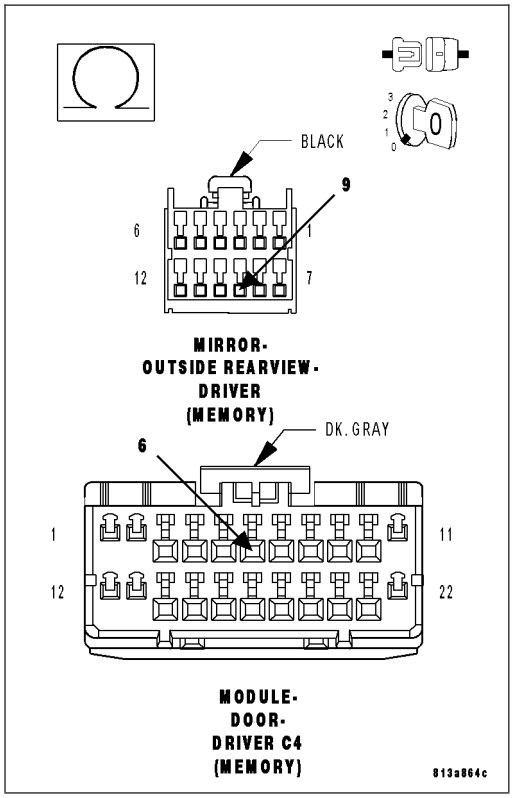

B1D1E,B1D2A–MIRROR VERTICAL MOTOR CONTROL CIRCUIT/PERFORMANCE – DOOR MODULE

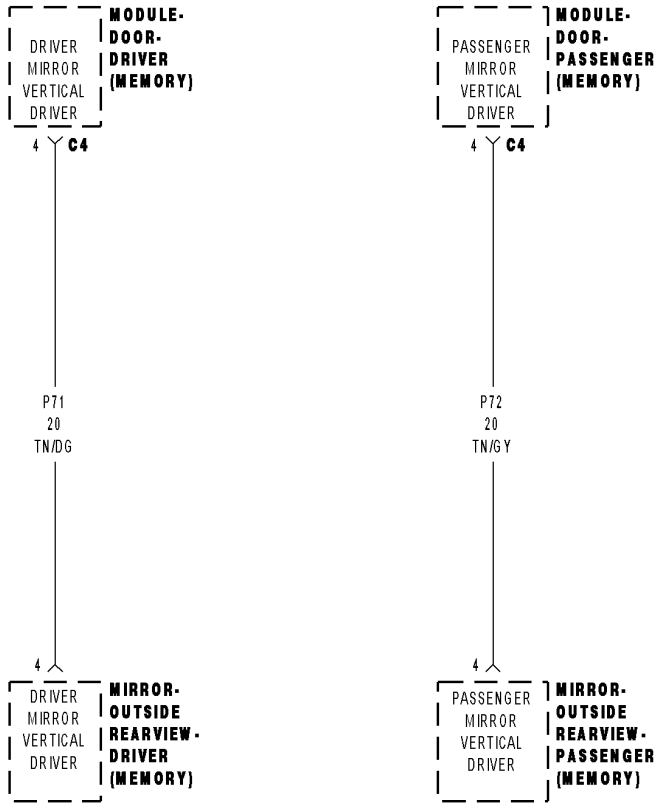

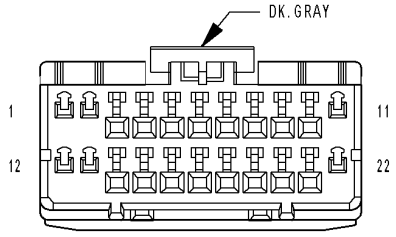

MODULE- DOOR- DRIVER C4 (MEMORY)

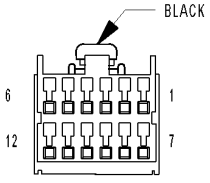

MIRROR- OUTSIDE REARVIEW- DRIVER (MEMORY)

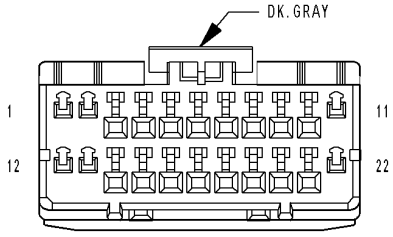

MODULE- DOOR- PASSENGER C4 (MEMORY)

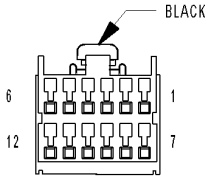

MIRROR- OUTSIDE REARVIEW- PASSENGER (MEMORY)

813aba9c

For a complete wiring diagram **Refer to Section 8W**.

- **When Monitored:**
  Continuously.
- **Set Condition:**
  When the Memory Mirror Module senses a value below the tolerance of the mirror motor on the Mirror Vertical Motor Control circuit for over 10 ms., this code will set.**NOTE: This test covers both the Driver and Passenger code depending on the side the code appeared in.**

Possible Causes
(P71) OR (P72) MIRROR VERTICAL DRIVER CIRCUIT SHORT TO GROUND
(P71) OR (P72) MIRROR VERTICAL DRIVER CIRCUIT SHORTED TO THE (Z912) OR (Z911) GROUND CIRCUIT
MIRROR SHORTED
DRIVER/PASSENGER DOOR MODULE

Diagnostic Test

1. TEST FOR INTERMITTENT CONDITION

Turn the ignition on.

With the scan tool, record and erase DTC's

Operate the Mirror Switch in all directions several times.

Cycle the ignition from on to off three times.

Turn the ignition on.

With the scan tool, read DTC's.

Does the scan tool display B1D1E or B1D2A–MIRROR VERTICAL MOTOR CONTROL CIRCUIT/PERFORMANCE?

Yes >> Go To 2

No >> The conditions that caused this code to set are not present at this time. Using the wiring diagram/schematic as a guide, inspect the wiring and connectors.
Perform BODY VERIFICATION TEST - VER 1. (Refer to BODY VERIFICATION TEST - VER 1).

2. TEST FOR A SHORTED MIRROR

Disconnect the appropriate mirror connector.
With the scan tool, erase DTC's.
Operate the Mirror Switch in all directions several times.
Cycle the ignition from on to off three times.
Turn the ignition on.
With the scan tool, read DTC's.

Does the scan tool display B1D1E or B1D2A–MIRROR VERTICAL MOTOR CONTROL CIRCUIT/PERFORMANCE?

No >> Replace the Mirror.
Perform BODY VERIFICATION TEST - VER 1. (Refer to BODY VERIFICATION TEST - VER 1).

Yes >> Go to 3

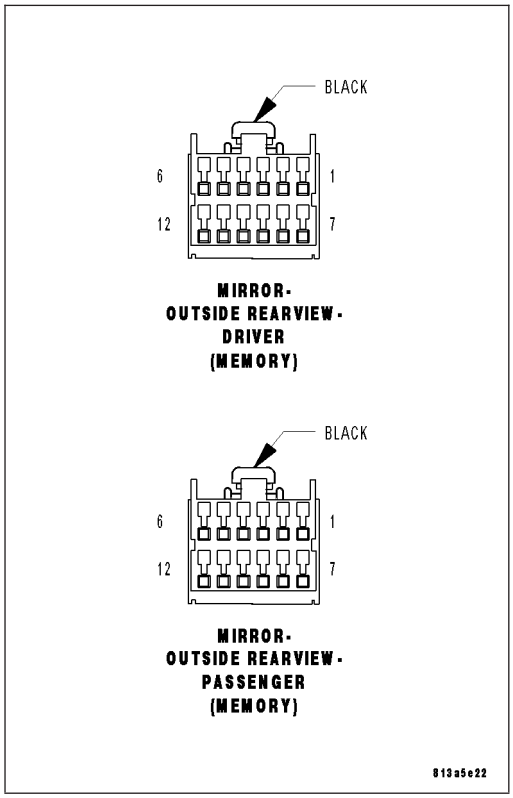

3. TEST THE (P71) OR (P72) MIRROR VERTICAL MOTOR DRIVER WIRE FOR A SHORT TO GROUND

Turn the ignition off.
Disconnect the appropriate Door Module C4 connector.
Measure the resistance between ground and the (P71) or (P72) Mirror Vertical Motor Driver circuit.

Is the resistance below 5000.0 ohms?

Yes >> Repair the (P71) or (P72) Mirror Vertical Motor Driver circuit for a short to ground.
Perform BODY VERIFICATION TEST - VER 1. (Refer to BODY VERIFICATION TEST - VER 1).

No >> Go to 4

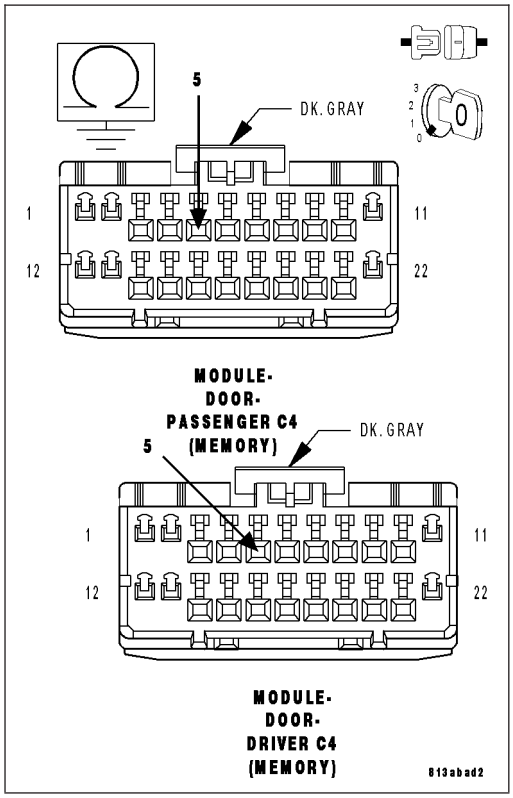

4. TEST THE (P71) OR (P72) MIRROR VERTICAL MOTOR DRIVER CIRCUIT SHORTED TO THE (Z912) GROUND CIRCUIT.

Measure the resistance between the (P71) or (P72) Mirror Vertical Motor Driver circuit and the (Z912) or (Z911) Ground circuit.

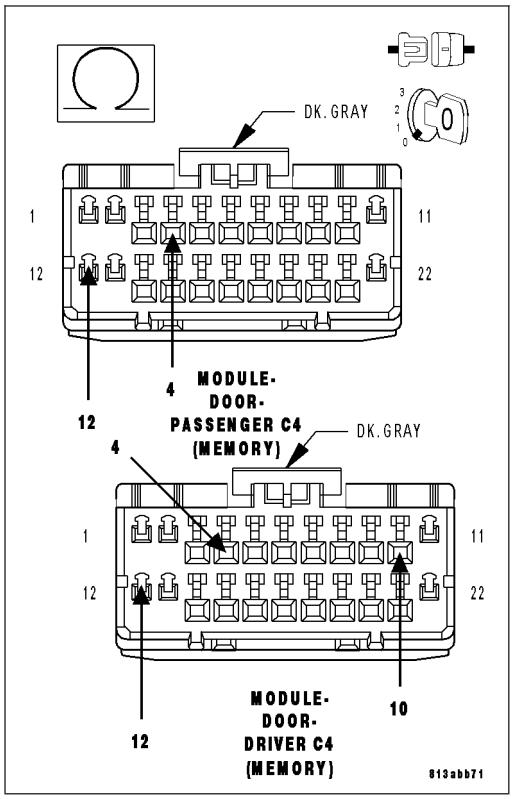

Is the resistance below 5000.0 ohms?

Yes >> Repair the (P71) or (P72) Mirror Vertical Motor Driver circuit for a short to the (Z912) or (Z911) Ground Circuit.
Perform BODY VERIFICATION TEST - VER 1. (Refer to BODY VERIFICATION TEST - VER 1).

No >> Replace the appropriate Door Module.
Perform BODY VERIFICATION TEST - VER 1. (Refer to BODY VERIFICATION TEST - VER 1).

B1D22,B1D2E–MIRROR HORIZONTAL MOTOR CONTROL CIRCUIT/PERFORMANCE – DOOR MODULE

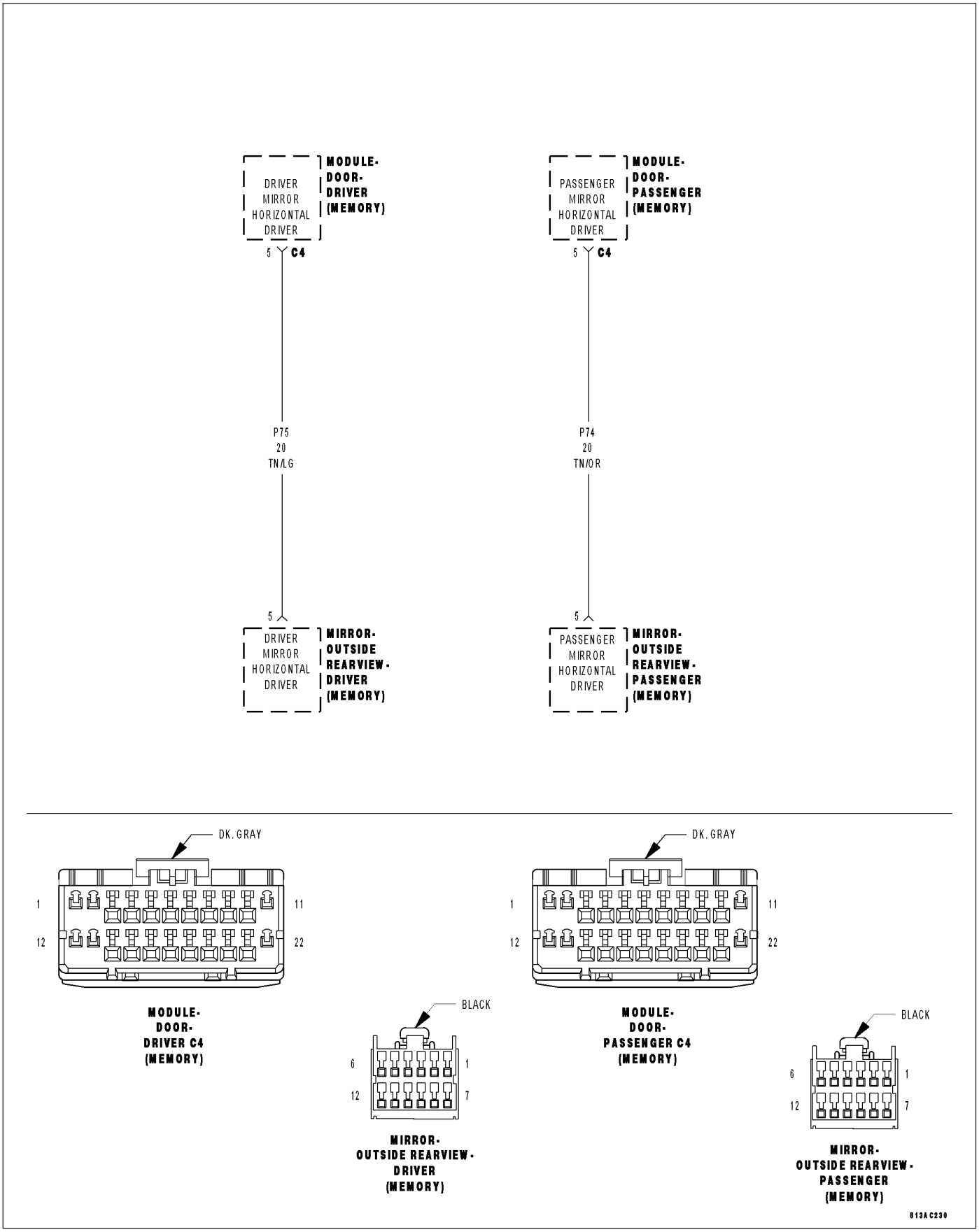

For a complete wiring diagram **Refer to Section 8W**.

- **When Monitored:**
  Continuously.
- **Set Condition:**
  When the Driver/Passenger Door Module senses a value below the tolerance of the mirror motor on the Mirror Horizontal Motor Driver circuit for over 10 ms., this code will set.**NOTE: This test covers both the Driver and Passenger code depending on the side the code appeared in.**

Possible Causes
(P75) OR (P74) MIRROR HORIZONTAL DRIVER CIRCUIT SHORT TO GROUND
(P75) OR (P74) MIRROR HORIZONTAL DRIVER CIRCUIT SHORTED TO THE (Z912) OR (Z911) GROUND CIRCUIT
MIRROR SHORTED
DRIVER/PASSENGER DOOR MODULE

Diagnostic Test

1. TEST FOR INTERMITTENT CONDITION

Turn the ignition on.

With the scan tool, record and erase DTC's

Operate the Mirror Switch in all directions several times.

Cycle the ignition from on to off three times.

Turn the ignition on.

With the scan tool, read DTC's.

Does the scan tool display B1D22 or B1D2E–MIRROR HORIZONTAL MOTOR CONTROL CIRCUIT/PERFORMANCE?

Yes >> Go To 2

No >> The conditions that caused this code to set are not present at this time. Using the wiring diagram/schematic as a guide, inspect the wiring and connectors.
Perform BODY VERIFICATION TEST - VER 1. (Refer to BODY VERIFICATION TEST - VER 1).

2. TEST FOR A SHORTED MIRROR

Disconnect the appropriate mirror connector.
With the scan tool, erase DTC's.
Operate the Mirror Switch in all directions several times.
Cycle the ignition from on to off three times.
Turn the ignition on.
With the scan tool, read DTC's.

Does the scan tool display B1D22 or B1D2E–MIRROR HORIZONTAL MOTOR CONTROL CIRCUIT/PERFORMANCE?

No >> Replace the Mirror.
Perform BODY VERIFICATION TEST - VER 1. (Refer to BODY VERIFICATION TEST - VER 1).

Yes >> Go to 3

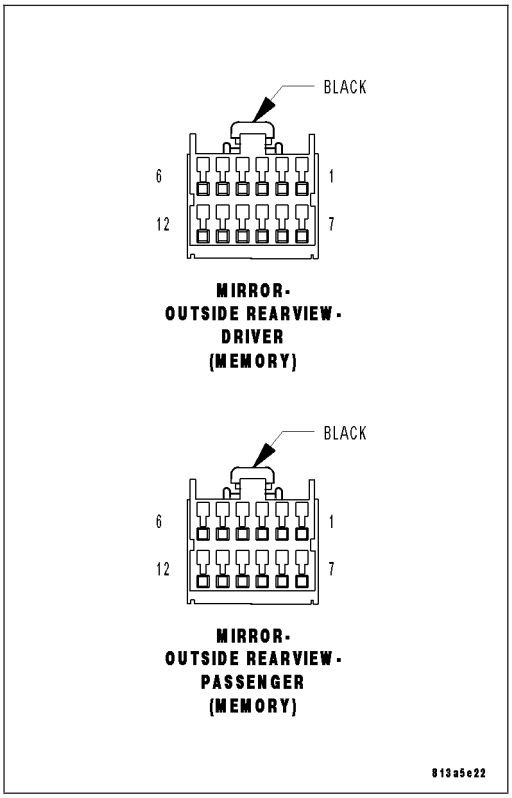

3. TEST THE (P75) OR (P74)) MIRROR HORIZONTAL MOTOR DRIVER WIRE FOR A SHORT TO GROUND

Turn the ignition off.
Disconnect the appropriate Door Module C4 connector.
Measure the resistance between ground and the (P75) or (P74) Mirror Horizontal Motor Driver circuit.

Is the resistance below 5000.0 ohms?

Yes >> Repair the (P75) or (P74) Mirror Horizontal Motor Driver circuit for a short to ground.
Perform BODY VERIFICATION TEST - VER 1. (Refer to BODY VERIFICATION TEST - VER 1).

No >> Go to 4

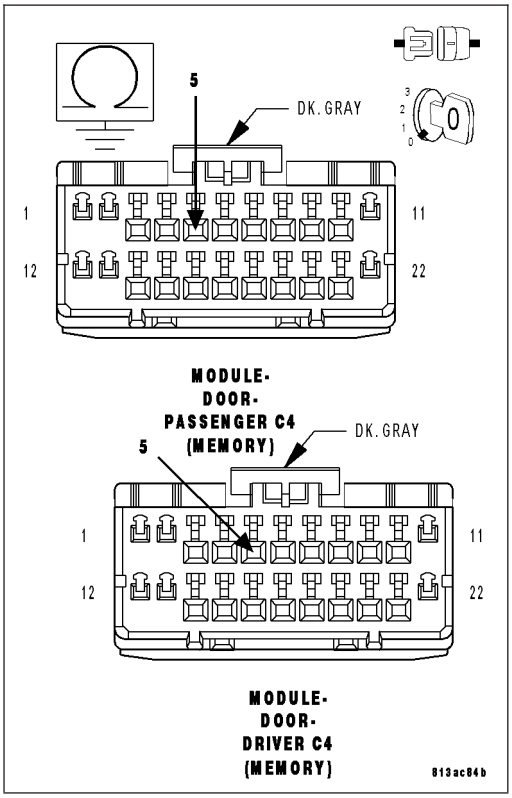

4. TEST THE (P75) OR (P74) MIRROR HORIZONTAL MOTOR DRIVER CIRCUIT SHORTED TO THE (Z912) OR (Z911) GROUND CIRCUIT.

Measure the resistance between the (P75) or (P74) Mirror Horizontal Driver circuit and the (Z912) or (Z911) Ground circuit.

Is the resistance below 5000.0 ohms?

Yes >> Repair the (P75) or (P74) Mirror Horizontal Motor Driver circuit for a short to the (Z912) or (Z911) Mirror Heater Ground Circuit.

Perform BODY VERIFICATION TEST - VER 1. (Refer to BODY VERIFICATION TEST - VER 1).

No >> Replace the appropriate Door Module.

Perform BODY VERIFICATION TEST - VER 1. (Refer to BODY VERIFICATION TEST - VER 1).

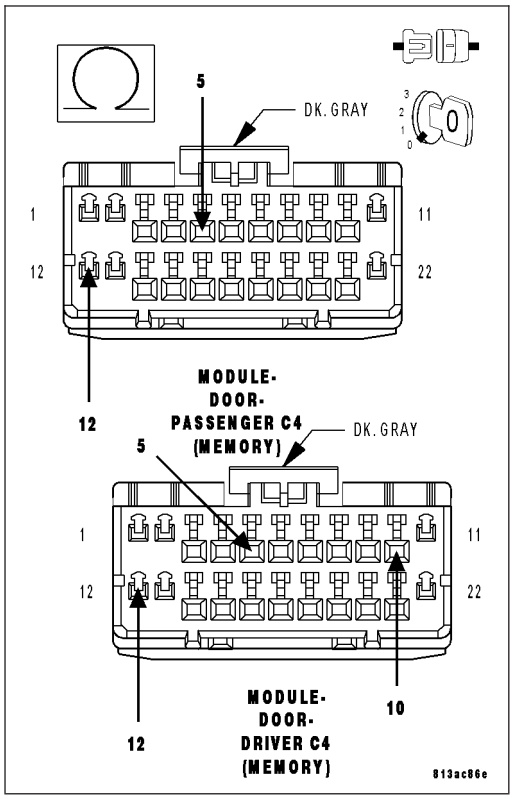

B1D4D–MEMORY SWITCH INPUT CIRCUIT STUCK – DOOR MODULE

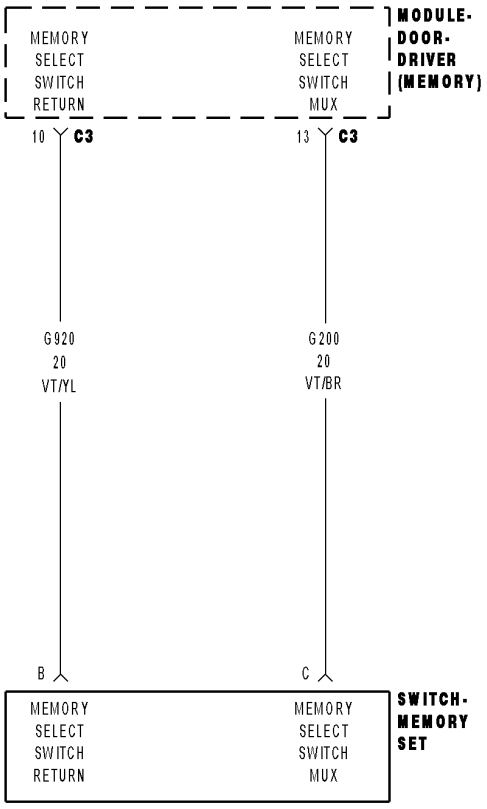

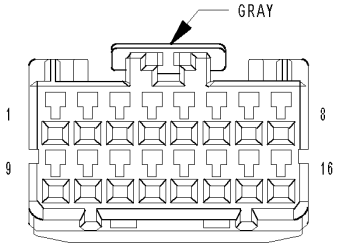

MODULE-DOOR-DRIVER C3 (MEMORY)

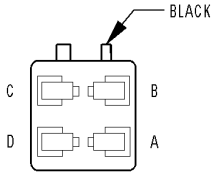

SWITCH-MEMORY SET

813af814

For a complete wiring diagram **Refer to Section 8W**.

- **When Monitored:**
  Continuously.
- **Set Condition:**
  When the Memory Select Switch Mux is under 2.6 volts for over 30 seconds.

Possible Causes
(P200) MEMORY SELECT SWITCH MUX WIRE PARTIAL SHORT TO GROUND
(P200) MEMORY SELECT SWITCH MUX CIRCUIT SHORTED TO THE (G920) MEMORY SELECT SWITCH RETURN CIRCUIT
MEMORY SET SWITCH
DRIVER DOOR MODULE

Diagnostic Test

1. TEST FOR INTERMITTENT CONDITION

With the scan tool, record and erase DTC's
Press the Memory Set Switch several times in all positions.
Cycle the ignition from on to off three times.
Turn the ignition on.
With the scan tool, read DTC's.

Does the scan tool display MEMORY SWITCH INPUT CIRCUIT STUCK?

Yes >> Go To 2

No >> The conditions that caused this code to set are not present at this time. Using the wiring diagram/schematic as a guide, inspect the wiring and connectors.
Perform BODY VERIFICATION TEST - VER 1. (Refer to BODY VERIFICATION TEST - VER 1).

2. MEMORY SELECTOR SWITCH SHORTED TO GROUND

With the scan tool, erase DTC's.
Disconnect the Memory Set Switch connector.
Turn the ignition on.
With the scan tool, read DTC's.

Does the scan tool display MEMORY SWITCH INPUT CIRCUIT STUCK?

No >> Replace the Memory Set Switch.
Perform BODY VERIFICATION TEST - VER 1. (Refer to BODY VERIFICATION TEST - VER 1).

Yes >> Go to 3

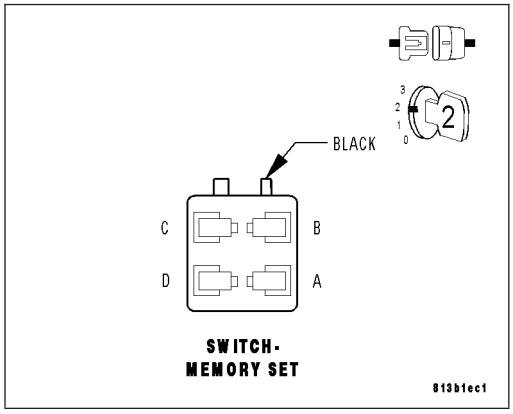

3. (P200) MEMORY SELECT SWITCH MUX CIRCUIT SHORT TO THE GROUND

Disconnect the Driver Door Module C3 connector.

Measure the resistance between ground and the (P200) Memory Select Switch Mux circuit.

Is the resistance below 10000.0 ohms?

Yes >> Repair the Memory Select Switch Mux wire for a short to ground.
Perform the BODY VERIFICATION TEST - VER 1. (Refer to BODY VERIFICATION TEST - VER 1).

No >> Go to 4

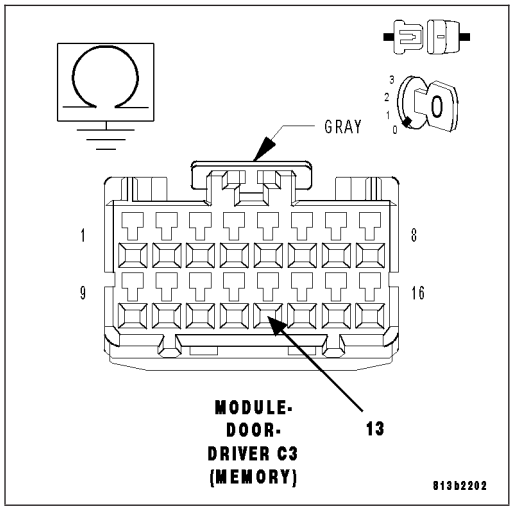

4. (P200) MEMORY SELECT SWITCH MUX CIRCUIT SHORT TO THE (G920) MEMORY SELECT SWITCH RETURN CIRCUIT

Measure the resistance between the (P200) Memory Select Switch Mux circuit and the (G920) Memory Select Switch Return circuit in the Driver Door Module C3 connector.

Is the resistance below 10000.0 ohms?

Yes >> Repair the (P200) Memory Select Switch Mux circuit for a short to the (G920) Memory Select Switch return circuit.
Perform BODY VERIFICATION TEST - VER 1. (Refer to BODY VERIFICATION TEST - VER 1).

No >> Replace the Driver Door Module.
Perform BODY VERIFICATION TEST - VER 1. (Refer to BODY VERIFICATION TEST - VER 1).

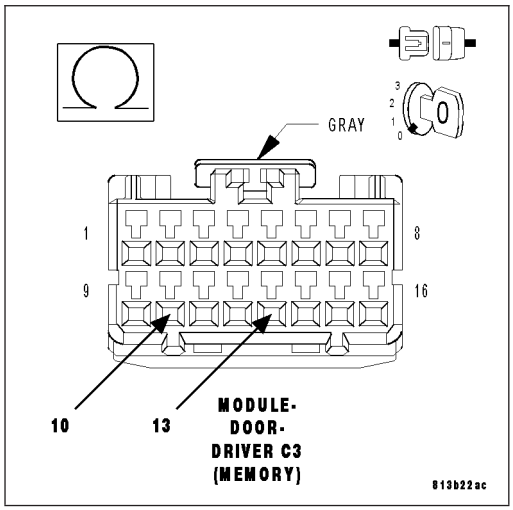

B210D-BATTERY VOLTAGE LOW

For a complete wiring diagram **Refer to Section 8W**.

- **When Monitored:**
  Engine running.
- **Set Condition:**
  This code is set immediately after the Door Module detects voltage under 11.3 volts on the (A913) Fused B(+) circuit.

Possible Causes
CHARGING SYSTEM VOLTAGE LOW
(A913) FUSED B(+) CIRCUIT
DRIVER/PASSENGER DOOR MODULE

Always perform the Pre-Diagnostic Troubleshooting procedure before proceeding.

Diagnostic Test

1. CHECK PCM FOR CHARGING SYSTEM DTC

With the scan tool, read Powertrain Control Module DTC's.

Are there any Charging System DTC's set in the Powertrain Control Module?

Yes >> (Refer to 8 - ELECTRICAL/CHARGING - DIAGNOSIS AND TESTING) for Charging System diagnostic procedures.

No >> Go To 2
Perform BODY VERIFICATION TEST – VER 1. (Refer to BODY VERIFICATION TEST - VER 1).

2. VERIFY THAT DTC B210D-BATTERY VOLTAGE LOW IS ACTIVE

With the scan tool, record and erase DTC's
Turn the ignition switch to the OFF position then start the engine and let run for one minute.
With the scan tool, read DTC's.

Does the DTC B210D-BATTERY VOLTAGE LOW reset?

Yes >> Go To 3

No >> The conditions that caused this code to set are not present at this time. Using the wiring diagram/schematic as a guide, inspect the wiring and connectors.
Perform BODY VERIFICATION TEST – VER 1. (Refer to BODY VERIFICATION TEST - VER 1).

3. CHECK THE VOLTAGE ON THE (A913) FUSED B(+) CIRCUIT

Disconnect the appropriate Door Module C4 connector.

NOTE: Check connectors - Clean and repair as necessary.
Start the engine and let idle.

Measure the voltage on the (A913) Fused B(+) circuit at the Door Module C4 connector and compare to voltage at the vehicle battery.

Is the voltage at the Door Module C4 connector the same as measured at the battery?

Yes >> Replace the Driver/Passenger Door Module in accordance with the service information.
Perform BODY VERIFICATION TEST – VER 1. (Refer to BODY VERIFICATION TEST - VER 1).

No >> Repair the (A913) Fused B(+) circuit as necessary.
Perform BODY VERIFICATION TEST – VER 1. (Refer to BODY VERIFICATION TEST - VER 1).

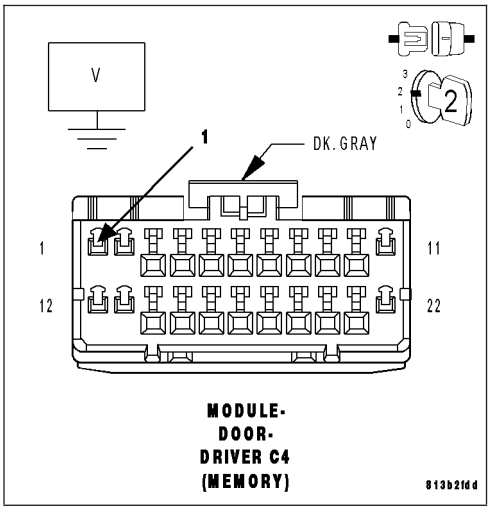

B210E-BATTERY VOLTAGE HIGH

For a complete wiring diagram **Refer to Section 8W**.

- **When Monitored:**
  Engine running.
- **Set Condition:**
  This code is set immediately after the Door Module detects voltage over 15 volts on the (A913) Fused B(+) circuit.

Possible Causes
CHARGING SYSTEM VOLTAGE HIGH
(A913) FUSED B(+) CIRCUIT
DRIVER/PASSENGER DOOR MODULE

Always perform the Pre-Diagnostic Troubleshooting procedure before proceeding.

Diagnostic Test

1. CHECK PCM FOR CHARGING SYSTEM DTC

With the scan tool, read Powertrain Control Module DTC's.

Are there any Charging System DTC's set in the Powertrain Control Module?

Yes >> (Refer to 8 - ELECTRICAL/CHARGING - DIAGNOSIS AND TESTING) for Charging System diagnostic procedures.

No >> Go To 2
Perform BODY VERIFICATION TEST – VER 1. (Refer to BODY VERIFICATION TEST - VER 1).

2. VERIFY THAT DTC B210E-BATTERY VOLTAGE HIGH IS ACTIVE

With the scan tool, record and erase DTC's
Turn the ignition switch to the OFF position then start the engine and let run for one minute.
With the scan tool, read DTC's.

Does the DTC B210E-BATTERY VOLTAGE HIGH reset?

Yes >> Go To 3

No >> The conditions that caused this code to set are not present at this time. Using the wiring diagram/schematic as a guide, inspect the wiring and connectors.
Perform BODY VERIFICATION TEST – VER 1. (Refer to BODY VERIFICATION TEST - VER 1).

3. CHECK THE VOLTAGE ON THE (A913) FUSED B(+) CIRCUIT

Disconnect the appropriate Door Module C4 connector.

NOTE: Check connectors - Clean and repair as necessary.

Start the engine and let idle.

Measure the voltage on the (A913) Fused B(+) circuit at the Door Module C4 connector and compare to voltage at the vehicle battery.

Is the voltage at the Door Module C4 connector the same as measured at the battery?

Yes >> Replace the Driver/Passenger Door Module in accordance with the service information.

Perform BODY VERIFICATION TEST – VER 1. (Refer to BODY VERIFICATION TEST - VER 1).

No >> Repair the (A913) Fused B(+) circuit as necessary.

Perform BODY VERIFICATION TEST – VER 1. (Refer to BODY VERIFICATION TEST - VER 1).

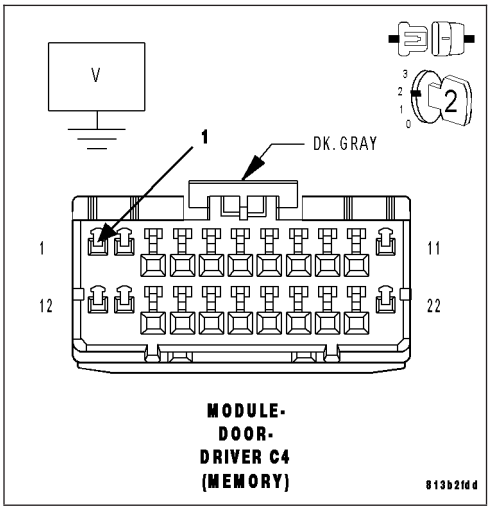

B2218,B2219-DOOR MODULE INTERNAL

For a complete wiring diagram **Refer to Section 8W**.

- **When Monitored:**
  Ignition on.
- **Set Condition:**
  This code is set immediately if the Driver/Passenger Door Module internal self test fails.

Possible Causes
DRIVER/PASSENGER DOOR MODULE

Always perform the Pre-Diagnostic Troubleshooting procedure before proceeding.

Diagnostic Test

1. VERIFY THAT DTC B2218, B2219-DOOR MODULE INTERNAL IS ACTIVE

With the scan tool, record and erase DTC's
Cycle the ignition switch off then back on.
With the scan tool, read DTC's.

Does the DTC B2218 or B2219 - DOOR MODULE INTERNAL reset?

Yes >> Replace the appropriate Door Module.
Perform BODY VERIFICATION TEST – VER 1. (Refer to BODY VERIFICATION TEST - VER 1).

No >> The conditions that caused this code to set are not present at this time. Using the wiring diagram/schematic as a guide, inspect the wiring and connectors.
Perform BODY VERIFICATION TEST – VER 1. (Refer to BODY VERIFICATION TEST - VER 1).

U0019–CAN B BUS – DRIVER DOOR MODULE

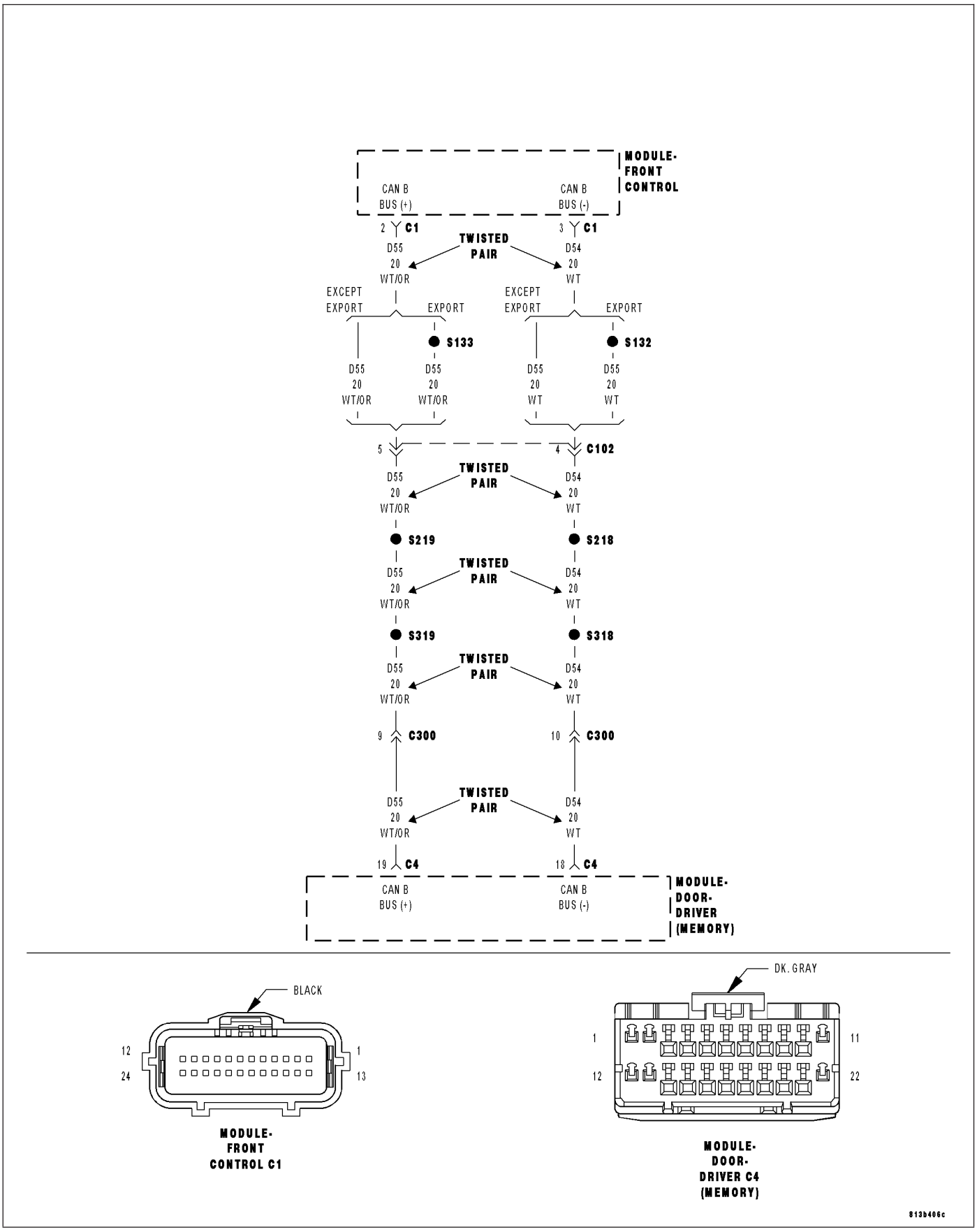

For a complete wiring diagram **Refer to Section 8W**.

- **When Monitored:**
  Continuously.
- **Set Condition:**
  Whenever the CAN B Bus (+) or CAN B (-) circuit is open.

Possible Causes
CAN B BUS DTC's IN FRONT CONTROL MODULE
(D55) CAN B BUS (+) CIRCUIT OPEN
(D54) CAN B BUS (-) CIRCUIT OPEN
DRIVER DOOR MODULE

Diagnostic Test

1. CHECK FOR ACTIVE DTCS

With the scan tool, read the active DTC's.

Cycle the ignition switch from off to on at least five times, leaving the ignition on for a minimum of 90 seconds per cycle.

With the scan tool, read the active DTC's.

Does the scan tool display this DTC as active?

Yes >> Go To 2

No >> If the DTC is stored, check for an intermittent condition. Visually inspect the related wiring harness connectors. Look for broken, bent, pushed out, or corroded terminals.

2. CHECK FRONT CONTROL MODULE DTC's

With the scan tool, read Front Control Module active DTC's

Does the scan tool display any CAN B BUS DTC's – ACTIVE?

Yes >> (Refer to 8 - ELECTRICAL/ELECTRONIC CONTROL MODULES - DIAGNOSIS AND TESTING)

No >> Go To 3

3. (D55) CAN B BUS (+) CIRCUIT OPEN

Turn the ignition off.

Disconnect the negative battery cable.

Disconnect the Driver Door Module C4 connector.

Disconnect the Front Control Module C1 connector.

Measure the resistance of the (D55) CAN B Bus (+) circuit between the Front Control Module C1 connector and the Driver Door Module C4 connector.

Is the resistance below 2.0 ohms?

Yes >> Go To 4

No >> Repair the (D55) CAN B Bus (+) circuit for an open.
Perform BODY VERIFICATION TEST – VER 1. (Refer to BODY VERIFICATION TEST – VER 1).

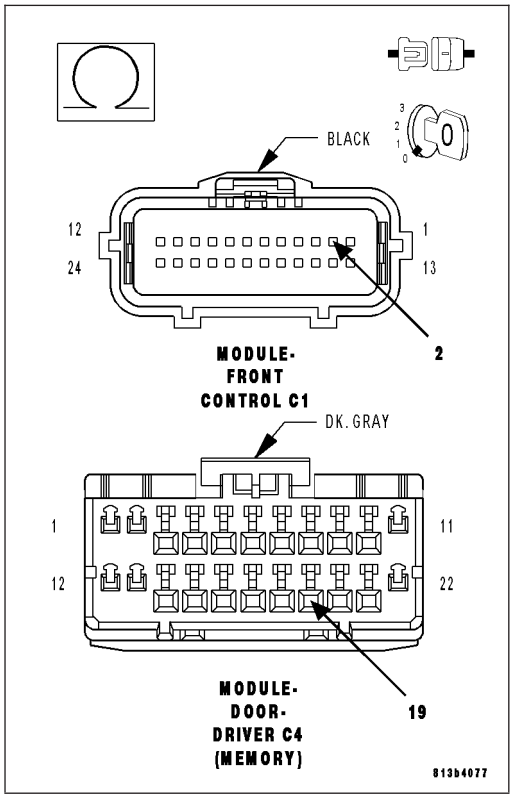

4. (D54) CAN B BUS (–) CIRCUIT OPEN

Measure the resistance of the (D54) CAN B Bus (–) circuit between the Front Control Module C1 connector and the Driver Door Module C4 connector.

Is the resistance below 2.0 ohms?

Yes >> Replace the Driver Door Module in accordance with the service information.
Perform BODY VERIFICATION TEST – VER 1. (Refer to BODY VERIFICATION TEST – VER 1).

No >> Repair the (D54) CAN B Bus (–) circuit for an open.
Perform BODY VERIFICATION TEST – VER 1. (Refer to BODY VERIFICATION TEST – VER 1).

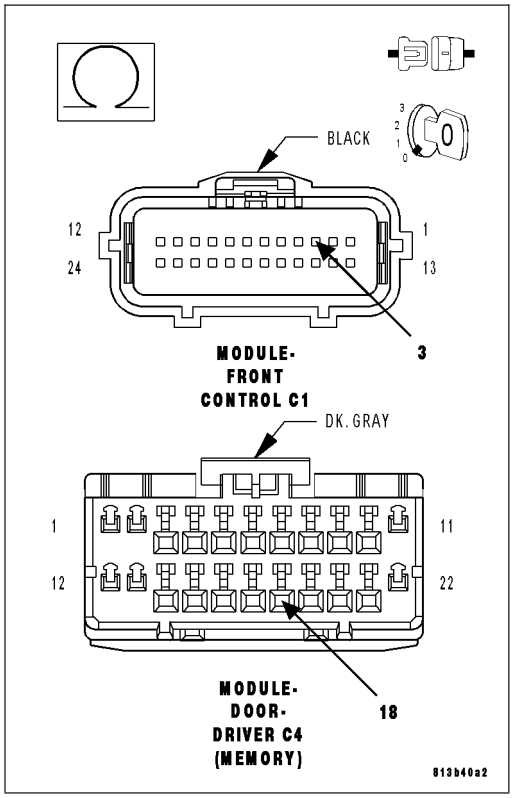

U0019–CAN B BUS – PASSENGER DOOR MODULE

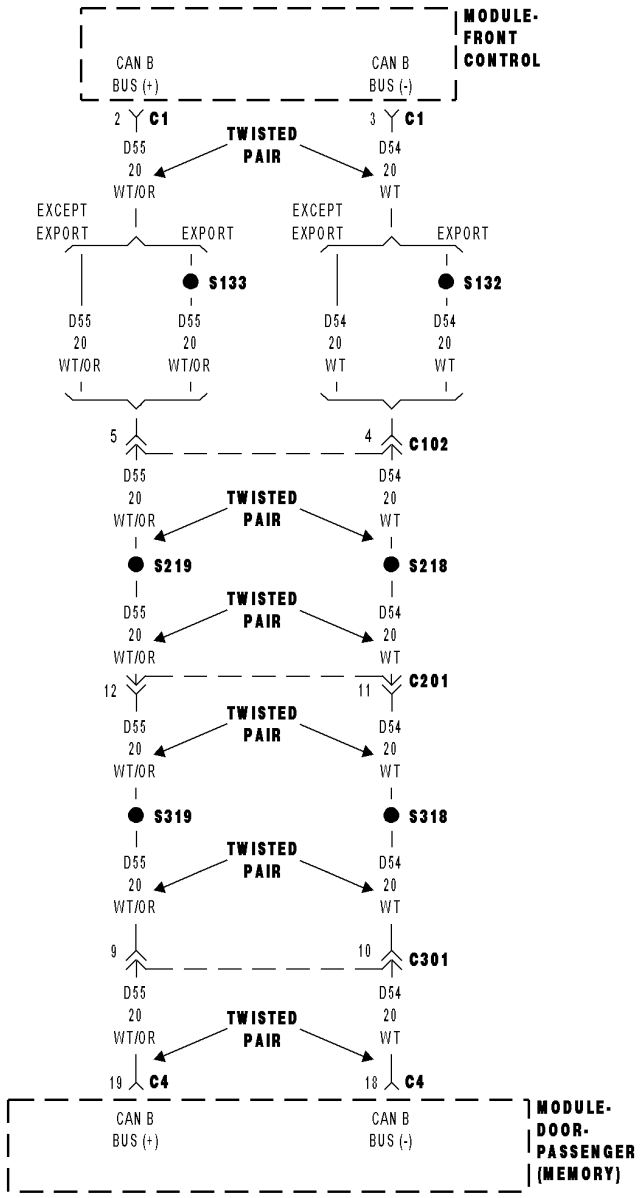

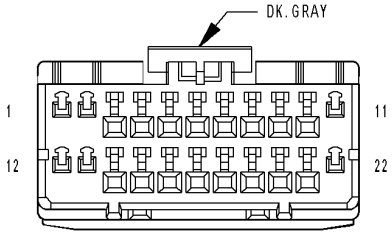

MODULE-
DOOR-
PASSENGER C4
(MEMORY)

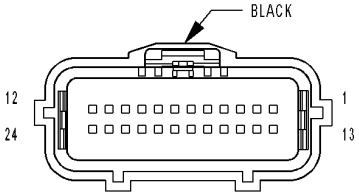

MODULE-
FRONT
CONTROL C1

813b5918

For a complete wiring diagram **Refer to Section 8W**.

- **When Monitored:**
  Continuously.
- **Set Condition:**
  Whenever the CAN B Bus (+) or CAN B (-) circuit is open.

Possible Causes
CAN B BUS DTC's IN FRONT CONTROL MODULE
(D55) CAN B BUS (+) CIRCUIT OPEN
(D54) CAN B BUS (-) CIRCUIT OPEN
PASSENGER DOOR MODULE

Diagnostic Test

1. CHECK FOR ACTIVE DTCS

With the scan tool, read the active DTC's.

Cycle the ignition switch from off to on at least five times, leaving the ignition on for a minimum of 90 seconds per cycle.

With the scan tool, read the active DTC's.

Does the scan tool display this DTC as active?

Yes >> Go To 2

No >> If the DTC is stored, check for an intermittent condition. Visually inspect the related wiring harness connectors. Look for broken, bent, pushed out, or corroded terminals.

2. CHECK FRONT CONTROL MODULE DTC's

With the scan tool, read Front Control Module active DTC's

Does the scan tool display any CAN B BUS DTC's – ACTIVE?

Yes >> (Refer to 8 - ELECTRICAL/ELECTRONIC CONTROL MODULES - DIAGNOSIS AND TESTING)

No >> Go To 3

3. (D55) CAN B BUS (+) CIRCUIT OPEN

Turn the ignition off.

Disconnect the negative battery cable.

Disconnect the Passenger Door Module C4 connector.

Disconnect the Front Control Module C1 connector.

Measure the resistance of the (D55) CAN B Bus (+) circuit between the Front Control Module C1 connector and the Passenger Door Module C4 connector.

Is the resistance below 2.0 ohms?

Yes >> Go To 4

No >> Repair the (D55) CAN B Bus (+) circuit for an open.
Perform BODY VERIFICATION TEST – VER 1. (Refer to BODY VERIFICATION TEST – VER 1).

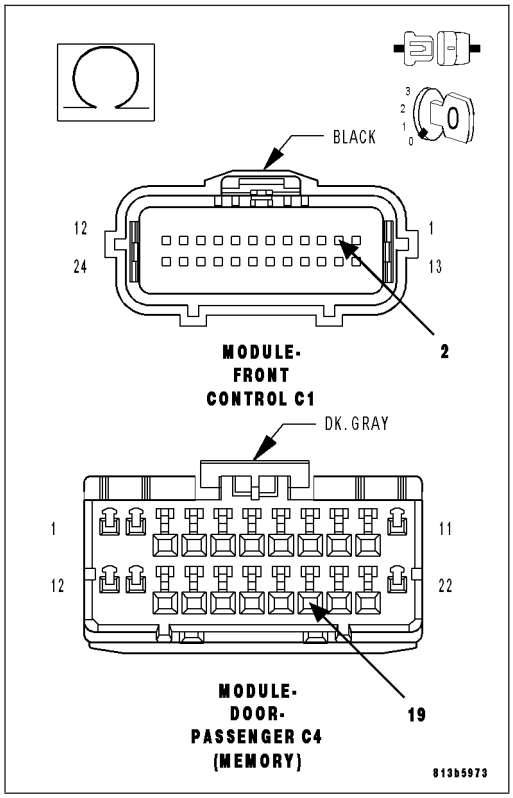

4. (D54) CAN B BUS (–) CIRCUIT OPEN

Measure the resistance of the (D54) CAN B Bus (–) circuit between the Front Control Module C1 connector and the Passenger Door Module C4 connector.

Is the resistance below 2.0 ohms?

Yes >> Replace the Passenger Door Module in accordance with the service information.
Perform BODY VERIFICATION TEST – VER 1. (Refer to BODY VERIFICATION TEST – VER 1).

No >> Repair the (D54) CAN B Bus (–) circuit for an open.
Perform BODY VERIFICATION TEST – VER 1. (Refer to BODY VERIFICATION TEST – VER 1).

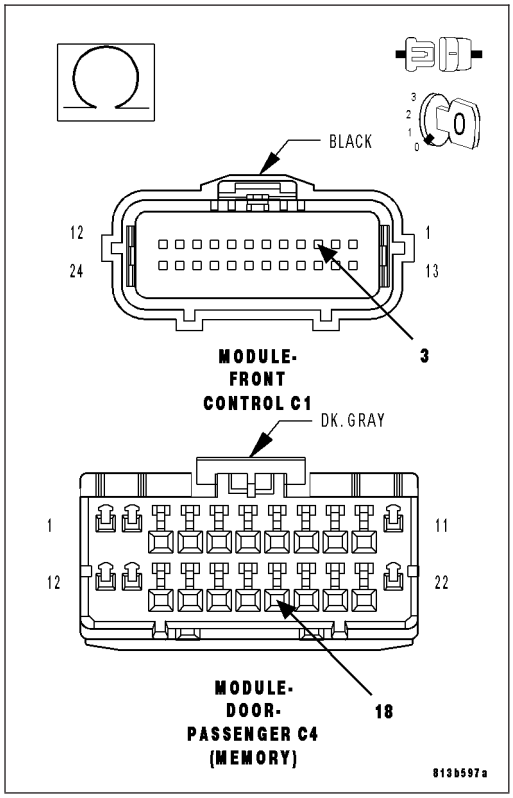

U0141–LOST COMMUNICATION WITH FRONT CONTROL MODULE

For a complete wiring diagram **Refer to Section 8W**.

(Refer to 8 - ELECTRICAL/ELECTRONIC CONTROL MODULES - DIAGNOSIS AND TESTING) for the diagnostic test procedure.

U0151-LOST COMMUNICATION WITH OCCUPANT RESTRAINT CONTROLLER

For a complete wiring diagram **Refer to Section 8W**.

(Refer to 8 - ELECTRICAL/ELECTRONIC CONTROL MODULES - DIAGNOSIS AND TESTING) for the diagnostic test procedure.

U0154-LOST COMMUNICATION WITH OCCUPANT CLASSIFICATION MODULE

For a complete wiring diagram **Refer to Section 8W**.

(Refer to 8 - ELECTRICAL/ELECTRONIC CONTROL MODULES - DIAGNOSIS AND TESTING) for the diagnostic test procedure.

U0155-LOST COMMUNICATION WITH CLUSTER/CCN

For a complete wiring diagram **Refer to Section 8W**.

(Refer to 8 - ELECTRICAL/ELECTRONIC CONTROL MODULES - DIAGNOSIS AND TESTING) for the diagnostic test procedure.

U0156-LOST COMMUNICATION WITH EOM

For a complete wiring diagram **Refer to Section 8W**.

(Refer to 8 - ELECTRICAL/ELECTRONIC CONTROL MODULES - DIAGNOSIS AND TESTING) for the diagnostic test procedure.

U0159-LOST COMMUNICATION WITH PARKING ASSIST CONTROL MODULE

For a complete wiring diagram **Refer to Section 8W**.

(Refer to 8 - ELECTRICAL/ELECTRONIC CONTROL MODULES - DIAGNOSIS AND TESTING) for the diagnostic test procedure.

U0164-LOST COMMUNICATION WITH HVAC CONTROL MODULE

For a complete wiring diagram **Refer to Section 8W**.

(Refer to 8 - ELECTRICAL/ELECTRONIC CONTROL MODULES - DIAGNOSIS AND TESTING) for the diagnostic test procedure.

U0168-LOST COMMUNICATION WITH VEHICLE SECURITY CONTROL MODULE (SKREEM/WCM)

For a complete wiring diagram **Refer to Section 8W**.

(Refer to 8 - ELECTRICAL/ELECTRONIC CONTROL MODULES - DIAGNOSIS AND TESTING) for the diagnostic test procedure.

U0169-LOST COMMUNICATION WITH SUNROOF CONTROL MODULE

For a complete wiring diagram **Refer to Section 8W**.

(Refer to 8 - ELECTRICAL/ELECTRONIC CONTROL MODULES - DIAGNOSIS AND TESTING) for the diagnostic test procedure.

U0169-LOST COMMUNICATION WITH SUNROOF CONTROL MODULE

For a complete wiring diagram **Refer to Section 8W**.

(Refer to 8 - ELECTRICAL/ELECTRONIC CONTROL MODULES - DIAGNOSIS AND TESTING) for the diagnostic test procedure.

U0184-LOST COMMUNICATION WITH RADIO

For a complete wiring diagram **Refer to Section 8W**.

(Refer to 8 - ELECTRICAL/ELECTRONIC CONTROL MODULES - DIAGNOSIS AND TESTING) for the diagnostic test procedure.

U0186-LOST COMMUNICATION WITH AUDIO AMPLIFIER

For a complete wiring diagram **Refer to Section 8W**.

(Refer to 8 - ELECTRICAL/ELECTRONIC CONTROL MODULES - DIAGNOSIS AND TESTING) for the diagnostic test procedure.

U0195-LOST COMMUNICATION WITH SDARS

For a complete wiring diagram **Refer to Section 8W**.

(Refer to 8 - ELECTRICAL/ELECTRONIC CONTROL MODULES - DIAGNOSIS AND TESTING) for the diagnostic test procedure.

U0197-LOST COMMUNICATION WITH HANDS FREE PHONE

For a complete wiring diagram **Refer to Section 8W**.

(Refer to 8 - ELECTRICAL/ELECTRONIC CONTROL MODULES - DIAGNOSIS AND TESTING) for the diagnostic test procedure.

U0200-LOST COMMUNICATION WITH PASSENGER DOOR MODULE

For a complete wiring diagram **Refer to Section 8W**.

(Refer to 8 - ELECTRICAL/ELECTRONIC CONTROL MODULES - DIAGNOSIS AND TESTING) for the diagnostic test procedure.

U0208-LOST COMMUNICATION WITH HEATED SEAT CONTROL MODULE

For a complete wiring diagram **Refer to Section 8W**.

(Refer to 8 - ELECTRICAL/ELECTRONIC CONTROL MODULES - DIAGNOSIS AND TESTING) for the diagnostic test procedure.

U0209-LOST COMMUNICATION WITH MEMORY SEAT CONTROL MODULE

For a complete wiring diagram **Refer to Section 8W**.

(Refer to 8 - ELECTRICAL/ELECTRONIC CONTROL MODULES - DIAGNOSIS AND TESTING) for the diagnostic test procedure.

U0212-LOST COMMUNICATION WITH SCCM - CAN B

For a complete wiring diagram **Refer to Section 8W**.

(Refer to 8 - ELECTRICAL/ELECTRONIC CONTROL MODULES - DIAGNOSIS AND TESTING) for the diagnostic test procedure.

U0231-LOST COMMUNICATION WITH RAIN SENSING MODULE

For a complete wiring diagram **Refer to Section 8W**.

(Refer to 8 - ELECTRICAL/ELECTRONIC CONTROL MODULES - DIAGNOSIS AND TESTING) for the diagnostic test procedure.

POWER MIRRORS - SERVICE INFORMATION

TABLE OF CONTENTS

page

POWER MIRRORS - SERVICE INFORMATION
DESCRIPTION 115
OPERATION 115
DIAGNOSIS AND TESTING
POWER MIRRORS 115
MIRROR-INSIDE REARVIEW
DESCRIPTION 116
OPERATION 116
DIAGNOSIS AND TESTING
AUTOMATIC DAY/NIGHT MIRROR 116

page

SWITCH-MIRROR
DESCRIPTION 117
OPERATION 117
DIAGNOSIS AND TESTING
POWER MIRROR SWITCH 117
REMOVAL 118
INSTALLATION 118

POWER MIRRORS - SERVICE INFORMATION

DESCRIPTION

AUTOMATIC DAY/NIGHT MIRROR

The automatic day/night mirror system is able to automatically change the reflectance of the inside rear view and outside left mirror in order to reduce the glare of headlamps approaching the vehicle from the rear. The automatic day/night rear view mirror receives battery current through a fuse in the junction block only when the ignition switch is in the ON position.

OUTSIDE REAR VIEW MIRROR

The power operated rear view mirrors allow the driver to adjust both outside mirrors electrically from the driver side front seat position by operating a switch on the driver side front door trim panel. The power mirrors receive a non-switched battery feed through a fuse in the junction block so that the system will remain operational, regardless of the ignition switch position.

OPERATION

AUTOMATIC DAY/NIGHT MIRROR

A switch located on the bottom of the automatic day/night mirror housing allows the vehicle operator to select whether the automatic dimming feature is operational. When the automatic day/night mirror is turned on, the mirror switch is lighted by an integral Light-Emitting Diode (LED). The mirror will automatically disable its self-dimming feature whenever the vehicle is being driven in reverse. The day/night mirror is automatically turned ON each time the ignition is turned to the ON position, regardless if it was previously turned OFF.

DIAGNOSIS AND TESTING

POWER MIRRORS

Any diagnosis of the Power Mirror system should begin with the use of scan tool. For information on the use of the scan tool, refer to the appropriate Diagnostic Service information.

For complete circuit diagrams, refer to the appropriate wiring information.

1. Check the fuses in the Power Distribution Center (PDC) and the junction block. If OK, go to Step 2. If not OK, repair the shorted circuit or component as required and replace the faulty fuse(s).
2. Check for battery voltage at the fuse in the junction block. If OK, go to Step 3. If not OK, repair the open circuit to the PDC as required.
3. Disconnect and isolate the battery negative cable. Remove the driver side power window switch and bezel assembly and unplug the wire harness connector from the power mirror switch. Connect the battery negative cable. Check for battery voltage at the fused B(+) circuit cavity in the door wire harness half of the power mirror switch wire harness connector. If OK, go to Step 4. If not OK, repair the open circuit to the junction block as required.
4. Disconnect and isolate the battery negative cable. Check for continuity between the ground circuit cavity in the door wire harness half of the power mirror switch wire harness connector and a good ground. There should be continuity. If not OK, repair open in the ground circuit.

MIRROR-INSIDE REARVIEW

DESCRIPTION

The automatic day/night mirror uses a thin layer of electrochromic material between two pieces of conductive glass to form the face of the mirror. When the mirror switch is in the ON position, two photocell sensors are used by the mirror circuitry to monitor external light levels and adjust the reflectance of the mirror.

OPERATION

The ambient photocell sensor is located on the forward-facing (windshield side) of the rear view mirror housing, and detects the ambient light levels outside of the vehicle. The headlamp photocell sensor is located inside the rear view mirror housing behind the mirror glass and faces rearward, to detect the level of the light being received at the rear window side of the mirror. When the circuitry of the automatic day/night mirror detects that the difference between the two light levels is too great (the light level received at the rear of the mirror is much higher than that at the front of the mirror), it begins to darken the mirror.

The automatic day/night mirror circuitry also monitors the transmission using an input from the backup lamp circuit. The mirror circuitry is programmed to automatically disable its self-dimming feature whenever it senses that the transmission backup lamp circuit is energized.

The automatic day/night mirror is a completely self-contained unit and cannot be repaired. If faulty or damaged, the entire mirror assembly must be replaced.

DIAGNOSIS AND TESTING

AUTOMATIC DAY/NIGHT MIRROR

For complete circuit diagrams, refer to the appropriate wiring information.

1. Check the fuse in the junction block. If OK, go to Step 2. If not OK, repair the shorted circuit or component as required and replace the faulty fuse.
2. Turn the ignition switch to the ON position. Check for battery voltage at the fuse in the junction block. If OK, go to Step 3. If not OK, repair the open circuit to the ignition switch as required.
3. Turn the ignition switch to the Off position. Disconnect and isolate the battery negative cable. Unplug the wire harness connector from the automatic day/night mirror. Connect the battery negative cable. Turn the ignition switch to the ON position. Check for battery voltage at the fused ignition switch output (run/start) circuit cavity of the automatic day/night mirror wire harness connector. If OK, go to Step 4. If not OK, repair the open circuit to the junction block as required.
4. Turn the ignition switch to the Off position. Disconnect and isolate the battery negative cable. Check for continuity between the ground circuit cavity of the automatic day/night mirror wire harness connector and a good ground. There should be continuity. If OK, go to Step 5. If not OK, repair the circuit to ground as required.
5. Connect the battery negative cable. Turn the ignition switch to the ON position. Apply the parking brake. Place the transmission gear selector lever in the Reverse position. Check for battery voltage at the backup lamp switch output circuit cavity of the automatic day/night mirror wire harness connector. If OK, go to Step 6. If not OK, repair the open circuit as required.
6. Turn the ignition switch to the Off position. Disconnect the battery negative cable. Plug in the automatic day/night mirror wire harness connector. Connect the battery negative cable. Cover the forward facing ambient photocell sensor to keep out any ambient light. Turn the ignition switch to the ON position. Place the transmission gear selector lever in the Neutral position. Place the mirror switch in the ON (the LED in the mirror switch is lighted) position. Cover the forward facing ambient photocell sensor to keep out any ambient light.

NOTE: The ambient photocell sensor must be covered completely, so that no light reaches the sensor. Use a finger pressed tightly against the sensor, or cover the sensor completely with electrical tape.

7. Shine a light into the rearward facing headlamp photocell sensor. The mirror glass should darken. If OK, go to Step 8. If not OK, replace the faulty automatic day/night mirror unit.
8. With the mirror glass darkened, place the transmission gear selector lever in the Reverse position. The mirror should return to its normal reflectance. If not OK, replace the faulty automatic day/night mirror.

SWITCH-MIRROR

DESCRIPTION

A power mirror switch is located on the driver's door trim panel, attached to the window/lock switch. The power mirror switch includes the following:

- **Power Mirror Selector Switch -** A three-position rotary joystick switch selects the right or left power mirror for adjustment, or turns the power mirror system Off in the center position.
- **Power Mirror Adjustment Switch -** A momentary joystick directional switch allows the driver to adjust the selected power mirror in the Up, Down, Right or Left directions.

OPERATION

The power mirror switch circuitry is connected to battery current through a fuse in the IPM on a fused B(+) circuit so that the power mirrors remain operational regardless of the ignition switch position. A rotary joystick selector switch has three positions, one to select the right mirror, one to select the left mirror, and a center OFF position. After the right or left mirror is selected, the joystick is moved to adjust the selected mirror Up, Down, Right or Left.

In vehicles without Memory Mirrors the power mirror switch circuitry controls the battery current and ground feeds to each of the four (two in each mirror head) power mirror motors. In vehicles with Memory Mirrors the mirror switch connects to the driver power mirror module. The driver memory mirror module uses the mirror switch inputs to control the battery current and ground feeds to driver mirror motor and sends a CAN Bus message to the passenger mirror module. The passenger mirror module controls the battery current and ground feeds to passenger mirror motors based on the CAN bus message from the driver memory module.

In vehicles equipped with the exterior day/night mirror, the operation of the dimming feature is controlled by the interior day/night mirror. The exterior mirror is hard wired to the interior mirror.

DIAGNOSIS AND TESTING

POWER MIRROR SWITCH

1. Disconnect and isolate the battery negative cable.
2. Remove the power mirror switch (Refer to 8 - ELECTRICAL/POWER MIRRORS/POWER MIRROR SWITCH - REMOVAL).
3. Disconnect the wire harness connector from the switch.
4. Test the switch continuity. refer to the Power Mirror Switch Tests chart to determine if the continuity is correct for the switch in each switch position. If not OK, replace the inoperative switch as required.

POWER MIRROR SWITCH TEST

SWITCH POSITION	CONTINUITY BETWEEN PINS OF MIRROR SWITCH
LEFT MIRROR SELECTED	
UP	PINS 5 & 7, PINS 4 & 3
DOWN	PINS 4 & 7, PINS 5 & 3
RIGHT	PINS 4 & 9, PINS 5 & 3
LEFT	PINS 4 & 3, PINS 5 & 9
RIGHT MIRROR SELECTED	
UP	PINS 4 & 3, PINS 5 & 6
DOWN	PINS 4 & 6, PINS 5 & 3
RIGHT	PINS 4 & 8, PINS 5 & 3
LEFT	PINS 4 & 3, PINS 5 & 8

REMOVAL

NOTE: A battery reconnect procedure must be performed anytime the battery has been disconnected. (Refer to 8 - ELECTRICAL/BATTERY SYSTEM - STANDARD PROCEDURE).

1. Disconnect and isolate the battery negative cable.
2. Remove the door trim panel.
3. Remove the power mirror switch from the door trim panel by twisting the switch counter-clockwise.

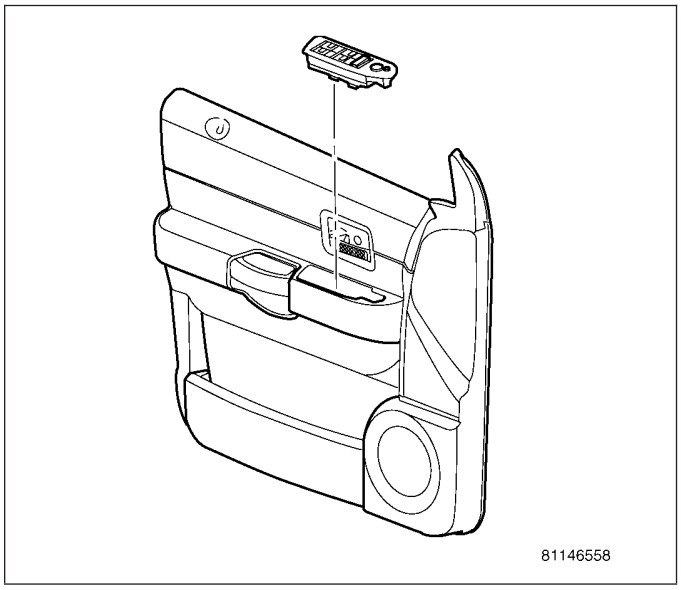

INSTALLATION

NOTE: A battery reconnect procedure must be performed anytime the battery has been disconnected. (Refer to 8 - ELECTRICAL/BATTERY SYSTEM - STANDARD PROCEDURE).

1. Install power mirror switch to door trim panel.
2. Connect wire harness connectors to switches.
3. Install door trim panel.
4. Connect battery negative cable.

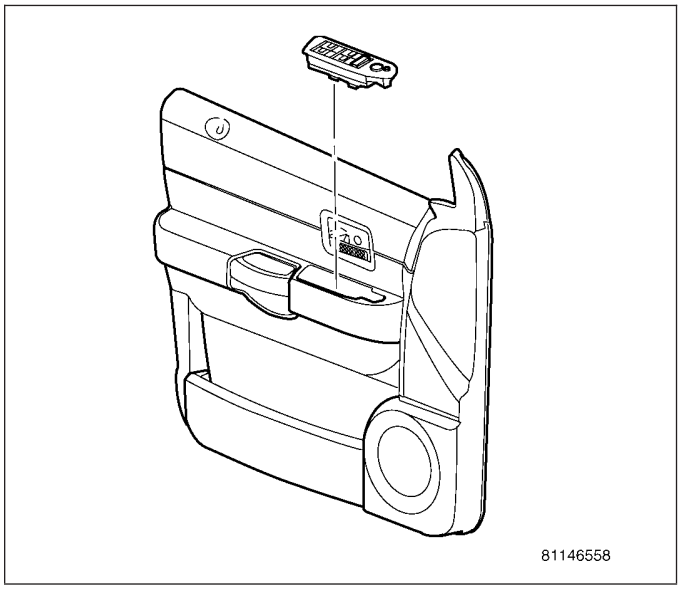

POWER SEATS - ELECTRICAL DIAGNOSTICS

TABLE OF CONTENTS

page

POWER SEATS - ELECTRICAL DIAGNOSTICS
DIAGNOSIS AND TESTING
B1D62–POWER SEAT SWITCH STUCK 121
B1D63–POWER SEAT SWITCH OPEN 122
B1D6D–SEAT HORIZONTAL POSITION SENSOR CIRCUIT LOW 126
B1D6E–SEAT HORIZONTAL POSITION SENSOR CIRCUIT HIGH 129
B1D71–SEAT FRONT VERTICAL POSITION SENSOR CIRCUIT LOW 131
B1D72–SEAT FRONT VERTICAL POSITION SENSOR CIRCUIT HIGH 134
B1D75–SEAT REAR VERTICAL POSITION SENSOR CIRCUIT LOW 136
B1D76–SEAT REAR VERTICAL POSITION SENSOR CIRCUIT HIGH 139
B1D79–SEAT RECLINER POSITION SENSOR CIRCUIT LOW 141
B1D7A–SEAT RECLINER POSITION SENSOR CIRCUIT HIGH 144
B1D7B–SEAT HORIZONTAL MOTOR CONTROL CIRCUIT PERFORMANCE. 146
B1D7F–SEAT FRONT VERTICAL MOTOR CONTROL CIRCUIT PERFORMANCE. 151
B1D83–SEAT REAR VERTICAL MOTOR CONTROL CIRCUIT PERFORMANCE. 156
B1D87–SEAT BACKREST MOTOR CONTROL CIRCUIT PERFORMANCE. 161
B1D9B–SEAT HORIZONTAL FRONT STOP NOT LEARNED 166
B210D-BATTERY VOLTAGE LOW 167
B210E-BATTERY VOLTAGE HIGH 169
B221C-MEMORY SEAT MODULE INTERNAL . 171
U0020-CAN B BUS OFF PERFORMANCE 172
U0021-CAN B BUS (+) CIRCUIT OPEN 175
U0022-CAN B BUS (+) CIRCUIT LOW 176
U0023-CAN B BUS (+) CIRCUIT HIGH 177
U0024-CAN B BUS (-) CIRCUIT OPEN 178
U0025-CAN B BUS (-) CIRCUIT LOW 179
U0026-CAN B BUS (-) CIRCUIT HIGH 180

page

U0141–LOST COMMUNICATION WITH FRONT CONTROL MODULE. 180
U0151-LOST COMMUNICATION WITH OCCUPANT RESTRAINT CONTROLLER 180
U0154-LOST COMMUNICATION WITH OCCUPANT CLASSIFICATION MODULE 180
U0155-LOST COMMUNICATION WITH CLUSTER/CCN 180
U0156-LOST COMMUNICATION WITH EOM . . 180
U0159-LOST COMMUNICATION WITH PARKING ASSIST CONTROL MODULE 180
U0164-LOST COMMUNICATION WITH HVAC CONTROL MODULE 180
U0168-LOST COMMUNICATION WITH VEHICLE SECURITY CONTROL MODULE (SKREEM/WCM) 180
U0169-LOST COMMUNICATION WITH SUNROOF CONTROL MODULE. 181
U0181–LOST COMMUNICATION WITH HEADLAMP LEVEL TRANSLATOR. 181
U0184-LOST COMMUNICATION WITH RADIO 181
U0186-LOST COMMUNICATION WITH AUDIO AMPLIFIER 181
U0195-LOST COMMUNICATION WITH SDARS 181
U0197-LOST COMMUNICATION WITH HANDS FREE PHONE 181
U0199-LOST COMMUNICATION WITH DRIVER DOOR MODULE 181
U0200-LOST COMMUNICATION WITH PASSENGER DOOR MODULE 181
U0208-LOST COMMUNICATION WITH HEATED SEAT CONTROL MODULE 181
U0212–LOST COMMUNICATION WITH SCCM 182
U0231-LOST COMMUNICATION WITH RAIN SENSING MODULE 182
POWER SEAT SYSTEM VERIFICATION TEST – VER 1 183

POWER SEATS - ELECTRICAL DIAGNOSTICS

DIAGNOSIS AND TESTING

B1D62–POWER SEAT SWITCH STUCK

For a complete wiring diagram **Refer to Section 8W**.

- **When Monitored:**
  Continuously.
- **Set Condition:**
  When the Memory Seat Module detects the switch engaged in an active position for over 50 seconds, this code will set.

Possible Causes
DRIVER SEAT SWITCH

Diagnostic Test

1. TEST FOR INTERMITTENT CONDITION

Turn the ignition on.

With the scan tool, record and erase DTC's

Press the Seat Switch in all directions several times.

Wait one minute.

With the scan tool, read DTC's.

Does the scan tool display B1D62–POWER SEAT SWITCH STUCK?

Yes >> Replace the Driver Seat Switch as necessary.
Perform POWER SEAT SYSTEM VERIFICATION TEST - VER 1.

No >> The conditions that caused this code to set are not present at this time. Using the wiring diagram/schematic as a guide, inspect the wiring and connectors.
Perform POWER SEAT SYSTEM VERIFICATION TEST - VER 1. (Refer to 8 - ELECTRICAL/POWER SEATS - DIAGNOSIS AND TESTING)

B1D63–POWER SEAT SWITCH OPEN

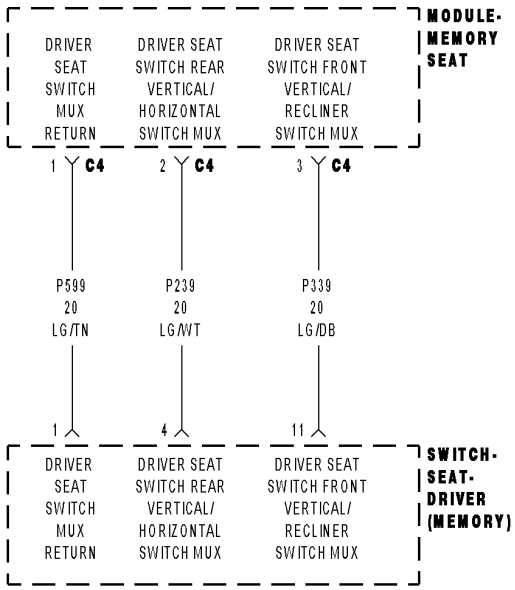

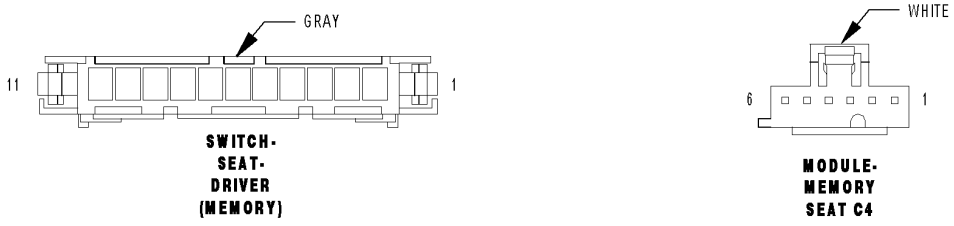

81344a9a

For a complete wiring diagram **Refer to Section 8W**.

- **When Monitored:**
  Continuously.
- **Set Condition:**
  When the Memory Seat Module detects an open driver seat switch MUX circuit this code will set.

Possible Causes
(P239) DRIVER SEAT REAR VERTICAL/HORIZONTAL SWITCH MUX OPEN
(P339) DRIVER SEAT FRONT VERTICAL/RECLINER SWITCH MUX OPEN
(P599) DRIVER SEAT SWITCH MUX RETURN OPEN
DRIVER SEAT SWITCH
MEMORY SEAT MODULE

Diagnostic Test

1. TEST FOR INTERMITTENT CONDITION

Turn the ignition on.
With the scan tool, record and erase DTC's
Press the Seat Switch in all directions several times.
Wait one minute.
With the scan tool, read DTC's.

Does the scan tool display B1D63–POWER SEAT SWITCH OPEN?

Yes >> Go To 2

No >> The conditions that caused this code to set are not present at this time. Using the wiring diagram/schematic as a guide, inspect the wiring and connectors.
Perform POWER SEAT SYSTEM VERIFICATION TEST - VER 1. (Refer to 8 - ELECTRICAL/POWER SEATS - DIAGNOSIS AND TESTING)

2. CHECK THE (P239) DRIVER SEAT REAR VERTICAL/HORIZONTAL SWITCH MUX CIRCUIT RESISTANCE

Disconnect the Memory Seat Module C4 connector.

NOTE: Check connectors - Clean and repair as necessary.
Measure the resistance between the (P239) Driver Seat Rear Vertical/Horizontal Switch MUX circuit and the (P599) Driver Seat Switch MUX Return circuit in the C4 connector.

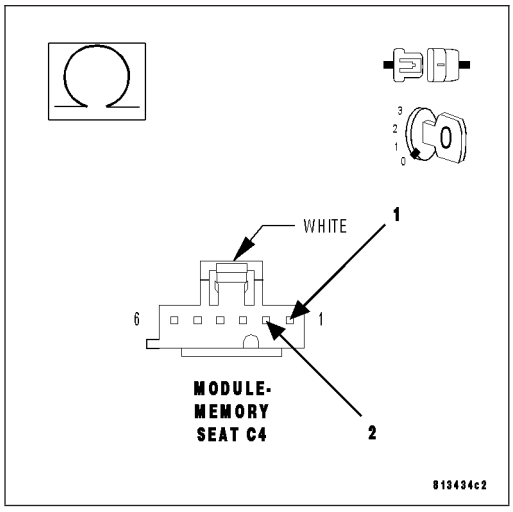

Is the resistance 47.0 ohms + or – 1.0?

Yes >> Go To 3

No >> Go To 5

3. CHECK THE (P339) DRIVER SEAT FRONT VERTICAL/RECLINER SWITCH MUX CIRCUIT RESISTANCE

Measure the resistance between the (P339) Driver Seat Front Vertical/Recliner Switch MUX circuit and the (P599) Driver Seat Switch MUX Return circuit in the C4 connector.

Is the resistance 47.0 ohms + or – 1.0?

Yes >> Replace the Memory Seat Module.
Perform POWER SEAT SYSTEM VERIFICATION TEST – VER 1 (Refer to 8 - ELECTRICAL/POWER SEATS - DIAGNOSIS AND TESTING)

No >> Go To 4

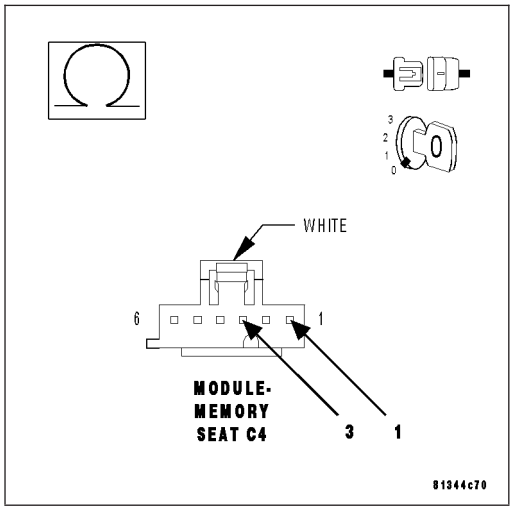

4. CHECK THE (P339) DRIVER SEAT FRONT VERTICAL/RECLINER SWITCH MUX WIRE RESISTANCE

Disconnect the Driver Seat Switch.

NOTE: Check connectors - Clean and repair as necessary.
Measure the resistance of the (P339) Driver Seat Front Vertical/Recliner Switch MUX circuit between the C4 connector and the Driver Seat Switch connector.

Is the resistance below 1.0 ohm?

Yes >> Replace the Driver Seat Switch.
Perform POWER SEAT SYSTEM VERIFICATION TEST – VER 1 (Refer to 8 - ELECTRICAL/POWER SEATS - DIAGNOSIS AND TESTING)

No >> Repair the (P339) Driver Seat Front Vertical/Recliner Switch MUX circuit for an open.
Perform POWER SEAT SYSTEM VERIFICATION TEST – VER 1 (Refer to 8 - ELECTRICAL/POWER SEATS - DIAGNOSIS AND TESTING)

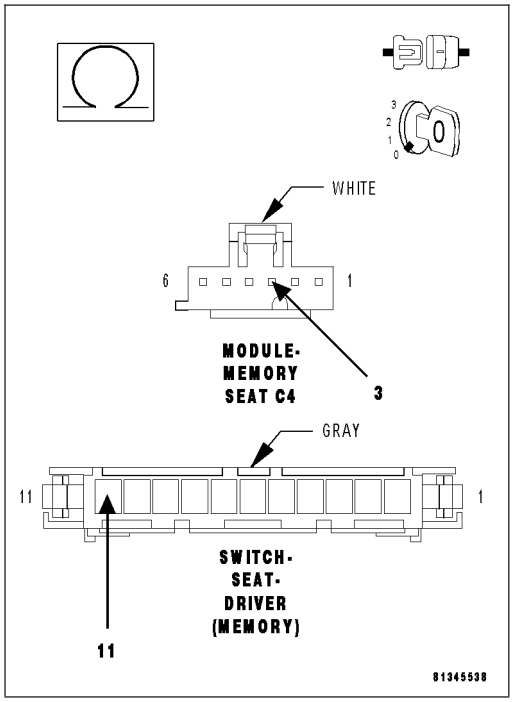

5. CHECK THE (P239) DRIVER SEAT REAR VERTICAL/HORIZONTAL SWITCH MUX WIRE RESISTANCE

Measure the resistance of the (P239) Driver Seat Rear Vertical/Horizontal Switch MUX circuit between the C4 connector and the Driver Seat Switch connector.

Is the resistance below 1.0 ohm?

Yes >> Go To 6

No >> Repair the (P239) Driver Seat Rear Vertical/Horizontal Switch MUX circuit for an open.
Perform POWER SEAT SYSTEM VERIFICATION TEST – VER 1 (Refer to 8 - ELECTRICAL/POWER SEATS - DIAGNOSIS AND TESTING)

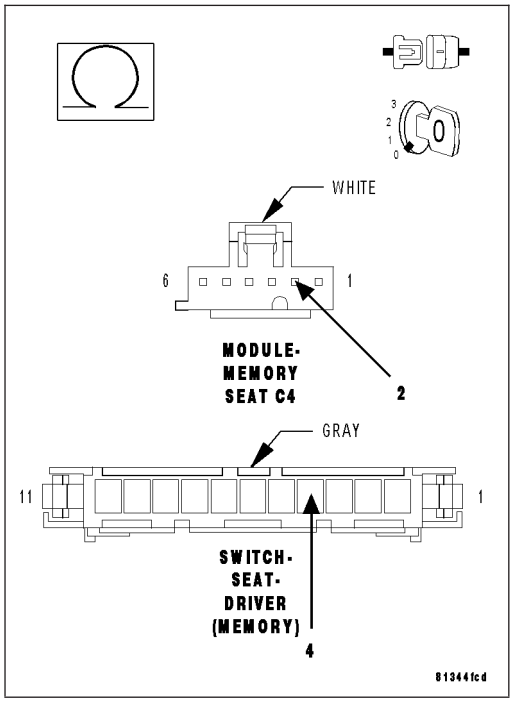

6. CHECK THE (P599) DRIVER SEAT SWITCH MUX RETURN WIRE RESISTANCE

Measure the resistance of the (P599) Driver Seat Switch MUX Return circuit between the C4 connector and the Driver Seat Switch connector.

Is the resistance below 1.0 ohm?

Yes >> Replace the Driver Seat Switch.
Perform BODY VERIFICATION TEST – VER 1 (Refer to BODY VERIFICATION TEST - VER 1).

No >> Repair the (P599) Driver Seat Switch MUX Return circuit for an open.
Perform POWER SEAT SYSTEM VERIFICATION TEST – VER 1 (Refer to 8 - ELECTRICAL/POWER SEATS - DIAGNOSIS AND TESTING)

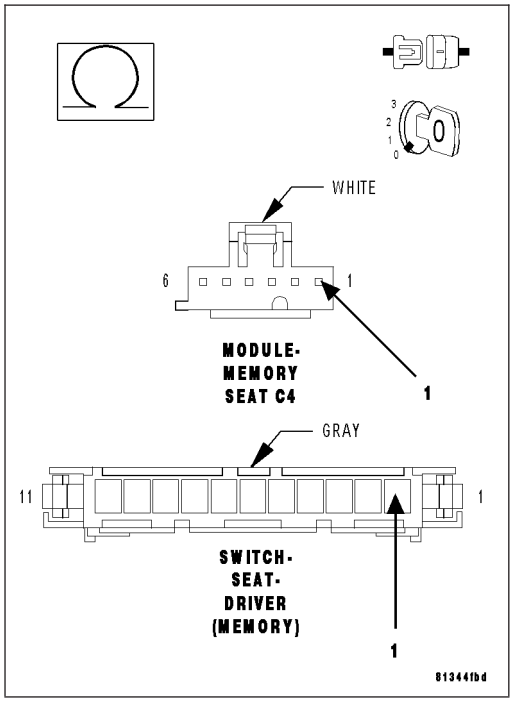

B1D6D–SEAT HORIZONTAL POSITION SENSOR CIRCUIT LOW

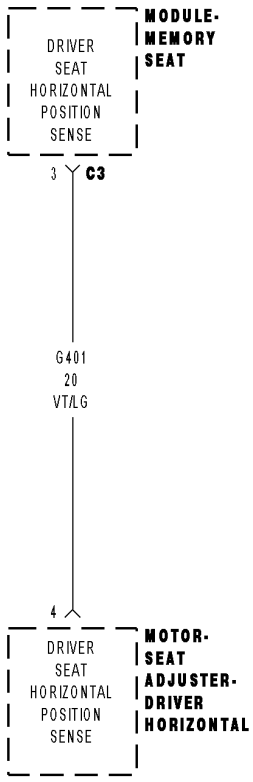

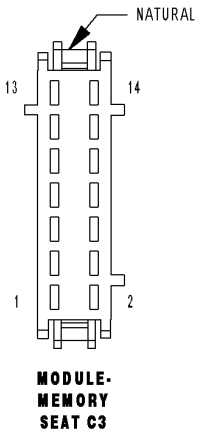

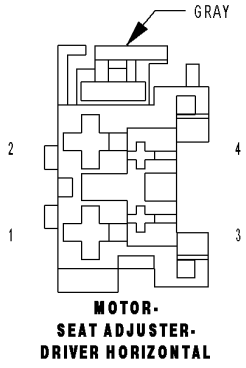

813480aa

For a complete wiring diagram **Refer to Section 8W**.

- **When Monitored:**
  When the seat motor is activated (sensor supply voltage is switched on whenever motor is activated).
- **Set Condition:**
  If sensor voltage is not within a specified range this DTC will set. This DTC will only set when the seat switch is moved in the same direction three consecutive times.

Possible Causes
(G401) DRIVER SEAT HORIZONTAL POSITION SENSE CIRCUIT SHORTED TO GROUND
DRIVER HORIZONTAL SEAT ADJUSTER MOTOR
MEMORY SEAT MODULE

Diagnostic Test

1. TEST FOR INTERMITTENT CONDITION

Turn the ignition on.
With the scan tool, record and erase DTC's
Move the Seat Switch in the Horizontal position three times.
With the scan tool, read DTC's.

Does the scan tool display B1D6D–SEAT HORIZONTAL POSITION SENSOR CIRCUIT LOW?

Yes >> Go To 2

No >> The conditions that caused this code to set are not present at this time. Using the wiring diagram/schematic as a guide, inspect the wiring and connectors.
Perform POWER SEAT SYSTEM VERIFICATION TEST - VER 1. (Refer to 8 - ELECTRICAL/POWER SEATS - DIAGNOSIS AND TESTING)

2. CHECK THE (G401) DRIVER SEAT HORIZONTAL POSITION SENSE VOLTAGE

Disconnect the Driver Horizontal Seat Adjuster Motor.

NOTE: Check connectors – Clean and repair as necessary.
Move the Seat Switch in the Horizontal position during the next step.
Using a 12-volt test light connect one lead to the (G401) Driver Seat Horizontal Position Sense circuit and the other lead to Driver Seat Horizontal Sensor Ground at the Driver Horizontal Seat Adjuster Motor connector.

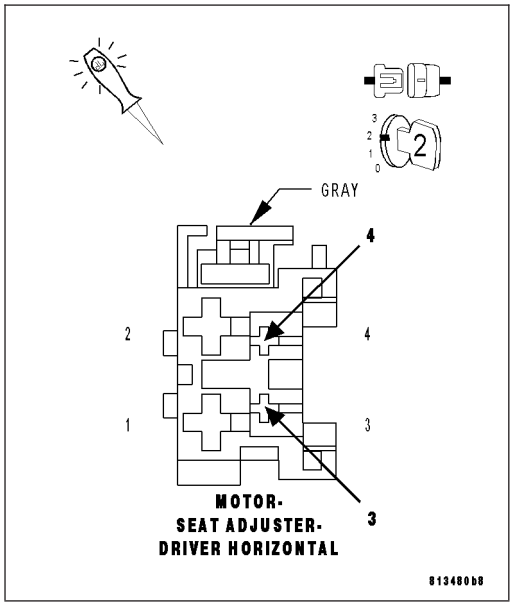

Does the test light illuminate for approximately two seconds then turn off with the seat switch engaged?

Yes >> Replace the seat track horizontal motor assembly.
Perform POWER SEAT SYSTEM VERIFICATION TEST – VER 1 (Refer to 8 - ELECTRICAL/POWER SEATS - DIAGNOSIS AND TESTING)

No >> Go To 3

3. CHECK THE (G401) DRIVER SEAT HORIZONTAL POSITION SENSE WIRE FOR A SHORT TO GROUND

Disconnect the Memory Seat Module C3 connector.

NOTE: Check connectors – Clean and repair as necessary.
Measure the resistance of the (G401) Driver Seat Horizontal Position Sense wire at the Driver Horizontal Seat Adjuster Motor connector to ground.

Is the resistance below 1000.0 ohm?

Yes >> Repair the (G401) Driver Seat Horizontal Position Sense circuit for a short to ground.
Perform POWER SEAT SYSTEM VERIFICATION TEST – VER 1 (Refer to 8 - ELECTRICAL/POWER SEATS - DIAGNOSIS AND TESTING)

No >> Replace the Memory Seat Module.
Perform POWER SEAT SYSTEM VERIFICATION TEST – VER 1 (Refer to 8 - ELECTRICAL/POWER SEATS - DIAGNOSIS AND TESTING)

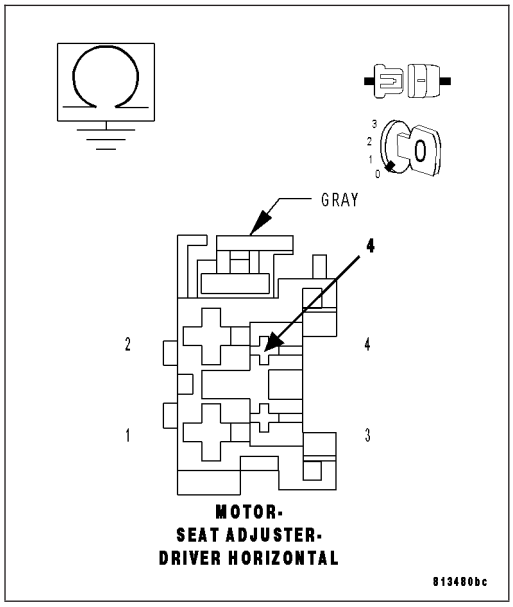

B1D6E–SEAT HORIZONTAL POSITION SENSOR CIRCUIT HIGH

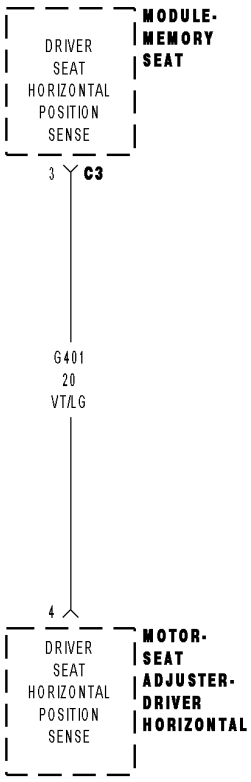

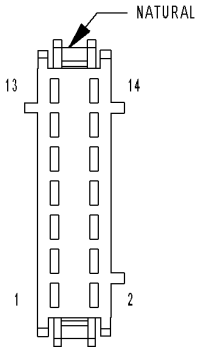

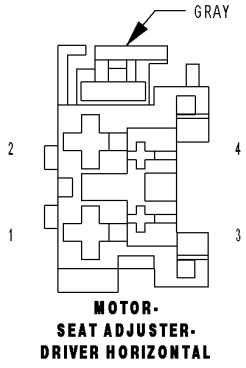

81348b39

For a complete wiring diagram **Refer to Section 8W**.

- **When Monitored:**
  When the seat motor is activated (sensor supply voltage is switched on whenever motor is activated).
- **Set Condition:**
  If during motor operation the sensor voltage is not within a specified range this code will set. This DTC will only set when the seat switch is moved in the same direction three consecutive times.

Possible Causes
(G401) DRIVER SEAT HORIZONTAL POSITION SENSE CIRCUIT SHORTED TO VOLTAGE
DRIVER RECLINER SEAT ADJUSTER MOTOR
MEMORY SEAT MODULE

Diagnostic Test

1. TEST FOR INTERMITTENT CONDITION

Turn the ignition on.
With the scan tool, record and erase DTC's
Move the seat switch in the horizontal position three times.
With the scan tool, read DTC's.

Does the scan tool display B1D6E–SEAT HORIZONTAL POSITION SENSOR CIRCUIT HIGH?

Yes >> Go To 2

No >> The conditions that caused this code to set are not present at this time. Using the wiring diagram/schematic as a guide, inspect the wiring and connectors.
Perform POWER SEAT SYSTEM VERIFICATION TEST - VER 1. (Refer to 8 - ELECTRICAL/POWER SEATS - DIAGNOSIS AND TESTING)

2. CHECK THE (G401) DRIVER SEAT HORIZONTAL POSITION SENSE VOLTAGE

Disconnect the Driver Horizontal Seat Adjuster Motor.

NOTE: Check connectors – Clean and repair as necessary.
With the scan tool erase DTC's
Move the seat switch in the horizontal positions three times.
With the scan tool, read DTC's.

Does the same DTC reset?

No >> Inspect the position sense wire for a possible intermittent short to voltage from another circuit, if OK replace the Driver Horizontal Seat Adjuster Motor assembly.
Perform POWER SEAT SYSTEM VERIFICATION TEST – VER 1 (Refer to 8 - ELECTRICAL/POWER SEATS - DIAGNOSIS AND TESTING)

Yes >> Inspect the position sense wire for a possible short to voltage from another circuit, if OK replace the Memory Seat Module.
Perform POWER SEAT SYSTEM VERIFICATION TEST – VER 1 (Refer to 8 - ELECTRICAL/POWER SEATS - DIAGNOSIS AND TESTING)

B1D71–SEAT FRONT VERTICAL POSITION SENSOR CIRCUIT LOW

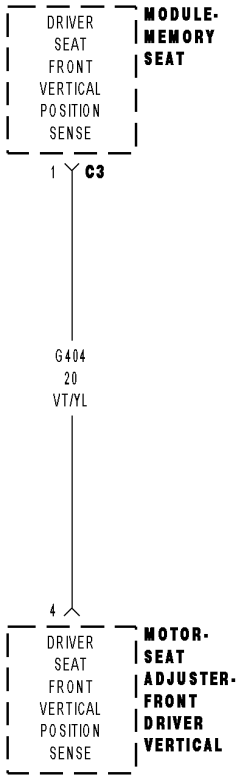

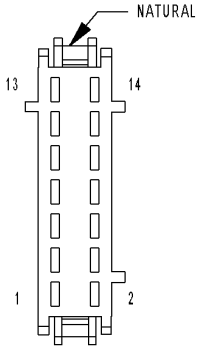

MODULE- MEMORY SEAT C3

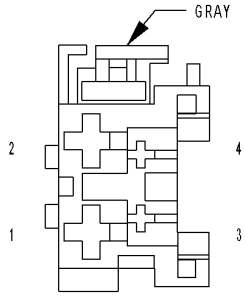

MOTOR- SEAT ADJUSTER- FRONT DRIVER VERTICAL

8134a4b2

For a complete wiring diagram **Refer to Section 8W**.

- **When Monitored:**
  When the seat motor is activated (sensor supply voltage is switched on whenever motor is activated).
- **Set Condition:**
  If sensor voltage is not within a specified range this DTC will set. This DTC will only set when the seat switch is moved in the same direction three consecutive times.

Possible Causes
(G404) DRIVER SEAT FRONT VERTICAL POSITION SENSE CIRCUIT SHORTED TO GROUND
FRONT DRIVER VERTICAL SEAT ADJUSTER MOTOR
MEMORY SEAT MODULE

Diagnostic Test

1. TEST FOR INTERMITTENT CONDITION

Turn the ignition on.
With the scan tool, record and erase DTC's
Move the Seat Switch in the Front Vertical position three times.
With the scan tool, read DTC's.

Does the scan tool display B1D71–SEAT FRONT VERTICAL POSITION SENSOR CIRCUIT LOW?

Yes >> Go To 2

No >> The conditions that caused this code to set are not present at this time. Using the wiring diagram/schematic as a guide, inspect the wiring and connectors.
Perform POWER SEAT SYSTEM VERIFICATION TEST - VER 1. (Refer to 8 - ELECTRICAL/POWER SEATS - DIAGNOSIS AND TESTING)

2. CHECK THE (G404) DRIVER SEAT FRONT VERTICAL POSITION SENSE VOLTAGE

Disconnect the Front Driver Vertical Seat Adjuster Motor.

NOTE: Check connectors – Clean and repair as necessary.
Move the seat switch in the front vertical position during the next step.
Using a 12-volt test light connect one lead to the (G404) Driver Seat Front Vertical Position Sense circuit and the other lead to the Driver Seat Front Vertical Sensor Ground at the Front Driver Seat Adjuster Motor connector.

Does the test light illuminate for approximately two seconds then turn off with the seat switch engaged?

Yes >> Replace the Front Driver Seat Adjuster Motor assembly.
Perform POWER SEAT SYSTEM VERIFICATION TEST – VER 1 (Refer to 8 - ELECTRICAL/POWER SEATS - DIAGNOSIS AND TESTING)

No >> Go To 3

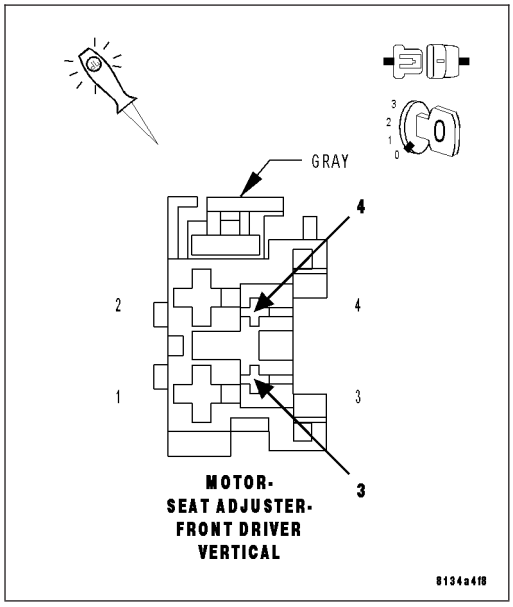

3. CHECK THE (G404) DRIVER SEAT FRONT VERTICAL POSITION SENSE WIRE FOR A SHORT TO GROUND

Disconnect the Memory Seat Module C3 connector.

NOTE: Check connectors – Clean and repair as necessary.
Measure the resistance of the (G404) Driver Seat Front Vertical Position Sense wire at the Front Driver Vertical Seat Adjuster Motor connector to ground.

Is the resistance below 1000.0 ohm?

Yes >> Repair the (G404) Driver Seat Front Vertical Position Sense circuit for a short to ground.
Perform POWER SEAT SYSTEM VERIFICATION TEST – VER 1 (Refer to 8 - ELECTRICAL/POWER SEATS - DIAGNOSIS AND TESTING)

No >> Replace the Memory Seat Module.
Perform POWER SEAT SYSTEM VERIFICATION TEST – VER 1 (Refer to 8 - ELECTRICAL/POWER SEATS - DIAGNOSIS AND TESTING)

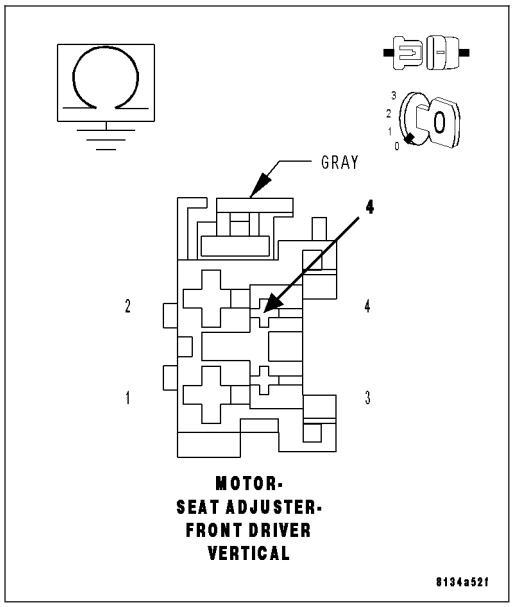

B1D72–SEAT FRONT VERTICAL POSITION SENSOR CIRCUIT HIGH

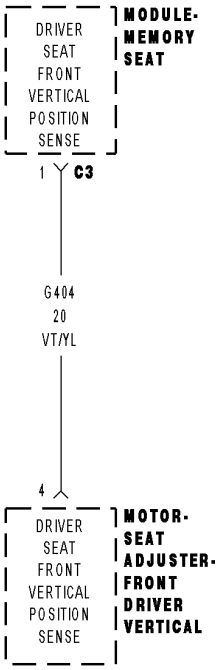

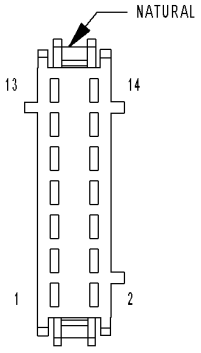

MODULE- MEMORY SEAT C3

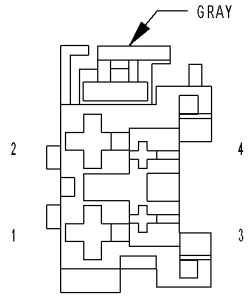

MOTOR- SEAT ADJUSTER- FRONT DRIVER VERTICAL

8134b1d7

For a complete wiring diagram **Refer to Section 8W**.

- **When Monitored:**
  When the seat motor is activated (sensor supply voltage is switched on whenever motor is activated).
- **Set Condition:**
  If during motor operation the sensor voltage is not within a specified range this code will set. This DTC will only set when the seat switch is moved in the same direction three consecutive times.

Possible Causes
(G404) DRIVER SEAT FRONT VERTICAL POSITION SENSE CIRCUIT SHORTED TO VOLTAGE
REAR DRIVER VERTICAL SEAT ADJUSTER MOTOR
MEMORY SEAT MODULE

Diagnostic Test

1. TEST FOR INTERMITTENT CONDITION

Turn the ignition on.
With the scan tool, record and erase DTC's
Move the seat switch front vertical position three times.
With the scan tool, read DTC's.

Does the scan tool display B1D72–SEAT FRONT VERTICAL POSITION SENSOR CIRCUIT HIGH?

Yes >> Go To 2

No >> The conditions that caused this code to set are not present at this time. Using the wiring diagram/schematic as a guide, inspect the wiring and connectors.
Perform POWER SEAT SYSTEM VERIFICATION TEST - VER 1. (Refer to 8 - ELECTRICAL/POWER SEATS - DIAGNOSIS AND TESTING)

2. CHECK THE (G404) DRIVER SEAT FRONT VERTICAL POSITION SENSE VOLTAGE

Disconnect the Front Driver Vertical Seat Adjuster Motor.

NOTE: Check connectors – Clean and repair as necessary.
With the scan tool erase DTC's
Move the seat switch in the both front vertical positions three times.
With the scan tool, read DTC's.

Does the same DTC reset?

No >> Inspect the position sense wire for a possible intermittent short to another circuit, if OK replace the Front Driver Vertical Seat Adjuster Motor assembly.
Perform POWER SEAT SYSTEM VERIFICATION TEST – VER 1 (Refer to 8 - ELECTRICAL/POWER SEATS - DIAGNOSIS AND TESTING)

Yes >> Inspect the position sense wire for a possible short to another circuit, if OK replace the Memory Seat Module.
Perform POWER SEAT SYSTEM VERIFICATION TEST – VER 1 (Refer to 8 - ELECTRICAL/POWER SEATS - DIAGNOSIS AND TESTING)

B1D75–SEAT REAR VERTICAL POSITION SENSOR CIRCUIT LOW

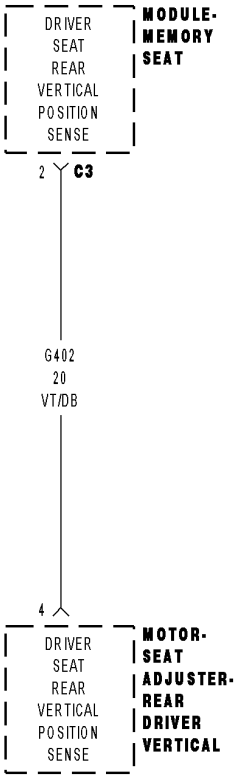

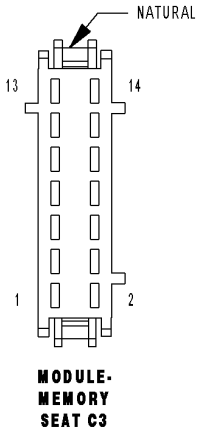

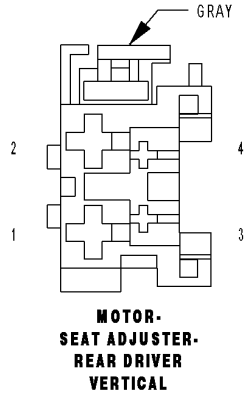

8134b410

For a complete wiring diagram **Refer to Section 8W**.

- **When Monitored:**
  When the seat motor is activated (sensor supply voltage is switched on whenever motor is activated).
- **Set Condition:**
  If sensor voltage is not within a specified range this DTC will set. This DTC will only set when the seat switch is moved in the same direction three consecutive times.

Possible Causes
(G402) DRIVER SEAT REAR VERTICAL POSITION SENSE CIRCUIT SHORTED TO GROUND
REAR DRIVER VERTICAL SEAT ADJUSTER MOTOR
MEMORY SEAT MODULE

Diagnostic Test

1. TEST FOR INTERMITTENT CONDITION

Turn the ignition on.
With the scan tool, record and erase DTC's
Move the Seat Switch in the Rear Vertical position three times.
With the scan tool, read DTC's.

Does the scan tool display B1D75–SEAT REAR VERTICAL POSITION SENSOR CIRCUIT LOW?

Yes >> Go To 2

No >> The conditions that caused this code to set are not present at this time. Using the wiring diagram/schematic as a guide, inspect the wiring and connectors.
Perform POWER SEAT SYSTEM VERIFICATION TEST - VER 1. (Refer to 8 - ELECTRICAL/POWER SEATS - DIAGNOSIS AND TESTING)

2. CHECK THE (G402) DRIVER SEAT REAR VERTICAL POSITION SENSE VOLTAGE

Disconnect the Rear Driver Vertical Seat Adjuster Motor.

NOTE: Check connectors – Clean and repair as necessary.
Move the seat switch in the rear vertical position during the next step.
Using a 12-volt test light connect one lead to the (G402) Driver Seat Rear Vertical Position Sense circuit and the other lead to Driver Seat Rear Vertical Sensor Ground at the Rear Driver Seat Adjuster Motor connector.

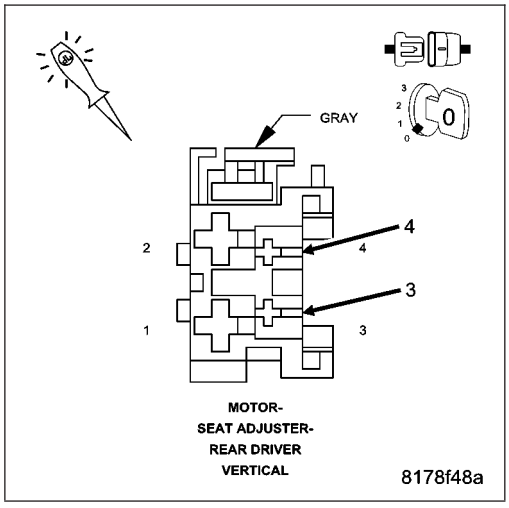

Does the test light illuminate for approximately two seconds then turn off with the seat switch engaged?

Yes >> Replace the Rear Driver Vertical Seat Adjuster Motor assembly.
Perform POWER SEAT SYSTEM VERIFICATION TEST – VER 1 (Refer to 8 - ELECTRICAL/POWER SEATS - DIAGNOSIS AND TESTING)

No >> Go To 3

3. CHECK THE (G402) DRIVER SEAT REAR VERTICAL POSITION SENSE WIRE FOR A SHORT TO GROUND

Disconnect the Memory Seat Module C3 connector.

NOTE: Check connectors – Clean and repair as necessary.
Measure the resistance of the (G402) Driver Seat Rear Vertical Position Sense wire at the Rear Driver Vertical Seat Adjuster Motor connector to ground.

Is the resistance below 1000.0 ohm?

Yes >> Repair the (G402) Driver Seat Rear Vertical Position Sense circuit for a short to ground.
Perform POWER SEAT SYSTEM VERIFICATION TEST – VER 1 (Refer to 8 - ELECTRICAL/POWER SEATS - DIAGNOSIS AND TESTING)

No >> Replace the Memory Seat Module.
Perform POWER SEAT SYSTEM VERIFICATION TEST – VER 1 (Refer to 8 - ELECTRICAL/POWER SEATS - DIAGNOSIS AND TESTING)

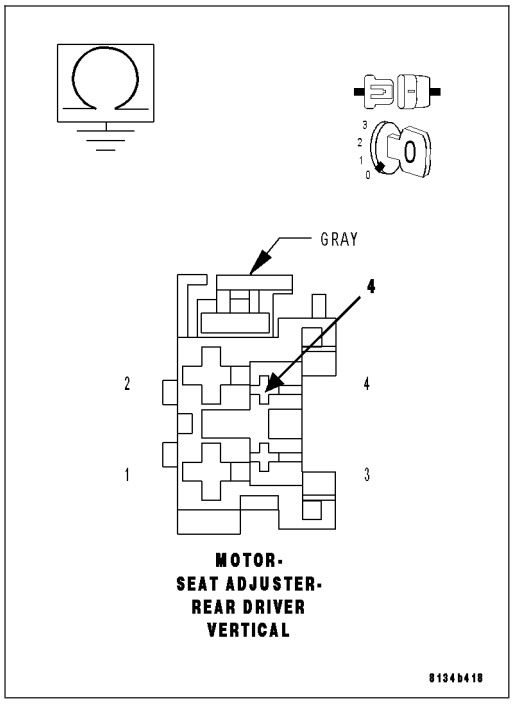

B1D76–SEAT REAR VERTICAL POSITION SENSOR CIRCUIT HIGH

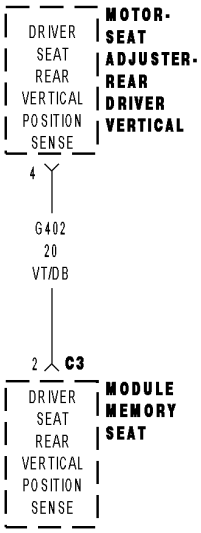

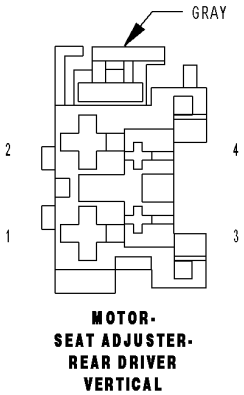

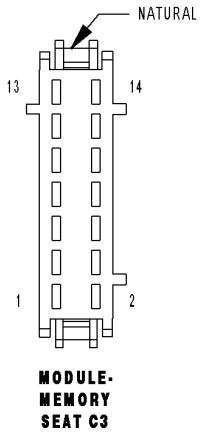

8134b8ed

For a complete wiring diagram **Refer to Section 8W**.

- **When Monitored:**
  When the seat motor is activated (sensor supply voltage is switched on whenever motor is activated).
- **Set Condition:**
  If during motor operation the sensor voltage is not within a specified range this code will set. This DTC will only set when the seat switch is moved in the same direction three consecutive times.

Possible Causes
(G402) DRIVER SEAT REAR VERTICAL POSITION SENSE CIRCUIT SHORTED TO VOLTAGE
REAR DRIVER VERTICAL SEAT ADJUSTER MOTOR
MEMORY SEAT MODULE

Diagnostic Test

1. TEST FOR INTERMITTENT CONDITION

Turn the ignition on.
With the scan tool, record and erase DTC's
Move the seat switch rear vertical position three times.
With the scan tool, read DTC's.

Does the scan tool display B1D76–SEAT REAR VERTICAL POSITION SENSOR CIRCUIT HIGH?

Yes >> Go To 2

No >> The conditions that caused this code to set are not present at this time. Using the wiring diagram/schematic as a guide, inspect the wiring and connectors.
Perform POWER SEAT SYSTEM VERIFICATION TEST - VER 1. (Refer to 8 - ELECTRICAL/POWER SEATS - DIAGNOSIS AND TESTING)

2. CHECK THE (G402) DRIVER SEAT REAR VERTICAL POSITION SENSE VOLTAGE

Disconnect the Rear Driver Vertical Seat Adjuster Motor.

NOTE: Check connectors – Clean and repair as necessary.
With the scan tool erase DTC's
Move the seat switch in the both rear vertical positions three times.
With the scan tool, read DTC's.

Does the same DTC reset?

No >> Inspect the position sense wire for a possible intermittent short to voltage from another circuit, if OK replace the Rear Driver Vertical Seat Adjuster Motor assembly.
Perform POWER SEAT SYSTEM VERIFICATION TEST – VER 1 (Refer to 8 - ELECTRICAL/POWER SEATS - DIAGNOSIS AND TESTING)

Yes >> Inspect the position sense wire for a possible short to voltage from another circuit, if OK replace the Memory Seat Module.
Perform POWER SEAT SYSTEM VERIFICATION TEST – VER 1 (Refer to 8 - ELECTRICAL/POWER SEATS - DIAGNOSIS AND TESTING)

B1D79–SEAT RECLINER POSITION SENSOR CIRCUIT LOW

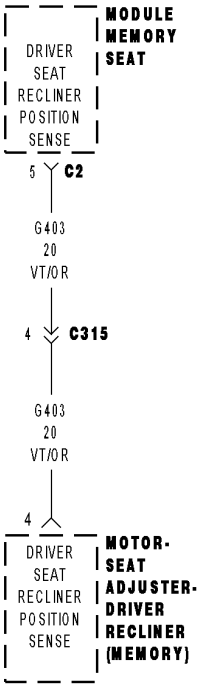

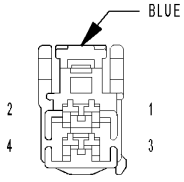

MOTOR- SEAT ADJUSTER- DRIVER RECLINER (MEMORY)

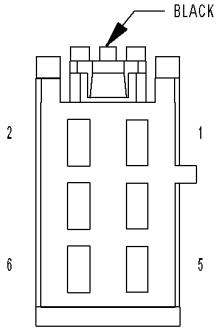

MODULE- MEMORY SEAT C2

8134bb8e

For a complete wiring diagram **Refer to Section 8W**.

- **When Monitored:**
  When the seat motor is activated (sensor supply voltage is switched on whenever motor is activated).
- **Set Condition:**
  If sensor voltage is not within a specified range this DTC will set. This DTC will only set when the seat switch is moved in the same direction three consecutive times.

Possible Causes
(G403) DRIVER SEAT RECLINER POSITION SENSE CIRCUIT SHORTED TO GROUND
DRIVER RECLINER SEAT ADJUSTER MOTOR
MEMORY SEAT MODULE

Diagnostic Test

1. TEST FOR INTERMITTENT CONDITION

Turn the ignition on.
With the scan tool, record and erase DTC's
Move the Seat Switch recliner position three times.
With the scan tool, read DTC's.

Does the scan tool display B1D79–SEAT RECLINER POSITION SENSOR CIRCUIT LOW?

Yes >> Go To 2

No >> The conditions that caused this code to set are not present at this time. Using the wiring diagram/schematic as a guide, inspect the wiring and connectors.
Perform POWER SEAT SYSTEM VERIFICATION TEST - VER 1. (Refer to 8 - ELECTRICAL/POWER SEATS - DIAGNOSIS AND TESTING)

2. CHECK THE (G403) DRIVER SEAT RECLINER POSITION SENSE VOLTAGE

Disconnect the Driver Recliner Seat Adjuster Motor.

NOTE: Check connectors – Clean and repair as necessary.
Move the seat switch in the recliner position during the next step.
Using a 12-volt test light connect one lead to the (G403) Driver Seat Recliner Position Sense circuit and the other lead to Driver Seat Recliner Position Sensor Ground at the Driver Recliner Seat Adjuster Motor connector.

Does the test light illuminate for approximately two seconds then turn off with the seat switch engaged?

Yes >> Replace the Driver Recliner Seat Adjuster Motor assembly.
Perform POWER SEAT SYSTEM VERIFICATION TEST – VER 1 (Refer to 8 - ELECTRICAL/POWER SEATS - DIAGNOSIS AND TESTING)

No >> Go To 3

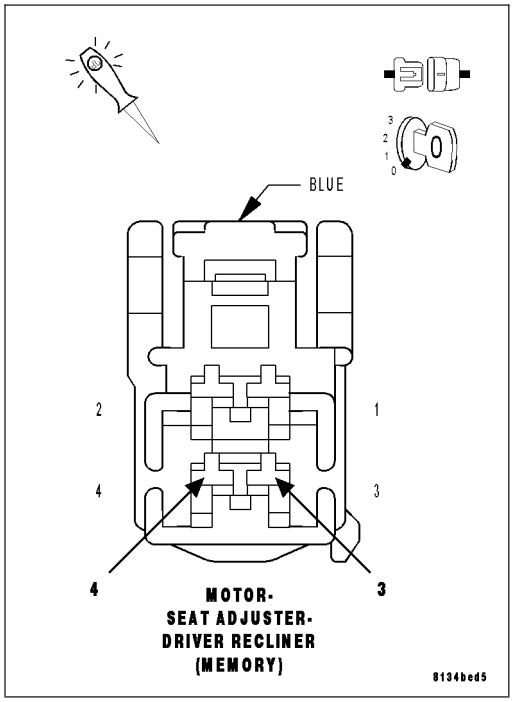

3. CHECK THE (G403) DRIVER SEAT RECLINER POSITION SENSE WIRE FOR A SHORT TO GROUND

Disconnect the Memory Seat Module C2 connector.

NOTE: Check connectors – Clean and repair as necessary.
Measure the resistance of the (G403) Driver Seat Recliner Position Sense wire at the Driver Recliner Seat Adjuster Motor connector to ground.

Is the resistance below 1000.0 ohm?

Yes >> Repair the (G403) Driver Seat Recliner Position Sense circuit for a short to ground.
Perform POWER SEAT SYSTEM VERIFICATION TEST – VER 1 (Refer to 8 - ELECTRICAL/POWER SEATS - DIAGNOSIS AND TESTING)

No >> Replace the Memory Seat Module.
Perform POWER SEAT SYSTEM VERIFICATION TEST – VER 1 (Refer to 8 - ELECTRICAL/POWER SEATS - DIAGNOSIS AND TESTING)

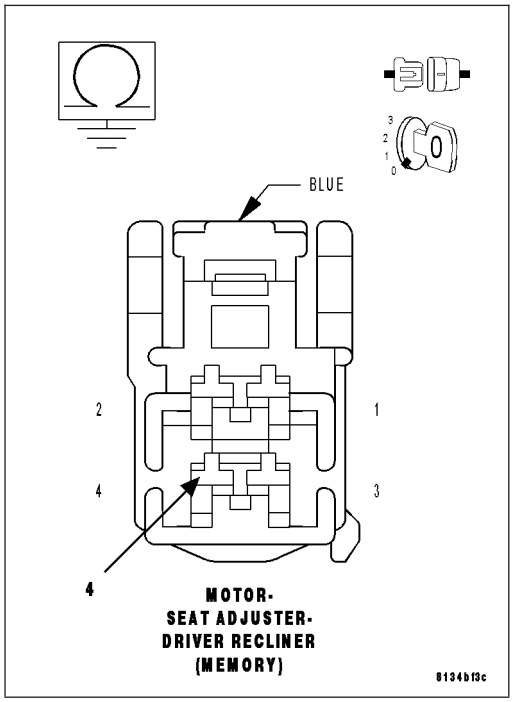

B1D7A–SEAT RECLINER POSITION SENSOR CIRCUIT HIGH

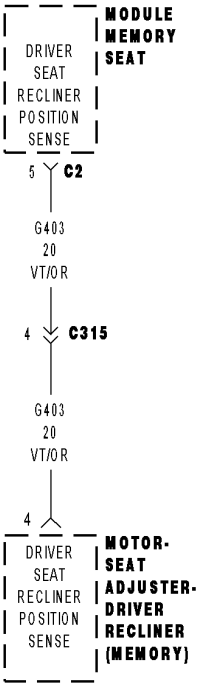

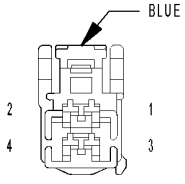

MOTOR- SEAT ADJUSTER- DRIVER RECLINER (MEMORY)

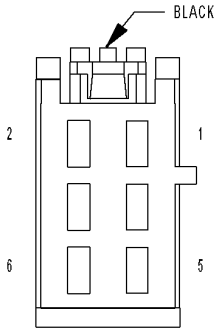

MODULE- MEMORY SEAT C2

8134dda0

For a complete wiring diagram **Refer to Section 8W**.

- **When Monitored:**
  When the seat motor is activated (sensor supply voltage is switched on whenever motor is activated).
- **Set Condition:**
  If during motor operation the sensor voltage is not within a specified range this code will set. This DTC will only set when the seat switch is moved in the same direction three consecutive times.

Possible Causes
(G403) DRIVER SEAT RECLINER POSITION SENSE CIRCUIT SHORTED TO VOLTAGE
DRIVER RECLINER SEAT ADJUSTER MOTOR
MEMORY SEAT MODULE

Diagnostic Test

1. TEST FOR INTERMITTENT CONDITION

Turn the ignition on.
With the scan tool, record and erase DTC's
Move the seat switch recliner position three times.
With the scan tool, read DTC's.

Does the scan tool display B1D7A–SEAT RECLINER POSITION SENSOR CIRCUIT HIGH?

Yes >> Go To 2

No >> The conditions that caused this code to set are not present at this time. Using the wiring diagram/schematic as a guide, inspect the wiring and connectors.
Perform POWER SEAT SYSTEM VERIFICATION TEST - VER 1. (Refer to 8 - ELECTRICAL/POWER SEATS - DIAGNOSIS AND TESTING)

2. CHECK THE (G403) DRIVER SEAT RECLINER POSITION SENSE VOLTAGE

Disconnect the Driver Recliner Seat Adjuster Motor.

NOTE: Check connectors – Clean and repair as necessary.
With the scan tool erase DTC's
Move the seat switch in the both recliner positions three times.
With the scan tool, read DTC's.

Does the same DTC reset?

No >> Inspect the position sense wire for a possible intermittent short to voltage from another circuit, if OK replace the Driver Recliner Seat Adjuster Motor assembly.
Perform POWER SEAT SYSTEM VERIFICATION TEST – VER 1 (Refer to 8 - ELECTRICAL/POWER SEATS - DIAGNOSIS AND TESTING)

Yes >> Inspect the position sense wire for a possible short to voltage from another circuit, if OK replace the Memory Seat Module.
Perform POWER SEAT SYSTEM VERIFICATION TEST – VER 1 (Refer to 8 - ELECTRICAL/POWER SEATS - DIAGNOSIS AND TESTING)

B1D7B–SEAT HORIZONTAL MOTOR CONTROL CIRCUIT PERFORMANCE

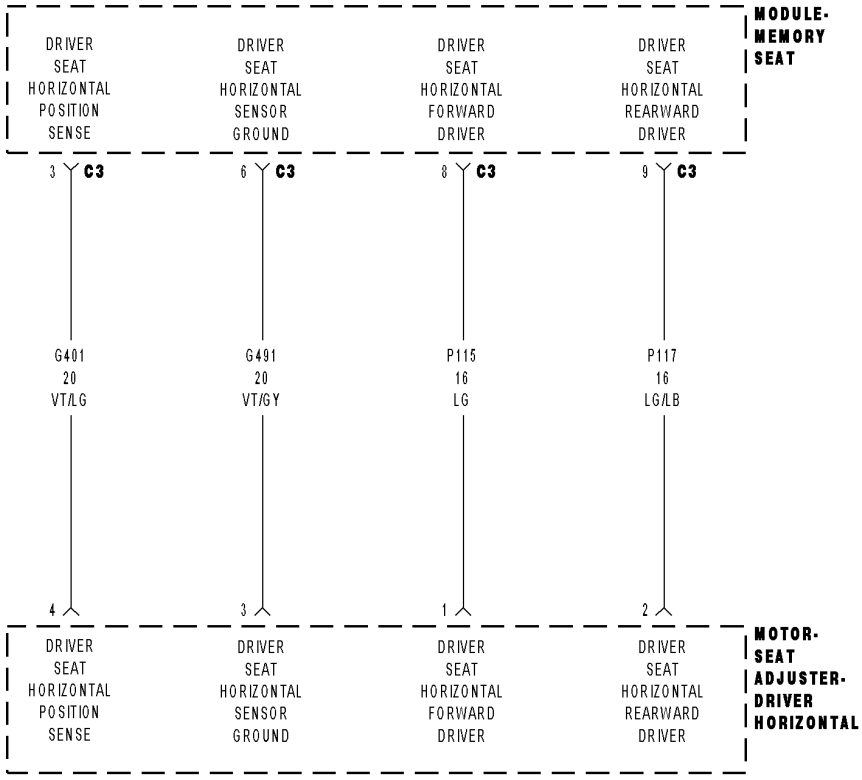

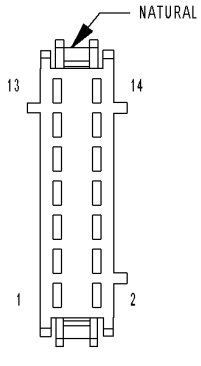

MODULE-
MEMORY
SEAT C3

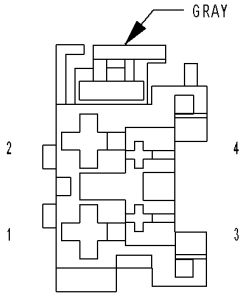

MOTOR-
SEAT ADJUSTER-
DRIVER HORIZONTAL

8134e24e

For a complete wiring diagram **Refer to Section 8W**.

- **When Monitored:**
  Whenever the seat motor is activated.
- **Set Condition:**
  If the Memory Seat Module does not detect the rotation of the seat motor this DTC will set. This DTC will only set when the seat switch is moved in the same direction three consecutive times.

Possible Causes
SEAT POSITION SENSOR CIRCUIT DIAGNOSTIC TROUBLE CODES
(G401) DRIVER SEAT HORIZONTAL POSITION SENSE CIRCUIT OPEN
(G491) DRIVER SEAT HORIZONTAL SENSOR GROUND CIRCUIT OPEN
(P115) DRIVER SEAT HORIZONTAL FORWARD DRIVER
(P117) DRIVER SEAT HORIZONTAL REARWARD DRIVER
DRIVER HORIZONTAL SEAT ADJUSTER MOTOR
MEMORY SEAT MODULE

Diagnostic Test

1. CHECK FOR RELATED DIAGNOSTIC TROUBLE CODES

Turn the ignition on.
With the scan tool, read DTC's.

Does the scan tool display any seat position sensor DTC's?

Yes >> Diagnose and repair the other DTC(s) first. Refer to the Table of Contents in this Section for a complete list of symptoms.

No >> Go To 2

2. TEST FOR INTERMITTENT CONDITION

Turn the ignition on.
With the scan tool, record and erase DTC's
Move the Seat Switch in the Horizontal position three times.
With the scan tool, read DTC's.

Does the scan tool display B1D7B–SEAT HORIZONTAL MOTOR CONTROL CIRCUIT PERFORMANCE?

Yes >> Go To 3

No >> The conditions that caused this code to set are not present at this time. Using the wiring diagram/schematic as a guide, inspect the wiring and connectors.
Perform POWER SEAT SYSTEM VERIFICATION TEST - VER 1. (Refer to 8 - ELECTRICAL/POWER SEATS - DIAGNOSIS AND TESTING)

3. CHECK THE (G401) DRIVER SEAT HORIZONTAL POSITION SENSE VOLTAGE

Disconnect the Driver Horizontal Seat Adjuster Motor.

NOTE: Check connectors – Clean and repair as necessary.

Move the Seat Switch in the Horizontal position during the next step.

Using a 12-volt test light connect one lead to the (G401) Driver Seat Horizontal Position Sense circuit and the other lead to Driver Seat Horizontal Sensor Ground at the Driver Horizontal Seat Adjuster Motor connector.

Does the test light illuminate for approximately two seconds then turn off with the seat switch engaged?

Yes >> Go To 4

No >> Go To 5

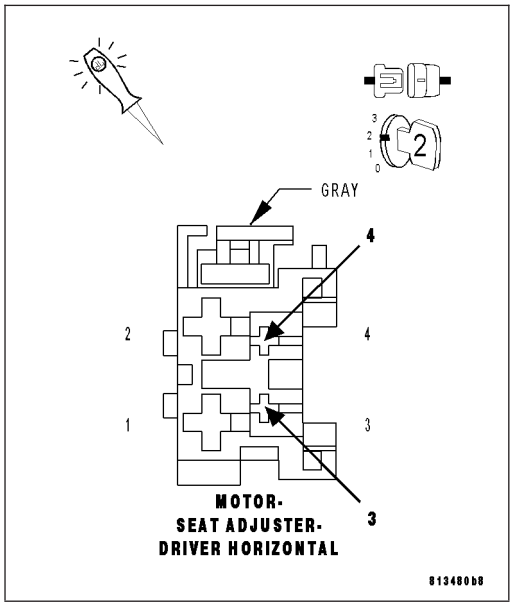

4. CHECK THE DRIVER SEAT HORIZONTAL FORWARD/REARWARD DRIVER VOLTAGE

Move the Seat Switch in the Horizontal position during the next step.

Using a 12-volt test light connect one lead to the (P115) Driver Seat Horizontal Forward Driver circuit and the other lead to (P117) Driver Seat Horizontal Rearward Driver circuit at the Driver Horizontal Seat Adjuster Motor connector.

Does the test light illuminate with the seat switch engaged?

Yes >> Replace the track/horizontal motor assembly.
Perform POWER SEAT SYSTEM VERIFICATION TEST – VER 1 (Refer to 8 - ELECTRICAL/POWER SEATS - DIAGNOSIS AND TESTING)

No >> Go To 7

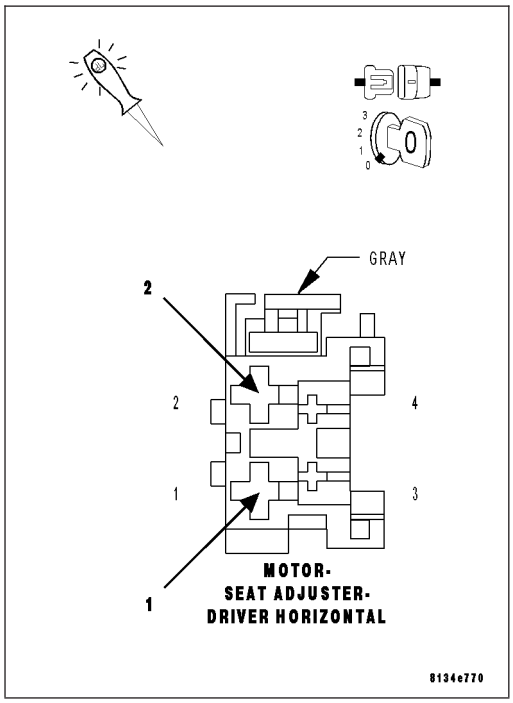

5. CHECK THE (G401) DRIVER SEAT HORIZONTAL POSITION SENSE WIRE FOR AN OPEN

Disconnect the Memory Seat Module C3 connector.

NOTE: Check connectors – Clean and repair as necessary.
Measure the resistance of the (G401) Driver Seat Horizontal Position Sense circuit at the Driver Horizontal Seat Adjuster Motor connector to the C3 connector.

Is the resistance above 1.0 ohm?

Yes >> Repair the (G401) Driver Seat Horizontal Position Sense circuit for an open.
Perform POWER SEAT SYSTEM VERIFICATION TEST – VER 1 (Refer to 8 - ELECTRICAL/POWER SEATS - DIAGNOSIS AND TESTING)

No >> Go To 6

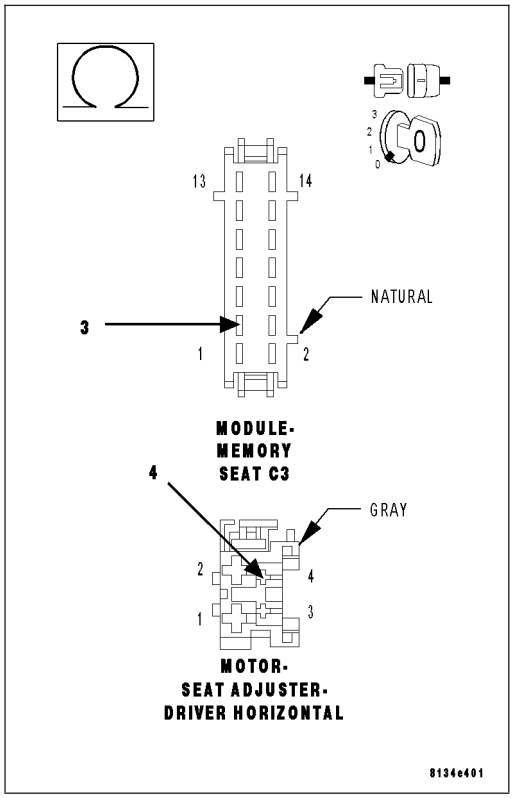

6. CHECK THE (G491) DRIVER SEAT HORIZONTAL SENSOR GROUND FOR AN OPEN

Measure the resistance of the (G491) Driver Seat Horizontal Sensor Ground circuit at the Driver Horizontal Seat Adjuster Motor connector to the C3 connector.

Is the resistance above 1.0 ohm?

Yes >> Repair the (G491) Driver Seat Horizontal Senor Ground circuit for an open.
Perform POWER SEAT SYSTEM VERIFICATION TEST – VER 1 (Refer to 8 - ELECTRICAL/POWER SEATS - DIAGNOSIS AND TESTING)

No >> Replace the Memory Seat Module.
Perform POWER SEAT SYSTEM VERIFICATION TEST – VER 1 (Refer to 8 - ELECTRICAL/POWER SEATS - DIAGNOSIS AND TESTING)

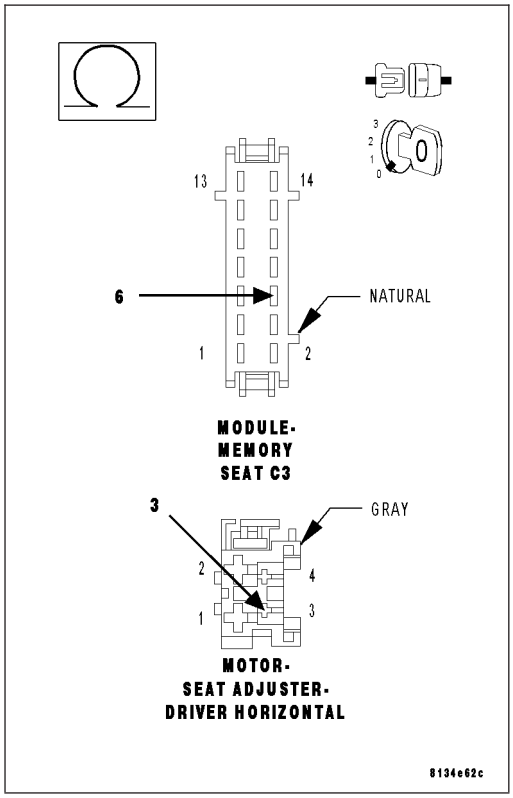

7. CHECK THE (P115) DRIVER SEAT HORIZONTAL FORWARD DRIVER WIRE FOR AN OPEN

Disconnect the Memory Seat Module C3 connector.

NOTE: Check connectors – Clean and repair as necessary.
Measure the resistance of the (P115) Driver Seat Horizontal Forward Driver circuit at the Driver Horizontal Seat Adjuster Motor connector to the C3 connector.

Is the resistance above 1.0 ohm?

Yes >> Repair the (P115) Driver Seat Horizontal Forward Driver circuit for an open.
Perform POWER SEAT SYSTEM VERIFICATION TEST – VER 1 (Refer to 8 - ELECTRICAL/POWER SEATS - DIAGNOSIS AND TESTING)

No >> Go To 8

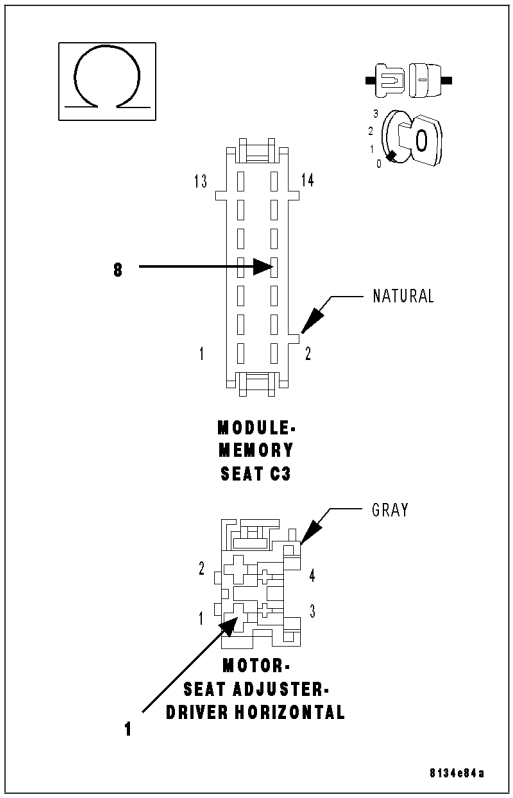

8. CHECK THE (P117) DRIVER SEAT HORIZONTAL REARWARD DRIVER FOR AN OPEN

Measure the resistance of the (P117) Driver Seat Horizontal Rearward Driver circuit at the Driver Horizontal Seat Adjuster Motor connector to the C3 connector.

Is the resistance above 1.0 ohm?

Yes >> Repair the (P117) Driver Seat Horizontal Rearward Driver circuit for an open.
Perform POWER SEAT SYSTEM VERIFICATION TEST – VER 1 (Refer to 8 - ELECTRICAL/POWER SEATS - DIAGNOSIS AND TESTING)

No >> Replace the Memory Seat Module.
Perform POWER SEAT SYSTEM VERIFICATION TEST – VER 1 (Refer to 8 - ELECTRICAL/POWER SEATS - DIAGNOSIS AND TESTING)

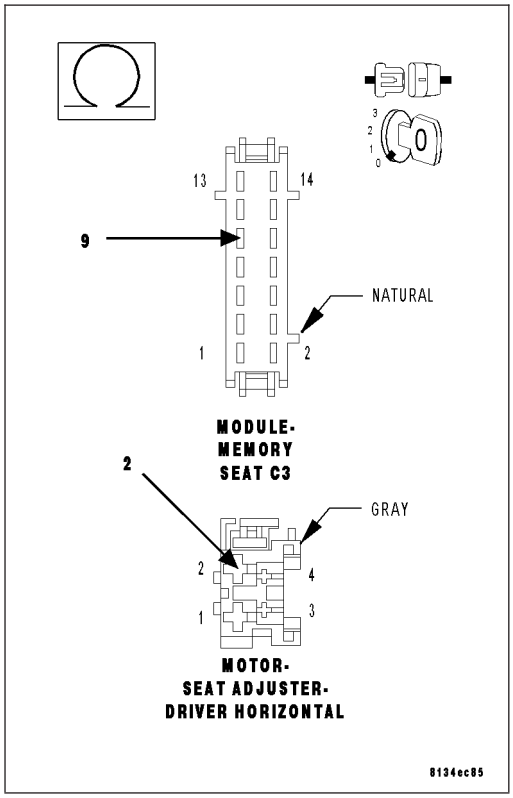

B1D7F–SEAT FRONT VERTICAL MOTOR CONTROL CIRCUIT PERFORMANCE

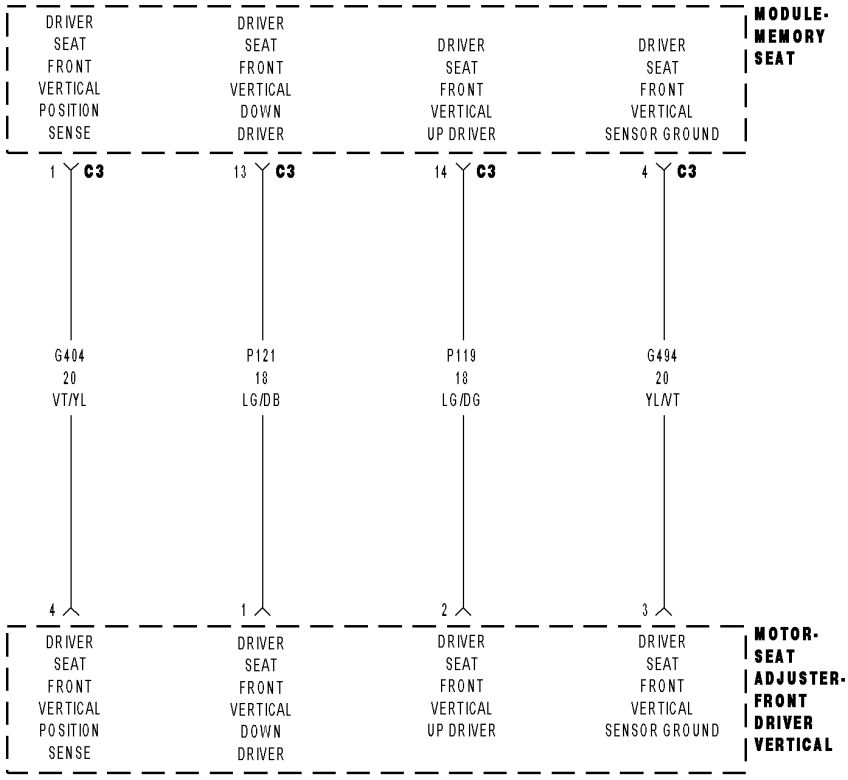

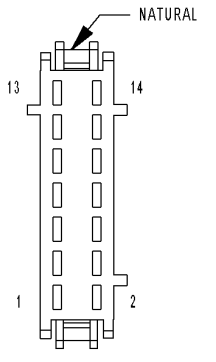

MODULE-
MEMORY
SEAT C3

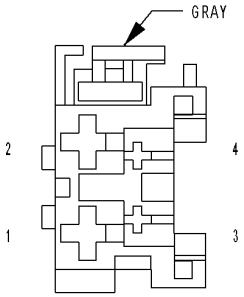

MOTOR-
SEAT ADJUSTER-
FRONT DRIVER
VERTICAL

81341148

For a complete wiring diagram **Refer to Section 8W**.

- **When Monitored:**
  Whenever the seat motor is activated.
- **Set Condition:**
  If the Memory Seat Module does not detect the rotation of the seat motor this DTC will set. This DTC will only set when the seat switch is moved in the same direction three consecutive times.

Possible Causes
SEAT POSITION SENSOR CIRCUIT DIAGNOSTIC TROUBLE CODES
(G404) DRIVER SEAT FRONT VERTICAL POSITION SENSE CIRCUIT OPEN
(G494) DRIVER SEAT FRONT VERTICAL SENSOR GROUND CIRCUIT OPEN
(P119) DRIVER SEAT FRONT VERTICAL UP DRIVER
(P121) DRIVER SEAT FRONT VERTICAL DOWN DRIVER
FRONT DRIVER VERTICAL SEAT ADJUSTER MOTOR
MEMORY SEAT MODULE

Diagnostic Test

1. CHECK FOR RELATED DIAGNOSTIC TROUBLE CODES

Turn the ignition on.
With the scan tool, read DTC's.

Does the scan tool display any seat position sensor DTC's?

Yes >> Diagnose and repair other DTC(s) first. Refer to the Table of Contents in this Section for a complete list of symptoms.

No >> Go To 2

2. TEST FOR INTERMITTENT CONDITION

Turn the ignition on.
With the scan tool, record and erase DTC's
Move the Seat Switch in the Front Vertical position three times.
With the scan tool, read DTC's.

Does the scan tool display B1D7F–SEAT FRONT VERTICAL MOTOR CONTROL CIRCUIT PERFORMANCE?

Yes >> Go To 3

No >> The conditions that caused this code to set are not present at this time. Using the wiring diagram/schematic as a guide, inspect the wiring and connectors.
Perform POWER SEAT SYSTEM VERIFICATION TEST - VER 1.

3. CHECK THE (G404) DRIVER SEAT FRONT VERTICAL POSITION SENSE VOLTAGE

Disconnect the Front Driver Vertical Seat Adjuster Motor.

NOTE: Check connectors – Clean and repair as necessary.

Move the Seat Switch in the front vertical position during the next step.

Using a 12-volt test light connect one lead to the (G404) Driver Seat Front Vertical Position Sense circuit and the other lead to Driver Seat Front Vertical Sensor Ground at the Driver Front Vertical Seat Adjuster Motor connector.

Does the test light illuminate for approximately two seconds then turn off with the seat switch engaged?

Yes >> Go To 4

No >> Go To 5

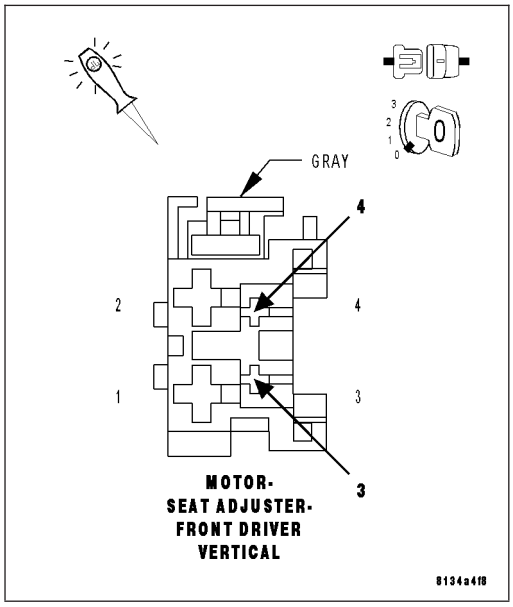

4. CHECK THE DRIVER SEAT FRONT VERTICAL UP/DOWN DRIVER VOLTAGE

Move the Seat Switch in the front vertical position during the next step.

Using a 12-volt test light connect one lead to the (G119) Driver Seat Front Vertical Up Driver circuit and the other lead to (P121) Driver Seat Front Vertical Down Driver circuit at the Front Driver Vertical Seat Adjuster Motor connector.

Does the test light illuminate with the seat switch engaged?

Yes >> Replace the Front Driver Vertical Seat Adjuster motor assembly.

Perform POWER SEAT SYSTEM VERIFICATION TEST – VER 1

No >> Go To 7

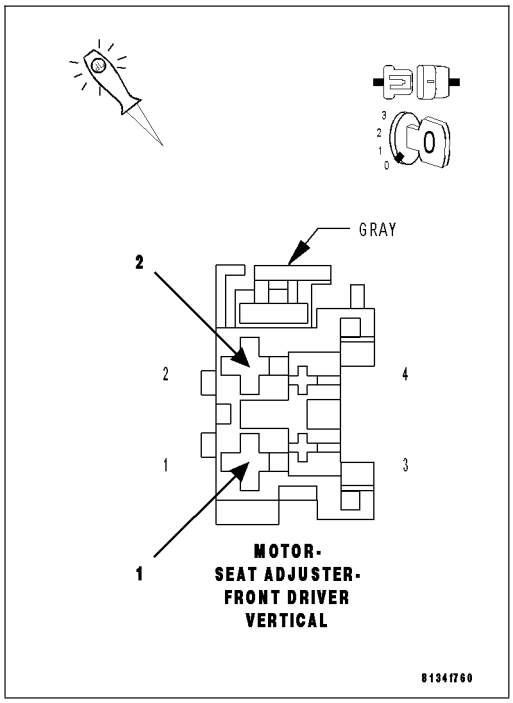

5. CHECK THE (G404) DRIVER SEAT FRONT VERTICAL POSITION SENSE WIRE FOR AN OPEN

Disconnect the Memory Seat Module C3 connector.

NOTE: Check connectors – Clean and repair as necessary.
Measure the resistance of the (G404) Driver Seat Front Vertical Position Sense circuit at the Front Driver Vertical Seat Adjuster Motor connector to the C3 connector.

Is the resistance above 1.0 ohm?

Yes >> Repair the (G404) Driver Seat Front Vertical Position Sense circuit for an open.
Perform POWER SEAT SYSTEM VERIFICATION TEST – VER 1

No >> Go To 6

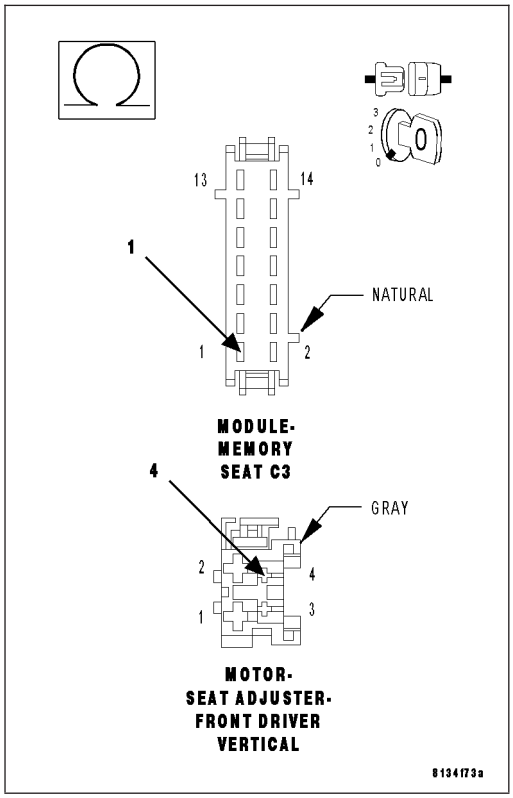

6. CHECK THE (G494) DRIVER SEAT FRONT VERTICAL SENSOR GROUND FOR AN OPEN

Measure the resistance of the (G494) Driver Seat Front Vertical Sensor Ground circuit at the Driver Front Vertical Seat Adjuster Motor connector to the C3 connector.

Is the resistance above 1.0 ohm?

Yes >> Repair the (G494) Driver Seat Front Vertical Senor Ground circuit for an open.
Perform POWER SEAT SYSTEM VERIFICATION TEST – VER 1

No >> Replace the Memory Seat Module.
Perform POWER SEAT SYSTEM VERIFICATION TEST – VER 1

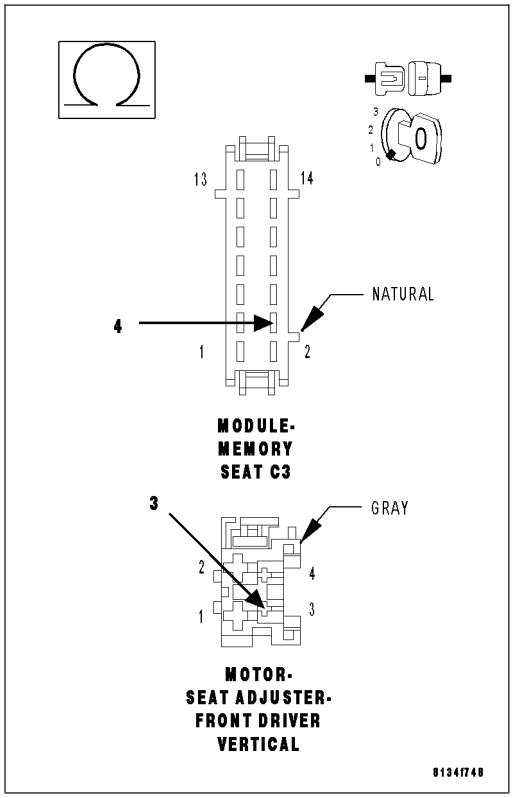

7. CHECK THE (P119) DRIVER SEAT FRONT VERTICAL UP DRIVER WIRE FOR AN OPEN

Disconnect the Memory Seat Module C3 connector.

NOTE: Check connectors – Clean and repair as necessary.
Measure the resistance of the (P119) Driver Seat Front Vertical Up Driver circuit at the Driver Front Vertical Seat Adjuster Motor connector to the C3 connector.

Is the resistance above 1.0 ohm?

Yes >> Repair the (P119) Driver Seat Front Vertical Up Driver circuit for an open.
Perform POWER SEAT SYSTEM VERIFICATION TEST – VER 1

No >> Go To 8

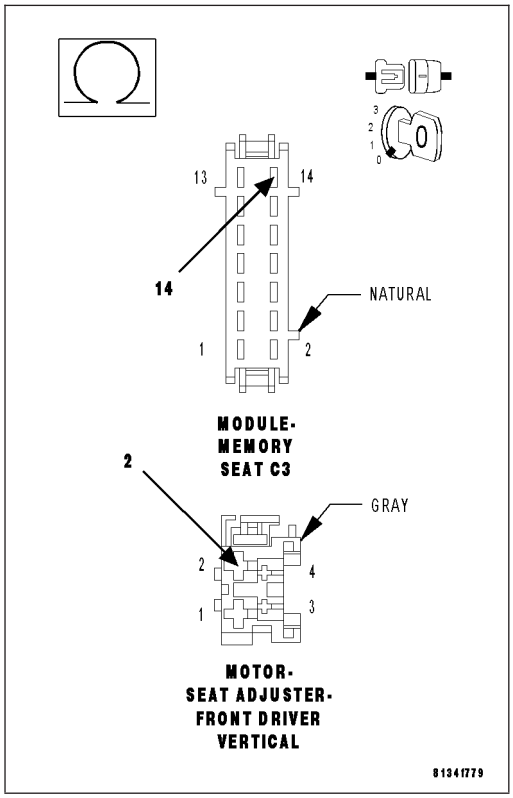

8. CHECK THE (P121) DRIVER SEAT FRONT VERTICAL DOWN DRIVER FOR AN OPEN

Measure the resistance of the (P121) Driver Seat Front Vertical Down Driver circuit at the Driver Front Vertical Seat Adjuster Motor connector to the C3 connector.

Is the resistance above 1.0 ohm?

Yes >> Repair the (P121) Driver Seat Front Vertical Down Driver circuit for an open.
Perform POWER SEAT SYSTEM VERIFICATION TEST – VER 1

No >> Replace the Memory Seat Module.
Perform POWER SEAT SYSTEM VERIFICATION TEST – VER 1

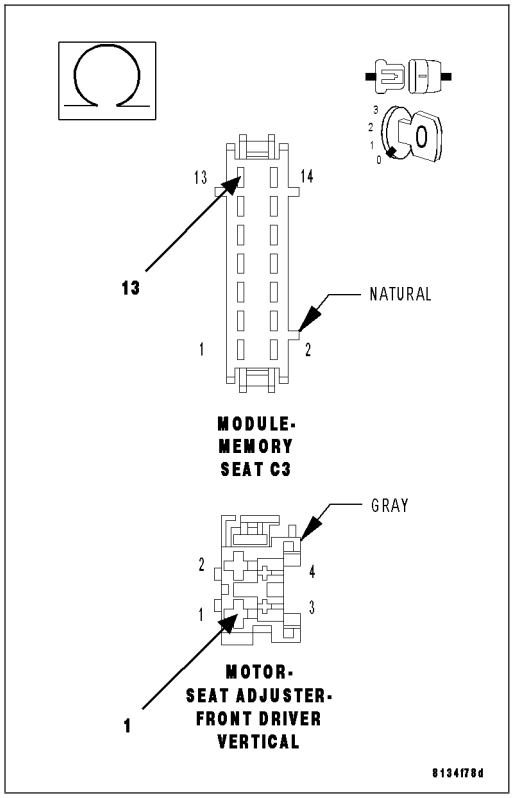

B1D83–SEAT REAR VERTICAL MOTOR CONTROL CIRCUIT PERFORMANCE

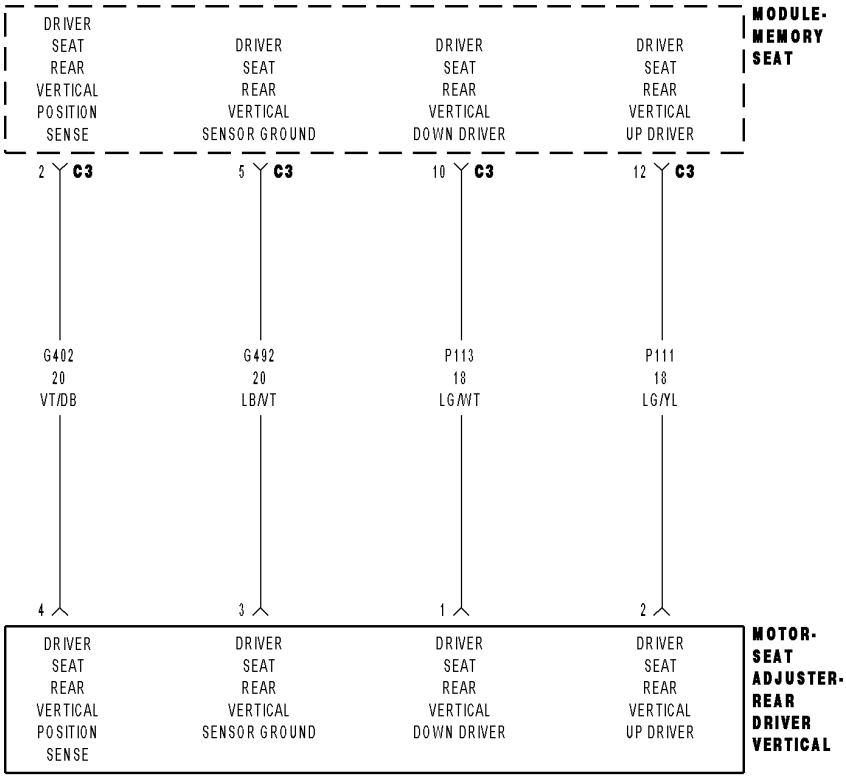

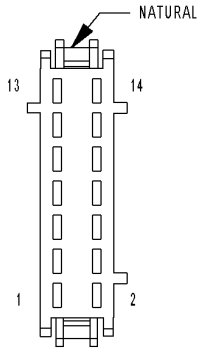

MODULE-
MEMORY
SEAT C3

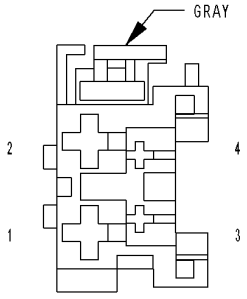

MOTOR-
SEAT ADJUSTER-
REAR DRIVER
VERTICAL

813509ac

For a complete wiring diagram **Refer to Section 8W**.

- **When Monitored:**
  Whenever the seat motor is activated.
- **Set Condition:**
  If the Memory Seat Module does not detect the rotation of the seat motor this DTC will set. This DTC will only set when the seat switch is moved in the same direction three consecutive times.

Possible Causes
SEAT POSITION SENSOR CIRCUIT DIAGNOSTIC TROUBLE CODES
(G402) DRIVER SEAT REAR VERTICAL POSITION SENSE CIRCUIT OPEN
(G492) DRIVER SEAT REAR VERTICAL SENSOR GROUND CIRCUIT OPEN
(P111) DRIVER SEAT REAR VERTICAL UP DRIVER
(P113) DRIVER SEAT REAR VERTICAL DOWN DRIVER
REAR DRIVER VERTICAL SEAT ADJUSTER MOTOR
MEMORY SEAT MODULE

Diagnostic Test

1. CHECK FOR RELATED DIAGNOSTIC TROUBLE CODES

Turn the ignition on.
With the scan tool, read DTC's.

Does the scan tool display any seat position sensor DTC's?

Yes >> Diagnose and repair other DTC(s) first. Refer to the Table of Contents in this Section for a complete list of symptoms.

No >> Go To 2

2. TEST FOR INTERMITTENT CONDITION

Turn the ignition on.
With the scan tool, record and erase DTC's
Move the Seat Switch in the Rear Vertical position three times.
With the scan tool, read DTC's.

Does the scan tool display B1D83–SEAT REAR VERTICAL MOTOR CONTROL CIRCUIT PERFORMANCE?

Yes >> Go To 3

No >> The conditions that caused this code to set are not present at this time. Using the wiring diagram/schematic as a guide, inspect the wiring and connectors.
Perform POWER SEAT SYSTEM VERIFICATION TEST - VER 1.

3. CHECK THE (G402) DRIVER SEAT REAR VERTICAL POSITION SENSE VOLTAGE

Disconnect the Rear Driver Vertical Seat Adjuster Motor.

NOTE: Check connectors – Clean and repair as necessary.

Move the Seat Switch in the rear vertical position during the next step.

Using a 12-volt test light connect one lead to the (G402) Driver Seat Rear Vertical Position Sense circuit and the other lead to Driver Seat Rear Vertical Sensor Ground at the Driver Rear Vertical Seat Adjuster Motor connector.

Does the test light illuminate for approximately two seconds then turn off with the seat switch engaged?

Yes >> Go To 4

No >> Go To 5

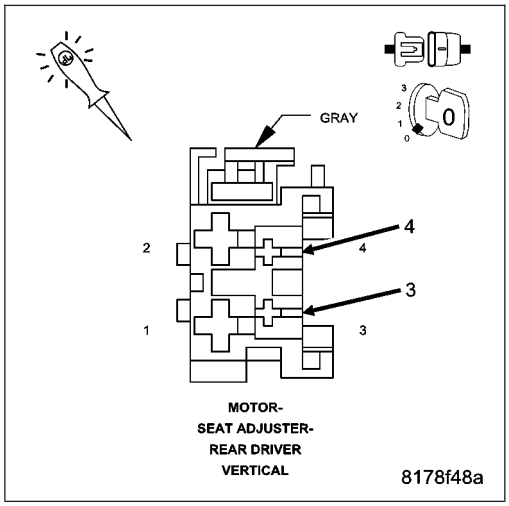

4. CHECK THE DRIVER SEAT REAR VERTICAL UP/DOWN DRIVER VOLTAGE

Move the Seat Switch in the rear vertical position during the next step.

Using a 12-volt test light connect one lead to the (P111) Driver Seat Rear Vertical Up Driver circuit and the other lead to (P113) Driver Seat Rear Vertical Down Driver circuit at the Rear Driver Vertical Seat Adjuster Motor connector.

Does the test light illuminate with the seat switch engaged?

Yes >> Replace the Rear Driver Vertical Seat Adjuster motor assembly.

Perform POWER SEAT SYSTEM VERIFICATION TEST – VER 1

No >> Go To 7

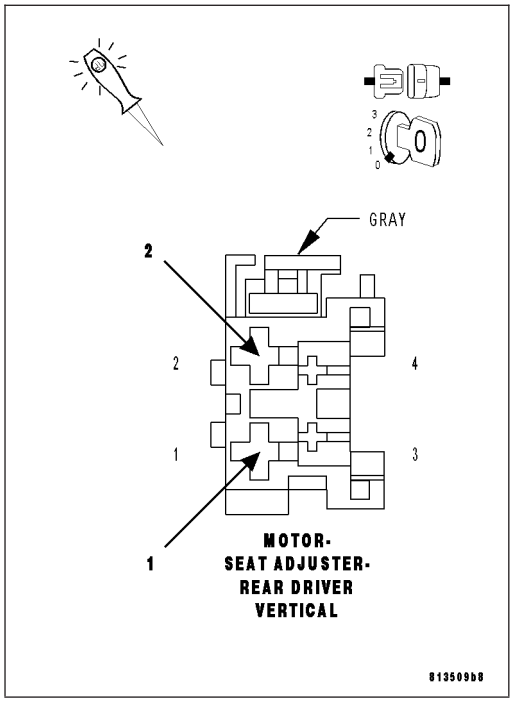

5. CHECK THE (G402) DRIVER SEAT REAR VERTICAL POSITION SENSE WIRE FOR AN OPEN

Disconnect the Memory Seat Module C3 connector.

NOTE: Check connectors – Clean and repair as necessary.
Measure the resistance of the (G402) Driver Seat Rear Vertical Position Sense circuit at the Rear Driver Vertical Seat Adjuster Motor connector to the C3 connector.

Is the resistance above 1.0 ohm?

Yes >> Repair the (G402) Driver Seat Rear Vertical Position Sense circuit for an open.
Perform POWER SEAT SYSTEM VERIFICATION TEST – VER 1

No >> Go To 6

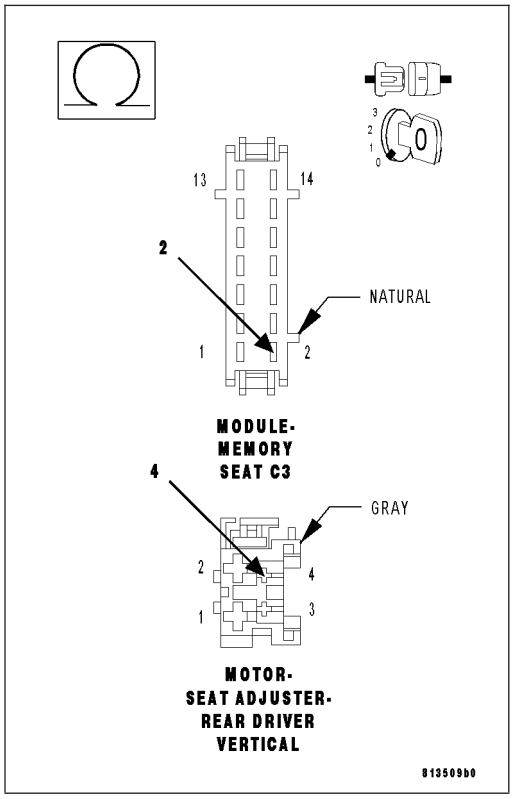

6. CHECK THE (G492) DRIVER SEAT REAR VERTICAL SENSOR GROUND FOR AN OPEN

Measure the resistance of the (G492) Driver Seat Rear Vertical Sensor Ground circuit at the Driver Rear Vertical Seat Adjuster Motor connector to the C3 connector.

Is the resistance above 1.0 ohm?

Yes >> Repair the (G492) Driver Seat Rear Vertical Senor Ground circuit for an open.
Perform MEMORY SYSTEM VERIFICATION TEST – VER 1

No >> Replace the Memory Seat Module.
Perform POWER SEAT SYSTEM VERIFICATION TEST – VER 1

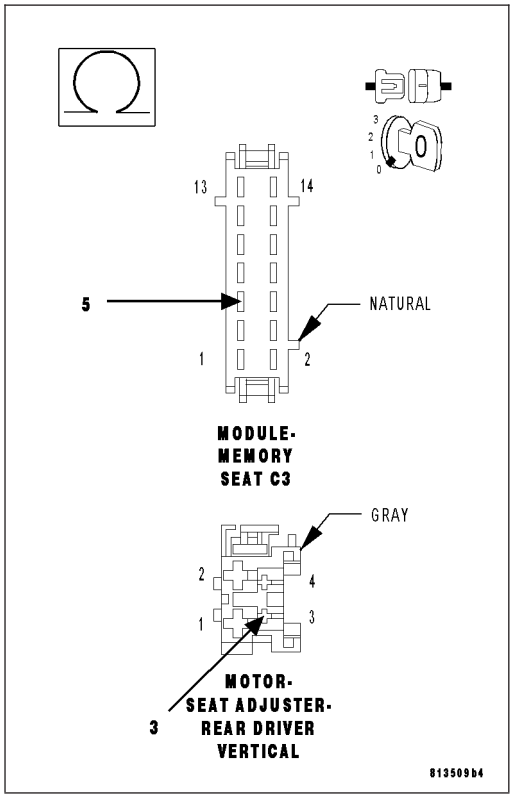

7. CHECK THE (P111) DRIVER SEAT REAR VERTICAL UP DRIVER WIRE FOR AN OPEN

Disconnect the Memory Seat Module C3 connector.

NOTE: Check connectors – Clean and repair as necessary.
Measure the resistance of the (P111) Driver Seat Rear Vertical Up Driver circuit at the Driver Rear Vertical Seat Adjuster Motor connector to the C3 connector.

Is the resistance above 1.0 ohm?

Yes >> Repair the (P111) Driver Seat Rear Vertical Up Driver circuit for an open.
Perform POWER SEAT SYSTEM VERIFICATION TEST – VER 1

No >> Go To 8

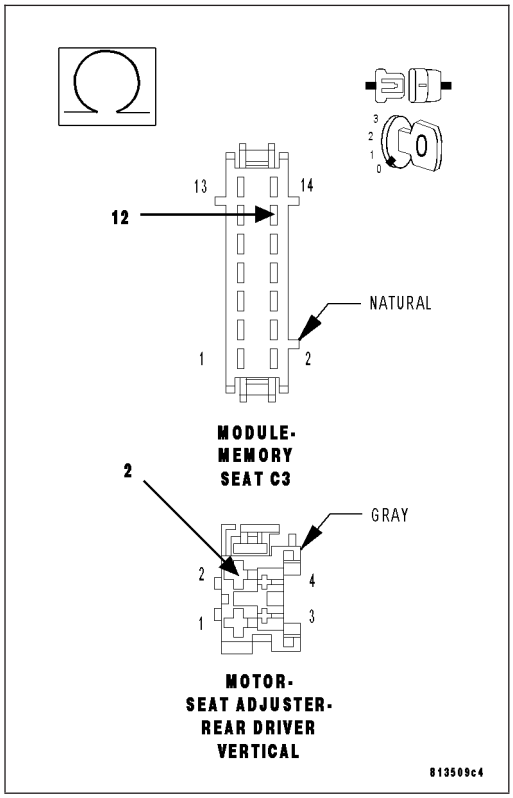

8. CHECK THE (P113) DRIVER SEAT REAR VERTICAL DOWN DRIVER FOR AN OPEN

Measure the resistance of the (P113) Driver Seat Rear Vertical Down Driver circuit at the Driver Rear Vertical Seat Adjuster Motor connector to the C3 connector.

Is the resistance above 1.0 ohm?

Yes >> Repair the (P113) Driver Seat Rear Vertical Down Driver circuit for an open.
Perform POWER SEAT SYSTEM VERIFICATION TEST – VER 1

No >> Replace the Memory Seat Module.
Perform POWER SEAT SYSTEM VERIFICATION TEST – VER 1

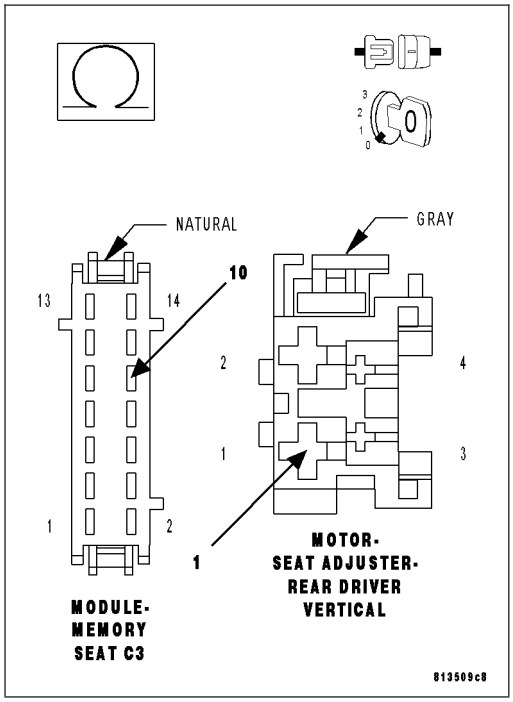

B1D87–SEAT BACKREST MOTOR CONTROL CIRCUIT PERFORMANCE

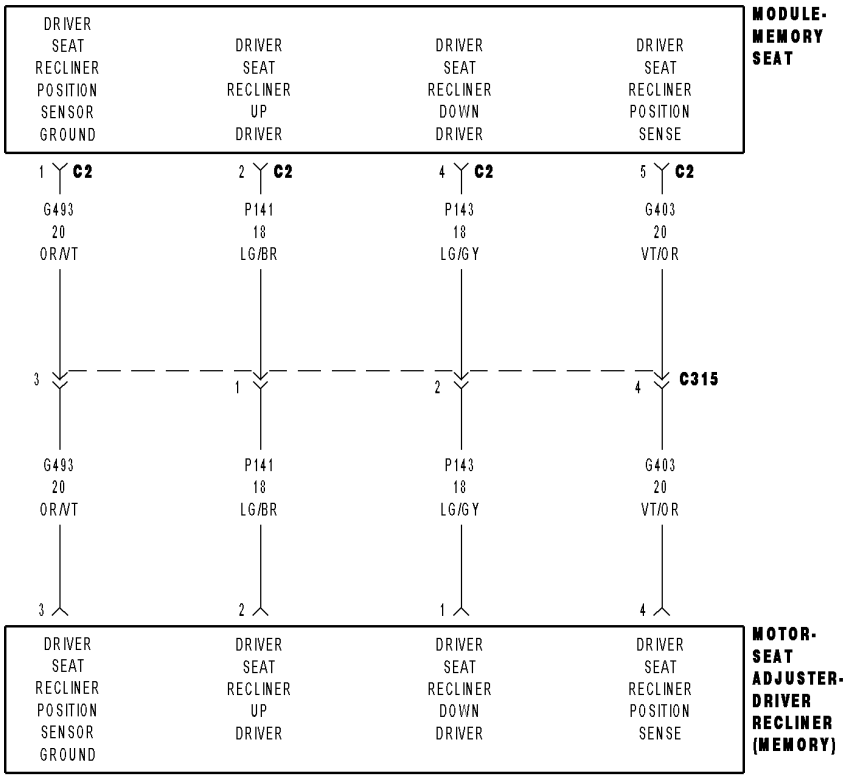

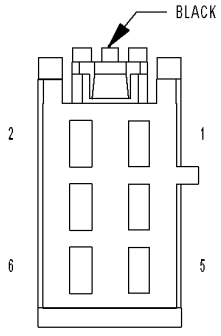

MODULE-MEMORY SEAT C2

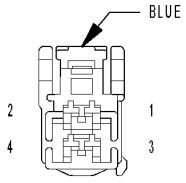

MOTOR-SEAT ADJUSTER-DRIVER RECLINER (MEMORY)

81352c41

For a complete wiring diagram **Refer to Section 8W**.

- **When Monitored:**
  Whenever the seat motor is activated.
- **Set Condition:**
  If the Memory Seat Module does not detect the rotation of the seat motor this DTC will set. This DTC will only set when the seat switch is moved in the same direction three consecutive times.

Possible Causes
SEAT POSITION SENSOR CIRCUIT DIAGNOSTIC TROUBLE CODES
(G403) DRIVER SEAT RECLINER POSITION SENSE CIRCUIT OPEN
(G493) DRIVER SEAT RECLINER POSITION SENSOR GROUND CIRCUIT OPEN
(P141) DRIVER SEAT RECLINER UP DRIVER
(P143) DRIVER SEAT RECLINER DOWN DRIVER
DRIVER RECLINER SEAT ADJUSTER MOTOR
MEMORY SEAT MODULE

Diagnostic Test

1. CHECK FOR RELATED DIAGNOSTIC TROUBLE CODES

Turn the ignition on.
With the scan tool, read DTC's.

Does the scan tool display any seat position sensor DTC's?

Yes >> Diagnose and repair the other DTC(s) first. Refer to the Table of Contents in this Section for a complete list of symptoms.

No >> Go To 2

2. TEST FOR INTERMITTENT CONDITION

Turn the ignition on.
With the scan tool, record and erase DTC's
Move the Seat Switch in the Recliner position three times.
With the scan tool, read DTC's.

Does the scan tool display B1D87–SEAT BACKREST MOTOR CONTROL CIRCUIT PERFORMANCE?

Yes >> Go To 3

No >> The conditions that caused this code to set are not present at this time. Using the wiring diagram/schematic as a guide, inspect the wiring and connectors.
Perform POWER SEAT SYSTEM VERIFICATION TEST - VER 1.

3. CHECK THE (G403) DRIVER SEAT RECLINER POSITION SENSE VOLTAGE

Disconnect the Driver Recliner Seat Adjuster Motor.

NOTE: Check connectors – Clean and repair as necessary.

Move the Seat Switch in the Recliner position during the next step.

Using a 12-volt test light connect one lead to the (G403) Driver Seat Recliner Position Sense circuit and the other lead to Driver Seat Recliner Position Sensor Ground at the Driver Recliner Seat Adjuster Motor connector.

Does the test light illuminate for approximately two seconds then turn off with the seat switch engaged?

Yes >> Go To 4

No >> Go To 5

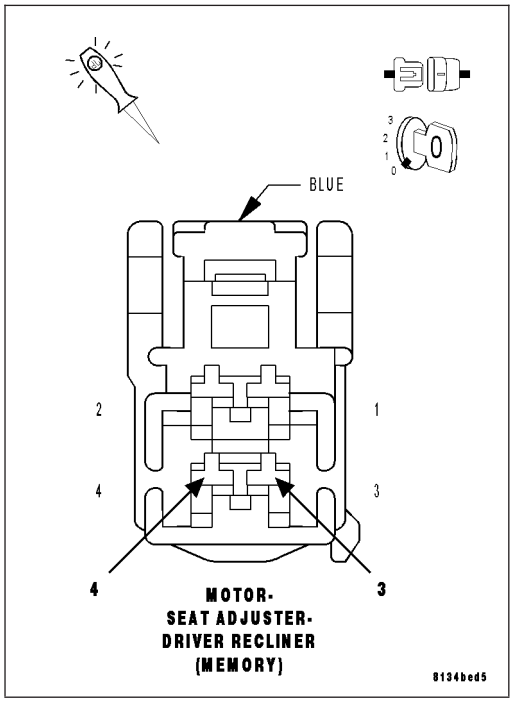

4. CHECK THE DRIVER SEAT RECLINER FORWARD/REARWARD DRIVER VOLTAGE

Move the Seat Switch in the Recliner position during the next step.

Using a 12-volt test light connect one lead to the (P141) Driver Seat Recliner Up Driver circuit and the other lead to (P143) Driver Seat Recliner Down Driver circuit at the Driver Recliner Seat Adjuster Motor connector.

Does the test light illuminate with the seat switch engaged?

Yes >> Replace the Recliner motor assembly.
Perform POWER SEAT SYSTEM VERIFICATION TEST – VER 1

No >> Go To 7

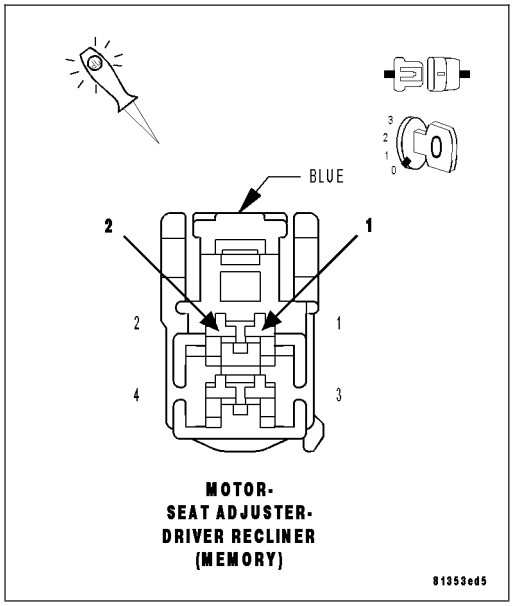

5. CHECK THE (G403) DRIVER SEAT RECLINER POSITION SENSE WIRE FOR AN OPEN

Disconnect the Memory Seat Module C2 connector.

NOTE: Check connectors – Clean and repair as necessary.
Measure the resistance of the (G403) Driver Seat Recliner Position Sense circuit at the Driver Recliner Seat Adjuster Motor connector to the C2 connector.

Is the resistance above 1.0 ohm?

Yes >> Repair the (G403) Driver Seat Recliner Position Sense circuit for an open.
Perform POWER SEAT SYSTEM VERIFICATION TEST – VER 1

No >> Go To 6

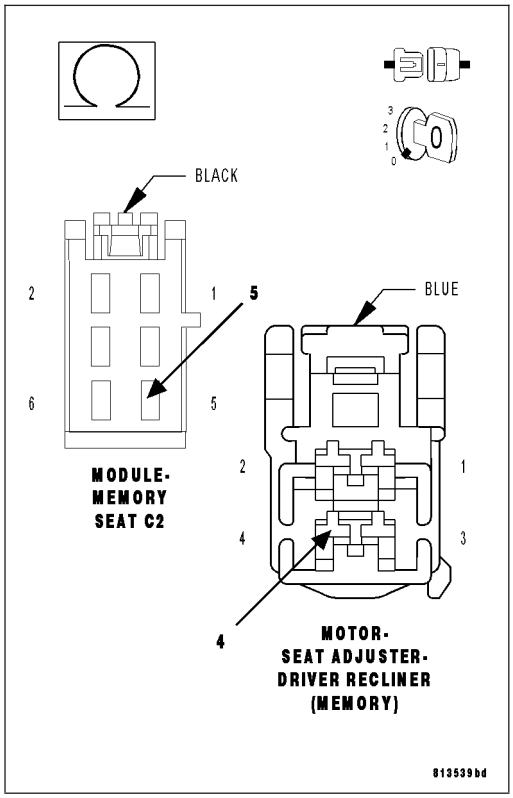

6. CHECK THE (G493) DRIVER SEAT RECLINER POSTION SENSOR GROUND FOR AN OPEN

Measure the resistance of the (G493) Driver Seat Recliner Position Sensor Ground circuit at the Driver Recliner Seat Adjuster Motor connector to the C2 connector.

Is the resistance above 1.0 ohm?

Yes >> Repair the (G493) Driver Seat Recliner Position Senor Ground circuit for an open.
Perform POWER SEAT SYSTEM VERIFICATION TEST – VER 1

No >> Replace the Memory Seat Module.
Perform POWER SEAT SYSTEM VERIFICATION TEST – VER 1

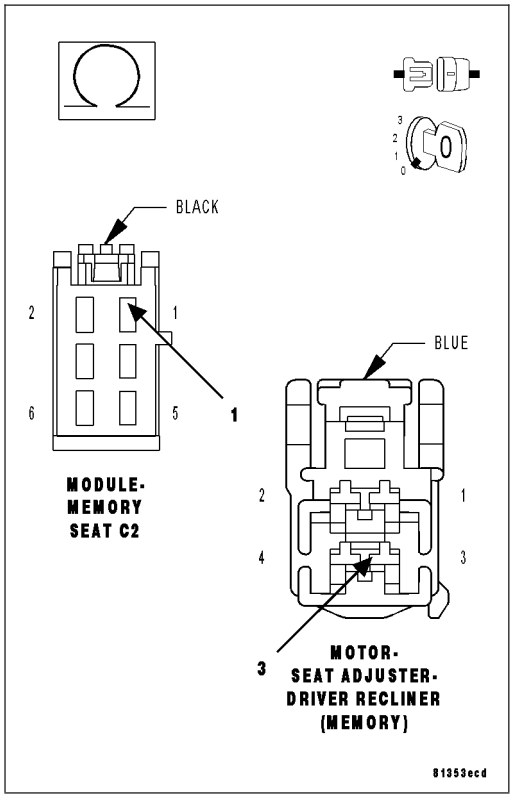

7. CHECK THE (P141) DRIVER SEAT RECLINER UP DRIVER WIRE FOR AN OPEN

Disconnect the Memory Seat Module C2 connector.

NOTE: Check connectors – Clean and repair as necessary.
Measure the resistance of the (P141) Driver Seat Recliner Up Driver circuit at the Driver Recliner Seat Adjuster Motor connector to the C2 connector.

Is the resistance above 1.0 ohm?

Yes >> Repair the (P141) Driver Seat Recliner Up Driver circuit for an open.
Perform POWER SEAT SYSTEM VERIFICATION TEST – VER 1

No >> Go To 8

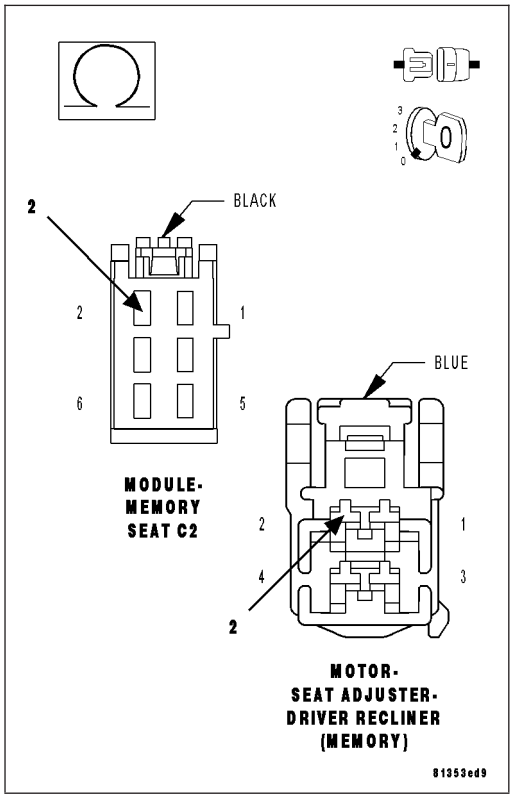

8. CHECK THE (P143) DRIVER SEAT RECLINER DOWN DRIVER FOR AN OPEN

Measure the resistance of the (P143) Driver Seat Recliner Down Driver circuit at the Driver Recliner Seat Adjuster Motor connector to the C2 connector.

Is the resistance above 1.0 ohm?

Yes >> Repair the (P143) Driver Seat Recliner Down Driver circuit for an open.
Perform POWER SEAT SYSTEM VERIFICATION TEST – VER 1

No >> Replace the Memory Seat Module.
Perform POWER SEAT SYSTEM VERIFICATION TEST – VER 1

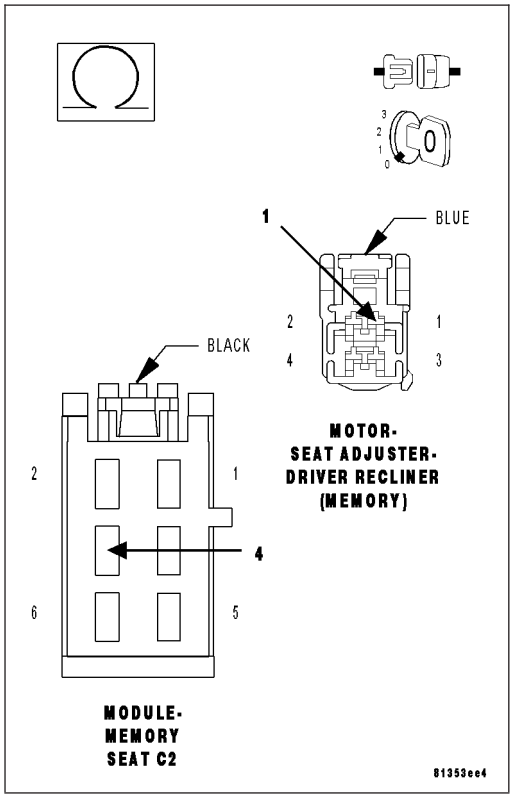

B1D9B–SEAT HORIZONTAL FRONT STOP NOT LEARNED

For a complete wiring diagram **Refer to Section 8W**.

- **When Monitored:**
  Whenever the seat motor is activated.
- **Set Condition:**
  Seat becomes de-standardized. If the seat is not standardized, an Easy Exit/Entry function can not be performed. If seat is standardized (learn seat cushion horizontal front hardstop) and then becomes de-standardized (conditions are: seat cushion motor is 5% past the expected hard stop position or seat cushion hall sensor failure is occured), a DTC is logged.

Possible Causes
OTHER DIAGNOSTIC TROUBLE CODES SET IN THE MEMORY SEAT MODULE
SEAT STANDERDIZATION ROUTINE NOT PERFORMED

Diagnostic Test

1. CHECK FOR RELATED DIAGNOSTIC TROUBLE CODES

Turn the ignition on.
With the scan tool, read DTC's.

Does the scan tool display any seat position sensor or circuit performance DTC's?

Yes >> Diagnose and repair the other DTC(s) first. Refer to the Table of Contents in this Section for a complete list of symptoms.

No >> Go To 2

2. TEST FOR INTERMITTENT CONDITION

Turn the ignition on.
With the scan tool, record and erase DTC's
Move the seat in the full forward horizontal position.
With the scan tool, read DTC's.

Does the scan tool display B1D9B–SEAT HORIZONTAL FRONT STOP NOT LEARNED?

Yes >> With the scan tool, perform the MSM Standard Routine.
Perform POWER SEAT SYSTEM VERIFICATION TEST - VER 1.

No >> The conditions that caused this code to set are not present at this time. Using the wiring diagram/schematic as a guide, inspect the wiring and connectors.
Perform POWER SEAT SYSTEM VERIFICATION TEST - VER 1.

B210D-BATTERY VOLTAGE LOW

For a complete wiring diagram **Refer to Section 8W**.

- **When Monitored:**
  Engine running, during seat motor operation.
- **Set Condition:**
  This code is set immediately after the Seat Memory Module receives a low charging system voltage message over the CAN B Bus or detects voltage under 9.5 volts on the (A110) Fused B(+) circuit.

Possible Causes
CHARGING SYSTEM VOLTAGE LOW
(A110) FUSED B(+) CIRCUIT
SEAT MEMORY MODULE

Always perform the Pre-Diagnostic Troubleshooting procedure before proceeding.

Diagnostic Test

1. CHECK PCM FOR CHARGING SYSTEM DTC

With the scan tool, read Powertrain Control Module DTC's.

Are there any Charging System DTC's set in the Powertrain Control Module?

Yes >> (Refer to 8 - ELECTRICAL/CHARGING - DIAGNOSIS AND TESTING) for Charging System diagnostic procedures.

No >> Go To 2
Perform POWER SEAT SYSTEM VERIFICATION TEST – VER 1.

2. VERIFY THAT DTC B210D-BATTERY VOLTAGE LOW IS ACTIVE

With the scan tool, record and erase DTC's
Turn the ignition switch to the OFF position then start the engine and operate the driver power seat.
With the scan tool, read DTC's.

Does the DTC B210D-BATTERY VOLTAGE LOW reset?

Yes >> Go To 3

No >> The conditions that caused this code to set are not present at this time. Using the wiring diagram/schematic as a guide, inspect the wiring and connectors.
Perform POWER SEAT SYSTEM VERIFICATION TEST – VER 1.

3. CHECK THE VOLTAGE ON THE (A110) FUSED B(+) CIRCUIT

Disconnect the Memory Seat Module connector.

NOTE: Check connectors - Clean and repair as necessary.

Start the engine and let idle.

Measure the voltage on the (A110) Fused B(+) circuit at the MSM connector and compare to voltage at the vehicle battery.

Is the voltage at the MSM connector the same as measured at the battery?

Yes >> Replace the Memory Seat Module in accordance with the service information.

Perform POWER SEAT SYSTEM VERIFICATION TEST – VER 1.

No >> Repair the (A110) Fused B(+) circuit as necessary.

Perform POWER SEAT SYSTEM VERIFICATION TEST – VER 1.

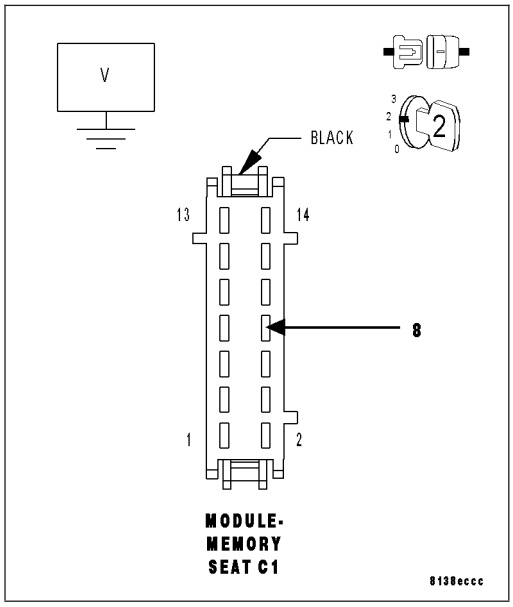

B210E-BATTERY VOLTAGE HIGH

For a complete wiring diagram **Refer to Section 8W**.

- **When Monitored:**
  Engine running, during seat operation.
- **Set Condition:**
  This code is set immediately after the Memory Seat Module receives a high charging system voltage message over the CAN B Bus or detects voltage over 16.5 volts on the (A110) Fused B(+) circuit.

Possible Causes
CHARGING SYSTEM VOLTAGE HIGH
(A110) FUSED B(+) CIRCUIT
MEMORY SEAT MODULE

Always perform the Pre-Diagnostic Troubleshooting procedure before proceeding.

Diagnostic Test

1. CHECK PCM FOR CHARGING SYSTEM DTC

With the scan tool, read Powertrain Control Module DTC's.

Are there any Charging System DTC's set in the Powertrain Control Module?

Yes >> (Refer to 8 - ELECTRICAL/CHARGING - DIAGNOSIS AND TESTING) for Charging System diagnostic procedures.

No >> Go To 2

2. VERIFY THAT DTC B210E-BATTERY VOLTAGE HIGH IS ACTIVE

With the scan tool, record and erase DTC's

Turn the ignition switch to the OFF position then start the engine and let run for one minute.

Attempt to operate the driver power seat.

With the scan tool, read DTC's.

Does the DTC B210E-BATTERY VOLTAGE HIGH reset?

Yes >> Go To 3

No >> The conditions that caused this code to set are not present at this time. Using the wiring diagram/schematic as a guide, inspect the wiring and connectors.

Perform POWER SEAT SYSTEM VERIFICATION TEST – VER 1.

3. CHECK THE VOLTAGE ON THE (A110) FUSED B(+) CIRCUIT

Disconnect the Seat Memory Module connector.

NOTE: Check connectors - Clean and repair as necessary.

Start the engine and let idle.

Measure the voltage on the (A110) Fused B(+) circuit at the MSM connector and compare to voltage at the vehicles battery.

Is the voltage at the MSM connector the same as measured at the battery?

Yes >> Replace the Memory Seat Module in accordance with the service information.

Perform POWER SEAT SYSTEM VERIFICATION TEST – VER 1.

No >> Repair the (A110) Fused B(+) circuit as necessary.

Perform POWER SEAT SYSTEM VERIFICATION TEST – VER 1.

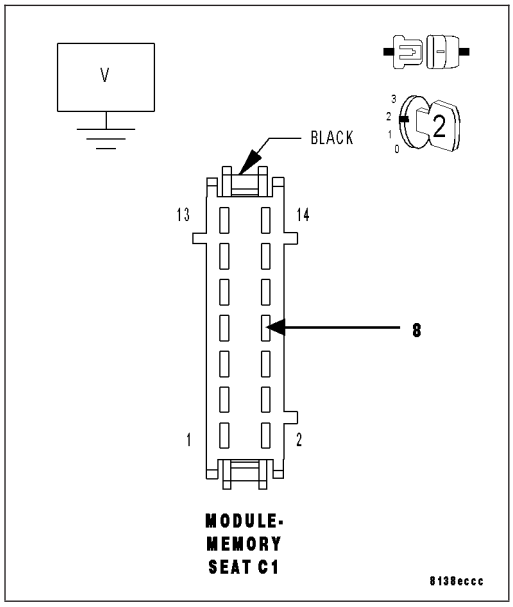

B221C-MEMORY SEAT MODULE INTERNAL

For a complete wiring diagram **Refer to Section 8W**.

- **When Monitored:**
  Ignition on.
- **Set Condition:**
  This code is set immediately if the Memory Seat Module internal self test fails.

Possible Causes
MEMORY SEAT MODULE

Always perform the Pre-Diagnostic Troubleshooting procedure before proceeding.

Diagnostic Test

1. VERIFY THAT DTC B221C-MEMORY SEAT MODULE INTERNAL IS ACTIVE

With the scan tool, record and erase DTC's
Cycle the ignition switch off then back on.
With the scan tool, read DTC's.

Does the DTC B221C-MEMORY SEAT MODULE INTERNAL reset?

Yes >> Replace the Memory Seat Module.
Perform POWER SEAT SYSTEM VERIFICATION TEST – VER 1.

No >> The conditions that caused this code to set are not present at this time. Using the wiring diagram/schematic as a guide, inspect the wiring and connectors.
Perform POWER SEAT SYSTEM VERIFICATION TEST – VER 1.

U0020-CAN B BUS OFF PERFORMANCE

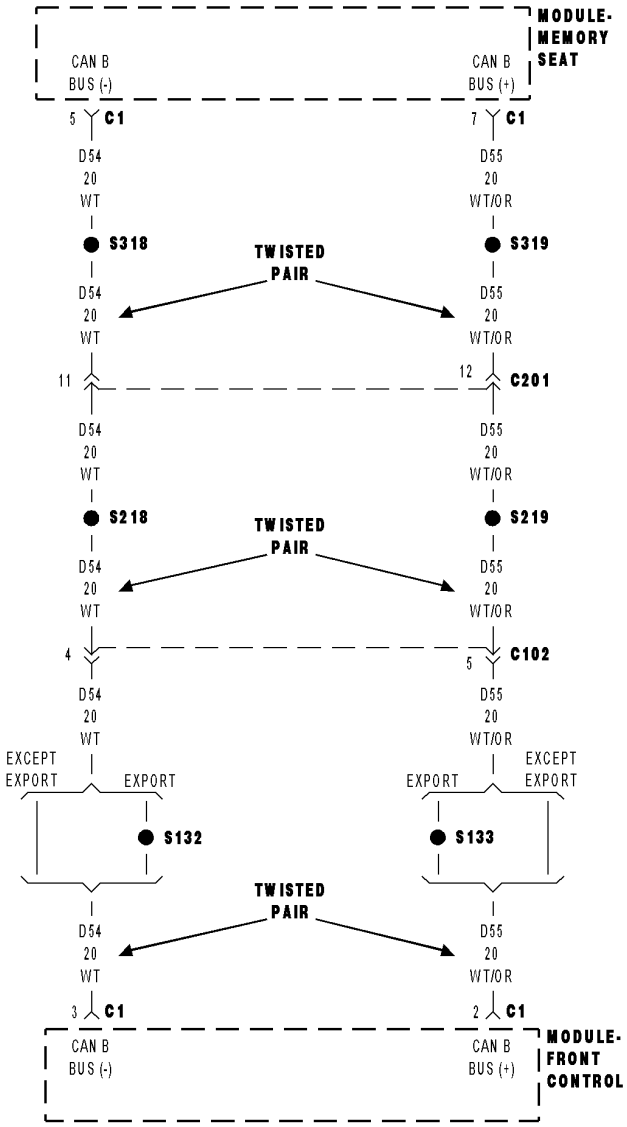

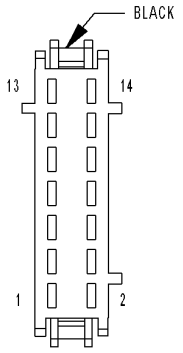

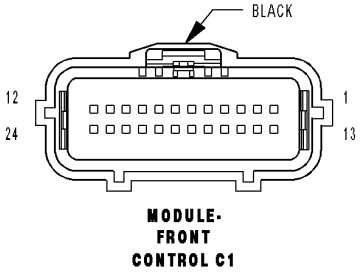

81381B60

For a complete wiring diagram **Refer to Section 8W**.

- **When Monitored:**
  Continuously.
- **Set Condition:**
  The Memory Seat Module detects the (D55) CAN B Bus (+) circuit or (D54) CAN B Bus (-) circuit open.

Possible Causes
(D55) CAN B BUS (+) CIRCUIT OPEN
(D54) CAN B BUS (-) CIRCUIT OPEN
MEMORY SEAT MODULE

Diagnostic Test

1. TEST FOR INTERMITTENT CONDITION

Turn the ignition on.
With the scan tool, record and erase MSM DTC's
Cycle the ignition from on to off three times.
Turn the ignition on.
With the scan tool, read active MSM DTC's.

Does the scan tool display this DTC as active?

Yes >> Go To 2

No >> The conditions that caused this code to set are not present at this time. Using the wiring diagram/schematic as a guide, inspect the wiring and connectors.

2. (D55) CAN B BUS (+) CIRCUIT OPEN

Turn the ignition off.
Disconnect the Memory Seat Module C1 harness connector.
Measure the voltage between the (D55) CAN B Bus (+) circuit and ground.

Is there any voltage present?

Yes >> Inspect the wiring and connectors for damage or shorted circuits. If ok, replace the Memory Seat Module in accordance with the service information.
Perform POWER SEAT SYSTEM VERIFICATION TEST - VER 1.

No >> Repair the (D55) CAN B Bus (+) circuit for an open.
Perform BODY VERIFICATION TEST - VER 1.

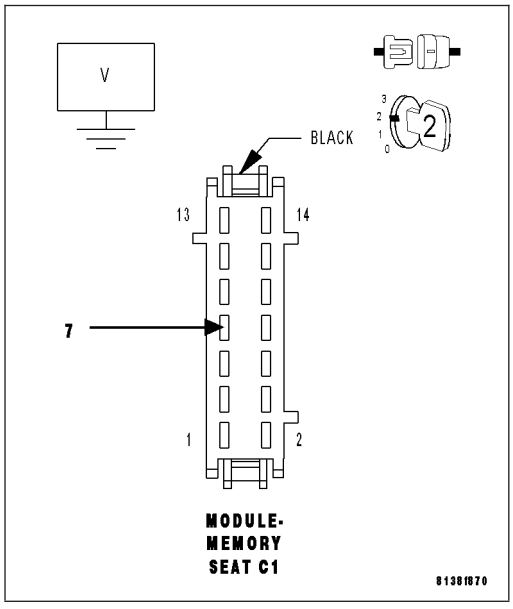

3. (D54) CAN B BUS (-) CIRCUIT OPEN

Turn the ignition off.

Disconnect the Memory Seat Module C1 harness connector.

Measure the voltage between the (D54) CAN B Bus (-) circuit and ground.

Is there any voltage present?

Yes >> Inspect the wiring and connectors for damage or shorted circuits. If ok, replace the Memory Seat Module in accordance with the service information.

Perform POWER SEAT SYSTEM VERIFICATION TEST - VER 1.

No >> Repair the (D54) CAN B Bus (-) circuit for an open.

Perform BODY VERIFICATION TEST - VER 1.

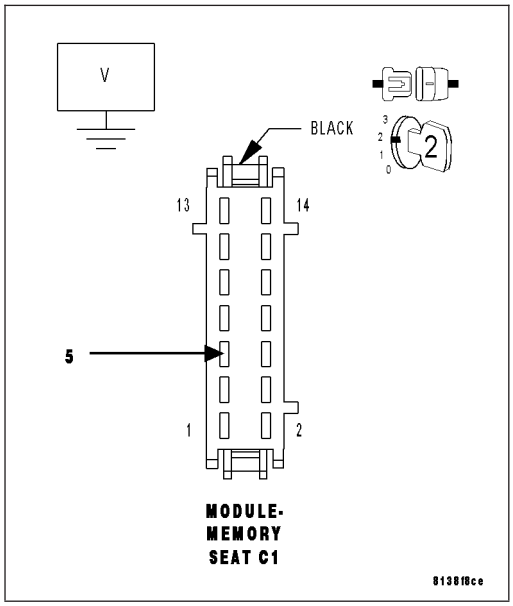

U0021-CAN B BUS (+) CIRCUIT OPEN

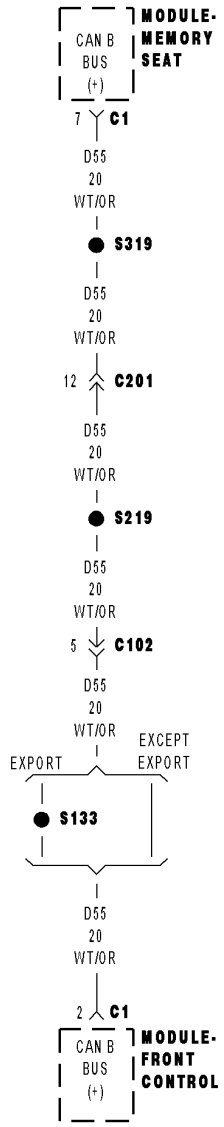

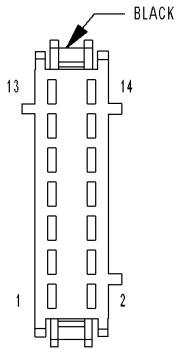

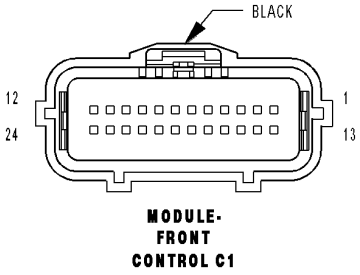

81391361

For a complete wiring diagram **Refer to Section 8W**.

- **When Monitored:**
  Continuously.
- **Set Condition:**
  The Memory Seat Module detects the (D55) CAN B Bus (+) circuit is open.

Possible Causes
(D55) CAN B BUS (+) CIRCUIT OPEN
MEMORY SEAT MODULE

Diagnostic Test

1. TEST FOR INTERMITTENT CONDITION

Turn the ignition on.
With the scan tool, record and erase MSM DTC's
Cycle the ignition from on to off three times.
Turn the ignition on.
With the scan tool, read active MSM DTC's.

Does the scan tool display this DTC as active?

Yes >> Go To 2

No >> The conditions that caused this code to set are not present at this time. Using the wiring diagram/schematic as a guide, inspect the wiring and connectors.

2. (D55) CAN B BUS (+) CIRCUIT OPEN

Turn the ignition off.
Disconnect the Memory Seat Module C1 harness connector.
Measure the voltage between the (D55) CAN B Bus (+) circuit and ground.

Is there any voltage present?

Yes >> Inspect the wiring and connectors for damage or shorted circuits. If ok, replace the Memory Seat Module in accordance with the service information.
Perform POWER SEAT SYSTEM VERIFICATION TEST - VER 1.

No >> Repair the (D55) CAN B Bus (+) circuit for an open.
Perform BODY VERIFICATION TEST - VER 1.

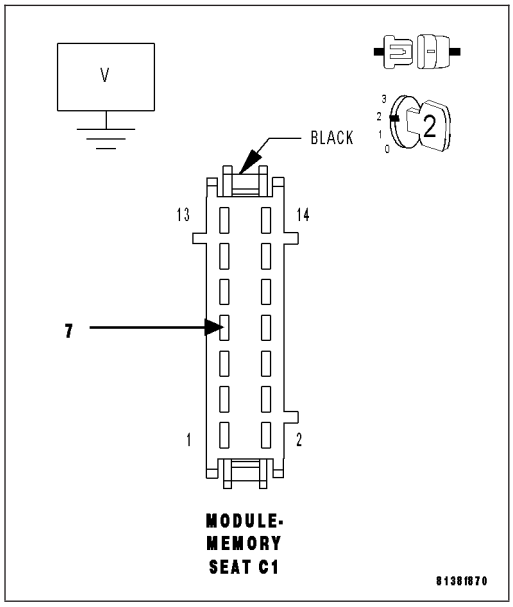

U0022-CAN B BUS (+) CIRCUIT LOW

For a complete wiring diagram **Refer to Section 8W**.

(Refer to 8 - ELECTRICAL/ELECTRONIC CONTROL MODULES - DIAGNOSIS AND TESTING) for the diagnostic test procedure.

U0023-CAN B BUS (+) CIRCUIT HIGH

For a complete wiring diagram **Refer to Section 8W**.

(Refer to 8 - ELECTRICAL/ELECTRONIC CONTROL MODULES - DIAGNOSIS AND TESTING) for the diagnostic test procedure.

U0024-CAN B BUS (-) CIRCUIT OPEN

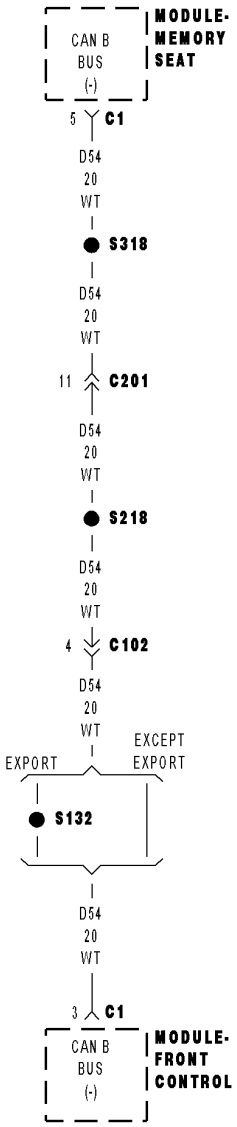

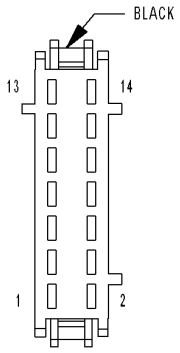

MODULE-
MEMORY
SEAT C1

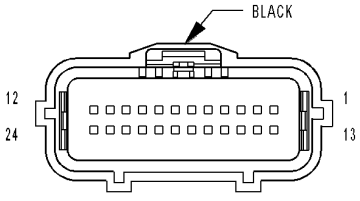

MODULE-
FRONT
CONTROL C1

81391482

For a complete wiring diagram **Refer to Section 8W**.

- **When Monitored:**
  Continuously.
- **Set Condition:**
  The Memory Seat Module detects the (D54) CAN B Bus (-) circuit is open.

Possible Causes
(D54) CAN B BUS (-) CIRCUIT OPEN
MEMORY SEAT MODULE

Theory of Operation

Diagnostic Test

1. TEST FOR INTERMITTENT CONDITION

Turn the ignition on.
With the scan tool, record and erase MSM DTC's
Cycle the ignition from on to off three times.
Turn the ignition on.
With the scan tool, read active MSM DTC's.

Does the scan tool display this DTC as active?

Yes >> Go To 2

No >> The conditions that caused this code to set are not present at this time. Using the wiring diagram/schematic as a guide, inspect the wiring and connectors.

2. (D54) CAN B BUS (-) CIRCUIT OPEN

Turn the ignition off.
Disconnect the Memory Seat Module C1 harness connector.
Measure the voltage between the (D54) CAN B Bus (-) circuit and ground.

Is there any voltage present?

Yes >> Inspect the wiring and connectors for damage or shorted circuits. If ok, replace the Memory Seat Module in accordance with the service information.
Perform POWER SEAT SYSTEM VERIFICATION TEST - VER 1.

No >> Repair the (D54) CAN B Bus (-) circuit for an open.
Perform BODY VERIFICATION TEST - VER 1.

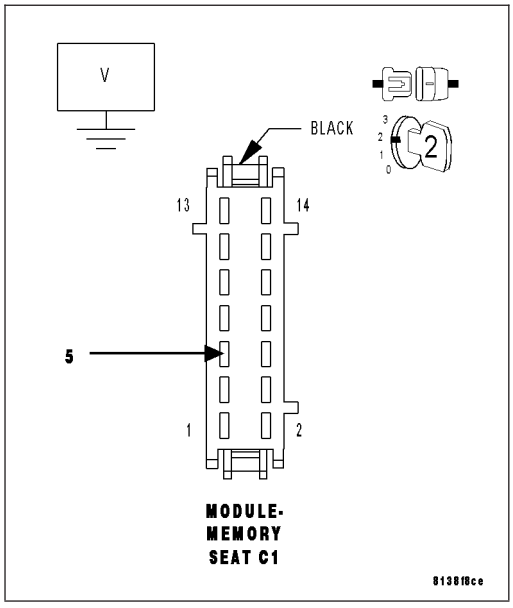

U0025-CAN B BUS (-) CIRCUIT LOW

For a complete wiring diagram **Refer to Section 8W**.

(Refer to 8 - ELECTRICAL/ELECTRONIC CONTROL MODULES - DIAGNOSIS AND TESTING) for the diagnostic test procedure.

U0026-CAN B BUS (-) CIRCUIT HIGH

For a complete wiring diagram **Refer to Section 8W**.

(Refer to 8 - ELECTRICAL/ELECTRONIC CONTROL MODULES - DIAGNOSIS AND TESTING) for the diagnostic test procedure.

U0141–LOST COMMUNICATION WITH FRONT CONTROL MODULE

For a complete wiring diagram **Refer to Section 8W**.

(Refer to 8 - ELECTRICAL/ELECTRONIC CONTROL MODULES - DIAGNOSIS AND TESTING) for the diagnostic test procedure.

U0151-LOST COMMUNICATION WITH OCCUPANT RESTRAINT CONTROLLER

For a complete wiring diagram **Refer to Section 8W**.

(Refer to 8 - ELECTRICAL/ELECTRONIC CONTROL MODULES - DIAGNOSIS AND TESTING) for the diagnostic test procedure.

U0154-LOST COMMUNICATION WITH OCCUPANT CLASSIFICATION MODULE

For a complete wiring diagram **Refer to Section 8W**.

(Refer to 8 - ELECTRICAL/ELECTRONIC CONTROL MODULES - DIAGNOSIS AND TESTING) for the diagnostic test procedure.

U0155-LOST COMMUNICATION WITH CLUSTER/CCN

For a complete wiring diagram **Refer to Section 8W**.

(Refer to 8 - ELECTRICAL/ELECTRONIC CONTROL MODULES - DIAGNOSIS AND TESTING) for the diagnostic test procedure.

U0156-LOST COMMUNICATION WITH EOM

For a complete wiring diagram **Refer to Section 8W**.

(Refer to 8 - ELECTRICAL/ELECTRONIC CONTROL MODULES - DIAGNOSIS AND TESTING) for the diagnostic test procedure.

U0159-LOST COMMUNICATION WITH PARKING ASSIST CONTROL MODULE

For a complete wiring diagram **Refer to Section 8W**.

(Refer to 8 - ELECTRICAL/ELECTRONIC CONTROL MODULES - DIAGNOSIS AND TESTING) for the diagnostic test procedure.

U0164-LOST COMMUNICATION WITH HVAC CONTROL MODULE

For a complete wiring diagram **Refer to Section 8W**.

(Refer to 8 - ELECTRICAL/ELECTRONIC CONTROL MODULES - DIAGNOSIS AND TESTING) for the diagnostic test procedure.

U0168-LOST COMMUNICATION WITH VEHICLE SECURITY CONTROL MODULE (SKREEM/WCM)

For a complete wiring diagram **Refer to Section 8W**.

(Refer to 8 - ELECTRICAL/ELECTRONIC CONTROL MODULES - DIAGNOSIS AND TESTING) for the diagnostic test procedure.

U0169-LOST COMMUNICATION WITH SUNROOF CONTROL MODULE

For a complete wiring diagram **Refer to Section 8W**.

(Refer to 8 - ELECTRICAL/ELECTRONIC CONTROL MODULES - DIAGNOSIS AND TESTING) for the diagnostic test procedure.

U0181–LOST COMMUNICATION WITH HEADLAMP LEVEL TRANSLATOR

For a complete wiring diagram **Refer to Section 8W**.

(Refer to 8 - ELECTRICAL/ELECTRONIC CONTROL MODULES - DIAGNOSIS AND TESTING) for the diagnostic test procedure.

U0184-LOST COMMUNICATION WITH RADIO

For a complete wiring diagram **Refer to Section 8W**.

(Refer to 8 - ELECTRICAL/ELECTRONIC CONTROL MODULES - DIAGNOSIS AND TESTING) for the diagnostic test procedure.

U0186-LOST COMMUNICATION WITH AUDIO AMPLIFIER

For a complete wiring diagram **Refer to Section 8W**.

(Refer to 8 - ELECTRICAL/ELECTRONIC CONTROL MODULES - DIAGNOSIS AND TESTING) for the diagnostic test procedure.

U0195-LOST COMMUNICATION WITH SDARS

For a complete wiring diagram **Refer to Section 8W**.

(Refer to 8 - ELECTRICAL/ELECTRONIC CONTROL MODULES - DIAGNOSIS AND TESTING) for the diagnostic test procedure.

U0197-LOST COMMUNICATION WITH HANDS FREE PHONE

For a complete wiring diagram **Refer to Section 8W**.

(Refer to 8 - ELECTRICAL/ELECTRONIC CONTROL MODULES - DIAGNOSIS AND TESTING) for the diagnostic test procedure.

U0199-LOST COMMUNICATION WITH DRIVER DOOR MODULE

For a complete wiring diagram **Refer to Section 8W**.

(Refer to 8 - ELECTRICAL/ELECTRONIC CONTROL MODULES - DIAGNOSIS AND TESTING) for the diagnostic test procedure.

U0200-LOST COMMUNICATION WITH PASSENGER DOOR MODULE

For a complete wiring diagram **Refer to Section 8W**.

(Refer to 8 - ELECTRICAL/ELECTRONIC CONTROL MODULES - DIAGNOSIS AND TESTING) for the diagnostic test procedure.

U0208-LOST COMMUNICATION WITH HEATED SEAT CONTROL MODULE

For a complete wiring diagram **Refer to Section 8W**.

(Refer to 8 - ELECTRICAL/ELECTRONIC CONTROL MODULES - DIAGNOSIS AND TESTING) for the diagnostic test procedure.

U0212–LOST COMMUNICATION WITH SCCM

For a complete wiring diagram **Refer to Section 8W**.

(Refer to 8 - ELECTRICAL/ELECTRONIC CONTROL MODULES - DIAGNOSIS AND TESTING) for the diagnostic test procedure.

U0231-LOST COMMUNICATION WITH RAIN SENSING MODULE

For a complete wiring diagram **Refer to Section 8W**.

(Refer to 8 - ELECTRICAL/ELECTRONIC CONTROL MODULES - DIAGNOSIS AND TESTING) for the diagnostic test procedure.

POWER SEAT SYSTEM VERIFICATION TEST – VER 1

Diagnostic Test

1. Perform Power Seat System Verification Test

Disconnect all jumper wires and reconnect all previously disconnected components and connectors.

Ensure that all accessories are turned off.

Ensure that the battery is fully charged.

Turn the ignition on.

If either the Memory Seat Module or the Driver Horizontal Seat Adjuster Motor/Seat Track was replaced, the MSM Standard Routine must be performed using the scan tool.

With the scan tool, record and erase DTCs from all modules.

Operate the driver seat in all positions.

With the Memory Switch on the Driver's Door, program the Driver's Seat No. 1 Button to a desired position and Driver No. 2 Button to a different position.

Verify that both Memory positions can be recalled from the RKE transmitter and the Memory Switch on the Driver's Door.

Turn the ignition off, wait 10 seconds, and then turn the ignition on.

With the scan tool, select ECU View.

Check for DTCs in the modules.

Are DTCs present in any of the modules or is the original condition still present?

Yes >> The repair is not complete. Refer to the related category for the DTC or symptom that is still present.

No >> The repair is complete.

POWER SEATS - SERVICE INFORMATION

TABLE OF CONTENTS

page

POWER SEATS - SERVICE INFORMATION
DESCRIPTION 185
OPERATION 188
DIAGNOSIS AND TESTING
MEMORY SEAT SYSTEM 189
POWER SEAT ADJUSTER 189
STANDARD PROCEDURE
MEMORY SYSTEM PROGRAMMING 189
MOTOR-SEAT ADJUSTER
REMOVAL 191
INSTALLATION 194

page

POWER SEAT RECLINER
REMOVAL 197
INSTALLATION 197
SWITCH-SEAT
DESCRIPTION 198
OPERATION 198
DIAGNOSIS AND TESTING
POWER SEAT SWITCH 198
REMOVAL 200
INSTALLATION 200

POWER SEATS - SERVICE INFORMATION

DESCRIPTION

POWER SEAT SYSTEM

WARNING: The front passenger seat assembly contains critical components that affect the front passenger airbag deployment. Correctly functioning front passenger seat components are critical for the Occupant Classification System (OCS) to properly classify the front passenger and calculate the proper airbag deployment. Unapproved modifications or service procedures to the front passenger seat assembly, its related components, or trim cover may inadvertently change the airbag deployment in case of a frontal crash. This could result in death or serious injury to the front seat passenger if the vehicle is involved in an accident. The following requirements must be strictly adhered to:

- **Do not modify the front passenger seat assembly or components in any way.**
- **Do not modify the front seat center console or center position seat in any way.**
- **Do not use prior or future model year seat trim covers not designated for the specific model being repaired. Always use the correct seat trim cover specified for the vehicle.**
- **Do not replace the seat trim cover with an aftermarket trim cover.**
- **Do not add a secondary trim cover other than those approved by DaimlerChrysler/Mopar®.**
- **At no time should any Supplemental Restraint System (SRS) component or SRS related component or fastener be modified or replaced with any part except those which are approved by DaimlerChrysler/Mopar.**

The power seat system allows the driver and front seat passenger to electrically adjust their seating positions using the power seat switches located on the outboard seat cushion side shield of each front seat.

The eight-way power seat includes a six-way adjustable seat cushion track and a two-way power seat back. The power seat can be adjusted up, down, front up, front down, forward, rearward, recliner forward, and recliner rearward. The power seat system is also available with the heated seat option and memory seat option that automatically positions the driver power seat for two different drivers (Refer to 8 - ELECTRICAL/HEATED SEATS - DESCRIPTION) and MEMORY SEAT SYSTEM below.

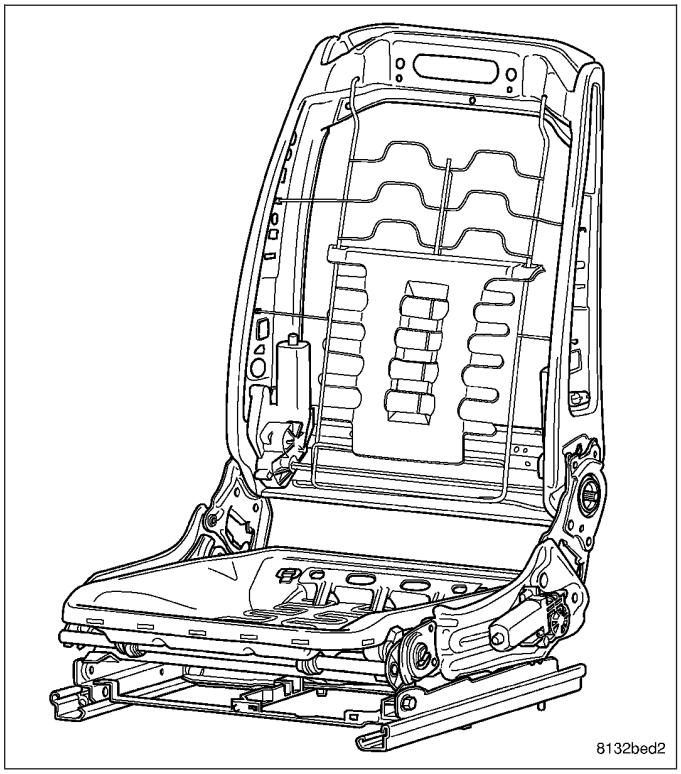

The power seat system for this vehicle includes the following major components:

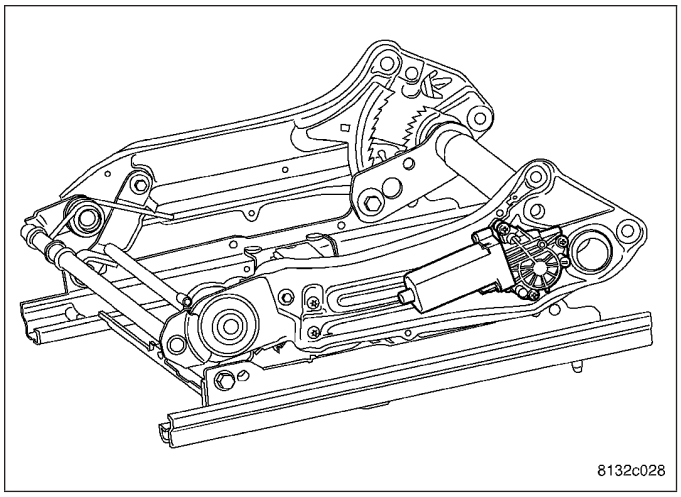

- **Power Seat Adjuster** - The power seat adjuster is made up of the upper and lower power seat adjuster assemblies. The upper power seat adjuster contains two reversible motors that are connected to worm-drive gearboxes that move the seat adjuster through a combination of screw-type drive units. These motors are the height adjust motor and the front tilt motor. On vehicles equipped with non-memory power seats, each motor contains a self-resetting circuit breaker to protect it from overload. On vehicles equipped with memory power seats the motor overload protection is a function of the Memory Seat Module (MSM). Consecutive or frequent resetting of the circuit breakers may damaged the motors.
  The height adjust motor is located on the rear of the upper power seat adjuster assembly and controls the up and down movement of the entire seat. The height adjust motor can be serviced separately from the power seat adjuster assembly.
  The front tilt motor is located on the front of the upper power seat adjuster assembly and controls the up and down movement of the seat front only. The front tilt motor can be serviced separately from the power seat adjuster assembly.

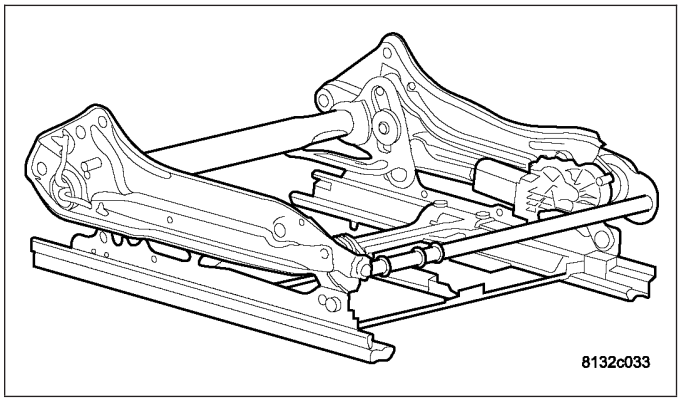

  The lower power seat adjuster contains one reversible motor that is connected to a worm-drive gearbox that moves the seat adjuster through a screw-type drive unit. On vehicles equipped with non-memory power seats, the motor will contain a self-resetting circuit breaker to protect it from overload. On vehicles equipped with memory power seats the motor overload protection is a function of the Memory Seat Module (MSM). The motor is part of the lower power seat track unit and must be replaced as an assembly, (Refer to 23 - BODY/SEATS/SEAT ADJUSTERS - REMOVAL).

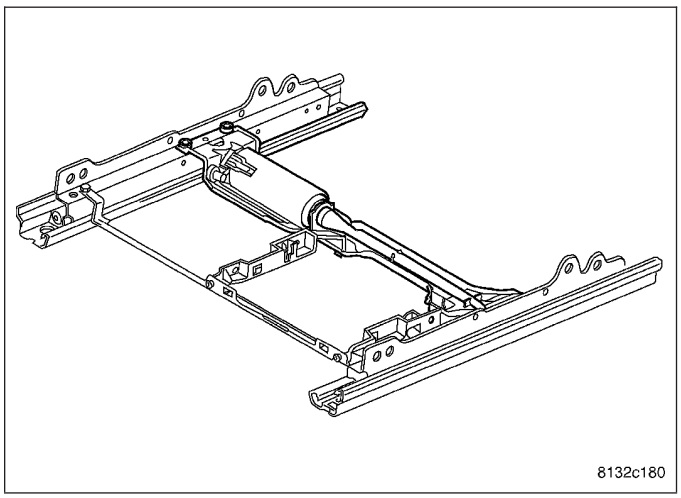

- **Power Seat Recliner** - The power seat recliner replaces the manual seat recliner.

The power seat option includes an electrically operated power seat back recliner mechanism. The power seat recliner switch is integral to the power seat switch assembly, but is actuated with a separate switch knob.
The power seat recliner motor cannot be repaired. If the unit is inoperative or damaged, the seat back frame must be replaced, (Refer to 8 - ELECTRICAL/POWER SEATS/POWER SEAT MOTOR - REMOVAL).

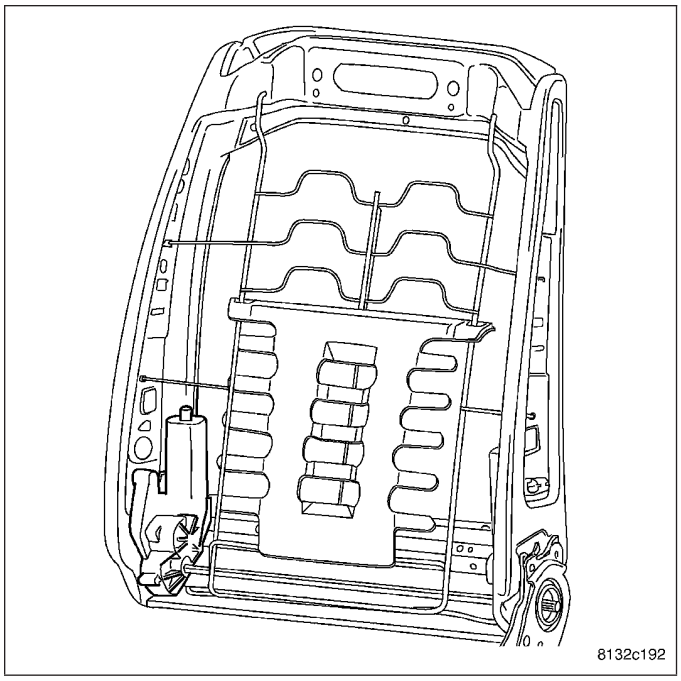

- **Power Seat Switches** - Vehicles may be equipped with driver only, or driver and passenger power seat switches. One seat switch is used for each front seat. The power seat switches are paddle-type levers mounted on the outboard seat side shields. Movement of the seat cushions and backs mimics the action of the switch paddles. (Refer to 8 - ELECTRICAL/POWER SEATS/ SEAT SWITCH - DESCRIPTION) for additional information.

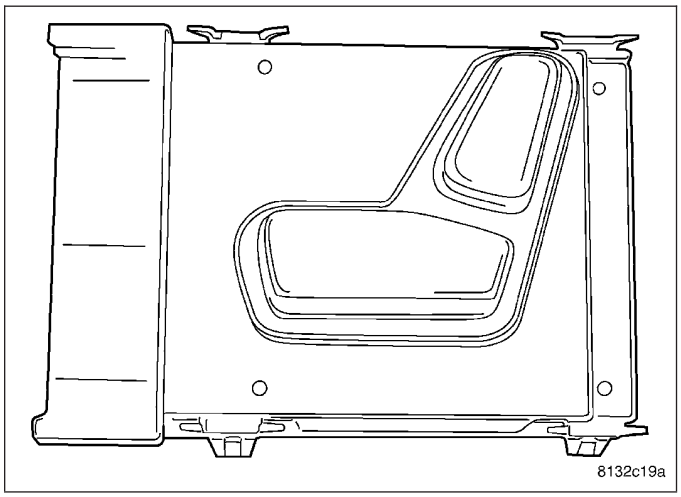

MEMORY SEAT SYSTEM

An electronic memory seat system is available on certain models. The memory system is able to store and recall all driver side power seat positions, outside mirror positions, power tilt/telescopic steering column positions and power adjustable pedal position. The system can be set for two different drivers. On vehicles with a factory installed radio connected to the Controller Area Network (CAN) data bus network, the memory system is also able to store and recall up to twelve radio station presets (six AM and six FM), also for two drivers. The memory system will also store and recall the last station listened to for each driver, even if it is not one of the twelve preset stations.

The memory system will automatically recall all of these settings when a button of the memory switch is depressed, or when the doors are unlocked using the Remote Keyless Entry (RKE) transmitter (if enabled). If the vehicle has more than two drivers the RKE transmitter recall of memory features can be disabled. This is a customer programmable feature of the Electronic Vehicle Information Center (EVIC) set through the use of the appropriate steering wheel switches. (Refer to 8 - ELECTRICAL/OVERHEAD CONSOLE/ELECTRONIC VEHICLE INFO CENTER - OPERATION) for additional information on the customer programmable features.

The memory system also has an “Easy Entry and /Exit” feature that provides the driver with more room to enter or exit the vehicle. When the seat is in a memorized position, it will move rearward 55 millimeters or to the end of its travel, whichever occurs first, when the key is removed from the ignition switch lock cylinder. This is also a customer

programmable feature of the Electronic Vehicle Information Center (EVIC) set through the use of the appropriate steering wheel switches.

The memory system also has a ″Tilt in Reverse″ feature that tilts the outside mirrors down a fixed, incremental angle when the vehicle is shifted into REVERSE with the ignition switch in the RUN position. This feature provides the customer with a better view of the ground and vehicle in the area of the rear tires when backing up. The mirrors move back to their previous position when the vehicle is shifted out of REVERSE.

The memory system includes the following components:

- **Memory Selector Switch** - located in the driver door trim panel.
- **Driver Door Module (DDM)** - located in the driver door, behind the trim panel.
- **Passenger Door Module (PDM)** - located in the passenger door, behind the trim panel.
- **Hall Effect Sensors - Outside Mirror** - The hall effect sensor is permanently installed on the outside mirror motor. This hall effect sensor is used to provide a reference signal to the memory heated seat mirror module, letting the module know the exact position of the mirror.
- **Sentry Key Remote Entry Module (SKREEM)** - located at ignition key cylinder.
- **Remote Keyless Entry (RKE) Transmitter** - located with ignition key.
- **Memory Seat Module (MSM)** - located underneath the driver seat and also controls the Adjustable Pedals.
- **Hall Effect Sensors - Seat Track** - These hall effect sensors are permanently installed in each of the power seat track motors. They are used to provide a reference signal to the memory heated seat mirror module, letting the module know the exact position of the seat cushion and recliner.
- **Radio** - located in the instrument panel center stack.
- **Automatic Temperature Control (ATC)** - located in the instrument panel center stack.

Certain functions and features of the memory system rely upon resources shared with other electronic modules in the vehicle over the Controller Area Network (CAN) bus. The CAN bus allows the sharing of sensor information. This helps to reduce wire harness complexity, internal controller hardware, and component sensor current loads. At the same time, this system provides increased reliability, enhanced diagnostics, and allows the addition of many new feature capabilities. For diagnosis of these electronic modules or of the CAN bus, the use of a scan tool and the proper diagnostic information are needed.

OPERATION

POWER SEAT SYSTEM

The power seat system receives battery current through a 50 amp fuse in the Power Distribution Center (PDC) so that the power seats remain operational, regardless of the ignition switch position.

When a power seat switch is actuated, a battery feed and a ground path are applied through the power seat switch contacts to the appropriate motor or motors. The motor and drive unit operate to move the seat in the selected direction until the switch is released, or until the travel limit of the power seat track is reached. When the switch is moved in the opposite direction, the battery feed and ground path to the motor is reversed through the switch contacts. This causes the motor to run in the opposite direction.

MEMORY SEAT SYSTEM

The Memory Seat Module (MSM) receives battery current through a 25 amp circuit breaker in the Power Distribution Center (PDC) so that the power seats remain operational, regardless of the ignition switch position. When the driver memory seat switch control knob is actuated, a resistance signal is sent to the MSM via the Controller Area Network (CAN) bus circuit. The MSM is responsible for the 12V battery feed and ground path to the power seat adjuster motor. The adjuster motor operates to move the power seat adjuster mechanism through its drive unit in the selected direction until the switch is released, or until the travel limit of the adjuster is reached.

The MSM receives memory set/position switch input through the CAN bus circuit. The MSM also receives hard wired input from the hall effect sensors, mounted on each of the driver power seat adjuster motors and the driver side view mirror motor. The programmed software in the module allows it to know where the seat/mirror is located in its designed travel by a pulse count generated from the hall effect sensors. This way, when the memory switch is depressed the module will power the seat adjuster/mirror motors until the correct preset location is achieved. The module will prevent the seat memory recall function from being initiated, if the transmission gear selector lever is not in the Park position, or if the vehicle is moving. These inputs are monitored over the Controller Area Network (CAN) bus circuit by the MSM.

A memory setting is saved by pressing the “set” button, then pressing either the memory “1” or “2” button within 5 seconds of pressing the “set” button.

A memory setting is recalled by pressing either the memory “1” or “2” button, or by pressing the unlock button on a “linked” Remote Keyless Entry (RKE) transmitter.

For driver safety, memorized settings can not be recalled if the transmission is in a position other than Park or the seat belt is latched.

DIAGNOSIS AND TESTING

MEMORY SEAT SYSTEM

In order to obtain conclusive testing of the power seats with and without the memory system option, the Controller Area Network (CAN) bus, and all of the electronic modules that provide inputs to, or receive outputs from the memory system components must be checked. Use a scan tool and the proper diagnostic information to accurately diagnose the power seat/memory seat systems.

NOTE: Vehicles equipped with the memory/heated seat option utilize a low voltage cut-off feature. This feature turns off the 12V power to the power seat system anytime vehicle voltage is below 11.0V. Be certain to check the vehicle electrical system for proper voltage anytime the power seat system appears inoperative.

Before any testing of the power seat system is attempted, the battery should be fully-charged.

POWER SEAT ADJUSTER

Operate the power seat switch and move the seat in all directions. The seat should move in each of the selected directions.

If the power seat adjuster fails to operate in more than one direction, proceed as follows:

1. Inspect the power seat adjuster motors to ensure the electrical connectors are fully seated to the motors. If OK, go to Step 2. If not OK, connect the electrical connector to the fully seated position.
2. Check the power seat fuse in the power distribution center. If OK, go to Step 3. If not OK, replace the inoperative fuse.
3. Remove the power seat switch from the seat cushion side panel. Check for battery voltage at the fused B(+) circuit cavity of the power seat switch wire harness connector. If OK, go to Step 4. If not OK, repair the open circuit to the power distribution center as required.
4. Check for continuity between the ground circuit cavity of the power seat switch wire harness connector and a good ground. There should be continuity. If OK, go to Step 5. If not OK, repair the open circuit to ground as required.
5. (Refer to 8 - ELECTRICAL/POWER SEATS/SEAT SWITCH - DIAGNOSIS AND TESTING). If the switch tests OK, check the wire harness between the power seat switch and the motor. If the circuits check OK, replace the inoperative power seat adjuster assembly. If the circuits are not OK, repair the wire harness as required.

STANDARD PROCEDURE

MEMORY SYSTEM PROGRAMMING

The Memory Seat Module (MSM) interfaces with the Remote Keyless Entry (RKE) system via the Controller Area Network (CAN) bus. The proper procedure of setting and recalling a memory position using the RKE is as follows:

1. Press and release memory switch 1 or 2 to recall memory position 1 or 2.
2. Adjust the seat, recliner, adjustable pedal position, set radio station presets, set HVAC temperature preset, and the side view mirrors to the desired position.
3. Press momentarily and release memory switch S.
4. Within five seconds, press momentarily and release memory switch 1 or 2.
5. To link the RKE transmitter: within ten seconds, press and release the “LOCK” button on one of the RKE transmitters

To program the second driver’s position, repeat the above procedure using memory switch 2. The second RKE transmitter can be programmed in the same fashion as indicated in Step 5.

NOTE: The module will abort a recall if the transmission is moved out of park or if any seat movement is activated whether manually or by memory recall. The module will also abort a recall if any movement of the adjustable pedals is detected.

To recall either of the programmed positions momentarily press and release either memory selector switch 1 or 2. If using RKE, just press and release the “UNLOCK” button on the proper transmitter for either position 1 or 2.

A recall is possible any time the vehicle transmission is in PARK and the seatbelt is unbuckled. This condition is monitored by the MSM.

MOTOR-SEAT ADJUSTER

REMOVAL

WARNING: A seat structure that has seen significant load may have the locking mechanism activated and may exhibit the following symptoms:
- **Locking pawl (2) loose**
- **Locking pawl (2) engaged into the seat frame sidemember (1)**
- **Height adjuster only works on outboard side**
- **Broken or missing shear pin (3)**

If any one or more of these symptoms exist replace the height adjuster assembly. Do not attempt any repairs. Failure to follow these instructions may result in personal injury or death.

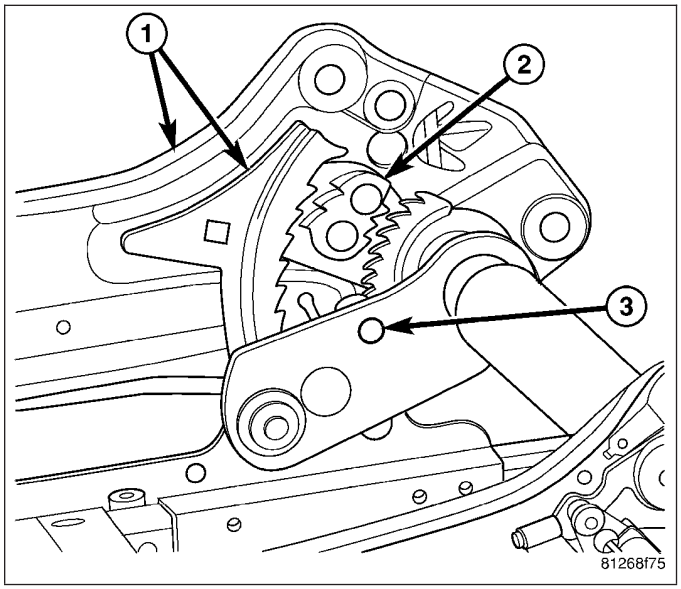

FRONT TILT MOTOR

1. Disconnect and isolate the battery negative cable.
2. Remove the affected seat with the inoperative motor (1) (Refer to 23 - BODY/SEATS/SEAT - FRONT - REMOVAL).
3. Remove the seat cushion and pan (Refer to 23 - BODY/SEATS/SEAT CUSHION COVER - REMOVAL).

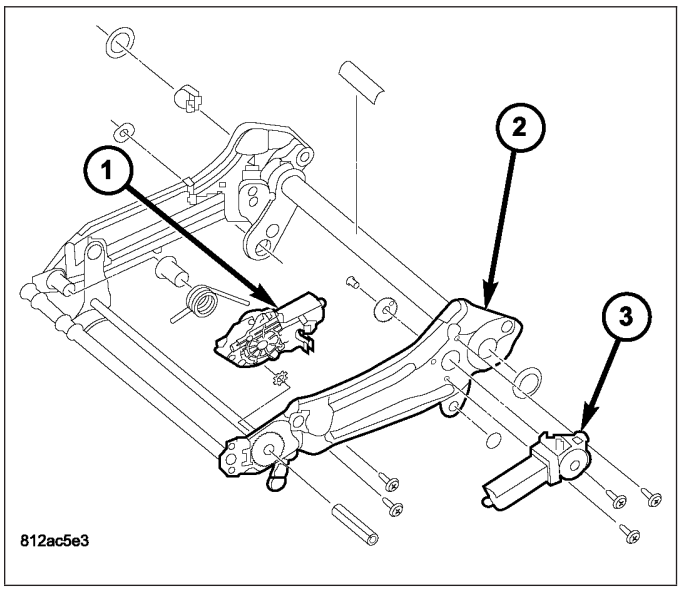

4. Disconnect the motor electrical connector.

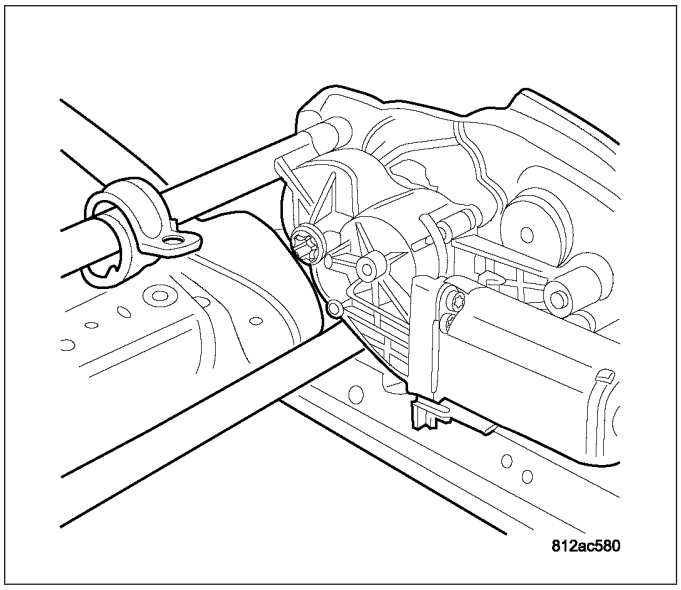

5. Remove the fasteners holding the motor to the seat adjuster (1).
6. Remove motor from seat adjuster (2).

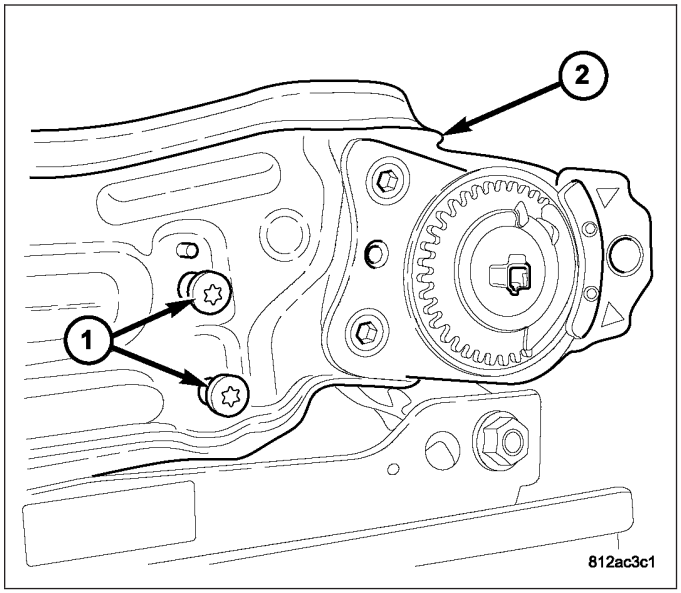

HEIGHT ADJUST MOTOR

WARNING: Use caution when removing the height adjust motor (3) if the motor is inoperative, and the power seat is not in the full up position. The seat adjuster assembly (2) is under load from the height adjust spring and may cause the motor to rotate under pressure when the fasteners are removed. The seat adjuster assembly also may spring upward when the motor is removed. If the height adjust motor is operative, move the power seat to the full up position prior to disconnecting the battery.

1. Disconnect and isolate the battery negative cable.
2. Remove the affected seat with the inoperative motor (3) (Refer to 23 - BODY/SEATS/SEAT - FRONT - REMOVAL).
3. Remove the seat cushion and pan (Refer to 23 - BODY/SEATS/SEAT CUSHION COVER - REMOVAL).

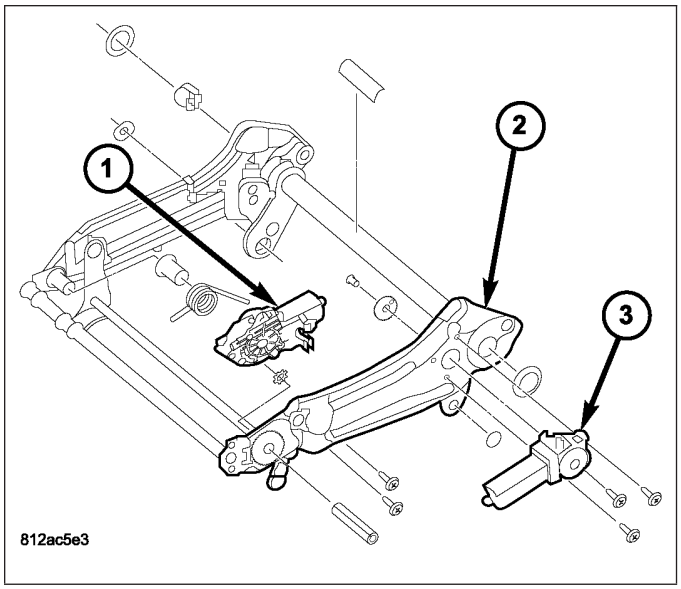

4. Disconnect the motor electrical connector.

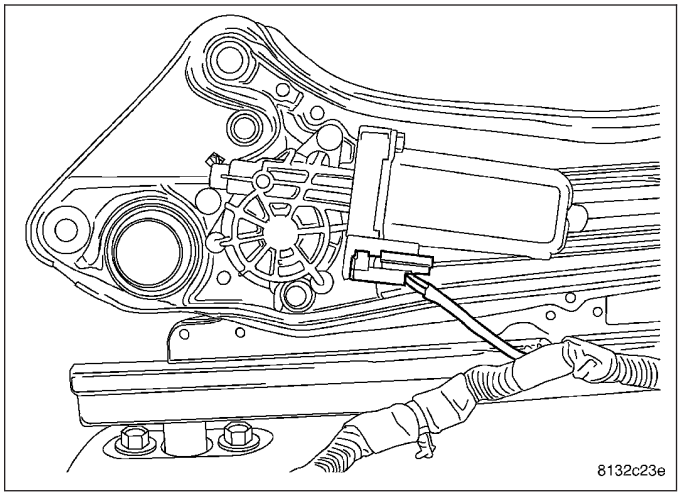

5. Remove the fasteners (1) holding the motor (3) to the seat adjuster (2).
6. Remove screw and washer from the motor shaft.
7. Remove motor (3) from seat adjuster (2).

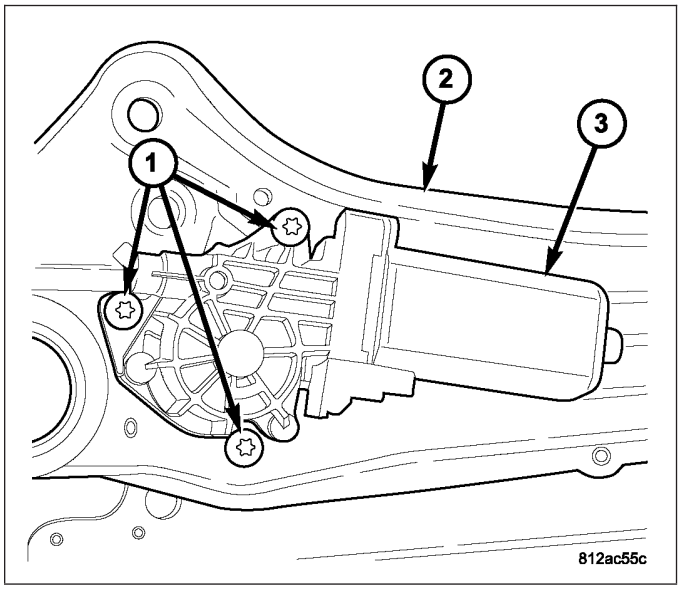

INSTALLATION

WARNING: A seat structure that has seen significant load may have the locking mechanism activated and may exhibit the following symptoms:
- **Locking pawl (2) loose**
- **Locking pawl (2) engaged into the seat frame sidemember (1)**
- **Height adjuster only works on outboard side**
- **Broken or missing shear pin (3)**

If any one or more of these symptoms exist replace the height adjuster assembly. Do not attempt any repairs. Failure to follow these instructions may result in personal injury or death.

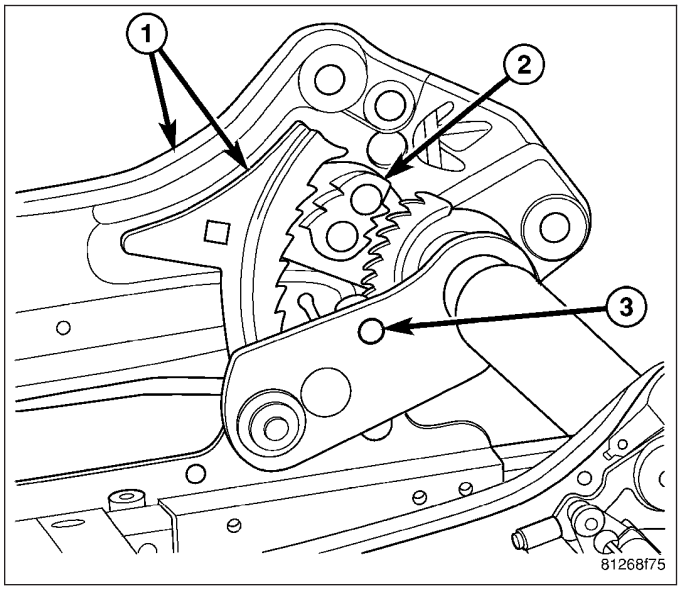

FRONT TILT MOTOR

1. Position motor (1) on seat adjuster (2).

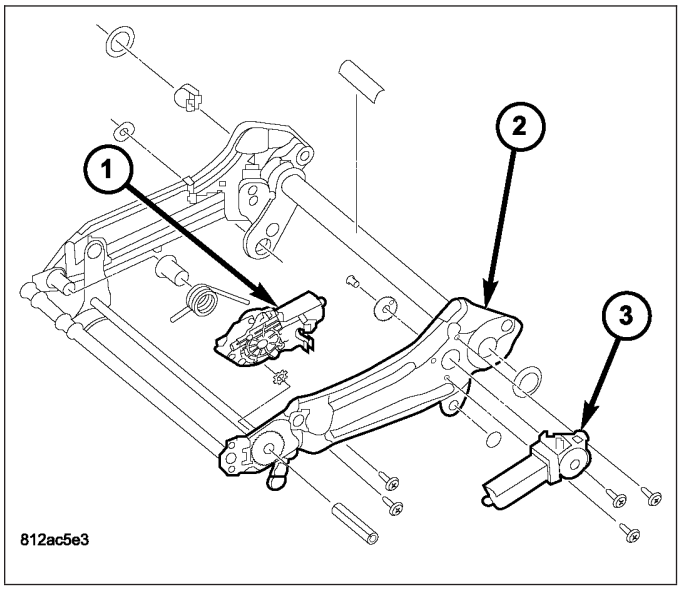

2. Install the fasteners (1) holding the motor to the seat adjuster (2). Tighten the screws to 5 N·m (44 in. lbs.).

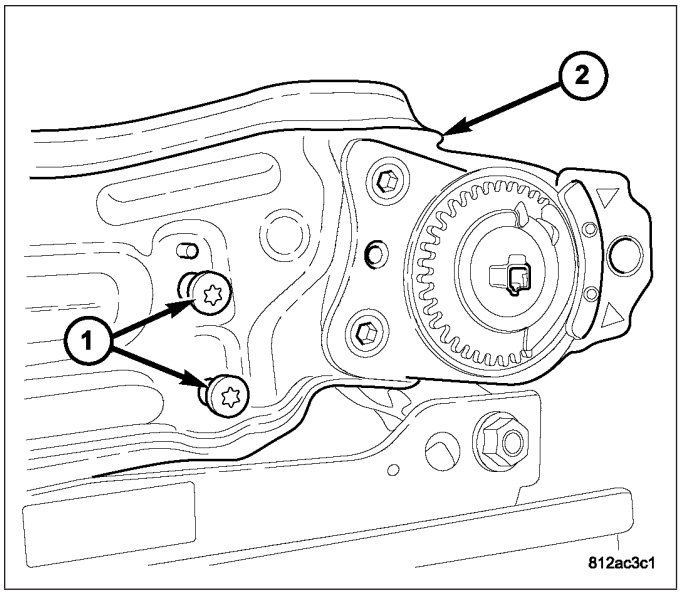

3. Connect the motor electrical connector.
4. Install the seat cushion (Refer to 23 - BODY/ SEATS/SEAT CUSHION COVER - INSTALLATION).
5. Clip the wire harness to cushion pan.
6. Install the seat assembly (Refer to 23 - BODY/ SEATS/SEAT - INSTALLATION).
7. Connect the battery negative cable.
8. Verify normal operation of the power seat assembly.

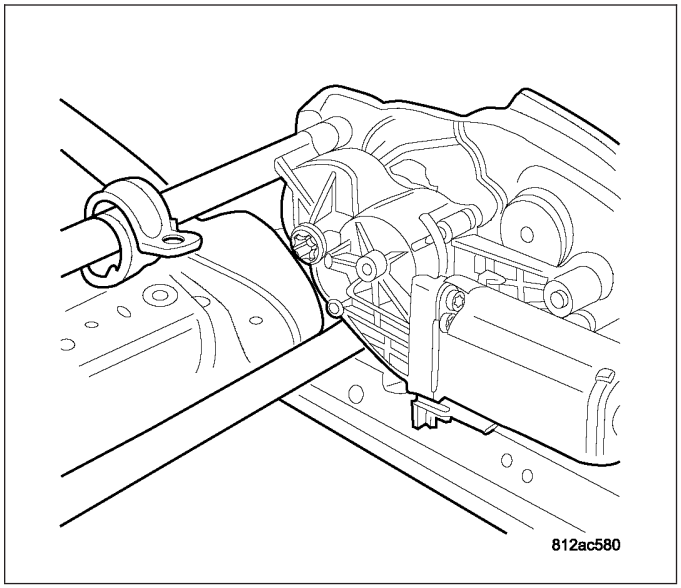

HEIGHT ADJUST MOTOR

1. Ensure the seat adjuster (2) is in the full up position by pulling upward on the upper adjuster assembly.
2. Position motor (3) on seat adjuster (2).
3. Install the motor shaft screw and washer and tighten until snug. **Do not torque screw at this time.**

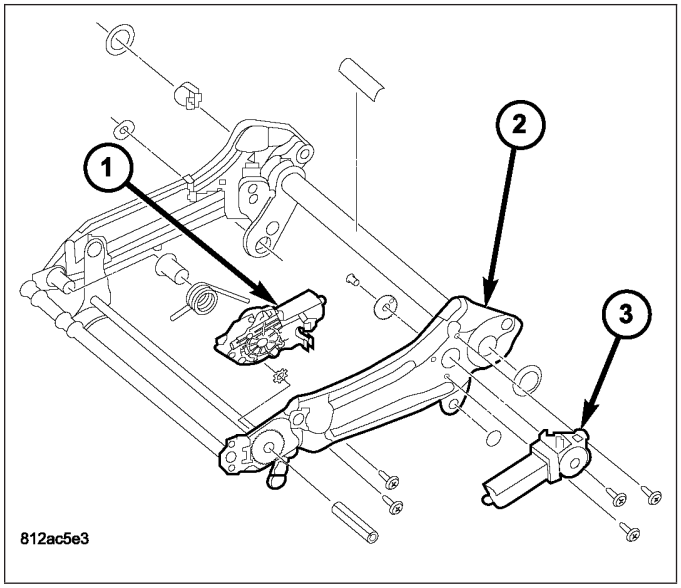

4. Install the screws (1) holding the motor (3) to the seat adjuster (2). **It may be necessary to twist the motor slightly to align the fastener holes.**
5. Starting with the bottom screw, tighten the motor screws (1) to 9 N·m (80 in. lbs.).
6. Tighten the motor shaft screw and washer to 6.5 N·m (57.5 in. lbs.).

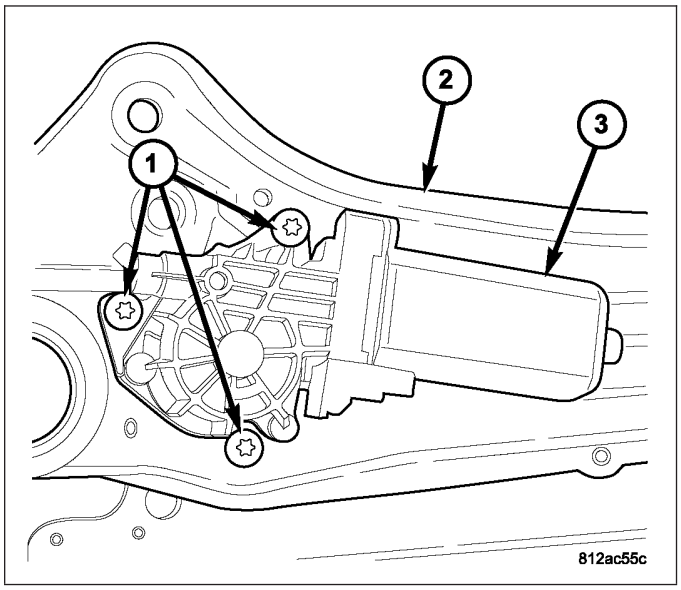

7. Connect the motor electrical connector.
8. Install the seat cushion (Refer to 23 - BODY/ SEATS/SEAT CUSHION COVER - INSTALLATION).
9. Clip the wire harness to cushion pan.
10. Install the seat assembly (Refer to 23 - BODY/ SEATS/SEAT - INSTALLATION).
11. Connect the battery negative cable.
12. Verify normal operation of the power seat assembly.

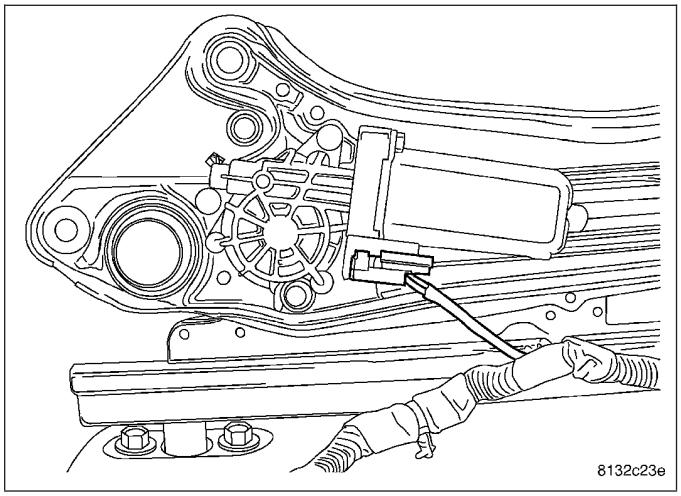

POWER SEAT RECLINER

REMOVAL

NOTE: The recliner motor is serviced as part of the seat back frame. Do not attempt to transfer the motor as the service part will come equipped with a new motor installed.

1. Remove the seat back frame assembly (Refer to 23 - BODY/SEATS/SEAT BACK CUSHION/COVER - REMOVAL).
2. Remove any parts that will need to be installed on new seat back frame assembly.

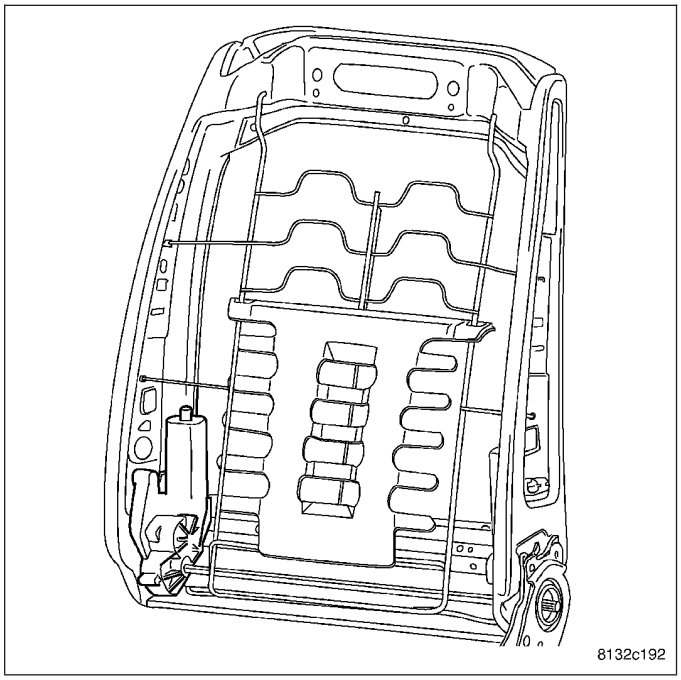

INSTALLATION

1. Install parts from old seat back assembly as necessary.
2. Install the seat back (1) (Refer to 23 - BODY/SEATS/SEAT BACK CUSHION/COVER - INSTALLATION).

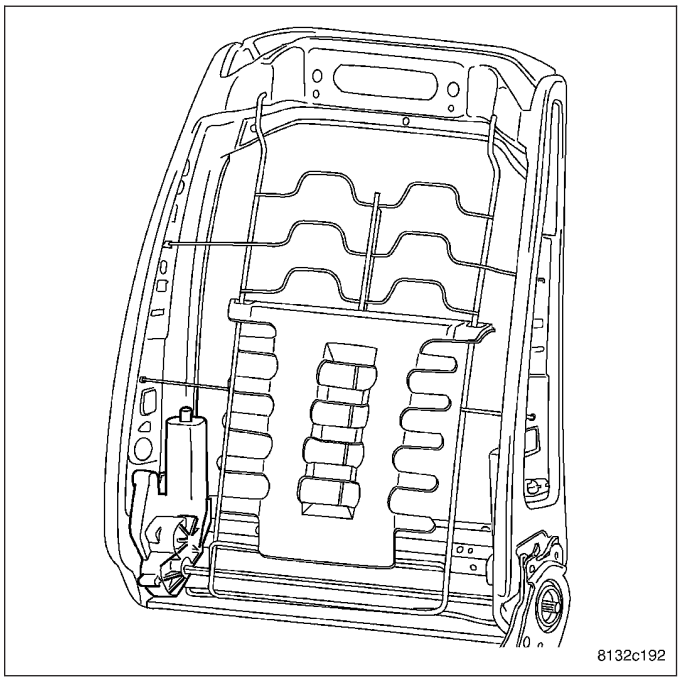

SWITCH-SEAT

DESCRIPTION

Both the driver and passenger power seats can be adjusted in eight different ways using the power seat switch. The power seat switch is located on the lower outboard side of the seat cushion on the seat cushion side shield on all models.

The individual switches in the power seat switch assembly cannot be repaired. If one switch is damaged or faulty, the entire power seat switch must be replaced.

OPERATION

When a power seat switch is actuated, a battery feed and a ground path are applied through the switch contacts to the power seat adjuster or recliner adjuster motor. The selected adjuster motor operates to move the seat or recliner through its drive unit in the selected direction until the switch is released, or until the travel limit of the adjuster is reached. When the switch is moved in the opposite direction, the battery feed and ground path to the motor are reversed through the switch contacts. This causes the adjuster motor to run in the opposite direction.

On vehicles equipped with memory system, a resistance signal is sent to the Memory Seat Module (MSM) via the Controller Area Network (CAN) bus circuit, when the driver memory seat switch control knob is actuated. The MSM is responsible for the 12v battery feed and ground path to the power seat adjuster motor. The adjuster motor operates to move the power seat adjuster mechanism through its drive unit in the selected direction until the switch is released, or until the travel limit of the adjuster is reached.

No power seat switch should be held applied in any direction after the adjuster has reached its travel limit. The power seat adjuster motors each contain a self-resetting circuit breaker to protect them from overload. However, consecutive or frequent resetting of the circuit breaker may result in motor damage.

DIAGNOSIS AND TESTING

POWER SEAT SWITCH

DRIVER WITHOUT MEMORY SEAT SYSTEM

1. Disconnect and isolate the battery negative cable.
2. Remove the power seat switch from the power seat (Refer to 8 - ELECTRICAL/POWER SEATS/SEAT SWITCH - REMOVAL).
3. Use an ohmmeter to test the continuity of the power seat switch. Refer to DRIVER POWER SEAT SWITCH WITHOUT MEMORY SEAT SYSTEM CONTINUITY table. If not OK, replace the faulty power seat switch. If switch tests OK (Refer to 8 - ELECTRICAL/POWER SEATS/POWER SEAT ADJUSTER - DIAGNOSIS AND TESTING).

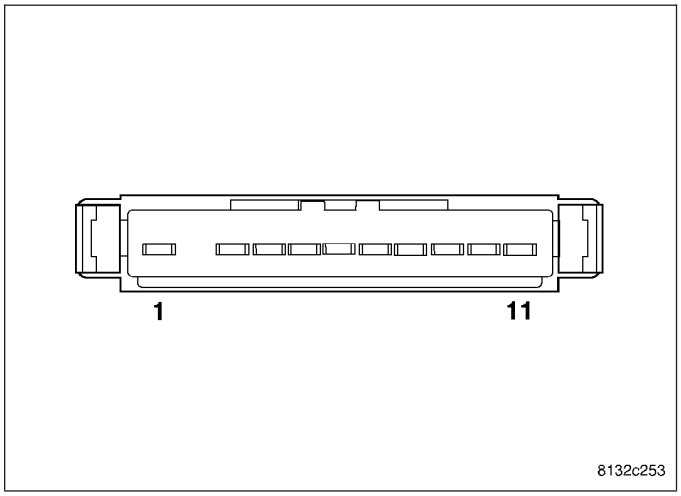

DRIVER POWER SEAT SWITCH WITHOUT MEMORY SEAT SYSTEM CONTINUITY

SWITCH POSITION	CONTINUITY BETWEEN
OFF	7-1, 7-3, 7-4, 7-5, 7-8, 7-9, 7-10, 7-11
RECLINER UP	6-3, 7-1, 7-4, 7-5, 7-8, 7-9, 7-10, 7-11
RECLINER DOWN	6-1, 7-3, 7-4, 7-5, 7-8, 7-9, 7-10, 7-11
HORIZONTAL FORWARD	6-8, 7-1, 7-3, 7-4, 7-5, 7-9, 7-10, 7-11
HORIZONTAL REARWARD	6-4, 7-1, 7-3, 7-5, 7-8, 7-9, 7-10, 7-11
FRONT TILT DOWN	6-5, 7-1, 7-3, 7-4, 7-8, 7-9, 7-10, 7-11
FRONT TILT UP	6-9, 7-1, 7-3, 7-4, 7-5, 7-8, 7-10, 7-11
REAR TILT DOWN	6-10, 7-1, 7-3, 7-4, 7-5, 7-8, 7-9, 7-11
REAR TILT UP	6-11, 7-1, 7-3, 7-4, 7-5, 7-8, 7-9, 7-10

PASSENGER SEAT

1. Disconnect and isolate the battery negative cable.
2. Remove the power seat switch from the power seat (Refer to 8 - ELECTRICAL/POWER SEATS/SEAT SWITCH - REMOVAL).
3. Use an ohmmeter to test the continuity of the power seat switch. Refer to PASSENGER POWER SEAT SWITCH CONTINUITY table. If not OK, replace the faulty power seat switch. If switch tests OK (Refer to 8 - ELECTRICAL/POWER SEATS/ POWER SEAT ADJUSTER - DIAGNOSIS AND TESTING).

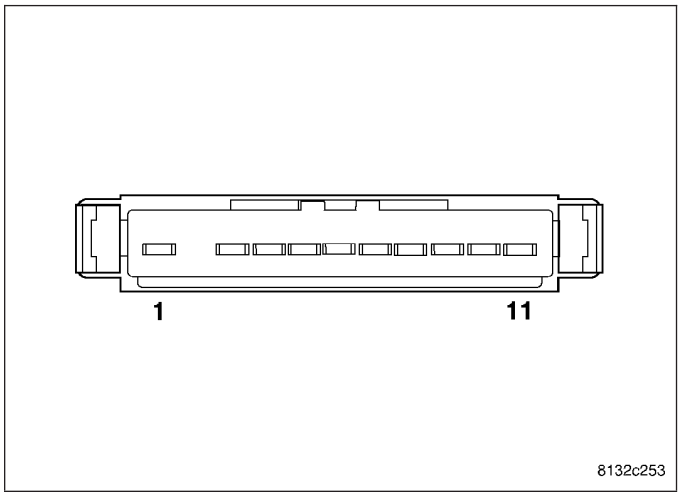

PASSENGER POWER SEAT SWITCH CONTINUITY

SWITCH POSITION	CONTINUITY BETWEEN
OFF	7-1, 7-3, 7-4, 7-5, 7-8, 7-9, 7-10, 7-11
RECLINER UP	6-3, 7-1, 7-4, 7-5, 7-8, 7-9, 7-10, 7-11
RECLINER DOWN	6-1, 7-3, 7-4, 7-5, 7-8, 7-9, 7-10, 7-11
HORIZONTAL FORWARD	6-8, 7-1, 7-3, 7-4, 7-5, 7-9, 7-10, 7-11
HORIZONTAL REARWARD	6-4, 7-1, 7-3, 7-5, 7-8, 7-9, 7-10, 7-11
FRONT TILT DOWN	6-5, 7-1, 7-3, 7-4, 7-8, 7-9, 7-10, 7-11
FRONT TILT UP	6-9, 7-1, 7-3, 7-4, 7-5, 7-8, 7-10, 7-11
REAR TILT DOWN	6-10, 7-1, 7-3, 7-4, 7-5, 7-8, 7-9, 7-11
REAR TILT UP	6-11, 7-1, 7-3, 7-4, 7-5, 7-8, 7-9, 7-10

DRIVER WITH MEMORY SEAT SYSTEM

1. Disconnect and isolate the battery negative cable.
2. Remove the power seat switch from the power seat (Refer to 8 - ELECTRICAL/POWER SEATS/SEAT SWITCH - REMOVAL).
3. Use an ohmmeter to test the resistance of the power seat switch. Refer to DRIVER POWER SEAT SWITCH WITH MEMORY SEAT SYSTEM CONTINUITY table. If not OK, replace the faulty power seat switch. If switch tests OK (Refer to 8 - ELECTRICAL/POWER SEATS/POWER SEAT ADJUSTER - DIAGNOSIS AND TESTING).

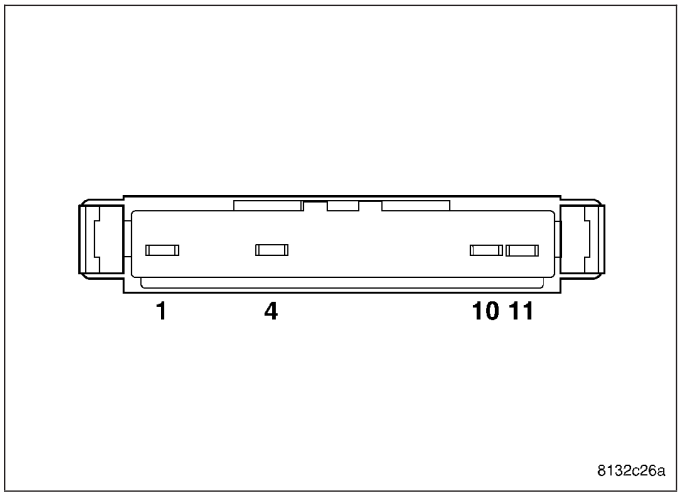

DRIVER POWER SEAT SWITCH WITH MEMORY SEAT SYSTEM CONTINUITY

SWITCH POSITION	CONTINUITY BETWEEN	RESISTANCE VALUE
OFF	10-4	OPEN
OFF	10-11	OPEN
OFF	1-4	47 OHMS
OFF	1-11	47 OHMS
REAR TILT UP	10-11	169 OHMS
REAR TILT DOWN	10-11	76 OHMS
HORIZONTAL FORWARD	10-11	43 OHMS
HORIZONTAL REARWARD	10-11	10 OHMS
RECLINER UP	10-4	43 OHMS
RECLINER DOWN	10-4	10 OHMS
FRONT TILT UP	10-4	169 OHMS
FRONT TILT DOWN	10-4	76 OHMS
ALL RESISTANCE VALUES ARE ± FIVE PERCENT		

REMOVAL

1. Disconnect and isolate the battery negative cable.
2. Remove the seat cushion side panel from the seat and disconnect the electrical harness connector.
3. Using a small flat bladed tool, gently release the four mounting tabs that secure the power seat switch and separate switch from trim panel.

INSTALLATION

1. Position the power seat switch on the seat cushion side panel. Gently apply pressure to the switch until the four mounting tabs that secure the switch snap into place.
2. Connect the power seat switch electrical connector.
3. Install the seat cushion side panel on the seat.
4. Connect the battery negative cable.
5. Verify normal operation of the power seat assembly.

POWER TOP - ELECTRICAL DIAGNOSIS

TABLE OF CONTENTS

page

POWER TOP - ELECTRICAL DIAGNOSIS
DIAGNOSIS AND TESTING
B1841–SUNROOF OPEN SWITCH INPUT CIRCUIT HIGH 203
B1844–SUNROOF CLOSE SWITCH INPUT CIRCUIT HIGH 206
B1847–SUNROOF VENT SWITCH INPUT CIRCUIT HIGH 209
B1849–SUNROOF MOTOR CONTROL CIRCUIT/PERFORMANCE (STALLED) 212

page

B2227–SUNROOF ECU INTERNAL 213
U0141–LOST COMMUNICATION WITH FRONT CONTROL MODULE. 213
U0155-LOST COMMUNICATION WITH CLUSTER/CCN 213
U0019–CAN B BUS 214
B210D-BATTERY VOLTAGE LOW 217
B210E-BATTERY VOLTAGE HIGH 219

POWER TOP - ELECTRICAL DIAGNOSIS

DIAGNOSIS AND TESTING

B1841–SUNROOF OPEN SWITCH INPUT CIRCUIT HIGH

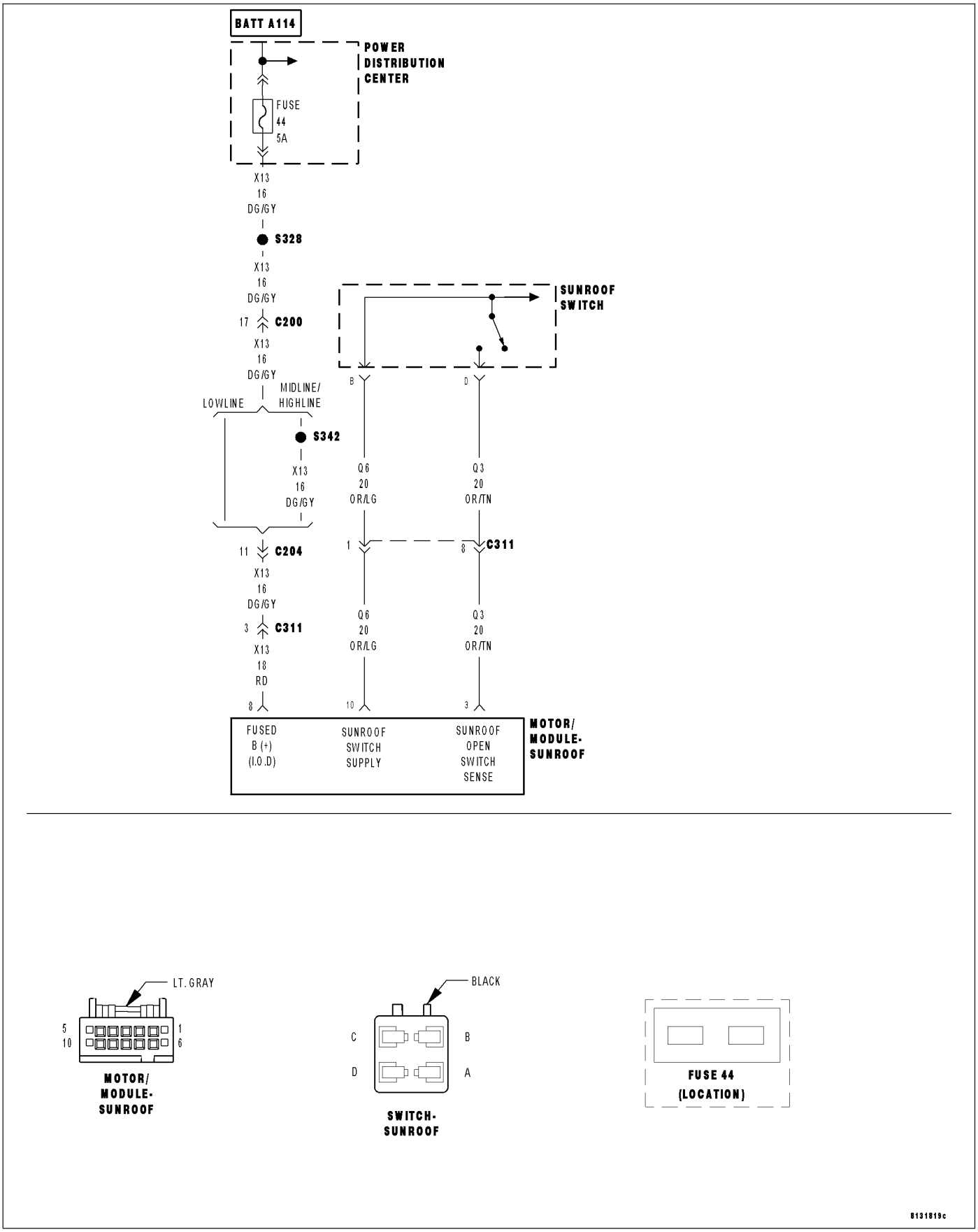

For a complete wiring diagram **Refer to Section 8W**.

Theory of Operation

The Sunroof Motor/Module supplies a 12 volt supply circuit to the sunroof switch. When the switch is closed to any of the 3 sense circuits (open, close or vent), it sends that command back to the module.

- **When Monitored:**
  Whenever the Sunroof module is awake.
- **Set Condition:**
  Whenever the module has determined that the open switch has been applied for over 15 seconds or there is a short to voltage on the Sunroof Open Switch Sense circuit, this code will set.

Possible Causes
(Q3) SUNROOF OPEN SWITCH SENSE CIRCUIT SHORT TO VOLTAGE
(Q3) SUNROOF OPEN SWITCH SENSE CIRCUIT SHORT TO (Q6) SUNROOF SWITCH SUPPLY CIRCUIT
SUNROOF SWITCH SHORTED
SUNROOF MOTOR/MODULE

Diagnostic Test

1. TEST FOR INTERMITTENT CONDITION

Turn the ignition on.
With the scan tool, record and erase DTC's
Press and release the Sunroof Switch in all positions several times.
Wait 30 seconds.
With the scan tool, read DTC's.

Does the scan tool display B1841–SUNROOF OPEN SWITCH INPUT CIRCUIT HIGH?

Yes >> Go To 2

No >> The conditions that caused this code to set are not present at this time. Check the switch for any binding conditions and using the wiring diagram/schematic as a guide, inspect the wiring and connectors.

2. SUNROOF SWITCH SHORTED

With the scan tool, erase DTC's.
Turn the ignition off.
Disconnect the Sunroof Switch connector.
Turn the ignition on and wait 30 seconds.
With the scan tool, read DTC's.

Does the scan tool display B1841–SUNROOF OPEN SWITCH INPUT CIRCUIT HIGH?

Yes >> Go To 3

No >> Replace the Sunroof Switch.
Perform BODY VERIFICATION TEST - VER 1. (Refer to BODY VERIFICATION TEST – VER 1).

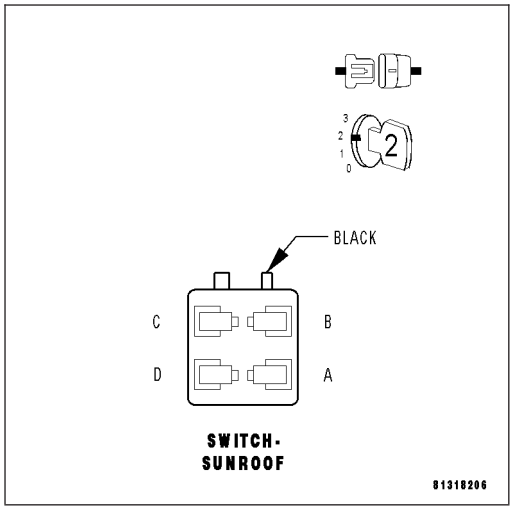

3. (Q3) SUNROOF OPEN SWITCH SENSE CIRCUIT SHORT TO VOLTAGE

NOTE: To further diagnose the sunroof, it is necessary to lower or remove the headliner.

Turn the ignition off.

Lower the headliner to gain access to the Sunroof Motor/Module connector.

Disconnect the Sunroof Motor/Module connector.

NOTE: Ensure the A-Pillar connector is connected before proceeding.

Turn the ignition on.

Measure the voltage between the (Q3) Sunroof Open Switch Sense circuit and Ground.

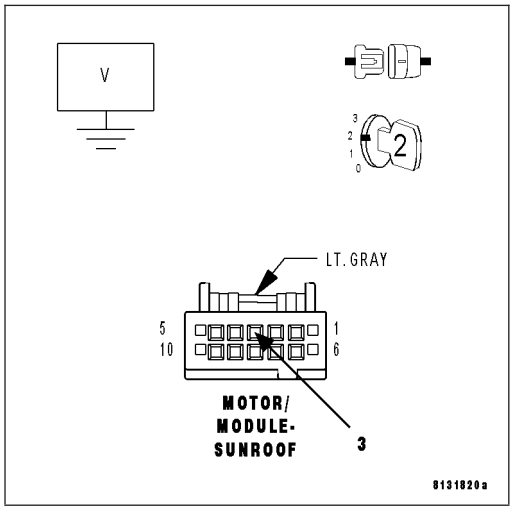

Is the voltage above 0.4 volts?

Yes >> Repair the (Q3) Sunroof Open Switch Sense circuit for a short to voltage.

Perform BODY VERIFICATION TEST - VER 1. (Refer to BODY VERIFICATION TEST – VER 1).

No >> Go To 4

4. (Q3) SUNROOF OPEN SWITCH SENSE CIRCUIT SHORT TO (Q6) SUNROOF SWITCH SUPPLY CIRCUIT

Turn the ignition off.

Disconnect the A-Pillar connector.

Measure the resistance between the (Q3) Sunroof Open Switch Sense circuit and the (Q6) Sunroof Switch Supply circuit in the Sunroof Motor/Module connector.

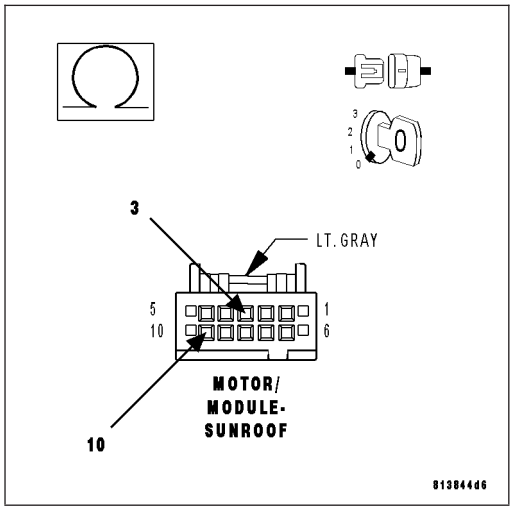

Is the resistance below 1000.0 ohms?

Yes >> Repair the (Q3) Sunroof Open Switch Sense circuit for a short to the (Q6) Sunroof Switch Supply circuit.

Perform BODY VERIFICATION TEST - VER 1. (Refer to BODY VERIFICATION TEST – VER 1).

No >> Replace the Sunroof Motor/Module.

Perform the Sunroof Position Calibration, (Refer to 8 - ELECTRICAL/POWER TOP/MOTOR - STANDARD PROCEDURE - SUNROOF POSITION CALIBRATION). Perform the Excessive Force Limitation Calibration, (Refer to 8 - ELECTRICAL/POWER TOP/MOTOR - STANDARD PROCEDURE - EXCESSIVE FORCE LIMITATION CALIBRATION).

Perform BODY VERIFICATION TEST - VER 1. (Refer to BODY VERIFICATION TEST – VER 1).

B1844–SUNROOF CLOSE SWITCH INPUT CIRCUIT HIGH

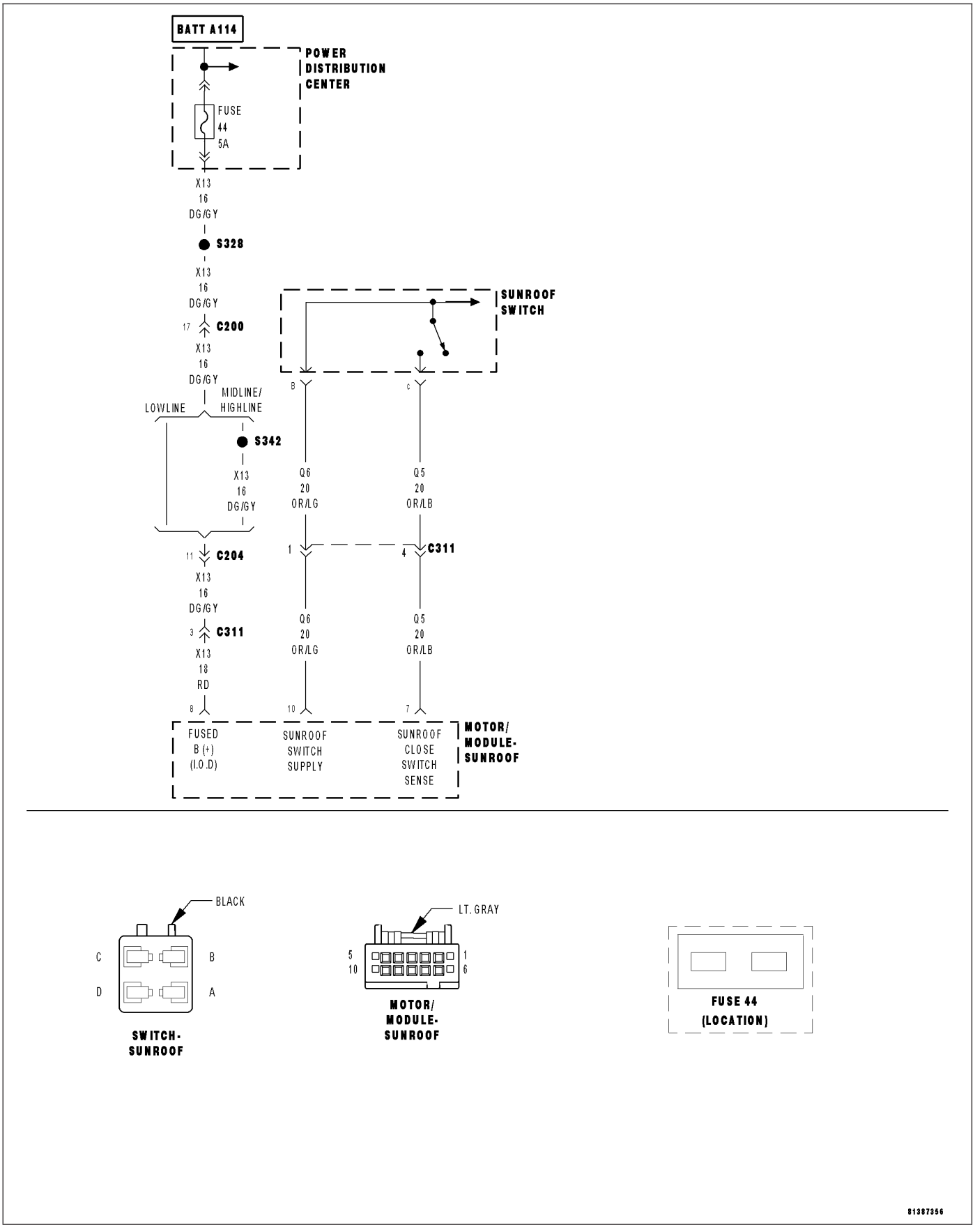

For a complete wiring diagram **Refer to Section 8W**.

Theory of Operation

The Sunroof Motor/Module supplies a 12 volt supply circuit to the sunroof switch. When the switch is closed to any of the 3 sense circuits (open, close or vent), it sends that command back to the module.

- **When Monitored:**
  Whenever the Sunroof module is awake.
- **Set Condition:**
  Whenever the module has determined that the close switch has been applied for over 15 seconds or there is a short to voltage on the Sunroof Close Switch Sense circuit, this code will set.

Possible Causes
(Q5) SUNROOF CLOSE SWITCH SENSE CIRCUIT SHORT TO VOLTAGE
(Q5) SUNROOF CLOSE SWITCH SENSE CIRCUIT SHORT TO (Q6) SUNROOF SWITCH SUPPLY CIRCUIT
SUNROOF SWITCH SHORTED
SUNROOF MOTOR/MODULE

Diagnostic Test

1. TEST FOR INTERMITTENT CONDITION

Turn the ignition on.
With the scan tool, record and erase DTC's
Press and release the Sunroof Switch in all positions several times.
Wait 30 seconds.
With the scan tool, read DTC's.

Does the scan tool display B1844–SUNROOF CLOSE SWITCH INPUT CIRCUIT HIGH?

Yes >> Go To 2

No >> The conditions that caused this code to set are not present at this time. Check the switch for any binding conditions and using the wiring diagram/schematic as a guide, inspect the wiring and connectors.

2. SUNROOF SWITCH SHORTED

With the scan tool, erase DTC's.
Turn the ignition off.
Disconnect the Sunroof Switch connector.
Turn the ignition on and wait 30 seconds.
With the scan tool, read DTC's.

Does the scan tool display B1844–SUNROOF CLOSE SWITCH INPUT CIRCUIT HIGH?

Yes >> Go To 3

No >> Replace the Sunroof Switch.
Perform BODY VERIFICATION TEST - VER 1. (Refer to BODY VERIFICATION TEST – VER 1).

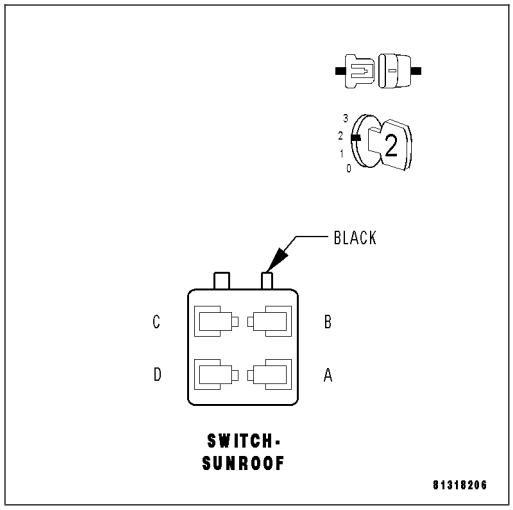

3. (Q5) SUNROOF CLOSE SWITCH SENSE CIRCUIT SHORT TO VOLTAGE

NOTE: To further diagnose the sunroof, it is necessary to lower or remove the headliner.

Turn the ignition off.

Lower the headliner to gain access to the Sunroof Motor/Module connector.

Disconnect the Sunroof Motor/Module connector.

NOTE: Ensure the A-Pillar connector is connected before proceeding.

Turn the ignition on.

Measure the voltage between the (Q5) Sunroof Close Switch Sense circuit and Ground.

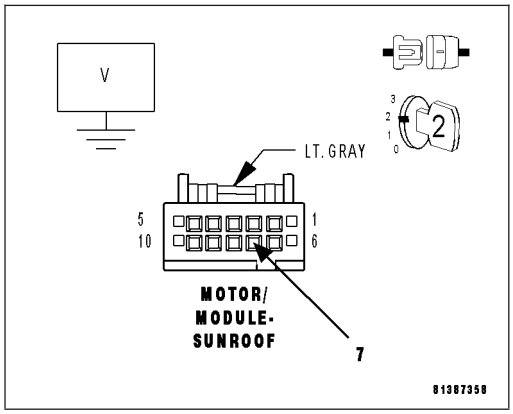

Is the voltage above 0.4 volts?

Yes >> Repair the (Q5) Sunroof Close Switch Sense circuit for a short to voltage.
Perform BODY VERIFICATION TEST - VER 1. (Refer to BODY VERIFICATION TEST – VER 1).

No >> Go To 4

4. (Q5) SUNROOF CLOSE SWITCH SENSE CIRCUIT SHORT TO (Q6) SUNROOF SWITCH SUPPLY CIRCUIT

Turn the ignition off.

Disconnect the A-Pillar connector.

Measure the resistance between the (Q5) Sunroof Close Switch Sense circuit and the (Q6) Sunroof Switch Supply circuit in the Sunroof Motor/Module connector.

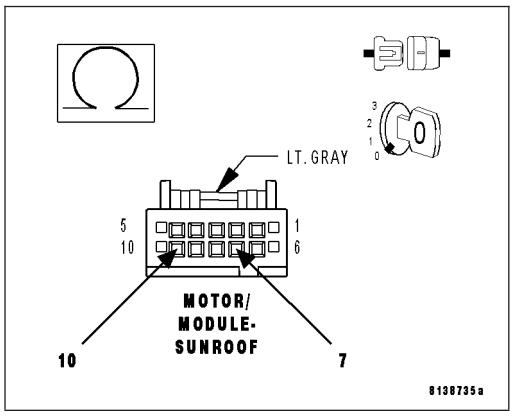

Is the resistance below 1000.0 ohms?

Yes >> Repair the (Q5) Sunroof Close Switch Sense circuit for a short to the (Q6) Sunroof Switch Supply circuit.
Perform BODY VERIFICATION TEST - VER 1. (Refer to BODY VERIFICATION TEST – VER 1).

No >> Replace the Sunroof Motor/Module.
Perform the Sunroof Position Calibration, (Refer to 8 - ELECTRICAL/POWER TOP/MOTOR - STANDARD PROCEDURE - SUNROOF POSITION CALIBRATION). Perform the Excessive Force Limitation Calibration, (Refer to 8 - ELECTRICAL/POWER TOP/MOTOR - STANDARD PROCEDURE - EXCESSIVE FORCE LIMITATION CALIBRATION).
Perform BODY VERIFICATION TEST - VER 1. (Refer to BODY VERIFICATION TEST – VER 1).

B1847–SUNROOF VENT SWITCH INPUT CIRCUIT HIGH

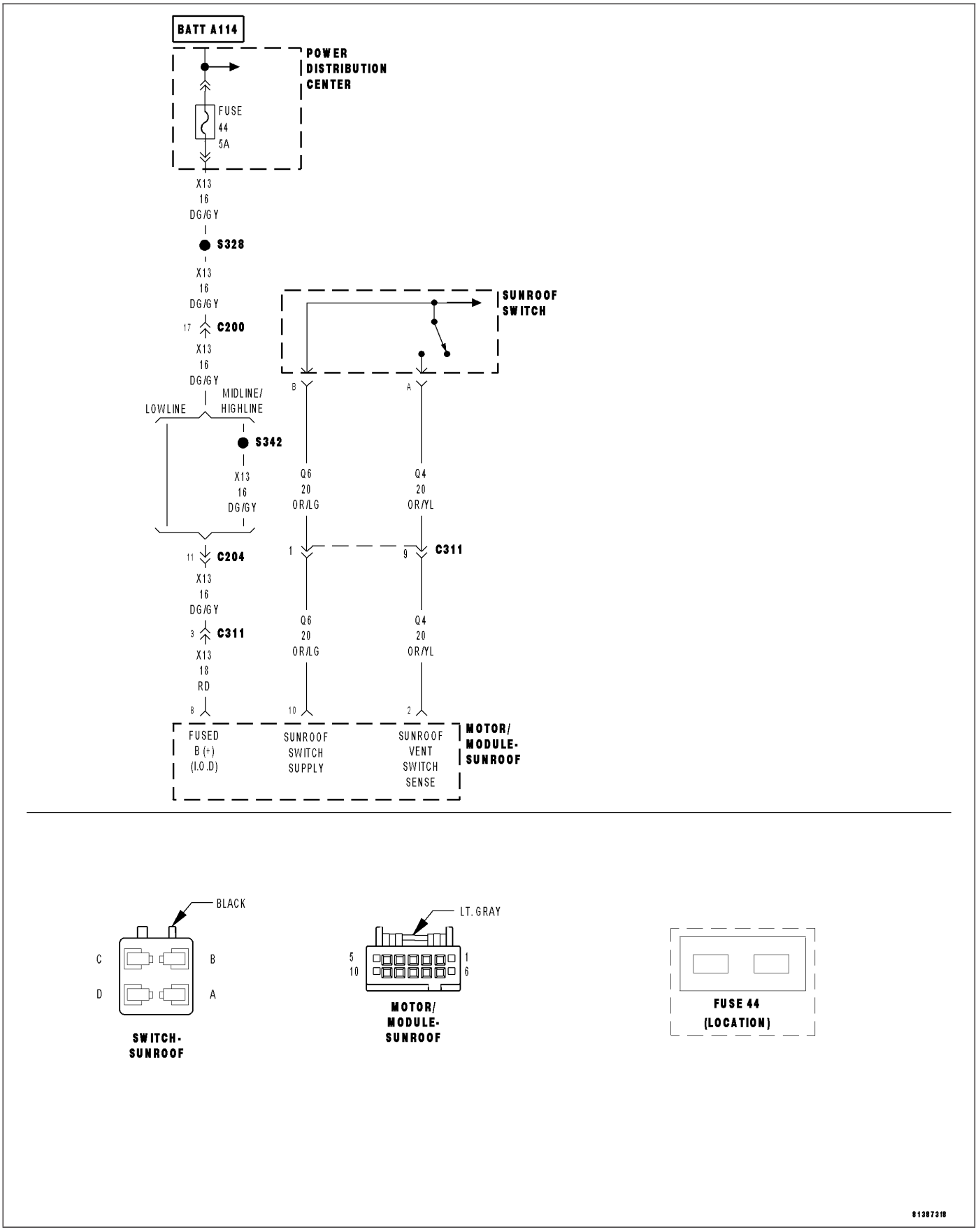

For a complete wiring diagram **Refer to Section 8W**.

Theory of Operation

The Sunroof Motor/Module supplies a 12 volt supply circuit to the sunroof switch. When the switch is closed to any of the 3 sense circuits (open, close or vent), it sends that command back to the module.

- **When Monitored:**
  Whenever the Sunroof module is awake.
- **Set Condition:**
  Whenever the module has determined that the vent switch has been applied for over 15 seconds or there is a short to voltage on the Sunroof Vent Switch Sense circuit, this code will set.

Possible Causes
(Q4) SUNROOF VENT SWITCH SENSE CIRCUIT SHORT TO VOLTAGE
(Q4) SUNROOF VENT SWITCH SENSE CIRCUIT SHORT TO (Q6) SUNROOF SWITCH SUPPLY CIRCUIT
SUNROOF SWITCH SHORTED
SUNROOF MOTOR/MODULE

Diagnostic Test

1. TEST FOR INTERMITTENT CONDITION

Turn the ignition on.
With the scan tool, record and erase DTC's
Press and release the Sunroof Switch in all positions several times.
Wait 30 seconds.
With the scan tool, read DTC's.

Does the scan tool display B1847–SUNROOF VENT SWITCH INPUT CIRCUIT HIGH?

Yes >> Go To 2

No >> The conditions that caused this code to set are not present at this time. Check the switch for any binding conditions and using the wiring diagram/schematic as a guide, inspect the wiring and connectors.

2. SUNROOF SWITCH SHORTED

With the scan tool, erase DTC's.
Turn the ignition off.
Disconnect the Sunroof Switch connector.
Turn the ignition on and wait 30 seconds.
With the scan tool, read DTC's.

Does the scan tool display B1847–SUNROOF VENT SWITCH INPUT CIRCUIT HIGH?

Yes >> Go To 3

No >> Replace the Sunroof Switch.
Perform BODY VERIFICATION TEST - VER 1. (Refer to BODY VERIFICATION TEST – VER 1).

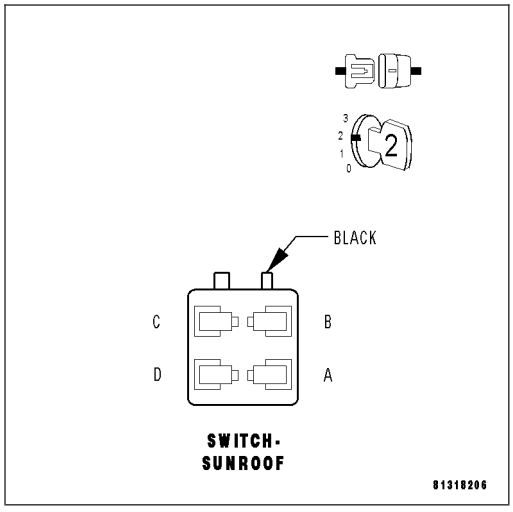

3. (Q4) SUNROOF VENT SWITCH SENSE CIRCUIT SHORT TO VOLTAGE

NOTE: To further diagnose the sunroof, it is necessary to lower or remove the headliner.

Turn the ignition off.

Lower the headliner to gain access to the Sunroof Motor/Module connector.

Disconnect the Sunroof Motor/Module connector.

NOTE: Ensure the A-Pillar connector is connected before proceeding.

Turn the ignition on.

Measure the voltage between the (Q4) Sunroof Vent Switch Sense circuit and Ground.

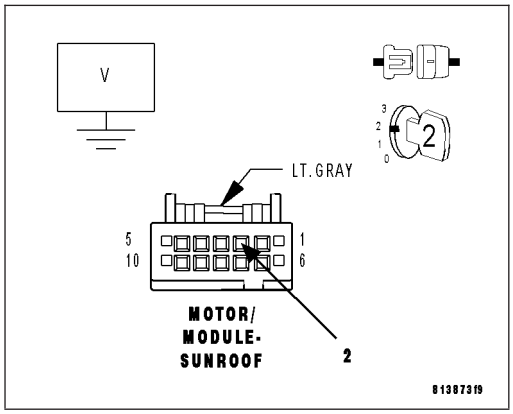

Is the voltage above 0.4 volts?

Yes >> Repair the (Q4) Sunroof Vent Switch Sense circuit for a short to voltage.
Perform BODY VERIFICATION TEST - VER 1. (Refer to BODY VERIFICATION TEST – VER 1).

No >> Go To 4

4. (Q4) SUNROOF VENT SWITCH SENSE CIRCUIT SHORT TO (Q6) SUNROOF SWITCH SUPPLY CIRCUIT

Turn the ignition off.

Disconnect the A-Pillar connector.

Measure the resistance between the (Q4) Sunroof Vent Switch Sense circuit and the (Q6) Sunroof Switch Supply circuit in the Sunroof Motor/Module connector.

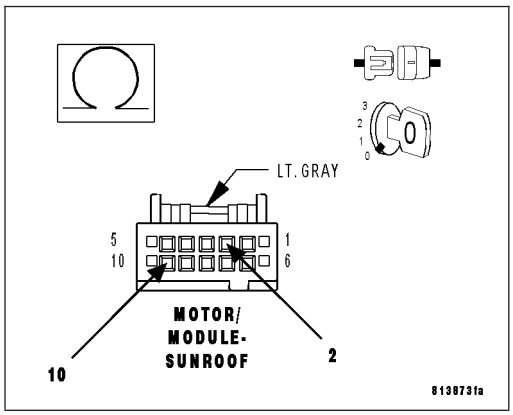

Is the resistance below 1000.0 ohms?

Yes >> Repair the (Q4) Sunroof Vent Switch Sense circuit for a short to the (Q6) Sunroof Switch Supply circuit.
Perform BODY VERIFICATION TEST - VER 1. (Refer to BODY VERIFICATION TEST – VER 1).

No >> Replace the Sunroof Motor/Module.
Perform the Sunroof Position Calibration, (Refer to 8 - ELECTRICAL/POWER TOP/MOTOR - STANDARD PROCEDURE - SUNROOF POSITION CALIBRATION). Perform the Excessive Force Limitation Calibration, (Refer to 8 - ELECTRICAL/POWER TOP/MOTOR - STANDARD PROCEDURE - EXCESSIVE FORCE LIMITATION CALIBRATION).
Perform BODY VERIFICATION TEST - VER 1. (Refer to BODY VERIFICATION TEST – VER 1).

B1849–SUNROOF MOTOR CONTROL CIRCUIT/PERFORMANCE (STALLED)

For a complete wiring diagram **Refer to Section 8W**.

- **When Monitored:**
  Whenever the Sunroof motor/module is in motion.
- **Set Condition:**
  Whenever the sunroof motor/module is attempting to move the sunroof in response to the input switches (or in response to an obstacle), and it doesn't appear to be responding correctly. This code is usually set when there is some type of binding in the sunroof mechanism.

Possible Causes
SUNROOF MOTOR/MODULE
MECHANICAL BINDING, STICKING OR CABLES OUT OF CALIBRATION

Diagnostic Test

1. TEST FOR INTERMITTENT CONDITION

Turn the ignition on.

With the scan tool, record and erase DTC's

Operate the Sunroof Switch in all positions several times.

Wait 30 seconds.

With the scan tool, read DTC's.

Does the scan tool display B1849–SUNROOF MOTOR CONTROL CIRCUIT/PERFORMANCE (STALLED)?

Yes >> Go To 2

No >> The conditions that caused this code to set are not present at this time. Check for any binding or sticking conditions.

2. SUNROOF MOTOR

NOTE: To further diagnose the sunroof, it is necessary to lower or remove the headliner.

NOTE: Any time the Sunroof Motor is removed, it is necessary to perform the Position Calibration when the motor is re-installed.

Turn the ignition off.

Lower the headliner to gain access to the Sunroof Motor/Module.

Remove the Sunroof Motor/Module from the sunroof.

NOTE: Ensure the A-Pillar connector is connected before proceeding.

Turn the ignition on.

While holding the motor firmly in your hand, have an assistant press the sunroof switch Open and after the motor stops press Close (NOT VENT) several times and observe the motor operation.

Did the motor operate smoothly and powerfull?

Yes >> Repair or replace the sunroof mechanism as necessary in accordance with Service Information.Perform BODY VERIFICATION TEST - VER 1. (Refer to BODY VERIFICATION TEST – VER 1).

No >> Replace the Sunroof Motor Module in accordance with service information.
(Refer to 8 - ELECTRICAL/POWER TOP/MOTOR - INSTALLATION) Perform BODY VERIFICATION TEST - VER 1. (Refer to BODY VERIFICATION TEST – VER 1).

B2227–SUNROOF ECU INTERNAL

For a complete wiring diagram **Refer to Section 8W**.

- **When Monitored:**
  Whenever the Sunroof module is awake.
- **Set Condition:**
  Whenever the module has determined that there is a motor or electronic malfunction, this code will set.

Possible Causes
SUNROOF MOTOR/MODULE

Diagnostic Test

1. TEST FOR INTERMITTENT CONDITION

Turn the ignition on.

With the scan tool, record and erase DTC's

Operate the Sunroof Switch in all positions several times.

Wait 30 seconds.

With the scan tool, read DTC's.

Does the scan tool display B2227–SUNROOF ECU INTERNAL?

Yes >> Replace the Sunroof Motor/Module.
Perform the Sunroof Position Calibration, (Refer to 8 - ELECTRICAL/POWER TOP/MOTOR - STANDARD PROCEDURE - SUNROOF POSITION CALIBRATION). Perform the Excessive Force Limitation Calibration, (Refer to 8 - ELECTRICAL/POWER TOP/MOTOR - STANDARD PROCEDURE - EXCESSIVE FORCE LIMITATION CALIBRATION).
Perform BODY VERIFICATION TEST - VER 1. (Refer to BODY VERIFICATION TEST – VER 1).

No >> The conditions that caused this code to set are not present at this time. Operate the Sunroof several times and recheck for DTC's. If the code reappears now or later, replace the Sunroof Motor/Module.

U0141–LOST COMMUNICATION WITH FRONT CONTROL MODULE

For a complete wiring diagram **Refer to Section 8W**.

(Refer to 8 - ELECTRICAL/ELECTRONIC CONTROL MODULES - DIAGNOSIS AND TESTING) for the diagnostic test procedure.

U0155-LOST COMMUNICATION WITH CLUSTER/CCN

For a complete wiring diagram **Refer to Section 8W**.

(Refer to 8 - ELECTRICAL/ELECTRONIC CONTROL MODULES - DIAGNOSIS AND TESTING) for the diagnostic test procedure.

U0019–CAN B BUS

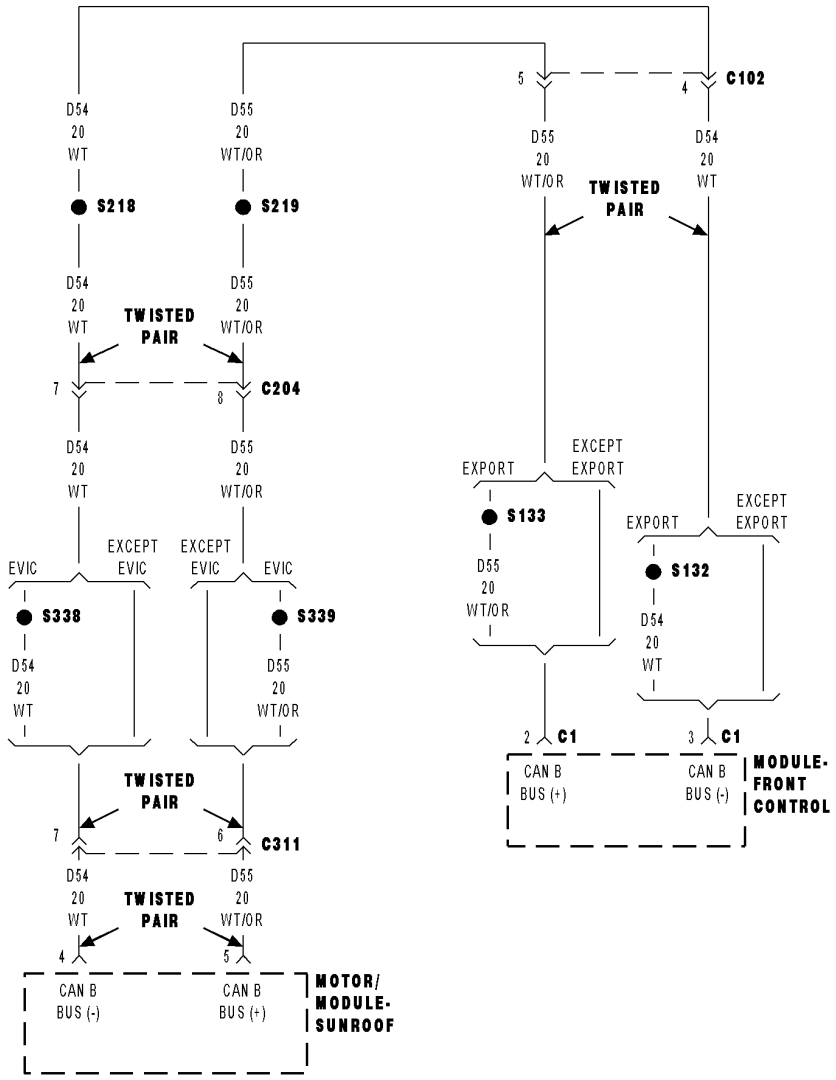

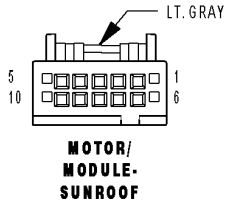

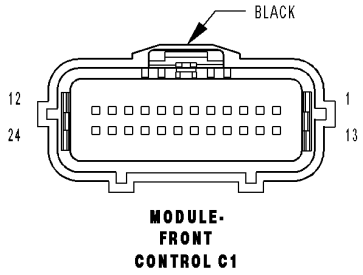

8138bdcd

For a complete wiring diagram **Refer to Section 8W**.

- **When Monitored:**
  Continuously.
- **Set Condition:**
  Whenever the CAN B Bus (+) or CAN B Bus (-) circuit is open, shorted to voltage or shorted to ground.

Possible Causes
CAN B BUS DTC's IN FRONT CONTROL MODULE
(D55) CAN B BUS (+) CIRCUIT OPEN
(D54) CAN B BUS (-) CIRCUIT OPEN
SUNROOF MOTOR/MODULE

Diagnostic Test

1. CHECK FOR ACTIVE DTCS

With the scan tool, read the active DTC's.

Cycle the ignition switch from off to on at least five times, leaving the ignition on for a minimum of 90 seconds per cycle.

Turn the ignition off and wait 30 seconds.

Turn the ignition on.

With the scan tool, read the active DTC's.

Does the scan tool display this DTC as active?

Yes >> Go To 2

No >> If the DTC is stored, check for an intermittent condition. Visually inspect the related wiring harness connectors. Look for broken, bent, pushed out, or corroded terminals.

2. CHECK FRONT CONTROL MODULE DTC's

With the scan tool, read Front Control Module active DTC's

Does the scan tool display any CAN B BUS DTC's – ACTIVE?

Yes >> (Refer to 8 - ELECTRICAL/ELECTRONIC CONTROL MODULES - DIAGNOSIS AND TESTING)

No >> Go To 3

3. (D55) CAN B BUS (+) CIRCUIT OPEN

Turn the ignition off.

Disconnect the negative battery cable.

Disconnect the Sunroof Motor/Module connector.

Disconnect the Front Control Module C1 connector.

Measure the resistance of the (D55) CAN B Bus (+) circuit between the Front Control Module C1 connector and the Sunroof Motor/Module connector.

Is the resistance below 2.0 ohms?

Yes >> Go To 4

No >> Repair the (D55) CAN B Bus (+) circuit for an open.
Perform BODY VERIFICATION TEST – VER 1. (Refer to BODY VERIFICATION TEST – VER 1).

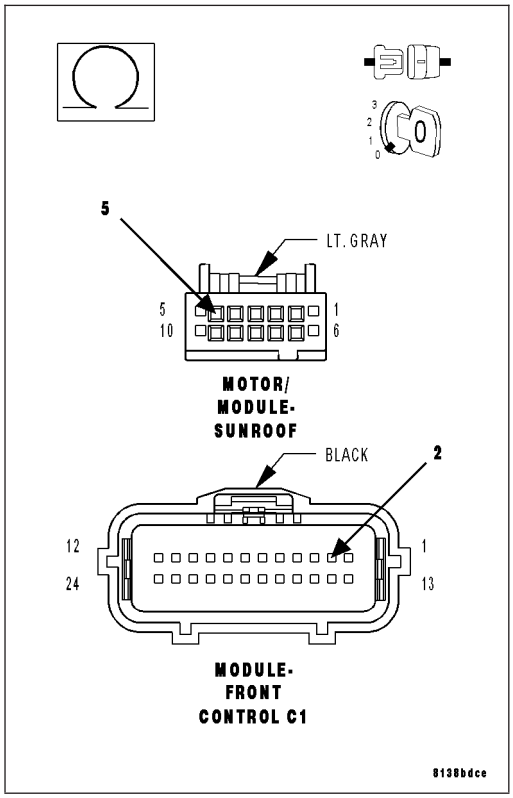

4. (D54) CAN B BUS (–) CIRCUIT OPEN

Measure the resistance of the (D54) CAN B Bus (–) circuit between the Front Control Module C1 connector and the Sunroof Motor/Module connector.

Is the resistance below 2.0 ohms?

Yes >> Replace the Sunroof Motor/Module in accordance with the service information.
Perform the Sunroof Position Calibration, (Refer to 8 - ELECTRICAL/POWER TOP/MOTOR - STANDARD PROCEDURE - SUNROOF POSITION CALIBRATION). Perform the Excessive Force Limitation Calibration, (Refer to 8 - ELECTRICAL/POWER TOP/MOTOR - STANDARD PROCEDURE - EXCESSIVE FORCE LIMITATION CALIBRATION).
Perform BODY VERIFICATION TEST - VER 1. (Refer to BODY VERIFICATION TEST – VER 1.

No >> Repair the (D54) CAN B Bus (–) circuit for an open.
Perform BODY VERIFICATION TEST – VER 1. (Refer to BODY VERIFICATION TEST – VER 1).

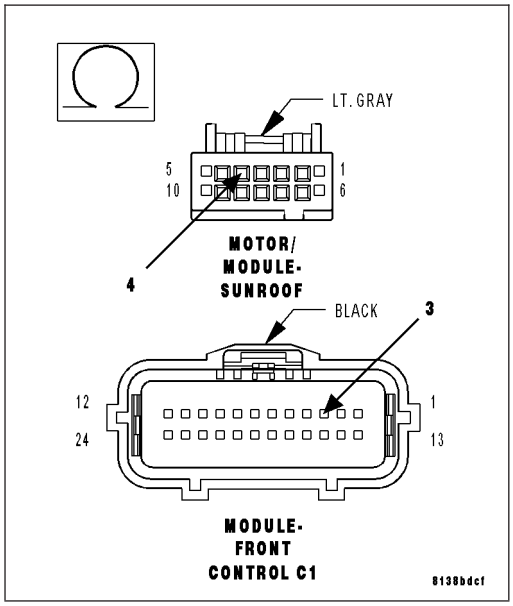

B210D-BATTERY VOLTAGE LOW

For a complete wiring diagram **Refer to Section 8W**.

- **When Monitored:**
  At all times.
- **Set Condition:**
  Anytime the module senses voltage input below 9.5 volts (motor operating or not). After this code is set, it becomes stored when the voltage exceeds 9.6 volts.

POSSIBLE CAUSES
LOW VOLTAGE ENGINE DTC
(X13) FUSED B(+) OR (Z909) GROUND CIRCUIT HAS HIGH RESISTANCE
POWER TOP MOTOR/MODULE

Diagnostic Test

1. CHECK ENGINE DTC's

NOTE: Ensure the battery is fully charged before proceeding.
With the scan tool, read ENGINE DTC's

Are there any ENGINE BATTERY OR CHARGING SYSTEM DTC's present?

No >> Go to 2

Yes >> Refer to symptom list for problems related to ENGINE.

2. TEST FOR INTERMITTENT CONDITION

With the scan tool, record and erase DTC's
Start the engine and run for two minutes.
Cycle the ignition from on to off three times.
Turn the ignition on.
With the scan tool, read DTC's.

Does the scan tool display BATTERY VOLTAGE LOW in the Sunroof module only?

Yes >> Go To 3

No >> The conditions that caused this code to set are not present at this time. Using the wiring diagram/schematic as a guide, inspect the wiring and connectors.
Perform BODY VERIFICATION TEST - VER 1. (Refer to 8 - ELECTRICAL/ELECTRONIC CONTROL MODULES/FRONT CONTROL MODULE - DIAGNOSIS AND TESTING)

3. (X13) FUSED B(+) CIRCUIT RESISTED

Lower the headliner and disconnect the Sunroof Motor/Module connector.

Test for a resisted (X13) Fused B(+) circuit by connecting a 12-volt test light between the (X13) Fused B(+) circuit and the (Z909) Ground circuit in the Sunroof Motor/Module connector. The test light must illuminate brightly. Compare the brightness to that of a direct connection to the battery.

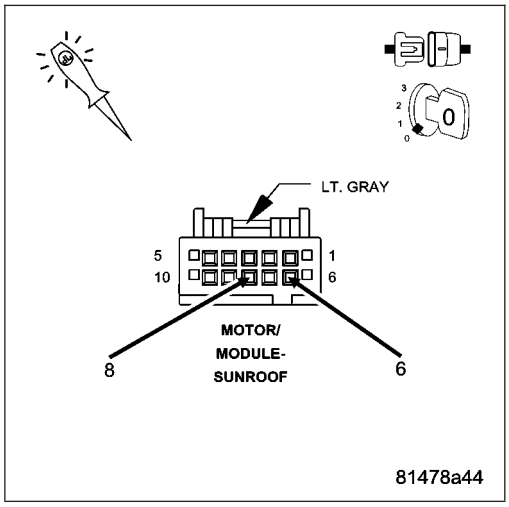

Does the test light illuminate brightly?

Yes >> Replace the Sunroof Motor/Module in accordance with Service Information. (Refer to 8 - ELECTRICAL/POWER TOP/ MOTOR - REMOVAL)

Perform BODY VERIFICATION TEST - VER 1.

No >> Test the (X13) Fused B(+) and the (Z909) Ground circuits to determine which one has the high resistance. Repair the (X13) Fused B(+) circuit or the (Z909) Ground circuit for high resistance.

Perform BODY VERIFICATION TEST - VER 1. (Refer to 8 - ELECTRICAL/ELECTRONIC CONTROL MODULES/FRONT CONTROL MODULE - DIAGNOSIS AND TESTING)

B210E-BATTERY VOLTAGE HIGH

For a complete wiring diagram **Refer to Section 8W**.

- **When Monitored:**
  At all times.
- **Set Condition:**
  Anytime the module senses voltage input above 16 volts. This code will become stored when the voltage drops below 15.9 volts.

POSSIBLE CAUSES
HIGH VOLTAGE ENGINE DTC
SUNROOF MOTOR/ MODULE

Diagnostic Test

1. CHECK ENGINE DTC's

With the scan tool, read ENGINE DTC's

Are there any ENGINE DTC's present?

No >> Go to 2

Yes >> Refer to symptom list for problems related to ENGINE.

2. TEST FOR INTERMITTENT CONDITION

With the scan tool, record and erase DTC's
Start the engine and run for two minutes.
Cycle the ignition from on to off three times.
Turn the ignition on.
With the scan tool, read DTC's.

Does the scan tool display BATTERY VOLTAGE HIGH in this module only?

Yes >> Replace the Sunroof Motor/Module in accordance with service information. (Refer to 8 - ELECTRICAL/ POWER TOP/MOTOR - REMOVAL)
Perform BODY VERIFICATION TEST - VER 1.

No >> The conditions that caused this code to set are not present at this time. Using the wiring diagram/schematic as a guide, inspect the wiring and connectors.
Perform BODY VERIFICATION TEST - VER 1.

POWER TOP - SUNROOF SERVICE INFO

TABLE OF CONTENTS

page

POWER TOP - SUNROOF SERVICE INFO
DESCRIPTION 221
OPERATION 222
DIAGNOSIS AND TESTING
POWER TOP - SUNROOF 222
MOTOR/MODULE-SUNROOF
DIAGNOSIS AND TESTING
MOTOR/MODULE - SUNROOF 223
STANDARD PROCEDURE
SUNROOF POSITION CALIBRATION 223
EXCESSIVE FORCE LIMITATION (EFL)
CALIBRATION 223
REMOVAL 224
INSTALLATION 224
SWITCH - SUNROOF
DESCRIPTION 226
OPERATION 226
DIAGNOSIS AND TESTING
SWITCH - POWER SUNROOF 226

POWER TOP - SUNROOF SERVICE INFO

DESCRIPTION

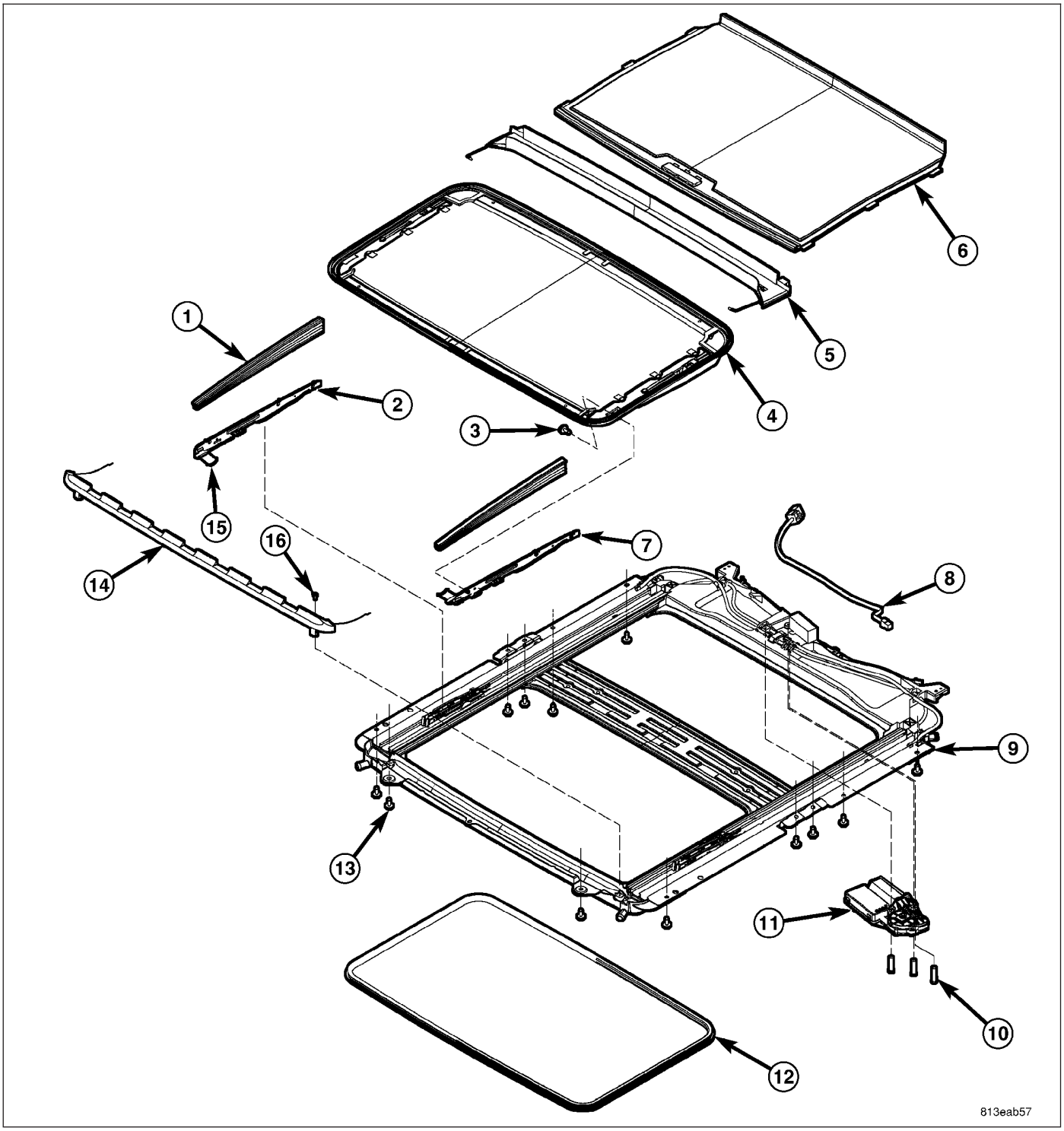

The power sunroof system allows the sunroof to be opened, closed or placed in the vent position electrically by actuating a switch in the overhead console. The sunroof system receives battery feed through a fuse in the Power Distribution Center (PDC). The sunroof will operate normally with the key in any position while the Accessory Delay system is active.

The sunroof glass panel tilts upward at the rear for ventilation and slides rearward under the roof when open. The panel seals flush with the roof in the closed position to eliminate wind noise. The sunroof includes a manual-sliding sunshade to cover the deep-tinted glass panel.

In addition to the standard power sunroof operation, this vehicle offers several additional features. There is an express (one-touch) opening and closing feature as well as Excessive Force Limitation (EFL). The EFL function detects obstacles trapped between the glass and the vehicle roof during a closing motion. Upon sensing an obstacle the EFL function will reverse direction of the glass to allow removal of the obstacle.

The main components of the power sunroof system are:

- The motor/module assembly
- The power sunroof glass and frame assembly
- The power sunroof switch
- The manual-sliding sunshade

OPERATION

This vehicle has a vent, tilt and slide power sunroof system with express (one-touch) open and closing feature. The sunroof system receives constant battery feed through a fuse in the Power Distribution Center (PDC). The sunroof will operate normally with the key in any position while the Accessory Delay system is active. If the sunroof is moving when the key is turned to the START position (crank engine), all motions stop until the key is released, then the previously requested sunroof motion will resume. The sunroof will also complete a requested motion if the Accessory Delay system goes inactive while the motion is in progress.

A combination push-button and rocker switch module mounted in the overhead console controls sunroof operation. The sunroof switch is a rocker design with a push button in the center of the two halves of the rocker. Pressing the rocker towards the front of the car commands the sunroof closed. Pressing the rocker towards the rear of the car commands the sunroof open. Pressing the center push button commands the sunroof up into the vent position (Rear of sunroof glass raises above the vehicle roof with glass still covering the sunroof opening). All switch commands operate with the glass starting in any position. (Refer to 8 - ELECTRICAL/POWER TOP/SWITCH - OPERATION) for additional information.

An electronic control system, integral to the motor/module assembly, provides the express open and close functions. Pressing the ″open″ or ″close″ end of the rocker switch moves the sunroof glass panel to the full open or full closed position, respectively. During express closing, anytime an obstacle is detected in the way of the glass, the motor will stop and reverse travel to avoid pinching an occupant’s finger, ice in the track, etc. This function is called Excessive Force Limitation (EFL). There are two methods of overriding the EFL function.

1. When three EFL events occur without the glass being allowed to fully close, the next close attempt will only move while the close switch is continuously actuated. This allows the sunroof to be forced closed if multiple close attempts fail.
2. If the sunroof close switch is continuously actuated during an EFL event, through the reversal, and during a two second wait time, then continuing to hold the close switch will cause the roof to move towards close with the EFL protection disabled. This allows the sunroof to be forced closed if it is known that a reversal will occur.

While in EFL override, the closing motion will cease if the sunroof switch is released at any time.

The motor/module is programmed to learn the speed required to drive the panel based on position and recalibrates itself as needed. If the sunroof becomes uncalibrated, it will only respond to the vent switch. If the vent switch is pressed, the glass will move toward vent; if the switch is released, all motion stops. In the event that the sunroof system becomes uncalibrated perform the sunroof position calibration procedure, (Refer to 8 - ELECTRICAL/POWER TOP/MOTOR - STANDARD PROCEDURE -SUNROOF POSITION CALIBRATION).

DIAGNOSIS AND TESTING

POWER TOP - SUNROOF

Any diagnosis of the power sunroof system should begin with the use of a scan tool and the proper Diagnostic Procedures Information. The scan tool can provide confirmation that the Controller Area Network (CAN) Data Bus is functional, that all of the electronic modules are sending and receiving the proper messages on the CAN Data Bus, and that the power sunroof motor is being sent the proper hard wired output by the sunroof switch.

For complete circuit diagrams, refer to the appropriate wiring information. The wiring information includes wiring diagrams, proper wire and connector repair procedures, details of wire harness routing and retention, connector pin-out information and location views for the various wire harness connectors, splices and grounds.

Refer to the appropriate diagnostic information.

MOTOR/MODULE-SUNROOF

DIAGNOSIS AND TESTING

MOTOR/MODULE - SUNROOF

Any diagnosis of the power sunroof system should begin with the use of a scan tool and the proper Diagnostic Procedures Information. The scan tool can provide confirmation that the Controller Area Network (CAN) Data Bus is functional, that all of the electronic modules are sending and receiving the proper messages on the CAN Data Bus, and that the power sunroof motor is being sent the proper hard wired output by the sunroof switch.

For complete circuit diagrams, refer to the appropriate wiring information. The wiring information includes wiring diagrams, proper wire and connector repair procedures, details of wire harness routing and retention, connector pin-out information and location views for the various wire harness connectors, splices and grounds.

Refer to the appropriate diagnostic information.

STANDARD PROCEDURE

SUNROOF POSITION CALIBRATION

Press the power sunroof switch (Open, Closed, and Vent). If no movement occurs when either the open switch or closed switch is pressed, but the system does move when the vent button is pressed and held, the system is not calibrated. Perform the following procedure to position calibrate the power sunroof system.

1. Turn the ignition to the RUN position.
2. Press the vent button on the power sunroof switch and hold until the sunroof glass panel has moved to the full vent position and the motor movement has stopped for at least 1 second.
3. Press the close switch on the power sunroof switch and hold for a moment (at least 100ms) and release. The sunroof glass panel should continue travel to the full close position. If the sunroof glass panel does not return to the full close position, refer to the appropriate diagnostic information for full system diagnosis.
4. Verify proper system operation.

EXCESSIVE FORCE LIMITATION (EFL) CALIBRATION

NOTE: Verify the battery is in good condition prior to performing this procedure. Do not leave the vehicle on a battery charger while performing this procedure. If the voltage at the sunroof motor/module drops below 11 volts or exceeds 15 volts at anytime while this procedure is being performed, the Excessive Force Limitation (EFL) function will not be properly calibrated.

1. Turn the ignition to the RUN position.
2. Press the vent button on the power sunroof switch and hold until the sunroof glass panel has moved to the full vent position and the motor movement has stopped for at least 1 second.
3. Press the close position on the power sunroof switch and release. The sunroof glass panel should continue travel to the full closed position. **This will be considered the first sunroof closed position in a series of four sunroof closes.**
4. Press the vent button on the power sunroof switch and release. The sunroof glass panel should move to the full vent position. After the sunroof motor/module has stopped, press the close position on the power sunroof switch and release. The sunroof glass panel should continue travel to the full closed position. **This will be considered the second sunroof closed position in a series of four sunroof closes.**
5. Continue to move the sunroof glass to the “vent” then “closed” positions two more times so that the sunroof glass has moved to the closed position a total of four times starting with the first sunroof close in step 3.
6. Press the open position on the power sunroof switch and release. The sunroof glass panel should continue travel to the full open position.
7. Press the close position on the power sunroof switch and release. The sunroof glass panel should continue travel to the full closed position. **This will be considered the first sunroof closed position in a series of five sunroof closes.**

8. Press the open position on the power sunroof switch and release. The sunroof glass panel should move to the full open position. After the sunroof motor/module has stopped, press the close position on the power sunroof switch and release. The sunroof glass panel should continue travel to the full closed position. **Continue to move the sunroof glass to the "open" then "closed" position four more times so that the sunroof glass has moved to the closed position a total of five times starting with the first sunroof close in step 7.**

Verify proper EFL calibration by placing a standard pencil at the front of the sunroof and then moving the sunroof to the full closed position. The sunroof should reverse direction upon contact without damage to the pencil.

REMOVAL

WARNING: The Excessive Force Limitation (EFL) feature must be calibrated any time a sunroof motor/module is replaced with a new component. Failure to perform this procedure could result in vehicle damage and/or personal injury. (Refer to 8 - ELECTRICAL/POWER TOP/MOTOR - STANDARD PROCEDURE - EXCESSIVE FORCE LIMITATION (EFL) CALIBRATION) for the appropriate procedure.

1. Disconnect the battery negative cable.
2. Remove the vehicle headliner, (Refer to 23 - BODY/INTERIOR/HEADLINER - REMOVAL).
3. Remove the power sunroof motor/module electrical connector (2).
4. Remove the retaining screws (3) and remove the motor/module (1) from the vehicle.

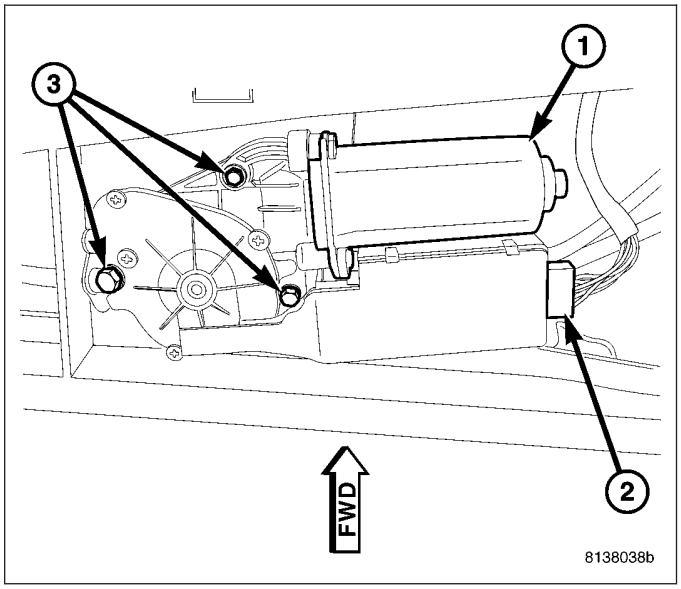

INSTALLATION

WARNING: The Excessive Force Limitation (EFL) feature must be calibrated any time a sunroof motor/module is replaced with a new component. Failure to perform this procedure could result in vehicle damage and/or personal injury. (Refer to 8 - ELECTRICAL/POWER TOP/MOTOR - STANDARD PROCEDURE - EXCESSIVE FORCE LIMITATION (EFL) CALIBRATION) for the appropriate procedure.

1. Position the power sunroof motor/module (1) in the vehicle.
2. Install the motor/module retaining screws (3). Tighten the screws to 4 N·m (35 in. lbs.).
3. Connect the motor/module electrical connector (2).
4. Connect the battery negative cable and move the sunroof through one open and close cycle to confirm proper system operation.
5. Install the vehicle headliner, (Refer to 23 - BODY/INTERIOR/HEADLINER - INSTALLATION).
6. Perform the sunroof position calibration, (Refer to 8 - ELECTRICAL/POWER TOP/MOTOR - STANDARD PROCEDURE - SUNROOF POSITION CALIBRATION).
7. Perform the Excessive Force Limitation (EFL) calibration, (Refer to 8 - ELECTRICAL/POWER TOP/MOTOR - STANDARD PROCEDURE - EXCESSIVE FORCE LIMITATION (EFL) CALIBRATION).
8. Verify proper operation of the power sunroof system.

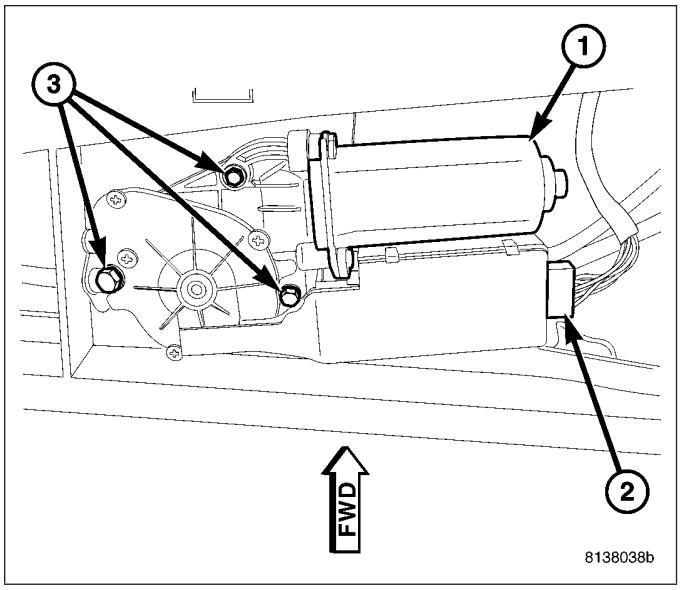

SWITCH - SUNROOF

DESCRIPTION

The power sunroof switch (3) is a combination push-button and rocker switch module mounted in the overhead console. The sunroof switch is a direct contact unit that is directly wired to the sunroof motor/module assembly. The sunroof switch performs the following functions:

- Power sunroof open (back of switch pushed)
- Power sunroof closed (front of switch pushed)
- Power sunroof vent (switch center button pushed)

The power sunroof switch is part of the overhead console assembly and cannot be replaced separately. If the switch is damaged or inoperative the overhead console must be replaced, (Refer to 8 - ELECTRICAL/OVERHEAD CONSOLE - REMOVAL).

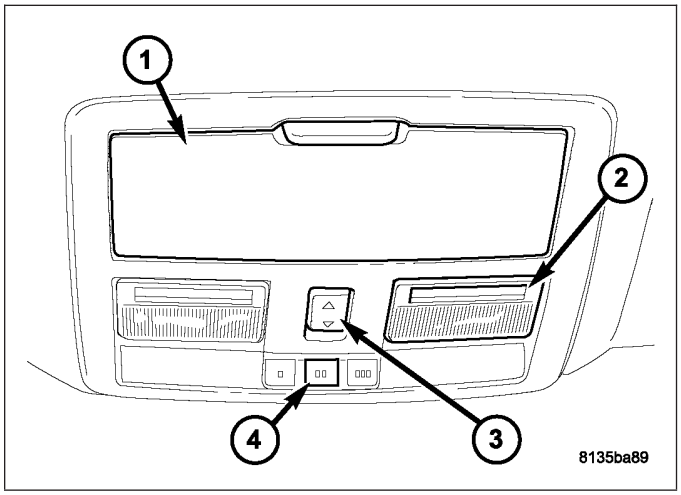

OPERATION

The power sunroof switch is hard wired to the sunroof motor/module assembly. The switch receives battery current from the motor/module when the ignition switch is in the RUN and ACCESSORY positions or the vehicle Accessory Delay System is active. When one of the switch positions is pressed it sends battery current back to the motor/module, signaling it to move the power sunroof to the appropriate position. The motor/module will perform one of the following functions:

- Power sunroof open (back of switch pushed)
- Power sunroof closed (front of switch pushed)
- Power sunroof vent (switch center button pushed)

DIAGNOSIS AND TESTING

SWITCH - POWER SUNROOF

Any diagnosis of the power sunroof system should begin with the use of a scan tool and the proper Diagnostic Procedures Information. The scan tool can provide confirmation that the Controller Area Network (CAN) Data Bus circuit is functional, that all of the electronic modules are sending and receiving the proper messages on the CAN Data Bus, and that the power sunroof motor/module assembly is being sent the proper hard wired output by the sunroof switch.

For complete circuit diagrams, refer to the appropriate wiring information. The wiring information includes wiring diagrams, proper wire and connector repair procedures, details of wire harness routing and retention, connector pin-out information and location views for the various wire harness connectors, splices and grounds. If completing the

appropriate diagnostic information results in the sunroof switch being inoperative, perform the following test prior to switch replacement.

1. Disconnect and isolate the battery negative cable.
2. Remove the overhead console, (Refer to 8 - ELECTRICAL/OVERHEAD CONSOLE - REMOVAL).
3. Disconnect the power sunroof switch wire harness connector.
4. Using an ohmmeter, test the continuity of the power sunroof switch in each switch position. Refer to the POWER SUNROOF SWITCH CONTINUITY TABLE . If OK, inspect the wiring harness and connectors for damage. Use a scan tool and the proper Diagnostic Procedures Information to complete diagnosis of the power sunroof system. If not OK, replace the overhead console.

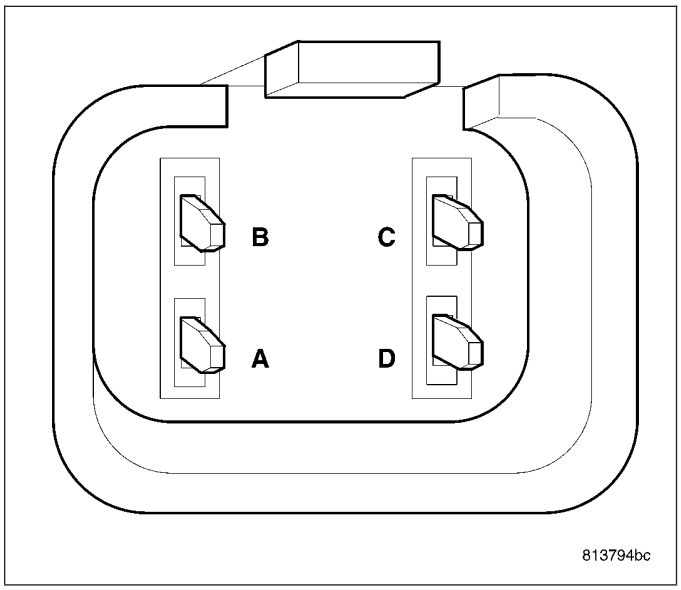

POWER SUNROOF SWITCH CONTINUITY TABLE

SWITCH POSITION	CONTINUITY BETWEEN PINS
OFF	NO CONTINUITY
SUNROOF OPEN	B & D
SUNROOF CLOSED	B & C
SUNROOF VENT	B & A

POWER WINDOWS - ELECTRICAL DIAGNOSTICS

TABLE OF CONTENTS

page

POWER WINDOWS - ELECTRICAL DIAGNOSTICS
DIAGNOSIS AND TESTING
B1852–DRIVER WINDOW SWITCH CIRCUIT STUCK – DDM 230
B1854–DRIVER WINDOW MOTOR CONTROL CIRCUIT LOW – DDM. 233
B1855–DRIVER WINDOW MOTOR CONTROL CIRCUIT HIGH – DDM 236
B1858–DRIVER WINDOW POSITION SENSOR POWER SUPPLY LOW – DDM 239
B1859–DRIVER WINDOW POSITION SENSOR POWER SUPPLY HIGH – DDM. . . . 242
B185A-DRIVER WINDOW POSITION SENSOR CIRCUIT PERFORMANCE - DDM . 244
B185D-PASSENGER WINDOW SWITCH CIRCUIT STUCK - PDM 250
B185F–PASSENGER WINDOW MOTOR CONTROL CIRCUIT LOW – PDM. 253
B1860–PASSENGER WINDOW MOTOR CONTROL CIRCUIT HIGH – PDM 256
B1863–PASSENGER WINDOW POSITION SENSOR POWER SUPPLY LOW – PDM 259
B1864–PASSENGER WINDOW POSITION SENSOR POWER SUPPLY HIGH – PDM. . . . 262
B1865–PASSENGER WINDOW POSITION SENSOR CIRCUIT PERFORMANCE - PDM . 264
B1868–DRIVER PASSENGER WINDOW SWITCH CIRCUIT STUCK – DDM 270
B210D-BATTERY VOLTAGE LOW – DDM/PDM. 273
B210E-BATTERY VOLTAGE HIGH – DDM/PDM. 274
B2218, B2219–DRIVER/PASSENGER DOOR MODULE INTERNAL – DDM/PDM 275
U0019–CAN B BUS-DDM/PDM 276
B16A4–PASSENGER WINDOW SWITCH BACKLIGHTING CIRCUIT LOW – PDM 280
B16A5–PASSENGER WINDOW SWITCH BACKLIGHTING CIRCUIT HIGH – PDM 283
U0141–LOST COMMUNICATION WITH FRONT CONTROL MODULE. 285

page

U0151-LOST COMMUNICATION WITH OCCUPANT RESTRAINT CONTROLLER 285
U0154-LOST COMMUNICATION WITH OCCUPANT CLASSIFICATION MODULE 285
U0155-LOST COMMUNICATION WITH CLUSTER/CCN 285
U0156-LOST COMMUNICATION WITH EOM . . 285
U0159-LOST COMMUNICATION WITH PARKING ASSIST CONTROL MODULE 285
U0164-LOST COMMUNICATION WITH HVAC CONTROL MODULE 286
U0168-LOST COMMUNICATION WITH VEHICLE SECURITY CONTROL MODULE (SKREEM/WCM) 286
U0169-LOST COMMUNICATION WITH SUNROOF CONTROL MODULE. 286
U0181-LOST COMMUNICATION WITH HEADLAMP LEVELING TRANSLATOR 286
U0184-LOST COMMUNICATION WITH RADIO 286
U0186-LOST COMMUNICATION WITH AUDIO AMPLIFIER. 286
U0186-LOST COMMUNICATION WITH AUDIO AMPLIFIER. 286
U0195-LOST COMMUNICATION WITH SDARS 286
U0199-LOST COMMUNICATION WITH DRIVER DOOR MODULE. 287
U0200-LOST COMMUNICATION WITH PASSENGER DOOR MODULE 287
U0208-LOST COMMUNICATION WITH HEATED SEAT CONTROL MODULE 287
U0209-LOST COMMUNICATION WITH MEMORY SEAT CONTROL MODULE 287
U0212-LOST COMMUNICATION WITH SCCM - CAN B 287
U0231-LOST COMMUNICATION WITH RAIN SENSING MODULE 287
*FRONT WINDOW MOVES ABOUT 3 INCHES AND QUITS 288

POWER WINDOWS - ELECTRICAL DIAGNOSTICS

DIAGNOSIS AND TESTING

B1852–DRIVER WINDOW SWITCH CIRCUIT STUCK – DDM

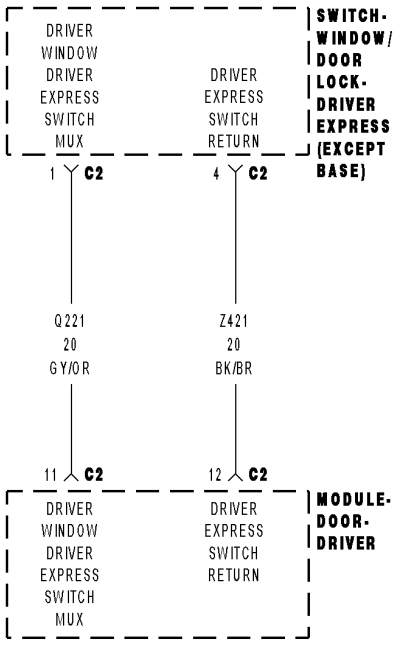

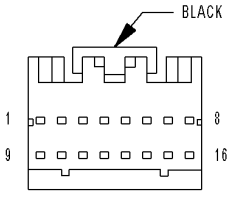

MODULE- DOOR- DRIVER C2

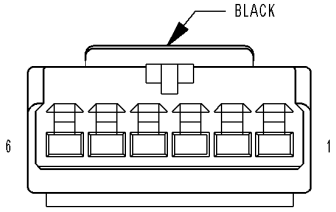

SWITCH- WINDOW/ DOOR LOCK- DRIVER EXPRESS C2 (EXCEPT BASE)

813578b5

For a complete wiring diagram **Refer to Section 8W**.

- **When Monitored:**
  Whenever the module is awake.
- **Set Condition:**
  When the Driver Window Driver Express Switch Mux circuit is below 3.5 volts for over 30 seconds.

Possible Causes
(Q221) DRIVER WINDOW DRIVER EXPRESS SWITCH MUX CIRCUIT SHORT TO GROUND
(Q221) DRIVER WINDOW DRIVER EXPRESS SWITCH MUX CIRCUIT SHORT TO THE (Z421) DRIVER EXPRESS SWITCH RETURN CIRCUIT
WINDOW/DOOR LOCK SWITCH SHORT TO GROUND
DRIVER DOOR MODULE (DDM)

Diagnostic Test

1. TEST FOR INTERMITTENT CONDITION

Turn the ignition on.
With the scan tool, record and erase DTC's
Operate the Driver Window Switch in all positions several times.
Wait 30 seconds.
With the scan tool, read DTC's.

Does the scan tool display B1852–DRIVER WINDOW SWITCH CIRCUIT STUCK?

Yes >> Go To 2

No >> The conditions that caused this code to set are not present at this time. Using the wiring diagram/schematic as a guide, inspect the wiring and connectors.
Perform BODY VERIFICATION TEST - VER 1. (Refer to BODY VERIFICATION TEST – VER 1).

2. DRIVER WINDOW SWITCH SHORTED

With the scan tool, erase DTC's.
Disconnect the Driver Window/Door Lock Switch C2 connector.
With the scan tool, read DTC's.

Does the scan tool display B1852–DRIVER WINDOW SWITCH CIRCUIT STUCK?

No >> Replace the Driver Express Window/Door Lock Switch.
Perform BODY VERIFICATION TEST - VER 1. (Refer to BODY VERIFICATION TEST – VER 1).

Yes >> Go To 3

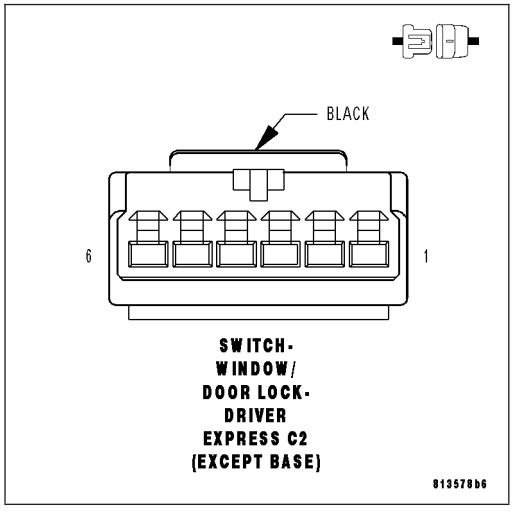

3. (Q221) DRIVER WINDOW DRIVER EXPRESS SWITCH MUX CIRCUIT SHORT TO GROUND

Turn the ignition off.

Disconnect the Driver Door Module C2 connector.

Measure the resistance between ground and the (Q221) Driver Window Driver Express Switch Mux circuit.

Is the resistance below 10000.0 ohms?

Yes >> Repair the (Q221) Driver Window Driver Express Switch Mux circuit for a short to ground.

Perform BODY VERIFICATION TEST - VER 1. (Refer to BODY VERIFICATION TEST – VER 1).

Yes >> Go To 4

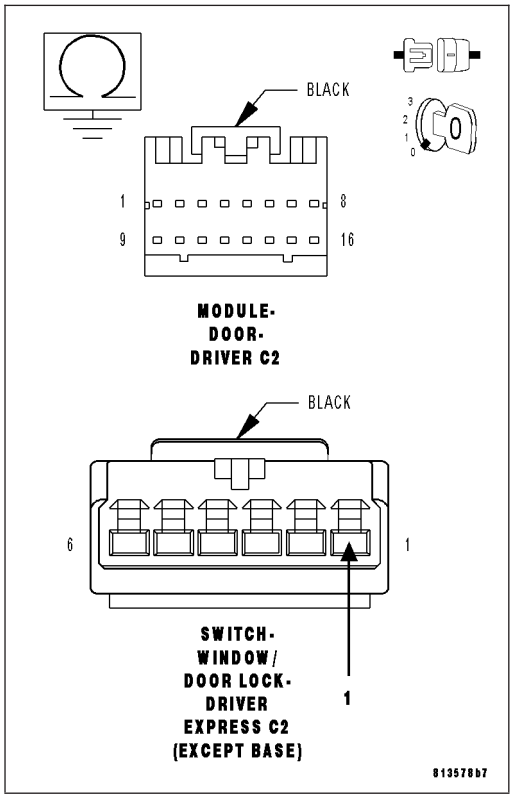

4. (Q221) DRIVER WINDOW DRIVER EXPRESS SWITCH MUX CIRCUIT SHORT TO (Z421) DRIVER EXPRESS SWITCH RETURN CIRCUIT

Measure the resistance between the (Q221) Driver Window Driver Express Switch Mux circuit and the (Z421) Driver Express Switch Return circuit.

Is the resistance below 10000.0 ohms?

Yes >> Repair the (Q221) Driver Window Driver Express Switch Mux circuit for a short to the (Z421) Driver Express Switch Return circuit.

Perform BODY VERIFICATION TEST - VER 1. (Refer to BODY VERIFICATION TEST – VER 1).

No >> Replace the Driver Door Module.

Perform BODY VERIFICATION TEST - VER 1. (Refer to BODY VERIFICATION TEST – VER 1).

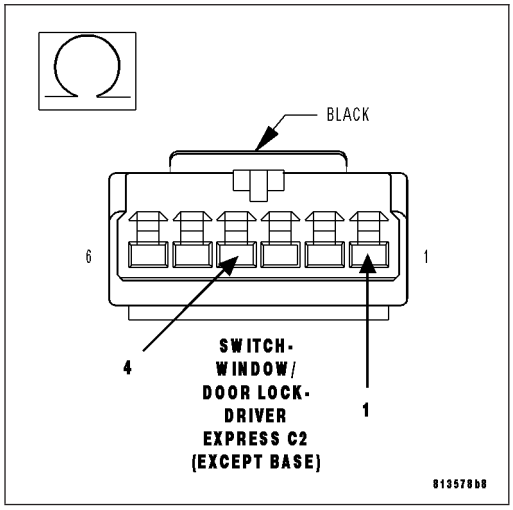

B1854–DRIVER WINDOW MOTOR CONTROL CIRCUIT LOW – DDM

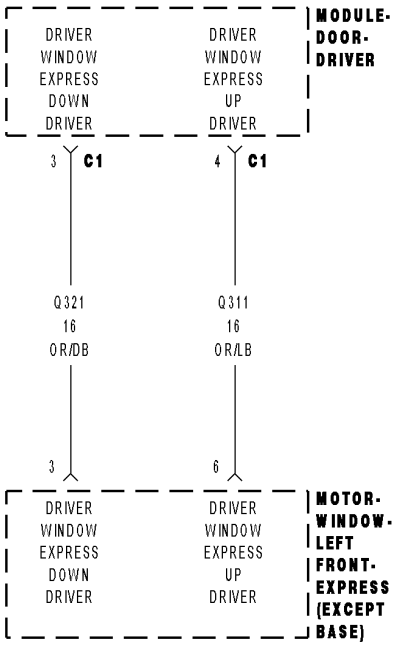

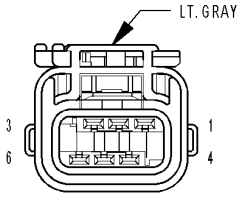

MOTOR-
WINDOW-
LEFT FRONT-
EXPRESS
(EXCEPT BASE)

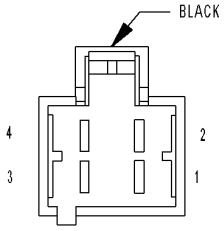

MODULE-
DOOR-
DRIVER C1

8135cae3

For a complete wiring diagram **Refer to Section 8W**.

- **When Monitored:**
  Whenever the module is awake.
- **Set Condition:**
  When both Driver Window Driver circuits (Up and Down) are grounded during a window movement command, this code will set.

Possible Causes
(Q321) DRIVER WINDOW EXPRESS DOWN DRIVER CIRCUIT SHORT TO GROUND
(Q311) DRIVER WINDOW EXPRESS UP DRIVER CIRCUIT SHORT TO GROUND
(Q321) DRIVER WINDOW EXPRESS DOWN DRIVER CIRCUIT SHORTED TO THE (Q311) DRIVER WINDOW EXPRESS UP DRIVER CIRCUIT
WINDOW MOTOR SHORTED
DRIVER DOOR MODULE (DDM)

Diagnostic Test

1. TEST FOR INTERMITTENT CONDITION

Turn the ignition on.
With the scan tool, record and erase DTC's
Try to operate the Driver Window up and down several times.
Wait 30 seconds.
With the scan tool, read DTC's.

Does the scan tool display B1854–DRIVER WINDOW MOTOR CONTROL CIRCUIT LOW?

Yes >> Go To 2

No >> The conditions that caused this code to set are not present at this time. Using the wiring diagram/schematic as a guide, inspect the wiring and connectors.
Perform BODY VERIFICATION TEST - VER 1. (Refer to BODY VERIFICATION TEST – VER 1).

2. WINDOW MOTOR SHORTED

With the scan tool, erase DTC's.
Turn the ignition off.
Disconnect the Driver Window Motor connector.
Turn the ignition on.
Operate the driver window switch up and down several times.
With the scan tool, read DTC's.

Does the scan tool display B1854–DRIVER WINDOW MOTOR CONTROL CIRCUIT LOW?

No >> Replace the Window Motor.
Perform BODY VERIFICATION TEST - VER 1. (Refer to BODY VERIFICATION TEST – VER 1).

Yes >> Go To 3

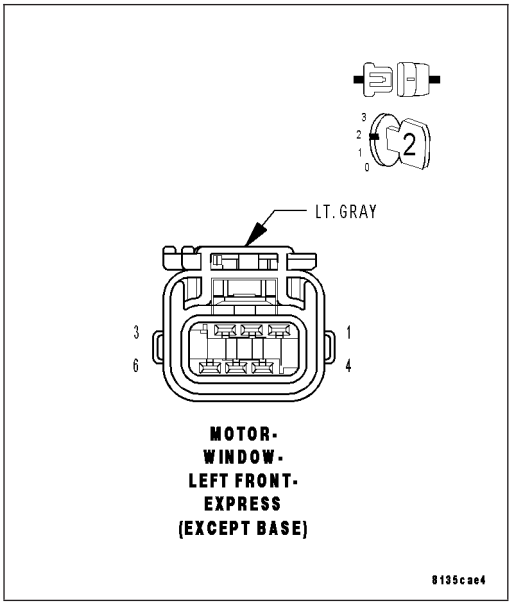

3. (Q321) DRIVER WINDOW EXPRESS DOWN DRIVER CIRCUIT SHORT TO GROUND

Turn the ignition off.

Disconnect the Driver Door Module C1 connector.

Measure the resistance between Ground and the (Q321) Driver Window Express Down Driver circuit.

Is the resistance below 1000.0 ohms?

Yes >> Repair the (Q321) Driver Window Express Down Driver circuit for a short to ground.
Perform BODY VERIFICATION TEST - VER 1. (Refer to BODY VERIFICATION TEST – VER 1).

No >> Go To 4

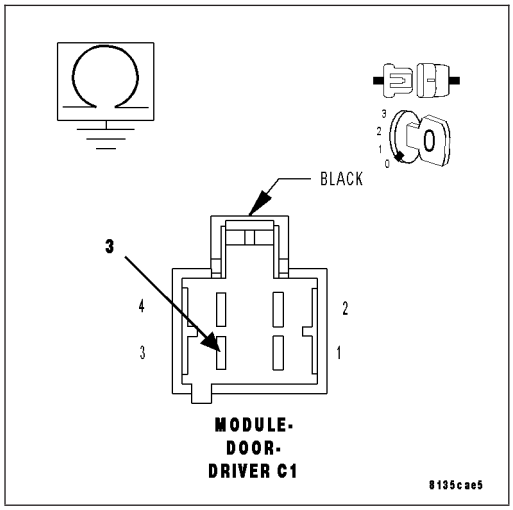

4. (Q311) DRIVER WINDOW EXPRESS UP DRIVER CIRCUIT SHORT TO GROUND

Measure the resistance between Ground and the (Q311) Driver Window Express Up Driver circuit.

Is the resistance below 1000.0 ohms?

Yes >> Repair the (Q311) Driver Window Express Up Driver circuit for a short to ground.
Perform BODY VERIFICATION TEST - VER 1. (Refer to BODY VERIFICATION TEST – VER 1).

No >> Go TO 5

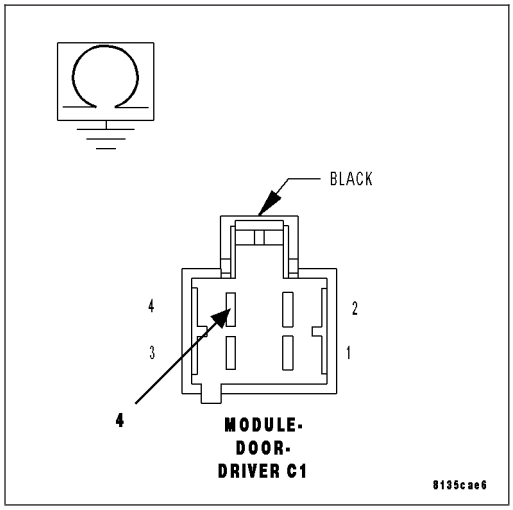

5. (Q321) DRIVER WINDOW EXPRESS DOWN DRIVER CIRCUIT SHORT TO (Q311) DRIVER WINDOW EXPRESS UP DRIVER CIRCUIT

Measure the resistance between the (Q321) Driver Window Express Down Driver circuit and the (Q311) Driver Window Express Up Driver circuit.

Is the resistance below 1000.0 ohms?

Yes >> Repair the (Q321) Driver Window xpress Down Driver circuit for a short to the (Q311) Driver Window Express Up Driver circuit.
Perform BODY VERIFICATION TEST - VER 1. (Refer to BODY VERIFICATION TEST – VER 1).

No >> Replace the Driver Door Module.
Perform BODY VERIFICATION TEST - VER 1. (Refer to BODY VERIFICATION TEST – VER 1).

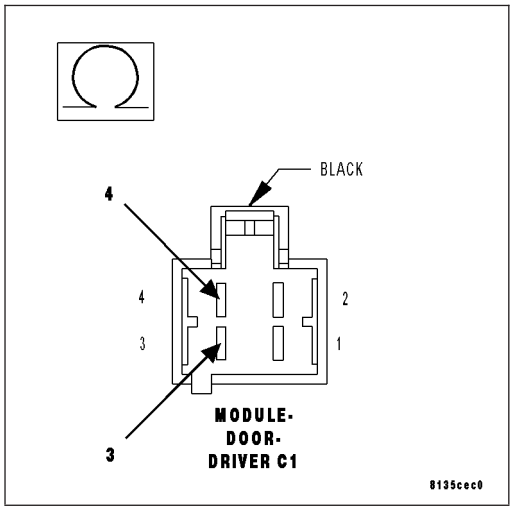

B1855–DRIVER WINDOW MOTOR CONTROL CIRCUIT HIGH – DDM

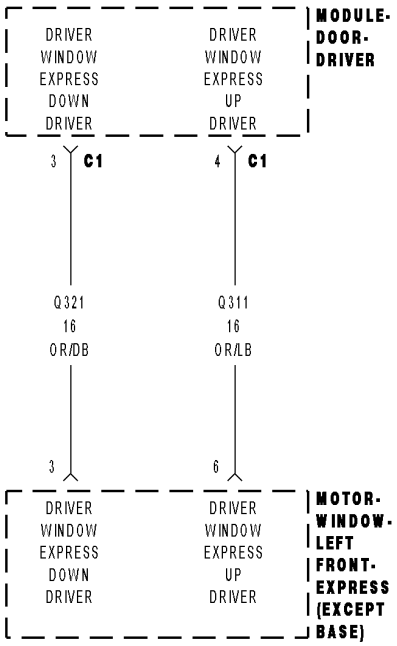

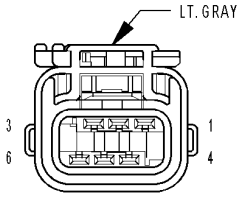

MOTOR-
WINDOW-
LEFT FRONT-
EXPRESS
(EXCEPT BASE)

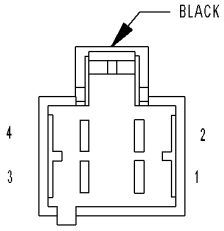

MODULE-
DOOR-
DRIVER C1

8135cae3

For a complete wiring diagram **Refer to Section 8W**.

- **When Monitored:**
  Whenever the module is awake.
- **Set Condition:**
  When both Driver Window Driver circuits (Up and Down) are supplied with voltage during a window movement command, this code will set.

Possible Causes
(Q321) DRIVER WINDOW EXPRESS DOWN DRIVER CIRCUIT SHORT TO VOLTAGE
(Q311) DRIVER WINDOW EXPRESS UP DRIVER CIRCUIT SHORT TO VOLTAGE
DRIVER DOOR MODULE (DDM)

Diagnostic Test

1. TEST FOR INTERMITTENT CONDITION

Turn the ignition on.

With the scan tool, record and erase DTC's

Try to operate the Driver Window up and down several times.

Wait 30 seconds.

With the scan tool, read DTC's.

Does the scan tool display B1855–DRIVER WINDOW MOTOR CONTROL CIRCUIT HIGH?

Yes >> Go To 2

No >> The conditions that caused this code to set are not present at this time. Using the wiring diagram/schematic as a guide, inspect the wiring and connectors.
Perform BODY VERIFICATION TEST - VER 1. (Refer to BODY VERIFICATION TEST – VER 1).

2. (Q321) DRIVER WINDOW EXPRESS DOWN DRIVER CIRCUIT SHORT TO VOLTAGE

Turn the ignition off.

Disconnect the Driver Door Module C1 connector.

Turn the ignition on.

Measure the voltage between the (Q321) Driver Window Express Down Driver circuit and Ground.

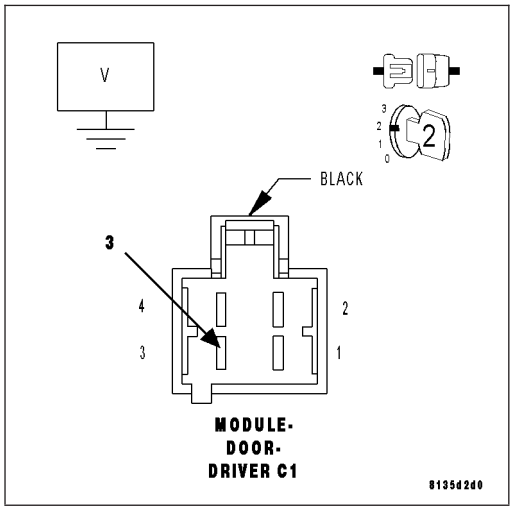

Is there any voltage present?

Yes >> Repair the (Q321) Driver Window Express Down Driver circuit for a short to voltage.
Perform BODY VERIFICATION TEST - VER 1. (Refer to BODY VERIFICATION TEST – VER 1).

No >> Go To 3

3. (Q311) DRIVER WINDOW EXPRESS UP DRIVER CIRCUIT SHORT TO VOLTAGE

Measure the voltage between the (Q311) Driver Window Express Up Driver circuit and Ground.

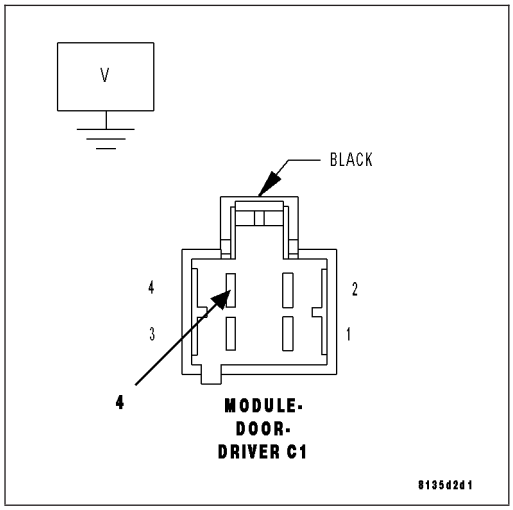

Is there any voltage present?

Yes >> Repair the (Q311) Driver Window Express Up Driver circuit for a short to voltage.
Perform BODY VERIFICATION TEST - VER 1. (Refer to BODY VERIFICATION TEST – VER 1).

No >> Replace the Driver Door Module.
Perform BODY VERIFICATION TEST - VER 1. (Refer to BODY VERIFICATION TEST – VER 1).

B1858–DRIVER WINDOW POSITION SENSOR POWER SUPPLY LOW – DDM

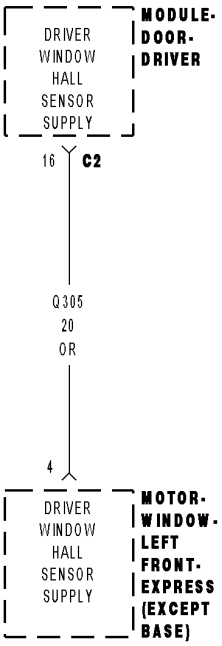

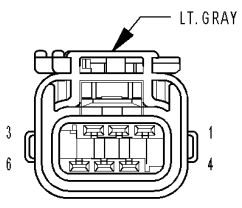

MOTOR· WINDOW· LEFT FRONT· EXPRESS (EXCEPT BASE)

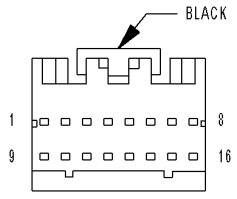

MODULE· DOOR· DRIVER C2

8135e745

For a complete wiring diagram **Refer to Section 8W**.

- **When Monitored:**
  Whenever the module is awake.
- **Set Condition:**
  When the Driver Window Hall Sensor Supply circuit falls below 1.4 volts for over 315 ms., this code will set.

Possible Causes
(Q305) DRIVER WINDOW HALL SENSOR SUPPLY CIRCUIT SHORT TO GROUND
WINDOW MOTOR SHORTED
DRIVER DOOR MODULE (DDM)

Diagnostic Test

1. TEST FOR INTERMITTENT CONDITION

Turn the ignition on.
With the scan tool, record and erase DTC's
Operate the Driver Window up and down several times.
Wait 30 seconds.
With the scan tool, read DTC's.

Does the scan tool display B1858–DRIVER WINDOW POSITION SENSOR POWER SUPPLY LOW?

Yes >> Go To 2

No >> The conditions that caused this code to set are not present at this time. Using the wiring diagram/schematic as a guide, inspect the wiring and connectors.
Perform BODY VERIFICATION TEST - VER 1. (Refer to BODY VERIFICATION TEST – VER 1).

2. WINDOW MOTOR SHORTED

With the scan tool, erase DTC's.
Turn the ignition off.
Disconnect the Driver Window Motor connector.
Turn the ignition on.
Operate the driver window switch up and down several times.
With the scan tool, read DTC's.

Does the scan tool display B1858–DRIVER WINDOW POSITION SENSOR POWER SUPPLY LOW?

No >> Replace the Window Motor.
Perform BODY VERIFICATION TEST - VER 1. (Refer to BODY VERIFICATION TEST – VER 1).

Yes >> Go To 3

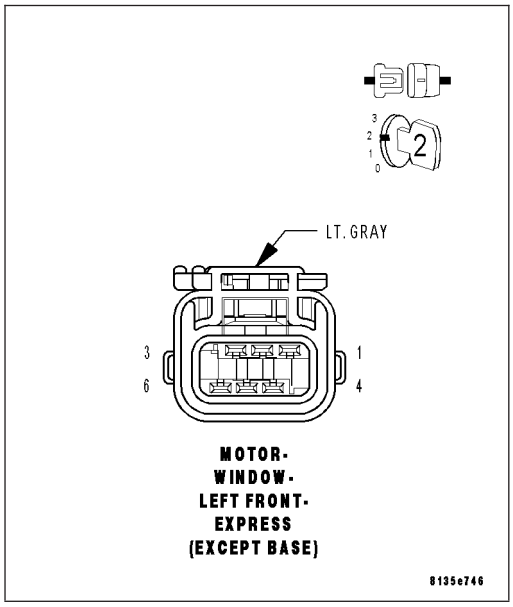

3. (Q305) DRIVER WINDOW HALL SENSOR SUPPLY CIRCUIT SHORT TO GROUND

Turn the ignition off.

Disconnect the Driver Door Module C2 connector.

Measure the resistance between Ground and the (Q305) Driver Window Hall Sensor Supply circuit.

Is the resistance below 1000.0 ohms?

Yes >> Repair the (Q305) Driver Window Hall Sensor Supply circuit for a short to ground.
Perform BODY VERIFICATION TEST - VER 1. (Refer to BODY VERIFICATION TEST – VER 1).

No >> Replace the Driver Door Module.
Perform BODY VERIFICATION TEST - VER 1. (Refer to BODY VERIFICATION TEST – VER 1).

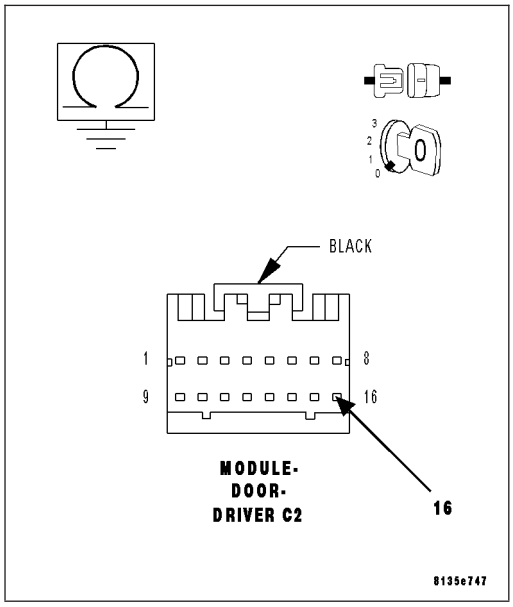

B1859–DRIVER WINDOW POSITION SENSOR POWER SUPPLY HIGH – DDM

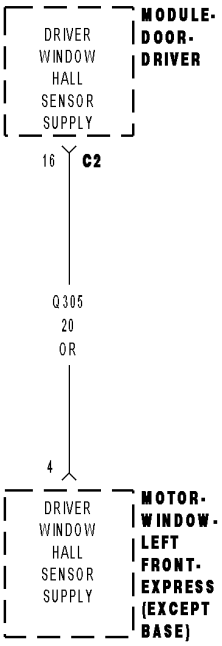

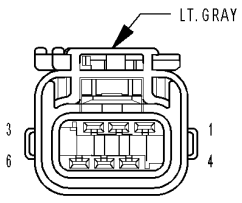

MOTOR· WINDOW· LEFT FRONT· EXPRESS (EXCEPT BASE)

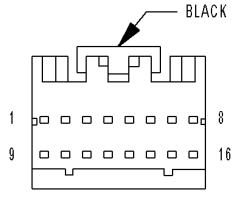

MODULE· DOOR· DRIVER C2

8135e745

For a complete wiring diagram **Refer to Section 8W**.

- **When Monitored:**
  Whenever the power is turned off to the module and it goes from being awake to sleep mode.
- **Set Condition:**
  When the Driver Window Hall Sensor Supply circuit is above 0.96 volts for over 15 ms. and the power to the module has been turned off, this code will set.

Possible Causes
(Q305) DRIVER WINDOW HALL SENSOR SUPPLY CIRCUIT SHORT TO VOLTAGE
DRIVER DOOR MODULE (DDM)

Diagnostic Test

1. TEST FOR INTERMITTENT CONDITION

Turn the ignition on.

With the scan tool, record and erase DTC's

Wait 30 seconds.

With the scan tool, read the active DTC's.

Does the scan tool display B1859–DRIVER WINDOW POSITION SENSOR POWER SUPPLY HIGH?

Yes >> Go To 2

No >> The conditions that caused this code to set are not present at this time. Using the wiring diagram/schematic as a guide, inspect the wiring and connectors.
Perform BODY VERIFICATION TEST - VER 1. (Refer to BODY VERIFICATION TEST – VER 1).

2. (Q305) DRIVER WINDOW HALL SENSOR SUPPLY CIRCUIT SHORT TO VOLTAGE

Turn the ignition off.

Disconnect the Driver Door Module C2 connector.

Turn the ignition on.

Measure the voltage between the (Q305) Driver Window Hall Sensor Supply circuit and Ground.

Is there any voltage present?

Yes >> Repair the (Q305) Driver Window Hall Sensor Supply circuit for a short to voltage.
Perform BODY VERIFICATION TEST - VER 1. (Refer to BODY VERIFICATION TEST – VER 1).

No >> Replace the Driver Door Module.
Perform BODY VERIFICATION TEST - VER 1. (Refer to BODY VERIFICATION TEST – VER 1).

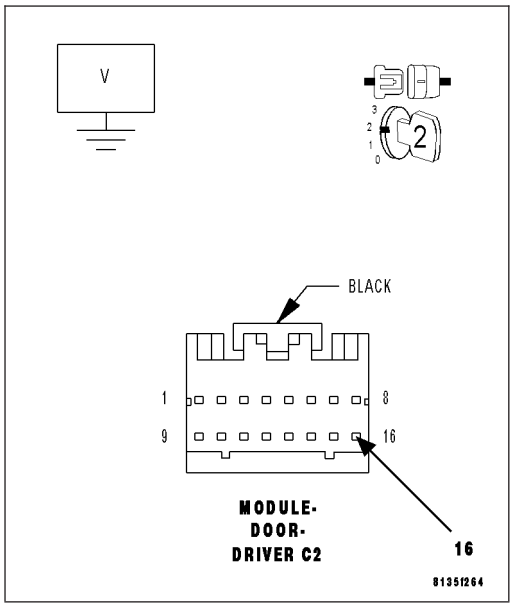

B185A-DRIVER WINDOW POSITION SENSOR CIRCUIT PERFORMANCE - DDM

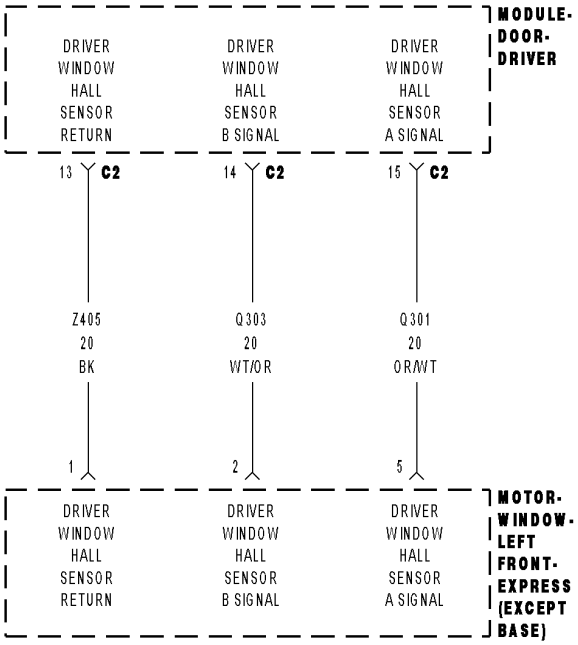

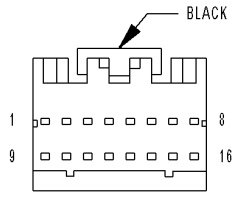

MODULE-
DOOR-
DRIVER C2

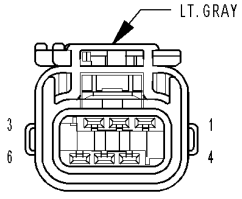

MOTOR-
WINDOW-
LEFT FRONT-
EXPRESS
(EXCEPT BASE)

813515e5

For a complete wiring diagram **Refer to Section 8W**.

- **When Monitored:**
  Whenever the module is awake.
- **Set Condition:**
  When one or both of the window motor hall sensors does not generate a signal during a window movement, this code will set.

Possible Causes
(Q301) DRIVER WINDOW HALL SENSOR A SIGNAL CIRCUIT SHORT TO GROUND
(Q303) DRIVER WINDOW HALL SENSOR B SIGNAL CIRCUIT SHORT TO GROUND
(Q301) DRIVER WINDOW HALL SENSOR A SIGNAL CIRCUIT SHORTED TO THE (Q303) DRIVER WINDOW HALL SENSOR B SIGNAL CIRCUIT
(Q301) DRIVER WINDOW HALL SENSOR A SIGNAL CIRCUIT SHORTED TO THE (Z405) DRIVER WINDOW HALL SENSOR RETURN CIRCUIT
(Q303) DRIVER WINDOW HALL SENSOR B SIGNAL CIRCUIT SHORTED TO THE (Z405) DRIVER WINDOW HALL SENSOR RETURN CIRCUIT
(Q301) DRIVER WINDOW HALL SENSOR A SIGNAL CIRCUIT OPEN
(Q303) DRIVER WINDOW HALL SENSOR B SIGNAL CIRCUIT OPEN
WINDOW MOTOR MALFUNCTION

Diagnostic Test

1. TEST FOR INTERMITTENT CONDITION

Turn the ignition on.

With the scan tool, record and erase DTC's

Try to operate the Driver Window up and down several times.

Wait 30 seconds.

With the scan tool, read DTC's.

Does the scan tool display B185A–DRIVER WINDOW POSITION SENSOR CIRCUIT PERFORMANCE?

Yes >> Go To 2

No >> The conditions that caused this code to set are not present at this time. Using the wiring diagram/schematic as a guide, inspect the wiring and connectors.
Perform BODY VERIFICATION TEST - VER 1. (Refer to BODY VERIFICATION TEST – VER 1).

2. (Q301) DRIVER WINDOW HALL SENSOR A SIGNAL SHORT TO GROUND

Turn the ignition off.

Disconnect the Driver Window Motor connector.

Disconnect the Driver Door Module C2 connector.

Measure the resistance between Ground and the Driver Window Hall Sensor A Signal circuit.

Is the resistance below 10000.0 ohms?

Yes >> Repair the Driver Window Hall Sensor A signal circuit for a short to ground.
Perform BODY VERIFICATION TEST - VER 1. (Refer to BODY VERIFICATION TEST – VER 1).

No >> Go To 3

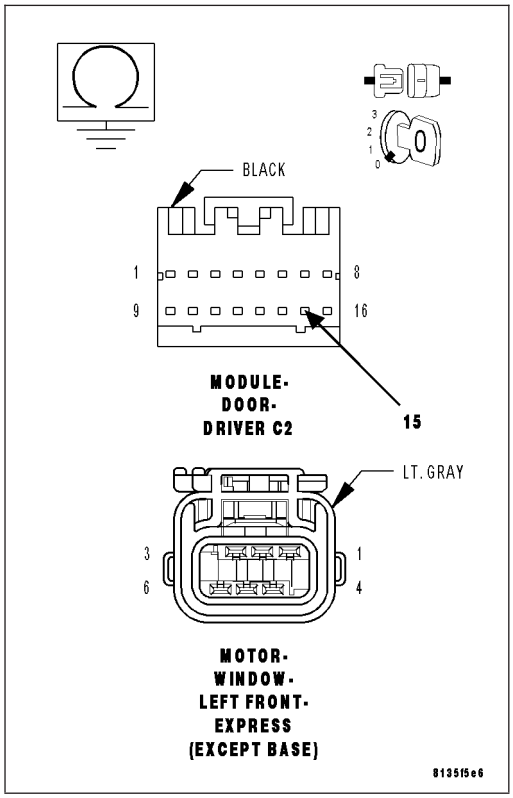

3. (Q303) DRIVER WINDOW HALL SENSOR B SIGNAL CIRCUIT SHORT TO GROUND

Measure the resistance between Ground and the (Q303) Driver Window Hall Sensor B Signal circuit.

Is the resistance below 10000.0 ohms?

Yes >> Repair the (Q303) Driver Window Hall Sensor B Signal circuit for a short to ground.
Perform BODY VERIFICATION TEST - VER 1. (Refer to BODY VERIFICATION TEST – VER 1).

No >> Go To 4

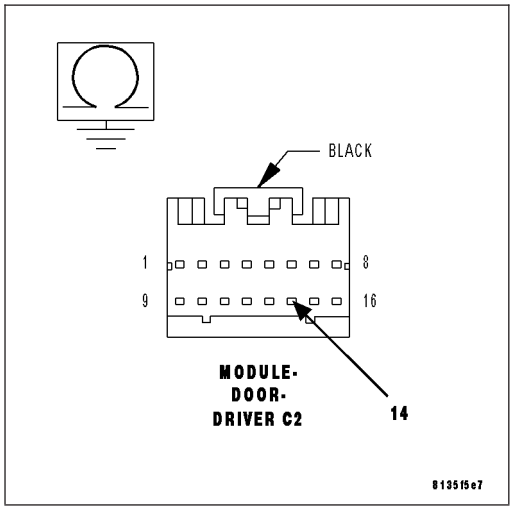

4. (Q301) DRIVER WINDOW HALL SENSOR A SIGNAL CIRCUIT OPEN

Measure the resistance of the (Q301) Driver Window Hall Sensor A Signal circuit between the Motor connector and the Module C2 connector.

Is the resistance below 1.0 ohms?

No >> Repair the (Q301) Driver Window Hall Sensor A Signal circuit for an open.
Perform BODY VERIFICATION TEST - VER 1. (Refer to BODY VERIFICATION TEST – VER 1).

Yes >> Go To 5

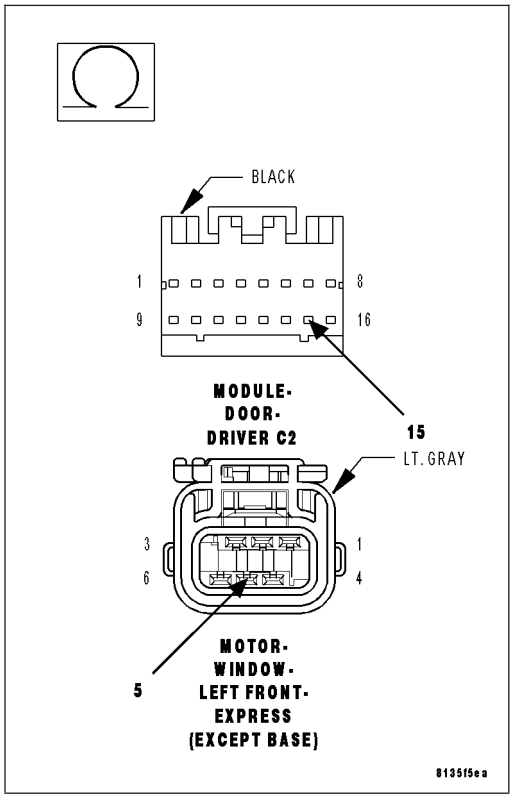

5. (Q303) DRIVER WINDOW HALL SENSOR B SIGNAL CIRCUIT OPEN

Measure the resistance of the (Q303) Driver Window Hall Sensor B Signal circuit between the Motor connector and the Module C2 connector.

Is the resistance below 1.0 ohms?

No >> Repair the (Q303) Driver Window Hall Sensor B Signal circuit for an open.
Perform BODY VERIFICATION TEST - VER 1. (Refer to BODY VERIFICATION TEST – VER 1).

Yes >> Go TO 6

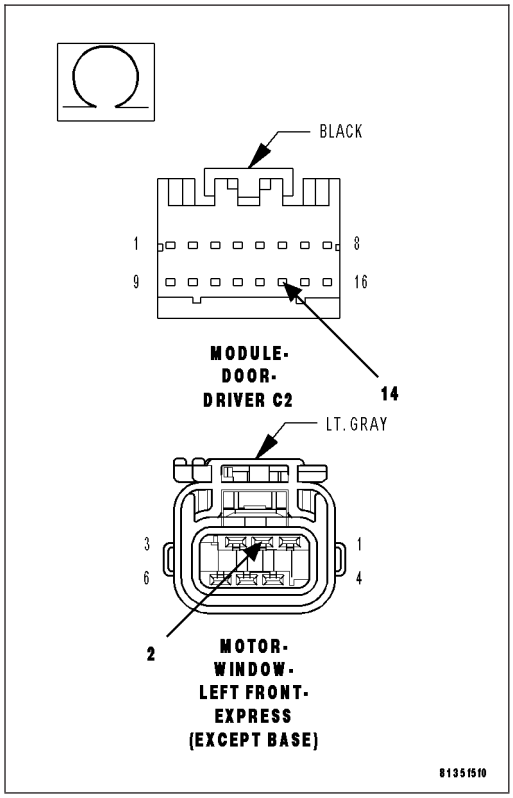

6. (Q303) DRIVER WINDOW HALL SENSOR B SIGNAL CIRCUIT SHORTED TO THE (Z405) DRIVER WINDOW HALL SENSOR RETURN

Measure the resistance between the (Q303) Driver Window Hall Sensor B Signal circuit and the (Z405) Driver Window Hall Senspr Return circuit.

Is the resistance below 10000.0 ohms?

No >> Repair the (Q303) Driver Window Hall Sensor B Signal circuit for a short to the Driver Window Hall Sensor Return circuit.

Perform BODY VERIFICATION TEST - VER 1. (Refer to BODY VERIFICATION TEST – VER 1).

Yes >> Go TO 7

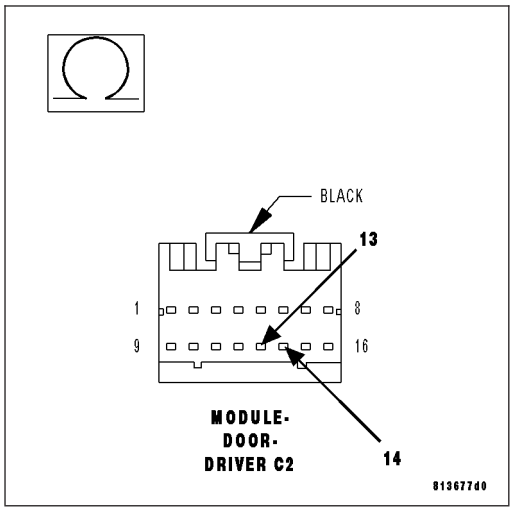

7. (Q301) DRIVER WINDOW HALL SENSOR A SIGNAL CIRCUIT SHORTED TO THE (Z405) DRIVER WINDOW HALL SENSOR RETURN

Measure the resistance between the (Q301) Driver Window Hall Sensor A Signal circuit and the (Z405) Driver Window Hall Senspr Return circuit.

Is the resistance below 10000.0 ohms?

No >> Repair the (Q301) Driver Window Hall Sensor A Signal circuit for a short to the (Z405) Driver Window Hall Sensor Return circuit.

Perform BODY VERIFICATION TEST - VER 1. (Refer to BODY VERIFICATION TEST – VER 1).

Yes >> Go TO 8

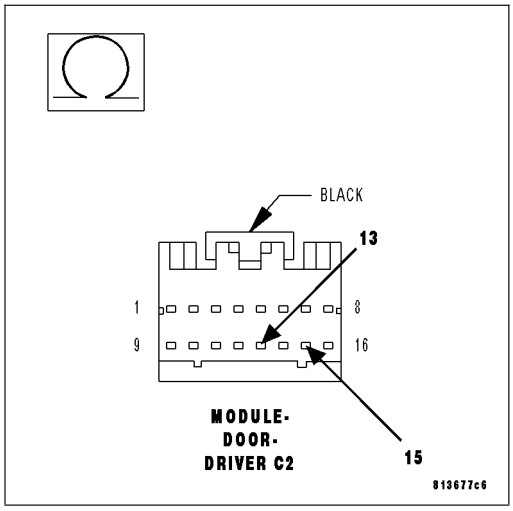

8. (Q301) DRIVER WINDOW HALL SENSOR A SIGNAL CIRCUIT SHORT TO (Q303) DRIVER WINDOW HALL SENSOR B SIGNAL CIRCUIT

Measure the resistance between the (Q301) Driver Window Hall Sensor A Signal circuit and the (Q303) Driver Window Hall Sensor B Signal circuit.

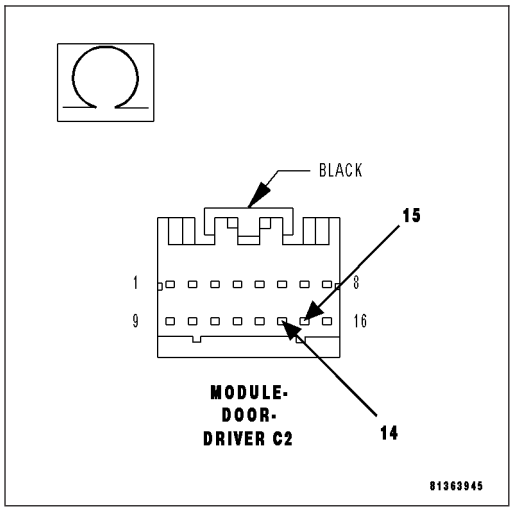

Is the resistance below 1000.0 ohms?

Yes >> Repair the (Q301) Driver Window Hall Sensor A Signal circuit for a short to the (Q303) Driver Window Hall Sensor B Signal circuit.

Perform BODY VERIFICATION TEST - VER 1. (Refer to BODY VERIFICATION TEST – VER 1).

No >> Replace the Window Motor.

Perform BODY VERIFICATION TEST - VER 1. (Refer to BODY VERIFICATION TEST – VER 1).

B185D-PASSENGER WINDOW SWITCH CIRCUIT STUCK - PDM

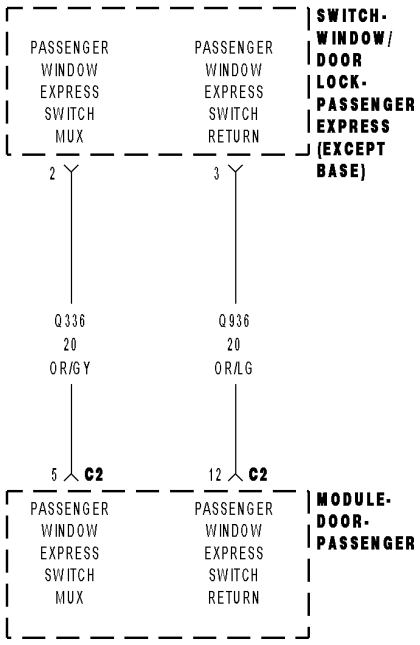

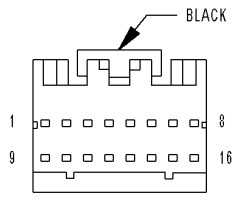

MODULE-
DOOR-
PASSENGER C2

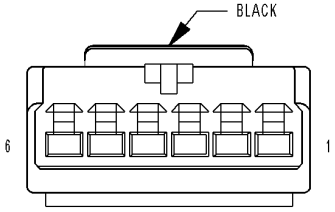

SWITCH-
WINDOW/
DOOR LOCK-
PASSENGER
EXPRESS
(EXCEPT BASE)

813644ec

For a complete wiring diagram **Refer to Section 8W**.

- **When Monitored:**
  Whenever the module is awake.
- **Set Condition:**
  When the Passenger Window Express Switch Mux circuit is below 3.5 volts for over 30 seconds.

Possible Causes
(Q336) PASSENGER WINDOW EXPRESS SWITCH MUX CIRCUIT SHORT TO GROUND
(Q336) PASSENGER WINDOW DRIVER EXPRESS SWITCH MUX CIRCUIT SHORT TO THE (Q936) PASSENGER WINDOW EXPESS SWITCH RETURN CIRCUIT
WINDOW/DOOR LOCK SWITCH SHORT TO GROUND
PASSENGER DOOR MODULE (PDM)

Diagnostic Test

1. TEST FOR INTERMITTENT CONDITION

Turn the ignition on.
With the scan tool, record and erase DTC's
Operate the Passenger Window Switch in all positions several times.
Wait 30 seconds.
With the scan tool, read DTC's.

Does the scan tool display B185D-PASSENGER WINDOW SWITCH CIRCUIT STUCK?

Yes >> Go To 2

No >> The conditions that caused this code to set are not present at this time. Check for a sticking switch and using the wiring diagram/schematic as a guide, inspect the wiring and connectors.
Perform BODY VERIFICATION TEST - VER 1. (Refer to BODY VERIFICATION TEST – VER 1.

2. DRIVER WINDOW SWITCH SHORTED

With the scan tool, erase DTC's.
Disconnect the Passenger Window/Door Lock Switch connector.
With the scan tool, read DTC's.

Does the scan tool display B185D–PASSENGER WINDOW SWITCH CIRCUIT STUCK?

No >> Replace the Passenger Express Window/Door Lock Switch.
Perform BODY VERIFICATION TEST - VER 1. (Refer to BODY VERIFICATION TEST – VER 1.

Yes >> Go To 3

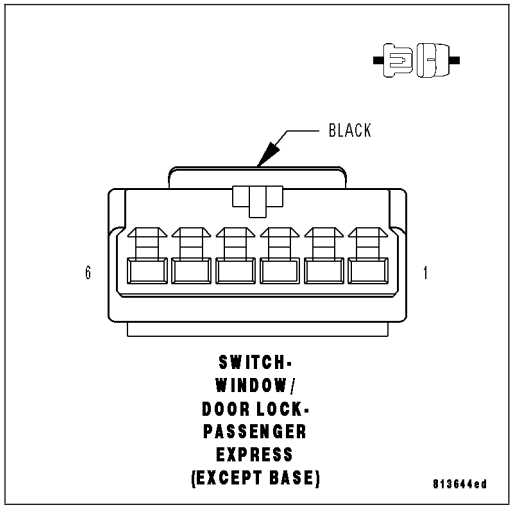

3. (Q336) PASSENGER WINDOW EXPRESS SWITCH MUX CIRCUIT SHORT TO GROUND

Turn the ignition off.

Disconnect the Passenger Door Module C2 connector.

Measure the resistance between ground and the (Q336) Passenger Window Express Switch Mux circuit.

Is the resistance below 10000.0 ohms?

Yes >> Repair the (Q336) Passenger Window Express Switch Mux circuit for a short to ground.
Perform BODY VERIFICATION TEST - VER 1. (Refer to BODY VERIFICATION TEST – VER 1.

No >> Go To 4

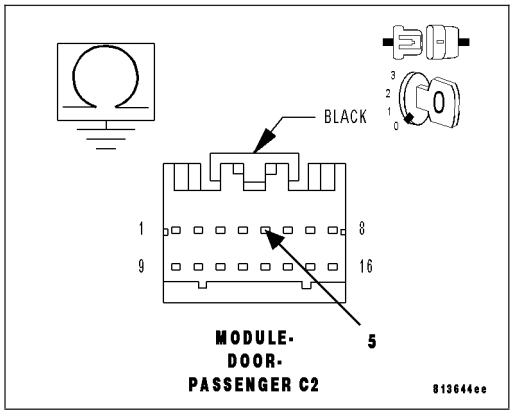

4. (Q336) PASSENGER WINDOW EXPRESS SWITCH MUX CIRCUIT SHORT TO (Q936) PASSENGER EXPRESS SWITCH RETURN CIRCUIT

Measure the resistance between the (Q336) Passenger Window Express Switch Mux circuit and the (Q936) Passenger Express Switch Return circuit.

Is the resistance below 10000.0 ohms?

Yes >> Repair the (Q336) Passenger Express Switch Mux circuit for a short to the (Q936) Passenger Window Express Switch Return circuit.
Perform BODY VERIFICATION TEST - VER 1. (Refer to BODY VERIFICATION TEST – VER 1.

No >> Replace the Passenger Door Module.
Perform BODY VERIFICATION TEST - VER 1. (Refer to BODY VERIFICATION TEST – VER 1.

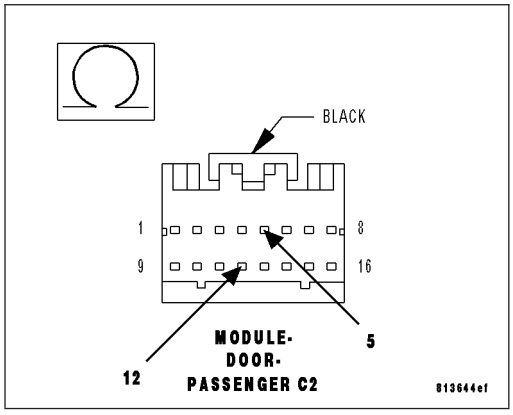

B185F–PASSENGER WINDOW MOTOR CONTROL CIRCUIT LOW – PDM

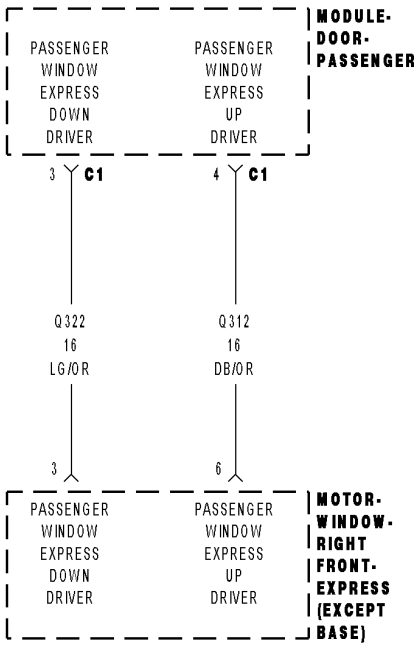

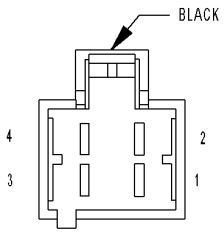

MODULE-
DOOR-
PASSENGER C1

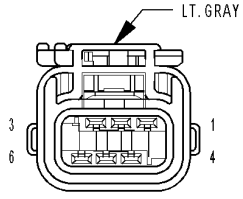

MOTOR-
WINDOW-
RIGHT FRONT-
EXPRESS
(EXCEPT BASE)

81365826

For a complete wiring diagram **Refer to Section 8W**.

- **When Monitored:**
  Whenever the module is awake.
- **Set Condition:**
  When both Passenger Window Driver circuits (Up and Down) are grounded during a window movement command, this code will set.

Possible Causes
(Q322) PASSENGER WINDOW EXPRESS DOWN DRIVER CIRCUIT SHORT TO GROUND
(Q312) PASSENGER WINDOW EXPRESS UP DRIVER CIRCUIT SHORT TO GROUND
(Q322) PASSENGER WINDOW EXPRESS DOWN DRIVER CIRCUIT SHORTED TO THE (Q312) PASSENGER WINDOW EXPRESS UP DRIVER CIRCUIT
WINDOW MOTOR SHORTED
PASSENGER DOOR MODULE (PDM)

Diagnostic Test

1. TEST FOR INTERMITTENT CONDITION

Turn the ignition on.
With the scan tool, record and erase DTC's
Try to operate the Passenger Window up and down several times.
Wait 30 seconds.
With the scan tool, read DTC's.

Does the scan tool display B185F–PASSENGER WINDOW MOTOR CONTROL CIRCUIT LOW?

Yes >> Go To 2

No >> The conditions that caused this code to set are not present at this time. Using the wiring diagram/schematic as a guide, inspect the wiring and connectors.
Perform BODY VERIFICATION TEST - VER 1. (Refer to BODY VERIFICATION TEST – VER 1).

2. WINDOW MOTOR SHORTED

With the scan tool, erase DTC's.
Turn the ignition off.
Disconnect the Passenger Window Motor connector.
Turn the ignition on.
Operate the passenger window switch up and down several times.
With the scan tool, read DTC's.

Does the scan tool display B185F–PASSENGER WINDOW MOTOR CONTROL CIRCUIT LOW?

No >> Replace the Window Motor.
Perform BODY VERIFICATION TEST - VER 1. (Refer to BODY VERIFICATION TEST – VER 1).

Yes >> Go To 3

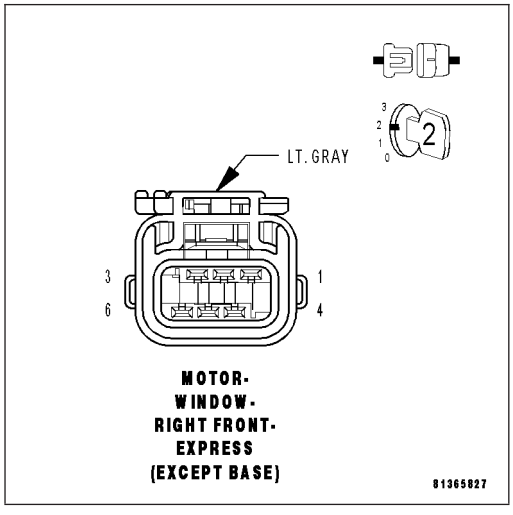

3. (Q322) PASSENGER WINDOW EXPRESS DOWN DRIVER CIRCUIT SHORT TO GROUND

Turn the ignition off.

Disconnect the Passenger Door Module C1 connector.

Measure the resistance between Ground and the (Q322) Passenger Window Express Down Driver circuit.

Is the resistance below 1000.0 ohms?

Yes >> Repair the (Q322) Passenger Window Express Down Driver circuit for a short to ground.
Perform BODY VERIFICATION TEST - VER 1. (Refer to BODY VERIFICATION TEST – VER 1).

No >> Go To 4

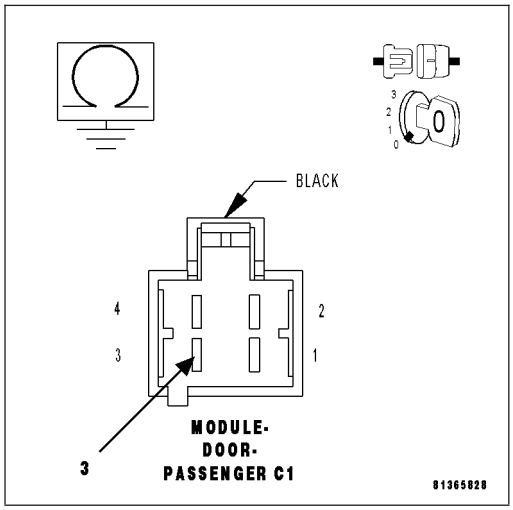

4. (Q312) PASSENGER WINDOW EXPRESS UP DRIVER CIRCUIT SHORT TO GROUND

Measure the resistance between Ground and the (Q312) Passenger Window Express Up Driver circuit.

Is the resistance below 1000.0 ohms?

Yes >> Repair the (Q312) Passenger Window Express Up Driver circuit for a short to ground.
Perform BODY VERIFICATION TEST - VER 1. (Refer to BODY VERIFICATION TEST – VER 1).

No >> Go To 5

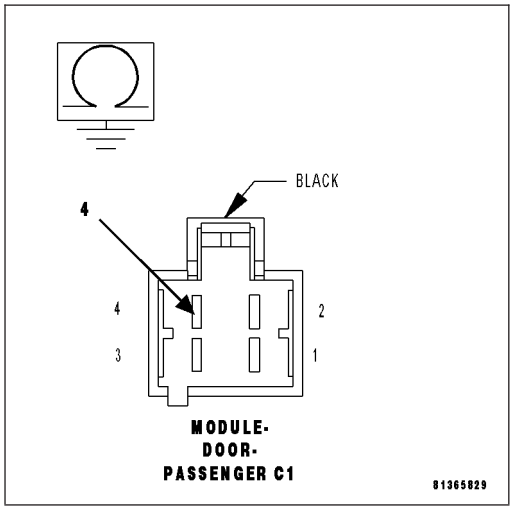

5. (Q322) PASSENGER WINDOW EXPRESS DOWN DRIVER CIRCUIT SHORT TO (Q312) PASSENGER WINDOW EXPRESS UP DRIVER CIRCUIT

Measure the resistance between the (Q322) Passsenger Window Express Down Driver circuit and the (Q312) Passenger Window Express Up Driver circuit.

Is the resistance below 1000.0 ohms?

Yes >> Repair the (Q322) Passenger Window xpress Down Driver circuit for a short to the (Q312) Passenger Window Express Up Driver circuit.
Perform BODY VERIFICATION TEST - VER 1. (Refer to BODY VERIFICATION TEST – VER 1).

No >> Replace the Passenger Door Module.
Perform BODY VERIFICATION TEST - VER 1. (Refer to BODY VERIFICATION TEST – VER 1).

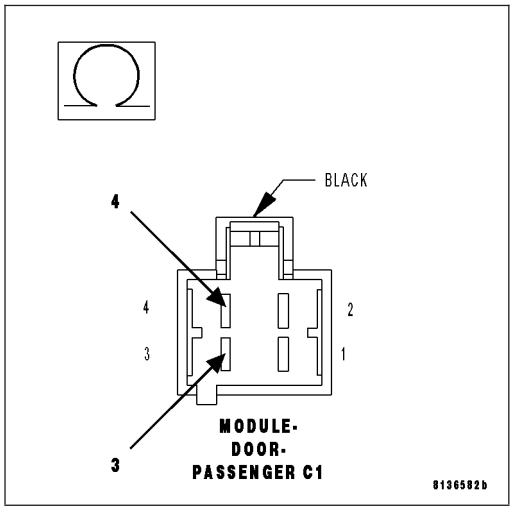

B1860–PASSENGER WINDOW MOTOR CONTROL CIRCUIT HIGH – PDM

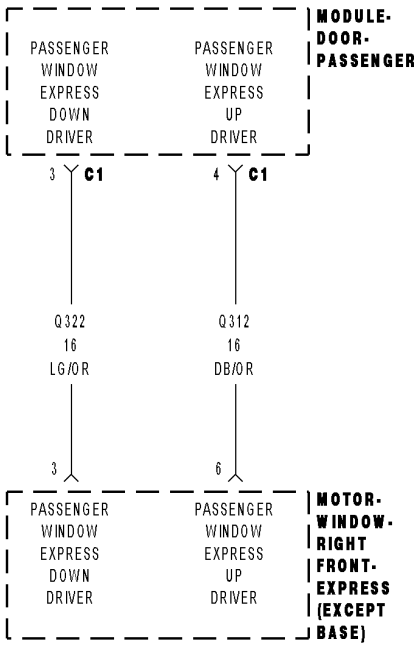

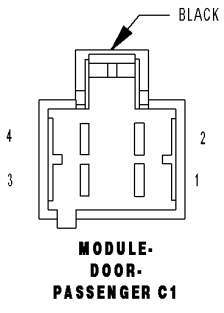

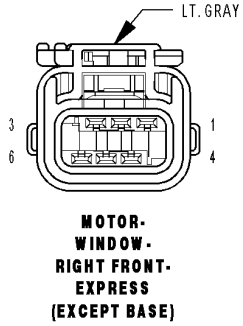

81365826

For a complete wiring diagram **Refer to Section 8W**.

- **When Monitored:**
  Whenever the module is awake.
- **Set Condition:**
  When both Passenger Window Driver circuits (Up and Down) are supplied with voltage during a window movement command, this code will set.

Possible Causes
(Q322) PASSENGER WINDOW EXPRESS DOWN DRIVER CIRCUIT SHORT TO VOLTAGE
(Q312) PASSENGR WINDOW EXPRESS UP DRIVER CIRCUIT SHORT TO VOLTAGE
PASSENGER DOOR MODULE (DDM)

Diagnostic Test

1. TEST FOR INTERMITTENT CONDITION

Turn the ignition on.

With the scan tool, record and erase DTC's

Try to operate the Passenger Window up and down several times.

Wait 30 seconds.

With the scan tool, read DTC's.

Does the scan tool display B1860–PASSENGER WINDOW MOTOR CONTROL CIRCUIT HIGH?

Yes >> Go To 2

No >> The conditions that caused this code to set are not present at this time. Using the wiring diagram/schematic as a guide, inspect the wiring and connectors.
Perform BODY VERIFICATION TEST - VER 1. (Refer to BODY VERIFICATION TEST – VER 1).

2. (Q322) PASSENGER WINDOW EXPRESS DOWN DRIVER CIRCUIT SHORT TO VOLTAGE

Turn the ignition off.

Disconnect the Passenger Door Module C1 connector.

Turn the ignition on.

Measure the voltage between the (Q322) Passenger Window Express Down Driver circuit and Ground.

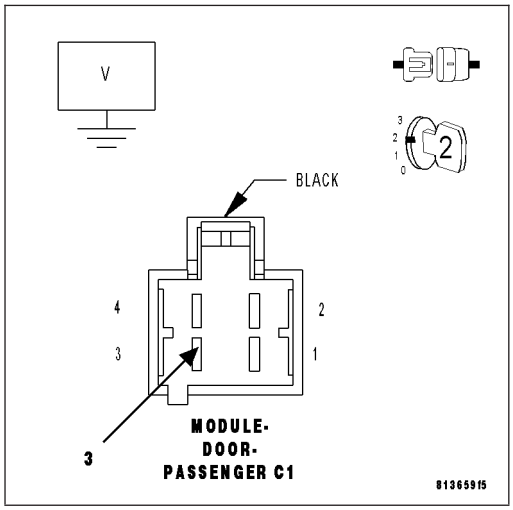

Is there any voltage present?

Yes >> Repair the (Q322) Passenger Window Express Down Driver circuit for a short to voltage.
Perform BODY VERIFICATION TEST - VER 1. (Refer to BODY VERIFICATION TEST – VER 1).

No >> Go To 3

3. (Q312)PASSENGER WINDOW EXPRESS UP DRIVER CIRCUIT SHORT TO VOLTAGE

Measure the voltage between the (Q312) Passenger Window Express Up Driver circuit and Ground.

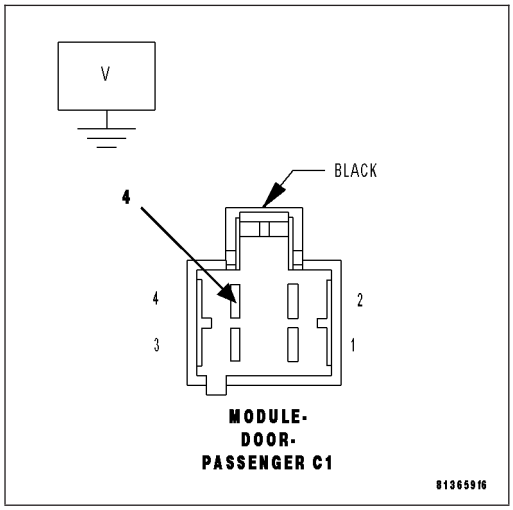

Is there any voltage present?

Yes >> Repair the (Q312) Passenger Window Express Up Driver circuit for a short to voltage.
Perform BODY VERIFICATION TEST - VER 1. (Refer to BODY VERIFICATION TEST – VER 1).

No >> Replace the Passenger Door Module.
Perform BODY VERIFICATION TEST - VER 1. (Refer to BODY VERIFICATION TEST – VER 1).

B1863–PASSENGER WINDOW POSITION SENSOR POWER SUPPLY LOW – PDM

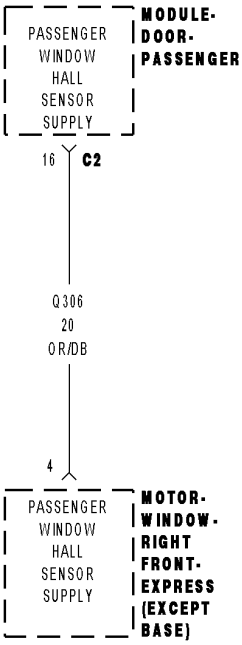

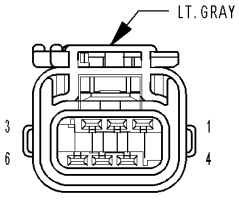

MOTOR- WINDOW- RIGHT FRONT- EXPRESS (EXCEPT BASE)

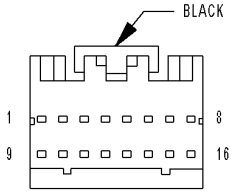

MODULE- DOOR- PASSENGER C2

81365b01

For a complete wiring diagram **Refer to Section 8W**.

- **When Monitored:**
  Whenever the module is awake.
- **Set Condition:**
  When the Passenger Window Hall Sensor Supply circuit falls below 1.4 volts for over 315 ms., this code will set.

Possible Causes
(Q306) PASSENGER WINDOW HALL SENSOR SUPPLY CIRCUIT SHORT TO GROUND
WINDOW MOTOR SHORTED
PASSENGER DOOR MODULE (PDM)

Diagnostic Test

1. TEST FOR INTERMITTENT CONDITION

Turn the ignition on.
With the scan tool, record and erase DTC's
Operate the Passenger Window up and down several times.
Wait 30 seconds.
With the scan tool, read DTC's.

Does the scan tool display B1863–PASSENGER WINDOW POSITION SENSOR POWER SUPPLY LOW?

Yes >> Go To 2

No >> The conditions that caused this code to set are not present at this time. Using the wiring diagram/schematic as a guide, inspect the wiring and connectors.
Perform BODY VERIFICATION TEST - VER 1. (Refer to BODY VERIFICATION TEST – VER 1).

2. WINDOW MOTOR SHORTED

With the scan tool, erase DTC's.
Turn the ignition off.
Disconnect the Passenger Window Motor connector.
Turn the ignition on.
Operate the passenger window switch up and down several times.
With the scan tool, read DTC's.

Does the scan tool display B1863–PASSENGER WINDOW POSITION SENSOR POWER SUPPLY LOW?

No >> Replace the Window Motor.
Perform BODY VERIFICATION TEST - VER 1. (Refer to BODY VERIFICATION TEST – VER 1).

Yes >> Go To 3

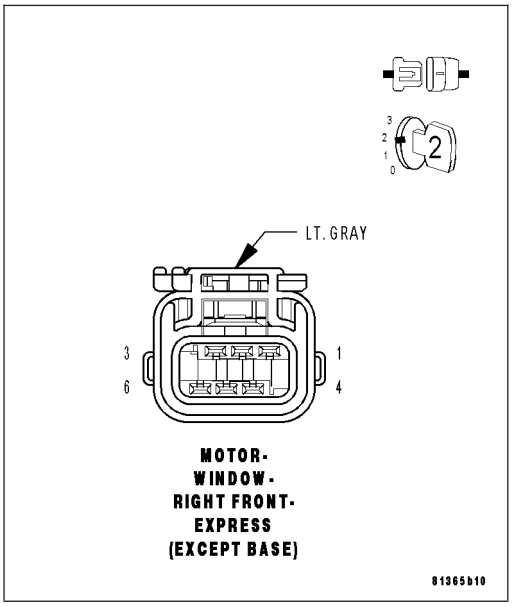

3. (Q306) PASSENGER WINDOW HALL SENSOR SUPPLY CIRCUIT SHORT TO GROUND

Turn the ignition off.

Disconnect the Passenger Door Module C2 connector.

Measure the resistance between Ground and the (Q306) Passenger Window Hall Sensor Supply circuit.

Is the resistance below 1000.0 ohms?

Yes >> Repair the (Q306) Passenger Window Hall Sensor Supply circuit for a short to ground.
Perform BODY VERIFICATION TEST - VER 1. (Refer to BODY VERIFICATION TEST – VER 1).

No >> Replace the Passenger Door Module.
Perform BODY VERIFICATION TEST - VER 1. (Refer to BODY VERIFICATION TEST – VER 1).

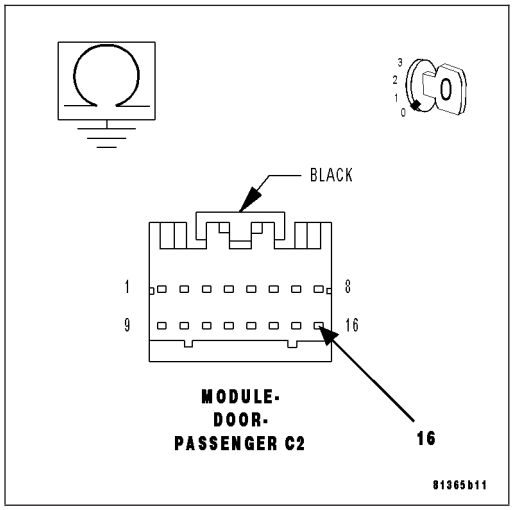

B1864–PASSENGER WINDOW POSITION SENSOR POWER SUPPLY HIGH – PDM

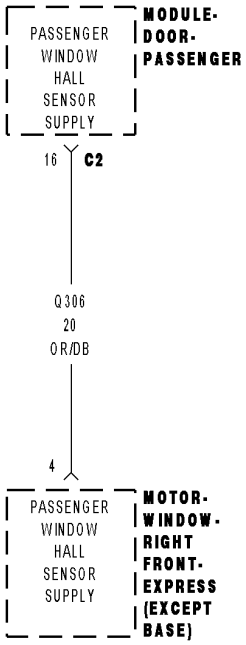

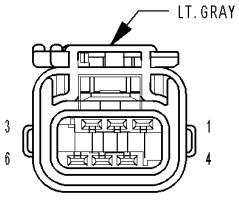

MOTOR-WINDOW-RIGHT FRONT-EXPRESS (EXCEPT BASE)

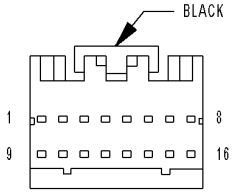

MODULE-DOOR-PASSENGER C2

81365b01

For a complete wiring diagram **Refer to Section 8W**.

- **When Monitored:**
  Whenever the power is turned off to the module and it goes from being awake to sleep mode.
- **Set Condition:**
  When the Passenger Window Hall Sensor Supply circuit is above 0.96 volts for over 15 ms. and the power to the module has been turned off, this code will set.

Possible Causes
(Q306) P[ASSENGER WINDOW HALL SENSOR SUPPLY CIRCUIT SHORT TO VOLTAGE
PASSENGER DOOR MODULE (PDM)

Diagnostic Test

1. TEST FOR INTERMITTENT CONDITION

Turn the ignition on.

With the scan tool, record and erase DTC's

Operate the Passenger Window up and down several times.

Wait 30 seconds.

With the scan tool, read the stored DTC's.

Does the scan tool display B1864–PASSENGER WINDOW POSITION SENSOR POWER SUPPLY HIGH?

Yes >> Go To 2

No >> The conditions that caused this code to set are not present at this time. Using the wiring diagram/schematic as a guide, inspect the wiring and connectors.
Perform BODY VERIFICATION TEST - VER 1. (Refer to BODY VERIFICATION TEST – VER 1).

2. (Q306) PASSENGER WINDOW HALL SENSOR SUPPLY CIRCUIT SHORT TO VOLTAGE

Turn the ignition off.

Disconnect the Passenger Door Module C2 connector.

Turn the ignition on.

Measure the voltage between the (Q306) Passenger Window Hall Sensor Supply circuit and Ground.

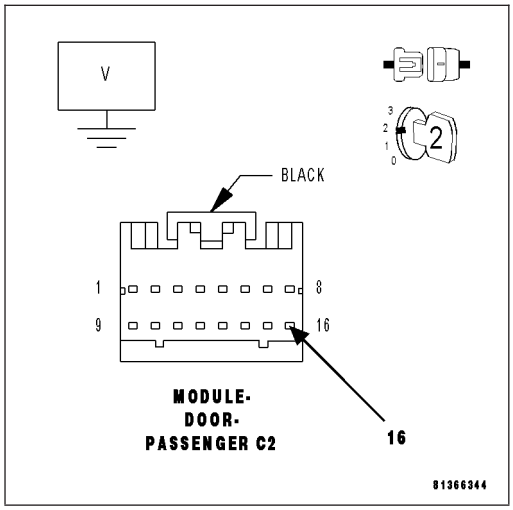

Is there any voltage present?

Yes >> Repair the (Q306) Passenger Window Hall Sensor Supply circuit for a short to voltage.
Perform BODY VERIFICATION TEST - VER 1. (Refer to BODY VERIFICATION TEST – VER 1).

No >> Replace the Passenger Door Module.
Perform BODY VERIFICATION TEST - VER 1. (Refer to BODY VERIFICATION TEST – VER 1).

B1865–PASSENGER WINDOW POSITION SENSOR CIRCUIT PERFORMANCE - PDM

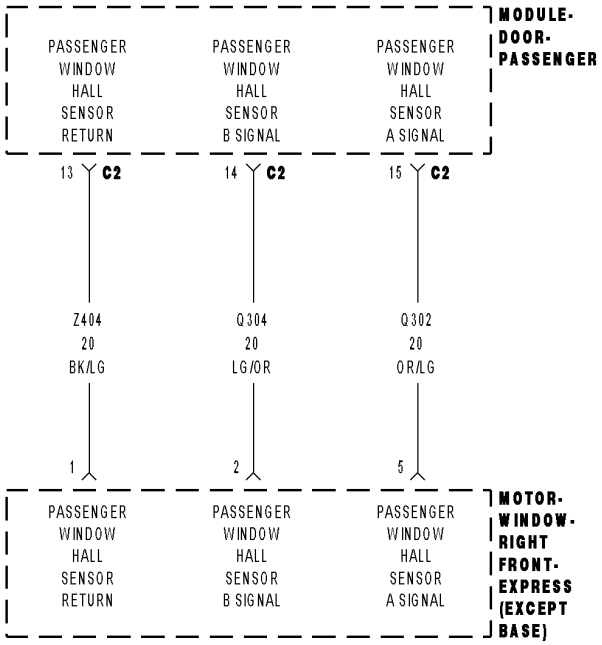

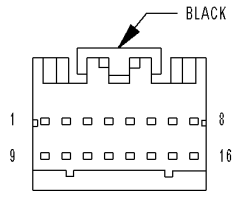

MODULE-
DOOR-
PASSENGER C2

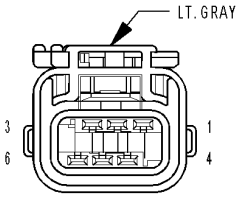

MOTOR-
WINDOW-
RIGHT FRONT-
EXPRESS
(EXCEPT BASE)

8136654a

For a complete wiring diagram **Refer to Section 8W**.

- **When Monitored:**
  Whenever the module is awake.
- **Set Condition:**
  When one or both of the window motor hall sensors do not generate a signal within 1.25 ms during a window movement, this code will set.

Possible Causes
(Q302) PASSENGER WINDOW HALL SENSOR A SIGNAL CIRCUIT SHORT TO GROUND
(Q304) PASSENGER WINDOW HALL SENSOR B SIGNAL CIRCUIT SHORT TO GROUND
(Q302) PASSENGER WINDOW HALL SENSOR A SIGNAL CIRCUIT SHORTED TO THE (Q304) PASSENGER WINDOW HALL SENSOR B SIGNAL CIRCUIT
(Q302) PASSENGER WINDOW HALL SENSOR A SIGNAL CIRCUIT SHORTED TO THE (Z404) PASSENGER WINDOW HALL SENSOR RETURN CIRCUIT
(Q304) PASSENGER WINDOW HALL SENSOR B SIIGNAL CIRCUIT SHORTED TO THE (Z404) PASSENGER WINDOW HALL SENSOR RETURN CIRCUIT
(Q302) PASSENGER WINDOW HALL SENSOR A SIGNAL CIRCUIT OPEN
(Q304) PASSENGER WINDOW HALL SENSOR B SIGNAL CIRCUIT OPEN
WINDOW MOTOR MALFUNCTION

Diagnostic Test

1. TEST FOR INTERMITTENT CONDITION

Turn the ignition on.

With the scan tool, record and erase DTC's

Try to operate the Passenger Window up and down several times.

Wait 30 seconds.

With the scan tool, read DTC's.

Does the scan tool display B1865–PASSENGER WINDOW POSITION SENSOR CIRCUIT PERFORMANCE?

Yes >> Go To 2

No >> The conditions that caused this code to set are not present at this time. Using the wiring diagram/schematic as a guide, inspect the wiring and connectors.
Perform BODY VERIFICATION TEST - VER 1. (Refer to BODY VERIFICATION TEST – VER 1).

2. (Q302) PASSENGER WINDOW HALL SENSOR A SIGNAL SHORT TO GROUND

Turn the ignition off.

Disconnect the Passenger Window Motor connector.

Disconnect the Passenger Door Module C2 connector.

Measure the resistance between Ground and the Passenger Window Hall Sensor A Signal circuit.

Is the resistance below 10000.0 ohms?

Yes >> Repair the Passenger Window Hall Sensor A signal circuit for a short to ground.
Perform BODY VERIFICATION TEST - VER 1. (Refer to BODY VERIFICATION TEST – VER 1).

No >> Go To 3

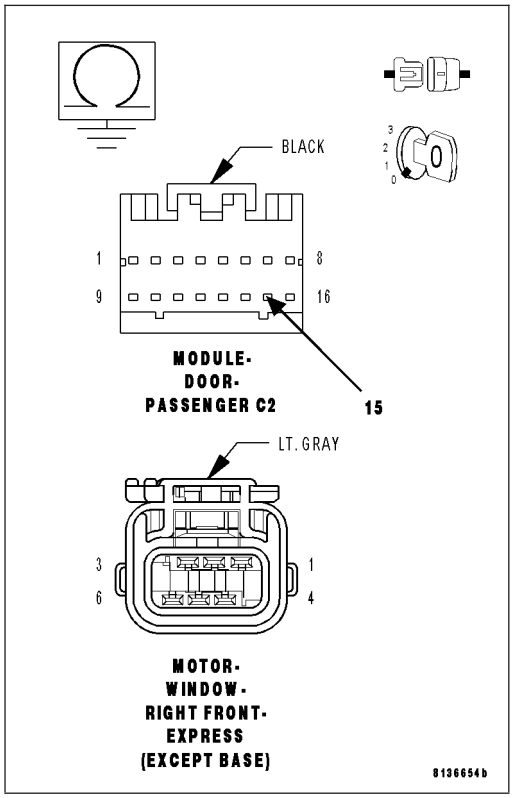

3. (Q304) PASSENGER WINDOW HALL SENSOR B SIGNAL CIRCUIT SHORT TO GROUND

Measure the resistance between Ground and the (Q304) Passenger Window Hall Sensor B Signal circuit.

Is the resistance below 10000.0 ohms?

Yes >> Repair the (Q304) Passenger Window Hall Sensor B Signal circuit for a short to ground.
Perform BODY VERIFICATION TEST - VER 1. (Refer to BODY VERIFICATION TEST – VER 1).

No >> Go To 4

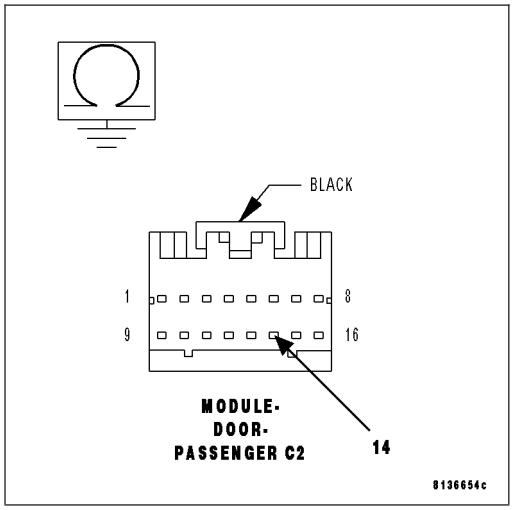

4. (Q302) PASSENGER WINDOW HALL SENSOR A SIGNAL CIRCUIT OPEN

Measure the resistance of the (Q302) Passenger Window Hall Sensor A Signal circuit between the Motor connector and the Module C2 connector.

Is the resistance below 1.0 ohms?

No >> Repair the (Q302) Passenger Window Hall Sensor A Signal circuit for an open.
Perform BODY VERIFICATION TEST - VER 1. (Refer to BODY VERIFICATION TEST – VER 1).

Yes >> Go To 5

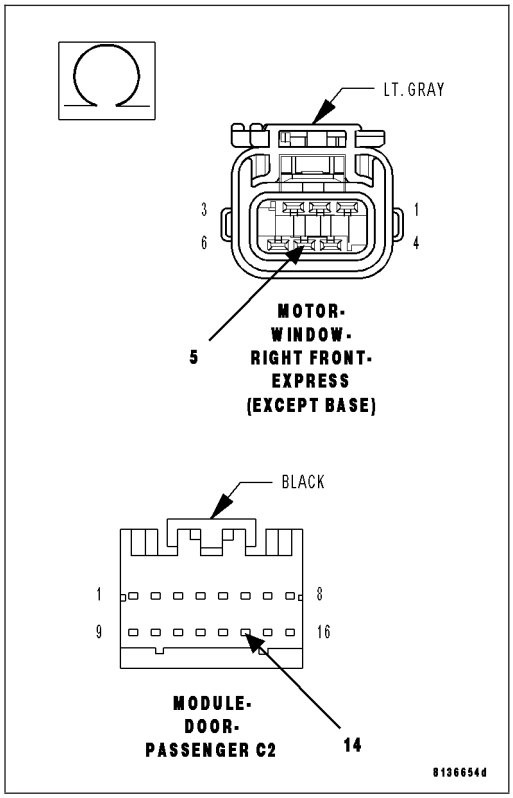

5. (Q304) PASSENGER WINDOW HALL SENSOR B SIGNAL CIRCUIT OPEN

Measure the resistance of the (Q304) Passenger Window Hall Sensor B Signal circuit between the Motor connector and the Module C2 connector.

Is the resistance below 1.0 ohms?

No >> Repair the (Q304) Passenger Window Hall Sensor B Signal circuit for an open.
Perform BODY VERIFICATION TEST - VER 1. (Refer to BODY VERIFICATION TEST – VER 1).

Yes >> Go To 6

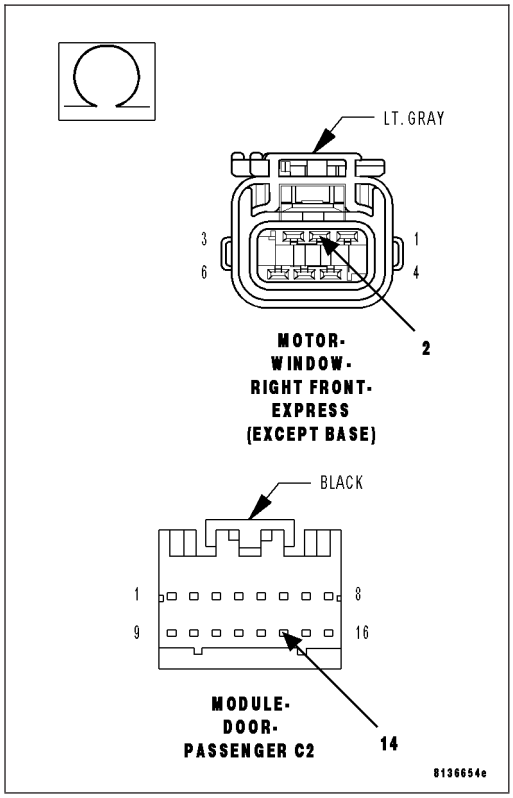

6. (Q304) PASSENGER WINDOW HALL SENSOR B SIGNAL CIRCUIT SHORTED TO (Z404) PASSENGER WINDOW HALL SENSOR RETURN

Measure the resistance between the (Q304) Passenger Window Hall Sensor B Signal circuit and the (Z404) Passenger Window Hall Sensor Return circuit in the PDM C2 connector.

Is the resistance below 10000.0 ohms?

No >> Repair the (Q304) Passenger Window Hall Sensor B Signal circuit for a short to the (Z404) Passenger Window Hall Sensor Return circuit.

Perform BODY VERIFICATION TEST - VER 1. (Refer to BODY VERIFICATION TEST – VER 1).

Yes >> Go To 7

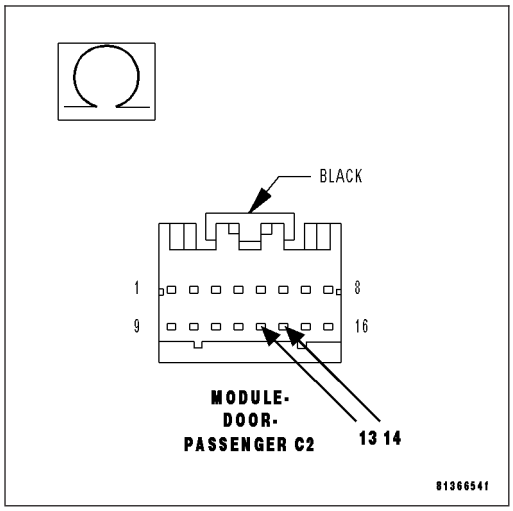

7. (Q302) PASSENGER WINDOW HALL SENSOR A SIGNAL CIRCUIT SHORTED TO (Z404) PASSENGER WINDOW HALL SENSOR RETURN

Measure the resistance between the (Q302) Passenger Window Hall Sensor A Signal circuit and the (Z404) Passenger Window Hall Sensor Return circuit in the PDM C2 connector.

Is the resistance below 10000.0 ohms?

No >> Repair the (Q302) Passenger Window Hall Sensor A Signal circuit for a short to the (Z404) Passenger Window Hall Sensor Return circuit.

Perform BODY VERIFICATION TEST - VER 1. (Refer to BODY VERIFICATION TEST – VER 1).

Yes >> Go To 8

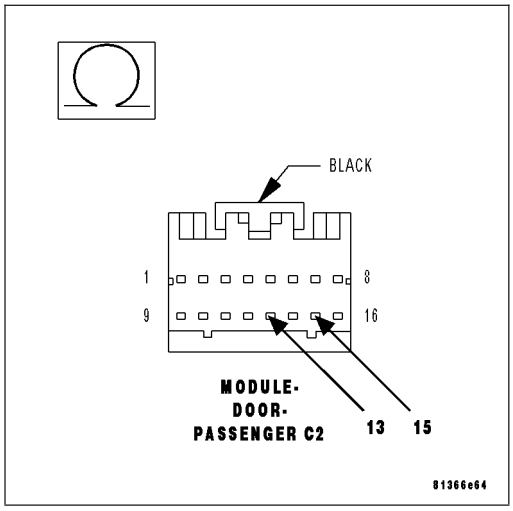

8. (Q304) PASSENGER WINDOW HALL SENSOR A SIGNAL CIRCUIT SHORT TO (Q304) PASSENGER WINDOW HALL SENSOR B SIGNAL CIRCUIT

Measure the resistance between the (Q302) Passenger Window Hall Sensor A Signal circuit and the (Q304) Passenger Window Hall Sensor B Signal circuit.

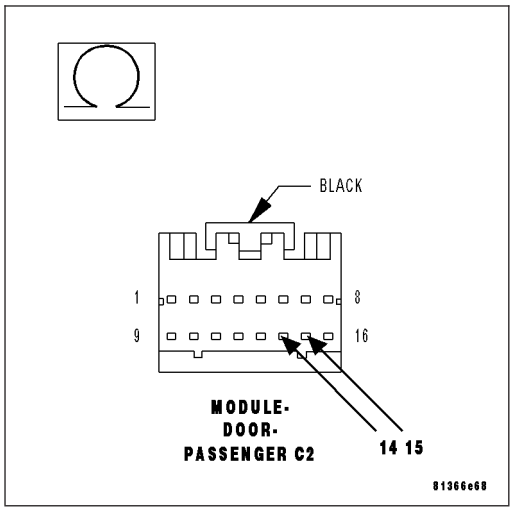

Is the resistance below 10000.0 ohms?

Yes >> Repair the (Q302) Passenger Window Hall Sensor A Signal circuit for a short to the (Q304) Passenger Window Hall Sensor B Signal circuit.

Perform BODY VERIFICATION TEST - VER 1. (Refer to BODY VERIFICATION TEST – VER 1).

No >> Replace the Window Motor.

Perform BODY VERIFICATION TEST - VER 1. (Refer to BODY VERIFICATION TEST – VER 1).

B1868–DRIVER PASSENGER WINDOW SWITCH CIRCUIT STUCK – DDM

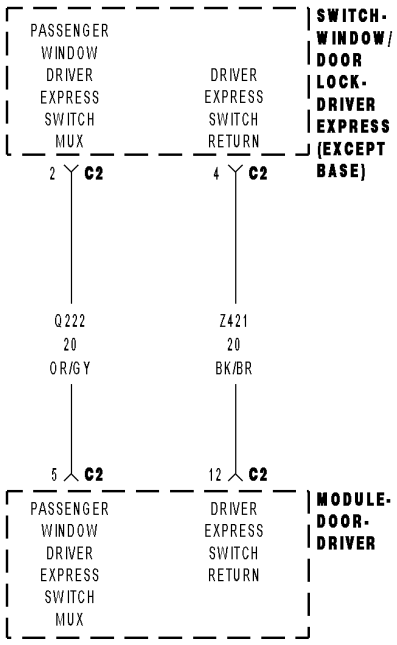

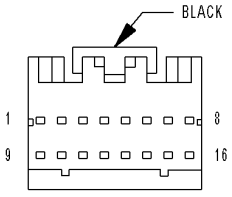

MODULE- DOOR- DRIVER C2

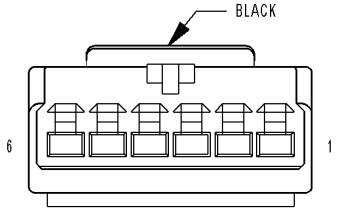

SWITCH- WINDOW/ DOOR LOCK- DRIVER EXPRESS C2 (EXCEPT BASE)

8135bd19

For a complete wiring diagram **Refer to Section 8W**.

- **When Monitored:**
  Whenever the module is awake.
- **Set Condition:**
  When the Passenger Window Driver Express Switch Mux circuit is below 3.5 volts for over 30 seconds.

Possible Causes
(Q222) PASSENGER WINDOW DRIVER EXPRESS SWITCH MUX CIRCUIT SHORT TO GROUND
(Q222) PASSENGER WINDOW DRIVER EXPRESS SWITCH MUX CIRCUIT SHORT TO THE (Z421) DRIVER EXPRESS SWITCH RETURN CIRCUIT
WINDOW/DOOR LOCK SWITCH SHORT TO GROUND
DRIVER DOOR MODULE (DDM)

Diagnostic Test

1. TEST FOR INTERMITTENT CONDITION

Turn the ignition on.
With the scan tool, record and erase DTC's
Operate the Driver Passenger Window Switch in all positions several times.
Wait 30 seconds.
With the scan tool, read DTC's.

Does the scan tool display B1868–DRIVER PASSENGER WINDOW SWITCH CIRCUIT STUCK?

Yes >> Go To 2

No >> The conditions that caused this code to set are not present at this time. Using the wiring diagram/schematic as a guide, inspect the wiring and connectors.
Perform BODY VERIFICATION TEST - VER 1. (Refer to BODY VERIFICATION TEST – VER 1).

2. DRIVER WINDOW SWITCH SHORTED

With the scan tool, erase DTC's.
Disconnect the Driver Window/Door Lock Switch C2 connector.
With the scan tool, read DTC's.

Does the scan tool display B1868–DRIVER PASSENGER WINDOW SWITCH CIRCUIT STUCK?

No >> Replace the Driver Express Window/Door Lock Switch.
Perform BODY VERIFICATION TEST - VER 1. (Refer to BODY VERIFICATION TEST – VER 1).

Yes >> Go To 3

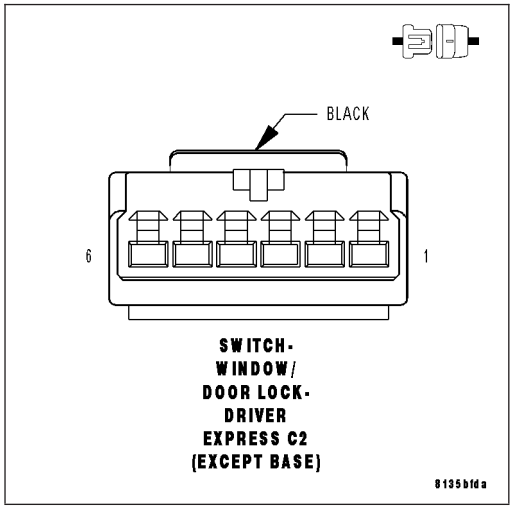

3. (Q222) PASSENGER WINDOW DRIVER EXPRESS SWITCH MUX CIRCUIT SHORT TO GROUND

Turn the ignition off.

Disconnect the Driver Door Module C2 connector.

Measure the resistance between ground and the (Q222) Passenger Window Driver Express Switch Mux circuit.

Is the resistance below 10000.0 ohms?

Yes >> Repair the (Q222) Passenger Window Driver Express Switch Mux circuit for a short to ground.

Perform BODY VERIFICATION TEST - VER 1. (Refer to BODY VERIFICATION TEST – VER 1).

No >> Go To 4

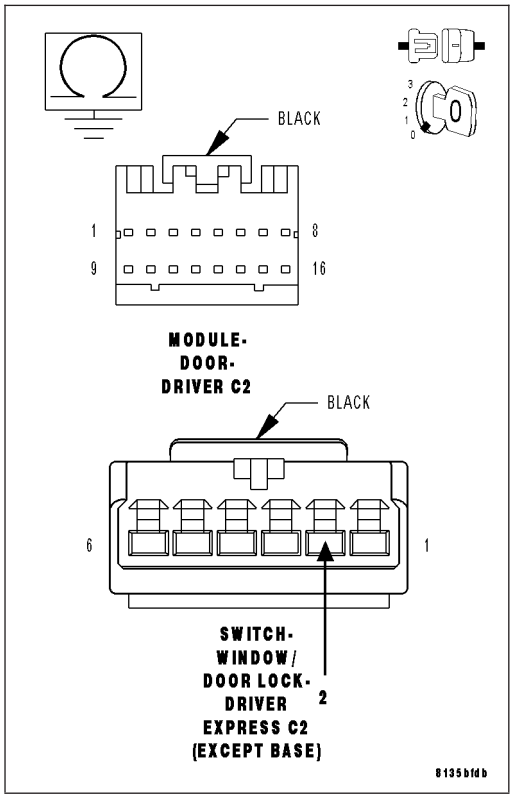

4. (Q222) PASSENGER WINDOW DRIVER EXPRESS SWITCH MUX CIRCUIT SHORT TO (Z421) DRIVER EXPRESS SWITCH RETURN CIRCUIT

Measure the resistance between the (Q222) Passenger Window Driver Express Switch Mux circuit and the (Z421) Driver Express Switch Return circuit.

Is the resistance below 10000.0 ohms?

Yes >> Repair the (Q222) Passenger Window Driver Express Switch Mux circuit for a short to the (Z421) Driver Express Switch Return circuit.

Perform BODY VERIFICATION TEST - VER 1. (Refer to BODY VERIFICATION TEST – VER 1).

No >> Replace the Driver Door Module.

Perform BODY VERIFICATION TEST - VER 1. (Refer to BODY VERIFICATION TEST – VER 1).

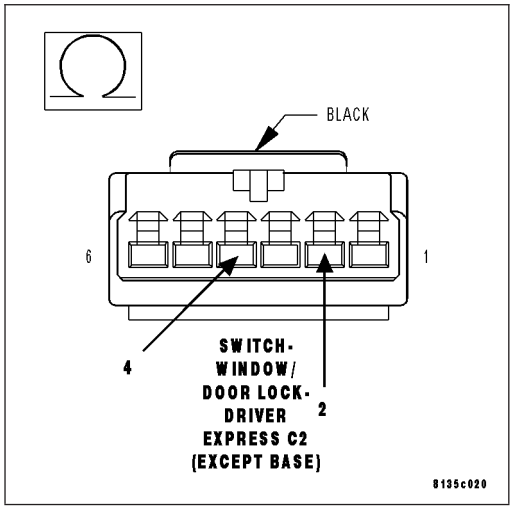

B210D-BATTERY VOLTAGE LOW – DDM/PDM

For a complete wiring diagram **Refer to Section 8W**.

- **When Monitored:**
  At all times.
- **Set Condition:**
  Anytime the module senses voltage input below 9.0 volts, this code will set.

POSSIBLE CAUSES
LOW VOLTAGE ENGINE DTC
DRIVER OR PASSENGER DOOR MODULE

Diagnostic Test

1. CHECK ENGINE DTC's

With the scan tool, read ENGINE DTC's

Are there any ENGINE DTC's present?

No >> Go to 2

Yes >> Refer to symptom list for problems related to ENGINE.

2. TEST FOR INTERMITTENT CONDITION

With the scan tool, record and erase DTC's

Start the engine and run for 2 minutes.

With the scan tool, read DTC's.

Does the scan tool display B210D-BATTERY VOLTAGE LOW?

Yes >> Replace the appropriate Door Module.
Perform BODY VERIFICATION TEST - VER 1. (Refer to BODY VERIFICATION TEST – VER 1).

No >> The conditions that caused this code to set are not present at this time. Using the wiring diagram/schematic as a guide, inspect the wiring and connectors.
Perform BODY VERIFICATION TEST - VER 1. (Refer to BODY VERIFICATION TEST – VER 1).

B210E-BATTERY VOLTAGE HIGH – DDM/PDM

For a complete wiring diagram **Refer to Section 8W**.

- **When Monitored:**
  At all times.
- **Set Condition:**
  Anytime the module senses voltage input above 15.9 volts, this code will set.

POSSIBLE CAUSES
HIGH VOLTAGE ENGINE DTC
DRIVER OR PASSENGER DOOR MODULE

Diagnostic Test

1. CHECK ENGINE DTC's

With the scan tool, read ENGINE DTC's

Are there any ENGINE DTC's present?

No >> Go to 2

Yes >> Refer to symptom list for problems related to ENGINE.

2. TEST FOR INTERMITTENT CONDITION

With the scan tool, record and erase DTC's

Start the engine and run for two minutes.

With the scan tool, read DTC's.

Does the scan tool display B210E-BATTERY VOLTAGE HIGH?

Yes >> Replace the appropriate Door Module.
Perform BODY VERIFICATION TEST - VER 1. (Refer to BODY VERIFICATION TEST – VER 1).

No >> The conditions that caused this code to set are not present at this time. Using the wiring diagram/schematic as a guide, inspect the wiring and connectors.
Perform BODY VERIFICATION TEST - VER 1. (Refer to BODY VERIFICATION TEST – VER 1).

B2218, B2219–DRIVER/PASSENGER DOOR MODULE INTERNAL – DDM/PDM

For a complete wiring diagram **Refer to Section 8W**.

- **When Monitored:**
  At all times.
- **Set Condition:**
  Whenever the module detects an EEPROM failure

POSSIBLE CAUSES
DRIVER OR PASSENGER DOOR MODULE

Diagnostic Test

1. Replace the Door Module

NOTE: Anytime this code is logged, the module must be replaced.

Repair

Replace the appropriate Door Module.
Perform BODY VERIFICATION TEST - VER 1. (Refer to BODY VERIFICATION TEST – VER 1).

U0019–CAN B BUS-DDM/PDM

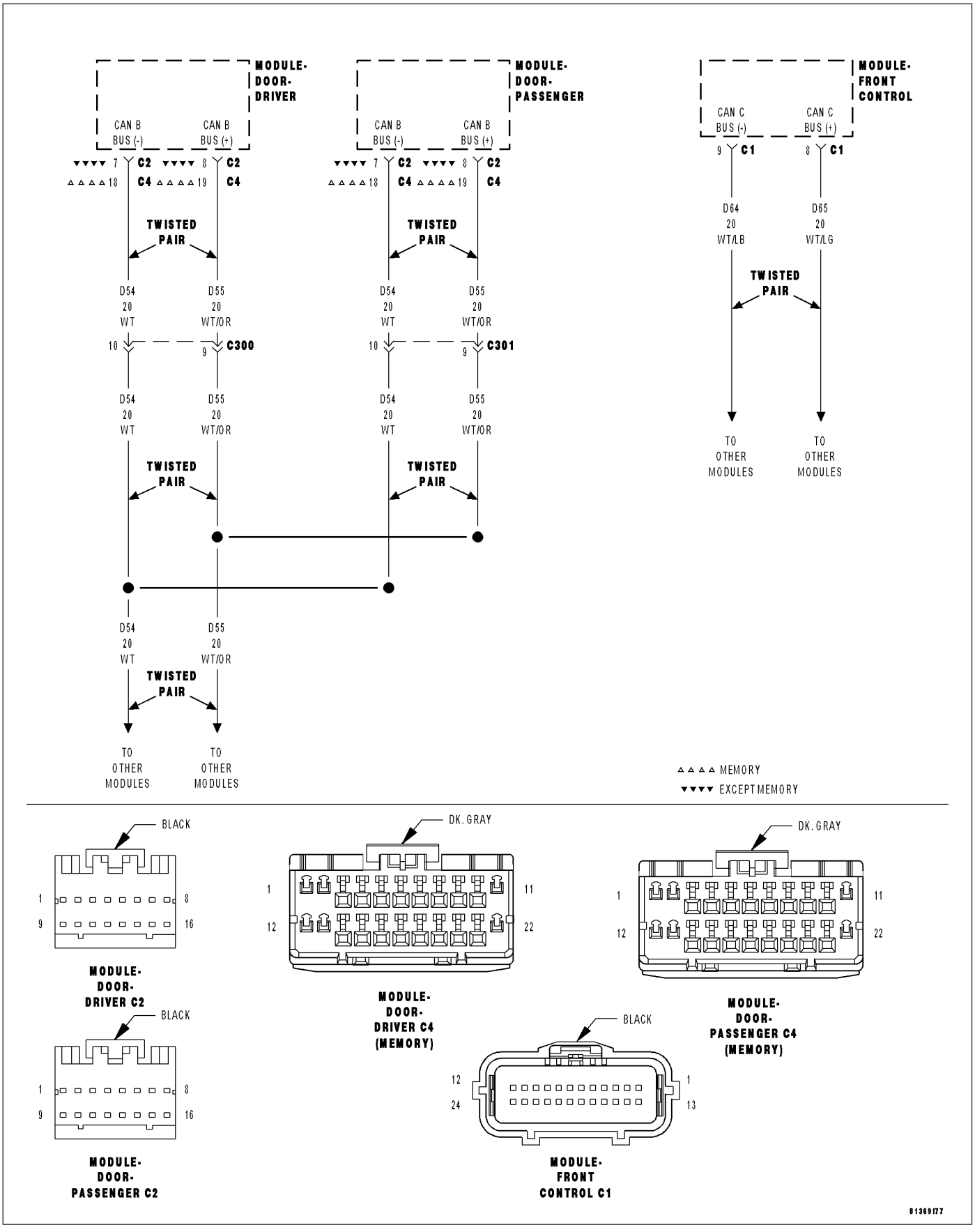

For a complete wiring diagram **Refer to Section 8W**.

- **When Monitored:**
  Continuously.
- **Set Condition:**
  Whenever the CAN B Bus (+) or CAN B Bus (-) circuit is open.

Possible Causes
CAN B BUS DTC's IN FRONT CONTROL MODULE
(D55) CAN B BUS (+) CIRCUIT OPEN
(D54) CAN B BUS (-) CIRCUIT OPEN
DRIVER OR PASSENGER DOOR MODULE

Diagnostic Test

1. CHECK FOR ACTIVE DTCS

With the scan tool, read the active DTC's.

Cycle the ignition switch from off to on at least 5 times, leaving the ignition on for a minimum of 90 seconds per cycle.

With the scan tool, read the active DTC's.

Does the scan tool display this DTC as active?

Yes >> Go To 2

No >> If the DTC is stored, check for an intermittent condition. Visually inspect the related wiring harness connectors. Look for broken, bent, pushed out, or corroded terminals.

2. CHECK FRONT CONTROL MODULE DTC's

With the scan tool, read Front Control Module active DTC's

Does the scan tool display any CAN B BUS DTC's – ACTIVE?

Yes >> (Refer to 8 - ELECTRICAL/ELECTRONIC CONTROL MODULES - DIAGNOSIS AND TESTING)

No >> Go To 3

3. MEMORY SYSTEM EQUIPPED?

IS THIS VEHICLE EQUIPPED WITH THE MEMORY SYSTEM?

No >> Go To 4

Yes >> Go To 6

4. (D55) CAN B BUS (+) CIRCUIT OPEN

Turn the ignition off.

Disconnect the negative battery cable.

Disconnect the appropriate Door Module C2 connector.

Disconnect the Front Control Module C1 connector.

Measure the resistance of the (D55) CAN B Bus (+) circuit between the Front Control Module C1 connector and the Door Module C2 connector.

Is the resistance below 2.0 ohms?

Yes >> Go To 5

No >> Repair the (D55) CAN B Bus (+) circuit for an open.
Perform BODY VERIFICATION TEST – VER 1. (Refer to BODY VERIFICATION TEST – VER 1).

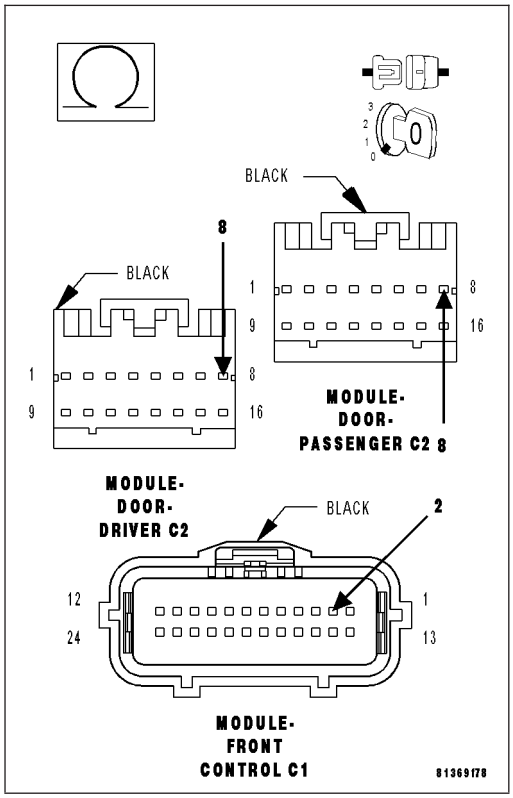

5. (D54) CAN B BUS (–) CIRCUIT OPEN

Measure the resistance of the (D54) CAN B Bus (–) circuit between the Front Control Module C1 connector and the Door Module C2 connector.

Is the resistance below 2.0 ohms?

Yes >> Replace the appropriate Door Module in accordance with the service information.
Perform BODY VERIFICATION TEST – VER 1. (Refer to BODY VERIFICATION TEST – VER 1).

No >> Repair the (D54) CAN B Bus (–) circuit for an open.
Perform BODY VERIFICATION TEST – VER 1. (Refer to BODY VERIFICATION TEST – VER 1).

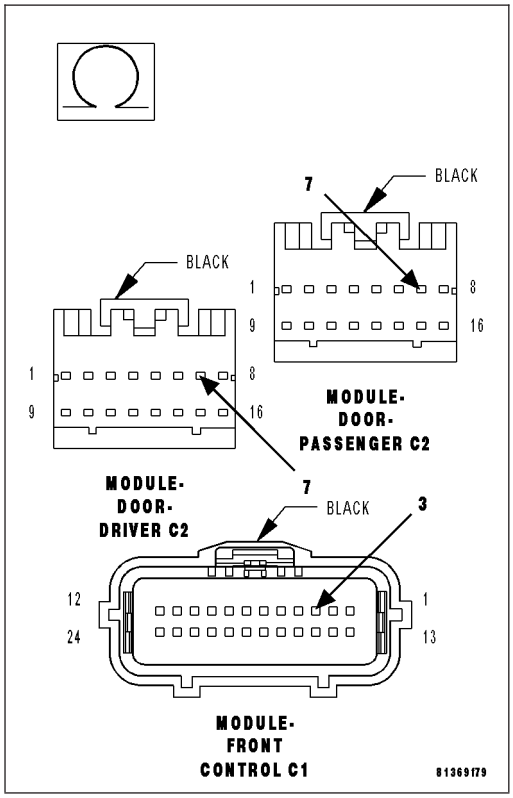

6. (D55) CAN B BUS (+) CIRCUIT OPEN

Turn the ignition off.

Disconnect the negative battery cable.

Disconnect the appropriate Door Module C4 connector.

Disconnect the Front Control Module C1 connector.

Measure the resistance of the (D55) CAN B Bus (+) circuit between the Front Control Module C1 connector and the Door Module C4 connector.

Is the resistance below 2.0 ohms?

Yes >> Go To 7

No >> Repair the (D55) CAN B Bus (+) circuit for an open.
Perform BODY VERIFICATION TEST – VER 1. (Refer to BODY VERIFICATION TEST – VER 1).

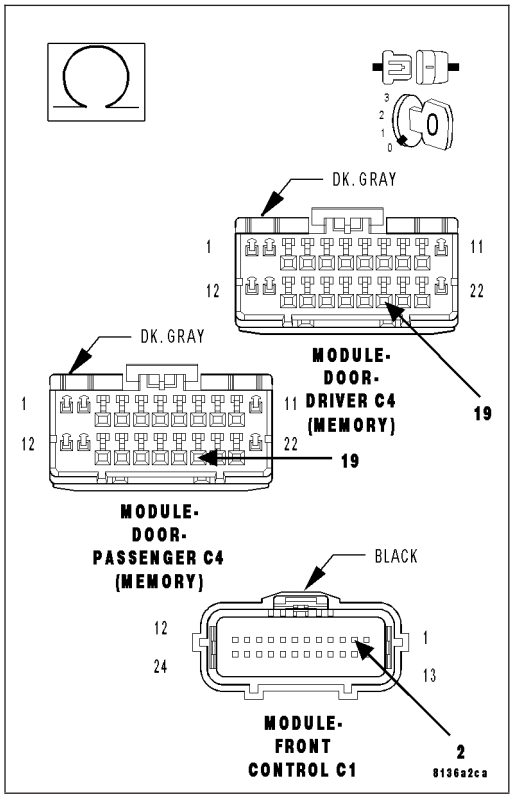

7. (D54) CAN B BUS (–) CIRCUIT OPEN

Measure the resistance of the (D54) CAN B Bus (–) circuit between the Front Control Module C1 connector and the Door Module C4 connector.

Is the resistance below 2.0 ohms?

Yes >> Replace the appropriate Door Module in accordance with the service information.
Perform BODY VERIFICATION TEST – VER 1. (Refer to BODY VERIFICATION TEST – VER 1).

No >> Repair the (D54) CAN B Bus (–) circuit for an open.
Perform BODY VERIFICATION TEST – VER 1. (Refer to BODY VERIFICATION TEST – VER 1).

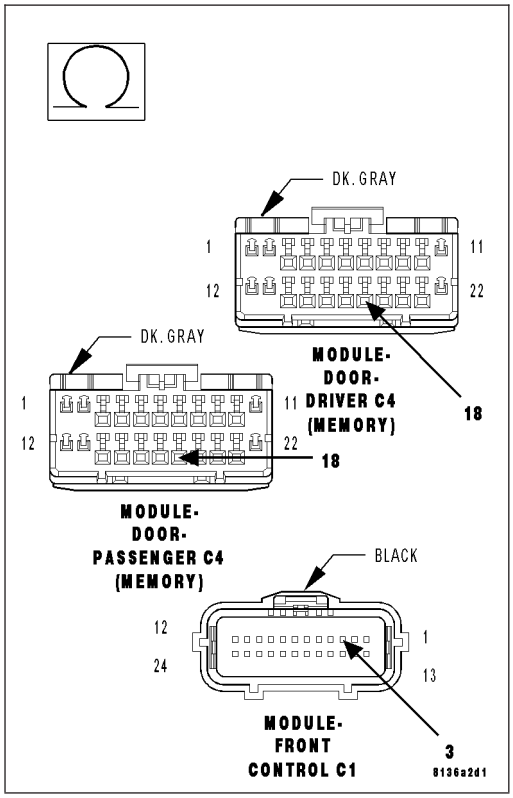

B16A4–PASSENGER WINDOW SWITCH BACKLIGHTING CIRCUIT LOW – PDM

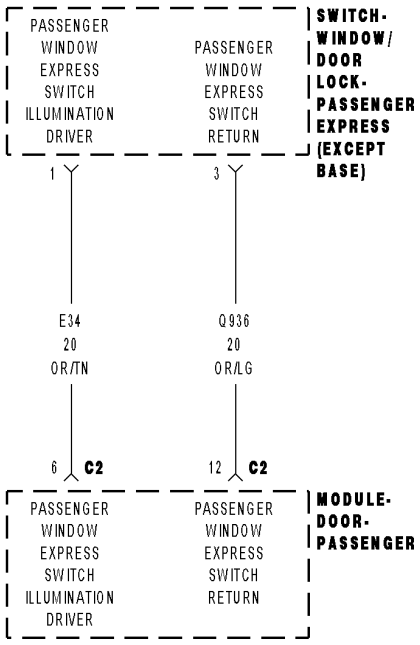

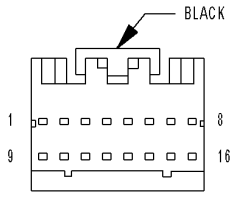

MODULE- DOOR- PASSENGER C2

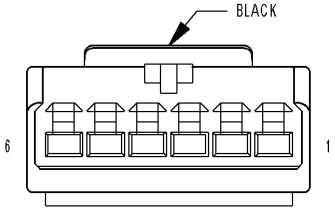

SWITCH- WINDOW/ DOOR LOCK- PASSENGER EXPRESS (EXCEPT BASE)

8136b089

For a complete wiring diagram **Refer to Section 8W**.

- **When Monitored:**
  Whenever the module is awake, the park lamps are on and the window lock out switch is on.
- **Set Condition:**
  When the Passenger Window Express Switch Illumination Driver circuit falls below 3.0 volts for over 25 ms. and the above conditions are met, this code will set.

Possible Causes
(E34) PASSENGER WINDOW EXPRESS SWITCH ILLUMINATION DRIVER CIRCUIT SHORT TO GROUND
(E34) PASSENGER WINDOW EXPRESS SWITCH ILLUMINATION DRIVER CIRCUIT SHORT TO (Q936) PASSENGER WINDOW EXPRESS SWITCH RETURN
WINDOW/DOOR LOCK SWITCH SHORTED
PASSENGER DOOR MODULE (PDM)

Diagnostic Test

1. TEST FOR INTERMITTENT CONDITION

Turn the ignition on.
With the scan tool, record and erase DTC's
Ensure the passenger window lock out switch is on.
Turn the park lights on.
Wait 30 seconds.
With the scan tool, read DTC's.

Does the scan tool display B16A4–PASSENGER WINDOW SWITCH BACKLIGHTING CIRCUIT LOW?

Yes >> Go To 2

No >> The conditions that caused this code to set are not present at this time. Using the wiring diagram/schematic as a guide, inspect the wiring and connectors.
Perform BODY VERIFICATION TEST - VER 1. (Refer to BODY VERIFICATION TEST – VER 1).

2. WINDOW/DOOR LOCK SWITCHSHORTED

With the scan tool, erase DTC's.
Turn the ignition off.
Disconnect the Passenger Window/Door Lock Switch connector.
Turn the ignition on.
Operate the passenger window lock out switch several times.
With the scan tool, read DTC's.

Does the scan tool display B16A4–PASSENGER WINDOW SWITCH BACKLIGHTING CIRCUIT LOW?

No >> Replace the Window/Door Lock Switch.
Perform BODY VERIFICATION TEST - VER 1. (Refer to BODY VERIFICATION TEST – VER 1).

Yes >> Go To 3

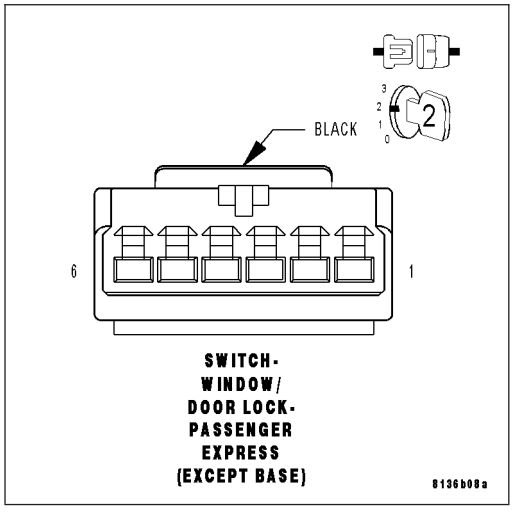

3. (E34) PASSENGER WINDOW EXPRESS SWITCH ILLUMINATION DRIVER CIRCUIT SHORT TO GROUND

Turn the ignition off.

Turn the park lamps off.

Disconnect the Passenger Door Module C2 connector.

Measure the resistance between Ground and the (E34) Passenger Window Express Switch Illumination Driver circuit.

Is the resistance below 10000.0 ohms?

Yes >> Repair the (E34) Passenger Window Express Switch Illumination Driver circuit for a short to ground.
Perform BODY VERIFICATION TEST - VER 1. (Refer to BODY VERIFICATION TEST – VER 1).

No >> Go To 4

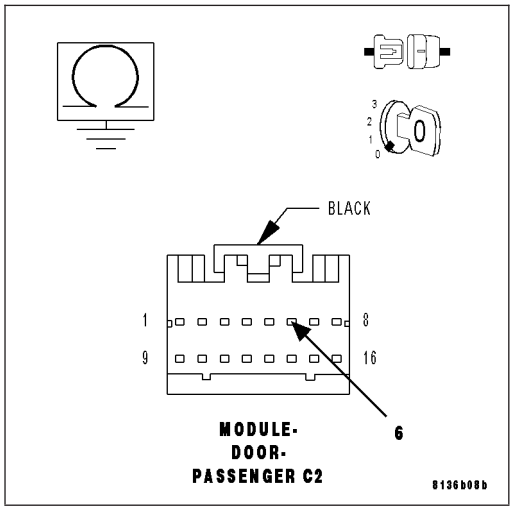

4. (E34) PASSENGER WINDOW EXPRESS SWITCH ILLUMINATION DRIVER CIRCUIT SHORT TO (Q936) PASSENGER WINDOW EXPRESS SWITCH RETURN

Measure the resistance between the (E34) Passenger Window Express Switch Illumination Driver circuit and the (Q936) Passenger Window Express Switch Return circuit.

Is the resistance below 10000.0 ohms?

Yes >> Repair the (E34) Passenger Window Express Switch Illumination Driver circuit for a short to the (Q936) Passenger Window Express Switch Return circuit.
Perform BODY VERIFICATION TEST - VER 1. (Refer to BODY VERIFICATION TEST – VER 1).

No >> Replace the Passenger Door Module.
Perform BODY VERIFICATION TEST - VER 1. (Refer to BODY VERIFICATION TEST – VER 1).

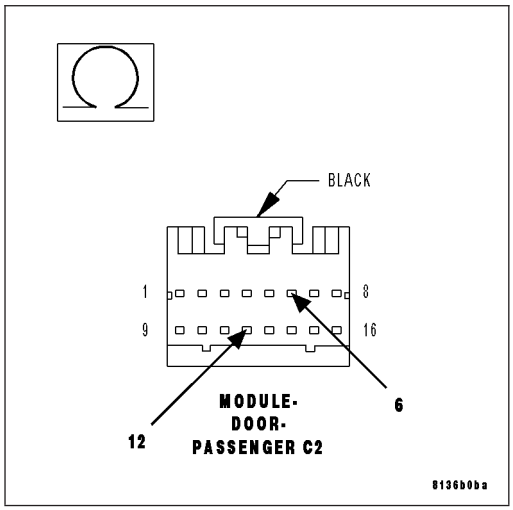

B16A5–PASSENGER WINDOW SWITCH BACKLIGHTING CIRCUIT HIGH – PDM

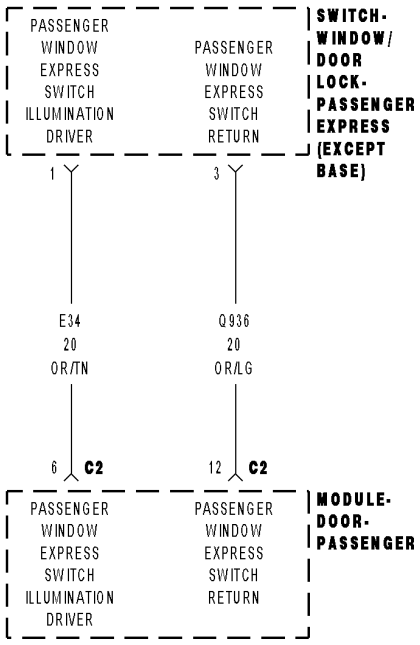

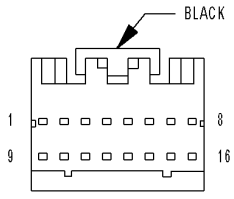

MODULE- DOOR- PASSENGER C2

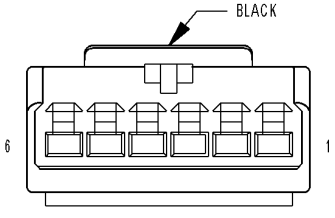

SWITCH- WINDOW/ DOOR LOCK- PASSENGER EXPRESS (EXCEPT BASE)

8136b089

For a complete wiring diagram **Refer to Section 8W**.

- **When Monitored:**
  Whenever the power is turned off to the module and it goes from awake to sleep mode.
- **Set Condition:**
  When the Passenger Window Express Switch Illumination Driver circuit is above 2.5 volts for over 15 ms. and the switch illumination output is turned off.

Possible Causes
(E34) PASSENGER WINDOW EXPRESS SWITCH ILLUMINATION DRIVER CIRCUIT SHORT TO VOLTAGE
WINDOW/DOOR LOCK SWITCH SHORTED
PASSENGER DOOR MODULE (PDM)

Diagnostic Test

1. TEST FOR INTERMITTENT CONDITION

Turn the ignition on.
With the scan tool, record and erase DTC's
Ensure the passenger window lock out switch is off.
Wait 30 seconds.
With the scan tool, read DTC's.

Does the scan tool display B16A5–PASSENGER WINDOW SWITCH BACKLIGHTING CIRCUIT HIGH?

Yes >> Go To 2

No >> The conditions that caused this code to set are not present at this time. Using the wiring diagram/schematic as a guide, inspect the wiring and connectors.
Perform BODY VERIFICATION TEST - VER 1. (Refer to BODY VERIFICATION TEST – VER 1).

2. WINDOW/DOOR LOCK SWITCHSHORTED

With the scan tool, erase DTC's.
Turn the ignition off.
Disconnect the Passenger Window/Door Lock Switch connector.
Turn the ignition on.
Operate the passenger window lock out switch several times.
With the scan tool, read DTC's.

Does the scan tool display B16A5–PASSENGER WINDOW SWITCH BACKLIGHTING CIRCUIT HIGH?

No >> Replace the Window/Door Lock Switch.
Perform BODY VERIFICATION TEST - VER 1. (Refer to BODY VERIFICATION TEST – VER 1).

Yes >> Go To 3

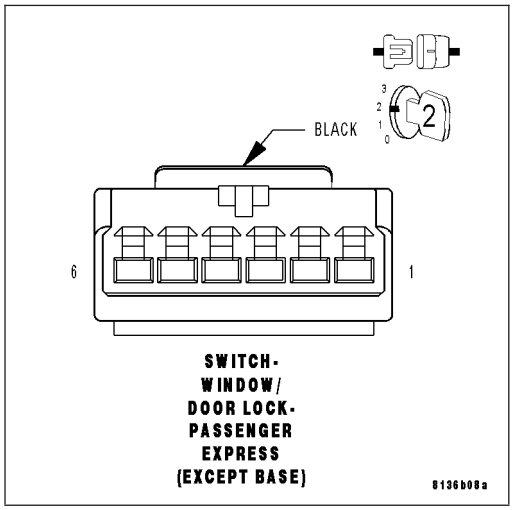

3. (E34) PASSENGER WINDOW EXPRESS SWITCH ILLUMINATION DRIVER CIRCUIT SHORT TO VOLTAGE

Turn the ignition off.

Disconnect the Passenger Door Module C2 connector.

Measure the voltage between the (E34) Passenger Window Express Switch Illumination Driver circuit and Ground.

Is there any voltage present?

Yes >> Repair the (E34) Passenger Window Express Switch Illumination Driver circuit for a short to voltage.
Perform BODY VERIFICATION TEST - VER 1. (Refer to BODY VERIFICATION TEST – VER 1).

No >> Replace the Passenger Door Module.
Perform BODY VERIFICATION TEST - VER 1. (Refer to BODY VERIFICATION TEST – VER 1).

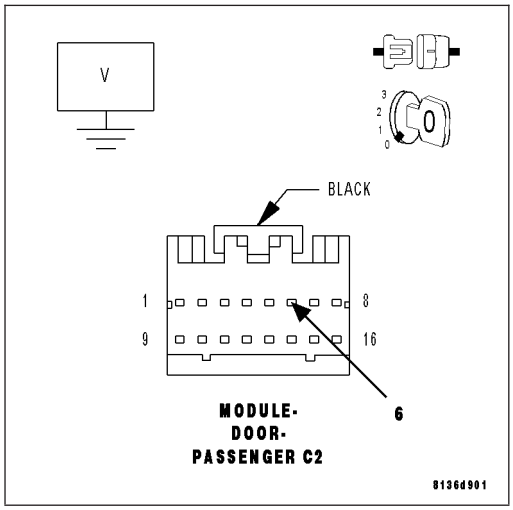

U0141–LOST COMMUNICATION WITH FRONT CONTROL MODULE

For a complete wiring diagram **Refer to Section 8W**.

(Refer to 8 - ELECTRICAL/ELECTRONIC CONTROL MODULES - DIAGNOSIS AND TESTING) for the diagnostic test procedure.

U0151-LOST COMMUNICATION WITH OCCUPANT RESTRAINT CONTROLLER

For a complete wiring diagram **Refer to Section 8W**.

(Refer to 8 - ELECTRICAL/ELECTRONIC CONTROL MODULES - DIAGNOSIS AND TESTING) for the diagnostic test procedure.

U0154-LOST COMMUNICATION WITH OCCUPANT CLASSIFICATION MODULE

For a complete wiring diagram **Refer to Section 8W**.

(Refer to 8 - ELECTRICAL/ELECTRONIC CONTROL MODULES - DIAGNOSIS AND TESTING) for the diagnostic test procedure.

U0155-LOST COMMUNICATION WITH CLUSTER/CCN

For a complete wiring diagram **Refer to Section 8W**.

(Refer to 8 - ELECTRICAL/ELECTRONIC CONTROL MODULES - DIAGNOSIS AND TESTING) for the diagnostic test procedure.

U0156-LOST COMMUNICATION WITH EOM

For a complete wiring diagram **Refer to Section 8W**.

(Refer to 8 - ELECTRICAL/ELECTRONIC CONTROL MODULES - DIAGNOSIS AND TESTING) for the diagnostic test procedure.

U0159-LOST COMMUNICATION WITH PARKING ASSIST CONTROL MODULE

For a complete wiring diagram **Refer to Section 8W**.

(Refer to 8 - ELECTRICAL/ELECTRONIC CONTROL MODULES - DIAGNOSIS AND TESTING) for the diagnostic test procedure.

U0164-LOST COMMUNICATION WITH HVAC CONTROL MODULE

For a complete wiring diagram **Refer to Section 8W**.

(Refer to 8 - ELECTRICAL/ELECTRONIC CONTROL MODULES - DIAGNOSIS AND TESTING) for the diagnostic test procedure.

U0168-LOST COMMUNICATION WITH VEHICLE SECURITY CONTROL MODULE (SKREEM/WCM)

For a complete wiring diagram **Refer to Section 8W**.

(Refer to 8 - ELECTRICAL/ELECTRONIC CONTROL MODULES - DIAGNOSIS AND TESTING) for the diagnostic test procedure.

U0169-LOST COMMUNICATION WITH SUNROOF CONTROL MODULE

For a complete wiring diagram **Refer to Section 8W**.

(Refer to 8 - ELECTRICAL/ELECTRONIC CONTROL MODULES - DIAGNOSIS AND TESTING) for the diagnostic test procedure.

U0181-LOST COMMUNICATION WITH HEADLAMP LEVELING TRANSLATOR

For a complete wiring diagram **Refer to Section 8W**.

(Refer to 8 - ELECTRICAL/ELECTRONIC CONTROL MODULES - DIAGNOSIS AND TESTING) for the diagnostic test procedure.

U0184-LOST COMMUNICATION WITH RADIO

For a complete wiring diagram **Refer to Section 8W**.

(Refer to 8 - ELECTRICAL/ELECTRONIC CONTROL MODULES - DIAGNOSIS AND TESTING) for the diagnostic test procedure.

U0186-LOST COMMUNICATION WITH AUDIO AMPLIFIER

For a complete wiring diagram **Refer to Section 8W**.

(Refer to 8 - ELECTRICAL/ELECTRONIC CONTROL MODULES - DIAGNOSIS AND TESTING) for the diagnostic test procedure.

U0186-LOST COMMUNICATION WITH AUDIO AMPLIFIER

For a complete wiring diagram **Refer to Section 8W**.

(Refer to 8 - ELECTRICAL/ELECTRONIC CONTROL MODULES - DIAGNOSIS AND TESTING) for the diagnostic test procedure.

U0195-LOST COMMUNICATION WITH SDARS

For a complete wiring diagram **Refer to Section 8W**.

(Refer to 8 - ELECTRICAL/ELECTRONIC CONTROL MODULES - DIAGNOSIS AND TESTING) for the diagnostic test procedure.

U0199-LOST COMMUNICATION WITH DRIVER DOOR MODULE

For a complete wiring diagram **Refer to Section 8W**.

(Refer to 8 - ELECTRICAL/ELECTRONIC CONTROL MODULES - DIAGNOSIS AND TESTING) for the diagnostic test procedure.

U0200-LOST COMMUNICATION WITH PASSENGER DOOR MODULE

For a complete wiring diagram **Refer to Section 8W**.

(Refer to 8 - ELECTRICAL/ELECTRONIC CONTROL MODULES - DIAGNOSIS AND TESTING) for the diagnostic test procedure.

U0208-LOST COMMUNICATION WITH HEATED SEAT CONTROL MODULE

For a complete wiring diagram **Refer to Section 8W**.

(Refer to 8 - ELECTRICAL/ELECTRONIC CONTROL MODULES - DIAGNOSIS AND TESTING) for the diagnostic test procedure.

U0209-LOST COMMUNICATION WITH MEMORY SEAT CONTROL MODULE

For a complete wiring diagram **Refer to Section 8W**.

(Refer to 8 - ELECTRICAL/ELECTRONIC CONTROL MODULES - DIAGNOSIS AND TESTING) for the diagnostic test procedure.

U0212-LOST COMMUNICATION WITH SCCM - CAN B

For a complete wiring diagram **Refer to Section 8W**.

(Refer to 8 - ELECTRICAL/ELECTRONIC CONTROL MODULES - DIAGNOSIS AND TESTING) for the diagnostic test procedure.

U0231-LOST COMMUNICATION WITH RAIN SENSING MODULE

For a complete wiring diagram **Refer to Section 8W**.

(Refer to 8 - ELECTRICAL/ELECTRONIC CONTROL MODULES - DIAGNOSIS AND TESTING) for the diagnostic test procedure.

*FRONT WINDOW MOVES ABOUT 3 INCHES AND QUITS

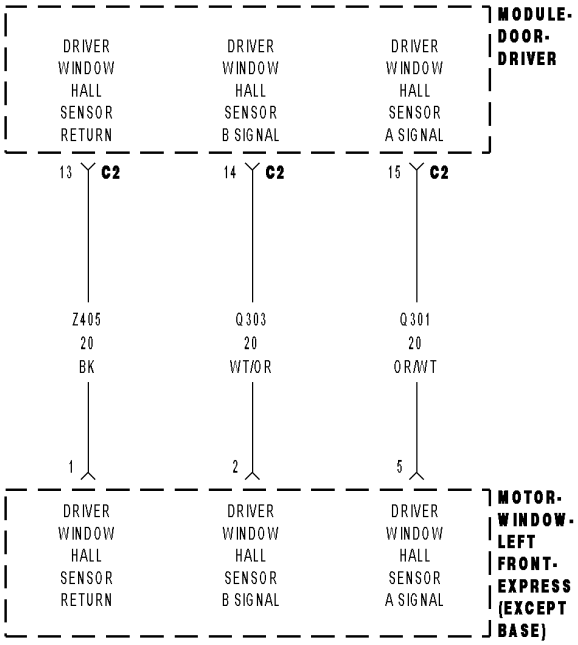

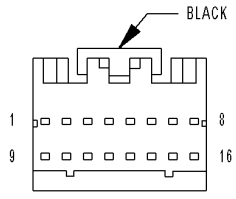

MODULE-
DOOR-
DRIVER C2

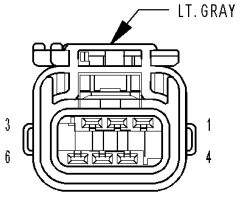

MOTOR-
WINDOW-
LEFT FRONT-
EXPRESS
(EXCEPT BASE)

813515e5

NOTE: The Driver circuits are shown but the Passenger side is similar.

For a complete wiring diagram **Refer to Section 8W**.

Possible Causes
WINDOW HALL SENSOR A AND SENSOR B SIGNAL CIRCUITS OPEN
WINDOW MOTOR (HALL SENSOR OPEN)

Diagnostic Test

1. TEST FOR DIAGNOSTIC TROUBLE CODES

Turn the ignition on.

With the scan tool, read DTC's.

Does the scan tool display any Power Window related DTC's?

No >> Go To 2

Yes >> Refer to symptom list for problems related to POWER WINDOWS.
Perform BODY VERIFICATION TEST - VER 1. (Refer to BODY VERIFICATION TEST – VER 1).

2. WINDOW HALL SENSOR A AND SENSOR B SIGNAL CIRCUIT OPEN

NOTE: Both Window Hall Sensor Signal circuits (A and B) must be open or closed for the result of this test to be valid.

Disconnect the appropriate Door Module C2 connector.

Disconnect the appropriate Window Motor connector.

Measure the resistance of the Window Hall Sensor A Signal circuit between the Motor connector and the Module C2 connector.

Measure the resistance of the Window Hall Sensor B Signal circuit between the Motor connector and the Module C2 connector.

Is the resistance below 2.0 ohms on both Signal circuits?

No >> Repair the Window Hall Sensor Signal circuits for opens.
Perform BODY VERIFICATION TEST - VER 1. (Refer to BODY VERIFICATION TEST – VER 1).

Yes >> Replace the Window Motor.
Perform BODY VERIFICATION TEST - VER 1. (Refer to BODY VERIFICATION TEST – VER 1).

POWER WINDOWS - SERVICE INFORMATION

TABLE OF CONTENTS

page

POWER WINDOWS - SERVICE INFORMATION
DESCRIPTION 291
OPERATION 291
DIAGNOSIS AND TESTING
POWER WINDOWS 291

page

POWER WINDOW SWITCH
REMOVAL 292
INSTALLATION 292

POWER WINDOWS - SERVICE INFORMATION

DESCRIPTION

The power window system allows each of the door windows to be raised and lowered electrically by actuating a switch on the trim panel of each respective door. A master switch on the driver side front door trim panel allows the driver to raise or lower each of the passenger door windows and to lock out the individual switches on the passenger doors from operation. The power window system receives battery feed through a circuit breaker in the Junction Block (JB), only when the ignition switch is in the ON position.

The power window system includes the power window switches on each door trim panel, circuit breaker, door modules and the power window motors inside each door.

The window motors are replaced with the window regulator assembly. If the window motors require replacement, the window regulator must be replaced.

OPERATION

POWER WINDOW SWITCH

The power windows are controlled by a window/lock switch on the trim panel of each front door. Switches in the driver door window/lock switch allows the driver to control the passenger windows.

The power window switch for the driver side front door window has a second detent position beyond the normal Down position that provides an automatic one-touch window down feature.

Some vehicles may be equipped with an express closing feature (front windows only). During an express closing, anytime an obstacle is detected in the way of the glass, the motor will stop and reverse travel to avoid pinching an occupant's fingers, etc. Modules in the doors are programmed to compare the position of the glass to the amount of current that is being used to drive up the glass.

The system also includes various features to manage the perceived forces on the glass as it travels up. If the express closing calibration is lost, the system will self-calibrate itself after the windows are moved up and down two cycles.

The power window switches control the battery and ground feeds to the power window motors. All of the passenger door power window switches receive their battery and ground feeds through the circuitry of the window/lock switch. When the power window lockout switch is in the Lock position, the battery feed for the individual passenger door power window switches is interrupted.

POWER WINDOW MOTOR

A permanent magnet reversible motor moves the window regulator through an integral gearbox mechanism. A positive and negative battery connection to the two motor terminals will cause the motor to rotate in one direction. Reversing the current through these same two connections will cause the motor to rotate in the opposite direction.

In addition, each power window motor is equipped with an integral self-resetting circuit breaker to protect the motor from overloads.

DIAGNOSIS AND TESTING

POWER WINDOWS

Any diagnosis of the Power Windows system should begin with the use of scan tool. For information on the use of the scan tool, refer to the appropriate Diagnostic Service information.

For complete circuit diagrams, refer to the appropriate wiring information.

POWER WINDOW SWITCH

REMOVAL

NOTE: A battery reconnect procedure must be performed anytime the battery has been disconnected. (Refer to 8 - ELECTRICAL/BATTERY SYSTEM - STANDARD PROCEDURE).

1. Disconnect and isolate the battery negative cable.
2. Remove rear door trim panel (Refer to 23 - BODY/DOORS - REAR/TRIM PANEL - REMOVAL).
3. Remove switch (1) from door trim panel (2).

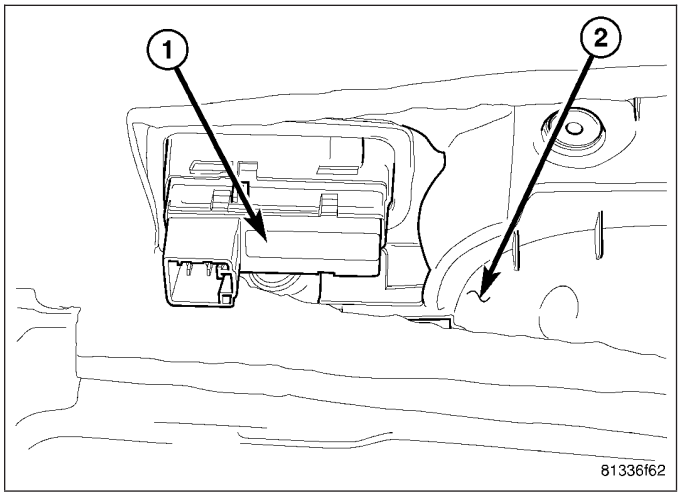

INSTALLATION

NOTE: A battery reconnect procedure must be performed anytime the battery has been disconnected. (Refer to 8 - ELECTRICAL/BATTERY SYSTEM - STANDARD PROCEDURE).

1. Install switch (1) to rear door trim panel (2).
2. Install rear door trim panel (Refer to 23 - BODY/DOORS - REAR/TRIM PANEL - INSTALLATION).
3. Connect battery negative cable.

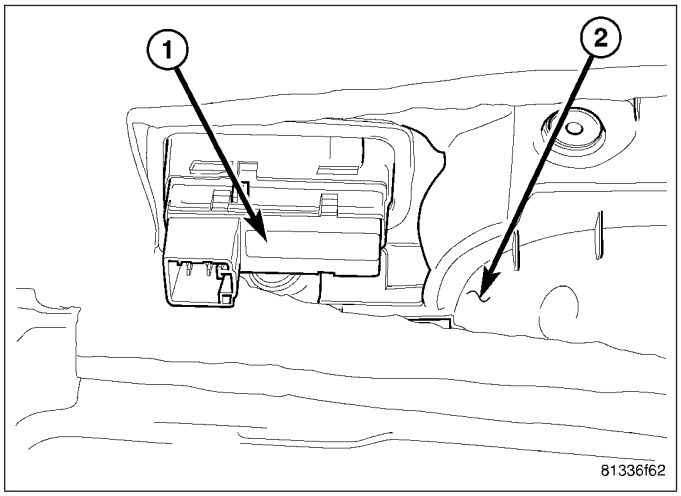

RESTRAINTS

TABLE OF CONTENTS

page

RESTRAINTS - ELECTRICAL DIAGNOSTICS 1

page

RESTRAINTS - SERVICE INFORMATION 363

RESTRAINTS - ELECTRICAL DIAGNOSTICS

TABLE OF CONTENTS

page

RESTRAINTS - ELECTRICAL DIAGNOSTICS
DIAGNOSIS AND TESTING
B1203-SRS WARNING INDICATOR CIRCUIT/PERFORMANCE 5
B1204-PASSENGER AIRBAG INDICATOR CIRCUIT LOW 7
B1205-PASSENGER AIRBAG INDICATOR CIRCUIT HIGH. 11
B1206-PASSENGER AIRBAG INDICATOR CIRCUIT OPEN 15
B1207-PASSENGER AIRBAG INDICATOR CIRCUIT SHORTED TOGETHER 19
B1B00-DRIVER AIRBAG SQUIB 1 CIRCUIT LOW. 23
B1B01-DRIVER AIRBAG SQUIB 1 CIRCUIT HIGH 27
B1B02-DRIVER AIRBAG SQUIB 1 CIRCUIT OPEN. 31
B1B03-DRIVER AIRBAG SQUIB 1 CIRCUIT SHORTED TOGETHER 36
B1B04-DRIVER AIRBAG SQUIB 2 CIRCUIT LOW. 40
B1B05-DRIVER AIRBAG SQUIB 2 CIRCUIT HIGH 44
B1B06-DRIVER AIRBAG SQUIB 2 CIRCUIT OPEN. 48
B1B07-DRIVER AIRBAG SQUIB 2 CIRCUIT SHORTED TOGETHER 53
B1B08-PASSENGER AIRBAG SQUIB 1 CIRCUIT LOW 57
B1B09-PASSENGER AIRBAG SQUIB 1 CIRCUIT HIGH. 60
B1B0A-PASSENGER AIRBAG SQUIB 1 CIRCUIT OPEN 63
B1B0B-PASSENGER AIRBAG SQUIB 1 CIRCUIT SHORTED TOGETHER 67

page

B1B0C-PASSENGER AIRBAG SQUIB 2 CIRCUIT LOW 70
B1B0D-PASSENGER AIRBAG SQUIB 2 CIRCUIT HIGH. 73
B1B0E-PASSENGER AIRBAG SQUIB 2 CIRCUIT OPEN 76
B1B0F-PASSENGER AIRBAG SQUIB 2 CIRCUIT SHORTED TOGETHER 80
B1B18-LEFT SIDE CURTAIN SQUIB 1 CIRCUIT LOW 83
B1B19-LEFT SIDE CURTAIN SQUIB 1 CIRCUIT HIGH. 87
B1B1A-LEFT SIDE CURTAIN SQUIB 1 CIRCUIT OPEN 90
B1B1B-LEFT SIDE CURTAIN SQUIB 1 CIRCUIT SHORTED TOGETHER 94
B1B20-RIGHT SIDE CURTAIN SQUIB 1 CIRCUIT LOW 97
B1B21-RIGHT SIDE CURTAIN SQUIB 1 CIRCUIT HIGH 100
B1B22-RIGHT SIDE CURTAIN SQUIB 1 CIRCUIT OPEN. 103
B1B23-RIGHT SIDE CURTAIN SQUIB 1 CIRCUIT SHORTED TOGETHER 107
B1B28-1st ROW DRIVER SEAT BELT PRETENSIONER CIRCUIT LOW. 110
B1B29-1ST ROW DRIVER SEAT BELT PRETENSIONER CIRCUIT HIGH 113
B1B2A-1st ROW DRIVER SEAT BELT PRETENSIONER CIRCUIT OPEN 117
B1B2B-1st ROW DRIVER SEAT BELT PRETENSIONER CIRCUIT SHORTED TOGETHER 121
B1B2C-1st ROW PASSENGER SEAT BELT PRETENSIONER CIRCUIT LOW 125
B1B2D-1st ROW PASSENGER SEAT BELT PRETENSIONER CIRCUIT HIGH 129

B1B2E-1st ROW PASSENGER SEAT BELT PRETENSIONER CIRCUIT OPEN 133
B1B2F-1st ROW PASSENGER SEAT BELT PRETENSIONER CIRCUIT SHORTED TOGETHER 137
B1B70-UP-FRONT LEFT SATELLITE ACCELERATION SENSOR INTERNAL 141
B1B71-UP-FRONT RIGHT SATELLITE ACCELERATION SENSOR INTERNAL 146
B1B72-LEFT SIDE SATELLITE ACCELERATION SENSOR 1 INTERNAL 151
B1B73-LEFT SIDE SATELLITE ACCELERATION SENSOR 2 INTERNAL 156
B1B75-RIGHT SIDE SATELLITE ACCELERATION SENSOR 1 INTERNAL 161
B1B76-RIGHT SIDE SATELLITE ACCELERATION SENSOR 2 INTERNAL 166
B1B78-PASSENGER SEAT WEIGHT SENSOR 3 - LEFT FRONT PERFORMANCE. 171
B1B79-PASSENGER SEAT WEIGHT SENSOR 3 - LEFT FRONT INPUT CIRCUIT LOW. 175
B1B7A-PASSENGER SEAT WEIGHT SENSOR 3 - LEFT FRONT INPUT CIRCUIT HIGH 181
B1B7D-PASSENGER SEAT WEIGHT SENSOR 2 - RIGHT FRONT PERFORMANCE. 186
B1B7E-PASSENGER SEAT WEIGHT SENSOR 2 - RIGHT FRONT INPUT CIRCUIT LOW 190
B1B7F-PASSENGER SEAT WEIGHT SENSOR 2 - RIGHT FRONT INPUT CIRCUIT HIGH 196
B1B82-PASSENGER SEAT WEIGHT SENSOR 4 - LEFT REAR PERFORMANCE. . 201
B1B83-PASSENGER SEAT WEIGHT SENSOR 4 - LEFT REAR INPUT CIRCUIT LOW. 205
B1B84-PASSENGER SEAT WEIGHT SENSOR 4 - LEFT REAR INPUT CIRCUIT HIGH 211
B1B87-PASSENGER SEAT WEIGHT SENSOR 1 - RIGHT REAR PERFORMANCE. 216
B1B88-PASSENGER SEAT WEIGHT SENSOR 1 - RIGHT REAR INPUT CIRCUIT LOW. 220
B1B89-PASSENGER SEAT WEIGHT SENSOR 1 - RIGHT REAR INPUT CIRCUIT HIGH 226
B1B8C-DRIVER SEAT TRACK POSITION SENSOR CIRCUIT PERFORMANCE. 231
B1B8D-DRIVER SEAT TRACK POSITION SENSOR CIRCUIT LOW. 235
B1B8E-DRIVER SEAT TRACK POSITION SENSOR CIRCUIT HIGH 241
B1B91-DRIVER SEAT TRACK POSITION SENSOR CONFIGURATION MISMATCH 248
B1BA5-AIRBAG SQUIB CONFIGURATION MISMATCH. 251
B1BA6-OCCUPANT CLASSIFICATION UNDETERMINED 252
B1BA7-OCCUPANT CLASSIFICATION SYSTEM VERIFICATION REQUIRED 253
B1BA8-OCM SYSTEM OUT OF CALIBRATION/NOT CALIBRATED 256
B1BB8-SRS WARNING INDICATOR STATUS MISMATCH. 257
B1BBA-PASSENGER SEAT WEIGHT SENSOR SUPPLY CIRCUIT. 259
B1BBB-PASSENGER SEAT WEIGHT SENSOR INPUTS SHORTED TOGETHER. . . 262
B1BBC-OCS NEGATIVE SYSTEM WEIGHT . . 265
B1BBD-OCM CURRENT CONFIGURATION TABLE UNPROGRAMMED. 268
B1BC7-DEPLOYMENT DATA RECORD FULL . 269
B1BC8-PASSENGER SEAT WEIGHT SENSORS PERFORMANCE 270
B2101-IGNITION RUN/START INPUT CIRCUIT LOW 274
B2102-IGNITION RUN/START INPUT CIRCUIT HIGH 278
B210D-BATTERY VOLTAGE LOW 280
B210E-BATTERY VOLTAGE HIGH 284
B212C-IGNITION RUN/START INPUT CIRCUIT OPEN. 287
B212D-IGNITION RUN ONLY INPUT CIRCUIT OPEN. 293
B2201-CALIBRATION MISMATCH 297
B2205-ORIGINAL VIN MISSING/MISMATCH . . 298
B2206-CURRENT VIN MISSING/MISMATCH . . 299
B2207-OCCUPANT RESTRAINT CONTROLLER INTERNAL 1 302
B2208-OCCUPANT RESTRAINT CONTROLLER INTERNAL 2 303
B2209-OCCUPANT RESTRAINT CONTROLLER INTERNAL 3 304
B220A-OCCUPANT RESTRAINT CONTROLLER INTERNAL 4 305
B220B-OCCUPANT RESTRAINT CONTROLLER FIRING STORED ENERGY . . 306
B220C-OCCUPANT RESTRAINT CONTROLLER ACCELEROMETER 1 INTERNAL 307
B220D-OCCUPANT RESTRAINT CONTROLLER ACCELEROMETER 2 INTERNAL 308
B220F-OCCUPANT RESTRAINT CONTROLLER CONTROL DRIVER 1 309
B2210-OCCUPANT RESTRAINT CONTROLLER CONTROL DRIVER 2 310
B2212-OCCUPANT CLASSIFICATION MODULE INTERNAL 311
B223B-VEHICLE CONFIGURATION MISMATCH. 313

B223D-OCCUPANT CLASSIFICATION MODULE DTC PRESENT 314
U0019-CAN B BUS 315
U0020-CAN B BUS OFF PERFORMANCE 318
U0022-CAN B BUS (+) CIRCUIT LOW 321
U0023-CAN B BUS (+) CIRCUIT HIGH 321
U0026-CAN B BUS (-) CIRCUIT HIGH 321
U0121-LOST COMMUNICATION WITH ANTI-LOCK BRAKE SYSTEM (ABS) CONTROL MODULE 321
U0141-LOST COMMUNICATION WITH FRONT CONTROL MODULE 321
U0151-LOST COMMUNICATION WITH OCCUPANT RESTRAINT CONTROLLER (ORC) 321
U0154-LOST COMMUNICATION WITH OCCUPANT CLASSIFICATION MODULE 321
U0155-LOST COMMUNICATION WITH CLUSTER/CCN 321
U0156-LOST COMMUNICATION WITH EOM . . 321
U0164-LOST COMMUNICATION WITH HVAC CONTROL MODULE 322
U0168-LOST COMMUNICATION WITH VEHICLE SECURITY CONTROL MODULE (SKREEM/WCM) 322
U0170-LOST COMMUNICATION W/UP-FRONT LEFT SATELLITE ACCELERATION SENSOR 323
U0171-LOST COMMUNICATION W/UP-FRONT RIGHT SATELLITE ACCELERATION SENSOR 328
U0172-LOST COMMUNICATION W/LEFT SIDE SATELLITE ACCELERATION SENSOR 1 333
U0173-LOST COMMUNICATION W/LEFT SIDE SATELLITE ACCELERATION SENSOR 2 338
U0175-LOST COMMUNICATION W/RIGHT SIDE SATELLITE ACCELERATION SENSOR 1 343
U0176-LOST COMMUNICATION W/RIGHT SIDE SATELLITE ACCELERATION SENSOR 2 348
U0184-LOST COMMUNICATION WITH RADIO 353
U0186-LOST COMMUNICATION WITH AUDIO AMPLIFIER 353
U0195-LOST COMMUNICATION WITH SDARS 353
U0196-LOST COMMUNICATION WITH VEHICLE ENTERTAINMENT CONTROL MODULE 353
U0197-LOST COMMUNICATION WITH HANDS FREE PHONE MODULE 353
U0199-LOST COMMUNICATION WITH DRIVER DOOR MODULE 353
U0200-LOST COMMUNICATION WITH PASSENGER DOOR MODULE 353
U0208-LOST COMMUNICATION WITH HEATED SEAT CONTROL MODULE 353
U0209-LOST COMMUNICATION WITH MEMORY SEAT CONTROL MODULE 353
*DIAGNOSIS AND CHECKOUT PROCEDURE FOR SEAT WEIGHT SENSORS 354
*OCS VERIFICATION TEST - VER 1 358
*ORC VERIFICATION TEST - VER 1 360
U1414-IMPLAUSIBLE/MISSING ECU CONFIGURATION DATA 361
U1415-IMPLAUSIBLE/MISSING VEHICLE CONFIGURATION DATA 362

RESTRAINTS - ELECTRICAL DIAGNOSTICS

DIAGNOSIS AND TESTING

B1203-SRS WARNING INDICATOR CIRCUIT/PERFORMANCE

For a complete wiring diagram **Refer to Section 8W**.

- **When Monitored:**
  With the ignition on, the Occupant Restraint Controller (ORC) monitors the CAN B bus for a message from the Instrument Cluster containing the airbag warning indicator status. The ORC requests the warning lamp status from the Instrument Cluster once every second.
- **Set Condition:**
  This DTC will set immediately if the indicator status is LOW or HIGH.

Possible Causes
INSTRUMENT CLUSTER ACTIVE DTCs
ORC

Diagnostic Test

1. CHECK FOR AN ACTIVE DTC

NOTE: Ensure the battery is fully charged.

NOTE: When reconnecting Airbag system components, the ignition must be turned off and the battery must be disconnected.

Turn the ignition on, then off, and then on again.
With the scan tool, read ORC DTCs.

Select DTC type.

Active
Go To 2

Stored
Go To 4

2. CHECK FOR INSTRUMENT CLUSTER DTCs

With the scan tool, read Instrument Cluster DTCs.

Does the scan tool display any Instrument Cluster DTCs?

Yes >> Refer to the symptom list for problems related to the Instrument Cluster.
Perform the ORC VERIFICATION TEST-VER 1.

No >> Go To 3

3. REPLACE THE ORC

WARNING: To avoid personal injury or death, turn the ignition off, disconnect the battery and wait two minutes before proceeding.

WARNING: If the Occupant Restraint Controller (ORC) is dropped at any time, it must be replaced. Failure to take the proper precautions can result in accidental airbag deployment and personal injury or death.

View Repair

Repair
Replace the ORC in accordance with the service information.
Perform the ORC VERIFICATION TEST-VER 1.

4. TEST FOR INTERMITTENT CONDITION

With the scan tool, record and erase all DTCs from all Airbag modules.

If any ACTIVE codes are present they must be resolved before diagnosing any stored codes.

WARNING: To avoid personal injury or death, turn the ignition off, disconnect the battery and wait two minutes before proceeding.

Using the wiring diagram/schematic as a guide, inspect the wiring and connectors.

Look for chafed, pierced, pinched, or partially broken wires and broken, bent, pushed out, spread, corroded, or contaminated terminals.

The following additional checks may assist you in identifying a possible intermittent problem.

Reconnect any disconnected components and harness connector.

WARNING: To avoid personal injury or death, turn the ignition on, then reconnect the battery.

With the scan tool, monitor active codes as you work through the following steps.

WARNING: To avoid personal injury or death, maintain a safe distance from all airbags while performing the following steps.

Wiggle the wiring harness and connectors of the related airbag circuit or component.

If codes are related to the Driver Airbag circuits, rotate the steering wheel from stop to stop.

If only stored codes return, continue the test until the problem area has been isolated.

In the previous steps you have attempted to recreate the conditions responsible for setting the active DTC in question.

Does the scan tool display any ACTIVE DTCs?

Yes >> Select the appropriate diagnostic procedure from the Table of Contents in this section.

No >> No problem found at this time. Erase all codes before returning vehicle to customer.

B1204-PASSENGER AIRBAG INDICATOR CIRCUIT LOW

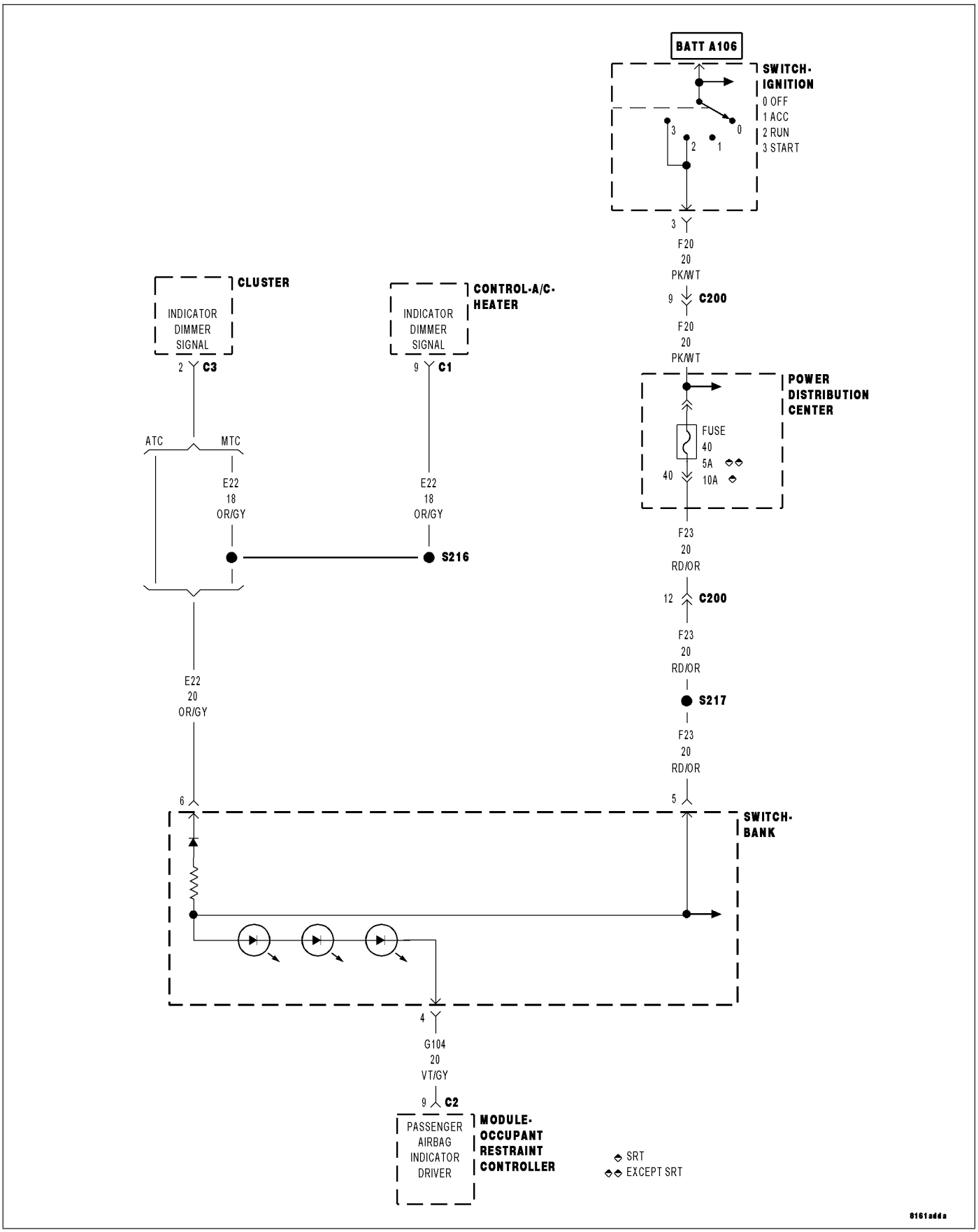

For a complete wiring diagram **Refer to Section 8W**.

- **When Monitored:**
  With the ignition on.
- **Set Condition:**
  If the Occupant Restraint Controller (ORC) cannot detect voltage on the (G104) Passenger Airbag Indicator Driver circuit.

Possible Causes
(G104) PASSENGER AIRBAG INDICATOR DRIVER CIRCUIT SHORTED TO GROUND
(F23) FUSED IGNITION SWITCH OUTPUT RUN-START CIRCUIT OPEN
PASSENGER AIRBAG ON/OFF INDICATOR LAMP (SWITCH BANK)
ORC

Diagnostic Test

1. VERIFY THAT DTC B1204-PASSENGER AIRBAG INDICATOR CIRCUIT LOW IS ACTIVE

NOTE: Ensure the battery is fully charged.

NOTE: The scan tool, SRS Airbag Load Tool MRL 8443, and DVOM are required to perform the following test.

NOTE: When reconnecting Airbag system components, the ignition must be turned off and the battery must be disconnected.
Turn the ignition on.
With the scan tool, read ORC DTCs.

Does the scan tool display active: B1204-PASSENGER AIRBAG INDICATOR CIRCUIT LOW?

Yes >> Go To 2

No >> Go To 6

2. CHECK THE PASSENGER AIRBAG INDICATOR DRIVER CIRCUIT VOLTAGE AT THE ORC CONNECTOR.

WARNING: If the Occupant Restraint Controller (ORC) is dropped at any time, it must be replaced. Failure to take the proper precautions can result in accidental airbag deployment and personal injury or death.

WARNING: To avoid personal injury or death, turn the ignition off, disconnect the battery and wait two minutes before proceeding.
Disconnect the ORC C1 and C2 connector.

NOTE: Check connectors - Clean and repair as necessary.
Connect the Load Tool ORC Adaptor (8443-24) to the ORC C2 connector.

WARNING: To avoid personal injury or death, turn the ignition on, then reconnect the battery.
Measure the voltage of the (G104) Passenger Airbag Indicator Driver circuit between the ORC Adaptor cavity 9 and ground.

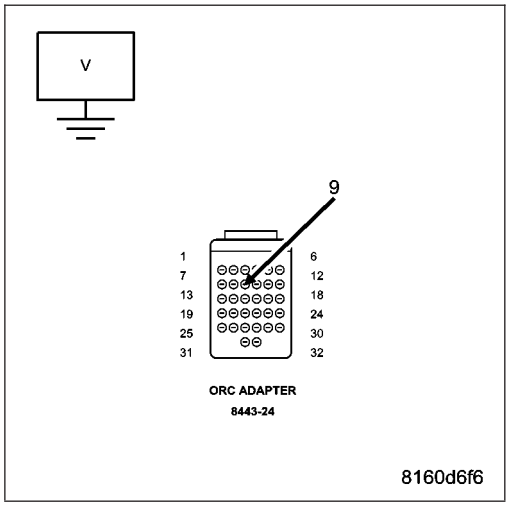

Is the voltage above 6.0 volts?

Yes >> Go To 5

No >> Go To 3

3. CHECK (F23) FUSED IGNITION SWITCH OUTPUT RUN-START CIRCUIT VOLTAGE

Disconnect the Switch Bank Connector

NOTE: Check connectors - Clean and repair as necessary.
Measure the voltage of the (F23) Fused Ignition Switch Output Run-Start circuit at the Switch Bank connector cavity 5.

Is the voltage above 6.0 volts?

Yes >> Go To 4

No >> Repair the (F23) Fused Ignition Switch Output Run-Start circuit open or low voltage condition. Perform ORC VERIFICATION TEST - VER 1.

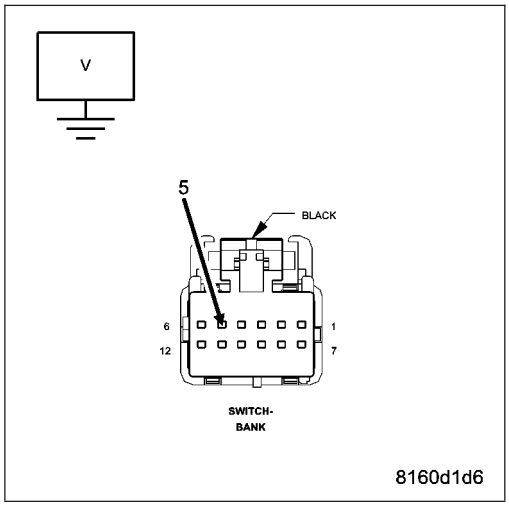

4. CHECK (G104) PASSENGER AIRBAG INDICATOR DRIVER CIRCUIT FOR A SHORT TO GROUND

WARNING: To avoid personal injury or death, turn the ignition off, disconnect the battery and wait two minutes before proceeding.

NOTE: Check connectors - Clean and repair as necessary.
Measure the resistance of the (G104) Passenger Airbag Indicator Driver circuit between the ORC Adaptor cavity 9 and ground.

Is the resistance below 100.0 ohms?

Yes >> Repair the (G104) Passenger Airbag Indicator Driver circuit for a short to ground.
Perform ORC VERIFICATION TEST - VER 1.

No >> Replace the Switch Bank in accordance with the service information. Perform the ORC VERIFICATION TEST-VER 1.

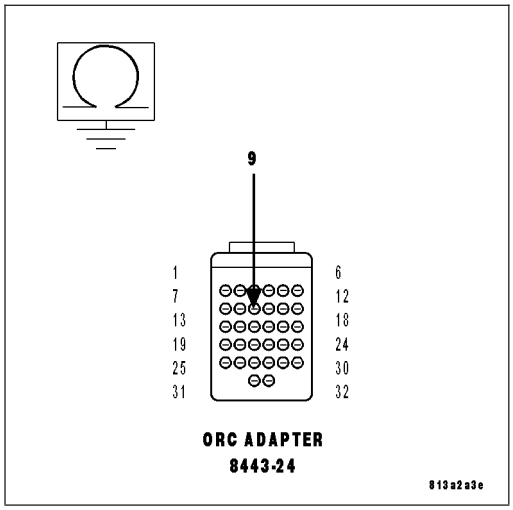

5. REPLACE THE ORC

WARNING: To avoid personal injury or death, turn the ignition off, disconnect the battery and wait two minutes before proceeding.

WARNING: If the Occupant Restraint Controller (ORC) is dropped at any time, it must be replaced. Failure to take the proper precautions can result in accidental airbag deployment and personal injury or death.

Repair

Replace the ORC in accordance with the service information.
Perform the ORC VERIFICATION TEST - VER 1.

6. TEST FOR INTERMITTENT CONDITION

With the scan tool, record and erase all DTCs from all Airbag modules.

If any ACTIVE codes are present they must be resolved before diagnosing any stored codes.

WARNING: To avoid personal injury or death, turn the ignition off, disconnect the battery and wait two minutes before proceeding.

Using the wiring diagram/schematic as a guide, inspect the wiring and connectors.

Look for chafed, pierced, pinched, or partially broken wires and broken, bent, pushed out, spread, corroded, or contaminated terminals.

The following additional checks may assist you in identifying a possible intermittent problem.

Reconnect any disconnected components and harness connector.

WARNING: To avoid personal injury or death, turn the ignition on, then reconnect the battery.

With the scan tool, monitor active codes as you work through the following steps.

WARNING: To avoid personal injury or death, maintain a safe distance from all airbags while performing the following steps.

Wiggle the wiring harness and connectors of the related airbag circuit or component.

If codes are related to the Driver Airbag circuits, rotate the steering wheel from stop to stop.

If only stored codes return, continue the test until the problem area has been isolated.

In the previous steps you have attempted to recreate the conditions responsible for setting the active DTC in question.

Does the scan tool display any ACTIVE DTCs?

Yes >> Select the appropriate diagnostic procedure from the Table of Contents in this section.

No >> No problem found at this time. Erase all codes before returning vehicle to customer.

B1205-PASSENGER AIRBAG INDICATOR CIRCUIT HIGH

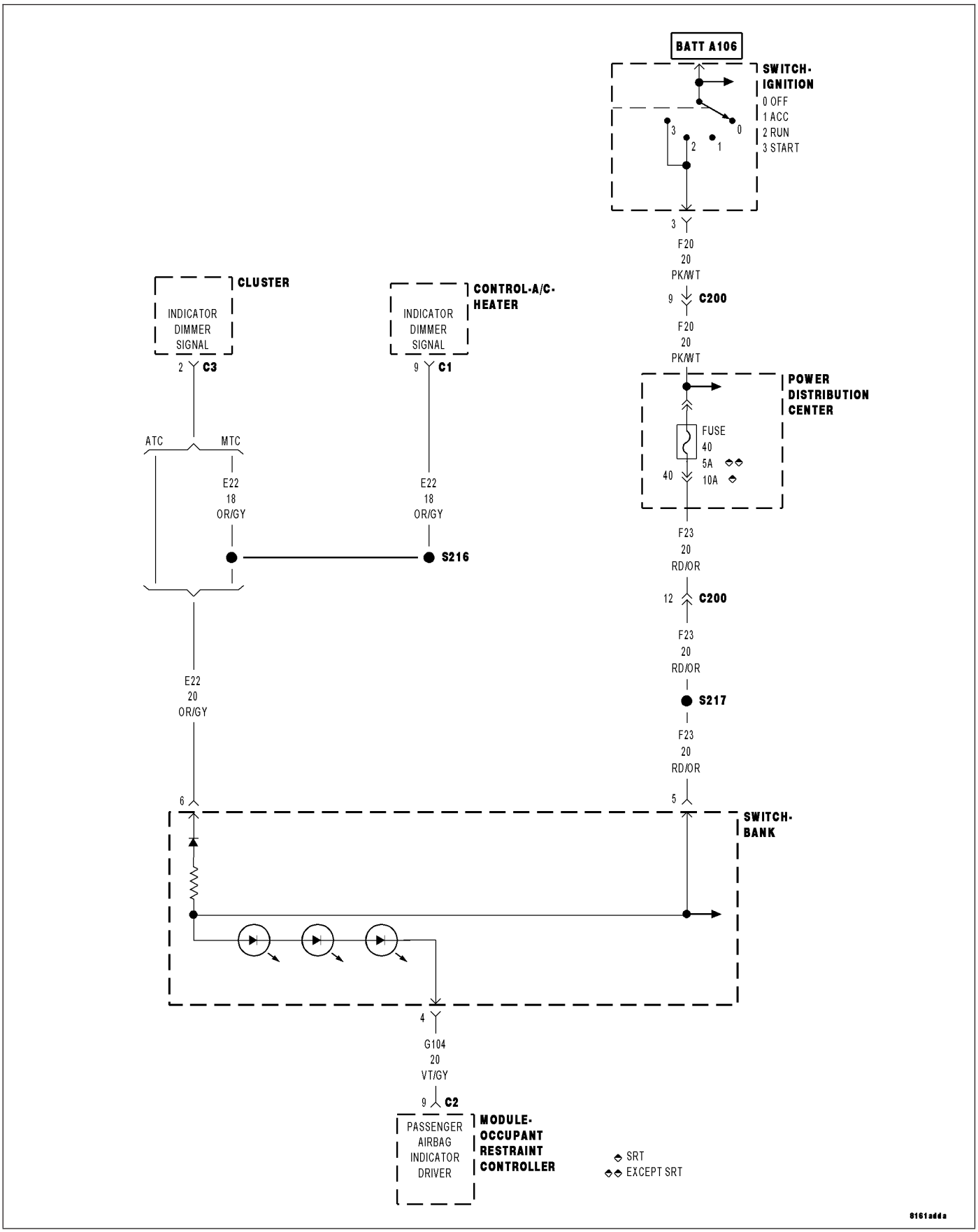

For a complete wiring diagram **Refer to Section 8W**.

- **When Monitored:**
  With the ignition on.
- **Set Condition:**
  If the Occupant Restraint Controller (ORC) senses a low resistance to battery voltage on the (G104) Passenger Airbag Indicator Driver circuit.

Possible Causes
(G104) PASSENGER AIRBAG INDICATOR DRIVER CIRCUIT SHORTED TO (F23) FUSED IGNITION SWITCH OUTPUT (RUN-START) CIRCUIT
(G104) PASSENGER AIRBAG INDICATOR DRIVER CIRCUIT SHORTED TO VOLTAGE
PASSENGER AIRBAG ON/OFF INDICATOR LAMP (SWITCH BANK)
ORC

Diagnostic Test

1. VERIFY THAT DTC B1205-PASSENGER AIRBAG INDICATOR CIRCUIT HIGH IS ACTIVE

NOTE: Ensure the battery is fully charged.

NOTE: The scan tool, SRS Airbag Load Tool MRL 8443, and DVOM are required to perform the following test.

NOTE: When reconnecting Airbag system components, the ignition must be turned off and the battery must be disconnected.

Turn the ignition on.

With the scan tool, read ORC DTCs.

Does the scan tool display active: B1205-PASSENGER AIRBAG INDICATOR CIRCUIT HIGH?

Yes >> Go To 2

No >> Go To 5

2. CHECK (G104) PASSENGER AIRBAG INDICATOR DRIVER CIRCUIT FOR A SHORT TO (F23) FUSED IGNITION SWITCH OUTPUT (RUN-START) CIRCUIT

WARNING: If the Occupant Restraint Controller (ORC) is dropped at any time, it must be replaced. Failure to take the proper precautions can result in accidental airbag deployment and personal injury or death.

WARNING: If the Occupant Classification Module (OCM) is dropped at any time, it must be replaced. Failure to take the proper precautions can result in accidental airbag deployment and personal injury or death.

WARNING: To avoid personal injury or death, turn the ignition off, disconnect the battery and wait two minutes before proceeding.

Disconnect the ORC C1 and C2 connectors.

Disconnect the OCM C1 connector.

Disconnect the Switch Bank connector.

NOTE: Check connectors - Clean and repair as necessary.

Connect the appropriate Load Tool ORC Adaptor (8443-24) to the ORC connectors.

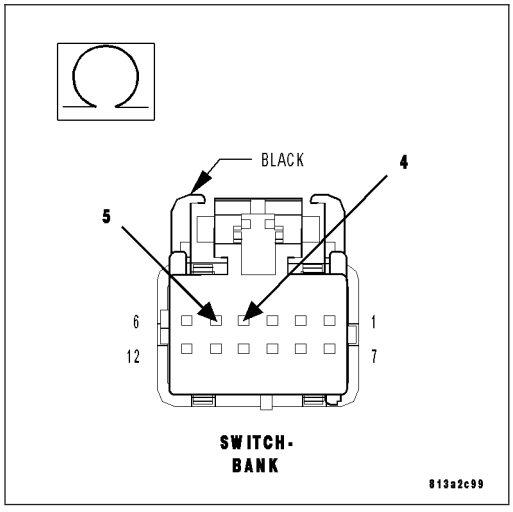

Measure the resistance between the (G104) Passenger Airbag Indicator Driver circuit and the (F23) Fused Ignition Switch Output (Run-Start) circuit in the Switch Bank connector.

Is the resistance below 100.0 ohms?

Yes >> Repair the (G104) Passenger Airbag Indicator Driver circuit for a short to the (F23) Fused Ignition Switch Output (Run-Start) circuit.
Perform ORC VERIFICATION TEST - VER 1.

No >> Go To 3

3. CHECK (G104) PASSENGER AIRBAG INDICATOR DRIVER CIRCUIT FOR A SHORT TO VOLTAGE

WARNING: To avoid personal injury or death, turn the ignition on, then reconnect the battery.
Remove the Airbag Run-Start Fuse from the PDC.

WARNING: To avoid personal injury or death, turn the ignition on, then reconnect the battery.
Measure the voltage of the (G104) Passenger Airbag Indicator Driver circuit in the Switch Bank connector cavity 4.

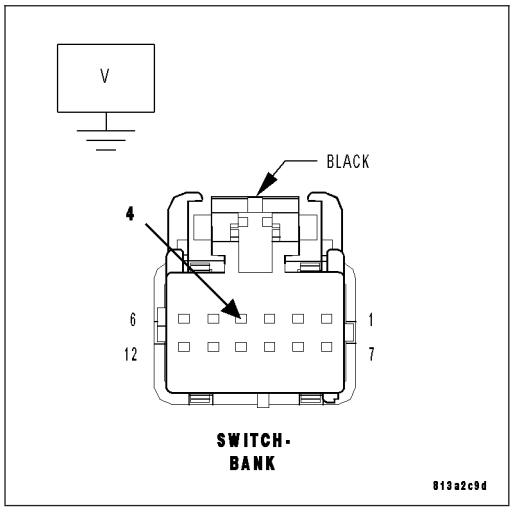

Is there any voltage present?

Yes >> Repair the (G104) Passenger Airbag Indicator Driver circuit for a short to voltage.
Perform ORC VERIFICATION TEST - VER 1.

No >> Go To 4

4. CHECK FOR ACTIVE DTC B1205-PASSENGER AIRBAG INDICATOR CIRCUIT HIGH WITH SWITCH BANK CONNECTOR DISCONNECTED

WARNING: To avoid personal injury or death, turn the ignition off, disconnect the battery and wait two minutes before proceeding.
Reconnect the Airbag Run-Start Fuse from the PDC.
Remove the Load Tool ORC Adaptor from the ORC connectors.
Reconnect the ORC C1 and C2 connectors.
Reconnect the OCM C1 connector.

WARNING: To avoid personal injury or death, turn the ignition on, then reconnect the battery.
With the scan tool, erase ORC DTCs.
Turn the ignition off, wait 10 seconds, and then turn the ignition on.
With the scan tool, read ORC DTCs.

Does the scan tool display active: B1205-PASSENGER AIRBAG INDICATOR CIRCUIT HIGH?

Yes >>

WARNING: To avoid personal injury or death, turn the ignition off, disconnect the battery and wait two minutes before proceeding.

WARNING: If the Occupant Restraint Controller (ORC) is dropped at any time, it must be replaced. Failure to take the proper precautions can result in accidental airbag deployment and personal injury or death.
Replace the ORC in accordance with the service information.
Perform the ORC VERIFICATION TEST-VER 1.

No >> Replace the Switch Bank in accordance with the Service Information.
Perform ORC VERIFICATION TEST - VER 1.

5. TEST FOR INTERMITTENT CONDITION

With the scan tool, record and erase all DTCs from all Airbag modules.

If any ACTIVE codes are present they must be resolved before diagnosing any stored codes.

WARNING: To avoid personal injury or death, turn the ignition off, disconnect the battery and wait two minutes before proceeding.

Using the wiring diagram/schematic as a guide, inspect the wiring and connectors.

Look for chafed, pierced, pinched, or partially broken wires and broken, bent, pushed out, spread, corroded, or contaminated terminals.

The following additional checks may assist you in identifying a possible intermittent problem.

Reconnect any disconnected components and harness connector.

WARNING: To avoid personal injury or death, turn the ignition on, then reconnect the battery.

With the scan tool, monitor active codes as you work through the following steps.

WARNING: To avoid personal injury or death, maintain a safe distance from all airbags while performing the following steps.

Wiggle the wiring harness and connectors of the related airbag circuit or component.

If codes are related to the Driver Airbag circuits, rotate the steering wheel from stop to stop.

If only stored codes return, continue the test until the problem area has been isolated.

In the previous steps you have attempted to recreate the conditions responsible for setting the active DTC in question.

Does the scan tool display any ACTIVE DTCs?

Yes >> Select the appropriate diagnostic procedure from the Table of Contents in this section.

No >> No problem found at this time. Erase all codes before returning vehicle to customer.

B1206-PASSENGER AIRBAG INDICATOR CIRCUIT OPEN

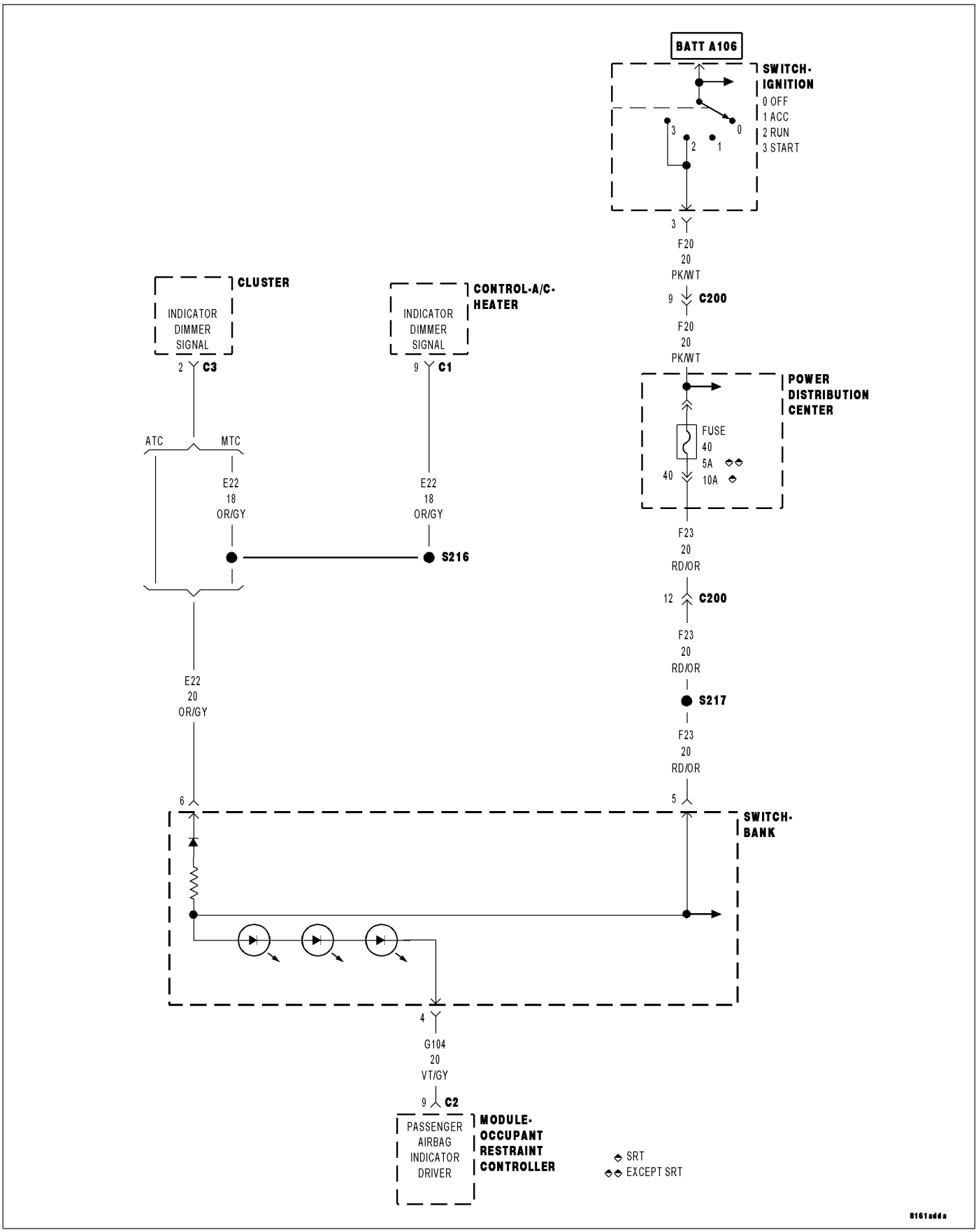

For a complete wiring diagram **Refer to Section 8W**.

- **When Monitored:**
  With the ignition on.
- **Set Condition:**
  If the Occupant Restraint Controller (ORC) cannot detect voltage on the (G104) Passenger Airbag Indicator Driver circuit.

Possible Causes
SWITCH BANK CONNECTOR DISCONNECTED
(G104) PASSENGER AIRBAG INDICATOR DRIVER CIRCUIT OPEN
PASSENGER AIRBAG ON/OFF INDICATOR LAMP (SWITCH BANK)
ORC

Diagnostic Test

1. VERIFY THAT DTC B1206 PASSENGER AIRBAG INDICATOR CIRCUIT OPEN IS ACTIVE

NOTE: Ensure the battery is fully charged.

NOTE: The scan tool, SRS Airbag Load Tool MRL 8443, and DVOM are required to perform the following test.

NOTE: When reconnecting Airbag system components, the ignition must be turned off and the battery must be disconnected.
Turn the ignition on.
With the scan tool, read ORC DTCs.

Does the scan tool display active: B1206-PASSENGER AIRBAG INDICATOR CIRCUIT OPEN?

Yes >> Go To 2

No >> Go To 6

2. VERIFY THAT SWITCH BANK CONNECTOR IS CONNECTED

Turn the ignition off.
Gain access to the Switch Bank connector.

Is the Switch Bank connected to the dash harness?

Yes >> Go To 3

No >> Connect the Switch Bank to the dash harness.
Perform ORC VERIFICATION TEST - VER 1.

3. CHECK (G104) PASSENGER AIRBAG INDICATOR DRIVER CIRCUIT OPERATION

WARNING: If the Occupant Restraint Controller (ORC) is dropped at any time, it must be replaced. Failure to take the proper precautions can result in accidental airbag deployment and personal injury or death.

WARNING: To avoid personal injury or death, turn the ignition off, disconnect the battery and wait two minutes before proceeding.
Disconnect the ORC C1 and C2 connector.

NOTE: Check connectors - Clean and repair as necessary.
Connect the appropriate Load Tool ORC Adaptor (8443-24) to the ORC connector.

WARNING: To avoid personal injury or death, turn the ignition on, then reconnect the battery.

Measure the voltage of the (G104) Passenger Airbag Indicator Driver circuit between the ORC Adaptor cavity 9 and the Switch Bank connector cavity 4.

Is the voltage above 6.0 volts?

Yes >>

WARNING: To avoid personal injury or death, turn the ignition off, disconnect the battery and wait two minutes before proceeding.

WARNING: If the Occupant Restraint Controller (ORC) is dropped at any time, it must be replaced. Failure to take the proper precautions can result in accidental airbag deployment and personal injury or death.Replace the ORC in accordance with the service information.

Perform the ORC VERIFICATION TEST-VER 1.

No >> Go To 4

4. CHECK (G104) PASSENGER AIRBAG INDICATOR DRIVER CIRCUIT FOR AN OPEN

WARNING: If the Occupant Restraint Controller (ORC) is dropped at any time, it must be replaced. Failure to take the proper precautions can result in accidental airbag deployment and personal injury or death.

WARNING: To avoid personal injury or death, turn the ignition off, disconnect the battery and wait two minutes before proceeding.
Measure the resistance of the (G104) Passenger Airbag Indicator Driver circuit between the ORC Adaptor cavity 9 and the Switch Bank connector cavity 4.

Is the resistance below 5.0 ohms?

Yes >> Go To 5

No >> Repair the (G104) Passenger Airbag Indicator Driver circuit for an open.
Perform ORC VERIFICATION TEST - VER 1.

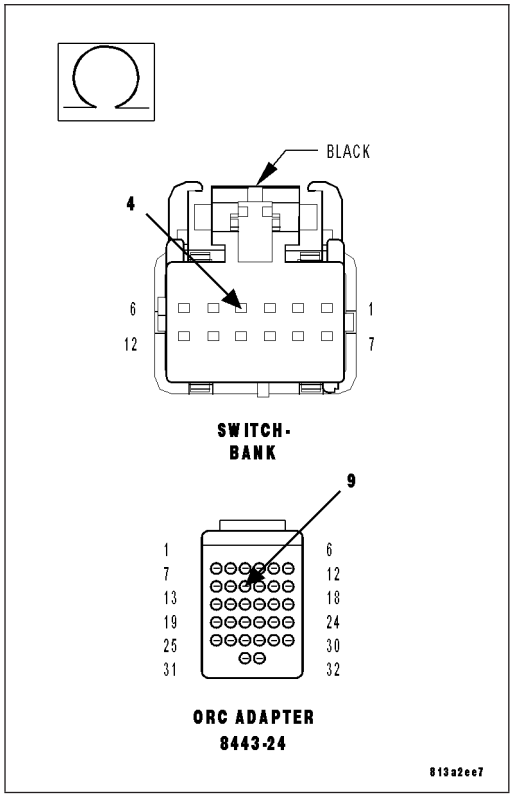

5. CHECK (F23) FUSED IGNITION SWITCH OUTPUT (RUN-START) CIRCUIT VOLTAGE

WARNING: To avoid personal injury or death, turn the ignition on, then reconnect the battery.
Measure the voltage of the (F23) Fused Ignition Switch Output (Run-Start) circuit at the Switch Bank connector cavity 5.

Is the voltage above 6.0 volts?

Yes >> Replace the Switch Bank in accordance with the service information.
Perform ORC VERIFICATION TEST - VER 1.

No >> Repair the open (F23) Fused Ignition Switch Output (Run-Start) circuit.
Perform ORC VERIFICATION TEST - VER 1.

6. TEST FOR INTERMITTENT CONDITION

With the scan tool, record and erase all DTCs from all Airbag modules.

If any ACTIVE codes are present they must be resolved before diagnosing any stored codes.

WARNING: To avoid personal injury or death, turn the ignition off, disconnect the battery and wait two minutes before proceeding.

Using the wiring diagram/schematic as a guide, inspect the wiring and connectors.

Look for chafed, pierced, pinched, or partially broken wires and broken, bent, pushed out, spread, corroded, or contaminated terminals.

The following additional checks may assist you in identifying a possible intermittent problem.

Reconnect any disconnected components and harness connector.

WARNING: To avoid personal injury or death, turn the ignition on, then reconnect the battery.

With the scan tool, monitor active codes as you work through the following steps.

WARNING: To avoid personal injury or death, maintain a safe distance from all airbags while performing the following steps.

Wiggle the wiring harness and connectors of the related airbag circuit or component.

If codes are related to the Driver Airbag circuits, rotate the steering wheel from stop to stop.

If only stored codes return, continue the test until the problem area has been isolated.

In the previous steps you have attempted to recreate the conditions responsible for setting the active DTC in question.

Does the scan tool display any ACTIVE DTCs?

Yes >> Select the appropriate diagnostic procedure from the Table of Contents in this section.

No >> No problem found at this time. Erase all codes before returning vehicle to customer.

B1207-PASSENGER AIRBAG INDICATOR CIRCUIT SHORTED TOGETHER

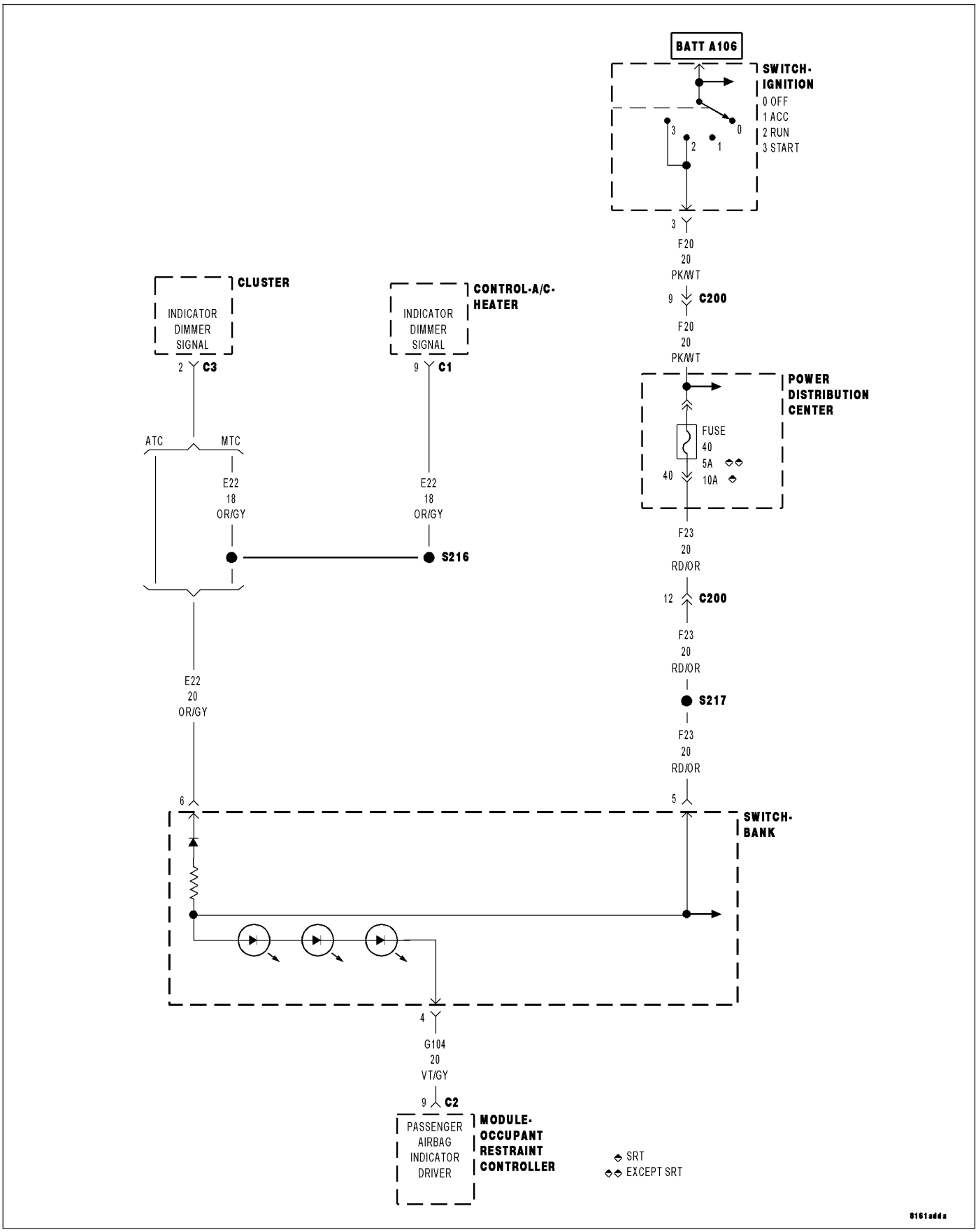

For a complete wiring diagram **Refer to Section 8W**.

- **When Monitored:**
  With the ignition on.
- **Set Condition:**
  When the Occupant Restraint Controller (ORC) detects over current on the (G104) Passenger Airbag Indicator Driver circuit.

Possible Causes
(G104) PASSENGER AIRBAG INDICATOR DRIVER CIRCUIT SHORTED TO (F23) FUSED IGNITION SWITCH OUTPUT (RUN-START) CIRCUIT
(G104) PASSENGER AIRBAG INDICATOR DRIVER CIRCUIT SHORTED TO VOLTAGE
PASSENGER AIRBAG ON/OFF INDICATOR LAMP (SWITCH BAN)
ORC

Diagnostic Test

1. VERIFY THAT DTC B1207-PASSENGER AIRBAG INDICATOR CIRCUIT SHORTED TOGETHER IS ACTIVE

NOTE: Ensure the battery is fully charged.

NOTE: The scan tool, SRS Airbag Load Tool MRL 8443, and DVOM are required to perform the following test.

NOTE: When reconnecting Airbag system components, the ignition must be turned off and the battery must be disconnected.

Turn the ignition on.

With the scan tool, read ORC DTCs.

Does the scan tool display active: B1207-PASSENGER AIRBAG INDICATOR CIRCUIT SHORTED TOGETHER?

Yes >> Go To 2

No >> Go To 6

2. CHECK (G104) PASSENGER AIRBAG INDICATOR DRIVER CIRCUIT FOR A SHORT TO (F23) FUSED IGNITION SWITCH OUTPUT (RUN-START) CIRCUIT

WARNING: If the Occupant Restraint Controller (ORC) is dropped at any time, it must be replaced. Failure to take the proper precautions can result in accidental airbag deployment and personal injury or death.

WARNING: If the Occupant Classification Module (OCM) is dropped at any time, it must be replaced. Failure to take the proper precautions can result in accidental airbag deployment and personal injury or death.

WARNING: To avoid personal injury or death, turn the ignition off, disconnect the battery and wait two minutes before proceeding.

Disconnect the ORC C1 and C2 connectors.

Disconnect the OCM C1 connector.

Disconnect the Switch Bank connector.

NOTE: Check connectors - Clean and repair as necessary.

Connect the appropriate Load Tool ORC Adaptor (8443-24) to the ORC connectors.

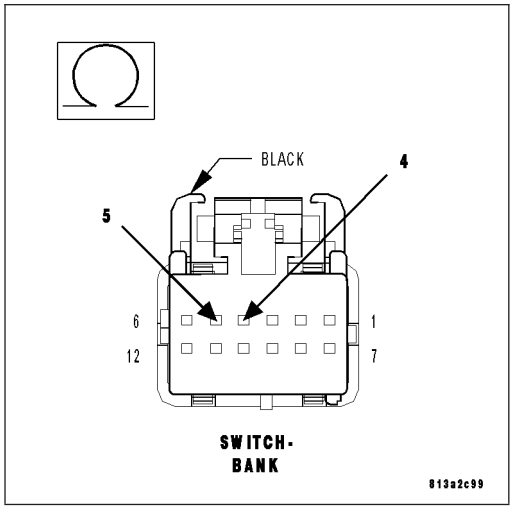

Measure the resistance between the (G104) Passenger Airbag Indicator Driver circuit and the (F23) Fused Ignition Switch Output (Run-Start) circuit in the Switch Bank connector.

Is the resistance below 100.0 ohms?

Yes >> Repair the (G104) Passenger Airbag Indicator Driver circuit for a short to the (F23) Fused Ignition Switch Output (Run-Start) circuit.
Perform ORC VERIFICATION TEST - VER 1.

No >> Go To 3

3. CHECK (G104) PASSENGER AIRBAG INDICATOR DRIVER CIRCUIT FOR A SHORT TO VOLTAGE

WARNING: To avoid personal injury or death, turn the ignition on, then reconnect the battery.
Measure the voltage of the (G104) Passenger Airbag Indicator Driver circuit.

Is there any voltage present?

Yes >> Repair the (G104) Passenger Airbag Indicator Driver circuit for a short to voltage.
Perform ORC VERIFICATION TEST - VER 1.

No >> Go To 4

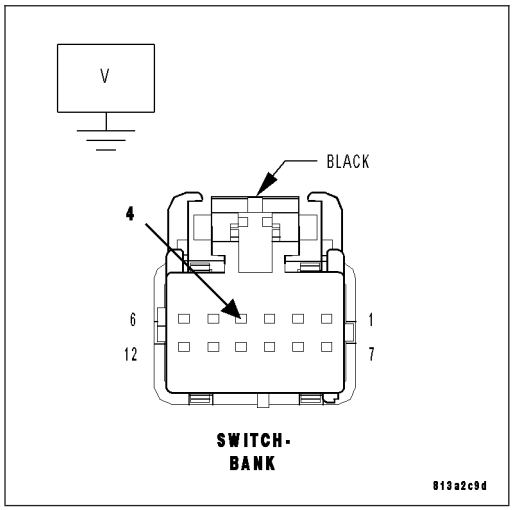

4. CHECK FOR ACTIVE DTC B1207-PASSENGER AIRBAG INDICATOR CIRCUIT SHORTED TOGETHER

WARNING: To avoid personal injury or death, turn the ignition off, disconnect the battery and wait two minutes before proceeding.
Remove the Load Tool ORC Adaptor from the ORC connectors.
Reconnect the ORC C1 and C2 connectors.
Reconnect the OCM C1 connector.

WARNING: To avoid personal injury or death, turn the ignition on, then reconnect the battery.
With the scan tool, erase ORC DTCs.
Turn the ignition off, wait 10 seconds, and then turn the ignition on.
With the scan tool, read ORC DTCs.

Does the scan tool display active: B1207-PASSENGER AIRBAG INDICATOR CIRCUIT SHORTED TOGETHER?

Yes >> Go To 5

No >> Replace the Switch Bank in accordance with the Service Information.
Perform ORC VERIFICATION TEST - VER 1.

5. REPLACE THE ORC

WARNING: To avoid personal injury or death, turn the ignition off, disconnect the battery and wait two minutes before proceeding.

WARNING: If the Occupant Restraint Controller (ORC) is dropped at any time, it must be replaced. Failure to take the proper precautions can result in accidental airbag deployment and personal injury or death.

View Repair

Repair

Replace the ORC in accordance with the service information.

Perform the ORC VERIFICATION TEST-VER 1.

6. TEST FOR INTERMITTENT CONDITION

With the scan tool, record and erase all DTCs from all Airbag modules.

If any ACTIVE codes are present they must be resolved before diagnosing any stored codes.

WARNING: To avoid personal injury or death, turn the ignition off, disconnect the battery and wait two minutes before proceeding.

Using the wiring diagram/schematic as a guide, inspect the wiring and connectors.

Look for chafed, pierced, pinched, or partially broken wires and broken, bent, pushed out, spread, corroded, or contaminated terminals.

The following additional checks may assist you in identifying a possible intermittent problem.

Reconnect any disconnected components and harness connector.

WARNING: To avoid personal injury or death, turn the ignition on, then reconnect the battery.

With the scan tool, monitor active codes as you work through the following steps.

WARNING: To avoid personal injury or death, maintain a safe distance from all airbags while performing the following steps.

Wiggle the wiring harness and connectors of the related airbag circuit or component.

If codes are related to the Driver Airbag circuits, rotate the steering wheel from stop to stop.

If only stored codes return, continue the test until the problem area has been isolated.

In the previous steps you have attempted to recreate the conditions responsible for setting the active DTC in question.

Does the scan tool display any ACTIVE DTCs?

Yes >> Select the appropriate diagnostic procedure from the Table of Contents in this section.

No >> No problem found at this time. Erase all codes before returning vehicle to customer.

B1B00-DRIVER AIRBAG SQUIB 1 CIRCUIT LOW

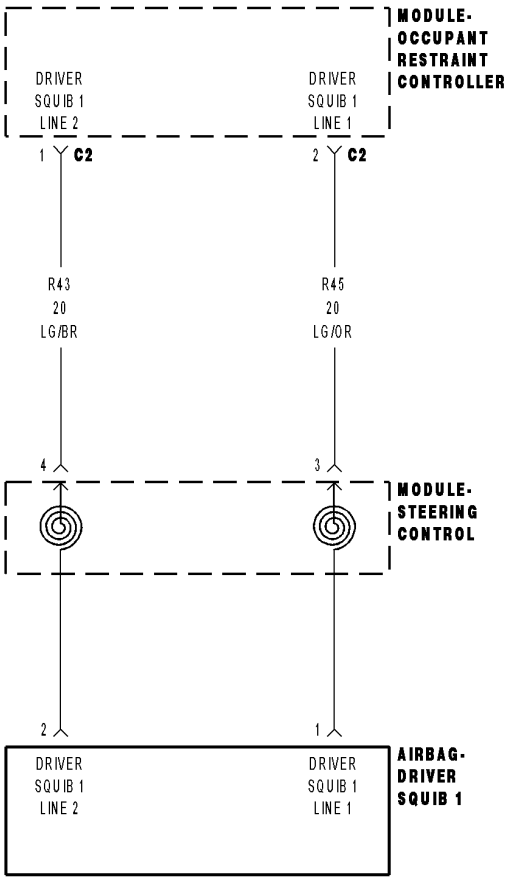

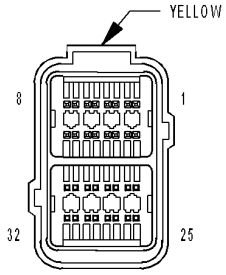

MODULE-
OCCUPANT
RESTRAINT
CONTROLLER C2

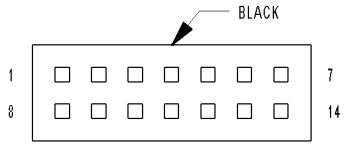

MODULE-
STEERING CONTROL

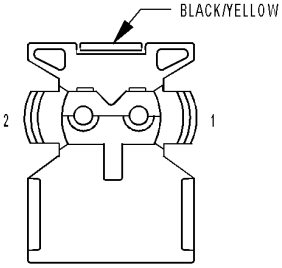

AIRBAG-
DRIVER
SQUIB 1

81339f3a

For a complete wiring diagram **Refer to Section 8W**.

- **When Monitored:**
  With the ignition on, the Occupant Restraint Controller (ORC) monitors the resistance of the Driver Squib 1 circuits.
- **Set Condition:**
  The ORC has detected low resistance on the Driver Squib 1 circuits.

Possible Causes
(R43) DRIVER SQUIB 1 LINE 2 CIRCUIT OR (R45) DRIVER SQUIB 1 LINE 1 CIRCUIT SHORTED TO GROUND
CLOCKSPRING
DRIVER AIRBAG
ORC

Diagnostic Test

1. DETERMINE ACTIVE OR STORED DTC

NOTE: Ensure the battery is fully charged.

NOTE: The scan tool, SRS Airbag Load Tool MRL 8443, and DVOM are required to perform the following test.

NOTE: When reconnecting airbag system components the Ignition must be turned off and the Battery must be disconnected.
Select Active or Stored DTC.

Is the DTC active or stored?

ORC - ACTIVE DTC
Go To 2

ORC - STORED DTC
Go To 6

2. CHECK FOR SHORTED SQUIB CIRCUITS IN DRIVER AIRBAG

WARNING: To avoid personal injury or death, turn the ignition off, disconnect the battery and wait two minutes before proceeding.
Disconnect the Driver Airbag Squib connectors.

WARNING: To avoid personal injury or death, do not place an intact undeployed airbag face down on a hard surface, the airbag will propel into the air if accidentally deployed.

NOTE: Check connectors - Clean and repair as necessary.
Connect the 8443 Load Tool and appropriate Jumper to the Driver Airbag Squib connectors.

WARNING: To avoid personal injury or death, turn the ignition on, then reconnect the battery.
With the scan tool, read the active ORC DTC's.

Does the scan tool display: B1B00 DRIVER AIRBAG SQUIB 1 CIRCUIT LOW?

Yes >> Go To 3

No >> Replace the Driver Airbag in accordance with the Service Information.
Perform ORC VERIFICATION TEST - VER 1

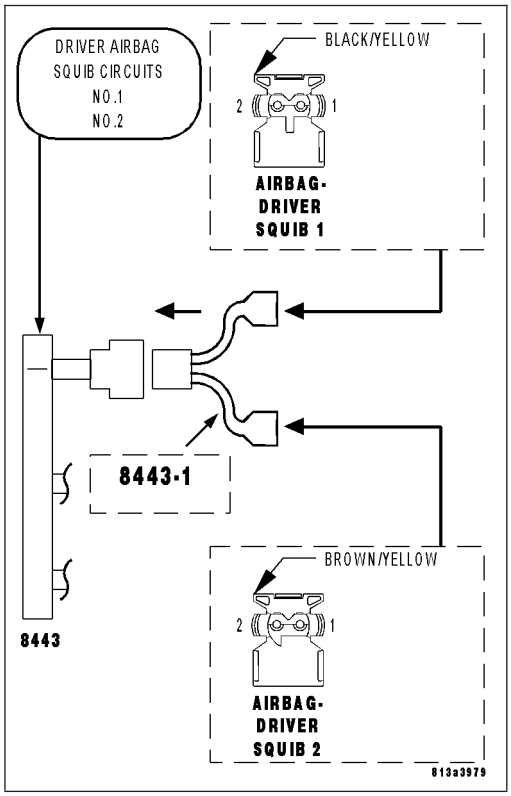

3. CHECK CLOCKSPRING SQUIB CIRCUITS FOR A SHORT TO GROUND

WARNING: To avoid personal injury or death, turn the ignition off, disconnect the battery and wait two minutes before proceeding.
Disconnect the 8443 Load Tool Jumper from the Driver Airbag Squib connectors.

Remove the Steering Control Module from the steering column in accordance with the Service Information.

Disconnect the Steering Control Module connector.

NOTE: Check connectors - Clean and repair as necessary.
With the Steering Control Module Connector attached to the steering column, connect the 8443 Load Tool and appropriate Jumper to the Steering Control Module connector.

WARNING: To avoid personal injury or death, turn the ignition on, then reconnect the battery.
With the scan tool, read the active ORC DTC's.

Does the scan tool display: B1B00 DRIVER AIRBAG SQUIB 1 CIRCUIT LOW?

Yes >> Go To 4

No >> Replace the Clockspring in accordance with the Service Information.
Perform ORC VERIFICATION TEST - VER 1

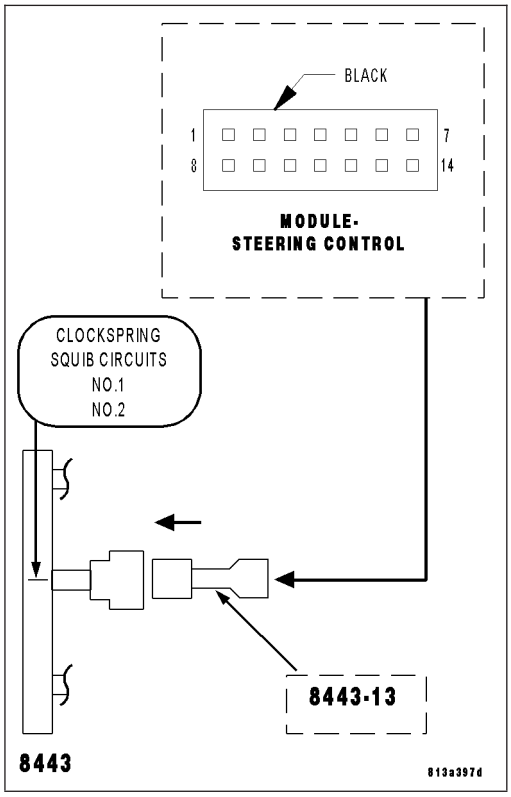

4. CHECK (R43) DRIVER SQUIB 1 LINE 2 CIRCUIT AND (R45) DRIVER SQUIB 1 LINE 1 CIRCUIT FOR A SHORT TO GROUND

WARNING: To avoid personal injury or death, turn the ignition off, disconnect the battery and wait two minutes before proceeding.
Disconnect the 8443 Load Tool and Jumper from the Steering Control Module connector.

Disconnect the ORC connectors.

NOTE: Check connectors - Clean and repair as necessary.
Connect the 8443 Load Tool ORC Adaptor to the ORC C2 connector.

Measure the resistance of the (R43) Driver Squib 1 Line 2 circuit between ground and the Steering Column Module connector.

Measure the resistance of the (R45) Driver Squib 1 Line 1 circuit between ground and the Steering Column Module connector.

Is the resistance below 10K ohms for either measurement?

Yes >> Repair the Driver Squib 1 circuits with a resistance below 10K ohms for a short to ground.
Perform ORC VERIFICATION TEST - VER 1

No >> Go To 5

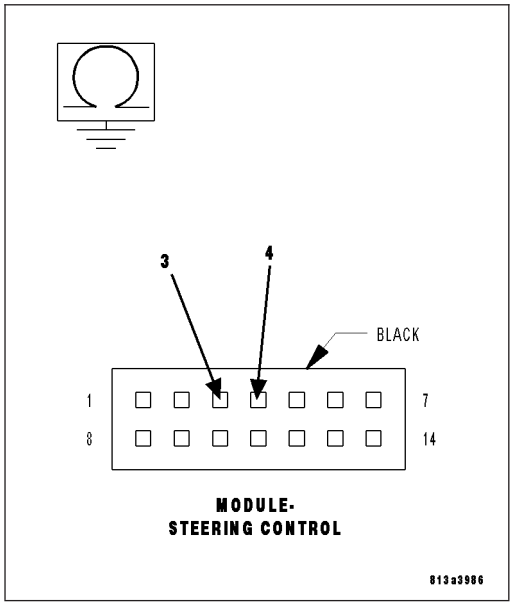

5. REPLACE THE ORC

WARNING: If the Occupant Restraint Controller (ORC) is dropped at any time, it must be replaced. Failure to take the proper precautions can result in accidental airbag deployment and personal injury or death.

NOTE: When reconnecting airbag system components the Ignition must be turned off and the Battery must be disconnected.

Repair

Replace the ORC in accordance with the Service Information.

Perform ORC VERIFICATION TEST - VER 1

6. STORED ORC DTC

With the scan tool, record and erase all DTC's from all Airbag System Modules.

If any ACTIVE codes are present they must be resolved before diagnosing any stored codes.

WARNING: To avoid personal injury or death, turn the ignition off, disconnect the battery and wait two minutes before proceeding.

Using the wiring diagram/schematic as a guide, inspect the wiring and connectors.

Look for chafed, pierced, pinched, or partially broken wires and broken, bent, pushed out, spread, corroded, or contaminated terminals.

The following additional checks may assist you in identifying a possible intermittent problem.

Reconnect any disconnected components and harness connector.

WARNING: To avoid personal injury or death, turn the ignition on, then reconnect the battery.

With the scan tool monitor active codes as you work through the following steps.

Wiggle the wiring harness and connectors of the related airbag circuit or component.

If codes are related to the Driver Airbag circuits, rotate the steering wheel from stop to stop.

If only stored codes return continue the test until the problem area has been isolated.

In the previous steps you have attempted to recreate the conditions responsible for setting active DTC in question.

Are any ACTIVE DTCs present?

Yes >> Select the appropriate diagnostic procedure from the Table of Contents in this section.

No >> No problem found at this time. Erase all codes before returning vehicle to customer.

B1B01-DRIVER AIRBAG SQUIB 1 CIRCUIT HIGH

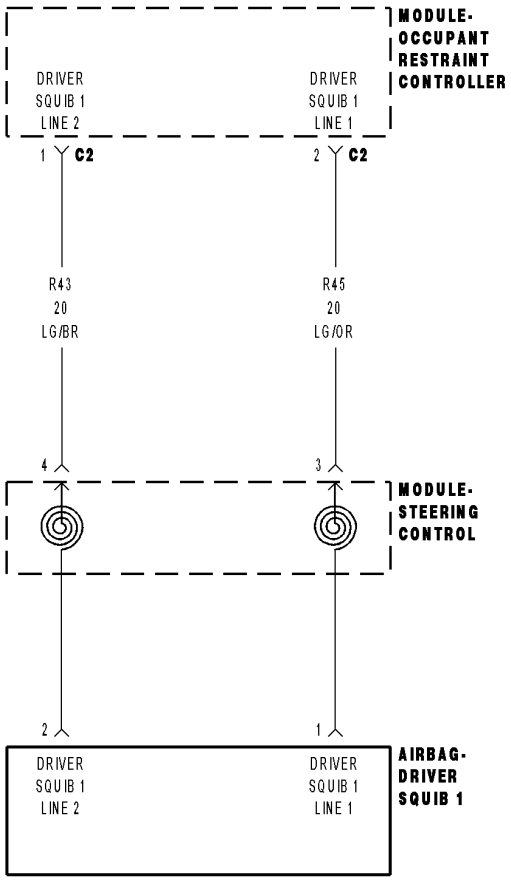

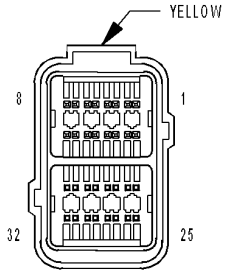

MODULE-
OCCUPANT
RESTRAINT
CONTROLLER C2

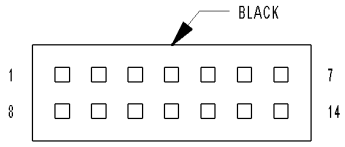

MODULE-
STEERING CONTROL

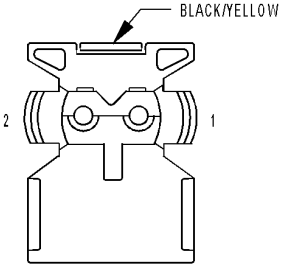

AIRBAG-
DRIVER
SQUIB 1

81339f3a

For a complete wiring diagram **Refer to Section 8W**.

- **When Monitored:**
  With the ignition on, the Occupant Restraint Controller (ORC) monitors the voltage on the Driver Squib 1 circuits.
- **Set Condition:**
  The ORC has detected voltage on the Driver Squib 1 circuits.

Possible Causes
(R43) DRIVER SQUIB 1 LINE 2 CIRCUIT OR (R45) DRIVER SQUIB 1 LINE 1 CIRCUIT SHORTED TO BATTERY
CLOCKSPRING
DRIVER AIRBAG
ORC

Diagnostic Test

1. DETERMINE ACTIVE OR STORED DTC

NOTE: Ensure the battery is fully charged.

NOTE: The scan tool, SRS Airbag Load Tool MRL 8443, and DVOM are required to perform the following test.

NOTE: When reconnecting airbag system components the Ignition must be turned off and the Battery must be disconnected.
Select Active or Stored DTC.

Is the DTC active or stored?

ORC - ACTIVE DTC
Go To 2

ORC - STORED DTC
Go To 6

2. CHECK FOR SHORTED SQUIB CIRCUITS IN DRIVER AIRBAG

WARNING: To avoid personal injury or death, turn the ignition off, disconnect the battery and wait two minutes before proceeding.
Disconnect the Driver Airbag Squib connectors.

WARNING: To avoid personal injury or death, do not place an intact undeployed airbag face down on a hard surface, the airbag will propel into the air if accidentally deployed.

NOTE: Check connectors - Clean and repair as necessary.
Connect the 8443 Load Tool and appropriate Jumper to the Driver Airbag Squib connectors.

WARNING: To avoid personal injury or death, turn the ignition on, then reconnect the battery.
With the scan tool, read the active ORC DTC's.

Does the scan tool display: B1B01 DRIVER AIRBAG SQUIB 1 CIRCUIT HIGH?

Yes >> Go To 3

No >> Replace the Driver Airbag in accordance with the Service Information.
Perform ORC VERIFICATION TEST - VER 1

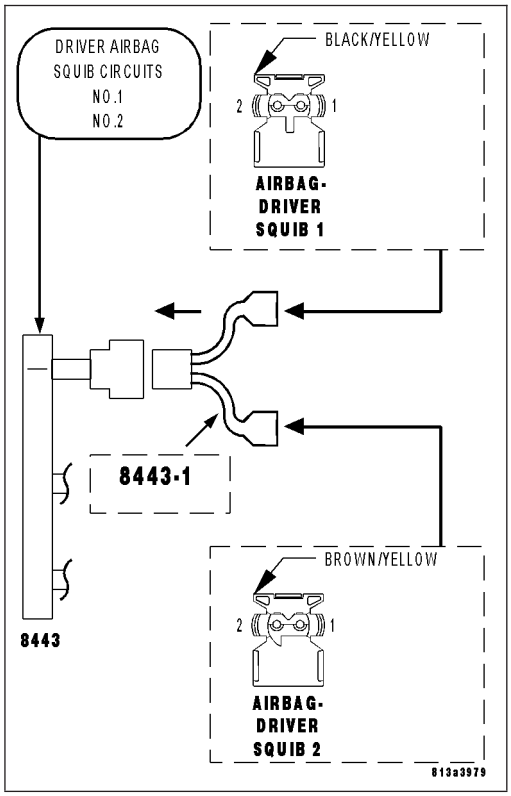

3. CHECK CLOCKSPRING SQUIB CIRCUITS FOR A SHORT TO BATTERY

WARNING: To avoid personal injury or death, turn the ignition off, disconnect the battery and wait two minutes before proceeding.
Disconnect the 8443 Load Tool and Jumper from the Driver Airbag Squib connectors.

Remove the Steering Control Module from the steering column in accordance with the Service Information.

Disconnect the Steering Control Module connector.

NOTE: Check connectors - Clean and repair as necessary.
With the Steering Control Module Connector attached to the steering column, connect the 8443 Load Tool and appropriate Jumper to the Steering Control Module connector.

WARNING: To avoid personal injury or death, turn the ignition on, then reconnect the battery.
With the scan tool, read the active ORC DTC's.

Does the scan tool display: B1B01 DRIVER AIRBAG SQUIB 1 CIRCUIT HIGH?

Yes >> Go To 4

No >> Replace the Clockspring in accordance with the Service Information.
Perform ORC VERIFICATION TEST - VER 1

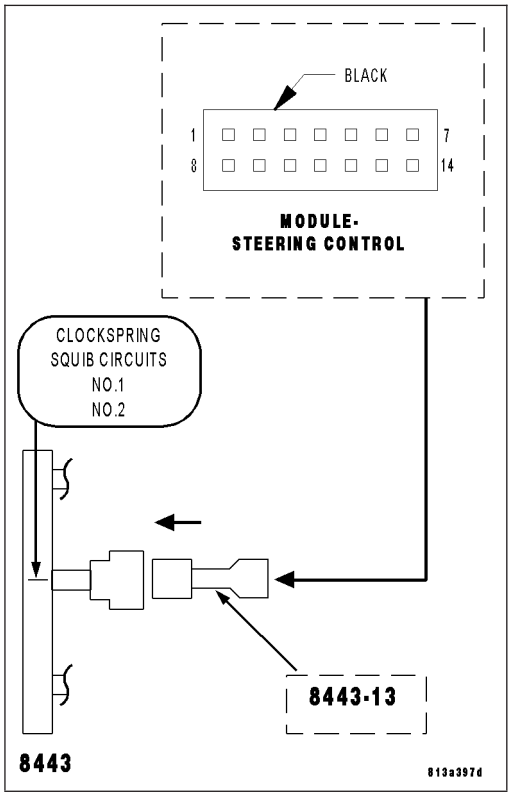

4. CHECK (R43) DRIVER SQUIB 1 LINE 2 CIRCUIT AND (R45) DRIVER SQUIB 1 LINE 1 CIRCUIT FOR A SHORT TO BATTERY

WARNING: To avoid personal injury or death, turn the ignition off, disconnect the battery and wait two minutes before proceeding.
Disconnect the 8443 Load Tool and Jumper from the Steering Control Module connector.

Disconnect the ORC connectors.

NOTE: Check connectors - Clean and repair as necessary.
Connect the 8443 Load Tool ORC Adaptor to the ORC C2 connector.

WARNING: To avoid personal injury or death, turn the ignition on, then reconnect the battery.
Measure the voltage of the (R43) Driver Squib 1 Line 2 circuit between the Steering Control Module connector and ground.

Measure the voltage of the (R45) Driver Squib 1 Line 1 circuit between the Steering Control Module connector and ground.

Is there any voltage present for either measurement?

Yes >> Repair the Driver Squib 1 circuits with voltage present for a short to Battery.
Perform ORC VERIFICATION TEST - VER 1

No >> Go To 5

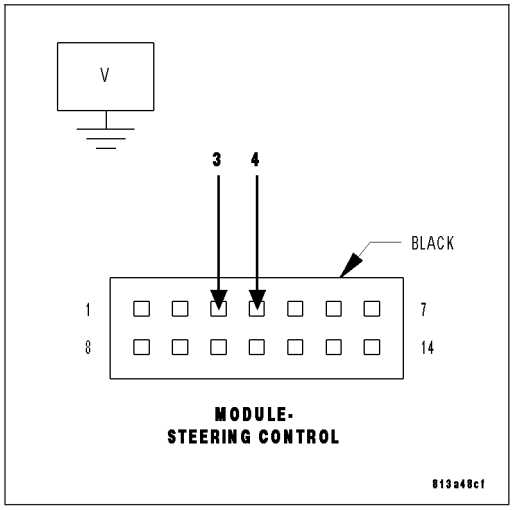

5. REPLACE THE ORC

WARNING: To avoid personal injury or death, turn the ignition off, disconnect the battery and wait two minutes before proceeding.

WARNING: If the Occupant Restraint Controller (ORC) is dropped at any time, it must be replaced. Failure to take the proper precautions can result in accidental airbag deployment and personal injury or death.

NOTE: When reconnecting airbag system components the Ignition must be turned off and the Battery must be disconnected.

View Repair

Repair

Replace the ORC in accordance with the Service Information.

Perform ORC VERIFICATION TEST - VER 1

6. STORED ORC DTC

With the scan tool, record and erase all DTC's from all Airbag System Modules.

If any ACTIVE codes are present they must be resolved before diagnosing any stored codes.

WARNING: To avoid personal injury or death, turn the ignition off, disconnect the battery and wait two minutes before proceeding.

Using the wiring diagram/schematic as a guide, inspect the wiring and connectors.

Look for chafed, pierced, pinched, or partially broken wires and broken, bent, pushed out, spread, corroded, or contaminated terminals.

The following additional checks may assist you in identifying a possible intermittent problem.

Reconnect any disconnected components and harness connector.

WARNING: To avoid personal injury or death, turn the ignition on, then reconnect the battery.

With the scan tool monitor active codes as you work through the following steps.

Wiggle the wiring harness and connectors of the related airbag circuit or component.

If codes are related to the Driver Airbag circuits, rotate the steering wheel from stop to stop.

If only stored codes return continue the test until the problem area has been isolated.

In the previous steps you have attempted to recreate the conditions responsible for setting active DTC's in question.

Are any ACTIVE DTC's present?

Yes >> Select the appropriate diagnostic procedure from the Table of Contents in this section.

No >> No problem found at this time. Erase all codes before returning vehicle to customer.

B1B02-DRIVER AIRBAG SQUIB 1 CIRCUIT OPEN

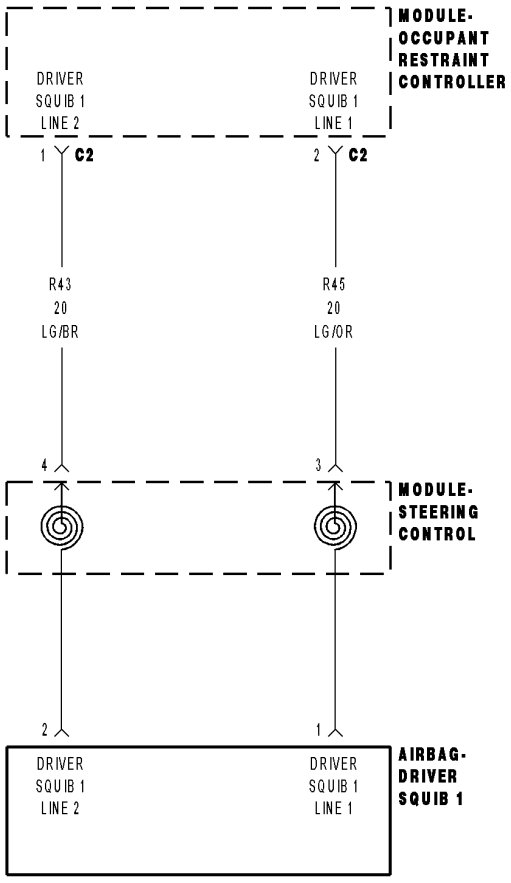

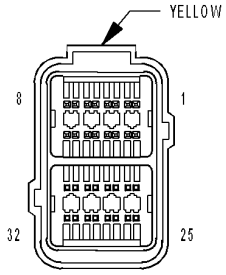

MODULE-
OCCUPANT
RESTRAINT
CONTROLLER C2

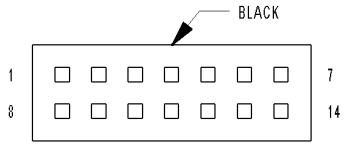

MODULE-
STEERING CONTROL

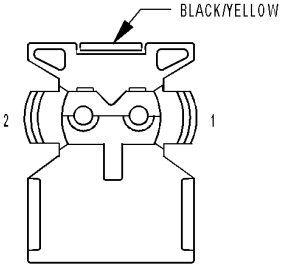

AIRBAG-
DRIVER
SQUIB 1

81339f3a

For a complete wiring diagram **Refer to Section 8W**.

- **When Monitored:**
  With the ignition on, the Occupant Restraint Controller (ORC) monitors the resistance of the Driver Squib 1 circuits.
- **Set Condition:**
  The ORC has detected an open or high resistance on the Driver Squib 1 circuits.

Possible Causes
(R43) DRIVER SQUIB 1 LINE 2 CIRCUIT OPEN
(R45) DRIVER SQUIB 1 LINE 1 CIRCUIT OPEN
CLOCKSPRING
DRIVER AIRBAG
ORC

Diagnostic Test

1. DETERMINE ACTIVE OR STORED DTC

NOTE: Ensure the battery is fully charged.

NOTE: The scan tool, SRS Airbag Load Tool MRL 8443, and DVOM are required to perform the following test.

NOTE: When reconnecting airbag system components the Ignition must be turned off and the Battery must be disconnected.
Select Active or Stored DTC.

Is the DTC active or stored?

ORC - ACTIVE DTC
Go To 2

ORC - STORED DTC
Go To 7

2. CHECK FOR OPEN SQUIB CIRCUITS IN DRIVER AIRBAG

WARNING: To avoid personal injury or death, turn the ignition off, disconnect the battery and wait two minutes before proceeding.
Disconnect the Driver Airbag Squib connectors.

WARNING: To avoid personal injury or death, do not place an intact undeployed airbag face down on a hard surface, the airbag will propel into the air if accidentally deployed.

NOTE: Check connectors - Clean and repair as necessary.
Connect the 8443 Load Tool and appropriate Jumper to the Driver Airbag Squib connectors.

WARNING: To avoid personal injury or death, turn the ignition on, then reconnect the battery.
With the scan tool, read the active ORC DTC's.

Does the scan tool display: B1B02 DRIVER AIRBAG SQUIB 1 CIRCUIT OPEN?

Yes >> Go To 3

No >> Replace the Driver Airbag in accordance with the Service Information.
Perform ORC VERIFICATION TEST - VER 1

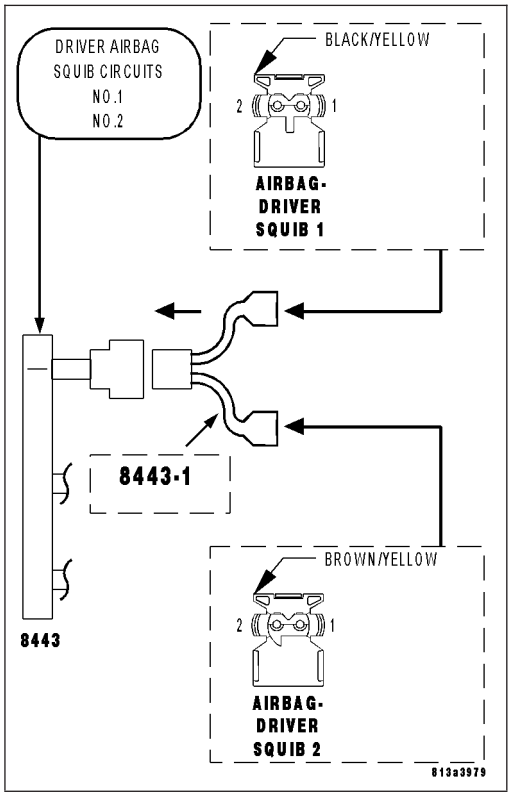

3. CHECK CLOCKSPRING SQUIB CIRCUITS FOR AN OPEN

WARNING: To avoid personal injury or death, turn the ignition off, disconnect the battery and wait two minutes before proceeding.
Disconnect the 8443 Load Tool and Jumper from the Driver Airbag Squib connectors.

Remove the Steering Control Module from the steering column in accordance with the Service Information.

Disconnect the Steering Control Module connector.

NOTE: Check connectors - Clean and repair as necessary.
With the Steering Control Module Connector attached to the steering column, connect the 8443 Load Tool and appropriate Jumper to the Steering Control Module connector.

WARNING: To avoid personal injury or death, turn the ignition on, then reconnect the battery.
With the scan tool, read the active ORC DTC's.

Does the scan tool display: B1B02 DRIVER AIRBAG SQUIB 1 CIRCUIT OPEN?

Yes >> Go To 4

No >> Replace the Clockspring in accordance with the Service Information.
Perform ORC VERIFICATION TEST - VER 1

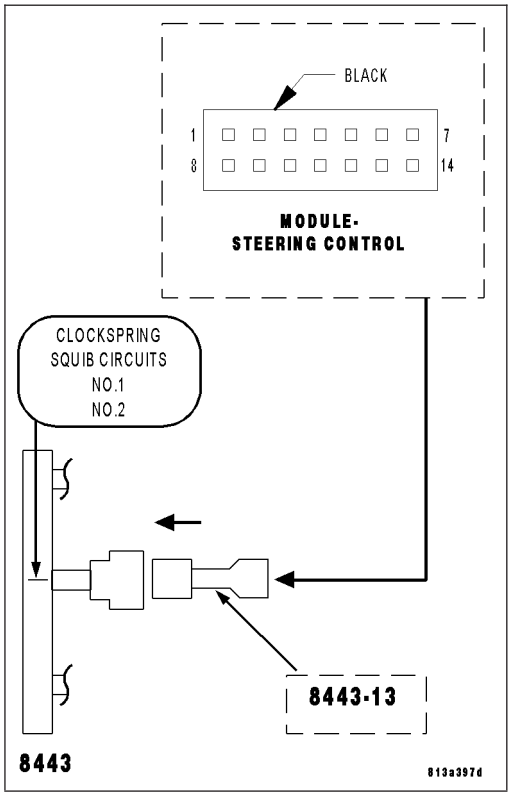

4. CHECK (R43) DRIVER SQUIB 1 LINE 2 CIRCUIT FOR AN OPEN

WARNING: To avoid personal injury or death, turn the ignition off, disconnect the battery and wait two minutes before proceeding.
Disconnect the 8443 Load Tool and Jumper from the Steering Control Module connector.

Disconnect the ORC connectors.

NOTE: Check connectors - Clean and repair as necessary.
Connect the 8443 Load Tool ORC Adaptor to the ORC C2 connector.

Measure the resistance of the (R43) Driver Squib 1 Line 2 circuit between the Steering Control Module connector and the ORC Load Tool Adaptor.

Is the resistance below 1.0 ohm?

Yes >> Go To 5

No >> Repair the (R43) Driver Squib 1 Line 2 circuit for an open. Then, Go To 5

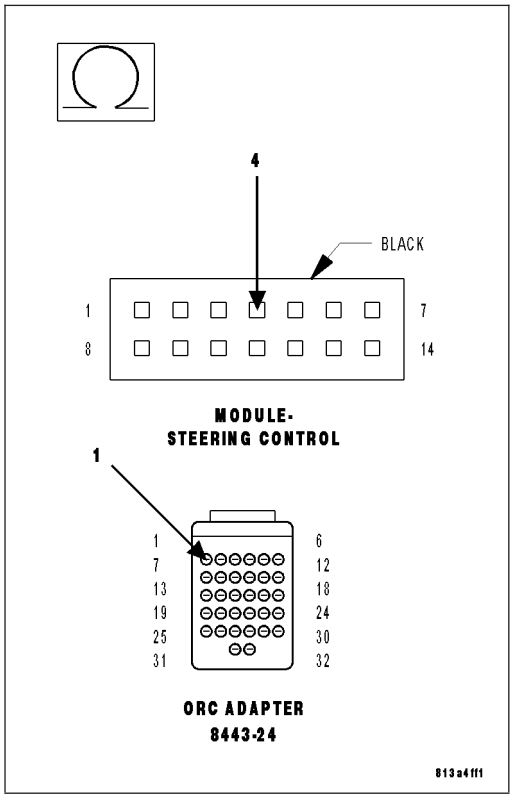

5. CHECK (R45) DRIVER SQUIB 1 LINE 1 CIRCUIT FOR AN OPEN

Measure the resistance of the (R45) Driver Squib 1 Line 1 circuit between the Steering Control Module connector and the ORC Load Tool Adaptor.

Is the resistance below 1.0 ohm?

Yes >> Go To 6

No >> Repair the (R45) Driver Squib 1 Line 1 circuit for an open. Perform ORC VERIFICATION TEST - VER 1

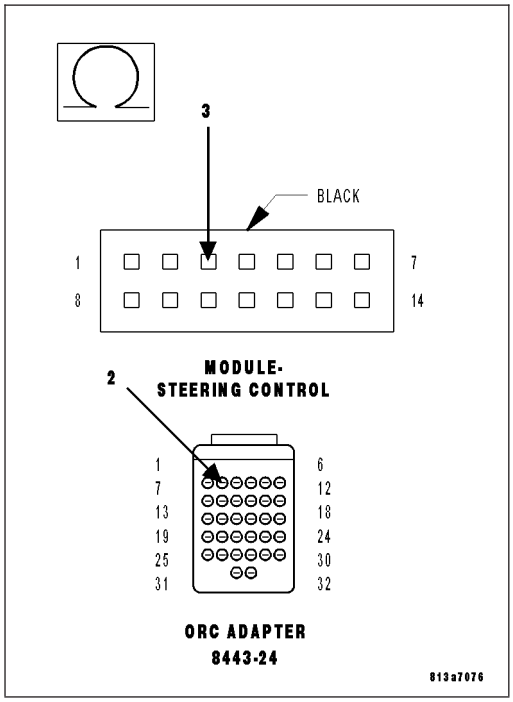

6. REPLACE THE ORC

WARNING: If the Occupant Restraint Controller (ORC) is dropped at any time, it must be replaced. Failure to take the proper precautions can result in accidental airbag deployment and personal injury or death.

NOTE: When reconnecting airbag system components the Ignition must be turned off and the Battery must be disconnected.

View Repair

Repair

Replace the ORC in accordance with the Service Information.

Perform ORC VERIFICATION TEST - VER 1

7. STORED ORC DTC

With the scan tool, record and erase all DTC's from all Airbag System Modules.

If any ACTIVE codes are present they must be resolved before diagnosing any stored codes.

WARNING: To avoid personal injury or death, turn the ignition off, disconnect the battery and wait two minutes before proceeding.

Using the wiring diagram/schematic as a guide, inspect the wiring and connectors.

Look for chafed, pierced, pinched, or partially broken wires and broken, bent, pushed out, spread, corroded, or contaminated terminals.

The following additional checks may assist you in identifying a possible intermittent problem.

Reconnect any disconnected components and harness connector.

WARNING: To avoid personal injury or death, turn the ignition on, then reconnect the battery.

With the scan tool monitor active codes as you work through the following steps.

Wiggle the wiring harness and connectors of the related airbag circuit or component.

If codes are related to the Driver Airbag circuits, rotate the steering wheel from stop to stop.

If only stored codes return continue the test until the problem area has been isolated.

In the previous steps you have attempted to recreate the conditions responsible for setting active DTC in question.

Are any ACTIVE DTC's present?

Yes >> Select the appropriate diagnostic procedure from the Table of Contents in this section.

No >> No problem found at this time. Erase all codes before returning vehicle to customer.

B1B03-DRIVER AIRBAG SQUIB 1 CIRCUIT SHORTED TOGETHER

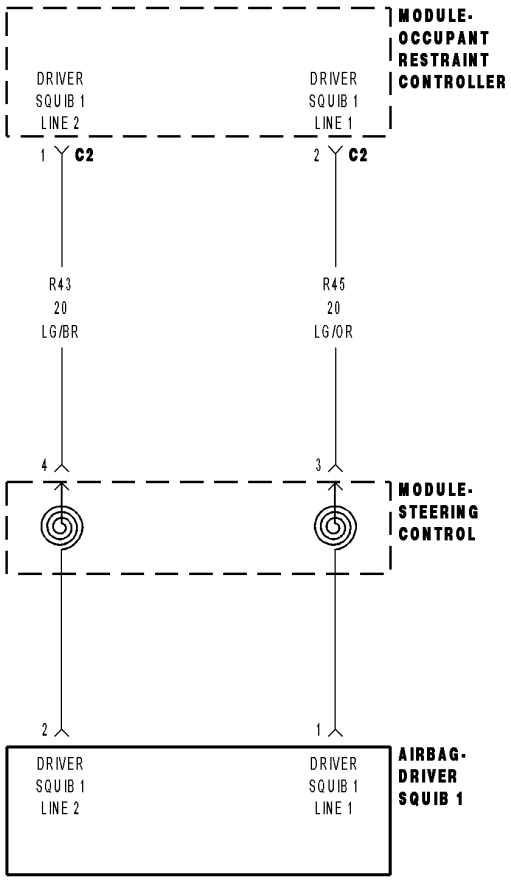

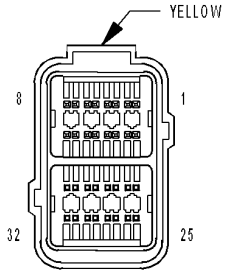

MODULE-
OCCUPANT
RESTRAINT
CONTROLLER C2

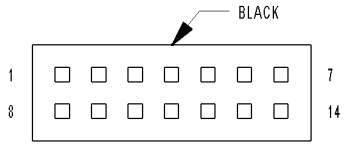

MODULE-
STEERING CONTROL

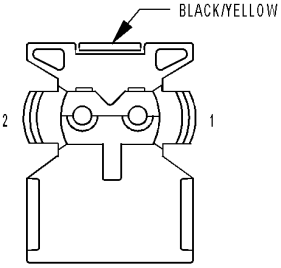

AIRBAG-
DRIVER
SQUIB 1

81339f3a

For a complete wiring diagram **Refer to Section 8W**.

- **When Monitored:**
  With the ignition on, the Occupant Restraint Controller (ORC) monitors the resistance of the Driver Squib 1 circuits.
- **Set Condition:**
  The ORC has detected low resistance between the Driver Squib 1 circuits.

Possible Causes
(R43) DRIVER SQUIB 1 LINE 2 CIRCUIT SHORTED TO (R45) DRIVER SQUIB 1 LINE 1 CIRCUIT
CLOCKSPRING
DRIVER AIRBAG
ORC

Diagnostic Test

1. DETERMINE ACTIVE OR STORED DTC

NOTE: Ensure the battery is fully charged.

NOTE: The scan tool, SRS Airbag Load Tool MRL 8443, and DVOM are required to perform the following test.

NOTE: When reconnecting airbag system components the Ignition must be turned off and the Battery must be disconnected.
Select Active or Stored DTC.

Is the DTC active or stored?

ORC - ACTIVE DTC
Go To 2

ORC - STORED DTC
Go To 6

2. CHECK FOR SHORTED SQUIB CIRCUITS IN DRIVER AIRBAG

WARNING: To avoid personal injury or death, turn the ignition off, disconnect the battery and wait two minutes before proceeding.

WARNING: To avoid personal injury or death, do not place an intact undeployed airbag face down on a hard surface, the airbag will propel into the air if accidentally deployed.
Disconnect the Driver Airbag Squib connectors.

NOTE: Check connectors - Clean and repair as necessary.
Connect the 8443 Load Tool and appropriate Jumper to the Driver Airbag Squib connectors.

WARNING: To avoid personal injury or death, turn the ignition on, then reconnect the battery.
With the scan tool, read the active ORC DTC's.

Does the scan tool display: B1B03 DRIVER AIRBAG SQUIB 1 CIRCUIT SHORTED TOGETHER?

Yes >> Go To 3

No >> Replace the Driver Airbag in accordance with the Service Information.
Perform ORC VERIFICATION TEST - VER 1

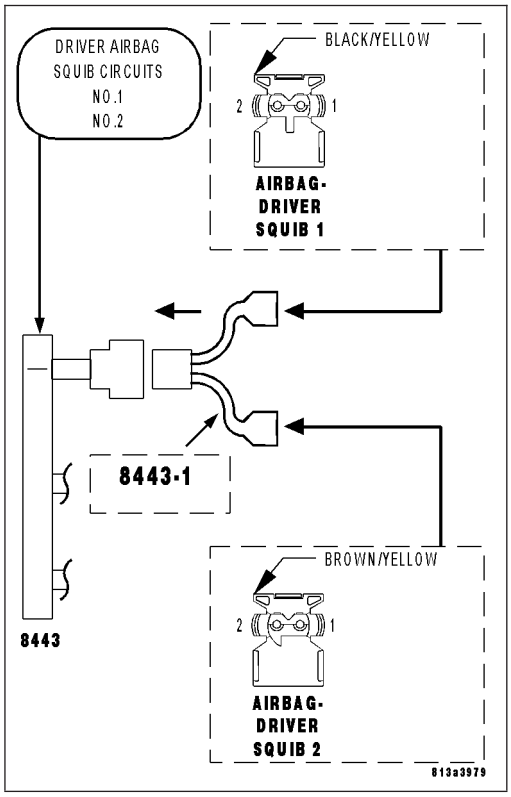

3. CHECK CLOCKSPRING SQUIB CIRCUITS FOR A SHORT TOGETHER

WARNING: To avoid personal injury or death, turn the ignition off, disconnect the battery and wait two minutes before proceeding.
Disconnect the 8443 Load Tool ORC from the Driver Airbag Squib connectors.

Remove the Steering Control Module from the steering column in accordance with the Service Information.

Disconnect the Steering Control Module connector.

NOTE: Check connectors - Clean and repair as necessary.
With the Steering Control Module Connector attached to the steering column, connect the 8443 Load Tool and appropriate Jumper to the Steering Control Module connector.

WARNING: To avoid personal injury or death, turn the ignition on, then reconnect the battery.
With the scan tool, read the active ORC DTC's.

Does the scan tool display: B1B03 DRIVER AIRBAG SQUIB 1 CIRCUIT SHORTED TOGETHER?

Yes >> Go To 4

No >> Replace the Clockspring in accordance with the Service Information.
Perform ORC VERIFICATION TEST - VER 1

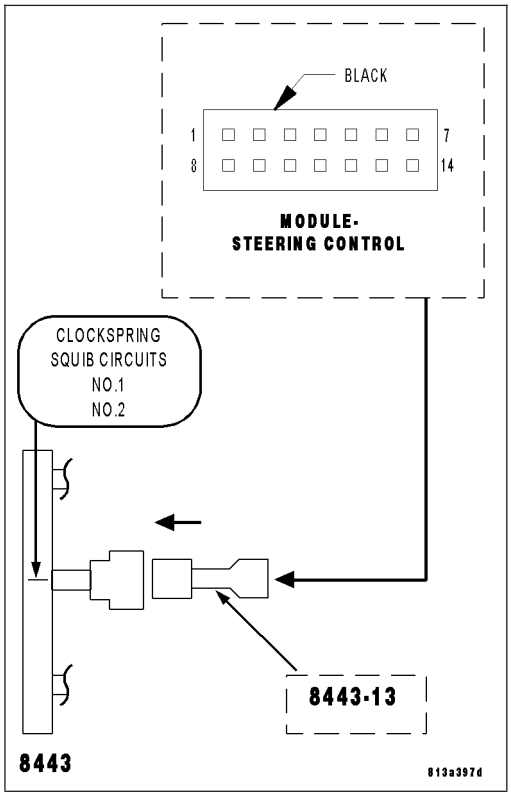

4. CHECK (R43) DRIVER SQUIB 1 LINE 2 CIRCUIT FOR A SHORT TO (R45) DRIVER SQUIB 1 LINE 1 CIRCUIT

WARNING: To avoid personal injury or death, turn the ignition off, disconnect the battery and wait two minutes before proceeding.
Disconnect the 8443 Load Tool and Jumper from the Steering Control Module connector.

Disconnect the ORC connectors.

NOTE: Check connectors - Clean and repair as necessary.
Connect the 8443 Load Tool ORC Adaptor to the ORC C2 connector.

Measure the resistance between the (R43) Driver Squib 1 Line 2 circuit and the (R45) Driver Squib 1 Line 1 circuit at the Steering Control Module connector.

Is the resistance below 10K ohms?

Yes >> Repair the (R43) Driver Squib 1 Line 2 circuit for a short to the (R45) Driver Squib 1 Line 1 circuit.
Perform ORC VERIFICATION TEST - VER 1

No >> Go To 5

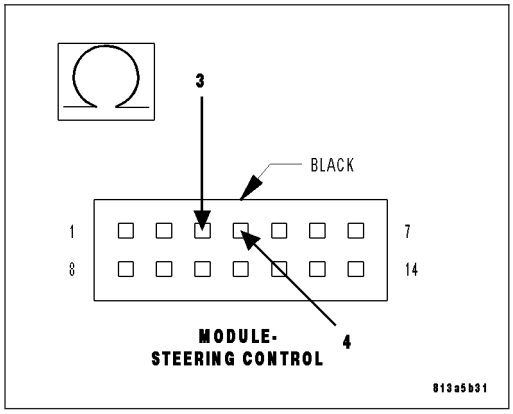

5. REPLACE THE ORC

WARNING: If the Occupant Restraint Controller (ORC) is dropped at any time, it must be replaced. Failure to take the proper precautions can result in accidental airbag deployment and personal injury or death.

NOTE: When reconnecting airbag system components the Ignition must be turned off and the Battery must be disconnected.

View Repair

Repair

Replace the ORC in accordance with the Service Information.

Perform ORC VERIFICATION TEST - VER 1

6. STORED ORC DTC

With the scan tool, record and erase all DTC's from all Airbag System Modules.

If any ACTIVE codes are present they must be resolved before diagnosing any stored codes.

WARNING: To avoid personal injury or death, turn the ignition off, disconnect the battery and wait two minutes before proceeding.

Using the wiring diagram/schematic as a guide, inspect the wiring and connectors.

Look for chafed, pierced, pinched, or partially broken wires and broken, bent, pushed out, spread, corroded, or contaminated terminals.

The following additional checks may assist you in identifying a possible intermittent problem.

Reconnect any disconnected components and harness connector.

WARNING: To avoid personal injury or death, turn the ignition on, then reconnect the battery.

With the scan tool monitor active codes as you work through the following steps.

Wiggle the wiring harness and connectors of the related airbag circuit or component.

If codes are related to the Driver Airbag circuits, rotate the steering wheel from stop to stop.

If only stored codes return continue the test until the problem area has been isolated.

In the previous steps you have attempted to recreate the conditions responsible for setting active DTC in question.

Are any ACTIVE DTCs present?

Yes >> Select the appropriate diagnostic procedure from the Table of Contents in this section.

No >> No problem found at this time. Erase all codes before returning vehicle to customer.

B1B04-DRIVER AIRBAG SQUIB 2 CIRCUIT LOW

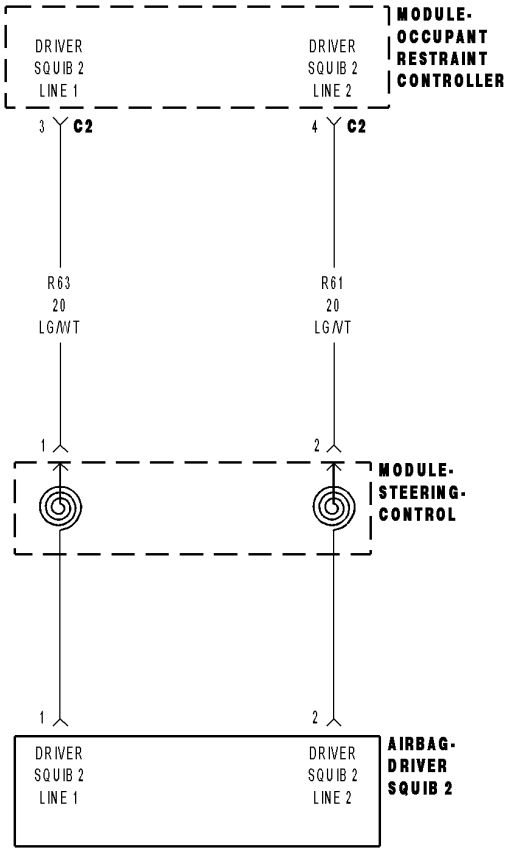

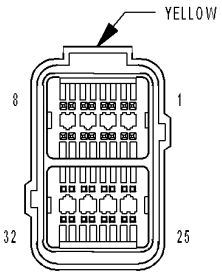

MODULE-
OCCUPANT
RESTRAINT
CONTROLLER C2

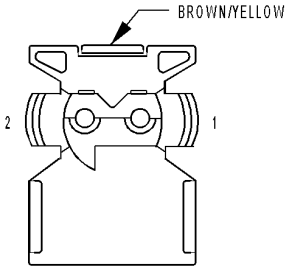

AIRBAG-
DRIVER
SQUIB 2

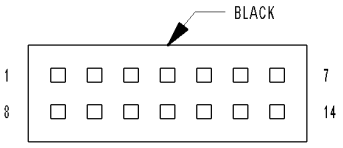

MODULE-
STEERING CONTROL

81339185

For a complete wiring diagram **Refer to Section 8W**.

- **When Monitored:**
  With the ignition on, the Occupant Restraint Controller (ORC) monitors the resistance of the Driver Squib 2 circuits.
- **Set Condition:**
  The ORC has detected low resistance on the Driver Squib 2 circuits.

Possible Causes
(R63) DRIVER SQUIB 2 LINE 1 CIRCUIT OR (R61) DRIVER SQUIB 2 LINE 2 CIRCUIT SHORTED TO GROUND
CLOCKSPRING
DRIVER AIRBAG
ORC

Diagnostic Test

1. DETERMINE ACTIVE OR STORED DTC

NOTE: Ensure the battery is fully charged.

NOTE: The scan tool, SRS Airbag Load Tool MRL 8443, and DVOM are required to perform the following test.

NOTE: When reconnecting airbag system components the Ignition must be turned off and the Battery must be disconnected.
Select Active or Stored DTC.

Is the DTC active or stored?

ORC - ACTIVE DTC
Go To 2

ORC - STORED DTC
Go To 6

2. CHECK FOR SHORTED SQUIB CIRCUITS IN DRIVER AIRBAG

WARNING: To avoid personal injury or death, turn the ignition off, disconnect the battery and wait two minutes before proceeding.
Disconnect the Driver Airbag Squib connectors.

WARNING: To avoid personal injury or death, do not place an intact undeployed airbag face down on a hard surface, the airbag will propel into the air if accidentally deployed.

NOTE: Check connectors - Clean and repair as necessary.
Connect the 8443 Load Tool and appropriate Jumper to the Driver Airbag Squib connectors.

WARNING: To avoid personal injury or death, turn the ignition on, then reconnect the battery.
With the scan tool, read the active ORC DTC's.

Does the scan tool display: B1B04 DRIVER AIRBAG SQUIB 2 CIRCUIT LOW?

Yes >> Go To 3

No >> Replace the Driver Airbag in accordance with the Service Information.
Perform ORC VERIFICATION TEST - VER 1

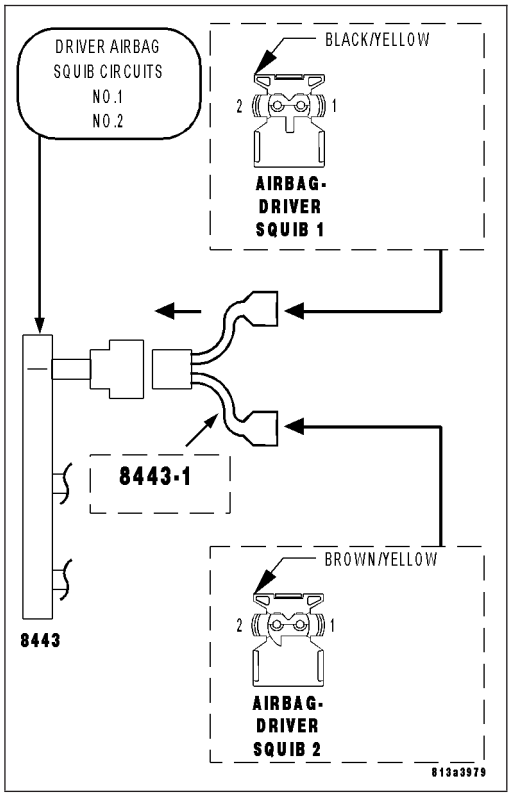

3. CHECK CLOCKSPRING SQUIB CIRCUITS FOR A SHORT TO GROUND

WARNING: To avoid personal injury or death, turn the ignition off, disconnect the battery and wait two minutes before proceeding.
Disconnect the 8443 Load Tool Jumper from the Driver Airbag Squib connectors.

Remove the Steering Control Module from the steering column in accordance with the Service Information.

Disconnect the Steering Control Module connector.

NOTE: Check connectors - Clean and repair as necessary.
With the Steering Control Module Connector attached to the steering column, connect the 8443 Load Tool and appropriate Jumper to the Steering Control Module connector.

WARNING: To avoid personal injury or death, turn the ignition on, then reconnect the battery.
With the scan tool, read the active ORC DTC's.

Does the scan tool display: B1B04 DRIVER AIRBAG SQUIB 2 CIRCUIT LOW?

Yes >> Go To 4

No >> Replace the Clockspring in accordance with the Service Information.
Perform ORC VERIFICATION TEST - VER 1

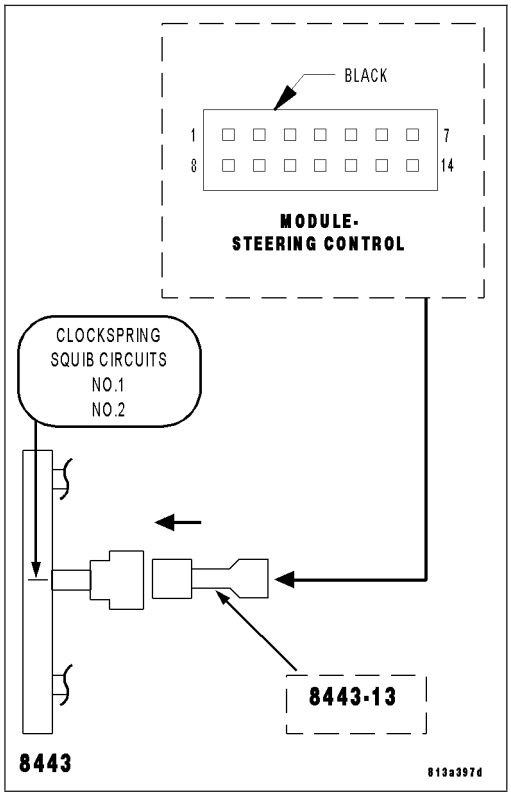

4. CHECK (R63) DRIVER SQUIB 2 LINE 1 CIRCUIT AND (R61) DRIVER SQUIB 2 LINE 2 CIRCUIT FOR A SHORT TO GROUND

WARNING: To avoid personal injury or death, turn the ignition off, disconnect the battery and wait two minutes before proceeding.
Disconnect the 8443 Load Tool and Jumper from the Steering Control Module connector.

Disconnect the ORC connectors.

NOTE: Check connectors - Clean and repair as necessary.
Connect the 8443 Load Tool ORC Adaptor to the ORC C2 connector.

Measure the resistance of the (R63) Driver Squib 2 Line 1 circuit between ground and the Steering Column Module connector.

Measure the resistance of the (R61) Driver Squib 2 Line 2 circuit between ground and the Steering Column Module connector.

Is the resistance below 10K ohms for either measurement?

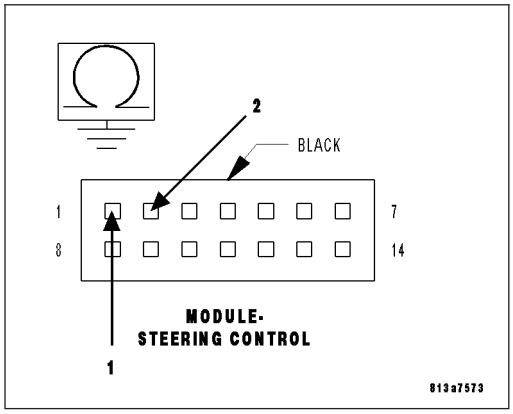

Yes >> Repair the Driver Squib 2 circuits with a resistance below 10K ohms for a short to ground.
Perform ORC VERIFICATION TEST - VER 1

No >> Go To 5

5. REPLACE THE ORC

WARNING: If the Occupant Restraint Controller (ORC) is dropped at any time, it must be replaced. Failure to take the proper precautions can result in accidental airbag deployment and personal injury or death.

NOTE: When reconnecting airbag system components the Ignition must be turned off and the Battery must be disconnected.

View Repair

Repair

Replace the ORC in accordance with the Service Information.

Perform ORC VERIFICATION TEST - VER 1

6. STORED ORC DTC

With the scan tool, record and erase all DTC's from all Airbag System Modules.

If any ACTIVE codes are present they must be resolved before diagnosing any stored codes.

WARNING: To avoid personal injury or death, turn the ignition off, disconnect the battery and wait two minutes before proceeding.

Using the wiring diagram/schematic as a guide, inspect the wiring and connectors.

Look for chafed, pierced, pinched, or partially broken wires and broken, bent, pushed out, spread, corroded, or contaminated terminals.

The following additional checks may assist you in identifying a possible intermittent problem.

Reconnect any disconnected components and harness connector.

WARNING: To avoid personal injury or death, turn the ignition on, then reconnect the battery.

With the scan tool monitor active codes as you work through the following steps.

Wiggle the wiring harness and connectors of the related airbag circuit or component.

If codes are related to the Driver Airbag circuits, rotate the steering wheel from stop to stop.

If only stored codes return continue the test until the problem area has been isolated.

In the previous steps you have attempted to recreate the conditions responsible for setting active DTC in question.

Are any ACTIVE DTCs present?

Yes >> Select the appropriate diagnostic procedure from the Table of Contents in this section.

No >> No problem found at this time. Erase all codes before returning vehicle to customer.

B1B05-DRIVER AIRBAG SQUIB 2 CIRCUIT HIGH

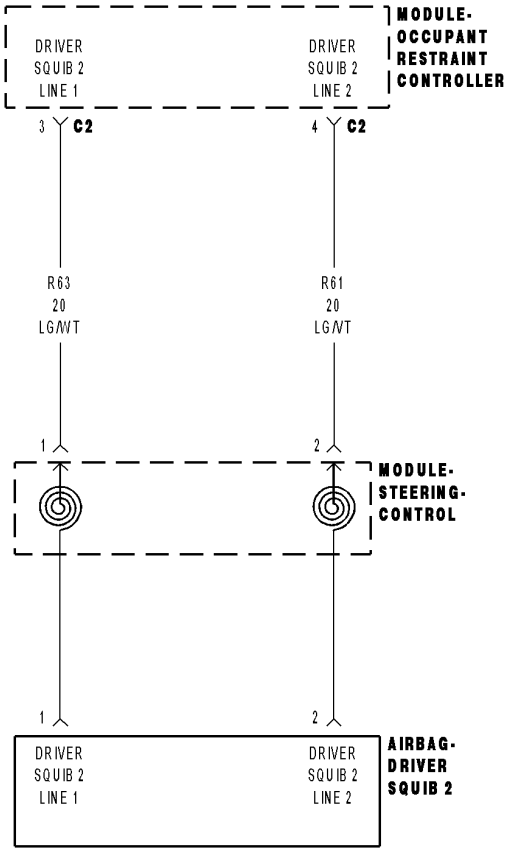

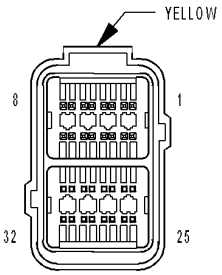

MODULE-
OCCUPANT
RESTRAINT
CONTROLLER C2

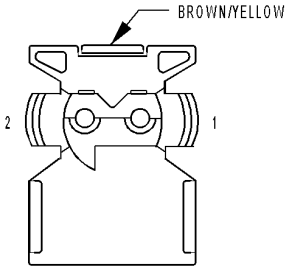

AIRBAG-
DRIVER
SQUIB 2

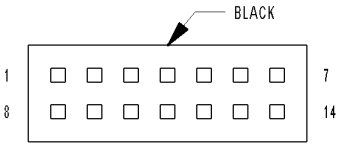

MODULE-
STEERING CONTROL

81339185

For a complete wiring diagram **Refer to Section 8W**.

- **When Monitored:**
  With the ignition on, the Occupant Restraint Controller (ORC) monitors the voltage on the Driver Squib 2 circuits.
- **Set Condition:**
  The ORC has detected voltage on the Driver Squib 2 circuits.

Possible Causes
(R63) DRIVER SQUIB 2 LINE 1 CIRCUIT OR (R61) DRIVER SQUIB 2 LINE 2 CIRCUIT SHORTED TO BATTERY
CLOCKSPRING
DRIVER AIRBAG
ORC

Diagnostic Test

1. DETERMINE ACTIVE OR STORED DTC

NOTE: Ensure the battery is fully charged.

NOTE: The Scan Tool, SRS Airbag Load Tool MRL 8443 and DVOM are required to perform the following test.

NOTE: When reconnecting airbag system components the Ignition must be turned off and the Battery must be disconnected.
Select Active or Stored DTC.

Is the DTC active or stored?

ORC - ACTIVE DTC
Go To 2

ORC - STORED DTC
Go To 6

2. CHECK FOR SHORTED SQUIB CIRCUITS IN DRIVER AIRBAG

WARNING: To avoid personal injury or death, turn the ignition off, disconnect the battery and wait two minutes before proceeding.
Disconnect the Driver Airbag Squib connectors.

WARNING: To avoid personal injury or death, do not place an intact undeployed airbag face down on a hard surface, the airbag will propel into the air if accidentally deployed.

NOTE: Check connectors - Clean and repair as necessary.
Connect the 8443 Load Tool and appropriate Jumper to the Driver Airbag Squib connectors.

WARNING: To avoid personal injury or death, turn the ignition on, then reconnect the battery.
With the scan tool, read the active ORC DTC's.

Does the scan tool display: B1B05 DRIVER AIRBAG SQUIB 2 CIRCUIT HIGH?

Yes >> Go To 3

No >> Replace the Driver Airbag in accordance with the Service Information.
Perform ORC VERIFICATION TEST - VER 1

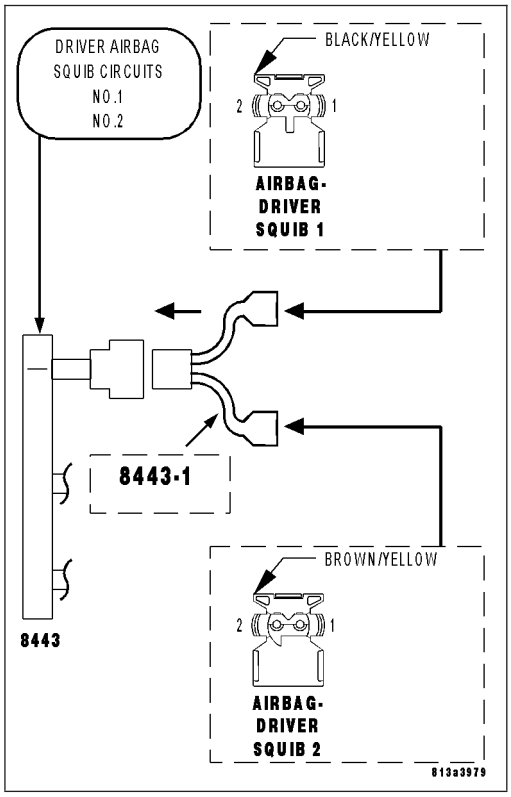

3. CHECK CLOCKSPRING SQUIB CIRCUITS FOR A SHORT TO BATTERY

WARNING: To avoid personal injury or death, turn the ignition off, disconnect the battery and wait two minutes before proceeding.
Disconnect the 8443 Load Tool and Jumper from the Driver Airbag Squib connectors.

Remove the Steering Control Module from the steering column in accordance with the Service Information.

Disconnect the Steering Control Module connector.

NOTE: Check connectors - Clean and repair as necessary.
With the Steering Control Module connector attached to the steering column, connect the 8443 Load Tool and appropriate Jumper to the Steering Control Module connector.

WARNING: To avoid personal injury or death, turn the ignition on, then reconnect the battery.
With the scan tool, read the active ORC DTC's.

Does the scan tool display: B1B05 DRIVER AIRBAG SQUIB 2 CIRCUIT HIGH?

Yes >> Go To 4

No >> Replace the Clockspring in accordance with the Service Information.
Perform ORC VERIFICATION TEST - VER 1

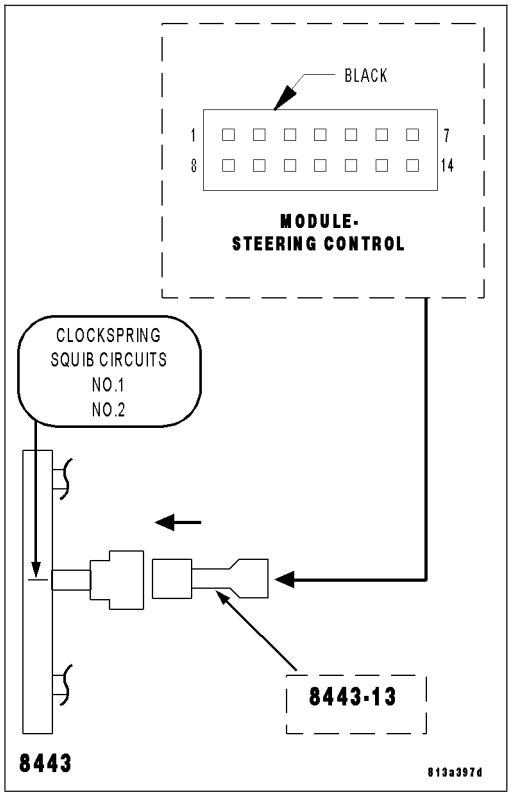

4. CHECK (R63) DRIVER SQUIB 2 LINE 1 CIRCUIT AND (R61) DRIVER SQUIB 2 LINE 2 CIRCUIT FOR A SHORT TO BATTERY

WARNING: To avoid personal injury or death, turn the ignition off, disconnect the battery and wait two minutes before proceeding.
Disconnect the 8443 Load Tool and Jumper from the Steering Control Module connector.

Disconnect the ORC connectors.

NOTE: Check connectors - Clean and repair as necessary.
Connect the 8443 Load Tool ORC Adaptor to the ORC C2 connector.

WARNING: To avoid personal injury or death, turn the ignition on, then reconnect the battery.
Measure the voltage of the (R63) Driver Squib 2 Line 1 circuit between the Steering Control Module connector and ground.

Measure the voltage of the (R61) Driver Squib 2 Line 2 circuit between the Steering Control Module connector and ground.

Is there any voltage present for either measurement?

Yes >> Repair the Driver Squib 2 circuits with voltage present for a short to Battery.
Perform ORC VERIFICATION TEST - VER 1

No >> Go To 5

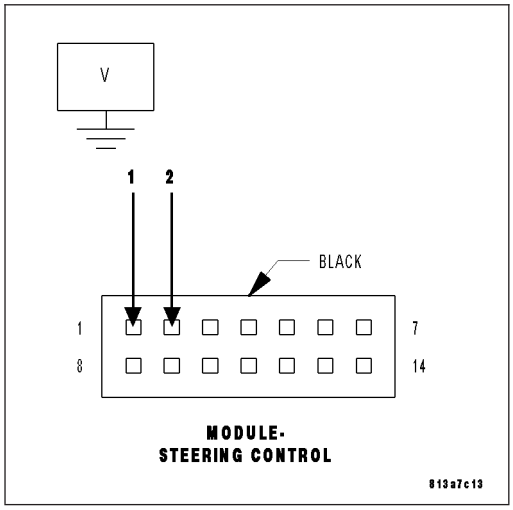

5. REPLACE THE ORC

WARNING: To avoid personal injury or death, turn the ignition off, disconnect the battery and wait two minutes before proceeding.

WARNING: If the Occupant Restraint Controller (ORC) is dropped at any time, it must be replaced. Failure to take the proper precautions can result in accidental airbag deployment and personal injury or death.

NOTE: When reconnecting airbag system components the Ignition must be turned off and the Battery must be disconnected.

View Repair

Repair

Replace the ORC in accordance with the Service Information.

Perform ORC VERIFICATION TEST - VER 1

6. STORED ORC DTC

With the scan tool, record and erase all DTC's from all Airbag System Modules.

If any ACTIVE codes are present they must be resolved before diagnosing any stored codes.

WARNING: To avoid personal injury or death, turn the ignition off, disconnect the battery and wait two minutes before proceeding.

Using the wiring diagram/schematic as a guide, inspect the wiring and connectors.

Look for chafed, pierced, pinched, or partially broken wires and broken, bent, pushed out, spread, corroded, or contaminated terminals.

The following additional checks may assist you in identifying a possible intermittent problem.

Reconnect any disconnected components and harness connector.

WARNING: To avoid personal injury or death, turn the ignition on, then reconnect the battery.

With the scan tool monitor active codes as you work through the following steps.

Wiggle the wiring harness and connectors of the related airbag circuit or component.

If codes are related to the Driver Airbag circuits, rotate the steering wheel from stop to stop.

If only stored codes return continue the test until the problem area has been isolated.

In the previous steps you have attempted to recreate the conditions responsible for setting active DTC's in question.

Are any ACTIVE DTC's present?

Yes >> Select the appropriate diagnostic procedure from the Table of Contents in this section.

No >> No problem found at this time. Erase all codes before returning vehicle to customer.

B1B06-DRIVER AIRBAG SQUIB 2 CIRCUIT OPEN

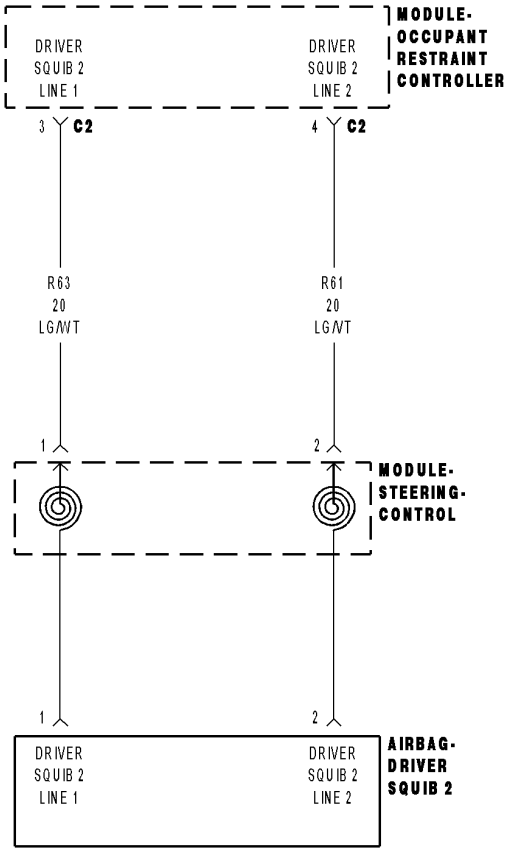

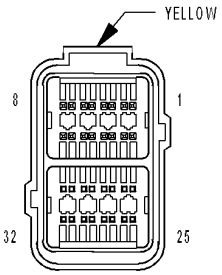

MODULE-
OCCUPANT
RESTRAINT
CONTROLLER C2

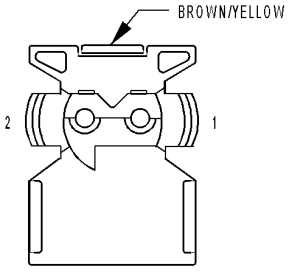

AIRBAG-
DRIVER
SQUIB 2

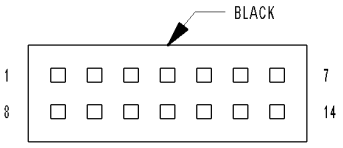

MODULE-
STEERING CONTROL

81339185

For a complete wiring diagram **Refer to Section 8W**.

- **When Monitored:**
  With the ignition on, the Occupant Restraint Controller (ORC) monitors the resistance of the Driver Squib 2 circuits.
- **Set Condition:**
  The ORC has detected an open or high resistance on the Driver Squib 2 circuits.

Possible Causes
(R63) DRIVER SQUIB 2 LINE 1 CIRCUIT OPEN
(R61) DRIVER SQUIB 2 LINE 2 CIRCUIT OPEN
CLOCKSPRING
DRIVER AIRBAG
ORC

Diagnostic Test

1. DETERMINE ACTIVE OR STORED DTC

NOTE: Ensure the battery is fully charged.

NOTE: The scan tool, SRS Airbag Load Tool MRL 8443, and DVOM are required to perform the following test.

NOTE: When reconnecting airbag system components the Ignition must be turned off and the Battery must be disconnected.
Select Active or Stored DTC.

Is the DTC active or stored?

ORC - ACTIVE DTC
Go To 2

ORC - STORED DTC
Go To 7

2. CHECK FOR OPEN SQUIB CIRCUITS IN DRIVER AIRBAG

WARNING: To avoid personal injury or death, turn the ignition off, disconnect the battery and wait two minutes before proceeding.
Disconnect the Driver Airbag Squib connectors.

WARNING: To avoid personal injury or death, do not place an intact undeployed airbag face down on a hard surface, the airbag will propel into the air if accidentally deployed.

NOTE: Check connectors - Clean and repair as necessary.
Connect the 8443 Load Tool and appropriate Jumper to the Driver Airbag Squib connectors.

WARNING: To avoid personal injury or death, turn the ignition on, then reconnect the battery.
With the scan tool, read the active ORC DTC's.

Does the scan tool display: B1B06 DRIVER AIRBAG SQUIB 2 CIRCUIT OPEN?

Yes >> Go To 3

No >> Replace the Driver Airbag in accordance with the Service Information.
Perform ORC VERIFICATION TEST - VER 1

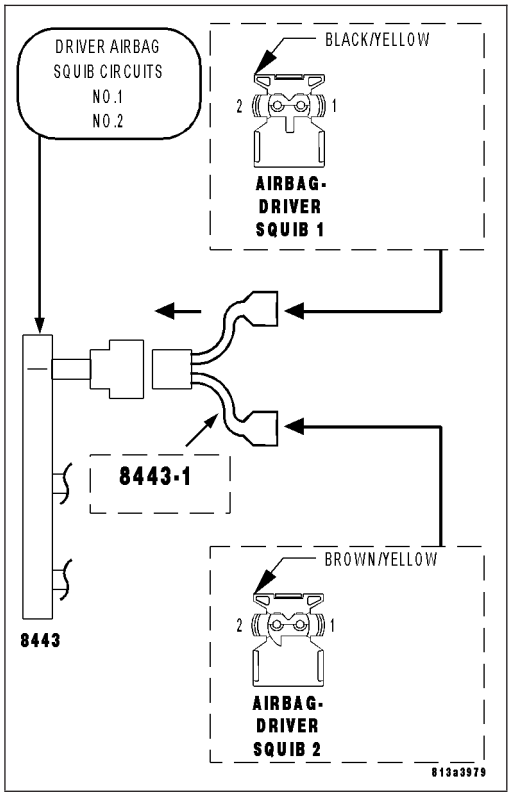

3. CHECK CLOCKSPRING SQUIB CIRCUITS FOR AN OPEN

WARNING: To avoid personal injury or death, turn the ignition off, disconnect the battery and wait two minutes before proceeding.
Disconnect the 8443 Load Tool and Jumper from the Driver Airbag Squib connectors.

Remove the Steering Control Module from the steering column in accordance with the Service Information.

Disconnect the Steering Control Module connector.

NOTE: Check connectors - Clean and repair as necessary.
With the Steering Control Module connector attached to the steering column, connect the 8443 Load Tool and appropriate Jumper to the Steering Control Module connector.

WARNING: To avoid personal injury or death, turn the ignition on, then reconnect the battery.
With the scan tool, read the active ORC DTC's.

Does the scan tool display: B1B06 DRIVER AIRBAG SQUIB 2 CIRCUIT OPEN?

Yes >> Go To 4

No >> Replace the Clockspring in accordance with the Service Information.
Perform ORC VERIFICATION TEST - VER 1

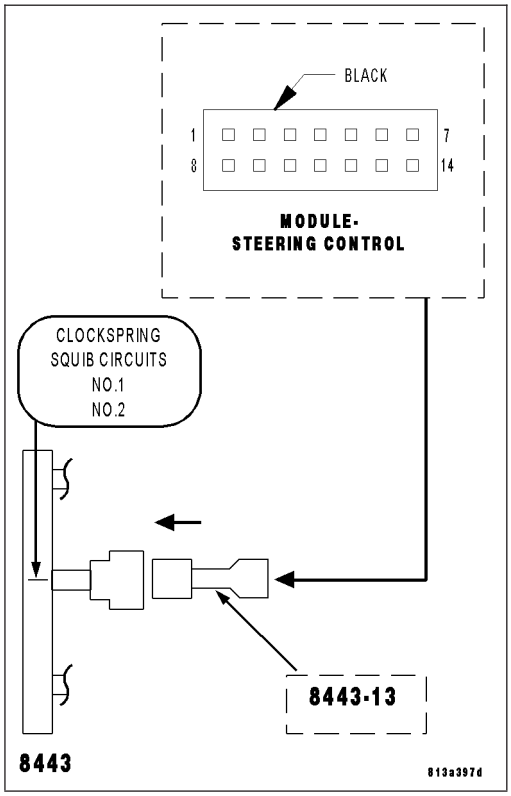

4. CHECK (R63) DRIVER SQUIB 2 LINE 1 CIRCUIT FOR AN OPEN

WARNING: To avoid personal injury or death, turn the ignition off, disconnect the battery and wait two minutes before proceeding.
Disconnect the 8443 Load Tool and Jumper from the Steering Control Module connector.

Disconnect the ORC connectors.

NOTE: Check connectors - Clean and repair as necessary.
Connect the 8443 Load Tool ORC Adaptor to the ORC C2 connector.

Measure the resistance of the (R63) Driver Squib 2 Line 1 circuit between the Steering Control Module connector and the ORC Load Tool Adaptor.

Is the resistance below 1.0 ohm?

Yes >> Go To 5

No >> Repair the (R63) Driver Squib 2 Line 1 circuit for an open. Then, Go To 5
Perform ORC VERIFICATION TEST - VER 1

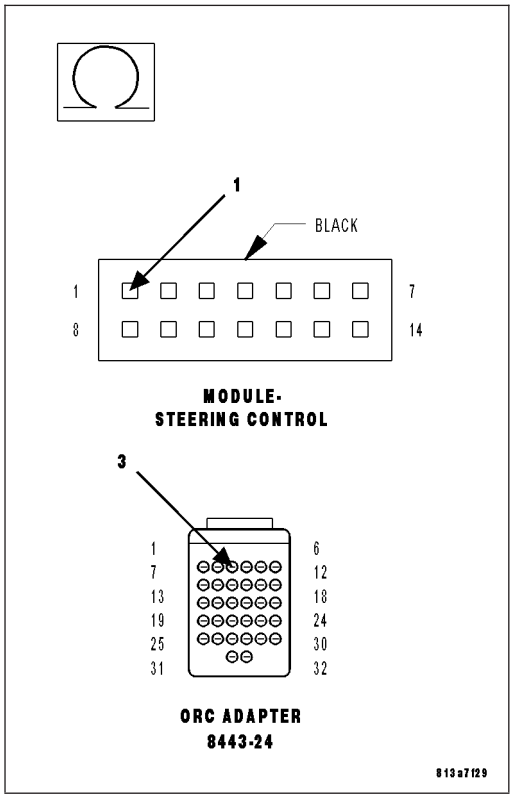

5. CHECK (R61) DRIVER SQUIB 2 LINE 2 CIRCUIT FOR AN OPEN

Measure the resistance of the (R61) Driver Squib 2 Line 2 circuit between the Steering Control Module connector and the ORC Load Tool Adaptor.

Is the resistance below 1.0 ohm?

Yes >> Go To 6

No >> Repair the (R61) Driver Squib 2 Line 2 circuit for an open.
Perform ORC VERIFICATION TEST - VER 1

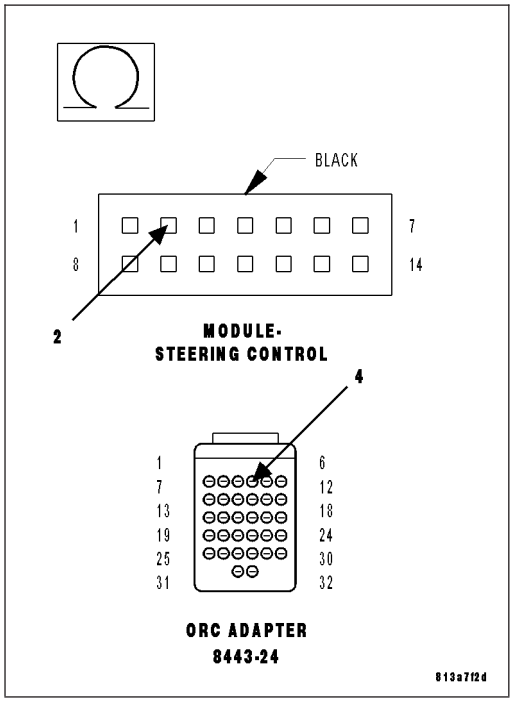

6. REPLACE THE ORC

WARNING: If the Occupant Restraint Controller (ORC) is dropped at any time, it must be replaced. Failure to take the proper precautions can result in accidental airbag deployment and personal injury or death.

NOTE: When reconnecting airbag system components the Ignition must be turned off and the Battery must be disconnected.

View Repair

Repair

Replace the ORC in accordance with the Service Information.

Perform ORC VERIFICATION TEST - VER 1

7. STORED ORC DTC

With the scan tool, record and erase all DTC's from all Airbag System Modules.

If any ACTIVE codes are present they must be resolved before diagnosing any stored codes.

WARNING: To avoid personal injury or death, turn the ignition off, disconnect the battery and wait two minutes before proceeding.

Using the wiring diagram/schematic as a guide, inspect the wiring and connectors.

Look for chafed, pierced, pinched, or partially broken wires and broken, bent, pushed out, spread, corroded, or contaminated terminals.

The following additional checks may assist you in identifying a possible intermittent problem.

Reconnect any disconnected components and harness connector.

WARNING: To avoid personal injury or death, turn the ignition on, then reconnect the battery.

With the scan tool monitor active codes as you work through the following steps.

Wiggle the wiring harness and connectors of the related airbag circuit or component.

If codes are related to the Driver Airbag circuits, rotate the steering wheel from stop to stop.

If only stored codes return continue the test until the problem area has been isolated.

In the previous steps you have attempted to recreate the conditions responsible for setting active DTC in question.

Are any ACTIVE DTC's present?

Yes >> Select the appropriate diagnostic procedure from the Table of Contents in this section.

No >> No problem found at this time. Erase all codes before returning vehicle to customer.

B1B07-DRIVER AIRBAG SQUIB 2 CIRCUIT SHORTED TOGETHER

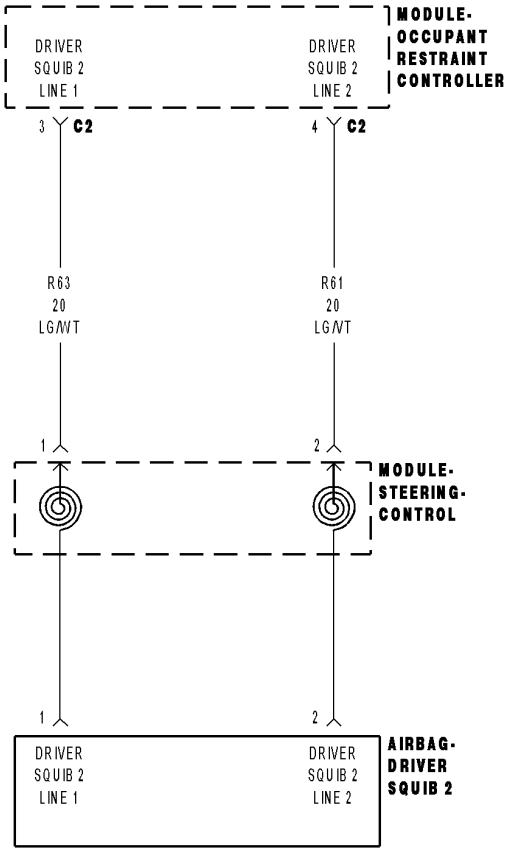

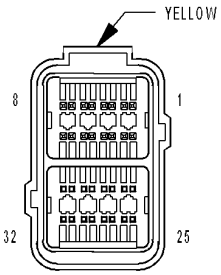

MODULE-
OCCUPANT
RESTRAINT
CONTROLLER C2

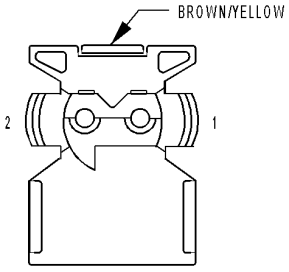

AIRBAG-
DRIVER
SQUIB 2

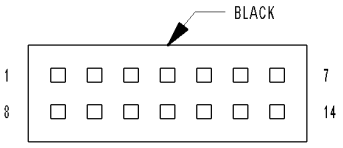

MODULE-
STEERING CONTROL

81339185

For a complete wiring diagram **Refer to Section 8W**.

- **When Monitored:**
  With the ignition on, the Occupant Restraint Controller (ORC) monitors the resistance of the Driver Squib 2 circuits.
- **Set Condition:**
  The ORC has detected low resistance between the Driver Squib 2 circuits.

Possible Causes
(R63) DRIVER SQUIB 2 LINE 1 CIRCUIT SHORTED TO (R61) DRIVER SQUIB 2 LINE 2 CIRCUIT
CLOCKSPRING
DRIVER AIRBAG
ORC

Diagnostic Test

1. DETERMINE ACTIVE OR STORED DTC

NOTE: Ensure the battery is fully charged.

NOTE: The Scan Tool, SRS Airbag Load Tool MRL 8443 and DVOM are required to perform the following test.

NOTE: When reconnecting airbag system components the Ignition must be turned off and the Battery must be disconnected.
Select Active or Stored DTC.

Is the DTC active or stored?

ORC - ACTIVE DTC
Go To 2

ORC - STORED DTC
Go To 6

2. CHECK FOR SHORTED SQUIB CIRCUITS IN DRIVER AIRBAG

WARNING: To avoid personal injury or death, turn the ignition off, disconnect the battery and wait two minutes before proceeding.

WARNING: To avoid personal injury or death, do not place an intact undeployed airbag face down on a hard surface, the airbag will propel into the air if accidentally deployed.
Disconnect the Driver Airbag Squib connectors.

NOTE: Check connectors - Clean and repair as necessary.
Connect the 8443 Load Tool and appropriate Jumper to the Driver Airbag Squib connectors.

WARNING: To avoid personal injury or death, turn the ignition on, then reconnect the battery.
With the scan tool, read the active ORC DTC's.

Does the scan tool display: B1B07 DRIVER AIRBAG SQUIB 2 CIRCUIT SHORTED TOGETHER?

Yes >> Go To 3

No >> Replace the Driver Airbag in accordance with the Service Information.
Perform ORC VERIFICATION TEST - VER 1

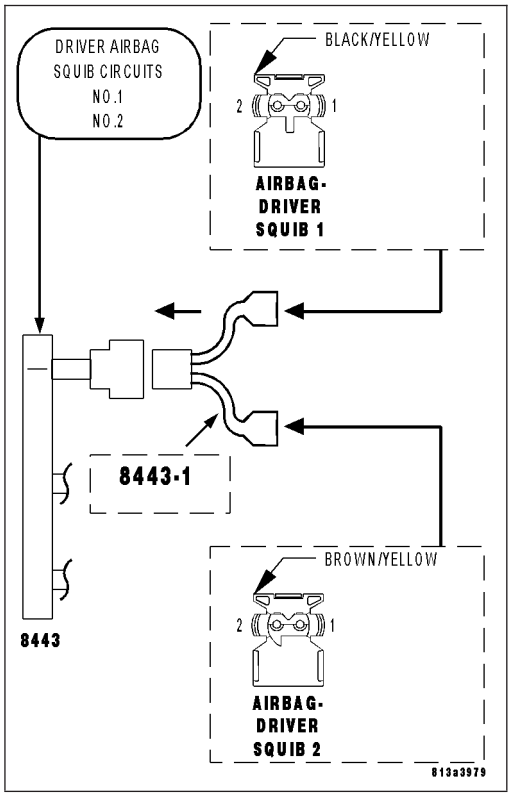

3. CHECK CLOCKSPRING SQUIB CIRCUITS FOR A SHORT TOGETHER

WARNING: To avoid personal injury or death, turn the ignition off, disconnect the battery and wait two minutes before proceeding.
Disconnect the 8443 Load Tool ORC from the Driver Airbag Squib connectors.

Remove the Steering Control Module from the steering column in accordance with the Service Information.

Disconnect the Steering Control Module connector.

NOTE: Check connectors - Clean and repair as necessary.
With the Steering Control Module connector attached to the steering column, connect the 8443 Load Tool and appropriate Jumper to the Steering Control Module connector.

WARNING: To avoid personal injury or death, turn the ignition on, then reconnect the battery.
With the scan tool, read the active ORC DTC's.

Does the scan tool display: B1B07 DRIVER AIRBAG SQUIB 2 CIRCUIT SHORTED TOGETHER?

Yes >> Go To 4

No >> Replace the Clockspring in accordance with the Service Information.
Perform ORC VERIFICATION TEST - VER 1

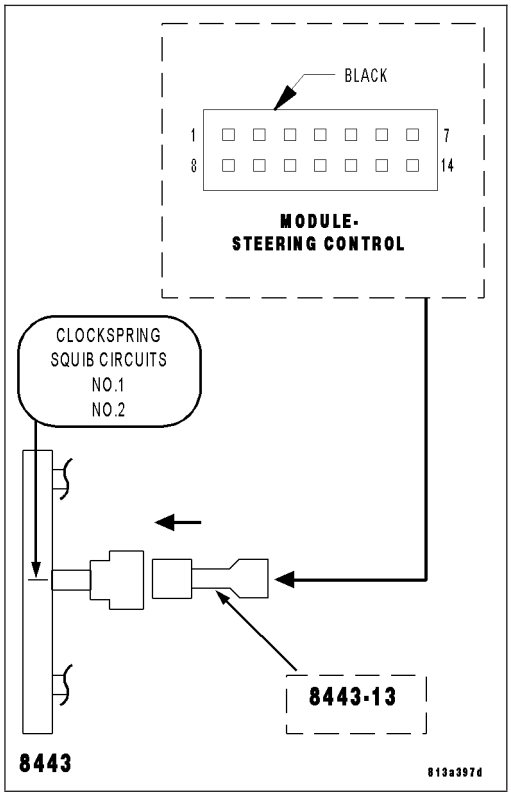

4. CHECK (R63) DRIVER SQUIB 2 LINE 1 CIRCUIT FOR A SHORT TO (R61) DRIVER SQUIB 2 LINE 2 CIRCUIT

WARNING: To avoid personal injury or death, turn the ignition off, disconnect the battery and wait two minutes before proceeding.
Disconnect the 8443 Load Tool and Jumper from the Steering Control Module connector.

Disconnect the ORC connectors.

NOTE: Check connectors - Clean and repair as necessary.
Connect the 8443 Load Tool ORC Adaptor to the ORC C2 connector.

Measure the resistance between the (R63) Driver Squib 2 Line 1 circuit and the (R61) Driver Squib 2 Line 2 circuit at the Steering Control Module connector.

Is the resistance below 10K ohms?

Yes >> Repair the (R63) Driver Squib 2 Line 1 circuit for a short to the (R61) Driver Squib 2 Line 2 circuit.
Perform ORC VERIFICATION TEST - VER 1

No >> Go To 5

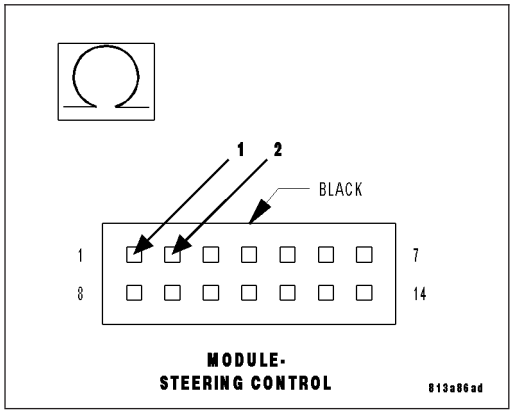

5. REPLACE THE ORC

WARNING: If the Occupant Restraint Controller (ORC) is dropped at any time, it must be replaced. Failure to take the proper precautions can result in accidental airbag deployment and personal injury or death.

NOTE: When reconnecting airbag system components the Ignition must be turned off and the Battery must be disconnected.

View Repair

Repair

Replace the ORC in accordance with the Service Information.

Perform ORC VERIFICATION TEST - VER 1

6. STORED ORC DTC

With the scan tool, record and erase all DTC's from all Airbag System Modules.

If any ACTIVE codes are present they must be resolved before diagnosing any stored codes.

WARNING: To avoid personal injury or death, turn the ignition off, disconnect the battery and wait two minutes before proceeding.

Using the wiring diagram/schematic as a guide, inspect the wiring and connectors.

Look for chafed, pierced, pinched, or partially broken wires and broken, bent, pushed out, spread, corroded, or contaminated terminals.

The following additional checks may assist you in identifying a possible intermittent problem.

Reconnect any disconnected components and harness connector.

WARNING: To avoid personal injury or death, turn the ignition on, then reconnect the battery.

With the scan tool monitor active codes as you work through the following steps.

Wiggle the wiring harness and connectors of the related airbag circuit or component.

If codes are related to the Driver Airbag circuits, rotate the steering wheel from stop to stop.

If only stored codes return continue the test until the problem area has been isolated.

In the previous steps you have attempted to recreate the conditions responsible for setting active DTC in question.

Are any ACTIVE DTCs present?

Yes >> Select the appropriate diagnostic procedure from the Table of Contents in this section.

No >> No problem found at this time. Erase all codes before returning vehicle to customer.

B1B08-PASSENGER AIRBAG SQUIB 1 CIRCUIT LOW

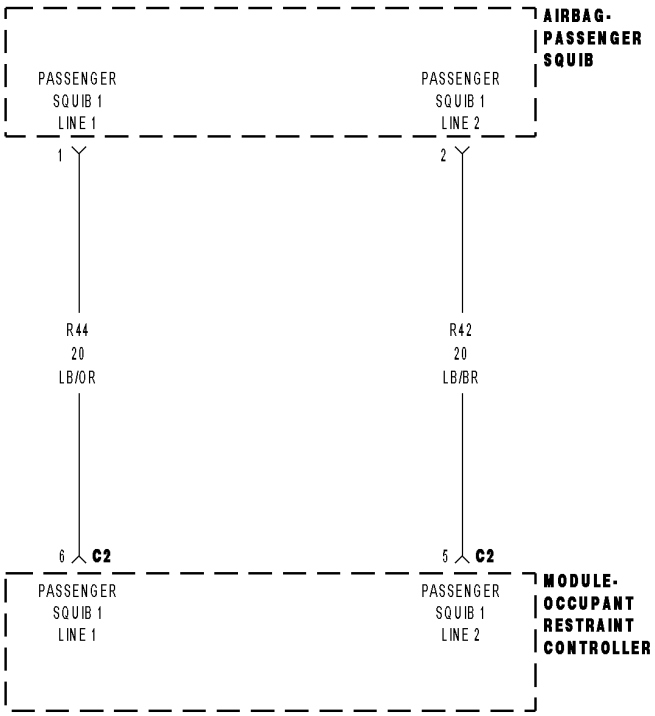

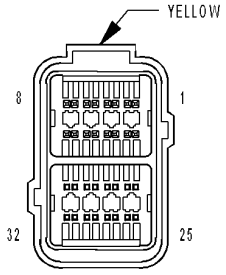

MODULE-
OCCUPANT
RESTRAINT
CONTROLLER C2

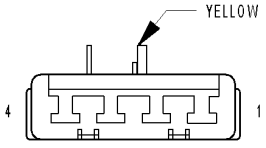

AIRBAG-
PASSENGER
SQUIB

81339fe2

For a complete wiring diagram **Refer to Section 8W**.

- **When Monitored:**
  With the ignition on, the Occupant Restraint Controller (ORC) monitors the resistance of the Passenger Squib 1 circuits.
- **Set Condition:**
  The ORC has detected low resistance on the Passenger Squib 1 circuits.

Possible Causes
(R42) PASSENGER SQUIB 1 LINE 2 CIRCUIT OR (R44) PASSENGER SQUIB 1 LINE 1 CIRCUIT SHORTED TO GROUND
PASSENGER AIRBAG
ORC

Diagnostic Test

1. DETERMINE ACTIVE OR STORED DTC

NOTE: Ensure the battery is fully charged.

NOTE: The scan tool, SRS Airbag Load Tool MRL 8443, and DVOM are required to perform the following test.

NOTE: When reconnecting airbag system components the Ignition must be turned off and the Battery must be disconnected.
Select Active or Stored DTC.

Is the DTC active or stored?

ORC - ACTIVE DTC
Go To 2

ORC - STORED DTC
Go To 5

2. CHECK FOR SHORTED SQUIB CIRCUITS IN PASSENGER AIRBAG

WARNING: To avoid personal injury or death, turn the ignition off, disconnect the battery and wait two minutes before proceeding.
Disconnect the Passenger Airbag Squib connector.

WARNING: To avoid personal injury or death, do not place an intact undeployed airbag face down on a hard surface, the airbag will propel into the air if accidentally deployed.

NOTE: Check connectors - Clean and repair as necessary.
Connect the 8443 Load Tool to the Passenger Airbag Squib connector.

WARNING: To avoid personal injury or death, turn the ignition on, then reconnect the battery.
With the scan tool, read the active ORC DTC's.

Does the scan tool display: B1B08 PASSENGER AIRBAG SQUIB 1 CIRCUIT LOW?

Yes >> Go To 3

No >> Replace the Passenger Airbag in accordance with the Service Information.
Perform ORC VERIFICATION TEST - VER 1

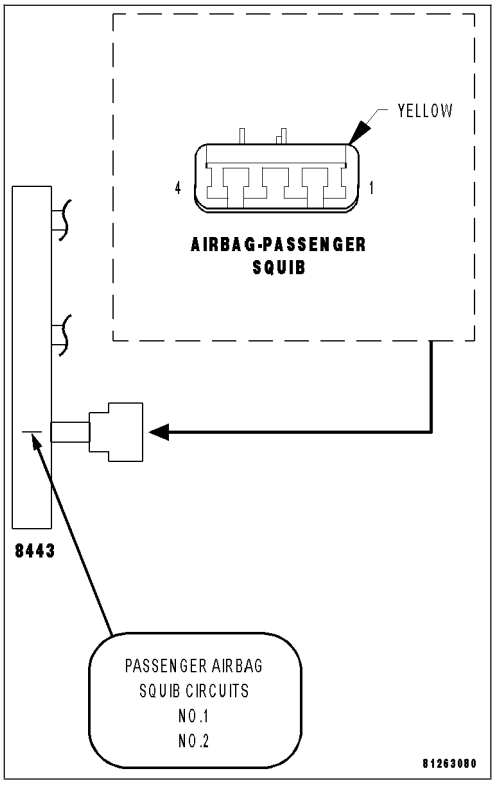

3. CHECK (R42) PASSENGER SQUIB 1 LINE 2 CIRCUIT AND (R44) PASSENGER SQUIB 1 LINE 1 CIRCUIT FOR A SHORT TO GROUND

WARNING: To avoid personal injury or death, turn the ignition off, disconnect the battery and wait two minutes before proceeding.
Disconnect the 8443 Load Tool from the Passenger Airbag Squib connector.

Disconnect the ORC connectors.

NOTE: Check connectors - Clean and repair as necessary.
Connect the 8443 Load Tool ORC Adaptor to the ORC C2 connector.

Measure the resistance of the (R42) Passenger Squib 1 Line 2 circuit between ground and the Passenger Airbag Squib connector.

Measure the resistance of the (R44) Passenger Squib 1 Line 1 circuit between ground and the Passenger Airbag Squib connector.

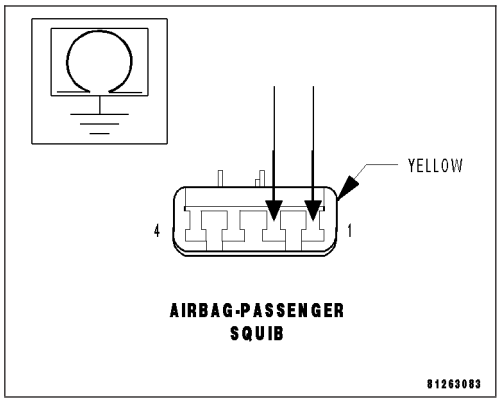

Is the resistance below 10K ohms on either circuit?

Yes >> Repair the Passenger Squib 1 circuits with a resistance below 10K ohms for a short to ground.
Perform ORC VERIFICATION TEST - VER 1

No >> Go To 4

4. REPLACE THE ORC

WARNING: If the Occupant Restraint Controller (ORC) is dropped at any time, it must be replaced. Failure to take the proper precautions can result in accidental airbag deployment and personal injury or death.

NOTE: When reconnecting airbag system components the Ignition must be turned off and the Battery must be disconnected.

View Repair

Repair

Replace the ORC in accordance with the Service Information.
Perform ORC VERIFICATION TEST - VER 1

5. STORED ORC DTC

With the scan tool, record and erase all DTC's from all Airbag System Modules.

If any ACTIVE codes are present they must be resolved before diagnosing any stored codes.

WARNING: To avoid personal injury or death, turn the ignition off, disconnect the battery and wait two minutes before proceeding.
Using the wiring diagram/schematic as a guide, inspect the wiring and connectors.

Look for chafed, pierced, pinched, or partially broken wires and broken, bent, pushed out, spread, corroded, or contaminated terminals.

The following additional checks may assist you in identifying a possible intermittent problem.

Reconnect any disconnected components and harness connector.

WARNING: To avoid personal injury or death, turn the ignition on, then reconnect the battery.
With the scan tool monitor active codes as you work through the following steps.

Wiggle the wiring harness and connectors of the related airbag circuit or component.

If codes are related to the Driver Airbag circuits, rotate the steering wheel from stop to stop.

If only stored codes return continue the test until the problem area has been isolated.

In the previous steps you have attempted to recreate the conditions responsible for setting active DTC in question.

Are any ACTIVE DTC's present?

Yes >> Select the appropriate diagnostic procedure from the Table of Contents in this section.

No >> No problem found at this time. Erase all codes before returning vehicle to customer.

B1B09-PASSENGER AIRBAG SQUIB 1 CIRCUIT HIGH

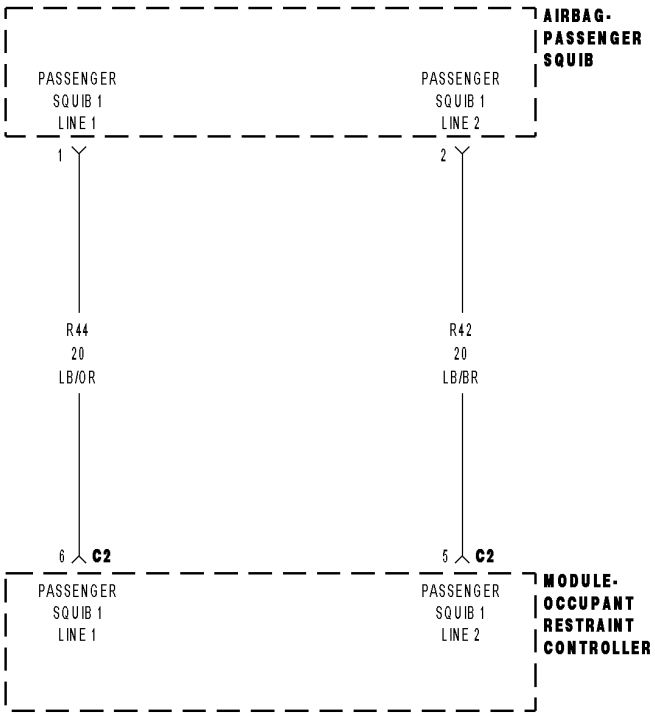

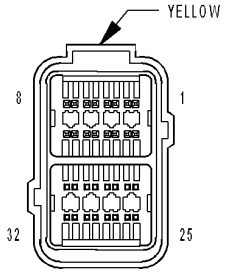

MODULE-
OCCUPANT
RESTRAINT
CONTROLLER C2

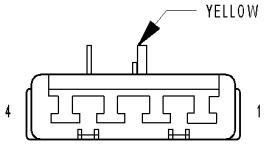

AIRBAG-
PASSENGER
SQUIB

81339fe2

For a complete wiring diagram **Refer to Section 8W**.

- **When Monitored:**
  With the ignition on, the Occupant Restraint Controller (ORC) monitors the voltage on the Passenger Squib 1 circuits.
- **Set Condition:**
  When the ORC has detected voltage on the Passenger Squib 1 circuits.

Possible Causes
(R42) PASSENGER SQUIB 1 LINE 2 CIRCUIT OR (R44) PASSENGER SQUIB 1 LINE 1 CIRCUIT SHORTED TO BATTERY
PASSENGER AIRBAG
ORC

Diagnostic Test

1. DETERMINE ACTIVE OR STORED DTC

NOTE: Ensure the battery is fully charged.

NOTE: The scan tool, SRS Airbag Load Tool MRL 8443, and DVOM are required to perform the following test.

NOTE: When reconnecting airbag system components the Ignition must be turned off and the Battery must be disconnected.
Select Active or Stored DTC.

Is the DTC active or stored?

ORC - ACTIVE DTC
Go To 2

ORC - STORED DTC
Go To 5

2. CHECK FOR SHORTED SQUIB CIRCUITS IN PASSENGER AIRBAG

WARNING: To avoid personal injury or death, turn the ignition off, disconnect the battery and wait two minutes before proceeding.
Disconnect the Passenger Airbag Squib connector.

WARNING: To avoid personal injury or death, do not place an intact undeployed airbag face down on a hard surface, the airbag will propel into the air if accidentally deployed.

NOTE: Check connectors - Clean and repair as necessary.
Connect the 8443 Load Tool to the Passenger Airbag Squib connector.

WARNING: To avoid personal injury or death, turn the ignition on, then reconnect the battery.
With the scan tool, read the active ORC DTC's.

Does the scan tool display: B1B09 PASSENGER AIRBAG SQUIB 1 CIRCUIT HIGH?

Yes >> Go To 3

No >> Replace the Passenger Airbag in accordance with the Service Information.
Perform ORC VERIFICATION TEST - VER 1

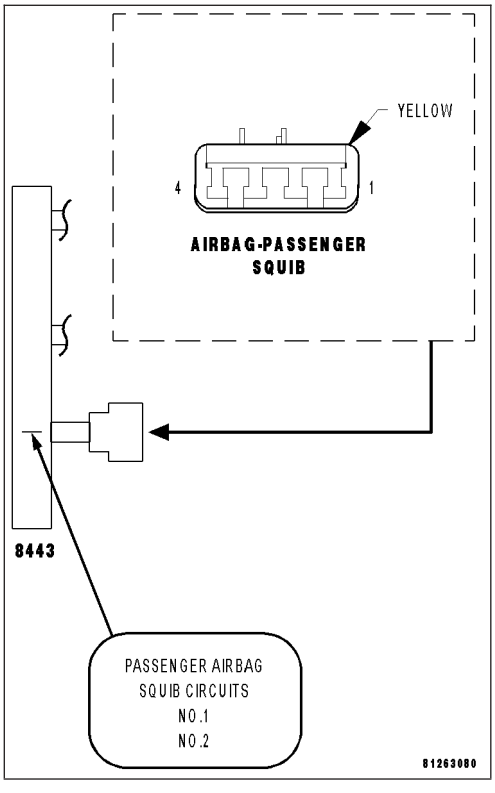

3. CHECK (R42) PASSENGER SQUIB 1 LINE 2 CIRCUIT AND (R44) PASSENGER SQUIB 1 LINE 1 CIRCUIT FOR A SHORT TO BATTERY

WARNING: To avoid personal injury or death, turn the ignition off, disconnect the battery and wait two minutes before proceeding.

Disconnect the 8443 Load Tool from the Passenger Airbag Squib connector.

Disconnect the ORC connectors.

NOTE: Check connectors - Clean and repair as necessary.

Connect the 8443 Load Tool ORC Adaptor to the ORC C2 connector.

Measure the voltage of the (R42) Passenger Squib 1 Line 2 circuit between the Passenger Airbag Squib connector and ground.

Measure the voltage of the (R44) Passenger Squib 1 Line 1 circuit between the Passenger Airbag Squib connector and ground.

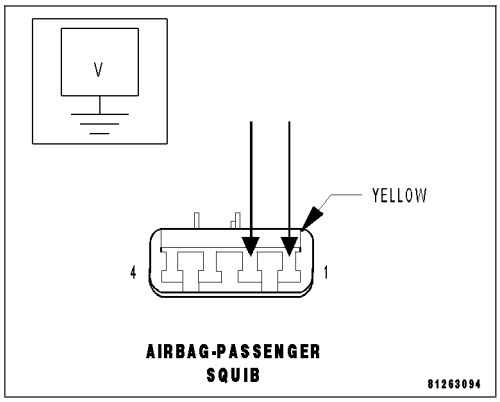

Is there any voltage present on either circuit?

Yes >> Repair the Passenger Squib 1 circuits with voltage present for a short to battery.
Perform ORC VERIFICATION TEST - VER 1

No >> Go To 4

4. REPLACE THE ORC

WARNING: To avoid personal injury or death, turn the ignition off, disconnect the battery and wait two minutes before proceeding.

WARNING: If the Occupant Restraint Controller (ORC) is dropped at any time, it must be replaced. Failure to take the proper precautions can result in accidental airbag deployment and personal injury or death.

NOTE: When reconnecting airbag system components the Ignition must be turned off and the Battery must be disconnected.

View Repair

Repair

Replace the ORC in accordance with the Service Information.
Perform ORC VERIFICATION TEST - VER 1

5. STORED ORC DTC

With the scan tool, record and erase all DTC's from all Airbag System Modules.

If any ACTIVE codes are present they must be resolved before diagnosing any stored codes.

WARNING: To avoid personal injury or death, turn the ignition off, disconnect the battery and wait two minutes before proceeding.

Using the wiring diagram/schematic as a guide, inspect the wiring and connectors.

Look for chafed, pierced, pinched, or partially broken wires and broken, bent, pushed out, spread, corroded, or contaminated terminals.

The following additional checks may assist you in identifying a possible intermittent problem.

Reconnect any disconnected components and harness connector.

WARNING: To avoid personal injury or death, turn the ignition on, then reconnect the battery.

With the scan tool monitor active codes as you work through the following steps.

Wiggle the wiring harness and connectors of the related airbag circuit or component.

If codes are related to the Driver Airbag circuits, rotate the steering wheel from stop to stop.

If only stored codes return continue the test until the problem area has been isolated.

In the previous steps you have attempted to recreate the conditions responsible for setting active DTC in question.

Are any ACTIVE DTCs present?

Yes >> Select the appropriate diagnostic procedure from the Table of Contents in this section.

No >> No problem found at this time. Erase all codes before returning vehicle to customer.

B1B0A-PASSENGER AIRBAG SQUIB 1 CIRCUIT OPEN

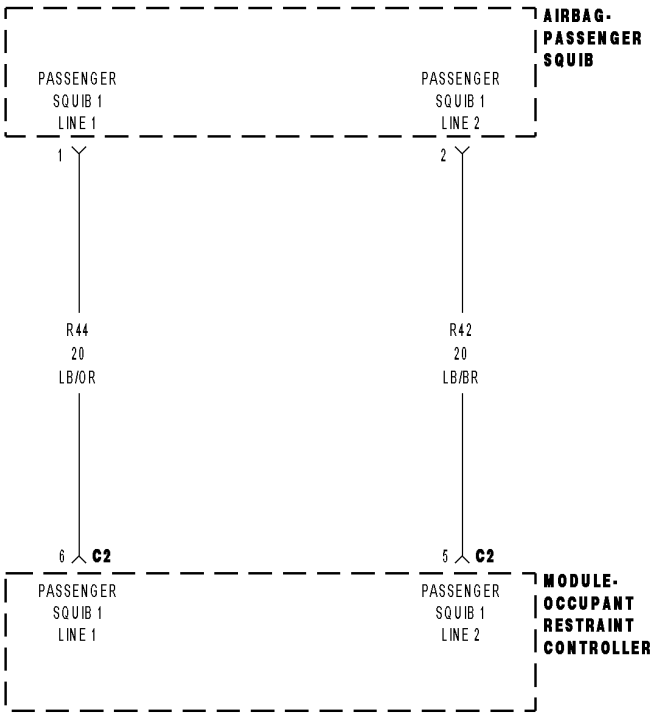

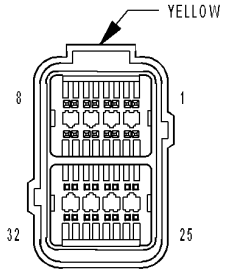

MODULE-
OCCUPANT
RESTRAINT
CONTROLLER C2

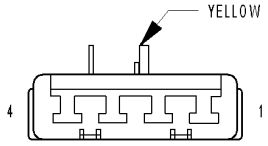

AIRBAG-
PASSENGER
SQUIB

81339fe2

For a complete wiring diagram **Refer to Section 8W**.

- **When Monitored:**
  With the ignition on, the Occupant Restraint Controller (ORC) monitors the resistance of the Passenger Squib 1 circuits.
- **Set Condition:**
  The ORC has detected an open or high resistance on the Passenger Squib 1 circuits.

Possible Causes
(R42) PASSENGER SQUIB 1 LINE 2 CIRCUIT OPEN
(R44) PASSENGER SQUIB 1 LINE 1 CIRCUIT OPEN
PASSENGER AIRBAG
ORC

Diagnostic Test

1. DETERMINE ACTIVE OR STORED DTC

NOTE: Ensure the battery is fully charged.

NOTE: The scan tool, SRS Airbag Load Tool MRL 8443, and DVOM are required to perform the following test.

NOTE: When reconnecting airbag system components the Ignition must be turned off and the Battery must be disconnected.
Select Active or Stored DTC.

Is the DTC active or stored?

ORC - ACTIVE DTC
Go To 2

ORC - STORED DTC
Go To 6

2. CHECK FOR OPEN SQUIB CIRCUITS IN PASSENGER AIRBAG

WARNING: To avoid personal injury or death, turn the ignition off, disconnect the battery and wait two minutes before proceeding.
Disconnect the Passenger Airbag Squib connector.

NOTE: Check connectors - Clean and repair as necessary.
Connect the 8443 Load Tool to the Passenger Airbag Squib connector.

WARNING: To avoid personal injury or death, turn the ignition on, then reconnect the battery.
With the scan tool, read the active ORC DTC's.

Does the scan tool display: B1B0A PASSENGER AIRBAG SQUIB 1 CIRCUIT OPEN?

Yes >> Go To 3

No >> Replace the Passenger Airbag in accordance with the Service Information.
Perform ORC VERIFICATION TEST - VER 1

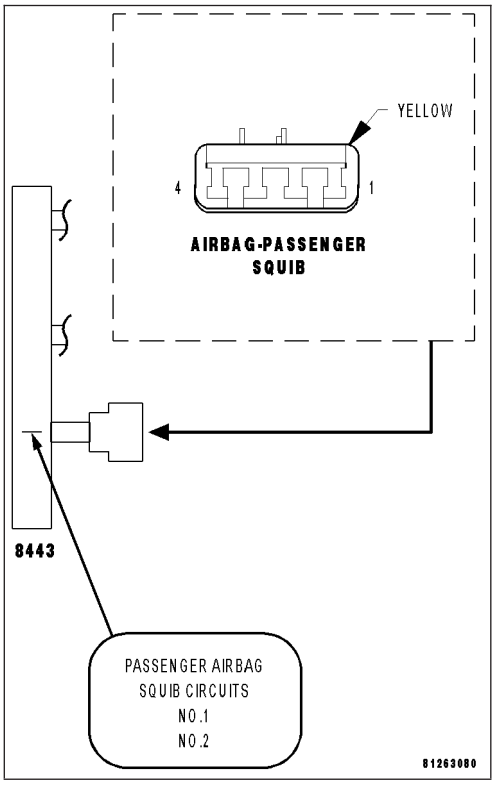

3. CHECK (R42) PASSENGER SQUIB 1 LINE 2 CIRCUIT FOR AN OPEN

WARNING: To avoid personal injury or death, turn the ignition off, disconnect the battery and wait two minutes before proceeding.
Disconnect the 8443 Load Tool from the Passenger Airbag Squib connector.

Disconnect the ORC connectors.

NOTE: Check connectors - Clean and repair as necessary.
Connect the 8443 Load Tool ORC Adaptor to the ORC C2 connector.

Measure the resistance of the (R42) Passenger Squib 1 Line 2 circuit between the Passenger Airbag Squib connector and the 8443 ORC Adaptor.

Is the resistance below 1.0 ohm?

Yes >> Go To 4

No >> Repair the (R42) Passenger Squib 1 Line 2 circuit for and open. Then, Go To 4

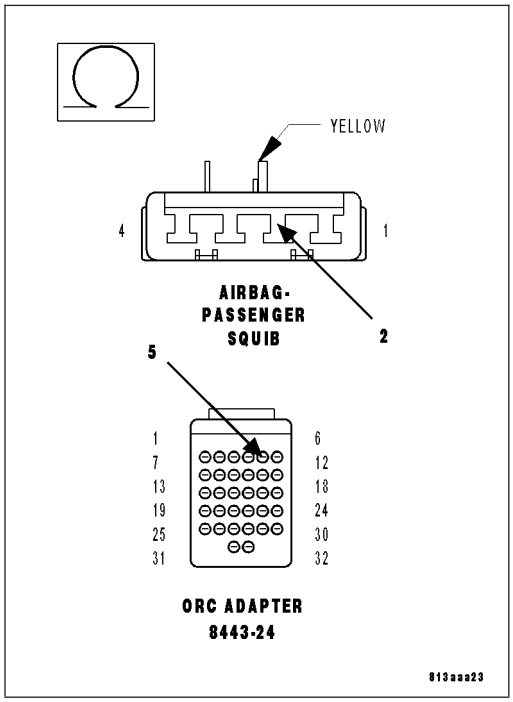

4. CHECK (R44) PASSENGER SQUIB 1 LINE 1 CIRCUIT FOR AN OPEN

Measure the resistance of the (R44) Passenger Squib 1 Line 1 circuit between the Passenger Airbag Squib connector and the 8443 ORC Adaptor.

Is the resistance below 1.0 ohm?

Yes >> Go To 5

No >> Repair the (R44) Passenger Squib 1 Line 1 circuit for an open.
Perform ORC VERIFICATION TEST - VER 1

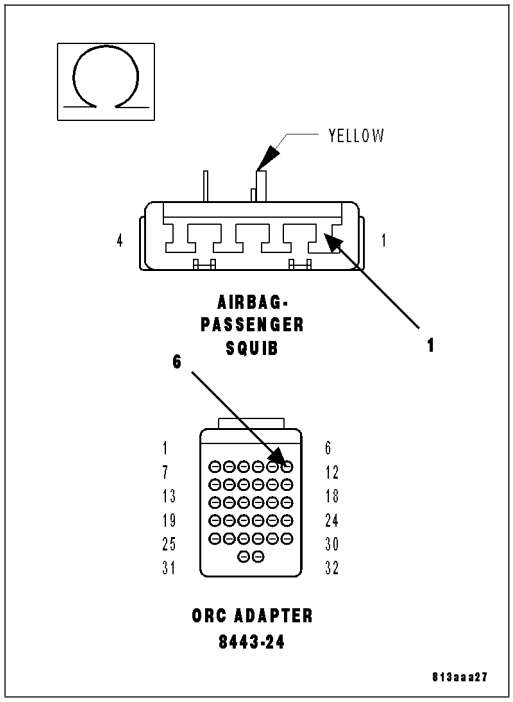

5. REPLACE THE ORC

WARNING: If the Occupant Restraint Controller (ORC) is dropped at any time, it must be replaced. Failure to take the proper precautions can result in accidental airbag deployment and personal injury or death.

NOTE: When reconnecting airbag system components the Ignition must be turned off and the Battery must be disconnected.

If there are no possible causes remaining, view repair.

Repair

Replace the ORC in accordance with the Service Information.

Perform ORC VERIFICATION TEST - VER 1

6. STORED ORC DTC

With the scan tool, record and erase all DTC's from all Airbag System Modules.

If any ACTIVE codes are present they must be resolved before diagnosing any stored codes.

WARNING: To avoid personal injury or death, turn the ignition off, disconnect the battery and wait two minutes before proceeding.

Using the wiring diagram/schematic as a guide, inspect the wiring and connectors.

Look for chafed, pierced, pinched, or partially broken wires and broken, bent, pushed out, spread, corroded, or contaminated terminals.

The following additional checks may assist you in identifying a possible intermittent problem.

Reconnect any disconnected components and harness connector.

WARNING: To avoid personal injury or death, turn the ignition on, then reconnect the battery.

With the scan tool monitor active codes as you work through the following steps.

Wiggle the wiring harness and connectors of the related airbag circuit or component.

If codes are related to the Driver Airbag circuits, rotate the steering wheel from stop to stop.

If only stored codes return continue the test until the problem area has been isolated.

In the previous steps you have attempted to recreate the conditions responsible for setting active DTC in question.

Are any ACTIVE DTCs present?

Yes >> Select the appropriate diagnostic procedure from the Table of Contents in this section.

No >> No problem found at this time. Erase all codes before returning vehicle to customer.

B1B0B-PASSENGER AIRBAG SQUIB 1 CIRCUIT SHORTED TOGETHER

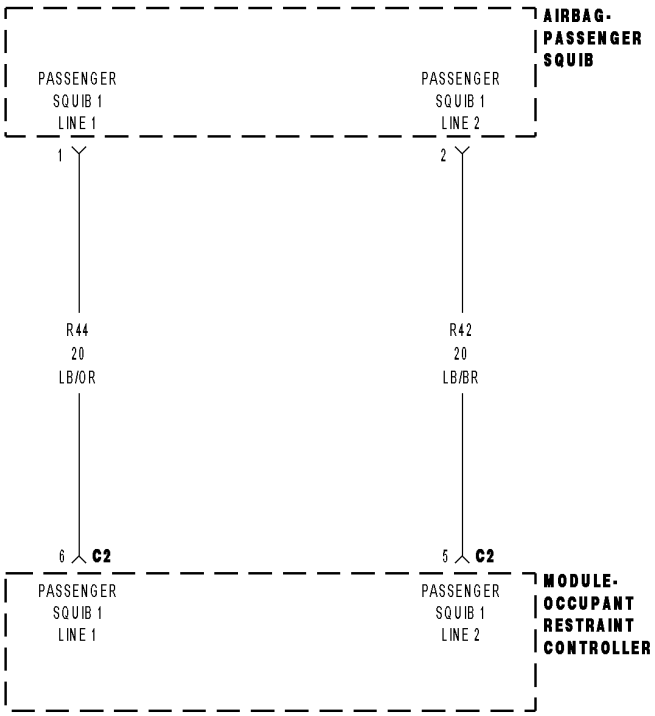

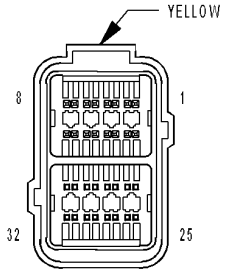

MODULE-
OCCUPANT
RESTRAINT
CONTROLLER C2

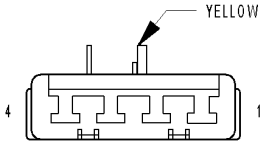

AIRBAG-
PASSENGER
SQUIB

81339fe2

For a complete wiring diagram **Refer to Section 8W**.

- **When Monitored:**
  With the ignition on, the Occupant Restraint Controller (ORC) monitors the resistance of the Passenger Squib 1 circuits.
- **Set Condition:**
  The ORC has detected low resistance between the Passenger Squib 1 circuits.

Possible Causes
(R42) PASSENGER SQUIB 1 LINE 2 CIRCUIT SHORTED TO (R44) PASSENGER SQUIB 1 LINE 1 CIRCUIT
PASSENGER AIRBAG
ORC

Diagnostic Test

1. DETERMINE ACTIVE OR STORED DTC

NOTE: Ensure the battery is fully charged.

NOTE: The scan tool, SRS Airbag Load Tool MRL 8443, and DVOM are required to perform the following test.

NOTE: When reconnecting airbag system components the Ignition must be turned off and the Battery must be disconnected.
Select Active or Stored DTC.

Is the DTC active or stored?

ORC - ACTIVE DTC
Go To 2

ORC - STORED DTC
Go To 5

2. CHECK FOR SHORTED SQUIB CIRCUITS IN PASSENGER AIRBAG

WARNING: To avoid personal injury or death, turn the ignition off, disconnect the battery and wait two minutes before proceeding.
Disconnect the Passenger Airbag Squib connector.

NOTE: Check connectors - Clean and repair as necessary.
Connect the 8443 Load Tool to the Passenger Airbag Squib connector.

WARNING: To avoid personal injury or death, turn the ignition on, then reconnect the battery.
With the scan tool, read the active ORC DTC's.

Does the scan tool display: B1B0B PASSENGER AIRBAG SQUIB 1 CIRCUIT SHORTED TOGETHER?

Yes >> Go To 3

No >> Replace the Passenger Airbag in accordance with the Service Information.
Perform ORC VERIFICATION TEST - VER 1

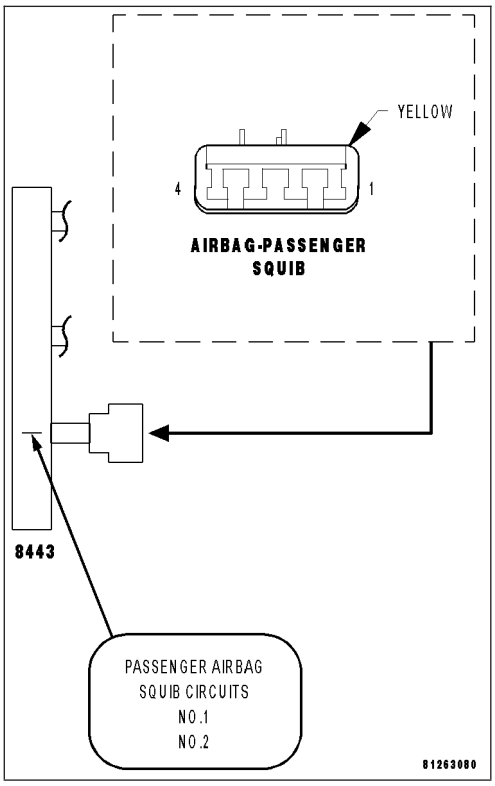

3. CHECK (R42) PASSENGER SQUIB 1 LINE 2 CIRCUIT FOR A SHORT TO (R44) PASSENGER SQUIB 1 LINE 1 CIRCUIT

WARNING: To avoid personal injury or death, turn the ignition off, disconnect the battery and wait two minutes before proceeding.

Disconnect the 8443 Load Tool from the Passenger Airbag Squib connector.

Disconnect the ORC connectors.

NOTE: Check connectors - Clean and repair as necessary.

Connect the 8443 Load Tool ORC Adaptor to the ORC C2 connector.

Measure the resistance between the (R42) Passenger Squib 1 Line 2 circuit and the (R44) Passenger Squib 1 Line 1 circuit at the Passenger Airbag Squib connector.

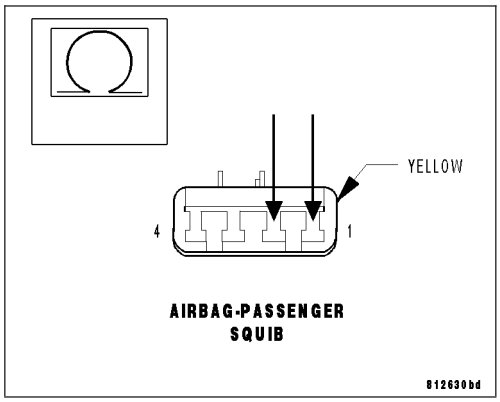

Is the resistance below 10K ohms?

Yes >> Repair the (R42) Passenger Squib 1 Line 2 circuit for a short to the (R44) Passenger Squib 1 Line 1 circuit.
Perform ORC VERIFICATION TEST - VER 1

No >> Go To 4

4. REPLACE THE ORC

WARNING: If the Occupant Restraint Controller (ORC) is dropped at any time, it must be replaced. Failure to take the proper precautions can result in accidental airbag deployment and personal injury or death.

NOTE: When reconnecting airbag system components the Ignition must be turned off and the Battery must be disconnected.

View Repair

Repair

Replace the ORC in accordance with the Service Information.
Perform ORC VERIFICATION TEST - VER 1

5. STORED ORC DTC

With the scan tool, record and erase all DTC's from all Airbag System Modules.

If any ACTIVE codes are present they must be resolved before diagnosing any stored codes.

WARNING: To avoid personal injury or death, turn the ignition off, disconnect the battery and wait two minutes before proceeding.

Using the wiring diagram/schematic as a guide, inspect the wiring and connectors.

Look for chafed, pierced, pinched, or partially broken wires and broken, bent, pushed out, spread, corroded, or contaminated terminals.

The following additional checks may assist you in identifying a possible intermittent problem.

Reconnect any disconnected components and harness connector.

WARNING: To avoid personal injury or death, turn the ignition on, then reconnect the battery.

With the scan tool monitor active codes as you work through the following steps.

Wiggle the wiring harness and connectors of the related airbag circuit or component.

If codes are related to the Driver Airbag circuits, rotate the steering wheel from stop to stop.

If only stored codes return continue the test until the problem area has been isolated.

In the previous steps you have attempted to recreate the conditions responsible for setting active DTC in question.

Are any ACTIVE DTC's present?

Yes >> Select the appropriate diagnostic procedure from the Table of Contents in this section.

No >> No problem found at this time. Erase all codes before returning vehicle to customer.

B1B0C-PASSENGER AIRBAG SQUIB 2 CIRCUIT LOW

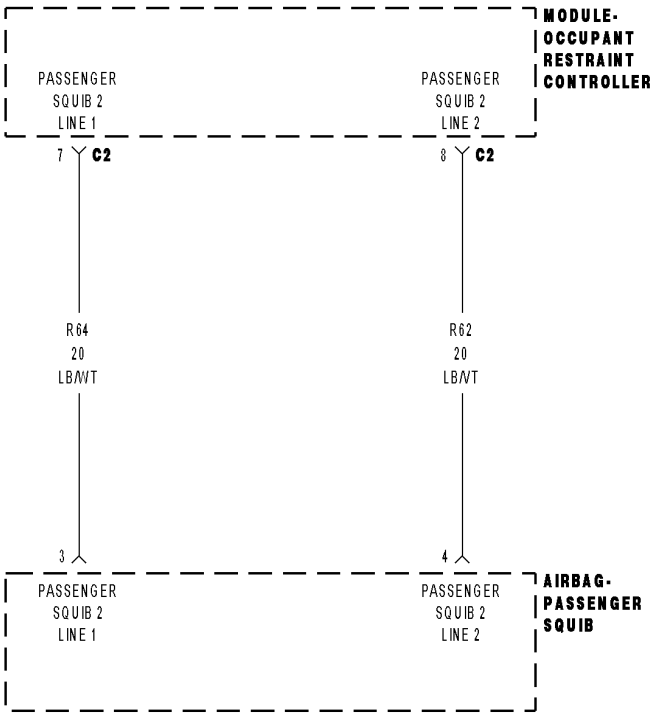

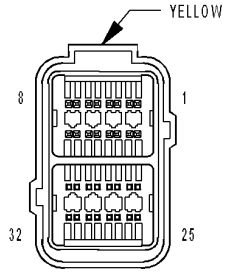

MODULE-
OCCUPANT
RESTRAINT
CONTROLLER C2

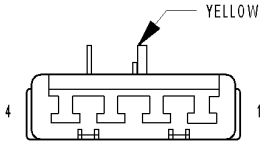

AIRBAG-
PASSENGER
SQUIB

8133a05a

For a complete wiring diagram **Refer to Section 8W**.

- **When Monitored:**
  With the ignition on, the Occupant Restraint Controller (ORC) monitors the resistance of the Passenger Squib 2 circuits.
- **Set Condition:**
  The ORC has detected low resistance on the Passenger Squib 2 circuits.

Possible Causes
(R64) PASSENGER SQUIB 2 LINE 1 CIRCUIT OR (R62) PASSENGER SQUIB 2 LINE 2 CIRCUIT SHORTED TO GROUND
PASSENGER AIRBAG
ORC

Diagnostic Test

1. DETERMINE ACTIVE OR STORED DTC

NOTE: Ensure the battery is fully charged.

NOTE: The scan tool, SRS Airbag Load Tool MRL 8443, and DVOM are required to perform the following test.

NOTE: When reconnecting airbag system components the Ignition must be turned off and the Battery must be disconnected.
Select Active or Stored DTC.

Is the DTC active or stored?

ORC - ACTIVE DTC
Go To 2

ORC - STORED DTC
Go To 5

2. CHECK FOR SHORTED SQUIB CIRCUITS IN PASSENGER AIRBAG

WARNING: To avoid personal injury or death, turn the ignition off, disconnect the battery and wait two minutes before proceeding.
Disconnect the Passenger Airbag Squib connector.

WARNING: To avoid personal injury or death, do not place an intact undeployed airbag face down on a hard surface, the airbag will propel into the air if accidentally deployed.

NOTE: Check connectors - Clean and repair as necessary.
Connect the 8443 Load Tool to the Passenger Airbag Squib connector.

WARNING: To avoid personal injury or death, turn the ignition on, then reconnect the battery.
With the scan tool, read the active ORC DTC's.

Does the scan tool display: B1B0C PASSENGER AIRBAG SQUIB 2 CIRCUIT LOW?

Yes >> Go To 3

No >> Replace the Passenger Airbag in accordance with the Service Information.
Perform ORC VERIFICATION TEST - VER 1

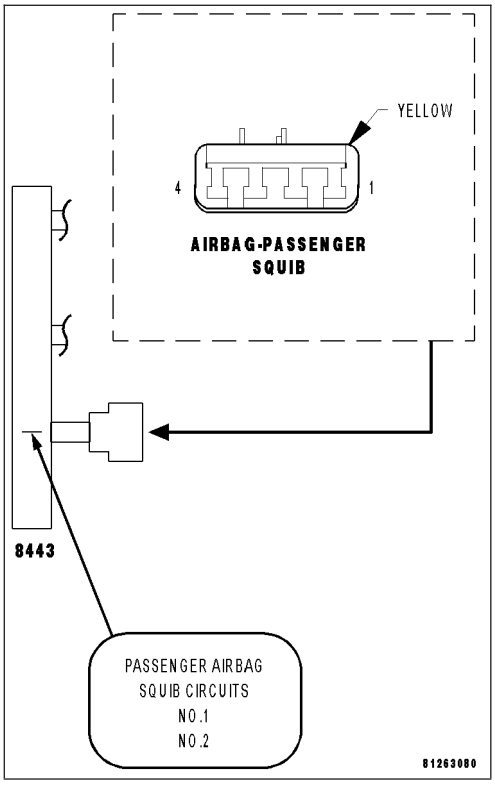

3. CHECK (R64) PASSENGER SQUIB 2 LINE 1 CIRCUIT AND (R62) PASSENGER SQUIB 2 LINE 2 CIRCUIT FOR A SHORT TO GROUND

WARNING: To avoid personal injury or death, turn the ignition off, disconnect the battery and wait two minutes before proceeding.
Disconnect the 8443 Load Tool from the Passenger Airbag Squib connector.

Disconnect the ORC connectors.

NOTE: Check connectors - Clean and repair as necessary.
Connect the 8443 Load Tool ORC Adaptor to the ORC C2 connector.

Measure the resistance of the (R64) Passenger Squib 2 Line 1 circuit between ground and the Passenger Airbag Squib connector.

Measure the resistance of the (R62) Passenger Squib 2 Line 2 circuit between ground and the Passenger Airbag Squib connector.

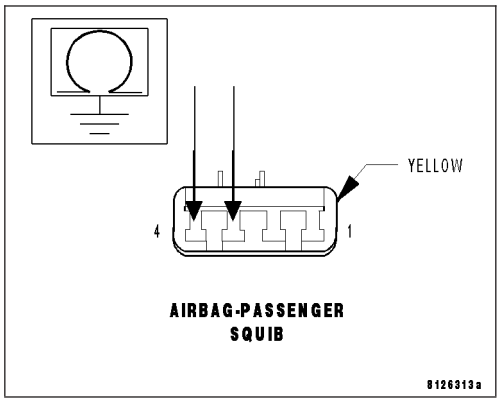

Is the resistance below 10K ohms on either circuit?

Yes >> Repair the Passenger Squib 2 circuits with a resistance below 10K ohms for a short to ground.
Perform ORC VERIFICATION TEST - VER 1

No >> Go To 4

4. REPLACE THE ORC

WARNING: If the Occupant Restraint Controller (ORC) is dropped at any time, it must be replaced. Failure to take the proper precautions can result in accidental airbag deployment and personal injury or death.

NOTE: When reconnecting airbag system components the Ignition must be turned off and the Battery must be disconnected.

View Repair

Repair

Replace the ORC in accordance with the Service Information.
Perform ORC VERIFICATION TEST - VER 1

5. STORED ORC DTC

With the scan tool, record and erase all DTC's from all Airbag System Modules.

If any ACTIVE codes are present they must be resolved before diagnosing any stored codes.

WARNING: To avoid personal injury or death, turn the ignition off, disconnect the battery and wait two minutes before proceeding.
Using the wiring diagram/schematic as a guide, inspect the wiring and connectors.

Look for chafed, pierced, pinched, or partially broken wires and broken, bent, pushed out, spread, corroded, or contaminated terminals.

The following additional checks may assist you in identifying a possible intermittent problem.

Reconnect any disconnected components and harness connector.

WARNING: To avoid personal injury or death, turn the ignition on, then reconnect the battery.
With the scan tool monitor active codes as you work through the following steps.

Wiggle the wiring harness and connectors of the related airbag circuit or component.

If codes are related to the Driver Airbag circuits, rotate the steering wheel from stop to stop.

If only stored codes return continue the test until the problem area has been isolated.

In the previous steps you have attempted to recreate the conditions responsible for setting active DTC in question.

Are any ACTIVE DTCs present?

Yes >> Select the appropriate diagnostic procedure from the Table of Contents in this section.

No >> No problem found at this time. Erase all codes before returning vehicle to customer.

B1B0D-PASSENGER AIRBAG SQUIB 2 CIRCUIT HIGH

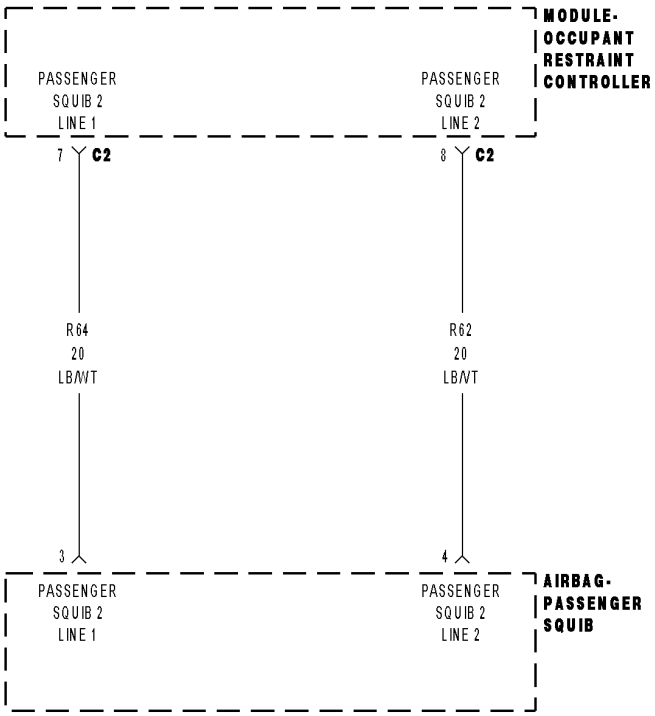

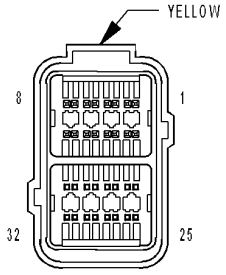

MODULE-
OCCUPANT
RESTRAINT
CONTROLLER C2

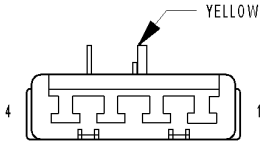

AIRBAG-
PASSENGER
SQUIB

8133a05a

For a complete wiring diagram **Refer to Section 8W**.

- **When Monitored:**
  With the ignition on, the Occupant Restraint Controller (ORC) monitors the voltage of the Passenger Squib 2 circuits.
- **Set Condition:**
  The ORC has detected voltage on the Passenger Squib 2 circuits.

Possible Causes
(R64) PASSENGER SQUIB 2 LINE 1 CIRCUIT OR (R62) PASSENGER SQUIB 2 LINE 2 CIRCUIT SHORTED TO BATTERY
PASSENGER AIRBAG
ORC

Diagnostic Test

1. DETERMINE ACTIVE OR STORED DTC

NOTE: Ensure the battery is fully charged.

NOTE: The scan tool, SRS Airbag Load Tool MRL 8443, and DVOM are required to perform the following test.

NOTE: When reconnecting airbag system components the Ignition must be turned off and the Battery must be disconnected.
Select Active or Stored DTC.

Is the DTC active or stored?

ORC - ACTIVE DTC
Go To 2

ORC - STORED DTC
Go To 5

2. CHECK FOR SHORTED SQUIB CIRCUITS IN PASSENGER AIRBAG

WARNING: To avoid personal injury or death, turn the ignition off, disconnect the battery and wait two minutes before proceeding.
Disconnect the Passenger Airbag Squib connector.

WARNING: To avoid personal injury or death, do not place an intact undeployed airbag face down on a hard surface, the airbag will propel into the air if accidentally deployed.

NOTE: Check connectors - Clean and repair as necessary.
Connect the 8443 Load Tool to the Passenger Airbag Squib connector.

WARNING: To avoid personal injury or death, turn the ignition on, then reconnect the battery.
With the scan tool, read the active ORC DTC's.

Does the scan tool display: B1B0D PASSENGER AIRBAG SQUIB 2 CIRCUIT HIGH?

Yes >> Go To 3

No >> Replace the Passenger Airbag in accordance with the Service Information.
Perform ORC VERIFICATION TEST - VER 1

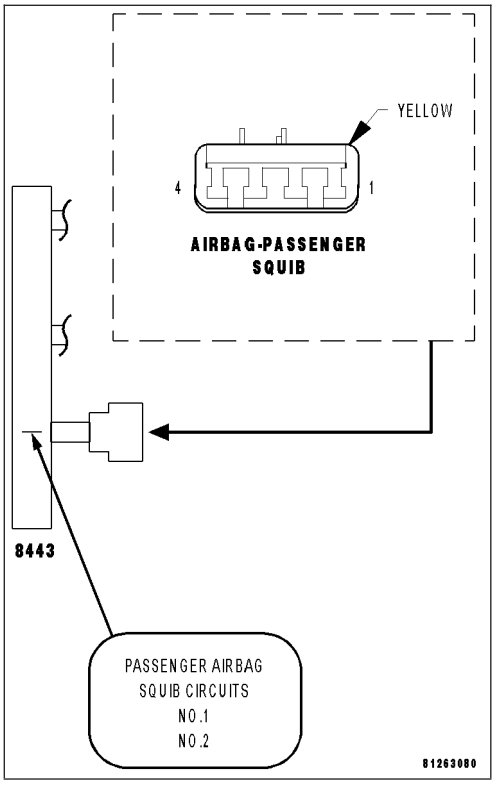

3. CHECK (R64) PASSENGER SQUIB 2 LINE 1 CIRCUIT AND (R62) PASSENGER SQUIB 2 LINE 2 CIRCUIT FOR A SHORT TO BATTERY

WARNING: To avoid personal injury or death, turn the ignition off, disconnect the battery and wait two minutes before proceeding.

Disconnect the 8443 Load Tool from the Passenger Airbag Squib connector.

Disconnect the ORC connectors.

NOTE: Check connectors - Clean and repair as necessary.

Connect the 8443 Load Tool ORC Adaptor to the ORC C2 connector.

Measure the voltage of the (R64) Passenger Squib 2 Line 1 circuit between the Passenger Airbag Squib connector and ground.

Measure the voltage of the (R62) Passenger Squib 2 Line 2 circuit between the Passenger Airbag Squib connector and ground.

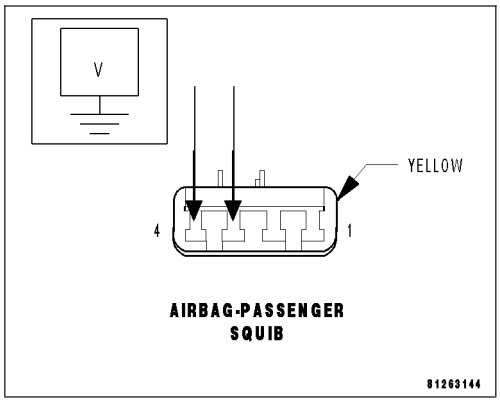

Is there any voltage present on either circuit?

Yes >> Repair the Passenger Squib 2 circuits with voltage present for a short to battery.
Perform ORC VERIFICATION TEST - VER 1

No >> Go To 4

4. REPLACE THE ORC

WARNING: To avoid personal injury or death, turn the ignition off, disconnect the battery and wait two minutes before proceeding.

WARNING: If the Occupant Restraint Controller (ORC) is dropped at any time, it must be replaced. Failure to take the proper precautions can result in accidental airbag deployment and personal injury or death.

NOTE: When reconnecting airbag system components the Ignition must be turned off and the Battery must be disconnected.

View Repair

Repair

Replace the ORC in accordance with the Service Information.
Perform ORC VERIFICATION TEST - VER 1

5. STORED ORC DTC

With the scan tool, record and erase all DTC's from all Airbag System Modules.

If any ACTIVE codes are present they must be resolved before diagnosing any stored codes.

WARNING: To avoid personal injury or death, turn the ignition off, disconnect the battery and wait two minutes before proceeding.

Using the wiring diagram/schematic as a guide, inspect the wiring and connectors.

Look for chafed, pierced, pinched, or partially broken wires and broken, bent, pushed out, spread, corroded, or contaminated terminals.

The following additional checks may assist you in identifying a possible intermittent problem.

Reconnect any disconnected components and harness connector.

WARNING: To avoid personal injury or death, turn the ignition on, then reconnect the battery.

With the scan tool monitor active codes as you work through the following steps.

Wiggle the wiring harness and connectors of the related airbag circuit or component.

If codes are related to the Driver Airbag circuits, rotate the steering wheel from stop to stop.

If only stored codes return continue the test until the problem area has been isolated.

In the previous steps you have attempted to recreate the conditions responsible for setting active DTC in question.

Are any ACTIVE DTCs present?

Yes >> Select the appropriate diagnostic procedure from the Table of Contents in this section.

No >> No problem found at this time. Erase all codes before returning vehicle to customer.

B1B0E-PASSENGER AIRBAG SQUIB 2 CIRCUIT OPEN

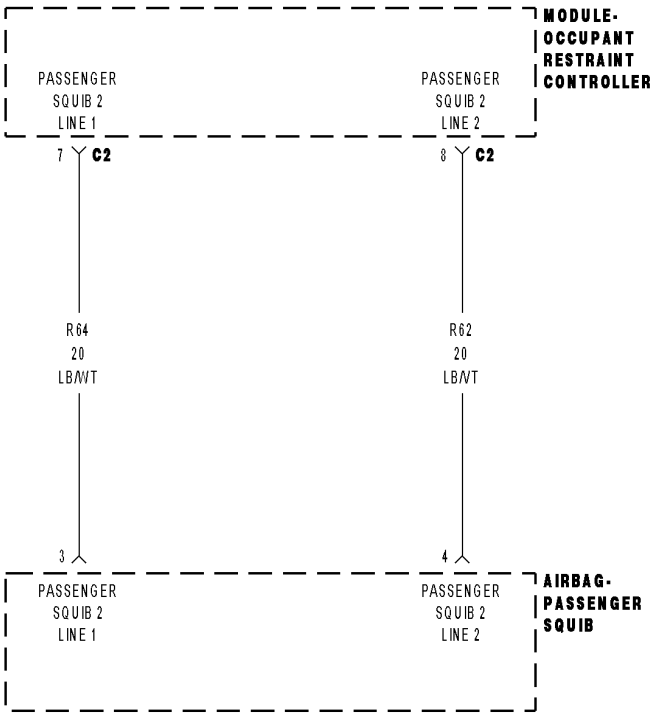

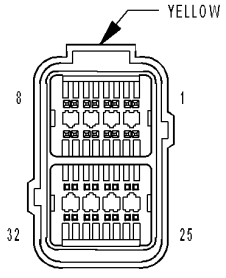

MODULE-
OCCUPANT
RESTRAINT
CONTROLLER C2

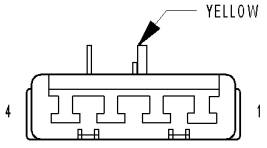

AIRBAG-
PASSENGER
SQUIB

8133a05a

For a complete wiring diagram **Refer to Section 8W**.

- **When Monitored:**
  With the ignition on, the Occupant Restraint Controller (ORC) monitors the resistance of the Passenger Squib 2 circuits.
- **Set Condition:**
  The ORC has detected an open or high resistance on the Passenger Squib 2 circuits.

Possible Causes
(R64) PASSENGER SQUIB 2 LINE 1 CIRCUIT OPEN
(R62) PASSENGER SQUIB 2 LINE 2 CIRCUIT OPEN
PASSENGER AIRBAG
ORC

Diagnostic Test

1. DETERMINE ACTIVE OR STORED DTC

NOTE: Ensure the battery is fully charged.

NOTE: The scan tool, SRS Airbag Load Tool MRL 8443, and DVOM are required to perform the following test.

NOTE: When reconnecting airbag system components the Ignition must be turned off and the Battery must be disconnected.
Select Active or Stored DTC.

Is the DTC active or stored?

ORC - ACTIVE DTC
Go To 2

ORC - STORED DTC
Go To 6

2. CHECK FOR OPEN SQUIB CIRCUITS IN PASSENGER AIRBAG

WARNING: To avoid personal injury or death, turn the ignition off, disconnect the battery and wait two minutes before proceeding.
Disconnect the Passenger Airbag Squib connector.

WARNING: To avoid personal injury or death, do not place an intact undeployed airbag face down on a hard surface, the airbag will propel into the air if accidentally deployed.

NOTE: Check connectors - Clean and repair as necessary.
Connect the 8443 Load Tool to the Passenger Airbag Squib connector.

WARNING: To avoid personal injury or death, turn the ignition on, then reconnect the battery.
With the scan tool, read the active ORC DTC's.

Does the scan tool display: B1B0E PASSENGER AIRBAG SQUIB CIRCUIT OPEN?

Yes >> Go To 3

No >> Replace the Passenger Airbag in accordance with the Service Information.
Perform ORC VERIFICATION TEST - VER 1

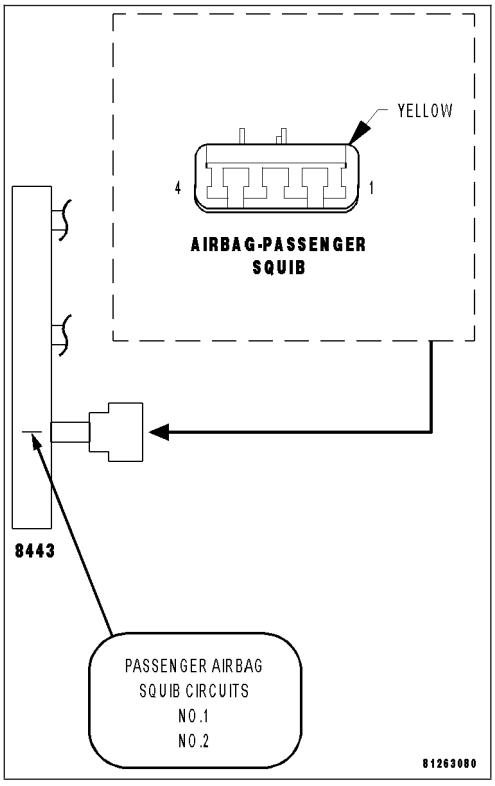

3. CHECK (R64) PASSENGER SQUIB 2 LINE 1 CIRCUIT FOR AN OPEN

WARNING: To avoid personal injury or death, turn the ignition off, disconnect the battery and wait two minutes before proceeding.
Disconnect the 8443 Load Tool from the Passenger Airbag Squib connector.

Disconnect the ORC connectors.

NOTE: Check connectors - Clean and repair as necessary.
Connect the 8443 Load Tool ORC Adaptor to the ORC C2 connector.

Measure the resistance of the (R64) Passenger Squib 2 Line 1 circuit between the Passenger Airbag Squib connector and the 8443 Load Tool ORC Adaptor.

Is the resistance below 1.0 ohm?

Yes >> Go to 4

No >> Repair the (R64) Passenger Squib 2 Line 1 circuit for an open. Then, Go To 4

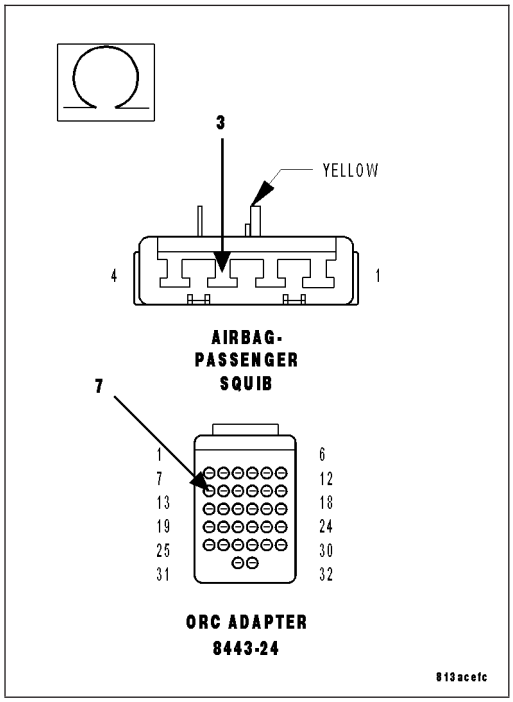

4. CHECK (R62) PASSENGER SQUIB 2 LINE 2 CIRCUIT FOR AN OPEN

Measure the resistance of the (R62) Passenger Squib 2 Line 2 circuit between the Passenger Airbag Squib connector and the 8443 Load Tool ORC Adaptor.

Is the resistance below 1.0 ohm?

Yes >> Go To 5

No >> Repair the (R62) Passenger Squib 2 Line 2 circuit for an open.
Perform ORC VERIFICATION TEST - VER 1

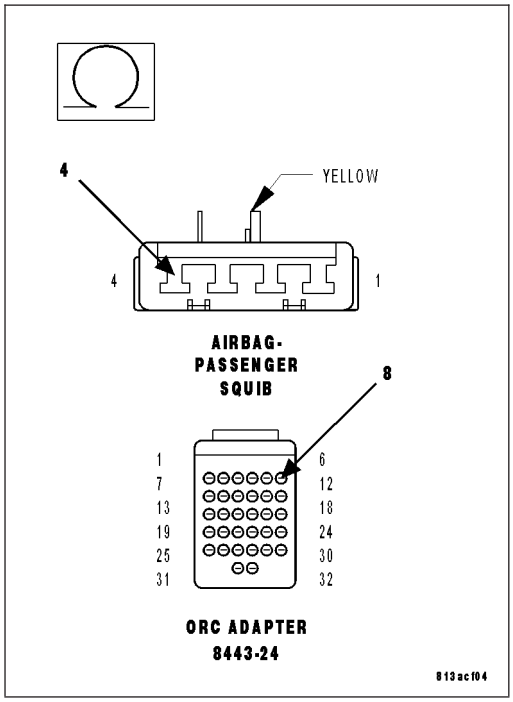

5. REPLACE THE ORC

WARNING: If the Occupant Restraint Controller (ORC) is dropped at any time, it must be replaced. Failure to take the proper precautions can result in accidental airbag deployment and personal injury or death.

NOTE: When reconnecting airbag system components the Ignition must be turned off and the Battery must be disconnected.

View Repair

Repair

Replace the ORC in accordance with the Service Information.

Perform ORC VERIFICATION TEST - VER 1

6. STORED ORC DTC

With the scan tool, record and erase all DTC's from all Airbag System Modules.

If any ACTIVE codes are present they must be resolved before diagnosing any stored codes.

WARNING: To avoid personal injury or death, turn the ignition off, disconnect the battery and wait two minutes before proceeding.

Using the wiring diagram/schematic as a guide, inspect the wiring and connectors.

Look for chafed, pierced, pinched, or partially broken wires and broken, bent, pushed out, spread, corroded, or contaminated terminals.

The following additional checks may assist you in identifying a possible intermittent problem.

Reconnect any disconnected components and harness connector.

WARNING: To avoid personal injury or death, turn the ignition on, then reconnect the battery.

With the scan tool monitor active codes as you work through the following steps.

Wiggle the wiring harness and connectors of the related airbag circuit or component.

If codes are related to the Passenger Airbag circuits, rotate the steering wheel from stop to stop.

If only stored codes return continue the test until the problem area has been isolated.

In the previous steps you have attempted to recreate the conditions responsible for setting active DTC in question.

Are any ACTIVE DTCs present?

Yes >> Select the appropriate diagnostic procedure from the Table of Contents in this section.

No >> No problem found at this time. Erase all codes before returning vehicle to customer.

B1B0F-PASSENGER AIRBAG SQUIB 2 CIRCUIT SHORTED TOGETHER

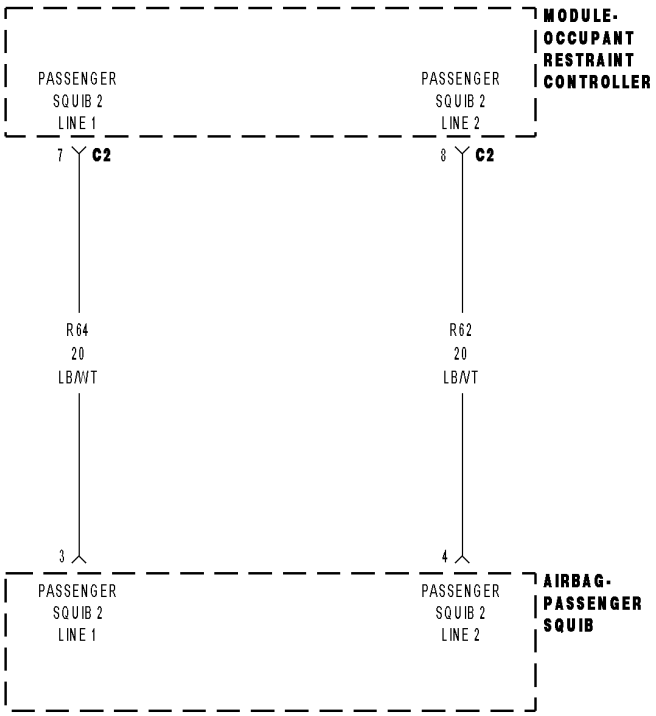

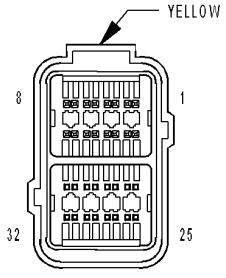

MODULE-
OCCUPANT
RESTRAINT
CONTROLLER C2

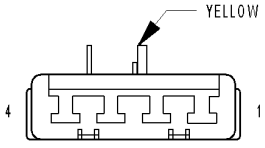

AIRBAG-
PASSENGER
SQUIB

8133a05a

For a complete wiring diagram **Refer to Section 8W**.

- **When Monitored:**
  With the ignition on, the Occupant Restraint Controller (ORC) monitors the resistance of the Passenger Squib 2 circuits.
- **Set Condition:**
  The ORC has detected low resistance between the Passenger Squib 2 circuits.

Possible Causes
(R64) PASSENGER SQUIB 2 LINE 1 CIRCUIT SHORTED TO (R62) PASSENGER SQUIB 2 LINE 2 CIRCUIT
PASSENGER AIRBAG
ORC

Diagnostic Test

1. DETERMINE ACTIVE OR STORED DTC

NOTE: Ensure the battery is fully charged.

NOTE: The scan tool, SRS Airbag Load Tool MRL 8443, and DVOM are required to perform the following test.

NOTE: When reconnecting airbag system components the Ignition must be turned off and the Battery must be disconnected.
Select Active or Stored DTC.

Is the DTC active or stored?

ORC - ACTIVE DTC
Go To 2

ORC - STORED DTC
Go To 5

2. CHECK FOR SHORTED SQUIB CIRCUITS IN PASSENGER AIRBAG

WARNING: To avoid personal injury or death, turn the ignition off, disconnect the battery and wait two minutes before proceeding.
Disconnect the Passenger Airbag Squib connector.

WARNING: To avoid personal injury or death, do not place an intact undeployed airbag face down on a hard surface, the airbag will propel into the air if accidentally deployed.

NOTE: Check connectors - Clean and repair as necessary.
Connect the 8443 Load Tool to the Passenger Airbag Squib connector.

WARNING: To avoid personal injury or death, turn the ignition on, then reconnect the battery
With the scan tool, read the active ORC DTC's.

Does the scan tool display: B1B0F PASSENGER AIRBAG SQUIB 2 CIRCUIT SHORTED TOGETHER?

Yes >> Go To 3

No >> Replace the Passenger Airbag in accordance with the Service Information.
Perform ORC VERIFICATION TEST - VER 1

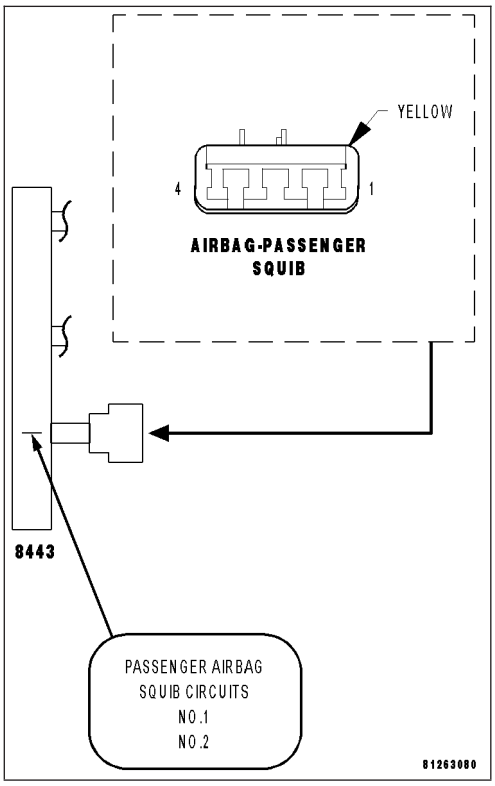

3. CHECK (R64) PASSENGER SQUIB 2 LINE 1 CIRCUIT FOR A SHORT TO (R62) PASSENGER SQUIB 2 LINE 2 CIRCUIT

WARNING: To avoid personal injury or death, turn the ignition off, disconnect the battery and wait two minutes before proceeding.
Disconnect the 8443 Load Tool from the Passenger Airbag Squib connector.

Disconnect the ORC connectors.

NOTE: Check connectors - Clean and repair as necessary.
Connect the 8443 Load Tool ORC Adaptor to the ORC C2 connector.

Measure the resistance between the (R64) Passenger Squib 2 Line 1 circuit and the (R62) Passenger Squib 2 Line 2 circuit at the Passenger Airbag Squib connector.

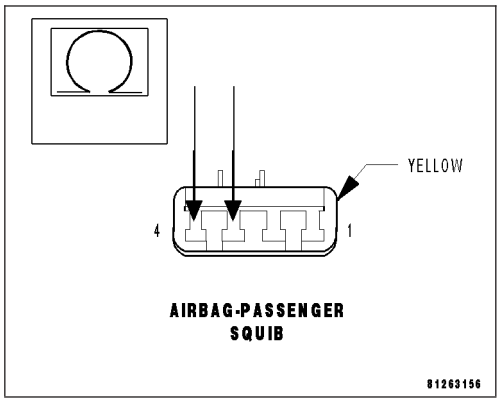

Is the resistance below 10K ohms?

Yes >> Repair the (R64) Passenger Squib 2 Line 1 circuit for a short to the (R62) Passenger Squib 2 Line 2 circuit.
Perform ORC VERIFICATION TEST - VER 1

No >> Go to 4

4. REPLACE THE ORC

WARNING: If the Occupant Restraint Controller (ORC) is dropped at any time, it must be replaced. Failure to take the proper precautions can result in accidental airbag deployment and personal injury or death.

NOTE: When reconnecting airbag system components the Ignition must be turned off and the Battery must be disconnected.

Repair

Replace the ORC in accordance with the Service Information.
Perform ORC VERIFICATION TEST - VER 1

5. STORED ORC DTC

With the scan tool, record and erase all DTC's from all Airbag System Modules.

If any ACTIVE codes are present they must be resolved before diagnosing any stored codes.

WARNING: To avoid personal injury or death, turn the ignition off, disconnect the battery and wait two minutes before proceeding.
Using the wiring diagram/schematic as a guide, inspect the wiring and connectors.

Look for chafed, pierced, pinched, or partially broken wires and broken, bent, pushed out, spread, corroded, or contaminated terminals.

The following additional checks may assist you in identifying a possible intermittent problem.

Reconnect any disconnected components and harness connector.

WARNING: To avoid personal injury or death, turn the ignition on, then reconnect the battery.
With the scan tool monitor active codes as you work through the following steps.

Wiggle the wiring harness and connectors of the related airbag circuit or component.

If codes are related to the Driver Airbag circuits, rotate the steering wheel from stop to stop.

If only stored codes return continue the test until the problem area has been isolated.

In the previous steps you have attempted to recreate the conditions responsible for setting active DTC in question.

Are any ACTIVE DTCs present?

Yes >> Select the appropriate diagnostic procedure from the Table of Contents in this section.

No >> No problem found at this time. Erase all codes before returning vehicle to customer.

B1B18-LEFT SIDE CURTAIN SQUIB 1 CIRCUIT LOW

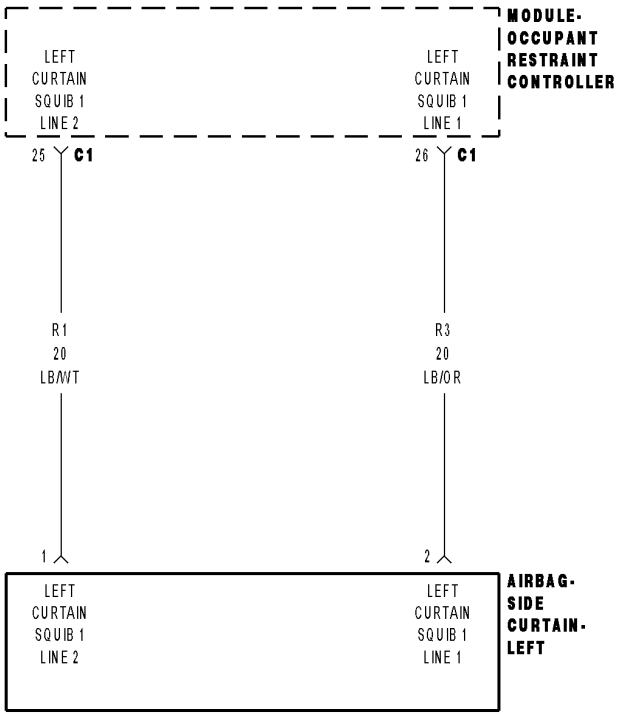

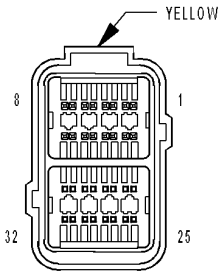

MODULE-
OCCUPANT
RESTRAINT
CONTROLLER C1

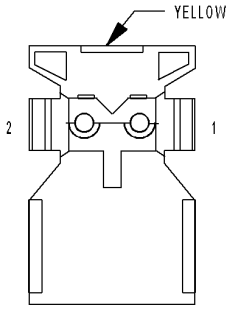

AIRBAG-
SIDE CURTAIN-
LEFT

8133a077

For a complete wiring diagram **Refer to Section 8W**.

- **When Monitored:**
  With the ignition on, the Occupant Restraint Controller (ORC) monitors the resistance of the Left Curtain Squib 1 circuits.
- **Set Condition:**
  The ORC has detected low resistance of the Left Curtain Squib 1 circuits.

Possible Causes
(R3) LEFT CURTAIN SQUIB 1 LINE 1 CIRCUIT OR (R1) LEFT CURTAIN SQUIB 1 LINE 2 CIRCUIT SHORTED TO GROUND
LEFT SIDE CURTAIN AIRBAG
ORC

Diagnostic Test

1. DETERMINE ACTIVE OR STORED DTC

NOTE: Ensure the battery is fully charged.

NOTE: The scan tool, SRS Airbag Load Tool MRL 8443, and DVOM are required to perform the following test.

NOTE: When reconnecting airbag system components the Ignition must be turned off and the Battery must be disconnected.
Select Active or Stored DTC.

Is the DTC active or stored?

ORC - ACTIVE DTC
Go To 2

ORC - STORED DTC
Go To 5

2. CHECK FOR SHORTED SQUIB CIRCUITS IN LEFT SIDE CURTAIN AIRBAG

WARNING: To avoid personal injury or death, turn the ignition off, disconnect the battery and wait two minutes before proceeding.
Disconnect the Left Side Curtain Airbag connector.

WARNING: To avoid personal injury or death, do not place an intact undeployed curtain airbag face down on a hard surface, the airbag will propel into the air if accidentally deployed.

NOTE: Check connectors - Clean and repair as necessary.
Connect the 8443 Load Tool and appropriate Jumper to the Left Side Curtain Airbag connector.

WARNING: To avoid personal injury or death, turn the ignition on, then reconnect the battery.
With the scan tool, read the active ORC DTC's.

Does the scan tool display: B1B18 LEFT SIDE CURTAIN SQUIB 1 CIRCUIT LOW?

Yes >> Go To 3

No >> Replace the Left Side Curtain Airbag in accordance with the Service Information.
Perform ORC VERIFICATION TEST - VER 1

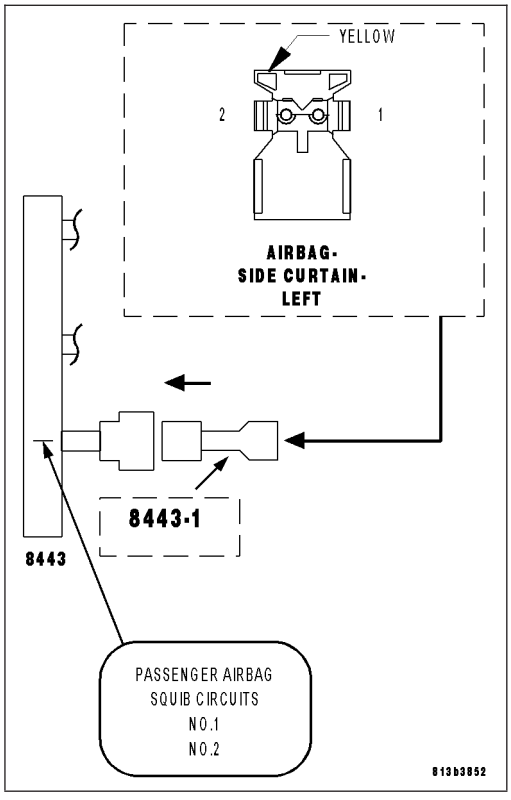

3. CHECK (R3) LEFT CURTAIN SQUIB 1 LINE 1 CIRCUIT AND (R1) LEFT CURTAIN SQUIB 1 LINE 2 CIRCUIT FOR A SHORT TO GROUND

WARNING: To avoid personal injury or death, turn the ignition off, disconnect the battery and wait two minutes before proceeding.

Disconnect the 8443 Load Tool and Jumper from the Left Side Curtain Airbag connector.

Disconnect the ORC connectors.

NOTE: Check connectors - Clean and repair as necessary.

Connect the 8443 Load Tool ORC Adaptor to the ORC C1 connector.

Measure the resistance of the (R3) Left Curtain Squib 1 Line 1 circuit between ground and the Left Side Curtain Airbag connector.

Measure the resistance of the (R1) Left Curtain Squib 1 Line 2 circuit between ground and the Left Side Curtain Airbag connector.

Is the resistance below 10K ohms on either circuit?

Yes >> Repair the Left Curtain Squib 1 circuits with a resistance below 10K ohms for a short to ground.
Perform ORC VERIFICATION TEST - VER 1

No >> Go To 4

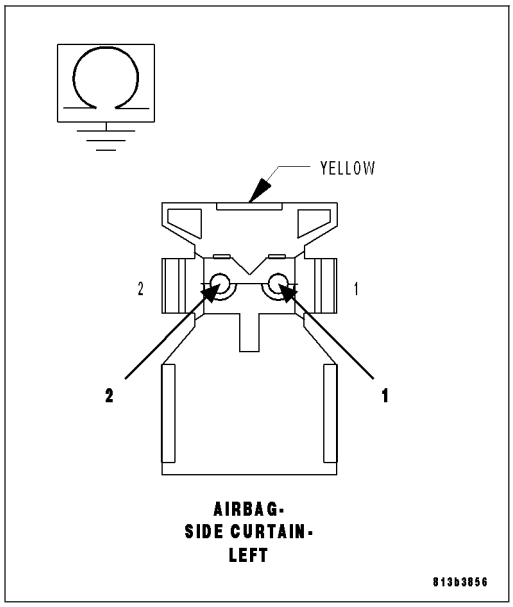

4. REPLACE THE ORC

WARNING: If the Occupant Restraint Controller (ORC) is dropped at any time, it must be replaced. Failure to take the proper precautions can result in accidental airbag deployment and personal injury or death.

NOTE: When reconnecting airbag system components the Ignition must be turned off and the Battery must be disconnected.

Repair

Replace the ORC in accordance with the Service Information.
Perform ORC VERIFICATION TEST - VER 1

5. STORED ORC DTC

With the scan tool, record and erase all DTC's from all Airbag System Modules.

If any ACTIVE codes are present they must be resolved before diagnosing any stored codes.

WARNING: To avoid personal injury or death, turn the ignition off, disconnect the battery and wait two minutes before proceeding.

Using the wiring diagram/schematic as a guide, inspect the wiring and connectors.

Look for chafed, pierced, pinched, or partially broken wires and broken, bent, pushed out, spread, corroded, or contaminated terminals.

The following additional checks may assist you in identifying a possible intermittent problem.

Reconnect any disconnected components and harness connector.

WARNING: To avoid personal injury or death, turn the ignition on, then reconnect the battery.

With the scan tool monitor active codes as you work through the following steps.

Wiggle the wiring harness and connectors of the related airbag circuit or component.

If codes are related to the Driver Airbag circuits, rotate the steering wheel from stop to stop.

IF only stored codes return continue the test until the problem area has been isolated.

In the previous steps you have attempted to recreate the conditions responsible for setting active DTC in question.

Are any ACTIVE DTC's present?

Yes >> Select the appropriate diagnostic procedure from the Table of Contents in this section.

No >> No problem found at this time. Erase all codes before returning vehicle to customer.

B1B19-LEFT SIDE CURTAIN SQUIB 1 CIRCUIT HIGH

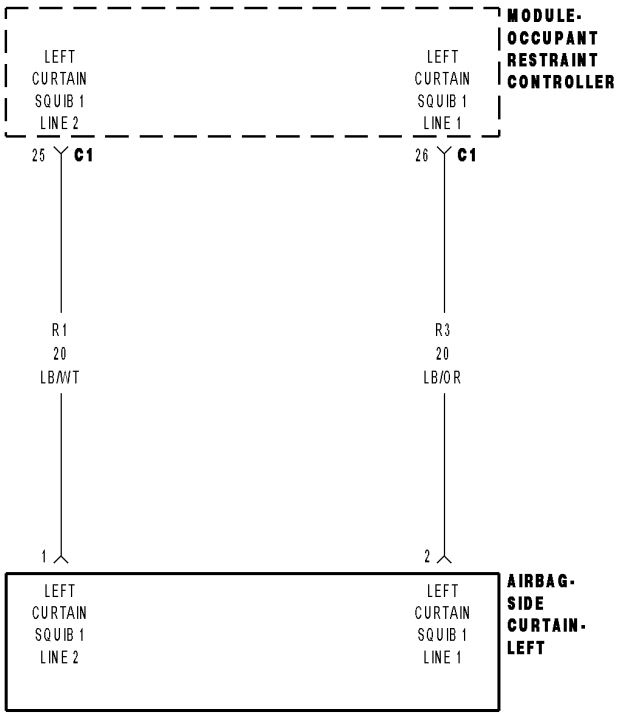

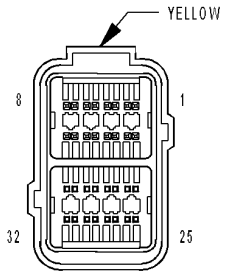

MODULE-
OCCUPANT
RESTRAINT
CONTROLLER C1

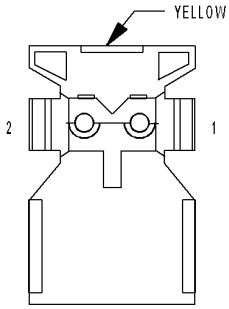

AIRBAG-
SIDE CURTAIN-
LEFT

8133a077

For a complete wiring diagram **Refer to Section 8W**.

- **When Monitored:**
  With the ignition on, the Occupant Restraint Controller (ORC) monitors the voltage on the Left Curtain Squib 1 circuits.
- **Set Condition:**
  The ORC has detected voltage on the Left Curtain Squib 1 circuits.

Possible Causes
(R3) LEFT CURTAIN SQUIB 1 LINE 1 CIRCUIT OR (R1) LEFT CURTAIN SQUIB 1 LINE 2 CIRCUIT SHORTED TO BATTERY
LEFT SIDE CURTAIN AIRBAG
ORC

Diagnostic Test

1. DETERMINE ACTIVE OR STORED DTC

NOTE: Ensure the battery is fully charged.

NOTE: The scan tool, SRS Airbag Load Tool MRL 8443, and DVOM are required to perform the following test.

NOTE: When reconnecting airbag system components the Ignition must be turned off and the Battery must be disconnected.
Select Active or Stored DTC.

Is the DTC active or stored?

ORC - ACTIVE DTC
Go To 2

ORC - STORED DTC
Go To 5

2. CHECK FOR SHORTED SQUIB CIRCUITS IN LEFT SIDE CURTAIN AIRBAG

WARNING: To avoid personal injury or death, turn the ignition off, disconnect the battery and wait two minutes before proceeding.
Disconnect the Left Side Curtain Airbag connector.

WARNING: To avoid personal injury or death, do not place an intact undeployed curtain airbag face down on a hard surface, the airbag will propel into the air if accidentally deployed.

NOTE: Check connectors - Clean and repair as necessary.
Connect the 8443 Load Tool and appropriate Jumper to the Left Side Curtain Airbag connector.

WARNING: To avoid personal injury or death, turn the ignition on, then reconnect the battery.
With the scan tool, read the active ORC DTC's.

Does the scan tool display: B1B19 LEFT SIDE CURTAIN SQUIB 1 CIRCUIT HIGH?

Yes >> Go To 3

No >> Replace the Left Side Curtain Airbag in accordance with the Service Information.
Perform ORC VERIFICATION TEST - VER 1

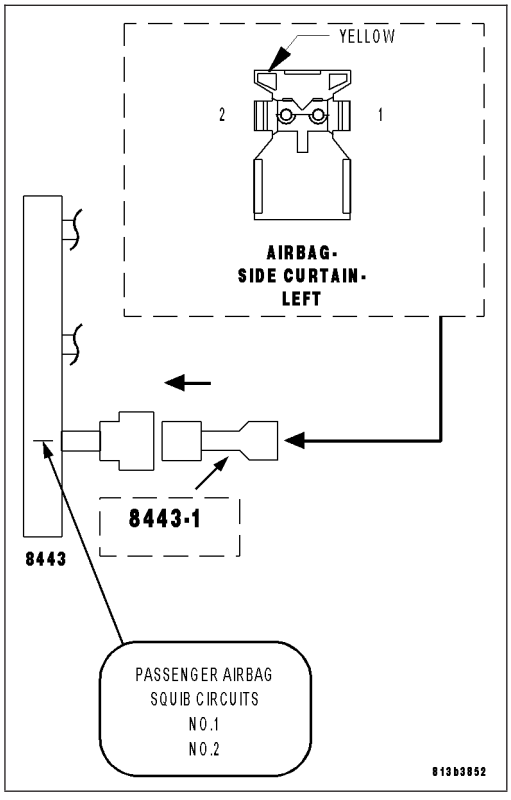

3. CHECK (R3) LEFT CURTAIN SQUIB 1 LINE 1 CIRCUIT AND (R1) LEFT CURTAIN SQUIB 1 LINE 2 CIRCUIT FOR A SHORT TO BATTERY

WARNING: To avoid personal injury or death, turn the ignition off, disconnect the battery and wait two minutes before proceeding.

Disconnect the 8443 Load Tool and Jumper from the Left Side Curtain Airbag connector.

Disconnect the ORC connectors.

NOTE: Check connectors - Clean and repair as necessary.

Connect the 8443 Load Tool ORC Adaptor to the ORC C1 connector.

Measure the voltage of the (R3) Left Curtain Squib 1 Line 1 circuit between the Left Side Curtain Airbag connector and ground.

Measure the voltage of the (R1) Left Curtain Squib 1 Line 2 circuit between the Left Side Curtain Airbag connector and ground.

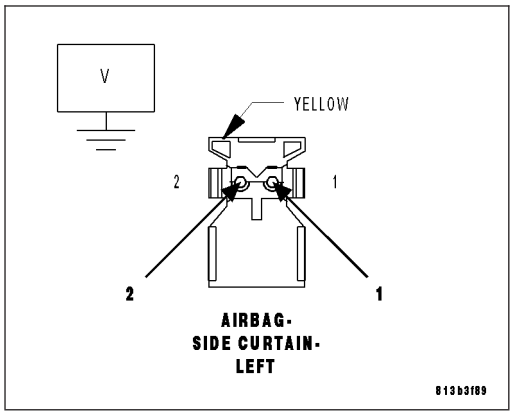

Is there any voltage present on either circuit?

Yes >> Repair the Left Curtain Squib 1 circuits with voltage present for a short to battery.
Perform ORC VERIFICATION TEST - VER 1

No >> Go To 4

4. REPLACE THE ORC

WARNING: To avoid personal injury or death, turn the ignition off, disconnect the battery and wait two minutes before proceeding.

WARNING: If the Occupant Restraint Controller (ORC) is dropped at any time, it must be replaced. Failure to take the proper precautions can result in accidental airbag deployment and personal injury or death.

NOTE: When reconnecting airbag system components the Ignition must be turned off and the Battery must be disconnected.

Repair

Replace the ORC in accordance with the Service Information.
Perform ORC VERIFICATION TEST - VER 1

5. STORED ORC DTC

With the scan tool, record and erase all DTC's from all Airbag System Modules.

If any ACTIVE codes are present they must be resolved before diagnosing any stored codes.

WARNING: To avoid personal injury or death, turn the ignition off then disconnect the battery and wait two minutes before proceeding.

Using the wiring diagram/schematic as a guide, inspect the wiring and connectors.

Look for chafed, pierced, pinched, or partially broken wires and broken, bent, pushed out, spread, corroded, or contaminated terminals.

The following additional checks may assist you in identifying a possible intermittent problem.

Reconnect any disconnected components and harness connector.

WARNING: To avoid personal injury or death, turn the ignition on, then reconnect the battery.

With the scan tool monitor active codes as you work through the following steps.

Wiggle the wiring harness and connectors of the related airbag circuit or component.

If codes are related to the Driver Airbag circuits, rotate the steering wheel from stop to stop.

If only stored codes return continue the test until the problem area has been isolated.

In the previous steps you have attempted to recreate the conditions responsible for setting active DTC in question.

Are any ACTIVE DTCs present?

Yes >> Select the appropriate diagnostic procedure from the Table of Contents in this section.

No >> No problem found at this time. Erase all codes before returning vehicle to customer.

B1B1A-LEFT SIDE CURTAIN SQUIB 1 CIRCUIT OPEN

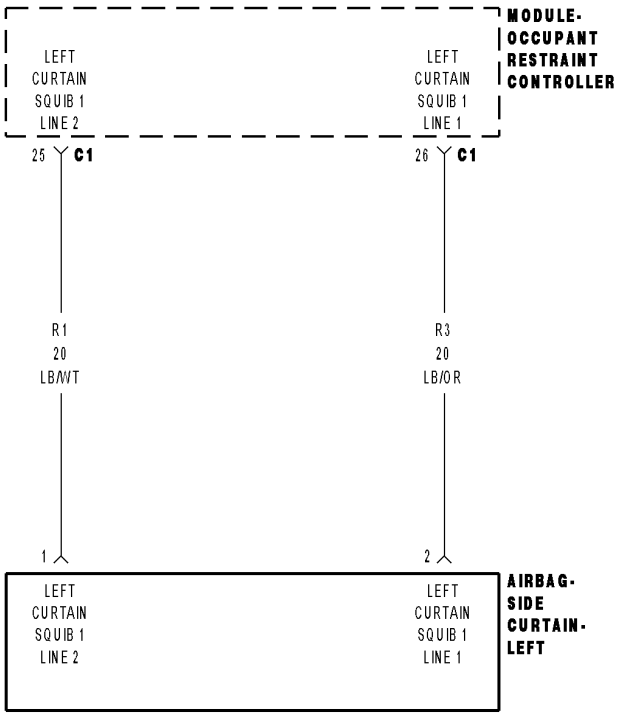

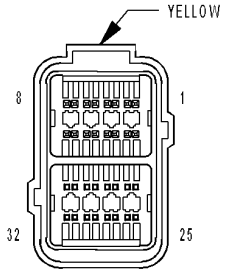

MODULE-
OCCUPANT
RESTRAINT
CONTROLLER C1

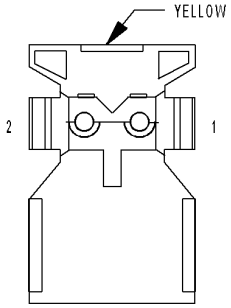

AIRBAG-
SIDE CURTAIN-
LEFT

8133a077

For a complete wiring diagram **Refer to Section 8W**.

- **When Monitored:**
  With the ignition on, the Occupant Restraint Controller (ORC) monitors the resistance of the Left Curtain Squib 1 circuits.
- **Set Condition:**
  The ORC has detected an open or high resistance on the Left Curtain Squib 1 circuits.

Possible Causes
(R3) LEFT CURTAIN SQUIB 1 LINE 1 CIRCUIT OPEN
(R1) LEFT CURTAIN SQUIB 1 LINE 2 CIRCUIT OPEN
LEFT SIDE CURTAIN AIRBAG
ORC

Diagnostic Test

1. DETERMINE ACTIVE OR STORED DTC

NOTE: Ensure the battery is fully charged.

NOTE: The scan tool, SRS Airbag Load Tool MRL 8443, and DVOM are required to perform the following test.

NOTE: When reconnecting airbag system components the Ignition must be turned off and the Battery must be disconnected.
Select Active or Stored DTC.

Is the DTC active or stored?

ORC - ACTIVE DTC
Go To 2

ORC - STORED DTC
Go To 6

2. CHECK FOR OPEN SQUIB CIRCUITS IN LEFT SIDE CURTAIN AIRBAG

WARNING: To avoid personal injury or death, turn the ignition off, disconnect the battery and wait two minutes before proceeding.
Disconnect the Left Side Curtain Airbag connector.

WARNING: To avoid personal injury or death, do not place an intact undeployed curtain airbag face down on a hard surface, the airbag will propel into the air if accidentally deployed.

NOTE: Check connectors - Clean and repair as necessary.
Connect the 8443 Load Tool and appropriate Jumper to the Left Side Curtain Airbag connector.

WARNING: To avoid personal injury or death, turn the ignition on, then reconnect the battery.
With the scan tool, read the active ORC DTC's.

Does the scan tool display: B1B1A LEFT SIDE CURTAIN SQUIB 1 CIRCUIT OPEN?

Yes >> Go To 3

No >> Replace the Left Side Curtain Airbag in accordance with the Service Information.
Perform ORC VERIFICATION TEST - VER 1

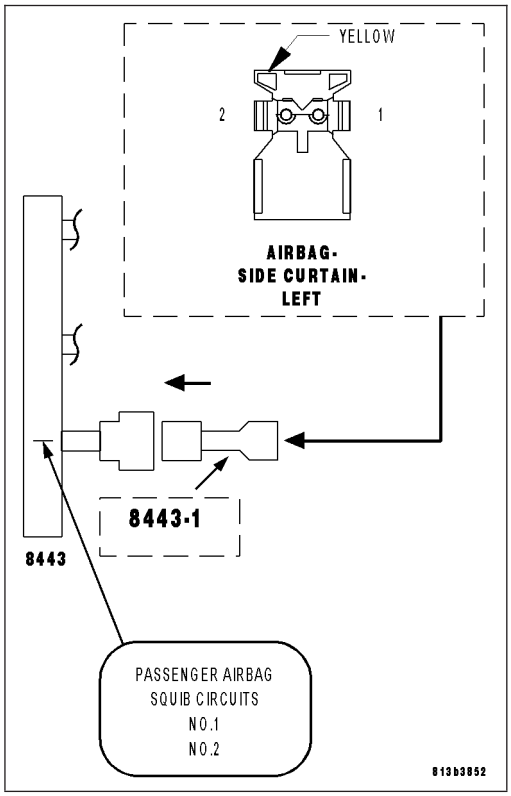

3. CHECK (R3) LEFT CURTAIN SQUIB 1 LINE 1 CIRCUIT FOR AN OPEN

WARNING: To avoid personal injury or death, turn the ignition off, disconnect the battery and wait two minutes before proceeding.
Disconnect the 8443 Load Tool and Jumper from the Left Side Curtain Airbag connector.

Disconnect the ORC connectors.

NOTE: Check connectors - Clean and repair as necessary.
Connect the 8443 Load Tool ORC Adaptor to the ORC C1 connector.

Measure the resistance of the (R3) Left Curtain Squib 1 Line 1 circuit between the Left Side Curtain Airbag connector and the Load Tool ORC Adaptor.

Is the resistance below 1.0 ohm?

Yes >> Go To 4

No >> Repair the (R3) Left Curtain Squib 1 Line 1 circuit for an open. Then, Go To 4

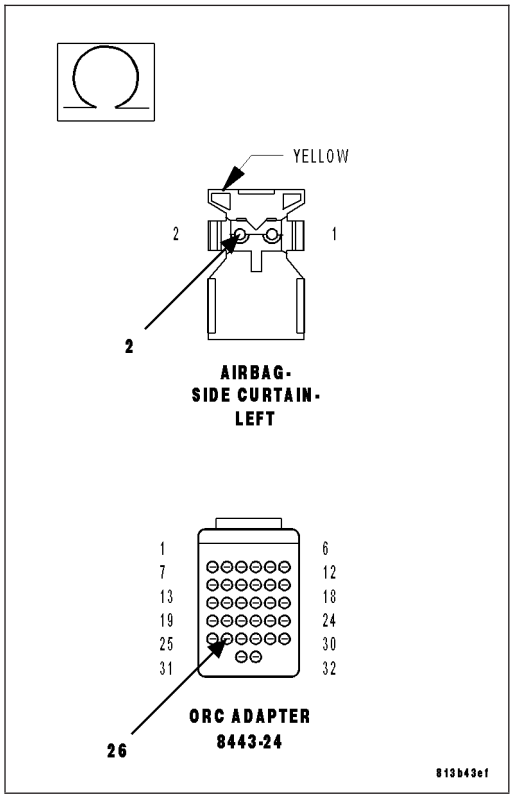

4. CHECK (R1) LEFT CURTAIN SQUIB 1 LINE 2 CIRCUIT FOR AN OPEN

Measure the resistance of the (R1) Left Curtain Squib 1 Line 2 circuit between the Left Side Curtain Airbag connector and the Load Tool ORC Adaptor.

Is the resistance below 1.0 ohm?

Yes >> Go To 5

No >> Repair the (R1) Left Curtain Squib 1 Line 2 circuit for an open.
Perform ORC VERIFICATION TEST - VER 1

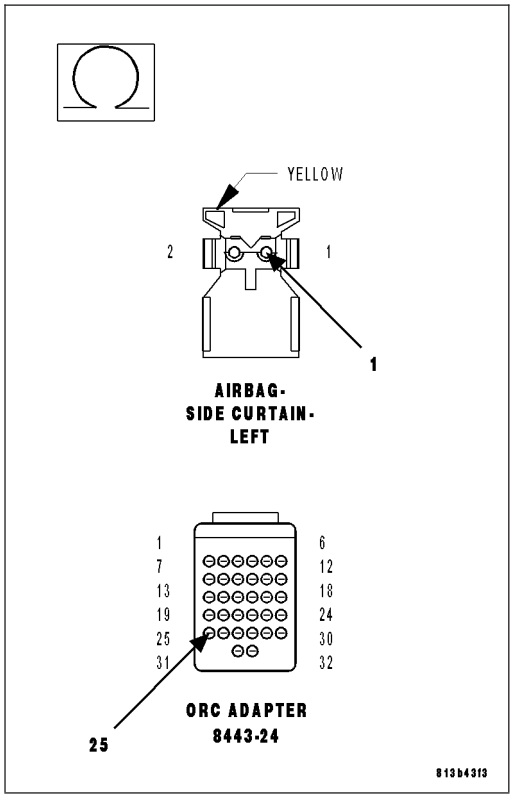

5. REPLACE THE ORC

WARNING: If the Occupant Restraint Controller (ORC) is dropped at any time, it must be replaced. Failure to take the proper precautions can result in accidental airbag deployment and personal injury or death.

NOTE: When reconnecting airbag system components the Ignition must be turned off and the Battery must be disconnected.

Repair

Replace the ORC in accordance with the Service Information.

Perform ORC VERIFICATION TEST - VER 1

6. STORED ORC DTC

With the scan tool, record and erase all DTC's from all Airbag System Modules.

If any ACTIVE codes are present they must be resolved before diagnosing any stored codes.

WARNING: To avoid personal injury or death, turn the ignition off, disconnect the battery and wait two minutes before proceeding.

Using the wiring diagram/schematic as a guide, inspect the wiring and connectors.

Look for chafed, pierced, pinched, or partially broken wires and broken, bent, pushed out, spread, corroded, or contaminated terminals.

The following additional checks may assist you in identifying a possible intermittent problem.

Reconnect any disconnected components and harness connector.

WARNING: To avoid personal injury or death, turn the ignition on, then reconnect the battery.

With the scan tool monitor active codes as you work through the following steps.

Wiggle the wiring harness and connectors of the related airbag circuit or component.

If codes are related to the Driver Airbag circuits, rotate the steering wheel from stop to stop.

If only stored codes return continue the test until the problem area has been isolated.

In the previous steps you have attempted to recreate the conditions responsible for setting active DTC in question.

Are any ACTIVE DTCs present?

Yes >> Select the appropriate diagnostic procedure from the Table of Contents in this section.

No >> No problem found at this time. Erase all codes before returning vehicle to customer.

B1B1B-LEFT SIDE CURTAIN SQUIB 1 CIRCUIT SHORTED TOGETHER

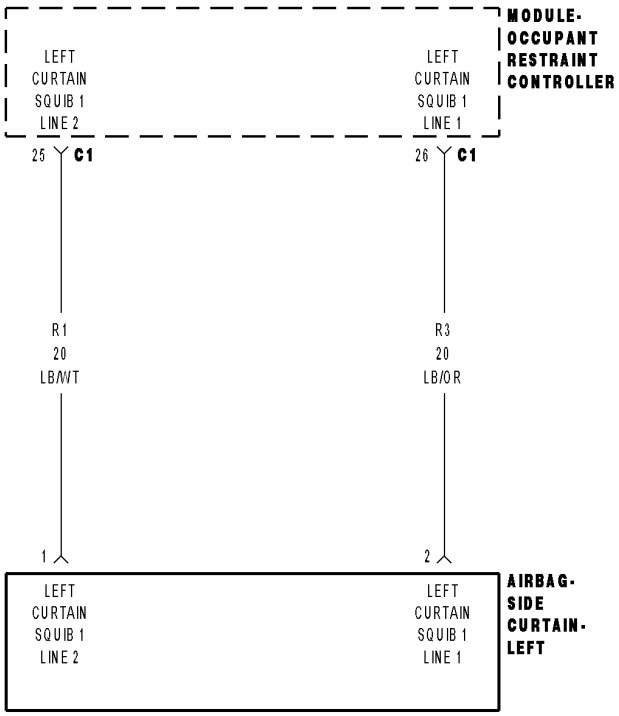

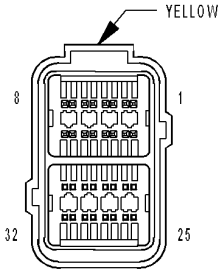

MODULE-
OCCUPANT
RESTRAINT
CONTROLLER C1

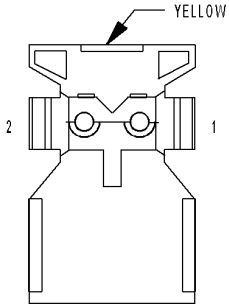

AIRBAG-
SIDE CURTAIN-
LEFT

8133a077

For a complete wiring diagram **Refer to Section 8W**.

- **When Monitored:**
  With the ignition on, the Occupant Restraint Controller (ORC) monitors the resistance of the Left Curtain Squib 1 circuits.
- **Set Condition:**
  The ORC has detected low resistance between the Left Curtain Squib 1 circuits.

Possible Causes
(R3) LEFT CURTAIN SQUIB 1 LINE 1 CIRCUIT SHORTED TO (R1) LEFT CURTAIN SQUIB 1 LINE 2 CIRCUIT
LEFT SIDE CURTAIN AIRBAG
ORC

Diagnostic Test

1. DETERMINE ACTIVE OR STORED DTC

NOTE: Ensure the battery is fully charged.

NOTE: The scan tool, SRS Airbag Load Tool MRL 8443, and DVOM are required to perform the following test.

NOTE: When reconnecting airbag system components the Ignition must be turned off and the Battery must be disconnected.
Select Active or Stored DTC.

Is the DTC active or stored?

ORC - ACTIVE DTC
Go To 2

ORC - STORED DTC
Go To 5

2. CHECK FOR SHORTED SQUIB CIRCUITS IN LEFT SIDE CURTAIN AIRBAG

WARNING: To avoid personal injury or death, turn the ignition off, disconnect the battery and wait two minutes before proceeding.
Disconnect the Left Side Curtain Airbag connector.

WARNING: To avoid personal injury or death, do not place an intact undeployed curtain airbag face down on a hard surface, the airbag will propel into the air if accidentally deployed.

NOTE: Check connectors - Clean and repair as necessary.
Connect the 8443 Load Tool and appropriate Jumper to the Left Side Curtain Airbag connector.

WARNING: To avoid personal injury or death, turn the ignition on, then reconnect the battery.
With the scan tool, read the active ORC DTC's.

Does the scan tool display: B1B1B LEFT SIDE CURTAIN SQUIB 1 CIRCUIT SHORTED TOGETHER?

Yes >> Go To 3

No >> Replace the Left Side Curtain Airbag in accordance with the Service Information.
Perform ORC VERIFICATION TEST - VER 1

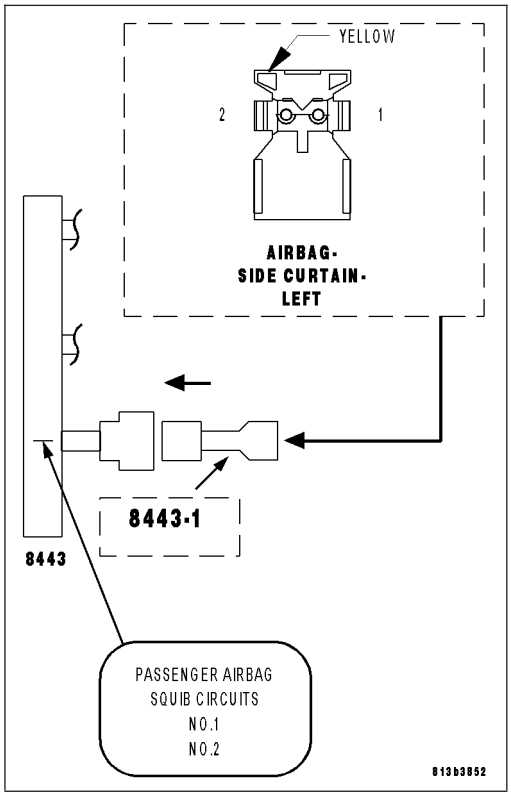

3. CHECK (R3) LEFT CURTAIN SQUIB 1 LINE 1 CIRCUIT FOR A SHORT TO (R1) LEFT CURTAIN SQUIB 1 LINE 2 CIRCUIT

WARNING: To avoid personal injury or death, turn the ignition off, disconnect the battery and wait two minutes before proceeding.

Disconnect the 8443 Load Tool and Jumper from the Left Side Curtain Airbag connector.

Disconnect the ORC connectors.

NOTE: Check connectors - Clean and repair as necessary.

Connect the 8443 Load Tool ORC Adaptor to the ORC C1 connector.

Measure the resistance between the (R3) Left Curtain Squib 1 Line 1 circuit and the (R1) Left Curtain Squib 1 Line 2 circuit at the Left Side Curtain Airbag connector.

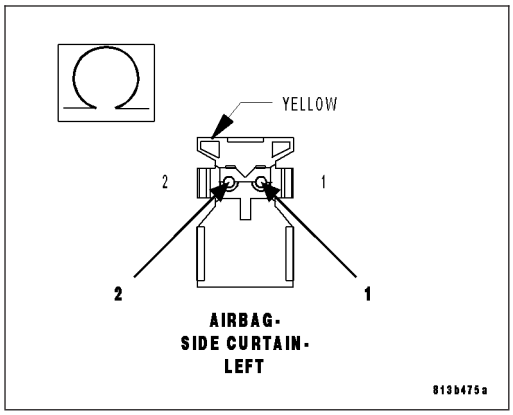

Is the resistance below 10K ohms?

Yes >> Repair the (R3) Left Curtain Squib 1 Line 1 circuit for a short to the (R1) Left Curtain Squib 1 Line 2 circuit.
Perform ORC VERIFICATION TEST - VER 1

No >> Go To 4

4. REPLACE THE ORC

WARNING: If the Occupant Restraint Controller (ORC) is dropped at any time, it must be replaced. Failure to take the proper precautions can result in accidental airbag deployment and personal injury or death.

NOTE: When reconnecting airbag system components the Ignition must be turned off and the Battery must be disconnected.

Repair

Replace the ORC in accordance with the Service Information.
Perform ORC VERIFICATION TEST - VER 1

5. STORED ORC DTC

With the scan tool, record and erase all DTC's from all Airbag System Modules.

If any ACTIVE codes are present they must be resolved before diagnosing any stored codes.

WARNING: To avoid personal injury or death, turn the ignition off, disconnect the battery and wait two minutes before proceeding.

Using the wiring diagram/schematic as a guide, inspect the wiring and connectors.

Look for chafed, pierced, pinched, or partially broken wires and broken, bent, pushed out, spread, corroded, or contaminated terminals.

The following additional checks may assist you in identifying a possible intermittent problem.

Reconnect any disconnected components and harness connector.

WARNING: To avoid personal injury or death, turn the ignition on, then reconnect the battery.

With the scan tool monitor active codes as you work through the following steps.

Wiggle the wiring harness and connectors of the related airbag circuit or component.

If codes are related to the Driver Airbag circuits, rotate the steering wheel from stop to stop.

If only stored codes return continue the test until the problem area has been isolated.

In the previous steps you have attempted to recreate the conditions responsible for setting active DTC in question.

Are any ACTIVE DTC's present?

Yes >> Select the appropriate diagnostic procedure from the Table of Contents in this section.

No >> No problem found at this time. Erase all codes before returning vehicle to customer.

B1B20-RIGHT SIDE CURTAIN SQUIB 1 CIRCUIT LOW

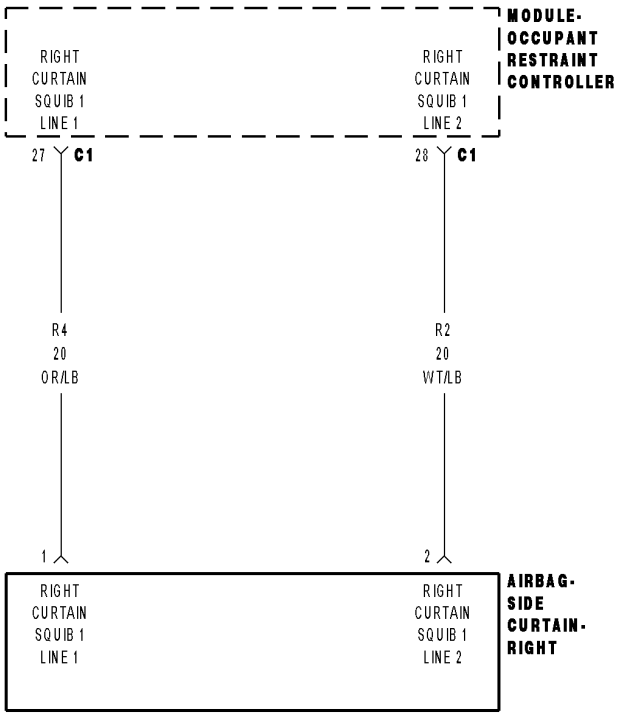

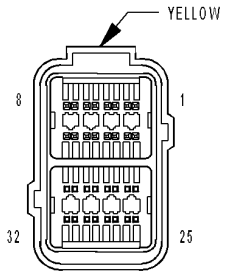

MODULE-
OCCUPANT
RESTRAINT
CONTROLLER C1

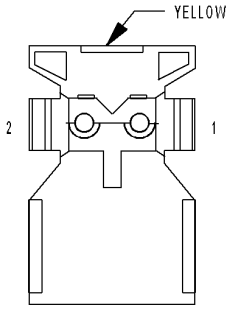

AIRBAG-
SIDE CURTAIN-
RIGHT

8133a0ab

For a complete wiring diagram **Refer to Section 8W**.

- **When Monitored:**
  With the ignition on, the Occupant Restraint Controller (ORC) monitors the resistance of the Right Curtain Squib 1 circuits.
- **Set Condition:**
  The ORC has detected low resistance on the Right Curtain Squib 1 circuits.

Possible Causes
(R4) RIGHT CURTAIN SQUIB 1 LINE 1 CIRCUIT OR (R2) RIGHT CURTAIN SQUIB 1 LINE 2 CIRCUIT SHORTED TO GROUND
RIGHT SIDE CURTAIN AIRBAG
ORC

Diagnostic Test

1. DETERMINE ACTIVE OR STORED DTC

NOTE: Ensure the battery is fully charged.

NOTE: The scan tool, SRS Airbag Load Tool MRL 8443, and DVOM are required to perform the following test.

NOTE: When reconnecting airbag system components the Ignition must be turned off and the Battery must be disconnected.
Select Active or Stored DTC.

Is the DTC active or stored?

ORC - ACTIVE DTC
Go To 2

ORC - STORED DTC
Go To 5

2. CHECK FOR SHORTED SQUIB CIRCUITS IN RIGHT SIDE CURTAIN AIRBAG

WARNING: To avoid personal injury or death, turn the ignition off, disconnect the battery and wait two minutes before proceeding.
Disconnect the Right Side Curtain Airbag connector.

WARNING: To avoid personal injury or death, do not place an intact undeployed curtain airbag face down on a hard surface, the airbag will propel into the air if accidentally deployed.

NOTE: Check connectors - Clean and repair as necessary.
Connect the 8443 Load Tool and appropriate Jumper to the Right Side Curtain Airbag connector.

WARNING: To avoid personal injury or death, turn the ignition on, then reconnect the battery.
With the scan tool, read the active ORC DTC's.

Does the scan tool display: B1B20 RIGHT SIDE CURTAIN SQUIB 1 CIRCUIT LOW?

Yes >> Go To 3

No >> Replace the Right Side Curtain Airbag in accordance with the Service Information.
Perform ORC VERIFICATION TEST - VER 1

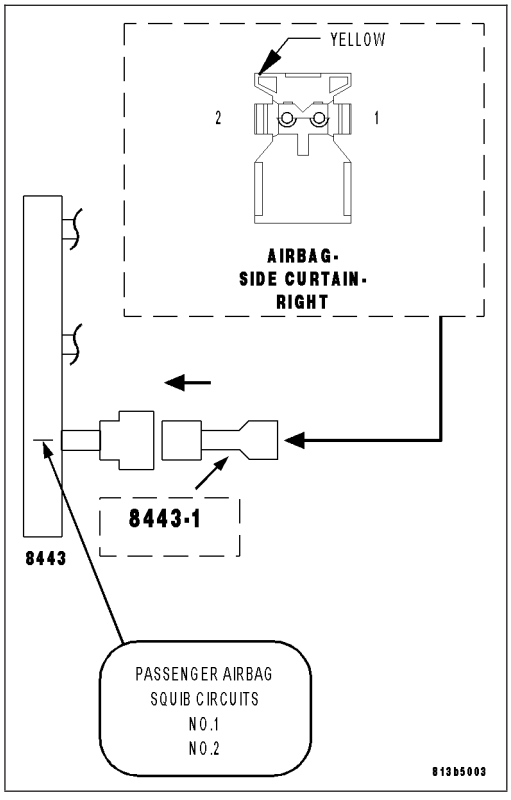

3. CHECK (R4) RIGHT CURTAIN SQUIB 1 LINE 1 CIRCUIT AND (R2) RIGHT CURTAIN SQUIB 1 LINE 2 CIRCUIT FOR A SHORT TO GROUND

WARNING: To avoid personal injury or death, turn the ignition off, disconnect the battery and wait two minutes before proceeding.
Disconnect the 8443 Load Tool and Jumper from the Right Side Curtain Airbag connector.

Disconnect the ORC connectors.

NOTE: Check connectors - Clean and repair as necessary.
Connect the 8443 Load Tool ORC Adaptor to the ORC C1 connector.

Measure the resistance of the (R4) Right Curtain Squib 1 Line 1 circuit between ground and the Right Side Curtain Airbag connector.

Measure the resistance of the (R2) Right Curtain Squib 1 Line 2 circuit between ground and the Right Side Curtain Airbag connector.

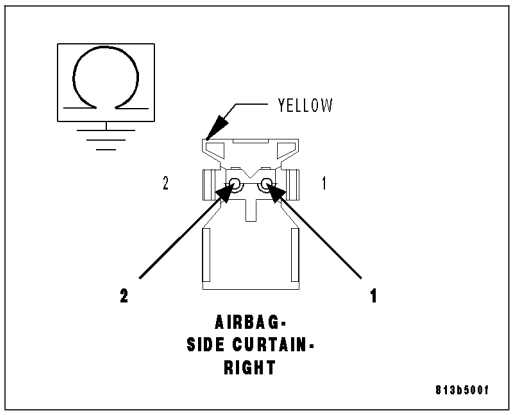

Is the resistance below 10K ohms on either circuit?

Yes >> Repair the Right Curtain Squib 1 circuits with a resistance below 10K ohms for a short to ground.
Perform ORC VERIFICATION TEST - VER 1

No >> Go to 4

4. REPLACE THE ORC

WARNING: If the Occupant Restraint Controller (ORC) is dropped at any time, it must be replaced. Failure to take the proper precautions can result in accidental airbag deployment and personal injury or death.

NOTE: When reconnecting airbag system components the Ignition must be turned off and the Battery must be disconnected.

Repair

Replace the ORC in accordance with the Service Information.
Perform ORC VERIFICATION TEST - VER 1

5. STORED ORC DTC

With the scan tool, record and erase all DTC's from all Airbag System Modules.

If any ACTIVE codes are present they must be resolved before diagnosing any stored codes.

WARNING: To avoid personal injury or death, turn the ignition off, disconnect the battery and wait two minutes before proceeding.
Using the wiring diagram/schematic as a guide, inspect the wiring and connectors.

Look for chafed, pierced, pinched, or partially broken wires and broken, bent, pushed out, spread, corroded, or contaminated terminals.

The following additional checks may assist you in identifying a possible intermittent problem.

Reconnect any disconnected components and harness connector.

WARNING: To avoid personal injury or death, turn the ignition on, then reconnect the battery.
With the scan tool monitor active codes as you work through the following steps.

Wiggle the wiring harness and connectors of the related airbag circuit or component.

If codes are related to the Driver Airbag circuits, rotate the steering wheel from stop to stop.

If only stored codes return continue the test until the problem area has been isolated.

In the previous steps you have attempted to recreate the conditions responsible for setting active DTC in question.

Are any ACTIVE DTC's present?

Yes >> Select the appropriate diagnostic procedure from the Table of Contents in this section.

No >> No problem found at this time. Erase all codes before returning vehicle to customer.

B1B21-RIGHT SIDE CURTAIN SQUIB 1 CIRCUIT HIGH

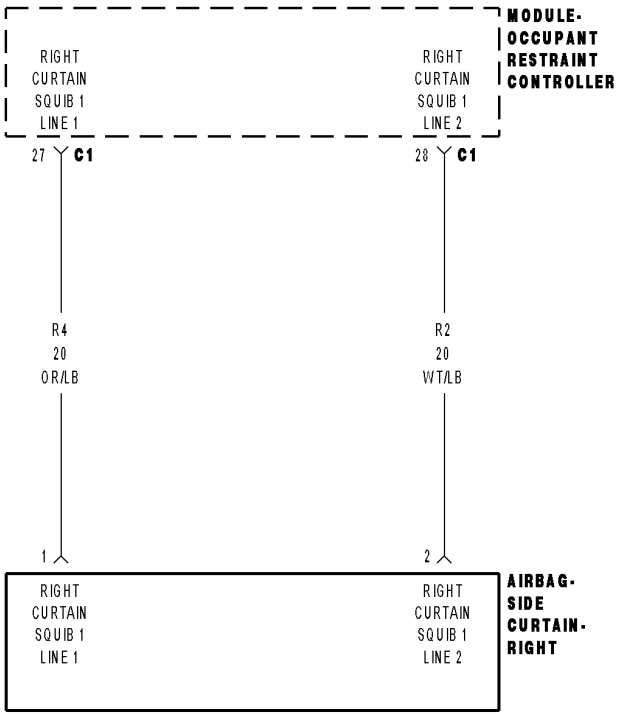

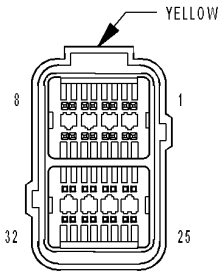

MODULE-
OCCUPANT
RESTRAINT
CONTROLLER C1

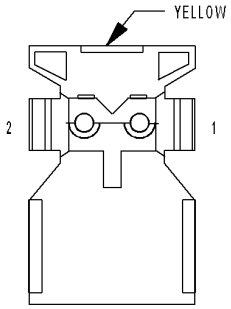

AIRBAG-
SIDE CURTAIN-
RIGHT

8133a0ab

For a complete wiring diagram **Refer to Section 8W**.

- **When Monitored:**
  With the ignition on, the Occupant Restraint Controller (ORC) monitors the voltage on the Right Curtain Squib 1 circuits.
- **Set Condition:**
  When the ORC detects voltage on the Right Curtain Squib 1 circuits.

Possible Causes
(R4) RIGHT CURTAIN SQUIB 1 LINE 1 CIRCUIT OR (R2) RIGHT CURTAIN SQUIB 1 LINE 2 CIRCUIT SHORTED TO BATTERY
RIGHT SIDE CURTAIN AIRBAG
ORC

Diagnostic Test

1. DETERMINE ACTIVE OR STORED DTC

NOTE: Ensure the battery is fully charged.

NOTE: The scan tool, SRS Airbag Load Tool MRL 8443, and DVOM are required to perform the following test.

NOTE: When reconnecting airbag system components the Ignition must be turned off and the Battery must be disconnected.
Select Active or Stored DTC.

Is the DTC active or stored?

ORC - ACTIVE DTC
Go To 2

ORC - STORED DTC
Go To 5

2. CHECK FOR SHORTED SQUIB CIRCUITS IN RIGHT SIDE CURTAIN AIRBAG

WARNING: To avoid personal injury or death, turn the ignition off, disconnect the battery and wait two minutes before proceeding.
Disconnect the Right Side Curtain Airbag connector.

WARNING: To avoid personal injury or death, do not place an intact uncoupled curtain airbag face down on a hard surface, the airbag will propel into the air if accidentally deployed.

NOTE: Check connectors - Clean and repair as necessary.
Connect the 8443 Load Tool and appropriate Jumper to the Right Side Curtain Airbag connector.

WARNING: To avoid personal injury or death, turn the ignition on, then reconnect the battery.
With the scan tool, read the active ORC DTC's.

Does the scan tool display: B1B21 RIGHT SIDE CURTAIN SQUIB 1 CIRCUIT HIGH?

Yes >> Go To 3

No >> Replace the Right Side Curtain Airbag in accordance with the Service Information.
Perform ORC VERIFICATION TEST - VER 1

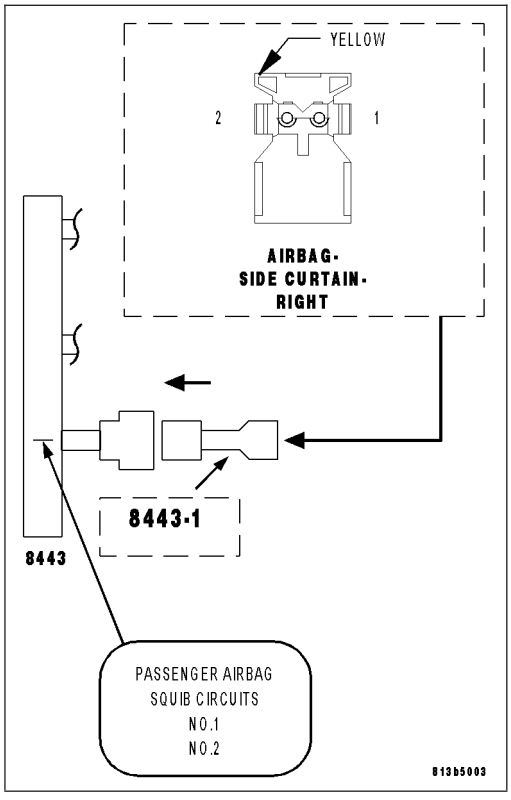

3. CHECK (R4) RIGHT CURTAIN SQUIB 1 LINE 1 CIRCUIT AND (R2) RIGHT CURTAIN SQUIB 1 LINE 2 CIRCUIT FOR A SHORT TO BATTERY

WARNING: To avoid personal injury or death, turn the ignition off, disconnect the battery and wait two minutes before proceeding.
Disconnect the 8443 Load Tool and Jumper from the Right Side Curtain Airbag connector.

Disconnect the ORC connectors.

NOTE: Check connectors - Clean and repair as necessary.
Connect the 8443 Load Tool ORC Adaptor to the ORC C1 connector.

Measure the voltage of the (R4) Right Curtain Squib 1 Line 1 circuit between the Right Side Curtain Airbag connector and ground.

Measure the voltage of the (R2) Right Curtain Squib 1 Line 2 circuit between the Right Side Curtain Airbag connector and ground.

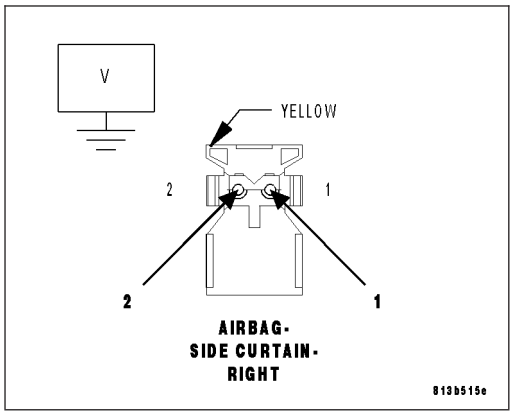

Is there any voltage present on either circuit?

Yes >> Repair the Right Curtain Squib 1 circuits with voltage present for a short to battery.
Perform ORC VERIFICATION TEST - VER 1

No >> Go to 4

4. REPLACE THE ORC

WARNING: To avoid personal injury or death, turn the ignition off, disconnect the battery and wait two minutes before proceeding.

WARNING: If the Occupant Restraint Controller (ORC) is dropped at any time, it must be replaced. Failure to take the proper precautions can result in accidental airbag deployment and personal injury or death.

NOTE: When reconnecting airbag system components the Ignition must be turned off and the Battery must be disconnected.

Repair

Replace the ORC in accordance with the Service Information.
Perform ORC VERIFICATION TEST - VER 1

5. STORED ORC DTC

With the scan tool, record and erase all DTC's from all Airbag System Modules.

If any ACTIVE codes are present they must be resolved before diagnosing any stored codes.

WARNING: To avoid personal injury or death, turn the ignition off, disconnect the battery and wait two minutes before proceeding.
Using the wiring diagram/schematic as a guide, inspect the wiring and connectors.

Look for chafed, pierced, pinched, or partially broken wires and broken, bent, pushed out, spread, corroded, or contaminated terminals.

The following additional checks may assist you in identifying a possible intermittent problem.

Reconnect any disconnected components and harness connector.

WARNING: To avoid personal injury or death, turn the ignition on, then reconnect the battery.
With the scan tool monitor active codes as you work through the following steps.

Wiggle the wiring harness and connectors of the related airbag circuit or component.

If codes are related to the Driver Airbag circuits, rotate the steering wheel from stop to stop.

If only stored codes return continue the test until the problem area has been isolated.

In the previous steps you have attempted to recreate the conditions responsible for setting active DTC in question.

Are any ACTIVE DTCs present?

Yes >> Select the appropriate diagnostic procedure from the Table of Contents in this section.

No >> No problem found at this time. Erase all codes before returning vehicle to customer

B1B22-RIGHT SIDE CURTAIN SQUIB 1 CIRCUIT OPEN

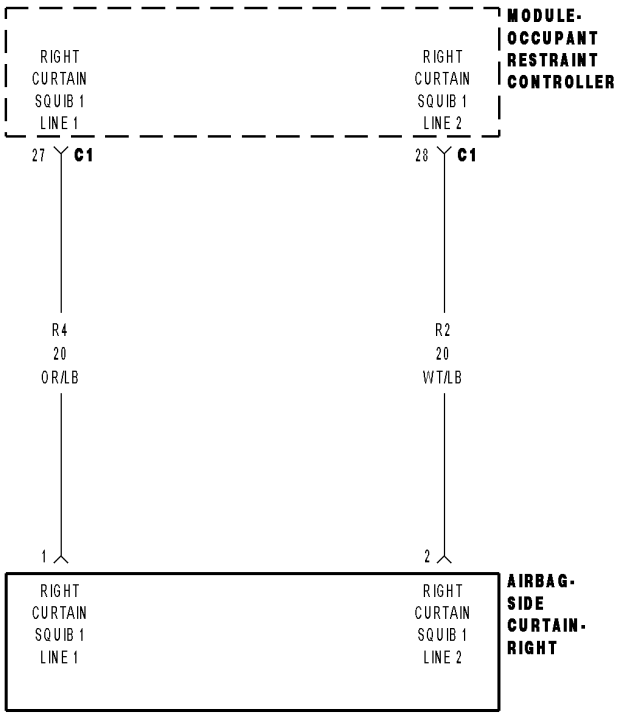

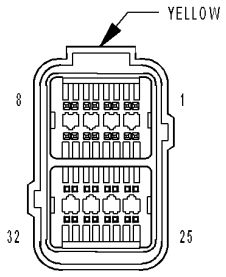

MODULE-
OCCUPANT
RESTRAINT
CONTROLLER C1

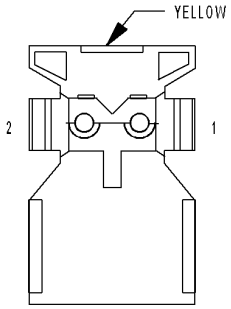

AIRBAG-
SIDE CURTAIN-
RIGHT

8133a0ab

For a complete wiring diagram **Refer to Section 8W**.

- **When Monitored:**
  With the ignition on, the Occupant Restraint Controller (ORC) monitors the resistance of the Right Curtain Squib 1 circuits.
- **Set Condition:**
  When the ORC has detects an open or high resistance on the Right Curtain Squib 1 circuits.

Possible Causes
(R4) RIGHT CURTAIN SQUIB 1 LINE 1 CIRCUIT OPEN
(R2) RIGHT CURTAIN SQUIB 1 LINE 2 CIRCUIT OPEN
RIGHT SIDE CURTAIN AIRBAG
ORC

Diagnostic Test

1. DETERMINE ACTIVE OR STORED DTC

NOTE: Ensure the battery is fully charged.

NOTE: The scan tool, SRS Airbag Load Tool MRL 8443, and DVOM are required to perform the following test.

NOTE: When reconnecting airbag system components the Ignition must be turned off and the Battery must be disconnected.
Select Active or Stored DTC.

Is the DTC active or stored?

ORC - ACTIVE DTC
Go To 2

ORC - STORED DTC
Go To 6

2. CHECK FOR OPEN SQUIB CIRCUITS IN RIGHT SIDE CURTAIN AIRBAG

WARNING: To avoid personal injury or death, turn the ignition off, disconnect the battery and wait two minutes before proceeding.
Disconnect the Right Side Curtain Airbag connector.

WARNING: To avoid personal injury or death, do not place an intact uncoupled curtain airbag face down on a hard surface, the airbag will propel into the air if accidentally deployed.

NOTE: Check connectors - Clean and repair as necessary.
Connect the 8443 Load Tool and appropriate Jumper to the Right Side Curtain Airbag connector.

WARNING: To avoid personal injury or death, turn the ignition on, then reconnect the battery.
With the scan tool, read the active ORC DTC's.

Does the scan tool display: B1B22 RIGHT SIDE CURTAIN SQUIB 1 CIRCUIT OPEN?

Yes >> Go to 3

No >> Replace the Right Side Curtain Airbag in accordance with the Service Information.
Perform ORC VERIFICATION TEST - VER 1

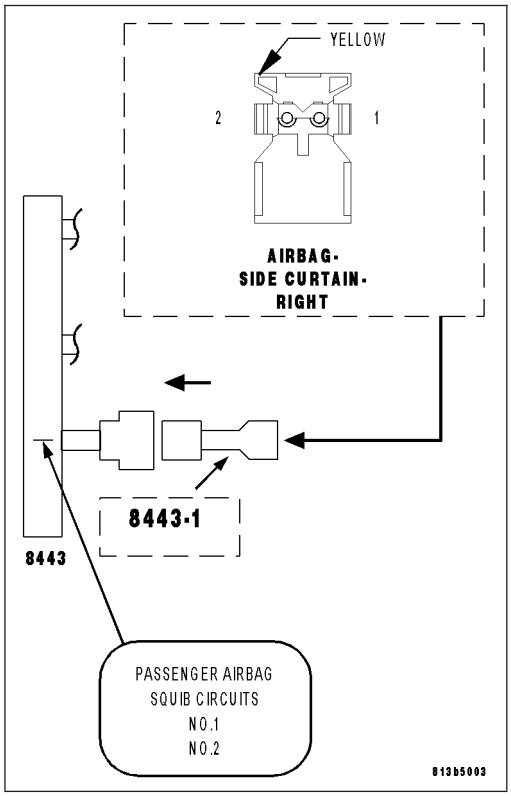

3. CHECK (R4) RIGHT CURTAIN SQUIB 1 LINE 1 CIRCUIT FOR AN OPEN

WARNING: To avoid personal injury or death, turn the ignition off, disconnect the battery and wait two minutes before proceeding.
Disconnect the 8443 Load Tool and Jumper from the Right Side Curtain Airbag connector.

Disconnect the ORC connectors.

NOTE: Check connectors - Clean and repair as necessary.
Connect the 8443 Load Tool ORC Adaptor to the ORC C1 connector.

Measure the resistance of the (R4) Right Curtain Squib 1 Line 1 circuit between the Right Side Curtain Airbag connector and the 8443 ORC Adaptor.

Is the resistance below 1.0 ohm?

Yes >> Go To 4

No >> Repair the (R4) Right Curtain Squib 1 Line 1 circuit for an open. Then, Go To 4

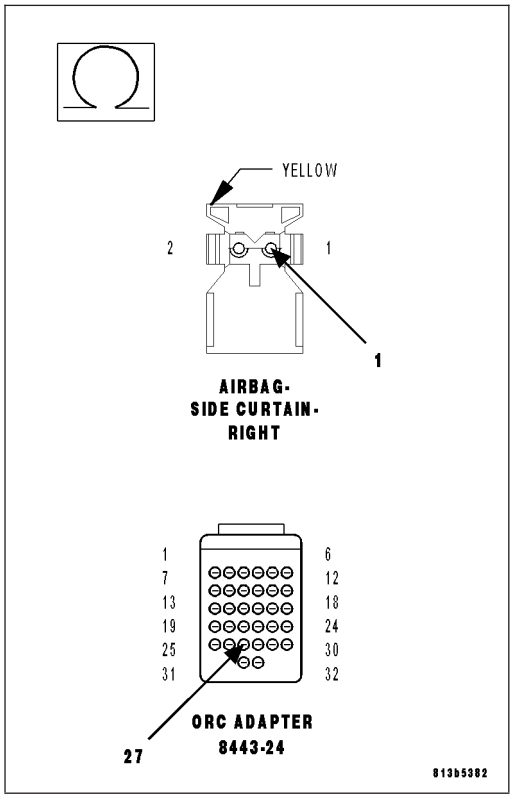

4. CHECK (R2) RIGHT CURTAIN SQUIB 1 LINE 2 CIRCUIT FOR AN OPEN

Measure the resistance of the (R2) Right Curtain Squib 1 Line 2 circuit between the Right Side Curtain Airbag connector and the 8443 ORC Adaptor.

Is the resistance below 1.0 ohm?

Yes >> Go To 5

No >> Repair the (R2) Right Curtain Squib 1 Line 2 circuit for an open.
Perform ORC VERIFICATION TEST - VER 1

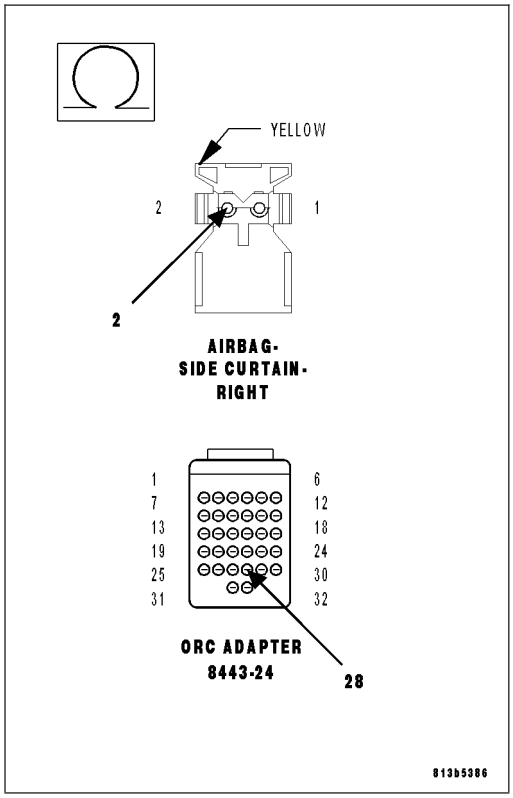

5. REPLACE THE ORC

WARNING: If the Occupant Restraint Controller (ORC) is dropped at any time, it must be replaced. Failure to take the proper precautions can result in accidental airbag deployment and personal injury or death.

NOTE: When reconnecting airbag system components the Ignition must be turned off and the Battery must be disconnected.

Repair

Replace the ORC in accordance with the Service Information.

Perform ORC VERIFICATION TEST - VER 1

6. STORED ORC DTC

With the scan tool, record and erase all DTC's from all Airbag System Modules.

If any ACTIVE codes are present they must be resolved before diagnosing any stored codes.

WARNING: To avoid personal injury or death, turn the ignition off, disconnect the battery and wait two minutes before proceeding.

Using the wiring diagram/schematic as a guide, inspect the wiring and connectors.

Look for chafed, pierced, pinched, or partially broken wires and broken, bent, pushed out, spread, corroded, or contaminated terminals.

The following additional checks may assist you in identifying a possible intermittent problem.

Reconnect any disconnected components and harness connector.

WARNING: To avoid personal injury or death, turn the ignition on, then reconnect the battery.

With the scan tool monitor active codes as you work through the following steps.

Wiggle the wiring harness and connectors of the related airbag circuit or component.

If codes are related to the Driver Airbag circuits, rotate the steering wheel from stop to stop.

If only stored codes return continue the test until the problem area has been isolated.

In the previous steps you have attempted to recreate the conditions responsible for setting active DTC in question.

Are any ACTIVE DTCs present?

Yes >> Select the appropriate diagnostic procedure from the Table of Contents in this section.

No >> No problem found at this time. Erase all codes before returning vehicle to customer.

B1B23-RIGHT SIDE CURTAIN SQUIB 1 CIRCUIT SHORTED TOGETHER

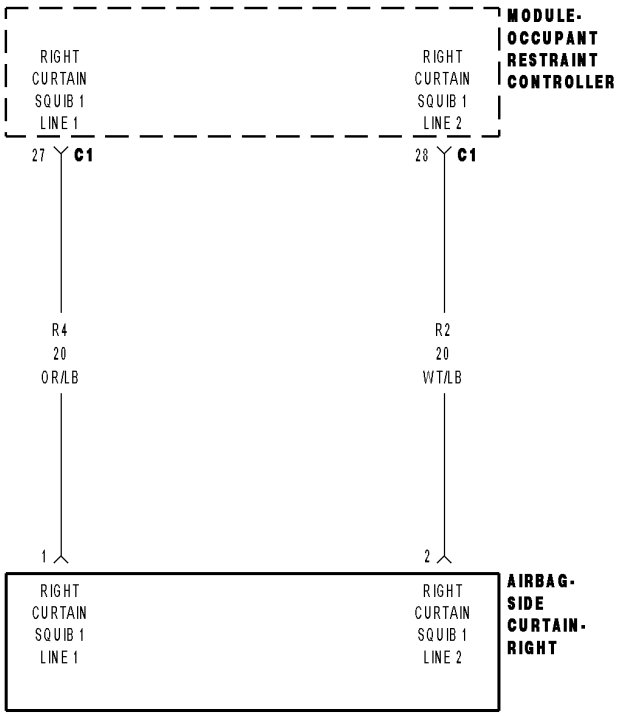

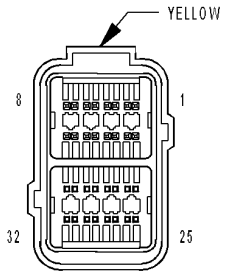

MODULE-
OCCUPANT
RESTRAINT
CONTROLLER C1

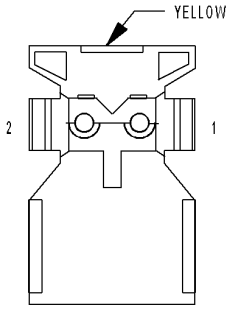

AIRBAG-
SIDE CURTAIN-
RIGHT

8133a0ab

For a complete wiring diagram **Refer to Section 8W**.

- **When Monitored:**
  With the ignition on, the Occupant Restraint Controller (ORC) monitors the resistance of the Right Curtain Squib 1 circuits.
- **Set Condition:**
  The ORC has detected low resistance between the Right Curtain Squib 1 circuits.

Possible Causes
(R4) RIGHT CURTAIN SQUIB 1 LINE 1 CIRCUIT SHORTED TO (R2) RIGHT CURTAIN SQUIB 1 LINE 2 CIRCUIT
RIGHT SIDE CURTAIN AIRBAG
ORC

Diagnostic Test

1. DETERMINE ACTIVE OR STORED DTC

NOTE: Ensure the battery is fully charged.

NOTE: The scan tool, SRS Airbag Load Tool MRL 8443, and DVOM are required to perform the following test.

NOTE: When reconnecting airbag system components the Ignition must be turned off and the Battery must be disconnected.
Select Active or Stored DTC.

Is the DTC active or stored?

ORC - ACTIVE DTC
Go To 2

ORC - STORED DTC
Go To 5

2. CHECK FOR SHORTED SQUIB CIRCUITS IN RIGHT SIDE CURTAIN AIRBAG

WARNING: To avoid personal injury or death, turn the ignition off, disconnect the battery and wait two minutes before proceeding.
Disconnect the Right Side Curtain Airbag connector.

WARNING: To avoid personal injury or death, do not place an intact uncoupled curtain airbag face down on a hard surface, the airbag will propel into the air if accidentally deployed.

NOTE: Check connectors - Clean and repair as necessary.
Connect the 8443 Load Tool and appropriate Jumper to the Right Side Curtain Airbag connector.

WARNING: To avoid personal injury or death, turn the ignition on, then reconnect the battery.
With the scan tool, read the active ORC DTC's.

Does the scan tool display: B1B23 RIGHT SIDE CURTAIN SQUIB 1 CIRCUIT SHORTED TOGETHER?

Yes >> Go to 3

No >> Replace the Right Side Curtain Airbag in accordance with the Service Information.
Perform ORC VERIFICATION TEST - VER 1

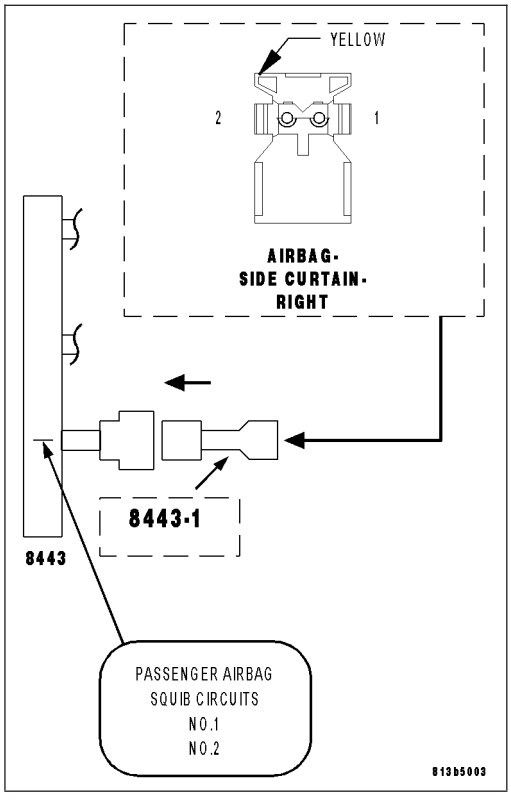

3. CHECK (R4) RIGHT CURTAIN SQUIB 1 LINE 1 CIRCUIT FOR A SHORT TO (R2) RIGHT CURTAIN SQUIB 1 LINE 2 CIRCUIT

WARNING: To avoid personal injury or death, turn the ignition off, disconnect the battery and wait two minutes before proceeding.
Disconnect the 8443 Load Tool and Jumper from the Right Side Curtain Airbag connector.

Disconnect the ORC connectors.

NOTE: Check connectors - Clean and repair as necessary.
Connect the 8443 Load Tool ORC Adaptor to the ORC C1 connector.

Measure the resistance between the (R4) Right Curtain Squib 1 Line 1 circuit and the (R2) Right Curtain Squib 1 Line 2 circuit at the Right Side Curtain Airbag connector.

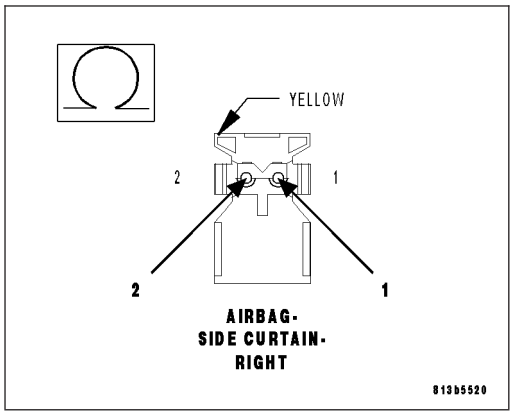

Is the resistance below 10K ohms?

Yes >> Repair the (R4) Right Curtain Squib 1 Line 1 circuit for a short to the (R2) Right Curtain Squib 1 Line 2 circuit.
Perform ORC VERIFICATION TEST - VER 1

No >> Go to 4

4. REPLACE THE ORC

WARNING: If the Occupant Restraint Controller (ORC) is dropped at any time, it must be replaced. Failure to take the proper precautions can result in accidental airbag deployment and personal injury or death.

NOTE: When reconnecting airbag system components the Ignition must be turned off and the Battery must be disconnected.

Repair

Replace the ORC in accordance with the Service Information.
Perform ORC VERIFICATION TEST - VER 1

5. STORED ORC DTC

With the scan tool, record and erase all DTC's from all Airbag System Modules.

If any ACTIVE codes are present they must be resolved before diagnosing any stored codes.

WARNING: To avoid personal injury or death, turn the ignition off, disconnect the battery and wait two minutes before proceeding.
Using the wiring diagram/schematic as a guide, inspect the wiring and connectors.

Look for chafed, pierced, pinched, or partially broken wires and broken, bent, pushed out, spread, corroded, or contaminated terminals.

The following additional checks may assist you in identifying a possible intermittent problem.

Reconnect any disconnected components and harness connector.

WARNING: To avoid personal injury or death, turn the ignition on, then reconnect the battery.
With the scan tool monitor active codes as you work through the following steps.

Wiggle the wiring harness and connectors of the related airbag circuit or component.

If codes are related to the Driver Airbag circuits, rotate the steering wheel from stop to stop.

If only stored codes return continue the test until the problem area has been isolated.

In the previous steps you have attempted to recreate the conditions responsible for setting active DTC in question.

Are any ACTIVE DTC's present?

Yes >> Select the appropriate diagnostic procedure from the Table of Contents in this section.

No >> No problem found at this time. Erase all codes before returning vehicle to customer.

B1B28-1st ROW DRIVER SEAT BELT PRETENSIONER CIRCUIT LOW

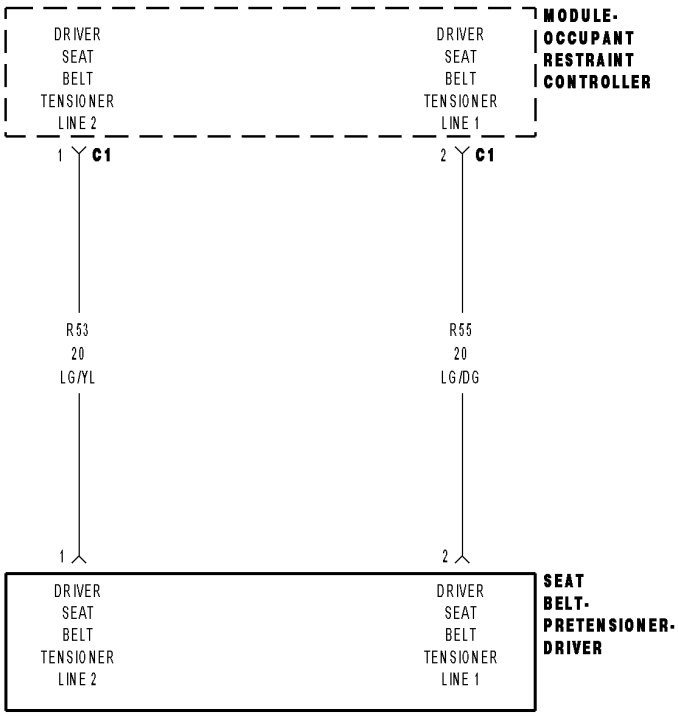

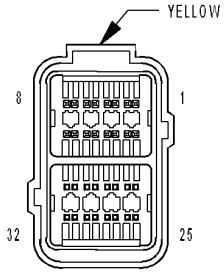

MODULE- OCCUPANT RESTRAINT CONTROLLER C1

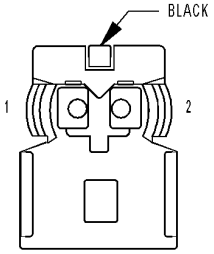

SEAT BELT- PRETENSIONER- DRIVER

8133a0c7

For a complete wiring diagram **Refer to Section 8W**.

- **When Monitored:**
  With the ignition on, the Occupant Restraint Controller (ORC) monitors the resistance of the Driver Seat Belt Tensioner circuits.
- **Set Condition:**
  The ORC has detected low resistance on the Driver Seat Belt Tensioner circuits.

Possible Causes
(R55) DRIVER SEAT BELT TENSIONER LINE 1 CIRCUIT OR (R53) DRIVER SEAT BELT TENSIONER LINE 2 CIRCUIT SHORTED TO GROUND
DRIVER SEAT BELT PRETENSIONER
ORC

Diagnostic Test

1. DETERMINE ACTIVE OR STORED DTC

NOTE: Ensure the battery is fully charged.

NOTE: The scan tool, SRS Airbag Load Tool MRL 8443, and DVOM are required to perform the following test.

NOTE: When reconnecting airbag system components the Ignition must be turned off and the Battery must be disconnected.
Select Active or Stored DTC.

Is the DTC active or stored?

ORC - ACTIVE DTC
Go To 2

ORC - STORED DTC
Go To 5

2. CHECK FOR SHORTED DRIVER SEAT BELT PRETENSIONER

WARNING: To avoid personal injury or death, turn the ignition off, disconnect the battery and wait two minutes before proceeding.
Disconnect the Driver Seat Belt Pretensioner connector.

NOTE: Check connectors - Clean and repair as necessary.
Connect the 8443 Load Tool and appropriate Jumper to the Driver Seat Belt Pretensioner connector.

WARNING: To avoid personal injury or death, turn the ignition on, then reconnect the battery.
With the scan tool, read the active ORC DTC's.

Does the scan tool display: B1B28 1st ROW DRIVER SEAT BELT PRETENSIONER CIRCUIT LOW?

Yes >> Go To 3

No >> Replace the Driver Seat Belt Pretensioner in accordance with the Service Information.
Perform ORC VERIFICATION TEST - VER 1

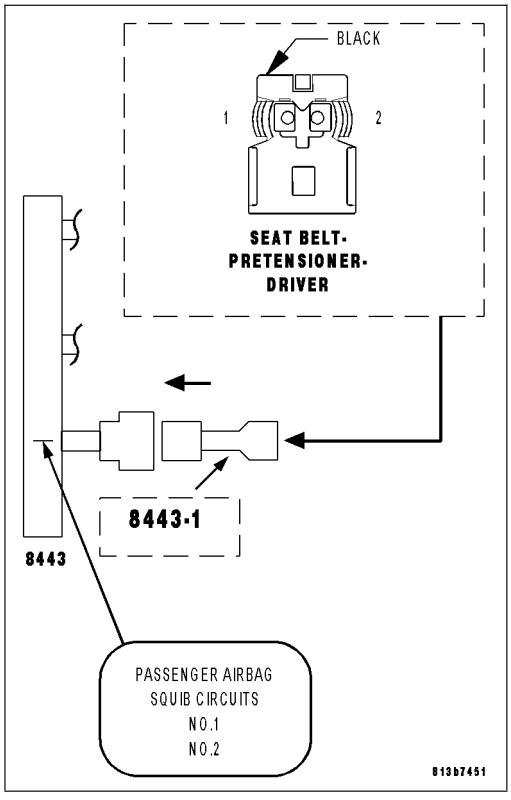

3. CHECK (R55) DRIVER SEAT BELT TENSIONER LINE 1 CIRCUIT AND (R53) DRIVER SEAT BELT TENSIONER LINE 2 CIRCUIT FOR A SHORT TO GROUND

WARNING: To avoid personal injury or death, turn the ignition off, disconnect the battery and wait two minutes before proceeding.
Disconnect the 8443 Load Tool and Jumper from the Driver Seat Belt Pretensioner connector.

Disconnect the ORC connectors.

NOTE: Check connectors - Clean and repair as necessary.
Connect the 8443 Load Tool ORC Adaptor to the ORC C1 connector.

Measure the resistance of the (R55) Driver Seat Belt Tensioner Line 1 circuit between ground and the Driver Seat Belt Pretensioner connector.

Measure the resistance of the (R53) Driver Seat Belt Tensioner Line 2 circuit between ground and the Driver Seat Belt Pretensioner connector.

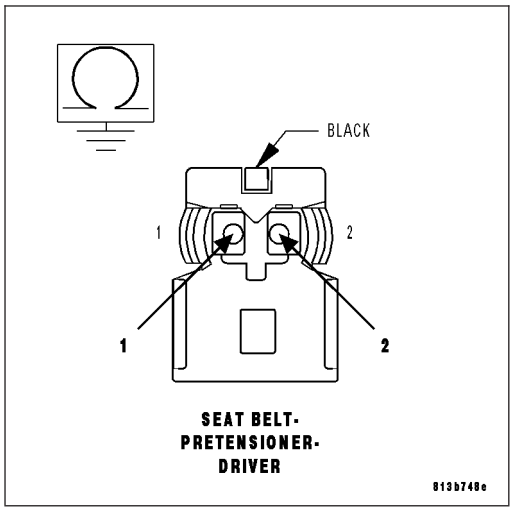

Is the resistance below 10K ohms on either circuit?

Yes >> Repair the Driver Seat Belt Tensioner circuits with a resistance below 10K ohms for a short to ground.
Perform ORC VERIFICATION TEST - VER 1

No >> Go To 4

4. REPLACE THE ORC

WARNING: If the Occupant Restraint Controller (ORC) is dropped at any time, it must be replaced. Failure to take the proper precautions can result in accidental airbag deployment and personal injury or death.

NOTE: When reconnecting airbag system components the Ignition must be turned off and the Battery must be disconnected.

Repair

Replace the ORC in accordance with the Service Information.
Perform ORC VERIFICATION TEST - VER 1

5. STORED ORC DTC

With the scan tool, record and erase all DTC's from all Airbag System Modules.

If any ACTIVE codes are present they must be resolved before diagnosing any stored codes.

WARNING: To avoid personal injury or death, turn the ignition off, disconnect the battery and wait two minutes before proceeding.
Using the wiring diagram/schematic as a guide, inspect the wiring and connectors.

Look for chafed, pierced, pinched, or partially broken wires and broken, bent, pushed out, spread, corroded, or contaminated terminals.

The following additional checks may assist you in identifying a possible intermittent problem.

Reconnect any disconnected components and harness connector.

WARNING: To avoid personal injury or death, turn the ignition on, then reconnect the battery.
With the scan tool monitor active codes as you work through the following steps.

Wiggle the wiring harness and connectors of the related airbag circuit or component.

If codes are related to the Driver Airbag circuits, rotate the steering wheel from stop to stop.

If only stored codes return continue the test until the problem area has been isolated.

In the previous steps you have attempted to recreate the conditions responsible for setting active DTC in question.

Are any ACTIVE DTC's present?

Yes >> Select the appropriate diagnostic procedure from the Table of Contents in this section.

No >> No problem found at this time. Erase all codes before returning vehicle to customer.

B1B29-1ST ROW DRIVER SEAT BELT PRETENSIONER CIRCUIT HIGH

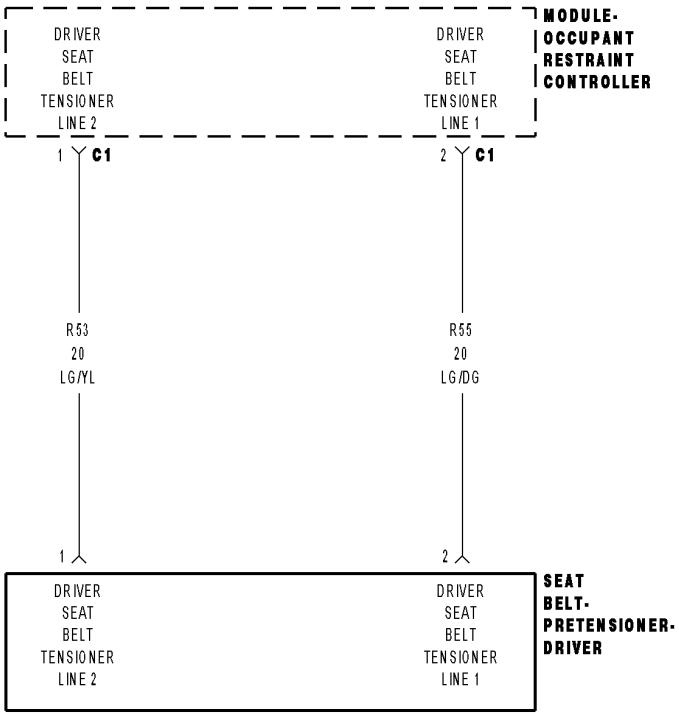

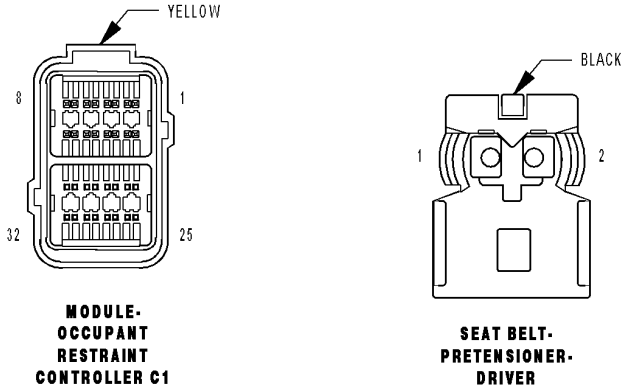

8133a0c7

For a complete wiring diagram **Refer to Section 8W**.

- **When Monitored:**
  With the ignition on, the Occupant Restraint Controller (ORC) monitors the voltage on the Driver Seat Belt Tensioner circuits.
- **Set Condition:**
  The ORC detects voltage on the Driver Seat Belt Tensioner circuits.

Possible Causes
(R55) DRIVER SEAT BELT TENSIONER LINE 1 CIRCUIT OR (R53) DRIVER SEAT BELT TENSIONER LINE 2 CIRCUIT SHORTED TO BATTERY
DRIVER SEAT BELT PRETENSIONER
ORC

Diagnostic Test

1. DETERMINE ACTIVE OR STORED DTC

NOTE: Ensure the battery is fully charged.

NOTE: The scan tool, SRS Airbag Load Tool MRL 8443, and DVOM are required to perform the following test.

NOTE: When reconnecting airbag system components the Ignition must be turned off and the Battery must be disconnected.
Select Active or Stored DTC.

Is the DTC active or stored?

ORC - ACTIVE DTC
Go To 2

ORC - STORED DTC
Go To 5

2. CHECK FOR SHORTED DRIVER SEAT BELT PRETENSIONER

WARNING: To avoid personal injury or death, turn the ignition off, disconnect the battery and wait two minutes before proceeding.
Disconnect the Driver Seat Belt Pretensioner connector.

NOTE: Check connectors - Clean and repair as necessary.
Connect the 8443 Load Tool and appropriate Jumper to the Driver Seat Belt Pretensioner connector.

WARNING: To avoid personal injury or death, turn the ignition on, then reconnect the battery.
With the scan tool, read the active ORC DTC's.

Does the scan tool display: B1B29 1st ROW DRIVER SEAT BELT PRETENSIONER CIRCUIT HIGH?

Yes >> Go To 3

No >> Replace the Driver Seat Belt Pretensioner in accordance with the Service Information.
Perform ORC VERIFICATION TEST - VER 1

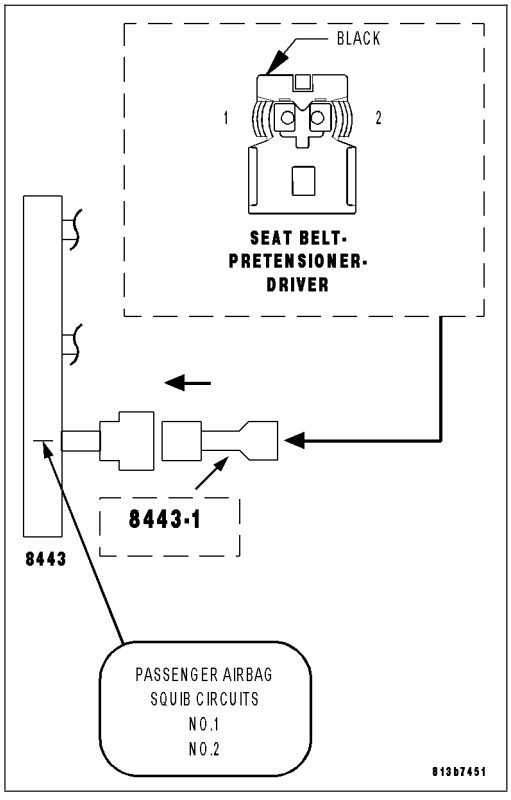

3. CHECK (R55) DRIVER SEAT BELT TENSIONER LINE 1 CIRCUIT AND (R53) DRIVER SEAT BELT TENSIONER LINE 2 CIRCUIT FOR A SHORT TO BATTERY

WARNING: To avoid personal injury or death, turn the ignition off, disconnect the battery and wait two minutes before proceeding.

Disconnect the 8443 Load Tool and Jumper from the Driver Seat Belt Pretensioner connector.

Disconnect the ORC connectors.

NOTE: Check connectors - Clean and repair as necessary.

Connect the 8443 Load Tool ORC Adaptor to the ORC C1 connector.

Measure the voltage of the (R55) Driver Seat Belt Tensioner Line 1 circuit between the Driver Seat Belt Pretensioner connector and ground.

Measure the voltage of the (R53) Driver Seat Belt Tensioner Line 2 circuit between the Driver Seat Belt Pretensioner connector and ground.

Is there any voltage present on either circuit?

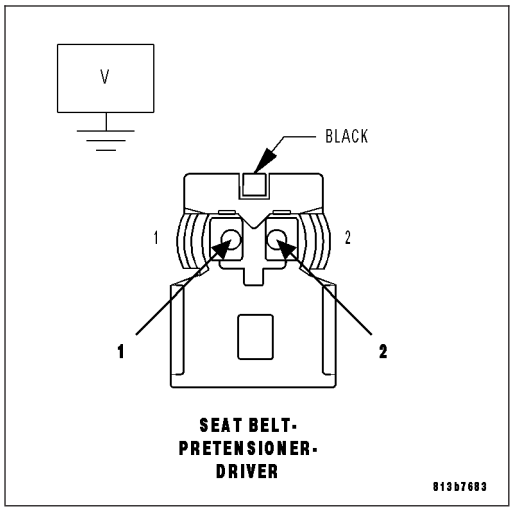

Yes >> Repair the Driver Seat Belt Tensioner circuits with voltage present for a short to battery.
Perform ORC VERIFICATION TEST - VER 1

No >> Go To 4

4. REPLACE THE ORC

WARNING: To avoid personal injury or death, turn the ignition off, disconnect the battery and wait two minutes before proceeding.

WARNING: If the Occupant Restraint Controller (ORC) is dropped at any time, it must be replaced. Failure to take the proper precautions can result in accidental airbag deployment and personal injury or death.

NOTE: When reconnecting airbag system components the Ignition must be turned off and the Battery must be disconnected.

Repair

Replace the ORC in accordance with the Service Information.
Perform ORC VERIFICATION TEST - VER 1

5. STORED ORC DTC

With the scan tool, record and erase all DTC's from all Airbag System Modules.

If any ACTIVE codes are present they must be resolved before diagnosing any stored codes.

WARNING: To avoid personal injury or death, turn the ignition off, disconnect the battery and wait two minutes before proceeding.

Using the wiring diagram/schematic as a guide, inspect the wiring and connectors.

Look for chafed, pierced, pinched, or partially broken wires and broken, bent, pushed out, spread, corroded, or contaminated terminals.

The following additional checks may assist you in identifying a possible intermittent problem.

Reconnect any disconnected components and harness connector.

WARNING: To avoid personal injury or death, turn the ignition on, then reconnect the battery.

With the scan tool monitor active codes as you work through the following steps.

Wiggle the wiring harness and connectors of the related airbag circuit or component.

If codes are related to the Driver Airbag circuits, rotate the steering wheel from stop to stop.

If only stored codes return continue the test until the problem area has been isolated.

In the previous steps you have attempted to recreate the conditions responsible for setting active DTC in question.

Are any ACTIVE DTCs present?

Yes >> Select the appropriate diagnostic procedure from the Table of Contents in this section.

No >> No problem found at this time. Erase all codes before returning vehicle to customer.

B1B2A-1st ROW DRIVER SEAT BELT PRETENSIONER CIRCUIT OPEN

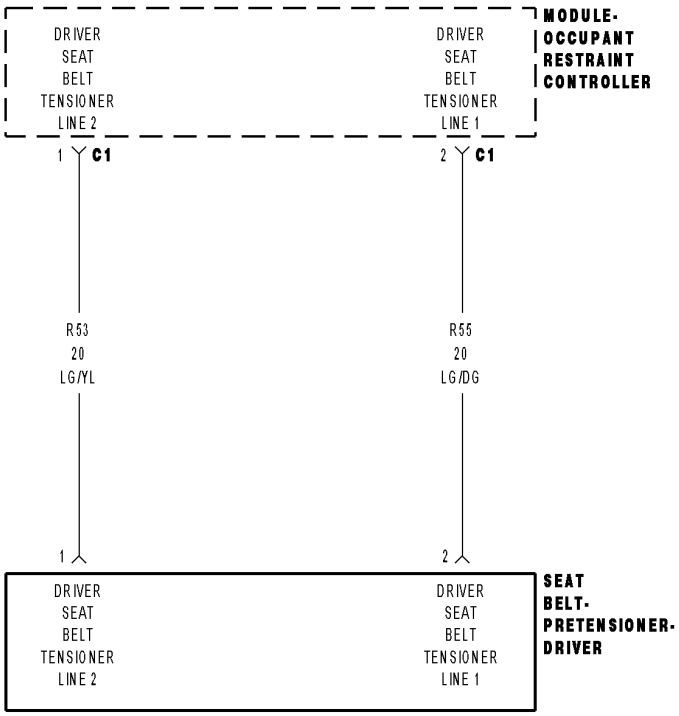

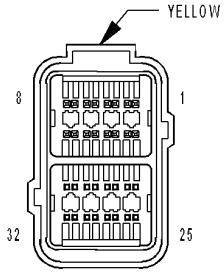

MODULE- OCCUPANT RESTRAINT CONTROLLER C1

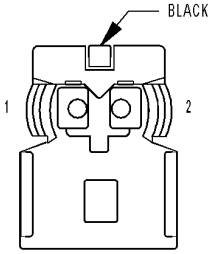

SEAT BELT- PRETENSIONER- DRIVER

8133a0c7

For a complete wiring diagram **Refer to Section 8W**.

- **When Monitored:**
  With the ignition on, the Occupant Restraint Controller (ORC) monitors the resistance of the Driver Seat Belt Tensioner circuits.
- **Set Condition:**
  The ORC has detected an open or high resistance on the Driver Seat Belt Tensioner circuits.

Possible Causes
(R55) DRIVER SEAT BELT TENSIONER LINE 1 CIRCUIT OR (R53) DRIVER SEAT BELT TENSIONER LINE 2 CIRCUIT OPEN
DRIVER SEAT BELT PRETENSIONER
ORC

Diagnostic Test

1. DETERMINE ACTIVE OR STORED DTC

NOTE: Ensure the battery is fully charged.

NOTE: The scan tool, SRS Airbag Load Tool MRL 8443, and DVOM are required to perform the following test.

NOTE: When reconnecting airbag system components the Ignition must be turned off and the Battery must be disconnected.
Select Active or Stored DTC.

Is the DTC active or stored?

ORC - ACTIVE DTC
Go To 2

ORC - STORED DTC
Go To 6

2. CHECK FOR OPEN DRIVER SEAT BELT PRETENSIONER

WARNING: To avoid personal injury or death, turn the ignition off, disconnect the battery and wait two minutes before proceeding.
Disconnect the Driver Seat Belt Pretensioner connector.

NOTE: Check connectors - Clean and repair as necessary.
Connect the 8443 Load Tool and appropriate Jumper to the Driver Seat Belt Pretensioner connector.

WARNING: To avoid personal injury or death, turn the ignition on, then reconnect the battery.
With the scan tool, read the active ORC DTC's.

Does the scan tool display: B1B2A 1st ROW DRIVER SEAT BELT PRETENSIONER CIRCUIT OPEN?

Yes >> Go To 3

No >> Replace the Driver Seat Belt Pretensioner in accordance with the Service Information.
Perform ORC VERIFICATION TEST - VER 1

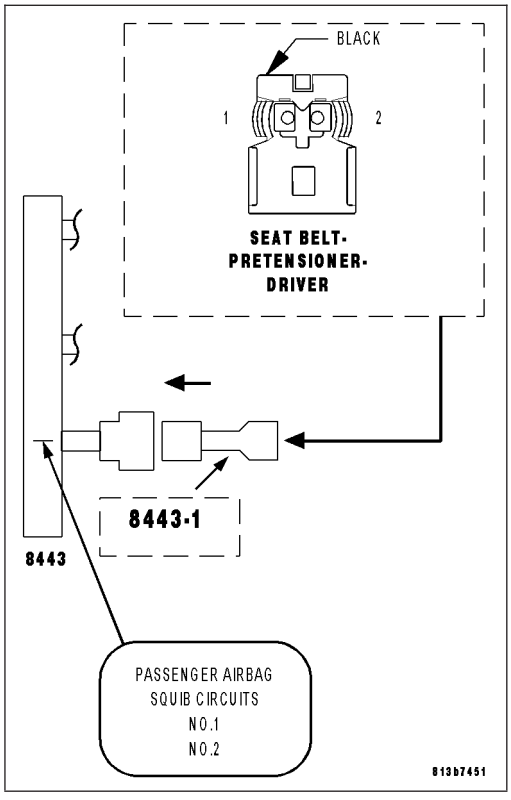

3. CHECK (R55) DRIVER SEAT BELT TENSIONER LINE 1 CIRCUIT FOR AN OPEN

WARNING: To avoid personal injury or death, turn the ignition off, disconnect the battery and wait two minutes before proceeding.
Disconnect the 8443 Load Tool and Jumper from the Driver Seat Belt Pretensioner connector.

Disconnect the ORC connectors.

NOTE: Check connectors - Clean and repair as necessary.
Connect the 8443 Load Tool ORC Adaptor to the ORC C1 connector.

Measure the resistance of the (R55) Driver Seat Belt Tensioner Line 1 circuit between the Driver Seat Belt Pretensioner connector and the 8443 ORC Adaptor.

Is the resistance below 1.0 ohm?

Yes >> Go To 4

No >> Repair the (R55) Driver Seat Belt Tensioner Line 1 circuit for and open. Then Go To 4

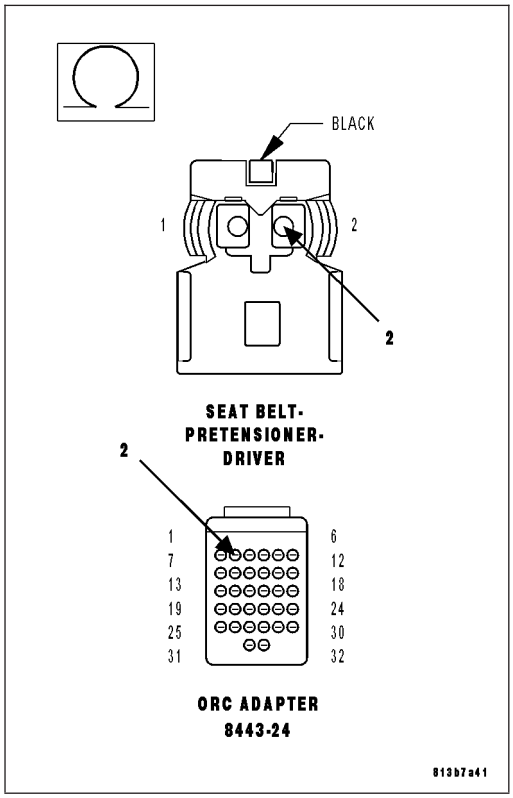

4. CHECK (R53) DRIVER SEAT BELT TENSIONER LINE 2 CIRCUIT FOR AN OPEN

Measure the resistance of the (R53) Driver Seat Belt Tensioner Line 2 circuit between the Driver Seat Belt Pretensioner connector and the 8443 ORC Adaptor.

Is the resistance below 1.0 ohm?

Yes >> Go To 5

No >> Repair the (R53) Driver Seat Belt Tensioner Line 2 circuit for and open.
Perform ORC VERIFICATION TEST - VER 1

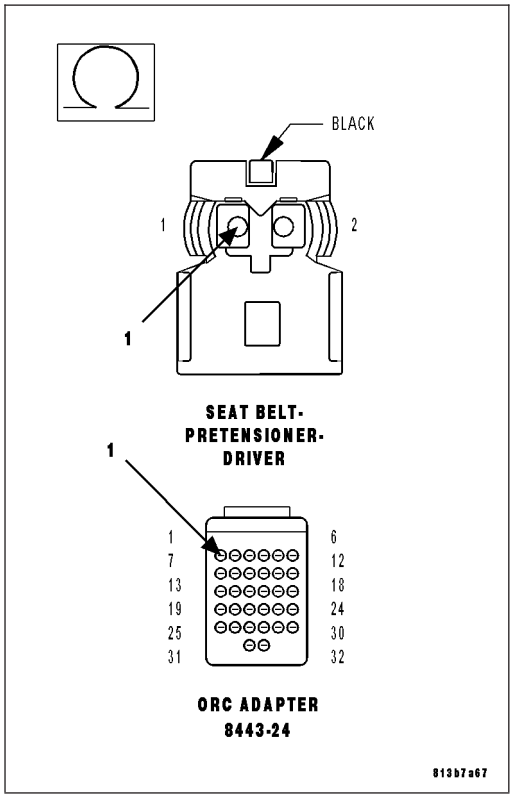

5. REPLACE THE ORC

WARNING: If the Occupant Restraint Controller (ORC) is dropped at any time, it must be replaced. Failure to take the proper precautions can result in accidental airbag deployment and personal injury or death.

NOTE: When reconnecting airbag system components the Ignition must be turned off and the Battery must be disconnected.

Repair

Replace the ORC in accordance with Service Information.

Perform ORC VERIFICATION TEST - VER 1

6. STORED ORC DTC

With the scan tool, record and erase all DTC's from all Airbag System Modules.

If any ACTIVE codes are present they must be resolved before diagnosing any stored codes.

WARNING: TO AVOID PERSONAL INJURY OR DEATH, TURN THE IGNITION OFF, DISCONNECT THE BATTERY AND WAIT TWO MINUTES BEFORE PROCEEDING.

Using the wiring diagram/schematic as a guide, inspect the wiring and connectors.

Look for chafed, pierced, pinched, or partially broken wires and broken, bent, pushed out, spread, corroded, or contaminated terminals.

The following additional checks may assist you in identifying a possible intermittent problem.

Reconnect any disconnected components and harness connector.

WARNING: TO AVOID PERSONAL INJURY OR DEATH, TURN THE IGNITION ON, THEN RECONNECT THE BATTERY.

With the scan tool monitor active codes as you work through the following steps.

Wiggle the wiring harness and connectors of the related airbag circuit or component.

If codes are related to the Driver Airbag circuits, rotate the steering wheel from stop to stop.

If only stored codes return continue the test until the problem area has been isolated.

In the previous steps you have attempted to recreate the conditions responsible for setting active DTC in question.

Are any ACTIVE DTCs present?

Yes >> Select the appropriate diagnostic procedure from the Table of Contents in this section.

No >> No problem found at this time. Erase all codes before returning vehicle to customer.

B1B2B-1st ROW DRIVER SEAT BELT PRETENSIONER CIRCUIT SHORTED TOGETHER

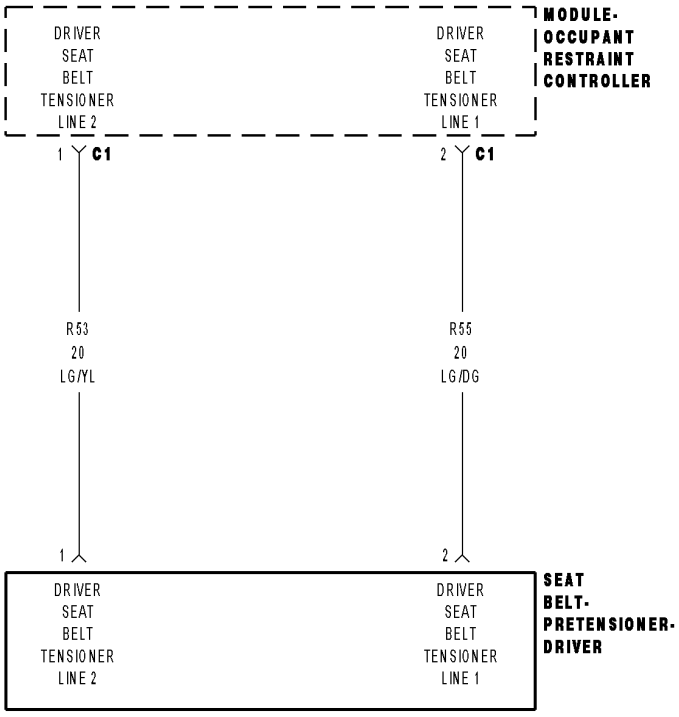

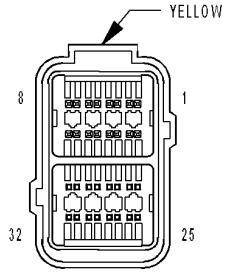

MODULE- OCCUPANT RESTRAINT CONTROLLER C1

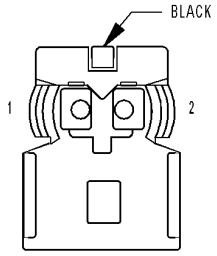

SEAT BELT- PRETENSIONER- DRIVER

8133a0c7

For a complete wiring diagram **Refer to Section 8W**.

- **When Monitored:**
  With the ignition on, the Occupant Restraint Controller (ORC) monitors the resistance of the Driver Seat Belt Tensioner circuits.
- **Set Condition:**
  The ORC has detected low resistance between the Driver Seat Belt Tensioner circuits.

Possible Causes
(R55) DRIVER SEAT BELT TENSIONER LINE 1 CIRCUIT SHORTED TO (R53) DRIVER SEAT BELT TENSIONER LINE 2 CIRCUIT
DRIVER SEAT BELT PRETENSIONER
ORC

Diagnostic Test

1. SELECT ACTIVE OR STORED DTC

NOTE: Ensure the battery is fully charged.

NOTE: The scan tool, SRS Airbag Load Tool MRL 8443, and DVOM are required to perform the following test.

NOTE: When reconnecting airbag system components the Ignition must be turned off and the Battery must be disconnected.

Select Active or Stored DTC.

Is the DTC active or stored?

ORC - ACTIVE DTC
Go To 2

ORC - STORED DTC
Go To 5

2. CHECK FOR SHORTED DRIVER SEAT BELT PRETENSIONER

WARNING: To avoid personal injury or death, turn the ignition off, disconnect the battery and wait two minutes before proceeding.
Disconnect the Driver Seatbelt Pretensioner connector.

NOTE: Check connectors - Clean and repair as necessary.
Connect the 8443 Load Tool and appropriate Jumper to the Driver Seat Belt Pretensioner connector.

WARNING: To avoid personal injury or death, turn the ignition on then reconnect the battery.
With the scan tool, read the active ORC DTC's.

Does the scan tool display: B1B2B 1st ROW DRIVER SEAT BELT PRETENSIONER CIRCUIT SHORTED TOGETHER?

Yes >> Go To 3

No >> Replace the Driver Seat Belt Pretensioner in accordance with the Service Information.
Perform ORC VERIFICATION TEST - VER 1

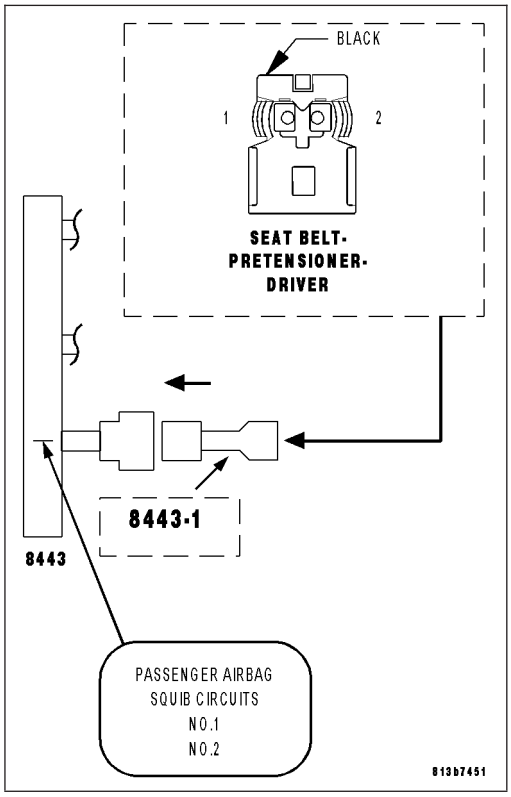

3. CHECK (R55) DRIVER SEAT BELT TENSIONER LINE 1 CIRCUIT FOR A SHORT TO (R53) DRIVER SEAT BELT TENSIONER LINE 2 CIRCUIT

WARNING: To avoid personal injury or death, turn the ignition off, disconnect the battery and wait two minutes before proceeding.
Disconnect the 8443 Load Tool and Jumper from the Driver Seat Belt Pretensioner connector.

Disconnect the ORC connectors.

NOTE: Check connectors - Clean and repair as necessary.
Connect the 8443 Load Tool ORC Adaptor to the ORC C1 connector.

Measure the resistance between the (R55) Driver Seat Belt Tensioner Line 1 circuit and the (R53) Driver Seat Belt Tensioner Line 2 circuit at the Driver Seat Belt Pretensioner connector.

Is the resistance below 10K ohms?

Yes >> Repair the (R55) Driver Seat Belt Tensioner Line 1 circuit for a short to the (R53) Driver Seat Belt Tensioner Line 2 circuit.
Perform ORC VERIFICATION TEST - VER 1

No >> Go To 4

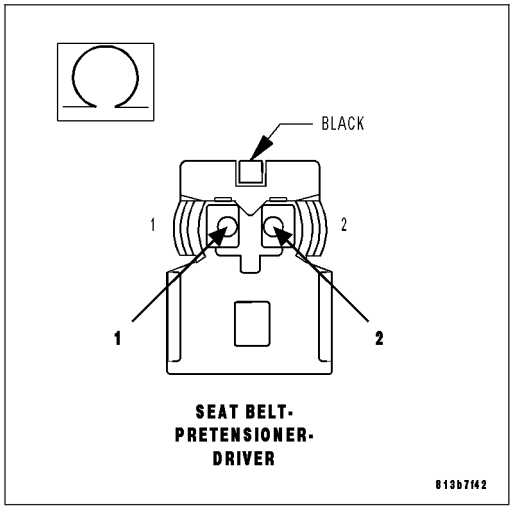

4. REPLACE THE ORC

WARNING: If the Occupant Restraint Controller (ORC) is dropped at any time, it must be replaced. Failure to take the proper precautions can result in accidental airbag deployment and personal injury or death.

NOTE: When reconnecting airbag system components the Ignition must be turned off and the Battery must be disconnected.

Repair

Replace the ORC in accordance with the Service Information.

Perform ORC VERIFICATION TEST - VER 1

5. STORED ORC DTC

With the scan tool, record and erase all DTC's from all Airbag System Modules.

If any ACTIVE codes are present they must be resolved before diagnosing any stored codes.

WARNING: To avoid personal injury or death, turn the ignition off, disconnect the battery and wait two minutes before proceeding.

Using the wiring diagram/schematic as a guide, inspect the wiring and connectors.

Look for chafed, pierced, pinched, or partially broken wires and broken, bent, pushed out, spread, corroded, or contaminated terminals.

The following additional checks may assist you in identifying a possible intermittent problem.

Reconnect any disconnected components and harness connector.

WARNING: To avoid personal injury or death, turn the ignition on, then reconnect the battery.

With the scan tool monitor active codes as you work through the following steps.

Wiggle the wiring harness and connectors of the related airbag circuit or component.

If codes are related to the Driver Airbag circuits, rotate the steering wheel from stop to stop.

If only stored codes return continue the test until the problem area has been isolated.

In the previous steps you have attempted to recreate the conditions responsible for setting active DTC in question.

Are any ACTIVE DTC's present?

Yes >> Select the appropriate diagnostic procedure from the Table of Contents in this section.

No >> No problem found at this time. Erase all codes before returning vehicle to customer.

B1B2C-1st ROW PASSENGER SEAT BELT PRETENSIONER CIRCUIT LOW

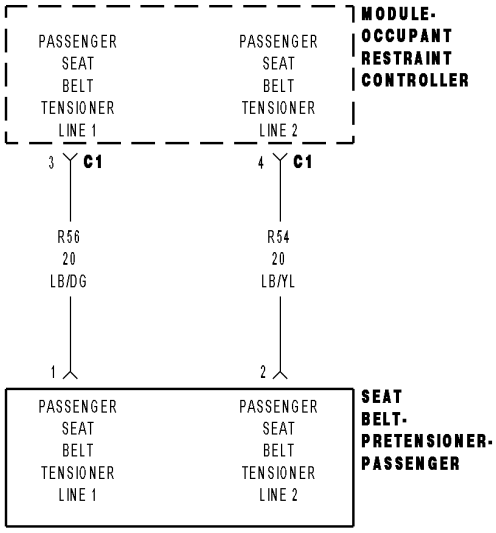

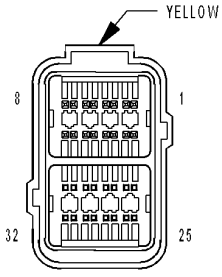

MODULE-
OCCUPANT
RESTRAINT
CONTROLLER C1

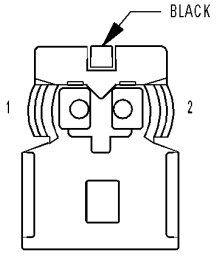

SEAT BELT-
PRETENSIONER-
PASSENGER

8133a0e2

For a complete wiring diagram **Refer to Section 8W**.

- **When Monitored:**
  With the ignition on, the Occupant Restraint Controller (ORC) monitors the resistance of the Passenger Seat Belt Tensioner circuits.
- **Set Condition:**
  The ORC has detected low resistance on the Passenger Seat Belt Tensioner circuits.

Possible Causes
(R56) PASSENGER SEAT BELT TENSIONER LINE 1 CIRCUIT OR (R54) PASSENGER SEAT BELT TENSIONER LINE 2 CIRCUIT SHORTED TO GROUND
PASSENGER SEAT BELT PRETENSIONER
ORC

Diagnostic Test

1. DETERMINE ACTIVE OR STORED DTC

NOTE: Ensure the battery is fully charged.

NOTE: The scan tool, SRS Airbag Load Tool MRL 8443, and DVOM are required to perform the following test.

NOTE: When reconnecting airbag system components the Ignition must be turned off and the Battery must be disconnected.
Select Active or Stored DTC.

Is the DTC active or stored?

ORC - ACTIVE DTC
Go To 2

ORC - STORED DTC
Go To 5

2. CHECK FOR SHORTED PASSENGER SEAT BELT PRETENSIONER

WARNING: To avoid personal injury or death, turn the ignition off, disconnect the battery and wait two minutes before proceeding.
Disconnect the Passenger Seat Belt Pretensioner connector.

NOTE: Check connectors - Clean and repair as necessary.
Connect the 8443 Load Tool and appropriate Jumper to the Passenger Seat Belt Pretensioner connector.

WARNING: To avoid personal injury or death, turn the ignition on, then reconnect the battery.
With the scan tool, read the active ORC DTC's.

Does the scan tool display: B1B2C 1st ROW PASSENGER SEAT BELT PRETENSIONER CIRCUIT LOW?

Yes >> Go To 3

No >> Replace the Passenger Seat Belt Pretensioner in accordance with the Service Information.
Perform ORC VERIFICATION TEST - VER 1

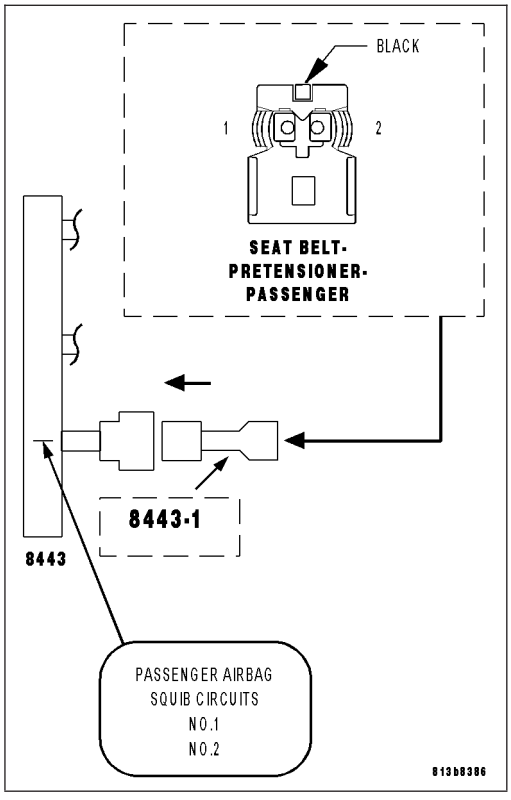

3. CHECK (R56) PASSENGER SEAT BELT TENSIONER LINE 1 CIRCUIT AND (R54) PASSENGER SEAT BELT TENSIONER LINE 2 CIRCUIT FOR A SHORT TO GROUND

WARNING: To avoid personal injury or death, turn the ignition off, disconnect the battery and wait two minutes before proceeding.

Disconnect the 8443 Load Tool and Jumper from the Passenger Seat Belt Pretensioner connector.

Disconnect the ORC connectors.

NOTE: Check connectors - Clean and repair as necessary.

Connect the 8443 Load Tool ORC Adaptor to the ORC C1 connector.

Measure the resistance of the (R56) Passenger Seat Belt Tensioner Line 1 circuit between ground and the Passenger Seat Belt Pretensioner connector.

Measure the resistance of the (R54) Passenger Seat Belt Tensioner Line 2 circuit between ground and the Passenger Seat Belt Pretensioner connector.

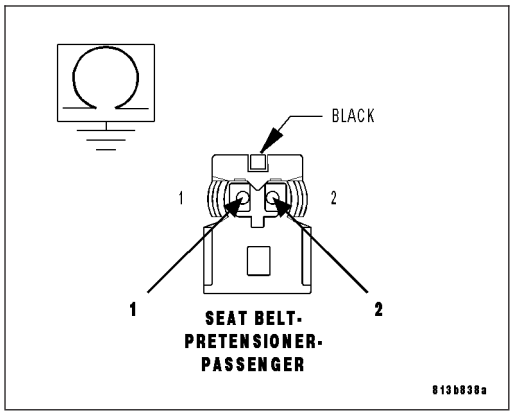

Is the resistance below 10K ohms on either circuit?

Yes >> Repair the Passenger Seat Belt Tensioner circuits with a resistance below 10k ohms for a short to ground.
Perform ORC VERIFICATION TEST - VER 1

No >> Go To 4

4. REPLACE THE ORC

WARNING: If the Occupant Restraint Controller (ORC) is dropped at any time, it must be replaced. Failure to take the proper precautions can result in accidental airbag deployment and personal injury or death.

NOTE: When reconnecting airbag system components the Ignition must be turned off and the Battery must be disconnected.

Repair

Replace the ORC in accordance with the Service Information.
Perform ORC VERIFICATION TEST - VER 1

5. STORED ORC DTC

With the scan tool, record and erase all DTC's from all Airbag System Modules.

If any ACTIVE codes are present they must be resolved before diagnosing any stored codes.

WARNING: To avoid personal injury or death, turn the ignition off, disconnect the battery and wait two minutes before proceeding.

Using the wiring diagram/schematic as a guide, inspect the wiring and connectors.

Look for chafed, pierced, pinched, or partially broken wires and broken, bent, pushed out, spread, corroded, or contaminated terminals.

The following additional checks may assist you in identifying a possible intermittent problem.

Reconnect any disconnected components and harness connector.

WARNING: To avoid personal injury or death, turn the ignition on, then reconnect the battery.

With the scan tool monitor active codes as you work through the following steps.

Wiggle the wiring harness and connectors of the related airbag circuit or component.

If codes are related to the Driver Airbag circuits, rotate the steering wheel from stop to stop.

If only stored codes return continue the test until the problem area has been isolated.

In the previous steps you have attempted to recreate the conditions responsible for setting active DTC in question.

Are any ACTIVE DTC's present?

Yes >> Select the appropriate diagnostic procedure from the Table of Contents in this section.

No >> No problem found at this time. Erase all codes before returning vehicle to customer.

B1B2D-1st ROW PASSENGER SEAT BELT PRETENSIONER CIRCUIT HIGH

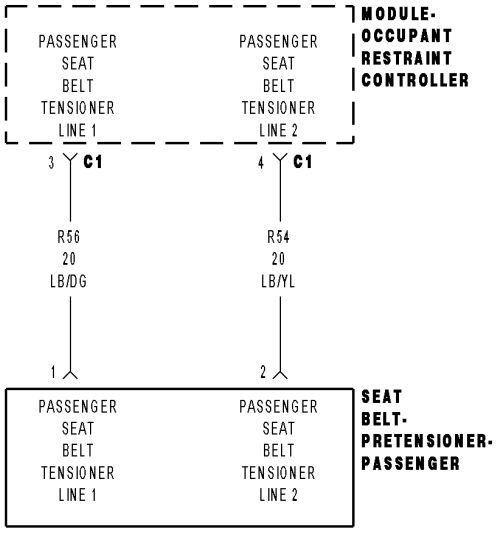

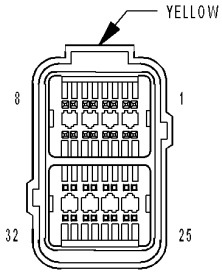

MODULE-
OCCUPANT
RESTRAINT
CONTROLLER C1

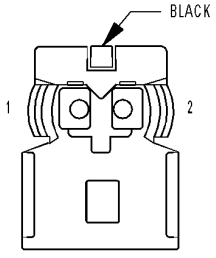

SEAT BELT-
PRETENSIONER-
PASSENGER

8133a0e2

For a complete wiring diagram **Refer to Section 8W**.

- **When Monitored:**
  With the ignition on, the Occupant Restraint Controller (ORC) monitors the voltage on the Passenger Seat Belt Tensioner circuits.
- **Set Condition:**
  The ORC detects voltage on the Passenger Seat Belt Tensioner circuits.

Possible Causes
(R56) PASSENGER SEAT BELT TENSIONER LINE 1 CIRCUIT OR (R54) PASSENGER SEAT BELT TENSIONER LINE 2 CIRCUIT SHORTED TO BATTERY
PASSENGER SEAT BELT PRETENSIONER
ORC

Diagnostic Test

1. DETERMINE ACTIVE OR STORED DTC

NOTE: Ensure the battery is fully charged.

NOTE: The scan tool, SRS Airbag Load Tool MRL 8443, and DVOM are required to perform the following test.

NOTE: When reconnecting airbag system components the Ignition must be turned off and the Battery must be disconnected.
Select Active or Stored DTC.

Is the DTC active or stored?

ORC - ACTIVE DTC
Go To 2

ORC - STORED DTC
Go To 5

2. CHECK FOR SHORTED PASSENGER SEAT BELT PRETENSIONER

WARNING: To avoid personal injury or death, turn the ignition off, disconnect the battery and wait two minutes before proceeding.
Disconnect the Passenger Seat Belt Pretensioner connector.

NOTE: Check connectors - Clean and repair as necessary.
Connect the 8443 Load Tool and appropriate Jumper to the Passenger Seat Belt Pretensioner connector.

WARNING: To avoid personal injury or death, turn the ignition on, then reconnect the battery.
With the scan tool, read the active ORC DTC's.

Does the scan tool display: B1B2D 1st ROW PASSENGER SEAT BELT TENSIONER CIRCUIT HIGH?

Yes >> Go To 3

No >> Replace the Passenger Seat Belt Pretensioner in accordance with the Service Information.
Perform ORC VERIFICATION TEST - VER 1

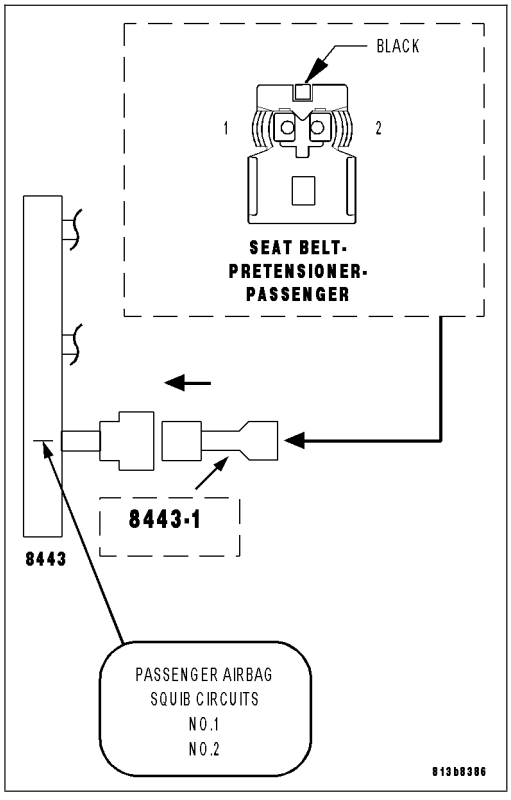

3. CHECK (R56) PASSENGER SEAT BELT TENSIONER LINE 1 CIRCUIT AND (R54) PASSENGER SEAT BELT TENSIONER LINE 2 CIRCUIT FOR A SHORT TO BATTERY

WARNING: To avoid personal injury or death, turn the ignition off, disconnect the battery and wait two minutes before proceeding.
Disconnect the 8443 Load Tool and Jumper from the Passenger Seat Belt Pretensioner connector.

Disconnect the ORC connectors.

NOTE: Check connectors - Clean and repair as necessary.
Connect the 8443 Load Tool ORC Adaptor to the ORC C1 connector.

WARNING: To avoid personal injury or death, turn the ignition on, then reconnect the battery.
Measure the voltage of the (R56) Passenger Seat Belt Tensioner Line 1 circuit between the Passenger Seat Belt Pretensioner connector and ground.

Measure the voltage of the (R54) Passenger Seat Belt Tensioner Line 2 circuit between the Passenger Seat Belt Pretensioner connector and ground.

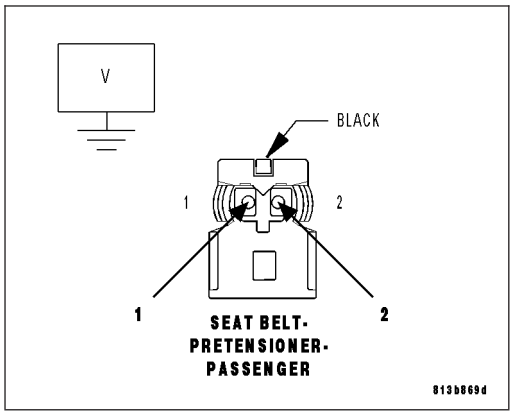

Is there any voltage present on either circuit?

Yes >> Repair the Passenger Seat Belt Tensioner circuits with voltage present for a short to battery.
Perform ORC VERIFICATION TEST - VER 1

No >> Go To 4

4. OCCUPANT RESTRAINT CONTROLLER

WARNING: To avoid personal injury or death, turn the ignition off, disconnect the battery and wait two minutes before proceeding.

WARNING: If the Occupant Restraint Controller (ORC) is dropped at any time, it must be replaced. Failure to take the proper precautions can result in accidental airbag deployment and personal injury or death.

NOTE: When reconnecting airbag system components the Ignition must be turned off and the Battery must be disconnected.

Repair

Replace the ORC in accordance with the Service Information.
Perform ORC VERIFICATION TEST - VER 1

5. STORED ORC DTC

With the scan tool, record and erase all DTC's from all Airbag System Modules.

If any ACTIVE codes are present they must be resolved before diagnosing any stored codes.

WARNING: To avoid personal injury or death, turn the ignition off, disconnect the battery and wait two minutes before proceeding.
Using the wiring diagram/schematic as a guide, inspect the wiring and connectors.

Look for chafed, pierced, pinched, or partially broken wires and broken, bent, pushed out, spread, corroded, or contaminated terminals.

The following additional checks may assist you in identifying a possible intermittent problem.

Reconnect any disconnected components and harness connector.

WARNING: To avoid personal injury or death, turn the ignition on, then reconnect the battery.
With the scan tool monitor active codes as you work through the following steps.

Wiggle the wiring harness and connectors of the related airbag circuit or component.

If codes are related to the Driver Airbag circuits, rotate the steering wheel from stop to stop.

If only stored codes return continue the test until the problem area has been isolated.

In the previous steps you have attempted to recreate the conditions responsible for setting active DTC in question.

Are any ACTIVE DTCs present?

Yes >> Select the appropriate diagnostic procedure from the Table of Contents in this section.

No >> No problem found at this time. Erase all codes before returning vehicle to customer

B1B2E-1st ROW PASSENGER SEAT BELT PRETENSIONER CIRCUIT OPEN

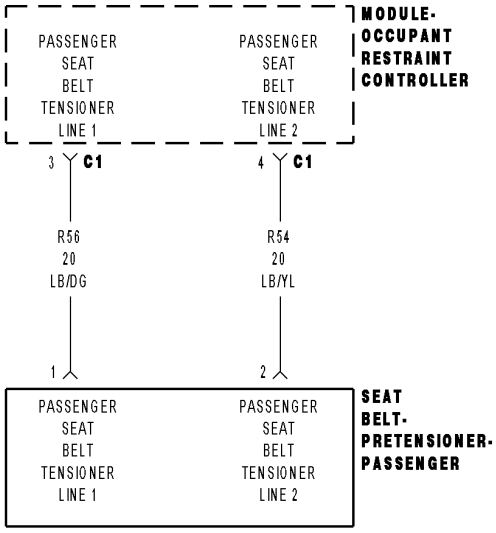

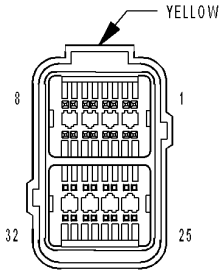

MODULE-
OCCUPANT
RESTRAINT
CONTROLLER C1

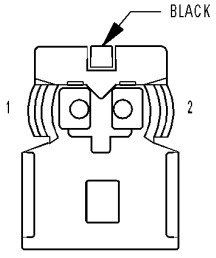

SEAT BELT-
PRETENSIONER-
PASSENGER

8133a0e2

For a complete wiring diagram **Refer to Section 8W**.

- **When Monitored:**
  With the ignition on, the Occupant Restraint Controller (ORC) monitors the resistance of the Passenger Seat Belt Tensioner circuits.
- **Set Condition:**
  The ORC has detected an open or high resistance on the Passenger Seat Belt Tensioner circuits.

Possible Causes
(R56) PASSENGER SEAT BELT TENSIONER LINE 1 CIRCUIT OR (R54) PASSENGER SEAT BELT TENSIONER LINE 2 CIRCUIT OPEN
PASSENGER SEAT BELT PRETENSIONER
ORC

Diagnostic Test

1. DETERMINE ACTIVE OR STORED DTC

NOTE: Ensure the battery is fully charged.

NOTE: The scan tool, SRS Airbag Load Tool MRL 8443, and DVOM are required to perform the following test.

NOTE: When reconnecting airbag system components the Ignition must be turned off and the Battery must be disconnected.
Select Active or Stored DTC.

Is the DTC active or stored?

ORC - ACTIVE DTC
Go To 2

ORC - STORED DTC
Go To 6

2. CHECK FOR OPEN PASSENGER SEAT BELT PRETENSIONER

WARNING: To avoid personal injury or death, turn the ignition off, disconnect the battery and wait two minutes before proceeding.
Disconnect the Passenger Seat Belt Pretensioner connector.

NOTE: Check connectors - Clean and repair as necessary.
Connect the 8443 Load Tool and appropriate Jumper to the Passenger Seat Belt Pretensioner connector.

WARNING: To avoid personal injury or death, turn the ignition on, then reconnect the battery.
With the scan tool, read the active ORC DTC's.

Does the scan tool display: B1B2E 1st ROW PASSENGER SEAT BELT PRETENSIONER CIRCUIT OPEN?

Yes >> Go To 3

No >> Replace the Passenger Seat Belt Pretensioner in accordance with the Service Information.
Perform ORC VERIFICATION TEST - VER 1

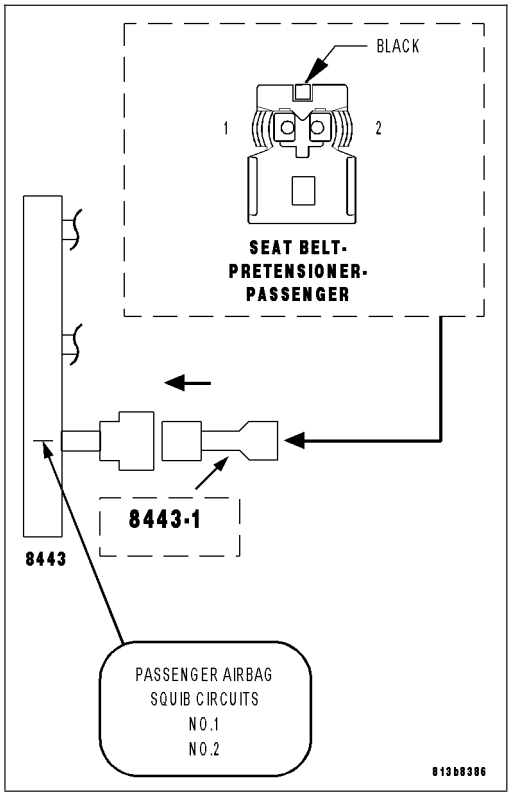

3. CHECK (R56) PASSENGER SEAT BELT TENSIONER LINE 1 CIRCUIT FOR AN OPEN

WARNING: To avoid personal injury or death, turn the ignition off, disconnect the battery and wait two minutes before proceeding.
Disconnect the 8443 Load Tool and Jumper from the Passenger Seat Belt Pretensioner connector.

Disconnect the ORC connectors.

NOTE: Check connectors - Clean and repair as necessary.
Connect the 8443 Load Tool ORC Adaptor to the ORC C1 connector.

Measure the resistance of the (R56) Passenger Seat Belt Tensioner Line 1 circuit between the Passenger Seat Belt Pretensioner connector and the 8443 ORC Adaptor.

Is the resistance below 1.0 ohm?

Yes >> Go To 4

No >> Repair the (R56) Passenger Seat Belt Tensioner Line 1 circuit for an open. Then Go To 4

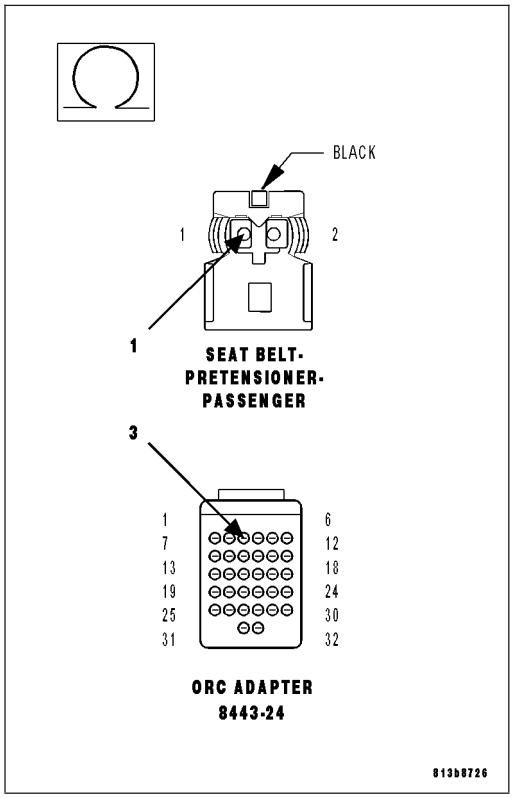

4. CHECK (R54) PASSENGER SEAT BELT TENSIONER LINE 2 CIRCUIT FOR AN OPEN

Measure the resistance of the (R54) Passenger Seat Belt Tensioner Line 2 circuit between the Passenger Seat Belt Pretensioner connector and the 8443 ORC Adaptor.

Is the resistance below 1.0 ohm?

Yes >> Go to 5

No >> Repair the (R54) Passenger Seat Belt Tensioner Line 2 circuit for an open.
Perform ORC VERIFICATION TEST - VER 1

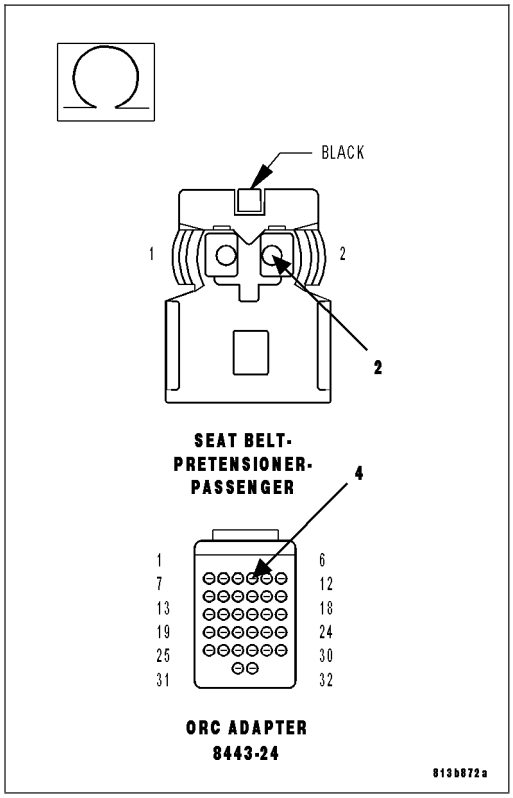

5. REPLACE THE ORC

WARNING: If the Occupant Restraint Controller (ORC) is dropped at any time, it must be replaced. Failure to take the proper precautions can result in accidental airbag deployment and personal injury or death.

NOTE: When reconnecting airbag system components the Ignition must be turned off and the Battery must be disconnected.

Repair

Replace the ORC in accordance with Service Information.

Perform ORC VERIFICATION TEST - VER 1

6. STORED ORC DTC

With the scan tool, record and erase all DTC's from all Airbag System Modules.

If any ACTIVE codes are present they must be resolved before diagnosing any stored codes.

WARNING: To avoid personal injury or death, turn the ignition off, disconnect the battery and wait two minutes before proceeding.

Using the wiring diagram/schematic as a guide, inspect the wiring and connectors.

Look for chafed, pierced, pinched, or partially broken wires and broken, bent, pushed out, spread, corroded, or contaminated terminals.

The following additional checks may assist you in identifying a possible intermittent problem.

Reconnect any disconnected components and harness connector.

WARNING: To avoid personal injury or death, turn the ignition on, then reconnect the battery.

With the scan tool monitor active codes as you work through the following steps.

Wiggle the wiring harness and connectors of the related airbag circuit or component.

If codes are related to the Driver Airbag circuits, rotate the steering wheel from stop to stop.

If only stored codes return continue the test until the problem area has been isolated.

In the previous steps you have attempted to recreate the conditions responsible for setting active DTC in question.

Are any ACTIVE DTCs present?

Yes >> Select the appropriate diagnostic procedure from the Table of Contents in this section.

No >> No problem found at this time. Erase all codes before returning vehicle to customer.

B1B2F-1st ROW PASSENGER SEAT BELT PRETENSIONER CIRCUIT SHORTED TOGETHER

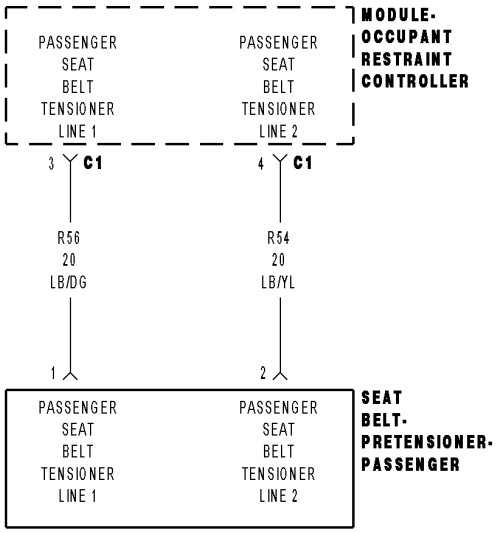

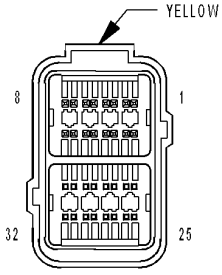

MODULE-
OCCUPANT
RESTRAINT
CONTROLLER C1

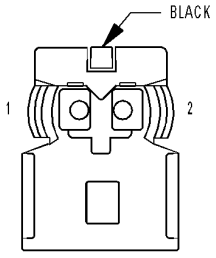

SEAT BELT-
PRETENSIONER-
PASSENGER

8133a0e2

For a complete wiring diagram **Refer to Section 8W**.

- **When Monitored:**
  With the ignition on, the Occupant Restraint Controller (ORC) monitors the resistance of the Passenger Seat Belt Tensioner circuits.
- **Set Condition:**
  The ORC has detected low resistance between the Passenger Seat Belt Tensioner circuits.

Possible Causes
(R56) PASSENGER SEAT BELT TENSIONER LINE 1 CIRCUIT SHORTED TO (R54) PASSENGER SEAT BELT TENSIONER LINE 2 CIRCUIT
PASSENGER SEAT BELT PRETENSIONER
ORC

Diagnostic Test

1. DETERMINE ACTIVE OR STORED DTC

NOTE: Ensure the battery is fully charged.

NOTE: The scan tool, SRS Airbag Load Tool MRL 8443, and DVOM are required to perform the following test.

NOTE: When reconnecting airbag system components the Ignition must be turned off and the Battery must be disconnected.

Select Active or Stored DTC.

Is the DTC active or stored?

ORC - ACTIVE DTC
Go To 2

ORC - STORED DTC
Go To 5

2. CHECK FOR SHORTED PASSENGER SEAT BELT PRETENSIONER

WARNING: To avoid personal injury or death, turn the ignition off, disconnect the battery and wait two minutes before proceeding.
Disconnect the Passenger Seat Belt Pretensioner connector.

NOTE: Check connectors - Clean and repair as necessary.
Connect the 8443 Load Tool and appropriate Jumper to the Passenger Seat Belt Pretensioner connector.

WARNING: To avoid personal injury or death, turn the ignition on then reconnect the battery.
With the scan tool, read the active ORC DTC's.

Does the scan tool display: B1B2F 1st ROW PASSENGER SEAT BELT PRETENSIONER CIRCUIT SHORTED TOGETHER?

Yes >> Go To 3

No >> Replace the Passenger Seat Belt Pretensioner in accordance with the Service Information.
Perform ORC VERIFICATION TEST - VER 1

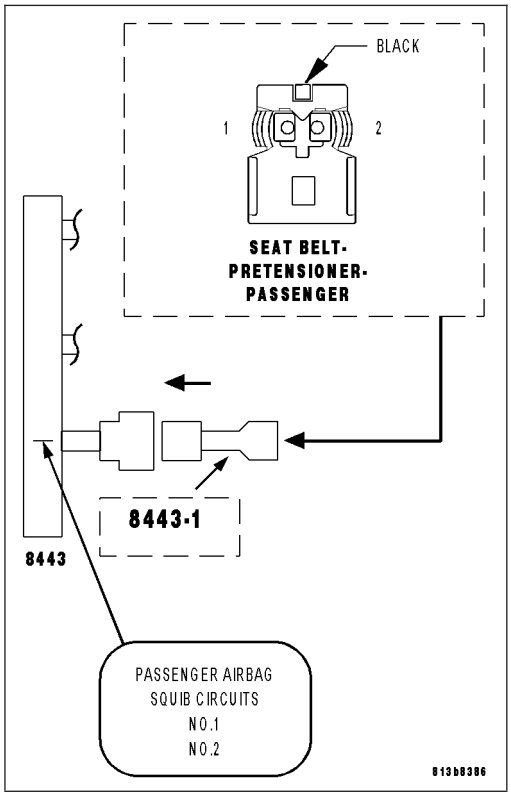

3. CHECK (R56) PASSENGER SEAT BELT TENSIONER LINE 1 CIRCUIT FOR A SHORT TO THE (R54) PASSENGER SEAT BELT TENSIONER LINE 2 CIRCUIT

WARNING: To avoid personal injury or death, turn the ignition off, disconnect the battery and wait two minutes before proceeding.
Disconnect the 8443 Load Tool and Jumper from the Passenger Seat Belt Pretensioner connector.

Disconnect the ORC connectors.

NOTE: Check connectors - Clean and repair as necessary.
Connect the 8443 Load Tool ORC Adaptor to the ORC C1 connector.

Measure the resistance between the (R56) Passenger Seat Belt Tensioner Line 1 circuit and the (R54) Passenger Seat Belt Tensioner Line 2 circuit at the Passenger Seat Belt Pretensioner connector.

Is the resistance below 10K ohms?

Yes >> Repair the (R56) Passenger Seat Belt Tensioner Line 1 circuit for a short to the (R54) Passenger Seat Belt Tensioner Line 2 circuit.
Perform ORC VERIFICATION TEST - VER 1

No >> Go to 4

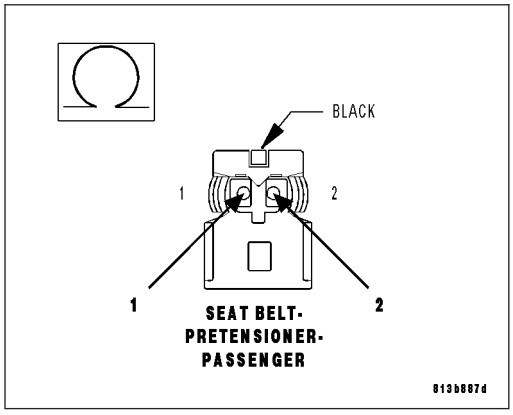

4. REPLACE THE ORC

WARNING: If the Occupant Restraint Controller (ORC) is dropped at any time, it must be replaced. Failure to take the proper precautions can result in accidental airbag deployment and personal injury or death.

NOTE: When reconnecting airbag system components the Ignition must be turned off and the Battery must be disconnected.

Repair

Replace the ORC in accordance with the Service Information.

Perform ORC VERIFICATION TEST - VER 1

5. STORED ORC DTC

With the scan tool, record and erase all DTC's from all Airbag System Modules.

If any ACTIVE codes are present they must be resolved before diagnosing any stored codes.

WARNING: To avoid personal injury or death, turn the ignition off, disconnect the battery and wait two minutes before proceeding.

Using the wiring diagram/schematic as a guide, inspect the wiring and connectors.

Look for chafed, pierced, pinched, or partially broken wires and broken, bent, pushed out, spread, corroded, or contaminated terminals.

The following additional checks may assist you in identifying a possible intermittent problem.

Reconnect any disconnected components and harness connector.

WARNING: To avoid personal injury or death, turn the ignition on, then reconnect the battery.

With the scan tool monitor active codes as you work through the following steps.

Wiggle the wiring harness and connectors of the related airbag circuit or component.

If codes are related to the Driver Airbag circuits, rotate the steering wheel from stop to stop.

If only stored codes return continue the test until the problem area has been isolated.

In the previous steps you have attempted to recreate the conditions responsible for setting active DTC in question.

Are any ACTIVE DTC's present?

Yes >> Select the appropriate diagnostic procedure from the Table of Contents in this section.

No >> No problem found at this time. Erase all codes before returning vehicle to customer.

B1B70-UP-FRONT LEFT SATELLITE ACCELERATION SENSOR INTERNAL

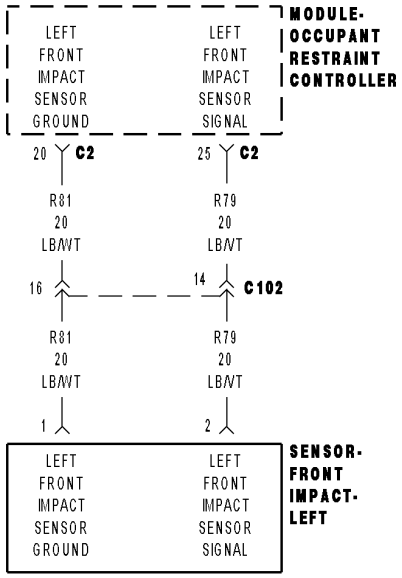

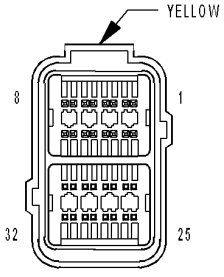

MODULE-
OCCUPANT
RESTRAINT
CONTROLLER C2

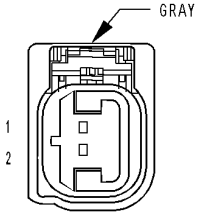

SENSOR-
FRONT IMPACT-
LEFT

8133e184

For a complete wiring diagram **Refer to Section 8W**.

- **When Monitored:**
  The Occupant Restraint Controller (ORC) continuously communicates with the Front Left Impact Sensor over the sensor signal circuit. The sensor communication and on board diagnostics are powered by the ORC signal.
- **Set Condition:**
  This code will set, if the ORC and the Front Left Impact Sensor do not establish and maintain valid data communications.

Possible Causes
(R79) SIGNAL CIRCUIT SHORTED TO BATTERY
(R79) SIGNAL CIRCUIT SHORTED TO GROUND
(R79, R81) FRONT LEFT IMPACT SENSOR CIRCUITS SHORTED TOGETHER
(R81) FRONT LEFT IMPACT SENSOR GROUND CIRCUIT OPEN
(R79) FRONT LEFT IMPACT SENSOR SIGNAL CIRCUIT OPEN
ORC, FRONT LEFT IMPACT SENSOR

Diagnostic Test

1. VERIFY THAT DTC B1B70-UP-FRONT LEFT SATELLITE ACCELERATION SENSOR INTERNAL IS ACTIVE

NOTE: Ensure the battery is fully charged.

NOTE: When reconnecting Airbag system components, the ignition must be turned off and the battery must be disconnected.

Turn the ignition on.

With the scan tool, read ORC DTCs.

Does the scan tool display active: B1B70-UP-FRONT LEFT SATELLITE ACCELERATION SENSOR INTERNAL?

Yes >> Go To 2

No >> Go To 9

2. CHECK THE (R79, R81) FRONT LEFT IMPACT SENSOR SIGNAL AND GROUND CIRCUITS FOR A SHORT TO BATTERY

WARNING: To avoid personal injury or death, turn the ignition off, disconnect the battery and wait two minutes before proceeding.

Disconnect the Front Left Impact Sensor connector.

Disconnect the ORC connector.

WARNING: To avoid personal injury or death, turn the ignition on, then reconnect the battery.

Measure the voltage of the (R79) Front Left Impact Sensor Signal circuit and (R81) Sensor Ground circuit at the Front Left Impact Sensor connector and ground.

Is there any voltage present?

Yes >> Repair the (R79, R81) Front Left Impact Sensor circuits for a short to battery.
Perform the ORC VERIFICATION TEST - VER 1.

No >> Go To 3

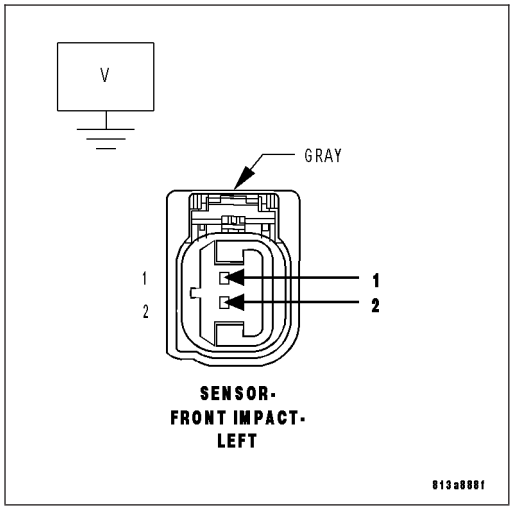

3. CHECK THE (R79) FRONT LEFT IMPACT SENSOR SIGNAL CIRCUIT FOR A SHORT TO GROUND

WARNING: To avoid personal injury or death, turn the ignition off, disconnect the battery and wait two minutes before proceeding.
Measure the resistance of the (R79) Front Left Impact Sensor Signal circuit between the Front Left Impact Sensor connector and ground.

Is the resistance below 100K ohms?

Yes >> Repair the (R79) Front Left Impact Sensor Signal circuit for a short to ground.
Perform the ORC VERIFICATION TEST - VER 1.

No >> Go To 4

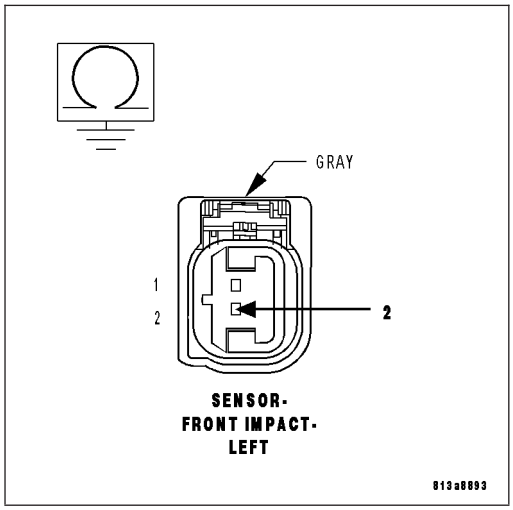

4. CHECK THE (R79, R81) FRONT LEFT IMPACT SENSOR CIRCUITS FOR A SHORT TOGETHER

Measure the resistance between the (R79) Front Left Impact Sensor Signal and (R81) Sensor Ground circuits at the Front Left Impact Sensor connector.

Is the resistance below 100K ohms?

Yes >> Repair the (R79, R81) Front Left Impact Sensor circuits shorted together.
Perform the ORC VERIFICATION TEST - VER 1.

No >> Go To 5

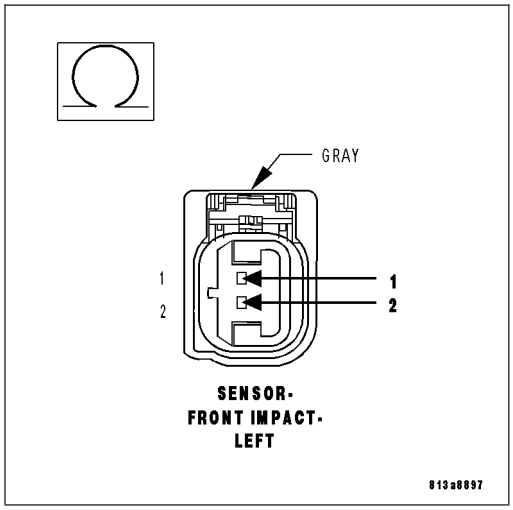

5. CHECK THE (R81) FRONT LEFT IMPACT SENSOR GROUND CIRCUIT FOR AN OPEN OR HIGH RESISTANCE

Connect the 8443 Load Tool ORC Adaptor to the Occupant Restraint Control Module connector.

Measure the resistance of the (R81) Front Left Impact Sensor Ground circuit between the Front Left Impact Sensor connector and the 8443 Load Tool ORC Adaptor.

Is the resistance below 1 ohm?

Yes >> Go To 6

No >> Repair the (R81) Front Left Impact Sensor 1 Ground circuit for an open or high resistance.
Perform the ORC VERIFICATION TEST - VER 1.

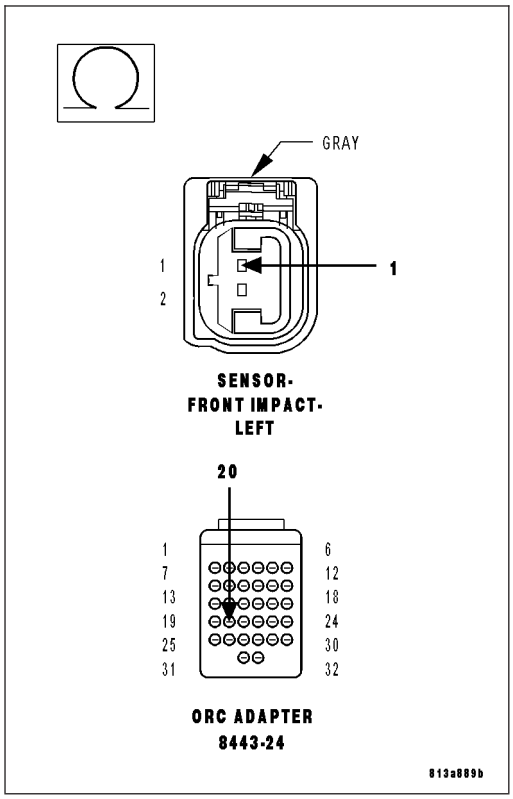

6. CHECK THE (R79) FRONT LEFT IMPACT SENSOR CIRCUIT FOR AN OPEN OR HIGH RESISTANCE

Measure the resistance of the (R79) Front Left Impact Sensor Ground circuit between the Front Left Impact Sensor connector and the 8443 Load Tool ORC Adaptor.

Is the resistance below 1 ohm?

Yes >> Go To 7

No >> Repair the (R79) Front Left Impact Sensor Signal circuit for an open or high resistance.
Perform the ORC VERIFICATION TEST - VER 1.

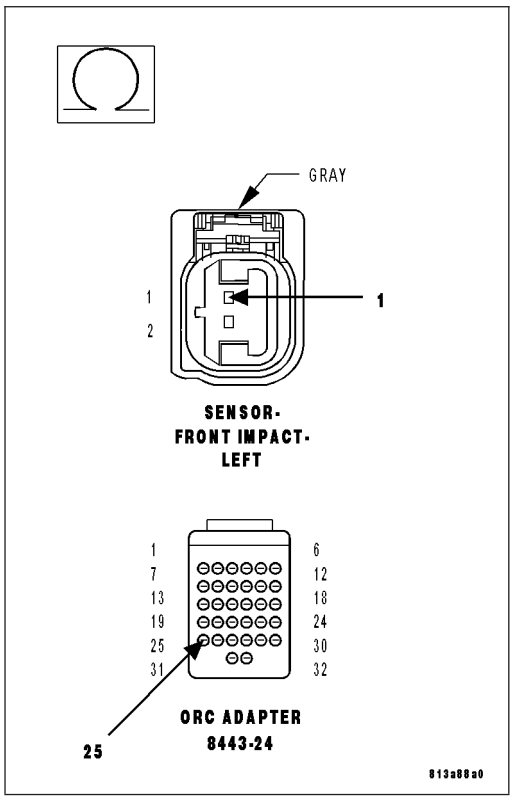

7. CHECK OPERATION OF THE FRONT LEFT IMPACT SENSOR

Replace the Front Left Impact Sensor.

Reconnect the vehicle body harness to the impact sensor.

Remove any special tools or jumper wires and reconnect all previously disconnected components - except the Battery.

WARNING: To avoid personal injury or death, turn the ignition on, then reconnect the battery.

Connect the scan tool to the Data Link Connector - use the most current software available.

Use the scan tool and erase the stored codes in all airbag system modules.

Turn the Ignition Off, and wait 15 seconds before turning the Ignition On.

Wait one minute, and read active codes and if there are none present read the stored codes.

Did the active Front Left Impact Sensor DTC return?

Yes >> Go To 8

No >> Repair is complete.
Perform the ORC VERIFICATION TEST - VER 1.

8. REPLACE THE OCCUPANT RESTRAINT CONTROLLER

WARNING: To avoid personal injury or death, turn the ignition off, disconnect the battery and wait two minutes before proceeding.

WARNING: If the airbag control module is dropped at any time, it must be replaced. Failure to take the proper precautions could result in accidental airbag deployment and personal injury or death.

If there are no possible causes remaining, view repair.

Repair

Replace the Occupant Restraint Controller in accordance with Service Information.
Perform the ORC VERIFICATION TEST - VER 1.

9. TEST FOR AN INTERMITTENT CONDITION

With the scan tool, record and erase all DTC's from all Airbag modules.

If any ACTIVE codes are present they must be resolved before diagnosing any stored codes.

WARNING: To avoid personal injury or death, turn the ignition off, disconnect the battery and wait two minutes before proceeding.

Using the wiring diagram/schematic as a guide, inspect the wiring and connectors.

Look for chafed, pierced, pinched, or partially broken wires and broken, bent, pushed out, spread, corroded, or contaminated terminals.

The following additional checks may assist you in identifying a possible intermittent problem.

Reconnect any disconnected components and harness connector.

WARNING: To avoid personal injury or death, turn the ignition on, then reconnect the battery.

With the scan tool monitor active codes as you work through the following steps.

WARNING: To avoid personal injury or death, maintain a safe distance from all airbags while performing the following steps.

Wiggle the wiring harness and connectors of the related airbag circuit or component.

If codes are related to the Driver Airbag circuits, rotate the steering wheel from stop to stop.

If only stored codes return continue the test until the problem area has been isolated.

In the previous steps you have attempted to recreate the conditions responsible for setting active DTC in question.

Are any ACTIVE DTCs present?

Yes >> Select the appropriate symptom from Symptom List.

No >> No problem found at this time. Erase all codes before returning vehicle to customer.

B1B71-UP-FRONT RIGHT SATELLITE ACCELERATION SENSOR INTERNAL

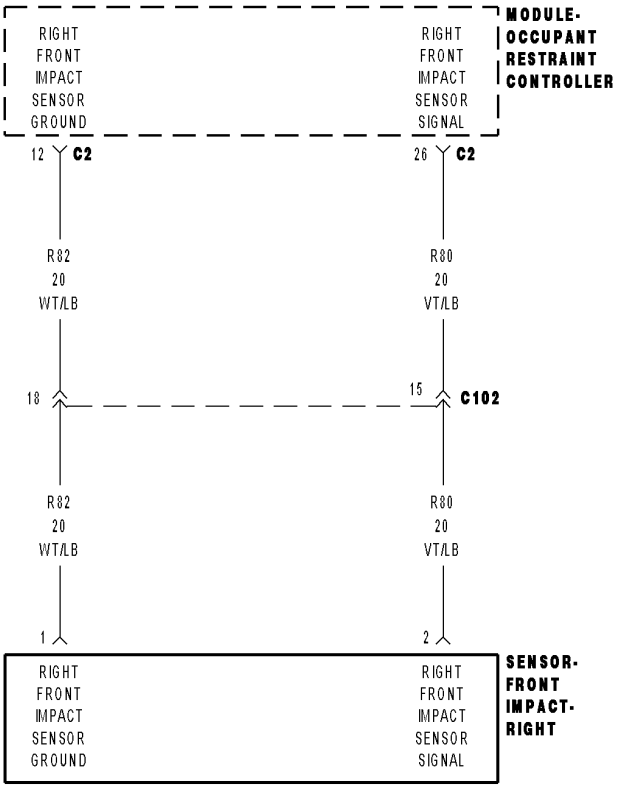

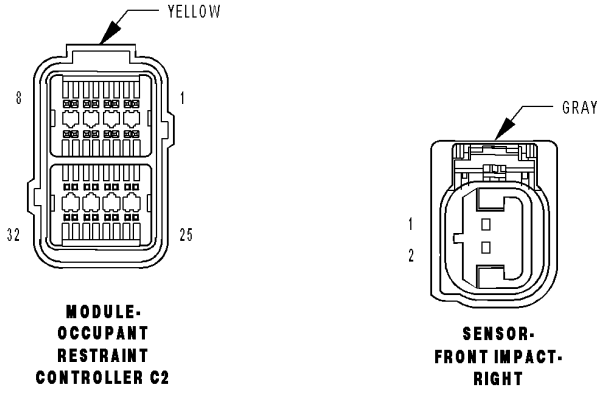

8133a491

For a complete wiring diagram **Refer to Section 8W**.

- **When Monitored:**
  The Occupant Restraint Controller (ORC) continuously communicates with the Front Right Impact Sensor over the sensor signal circuit. The sensor communication and on board diagnostics are powered by the ORC signal.
- **Set Condition:**
  This code will set, if the ORC and the Front Right Impact Sensor do not establish and maintain valid data communications.

Possible Causes
(R80) SIGNAL CIRCUIT SHORTED TO BATTERY
(R80) SIGNAL CIRCUIT SHORTED TO GROUND
(R80, R82) FRONT RIGHT IMPACT SENSOR CIRCUITS SHORTED TOGETHER
(R82) FRONT RIGHT IMPACT SENSOR GROUND CIRCUIT OPEN
(R80) FRONT RIGHT IMPACT SENSOR SIGNAL CIRCUIT OPEN
ORC, FRONT RIGHT IMPACT SENSOR

Diagnostic Test

1. VERIFY THAT DTC B1B71-UP-FRONT RIGHT SATELLITE ACCELERATION SENSOR INTERNAL IS ACTIVE

NOTE: Ensure the battery is fully charged.

NOTE: When reconnecting Airbag system components, the ignition must be turned off and the battery must be disconnected.

Turn the ignition on.

With the scan tool, read ORC DTCs.

Does the scan tool display active: B1B71-UP-FRONT RIGHT SATELLITE ACCELERATION SENSOR INTERNAL?

Yes >> Go To 2

No >> Go To 9

2. CHECK THE (R80, R82) FRONT RIGHT IMPACT SENSOR SIGNAL AND GROUND CIRCUITS FOR A SHORT TO BATTERY

WARNING: To avoid personal injury or death, turn the ignition off, disconnect the battery and wait two minutes before proceeding.

Disconnect the Front Right Impact Sensor connector.

Disconnect the ORC connector.

WARNING: To avoid personal injury or death, turn the ignition on, then reconnect the battery.

Measure the voltage of the (R80) Front Right Impact Sensor Signal circuit and (R82) Sensor Ground circuit at the Front Right Impact Sensor connector and ground.

Is there any voltage present?

Yes >> Repair the (R80, R82) Front Right Impact Sensor circuits for a short to battery.
Perform the ORC VERIFICATION TEST - VER 1.

No >> Go To 3

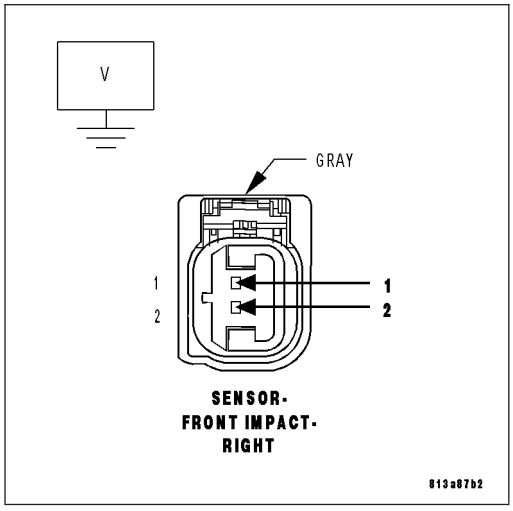

3. CHECK THE (R80) FRONT RIGHT IMPACT SENSOR SIGNAL CIRCUIT FOR A SHORT TO GROUND

WARNING: To avoid personal injury or death, turn ignition on, then reconnect the battery.

Measure the resistance of the (R80) Front Right Impact Sensor Signal circuit between the Front Right Impact Sensor connector and ground.

Is the resistance below 100K ohms?

Yes >> Repair the (R80) Front Right Impact Sensor Signal circuit for a short to ground.
Perform the ORC VERIFICATION TEST - VER 1.

No >> Go To 4

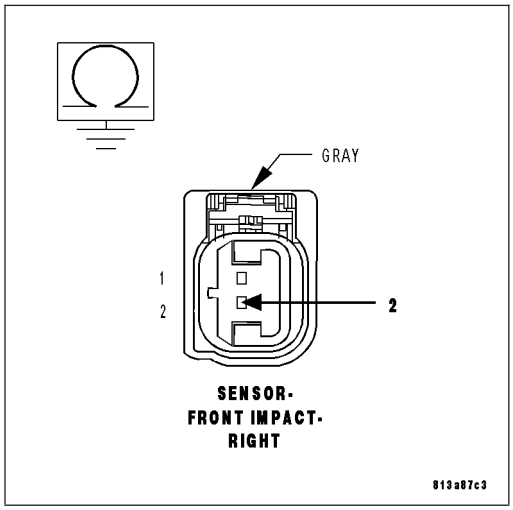

4. CHECK THE (R80, R82) FRONT RIGHT IMPACT SENSOR CIRCUITS FOR A SHORT TOGETHER

Measure the resistance between the (R80) Front Right Impact Sensor Signal and (R82) Sensor Ground circuits at the Front Right Impact Sensor connector.

Is the resistance below 100K ohms?

Yes >> Repair the (R80, R82) Front Right Impact Sensor circuits shorted together.
Perform the ORC VERIFICATION TEST - VER 1.

No >> Go To 5

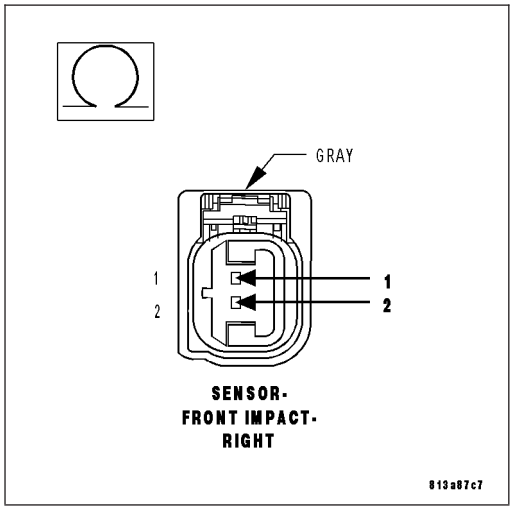

5. CHECK THE (R82) FRONT RIGHT IMPACT SENSOR GROUND CIRCUIT FOR AN OPEN OR HIGH RESISTANCE

Connect the 8443 Load Tool ORC Adaptor to the Occupant Control Module connector.

Measure the resistance of the (R82) Front Right Impact Sensor Ground circuit between the Front Right Impact Sensor connector and the 8443 Load Tool ORC Adaptor.

Is the resistance below 1 ohm?

Yes >> Go To 6

No >> Repair the (R82) Front Right Impact Sensor 2 Ground circuit for an open or high resistance.
Perform the ORC VERIFICATION TEST - VER 1.

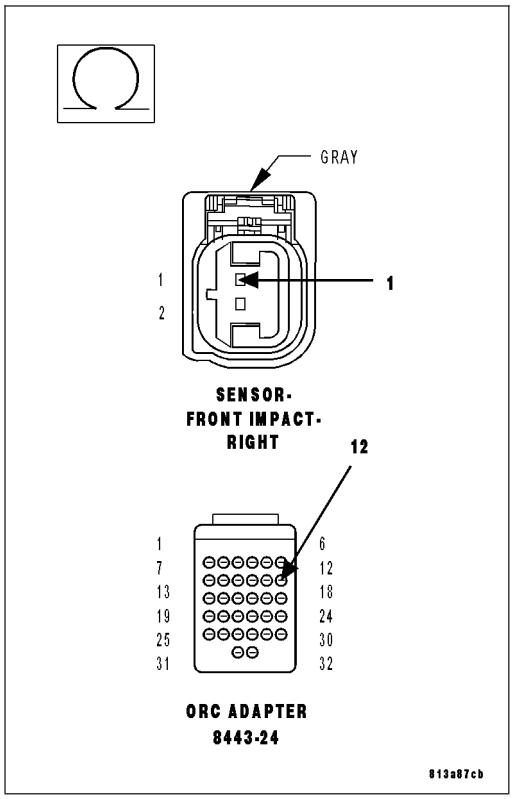

6. CHECK THE (R80) FRONT RIGHT IMPACT SENSOR CIRCUIT FOR AN OPEN OR HIGH RESISTANCE

Measure the resistance of the (R80) Front Right Impact Sensor Signal circuit between the Front Right Impact Sensor connector and the 8443 Load Tool ORC Adaptor.

Is the resistance below 1 ohm?

Yes >> Go To 7

No >> Repair the (R80) Front Right Impact Sensor Signal circuit for an open or high resistance.
Perform the ORC VERIFICATION TEST - VER 1.

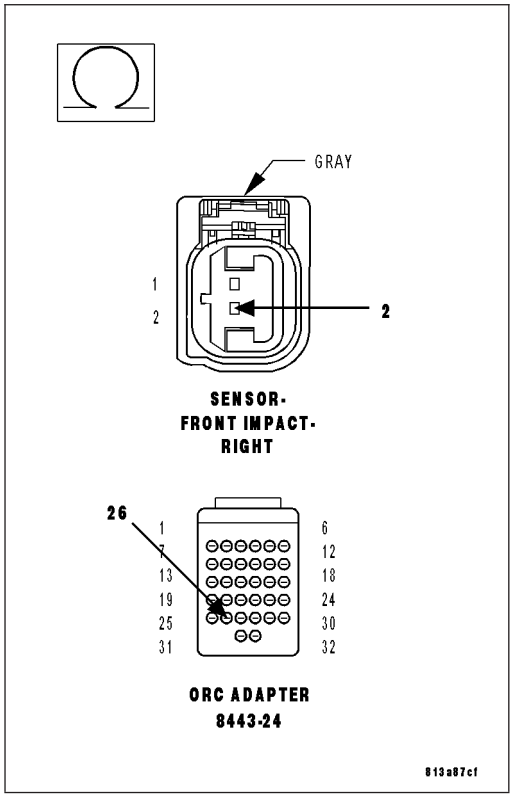

7. CHECK OPERATION OF THE FRONT RIGHT IMPACT SENSOR

Replace the Front Right Impact Sensor.

Reconnect the vehicle body harness to the impact sensor.

Remove any special tools or jumper wires and reconnect all previously disconnected components - except the Battery.

WARNING: To avoid personal injury or death, turn the ignition on, then reconnect the battery.

Connect the scan tool to the Data Link Connector - use the most current software available.

Use the scan tool and erase the stored codes in all airbag system modules.

Turn the Ignition Off, and wait 15 seconds before turning the Ignition On.

Wait one minute, and read active codes and if there are none present read the stored codes.

Did the active Front Right Impact Sensor DTC return?

Yes >> Go To 8

No >> Repair is complete.
Perform the ORC VERIFICATION TEST - VER 1.

8. REPLACE THE OCCUPANT RESTRAINT CONTROLLER

WARNING: To avoid personal injury or death, turn the ignition off, disconnect the battery and wait two minutes before proceeding.

WARNING: If the airbag control module is dropped at any time, it must be replaced. Failure to take the proper precautions could result in accidental airbag deployment and personal injury or death.

If there are no possible causes remaining, view repair.

Repair

Replace the Occupant Restraint Controller in accordance with Service Instructions.
Perform the ORC VERIFICATION TEST - VER 1.

9. TEST FOR AN INTERMITTENT CONDITION

With the scan tool, record and erase all DTC's from all Airbag modules.

If any ACTIVE codes are present they must be resolved before diagnosing any stored codes.

WARNING: To avoid personal injury or death, turn the ignition off, disconnect the battery and wait two minutes before proceeding.

Using the wiring diagram/schematic as a guide, inspect the wiring and connectors.

Look for chafed, pierced, pinched, or partially broken wires and broken, bent, pushed out, spread, corroded, or contaminated terminals.

The following additional checks may assist you in identifying a possible intermittent problem.

Reconnect any disconnected components and harness connector.

WARNING: To avoid personal injury or death, turn the ignition on, then reconnect the battery.

With the scan tool monitor active codes as you work through the following steps.

WARNING: To avoid personal injury or death, maintain a safe distance from all airbags while performing the following steps.

Wiggle the wiring harness and connectors of the related airbag circuit or component.

If codes are related to the Driver Airbag circuits, rotate the steering wheel from stop to stop.

If only stored codes return continue the test until the problem area has been isolated.

In the previous steps you have attempted to recreate the conditions responsible for setting active DTC in question.

Are any ACTIVE DTCs present?

Yes >> Select the appropriate symptom from Symptom List.

No >> No problem found at this time. Erase all codes before returning vehicle to customer.

B1B72-LEFT SIDE SATELLITE ACCELERATION SENSOR 1 INTERNAL

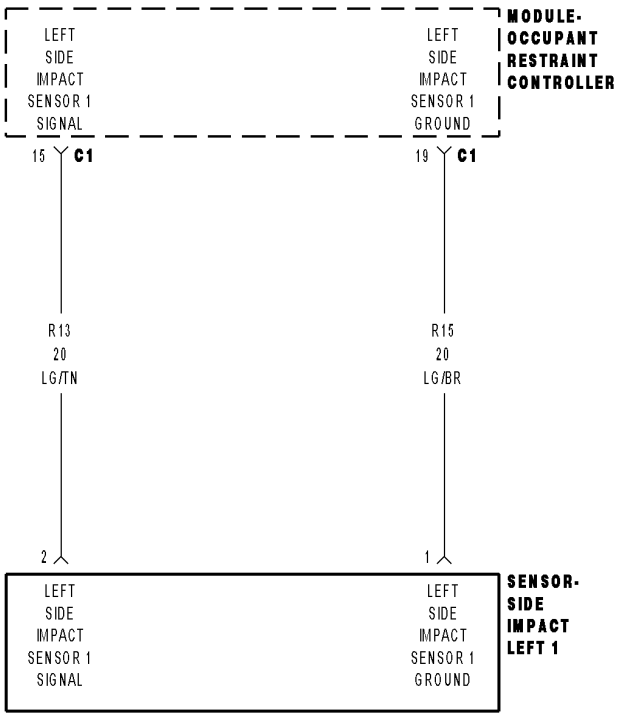

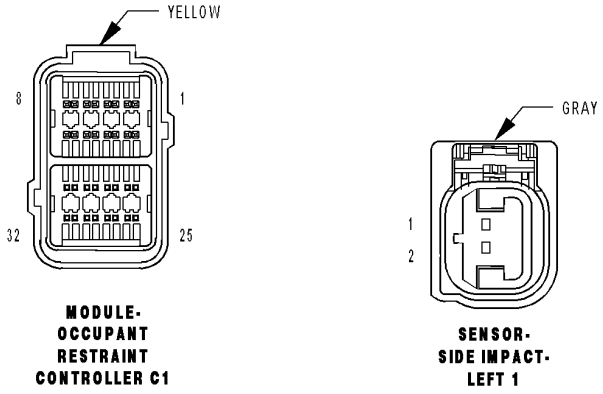

8133a4ed

For a complete wiring diagram **Refer to Section 8W**.

- **When Monitored:**
  The Occupant Restraint Controller (ORC) continuously communicates with the Left Side Impact Sensor 1 over the sensor signal circuit. The sensor communication and on board diagnostics are powered by the ORC signal.
- **Set Condition:**
  This code will set, if the ORC and the Left Side Impact Sensor 1 do not establish and maintain valid data communications.

Possible Causes
(R13) SIGNAL CIRCUIT SHORTED TO BATTERY
(R13) SIGNAL CIRCUIT SHORTED TO GROUND
(R13, R15) LEFT SIDE IMPACT SENSOR 1 CIRCUITS SHORTED TOGETHER
(R15) LEFT SIDE IMPACT SENSOR 1 GROUND CIRCUIT OPEN
(R13) LEFT SIDE IMPACT SENSOR 1 SIGNAL CIRCUIT OPEN
ORC, LEFT SIDE IMPACT SENSOR 1

Diagnostic Test

1. VERIFY THAT DTC B1B72-LEFT SIDE SATELLITE ACCELERATION SENSOR 1 INTERNAL 1 IS ACTIVE

NOTE: Ensure the battery is fully charged.

NOTE: When reconnecting Airbag system components, the ignition must be turned off and the battery must be disconnected.

Turn the ignition on.

With the scan tool, read ORC DTCs.

Does the scan tool display active: B1B72-LEFT SIDE SATELLITE ACCELERATION SENSOR 1 INTERNAL?

Yes >> Go To 2

No >> Go To 9

2. CHECK THE (R13, R15) LEFT SIDE IMPACT SENSOR 1 SIGNAL AND GROUND CIRCUITS FOR A SHORT TO BATTERY

WARNING: To avoid personal injury or death, turn the ignition off, disconnect the battery and wait two minutes before proceeding.

Disconnect the Left Side Impact Sensor 1 connector.

Disconnect the ORC connector.

WARNING: To avoid personal injury or death, turn the ignition on, then reconnect the battery.

Measure the voltage of the (R13) Left Side Impact Sensor 1 Signal circuit and (R15) Sensor Ground circuit at the Left Side Impact Sensor 1 connector and ground.

Is there any voltage present?

Yes >> Repair the (R13, R15) Left Side Impact Sensor 1 circuits for a short to battery.
Perform the ORC VERIFICATION TEST - VER 1.

No >> Go To 3

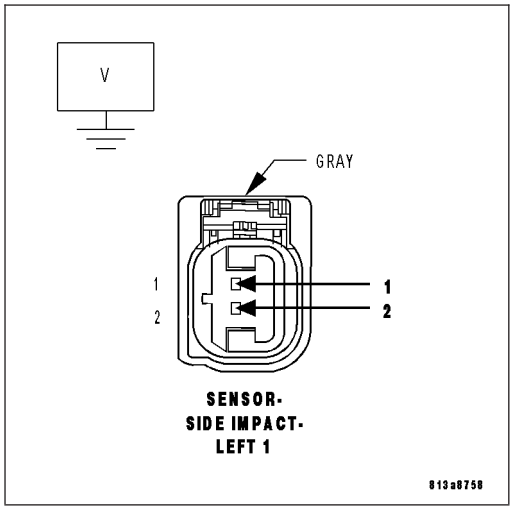

3. CHECK THE (R13) LEFT SIDE IMPACT SENSOR 1 SIGNAL CIRCUIT FOR A SHORT TO GROUND

WARNING: To avoid personal injury or death, turn ignition on, then reconnect the battery.

Measure the resistance of the (R13) Left Side Impact Sensor 1 Signal circuit between the Left Side Impact Sensor 1 connector and ground.

Is the resistance below 100K ohms?

Yes >> Repair the (R13) Left Side Impact Sensor 1 Signal circuit for a short to ground.
Perform the ORC VERIFICATION TEST - VER 1.

No >> Go To 4

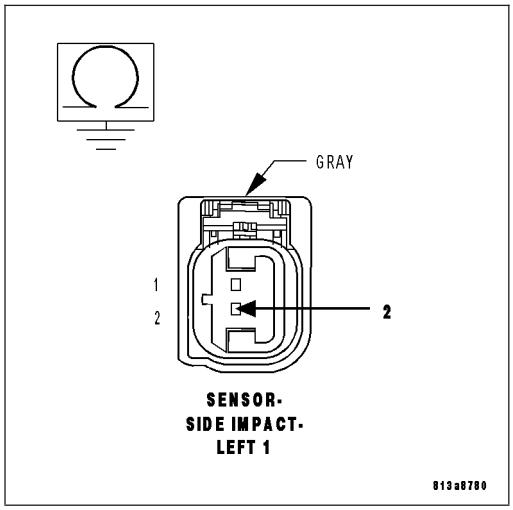

4. CHECK THE (R13, R15) LEFT SIDE IMPACT SENSOR CIRCUITS FOR A SHORT TOGETHER

Measure the resistance between the (R13) Left Side Impact Sensor 1 Signal and (R15) Sensor Ground circuits at the Left Side Impact Sensor 1 connector.

Is the resistance below 100K ohms?

Yes >> Repair the (R13, R15) Left Side Impact Sensor 1 circuits shorted together.
Perform the ORC VERIFICATION TEST - VER 1.

No >> Go To 5

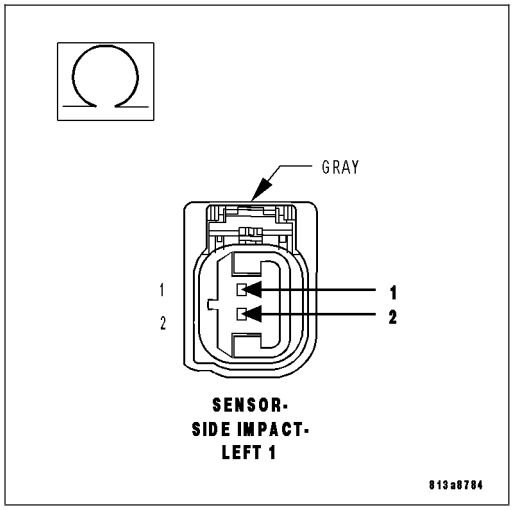

5. CHECK THE (R15) LEFT SIDE IMPACT SENSOR 1 GROUND CIRCUIT FOR AN OPEN OR HIGH RESISTANCE

Connect the 8443 Load Tool ORC Adaptor to the Occupant Control Module connector.

Measure the resistance of the (R15) Left Side Impact Sensor 1 Ground circuit between the Left Side Impact Sensor 1 connector and the 8443 Load Tool ORC Adaptor.

Is the resistance below 1 ohm?

Yes >> Go To 6

No >> Repair the (R15) Left Side Impact Sensor 1 Ground circuit for an open or high resistance.
Perform the ORC VERIFICATION TEST - VER 1.

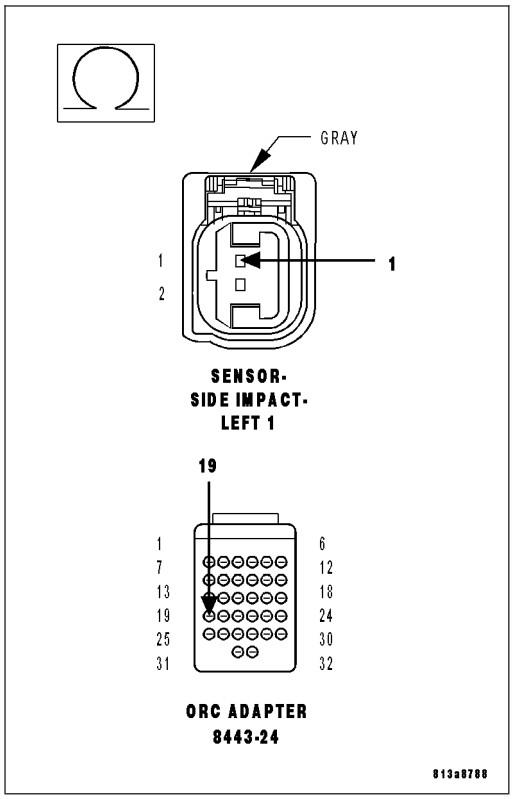

6. CHECK THE (R13) LEFT SIDE IMPACT SENSOR 1 CIRCUIT FOR AN OPEN OR HIGH RESISTANCE

Measure the resistance of the (R13) Left Side Impact Sensor 1 Signal circuit between the Left Side Impact Sensor 1 connector and the 8443 Load Tool ORC Adaptor.

Is the resistance below 1 ohm?

Yes >> Go To 7

No >> Repair the (R13) Left Side Impact Sensor 1 Signal circuit for an open or high resistance.
Perform the ORC VERIFICATION TEST - VER 1.

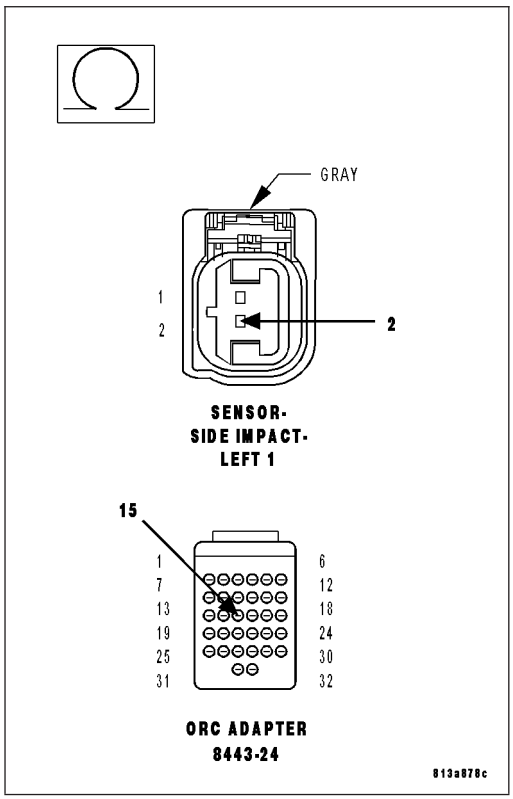

7. CHECK OPERATION OF THE LEFT SIDE IMPACT SENSOR 1

Replace the Left Side Impact Sensor 1.

Reconnect the vehicle body harness to the impact sensor.

Remove any special tools or jumper wires and reconnect all previously disconnected components - except the Battery.

WARNING: To avoid personal injury or death, turn the ignition on, then reconnect the battery.

Connect the scan tool to the Data Link Connector - use the most current software available.

Use the scan tool and erase the stored codes in all airbag system modules.

Turn the Ignition Off, and wait 15 seconds before turning the Ignition On.

Wait one minute, and read active codes and if there are none present read the stored codes.

Did the active Left Side Impact Sensor 1 DTC return?

Yes >> Go To 8

No >> Repair is complete.
Perform the ORC VERIFICATION TEST - VER 1.

8. REPLACE THE OCCUPANT RESTRAINT CONTROLLER

WARNING: To avoid personal injury or death, turn the ignition off, disconnect the battery and wait two minutes before proceeding.

WARNING: If the airbag control module is dropped at any time, it must be replaced. Failure to take the proper precautions could result in accidental airbag deployment and personal injury or death.

If there are no possible causes remaining, view repair.

Repair

Replace the Occupant Restraint Controller in accordance with Service Instructions.
Perform the ORC VERIFICATION TEST - VER 1.

9. TEST FOR AN INTERMITTENT CONDITION

With the scan tool, record and erase all DTC's from all Airbag modules.

If any ACTIVE codes are present they must be resolved before diagnosing any stored codes.

WARNING: To avoid personal injury or death, turn the ignition off, disconnect the battery and wait two minutes before proceeding.

Using the wiring diagram/schematic as a guide, inspect the wiring and connectors.

Look for chafed, pierced, pinched, or partially broken wires and broken, bent, pushed out, spread, corroded, or contaminated terminals.

The following additional checks may assist you in identifying a possible intermittent problem.

Reconnect any disconnected components and harness connector.

WARNING: To avoid personal injury or death, turn the ignition on, then reconnect the battery.

With the scan tool monitor active codes as you work through the following steps.

WARNING: To avoid personal injury or death, maintain a safe distance from all airbags while performing the following steps.

Wiggle the wiring harness and connectors of the related airbag circuit or component.

If codes are related to the Driver Airbag circuits, rotate the steering wheel from stop to stop.

If only stored codes return continue the test until the problem area has been isolated.

In the previous steps you have attempted to recreate the conditions responsible for setting active DTC in question.

Are any ACTIVE DTCs present?

Yes >> Select the appropriate symptom from Symptom List.

No >> No problem found at this time. Erase all codes before returning vehicle to customer.

B1B73-LEFT SIDE SATELLITE ACCELERATION SENSOR 2 INTERNAL

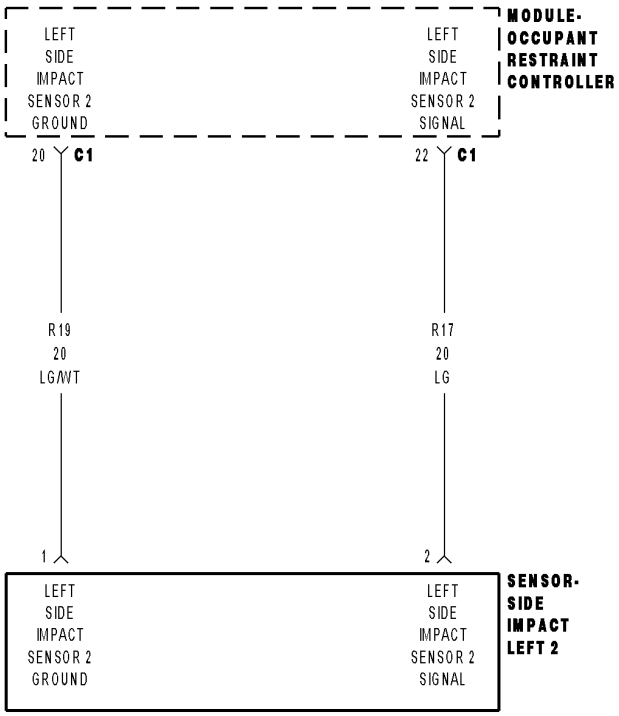

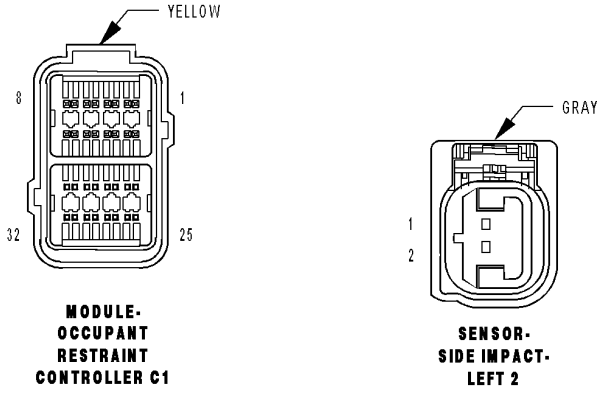

8133a81b

For a complete wiring diagram **Refer to Section 8W**.

- **When Monitored:**
  The Occupant Restraint Controller (ORC) continuously communicates with the Left Side Impact Sensor 2 over the sensor signal circuit. The sensor communication and on board diagnostics are powered by the ORC signal.
- **Set Condition:**
  This code will set, if the ORC and the Left Side Impact Sensor 2 do not establish and maintain valid data communications.

Possible Causes
(R17) SIGNAL CIRCUIT SHORTED TO BATTERY
(R17) SIGNAL CIRCUIT SHORTED TO GROUND
(R17, R19) LEFT SIDE IMPACT SENSOR 2 CIRCUITS SHORTED TOGETHER
(R19) LEFT SIDE IMPACT SENSOR 2 GROUND CIRCUIT OPEN
(R17) LEFT SIDE IMPACT SENSOR 2 SIGNAL CIRCUIT OPEN
ORC, LEFT SIDE IMPACT SENSOR 2

Diagnostic Test

1. VERIFY THAT DTC B1B73-LEFT SIDE SATELLITE ACCELERATION SENSOR 2 INTERNAL IS ACTIVE

NOTE: Ensure the battery is fully charged.

NOTE: When reconnecting Airbag system components, the ignition must be turned off and the battery must be disconnected.

Turn the ignition on.

With the scan tool, read ORC DTCs.

Does the scan tool display active: B1B73-LEFT SIDE SATELLITE ACCELERATION SENSOR 2 INTERNAL?

Yes >> Go To 2

No >> Go To 9

2. CHECK THE (R17, R19) LEFT SIDE IMPACT SENSOR 2 SIGNAL AND GROUND CIRCUITS FOR A SHORT TO BATTERY

WARNING: To avoid personal injury or death, turn the ignition off, disconnect the battery and wait two minutes before proceeding.

Disconnect the Left Side Impact Sensor 2 connector.

Disconnect the ORC connector.

WARNING: To avoid personal injury or death, turn the ignition on, then reconnect the battery.

Measure the voltage of the (R17) Left Side Impact Sensor 2 Signal circuit and (R19) Sensor Ground circuit at the Left Side Impact Sensor 2 connector and ground.

Is there any voltage present?

Yes >> Repair the (R17, R19) Left Side Impact Sensor 2 circuits for a short to battery.
Perform the ORC VERIFICATION TEST - VER 1.

No >> Go To 3

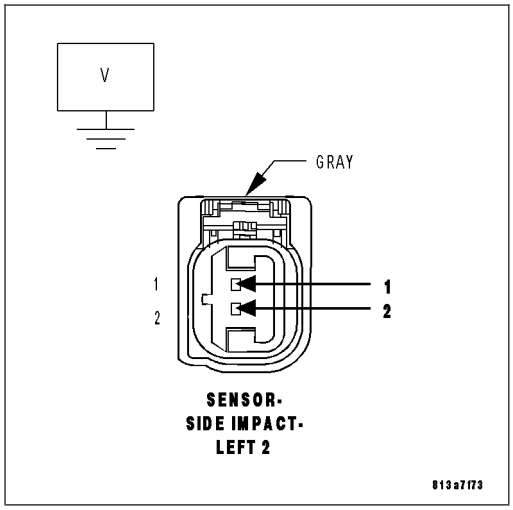

3. CHECK THE (R17) LEFT SIDE IMPACT SENSOR 2 SIGNAL CIRCUIT FOR A SHORT TO GROUND

WARNING: To avoid personal injury or death, turn ignition on, then reconnect the battery.

Measure the resistance of the (R17) Left Side Impact Sensor 2 Signal circuit between the Left Side Impact Sensor 2 connector and ground.

Is the resistance below 100K ohms?

Yes >> Repair the (R17) Left Side Impact Sensor 2 Signal circuit for a short to ground.
Perform the ORC VERIFICATION TEST - VER 1.

No >> Go To 4

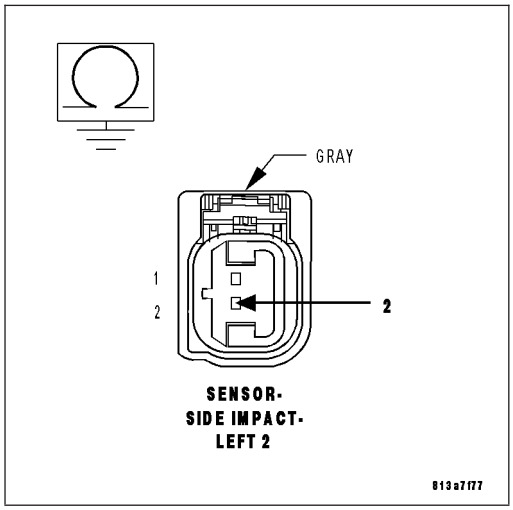

4. CHECK THE (R17, R19) LEFT SIDE IMPACT SENSOR 2 CIRCUITS FOR A SHORT TOGETHER

Measure the resistance between the (R17) Left Side Impact Sensor 2 Signal and (R19) Sensor Ground circuits at the Left Side Impact Sensor 2 connector.

Is the resistance below 100K ohms?

Yes >> Repair the (R17, R19) Left Side Impact Sensor 2 circuits shorted together.
Perform the ORC VERIFICATION TEST - VER 1.

No >> Go To 5

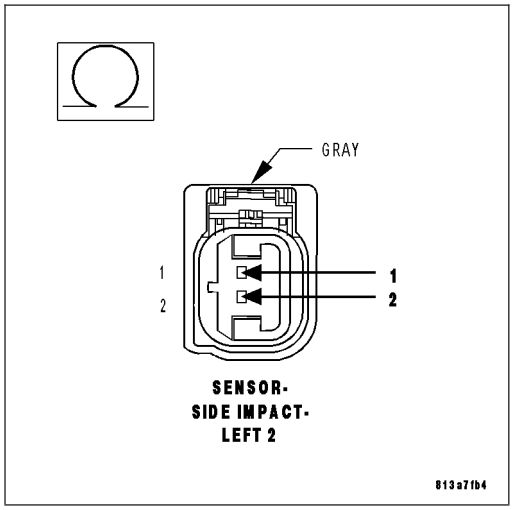

5. CHECK THE (R19) LEFT SIDE IMPACT SENSOR 2 GROUND CIRCUIT FOR AN OPEN OR HIGH RESISTANCE

Connect the 8443 Load Tool ORC Adaptor to the Occupant Control Module connector.

Measure the resistance of the (R19) Left Side Impact Sensor 2 Ground circuit between the Left Side Impact Sensor 2 connector and the 8443 Load Tool ORC Adaptor.

Is the resistance below 1 ohm?

Yes >> Go To 6

No >> Repair the (R19) Left Side Impact Sensor 2 Ground circuit for an open or high resistance.
Perform the ORC VERIFICATION TEST - VER 1.

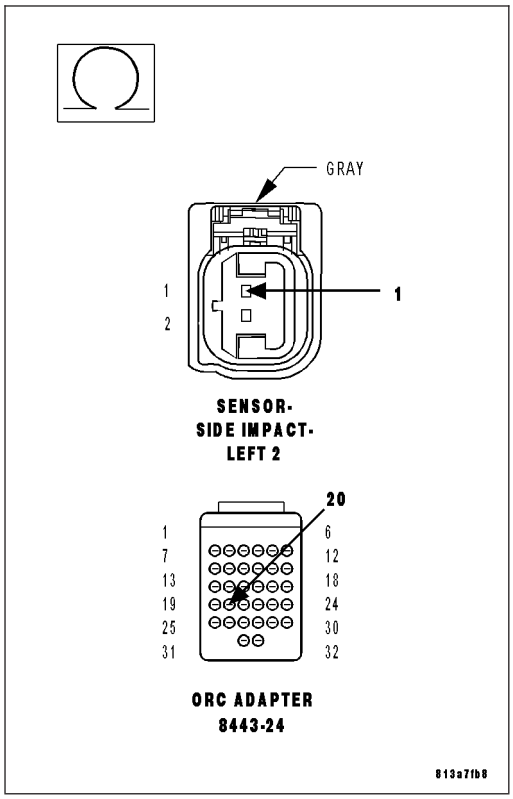

6. CHECK THE (R17) LEFT SIDE IMPACT SENSOR 2 CIRCUIT FOR AN OPEN OR HIGH RESISTANCE

Measure the resistance of the (R17) Left Side Impact Sensor 2 Signal circuit between the Left Side Impact Sensor 2 connector and the 8443 Load Tool ORC Adaptor.

Is the resistance below 1 ohm?

Yes >> Go To 7

No >> Repair the (R17) Left Side Impact Sensor 2 Signal circuit for an open or high resistance.
Perform the ORC VERIFICATION TEST - VER 1.

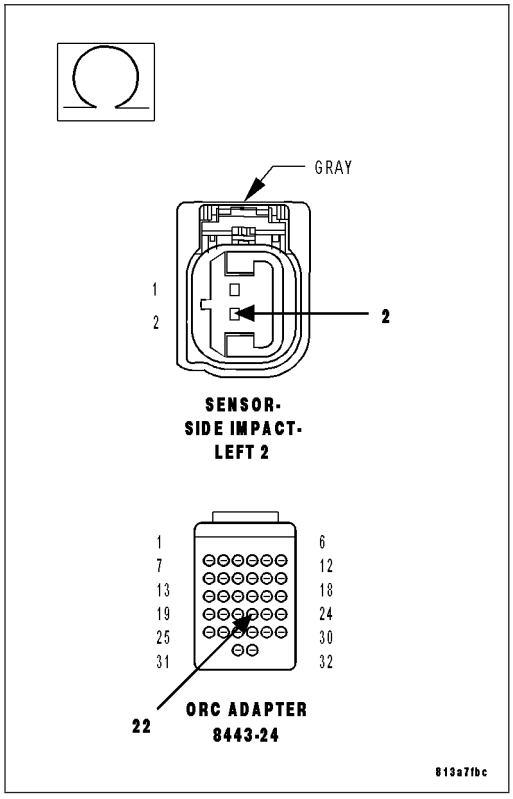

7. CHECK OPERATION OF THE LEFT SIDE IMPACT SENSOR 2

Replace the Left Side Impact Sensor 2.

Reconnect the vehicle body harness to the impact sensor.

Remove any special tools or jumper wires and reconnect all previously disconnected components - except the Battery.

WARNING: To avoid personal injury or death, turn the ignition on, then reconnect the battery.

Connect the scan tool to the Data Link Connector - use the most current software available.

Use the scan tool and erase the stored codes in all airbag system modules.

Turn the Ignition Off, and wait 15 seconds before turning the Ignition On.

Wait one minute, and read active codes and if there are none present read the stored codes.

Did the active Left Side Impact Sensor 2 DTC return?

Yes >> Go To 8

No >> Repair is complete.
Perform the ORC VERIFICATION TEST - VER 1.

8. REPLACE THE OCCUPANT RESTRAINT CONTROLLER

WARNING: To avoid personal injury or death, turn the ignition off, disconnect the battery and wait two minutes before proceeding.

WARNING: If the airbag control module is dropped at any time, it must be replaced. Failure to take the proper precautions could result in accidental airbag deployment and personal injury or death.

If there are no possible causes remaining, view repair.

Repair

Replace the Occupant Restraint Controller in accordance with Service Instructions.
Perform the ORC VERIFICATION TEST - VER 1.

9. TEST FOR AN INTERMITTENT CONDITION

With the scan tool, record and erase all DTC's from all Airbag modules.

If any ACTIVE codes are present they must be resolved before diagnosing any stored codes.

WARNING: To avoid personal injury or death, turn the ignition off, disconnect the battery and wait two minutes before proceeding.

Using the wiring diagram/schematic as a guide, inspect the wiring and connectors.

Look for chafed, pierced, pinched, or partially broken wires and broken, bent, pushed out, spread, corroded, or contaminated terminals.

The following additional checks may assist you in identifying a possible intermittent problem.

Reconnect any disconnected components and harness connector.

WARNING: To avoid personal injury or death, turn the ignition on, then reconnect the battery.

With the scan tool monitor active codes as you work through the following steps.

WARNING: To avoid personal injury or death, maintain a safe distance from all airbags while performing the following steps.

Wiggle the wiring harness and connectors of the related airbag circuit or component.

If codes are related to the Driver Airbag circuits, rotate the steering wheel from stop to stop.

If only stored codes return continue the test until the problem area has been isolated.

In the previous steps you have attempted to recreate the conditions responsible for setting active DTC in question.

Are any ACTIVE DTCs present?

Yes >> Select the appropriate symptom from Symptom List.

No >> No problem found at this time. Erase all codes before returning vehicle to customer.

B1B75-RIGHT SIDE SATELLITE ACCELERATION SENSOR 1 INTERNAL

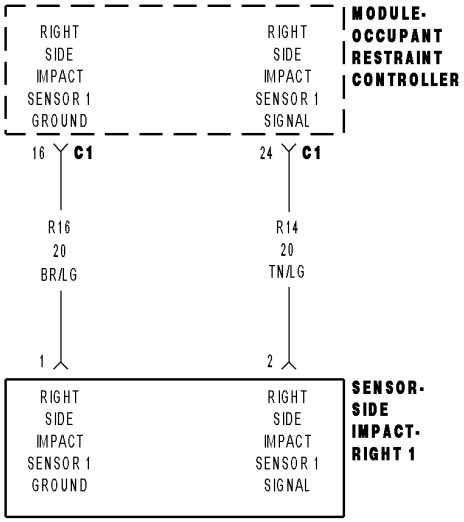

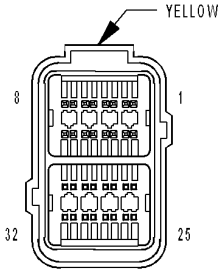

MODULE-
OCCUPANT
RESTRAINT
CONTROLLER C1

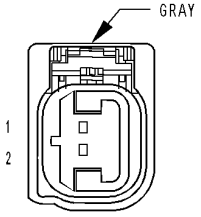

SENSOR-
SIDE IMPACT-
RIGHT 1

8133a88b

For a complete wiring diagram **Refer to Section 8W**.

- **When Monitored:**
  The Occupant Restraint Controller (ORC) continuously communicates with the Right Side Impact Sensor 1 over the sensor signal circuit. The sensor communication and on board diagnostics are powered by the ORC signal.
- **Set Condition:**
  This code will set, if the ORC and the Right Side Impact Sensor 1 do not establish and maintain valid data communications.

Possible Causes
(R14) SIGNAL CIRCUIT SHORTED TO BATTERY
(R14) SIGNAL CIRCUIT SHORTED TO GROUND
(R14, R16) RIGHT SIDE IMPACT SENSOR 1 CIRCUITS SHORTED TOGETHER
(R16) RIGHT SIDE IMPACT SENSOR 1 GROUND CIRCUIT OPEN
(R14) RIGHT SIDE IMPACT SENSOR 1 SIGNAL CIRCUIT OPEN
ORC, RIGHT SIDE IMPACT SENSOR 1

Diagnostic Test

1. VERIFY THAT DTC B1B75-RIGHT SIDE SATELLITE ACCELERATION SENSOR 1 INTERNAL

NOTE: Ensure the battery is fully charged.

NOTE: When reconnecting Airbag system components, the ignition must be turned off and the battery must be disconnected.

Turn the ignition on.

With the scan tool, read ORC DTCs.

Does the scan tool display active: B1B75-RIGHT SIDE SATELLITE ACCELERATION SENSOR 1 INTERNAL?

Yes >> Go To 2

No >> Go To 9

2. CHECK THE (R14, R16) RIGHT SIDE IMPACT SENSOR 1 SIGNAL AND GROUND CIRCUITS FOR A SHORT TO BATTERY

WARNING: To avoid personal injury or death, turn the ignition off, disconnect the battery and wait two minutes before proceeding.

Disconnect the Right Side Impact Sensor 1 connector.

Disconnect the ORC connector.

WARNING: To avoid personal injury or death, turn the ignition on, then reconnect the battery.

Measure the voltage of the (R14) Right Side Impact Sensor 1 Signal circuit and (R16) Sensor Ground circuit at the Right Side Impact Sensor 1 connector and ground.

Is there any voltage present?

Yes >> Repair the (R14, R16) Right Side Impact Sensor 1 circuits for a short to battery.
Perform the ORC VERIFICATION TEST - VER 1.

No >> Go To 3

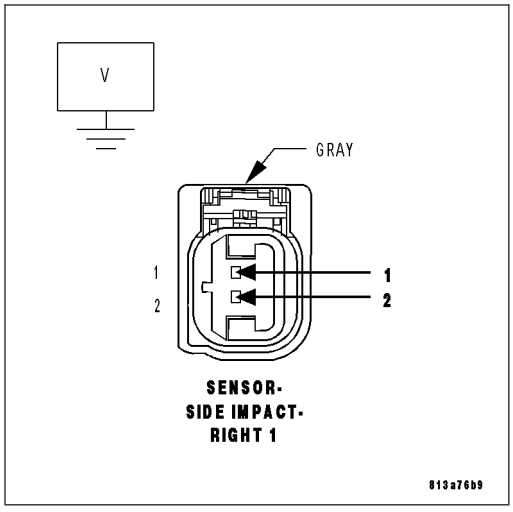

3. CHECK THE (R14) RIGHT SIDE IMPACT SENSOR 1 SIGNAL CIRCUIT FOR A SHORT TO GROUND

WARNING: To avoid personal injury or death, turn ignition on, then reconnect the battery.

Measure the resistance of the (R14) Right Side Impact Sensor 1 Signal circuit between the Right Side Impact Sensor 1 connector and ground.

Is the resistance below 100K ohms?

Yes >> Repair the (R14) Right Side Impact Sensor 1 Signal circuit for a short to ground.
Perform the ORC VERIFICATION TEST - VER 1.

No >> Go To 4

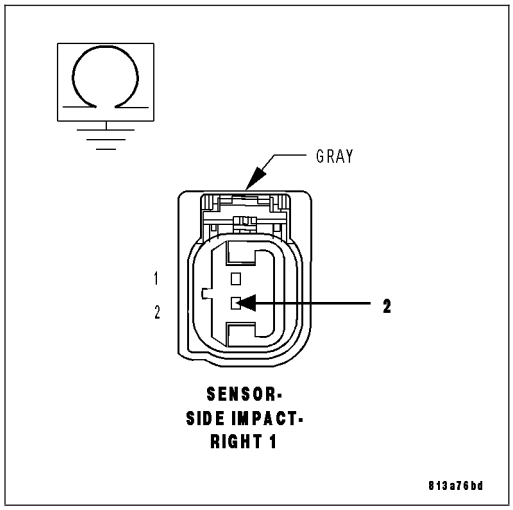

4. CHECK THE (R14, R16) RIGHT SIDE IMPACT SENSOR CIRCUITS FOR A SHORT TOGETHER

Measure the resistance between the (R14) Right Side Impact Sensor 1 Signal and (R16) Sensor Ground circuits at the Right Side Impact Sensor 1 connector.

Is the resistance below 100K ohms?

Yes >> Repair the (R14, R16) Right Side Impact Sensor 1 circuits shorted together.
Perform the ORC VERIFICATION TEST - VER 1.

No >> Go To 5

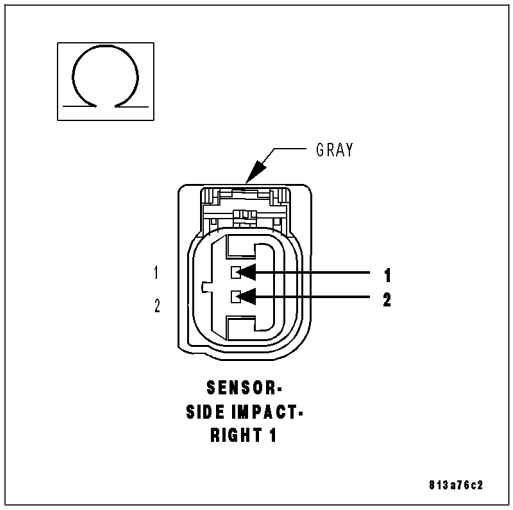

5. CHECK THE (R16) RIGHT SIDE IMPACT SENSOR 1 GROUND CIRCUIT FOR AN OPEN OR HIGH RESISTANCE

Connect the 8443 Load Tool ORC Adaptor to the Occupant Control Module connector.

Measure the resistance of the (R16) Right Side Impact Sensor 1 Ground circuit between the Right Side Impact Sensor 1 connector and the 8443 Load Tool ORC Adaptor.

Is the resistance below 1 ohm?

Yes >> Go To 6

No >> Repair the (R16) Right Side Impact Sensor 1 Ground circuit for an open or high resistance.
Perform the ORC VERIFICATION TEST - VER 1.

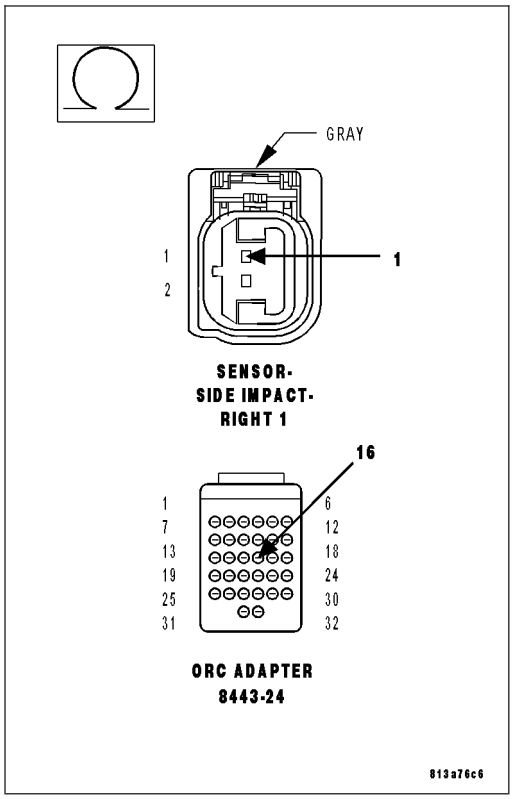

6. CHECK THE (R14) RIGHT SIDE IMPACT SENSOR 1 CIRCUIT FOR AN OPEN OR HIGH RESISTANCE

Measure the resistance of the (R14) Right Side Impact Sensor 1 Signal circuit between the Right Side Impact Sensor 1 connector and the 8443 Load Tool ORC Adaptor.

Is the resistance below 1 ohm?

Yes >> Go To 7

No >> Repair the (R14) Right Side Impact Sensor 1 Signal circuit for an open or high resistance.
Perform the ORC VERIFICATION TEST - VER 1.

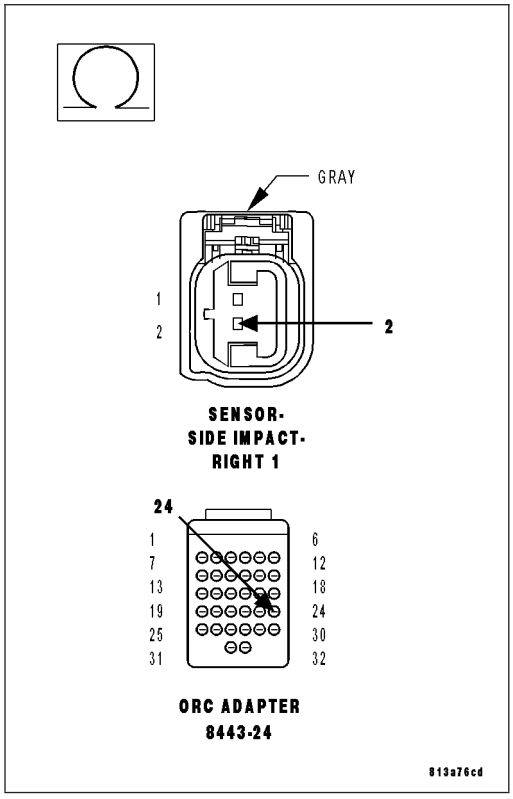

7. CHECK OPERATION OF THE RIGHT SIDE IMPACT SENSOR 1

Replace the Right Side Impact Sensor 1.

Reconnect the vehicle body harness to the impact sensor.

Remove any special tools or jumper wires and reconnect all previously disconnected components - except the Battery.

WARNING: To avoid personal injury or death, turn the ignition on, then reconnect the battery.

Connect the scan tool to the Data Link Connector - use the most current software available.

Use the scan tool and erase the stored codes in all airbag system modules.

Turn the Ignition Off, and wait 15 seconds before turning the Ignition On.

Wait one minute, and read active codes and if there are none present read the stored codes.

Did the active Right Side Impact Sensor 1 DTC return?

Yes >> Go To 8

No >> Repair is complete.
Perform the ORC VERIFICATION TEST - VER 1.

8. REPLACE THE OCCUPANT RESTRAINT CONTROLLER

WARNING: To avoid personal injury or death, turn the ignition off, disconnect the battery and wait two minutes before proceeding.

WARNING: If the airbag control module is dropped at any time, it must be replaced. Failure to take the proper precautions could result in accidental airbag deployment and personal injury or death.

If there are no possible causes remaining, view repair.

Repair

Replace the Occupant Restraint Controller in accordance with Service Instructions.
Perform the ORC VERIFICATION TEST - VER 1.

9. TEST FOR AN INTERMITTENT CONDITION

With the scan tool, record and erase all DTC's from all Airbag modules.

If any ACTIVE codes are present they must be resolved before diagnosing any stored codes.

WARNING: To avoid personal injury or death, turn the ignition off, disconnect the battery and wait two minutes before proceeding.

Using the wiring diagram/schematic as a guide, inspect the wiring and connectors.

Look for chafed, pierced, pinched, or partially broken wires and broken, bent, pushed out, spread, corroded, or contaminated terminals.

The following additional checks may assist you in identifying a possible intermittent problem.

Reconnect any disconnected components and harness connector.

WARNING: To avoid personal injury or death, turn the ignition on, then reconnect the battery.

With the scan tool monitor active codes as you work through the following steps.

WARNING: To avoid personal injury or death, maintain a safe distance from all airbags while performing the following steps.

Wiggle the wiring harness and connectors of the related airbag circuit or component.

If codes are related to the Driver Airbag circuits, rotate the steering wheel from stop to stop.

If only stored codes return continue the test until the problem area has been isolated.

In the previous steps you have attempted to recreate the conditions responsible for setting active DTC in question.

Are any ACTIVE DTCs present?

Yes >> Select the appropriate symptom from Symptom List.

No >> No problem found at this time. Erase all codes before returning vehicle to customer.

B1B76-RIGHT SIDE SATELLITE ACCELERATION SENSOR 2 INTERNAL

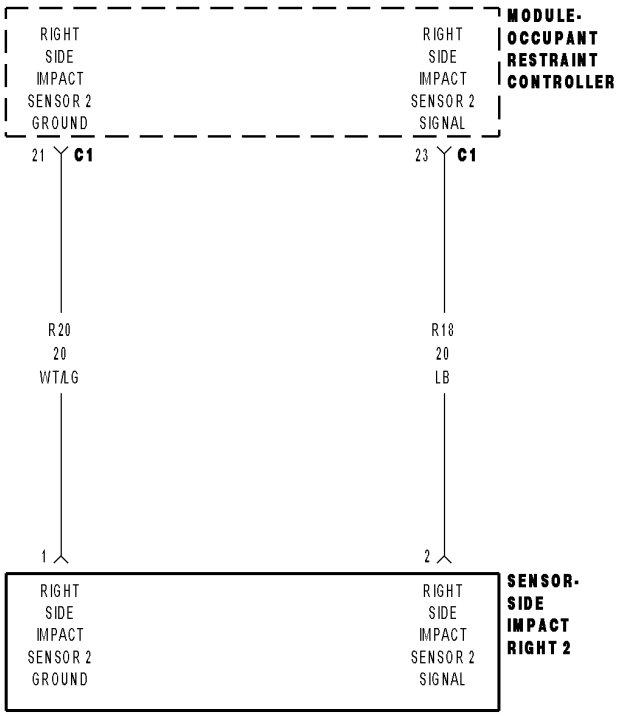

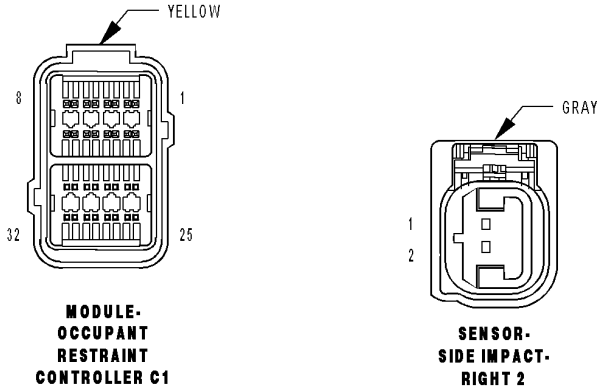

8133a8a1

For a complete wiring diagram **Refer to Section 8W**.

- **When Monitored:**
  The Occupant Restraint Controller (ORC) continuously communicates with the Right Side Impact Sensor 2 over the sensor signal circuit. The sensor communication and on board diagnostics are powered by the ORC signal.
- **Set Condition:**
  This code will set, if the ORC and the Right Side Impact Sensor 2 do not establish and maintain valid data communications.

Possible Causes
(R18) SIGNAL CIRCUIT SHORTED TO BATTERY
(R18) SIGNAL CIRCUIT SHORTED TO GROUND
(R18, R20) RIGHT SIDE IMPACT SENSOR 2 CIRCUITS SHORTED TOGETHER
(R20) RIGHT SIDE IMPACT SENSOR 2 GROUND CIRCUIT OPEN
(R18) RIGHT SIDE IMPACT SENSOR 2 SIGNAL CIRCUIT OPEN
ORC, RIGHT SIDE IMPACT SENSOR 2

Diagnostic Test

1. VERIFY ACTIVE B1B76-RIGHT SIDE SATELLITE ACCELERATION SENSOR 2 INTERNAL

Turn the ignition on.

With the scan tool, read ORC DTCs.

NOTE: Ensure the battery is fully charged.

NOTE: When reconnecting Airbag system components, the ignition must be turned off and the battery must be disconnected.

Does the scan tool display an active: B1B76-RIGHT SIDE SATELLITE ACCELERATION SENSOR 2 INTERNAL?

Yes >> Go To 2

No >> Go To 9

2. CHECK THE (R18, R20) RIGHT SIDE IMPACT SENSOR 2 SIGNAL AND GROUND CIRCUITS FOR A SHORT TO BATTERY

WARNING: To avoid personal injury or death, turn the ignition off, disconnect the battery and wait two minutes before proceeding.

Disconnect the Right Side Impact Sensor 2 connector.

Disconnect the ORC connector.

WARNING: To avoid personal injury or death, turn the ignition on, then reconnect the battery.

Measure the voltage of the (R18) Right Side Impact Sensor 2 Signal circuit and (R20) Sensor Ground circuit at the Right Side Impact Sensor 2 connector and ground.

Is there any voltage present?

Yes >> Repair the (R18, R20) Right Side Impact Sensor 2 circuits for a short to battery.
Perform the ORC VERIFICATION TEST - VER 1.

No >> Go To 3

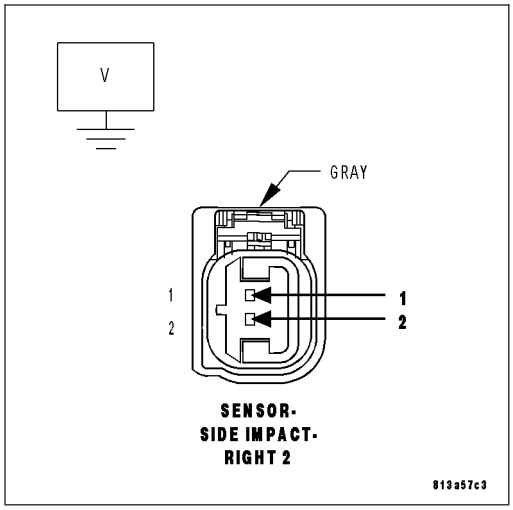

3. CHECK THE (R18) RIGHT SIDE IMPACT SENSOR 2 SIGNAL CIRCUIT FOR A SHORT TO GROUND

Measure the resistance of the (R18) Right Side Impact Sensor 2 Signal circuit between the Right Side Impact Sensor 2 connector and ground.

Is the resistance below 100K ohms?

Yes >> Repair the (R18) Right Side Impact Sensor 2 Signal circuit for a short to ground.
Perform the ORC VERIFICATION TEST - VER 1.

No >> Go To 4

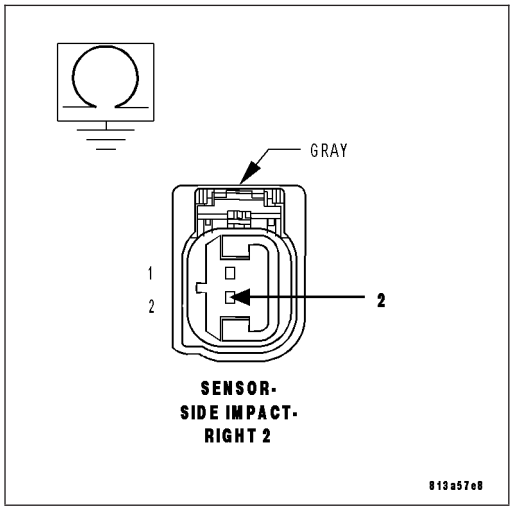

4. CHECK THE (R18, R20) RIGHT SIDE IMPACT SENSOR 2 CIRCUITS FOR A SHORT TOGETHER

Measure the resistance between the (R18) Right Side Impact Sensor 2 Signal and (R20) Sensor Ground circuits at the Right Side Impact Sensor 2 connector.

Is the resistance below 100K ohms?

Yes >> Repair the (R18, R20) Right Side Impact Sensor 2 circuits shorted together.
Perform the ORC VERIFICATION TEST - VER 1.

No >> Go To 5

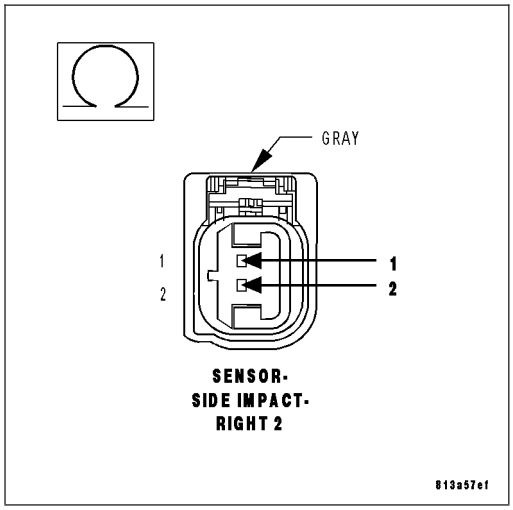

5. CHECK THE (R18) RIGHT SIDE IMPACT SENSOR 2 GROUND CIRCUIT FOR AN OPEN OR HIGH RESISTANCE

Connect the 8443 Load Tool ORC Adaptor to the Occupant Restraint Controller C2 connector.

Measure the resistance of the (R20) Right Side Impact Sensor 2 Ground circuit between the Right Side Impact Sensor 2 connector and the 8443 Load Tool ORC Adaptor.

Is the resistance below 1 ohm?

Yes >> Go To 6

No >> Repair the (R20) Right Side Impact Sensor 2 Ground circuit for an open or high resistance.
Perform the ORC VERIFICATION TEST - VER 1.

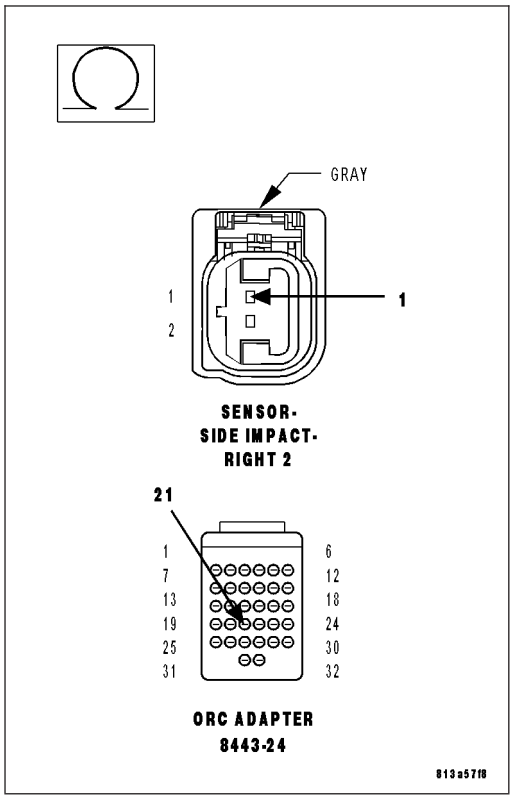

6. CHECK THE (R18) RIGHT SIDE IMPACT SENSOR 2 CIRCUIT FOR AN OPEN OR HIGH RESISTANCE

Measure the resistance of the (R18) Right Side Impact Sensor 2 Signal circuit between the Right Side Impact Sensor 2 connector and the 8443 Load Tool ORC Adaptor.

Is the resistance below 1 ohm?

Yes >> Go To 7

No >> Repair the (R18) Right Side Impact Sensor 2 Signal circuit for an open or high resistance.
Perform the ORC VERIFICATION TEST - VER 1.

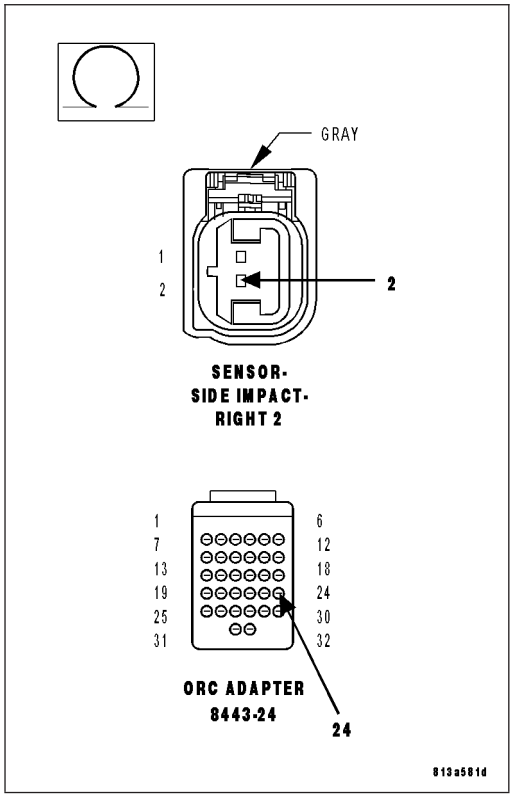

7. CHECK OPERATION OF THE RIGHT SIDE IMPACT SENSOR 2

Replace the Right Side Impact Sensor 2.

Reconnect the vehicle body harness to the impact sensor.

Remove any special tools or jumper wires and reconnect all previously disconnected components - except the Battery.

WARNING: To avoid personal injury or death, turn the ignition on, then reconnect the battery.

Connect the scan tool to the Data Link Connector - use the most current software available.

Use the scan tool and erase the stored codes in all airbag system modules.

Turn the Ignition Off, and wait 15 seconds before turning the Ignition On.

Wait one minute, and read active codes and if there are none present read the stored codes.

Did the active Right Side Impact Sensor 2 DTC return?

Yes >> Go To 8

No >> Repair is complete.
Perform the ORC VERIFICATION TEST - VER 1.

8. REPLACE THE OCCUPANT RESTRAINT CONTROLLER

WARNING: To avoid personal injury or death, turn the ignition off, disconnect the battery and wait two minutes before proceeding.

WARNING: If the airbag control module is dropped at any time, it must be replaced. Failure to take the proper precautions could result in accidental airbag deployment and personal injury or death.

Repair

Replace the Occupant Restraint Controller in accordance with Service Instructions.
Perform the ORC VERIFICATION TEST - VER 1.

9. TEST FOR INTERMITTENT CONDITION

With the scan tool, record and erase all DTC's from all Airbag modules.

If any ACTIVE codes are present they must be resolved before diagnosing any stored codes.

WARNING: To avoid personal injury or death, turn the ignition off, disconnect the battery and wait two minutes before proceeding.

Using the wiring diagram/schematic as a guide, inspect the wiring and connectors.

Look for chafed, pierced, pinched, or partially broken wires and broken, bent, pushed out, spread, corroded, or contaminated terminals.

The following additional checks may assist you in identifying a possible intermittent problem.

Reconnect any disconnected components and harness connector.

WARNING: To avoid personal injury or death, turn the ignition on, then reconnect the battery.

With the scan tool monitor active codes as you work through the following steps.

WARNING: To avoid personal injury or death, maintain a safe distance from all airbags while performing the following steps.

Wiggle the wiring harness and connectors of the related airbag circuit or component.

If codes are related to the Driver Airbag circuits, rotate the steering wheel from stop to stop.

If only stored codes return continue the test until the problem area has been isolated.

In the previous steps you have attempted to recreate the conditions responsible for setting active DTC in question.

Are any ACTIVE DTCs present?

Yes >> Select the appropriate symptom from Symptom List.

No >> No problem found at this time. Erase all codes before returning vehicle to customer.

B1B78-PASSENGER SEAT WEIGHT SENSOR 3 - LEFT FRONT PERFORMANCE

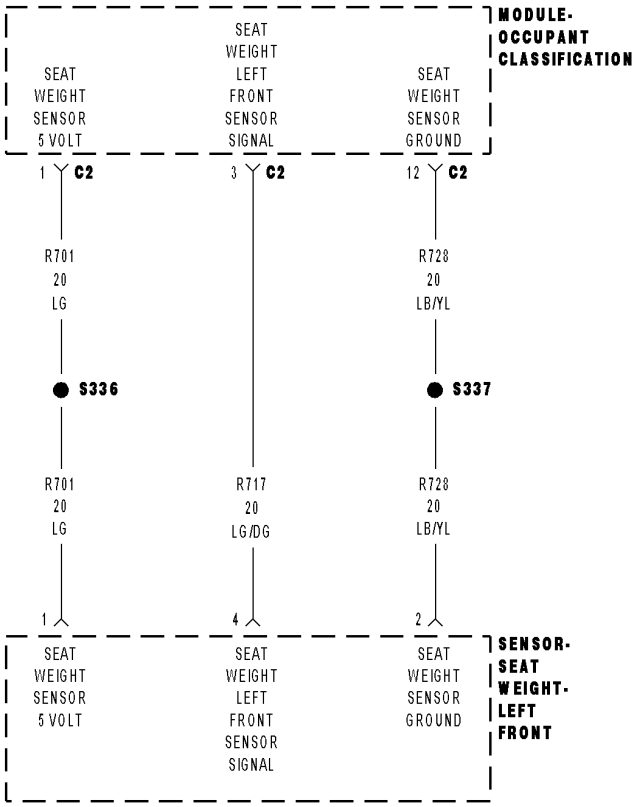

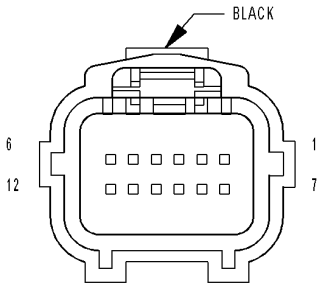

MODULE-
OCCUPANT
CLASSIFICATION C2

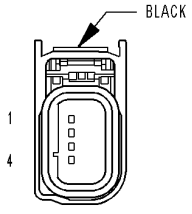

SENSOR-
SEAT WEIGHT-
LEFT FRONT

8133acea

For a complete wiring diagram **Refer to Section 8W**.

- **When Monitored:**
  When CAN ignitions status is Run or SNA, during auto zero and while performing the Occupant Classification Module System Verification Test.
- **Set Condition:**
  During the occupant classification verification test: if the module detects that the sensor input is less than 1.4 volts or greater than 3.6 volts. During auto zero: if the module detects that the sensor input is less than 1 volt or greater than 4 volts.

Possible Causes
PASSENGER SEAT HARNESS WIRES CHAFED, PIERCED, PINCHED, PARTIALLY BROKEN
PASSENGER SEAT HARNESS CONNECTOR TERMINALS BROKEN, BENT PUSHED OUT, SPREAD, CORRODED, CONTAMINATED
LEFT-FRONT PASSENGER SEAT WEIGHT SENSOR
DAMAGE TO THE PASSENGER SEAT STRUCTURE, RISER ASSEMBLY, CROSSMEMBERS, SEAT TRACKS, FLOOR PAN
OCCUPANT CLASSIFICATION MODULE (OCM)

Diagnostic Test

1. CHECK FOR ACTIVE INTERNAL FAULTS, IGNITION FAULTS, AND BATTERY FAULTS IN THE OCCUPANT CLASSIFICATION MODULE (OCM)

NOTE: Ensure the battery is fully charged.

NOTE: When reconnecting Airbag system components, the ignition must be turned off and the battery must be disconnected.

Turn the ignition on, then off, and then on again.

With the scan tool, read Occupant Classification Module (OCM) DTCs.

Does the scan tool display any active DTCs relating to internal faults, ignition faults, or battery faults?

Yes >> Diagnose and repair the DTCs. Refer to the Table of Contents in this Section for a complete list of symptoms.

No >> Go To 2

2. VERIFY THAT DTC B1B78-PASSENGER SEAT WEIGHT SENSOR 3 - LEFT FRONT PERFORMANCE IS ACTIVE

With the scan tool, read OCM DTCs.

Does the scan tool display active: B1B78-PASSENGER SEAT WEIGHT SENSOR 3 - LEFT FRONT PERFORMANCE?

Yes >> Go To 3

No >> Go To 5

3. INSPECT PASSENGER SEAT HARNESS WIRES AND CONNECTORS

WARNING: To avoid personal injury or death, turn the ignition off, disconnect the battery and wait two minutes before proceeding.

Using the wiring diagram/schematic as a guide, inspect the Passenger Seat Harness wiring and connectors. Look for chafed, pierced, pinched, or partially broken wires and broken, bent, pushed out, spread, corroded, or contaminated terminals.

Are any of these conditions present?

Yes >>

NOTE: Do not attempt to repair the Seat Harness. Replace the Seat Harness if the condition inspecting or testing for is present in the Seat Harness.

Replace the Passenger Seat Harness in accordance with the Service Information.

Perform OCS VERIFICATION TEST - VER 1.

No >> Go To 4

4. PERFORM OCCUPANT CLASSIFICATION MODULE SYSTEM VERIFICATION TEST

Verify that all of the Seat Weight Sensor mounting screws are torqued to specification. Refer to 23 - BODY/SEATS.

WARNING: To avoid personal injury or death, turn the ignition on, then reconnect the battery.

NOTE: Failure to follow test instructions or aborting the test will cause faults to set when performing the Occupant Classification Module System Verification Test. To prevent faults due to process errors: Verify That All Tests Steps That Led You Here Were Performed As Directed; Verify That The Ignition Is In Run; Wait 30 Seconds After Changing The Seat Weight Before Proceeding To Allow The System To Stabilize; Only Press Scan Tool Buttons When Directed To Do So; and Perform The Occupant Classification Module System Verification Test To Completion.

With the scan tool in OCM, select More Options, select System Tests, and select Occupant Classification Module System Verification Test. Run the test by following the instructions displayed on the scan tool. When the test is complete, wait two minutes, and then proceed as follows.

With the scan tool, read OCM DTCs.

Does the scan tool display any active PASSENGER SEAT WEIGHT SENSOR PERFORMANCE DTCs?

Yes >> Perform the *Diagnosis/Checkout Procedure For Seat Weight Sensors.

Perform OCS VERIFICATION TEST - VER 1.

No - But Other DTCs Present

Diagnose and repair the DTCs. Refer to the Table of Contents in this Section for a complete list of symptoms.

No Active DTCs Present

Perform OCS VERIFICATION TEST - VER 1.

5. TEST FOR INTERMITTENT CONDITION

With the scan tool, record and erase all DTCs from all Airbag modules.

If any ACTIVE codes are present they must be resolved before diagnosing any stored codes.

WARNING: To avoid personal injury or death, turn the ignition off, disconnect the battery and wait two minutes before proceeding.

Using the wiring diagram/schematic as a guide, inspect the wiring and connectors.

Look for chafed, pierced, pinched, or partially broken wires and broken, bent, pushed out, spread, corroded, or contaminated terminals.

The following additional checks may assist you in identifying a possible intermittent problem.

Reconnect any disconnected components and harness connector.

WARNING: To avoid personal injury or death, turn the ignition on, then reconnect the battery.

With the scan tool, monitor active codes as you work through the following steps.

WARNING: To avoid personal injury or death, maintain a safe distance from all airbags while performing the following steps.

Wiggle the wiring harness and connectors of the related airbag circuit or component.

If codes are related to the Driver Airbag circuits, rotate the steering wheel from stop to stop.

If only stored codes return, continue the test until the problem area has been isolated.

In the previous steps you have attempted to recreate the conditions responsible for setting the active DTC in question.

Does the scan tool display any ACTIVE DTCs?

Yes >> Select appropriate symptom from Symptom List.

No >> No problem found at this time. Erase all codes before returning vehicle to customer.

B1B79-PASSENGER SEAT WEIGHT SENSOR 3 - LEFT FRONT INPUT CIRCUIT LOW

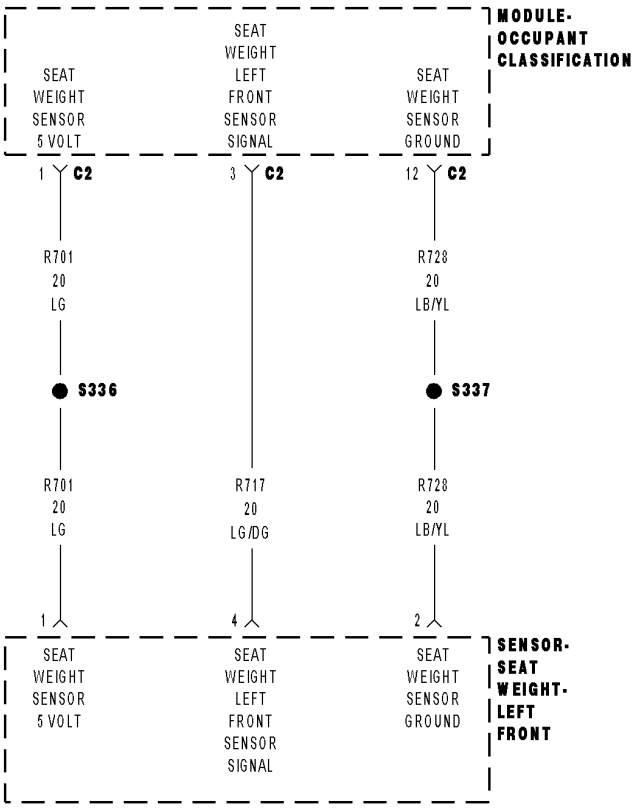

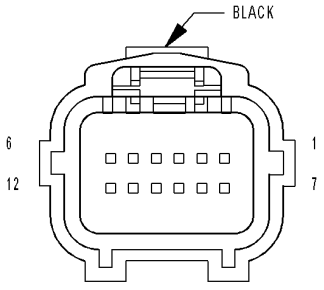

MODULE-
OCCUPANT
CLASSIFICATION C2

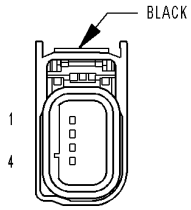

SENSOR-
SEAT WEIGHT-
LEFT FRONT

8133acea

For a complete wiring diagram **Refer to Section 8W**.

- **When Monitored:**
  While the CAN bus ignition status is in IGN_RUN, the module checks the sensor input ranges.
- **Set Condition:**
  If the module detects that the sensor input is less than 3.4± .6% of the (R701) Seat Weight Sensor 5 Volt circuit voltage. This DTC will also set if the (R701) Seat Weight Sensor 5 Volt circuit is shorted to ground. However, this condition would prevent communication with the OCM and cause a Lost Communication With OCM DTC to set in other modules.

Possible Causes
PASSENGER SEAT HARNESS IMPROPERLY ROUTED
PASSENGER SEAT HARNESS WIRES CHAFED, PIERCED, PINCHED, PARTIALLY BROKEN
PASSENGER SEAT HARNESS CONNECTOR TERMINALS BROKEN, BENT PUSHED OUT, SPREAD, CORRODED, CONTAMINATED
(R717) LT-FT SEAT WEIGHT SENSOR SIGNAL CIRCUIT SHORTED TO GROUND
(R717) LT-FT SEAT WEIGHT SENSOR SIGNAL CIRCUIT OPEN
(R701) SEAT WEIGHT SENSOR 5 VOLT CIRCUIT OPEN
LEFT-FRONT SEAT WEIGHT SENSOR
OCCUPANT CLASSIFICATION MODULE (OCM)

Diagnostic Test

1. CHECK FOR ACTIVE INTERNAL FAULTS, IGNITION FAULTS, AND BATTERY FAULTS IN THE OCCUPANT CLASSIFICATION MODULE (OCM)

NOTE: Ensure the battery is fully charged.

NOTE: When reconnecting Airbag system components, the ignition must be turned off and the battery must be disconnected.

Turn the ignition on, then off, and then on again.

With the scan tool, read Occupant Classification Module (OCM) DTCs.

Does the scan tool display any active DTCs relating to internal faults, ignition faults, or battery faults?

Yes >> Diagnose and repair the DTCs. Refer to the Table of Contents in this Section for a complete list of symptoms.

No >> Go To 2

2. VERIFY THAT DTC B1B79–PASSENGER SEAT WEIGHT SENSOR 3 - LEFT FRONT INPUT CIRCUIT LOW IS ACTIVE

With the scan tool, read OCM DTCs.

Does the scan tool display active: B1B79–PASSENGER SEAT WEIGHT SENSOR 3 - LEFT FRONT INPUT CIRCUIT LOW?

Yes >> Go To 3

No >> Go To 10

3. INSPECT PASSENGER SEAT HARNESS WIRES AND CONNECTORS

WARNING: To avoid personal injury or death, turn the ignition off, disconnect the battery and wait two minutes before proceeding.

Using the wiring diagram/schematic as a guide, inspect the Passenger Seat Harness wiring and connectors. Look for chafed, pierced, pinched, or partially broken wires and broken, bent, pushed out, spread, corroded, or contaminated terminals.

Are any of these conditions present?

Yes >>

NOTE: Do not attempt to repair the Seat Harness. Replace the Seat Harness if the condition inspecting or testing for is present in the Seat Harness.

Replace the Passenger Seat Harness in accordance with the Service Information.

Perform OCS VERIFICATION TEST - VER 1.

No >> Go To 4

4. VERIFY THAT PASSENGER SEAT HARNESS IS ROUTED CORRECTLY

Verify that the Passenger Seat Harness is routed correctly.

Is the Passenger Seat Harness routed correctly?

Yes >> Go To 5

No >> Reroute the Passenger Seat Harness as necessary. Then, Go To 5

5. CHECK IF MORE THAN ONE PASSENGER SEAT WEIGHT SENSOR DTC IS ACTIVE

Verify that all of the Seat Weight Sensor mounting screws are torqued to specification. Refer to 23 - BODY/SEATS.

WARNING: To avoid personal injury or death, turn the ignition on, then reconnect the battery.

NOTE: Failure to follow test instructions or aborting the test will cause faults to set when performing the Occupant Classification Module System Verification Test. To prevent faults due to process errors: Verify That All Tests Steps That Led You Here Were Performed As Directed; Verify That The Ignition Is In Run; Wait 30 Seconds After Changing The Seat Weight Before Proceeding To Allow The System To Stabilize; Only Press Scan Tool Buttons When Directed To Do So; and Perform The Occupant Classification Module System Verification Test To Completion.

With the scan tool in OCM, select More Options, select System Tests, and select Occupant Classification Module System Verification Test. Run the test by following the instructions displayed on the scan tool. When the test is complete, wait two minutes, and then proceed as follows.

With the scan tool, read OCM DTCs.

Does the scan tool display any active PASSENGER SEAT WEIGHT SENSOR DTCs?

Yes - More Than One PASSENGER SEAT WEIGHT SENSOR DTC Is Active.

Perform the Diagnosis/Checkout Procedure For Seat Weight Sensors.

Perform OCS VERIFICATION TEST - VER 1

Yes - Only DTC B1B79 Is Active.

Go To 6

No - But Other DTCs Present.

Diagnose and repair the DTCs. Refer to the Table of Contents in this Section for a complete list of symptoms.

No - No Active DTCs Present.

Perform OCS VERIFICATION TEST - VER 1.

6. CHECK VOLTAGE OF (R701) SEAT WEIGHT SENSOR 5 VOLT CIRCUIT

WARNING: To avoid personal injury or death, turn the ignition off, disconnect the battery and wait two minutes before proceeding.
Disconnect the Left-Front Seat Weight Sensor connector.

WARNING: To avoid personal injury or death, turn the ignition on, then reconnect the battery.
Measure the voltage of the (R701) Seat Weight Sensor 5 Volt circuit.

Is the voltage above 4.8 volts?

Yes >> Go To 7

No >> Go To 9

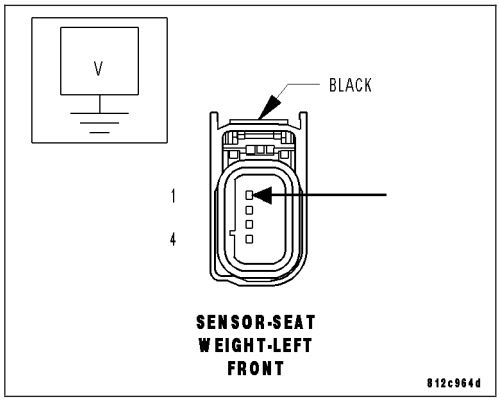

7. CHECK (R717) LT-FT SEAT WEIGHT SENSOR SIGNAL CIRCUIT FOR A SHORT TO GROUND

WARNING: To avoid personal injury or death, turn the ignition off, disconnect the battery and wait two minutes before proceeding.
Disconnect the OCM C2 connector.

Measure the resistance of the (R717) LT-FT Seat Weight Sensor Signal circuit between ground and the OCM C2 connector.

Is the resistance below 10k ohms?

Yes >>

NOTE: Do not attempt to repair the Seat Harness. Replace the Seat Harness if the condition inspecting or testing for is present in the Seat Harness.

Replace the Passenger Seat Harness in accordance with the Service Information.

Perform OCS VERIFICATION TEST - VER 1.

No >> Go To 8

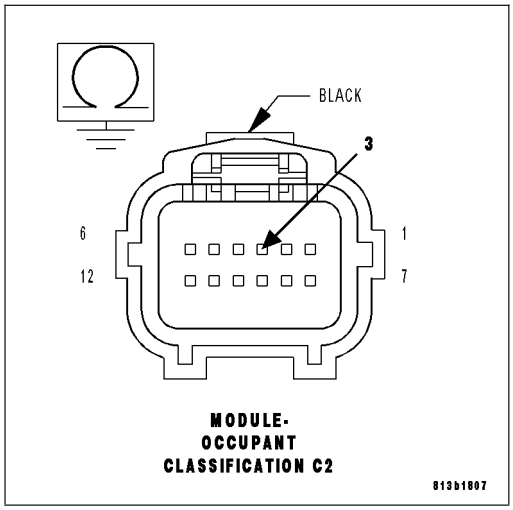

8. CHECK (R717) LT-FT SEAT WEIGHT SENSOR SIGNAL CIRCUIT FOR AN OPEN

Measure the resistance of the (R717) LT-FT Seat Weight Sensor Signal circuit between the OCM C2 connector and the Left-Front Seat Weight Sensor connector.

Is the resistance below 5.0 ohms?

Yes >> Replace the Left-Front Seat Weight Sensor in accordance with the Service Information. Perform OCS VERIFICATION TEST - VER 1. If DTC B1B79–PASSENGER SEAT WEIGHT SENSOR 3 - LEFT FRONT INPUT CIRCUIT LOW returns active, replace the OCM in accordance with the Service Information.

Perform OCS VERIFICATION TEST - VER 1.

No >>

NOTE: Do not attempt to repair the Seat Harness. Replace the Seat Harness if the condition inspecting or testing for is present in the Seat Harness.

Replace the Passenger Seat Harness in accordance with the Service Information.

Perform OCS VERIFICATION TEST - VER 1.

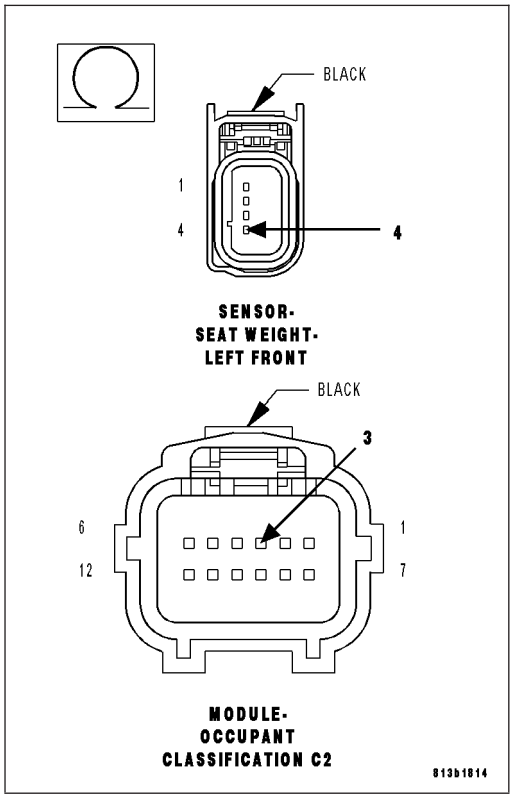

9. CHECK (R701) SEAT WEIGHT SENSOR 5 VOLT CIRCUIT FOR AN OPEN

WARNING: To avoid personal injury or death, turn the ignition off, disconnect the battery and wait two minutes before proceeding.

Disconnect the OCM C2 connector.

Measure the resistance of the (R701) Seat Weight Sensor 5 Volt circuit between the OCM C2 connector and the Left-Front Seat Weight Sensor connector.

Is the resistance below 5.0 ohms?

Yes >> Replace the OCM in accordance with the Service Information.

Perform OCS VERIFICATION TEST - VER 1.

No >>

NOTE: Do not attempt to repair the Seat Harness. Replace the Seat Harness if the condition inspecting or testing for is present in the Seat Harness.

Replace the Passenger Seat Harness in accordance with the Service Information.

Perform OCS VERIFICATION TEST - VER 1.

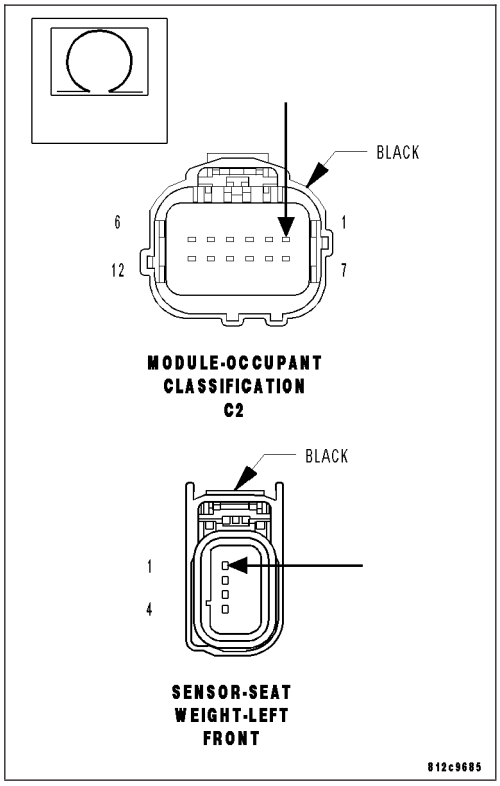

10. TEST FOR INTERMITTENT CONDITION

With the scan tool, record and erase all DTCs from all Airbag modules.

If any ACTIVE codes are present they must be resolved before diagnosing any stored codes.

WARNING: To avoid personal injury or death, turn the ignition off, disconnect the battery and wait two minutes before proceeding.

Using the wiring diagram/schematic as a guide, inspect the wiring and connectors.

Look for chafed, pierced, pinched, or partially broken wires and broken, bent, pushed out, spread, corroded, or contaminated terminals.

The following additional checks may assist you in identifying a possible intermittent problem.

Reconnect any disconnected components and harness connector.

WARNING: To avoid personal injury or death, turn the ignition on, then reconnect the battery.

With the scan tool, monitor active codes as you work through the following steps.

WARNING: To avoid personal injury or death, maintain a safe distance from all airbags while performing the following steps.

Wiggle the wiring harness and connectors of the related airbag circuit or component.

If codes are related to the Driver Airbag circuits, rotate the steering wheel from stop to stop.

If only stored codes return, continue the test until the problem area has been isolated.

In the previous steps you have attempted to recreate the conditions responsible for setting the active DTC in question.

Does the scan tool display any ACTIVE DTCs?

Yes >> Select appropriate symptom from Symptom List.

No >> No problem found at this time. Erase all codes before returning vehicle to customer.

B1B7A-PASSENGER SEAT WEIGHT SENSOR 3 - LEFT FRONT INPUT CIRCUIT HIGH

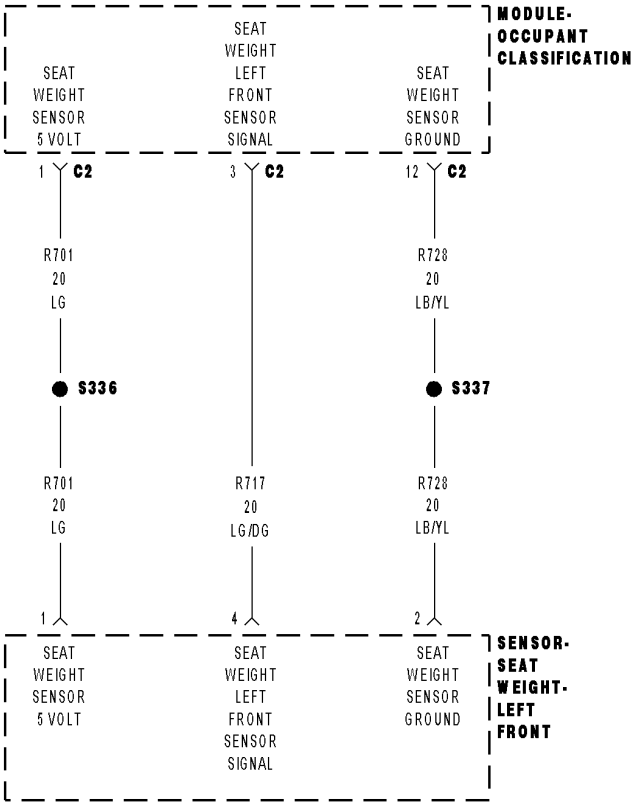

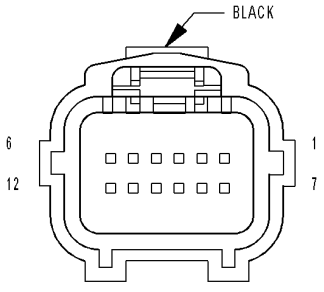

MODULE-
OCCUPANT
CLASSIFICATION C2

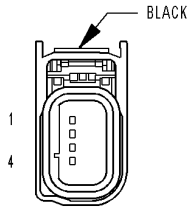

SENSOR-
SEAT WEIGHT-
LEFT FRONT

8133acea

For a complete wiring diagram **Refer to Section 8W**.

- **When Monitored:**
  While the CAN bus ignition status is in IGN_RUN, the module checks the sensor input ranges.
- **Set Condition:**
  If the module detects that the sensor input is greater than 96 ± 0.6% of the (R701) Seat Weight Sensor 5 Volt circuit voltage.

Possible Causes
PASSENGER SEAT HARNESS IMPROPERLY ROUTED
PASSENGER SEAT HARNESS WIRES CHAFED, PIERCED, PINCHED, PARTIALLY BROKEN
PASSENGER SEAT HARNESS CONNECTOR TERMINALS BROKEN, BENT PUSHED OUT, SPREAD, CORRODED, CONTAMINATED
(R717) LT-FT SEAT WEIGHT SENSOR SIGNAL CIRCUIT SHORTED TO VOLTAGE
(R717) LT-FT SEAT WEIGHT SENSOR SIGNAL CIRCUIT SHORTED TO (R701) SEAT WEIGHT SENSOR 5 VOLT CIRCUIT
(R728) SEAT WEIGHT SENSOR GROUND CIRCUIT OPEN
LEFT-FRONT SEAT WEIGHT SENSOR
OCCUPANT CLASSIFICATION MODULE (OCM)

Diagnostic Test

1. CHECK FOR ACTIVE INTERNAL FAULTS, IGNITION FAULTS, AND BATTERY FAULTS IN THE OCCUPANT CLASSIFICATION MODULE (OCM)

NOTE: Ensure the battery is fully charged.

NOTE: When reconnecting Airbag system components, the ignition must be turned off and the battery must be disconnected.

Turn the ignition on, then off, and then on again.

With the scan tool, read Occupant Classification Module (OCM) DTCs.

Does the scan tool display any active DTCs relating to internal faults, ignition faults, or battery faults?

Yes >> Diagnose and repair the DTCs. Refer to the Table of Contents in this Section for a complete list of symptoms.

No >> Go To 2

2. VERIFY THAT DTC B1B7A–PASSENGER SEAT WEIGHT SENSOR 3 - LEFT FRONT INPUT CIRCUIT HIGH IS ACTIVE

With the scan tool, read OCM DTCs.

Does the scan tool display active: B1B7A–PASSENGER SEAT WEIGHT SENSOR 3 - LEFT FRONT INPUT CIRCUIT HIGH?

Yes >> Go To 3

No >> Go To 9

3. INSPECT PASSENGER SEAT HARNESS WIRES AND CONNECTORS

WARNING: To avoid personal injury or death, turn the ignition off, disconnect the battery and wait two minutes before proceeding.

Using the wiring diagram/schematic as a guide, inspect the Passenger Seat Harness wiring and connectors. Look for chafed, pierced, pinched, or partially broken wires and broken, bent, pushed out, spread, corroded, or contaminated terminals.

Are any of these conditions present?

Yes >>

NOTE: Do not attempt to repair the Seat Harness. Replace the Seat Harness if the condition inspecting or testing for is present in the Seat Harness.

Replace the Passenger Seat Harness in accordance with the Service Information.

Perform OCS VERIFICATION TEST - VER 1.

No >> Go To 4

4. VERIFY THAT PASSENGER SEAT HARNESS IS ROUTED CORRECTLY

Verify that the Passenger Seat Harness is routed correctly.

Is the Passenger Seat Harness routed correctly?

Yes >> Go To 5

No >> Reroute the Passenger Seat Harness as necessary.

Perform OCS VERIFICATION TEST - VER 1.

5. CHECK IF MORE THAN ONE PASSENGER SEAT WEIGHT SENSOR DTC IS ACTIVE

Verify that all of the Seat Weight Sensor mounting screws are torqued to specification. Refer to 23 - BODY/SEATS.

WARNING: To avoid personal injury or death, turn the ignition on, then reconnect the battery.

NOTE: Failure to follow test instructions or aborting the test will cause faults to set when performing the Occupant Classification Module System Verification Test. To prevent faults due to process errors: Verify That All Tests Steps That Led You Here Were Performed As Directed; Verify That The Ignition Is In Run; Wait 30 Seconds After Changing The Seat Weight Before Proceeding To Allow The System To Stabilize; Only Press Scan Tool Buttons When Directed To Do So; and Perform The Occupant Classification Module System Verification Test To Completion.

With the scan tool in OCM, select More Options, select System Tests, and select Occupant Classification Module System Verification Test. Run the test by following the instructions displayed on the scan tool. When the test is complete, wait two minutes, and then proceed as follows.

With the scan tool, read OCM DTCs.

Does the scan tool display any active PASSENGER SEAT WEIGHT SENSOR DTCs?

Yes - More Than One PASSENGER SEAT WEIGHT SENSOR DTC Is Active

Perform the *Diagnosis/Checkout Procedure For Seat Weight Sensors.

Perform OCS VERIFICATION TEST - VER 1.

Yes - Only DTC B1B7A Is Active

Go To 6

No - But Other DTCs Present

Diagnose and repair the DTCs. Refer to the Table of Contents in this Section for a complete list of symptoms.

No - No Active DTCs Present

Perform OCS VERIFICATION TEST - VER 1.

6. CHECK (R717) LT-FT SEAT WEIGHT SENSOR SIGNAL CIRCUIT FOR A SHORT TO VOLTAGE

WARNING: To avoid personal injury or death, turn the ignition off, disconnect the battery and wait two minutes before proceeding.
Disconnect the OCM C2 connector.
Measure the voltage of the (R717) LT-FT Seat Weight Sensor Signal circuit.

Is the voltage above 0.2 volts?

Yes >>

NOTE: Do not attempt to repair the Seat Harness. Replace the Seat Harness if the condition inspecting or testing for is present in the Seat Harness.

Replace the Passenger Seat Harness in accordance with the Service Information.

Perform OCS VERIFICATION TEST - VER 1.

No >> Go To 7

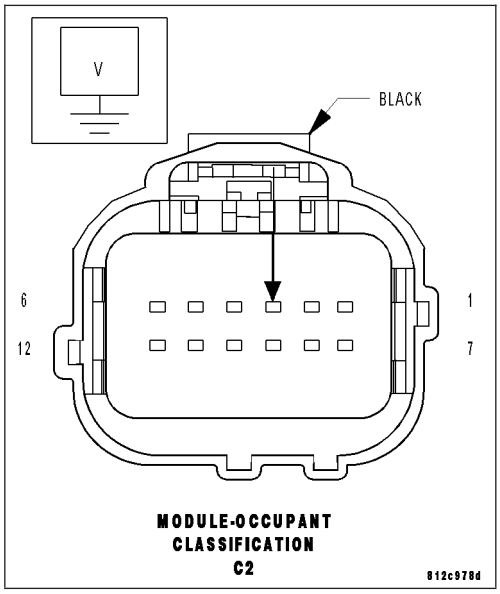

7. CHECK (R717) LT-FT SEAT WEIGHT SENSOR SIGNAL CIRCUIT FOR A SHORT TO (R701) SEAT WEIGHT SENSOR 5 VOLT CIRCUIT

Disconnect the Left-Front Seat Weight Sensor connector.
Measure the resistance between the (R717) LT-FT Seat Weight Sensor Signal circuit and the (R701) Seat Weight Sensor 5 Volt circuit.

Is the resistance below 10K ohms?

Yes >>

NOTE: Do not attempt to repair the Seat Harness. Replace the Seat Harness if the condition inspecting or testing for is present in the Seat Harness.

Replace the Passenger Seat Harness in accordance with the Service Information.

Perform OCS VERIFICATION TEST - VER 1.

No >> Go To 8

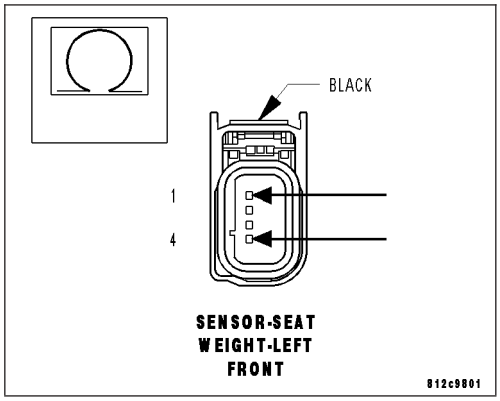

8. CHECK (R728) SEAT WEIGHT SENSOR GROUND CIRCUIT FOR AN OPEN

Measure the resistance of the (R728) Seat Weight Sensor Ground circuit between the OCM C2 connector and the Left-Front Seat Weight Sensor connector.

Is the resistance below 5.0 ohms?

Yes >> Replace the OCM in accordance with the Service Information.
Perform OCS VERIFICATION TEST - VER 1.

No >>

NOTE: Do not attempt to repair the Seat Harness. Replace the Seat Harness if the condition inspecting or testing for is present in the Seat Harness.

Replace the Passenger Seat Harness in accordance with the Service Information.
Perform OCS VERIFICATION TEST - VER 1.

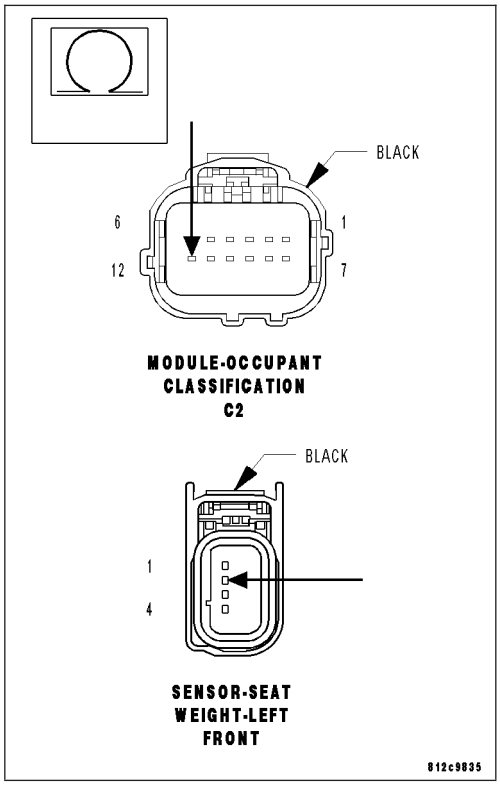

9. TEST FOR INTERMITTENT CONDITION

With the scan tool, record and erase all DTCs from all Airbag modules.

If any ACTIVE codes are present they must be resolved before diagnosing any stored codes.

WARNING: To avoid personal injury or death, turn the ignition off, disconnect the battery and wait two minutes before proceeding.

Using the wiring diagram/schematic as a guide, inspect the wiring and connectors.

Look for chafed, pierced, pinched, or partially broken wires and broken, bent, pushed out, spread, corroded, or contaminated terminals.

The following additional checks may assist you in identifying a possible intermittent problem.

Reconnect any disconnected components and harness connector.

WARNING: To avoid personal injury or death, turn the ignition on, then reconnect the battery.

With the scan tool, monitor active codes as you work through the following steps.

WARNING: To avoid personal injury or death, maintain a safe distance from all airbags while performing the following steps.

Wiggle the wiring harness and connectors of the related airbag circuit or component.

If codes are related to the Driver Airbag circuits, rotate the steering wheel from stop to stop.

If only stored codes return, continue the test until the problem area has been isolated.

In the previous steps you have attempted to recreate the conditions responsible for setting the active DTC in question.

Does the scan tool display any ACTIVE DTCs?

Yes >> Select appropriate symptom from Symptom List.

No >> No problem found at this time. Erase all codes before returning vehicle to customer.

B1B7D-PASSENGER SEAT WEIGHT SENSOR 2 - RIGHT FRONT PERFORMANCE

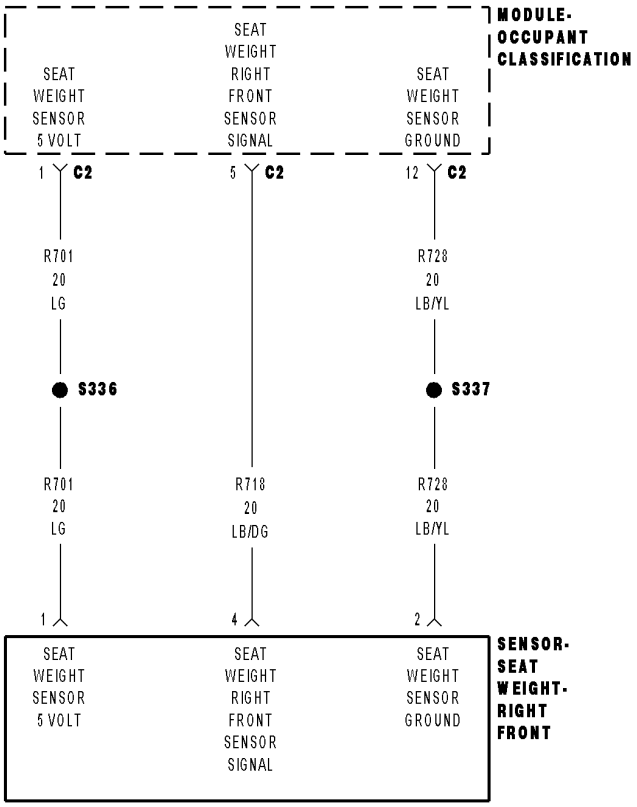

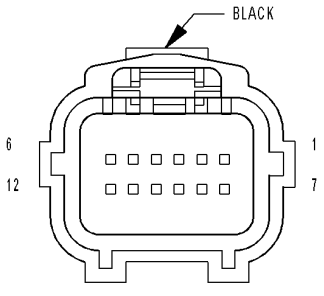

MODULE-
OCCUPANT
CLASSIFICATION C2

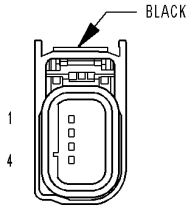

SENSOR-
SEAT WEIGHT-
RIGHT FRONT

8133af33

For a complete wiring diagram **Refer to Section 8W**.

- **When Monitored:**
  When CAN ignitions status is Run or SNA, during auto zero and while performing the Occupant Classification Module System Verification Test.
- **Set Condition:**
  During the occupant classification verification test: if the module detects that the sensor input is less than 1.4 volts or greater than 3.6 volts. During auto zero: if the module detects that the sensor input is less than 1 volt or greater than 4 volts.

Possible Causes
PASSENGER SEAT HARNESS WIRES CHAFED, PIERCED, PINCHED, PARTIALLY BROKEN
PASSENGER SEAT HARNESS CONNECTOR TERMINALS BROKEN, BENT PUSHED OUT, SPREAD, CORRODED, CONTAMINATED
RIGHT-FRONT PASSENGER SEAT WEIGHT SENSOR
DAMAGE TO THE PASSENGER SEAT STRUCTURE, RISER ASSEMBLY, CROSSMEMBERS, SEAT TRACKS, FLOOR PAN
OCCUPANT CLASSIFICATION MODULE (OCM)

Diagnostic Test

1. CHECK FOR ACTIVE INTERNAL FAULTS, IGNITION FAULTS, AND BATTERY FAULTS IN THE OCCUPANT CLASSIFICATION MODULE (OCM)

NOTE: Ensure the battery is fully charged.

NOTE: When reconnecting Airbag system components, the ignition must be turned off and the battery must be disconnected.

Turn the ignition on, then off, and then on again.

With the scan tool, read Occupant Classification Module (OCM) DTCs.

Does the scan tool display any active DTCs relating to internal faults, ignition faults, or battery faults?

Yes >> Diagnose and repair the DTCs. Refer to the Table of Contents in this Section for a complete list of symptoms.

No >> Go To 2

2. VERIFY THAT DTC B1B7D–PASSENGER SEAT WEIGHT SENSOR 2 - RIGHT FRONT PERFORMANCE IS ACTIVE

With the scan tool, read OCM DTCs.

Does the scan tool display active: B1B7D–PASSENGER SEAT WEIGHT SENSOR 2 - RIGHT FRONT PERFORMANCE?

Yes >> Go To 3

No >> Go To 5

3. INSPECT PASSENGER SEAT HARNESS WIRES AND CONNECTORS

WARNING: To avoid personal injury or death, turn the ignition off, disconnect the battery and wait two minutes before proceeding.

Using the wiring diagram/schematic as a guide, inspect the Passenger Seat Harness wiring and connectors. Look for chafed, pierced, pinched, or partially broken wires and broken, bent, pushed out, spread, corroded, or contaminated terminals.

Are any of these conditions present?

Yes >>

NOTE: Do not attempt to repair the Seat Harness. Replace the Seat Harness if the condition inspecting or testing for is present in the Seat Harness.

Replace the Passenger Seat Harness in accordance with the Service Information.

Perform OCS VERIFICATION TEST - VER 1.

No >> Go To 4

4. PERFORM OCCUPANT CLASSIFICATION MODULE SYSTEM VERIFICATION TEST

Verify that all of the Seat Weight Sensor mounting screws are torqued to specification. Refer to 23 - BODY/SEATS.

WARNING: To avoid personal injury or death, turn the ignition on, then reconnect the battery.

NOTE: Failure to follow test instructions or aborting the test will cause faults to set when performing the Occupant Classification Module System Verification Test. To prevent faults due to process errors: Verify That All Tests Steps That Led You Here Were Performed As Directed; Verify That The Ignition Is In Run; Wait 30 Seconds After Changing The Seat Weight Before Proceeding To Allow The System To Stabilize; Only Press Scan Tool Buttons When Directed To Do So; and Perform The Occupant Classification Module System Verification Test To Completion.

With the scan tool in OCM, select More Options, select System Tests, and select Occupant Classification Module System Verification Test. Run the test by following the instructions displayed on the scan tool. When the test is complete, wait two minutes, and then proceed as follows.

With the scan tool, read OCM DTCs.

Does the scan tool display any active PASSENGER SEAT WEIGHT SENSOR PERFORMANCE DTCs?

Yes >> Perform the *Diagnosis/Checkout Procedure For Seat Weight Sensors.

Perform OCS VERIFICATION TEST - VER 1.

No, But Other DTCs Present

Diagnose and repair the DTCs. Refer to the Table of Contents in this Section for a complete list of symptoms.

No Active DTCs Present

Perform OCS VERIFICATION TEST - VER 1.

5. TEST FOR INTERMITTENT CONDITION

With the scan tool, record and erase all DTCs from all Airbag modules.

If any ACTIVE codes are present they must be resolved before diagnosing any stored codes.

WARNING: To avoid personal injury or death, turn the ignition off, disconnect the battery and wait two minutes before proceeding.

Using the wiring diagram/schematic as a guide, inspect the wiring and connectors.

Look for chafed, pierced, pinched, or partially broken wires and broken, bent, pushed out, spread, corroded, or contaminated terminals.

The following additional checks may assist you in identifying a possible intermittent problem.

Reconnect any disconnected components and harness connector.

WARNING: To avoid personal injury or death, turn the ignition on, then reconnect the battery.

With the scan tool, monitor active codes as you work through the following steps.

WARNING: To avoid personal injury or death, maintain a safe distance from all airbags while performing the following steps.

Wiggle the wiring harness and connectors of the related airbag circuit or component.

If codes are related to the Driver Airbag circuits, rotate the steering wheel from stop to stop.

If only stored codes return, continue the test until the problem area has been isolated.

In the previous steps you have attempted to recreate the conditions responsible for setting the active DTC in question.

Does the scan tool display any ACTIVE DTCs?

Yes >> Select appropriate symptom from Symptom List.

No >> No problem found at this time. Erase all codes before returning vehicle to customer.

B1B7E-PASSENGER SEAT WEIGHT SENSOR 2 - RIGHT FRONT INPUT CIRCUIT LOW

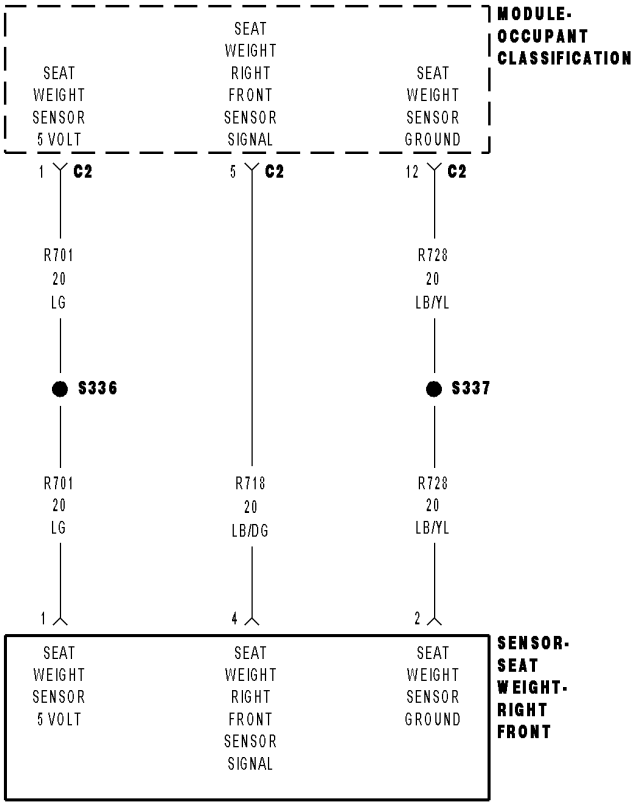

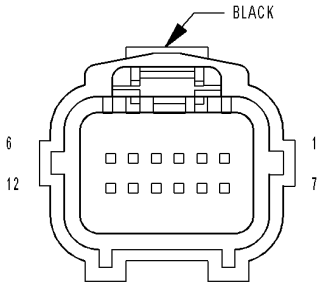

MODULE-
OCCUPANT
CLASSIFICATION C2

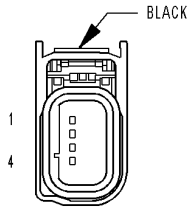

SENSOR-
SEAT WEIGHT-
RIGHT FRONT

8133af33

For a complete wiring diagram **Refer to Section 8W**.

- **When Monitored:**
  While the CAN bus ignition status is in IGN_RUN, the module checks the sensor input ranges.
- **Set Condition:**
  If the module detects that the sensor input is less than 3.4 ± 0.6% of the (R701) Seat Weight Sensor 5 Volt circuit voltage. This DTC will also set if the (R701) Seat Weight Sensor 5 Volt circuit is shorted to ground. However, this condition would prevent communication with the OCM and cause a Lost Communication With OCM DTC to set in other modules.

Possible Causes
PASSENGER SEAT HARNESS IMPROPERLY ROUTED
PASSENGER SEAT HARNESS WIRES CHAFED, PIERCED, PINCHED, PARTIALLY BROKEN
PASSENGER SEAT HARNESS CONNECTOR TERMINALS BROKEN, BENT PUSHED OUT, SPREAD, CORRODED, CONTAMINATED
(R718) RT-FT SEAT WEIGHT SENSOR SIGNAL CIRCUIT SHORTED TO GROUND
(R718) RT-FT SEAT WEIGHT SENSOR SIGNAL CIRCUIT OPEN
(R701) SEAT WEIGHT SENSOR 5 VOLT CIRCUIT OPEN
RIGHT-FRONT SEAT WEIGHT SENSOR
OCCUPANT CLASSIFICATION MODULE (OCM)

Diagnostic Test

1. CHECK FOR ACTIVE INTERNAL FAULTS, IGNITION FAULTS, AND BATTERY FAULTS IN THE OCCUPANT CLASSIFICATION MODULE (OCM)

NOTE: Ensure the battery is fully charged.

NOTE: When reconnecting Airbag system components, the ignition must be turned off and the battery must be disconnected.

Turn the ignition on, then off, and then on again.

With the scan tool, read Occupant Classification Module (OCM) DTCs.

Does the scan tool display any active DTCs relating to internal faults, ignition faults, or battery faults?

Yes >> Diagnose and repair the DTCs. Refer to the Table of Contents in this Section for a complete list of symptoms.

No >> Go To 2

2. VERIFY THAT DTC B1B7E-PASSENGER SEAT WEIGHT SENSOR 2 - RIGHT FRONT INPUT CIRCUIT LOW IS ACTIVE

With the scan tool, read OCM DTCs.

Does the scan tool display active: B1B7E–PASSENGER SEAT WEIGHT SENSOR 2 - RIGHT FRONT INPUT CIRCUIT LOW?

Yes >> Go To 3

No >> Go To 10

3. INSPECT PASSENGER SEAT HARNESS WIRES AND CONNECTORS

WARNING: To avoid personal injury or death, turn the ignition off, disconnect the battery and wait two minutes before proceeding.

Using the wiring diagram/schematic as a guide, inspect the Passenger Seat Harness wiring and connectors. Look for chafed, pierced, pinched, or partially broken wires and broken, bent, pushed out, spread, corroded, or contaminated terminals.

Are any of these conditions present?

Yes >>

NOTE: Do not attempt to repair the Seat Harness. Replace the Seat Harness if the condition inspecting or testing for is present in the Seat Harness.

Replace the Passenger Seat Harness in accordance with the Service Information.

Perform OCS VERIFICATION TEST - VER 1.

No >> Go To 4

4. VERIFY THAT PASSENGER SEAT HARNESS IS ROUTED CORRECTLY

Verify that the Passenger Seat Harness is routed correctly.

Is the Passenger Seat Harness routed correctly?

Yes >> Go To 5

No >> Reroute the Passenger Seat Harness as necessary. Then, Go To 5

5. CHECK IF MORE THAN ONE PASSENGER SEAT WEIGHT SENSOR DTC IS ACTIVE

Verify that all of the Seat Weight Sensor mounting screws are torqued to specification. Refer to 23 - BODY/SEATS.

WARNING: To avoid personal injury or death, turn the ignition on, then reconnect the battery.

NOTE: Failure to follow test instructions or aborting the test will cause faults to set when performing the Occupant Classification Module System Verification Test. To prevent faults due to process errors: Verify That All Tests Steps That Led You Here Were Performed As Directed; Verify That The Ignition Is In Run; Wait 30 Seconds After Changing The Seat Weight Before Proceeding To Allow The System To Stabilize; Only Press Scan Tool Buttons When Directed To Do So; and Perform The Occupant Classification Module System Verification Test To Completion.

With the scan tool in OCM, select More Options, select System Tests, and select Occupant Classification Module System Verification Test. Run the test by following the instructions displayed on the scan tool. When the test is complete, wait two minutes, and then proceed as follows.

With the scan tool, read OCM DTCs.

Does the scan tool display any active PASSENGER SEAT WEIGHT SENSOR DTCs?

Yes - More Than One PASSENGER SEAT WEIGHT SENSOR DTC Is Active

Perform the *Diagnosis/Checkout Procedure For Seat Weight Sensors.

Perform OCS VERIFICATION TEST - VER 1.

Yes - Only DTC B1B7E Is Active

Go To 6

No - But Other DTCs Present

Diagnose and repair the DTCs. Refer to the Table of Contents in this Section for a complete list of symptoms.

No - No Active DTCs Present

Perform OCS VERIFICATION TEST - VER 1.

6. CHECK VOLTAGE OF (R701) SEAT WEIGHT SENSOR 5 VOLT CIRCUIT

WARNING: To avoid personal injury or death, turn the ignition off, disconnect the battery and wait two minutes before proceeding.
Disconnect the Right-Front Seat Weight Sensor connector.

WARNING: To avoid personal injury or death, turn the ignition on, then reconnect the battery.
Measure the voltage of the (R701) Seat Weight Sensor 5 Volt circuit.

Is the voltage above 4.8 volts?

Yes >> Go To 7

No >> Go To 9

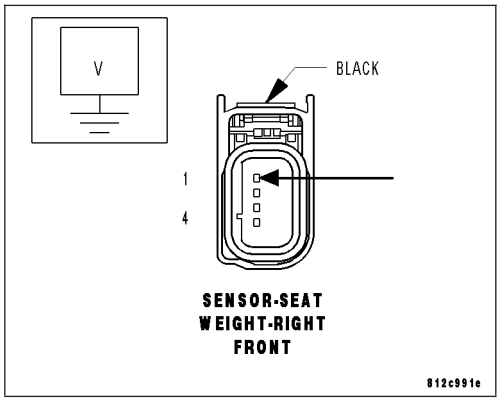

7. CHECK (R718) RT-FT SEAT WEIGHT SENSOR SIGNAL CIRCUIT FOR A SHORT TO GROUND

WARNING: To avoid personal injury or death, turn the ignition off, disconnect the battery and wait two minutes before proceeding.
Disconnect the OCM C2 connector.

Measure the resistance of the (R718) RT-FT Seat Weight Sensor Signal circuit between ground and the OCM C2 connector.

Is the resistance below 10k ohms?

Yes >>

NOTE: Do not attempt to repair the Seat Harness. Replace the Seat Harness if the condition inspecting or testing for is present in the Seat Harness.

Replace the Passenger Seat Harness in accordance with the Service Information.

Perform OCS VERIFICATION TEST - VER 1.

No >> Go To 8

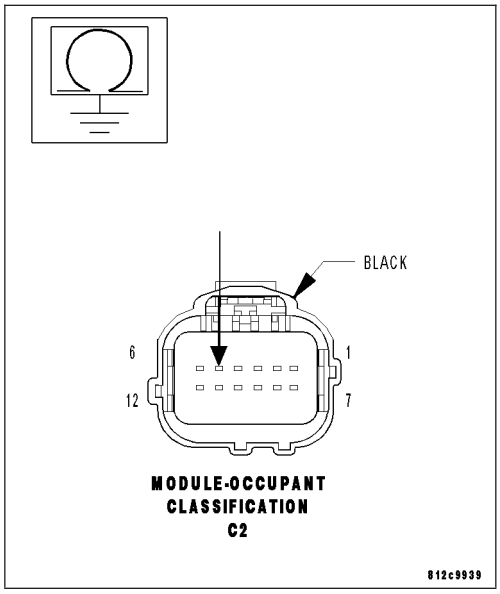

8. CHECK (R718) RT-FT SEAT WEIGHT SENSOR SIGNAL CIRCUIT FOR AN OPEN

Measure the resistance of the (R718) RT-FT Seat Weight Sensor Signal circuit between the OCM C2 connector and the Right-Front Seat Weight Sensor connector.

Is the resistance below 5.0 ohms?

Yes >> Replace the Right-Front Seat Weight Sensor in accordance with the Service Information. Perform OCS VERIFICATION TEST - VER 1. If DTC B1B7E-PASSENGER SEAT WEIGHT SENSOR 2 - RIGHT FRONT INPUT CIRCUIT LOW returns active, replace the OCM in accordance with the Service Information.

Perform OCS VERIFICATION TEST - VER 1.

No >>

NOTE: Do not attempt to repair the Seat Harness. Replace the Seat Harness if the condition inspecting or testing for is present in the Seat Harness.

Replace the Passenger Seat Harness in accordance with the Service Information.

Perform OCS VERIFICATION TEST - VER 1.

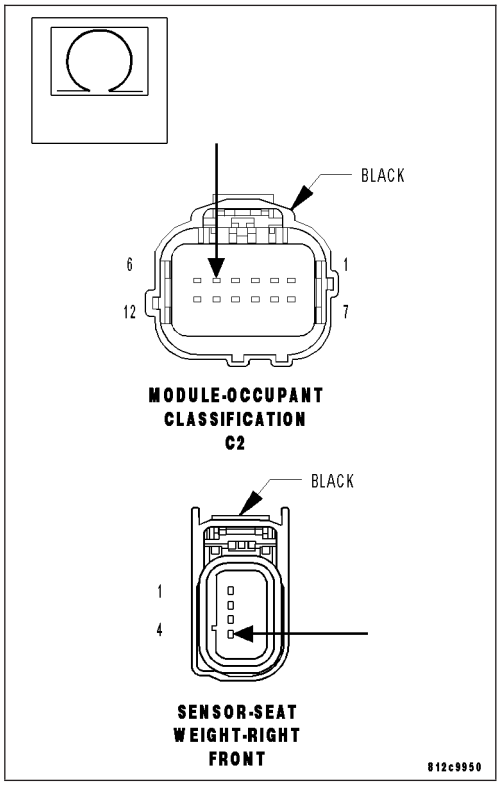

9. CHECK (R701) SEAT WEIGHT SENSOR 5 VOLT CIRCUIT FOR AN OPEN

WARNING: To avoid personal injury or death, turn the ignition off, disconnect the battery and wait two minutes before proceeding.

Disconnect the OCM C2 connector.

Measure the resistance of the (R701) Seat Weight Sensor 5 Volt circuit between the OCM C2 connector and the Right-Front Seat Weight Sensor connector.

Is the resistance below 5.0 ohms?

Yes >> Replace the OCM in accordance with the Service Information.

Perform OCS VERIFICATION TEST - VER 1.

No >>

NOTE: Do not attempt to repair the Seat Harness. Replace the Seat Harness if the condition inspecting or testing for is present in the Seat Harness.

Replace the Passenger Seat Harness in accordance with the Service Information.

Perform OCS VERIFICATION TEST - VER 1.

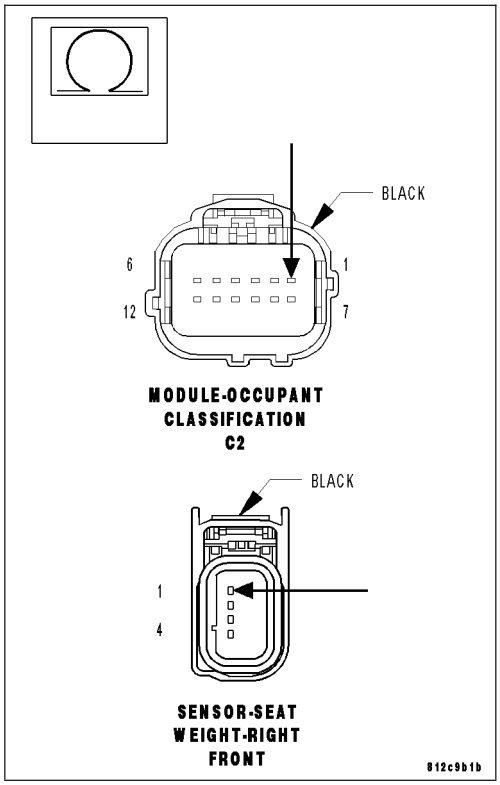

10. TEST FOR INTERMITTENT CONDITION

With the scan tool, record and erase all DTCs from all Airbag modules.

If any ACTIVE codes are present they must be resolved before diagnosing any stored codes.

WARNING: To avoid personal injury or death, turn the ignition off, disconnect the battery and wait two minutes before proceeding.

Using the wiring diagram/schematic as a guide, inspect the wiring and connectors.

Look for chafed, pierced, pinched, or partially broken wires and broken, bent, pushed out, spread, corroded, or contaminated terminals.

The following additional checks may assist you in identifying a possible intermittent problem.

Reconnect any disconnected components and harness connector.

WARNING: To avoid personal injury or death, turn the ignition on, then reconnect the battery.

With the scan tool, monitor active codes as you work through the following steps.

WARNING: To avoid personal injury or death, maintain a safe distance from all airbags while performing the following steps.

Wiggle the wiring harness and connectors of the related airbag circuit or component.

If codes are related to the Driver Airbag circuits, rotate the steering wheel from stop to stop.

If only stored codes return, continue the test until the problem area has been isolated.

In the previous steps you have attempted to recreate the conditions responsible for setting the active DTC in question.

Does the scan tool display any ACTIVE DTCs?

Yes >> Select appropriate symptom from Symptom List.

No >> No problem found at this time. Erase all codes before returning vehicle to customer.

B1B7F-PASSENGER SEAT WEIGHT SENSOR 2 - RIGHT FRONT INPUT CIRCUIT HIGH

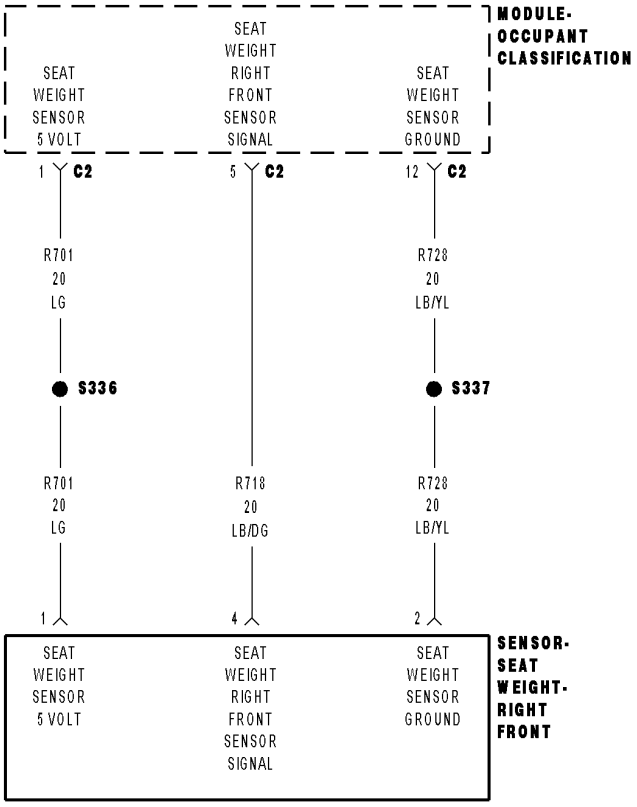

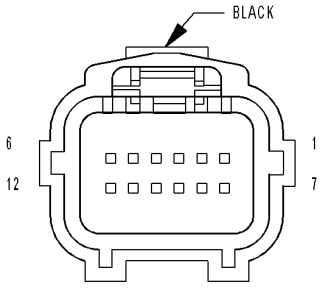

MODULE-
OCCUPANT
CLASSIFICATION C2

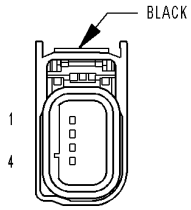

SENSOR-
SEAT WEIGHT-
RIGHT FRONT

8133af33

For a complete wiring diagram **Refer to Section 8W**.

- **When Monitored:**
  While the CAN bus ignition status is in IGN_RUN, the module checks the sensor input ranges.
- **Set Condition:**
  If the module detects that the sensor input is greater than 96 ± 0.6% of the (R701) Seat Weight Sensor 5 Volt circuit voltage.

Possible Causes
PASSENGER SEAT HARNESS IMPROPERLY ROUTED
PASSENGER SEAT HARNESS WIRES CHAFED, PIERCED, PINCHED, PARTIALLY BROKEN
PASSENGER SEAT HARNESS CONNECTOR TERMINALS BROKEN, BENT PUSHED OUT, SPREAD, CORRODED, CONTAMINATED
(R718) RT-FT SEAT WEIGHT SENSOR SIGNAL CIRCUIT SHORTED TO VOLTAGE
(R718) RT-FT SEAT WEIGHT SENSOR SIGNAL CIRCUIT SHORTED TO (R701) SEAT WEIGHT SENSOR 5 VOLT CIRCUIT
(R728) SEAT WEIGHT SENSOR GROUND CIRCUIT OPEN
RIGHT-FRONT SEAT WEIGHT SENSOR
OCCUPANT CLASSIFICATION MODULE (OCM)

Diagnostic Test

1. CHECK FOR ACTIVE INTERNAL FAULTS, IGNITION FAULTS, AND BATTERY FAULTS IN THE OCCUPANT CLASSIFICATION MODULE (OCM)

NOTE: Ensure the battery is fully charged.

NOTE: When reconnecting Airbag system components, the ignition must be turned off and the battery must be disconnected.

Turn the ignition on, then off, and then on again.

With the scan tool, read Occupant Classification Module (OCM) DTCs.

Does the scan tool display any active DTCs relating to internal faults, ignition faults, or battery faults?

Yes >> Diagnose and repair the DTCs. Refer to the Table of Contents in this Section for a complete list of symptoms.

No >> Go To 2

2. VERIFY THAT DTC B1B7F–PASSENGER SEAT WEIGHT SENSOR 2 - RIGHT FRONT INPUT CIRCUIT HIGH IS ACTIVE

With the scan tool, read OCM DTCs.

Does the scan tool display active: B1B7F–PASSENGER SEAT WEIGHT SENSOR 2 - RIGHT FRONT INPUT CIRCUIT HIGH?

Yes >> Go To 3

No >> Go To 9

3. INSPECT PASSENGER SEAT HARNESS WIRES AND CONNECTORS

WARNING: To avoid personal injury or death, turn the ignition off, disconnect the battery and wait two minutes before proceeding.

Using the wiring diagram/schematic as a guide, inspect the Passenger Seat Harness wiring and connectors. Look for chafed, pierced, pinched, or partially broken wires and broken, bent, pushed out, spread, corroded, or contaminated terminals.

Are any of these conditions present?

Yes >>

NOTE: Do not attempt to repair the Seat Harness. Replace the Seat Harness if the condition inspecting or testing for is present in the Seat Harness.

Replace the Passenger Seat Harness in accordance with the Service Information.

Perform OCS VERIFICATION TEST - VER 1.

No >> Go To 4

4. VERIFY THAT PASSENGER SEAT HARNESS IS ROUTED CORRECTLY

Verify that the Passenger Seat Harness is routed correctly.

Is the Passenger Seat Harness routed correctly?

Yes >> Go To 5

No >> Reroute the Passenger Seat Harness as necessary.

Perform OCS VERIFICATION TEST - VER 1.

5. CHECK IF MORE THAN ONE PASSENGER SEAT WEIGHT SENSOR DTC IS ACTIVE

Verify that all of the Seat Weight Sensor mounting screws are torqued to specification. Refer to 23 - BODY/SEATS.

WARNING: To avoid personal injury or death, turn the ignition on, then reconnect the battery.

NOTE: Failure to follow test instructions or aborting the test will cause faults to set when performing the Occupant Classification Module System Verification Test. To prevent faults due to process errors: Verify That All Tests Steps That Led You Here Were Performed As Directed; Verify That The Ignition Is In Run; Wait 30 Seconds After Changing The Seat Weight Before Proceeding To Allow The System To Stabilize; Only Press Scan Tool Buttons When Directed To Do So; and Perform The Occupant Classification Module System Verification Test To Completion.

With the scan tool in OCM, select More Options, select System Tests, and select Occupant Classification Module System Verification Test. Run the test by following the instructions displayed on the scan tool. When the test is complete, wait two minutes, and then proceed as follows.

With the scan tool, read OCM DTCs.

Does the scan tool display any active PASSENGER SEAT WEIGHT SENSOR DTCs?

Yes, More Than One PASSENGER SEAT WEIGHT SENSOR DTC Is Active

Perform the *Diagnosis/Checkout Procedure For Seat Weight Sensors.

Perform OCS VERIFICATION TEST - VER 1.

Yes, Only DTC B1B7F Is Active

Go To 6

No, But Other DTCs Present

Diagnose and repair the DTCs. Refer to the Table of Contents in this Section for a complete list of symptoms.

No Active DTCs Present

Perform OCS VERIFICATION TEST - VER 1.

6. CHECK (R718) RT-FT SEAT WEIGHT SENSOR SIGNAL CIRCUIT FOR A SHORT TO VOLTAGE

WARNING: To avoid personal injury or death, turn the ignition off, disconnect the battery and wait two minutes before proceeding.

Disconnect the OCM C2 connector.

Measure the voltage of the (R718) RT-FT Seat Weight Sensor Signal circuit.

Is the voltage above 0.2 volts?

Yes >>

NOTE: Do not attempt to repair the Seat Harness. Replace the Seat Harness if the condition inspecting or testing for is present in the Seat Harness.

Replace the Passenger Seat Harness in accordance with the Service Information.

Perform OCS VERIFICATION TEST - VER 1.

No >> Go To 7

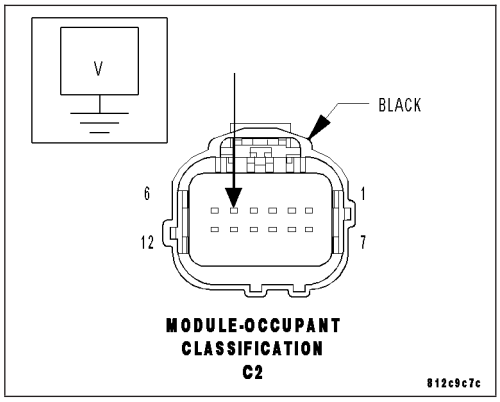

7. CHECK (R718) RT-FT SEAT WEIGHT SENSOR SIGNAL CIRCUIT FOR A SHORT TO (R701) SEAT WEIGHT SENSOR 5 VOLT CIRCUIT

Disconnect the Right-Front Seat Weight Sensor connector.

Measure the resistance between the (R718) RT-FT Seat Weight Sensor Signal circuit and the (R701) Seat Weight Sensor 5 Volt circuit.

Is the resistance below 10K ohms?

Yes >>

NOTE: Do not attempt to repair the Seat Harness. Replace the Seat Harness if the condition inspecting or testing for is present in the Seat Harness.

Replace the Passenger Seat Harness in accordance with the Service Information.

Perform OCS VERIFICATION TEST - VER 1.

No >> Go To 8

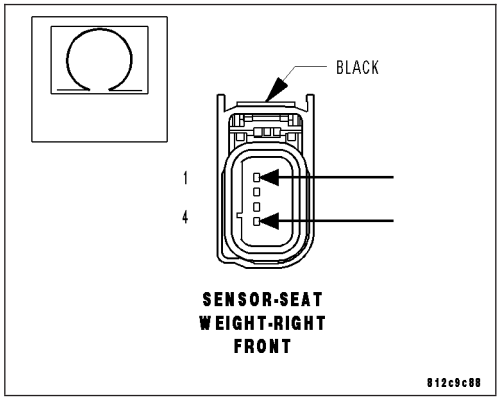

8. CHECK (R728) SEAT WEIGHT SENSOR GROUND CIRCUIT FOR AN OPEN

Measure the resistance of the (R728) Seat Weight Sensor Ground circuit between the OCM C2 connector and the Right-Front Seat Weight Sensor connector.

Is the resistance below 5.0 ohms?

Yes >> Replace the OCM in accordance with the Service Information.

Perform OCS VERIFICATION TEST - VER 1.

No >>

NOTE: Do not attempt to repair the Seat Harness. Replace the Seat Harness if the condition inspecting or testing for is present in the Seat Harness.

Replace the Passenger Seat Harness in accordance with the Service Information.

Perform OCS VERIFICATION TEST - VER 1.

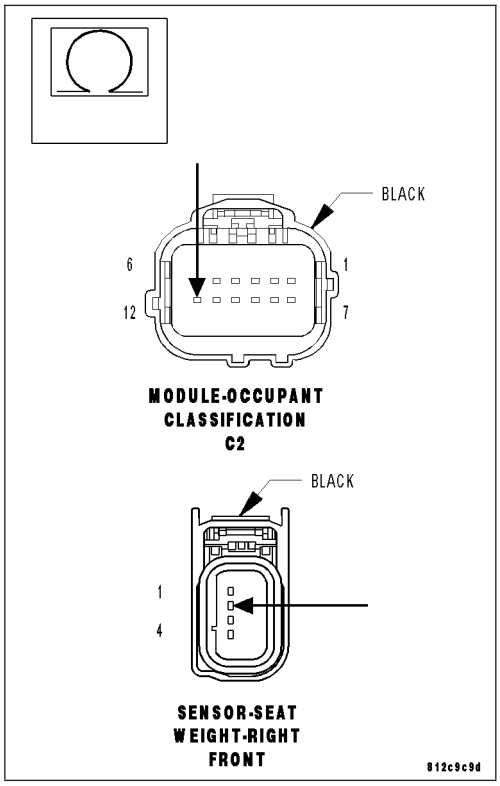

9. TEST FOR INTERMITTENT CONDITION

With the scan tool, record and erase all DTCs from all Airbag modules.

If any ACTIVE codes are present they must be resolved before diagnosing any stored codes.

WARNING: To avoid personal injury or death, turn the ignition off, disconnect the battery and wait two minutes before proceeding.

Using the wiring diagram/schematic as a guide, inspect the wiring and connectors.

Look for chafed, pierced, pinched, or partially broken wires and broken, bent, pushed out, spread, corroded, or contaminated terminals.

The following additional checks may assist you in identifying a possible intermittent problem.

Reconnect any disconnected components and harness connector.

WARNING: To avoid personal injury or death, turn the ignition on, then reconnect the battery.

With the scan tool, monitor active codes as you work through the following steps.

WARNING: To avoid personal injury or death, maintain a safe distance from all airbags while performing the following steps.

Wiggle the wiring harness and connectors of the related airbag circuit or component.

If codes are related to the Driver Airbag circuits, rotate the steering wheel from stop to stop.

If only stored codes return, continue the test until the problem area has been isolated.

In the previous steps you have attempted to recreate the conditions responsible for setting the active DTC in question.

Does the scan tool display any ACTIVE DTCs?

Yes >> Select appropriate symptom from Symptom List.

No >> No problem found at this time. Erase all codes before returning vehicle to customer.

B1B82-PASSENGER SEAT WEIGHT SENSOR 4 - LEFT REAR PERFORMANCE

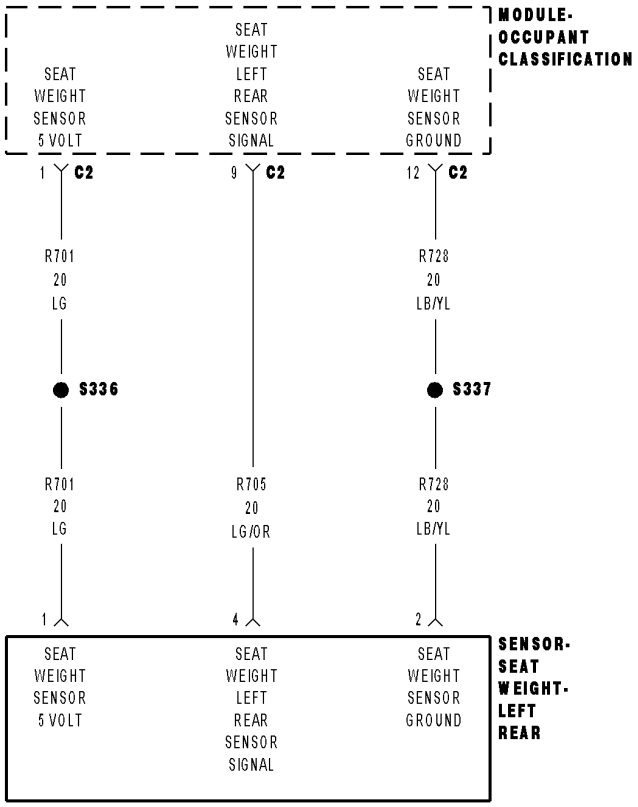

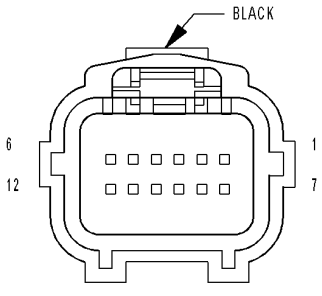

MODULE-
OCCUPANT
CLASSIFICATION C2

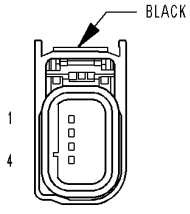

SENSOR-
SEAT WEIGHT-
LEFT REAR

8133afa0

For a complete wiring diagram **Refer to Section 8W**.

- **When Monitored:**
  When CAN ignitions status is Run or SNA, during auto zero and while performing the Occupant Classification Module System Verification Test.
- **Set Condition:**
  During the occupant classification verification test: if the module detects that the sensor input is less than 1.4 volts or greater than 3.6 volts. During auto zero: if the module detects that the sensor input is less than 1 volt or greater than 4 volts.

Possible Causes
PASSENGER SEAT HARNESS WIRES CHAFED, PIERCED, PINCHED, PARTIALLY BROKEN
PASSENGER SEAT HARNESS CONNECTOR TERMINALS BROKEN, BENT PUSHED OUT, SPREAD, CORRODED, CONTAMINATED
LEFT-REAR PASSENGER SEAT WEIGHT SENSOR
DAMAGE TO THE PASSENGER SEAT STRUCTURE, RISER ASSEMBLY, CROSSMEMBERS, SEAT TRACKS, FLOOR PAN
OCCUPANT CLASSIFICATION MODULE (OCM)

Diagnostic Test

1. CHECK FOR ACTIVE INTERNAL FAULTS, IGNITION FAULTS, AND BATTERY FAULTS IN THE OCCUPANT CLASSIFICATION MODULE (OCM)

NOTE: Ensure the battery is fully charged.

NOTE: When reconnecting Airbag system components, the ignition must be turned off and the battery must be disconnected.

Turn the ignition on, then off, and then on again.

With the scan tool, read Occupant Classification Module (OCM) DTCs.

Does the scan tool display any active DTCs relating to internal faults, ignition faults, or battery faults?

Yes >> Diagnose and repair the DTCs. Refer to the Table of Contents in this Section for a complete list of symptoms.

No >> Go To 2

2. VERIFY THAT DTC B1B82–PASSENGER SEAT WEIGHT SENSOR 4 - LEFT REAR PERFORMANCE IS ACTIVE

With the scan tool, read OCM DTCs.

Does the scan tool display active: B1B82–PASSENGER SEAT WEIGHT SENSOR 4 - LEFT REAR PERFORMANCE?

Yes >> Go To 3

No >> Go To 5

3. INSPECT PASSENGER SEAT HARNESS WIRES AND CONNECTORS

WARNING: To avoid personal injury or death, turn the ignition off, disconnect the battery and wait two minutes before proceeding.

Using the wiring diagram/schematic as a guide, inspect the Passenger Seat Harness wiring and connectors. Look for chafed, pierced, pinched, or partially broken wires and broken, bent, pushed out, spread, corroded, or contaminated terminals.

Are any of these conditions present?

Yes >>

NOTE: Do not attempt to repair the Seat Harness. Replace the Seat Harness if the condition inspecting or testing for is present in the Seat Harness.

Replace the Passenger Seat Harness in accordance with the Service Information.

Perform OCS VERIFICATION TEST - VER 1.

No >> Go To 4

4. PERFORM OCCUPANT CLASSIFICATION MODULE SYSTEM VERIFICATION TEST

Verify that all of the Seat Weight Sensor mounting screws are torqued to specification. Refer to 23 - BODY/SEATS.

WARNING: To avoid personal injury or death, turn the ignition on, then reconnect the battery.

NOTE: Failure to follow test instructions or aborting the test will cause faults to set when performing the Occupant Classification Module System Verification Test. To prevent faults due to process errors: Verify That All Tests Steps That Led You Here Were Performed As Directed; Verify That The Ignition Is In Run; Wait 30 Seconds After Changing The Seat Weight Before Proceeding To Allow The System To Stabilize; Only Press Scan Tool Buttons When Directed To Do So; and Perform The Occupant Classification Module System Verification Test To Completion.

With the scan tool in OCM, select More Options, select System Tests, and select Occupant Classification Module System Verification Test. Run the test by following the instructions displayed on the scan tool. When the test is complete, wait two minutes, and then proceed as follows.

With the scan tool, read OCM DTCs.

Does the scan tool display any active PASSENGER SEAT WEIGHT SENSOR PERFORMANCE DTCs?

Yes >> Perform the *Diagnosis/Checkout Procedure For Seat Weight Sensors.

No - But Other DTCs Present

Diagnose and repair the DTCs. Refer to the Table of Contents in this Section for a complete list of symptoms.

No - No Active DTCs Present

Perform OCS VERIFICATION TEST - VER 1.

5. TEST FOR INTERMITTENT CONDITION

With the scan tool, record and erase all DTCs from all Airbag modules.

If any ACTIVE codes are present they must be resolved before diagnosing any stored codes.

WARNING: To avoid personal injury or death, turn the ignition off, disconnect the battery and wait two minutes before proceeding.

Using the wiring diagram/schematic as a guide, inspect the wiring and connectors.

Look for chafed, pierced, pinched, or partially broken wires and broken, bent, pushed out, spread, corroded, or contaminated terminals.

The following additional checks may assist you in identifying a possible intermittent problem.

Reconnect any disconnected components and harness connector.

WARNING: To avoid personal injury or death, turn the ignition on, then reconnect the battery.

With the scan tool, monitor active codes as you work through the following steps.

WARNING: To avoid personal injury or death, maintain a safe distance from all airbags while performing the following steps.

Wiggle the wiring harness and connectors of the related airbag circuit or component.

If codes are related to the Driver Airbag circuits, rotate the steering wheel from stop to stop.

If only stored codes return, continue the test until the problem area has been isolated.

In the previous steps you have attempted to recreate the conditions responsible for setting the active DTC in question.

Does the scan tool display any ACTIVE DTCs?

Yes >> Select appropriate symptom from Symptom List.

No >> No problem found at this time. Erase all codes before returning vehicle to customer.

B1B83-PASSENGER SEAT WEIGHT SENSOR 4 - LEFT REAR INPUT CIRCUIT LOW

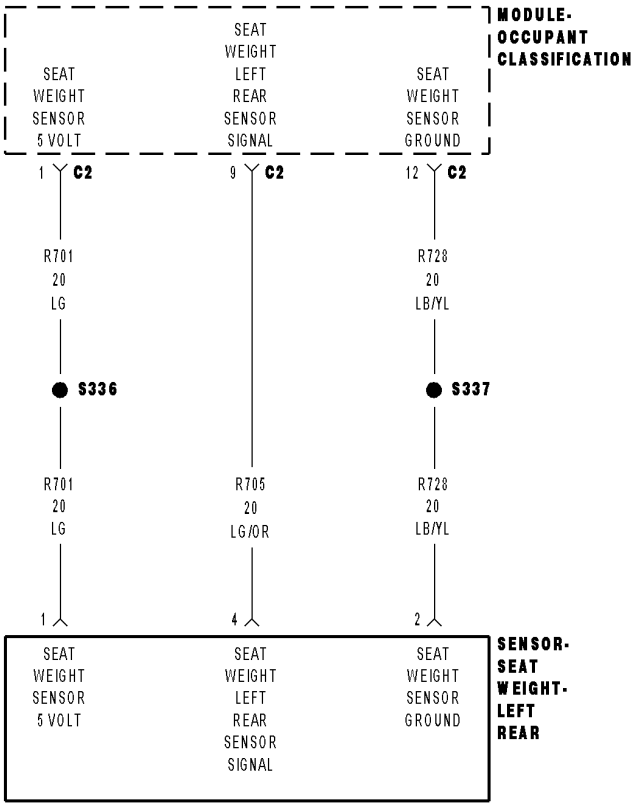

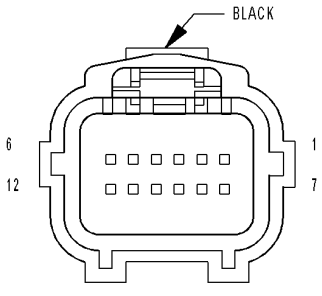

MODULE-
OCCUPANT
CLASSIFICATION C2

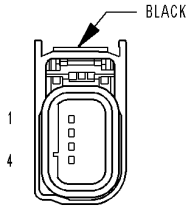

SENSOR-
SEAT WEIGHT-
LEFT REAR

8133afa0

For a complete wiring diagram **Refer to Section 8W**.

- **When Monitored:**
  While the CAN bus ignition status is in IGN_RUN, the module checks the sensor input ranges.
- **Set Condition:**
  If the module detects that the sensor input is less than 3.4 ± 0.6% of the (R701) Seat Weight Sensor 5 Volt circuit voltage. This DTC will also set if the (R701) Seat Weight Sensor 5 Volt circuit is shorted to ground. However, this condition would prevent communication with the OCM and cause a Lost Communication With OCM DTC to set in other modules.

Possible Causes
PASSENGER SEAT HARNESS IMPROPERLY ROUTED
PASSENGER SEAT HARNESS WIRES CHAFED, PIERCED, PINCHED, PARTIALLY BROKEN
PASSENGER SEAT HARNESS CONNECTOR TERMINALS BROKEN, BENT PUSHED OUT, SPREAD, CORRODED, CONTAMINATED
(R705) LT-RR SEAT WEIGHT SENSOR SIGNAL CIRCUIT SHORTED TO GROUND
(R705) LT-RR SEAT WEIGHT SENSOR SIGNAL CIRCUIT OPEN
(R701) SEAT WEIGHT SENSOR 5 VOLT CIRCUIT OPEN
LEFT-REAR SEAT WEIGHT SENSOR
OCCUPANT CLASSIFICATION MODULE (OCM)

Diagnostic Test

1. CHECK FOR ACTIVE INTERNAL FAULTS, IGNITION FAULTS, AND BATTERY FAULTS IN THE OCCUPANT CLASSIFICATION MODULE (OCM)

NOTE: Ensure the battery is fully charged.

NOTE: When reconnecting Airbag system components, the ignition must be turned off and the battery must be disconnected.

Turn the ignition on, then off, and then on again.

With the scan tool, read Occupant Classification Module (OCM) DTCs.

Does the scan tool display any active DTCs relating to internal faults, ignition faults, or battery faults?

Yes >> Diagnose and repair the DTCs. Refer to the Table of Contents in this Section for a complete list of symptoms.

No >> Go To 2

2. VERIFY THAT DTC B1B83–PASSENGER SEAT WEIGHT SENSOR 4 - LEFT REAR INPUT CIRCUIT LOW IS ACTIVE

With the scan tool, read OCM DTCs.

Does the scan tool display active: B1B83–PASSENGER SEAT WEIGHT SENSOR 4 - LEFT REAR INPUT CIRCUIT LOW?

Yes >> Go To 3

No >> Go To 10

3. INSPECT PASSENGER SEAT HARNESS WIRES AND CONNECTORS

WARNING: To avoid personal injury or death, turn the ignition off, disconnect the battery and wait two minutes before proceeding.

Using the wiring diagram/schematic as a guide, inspect the Passenger Seat Harness wiring and connectors. Look for chafed, pierced, pinched, or partially broken wires and broken, bent, pushed out, spread, corroded, or contaminated terminals.

Are any of these conditions present?

Yes >>

NOTE: Do not attempt to repair the Seat Harness. Replace the Seat Harness if the condition inspecting or testing for is present in the Seat Harness.

Replace the Passenger Seat Harness in accordance with the Service Information.

Perform OCS VERIFICATION TEST - VER 1.

No >> Go To 4

4. VERIFY THAT PASSENGER SEAT HARNESS IS ROUTED CORRECTLY

Verify that the Passenger Seat Harness is routed correctly.

Is the Passenger Seat Harness routed correctly?

Yes >> Go To 5

No >> Reroute the Passenger Seat Harness as necessary.

Perform OCS VERIFICATION TEST - VER 1.

5. CHECK IF MORE THAN ONE PASSENGER SEAT WEIGHT SENSOR DTC IS ACTIVE

Verify that all of the Seat Weight Sensor mounting screws are torqued to specification. Refer to 23 - BODY/SEATS.

WARNING: To avoid personal injury or death, turn the ignition on, then reconnect the battery.

NOTE: Failure to follow test instructions or aborting the test will cause faults to set when performing the Occupant Classification Module System Verification Test. To prevent faults due to process errors: Verify That All Tests Steps That Led You Here Were Performed As Directed; Verify That The Ignition Is In Run; Wait 30 Seconds After Changing The Seat Weight Before Proceeding To Allow The System To Stabilize; Only Press Scan Tool Buttons When Directed To Do So; and Perform The Occupant Classification Module System Verification Test To Completion.

With the scan tool in OCM, select More Options, select System Tests, and select Occupant Classification Module System Verification Test. Run the test by following the instructions displayed on the scan tool. When the test is complete, wait two minutes, and then proceed as follows.

With the scan tool, read OCM DTCs.

Does the scan tool display any active PASSENGER SEAT WEIGHT SENSOR DTCs?

Yes - More Than One PASSENGER SEAT WEIGHT SENSOR DTC Is Active

Perform the *Diagnosis/Checkout Procedure For Seat Weight Sensors.

Perform OCS VERIFICATION TEST - VER 1.

Yes - Only DTC B1B83 Is Active

Go To 6

No - But Other DTCs Present

Diagnose and repair the DTCs. Refer to the Table of Contents in this Section for a complete list of symptoms.

No - No Active DTCs Present

Perform OCS VERIFICATION TEST - VER 1.

6. CHECK VOLTAGE OF (R701) SEAT WEIGHT SENSOR 5 VOLT CIRCUIT

WARNING: To avoid personal injury or death, turn the ignition off, disconnect the battery and wait two minutes before proceeding.
Disconnect the Left-Rear Seat Weight Sensor connector.

WARNING: To avoid personal injury or death, turn the ignition on, then reconnect the battery.
Measure the voltage of the (R701) Seat Weight Sensor 5 Volt circuit.

Is the voltage above 4.8 volts?

Yes >> Go To 7

No >> Go To 9

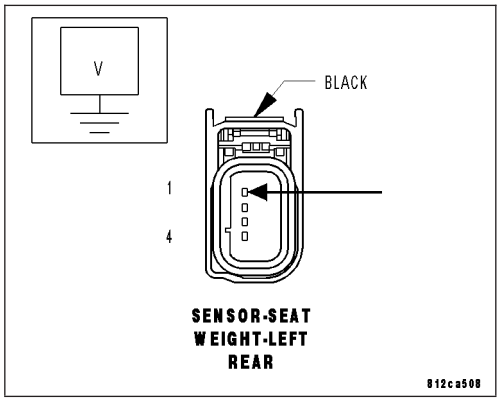

7. CHECK (R705) LT-RR SEAT WEIGHT SENSOR SIGNAL CIRCUIT FOR A SHORT TO GROUND

WARNING: To avoid personal injury or death, turn the ignition off, disconnect the battery and wait two minutes before proceeding.
Disconnect the OCM C2 connector.

Measure the resistance of the (R705) LT-RR Seat Weight Sensor Signal circuit between ground and the OCM C2 connector.

Is the resistance below 10k ohms?

Yes >>

NOTE: Do not attempt to repair the Seat Harness. Replace the Seat Harness if the condition inspecting or testing for is present in the Seat Harness.

Replace the Passenger Seat Harness in accordance with the Service Information.

Perform OCS VERIFICATION TEST - VER 1.

No >> Go To 8

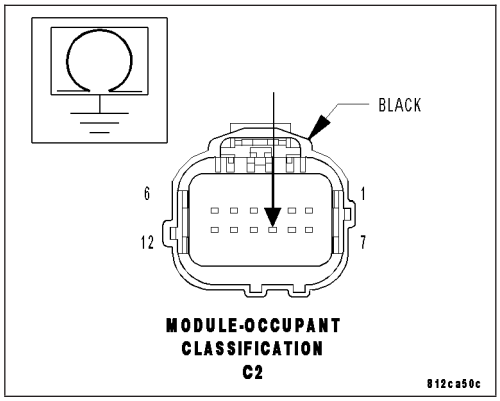

8. CHECK (R705) LT-RR SEAT WEIGHT SENSOR SIGNAL CIRCUIT FOR AN OPEN

Measure the resistance of the (R705) LT-RR Seat Weight Sensor Signal circuit between the OCM C2 connector and the Left-Rear Seat Weight Sensor connector.

Is the resistance below 5.0 ohms?

Yes >> Replace the Left-Rear Seat Weight Sensor in accordance with the Service Information. Perform OCS VERIFICATION TEST - VER 1. If DTC B1B83-PASSENGER SEAT WEIGHT SENSOR 4 - LEFT REAR INPUT CIRCUIT LOW returns active, replace the OCM in accordance with the Service Information.

Perform OCS VERIFICATION TEST - VER 1.

No >>

NOTE: Do not attempt to repair the Seat Harness. Replace the Seat Harness if the condition inspecting or testing for is present in the Seat Harness.

Replace the Passenger Seat Harness in accordance with the Service Information.

Perform OCS VERIFICATION TEST - VER 1.

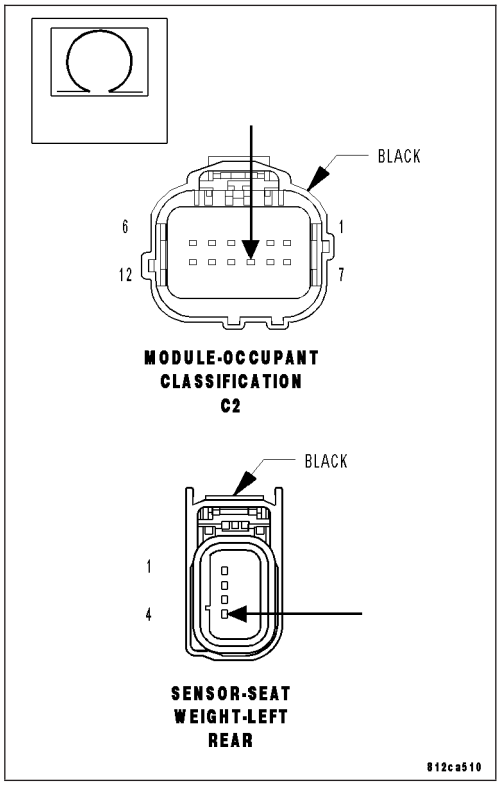

9. CHECK (R701) SEAT WEIGHT SENSOR 5 VOLT CIRCUIT FOR AN OPEN

WARNING: To avoid personal injury or death, turn the ignition off, disconnect the battery and wait two minutes before proceeding.

Disconnect the OCM C2 connector.

Measure the resistance of the (R701) Seat Weight Sensor 5 Volt circuit between the OCM C2 connector and the Left-Rear Seat Weight Sensor connector.

Is the resistance below 5.0 ohms?

Yes >> Replace the OCM in accordance with the Service Information.

Perform OCS VERIFICATION TEST - VER 1.

No >>

NOTE: Do not attempt to repair the Seat Harness. Replace the Seat Harness if the condition inspecting or testing for is present in the Seat Harness.

Replace the Passenger Seat Harness in accordance with the Service Information.

Perform OCS VERIFICATION TEST - VER 1.

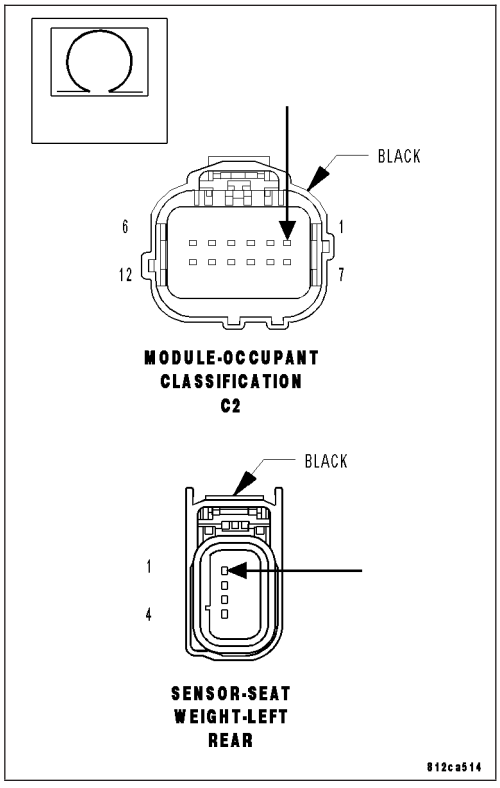

10. TEST FOR INTERMITTENT CONDITION

With the scan tool, record and erase all DTCs from all Airbag modules.

If any ACTIVE codes are present they must be resolved before diagnosing any stored codes.

WARNING: To avoid personal injury or death, turn the ignition off, disconnect the battery and wait two minutes before proceeding.

Using the wiring diagram/schematic as a guide, inspect the wiring and connectors.

Look for chafed, pierced, pinched, or partially broken wires and broken, bent, pushed out, spread, corroded, or contaminated terminals.

The following additional checks may assist you in identifying a possible intermittent problem.

Reconnect any disconnected components and harness connector.

WARNING: To avoid personal injury or death, turn the ignition on, then reconnect the battery.

With the scan tool, monitor active codes as you work through the following steps.

WARNING: To avoid personal injury or death, maintain a safe distance from all airbags while performing the following steps.

Wiggle the wiring harness and connectors of the related airbag circuit or component.

If codes are related to the Driver Airbag circuits, rotate the steering wheel from stop to stop.

If only stored codes return, continue the test until the problem area has been isolated.

In the previous steps you have attempted to recreate the conditions responsible for setting the active DTC in question.

Does the scan tool display any ACTIVE DTCs?

Yes >> Select appropriate symptom from Symptom List.

No >> No problem found at this time. Erase all codes before returning vehicle to customer.

B1B84-PASSENGER SEAT WEIGHT SENSOR 4 - LEFT REAR INPUT CIRCUIT HIGH

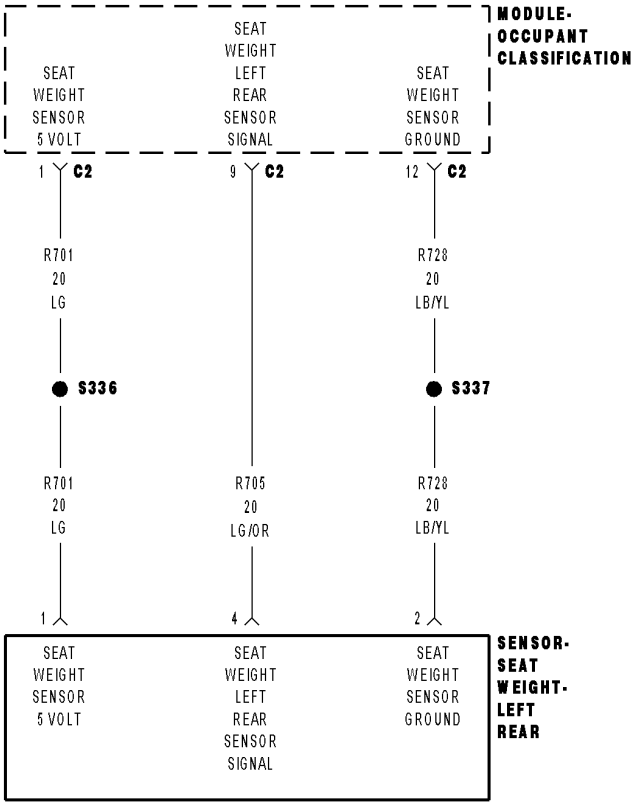

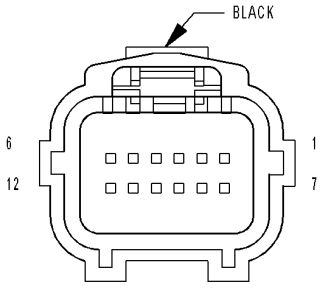

MODULE-
OCCUPANT
CLASSIFICATION C2

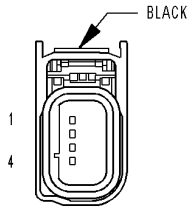

SENSOR-
SEAT WEIGHT-
LEFT REAR

8133afa0

For a complete wiring diagram **Refer to Section 8W**.

- **When Monitored:**
  While the CAN bus ignition status is in IGN_RUN, the module checks the sensor input ranges.
- **Set Condition:**
  If the module detects that the sensor input is greater than 96 ± 0.6% of the (R701) Seat Weight Sensor 5 Volt circuit voltage.

Possible Causes
PASSENGER SEAT HARNESS IMPROPERLY ROUTED
PASSENGER SEAT HARNESS WIRES CHAFED, PIERCED, PINCHED, PARTIALLY BROKEN
PASSENGER SEAT HARNESS CONNECTOR TERMINALS BROKEN, BENT PUSHED OUT, SPREAD, CORRODED, CONTAMINATED
(R705) LT-RR SEAT WEIGHT SENSOR SIGNAL CIRCUIT SHORTED TO VOLTAGE
(R705) LT-RR SEAT WEIGHT SENSOR SIGNAL CIRCUIT SHORTED TO (R701) SEAT WEIGHT SENSOR 5 VOLT CIRCUIT
(R728) SEAT WEIGHT SENSOR GROUND CIRCUIT OPEN
LEFT-REAR SEAT WEIGHT SENSOR
OCCUPANT CLASSIFICATION MODULE (OCM)

Diagnostic Test

1. CHECK FOR ACTIVE INTERNAL FAULTS, IGNITION FAULTS, AND BATTERY FAULTS IN THE OCCUPANT CLASSIFICATION MODULE (OCM)

NOTE: Ensure the battery is fully charged.

NOTE: When reconnecting Airbag system components, the ignition must be turned off and the battery must be disconnected.

Turn the ignition on, then off, and then on again.

With the scan tool, read Occupant Classification Module (OCM) DTCs.

Does the scan tool display any active DTCs relating to internal faults, ignition faults, or battery faults?

Yes >> Diagnose and repair the DTCs. Refer to the Table of Contents in this Section for a complete list of symptoms.

No >> Go To 2

2. VERIFY THAT DTC B1B84–PASSENGER SEAT WEIGHT SENSOR 4 - LEFT REAR INPUT CIRCUIT HIGH IS ACTIVE

With the scan tool, read OCM DTCs.

Does the scan tool display active: B1B84–PASSENGER SEAT WEIGHT SENSOR 4 - LEFT REAR INPUT CIRCUIT HIGH?

Yes >> Go To 3

No >> Go To 9

3. INSPECT PASSENGER SEAT HARNESS WIRES AND CONNECTORS

WARNING: To avoid personal injury or death, turn the ignition off, disconnect the battery and wait two minutes before proceeding.

Using the wiring diagram/schematic as a guide, inspect the Passenger Seat Harness wiring and connectors. Look for chafed, pierced, pinched, or partially broken wires and broken, bent, pushed out, spread, corroded, or contaminated terminals.

Are any of these conditions present?

Yes >>

NOTE: Do not attempt to repair the Seat Harness. Replace the Seat Harness if the condition inspecting or testing for is present in the Seat Harness.

Replace the Passenger Seat Harness in accordance with the Service Information.

Perform OCS VERIFICATION TEST - VER 1.

No >> Go To 4

4. VERIFY THAT PASSENGER SEAT HARNESS IS ROUTED CORRECTLY

Verify that the Passenger Seat Harness is routed correctly.

Is the Passenger Seat Harness routed correctly?

Yes >> Go To 5

No >> Reroute the Passenger Seat Harness as necessary.

Perform OCS VERIFICATION TEST - VER 1.

5. CHECK IF MORE THAN ONE PASSENGER SEAT WEIGHT SENSOR DTC IS ACTIVE

Verify that all of the Seat Weight Sensor mounting screws are torqued to specification. Refer to 23 - BODY/SEATS.

WARNING: To avoid personal injury or death, turn the ignition on, then reconnect the battery.

NOTE: Failure to follow test instructions or aborting the test will cause faults to set when performing the Occupant Classification Module System Verification Test. To prevent faults due to process errors: Verify That All Tests Steps That Led You Here Were Performed As Directed; Verify That The Ignition Is In Run; Wait 30 Seconds After Changing The Seat Weight Before Proceeding To Allow The System To Stabilize; Only Press Scan Tool Buttons When Directed To Do So; and Perform The Occupant Classification Module System Verification Test To Completion.

With the scan tool in OCM, select More Options, select System Tests, and select Occupant Classification Module System Verification Test. Run the test by following the instructions displayed on the scan tool. When the test is complete, wait two minutes, and then proceed as follows.

With the scan tool, read OCM DTCs.

Does the scan tool display any active PASSENGER SEAT WEIGHT SENSOR DTCs?

Yes - More Than One PASSENGER SEAT WEIGHT SENSOR DTC Is Active

Perform the *Diagnosis/Checkout Procedure For Seat Weight Sensors.

Perform OCS VERIFICATION TEST - VER 1.

Yes - Only DTC B1B84 Is Active

Go To 6

No - But Other DTCs Present

Diagnose and repair the DTCs. Refer to the Table of Contents in this Section for a complete list of symptoms.

No - Active DTCs Present

Perform OCS VERIFICATION TEST - VER 1.

6. CHECK (R705) LT-RR SEAT WEIGHT SENSOR SIGNAL CIRCUIT FOR A SHORT TO VOLTAGE

WARNING: To avoid personal injury or death, turn the ignition off, disconnect the battery and wait two minutes before proceeding.
Disconnect the OCM C2 connector.
Measure the voltage of the (R705) LT-RR Seat Weight Sensor Signal circuit.

Is the voltage above 0.2 volts?

Yes >>

NOTE: Do not attempt to repair the Seat Harness. Replace the Seat Harness if the condition inspecting or testing for is present in the Seat Harness.

Replace the Passenger Seat Harness in accordance with the Service Information.

Perform OCS VERIFICATION TEST - VER 1.

No >> Go To 7

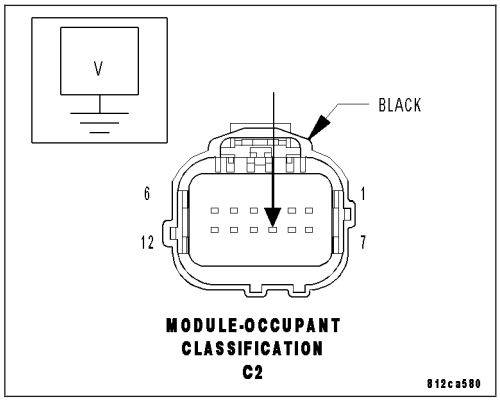

7. CHECK (R705) LT-RR SEAT WEIGHT SENSOR SIGNAL CIRCUIT FOR A SHORT TO (R701) SEAT WEIGHT SENSOR 5 VOLT CIRCUIT

Disconnect the Left-Rear Seat Weight Sensor connector.
Measure the resistance between the (R705) LT-RR Seat Weight Sensor Signal circuit and the (R701) Seat Weight Sensor 5 Volt circuit.

Is the resistance below 10K ohms?

Yes >>

NOTE: Do not attempt to repair the Seat Harness. Replace the Seat Harness if the condition inspecting or testing for is present in the Seat Harness.

Replace the Passenger Seat Harness in accordance with the Service Information.

Perform OCS VERIFICATION TEST - VER 1.

No >> Go To 8

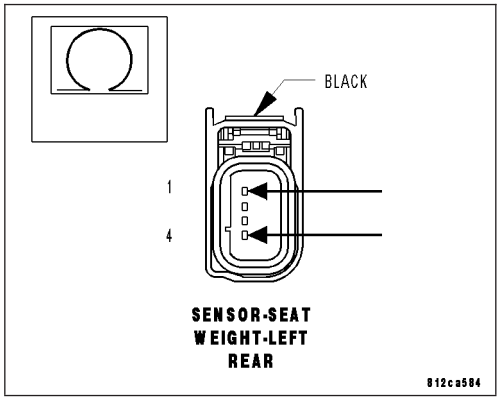

8. CHECK (R728) SEAT WEIGHT SENSOR GROUND CIRCUIT FOR AN OPEN

Measure the resistance of the (R728) Seat Weight Sensor Ground circuit between the OCM C2 connector and the Left-Rear Seat Weight Sensor connector.

Is the resistance below 5.0 ohms?

Yes >> Replace the OCM in accordance with the Service Information.

Perform OCS VERIFICATION TEST - VER 1.

No >>

NOTE: Do not attempt to repair the Seat Harness. Replace the Seat Harness if the condition inspecting or testing for is present in the Seat Harness.

Replace the Passenger Seat Harness in accordance with the Service Information.

Perform OCS VERIFICATION TEST - VER 1.

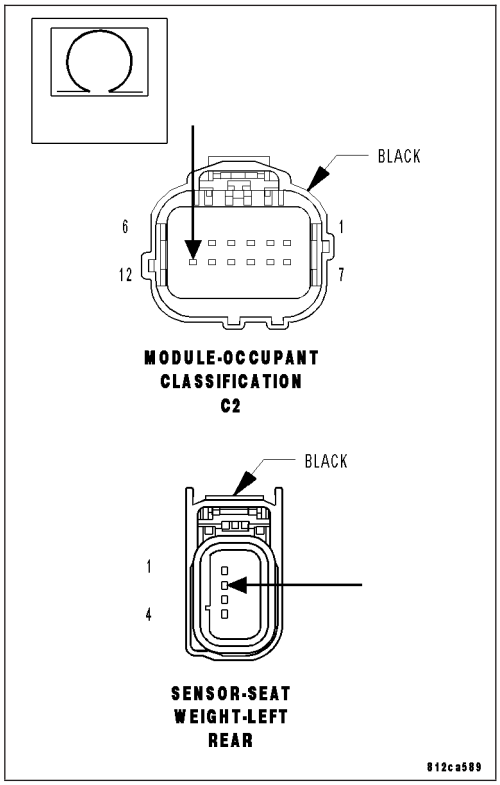

9. TEST FOR INTERMITTENT CONDITION

With the scan tool, record and erase all DTCs from all Airbag modules.

If any ACTIVE codes are present they must be resolved before diagnosing any stored codes.

WARNING: To avoid personal injury or death, turn the ignition off, disconnect the battery and wait two minutes before proceeding.

Using the wiring diagram/schematic as a guide, inspect the wiring and connectors.

Look for chafed, pierced, pinched, or partially broken wires and broken, bent, pushed out, spread, corroded, or contaminated terminals.

The following additional checks may assist you in identifying a possible intermittent problem.

Reconnect any disconnected components and harness connector.

WARNING: To avoid personal injury or death, turn the ignition on, then reconnect the battery.

With the scan tool, monitor active codes as you work through the following steps.

WARNING: To avoid personal injury or death, maintain a safe distance from all airbags while performing the following steps.

Wiggle the wiring harness and connectors of the related airbag circuit or component.

If codes are related to the Driver Airbag circuits, rotate the steering wheel from stop to stop.

If only stored codes return, continue the test until the problem area has been isolated.

In the previous steps you have attempted to recreate the conditions responsible for setting the active DTC in question.

Does the scan tool display any ACTIVE DTCs?

Yes >> Select appropriate symptom from Symptom List.

No >> No problem found at this time. Erase all codes before returning vehicle to customer.

B1B87-PASSENGER SEAT WEIGHT SENSOR 1 - RIGHT REAR PERFORMANCE

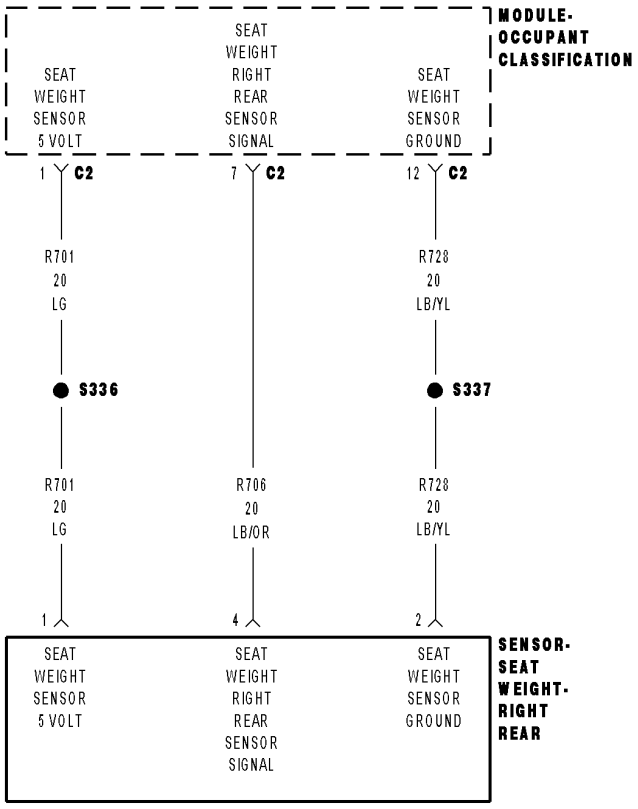

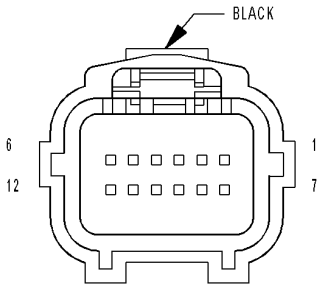

MODULE-
OCCUPANT
CLASSIFICATION C2

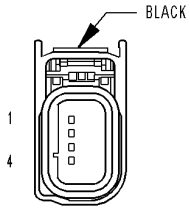

SENSOR-
SEAT WEIGHT-
RIGHT REAR

8133b104

For a complete wiring diagram **Refer to Section 8W**.

- **When Monitored:**
  When CAN ignitions status is Run or SNA, during auto zero and while performing the Occupant Classification Module System Verification Test.
- **Set Condition:**
  During the occupant classification verification test: if the module detects that the sensor input is less than 1.4 volts or greater than 3.6 volts. During auto zero: if the module detects that the sensor input is less than 1 volt or greater than 4 volts.

Possible Causes
PASSENGER SEAT HARNESS WIRES CHAFED, PIERCED, PINCHED, PARTIALLY BROKEN
PASSENGER SEAT HARNESS CONNECTOR TERMINALS BROKEN, BENT PUSHED OUT, SPREAD, CORRODED, CONTAMINATED
RIGHT-REAR PASSENGER SEAT WEIGHT SENSOR
DAMAGE TO THE PASSENGER SEAT STRUCTURE, RISER ASSEMBLY, CROSSMEMBERS, SEAT TRACKS, FLOOR PAN
OCCUPANT CLASSIFICATION MODULE (OCM)

Diagnostic Test

1. CHECK FOR ACTIVE INTERNAL FAULTS, IGNITION FAULTS, AND BATTERY FAULTS IN THE OCCUPANT CLASSIFICATION MODULE (OCM)

NOTE: Ensure the battery is fully charged.

NOTE: When reconnecting Airbag system components, the ignition must be turned off and the battery must be disconnected.

Turn the ignition on, then off, and then on again.

With the scan tool, read Occupant Classification Module (OCM) DTCs.

Does the scan tool display any active DTCs relating to internal faults, ignition faults, or battery faults?

Yes >> Diagnose and repair the DTCs. Refer to the Table of Contents in this Section for a complete list of symptoms.

No >> Go To 2

2. VERIFY THAT DTC B1B87–PASSENGER SEAT WEIGHT SENSOR 1 - RIGHT REAR PERFORMANCE IS ACTIVE

With the scan tool, read OCM DTCs.

Does the scan tool display active: B1B87–PASSENGER SEAT WEIGHT SENSOR 1 - RIGHT REAR PERFORMANCE?

Yes >> Go To 3

No >> Go To 5

3. INSPECT PASSENGER SEAT HARNESS WIRES AND CONNECTORS

WARNING: To avoid personal injury or death, turn the ignition off, disconnect the battery and wait two minutes before proceeding.

Using the wiring diagram/schematic as a guide, inspect the Passenger Seat Harness wiring and connectors. Look for chafed, pierced, pinched, or partially broken wires and broken, bent, pushed out, spread, corroded, or contaminated terminals.

Are any of these conditions present?

Yes >>

NOTE: Do not attempt to repair the Seat Harness. Replace the Seat Harness if the condition inspecting or testing for is present in the Seat Harness.

Replace the Passenger Seat Harness in accordance with the Service Information.

Perform OCS VERIFICATION TEST - VER 1.

No >> Go To 4

4. PERFORM OCCUPANT CLASSIFICATION MODULE SYSTEM VERIFICATION TEST

Verify that all of the Seat Weight Sensor mounting screws are torqued to specification. Refer to 23 - BODY/SEATS.

WARNING: To avoid personal injury or death, turn the ignition on, then reconnect the battery.

NOTE: Failure to follow test instructions or aborting the test will cause faults to set when performing the Occupant Classification Module System Verification Test. To prevent faults due to process errors: Verify That All Tests Steps That Led You Here Were Performed As Directed; Verify That The Ignition Is In Run; Wait 30 Seconds After Changing The Seat Weight Before Proceeding To Allow The System To Stabilize; Only Press Scan Tool Buttons When Directed To Do So; and Perform The Occupant Classification Module System Verification Test To Completion.

With the scan tool in OCM, select More Options, select System Tests, and select Occupant Classification Module System Verification Test. Run the test by following the instructions displayed on the scan tool. When the test is complete, wait two minutes, and then proceed as follows.

With the scan tool, read OCM DTCs.

Does the scan tool display any active PASSENGER SEAT WEIGHT SENSOR PERFORMANCE DTCs?

Yes >> Perform the *Diagnosis/Checkout Procedure For Seat Weight Sensors.

Perform OCS VERIFICATION TEST - VER 1.

No - But Other DTCs Present

Diagnose and repair the DTCs. Refer to the Table of Contents in this Section for a complete list of symptoms.

No - No Active DTCs Present

Perform OCS VERIFICATION TEST - VER 1.

5. TEST FOR INTERMITTENT CONDITION

With the scan tool, record and erase all DTCs from all Airbag modules.

If any ACTIVE codes are present they must be resolved before diagnosing any stored codes.

WARNING: To avoid personal injury or death, turn the ignition off, disconnect the battery and wait two minutes before proceeding.

Using the wiring diagram/schematic as a guide, inspect the wiring and connectors.

Look for chafed, pierced, pinched, or partially broken wires and broken, bent, pushed out, spread, corroded, or contaminated terminals.

The following additional checks may assist you in identifying a possible intermittent problem.

Reconnect any disconnected components and harness connector.

WARNING: To avoid personal injury or death, turn the ignition on, then reconnect the battery.

With the scan tool, monitor active codes as you work through the following steps.

WARNING: To avoid personal injury or death, maintain a safe distance from all airbags while performing the following steps.

Wiggle the wiring harness and connectors of the related airbag circuit or component.

If codes are related to the Driver Airbag circuits, rotate the steering wheel from stop to stop.

If only stored codes return, continue the test until the problem area has been isolated.

In the previous steps you have attempted to recreate the conditions responsible for setting the active DTC in question.

Does the scan tool display any ACTIVE DTCs?

Yes >> Select appropriate symptom from Symptom List.

No >> No problem found at this time. Erase all codes before returning vehicle to customer.

B1B88-PASSENGER SEAT WEIGHT SENSOR 1 - RIGHT REAR INPUT CIRCUIT LOW

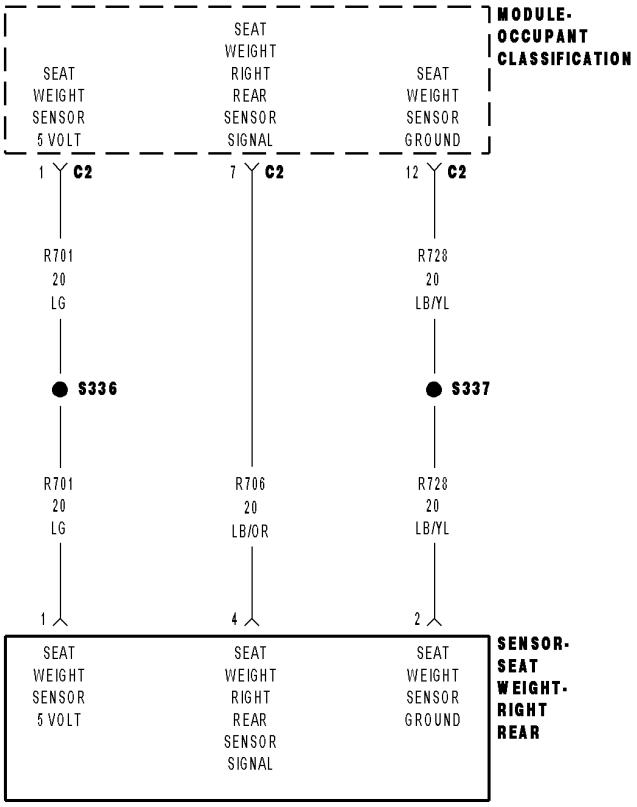

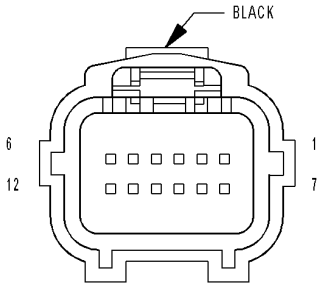

MODULE-
OCCUPANT
CLASSIFICATION C2

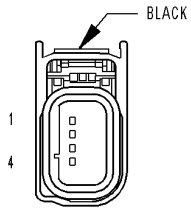

SENSOR-
SEAT WEIGHT-
RIGHT REAR

8133b104

For a complete wiring diagram **Refer to Section 8W**.

- **When Monitored:**
  While the CAN bus ignition status is in IGN_RUN, the module checks the sensor input ranges.
- **Set Condition:**
  If the module detects that the sensor input is less than 3.4 ± 0.6% of the (R701) Seat Weight Sensor 5 Volt circuit voltage. This DTC will also set if the (R701) Seat Weight Sensor 5 Volt circuit is shorted to ground. However, this condition would prevent communication with the OCM and cause a Lost Communication With OCM DTC to set in other modules.

Possible Causes
PASSENGER SEAT HARNESS IMPROPERLY ROUTED
PASSENGER SEAT HARNESS WIRES CHAFED, PIERCED, PINCHED, PARTIALLY BROKEN
PASSENGER SEAT HARNESS CONNECTOR TERMINALS BROKEN, BENT PUSHED OUT, SPREAD, CORRODED, CONTAMINATED
(R706) RT-RR SEAT WEIGHT SENSOR SIGNAL CIRCUIT SHORTED TO GROUND
(R706) RT-RR SEAT WEIGHT SENSOR SIGNAL CIRCUIT OPEN
(R701) SEAT WEIGHT SENSOR 5 VOLT CIRCUIT OPEN
RIGHT-REAR SEAT WEIGHT SENSOR
OCCUPANT CLASSIFICATION MODULE (OCM)

Diagnostic Test

1. CHECK FOR ACTIVE INTERNAL FAULTS, IGNITION FAULTS, AND BATTERY FAULTS IN THE OCCUPANT CLASSIFICATION MODULE (OCM)

NOTE: Ensure the battery is fully charged.

NOTE: When reconnecting Airbag system components, the ignition must be turned off and the battery must be disconnected.

Turn the ignition on, then off, and then on again.

With the scan tool, read Occupant Classification Module (OCM) DTCs.

Does the scan tool display any active DTCs relating to internal faults, ignition faults, or battery faults?

Yes >> Diagnose and repair the DTCs. Refer to the Table of Contents in this Section for a complete list of symptoms.

No >> Go To 2

2. VERIFY THAT DTC B1B88–PASSENGER SEAT WEIGHT SENSOR 1 - RIGHT REAR INPUT CIRCUIT LOW IS ACTIVE

With the scan tool, read OCM DTCs.

Does the scan tool display active: B1B88–PASSENGER SEAT WEIGHT SENSOR 1 - RIGHT REAR INPUT CIRCUIT LOW?

Yes >> Go To 3

No >> Go To 10

3. INSPECT PASSENGER SEAT HARNESS WIRES AND CONNECTORS

WARNING: To avoid personal injury or death, turn the ignition off, disconnect the battery and wait two minutes before proceeding.

Using the wiring diagram/schematic as a guide, inspect the Passenger Seat Harness wiring and connectors. Look for chafed, pierced, pinched, or partially broken wires and broken, bent, pushed out, spread, corroded, or contaminated terminals.

Are any of these conditions present?

Yes >>

NOTE: Do not attempt to repair the Seat Harness. Replace the Seat Harness if the condition inspecting or testing for is present in the Seat Harness.

Replace the Passenger Seat Harness in accordance with the Service Information.

Perform OCS VERIFICATION TEST - VER 1.

No >> Go To 4

4. VERIFY THAT PASSENGER SEAT HARNESS IS ROUTED CORRECTLY

Verify that the Passenger Seat Harness is routed correctly.

Is the Passenger Seat Harness routed correctly?

Yes >> Go To 5

No >> Reroute the Passenger Seat Harness as necessary.

Perform OCS VERIFICATION TEST - VER 1.

5. CHECK IF MORE THAN ONE PASSENGER SEAT WEIGHT SENSOR DTC IS ACTIVE

Verify that all of the Seat Weight Sensor mounting screws are torqued to specification. Refer to 23 - BODY/SEATS.

WARNING: To avoid personal injury or death, turn the ignition on, then reconnect the battery.

NOTE: Failure to follow test instructions or aborting the test will cause faults to set when performing the Occupant Classification Module System Verification Test. To prevent faults due to process errors: Verify That All Tests Steps That Led You Here Were Performed As Directed; Verify That The Ignition Is In Run; Wait 30 Seconds After Changing The Seat Weight Before Proceeding To Allow The System To Stabilize; Only Press Scan Tool Buttons When Directed To Do So; and Perform The Occupant Classification Module System Verification Test To Completion.

With the scan tool in OCM, select More Options, select System Tests, and select Occupant Classification Module System Verification Test. Run the test by following the instructions displayed on the scan tool. When the test is complete, wait two minutes, and then proceed as follows.

With the scan tool, read OCM DTCs.

Does the scan tool display any active PASSENGER SEAT WEIGHT SENSOR DTCs?

Yes, More Than One PASSENGER SEAT WEIGHT SENSOR DTC Is Active

Perform the *Diagnosis/Checkout Procedure For Seat Weight Sensors.

Perform OCS VERIFICATION TEST - VER 1.

Yes - Only DTC B1B88 Is Active

Go To 6

No - But Other DTCs Present

Diagnose and repair the DTCs. Refer to the Table of Contents in this Section for a complete list of symptoms.

No - No Active DTCs Present

Perform OCS VERIFICATION TEST - VER 1.

6. CHECK VOLTAGE OF (R701) SEAT WEIGHT SENSOR 5 VOLT CIRCUIT

WARNING: To avoid personal injury or death, turn the ignition off, disconnect the battery and wait two minutes before proceeding.
Disconnect the Right-Rear Seat Weight Sensor connector.

WARNING: To avoid personal injury or death, turn the ignition on, then reconnect the battery.
Measure the voltage of the (R701) Seat Weight Sensor 5 Volt circuit.

Is the voltage above 4.8 volts?

Yes >> Go To 7

No >> Go To 9

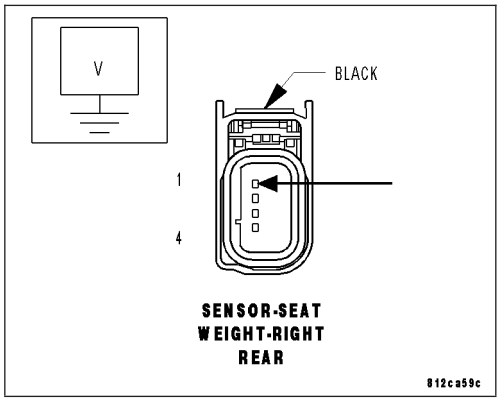

7. CHECK (R706) RT-RR SEAT WEIGHT SENSOR SIGNAL CIRCUIT FOR A SHORT TO GROUND

WARNING: To avoid personal injury or death, turn the ignition off, disconnect the battery and wait two minutes before proceeding.
Disconnect the OCM C2 connector.

Measure the resistance of the (R706) RT-RR Seat Weight Sensor Signal circuit between ground and the OCM C2 connector.

Is the resistance below 10k ohms?

Yes >>

NOTE: Do not attempt to repair the Seat Harness. Replace the Seat Harness if the condition inspecting or testing for is present in the Seat Harness.

Replace the Passenger Seat Harness in accordance with the Service Information.

Perform OCS VERIFICATION TEST - VER 1.

No >> Go To 8

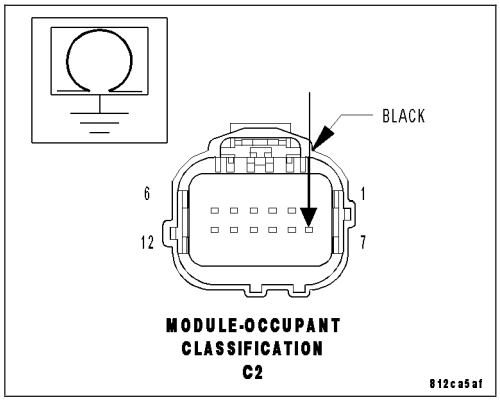

8. CHECK (R706) RT-RR SEAT WEIGHT SENSOR SIGNAL CIRCUIT FOR AN OPEN

Measure the resistance of the (R706) RT-RR Seat Weight Sensor Signal circuit between the OCM C2 connector and the Right-Rear Seat Weight Sensor connector.

Is the resistance below 5.0 ohms?

Yes >> Replace the Right-Rear Seat Weight Sensor in accordance with the Service Information. Perform OCS VERIFICATION TEST - VER 1. If DTC B1B88–PASSENGER SEAT WEIGHT SENSOR 1 - RIGHT REAR INPUT CIRCUIT LOW returns active, replace the OCM in accordance with the Service Information.

Perform OCS VERIFICATION TEST - VER 1.

No >>

NOTE: Do not attempt to repair the Seat Harness. Replace the Seat Harness if the condition inspecting or testing for is present in the Seat Harness.

Replace the Passenger Seat Harness in accordance with the Service Information.

Perform OCS VERIFICATION TEST - VER 1.

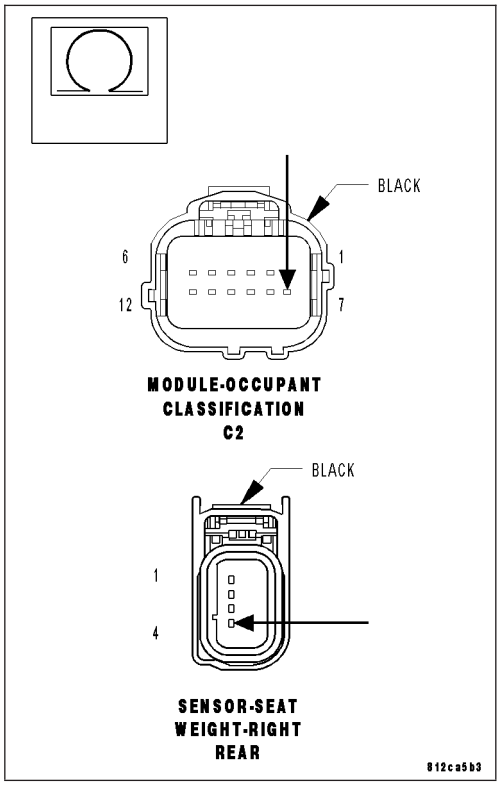

9. CHECK (R701) SEAT WEIGHT SENSOR 5 VOLT CIRCUIT FOR AN OPEN

WARNING: To avoid personal injury or death, turn the ignition off, disconnect the battery and wait two minutes before proceeding.

Disconnect the OCM C2 connector.

Measure the resistance of the (R701) Seat Weight Sensor 5 Volt circuit between the OCM C2 connector and the Right-Rear Seat Weight Sensor connector.

Is the resistance below 5.0 ohms?

Yes >> Replace the OCM in accordance with the Service Information.

Perform OCS VERIFICATION TEST - VER 1.

No >>

NOTE: Do not attempt to repair the Seat Harness. Replace the Seat Harness if the condition inspecting or testing for is present in the Seat Harness.

Replace the Passenger Seat Harness in accordance with the Service Information.

Perform OCS VERIFICATION TEST - VER 1.

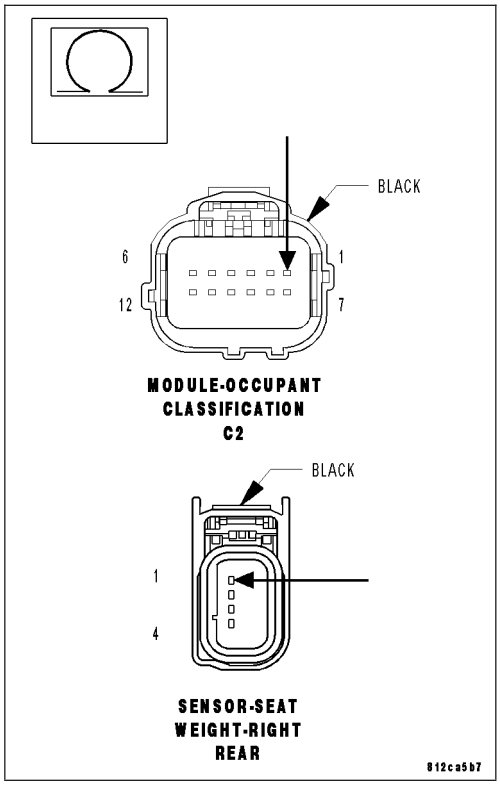

10. TEST FOR INTERMITTENT CONDITION

With the scan tool, record and erase all DTCs from all Airbag modules.

If any ACTIVE codes are present they must be resolved before diagnosing any stored codes.

WARNING: To avoid personal injury or death, turn the ignition off, disconnect the battery and wait two minutes before proceeding.

Using the wiring diagram/schematic as a guide, inspect the wiring and connectors.

Look for chafed, pierced, pinched, or partially broken wires and broken, bent, pushed out, spread, corroded, or contaminated terminals.

The following additional checks may assist you in identifying a possible intermittent problem.

Reconnect any disconnected components and harness connector.

WARNING: To avoid personal injury or death, turn the ignition on, then reconnect the battery.

With the scan tool, monitor active codes as you work through the following steps.

WARNING: To avoid personal injury or death, maintain a safe distance from all airbags while performing the following steps.

Wiggle the wiring harness and connectors of the related airbag circuit or component.

If codes are related to the Driver Airbag circuits, rotate the steering wheel from stop to stop.

If only stored codes return, continue the test until the problem area has been isolated.

In the previous steps you have attempted to recreate the conditions responsible for setting the active DTC in question.

Does the scan tool display any ACTIVE DTCs?

Yes >> Select appropriate symptom from Symptom List.

No >> No problem found at this time. Erase all codes before returning vehicle to customer.

B1B89-PASSENGER SEAT WEIGHT SENSOR 1 - RIGHT REAR INPUT CIRCUIT HIGH

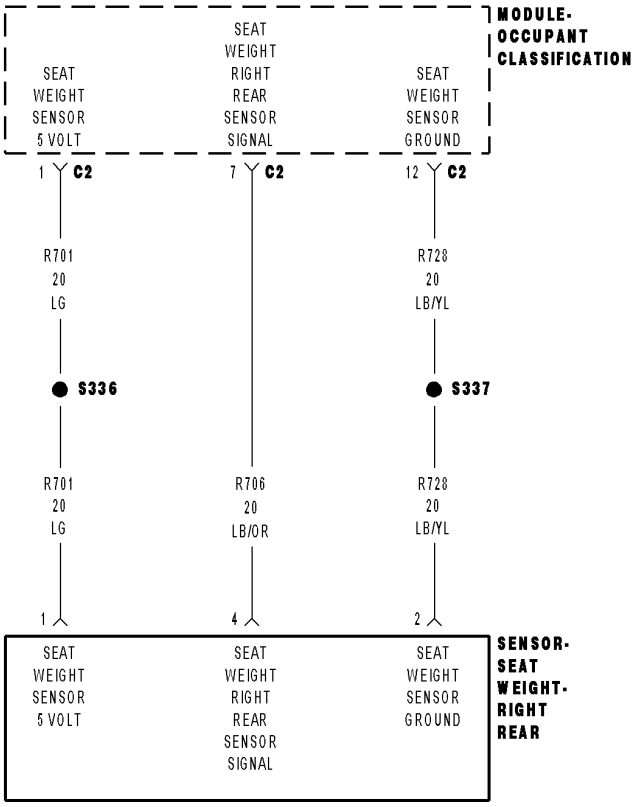

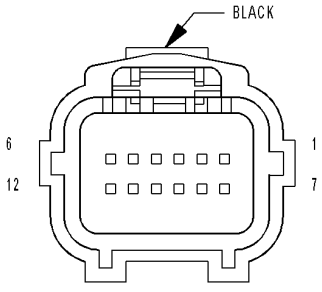

MODULE-
OCCUPANT
CLASSIFICATION C2

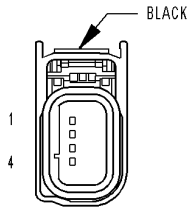

SENSOR-
SEAT WEIGHT-
RIGHT REAR

8133b104

For a complete wiring diagram **Refer to Section 8W**.

- **When Monitored:**
  While the CAN bus ignition status is in IGN_RUN, the module checks the sensor input ranges.
- **Set Condition:**
  If the module detects that the sensor input is greater than 96 ± 0.6% of the (R701) Seat Weight Sensor 5 Volt circuit voltage.

Possible Causes
PASSENGER SEAT HARNESS IMPROPERLY ROUTED
PASSENGER SEAT HARNESS WIRES CHAFED, PIERCED, PINCHED, PARTIALLY BROKEN
PASSENGER SEAT HARNESS CONNECTOR TERMINALS BROKEN, BENT PUSHED OUT, SPREAD, CORRODED, CONTAMINATED
(R706) RT-RR SEAT WEIGHT SENSOR SIGNAL CIRCUIT SHORTED TO VOLTAGE
(R706) RT-RR SEAT WEIGHT SENSOR SIGNAL CIRCUIT SHORTED TO (R701) SEAT WEIGHT SENSOR 5 VOLT CIRCUIT
(R728) SEAT WEIGHT SENSOR GROUND CIRCUIT OPEN
RIGHT-REAR SEAT WEIGHT SENSOR
OCCUPANT CLASSIFICATION MODULE (OCM)

Diagnostic Test

1. CHECK FOR ACTIVE INTERNAL FAULTS, IGNITION FAULTS, AND BATTERY FAULTS IN THE OCCUPANT CLASSIFICATION MODULE (OCM)

NOTE: Ensure the battery is fully charged.

NOTE: When reconnecting Airbag system components, the ignition must be turned off and the battery must be disconnected.

Turn the ignition on, then off, and then on again.

With the scan tool, read Occupant Classification Module (OCM) DTCs.

Does the scan tool display any active DTCs relating to internal faults, ignition faults, or battery faults?

Yes >> Diagnose and repair the DTCs. Refer to the Table of Contents in this Section for a complete list of symptoms.

No >> Go To 2

2. VERIFY THAT DTC B1B89–PASSENGER SEAT WEIGHT SENSOR 1 - RIGHT REAR INPUT CIRCUIT HIGH IS ACTIVE

With the scan tool, read OCM DTCs.

Does the scan tool display active: B1B89–PASSENGER SEAT WEIGHT SENSOR 1 - RIGHT REAR INPUT CIRCUIT HIGH?

Yes >> Go To 3

No >> Go To 9

3. INSPECT PASSENGER SEAT HARNESS WIRES AND CONNECTORS

WARNING: To avoid personal injury or death, turn the ignition off, disconnect the battery and wait two minutes before proceeding.

Using the wiring diagram/schematic as a guide, inspect the Passenger Seat Harness wiring and connectors. Look for chafed, pierced, pinched, or partially broken wires and broken, bent, pushed out, spread, corroded, or contaminated terminals.

Are any of these conditions present?

Yes >>

NOTE: Do not attempt to repair the Seat Harness. Replace the Seat Harness if the condition inspecting or testing for is present in the Seat Harness.

Replace the Passenger Seat Harness in accordance with the Service Information.

Perform OCS VERIFICATION TEST - VER 1.

No >> Go To 4

4. VERIFY THAT PASSENGER SEAT HARNESS IS ROUTED CORRECTLY

Verify that the Passenger Seat Harness is routed correctly.

Is the Passenger Seat Harness routed correctly?

Yes >> Go To 5

No >> Reroute the Passenger Seat Harness as necessary.

Perform OCS VERIFICATION TEST - VER 1.

5. CHECK IF MORE THAN ONE PASSENGER SEAT WEIGHT SENSOR DTC IS ACTIVE

Verify that all of the Seat Weight Sensor mounting screws are torqued to specification. Refer to 23 - BODY/SEATS.

WARNING: To avoid personal injury or death, turn the ignition on, then reconnect the battery.

NOTE: Failure to follow test instructions or aborting the test will cause faults to set when performing the Occupant Classification Module System Verification Test. To prevent faults due to process errors: Verify That All Tests Steps That Led You Here Were Performed As Directed; Verify That The Ignition Is In Run; Wait 30 Seconds After Changing The Seat Weight Before Proceeding To Allow The System To Stabilize; Only Press Scan Tool Buttons When Directed To Do So; and Perform The Occupant Classification Module System Verification Test To Completion.

With the scan tool in OCM, select More Options, select System Tests, and select Occupant Classification Module System Verification Test. Run the test by following the instructions displayed on the scan tool. When the test is complete, wait two minutes, and then proceed as follows.

With the scan tool, read OCM DTCs.

Does the scan tool display any active PASSENGER SEAT WEIGHT SENSOR DTCs?

Yes - More Than One PASSENGER SEAT WEIGHT SENSOR DTC Is Active

Perform the *Diagnosis/Checkout Procedure For Seat Weight Sensors.

Perform OCS VERIFICATION TEST - VER 1.

Yes - Only DTC B1B89 Is Active

Go To 6

No - But Other DTCs Present

Diagnose and repair the DTCs. Refer to the Table of Contents in this Section for a complete list of symptoms.

No - No Active DTCs Present

Perform OCS VERIFICATION TEST - VER 1.

6. CHECK (R706) RT-RR SEAT WEIGHT SENSOR SIGNAL CIRCUIT FOR A SHORT TO VOLTAGE

WARNING: To avoid personal injury or death, turn the ignition off, disconnect the battery and wait two minutes before proceeding.
Disconnect the OCM C2 connector.
Measure the voltage of the (R706) RT-RR Seat Weight Sensor Signal circuit.

Is the voltage above 0.2 volts?

Yes >>

NOTE: Do not attempt to repair the Seat Harness. Replace the Seat Harness if the condition inspecting or testing for is present in the Seat Harness.

Replace the Passenger Seat Harness in accordance with the Service Information.

Perform OCS VERIFICATION TEST - VER 1.

No >> Go To 7

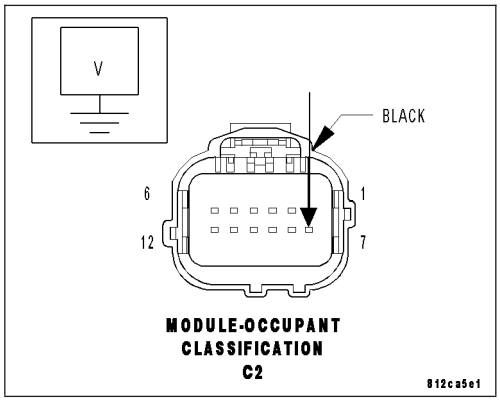

7. CHECK (R706) RT-RR SEAT WEIGHT SENSOR SIGNAL CIRCUIT FOR A SHORT TO (R701) SEAT WEIGHT SENSOR 5 VOLT CIRCUIT

Disconnect the Right-Rear Seat Weight Sensor connector.
Measure the resistance between the (R706) RT-RR Seat Weight Sensor Signal circuit and the (R701) Seat Weight Sensor 5 Volt circuit.

Is the resistance below 10K ohms?

Yes >>

NOTE: Do not attempt to repair the Seat Harness. Replace the Seat Harness if the condition inspecting or testing for is present in the Seat Harness.

Replace the Passenger Seat Harness in accordance with the Service Information.

Perform OCS VERIFICATION TEST - VER 1.

No >> Go To 8

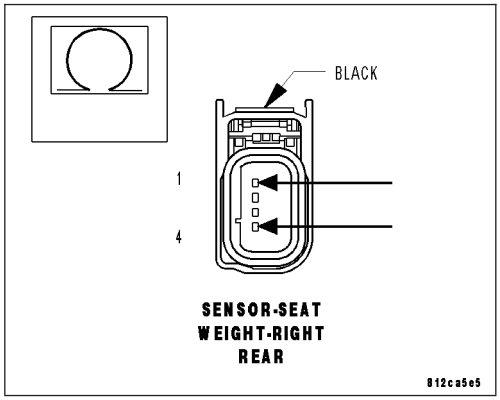

8. CHECK (R728) SEAT WEIGHT SENSOR GROUND CIRCUIT FOR AN OPEN

Measure the resistance of the (R728) Seat Weight Sensor Ground circuit between the OCM C2 connector and the Right-Rear Seat Weight Sensor connector.

Is the resistance below 5.0 ohms?

Yes >> Replace the OCM in accordance with the Service Information.

Perform OCS VERIFICATION TEST - VER 1.

No >>

NOTE: Do not attempt to repair the Seat Harness. Replace the Seat Harness if the condition inspecting or testing for is present in the Seat Harness.

Replace the Passenger Seat Harness in accordance with the Service Information.

Perform OCS VERIFICATION TEST - VER 1.

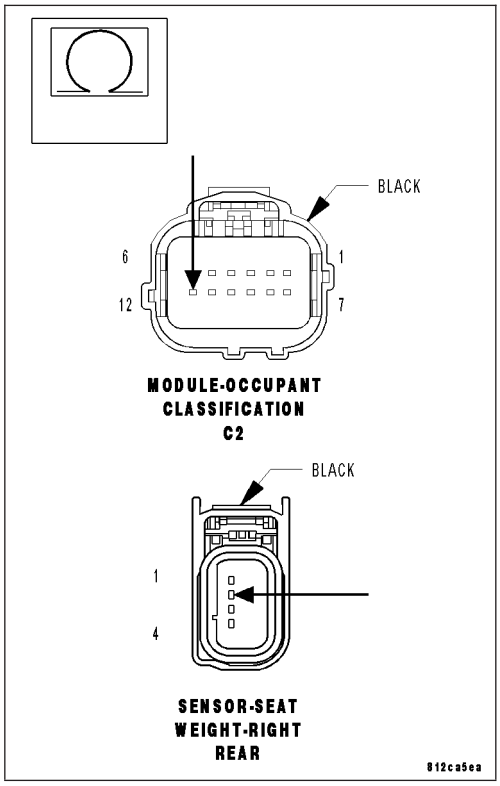

9. TEST FOR INTERMITTENT CONDITION

With the scan tool, record and erase all DTCs from all Airbag modules.

If any ACTIVE codes are present they must be resolved before diagnosing any stored codes.

WARNING: To avoid personal injury or death, turn the ignition off, disconnect the battery and wait two minutes before proceeding.

Using the wiring diagram/schematic as a guide, inspect the wiring and connectors.

Look for chafed, pierced, pinched, or partially broken wires and broken, bent, pushed out, spread, corroded, or contaminated terminals.

The following additional checks may assist you in identifying a possible intermittent problem.

Reconnect any disconnected components and harness connector.

WARNING: To avoid personal injury or death, turn the ignition on, then reconnect the battery.

With the scan tool, monitor active codes as you work through the following steps.

WARNING: To avoid personal injury or death, maintain a safe distance from all airbags while performing the following steps.

Wiggle the wiring harness and connectors of the related airbag circuit or component.

If codes are related to the Driver Airbag circuits, rotate the steering wheel from stop to stop.

If only stored codes return, continue the test until the problem area has been isolated.

In the previous steps you have attempted to recreate the conditions responsible for setting the active DTC in question.

Does the scan tool display any ACTIVE DTCs?

Yes >> Select appropriate symptom from Symptom List.

No >> No problem found at this time. Erase all codes before returning vehicle to customer.

B1B8C-DRIVER SEAT TRACK POSITION SENSOR CIRCUIT PERFORMANCE

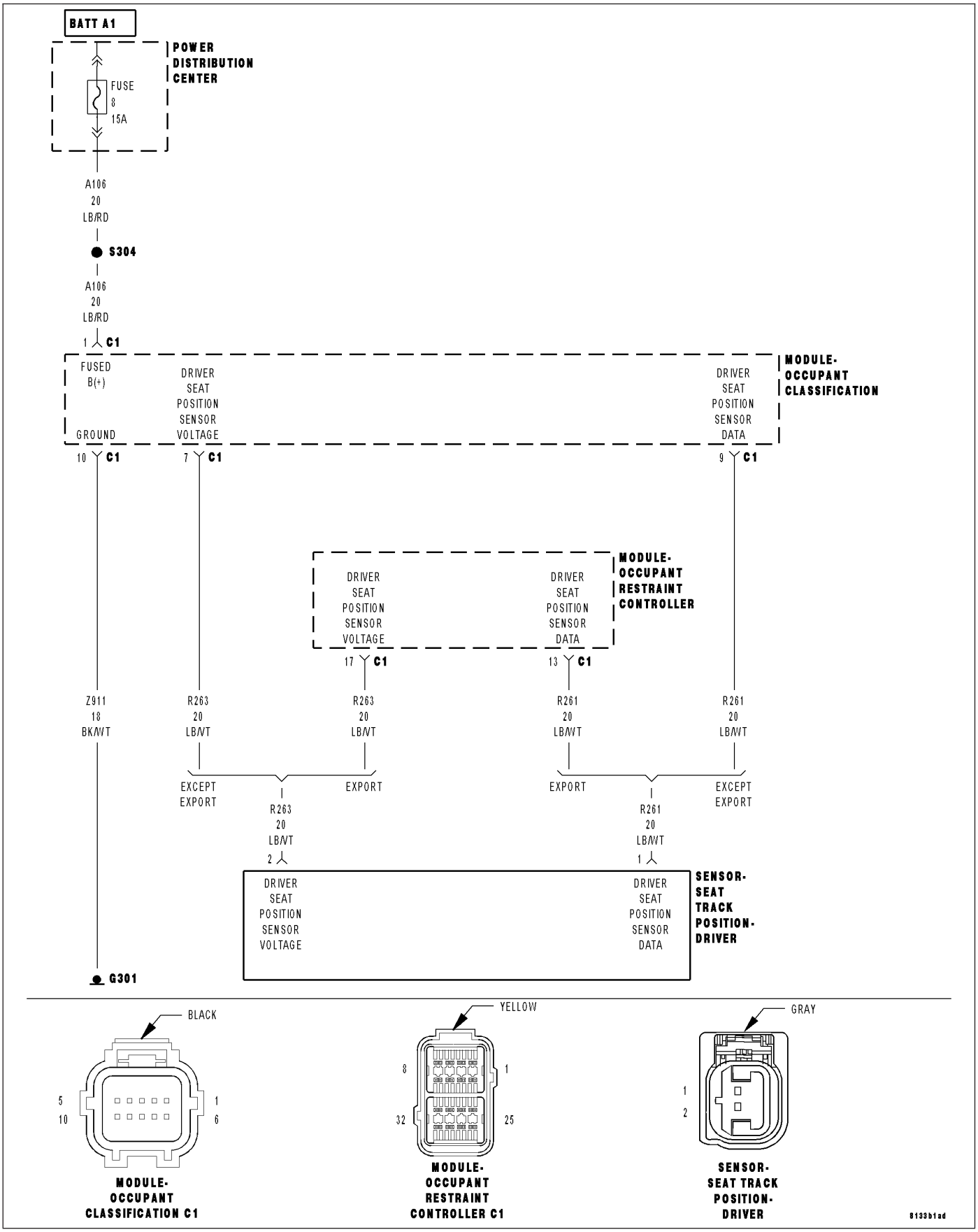

For a complete wiring diagram **Refer to Section 8W**.

- **When Monitored:**
  While the CAN bus ignition status is in IGN_RUN, the module checks the sensor input ranges.
- **Set Condition:**
  If the module detects that the sensor input is between 8 and 12 mA.

Possible Causes
DRIVER SEAT TRACK POSITION SENSOR
OCCUPANT CLASSIFICATION MODULE (OCM)
OCCUPANT RESTRAINT CONTROLLER

1. IDENTIFYING VEHICLE EQUIPMENT

NOTE: Ensure the battery is fully charged.

NOTE: The Seat Track Position Sensor(s) will be wired to the Occupant Restraint Controller (ORC) if the vehicle is not equipped with the Occupant Classification Module (OCM).
With the scan tool, read ORC and if equipped OCM active DTCs.

Select the module reporting the Seat Track Position Sensor DTC(s)

ORC >> Go To 5

OCM
Go To 2 Diagnostic Test

2. CHECK FOR ACTIVE INTERNAL FAULTS, IGNITION FAULTS, BATTERY FAULTS, OR SEAT TRACK POSITION SENSOR CIRCUIT HIGH OR LOW FAULTS IN THE OCCUPANT CLASSIFICATION MODULE (OCM)

With the scan tool, read Occupant Classification Module (OCM) DTCs.

Does the scan tool display any active DTCs relating to internal faults, ignition faults, battery faults, or Seat Track Position Sensor Circuit High or Low faults?

Yes >> Diagnose and repair the DTCs. Refer to the Table of Contents in this Section for a complete list of symptoms.

No >> Go To 3

3. VERIFY THAT B1B8C-DRIVER SEAT TRACK POSITION SENSOR CIRCUIT PERFORMANCE IS ACTIVE

Does the scan tool display active: B1B8C-DRIVER SEAT TRACK POSITION SENSOR CIRCUIT PERFORMANCE?

Yes >> Go To 4

No >> Go To 8

4. PERFORM SEAT TRACK POSITION SENSOR PERFORMANCE TEST

With the scan tool, erase OCM DTCs.
Turn the ignition off, wait 10 seconds and then turn the ignition on.
Cycle the driver seat to the full forward position and then to the full rearward position.
Return the driver seat to its approximate original position.
Wait two minutes, and then with the scan tool, read OCM DTCs.

Does the scan tool display active: B1B8C-DRIVER SEAT TRACK POSITION SENSOR CIRCUIT PERFORMANCE?

Yes >>

WARNING: To avoid personal injury or death, turn the ignition off, disconnect the battery and wait two minutes before proceeding.

WARNING: If the Occupant Classification Module (OCM) is dropped at any time, it must be replaced. Failure to take the proper precautions can result in accidental airbag deployment and personal injury or death.Replace the Driver Seat Track Position Sensor in accordance with the Service Information.

Perform the OCS VERIFICATION TEST-VER 1.If DTC B1B8C-DRIVER SEAT TRACK POSITION SENSOR CIRCUIT PERFORMANCE returns active, replace the OCM in accordance with the Service Information.

No >> Perform the OCS VERIFICATION TEST-VER 1. Diagnostic Test

5. CHECK FOR ACTIVE INTERNAL FAULTS, IGNITION FAULTS, BATTERY FAULTS, OR SEAT TRACK POSITION SENSOR CIRCUIT HIGH OR LOW FAULTS IN THE OCCUPANT RESTRAINT CONTROLLER (ORC)

With the scan tool, read Occupant Restraint Controller (ORC) DTCs.

Does the scan tool display any active DTCs relating to internal faults, ignition faults, battery faults, or Seat Track Position Sensor Circuit High or Low faults?

Yes >> Diagnose and repair the DTCs. Refer to the Table of Contents in this Section for a complete list of symptoms.

No >> Go To 6

6. VERIFY THAT B1B8C-DRIVER SEAT TRACK POSITION SENSOR CIRCUIT PERFORMANCE IS ACTIVE

With the scan tool, read ORC DTCs.

Does the scan tool display active: B1B8C-DRIVER SEAT TRACK POSITION SENSOR CIRCUIT PERFORMANCE?

Yes >> Go To 7

No >> Go To 8

7. PERFORM SEAT TRACK POSITION SENSOR PERFORMANCE TEST

With the scan tool, erase ORC DTCs.

Turn the ignition off, wait 10 seconds and then turn the ignition on.

Cycle the driver seat to the full forward position and then to the full rearward position.

Return the driver seat to its approximate original position.

Wait two minutes, and then with the scan tool, read OCM DTCs.

Does the scan tool display active: B1B8C-DRIVER SEAT TRACK POSITION SENSOR CIRCUIT PERFORMANCE?

Yes >>

WARNING: To avoid personal injury or death, turn the ignition off, disconnect the battery and wait two minutes before proceeding.

WARNING: If the Occupant Restraint Controller (ORC) is dropped at any time, it must be replaced. Failure to take the proper precautions can result in accidental airbag deployment and personal injury or death.Replace the Driver Seat Track Position Sensor in accordance with the Service Information.

Perform the ORC VERIFICATION TEST-VER 1.If DTC B1B8C-DRIVER SEAT TRACK POSITION SENSOR CIRCUIT PERFORMANCE returns active, replace the ORC in accordance with the Service Information.

No >> Perform the ORC VERIFICATION TEST-VER 1.

8. TEST FOR AN INTERMITTENT CONDITION

With the scan tool, record and erase all DTC's from the OCM and ORC.

If any ACTIVE codes are present they must be resolved before diagnosing any stored codes.

WARNING: To avoid personal injury or death, turn the ignition off, disconnect the battery and wait two minutes before proceeding.

Using the wiring diagram/schematic as a guide, inspect the wiring and connectors.

Look for chafed, pierced, pinched, or partially broken wires and broken, bent, pushed out, spread, corroded, or contaminated terminals.

The following additional checks may assist you in identifying a possible intermittent problem.

Reconnect any disconnected components and harness connector.

WARNING: To avoid personal injury or death, turn the ignition on, then reconnect the battery.

With the scan tool monitor active codes as you work through the following steps.

WARNING: To avoid personal injury or death, maintain a safe distance from all airbags while performing the following steps.

Wiggle the wiring harness and connectors of the related airbag circuit or component.

If only stored codes return continue the test until the problem area has been isolated.

In the previous steps you have attempted to recreate the conditions responsible for setting active DTC in question.

Are any ACTIVE DTCs present?

Yes >> Select the appropriate symptom from Symptom List.

No >> No problem found at this time. Erase all codes before returning vehicle to customer.

B1B8D-DRIVER SEAT TRACK POSITION SENSOR CIRCUIT LOW

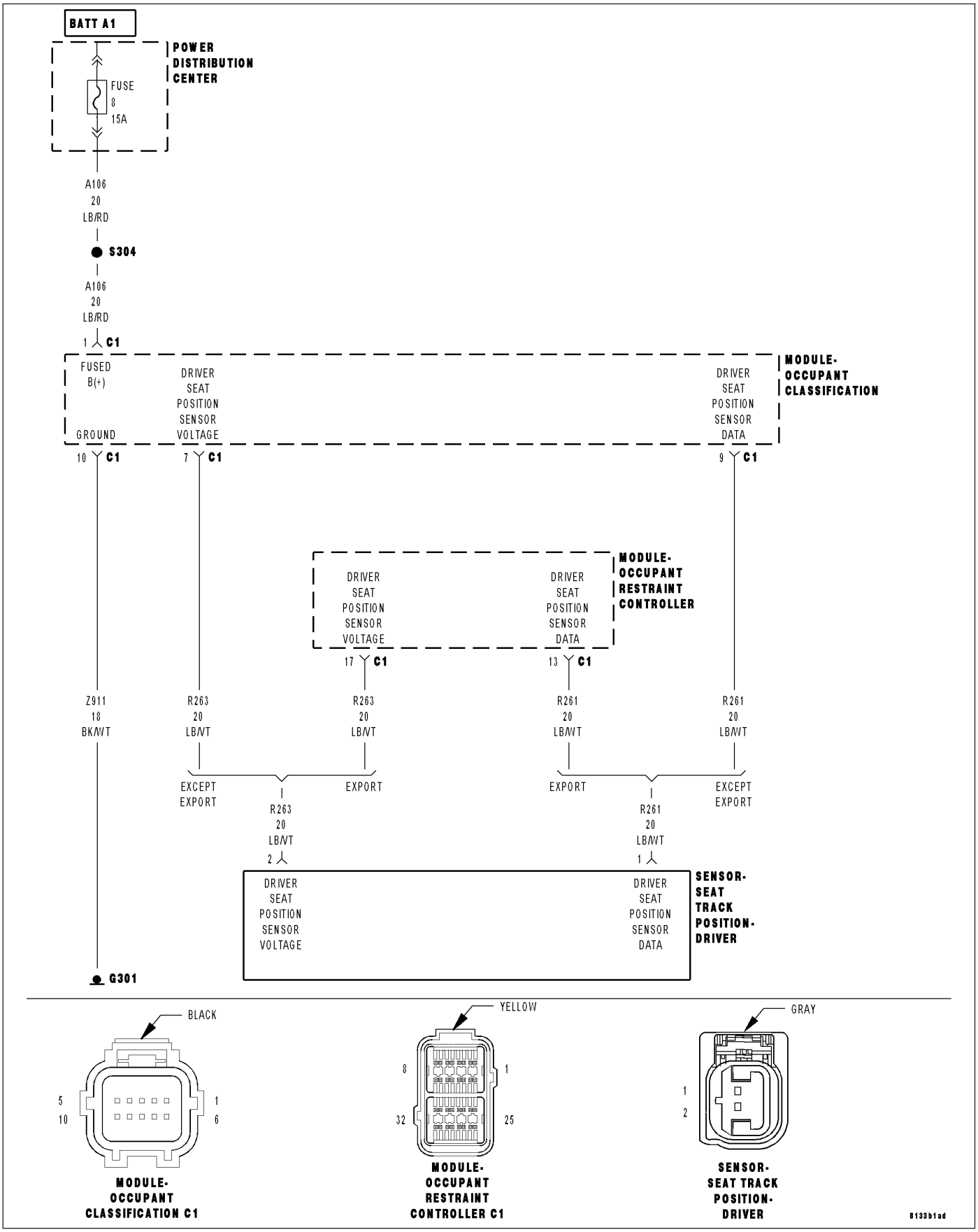

For a complete wiring diagram **Refer to Section 8W**.

- **When Monitored:**
  While the CAN bus ignition status is in IGN_RUN and the module is configured for a Seat Track Position Sensor, the module checks the sensor input current ranges.
- **Set Condition:**
  If the module detects that the sensor input is less than or equal to 0.3 ma. This DTC may set when the current is between 0.3 mA and 2.0 mA.

Possible Causes
DRIVER SEAT HARNESS IMPROPERLY ROUTED
DRIVER SEAT HARNESS WIRES CHAFED, PIERCED, PINCHED, PARTIALLY BROKEN
DRIVER SEAT HARNESS CONNECTOR TERMINALS BROKEN, BENT, PUSHED OUT, SPREAD, CORRODED, CONTAMINATED
(R261) SEAT POSITION SENSOR DATA-DRIVER CIRCUIT SHORTED TO GROUND
(R263) SEAT POSITION SENSOR VOLTAGE-DRIVER CIRCUIT SHORTED TO GROUND
(R261) SEAT POSITION SENSOR DATA-DRIVER CIRCUIT OPEN
(R263) SEAT POSITION SENSOR VOLTAGE-DRIVER CIRCUIT OPEN
DRIVER SEAT TRACK POSITION SENSOR
OCCUPANT CLASSIFICATION MODULE (OCM)
OCCUPANT RESTRAINT CONTROLLER (ORC)

Diagnostic Test

1. IDENTIFYING VEHICLE EQUIPMENT

NOTE: Ensure the battery is fully charged.

NOTE: The Seat Track Position Sensor(s) will be wired to the Occupant Restraint Controller (ORC) if the vehicle is not equipped with the Occupant Classification Module (OCM).

Turn the ignition on.

With the scan tool, read ORC and if equipped OCM active DTCs.

Select the module reporting the Seat Track Position Sensor DTC(s)

ORC >> Go To 8

OCM

Go To 2 Diagnostic Test

2. CHECK FOR ACTIVE INTERNAL FAULTS, IGNITION FAULTS, AND BATTERY FAULTS IN THE OCCUPANT CLASSIFICATION MODULE (OCM)

Does the scan tool display any active DTCs relating to internal faults, ignition faults, or battery faults?

Yes >> Diagnose and repair the DTCs. Refer to the Table of Contents in this Section for a complete list of symptoms.

No >> Go To 3

3. VERIFY THAT DTC B1B8D-DRIVER SEAT TRACK POSITION SENSOR CIRCUIT LOW IS ACTIVE

Does the scan tool display active: B1B8D-DRIVER SEAT TRACK POSITION SENSOR CIRCUIT LOW?

Yes >> Go To 4

No >> Go To 14

4. INSPECT DRIVER SEAT HARNESS WIRES AND CONNECTORS

WARNING: To avoid personal injury or death, turn the ignition off, disconnect the battery and wait two minutes before proceeding.

Using the wiring diagram/schematic as a guide, inspect the Driver Seat Harness wiring and connectors. Look for chafed, pierced, pinched, or partially broken wires and broken, bent, pushed out, spread, corroded, or contaminated terminals.

Are any of these conditions present?

Yes >>

NOTE: Do not attempt to repair the Seat Harness. Replace the Seat Harness if the condition inspecting or testing for is present in the Seat Harness.

Replace the Driver Seat Harness in accordance with the Service Information.

Perform OCS VERIFICATION TEST - VER 1.

No >> Go To 5

5. VERIFY THAT DRIVER SEAT HARNESS IS ROUTED CORRECTLY

Verify that the Driver Seat Harness is routed correctly.

Is the Driver Seat Harness routed correctly?

Yes >> Go To 6

No >> Reroute the Driver Seat Harness as necessary.

Perform OCS VERIFICATION TEST - VER 1.

6. CHECK (R261) SEAT POSITION SENSOR DATA-DRIVER CIRCUIT AND (R263) SEAT POSITION SENSOR VOLTAGE-DRIVER CIRCUIT FOR A SHORT TO GROUND

Measure the resistance between ground and the (R261) Seat Position Sensor Data-Driver circuit.

Measure the resistance between ground and the (R263) Seat Position Sensor Voltage-Driver circuit.

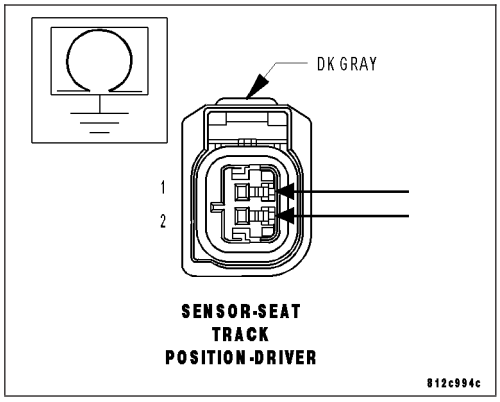

Is the resistance below 10k ohms on either circuit?

Yes >>

NOTE: Do not attempt to repair the Seat Harness. Replace the Seat Harness if the condition inspecting or testing for is present in the Seat Harness.

Replace the Driver Seat Harness in accordance with the service information.

Perform the OCS VERIFICATION TEST-VER 1.

No >> Go To 7

7. CHECK (R261) SEAT POSITION SENSOR DATA-DRIVER CIRCUIT AND (R263) SEAT POSITION SENSOR VOLTAGE-DRIVER CIRCUIT FOR AN OPEN

Disconnect the OCM C1 connector.

Measure the resistance of the (R261) Seat Position Sensor Data-Driver circuit between the OCM C1 connector and the Driver Seat Track Position Sensor connector.

Measure the resistance of the (R263) Seat Position Sensor Voltage-Driver circuit between the OCM C1 connector and the Driver Seat Track Position Sensor connector.

Is the resistance of either circuit above 5.0 ohms?

Yes >>

NOTE: Do not attempt to repair the Seat Harness. Replace the Seat Harness if the condition inspecting or testing for is present in the Seat Harness.

Replace the Driver Seat Harness in accordance with the Service Information.

Perform the OCS VERIFICATION TEST-VER 1.

No >>

WARNING: To avoid personal injury or death, turn the ignition off, disconnect the battery and wait two minutes before proceeding.

WARNING: If the Occupant Classification module (OCM) is dropped at any time, it must be replaced. Failure to take the proper precautions can result in accidental airbag deployment and personal injury or death.Replace the OCM in accordance with the service information.

Perform the OCS VERIFICATION TEST-VER 1. Diagnostic Test

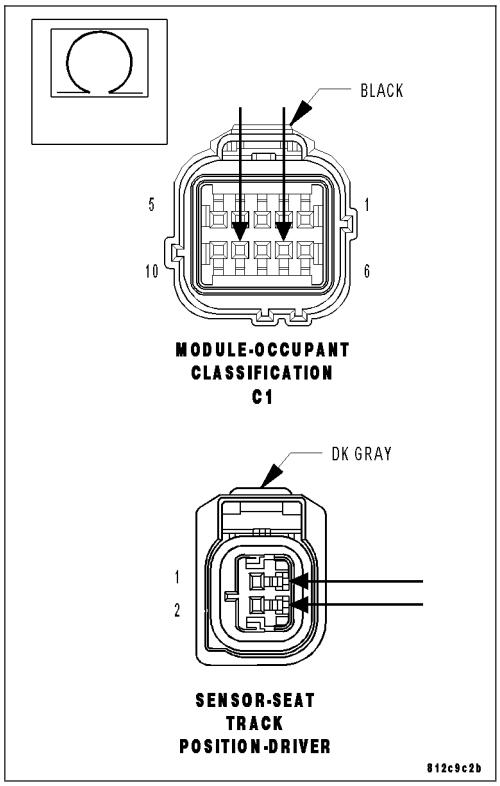

8. CHECK FOR ACTIVE INTERNAL FAULTS, IGNITION FAULTS, AND BATTERY FAULTS IN THE OCCUPANT RESTRAINT CONTROLLER (ORC)

With the scan tool, read Occupant restraint Controller (ORC) DTCs.

Does the scan tool display any active DTCs relating to internal faults, ignition faults, or battery faults?

Yes >> Diagnose and repair the DTCs. Refer to the Table of Contents in this Section for a complete list of symptoms.

No >> Go To 9

9. VERIFY THAT DTC B1B8D-DRIVER SEAT TRACK POSITION SENSOR CIRCUIT LOW IS ACTIVE

Does the scan tool display active: B1B8D-DRIVER SEAT TRACK POSITION SENSOR CIRCUIT LOW?

Yes >> Go To 10

No >> Go To 14

10. INSPECT DRIVER SEAT HARNESS WIRES AND CONNECTORS

WARNING: To avoid personal injury or death, turn the ignition off, disconnect the battery and wait two minutes before proceeding.

Using the wiring diagram/schematic as a guide, inspect the Driver Seat Harness wiring and connectors. Look for chafed, pierced, pinched, or partially broken wires and broken, bent, pushed out, spread, corroded, or contaminated terminals.

Are any of these conditions present?

Yes >>

NOTE: Do not attempt to repair the Seat Harness. Replace the Seat Harness if the condition inspecting or testing for is present in the Seat Harness.

Replace the Driver Seat Harness in accordance with the Service Information.

Perform ORC VERIFICATION TEST - VER 1.

No >> Go To 11

11. VERIFY THAT DRIVER SEAT HARNESS IS ROUTED CORRECTLY

Verify that the Driver Seat Harness is routed correctly.

Is the Driver Seat Harness routed correctly?

Yes >> Go To 12

No >> Reroute the Driver Seat Harness as necessary.

Perform ORC VERIFICATION TEST - VER 1.

12. CHECK (R261) SEAT POSITION SENSOR DATA-DRIVER CIRCUIT AND (R263) SEAT POSITION SENSOR VOLTAGE-DRIVER CIRCUIT FOR A SHORT TO GROUND

Measure the resistance between ground and the (R261) Seat Position Sensor Data-Driver circuit.

Measure the resistance between ground and the (R263) Seat Position Sensor Voltage-Driver circuit.

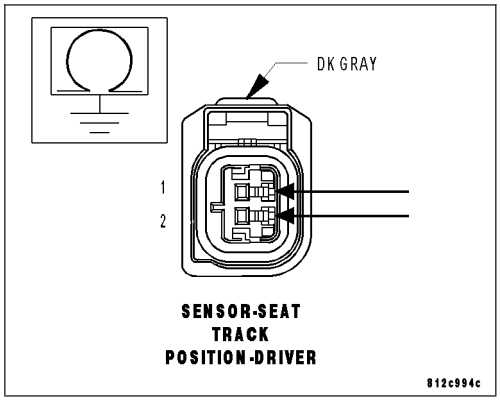

Is the resistance below 10k ohms on either circuit?

Yes >>

NOTE: Do not attempt to repair the Seat Harness. Replace the Seat Harness if the condition inspecting or testing for is present in the Seat Harness.

Replace the Driver Seat Harness in accordance with the service information.

Perform the ORC VERIFICATION TEST-VER 1.

No >> Go To 13

13. CHECK (R261) SEAT POSITION SENSOR DATA-DRIVER CIRCUIT AND (R263) SEAT POSITION SENSOR VOLTAGE-DRIVER CIRCUIT FOR AN OPEN

Disconnect the ORC C1 connector.

Measure the resistance of the (R261) Seat Position Sensor Data-Driver circuit between the ORC-C1 connector and the Driver Seat Track Position Sensor connector.

Measure the resistance of the (R263) Seat Position Sensor Voltage-Driver circuit between the ORC-C1 connector and the Driver Seat Track Position Sensor connector.

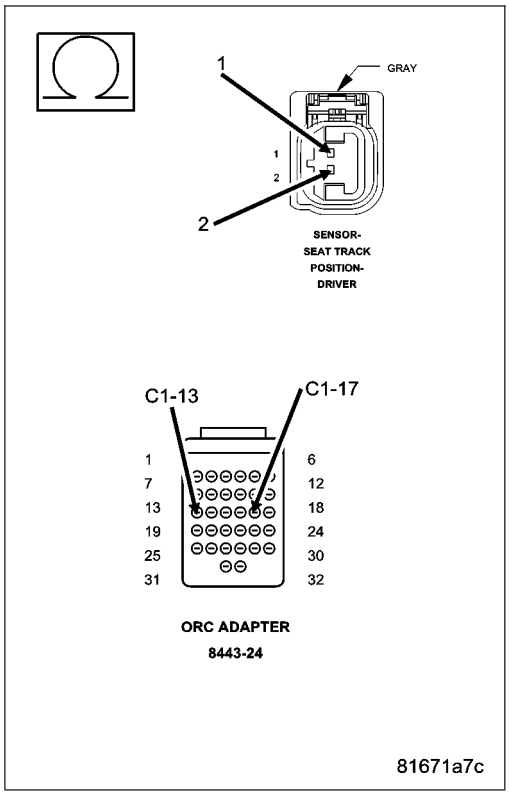

Is the resistance of either circuit above 5.0 ohms?

Yes >>

NOTE: Do not attempt to repair the Seat Harness. Replace the Seat Harness if the condition inspecting or testing for is present in the Seat Harness.

Replace the Driver Seat Harness in accordance with the Service Information.

Perform the ORC VERIFICATION TEST-VER 1.

No >>

WARNING: To avoid personal injury or death, turn the ignition off, disconnect the battery and wait two minutes before proceeding.

WARNING: If the Occupant Restraint Controller (ORC) is dropped at any time, it must be replaced. Failure to take the proper precautions can result in accidental airbag deployment and personal injury or death.Replace the Occupant Restraint Controller (ORC) in accordance with the service information.

Perform the ORC VERIFICATION TEST-VER 1.

14. TEST FOR AN INTERMITTENT CONDITION

With the scan tool, record and erase all DTC's from the OCM.

If any ACTIVE codes are present they must be resolved before diagnosing any stored codes.

WARNING: To avoid personal injury or death, turn the ignition off, disconnect the battery and wait two minutes before proceeding.

Using the wiring diagram/schematic as a guide, inspect the wiring and connectors.

Look for chafed, pierced, pinched, or partially broken wires and broken, bent, pushed out, spread, corroded, or contaminated terminals.

The following additional checks may assist you in identifying a possible intermittent problem.

Reconnect any disconnected components and harness connector.

WARNING: To avoid personal injury or death, turn the ignition on, then reconnect the battery.

With the scan tool monitor active codes as you work through the following steps.

WARNING: To avoid personal injury or death, maintain a safe distance from all airbags while performing the following steps.

Wiggle the wiring harness and connectors of the related airbag circuit or component.

If only stored codes return continue the test until the problem area has been isolated.

In the previous steps you have attempted to recreate the conditions responsible for setting active DTC in question.

Are any ACTIVE DTCs present?

Yes >> Select the appropriate symptom from Symptom List.

No >> No problem found at this time. Erase all codes before returning vehicle to customer.

B1B8E-DRIVER SEAT TRACK POSITION SENSOR CIRCUIT HIGH

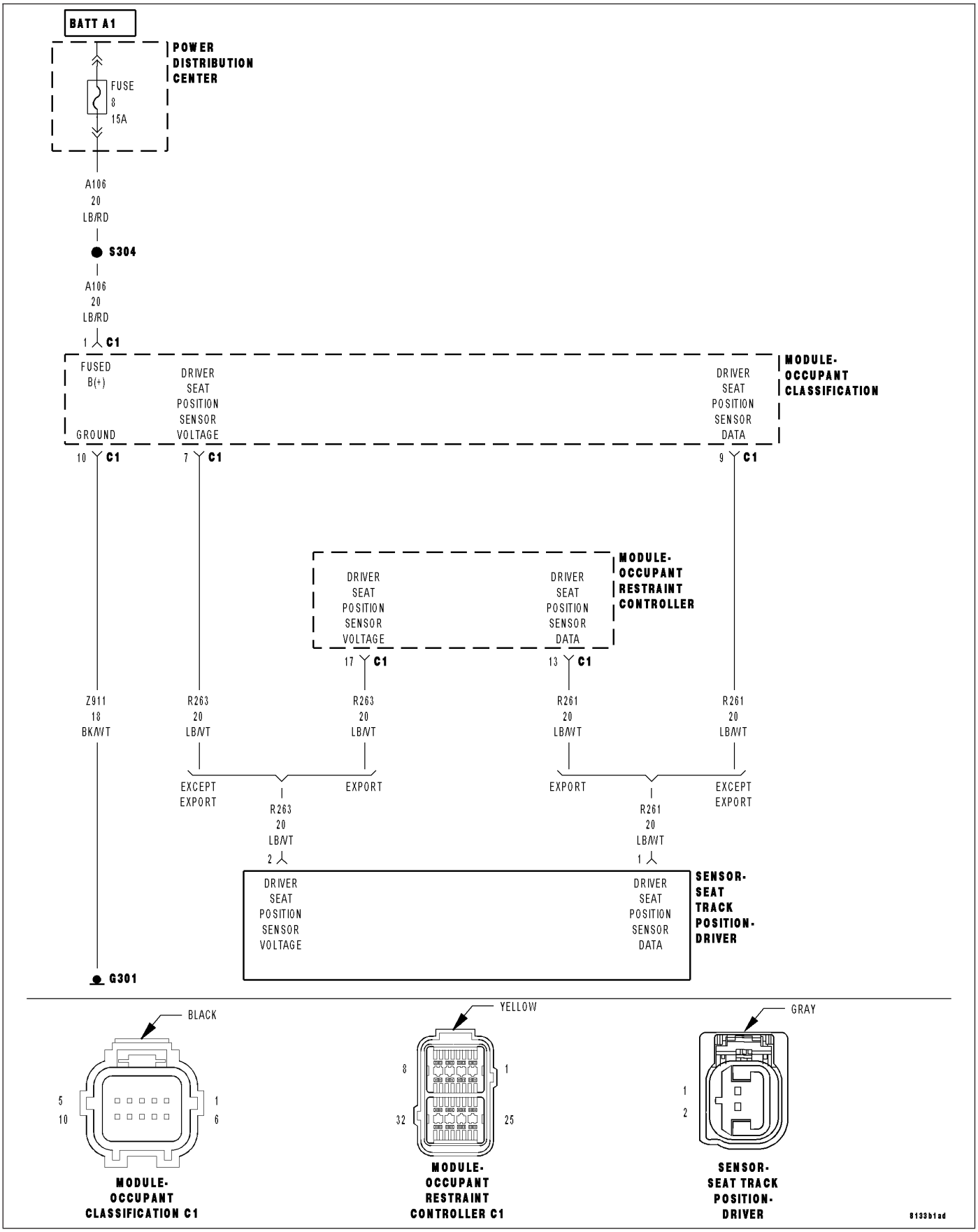

For a complete wiring diagram **Refer to Section 8W**.

- **When Monitored:**
  While the CAN bus ignition status is in IGN_RUN and the module is configured for a Seat Track Position Sensor, the module checks the sensor input current ranges.
- **Set Condition:**
  If the module detects that the sensor input is greater than or equal to 20.5 mA. This DTC may set when the current is between 17 mA and 20.5 mA.

Possible Causes
DRIVER SEAT HARNESS IMPROPERLY ROUTED
DRIVER SEAT HARNESS WIRES CHAFED, PIERCED, PINCHED, PARTIALLY BROKEN
DRIVER SEAT HARNESS CONNECTOR TERMINALS BROKEN, BENT, PUSHED OUT, SPREAD, CORRODED, CONTAMINATED
(R261) SEAT POSITION SENSOR DATA-DRIVER CIRCUIT SHORTED TO VOLTAGE
(R263) SEAT POSITION SENSOR VOLTAGE-DRIVER CIRCUIT SHORTED TO VOLTAGE
(R261) SEAT POSITION SENSOR DATA-DRIVER CIRCUIT SHORTED TO (R263) SEAT POSITION SENSOR VOLTAGE-DRVER CIRCUIT
DRIVER SEAT TRACK POSITION SENSOR
OCCUPANT CLASSIFICATION MODULE (OCM)
OCCUPANT RESTRAINT CONTROLLER (ORC)

Diagnostic Test

1. IDENTIFYING VEHICLE EQUIPMENT

NOTE: Ensure the battery is fully charged.
Turn the ignition on.
With the scan tool, read ORC and if equipped OCM active DTCs.

Select the module reporting the Seat Track Position Sensor DTC(s)

ORC >> Go To 9

OCM
Go To 3 Diagnostic Test

2. CHECK FOR ACTIVE INTERNAL FAULTS, IGNITION FAULTS, AND BATTERY FAULTS IN THE OCCUPANT CLASSIFICATION MODULE (OCM)

With the scan tool, read Occupant Classification Module (OCM) DTCs.

Does the scan tool display any active DTCs relating to internal faults, ignition faults, or battery faults?

Yes >> Diagnose and repair the DTCs. Refer to the Table of Contents in this Section for a complete list of symptoms.

No >> Go To 3

3. VERIFY THAT DTC B1B8E-DRIVER SEAT TRACK POSITION SENSOR CIRCUIT HIGH IS ACTIVE

With the scan tool, read OCM DTCs.

Does the scan tool display active: B1B8E-DRIVER SEAT TRACK POSITION SENSOR CIRCUIT HIGH?

Yes >> Go To 4

No >> Go To 16

4. INSPECT DRIVER SEAT HARNESS WIRES AND CONNECTORS

With the scan tool, erase OCM DTCs.

WARNING: To avoid personal injury or death, turn the ignition off, disconnect the battery and wait two minutes before proceeding.
Using the wiring diagram/schematic as a guide, inspect the Driver Seat Harness wiring and connectors. Look for chafed, pierced, pinched, or partially broken wires and broken, bent, pushed out, spread, corroded, or contaminated terminals.

Are any of these conditions present?

Yes >>

NOTE: Do not attempt to repair the Seat Harness. Replace the Seat Harness if the condition inspecting or testing for is present in the Seat Harness.

Replace the Driver Seat Harness in accordance with the Service Information.
Perform OCS VERIFICATION TEST - VER 1.

No >> Go To 5

5. VERIFY THAT DRIVER SEAT HARNESS IS ROUTED CORRECTLY

Verify that the Driver Seat Harness is routed correctly.

Is the Driver Seat Harness routed correctly?

Yes >> Go To 6

No >> Reroute the Driver Seat Harness as necessary.
Perform OCS VERIFICATION TEST - VER 1.

6. CHECK FOR DTC B1B8E-DRIVER SEAT TRACK POSITION SENSOR CIRCUIT HIGH WITH DRIVER SEAT TRACK POSITION SENSOR DISCONNECTED

WARNING: To avoid personal injury or death, turn the ignition off, disconnect the battery and wait two minutes before proceeding.
Disconnect the Driver Seat Track Position Sensor connector.

WARNING: To avoid personal injury or death, turn the ignition on, then reconnect the battery.
Wait two minutes, and then with the scan tool, read OCM DTCs.

Does the scan tool display: B1B8E-DRIVER SEAT TRACK POSITION SENSOR CIRCUIT HIGH?

Yes >> Go To 7

No >>

WARNING: To avoid personal injury or death, turn the ignition off, disconnect the battery and wait two minutes before proceeding.Replace the Driver Seat Track Position Sensor in accordance with the service information.

Perform the OCS VERIFICATION TEST-VER 1.

7. CHECK (R261) SEAT POSITION SENSOR DATA-DRIVER CIRCUIT AND (R263) SEAT POSITION SENSOR VOLTAGE-DRIVER CIRCUIT FOR A SHORT TO VOLTAGE

WARNING: To avoid personal injury or death, turn the ignition off, disconnect the battery and wait two minutes before proceeding.
Disconnect the OCM C1 connector.

WARNING: To avoid personal injury or death, turn the ignition on, then reconnect the battery.
Measure the voltage of the (R261) Seat Position Sensor Data-Driver circuit.

Measure the voltage of the (R263) Seat Position Sensor Voltage-Driver circuit.

Is the voltage above 0.2 volts on either circuit?

Yes >>

NOTE: Do not attempt to repair the Seat Harness. Replace the Seat Harness if the condition inspecting or testing for is present in the Seat Harness.

WARNING: To avoid personal injury or death, turn the ignition off, disconnect the battery and wait two minutes before proceeding.Replace the Driver Seat Harness in accordance with the Service Information.

Perform the OCS VERIFICATION TEST-VER 1.

No >> Go To 8

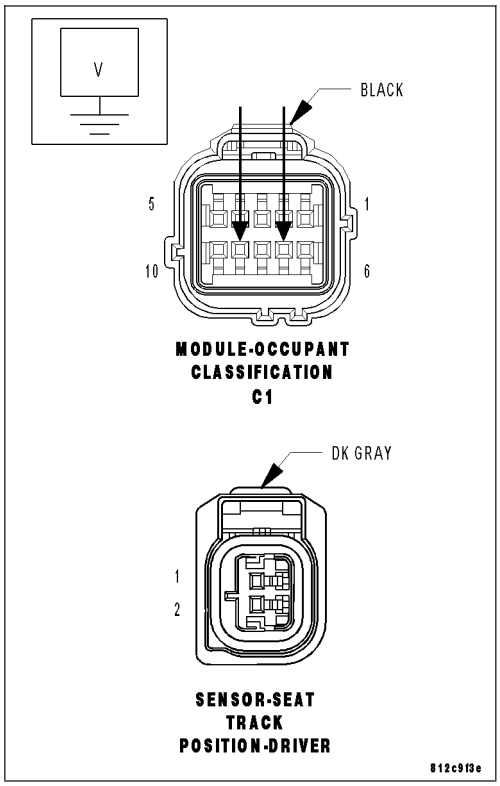

8. CHECK (R261) SEAT POSITION SENSOR DATA-DRIVER CIRCUIT FOR A SHORT TO (R263) SEAT POSITION SENSOR VOLTAGE-DRIVER CIRCUIT

WARNING: To avoid personal injury or death, turn the ignition off, disconnect the battery and wait two minutes before proceeding.
Measure the resistance between the (R261) Seat Position Sensor Data-Driver circuit and the (R263) Seat Position Sensor Voltage-Driver circuit.

Is the resistance below 10k ohms?

Yes >>

NOTE: Do not attempt to repair the Seat Harness. Replace the Seat Harness if the condition inspecting or testing for is present in the Seat Harness.

Replace the Driver Seat Harness in accordance with the service information.

Perform the OCS VERIFICATION TEST-VER 1.

No >> Replace the OCM in accordance with the Service information.

Perform the OCS VERIFICATION TEST-VER 1.

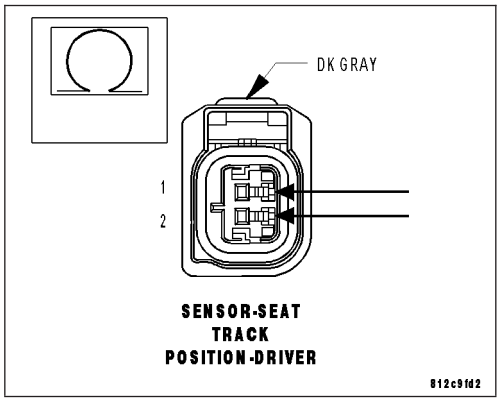

Diagnostic Test

9. CHECK FOR ACTIVE INTERNAL FAULTS, IGNITION FAULTS, AND BATTERY FAULTS IN THE OCCUPANT RESTRAINT CONTROLLER (ORC)

With the scan tool, read Occupant Restraint Controller (ORC) DTCs.

Does the scan tool display any active DTCs relating to internal faults, ignition faults, or battery faults?

Yes >> Diagnose and repair the DTCs. Refer to the Table of Contents in this Section for a complete list of symptoms.

No >> Go To 10

10. VERIFY THAT DTC B1B8E-DRIVER SEAT TRACK POSITION SENSOR CIRCUIT HIGH IS ACTIVE

Does the scan tool display active: B1B8E-DRIVER SEAT TRACK POSITION SENSOR CIRCUIT HIGH?

Yes >> Go To 11

No >> Go To 16

11. INSPECT DRIVER SEAT HARNESS WIRES AND CONNECTORS

WARNING: To avoid personal injury or death, turn the ignition off, disconnect the battery and wait two minutes before proceeding.

Using the wiring diagram/schematic as a guide, inspect the Driver Seat Harness wiring and connectors. Look for chafed, pierced, pinched, or partially broken wires and broken, bent, pushed out, spread, corroded, or contaminated terminals.

Are any of these conditions present?

Yes >>

NOTE: Do not attempt to repair the Seat Harness. Replace the Seat Harness if the condition inspecting or testing for is present in the Seat Harness.

Replace the Driver Seat Harness in accordance with the Service Information.

Perform ORC VERIFICATION TEST - VER 1.

No >> Go To 12

12. VERIFY THAT DRIVER SEAT HARNESS IS ROUTED CORRECTLY

Verify that the Driver Seat Harness is routed correctly.

Is the Driver Seat Harness routed correctly?

Yes >> Go To 13

No >> Reroute the Driver Seat Harness as necessary.

Perform ORC VERIFICATION TEST - VER 1.

13. CHECK FOR DTC B1B8E-DRIVER SEAT TRACK POSITION SENSOR CIRCUIT HIGH WITH DRIVER SEAT TRACK POSITION SENSOR DISCONNECTED

WARNING: To avoid personal injury or death, turn the ignition off, disconnect the battery and wait two minutes before proceeding.
Disconnect the Driver Seat Track Position Sensor connector.

WARNING: To avoid personal injury or death, turn the ignition on, then reconnect the battery.
Wait two minutes, and then with the scan tool, read ORC DTCs.

Does the scan tool display: B1B8E-DRIVER SEAT TRACK POSITION SENSOR CIRCUIT HIGH?

Yes >> Go To 14

No >>

WARNING: To avoid personal injury or death, turn the ignition off, disconnect the battery and wait two minutes before proceeding.Replace the Driver Seat Track Position Sensor in accordance with the service information.

Perform the ORC VERIFICATION TEST-VER 1.

14. CHECK (R261) SEAT POSITION SENSOR DATA-DRIVER CIRCUIT AND (R263) SEAT POSITION SENSOR VOLTAGE-DRIVER CIRCUIT FOR A SHORT TO VOLTAGE

WARNING: To avoid personal injury or death, turn the ignition off, disconnect the battery and wait two minutes before proceeding.
Disconnect the ORC C1 connector.

WARNING: To avoid personal injury or death, turn the ignition on, then reconnect the battery.
Measure the voltage of the (R261) Seat Position Sensor Data-Driver circuit at the Driver Seat Track Position Sensor connector.

Measure the voltage of the (R263) Seat Position Sensor Voltage-Driver circuit at the Driver Seat Track Position Sensor connector.

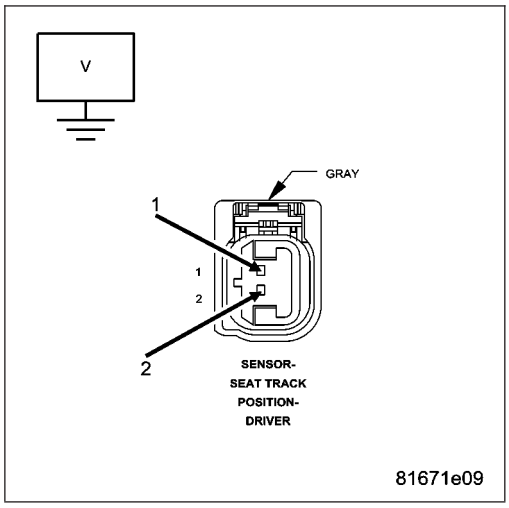

Is the voltage above 0.2 volts on either circuit?

Yes >>

NOTE: Do not attempt to repair the Seat Harness. Replace the Seat Harness if the condition inspecting or testing for is present in the Seat Harness.

WARNING: To avoid personal injury or death, turn the ignition off, disconnect the battery and wait two minutes before proceeding.Replace the Driver Seat Harness in accordance with the Service Information.

Perform the ORC VERIFICATION TEST-VER 1.

No >> Go To 15

15. CHECK (R261) SEAT POSITION SENSOR DATA-DRIVER CIRCUIT FOR A SHORT TO (R263) SEAT POSITION SENSOR VOLTAGE-DRIVER CIRCUIT

WARNING: To avoid personal injury or death, turn the ignition off, disconnect the battery and wait two minutes before proceeding.
Measure the resistance between the (R261) Seat Position Sensor Data-Driver circuit and the (R263) Seat Position Sensor Voltage-Driver circuit in the Driver Seat Track Position Sensor connector.

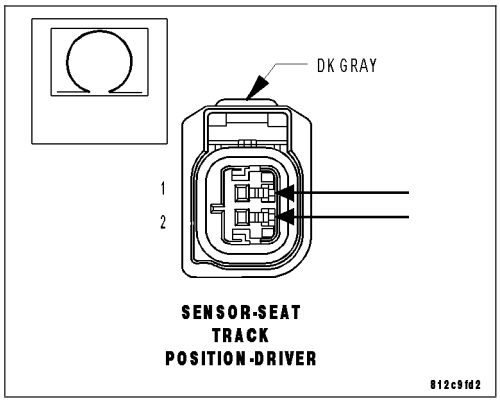

Is the resistance below 10k ohms?

Yes >>

NOTE: Do not attempt to repair the Seat Harness. Replace the Seat Harness if the condition inspecting or testing for is present in the Seat Harness.

Replace the Driver Seat Harness in accordance with the service information.

Perform the ORC VERIFICATION TEST-VER 1.

No >> Replace the ORC in accordance with the Service information.

Perform the ORC VERIFICATION TEST-VER 1.

16. TEST FOR AN INTERMITTENT CONDITION

With the scan tool, record and erase all DTC's from the OCM.

If any ACTIVE codes are present they must be resolved before diagnosing any stored codes.

WARNING: To avoid personal injury or death, turn the ignition off, disconnect the battery and wait two minutes before proceeding.

Using the wiring diagram/schematic as a guide, inspect the wiring and connectors.

Look for chafed, pierced, pinched, or partially broken wires and broken, bent, pushed out, spread, corroded, or contaminated terminals.

The following additional checks may assist you in identifying a possible intermittent problem.

Reconnect any disconnected components and harness connector.

WARNING: To avoid personal injury or death, turn the ignition on, then reconnect the battery.
With the scan tool monitor active codes as you work through the following steps.

WARNING: To avoid personal injury or death, maintain a safe distance from all airbags while performing the following steps.

Wiggle the wiring harness and connectors of the related airbag circuit or component.

If only stored codes return continue the test until the problem area has been isolated.

In the previous steps you have attempted to recreate the conditions responsible for setting active DTC in question.

Are any ACTIVE DTCs present?

Yes >> Select the appropriate symptom from Symptom List.

No >> No problem found at this time. Erase all codes before returning vehicle to customer.

B1B91-DRIVER SEAT TRACK POSITION SENSOR CONFIGURATION MISMATCH

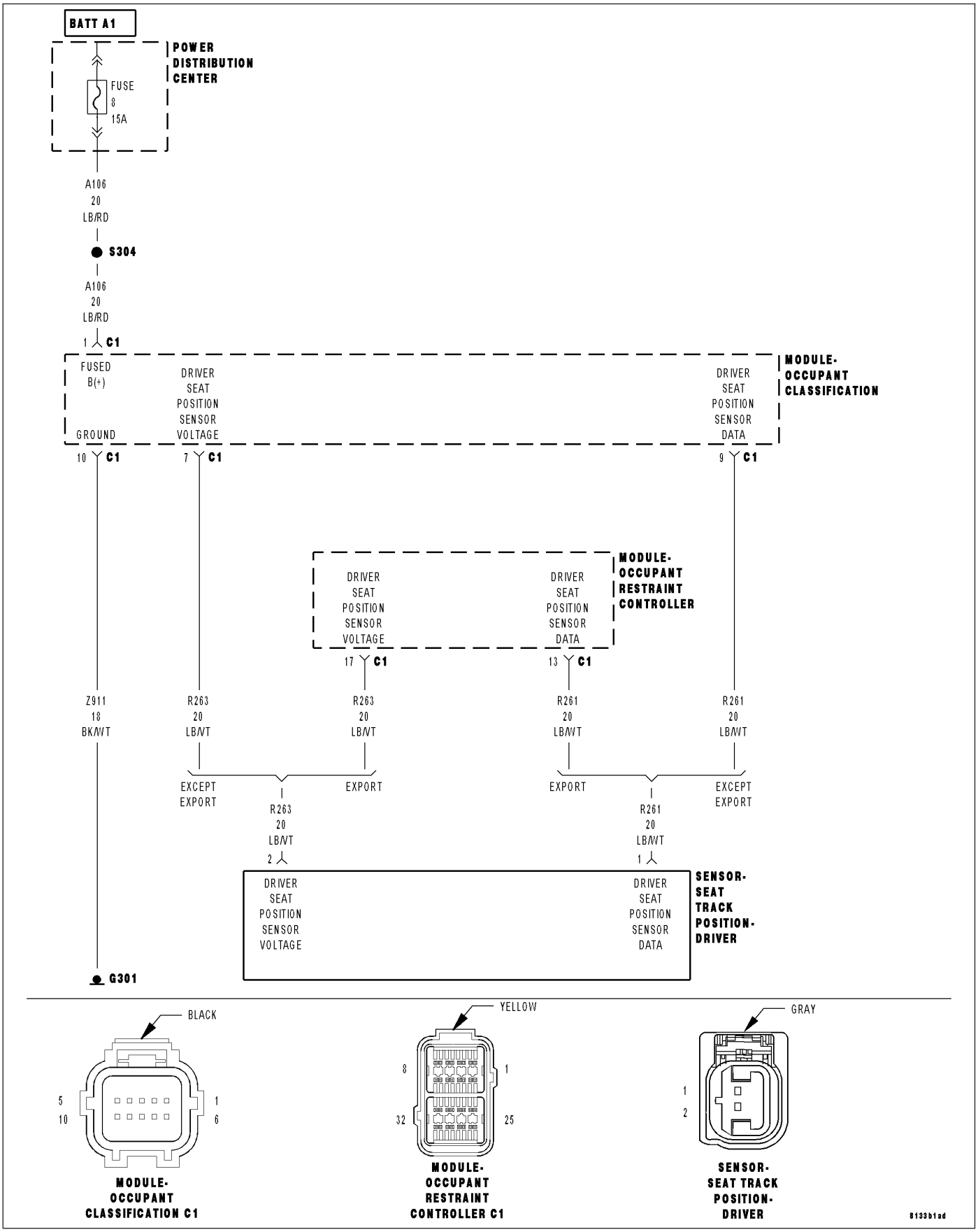

For a complete wiring diagram **Refer to Section 8W**.

- **When Monitored:**
  With the ignition on the OCM monitors the Seat Track Position Sensors circuits.
- **Set Condition:**
  If the module detects current on the Seat Track Position Sensors circuits and the module is not configured for STPS.

Possible Causes
SENSORS
WIRING
OCCUPANT CLASSIFICATION MODULE (OCM)
OCCUPANT RESTRAINT CONTROLLER (ORC)

Diagnostic Test

1. IDENTIFYING VEHICLE EQUIPMENT

NOTE: Ensure the battery is fully charged.

NOTE: The Seat Track Position Sensor(s) will be wired to the Occupant Restraint Controller (ORC) if the vehicle is not equipped with the Occupant Classification Module (OCM).

Turn the ignition on.

With the scan tool, read ORC and if equipped OCM active DTCs.

Select the module reporting the Active Seat Track Position Sensor DTC(s)

ORC >> Go To 5

OCM

Go To 2 Diagnostic Test

2. CHECK FOR ACTIVE INTERNAL FAULTS, IGNITION FAULTS, AND BATTERY FAULTS IN THE OCCUPANT CLASSIFICATION MODULE (OCM)

With the scan tool, read Occupant Classification Module (OCM) DTCs.

Does the scan tool display any active DTCs relating to internal faults, ignition faults, or battery faults?

Yes >> Diagnose and repair the DTCs. Refer to the Table of Contents in this Section for a complete list of symptoms.

No >> Go To 3

3. VERIFY THAT B1B91-DRIVER SEAT TRACK POSITION SENSOR CONFIGURATION MISMATCH IS ACTIVE

Turn the ignition off, wait 10 seconds and then turn the ignition on.

Wait 2 minutes, and then with the scan tool, read OCM DTCs.

Does the scan tool display active: B1B91-DRIVER SEAT TRACK POSITION SENSOR CONFIGURATION MISMATCH?

Yes >> Go To 4

No >> Perform the OCS VERIFICATION TEST-VER. 1

4. VERIFY WIRING

Turn the ignition off.

Inspect the driver and passenger seat wiring for Seat Position Sensors.

Are Seat Position Sensor(s) present?

Yes >>

WARNING: To avoid personal injury or death, turn the ignition off, disconnect the battery and wait two minutes before proceeding.

WARNING: If the Occupant Classification Module (OCM) is dropped at any time, it must be replaced. Failure to take the proper precautions can result in accidental airbag deployment and personal injury or death.Replace the OCM in accordance with the Service Information.

Perform the OCS VERIFICATION TEST-VER. 1

No >> Perform the OCS VERIFICATION TEST-VER. 1 Diagnostic Test

5. CHECK FOR ACTIVE INTERNAL FAULTS, IGNITION FAULTS, AND BATTERY FAULTS IN THE OCCUPANT RESTRAINT CONTROLLER (ORC)

With the scan tool, read Occupant Restraint Controller (ORC) DTCs.

Does the scan tool display any active DTCs relating to internal faults, ignition faults, or battery faults?

Yes >> Diagnose and repair the DTCs. Refer to the Table of Contents in this Section for a complete list of symptoms.

No >> Go To 6

6. VERIFY THAT B1B91-DRIVER SEAT TRACK POSITION SENSOR CONFIGURATION MISMATCH IS ACTIVE

With the scan tool, erase ORC DTCs.

Turn the ignition off, wait 10 seconds and then turn the ignition on.

Wait 2 minutes, and then with the scan tool, read ORC DTCs.

Does the scan tool display active: B1B91-DRIVER SEAT TRACK POSITION SENSOR CONFIGURATION MISMATCH?

Yes >> Go To 7

No >> Perform the ORC VERIFICATION TEST-VER. 1

7. VERIFY WIRING

Turn the ignition off.

Inspect the driver and passenger seat wiring for Seat Position Sensors.

Are Seat Position Sensor(s) present?

Yes >>

WARNING: To avoid personal injury or death, turn the ignition off, disconnect the battery and wait two minutes before proceeding.

WARNING: If the Occupant Restraint Controller (ORC) is dropped at any time, it must be replaced. Failure to take the proper precautions can result in accidental airbag deployment and personal injury or death.Replace the ORC in accordance with the Service Information.

Perform the ORC VERIFICATION TEST-VER. 1

No >> Perform the ORC VERIFICATION TEST-VER. 1

B1BA5-AIRBAG SQUIB CONFIGURATION MISMATCH

For a complete wiring diagram **Refer to Section 8W**.

- **When Monitored:**
  With the ignition on.
- **Set Condition:**
  If an Occupant Restraint Controller (ORC) configured for vehicles without side airbags is installed in a vehicle with side airbags.

Possible Causes
POWERTRAIN CONTROL MODULE (PCM)
OCCUPANT RESTRAINT CONTROLLER (ORC)

Diagnostic Test

1. VERIFY THAT DTC B1BA5 AIRBAG SQUIB CONFIGURATION MISMATCH IS ACTIVE

NOTE: Ensure the battery is fully charged.

NOTE: When reconnecting Airbag system components, the ignition must be turned off and the battery must be disconnected.

Turn the ignition on.

With the scan tool, read ORC DTCs.

Does the scan tool display active: B1BA5 AIRBAG SQUIB CONFIGURATION MISMATCH?

Yes >> Go To 2

No >> Go To 5

2. VERIFY THAT VEHICLE IS EQUIPPED WITH OCCUPANT CLASSIFICATION SYSTEM (OCS)

Vehicles equipped with a Occupant Classification System (OCS) will have a Passenger Airbag On/Off Indicator Lamp mounted to the dashboard. Verify that the vehicle is equipped with this indicator lamp.

With the scan tool, select ECU View and check that the Occupant Classification Module (OCM) is active on the bus.

Is the vehicle equipped with an Occupant Classification System (OCS)?

Yes >> Go To 3

No >> Replace the ORC in accordance with Service Information.
Perform ORC VERIFICATION TEST - VER 1.

3. CHECK ORC PART NUMBER WITH SCAN TOOL

With the scan tool, select ECU View, select ORC, select ECU Details, and read the ORC part number.

Is the part number correct for the vehicle?

Yes >> Go To 4

No >> Replace the ORC in accordance with Service Information.
Perform ORC VERIFICATION TEST - VER 1.

4. CHECK VIN WITH SCAN TOOL

With the scan tool, read the VIN.

Is the correct VIN displayed?

Yes >> Replace the ORC in accordance with Service Information.
Perform ORC VERIFICATION TEST - VER 1.

No >> Replace the Powertrain Control Module (PCM) in accordance with Service Information.
Perform ORC VERIFICATION TEST - VER 1.

5. TEST FOR INTERMITTENT CONDITION

With the scan tool, record and erase all DTCs from all Airbag modules.

If any ACTIVE codes are present they must be resolved before diagnosing any stored codes.

WARNING: To avoid personal injury or death, turn the ignition off, disconnect the battery and wait two minutes before proceeding.

Using the wiring diagram/schematic as a guide, inspect the wiring and connectors.

Look for chafed, pierced, pinched, or partially broken wires and broken, bent, pushed out, spread, corroded, or contaminated terminals.

The following additional checks may assist you in identifying a possible intermittent problem.

Reconnect any disconnected components and harness connector.

WARNING: To avoid personal injury or death, turn the ignition on, then reconnect the battery.

With the scan tool, monitor active codes as you work through the following steps.

WARNING: To avoid personal injury or death, maintain a safe distance from all airbags while performing the following steps.

Wiggle the wiring harness and connectors of the related airbag circuit or component.

If codes are related to the Driver Airbag circuits, rotate the steering wheel from stop to stop.

If only stored codes return, continue the test until the problem area has been isolated.

In the previous steps you have attempted to recreate the conditions responsible for setting the active DTC in question.

Does the scan tool display any ACTIVE DTCs?

Yes >> Select appropriate symptom from Symptom List.

No >> No problem found at this time. Erase all codes before returning vehicle to customer.

B1BA6-OCCUPANT CLASSIFICATION UNDETERMINED

For a complete wiring diagram **Refer to Section 8W**.

- **When Monitored:**
  With the ignition on or off.
- **Set Condition:**
  Because other DTCs have made occupant detection impossible. This DTC will set in addition to all sensor and module DTCs and will be erased when the repairs are completed.

Refer to **B1BA7-OCCUPANT CLASSIFICATION SYSTEM VERIFICATION REQUIRED** for the diagnostic test procedure.

B1BA7-OCCUPANT CLASSIFICATION SYSTEM VERIFICATION REQUIRED

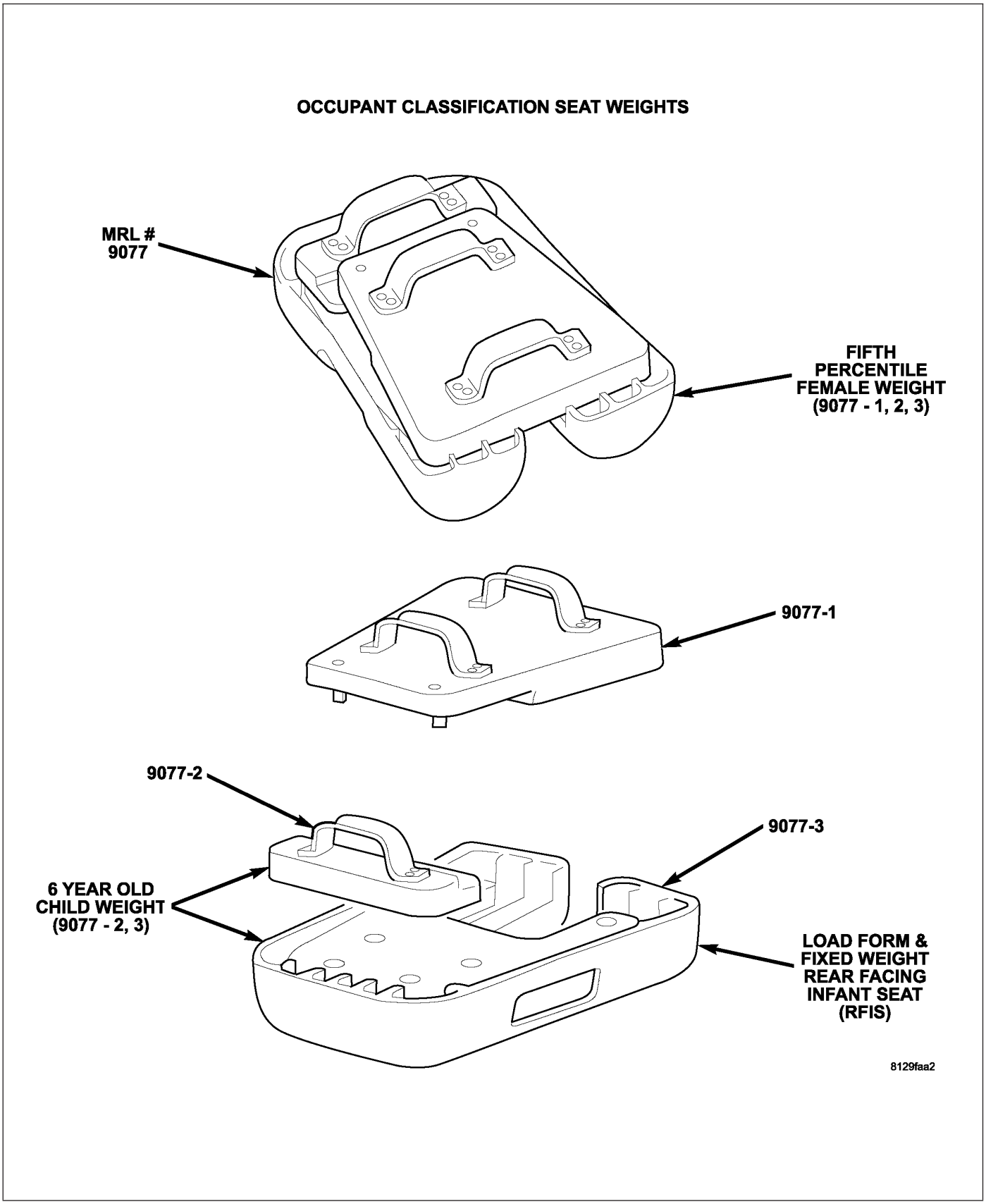

OCS SEAT WEIGHTS MRL #9077

- **When Monitored:**
  With the CAN ignition status as IGN_RUN, the module tries to detect potentially damaging events and monitors the CAN Bus for the X Impact messages (crash event causing one or more airbag or pretensioner to deploy) or upon detecting an Offset Event (if equipped).
- **Set Condition:**
  This DTC will set if the module detects a potentially damaging event or the Impact messages from the CAN Bus input.

Possible Causes
B1BA7-OCS VERIFICATION REQUIRED DTC ACTIVE

Diagnostic Test

1. CHECK FOR OCCUPANT CLASSIFICATION MODULE (OCM) ACTIVE DTCs:

- ACTIVE INTERNAL FAULTS
- IGNITION FAULTS
- BATTERY FAULT
- SEAT WEIGHT SENSOR DTCs

NOTE: Ensure the battery is fully charged.

NOTE: When reconnecting Airbag system components, the ignition must be turned off and the battery must be disconnected.

Turn the ignition on, then off, and then on again.

With the scan tool, read Occupant Classification Module (OCM) DTCs.

Does the scan tool display any active DTCs listed above?

Yes >> Diagnose and repair the DTCs. Refer to the Table of Contents in this Section for a complete list of symptoms.

No >> Go To 2

2. VERIFY THAT DTC B1BA7-OCCUPANT CLASSIFICATION SYSTEM VERIFICATION REQUIRED IS ACTIVE

With the scan tool, read OCM DTCs.

Does the scan tool display active: B1BA7-OCCUPANT CLASSIFICATION SYSTEM VERIFICATION REQUIRED?

Yes >> Go To 3

No >> Go To 4

3. PERFORM OCCUPANT CLASSIFICATION MODULE SYSTEM VERIFICATION TEST

Verify that the passenger seat is empty.

Perform a visual inspection of the Passenger Seat, wiring, connectors, risers, sensors, and retainers. Look for chafed, pierced, pinched, or partially broken wires and broken, bent, pushed out, spread, corroded, or contaminated terminals. Also, inspect for damaged or bent risers, a damaged or bent seat and seat structure, damaged or bent seat tracks, and damaged or loose sensors. Repair or replace any problems found in accordance with the service information and then continue this procedure. Refer to 23 - BODY/SEATS.

NOTE: Failure to follow the test instructions or aborting the test will cause faults to set when performing the Occupant Classification Module System Verification Test. To prevent faults due to process errors: Verify That All Tests Steps That Led You Here Were Performed As Directed; Verify That The Ignition Is In Run; Wait 30 Seconds After Changing The Seat Weight Before Proceeding To Allow The System To Stabilize; Only Press Scan Tool Buttons When Directed To Do So; and Perform The Occupant Classification Module System Verification Test To Completion.

With the scan tool in OCM, select More Options, select System Tests, and select Occupant Classification Module System Verification Test. Run the test by following the instructions displayed on the scan tool. When the test is complete, proceed as follows.

With the scan tool, read OCM DTCs.

Does the scan tool display active: B1BA7-OCCUPANT CLASSIFICATION SYSTEM VERIFICATION REQUIRED?

Yes >> Perform the *Diagnosis/Checkout Procedure For Seat Weight Sensors.
Perform OCS VERIFICATION TEST - VER 1.

No, But Other DTCs Present
Diagnose and repair the DTCs. Refer to the Table of Contents in this Section for a complete list of symptoms.

No Active DTCs Present
Perform OCS VERIFICATION TEST - VER 1.

4. CHECK FOR ACTIVE DTC B1BA8–OCM SYSTEM OUT OF CALIBRATION/NOT CALIBRATED

With the scan tool, read OCM DTCs.

Does the scan tool display active: B1BA8-OCM SYSTEM OUT OF CALIBRATION/NOT CALIBRATED?

Yes >> Diagnose and repair the DTC. Refer to the Table of Contents in this Section for a complete list of symptoms.

No >> Perform OCS VERIFICATION TEST - VER 1.

B1BA8-OCM SYSTEM OUT OF CALIBRATION/NOT CALIBRATED

For a complete wiring diagram **Refer to Section 8W**.

- **When Monitored:**
  While the CAN bus ignition status is IGN_RUN or status not available.
- **Set Condition:**
  This DTC will set if the module or the technician initiated a system verification (rezero) process and the system verification process was not successfully completed.

Diagnostic Test

1. PERFORM OCCUPANT CLASSIFICATION MODULE SYSTEM VERIFICATION TEST

Verify that the passenger seat is empty.

Perform a visual inspection of the Passenger Seat, wiring, connectors, risers, sensors, and retainers. Look for chafed, pierced, pinched, or partially broken wires and broken, bent, pushed out, spread, corroded, or contaminated terminals. Also, inspect for damaged or bent risers, a damaged or bent seat and seat structure, damaged or bent seat tracks, and damaged or loose sensors. Repair or replace any problems found in accordance with the service information and then continue this procedure. Refer to 23 - BODY/SEATS.

NOTE: Failure to follow the test instructions or aborting the test will cause faults to set when performing the Occupant Classification Module System Verification Test. To prevent faults due to process errors: Verify That All Tests Steps That Led You Here Were Performed As Directed; Verify That The Ignition Is In Run; Wait 30 Seconds After Changing The Seat Weight Before Proceeding To Allow The System To Stabilize; Only Press Scan Tool Buttons When Directed To Do So; and Perform The Occupant Classification Module System Verification Test To Completion.

With the scan tool in OCM, select More Options, select System Tests, and select Occupant Classification Module System Verification Test. Run the test by following the instructions displayed on the scan tool. When the test is complete, proceed as follows.

With the scan tool, read OCM DTCs.

Does the scan tool display any active DTCs?

Yes - B1BA8 is Active
Perform the *Diagnosis/Checkout Procedure For Seat Weight Sensors.

Yes Other DTCs Present
Diagnose and repair the DTCs. Refer to the Table of Contents in this Section for a complete list of symptoms.

No Active DTCs Present
Perform OCS VERIFICATION TEST - VER 1.

B1BB8-SRS WARNING INDICATOR STATUS MISMATCH

For a complete wiring diagram **Refer to Section 8W**.

- **When Monitored:**
  After the Instrument Cluster bulb check is completed, the ORC compares the lamp request by the ORC (On or Off) and the Lamp On request by the Instrument Cluster (On or Off) Can bus messages. Each message is transmitted one time per second or when a change in the lap state occurs.
- **Set Condition:**
  If the lamp request by the ORC (On or Off), and the Lamp On by the Instrument Cluster (On or Off), messages do not match, this code will set.

Possible Causes
OCCUPANT RESTRAINT CONTROLLER, INSTRUMENT CLUSTER MESSAGE MISMATCH
INSTRUMENT CLUSTER
OCCUPANT RESTRAINT CONTROLLER

Diagnostic Test

1. CHECK FOR AN ACTIVE DTC

NOTE: Ensure the battery is fully charged.

NOTE: When reconnecting Airbag system components, the ignition must be turned off and the battery must be disconnected.

Turn the ignition on, then off, and then on again.

With the scan tool, read Occupant Restraint Controller (ORC) DTCs.

Select DTC type.

Active

Go To 2

Stored

Go To 5

2. CHECK FOR ACTIVE INSTRUMENT CLUSTER DTCs

With the scan tool, read Instrument Cluster DTCs.

Does the scan tool display and active Instrument Cluster DTCs?

Yes >> Refer to symptom list for problems related to the Instrument Cluster.
Perform the ORC VERIFICATION TEST-VER 1.

No >> Go To 3

3. CHECK THE ORC AND INSTRUMENT CLUSTER FOR LAMP STATUS

With the scan tool view the Instrument Cluster Data Display.

Cycle the ignition key and observe the SRS Indicator Lamp Request status (Set/Not Set) during the Instrument Cluster bulb check.

With the scan tool view the ORC Data Display.

Cycle the ignition key and observe the SRS Indicator Lamp Status (Lamp On/Lamp Off) during the Instrument Cluster bulb check.

Did the Data Display information match the operation of the lamp?

Yes >> Go To 4

No >> Replace the Instrument Cluster in accordance with the service information.
Perform the ORC VERIFICATION TEST-VER 1.

4. REPLACE THE OCCUPANT RESTRAINT CONTROLLER

WARNING: To avoid personal injury or death, turn the ignition off, disconnect the battery and wait two minutes before proceeding.

WARNING: If the airbag control module is dropped at any time, it must be replaced. Failure to take the proper precautions could result in accidental airbag deployment and personal injury or death.

If there are no possible causes remaining, view repair.

Repair

Replace the Occupant Restraint Controller in accordance with the service information.

Perform the ORC VERIFICATION TEST-VER 1.

5. TEST FOR INTERMITTENT CONDITION

With the scan tool, record and erase all DTCs from all Airbag modules.

If any ACTIVE codes are present they must be resolved before diagnosing any stored codes.

WARNING: To avoid personal injury or death, turn the ignition off, disconnect the battery and wait two minutes before proceeding.

Using the wiring diagram/schematic as a guide, inspect the wiring and connectors.

Look for chafed, pierced, pinched, or partially broken wires and broken, bent, pushed out, spread, corroded, or contaminated terminals.

The following additional checks may assist you in identifying a possible intermittent problem.

Reconnect any disconnected components and harness connector.

WARNING: To avoid personal injury or death, turn the ignition on, then reconnect the battery.

With the scan tool, monitor active codes as you work through the following steps.

WARNING: To avoid personal injury or death, maintain a safe distance from all airbags while performing the following steps.

Wiggle the wiring harness and connectors of the related airbag circuit or component.

If codes are related to the Driver Airbag circuits, rotate the steering wheel from stop to stop.

If only stored codes return, continue the test until the problem area has been isolated.

In the previous steps you have attempted to recreate the conditions responsible for setting the active DTC in question.

Does the scan tool display any ACTIVE DTCs?

Yes >> Select appropriate symptom from Symptom List.

No >> No problem found at this time. Erase all codes before returning vehicle to customer.

B1BBA-PASSENGER SEAT WEIGHT SENSOR SUPPLY CIRCUIT

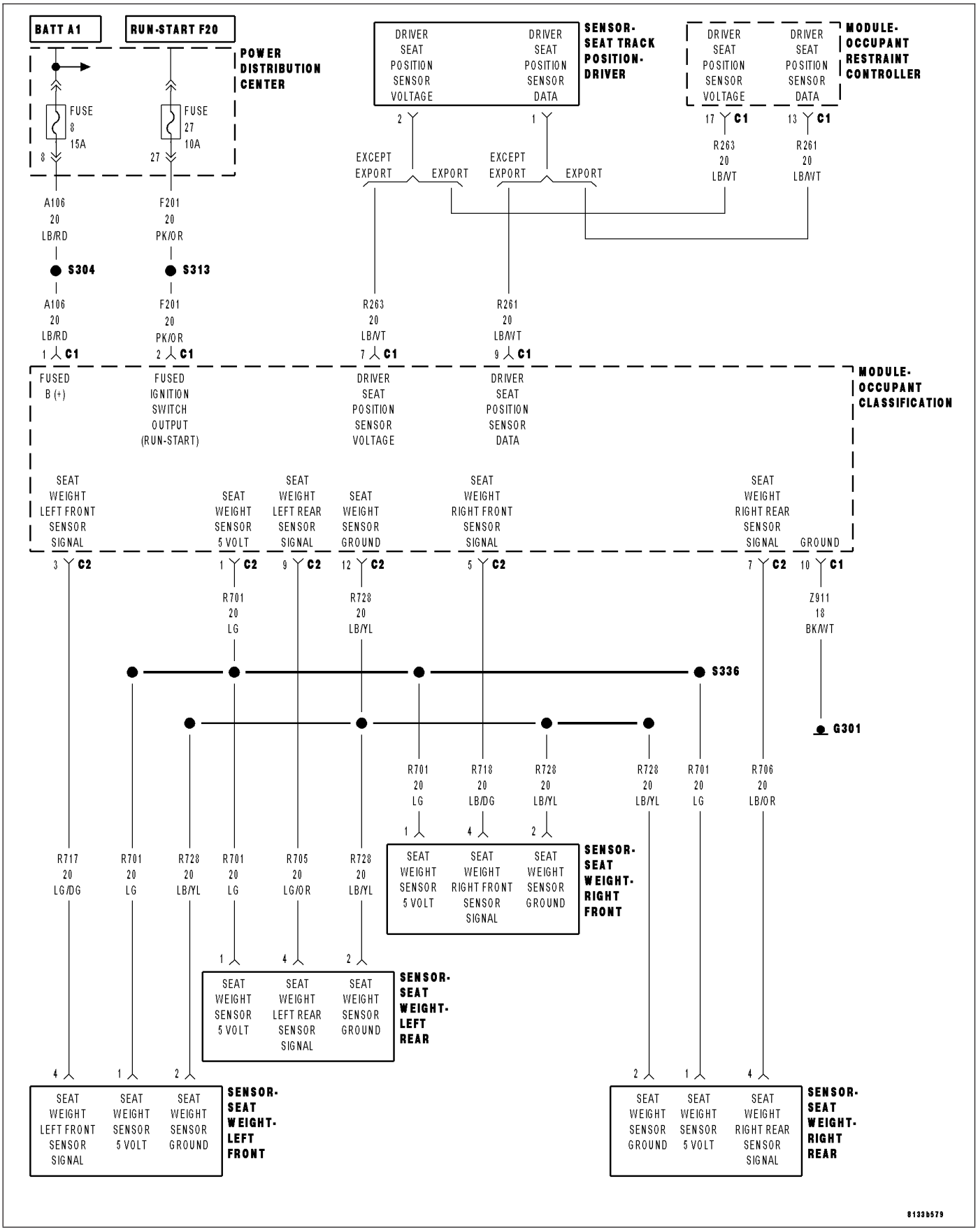

For a complete wiring diagram **Refer to Section 8W**.

- **When Monitored:**
  While the CAN bus ignition status is in IGN_RUN, the module checks the sensor supply.
- **Set Condition:**
  If the OCM detects that the sensor supply shorted. **NOTE: A shorted supply circuit will cause a 'NO RESPONSE FROM OCM" condition.**

Possible Causes
OCS SUPPLY CIRCUIT SHORTED
OCCUPANT CLASSIFICATION MODULE (OCM)

Diagnostic Test

1. VERIFY THAT B1BBA-PASSENGER SEAT WEIGHT SENSOR SUPPLY CIRCUIT DTC IS ACTIVE

With the scan tool, read OCM DTCs.

Does the scan tool display active: B1BBA-PASSENGER SEAT WEIGHT SENSOR SUPPLY CIRCUIT?

Yes >> Replace the OCM in accordance with the Service Information.
Perform the OCS VERIFICATION REQUIRED procedure.

No >> Go To 2

2. INSPECT PASSENGER SEAT HARNESS WIRES AND CONNECTORS

WARNING: To avoid personal injury or death, turn the ignition off, disconnect the battery and wait two minutes before proceeding.
Using the wiring diagram/schematic as a guide, inspect the Passenger Seat Harness wiring and connectors. Look for chafed, pierced, pinched, or partially broken wires and broken, bent, pushed out, spread, corroded, or contaminated terminals.

Are any of these conditions present?

Yes >>

NOTE: Do not attempt to repair the Seat Harness. Replace the Seat Harness if the condition inspecting or testing for is present in the Seat Harness.
Replace the Passenger Seat Harness in accordance with the Service Information.
Perform OCS VERIFICATION TEST - VER 1.

No >> Go To 3

3. TEST FOR INTERMITTENT CONDITION

With the scan tool, record and erase all DTC's from the OCM.

If any ACTIVE codes are present they must be resolved before diagnosing any stored codes.

WARNING: To avoid personal injury or death, turn the ignition off, disconnect the battery and wait two minutes before proceeding.
Using the wiring diagram/schematic as a guide, inspect the wiring and connectors.

Look for chafed, pierced, pinched, or partially broken wires and broken, bent, pushed out, spread, corroded, or contaminated terminals.

The following additional checks may assist you in identifying a possible intermittent problem.

Reconnect any disconnected components and harness connector.

WARNING: To avoid personal injury or death, turn the ignition on, then reconnect the battery.
With the scan tool monitor active codes as you work through the following steps.

WARNING: To avoid personal injury or death, maintain a safe distance from all airbags while performing the following steps.
Wiggle the wiring harness and connectors of the related airbag circuit or component.

If only stored codes return continue the test until the problem area has been isolated.

In the previous steps you have attempted to recreate the conditions responsible for setting active DTC in question.

Are any ACTIVE DTCs present?

Yes >> Select the appropriate symptom from Symptom List.

No >> No problem found at this time. Erase all codes before returning vehicle to customer.

B1BBB-PASSENGER SEAT WEIGHT SENSOR INPUTS SHORTED TOGETHER

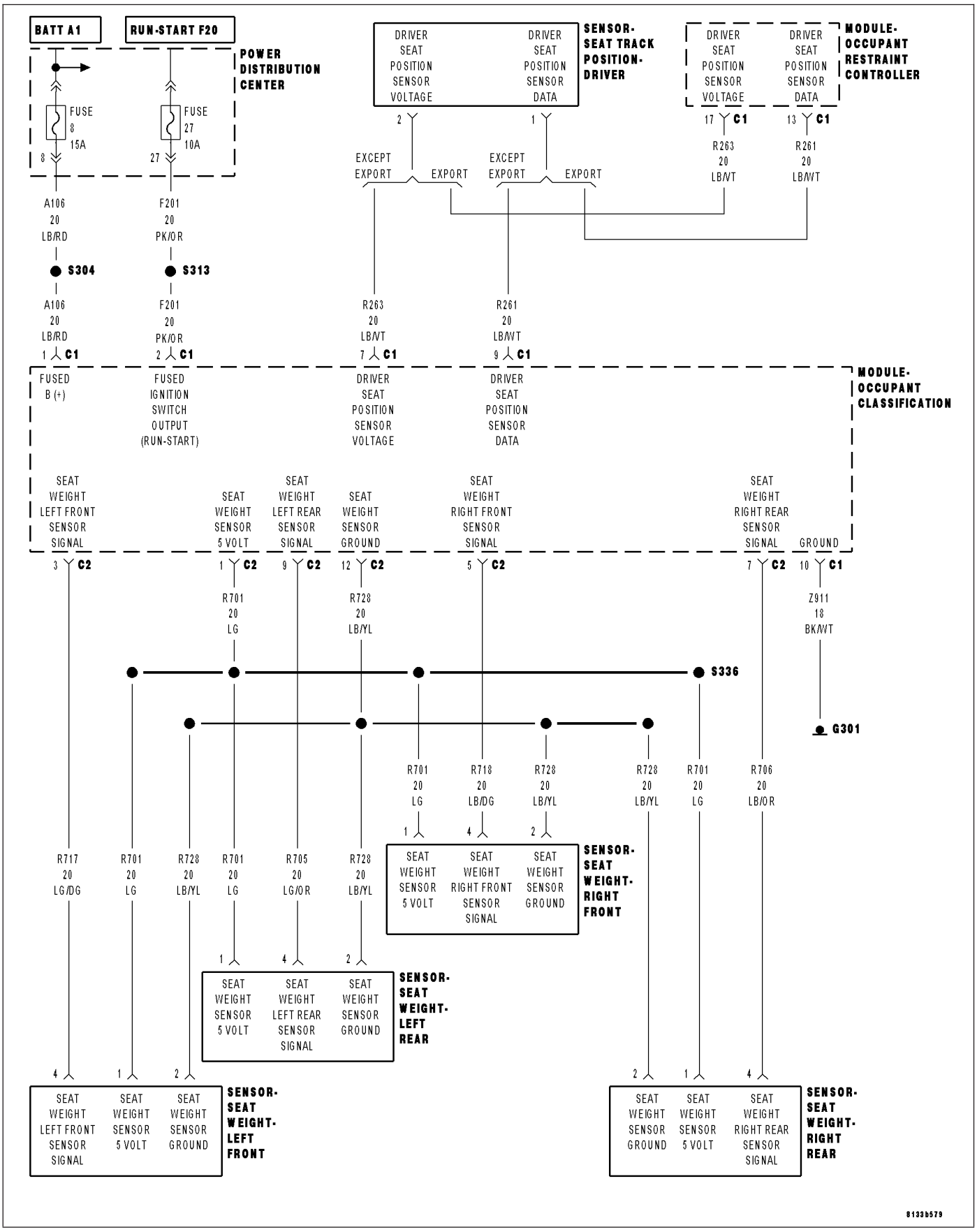

For a complete wiring diagram **Refer to Section 8W**.

- **When Monitored:**
  While the CAN bus ignition status is in IGN_RUN.
- **Set Condition:**
  If the OCM detects any two sensors voltages below 20 mV for 10 minutes while any other sensor is greater than 40 mV. Note: 1 a/d count is equal to 5 mV. **NOTE: A shorted supply circuit will cause a 'NO RESPONSE FROM OCM" condition.**

Possible Causes
OCS SENSOR CIRCUITS SHORTED TOGETHER
OCCUPANT CLASSIFICATION MODULE (OCM)

Diagnostic Test

1. VERIFY THAT B1BBB-PASSENGER SEAT WEIGHT SENSOR INPUTS SHORTED TOGETHER

With the scan tool, read OCM DTCs.

Does the scan tool display active: B1BBB-PASSENGER SEAT WEIGHT SENSOR INPUTS SHORTED TOGETHER ?

Yes >> Replace the OCM in accordance with the Service Information.
Perform the OCS VERIFICATION REQUIRED procedure.

No >> Go To 2

2. INSPECT PASSENGER SEAT HARNESS WIRES AND CONNECTORS

WARNING: To avoid personal injury or death, turn the ignition off, disconnect the battery and wait two minutes before proceeding.
Using the wiring diagram/schematic as a guide, inspect the Passenger Seat Harness wiring and connectors. Look for chafed, pierced, pinched, or partially broken wires and broken, bent, pushed out, spread, corroded, or contaminated terminals.

Are any of these conditions present?

Yes >>

NOTE: Do not attempt to repair the Seat Harness. Replace the Seat Harness if the condition inspecting or testing for is present in the Seat Harness.
Replace the Passenger Seat Harness in accordance with the Service Information.
Perform OCS VERIFICATION TEST - VER 1.

No >> Go To 3

3. TEST FOR INTERMITTENT CONDITION

With the scan tool, record and erase all DTC's from the OCM.

If any ACTIVE codes are present they must be resolved before diagnosing any stored codes.

WARNING: To avoid personal injury or death, turn the ignition off, disconnect the battery and wait two minutes before proceeding.
Using the wiring diagram/schematic as a guide, inspect the wiring and connectors.

Look for chafed, pierced, pinched, or partially broken wires and broken, bent, pushed out, spread, corroded, or contaminated terminals.

The following additional checks may assist you in identifying a possible intermittent problem.

Reconnect any disconnected components and harness connector.

WARNING: To avoid personal injury or death, turn the ignition on, then reconnect the battery.
With the scan tool monitor active codes as you work through the following steps.

WARNING: To avoid personal injury or death, maintain a safe distance from all airbags while performing the following steps.
Wiggle the wiring harness and connectors of the related airbag circuit or component.

If only stored codes return continue the test until the problem area has been isolated.
In the previous steps you have attempted to recreate the conditions responsible for setting active DTC in question.

Are any ACTIVE DTCs present?

Yes >> Select the appropriate symptom from Symptom List.

No >> No problem found at this time. Erase all codes before returning vehicle to customer.

B1BBC-OCS NEGATIVE SYSTEM WEIGHT

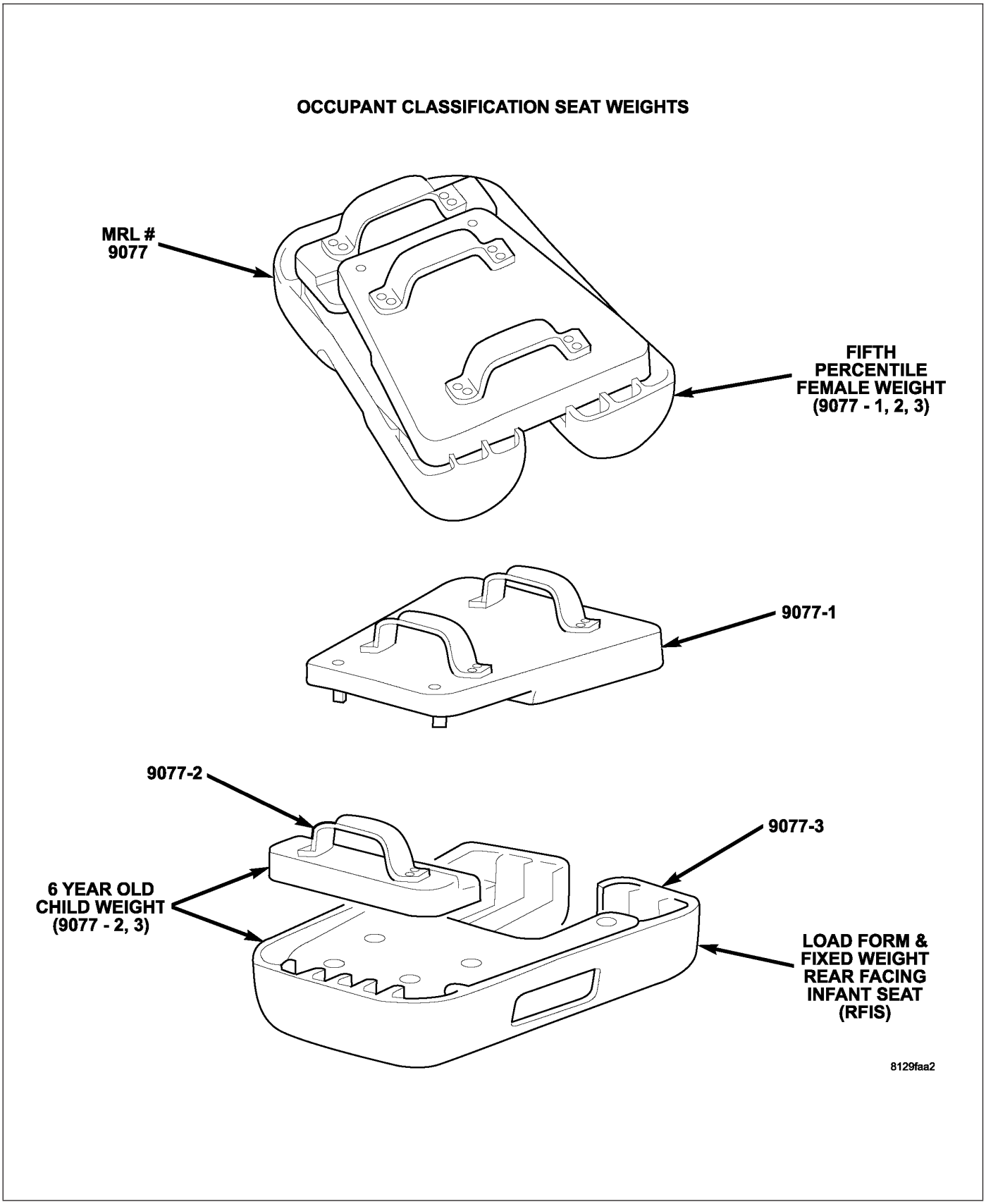

OCS SEAT WEIGHTS MRL #9077

- **When Monitored:**
  While the CAN bus ignition status is in IGN_RUN, the module checks the sensor input ranges.
- **Set Condition:**
  If the module detects a seat weight sensor input with the total seat weight below -6.5 kg +/- 1kg.

Possible Causes
DAMAGE TO THE PASSENGER SEAT STRUCTURE, RISER ASSEMBLY, CROSSMEMBERS, SEAT TRACKS, FLOOR PAN
OBJECT UNDER SEAT OR REAR SEAT FOLDED DOWN AND RESTING AGAINST PASSENGER SEAT
OCCUPANT CLASSIFICATION MODULE (OCM)

Diagnostic Test

1. TEST CONDITIONS

- ACTIVE INTERNAL DTC
- IGNITION DTC
- BATTERY DTC
- SEAT WEIGHT SENSOR DTC

NOTE: Ensure the battery is fully charged.

NOTE: When reconnecting Airbag system components, the ignition must be turned off and the battery must be disconnected.

Turn the ignition on, then off, and then on again.

With the scan tool, read Occupant Classification Module (OCM) DTCs.

Does the scan tool display any active DTCs listed above?

Yes >> Diagnose and repair the DTCs. Refer to the Table of Contents in this Section for a complete list of symptoms.

No >> Go To 2

2. ACTIVE OR STORED DTC

With the scan tool, read OCM DTCs.

Does the scan tool display active: B1BBC-NEGATIVE SYSTEM WEIGHT?

Yes >> Go To 3

No >> Go To 4

3. PERFORM OCCUPANT CLASSIFICATION MODULE SYSTEM VERIFICATION TEST

Verify that the passenger seat is empty.

Perform a visual inspection of the Passenger Seat, wiring, connectors, risers, sensors, and retainers. Look for chafed, pierced, pinched, or partially broken wires and broken, bent, pushed out, spread, corroded, or contaminated terminals. Also, inspect for damaged or bent risers, a damaged or bent seat and seat structure, damaged or bent seat tracks, and damaged or loose sensors. Repair or replace any problems found in accordance with the service information and then continue this procedure. Refer to 23 - BODY/SEATS.

NOTE: Failure to follow the test instructions or aborting the test will cause faults to set when performing the Occupant Classification Module System Verification Test. To prevent faults due to process errors: Verify That All Tests Steps That Led You Here Were Performed As Directed; Verify That The Ignition Is In Run; Wait 30 Seconds After Changing The Seat Weight Before Proceeding To Allow The System To Stabilize; Only Press Scan Tool Buttons When Directed To Do So; and Perform The Occupant Classification Module System Verification Test To Completion.

With the scan tool in OCM, select More Options, select System Tests, and select Occupant Classification Module System Verification Test. Run the test by following the instructions displayed on the scan tool. When the test is complete, proceed as follows.

With the scan tool, read OCM DTCs.

Does the scan tool display active: B1BBC-OCS NEGATIVE SYSTEM WEIGHT DTC?

Yes >> Perform the *Diagnosis/Checkout Procedure For Seat Weight Sensors.
Perform OCS VERIFICATION TEST - VER 1.

No - But Other DTCs Present
Diagnose and repair the DTCs. Refer to the Table of Contents in this Section for a complete list of symptoms.

No - No Active DTCs Present
Perform OCS VERIFICATION TEST - VER 1.

4. STORED B1BBC-OCS NEGATIVE SYSTEM WEIGHT DTC

With the scan tool, record and erase all DTC's from all Airbag System Modules.

If any ACTIVE codes are present they must be resolved before diagnosing any stored codes.

WARNING: To avoid personal injury or death, turn the ignition off, disconnect the battery and wait two minutes before proceeding.

Using the wiring diagram/schematic as a guide, inspect the wiring and connectors.

Look for chafed, pierced, pinched, or partially broken wires and broken, bent, pushed out, spread, corroded, or contaminated terminals.

The following additional checks may assist you in identifying a possible intermittent problem.

Reconnect any disconnected components and harness connector.

WARNING: To avoid personal injury or death, turn the ignition on, then reconnect the battery.

With the scan tool monitor active codes as you work through the following steps.

Wiggle the wiring harness and connectors of the related airbag circuit or component.

If codes are related to the Driver Airbag circuits, rotate the steering wheel from stop to stop.

IF only stored codes return continue the test until the problem area has been isolated.

In the previous steps you have attempted to recreate the conditions responsible for setting active DTC in question.

Are any ACTIVE DTC's present?

Yes >> Select appropriate symptom from Symptom List.

No >> No problem found at this time. Erase all codes before returning vehicle to customer.

B1BBD-OCM CURRENT CONFIGURATION TABLE UNPROGRAMMED

For a complete wiring diagram **Refer to Section 8W**.

- **When Monitored:**
  If the Configuration Table is not programmed at the supplier or when the checksum is invalid.
- **Set Condition:**
  This DTC will set if the module was received unprogrammed from the supplier, the vehicle line was not identified correctly or if the flash procedure was not completed successfully

Possible Causes
NEW OCCUPANT CLASSIFICATION MODULE
INTERNAL CHECKSUM FAILURE

Diagnostic Test

1. MODULE CONFIGURATION

Does the scan tool display B1BBD-OCM CURRENT CONFIGURATION TABLE UNPROGRAMMED?

Yes >> Perform the B1BA7–OCS VERIFICATION REQUIRED diagnostic procedure.

No >> Replace the Occupant Classification Module in accordance with the service information. With the scan tool, perform the OCM SYSTEM VERIFICATION procedure.

B1BC7-DEPLOYMENT DATA RECORD FULL

For a complete wiring diagram **Refer to Section 8W**.

- **When Monitored:**
  With the ignition on. The module's on board diagnostics continuously performs internal circuit tests.
- **Set Condition:**
  This DTC will set if the module identifies an out of range internal circuit.

Possible Causes
OCCUPANT RESTRAINT CONTROLLER

Diagnostic Test

1. CHECK FOR ACTIVE DTC

Turn the ignition on.

With the scan tool, read ORC DTCs.

Is the Deployment Data Record Full DTC active?

Yes >> Go To 2

No >> Perform the ORC VERIFICATION TEST-VER. 1.

2. REPLACE THE OCCUPANT RESTRAINT CONTROLLER

WARNING: To avoid personal injury or death, turn the ignition off, disconnect the battery and wait two minutes before proceeding.

WARNING: If the airbag control module is dropped at any time, it must be replaced. Failure to take the proper precautions can result in accidental airbag deployment and personal injury or death.

View repair.

Repair

Replace the Occupant Restraint Controller in accordance with the service information.

Perform the ORC VERIFICATION TEST-VER 1.

B1BC8-PASSENGER SEAT WEIGHT SENSORS PERFORMANCE

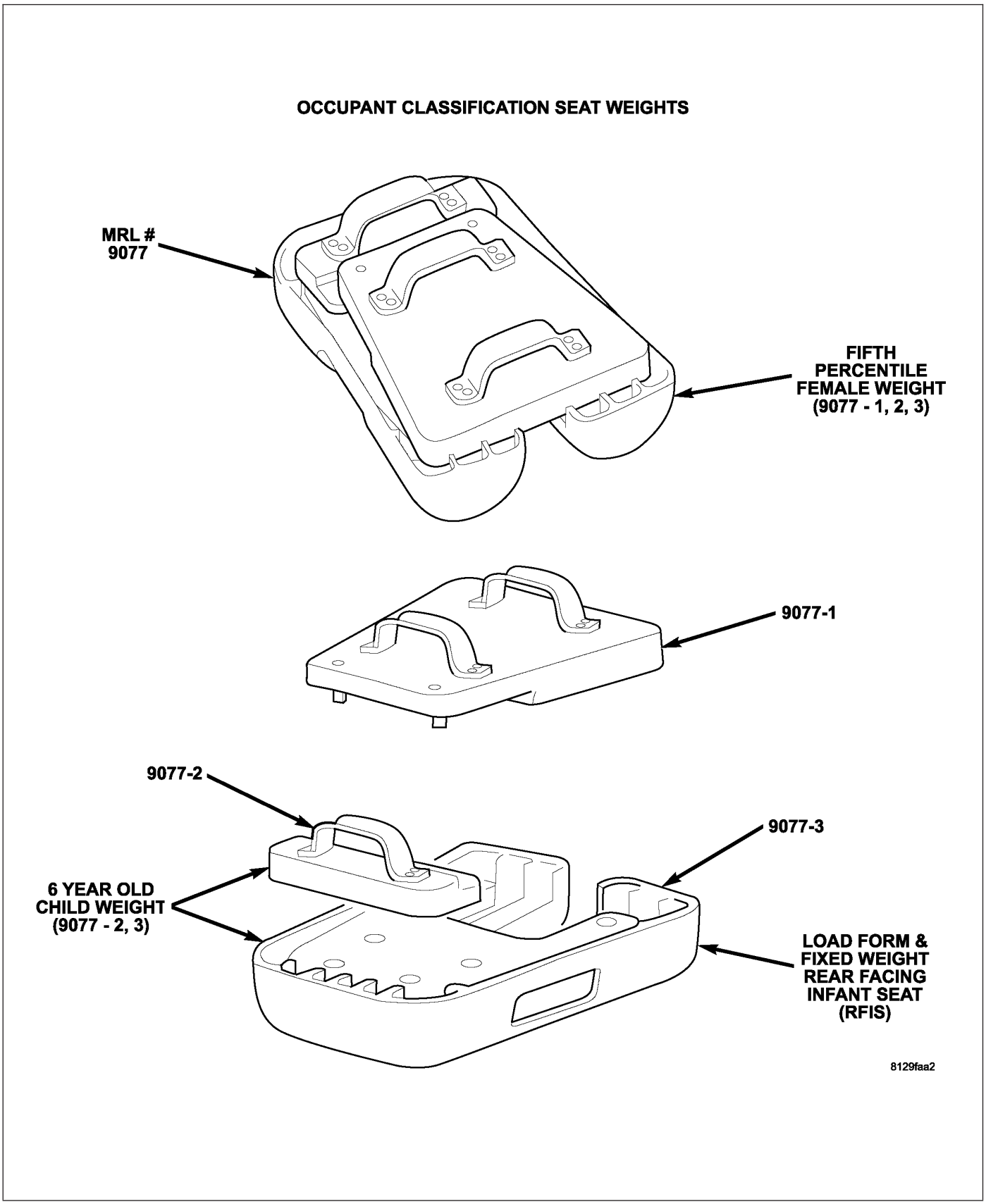

OCS SEAT WEIGHTS MRL #9077

For a complete wiring diagram **Refer to Section 8W**.

- **When Monitored:**
  While the CAN bus ignition status is in IGN_RUN, the module checks the sensor input ranges.
- **Set Condition:**
  If the module detects the difference between 2 sensors is less than 3 A/D (15 mV) counts for 10 consecutive minutes while at least one sensor count is changing and greater than 8 A/D (40 mV) counts.

Possible Causes
OTHER SEAT WEIGHT SENSOR FAULTS ACTIVE IN THE OCM
PASSENGER SEAT HARNESS WIRES CHAFED, PIERCED, PINCHED, PARTIALLY BROKEN
PASSENGER SEAT HARNESS CONNECTOR TERMINALS BROKEN, BENT PUSHED OUT, SPREAD, CORRODED, CONTAMINATED
PASSENGER SEAT WEIGHT SENSORS
DAMAGE TO THE PASSENGER SEAT STRUCTURE, RISER ASSEMBLY, CROSSMEMBERS, SEAT TRACKS, FLOOR PAN
OCCUPANT CLASSIFICATION MODULE (OCM)

Diagnostic Test

1. CHECK FOR ACTIVE INTERNAL FAULTS, IGNITION FAULTS, AND BATTERY FAULTS IN THE OCCUPANT CLASSIFICATION MODULE (OCM)

NOTE: Ensure the battery is fully charged.

NOTE: When reconnecting Airbag system components, the ignition must be turned off and the battery must be disconnected.
Turn the ignition on, then off, and then on again.

NOTE: This DTC will take 10 minutes to mature, allow plenty of time for the code to mature between as you work through the test steps.
With the scan tool, read Occupant Classification Module (OCM) DTCs.

Does the scan tool display any active DTCs relating to internal faults, ignition faults, or battery faults?

Yes >> Diagnose and repair the DTCs. Refer to the Table of Contents in this Section for a complete list of symptoms.

No >> Go To 2

2. VERIFY THAT DTC B1BC8-PASSENGER SEAT WEIGHT SENSORS PERFORMANCE IS ACTIVE

With the scan tool, read OCM DTCs.

Does the scan tool display active: B1BC8-PASSENGER SEAT WEIGHT SENSORS PERFORMANCE?

Yes >> Go To 3

No >> Go To 6

3. CHECK FOR OTHER ACTIVE PASSENGER SEAT WEIGHT SENSOR FAULTS IN THE OCM

With the scan tool, read OCM DTCs.

Does the scan tool display any other active Seat Weight Sensor DTCs?

Yes >> Diagnose and repair the DTCs. Refer to the Table of Contents in this Section for a complete list of symptoms.

No >> Go To 4

4. INSPECT PASSENGER SEAT HARNESS WIRES AND CONNECTORS

WARNING: To avoid personal injury or death, turn the ignition off, disconnect the battery and wait two minutes before proceeding.

Using the wiring diagram/schematic as a guide, inspect the Passenger Seat Harness wiring and connectors. Look for chafed, pierced, pinched, or partially broken wires and broken, bent, pushed out, spread, corroded, or contaminated terminals.

Are any of these conditions present?

Yes >>

NOTE: Do not attempt to repair the Seat Harness. Replace the Seat Harness if the condition inspecting or testing for is present in the Seat Harness.

Replace the Passenger Seat Harness in accordance with the Service Information.

Perform OCS VERIFICATION TEST - VER 1.

No >> Go To 5

5. PERFORM OCCUPANT CLASSIFICATION MODULE SYSTEM VERIFICATION TEST

Perform a visual inspection of the Passenger Seat, wiring, connectors, risers, sensors, and retainers. Look for chafed, pierced, pinched, or partially broken wires and broken, bent, pushed out, spread, corroded, or contaminated terminals. Also, inspect for damaged or bent risers, a damaged or bent seat and seat structure, damaged or bent seat tracks, and damaged or loose sensors. Repair or replace any problems found in accordance with the service information and then continue this procedure. Refer to 23 - BODY/SEATS.

WARNING: To avoid personal injury or death, turn the ignition on, then reconnect the battery.

NOTE: Failure to follow test instructions or aborting the test will cause faults to set when performing the Occupant Classification Module System Verification Test. To prevent faults due to process errors: Verify That All Tests Steps That Led You Here Were Performed As Directed; Verify That The Ignition Is In Run; Wait 30 Seconds After Changing The Seat Weight Before Proceeding To Allow The System To Stabilize; Only Press Scan Tool Buttons When Directed To Do So; and Perform The Occupant Classification Module System Verification Test To Completion.

With the scan tool in OCM, select More Options, select System Tests, and select Occupant Classification Module System Verification Test. Run the test by following the instructions displayed on the scan tool. When the test is complete, wait two minutes, and then proceed as follows.

With the scan tool, read OCM DTCs.

Does the scan tool display any active B1BC8-PASSENGER SEAT WEIGHT SENSORS PERFORMANCE DTC?

Yes >> Perform the *Diagnosis/Checkout Procedure For Seat Weight Sensors.

Perform OCS VERIFICATION TEST - VER 1.

Other DTCs ACTIVE

Diagnose and repair the DTCs. Refer to the Table of Contents in this Section for a complete list of symptoms.

No >> Perform OCS VERIFICATION TEST - VER 1.

6. TEST FOR INTERMITTENT CONDITION

With the scan tool, record and erase all DTCs from all Airbag modules.

If any ACTIVE codes are present they must be resolved before diagnosing any stored codes.

WARNING: To avoid personal injury or death, turn the ignition off, disconnect the battery and wait two minutes before proceeding.

Using the wiring diagram/schematic as a guide, inspect the wiring and connectors.

Look for chafed, pierced, pinched, or partially broken wires and broken, bent, pushed out, spread, corroded, or contaminated terminals.

The following additional checks may assist you in identifying a possible intermittent problem.

Reconnect any disconnected components and harness connector.

WARNING: To avoid personal injury or death, turn the ignition on, then reconnect the battery.
With the scan tool, monitor active codes as you work through the following steps.

NOTE: This DTC will take 10 minutes to mature, allow plenty of time for the code to mature between as you work through the test steps.

WARNING: To avoid personal injury or death, maintain a safe distance from all airbags while performing the following steps.
Wiggle the wiring harness and connectors of the related airbag circuit or component.

If codes are related to the Driver Airbag circuits, rotate the steering wheel from stop to stop.

If only stored codes return, continue the test until the problem area has been isolated.

In the previous steps you have attempted to recreate the conditions responsible for setting the active DTC in question.

Does the scan tool display any ACTIVE DTCs?

Yes >> Select appropriate symptom from Symptom List.

No >> No problem found at this time. Erase all codes before returning vehicle to customer.

B2101-IGNITION RUN/START INPUT CIRCUIT LOW

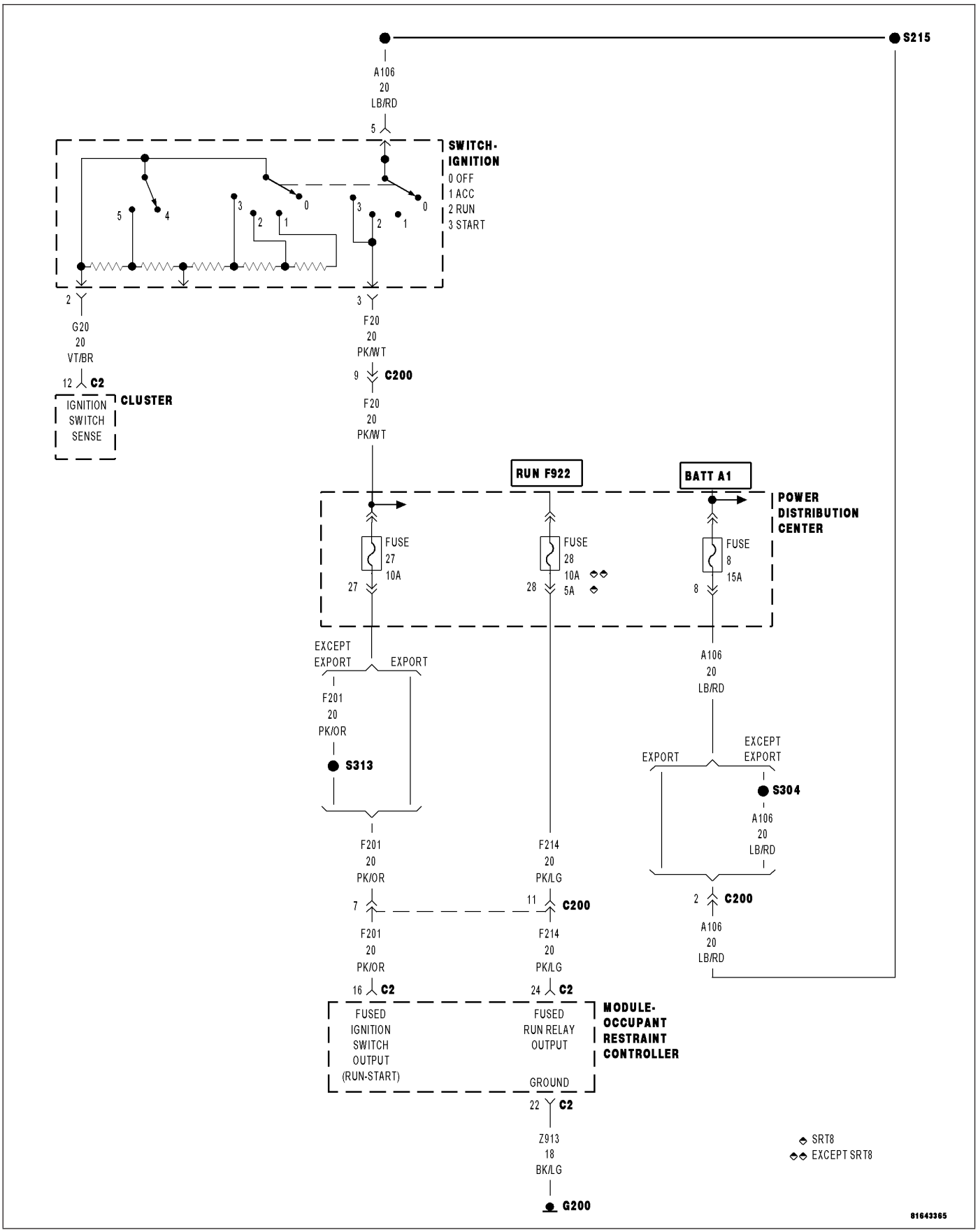

For a complete wiring diagram **Refer to Section 8W**.

- **When Monitored:**
  While the CAN bus is RUN or signal not available and the IOD status is “IN”. The module checks the (F201) Fused Ignition Switch Output (Run-Start) circuit voltage input range.
- **Set Condition:**
  With the ignition on, if voltage on the (F201) Fused Ignition Switch Output (Run-Start) circuit is equal to or below 6.50 ± 0.25 volts. Within 60 seconds of turning the ignition off, if the (F201) Fused Ignition Switch Output (Run-Start) circuit is 2.4 to 5.0 volts.

Possible Causes
(F20) IGNITION SWITCH OUTPUT (RUN-START) CIRCUIT OPEN
(F201) FUSED IGNITION SWITCH OUTPUT (RUN-START) CIRCUIT SHORTED TO GROUND
OPEN FUSE (27)
(F201) FUSED IGNITION SWITCH OUTPUT (RUN-START) CIRCUIT OPEN
OCCUPANT RESTRAINT CONTROLLER (ORC)

Diagnostic Test

1. VERIFY THAT DTC B2101 IGNITION RUN/START INPUT CIRCUIT LOW IS ACTIVE IN THE ORC.

NOTE: Ensure the battery is fully charged.

NOTE: When reconnecting Airbag system components, the ignition must be turned off and the battery must be disconnected.

Turn the ignition on.

With the scan tool, read Occupant Restraint Controller (ORC) DTCs.

Does the scan tool display active: B210-IGNITION RUN/START INPUT CIRCUIT LOW?

Yes >> Go To 2

No >> Go To 7

2. INSPECT AIRBAG RUN-START FUSE

Turn the ignition off.

Remove the Airbag Run-Start Fuse from the rear Power Distribution Center and inspect the fuse.

NOTE: Check connectors - Clean and repair as necessary.

Is the Run/Start fuse open?

Yes >> Go To 3

No >> Go To 5

3. CHECK (F201) FUSED IGNITION SWITCH OUTPUT (RUN-START) CIRCUIT RESISTANCE

Measure the resistance of the (F201) Fused Ignition Switch Output (Run-Start) circuit between ground and the Airbag Run-Start fuse terminal (output side).

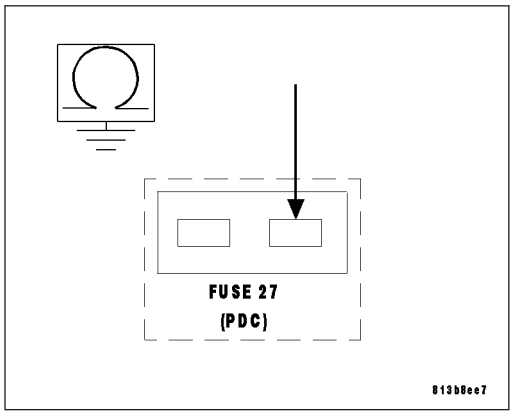

Is the resistance below 100.0 ohms?

Yes >> Go To 4

No >> Using the wiring diagram/schematic as a guide, inspect the related wiring and connectors. Look for chafed, pierced, pinched, or partially broken wires and broken, bent, pushed out, spread, corroded, or contaminated terminals.
Replace Airbag Run-Start Fuse.
Perform ORC VERIFICATION TEST - VER 1.

4. CHECK (F201) FUSED IGNITION SWITCH OUTPUT (RUN-START) CIRCUIT RESISTANCE WITH ORC CONNECTORS DISCONNECTED

WARNING: If the Occupant Restraint Controller is dropped at any time, it must be replaced. Failure to take the proper precautions can result in accidental airbag deployment and personal injury or death.

WARNING: To avoid personal injury or death, turn the ignition off, disconnect the battery and wait two minutes before proceeding.
Disconnect the both ORC connectors.

NOTE: Check connectors - Clean and repair as necessary.
Connect the Load Tool ORC 8443-24 Adaptor to the ORC C2 connector.

Measure the resistance of the (F201) Fused Ignition Switch Output (Run-Start) circuit between 8443-24 adaptor and ground).

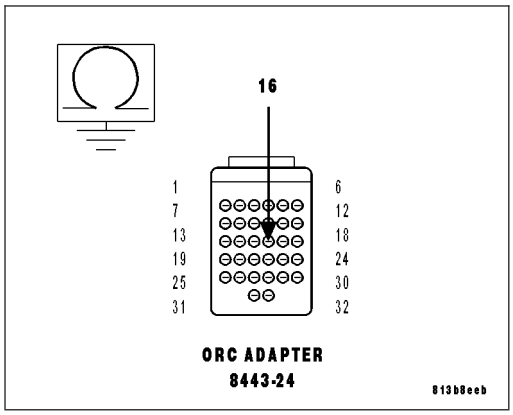

Is the resistance below 100.0 ohms?

Yes >> Repair the (F201) Ignition Switch Output (Run-Start) circuit shorted to ground.
Perform ORC VERIFICATION TEST - VER 1.

No >> Replace the ORC in accordance with the Service Information.
Replace the Airbag Run-Start Fuse.
Perform ORC VERIFICATION TEST - VER 1 .

5. CHECK (F201) IGNITION SWITCH OUTPUT (RUN-START) CIRCUIT FOR AN OPEN

Turn the ignition on.

Measure the voltage of the (F201) Ignition Switch Output (Run-Start) circuit at the Airbag Run-Start fuse terminal (supply side).

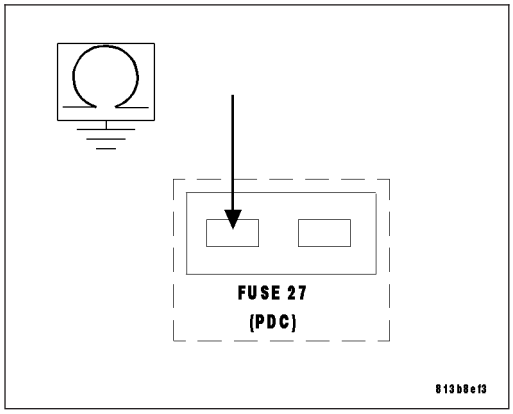

Is the voltage above 6.50 ± 0.25 volts?

Yes >> Go To 6

No >> Repair the open (F201) Ignition Switch Output (Run-Start) circuit.
Perform ORC VERIFICATION TEST - VER 1.

6. CHECK (F201) FUSED IGNITION SWITCH OUTPUT (RUN-START) CIRCUIT FOR AN OPEN

WARNING: To avoid personal injury or death, turn the ignition off, disconnect the battery and wait two minutes before proceeding.
Reinstall the Airbag Run-Start Fuse.

Disconnect the both ORC connectors.

NOTE: Check connectors - Clean and repair as necessary.
Install the Airbag Load tool ORC 8443-24 adaptor to the ORC C2 connector.

WARNING: To avoid personal injury or death, turn the ignition on, then reconnect the battery.

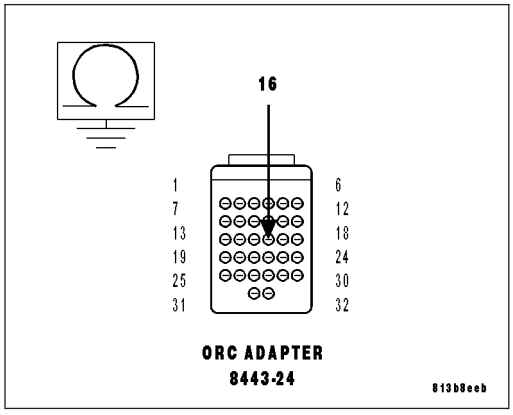

Measure the voltage of the (F201) Fused Ignition Switch Output (Run-Start) Circuit between the 8443-24 connector and ground.

Is the voltage above 6.50 ± 0.25 volts?

Yes >> Replace the ORC in accordance with the Service Information.
Perform ORC VERIFICATION TEST - VER 1.

No >> Repair the open (F201) Fused Ignition Switch Output (Run-Start) circuit.
Perform ORC VERIFICATION TEST - VER 1.

7. TEST FOR INTERMITTENT CONDITION

With the scan tool, record and erase all DTCs from all Airbag modules.

If any ACTIVE codes are present they must be resolved before diagnosing any stored codes.

WARNING: To avoid personal injury or death, turn the ignition off, disconnect the battery and wait two minutes before proceeding.

Using the wiring diagram/schematic as a guide, inspect the wiring and connectors.

Look for chafed, pierced, pinched, or partially broken wires and broken, bent, pushed out, spread, corroded, or contaminated terminals.

The following additional checks may assist you in identifying a possible intermittent problem.

Reconnect any disconnected components and harness connector.

WARNING: To avoid personal injury or death, turn the ignition on, then reconnect the battery.

With the scan tool, monitor active codes as you work through the following steps.

WARNING: To avoid personal injury or death, maintain a safe distance from all airbags while performing the following steps.

Wiggle the wiring harness and connectors of the related airbag circuit or component.

If codes are related to the Driver Airbag circuits, rotate the steering wheel from stop to stop.

If only stored codes return, continue the test until the problem area has been isolated.

In the previous steps you have attempted to recreate the conditions responsible for setting the active DTC in question.

Does the scan tool display any ACTIVE DTCs?

Yes >> Select appropriate symptom from Symptom List.

No >> No problem found Erase all codes before returning vehicle to customer.

B2102-IGNITION RUN/START INPUT CIRCUIT HIGH

For a complete wiring diagram **Refer to Section 8W**.

- **When Monitored:**
  While the CAN bus ignition status is RUN or signal not available and the IOD status is ″IN″. The module checks the (F201) Fused Ignition Switch Output (Run-Start) circuit voltage input range.
- **Set Condition:**
  If the module detects that the ignition voltage is greater than 24.25 volts ±0.25 volts for 10 seconds.

Possible Causes
VEHICLE CHARGING SYSTEM
VEHICLE WIRING AND HARNESS CONNECTORS
OCCUPANT RESTRAINT CONTROLLER

Diagnostic Test

1. VERIFY THAT DTC B2102-IGNITION RUN/START INPUT CIRCUIT HIGH IS ACTIVE

NOTE: Ensure the battery is fully charged.

NOTE: When reconnecting Airbag system components, the ignition must be turned off and the battery must be disconnected.

Turn the ignition on, then off, and then on again.

With the scan tool, read Occupant Classification Module (OCM) DTCs.

Does the scan tool display active: B2102-IGNITION RUN/START INPUT CIRCUIT HIGH?

Yes >> Go To 2

No >> Go To 3

2. CHECK FOR CHARGING SYSTEM RELATED DTCs IN THE POWERTRAIN CONTROL MODULE (PCM)

With the scan tool in ECU View, select PCM and check for any Charging System related DTCs.

Does the scan tool display any Charging System related DTCs?

Yes >> Diagnose and repair the DTCs. Refer to (Refer to 9 - ENGINE - DIAGNOSIS AND TESTING).

No >> Replace the OCM in accordance with the Service Information.
Perform OCS VERIFICATION TEST - VER 1.

3. TEST FOR INTERMITTENT CONDITION

With the scan tool, record and erase all DTCs from all Airbag modules.

If any ACTIVE codes are present they must be resolved before diagnosing any stored codes.

WARNING: To avoid personal injury or death, turn the ignition off, disconnect the battery and wait two minutes before proceeding.

Using the wiring diagram/schematic as a guide, inspect the wiring and connectors.

Look for chafed, pierced, pinched, or partially broken wires and broken, bent, pushed out, spread, corroded, or contaminated terminals.

The following additional checks may assist you in identifying a possible intermittent problem.

Reconnect any disconnected components and harness connector.

WARNING: To avoid personal injury or death, turn the ignition on, then reconnect the battery.

With the scan tool, monitor active codes as you work through the following steps.

WARNING: To avoid personal injury or death, maintain a safe distance from all airbags while performing the following steps.

Wiggle the wiring harness and connectors of the related airbag circuit or component.

If codes are related to the Driver Airbag circuits, rotate the steering wheel from stop to stop.

If only stored codes return, continue the test until the problem area has been isolated.

In the previous steps you have attempted to recreate the conditions responsible for setting the active DTC in question.

Does the scan tool display any ACTIVE DTCs?

Yes >> Select appropriate symptom from Symptom List.

No >> No problem found Erase all codes before returning vehicle to customer.

B210D-BATTERY VOLTAGE LOW

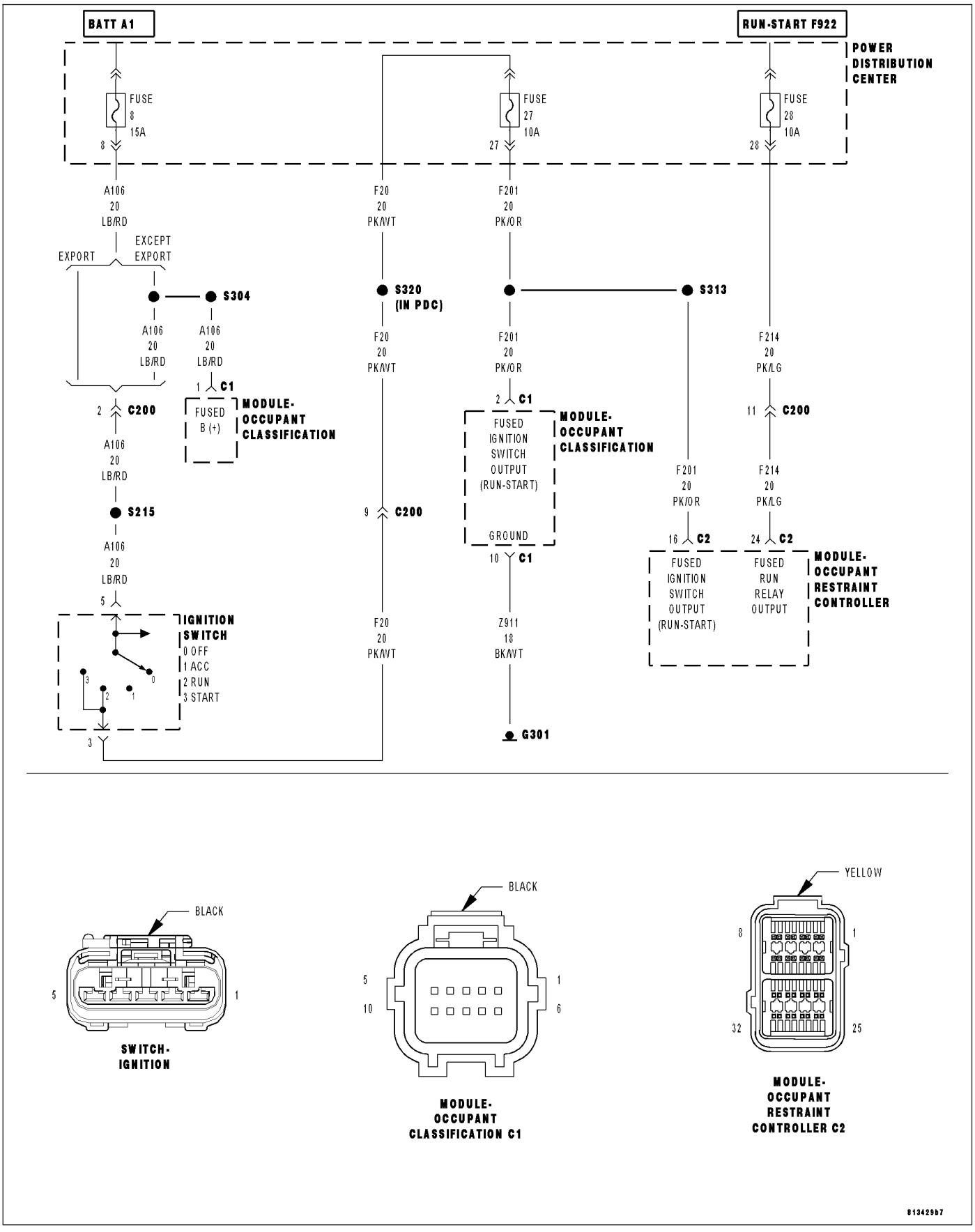

For a complete wiring diagram **Refer to Section 8W**.

- **When Monitored:**
  OCM-While the CAN bus ignition status received is RUN or signal not available, the module checks the (A106) Fused B(+) circuit voltage input range.
- **Set Condition:**
  OCM-If the module detects that the battery voltage is less than or equal to 6.50 ±0.25 volts.
- **When Monitored:**
  ORC-While the CAN bus ignition status received is RUN or signal not available, the module checks the (F201) Fused Ignition Switch Output (RUN/START) circuit and the (F214) Fused Run Relay Output (RUN only) circuit voltage input range.
- **Set Condition:**
  ORC-If the module detects that the battery voltage is less than or equal to 6.50 ±0.25 volts on the (F201) or (F214) circuits.

Possible Causes
OCM (A106) FUSED B(+) CIRCUIT
ORC (F201) FUSED IGNITION SWITCH OUTPUT (RUN/START) CIRCUIT OPEN
ORC (F214) FUSED RUN RELAY OUTPUT CIRCUIT OPEN
VEHICLE CHARGING SYSTEM
OCCUPANT CLASSIFICATION MODULE
OCCUPANT RESTRAINT CONTROLLER

Diagnostic Test

1. CHECK FOR AN ACTIVE DTC

NOTE: Ensure the battery is fully charged.

NOTE: Troubleshoot any PCM charging/cranking DTCs before proceeding.

NOTE: When reconnecting Airbag system components, the ignition must be turned off and the battery must be disconnected.

Turn the ignition on.

With the scan tool, read Occupant Restraint Controller (ORC) DTCs.

Select module and DTC type.

OCM Active
Go To 2

OCM Stored
Go To 4

ORC Active
Go To 3

ORC Stored
Go To 4

2. TEST THE VOLTAGE OF OCM (A106) FUSED B(+) CIRCUITS.

WARNING: To avoid personal injury or death, turn the ignition off, disconnect the battery and wait two minutes before proceeding.
Disconnect the OCM C1 connector.

WARNING: To avoid personal injury or death, turn the ignition on, then reconnect the battery.
Measure the voltage of the (A106) Fused (B+) circuit.

Is the voltage above 6.50 ±0.25 volts on both circuits?

Yes >> Replace the OCM in accordance with the service information. Perform the Occupant Classification Module System Verification Test.
Perform OCS VERIFICATION TEST - VER 1.

No >> Repair the low voltage on the (A106) FUSED B(+) circuit.
Perform OCS VERIFICATION TEST - VER 1.

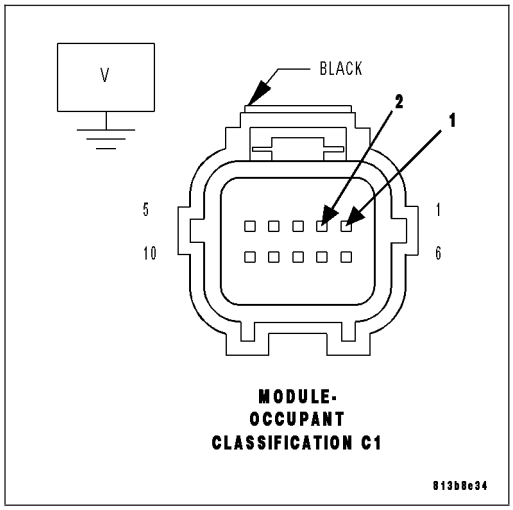

3. MEASURE THE VOLTAGE OF ORC (F214) FUSED RUN RELAY OUTPUT AND THE (F201) FUSED IGNITION OUTPUT RUN/START CIRCUITS

WARNING: To avoid personal injury or death, turn the ignition off, disconnect the battery and wait two minutes before proceeding.
Disconnect the ORC C1 connector.

WARNING: To avoid personal injury or death, turn the ignition on, then reconnect the battery.
Measure the voltage of the (F214) fused Run Relay Output and (F201) Fused Ignition Switch Output Run/Start circuits.

Is the voltage above 6.50 ±0.25 volts on both circuits?

Yes >> Replace the ORC in accordance with the Service Information.
Perform ORC VERIFICATION TEST - VER 1.

No >> Repair the (F214) Fused Run relay Output and/or (F201) Fused Ignition Switch output Run/Start circuits for an open.
Perform ORC VERIFICATION TEST - VER 1.

4. TEST FOR INTERMITTENT CONDITION

With the scan tool, record and erase all DTCs from all Airbag modules.

If any ACTIVE codes are present they must be resolved before diagnosing any stored codes.

WARNING: To avoid personal injury or death, turn the ignition off, disconnect the battery and wait two minutes before proceeding.
Using the wiring diagram/schematic as a guide, inspect the wiring and connectors.

Look for chafed, pierced, pinched, or partially broken wires and broken, bent, pushed out, spread, corroded, or contaminated terminals.

The following additional checks may assist you in identifying a possible intermittent problem.

Reconnect any disconnected components and harness connector.

WARNING: To avoid personal injury or death, turn the ignition on, then reconnect the battery.
With the scan tool, monitor active codes as you work through the following steps.

WARNING: To avoid personal injury or death, maintain a safe distance from all airbags while performing the following steps.
Wiggle the wiring harness and connectors of the related airbag circuit or component.

If codes are related to the Driver Airbag circuits, rotate the steering wheel from stop to stop.

If only stored codes return, continue the test until the problem area has been isolated.

In the previous steps you have attempted to recreate the conditions responsible for setting the active DTC in question.

Does the scan tool display any ACTIVE DTCs?

Yes >> Select appropriate symptom from Symptom List.

No >> No problem found Erase all codes before returning vehicle to customer.

B210E-BATTERY VOLTAGE HIGH

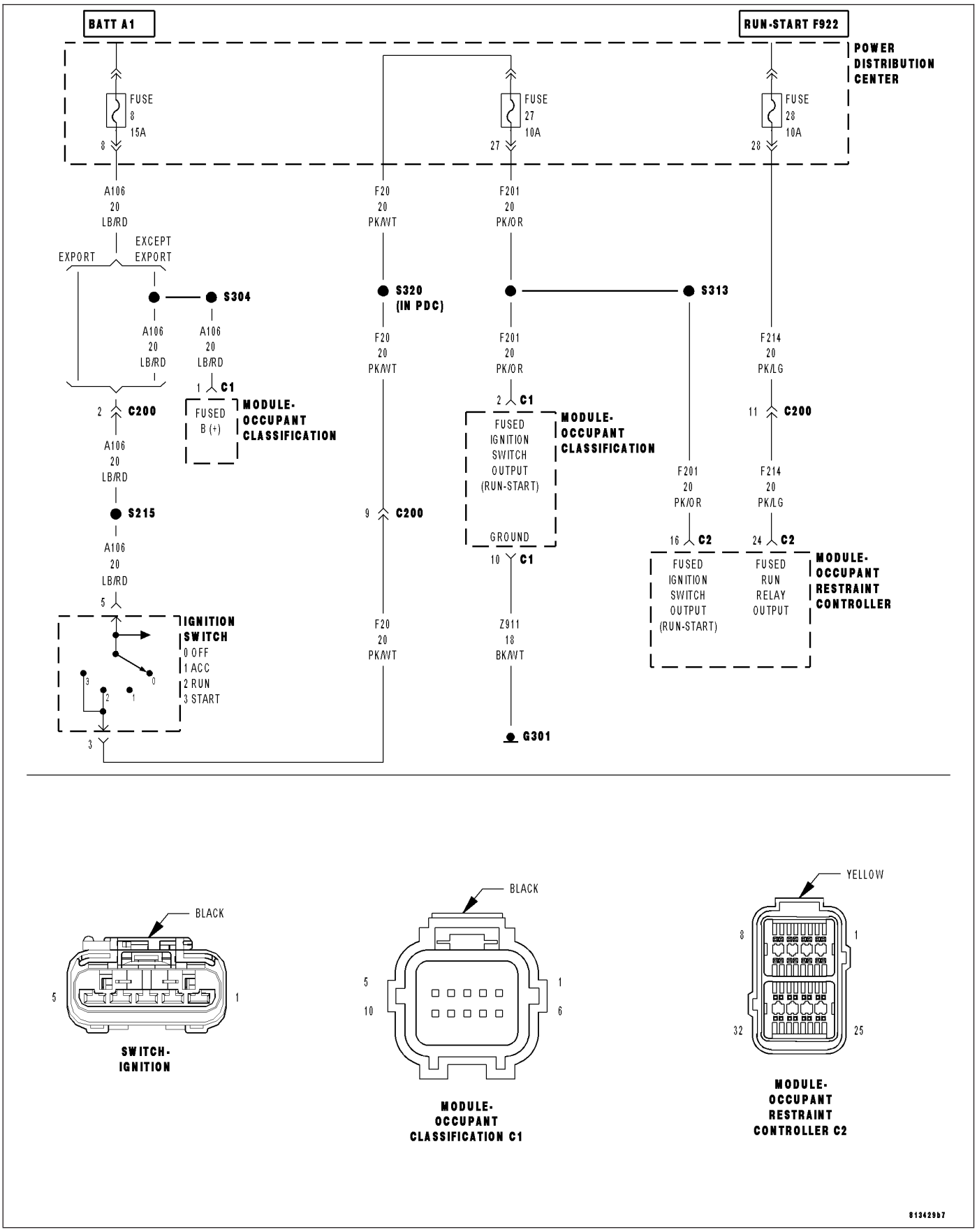

For a complete wiring diagram **Refer to Section 8W**.

- **When Monitored:**
  While the CAN bus ignition status received is RUN or signal not available, the module checks the (A106) Fused B(+) circuit voltage input range.
- **Set Condition:**
  If the module detects that the battery voltage is greater than or equal to 24.25 ±0.25 volts for 10 seconds.

Possible Causes
VEHICLE CHARGING SYSTEM
OCCUPANT CLASSIFICATION MODULE (OCM)

Diagnostic Test

1. CHECK FOR AN ACTIVE DTC

Turn the ignition on, then off, and then on again.

With the scan tool, read OCM DTCs.

Does the scan tool display active: B210E-BATTERY VOLTAGE HIGH?

Yes >> Go To 2

No >> Go To 4

2. CHECK THE BATTERY VOLTAGE TO THE OCCUPANT CLASSIFICATION MODULE

With the scan tool in Data Display, read OCM battery voltage.

Is the battery voltage greater than 24.25 volts ±0.25 volts?

Yes >> Go To 3

No >> Replace the OCM in accordance with the Service Information.
Perform OCS VERIFICATION TEST - VER 1.

3. CHECK FOR CHARGING SYSTEM RELATED DTCs IN THE POWERTRAIN CONTROL MODULE (PCM)

With the scan tool in ECU View, select PCM and check for any Charging System related DTCs.

Does the scan tool display any Charging System related DTCs?

Yes >> Diagnose and repair the DTCs. Refer to (Refer to 9 - ENGINE - DIAGNOSIS AND TESTING).

No >> Replace the OCM in accordance with the Service Information.
Perform OCS VERIFICATION TEST - VER 1.

4. TEST FOR INTERMITTENT CONDITION

With the scan tool, record and erase all DTCs from all Airbag modules.

If any ACTIVE codes are present they must be resolved before diagnosing any stored codes.

WARNING: To avoid personal injury or death, turn the ignition off, disconnect the battery and wait two minutes before proceeding.

Using the wiring diagram/schematic as a guide, inspect the wiring and connectors.

Look for chafed, pierced, pinched, or partially broken wires and broken, bent, pushed out, spread, corroded, or contaminated terminals.

The following additional checks may assist you in identifying a possible intermittent problem.

Reconnect any disconnected components and harness connector.

WARNING: To avoid personal injury or death, turn the ignition on, then reconnect the battery.

With the scan tool, monitor active codes as you work through the following steps.

WARNING: To avoid personal injury or death, maintain a safe distance from all airbags while performing the following steps.

Wiggle the wiring harness and connectors of the related airbag circuit or component.

If codes are related to the Driver Airbag circuits, rotate the steering wheel from stop to stop.

If only stored codes return, continue the test until the problem area has been isolated.

In the previous steps you have attempted to recreate the conditions responsible for setting the active DTC in question.

Does the scan tool display any ACTIVE DTCs?

Yes >> Select appropriate symptom from Symptom List.

No >> No problem found Erase all codes before returning vehicle to customer.

B212C-IGNITION RUN/START INPUT CIRCUIT OPEN

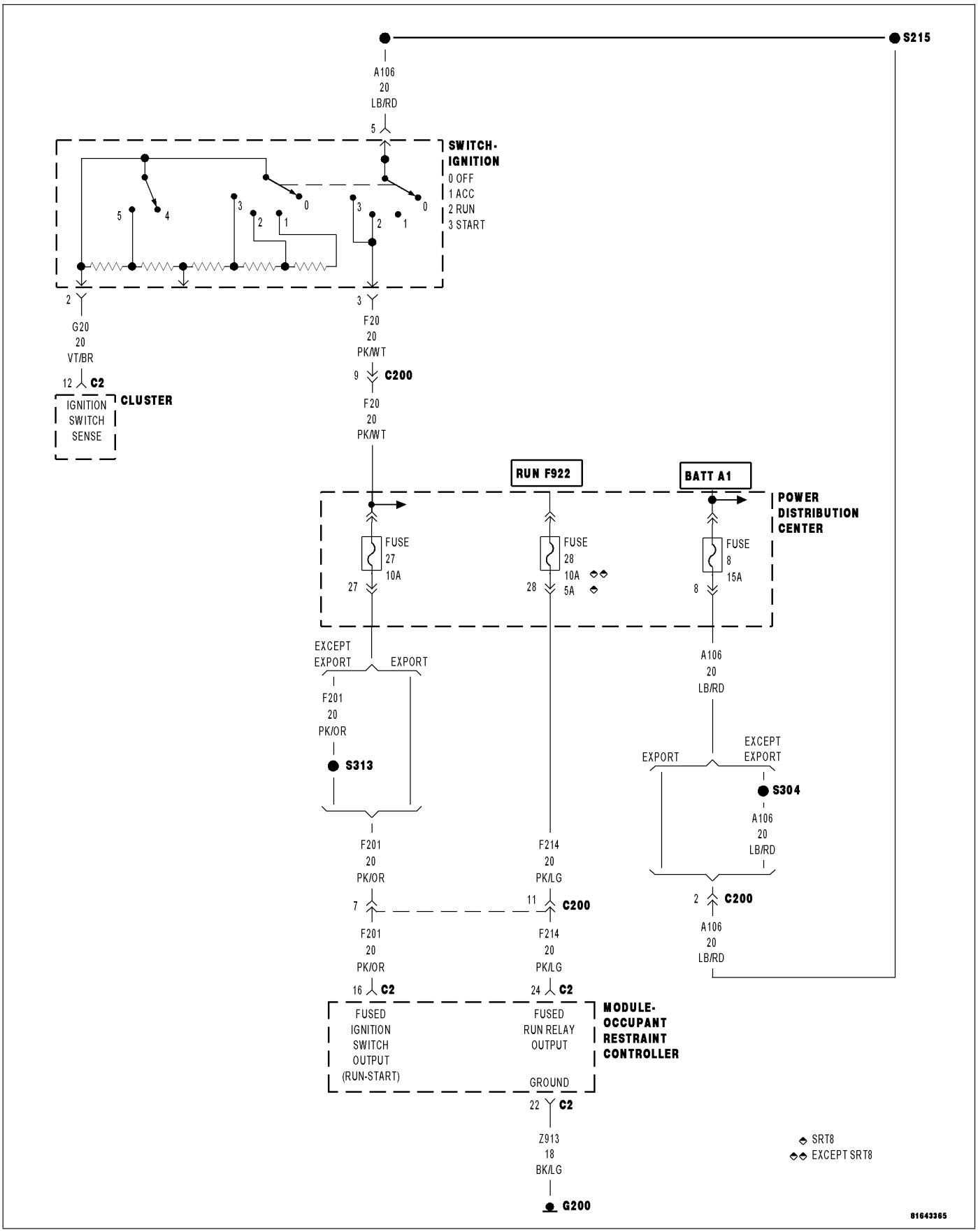

For a complete wiring diagram **Refer to Section 8W**.

- **When Monitored:**
  With the ignition in the Run-Start position.
- **Set Condition:**
  If voltage on the (F201) Fused Ignition Switch Output (Run-Start) circuit drops below 6.0 volts.

Possible Causes
(F20) IGNITION SWITCH OUTPUT (RUN-START) CIRCUIT OPEN
(F201) FUSED IGNITION SWITCH OUTPUT (RUN-START) CIRCUIT SHORTED TO GROUND
OPEN FUSE (27)
(F201) FUSED IGNITION SWITCH OUTPUT (RUN-START) CIRCUIT OPEN
OCCUPANT CLASSIFICATION MODULE (OCM)
OCCUPANT RESTRAINT CONTROLLER (ORC)

Diagnostic Test

1. VERIFY THAT DTC B212C-IGNITION RUN/START INPUT CIRCUIT OPEN IS ACTIVE IN THE ORC.

NOTE: Ensure the battery is fully charged.

NOTE: When reconnecting Airbag system components, the ignition must be turned off and the battery must be disconnected.

Turn the ignition on.

With the scan tool, read Occupant Restraint Controller (ORC) DTCs.

Does the scan tool display active: B212C-IGNITION RUN/START INPUT CIRCUIT OPEN?

Yes >> Go To 3

No >> Go To 2

2. CHECK FOR ACTIVE DTC B212C-IGNITION RUN/START INPUT CIRCUIT OPEN IN OCM.

With the scan tool, read Occupant Classification Module (OCM) DTCs.

Does the scan tool display active: B212C-IGNITION RUN/START INPUT CIRCUIT OPEN?

Yes >> Go To 3

No >> Go To 11

3. INSPECT AIRBAG RUN-START FUSE

Turn the ignition off.

Remove the Airbag Run-Start Fuse from the rear Power Distribution Center and inspect the fuse.

NOTE: Check connectors - Clean and repair as necessary.

Is the Run/Start fuse open?

Yes >> Go To 4

No >> Go To 7

4. CHECK (F201) FUSED IGNITION SWITCH OUTPUT (RUN-START) CIRCUIT RESISTANCE

Measure the resistance of the (F201) Fused Ignition Switch Output (Run-Start) circuit between ground and the Airbag Run-Start fuse terminal (output side).

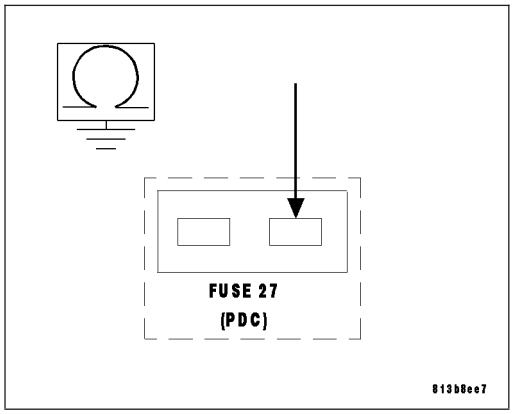

Is the resistance below 100.0 ohms?

Yes >> Go To 5

No >> Using the wiring diagram/schematic as a guide, inspect the related wiring and connectors. Look for chafed, pierced, pinched, or partially broken wires and broken, bent, pushed out, spread, corroded, or contaminated terminals.
Replace Airbag Run-Start Fuse.
Perform ORC VERIFICATION TEST - VER 1.
Perform OCS VERIFICATION TEST - VER 1.

5. CHECK (F201) FUSED IGNITION SWITCH OUTPUT (RUN-START) CIRCUIT RESISTANCE WITH ORC CONNECTORS DISCONNECTED

WARNING: If the Occupant Restraint Controller is dropped at any time, it must be replaced. Failure to take the proper precautions can result in accidental airbag deployment and personal injury or death.

WARNING: To avoid personal injury or death, turn the ignition off, disconnect the battery and wait two minutes before proceeding.
Disconnect the both ORC connectors.

NOTE: Check connectors - Clean and repair as necessary.
Connect the Load Tool ORC 8443-24 Adaptor to the ORC C2 connector.

Measure the resistance of the (F201) Fused Ignition Switch Output (Run-Start) circuit between 8443–24 adaptor and ground).

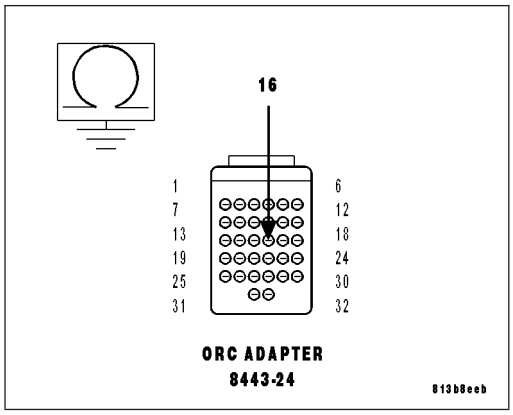

Is the resistance below 100.0 ohms?

Yes >> Go To 6

No >> Replace the ORC in accordance with the Service Information.
Replace the Airbag Run-Start Fuse.
Perform ORC VERIFICATION TEST - VER 1.
Perform OCS VERIFICATION TEST - VER 1.

6. CHECK (F201) FUSED IGNITION SWITCH OUTPUT (RUN-START) CIRCUIT RESISTANCE WITH OCM C1 CONNECTOR DISCONNECTED

WARNING: If the Occupant Classification Module is dropped at any time, it must be replaced. Failure to take the proper precautions can result in accidental airbag deployment and personal injury or death.

Disconnect the OCM C1 connector.

Measure the resistance of the (F201) Fused Ignition Switch Output (Run-Start) circuit between ground and the Airbag Run-Start fuse terminal (output side).

Is the resistance below 100.0 ohms?

Yes >> Repair the (F201) Fused Ignition Switch Output (Run-Start) circuit for a short to ground.
Replace the Airbag Run-Start Fuse.
Perform ORC VERIFICATION TEST - VER 1.
Perform OCS VERIFICATION TEST - VER 1.

No >> Replace the OCM in accordance with the Service Information.
Replace the Airbag Run-Start Fuse.
Perform ORC VERIFICATION TEST - VER 1.
Perform OCS VERIFICATION TEST - VER 1.

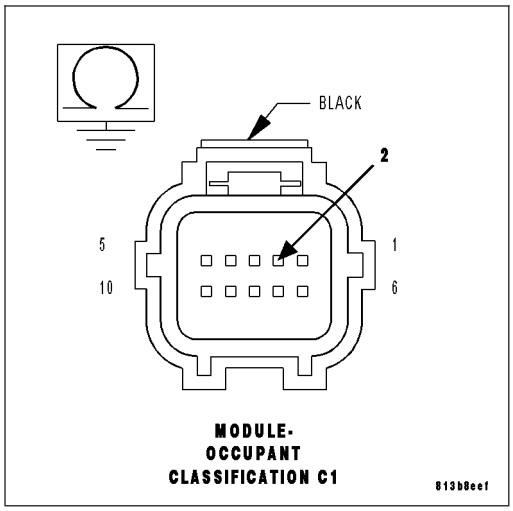

7. CHECK (F201) IGNITION SWITCH OUTPUT (RUN-START) CIRCUIT FOR AN OPEN

Turn the ignition on.

Measure the voltage of the (F20) Ignition Switch Output (Run-Start) circuit at the Airbag Run-Start fuse terminal (supply side).

Is the voltage above 6.0 volts?

Yes >> Go To 8

No >> Repair the open (F20) Ignition Switch Output (Run-Start) circuit.
Perform ORC VERIFICATION TEST - VER 1.
Perform OCS VERIFICATION TEST - VER 1.

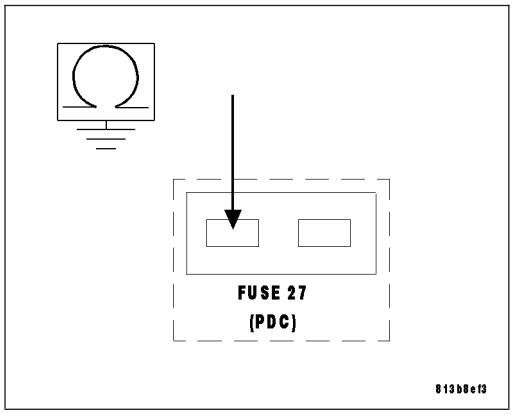

8. CHECK (F201) FUSED IGNITION SWITCH OUTPUT (RUN-START) CIRCUIT FOR AN OPEN

WARNING: To avoid personal injury or death, turn the ignition off, disconnect the battery and wait two minutes before proceeding.

Reinstall the Airbag Run-Start Fuse.

Disconnect the both ORC connectors.

NOTE: Check connectors - Clean and repair as necessary.

Install the Airbag Load tool ORC 8443-24 adaptor to the ORC C2 connector.

WARNING: To avoid personal injury or death, turn the ignition on, then reconnect the battery.

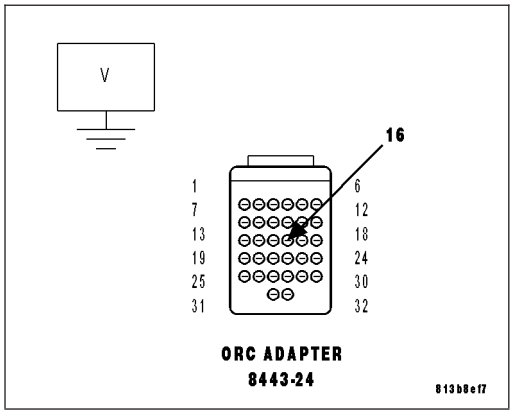

Measure the voltage of the (F201) Fused Ignition Switch Output (Run-Start) Circuit between the 8443-24 connector and ground.

Is the voltage above 6.0 volts?

Yes >> Replace the ORC in accordance with the Service Information.
Perform ORC VERIFICATION TEST - VER 1.
Perform OCS VERIFICATION TEST - VER 1 if DTC B210C-IGNITION RUN/START INPUT CIRCUIT OPEN was Active in the OCM.

No >> Repair the open (F201) Fused Ignition Switch Output (Run-Start) circuit.
Perform ORC VERIFICATION TEST - VER 1.
Perform OCS VERIFICATION TEST - VER 1 if DTC B210C-IGNITION RUN/START INPUT CIRCUIT OPEN was Active in the OCM.

9. CHECK (F201) FUSED IGNITION SWITCH OUTPUT (RUN-START) CIRCUIT FOR AN OPEN

WARNING: To avoid personal injury or death, turn the ignition off, disconnect the battery and wait two minutes before proceeding.
Reinstall the Airbag Run-Start Fuse.
Disconnect the both Occupant Classification Module (OCM) connectors.

NOTE: Check connectors - Clean and repair as necessary.

WARNING: To avoid personal injury or death, turn the ignition on, then reconnect the battery.
Measure the voltage of the (F201) Fused Ignition Switch Output (Run-Start) Circuit between the OCM connector and ground.

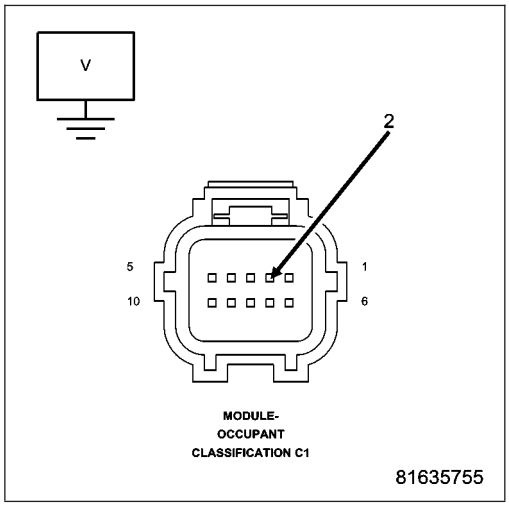

Is the voltage above 6.0 volts?

Yes >> Go To 10

No >> Repair the open (F201) Fused Ignition Switch Output (Run-Start) circuit between the OCM and the splice.
Perform ORC VERIFICATION TEST - VER 1.
Perform OCS VERIFICATION TEST - VER 1.

10. VERIFY THAT DTC B212C-IGNITION RUN/START INPUT CIRCUIT OPEN DTC IS ACTIVE.

Reconnect both Occupant Restraints Controller (ORC) connectors.
Reconnect both Occupant Classification Module (OCM) connectors.

WARNING: To avoid personal injury or death, turn the ignition on, then reconnect the battery.
With the scan tool, read Occupant Restraint Controller (ORC) DTCs and Occupant Classification Module (OCM) DTCs.

Select the module displaying the active: B212C-IGNITION RUN/START INPUT CIRCUIT OPEN?

Occupant Restraint Controller (ORC)
Replace the Occupant Restraint Controller (ORC) in accordance with the Service Information.
Perform ORC VERIFICATION TEST - VER 1.
Perform OCS VERIFICATION TEST - VER 1 if DTC B212C-IGNITION RUN/START INPUT CIRCUIT OPEN was Active in the OCM.

Occupant Classification Module (OCM)
Replace the Occupant Classification Module (OCM) in accordance with the Service Information.
Perform ORC VERIFICATION TEST - VER 1.
Perform OCS VERIFICATION TEST - VER 1 if DTC B212C-IGNITION RUN/START INPUT CIRCUIT OPEN was Active in the OCM.

11. TEST FOR INTERMITTENT CONDITION

With the scan tool, record and erase all DTCs from all Airbag modules.

If any ACTIVE codes are present they must be resolved before diagnosing any stored codes.

WARNING: To avoid personal injury or death, turn the ignition off, disconnect the battery and wait two minutes before proceeding.

Using the wiring diagram/schematic as a guide, inspect the wiring and connectors.

Look for chafed, pierced, pinched, or partially broken wires and broken, bent, pushed out, spread, corroded, or contaminated terminals.

The following additional checks may assist you in identifying a possible intermittent problem.

Reconnect any disconnected components and harness connector.

WARNING: To avoid personal injury or death, turn the ignition on, then reconnect the battery.

With the scan tool, monitor active codes as you work through the following steps.

WARNING: To avoid personal injury or death, maintain a safe distance from all airbags while performing the following steps.

Wiggle the wiring harness and connectors of the related airbag circuit or component.

If codes are related to the Driver Airbag circuits, rotate the steering wheel from stop to stop.

If only stored codes return, continue the test until the problem area has been isolated.

In the previous steps you have attempted to recreate the conditions responsible for setting the active DTC in question.

Does the scan tool display any ACTIVE DTCs?

Yes >> Select appropriate symptom from Symptom List.

No >> No problem found Erase all codes before returning vehicle to customer.

B212D-IGNITION RUN ONLY INPUT CIRCUIT OPEN

For a complete wiring diagram **Refer to Section 8W**.

- **When Monitored:**
  With the ignition in the Run position.
- **Set Condition:**
  If voltage on the (F214) Fused Run Relay Output circuit drops below 6.50 ± 0.25 volts.

Possible Causes
ACTIVE FCM RUN RELAY TROUBLE CODES
(F922) RUN RELAY CIRCUIT OPEN
FUSE 28 OPEN
(F214) FUSED RUN RELAY OUTPUT CIRCUIT OPEN OR SHORTED TO GROUND
OCCUPANT RESTRAINT CONTROLLER (ORC)

Diagnostic Test

1. VERIFY THAT DTC B212D-IGNITION RUN ONLY INPUT CIRCUIT OPEN IS ACTIVE

NOTE: Ensure the battery is fully charged.

NOTE: When reconnecting Airbag system components, the ignition must be turned off and the battery must be disconnected.

Turn the ignition on.

With the scan tool, read Occupant Restraint Controller (ORC) DTCs.

Does the scan tool display active: B212D-IGNITION RUN ONLY INPUT CIRCUIT OPEN?

Yes >> Go To 2

No >> Go To 8

2. CHECK FOR ACTIVE FCM RUN RELAY CONTROL CIRCUIT DTC

With the scan tool, read Front Control Module (FCM) DTCs.

Does the scan tool display active: B2122, B2123, or B2124 DTCs?

Yes >> (Refer to 8 - ELECTRICAL/IGNITION CONTROL - DIAGNOSIS AND TESTING - B2122), (Refer to 8 - ELECTRICAL/IGNITION CONTROL - DIAGNOSIS AND TESTING - B2123), (Refer to 8 - ELECTRICAL/IGNITION CONTROL - DIAGNOSIS AND TESTING - B2124).

No >> Go To 3

3. INSPECT AIRBAG RUN CIRCUIT FUSE

Turn the ignition off.

Remove the Airbag Run Circuit Fuse No. 28 from the Power Distribution Center and inspect the fuse.

NOTE: Check connectors - Clean and repair as necessary.

Is the fuse open?

Yes >> Go To 4

No >> Go To 6

4. CHECK (F214) FUSED RUN RELAY OUTPUT CIRCUIT RESISTANCE

Measure the resistance of the (F214) Run Relay Output circuit between the Airbag Run Relay Output Circuit fuse No. 28 (supply side) terminal and ground.

Is the resistance below 100.0 ohms?

Yes >> Go To 5

No >> Using the wiring diagram/schematic as a guide, inspect the related wiring and connectors. Look for chafed, pierced, pinched, or partially broken wires and broken, bent, pushed out, spread, corroded, or contaminated terminals.
Replace Airbag Run Circuit Fuse.
Perform ORC VERIFICATION TEST - VER 1.

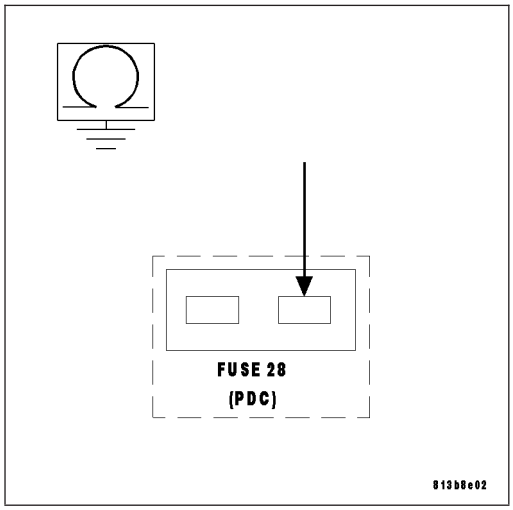

5. CHECK (F214) FUSED RUN RELAY OUTPUT CIRCUIT RESISTANCE WITH ORC C2 CONNECTOR DISCONNECTED

WARNING: If the Occupant Restraint Controller is dropped at any time, it must be replaced. Failure to take the proper precautions can result in accidental airbag deployment and personal injury or death.

WARNING: To avoid personal injury or death, turn the ignition off, disconnect the battery and wait two minutes before proceeding.
Disconnect the ORC C1 connector.

NOTE: Check connectors - Clean and repair as necessary.
Connect the appropriate Load Tool ORC 8443-24 Adaptor to the ORC connector.

Measure the resistance of the (F214) Fused Run Relay Output circuit between 8443-24 adaptor and ground.

Is the resistance below 100.0 ohms?

Yes >> Repair the (F214) Fused Run Relay Output circuit for a short to ground.
Replace the Airbag Run Circuit Fuse.
Perform ORC VERIFICATION TEST - VER 1.

No >> Replace the ORC in accordance with the Service Information.
Replace the Airbag Run Circuit Fuse.
Perform ORC VERIFICATION TEST - VER 1.

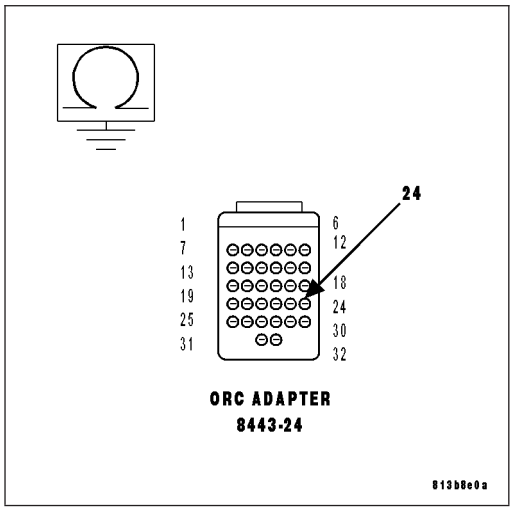

6. CHECK (F922) RUN RELAY OUTPUT CIRCUIT VOLTAGE

Turn the ignition on.

Measure the voltage of the (F922) Run Relay Output circuit at the Airbag Run Circuit fuse terminal (supply side).

Is the voltage above 6.0 ± 0.25 volts?

Yes >> Go To 7

No >> Repair the open (F922) Run Relay Output circuit.
Perform ORC VERIFICATION TEST - VER 1.

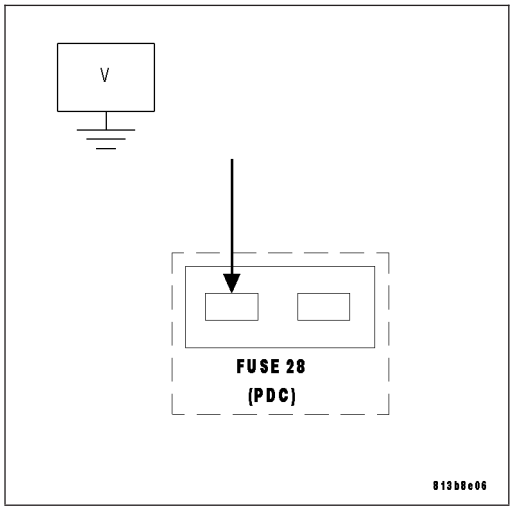

7. CHECK (F214) FUSED RUN RELAY OUTPUT CIRCUIT FOR AN OPEN

WARNING: To avoid personal injury or death, turn the ignition off, disconnect the battery and wait two minutes before proceeding.
Reinstall the Airbag Run Circuit Fuse.

Disconnect the ORC C1 connector.

NOTE: Check connectors - Clean and repair as necessary.
Connect the Airbag Load Tool ORC 8443-24 Adaptor to the ORC C1 harness connector.

WARNING: To avoid personal injury or death, turn the ignition on, then reconnect the battery.
Measure the voltage of the (F214) Fused Run Relay Output Circuit between the 8443-24 adaptor and ground.

Is the voltage above 6.0 ± 0.25 volts?

Yes >> Replace the ORC in accordance with the Service Information.
Perform ORC VERIFICATION TEST - VER 1.

No >> Repair the open (F214) Fused Run Relay Output circuit.
Perform ORC VERIFICATION TEST - VER 1.

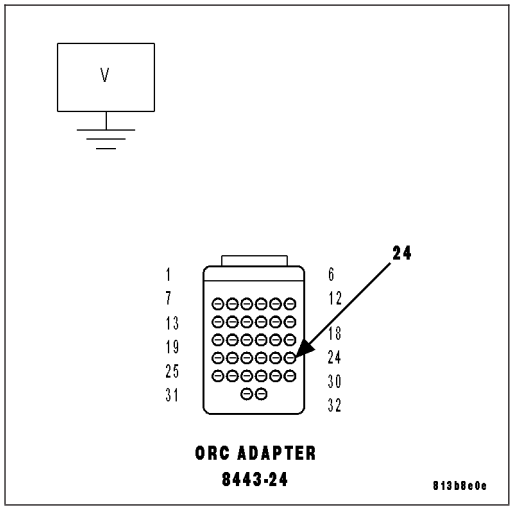

8. TEST FOR INTERMITTENT CONDITION

With the scan tool, record and erase all DTCs from all Airbag modules.

If any ACTIVE codes are present they must be resolved before diagnosing any stored codes.

WARNING: To avoid personal injury or death, turn the ignition off, disconnect the battery and wait two minutes before proceeding.
Using the wiring diagram/schematic as a guide, inspect the wiring and connectors.

Look for chafed, pierced, pinched, or partially broken wires and broken, bent, pushed out, spread, corroded, or contaminated terminals.

The following additional checks may assist you in identifying a possible intermittent problem.

Reconnect any disconnected components and harness connector.

WARNING: To avoid personal injury or death, turn the ignition on, then reconnect the battery.
With the scan tool, monitor active codes as you work through the following steps.

WARNING: To avoid personal injury or death, maintain a safe distance from all airbags while performing the following steps.

Wiggle the wiring harness and connectors of the related airbag circuit or component.

If codes are related to the Driver Airbag circuits, rotate the steering wheel from stop to stop.

If only stored codes return, continue the test until the problem area has been isolated.

In the previous steps you have attempted to recreate the conditions responsible for setting the active DTC in question.

Does the scan tool display any ACTIVE DTCs?

Yes >> Select appropriate symptom from Symptom List.

No >> No problem found Erase all codes before returning vehicle to customer.

B2201-CALIBRATION MISMATCH

- **When Monitored:**
  With the Ignition on.
- **Set Condition:**
  This DTC will be set when the VIN stored in the PCM does not match the VIN stored in the Occupant Restraint Controller (ORC). The ORC does not support a stored B2201 DTC.

Possible Causes
INCORRECT PCM
OCCUPANT RESTRAINT CONTROLLER (ORC)

Diagnostic Test

1. VERIFY THAT DTC B2201-CALIBRATION MISMATCH IS ACTIVE

Turn the ignition on.

With the scan tool, read ORC DTCs.

NOTE: Ensure the battery is fully charged.

NOTE: When reconnecting Airbag system components, the ignition must be turned off and the battery must be disconnected.

Does the scan tool display active: B2201-CALIBRATION MISMATCH?

Yes >> Go To 2

No >> Test Complete.

2. CHECK VIN IN PCM

With the scan tool compare the VIN that is programmed into the PCM to the VIN stored in the ORC.

Does the VIN programmed into the PCM match the VIN stored in the ORC?

Yes >> Go To 3

No >> Replace and program the Powertrain Control Module in accordance with the service information. Ensure the PCM is replaced with the correct vehicle line PCM.
Perform (NGC) POWERTRAIN VERIFICATION TEST VER - 5.

3. REPLACE THE OCCUPANT RESTRAINT CONTROLLER

WARNING: To avoid personal injury or death, turn the ignition off, disconnect the battery and wait two minutes before proceeding.

WARNING: If the airbag control module is dropped at any time, it must be replaced. Failure to take the proper precautions can result in accidental airbag deployment and personal injury or death.

View repair.

Repair

Replace the Occupant Restraint Controller in accordance with the service information.
Perform the ORC VERIFICATION TEST-VER 1.

B2205-ORIGINAL VIN MISSING/MISMATCH

For a complete wiring diagram **Refer to Section 8W**.

- **When Monitored:**
  With the ignition on.
- **Set Condition:**
  The Occupant Restraint Controller will receive and monitor the VIN message from the PCM and record the VIN if different from the last VIN.

Possible Causes
INCORRECT VIN PROGRAMMED IN PCM
OCCUPANT RESTRAINT CONTROLLER

Diagnostic Test

1. VERIFY THAT DTC B2205-ORIGINAL VIN MISSING/MISMATCH

Turn the ignition on.

With the scan tool, read ORC DTCs.

NOTE: Ensure the battery is fully charged.

NOTE: When reconnecting Airbag system components, the ignition must be turned off and the battery must be disconnected.

Does the scan tool display active : B2205-ORIGINAL VIN MISSING/MISMATCH?

Yes >> Go To 2

No >> If the DTC is stored, check for an intermittent condition. Visually inspect the related wiring harness connectors. Look for broken, bent, pushed out, or corroded terminals.

2. CHECK VIN IN PCM

With the scan tool compare the VIN that is programmed into the PCM to the VIN on the vehicle.

Does the VIN programmed into the PCM match the vehicles VIN?

Yes >> Go To 3

No >> Replace the Powertrain Control Module in accordance with Service Information.
Perform the (NGC) POWERTRAIN VERIFICATION TEST-VER. 1

3. REPLACE THE OCCUPANT RESTRAINT CONTROLLER

WARNING: To avoid personal injury or death, turn the ignition off, disconnect the battery and wait two minutes before proceeding.

WARNING: If the airbag control module is dropped at any time, it must be replaced. Failure to take the proper precautions can result in accidental airbag deployment and personal injury or death.

View repair.

Repair

Replace the Occupant Restraint Controller in accordance with the service information.
Perform the ORC VERIFICATION TEST-VER 1.

B2206-CURRENT VIN MISSING/MISMATCH

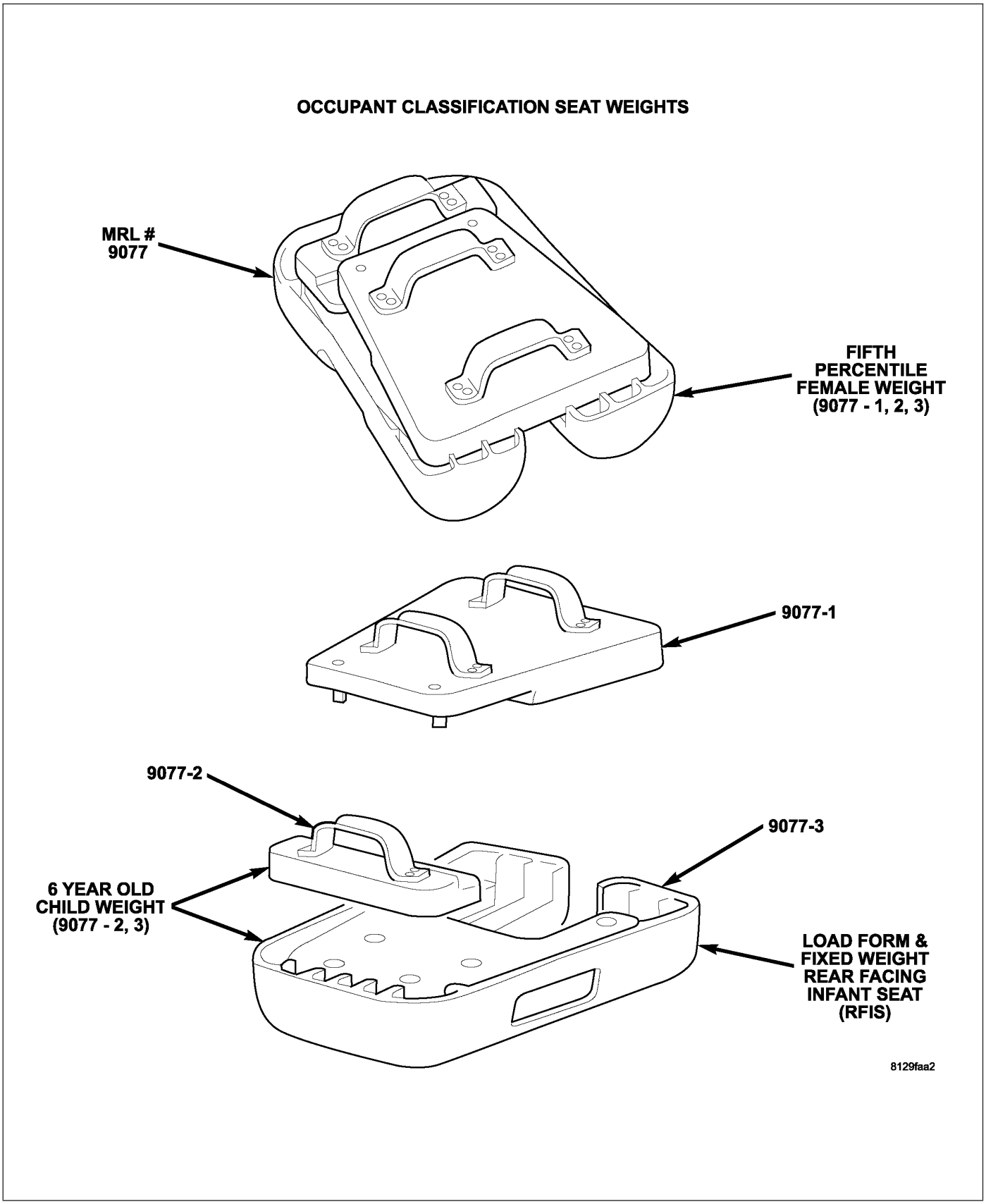

OCS SEAT WEIGHTS MRL #9077

For a complete wiring diagram **Refer to Section 8W**.

- **When Monitored:**
  During power-up, the ORC and OCM monitors the CAN bus for the VIN message.
- **Set Condition:**
  This DTC will set if the VIN information received from the PCM is different from the stored VIN.

Possible Causes
INCORRECT VIN PROGRAMMED INTO THE PCM
OCCUPANT CLASSIFICATION MODULE (OCM)
OCCUPANT RESTRAINT CONTROLLER (ORC)

Diagnostic Test

1. CHECK FOR ACTIVE DTC

NOTE: Troubleshoot any Ignition, Battery, Seat Weight Sensor, or OCM Internal DTCs BEFORE proceeding

NOTE: Ensure that the battery is fully charged.

With the scan tool, read DTCs.

Select the module and DTC type.

OCM-Active
Go To 2

OCM-Stored
Erase code with scan tool, test complete.

ORC-Active
Go To 4

ORC-Stored
Erase code with scan tool, test complete.

2. CHECK THE VIN STORED IN THE PCM

With the scan tool, compare the VIN that is stored in the PCM to the VIN of the vehicle's VIN plate.

Does the VIN stored in the PCM match the vehicle's VIN?

Yes >> Go To 3

No >> Replace and Configure the Powertrain Control Module in accordance with the service information. Perform (NGC) POWERTRAIN VERIFICATION TEST VER - 5. Refer to (Refer to 9 - ENGINE - DIAGNOSIS AND TESTING).

3. PERFORM OCCUPANT CLASSIFICATION MODULE SYSTEM VERIFICATION TEST

Verify that the passenger seat is empty.

Verify that all of the Seat Weight Sensor mounting screws are torqued to specification. Refer to 23 - BODY/SEATS.

NOTE: Failure to follow the test instructions or aborting the test will cause faults to set when performing the Occupant Classification Module System Verification Test. To prevent faults due to process errors: Verify That All Tests Steps That Led You Here Were Performed As Directed; Verify That The Ignition Is In Run; Wait 30 Seconds After Changing The Seat Weight Before Proceeding To Allow The System To Stabilize; Only Press Scan Tool Buttons When Directed To Do So; and Perform The Occupant Classification Module System Verification Test To Completion.

With the scan tool in OCM, select More Options, select System Tests, and select Occupant Classification Module System Verification Test. Run the test by following the instructions displayed on the scan tool. When the test is complete, proceed as follows.

With the scan tool, read OCM DTCs.

Does the scan tool display active: B2206-CURRENT VIN MISSING/MISMATCH?

Yes >> Replace the OCM in accordance with the Service Information.
Perform OCS VERIFICATION TEST - VER 1.

No - But Other DTCs Present
Diagnose and repair the DTCs. Refer to the Table of Contents in this Section for a complete list of symptoms.

No - No Active DTCs Present
Perform OCS VERIFICATION TEST - VER 1.

4. CHECK THE VIN STORED IN THE PCM

With the scan tool, compare the VIN that is stored in the PCM to the VIN of the vehicle's VIN plate.

Does the VIN stored in the PCM match the vehicle's VIN?

Yes >> Go To 5

No >> Replace and Configure the Powertrain Control Module in accordance with the service information.
Perform (NGC) POWERTRAIN VERIFICATION TEST VER - 5. Refer to (Refer to 9 - ENGINE - DIAGNOSIS AND TESTING).

5. REPLACE THE OCCUPANT RESTRAINT CONTROLLER

WARNING: To avoid personal injury or death, turn the ignition off, disconnect the battery and wait two minutes before proceeding.

WARNING: If the airbag control module is dropped at any time, it must be replaced. Failure to take the proper precautions can result in accidental airbag deployment and personal injury or death.

View repair.

Repair
Replace the Occupant Restraint Controller in accordance with the service information.
Perform the ORC VERIFICATION TEST-VER 1.

B2207-OCCUPANT RESTRAINT CONTROLLER INTERNAL 1

For a complete wiring diagram **Refer to Section 8W**.

- **When Monitored:**
  With the ignition on. The module's on board diagnostics continuously performs internal circuit tests.
- **Set Condition:**
  This DTC will set if the module identifies an out of range internal circuit.

Possible Causes
OCCUPANT RESTRAINT CONTROLLER

Diagnostic Test

1. REPLACE OCCUPANT RESTRAINT CONTROLLER

Turn the ignition on.

With the scan tool, erase and read ORC DTCs.

WARNING: To avoid personal injury or death, turn the ignition off, disconnect the battery and wait two minutes before proceeding.

WARNING: If the Occupant Restraint Controller is dropped at any time, it must be replaced. Failure to take proper precautions could result in accidental airbag deployment and personal injury or death.

When this code is set, view repair.

Repair

Replace the Occupant Restraint Controller in accordance with the Service Information.

Perform the ORC VERIFICATION TEST-VER. 1.

B2208-OCCUPANT RESTRAINT CONTROLLER INTERNAL 2

For a complete wiring diagram **Refer to Section 8W**.

- **When Monitored:**
  With the ignition on. The module's on board diagnostics continuously performs internal circuit tests.
- **Set Condition:**
  This DTC will set if the module identifies an out of range internal circuit.

Possible Causes
OCCUPANT RESTRAINT CONTROLLER

Diagnostic Test

1. REPLACE OCCUPANT RESTRAINT CONTROLLER

Turn the ignition on.

With the scan tool, erase and read ORC DTCs.

WARNING: To avoid personal injury or death, turn the ignition off, disconnect the battery and wait two minutes before proceeding.

WARNING: If the Occupant Restraint Controller is dropped at any time, it must be replaced. Failure to take proper precautions could result in accidental airbag deployment and personal injury or death.

When this code is set, view repair.

Repair

Replace the Occupant Restraint Controller in accordance with the Service Information.

Perform the ORC VERIFICATION TEST-VER. 1.

B2209-OCCUPANT RESTRAINT CONTROLLER INTERNAL 3

For a complete wiring diagram **Refer to Section 8W**.

- **When Monitored:**
  With the ignition on. The module's on board diagnostics continuously performs internal circuit tests.
- **Set Condition:**
  This DTC will set if the module identifies an out of range internal circuit.

Possible Causes
OCCUPANT RESTRAINT CONTROLLER

Diagnostic Test

1. REPLACE OCCUPANT RESTRAINT CONTROLLER

Turn the ignition on.

With the scan tool, erase and read ORC DTCs.

WARNING: To avoid personal injury or death, turn the ignition off, disconnect the battery and wait two minutes before proceeding.

WARNING: If the Occupant Restraint Controller is dropped at any time, it must be replaced. Failure to take proper precautions could result in accidental airbag deployment and personal injury or death.

When this code is set, view repair.

Repair

Replace the Occupant Restraint Controller in accordance with the Service Information.

Perform the ORC VERIFICATION TEST-VER. 1.

B220A-OCCUPANT RESTRAINT CONTROLLER INTERNAL 4

For a complete wiring diagram **Refer to Section 8W**.

- **When Monitored:**
  With the ignition on. The module's on board diagnostics continuously performs internal circuit tests.
- **Set Condition:**
  This DTC will set if the module identifies an out of range internal circuit.

Possible Causes
OCCUPANT RESTRAINT CONTROLLER

Diagnostic Test

1. REPLACE OCCUPANT RESTRAINT CONTROLLER

Turn the ignition on.

With the scan tool, erase and read ORC DTCs.

WARNING: To avoid personal injury or death, turn the ignition off, disconnect the battery and wait two minutes before proceeding.

WARNING: If the Occupant Restraint Controller is dropped at any time, it must be replaced. Failure to take proper precautions could result in accidental airbag deployment and personal injury or death.

When this code is set, view repair.

Repair

Replace the Occupant Restraint Controller in accordance with the Service Information.

Perform the ORC VERIFICATION TEST-VER. 1.

B220B-OCCUPANT RESTRAINT CONTROLLER FIRING STORED ENERGY

For a complete wiring diagram **Refer to Section 8W**.

- **When Monitored:**
  With the ignition on. The module's on board diagnostics continuously performs internal circuit tests.
- **Set Condition:**
  This DTC will set if the module identifies an out of range internal circuit.

Possible Causes
OCCUPANT RESTRAINT CONTROLLER

Diagnostic Test

1. REPLACE OCCUPANT RESTRAINT CONTROLLER

Turn the ignition on.

With the scan tool, erase and read ORC DTCs.

WARNING: To avoid personal injury or death, turn the ignition off, disconnect the battery and wait two minutes before proceeding.

WARNING: If the Occupant Restraint Controller is dropped at any time, it must be replaced. Failure to take proper precautions can result in accidental airbag deployment and personal injury or death.

When this code is set, view repair.

Repair

Replace the Occupant Restraint Controller in accordance with the Service Information.

Perform the ORC VERIFICATION TEST-VER. 1.

B220C-OCCUPANT RESTRAINT CONTROLLER ACCELEROMETER 1 INTERNAL

For a complete wiring diagram **Refer to Section 8W**.

- **When Monitored:**
  With the ignition on. The module's on board diagnostics continuously performs internal circuit tests.
- **Set Condition:**
  This DTC will set if the module identifies an out of range internal circuit.

Possible Causes
OCCUPANT RESTRAINT CONTROLLER

Diagnostic Test

1. REPLACE OCCUPANT RESTRAINT CONTROLLER

Turn the ignition on.

With the scan tool, erase and read ORC DTCs.

WARNING: To avoid personal injury or death, turn the ignition off, disconnect the battery and wait two minutes before proceeding.

WARNING: If the Occupant Restraint Controller is dropped at any time, it must be replaced. Failure to take proper precautions can result in accidental airbag deployment and personal injury or death.

When this code is set, view repair.

Repair

Replace the Occupant Restraint Controller in accordance with the Service Information.

Perform the ORC VERIFICATION TEST-VER. 1.

B220D-OCCUPANT RESTRAINT CONTROLLER ACCELEROMETER 2 INTERNAL

For a complete wiring diagram **Refer to Section 8W**.

- **When Monitored:**
  With the ignition on. The module's on board diagnostics continuously performs internal circuit tests.
- **Set Condition:**
  This DTC will set if the module identifies an out of range internal circuit.

Possible Causes
OCCUPANT RESTRAINT CONTROLLER

Diagnostic Test

1. REPLACE OCCUPANT RESTRAINT CONTROLLER

Turn the ignition on.

With the scan tool, erase and read ORC DTCs.

WARNING: To avoid personal injury or death, turn the ignition off, disconnect the battery and wait two minutes before proceeding.

WARNING: If the Occupant Restraint Controller is dropped at any time, it must be replaced. Failure to take proper precautions can result in accidental airbag deployment and personal injury or death.

When this code is set, view repair.

Repair

Replace the Occupant Restraint Controller in accordance with the Service Information.

Perform the ORC VERIFICATION TEST-VER. 1.

B220F-OCCUPANT RESTRAINT CONTROLLER CONTROL DRIVER 1

For a complete wiring diagram **Refer to Section 8W**.

- **When Monitored:**
  With the ignition on. The module's on board diagnostics continuously performs internal circuit tests.
- **Set Condition:**
  This DTC will set if the module identifies an out of range internal circuit.

Possible Causes
OCCUPANT RESTRAINT CONTROLLER

Diagnostic Test

1. REPLACE OCCUPANT RESTRAINT CONTROLLER

Turn the ignition on.

With the scan tool, erase and read ORC DTCs.

WARNING: To avoid personal injury or death, turn the ignition off, disconnect the battery and wait two minutes before proceeding.

WARNING: If the Occupant Restraint Controller is dropped at any time, it must be replaced. Failure to take proper precautions can result in accidental airbag deployment and personal injury or death.

When this code is set, view repair.

Repair

Replace the Occupant Restraint Controller in accordance with the Service Information.

Perform the ORC VERIFICATION TEST-VER. 1

B2210-OCCUPANT RESTRAINT CONTROLLER CONTROL DRIVER 2

For a complete wiring diagram **Refer to Section 8W**.

- **When Monitored:**
  With the ignition on. The module's on board diagnostics continuously performs internal circuit tests.
- **Set Condition:**
  This DTC will set if the module identifies an out of range internal circuit.

Possible Causes
OCCUPANT RESTRAINT CONTROLLER

Diagnostic Test

1. REPLACE OCCUPANT RESTRAINT CONTROLLER

Turn the ignition on.

With the scan tool, erase and read ORC DTCs.

WARNING: To avoid personal injury or death, turn the ignition off, disconnect the battery and wait two minutes before proceeding.

WARNING: If the Occupant Restraint Controller is dropped at any time, it must be replaced. Failure to take proper precautions can result in accidental airbag deployment and personal injury or death.

When this code is set, view repair.

Repair

Replace the Occupant Restraint Controller in accordance with the Service Information.

Perform the ORC VERIFICATION TEST-VER. 1

B2212-OCCUPANT CLASSIFICATION MODULE INTERNAL

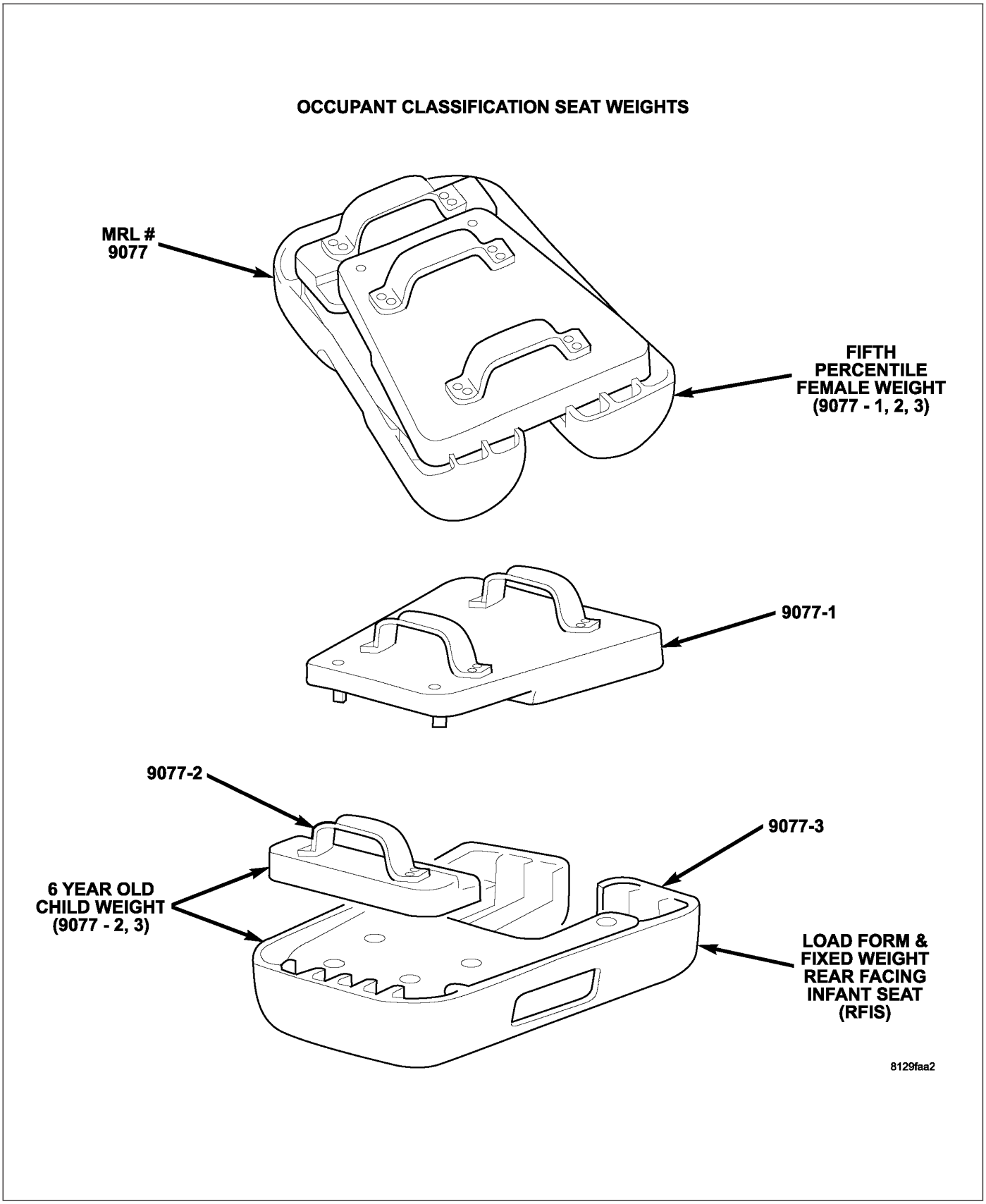

OCS SEAT WEIGHTS MRL #9077

For a complete wiring diagram **Refer to Section 8W**.

- **When Monitored:**
  While the IGN status is RUN or signal not available, while the CAN bus system voltage is between 10 and 16 volts, and during the OCS Verification Test.
- **Set Condition:**
  This DTC will set if the module detects an internal failure.

Possible Causes
OCCUPANT CLASSIFICATION MODULE

Diagnostic Test

1. PERFORM THE OCCUPANT CLASSIFICATION MODULE VERIFICATION TEST

NOTE: Ensure that the passenger seat is empty.

NOTE: Ensure that all seat and strain gauge sensor bolts are properly torqued.

With the scan tool, erase OCM DTCs.

Turn the ignition off, wait 10 seconds and turn ignition on.

With the scan tool, read OCM DTCs.

Did the DTC: B2212-OCCUPANT CLASSIFICATION MODULE INTERNAL reset?

Yes >> Go To 2

No >> Perform the OCS VERIFICATION TEST-VER 1.

2. PERFORM OCCUPANT CLASSIFICATION MODULE SYSTEM VERIFICATION TEST

Verify that the passenger seat is empty.

Verify that all of the Seat Weight Sensor mounting screws are torqued to specification. Refer to 23 - BODY/SEATS.

NOTE: Failure to follow the test instructions or aborting the test will cause faults to set when performing the Occupant Classification Module System Verification Test. To prevent faults due to process errors: Verify That All Tests Steps That Led You Here Were Performed As Directed; Verify That The Ignition Is In Run; Wait 30 Seconds After Changing The Seat Weight Before Proceeding To Allow The System To Stabilize; Only Press Scan Tool Buttons When Directed To Do So; and Perform The Occupant Classification Module System Verification Test To Completion.

With the scan tool in OCM, select More Options, select System Tests, and select Occupant Classification Module System Verification Test. Run the test by following the instructions displayed on the scan tool. When the test is complete, proceed as follows.

With the scan tool, read OCM DTCs.

Does the scan tool display any active DTCs?

Yes - B2212 is ACTIVE
Replace the Occupant Classification Module in accordance with the service information.

Yes - other DTCs ACTIVE
Diagnose and repair the DTCs. Refer to the Table of Contents in this Section for a complete list of symptoms.

No >> Perform OCS VERIFICATION TEST - VER 1.

B223B-VEHICLE CONFIGURATION MISMATCH

For a complete wiring diagram **Refer to Section 8W**.

- **When Monitored:**
  With the ignition on.
- **Set Condition:**
  The Front Control Module sends a message to the Occupant Restraint Controller (ORC) that the vehicle is not equipped with an Occupant Classification Module (OCM) but the ORC is receiving OCM messages over the Can B bus.

Possible Causes
INCORRECT PCM
OCCUPANT RESTRAINT CONTROLLER

Diagnostic Test

1. VERIFY THAT DTC B223B-VEHICLE CONFIGURATION MISMATCH IS ACTIVE

Turn the ignition on.

With the scan tool, read ORC DTCs.

NOTE: Ensure the battery is fully charged.

NOTE: When reconnecting Airbag system components, the ignition must be turned off and the battery must be disconnected.

Does the scan tool display active: B223B-VEHICLE CONFIGURATION MISMATCH?

Yes >> Go To 2

No >> If the DTC is stored, check for an intermittent condition. Visually inspect the related wiring harness connectors. Look for broken, bent, pushed out, or corroded terminals.
Perform the ORC VERIFICATION TEST-VER. 1

2. COMPARE STORED VINS IN THE PCM AND ORC

With the scan tool, read and record the VIN that is stored in the PCM.

With the scan tool, read and record the VIN that is stored in the ORC.

Do the VINs stored in the PCM and ORC match?

Yes >> Go To 3

No >> Replace and program the Powertrain Control Module in accordance with the Service Information. Ensure the PCM is replaced with the correct VIN.

3. REPLACE THE OCCUPANT RESTRAINT CONTROLLER

WARNING: To avoid personal injury or death, turn the ignition off, disconnect the battery and wait two minutes before proceeding.

WARNING: If the airbag control module is dropped at any time, it must be replaced. Failure to take the proper precautions can result in accidental airbag deployment and personal injury or death.

View repair.

Repair

Replace the Occupant Restraint Controller in accordance with the service information.
Perform the ORC VERIFICATION TEST-VER 1.

B223D-OCCUPANT CLASSIFICATION MODULE DTC PRESENT

For a complete wiring diagram **Refer to Section 8W**.

- **When Monitored:**
  With the ignition on.
- **Set Condition:**
  This DTC will set if the ORC receives a bus message with the active OCM DTC Present bit set.

Possible Causes
ACTIVE DTC IN OCCUPANT CLASSIFICATION MODULE
OCCUPANT RESTRAINT CONTROLLER (ORC)

Diagnostic Test

1. ACTIVE OR STORED DTC

With the scan tool, read the OCCUPANT RESTRAINT CONTROLLER active DTCs.

Is the B223D-OCCUPANT CLASSIFICATION MODULE DTC active?

Yes >> Go To 2

No >> With the scan tool, perform the ORC VERIFICATION TEST VER-1.

2. ACTIVE DTC IN OCCUPANT CLASSIFICATION MODULE

With the scan tool, read the OCCUPANT CLASSIFICATION MODULE active DTCs.

Are there any active DTC present?

Yes >> Refer to the symptom list for problems related to the OCCUPANT CLASSIFICATION MODULE (OCM).

No >> Go To 3

3. REPLACE THE OCCUPANT RESTRAINT CONTROLLER

WARNING: To avoid personal injury or death, turn the ignition off, disconnect the battery and wait two minutes before proceeding.

WARNING: If the airbag control module is dropped at any time, it must be replaced. Failure to take the proper precautions can result in accidental airbag deployment and personal injury or death.

If there are no possible causes remaining, view repair.

Repair

Replace the Occupant Restraint Controller in accordance with Service Instructions.
Perform the ORC VERIFICATION TEST - VER 1.

U0019-CAN B BUS

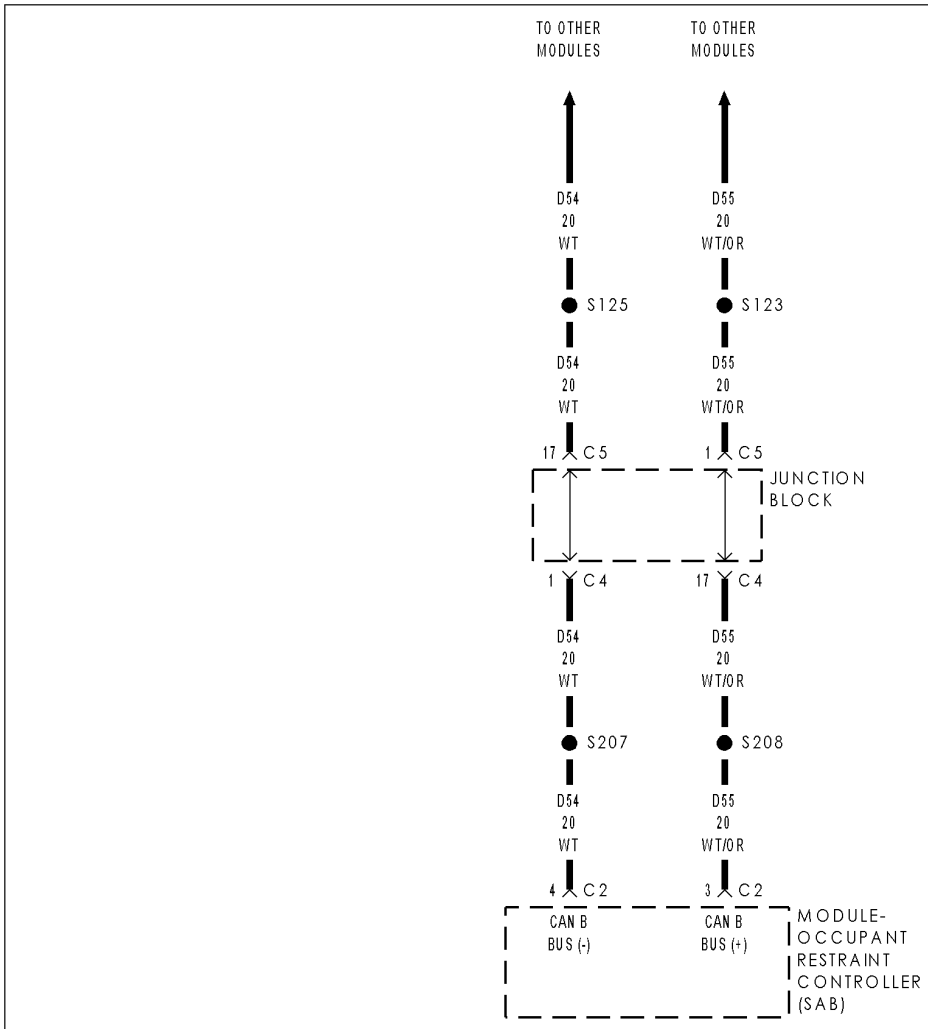

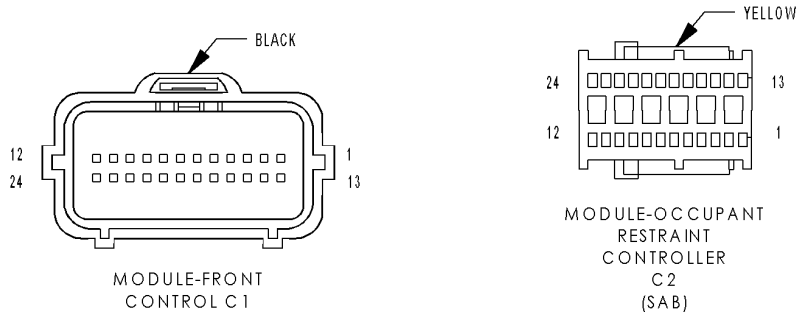

812cc008

MS-CAN B D54 AND D55

For a complete wiring diagram **Refer to Section 8W**.

- **When Monitored:**
  Continuously
- **Set Condition:**
  Whenever the CAN B Bus (+) or CAN B Bus (-) circuit is open, shorted to voltage, or shorted to ground.

Possible Causes
ACTIVE U0019 CAN B BUS DTC IN FRONT CONTROL MODULE
(D55) CAN B BUS (+) CIRCUIT OPEN
(D54) CAN B BUS (-) CIRCUIT OPEN
OCCUPANT RESTRAINT CONTROLLER (ORC)

Diagnostic Test

1. VERIFY DTC U0019-CAN B BUS IS ACTIVE

Turn the ignition on.

With the scan tool, read Occupant Restraint Controller (ORC) DTCs.

Does the scan tool display active: U0019-CAN B BUS?

Yes >> Go To 2

No >> If the DTC is stored, check for an intermittent condition by inspecting the related wiring harness for chafed, pierced, pinched, and partially broken wires. Also, inspect the related connectors for broken, bent, pushed out, spread, corroded, or contaminated terminals.
Perform ORC VERIFICATION TEST – VER 1.

2. CHECK FOR ACTIVE CAN B BUS RELATED DTCS IN THE FRONT CONTROL MODULE (FCM)

With the scan tool, read Front Control Module (FCM) DTCs

Does the scan tool display any active: CAN B BUS related DTCs?

Yes >> Diagnose and repair the DTC(s). (Refer to 8 - ELECTRICAL/ELECTRONIC CONTROL MODULES - DIAGNOSIS AND TESTING)

No >> Go To 3

3. CHECK (D55) CAN B BUS (+) CIRCUIT FOR AN OPEN

Turn the ignition off.

Disconnect the negative battery cable.

Disconnect the ORC C2 connector.

Disconnect the Front Control Module (FCM) C1 connector.

Measure the resistance of the (D55) CAN B Bus (+) circuit between the Front Control Module C1 connector and the ORC C2 connector.

Is the resistance below 2.0 ohms?

Yes >> Go To 4

No >> Repair the (D55) CAN B Bus (+) circuit for an open.
Perform ORC VERIFICATION TEST - VER 1.

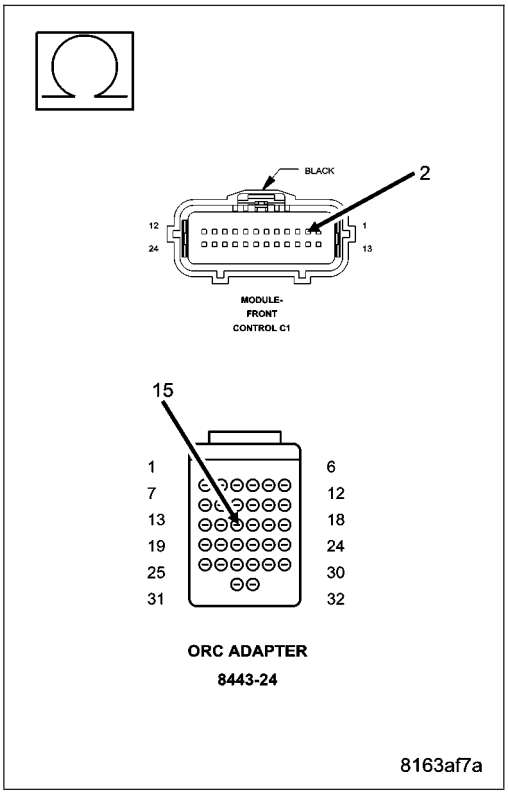

4. CHECK (D54) CAN B BUS (–) CIRCUIT FOR AN OPEN

Measure the resistance of the (D54) CAN B Bus (–) circuit between the Front Control Module C1 connector and the ORC C2 connector.

Is the resistance below 2.0 ohms?

Yes >> Replace the ORC in accordance with the Service Information.
Perform ORC VERIFICATION TEST - VER 1.

No >> Repair the (D54) CAN B Bus (–) circuit for an open.
Perform ORC VERIFICATION TEST - VER 1.

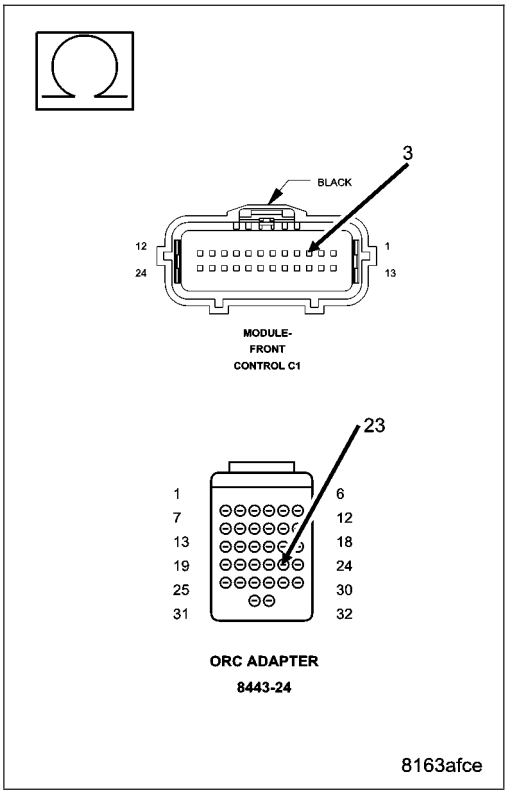

U0020-CAN B BUS OFF PERFORMANCE

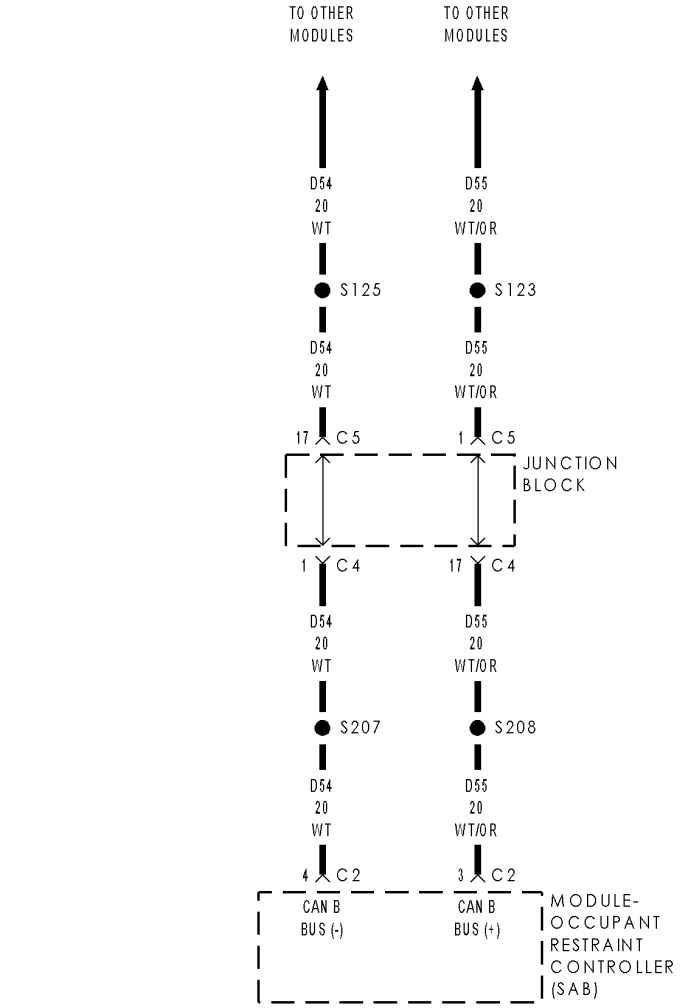

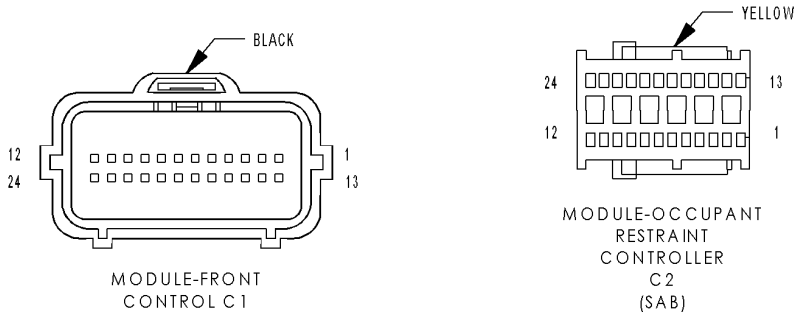

812cc008

MS-CAN B D54 AND D55

For a complete wiring diagram **Refer to Section 8W**.

- **When Monitored:**
  Continuously
- **Set Condition:**
  Whenever the CAN B Bus (+) or CAN B Bus (-) circuit is open, shorted to voltage, or shorted to ground.

Possible Causes
ACTIVE U0020 CAN B BUS DTC IN OCCUPANT CLASSIFICATION MODULE
(D55) CAN B BUS (+) CIRCUIT OPEN
(D54) CAN B BUS (-) CIRCUIT OPEN
OCCUPANT CLASSIFICATION MODULE (OCM)

Diagnostic Test

1. VERIFY DTC U0020-CAN B BUS OFF PERFORMANCE IS ACTIVE

Turn the ignition on.

With the scan tool, read Occupant Classification Module (OCM) DTCs.

Does the scan tool display active: U0020-CAN B BUS OFF PERFORMANCE?

Yes >> Go To 2

No >> If the DTC is stored, check for an intermittent condition by inspecting the related wiring harness for chafed, pierced, pinched, and partially broken wires. Also, inspect the related connectors for broken, bent, pushed out, spread, corroded, or contaminated terminals.
Perform ORC VERIFICATION TEST – VER 1.

2. CHECK FOR ACTIVE CAN B BUS RELATED DTCS IN THE FRONT CONTROL MODULE (FCM)

With the scan tool, read Front Control Module (FCM) DTCs

Does the scan tool display any active CAN B BUS related DTCs?

Yes >> Diagnose and repair the DTC(s). (Refer to 8 - ELECTRICAL/ELECTRONIC CONTROL MODULES - DIAGNOSIS AND TESTING).

No >> Go To 3

3. CHECK (D55) CAN B BUS (+) CIRCUIT FOR AN OPEN

Turn the ignition off.

Disconnect the negative battery cable.

Disconnect the OCM C1 connector.

Disconnect the Front Control Module (FCM) C1 connector.

Measure the resistance of the (D55) CAN B Bus (+) circuit between the Front Control Module C1 connector and the OCM C1 connector.

Is the resistance below 2.0 ohms?

Yes >> Go To 4

No >> Repair the (D55) CAN B Bus (+) circuit for an open.
Perform OCS VERIFICATION TEST - VER 1.

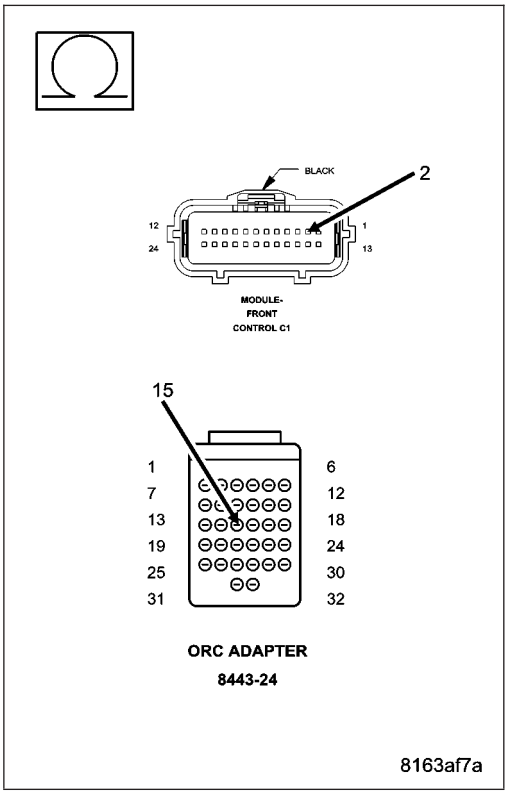

4. CHECK (D54) CAN B BUS (–) CIRCUIT FOR AN OPEN

Measure the resistance of the (D54) CAN B Bus (–) circuit between the Front Control Module C1 connector and the OCM C1 connector.

Is the resistance below 2.0 ohms?

Yes >> Replace the OCM in accordance with the Service Information.
Perform OCS VERIFICATION TEST - VER 1.

No >> Repair the (D54) CAN B Bus (–) circuit for an open.
Perform OCS VERIFICATION TEST - VER 1.

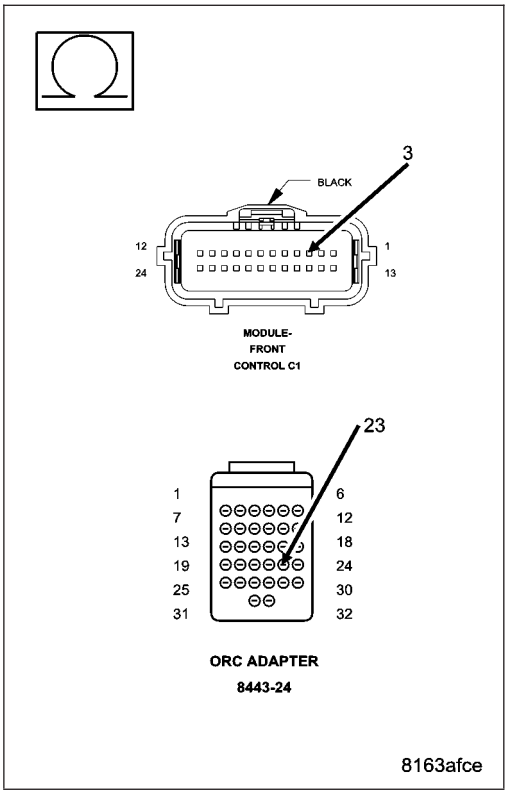

U0022-CAN B BUS (+) CIRCUIT LOW

For a complete wiring diagram **Refer to Section 8W**.

(Refer to 8 - ELECTRICAL/ELECTRONIC CONTROL MODULES - DIAGNOSIS AND TESTING) for the diagnostic test procedure.

U0023-CAN B BUS (+) CIRCUIT HIGH

For a complete wiring diagram **Refer to Section 8W**.

(Refer to 8 - ELECTRICAL/ELECTRONIC CONTROL MODULES - DIAGNOSIS AND TESTING) for the diagnostic test procedure.

U0026-CAN B BUS (-) CIRCUIT HIGH

For a complete wiring diagram **Refer to Section 8W**.

(Refer to 8 - ELECTRICAL/ELECTRONIC CONTROL MODULES - DIAGNOSIS AND TESTING) for the diagnostic test procedure.

U0121-LOST COMMUNICATION WITH ANTI-LOCK BRAKE SYSTEM (ABS) CONTROL MODULE

For a complete wiring diagram **Refer to Section 8W**.

(Refer to 8 - ELECTRICAL/ELECTRONIC CONTROL MODULES - DIAGNOSIS AND TESTING) for the diagnostic test procedure.

U0141-LOST COMMUNICATION WITH FRONT CONTROL MODULE

For a complete wiring diagram **Refer to Section 8W**.

(Refer to 8 - ELECTRICAL/ELECTRONIC CONTROL MODULES - DIAGNOSIS AND TESTING) for the diagnostic test procedure.

U0151-LOST COMMUNICATION WITH OCCUPANT RESTRAINT CONTROLLER (ORC)

For a complete wiring diagram **Refer to Section 8W**.

(Refer to 8 - ELECTRICAL/ELECTRONIC CONTROL MODULES - DIAGNOSIS AND TESTING) for the diagnostic test procedure.

U0154-LOST COMMUNICATION WITH OCCUPANT CLASSIFICATION MODULE

For a complete wiring diagram **Refer to Section 8W**.

(Refer to 8 - ELECTRICAL/ELECTRONIC CONTROL MODULES - DIAGNOSIS AND TESTING) for the diagnostic test procedure.

U0155-LOST COMMUNICATION WITH CLUSTER/CCN

For a complete wiring diagram **Refer to Section 8W**.

(Refer to 8 - ELECTRICAL/ELECTRONIC CONTROL MODULES - DIAGNOSIS AND TESTING) for the diagnostic test procedure.

U0156-LOST COMMUNICATION WITH EOM

For a complete wiring diagram **Refer to Section 8W**.

(Refer to 8 - ELECTRICAL/ELECTRONIC CONTROL MODULES - DIAGNOSIS AND TESTING) for the diagnostic test procedure.

U0164-LOST COMMUNICATION WITH HVAC CONTROL MODULE

For a complete wiring diagram **Refer to Section 8W**.

(Refer to 8 - ELECTRICAL/ELECTRONIC CONTROL MODULES - DIAGNOSIS AND TESTING) for the diagnostic test procedure.

U0168-LOST COMMUNICATION WITH VEHICLE SECURITY CONTROL MODULE (SKREEM/WCM)

For a complete wiring diagram **Refer to Section 8W**.

(Refer to 8 - ELECTRICAL/ELECTRONIC CONTROL MODULES - DIAGNOSIS AND TESTING) for the diagnostic test procedure.

U0170-LOST COMMUNICATION W/UP-FRONT LEFT SATELLITE ACCELERATION SENSOR

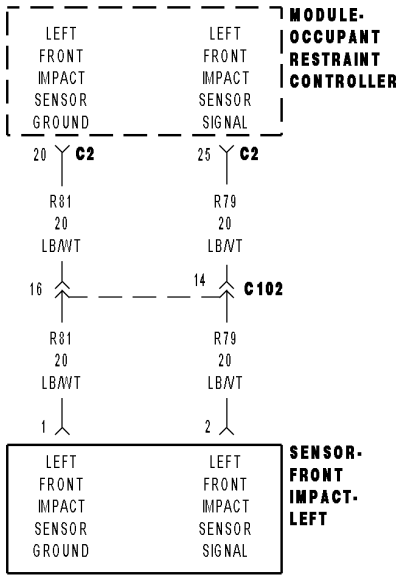

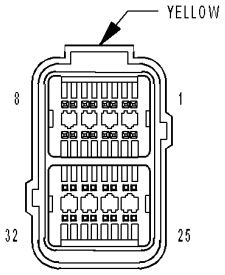

MODULE-
OCCUPANT
RESTRAINT
CONTROLLER C2

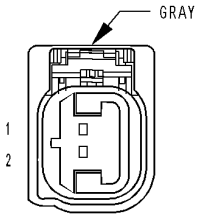

SENSOR-
FRONT IMPACT-
LEFT

8133e184

For a complete wiring diagram **Refer to Section 8W**.

- **When Monitored:**
  The Occupant Restraint Controller (ORC) continuously communicates with the Front Left Impact Sensor over the sensor signal circuit. The sensor communication and on board diagnostics are powered by the ORC signal.
- **Set Condition:**
  This code will set, if the ORC and the Front Left Impact Sensor do not establish and maintain valid data communications.

Possible Causes
(R79) SIGNAL CIRCUIT SHORTED TO BATTERY
(R79) SIGNAL CIRCUIT SHORTED TO GROUND
(R79, R81) FRONT LEFT IMPACT SENSOR CIRCUITS SHORTED TOGETHER
(R81) FRONT LEFT IMPACT SENSOR GROUND CIRCUIT OPEN
(R79) FRONT LEFT IMPACT SENSOR SIGNAL CIRCUIT OPEN
ORC, FRONT LEFT IMPACT SENSOR

Diagnostic Test

1. VERIFY THAT DTC U0170-LOST COMMUNICATION W/UP-FRONT LEFT SATELLITE ACCELERATION SENSOR IS ACTIVE

NOTE: Ensure the battery is fully charged.

NOTE: When reconnecting Airbag system components, the ignition must be turned off and the battery must be disconnected.

Turn the ignition on.

With the scan tool, read ORC DTCs.

Does the scan tool display active: U0170-LOST COMMUNICATION W/UP-FRONT LEFT SATELLITE ACCELERATION SENSOR?

Yes >> Go To 2

No >> Go To 9

2. CHECK THE (R79, R81) FRONT LEFT IMPACT SENSOR SIGNAL AND GROUND CIRCUITS FOR A SHORT TO BATTERY

WARNING: To avoid personal injury or death, turn the ignition off, disconnect the battery and wait two minutes before proceeding.

Disconnect the Front Left Impact Sensor connector.

Disconnect the ORC connector.

WARNING: To avoid personal injury or death, turn the ignition on, then reconnect the battery.

Measure the voltage of the (R79) Front Left Impact Sensor Signal circuit and (R81) Sensor Ground circuit at the Front Left Impact Sensor connector and ground.

Is there any voltage present?

Yes >> Repair the (R79, R81) Front Left Impact Sensor circuits for a short to battery.
Perform the ORC VERIFICATION TEST - VER 1.

No >> Go To 3

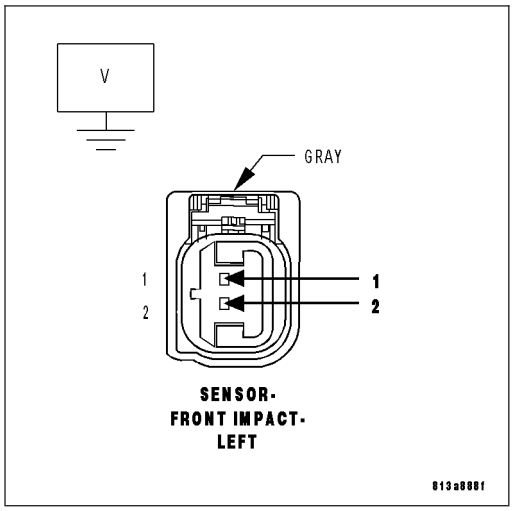

3. CHECK THE (R79) FRONT LEFT IMPACT SENSOR SIGNAL CIRCUIT FOR A SHORT TO GROUND

WARNING: To avoid personal injury or death, turn the ignition off, disconnect the battery and wait two minutes before proceeding.
Measure the resistance of the (R79) Front Left Impact Sensor Signal circuit between the Front Left Impact Sensor connector and ground.

Is the resistance below 100K ohms?

Yes >> Repair the (R79) Front Left Impact Sensor Signal circuit for a short to ground.
Perform the ORC VERIFICATION TEST - VER 1.

No >> Go To 4

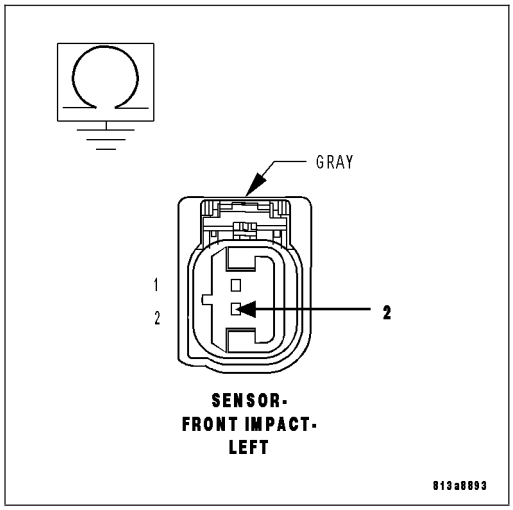

4. CHECK THE (R79, R81) FRONT LEFT IMPACT SENSOR CIRCUITS FOR A SHORT TOGETHER

Measure the resistance between the (R79) Front Left Impact Sensor Signal and (R81) Sensor Ground circuits at the Front Left Impact Sensor connector.

Is the resistance below 100K ohms?

Yes >> Repair the (R79, R81) Front Left Impact Sensor circuits shorted together.
Perform the ORC VERIFICATION TEST - VER 1.

No >> Go To 5

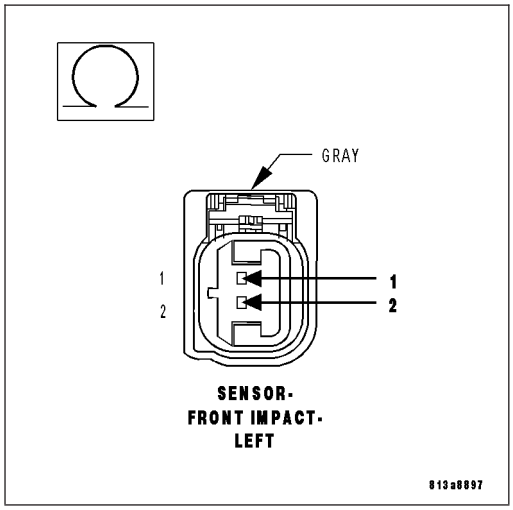

5. CHECK THE (R81) FRONT LEFT IMPACT SENSOR GROUND CIRCUIT FOR AN OPEN OR HIGH RESISTANCE

Connect the 8443 Load Tool ORC Adaptor to the Occupant Restraint Control Module connector.

Measure the resistance of the (R81) Front Left Impact Sensor Ground circuit between the Front Left Impact Sensor connector and the 8443 Load Tool ORC Adaptor.

Is the resistance below 1 ohm?

Yes >> Go To 6

No >> Repair the (R81) Front Left Impact Sensor 1 Ground circuit for an open or high resistance.
Perform the ORC VERIFICATION TEST - VER 1.

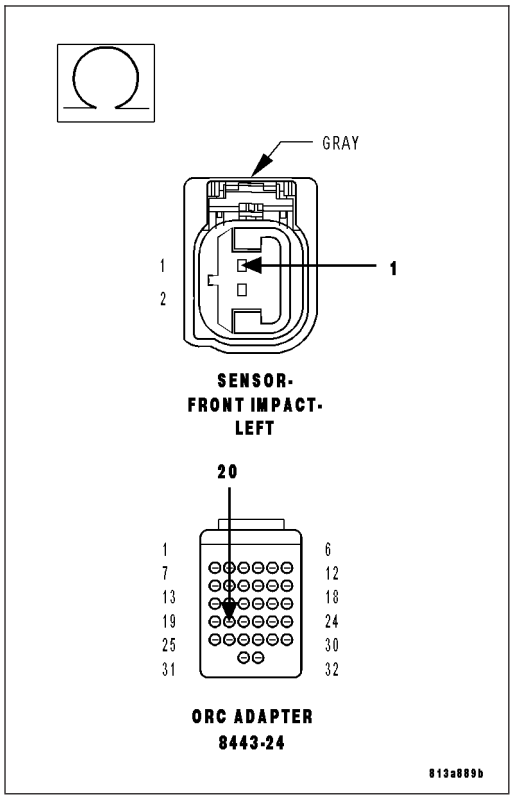

6. CHECK THE (R79) FRONT LEFT IMPACT SENSOR CIRCUIT FOR AN OPEN OR HIGH RESISTANCE

Measure the resistance of the (R79) Front Left Impact Sensor Ground circuit between the Front Left Impact Sensor connector and the 8443 Load Tool ORC Adaptor.

Is the resistance below 1 ohm?

Yes >> Go To 7

No >> Repair the (R79) Front Left Impact Sensor Signal circuit for an open or high resistance.
Perform the ORC VERIFICATION TEST - VER 1.

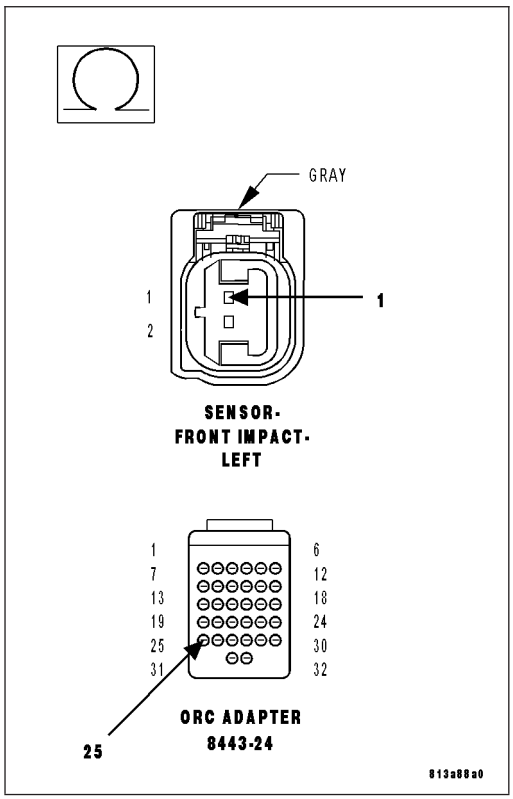

7. CHECK OPERATION OF THE FRONT LEFT IMPACT SENSOR

Replace the Front Left Impact Sensor.

Reconnect the vehicle body harness to the impact sensor.

Remove any special tools or jumper wires and reconnect all previously disconnected components - except the Battery.

WARNING: To avoid personal injury or death, turn the ignition on, then reconnect the battery.

Connect the scan tool to the Data Link Connector - use the most current software available.

Use the scan tool and erase the stored codes in all airbag system modules.

Turn the Ignition Off, and wait 15 seconds before turning the Ignition On.

Wait one minute, and read active codes and if there are none present read the stored codes.

Did the active Front Left Impact Sensor DTC return?

Yes >> Go To 8

No >> Repair is complete.
Perform the ORC VERIFICATION TEST - VER 1.

8. REPLACE THE OCCUPANT RESTRAINT CONTROLLER

WARNING: To avoid personal injury or death, turn the ignition off, disconnect the battery and wait two minutes before proceeding.

WARNING: If the airbag control module is dropped at any time, it must be replaced. Failure to take the proper precautions can result in accidental airbag deployment and personal injury or death.

If there are no possible causes remaining, view repair.

Repair

Replace the Occupant Restraint Controller in accordance with Service Information.
Perform the ORC VERIFICATION TEST - VER 1.

9. TEST FOR AN INTERMITTENT CONDITION

With the scan tool, record and erase all DTC's from all Airbag modules.

If any ACTIVE codes are present they must be resolved before diagnosing any stored codes.

WARNING: To avoid personal injury or death, turn the ignition off, disconnect the battery and wait two minutes before proceeding.

Using the wiring diagram/schematic as a guide, inspect the wiring and connectors.

Look for chafed, pierced, pinched, or partially broken wires and broken, bent, pushed out, spread, corroded, or contaminated terminals.

The following additional checks may assist you in identifying a possible intermittent problem.

Reconnect any disconnected components and harness connector.

WARNING: To avoid personal injury or death, turn the ignition on, then reconnect the battery.

With the scan tool monitor active codes as you work through the following steps.

WARNING: To avoid personal injury or death, maintain a safe distance from all airbags while performing the following steps.

Wiggle the wiring harness and connectors of the related airbag circuit or component.

If codes are related to the Driver Airbag circuits, rotate the steering wheel from stop to stop.

If only stored codes return continue the test until the problem area has been isolated.

In the previous steps you have attempted to recreate the conditions responsible for setting active DTC in question.

Are any ACTIVE DTCs present?

Yes >> Select the appropriate symptom from Symptom List.

No >> No problem found at this time. Erase all codes before returning vehicle to customer.

U0171-LOST COMMUNICATION W/UP-FRONT RIGHT SATELLITE ACCELERATION SENSOR

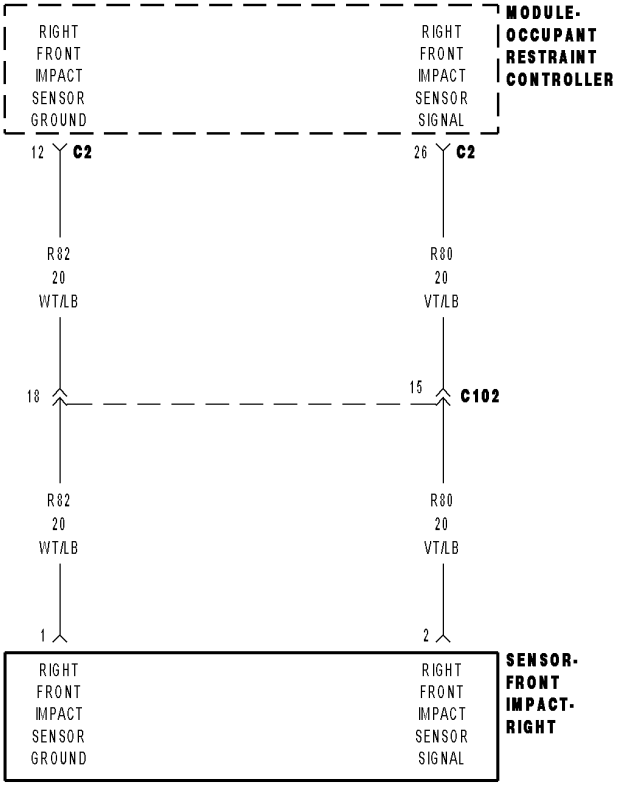

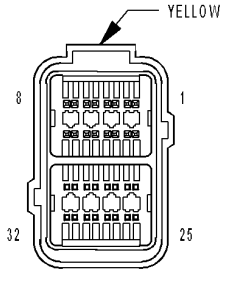

MODULE-
OCCUPANT
RESTRAINT
CONTROLLER C2

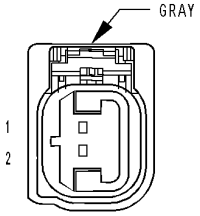

SENSOR-
FRONT IMPACT-
RIGHT

8133a491

For a complete wiring diagram **Refer to Section 8W**.

- **When Monitored:**
  The Occupant Restraint Controller (ORC) continuously communicates with the Front Right Impact Sensor over the sensor signal circuit. The sensor communication and on board diagnostics are powered by the ORC signal.
- **Set Condition:**
  This code will set, if the ORC and the Front Right Impact Sensor do not establish and maintain valid data communications.

Possible Causes
(R80) SIGNAL CIRCUIT SHORTED TO BATTERY
(R80) SIGNAL CIRCUIT SHORTED TO GROUND
(R80, R82) FRONT RIGHT IMPACT SENSOR CIRCUITS SHORTED TOGETHER
(R82) FRONT RIGHT IMPACT SENSOR GROUND CIRCUIT OPEN
(R80) FRONT RIGHT IMPACT SENSOR SIGNAL CIRCUIT OPEN
ORC, FRONT RIGHT IMPACT SENSOR

Diagnostic Test

1. VERIFY THAT DTC U0171-LOST COMMUNICATION W/UP-FRONT RIGHT SATELLITE ACCELERATION SENSOR IS ACTIVE

NOTE: Ensure the battery is fully charged.

NOTE: When reconnecting Airbag system components, the ignition must be turned off and the battery must be disconnected.

Turn the ignition on.

With the scan tool, read ORC DTCs.

Does the scan tool display active: U0171-LOST COMMUNICATION W/UP-FRONT RIGHT SATELLITE ACCELERATION SENSOR?

Yes >> Go To 2

No >> Go To 9

2. CHECK THE (R80, R82) FRONT RIGHT IMPACT SENSOR SIGNAL AND GROUND CIRCUITS FOR A SHORT TO BATTERY

WARNING: To avoid personal injury or death, turn the ignition off, disconnect the battery and wait two minutes before proceeding.

Disconnect the Right Front Impact Sensor connector.

Disconnect the ORC connector.

WARNING: To avoid personal injury or death, turn the ignition on, then reconnect the battery.

Measure the voltage of the (R80) Front Right Impact Sensor Signal circuit and (R82) Sensor Ground circuit at the Front Right Impact Sensor connector and ground.

Is there any voltage present?

Yes >> Repair the (R80 and R82) Front Right Impact Sensor circuits for a short to battery.
Perform the ORC VERIFICATION TEST - VER 1.

No >> Go To 3

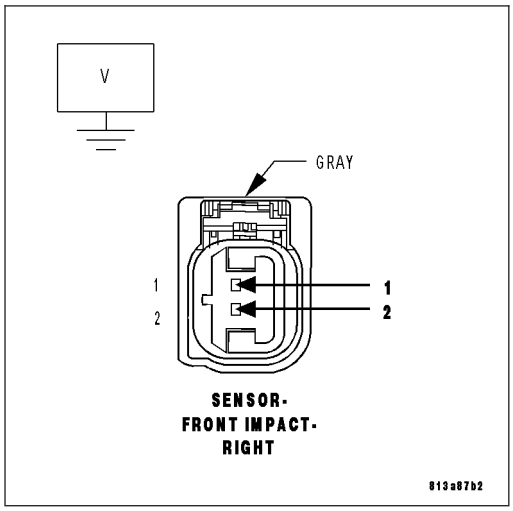

3. CHECK THE (R80) FRONT RIGHT IMPACT SENSOR SIGNAL CIRCUIT FOR A SHORT TO GROUND

WARNING: To avoid personal injury or death, turn ignition on, then reconnect the battery.

Measure the resistance of the (R80) Front Right Impact Sensor Signal circuit between the Front Right Impact Sensor connector and ground.

Is the resistance below 100K ohms?

Yes >> Repair the (R80) Front Right Impact Sensor Signal circuit for a short to ground.
Perform the ORC VERIFICATION TEST - VER 1.

No >> Go To 4

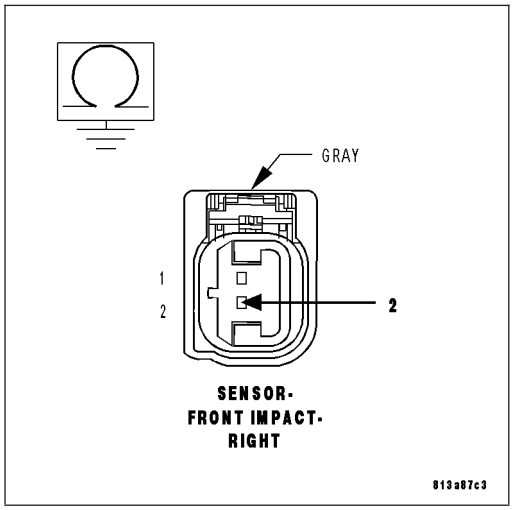

4. CHECK THE (R80, R82) FRONT RIGHT IMPACT SENSOR CIRCUITS FOR A SHORT TOGETHER

Measure the resistance between the (R80) Front Right Impact Sensor Signal and (R82) Sensor Ground circuits at the Front Right Impact Sensor connector.

Is the resistance below 100K ohms?

Yes >> Repair the (R80, R82) Front Right Impact Sensor circuits shorted together.
Perform the ORC VERIFICATION TEST - VER 1.

No >> Go To 5

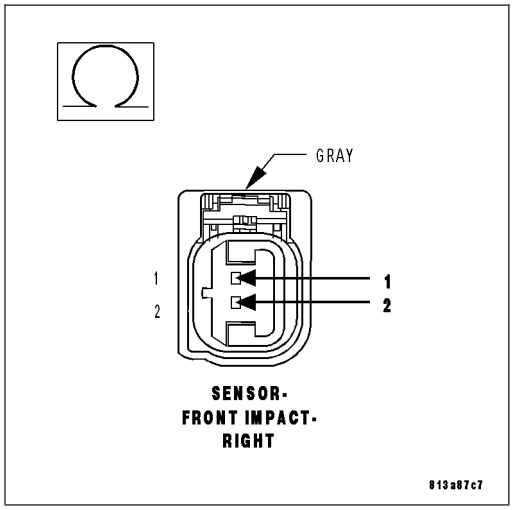

5. CHECK THE (R82) FRONT RIGHT IMPACT SENSOR GROUND CIRCUIT FOR AN OPEN OR HIGH RESISTANCE

Connect the 8443 Load Tool ORC Adaptor to the Occupant Control Module connector.

Measure the resistance of the (R82) Front Right Impact Sensor Ground circuit between the Front Right Impact Sensor connector and the 8443 Load Tool ORC Adaptor.

Is the resistance below 1 ohm?

Yes >> Go To 6

No >> Repair the (R82) Front Right Impact Sensor 2 Ground circuit for an open or high resistance.
Perform the ORC VERIFICATION TEST - VER 1.

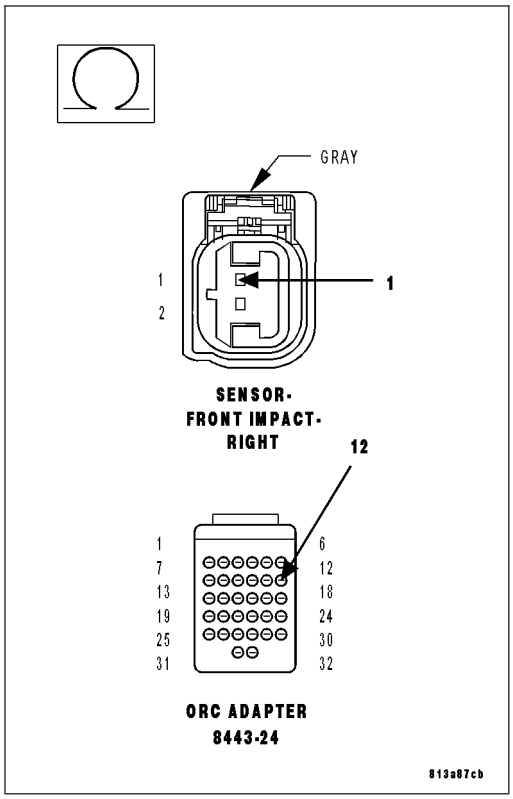

6. CHECK THE (R80) FRONT RIGHT IMPACT SENSOR CIRCUIT FOR AN OPEN OR HIGH RESISTANCE

Measure the resistance of the (R80) Front Right Impact Sensor Signal circuit between the Front Right Impact Sensor connector and the 8443 Load Tool ORC Adaptor.

Is the resistance below 1 ohm?

Yes >> Go To 7

No >> Repair the (R80) Front Right Impact Sensor Signal circuit for an open or high resistance.
Perform the ORC VERIFICATION TEST - VER 1.

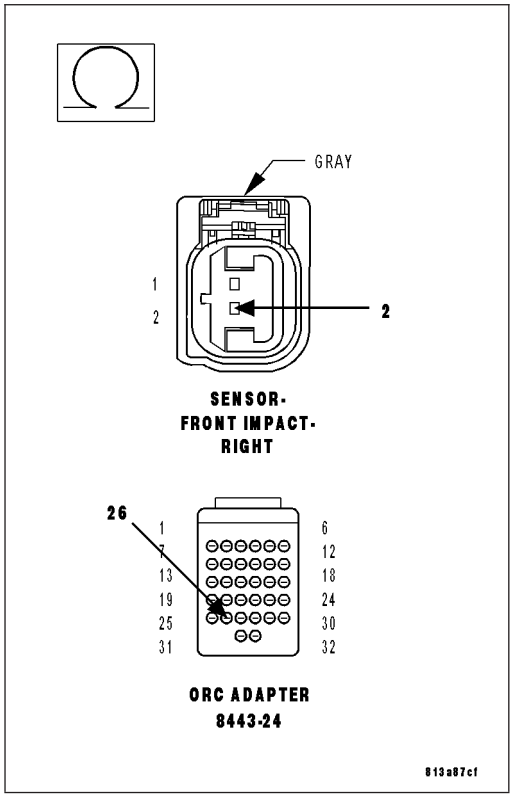

7. CHECK OPERATION OF THE FRONT RIGHT IMPACT SENSOR

Replace the Front Right Impact Sensor.

Reconnect the vehicle body harness to the impact sensor.

Remove any special tools or jumper wires and reconnect all previously disconnected components - except the Battery.

WARNING: To avoid personal injury or death, turn the ignition on, then reconnect the battery.

Connect the scan tool to the Data Link Connector - use the most current software available.

Use the scan tool and erase the stored codes in all airbag system modules.

Turn the Ignition Off, and wait 15 seconds before turning the Ignition On.

Wait one minute, and read active codes and if there are none present read the stored codes.

Did the active Front Right Impact Sensor DTC return?

Yes >> Go To 8

No >> Repair is complete.
Perform the ORC VERIFICATION TEST - VER 1.

8. REPLACE THE OCCUPANT RESTRAINT CONTROLLER

WARNING: To avoid personal injury or death, turn the ignition off, disconnect the battery and wait two minutes before proceeding.

WARNING: If the airbag control module is dropped at any time, it must be replaced. Failure to take the proper precautions can result in accidental airbag deployment and personal injury or death.

If there are no possible causes remaining, view repair.

Repair

Replace the Occupant Restraint Controller in accordance with Service Instructions.
Perform the ORC VERIFICATION TEST - VER 1.

9. TEST FOR AN INTERMITTENT CONDITION

With the scan tool, record and erase all DTC's from all Airbag modules.

If any ACTIVE codes are present they must be resolved before diagnosing any stored codes.

WARNING: To avoid personal injury or death, turn the ignition off, disconnect the battery and wait two minutes before proceeding.

Using the wiring diagram/schematic as a guide, inspect the wiring and connectors.

Look for chafed, pierced, pinched, or partially broken wires and broken, bent, pushed out, spread, corroded, or contaminated terminals.

The following additional checks may assist you in identifying a possible intermittent problem.

Reconnect any disconnected components and harness connector.

WARNING: To avoid personal injury or death, turn the ignition on, then reconnect the battery.

With the scan tool monitor active codes as you work through the following steps.

WARNING: To avoid personal injury or death, maintain a safe distance from all airbags while performing the following steps.

Wiggle the wiring harness and connectors of the related airbag circuit or component.

If codes are related to the Driver Airbag circuits, rotate the steering wheel from stop to stop.

If only stored codes return continue the test until the problem area has been isolated.

In the previous steps you have attempted to recreate the conditions responsible for setting active DTC in question.

Are any ACTIVE DTCs present?

Yes >> Select the appropriate symptom from Symptom List.

No >> No problem found at this time. Erase all codes before returning vehicle to customer.

U0172-LOST COMMUNICATION W/LEFT SIDE SATELLITE ACCELERATION SENSOR 1

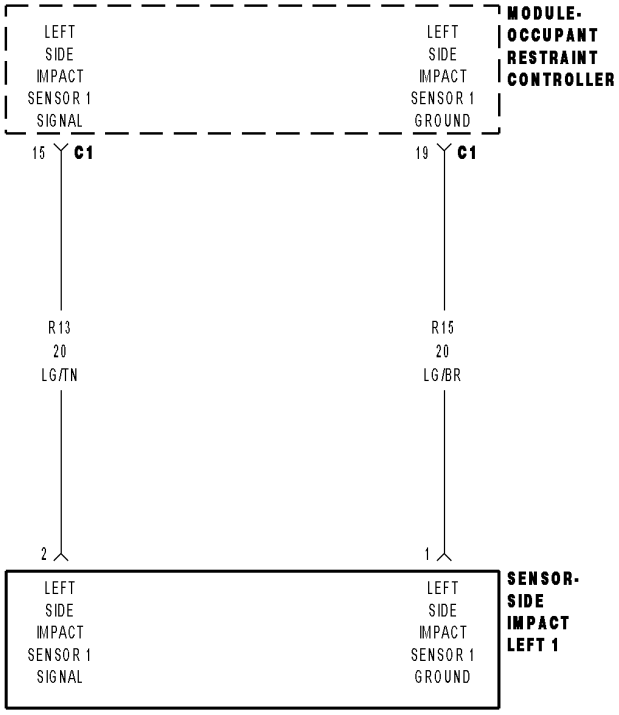

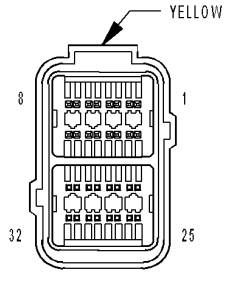

MODULE-
OCCUPANT
RESTRAINT
CONTROLLER C1

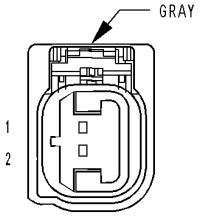

SENSOR-
SIDE IMPACT-
LEFT 1

8133a4ed

For a complete wiring diagram **Refer to Section 8W**.

- **When Monitored:**
  The Occupant Restraint Controller (ORC) continuously communicates with the Left Side Impact Sensor 1 over the sensor signal circuit. The sensor communication and on board diagnostics are powered by the ORC signal.
- **Set Condition:**
  This code will set, if the ORC and the Left Side Impact Sensor 1 do not establish and maintain valid data communications.

Possible Causes
(R13) SIGNAL CIRCUIT SHORTED TO BATTERY
(R13) SIGNAL CIRCUIT SHORTED TO GROUND
(R13, R15) LEFT SIDE IMPACT SENSOR 1 CIRCUITS SHORTED TOGETHER
(R15) LEFT SIDE IMPACT SENSOR 1 GROUND CIRCUIT OPEN
(R13) LEFT SIDE IMPACT SENSOR 1 SIGNAL CIRCUIT OPEN
ORC, LEFT SIDE IMPACT SENSOR 1

Diagnostic Test

1. VERIFY THAT DTC U0172-LOST COMMUNICATION W/LEFT SIDE SATELLITE ACCELERATION SENSOR 1 IS ACTIVE

NOTE: Ensure the battery is fully charged.

NOTE: When reconnecting Airbag system components, the ignition must be turned off and the battery must be disconnected.

Turn the ignition on.

With the scan tool, read ORC DTCs.

Does the scan tool display active: U0172-LOST COMMUNICATION W/LEFT SIDE IMPACT SENSOR 1?

Yes >> Go To 2

No >> Go To 9

2. CHECK THE (R13, R15) LEFT SIDE IMPACT SENSOR 1 SIGNAL AND GROUND CIRCUITS FOR A SHORT TO BATTERY

WARNING: To avoid personal injury or death, turn the ignition off, disconnect the battery and wait two minutes before proceeding.

Disconnect the Left Side Impact Sensor 1 connector.

Disconnect the ORC connector.

WARNING: To avoid personal injury or death, turn the ignition on, then reconnect the battery.

Measure the voltage of the (R13) Left Side Impact Sensor 1 Signal circuit and (R15) Sensor Ground circuit at the Left Side Impact Sensor 1 connector and ground.

Is there any voltage present?

Yes >> Repair the (R13, R15) Left Side Impact Sensor 1 circuits for a short to battery.
Perform the ORC VERIFICATION TEST - VER 1.

No >> Go To 3

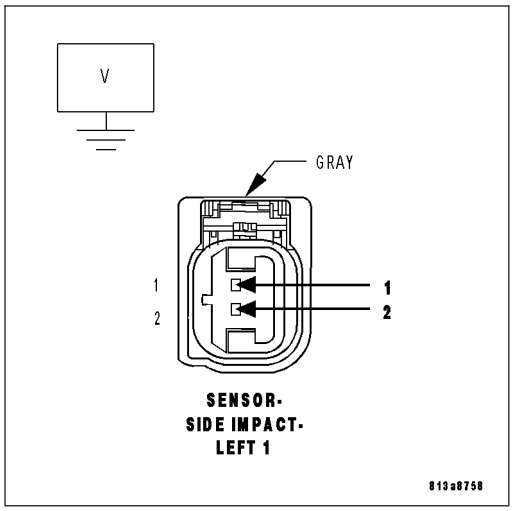

3. CHECK THE (R13) LEFT SIDE IMPACT SENSOR 1 SIGNAL CIRCUIT FOR A SHORT TO GROUND

WARNING: To avoid personal injury or death, turn ignition on, then reconnect the battery.

Measure the resistance of the (R13) Left Side Impact Sensor 1 Signal circuit between the Left Side Impact Sensor 1 connector and ground.

Is the resistance below 100K ohms?

Yes >> Repair the (R13) Left Side Impact Sensor 1 Signal circuit for a short to ground.
Perform the ORC VERIFICATION TEST - VER 1.

No >> Go To 4

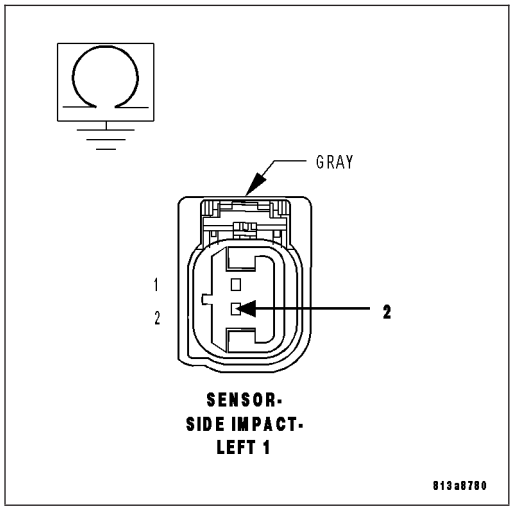

4. CHECK THE (R13, R15) LEFT SIDE IMPACT SENSOR CIRCUITS FOR A SHORT TOGETHER

Measure the resistance between the (R13) Left Side Impact Sensor 1 Signal and (R15) Sensor Ground circuits at the Left Side Impact Sensor 1 connector.

Is the resistance below 100K ohms?

Yes >> Repair the (R13, R15) Left Side Impact Sensor 1 circuits shorted together.
Perform the ORC VERIFICATION TEST - VER 1.

No >> Go To 5

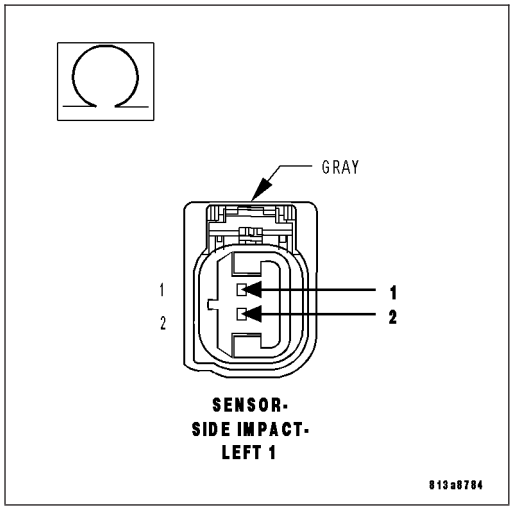

5. CHECK THE (R15) LEFT SIDE IMPACT SENSOR 1 GROUND CIRCUIT FOR AN OPEN OR HIGH RESISTANCE

Connect the 8443 Load Tool ORC Adaptor to the Occupant Control Module connector.

Measure the resistance of the (R15) Left Side Impact Sensor 1 Ground circuit between the Left Side Impact Sensor 1 connector and the 8443 Load Tool ORC Adaptor.

Is the resistance below 1 ohm?

Yes >> Go To 6

No >> Repair the (R15) Left Side Impact Sensor 1 Ground circuit for an open or high resistance.
Perform the ORC VERIFICATION TEST - VER 1.

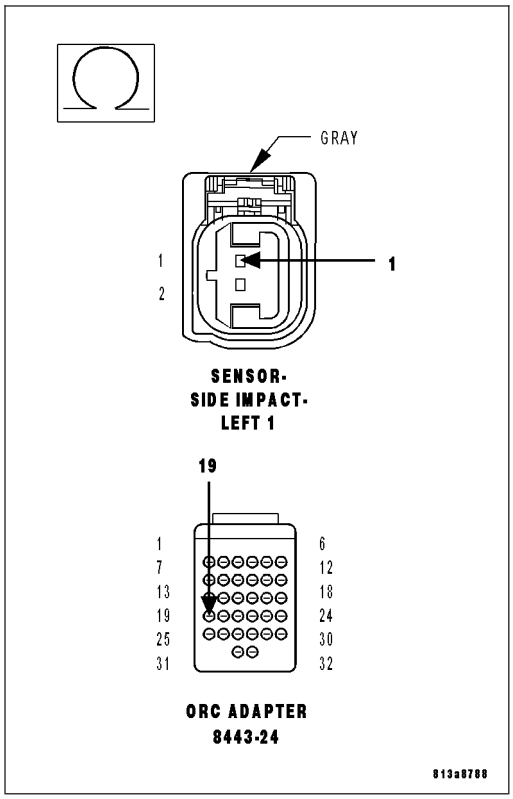

6. CHECK THE (R13) LEFT SIDE IMPACT SENSOR 1 CIRCUIT FOR AN OPEN OR HIGH RESISTANCE

Measure the resistance of the (R13) Left Side Impact Sensor 1 Signal circuit between the Left Side Impact Sensor 1 connector and the 8443 Load Tool ORC Adaptor.

Is the resistance below 1 ohm?

Yes >> Go To 7

No >> Repair the (R13) Left Side Impact Sensor 1 Signal circuit for an open or high resistance.
Perform the ORC VERIFICATION TEST - VER 1.

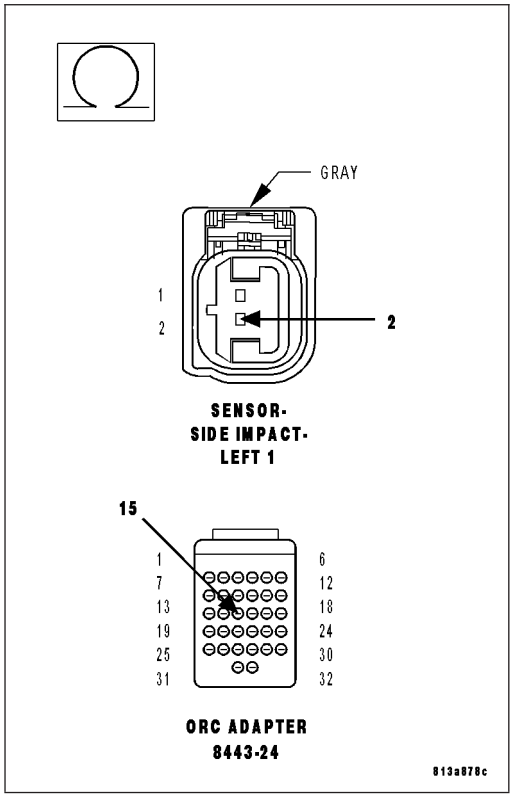

7. CHECK OPERATION OF THE LEFT SIDE IMPACT SENSOR 1

Replace the Left Side Impact Sensor 1.

Reconnect the vehicle body harness to the impact sensor.

Remove any special tools or jumper wires and reconnect all previously disconnected components - except the Battery.

WARNING: To avoid personal injury or death, turn the ignition on, then reconnect the battery.

Connect the scan tool to the Data Link Connector - use the most current software available.

Use the scan tool and erase the stored codes in all airbag system modules.

Turn the Ignition Off, and wait 15 seconds before turning the Ignition On.

Wait one minute, and read active codes and if there are none present read the stored codes.

Did the active Left Side Impact Sensor 1 DTC return?

Yes >> Go To 8

No >> Repair is complete.
Perform the ORC VERIFICATION TEST - VER 1.

8. REPLACE THE OCCUPANT RESTRAINT CONTROLLER

WARNING: To avoid personal injury or death, turn the ignition off, disconnect the battery and wait two minutes before proceeding.

WARNING: If the airbag control module is dropped at any time, it must be replaced. Failure to take the proper precautions can result in accidental airbag deployment and personal injury or death.

If there are no possible causes remaining, view repair.

Repair

Replace the Occupant Restraint Controller in accordance with Service Instructions.
Perform the ORC VERIFICATION TEST - VER 1.

9. TEST FOR AN INTERMITTENT CONDITION

With the scan tool, record and erase all DTC's from all Airbag modules.

If any ACTIVE codes are present they must be resolved before diagnosing any stored codes.

WARNING: To avoid personal injury or death, turn the ignition off, disconnect the battery and wait two minutes before proceeding.

Using the wiring diagram/schematic as a guide, inspect the wiring and connectors.

Look for chafed, pierced, pinched, or partially broken wires and broken, bent, pushed out, spread, corroded, or contaminated terminals.

The following additional checks may assist you in identifying a possible intermittent problem.

Reconnect any disconnected components and harness connector.

WARNING: To avoid personal injury or death, turn the ignition on, then reconnect the battery.

With the scan tool monitor active codes as you work through the following steps.

WARNING: To avoid personal injury or death, maintain a safe distance from all airbags while performing the following steps.

Wiggle the wiring harness and connectors of the related airbag circuit or component.

If codes are related to the Driver Airbag circuits, rotate the steering wheel from stop to stop.

If only stored codes return continue the test until the problem area has been isolated.

In the previous steps you have attempted to recreate the conditions responsible for setting active DTC in question.

Are any ACTIVE DTCs present?

Yes >> Select the appropriate symptom from Symptom List.

No >> No problem found at this time. Erase all codes before returning vehicle to customer.

U0173-LOST COMMUNICATION W/LEFT SIDE SATELLITE ACCELERATION SENSOR 2

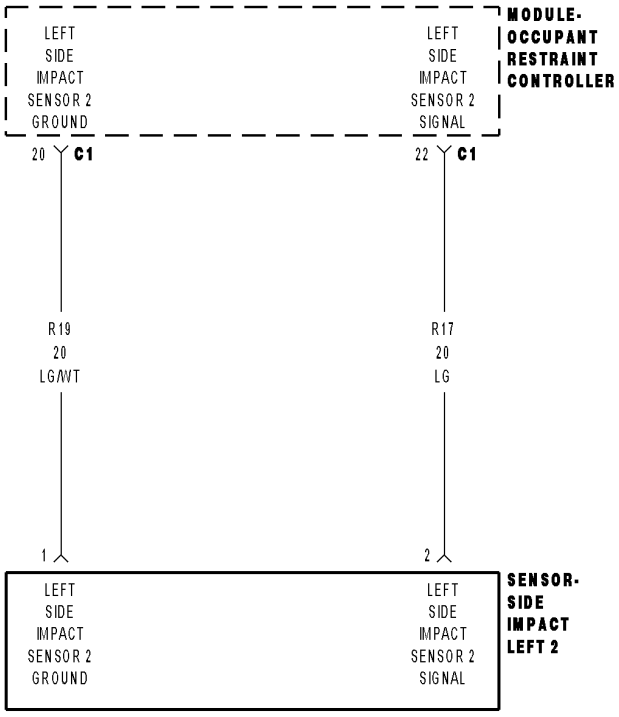

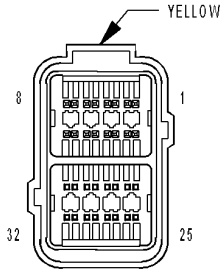

MODULE-
OCCUPANT
RESTRAINT
CONTROLLER C1

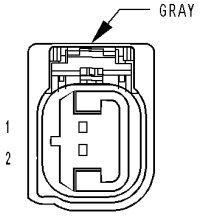

SENSOR-
SIDE IMPACT-
LEFT 2

8133a81b

For a complete wiring diagram **Refer to Section 8W**.

- **When Monitored:**
  The Occupant Restraint Controller (ORC) continuously communicates with the Left Side Impact Sensor 2 over the sensor signal circuit. The sensor communication and on board diagnostics are powered by the ORC signal.
- **Set Condition:**
  This code will set, if the ORC and the Left Side Impact Sensor 2 do not establish and maintain valid data communications.

Possible Causes
(R17) SIGNAL CIRCUIT SHORTED TO BATTERY
(R17) SIGNAL CIRCUIT SHORTED TO GROUND
(R17, R19) LEFT SIDE IMPACT SENSOR 2 CIRCUITS SHORTED TOGETHER
(R19) LEFT SIDE IMPACT SENSOR 2 GROUND CIRCUIT OPEN
(R17) LEFT SIDE IMPACT SENSOR 2 SIGNAL CIRCUIT OPEN
ORC, LEFT SIDE IMPACT SENSOR 2

Diagnostic Test

1. VERIFY THAT DTC U0173-LOST COMMUNICATION W/LEFT SIDE SATELLITE ACCELERATION SENSOR 2 IS ACTIVE

NOTE: Ensure the battery is fully charged.

NOTE: When reconnecting Airbag system components, the ignition must be turned off and the battery must be disconnected.

Turn the ignition on.

With the scan tool, read ORC DTCs.

Does the scan tool display active: U0173-LOST COMMUNICATION W/LEFT SIDE SATELLITE ACCELERATION SENSOR 1?

Yes >> Go To 2

No >> Go To 9

2. CHECK THE (R17, R19) LEFT SIDE IMPACT SENSOR 2 SIGNAL AND GROUND CIRCUITS FOR A SHORT TO BATTERY

WARNING: To avoid personal injury or death, turn the ignition off, disconnect the battery and wait two minutes before proceeding.

Disconnect the Left Side Impact Sensor 2 connector.

Disconnect the ORC connector.

WARNING: To avoid personal injury or death, turn the ignition on, then reconnect the battery.

Measure the voltage of the (R17) Left Side Impact Sensor 2 Signal circuit and (R19) Sensor Ground circuit at the Left Side Impact Sensor 2 connector and ground.

Is there any voltage present?

Yes >> Repair the (R17, R19) Left Side Impact Sensor 2 circuits for a short to battery.
Perform the ORC VERIFICATION TEST - VER 1.

No >> Go To 3

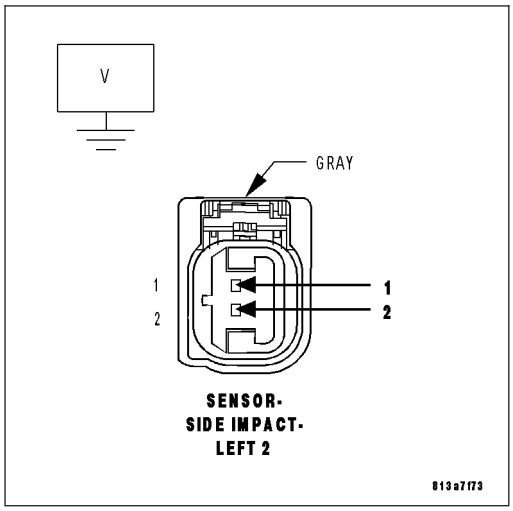

3. CHECK THE (R17) LEFT SIDE IMPACT SENSOR 2 SIGNAL CIRCUIT FOR A SHORT TO GROUND

WARNING: To avoid personal injury or death, turn ignition on, then reconnect the battery.

Measure the resistance of the (R17) Left Side Impact Sensor 2 Signal circuit between the Left Side Impact Sensor 2 connector and ground.

Is the resistance below 100K ohms?

Yes >> Repair the (R17) Left Side Impact Sensor 2 Signal circuit for a short to ground.
Perform the ORC VERIFICATION TEST - VER 1.

No >> Go To 4

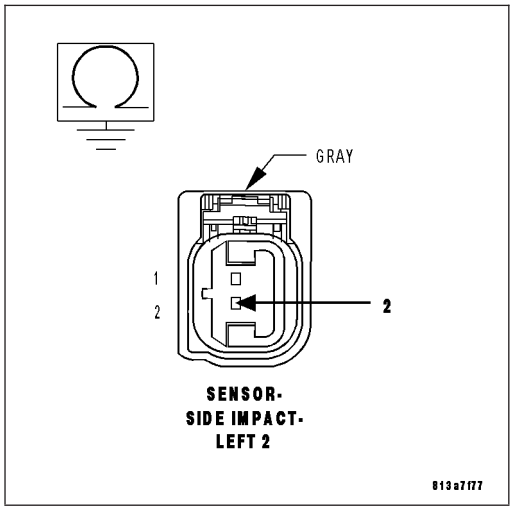

4. CHECK THE (R17, R19) LEFT SIDE IMPACT SENSOR 2 CIRCUITS FOR A SHORT TOGETHER

Measure the resistance between the (R17) Left Side Impact Sensor 2 Signal and (R19) Sensor Ground circuits at the Left Side Impact Sensor 2 connector.

Is the resistance below 100K ohms?

Yes >> Repair the (R17, R19) Left Side Impact Sensor 2 circuits shorted together.
Perform the ORC VERIFICATION TEST - VER 1.

No >> Go To 5

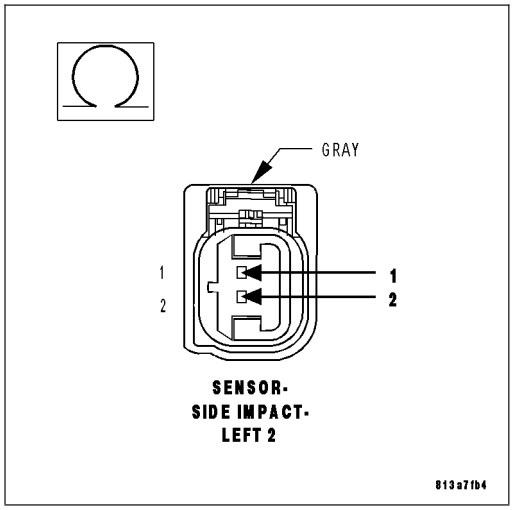

5. CHECK THE (R19) LEFT SIDE IMPACT SENSOR 2 GROUND CIRCUIT FOR AN OPEN OR HIGH RESISTANCE

Connect the 8443 Load Tool ORC Adaptor to the Occupant Control Module connector.

Measure the resistance of the (R19) Left Side Impact Sensor 2 Ground circuit between the Left Side Impact Sensor 2 connector and the 8443 Load Tool ORC Adaptor.

Is the resistance below 1 ohm?

Yes >> Go To 6

No >> Repair the (R19) Left Side Impact Sensor 2 Ground circuit for an open or high resistance.
Perform the ORC VERIFICATION TEST - VER 1.

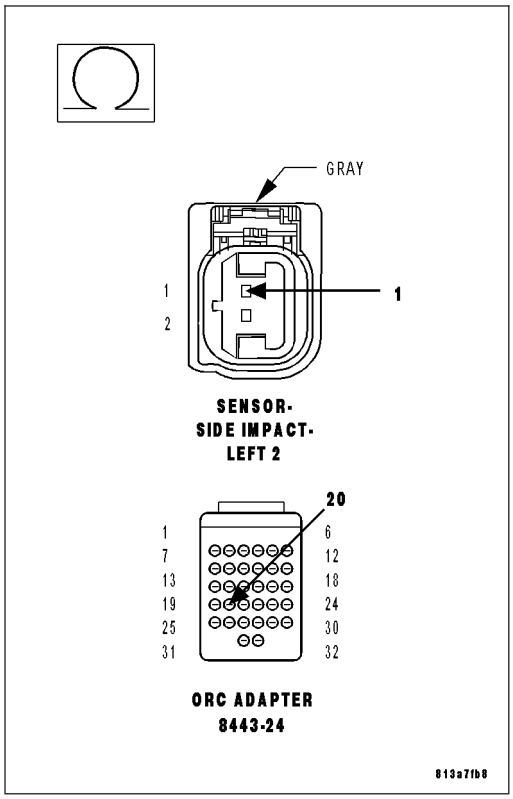

6. CHECK THE (R17) LEFT SIDE IMPACT SENSOR 2 CIRCUIT FOR AN OPEN OR HIGH RESISTANCE

Measure the resistance of the (R17) Left Side Impact Sensor 2 Signal circuit between the Left Side Impact Sensor 2 connector and the 8443 Load Tool ORC Adaptor.

Is the resistance below 1 ohm?

Yes >> Go To 7

No >> Repair the (R17) Left Side Impact Sensor 2 Signal circuit for an open or high resistance.
Perform the ORC VERIFICATION TEST - VER 1.

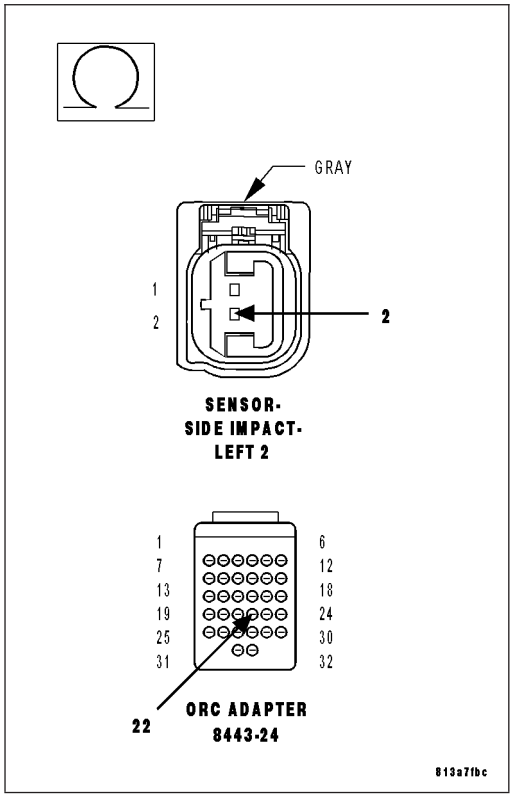

7. CHECK OPERATION OF THE LEFT SIDE IMPACT SENSOR 2

Replace the Left Side Impact Sensor 2.

Reconnect the vehicle body harness to the impact sensor.

Remove any special tools or jumper wires and reconnect all previously disconnected components - except the Battery.

WARNING: To avoid personal injury or death, turn the ignition on, then reconnect the battery.

Connect the scan tool to the Data Link Connector - use the most current software available.

Use the scan tool and erase the stored codes in all airbag system modules.

Turn the Ignition Off, and wait 15 seconds before turning the Ignition On.

Wait one minute, and read active codes and if there are none present read the stored codes.

Did the active Left Side Impact Sensor 2 DTC return?

Yes >> Go To 8

No >> Repair is complete.
Perform the ORC VERIFICATION TEST - VER 1.

8. REPLACE THE OCCUPANT RESTRAINT CONTROLLER

WARNING: To avoid personal injury or death, turn the ignition off, disconnect the battery and wait two minutes before proceeding.

WARNING: If the airbag control module is dropped at any time, it must be replaced. Failure to take the proper precautions can result in accidental airbag deployment and personal injury or death.

If there are no possible causes remaining, view repair.

Repair

Replace the Occupant Restraint Controller in accordance with Service Instructions.
Perform the ORC VERIFICATION TEST - VER 1.

9. TEST FOR AN INTERMITTENT CONDITION

With the scan tool, record and erase all DTC's from all Airbag modules.

If any ACTIVE codes are present they must be resolved before diagnosing any stored codes.

WARNING: To avoid personal injury or death, turn the ignition off, disconnect the battery and wait two minutes before proceeding.

Using the wiring diagram/schematic as a guide, inspect the wiring and connectors.

Look for chafed, pierced, pinched, or partially broken wires and broken, bent, pushed out, spread, corroded, or contaminated terminals.

The following additional checks may assist you in identifying a possible intermittent problem.

Reconnect any disconnected components and harness connector.

WARNING: To avoid personal injury or death, turn the ignition on, then reconnect the battery.

With the scan tool monitor active codes as you work through the following steps.

WARNING: To avoid personal injury or death, maintain a safe distance from all airbags while performing the following steps.

Wiggle the wiring harness and connectors of the related airbag circuit or component.

If codes are related to the Driver Airbag circuits, rotate the steering wheel from stop to stop.

If only stored codes return continue the test until the problem area has been isolated.

In the previous steps you have attempted to recreate the conditions responsible for setting active DTC in question.

Are any ACTIVE DTCs present?

Yes >> Select the appropriate symptom from Symptom List.

No >> No problem found at this time. Erase all codes before returning vehicle to customer.

U0175-LOST COMMUNICATION W/RIGHT SIDE SATELLITE ACCELERATION SENSOR 1

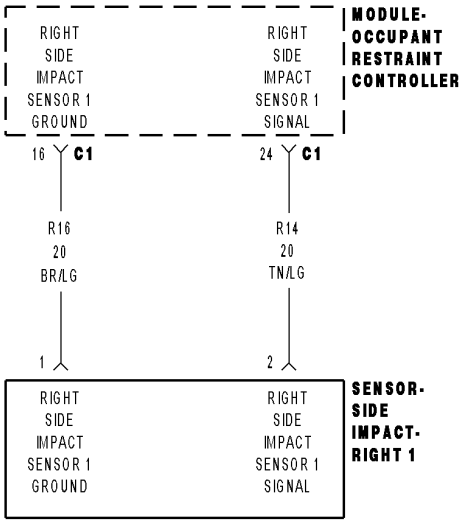

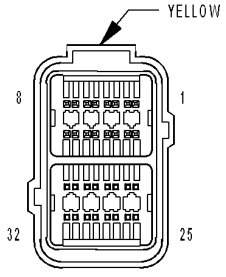

MODULE-
OCCUPANT
RESTRAINT
CONTROLLER C1

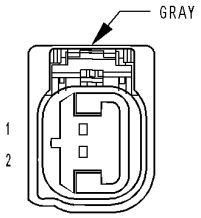

SENSOR-
SIDE IMPACT-
RIGHT 1

8133a88b

For a complete wiring diagram **Refer to Section 8W**.

- **When Monitored:**
  The Occupant Restraint Controller (ORC) continuously communicates with the Right Side Impact Sensor 1 over the sensor signal circuit. The sensor communication and on board diagnostics are powered by the ORC signal.
- **Set Condition:**
  This code will set, if the ORC and the Right Side Impact Sensor 1 do not establish and maintain valid data communications.

Possible Causes
(R14) SIGNAL CIRCUIT SHORTED TO BATTERY
(R14) SIGNAL CIRCUIT SHORTED TO GROUND
(R14, R16) RIGHT SIDE IMPACT SENSOR 1 CIRCUITS SHORTED TOGETHER
(R16) RIGHT SIDE IMPACT SENSOR 1 GROUND CIRCUIT OPEN
(R14) RIGHT SIDE IMPACT SENSOR 1 SIGNAL CIRCUIT OPEN
ORC, RIGHT SIDE IMPACT SENSOR 1

Diagnostic Test

1. VERIFY THAT DTC U0175-LOST COMMUNICATION W/RIGHT SIDE SATELLITE ACCELERATION SENSOR 1

NOTE: Ensure the battery is fully charged.

NOTE: When reconnecting Airbag system components, the ignition must be turned off and the battery must be disconnected.

Turn the ignition on.

With the scan tool, read ORC DTCs.

Does the scan tool display active: U0175-LOST COMMUNICATION W/RIGHT SIDE SATELLITE ACCELERATION SENSOR 1?

Yes >> Go To 2

No >> Go To 9

2. CHECK THE (R14, R16) RIGHT SIDE IMPACT SENSOR 1 SIGNAL AND GROUND CIRCUITS FOR A SHORT TO BATTERY

WARNING: To avoid personal injury or death, turn the ignition off, disconnect the battery and wait two minutes before proceeding.

Disconnect the Right Side Impact Sensor 1 connector.

Disconnect the ORC connector.

WARNING: To avoid personal injury or death, turn the ignition on, then reconnect the battery.

Measure the voltage of the (R14) Right Side Impact Sensor 1 Signal circuit and (R16) Sensor Ground circuit at the Right Side Impact Sensor 1 connector and ground.

Is there any voltage present?

Yes >> Repair the (R14, R16) Right Side Impact Sensor 1 circuits for a short to battery.
Perform the ORC VERIFICATION TEST - VER 1.

No >> Go To 3

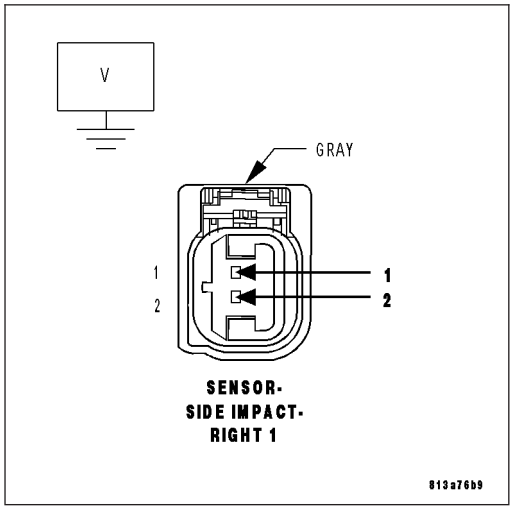

3. CHECK THE (R14) RIGHT SIDE IMPACT SENSOR 1 SIGNAL CIRCUIT FOR A SHORT TO GROUND

WARNING: To avoid personal injury or death, turn ignition on, then reconnect the battery.

Measure the resistance of the (R14) Right Side Impact Sensor 1 Signal circuit between the Right Side Impact Sensor 1 connector and ground.

Is the resistance below 100K ohms?

Yes >> Repair the (R14) Right Side Impact Sensor 1 Signal circuit for a short to ground.
Perform the ORC VERIFICATION TEST - VER 1.

No >> Go To 4

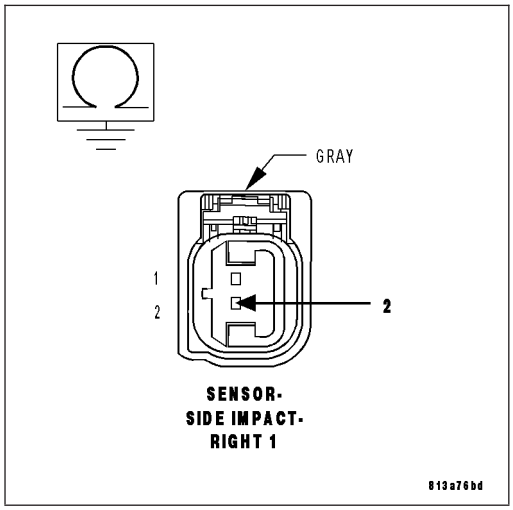

4. CHECK THE (R14, R16) RIGHT SIDE IMPACT SENSOR CIRCUITS FOR A SHORT TOGETHER

Measure the resistance between the (R14) Right Side Impact Sensor 1 Signal and (R16) Sensor Ground circuits at the Right Side Impact Sensor 1 connector.

Is the resistance below 100K ohms?

Yes >> Repair the (R14, R16) Right Side Impact Sensor 1 circuits shorted together.
Perform the ORC VERIFICATION TEST - VER 1.

No >> Go To 5

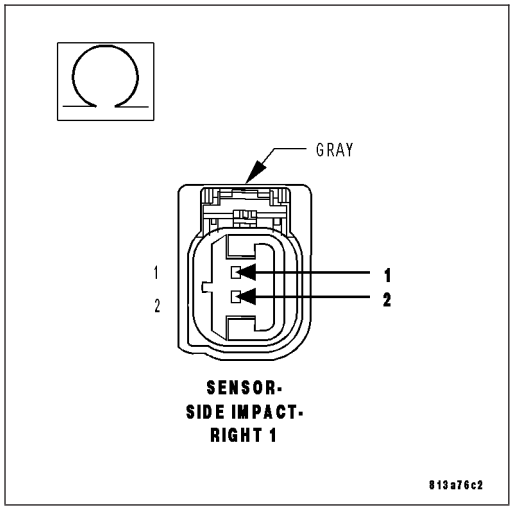

5. CHECK THE (R16) RIGHT SIDE IMPACT SENSOR 1 GROUND CIRCUIT FOR AN OPEN OR HIGH RESISTANCE

Connect the 8443 Load Tool ORC Adaptor to the Occupant Control Module connector.

Measure the resistance of the (R16) Right Side Impact Sensor 1 Ground circuit between the Right Side Impact Sensor 1 connector and the 8443 Load Tool ORC Adaptor.

Is the resistance below 1 ohm?

Yes >> Go To 6

No >> Repair the (R16) Right Side Impact Sensor 1 Ground circuit for an open or high resistance.
Perform the ORC VERIFICATION TEST - VER 1.

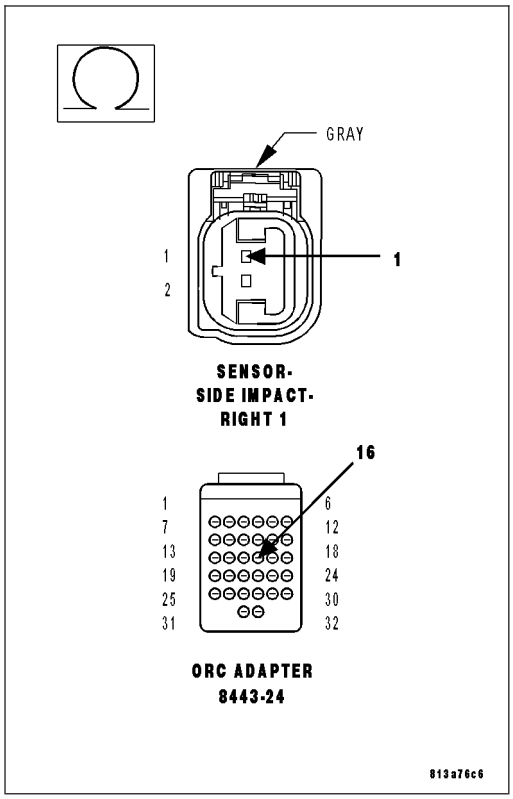

6. CHECK THE (R14) RIGHT SIDE IMPACT SENSOR 1 CIRCUIT FOR AN OPEN OR HIGH RESISTANCE

Measure the resistance of the (R14) Right Side Impact Sensor 1 Signal circuit between the Right Side Impact Sensor 1 connector and the 8443 Load Tool ORC Adaptor.

Is the resistance below 1 ohm?

Yes >> Go To 7

No >> Repair the (R14) Right Side Impact Sensor 1 Signal circuit for an open or high resistance.
Perform the ORC VERIFICATION TEST - VER 1.

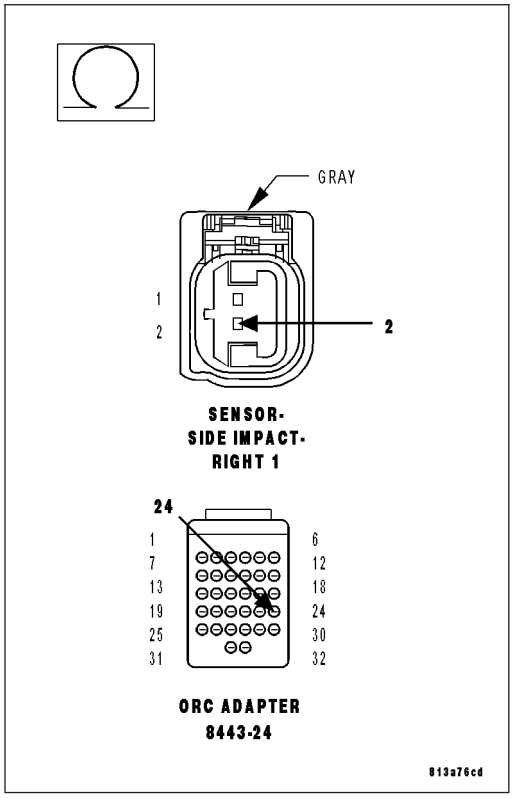

7. CHECK OPERATION OF THE RIGHT SIDE IMPACT SENSOR 1

Replace the Right Side Impact Sensor 1.

Reconnect the vehicle body harness to the impact sensor.

Remove any special tools or jumper wires and reconnect all previously disconnected components - except the Battery.

WARNING: To avoid personal injury or death, turn the ignition on, then reconnect the battery.

Connect the scan tool to the Data Link Connector - use the most current software available.

Use the scan tool and erase the stored codes in all airbag system modules.

Turn the Ignition Off, and wait 15 seconds before turning the Ignition On.

Wait one minute, and read active codes and if there are none present read the stored codes.

Did the active Right Side Impact Sensor 1 DTC return?

Yes >> Go To 8

No >> Repair is complete.
Perform the ORC VERIFICATION TEST - VER 1.

8. REPLACE THE OCCUPANT RESTRAINT CONTROLLER

WARNING: To avoid personal injury or death, turn the ignition off, disconnect the battery and wait two minutes before proceeding.

WARNING: If the airbag control module is dropped at any time, it must be replaced. Failure to take the proper precautions could result in accidental airbag deployment and personal injury or death.

If there are no possible causes remaining, view repair.

Repair

Replace the Occupant Restraint Controller in accordance with Service Instructions.
Perform the ORC VERIFICATION TEST - VER 1.

9. TEST FOR AN INTERMITTENT CONDITION

With the scan tool, record and erase all DTC's from all Airbag modules.

If any ACTIVE codes are present they must be resolved before diagnosing any stored codes.

WARNING: To avoid personal injury or death, turn the ignition off, disconnect the battery and wait two minutes before proceeding.

Using the wiring diagram/schematic as a guide, inspect the wiring and connectors.

Look for chafed, pierced, pinched, or partially broken wires and broken, bent, pushed out, spread, corroded, or contaminated terminals.

The following additional checks may assist you in identifying a possible intermittent problem.

Reconnect any disconnected components and harness connector.

WARNING: To avoid personal injury or death, turn the ignition on, then reconnect the battery.

With the scan tool monitor active codes as you work through the following steps.

WARNING: To avoid personal injury or death, maintain a safe distance from all airbags while performing the following steps.

Wiggle the wiring harness and connectors of the related airbag circuit or component.

If codes are related to the Driver Airbag circuits, rotate the steering wheel from stop to stop.

If only stored codes return continue the test until the problem area has been isolated.

In the previous steps you have attempted to recreate the conditions responsible for setting active DTC in question.

Are any ACTIVE DTCs present?

Yes >> Select the appropriate symptom from Symptom List.

No >> No problem found at this time. Erase all codes before returning vehicle to customer.

U0176-LOST COMMUNICATION W/RIGHT SIDE SATELLITE ACCELERATION SENSOR 2

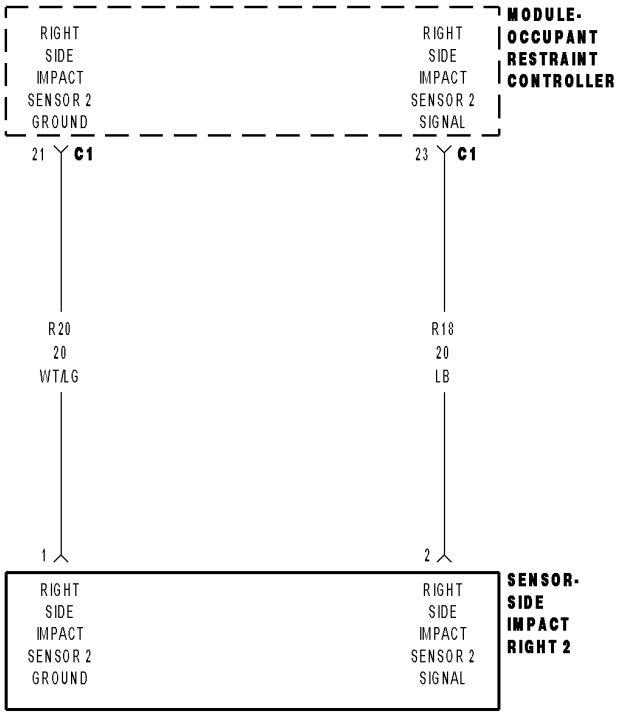

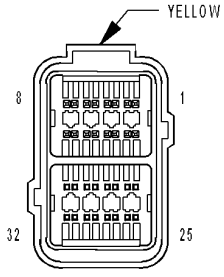

MODULE-
OCCUPANT
RESTRAINT
CONTROLLER C1

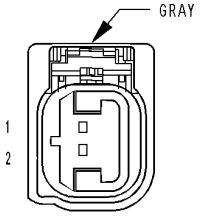

SENSOR-
SIDE IMPACT-
RIGHT 2

8133a8a1

For a complete wiring diagram **Refer to Section 8W**.

- **When Monitored:**
  The Occupant Restraint Controller (ORC) continuously communicates with the Right Side Impact Sensor 2 over the sensor signal circuit. The sensor communication and on board diagnostics are powered by the ORC signal.
- **Set Condition:**
  This code will set, if the ORC and the Right Side Impact Sensor 2 do not establish and maintain valid data communications.

Possible Causes
(R18) SIGNAL CIRCUIT SHORTED TO BATTERY
(R18) SIGNAL CIRCUIT SHORTED TO GROUND
(R18, R20) RIGHT SIDE IMPACT SENSOR 2 CIRCUITS SHORTED TOGETHER
(R20) RIGHT SIDE IMPACT SENSOR 2 GROUND CIRCUIT OPEN
(R18) RIGHT SIDE IMPACT SENSOR 2 SIGNAL CIRCUIT OPEN
ORC, RIGHT SIDE IMPACT SENSOR 2

Diagnostic Test

1. VERIFY ACTIVE DTC U0176-LOST COMMUNICATION W/RIGHT SIDE SATELLITE ACCELERATION SENSOR 2

Turn the ignition on.

With the scan tool, read ORC DTCs.

NOTE: Ensure the battery is fully charged.

NOTE: When reconnecting Airbag system components, the ignition must be turned off and the battery must be disconnected.

Does the scan tool display an active: U0176-LOST COMMUNICATION W/RIGHT SIDE SATELLITE ACCELERATION SENSOR 2?

Yes >> Go To 2

No >> Go To 9

2. CHECK THE (R18, R20) RIGHT SIDE IMPACT SENSOR 2 SIGNAL AND GROUND CIRCUITS FOR A SHORT TO BATTERY

WARNING: To avoid personal injury or death, turn the ignition off, disconnect the battery and wait two minutes before proceeding.

Disconnect the Right Side Impact Sensor 2 connector.

Disconnect the ORC connector.

WARNING: To avoid personal injury or death, turn the ignition on, then reconnect the battery.

Measure the voltage of the (R18) Right Side Impact Sensor 2 Signal circuit and (R20) Sensor Ground circuit at the Right Side Impact Sensor 2 connector and ground.

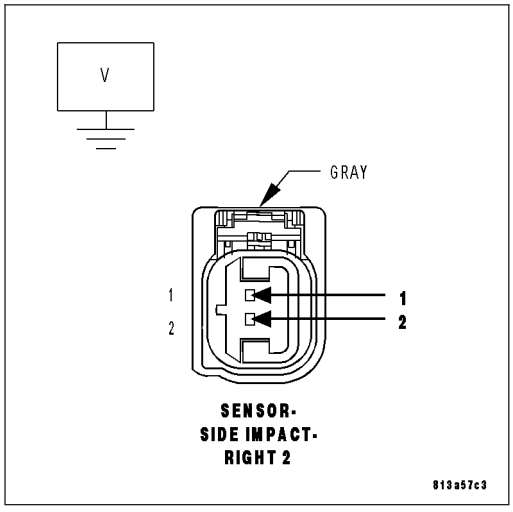

Is there any voltage present?

Yes >> Repair the (R18, R20) Right Side Impact Sensor 2 circuits for a short to battery.
Perform the ORC VERIFICATION TEST - VER 1.

No >> Go To 3

3. CHECK THE (R18) RIGHT SIDE IMPACT SENSOR 2 SIGNAL CIRCUIT FOR A SHORT TO GROUND

Measure the resistance of the (R18) Right Side Impact Sensor 2 Signal circuit between the Right Side Impact Sensor 2 connector and ground.

Is the resistance below 100K ohms?

Yes >> Repair the (R18) Right Side Impact Sensor 2 Signal circuit for a short to ground.
Perform the ORC VERIFICATION TEST - VER 1.

No >> Go To 4

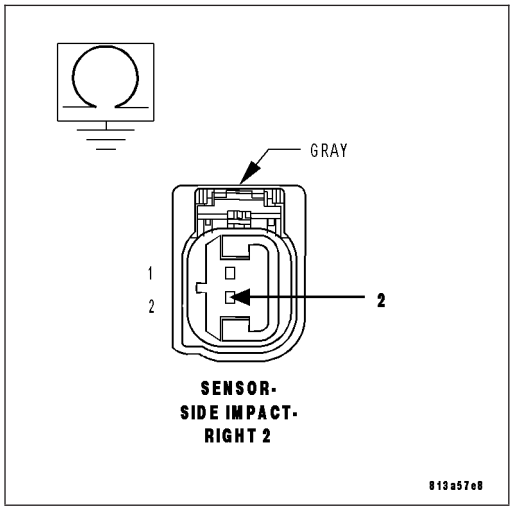

4. CHECK THE (R18, R20) RIGHT SIDE IMPACT SENSOR CIRCUITS FOR A SHORT TOGETHER

Measure the resistance between the (R18) Right Side Impact Sensor 2 Signal and (R20) Sensor Ground circuits at the Right Side Impact Sensor 2 connector.

Is the resistance below 100K ohms?

Yes >> Repair the (R18, R20) Right Side Impact Sensor 2 circuits shorted together.
Perform the ORC VERIFICATION TEST - VER 1.

No >> Go To 5

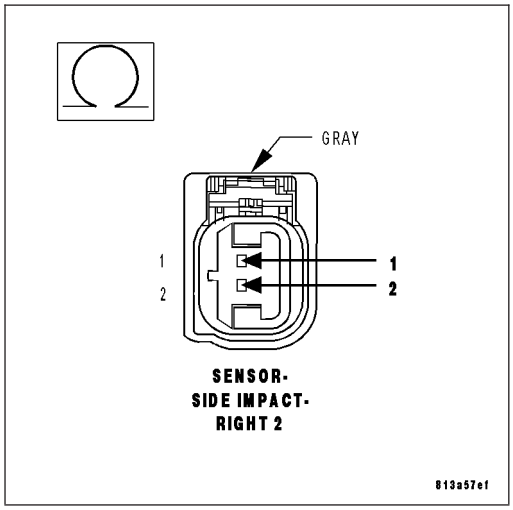

5. CHECK THE (R18) RIGHT SIDE IMPACT SENSOR 2 GROUND CIRCUIT FOR AN OPEN OR HIGH RESISTANCE

Connect the 8443 Load Tool ORC Adaptor to the Occupant Restraint Controller C2 connector.

Measure the resistance of the (R20) Right Side Impact Sensor 2 Ground circuit between the Right Side Impact Sensor 2 connector and the 8443 Load Tool ORC Adaptor.

Is the resistance below 1 ohm?

Yes >> Go To 6

No >> Repair the (R20) Right Side Impact Sensor 2 Ground circuit for an open or high resistance.
Perform the ORC VERIFICATION TEST - VER 1.

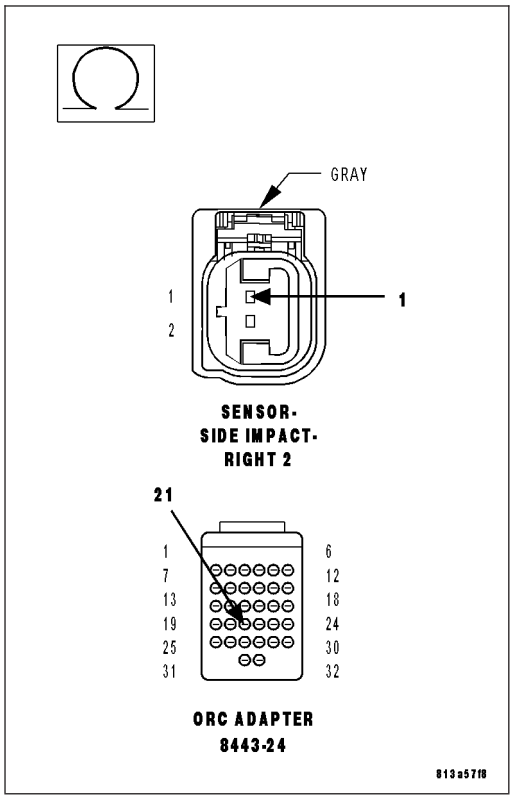

6. CHECK THE (R18) RIGHT SIDE IMPACT SENSOR 2 CIRCUIT FOR AN OPEN OR HIGH RESISTANCE

Measure the resistance of the (R18) Right Side Impact Sensor 2 Signal circuit between the Right Side Impact Sensor 2 connector and the 8443 Load Tool ORC Adaptor.

Is the resistance below 1 ohm?

Yes >> Go To 7

No >> Repair the (R18) Right Side Impact Sensor 2 Signal circuit for an open or high resistance.
Perform the ORC VERIFICATION TEST - VER 1.

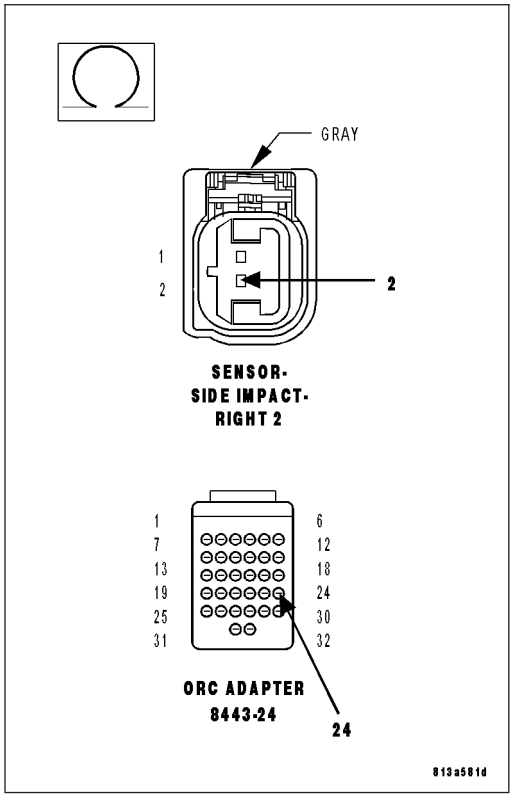

7. CHECK OPERATION OF THE RIGHT SIDE IMPACT SENSOR 2

Replace the Right Side Impact Sensor 2.

Reconnect the vehicle body harness to the impact sensor.

Remove any special tools or jumper wires and reconnect all previously disconnected components - except the Battery.

WARNING: To avoid personal injury or death, turn the ignition on, then reconnect the battery.

Connect the scan tool to the Data Link Connector - use the most current software available.

Use the scan tool and erase the stored codes in all airbag system modules.

Turn the Ignition Off, and wait 15 seconds before turning the Ignition On.

Wait one minute, and read active codes and if there are none present read the stored codes.

Did the active Right Side Impact Sensor 2 DTC return?

Yes >> Go To 8

No >> Repair is complete.
Perform the ORC VERIFICATION TEST - VER 1.

8. REPLACE THE OCCUPANT RESTRAINT CONTROLLER

WARNING: To avoid personal injury or death, turn the ignition off, disconnect the battery and wait two minutes before proceeding.

WARNING: If the airbag control module is dropped at any time, it must be replaced. Failure to take the proper precautions can result in accidental airbag deployment and personal injury or death.

View Repair

Repair

Replace the Occupant Restraint Controller in accordance with Service Instructions.
Perform the ORC VERIFICATION TEST - VER 1.

9. TEST FOR INTERMITTENT CONDITION

With the scan tool, record and erase all DTC's from all Airbag modules.

If any ACTIVE codes are present they must be resolved before diagnosing any stored codes.

WARNING: To avoid personal injury or death, turn the ignition off, disconnect the battery and wait two minutes before proceeding.

Using the wiring diagram/schematic as a guide, inspect the wiring and connectors.

Look for chafed, pierced, pinched, or partially broken wires and broken, bent, pushed out, spread, corroded, or contaminated terminals.

The following additional checks may assist you in identifying a possible intermittent problem.

Reconnect any disconnected components and harness connector.

WARNING: To avoid personal injury or death, turn the ignition on, then reconnect the battery.

With the scan tool monitor active codes as you work through the following steps.

WARNING: To avoid personal injury or death, maintain a safe distance from all airbags while performing the following steps.

Wiggle the wiring harness and connectors of the related airbag circuit or component.

If codes are related to the Driver Airbag circuits, rotate the steering wheel from stop to stop.

If only stored codes return continue the test until the problem area has been isolated.

In the previous steps you have attempted to recreate the conditions responsible for setting active DTC in question.

Are any ACTIVE DTCs present?

Yes >> Select the appropriate symptom from Symptom List.

No >> No problem found at this time. Erase all codes before returning vehicle to customer.

U0184-LOST COMMUNICATION WITH RADIO

For a complete wiring diagram **Refer to Section 8W**.

(Refer to 8 - ELECTRICAL/ELECTRONIC CONTROL MODULES - DIAGNOSIS AND TESTING) for the diagnostic test procedure.

U0186-LOST COMMUNICATION WITH AUDIO AMPLIFIER

For a complete wiring diagram **Refer to Section 8W**.

(Refer to 8 - ELECTRICAL/ELECTRONIC CONTROL MODULES - DIAGNOSIS AND TESTING) for the diagnostic test procedure.

U0195-LOST COMMUNICATION WITH SDARS

For a complete wiring diagram **Refer to Section 8W**.

(Refer to 8 - ELECTRICAL/ELECTRONIC CONTROL MODULES - DIAGNOSIS AND TESTING) for the diagnostic test procedure.

U0196-LOST COMMUNICATION WITH VEHICLE ENTERTAINMENT CONTROL MODULE

For a complete wiring diagram **Refer to Section 8W**.

(Refer to 8 - ELECTRICAL/ELECTRONIC CONTROL MODULES - DIAGNOSIS AND TESTING) for the diagnostic test procedure.

U0197-LOST COMMUNICATION WITH HANDS FREE PHONE MODULE

For a complete wiring diagram **Refer to Section 8W**.

(Refer to 8 - ELECTRICAL/ELECTRONIC CONTROL MODULES - DIAGNOSIS AND TESTING) for the diagnostic test procedure.

U0199-LOST COMMUNICATION WITH DRIVER DOOR MODULE

For a complete wiring diagram **Refer to Section 8W**.

(Refer to 8 - ELECTRICAL/ELECTRONIC CONTROL MODULES - DIAGNOSIS AND TESTING) for the diagnostic test procedure.

U0200-LOST COMMUNICATION WITH PASSENGER DOOR MODULE

For a complete wiring diagram **Refer to Section 8W**.

(Refer to 8 - ELECTRICAL/ELECTRONIC CONTROL MODULES - DIAGNOSIS AND TESTING) for the diagnostic test procedure.

U0208-LOST COMMUNICATION WITH HEATED SEAT CONTROL MODULE

For a complete wiring diagram **Refer to Section 8W**.

(Refer to 8 - ELECTRICAL/ELECTRONIC CONTROL MODULES - DIAGNOSIS AND TESTING) for the diagnostic test procedure.

U0209-LOST COMMUNICATION WITH MEMORY SEAT CONTROL MODULE

For a complete wiring diagram **Refer to Section 8W**.

(Refer to 8 - ELECTRICAL/ELECTRONIC CONTROL MODULES - DIAGNOSIS AND TESTING) for the diagnostic test procedure.

*DIAGNOSIS AND CHECKOUT PROCEDURE FOR SEAT WEIGHT SENSORS

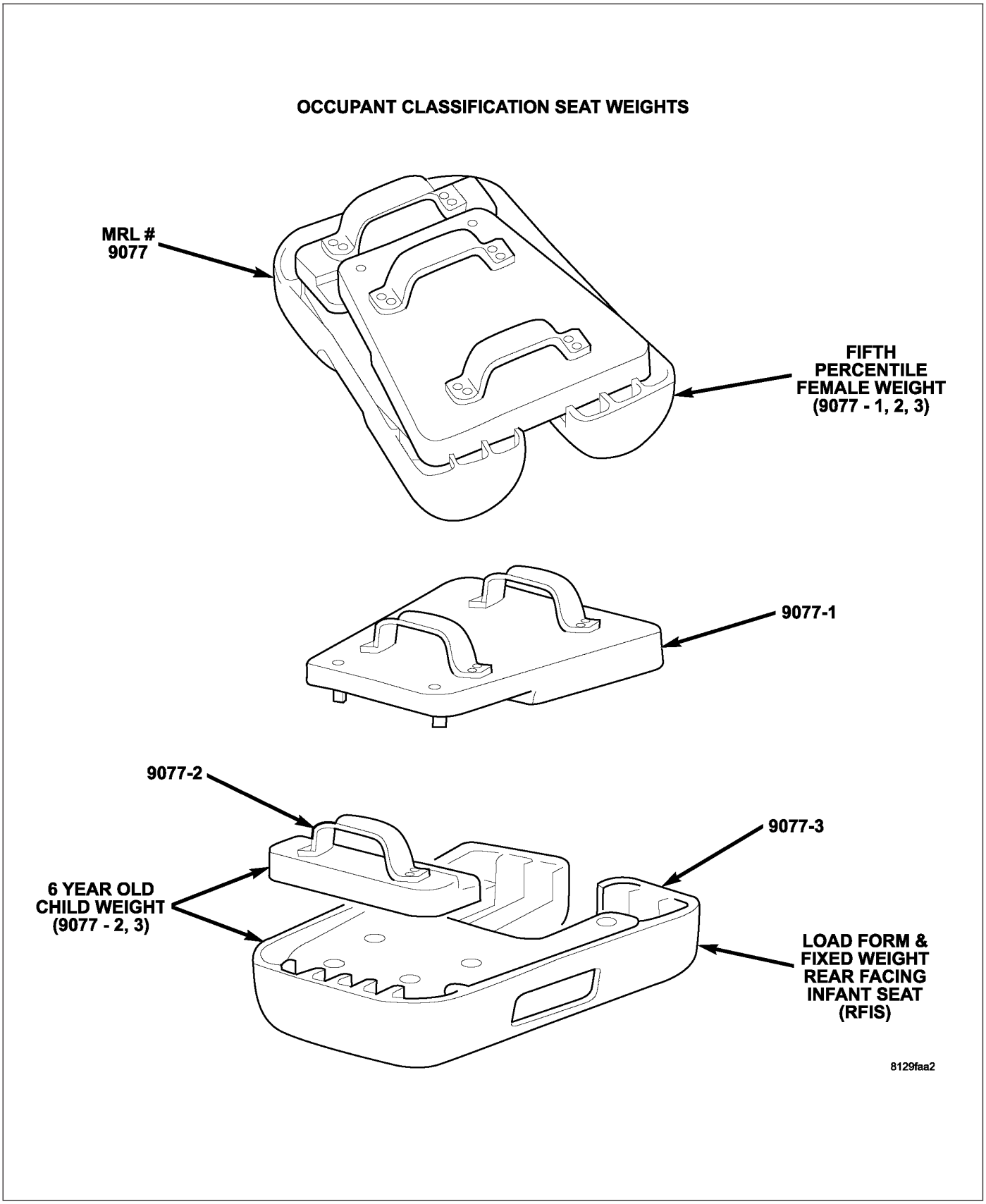

OCS SEAT WEIGHTS MRL #9077

1. VERIFY COMPLAINT

Turn the ignition off.

Move the front passenger seat to the full rear position. Verify that the seat is empty, the seat back is in the normal upright position, and that the seat is not interfering with any interior components.

Verify that all related connectors are properly seated and locked.

Turn the ignition on.

With the scan tool in OCM, select Data Display and note the Passenger Seat Weight Sensor voltage for all four sensors (Left Front, Right Front, Left Rear and Right Rear).

Move the front passenger seat to the mid track position.

Using the scan tool, note the Passenger Seat Weight Sensor voltage for all four sensors.

Move the front passenger seat to the full forward position.

Using the scan tool, note the Passenger Seat Weight Sensor voltage for all four sensors. The voltage should be from 1.4 to 3.6 volts for each sensor in each position (full rear, mid track, and full forward).

Is any sensor's voltage reading out of the acceptable range in any position?

Yes >> Go To 2

No >> Perform test B1BA7 Occupant Classification System Verification Required. If the test passes, the seat weight sensing system is working properly. Return to the procedure that directed you to this procedure.

2. CHECKING FOR BENT FLOOR PAN

Turn the ignition off.

Loosen all of the mounting screws retaining the front passenger seat to the vehicle crossmembers, but do not remove them. Verify that the seat is loose and that no binding exists between the seat and the crossmembers.

Move the front passenger seat to the full rear position and then to the full forward position.

Tighten all of the mounting screws to specification. Refer to 23 - BODY/SEATS.

Move the front passenger seat to the full rear position.

Turn the ignition on.

Using the scan tool, note the Passenger Seat Weight Sensor voltage for all four sensors.

Move the front passenger seat to the mid track position.

Using the scan tool, note the Passenger Seat Weight Sensor voltage for all four sensors.

Move the front passenger seat to the full forward position.

Using the scan tool, note the Passenger Seat Weight Sensor voltage for all four sensors. The voltage should be from 1.4 to 3.6 volts for each sensor in each position.

Is any sensor's voltage reading out of the acceptable range in any position?

Yes >> Go To 3

No >> Perform test B1BA7 Occupant Classification System Verification Required. If the test passes, the seat weight sensing system is working properly. Return to the procedure that directed you to this procedure.

3. CHECKING SEAT TO RISER STRESS

Turn the ignition off.

Loosen all of the mounting screws retaining the front passenger seat track to the riser, but do not remove them. Verify that the seat track is loose and that no binding exists between the seat track and the risers.

Turn the ignition on.

Using the scan tool, note the Passenger Seat Weight Sensor voltage for all four sensors. The voltage should be from 1.5 to 3.5 volts for each sensor.

Is any sensor's voltage reading out of the acceptable range?

Yes >> Go To 4

No >> Visually inspect for damaged or bent risers and crossmembers. Also, verify that the riser holes line up with the seat mounts in the crossmembers.

If riser damage is apparent, replace the risers in accordance with the Service Information. Then, reinstall the Seat Weight Sensors, and Go To 6.

NOTE: Failure to follow test instructions or aborting the test will cause faults to set when performing the Occupant Classification Module System Verification Test. To prevent faults due to process errors: Verify That All Tests Steps That Led You Here Were Performed As Directed; Verify That The Ignition Is In Run; Wait 30 Seconds After Changing The Seat Weight Before Proceeding To Allow The System To Stabilize; Only Press Scan Tool Buttons When Directed To Do So; and Perform The Occupant Classification Module System Verification Test To Completion.

If crossmember or floorpan damage is present, repair or replace the components as necessary in accordance with the Service Information. Reinstall the seat in the vehicle in accordance with the Service Information. Turn the ignition on. With the scan tool in OCM, select More Options, select System Tests, and select Occupant Classification Module System Verification Test. Run the test by following the directions displayed on the scan tool. When the test is complete, Go To 1.

4. TEST SEAT FRAME

Turn the ignition off.

Remove the front passenger seat from the risers in accordance with the Service Information. Return the risers to their normal mounting position.

Turn the ignition on.

Using the scan tool, note the Passenger Seat Weight Sensor voltage for all four sensors. The voltage should be from 1.4 to 3.6 volts for each sensor.

Is any sensor's voltage reading out of the acceptable range?

Yes >> Go To 5

No >> Visually inspect for damaged or bent risers, a damaged or bent seat and seat structure, and damaged or bent seat tracks. Also, verify that the holes in the center of the sensors line up with the seat track holes and that the seat track position locating tabs are locked in the same parallel slots. If riser damage is apparent, replace the risers in accordance with the Service Information. Then, reinstall the Seat Weight Sensors, and Go To 6.

If seat or seat track damage is present, replace the components as necessary in accordance with the Service Information. Then, Go To 7

5. TEST SENSOR

Turn the ignition off.

Loosen the mounting screws of all of the Seat Weight Sensors, but do not remove them. Verify that the sensors are loose and that no binding exists between the sensors and the risers.

Turn the ignition on.

Using the scan tool, note the Passenger Seat Weight Sensor voltage for all four sensors. The voltage should be from 1.4 to 3.6 volts for each sensor.

Is any sensor's voltage reading out of the acceptable range?

Yes >> Replace any Seat Weight Sensors that have an unacceptable voltage reading in accordance with the Service Information. Then, Go To 6.

No >> Replace the risers in accordance with the Service Information. Then, reinstall the Seat Weight Sensors, and Go To 6

6. CHECKING FOR IMPROPER SEAT WEIGHT SENSOR TORQUE

Turn the ignition off.

Tighten all of the Seat Weight Sensor mounting screws to specification. Refer to 23 - BODY/SEATS.

Turn the ignition on.

Using the scan tool, note the Passenger Seat Weight Sensor voltage for all four sensors. The voltage should be from 1.4 to 3.6 volts for each sensor.

Is any sensor's voltage reading out of the acceptable range?

Yes >> Loosen the mounting screws of all Seat Weight Sensors with an unacceptable voltage reading, and repeat Steps 5 and 6.

No >> Go To 7

7. TEST SEAT TRACKS

Turn the ignition off.

Mount the front passenger seat on the risers in accordance with service information.

Turn the ignition on.

Using the scan tool, note the Passenger Seat Weight Sensor voltage for all four sensors. The voltage should be from 1.4 to 3.6 volts for each sensor.

Is any sensor's voltage reading out of the acceptable range?

Yes >> Replace the seat track in accordance with the Service Information. Verify that no binding exists between the seat and risers. Then, repeat Steps 6 and 7.

No >>

NOTE: Failure to follow test instructions or aborting the test will cause faults to set when performing the Occupant Classification Module System Verification Test. To prevent faults due to process errors: Verify That All Tests Steps That Led You Here Were Performed As Directed; Verify That The Ignition Is In Run; Wait 30 Seconds After Changing The Seat Weight Before Proceeding To Allow The System To Stabilize; Only Press Scan Tool Buttons When Directed To Do So; and Perform The Occupant Classification Module System Verification Test To Completion.

Reinstall the seat in the vehicle in accordance with the Service Information. Turn the ignition on. With the scan tool in OCM, select More Options, select System Tests, and select Occupant Classification Module System Verification Test. Run the test by following the instructions displayed by the scan tool. When the test is complete, Go To 1

*OCS VERIFICATION TEST - VER 1

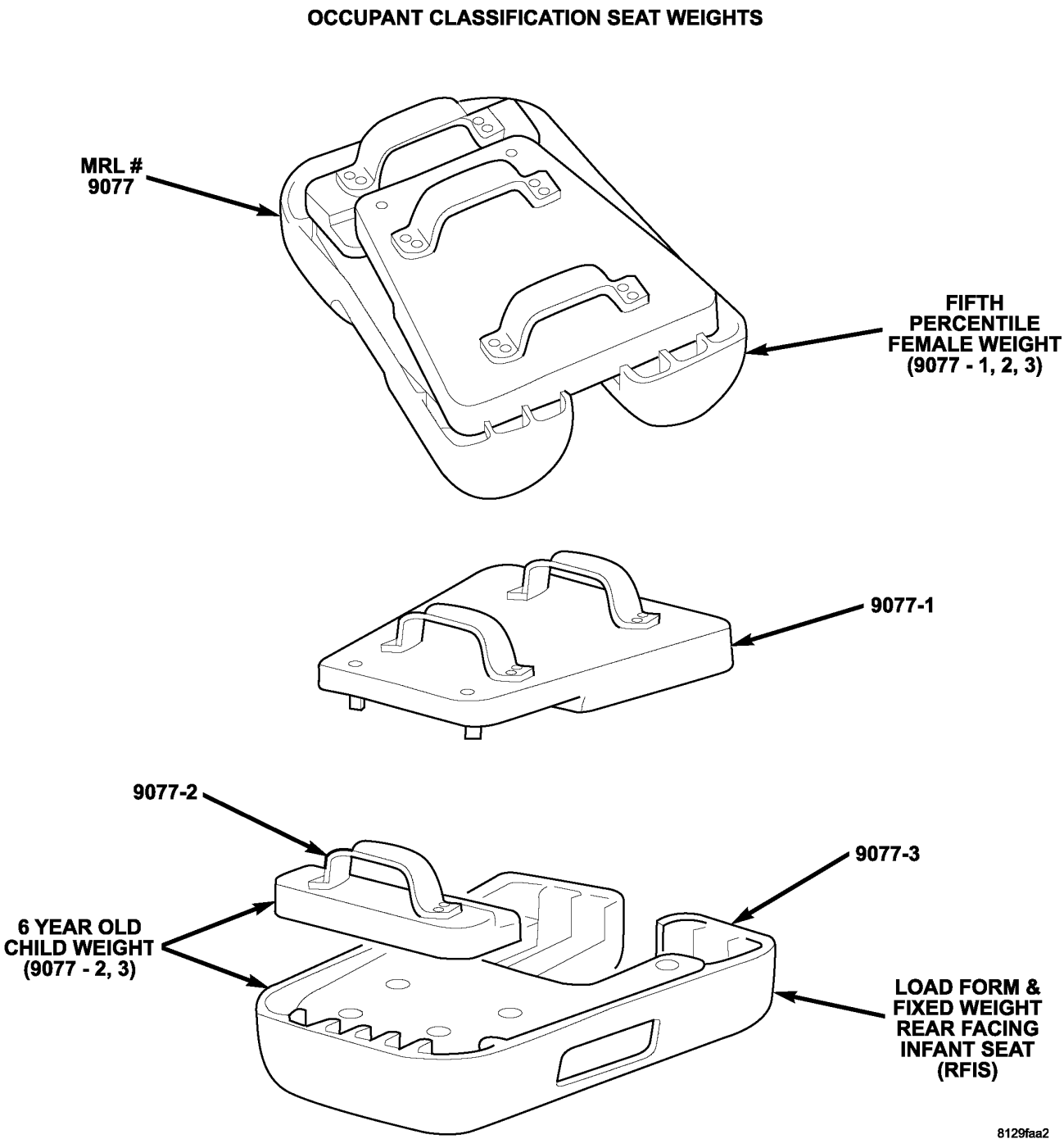

For a complete wiring diagram **Refer to Section 8W**.

1.

1. Remove any special tools or jumper wires and reconnect all previously disconnected components - except the Battery.

WARNING: TO AVOID PERSONAL INJURY OR DEATH, TURN THE IGNITION ON THEN RECONNECT THE BATTERY.

2. Connect the scan tool to the Data Link Connector - use the most current software available.

3. With the scan tool to erase stored DTCs in all airbag system modules.

4. Turn the ignition off, and wait 15 seconds, then turn the ignition on.

5. Wait one minute, and read active codes and if there are none present read the stored codes.

6. Note: Read the DTC's in all airbag system related modules.

7. If the scan tool shows any active or stored codes, return to the Table of Content and follow path specified for that trouble code. If no active or stored codes are present, the repair is complete.

Are any DTC's present or is the original condition still present?

Yes >> Repair is not complete, refer to appropriate symptom list.

No >> Repair is complete.

*ORC VERIFICATION TEST - VER 1

For a complete wiring diagram **Refer to Section 8W**.

1.

1. Remove any special tools or jumper wires and reconnect all previously disconnected components - except the Battery.

WARNING: TO AVOID PERSONAL INJURY OR DEATH, TURN THE IGNITION ON THEN RECONNECT THE BATTERY.

2. Connect the scan tool to the Data Link Connector - use the most current software available.

3. With the scan tool to erase stored DTCs in all airbag system modules.

4. Turn the ignition off, and wait 15 seconds, then turn the ignition on.

5. Wait one minute, and read active codes and if there are none present read the stored codes.

6. Note: If equipped with Airbag On - Off switch, read the DTC's in all switch positions.

7. Note: Read the DTC's in all airbag system related modules.

8. If the scan tool shows any active or stored codes, return to the Table of Contents and follow path specified for that trouble code. If no active or stored codes are present, the repair is complete.

Are any DTC's present or is the original condition still present?

Yes >> Repair is not complete, refer to appropriate symptom list.

No >> Repair is complete.

U1414-IMPLAUSIBLE/MISSING ECU CONFIGURATION DATA

For a complete wiring diagram **Refer to Section 8W**.

- **When Monitored:**
  With the ignition on. The ORC on board diagnostics continuously monitors the CAN Bus message from the FCM containing the ORC Configuration Data.
- **Set Condition:**
  This DTC will set if the appropriate CAN Bus message is not received by the ORC.

Possible Causes
FRONT CONTROL MODULE

Diagnostic Test

1. FRONT CONTROL MODULE FAILURE

Turn the ignition on.

With the scan tool, read FCM DTCs.

Does the scan tool display any Front Control Module DTCs?

Yes >> Select appropriate symptom from Symptom List. Repair all FCM active DTCs and before diagnosing the ORC DTCs.

No >> Replace the Front Control Module in accordance with the Service Information.
Perform the *AIRBAG SYSTEM VERIFICATION TEST - VER 1.

U1415-IMPLAUSIBLE/MISSING VEHICLE CONFIGURATION DATA

For a complete wiring diagram **Refer to Section 8W**.

- **When Monitored:**
  With the ignition on. The ORC on board diagnostics loads the ORC Configuration Data from the FCM CAN Bus message.
- **Set Condition:**
  This DTC will set if the CAN Bus message was received but the information is invalid or corrupt.

Possible Causes
OCCUPANT RESTRAINT CONTROLLER (ORC)

Diagnostic Test

1. OCCUPANT RESTRAINT CONTROLLER

WARNING: To avoid personal injury or death, turn the ignition off, disconnect the battery and wait two minutes before proceeding.

WARNING: If the Occupant Restraint Controller is dropped at any time, it must be replaced. Failure to take the proper precautions can result in accidental airbag deployment and personal injury or death.

Disconnect the ORC harness connector(s).

NOTE: Check connectors - Clean and repair as necessary.

Repair

Replace the Occupant Restraint Controller in accordance with Service Information.

Perform the *AIRBAG SYSTEM VERIFICATION TEST - VER 1.

RESTRAINTS - SERVICE INFORMATION

TABLE OF CONTENTS

page

RESTRAINTS - SERVICE INFORMATION
DESCRIPTION 364
OPERATION 366
WARNING 367
DIAGNOSIS AND TESTING
AIRBAG SYSTEM 368
STANDARD PROCEDURE
HANDLING AIRBAGS 368
SERVICE AFTER AN AIRBAG DEPLOYMENT . 369
HANDLING NON-DEPLOYED
SUPPLEMENTAL RESTRAINTS 370
SPECIFICATIONS
RESTRAINTS 371
CHILD RESTRAINT ANCHOR
DESCRIPTION 372
OPERATION 373
CLOCKSPRING
DESCRIPTION 374
OPERATION 375
STANDARD PROCEDURE
CLOCKSPRING CENTERING 376
CURTAIN AIRBAG
DESCRIPTION 378
OPERATION 379
REMOVAL 379
INSTALLATION 381
DRIVER AIRBAG
DESCRIPTION 383
OPERATION 384
REMOVAL 385
INSTALLATION 385
DRIVER AIRBAG TRIM COVER
REMOVAL 386
INSTALLATION 386
FRONT SEAT BELT HEIGHT ADJUSTER
REMOVAL 388
INSTALLATION 389
IMPACT SENSOR
DESCRIPTION 391

page

OPERATION 392
REMOVAL 393
INSTALLATION 394
OCCUPANT CLASSIFICATION MODULE
DESCRIPTION 396
OPERATION 396
REMOVAL 397
INSTALLATION 398
OCCUPANT RESTRAINT CONTROLLER
DESCRIPTION 399
OPERATION 399
REMOVAL 400
INSTALLATION 402
PASSENGER AIRBAG
DESCRIPTION 404
OPERATION 405
REMOVAL 406
INSTALLATION 409
SEAT BELT AND RETRACTOR
REMOVAL 413
INSTALLATION 419
SEAT BELT BUCKLE
REMOVAL 425
INSTALLATION 426
SEAT BELT TENSIONER
DESCRIPTION 427
OPERATION 427
SEAT TRACK POSITION SENSOR
DESCRIPTION 428
OPERATION 428
REMOVAL 428
INSTALLATION 429
SEAT WEIGHT SENSOR
DESCRIPTION 430
OPERATION 430
REMOVAL 431
INSTALLATION 434

RESTRAINTS - SERVICE INFORMATION

DESCRIPTION

The Occupant Restraint System include both active and passive types. Active restraints are those which require the vehicle occupants to take some action to employ, such as fastening a seat belt; while passive restraints require no action by the vehicle occupants to be employed.

ACTIVE RESTRAINTS

The active restraints include:

- **Front Seat Belts** - Both front seating positions are equipped with three-point seat belt systems employing lower B-pillar mounted inertia latch-type emergency locking retractors, height-adjustable upper B-pillar mounted turning loops, a traveling lower seat belt anchor secured to the outboard side of the seat frame, and a traveling end-release seat belt buckle secured to the inboard side of the seat frame. The driver side front seat belt retractor includes an integral seat belt switch that detects whether the driver side front seat belt has been fastened.
- **Second Row Seat Belts** - All three second row seating positions are equipped with three-point seat belt systems. The outboard seating position belts employ lower C-pillar mounted inertia latch-type emergency locking retractors, self-cinching latch plates for compatibility with child seats, fixed lower seat belt anchors secured to the floor panel. The center position retractor is secured within the center rear seat back panel, and the fixed lower seat belt anchor and the fixed end-release buckle are both secured to the floor panel.
- **Child Restraint Anchors** - All vehicles are equipped with three, fixed-position, child seat upper tether anchors for the second row seating. These upper anchors are integral to the rear shelf panel on sedans, and the back of each second row seat back on wagons. Two lower anchors are also provided for each second row seating position. These lower anchors are accessed from the front of the rear seat where the seat back meets the seat cushion.

PASSIVE RESTRAINTS

The passive restraints include the following:

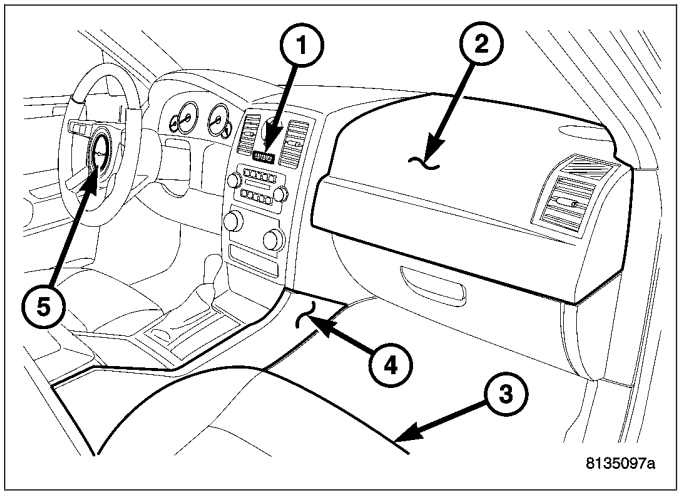

- **Dual Front Airbags** - Multistage driver and front passenger airbags are standard in this model. This airbag system is a passive, inflatable, Supplemental Restraint System (SRS) and vehicles with this equipment can be readily identified by the “SRS - AIRBAG” logo molded into the driver airbag trim cover in the center of the steering wheel and also into the passenger airbag door on the top of the instrument panel above the glove box. Vehicles with the airbag system can also be identified by the airbag indicator, which will illuminate in the Electro-Mechanical Instrument Cluster (EMIC) for about seven seconds as a bulb test each time the ignition switch is turned to the On position. A pyrotechnic-type seat belt tensioner is also integral to the driver and passenger front seat belt retractors to work in conjunction with the dual front airbags.
- **Occupant Classification System** - Vehicles manufactured for sale in North America (except Mexico) also include an Occupant Classification System (OCS) with components that are located on the front seats. These components include an Occupant Classification Module (OCM) and four seat weight sensors on the passenger seat, and a seat track position sensor on the driver seat. Vehicles equipped with the OCS components can be readily identified by a passenger airbag disabled indicator located just above the radio, between the a/c outlets on the instrument panel.
- **Curtain Airbags** - Curtain airbags are available when it is also equipped with dual front airbags. This airbag system is a passive, inflatable, Supplemental Restraint System (SRS) and can be readily identified by a molded identification trim button with the “SRS - AIRBAG” logo located on the headliner above each B-pillar.

The supplemental restraint system includes the following major components, which are described in further detail elsewhere in this service information:



- **Airbag Indicator** - The airbag indicator is integral to the ElectroMechanical Instrument Cluster (EMIC), which is located on the instrument panel in front of the driver.
- **Clockspring** - The clockspring is located near the top of the steering column, directly beneath the steering wheel.
- **Curtain Airbag** - In vehicles equipped with this option, a curtain airbag is secured to each inside roof side rail, and extends from the A-pillar to the D-pillar. The curtain airbags are concealed above the headliner trim.
- **Driver Airbag** - The driver airbag is located in the center of the steering wheel, beneath the driver airbag trim cover.
- **Driver Knee Blocker** - The driver knee blocker is a structural unit secured to the back side of and integral to the instrument panel steering column opening cover.
- **Front Impact Sensor** - Two front impact sensors are used on vehicles equipped with dual front airbags, one left side and one right side. One sensor is located on the back side of each vertical member of the radiator support.
- **Occupant Classification Module** - Vehicles equipped with the Occupant Classification System (OCS) include an Occupant Classification Module (OCM) which is secured to the underside of the passenger side front seat cushion frame.
- **Occupant Restraint Controller** - The Occupant Restraint Controller (ORC) is located on a mount on the floor panel transmission tunnel in front of the transmission gear selector, and is concealed below the instrument panel.
- **Passenger Airbag** - The passenger airbag is located in the instrument panel, beneath the passenger airbag door on the top of the instrument panel above the glove box on the passenger side of the vehicle.
- **Passenger Airbag Disabled Indicator** - The Occupant Classification System (OCS) includes a passenger airbag disabled indicator which is located just above the radio in the instrument panel center stack, between the a/c outlets.
- **Passenger Knee Blocker** - The passenger knee blocker is a structural reinforcement that is integral to and concealed within the glove box door.
- **Seat Belt Tensioner** - A seat belt tensioner is integral to both front seat belt retractor units on vehicles equipped with dual front airbags. The seat belt retractor and tensioner units are secured to the right and left inner B-pillars and concealed beneath the lower B-pillar trim.
- **Seat Track Position Sensor** - The Occupant Classification System (OCS) includes two seat track position sensors. One sensor is located on the inboard side of the outboard seat adjuster track on both the driver and the passenger front seats.
- **Seat Weight Sensor** - Vehicles equipped with the Occupant Classification System (OCS) include four seat weight sensors, one on each corner of the passenger side front seat between the seat cushion frame and the seat adjuster tracks.
- **Side Impact Sensor** - Four side impact sensors are used on vehicles equipped with the curtain airbags, two on each side of the vehicle. One sensor is located near each right and left side B-pillar and C-pillar concealed behind the interior trim.

The ORC, the OCM, and the EMIC each contain a microprocessor and programming that allow them to communicate with each other using the Controller Area Network (CAN) data bus. This method of communication is used by

the ORC for control of the airbag indicator in the EMIC. (Refer to 8 - ELECTRICAL/ELECTRONIC CONTROL MODULES/COMMUNICATION - DESCRIPTION).

OPERATION

ACTIVE RESTRAINTS

The primary passenger restraints in this or any other vehicle are the seat belts and child restraint anchors. Seat belts and child restraint anchors are referred to as an active restraint because the vehicle occupants are required to physically fasten and properly adjust these restraints in order to benefit from them. See the owner's manual in the vehicle glove box for more information on the features, use and operation of all of the factory-installed active restraints.

PASSIVE RESTRAINTS

The passive restraints are referred to as a supplemental restraint system because they were designed and are intended to enhance the protection for the occupants of the vehicle **only** when used in conjunction with the seat belts. They are referred to as passive restraints because the vehicle occupants are not required to do anything to make them operate; however, the vehicle occupants must be wearing their seat belts in order to obtain the maximum safety benefit from the factory-installed supplemental restraint system.

The supplemental restraint system electrical circuits are continuously monitored and controlled by a microprocessor and software contained within the Occupant Restraint Controller (ORC). An airbag indicator in the ElectroMechanical Instrument Cluster (EMIC) illuminates for about seven seconds as a bulb test each time the ignition switch is turned to the On or Start positions. Following the bulb test, the airbag indicator is turned on or off by the ORC to indicate the status of the supplemental restraint system. If the airbag indicator comes on at any time other than during the bulb test, it indicates that there is a problem in the supplemental restraint system electrical circuits. Such a problem may cause airbags not to deploy when required, or to deploy when not required.

Deployment of the supplemental restraints depends upon the angle and severity of an impact. Deployment is not based upon vehicle speed; rather, deployment is based upon the rate of deceleration as measured by the forces of gravity (G force) upon the impact sensors. When an impact is severe enough, the microprocessor in the ORC signals the inflator of the appropriate airbags to deploy their cushions. The front seat belt tensioners are provided with a deployment signal by the ORC in conjunction with the front airbags.

During a frontal vehicle impact, the knee blockers work in concert with properly fastened and adjusted seat belts to restrain both the driver and the front seat passenger in the proper position for an airbag deployment. The knee blockers also absorb and distribute the crash energy from the driver and the front seat passenger to the structure of the instrument panel. The seat belt tensioners remove the slack from the front seat belts to provide further assurance that the driver and front seat passenger are properly positioned and restrained for an airbag deployment.

The airbag deployment and deflation occur very rapidly. In a typical 48 kilometer-per-hour (30 mile-per-hour) barrier impact, from the moment of impact until the airbags are fully inflated takes about 40 milliseconds. Within one to two seconds from the moment of impact, the airbags are almost entirely deflated. The times cited for these events are approximations, which apply only to a barrier impact at the given speed. Actual times will vary somewhat, depending upon the vehicle speed, impact angle, severity of the impact, and the type of collision.

When the ORC monitors a problem in any of the dual front airbag system circuits or components, including the seat belt tensioners, it stores a fault code or Diagnostic Trouble Code (DTC) in its memory circuit and sends an electronic message to the EMIC to turn on the airbag indicator. Proper testing of the supplemental restraint system components, the Controller Area Network (CAN) data bus, the electronic message inputs to and outputs from the EMIC or the ORC, as well as the retrieval or erasure of a DTC from the ORC or the EMIC requires the use of a diagnostic scan tool and the appropriate diagnostic information.

See the owner's manual in the vehicle glove box for more information on the features, use and operation of all of the passive restraints.

OCCUPANT CLASSIFICATION SYSTEM

In vehicles equipped with the Occupant Classification System (OCS), the OCS automatically suppresses or enables passenger airbag and seat belt tensioner operation based upon whether or not the passenger front seat is occupied and, if the seat is occupied, classifies the size of the occupant and whether the seat is occupied by a child seat.

The OCS has an Occupant Classification Module (OCM) that monitors inputs from the seat weight sensors under the passenger side front seat cushion and from the seat track position sensors on the passenger side and driver

side seat adjuster tracks. Based upon those inputs the microprocessor within the OCM classifies the occupant of the passenger front seat, and the proximity of each front seat to the front airbags. The OCM then sends electronic occupant classification messages to the Occupant Restraint Controller (ORC). The microprocessor and programming of the ORC determines whether to enable or disable the deployment circuits for the passenger airbag and seat belt tensioner; and, if enabled, what force level should be used to deploy each front airbag.

The OCS electrical circuits and components are continuously monitored by the OCM, and the OCM is continuously monitored by the ORC. A passenger airbag disabled indicator is located in the instrument panel center stack just above the radio, between the a/c outlets. This indicator receives battery current whenever the ignition switch is in the On or Start positions, and illuminates only when the ORC pulls the indicator control circuit to ground. The indicator illuminates for about seven seconds as a bulb test each time the ignition switch is turned to the On or Start positions. Following the bulb test, the indicator is turned on or off by the ORC based upon the electronic occupant classification messages received from the OCM. This indicator is illuminated whenever the seat is occupied and passenger airbag and seat belt tensioner operation has been suppressed, and is turned off whenever the seat is empty or when the seat is occupied and the passenger airbag and seat belt tensioner are enabled.

When the OCM monitors a problem in any of the OCS circuits or components, it stores a fault code or DTC in its memory circuit and sends an electronic message to the ORC. The ORC then sends an electronic message to the Electro-Mechanical Instrument Cluster (EMIC) to turn on the airbag indicator. If for any reason the OCM is unable to classify the occupant it sends an electronic message to the ORC, and the ORC suppresses passenger airbag and seat belt tensioner operation. Proper testing of the OCS components, the Controller Area Network (CAN) data bus, the electronic message inputs to and outputs from the OCM, the EMIC or the ORC, as well as the retrieval or erasure of a DTC from the OCM, the ORC or the EMIC requires the use of a diagnostic scan tool and the appropriate diagnostic information.

See the owner's manual in the vehicle glove box for more information on the features, use and operation of the OCS.

WARNING

Disconnect and isolate the battery negative cable before beginning any airbag system component diagnosis, testing, removal, or installation procedures. Allow system capacitor to discharge for two minutes before beginning any component service. This will disable the airbag system. Failure to disable the airbag system may result in accidental airbag deployment, personal injury, or death.

Do not place an intact undeployed airbag face down on a solid surface. The airbag will propel into the air if accidentally deployed and may result in personal injury or death.

When carrying or handling an undeployed airbag, the trim side (face) of the airbag should be pointing towards the body to minimize possibility of injury if accidental deployment occurs. Failure to do this may result in personal injury or death.

Replace airbag system components with Mopar® replacement parts. Substitute parts may appear interchangeable, but internal differences may result in inferior occupant protection. Failure to do so may result in occupant personal injury or death.

Wear safety glasses, rubber gloves, and long sleeved clothing when cleaning powder residue from vehicle after an airbag deployment. Powder residue emitted from a deployed airbag can cause skin irritation. Flush affected area with cool water if irritation is experienced. If nasal or throat irritation is experienced, exit the vehicle for fresh air until the irritation ceases. If irritation continues, see a physician.

Do not use a replacement airbag that is not in the original packaging. This may result in improper deployment, personal injury, or death.

The factory installed fasteners, screws and bolts used to fasten airbag components have a special coating and are specifically designed for the airbag system. Do not use substitute fasteners. Use only original equipment fasteners listed in the parts catalog when fastener replacement is required.

During, and following, any child restraint anchor service, due to impact event or vehicle repair, carefully inspect all mounting hardware, tether straps, and anchors for proper installation, operation, or damage. If a child restraint anchor is found damaged in any way, the anchor must be replaced. Failure to do this may result in personal injury or death.

Deployed and nondeployed airbags may or may not have live pyrotechnic material within the airbag inflator. Do not dispose of driver/passenger/curtain airbags or seat belt tensioners unless you are sure of complete deployment. Refer to the Hazardous Substance Control System for proper disposal. Dispose of deployed airbags and tensioners consistent with state, provincial, local, and federal regulations.

After any airbag component testing or service, do not connect the battery negative cable (Refer to 8 - ELECTRICAL/RESTRAINTS - DIAGNOSIS AND TESTING - AIRBAG SYSTEM) Personal injury or death may result if the system test is not performed first.

If the vehicle is equipped with the Occupant Classification System (OCS), do not connect the battery negative cable before performing the OCS Verification test using the scan tool and the appropriate diagnostic information. Personal injury or death may result if the system test is not performed properly.

Never replace both the Occupant Restraint Controller (ORC) and the Occupant Classification Module (OCM) at the same time. If both require replacement, replace one, then perform the airbag system test (Refer to 8 - ELECTRICAL/RESTRAINTS - DIAGNOSIS AND TESTING - AIRBAG SYSTEM) before replacing the other. Both the ORC and the OCM store OCS calibration data, which they transfer to one another when one of them is replaced. If both are replaced at the same time, an irreversible fault will be set in both modules and the OCS may malfunction and result in personal injury or death.

If both require replacement, replace one, then perform the airbag system test (Refer to 8 - ELECTRICAL/RESTRAINTS - DIAGNOSIS AND TESTING - AIRBAG SYSTEM) before replacing the other. Failure to do this may result in personal injury or death.

If equipped with OCS, the seat weight sensor is a sensitive, calibrated unit and must be handled carefully. Do not drop or handle roughly. If dropped or damaged, replace with another sensor. Failure to do so may result in occupant injury or death.

If equipped with OCS, the front passenger seat must be handled carefully as well. When removing the seat, be careful when setting on floor not to drop. If dropped, the sensor may be inoperative, could result in occupant injury, or possibly death.

If equipped with OCS, when the passenger front seat is on the floor, no one should sit in the front passenger seat. This uneven force may damage the sensing ability of the seat weight sensors. If sat on and damaged, the sensor may be inoperative, could result in occupant injury, or possibly death.

DIAGNOSIS AND TESTING

AIRBAG SYSTEM

1. With the battery negative cable disconnected, connect the scan tool to the Data Link Connector (DLC).
2. Turn the ignition key to the ON position, then exit vehicle with the scan tool.
3. After checking that no one is inside the vehicle, connect the battery negative remote terminal.
4. Read and record the **ACTIVE** Diagnostic Trouble Code (DTC) data.
5. Read and record any **STORED** DTC's.
6. Refer to the proper diagnostic information if any DTC's are found in Step 4 and Step 5.
7. If the airbag warning lamp either fails to light, or goes ON and stays ON, there is a system malfunction. To test the airbag warning lamp (bulb) operation in the cluster (Refer to 8 - ELECTRICAL/INSTRUMENT CLUSTER - DIAGNOSIS AND TESTING). Refer to the appropriate diagnostic information for any other system problems.

STANDARD PROCEDURE

HANDLING AIRBAGS

DEPLOYED AIRBAG

WARNING: The vehicle interior may contain a very small amount of powder, a by-product of airbag deployment. This powder can irritate the skin, eyes, nose and throat. Wear safety glasses, rubber gloves, and long sleeved clothing when cleaning any of the powder residue from the vehicle. If you find that the cleanup is irritating your skin, run cool water over the affected area. Also, if you experience nasal or throat irritation, exit the vehicle for fresh air until the irritation ceases. If irritation continues, see a physician.

UNDEPLOYED AIRBAG

WARNING: The airbags must be stored in its original special container until used for service. At no time should a source of electricity be permitted near the inflator on the back of an airbag. When carrying or handling an undeployed airbag, the trim side of the airbag should be pointing toward the body to minimize the possibility of personal injury or death if accidental deployment occurs. Do not place undeployed airbag face down on a solid surface, the airbag will propel into the air if accidental deployment occurs.

SERVICE AFTER AN AIRBAG DEPLOYMENT

DRIVER AIRBAG

After a Driver Airbag has been deployed due to a collision, the following **MUST** be replaced:

- Driver Airbag
- Clockspring Assembly
- Steering Wheel
- Complete Steering Column Assembly w/Lower Steering Column Coupler

All other airbag and vehicle components should be closely inspected following any airbag deployment, and should be replaced when visible damage is incurred.

WARNING: Do not connect the battery negative cable (Refer to 8 - ELECTRICAL/RESTRAINTS - DIAGNOSIS AND TESTING - AIRBAG SYSTEM). Personal injury or death may result if the system test is not performed first.

PASSENGER AIRBAG

After a Passenger Airbag has been deployed due to a collision. the following **MUST** be replaced:

- Passenger Airbag
- Instrument Panel Top Pad Assembly

All other airbag and vehicle components should be closely inspected following any airbag deployment, and should be replaced when visible damage is incurred.

WARNING: Do not connect the battery negative cable (Refer to 8 - ELECTRICAL/RESTRAINTS - DIAGNOSIS AND TESTING - AIRBAG SYSTEM). Personal injury or death may result if the system test is not performed first.

CURTAIN AIRBAG

After a Curtain Airbag has been deployed due to a collision, the following **MUST** be replaced:

- Curtain Airbag Assembly
- Headliner
- A, B, and C-Pillar Trim on deployed side.

All other airbag and vehicle components should be closely inspected following any airbag deployment, and should be replaced when visible damage is incurred.

WARNING: Do not connect the battery negative cable (Refer to 8 - ELECTRICAL/RESTRAINTS - DIAGNOSIS AND TESTING - AIRBAG SYSTEM). Personal injury or death may result if the system test is not performed first.

OCCUPANT CLASSIFICATION SYSTEM (OCS)

After an impact event, either front, rear, or side, the OCS system components need to be inspected and replaced if found to be damaged.

This includes:

- Occupant Classification Module (OCM)
- Passenger Airbag Disabled Indicator

- Seat Weight Sensor

WARNING: Never replace both the Occupant Restraint Controller (ORC) and the Occupant Classification Module (OCM) at the same time. If both require replacement, replace one, then perform the Airbag System test (Refer to 8 - ELECTRICAL/RESTRAINTS - DIAGNOSIS AND TESTING - AIRBAG SYSTEM) before replacing the other. Both the ORC and the OCM store Occupant Classification System (OCS) calibration data, which they transfer to one another when one of them is replaced. If both are replaced at the same time, an irreversible fault will be set in both modules and the OCS may malfunction and result in personal injury or death.

Whether replaced or not, the OCS must be re-zeroed to make sure that the system in within proper parameters to sense the occupants weight correctly.

WARNING: Do not connect the battery negative cable (Refer to 8 - ELECTRICAL/RESTRAINTS - DIAGNOSIS AND TESTING - AIRBAG SYSTEM). Personal injury or death may result if the system test is not performed first.

WARNING: Following successful completion of the Airbag System test procedure, the Occupant Classification System Verification Test must be done using a scan tool and the appropriate diagnostic information. Personal injury or death may result if the system test is not performed.

SEAT BELTS AND TENSIONERS

After a frontal impact where an airbag has been deployed due to a collision, the following **MUST** be replaced:

- Front Seat Belt and Retractor (driver and passenger) with integral Tensioners.

WARNING: Do not connect the battery negative cable (Refer to 8 - ELECTRICAL/RESTRAINTS - DIAGNOSIS AND TESTING - AIRBAG SYSTEM). Personal injury or death may result if the system test is not performed first.

All other seat belts should be closely inspected for cuts, tears, fraying, or damage in any way following any frontal impact or airbag deployment. The other seat belts are to be replaced when visible damage is incurred. Inspect the Lower Anchors and Tether for CHildren (LATCH) child restraint anchors for damage after an impact event and replace as needed.

CLEAN UP PROCEDURE

Roll or fold the airbag towards its mounting point (i.e. instrument panel, steering wheel, knee blocker, curtain, or seat back). Then tape the ripped cover over the deployed airbag if applicable.

Use a vacuum cleaner to remove any residual powder from the vehicle interior. Work from the outside in to avoid kneeling or sitting in a contaminated area. Vacuum the heater and A/C outlets as well. If the heater or air conditioner was in RECIRC mode at time of airbag deployment, operate blower motor on low speed and vacuum powder residue expelled from the heater and A/C outlets. Multiple vacuum cleaning may be necessary to decontaminate the interior of the vehicle.

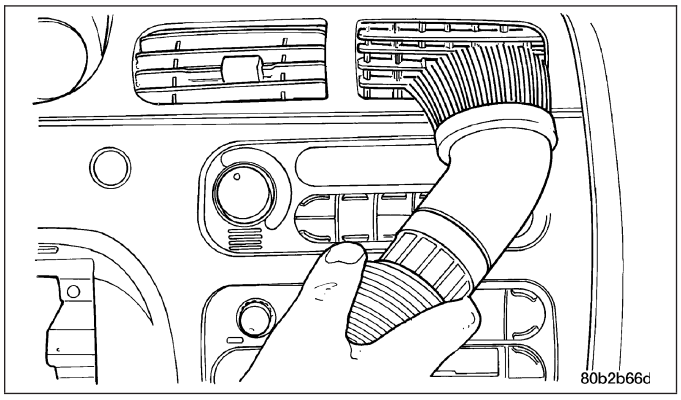

HANDLING NON-DEPLOYED SUPPLEMENTAL RESTRAINTS

At no time should any source of electricity be permitted near the inflator on the back of a non-deployed airbag or seat belt tensioner. When carrying a non-deployed airbag, the trim cover or airbag cushion side of the unit should be pointed away from the body to minimize injury in the event of an accidental deployment. If the airbag unit is placed on a bench or any other surface, the trim cover or airbag cushion side of the unit should be face up to minimize movement in the event of an accidental deployment.

When handling a non-deployed seat belt tensioner, take proper care to keep fingers out from under the retractor cover and away from the seat belt webbing where it exits from the retractor cover. In addition, the supplemental restraint system should be disarmed whenever any steering wheel, steering column, seat belt tensioner, airbag, impact sensor, or instrument panel components require diagnosis or service. Failure to observe this warning could result in accidental airbag deployment and possible personal injury.

All damaged, faulty or non-deployed airbags and seat belt tensioners which are replaced on vehicles are to be handled and disposed of properly. If an airbag or seat belt tensioner unit is faulty or damaged and non-deployed, refer to the Hazardous Substance Control System for proper disposal. Dispose of all non-deployed and deployed airbags and seat belt tensioners in a manner consistent with state, provincial, local and federal regulations.

SUPPLEMENTAL RESTRAINT STORAGE

Airbags and seat belt tensioners must be stored in their original, special container until they are used for service. Also, they must be stored in a clean, dry environment; away from sources of extreme heat, sparks, and high electrical energy. Always place or store any airbag on a surface with its trim cover or airbag cushion side facing up, to minimize movement in case of an accidental deployment.

SPECIFICATIONS

RESTRAINTS

TORQUE SPECIFICATIONS

DESCRIPTION	N-m	Ft. Lbs.	In. Lbs.
Curtain airbag inflator to C/D-pillar bolt	11	8	97
Curtain airbag roof side rail retaining screws	5	4	44
Driver airbag retaining bolts	10	7	89
Front seat belt anchor nut	37	27.5	328
Front seat belt buckle retaining nut	43	31.5	381
Front seat belt guide retaining screw	3	2	27
Front seat belt height adjuster retaining bolts	32	23.5	283
Front seat belt retractor retaining bolt	32	23.5	283
Front seat belt turning loop retaining bolt	40	30	354
Impact sensor retaining screws	7	5	62
Left and right side passenger airbag mounting screws	3	2	27
Occupant classification module retaining screws	2	1	18
Occupant restraint controller retaining screws	11	8	97
Passenger airbag mounting bolts	12	9	106
Rear center seat belt retractor anchor nut	34	25	301
Rear seat belt anchor bolt	32	23.5	283
Rear seat belt buckle retaining nut	34	25	301
Rear seat belt turning loop retaining bolt	40	29.5	354
Seat weight sensor - adjuster to riser center retaining nut	45	33	398
Seat weight sensor to seat riser nuts	40	29.5	354
Sedan - Rear center seat belt retractor retaining nut	34	25	301
Sedan - Rear seat belt retractor retaining bolt	32	23	283
Wagon - Rear seat belt retractor retaining bolt	34	25	301
Wagon - Rear center seat belt retractor retaining nut	34	25	301

CHILD RESTRAINT ANCHOR

DESCRIPTION

The Lower Anchors and Tether for CHildren, or LATCH child restraint anchorage system provides for the installation of suitable child restraints in certain seating positions without using the seat belt provided for that seating position. The second row seats are equipped with a fixed-position child restraint upper tether anchor for both the center and the two outboard seating positions, and child restraint lower anchors for all three seating positions.

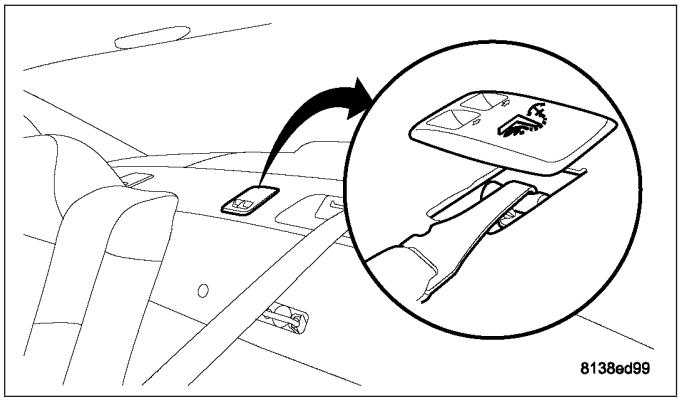

The three upper tether anchors are integral to the rear shelf panel on sedans and the seat back frame on wagons. These anchors are each constructed from a heavy-gauge steel wire loop. The child restraint upper tether anchors cannot be adjusted or repaired and, if faulty or damaged, they must be replaced.

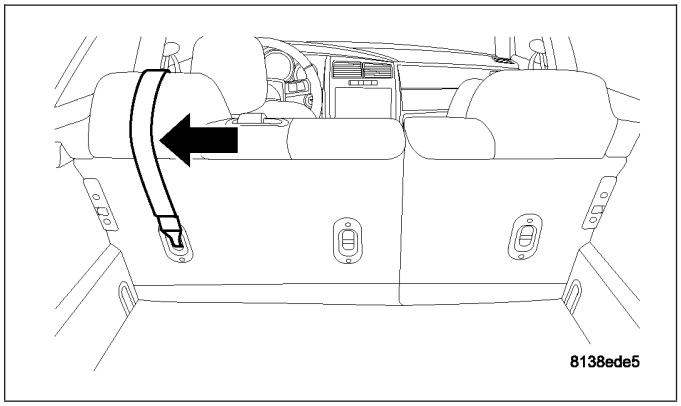

The lower anchors (1) are permanently mounted to the rear floor pan beneath the seat. These anchors are also constructed from a heavy-gauge steel wire loop welded to the floor pan. They are each accessed from the front of their respective seats, at each side where the seat back meets the seat cushion. These lower anchors cannot be adjusted or repaired and, if faulty or damaged, they must be replaced as a unit.

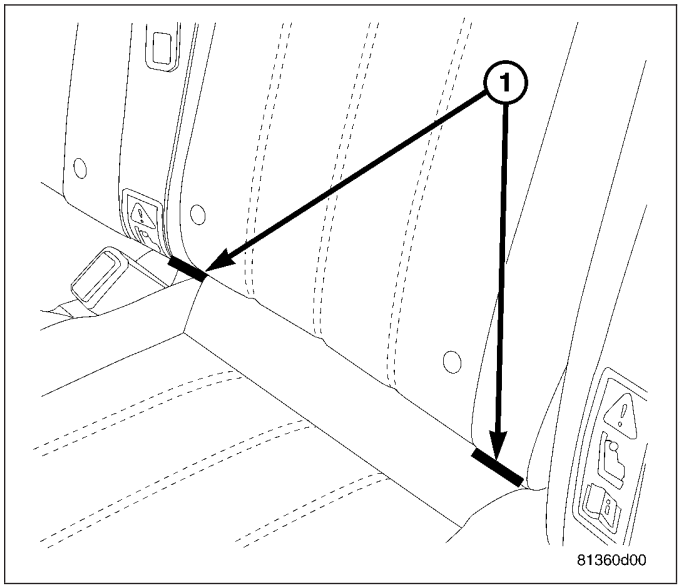

OPERATION

See the owner's manual in the vehicle glove box for more information on the proper use of all of the factory-installed child restraint anchors.

CLOCKSPRING

DESCRIPTION

The clockspring assembly is secured with three screws (1) onto the top of the Steering Column Control Module (SCCM) (Refer to 19 - STEERING/COLUMN/STEERING COLUMN CONTROL MODULE - DESCRIPTION) near the top of the steering column behind the steering wheel.

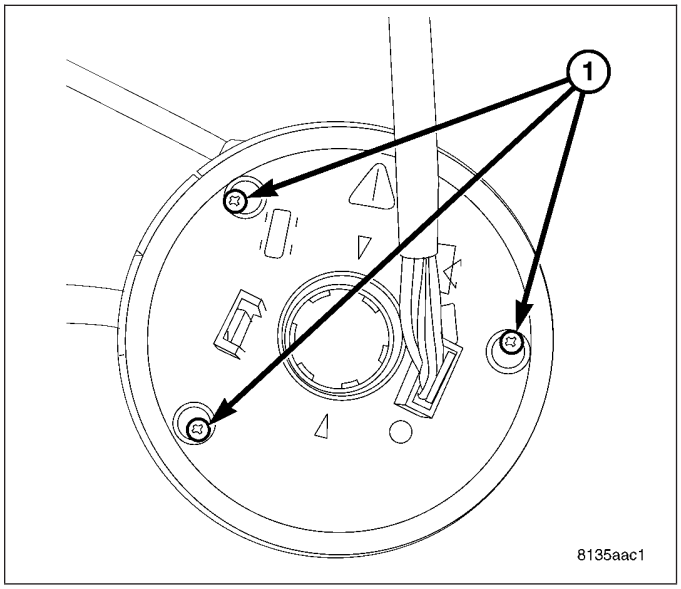

The clockspring consists of a flat, round molded plastic case. Within the plastic case is a spool-like molded plastic rotor with a hub. The surface of the rotor hub has a large center hole. Within the plastic case and wound around the rotor spool is a long ribbon-like tape that consists of several thin copper wire leads sandwiched between two thin plastic membranes. The outer end of the tape terminates at the connector terminals that align themselves into the SCCM self-docking connector that faces the instrument panel, while the inner end of the tape terminates at the pigtail wires and connector receptacles on the hub of the clockspring rotor that face the steering wheel.

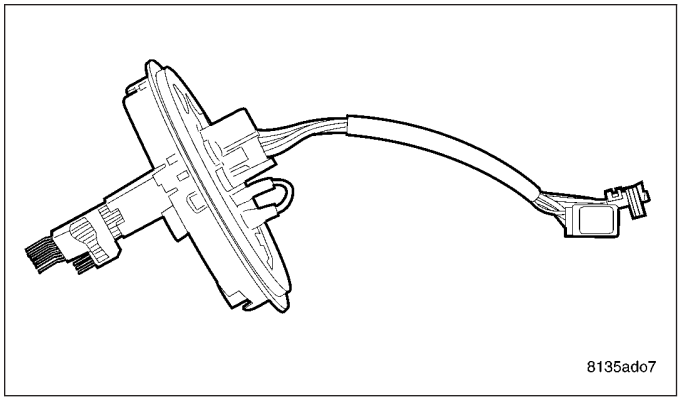

Service replacement clocksprings are shipped pre-centered and with the screws backed out and holding the clockspring into place. If reusing a clockspring or installing a new one that you are unsure if it is centered or not, (Refer to 8 - ELECTRICAL/RESTRAINTS/CLOCKSPRING - STANDARD PROCEDURE - CLOCKSPRING CENTERING).

The clockspring cannot be repaired. If the clockspring is faulty, damaged, or if the driver airbag has been deployed, the clockspring must be replaced.

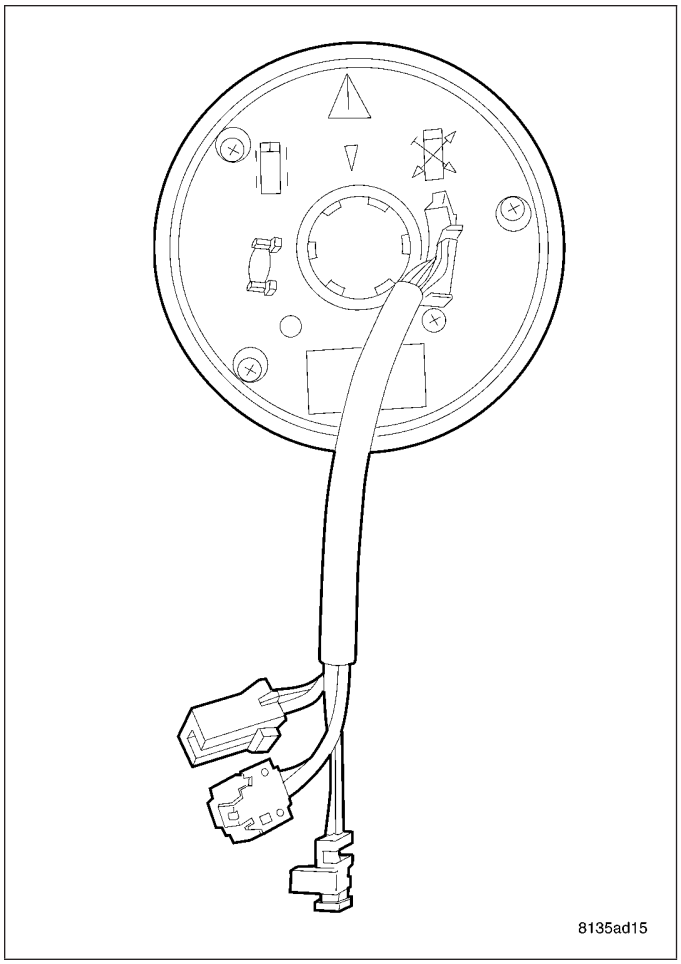

OPERATION

The clockspring is a mechanical electrical circuit component that is used to provide continuous electrical continuity between the fixed instrument panel wire harness and the electrical components mounted on or in the rotating steering wheel. On this model the rotating electrical components include the:

- Driver Airbag
- Horn Switch
- Steering Wheel Switches (if the vehicle is so equipped)

The clockspring case is positioned and secured to Steering Column Control Module (SCCM) mounting housing near the top of the steering column. The connector terminals on the tail of the fixed clockspring case connect the clockspring to the vehicle electrical system through the self-docking connector in the instrument panel wire harness.

The clockspring rotor is movable and is keyed to the steering column shaft that is molded onto the rotor hub. The lobe on the turn signal cancel cam on the lower surface of the clockspring rotor hub contact a turn signal cancel actuator of the multi-function switch to provide automatic turn signal cancellation.

Two short, yellow-sleeved pigtail wires on the upper surface of the clockspring rotor connect the clockspring to the multistage driver airbag, while a steering wheel wire harness connects the two connector receptacles on the upper surface of the clockspring rotor to the horn switch feed pigtail wire connector and, if the vehicle is so equipped, to the optional steering wheel switches on the steering wheel.

Like the clockspring in a timepiece, the clockspring tape has travel limits and can be damaged by being wound too tightly during full stop-to-stop steering wheel rotation. To prevent this from occurring, the clockspring is centered when it is installed on the steering column. Centering the clockspring indexes the clockspring tape to the movable steering components so that the tape can operate within its designed travel limits. However, if the clockspring is removed from the steering column or if the steering shaft is disconnected from the steering gear, the clockspring spool can change position relative to the movable steering components. The clockspring must be re-centered following completion of this service or the tape may be damaged.

Service replacement clocksprings are shipped pre-centered. The screws that retain the clockspring to the SCCM should not be removed until the clockspring has been installed on the SCCM. If the screws have been removed before the clockspring is installed on the SCCM, the clockspring centering procedure must be performed (Refer to 8 - ELECTRICAL/RESTRAINTS/CLOCKSPRING - STANDARD PROCEDURE - CLOCKSPRING CENTERING).

The clockspring is located within the SCCM. If the clockspring has to be replaced (Refer to 19 - STEERING/COLUMN/STEERING COLUMN CONTROL MODULE - DISASSEMBLY).

STANDARD PROCEDURE

CLOCKSPRING CENTERING

If the rotating tape (wire coil) in the clockspring is not positioned properly with the steering wheel and the front wheels, the clockspring may fail. The following procedure **MUST BE USED** to center the clockspring if it is not known to be properly positioned, or if the front wheels were moved from the straight ahead position.

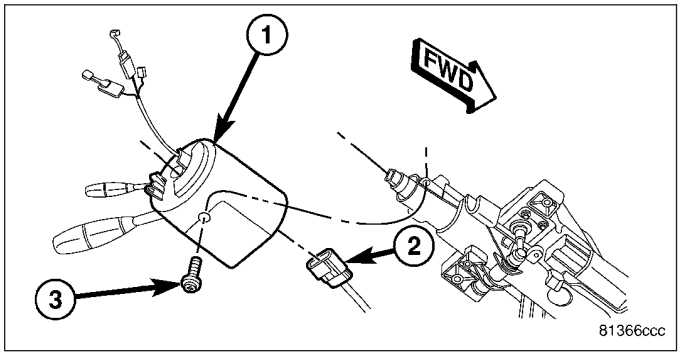

NOTE: Before starting this procedure, be certain to turn the steering wheel until the front wheels are in the straight-ahead position.

1. Position steering wheel and front wheels straight ahead.
2. Remove the Steering Column Control Module (SCCM) (Refer to 19 - STEERING/COLUMN/STEERING COLUMN CONTROL MODULE - REMOVAL).
3. Remove the clockspring (Refer to 19 - STEERING/COLUMN/STEERING COLUMN CONTROL MODULE - DISASSEMBLY).
4. The clockspring can rotate approximately 5 3/4 turns from lock to lock. To be properly centered, rotate the clockspring rotor clockwise until the rotor stops. Do not apply excessive force.
5. From the end of travel, rotate the rotor counterclockwise two turns and then keep going a little more until the wires end up on the right side of the column shaft (at the 3 o'clock position).

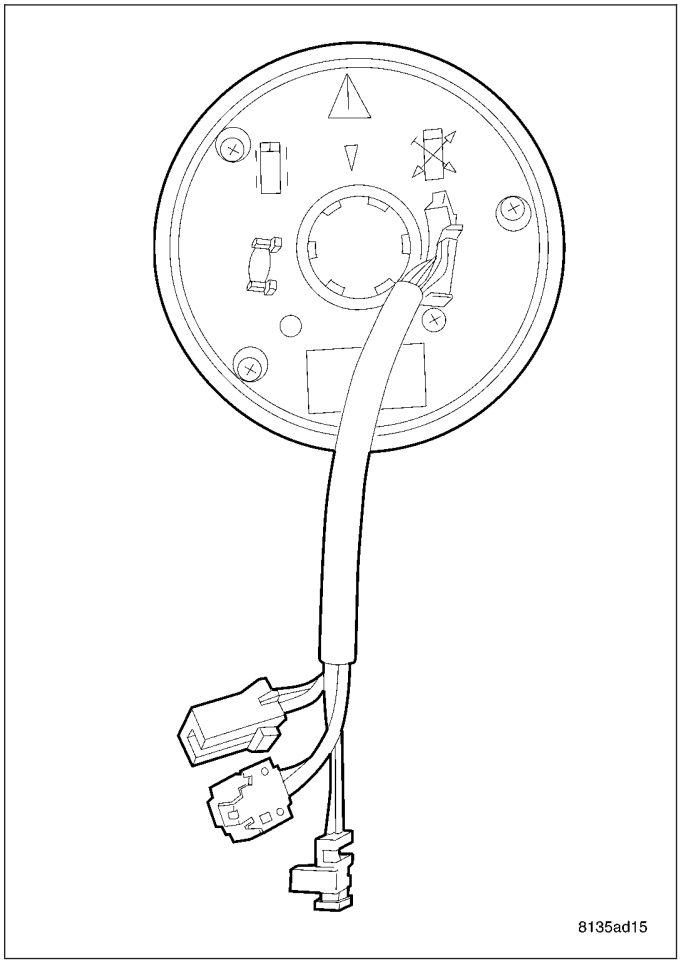

6. Install the SCCM (Refer to 19 - STEERING/COLUMN/STEERING COLUMN CONTROL MODULE - INSTALLATION)

WARNING: Do not connect the battery negative cable (Refer to 8 - ELECTRICAL/RESTRAINTS - DIAGNOSIS AND TESTING). Personal injury or death may result if the system test is not performed properly.

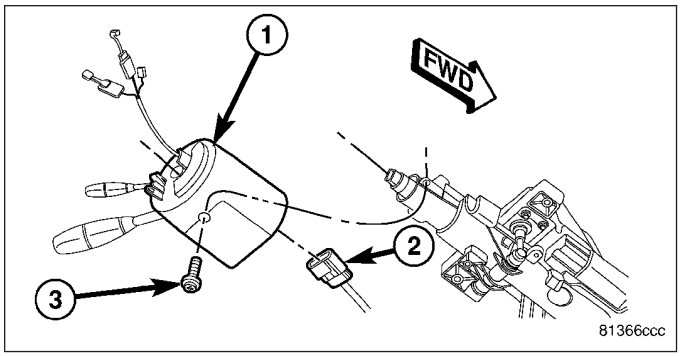

CURTAIN AIRBAG

DESCRIPTION

Curtain airbags are available when also equipped with dual front airbags. These airbags are passive, inflatable, Supplemental Restraint System (SRS) components, and can be readily identified by a molded identification trim button with the “SRS - AIRBAG” logo located near the top of each upper B-pillar trim panel. This system is designed to reduce injuries to the vehicle occupants in the event of a side impact collision.



Curtain airbags have two individually controlled curtain airbags. These airbags are concealed and mounted above the headliner where they are each secured to one of the roof side rails. Each folded airbag cushion extends along the roof rail from the A-pillar at the front of the vehicle to the D-pillar at the rear of the vehicle. The airbag cushion is initially secured during installation with plastic push-in fasteners to the roof rail.

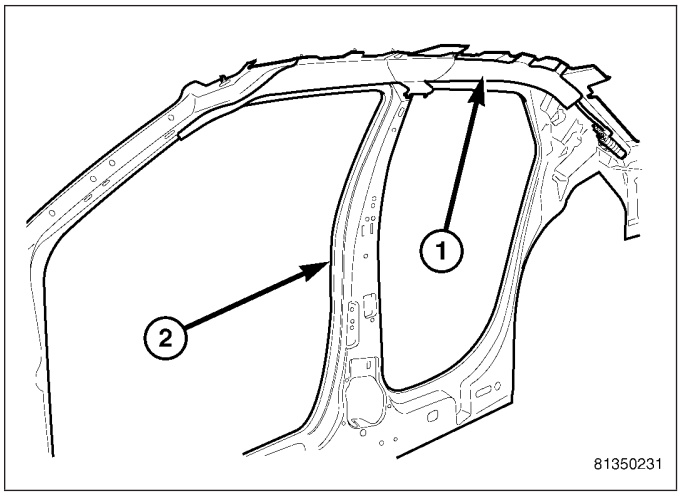

A long tether extends down the A-pillar from the front of the airbag cushion. A short tether is secured near the top of the D-pillar.

The hybrid-type inflator for each airbag is secured to the roof rail at the rear of airbag, back by the C and D-pillars. The entire assembly is secured to the inside of the roof rail with screws.

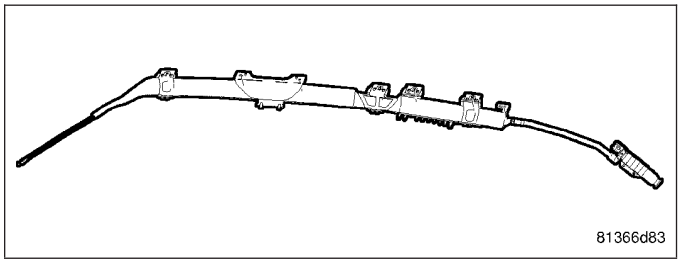

An airbag squib harness connector is routed up to the rear of the airbag inflator. The body harness then connects the curtain airbag to the Occupant Restraint Controller (ORC).

The curtain airbag cannot be adjusted or repaired and must be replaced if deployed, faulty, or in any way damaged. Once a curtain airbag has been deployed, the complete airbag, the headliner, the upper A, B, C and D-pillar trim, and all other visibly damaged components must be replaced.

OPERATION

Each curtain airbag is deployed individually by an electrical signal generated by the Occupant Restraint Controller (ORC) to which it is connected through squib circuits. The hybrid-type inflator assembly for each airbag contains a small canister of highly compressed inert gas. When the ORC sends the proper electrical signal to the airbag inflator, the electrical energy creates enough heat to ignite chemical pellets within the inflator.

Once ignited, these chemicals burn rapidly and produce the pressure necessary to rupture a containment disk in the inert gas canister. The inflator and inert gas canister are sealed and connected to a tubular manifold so that all of the released gas is directed into the folded curtain airbag cushion, causing the cushion to inflate. As the airbag cushion inflates it will drop down from the roof rail between the edge of the headliner and the side glass/body pillars to form a curtain-like cushion to protect the vehicle occupants during a side impact collision.

The front and rear tethers keep the airbag cushion taut to the side of the vehicle, thus ensuring that the bag will deploy in the proper position. Following the airbag deployment, the airbag cushion quickly deflates by venting the inert gas through the loose weave of the cushion fabric, and the deflated cushion hangs down loosely from the roof rail.

REMOVAL

NOTE: The sedan and wagon curtain airbags are mounted similar and are removed the same way.

1. Disconnect and isolate the battery negative cable.

WARNING: Wait two minutes for the airbag system reserve capacitor to discharge before beginning any airbag system or component service. Failure to do so may result in accidental airbag deployment, personal injury or death.

2. Remove the headliner from the vehicle (Refer to 23 - BODY/INTERIOR/HEADLINER - REMOVAL).
3. Disconnect the curtain airbag squib connector (2) from the inflator (3).

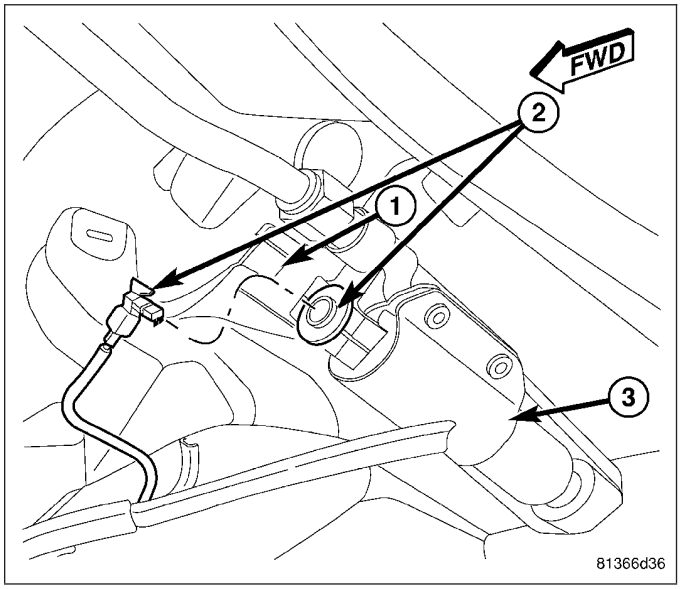

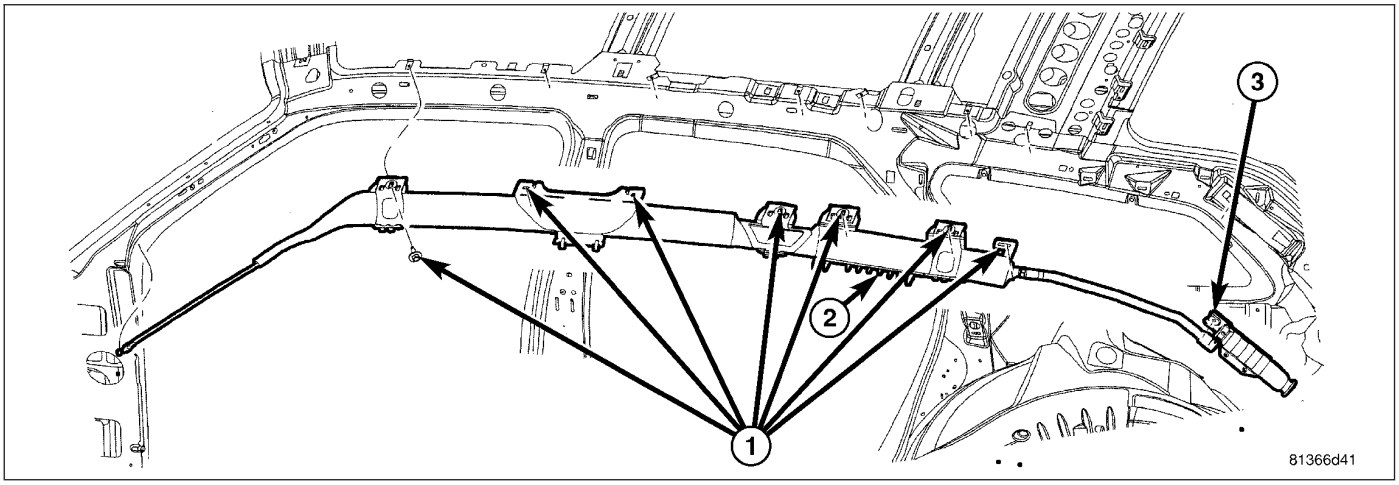

4. Remove the screws (1) that secure the curtain airbag to the spring nuts in the roof side rail.

5. Remove the push pin and unclip the front tether (2) from the A-pillar (1).

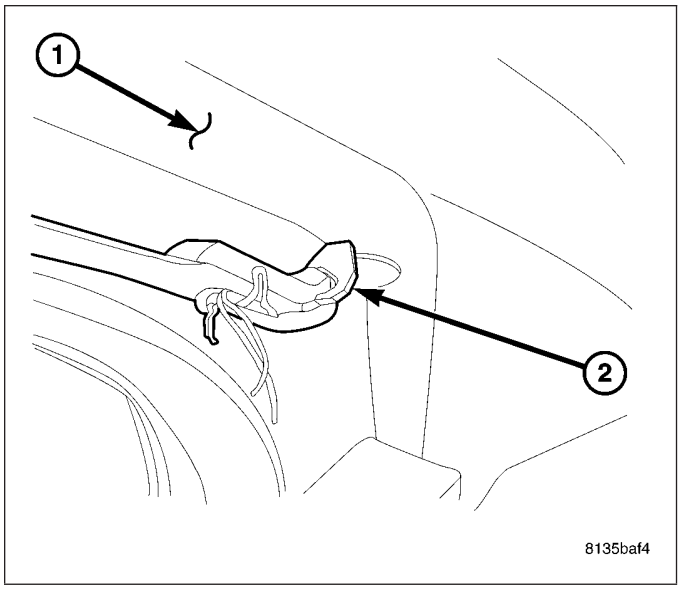

6. Remove the bolt (2) holding the inflator to the C/D-pillar.

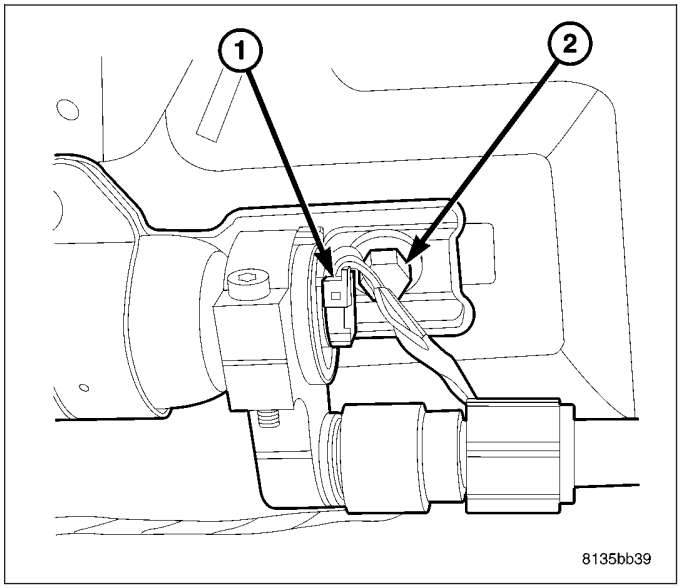

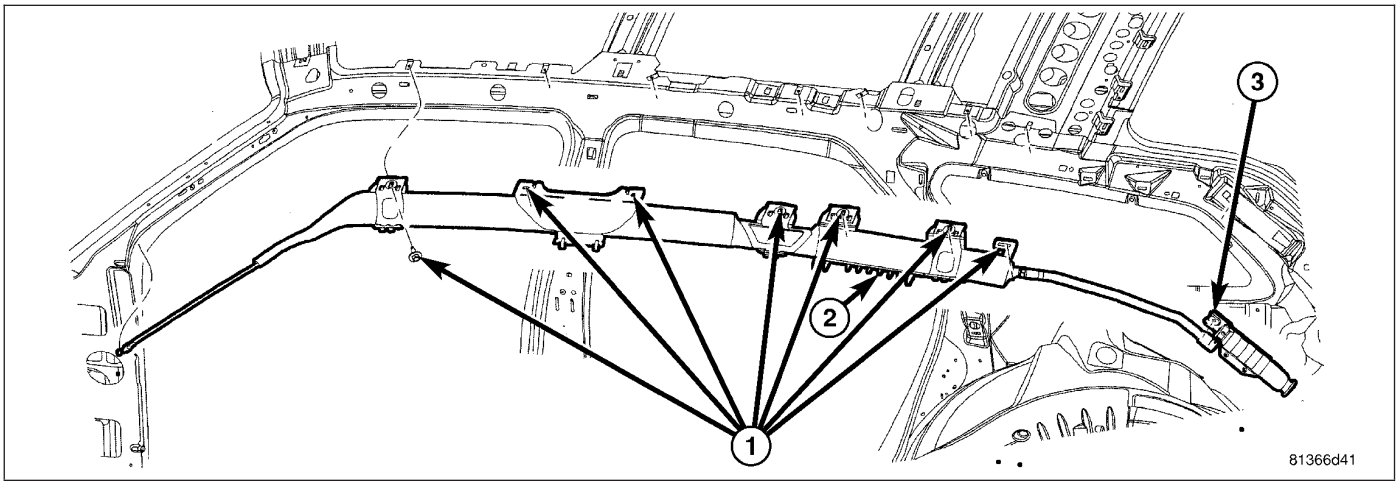

7. The curtain airbag will be held in place with push pins. Release the push pins and remove bag from vehicle.

INSTALLATION

NOTE: The sedan and wagon curtain airbags are mounted similar and are removed the same way.

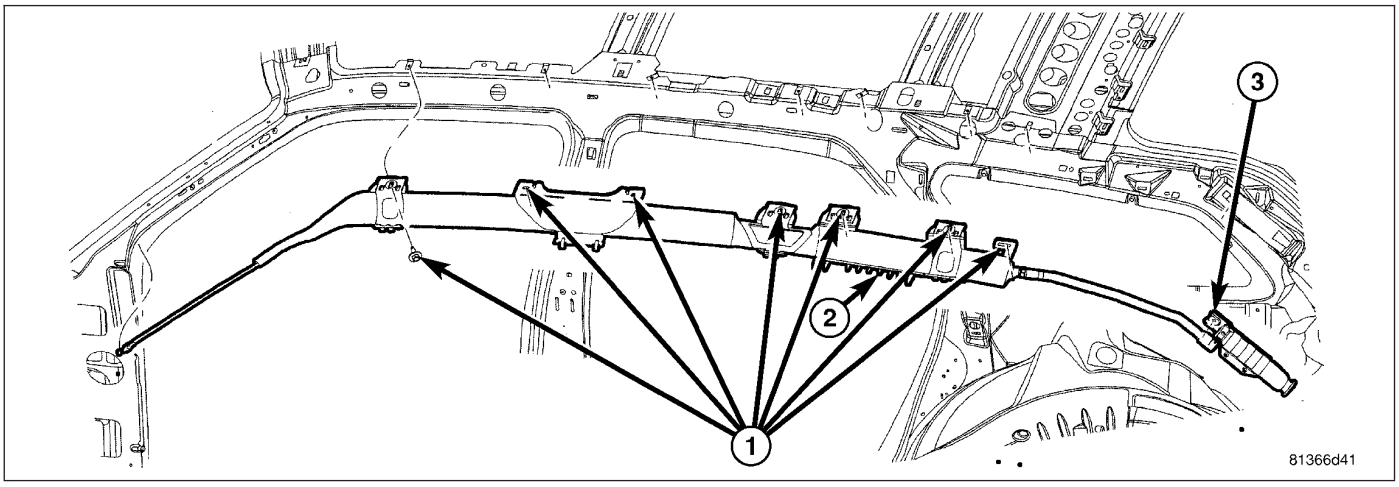

1. Position the curtain airbag in vehicle along roof side rail and install by fastening to roof side rail with integral push fasteners.
2. Install the bolt (2) holding the inflator to the C/D-pillar. Torque bolt to 11 N·m (97 in. lbs.).

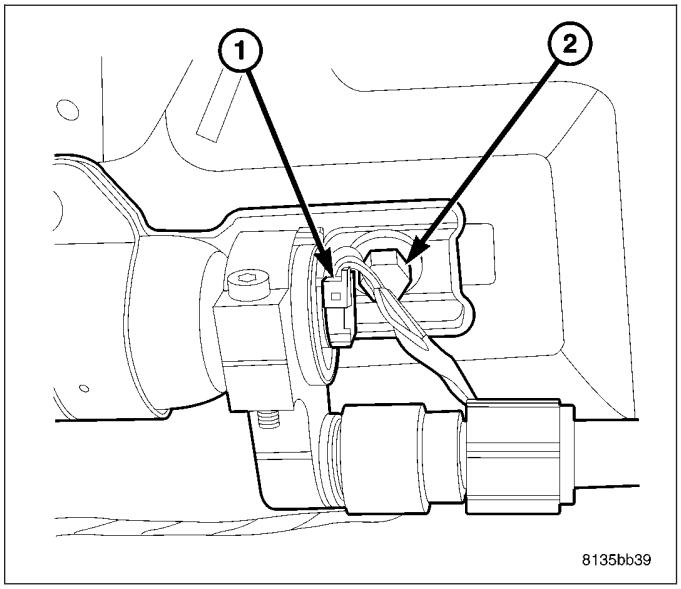

3. Clip the front tether (2) to the A-pillar (1) and install push fastener.

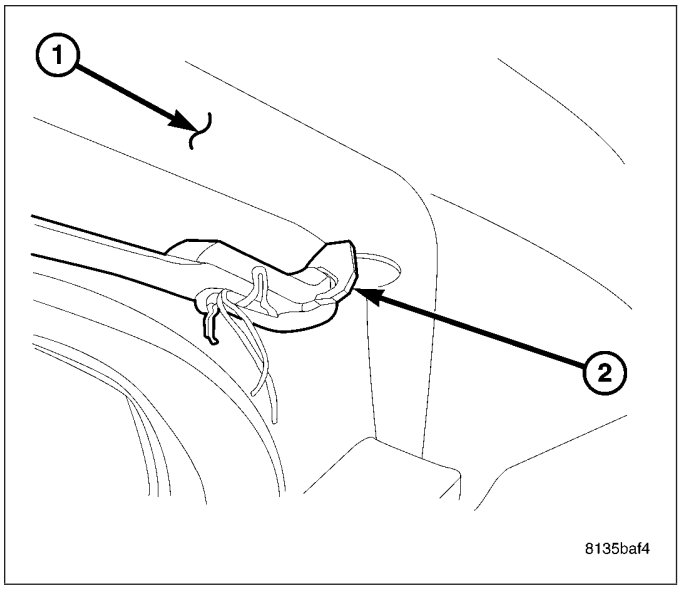

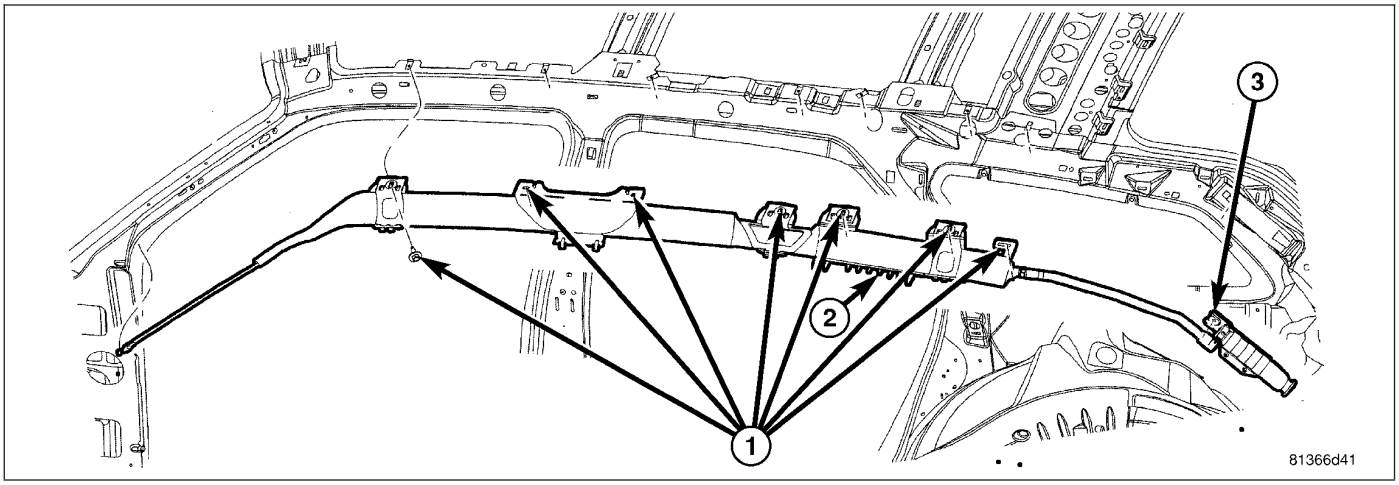

4. Install the screws (1) that secure the curtain airbag to the spring nuts in the roof side rail. Torque screws to 5 N·m (44 in. lbs.).
5. Connect the curtain airbag squib connector (2) to the inflator (3).
6. Install the headliner into the vehicle (Refer to 23 - BODY/INTERIOR/HEADLINER - INSTALLATION).

WARNING: Do not connect the battery negative cable (Refer to 8 - ELECTRICAL/RESTRAINTS - DIAGNOSIS AND TESTING - AIRBAG SYSTEM). Personal injury or death may result if the system test is not performed first.

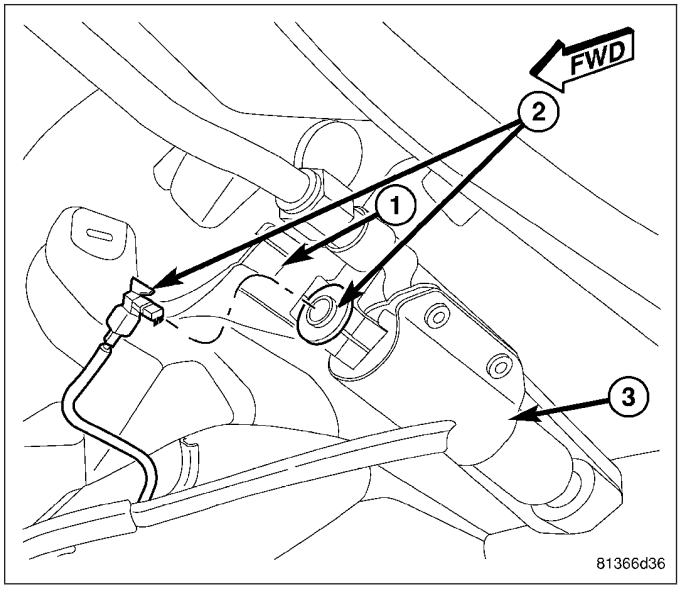

DRIVER AIRBAG

DESCRIPTION

The driver airbag used in this model is a multistage, Next Generation-type that complies with revised federal airbag standards to deploy with less force than those used in some prior models. A radial deploying fabric cushion with internal tethers is used. The airbag inflator is a dual-initiator, non-azide, pyrotechnic-type unit with four mounting studs and is secured to the stamped metal airbag housing by four flanged hex nuts. Two keyed and color-coded connector receptacles on the driver airbag inflator connect the two inflator initiators to the vehicle electrical system through two yellow-jacketed, two-wire pigtail harnesses of the clockspring.

The driver airbag unit cannot be repaired, and must be replaced if deployed or in any way damaged. The driver airbag trim cover and horn switch unit may be disassembled from the driver airbag unit, and is available for separate service replacement.

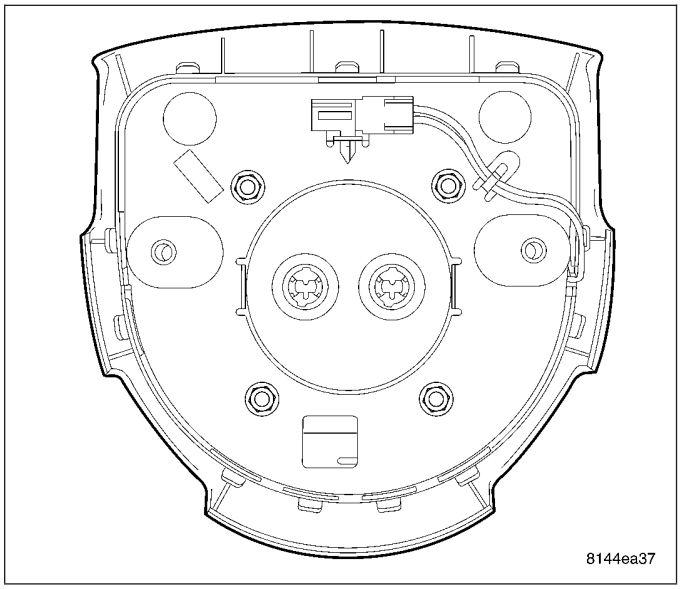

The driver airbag protective trim cover (1) is the most visible part of the driver airbag. The driver airbag is located in the center of the steering wheel (1), where it is secured with two screws to the armature of the four-spoke steering wheel. Concealed beneath the driver airbag trim cover are the horn switch, the folded airbag cushion, the airbag cushion retainer, the airbag housing, the airbag inflator, and the retainers that secure the inflator to the airbag housing.

The airbag cushion, housing, and inflator are secured within the trim cover.

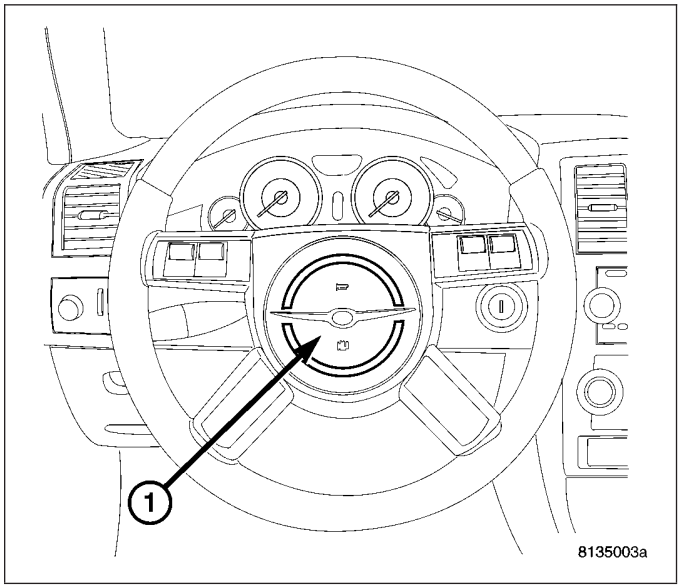

The vertical walls of this trim cover have small windows with blocking tabs that are engaged by hook formations around the perimeter of the airbag housing. Each hook is inserted through one of the windows and the blocking tab in each window keeps the hook properly engaged with the trim cover, locking the trim cover securely into place on the airbag housing.

The resistive membrane-type horn switch is secured with heat stakes to the inside surface of the driver airbag trim cover, between the trim cover and the folded airbag cushion.

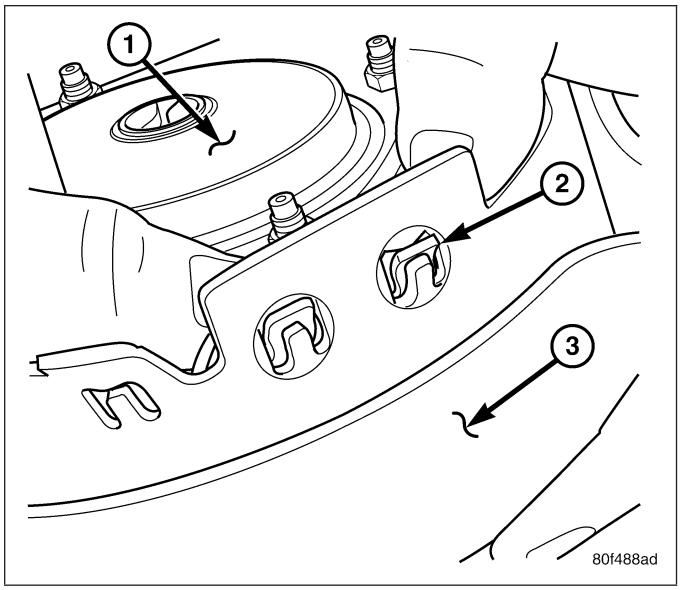

OPERATION

The multistage driver airbag is deployed by electrical signals generated by the Occupant Restraint Controller (ORC) through the driver airbag squib 1 and squib 2 circuits to the two initiators in the airbag inflator. By using two initiators, the airbag can be deployed at multiple levels of force. The force level is controlled by the ORC to suit the monitored impact conditions by providing one of three delay intervals between the electrical signals provided to the two initiators. The longer the delay between these signals, the less forcefully the airbag will deploy.

When the ORC sends the proper electrical signals to each initiator, the electrical energy generates enough heat to initiate a small pyrotechnic charge which, in turn ignites chemical pellets within the inflator. Once ignited, these chemical pellets burn rapidly and produce a large quantity of inert gas. The inflator is sealed to the back of the airbag housing and a diffuser in the inflator directs all of the inert gas into the airbag cushion, causing the cushion to inflate. As the cushion inflates, the driver airbag trim cover will split at predetermined breakout lines, then fold back out of the way along with the horn switch unit. Following an airbag deployment, the airbag cushion quickly deflates by venting the inert gas towards the instrument panel through vent holes within the fabric used to construct the back (steering wheel side) panel of the airbag cushion.

Some of the chemicals used to create the inert gas may be considered hazardous while in their solid state before they are burned, but they are securely sealed within the airbag inflator. Typically, both initiators are used and all potentially hazardous chemicals are burned during an airbag deployment event.

The inert gas that is produced when the chemicals are burned is harmless. However, a small amount of residue from the burned chemicals may cause some temporary discomfort if it contacts the skin, eyes, or breathing passages. If skin or eye irritation is noted, rinse the affected area with plenty of cool, clean water. If breathing passages are irritated, move to another area where there is plenty of clean, fresh air to breath. If the irritation is not alleviated by these actions, contact a physician.

REMOVAL

1. Disconnect and isolate the battery negative cable.

WARNING: Wait two minutes for the airbag system reserve capacitor to discharge before beginning any airbag system or component service. Failure to do so may result in accidental airbag deployment, personal injury or death.

2. From behind the steering wheel (1), remove the two screw covers and screws (5) to the driver airbag (3).

CAUTION: Do not pull on the horn switch feed pigtail wire to disengage the connector from the driver airbag or to disconnect the horn switch to steering wheel wire harness connection. Improper pulling on this pigtail wire or connection can result in damage to the horn switch membrane or feed circuit.

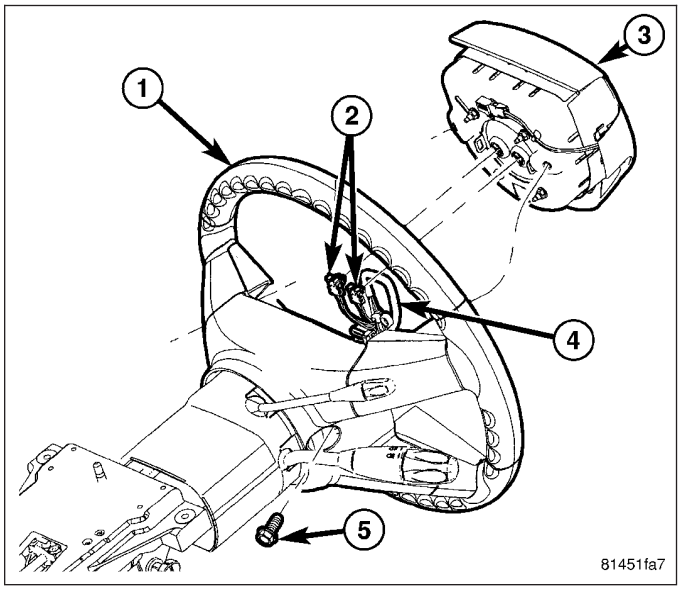

3. Carefully pull airbag rearward just far enough to disconnect the two airbag squib connectors (2) and the horn connector (4).
4. Separate driver airbag from steering column.

NOTE: The driver airbag trim cover is available for service separately. If the horn switch is faulty or the trim cover is damaged, the airbag cushion assembly may be transferred to a new trim cover. If the airbag is defective, the entire driver airbag and driver airbag trim cover must be replaced as an assembly.

INSTALLATION

NOTE: The driver airbag trim cover is available for service separately. If the horn switch is faulty or the trim cover is damaged, the airbag cushion assembly may be transferred to a new trim cover. If the airbag is defective, the entire driver airbag and driver airbag trim cover must be replaced as an assembly.

1. Position driver airbag (3) in steering wheel (1) near mounting location.
2. Connect the two airbag squib connectors (2) and the horn connector (4).
3. Position the driver airbag mounting screws (2) into the driver airbag. From behind the steering wheel (1) install the two screws (5) to the driver airbag. Torque the two screws (5) to 10 N·m (89 in. lbs.).

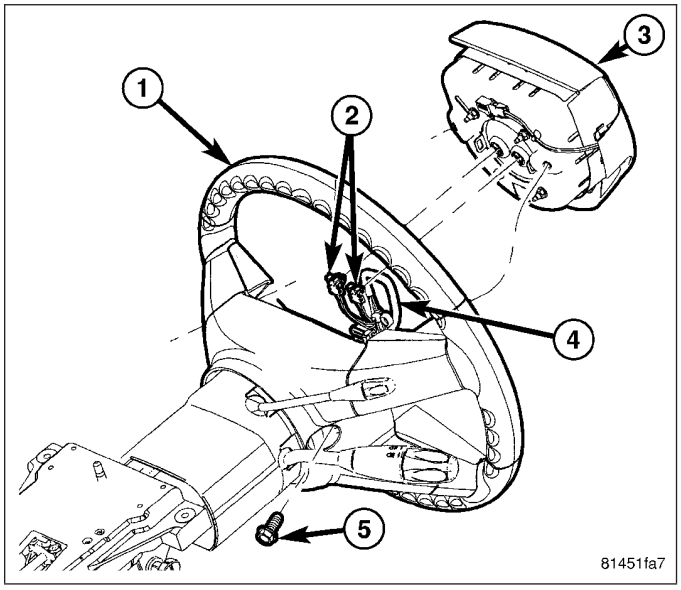

WARNING: Do not connect the battery negative cable (Refer to 8 - ELECTRICAL/RESTRAINTS - DIAGNOSIS AND TESTING - AIRBAG SYSTEM). Personal injury or death may result if the system test is not performed first.

DRIVER AIRBAG TRIM COVER

REMOVAL

1. Disconnect and isolate the battery negative cable.

WARNING: Wait two minutes for the airbag system reserve capacitor to discharge before beginning any airbag system or component service. Failure to do so may result in accidental airbag deployment, personal injury or death.

CAUTION: Do not pull on the horn switch feed pigtail wire to disengage the connector from the driver airbag or to disconnect the horn switch to steering wheel wire harness connection. Improper pulling on this pigtail wire or connection can result in damage to the horn switch membrane or feed circuit.

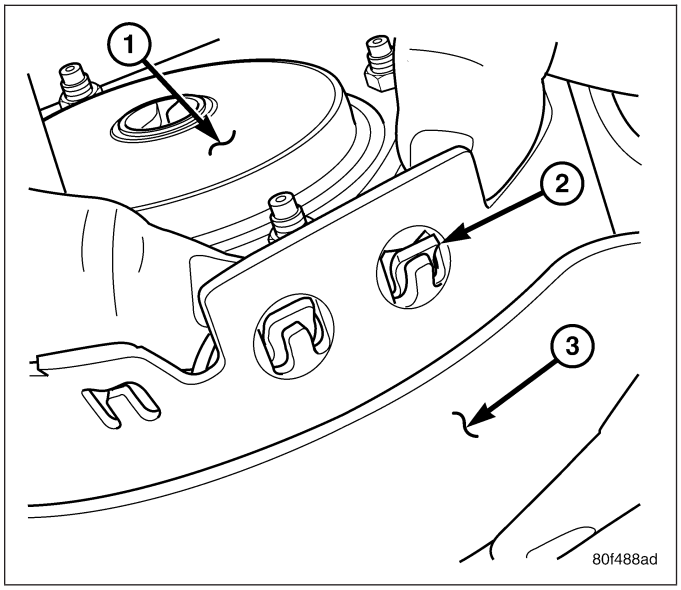

2. Remove the driver airbag (2) (Refer to 8 - ELECTRICAL/RESTRAINTS/DRIVER AIRBAG - REMOVAL).
3. With driver airbag removed, pick a corner and push down on the inflator (1) or latch hook mounting plate until the latch hooks (2) push out of the driver airbag cover (3).
4. Remove driver airbag from driver airbag cover.
5. The membrane type horn switch is integral to the driver airbag trim cover. If inoperative, the entire trim cover must be replaced.

INSTALLATION

1. Place the driver airbag into new driver airbag trim cover. Be careful not to pinch the airbag cushion between the latch hook mounting plate and the trim cover.

NOTE: Make sure that the horn switch wire harness is routed through the cut-out on the side of the trim cover and positioned in the hook on the back of the housing. Attach connector to the housing.

2. Push down on the latch hook mounting plate and guide the latch hooks into the slots on the driver airbag cover.

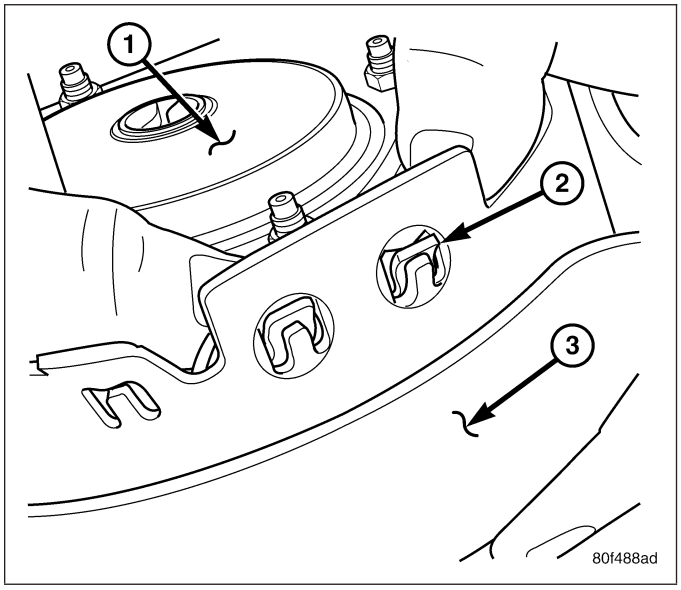

3. Once all the latch hooks have been started, pull the driver airbag cover away from the driver airbag to fully seat the latch hooks.
4. Install the driver airbag (2) (Refer to 8 - ELECTRICAL/RESTRAINTS/DRIVER AIRBAG - INSTALLATION). Torque the two screws (1) to 10 N·m (89 in. lbs.).

WARNING: Do not connect the battery negative cable (Refer to 8 - ELECTRICAL/RESTRAINTS - DIAGNOSIS AND TESTING - AIRBAG SYSTEM). Personal injury or death may result if the system test is not performed first.

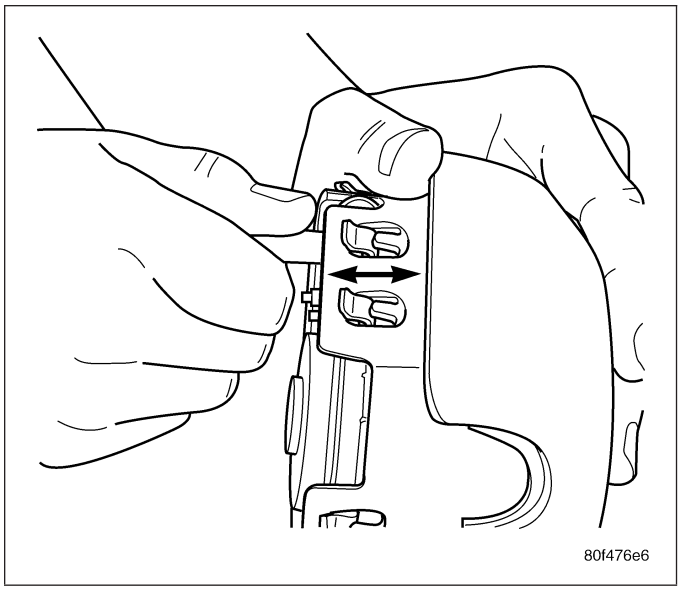

FRONT SEAT BELT HEIGHT ADJUSTER

REMOVAL

1. Remove the upper turning loop (3) trim cover (2).
2. Remove the upper turning loop retaining bolt (4).

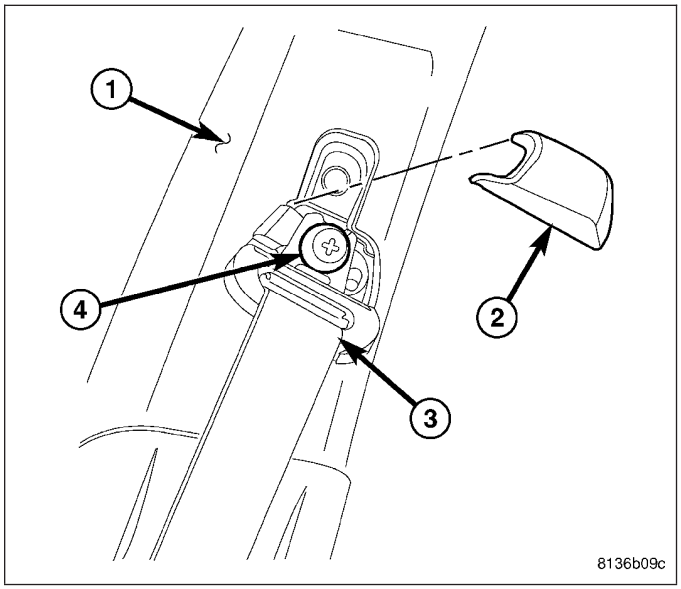

3. Remove the upper B-pillar trim (Refer to 23 - BODY/INTERIOR/B-PILLAR TRIM - REMOVAL).

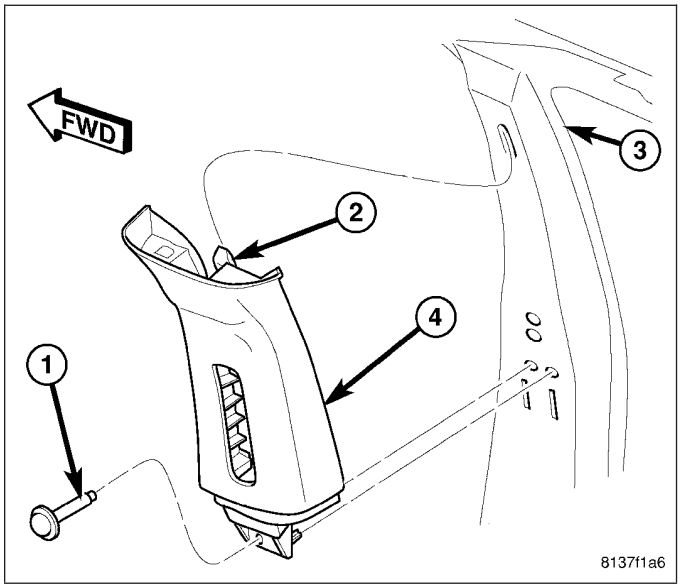

4. Remove the two bolts (1) to the seat belt height adjuster (2).

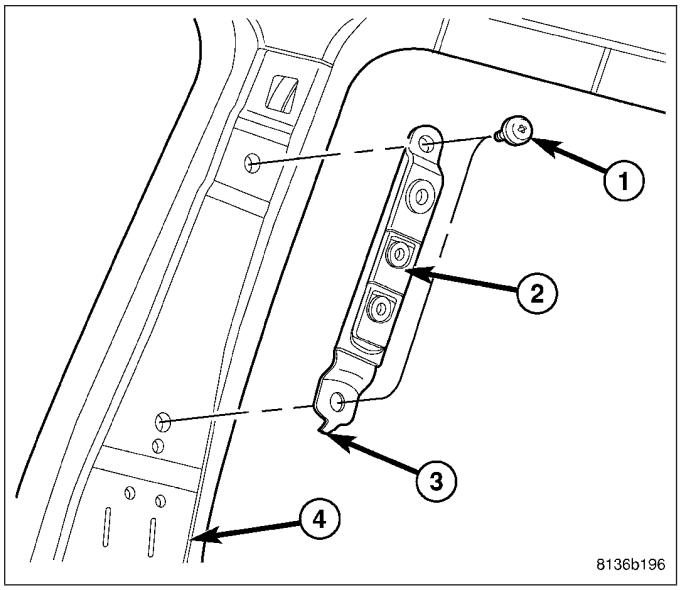

INSTALLATION

1. Position height adjuster making sure that indexing tab is in the proper hole.
2. Install the two mounting bolts (1). Torque bolts to 32 N·m (24 ft. lbs.).

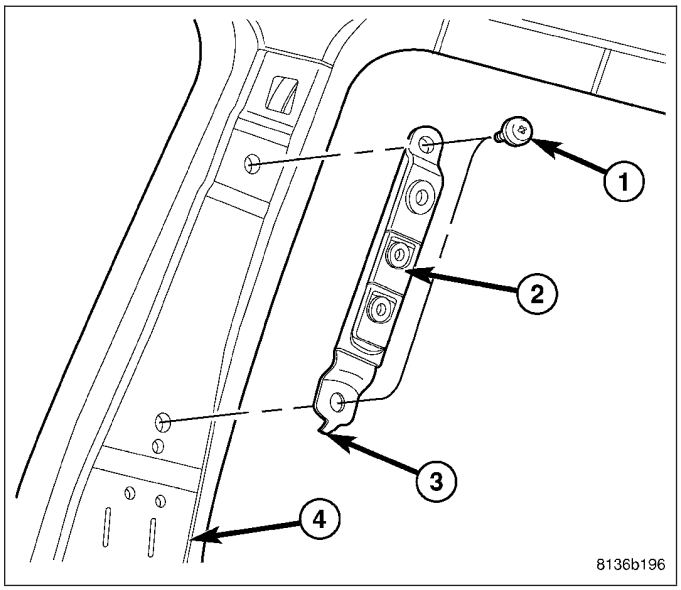

3. Install the upper B-pillar trim (Refer to 23 - BODY/ INTERIOR/B-PILLAR TRIM - INSTALLATION).

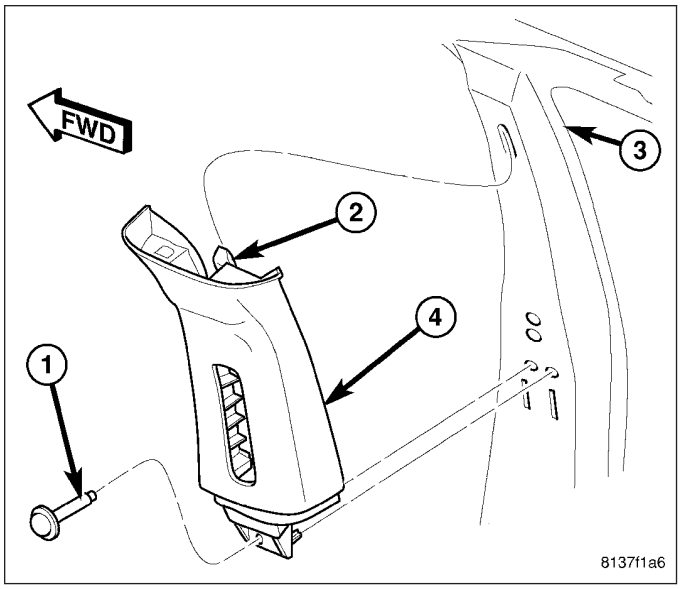

4. Position the upper turning loop (3) and install the retaining bolt (4). Torque bolt to 40 N·m (30 ft. lbs.).
5. Install the upper turning loop (3) trim cover (2).

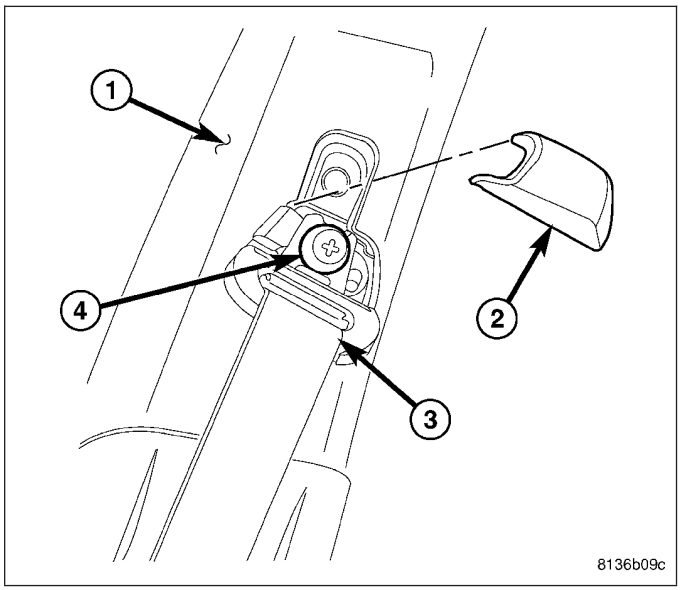

IMPACT SENSOR

DESCRIPTION

FRONT IMPACT SENSORS

Two front impact sensors (1) are used on this model, one each for the left and right sides of the vehicle. These sensors are mounted remotely from the impact sensor that is internal to the Occupant Restraint Controller (ORC). Each front sensor is secured with two screws (2) to the backs of the right and left vertical members of the radiator support within the engine compartment.

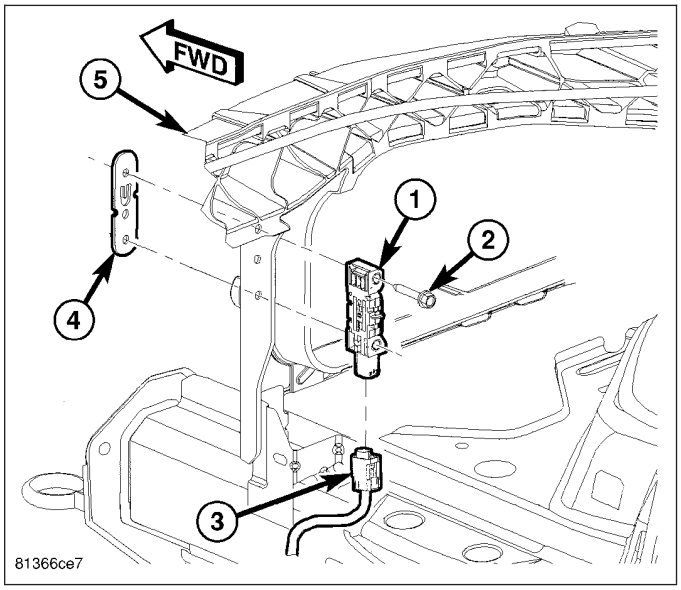

The right and left front impact sensors are identical in construction and calibration. A cavity in the center of the molded black plastic impact sensor housing contains the electronic circuitry of the sensor which includes an electronic communication chip and an electronic impact sensor. Potting material fills the cavity to seal and protect the internal electronic circuitry and components.

The impact sensors cannot be repaired or adjusted and, if damaged or faulty, they must be replaced.

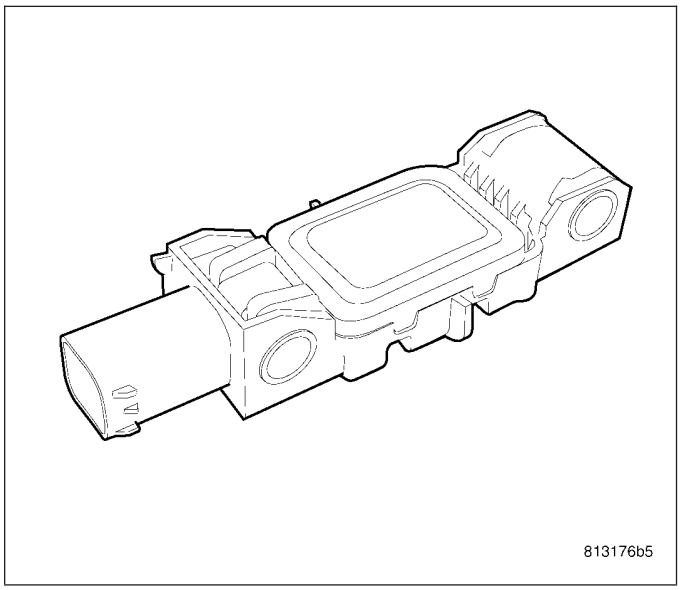

SIDE IMPACT SENSORS

Four side impact sensors are used on this model when it is equipped with the curtain airbags, two each for the left and right sides of the vehicle. The sedan and wagon side impact sensor locations are identical. These sensors are mounted remotely from the impact sensor that is internal to the Occupant Restraint Controller (ORC). Each side sensor is secured with two screws to the inner right or left B-pillar and C-pillar within the passenger compartment.

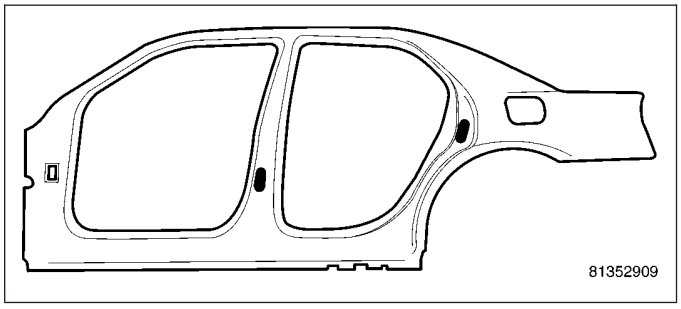

The right and left side impact sensors are identical in construction and calibration. A cavity in the center of the molded black plastic impact sensor housing contains the electronic circuitry of the sensor which includes an electronic communication chip and an electronic impact sensor. Potting material fills the cavity to seal and protect the internal electronic circuitry and components.

The impact sensors cannot be repaired or adjusted and, if damaged or faulty, they must be replaced.

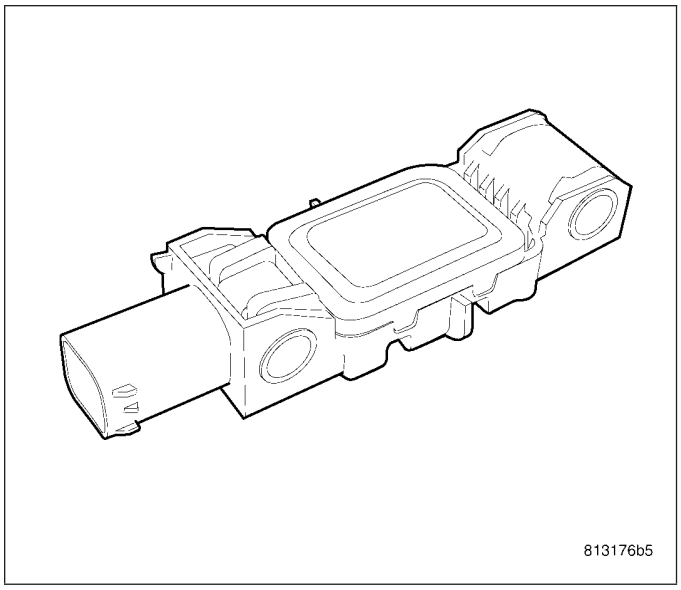

OPERATION

FRONT IMPACT SENSORS

The front impact sensors are electronic accelerometers that sense the rate of vehicle deceleration, which provides verification of the direction and severity of an impact. Each sensor also contains an electronic communication chip that allows the unit to communicate the sensor status as well as sensor fault information to the microprocessor in the Occupant Restraint Controller (ORC).

The ORC microprocessor continuously monitors all of the passive restraint system electrical circuits to determine the system readiness. If the ORC detects a monitored system fault, it sets a Diagnostic Trouble Code (DTC) and controls the airbag indicator operation accordingly. The impact sensors each receive battery current and ground through dedicated left and right sensor plus and minus circuits from the ORC. The impact sensors and the ORC communicate by modulating the voltage in the sensor plus circuit.

The most reliable, efficient, and accurate means to diagnose the impact sensors, the ORC, and the electronic message communication between the sensors and the ORC requires the use of a scan tool and the appropriate diagnostic information.

SIDE IMPACT SENSORS

The side impact sensors are electronic accelerometers that sense the rate of vehicle deceleration, which provides verification of the direction and severity of an impact. Each sensor also contains an electronic communication chip that allows the unit to communicate the sensor status as well as sensor fault information to the microprocessor in the Occupant Restraint Controller (ORC).

The ORC microprocessor continuously monitors all of the side passive restraint system electrical circuits to determine the system readiness. If the ORC detects a monitored system fault, it sets a Diagnostic Trouble Code (DTC) and controls the airbag indicator operation accordingly. The impact sensors each receive battery current and ground through the same left or right sensor plus and minus circuits in a series arrangement from the ORC. The impact sensors and the ORC communicate by modulating the voltage in the sensor plus circuit.

The most reliable, efficient, and accurate means to diagnose the impact sensors, the ORC, and the electronic message communication between the sensors and the ORC requires the use of a scan tool and the appropriate diagnostic information.

REMOVAL

FRONT IMPACT SENSOR

1. Disconnect and isolate the battery negative cable.

WARNING: Wait two minutes for the airbag system reserve capacitor to discharge before beginning any airbag system or component service. Failure to do so may result in accidental airbag deployment, personal injury or death.

NOTE: If replacing the left front impact sensor, the air intake system needs to be removed (Refer to 9 - ENGINE/AIR INTAKE SYSTEM - REMOVAL).

2. Disconnect the electrical connector (3).
3. Remove the two mounting screws (2).

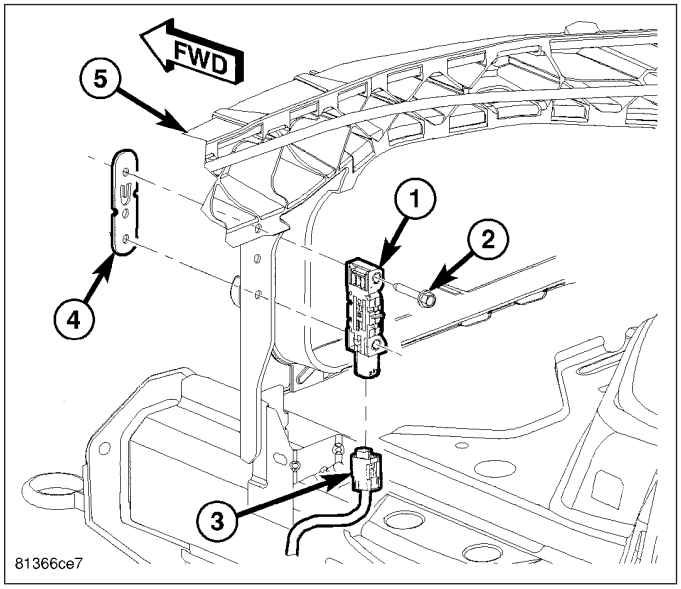

SIDE IMPACT SENSOR

B-PILLAR MOUNTED SIDE IMPACT SENSOR

1. Disconnect and isolate the battery negative cable.

WARNING: Wait two minutes for the airbag system reserve capacitor to discharge before beginning any airbag system or component service. Failure to do so may result in accidental airbag deployment, personal injury or death.

2. Remove the B-pillar trim panel (Refer to 23 - BODY/INTERIOR/B-PILLAR TRIM - REMOVAL).
3. Disconnect the electrical connector (1).
4. Remove the two retaining screws (2).

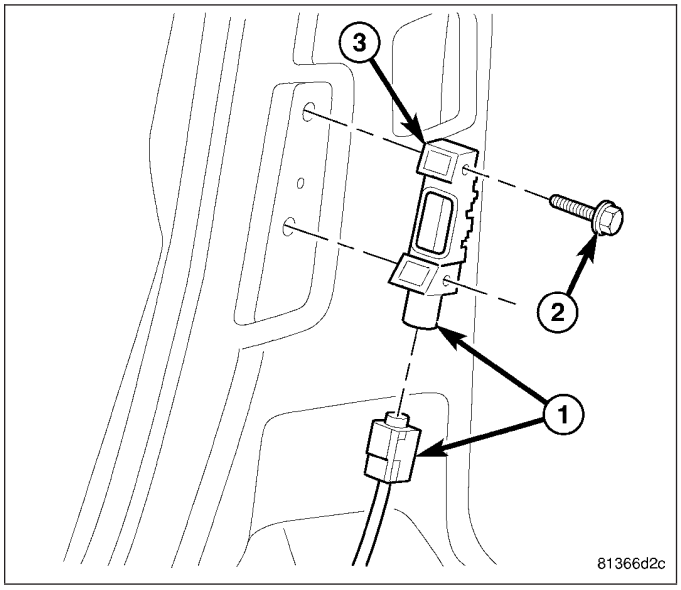

C-PILLAR MOUNTED SIDE IMPACT SENSOR

1. Disconnect and isolate the battery negative cable.

WARNING: Wait two minutes for the airbag system reserve capacitor to discharge before beginning any airbag system or component service. Failure to do so may result in accidental airbag deployment, personal injury or death.

2. Remove the C-pillar trim panel (Refer to 23 - BODY/INTERIOR/C-PILLAR TRIM - REMOVAL).
3. Disconnect the electrical connector (3).
4. Remove the two retaining screws (2).

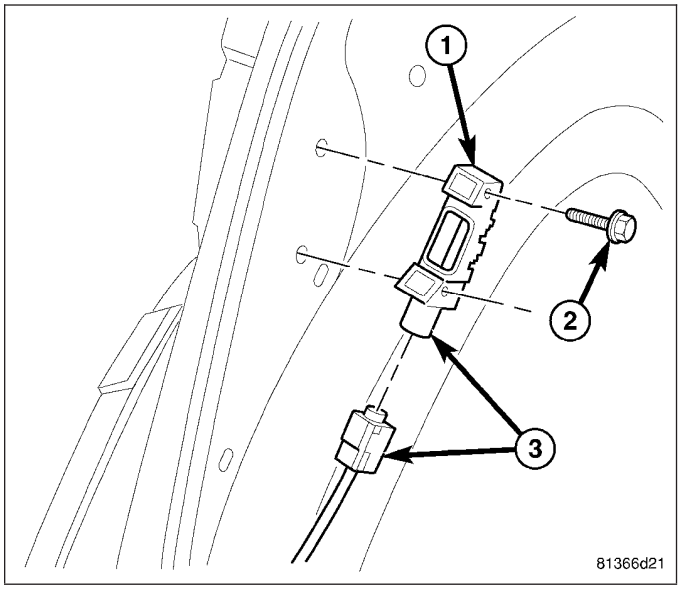

INSTALLATION

FRONT IMPACT SENSOR

1. Position the front impact sensor in the correct mounting location and install the two mounting screws (2). Torque screws (2) to 7 N·m (62 in. lbs.).
2. Connect the electrical connector (3).

NOTE: If replacing the left front impact sensor, the air intake system needs to be installed (Refer to 9 - ENGINE/AIR INTAKE SYSTEM - INSTALLATION).

WARNING: Do not connect the battery negative cable (Refer to 8 - ELECTRICAL/RESTRAINTS - DIAGNOSIS AND TESTING - AIRBAG SYSTEM). Personal injury or death may result if the system test is not performed first.

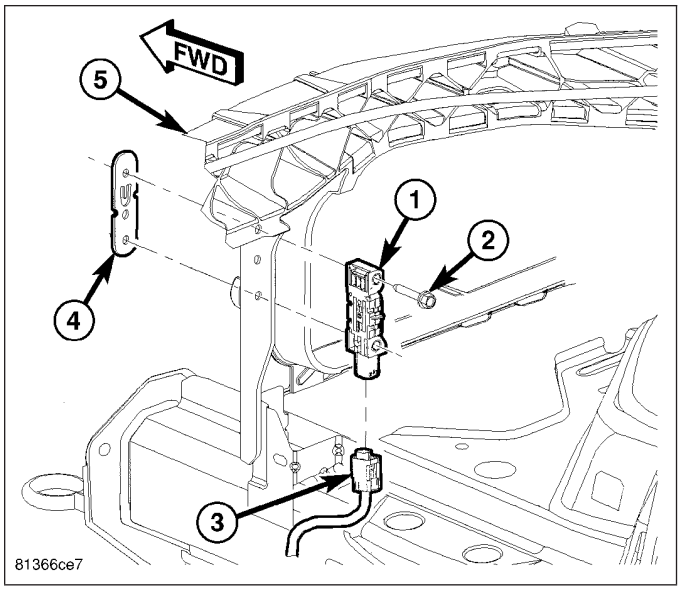

SIDE IMPACT SENSOR

B-PILLAR MOUNTED SIDE IMPACT SENSOR

1. Position the B-pillar mounted impact sensor in the correct mounting location and install the two mounting screws (2). Torque screws (2) to 7 N·m (62 in. lbs.).
2. Connect the electrical connector (1).
3. Install the B-pillar trim panel (Refer to 23 - BODY/ INTERIOR/B-PILLAR TRIM - INSTALLATION).

WARNING: Do not connect the battery negative cable (Refer to 8 - ELECTRICAL/RESTRAINTS - DIAGNOSIS AND TESTING - AIRBAG SYSTEM). Personal injury or death may result if the system test is not performed first.

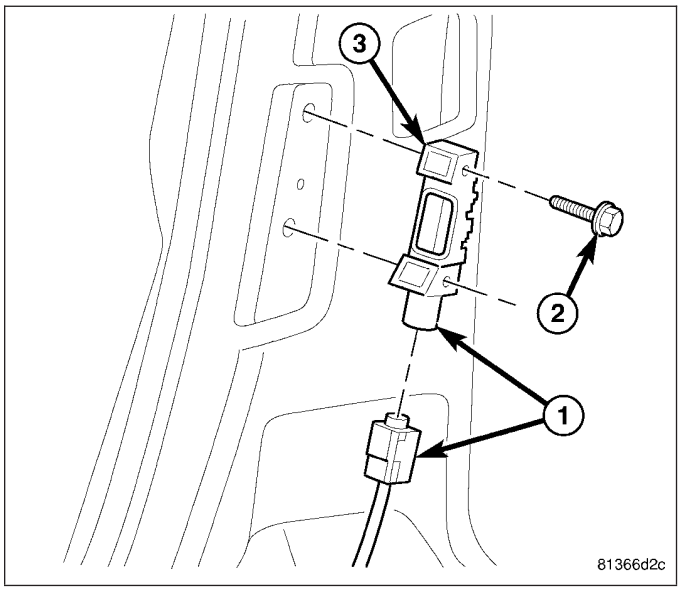

C-PILLAR MOUNTED SIDE IMPACT SENSOR

1. Position the C-pillar mounted impact sensor in the correct mounting location and install the two mounting screws (2). Torque screws (2) to 7 N·m (62 in. lbs.).
2. Connect the electrical connector (3).
3. Install the C-pillar trim panel (Refer to 23 - BODY/ INTERIOR/C-PILLAR TRIM - INSTALLATION).

WARNING: Do not connect the battery negative cable (Refer to 8 - ELECTRICAL/RESTRAINTS - DIAGNOSIS AND TESTING - AIRBAG SYSTEM). Personal injury or death may result if the system test is not performed first.

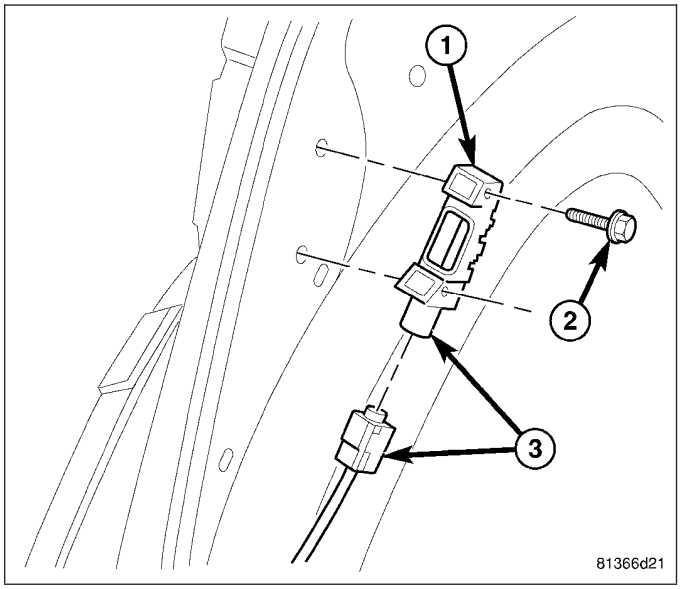

OCCUPANT CLASSIFICATION MODULE

DESCRIPTION

The Occupant Classification Module (OCM) is secured with two screws to a mount on the underside of the passenger side front seat cushion frame near the outboard front corner. Concealed within a hollow in the center of the molded plastic OCM housing is a microprocessor and the other electronic circuitry of the module. The module housing is sealed to enclose and protect the internal electronic circuitry. The OCM software is flash programmable.

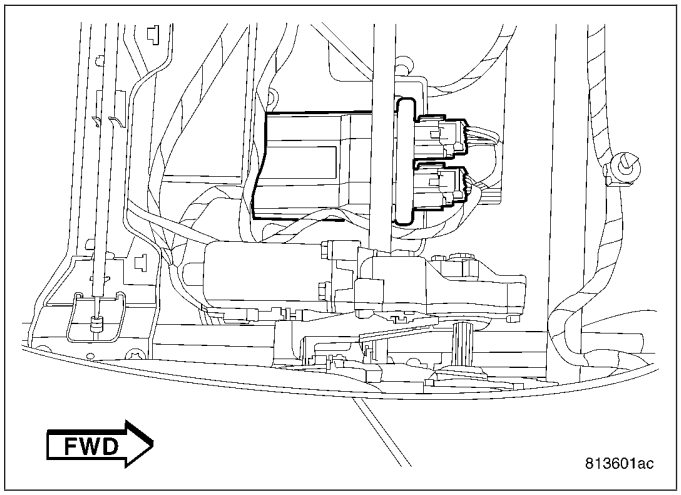

A non-calibrated OCM is available for service replacement. The OCM and all of the other components of the Occupant Classification System (OCS) including the passenger front seat, the seat weight sensors, the passenger or driver seat track position sensor and the seat adjusters, cushion, back, frame, foam, springs, and wiring harness are a factory-calibrated and assembled unit. Any time any one of these components is removed or replaced for any reason, the OCM must be re-calibrated using a diagnostic scan tool, the Occupant Classification Seat Weight special tool, and the Occupant Classification System Verification Test. Refer to the appropriate diagnostic procedures.

The OCM cannot be adjusted or repaired and, if damaged or faulty, it must be replaced.

OPERATION

The microprocessor in the Occupant Classification Module (OCM) (2) contains the Occupant Classification System (OCS) logic circuits. The OCM uses On-Board Diagnostics (OBD) and can communicate with other electronic modules in the vehicle as well as with the diagnostic scan tool using the Controller Area Network (CAN) data bus. This method of communication is also used for OCS diagnosis and testing through the 16-way data link connector located on the driver side lower edge of the instrument panel.

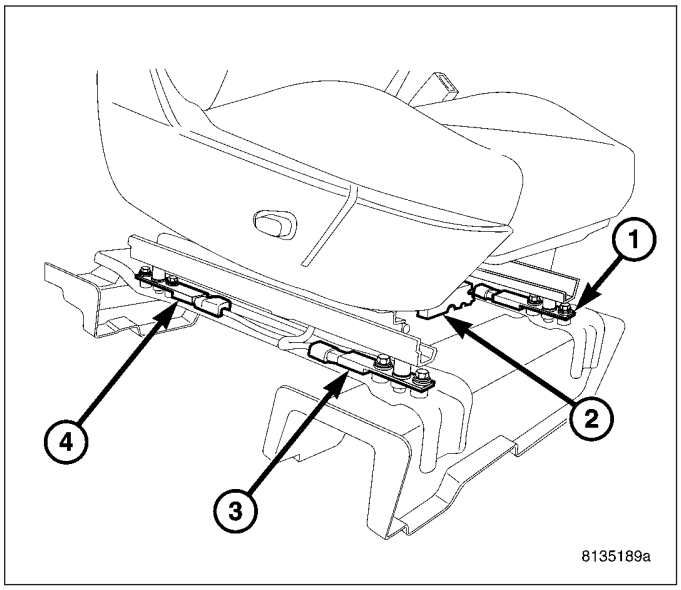

The OCM (2) provides voltage to the four seat weight sensors located on the corners of the passenger front seat (1, 3, and 4), and to the seat track position sensors on the outboard passenger and driver front seat upper seat tracks. The OCM then monitors return inputs from each of the sensors on dedicated hard wired data communication circuits. The seat weight sensor input allows the OCM to determine whether the passenger side front seat is occupied and the relative size of the occupant by providing a weight-sensing reference to the load on the seat. The seat track position sensor provides an additional logic input to the OCM microprocessor that allows it to determine the position of the front seat passenger and driver relative to the front airbags.

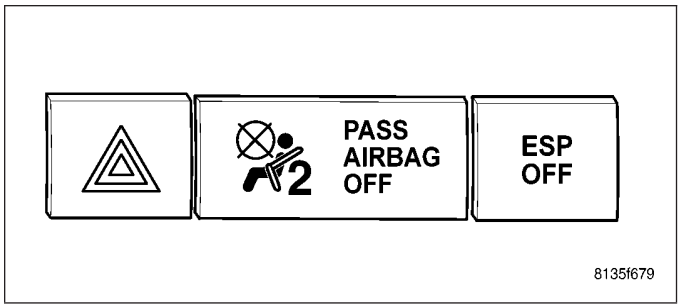

Pre-programmed decision algorithms and OCS calibration allow the OCM microprocessor to determine when passenger airbag protection is appropriate based upon the seat load as signaled by the seat weight sensors. When the programmed conditions are met, the OCM sends the proper electronic occupant classification messages over the CAN data bus to the Occupant Restraint Controller (ORC), and the ORC enables or disables the deployment circuits for the passenger front supplemental restraints. The ORC also provides a control output for the Passenger Airbag Disabled (PAD) Indicator in the instrument panel based upon the electronic occupant classification messages it receives from the OCM.

The OCM also sends electronic driver and passenger seat track position messages to the ORC over the CAN data bus. The ORC uses the seat track position data as an additional logic input for determining the force level with which to deploy the multistage front airbags.

The OCM microprocessor continuously monitors all of the OCS electrical circuits and components to determine the system readiness. If the OCM detects a monitored system fault, it sets an active and stored Diagnostic Trouble Code (DTC) and sends the appropriate electronic messages to the ORC over the CAN data bus. Then the ORC sets a DTC and sends messages to control the airbag indicator operation accordingly. An active fault only remains for the duration of the fault, or in some cases for the duration of the current ignition switch cycle, while a stored fault causes a DTC to be stored in memory by the OCM and the ORC. For some DTC's, if a fault does not recur for a number of ignition cycles, the OCM will automatically erase the stored DTC. For other internal faults, the stored DTC is latched forever.

The OCM receives battery current on a fused ignition switch output (run-start) circuit. The OCM receives ground through a ground circuit and take out of the body wire harness. These connections allow the OCM to be operational whenever the ignition switch is in the Start or On positions.

The most reliable, efficient, and accurate means to diagnose the OCM, the CAN data bus network, and the electronic message inputs to and outputs from the OCM requires the use of a diagnostic scan tool and the appropriate diagnostic information.

REMOVAL

WARNING: Never replace both the Occupant Restraint Controller (ORC) and the Occupant Classification Module (OCM) at the same time. If both require replacement, replace one, then perform the Airbag System test (Refer to 8 - ELECTRICAL/RESTRAINTS - DIAGNOSIS AND TESTING - AIRBAG SYSTEM) before replacing the other. Both the ORC and the OCM store Occupant Classification System (OCS) calibration data, which they transfer to one another when one of them is replaced. If both are replaced at the same time, an irreversible fault will be set in both modules and the OCS may malfunction and result in personal injury or death.

1. Disconnect and isolate the battery negative cable.

WARNING: Wait two minutes for the airbag system reserve capacitor to discharge before beginning any airbag system or component service. Failure to do so may result in accidental airbag deployment, personal injury or death.

2. Reach under the front edge of the passenger front seat cushion to access and disconnect the two harness connectors (3) from the Occupant Classification Module (OCM) (4).
3. Remove the two screws (2) that secure the OCM to the OCM bracket (1).
4. Remove the OCM from under the passenger front seat.

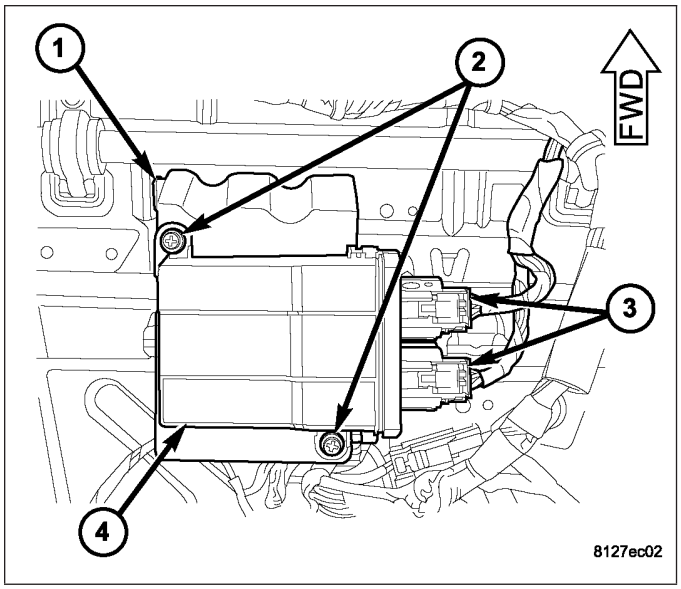

INSTALLATION

WARNING: Never replace both the Occupant Restraint Controller (ORC) and the Occupant Classification Module (OCM) at the same time. If both require replacement, replace one, then perform the Airbag System test (Refer to 8 - ELECTRICAL/RESTRAINTS - DIAGNOSIS AND TESTING - AIRBAG SYSTEM) before replacing the other. Both the ORC and the OCM store Occupant Classification System (OCS) calibration data, which they transfer to one another when one of them is replaced. If both are replaced at the same time, an irreversible fault will be set in both modules and the OCS may malfunction and result in personal injury or death.

1. Carefully position the Occupant Classification Module (OCM) (4) to the OCM bracket (1).
2. Install and tighten the two screws (2) that secure the OCM to the OCM bracket. Tighten the screws to 2 N·m (20 in. lbs.).
3. Connect the two harness connectors (3) to the OCM.

WARNING: Do not connect the battery negative cable (Refer to 8 - ELECTRICAL/RESTRAINTS - DIAGNOSIS AND TESTING - AIRBAG SYSTEM). Personal injury or death may result if the system test is not performed first.

WARNING: Following successful completion of the Airbag System test procedure, the Occupant Classification System Verification Test must be done using a scan tool and the appropriate diagnostic information.

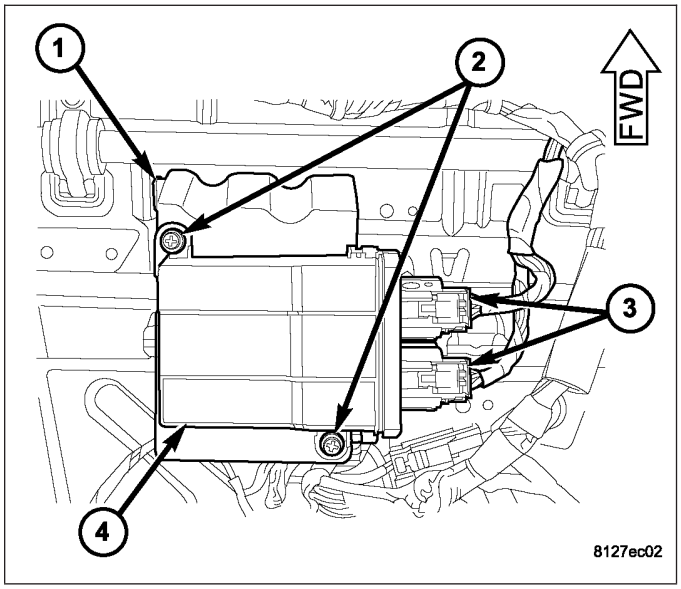

OCCUPANT RESTRAINT CONTROLLER

DESCRIPTION

The Occupant Restraint Controller (ORC) (2), sometimes referred to as the Airbag Control Module (ACM), is secured with three screws to a stamped steel mounting bracket welded onto the top of the floor panel transmission tunnel underneath the instrument panel center stack, beneath the center floor console in the passenger compartment of the vehicle. Concealed within a hollow in the center of the die cast aluminum ORC housing is the electronic circuitry of the ORC which includes a microprocessor, an electronic impact sensor, an electronic safing sensor, and an energy storage capacitor. A stamped metal cover plate is secured to the bottom of the ORC housing with four screws to enclose and protect the internal electronic circuitry and components.

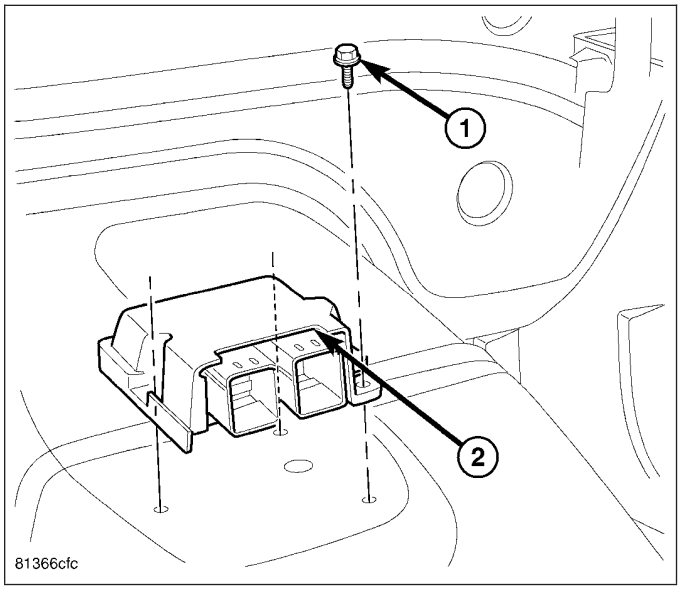

The ORC housing has integral mounting flanges in three locations. Two molded plastic electrical connectors (1 and 2) exit the rearward facing side of the ORC housing. These terminal pins connect the ORC to the vehicle electrical system through two connectors.

The impact sensor and safing sensor internal to the ORC are calibrated for the specific vehicle, and are only serviced as a unit with the ORC. The ORC cannot be repaired or adjusted and, if damaged or faulty, it must be replaced.

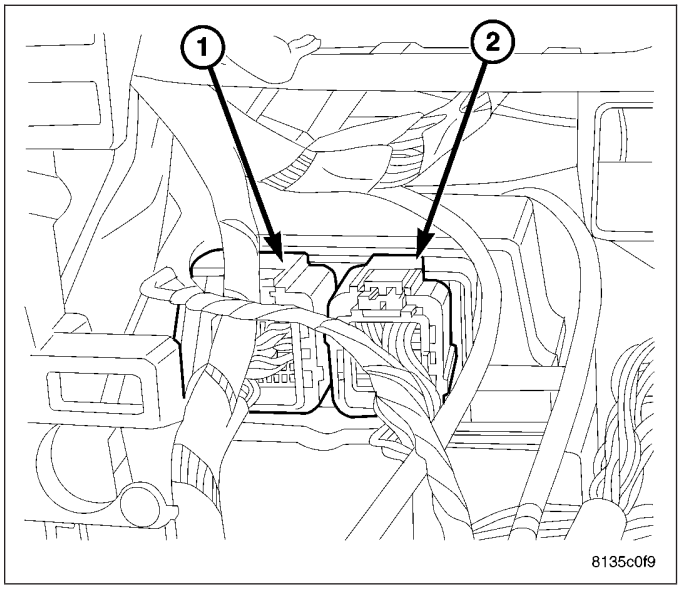

OPERATION

The microprocessor in the Occupant Restraint Controller (ORC) contains the supplemental restraint system logic circuits and controls all of the supplemental restraint system components. The ORC uses On-Board Diagnostics (OBD) and can communicate with other electronic modules in the vehicle as well as with the diagnostic scan tool using the Controller Area Network (CAN) data bus. This method of communication is used for control of the airbag indicator in the ElectroMechanical Instrument Cluster (EMIC) and for supplemental restraint system diagnosis and testing through the 16-way data link connector located on the driver side lower edge of the instrument panel.

The ORC microprocessor continuously monitors all of the supplemental restraint system electrical circuits to determine the system readiness. If the ORC detects a monitored system fault, it sets an active and stored Diagnostic Trouble Code (DTC) and sends electronic messages to the EMIC over the CAN data bus to turn on the airbag indicator. An active fault only remains for the duration of the fault, or in some cases for the duration of the current ignition switch cycle, while a stored fault causes a DTC to be stored in memory by the ORC. For some DTC's, if a fault does not recur for a number of ignition cycles, the ORC will automatically erase the stored DTC. For other internal faults, the stored DTC is latched forever.

On models equipped with the Occupant Classification System (OCS), the ORC communicates with the Occupant Classification Module (OCM) over the CAN data bus. The ORC will internally disable the passenger airbag and seat belt tensioner deployment circuits if the OCM detects that the passenger front seat is unoccupied or that it is occupied by a load that is inappropriate for an airbag deployment. The ORC also provides a control output to the passenger airbag disabled indicator through the passenger airbag indicator driver circuit. The OCM notifies the ORC when it has detected a monitored system fault and stored a DTC in its memory for any faulty OCS component or circuit, then the ORC sets a DTC and controls the airbag indicator operation accordingly.

The ORC receives battery current through two circuits; a fused ignition switch output (run) circuit and a fused ignition switch output (run-start) circuit. The ORC receives ground through a ground circuit of the instrument panel wire harness. These connections allow the ORC to be operational whenever the ignition switch is in the Start or On positions.

The ORC also contains an energy-storage capacitor. When the ignition switch is in the Start or On positions, this capacitor is continually being charged with enough electrical energy to deploy the front supplemental restraint components for up to one second following a battery disconnect or failure. The purpose of the capacitor is to provide backup supplemental restraint system protection in case there is a loss of battery current supply to the ORC during an impact.

Two sensors are contained within the ORC, an electronic impact sensor and a safing sensor. The ORC also monitors inputs from two remote front impact sensors located on the back of the right and left vertical members of the radiator support near the front of the vehicle. The electronic impact sensors are accelerometers that sense the rate of vehicle deceleration, which provides verification of the direction and severity of an impact. On vehicles equipped with curtain airbags, the ORC also monitors inputs from four additional remote impact sensors located on the left and right inner B-pillars and C-pillars to control deployment of the curtain airbags.

The safing sensor is an electronic accelerometer sensor within the ORC that provides an additional logic input to the ORC microprocessor. The safing sensor is used to verify the need for a supplemental restraint deployment by detecting impact energy of a lesser magnitude than that of the primary electronic impact sensors, and must exceed a safing threshold in order for the airbags to deploy. Vehicles equipped with curtain airbags, feature a second safing sensor within the ORC to provide confirmation to the ORC microprocessor of side impact forces. This second safing sensor is a bi-directional unit that detects impact forces from either side of the vehicle.

Pre-programmed decision algorithms in the ORC microprocessor determine when the deceleration rate as signaled by the impact sensors and the safing sensors indicate an impact that is severe enough to require supplemental restraint system protection and, based upon the severity of the monitored impact, determines the level of front airbag deployment force required for each front seating position. When the programmed conditions are met, the ORC sends the proper electrical signals to deploy the dual multistage front airbags at the programmed force levels, the front seat belt tensioners and, if the vehicle is so equipped, either curtain airbag. For vehicles equipped with the OCS, the passenger airbag and seat belt tensioner will be deployed by the ORC only if enabled by the OCM messages (passenger airbag disabled indicator Off) at the time of the impact.

The most reliable, efficient, and accurate means to diagnose the ORC, the CAN data bus, and the electronic message inputs to and outputs from the ORC requires the use of a diagnostic scan tool and the appropriate diagnostic information.

REMOVAL

WARNING: Never replace both the Occupant Restraint Controller (ORC) and the Occupant Classification Module (OCM) at the same time. If both require replacement, replace one, then perform the Airbag System test (Refer to 8 - ELECTRICAL/RESTRAINTS - DIAGNOSIS AND TESTING - AIRBAG SYSTEM) before replacing the other. Both the ORC and the OCM store Occupant Classification System (OCS) calibration data, which they transfer to one another when one of them is replaced. If both are replaced at the same time, an irreversible fault will be set in both modules and the OCS may malfunction and result in personal injury or death.

1. Disconnect and isolate the battery negative cable.

WARNING: Wait two minutes for the airbag system reserve capacitor to discharge before beginning any airbag system or component service. Failure to do so may result in accidental airbag deployment, personal injury or death.

2. Remove the center floor console (Refer to 23 - BODY/INTERIOR/FLOOR CONSOLE - REMOVAL).

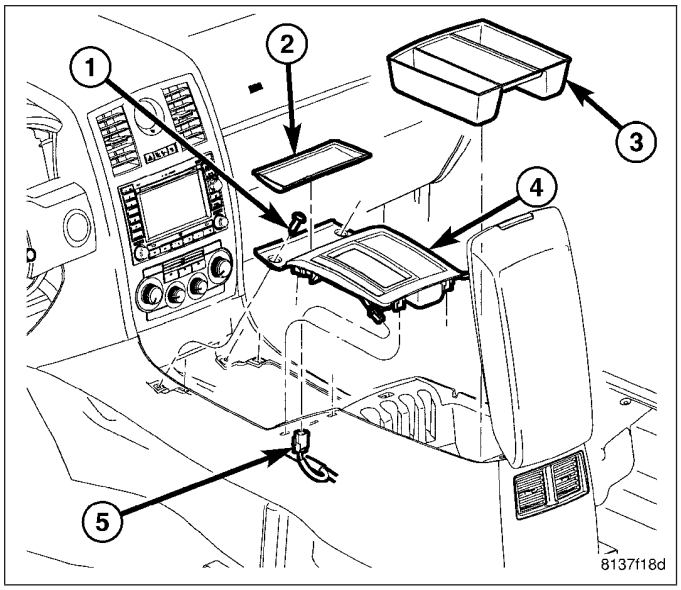

3. Disconnect the two electrical connectors (1 and 2).

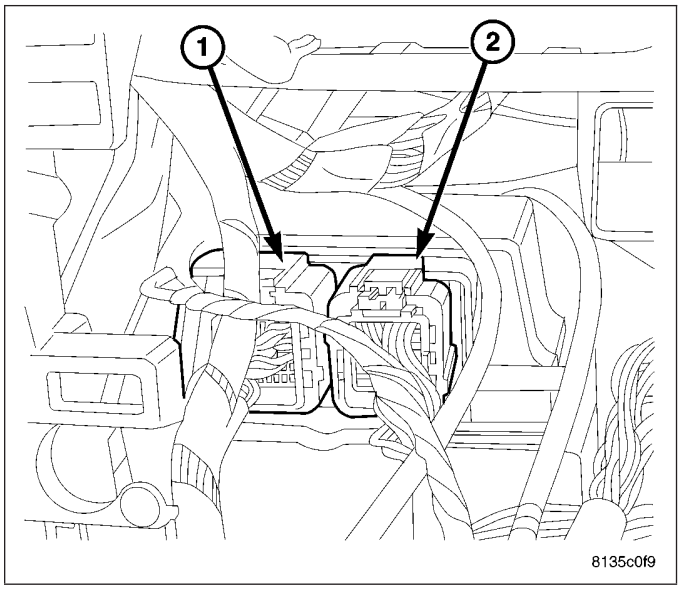

4. Move the sound deadening material (1) as needed to access the Occupant Restraint Controller (ORC) mounting screws.

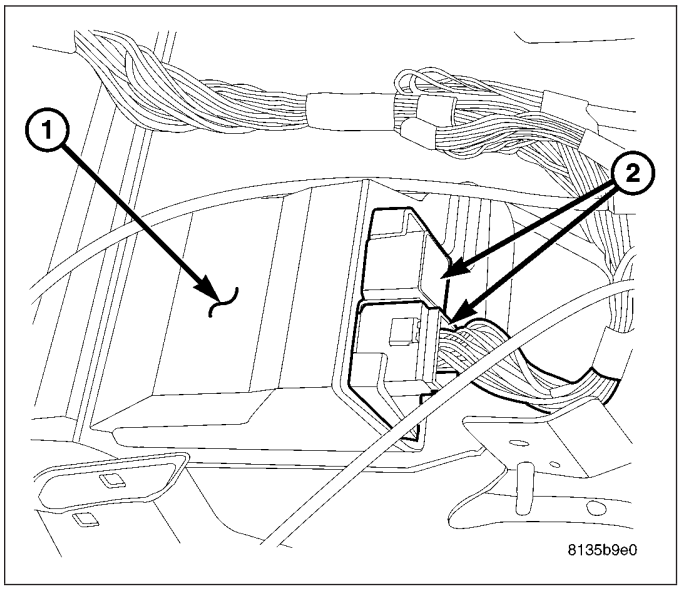

5. Remove the three mounting screws (1) to the ORC (2).

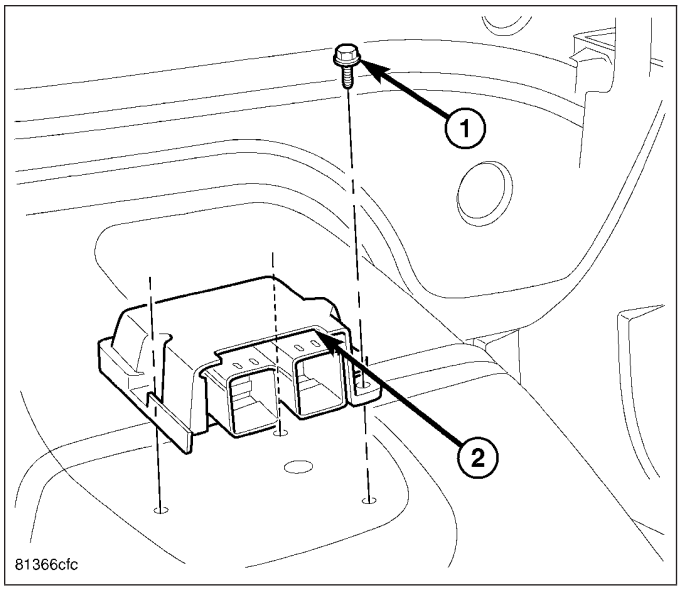

INSTALLATION

WARNING: Do not install ORC if mounting location is deformed or damaged. This will cause the ORC to be improperly located and could result in occupant personal injury or death.

WARNING: Never replace both the Occupant Restraint Controller (ORC) and the Occupant Classification Module (OCM) at the same time. If both require replacement, replace one, then perform the Airbag System test (Refer to 8 - ELECTRICAL/RESTRAINTS - DIAGNOSIS AND TESTING - AIRBAG SYSTEM) before replacing the other. Both the ORC and the OCM store Occupant Classification System (OCS) calibration data, which they transfer to one another when one of them is replaced. If both are replaced at the same time, an irreversible fault will be set in both modules and the OCS may malfunction and result in personal injury or death.

1. Position the ORC (2) into position and install the three mounting screws (1). Tighten the screws to 11 N·m (97 in. lbs.).

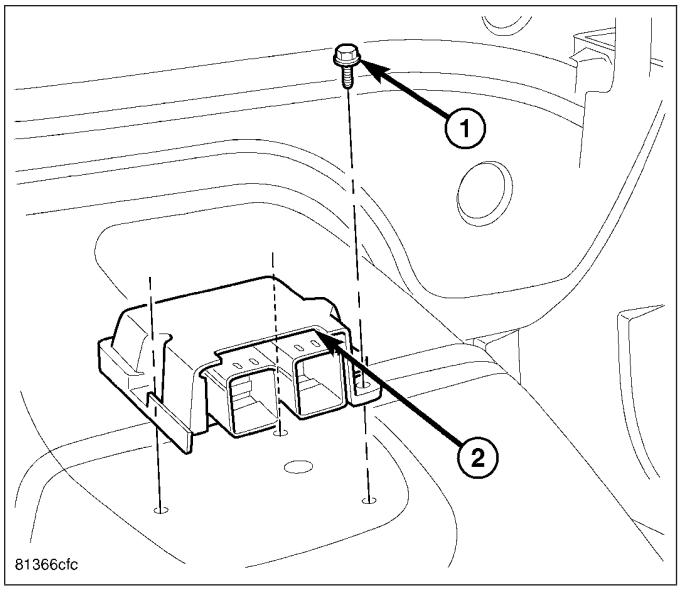

2. Make sure to reinstall the sound deadening material (1) over the ORC.

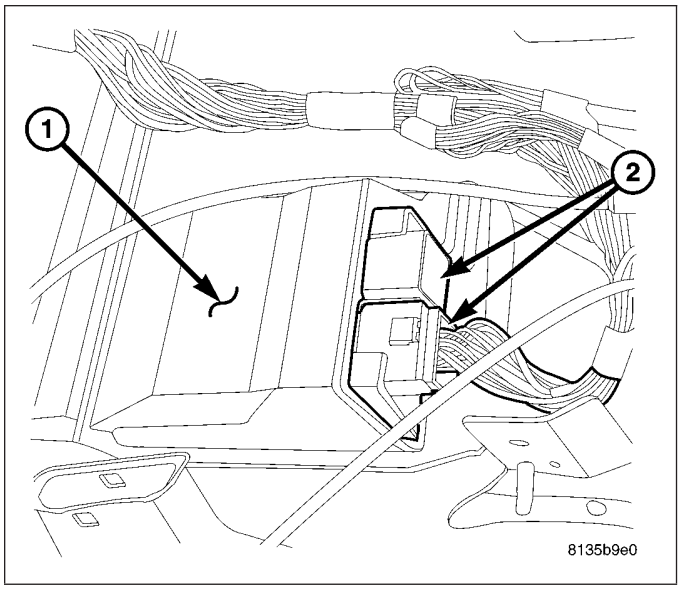

3. Connect the two electrical connectors (1 and 2).

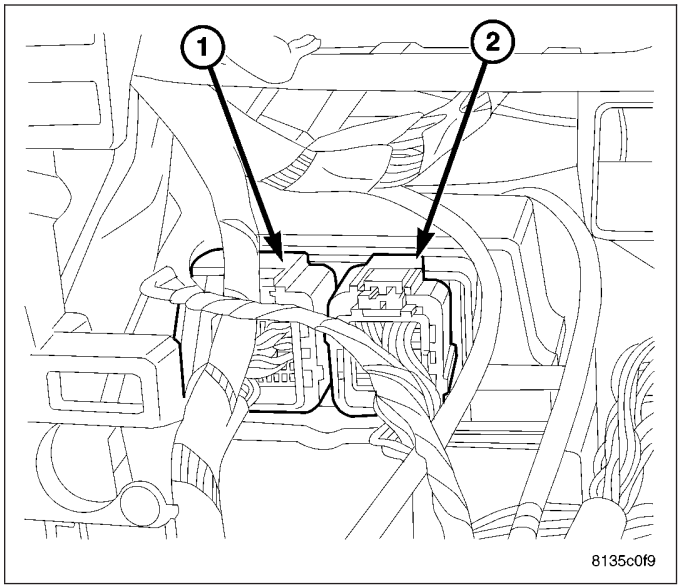

4. Install the center floor console (Refer to 23 - BODY/INTERIOR/FLOOR CONSOLE - INSTALLATION).

WARNING: Do not connect the battery negative cable (Refer to 8 - ELECTRICAL/RESTRAINTS - DIAGNOSIS AND TESTING - AIRBAG SYSTEM). Personal injury or death may result if the system test is not performed first.

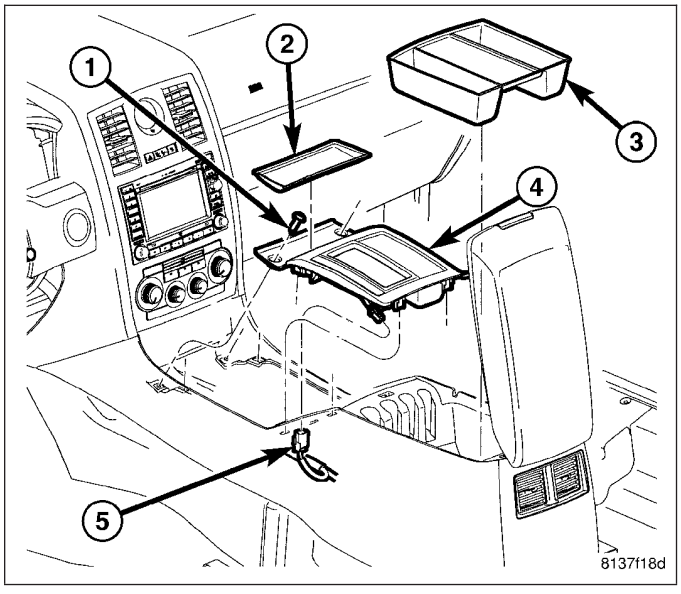

PASSENGER AIRBAG

DESCRIPTION

The passenger airbag used in this model is a multi-stage, Next Generation-type that complies with revised federal airbag standards to deploy with less force than those used in some prior models. The passenger airbag consists of a stamped and welded metal housing, the airbag cushion, the airbag inflator, and a stamped metal airbag cushion retainer plate that is secured to the airbag housing. The airbag housing contains the airbag inflator and the folded airbag cushion. A rectangular fabric cushion is used.

The airbag inflator is a non-azide, pyrotechnic-type unit that is secured to and sealed within the airbag housing. A short four-wire pigtail harness with a keyed, yellow connector insulator connects the two inflator initiators to the vehicle electrical system through the instrument panel wire harness.

This passenger airbag cannot be repaired, and must be replaced if deployed, faulty, or in any way damaged.

The horizontal surface of the injection molded, thermoplastic passenger airbag door (2) is the most visible part of the passenger airbag. The passenger airbag door is located above the glove box opening on the top of the instrument panel, in front of the front seat passenger seating position.

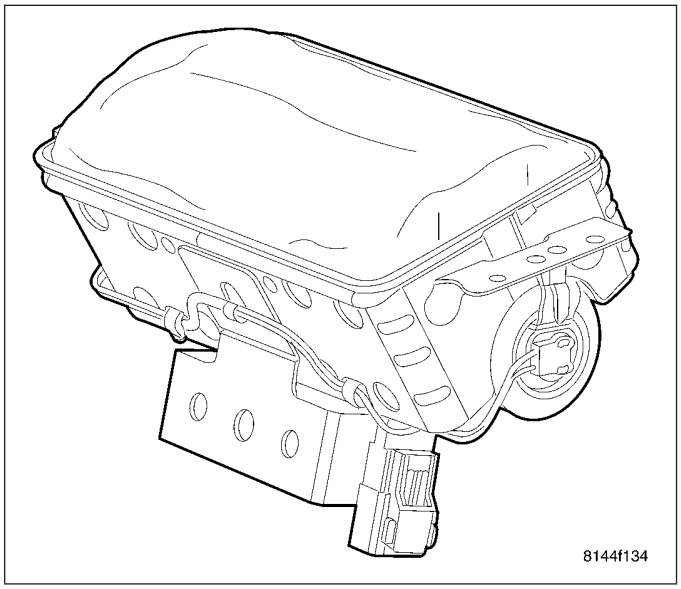

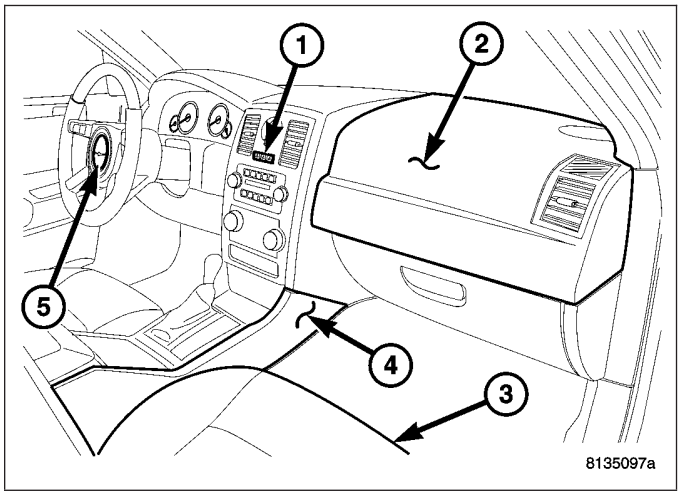

Located below the passenger airbag door within the instrument panel is the passenger airbag. The passenger airbag housing fits into a molded receptacle on the back of the airbag door, where twelve stamped hook formations on the forward and rearward edges of the airbag housing are engaged in mating small window openings on the forward and rearward flanges of the receptacle to secure the airbag door to the airbag housing. These airbag door fasteners and mounting provisions are all concealed beneath the instrument panel base trim.

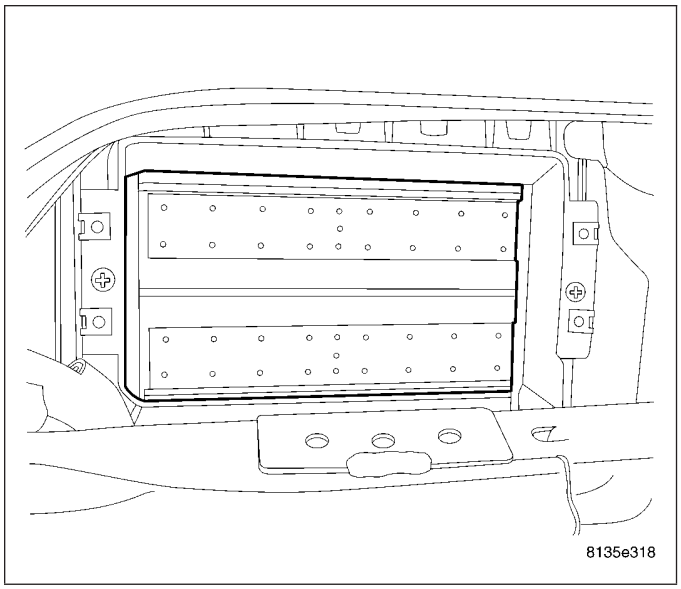

The passenger airbag is secured by four screws (1) through a stamped mounting bracket to the instrument panel cover/pad and two bolts (2) to the instrument panel structural support.

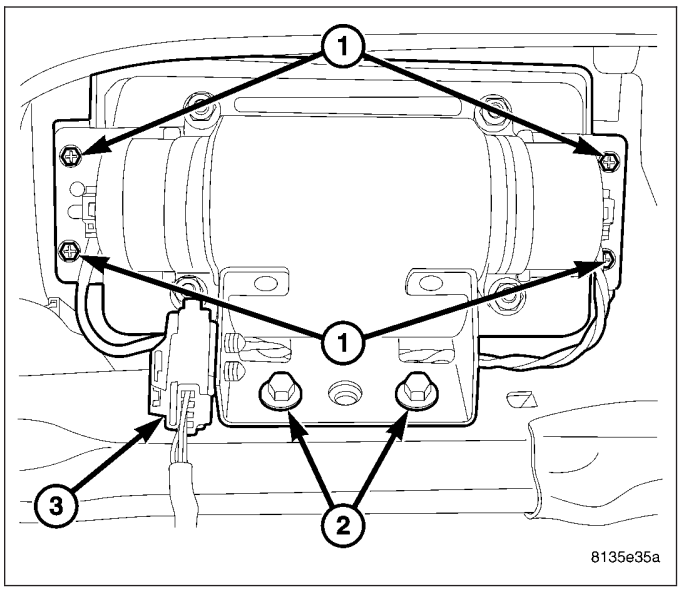

OPERATION

The multistage passenger airbag is deployed by electrical signals generated by the Occupant Restraint Controller (ORC) through the passenger airbag squib 1 and squib 2 circuits to the two initiators in the airbag inflator. By using two initiators, the airbag can be deployed at multiple levels of force. The force level is controlled by the ORC to suit the monitored impact conditions by providing one of three delay intervals between the electrical signals provided to the two initiators. The longer the delay between these signals, the less forcefully the airbag will deploy.

When the ORC sends the proper electrical signals to each initiator, the electrical energy generates enough heat to initiate a small pyrotechnic charge which, in turn ignites chemical pellets within the inflator. Once ignited, these chemical pellets burn rapidly and produce a large quantity of inert gas. The inflator is sealed to the airbag cushion and a diffuser in the inflator directs all of the inert gas into the airbag cushion, causing the cushion to inflate. As the cushion inflates, the passenger airbag door will split at predetermined tear seam lines concealed on the inside surface of the door, then the door will pivot up over the top of the instrument panel and out of the way. Following an airbag deployment, the airbag cushion quickly deflates by venting the inert gas through vent holes within the fabric used to construct the back (windshield side) of the airbag cushion. Typically, both initiators are used during an airbag deployment event.

REMOVAL

DEPLOYED PASSENGER AIRBAG

For deployed passenger airbags, the instrument panel top pad must be replaced.

1. Open hood.
2. Disconnect and isolate the battery negative cable.

WARNING: Wait two minutes for the airbag system reserve capacitor to discharge before beginning any airbag system or component service. Failure to do so may result in accidental airbag deployment, personal injury or death.

3. Remove instrument panel (Refer to 23 - BODY/INSTRUMENT PANEL/INSTRUMENT PANEL ASSEMBLY - REMOVAL).
4. Disconnect the passenger airbag electrical connector (3).
5. Remove the four left and right passenger airbag mounting screws (1).
6. Remove the two lower passenger airbag mounting bolts (2).
7. Separate passenger airbag from instrument panel.

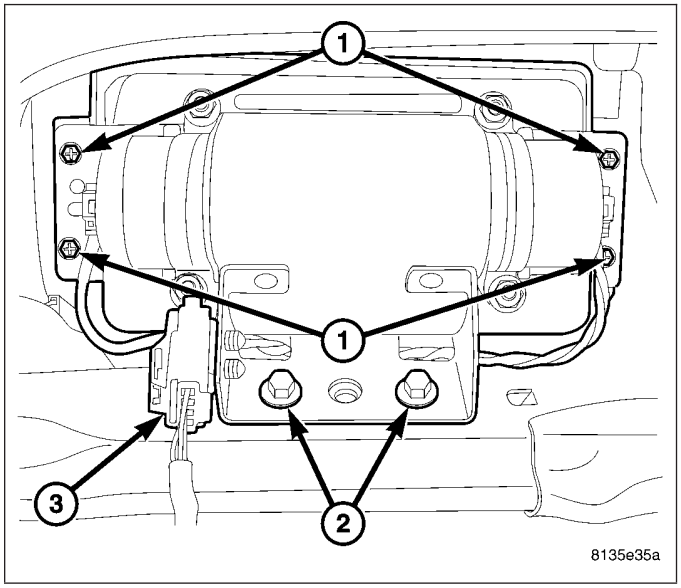

8. Remove and inspect all reusable components from the instrument panel and transfer to the new instrument panel top pad.
9. Clean powder residue from interior of vehicle (Refer to 8 - ELECTRICAL/RESTRAINTS - STANDARD PROCEDURE - SERVICE AFTER AN AIRBAG DEPLOYMENT).

NONDEPLOYED PASSENGER AIRBAG

1. Disconnect and isolate the battery negative cable.

WARNING: Wait two minutes for the airbag system reserve capacitor to discharge before beginning any airbag system or component service. Failure to do so may result in accidental airbag deployment, personal injury or death.

2. Remove the right side silencer pad (Refer to 23 - BODY/INSTRUMENT PANEL/INSTRUMENT PANEL SILENCER - REMOVAL).

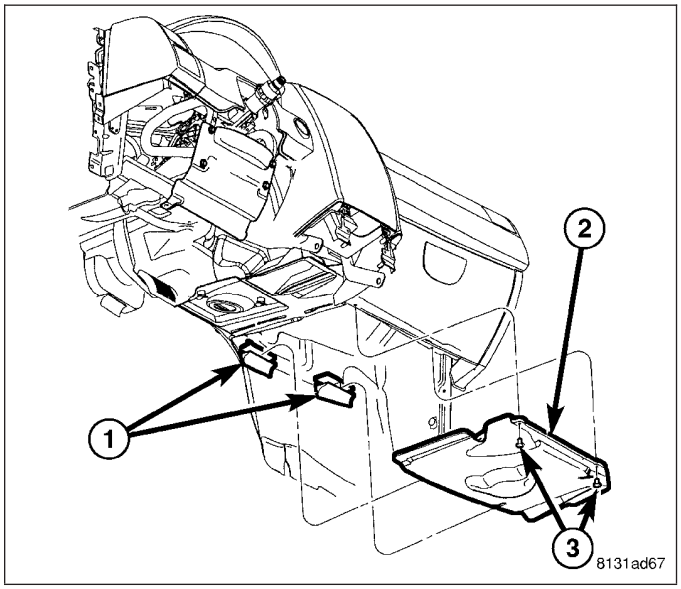

3. Remove the glove box assembly (Refer to 23 - BODY/INSTRUMENT PANEL/GLOVE BOX - REMOVAL).

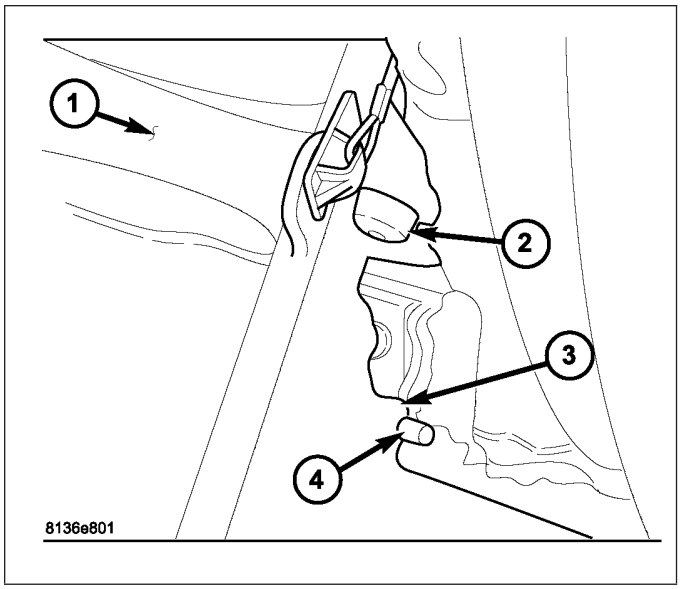

4. Remove the two inboard mounting screws (2) to the passenger airbag just below the distribution duct (1) and to the left of the distribution housing.

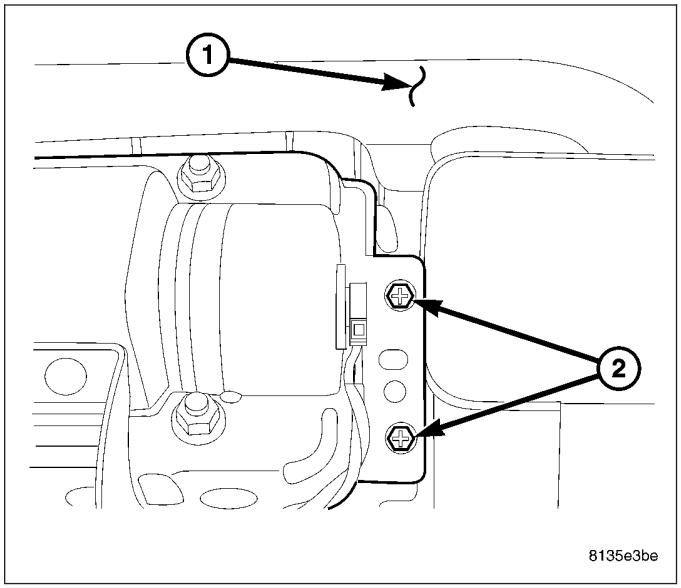

5. Remove the two outboard mounting screws (1) to the passenger airbag just below the distribution duct.

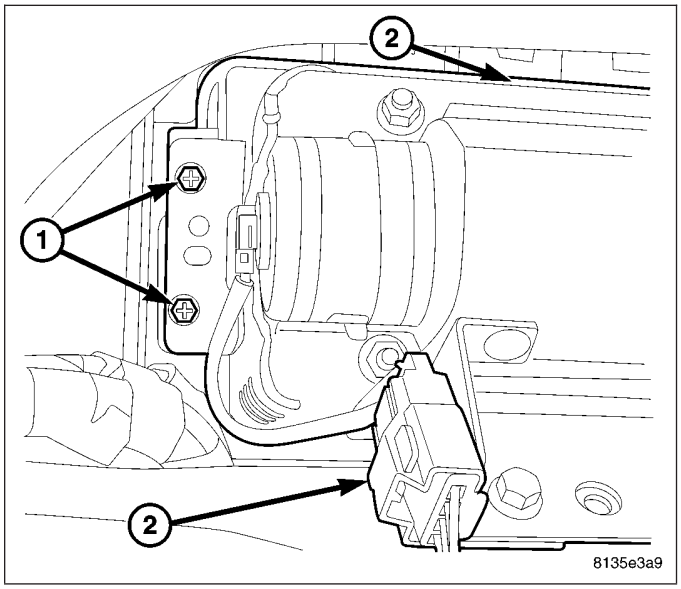

6. Remove the two passenger airbag mounting bolts (2) to the crosscar beam.
7. Disconnect the passenger airbag electrical connector (3).

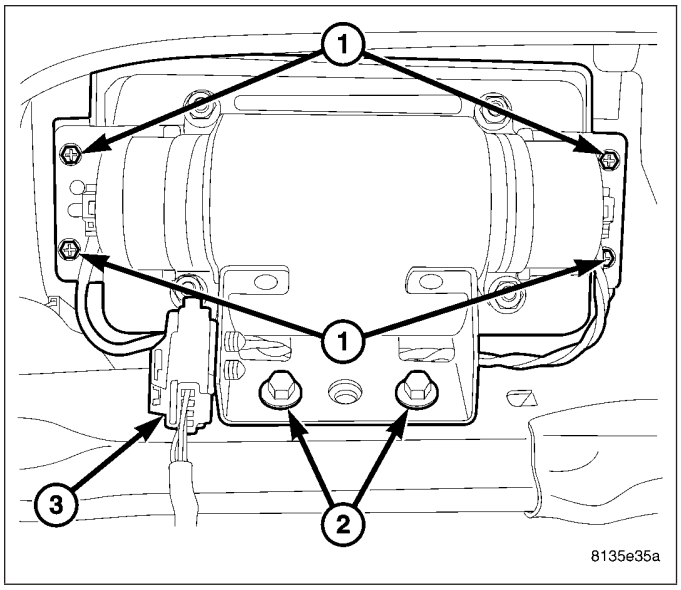

8. Maneuver the passenger airbag down in a way to clear any obstacles that may impede the removal of the airbag.

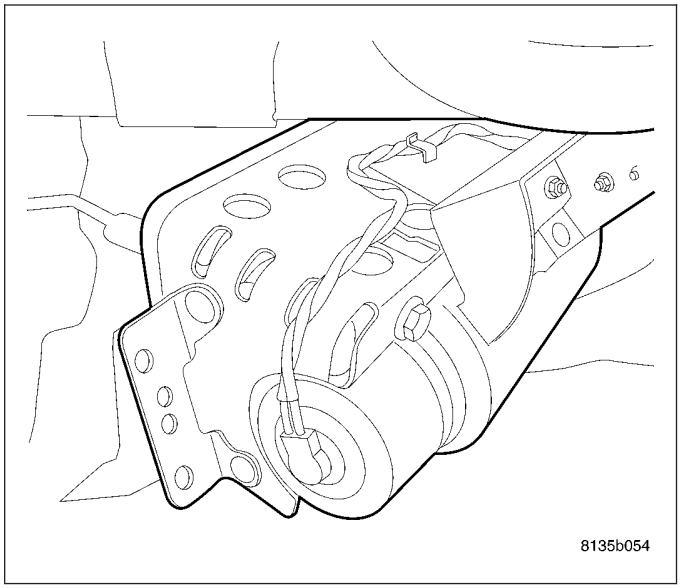

INSTALLATION

DEPLOYED PASSENGER AIRBAG

NOTE: For deployed passenger airbags, the instrument panel top pad must be replaced.

1. Clean powder residue from interior of vehicle (Refer to 8 - ELECTRICAL/RESTRAINTS - STANDARD PROCEDURE - SERVICE AFTER AN AIRBAG DEPLOYMENT).
2. Inspect and transfer all reusable components from the old instrument panel top pad to the new instrument panel top pad.
3. Position new passenger airbag into instrument panel cavity.

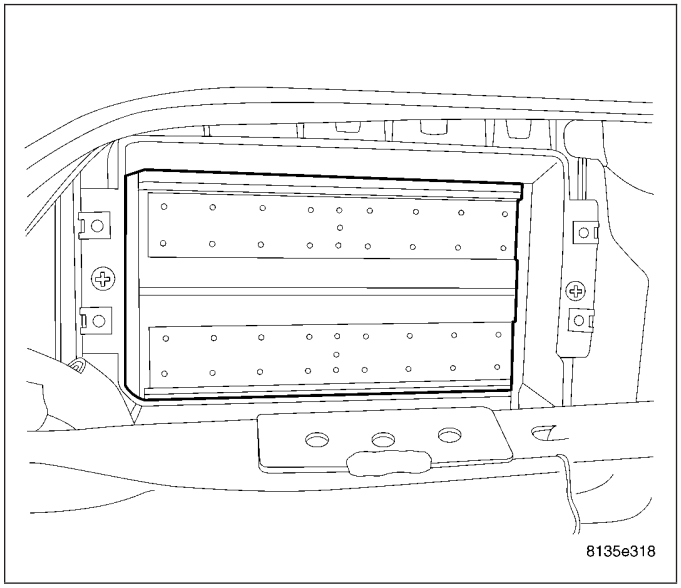

4. Install the two lower passenger airbag mounting bolts (2). Torque bolts to 11.6 N·m (103 in. lbs.).
5. Install the four left and right passenger airbag mounting screws (1). Torque screws to 2.8 N·m (25 in. lbs.).
6. Connect the passenger airbag electrical connector (3).
7. Install new instrument panel assembly (Refer to 23 - BODY/INSTRUMENT PANEL/INSTRUMENT PANEL ASSEMBLY - INSTALLATION).

WARNING: Do not connect the battery negative cable (Refer to 8 - ELECTRICAL/RESTRAINTS - DIAGNOSIS AND TESTING - AIRBAG SYSTEM). Personal injury or death may result if the system test is not performed first.

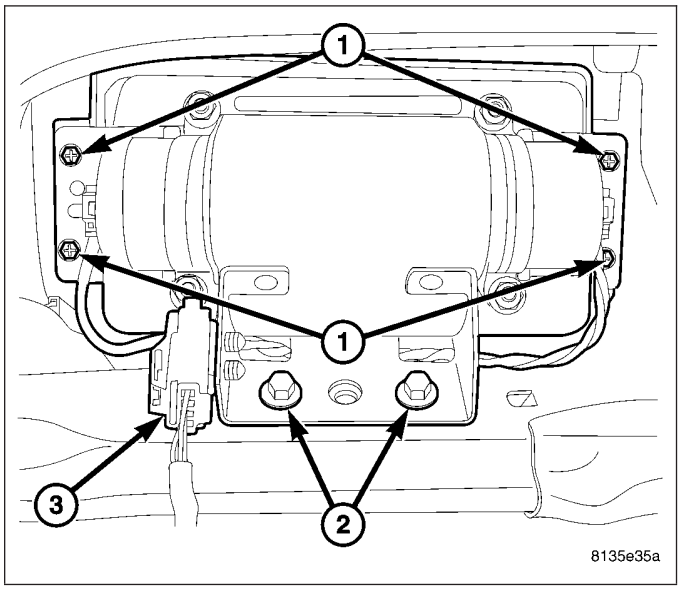

NONDEPLOYED PASSENGER AIRBAG

1. Maneuver the passenger airbag up into the instrument panel in a way to clear any obstacles that may impede the installation of the airbag.

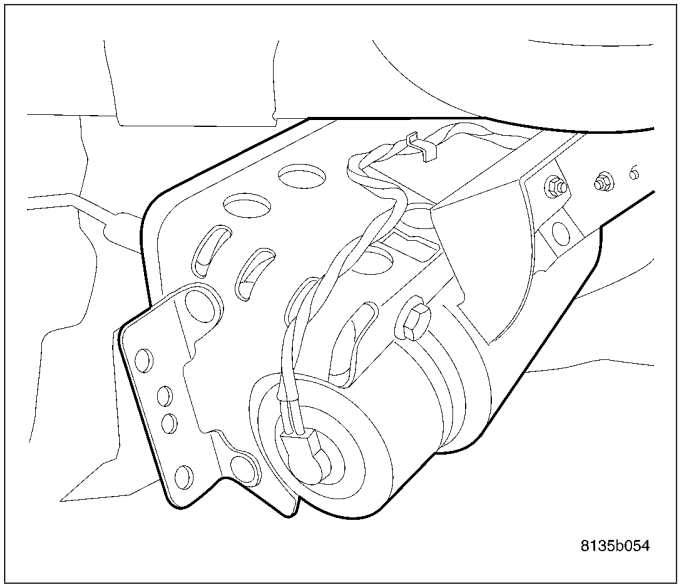

2. Place the passenger into the cavity of the passenger airbag door.

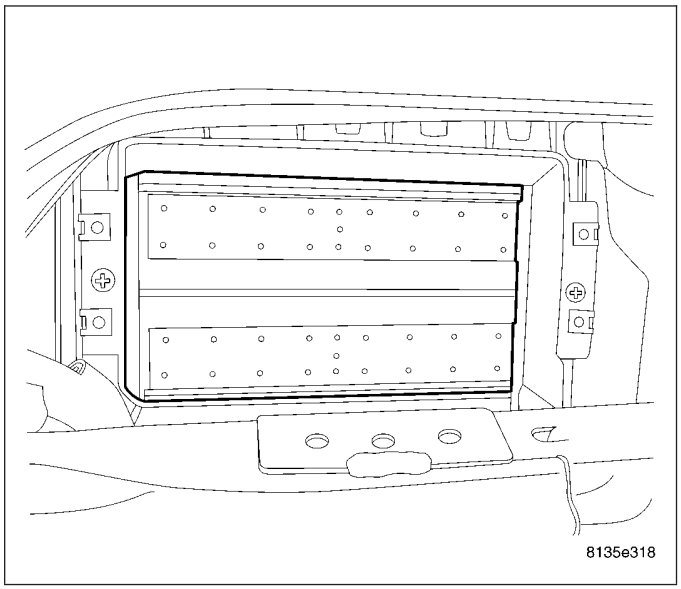

3. Install the two passenger airbag mounting bolts (2) to the crosscar beam. Torque bolts to 11.6 N·m (103 in. lbs.).
4. Connect the passenger airbag electrical connector (3).

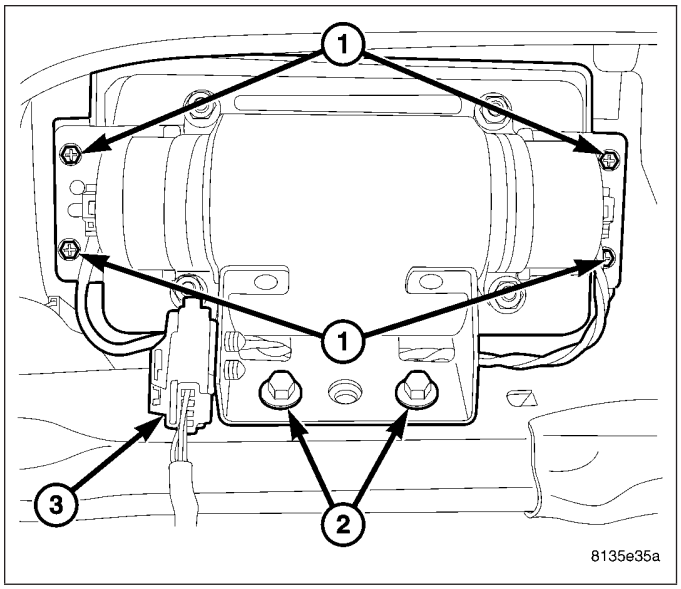

5. Install the two inboard mounting screws (2) to the passenger airbag just below the distribution duct (1) and to the left of the distribution housing. Torque screws to 2.8 N·m (25 in. lbs.).

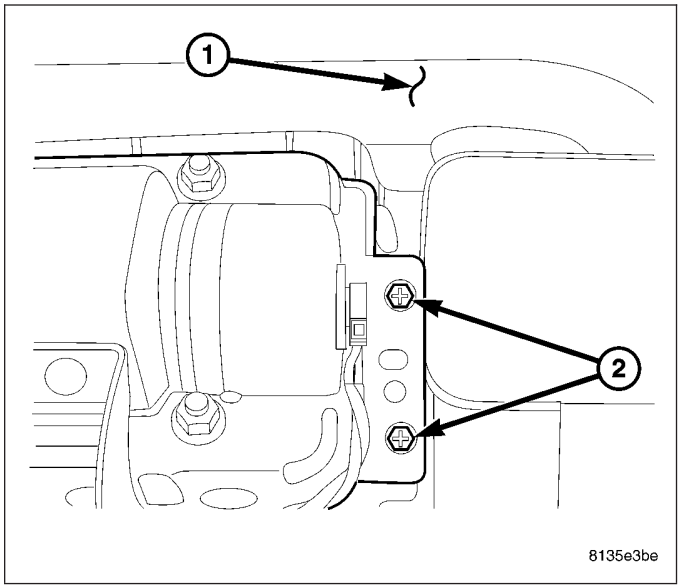

6. Install the two outboard mounting screws (1) to the passenger airbag just below the distribution duct. Torque screws to 2.8 N·m (25 in. lbs.).

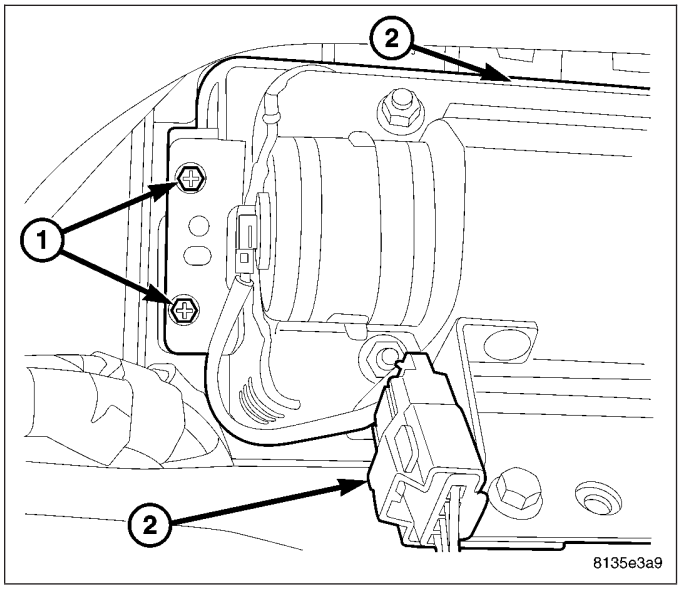

7. Install the glove box assembly (Refer to 23 - BODY/INSTRUMENT PANEL/GLOVE BOX - INSTALLATION).

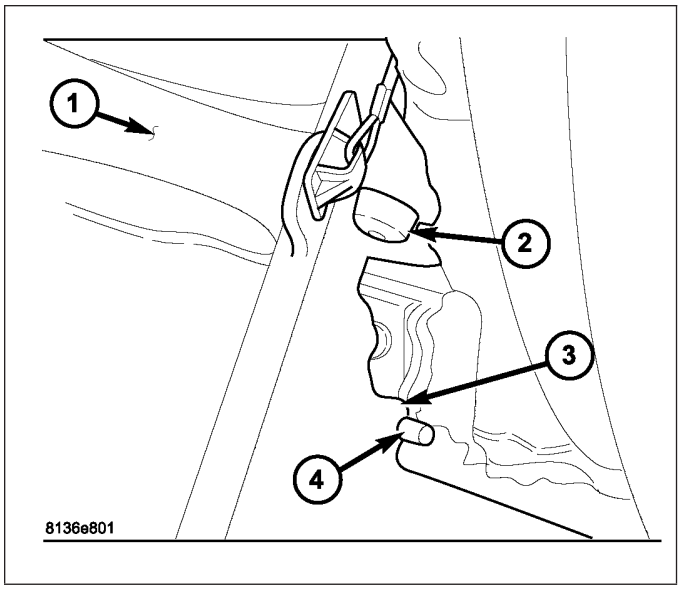

8. Install the right side silencer pad (Refer to 23 - BODY/INSTRUMENT PANEL/INSTRUMENT PANEL SILENCER - INSTALLATION).

WARNING: Do not connect the battery negative cable (Refer to 8 - ELECTRICAL/RESTRAINTS - DIAGNOSIS AND TESTING - AIRBAG SYSTEM). Personal injury or death may result if the system test is not performed first.

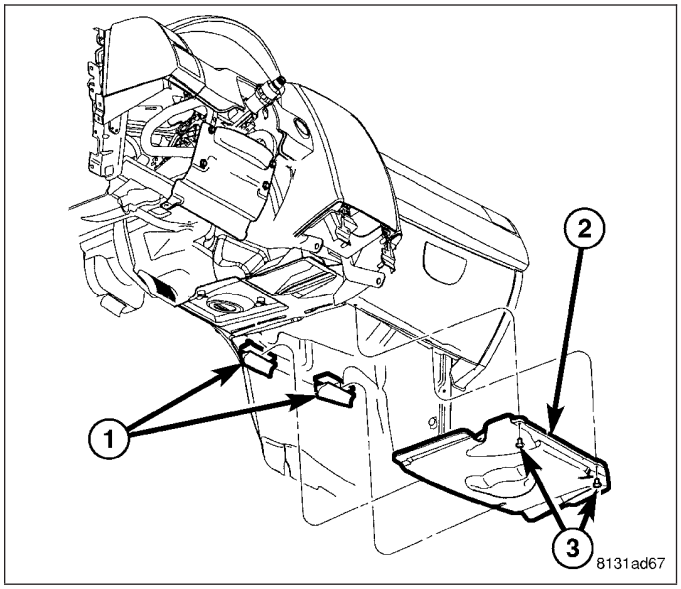

SEAT BELT AND RETRACTOR

REMOVAL

FRONT

1. Disconnect and isolate the battery negative cable.

WARNING: Wait two minutes for the airbag system reserve capacitor to discharge before beginning any airbag system or component service. Failure to do so may result in accidental airbag deployment, personal injury or death.

2. Remove trim cover (3) from the seat cushion outboard trim cover.
3. Remove seat belt (1) lower anchor nut (2) from seat cushion frame.

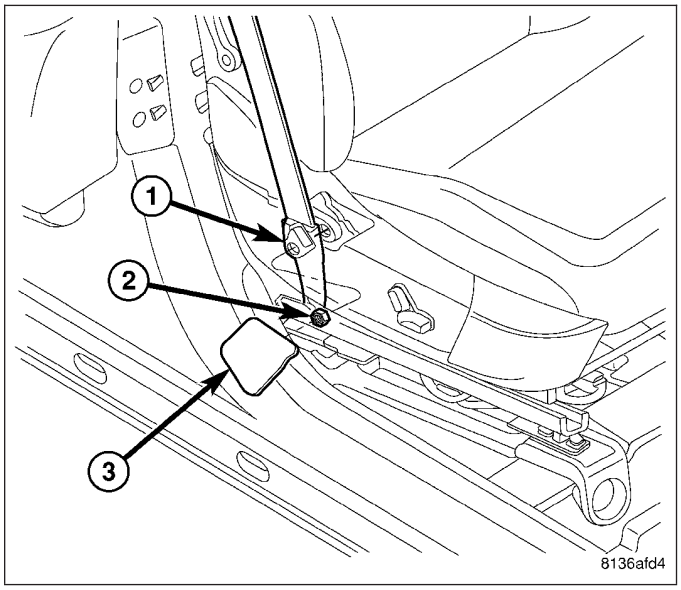

4. Remove the upper turning loop (3) trim cover (2).
5. Remove the upper turning loop retaining bolt (4).

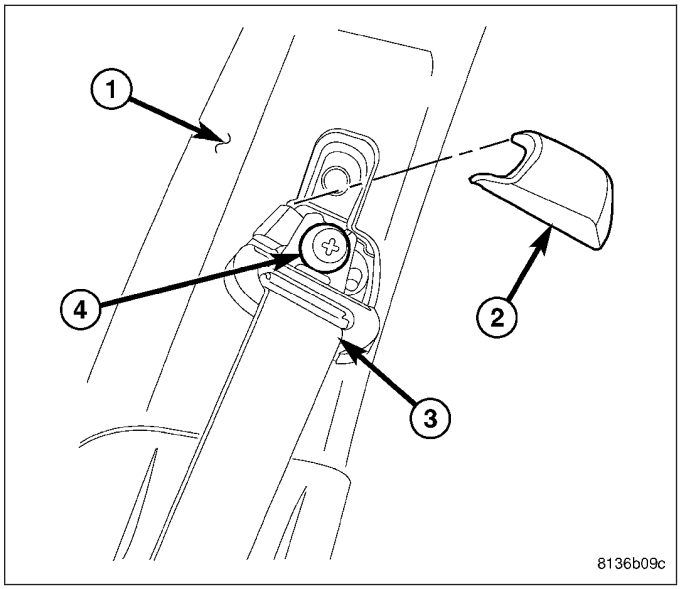

6. Remove the lower B-pillar trim (Refer to 23 - BODY/INTERIOR/B-PILLAR TRIM - REMOVAL).

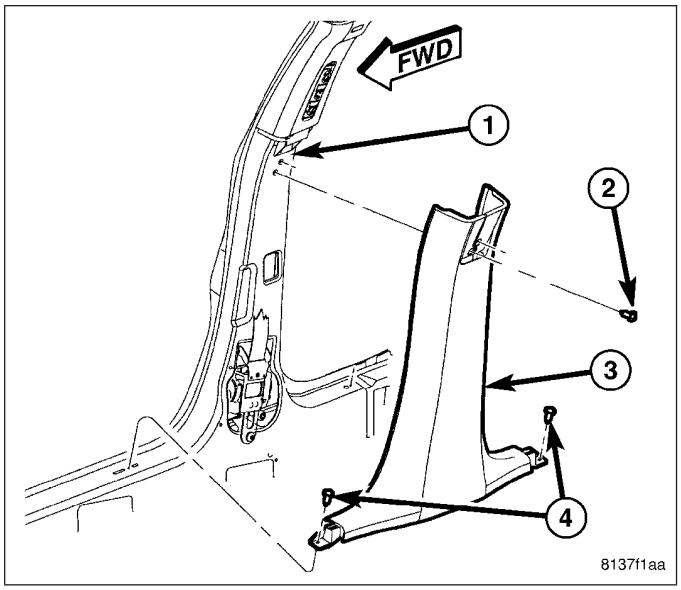

7. Remove the one screw (2) to the front seat belt web guide (3).

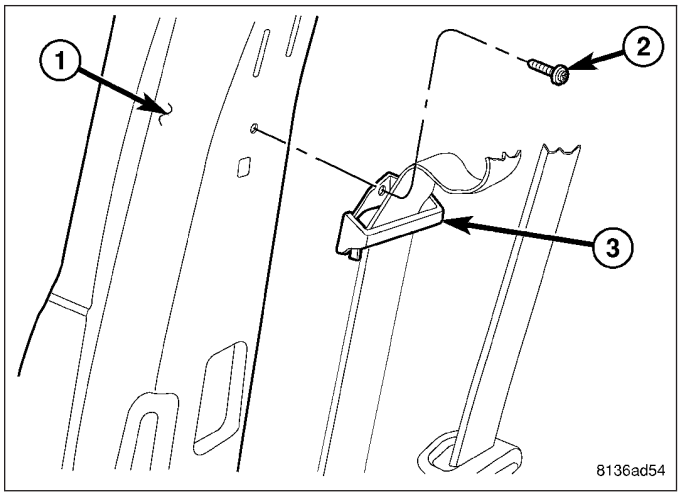

8. Disconnect the tensioner (2) squib connector (3).

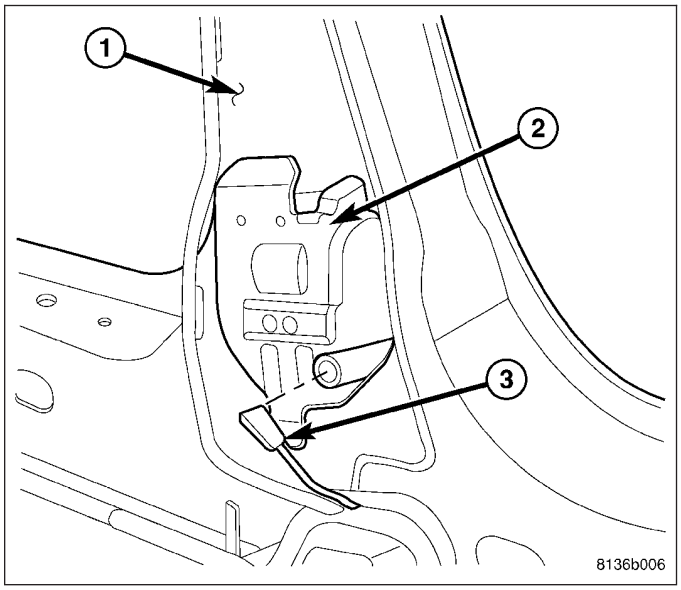

9. Remove the one screw between the upper retractor indexing tabs in B-pillar.
10. Remove the one front seat belt retractor (4) retaining bolt (3).
11. Pull the retractor inboard and release the indexing tabs (2) from the B-pillar (1).

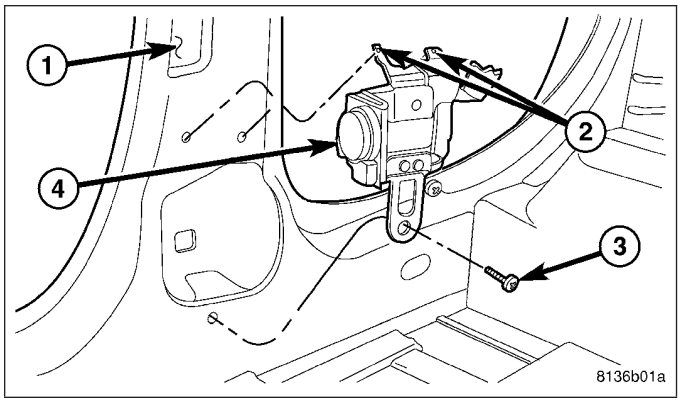

REAR - SEDAN

1. Remove the lower seat belt anchor (2) bolt (3).

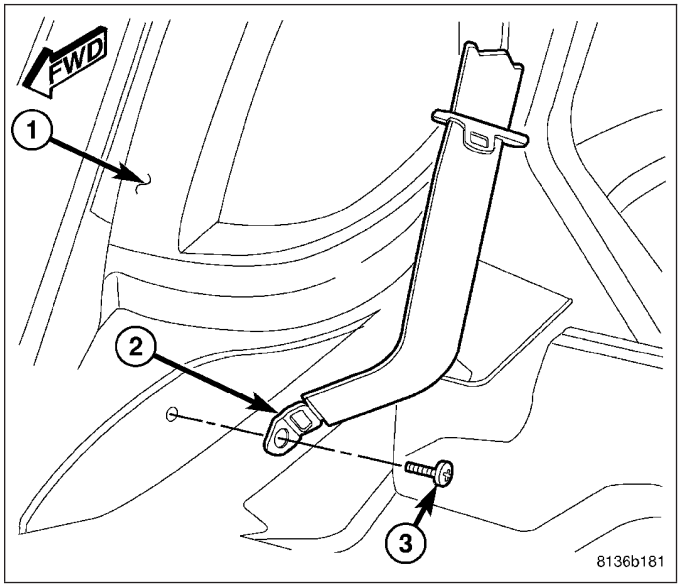

2. Remove the upper C-pillar trim panel (Refer to 23 - BODY/INTERIOR/C-PILLAR TRIM - REMOVAL).

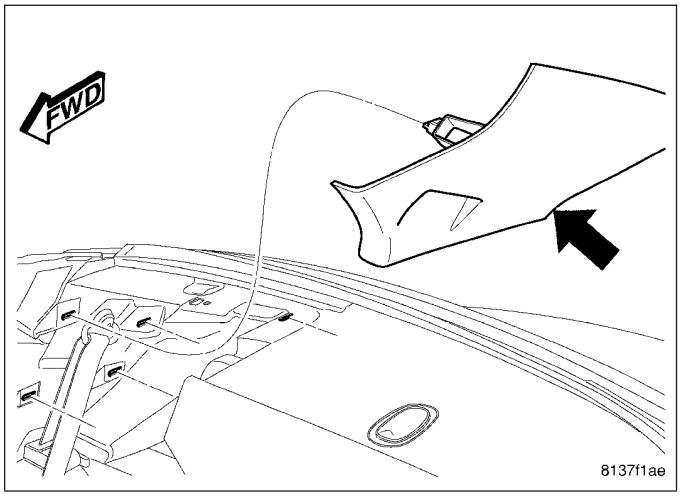

3. Remove the one upper turning loop retaining bolt (2).

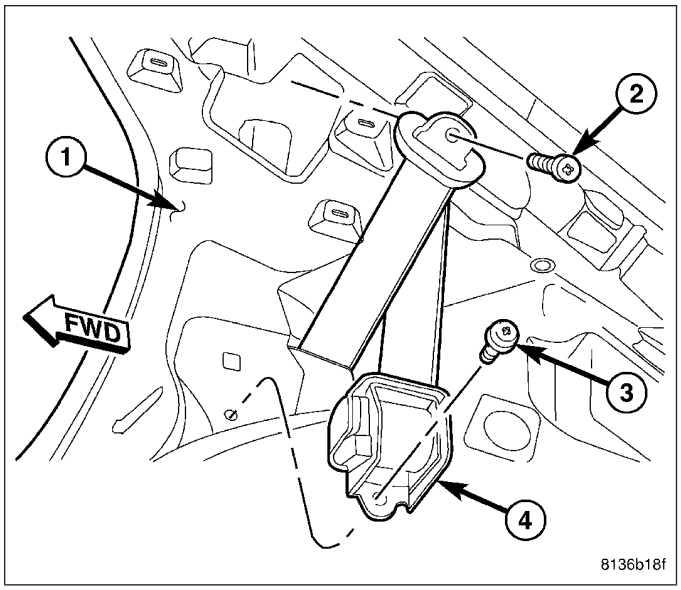

4. Remove the one seat belt retractor (4) mounting bolt (3).
5. Pull retractor inboard and drop down to release tabs from slots.

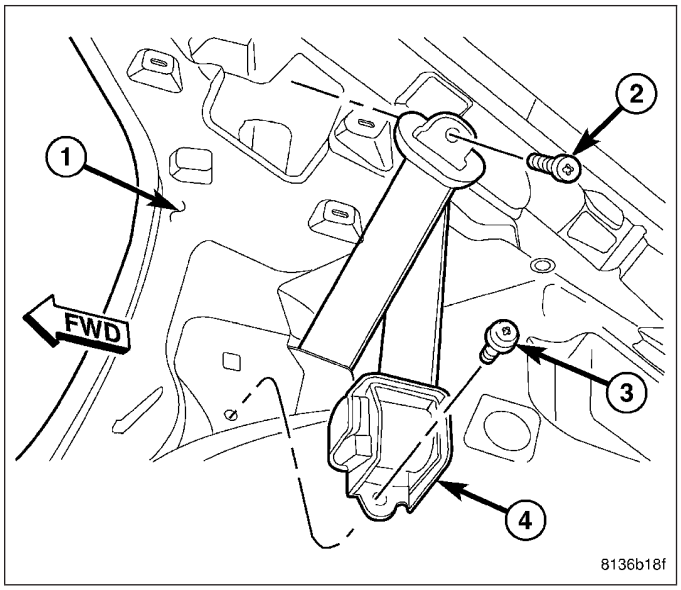

REAR - WAGON

1. Remove the lower seat belt anchor (2) bolt (3).

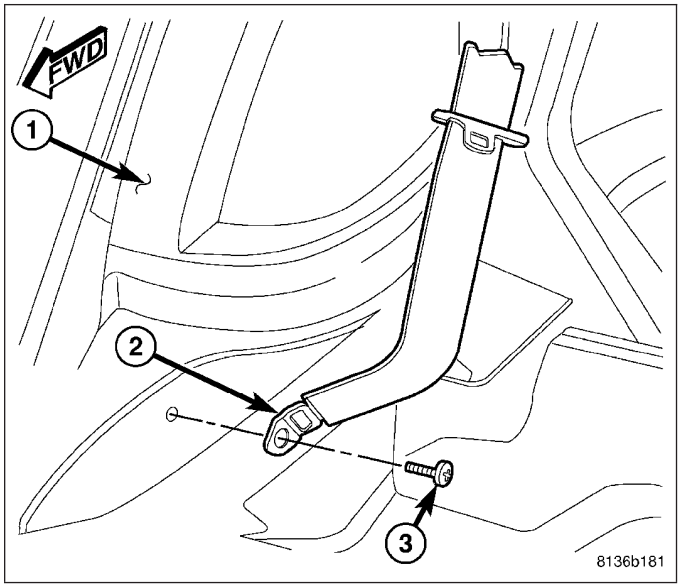

2. Remove the quarter trim panel.
3. Remove the one rear seat belt retractor (4) retaining nut (2).

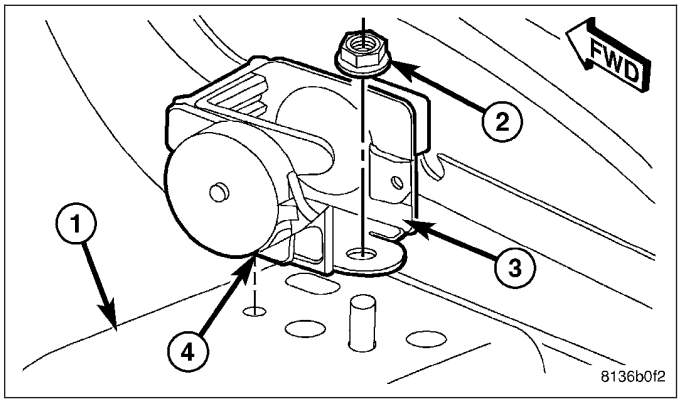

REAR CENTER - SEDAN

1. Remove the rear seat cushion (Refer to 23 - BODY/SEATS/SEAT CUSHION COVER - REMOVAL).
2. Remove the one nut (3) to the seat belt lower anchor.

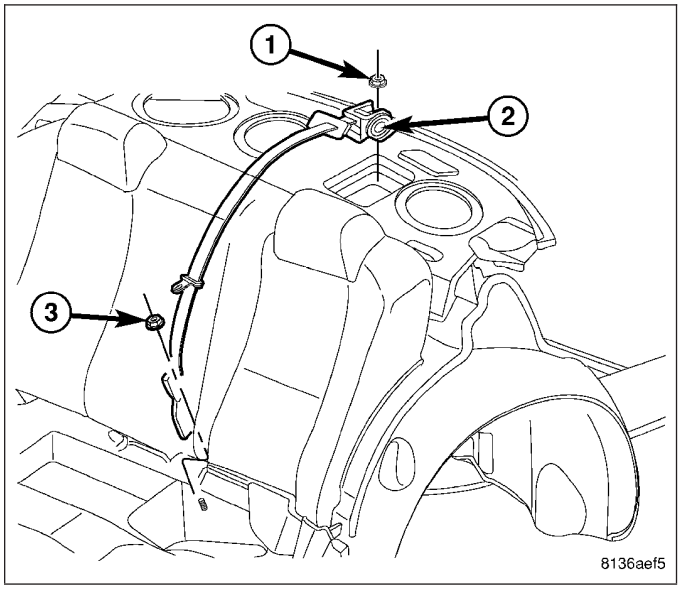

3. Remove the rear shelf trim panel (Refer to 23 - BODY/INTERIOR/REAR SHELF TRIM PANEL - REMOVAL).

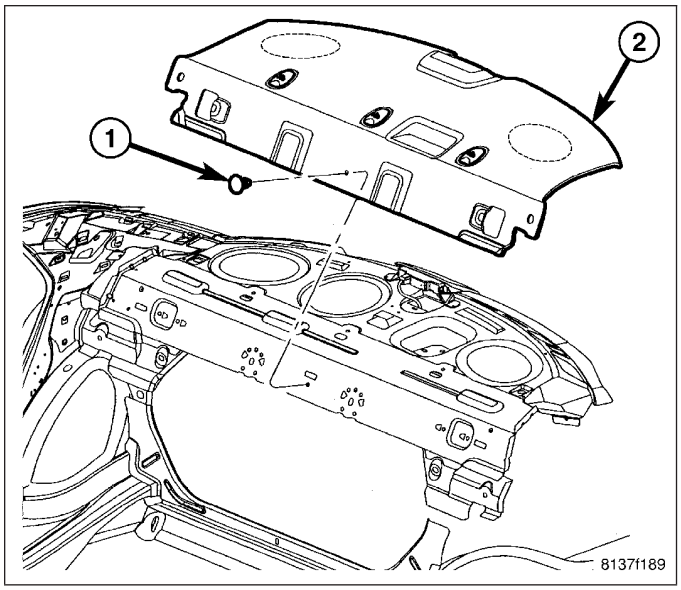

4. Remove the one retaining nut (1) to the center seat belt retractor (2).

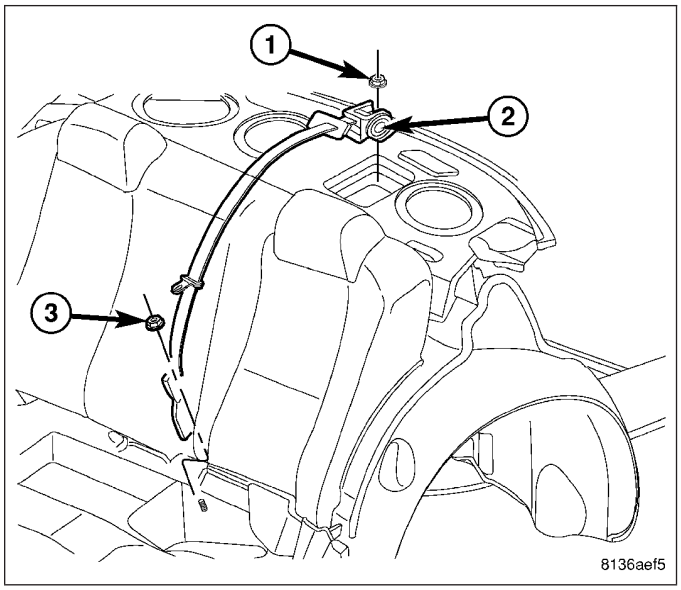

REAR CENTER - WAGON

1. Remove the left seat back trim cover (60% portion of the rear folding seats) (Refer to 23 - BODY/ SEATS/SEAT BACK CUSHION/COVER - REMOVAL).
2. Disconnect the rear seat back latching cable from seat frame.

NOTE: If the seat back is not fully latched, the center seat belt will not release from the retractor.

3. Remove the one bolt (2) holding the rear center seat belt retractor.

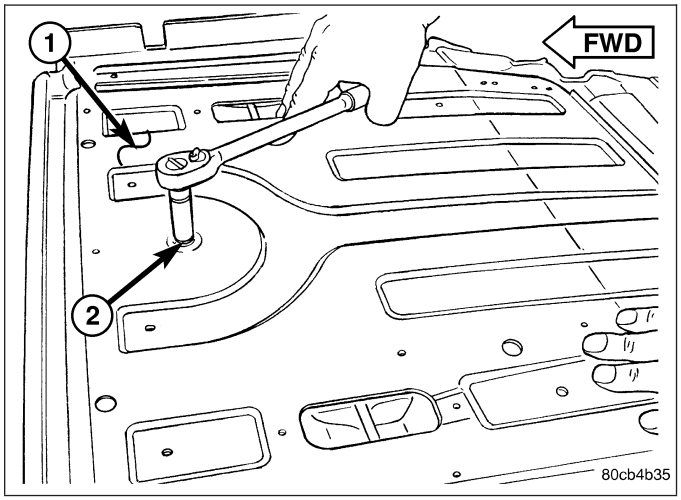

INSTALLATION

FRONT

1. Position the retractor in the B-pillar (1) with the indexing tabs (2).
2. Install the one front seat belt retractor (4) retaining bolt (3). Torque bolt to 32 N·m (24 ft. lbs.).
3. Install the one screw between the upper retractor indexing tabs (2) in B-pillar.

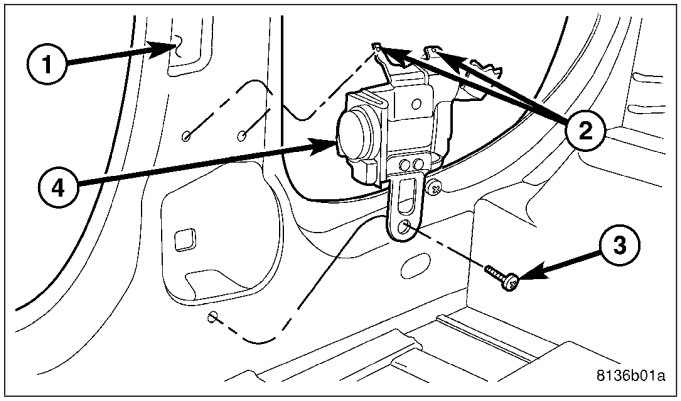

4. Connect the tensioner (2) squib connector (3).

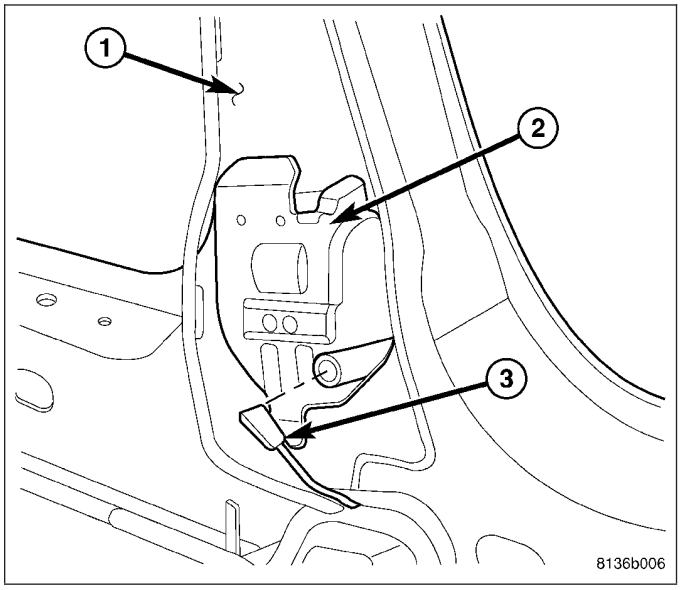

5. Install the one screw (2) to the front seat belt web guide (3). Torque screw to 3 N·m (20 in. lbs.).

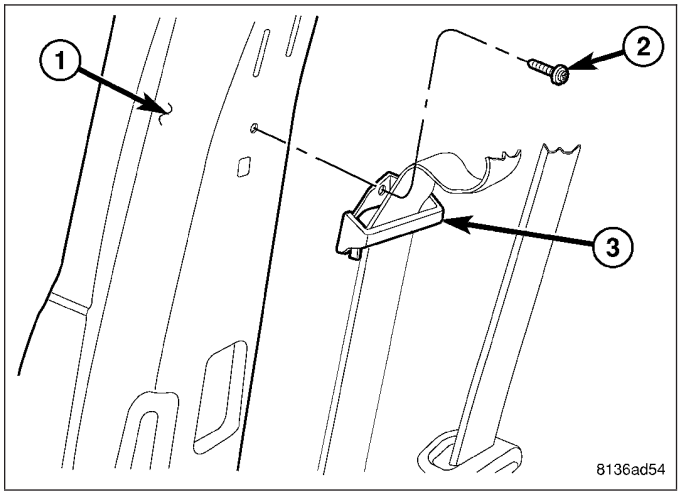

6. Position the upper turning loop (3) and install the retaining bolt (4). Torque bolt to 40 N·m (30 ft. lbs.).
7. Install the upper turning loop (3) trim cover (2).

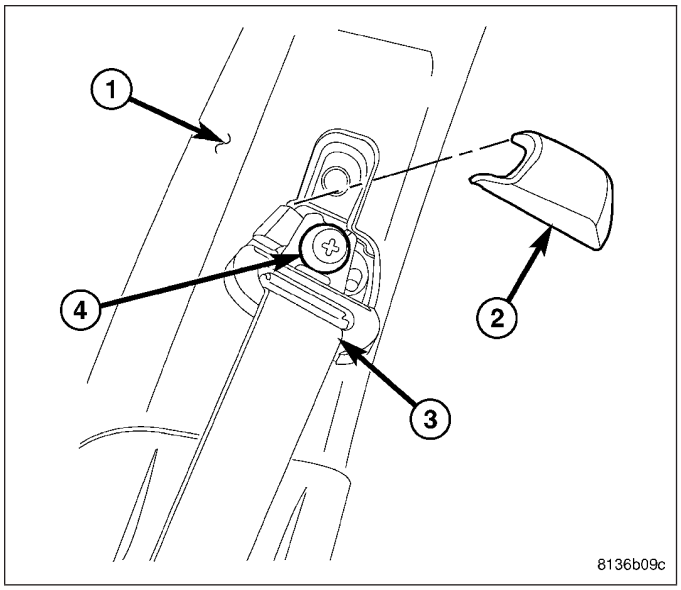

8. Install the lower B-pillar trim (Refer to 23 - BODY/ INTERIOR/B-PILLAR TRIM - INSTALLATION).

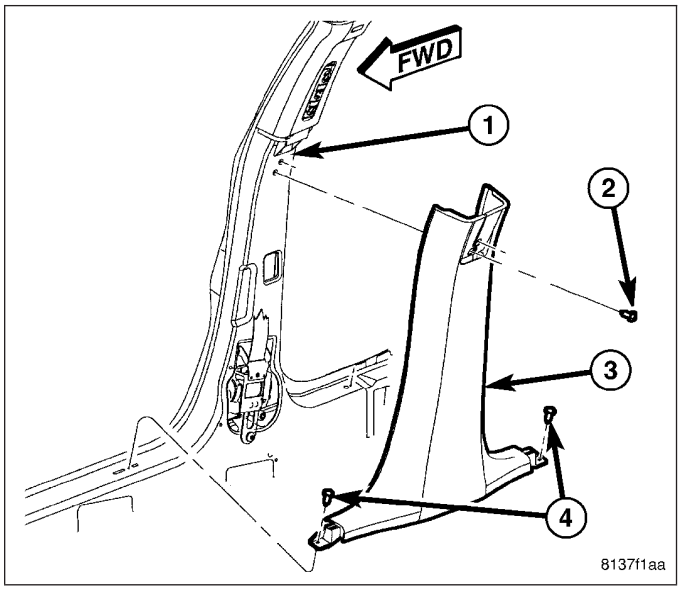

9. Position the seat belt (1) onto the stud on the seat cushion frame and install the lower anchor nut (2). Torque nut to 37 N·m (27 ft. lbs.).
10. Install the trim cover (3) onto the seat cushion outboard trim cover.

WARNING: Do not connect the battery negative cable (Refer to 8 - ELECTRICAL/RESTRAINTS - DIAGNOSIS AND TESTING - AIRBAG SYSTEM). Personal injury or death may result if the system test is not performed first.

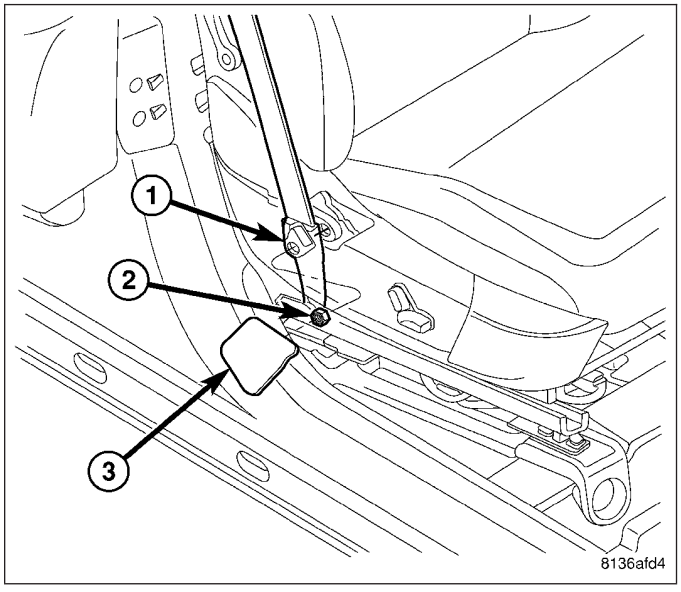

REAR - SEDAN

1. Position the retractor (4) on the C-pillar to the indexing tab slips up into the pillar.
2. Install the retractor mounting bolt (3). Torque bolt to 32 N·m (24 ft. lbs.).

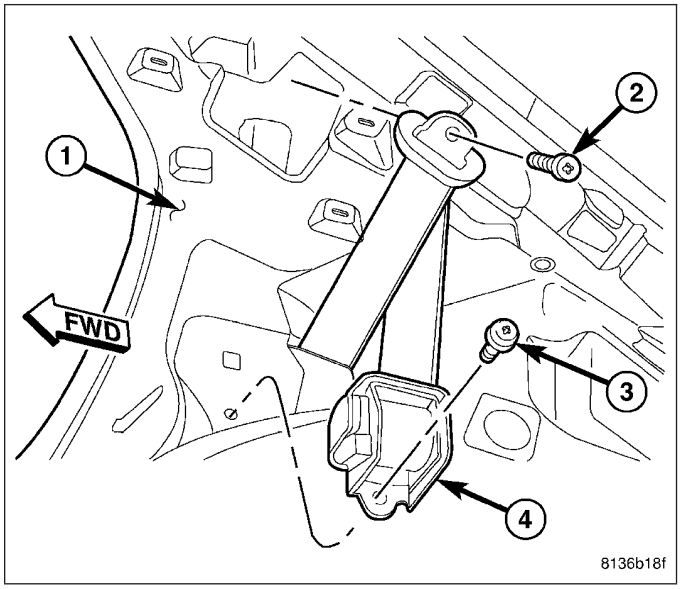

3. Install the one upper turning loop retaining bolt (2). Torque bolt to 40 N·m (30 ft. lbs.).

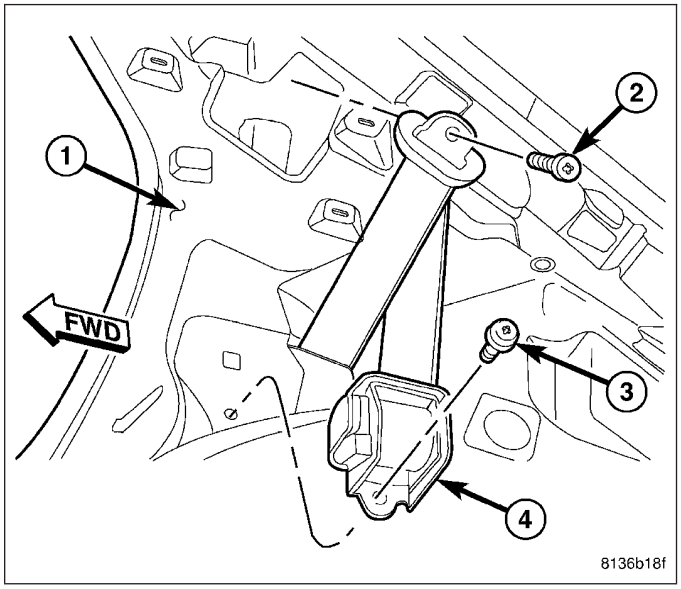

4. Install the upper C-pillar trim panel (Refer to 23 - BODY/INTERIOR/C-PILLAR TRIM - INSTALLATION).

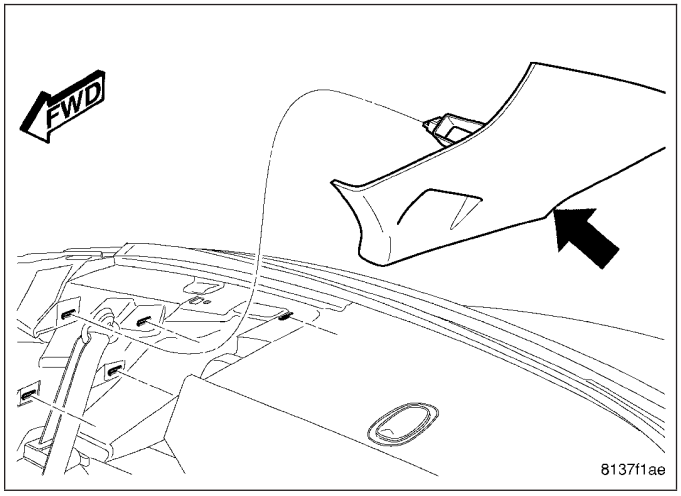

5. Install the lower seat belt anchor (2) bolt (3). Torque bolt to 32 N·m (24 ft. lbs.).

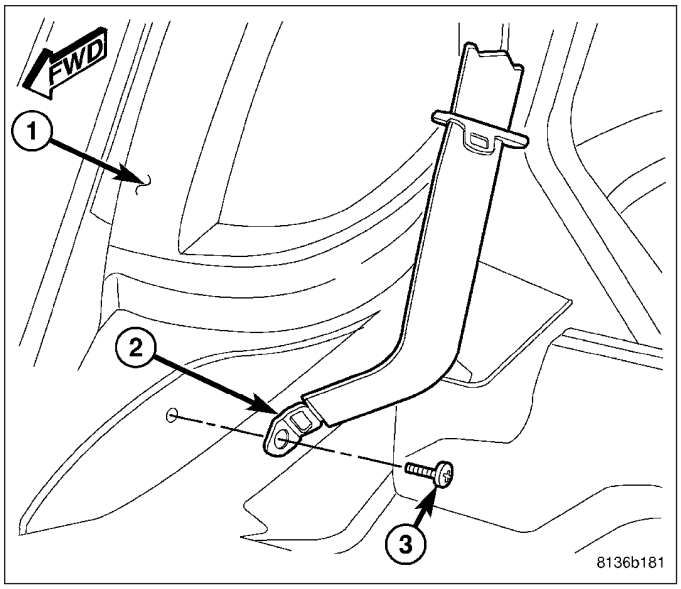

REAR - WAGON

1. Place the one rear seat belt retractor (4) so that the indexing tab is in its slot.
2. Install the retaining nut (2). Torque nut to 34 N·m (25 ft. lbs.).
3. Install the quarter trim panel.

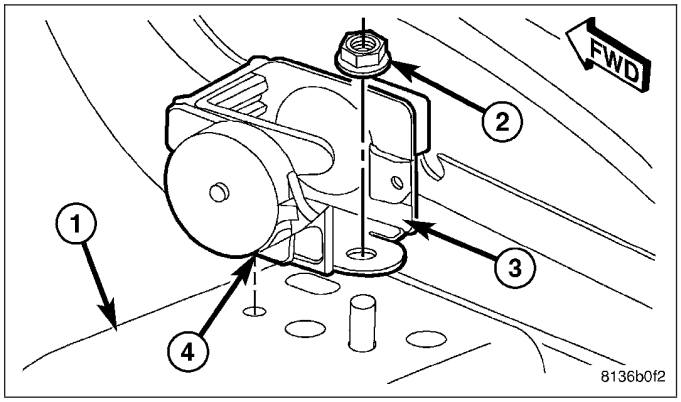

4. Install the lower seat belt anchor (2) bolt (3). Torque bolt to 32 N·m (24 ft. lbs.).

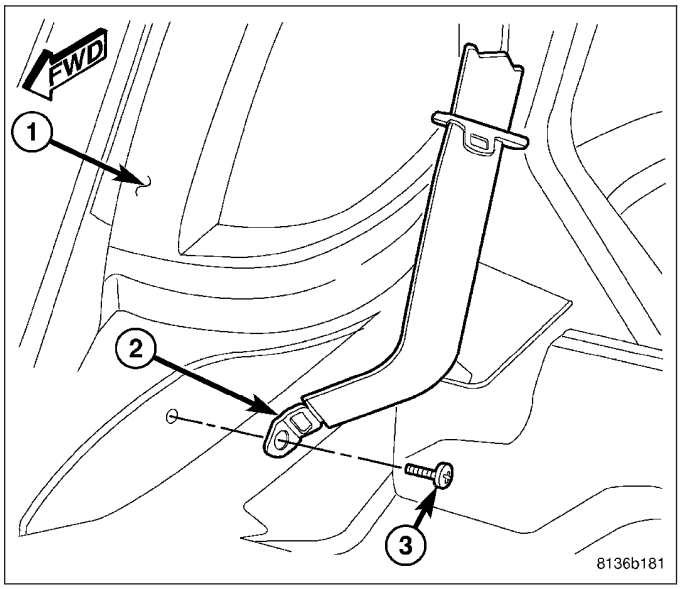

REAR CENTER - SEDAN

1. Place the rear center retractor (2) into position and install the one retaining nut (1). Torque nut to 34 N·m (25 ft. lbs.).

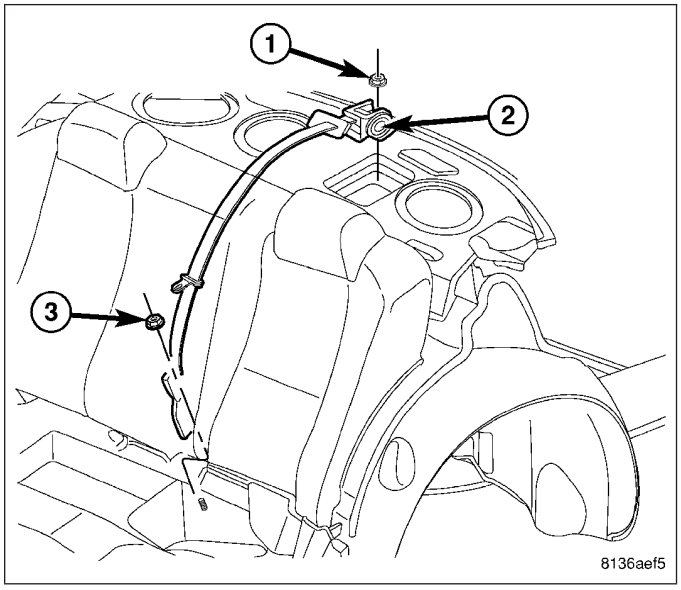

2. Install the rear shelf trim panel (Refer to 23 - BODY/INTERIOR/REAR SHELF TRIM PANEL - INSTALLATION).

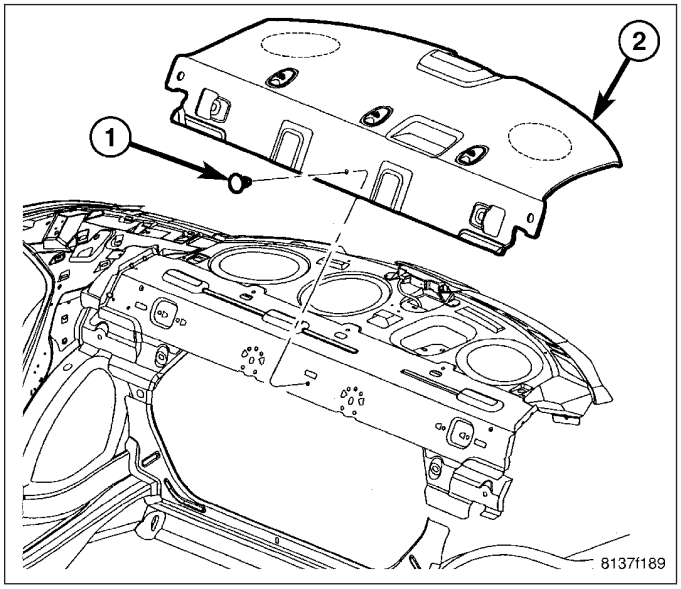

3. Install the one nut (3) to the seat belt lower anchor. Torque nut to 34 N·m (25 ft. lbs.).
4. Install the rear seat cushion (Refer to 23 - BODY/ SEATS/SEAT CUSHION COVER - INSTALLATION).

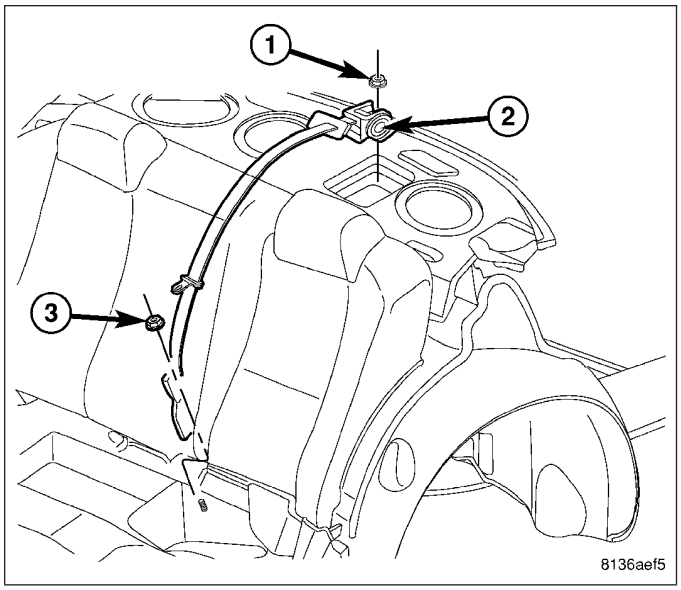

REAR CENTER - WAGON

1. Position the rear center retractor into position in the seat back.
2. Install the one bolt (2) holding the rear center seat belt retractor. Torque nut to 34 N·m (25 ft. lbs.).
3. Install the left seat back trim cover (60% portion of the rear folding seats) (Refer to 23 - BODY/SEATS/ SEAT - INSTALLATION).

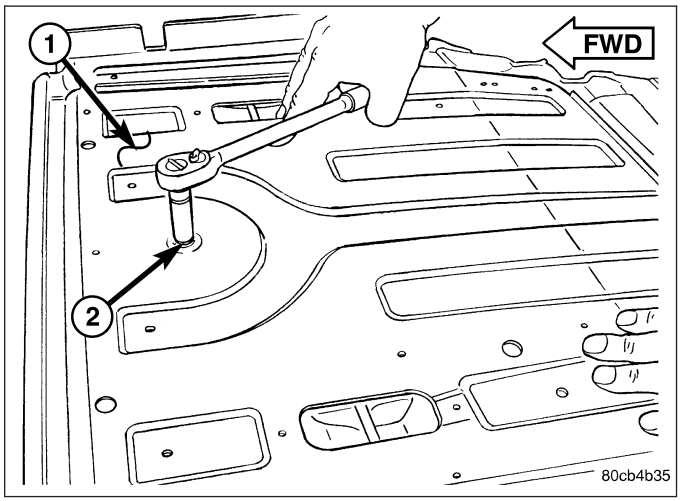

SEAT BELT BUCKLE

REMOVAL

FRONT SEAT BELT BUCKLE

1. Disconnect and isolate the battery negative cable.

WARNING: Wait two minutes for the airbag system reserve capacitor to discharge before beginning any airbag system or component service. Failure to do so may result in accidental airbag deployment, personal injury or death.

2. Remove center console from vehicle (Refer to 23 - BODY/INTERIOR/FLOOR CONSOLE - REMOVAL).
3. Remove the inner side shield from the front seat cushion.
4. Disconnect the one electrical connector.
5. Remove the one nut to the buckle assembly.

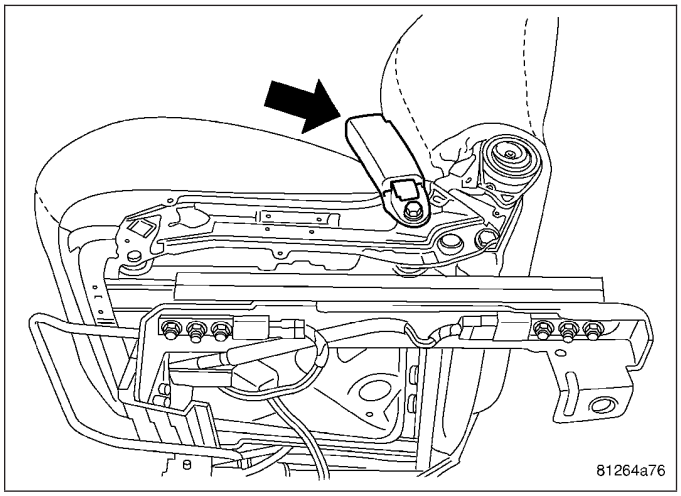

REAR SEAT BELT BUCKLE

1. Remove the rear seat cushion (Refer to 23 - BODY/SEATS/SEAT CUSHION COVER - REMOVAL).
2. Remove the one nut (2) to the seat belt buckle.

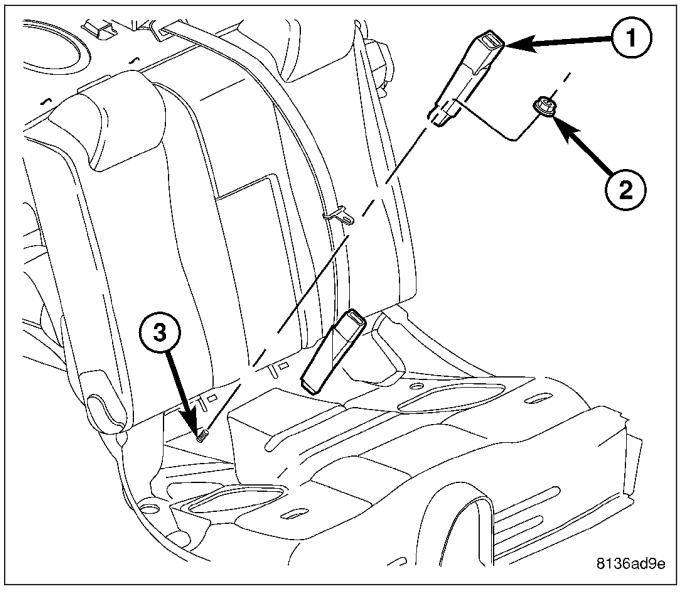

INSTALLATION

FRONT SEAT BELT BUCKLE

1. Position the front seat belt buckle onto the stud near the rear of the inboard seat cushion frame.
2. Install the retaining nut onto seat cushion frame. Tighten the nut to 43 N·m (32 ft. lbs.)
3. Connect the seat belt buckle electrical connector.
4. Install the seat cushion side shield.
5. Install floor console (Refer to 23 - BODY/INTERIOR/FLOOR CONSOLE - INSTALLATION).

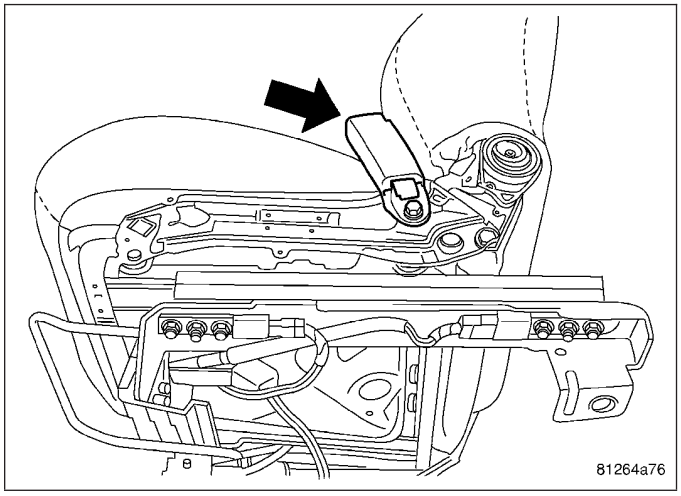

WARNING: Do not connect the battery negative cable (Refer to 8 - ELECTRICAL/RESTRAINTS - DIAGNOSIS AND TESTING - AIRBAG SYSTEM). Personal injury or death may result if the system test is not performed first.

WARNING: Following successful completion of the Airbag System test procedure, the Occupant Classification System Verification Test must be done using a scan tool and the appropriate diagnostic information.

REAR SEAT BELT BUCKLE

1. Position the rear seat belt buckle onto mounting studs (3).
2. Install retaining nut. Torque nut to 34 N·m (25 ft. lbs.).
3. Install rear seat cushion (Refer to 23 - BODY/SEATS/SEAT CUSHION COVER - INSTALLATION).

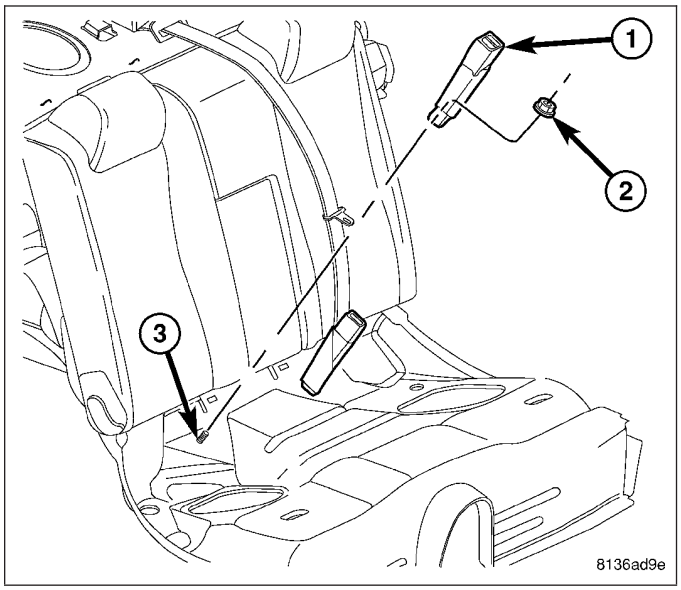

SEAT BELT TENSIONER

DESCRIPTION

Seat Belt Tensioners supplement the dual front airbags. The seat belt tensioners are integral to the front seat belt retractors (2), which are secured to the inner B-pillar (1) on the right and left sides of the vehicle. The retractor is concealed beneath the lower B-pillar trim. The seat belt tensioner consists primarily of a sprocket/pinion, a steel tube, a cast metal housing, numerous steel balls, a stamped metal ball trap, a torsion bar, a small pyrotechnically activated gas generator, and a short pigtail wire. All of these components are located on one side of the retractor spool on the outside of the retractor housing except for the torsion bar, which serves as the spindle upon which the retractor spool rides. The seat belt tensioners are controlled by the Occupant Restraint Controller (ORC) and are connected to the vehicle electrical system through the body wire harness (3).

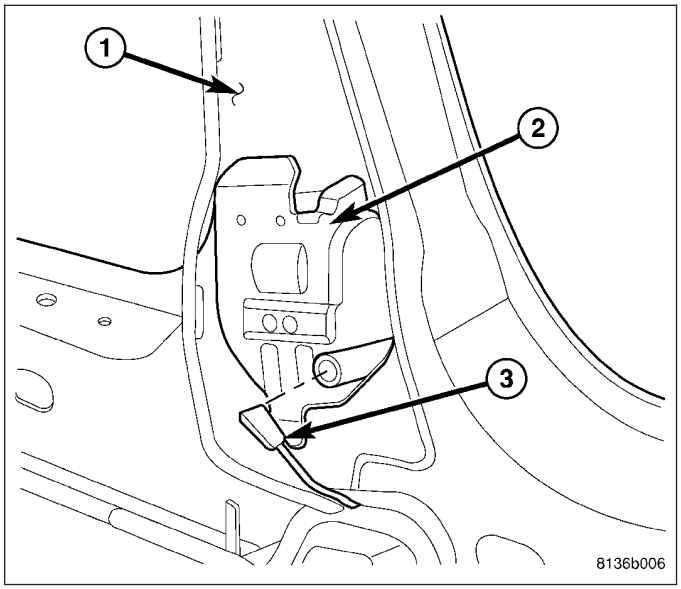

The seat belt tensioners cannot be repaired and, if faulty or damaged, the entire front seat belt and retractor unit must be replaced. If the front airbags have been deployed, the seat belt tensioners have also been deployed. The seat belt tensioners are not intended for reuse and must be replaced following any front airbag deployment. A growling or grinding sound while attempting to operate the seat belt retractor is a sure indication that the seat belt tensioner has been deployed and requires replacement. Refer to the proper Body Diagnostic Procedures manual for diagnosis and testing.

OPERATION

The seat belt tensioners are deployed in conjunction with the front airbags by a signal generated by the Occupant Restraint Controller (ORC) through the driver or passenger seat belt tensioner line 1 and line 2 (or squib) circuits. When the ORC sends the proper electrical signal to the tensioners, the electrical energy generates enough heat to initiate a small pyrotechnic gas generator. The gas generator is installed in one end of a steel tube that contains numerous steel balls. As the gas expands, it pushes the steel balls through the tube into a cast metal housing, where a ball guide directs the balls into engagement with the teeth of a sprocket that is geared to one end of the retractor spool. As the balls drive past the sprocket, the sprocket turns and drives the seat belt retractor spool causing the slack to be removed from the front seat belts. The ball trap captures the balls as they leave the sprocket and are expelled from the housing.

Removing excess slack from the front seat belts not only keeps the occupants properly positioned for an airbag deployment following a frontal impact of the vehicle, but also helps to reduce injuries that the occupant might experience in these situations as a result of harmful contact with the steering wheel, steering column, instrument panel and/or windshield. Also, the seat belt tensioner torsion bar that the retractor spool rides upon is designed to deform in order to control the loading being applied to the occupants by the seat belts during a frontal impact, further reducing the potential for occupant injuries.

The ORC monitors the condition of the seat belt tensioners through circuit resistance, and will illuminate the airbag indicator in the instrument cluster and store a Diagnostic Trouble Code (DTC) for any fault that is detected. For proper diagnosis of the seat belt tensioners, a scan tool is required and the appropriate body diagnostic information.

SEAT TRACK POSITION SENSOR

DESCRIPTION

The seat track position sensor (1) is a Hall Effect-type sensor. This sensor consists of a Hall Effect Integrated Circuit (IC) chip encased in potting material within a cavity of the molded plastic sensor housing. The sensor housing has two integral snap features (3) and snaps into a stamped metal bracket located on the lower outboard seat adjuster track. A molded connector (2) integral to the sensor housing is connected to the vehicle electrical system through the driver seat wire harness.

The seat track position sensor cannot be adjusted or repaired and, if faulty or damaged, the entire sensor must be replaced.

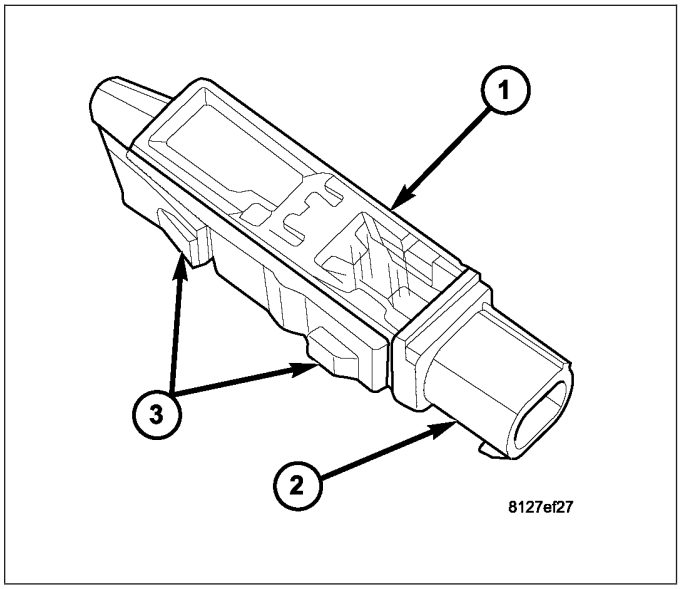

OPERATION

The seat track position sensor is designed to provide a seat position data input to the Occupant Classification Module (OCM) indicating whether the driver front seat is in a forward or rearward position. The OCM sends electronic seat position messages to the Occupant Restraint Controller (ORC) over the Controller Area Network (CAN) data bus. The ORC uses this data as an additional logic input for use in determining the appropriate deployment force to be used when deploying the multistage front airbags.

The seat track position sensor receives a nominal five volt supply from the OCM. The sensor communicates the seat position by modulating the voltage returned to the OCM on a sensor data circuit. The OCM also monitors the condition of the sensor circuits and will store a Diagnostic Trouble Code (DTC) for any fault that is detected, then send messages to the ORC to illuminate the airbag indicator in the instrument cluster. For proper diagnosis of the seat track position sensor, a diagnostic scan tool is required and the appropriate diagnostic information.

REMOVAL

1. Disconnect and isolate the battery negative cable.

WARNING: Wait two minutes for the airbag system reserve capacitor to discharge before beginning any airbag system or component service. Failure to do so may result in accidental airbag deployment, personal injury or death.

2. Reach under the front edge of the front seat cushion to access the seat track position sensor (3) in a bracket (1) located on the lower outboard seat track (5).
3. Disconnect the electrical connector (4) from the sensor.
4. Using a small screwdriver, depress the snap feature (2) and pull the sensor out of the bracket.

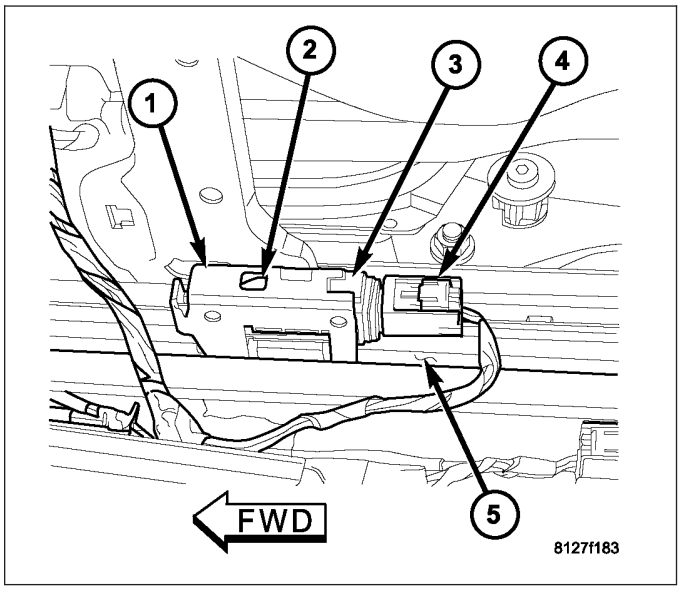

INSTALLATION

1. Position the seat track position sensor (3) on the end of the bracket (1) located on the lower outboard seat track (5).
2. Push the sensor firmly into the bracket until the snap feature (2) locks into place.
3. Connect the electrical connector (4) to the sensor.

WARNING: Do not connect the battery negative cable (Refer to 8 - ELECTRICAL/RESTRAINTS - DIAGNOSIS AND TESTING - AIRBAG SYSTEM). Personal injury or death may result if the system test is not performed first.

WARNING: Following successful completion of the Airbag System test procedure, the Occupant Classification System Verification Test must be done using a scan tool and the appropriate diagnostic information.

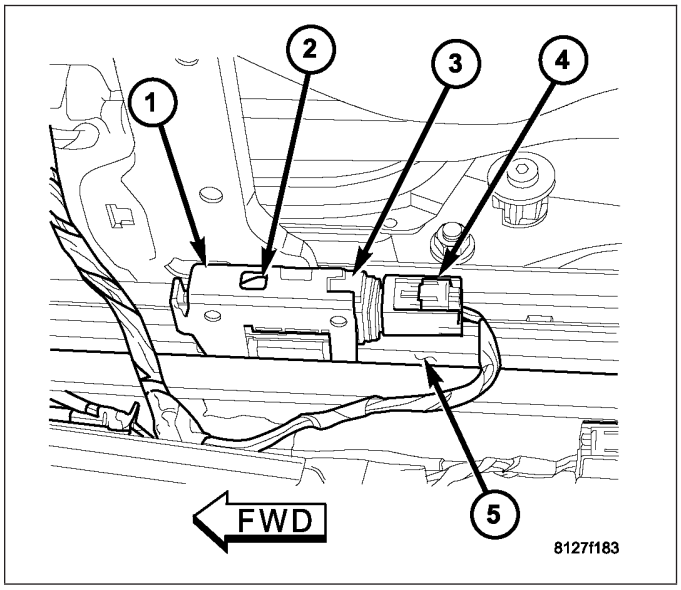

SEAT WEIGHT SENSOR

DESCRIPTION

The seat weight sensors (4) are strain gauge-type units. The electronic elements of the sensor are encased in a potting material within the molded plastic sensor housing. Four sensors (4) are used in the Occupant Classification System (OCS). A sensor is located at each corner of the passenger side front seat.

The strain gauge for each sensor is secured by three screws and nuts (2) between the seat cushion frame and the seat adjusters (3). A molded connector receptacle (1) integral to each sensor housing is connected to the vehicle electrical system through a dedicated connector and take out of the passenger seat wire harness beneath the seat cushion frame.

The seat weight sensors cannot be adjusted or repaired and, if faulty or damaged, the entire sensor must be replaced.

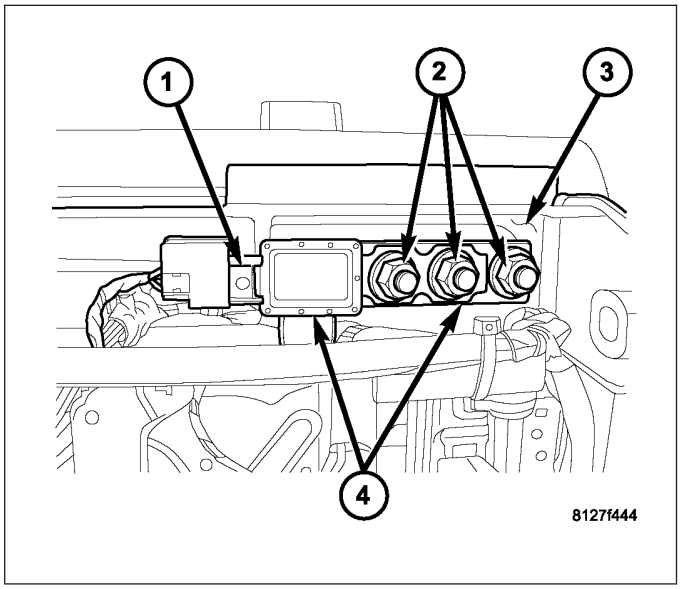

WARNING: The Seat Weight Sensor is a sensitive, calibrated unit and must be handled carefully. Do not drop or handle roughly. If dropped or damaged, replace with another sensor. Failure to do so may result in occupant injury or death.

WARNING: The front passenger seat must be handled carefully as well. When removing the seat, be careful when setting on floor not to drop. If dropped, the sensor may be inoperative, could result in occupant injury, or possibly death.

WARNING: When the seat is on the floor, no one should sit in the front passenger seat. This uneven force may damage the sensing ability of the seat weight sensors. If sat on and damaged, the sensor may be inoperative, could result in occupant injury, or possibly death.

OPERATION

The seat weight sensor units are designed to sense the relative weight of a load applied to the passenger side front seat, which provides a logic input to the microprocessor of the Occupant Classification Module (OCM). When a load is applied to the seat, the strain gauge of each sensor is flexed causing a change of electrical resistance through the strain gauge. These changes in resistance are measured by the sensor and the internal sensor circuitry changes the sensor output voltage.

Each weight sensor receives a nominal five volts and a ground through parallel hard wired circuits from the OCM. The OCM then monitors the output voltage of each sensor on dedicated hard wired data communication circuits. The hard wired circuits between the sensors and the OCM may be diagnosed and tested using conventional diagnostic tools and procedures. However, the most reliable, efficient, and accurate means to diagnose the seat weight sensor inputs to the OCM, and the electronic message communication between the OCM and the Occupant Restraint Controller (ORC) requires the use of a diagnostic scan tool. Refer to the appropriate diagnostic information.

REMOVAL

MANUAL PASSENGER FRONT SEAT

WARNING: The Seat Weight Sensor is a sensitive, calibrated unit and must be handled carefully. Do not drop or handle roughly. If dropped or damaged, replace with another sensor. Failure to do so may result in occupant injury or death.

WARNING: The front passenger seat must be handled carefully as well. When removing the seat, be careful when setting on floor not to drop. If dropped, the sensor may be inoperative, could result in occupant injury, or possibly death.

WARNING: When the seat is on the floor, no one should sit in the front passenger seat. This uneven force may damage the sensing ability of the seat weight sensors. If sat on and damaged, the sensor may be inoperative, could result in occupant injury, or possibly death.

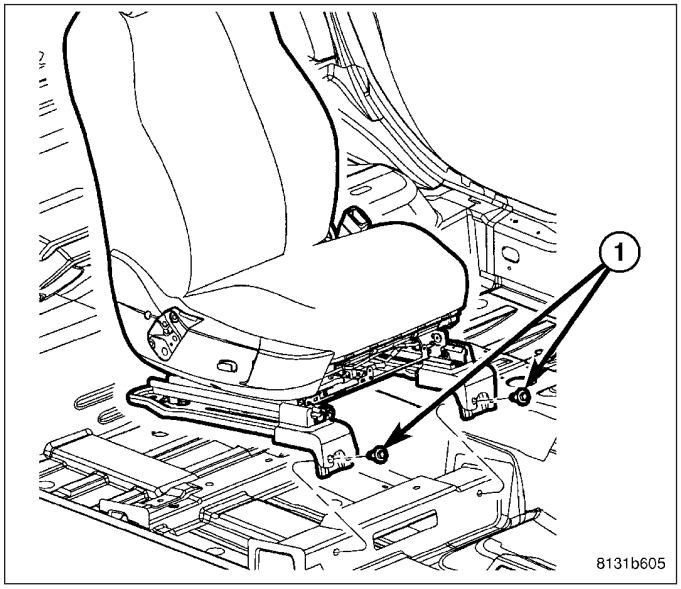

1. Disconnect and isolate the battery negative cable.

WARNING: Wait two minutes for the airbag system reserve capacitor to discharge before beginning any airbag system or component service. Failure to do so may result in accidental airbag deployment, personal injury or death.

2. Remove front passenger seat (Refer to 23 - BODY/SEATS/SEAT - REMOVAL).
3. Remove the adjuster to riser mounting bolt (3). For additional information (Refer to 23 - BODY/SEATS/SEAT RISER - REMOVAL).

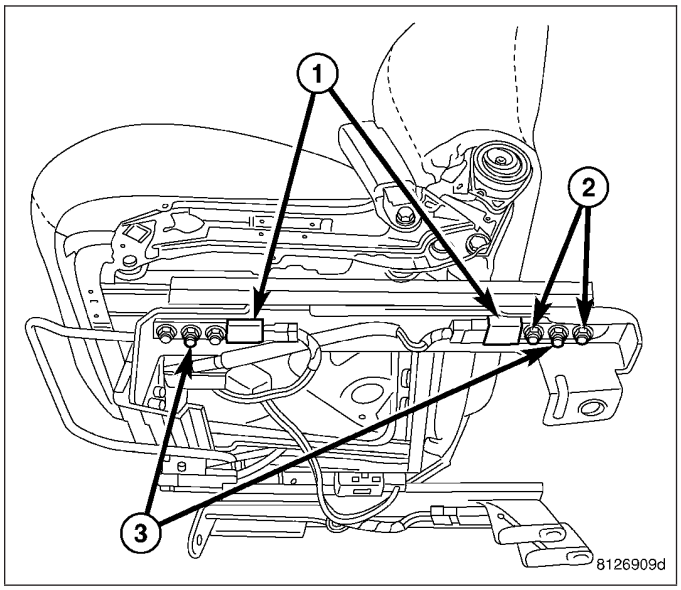

4. Remove the two nuts (2) holding the seat weight sensor (4) to the seat riser.
5. Disconnect the one electrical connector (1).

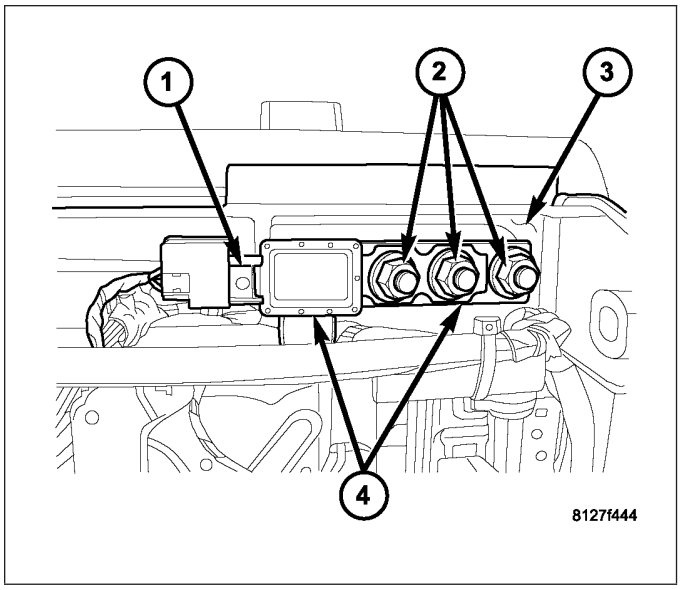

POWER FRONT PASSENGER SEAT

NOTE: If the vehicle is equipped with a power front passenger seat, to remove the adjuster from the riser it is necessary to have battery power to move the seat forward and rearward to access the mounting bolts.

1. Remove front passenger seat mounting bolts (Refer to 23 - BODY/SEATS/SEAT - REMOVAL).

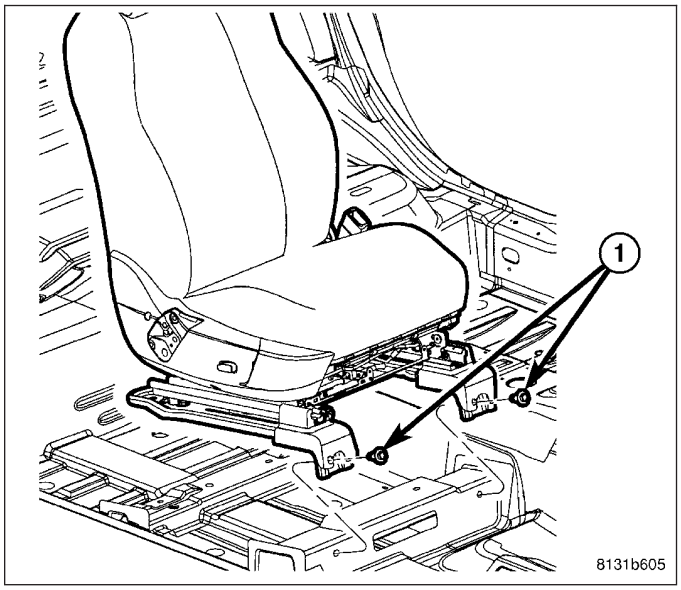

2. Remove the adjuster to riser mounting bolt (3). For additional information (Refer to 23 - BODY/SEATS/ SEAT RISER - REMOVAL).
3. Disconnect and isolate the battery negative cable.

WARNING: Wait two minutes for the airbag system reserve capacitor to discharge before beginning any airbag system or component service. Failure to do so may result in accidental airbag deployment, personal injury or death.

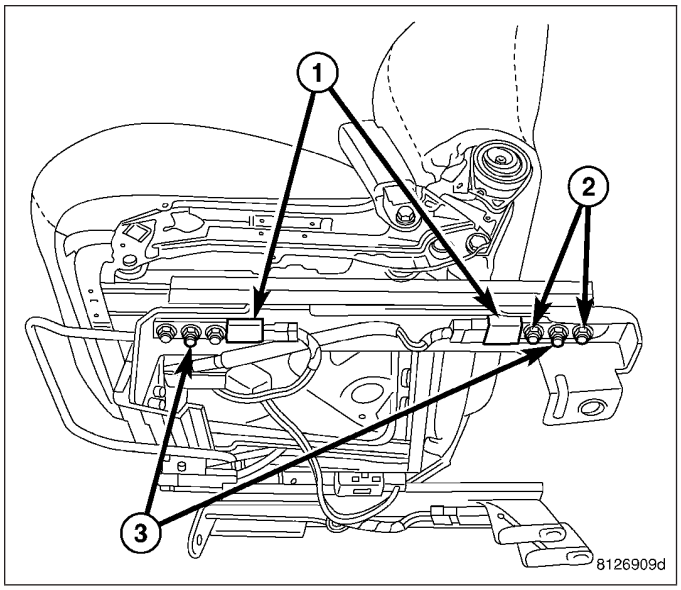

4. Remove the two nuts (2) holding the seat weight sensor (4) to the seat riser.
5. Disconnect the one electrical connector (1).

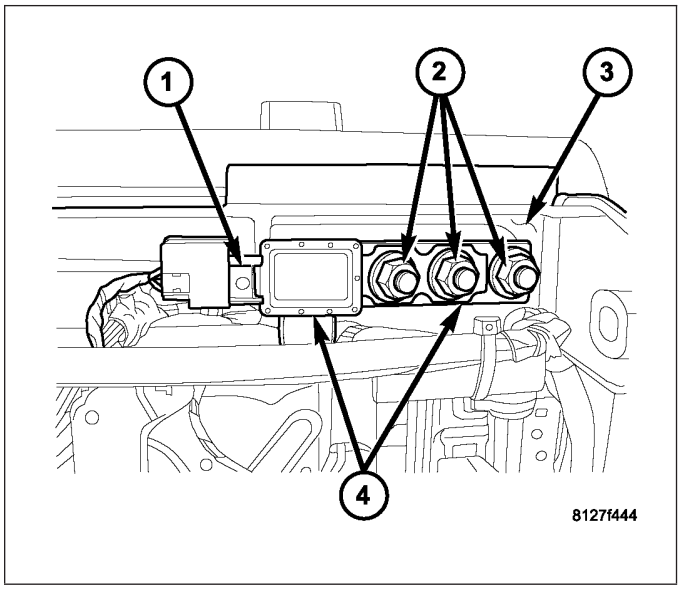

INSTALLATION

MANUAL PASSENGER FRONT SEAT

WARNING: The Seat Weight Sensor is a sensitive, calibrated unit and must be handled carefully. Do not drop or handle roughly. If dropped or damaged, replace with another sensor. Failure to do so may result in occupant injury or death.

WARNING: The front passenger seat must be handled carefully as well. When removing the seat, be careful when setting on floor not to drop. If dropped, the sensor may be inoperative, could result in occupant injury, or possibly death.

WARNING: When the seat is on the floor, no one should sit in the front passenger seat. This uneven force may damage the sensing ability of the seat weight sensors. If sat on and damaged, the sensor may be inoperative, could result in occupant injury, or possibly death.

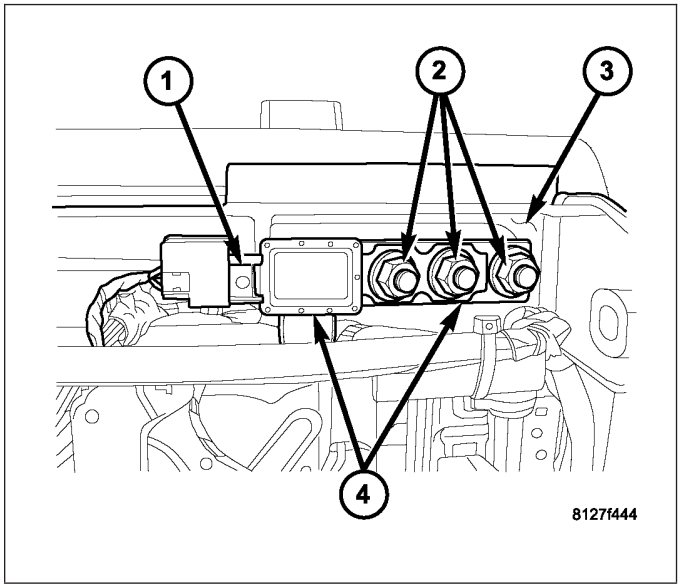

1. Position the seat weight sensor onto passenger front seat riser.
2. Install the two nuts (2) holding the seat weight sensor (4) to the seat riser. Torque nuts to 40 N·m (30 ft. lbs.).
3. Connect the one electrical connector (1).
4. Install the adjuster to riser mounting bolt (3). Torque nuts to 45 N·m (33 ft. lbs.). For additional information (Refer to 23 - BODY/SEATS/SEAT RISER - INSTALLATION).

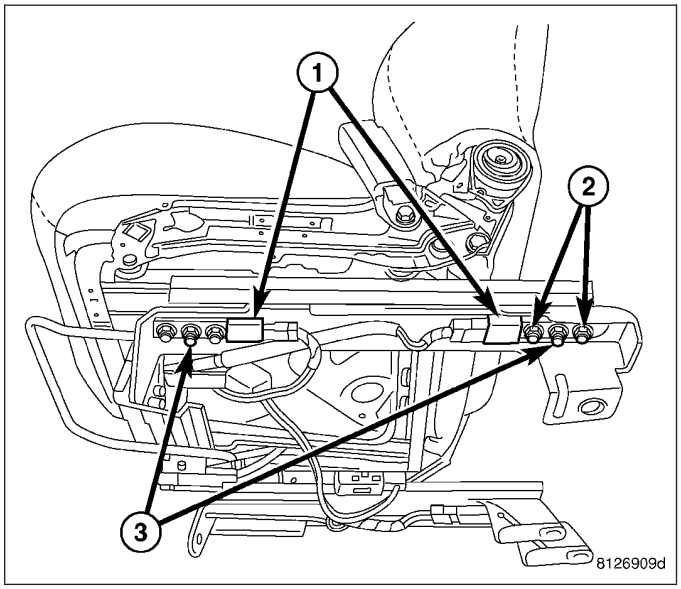

5. Install the front passenger seat (Refer to 23 - BODY/SEATS/SEAT - INSTALLATION)

WARNING: Do not connect the battery negative cable (Refer to 8 - ELECTRICAL/RESTRAINTS - DIAGNOSIS AND TESTING - AIRBAG SYSTEM). Personal injury or death may result if the system test is not performed first.

WARNING: Following successful completion of the Airbag System test procedure, the Occupant Classification System Verification Test must be done using a scan tool and the appropriate diagnostic information.

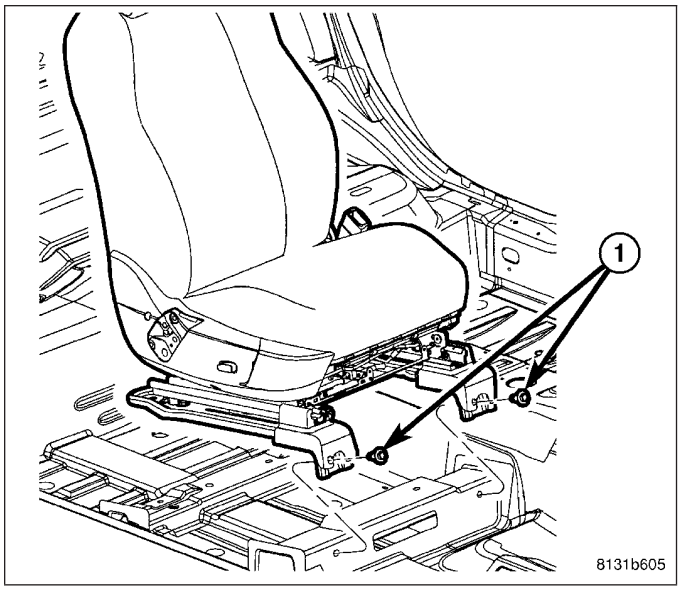

POWER FRONT PASSENGER SEAT

NOTE: If the vehicle is equipped with a power front passenger seat, to remove the adjuster from the riser it is necessary to have battery power to move the seat forward and rearward to access the mounting bolts.

1. Position the seat weight sensor onto passenger front seat riser.
2. Install the two nuts (2) holding the seat weight sensor (4) to the seat riser. Torque nuts to 40 N·m (30 ft. lbs.).
3. Connect the one electrical connector (1).

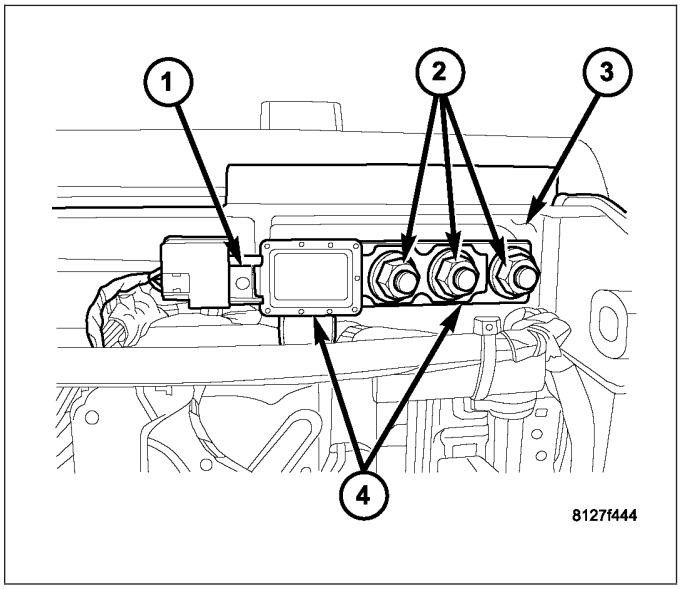

4. Install the adjuster to riser mounting bolt (3). Torque nuts to 45 N·m (33 ft. lbs.). For additional information (Refer to 23 - BODY/SEATS/SEAT RISER - INSTALLATION).

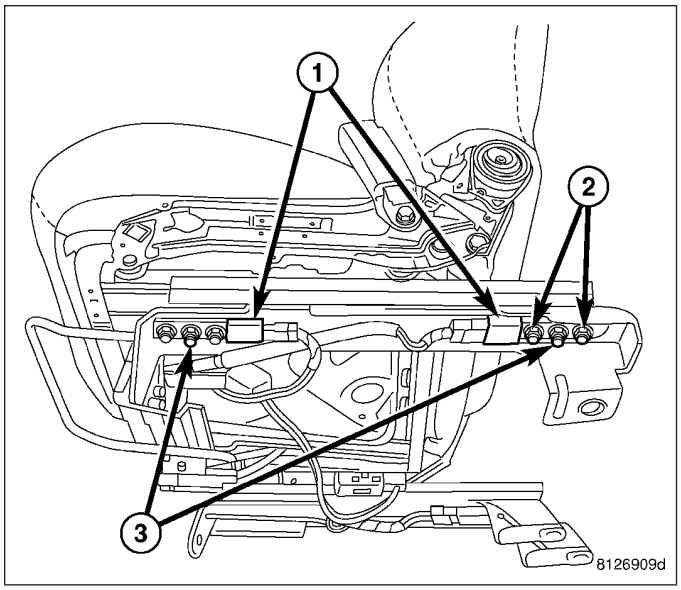

5. Install the front passenger seat bolts (Refer to 23 - BODY/SEATS/SEAT - INSTALLATION).

WARNING: Do not connect the battery negative cable (Refer to 8 - ELECTRICAL/RESTRAINTS - DIAGNOSIS AND TESTING - AIRBAG SYSTEM). Personal injury or death may result if the system test is not performed first.

WARNING: Following successful completion of the Airbag System test procedure, the Occupant Classification System Verification Test must be done using a scan tool and the appropriate diagnostic information.

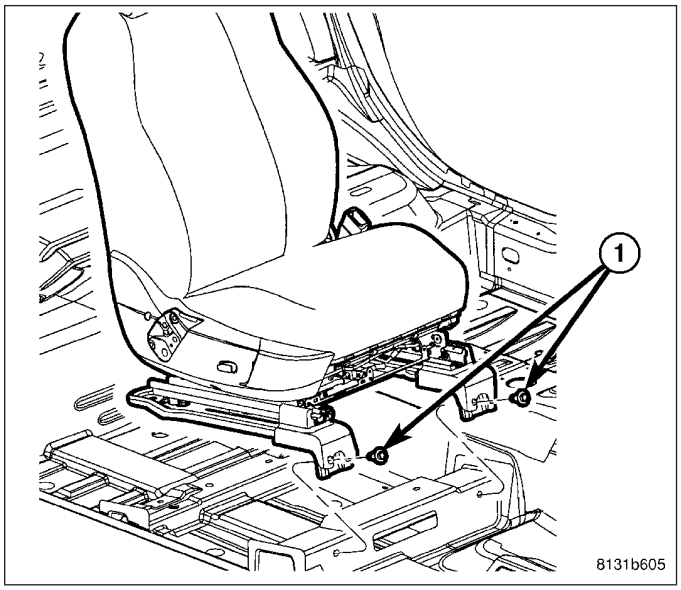

SPEED CONTROL

TABLE OF CONTENTS

page

SPEED CONTROL
DESCRIPTION 2
OPERATION 2

SPEED CONTROL

DESCRIPTION

The speed control system is fully and electronically controlled by the Powertrain Control Module (PCM). **A cable and a vacuum controlled servo are not used. This is a servo-less system.** The switch is labeled: ON/OFF, RES/ACCEL, SET, COAST, and CANCEL.

OPERATION

When speed control is selected by depressing the ON switch, the PCM allows a set speed to be stored in its RAM for speed control. To store a set speed, depress the SET switch while the vehicle is moving at a speed between 25 and 100 mph. In order for the speed control to engage, the brakes cannot be applied, nor can the gear selector indicating the transmission is in Park or Neutral or low.

The speed control can be disengaged manually by:

- Stepping on the brake pedal
- Depressing the OFF switch
- Depressing the CANCEL switch.

NOTE: Depressing the OFF switch or turning off the ignition switch will erase the set speed stored in the PCM (the ECM with a diesel engine).

For added safety, the speed control system is programmed to disengage for any of the following conditions:

- An indication of Park or Neutral
- A rapid increase rpm (indicates that the clutch has been disengaged)
- Excessive engine rpm (indicates that the transmission may be in a low gear)
- The speed signal increases at a rate of 10 mph per second (indicates that the coefficient of friction between the road surface and tires is extremely low)
- The speed signal decreases at a rate of 10 mph per second (indicates that the vehicle may have decelerated at an extremely high rate)

Once the speed control has been disengaged, depressing the RES/ACCEL switch (when speed is greater than 20 mph) restores the vehicle to the target speed that was stored in the PCM (the ECM with a diesel engine).

While the speed control is engaged, the driver can increase the vehicle speed by depressing the RES/ACCEL switch. The new target speed is stored in the PCM (the ECM with a diesel engine) when the RES/ACCEL is released. The PCM (the ECM with a diesel engine) also has a ″tap-up″ feature in which vehicle speed increases at a rate of approximately 1 mph for each momentary switch activation of the RES/ACCEL switch.

A “tap down” feature is used to decelerate without disengaging the speed control system. To decelerate from an existing recorded target speed, momentarily depress the COAST switch. For each switch activation, speed will be lowered approximately 1 mph.

VEHICLE THEFT SECURITY

TABLE OF CONTENTS

page

VEHICLE THEFT SECURITY - ELECTRICAL DIAGNOSTICS 1

page

VEHICLE THEFT SECURITY - SERVICE INFORMATION 124

VEHICLE THEFT SECURITY - ELECTRICAL DIAGNOSTICS

TABLE OF CONTENTS

page

VEHICLE THEFT SECURITY - ELECTRICAL DIAGNOSTICS
DIAGNOSIS AND TESTING
B1A20-PRE-ARM TIMEOUT 4
B1A24–KEY NOT PROGRAMMED 5
B1A25-INVALID KEY 6
B1A26–MAXIMUM NUMBER OF KEYS PROGRAMMED. 9
B1A27–SKREEM PROGRAMMING PERFORMANCE. 10
B1A28-ECM MISMATCH WITH SKIM 11
B1A29-SKIM BASESTATION MISMATCH 14
B1A2A-KEY 1 COMMUNICATION ERROR 17
B1A2BA-KEY 2 COMMUNICATION ERROR 20
B1A2C-KEY 3 COMMUNICATION ERROR 23
B1A2D-KEY 4 COMMUNICATION ERROR 26
B1A2E-KEY 5 COMMUNICATION ERROR 29
B1A2F-KEY 6 COMMUNICATION ERROR 32
B1A30-KEY 7 COMMUNICATION ERROR 35
B1A31-KEY 8 COMMUNICATION ERROR 38
B1A35-UNIDENTIFIED KEY COMMUNICATION ERROR 41
B1A37–SECURITY TRANSMITTER SENSOR CIRCUIT LOW 44
B1A38–SECURITY TRANSMITTER SENSOR CIRCUIT HIGH. 47
B1A3A–SECURITY RECEIVER SENSOR CIRCUIT LOW 49
B1A3B–SECURITY RECEIVER SENSOR CIRCUIT HIGH. 52
B1A3C-INTERNAL SIREN BATTERY 54
B1A3D-SIREN BATTERY TAMPER / LOSS OF POWER SUPPLY 56
B1A3E-SIREN / ITM MISMATCH 59
B1A3F-ITM ARMING SEQUENCE PERFORMANCE. 60

page

B1A41-SECURITY TRANSMITTER SENSOR CIRCUIT OPEN 61
B1A42-SECURITY TRANSMITTER SENSOR CIRCUIT SHORTED TOGETHER 65
B1A43-SECURITY TRANSMITTER SENSOR RETURN CIRCUIT LOW 68
B1A44-SECURITY RECEIVER SENSOR CIRCUIT OPEN 70
B1A45-SECURITY RECEIVER SENSOR CIRCUIT SHORTED TOGETHER 74
B1A46-SECURITY RECEIVER SENSOR RETURN CIRCUIT LOW 77
B1A47-SECURITY TRANSMITTER/ RECEIVER SENSOR RETURN CIRCUIT HIGH 79
B2101-IGNITION RUN/START INPUT LOW 82
B2102-IGNITION RUN/START INPUT HIGH 85
B210A-SYSTEM VOLTAGE LOW 87
B210D-SYSTEM VOLTAGE HIGH 89
B210D-BATTERY VOLTAGE LOW 91
B210E-BATTERY VOLTAGE HIGH 94
B2204-ECU CONFIGURATION MISMATCH 95
B2205-ORIGINAL VIN MISSING/MISMATCH . . . 96
B2206-CURRENT VIN MISSING/MISMATCH . . . 98
B2224–SKREEM INTERNAL 99
B2228-SKREEM INTERNAL - RKE RECEIVER 100
B2229-SKREEM INTERNAL - SKIM IMMOBILIZER 101
B222A-VEHICLE LINE MISMATCH 102
B223C-INTRUSION TRANSCEIVER MODULE INTERNAL 103
B2254-COLUMN LOCK MODULE INTERNAL . 104
U0019-CAN B BUS 107
U0019–CAN B BUS – ITM 110

U0141-LOST COMMUNICATION WITH FRONT CONTROL MODULE 113
U0146-LOST COMMUNICATION WITH CENTRAL GATEWAY 113
U0151-LOST COMMUNICATION WITH OCCUPANT RESTRAINT CONTROLLER 113
U0154-LOST COMMUNICATION WITH OCCUPANT CLASSIFICATION MODULE 113
U0155-LOST COMMUNICATION WITH CLUSTER/CCN 113
U110D-LOST COMMUNICATION WITH SECURITY SIREN 114
U1416-IMPLAUSIBLE SECURITY SIREN SIGNAL RECEIVED 118
STANDARD PROCEDURE
SKREEM/SKIM VERIFICATION 123

VEHICLE THEFT SECURITY - ELECTRICAL DIAGNOSTICS

DIAGNOSIS AND TESTING

B1A20-PRE-ARM TIMEOUT

For a complete wiring diagram **Refer to Section 8W**.

- **When Monitored:**
  During the VTSS pre-arm process.
- **Set Condition:**
  If the VTSS pre-arm sequence is interrupted within sixteen seconds after securing the vehicle.

Possible Causes
INTERMITTENT PROBLEM WITH FUSED (B+) TO CLUSTER
INTERMITTENT PROBLEM WITH CAN B BUS CIRCUITS TO CLUSTER

Diagnostic Test

1. DETERMINING IF DTC IS CURRENT

NOTE: Diagnose any related Communication DTC(s) before continuing.

With a scan tool, read and record DTC(s).

With the scan tool, clear DTC(s).

Turn the ignition off and remove the key from the ignition.

Lock and close all doors to allow the VTSS to go from pre-arm to armed status and wait one minute.

Disarm the VTSS.

Using the scan tool, read DTC(s).

Does the DTC reset?

Yes >> Remove the Cluster and inspect the Fused B (+) and both CAN B BUS circuits for spread terminals or intermittent opens.

Perform BODY VERIFICATION TEST - VER 1. (Refer to 8 - ELECTRICAL/ELECTRONIC CONTROL MODULES - STANDARD PROCEDURE)

No >> DTC is not active at this time. Test complete.

B1A24–KEY NOT PROGRAMMED

For a complete wiring diagram **Refer to Section 8W**.

- **When Monitored:**
  With the ignition on.

Possible Causes
KEY NOT PROGRAMMED
SENTRY KEY REMOTE ENTRY MODULE (SKREEM)

Diagnostic Test

1. PROGRAM ALL OF THE IGNITION KEYS

Turn the ignition on.

With the scan tool, attempt to program the key(s) into the SKREEM.

Was the programming of the key(s) successful?

Yes >> Perform SKREEM VERIFICATION TEST. (Refer to 8 - ELECTRICAL/VEHICLE THEFT SECURITY - STANDARD PROCEDURE).

No >> Replace the ignition key and attempt to program it into the SKREEM. If the DTC resets, replace and program the SKREEM in accordance with the Service Information.

NOTE: If this vehicle is equipped with a Steering Column Lock Module, it must be replaced along with the SKREEM.

Perform SKREEM VERIFICATION TEST. (Refer to 8 - ELECTRICAL/VEHICLE THEFT SECURITY - STANDARD PROCEDURE).

B1A25-INVALID KEY

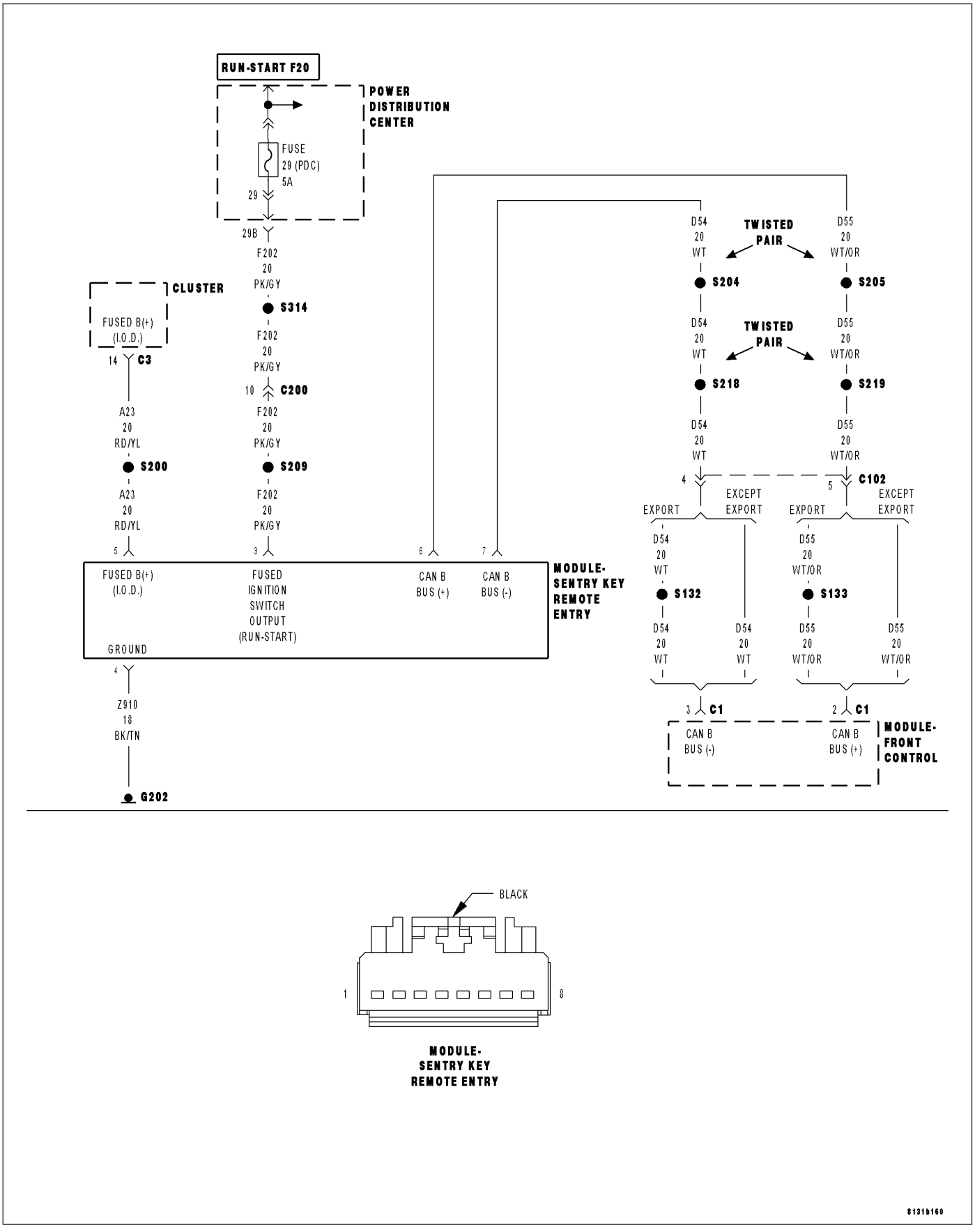

For a complete wiring diagram **Refer to Section 8W**.

- **When Monitored:**
  At ignition on and during Key Programming Mode.
- **Set Condition:**
  When the SKREEM does not receive a transponder response after 8 consecutive transponder read attempts within 2.0 seconds.

Possible Causes
MULTIPLE KEY OPERATION
IGNITION KEY
SKREEM
INTERMITTENT WIRING HARNESS PROBLEM

Diagnostic Test

1. DETERMINING IF DTC IS CURRENT

With the scan tool, read and record the SKREEM DTCs.
With the scan tool, erase the SKREEM DTCs

NOTE: Perform the following test several times to ensure the DTC is current.
Turn the ignition off.
Wait 10 seconds.
Turn the ignition on.
With the scan tool, read the SKREEM DTCs.

Does the scan tool display the DTC that was previously erased?

Yes >> Go To 2

No >> Go To 6

2. CHECKING FOR MULTIPLE KEYS

Are there multiple vehicle ignition keys available?

Yes >> Go To 3

No >> Go To 4

3. MULTIPLE KEY OPERATION

NOTE: Perform the following steps using one of the vehicle ignition keys. When finished, repeat the procedure using each of the other vehicle keys, one at a time.
With the scan tool, erase the SKREEM DTCs.
Turn the ignition off.
Wait 10 seconds.
Turn the ignition on
With the scan tool, read the SKREEM DTCs.

Is the DTC present for all ignition keys?

Yes >> Replace and program the Sentry Key Remote Entry Module in accordance with the Service Information. Perform SKREEM VERIFICATION TEST.

No >> Replace the ignition key(s) that cause the SKIM DTC. Perform SKREEM VERIFICATION TEST.

4. REPROGRAM KEY

With the scan tool, attempt to reprogram the ignition key to the SKREEM.
With the scan tool, erase the SKREEM DTCs.
Wait 10 seconds.
Turn the ignition on.
With the scan tool, read the SKREEM DTCs.

Does the DTC set again?

Yes >> Go To 5

No >> Test complete.

5. PROGRAM NEW IGNITION KEY

Replace the ignition key with a new key.
With the scan tool, program the new ignition key to the SKREEM.
With the scan tool, erase the SKREEM DTCs.
Turn the ignition off.
Wait 10 seconds.
Turn the ignition on.
With the scan tool, read the SKREEM DTCs.

Does the DTC set again?

Yes >> Replace and program the Sentry Key Remote Entry Module in accordance with the Service Information.
Perform SKREEM VERIFICATION TEST

No >> Test complete.

6. INTERMITTENT WIRING HARNESS PROBLEM

Turn the ignition off.

NOTE: Check the following items:
- **Visually inspect the related wiring harness. Look for any chafed, pierced, pinched, or partially broken wires.**
- **Visually inspect the related wiring harness connectors. Look for broken, bent, pushed out, or corroded terminals.**
- **Refer to any Technical Service Bulletins (TSB) that may apply.**

Were any problems found?

Yes >> Repair wiring harness/connectors as necessary.
Perform SKREEM VERIFICATION TEST

No >> Test Complete.

B1A26–MAXIMUM NUMBER OF KEYS PROGRAMMED

For a complete wiring diagram **Refer to Section 8W**.

- **When Monitored:**
  With the ignition on.
- **Set Condition:**
  When the maximum number of keys (8) have been programmed into the Sentry Key Remote Entry Module (SKREEM).

Possible Causes
MAXIMUM AMOUNT OF KEY PROGRAMMED INTO SKREEM
SKREEM

Diagnostic Test

1. REPROGRAM ALL IGNITION KEYS

NOTE: This procedure will clear all the key information from the SKREEM. It is important to obtain all of the customer's ignition keys so they may be reprogrammed into the module.

Turn the ignition on.

With the scan tool, clear all the key information in the SKREEM.

Program the all of the customer keys into the SKREEM (maximum eight).

Did the "Maximum Number of Keys Programmed" display again?

Yes >> Replace and program the SKREEM in accordance with the Service Information.

NOTE: If this vehicle is equipped with a Steering Column Lock Module it must be replaced along with the SKREEM.

Perform SKREEM VERIFICATION TEST. (Refer to 8 - ELECTRICAL/VEHICLE THEFT SECURITY - STANDARD PROCEDURE).

No >> Programming of the keys was successful. Test complete.

Perform SKREEM VERIFICATION TEST. (Refer to 8 - ELECTRICAL/VEHICLE THEFT SECURITY - STANDARD PROCEDURE).

B1A27–SKREEM PROGRAMMING PERFORMANCE

For a complete wiring diagram **Refer to Section 8W**.

- **When Monitored:**
  With the ignition on.

Possible Causes
SENTRY KEY REMOTE ENTRY MODULE (SKREEM)

Diagnostic Test

1. VERIFY THAT THE DTC IS ACTIVE

Turn the ignition on.

NOTE: Before continuing, review and check for the following:
- **Review the repair history of the vehicle.**
- **Ensure that the vehicle has the correct PCM and SKREEM installed by verifying the part numbers.**
- **With the scan tool, ensure that the PCM and SKREEM are programmed correctly. Compare the PCM VIN to the SKREEM VIN and ensure the two VINs match.**

With the scan tool, clear DTCs.

Perform 5 ignition cycles, leaving the ignition switch on for a minimum of 90 seconds per cycle.

With the scan tool, read DTCs.

Does the DTC reset?

Yes >> Replace and program the SKREEM in accordance with the Service Information.

NOTE: If this vehicle is equipped with a Steering Column Lock Module, it must be replaced along with the SKREEM.

Perform SKREEM VERIFICATION TEST. (Refer to 8 - ELECTRICAL/VEHICLE THEFT SECURITY - STANDARD PROCEDURE).

No >> The DTC is not active at this time. Test complete.

B1A28-ECM MISMATCH WITH SKIM

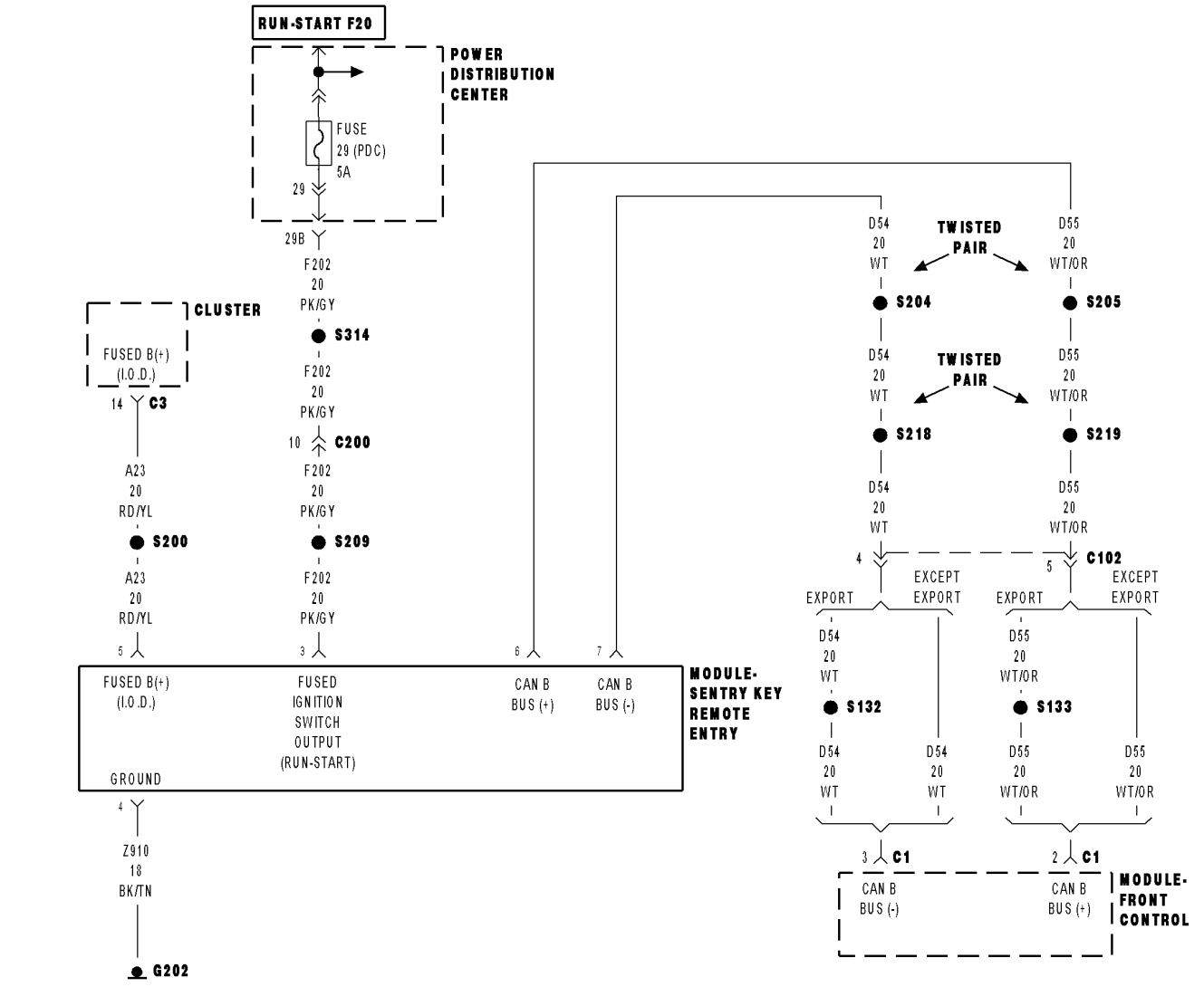

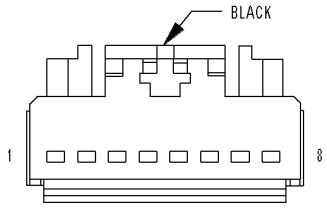

MODULE-SENTRY KEY REMOTE ENTRY

8131b160

For a complete wiring diagram **Refer to Section 8W**.

- **When Monitored:**
  At ignition on, after ignition on during any rolling code handshake that occurs with the PCM due to a SKIM or PCM reset.
- **Set Condition:**
  When a PCM STATUS message with a Valid Key status is not received by the SKIM within 3.5 seconds of transmitting the last Valid Key Code message to the PCM.

Possible Causes
VERIFYING PCM VIN
REPLACE SKREEM AND CHECK DTC'S
INTERMITTENT WIRING HARNESS PROBLEM
PCM

Diagnostic Test

1. DETERMINING IF DTC IS CURRENT

With the scan tool, erase the SKREEM DTCs.
Turn the ignition off.
Wait 10 seconds.
Turn the ignition on and wait 2 minutes.
With the scan tool, read the SKREEM DTCs.

Does the scan tool display the DTC that was previously erased?

Yes >> Go To 2

No >> Go To 4

2. VERIFYING THE PCM VIN

Turn the ignition on.
With the scan tool, select Engine system from the main menu.
Display and record the Vehicle Identification Number.

NOTE: Ensure that a VIN has been programmed into the PCM. If a VIN is not displayed, attempt to program the PCM with the correct VIN before continuing.

Does the VIN recorded from the PCM match the VIN of the vehicle?

Yes >> Go To 3

No >> Perform the PCM replaced to update the VIN in the PCM.
Perform SKREEM VERIFICATION TEST

3. REPLACE SKREEM AND CHECK DTC'S

Turn the ignition off.
Replace and program the Sentry Key Remote Entry Module in accordance with the Service Information.
Turn the ignition on.
With the scan tool, display and clear all PCM and SKREEM DTC's.
Perform 5 ignition key cycles leaving the ignition key on for 90 seconds per cycle.
With the scan tool, check for SKREEM DTCs.

Does the scan tool display the same DTC?

Yes >> Replace and program the Powertrain Control Module in accordance with the Service Information.
Perform SKREEM VERIFICATION TEST

No >> The repair is complete.
Perform SKREEM VERIFICATION TEST

4. INTERMITTENT

Turn the ignition off.

NOTE: Check for the following conditions:

- **Visually inspect the related wiring harness. Look for any chafed, pierced, pinched, or partially broken wires.**
- **Visually inspect the related wiring harness connectors. Look for broken, bent, pushed out, or corroded terminals.**
- **Refer to any Technical Service Bulletins (TSB) that may apply.**

Were any problems found?

Yes >> Repair wiring harness/connectors as necessary.
Perform SKREEM VERIFICATION TEST

No >> Test Complete.

B1A29-SKIM BASESTATION MISMATCH

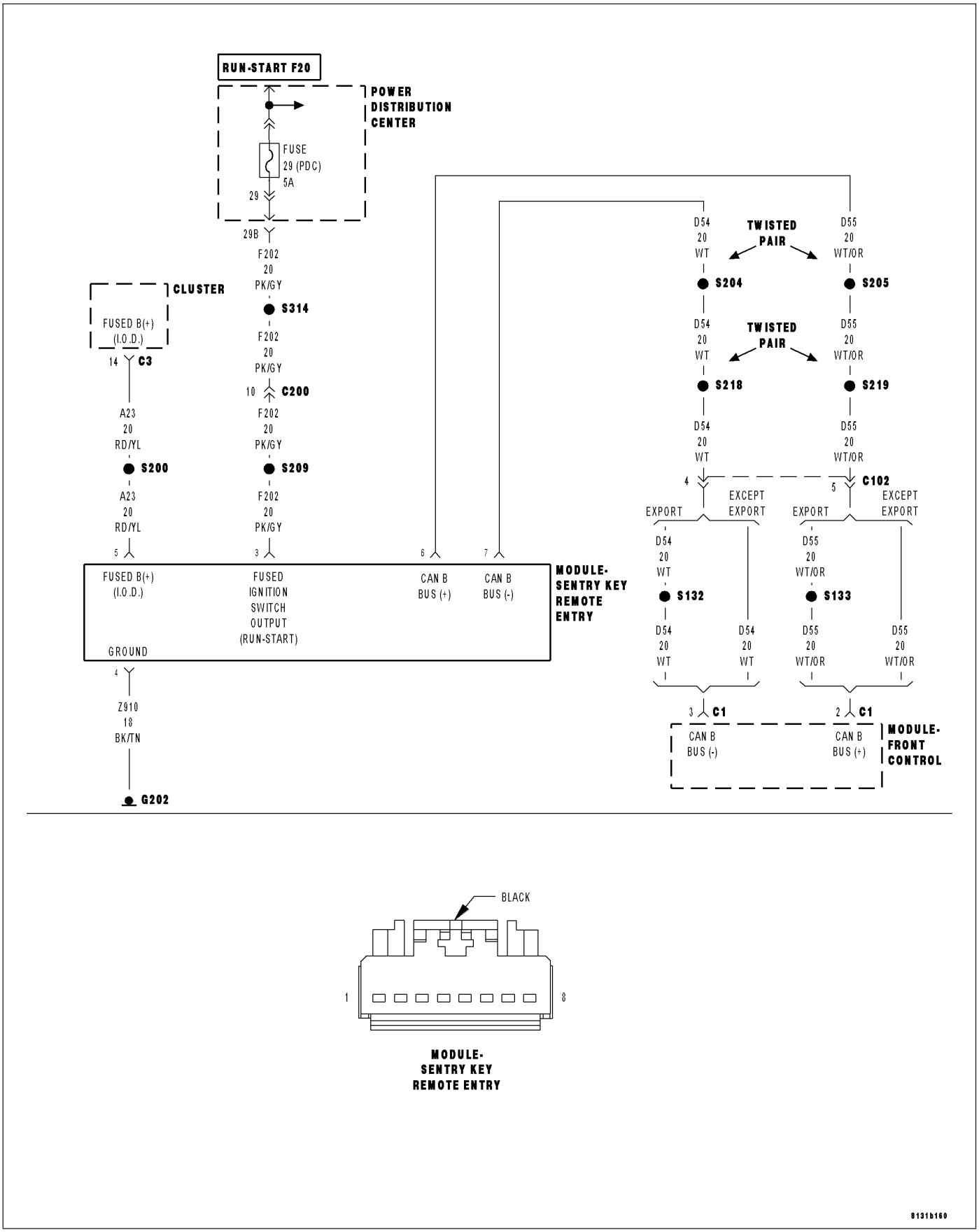

MODULE-
SENTRY KEY
REMOTE ENTRY

For a complete wiring diagram **Refer to Section 8W**.

- **When Monitored:**
  At ignition on, after ignition on during any rolling code handshake that occurs with the PCM due to a SKIM or PCM reset.
- **Set Condition:**
  When a PCM STATUS message with a Valid Key status is not received by the SKIM within 3.5 seconds of transmitting the last Valid Key Code message to the PCM.

Possible Causes
VERIFYING PCM VIN
REPLACE SKREEM AND CHECK DTC'S
INTERMITTENT WIRING HARNESS PROBLEM
PCM

Diagnostic Test

1. DETERMINING IF DTC IS CURRENT

With the scan tool, erase the SKREEM DTCs.
Turn the ignition off.
Wait 10 seconds.
Turn the ignition on and wait 2 minutes.
With the scan tool, read the SKREEM DTCs.

Does the scan tool display the DTC that was previously erased?

Yes >> Go To 2

No >> Go To 4

2. VERIFYING THE PCM VIN

Turn the ignition on.
With the scan tool, select Engine system from the main menu.
Display and record the Vehicle Identification Number.

NOTE: Ensure that a VIN has been programmed into the PCM. If a VIN is not displayed, attempt to program the PCM with the correct VIN before continuing.

Does the VIN recorded from the PCM match the VIN of the vehicle?

Yes >> Go To 3

No >> Perform the PCM replaced to update the VIN in the PCM.
Perform SKREEM VERIFICATION TEST

3. REPLACE SKREEM AND CHECK DTC'S

Turn the ignition off.
Replace and program the Sentry Key Remote Entry Module in accordance with the Service Information.
Turn the ignition on.
With the scan tool, display and clear all PCM and SKREEM DTC's.
Perform 5 ignition key cycles leaving the ignition key on for 90 seconds per cycle.
With the scan tool, check for SKREEM DTCs.

Does the scan tool display the same DTC?

Yes >> Replace and program the Powertrain Control Module in accordance with the Service Information.
Perform SKREEM VERIFICATION TEST

No >> The repair is complete.
Perform SKREEM VERIFICATION TEST

4. INTERMITTENT

Turn the ignition off.

NOTE: Check for the following conditions:

- **Visually inspect the related wiring harness. Look for any chafed, pierced, pinched, or partially broken wires.**
- **Visually inspect the related wiring harness connectors. Look for broken, bent, pushed out, or corroded terminals.**
- **Refer to any Technical Service Bulletins (TSB) that may apply.**

Were any problems found?

Yes >> Repair wiring harness/connectors as necessary.
Perform SKREEM VERIFICATION TEST

No >> Test Complete.

B1A2A-KEY 1 COMMUNICATION ERROR

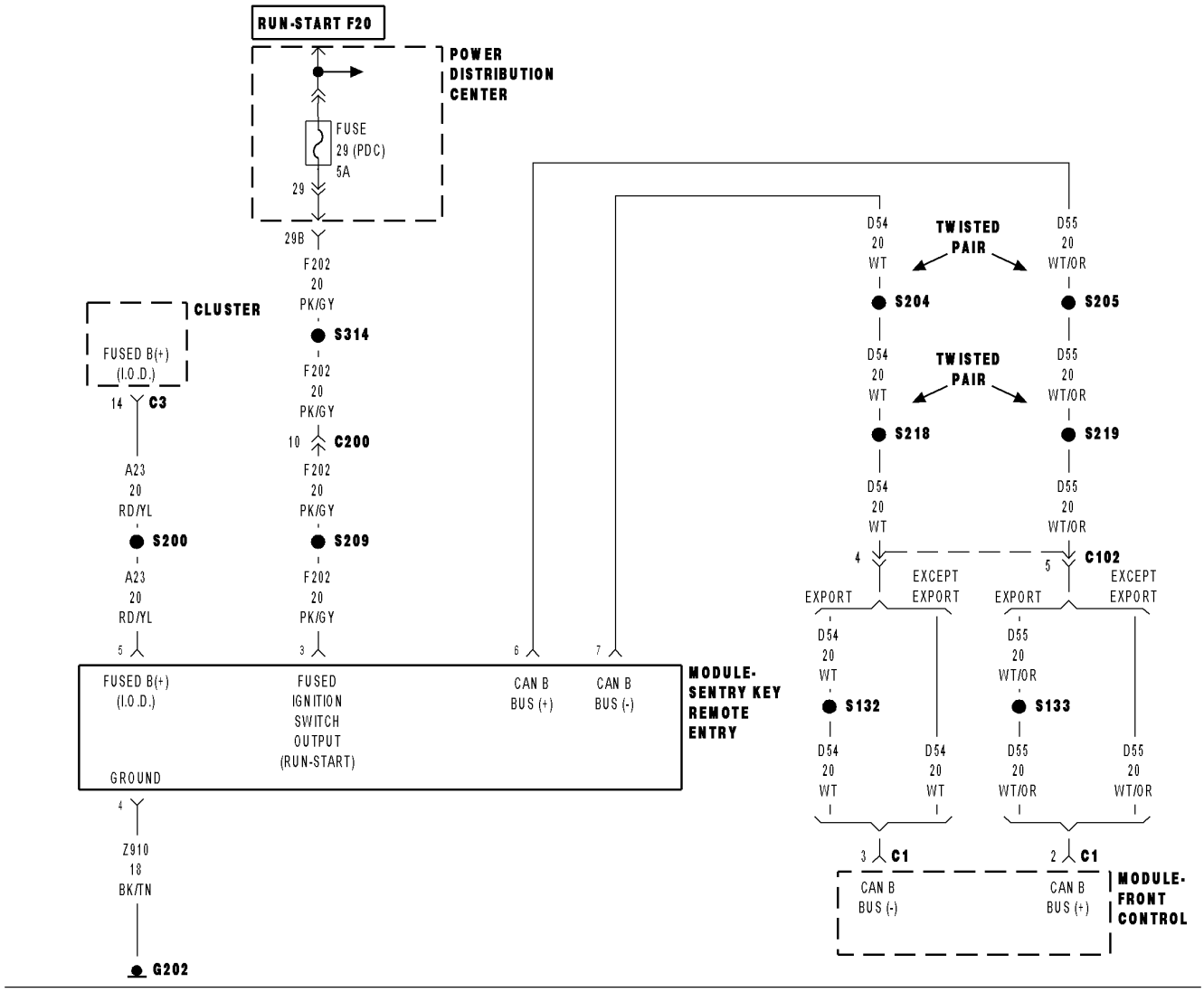

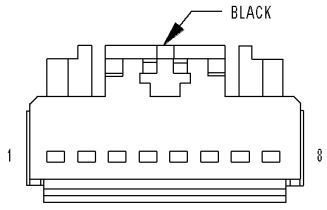

MODULE-SENTRY KEY REMOTE ENTRY

8131b160

For a complete wiring diagram **Refer to Section 8W**.

- **When Monitored:**
  At ignition on and during Key Programming Mode.
- **Set Condition:**
  When the SKREEM does not receive a transponder response after 8 consecutive transponder read attempts within 2.0 seconds.

Possible Causes
MULTIPLE KEY OPERATION
IGNITION KEY
SKREEM
INTERMITTENT WIRING HARNESS PROBLEM

Diagnostic Test

1. DETERMINING IF DTC IS CURRENT

With the scan tool, read and record the SKREEM DTCs.
With the scan tool, erase the SKREEM DTCs.

NOTE: Perform the following test several times to ensure the DTC is current.
Turn the ignition off.
Wait 10 seconds.
Turn the ignition on.
With the scan tool, read the SKREEM DTCs.

Does the scan tool display the DTC that was previously erased?

Yes >> Go To 2

No >> Go To 6

2. CHECKING FOR MULTIPLE KEYS

Are there multiple vehicle ignition keys available?

Yes >> Go To 3

No >> Go To 4

3. MULTIPLE KEY OPERATION

NOTE: Perform the following steps using one of the vehicle ignition keys. When finished, repeat the procedure using each of the other vehicle keys, one at a time.
With the scan tool, erase the SKREEM DTCs.
Turn the ignition off.
Wait 10 seconds.
Turn the ignition on
With the scan tool, read the SKREEM DTCs.

Is the DTC present for all ignition keys?

Yes >> Replace and program the Sentry Key Remote Entry Module in accordance with the Service Information. Perform SKREEM VERIFICATION TEST.

No >> Replace the ignition key(s) that cause the SKIM DTC. Perform SKREEM VERIFICATION TEST.

4. REPROGRAM KEY

With the scan tool, attempt to reprogram the ignition key to the SKREEM.
With the scan tool, erase the SKREEM DTCs.
Wait 10 seconds.
Turn the ignition on.
With the scan tool, read the SKREEM DTCs.

Does the DTC set again?

Yes >> Go To 5

No >> Test complete.

5. PROGRAM NEW IGNITION KEY

Replace the ignition key with a new key.
With the scan tool, program the new ignition key to the SKREEM.
With the scan tool, erase the SKREEM DTCs.
Turn the ignition off.
Wait 10 seconds.
Turn the ignition on.
With the scan tool, read the SKREEM DTCs.

Does the DTC set again?

Yes >> Replace and program the Sentry Key Remote Entry Module in accordance with the Service Information.
Perform SKREEM VERIFICATION TEST

No >> Test complete.

6. INTERMITTENT WIRING HARNESS PROBLEM

Turn the ignition off.

NOTE: Check the following items:
- **Visually inspect the related wiring harness. Look for any chafed, pierced, pinched, or partially broken wires.**
- **Visually inspect the related wiring harness connectors. Look for broken, bent, pushed out, or corroded terminals.**
- **Refer to any Technical Service Bulletins (TSB) that may apply.**

Were any problems found?

Yes >> Repair wiring harness/connectors as necessary.
Perform SKREEM VERIFICATION TEST

No >> Test Complete.

B1A2BA-KEY 2 COMMUNICATION ERROR

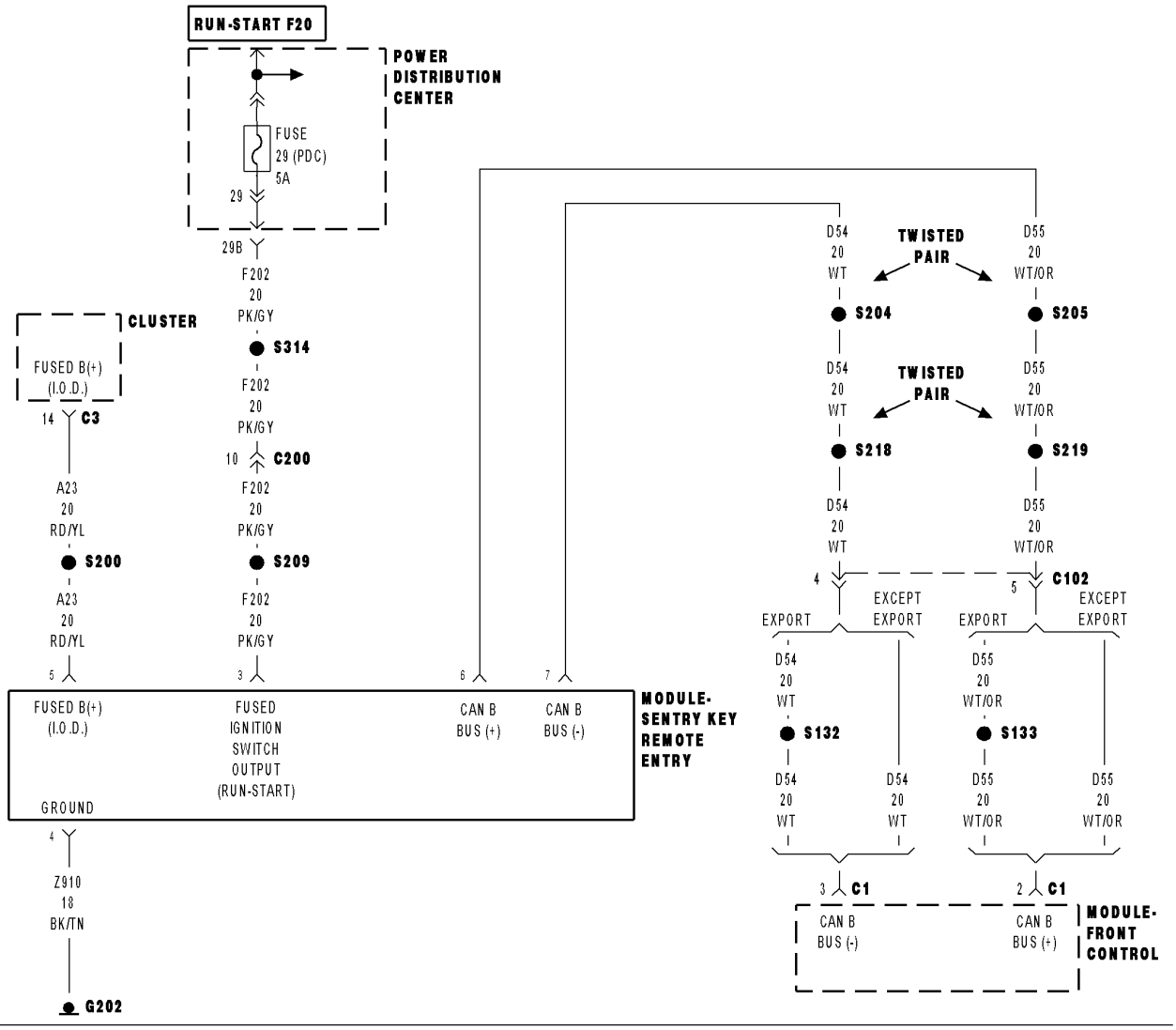

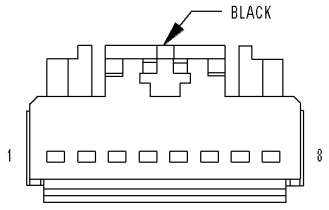

MODULE-SENTRY KEY REMOTE ENTRY

8131b160

For a complete wiring diagram **Refer to Section 8W**.

- **When Monitored:**
  At ignition on and during Key Programming Mode.
- **Set Condition:**
  When the SKREEM does not receive a transponder response after 8 consecutive transponder read attempts within 2.0 seconds.

Possible Causes
MULTIPLE KEY OPERATION
IGNITION KEY
SKREEM
INTERMITTENT WIRING HARNESS PROBLEM

Diagnostic Test

1. DETERMINING IF DTC IS CURRENT

With the scan tool, read and record the SKREEM DTCs.
With the scan tool, erase the SKREEM DTCs

NOTE: Perform the following test several times to ensure the DTC is current.
Turn the ignition off.
Wait 10 seconds.
Turn the ignition on.
With the scan tool, read the SKREEM DTCs.

Does the scan tool display the DTC that was previously erased?

Yes >> Go To 2

No >> Go To 6

2. CHECKING FOR MULTIPLE KEYS

Are there multiple vehicle ignition keys available?

Yes >> Go To 3

No >> Go To 4

3. MULTIPLE KEY OPERATION

NOTE: Perform the following steps using one of the vehicle ignition keys. When finished, repeat the procedure using each of the other vehicle keys one at a time.
With the scan tool, erase the SKREEM DTCs.
Turn the ignition off.
Wait 10 seconds.
Turn the ignition on
With the scan tool, read the SKREEM DTCs.

Is the DTC present for all ignition keys?

Yes >> Replace and program the Sentry Key Remote Entry Module in accordance with the Service Information. Perform SKREEM VERIFICATION TEST.

No >> Replace the ignition key(s) that cause the SKIM DTC. Perform SKREEM VERIFICATION TEST.

4. REPROGRAM KEY

With the scan tool, attempt to reprogram the ignition key to the SKREEM.
With the scan tool, erase the SKREEM DTCs.
Wait 10 seconds.
Turn the ignition on.
With the scan tool, read the SKREEM DTCs.

Does the DTC set again?

Yes >> Go To 5

No >> Test complete.

5. PROGRAM NEW IGNITION KEY

Replace the ignition key with a new key.
With the scan tool, program the new ignition key to the SKREEM.
With the scan tool, erase the SKREEM DTCs.
Turn the ignition off.
Wait 10 seconds.
Turn the ignition on.
With the scan tool, read the SKREEM DTCs.

Does the DTC set again?

Yes >> Replace and program the Sentry Key Remote Entry Module in accordance with the Service Information. Perform SKREEM VERIFICATION TEST.

No >> Test complete.

6. INTERMITTENT WIRING HARNESS PROBLEM

Turn the ignition off.

NOTE: Check the following items:
- **Visually inspect the related wiring harness. Look for any chafed, pierced, pinched, or partially broken wires.**
- **Visually inspect the related wiring harness connectors. Look for broken, bent, pushed out, or corroded terminals.**
- **Refer to any Technical Service Bulletins (TSB) that may apply.**

Were any problems found?

Yes >> Repair wiring harness/connectors as necessary.
Perform SKREEM VERIFICATION TEST

No >> Test Complete.

B1A2C-KEY 3 COMMUNICATION ERROR

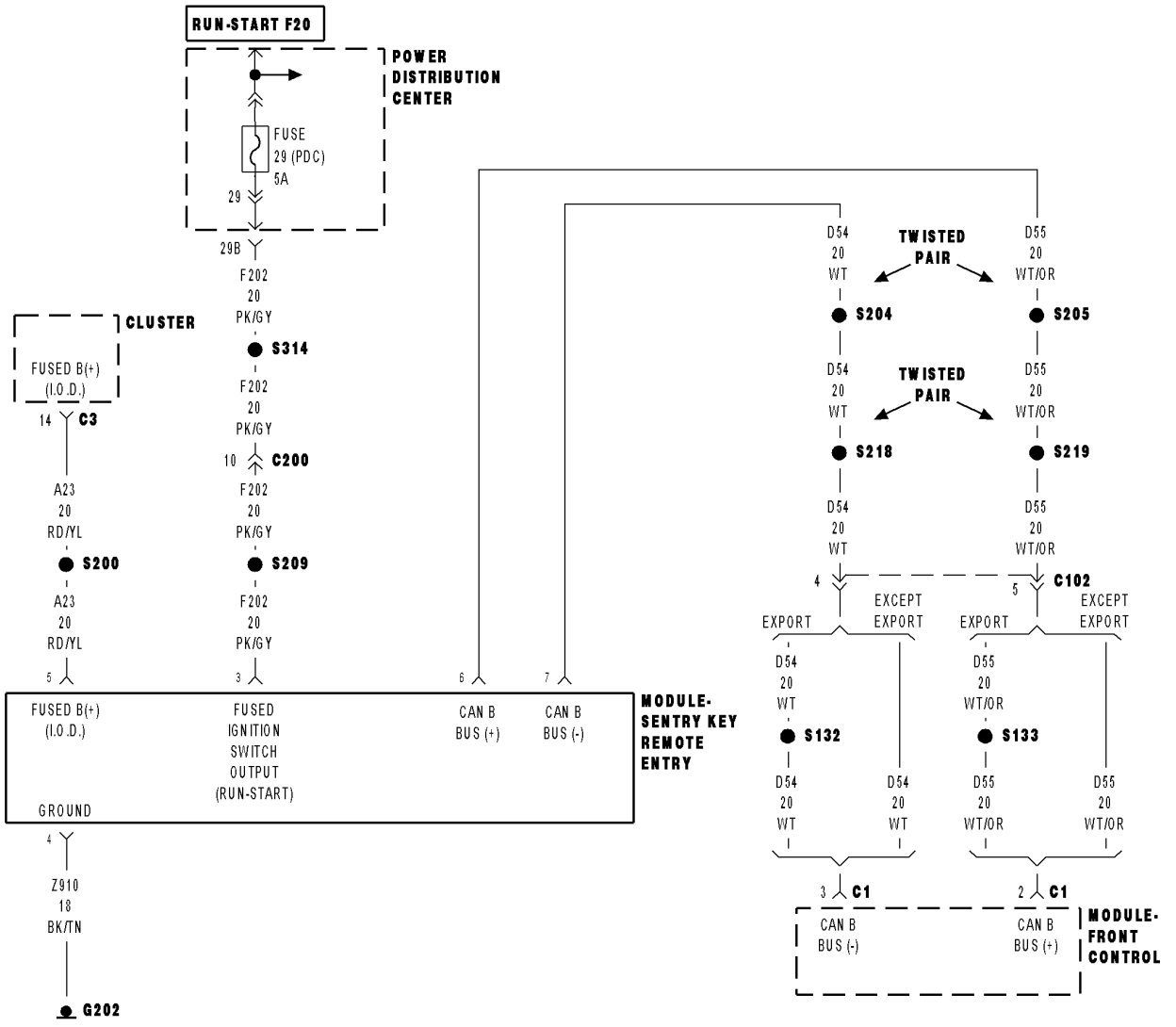

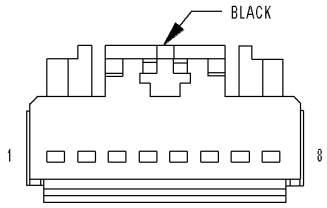

MODULE-
SENTRY KEY
REMOTE ENTRY

8131b160

For a complete wiring diagram **Refer to Section 8W**.

- **When Monitored:**
  At ignition on and during Key Programming Mode.
- **Set Condition:**
  When the SKREEM does not receive a transponder response after 8 consecutive transponder read attempts within 2.0 seconds.

Possible Causes
MULTIPLE KEY OPERATION
IGNITION KEY
SKREEM
INTERMITTENT WIRING HARNESS PROBLEM

Diagnostic Test

1. DETERMINING IF DTC IS CURRENT

With the scan tool, read and record the SKREEM DTCs.
With the scan tool, erase the SKREEM DTCs

NOTE: Perform the following test several times to ensure the DTC is current.
Turn the ignition off.
Wait 10 seconds.
Turn the ignition on.
With the scan tool, read the SKREEM DTCs.

Does the scan tool display the DTC that was previously erased?

Yes >> Go To 2

No >> Go To 6

2. CHECKING FOR MULTIPLE KEYS

Are there multiple vehicle ignition keys available?

Yes >> Go To 3

No >> Go To 4

3. MULTIPLE KEY OPERATION

NOTE: Perform the following steps using one of the vehicle ignition keys. When finished, repeat the procedure using each of the other vehicle keys one at a time.
With the scan tool, erase the SKREEM DTCs.
Turn the ignition off.
Wait 10 seconds.
Turn the ignition on
With the scan tool, read the SKREEM DTCs.

Is the DTC present for all ignition keys?

Yes >> Replace and program the Sentry Key Remote Entry Module in accordance with the Service Information. Perform SKREEM VERIFICATION TEST.

No >> Replace the ignition key(s) that cause the SKIM DTC. Perform SKREEM VERIFICATION TEST.

4. REPROGRAM KEY

With the scan tool, attempt to reprogram the ignition key to the SKREEM.
With the scan tool, erase the SKREEM DTCs.
Wait 10 seconds.
Turn the ignition on.
With the scan tool, read the SKREEM DTCs.

Does the DTC set again?

Yes >> Go To 5

No >> Test complete.

5. PROGRAM NEW IGNITION KEY

Replace the ignition key with a new key.
With the scan tool, program the new ignition key to the SKREEM.
With the scan tool, erase the SKREEM DTCs.
Turn the ignition off.
Wait 10 seconds.
Turn the ignition on.
With the scan tool, read the SKREEM DTCs.

Does the DTC set again?

Yes >> Replace and program the Sentry Key Remote Entry Module in accordance with the Service Information. Perform SKREEM VERIFICATION TEST.

No >> Test complete.

6. INTERMITTENT WIRING HARNESS PROBLEM

Turn the ignition off.

NOTE: Check the following items:
- **Visually inspect the related wiring harness. Look for any chafed, pierced, pinched, or partially broken wires.**
- **Visually inspect the related wiring harness connectors. Look for broken, bent, pushed out, or corroded terminals.**
- **Refer to any Technical Service Bulletins (TSB) that may apply.**

Were any problems found?

Yes >> Repair wiring harness/connectors as necessary. Perform SKREEM VERIFICATION TEST.

No >> Test Complete.

B1A2D-KEY 4 COMMUNICATION ERROR

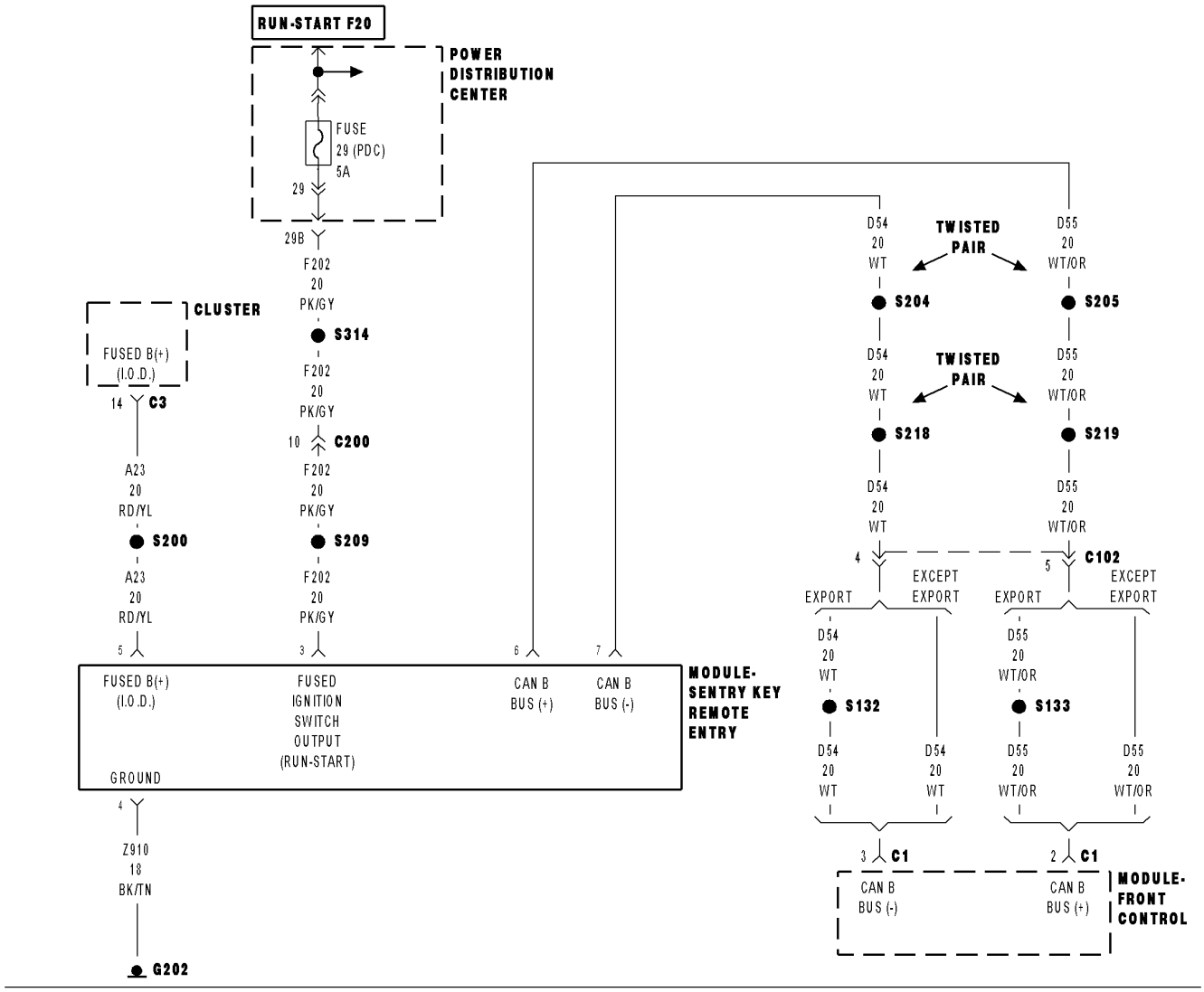

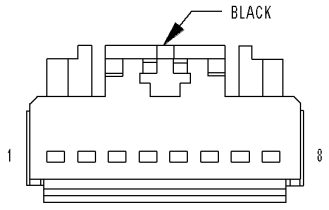

MODULE-SENTRY KEY REMOTE ENTRY

For a complete wiring diagram **Refer to Section 8W**.

- **When Monitored:**
  At ignition on and during Key Programming Mode.
- **Set Condition:**
  When the SKREEM does not receive a transponder response after 8 consecutive transponder read attempts within 2.0 seconds.

Possible Causes
MULTIPLE KEY OPERATION
IGNITION KEY
SKREEM
INTERMITTENT WIRING HARNESS PROBLEM

Diagnostic Test

1. DETERMINING IF DTC IS CURRENT

With the scan tool, read and record the SKREEM DTCs.
With the scan tool, erase the SKREEM DTCs

NOTE: Perform the following test several times to ensure the DTC is current.
Turn the ignition off.
Wait 10 seconds.
Turn the ignition on.
With the scan tool, read the SKREEM DTCs.

Does the scan tool display the DTC that was previously erased?

Yes >> Go To 2

No >> Go To 6

2. CHECKING FOR MULTIPLE KEYS

Are there multiple vehicle ignition keys available?

Yes >> Go To 3

No >> Go To 4

3. MULTIPLE KEY OPERATION

NOTE: Perform the following steps using one of the vehicle ignition keys. When finished, repeat the procedure using each of the other vehicle keys, one at a time.
With the scan tool, erase the SKREEM DTCs.
Turn the ignition off.
Wait 10 seconds.
Turn the ignition on
With the scan tool, read the SKREEM DTCs.

Is the DTC present for all ignition keys?

Yes >> Replace and program the Sentry Key Remote Entry Module in accordance with the Service Information. Perform SKREEM VERIFICATION TEST.

No >> Replace the ignition key(s) that cause the SKIM DTC. Perform SKREEM VERIFICATION TEST.

4. REPROGRAM KEY

With the scan tool, attempt to reprogram the ignition key to the SKREEM.
With the scan tool, erase the SKREEM DTCs.
Wait 10 seconds.
Turn the ignition on.
With the scan tool, read the SKREEM DTCs.

Does the DTC set again?

Yes >> Go To 5

No >> Test complete.

5. PROGRAM NEW IGNITION KEY

Replace the ignition key with a new key.
With the scan tool, program the new ignition key to the SKREEM.
With the scan tool, erase the SKREEM DTCs.
Turn the ignition off.
Wait 10 seconds.
Turn the ignition on.
With the scan tool, read the SKREEM DTCs.

Does the DTC set again?

Yes >> Replace and program the Sentry Key Remote Entry Module in accordance with the Service Information. Perform SKREEM VERIFICATION TEST.

No >> Test complete.

6. INTERMITTENT WIRING HARNESS PROBLEM

Turn the ignition off.

NOTE: Check the following items:
- **Visually inspect the related wiring harness. Look for any chafed, pierced, pinched, or partially broken wires.**
- **Visually inspect the related wiring harness connectors. Look for broken, bent, pushed out, or corroded terminals.**
- **Refer to any Technical Service Bulletins (TSB) that may apply.**

Were any problems found?

Yes >> Repair wiring harness/connectors as necessary. Perform SKREEM VERIFICATION TEST.

No >> Test Complete.

B1A2E-KEY 5 COMMUNICATION ERROR

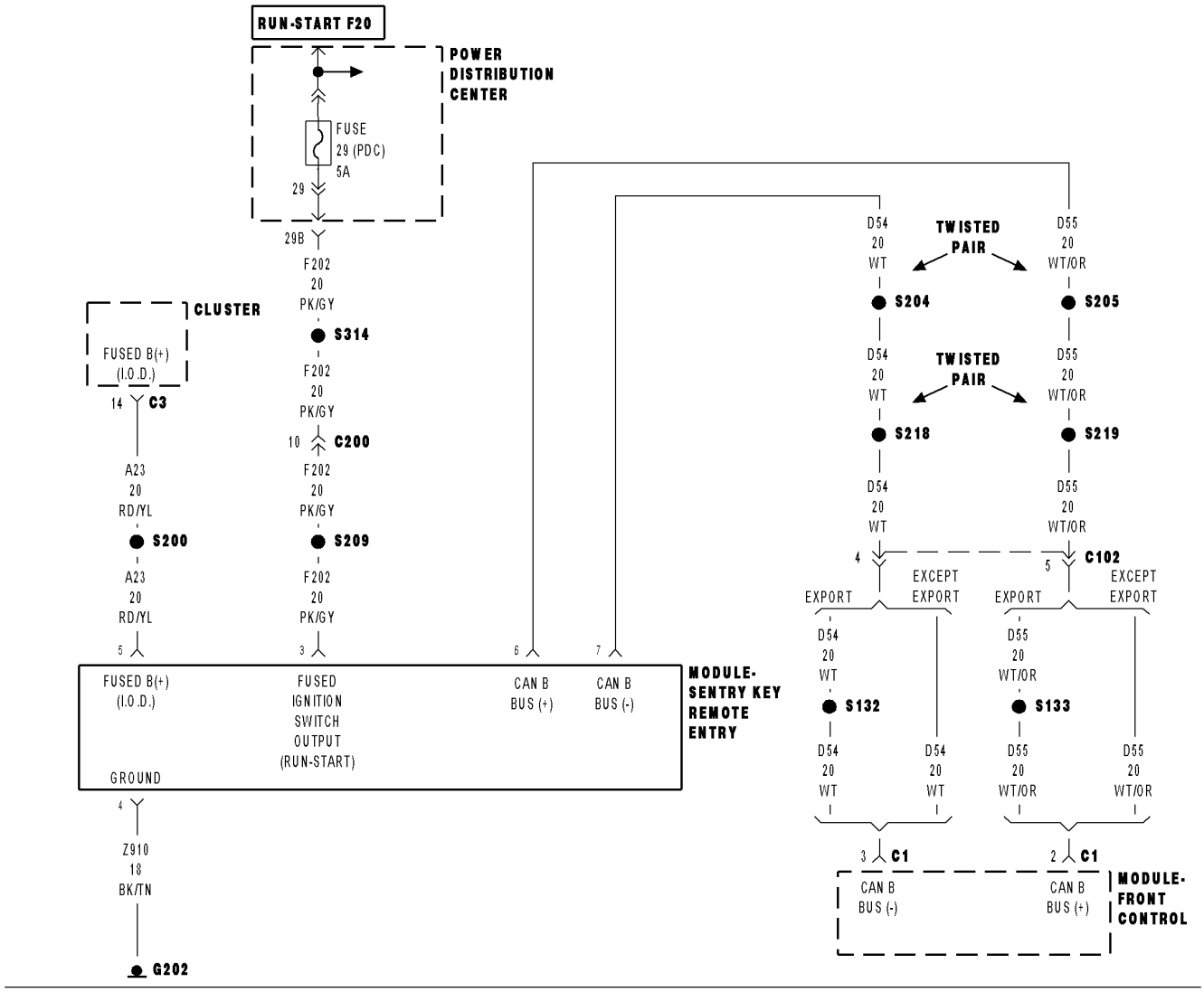

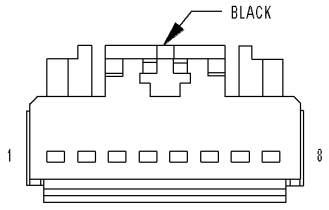

MODULE-SENTRY KEY REMOTE ENTRY

8131b160

For a complete wiring diagram **Refer to Section 8W**.

- **When Monitored:**
  At ignition on and during Key Programming Mode.
- **Set Condition:**
  When the SKREEM does not receive a transponder response after 8 consecutive transponder read attempts within 2.0 seconds.

Possible Causes
MULTIPLE KEY OPERATION
IGNITION KEY
SKREEM
INTERMITTENT WIRING HARNESS PROBLEM

Diagnostic Test

1. DETERMINING IF DTC IS CURRENT

With the scan tool, read and record the SKREEM DTCs.
With the scan tool, erase the SKREEM DTCs

NOTE: Perform the following test several times to ensure the DTC is current.
Turn the ignition off.
Wait 10 seconds.
Turn the ignition on.
With the scan tool, read the SKREEM DTCs.

Does the scan tool display the DTC that was previously erased?

Yes >> Go To 2

No >> Go To 6

2. CHECKING FOR MULTIPLE KEYS

Are there multiple vehicle ignition keys available?

Yes >> Go To 3

No >> Go To 4

3. MULTIPLE KEY OPERATION

NOTE: Perform the following steps using one of the vehicle ignition keys. When finished, repeat the procedure using each of the other vehicle keys, one at a time.
With the scan tool, erase the SKREEM DTCs.
Turn the ignition off.
Wait 10 seconds.
Turn the ignition on.
With the scan tool, read the SKREEM DTCs.

Is the DTC present for all ignition keys?

Yes >> Replace and program the Sentry Key Remote Entry Module in accordance with the Service Information. Perform SKREEM VERIFICATION TEST

No >> Replace the ignition key(s) that cause the SKIM DTC. Perform SKREEM VERIFICATION TEST.

4. REPROGRAM KEY

With the scan tool, attempt to reprogram the ignition key to the SKREEM.
With the scan tool, erase the SKREEM DTCs.
Wait 10 seconds.
Turn the ignition on.
With the scan tool, read the SKREEM DTCs.

Does the DTC set again?

Yes >> Replace and program the Sentry Key Remote Entry Module in accordance with the Service Information. Perform SKREEM VERIFICATION TEST

No >> Test complete.

5. PROGRAM NEW IGNITION KEY

Replace the ignition key with a new key.
With the scan tool, program the new ignition key to the SKREEM.
With the scan tool, erase the SKREEM DTCs.
Turn the ignition off.
Wait 10 seconds.
Turn the ignition on.
With the scan tool, read the SKREEM DTCs.

Does the DTC set again?

Yes >> Replace and program the Sentry Key Remote Entry Module in accordance with the Service Information. Perform SKREEM VERIFICATION TEST

No >> Test complete.

6. INTERMITTENT WIRING HARNESS PROBLEM

Turn the ignition off.

NOTE: Check the following items:
- **Visually inspect the related wiring harness. Look for any chafed, pierced, pinched, or partially broken wires.**
- **Visually inspect the related wiring harness connectors. Look for broken, bent, pushed out, or corroded terminals.**
- **Refer to any Technical Service Bulletins (TSB) that may apply.**

Were any problems found?

Yes >> Repair wiring harness/connectors as necessary. Perform SKREEM VERIFICATION TEST.

No >> Test Complete.

B1A2F-KEY 6 COMMUNICATION ERROR

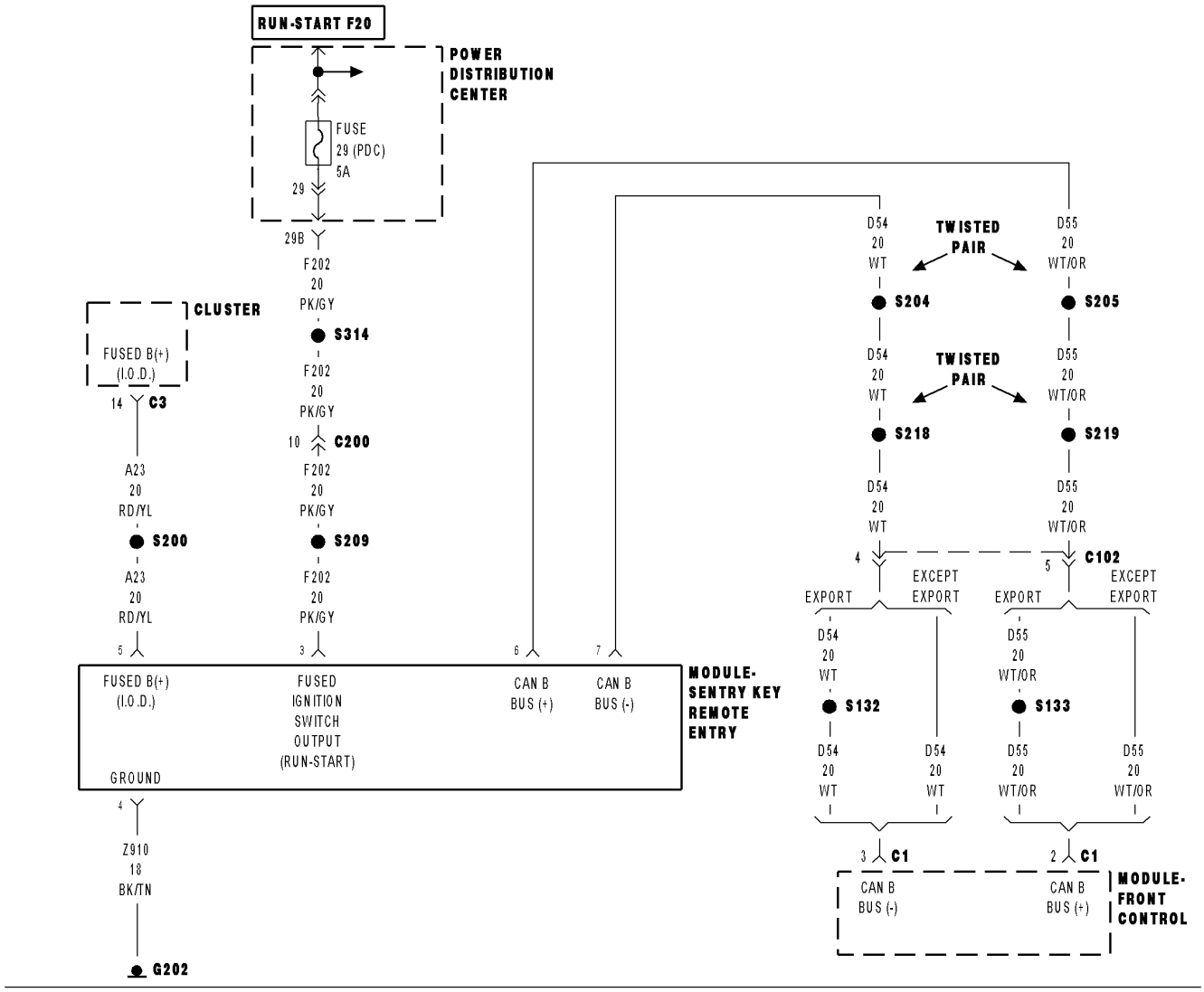

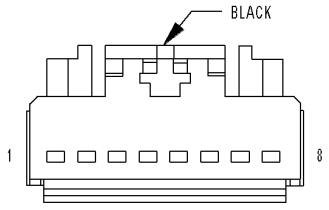

MODULE-SENTRY KEY REMOTE ENTRY

8131b160

For a complete wiring diagram **Refer to Section 8W**.

- **When Monitored:**
  At ignition on and during Key Programming Mode.
- **Set Condition:**
  When the SKREEM does not receive a transponder response after 8 consecutive transponder read attempts within 2.0 seconds.

Possible Causes
MULTIPLE KEY OPERATION
IGNITION KEY
SKREEM
INTERMITTENT WIRING HARNESS PROBLEM

Diagnostic Test

1. DETERMINING IF DTC IS CURRENT

With the scan tool, read and record the SKREEM DTCs.
With the scan tool, erase the SKREEM DTCs

NOTE: Perform the following test several times to ensure the DTC is current.
Turn the ignition off.
Wait 10 seconds.
Turn the ignition on.
With the scan tool, read the SKREEM DTCs.

Does the scan tool display the DTC that was previously erased?

Yes >> Go To 2

No >> Go To 6

2. CHECKING FOR MULTIPLE KEYS

Are there multiple vehicle ignition keys available?

Yes >> Go To 3

No >> Go To 4

3. MULTIPLE KEY OPERATION

NOTE: Perform the following steps using one of the vehicle ignition keys. When finished, repeat the procedure using each of the other vehicle keys, one at a time.
With the scan tool, erase the SKREEM DTCs.
Turn the ignition off.
Wait 10 seconds.
Turn the ignition on.
With the scan tool, read the SKREEM DTCs.

Is the DTC present for all ignition keys?

Yes >> Replace and program the Sentry Key Remote Entry Module in accordance with the Service Information. Perform SKREEM VERIFICATION TEST.

No >> Replace the ignition key(s) that cause the SKIM DTC. Perform SKREEM VERIFICATION TEST.

4. REPROGRAM KEY

With the scan tool, attempt to reprogram the ignition key to the SKREEM.
With the scan tool, erase the SKREEM DTCs.
Wait 10 seconds.
Turn the ignition on.
With the scan tool, read the SKREEM DTCs.

Does the DTC set again?

Yes >> Go To 5

No >> Test complete.

5. PROGRAM NEW IGNITION KEY

Replace the ignition key with a new key.
With the scan tool, program the new ignition key to the SKREEM.
With the scan tool, erase the SKREEM DTCs.
Turn the ignition off.
Wait 10 seconds.
Turn the ignition on.
With the scan tool, read the SKREEM DTCs.

Does the DTC set again?

Yes >> Replace and program the Sentry Key Remote Entry Module in accordance with the Service Information. Perform SKREEM VERIFICATION TEST.

No >> Test complete.

6. INTERMITTENT WIRING HARNESS PROBLEM

Turn the ignition off.

NOTE: Check the following items:
- **Visually inspect the related wiring harness. Look for any chafed, pierced, pinched, or partially broken wires.**
- **Visually inspect the related wiring harness connectors. Look for broken, bent, pushed out, or corroded terminals.**
- **Refer to any Technical Service Bulletins (TSB) that may apply.**

Were any problems found?

Yes >> Repair wiring harness/connectors as necessary.
Perform SKREEM VERIFICATION TEST

No >> Test Complete.

B1A30-KEY 7 COMMUNICATION ERROR

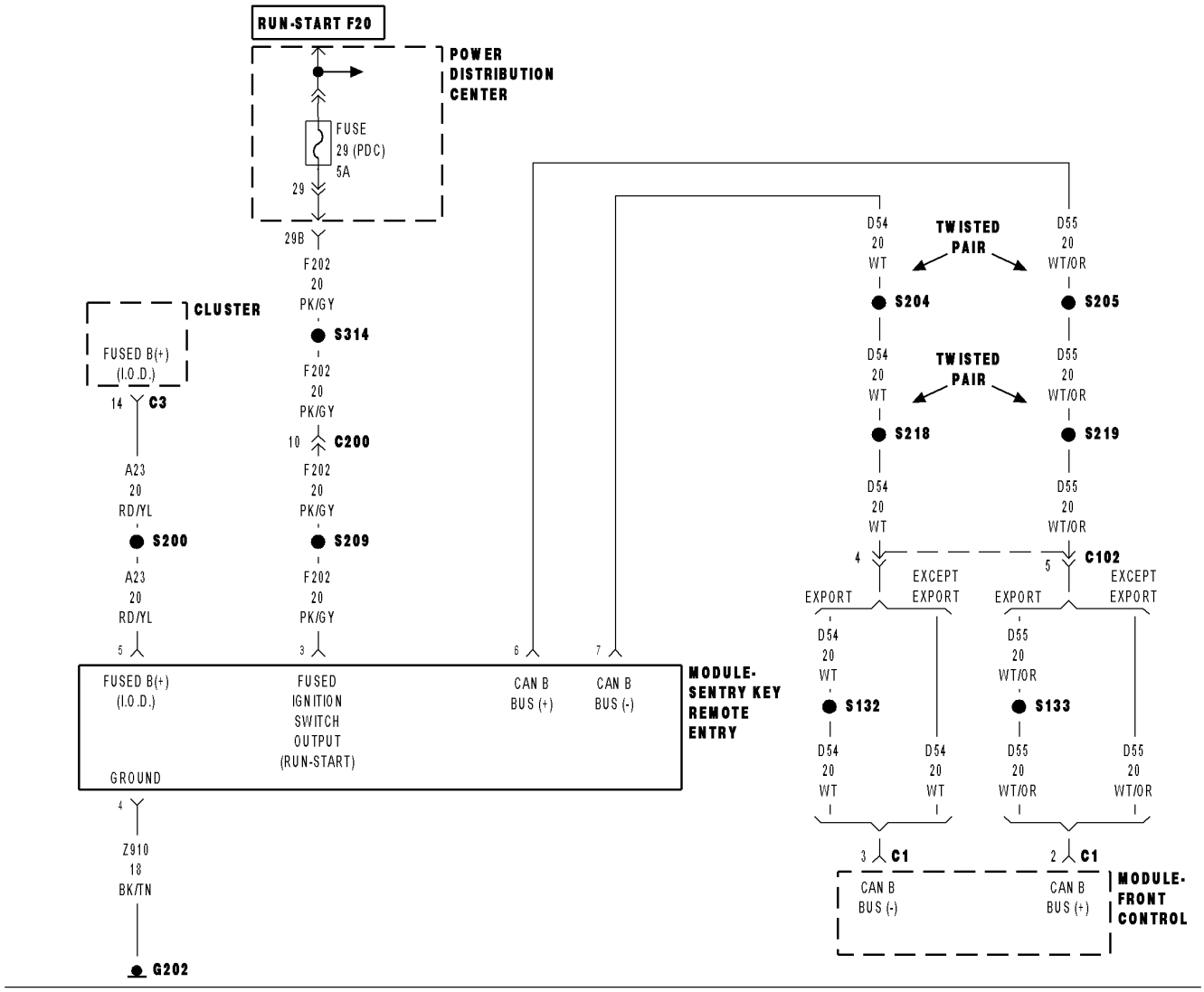

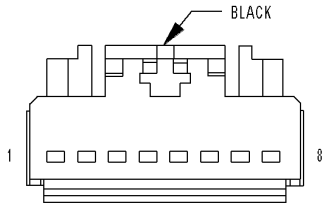

MODULE-SENTRY KEY REMOTE ENTRY

For a complete wiring diagram **Refer to Section 8W**.

- **When Monitored:**
  At ignition on and during Key Programming Mode.
- **Set Condition:**
  When the SKREEM does not receive a transponder response after 8 consecutive transponder read attempts within 2.0 seconds.

Possible Causes
MULTIPLE KEY OPERATION
IGNITION KEY
SKREEM
INTERMITTENT WIRING HARNESS PROBLEM

Diagnostic Test

1. DETERMINING IF DTC IS CURRENT

With the scan tool, read and record the SKREEM DTCs.
With the scan tool, erase the SKREEM DTCs

NOTE: Perform the following test several times to ensure the DTC is current.
Turn the ignition off.
Wait 10 seconds.
Turn the ignition on.
With the scan tool, read the SKREEM DTCs.

Does the scan tool display the DTC that was previously erased?

Yes >> Go To 2
No >> Go To 6

2. CHECKING FOR MULTIPLE KEYS

Are there multiple vehicle ignition keys available?

Yes >> Go To 3
No >> Go To 4

3. MULTIPLE KEY OPERATION

NOTE: Perform the following steps using one of the vehicle ignition keys. When finished, repeat the procedure using each of the other vehicle keys one at a time.
With the scan tool, erase the SKREEM DTCs.
Turn the ignition off.
Wait 10 seconds.
Turn the ignition on.
With the scan tool, read the SKREEM DTCs.

Is the DTC present for all ignition keys?

Yes >> Replace and program the Sentry Key Remote Entry Module in accordance with the Service Information. Perform SKREEM VERIFICATION TEST.
No >> Replace the ignition key(s) that cause the SKIM DTC. Perform SKREEM VERIFICATION TEST.

4. REPROGRAM KEY

With the scan tool, attempt to reprogram the ignition key to the SKREEM.
With the scan tool, erase the SKREEM DTCs.
Wait 10 seconds.
Turn the ignition on.
With the scan tool, read the SKREEM DTCs.

Does the DTC set again?

Yes >> Go To 5

No >> Test complete.

5. PROGRAM NEW IGNITION KEY

Replace the ignition key with a new key.
With the scan tool, program the new ignition key to the SKREEM.
With the scan tool, erase the SKREEM DTCs.
Turn the ignition off.
Wait 10 seconds.
Turn the ignition on.
With the scan tool, read the SKREEM DTCs.

Does the DTC set again?

Yes >> Replace and program the Sentry Key Remote Entry Module in accordance with the Service Information. Perform SKREEM VERIFICATION TEST.

No >> Test complete.

6. INTERMITTENT WIRING HARNESS PROBLEM

Turn the ignition off.

NOTE: Check the following items:
- **Visually inspect the related wiring harness. Look for any chafed, pierced, pinched, or partially broken wires.**
- **Visually inspect the related wiring harness connectors. Look for broken, bent, pushed out, or corroded terminals.**
- **Refer to any Technical Service Bulletins (TSB) that may apply.**

Were any problems found?

Yes >> Repair wiring harness/connectors as necessary. Perform SKREEM VERIFICATION TEST.

No >> Test Complete.

B1A31-KEY 8 COMMUNICATION ERROR

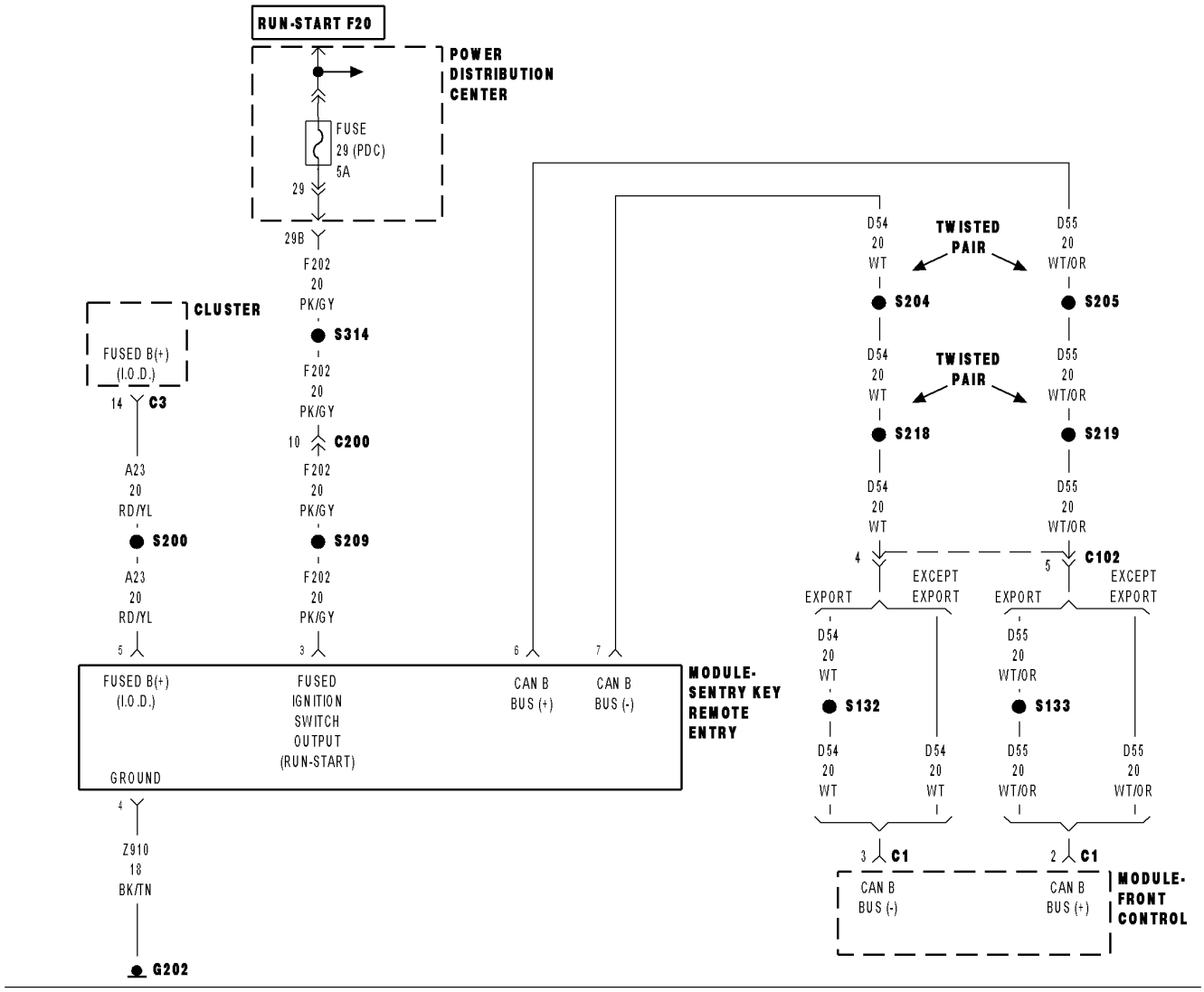

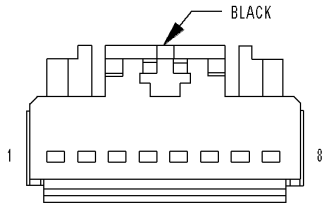

MODULE-SENTRY KEY REMOTE ENTRY

For a complete wiring diagram **Refer to Section 8W**.

- **When Monitored:**
  At ignition on and during Key Programming Mode.
- **Set Condition:**
  When the SKREEM does not receive a transponder response after 8 consecutive transponder read attempts within 2.0 seconds.

Possible Causes
MULTIPLE KEY OPERATION
IGNITION KEY
SKREEM
INTERMITTENT WIRING HARNESS PROBLEM

Diagnostic Test

1. DETERMINING IF DTC IS CURRENT

With the scan tool, read and record the SKREEM DTCs.
With the scan tool, erase the SKREEM DTCs

NOTE: Perform the following test several times to ensure the DTC is current.
Turn the ignition off.
Wait 10 seconds.
Turn the ignition on.
With the scan tool, read the SKREEM DTCs.

Does the scan tool display the DTC that was previously erased?

Yes >> Go To 2

No >> Go To 6

2. CHECKING FOR MULTIPLE KEYS

Are there multiple vehicle ignition keys available?

Yes >> Go To 3

No >> Go To 4

3. MULTIPLE KEY OPERATION

NOTE: Perform the following steps using one of the vehicle ignition keys. When finished, repeat the procedure using each of the other vehicle keys, one at a time.
With the scan tool, erase the SKREEM DTCs.
Turn the ignition off.
Wait 10 seconds.
Turn the ignition on.
With the scan tool, read the SKREEM DTCs.

Is the DTC present for all ignition keys?

Yes >> Replace and program the Sentry Key Remote Entry Module in accordance with the Service Information. Perform SKREEM VERIFICATION TEST.

No >> Replace the ignition key(s) that cause the SKIM DTC. Perform SKREEM VERIFICATION TEST.

4. REPROGRAM KEY

With the scan tool, attempt to reprogram the ignition key to the SKREEM.
With the scan tool, erase the SKREEM DTCs.
Wait 10 seconds.
Turn the ignition on.
With the scan tool, read the SKREEM DTCs.

Does the DTC set again?

Yes >> Go To 5

No >> Test complete.

5. PROGRAM NEW IGNITION KEY

Replace the ignition key with a new key.
With the scan tool, program the new ignition key to the SKREEM.
With the scan tool, erase the SKREEM DTCs.
Turn the ignition off.
Wait 10 seconds.
Turn the ignition on.
With the scan tool, read the SKREEM DTCs.

Does the DTC set again?

Yes >> Replace and program the Sentry Key Remote Entry Module in accordance with the Service Information. Perform SKREEM VERIFICATION TEST

No >> Test complete.

6. INTERMITTENT WIRING HARNESS PROBLEM

Turn the ignition off.

NOTE: Check the following items:
- **Visually inspect the related wiring harness. Look for any chafed, pierced, pinched, or partially broken wires.**
- **Visually inspect the related wiring harness connectors. Look for broken, bent, pushed out, or corroded terminals.**
- **Refer to any Technical Service Bulletins (TSB) that may apply.**

Were any problems found?

Yes >> Repair wiring harness/connectors as necessary.
Perform SKREEM VERIFICATION TEST.

No >> Test Complete.

B1A35-UNIDENTIFIED KEY COMMUNICATION ERROR

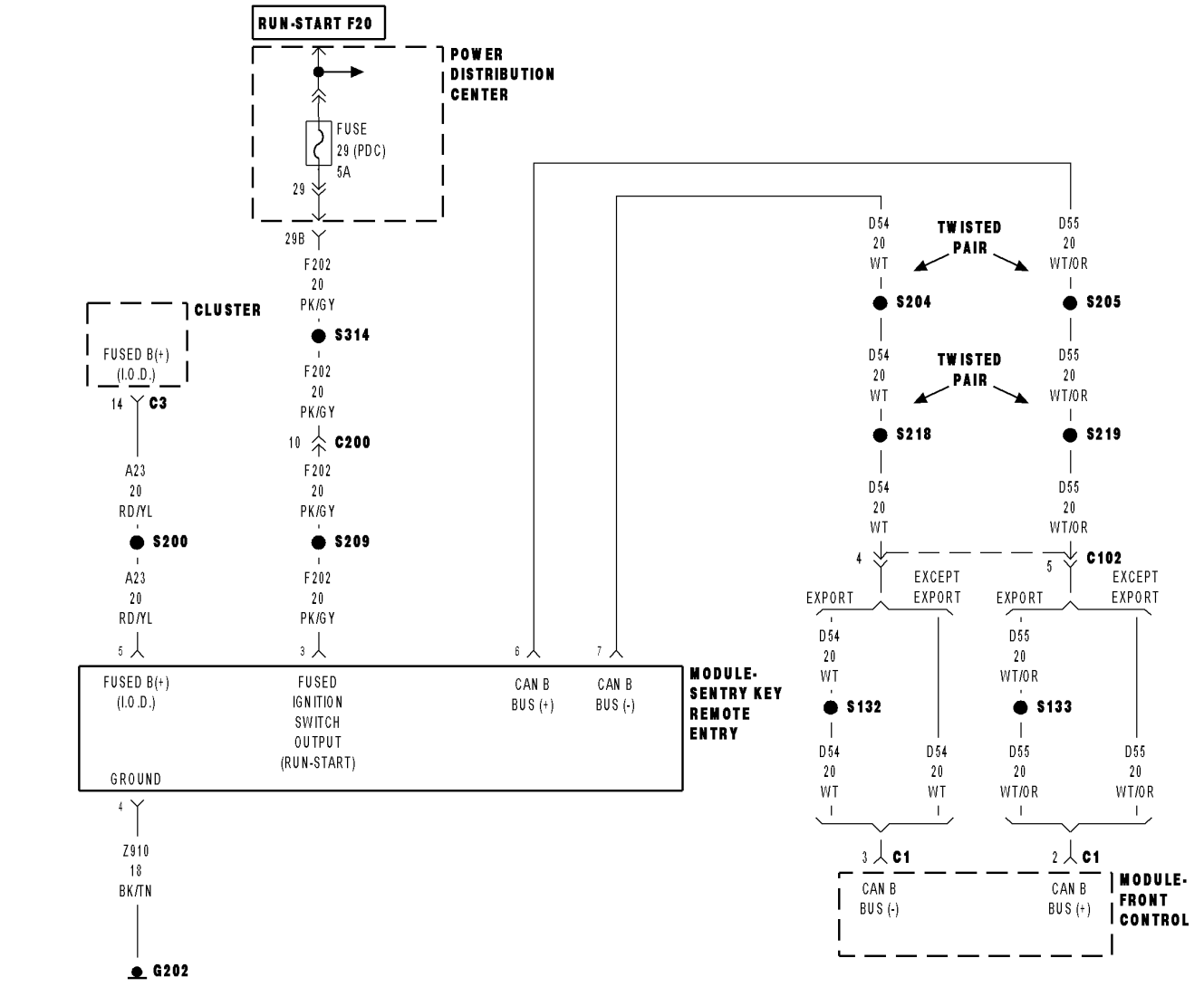

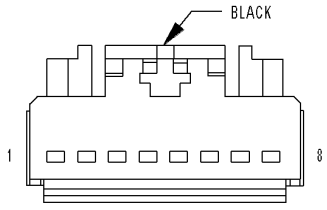

MODULE-SENTRY KEY REMOTE ENTRY

8131b160

For a complete wiring diagram **Refer to Section 8W**.

- **When Monitored:**
  At ignition on and during Key Programming Mode.
- **Set Condition:**
  When the SKREEM does not receive a transponder response after 8 consecutive transponder read attempts within 2.0 seconds.

Possible Causes
MULTIPLE KEY OPERATION
IGNITION KEY
SKREEM
INTERMITTENT WIRING HARNESS PROBLEM

Diagnostic Test

1. DETERMINING IF DTC IS CURRENT

With the scan tool, read and record the SKREEM DTCs.
With the scan tool, erase the SKREEM DTCs

NOTE: Perform the following test several times to ensure the DTC is current.
Turn the ignition off.
Wait 10 seconds.
Turn the ignition on.
With the scan tool, read the SKREEM DTCs.

Does the scan tool display the DTC that was previously erased?

Yes >> Go To 2

No >> Go To 6

2. CHECKING FOR MULTIPLE KEYS

Are there multiple vehicle ignition keys available?

Yes >> Go To 3

No >> Go To 4

3. MULTIPLE KEY OPERATION

NOTE: Perform the following steps using one of the vehicle ignition keys. When finished, repeat the procedure using each of the other vehicle keys, one at a time.
With the scan tool, erase the SKREEM DTCs.
Turn the ignition off.
Wait 10 seconds.
Turn the ignition on.
With the scan tool, read the SKREEM DTCs.

Is the DTC present for all ignition keys?

Yes >> Replace and program the Sentry Key Remote Entry Module in accordance with the Service Information. Perform SKREEM VERIFICATION TEST.

No >> Replace the ignition key(s) that cause the SKIM DTC. Perform SKREEM VERIFICATION TEST.

4. REPROGRAM KEY

With the scan tool, attempt to reprogram the ignition key to the SKREEM.
With the scan tool, erase the SKREEM DTCs.
Wait 10 seconds.
Turn the ignition on.
With the scan tool, read the SKREEM DTCs.

Does the DTC set again?

Yes >> Go To 5

No >> Test complete.

5. PROGRAM NEW IGNITION KEY

Replace the ignition key with a new key.
With the scan tool, program the new ignition key to the SKREEM.
With the scan tool, erase the SKREEM DTCs.
Turn the ignition off.
Wait 10 seconds.
Turn the ignition on.
With the scan tool, read the SKREEM DTCs.

Does the DTC set again?

Yes >> Replace and program the Sentry Key Remote Entry Module in accordance with the Service Information. Perform SKREEM VERIFICATION TEST.

No >> Test complete.

6. INTERMITTENT WIRING HARNESS PROBLEM

Turn the ignition off.

NOTE: Check the following items:
- **Visually inspect the related wiring harness. Look for any chafed, pierced, pinched, or partially broken wires.**
- **Visually inspect the related wiring harness connectors. Look for broken, bent, pushed out, or corroded terminals.**
- **Refer to any Technical Service Bulletins (TSB) that may apply.**

Were any problems found?

Yes >> Repair wiring harness/connectors as necessary. Perform SKREEM VERIFICATION TEST.

No >> Test Complete.

B1A37–SECURITY TRANSMITTER SENSOR CIRCUIT LOW

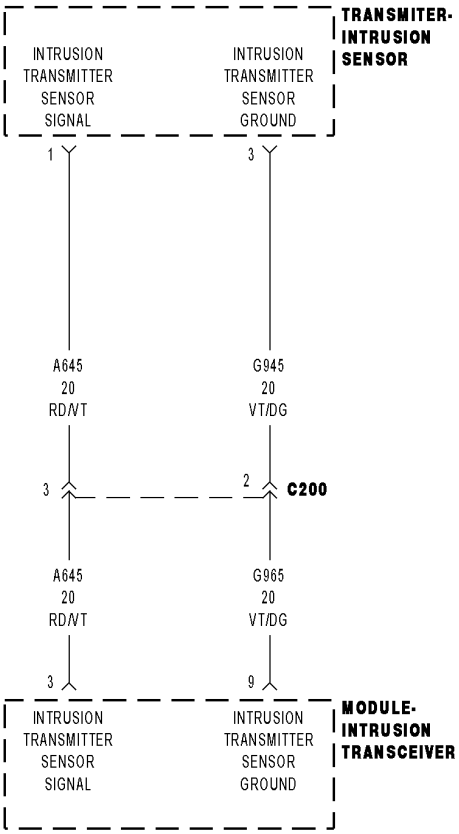

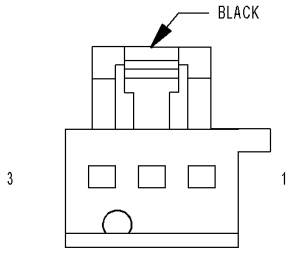

TRANSMITTER-
INTRUSION
SENSOR
(RHD)

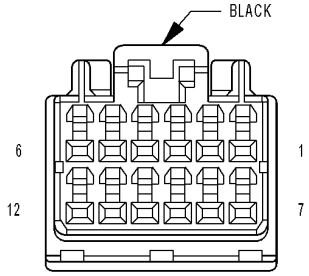

MODULE-
INTRUSION
TRANSCEIVER
(RHD)

8174226a

For a complete wiring diagram **Refer to Section 8W**.

- **When Monitored:**
  When the VTSS is armed.
- **Set Condition:**
  If the current flow on the sensor signal circuit is above a specified range this DTC will set.

Possible Causes
(A645) INTRUSION TRANSMITTER SENSOR SIGNAL CIRCUIT SHORTED TO GROUND
INTRUSION SENSOR TRANSMITTER
INTRUSION TRANSCEIVER MODULE

Diagnostic Test

1. TEST FOR INTERMITTENT CONDITION

Turn the ignition on.
With the scan tool, record and erase DTC's.
Turn the ignition off and remove the key from the ignition.
Close all doors and arm the VTSS and wait 2 minutes.
Disarm the VTSS turn the ignition on.
Turn the ignition on and with the scan tool, read DTC's.

Does the scan tool display B1A37–SECURITY TRANSMITTER SENSOR CIRCUIT LOW ?

Yes >> Go To 2

No >> The conditions that caused this code to set are not present at this time. Using the wiring diagram/schematic as a guide, inspect the wiring and connectors.
Perform BODY VERIFICATION TEST – VER 1 (Refer to 8 - ELECTRICAL/ELECTRONIC CONTROL MODULES - STANDARD PROCEDURE)

2. INTRUSION SENSOR TRANSMITTER

Turn the ignition off.
Disconnect the Intrusion Sensor Transmitter connector.
Turn the ignition on and with the scan tool, erase DTC's.
Turn the ignition off and remove the key from the ignition.
Close all doors and arm the VTSS and wait 2 minutes.
Disarm the VTSS turn the ignition on.
With the scan tool, read DTC's.

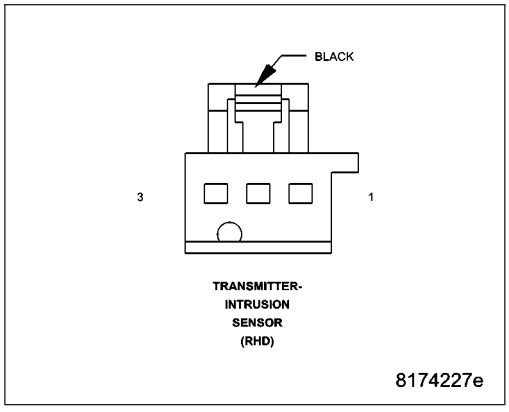

Does the scan tool display B1A41–SECURITY TRANSMITTER SENSOR CIRCUIT OPEN?

Yes >> Replace the Intrusion Sensor Transmitter.
Perform BODY VERIFICATION TEST – VER 1 (Refer to 8 - ELECTRICAL/ELECTRONIC CONTROL MODULES - STANDARD PROCEDURE)

No >> Go To 3

3. CHECK THE (A645) INTRUSION TRANSMITTER SENSOR SIGNAL CIRCUIT SHORT TO GROUND

Turn the ignition is off.

Disconnect the Intrusion Transceiver Module connector.

Measure the resistance between ground and the (A645) Intrusion Transmitter Sensor Signal circuit at the Intrusion Transceiver Module connector.

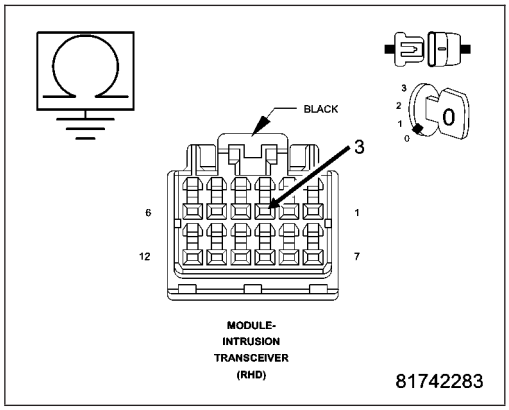

Is the resistance below 5.0 ohms?

Yes >> Repair the (A645) Intrusion Transmitter Sensor Signal circuit for a short to ground.

Perform BODY VERIFICATION TEST – VER 1 (Refer to 8 - ELECTRICAL/ELECTRONIC CONTROL MODULES - STANDARD PROCEDURE)

No >> Replace the Intrusion Transceiver Module in accordance with the Service Information.

Perform BODY VERIFICATION TEST – VER 1 (Refer to 8 - ELECTRICAL/ELECTRONIC CONTROL MODULES - STANDARD PROCEDURE)

B1A38–SECURITY TRANSMITTER SENSOR CIRCUIT HIGH

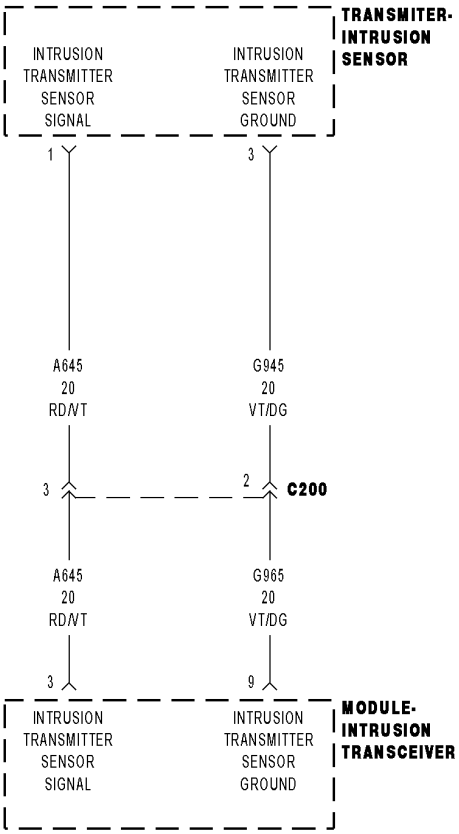

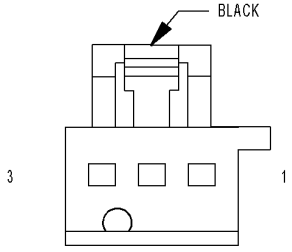

TRANSMITTER-
INTRUSION
SENSOR
(RHD)

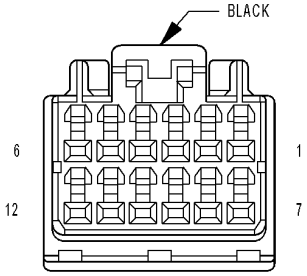

MODULE-
INTRUSION
TRANSCEIVER
(RHD)

8174226a

For a complete wiring diagram **Refer to Section 8W**.

- **When Monitored:**
  When the VTSS is armed.
- **Set Condition:**
  If the current flow on the sensor signal circuit is above a specified range this DTC will set.

Possible Causes
(A645) INTRUSION TRANSMITTER SENSOR SIGNAL CIRCUIT SHORTED TO VOLTAGE
INTRUSION TRANSCEIVER MODULE

Diagnostic Test

1. TEST FOR INTERMITTENT CONDITION

Turn the ignition on.

With the scan tool, record and erase DTC's.

Turn the ignition off and remove the key from the ignition.

Close all doors and arm the VTSS and wait 2 minutes.

Disarm the VTSS turn the ignition on.

Turn the ignition on and with the scan tool, read DTC's.

Does the scan tool display B1A38–SECURITY TRANSMITTER SENSOR CIRCUIT HIGH ?

Yes >> Go To 2

No >> The conditions that caused this code to set are not present at this time. Using the wiring diagram/schematic as a guide, inspect the wiring and connectors.
Perform BODY VERIFICATION TEST – VER 1 (Refer to 8 - ELECTRICAL/ELECTRONIC CONTROL MODULES - STANDARD PROCEDURE)

2. CHECK THE (A645) INTRUSION TRANSMITTER SENSOR SIGNAL CIRCUIT SHORT TO VOLTAGE

Turn the ignition is off.

Disconnect the Intrusion Sensor Transmitter connector

Disconnect the Intrusion Transceiver Module connector.

Turn the ignition on.

Measure for voltage between chassis ground and the (A645) Intrusion Transmitter Sensor Signal circuit at the Intrusion Transceiver Module connector.

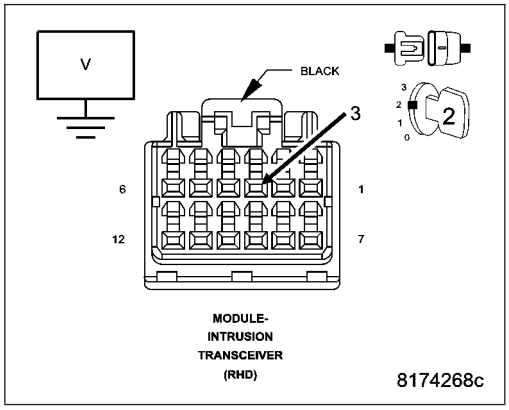

Is there any voltage present?

Yes >> Repair the (A645) Intrusion Transmitter Sensor Signal circuit for a short to voltage.
Perform BODY VERIFICATION TEST – VER 1 (Refer to 8 - ELECTRICAL/ELECTRONIC CONTROL MODULES - STANDARD PROCEDURE)

No >> Replace the Intrusion Transceiver Module in accordance with the Service Information.
Perform BODY VERIFICATION TEST – VER 1 (Refer to 8 - ELECTRICAL/ELECTRONIC CONTROL MODULES - STANDARD PROCEDURE)

B1A3A–SECURITY RECEIVER SENSOR CIRCUIT LOW

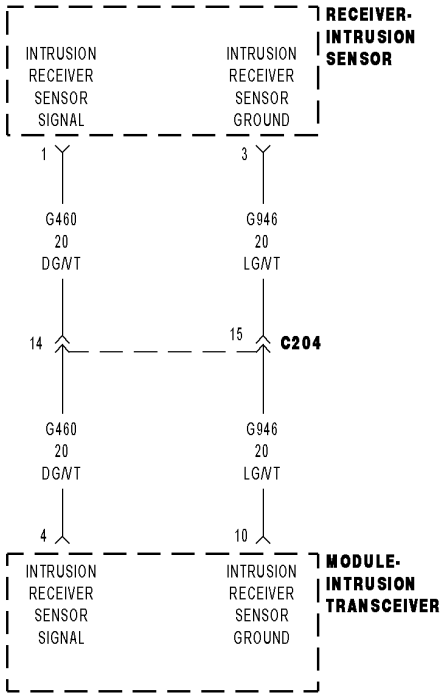

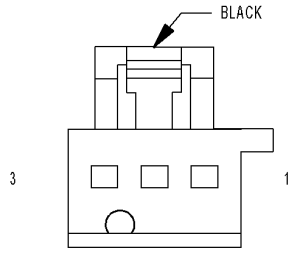

TRANSMITTER-
INTRUSION
SENSOR
(RHD)

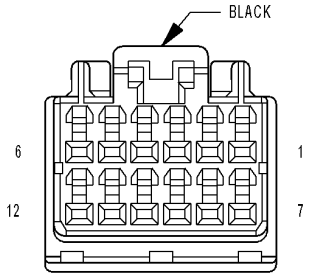

MODULE-
INTRUSION
TRANSCEIVER
(RHD)

81742733

For a complete wiring diagram **Refer to Section 8W**.

- **When Monitored:**
  When the VTSS is armed.
- **Set Condition:**
  If the current flow on the sensor signal circuit is above a specified range this DTC will set.

Possible Causes
(G460) INTRUSION RECEIVER SENSOR SIGNAL CIRCUIT SHORTED TO GROUND
INTRUSION SENSOR RECEIVER
INTRUSION TRANSCEIVER MODULE

Diagnostic Test

1. TEST FOR INTERMITTENT CONDITION

Turn the ignition on.
With the scan tool, record and erase DTC's.
Turn the ignition off and remove the key from the ignition.
Close all doors and arm the VTSS and wait 2 minutes.
Disarm the VTSS turn the ignition on.
Turn the ignition on and with the scan tool, read DTC's.

Does the scan tool display B1A3A–SECURITY RECEIVER SENSOR CIRCUIT LOW ?

Yes >> Go To 2

No >> The conditions that caused this code to set are not present at this time. Using the wiring diagram/schematic as a guide, inspect the wiring and connectors.
Perform BODY VERIFICATION TEST – VER 1 (Refer to 8 - ELECTRICAL/ELECTRONIC CONTROL MODULES - STANDARD PROCEDURE)

2. INTRUSION SENSOR RECEIVER

Turn the ignition off.
Disconnect the Intrusion Sensor Receiver connector.
Turn the ignition on and with the scan tool, erase DTC's.
Turn the ignition off and remove the key from the ignition.
Close all doors and arm the VTSS and wait 2 minutes.
Disarm the VTSS turn the ignition on.
With the scan tool, read DTC's.

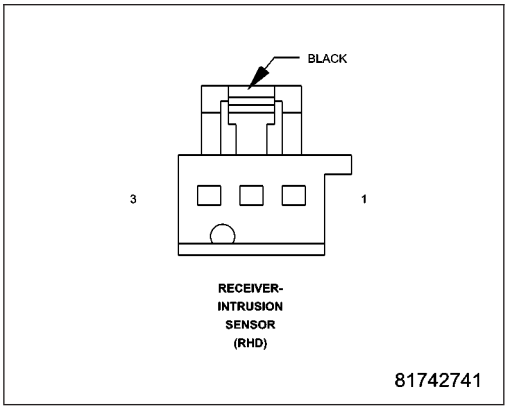

Does the scan tool display B1A44–SECURITY RECEIVER SENSOR CIRCUIT OPEN?

Yes >> Replace the Intrusion Sensor Receiver.
Perform BODY VERIFICATION TEST – VER 1 (Refer to 8 - ELECTRICAL/ELECTRONIC CONTROL MODULES - STANDARD PROCEDURE)

No >> Go To 3

3. CHECK THE (G460) INTRUSION RECEIVER SENSOR SIGNAL CIRCUIT SHORT TO GROUND

Turn the ignition is off.

Disconnect the Intrusion Transceiver Module connector.

Measure the resistance between ground and the (G460) Intrusion Receiver Sensor Signal circuit at the Intrusion Transceiver Module connector.

Is the resistance below 5.0 ohms?

Yes >> Repair the (G460) Intrusion Receiver Sensor Signal circuit for a short to ground.

Perform BODY VERIFICATION TEST – VER 1 (Refer to 8 - ELECTRICAL/ELECTRONIC CONTROL MODULES - STANDARD PROCEDURE)

No >> Replace the Intrusion Transceiver Module in accordance with the Service Information.

Perform BODY VERIFICATION TEST – VER 1 (Refer to 8 - ELECTRICAL/ELECTRONIC CONTROL MODULES - STANDARD PROCEDURE)

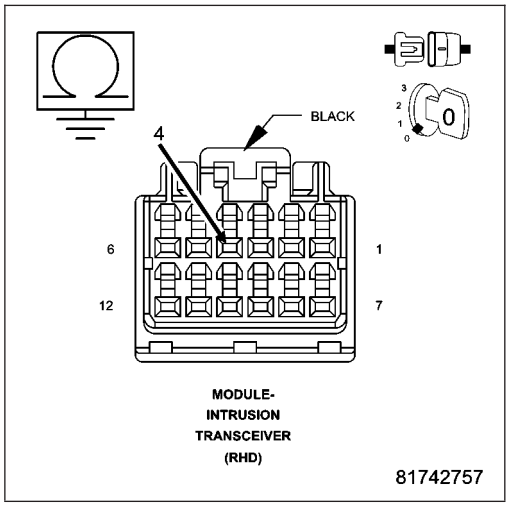

B1A3B–SECURITY RECEIVER SENSOR CIRCUIT HIGH

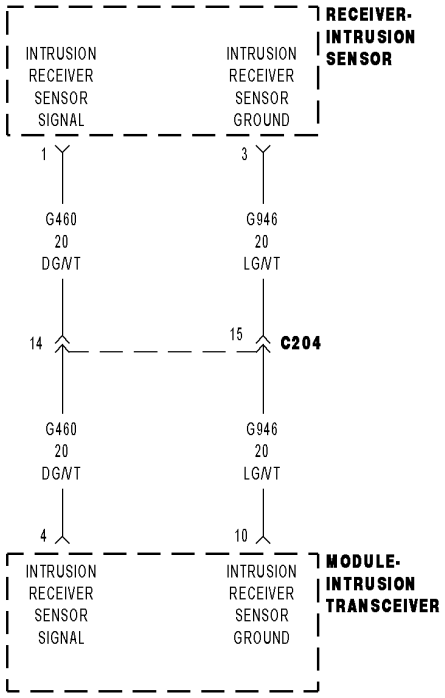

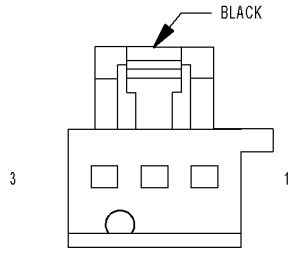

TRANSMITTER-
INTRUSION
SENSOR
(RHD)

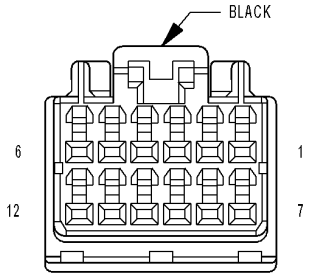

MODULE-
INTRUSION
TRANSCEIVER
(RHD)

81742733

For a complete wiring diagram **Refer to Section 8W**.

- **When Monitored:**
  When the VTSS is armed.
- **Set Condition:**
  If the current flow on the sensor signal circuit is above a specified range this DTC will set.

Possible Causes
(G460) INTRUSION RECEIVER SENSOR SIGNAL CIRCUIT SHORTED TO VOLTAGE
INTRUSION TRANSCEIVER MODULE

Diagnostic Test

1. TEST FOR INTERMITTENT CONDITION

Turn the ignition on.

With the scan tool, record and erase DTC's.

Turn the ignition off and remove the key from the ignition.

Close all doors and arm the VTSS and wait 2 minutes.

Disarm the VTSS turn the ignition on.

Turn the ignition on and with the scan tool, read DTC's.

Does the scan tool display B1A3B–SECURITY RECEIVER SENSOR CIRCUIT HIGH ?

Yes >> Go To 2

No >> The conditions that caused this code to set are not present at this time. Using the wiring diagram/schematic as a guide, inspect the wiring and connectors.
Perform BODY VERIFICATION TEST – VER 1 (Refer to 8 - ELECTRICAL/ELECTRONIC CONTROL MODULES - STANDARD PROCEDURE)

2. CHECK THE (G460) INTRUSION RECEIVER SENSOR SIGNAL CIRCUIT SHORT TO VOLTAGE

Turn the ignition is off.

Disconnect the Intrusion Sensor Receiver connector.

Disconnect the Intrusion Transceiver Module connector.

Measure for voltage between chassis ground and the (G460) Intrusion Receiver Sensor Signal circuit at the Intrusion Transceiver Module connector.

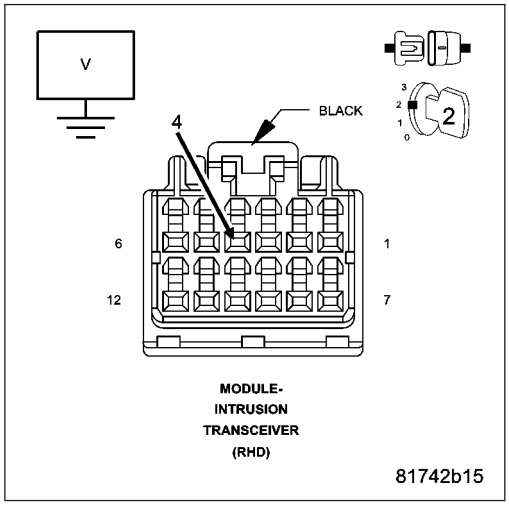

Is there any voltage present?

Yes >> Repair the (G460) Intrusion Receiver Sensor Signal circuit for a short to voltage.
Perform BODY VERIFICATION TEST – VER 1 (Refer to 8 - ELECTRICAL/ELECTRONIC CONTROL MODULES - STANDARD PROCEDURE)

No >> Replace the Intrusion Transceiver Module in accordance with the Service Information.
Perform BODY VERIFICATION TEST – VER 1 (Refer to 8 - ELECTRICAL/ELECTRONIC CONTROL MODULES - STANDARD PROCEDURE)

B1A3C-INTERNAL SIREN BATTERY

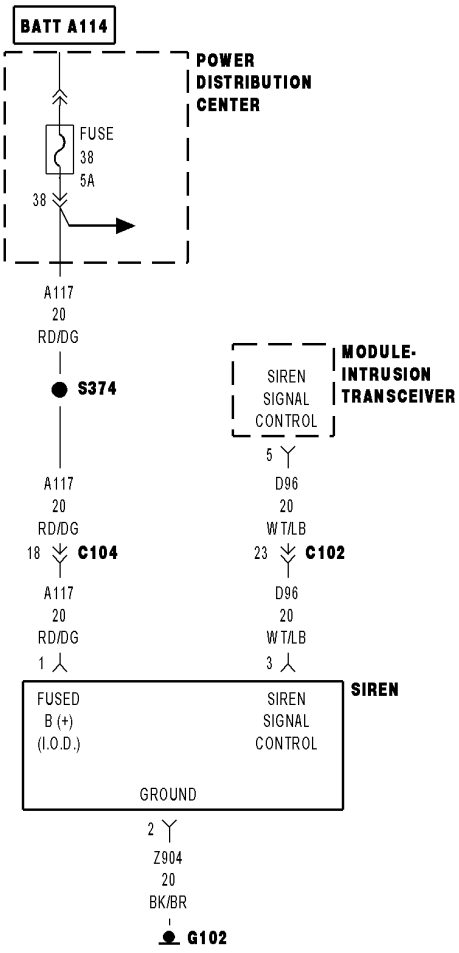

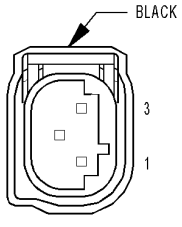

SIREN (RHD)

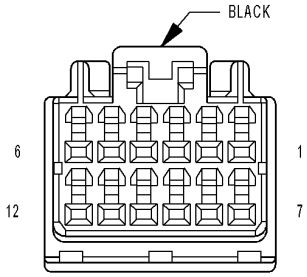

MODULE- INTRUSION TRANSCEIVER (RHD)

81742c69

For a complete wiring diagram **Refer to Section 8W**.

- **When Monitored:**
  Continuously with the engine over 600 RPM.
- **Set Condition:**
  When the internal battery within the siren does not charge as expected, the ITM sets this code.

Possible Causes
VEHICLE STORED WITH NO BATTERY VOLTAGE FOR EXTENDED PERIOD OF TIME
SIREN

Diagnostic Test

1. DETERMINING IF DTC IS CURRENT

With a scan tool, read and record DTC(s).
With the scan tool, clear DTC(s).
Start the engine and allow it to idle for 2 minutes then turn the engine off.
Using the scan tool, read DTC(s).

Does the DTC reset?

Yes >> Go To 2

No >> DTC is not active at this time. Test complete.

2. VEHICLE STORED WITH NO BATTERY VOLTAGE FOR EXTENDED PERIOD OF TIME

NOTE: If the vehicle was allowed to sit with no battery voltage for an extended period of time the back up battery located in the siren may discharge and need to be recharged.

Was the vehicle battery power just restored after the vehicle was stored with no power for an extended period of time?

Yes >> Allow the vehicle to sit with a fully charged battery for two hours then restart this procedure.

No >> Replace the Siren in accordance with the Service Information. (Refer to 8 - ELECTRICAL/ELECTRONIC CONTROL MODULES - STANDARD PROCEDURE).

B1A3D-SIREN BATTERY TAMPER / LOSS OF POWER SUPPLY

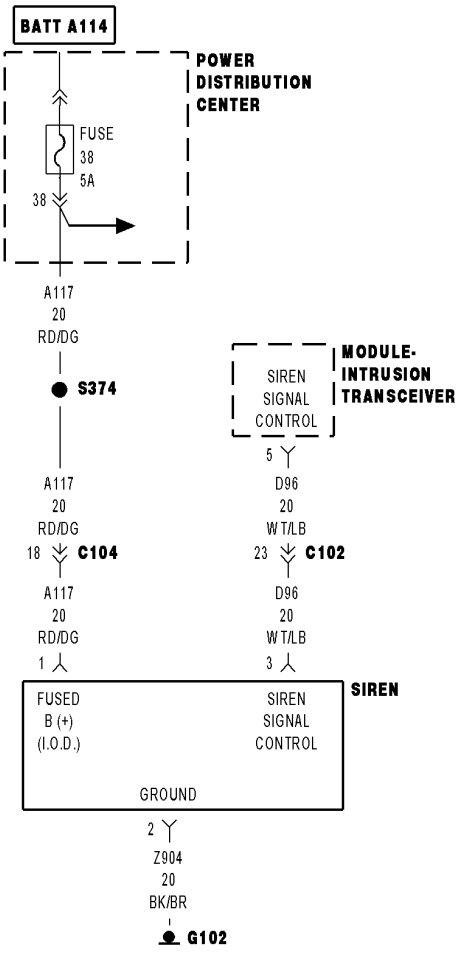

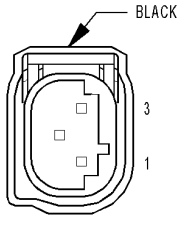

SIREN (RHD)

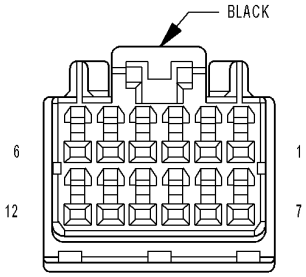

MODULE- INTRUSION TRANSCEIVER (RHD)

81742c69

For a complete wiring diagram **Refer to Section 8W**.

- **When Monitored:**
  Continuously with the VTSS armed.
- **Set Condition:**
  If the ITM detects incorrect voltage at the siren this code will set.

Possible Causes
HARNESS TAMPERING/INTERMITTENT CONDITION
SIREN GROUND OPEN
SIREN

Diagnostic Test

1. INSPECT SIREN HARNESS

Inspect the wiring harness to the siren for any signs of tampering or intermittent condition.

Were there any problems found?

Yes >> Repair wiring as necessary.
Perform BODY VERIFICATION TEST – VER 1 (Refer to 8 - ELECTRICAL/ELECTRONIC CONTROL MODULES - STANDARD PROCEDURE)

No >> Go To 2

2. DETERMINING IF DTC IS CURRENT

With a scan tool, read and record DTC(s).
With the scan tool, clear DTC(s).
Turn the ignition off and remove the key from the ignition.
Lock and close all doors to allow the VTSS to go from pre-arm to armed status and wait one minute.
Disarm the VTSS.
Using the scan tool, read DTC(s).

Does the DTC reset?

Yes >> Go To 3

No >> DTC is not active at this time. Test complete.
Perform BODY VERIFICATION TEST – VER 1 (Refer to 8 - ELECTRICAL/ELECTRONIC CONTROL MODULES - STANDARD PROCEDURE)

3. CHECK THE FUSED B(+) CIRCUIT AT THE SIREN

Turn the ignition off.
Disconnect the Siren connector.
Using a 12-volt test light connected to ground, check the Fused B(+) circuit at the siren connector.

Does the test light illuminate brightly?

Yes >> Go To 4

No >> Repair the Fused B(+) circuit for an open.
Perform BODY VERIFICATION TEST – VER 1 (Refer to 8 - ELECTRICAL/ELECTRONIC CONTROL MODULES - STANDARD PROCEDURE)

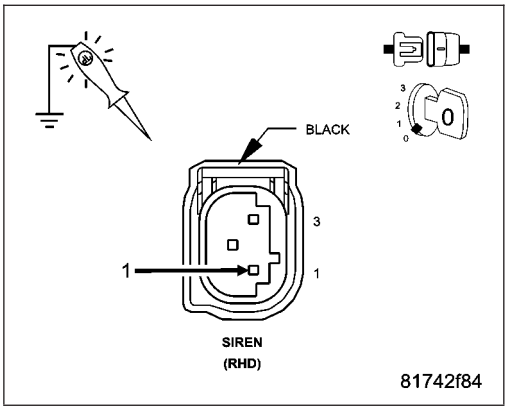

4. CHECK THE GROUND CIRCUIT AT THE SIREN

Using a 12-volt test light connected to 12-volts, check the Ground circuit at the siren connector.

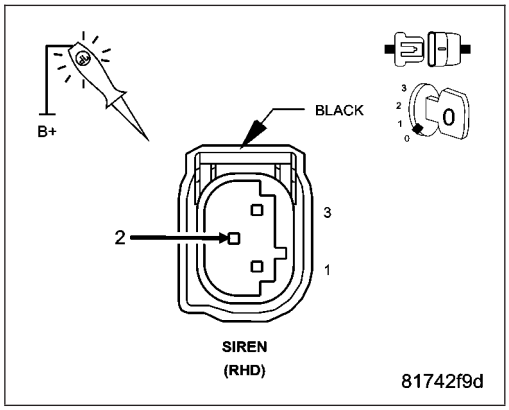

Does the test light illuminate brightly?

Yes >> Replace the Siren in accordance with the Service Information.

Perform BODY VERIFICATION TEST – VER 1 (Refer to 8 - ELECTRICAL/ELECTRONIC CONTROL MODULES - STANDARD PROCEDURE)

No >> Repair the Ground circuit for an open.

Perform BODY VERIFICATION TEST – VER 1 (Refer to 8 - ELECTRICAL/ELECTRONIC CONTROL MODULES - STANDARD PROCEDURE)

B1A3E-SIREN / ITM MISMATCH

For a complete wiring diagram **Refer to Section 8W**.

- **When Monitored:**
  While the VTSS is armed.
- **Set Condition:**
  ITM losses battery voltage.

Possible Causes
CAN B BUS COMMUNICATION PROBLEMS
INTERMITTENT LOSS OF FUSED B(+) TO THE ITM WITH THE VTSS ARMED

Diagnostic Test

1. DETERMINING IF DTC IS CURRENT

NOTE: Diagnose any related Communication DTC(s) before continuing.
With a scan tool, read and record DTC(s).
With the scan tool, clear DTC(s).
Turn the ignition off and remove the key from the ignition.
Lock and close all doors to allow the VTSS to go from pre-arm to armed status and wait one minute.
Disarm the VTSS.
Using the scan tool, read DTC(s).

Does the DTC reset?

Yes >> Check for and correct any CAN B Bus DTC's set in the ITM or other modules. Also check for intermittent loss Fused B(+) to the ITM.
Perform BODY VERIFICATION TEST – VER 1 (Refer to 8 - ELECTRICAL/ELECTRONIC CONTROL MODULES - STANDARD PROCEDURE)

No >> DTC is not active at this time. Test complete.
Perform BODY VERIFICATION TEST – VER 1 (Refer to 8 - ELECTRICAL/ELECTRONIC CONTROL MODULES - STANDARD PROCEDURE)

B1A3F-ITM ARMING SEQUENCE PERFORMANCE

For a complete wiring diagram **Refer to Section 8W**.

- **When Monitored:**
  During the VTSS pre-arm process.
- **Set Condition:**
  ITM losses battery voltage.

Possible Causes
CAN B BUS COMMUNICATION PROBLEMS
INTERMITTENT LOSS OF FUSED B(+) TO THE ITM DURING THE VTSS PRE-ARM PROCESS

Diagnostic Test

1. DETERMINING IF DTC IS CURRENT

NOTE: Diagnose any related Communication DTC(s) before continuing.

With a scan tool, read and record DTC(s).

With the scan tool, clear DTC(s).

Turn the ignition off and remove the key from the ignition.

Lock and close all doors to allow the VTSS to go from pre-arm to armed status and wait one minute.

Disarm the VTSS.

Using the scan tool, read DTC(s).

Does the DTC reset?

Yes >> Check for and correct any CAN B Bus DTC's set in the ITM or other modules. Also check for intermittent loss Fused B(+) to the ITM.
Perform BODY VERIFICATION TEST – VER 1 (Refer to 8 - ELECTRICAL/ELECTRONIC CONTROL MODULES - STANDARD PROCEDURE)

No >> DTC is not active at this time. Test complete.
Perform BODY VERIFICATION TEST – VER 1 (Refer to 8 - ELECTRICAL/ELECTRONIC CONTROL MODULES - STANDARD PROCEDURE)

B1A41-SECURITY TRANSMITTER SENSOR CIRCUIT OPEN

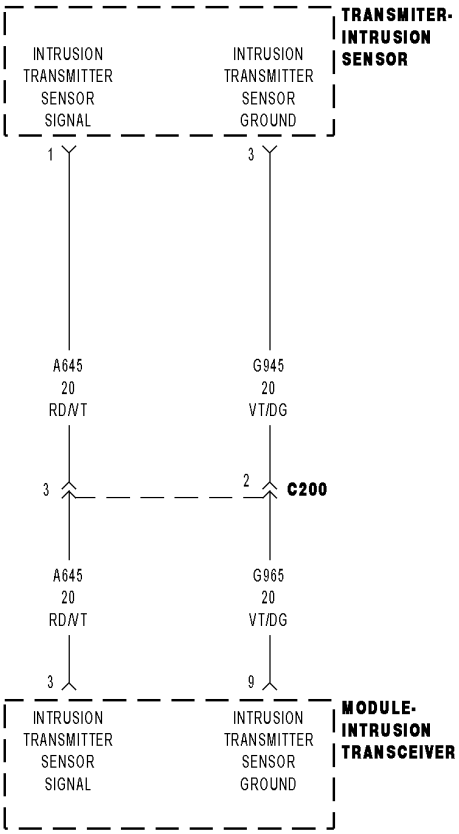

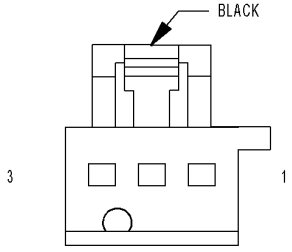

TRANSMITTER-
INTRUSION
SENSOR
(RHD)

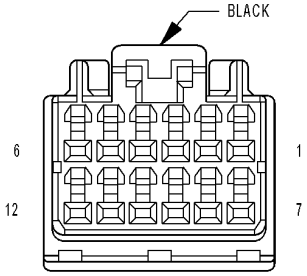

MODULE-
INTRUSION
TRANSCEIVER
(RHD)

8174226a

For a complete wiring diagram **Refer to Section 8W**.

- **When Monitored:**
  When the VTSS is armed.
- **Set Condition:**
  If the voltage current is below a specified range this DTC will set.

Possible Causes
(A645) INTRUSION TRANSMITTER SENSOR SIGNAL CIRCUIT OPEN
(G945) INTRUSION TRANSMITTER SENSOR GROUND CIRCUIT OPEN
INTRUSION SENSOR TRANSMITTER OPEN/MISSING
INTRUSION TRANSCEIVER MODULE

Diagnostic Test

1. TEST FOR INTERMITTENT CONDITION

Turn the ignition on.
With the scan tool, record and erase DTC's.
Turn the ignition off and remove the key from the ignition.
Close all doors and arm the VTSS and wait 1 minute.
Disarm the VTSS turn the ignition on and wait 1 minute.
With the scan tool, read DTC's.

Does the scan tool display B1A41–SECURITY TRANSMITTER SENSOR CIRCUIT OPEN?

Yes >> Go To 2

No >> The conditions that caused this code to set are not present at this time. Using the wiring diagram/schematic as a guide, inspect the wiring and connectors.
Perform BODY VERIFICATION TEST – VER 1 (Refer to 8 - ELECTRICAL/ELECTRONIC CONTROL MODULES - STANDARD PROCEDURE)

2. CHECK THE (A645) INTRUSION TRANSMITTER SENSOR SIGNAL CIRCUIT VOLTAGE

Disconnect the Intrusion Sensor Transmitter connector.

NOTE: Check connectors - Clean/repair as necessary.
Turn the ignition on.
With the scan tool actuate the Intrusion Sensor Transmitter.
Measure the voltage between (A645) Intrusion Sensor Signal circuit and (G945) Intrusion Transmitter Sensor Ground circuit.

Is the voltage above 10.0 volts

Yes >> Go To 3

No >> Go To 4

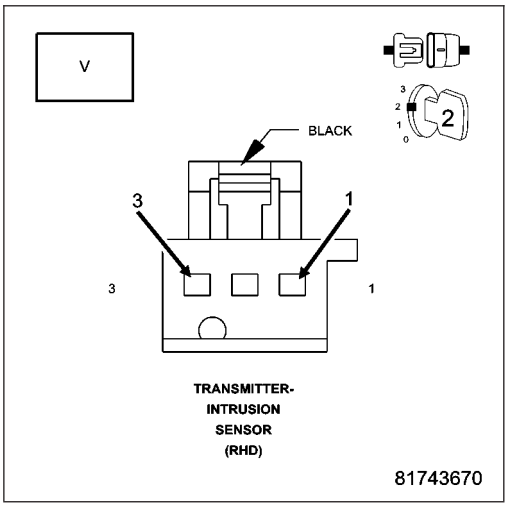

3. CHECK THE INTRUSION SENSOR TRANSMITTER

Turn the ignition is off.
Install a known good Intrusion Sensor Transmitter.
Turn the ignition on.
With the scan tool erase DTC's.
Turn the ignition off and remove the key from the ignition.
Close all doors and arm the VTSS and wait 1 minute.
Disarm the VTSS turn the ignition on and wait 1 minute.
With the scan tool, read DTC's.

Does the scan tool display B1A41–SECURITY TRANSMITTER SENSOR CIRCUIT OPEN?

Yes >> Replace the Intrusion Transceiver Module in accordance with the Service Information.
Perform BODY VERIFICATION TEST – VER 1 (Refer to 8 - ELECTRICAL/ELECTRONIC CONTROL MODULES - STANDARD PROCEDURE)

No >> Replace the original Intrusion Sensor Transmitter.
Perform BODY VERIFICATION TEST – VER 1 (Refer to 8 - ELECTRICAL/ELECTRONIC CONTROL MODULES - STANDARD PROCEDURE)

4. CHECK THE (A645) INTRUSION TRANSMITTER SENSOR SIGNAL WIRE

Turn the ignition is off.
Disconnect the Intrusion Transceiver Module connector.
Measure the resistance of the (A645) Intrusion Transmitter Sensor Signal circuit between the Intrusion Sensor Transmitter connector and the Intrusion Transceiver Module connector.

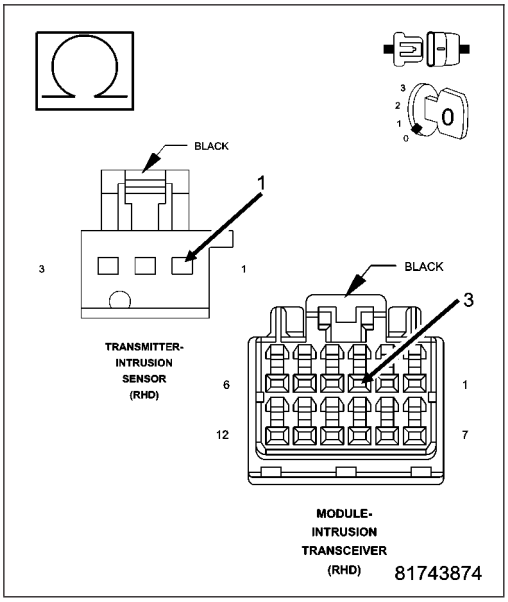

Is the resistance below 5.0 ohms?

Yes >> Repair the (A645) Intrusion Transmitter Sensor Signal circuit for an open.
Perform BODY VERIFICATION TEST – VER 1 (Refer to 8 - ELECTRICAL/ELECTRONIC CONTROL MODULES - STANDARD PROCEDURE)

No >> Go To 5

5. CHECK THE (G945) INTRUSION TRANSMITTER SENSOR GROUND WIRE FOR AN OPEN

Ensure Ignition is off.

Measure the resistance of the (G945) Intrusion Transmitter Sensor Ground circuit from the Intrusion Sensor Transmitter connector to the Intrusion Transceiver Module connector.

Is the resistance below 5.0 ohms?

Yes >> Replace the Intrusion Transceiver Module in accordance with the Service Information.

Perform BODY VERIFICATION TEST – VER 1 (Refer to 8 - ELECTRICAL/ELECTRONIC CONTROL MODULES - STANDARD PROCEDURE)

No >> Repair the (G945) Intrusion Transmitter Sensor Ground circuit for an open.

Perform BODY VERIFICATION TEST – VER 1 (Refer to 8 - ELECTRICAL/ELECTRONIC CONTROL MODULES - STANDARD PROCEDURE)

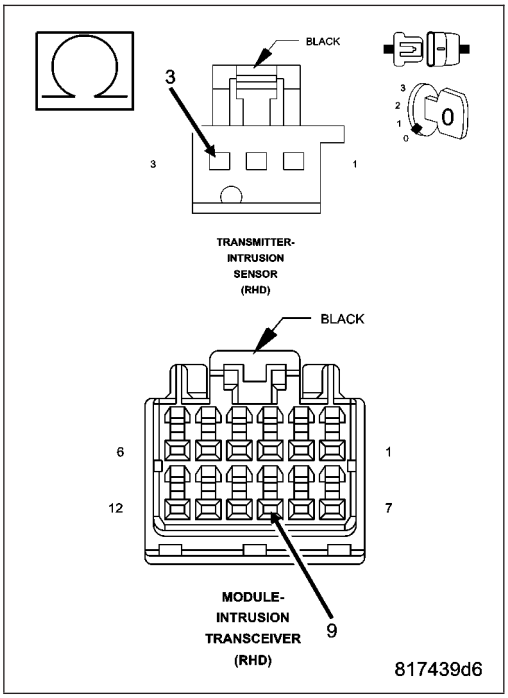

B1A42-SECURITY TRANSMITTER SENSOR CIRCUIT SHORTED TOGETHER

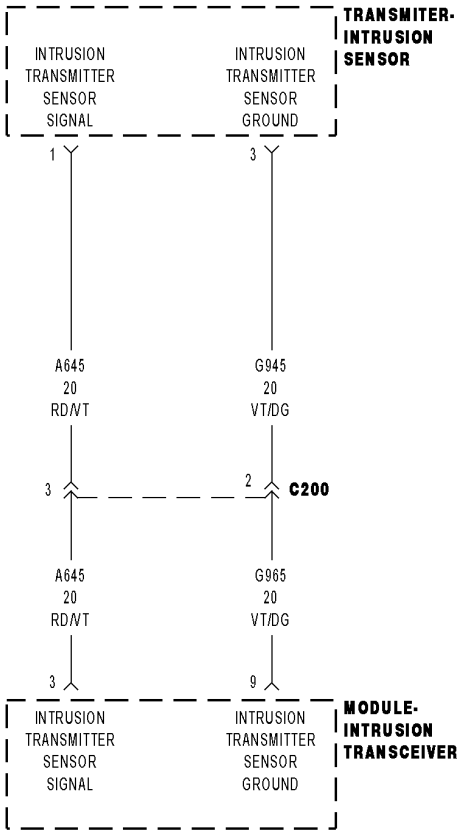

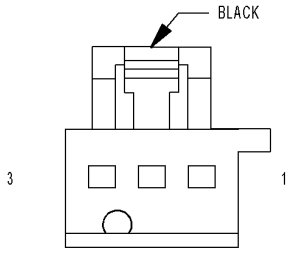

TRANSMITTER-
INTRUSION
SENSOR
(RHD)

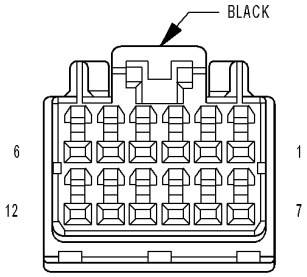

MODULE-
INTRUSION
TRANSCEIVER
(RHD)

8174226a

For a complete wiring diagram **Refer to Section 8W**.

- **When Monitored:**
  During the VTSS pre-arm process.
- **Set Condition:**
  If the voltage current is below a specified range this DTC will set.

Possible Causes
INTRUSION SENSOR TRANSMITTER
(A645) INTRUSION TRANSMITTER SENSOR SIGNAL SHORTED TO (G945) INTRUSION TRANSMITTER SENSOR GROUND
INTRUSION TRANSCEIVER MODULE

Diagnostic Test

1. DETERMINING IF DTC IS CURRENT

NOTE: Diagnose any related Communication DTC(s) before continuing.
With a scan tool, read and record DTC(s).
With the scan tool, clear DTC(s).
Turn the ignition off and remove the key from the ignition.
Lock and close all doors to allow the VTSS to go from pre-arm to armed status and wait one minute.
Disarm the VTSS.
Using the scan tool, read DTC(s).

Does the DTC reset?

Yes >> Go To 2

No >> DTC is not active at this time. Test complete.
Perform BODY VERIFICATION TEST – VER 1 (Refer to 8 - ELECTRICAL/ELECTRONIC CONTROL MODULES - STANDARD PROCEDURE)

2. INTRUSION SENSOR TRANSMITTER

Disconnect the Intrusion Sensor Transmitter connector.

NOTE: Check connectors - Clean/repair as necessary.
Connect a known good Intrusion Sensor Transmitter.
Turn the ignition on.
With the scan tool, clear DTC(s).
Turn the ignition off and remove the key from the ignition.
Lock and close all doors to allow the VTSS to go from pre-arm to armed status and wait one minute.
Disarm the VTSS.
Using the scan tool, read DTC(s).

Does the DTC reset?

Yes >> Go To 3

No >> Replace the original Intrusion Sensor Transmitter.
Perform BODY VERIFICATION TEST – VER 1 (Refer to 8 - ELECTRICAL/ELECTRONIC CONTROL MODULES - STANDARD PROCEDURE)

3. CHECK THE (A645) INTRUSION TRANSMITTER SENSOR SIGNAL WIRE FOR A SHORT TO (G945) INTRUSION TRANSMITTER SENSOR GROUND

Turn the ignition is off.

Disconnect the Intrusion Sensor Transceiver connector.

Disconnect the Intrusion Transceiver Module connector.

Measure the resistance between the (A645) Intrusion Transmitter Sensor Signal circuit to the (G945) Intrusion Transmitter Sensor Ground circuit in the Intrusion Sensor Transmitter connector.

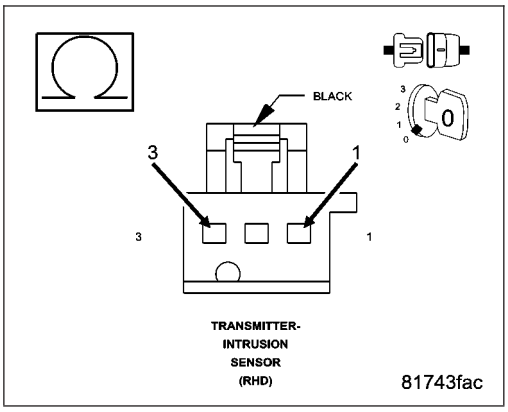

Is the resistance below 5.0 ohms?

Yes >> Repair the (A645) Intrusion Transmitter Sensor Signal circuit for a short to the (G945) Intrusion Transmitter Sensor Ground circuit.

Perform BODY VERIFICATION TEST – VER 1 (Refer to 8 - ELECTRICAL/ELECTRONIC CONTROL MODULES - STANDARD PROCEDURE)

No >> Replace the Intrusion Transceiver Module in accordance with the Service Information.

Perform BODY VERIFICATION TEST – VER 1 (Refer to 8 - ELECTRICAL/ELECTRONIC CONTROL MODULES - STANDARD PROCEDURE)

B1A43-SECURITY TRANSMITTER SENSOR RETURN CIRCUIT LOW

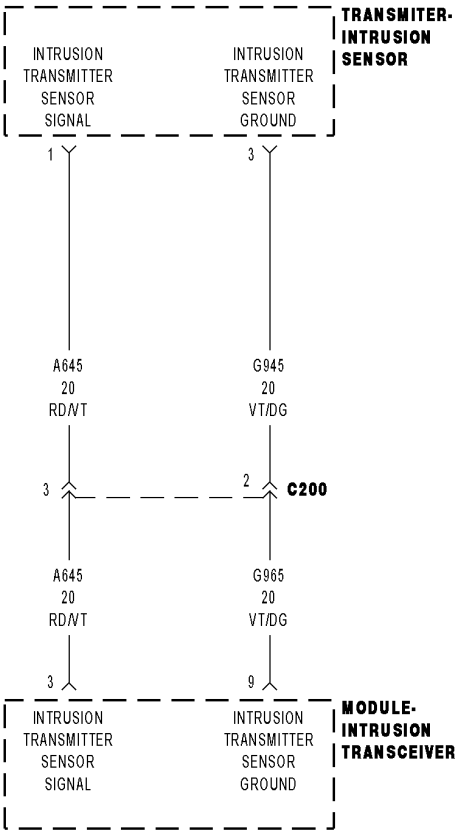

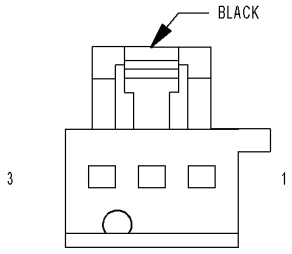

TRANSMITTER-
INTRUSION
SENSOR
(RHD)

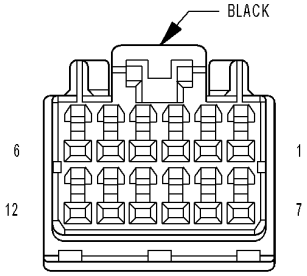

MODULE-
INTRUSION
TRANSCEIVER
(RHD)

8174226a

For a complete wiring diagram **Refer to Section 8W**.

- **When Monitored:**
  During the VTSS pre-arm process.
- **Set Condition:**
  The Intrusion Transceiver Module detects a short to ground condition on the sensor ground circuit.

Possible Causes
(G945) INTRUSION TRANSMITTER SENSOR GROUND CIRCUIT SHORTED TO GROUND
INTRUSION TRANSCEIVER MODULE

Diagnostic Test

1. DETERMINING IF DTC IS CURRENT

NOTE: Diagnose any related Communication DTC(s) before continuing.
With a scan tool, read and record DTC(s).
With the scan tool, clear DTC(s).
Turn the ignition off and remove the key from the ignition.
Lock and close all doors to allow the VTSS to go from pre-arm to armed status and wait one minute.
Disarm the VTSS.
Using the scan tool, read DTC(s).

Does the DTC reset?

Yes >> Go To 2
Perform BODY VERIFICATION TEST – VER 1 (Refer to 8 - ELECTRICAL/ELECTRONIC CONTROL MODULES - STANDARD PROCEDURE)

No >> DTC is not active at this time. Test complete.
Perform BODY VERIFICATION TEST – VER 1 (Refer to 8 - ELECTRICAL/ELECTRONIC CONTROL MODULES - STANDARD PROCEDURE)

2. CHECK THE (G945) SENSOR GROUND CIRCUIT SHORTED TO GROUND

Turn the ignition is off.
Disconnect the Intrusion Sensor Transmitter connector.
Disconnect the Intrusion Transceiver Module connector.
Measure the resistance between ground and the (G945) Intrusion Transmitter Sensor Ground circuit at the Intrusion Sensor Transmitter connector.

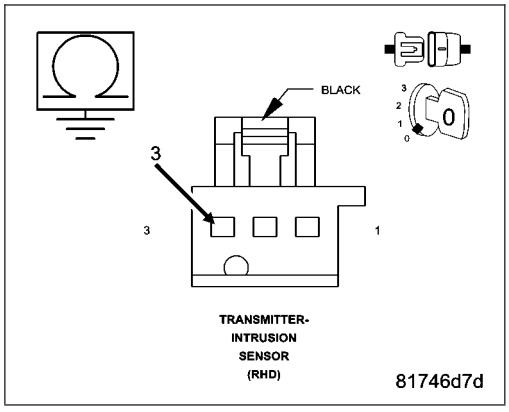

Is the resistance below 5.0 ohms?

Yes >> Repair the (G945) Intrusion Transmitter Sensor Ground circuit for a short to ground.
Perform BODY VERIFICATION TEST – VER 1 (Refer to 8 - ELECTRICAL/ELECTRONIC CONTROL MODULES - STANDARD PROCEDURE)

No >> Replace the Intrusion Transceiver Module in accordance with the Service Information.
Perform BODY VERIFICATION TEST – VER 1 (Refer to 8 - ELECTRICAL/ELECTRONIC CONTROL MODULES - STANDARD PROCEDURE)

B1A44-SECURITY RECEIVER SENSOR CIRCUIT OPEN

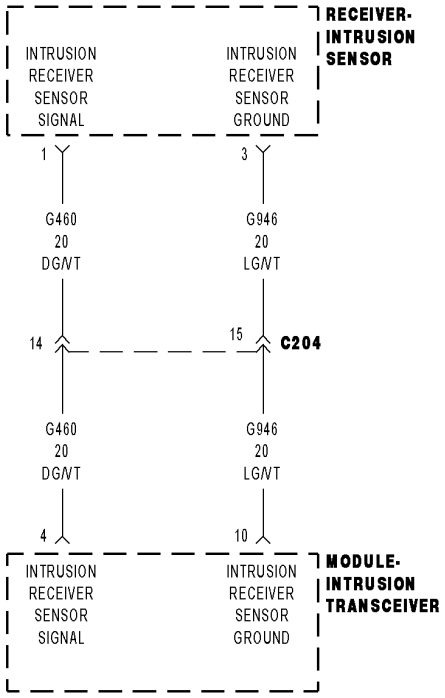

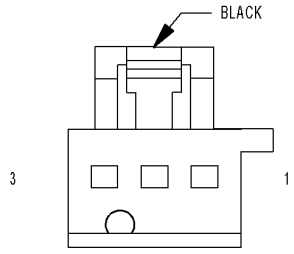

TRANSMITTER-
INTRUSION
SENSOR
(RHD)

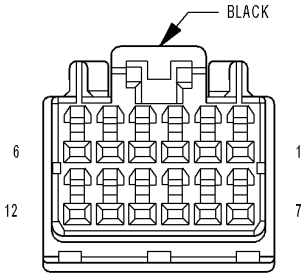

MODULE-
INTRUSION
TRANSCEIVER
(RHD)

81742733

For a complete wiring diagram **Refer to Section 8W**.

- **When Monitored:**
  When the VTSS is armed.
- **Set Condition:**
  If the voltage current is below a specified range this DTC will set.

Possible Causes
(G460) INTRUSION RECEIVER SENSOR SIGNAL CIRCUIT OPEN
(G946) INTRUSION RECEIVER SENSOR GROUND CIRCUIT OPEN
INTRUSION SENSOR RECEIVER OPEN/MISSING
INTRUSION TRANSCEIVER MODULE

Diagnostic Test

1. TEST FOR INTERMITTENT CONDITION

Turn the ignition on.
With the scan tool, record and erase DTC's.
Turn the ignition off and remove the key from the ignition.
Close all doors and arm the VTSS and wait one minute.
Disarm the VTSS turn the ignition on and wait one minute.
With the scan tool, read DTC's.

Does the scan tool display B1A44–SECURITY RECEIVER SENSOR CIRCUIT OPEN?

Yes >> Go To 2

No >> The conditions that caused this code to set are not present at this time. Using the wiring diagram/schematic as a guide, inspect the wiring and connectors.
Perform BODY VERIFICATION TEST – VER 1 (Refer to 8 - ELECTRICAL/ELECTRONIC CONTROL MODULES - STANDARD PROCEDURE)

2. CHECK THE (G460) INTRUSION RECEIVER SENSOR SIGNAL CIRCUIT VOLTAGE

Disconnect the Intrusion Sensor Receiver connector.

NOTE: Check connectors - Clean/repair as necessary.
Turn the ignition on.
With the scan tool actuate the Intrusion Sensor Receiver.
Measure the voltage between (G460) Intrusion Receiver Sensor Signal circuit and (G946) Intrusion Receiver Sensor Ground circuit.

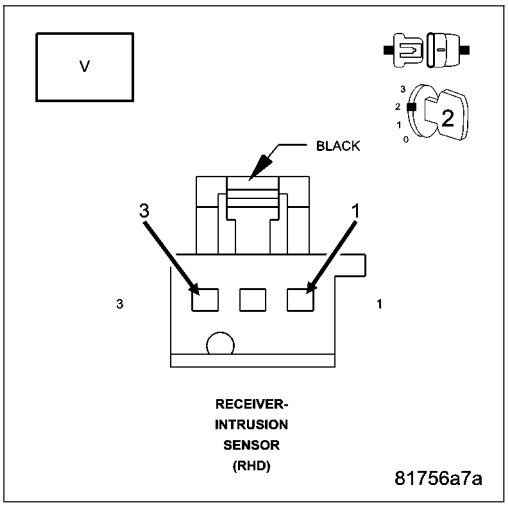

Is the voltage above 10.0 volts

Yes >> Go To 3

No >> Go To 4

3. CHECK THE INTRUSION SENSOR RECEIVER

Turn the ignition off.
Install a known good Intrusion Sensor Receiver.
Turn the ignition on.
With the scan tool erase DTC's.
Turn the ignition off and remove the key from the ignition.
Close all doors and arm the VTSS and wait one minute.
Disarm the VTSS turn the ignition on and wait one minute.
With the scan tool, read DTC's.

Does the scan tool display B1A44–SECURITY RECEIVER SENSOR CIRCUIT OPEN?

Yes >> Replace the Intrusion Transceiver Module in accordance with the Service Information.
Perform BODY VERIFICATION TEST – VER 1 (Refer to 8 - ELECTRICAL/ELECTRONIC CONTROL MODULES - STANDARD PROCEDURE)

No >> Replace the original Intrusion Sensor Receiver.
Perform BODY VERIFICATION TEST – VER 1 (Refer to 8 - ELECTRICAL/ELECTRONIC CONTROL MODULES - STANDARD PROCEDURE)

4. CHECK THE (G460) INTRUSION RECEIVER SENSOR SIGNAL WIRE

Turn the ignition off.
Disconnect the Intrusion Transceiver Module connector.
Measure the resistance of the (G460) Intrusion Receiver Sensor Signal circuit between the Intrusion Sensor Receiver connector and the Intrusion Transceiver Module connector.

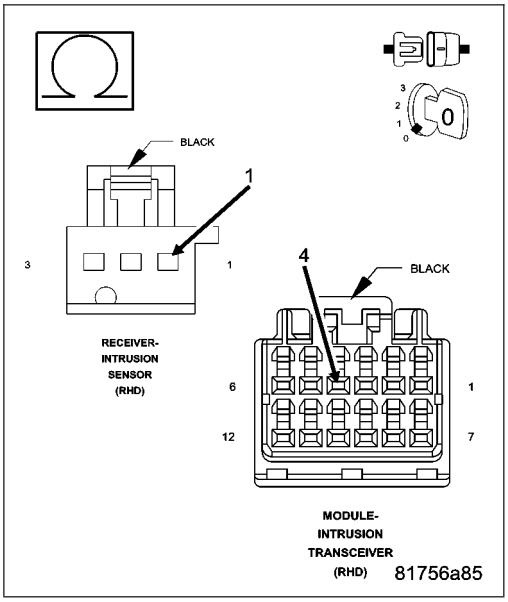

Is the resistance below 5.0 ohms?

Yes >> Repair the (G460) Intrusion Receiver Sensor Signal circuit for an open.
Perform BODY VERIFICATION TEST – VER 1 (Refer to 8 - ELECTRICAL/ELECTRONIC CONTROL MODULES - STANDARD PROCEDURE)

No >> Go To 5
Perform BODY VERIFICATION TEST – VER 1 (Refer to 8 - ELECTRICAL/ELECTRONIC CONTROL MODULES - STANDARD PROCEDURE)

5. CHECK THE (G946) SENSOR GROUND WIRE FOR AN OPEN

Ensure Ignition is off.

Measure the resistance of the (G946) Intrusion Receiver Sensor Ground circuit from the Intrusion Sensor Receiver connector to the Intrusion Transceiver Module connector.

Is the resistance below 5.0 ohms?

Yes >> Replace the Intrusion Transceiver Module in accordance with the Service Information.

Perform BODY VERIFICATION TEST – VER 1 (Refer to 8 - ELECTRICAL/ELECTRONIC CONTROL MODULES - STANDARD PROCEDURE)

No >> Repair the (G946) Intrusion Receiver Sensor Ground circuit for an open.

Perform BODY VERIFICATION TEST – VER 1 (Refer to 8 - ELECTRICAL/ELECTRONIC CONTROL MODULES - STANDARD PROCEDURE)

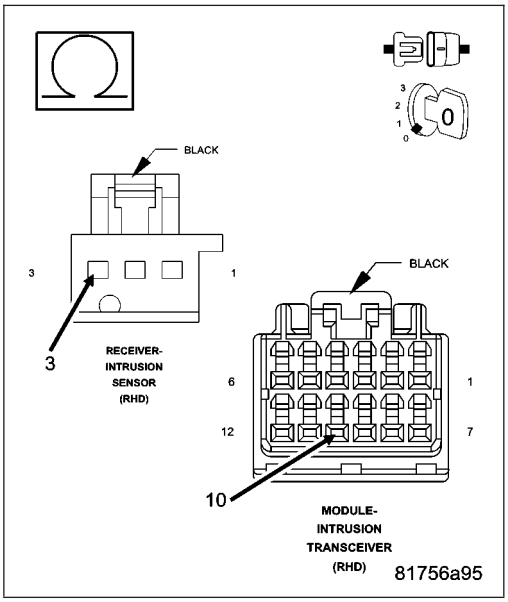

B1A45-SECURITY RECEIVER SENSOR CIRCUIT SHORTED TOGETHER

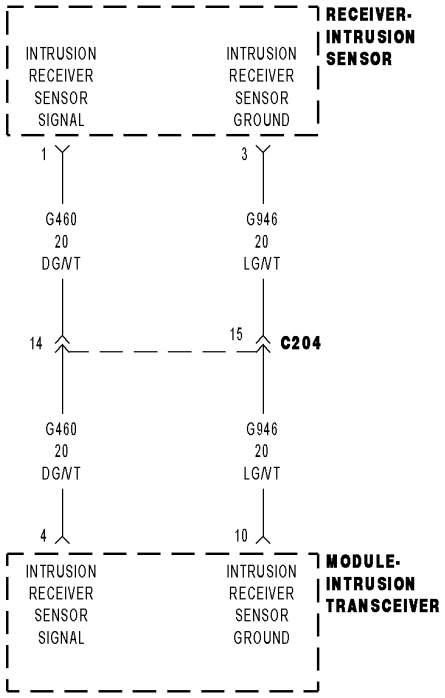

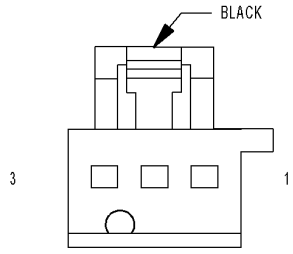

TRANSMITTER-
INTRUSION
SENSOR
(RHD)

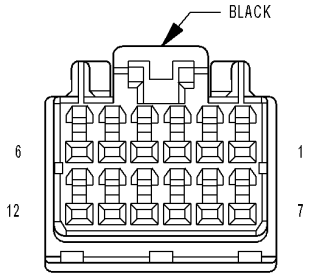

MODULE-
INTRUSION
TRANSCEIVER
(RHD)

81742733

For a complete wiring diagram **Refer to Section 8W**.

- **When Monitored:**
  During the VTSS pre-arm process.
- **Set Condition:**
  If the voltage current is below a specified range this DTC will set.

Possible Causes
INTRUSION SENSOR RECEIVER
(G460) INTRUSION RECEIVER SENSOR SIGNAL SHORTED TO (G946) INTRUSION RECEIVER SENSOR GROUND
INTRUSION TRANSCEIVER MODULE

Diagnostic Test

1. DETERMINING IF DTC IS CURRENT

NOTE: Diagnose any related Communication DTC(s) before continuing.
With a scan tool, read and record DTC(s).
With the scan tool, clear DTC(s).
Turn the ignition off and remove the key from the ignition.
Lock and close all doors to allow the VTSS to go from pre-arm to armed status and wait one minute.
Disarm the VTSS.
Using the scan tool, read DTC(s).

Does the DTC reset?

Yes >> Go To 2

No >> DTC is not active at this time. Test complete.
Perform BODY VERIFICATION TEST – VER 1 (Refer to 8 - ELECTRICAL/ELECTRONIC CONTROL MODULES - STANDARD PROCEDURE)

2. INTRUSION SENSOR RECEIVER

Disconnect the Intrusion Sensor Receiver connector.

NOTE: Check connectors - Clean/repair as necessary.
Connect a known good Intrusion Sensor Receiver.
Turn the ignition on.
With the scan tool, clear DTC(s).
Turn the ignition off and remove the key from the ignition.
Lock and close all doors to allow the VTSS to go from pre-arm to armed status and wait one minute.
Disarm the VTSS.
Using the scan tool, read DTC(s).

Does the DTC reset?

Yes >> Go To 3

No >> Replace the original Intrusion Sensor Receiver.
Perform BODY VERIFICATION TEST – VER 1 (Refer to 8 - ELECTRICAL/ELECTRONIC CONTROL MODULES - STANDARD PROCEDURE)

3. CHECK THE (G460) INTRUSION RECEIVER SENSOR SIGNAL WIRE FOR A SHORT TO (G946) INTRUSION RECEIVER SENSOR GROUND

Turn the ignition off.

Disconnect the Intrusion Sensor Transceiver connector.

Disconnect the Intrusion Transceiver Module connector.

Measure the resistance between the (G460) Intrusion Receiver Sensor Signal circuit to the (G946) Intrusion Receiver Sensor Ground circuit in the Intrusion Sensor Receiver connector.

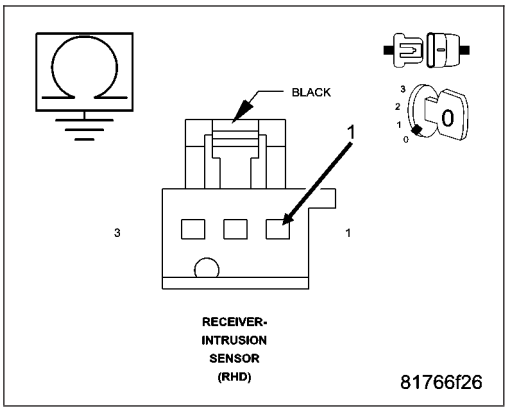

Is the resistance below 5.0 ohms?

Yes >> Repair the (G460) Intrusion Receiver Sensor Signal circuit for a short to the (G946) Sensor Ground circuit.

Perform BODY VERIFICATION TEST – VER 1 (Refer to 8 - ELECTRICAL/ELECTRONIC CONTROL MODULES - STANDARD PROCEDURE)

No >> Replace the Intrusion Transceiver Module in accordance with the Service Information.

Perform BODY VERIFICATION TEST – VER 1 (Refer to 8 - ELECTRICAL/ELECTRONIC CONTROL MODULES - STANDARD PROCEDURE)

B1A46-SECURITY RECEIVER SENSOR RETURN CIRCUIT LOW

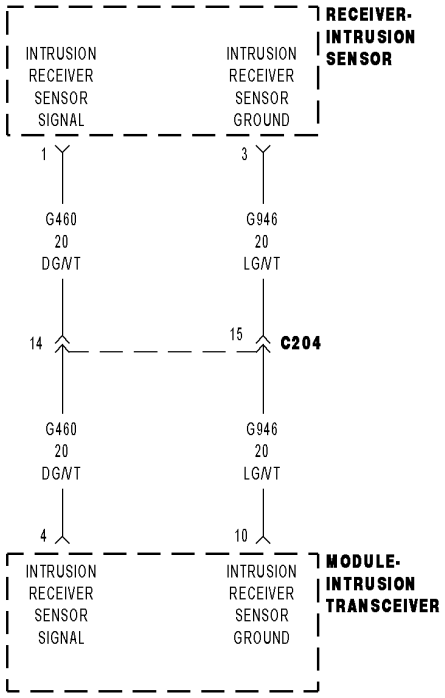

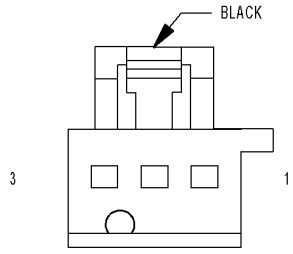

TRANSMITTER-
INTRUSION
SENSOR
(RHD)

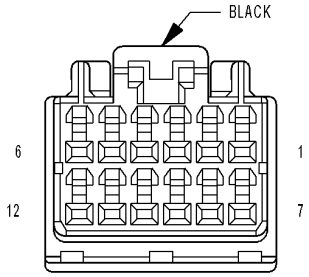

MODULE-
INTRUSION
TRANSCEIVER
(RHD)

81742733

For a complete wiring diagram **Refer to Section 8W**.

- **When Monitored:**
  During the VTSS pre-arm process.
- **Set Condition:**
  The Intrusion Transceiver Module detects a short to ground condition on the sensor ground circuit.

Possible Causes
(946) INTRUSION RECEIVER SENSOR GROUND CIRCUIT SHORTED TO GROUND
INTRUSION TRANSCEIVER MODULE

Diagnostic Test

1. DETERMINING IF DTC IS CURRENT

NOTE: Diagnose any related Communication DTC(s) before continuing.
With a scan tool, read and record DTC(s).
With the scan tool, clear DTC(s).
Turn the ignition off and remove the key from the ignition.
Lock and close all doors to allow the VTSS to go from pre-arm to armed status and wait one minute.
Disarm the VTSS.
Using the scan tool, read DTC(s).

Does the DTC reset?

Yes >> Go to 2
Perform BODY VERIFICATION TEST – VER 1 (Refer to 8 - ELECTRICAL/ELECTRONIC CONTROL MODULES - STANDARD PROCEDURE)

No >> DTC is not active at this time. Test complete.
Perform BODY VERIFICATION TEST – VER 1 (Refer to 8 - ELECTRICAL/ELECTRONIC CONTROL MODULES - STANDARD PROCEDURE)

2. CHECK THE (G946) INTRUSION RECEIVER SENSOR GROUND CIRCUIT SHORTED TO GROUND

Turn the ignition off.
Disconnect the Intrusion Sensor Receiver connector.
Disconnect the Intrusion Transceiver Module connector.
Measure the resistance between ground and the (G946) Intrusion Receiver Sensor Ground circuit at the Intrusion Sensor Receiver connector.

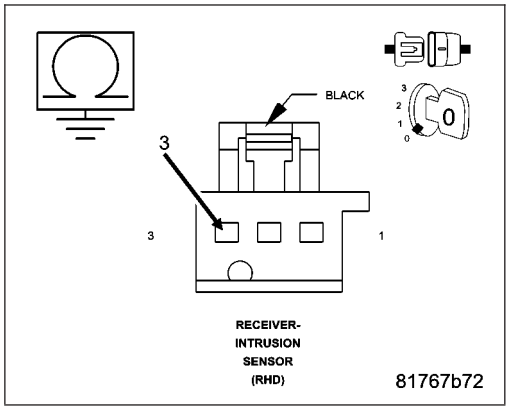

Is the resistance below 5.0 ohms?

Yes >> Repair the (G946) Intrusion Receiver Sensor Ground circuit for a short to ground.
Perform BODY VERIFICATION TEST – VER 1 (Refer to 8 - ELECTRICAL/ELECTRONIC CONTROL MODULES - STANDARD PROCEDURE)

No >> Replace the Intrusion Transceiver Module in accordance with the Service Information.
Perform BODY VERIFICATION TEST – VER 1 (Refer to 8 - ELECTRICAL/ELECTRONIC CONTROL MODULES - STANDARD PROCEDURE)

B1A47-SECURITY TRANSMITTER/RECEIVER SENSOR RETURN CIRCUIT HIGH

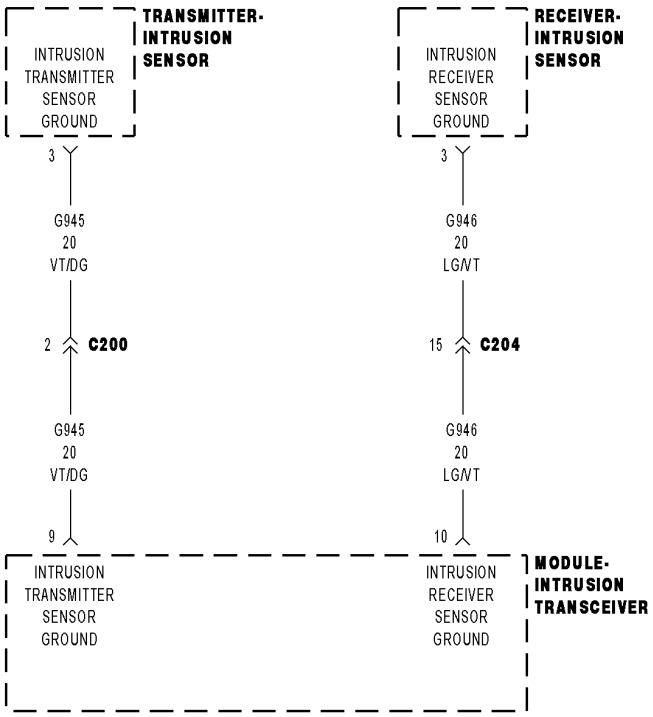

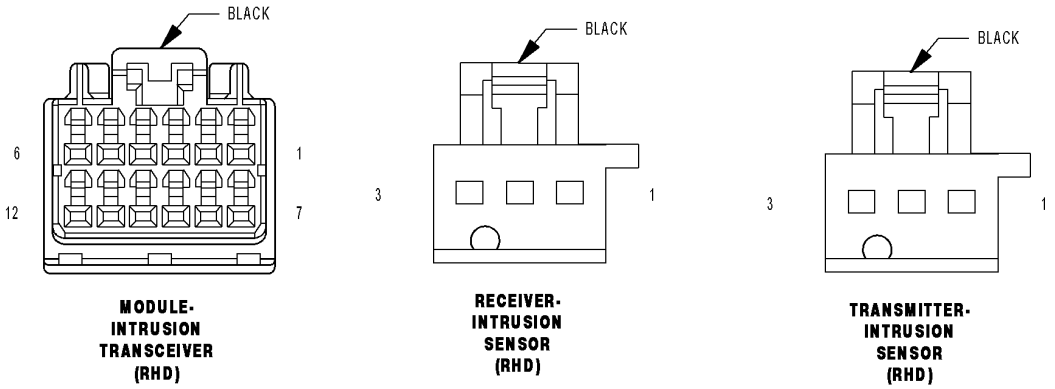

81768439

For a complete wiring diagram **Refer to Section 8W**.

- **When Monitored:**
  During the VTSS pre-arm process.
- **Set Condition:**
  The Intrusion Transceiver Module detects a short to battery condition on the sensor ground circuit.

Possible Causes
(G945) INTRUSION TRANSMITTER SENSOR GROUND CIRCUIT SHORTED TO BATTERY
(G946) INTRUSION RECEIVER SENSOR GROUND CIRCUIT SHORTED TO BATTERY
INTRUSION TRANSCEIVER MODULE

Diagnostic Test

1. DETERMINING IF DTC IS CURRENT

NOTE: Diagnose any related Communication DTC(s) before continuing.
With a scan tool, read and record DTC(s).
With the scan tool, clear DTC(s).
Turn the ignition off and remove the key from the ignition.
Lock and close all doors to allow the VTSS to go from pre-arm to armed status and wait one minute.
Disarm the VTSS.
Using the scan tool, read DTC(s).

Does the DTC reset?

Yes >> Go to 2

No >> DTC is not active at this time. Test complete.
Perform BODY VERIFICATION TEST – VER 1 (Refer to 8 - ELECTRICAL/ELECTRONIC CONTROL MODULES - STANDARD PROCEDURE)

2. CHECK THE (G946) INTRUSION RECEIVER SENSOR GROUND CIRCUIT SHORT TO BATTERY

Turn the ignition off.
Disconnect the Intrusion Sensor Receiver connector.
Disconnect the Intrusion Transceiver Module connector.
Turn the ignition on.
Measure the voltage of the (G946) Intrusion Receiver Sensor Ground circuit in the Intrusion Sensor Receiver connector.

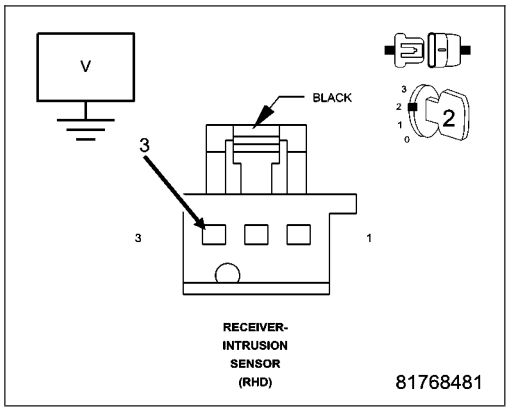

Is there any voltage present?

Yes >> Repair the (G946) Intrusion Receiver Sensor Ground circuit for a short to voltage.
Perform BODY VERIFICATION TEST – VER 1 (Refer to 8 - ELECTRICAL/ELECTRONIC CONTROL MODULES - STANDARD PROCEDURE)

No >> Go To 3

3. CHECK THE (G945) SENSOR GROUND CIRCUIT SHORT TO BATTERY

Turn the ignition off.

Disconnect the Intrusion Sensor Transmitter connector.

Turn the ignition on.

Measure the voltage of the (G945) Intrusion Transmitter Sensor Ground circuit in the Intrusion Sensor Transmitter connector.

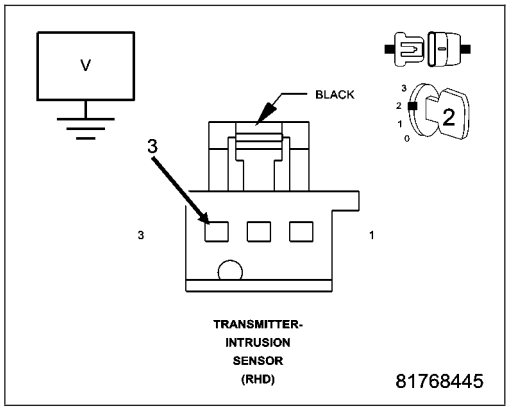

Is there any voltage present?

Yes >> Repair the (G945) Transmitter Sensor Ground circuit for a short to voltage.

Perform BODY VERIFICATION TEST – VER 1 (Refer to 8 - ELECTRICAL/ELECTRONIC CONTROL MODULES - STANDARD PROCEDURE)

No >> Replace the Intrusion Transceiver Module in accordance with the Service Information.

Perform BODY VERIFICATION TEST – VER 1 (Refer to 8 - ELECTRICAL/ELECTRONIC CONTROL MODULES - STANDARD PROCEDURE)

B2101-IGNITION RUN/START INPUT LOW

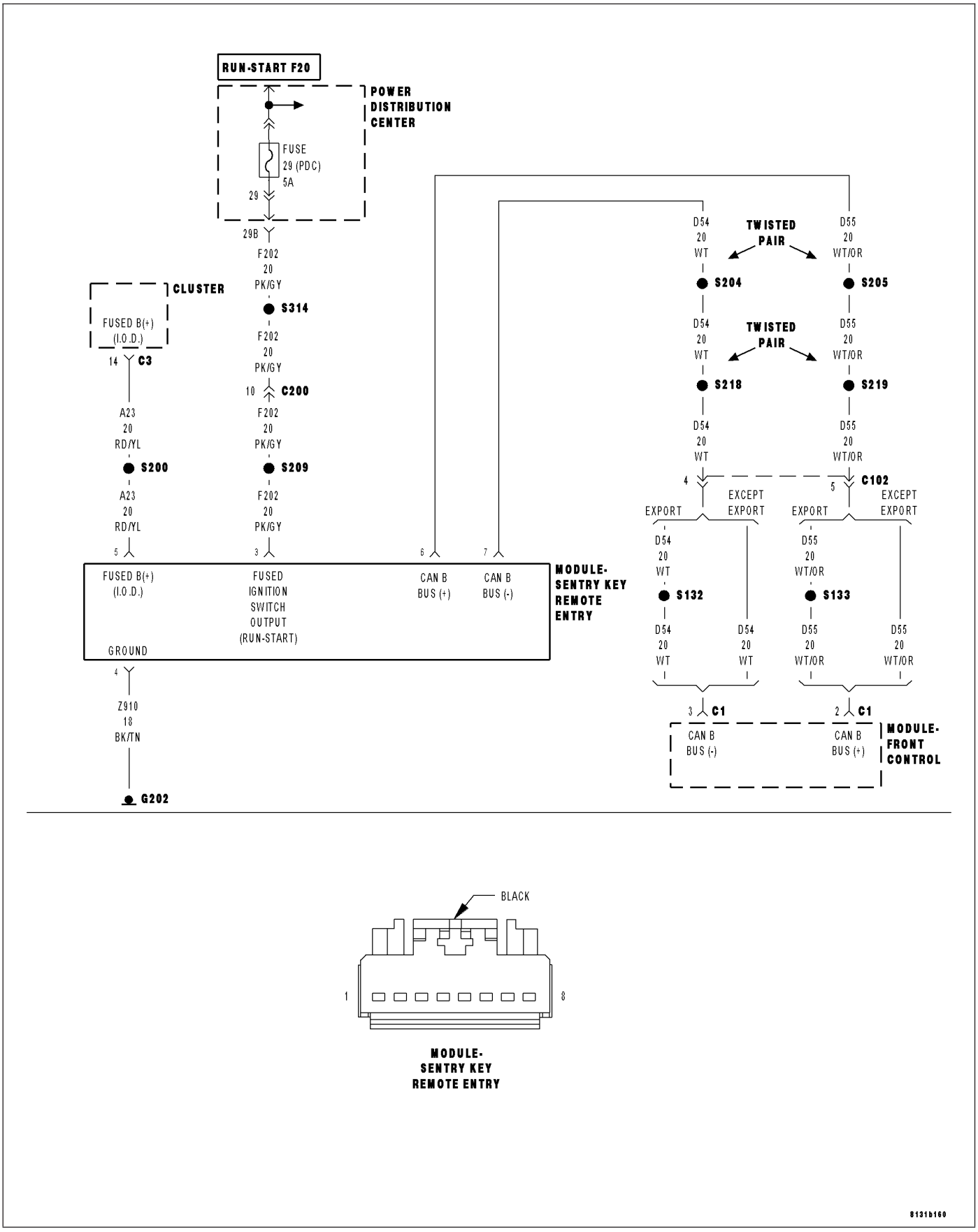

MODULE-
SENTRY KEY
REMOTE ENTRY

For a complete wiring diagram **Refer to Section 8W**.

- **When Monitored:**
  With the ignition switch on.
- **Set Condition:**
  The SKREEM has detected the ignition switch input voltage below a calibrated value.

Possible Causes
FUSED IGNITION SWITCH OUTPUT (RUN-START) CIRCUIT OPEN
SKREEM

Diagnostic Test

1. DETERMINING IF DTC IS CURRENT

NOTE: Diagnose any related Powertrain DTC(s) before continuing.
With a scan tool, read and record DTC(s).
With the scan tool, clear DTC(s).
Perform 5 ignition cycles, leaving the ignition switch on for a minimum of 90 seconds per cycle.
Using the scan tool, read DTC(s).

Does the DTC reset?

Yes >> Go To 3

No >> Go to 2

2. INTERMITTENT CONDITION

NOTE: Check for any of the follow conditions:
- **Poor wire to terminal connection**
- **Corroded terminals**
- **Backed out or loose terminals**
- **Broken wire internal to the insulation**
- **Dirty (partial) module ground**

With the ignition on, wiggle the related wires.
Using a scan tool, read DTC(s).

Does the DTC reset?

Yes >> Repair the wiring as necessary.
Perform SKREEM VERIFICATION TEST.

No >> DTC is not active at this time. Test complete.

3. FUSED IGNITION SWITCH OUTPUT (RUN-START) CIRCUIT OPENED

NOTE: Check the related fuses to the Fused Ignition Switch Output (Run-Start) circuit. If the fuse is found to be open, repair the circuit for a shorted condition.
Turn the ignition off.
Disconnect the SKREEM harness connector.
Turn the ignition on.
Using a 12 volt test light connected to ground, probe the Fused Ignition Switch Output (Run-Start) circuit in the SKREEM harness connector.

Does the test light illuminate brightly?

Yes >> Go to 4

No >> Repair the Fused Ignition Switch Output (Run-Start) circuit for an open.
Perform SKREEM VERIFICATION TEST.

4. SKREEM

NOTE: A dirty (partial) ground can cause abnormal conditions within a system. Ensure the module has a good ground before continuing.

Turn the ignition off.

Reconnect the SKREEM connector

Back probe the Fused Ignition Switch Output (Run-Start) circuit.

Start the engine.

Using the scan tool, view battery voltage under Data Display in the Engine category.

Compare the voltage on the scan tool to the voltage reading on the voltmeter.

Is the voltage on the scan tool equal to the voltmeter reading +/- .5 volt?

Yes >> Replace and program the SKREEM in accordance with the Service Information. Perform SKREEM VERIFICATION TEST.

No >> Repair the Fused Ignition Switch Output (Run-Start) circuit for high resistance. Perform SKREEM VERIFICATION TEST.

B2102-IGNITION RUN/START INPUT HIGH

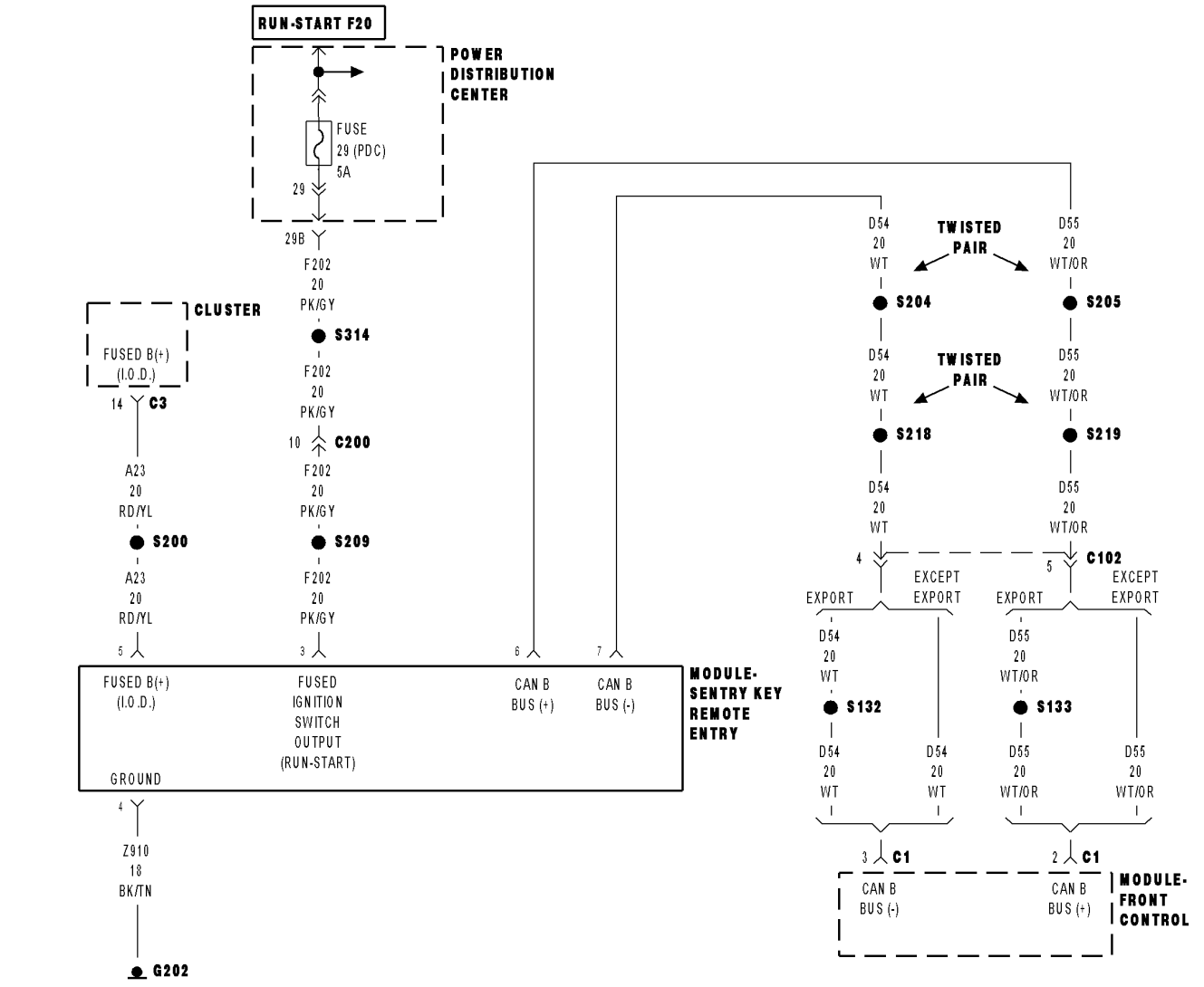

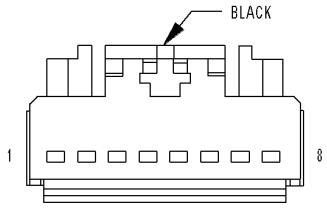

MODULE-
SENTRY KEY
REMOTE ENTRY

8131b160

For a complete wiring diagram **Refer to Section 8W**.

- **When Monitored:**
  With the ignition switch on.
- **Set Condition:**
  The SKREEM has detected the ignition switch input voltage above a calibrated value.

Possible Causes
FUSED IGNITION SWITCH OUTPUT (RUN-START) CIRCUIT
SKREEM

Diagnostic Test

1. DETERMINING IF DTC IS CURRENT

NOTE: Diagnose any related Powertrain DTC(s) before continuing.
With a scan tool, read and record DTC(s).
With the scan tool, clear DTC(s).
Perform 5 ignition cycles, leaving the ignition switch on for a minimum of 90 seconds per cycle.
Using the scan tool, read DTC(s).

Does the DTC reset?

Yes >> Go To 3

No >> Go to 2

2. INTERMITTENT CONDITION

NOTE: Check for any of the follow conditions:
- **Poor wire to terminal connection**
- **Corroded terminals**
- **Backed out or loose terminals**
- **Broken wire internal to the insulation**
- **Dirty (partial) module ground**

With the ignition on, wiggle the related wires.
Using a scan tool, read DTC(s).

Does the DTC reset?

Yes >> Repair the wiring as necessary.
Perform SKREEM VERIFICATION TEST.

No >> DTC is not active at this time. Test complete.

3. FUSED IGNITION SWITCH OUTPUT (RUN-START) CIRCUIT SHORTED TO BATTERY VOLTAGE

NOTE: A dirty (partial) ground can cause abnormal conditions within a system. Ensure the module has a good ground before continuing.
Turn the ignition off.
Disconnect the SKREEM harness connector.
Using a 12 volt test light connected to ground, probe the Fused Ignition Switch Output (Run-Start) circuit in the SKREEM harness connector.

Does the test light illuminate brightly?

Yes >> Repair the Fused Ignition Switch Output (Run-Start) circuit for a short to voltage.
Perform SKREEM VERIFICATION TEST.

No >> Replace and program the SKREEM in accordance with the Service Information.
Perform SKREEM VERIFICATION TEST.

B210A-SYSTEM VOLTAGE LOW

For a complete wiring diagram **Refer to Section 8W**.

- **When Monitored:**
  With the ignition switch on.
- **Set Condition:**
  The SKREEM has detected the system voltage is below a calibrated value.

Possible Causes
FUSED IGNITION SWITCH OUTPUT (RUN-START) CIRCUIT OPEN
FUSED (B+) CIRCUIT OPEN
SKREEM

Diagnostic Test

1. DETERMINING IF DTC IS CURRENT

NOTE: Diagnose any related Powertrain DTC(s) before continuing.
With a scan tool, read and record DTC(s).
With the scan tool, clear DTC(s).
Perform 5 ignition cycles, leaving the ignition switch on for a minimum of 90 seconds per cycle.
Using the scan tool, read DTC(s).

Does the DTC reset?

Yes >> Go To 3

No >> Go to 2

2. INTERMITTENT CONDITION

NOTE: Check for any of the follow conditions:
- **Poor wire to terminal connection**
- **Corroded terminals**
- **Backed out or loose terminals**
- **Broken wire internal to the insulation**
- **Dirty (partial) module ground**

With the ignition on, wiggle the related wires.
Using a scan tool, read DTC(s).

Does the DTC reset?

Yes >> Repair the wiring as necessary.
Perform SKREEM VERIFICATION TEST.

No >> DTC is not active at this time. Test complete.

3. FUSED IGNITION SWITCH OUTPUT (RUN-START) CIRCUIT OPEN

NOTE: Check the related fuses to the Fused Ignition Switch Output (Run-Start) circuit. If the fuse is found to be open repair the circuit for a shorted condition.

Turn the ignition off.

Disconnect the SKREEM harness connector.

Turn the ignition on.

Using a 12 volt test light connected to ground, probe the Fused Ignition Switch Output (Run-Start) circuit in the SKREEM harness connector.

Does the test light illuminate brightly?

Yes >> Go to 4

No >> Repair the Fused Ignition Switch Output (Run-Start) circuit for an open.
Perform SKREEM VERIFICATION TEST.

4. FUSED (B+) CIRCUIT OPEN

Turn the ignition off.

Using a 12 volt test light connected to ground, probe the Fused (B+) circuit in the SKREEM harness connector.

Does the test light illuminate brightly?

Yes >> Go to 5

No >> Repair the Fused (B+) circuit for an open.
Perform SKREEM VERIFICATION TEST.

5. SKREEM

NOTE: Repeat the below procedure for both the Fused Ignition Switch Output (Run-Start) circuit and the Fused (B+) circuit.

NOTE: A dirty (partial) ground can cause abnormal conditions within a system. Ensure the module has a good ground before continuing.

Turn the ignition off.

Reconnect the SKREEM connector.

Back probe the Fused Ignition Switch Output (Run-Start) circuit and then the Fused (B+) circuit.

Start the engine.

Using the scan tool, view battery voltage under Data Display in the Engine category.

Compare the voltage on the scan tool to the voltage reading on the voltmeter.

Is the voltage on the scan tool equal to the voltmeter reading +/- .5 volt?

Yes >> Replace and program the SKREEM in accordance with the Service Information.
Perform SKREEM VERIFICATION TEST.

No >> Repair the circuit(s) that indicated the incorrect voltage.
Perform SKREEM VERIFICATION TEST.

B210D-SYSTEM VOLTAGE HIGH

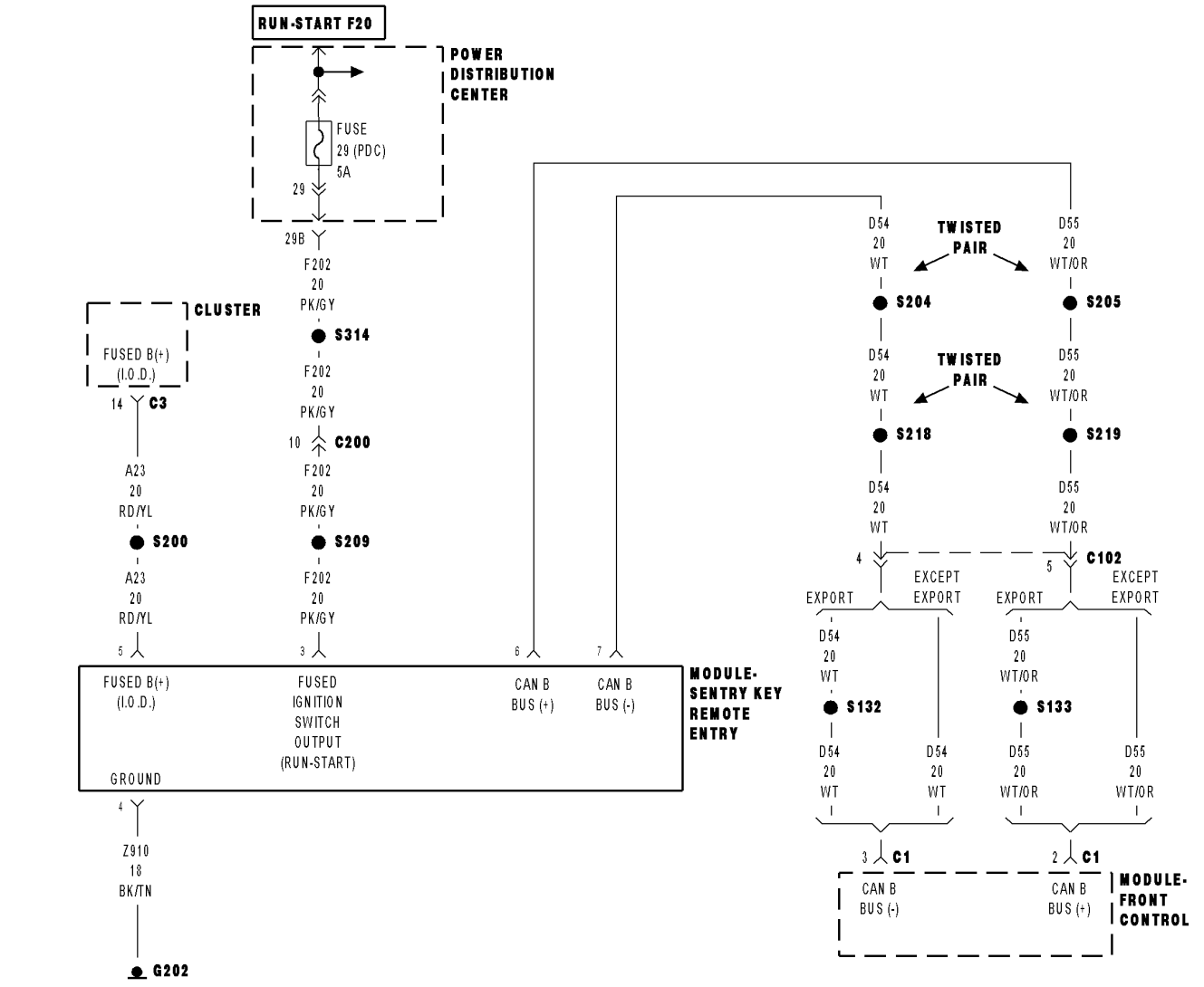

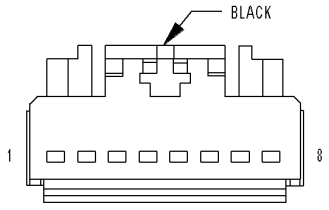

MODULE-
SENTRY KEY
REMOTE ENTRY

For a complete wiring diagram **Refer to Section 8W**.

- **When Monitored:**
  With the ignition switch on.
- **Set Condition:**
  The SKREEM has detected the system voltage above a calibrated value.

Possible Causes
FUSED IGNITION SWITCH OUTPUT (RUN-START) CIRCUIT
SKREEM

Diagnostic Test

1. DETERMINING IF DTC IS CURRENT

NOTE: Diagnose any related Powertrain DTC(s) before continuing.
With a scan tool, read and record DTC(s).
With the scan tool, clear DTC(s).
Perform 5 ignition cycles, leaving the ignition switch on for a minimum of 90 seconds per cycle.
Using the scan tool, read DTC(s).

Does the DTC reset?

Yes >> Go To 3

No >> Go to 2

2. INTERMITTENT CONDITION

NOTE: Check for any of the follow conditions:
- **Poor wire to terminal connection**
- **Corroded terminals**
- **Backed out or loose terminals**
- **Broken wire internal to the insulation**
- **Dirty (partial) module ground**

With the ignition on, wiggle the related wires.
Using a scan tool, read DTC(s).

Does the DTC reset?

Yes >> Repair the wiring as necessary.
Perform SKREEM VERIFICATION TEST.

No >> DTC is not active at this time. Test complete.

3. FUSED IGNITION SWITCH OUTPUT (RUN-START) CIRCUIT SHORTED TO BATTERY VOLTAGE

NOTE: A dirty (partial) ground can cause abnormal conditions within a system. Ensure the module has a good ground before continuing.
Turn the ignition off.
Disconnect the SKREEM harness connector.
Using a 12 volt test light connected to ground, probe the Fused Ignition Switch Output (Run-Start) circuit in the SKREEM harness connector.

Does the test light illuminate brightly?

Yes >> Repair the Fused Ignition Switch Output (Run-Start) circuit for a short to voltage.
Perform SKREEM VERIFICATION TEST.

No >> Replace and reprogram the SKREEM in accordance with the Service Information.
Perform SKREEM VERIFICATION TEST.

B210D-BATTERY VOLTAGE LOW

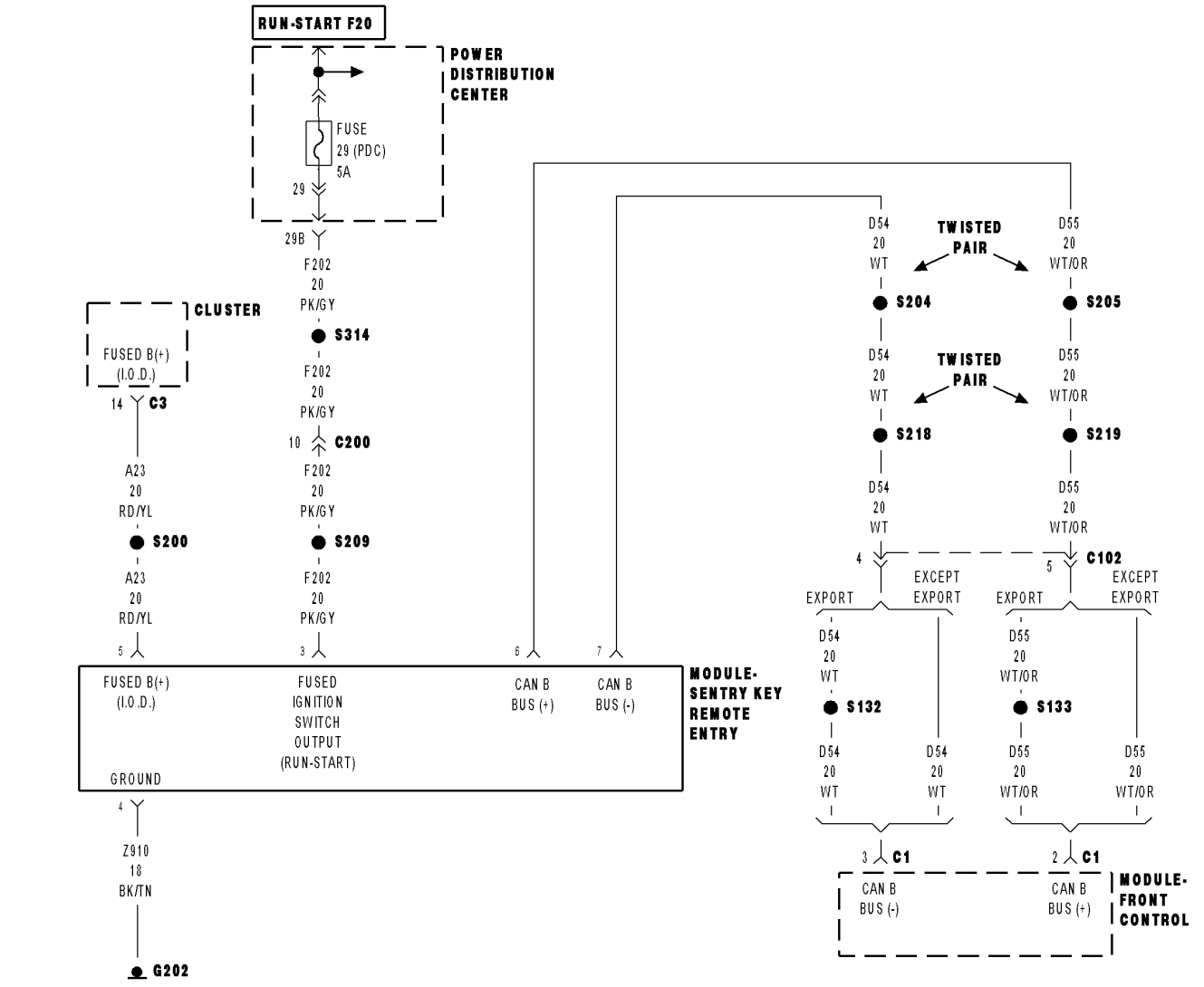

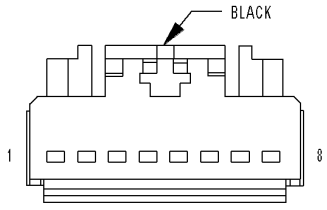

MODULE-SENTRY KEY REMOTE ENTRY

8131b160

For a complete wiring diagram **Refer to Section 8W**.

- **When Monitored:**
  With the ignition switch on.
- **Set Condition:**
  The SKREEM has detected the Fused (B+) input voltage below a calibrated value.

Possible Causes
FUSED (B+) CIRCUIT OPEN
SKREEM

Diagnostic Test

1. DETERMINING IF DTC IS CURRENT

NOTE: Diagnose any related Powertrain DTC(s) before continuing.
With a scan tool, read and record DTC(s).
With the scan tool, clear DTC(s).
Perform 5 ignition cycles, leaving the ignition switch on for a minimum of 90 seconds per cycle.
Using the scan tool, read DTC(s).

Does the DTC reset?

Yes >> Go To 3

No >> Go to 2

2. INTERMITTENT CONDITION

NOTE: Check for any of the follow conditions:
- **Poor wire to terminal connection**
- **Corroded terminals**
- **Backed out or loose terminals**
- **Broken wire internal to the insulation**
- **Dirty (partial) module ground**
- **Dirty (partial) module ground**

With the ignition on, wiggle the related wires.
Using a scan tool, read DTC(s).

Does the DTC reset?

Yes >> Repair the wiring as necessary.
Perform SKREEM VERIFICATION TEST.

No >> DTC is not active at this time. Test complete.

3. FUSED (B+) CIRCUIT OPEN

NOTE: Check the related fuses to the Fused (B+) circuit. If the fuse is found to be open repair the circuit for a shorted condition.
Turn the ignition off.
Disconnect the SKREEM harness connector.
Turn the ignition on.
Using a 12 volt test light connected to ground, probe the Fused (B+) circuit in the SKREEM harness connector.

Does the test light illuminate brightly?

Yes >> Go to 4

No >> Repair the Fused (B+) circuit for an open.
Perform SKREEM VERIFICATION TEST.

4. SKREEM

NOTE: A dirty (partial) ground can cause abnormal conditions within a system. Ensure the module has a good ground before continuing.

Turn the ignition off.

Reconnect the SKREEM connector

Back probe the Fused (B+) circuit.

Start the engine.

Using the scan tool, view battery voltage under Data Display in the Engine category.

Compare the voltage on the scan tool to the voltage reading on the voltmeter.

Is the voltage on the scan tool equal to the voltmeter reading +/- .5 volt?

Yes >> Replace and program the SKREEM in accordance with the Service Information.
Perform SKREEM VERIFICATION TEST.

No >> Repair the Fused (B+) circuit for high resistances.
Perform SKREEM VERIFICATION TEST.

B210E-BATTERY VOLTAGE HIGH

For a complete wiring diagram **Refer to Section 8W**.

- **When Monitored:**
  With the ignition switch on.
- **Set Condition:**
  The SKREEM has detected the Fused (B+) input voltage above a calibrated value.

Possible Causes
VEHICLE CHARGING SYSTEM
SKREEM

Diagnostic Test

1. DETERMINING IF DTC IS CURRENT

CAUTION: Diagnose and repair all Powertrain DTCs before continuing.
Turn the ignition on.
With the scan tool, record and erase the SKREEM DTCs.
Perform 5 ignition cycles, leaving the ignition switch on for a minimum of 90 seconds per cycle.
Using the scan tool, read the SKREEM DTCs.

Does the DTC reset?

Yes >> Replace and program the SKREEM in accordance with the Service Information.
Perform SKREEM VERIFICATION TEST.

No >> Perform SKREEM VERIFICATION TEST.

B2204-ECU CONFIGURATION MISMATCH

For a complete wiring diagram **Refer to Section 8W**.

- **When Monitored:**
  With the ignition on.

Possible Causes
SENTRY KEY REMOTE ENTRY MODULE (SKREEM)

Diagnostic Test

1. VERIFY THAT THE DTC IS ACTIVE

Turn the ignition on.

NOTE: Before continuing, review and check for the following:
- **Review the repair history of the vehicle.**
- **Ensure that the vehicle has the correct PCM and SKREEM installed by verifying the part numbers.**
- **With the scan tool, ensure that the PCM and SKREEM are programmed correctly. Compare the PCM VIN to the SKREEM VIN and ensure the two VINs match.**

With the scan tool, clear DTCs.

Perform 5 ignition cycles, leaving the ignition switch on for a minimum of 90 seconds per cycle.

With the scan tool, read DTCs.

Does the DTC reset?

Yes >> Replace and program the SKREEM in accordance with the Service Information.

NOTE: If this vehicle is equipped with a Steering Column Lock Module, it must be replaced along with the SKREEM.

Perform SKREEM VERIFICATION TEST. (Refer to 8 - ELECTRICAL/VEHICLE THEFT SECURITY - STANDARD PROCEDURE)

No >> The DTC is not active at this time. Test complete.

B2205-ORIGINAL VIN MISSING/MISMATCH

For a complete wiring diagram **Refer to Section 8W**.

- **When Monitored:**
  At ignition on, after ignition on during any rolling code handshake that occurs with the PCM due to a SKIM or PCM reset.
- **Set Condition:**
  When a PCM STATUS message with a Valid Key status is not received by the SKIM within 3.5 seconds of transmitting the last Valid Key Code message to the PCM.

Possible Causes
VERIFYING PCM VIN
REPLACE SKREEM AND CHECK DTC'S
INTERMITTENT WIRING HARNESS PROBLEM
PCM

Diagnostic Test

1. DETERMINING IF DTC IS CURRENT

With the scan tool, erase the SKREEM DTCs.
Turn the ignition off.
Wait 10 seconds.
Turn the ignition on and wait 2 minutes.
With the scan tool, read the SKREEM DTCs.

Does the scan tool display the DTC that was previously erased?

Yes >> Go To 2

No >> Go To 4

2. VERIFYING THE PCM VIN

Turn the ignition on.
With the scan tool, select Engine system from the main menu.
Display and record the Vehicle Identification Number.

NOTE: Ensure that a VIN has been programmed into the PCM. If a VIN is not displayed, attempt to program the PCM with the correct VIN before continuing.

Does the VIN recorded from the PCM match the VIN of the vehicle?

Yes >> Go To 3

No >> Perform the PCM replaced to update the VIN in the PCM.
Perform SKREEM VERIFICATION TEST

3. REPLACE SKREEM AND CHECK DTC'S

Turn the ignition off.
Replace and program the Sentry Key Remote Entry Module in accordance with the Service Information.
Turn the ignition on.
With the scan tool, display and clear all PCM and SKREEM DTC's.
Perform 5 ignition key cycles leaving the ignition key on for 90 seconds per cycle.
With the scan tool, check for SKREEM DTCs.

Does the scan tool display the same DTC?

Yes >> Replace and program the Powertrain Control Module in accordance with the Service Information.
Perform SKREEM VERIFICATION TEST

No >> The repair is complete.
Perform SKREEM VERIFICATION TEST

4. INTERMITTENT

Turn the ignition off.

NOTE: Check for the following conditions:
- **Visually inspect the related wiring harness. Look for any chafed, pierced, pinched, or partially broken wires.**
- **Visually inspect the related wiring harness connectors. Look for broken, bent, pushed out, or corroded terminals.**
- **Refer to any Technical Service Bulletins (TSB) that may apply.**

Were any problems found?

Yes >> Repair wiring harness/connectors as necessary.
Perform SKREEM VERIFICATION TEST

No >> Test Complete.

B2206-CURRENT VIN MISSING/MISMATCH

For a complete wiring diagram **Refer to Section 8W**.

- **When Monitored:**
  Anytime the ignition key is in the ON position.
- **Set Condition:**
  VIN stored in Intrusion Transceiver Module does not match the VIN stored in the Cluster.

Possible Causes
INTRUSION TRANSCEIVER MODULE SWAPPED FROM DIFFERENT VEHICLE

Diagnostic Test

1. DETERMINING IF DTC IS CURRENT

With a scan tool, read and record DTC(s).
With the scan tool, clear DTC(s).
Turn the ignition off and remove the key from the ignition.
Lock and close all doors to allow the VTSS to go from pre-arm to armed status and wait one minute.
Disarm the VTSS.
Using the scan tool, read DTC(s).

Does the DTC reset?

Yes >> Using the scan tool under Miscellaneous functions initialize the Intrusion Transceiver Module.
Perform BODY VERIFICATION TEST – VER 1 (Refer to 8 - ELECTRICAL/ELECTRONIC CONTROL MODULES - STANDARD PROCEDURE)

No >> DTC is not active at this time. Test complete.
Perform BODY VERIFICATION TEST – VER 1 (Refer to 8 - ELECTRICAL/ELECTRONIC CONTROL MODULES - STANDARD PROCEDURE)

B2224–SKREEM INTERNAL

For a complete wiring diagram **Refer to Section 8W**.

- **When Monitored:**
  With the ignition on.

Possible Causes
SENTRY KEY REMOTE ENTRY MODULE (SKREEM)

Diagnostic Test

1. VERIFY THAT THE DTC IS ACTIVE

Turn the ignition on.

NOTE: Before continuing, review and check for the following:
- **Review the repair history of the vehicle.**
- **Ensure that the vehicle has the correct PCM and SKREEM installed by verifying the part numbers.**
- **With the scan tool, ensure that the PCM and SKREEM are programmed correctly. Compare the PCM VIN to the SKREEM VIN and ensure the two VINs match.**

With the scan tool, clear DTCs.

Perform 5 ignition cycles, leaving the ignition switch on for a minimum of 90 seconds per cycle.

With the scan tool, read DTCs.

Does the DTC reset?

Yes >> Replace and program the SKREEM in accordance with the Service Information.

NOTE: If this vehicle is equipped with a Steering Column Lock Module, it must be replaced along with the SKREEM.

Perform SKREEM VERIFICATION TEST. (Refer to 8 - ELECTRICAL/VEHICLE THEFT SECURITY - STANDARD PROCEDURE)

No >> The DTC is not active at this time. Test complete.

B2228-SKREEM INTERNAL - RKE RECEIVER

For a complete wiring diagram **Refer to Section 8W**.

- **When Monitored:**
  With the ignition on.

Possible Causes
SENTRY KEY REMOTE ENTRY MODULE (SKREEM)

Diagnostic Test

1. VERIFY THAT THE DTC IS ACTIVE

Turn the ignition on.

NOTE: Before continuing, review and check for the following:
- **Review the repair history of the vehicle.**
- **Ensure that the vehicle has the correct PCM and SKREEM installed by verifying the part numbers.**
- **With the scan tool, ensure that the PCM and SKREEM are programmed correctly. Compare the PCM VIN to the SKREEM VIN and ensure the two VINs match.**

With the scan tool, clear DTCs.

Perform 5 ignition cycles, leaving the ignition switch on for a minimum of 90 seconds per cycle.

With the scan tool, read DTCs.

Does the DTC reset?

Yes >> Replace and program the SKREEM in accordance with the Service Information.

NOTE: If this vehicle is equipped with a Steering Column Lock Module, it must be replaced along with the SKREEM.

Perform SKREEM VERIFICATION TEST. (Refer to 8 - ELECTRICAL/VEHICLE THEFT SECURITY - STANDARD PROCEDURE)

No >> The DTC is not active at this time. Test complete.

B2229-SKREEM INTERNAL - SKIM IMMOBILIZER

For a complete wiring diagram **Refer to Section 8W**.

- **When Monitored:**
  With the ignition on.

Possible Causes
SENTRY KEY REMOTE ENTRY MODULE (SKREEM)

Diagnostic Test

1. VERIFY THAT THE DTC IS ACTIVE

Turn the ignition on.

NOTE: Before continuing, review and check for the following:
- **Review the repair history of the vehicle.**
- **Ensure that the vehicle has the correct PCM and SKREEM installed by verifying the part numbers.**
- **With the scan tool, ensure that the PCM and SKREEM are programmed correctly. Compare the PCM VIN to the SKREEM VIN and ensure the two VINs match.**

With the scan tool, clear DTCs.

Perform 5 ignition cycles, leaving the ignition switch on for a minimum of 90 seconds per cycle.

With the scan tool, read DTCs.

Does the DTC reset?

Yes >> Replace and program the SKREEM in accordance with the Service Information.

NOTE: If this vehicle is equipped with a Steering Column Lock Module, it must be replaced along with the SKREEM.

Perform SKREEM VERIFICATION TEST. (Refer to 8 - ELECTRICAL/VEHICLE THEFT SECURITY - STANDARD PROCEDURE)

No >> The DTC is not active at this time. Test complete.

B222A-VEHICLE LINE MISMATCH

For a complete wiring diagram **Refer to Section 8W**.

- **When Monitored:**
  Anytime the ignition key is in the ON position.
- **Set Condition:**
  If the Intrusion Transceiver Module is not configured.

Possible Causes
INTRUSION TRANSCEIVER MODULE CONFIGURATION

Diagnostic Test

1. CONFIGURE THE INTRUSION TRANSCEIVER MODULE

Using the scan tool under miscellaneous functions perform the initialization procedure for the Intrusion Transceiver Module.

With the scan tool, clear DTC(s).

Turn the ignition off and remove the key from the ignition.

Lock and close all doors to allow the VTSS to go from pre-arm to armed status and wait one minute.

Disarm the VTSS.

Using the scan tool, read DTC(s).

Does the DTC reset?

Yes >> Replace the Intrusion Transceiver Module in accordance with the Service Information.
Perform BODY VERIFICATION TEST – VER 1 (Refer to 8 - ELECTRICAL/ELECTRONIC CONTROL MODULES - STANDARD PROCEDURE)

No >> Test complete.
Perform BODY VERIFICATION TEST – VER 1 (Refer to 8 - ELECTRICAL/ELECTRONIC CONTROL MODULES - STANDARD PROCEDURE)

B223C-INTRUSION TRANSCEIVER MODULE INTERNAL

For a complete wiring diagram **Refer to Section 8W**.

- **When Monitored:**
  Ignition on.
- **Set Condition:**
  Internal Intrusion Transceiver Module test failed.

Possible Causes
INTRUSION TRANSCEIVER MODULE

Diagnostic Test

1. DETERMINING IF DTC IS CURRENT

With a scan tool, read and record DTC(s).
With the scan tool, clear DTC(s).
Turn the ignition off and remove the key from the ignition.
Lock and close all doors to allow the VTSS to go from pre-arm to armed status and wait one minute.
Disarm the VTSS.
Using the scan tool, read DTC(s).

Does the DTC reset?

Yes >> Replace the Intrusion Transceiver Module in accordance with the Service Information.
Perform BODY VERIFICATION TEST – VER 1 (Refer to 8 - ELECTRICAL/ELECTRONIC CONTROL MODULES - STANDARD PROCEDURE)

No >> DTC is not active at this time. Test complete.
Perform BODY VERIFICATION TEST – VER 1 (Refer to 8 - ELECTRICAL/ELECTRONIC CONTROL MODULES - STANDARD PROCEDURE)

B2254-COLUMN LOCK MODULE INTERNAL

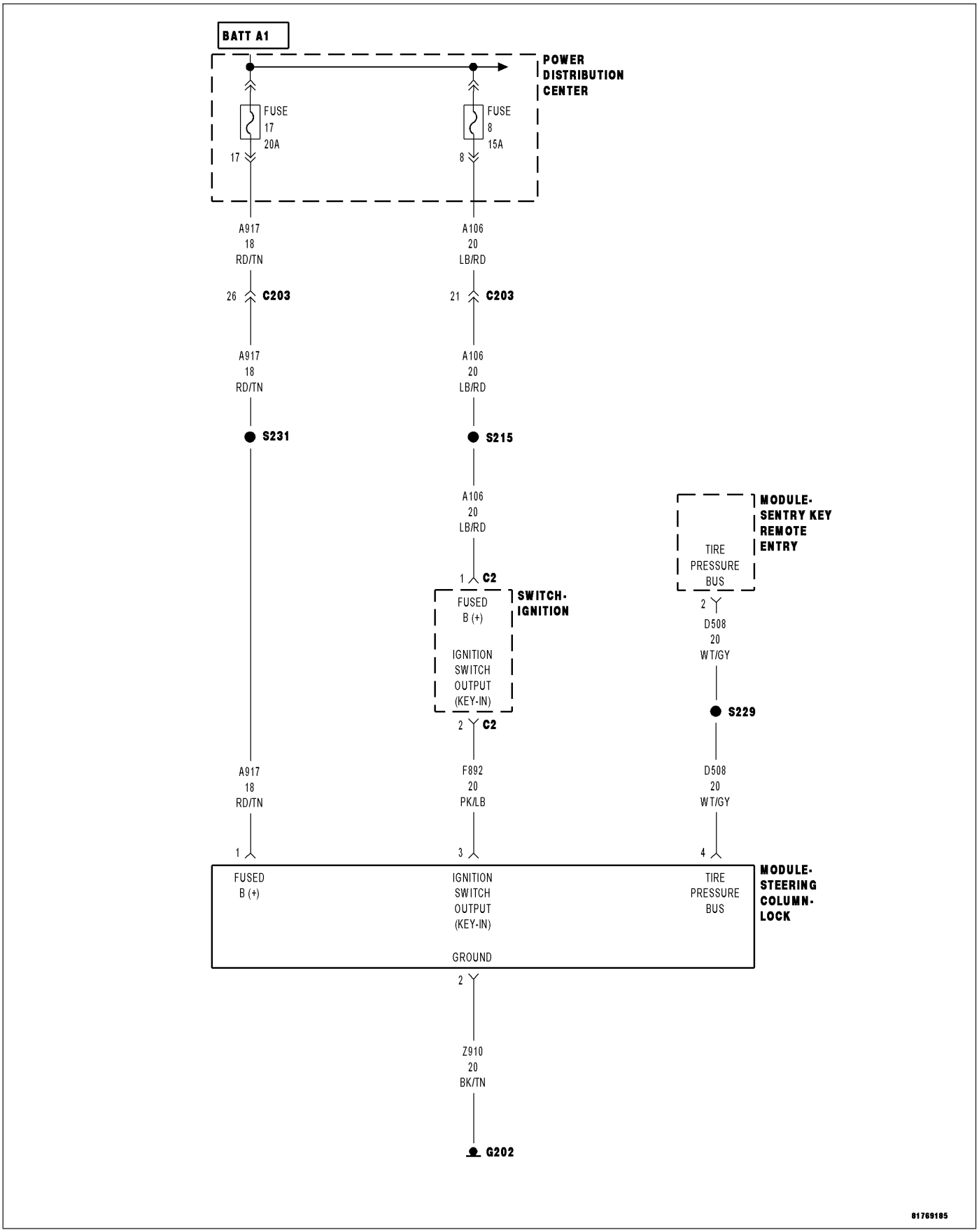

For a complete wiring diagram **Refer to Section 8W**

- **When Monitored:**
  Continuously.
- **Set Condition:**
  If the SKREEM does not receive the correct response message back from the Steering Column Lock Module.

Possible Causes
INTERMITTENT CONDITION
(A917) FUSED B(+) CIRCUIT OPEN
(F892) IGNITION SWITCH OUTPUT (KEY-IN) CIRCUIT OPEN
(Z910) GROUND CIRCUIT OPEN
(D508) TIRE PRESSURE BUS CIRCUIT OPEN
STEERING COLUMN LOCK MODULE

Diagnostic Test

1. INTERMITTENT DTC

With the scan tool, erase the current SKREEM DTC's.

Turn the ignition off.

Arm the VTSS and wait one minute.

Disarm the VTSS and turn the ignition on.

Does the scan tool display the same DTC?

Yes >> Go To 2

No >> The condition that caused this symptom is currently not present. Inspect the related wiring harness for a possible intermittent condition. Look for any chafed, pierced, pinched or partially broken wires.
Perform BODY VERIFICATION TEST - VER 1. (Refer to 8 - ELECTRICAL/ELECTRONIC CONTROL MODULES - STANDARD PROCEDURE)

2. (A917) FUSED B(+) CIRCUIT OPEN

Gain access to the Steering Column Lock Module.

Disconnect the Steering Column Lock Module connector.

Using a 12-volt test light connected to ground, check the (A917) Fused B(+) circuit in the Steering Column Lock Module connector.

Does the test light illuminate brightly?

Yes >> Go To 3

No >> Repair the (A917) Fused B(+) circuit for an open.
Perform BODY VERIFICATION TEST - VER 1. (Refer to 8 - ELECTRICAL/ELECTRONIC CONTROL MODULES - STANDARD PROCEDURE)

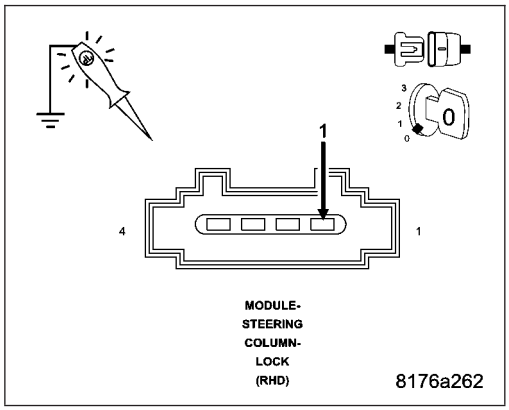

3. (A892) IGNITION SWITCH OUTPUT (KEY-IN) CIRCUIT OPEN

Ensure the ignition key is fully inserted into the ignition switch.

Using a 12-volt test light connected to ground, check the (A892) Ignition Switch Output (Key-In) circuit in the Steering Column Lock Module connector.

Does the test light illuminate brightly?

Yes >> Go To 4

No >> Repair the (A892) Ignition Switch Output (Key-In) circuit for an open.

Perform BODY VERIFICATION TEST - VER 1. (Refer to 8 - ELECTRICAL/ELECTRONIC CONTROL MODULES - STANDARD PROCEDURE)

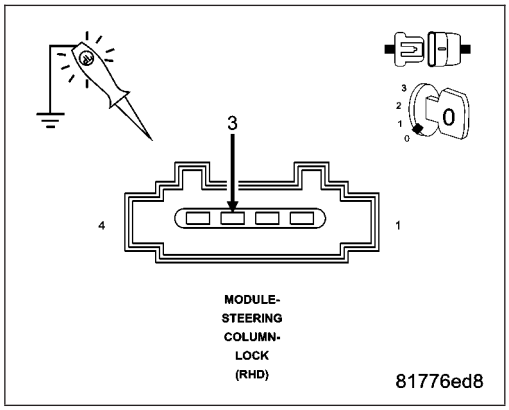

4. (Z910) GROUND CIRCUIT OPEN

Using a 12-volt test light connected to 12-volts, check the (Z910) Ground circuit at the Steering Column Lock Module connector.

Does the test light illuminate brightly?

Yes >> Go To 5

No >> Repair the (Z910) Ground circuit for an open.

Perform BODY VERIFICATION TEST - 1A. (Refer to 8 - ELECTRICAL/ELECTRONIC CONTROL MODULES - STANDARD PROCEDURE)

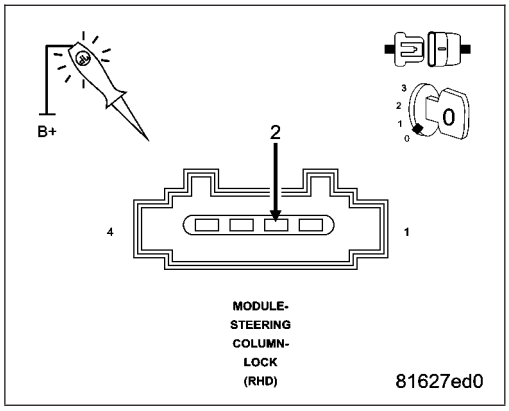

5. (D508) TIRE PRESSURE BUS CIRCUIT OPEN

Disconnect the SKREEM harness connector.

Measure the resistance of the (D508) Tire Pressure Bus circuit between the SKREEM and the Steering Column Lock Module connectors.

Is the resistance below 1.0 ohms?

Yes >> Replace the Steering Column Lock Module in accordance with the Service Information.

Perform SKREEM VERIFICATION TEST. (Refer to 8 - ELECTRICAL/VEHICLE THEFT SECURITY - STANDARD PROCEDURE)

No >> Repair the (D508) Tire Pressure Bus circuit for an open.

Perform BODY VERIFICATION TEST - 1A. (Refer to 8 - ELECTRICAL/ELECTRONIC CONTROL MODULES - STANDARD PROCEDURE)

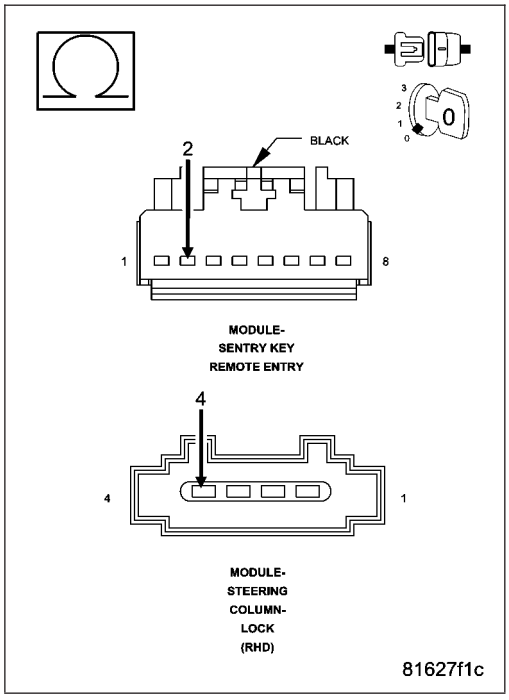

U0019-CAN B BUS

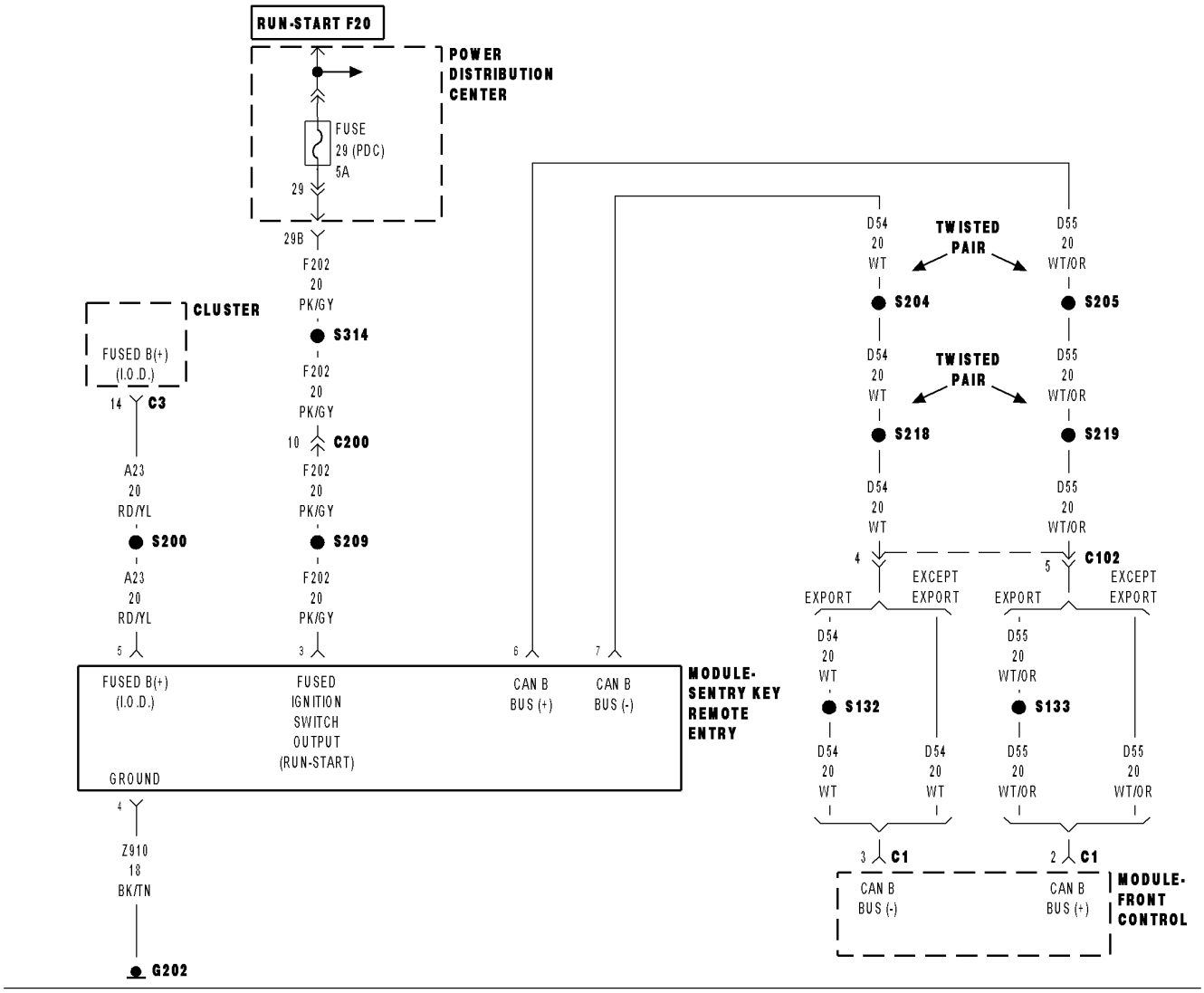

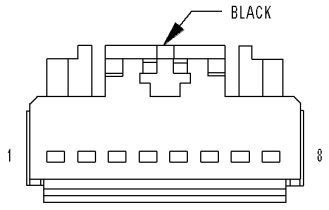

MODULE-
SENTRY KEY
REMOTE ENTRY

8131b160

For a complete wiring diagram **Refer to Section 8W**.

- **When Monitored:**
  Continuously
- **Set Condition:**
  Whenever the CAN B Bus (+) or CAN B Bus (–) circuit is open, shorted to voltage or shorted to ground.

Possible Causes
CAN B BUS DTC's IN FRONT CONTROL MODULE
(D55) CAN B BUS (+) CIRCUIT OPEN
(D54) CAN B BUS (-) CIRCUIT OPEN
SKREEM

Diagnostic Test

1. CHECK FOR ACTIVE DTC's

With the scan tool, read the active DTC's.

Cycle the ignition switch from off to on at least 5 times, leaving the ignition on for a minimum of 90 seconds per cycle.

With the scan tool, read the active DTC's.

Does the scan tool display this DTC as active?

Yes >> Go To 2

No >> If the DTC is stored, check for an intermittent condition. Visually inspect the related wiring harness connectors. Look for broken, bent, pushed out, or corroded terminals.

2. CHECK FRONT CONTROL MODULE DTC's

With the scan tool, read Front Control Module active DTC's

Does the scan tool display any CAN B BUS DTC's - ACTIVE?

Yes >> Refer to 8 - ELECTRICAL/ELECTRONIC CONTROL MODULES - DIAGNOSIS AND TESTING.

No >> Go To 3

3. (D55) CAN B BUS (+) CIRCUIT OPEN

Turn the ignition off.

Disconnect the negative battery cable.

Disconnect the SKREEM connector.

Disconnect the Front Control Module connector.

Measure the resistance of the (D55) CAN B Bus (+) circuit between the Front Control Module harness connector and the SKREEM harness connector.

Is the resistance below 2.0 ohms?

Yes >> Go To 4

No >> Repair the (D55) CAN B Bus (+) circuit for an open.
Perform BODY VERIFICATION TEST - VER 1.

4. (D54) CAN B BUS (–) CIRCUIT OPEN

Measure the resistance of the (D54) CAN B Bus (–) circuit between the Front Control Module harness connector and the SKREEM harness connector.

Is the resistance below 2.0 ohms?

Yes >> Replace the SKREEM in accordance with the service information.
Perform BODY VERIFICATION TEST - VER 1.

No >> Repair the (D54) CAN B Bus (–) circuit for an open.
Perform BODY VERIFICATION TEST - VER 1.

U0019–CAN B BUS – ITM

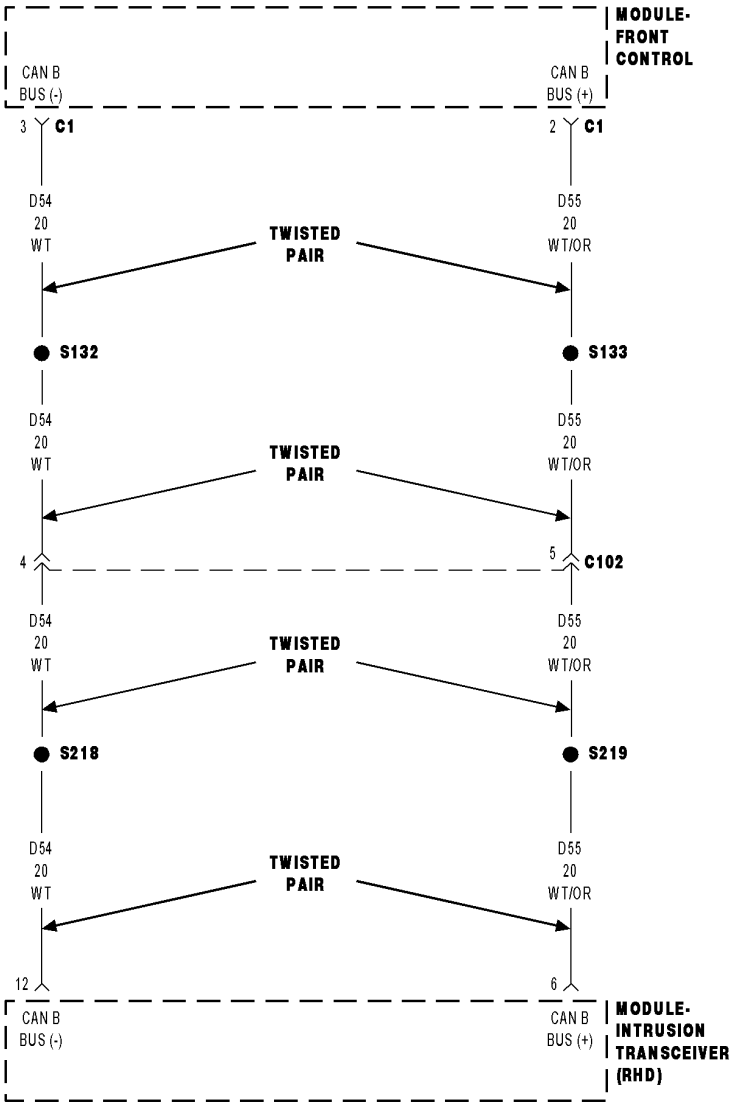

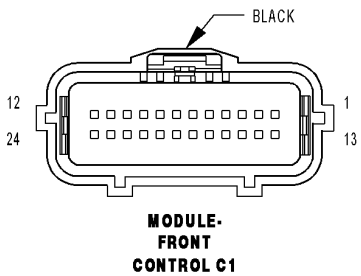

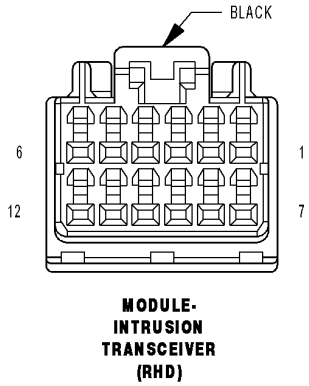

8176b4b8

For a complete wiring diagram **Refer to Section 8W**.

- **When Monitored:**
  Continuously
- **Set Condition:**
  Whenever the CAN B Bus (+) or CAN B Bus (-) circuit is open, shorted to voltage or shorted to ground.

Possible Causes
CAN B BUS DTC's IN FRONT CONTROL MODULE
(D55) CAN B BUS (+) CIRCUIT OPEN
(D54) CAN B BUS (-) CIRCUIT OPEN
INTRUSION TRANSCEIVER MODULE

Diagnostic Test

1. CHECK FOR ACTIVE DTCS

With the scan tool, read the active DTC's.

Cycle the ignition switch from off to on at least 5 times, leaving the ignition on for a minimum of 90 seconds per cycle.

With the scan tool, read the active DTC's.

Does the scan tool display this DTC as active?

Yes >> Go To 2

No >> If the DTC is stored, check for an intermittent condition. Visually inspect the related wiring harness connectors. Look for broken, bent, pushed out, or corroded terminals.

2. CHECK FRONT CONTROL MODULE DTC's

With the scan tool, read Front Control Module active DTC's

Does the scan tool display any CAN B BUS DTC's – ACTIVE?

Yes >> (Refer to 8 - ELECTRICAL/ELECTRONIC CONTROL MODULES - DIAGNOSIS AND TESTING)

No >> Go To 3

3. (D55) CAN B BUS (+) CIRCUIT OPEN

Turn the ignition off.

Disconnect the negative battery cable.

Disconnect the Intrusion Transceiver Module connector.

Disconnect the Front Control Module C1 connector.

Measure the resistance of the (D55) CAN B Bus (+) circuit between the Front Control Module C1 connector and the Intrusion Transceiver Module connector.

Is the resistance below 2.0 ohms?

Yes >> Go To 4

No >> Repair the (D55) CAN B Bus (+) circuit for an open.
Perform BODY VERIFICATION TEST - VER 1. (Refer to 8 - ELECTRICAL/ELECTRONIC CONTROL MODULES - STANDARD PROCEDURE)

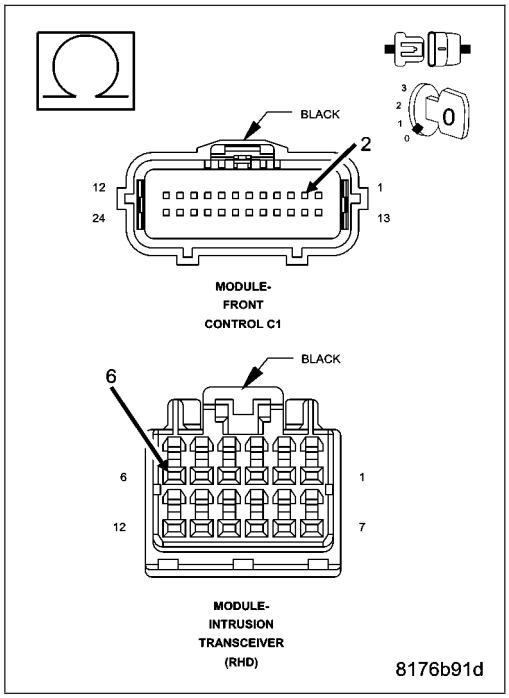

4. (D54) CAN B BUS (–) CIRCUIT OPEN

Measure the resistance of the (D54) CAN B Bus (–) circuit between the Front Control Module C1 connector and the Intrusion Transceiver Module connector.

Is the resistance below 2.0 ohms?

Yes >> Replace the Intrusion Transceiver Module in accordance with the service information.
Perform BODY VERIFICATION TEST - VER 1. (Refer to 8 - ELECTRICAL/ELECTRONIC CONTROL MODULES - STANDARD PROCEDURE)

No >> Repair the (D54) CAN B Bus (–) circuit for an open.
Perform BODY VERIFICATION TEST - VER 1. (Refer to 8 - ELECTRICAL/ELECTRONIC CONTROL MODULES - STANDARD PROCEDURE)

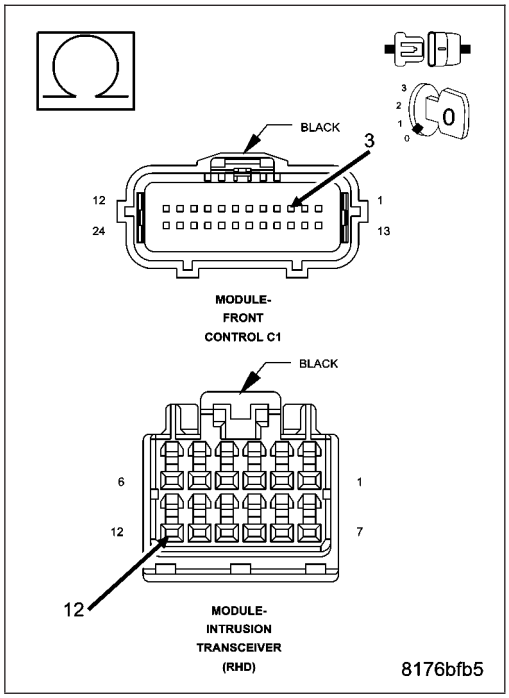

U0141-LOST COMMUNICATION WITH FRONT CONTROL MODULE

For a complete wiring diagram **Refer to Section 8W**.

(Refer to 8 - ELECTRICAL/ELECTRONIC CONTROL MODULES - DIAGNOSIS AND TESTING) for the diagnostic test procedure.

U0146-LOST COMMUNICATION WITH CENTRAL GATEWAY

For a complete wiring diagram **Refer to Section 8W**.

(Refer to 8 - ELECTRICAL/ELECTRONIC CONTROL MODULES - DIAGNOSIS AND TESTING) and perform the U0141-Lost Communication With Front Control Module test for the diagnostic test procedure.

U0151-LOST COMMUNICATION WITH OCCUPANT RESTRAINT CONTROLLER

For a complete wiring diagram **Refer to Section 8W**.

(Refer to 8 - ELECTRICAL/ELECTRONIC CONTROL MODULES - DIAGNOSIS AND TESTING) for the diagnostic test procedure.

U0154-LOST COMMUNICATION WITH OCCUPANT CLASSIFICATION MODULE

For a complete wiring diagram **Refer to Section 8W**.

(Refer to 8 - ELECTRICAL/ELECTRONIC CONTROL MODULES - DIAGNOSIS AND TESTING) for the diagnostic test procedure.

U0155-LOST COMMUNICATION WITH CLUSTER/CCN

For a complete wiring diagram **Refer to Section 8W**.

(Refer to 8 - ELECTRICAL/ELECTRONIC CONTROL MODULES - DIAGNOSIS AND TESTING) for the diagnostic test procedure.

U110D-LOST COMMUNICATION WITH SECURITY SIREN

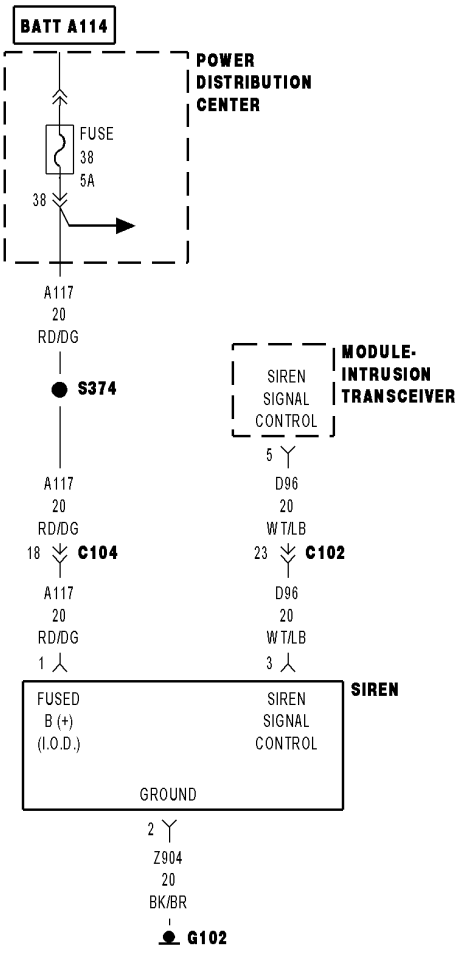

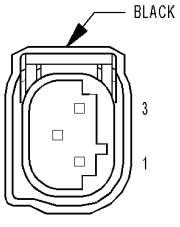

SIREN (RHD)

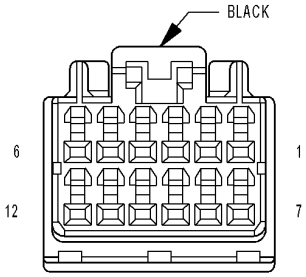

MODULE- INTRUSION TRANSCEIVER (RHD)

81742c69

For a complete wiring diagram **Refer to Section 8W**

- **When Monitored:**
  Continuously while the VTSS is armed.
- **Set Condition:**
  If the Intrusion Transceiver Module does not receive messages from the Siren.

Possible Causes
INTERMITTENT CONDITION
(A117) FUSED B(+) (I.O.D.) CIRCUIT OPEN
(Z904) GROUND CIRCUIT OPEN
(D96) SIREN SIGNAL CONTROL CIRCUIT SHORT TO BATTERY
(D96) SIREN SIGNAL CONTROL CIRCUIT OPEN
(D96) SIREN SIGNAL CONTROL CIRCUIT SHORT TO GROUND
SIREN
INTRUSION TRANSCEIVER MODULE

Diagnostic Test

1. INTERMITTENT DTC

With the scan tool, erase the current Intrusion Transceiver Module DTC's.

Turn the ignition off.

Arm the VTSS and wait 1 minute.

Disarm the VTSS and turn the ignition on.

Does the scan tool display the same DTC?

Yes >> Go To 2

No >> The condition that caused this symptom is currently not present. Inspect the related wiring harness for a possible intermittent condition. Look for any chafed, pierced, pinched or partially broken wires.
Perform BODY VERIFICATION TEST - VER 1. (Refer to 8 - ELECTRICAL/ELECTRONIC CONTROL MODULES - STANDARD PROCEDURE)

2. (A117) FUSED B(+) (I.O.D.) CIRCUIT OPEN

Gain access to the VTSS Siren.

Disconnect the Siren connector.

Using a 12-volt test light connected to ground, check the (A117) Fused B(+) (I.O.D.) circuit in the Siren connector.

Does the test light illuminate brightly?

Yes >> Go To 3

No >> Repair the (A117) Fused B(+) (I.O.D.) circuit for an open.
Perform BODY VERIFICATION TEST - VER 1. (Refer to 8 - ELECTRICAL/ELECTRONIC CONTROL MODULES - STANDARD PROCEDURE)

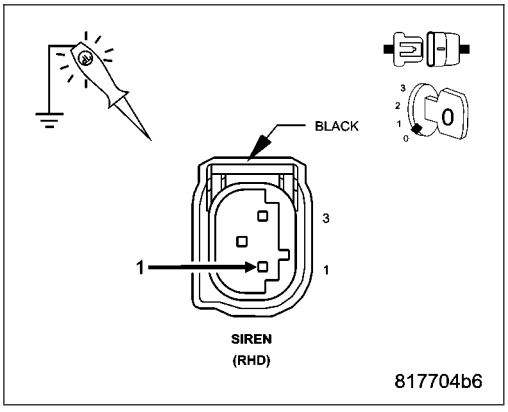

3. (Z904) GROUND CIRCUIT

Using a 12-volt test light connected to 12-volts, check the (Z904) Ground circuit at the siren connector.

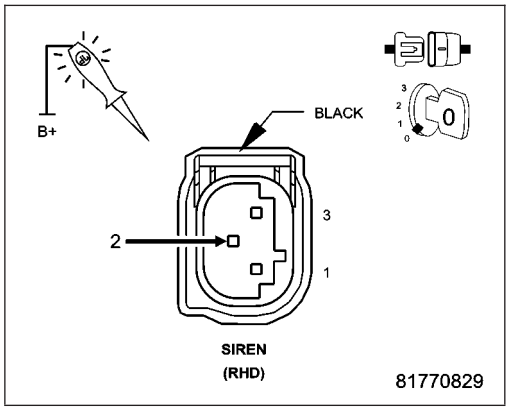

Does the test light illuminate brightly?

Yes >> Go To 4

No >> Repair the (Z904) Ground circuit for an open.
Perform BODY VERIFICATION TEST - 1A. (Refer to 8 - ELECTRICAL/ELECTRONIC CONTROL MODULES - STANDARD PROCEDURE)

4. FAULTY SIREN

Use the DRBIII® and set up as follows:

Use the Scope input cable CH7058, Cable to Probe adapter CH7062, and the red and black test probes.

Connect the scope input cable to the channel one connector on the DRBIII®. Attach the red and black leads and the cable to probe adapter to the scope input cable.

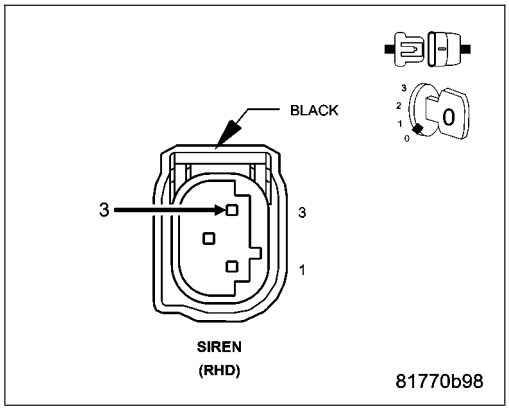

Select DRBIII® Stand-alone.

Select lab scope.

Select Live.

Select 12 volt square wave.

Press F2 for Scope.

Press F2 and use the down arrow to set voltage range to 20 volts. Press F2 again when complete.

Disconnect the Siren connector.

Connect the black lead to the chassis ground. Connect the red lead to the (D96) Siren Signal Control circuit in the Siren connector.

Close all doors and arm the VTSS.

Observe the voltage displayed on the DRBIII® Lab Scope.

Is there a voltage square wave present 1 to 2 seconds?

Yes >> Connect a known good siren and try to reset the DTC. If the DTC does not reset the original siren needs to be replaced. If the DTC does reset replace the ITM.
Perform BODY VERIFICATION TEST - VER 1. (Refer to 8 - ELECTRICAL/ELECTRONIC CONTROL MODULES - STANDARD PROCEDURE)

No >> Go To 5

5. (D96) SIREN SIGNAL CONTROL CIRCUIT SHORT TO BATTERY

Disconnect the Siren harness connector.

Measure the voltage of the (D96) Siren Signal Control circuit.

Is there any voltage present?

Yes >> Repair the (D96) Siren Signal Control circuit for a short to voltage.Perform BODY VERIFICATION TEST - 1A. (Refer to 8 - ELECTRICAL/ELECTRONIC CONTROL MODULES - STANDARD PROCEDURE)

No >> Go To 6

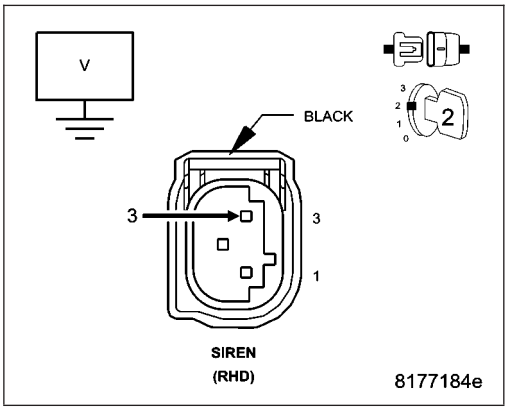

6. (D96) SIREN SIGNAL CONTROL CIRCUIT SHORT TO GROUND

Disconnect the Siren harness connector.

Disconnect the Intrusion Transceiver Module harness connector.

Measure the resistance between ground and the (D96) Siren Signal Control circuit.

Is the resistance above 5.0 ohms?

Yes >> Go To 7

No >> Repair the (D96) Siren Signal Control circuit for a short to ground.

Perform BODY VERIFICATION TEST - 1A. (Refer to 8 - ELECTRICAL/ELECTRONIC CONTROL MODULES - STANDARD PROCEDURE)

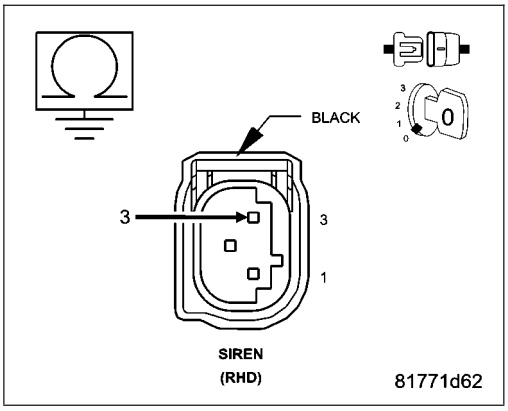

7. (D96) SIREN SIGNAL CONTROL CIRCUIT OPEN

Disconnect the Intrusion Transceiver Module harness connector.

Measure the resistance of the (D96) Siren Signal Control circuit between the Intrusion Transceiver Module and the Siren connector.

Is the resistance below 5.0 ohms?

Yes >> Replace the Intrusion Transceiver Module in accordance with the Service Information.

Perform BODY VERIFICATION TEST - VER 1. (Refer to 8 - ELECTRICAL/ELECTRONIC CONTROL MODULES - STANDARD PROCEDURE)

No >> Repair the (D96) Siren Signal Control circuit for an open.

Perform BODY VERIFICATION TEST - 1A. (Refer to 8 - ELECTRICAL/ELECTRONIC CONTROL MODULES - STANDARD PROCEDURE)

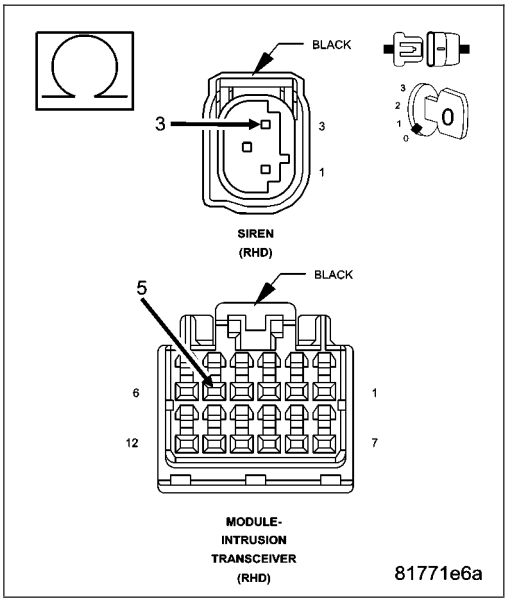

U1416-IMPLAUSIBLE SECURITY SIREN SIGNAL RECEIVED

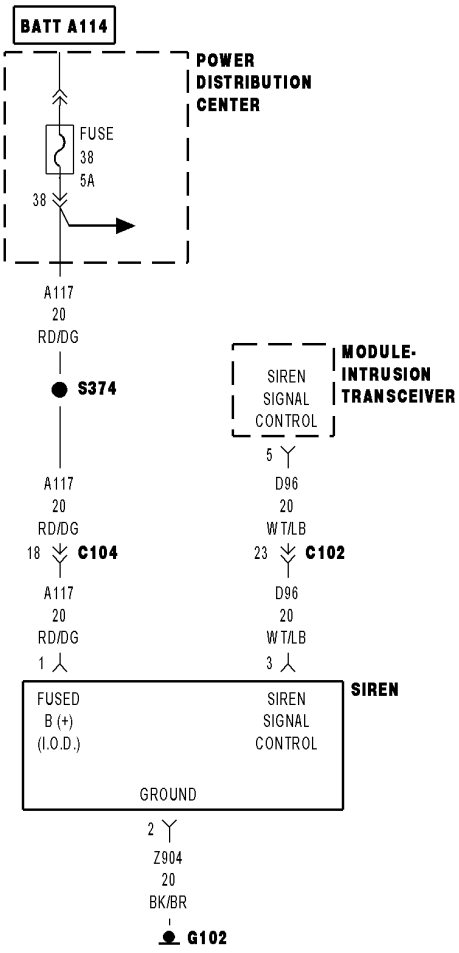

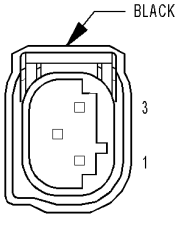

SIREN (RHD)

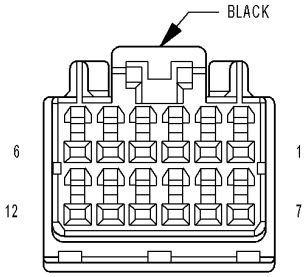

MODULE- INTRUSION TRANSCEIVER (RHD)

81742c69

For a complete wiring diagram **Refer to Section 8W**

- **When Monitored:**
  Continuously while the VTSS is armed.
- **Set Condition:**
  If the Intrusion Transceiver Module does not receive messages from the Siren.

Possible Causes
INTERMITTENT CONDITION
(A117) FUSED B(+) (I.O.D.) CIRCUIT OPEN
(Z904) GROUND CIRCUIT OPEN
(D96) SIREN SIGNAL CONTROL CIRCUIT SHORT TO BATTERY
(D96) SIREN SIGNAL CONTROL CIRCUIT OPEN
(D96) SIREN SIGNAL CONTROL CIRCUIT SHORT TO GROUND
SIREN
INTRUSION TRANSCEIVER MODULE

Diagnostic Test

1. INTERMITTENT DTC

With the scan tool, erase the current Intrusion Transceiver Module DTC's.

Turn the ignition off.

Arm the VTSS and wait one minute.

Disarm the VTSS and turn the ignition on.

Does the scan tool display the same DTC?

Yes >> Go To 2

No >> The condition that caused this symptom is currently not present. Inspect the related wiring harness for a possible intermittent condition. Look for any chafed, pierced, pinched or partially broken wires.
Perform BODY VERIFICATION TEST - VER 1. (Refer to 8 - ELECTRICAL/ELECTRONIC CONTROL MODULES - STANDARD PROCEDURE)

2. (A117) FUSED B(+) (I.O.D.)

Gain access to the VTSS Siren.

Disconnect the Siren connector.

Using a 12-volt test light connected to ground, check the (A117) Fused B(+) (I.O.D.) circuit in the Siren connector.

Does the test light illuminate brightly?

Yes >> Go To 3

No >> Repair the (A117) Fused B(+) (I.O.D.) circuit for an open.
Perform BODY VERIFICATION TEST - VER 1. (Refer to 8 - ELECTRICAL/ELECTRONIC CONTROL MODULES - STANDARD PROCEDURE)

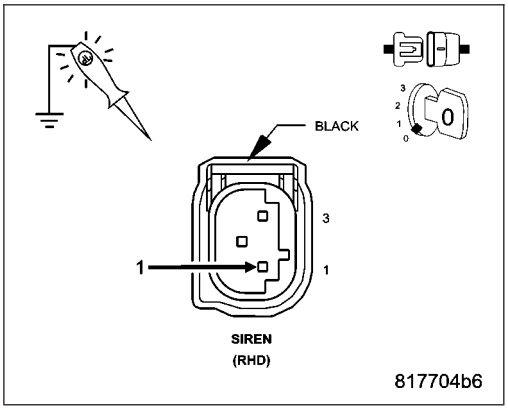

3. (Z904) GROUND CIRCUIT

Using a 12-volt test light connected to 12-volts, check the (Z904) Ground circuit at the siren connector.

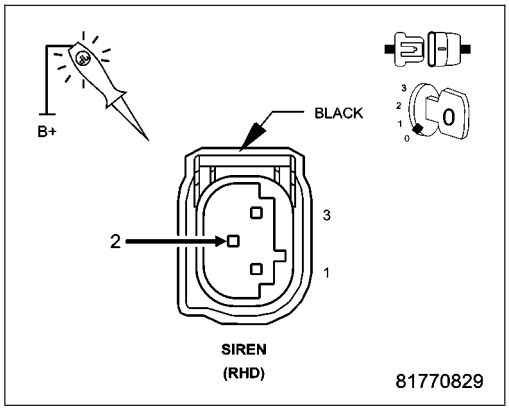

Does the test light illuminate brightly?

Yes >> Go To 4

No >> Repair the (Z904) Ground circuit for an open.

Perform BODY VERIFICATION TEST - 1A. (Refer to 8 - ELECTRICAL/ELECTRONIC CONTROL MODULES - STANDARD PROCEDURE)

4. FAULTY SIREN

Use the DRBIII® and set up as follows:

Use the Scope input cable CH7058, Cable to Probe adapter CH7062, and the red and black test probes.

Connect the scope input cable to the channel one connector on the DRBIII®. Attach the red and black leads and the cable to probe adapter to the scope input cable.

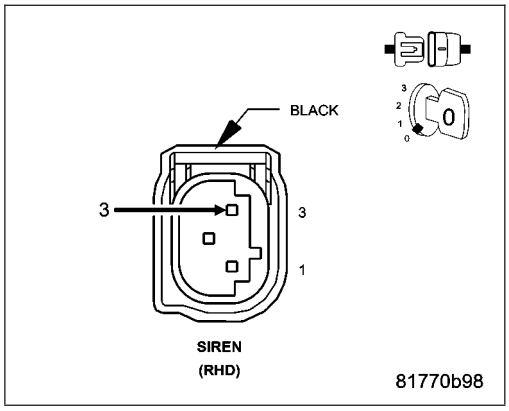

Select DRBIII® Stand-alone.

Select lab scope.

Select Live.

Select 12 volt square wave.

Press F2 for Scope.

Press F2 and use the down arrow to set voltage range to 20 volts. Press F2 again when complete.

Disconnect the Siren connector.

Connect the black lead to the chassis ground. Connect the red lead to the (D96) Siren Signal Control circuit in the Siren connector.

Close all doors and arm the VTSS.

Observe the voltage displayed on the DRBIII® Lab Scope.

Is there a voltage square wave present 1 to 2 seconds?

Yes >> Connect a known good siren and try to reset the DTC. If the DTC does not reset the original siren needs to be replaced. If the DTC does reset replace the Intrusion Transceiver Module in accordance with the Service Information.

Perform BODY VERIFICATION TEST - VER 1. (Refer to 8 - ELECTRICAL/ELECTRONIC CONTROL MODULES - STANDARD PROCEDURE)

No >> Go To 5

5. (D96) SIREN SIGNAL CONTROL CIRCUIT SHORT TO BATTERY

Disconnect the Siren harness connector.

Measure the voltage of the (D96) Siren Signal Control circuit.

Is there any voltage present?

Yes >> Repair the (D96) Siren Signal Control circuit for a short to voltage.Perform BODY VERIFICATION TEST - 1A. (Refer to 8 - ELECTRICAL/ELECTRONIC CONTROL MODULES - STANDARD PROCEDURE)

No >> Go To 6

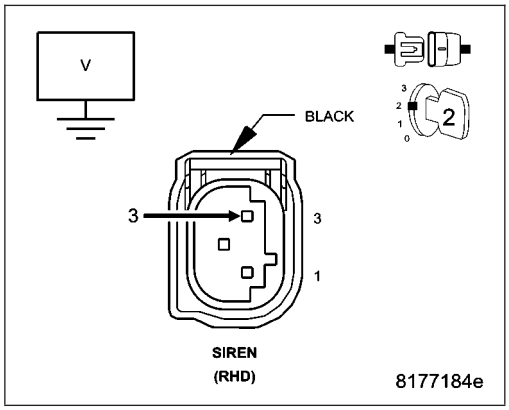

6. (D96) SIREN SIGNAL CONTROL CIRCUIT SHORT TO GROUND

Disconnect the Siren harness connector.

Disconnect the Intrusion Transceiver Module harness connector.

Measure the resistance between ground and the (D96) Siren Signal Control circuit.

Is the resistance above 5.0 ohms?

Yes >> Go To 7

No >> Repair the (D96) Siren Signal Control circuit for a short to ground.

Perform BODY VERIFICATION TEST - 1A. (Refer to 8 - ELECTRICAL/ELECTRONIC CONTROL MODULES - STANDARD PROCEDURE)

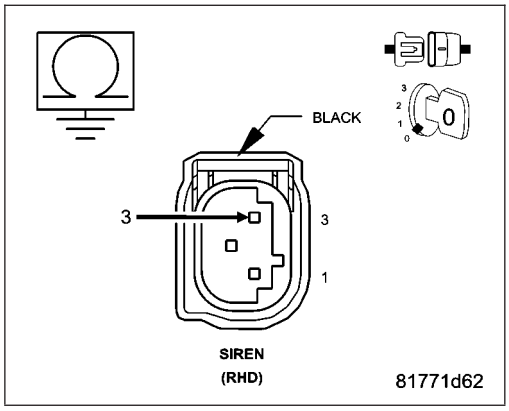

7. (D96) SIREN SIGNAL CONTROL CIRCUIT OPEN

Disconnect the Intrusion Transceiver Module harness connector.

Measure the resistance of the (D96) Siren Signal Control circuit between the Intrusion Transceiver Module and the Siren connector.

Is the resistance below 5.0 ohms?

Yes >> Replace the Intrusion Transceiver Module in accordance with the Service Information.

Perform BODY VERIFICATION TEST - VER 1. (Refer to 8 - ELECTRICAL/ELECTRONIC CONTROL MODULES - STANDARD PROCEDURE)

No >> Repair the (D96) Siren Signal Control circuit for an open.

Perform BODY VERIFICATION TEST - 1A. (Refer to 8 - ELECTRICAL/ELECTRONIC CONTROL MODULES - STANDARD PROCEDURE)

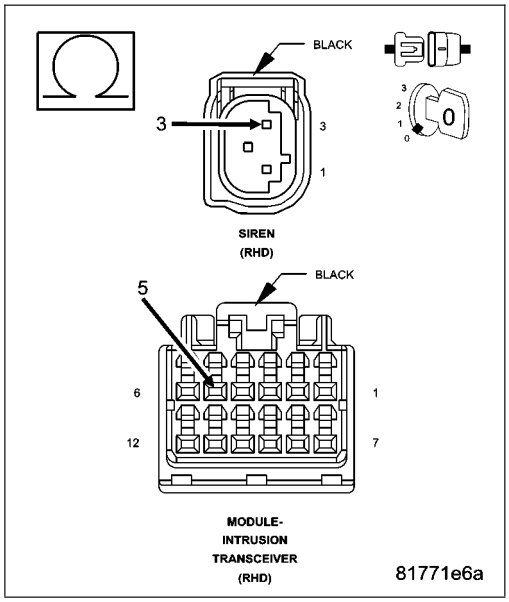

STANDARD PROCEDURE

SKREEM/SKIM VERIFICATION

For a complete wiring diagram **Refer to Section 8W**.

Diagnostic Test

1. SKREEM/SKIM VERIFICATION

NOTE: When entering the PIN, care should be taken because the SKREEM will only allow 3 consecutive attempts to enter the correct PIN. If 3 consecutive incorrect PIN's are entered the SKREEM will Lock Out the scan tool. To exit Lock Mode, the ignition key must remain the Run position for I hour. All accessories must be off. A battery charger connected to the battery during this time period is recommended.

NOTE: On vehicles equipped with a premium Tire Pressure Monitoring (TPM) system, when the SKREEM and/or the spare tire pressure sensor is replaced with a new unit, a diagnostic scan tool MUST be used to run a routine that allows the SKREEM to be programmed with the ID number and location of the spare tire pressure sensor mounted in the wheel of the spare tire. Follow the programming steps outlined in the diagnostic scan tool for "Learn Spare Tire Sensor ID" under "Miscellaneous Functions" for the "WCM/Wireless Control Module" menu item as appropriate. In addition, if the SKREEM is replaced, the spare tire must be dismounted from its wheel to access and note the ID number on the spare tire pressure sensor so that the ID code for that sensor can be programmed into the new SKREEM.

1. Reconnect the previously disconnected components and connectors.
2. Obtain the vehicle's unique Personal Identification Number (PIN) assigned to it's original SKREEM. This number can be obtained from the vehicle invoice or from the DaimlerChrysler Customer Center (Phone 1-800-992-1997).
3. With the scan tool, select Miscellaneous Functions, WCM/Wireless Control Module. Then select the desired procedure and follow the display on the scan tool.
4. If the vehicle is equipped with Tire Pressure Monitoring System program the Palcard Pressure Values into the WCM/SKREEM.
5. Ensure all the customer's key have been programmed into the new module if necessary.
6. With the scan tool, ease all DTCs. Perform 5 ignition key cycles, leaving the key on for at least 90 seconds per cycle.
7. With the scan tool, read SKREEM DTC(s).
8.

NOTE: If this vehicle is equipped with a Steering Column Lock Module, it must be replaced along with the SKREEM.

Are there any SKREEM DTC(s) present?

Yes >> Repair not complete, refer to the appropriate symptom.

No >> Repair is complete.

VEHICLE THEFT SECURITY - SERVICE INFORMATION

TABLE OF CONTENTS

page

VEHICLE THEFT SECURITY - SERVICE INFORMATION
DESCRIPTION 125
OPERATION 126
DIAGNOSIS AND TESTING
VEHICLE THEFT SECURITY SYSTEM/ SENTRY KEY REMOTE ENTRY SYSTEM . . . 128
HOOD AJAR SWITCH - EXPORT
DESCRIPTION 130
OPERATION 130
REMOVAL 130
INSTALLATION 130
INTRUSION MODULE - EXPORT
DESCRIPTION 132
OPERATION 132
REMOVAL 133
INSTALLATION 133
INTRUSION SENSOR - EXPORT
DESCRIPTION
TRANSMITTER 134
RECEIVER 134
OPERATION
TRANSMITTER 135
RECEIVER 135
REMOVAL
TRANSMITTER 135

page

RECEIVER 136
INSTALLATION
TRANSMITTER 136
RECEIVER 137
SHAFT LOCK MODULE - EXPORT
DESCRIPTION 138
OPERATION 138
SENTRY KEY REMOTE ENTRY MODULE
DESCRIPTION 139
OPERATION 140
DIAGNOSIS AND TESTING
SENTRY KEY REMOTE ENTRY MODULE (SKREEM) 141
REMOVAL 141
INSTALLATION 143
TRANSPONDER KEY
DESCRIPTION 145
OPERATION 145
STANDARD PROCEDURE
TRANSPONDER PROGRAMMING 146
VTSS/SKIS INDICATOR LAMP
DESCRIPTION 148
OPERATION 148

VEHICLE THEFT SECURITY - SERVICE INFORMATION

DESCRIPTION

VEHICLE THEFT SECURITY SYSTEM

The VTSS is available in two different configurations: One is designed for vehicles manufactured for sale in North America; while the other configuration is designed for vehicles manufactured for sale in markets outside of North America, also referred to as export markets. In addition, the VTSS for export is available in two versions: base and premium. All vehicles equipped with VTSS are also equipped with the Remote Keyless Entry (RKE) system and the Sentry Key Immobilizer System (SKIS), regardless of their market destination.

The North American and export base version of the VTSS system provide perimeter vehicle protection by monitoring the vehicle doors, the ignition switch, and for vehicles built for certain markets where it is required equipment, the hood. If unauthorized vehicle use or tampering is detected, these systems respond by pulsing the vehicle horn as an audible deterrent and flashing certain exterior lamps as a visual deterrent.

The export premium version of the VTSS system is only available in vehicles manufactured for sale in certain markets where it is required equipment. The export premium version of the VTSS provides the same perimeter protection features as the base version, but adds interior vehicle intrusion protection.

The VTSS includes the following major components, which are described in further detail elsewhere in this service information:

- **Door Ajar Switches** - A door ajar switch is integral to the door latch mechanism of each front and rear door.
- **Front Control Module** - The Front Control Module (FCM) is integral to the Integrated Power Module (IPM). The FCM/IPM is located in the engine compartment, near the battery and the Power Distribution Center (PDC) (Refer to 8 - ELECTRICAL/POWER DISTRIBUTION - DESCRIPTION).
- **Horn Relay** - The horn relay is located in the Power Distribution Center (PDC) in the engine compartment near the battery
- **Ignition Switch** - The ignition switch is located on the steering column in the passenger compartment (Refer to 8 - ELECTRICAL/IGNITION CONTROL/IGNITION SWITCH - DESCRIPTION).
- **Instrument Cluster** - The ElectroMechanical Instrument Cluster (EMIC) is also known as the Cab Compartment Node (CCN). The EMIC/CCN is located in the instrument panel above the steering column opening, directly in front of the driver (Refer to 8 - ELECTRICAL/INSTRUMENT CLUSTER - DESCRIPTION).
- **Intrusion Module** - An intrusion module is located the passenger side instrument panel, just above the glove box of vehicles built for sale in certain export markets where it is required equipment (Refer to 8 - ELECTRICAL/VEHICLE THEFT SECURITY/INTRUSION TRANSCEIVER MODULE - DESCRIPTION).
- **Intrusion Sensor Receiver** - An intrusion sensor receiver is located in the right front corner of the overhead console above the headliner in the passenger compartment of vehicles built for sale in certain export markets where it is required equipment (Refer to 8 - ELECTRICAL/VEHICLE THEFT SECURITY/INTRUSION SENSOR RECEIVER - DESCRIPTION).
- **Intrusion Sensor Transmitter** - An intrusion sensor transmitter is located in the right C-pillar upper trim panel in the passenger compartment of vehicles built for sale in certain export markets where it is required equipment (Refer to 8 - ELECTRICAL/VEHICLE THEFT SECURITY/INTRUSION SENSOR TRANSMITTER - DESCRIPTION).
- **Liftgate Ajar Switch - Wagon only** - A liftgate ajar switch is integral to the latch mechanism of the liftgate.
- **Security Indicator** - The security indicator is integral to the instrument cluster (Refer to 8 - ELECTRICAL/INSTRUMENT CLUSTER - OPERATION).
- **Siren** - An alarm siren is located behind the left front wheelhouse splash shield, outboard of the left front frame rail. A single screw secures the mounting bracket to the right end of the front crossmember of vehicles built for sale in certain export markets where it is required equipment.

SENTRY KEY REMOTE ENTRY SYSTEM

The Sentry Key Remote Entry System (SKREES) provides passive vehicle protection by preventing the engine from operating unless a valid electronically encoded key is detected in the ignition lock cylinder. The SKREES used in combination with the export premium version of the VTSS adds a steering shaft lock feature that provides passive protection by preventing the vehicle from being steered unless a valid electronically encoded key is detected in the ignition lock cylinder.

The SKREES includes the following major components, which are described in further detail elsewhere in this service information:

- **Powertrain Control Module** - The Powertrain Control Module (PCM) is located in the engine compartment.
- **Sentry Key Remote Entry Module (SKREEM)/Wireless Control Module (WCM)** - The Sentry Key REmote Entry Module (SKREEM), sometimes referred to as the Wireless Control Module (WCM), is located on the right side of the steering column near the ignition lock cylinder housing and an integral molded plastic antenna ring circles the ignition lock cylinder like a halo. The SKREEM and its antenna are concealed beneath the instrument panel steering column shrouds.
- **Sentry Key Transponder** - The Sentry Key transponder is contained within the Remote Keyless Entry (RKE) transmitter on the ignition key.
- **Security Indicator** - The security indicator is integral to the ElectroMechanical Instrument Cluster. (Refer to 8 - ELECTRICAL/INSTRUMENT CLUSTER - OPERATION).
- **Shaft Lock Module** - A shaft lock module is located on the lower end of the steering column casting below the instrument panel in the passenger compartment of vehicles built for sale in certain export markets where it is required equipment.

OPERATION

The ElectroMechanical Instrument Cluster (EMIC), sometimes referred to as the Cab Compartment Node (CCN), is used to control and integrate many of the functions and features included in the Vehicle Theft Security System (VTSS). In the VTSS, the EMIC/CCN receives inputs indicating the status of the door ajar switches, the liftgate ajar switch and the ignition switch. The EMIC/CCN will process the information from all of these inputs, internally control the security indicator as appropriate, and send electronic messages to the Front Control Module (FCM) over the Controller Area Network (CAN) data bus. The FCM internally controls the output to the hazard warning lamps and sends a control output to energize or de-energize the horn relay as appropriate.

Following are paragraphs describing the operation of each of the VTSS features.

ENABLING

VTSS should be learned off the vehicle configuration message from the FCM when the EMIC/CCN gets replaced.

ARMING

Passive arming of the VTSS occurs when the vehicle is exited with the key removed from the ignition switch, the headlamps are turned off, and the doors are locked while they are open using the power lock switch. Active arming occurs when the “Lock” button on the Remote Keyless Entry (RKE) transmitter is depressed to lock the vehicle. For active arming to occur, the doors must be closed and the ignition switch must be in the Off position when the RKE transmitter “Lock” button is depressed. The power lock switch will not function if the key is in the ignition switch or the headlamps are turned on with the driver side front door open.

Pre-arming of the VTSS is initiated when a door or the liftgate is open when the vehicle is locked using a power door lock switch or when the RKE transmitter “Lock” button is depressed. Pre-arming will not occur if the key is in the ignition switch or the headlamps are turned on with the driver side front door open. When the VTSS is pre-armed, the arming sequence is delayed until all of the doors and the liftgate have been closed. The VTSS will remain in “Pre-Armed” mode for up to seventeen seconds after all doors and the liftgate have been closed.

Once the VTSS begins the passive or active arming sequence, the security indicator in the instrument cluster will flash rapidly for about seventeen seconds. This indicates that VTSS arming is in progress. If the ignition switch is turned to the On position, a door or the liftgate is opened, a door or the liftgate is unlocked by any means, or the RKE “Panic” button is depressed during the seventeen second arming process, the security indicator will stop flashing and the arming process will abort. Once the seventeen second arming sequence is successfully completed, the security indicator will flash at a slower rate, indicating that the VTSS is armed.

DISARMING

Since this model is not equipped with lock cylinder switches, passive disarming of the VTSS is only possible if the vehicle is equipped with the optional Sentry Key Immobilizer System (SKIS). On vehicles with SKIS, turning the ignition switch to the On position using a valid SKIS key will passively disarm VTSS. Active disarming of the VTSS occurs when the vehicle is unlocked by depressing the “Unlock” button of the RKE transmitter. Once the alarm has been activated, either disarming method will also deactivate the alarm. Depressing the “Panic” button on the RKE transmitter will **not** disarm the VTSS.

POWER-UP MODE

When the armed VTSS senses that the battery has been disconnected and reconnected, it enters its power-up mode. In the power-up mode the alarm system remains armed following a battery failure or disconnect. If the VTSS was armed prior to a battery disconnect or failure, the technician or vehicle operator will have to actively or passively disarm the alarm system after the battery is reconnected. The power-up mode will also apply if the battery goes dead while the system is armed, and battery jump-starting is attempted. The VTSS will be armed until the technician or vehicle operator has actively or passively disarmed the alarm system. If the VTSS is in the disarmed mode prior to a battery disconnect or failure, it will remain disarmed after the battery is reconnected or replaced, or if jump-starting is attempted.

TAMPER ALERT

The VTSS tamper alert feature will sound the horn three times upon disarming, if the alarm was triggered and has since timed-out (about eighteen minutes) or if the battery has been disconnected and reconnected. This feature alerts the vehicle operator that the VTSS alarm was activated while the vehicle was unattended.

INTRUSION ALARM

The intrusion alarm is an exclusive feature of the export premium version of the VTSS, which is only available in certain markets where it is required. When the VTSS is armed, the intrusion module uses a hard wired outputs to control an ultrasonic transmitter and receiver which allows the module to monitor the interior of the vehicle for movement. If motion is detected, the intrusion module sends an electronic message to the EMIC/CCN and the FCM over the CAN data bus to invoke the visual alarm features, and sends an electronic message to the siren over a dedicated serial bus to invoke the audible alarm feature.

The motion detect feature of the intrusion module can be disabled by depressing the LOCK button on the RKE transmitter three times within 15 seconds during VTSS arming, while the security indicator is still flashing rapidly. The VTSS provides a single short siren chirp as an audible confirmation that the motion detect disable request has been received.

The intrusion module must be electronically enabled in order for the intrusion alarm to perform as designed. The intrusion alarm function of the module is enabled on vehicles equipped with this option at the factory, but a service replacement module must be configured and enabled by the dealer using a diagnostic scan tool. Refer to the appropriate diagnostic information. The intrusion module monitors the conditions of the transmitter and receiver sensors as well as the siren, and will store fault information in the form of a Diagnostic Trouble Code (DTC) if a system malfunction is detected. The intrusion module can be diagnosed, and any stored DTC can be retrieved using a diagnostic scan tool. Refer to the appropriate diagnostic information.

SENTRY KEY IMMOBILIZER SYSTEM

The Sentry Key Immobilizer System (SKIS, sometimes referred to as the Sentry Key Remote Entry System (SKREES),) is designed to provide passive protection against unauthorized vehicle use by disabling the engine after about two seconds of running, whenever any method other than a valid Sentry Key is used to start the vehicle. The SKIS/SKREES is considered a passive protection system because it is always active when the ignition system is energized and does not require any customer intervention. The SKIS/SKREES uses Radio Frequency (RF) communication to obtain confirmation that the key in the ignition switch is a valid key for operating the vehicle. The microprocessor-based SKIS/SKREES hardware and software also uses electronic messages to communicate with other electronic modules in the vehicle over the Controller Area Network (CAN) data bus. (Refer to 8 - ELECTRICAL/ELECTRONIC CONTROL MODULES/COMMUNICATION - OPERATION).

Pre-programmed Sentry Key transponders are provided with the vehicle from the factory. Each Sentry Key REmote Entry Module (SKREEM), sometimes referred to as the Wireless Control Module (WCM), will recognize a maximum of eight Sentry Keys. If the customer would like additional keys other than those provided with the vehicle, they may be purchased from any authorized dealer. These additional keys must be programmed to the SKREEM/WCM in the vehicle in order for the system to recognize them as valid keys. This can be done by the dealer using a diagnostic scan tool or, if Customer Learn programming is an available SKIS/SKREES feature in the market where the vehicle was purchased, the customer can program the additional keys, as long as at least two valid Sentry Keys are already available. (Refer to 8 - ELECTRICAL/VEHICLE THEFT SECURITY - STANDARD PROCEDURE - TRANSPONDER PROGRAMMING).

In vehicles equipped with an export premium version of the VTSS, the SKIS also controls an electronic shaft lock module on the steering column that locks the steering shaft from rotation unless a valid key is detected in the igni-

tion lock cylinder. The SKREEM communicates with the shaft lock module over a dedicated serial bus to monitor and control the shaft lock function.

The SKREEM performs a self-test of the SKIS and the shaft lock module each time the ignition switch is turned to the ON position, and will store fault information in the form of a Diagnostic Trouble Code (DTC) if a system malfunction is detected. The SKREEM will also send an electronic message to the instrument cluster if a fault is detected, and the instrument cluster illuminates the security indicator or displays a textual shaft lock error message in the Electronic Vehicle Information Center (EVIC) as appropriate. The SKIS can be diagnosed, and any stored DTC can be retrieved using a diagnostic scan tool. Refer to the appropriate diagnostic information.

DIAGNOSIS AND TESTING

VEHICLE THEFT SECURITY SYSTEM/SENTRY KEY REMOTE ENTRY SYSTEM

SENTRY KEY IMMOBILIZER SYSTEM (SKIM)/SENTRY KEY REMOTE ENTRY SYSTEM (SKREES)

Conventional diagnostic methods may not prove conclusive in the diagnosis of the Sentry Key REmote Entry Module (SKREEM), sometimes referred to as the Wireless Control Module (WCM), and the Sentry Key Immobilizer System (SKIM), sometimes referred to as the Sentry Key Remote Entry System (SKREES), the ElectroMechanical Instrument Cluster (EMIC), the Powertrain Control Module (PCM), the Controller Area Network (CAN) data bus, or the electronic message inputs used to provide the electronic features of the SKREES. The most reliable, efficient, and accurate means to diagnose the SKREEM, the EMIC, the PCM, the CAN data bus, and the electronic message inputs for the SKREES requires the use of a diagnostic scan tool. Refer to the appropriate diagnostic information.

SENTRY KEY REMOTE ENTRY SYSTEM DIAGNOSIS

CONDITION	POSSIBLE CAUSES	CORRECTION
SECURITY INDICATOR FAILS TO LIGHT DURING BULB TEST	1. Light-Emitting Diode (LED) faulty.	1. Perform the instrument cluster actuator test. (Refer to 8 - ELECTRICAL/INSTRUMENT CLUSTER - DIAGNOSIS AND TESTING - ACTUATOR TEST)..
	2. Fuse faulty.	2. Check the SKREEM fused B(+) fuse and the fused ignition switch output (run-start) fuse in the Junction Block (JB). Replace fuses, if required.
	3. Ground path faulty.	3. Check for continuity to ground at the connector for the SKREEM. Repair wiring, if required.
	4. Battery feed faulty.	4. Check for battery voltage at the connector for the SKREEM. Repair wiring, if required.
	5. Ignition feed faulty.	5. Check for battery voltage at the connector for the SKREEM with the ignition switch in the On position. Repair wiring, if required.
SECURITY INDICATOR FLASHES FOLLOWING BULB TEST	1. Invalid key in ignition switch lock cylinder.	1. Replace the key with a known valid key.
	2. Key-related fault.	2. Use a diagnostic scan tool and the appropriate diagnostic information for further diagnosis.
SECURITY INDICATOR LIGHTS SOLID FOLLOWING BULB TEST	1. SKREES system malfunction/fault detected.	1. Use a diagnostic scan tool and the appropriate diagnostic information for further diagnosis.
	2. SKREES system inoperative.	2. Use a diagnostic scan tool and the appropriate diagnostic information for further diagnosis.

VEHICLE THEFT SECURITY SYSTEM

However, conventional diagnostic methods may not prove conclusive in the diagnosis of the ElectroMechanical Instrument Cluster (EMIC), the Front Control Module (FCM), the Controller Area Network (CAN) data bus, or the electronic message inputs used to provide the electronic features of the VTSS. The most reliable, efficient, and

accurate means to diagnose the EMIC, the FCM, the CAN data bus, and the electronic message inputs for the VTSS requires the use of a diagnostic scan tool. Refer to the appropriate diagnostic information.

HOOD AJAR SWITCH - EXPORT

DESCRIPTION

The hood ajar switch is a normally closed, single pole, spring-loaded plunger actuated switch that is used only on vehicles equipped with the Vehicle Theft Security System (VTSS) for sale in certain markets where it is required equipment. The switch is connected to the vehicle electrical system through the headlamp and dash wire harness.

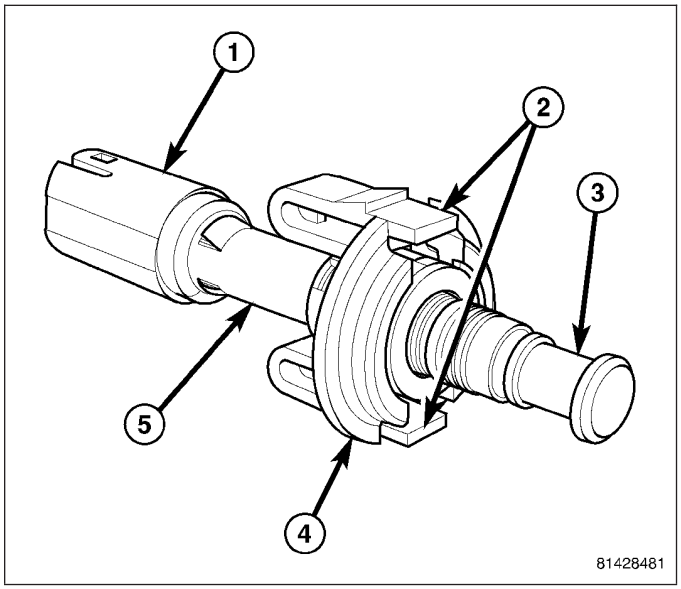

The switch plunger (3) extends through a mounting collar (4) and sleeve on the upper end of the switch body. The sleeve has a one-time, self-adjustment feature that is activated after the switch is installed by closing the hood. Two integral latches (2) lock the switch into a keyed mounting hole in the stamped steel switch mounting bracket. The mounting bracket is secured toward the left rear of the engine compartment. The underside of the hood panel inner reinforcement actuates the switch plunger as the hood panel is closed.

An installed hood ajar switch cannot be readjusted or repaired. If the switch is damaged, ineffective, or requires readjustment, it must be replaced with a new unit.

OPERATION

The hood ajar switch is a normally closed switch that is held open as the spring-loaded switch plunger is depressed by the inner hood panel reinforcement when the hood panel is closed and latched. When the hood is opened, the spring-loaded switch plunger extends from the switch body and the switch contacts are closed. The switch is connected in series between ground and the hood ajar switch sense input of the Front Control Module (FCM). The FCM uses an internal resistor pull up to monitor the state of the hood ajar switch contacts.

The components of the switch self-adjustment feature include an integral stop on the shaft of the plunger and a ribbed, ratcheting sleeve at the top of the switch body from which the plunger extends. With the switch mounting collar secured in its mounting bracket, the plunger is depressed by the hood inner reinforcement as the hood is closed. As the plunger is depressed, the plunger stop contacts the top of the sleeve and the sleeve is driven downward, ratcheting through the switch mounting collar until the hood is fully closed and latched. The ribs on the sleeve are engaged within the mounting collar to maintain this adjusted position.

REMOVAL

1. Unlatch and open the hood.
2. Disconnect and isolate the battery negative cable.
3. From the top of the hood ajar switch mounting bracket, squeeze the two switch latch tabs together and pull the switch upward.
4. Pull the hood ajar switch up through the hole in the mounting bracket far enough to access and disconnect the wire harness connector and remove switch from vehicle.

INSTALLATION

NOTE: Self-adjustment of the hood ajar switch is a one-time feature. If the switch is damaged, ineffective, removed or requires readjustment, it must be replaced with a new unit.

1. Position the hood ajar switch near the hole in the mounting bracket.
2. Pull the wire harness connector through the switch mounting bracket and reconnect it to the switch.
3. From the top of the mounting bracket, press the switch downward into the mounting hole until the integral switch latch tabs lock it into place.
4. Reconnect the battery negative cable.

5. Close and latch the hood. This will adjust the hood ajar switch to the proper height.

INTRUSION MODULE - EXPORT

DESCRIPTION

An intrusion module (1) is part of the premium version of the Vehicle Theft Security System (VTSS). The premium version of the VTSS is only available in vehicles built for certain markets, where the additional features offered by this system are required. The intrusion module is located in the passenger compartment. This unit is designed to work in conjunction with the intrusion sensor transmitter and intrusion sensor receiver to provide interior motion detection and serves as the interface between the Forward Control Module (FCM), the ElectroMechanical Instrument Cluster (EMIC), sometimes referred to as the Cab Compartment Node (CCN), and the alarm siren.

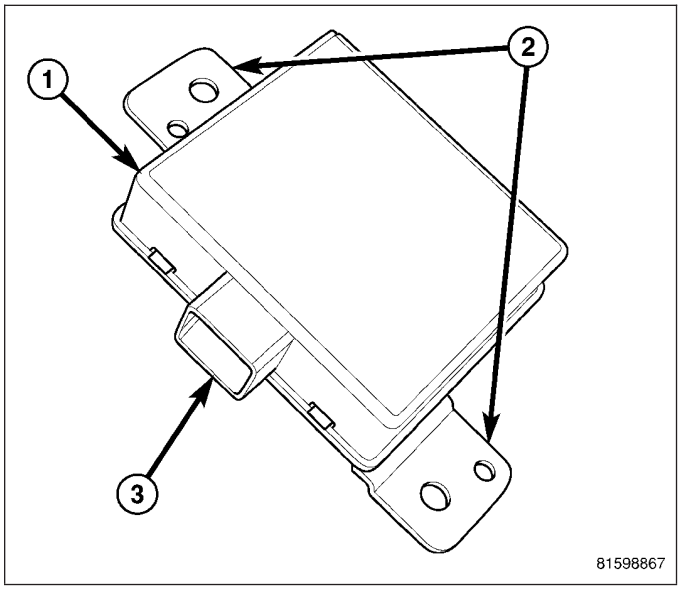

The intrusion module has two integral mounts (2) that are secured behind the passenger side instrument panel, just above the glove box. Concealed within the molded plastic housing is the circuitry of the module, which includes a microprocessor. The module is connected to the vehicle electrical system by a connector of the body wire harness.

The intrusion module unit cannot be adjusted or repaired and, if faulty or damaged, it must be replaced.

OPERATION

The microprocessor in the intrusion module contains the motion detection logic circuits and controls all of the features of the premium version of the Vehicle Theft Security System (VTSS). The module uses On-Board Diagnostics (OBD) and can communicate with other modules in the vehicle as well as with a diagnostic scan tool using the Controller Area Network (CAN) data bus. This method of communication is used by the module to communicate with the Forward Control Module (FCM) and the ElectroMechanical Instrument Cluster (EMIC), sometimes referred to as the Cab Compartment Node (CCN). The module also communicates with the alarm siren over a dedicated serial bus circuit.

The intrusion module microprocessor continuously monitors inputs from the intrusion sensor transmitter and receiver as well as inputs from the EMIC/CCN and the alarm siren module. The module energizes the intrusion sensor transmitter, which transmits ultrasonic signals into the vehicle cabin through a transmit transducer, then monitors the current draw of the transmitter to detect problems with the transmitter and transmitter circuits. The module also energizes the intrusion sensor receiver, which listens to the ultrasonic signals through a receive transducer as they bounce off of objects in the vehicle interior, then monitors the current draw of the receiver for data signals and to detect problems with the receiver and receiver circuits. If an object is moving in the interior, a detection circuit in the module senses this movement through the modulation of the returning data signals from the receiver.

If movement is detected, the intrusion module sends an electronic message to the FCM over the CAN data bus to flash the exterior lighting and sends another message to the alarm siren module over the dedicated serial bus line to sound the siren. When the EMIC/CCN or FCM detect a breach in the perimeter protection through a door or hood ajar switch input, they send an electronic message to the intrusion module and the module sends a message to the FCM to flash the exterior lighting and a message to the alarm siren module to sound the siren. The module also monitors message inputs from the alarm siren module for siren battery or siren input/output circuit tamper alerts, and siren battery condition alerts, then sets active and stored Diagnostic Trouble Codes (DTC) for any monitored system faults it detects. An active fault only remains for the current ignition switch cycle, while a stored fault causes a DTC to be stored in memory by the module. If a fault does not recur for 50 ignition cycles, the module will automatically erase the stored DTC.

The intrusion module receives constant battery voltage (when armed), and is grounded at all times through a hard wired remote ground point. These connections allow the module to remain operational, regardless of the ignition switch position. Use a diagnostic scan tool and refer to the appropriate diagnostic information for proper diagnosis of the system.

REMOVAL

1. Disconnect and isolate the battery negative cable.
2. Remove the glove box (Refer to 23 - BODY/INSTRUMENT PANEL/GLOVE BOX - REMOVAL).
3. Reach up behind the instrument panel and remove the two retaining screws to the intrusion module.
4. Disconnect the electrical connector to the intrusion Module.
5. Remove the module from the instrument panel.

INSTALLATION

1. Position the intrusion module on the passenger side of the instrument panel and connect the electrical connector.
2. Install and tighten the two fasteners that secure the module to the instrument panel.
3. Install the glove box (Refer to 23 - BODY/INSTRUMENT PANEL/GLOVE BOX - INSTALLATION).
4. Connect the battery negative cable.

INTRUSION SENSOR - EXPORT

DESCRIPTION

TRANSMITTER

An intrusion sensor transmitter (2) is part of the premium version of the Vehicle Theft Security System (VTSS). The premium version of the VTSS is only available in vehicles built for certain markets, where the additional features offered by this system are required. This unit is designed to work in conjunction with the intrusion sensor receiver to provide interior motion detection inputs to the intrusion module, which serves as the interface between the Forward Control Module (FCM), the ElectroMechanical Instrument Cluster (EMIC), sometimes referred to as the Cab Compartment Node (CCN), and the alarm siren.

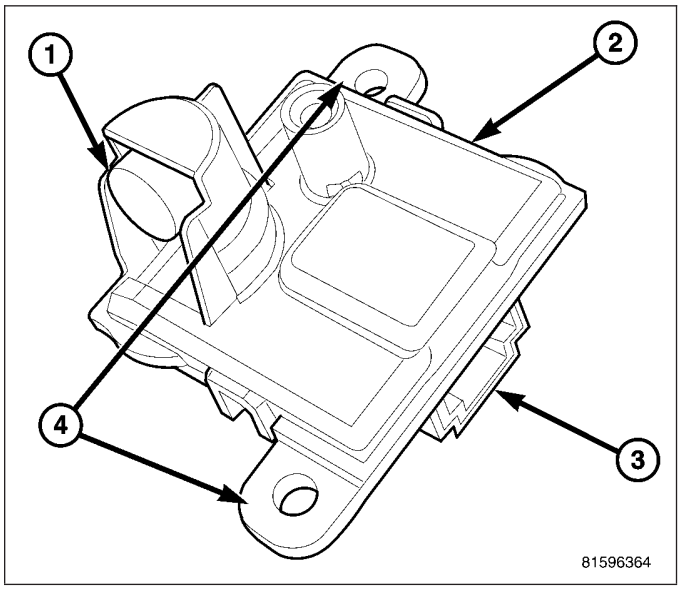

The transmitter is located in the passenger compartment, where it is concealed behind the right C-pillar. The trim bezel has a small round opening that faces the front of the vehicle through which the transducer is aimed. Concealed within the molded plastic transmitter housing is the circuitry of the transmitter which includes an ultrasonic transmit transducer (1).

The intrusion sensor transmitter cannot be adjusted or repaired and, if faulty or damaged, it must be replaced. The transmitter mounting bracket is serviced as a unit with the headliner. The transducer trim bezel is available for separate service replacement.

RECEIVER

An intrusion sensor receiver (1) is part of the premium version of the Vehicle Theft Security System (VTSS). The premium version of the VTSS is only available in vehicles built for certain markets, where the additional features offered by this system are required. This unit is designed to work in conjunction with the intrusion sensor transmitter to provide interior motion detection inputs to the intrusion module, which serves as the interface between the Forward Control Module (FCM), the ElectroMechanical Instrument Cluster (EMIC), sometimes referred to as the Cab Compartment Node (CCN), and the alarm siren.

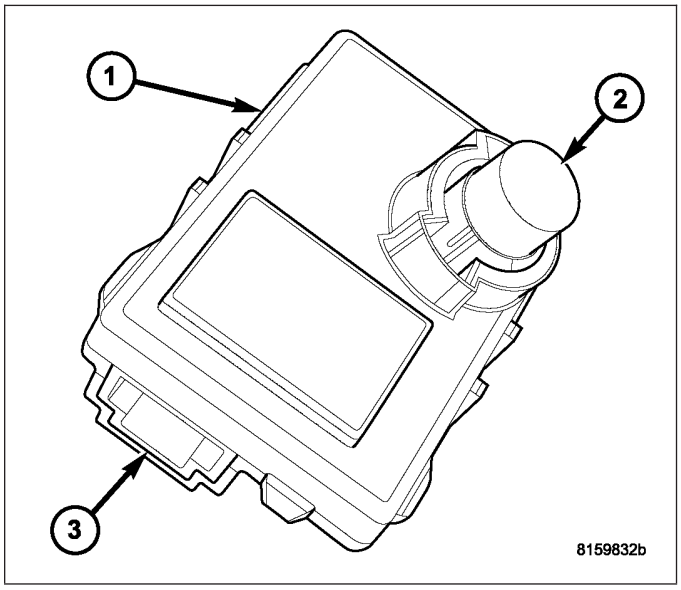

The receiver is located in the passenger compartment, where it is concealed behind the right front corner of the overhead console housing and engages three latch tabs integral to the receiver housing. The ultrasonic receiver transducer (2) is aimed through a small dedicated round opening in the overhead console forward of the reading lamps and is the only evidence of the receiver that is visible from the passenger compartment.

Concealed within the receiver housing is the circuitry which includes the receive transducer. The receiver is connected to the vehicle electrical system wire harness that is integral to the headliner.

The intrusion sensor receiver cannot be adjusted or repaired and, if faulty or damaged, it must be replaced. The receiver mounting bracket is serviced as a unit with the overhead console.

OPERATION

TRANSMITTER

The intrusion sensor transmitter operates only when it is energized by the intrusion module. The transmitter generates ultrasonic signals into the vehicle cabin through a transmit transducer. Then the intrusion sensor receiver listens to the returning signals as they bounce off of objects in the vehicle interior and provides input signals to the intrusion module. If an object is moving in the interior, a detection circuit in the intrusion module senses this movement through the modulation of the returning signals that occur due to the Doppler effect. The intrusion module monitors the current draw of the transmitter circuits to determine the condition of the transmitter and, if the draw is too high or too low, it will store a Diagnostic Trouble Code (DTC) for any fault that is detected.

Use a diagnostic scan tool and refer to the appropriate diagnostic information for diagnosis and testing of the system.

RECEIVER

The intrusion sensor receiver operates only when it is energized by the intrusion module. The receiver monitors ultrasonic signals generated in the vehicle cabin by the intrusion sensor transmitter through a receive transducer. The receiver listens to the ultrasonic signals as they bounce off of objects in the vehicle interior and provides input signals to the intrusion module. If an object is moving in the interior, a detection circuit in the intrusion module senses this movement through the modulation of the returning signals that occur due to the Doppler effect. The intrusion module monitors the current draw of the receiver circuits to determine the condition of the receiver and, if the draw is too high or too low, it will store a Diagnostic Trouble Code (DTC) for any fault that is detected.

Use a diagnostic scan tool and refer to the appropriate diagnostic information for diagnosis and testing of the system.

REMOVAL

TRANSMITTER

1. Disconnect and isolate the battery negative cable.
2. If replacing the bezel, pull the bezel (1) inboard from the C-pillar (3), or use a trim stick or equivalent to unsnap it from the transducer housing (2) of the intrusion sensor transmitter.
3. Remove the C-pillar trim panel (Refer to 23 - BODY/INTERIOR/C-PILLAR TRIM - REMOVAL).
4. Remove the two retaining screws from the C-pillar and remove the sensor.

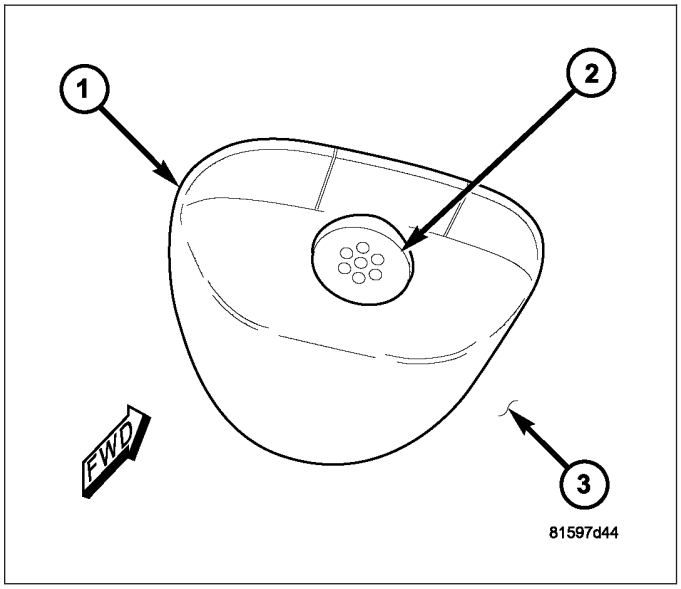

RECEIVER

1. Disconnect and isolate the battery negative cable.
2. Remove the overhead console from the headliner. (Refer to 8 - ELECTRICAL/OVERHEAD CONSOLE - REMOVAL).
3. Disconnect the electrical connector (5) on the receiver housing.
4. Release the three latch features (2) of the mounting bracket and disengage the receiver from the bracket.

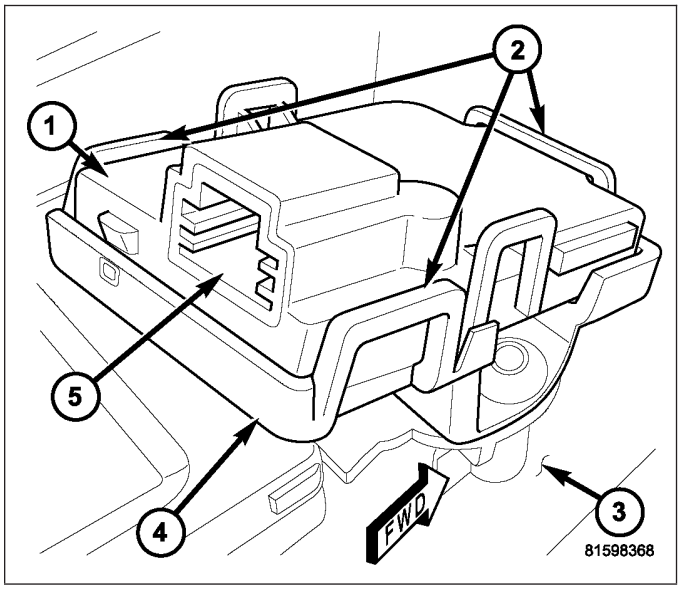

INSTALLATION

TRANSMITTER

1. Position the sensor on the inside of the C-pillar.
2. Install the two retaining screws.
3. Connect the electrical connector.
4. Install the C-pillar (Refer to 23 - BODY/INTERIOR/C-PILLAR TRIM - INSTALLATION).
5. If installing the bezel, position the bezel (1) over the transducer housing (2) of the intrusion sensor transmitter and press it straight on until it snaps into place against the C—pillar (3).
6. Reconnect the battery negative cable.

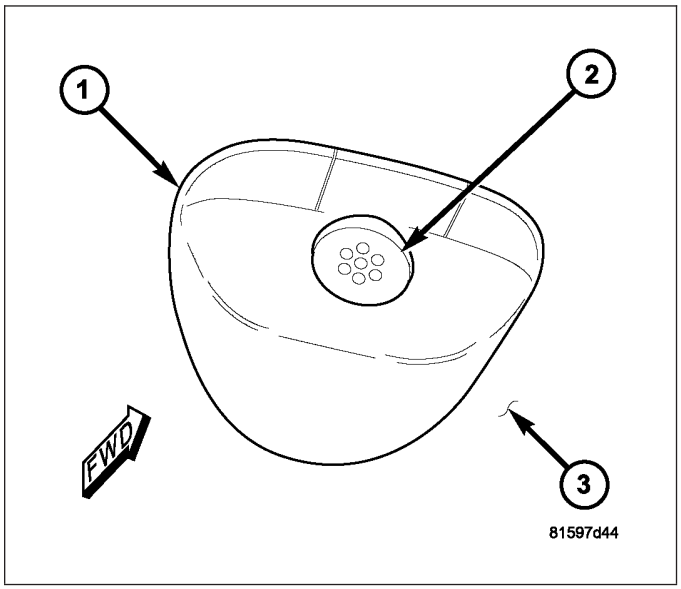

RECEIVER

1. Position the intrusion sensor receiver (1) to the mounting bracket (4) on the right front corner of the overhead console housing (3).
2. Press the receiver down until the three latch features (2) of the bracket are fully engaged.
3. Connect the electrical connector (5) on the receiver housing.
4. Install the overhead console onto the headliner. (Refer to 8 - ELECTRICAL/OVERHEAD CONSOLE - INSTALLATION).
5. Reconnect the battery negative cable.

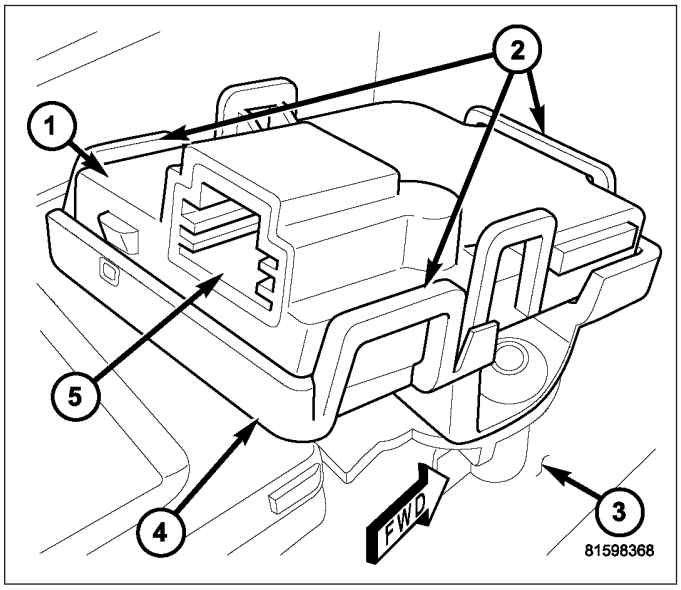

SHAFT LOCK MODULE - EXPORT

DESCRIPTION

A shaft lock module (1) is part of the premium version of the Sentry Key Immobilizer System (SKIS) in the Vehicle Theft Security System (VTSS). The premium version of the SKIS is only available in vehicles built for certain markets, where the additional features offered by this system are required. The shaft lock module is located in a bracket integral to the lower end of the steering column housing casting below the instrument panel in the passenger compartment. This unit is designed to work in conjunction with the Sentry Key REmote Entry Module (SKREEM) to control a locking bolt (2) that engages a machined slot in the steering shaft to prevent shaft rotation whenever there is not a valid key present in the ignition lock cylinder on the instrument panel.

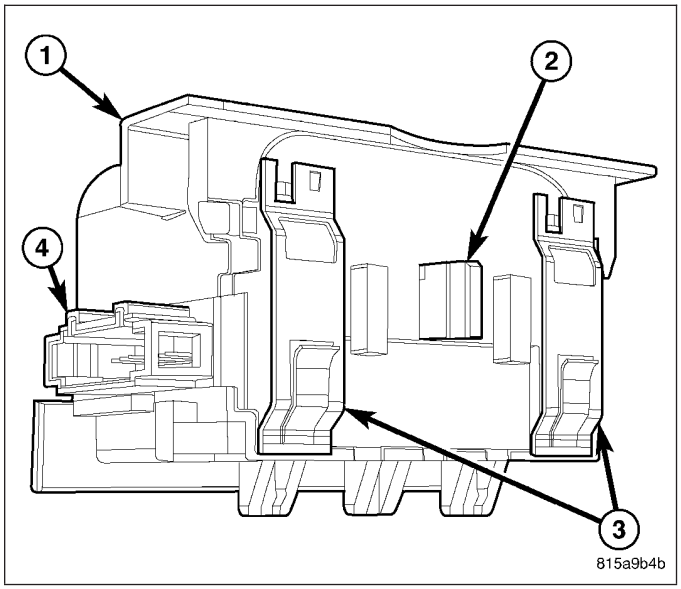

Concealed within the module is the electronic circuitry of the module, and a bi-directional electric motor that actuates the locking bolt. The module is connected to the vehicle electrical system through the instrument panel wire harness.

The mounting provisions for the shaft lock module are designed to resist unauthorized tampering. The module cannot be removed from the steering column while the locking bolt is in the locked position, or while the steering column is installed in the vehicle. The shaft lock module unit cannot be adjusted or repaired and, if ineffective or damaged, the entire steering column must be replaced.

OPERATION

The electronic circuitry within the shaft lock module contains all of the logic circuits and components to monitor and control the operation of the shaft locking bolt. The module uses a serial data bus for bi-directional communication with the Sentry Key REmote Entry Module (SKREEM), sometimes referred to as the Wireless Control Module (WCM). If the module detects a problem with the positioning or operation of the locking bolt, it sends an error message to the SKREEM/WCM. The SKREEM/WCM then stores a Diagnostic Trouble Code (DTC) and sends an electronic error message to the ElectroMechanical Instrument Cluster (EMIC), sometimes referred to as the Cab Compartment Node (CCN), over the Controller Area Network (CAN) data bus, and a **SERVICE COLUMN LOCK** message will appear in the instrument cluster display.

The shaft lock module continuously monitors inputs from the SKREEM/WCM and energizes the electric motor to move the locking bolt to the locked or unlocked position based upon that input. If the SKREEM/WCM indicates that the key present in the ignition lock cylinder is invalid, the locking bolt remains in the locked position. When the SKREEM/WCM indicates that a valid key is present in the ignition lock cylinder, the shaft lock module operates a motor to move the locking bolt to the unlocked position. However, to prevent inadvertent column locking due to a failure while the vehicle is being operated, the module cannot move the locking bolt from the unlocked position to the locked position as long as a key remains in the ignition lock cylinder.

The shaft lock module receives ground at all times through a hard wired remote ground point. The module receives battery voltage to operate and to move the locking bolt in the unlocked direction on a B(+) circuit, and receives battery voltage to operate the locking bolt in the locked direction only when the key is removed from the ignition switch. These connections allow the module to remain operational, regardless of the ignition switch position.

For added system security, the shaft lock module learns a unique Secret Key code from the SKREEM/WCM over the serial data bus upon initialization. This code is stored in the memory of the module and cannot be changed. Therefore, if the SKREEM/WCM requires service replacement, a new shaft lock module will also be required. Another security code, called a PIN, is used to gain access to the SKREEM/WCM Secured Access Mode. The Secured Access Mode is required during service to initialize a new shaft lock module. The shaft lock module is not available for separate service replacement. It is integral to the steering column so a complete column must be installed if the module is damaged or inoperative (Refer to 19 - STEERING/COLUMN - REMOVAL).

Use a diagnostic scan tool and refer to the appropriate diagnostic information to diagnose and test the system.

SENTRY KEY REMOTE ENTRY MODULE

DESCRIPTION

The Sentry Key Remote Entry Module (SKREEM) (3), sometimes referred to as the Wireless Control Module (WCM), performs the functions of what used to be the Sentry Key Immobilizer Module (SKIM), the Remote Keyless Entry (RKE) Module, and the Tire Pressure Monitoring (TPM) System.

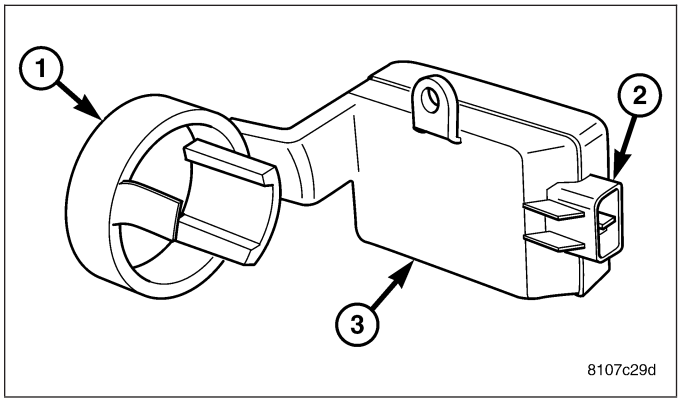

The SKREEM/WCM is located on and around (antenna ring) (4) the ignition key cylinder (2) along with the ignition switch (1). It is accessible only from behind the instrument panel, to the left of the steering column. Serviceability requires lock cylinder removal to access the complete unit.

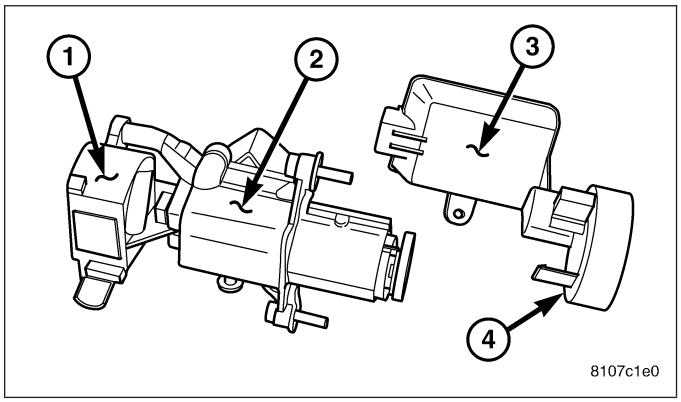

SENTRY KEY REMOTE ENTRY SYSTEM (SKREES)

The Sentry Key REmote Entry System (SKREES), sometimes referred to as the Sentry Key Immobilizer System (SKIS), authenticates an electronically coded Transponder Key placed into the ignition and sends a valid/invalid key message to the Powertrain Control Module (PCM) based upon the results. The “VALID/INVALID KEY” message communication is performed using a rolling code algorithm via the Programmable Controller Area Network (CAN) data bus. A “VALID KEY” message must be sent to the Powertrain Control Module (PCM) within two seconds of ignition ON to free the engine from immobilization.

REMOTE KEYLESS ENTRY (RKE)

The RKE transmitter uses radio frequency signals to communicate with the SKREEM/WCM. The SKREEM/WCM is on the Controller Area Network (CAN) data bus network. When the operator presses a button on the transmitter, it sends a specific request to the SKREEM/WCM. In turn the SKREEM/WCM sends the appropriate request over the CAN bus to the Integrated Power Module (IPM) to activate the park lamps, the headlamps, and the horn for horn chirp.

TIRE PRESSURE MONITORING (TPM)

If equipped with the Tire Pressure Monitoring (TPM) System, each of the vehicles four wheels will have a valve stem with a pressure sensor and radio transmitter built in. Signals from the tire pressure sensor/transmitter are received and interpreted by the SKREEM/WCM.

A sensor/transmitter in a mounted wheel will broadcast its detected pressure once per minute when the vehicle is moving faster than 15 mph (24 km/h). Each sensor/transmitter’s broadcast is uniquely coded so that the SKREEM/WCM can determine the location.

OPERATION

SENTRY KEY REMOTE ENTRY SYSTEM (SKREES)

The Sentry Key Remote Entry Module (SKREEM), sometimes referred to as the Wireless Control Module (WCM), receives an encrypted Radio Frequency (RF) signal from the transponder key. The SKREEM/WCM then decrypts the signal and broadcasts the requested remote commands to the appropriate modules in the vehicle over the Controller Area Network (CAN) data bus. A valid transponder key ID must be incorporated into the RF signal in order for the SKREEM/WCM to pass the message on to the appropriate modules.

Automatic transponder key synchronization is done by the SKREEM/WCM if a valid transponder key is inserted into the ignition cylinder, and the ignition is turned ON. This provides a maximum operation window for RKE functions.

Each Sentry Key Remote Entry System (SKREES), sometimes referred to as the Sentry Key Immobilizer System (SKIS), consists of a SKREEM/WCM and a transponder key. Each system has a secret key code unique to that system. The secret key is electronically coded in the SKREEM/WCM and in all programmed transponder keys. It is used for immobilization and RKE functions for data security. In addition, each transponder key will have a unique identification.

NOTE: After a SKREEM/WCM is replaced, the ignition/transponder keys need to be programmed to the new SKREEM/WCM. Follow the directions on the diagnostic scan tool. The transponder key for the SKREES/SKIM and the RKE will both be programmed during this operation. There is no need to program the fob of the key for RKE functionality once the transponder key is programmed to the new SKREEM/WCM.

REMOTE KEYLESS ENTRY (RKE)

After pressing the lock button on the RKE transmitter, all of the door locks will lock, the illuminated entry will turn off (providing all doors are closed), and the Vehicle Theft Security System (VTSS) (if equipped) will arm. After pressing the unlock button, on the RKE transmitter, one time, the driver door lock will unlock, the illuminated entry will turn on the courtesy lamps, and the VTSS (if equipped) will disarm. After pressing the unlock button a second time, the remaining door locks will unlock. The Electronic Vehicle Information Center (EVIC) or a scan tool can reprogram this feature to unlock all of the door locks with one press of the unlock button. If the vehicle is equipped with the memory system, the memory message will identify which transmitter (1 or 2) sent the signal. Refer to Overhead Console/Electronic Vehicle Information Center for more information on customer programmable features.

The SKREEM/WCM is capable of retaining up to 8 individual access codes (8 transmitters). If the PRNDL is in any position except park, the SKREEM/WCM will disable the RKE. The 4 button transmitter uses 1-CR2032 battery. The minimum battery life is approximately 4.7 years based on 20 transmissions a day at 84°F (25°C). Use a scan tool or the Miller Tool 9001 RF Detector to test the RKE transmitter. Use a scan tool or the customer programming method to program the RKE system. However, the SKREEM/WCM will only allow RKE programming when the ignition is in the ON position, the PRNDL is in park position, and the VTSS (if equipped) is disarmed.

NOTE: After a SKREEM/WCM is replaced, the ignition/transponder keys need to be programmed to the new SKREEM/WCM. Follow the directions on the diagnostic scan tool. The transponder key for the SKREES/SKIM and the RKE will both be programmed during this operation. There is no need to program the fob of the key for RKE functionality once the transponder key is programmed to the new SKREEM/WCM.

TIRE PRESSURE MONITORING (TPM)

The SKREEM monitors the signals from the tire pressure sensor/transmitters and determines if any tire has gone below the low pressure threshold LOW TIRE PRESSURE THRESHOLDS table.

LOW TIRE PRESSURE THRESHOLDS

SYSTEM STATUS INDICATOR	TIRE PRESSURE
ON	172 kPa (25 PSI)
OFF	207 kPa (30 PSI)

CRITICAL AND NON-CRITICAL SYSTEM ALERTS

CRITICAL: A critical alert will be triggered when a tire pressure has gone below a set threshold pressure. The SKREEM will send a message to the cluster to display “X TIRE(S) LOW PRESSURE”. “X” will be the number of tires reporting low pressure. The message will display for the duration of the current ignition cycle or until an EVIC button is pressed. If the display is removed without correcting the condition, it will reappear 300 seconds to warn the driver of the low pressure condition.

NONCRITICAL: A noncritical alert will be triggered when no signal is received from a sensor/transmitter or when a sensor/transmitter low battery condition is detected. The cluster will display “SERVICE TIRE PRESS. SYSTEM.”

DIAGNOSIS AND TESTING

SENTRY KEY REMOTE ENTRY MODULE (SKREEM)

For proper diagnosis and testing of the Sentry Key Remote Entry Module (SKREEM), sometimes referred to as the Wireless Control Module (WCM), Remote Keyless Entry (RKE) System, and the Tire Pressure Monitoring (TPM), use a scan tool and appropriate diagnostic information.

NOTE: After a SKREEM/WCM is replaced, the ignition/transponder keys need to be programmed to the new SKREEM/WCM. Follow the directions on the diagnostic scan tool. The transponder key for the SKREES/SKIM and the RKE will both be programmed during this operation. There is no need to program the fob of the key for RKE functionality once the transponder key is programmed to the new SKREEM/WCM.

REMOVAL

1. Disconnect and isolate the battery negative cable.

WARNING: Wait two minutes for the airbag system reserve capacitor to discharge before beginning any airbag system or component service. Failure to do so may result in accidental airbag deployment, personal injury or death.

2. Remove the instrument cluster bezel (Refer to 23 - BODY/INSTRUMENT PANEL/CLUSTER BEZEL - REMOVAL).
3. Remove the steering column opening cover (Refer to 23 - BODY/INSTRUMENT PANEL/STEERING COLUMN OPENING COVER - REMOVAL).
4. Reach up behind the left side of the center stack and disconnect the ignition switch (6) and SKREEM (5) electrical connectors.

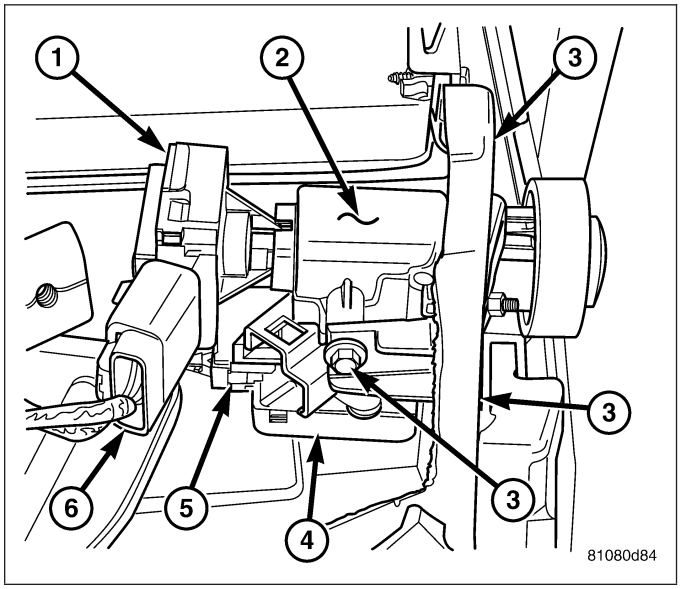

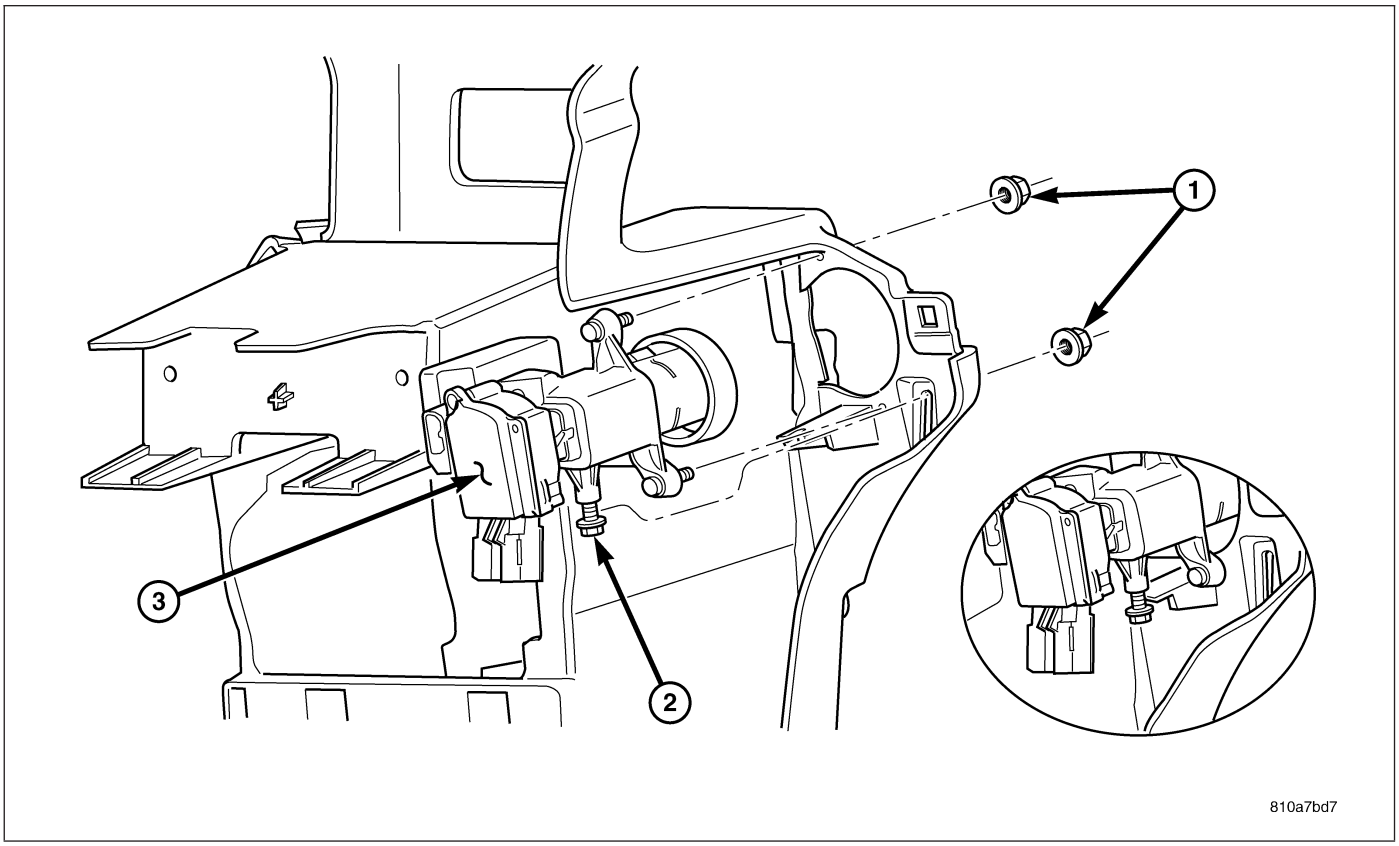

5. From underneath the ignition switch/lock assembly, loosen the lower retaining screw (2).
6. Remove the two mounting nuts (1) from the front of the instrument panel.
7. Push the ignition switch/lock assembly (3) inward toward the bulkhead.
8. Remove the SKREEM mounting screw (1) on the ignition lock assembly and separate the SKREEM from the ignition lock assembly.

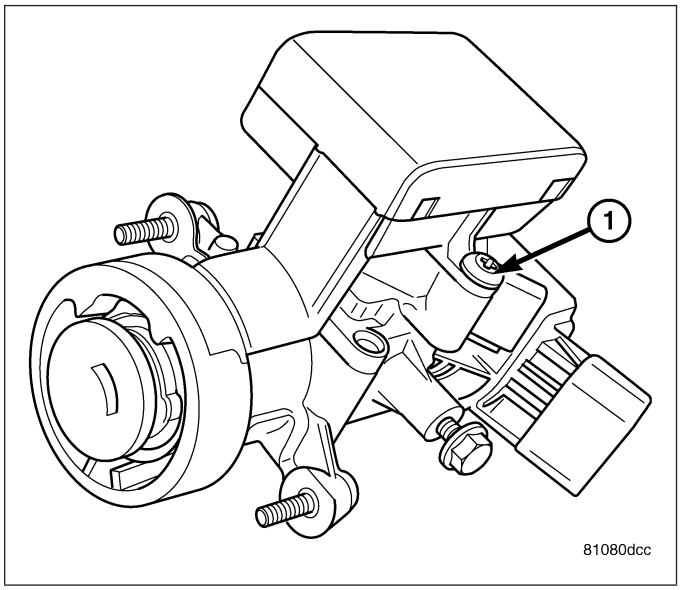

NOTE: After a SKREEM/WCM is replaced, the ignition/transponder keys need to be programmed to the new SKREEM/WCM. Follow the directions on the diagnostic scan tool. The transponder key for the SKREES/SKIM and the RKE will both be programmed during this operation. There is no need to program the fob of the key for RKE functionality once the transponder key is programmed to the new SKREEM/WCM.

NOTE: When a PCM and the SKREEM/WCM are replaced at the same time, perform the following steps in order:

- Program the new PCM.
- Program the new SKREEM/WCM.
- Program all ignition/transponder keys to the new SKREEM/WCM.

(Refer to 8 - ELECTRICAL/ELECTRONIC CONTROL MODULES - STANDARD PROCEDURE - PCM/SKREEM PROGRAMMING).

INSTALLATION

NOTE: After a SKREEM/WCM is replaced, the ignition/transponder keys need to be programmed to the new SKREEM/WCM. Follow the directions on the diagnostic scan tool. The transponder key for the SKREES/SKIM and the RKE will both be programmed during this operation. There is no need to program the fob of the key for RKE functionality once the transponder key is programmed to the new SKREEM/WCM.

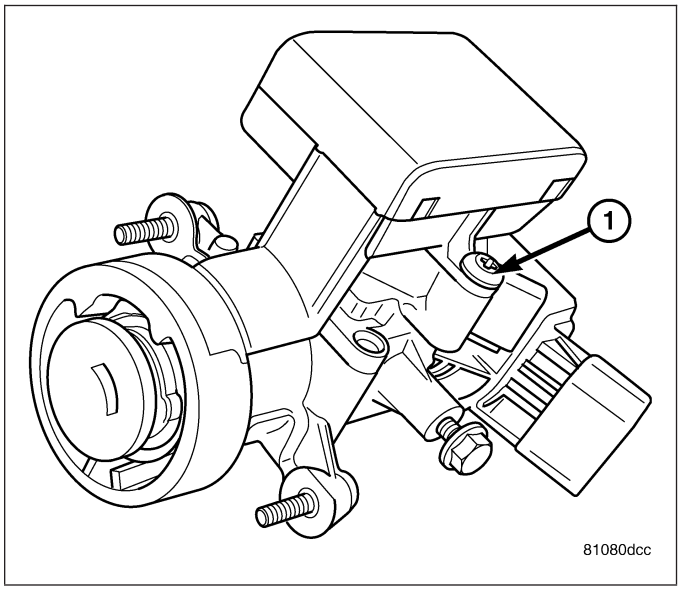

NOTE: When a PCM and the SKREEM/WCM are replaced at the same time, perform the following steps in order:

- Program the new PCM.
- Program the new SKREEM/WCM.
- Program all ignition/transponder keys to the new SKREEM/WCM.

(Refer to 8 - ELECTRICAL/ELECTRONIC CONTROL MODULES - STANDARD PROCEDURE - PCM/SKREEM PROGRAMMING).

1. Position the SKREEM on the ignition lock housing and install the retaining screw (1).

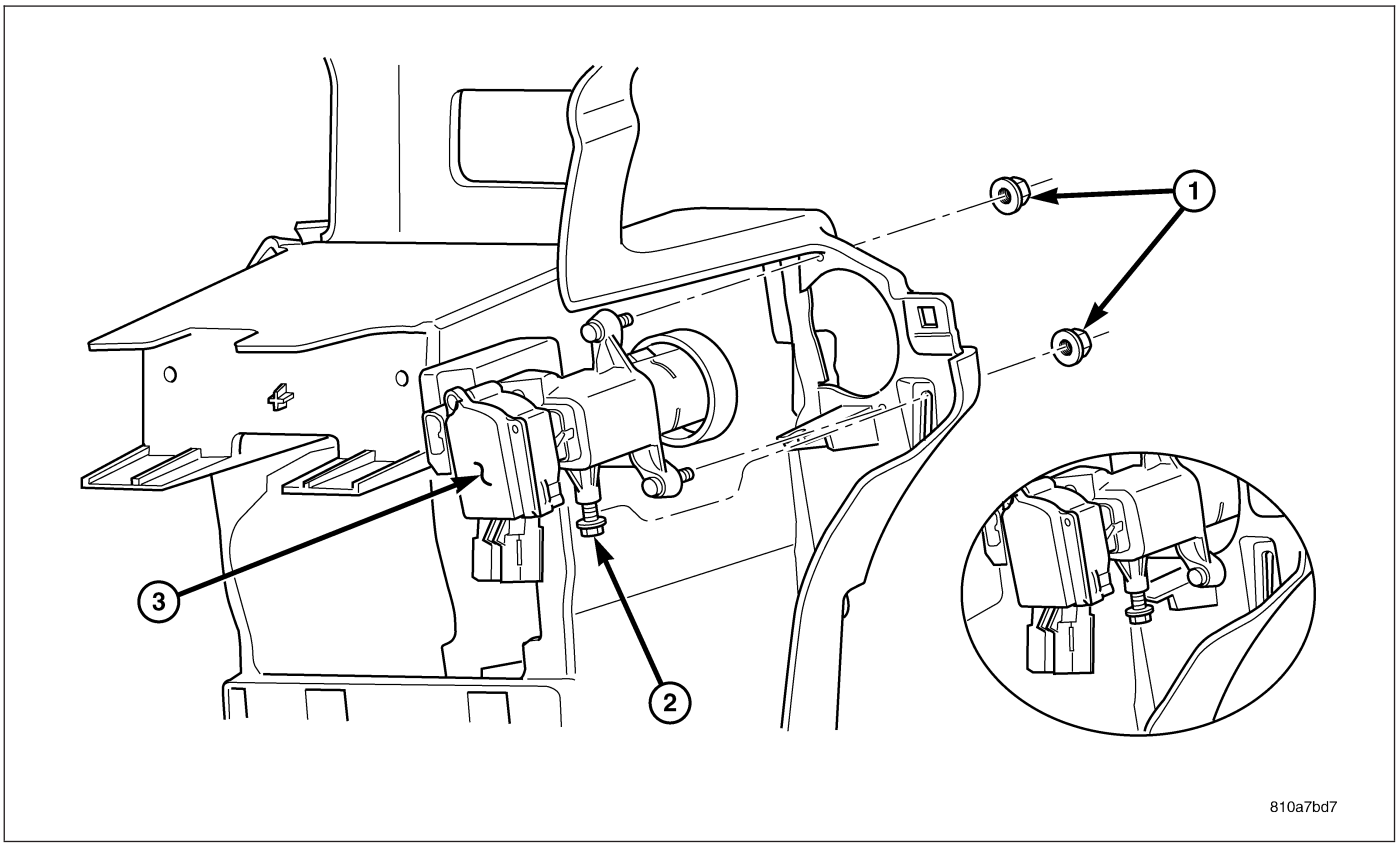

2. Position the ignition switch/lock assembly (3) up in behind the instrument panel and push rearward.
3. Install the two mounting nuts to the front of the instrument panel (1).

4. From underneath the ignition switch/lock assembly, tighten the lower retaining screw (3).
5. Reach up behind the left side of the center stack and connect the ignition switch (6) and SKREEM (5) electrical connectors.
6. Install the cluster bezel (Refer to 23 - BODY/INSTRUMENT PANEL/CLUSTER BEZEL - INSTALLATION).
7. Install the steering column opening cover (Refer to 23 - BODY/INSTRUMENT PANEL/STEERING COLUMN OPENING COVER - INSTALLATION).
8. Connect the battery negative cable.

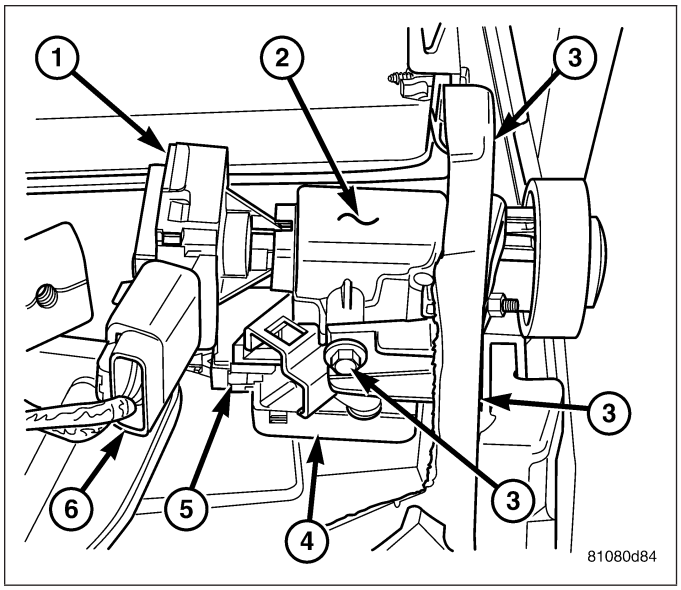

TRANSPONDER KEY

DESCRIPTION

Each ignition key (2) used in the Sentry Key Remote Entry System (SKREES), sometimes referred to as the Sentry Key Immobilizer System (SKIS) has a transponder chip included on the circuit board (4) beneath the cover (1) of the integral Remote Keyless Entry (RKE) transmitter (3). In addition to having to be cut to match the mechanical coding of the ignition lock cylinder and programmed for operation of the RKE system, each new Sentry Key has a unique transponder identification code that is permanently programmed into it by the manufacturer, and which must be programmed into the Sentry Key REmote Entry Module (SKREEM), sometimes referred to as the Wireless Control Module (WCM), to be recognized by the SKREES/SKIS as a valid key.

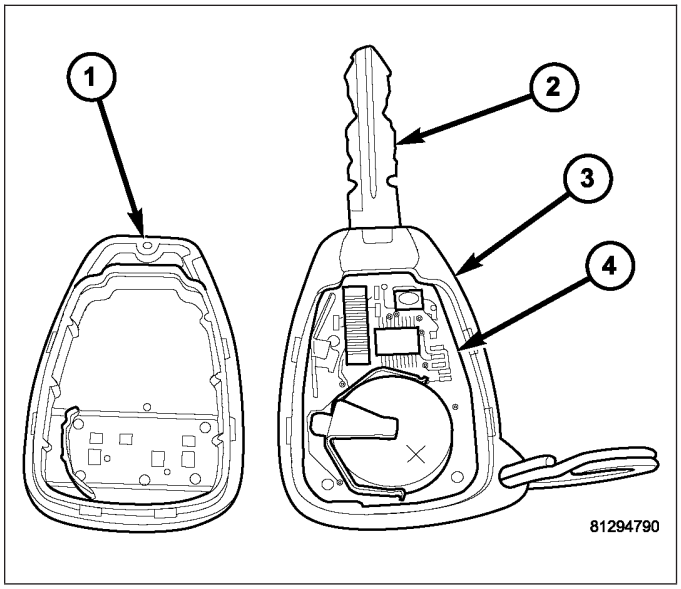

The Sentry Key transponder cannot be adjusted or repaired. If faulty or damaged, the entire key and RKE transmitter unit must be replaced.

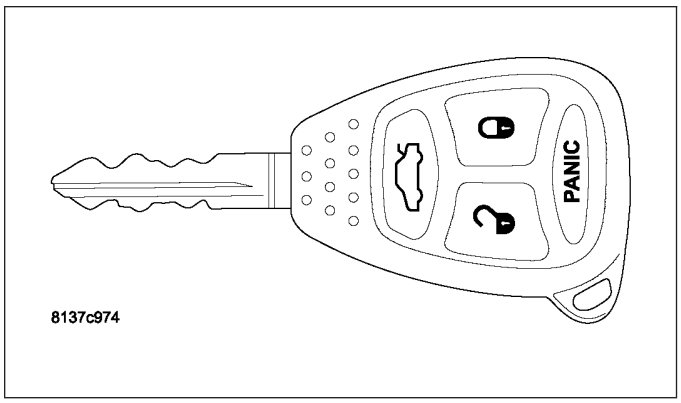

OPERATION

When the ignition switch is turned to the On position, the Sentry Key REmote Entry Module (SKREEM), sometimes referred to as the Wireless Control Module (WCM), communicates through its antenna with the Sentry Key transponder using a Radio Frequency (RF) signal. The SKREEM/WCM then listens for a RF response from the transponder through the same antenna. The Sentry Key transponder chip is within the range of the SKREEM/WCM transceiver antenna ring when it is inserted into the ignition lock cylinder. The SKREEM/WCM determines whether a valid key is present in the ignition lock cylinder based upon the response from the transponder. If a valid key is detected, that fact is communicated by the SKREEM/WCM to the Powertrain Control Module (PCM) over the Controller Area Network (CAN) data bus, and the PCM allows the engine to continue running. If the PCM receives an invalid key message, or receives no message from the SKREEM/WCM over the CAN data bus, the engine will be disabled after about two seconds of operation. The ElectroMechanical Instrument Cluster (EMIC) will also respond to the invalid key message on the CAN data bus by flashing the security indicator on and off.

Each Sentry Key has a unique transponder identification code permanently programmed into it by the manufacturer. Likewise, the SKREEM/WCM has a unique Secret Key code programmed into it by the manufacturer. When a Sentry Key is programmed into the memory of the SKREEM/WCM, the SKREEM/WCM stores the transponder identification code from the Sentry Key, and the Sentry Key learns the Secret Key code from the SKREEM/WCM. Once the Sentry Key learns the Secret Key code of the SKREEM/WCM, it is permanently stored in the memory of the transponder. Therefore, once a Sentry Key has been programmed to a particular vehicle, it cannot be used on any other vehicle (Refer to 8 - ELECTRICAL/VEHICLE THEFT SECURITY/TRANSPONDER KEY - STANDARD PROCEDURE).

The Sentry Key REmote Entry System (SKREES), sometimes referred to as the Sentry Key Immobilizer System (SKIS), performs a self-test each time the ignition switch is turned to the On position, and will store key-related fault information in the form of a Diagnostic Trouble Code (DTC) in SKREEM/WCM memory if a Sentry Key transponder problem is detected. The Sentry Key transponder chip can be diagnosed, and any stored DTC can be retrieved using a diagnostic scan tool. Refer to the appropriate diagnostic information.

Common communication problems:

- Two transponder keys too close together.
- Speed Pass too close to transponder key.

Solid indicator that there is a system failure.

- Loss of PCM communication.
- Failed antenna circuit.

NOTE: After a SKREEM/WCM is replaced, the ignition/transponder keys need to be programmed to the new SKREEM/WCM. Follow the directions on the diagnostic scan tool. The transponder key for the SKREES/ SKIM and the RKE will both be programmed during this operation. There is no need to program the fob of the key for RKE functionality once the transponder key is programmed to the new SKREEM/WCM.

NOTE: When a PCM and the SKREEM/WCM are replaced at the same time, perform the following steps in order:

- Program the new PCM.
- Program the new SKREEM/WCM.
- Program all ignition/transponder keys to the new SKREEM/WCM.

(Refer to 8 - ELECTRICAL/ELECTRONIC CONTROL MODULES - STANDARD PROCEDURE - PCM/SKREEM PROGRAMMING).

STANDARD PROCEDURE

TRANSPONDER PROGRAMMING

NOTE: After a SKREEM/WCM is replaced, the ignition/transponder keys need to be programmed to the new SKREEM/WCM. Follow the directions on the diagnostic scan tool. The transponder key for the SKREES/ SKIM and the RKE will both be programmed during this operation. There is no need to program the fob of the key for RKE functionality once the transponder key is programmed to the new SKREEM/WCM.

NOTE: When a PCM and the SKREEM/WCM are replaced at the same time, perform the following steps in order:

- Program the new PCM.
- Program the new SKREEM/WCM.
- Program all ignition/transponder keys to the new SKREEM/WCM.

(Refer to 8 - ELECTRICAL/ELECTRONIC CONTROL MODULES - STANDARD PROCEDURE - PCM/SKREEM PROGRAMMING).

All Sentry Keys included with the vehicle are pre-programmed to work with the Sentry Key Remote Entry System (SKREES), sometimes referred to as the Sentry Key Immobilizer System (SKIS), when it is shipped from the factory. The Sentry Key REmote Entry Module (SKREEM), sometimes referred to as the Wireless Control Module (WCM), can be programmed to recognize up to a total of eight Sentry Keys. When programming a blank Sentry Key transponder, the key must first be cut to match the ignition switch lock cylinder in the vehicle for which it will be used. Once the additional or new key has been cut, the SKREEM/WCM must be programmed to recognize it as a valid key. There are two possible methods to program the SKREEM/WCM to recognize a new or additional valid key, the Secured Access Method and the Customer Learn Method. Following are the details of these two programming methods.

SECURED ACCESS METHOD

The Secured Access method applies to all vehicles. This method requires the use of a diagnostic scan tool. This method will also require that you have access to the unique four-digit PIN code that was assigned to the original SKREEM/WCM. The PIN code **MUST** be used to enter the Secured Access Mode in the SKREEM/WCM. This PIN number may be obtained from the vehicle owner, from the original vehicle invoice, or from the DaimlerChrysler Customer Center. Refer to the appropriate diagnostic information for the proper Secured Access method programming procedures.

NOTE: The Remote Keyless Entry (RKE) Transmitter will also be programmed during this procedure.

CUSTOMER LEARN METHOD

The Customer Learn feature is only available on domestic vehicles, or those vehicles which have a U.S. country code designator. This programming method also requires access to at least two valid Sentry Keys. If two valid Sentry Keys are not available, or if the vehicle does not have a U.S. country code designator, the Secured Access Method **MUST** be used to program new or additional valid keys to the SKREEM/WCM. The Customer Learn programming method procedures are as follows:

1. Obtain the blank Sentry Key(s) that are to be programmed as valid keys for the vehicle. Cut the blank key(s) to match the ignition switch lock cylinder mechanical key codes.
2. Insert one of the two valid Sentry Keys into the ignition switch and turn the ignition switch to the On position.
3. After the ignition switch has been in the On position for longer than three seconds, but no more than fifteen seconds, cycle the ignition switch back to the Off position. Replace the first valid Sentry Key in the ignition switch lock cylinder with the second valid Sentry Key and turn the ignition switch back to the On position. The second valid Sentry Key must be inserted in the lock cylinder within fifteen seconds of removing the first valid key.
4. About ten seconds after the completion of Step 3, the security indicator in the instrument cluster will start to flash to indicate that the system has entered the Customer Learn programming mode.
5. Within sixty seconds of entering the Customer Learn programming mode, turn the ignition switch to the Off position, replace the valid Sentry Key with a blank Sentry Key transponder, and turn the ignition switch back to the On position.
6. About ten seconds after the completion of Step 5, the security indicator will stop flashing, stay on solid for three seconds, then turn off to indicate that the blank Sentry Key has been successfully programmed. The SKREES/SKIS will immediately exit the Customer Learn programming mode. After the ignition is cycled the vehicle may be started using the newly programmed valid Sentry Key.

NOTE: The Remote Keyless Entry (RKE) Transmitter will also be programmed during this procedure.

Each of these steps must be repeated and completed in their entirety for each additional Sentry Key that is to be programmed. If the above steps are not completed in the given sequence, or within the allotted time, the SKREEM/WCM will exit the Customer Learn programming mode and the programming will be unsuccessful. The SKREEM/WCM will also automatically exit the Customer Learn programming mode if it sees a non-blank Sentry Key transponder when it should see a blank, if it has already programmed eight (8) valid Sentry Keys, or if the ignition switch is turned to the Off position for more than about fifty seconds.

NOTE: If an attempt is made to start the vehicle while in the Customer Learn mode (security indicator flashing), the SKREES/SKIS will respond as though the vehicle were being started with an invalid key. In other words, the engine will stall after about two seconds of operation. No faults will be set.

NOTE: Once a Sentry Key has been programmed as a valid key to a vehicle, it cannot be programmed as a valid key for use on any other vehicle.

VTSS/SKIS INDICATOR LAMP

DESCRIPTION

The Sentry Key Remote Entry System (SKREES), sometimes referred to as the Sentry Key Immobilizer System (SKIS), uses an indicator light to convey information on the status of the system to the customer. This light is shared with the Vehicle Theft Security System (VTSS). The light is located in the instrument panel switch pod, just to the right of the cluster. The indicator light is controlled by the Cab Compartment Node (CCN), via the Controller Area Network (CAN) data bus based upon messages it receives from the Sentry Key Remote Entry Module (SKREEM), sometimes referred to as the Wireless Control Module (WCM),on the CAN data bus, and is hard wired to the cluster.

OPERATION

The VTSS/SKREES lamp is controlled according to Sentry Key Remote Entry Module (SKREEM), sometimes referred to as the Wireless Control Module (WCM), messages. Then, the SKREEM/WCM sends messages to the Front Control Module (FCM) to operate the light based upon the results of the SKREES/SKIS self tests. The light may be actuated in two possible ways, flashing or on solid. If the light comes on and stays on solid after a power-up test, this indicates that the SKREEM/WCM has detected a system malfunction. If the SKREEM/WCM detects an invalid key when the ignition switch is moved to the ON position, it sends a message on the CAN bus to the FCM, to flash the light. The SKREEM/WCM can also send a message to flash the light and generate a single audible chime at the same time. These two events occurring simultaneously indicate that the SKREES/SKIS has been placed into the ″Customer Learn″ mode (Refer to 8 - ELECTRICAL/VEHICLE THEFT SECURITY/TRANSPONDER KEY - STANDARD PROCEDURE). If the light comes on and stays on after the power-up test, diagnosis of the SKREES/SKIS should be performed using a scan tool and the appropriate diagnostic information. The light is not a serviceable component.

WIPERS/WASHERS

TABLE OF CONTENTS

page

WIPERS/WASHERS - ELECTRICAL DIAGNOSTICS 1

page

WIPERS/WASHERS - SERVICE INFORMATION . . 63

WIPERS/WASHERS - ELECTRICAL DIAGNOSTICS

TABLE OF CONTENTS

page

WIPERS/WASHERS - ELECTRICAL DIAGNOSTICS
DIAGNOSIS AND TESTING
B2304-WIPER PARK SWITCH INPUT CIRCUIT LOW 3
B2305-WIPER PARK SWITCH INPUT CIRCUIT HIGH. 6
B2313-WIPER ON/OFF CONTROL CIRCUIT LOW 8
B2314-WIPER ON/OFF CONTROL CIRCUIT HIGH 11
B2315-WIPER ON/OFF CONTROL CIRCUIT OPEN. 13
B2317-WIPER HI/LOW CONTROL CIRCUIT LOW. 15
B2318-WIPER HI/LOW CONTROL CIRCUIT HIGH 18
B2319-WIPER HI/LOW CONTROL CIRCUIT OPEN. 20
B231F-FRONT/REAR WASHER MOTOR CONTROL CIRCUIT LOW. 22
B2320-FRONT/REAR WASHER MOTOR CONTROL CIRCUIT HIGH 26
B2321-FRONT/REAR WASHER MOTOR CONTROL CIRCUIT OPEN. 29
B230D-REAR WIPER PARK SWITCH INPUT CIRCUIT LOW 32
B230E-REAR WIPER PARK SWITCH INPUT CIRCUIT OPEN 35

page

B231B-REAR WIPER MOTOR CONTROL CIRCUIT LOW 37
B231C-REAR WIPER MOTOR CONTROL CIRCUIT HIGH. 40
B231D-REAR WIPER MOTOR CONTROL CIRCUIT OPEN 42
B2323-HEADLAMP WASHER MOTOR CONTROL CIRCUIT LOW. 44
B2324-HEADLAMP WASHER MOTOR CONTROL CIRCUIT HIGH 47
B2325-HEADLAMP WASHER MOTOR CONTROL CIRCUIT OPEN. 49
B2328-WASHER FLUID LEVEL SENSOR INPUT CIRCUIT HIGH 51
B210D-BATTERY VOLTAGE LOW (RSM) 53
B210E-BATTERY VOLTAGE HIGH (RSM) 54
B2211-RAIN SENSOR MODULE INITIALIZATION PERFORMANCE. 55
B221D-(RSM) RAIN SENSOR MODULE INTERNAL 56
B2329-RAIN SENSOR OPTICAL PATH 1 PERFORMANCE. 57
B232A-RAIN SENSOR OPTICAL PATH 2 PERFORMANCE. 58
B232B-RAIN SENSOR OPTICAL PATH 3 PERFORMANCE. 59
B232C-RAIN SENSOR OPTICAL PATH 4 PERFORMANCE. 60
U0019–CAN B BUS (RSM) 61

WIPERS/WASHERS - ELECTRICAL DIAGNOSTICS

DIAGNOSIS AND TESTING

B2304-WIPER PARK SWITCH INPUT CIRCUIT LOW

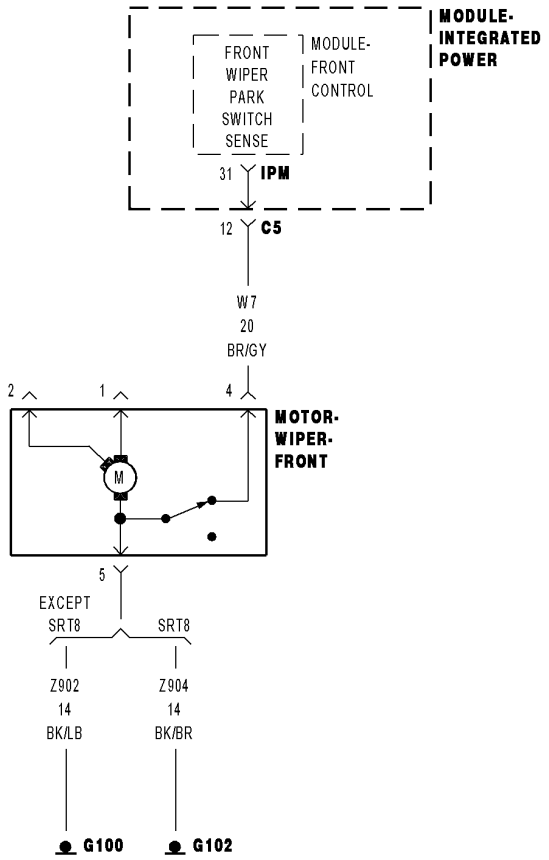

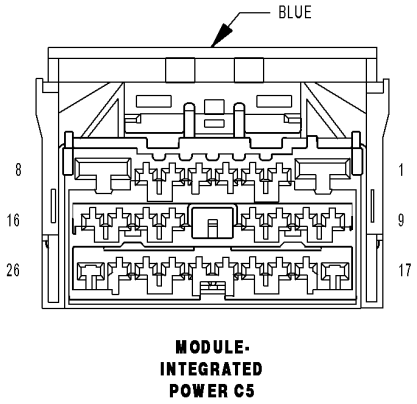

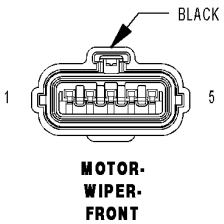

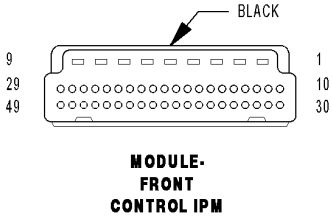

816205c5

For a complete wiring diagram **Refer to Section 8W**.

- **When Monitored:**
- With the ignition on.
- **Set Condition:**
- The FCM detects a short to ground condition.

Possible Causes
FRONT WIPER MOTOR
(W7) FRONT WIPER PARK SWITCH SENSE CIRCUIT SHORT TO GROUND
FRONT CONTROL MODULE

Diagnostic Test

1. INTERMITTENT CONDITION

Turn the ignition on.
With the Scan Tool, clear all FCM DTC's.
Turn the Wipers on, then off.
With the Scan Tool, read the FCM DTC's.

Does the Scan Tool read: B2304-WIPER PARK SWITCH INPUT CIRCUIT LOW?

Yes >> Go To 2

No >> The condition that caused the symptom is currently not present. Inspect the related wiring for a possible intermittent condition. Look for any chafed, pierced, pinched, or partially broken wires.
Perform the BODY VERIFICATION TEST — VER 1. (Refer to 8 - ELECTRICAL/ELECTRONIC CONTROL MODULES/FRONT CONTROL MODULE - DIAGNOSIS AND TESTING)

2. WIPER MOTOR

With the scan tool, erase DTCs.
Turn the ignition off.
Disconnect the Front Wiper Motor harness connector.
Turn the ignition on.
Activate the Wipers
Wait 30 seconds.
With the scan tool, read FCM DTCs.

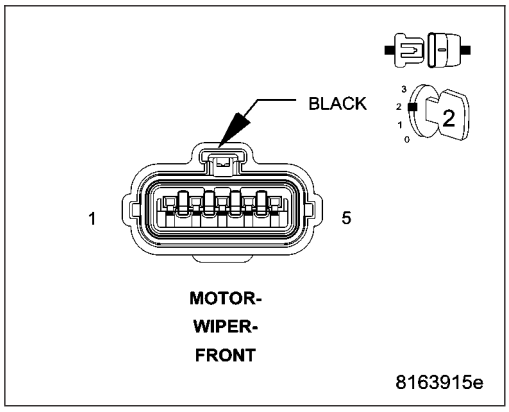

Does the Scan Tool read: B2305-WIPER PARK SWITCH INPUT CIRCUIT HIGH?

Yes >> Replace the Front Wiper Motor in accordance with the service information.
Perform the BODY VERIFICATION TEST — VER 1. (Refer to 8 - ELECTRICAL/ELECTRONIC CONTROL MODULES/FRONT CONTROL MODULE - DIAGNOSIS AND TESTING)

No >> Go To 3

3. (W7) FRONT WIPER MOTOR PARK SWITCH SENSE CIRCUIT SHORT TO GROUND

Turn the ignition off.

Disconnect the IPM C5 harness connector.

Measure the resistance between ground and the (W7) Front Wiper Park Switch Sense circuit.

Is the resistance below 5.0 ohms?

Yes >> Repair the (W7) Front Wiper Park Switch Sense circuit for a short to ground condition.

Perform the BODY VERIFICATION TEST — VER 1. (Refer to 8 - ELECTRICAL/ELECTRONIC CONTROL MODULES/ FRONT CONTROL MODULE - DIAGNOSIS AND TESTING)

No >> Replace the Front Control Module in accordance with the service information.

Perform the BODY VERIFICATION TEST — VER 1. (Refer to 8 - ELECTRICAL/ELECTRONIC CONTROL MODULES/ FRONT CONTROL MODULE - DIAGNOSIS AND TESTING)

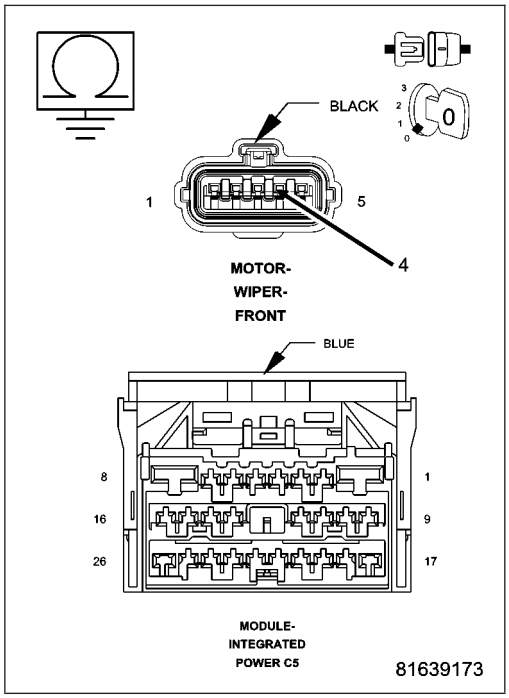

B2305-WIPER PARK SWITCH INPUT CIRCUIT HIGH

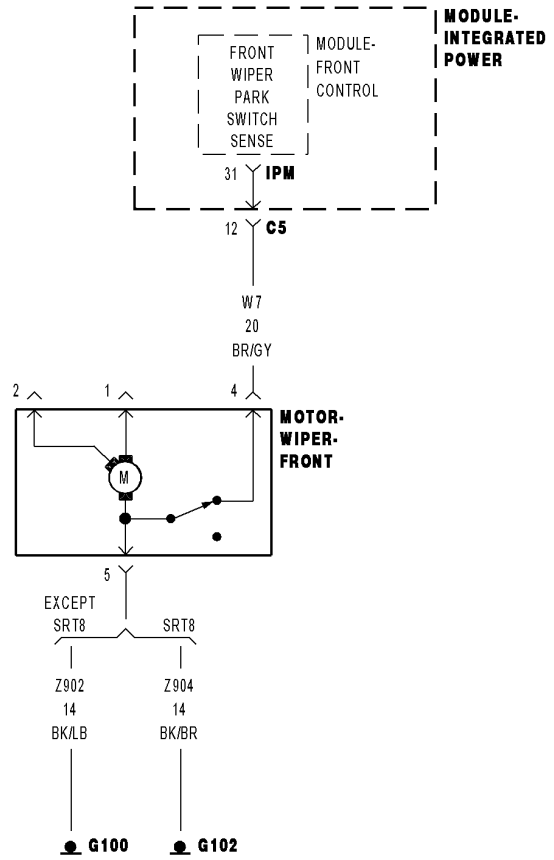

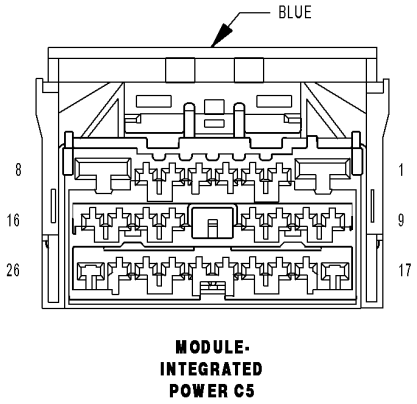

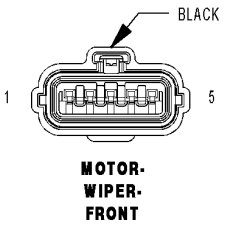

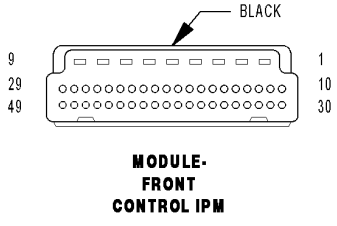

816205c5

For a complete wiring diagram **Refer to Section 8W**.

- **When Monitored:**
- With the ignition on.
- **Set Condition:**
- The FCM detects an open condition.

Possible Causes
(W7) FRONT WIPER PARK SWITCH SENSE CIRCUIT SHORT TO VOLTAGE
FRONT CONTROL MODULE

Diagnostic Test

1. INTERMITTENT CONDITION

Turn the ignition on.
With the Scan Tool, clear all FCM DTC's.
Turn the Front Wipers on, then off.
With the Scan Tool, read the FCM DTC's.

Does the Scan Tool read: B2305-WIPER PARK SWITCH INPUT CIRCUIT HIGH?

Yes >> Go To 2

No >> The condition that caused the symptom is currently not present. Inspect the related wiring for a possible intermittent condition. Look for any chafed, pierced, pinched, or partially broken wires.
Perform the BODY VERIFICATION TEST — VER 1. (Refer to 8 - ELECTRICAL/ELECTRONIC CONTROL MODULES/FRONT CONTROL MODULE - DIAGNOSIS AND TESTING)

2. (W7) FRONT WIPER PARK SWITCH SENSE CIRCUIT SHORT TO VOLTAGE

Turn the ignition off.
Disconnect the Front Wiper Motor harness connector.
Disconnect the IPM C5 harness connector.
Measure the voltage on the (W7) Front Wiper Park Switch Sense circuit.

Is the voltage above 5.0 volts?

Yes >> Repair the (W7) Front Wiper Park Switch Sense circuit for a short to voltage.
Perform the BODY VERIFICATION TEST — VER 1. (Refer to 8 - ELECTRICAL/ELECTRONIC CONTROL MODULES/FRONT CONTROL MODULE - DIAGNOSIS AND TESTING)

No >> Replace the FCM in accordance with the service information.
Perform the BODY VERIFICATION TEST — VER 1. (Refer to 8 - ELECTRICAL/ELECTRONIC CONTROL MODULES/FRONT CONTROL MODULE - DIAGNOSIS AND TESTING))

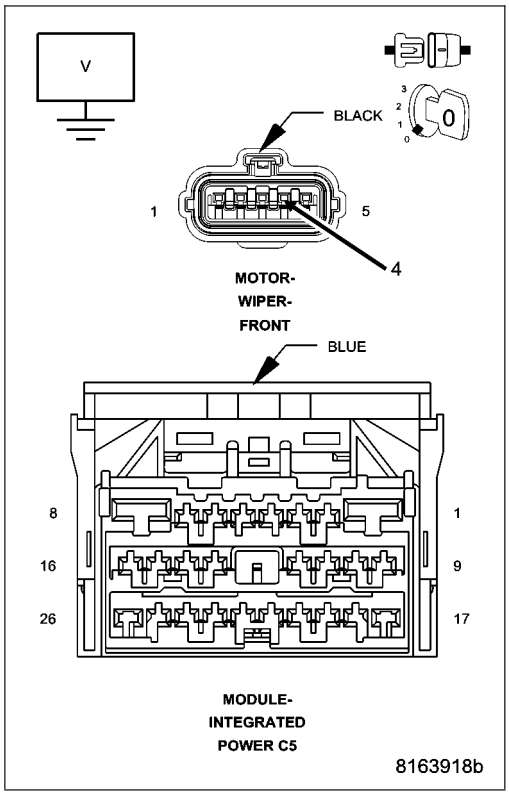

B2313-WIPER ON/OFF CONTROL CIRCUIT LOW

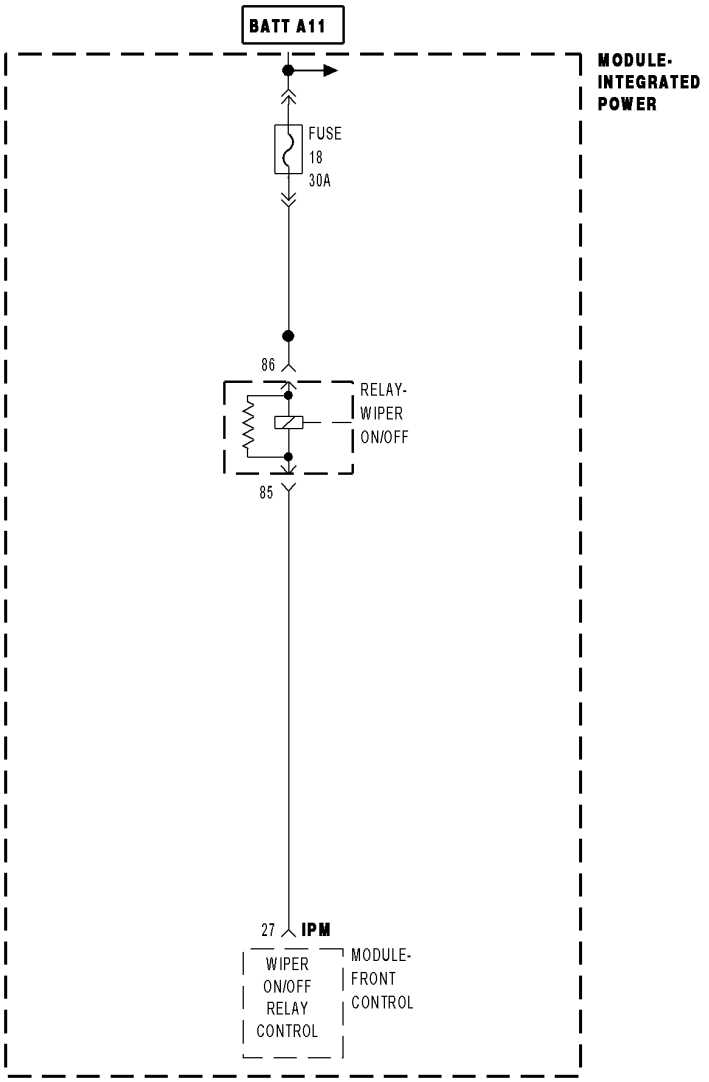

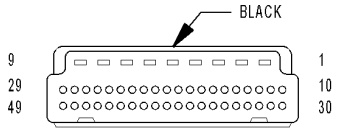

MODULE-
FRONT
CONTROL IPM

815FF1C0

For a complete wiring diagram **Refer to Section 8W**.

- **When Monitored:**
- With the ignition on.
- **Set Condition:**
- When the FCM detects a short/low condition.

Possible Causes
(A11) FUSED B+ CIRCUIT OPEN
WIPER ON/OFF RELAY
FRONT CONTROL MODULE
INTEGRATED POWER MODULE

Diagnostic Test

1. (A11) FUSED B+ CIRCUIT OPEN

NOTE: Check all fuses and circuit breakers before proceeding with the diagnosis of this DTC.

Turn the ignition on.

Remove the Wiper ON/OFF relay.

Measure the voltage at cavity 86 of the Wiper ON/OFF relay.

Is the voltage above 10.0 volts?

Yes >> Go To 2

No >> Check the (A11) Fused B+ circuit for an open.
Perform the BODY VERIFICATION TEST — VER 1. (Refer to 8 - ELECTRICAL/ELECTRONIC CONTROL MODULES/FRONT CONTROL MODULE - DIAGNOSIS AND TESTING)

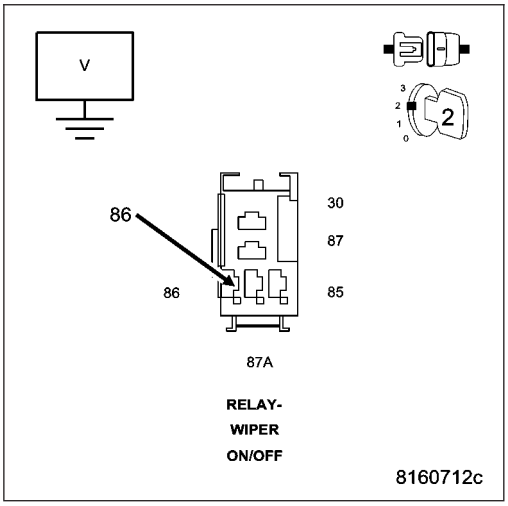

2. WIPER ON/OFF RELAY

Turn the ignition off.

Replace the Wiper ON/OFF relay with and known good relay.

Turn the ignition on.

With the Scan Tool, clear all FCM DTC's.

Turn the Wipers ON then OFF.

With the Scan Tool, read the Wiper DTC's.

Does the Scan Tool read: B2313-WIPER ON/OFF CONTROL CIRCUIT LOW?

Yes >> Go To 3

No >> Replace the Wiper ON/OFF relay.
Perform the BODY VERIFICATION TEST — VER 1. (Refer to 8 - ELECTRICAL/ELECTRONIC CONTROL MODULES/FRONT CONTROL MODULE - DIAGNOSIS AND TESTING)

3. INTEGRATED POWER MODULE

Turn the ignition off.

Disconnect the FCM from the IPM.

Measure the voltage on cavity 27 (Wiper ON/OFF Relay Control) of the IPM.

Is the voltage above 10.0 volts?

Yes >> Replace the FCM in accordance with the service information.

Perform the BODY VERIFICATION TEST — VER 1. (Refer to 8 - ELECTRICAL/ELECTRONIC CONTROL MODULES/ FRONT CONTROL MODULE - DIAGNOSIS AND TESTING)

No >> Replace the IPM in accordance with the service information.

Perform the BODY VERIFICATION TEST — VER 1. (Refer to 8 - ELECTRICAL/ELECTRONIC CONTROL MODULES/ FRONT CONTROL MODULE - DIAGNOSIS AND TESTING)

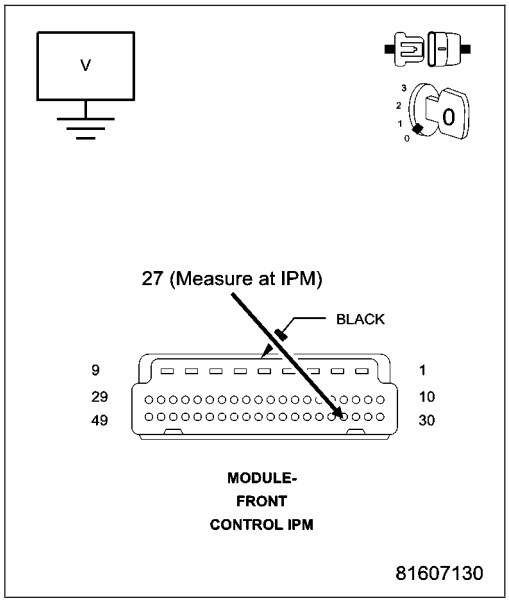

B2314-WIPER ON/OFF CONTROL CIRCUIT HIGH

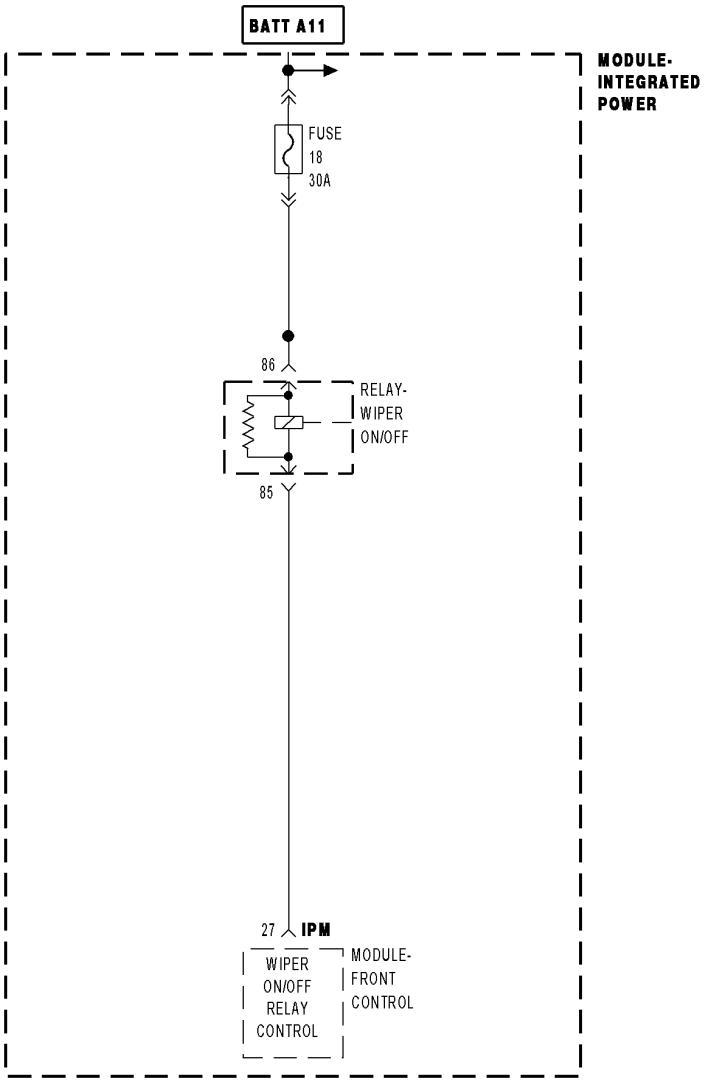

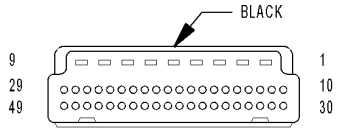

MODULE-
FRONT
CONTROL IPM

815FF1C0

For a complete wiring diagram **Refer to Section 8W**.

- **When Monitored:**
- With the ignition on.
- **Set Condition:**
- When the FCM detects a short/HIGH condition.

Possible Causes
INTEGRATED POWER MODULE

Diagnostic Test

1. INTEGRATED POWER MODULE

Turn the ignition off.

Replace the Wiper ON/OFF relay with and known good relay.

With the Scan Tool, clear all FCM DTC's.

Turn the Wipers ON then OFF.

With the Scan Tool, read the Wiper DTC's.

Does the Scan Tool read: B2314-WIPER ON/OFF CONTROL CIRCUIT HIGH?

Yes >> Replace the Integrated Power Module in accordance with the service information.
Perform the BODY VERIFICATION TEST — VER 1. (Refer to 8 - ELECTRICAL/ELECTRONIC CONTROL MODULES/FRONT CONTROL MODULE - DIAGNOSIS AND TESTING)

No >> Test complete.
Perform the BODY VERIFICATION TEST — VER 1. (Refer to 8 - ELECTRICAL/ELECTRONIC CONTROL MODULES/FRONT CONTROL MODULE - DIAGNOSIS AND TESTING)

B2315-WIPER ON/OFF CONTROL CIRCUIT OPEN

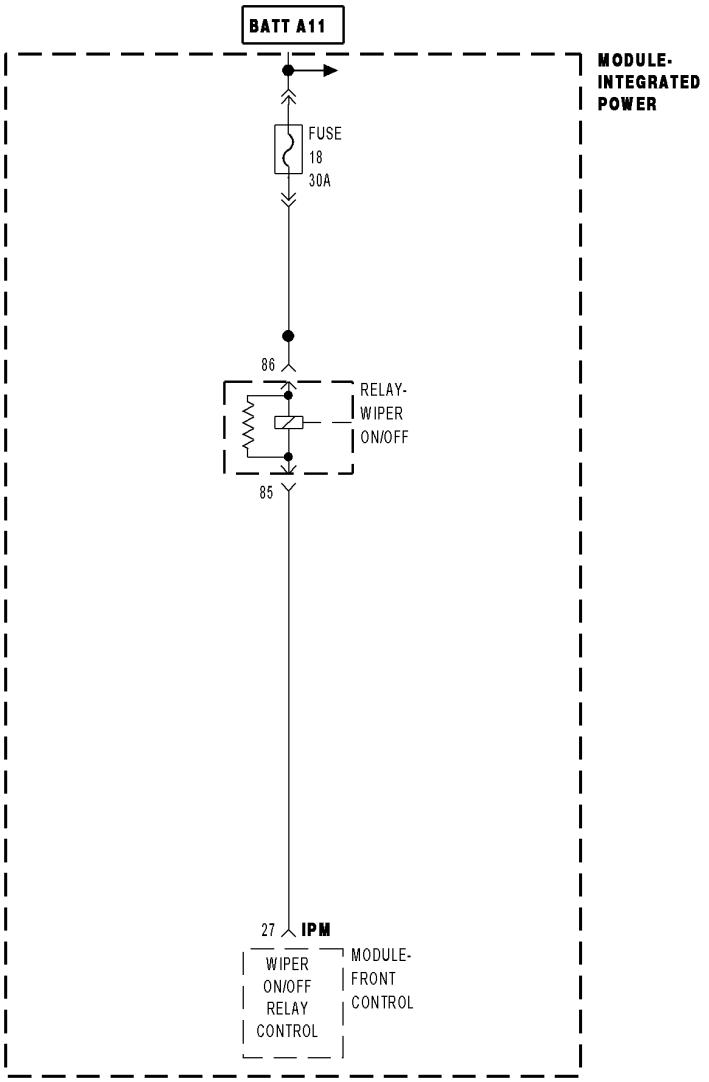

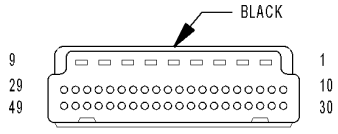

MODULE-
FRONT
CONTROL IPM

815FF1C0

For a complete wiring diagram **Refer to Section 8W**.

- **When Monitored:**
- With the ignition on.
- **Set Condition:**
- When the FCM detects a short/low condition.

Possible Causes
INTEGRATED POWER MODULE

Diagnostic Test

1. INTEGRATED POWER MODULE

Turn the ignition off.

Replace the Wiper ON/OFF relay with and known good relay.

With the Scan Tool, clear all FCM DTC's.

Turn the Wipers ON then OFF.

With the Scan Tool, read the Wiper DTC's.

Does the Scan Tool read: B2315-WIPER ON/OFF CONTROL CIRCUIT OPEN?

Yes >> Replace the Integrated Power Module in accordance with the service information.
Perform the BODY VERIFICATION TEST — VER 1. (Refer to 8 - ELECTRICAL/ELECTRONIC CONTROL MODULES/FRONT CONTROL MODULE - DIAGNOSIS AND TESTING)

No >> Test complete.
Perform the BODY VERIFICATION TEST — VER 1. (Refer to 8 - ELECTRICAL/ELECTRONIC CONTROL MODULES/FRONT CONTROL MODULE - DIAGNOSIS AND TESTING)

B2317-WIPER HI/LOW CONTROL CIRCUIT LOW

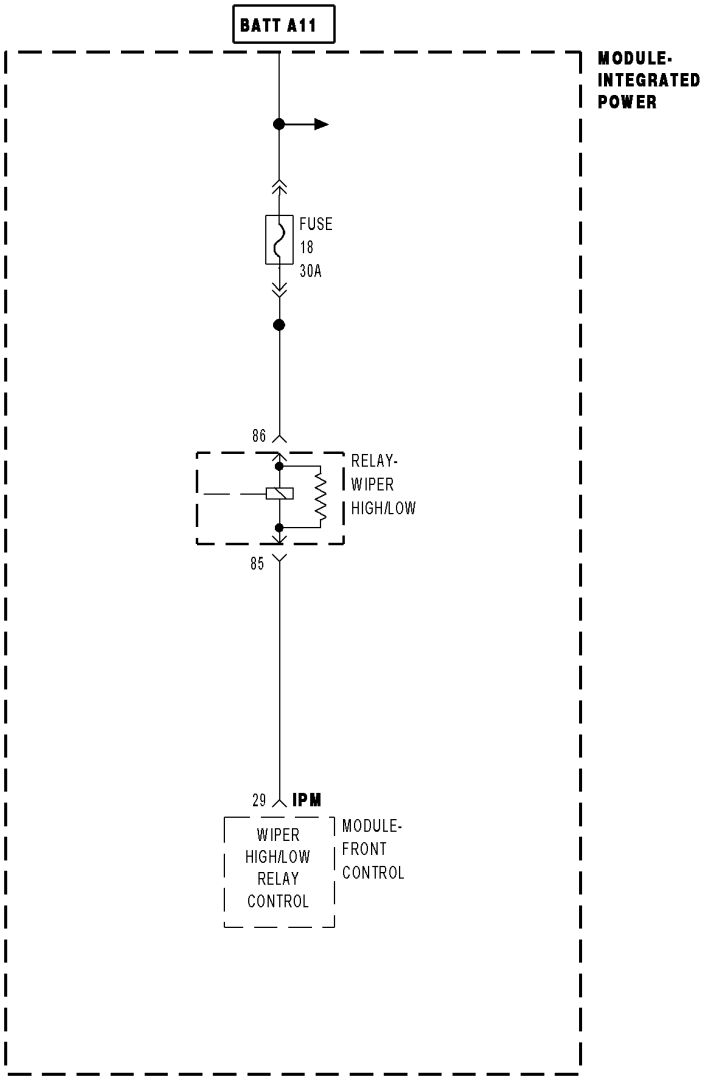

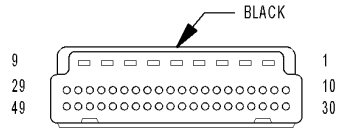

**MODULE-
FRONT
CONTROL IPM**

815FF204

For a complete wiring diagram **Refer to Section 8W**.

- **When Monitored:**
- With the ignition on.
- **Set Condition:**
- When the FCM detects a short/low condition.

Possible Causes
(A11) FUSED B+ CIRCUIT OPEN
WIPER HI/LOW RELAY
FRONT CONTROL MODULE
INTEGRATED POWER MODULE

Diagnostic Test

1. (A11) FUSED B+ CIRCUIT OPEN

NOTE: Check all fuses and circuit breakers before proceeding with the diagnosis of this DTC.

Turn the ignition on.

Remove the Wiper HI/LOW relay.

Measure the voltage at cavity 86 of the Wiper HI/LOW relay.

Is the voltage above 10.0 volts?

Yes >> Go To 2

No >> Check the (A11) Fused B+ circuit for an open.
Perform the BODY VERIFICATION TEST — VER 1. (Refer to 8 - ELECTRICAL/ELECTRONIC CONTROL MODULES/FRONT CONTROL MODULE - DIAGNOSIS AND TESTING)

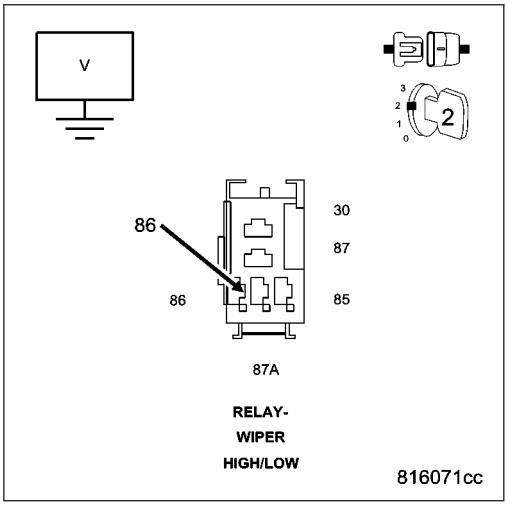

2. WIPER HI/LOW RELAY

Turn the ignition off.

Replace the Wiper HI/LOW relay with and known good relay.

Turn the ignition on.

With the Scan Tool, clear all FCM DTC's.

Turn the Wipers ON then OFF.

With the Scan Tool, read the Wiper DTC's.

Does the Scan Tool read: B2313-WIPER HI/LOW CONTROL CIRCUIT LOW?

Yes >> Go To 3

No >> Replace the Wiper HI/LOW relay.
Perform the BODY VERIFICATION TEST — VER 1. (Refer to 8 - ELECTRICAL/ELECTRONIC CONTROL MODULES/FRONT CONTROL MODULE - DIAGNOSIS AND TESTING)

3. INTEGRATED POWER MODULE

Turn the ignition off.

Disconnect the FCM from the IPM.

Measure the voltage on cavity 29 (Wiper HI/LOW Relay Control) of the IPM.

Is the voltage above 10.0 volts?

Yes >> Replace the FCM in accordance with the service information.

Perform the BODY VERIFICATION TEST — VER 1. (Refer to 8 - ELECTRICAL/ELECTRONIC CONTROL MODULES/ FRONT CONTROL MODULE - DIAGNOSIS AND TESTING)

No >> Replace the IPM in accordance with the service information.

Perform the BODY VERIFICATION TEST — VER 1. (Refer to 8 - ELECTRICAL/ELECTRONIC CONTROL MODULES/ FRONT CONTROL MODULE - DIAGNOSIS AND TESTING)

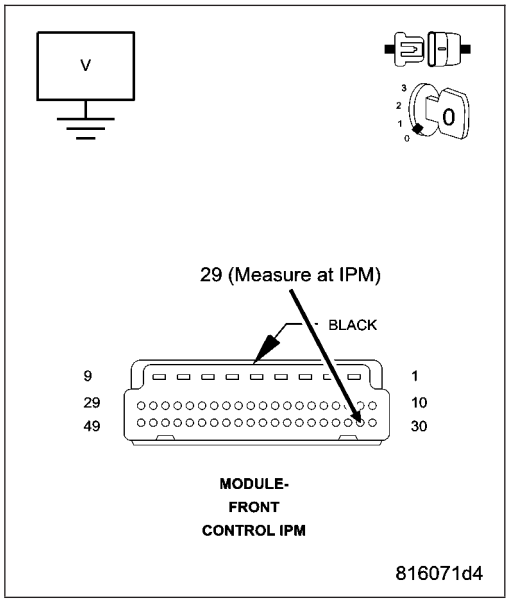

B2318-WIPER HI/LOW CONTROL CIRCUIT HIGH

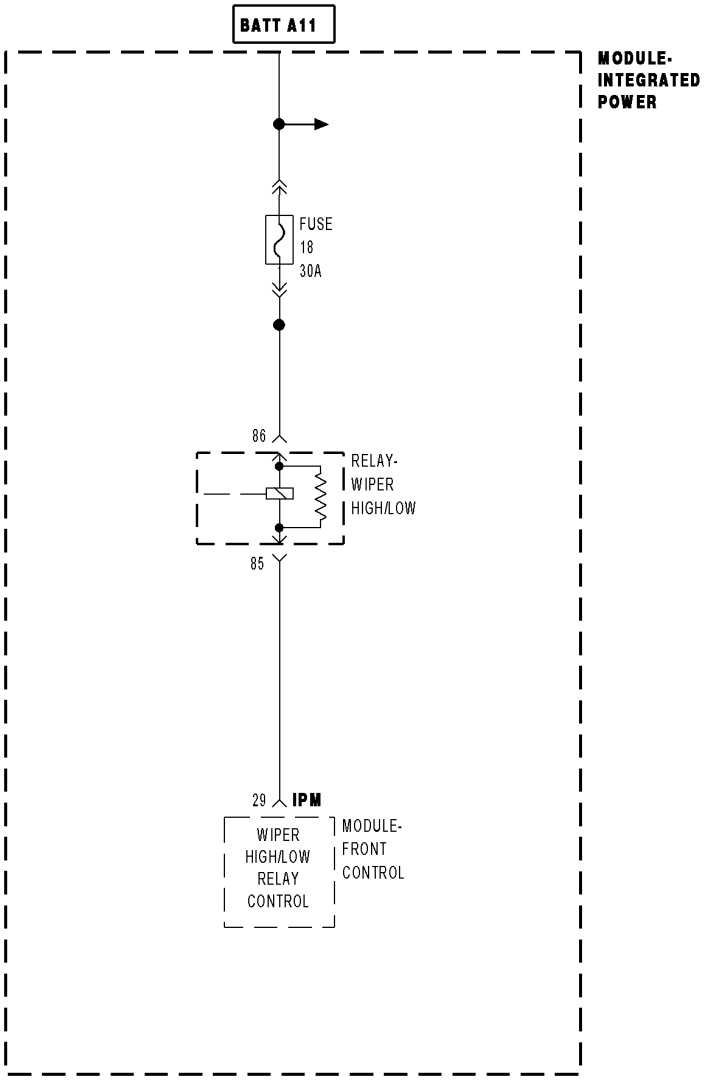

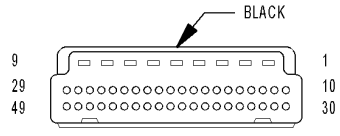

MODULE-
FRONT
CONTROL IPM

815FF204

For a complete wiring diagram **Refer to Section 8W**.

- **When Monitored:**
- With the ignition on.
- **Set Condition:**
- When the FCM detects a short/HIGH condition.

Possible Causes
INTEGRATED POWER MODULE

Diagnostic Test

1. INTEGRATED POWER MODULE

Turn the ignition off.

Replace the Wiper HI/LOW relay with and known good relay.

With the Scan Tool, clear all FCM DTC's.

Turn the Wipers ON then OFF.

With the Scan Tool, read the Wiper DTC's.

Does the Scan Tool read: B2318-WIPER HI/LOW CONTROL CIRCUIT HIGH?

Yes >> Replace the Integrated Power Module in accordance with the service information.
Perform the BODY VERIFICATION TEST — VER 1. (Refer to 8 - ELECTRICAL/ELECTRONIC CONTROL MODULES/FRONT CONTROL MODULE - DIAGNOSIS AND TESTING)

No >> Test complete.
Perform the BODY VERIFICATION TEST — VER 1. (Refer to 8 - ELECTRICAL/ELECTRONIC CONTROL MODULES/FRONT CONTROL MODULE - DIAGNOSIS AND TESTING)

B2319-WIPER HI/LOW CONTROL CIRCUIT OPEN

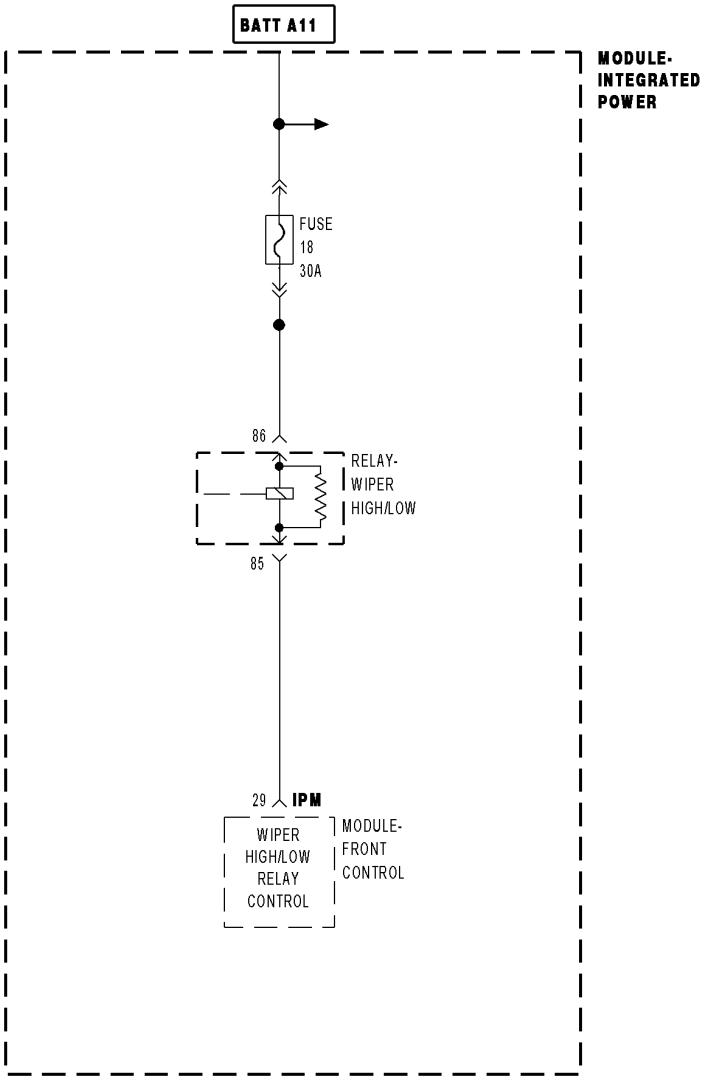

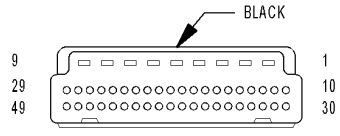

MODULE-
FRONT
CONTROL IPM

815FF204

For a complete wiring diagram **Refer to Section 8W**.

- **When Monitored:**
- With the ignition on.
- **Set Condition:**
- When the FCM detects a short/low condition.

Possible Causes
INTEGRATED POWER MODULE

Diagnostic Test

1. INTEGRATED POWER MODULE

Turn the ignition off.

Replace the Wiper HI/LOW relay with and known good relay.

With the Scan Tool, clear all FCM DTC's.

Turn the Wipers ON then OFF.

With the Scan Tool, read the Wiper DTC's.

Does the Scan Tool read: B2319-WIPER HI/LOW CONTROL CIRCUIT OPEN?

Yes >> Replace the Integrated Power Module in accordance with the service information.
Perform the BODY VERIFICATION TEST — VER 1. (Refer to 8 - ELECTRICAL/ELECTRONIC CONTROL MODULES/FRONT CONTROL MODULE - DIAGNOSIS AND TESTING)

No >> Test complete.
Perform the BODY VERIFICATION TEST — VER 1. (Refer to 8 - ELECTRICAL/ELECTRONIC CONTROL MODULES/FRONT CONTROL MODULE - DIAGNOSIS AND TESTING)

B231F-FRONT/REAR WASHER MOTOR CONTROL CIRCUIT LOW

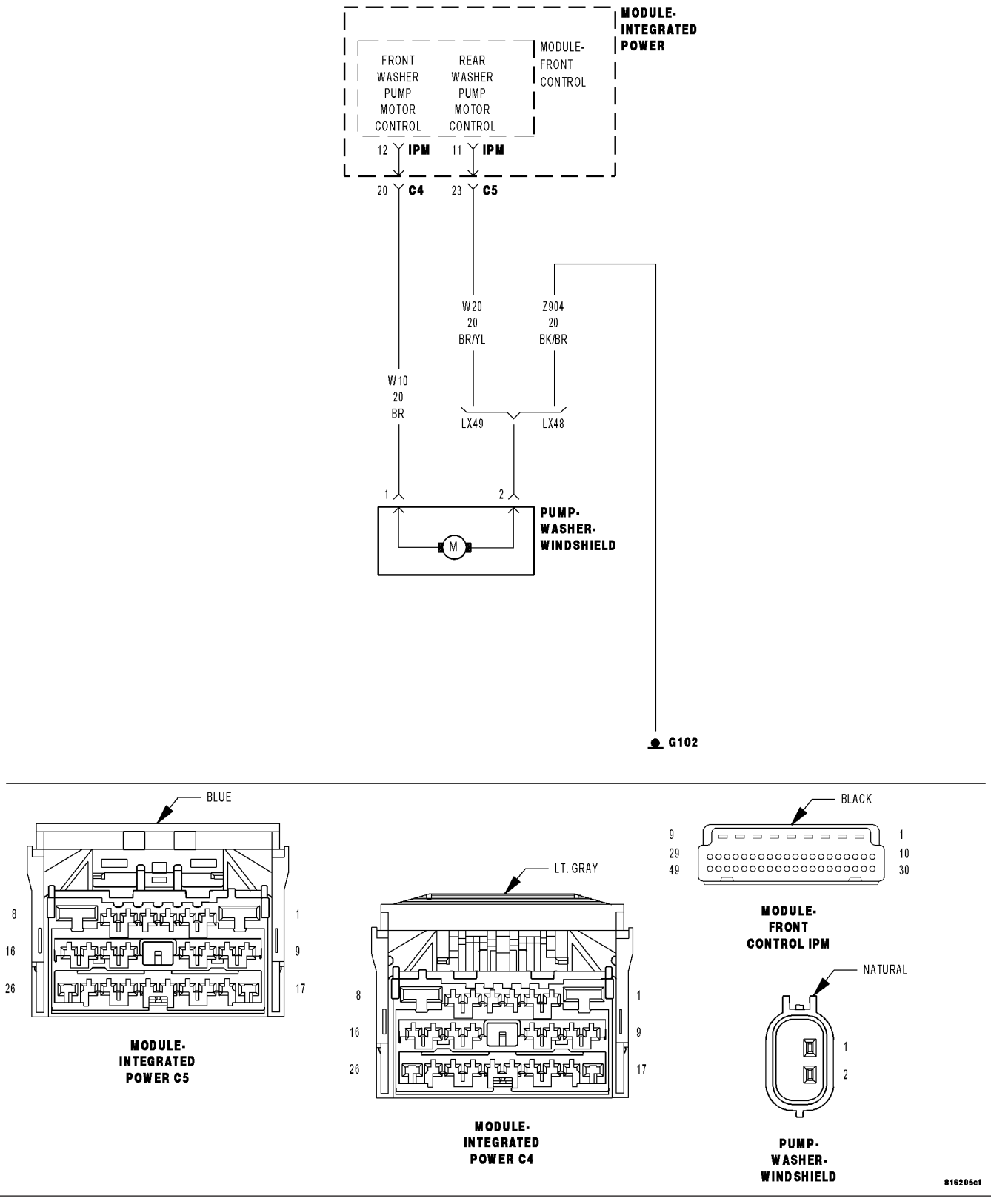

For a complete wiring diagram **Refer to Section 8W**.

- **When Monitored:**
- With the ignition on.
- **Set Condition:**
- When the FCM detects a short/low condition on the washer Pump Motor Control circuit.

Possible Causes
(W10)/(W20) WASHER PUMP MOTOR CONTROL CIRCUIT SHORT TOGETHER
(W10) WASHER PUMP MOTOR CONTROL CIRCUIT SHORT TO GROUND
(W20) WASHER PUMP MOTOR CONTROL CIRCUIT SHORT TO GROUND
WIPER WASHER PUMP
FRONT CONTROL MODULE

Diagnostic Test

1. INTERMITTENT CONDITION

Turn the ignition on.
With the Scan Tool, clear all FCM DTC's.
Turn the Washers on.
With the Scan Tool, read the Wiper/Washers DTC's.

Does the Scan Tool read: B231F-FRONT/REAR WASHER MOTOR CONTROL CIRCUIT LOW?

Yes >> Go To 2

No >> The condition that caused the symptom is currently not present. Inspect the related wiring for a possible intermittent condition. Look for any chafed, pierced, pinched, or partially broken wires.
Perform the BODY VERIFICATION TEST — VER 1. (Refer to 8 - ELECTRICAL/ELECTRONIC CONTROL MODULES/FRONT CONTROL MODULE - DIAGNOSIS AND TESTING)

2. WASHER PUMP MOTOR

Turn the ignition off.
Disconnect the Washer Pump Motor connector.
Turn the ignition on.
With the Scan Tool, read the DTC's.

Does the Scan Tool read:B231F-FRONT/REAR WASHER MOTOR CONTROL CIRCUIT LOW?

Yes >> Go To 3

No >> Replace the Washer Pump Motor in accordance with the service information.
Perform the BODY VERIFICATION TEST — VER 1. (Refer to 8 - ELECTRICAL/ELECTRONIC CONTROL MODULES/FRONT CONTROL MODULE - DIAGNOSIS AND TESTING)

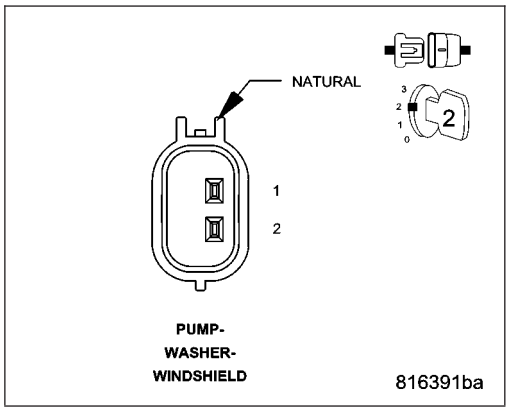

3. (W10)/(W20) WASHER PUMP MOTOR CONTROL CIRCUITS SHORT TOGETHER

Turn the ignition off.

Disconnect the IPM C4 and C5 harness connectors.

Measure the resistance between the (W10) and (W20) Washer Pump Motor Control circuits.

Is the resistance below 5.0 ohms?

Yes >> Repair the (W10) and (W20) Washer Pump Motor Control circuits for a short together.

Perform the BODY VERIFICATION TEST — VER 1. (Refer to 8 - ELECTRICAL/ELECTRONIC CONTROL MODULES/ FRONT CONTROL MODULE - DIAGNOSIS AND TESTING)

No >> Go To 4

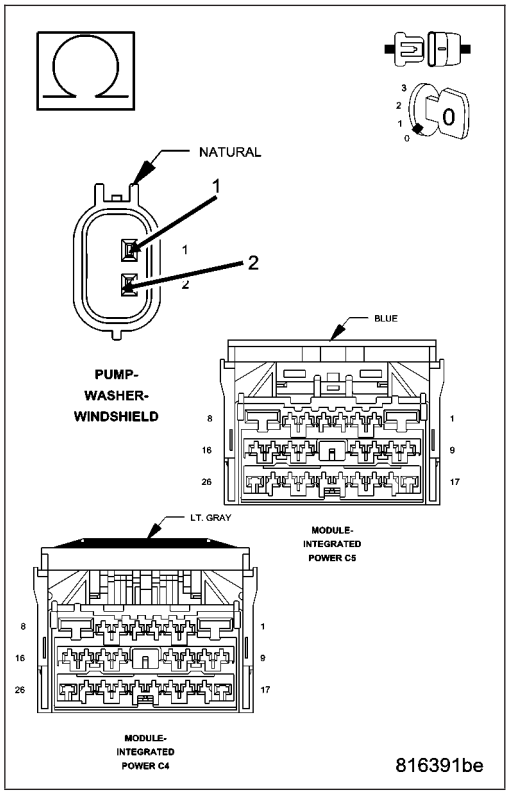

4. (W10) WASHER PUMP MOTOR CONTROL CIRCUIT SHORT TO GROUND

Measure the resistance between ground and the (W10) Washer Pump Motor Control circuit.

Is the resistance below 5.0 ohms?

Yes >> Repair the (W10) Washer Pump Motor Control circuit for a short to ground.

Perform the BODY VERIFICATION TEST — VER 1. (Refer to 8 - ELECTRICAL/ELECTRONIC CONTROL MODULES/ FRONT CONTROL MODULE - DIAGNOSIS AND TESTING)

No >> Go To 5

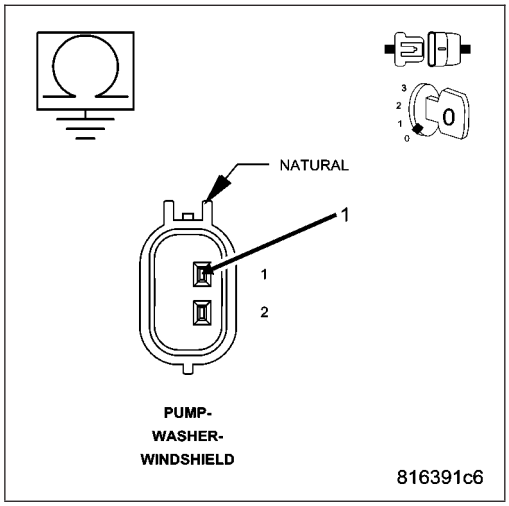

5. (W20) WASHER PUMP MOTOR CONTROL CIRCUIT SHORT TO GROUND

Measure the resistance between ground and the (W20) Washer Pump Motor Control circuit.

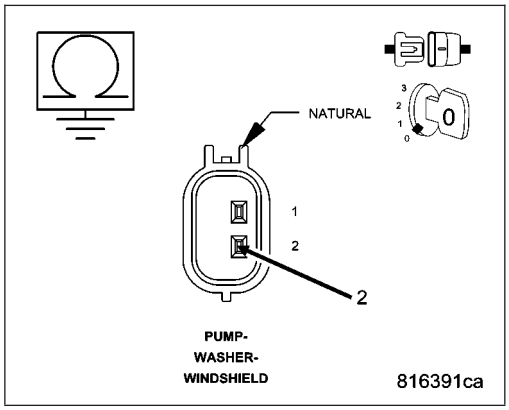

Is the resistance below 5.0 ohms?

Yes >> Repair the (W20) Washer Pump Motor Control circuit for a short to ground.

Perform the BODY VERIFICATION TEST — VER 1. (Refer to 8 - ELECTRICAL/ELECTRONIC CONTROL MODULES/ FRONT CONTROL MODULE - DIAGNOSIS AND TESTING)

No >> Replace the Front Control Module in accordance with the service information.

Perform the BODY VERIFICATION TEST — VER 1. (Refer to 8 - ELECTRICAL/ELECTRONIC CONTROL MODULES/ FRONT CONTROL MODULE - DIAGNOSIS AND TESTING)

B2320-FRONT/REAR WASHER MOTOR CONTROL CIRCUIT HIGH

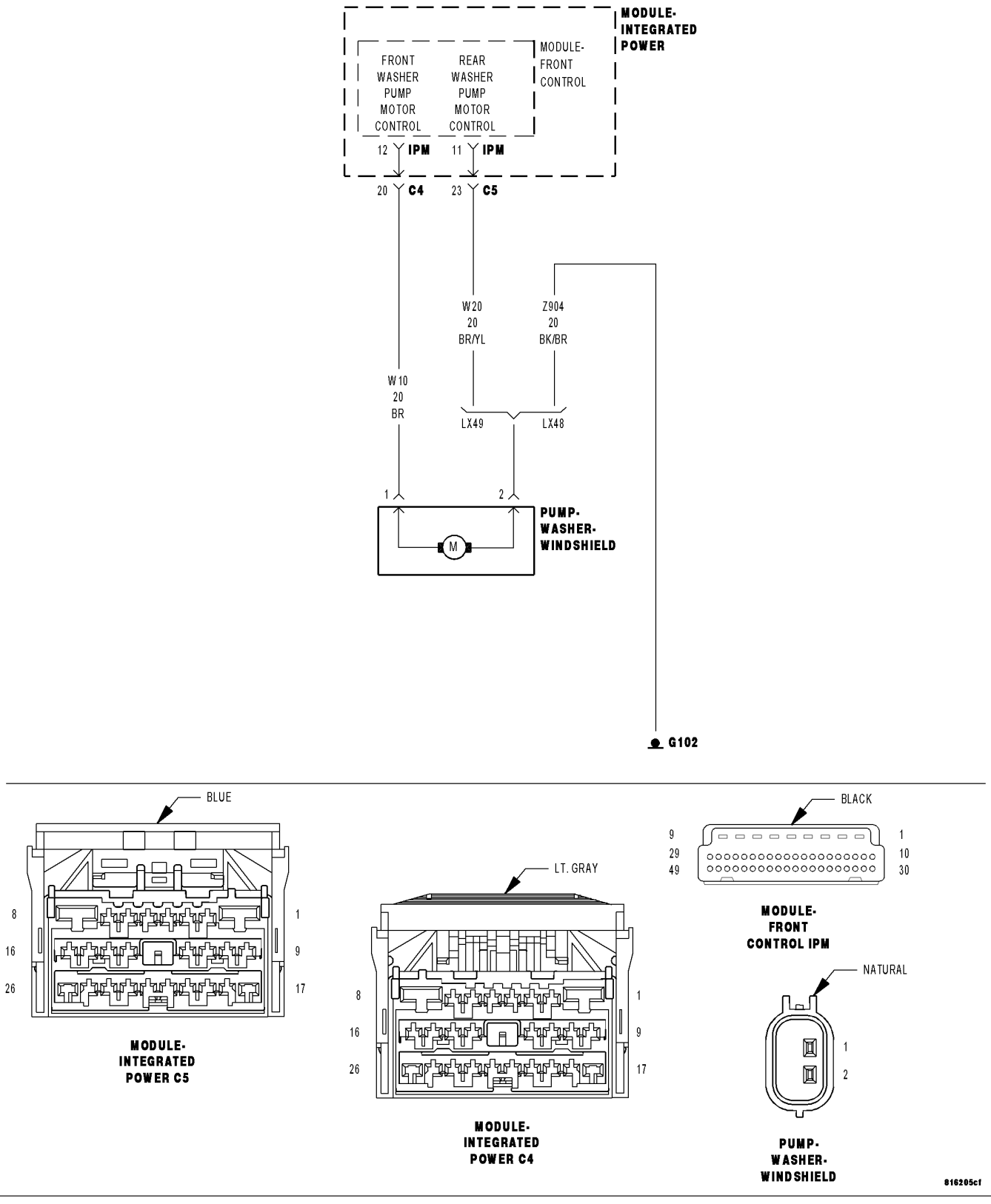

For a complete wiring diagram **Refer to Section 8W**.

- **When Monitored:**
  With the ignition on.
- **Set Condition:**
  The FCM detects an open condition.

Possible Causes
(W10) WASHER PUMP MOTOR CONTROL CIRCUIT SHORT TO VOLTAGE
(W20) WASHER PUMP MOTOR CONTROL CIRCUIT SHORT TO VOLTAGE
FRONT CONTROL MODULE

Diagnostic Test

1. INTERMITTENT CONDITION

Turn the ignition on.
With the Scan Tool, clear all FCM DTC's.
Turn the Washers on.
With the Scan Tool, read the Wiper/Washers DTC's.

Does the Scan Tool read: B2320-FRONT/REAR WASHER MOTOR CONTROL CIRCUIT HIGH?

Yes >> Go To 2

No >> The condition that caused the symptom is currently not present. Inspect the related wiring for a possible intermittent condition. Look for any chafed, pierced, pinched, or partially broken wires.
Perform the BODY VERIFICATION TEST — VER 1. (Refer to 8 - ELECTRICAL/ELECTRONIC CONTROL MODULES/FRONT CONTROL MODULE - DIAGNOSIS AND TESTING)

2. (W10) WASHER PUMP MOTOR CONTROL CIRCUIT SHORT TO VOLTAGE

Turn the ignition off.
Disconnect the IPM C4 harness connector.
Disconnect the Washer Pump Motor harness connector.
Turn the ignition on.
Measure the voltage of the (W10) Washer Pump Motor Control circuit.

Is the voltage above 5.0 volts?

Yes >> Repair the (W10) Washer Pump Motor Control circuit for a short to voltage.
Perform the BODY VERIFICATION TEST — VER 1. (Refer to 8 - ELECTRICAL/ELECTRONIC CONTROL MODULES/FRONT CONTROL MODULE - DIAGNOSIS AND TESTING)

No >> Go To 3

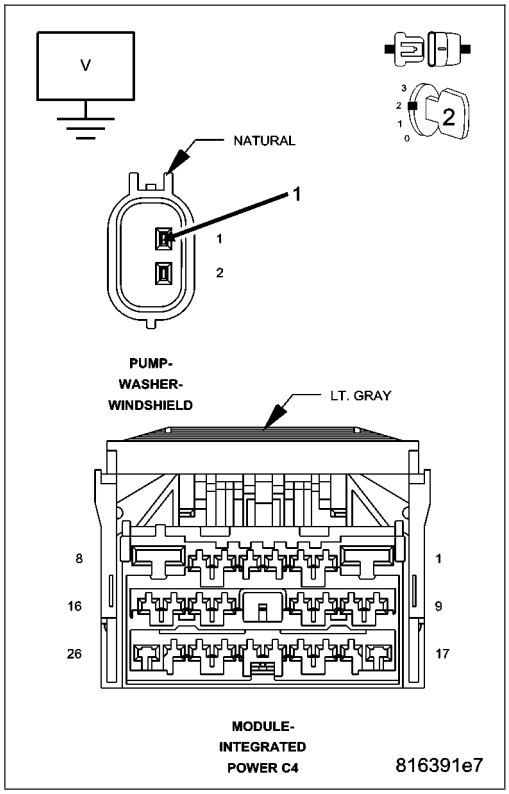

3. (W20) WASHER PUMP MOTOR CONTROL CIRCUIT SHORT TO VOLTAGE

Disconnect the IPM C5 harness connector.

Measure the Voltage of the (W20) Washer Pump Motor Control circuit.

Is the voltage above 5.0 volts?

Yes >> Repair the (W20) Washer Pump Motor Control circuit for a short to voltage.

Perform the BODY VERIFICATION TEST — VER 1. (Refer to 8 - ELECTRICAL/ELECTRONIC CONTROL MODULES/ FRONT CONTROL MODULE - DIAGNOSIS AND TESTING)

No >> Replace the Front Control Module in accordance with the service information.

Perform the BODY VERIFICATION TEST — VER 1. (Refer to 8 - ELECTRICAL/ELECTRONIC CONTROL MODULES/ FRONT CONTROL MODULE - DIAGNOSIS AND TESTING)

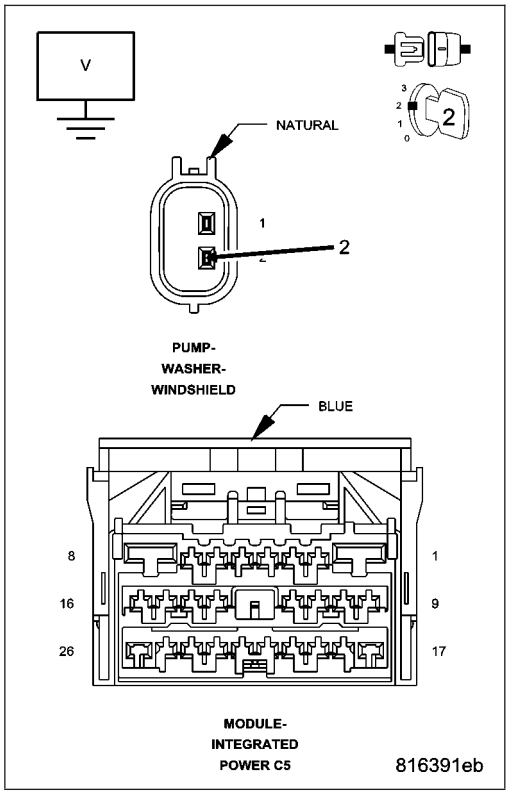

B2321-FRONT/REAR WASHER MOTOR CONTROL CIRCUIT OPEN

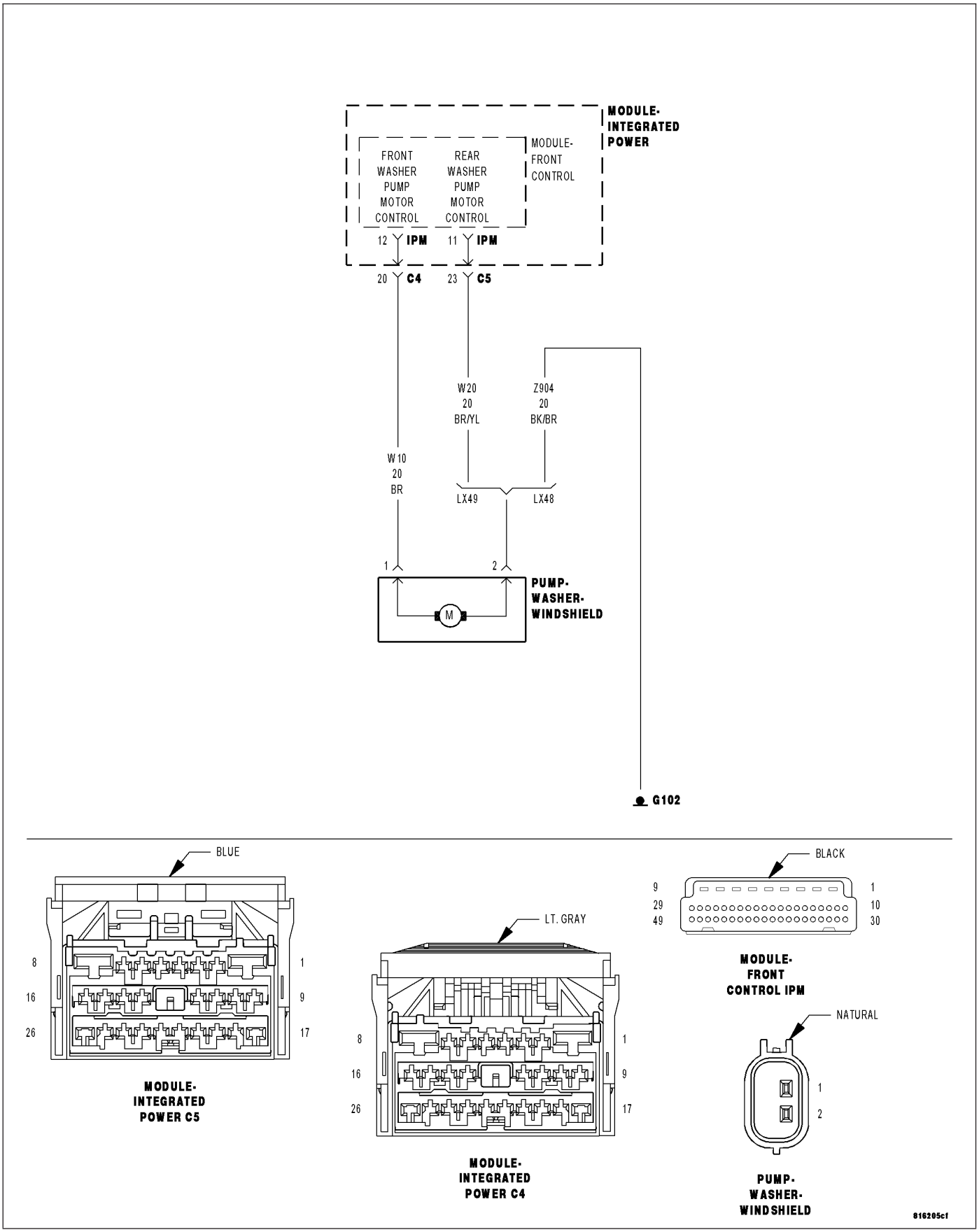

For a complete wiring diagram **Refer to Section 8W**.

- **When Monitored:**
  With the ignition on.
- **Set Condition:**
  The FCM detects an open condition.

Possible Causes
(W10) WASHER PUMP MOTOR CONTROL CIRCUIT OPEN
(W20) WASHER PUMP MOTOR CONTROL CIRCUIT OPEN
FRONT CONTROL MODULE

Diagnostic Test

1. INTERMITTENT CONDITION

Turn the ignition on.
With the Scan Tool, clear all FCM DTC's.
Turn the Washers on.
With the Scan Tool, read the FCM DTC's.

Does the Scan Tool read: B2321-FRONT/REAR WASHER MOTOR CONTROL CIRCUIT OPEN?

Yes >> Go To 2

No >> The condition that caused the symptom is currently not present. Inspect the related wiring for a possible intermittent condition. Look for any chafed, pierced, pinched, or partially broken wires.
Perform the BODY VERIFICATION TEST — VER 1. (Refer to 8 - ELECTRICAL/ELECTRONIC CONTROL MODULES/FRONT CONTROL MODULE - DIAGNOSIS AND TESTING)

2. (W10) WASHER PUMP MOTOR CONTROL CIRCUIT OPEN

Turn the ignition off.
Disconnect the IPM C4 harness connector.
Disconnect the Washer Pump Motor harness connector.
Measure the resistance of the (W10) Washer Pump Motor Control circuit.

Is the resistance above 5.0 ohms?

Yes >> Repair the (W10) Washer Pump Motor Control circuit for an open.
Perform the BODY VERIFICATION TEST — VER 1. (Refer to 8 - ELECTRICAL/ELECTRONIC CONTROL MODULES/FRONT CONTROL MODULE - DIAGNOSIS AND TESTING)

No >> Go To 3

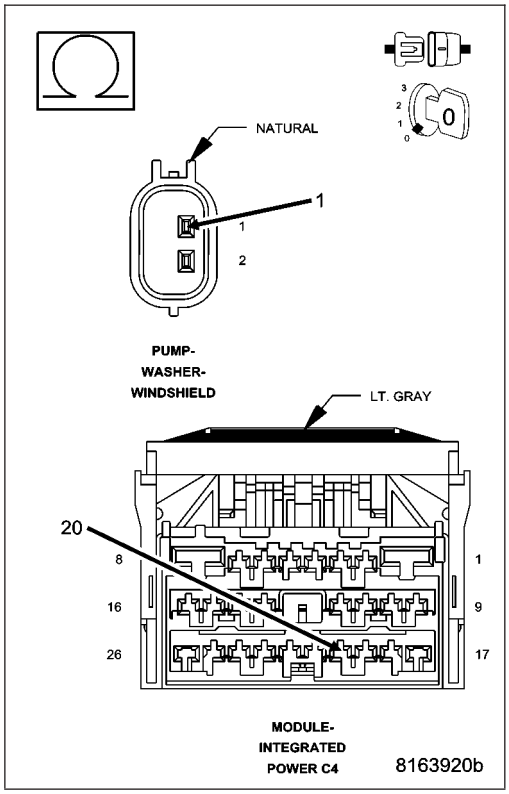

3. (W20) WASHER PUMP MOTOR CONTROL CIRCUIT OPEN

Disconnect the IPM C5 harness connector.

Measure the resistance of the (W20) Washer Pump Motor Control circuit.

Is the resistance above 5.0 ohms?

Yes >> Repair the (W20) Washer Pump Motor Control circuit for an open.

Perform the BODY VERIFICATION TEST — VER 1. (Refer to 8 - ELECTRICAL/ELECTRONIC CONTROL MODULES/ FRONT CONTROL MODULE - DIAGNOSIS AND TESTING)

No >> Replace the Front Control Module in accordance with the service information.

Perform the BODY VERIFICATION TEST — VER 1. (Refer to 8 - ELECTRICAL/ELECTRONIC CONTROL MODULES/ FRONT CONTROL MODULE - DIAGNOSIS AND TESTING)

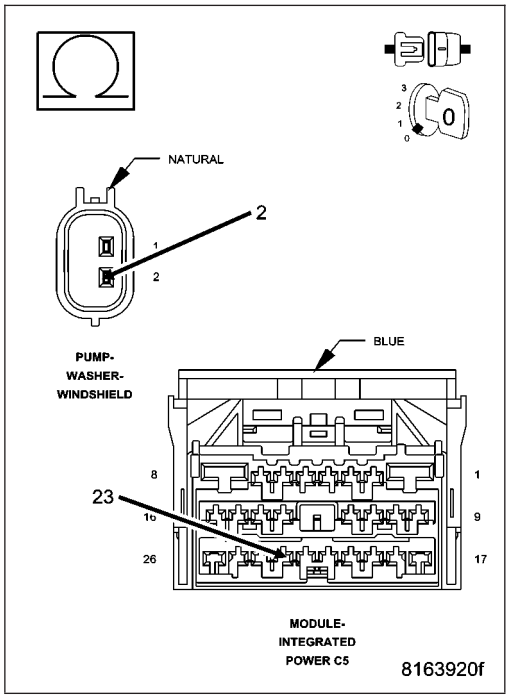

B230D-REAR WIPER PARK SWITCH INPUT CIRCUIT LOW

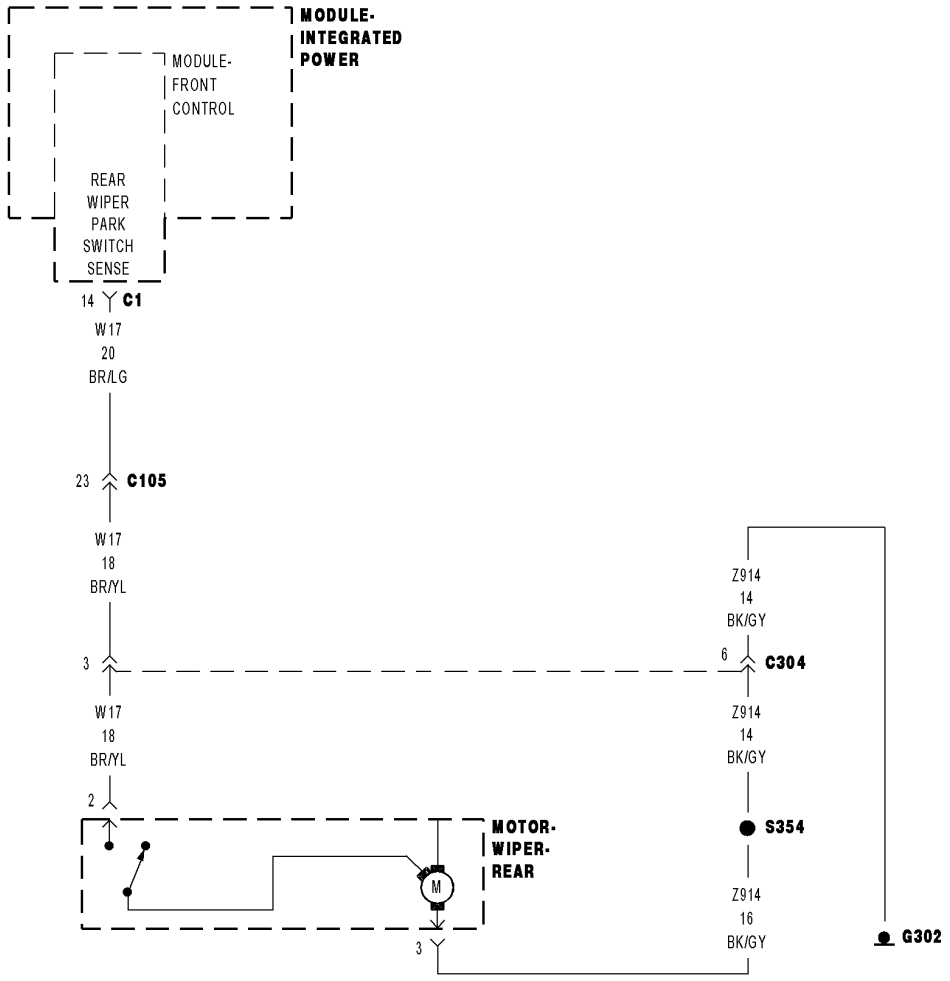

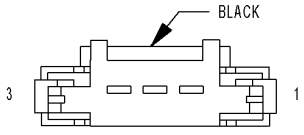

MOTOR-
WIPER-
REAR
(LX49)

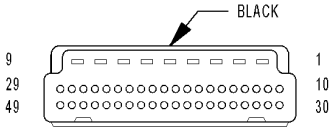

MODULE-
FRONT
CONTROL IPM

815FF1F5

For a complete wiring diagram **Refer to Section 8W**.

Possible Causes
REAR WIPER MOTOR
(W17) REAR WIPER PARK SWITCH SENSE CIRCUIT SHORT TO GROUND
FRONT CONTROL MODULE

Diagnostic Test

1. INTERMITTENT CONDITION

Turn the ignition on.
With the Scan Tool, clear all FCM DTC's.
Turn the Rear Wipers on.
With the Scan Tool, read the FCM DTC's.

Does the Scan Tool read: B230D-REAR WIPER PARK SWITCH INPUT CIRCUIT LOW?

Yes >> Go To 2

No >> The condition that caused the symptom is currently not present. Inspect the related wiring for a possible intermittent condition. Look for any chafed, pierced, pinched, or partially broken wires.

Perform the BODY VERIFICATION TEST — VER 1. (Refer to 8 - ELECTRICAL/ELECTRONIC CONTROL MODULES/FRONT CONTROL MODULE - DIAGNOSIS AND TESTING)

2. REAR WIPER MOTOR

Turn the ignition off.
Disconnect the Rear Wiper Motor connector.
Turn the ignition on.
With the Scan Tool, read the FCM DTC's.

Does the Scan Tool read: B230D-REAR WIPER PARK SWITCH INPUT CIRCUIT LOW?

Yes >> Go To 3

No >> Replace the Rear Wiper Motor in accordance with the service information.

Perform the BODY VERIFICATION TEST — VER 1. (Refer to 8 - ELECTRICAL/ELECTRONIC CONTROL MODULES/FRONT CONTROL MODULE - DIAGNOSIS AND TESTING)

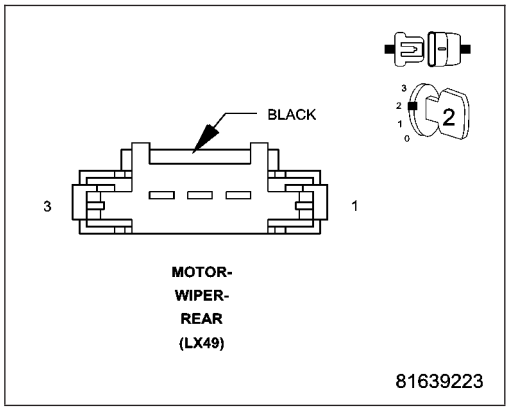

3. (W17) REAR WIPER PARK SWITCH SENSE CIRCUIT SHORT TO GROUND

Turn the ignition off.

Disconnect the FCM C1 harness connector.

Measure the resistance between ground and the (W17) Rear Wiper Park Switch Sense circuit.

Is the resistance below 5.0 ohms?

Yes >> Repair the (W17) Rear Wiper Park Switch Sense circuit for a short condition.

Perform the BODY VERIFICATION TEST — VER 1. (Refer to 8 - ELECTRICAL/ELECTRONIC CONTROL MODULES/ FRONT CONTROL MODULE - DIAGNOSIS AND TESTING)

No >> Replace the Front Control Module in accordance with the service information.

Perform the BODY VERIFICATION TEST — VER 1. (Refer to 8 - ELECTRICAL/ELECTRONIC CONTROL MODULES/ FRONT CONTROL MODULE - DIAGNOSIS AND TESTING)

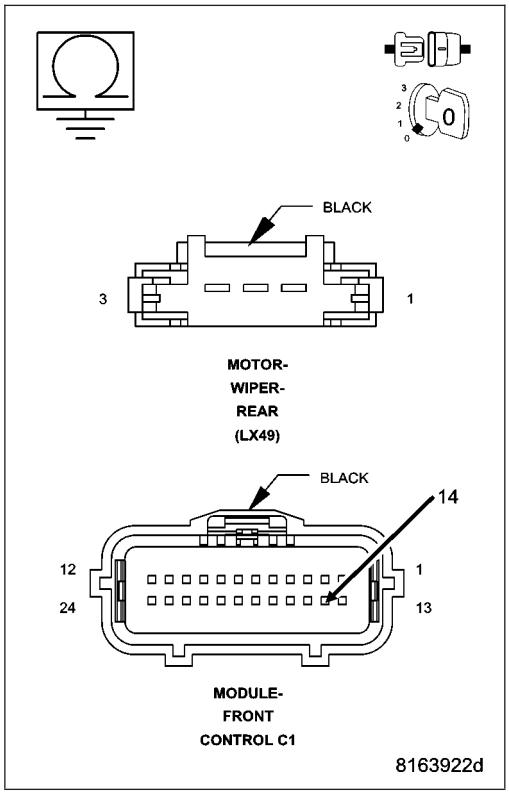

B230E-REAR WIPER PARK SWITCH INPUT CIRCUIT OPEN

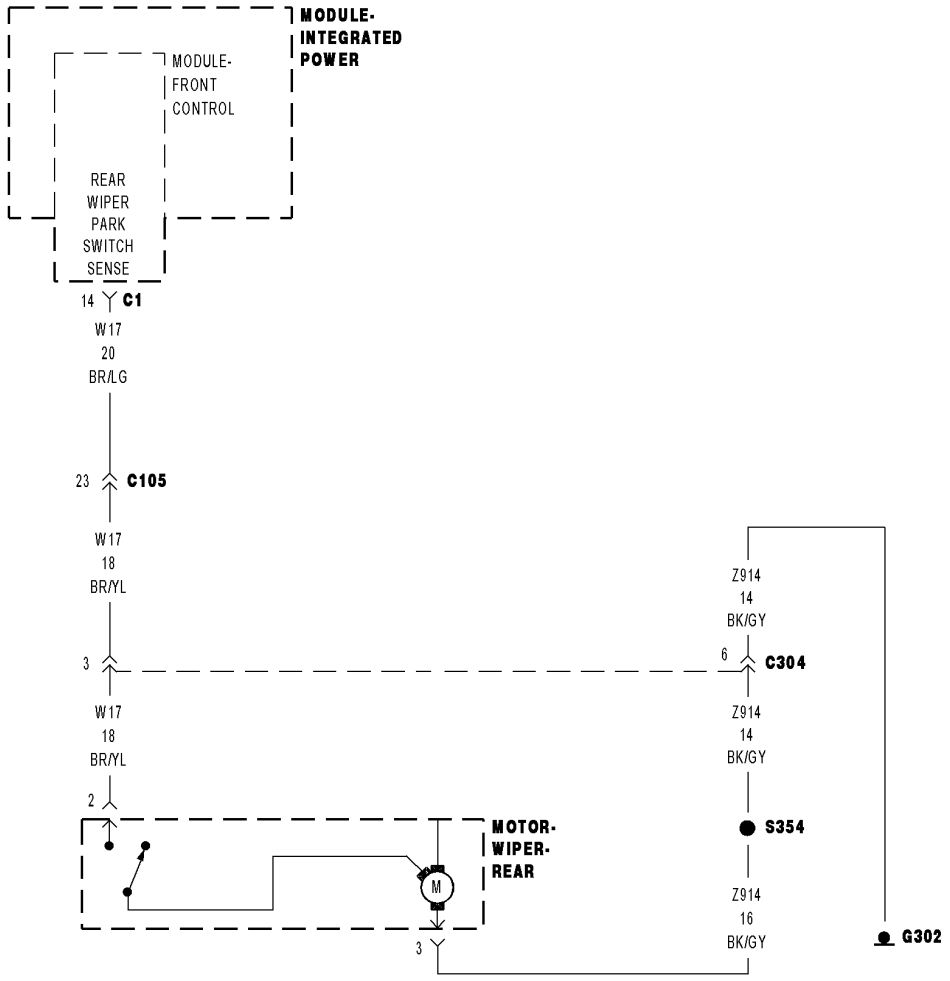

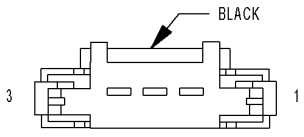

MOTOR-
WIPER-
REAR
(LX49)

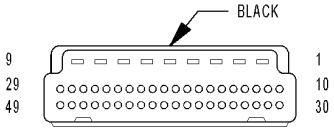

MODULE-
FRONT
CONTROL IPM

815FF1F5

For a complete wiring diagram **Refer to Section 8W**.

Possible Causes
(W17) REAR WIPER PARK SWITCH SENSE CIRCUIT OPEN
FRONT CONTROL MODULE

Diagnostic Test

1. INTERMITTENT CONDITION

Turn the ignition on.

With the Scan Tool, clear all FCM DTC's.

Turn the Rear Wipers on.

With the Scan Tool, read the Rear Wiper DTC's.

Does the Scan Tool read: B230E-REAR WIPER PARK SWITCH INPUT CIRCUIT OPEN?

Yes >> Go To 2

No >> The condition that caused the symptom is currently not present. Inspect the related wiring for a possible intermittent condition. Look for any chafed, pierced, pinched, or partially broken wires.

Perform the BODY VERIFICATION TEST — VER 1. (Refer to 8 - ELECTRICAL/ELECTRONIC CONTROL MODULES/FRONT CONTROL MODULE - DIAGNOSIS AND TESTING)

2. (W17) REAR WIPER PARK SWITCH SENSE CIRCUIT OPEN

Turn the ignition off.

Disconnect the Rear Wiper Motor connector.

Disconnect the FCM C1 harness connector.

Measure the resistance of the (W17) Rear Wiper Park Switch Sense circuit.

Is the resistance above 5.0 ohms?

Yes >> Repair the (W17) Rear Wiper Park Switch Sense circuit for an open condition.

Perform the BODY VERIFICATION TEST — VER 1.

No >> Replace the Front Control Module in accordance with the service information.

Perform the BODY VERIFICATION TEST — VER 1.

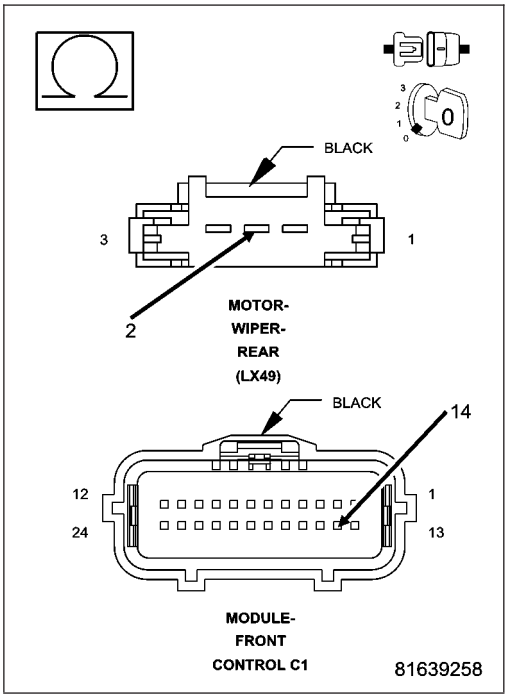

B231B-REAR WIPER MOTOR CONTROL CIRCUIT LOW

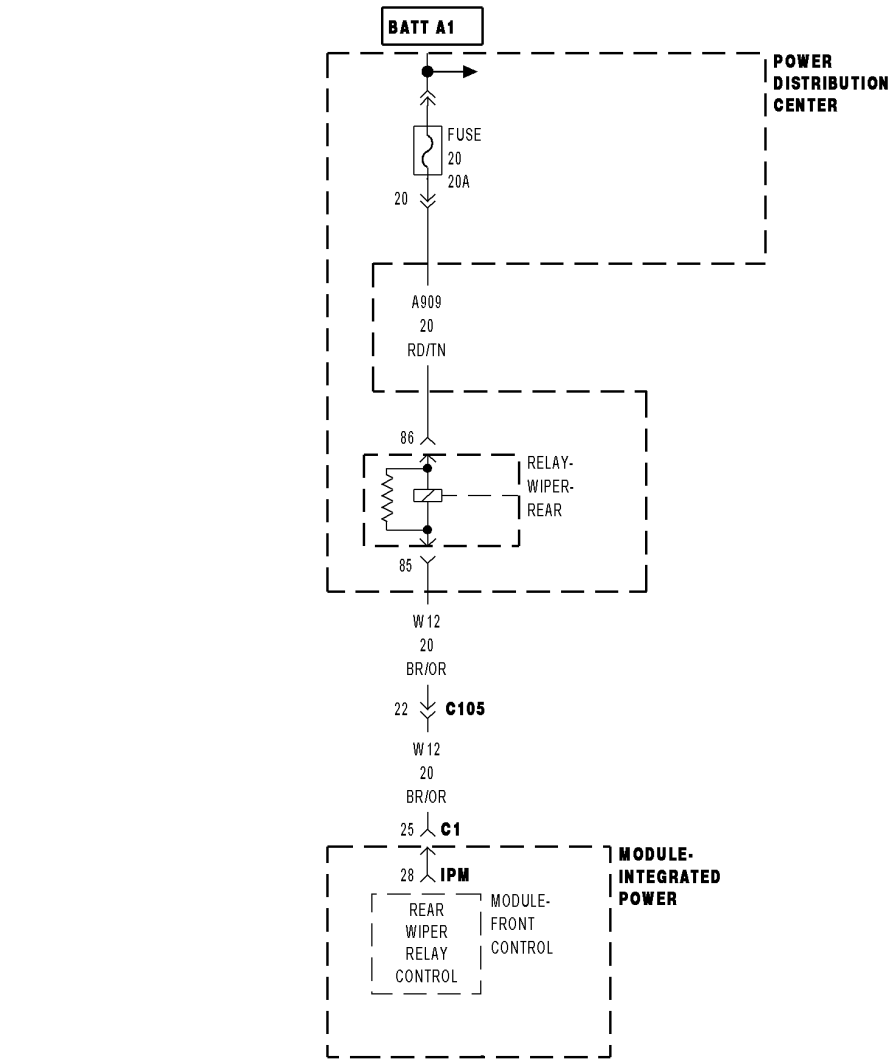

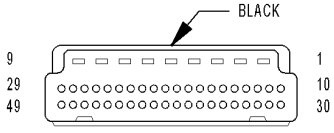

MODULE-FRONT CONTROL IPM

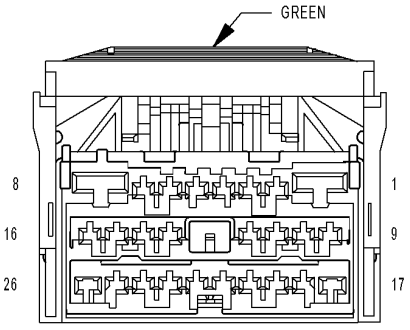

MODULE-INTEGRATED POWER C1

815FF1E7

For a complete wiring diagram **Refer to Section 8W**.

Possible Causes
(A1) FUSED B+ CIRCUIT OPEN
REAR WIPER RELAY
FRONT CONTROL MODULE
INTEGRATED POWER MODULE

Diagnostic Test

1. (A1) FUSED B+ CIRCUIT OPEN

NOTE: Check all fuses and circuit breakers before proceeding with the diagnosis of this DTC.
Turn the ignition on.
Remove the Rear Wiper relay.
Measure the voltage at cavity 86 of the Rear Wiper relay.

Is the voltage above 10.0 volts?

Yes >> Go To 2

No >> Check the (A1) Fused B+ circuit for an open.
Perform the BODY VERIFICATION TEST — VER 1. (Refer to 8 - ELECTRICAL/ELECTRONIC CONTROL MODULES/FRONT CONTROL MODULE - DIAGNOSIS AND TESTING)

2. REAR WIPER RELAY

Turn the ignition off.
Replace the Rear Wiper relay with and known good relay.
Turn the ignition on.
With the Scan Tool, clear all FCM DTC's.
Turn the Rear Wipers ON then OFF.
With the Scan Tool, read the FCM DTC's.

Does the Scan Tool read: B231B-REAR WIPER MOTOR CONTROL CIRCUIT LOW?

Yes >> Go To 3

No >> Replace the Rear Wiper relay.
Perform the BODY VERIFICATION TEST — VER 1. (Refer to 8 - ELECTRICAL/ELECTRONIC CONTROL MODULES/FRONT CONTROL MODULE - DIAGNOSIS AND TESTING)

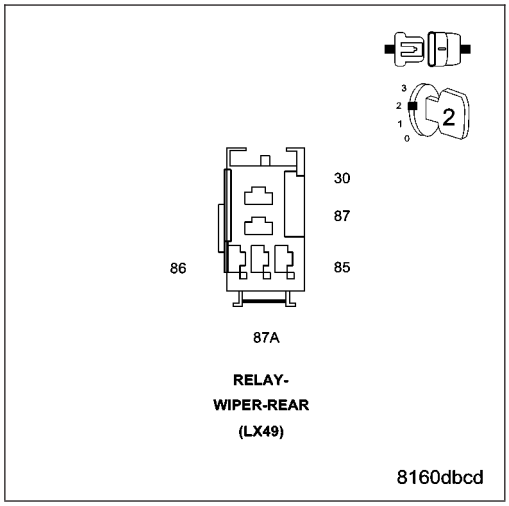

3. INTEGRATED POWER MODULE

Turn the ignition off.

Disconnect the FCM from the IPM.

Turn the ignition on.

Measure the voltage on cavity 28 (Rear Wiper Relay Control) of the IPM.

Is the voltage above 10.0 volts?

Yes >> Replace the FCM in accordance with the service information.

Perform the BODY VERIFICATION TEST — VER 1. (Refer to 8 - ELECTRICAL/ELECTRONIC CONTROL MODULES/ FRONT CONTROL MODULE - DIAGNOSIS AND TESTING)

No >> Replace the IPM in accordance with the service information.

Perform the BODY VERIFICATION TEST — VER 1. (Refer to 8 - ELECTRICAL/ELECTRONIC CONTROL MODULES/ FRONT CONTROL MODULE - DIAGNOSIS AND TESTING)

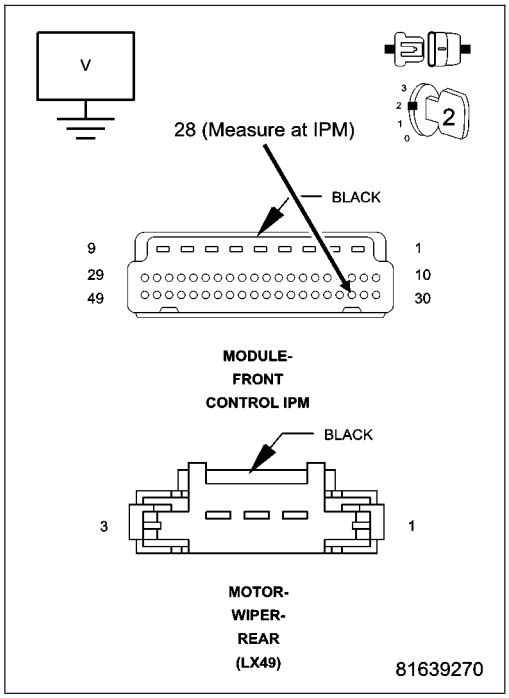

B231C-REAR WIPER MOTOR CONTROL CIRCUIT HIGH

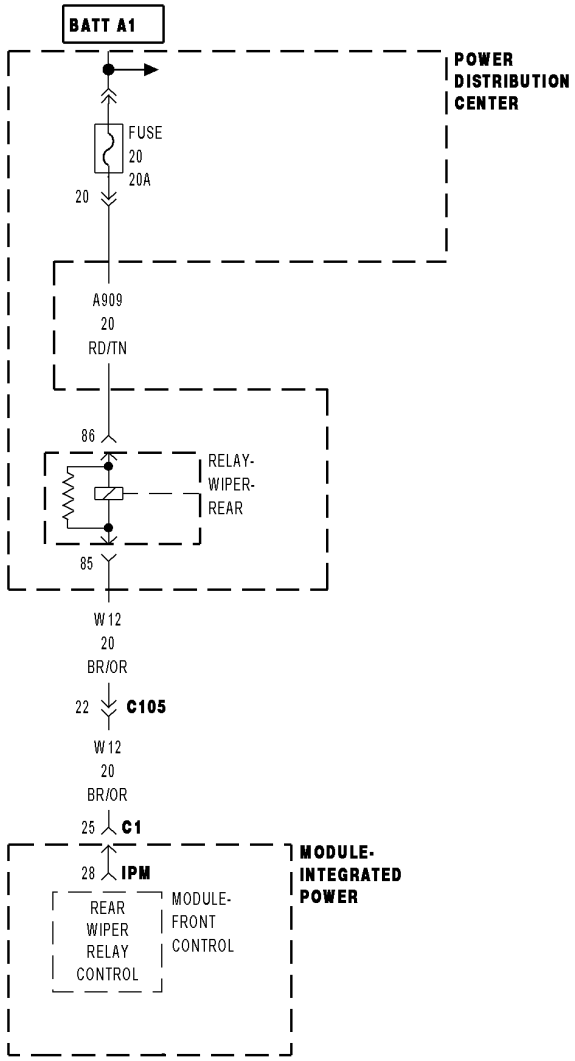

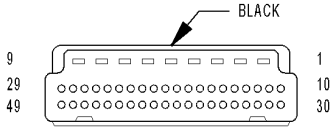

MODULE-FRONT CONTROL IPM

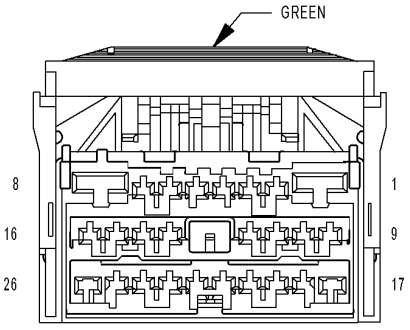

MODULE-INTEGRATED POWER C1

815FF1E7

For a complete wiring diagram **Refer to Section 8W**.

Possible Causes
REAR WIPER RELAY
INTEGRATED POWER MODULE

Diagnostic Test

1. INTEGRATED POWER MODULE

Turn the ignition off.
Replace the Rear Wiper relay with a known good relay.
With the Scan Tool, clear all FCM DTC's.
Turn the Rear Wipers ON then OFF.
With the Scan Tool, read the FCM DTC's.

Does the Scan Tool read: B231C-REAR WIPER MOTOR CONTROL CIRCUIT HIGH?

Yes >> Replace the Integrated Power Module in accordance with the service information.
Perform the BODY VERIFICATION TEST — VER 1. (Refer to 8 - ELECTRICAL/ELECTRONIC CONTROL MODULES/FRONT CONTROL MODULE - DIAGNOSIS AND TESTING)

No >> Test complete.
Perform the BODY VERIFICATION TEST — VER 1. (Refer to 8 - ELECTRICAL/ELECTRONIC CONTROL MODULES/FRONT CONTROL MODULE - DIAGNOSIS AND TESTING)

B231D-REAR WIPER MOTOR CONTROL CIRCUIT OPEN

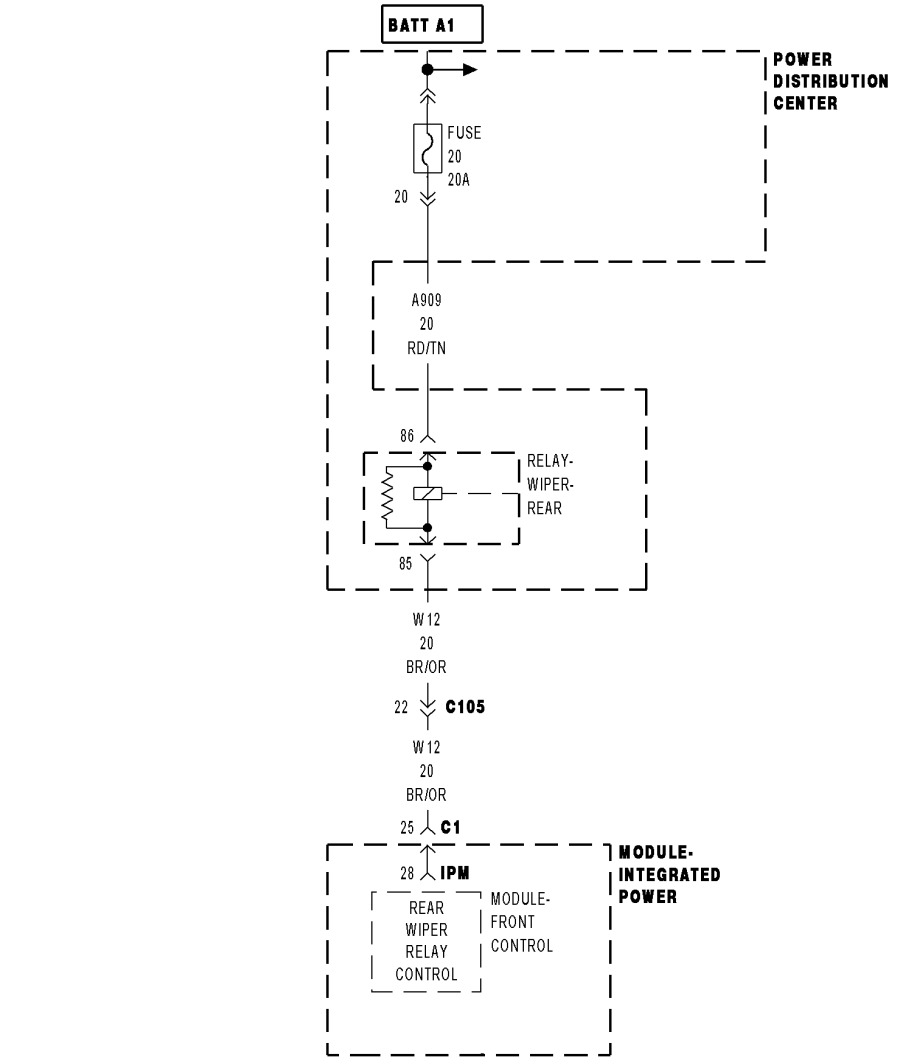

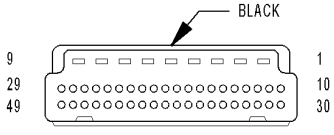

MODULE-FRONT CONTROL IPM

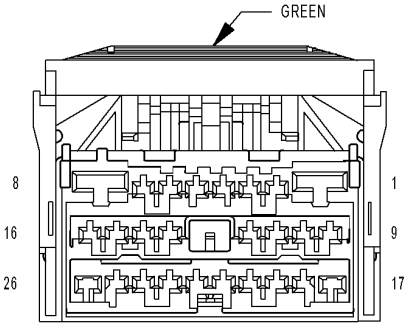

MODULE-INTEGRATED POWER C1

815FF1E7

For a complete wiring diagram **Refer to Section 8W**.

- **When Monitored:**
- With the ignition on.
- **Set Condition:**
- When the FCM detects a short/low condition.

Possible Causes
INTEGRATED POWER MODULE

Diagnostic Test

1. INTEGRATED POWER MODULE

Turn the ignition off.
Replace the Rear Wiper relay with a known good relay.
With the Scan Tool, clear all FCM DTC's.
Turn the Wipers ON then OFF.
With the Scan Tool, read the FCM DTC's.

Does the Scan Tool read: B231D-REAR WIPER MOTOR CONTROL CIRCUIT OPEN?

Yes >> Replace the Integrated Power Module in accordance with the service information.
Perform the BODY VERIFICATION TEST — VER 1. (Refer to 8 - ELECTRICAL/ELECTRONIC CONTROL MODULES/FRONT CONTROL MODULE - DIAGNOSIS AND TESTING)

No >> Test complete.
Perform the BODY VERIFICATION TEST — VER 1. (Refer to 8 - ELECTRICAL/ELECTRONIC CONTROL MODULES/FRONT CONTROL MODULE - DIAGNOSIS AND TESTING)

B2323-HEADLAMP WASHER MOTOR CONTROL CIRCUIT LOW

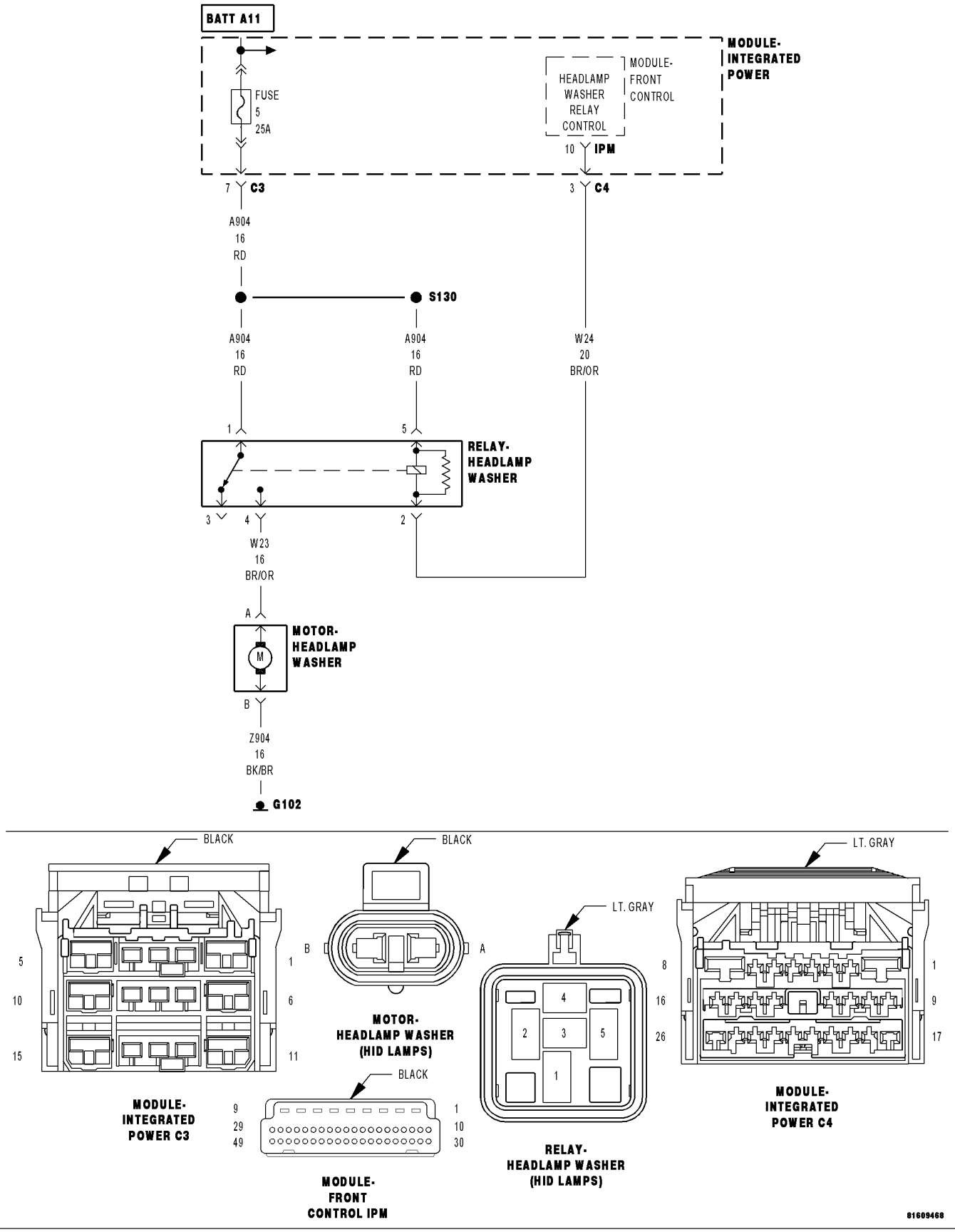

For a complete wiring diagram **Refer to Section 8W**.

- **When Monitored:**
- With the ignition on.
- **Set Condition:**
- When the FCM detects a short/low condition.

Possible Causes
(A11) FUSED B+ CIRCUIT OPEN
WIPER ON/OFF RELAY
FRONT CONTROL MODULE
INTEGRATED POWER MODULE

Diagnostic Test

1. (A11) FUSED B+ CIRCUIT OPEN

NOTE: Check all fuses and circuit breakers before proceeding with the diagnosis of this DTC.

Turn the ignition on.

Remove the Headlamp Washer relay.

Measure the voltage at cavity 86 of the Headlamp Washer relay.

Is the voltage above 10.0 volts?

Yes >> Go To 2

No >> Repair the (A11) Fused B+ circuit for an open.
Perform the BODY VERIFICATION TEST — VER 1. (Refer to 8 - ELECTRICAL/ELECTRONIC CONTROL MODULES/FRONT CONTROL MODULE - DIAGNOSIS AND TESTING)

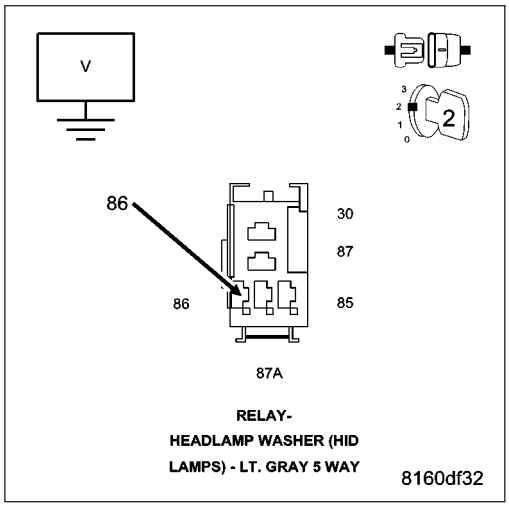

2. HEADLAMP WASHER RELAY

Turn the ignition off.

Replace the Headlamp Washer relay with a known good relay.

Turn the ignition on.

With the Scan Tool, clear all FCM DTC's.

Activate the Headlamp Washers.

With the Scan Tool, read the FCM DTC's.

Does the Scan Tool read: B2323-HEADLAMP WASHER MOTOR CONTROL CIRCUIT LOW?

Yes >> Go To 3

No >> Replace the Headlamp Washer relay.
Perform the BODY VERIFICATION TEST — VER 1. (Refer to 8 - ELECTRICAL/ELECTRONIC CONTROL MODULES/FRONT CONTROL MODULE - DIAGNOSIS AND TESTING)

3. (W24) HEADLAMP WASHER RELAY CONTROL CIRCUIT SHORT TO GROUND

Turn the ignition off.

Disconnect the IPM C4 Connector.

Measure the resistance to ground of the (W24) Headlamp Washer Relay Control circuit.

Is the resistance below 5.0 ohms?

Yes >> Repair the (W24) Headlamp Washer Relay Control circuit for a short to ground.

Perform the BODY VERIFICATION TEST — VER 1. (Refer to 8 - ELECTRICAL/ELECTRONIC CONTROL MODULES/ FRONT CONTROL MODULE - DIAGNOSIS AND TESTING)

No >> Replace the FCM in accordance with the service information.

Perform the BODY VERIFICATION TEST — VER 1. (Refer to 8 - ELECTRICAL/ELECTRONIC CONTROL MODULES/ FRONT CONTROL MODULE - DIAGNOSIS AND TESTING)

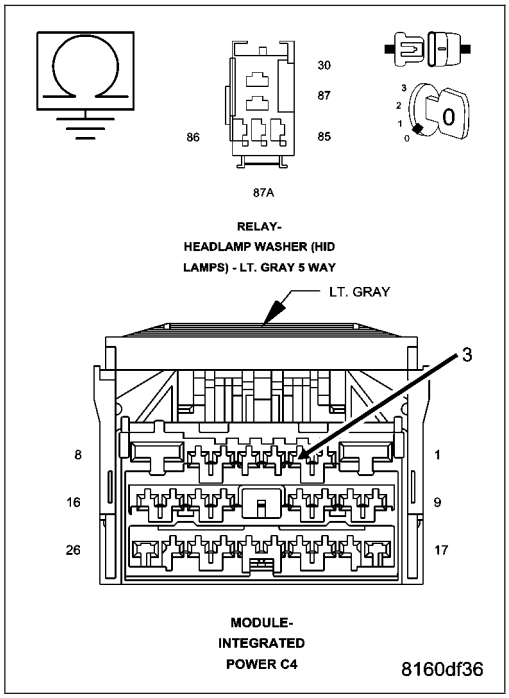

B2324-HEADLAMP WASHER MOTOR CONTROL CIRCUIT HIGH

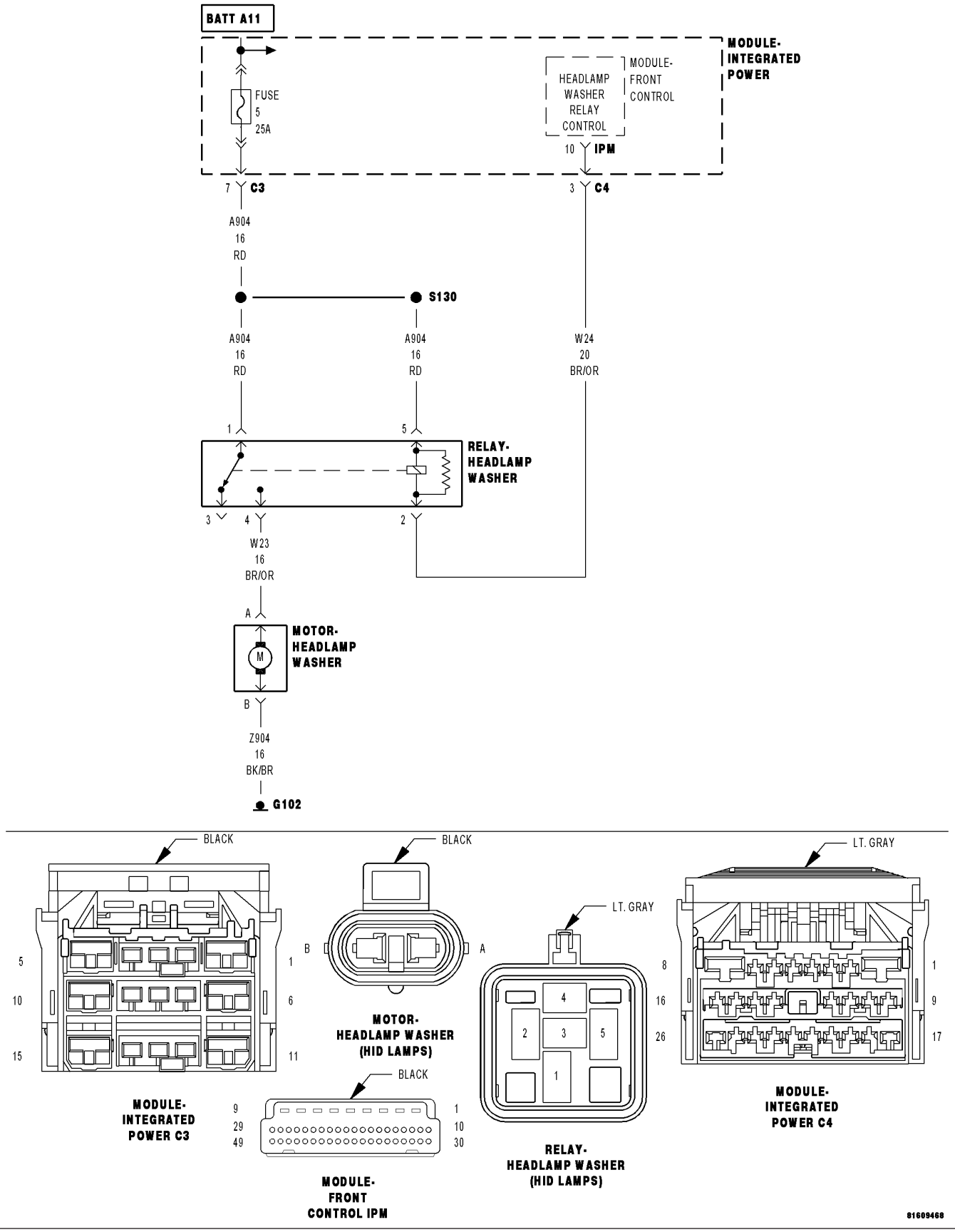

For a complete wiring diagram **Refer to Section 8W**.

- **When Monitored:**
- With the ignition on.
- **Set Condition:**
- When the FCM detects a short/HIGH condition.

Possible Causes
INTEGRATED POWER MODULE

Diagnostic Test

1. HEADLAMP WASHER RELAY

Turn the ignition off.

Replace the Rear Wiper relay with a known good relay.

With the Scan Tool, clear all FCM DTC's.

Turn the Rear Wipers ON then OFF.

With the Scan Tool, read the FCM DTC's.

Does the Scan Tool read: B231C-REAR WIPER MOTOR CONTROL CIRCUIT HIGH?

Yes >> Replace the Integrated Power Module in accordance with the service information.
Perform the BODY VERIFICATION TEST — VER 1. (Refer to 8 - ELECTRICAL/ELECTRONIC CONTROL MODULES/FRONT CONTROL MODULE - DIAGNOSIS AND TESTING)

No >> Test complete.
Perform the BODY VERIFICATION TEST — VER 1. (Refer to 8 - ELECTRICAL/ELECTRONIC CONTROL MODULES/FRONT CONTROL MODULE - DIAGNOSIS AND TESTING)

B2325-HEADLAMP WASHER MOTOR CONTROL CIRCUIT OPEN

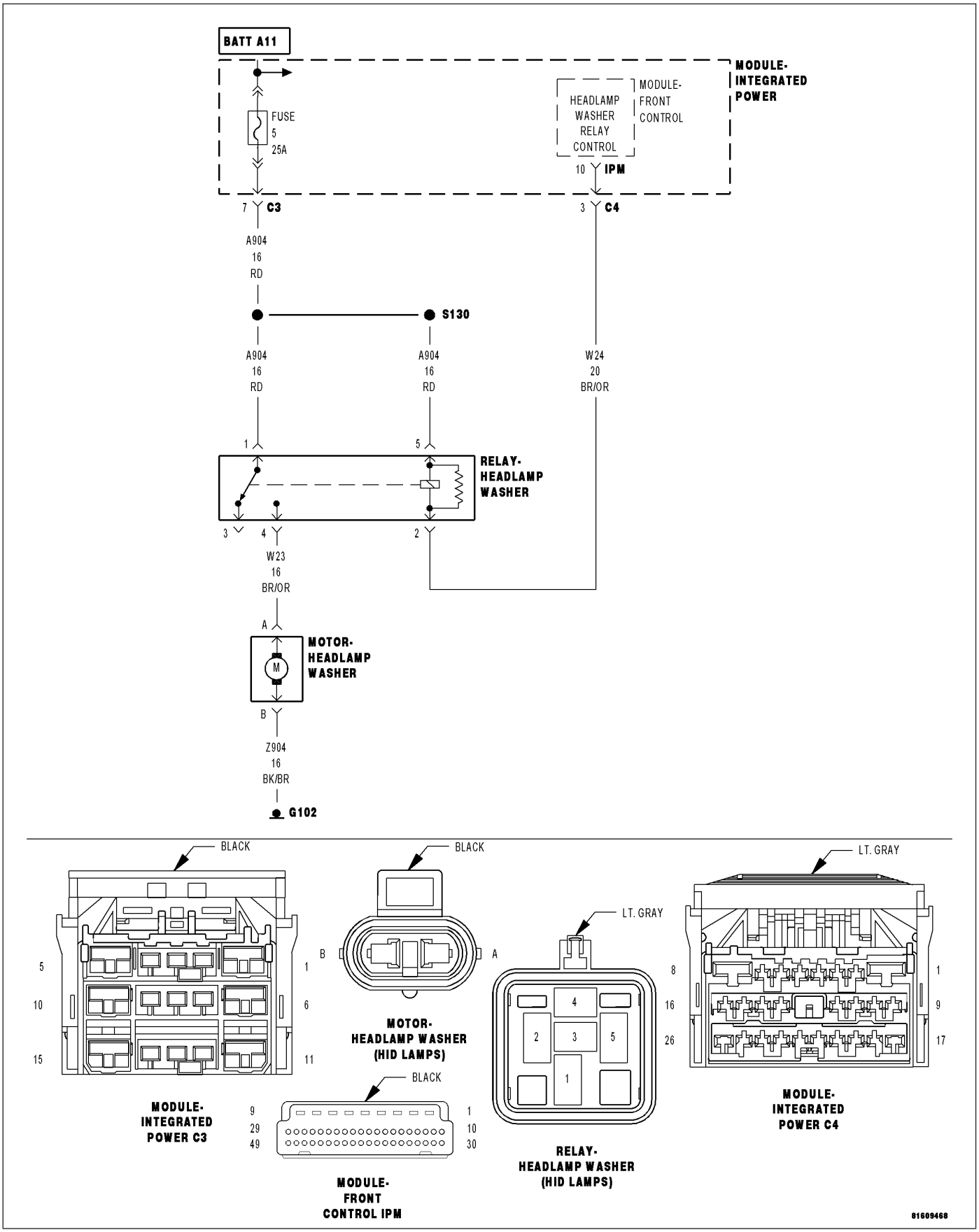

For a complete wiring diagram **Refer to Section 8W**.

- **When Monitored:**
- With the ignition on.
- **Set Condition:**
- When the FCM detects a high condition.

Possible Causes
INTEGRATED POWER MODULE

Diagnostic Test

1. INTEGRATED POWER MODULE

Turn the ignition off.

Replace the Wiper ON/OFF relay with and known good relay.

With the Scan Tool, clear all FCM DTC's.

Turn the Wipers ON then OFF.

With the Scan Tool, read the Wiper DTC's.

Does the Scan Tool read: B2325–HEADLAMP WASHER MOTOR CONTROL CIRCUIT HIGH?

Yes >> Replace the Integrated Power Module in accordance with the service information.
Perform the BODY VERIFICATION TEST — VER 1. (Refer to 8 - ELECTRICAL/ELECTRONIC CONTROL MODULES/FRONT CONTROL MODULE - DIAGNOSIS AND TESTING)

No >> Test complete.
Perform the BODY VERIFICATION TEST — VER 1. (Refer to 8 - ELECTRICAL/ELECTRONIC CONTROL MODULES/FRONT CONTROL MODULE - DIAGNOSIS AND TESTING)

B2328-WASHER FLUID LEVEL SENSOR INPUT CIRCUIT HIGH

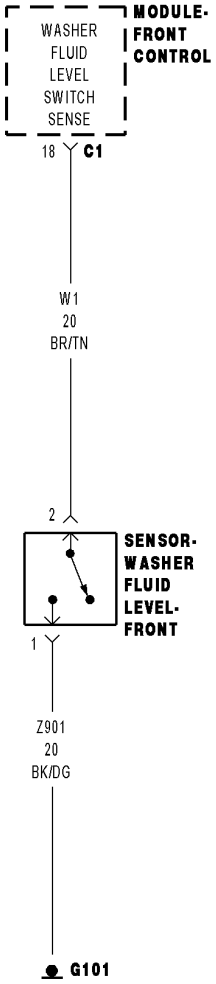

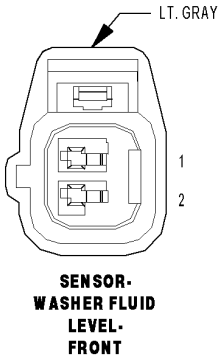

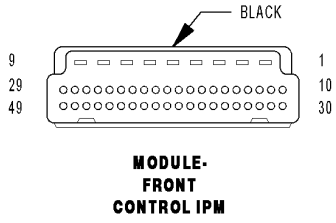

815FF1D8

For a complete wiring diagram **Refer to Section 8W**.

- **When Monitored:**
  With the ignition on.
- **Set Condition:**
  When the FCM detects a HIGH condition.

Possible Causes
(W1) WASHER FLUID LEVEL SWITCH SENSE SHORT TO VOLTAGE
FRONT CONTROL MODULE

Diagnostic Test

1. INTERMITTENT CONDITION

Turn the ignition on.

With the Scan Tool, clear all FCM DTC's.

Turn the Wiper Washers on.

With the Scan Tool, read the Wiper DTC's.

Does the Scan Tool read: B2328-WASHER FLUID LEVEL SENSOR INPUT CIRCUIT HIGH?

Yes >> Go To 2

No >> The condition that caused the symptom is currently not present. Inspect the related wiring for a possible intermittent condition. Look for any chafed, pierced, pinched, or partially broken wires.

Perform the BODY VERIFICATION TEST — VER 1. (Refer to 8 - ELECTRICAL/ELECTRONIC CONTROL MODULES/FRONT CONTROL MODULE - DIAGNOSIS AND TESTING)

2. W1 WASHER FLUID LEVEL SENSOR CONTROL CIRCUIT SHORT TO VOLTAGE

Turn the ignition off.

Disconnect the Washer Fluid Level Sensor connector.

Disconnect the Front Control Module C1 connector.

Measure the voltage of the (W1) Washer Fluid Level Sensor control circuit.

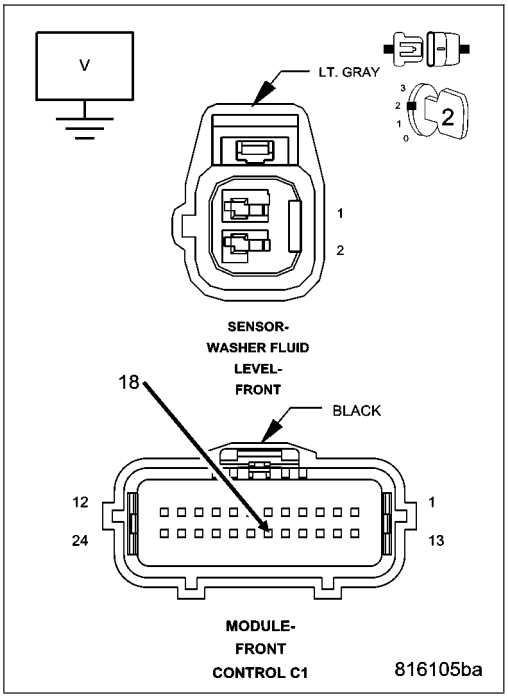

Is the voltage above 10.0 volts?

Yes >> Repair the (W1) Washer Fluid Level Sensor control circuit.

Perform the BODY VERIFICATION TEST — VER 1. (Refer to 8 - ELECTRICAL/ELECTRONIC CONTROL MODULES/FRONT CONTROL MODULE - DIAGNOSIS AND TESTING)

No >> Replace the Front Control Module in accordance with the service information.

Perform the BODY VERIFICATION TEST — VER 1. (Refer to 8 - ELECTRICAL/ELECTRONIC CONTROL MODULES/FRONT CONTROL MODULE - DIAGNOSIS AND TESTING)

B210D-BATTERY VOLTAGE LOW (RSM)

For a complete wiring diagram **Refer to Section 8W**.

- **When Monitored:**
  With the ignition on.
- **Set Condition:**
  Rain Sensor Module supply voltage less than 8.0 volts.

Possible Causes
VEHICLE CHARGING SYSTEM
RAIN SENSING MODULE

Diagnostic Test

1. CHECK FOR ACTIVE DTC: B210D-BATTERY VOLTAGE LOW

Turn the ignition on.

With the scan tool, record and erase Rain Sensor Module DTCs.

Wait 30 seconds.

With the scan tool, read Rain Sensor Module DTCs.

Is DTC: B210D-BATTERY VOLTAGE LOW active?

Yes >> Go To 2

No >> The condition that caused this code to set is not present at this time. Check for an intermittent condition by inspecting the related wiring harness for chaffed, pierced, pinched, and partially broken wires. Also inspect the related connectors for broken, bent, pushed out, spread, corroded, or contaminated terminals.

Perform BODY VERIFICATION TEST - VER 1. (Refer to 8 - ELECTRICAL/ELECTRONIC CONTROL MODULES/FRONT CONTROL MODULE - DIAGNOSIS AND TESTING)

2. VERIFY OPERATION OF THE VEHICLE CHARGING SYSTEM

NOTE: Troubleshoot any PCM charging/cranking DTCs before proceeding.

NOTE: Ensure the battery is fully charged.

Are any charging system DTCs present?

Yes >> (Refer to 8 - ELECTRICAL/ELECTRONIC CONTROL MODULES/FRONT CONTROL MODULE - DIAGNOSIS AND TESTING)

No >> Replace the Rain Sensor Module in accordance with the service information.

Perform BODY VERIFICATION TEST - VER 1. (Refer to 8 - ELECTRICAL/ELECTRONIC CONTROL MODULES/FRONT CONTROL MODULE - DIAGNOSIS AND TESTING)

B210E-BATTERY VOLTAGE HIGH (RSM)

For a complete wiring diagram **Refer to Section 8W**.

- **When Monitored:**
  With the ignition on.
- **Set Condition:**
  Rain Sensor Module supply voltage greater than 16.0 volts.

Possible Causes
VEHICLE CHARGING SYSTEM
RAIN SENSOR MODULE

Diagnostic Test

1. CHECK FOR ACTIVE DTC: B210E-BATTERY VOLTAGE HIGH

Turn the ignition on.

With the scan tool, record and erase Rain Sensor Module DTCs.

Wait 30 seconds.

With the scan tool, read Rain Sensor Module DTCs.

Is DTC: B210E-BATTERY VOLTAGE HIGH active?

Yes >> Go To 2

No >> The condition that caused this code to set is not present at this time. Check for an intermittent condition by inspecting the related wiring harness for chaffed, pierced, pinched, and partially broken wires. Also inspect the related connectors for broken, bent, pushed out, spread, corroded, or contaminated terminals.

Perform BODY VERIFICATION TEST - VER 1. (Refer to 8 - ELECTRICAL/ELECTRONIC CONTROL MODULES/FRONT CONTROL MODULE - DIAGNOSIS AND TESTING)

2. VERIFY OPERATION OF THE VEHICLE CHARGING SYSTEM

NOTE: Troubleshoot any PCM charging/cranking DTCs before proceeding.

NOTE: Ensure the battery is fully charged.

Are any charging system DTCs present?

Yes >> (Refer to 8 - ELECTRICAL/ELECTRONIC CONTROL MODULES/FRONT CONTROL MODULE - DIAGNOSIS AND TESTING)

No >> Replace the Rain Sensor Module in accordance with the service information.

Perform BODY VERIFICATION TEST - VER 1. (Refer to 8 - ELECTRICAL/ELECTRONIC CONTROL MODULES/FRONT CONTROL MODULE - DIAGNOSIS AND TESTING)

B2211-RAIN SENSOR MODULE INITIALIZATION PERFORMANCE

For a complete wiring diagram **Refer to Section 8W**.

- **When Monitored:**
  With the ignition on.
- **Set Condition:**
  This DTC is set when the internal initialization state machine is set to FAIL.

Possible Causes
WINDSHIELD
RAIN SENSOR MODULE

Diagnostic Test

1. CHECK FOR DELAMINATION ON THE WINDSHIELD

NOTE: If module has been reflashed or powered up while not connected to the windshield, this DTC will set. If this is the case, reattach the RSM to the windshield and proceed.
Check the contact surface of the Rain Sensor Module to the windshield for delamination (this will resemble air bubbles in the contact area).

Is delamination present on the windshield?

Yes >> Replace the windshield in accordance with the service information
Perform the BODY VERIFICATION TEST — VER 1. (Refer to 8 - ELECTRICAL/ELECTRONIC CONTROL MODULES/FRONT CONTROL MODULE - DIAGNOSIS AND TESTING)

No >> Go To 2

2. REPLACE THE RAIN SENSOR MODULE

With the scan tool read RSM DTCs.

Does the scan tool read: B2211-RAIN SENSOR MODULE INITIALIZATION PERFORMANCE?

Yes >> Replace the RSM in accordance with the service information.
Perform the BODY VERIFICATION TEST — VER 1. (Refer to 8 - ELECTRICAL/ELECTRONIC CONTROL MODULES/FRONT CONTROL MODULE - DIAGNOSIS AND TESTING)

No >> Test complete.

B221D-(RSM) RAIN SENSOR MODULE INTERNAL

For a complete wiring diagram **Refer to Section 8W**.

- **When Monitored:**
  With the ignition on.
- **Set Condition:**
  The Rain Sensing Module detects an internal failure.

Possible Causes
RAIN SENSING MODULE

Diagnostic Test

1. REPLACE THE RAIN SENSING MODULE

With the scan tool, read RSM DTCs.

Is DTC: B221D-(RSM) RAIN SENSOR MODULE INTERNAL active?

Yes >> Replace the Rain Sensing Module in accordance with the Service Information.
Perform BODY VERIFICATION TEST - VER 1. (Refer to 8 - ELECTRICAL/ELECTRONIC CONTROL MODULES/FRONT CONTROL MODULE - DIAGNOSIS AND TESTING)

No >> Test complete.

B2329-RAIN SENSOR OPTICAL PATH 1 PERFORMANCE

For a complete wiring diagram **Refer to Section 8W**.

- **When Monitored:**
  With the ignition on.
- **Set Condition:**
  Each optical track (received value) is monitored once a second while the rain sensor is active (WK Intermittent 1-5, LX intermittent 1–6) and compared to a small value. The optical track value must be below this value for 4 minutes (checked once per second) before this DTC will be set. Once the DTC is set, the optical track must be above the threshold for 4 minutes (checked once per second) before the DTC is cleared.

Possible Causes
RAIN SENSING MODULE

Diagnostic Test

1. REPLACE THE RAIN SENSOR MODULE

NOTE: Check the contact surface of the RSM to the windshield for Delamination (this will resemble air bubbles in the contact area). If Delamination is present, replace the windshield in accordance with the service information.

With the scan tool read RSM DTCs.

Does the scan tool read: B2329-RAIN SENSOR OPTICAL PATH 1 PERFORMANCE?

Yes >> Replace the RSM in accordance with the service information.
Perform the BODY VERIFICATION TEST — VER 1. (Refer to 8 - ELECTRICAL/ELECTRONIC CONTROL MODULES/FRONT CONTROL MODULE - DIAGNOSIS AND TESTING)

No >> Test complete.

B232A-RAIN SENSOR OPTICAL PATH 2 PERFORMANCE

For a complete wiring diagram **Refer to Section 8W**.

- **When Monitored:**
  With the ignition on.
- **Set Condition:**
  Each optical track (received value) is monitored once a second while the rain sensor is active (WK Intermittent 1-5, LX intermittent 1-6) and compared to a small value. The optical track value must be below this value for 4 minutes (checked once per second) before this DTC will be set. Once the DTC is set, the optical track must be above the threshold for 4 minutes (checked once per second) before the DTC is cleared.

Possible Causes
RAIN SENSING MODULE

Diagnostic Test

1. REPLACE THE RAIN SENSOR MODULE

NOTE: Check the contact surface of the RSM to the windshield for Delamination (this will resemble air bubbles in the contact area). If Delamination is present, replace the windshield in accordance with the service information.

With the scan tool read RSM DTCs.

Does the scan tool read: B232A-RAIN SENSOR OPTICAL PATH 2 PERFORMANCE?

Yes >> Replace the RSM in accordance with the service information.
Perform the BODY VERIFICATION TEST — VER 1. (Refer to 8 - ELECTRICAL/ELECTRONIC CONTROL MODULES/FRONT CONTROL MODULE - DIAGNOSIS AND TESTING)

No >> Test complete.

B232B-RAIN SENSOR OPTICAL PATH 3 PERFORMANCE

For a complete wiring diagram **Refer to Section 8W**.

- **When Monitored:**
  With the ignition on.
- **Set Condition:**
  Each optical track (received value) is monitored once a second while the rain sensor is active (WK Intermittent 1-5, LX intermittent 1-6) and compared to a small value. The optical track value must be below this value for 4 minutes (checked once per second) before this DTC will be set. Once the DTC is set, the optical track must be above the threshold for 4 minutes (checked once per second) before the DTC is cleared.

Possible Causes
RAIN SENSING MODULE

Diagnostic Test

1. REPLACE THE RAIN SENSOR MODULE

NOTE: Check the contact surface of the RSM to the windshield for Delamination (this will resemble air bubbles in the contact area). If Delamination is present, replace the windshield in accordance with the service information.

With the scan tool read RSM DTCs.

Does the scan tool read: B232B-RAIN SENSOR OPTICAL PATH 3 PERFORMANCE?

Yes >> Replace the RSM in accordance with the service information.
Perform the BODY VERIFICATION TEST — VER 1. (Refer to 8 - ELECTRICAL/ELECTRONIC CONTROL MODULES/FRONT CONTROL MODULE - DIAGNOSIS AND TESTING)

No >> Test complete.

B232C-RAIN SENSOR OPTICAL PATH 4 PERFORMANCE

For a complete wiring diagram **Refer to Section 8W**.

- **When Monitored:**
  With the ignition on.
- **Set Condition:**
  Each optical track (received value) is monitored once a second while the rain sensor is active (WK Intermittent 1-5, LX intermittent 1-6) and compared to a small value. The optical track value must be below this value for 4 minutes (checked once per second) before this DTC will be set. Once the DTC is set, the optical track must be above the threshold for 4 minutes (checked once per second) before the DTC is cleared.

Possible Causes
RAIN SENSING MODULE

Diagnostic Test

1. REPLACE THE RAIN SENSOR MODULE

NOTE: Check the contact surface of the RSM to the windshield for Delamination (this will resemble air bubbles in the contact area). If Delamination is present, replace the windshield in accordance with the service information.

With the scan tool read RSM DTCs.

Does the scan tool read: B232C-RAIN SENSOR OPTICAL PATH 4 PERFORMANCE?

Yes >> Replace the RSM in accordance with the service information.
Perform the BODY VERIFICATION TEST — VER 1. (Refer to 8 - ELECTRICAL/ELECTRONIC CONTROL MODULES/FRONT CONTROL MODULE - DIAGNOSIS AND TESTING)

No >> Test complete.

U0019–CAN B BUS (RSM)

For a complete wiring diagram **Refer to Section 8W**.

- **When Monitored:**
  With the ignition on.
- **Set Condition:**
  If the Can B Bus (+) or B Bus (–) circuit is open, shorted to voltage, or shorted to ground.

Possible Causes
CAN B BUS DTCs IN FRONT CONTROL MODULE
(D55) CAN B BUS (+) CIRCUIT OPEN
(D54) CAN B BUS (–) CIRCUIT OPEN
RAIN SENSOR MODULE

Diagnostic Test

1. CHECK FOR ACTIVE DTC U0019–CAN B BUS

Turn the ignition on.

With the scan tool, record and erase any Rain Sensor Module DTCs.

Turn the ignition off, wait 30 seconds then turn the ignition on.

With the scan tool, read DTCs.

Is DTC U0019–CAN B BUS active?

Yes >> Go To 2

No >> The condition that caused this code to set is not present at this time. Check for an intermittent condition by inspecting the related wiring harness for chaffed, pierced, pinched, and partially broken wires. Also inspect the related connectors for broken, bent, pushed out, spread, corroded, or contaminated terminals.

Perform BODY VERIFICATION TEST VER 1. (Refer to 8 - ELECTRICAL/ELECTRONIC CONTROL MODULES/FRONT CONTROL MODULE - DIAGNOSIS AND TESTING)

2. CHECK FOR ACTIVE CAN B BUS RELATED DTCS IN THE FRONT CONTROL MODULE

With the scan tool, read Front Control Module DTCs

Does the scan tool display any active CAN B BUS related DTCs?

Yes >> Diagnose and repair the DTC(s). (Refer to 8 - ELECTRICAL/ELECTRONIC CONTROL MODULES/FRONT CONTROL MODULE - DIAGNOSIS AND TESTING)

No >> Go to 3

3. CHECK (D55) CAN B BUS (+) CIRCUIT FOR AN OPEN

Turn the ignition off.

Disconnect the negative battery cable.

Disconnect the Rain Sensor Module harness connector.

Disconnect the Front Control Module C1 harness connector.

Measure the resistance of the (D55) Can B Bus (+) circuit between the Front Control Module C1 harness connector and the Rain Sensor Module harness connector.

Is the resistance below 5.0 ohms?

Yes >> Go To 4

No >> Repair the Can B Bus (+) circuit for an open.

Perform BODY VERIFICATION TEST VER 1. (Refer to 8 - ELECTRICAL/ELECTRONIC CONTROL MODULES/FRONT CONTROL MODULE - DIAGNOSIS AND TESTING)

4. CHECK THE (D54) CAN B BUS (–) CIRCUIT FOR AN OPEN

Measure the resistance of the (D54) Can B Bus (–) circuit between the Front Control Module C1 harness connector and the Rain Sensor Module harness connector.

Is the resistance below 5.0 ohms?

Yes >> Replace the Rain Sensor Module in accordance with the service information.
Perform BODY VERIFICATION TEST VER 1. (Refer to 8 - ELECTRICAL/ELECTRONIC CONTROL MODULES/FRONT CONTROL MODULE - DIAGNOSIS AND TESTING)

No >> Repair the Can B Bus (–) circuit for an open.
Perform BODY VERIFICATION TEST VER 1. (Refer to 8 - ELECTRICAL/ELECTRONIC CONTROL MODULES/FRONT CONTROL MODULE - DIAGNOSIS AND TESTING)

WIPERS/WASHERS - SERVICE INFORMATION

TABLE OF CONTENTS

page

WIPERS/WASHERS - SERVICE INFORMATION
DESCRIPTION 64
OPERATION 65
CHECK VALVE
REMOVAL 69
INSTALLATION 69
FRONT WIPER MODULE
DESCRIPTION 70
OPERATION 70
REMOVAL 71
INSTALLATION 72
FRONT WIPER MOTOR
REMOVAL 75
INSTALLATION 77
HEADLAMP WASHER
DESCRIPTION 81
OPERATION 81
REMOVAL 81
INSTALLATION 82
HEADLAMP WASHER HOSE
REMOVAL 83
INSTALLATION 83
HEADLAMP WASHER PUMP MOTOR
REMOVAL 84

page

INSTALLATION 84
SENSOR-RAIN
DESCRIPTION 85
OPERATION 86
REMOVAL 86
INSTALLATION 87
REAR WIPER MOTOR - WAGON ONLY
REMOVAL 88
INSTALLATION 90
WASHER FLUID LEVEL SWITCH
REMOVAL 93
INSTALLATION 94
WASHER PUMP MOTOR
REMOVAL 95
INSTALLATION 96
WASHER RESERVOIR
REMOVAL 97
INSTALLATION 99
WIPER ARMS
REMOVAL 102
INSTALLATION 104

WIPERS/WASHERS - SERVICE INFORMATION

DESCRIPTION

FRONT WIPER/WASHER SYSTEM

The wiper and washer system includes the following major components:

- **Front Control Module** - The Front Control Module (FCM) is integral to the Integrated Power Module (IPM). The FCM/IPM is located in the engine compartment, near the right shock tower. (Refer to 8 - ELECTRICAL/ POWER DISTRIBUTION - DESCRIPTION).
- **Front Washer Nozzle** - Two washer nozzles with integral check valves are secured to the hood panel near the base of the windshield.
- **Front Washer Plumbing** - The plumbing for the washer system consists of nylon hoses and molded plastic fittings. The plumbing is routed within the engine compartment from the washer reservoir. The front washer hose is routed across the underside of the hood panel to the washer nozzles.
- **Front Wiper Arms** - The two wiper arms are secured with nuts to the threaded ends of the two wiper pivot shafts, which extend through the cowl panel located near the base of the windshield.
- **Front Wiper Blade** - The two wiper blades are secured to the two wiper arms with an integral latch, and are parked on the glass near the bottom of the windshield when the wiper system is not in operation.
- **Front Wiper Module** - The wiper pivot shafts are the only visible components of the front wiper module. The remainder of the module is concealed within the engine compartment beneath the cowl panel. The wiper module includes a cast aluminum wiper module bracket, two rubber-isolated wiper module mounts, one dowel on the underside of the wiper motor, the wiper motor crank arm, the two wiper drive links, the two powered wiper pivots.
- **Instrument Cluster** - The ElectroMechanical Instrument Cluster (EMIC) is also known as the Cab Compartment Node (CCN). The EMIC/CCN is located in the instrument panel above the steering column opening, directly in front of the driver. (Refer to 8 - ELECTRICAL/INSTRUMENT CLUSTER - DESCRIPTION).
- **Multi-Function Switch** - The multi-function switch is located on the steering column, just behind the steering wheel. A control stalk that extends from the left side of the switch that is dedicated to providing all of the driver controls for the front wiper and washer systems, turn signal, and high and low beam functions (Refer to 8 - ELECTRICAL/LAMPS/LIGHTING - EXTERIOR/MULTI-FUNCTION SWITCH - DESCRIPTION).
- **Rain Sensor** - Vehicles equipped with the automatic wiper feature have a Rain Sensor located just below the inside rear view mirror button. The sensor bracket is bonded to the inside surface of the windshield glass.
- **Washer Fluid Level Switch** - The washer fluid level switch is located in a dedicated hole on the lower portion of the washer reservoir, ahead of the right front wheel house splash shield.
- **Washer Pump/Motor** - The reversible electric washer pump/motor is located in the lower portion of the washer reservoir, ahead of the right front wheel house splash shield. The washer pump/motor is a reversible motor (wagon only) and provides washer fluid to either the front or rear (wagon only) washer system plumbing, depending upon the direction of the pump motor rotation.
- **Washer Reservoir** - The washer reservoir is mounted just in front of the right front wheel splash shield. The filler neck is located in the right front corner of the engine compartment.
- **Wiper High/Low Relay** - The wiper high/low relay is an International Standards Organization (ISO) micro relay located in the Power Distribution Center (PDC) in the engine compartment.
- **Wiper On/Off Relay** - The wiper on/off relay is an International Standards Organization (ISO) micro relay located in the Power Distribution Center (PDC) in the engine compartment.

HEADLAMP WASHERS

The headlamp washers on this vehicle (if equipped) work in conjunction with the windshield washers. The headlamp washers are enabled with the headlamps “ON” and the windshield washers activated. With the windshield washers activated the headlamp washers will spray once for a predetermined amount of time.

REAR WIPER/WASHER SYSTEM - WAGON ONLY

The rear wiper and washer system includes the following major components:

- **Front Control Module** - The Front Control Module (FCM) is integral to the Integrated Power Module (IPM). The FCM/IPM is located on the side of engine compartment. (Refer to 8 - ELECTRICAL/POWER DISTRIBUTION - DESCRIPTION).

- **Instrument Panel Switch Pod** - The rear wiper/washer switch is part of the instrument panel switch pod. The pod contains the rear wipe/wash switch, the hazard switch, the passenger airbag disabled (PAD) indicator, and the electronic stability program (ESP) off switch. The instrument panel switch pod is located in the instrument panel center bezel, just above the radio and in between the A/C outlets.
- **Instrument Cluster** - The ElectroMechanical Instrument Cluster (EMIC) is also known as the Cab Compartment Node (CCN). The EMIC/CCN is located in the instrument panel above the steering column opening, directly in front of the driver. (Refer to 8 - ELECTRICAL/INSTRUMENT CLUSTER - DESCRIPTION).
- **Rear Washer Nozzle** - A rear washer nozzle is secured to a mounting hole in the liftgate panel.
- **Rear Washer Plumbing** - The plumbing for the washer system consists of nylon hoses and molded plastic fittings. The rear washer hose is routed through the dash panel from the engine compartment into the passenger compartment, along the right side body harness, then up the c-pillar and into the liftgate.
- **Rear Wiper Arm** - The single rear wiper arm is secured by a nut directly to the rear wiper motor output shaft, which extends through the center of the liftgate outer panel near the base of the liftgate glass.
- **Rear Wiper Blade** - The single rear wiper blade is secured to the rear wiper arm with an integral latch, and is parked near the bottom of the liftgate glass when the rear wiper system is not in operation.
- **Rear Wiper Motor** - The rear wiper motor output shaft is the only visible component of the rear wiper motor. The remainder of the motor is concealed within the liftgate beneath the liftgate. The rear wiper motor includes the motor bracket, the rear wiper motor, and the rear wiper motor park switch.
- **Rear Wiper Relay** - The rear wiper relay is located in the Power Distribution Center (PDC) in the engine compartment near the battery.
- **Washer Reservoir** - The rear washer system shares a single reservoir and reversible pump with the front washer system, but has its own dedicated plumbing.

OPERATION

FRONT WIPER/WASHER SYSTEM

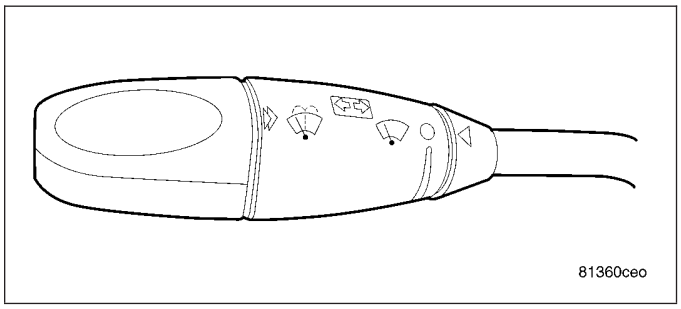

All front wiper and washer system functions are initiated with the control knob on the end of the multi-function switch control stalk that extends from the left side of the steering column, just behind the steering wheel. Rotating the control knob on the end of the control stalk, selects the Off, Intermittent, Auto (on models equipped with automatic wipers), Low, or High front wiper system operating modes. In the Intermittent mode, the control knob also allows the vehicle operator to select from one of six intermittent wipe intervals. In the Auto mode, the control knob also allows the vehicle operator to select from one of six automatic wiper sensitivity levels. Pressing in on the end of the control stalk momentarily activates the Mist Wipe. Pressing it in all the way will activate the windshield washers. In the Auto mode, as you increase the sensitivity of the wipers (less delay between wipes), the result will be a corresponding acknowledgment wipe to let you know you made an adjustment to the system. The multi-function switch provides hard wired resistor multiplexed inputs to the Steering Column Control Module (SCCM), for all of the wiper and washer system functions. The SCCM then sends electronic messages to the Front Control Module (FCM) over the Controller Area Network (CAN) data bus requesting the appropriate front wiper and washer system operating modes.

All the front wiper and washer system operation is controlled by the FCM logic circuits, and that logic will only allow these systems to operate when the ignition switch is in the Accessory or On positions. Battery current is directed from a B(+) fuse in the Integrated Power Module (IPM) to the wiper on/off relay and the wiper high/low relay in the PDC through a fused B(+) circuit. The FCM uses low side drivers to control wiper system operation by energizing or de-energizing the wiper high/low and wiper on/off relays. The FCM uses both high side and low side drivers to control the operation of the washer pump/motor unit. The multi-function switch circuitry receives a clean ground output from the SCCM on a multi-function switch return circuit, then provides resistor multiplexed inputs to the SCCM on an intermittent wipe mux circuit to indicate the selected wiper system mode and on a wash/beam select mux circuit to indicate the selected washer system mode.

AUTOMATIC WIPE MODE

In models equipped with the automatic wiper feature, the internal circuitry of both the multi-function switch, the rain sensor, and the CCN work in concert to provide an automatic wiper mode with five sensitivity selections. When selected, this switch position will automatically operate the front wipers at the designated sensitivity setting and maintain visibility through the windshield glass at that predetermined sensitivity setting.

With automatic wipers, when the control knob on the control stalk of the multi-function switch is moved to one of the six Auto sensitivity positions, the SCCM sends an electronic message to the Rain Sensor over the Controller Area Network (CAN) data bus network indicating the selected position. The sensor monitors an area within the wipe pattern of the windshield glass for the accumulation of moisture. Based upon internal programming and the selected sensitivity level, when sufficient moisture has accumulated the rain sensor sends the appropriate electronic wipe command messages to the FCM over the CAN data bus and the FCM operates the front wiper system accordingly.

As the sensitivity level is set higher, the rain sensor is more sensitive to moisture accumulation and will send wipe commands more frequently. The SCCM logic is also programmed to provide an immediate wipe cycle each time the control knob on the multi-function switch is moved from a non-automatic wipe position to one of the six Auto sensitivity positions, and another immediate wipe cycle each time the control knob is moved from a lower Auto sensitivity position to a higher Auto sensitivity position.

CONTINUOUS WIPE MODE

When the Low position of the control knob on the control stalk of the multi-function switch is selected, the SCCM sends an electronic wiper switch low message to the FCM, then the FCM energizes the wiper on/off relay. This directs battery current through the normally open contacts of the energized wiper on/off relay and the normally closed contacts of the de-energized wiper high/low relay to the low speed brush of the wiper motor, causing the wipers to cycle at low speed.

When the High position of the control knob is selected, the SCCM sends an electronic wiper switch high message to the FCM, then the FCM energizes both the wiper on/off relay and the wiper high/low relay. This directs battery current through the normally open contacts of the energized wiper on/off relay and the normally open contacts of the energized wiper high/low relay to the high speed brush of the wiper motor, causing the wipers to cycle at high speed.

When the Off position of the multi-function switch control knob is selected, the SCCM sends an electronic wiper switch off message to the FCM. If the wiper motor was operating at high speed, the FCM immediately de-energizes the wiper high/low relay causing the wiper motor to return to low speed operation. Then one of two events will occur. The event that occurs depends upon the position of the wiper blades on the windshield at the moment that the control knob Off position is selected.

If the wiper blades are in the down position on the windshield when the Off position is selected, the park switch that is integral to the wiper motor is closed to ground and provides a hard wired park switch sense input to the FCM. The FCM then de-energizes the wiper on/off relay and the wiper motor ceases to operate. If the wiper blades are not in the down position on the windshield at the moment the Off position is selected, the park switch is an open circuit and the FCM keeps the wiper on/off relay energized, which causes the wiper motor to continue running at low speed until the wiper blades are in the down position on the windshield and the park switch input to the FCM is again closed to ground.

HEADLAMPS ON WITH WIPERS MODE

The CCN provides an automatic headlamps on with wipers feature for models equipped automatic headlamps. This is a customer programmable feature. If this feature is enabled, the headlamps will turn on automatically whenever the windshield wipers are turned on; and, if the headlamps were turned on automatically when the wipers were turned on, they will also turn off automatically when the wipers are turned off. If this feature is enabled, when the automatic wiper mode is selected the headlamps will turn on automatically only after the wipers complete a minimum of five automatic wipe cycles within about sixty seconds, and they will turn off automatically after four minutes elapse without any wipe cycles.

INTERMITTENT WIPE MODE

When the control knob on the control stalk of the multi-function switch is moved to one of the Intermittent interval positions the SCCM sends an electronic wiper switch delay message to the FCM, then the FCM electronic intermittent wipe logic circuit responds by calculating the correct length of time between wiper sweeps based upon the selected delay interval input. The FCM monitors the changing state of the wiper motor park switch through a hard

wired park switch sense input. This input allows the FCM to determine the proper intervals at which to energize and de-energize the wiper on/off relay to operate the wiper motor intermittently for one low speed cycle at a time.

The FCM logic is also programmed to provide vehicle speed sensitivity to the selected intermittent wipe delay intervals. In order to provide this feature the FCM monitors electronic vehicle speed messages from the Powertrain Control Module (PCM) and doubles the selected delay interval whenever the vehicle speed is approximately sixteen kilometers-per-hour (ten miles-per-hour) or less.

PULSE WIPE MODE

When the control knob on the control stalk of the multi-function switch is depressed to the momentary pulse wipe position for less than about one-half second, the SCCM sends an electronic switch message to the FCM, then the FCM energizes the wiper on/off relay for one complete wipe cycle. The FCM de-energizes the relay when the state of the park switch sense changes to ground, parking the wiper blades near the base of the windshield.

WASH MODE

When the control knob on the control stalk of the multi-function switch is depressed to the momentary Wash position for more than about one-half second, the SCCM sends an electronic washer switch message to the FCM, then the FCM directs battery current and ground to the washer pump/motor unit. This will cause the washer pump/motor unit to be energized for as long as the Wash switch is held closed up to about ten seconds, and to de-energize when the front Wash switch is released.

When the control knob is depressed to the momentary Wash position while the wiper system is operating in one of the intermittent interval positions, the washer pump/motor operation is the same. However, the FCM also energizes the wiper on/off relay to override the selected delay interval and operate the wiper motor in a continuous low speed mode for as long as the control knob is held depressed, then de-energizes the relay and reverts to the selected delay mode interval several wipe cycles after the control knob is released. If the control knob is held depressed for more than about ten seconds, the FCM will suspend washer pump/motor operation until the knob is released. then cycled back to the Wash position if so desired.

The headlamp washer system (if equipped) utilizes a separate high pressure pump that is attached to the windshield washer reservoir. The headlamp washer pump feeds nozzles that are mounted in the front fascia of the vehicle. The nozzle bodies spray the headlamps with high pressure washer solvent when the system is activated.

To activate the headlamp washers, turn ON the headlamps and then press the windshield washer control knob. This will operate the windshield washers and direct two timed high pressure sprays onto the headlamp lens.

WIPE-AFTER-WASH MODE

When the control knob on the control stalk of the multi-function switch is depressed to the momentary Wash position for more than about one-half second while the wiper system is not operating, the instrument cluster sends an electronic washer switch message to the FCM, then the FCM directs battery current and ground to the washer pump/motor unit and energizes the wiper on/off relay. This will cause the washer pump/motor unit to be energized and operate the wiper motor in a continuous low speed mode for as long as the Wash switch is held closed up to about ten seconds. When the control knob is released, the FCM de-energizes the washer pump/motor unit, but allows the wiper motor to operate for several additional wipe cycles before it de-energizes the wiper on/off relay and parks the wiper blades near the base of the windshield.

If the control knob is held depressed for more than about thirty seconds, the FCM will suspend washer pump/motor operation until the knob is released, then cycled back to the Wash position; however, the wipers will continue to operate for as long as the Wash switch is held closed. The FCM monitors the changing state of the wiper motor park switch through a hard wired wiper park switch sense circuit input. This input allows the FCM to count the number of wipe cycles that occur after the Wash switch is released, and to determine the proper interval at which to de-energize the wiper on/off relay to complete the wipe-after-wash mode cycle.

REAR WIPER/WASHER SYSTEM - WAGON ONLY

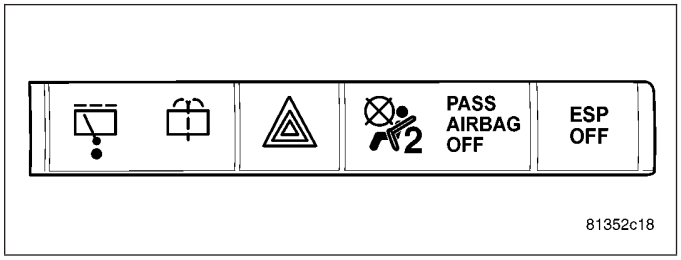

All rear wiper and washer system functions are initiated with the rear wiper and washer switch in the instrument panel switch pod located on the instrument panel center bezel, just above the radio and below the a/c outlets (Refer to 8 - ELECTRICAL/INSTRUMENT CLUSTER/INSTRUMENT PANEL SWITCH POD - REMOVAL). Pushing the left side of the wiper/washer switch selects the rear wiper system operating mode (intermittent). it has fixed 10 seconds delay between wipe (not adjustable). indicator at bottom of the WIPE graphic will light up when the wipe switch is ON and goes away when the wipe is OFF. Depressing the momentary contact switch activates the rear washer system. When a rear wiper or washer mode is selected, the circuitry within the instrument panel switch pod sends an electronic rear wiper/washer switch status message over the Controller Area Network (CAN) data bus to the ElectroMechanical Instrument Cluster (EMIC) also referred to as the Cab Compartment Node (CCN). The CCN then sends electronic messages to the Front Control Module (FCM) over the CAN data bus requesting the appropriate rear wiper and washer system operating modes.

INTERMITTENT WIPE MODE

When the rear wiper switch is pressed to the left, the instrument cluster sends an electronic wiper switch message to the FCM, then the FCM electronic wipe logic circuit responds by selecting a predetermined length of time between wiper sweeps.

WASH MODE

When the rear washer control switch is depressed to the right in the momentary Wash position, the instrument cluster sends an electronic washer switch message to the FCM, then the FCM directs battery current and ground to the washer pump/motor. This will cause the washer pump/motor to be energized for as long as the Wash switch is held closed up to about ten seconds, and to de-energize when the rear wiper/washer switch is released.

WIPE-AFTER-WASH MODE

When the rear washer switch is released from the momentary Wash position, the instrument cluster sends an electronic washer switch message to the FCM. The FCM de-energizes the washer pump/motor, but allows the rear wiper motor to operate for several wipe cycles before it de-energizes the rear wiper relay.

OFF MODE

When the Off position of the rear wiper switch is selected, one of three events is possible. The event that will occur depends upon the position of the wiper blade on the liftgate glass and the mode the wiper motor is operating under at the moment that the Off position is selected. If the wiper blade is in the down position on the glass and the rear wiper system is operating in the intermittent cycle mode when the Off position is selected, the park switch is open and the FCM de-energizes the rear wiper relay control coil causing the rear wiper motor to cease to operate.

If the wiper blade is not in the down position on the glass and is operating in the intermittent cycle mode when the Off position is selected, the park switch is closed to ground and the FCM keeps the rear wiper relay control coil energized to operate the rear wiper motor until the rear wiper blade is in the down position on the glass and the park switch input is an open circuit.

The third event occurs with the rear wiper operating in the wipe-after-wash mode when the Off position is selected, in which case the FCM will continue to run the wiper motor until the completion of two wipes after wash before the rear wiper blade is parked. The FCM will also run the rear wiper motor to park the rear wiper blade if the ignition switch is turned to the Off position while the rear wiper system is still operating.

CHECK VALVE

REMOVAL

The rear washer check valve is located on the lower liftgate.

1. Disconnect and isolate the battery negative cable.
2. Remove the lower liftgate trim panel (Refer to 23 - BODY/DECKLID/HATCH/LIFTGATE/TAILGATE/ TRIM PANEL - REMOVAL).
3. Remove check valve by twisting washer hose at each end.

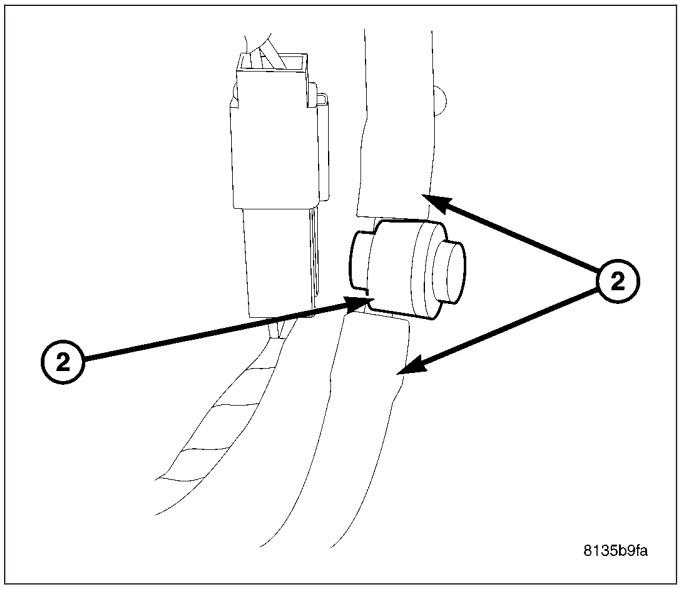

INSTALLATION

1. Insert check valve into washer hose.
2. Install lower liftgate trim panel (Refer to 23 - BODY/DECKLID/HATCH/LIFTGATE/TAILGATE/ TRIM PANEL - INSTALLATION).
3. Connect battery negative cable.

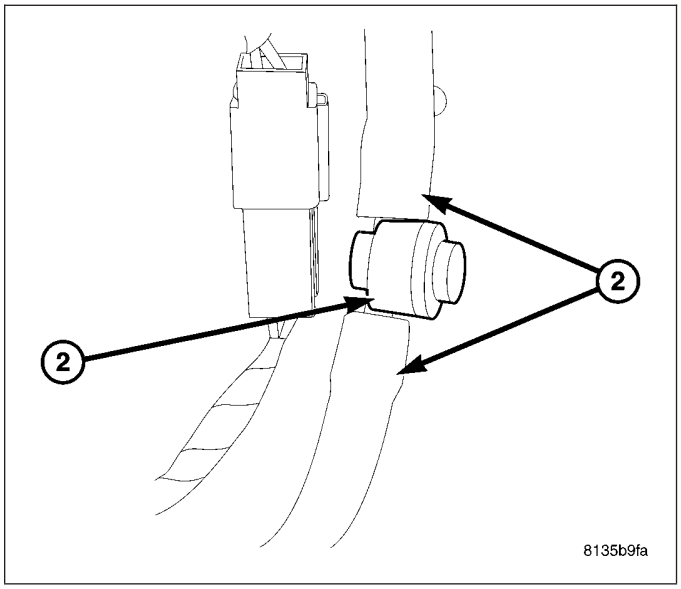

FRONT WIPER MODULE

DESCRIPTION

The front wiper module is secured with screws through two rubber grommet-type insulators to the cowl plenum panel. The module is located in the rear of the engine compartment where it is concealed beneath the molded plastic cowl plenum grille panel. The ends of the pivot shafts protruding through openings in the cowl plenum cover/grille panel are the only visible components of the wiper module. The wiper module consists of the following major components:

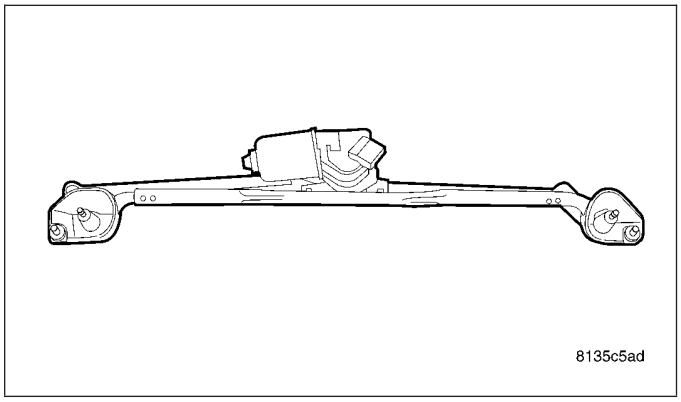

- **Crank Arm** - The wiper motor crank arm is a stamped steel unit with an internally splined hole on the driven end that is secured to the wiper motor output shaft with a nut, and a long ball stud secured to the drive end to accept the wiper linkage.
- **Linkage** - The two wiper linkage members are each constructed of stamped steel. A driver side drive link with a plastic socket-type bushing in the left end, and a plastic sleeve-type bushing in the right end. The socket bushing is snap-fit over the pivot ball stud on the left pivot lever arm, while the sleeve bushing is fit over the longer pivot stud on the wiper motor crank arm. The passenger side drive link has a plastic socket-type bushing on each end. One end of this drive link is snap-fit over the ball stud on the right pivot lever arm, while the other end is snap-fit over the top of the driver side drive link on the ball stud of the wiper motor crank arm.
- **Motor** - The wiper motor is secured on the underside of the module bracket near the center with three screws. The wiper motor output shaft passes through a hole in the module bracket, where a nut secures the wiper motor crank arm to the motor output shaft. The two-speed permanent magnet wiper motor features an integral transmission, an internal park switch, and an internal Positive Temperature Coefficient (PTC) circuit breaker.
- **Pivots** - This module features two pivots. The two wiper pivot shafts have lever arms with ball studs at their base to accept the wiper linkage. The upper end of all three pivot shafts has a threaded stud with a tapered and serrated area just below the threads to accept the left wiper arm or the right wiper arm links.

The front wiper module cannot be adjusted or repaired. The front wiper motor is available for separate service replacement. If any other component of the module is inoperative or damaged, the entire front wiper module unit must be replaced.

OPERATION

The front wiper module operation is controlled by the battery current inputs received by the wiper motor through the wiper on/off and wiper high/low relays. The wiper motor speed is controlled by current flow to either the low speed or the high speed set of brushes. The park switch is a single pole, single throw, momentary switch within the wiper motor that is mechanically actuated by the wiper motor transmission components. The park switch alternately opens and closes the wiper park switch sense circuit to ground, depending upon the position of the wipers on the glass. This feature allows the motor to complete its current wipe cycle after the wiper system has been turned Off, and to park the wiper blades in the lowest portion of the wipe pattern. The automatic resetting circuit breaker protects the motor from overloads.

The wiper motor crank arm, the two wiper linkage members, and the two wiper pivots mechanically convert the rotary output of the wiper motor to the back and forth wiping motion of the wiper arms and blades on the glass.

REMOVAL

1. Disconnect and isolate the battery negative cable.
2. Remove the wiper arms (1) and (2) (Refer to 8 - ELECTRICAL/WIPERS/WASHERS/WIPER ARMS - REMOVAL).

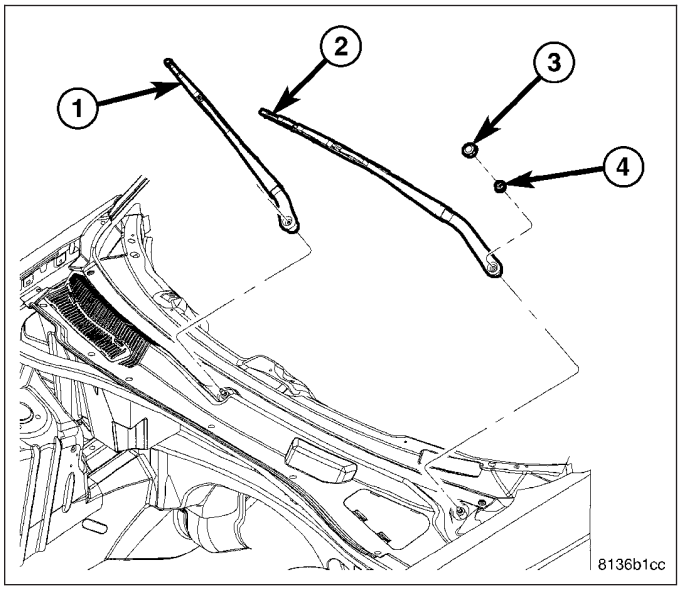

3. Remove the cowl panel (1) (Refer to 23 - BODY/ EXTERIOR/COWL GRILLE - REMOVAL).

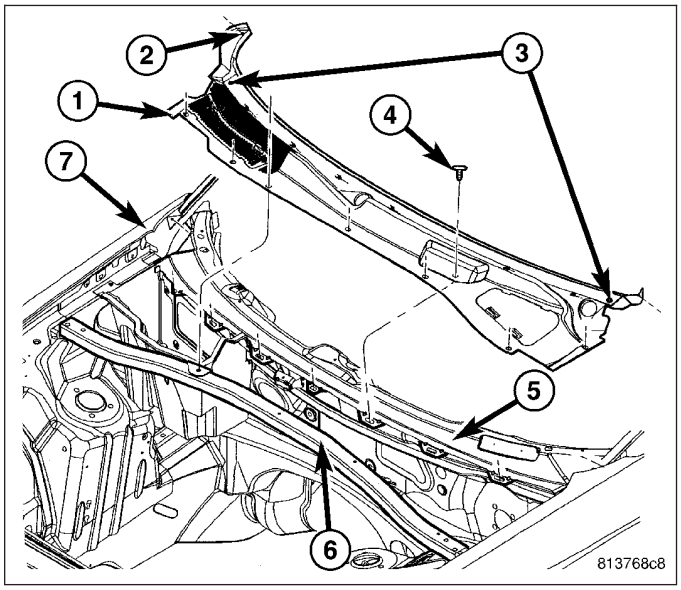

4. Disconnect the wiper motor electrical connector (1).

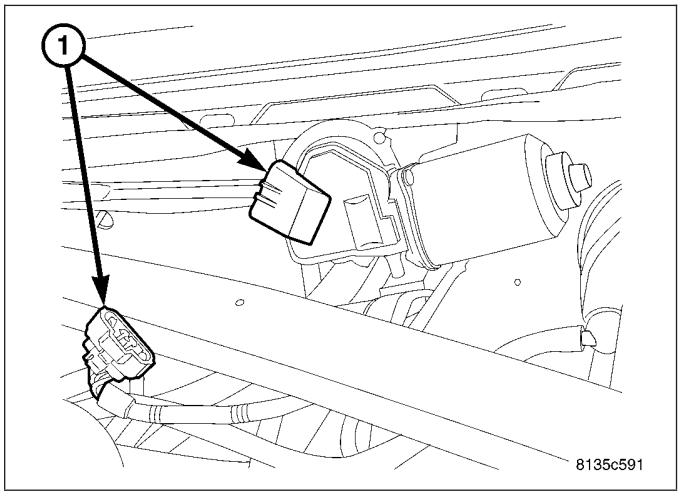

5. Remove the two retaining bolts (1 and 4) and remove wiper module (3) from vehicle.

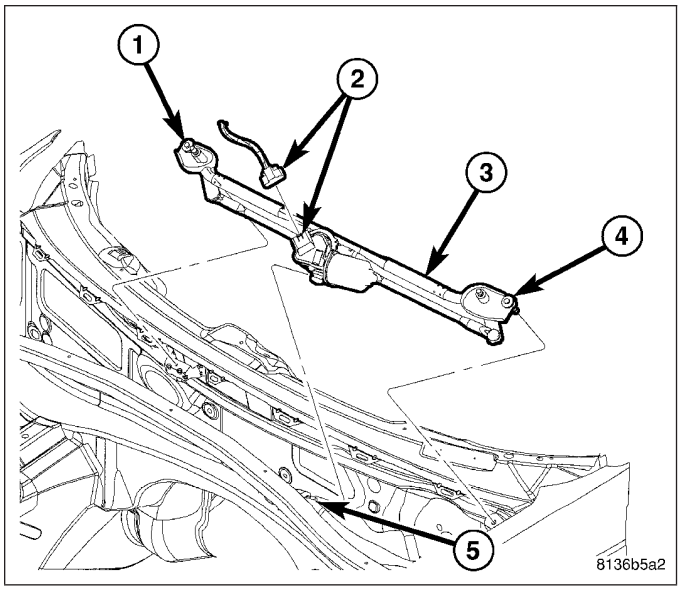

INSTALLATION

1. Inspect the grommet (1) that the wiper motor sits in. If cracked, brittle, or damaged, replace the grommet (1).

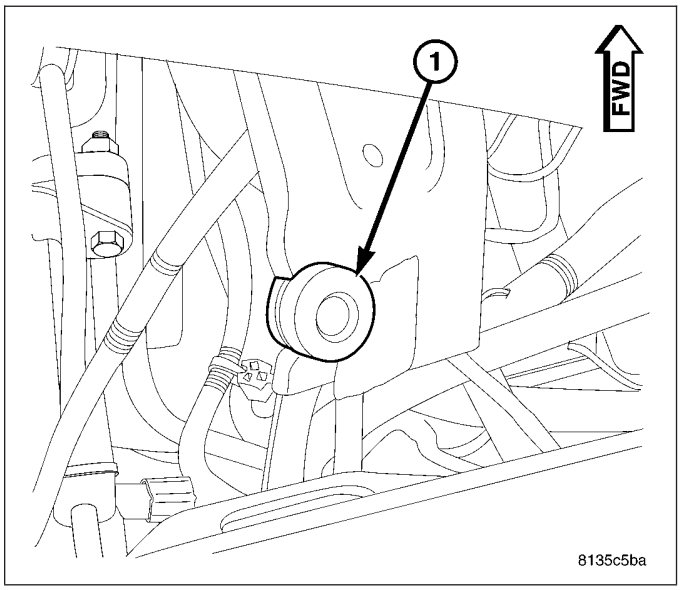

2. While positioning the wiper module in its mounting location, make sure that the dowel on the bottom of the wiper motor (1) slides into the mounting grommet (2) correctly.

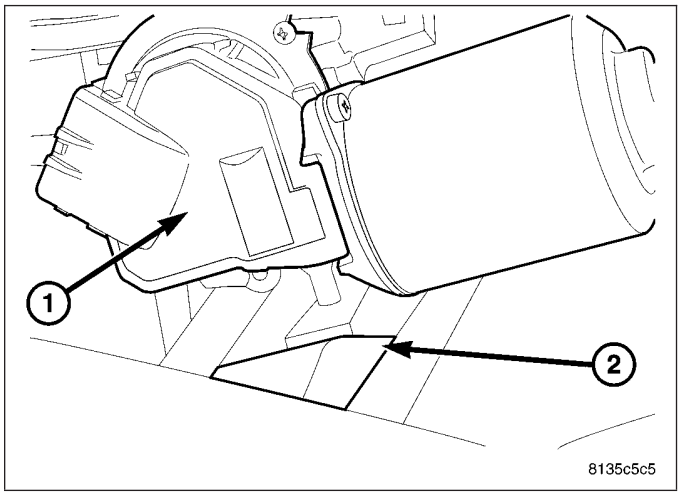

3. Install the two retaining bolts (1 and 4). Torque bolts to 8 N·m (70 in. lbs.).

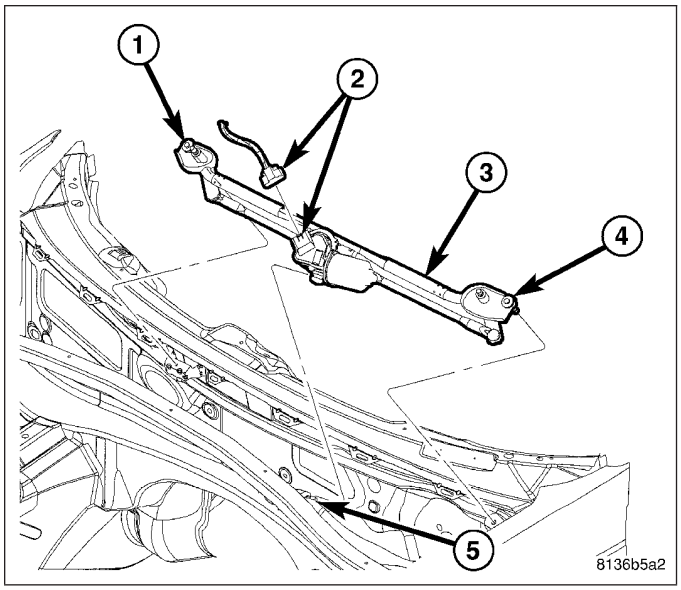

4. Connect the wiper motor electrical connector (1).

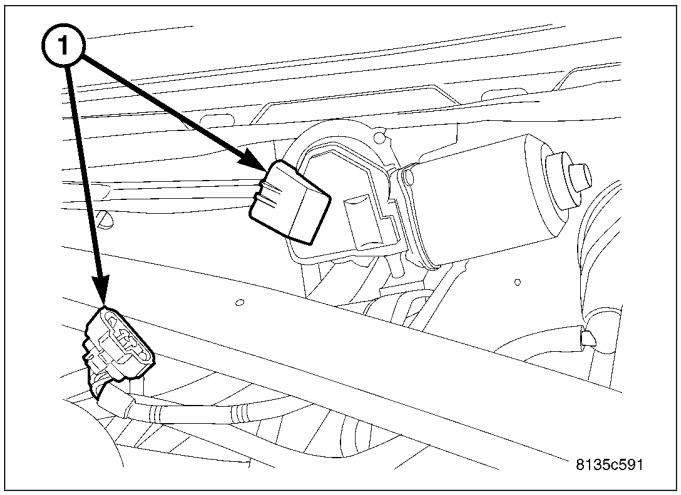

5. Install the cowl panel (1) (Refer to 23 - BODY/EXTERIOR/COWL GRILLE - INSTALLATION).

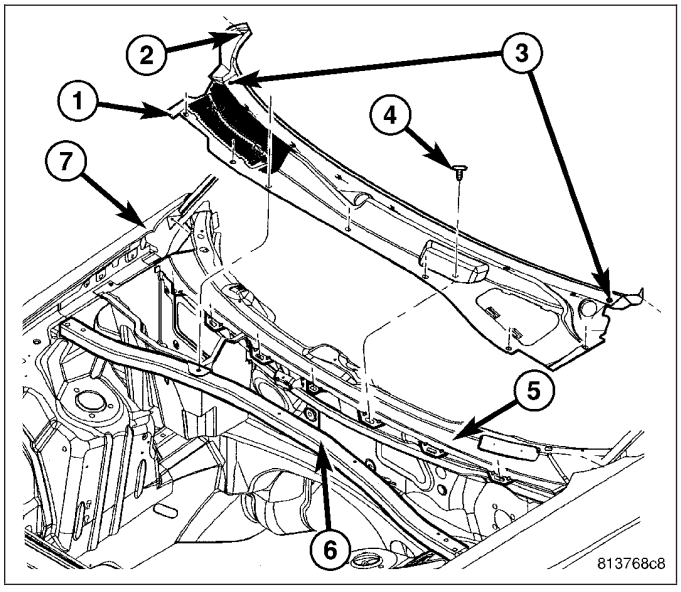

6. Install the wiper arms (1) and (2) (Refer to 8 - ELECTRICAL/WIPERS/WASHERS/WIPER ARMS - INSTALLATION). Torque nuts to 18 N·m (150 in. lbs.).
7. Connect the battery negative cable.

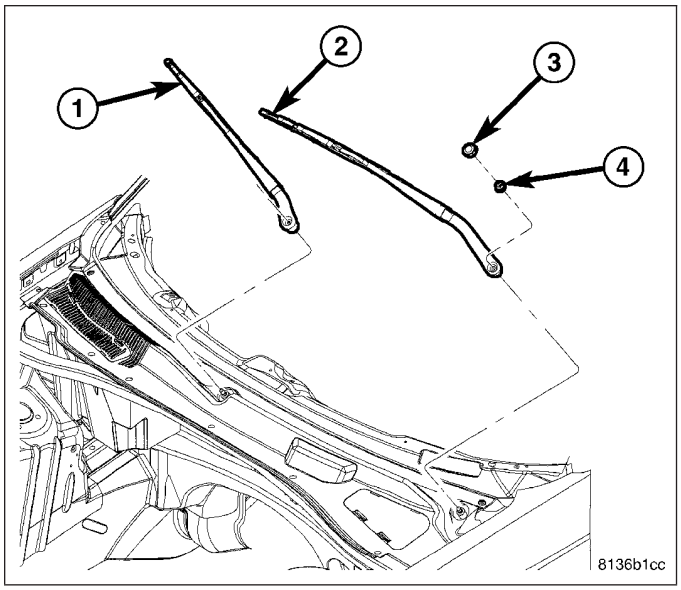

FRONT WIPER MOTOR

REMOVAL

1. Disconnect and isolate the battery negative cable.
2. Remove the front wiper module (3) (Refer to 8 - ELECTRICAL/WIPERS/WASHERS/WIPER MODULE - REMOVAL).

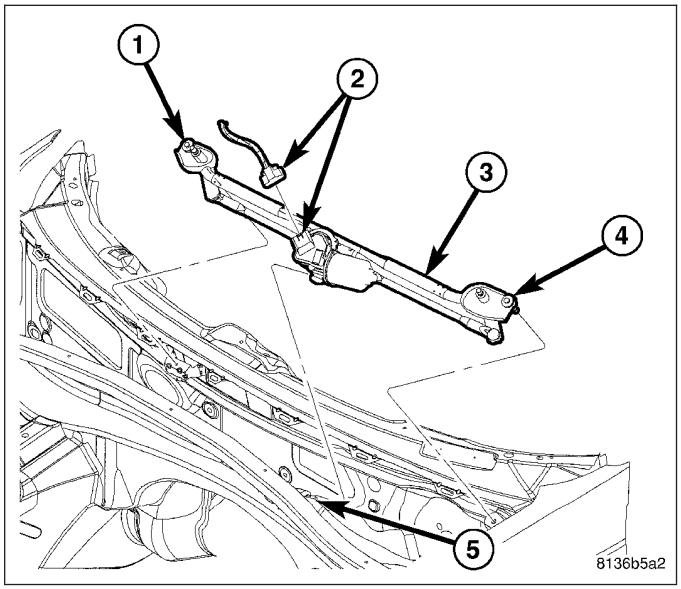

3. With front wiper module on bench or in vise, remove the one nut attaching the bellcrank to the motor shaft.

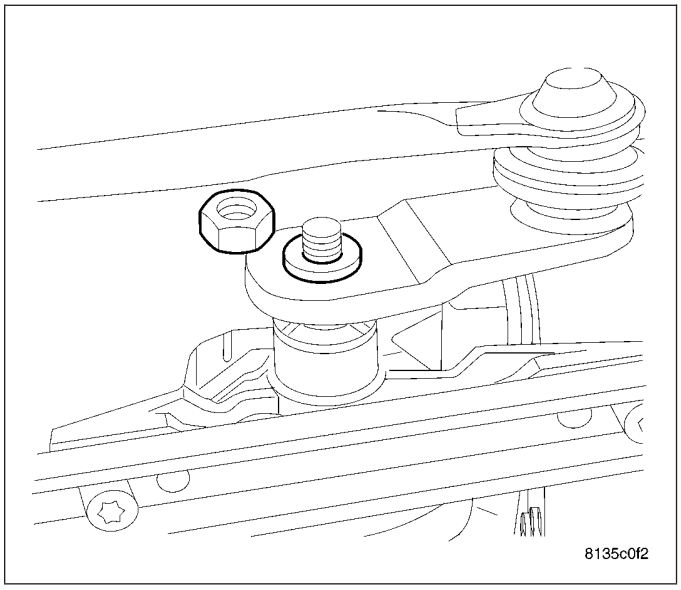

4. Using a flat bladed tool, carefully pry the bellcrank from the wiper motor shaft.

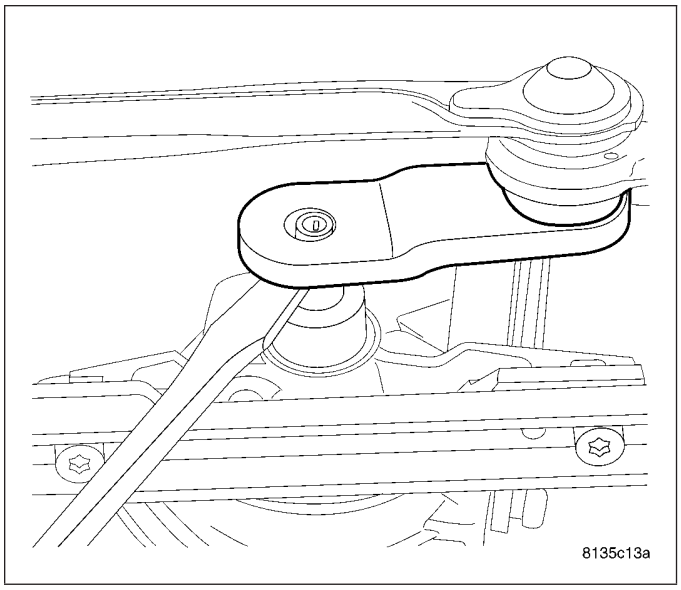

5. Separate the bellcrank from the wiper motor shaft.

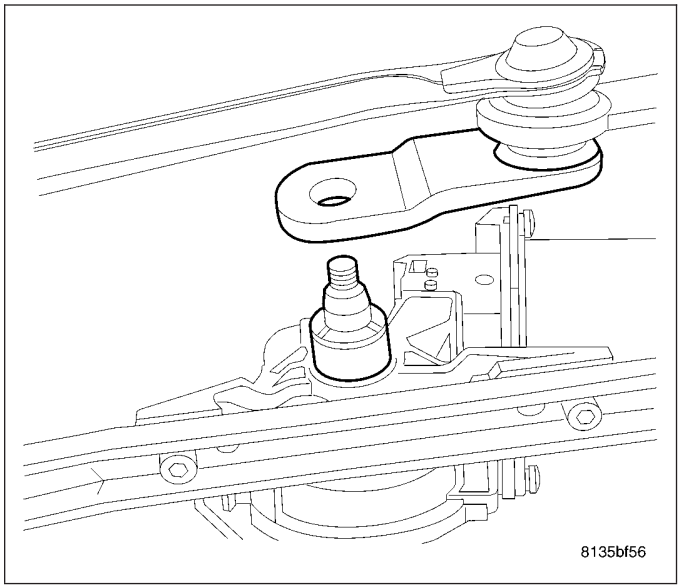

6. Remove the two motor mounting bolts (1).

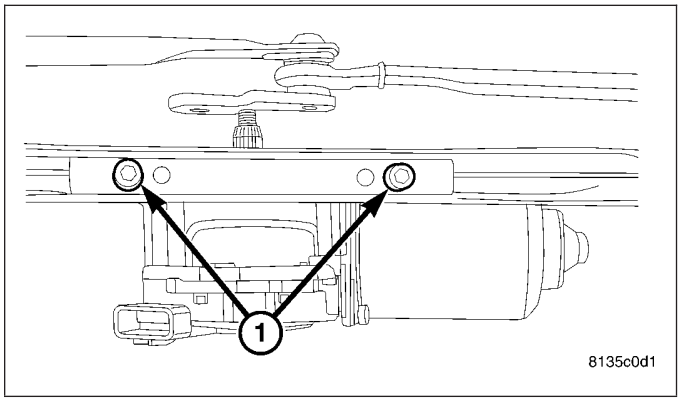

NOTE: When separating the motor from the linkage, there are two pocket nuts that may fall out. Take care to keep these and reinstall them during installation.

7. Separate the wiper motor from the wiper module/linkage.

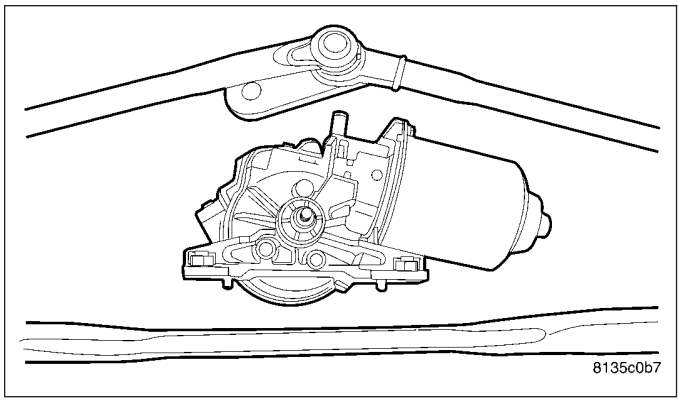

INSTALLATION

1. Ensure that the shaft seal (3) is on the new motor shaft. If necessary, transfer the one on the old motor. If transferred, make sure the seal is in good shape (not brittle, free from cracks, and not damaged).

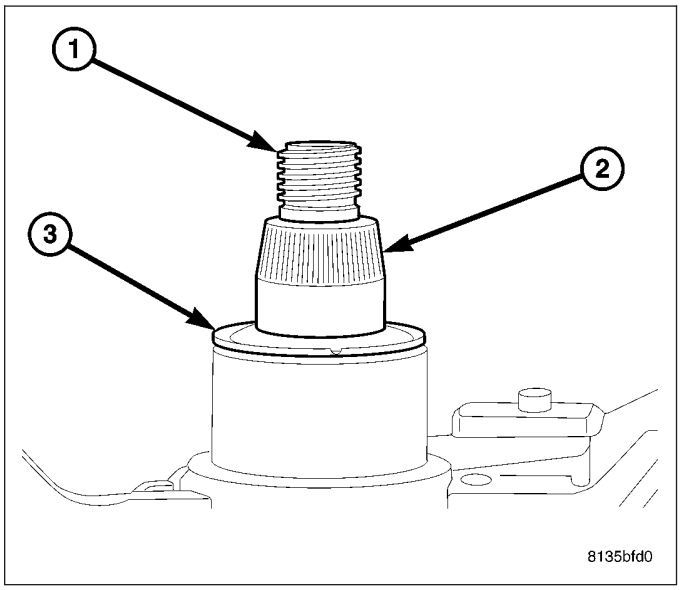

2. Ensure that the pocket nuts (1) are in place in the motor before assembly.

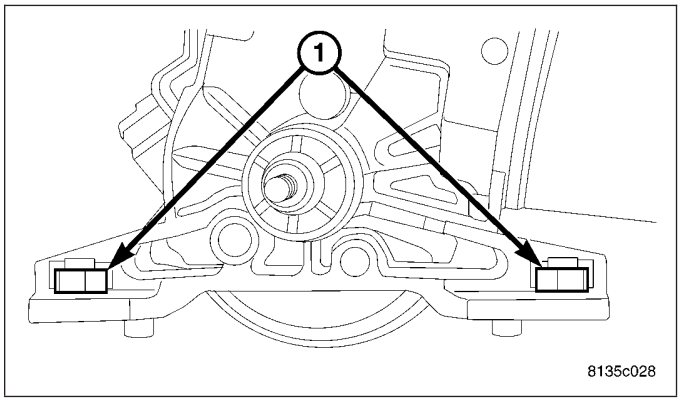

3. If needed to install pocket nut (1), align the nut with the pocket.

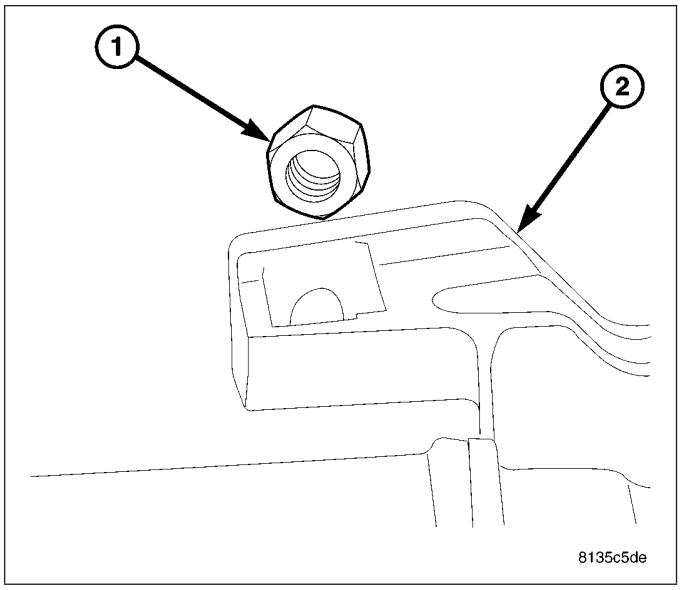

4. Drop nut (1) into pocket.

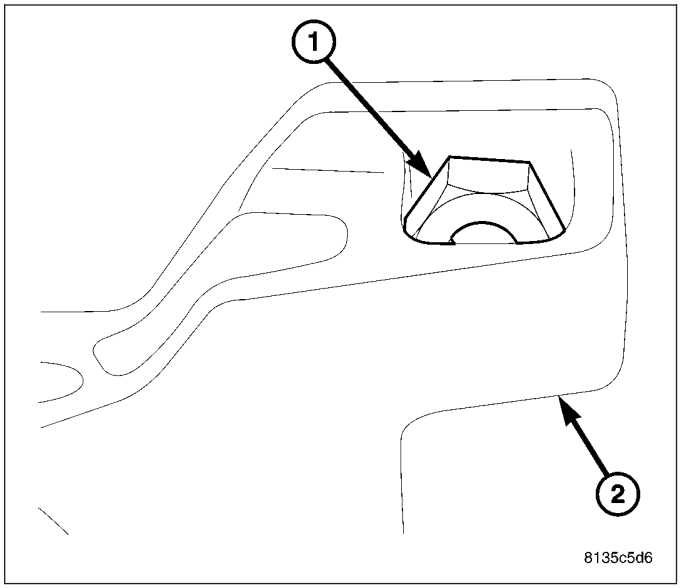

5. Place wiper motor in its mounting location making sure that the pocket nuts are in place.

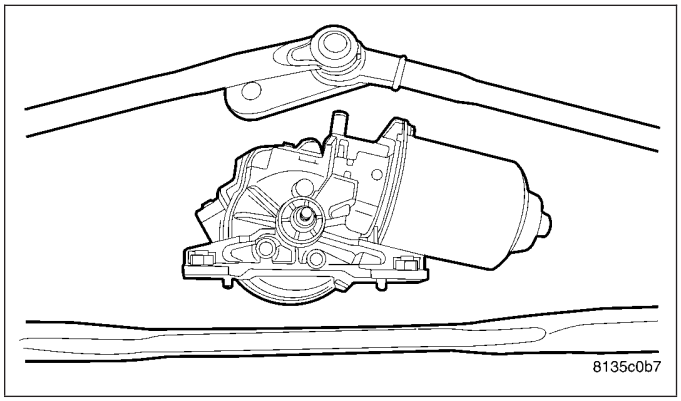

6. Install and tighten the mounting bolts (1).

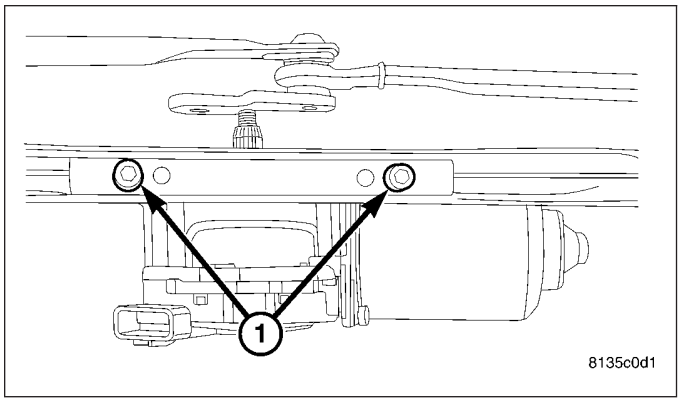

7. Position the bellcrank on the wiper motor shaft.

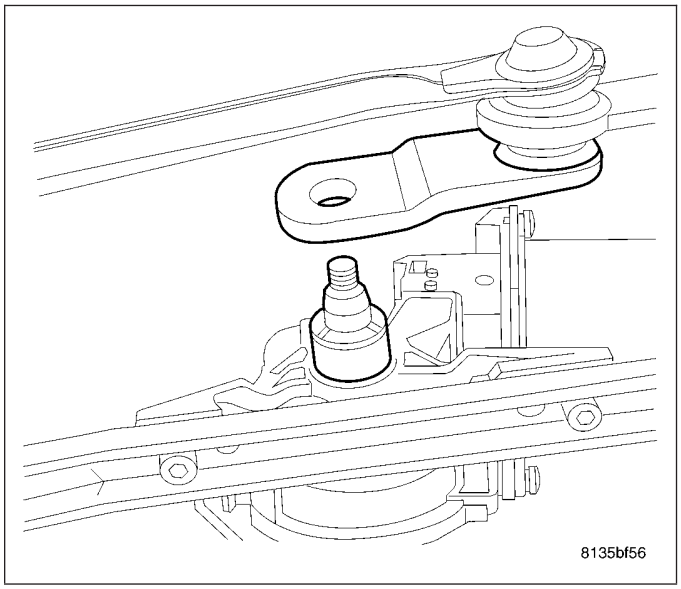

8. Align the bellcrank with the linkage arms.

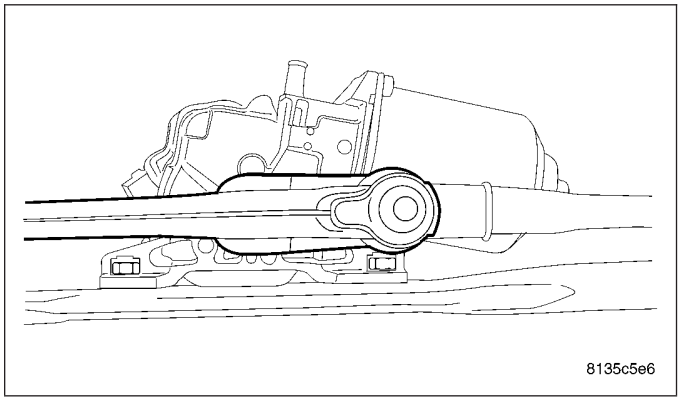

9. Install and tighten the nut to the bellcrank.

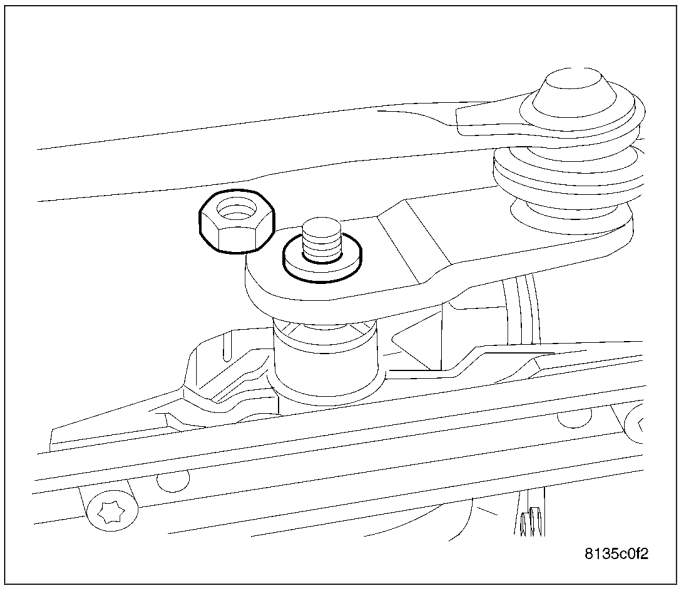

10. Install the front wiper module (3) (Refer to 8 - ELECTRICAL/WIPERS/WASHERS/WIPER MODULE - INSTALLATION).
11. Connect the battery negative cable.

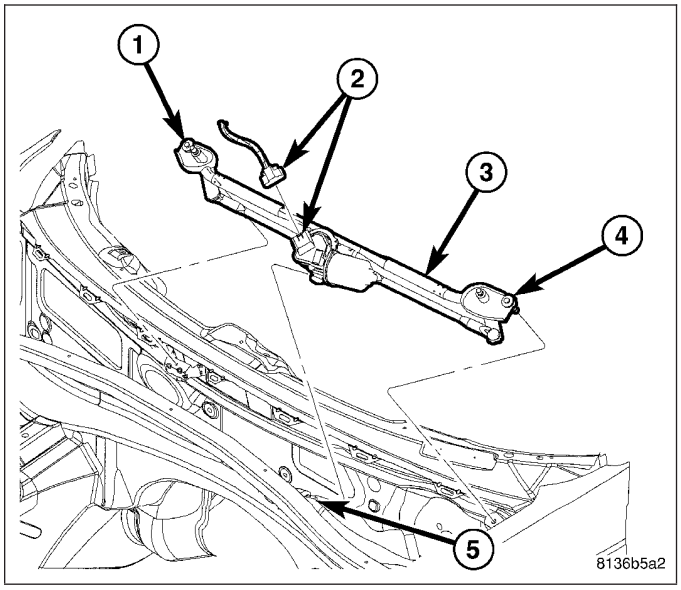

HEADLAMP WASHER

DESCRIPTION

The headlamp washers work in conjunction with the windshield washers. The headlamp washers are enabled with the headlamps “ON” and the front windshield washers activated. With the windshield washers activated the headlamp washers will spray twice for a predetermined amount of time.

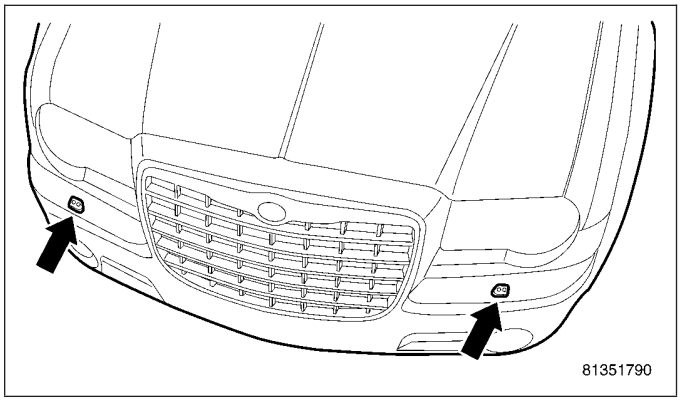

OPERATION

The headlamp washer system utilizes a separate high pressure pump that is attached to the windshield washer reservoir. The headlamp washer pump feeds nozzles that are mounted in the front fascia of the vehicle. The nozzles are aimed in front of the headlamp assembly. These nozzles spray the headlamps when the system is activated.

To activate the headlamp washers, turn ON the headlamps and then press the front windshield washer control knob. This will operate the windshield washers and direct one, timed high pressure sprays onto the headlamp lens.

REMOVAL

1. Disconnect and isolate the battery negative cable.
2. Loosen front fascia as necessary on the side to be removed (Refer to 13 - FRAME & BUMPERS/ BUMPERS/FRONT FASCIA - REMOVAL).
3. Disconnect washer hose (2) from headlamp washer.
4. Remove headlamp washer from front fascia (1).

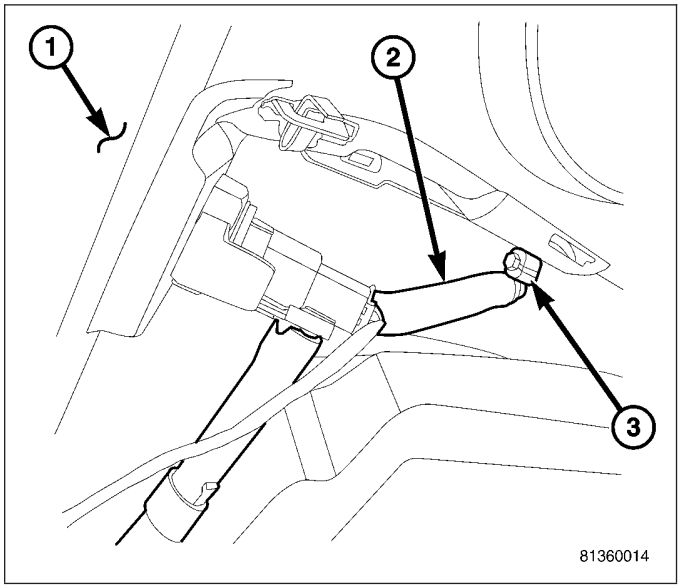

INSTALLATION

1. Install headlamp washer to front fascia (1).
2. Attache washer hose (2) to headlamp washer fitting (3).
3. Install front fascia (1) (Refer to 13 - FRAME & BUMPERS/BUMPERS/FRONT FASCIA - INSTALLATION).
4. Connect battery negative cable.

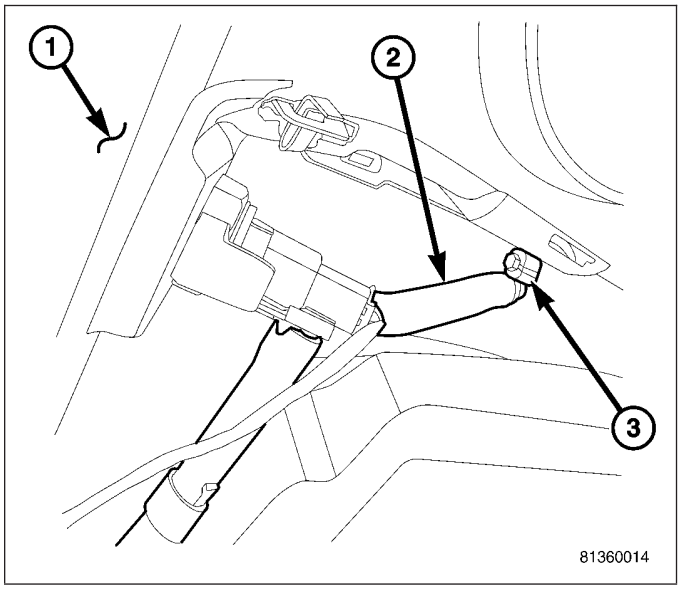

HEADLAMP WASHER HOSE

REMOVAL

The headlamp washer hose (2) is a special high pressure hose with specific fittings (3), and must be replaced as a unit.

1. Disconnect and isolate the battery negative cable.
2. Loosen up the fascia (1) on the side of the vehicle in which hose needs replacing (Refer to 13 - FRAME & BUMPERS/BUMPERS/FRONT FASCIA - REMOVAL).
3. When disconnecting hose (2) , press down firmly on latch (3) at headlamp washer pump motor and washer assembly and pull apart.

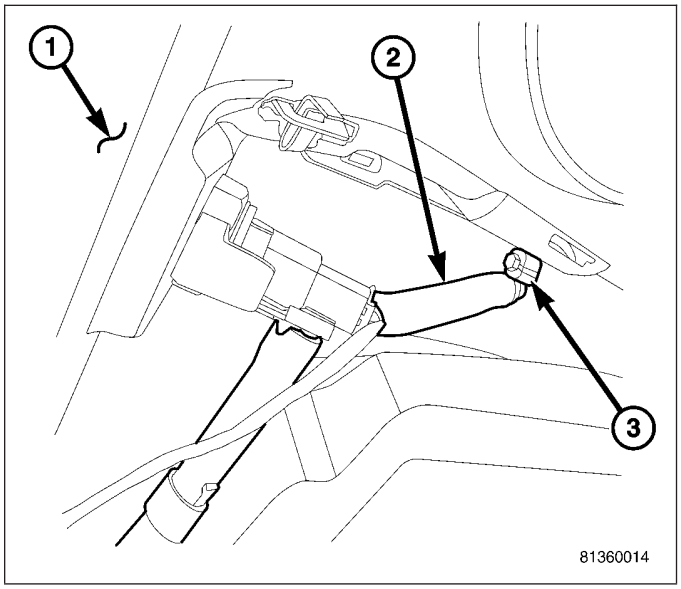

INSTALLATION

The headlamp washer hose is a special high pressure hose with specific fittings, and must be replaced as a unit.

1. Install the new high pressure headlamp washer hose (2) assembly. Push fitting (3) on until a snap is heard.
2. Install the fascia (Refer to 13 - FRAME & BUMPERS/BUMPERS/FRONT FASCIA - INSTALLATION).
3. Connect the battery negative cable.

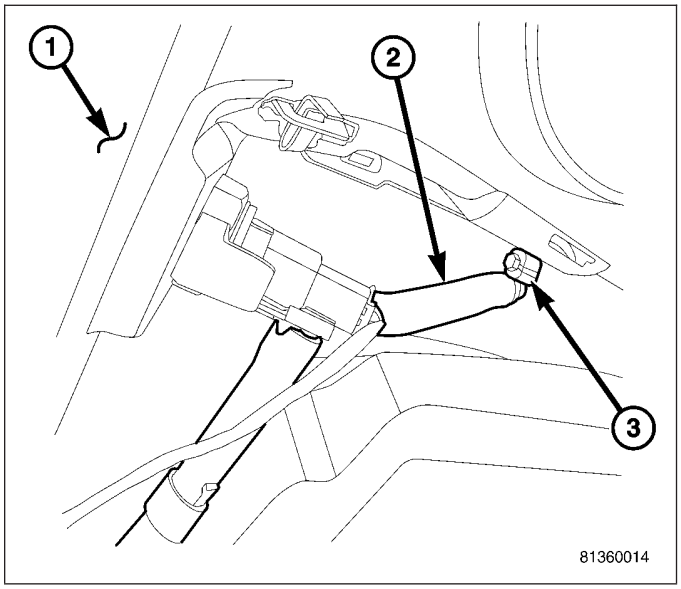

HEADLAMP WASHER PUMP MOTOR

REMOVAL

1. Disconnect and isolate the battery negative cable.
2. Drain washer fluid from the reservoir and into a suitable clean container. This can be done by disconnecting the windshield washer hose from the front (outboard) washer pump and allowing the washer fluid to drain into a container through a temporary jumper hose connected to the front washer pump.
3. Remove the washer reservoir (Refer to 8 - ELECTRICAL/WIPERS/WASHERS/WASHER RESERVOIR - REMOVAL).
4. Disconnect the high pressure headlamp washer pump hose by pressing down firmly on latch and pulling hose off.
5. Disconnect the high pressure headlamp washer pump motor electrical connector (1).
6. Remove pump from reservoir by pulling pump up and away from reservoir cavity and out of mounting grommet. Do not damage reservoir/pump sealing surface or puncture reservoir during removal.
7. Remove pump grommet and discard.

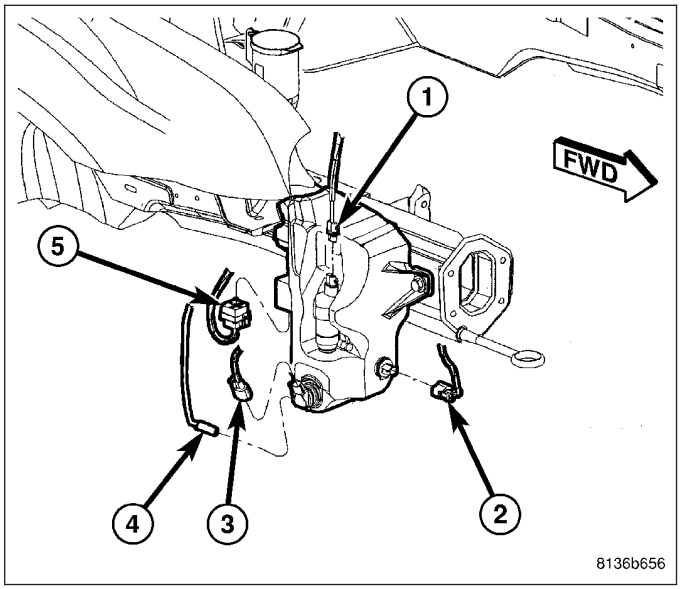

INSTALLATION

1. Use new grommet when installing a new pump assembly.
2. Assure that the pump is aligned to and fully seated in the reservoir cavity.
3. Install the washer reservoir (Refer to 8 - ELECTRICAL/WIPERS/WASHERS/WASHER RESERVOIR - INSTALLATION).
4. Connect the electrical harness connectors to the washer pump motors and the fluid level sensor.
5. Connect the high pressure headlamp washer hose by firmly pushing hose onto inlet until a snap is heard.
6. Refill the reservoir with fluid drained previously.
7. Connect the battery negative cable.

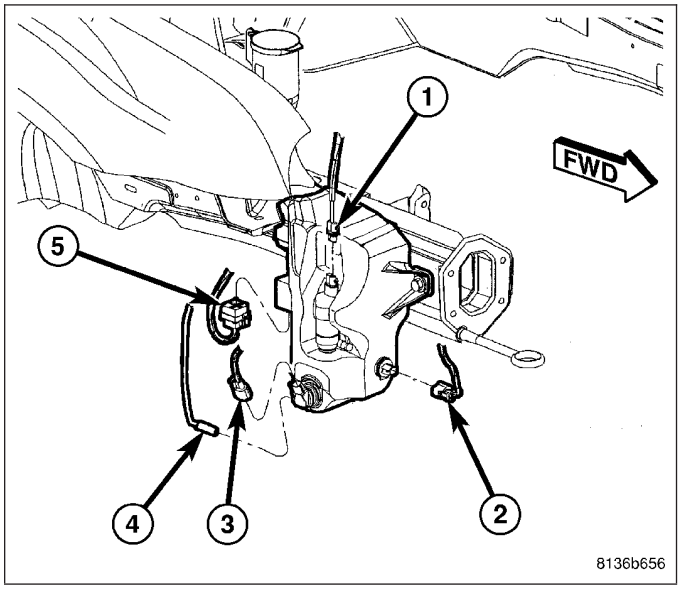

SENSOR-RAIN

DESCRIPTION

The Rain Sensor is the primary component of the automatic wiper system.

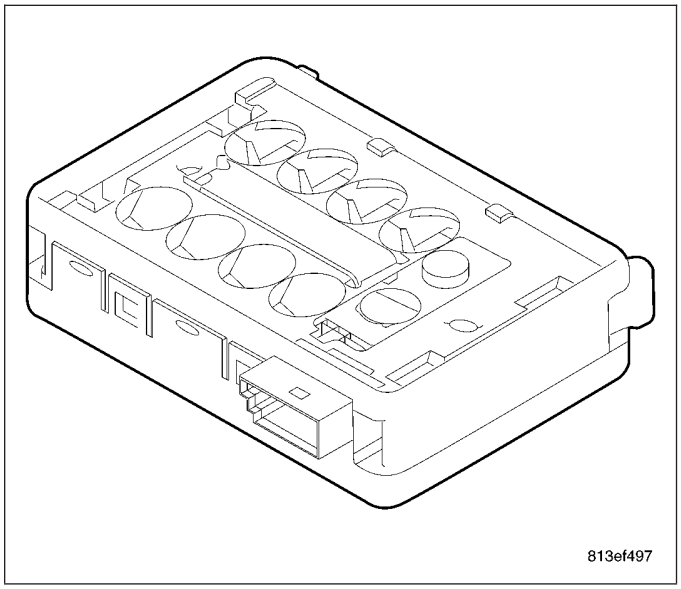

The rain sensor is located on the inside of the windshield, just below the rear view mirror mounting button (1).

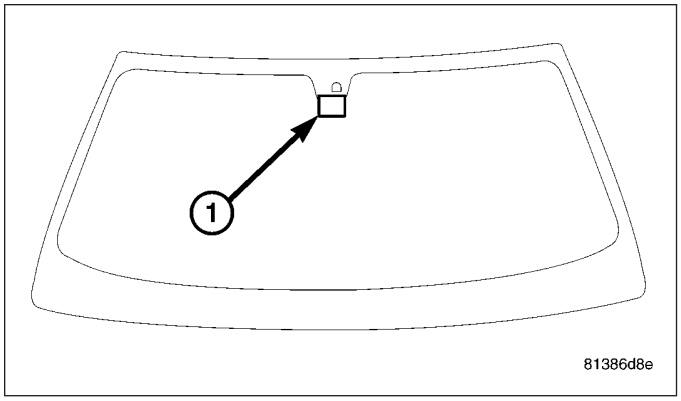

Sliding cam locks (6) on each side of the top sides of the sensor (either side of the connector) secures the sensor to the mounting bracket (9) that is bonded (1) to the windshield glass. A small screwdriver can be used to push in the tabs until the slider protrudes from the opposing side of the sensor case (5). Concealed within the sensor housing (5) is the electronic circuitry (7) of the module, which includes four Infrared diodes, four photocells, and a microprocessor.

The rain sensor software is Flash compatible, which means it can be reprogrammed using Flash reprogramming procedures. However, if any of the hardware of the sensor is damaged or faulty, the entire rain sensor must be replaced. The rain sensor bracket (9) is serviced as a unit with the windshield glass. If the bracket is faulty, damaged, or separated from the windshield glass, the windshield must be replaced.

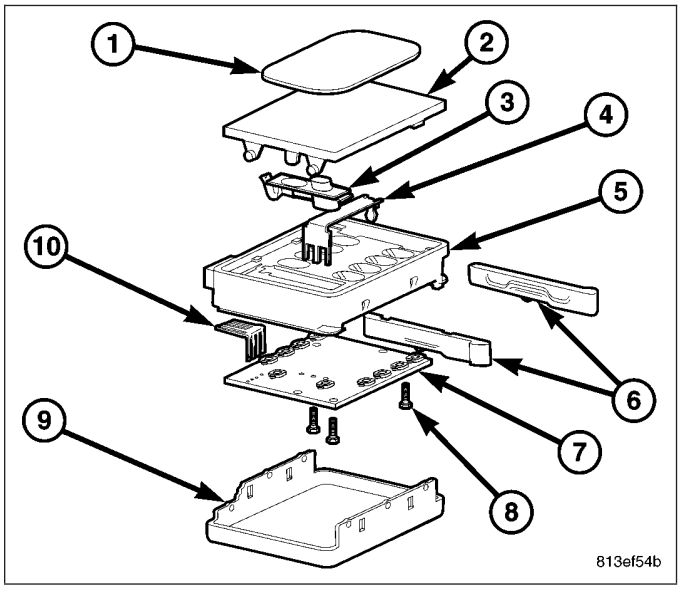

OPERATION

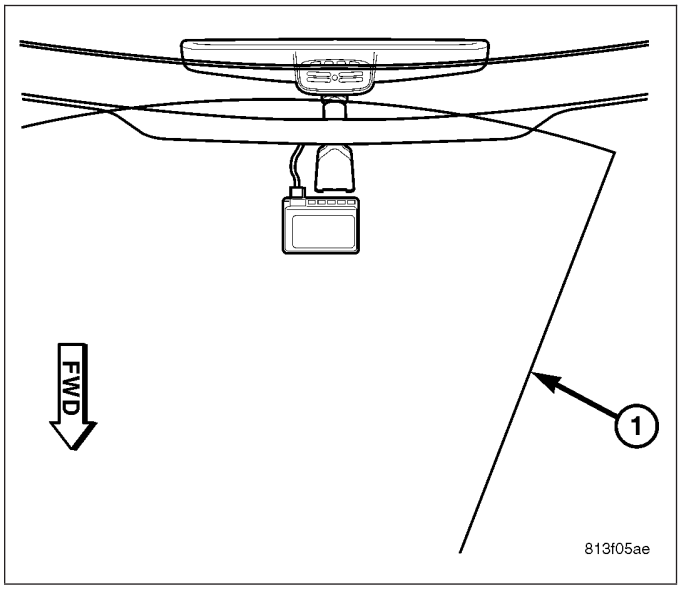

The microprocessor-based Rain Sensor senses moisture in the wipe pattern (1) on the outside of the windshield glass and sends wipe commands to the Front Control Module (FCM). Four Infrared diodes within the sensor generate infrared light beams that are aimed by four of the convex optical lenses near the base of the sensor through the windshield glass. Four additional convex optical lenses near the top of the sensor are focused on the infrared light beams on the outside of the windshield glass and allow the four photocells within the sensor to sense changes in the intensity of these infrared light beams. When sufficient moisture accumulates within the wipe pattern (1) of the windshield glass, the sensor detects a change in the monitored infrared light beam intensity.

The internal programming of the sensor then sends the appropriate electronic wipe command messages to the FCM over the Controller Area Network (CAN) data bus. The FCM responds by activating or deactivating the front wiper system. The CCN sends electronic sensitivity level messages to the rain sensor over the CAN data bus based upon the driver-selected sensitivity setting of the control knob on the control stalk of the multi-function switch. The higher the selected sensitivity setting the more sensitive the rain sensor is to the accumulated moisture on the windshield glass, and the more frequently the sensor will send wipe commands to the FCM to operate the front wiper system.

The rain sensor operates on battery current received through a fuse in the Power Distribution Center (PDC) on a fused B+ circuit. The rain sensor receives ground at all times through the body wire harness. It is important to note that the default condition of the automatic wiper system is low. Therefore, if no message is received by the FCM from the rain sensor for more than about five seconds when in the Auto sensitivity wipe mode, the wipers will default to a constant low wipe state.

The rain sensor ground and battery current inputs may be diagnosed using conventional diagnostic tools and methods. The most reliable, efficient, and accurate means to diagnose the rain sensor requires the use of a scan tool and the appropriate diagnostic information.

REMOVAL

1. Disconnect and isolate the battery negative cable.
2. Disconnect the electrical connector.
3. Using a small screwdriver or equivalent, from the top (connector side) push in the tabs until the slider protrudes from the opposing (bottom) side of the sensor case.
4. Gently pull each slider (1) slightly more until the cam lock releases the sensor.

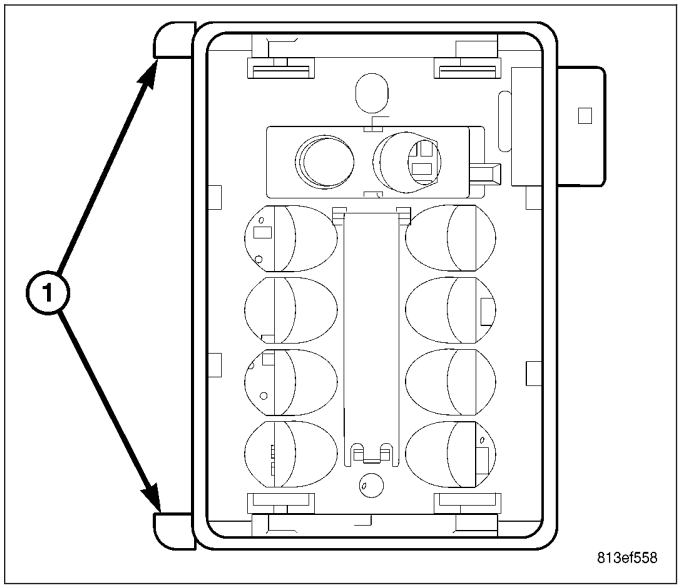

INSTALLATION

1. Make sure that the slider locks are positioned correctly in the downward position, sticking out of the side opposite the connector.
2. Position the rain sensor below the inside rear view mirror, over the bracket and gently push down to seat it on the bracket.
3. Push the slider cam locks (1) inward until they are flush with the side of the sensor case.
4. Connect the wire harness connector to the sensor.
5. Connect the battery negative cable.

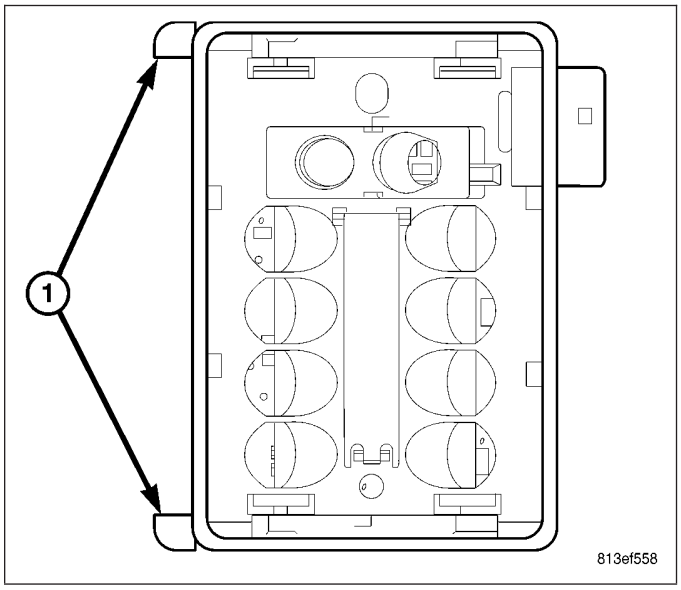

REAR WIPER MOTOR - WAGON ONLY

REMOVAL

1. Disconnect and isolate the battery negative cable.
2. Remove the rear wiper arm (3) (Refer to 8 - ELECTRICAL/WIPERS/WASHERS/WIPER ARMS - REMOVAL).

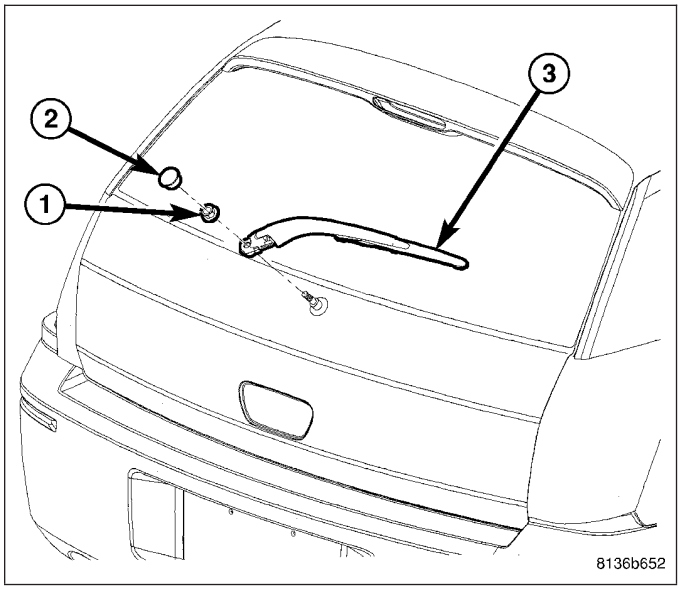

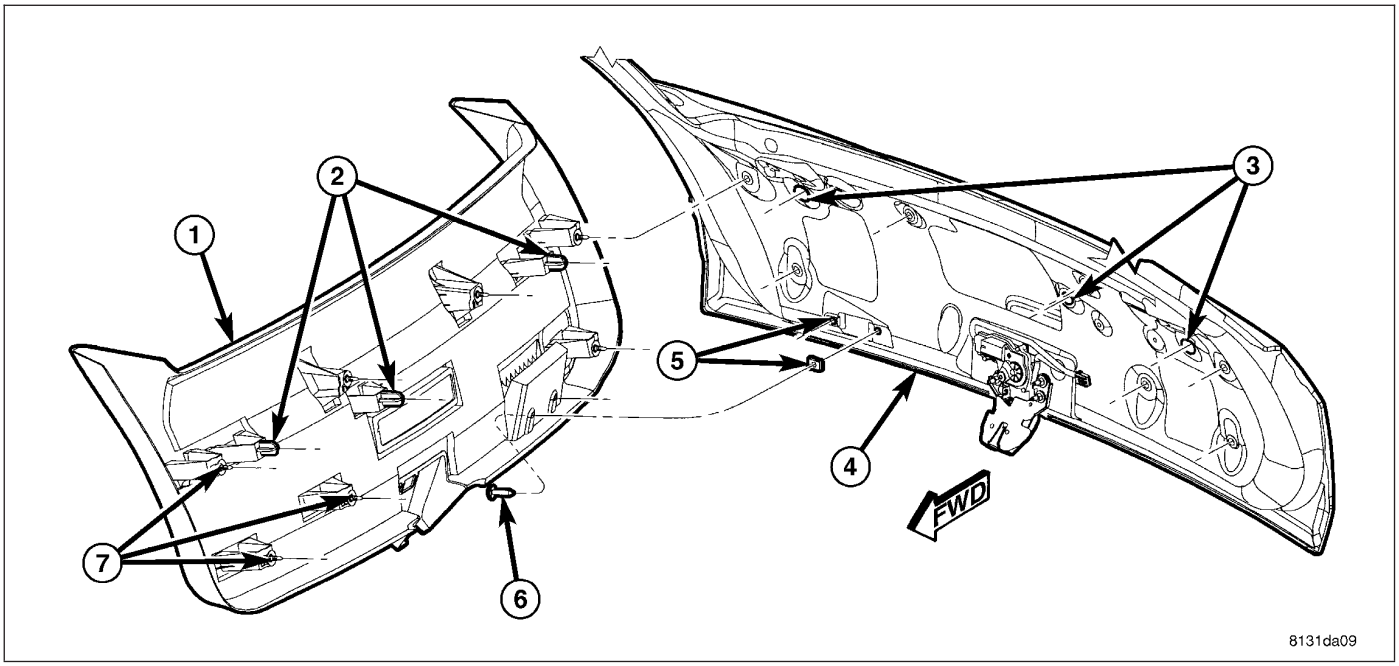

3. Remove the liftgate trim panel (Refer to 23 - BODY/DECKLID/HATCH/LIFTGATE/TAILGATE/TRIM PANEL - REMOVAL).

4. Remove the three mounting fasteners (1).

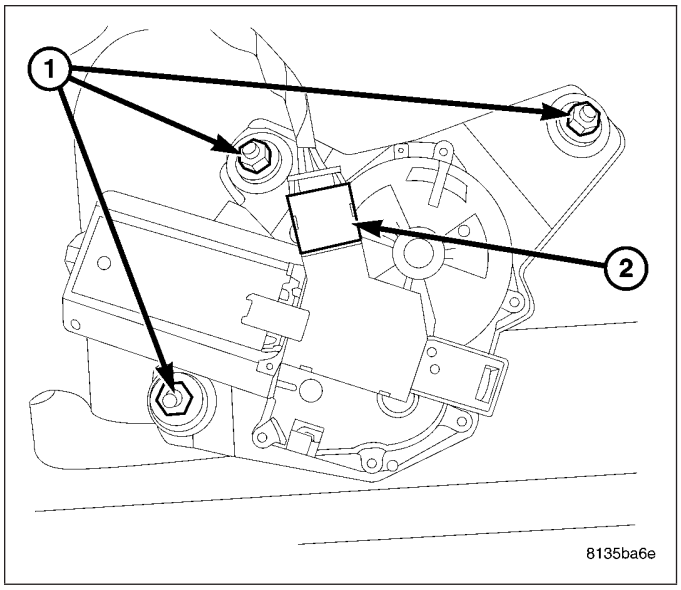

5. Disconnect the electrical harness connector (5).
6. Separate the wiper motor (3) from the liftgate.

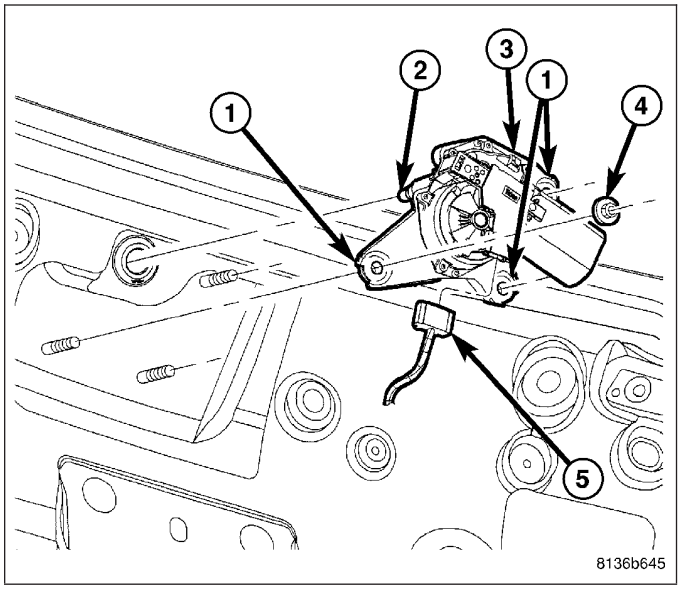

7. Inspect the wiper motor shaft to liftgate seal (1).

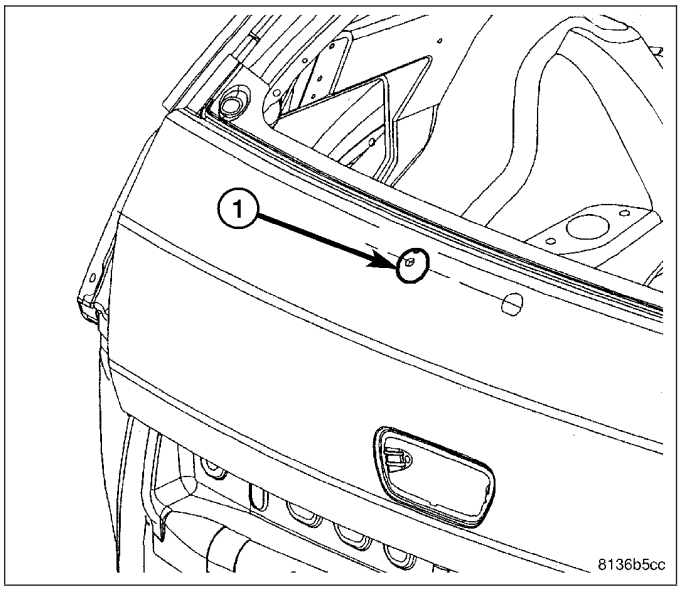

INSTALLATION

1. Inspect the shaft-to-liftgate seal (1) in liftgate.

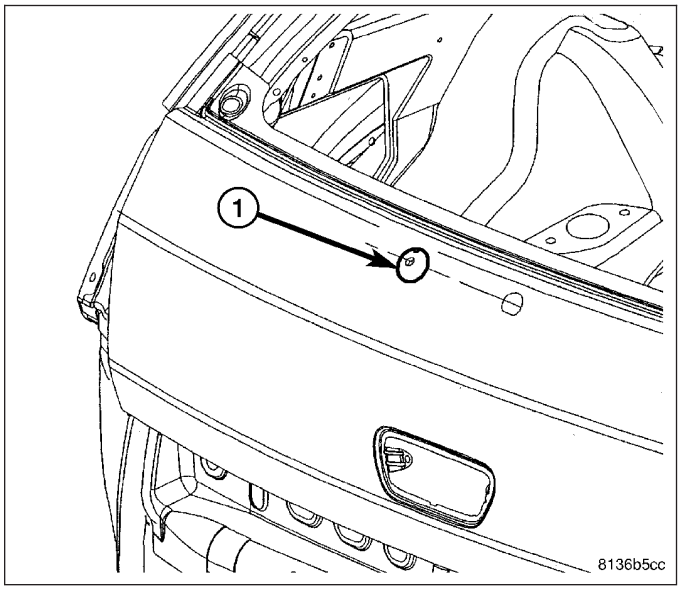

2. If seal is damaged, brittle, or deformed in any way replace. Position shaft seal (1) with the arrow in the UP position.

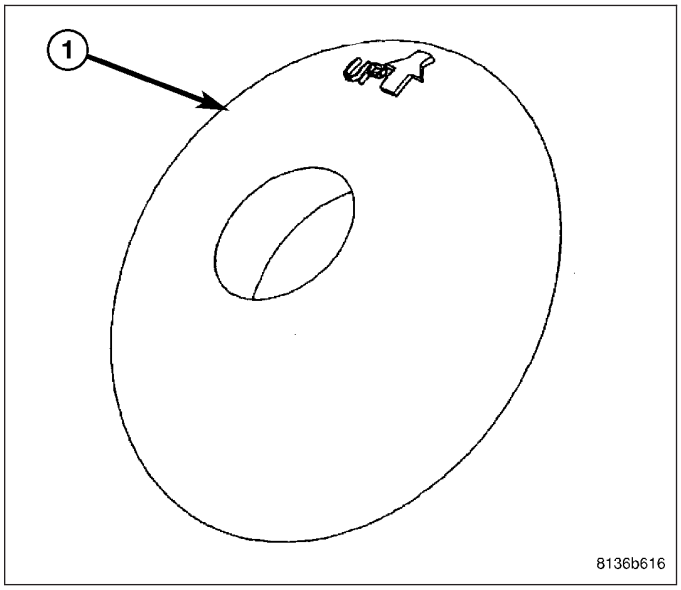

3. Position wiper motor (3) in liftgate.

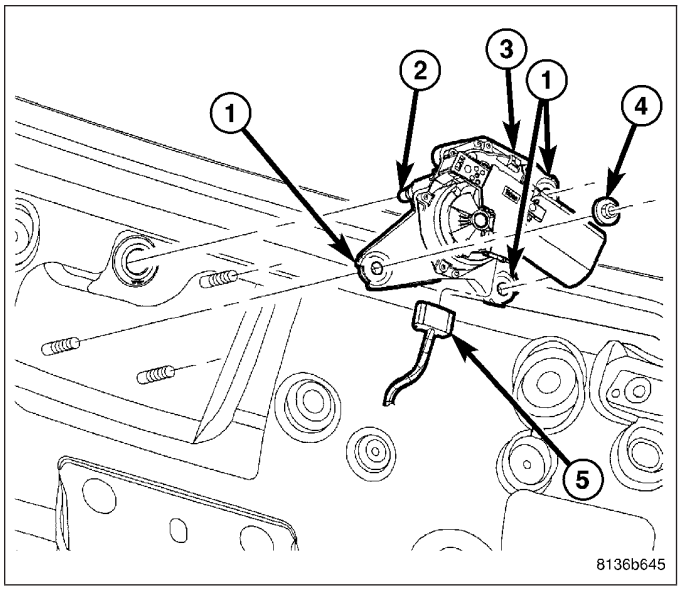

4. Install the mounting nuts (1). Torque nuts to 8 N·m (70 in. lbs).

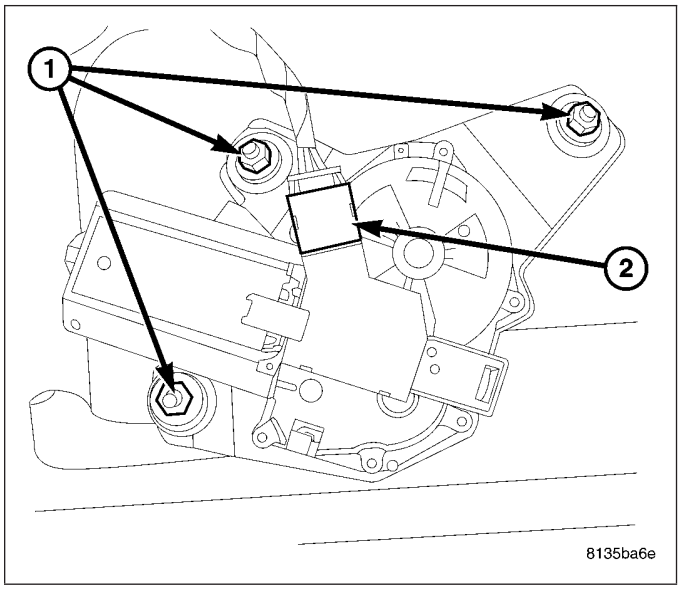

5. Connect the electrical harness connector (5).

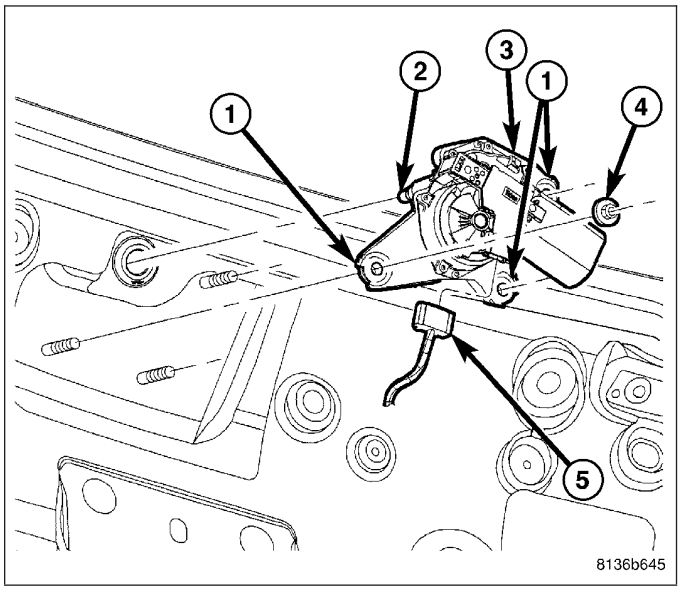

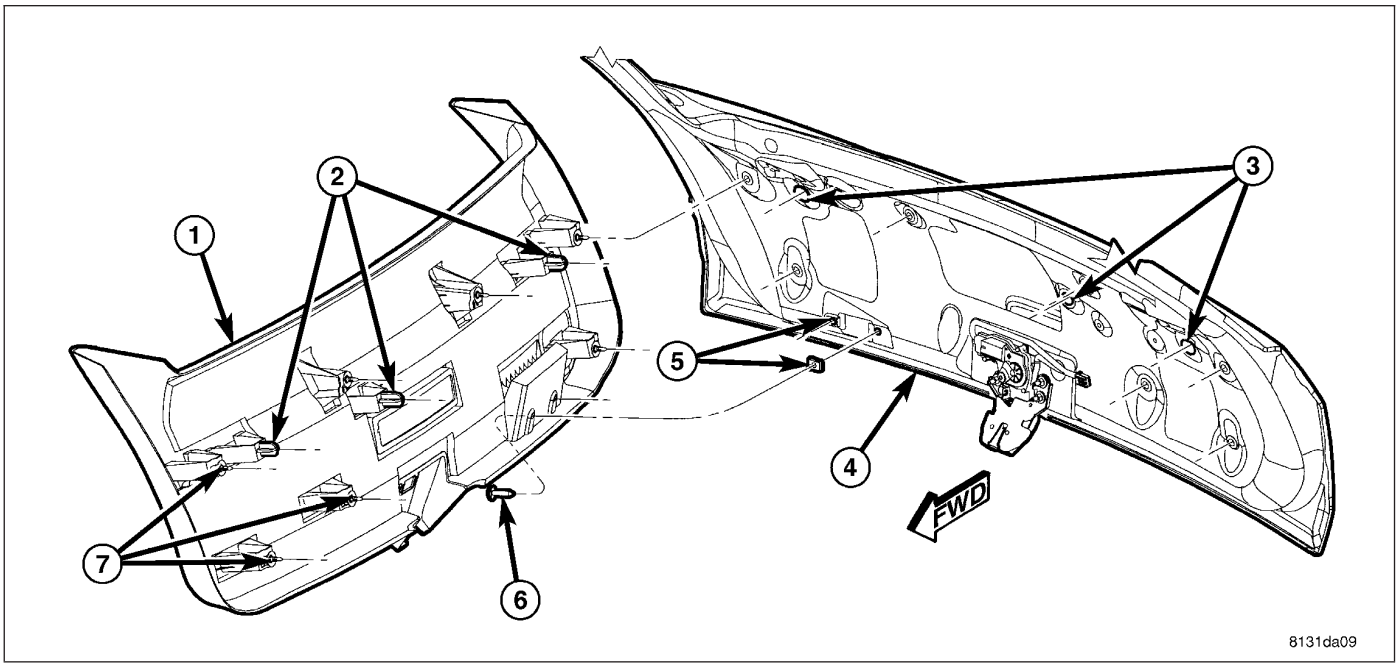

6. Install lower liftgate trim panel (Refer to 23 - BODY/DECKLID/HATCH/LIFTGATE/TAILGATE/TRIM PANEL - INSTALLATION).
7. Install the rear wiper arm (Refer to 8 - ELECTRICAL/WIPERS/WASHERS/WIPER ARMS - INSTALLATION). Torque nut to 18 N·m (13 ft. lbs.).
8. Connect the battery negative cable.

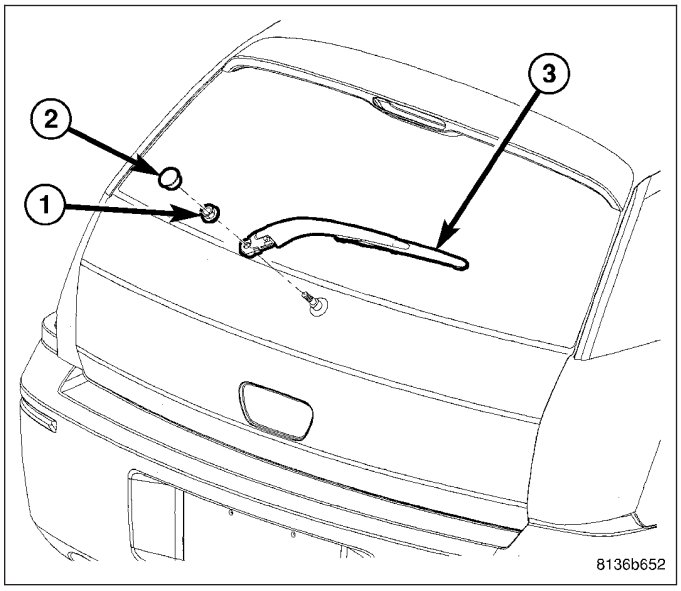

WASHER FLUID LEVEL SWITCH

REMOVAL

1. Disconnect and isolate the battery negative cable.
2. Drain washer fluid from the reservoir and into a suitable clean container. This can be done by disconnecting the windshield washer hose from the front (outboard) washer pump and allowing the washer fluid to drain into a container through a temporary jumper hose connected to the front washer pump.
3. Remove the washer reservoir (Refer to 8 - ELECTRICAL/WIPERS/WASHERS/WASHER RESERVOIR - REMOVAL).

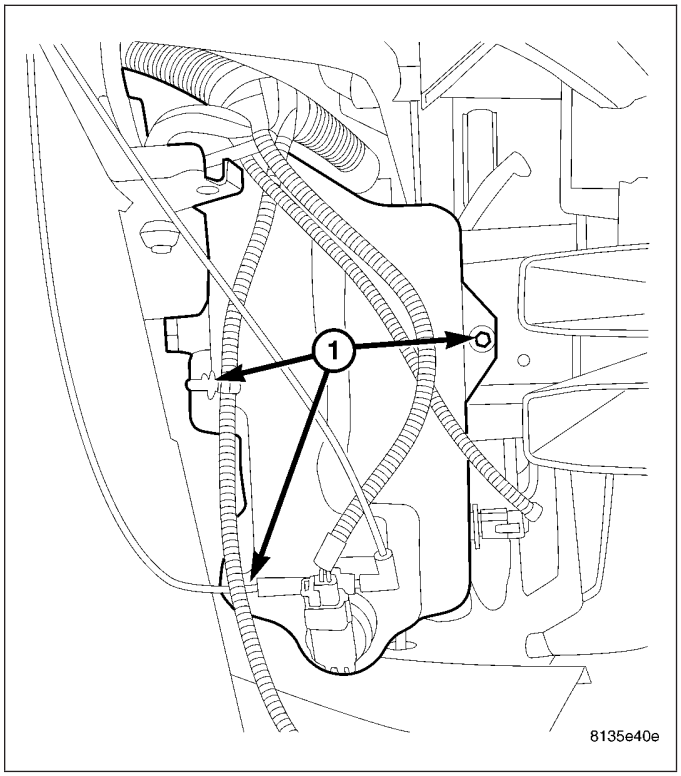

4. Remove the washer fluid level switch by pulling out of reservoir. Inspect the grommet and if installing a new switch, always use a new grommet.

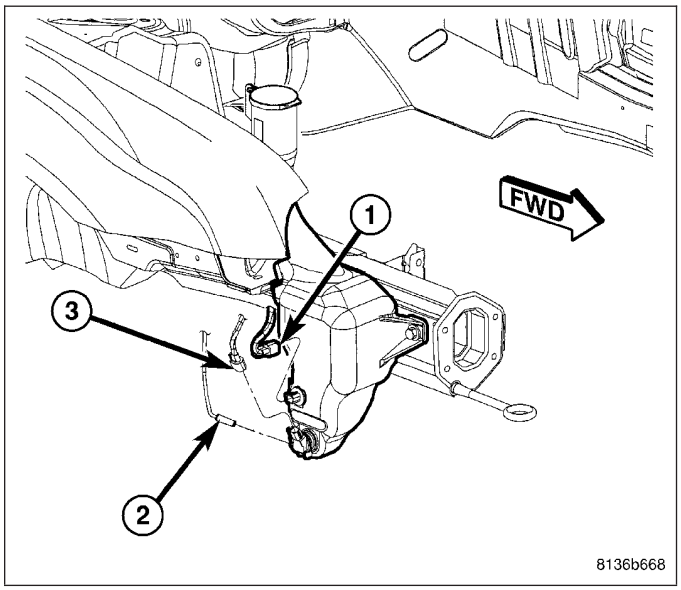

INSTALLATION

1. Inspect grommet and if installing new switch, use a new grommet. Position the switch into opening and firmly press into place.

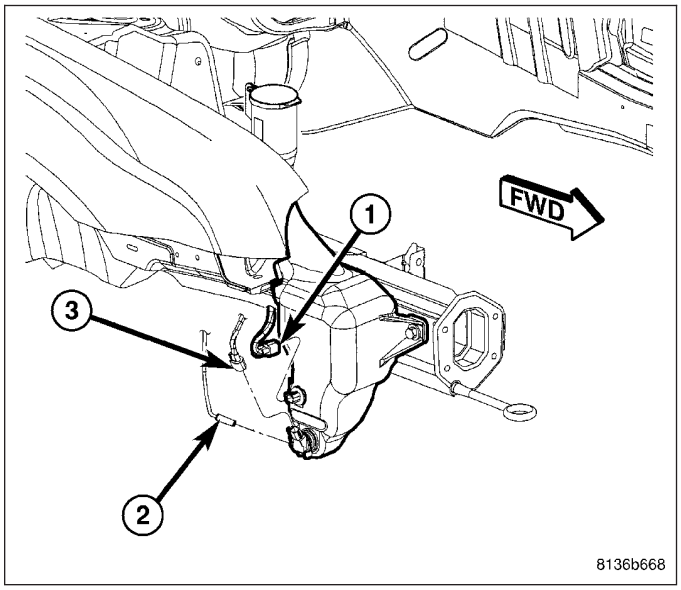

2. Install the washer reservoir (Refer to 8 - ELECTRICAL/WIPERS/WASHERS/WASHER RESERVOIR - INSTALLATION).
3. Refill the reservoir with fluid drained previously.
4. Connect the battery negative cable.

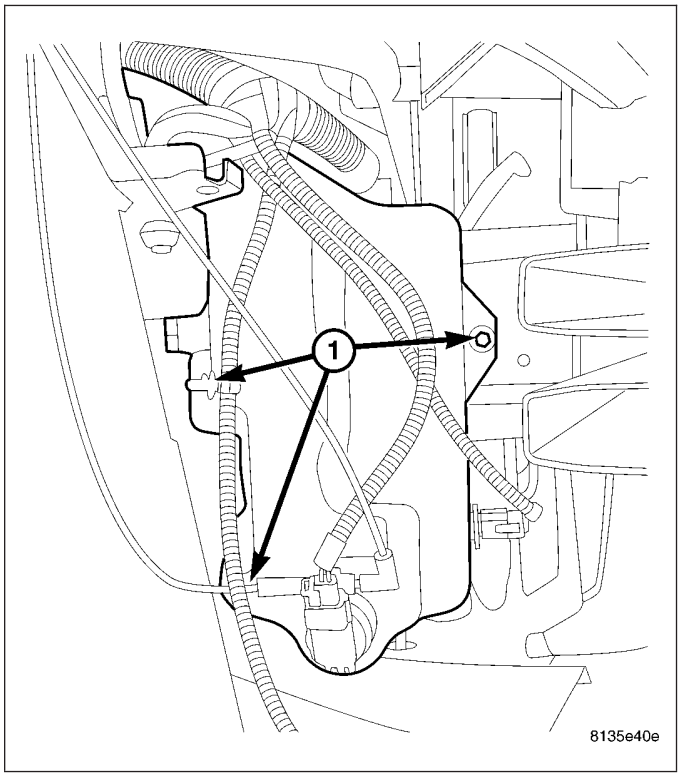

WASHER PUMP MOTOR

REMOVAL

1. Disconnect and isolate the battery negative cable.
2. Drain washer fluid from the reservoir and into a suitable clean container. This can be done by disconnecting the windshield washer hose from the front (outboard) washer pump and allowing the washer fluid to drain into a container through a temporary jumper hose connected to the front washer pump.
3. Remove the washer reservoir (Refer to 8 - ELECTRICAL/WIPERS/WASHERS/WASHER RESERVOIR - REMOVAL).

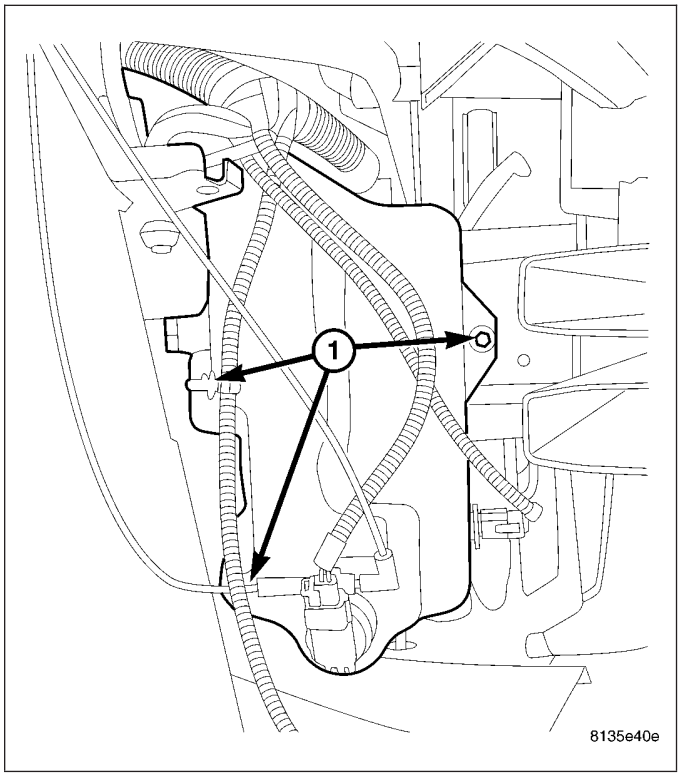

4. Remove the washer pump motor by pulling out of reservoir. Inspect the grommet and if installing a new motor, always use a new grommet.

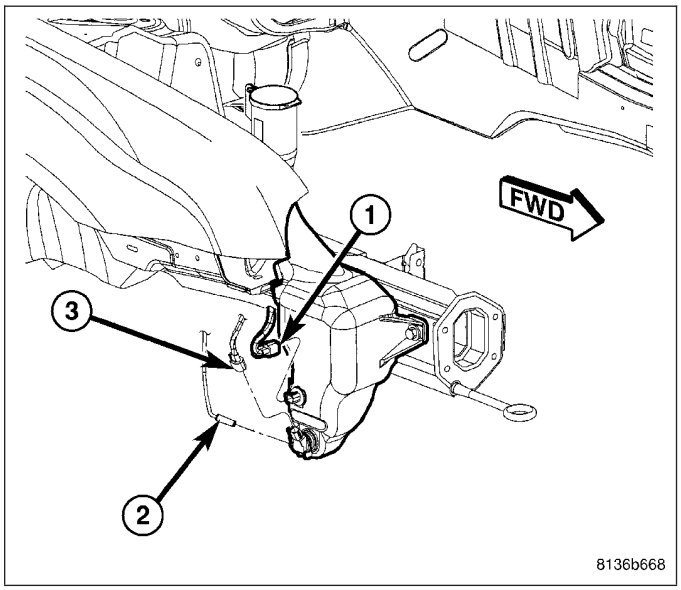

INSTALLATION

1. Inspect grommet and if installing new motor, use a new grommet. Position the motor into opening and firmly press into place.

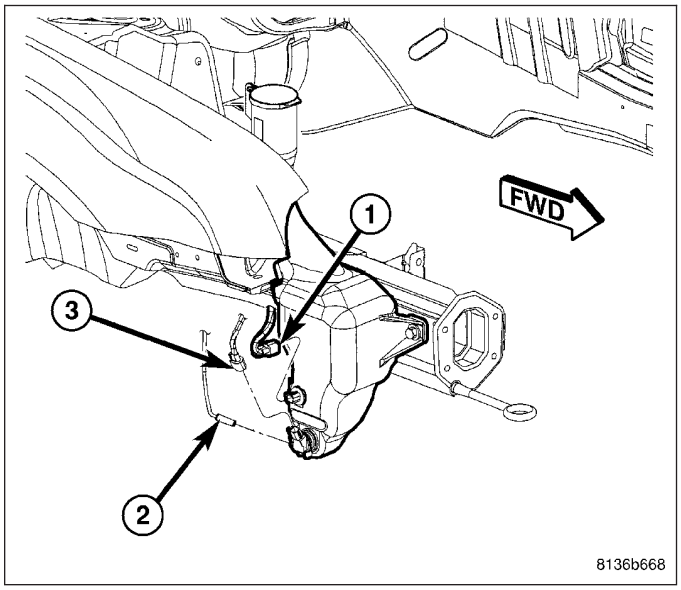

2. Install the washer reservoir (Refer to 8 - ELECTRICAL/WIPERS/WASHERS/WASHER RESERVOIR - INSTALLATION).
3. Refill the reservoir with fluid drained previously.
4. Connect the battery negative cable.

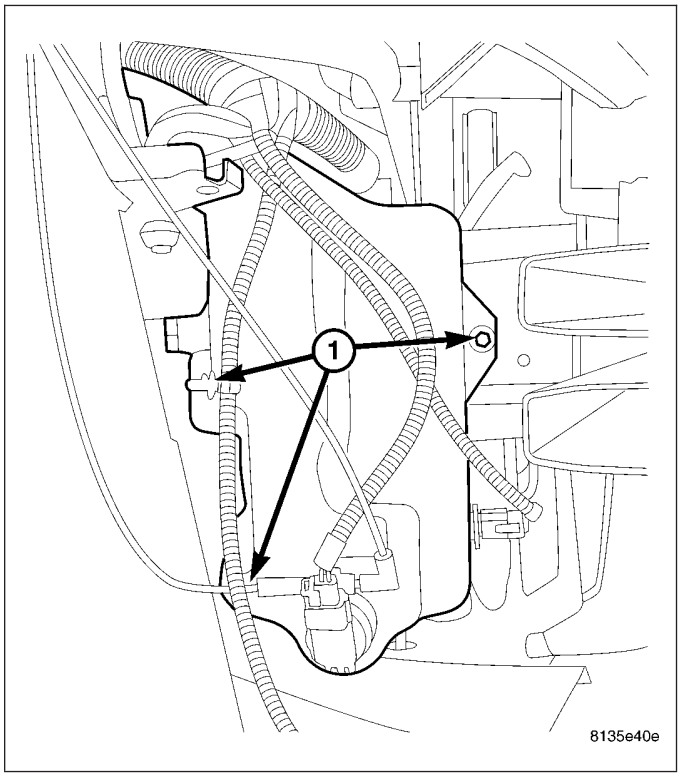

WASHER RESERVOIR

REMOVAL

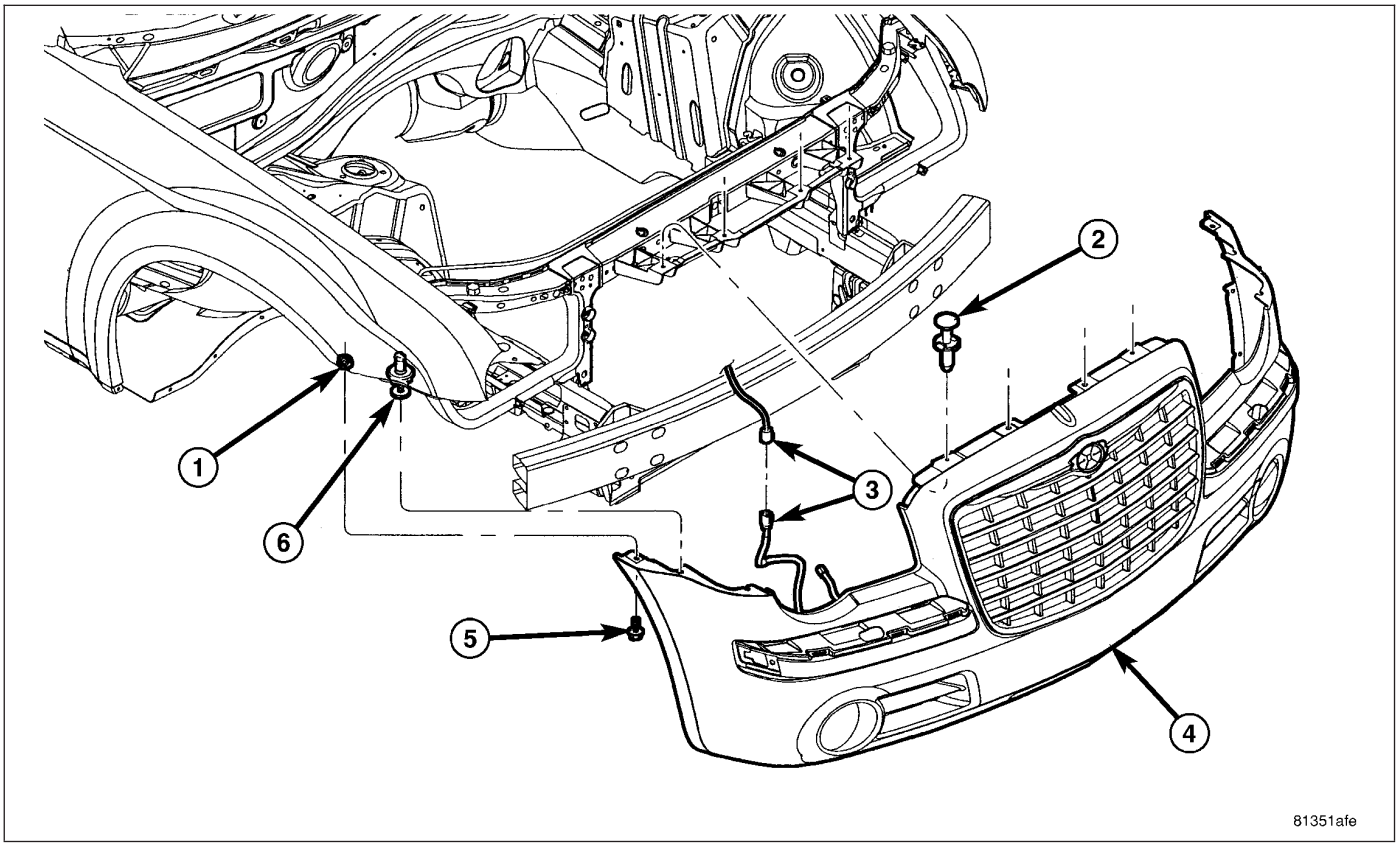

1. Disconnect and isolate the battery negative cable.
2. Remove the front fascia (4) (Refer to 13 - FRAME & BUMPERS/BUMPERS/FRONT FASCIA - REMOVAL).
3. Disconnect electrical harness connectors (1 and 3) from reservoir.
4. Disconnect hose from reservoir (2) and drain fluid into container.

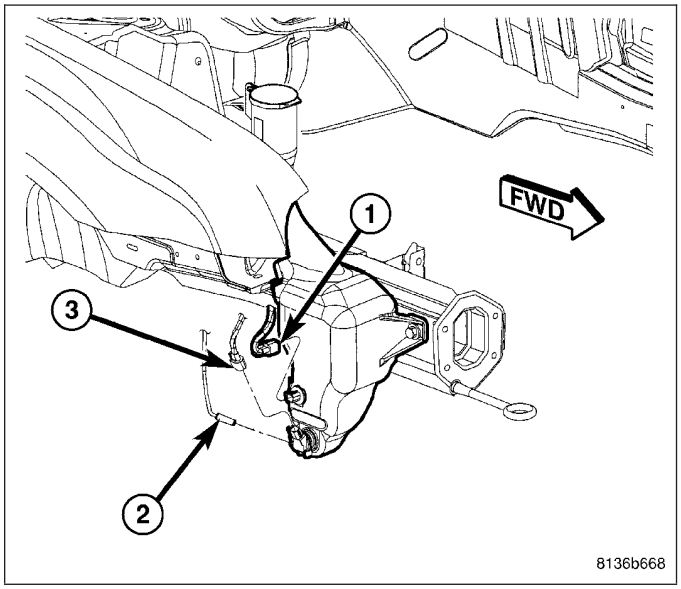

5. Remove the rear mounting fastener (2).

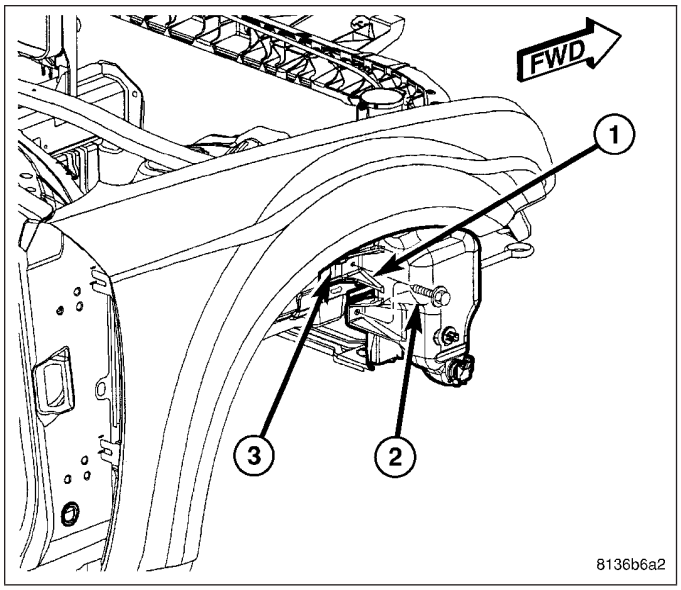

6. Remove the remaining fasteners (1).

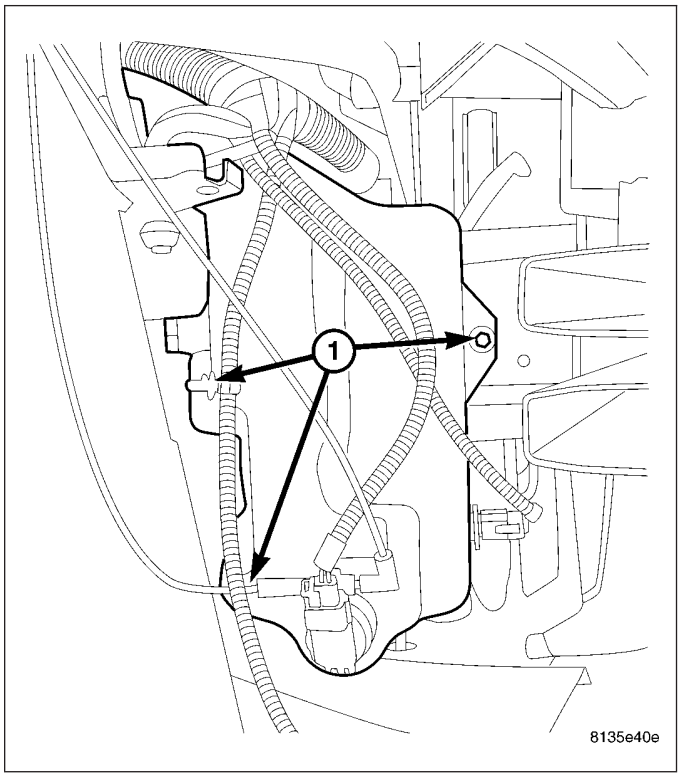

7. Remove the reservoir (4) from the vehicle.

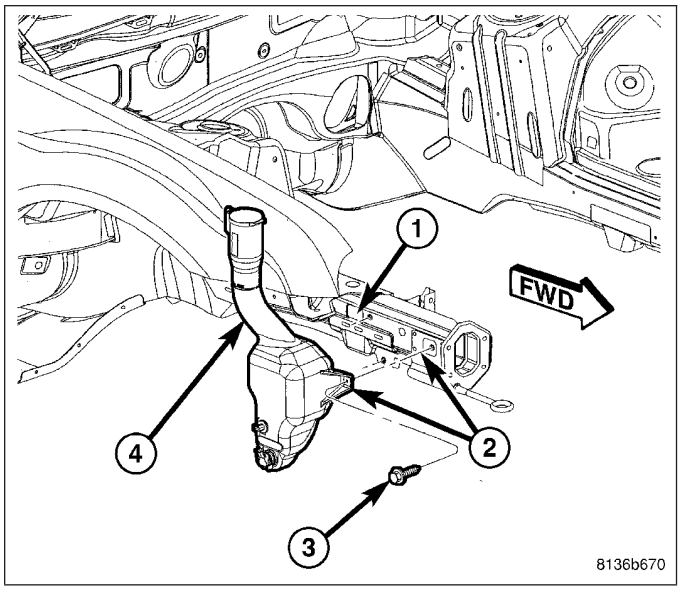

INSTALLATION

1. Position reservoir (4) in vehicle.

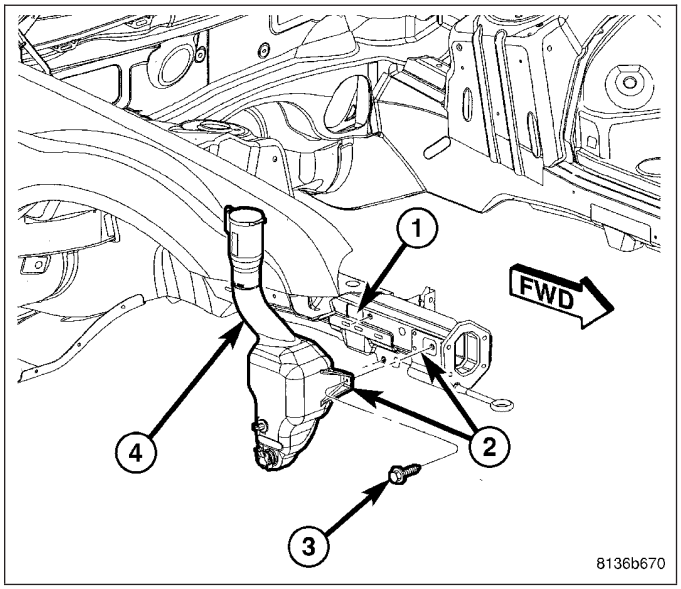

2. Install mounting fasteners (1). Torque fasteners to 7 N·m (62 in. lbs).

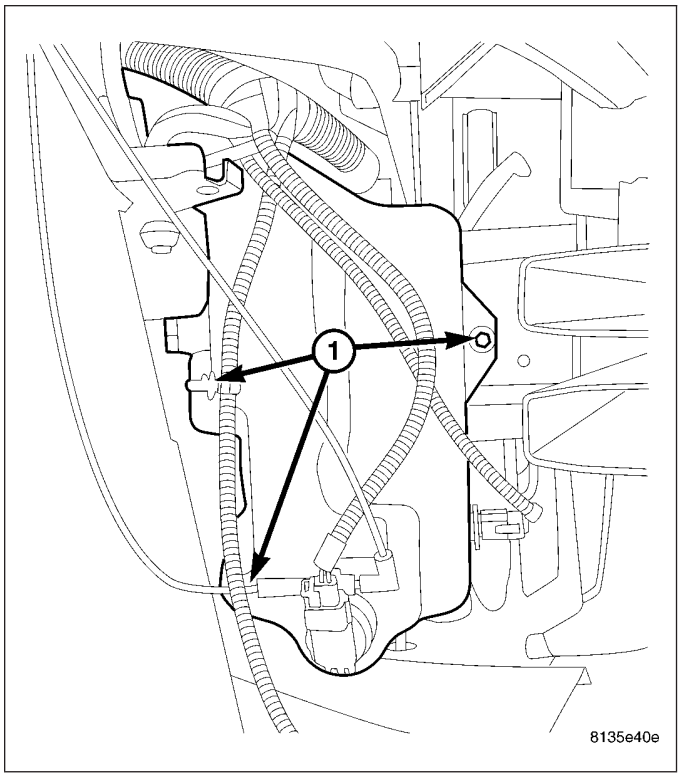

3. Install rear mounting fastener (2). Torque fastener to 7 N·m (62 in. lbs).

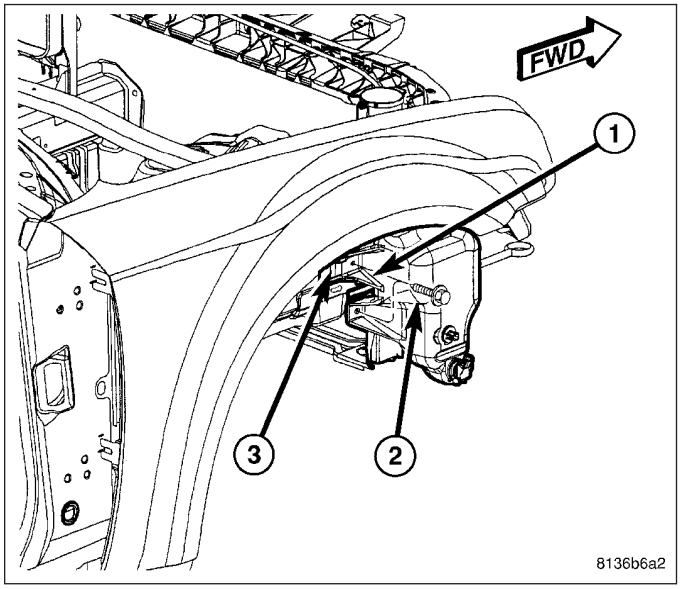

4. Connect electrical harness connectors (1 and 3) and hoses (2) to reservoir.

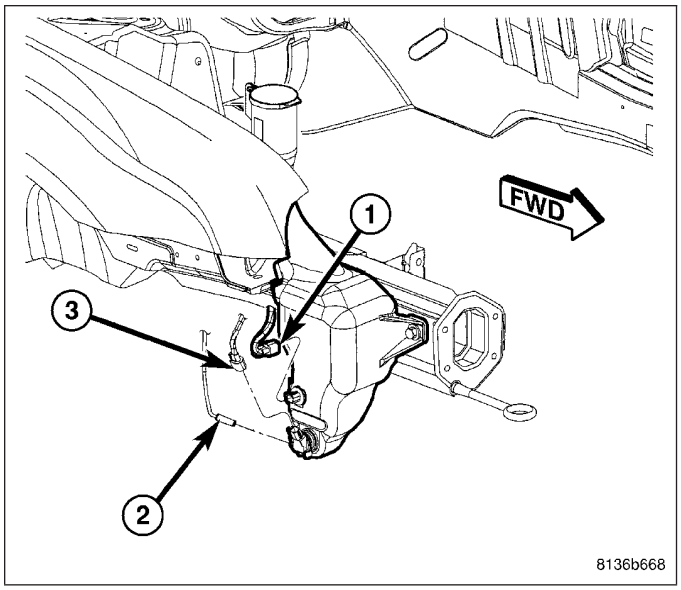

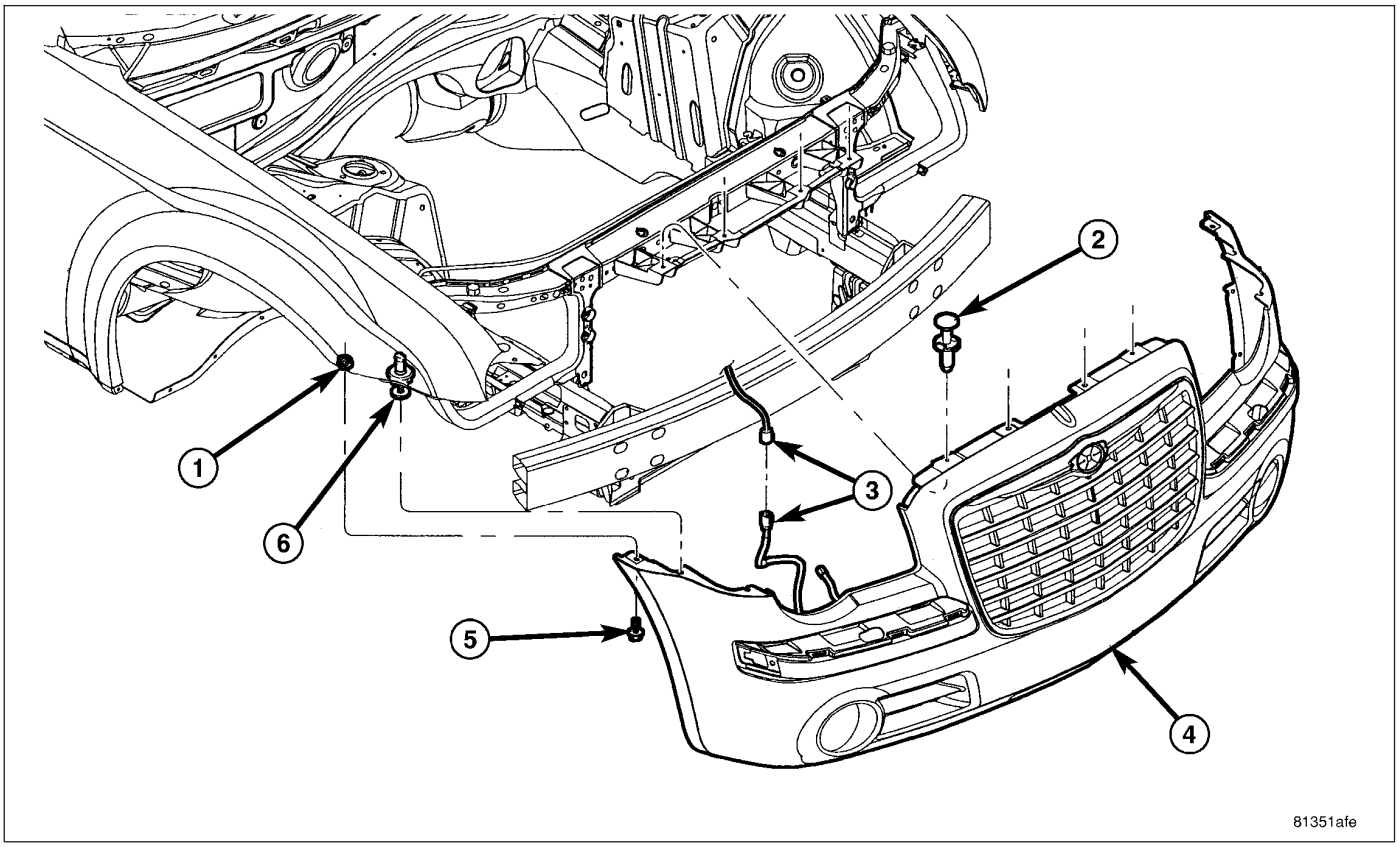

5. Install front fascia (4) (Refer to 13 - FRAME & BUMPERS/BUMPERS/FRONT FASCIA - INSTALLATION).
6. Connect the battery negative cable.
7. Fill reservoir.

WIPER ARMS

REMOVAL

FRONT WIPER ARM

1. Remove the nut caps (3).
2. Remove the retaining nuts (4).

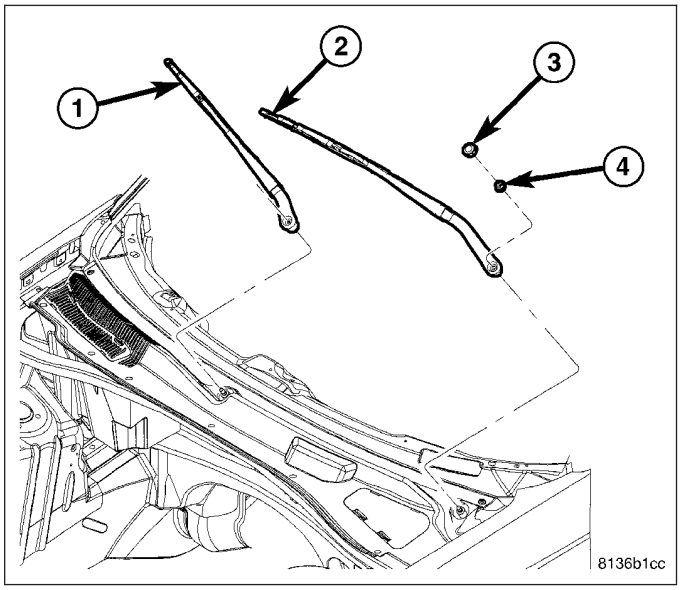

3. Using a suitable two jaw puller (5), separate the wiper arm (7) from the wiper pivot.

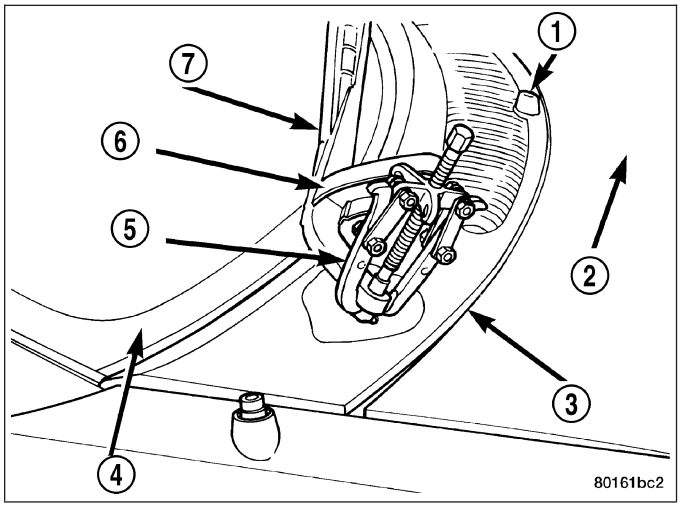

4. Remove the wiper arms (1 and 2).

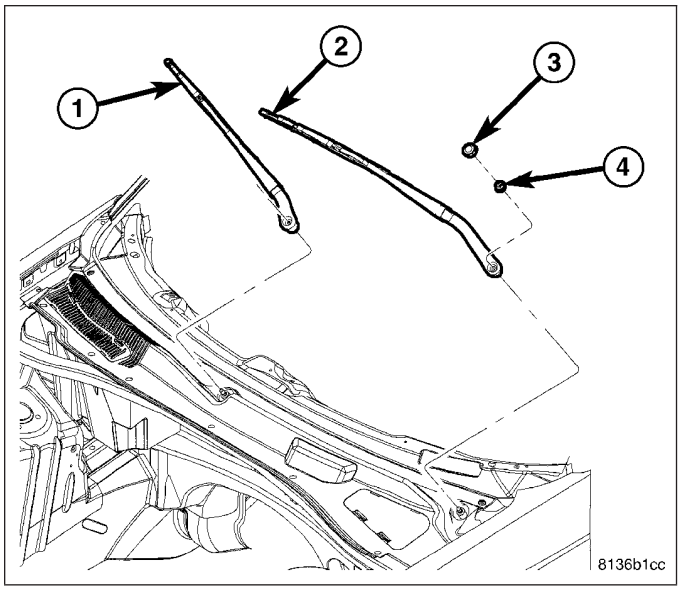

REAR WIPER ARM - WAGON

1. Remove the nut cap (2).
2. Remove the retaining nut (1).
3. Gently rock the wiper arm from side to side to loosen it from the shaft.
4. Remove the wiper arm (3).

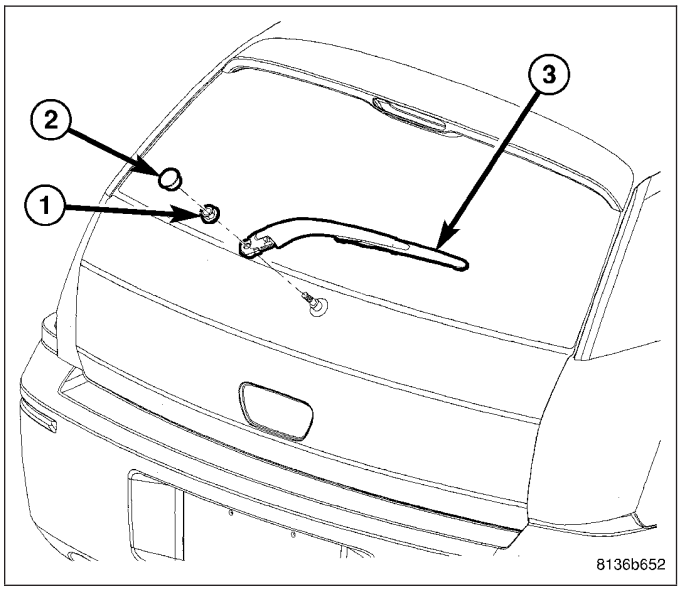

INSTALLATION

FRONT WIPER ARM

1. Install wiper arms (1) on wiper arm pivots.
2. Install retaining nuts (4). Torque nuts to 18 N·m (13 ft. lbs.).
3. Install nut caps (3).

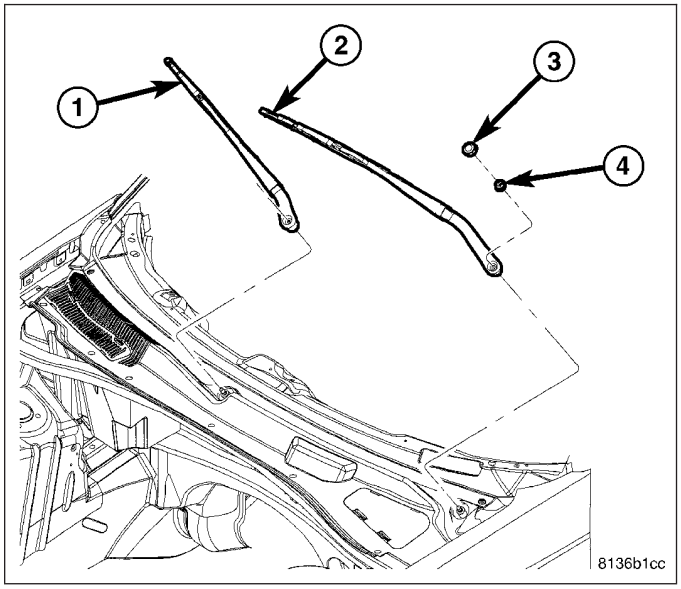

REAR WIPER ARM - WAGON

1. Install wiper arm (3).
2. Install retaining nut (1). Torque nut to 18 N·m (13 ft. lbs.).
3. install nut cap (2).

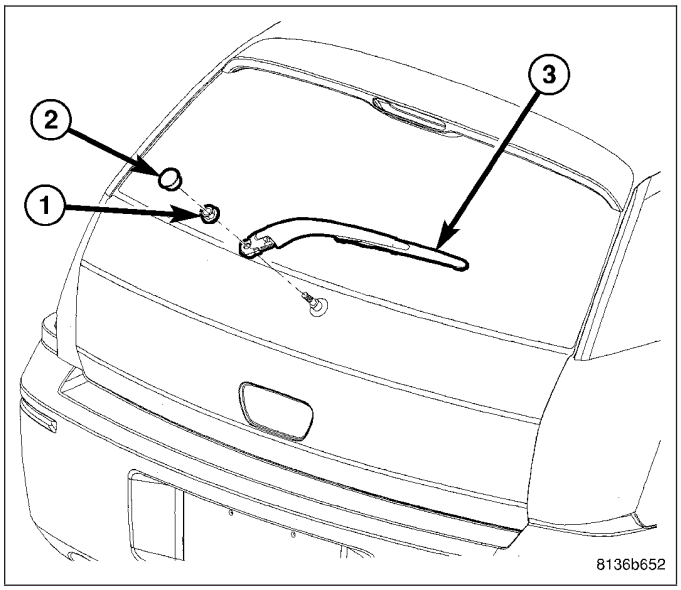

NAVIGATION/TELECOMMUNICATION

TABLE OF CONTENTS

page

NAVIGATION/TELECOMMUNICATION - ELECTRICAL DIAGNOSTICS 1

page

NAVIGATION/TELECOMMUNICATION - SERVICE INFORMATION 55

NAVIGATION/TELECOMMUNICATION - ELECTRICAL DIAGNOSTICS

TABLE OF CONTENTS

page

NAVIGATION/TELECOMMUNICATION - ELECTRICAL DIAGNOSTICS
DIAGNOSIS AND TESTING
B1411-HFM LEFT AUDIO OUTPUT CIRCUIT LOW 4
B1412-HFM LEFT AUDIO OUTPUT CIRCUIT HIGH 8
B1415-HFM RIGHT AUDIO OUTPUT CIRCUIT LOW 11
B1416-HFM RIGHT AUDIO OUTPUT CIRCUIT HIGH. 15
B1435-VOICE RECOGNITION/PHONE SWITCH INPUT CIRCUIT PERFORMANCE . . . 18
B1436-VOICE RECOGNITION/PHONE SWITCH INPUT CIRCUIT LOW 20
B1437-VOICE RECOGNITION/PHONE SWITCH INPUT CIRCUIT HIGH 23
B1438–VOICE RECOGNITION SWITCH STUCK. 27
B1439-PHONE SWITCH STUCK 29
B145A-TELEMATICS MIRROR CONTROL CIRCUIT HIGH. 31
B1459-TELEMATICS MIRROR CONTROL CIRCUIT LOW 34
B1492–GENERAL MICROPHONE PERFORMANCE 37
B2203–ROM CHECKSUM PERFORMANCE . . . 43
B222A-VEHICLE LINE MISMATCH 44
B222E–FLASH CHECKSUM PERFORMANCE . 45
B222F–FLASH WRITE PERFORMANCE 46
B2223-(HFM) HANDS FREE PHONE INTERNAL 47
B2230–RAM WRITE PERFORMANCE 48
U0019–CAN B BUS 49

page

U0141–LOST COMMUNICATION WITH FRONT CONTROL MODULE 52
U0151-LOST COMMUNICATION WITH OCCUPANT RESTRAINT CONTROLLER 52
U0154-LOST COMMUNICATION WITH OCCUPANT CLASSIFICATION MODULE 52
U0155-LOST COMMUNICATION WITH CLUSTER/CCN 52
U0156-LOST COMMUNICATION WITH EOM . . . 52
U0159-LOST COMMUNICATION WITH PARKING ASSIST CONTROL MODULE 52
U0164-LOST COMMUNICATION WITH HVAC CONTROL MODULE 52
U0168-LOST COMMUNICATION WITH VEHICLE SECURITY CONTROL MODULE (SKREEM/WCM) 52
U0169-LOST COMMUNICATION WITH SUNROOF CONTROL MODULE. 52
U0181-LOST COMMUNICATION WITH HEADLAMP LEVELING TRANSLATOR 53
U0184-LOST COMMUNICATION WITH RADIO 53
U0186-LOST COMMUNICATION WITH AUDIO AMPLIFIER 53
U0195-LOST COMMUNICATION WITH SDARS 53
U0196-LOST COMMUNICATION WITH VEHICLE ENTERTAINMENT CONTROL MODULE. 53
U0199-LOST COMMUNICATION WITH DRIVER DOOR MODULE 53
U0200-LOST COMMUNICATION WITH PASSENGER DOOR MODULE 53
U0208-LOST COMMUNICATION WITH HEATED SEAT CONTROL MODULE 53

U0209-LOST COMMUNICATION WITH MEMORY SEAT CONTROL MODULE 54
U0212-LOST COMMUNICATION WITH SCCM - CAN B 54
U0231-LOST COMMUNICATION WITH RAIN SENSING MODULE 54

NAVIGATION/TELECOMMUNICATION - ELECTRICAL DIAGNOSTICS

DIAGNOSIS AND TESTING

B1411-HFM LEFT AUDIO OUTPUT CIRCUIT LOW

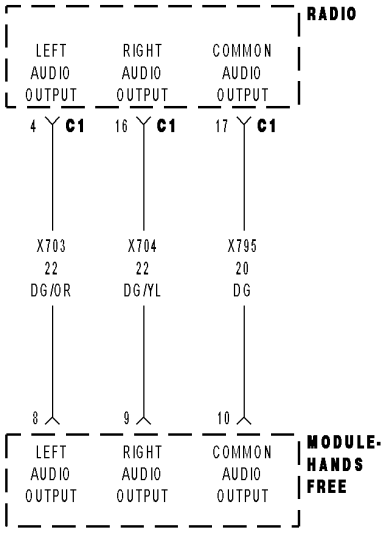

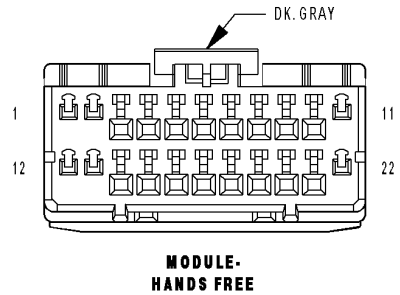

MODULE-HANDS FREE

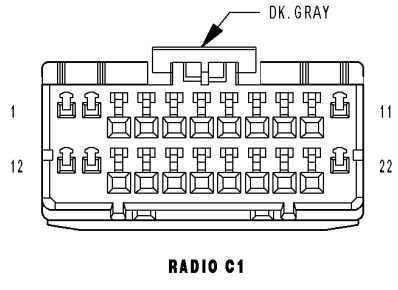

RADIO C1

8134a1ee

For a complete wiring diagram **Refer to Section 8W**.

- **When Monitored:**
  With the ignition on.
- **Set Condition:**
  The Hands Free Module detects low voltage on the (X703) Left Audio Output circuit.

Possible Causes
(X703) LEFT AUDIO OUTPUT CIRCUIT OPEN
(X703) LEFT AUDIO OUTPUT CIRCUIT SHORT TO GROUND
(X795) COMMON AUDIO OUTPUT CIRCUIT OPEN
(X703) LEFT AUDIO OUTPUT CIRCUIT SHORT TO (X795) COMMON AUDIO OUTPUT CIRCUIT
HANDS FREE MODULE

Diagnostic Test

1. CHECK FOR ACTIVE DTC

With the scan tool, read the active DTC's.

Cycle the ignition switch from off to on at least 5 times, leaving the ignition on for a minimum of 90 seconds per cycle.

With the scan tool, read the active DTC's.

Does the scan tool display this DTC as active?

Yes >> Go To 2

No >> If the DTC is stored, check for an intermittent condition. Visually inspect the related wiring harness connectors. Look for broken, bent, pushed out, or corroded terminals.

2. (X703) LEFT AUDIO OUTPUT CIRCUIT OPEN

Turn the ignition off.

Disconnect the Hands Free Module harness connector.

Disconnect the Radio C1 harness connector.

Measure the resistance of the (X703) Left Audio Output circuit between the HFM connector and the radio connector.

Is the resistance below 5.0 ohms?

Yes >> Go To 3

No >> Repair the (X703) Left Audio Output circuit for an open
Perform BODY VERIFICATION TEST – VER 1. (Refer to BODY VERIFICATION TEST – VER 1).

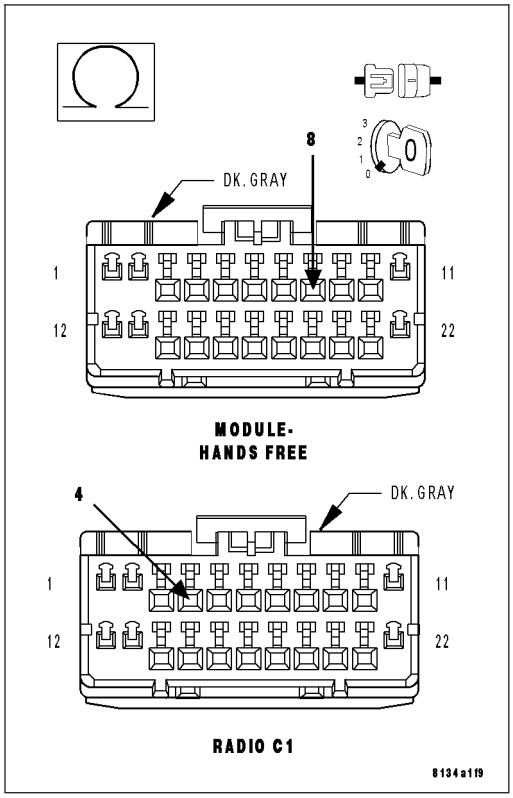

3. (X703) LEFT AUDIO OUTPUT CIRCUIT SHORT TO GROUND

Measure the resistance between ground and the (X703) Left Audio Output circuit.

Is the resistance below 5.0 ohms?

Yes >> Repair the (X703) Left Audio Output circuit for short to ground.
Perform BODY VERIFICATION TEST – VER 1. (Refer to BODY VERIFICATION TEST – VER 1).

No >> Go To 4

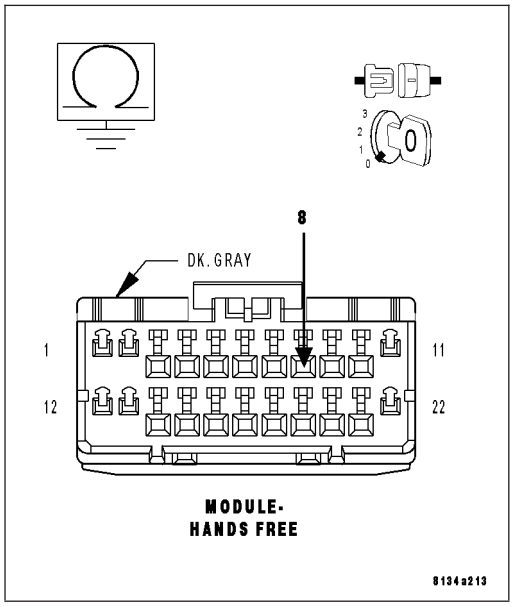

4. (X795) COMMON AUDIO OUTPUT CIRCUIT OPEN

Measure the resistance of the (X795) Common Audio Output circuit between the HFM connector and the radio connector.

Is the resistance below 5.0 ohms?

Yes >> Go To 5

No >> Repair the (X795) Common Audio Output circuit for an open.
Perform BODY VERIFICATION TEST – VER 1. (Refer to BODY VERIFICATION TEST – VER 1).

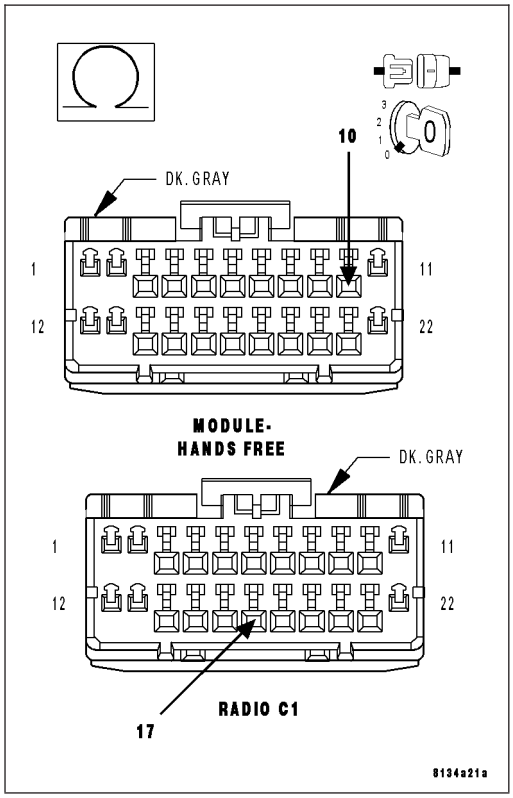

5. (X703) LEFT AUDIO OUTPUT CIRCUIT SHORT TO (X795) COMMON AUDIO OUTPUT CIRCUIT

Measure the resistance between the (X703) Left Audio Output circuit and the (X795) Common Audio Output circuit.

Is the resistance below 5.0 ohms?

Yes >> Repair the (X703) Left Audio Output circuit for a short to the (X795) Common Audio Output circuit.

Perform BODY VERIFICATION TEST – VER 1. (Refer to BODY VERIFICATION TEST – VER 1).

No >> Inspect the wiring and connectors for damage or shorted circuits. If ok, replace and program the Hands Free Module in accordance with the service information.

Perform BODY VERIFICATION TEST – VER 1. (Refer to BODY VERIFICATION TEST – VER 1).

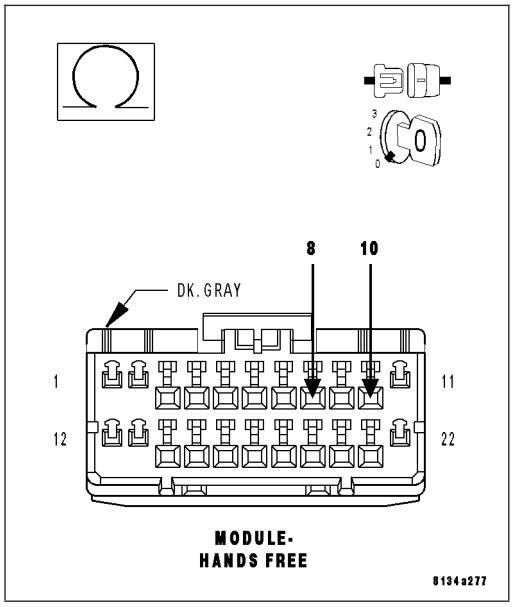

B1412-HFM LEFT AUDIO OUTPUT CIRCUIT HIGH

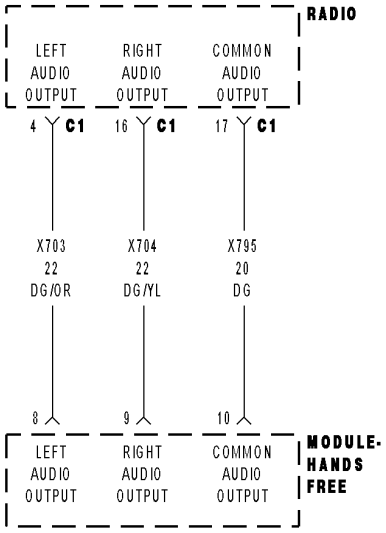

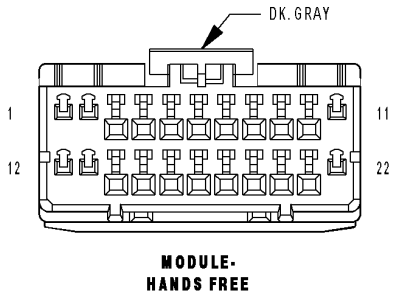

MODULE-HANDS FREE

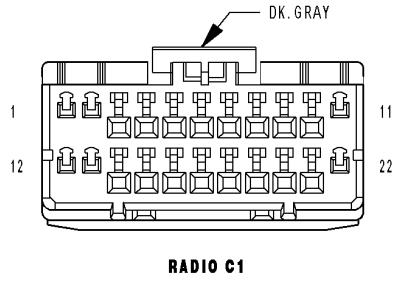

RADIO C1

8134a1ee

For a complete wiring diagram **Refer to Section 8W**.

- **When Monitored:**
  With the ignition on.
- **Set Condition:**
  The Hands Free Module detects high voltage on the (X703) Left Audio Output circuit.

Possible Causes
(X703) LEFT AUDIO OUTPUT CIRCUIT OPEN
(X795) COMMON AUDIO OUTPUT CIRCUIT OPEN
(X703) LEFT AUDIO OUTPUT CIRCUIT SHORT TO VOLTAGE
HANDS FREE MODULE

Diagnostic Test

1. CHECK FOR ACTIVE DTC

With the scan tool, read the active DTC's.

Cycle the ignition switch from off to on at least 5 times, leaving the ignition on for a minimum of 90 seconds per cycle.

With the scan tool, read the active DTC's.

Does the scan tool display this DTC as active?

Yes >> Go To 2

No >> If the DTC is stored, check for an intermittent condition. Visually inspect the related wiring harness connectors. Look for broken, bent, pushed out, or corroded terminals.

2. (X703) LEFT AUDIO OUTPUT CIRCUIT OPEN

Turn the ignition off.

Disconnect the Hands Free Module harness connector.

Disconnect the Radio C1 harness connector.

Measure the resistance of the (X703) Left Audio Output circuit between the HFM connector and the radio connector.

Is the resistance below 5.0 ohms?

Yes >> Go To 3

No >> Repair the (X703) Left Audio Output circuit for an open
Perform BODY VERIFICATION TEST – VER 1. (Refer to BODY VERIFICATION TEST – VER 1).

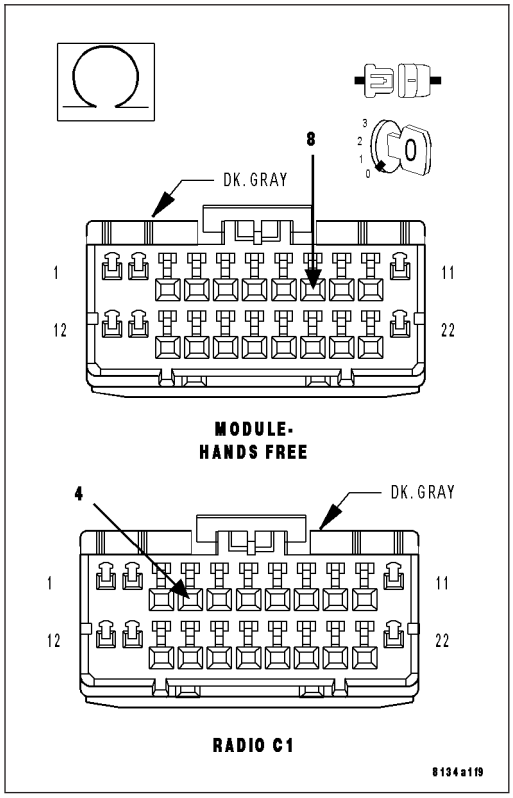

3. (X795) COMMON AUDIO OUTPUT CIRCUIT OPEN

Measure the resistance of the (X795) Common Audio Output circuit between the HFM connector and the radio connector.

Is the resistance below 5.0 ohms?

Yes >> Go To 4

No >> Repair the (X795) Common Audio Output circuit for an open.

Perform BODY VERIFICATION TEST – VER 1. (Refer to BODY VERIFICATION TEST – VER 1).

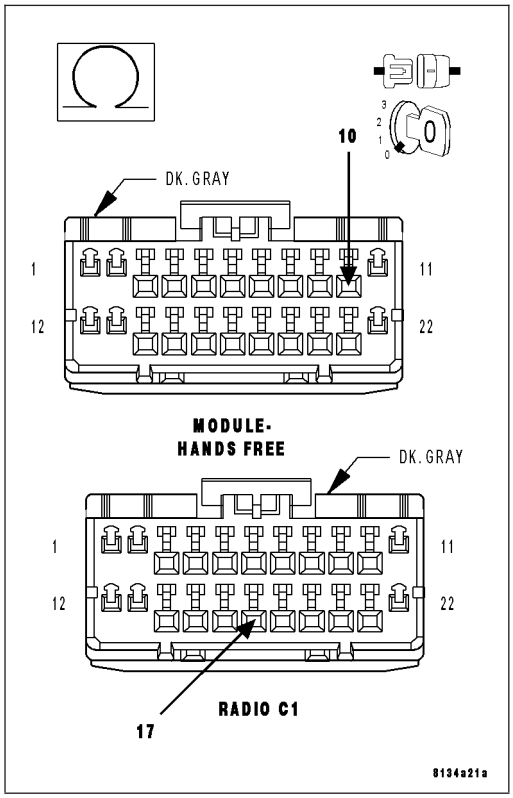

4. (X703) LEFT AUDIO OUTPUT CIRCUIT SHORT TO VOLTAGE

Turn the ignition on.

Measure the voltage of the (X703) Left Audio Output circuit.

Is the voltage above 1.0 volts?

Yes >> Repair the (X703) Left Audio Output circuit for a short to voltage.

Perform BODY VERIFICATION TEST – VER 1. (Refer to BODY VERIFICATION TEST – VER 1).

No >> Inspect the wiring and connectors for damage or shorted circuits. If ok, replace and program the Hands Free Module in accordance with the service information.

Perform BODY VERIFICATION TEST – VER 1. (Refer to BODY VERIFICATION TEST – VER 1).

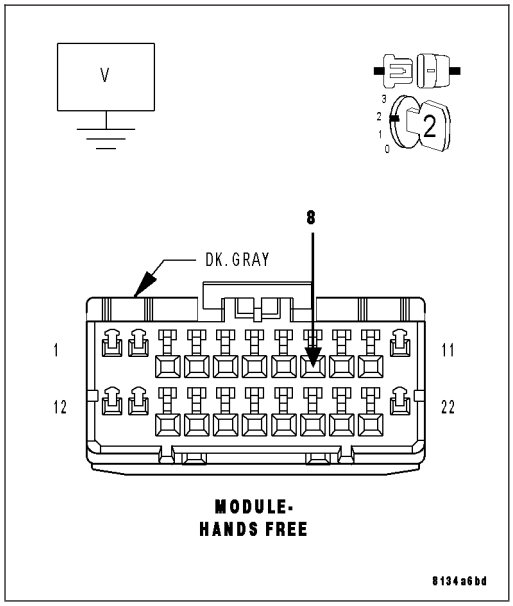

B1415-HFM RIGHT AUDIO OUTPUT CIRCUIT LOW

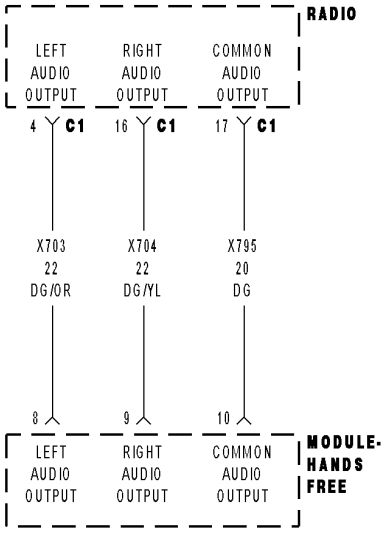

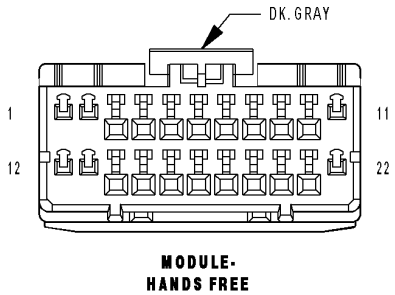

MODULE-HANDS FREE

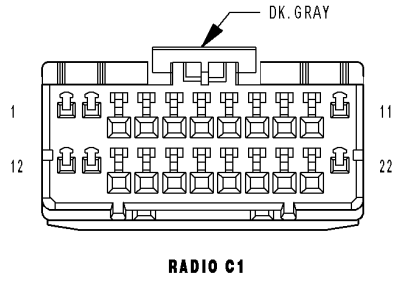

RADIO C1

8134a1ee

For a complete wiring diagram **Refer to Section 8W**.

- **When Monitored:**
  With the ignition on.
- **Set Condition:**
  The Hands Free Module detects low voltage on the (X704) Right Audio Output circuit.

Possible Causes
(X704) RIGHT AUDIO OUTPUT CIRCUIT OPEN
(X704) RIGHT AUDIO OUTPUT CIRCUIT SHORT TO GROUND
(X795) COMMON AUDIO OUTPUT CIRCUIT OPEN
(X704) RIGHT AUDIO OUTPUT CIRCUIT SHORT TO (X795) COMMON AUDIO OUTPUT CIRCUIT
HANDS FREE MODULE

Diagnostic Test

1. CHECK FOR ACTIVE DTC

With the scan tool, read the active DTC's.

Cycle the ignition switch from off to on at least 5 times, leaving the ignition on for a minimum of 90 seconds per cycle.

With the scan tool, read the active DTC's.

Does the scan tool display this DTC as active?

Yes >> Go To 2

No >> If the DTC is stored, check for an intermittent condition. Visually inspect the related wiring harness connectors. Look for broken, bent, pushed out, or corroded terminals.

2. (X704) RIGHT AUDIO OUTPUT CIRCUIT OPEN

Turn the ignition off.

Disconnect the Hands Free Module harness connector.

Disconnect the Radio C1 harness connector.

Measure the resistance of the (X704) Right Audio Output circuit between the HFM connector and the radio connector.

Is the resistance below 5.0 ohms?

Yes >> Go To 3

No >> Repair the (X704) Right Audio Output circuit for an open. Perform BODY VERIFICATION TEST – VER 1. (Refer to BODY VERIFICATION TEST – VER 1).

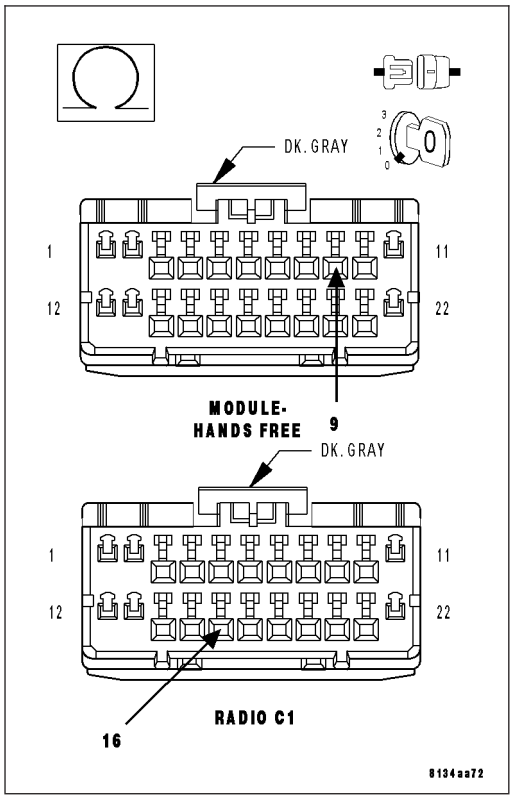

3. (X704) RIGHT AUDIO OUTPUT CIRCUIT SHORT TO GROUND

Measure the resistance between ground and the (X704) Right Audio Output circuit.

Is the resistance below 5.0 ohms?

Yes >> Repair the (X704) Right Audio Output circuit for short to ground.
Perform BODY VERIFICATION TEST – VER 1. (Refer to BODY VERIFICATION TEST – VER 1).

No >> Go To 4

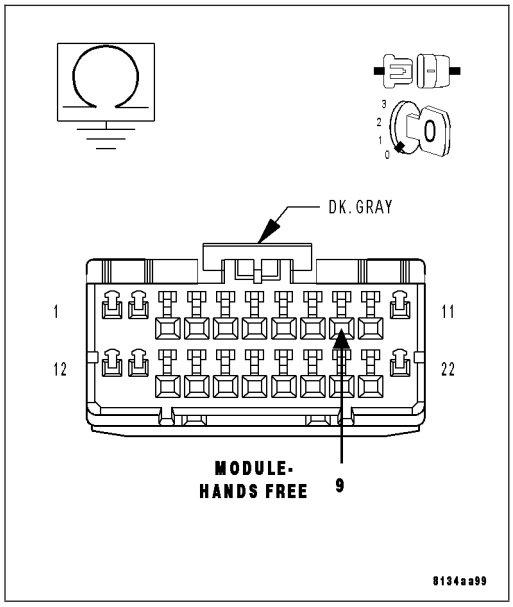

4. (X795) COMMON AUDIO OUTPUT CIRCUIT OPEN

Measure the resistance of the (X795) Common Audio Output circuit between the HFM connector and the radio connector.

Is the resistance below 5.0 ohms?

Yes >> Go To 5

No >> Repair the (X795) Common Audio Output circuit for an open.
Perform BODY VERIFICATION TEST – VER 1. (Refer to BODY VERIFICATION TEST – VER 1).

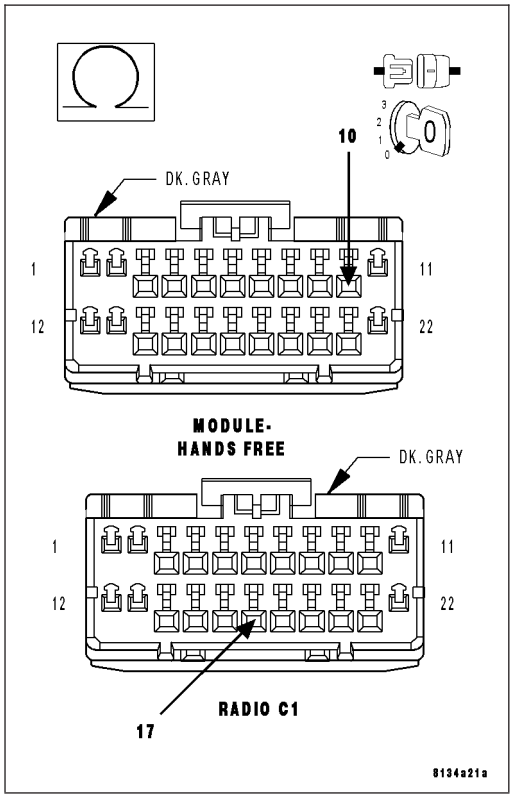

5. (X704) RIGHT AUDIO OUTPUT CIRCUIT SHORT TO (X795) COMMON AUDIO OUTPUT CIRCUIT

Measure the resistance between the (X704) Right Audio Output circuit and the (X795) Common Audio Output circuit.

Is the resistance below 5.0 ohms?

Yes >> Repair the (X704) Right Audio Output circuit for a short to the (X795) Common Audio Output circuit.

Perform BODY VERIFICATION TEST – VER 1. (Refer to BODY VERIFICATION TEST – VER 1).

No >> Inspect the wiring and connectors for damage or shorted circuits. If ok, replace and program the Hands Free Module in accordance with the service information.

Perform BODY VERIFICATION TEST – VER 1. (Refer to BODY VERIFICATION TEST – VER 1).

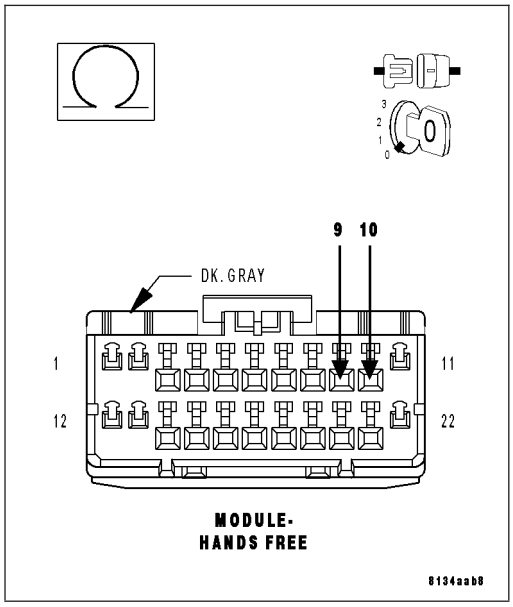

B1416-HFM RIGHT AUDIO OUTPUT CIRCUIT HIGH

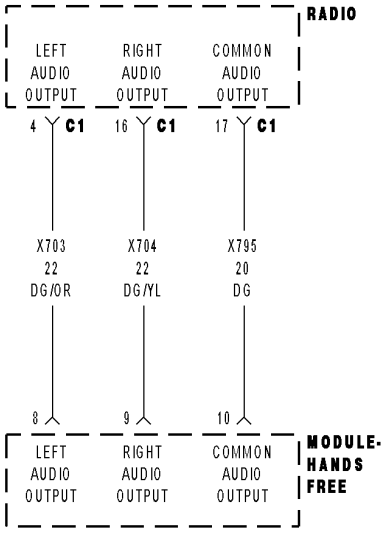

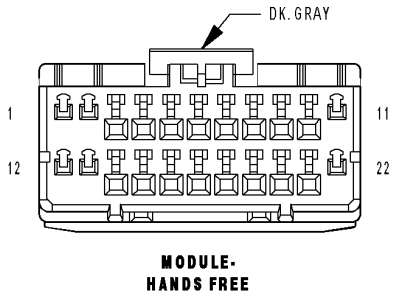

MODULE-HANDS FREE

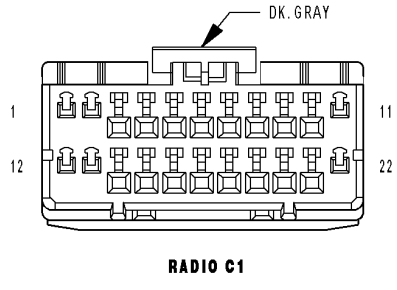

RADIO C1

8134a1ee

For a complete wiring diagram **Refer to Section 8W**.

- **When Monitored:**
  With the ignition on.
- **Set Condition:**
  The Hands Free Module detects high voltage on the (X704) Right Audio Output circuit.

Possible Causes
(X704) RIGHT AUDIO OUTPUT CIRCUIT OPEN
(X795) COMMON AUDIO OUTPUT CIRCUIT OPEN
(X704) RIGHT AUDIO OUTPUT CIRCUIT SHORT TO VOLTAGE
HANDS FREE MODULE

Diagnostic Test

1. CHECK FOR ACTIVE DTC

With the scan tool, read the active DTC's.

Cycle the ignition switch from off to on at least 5 times, leaving the ignition on for a minimum of 90 seconds per cycle.

With the scan tool, read the active DTC's.

Does the scan tool display this DTC as active?

Yes >> Go To 2

No >> If the DTC is stored, check for an intermittent condition. Visually inspect the related wiring harness connectors. Look for broken, bent, pushed out, or corroded terminals.

2. (X704) RIGHT AUDIO OUTPUT CIRCUIT OPEN

Turn the ignition off.

Disconnect the Hands Free Module harness connector.

Disconnect the Radio C1 harness connector.

Measure the resistance of the (X704) Right Audio Output circuit between the HFM connector and the radio connector.

Is the resistance below 5.0 ohms?

Yes >> Go To 3

No >> Repair the (X704) Right Audio Output circuit for an open. Perform BODY VERIFICATION TEST – VER 1. (Refer to BODY VERIFICATION TEST – VER 1).

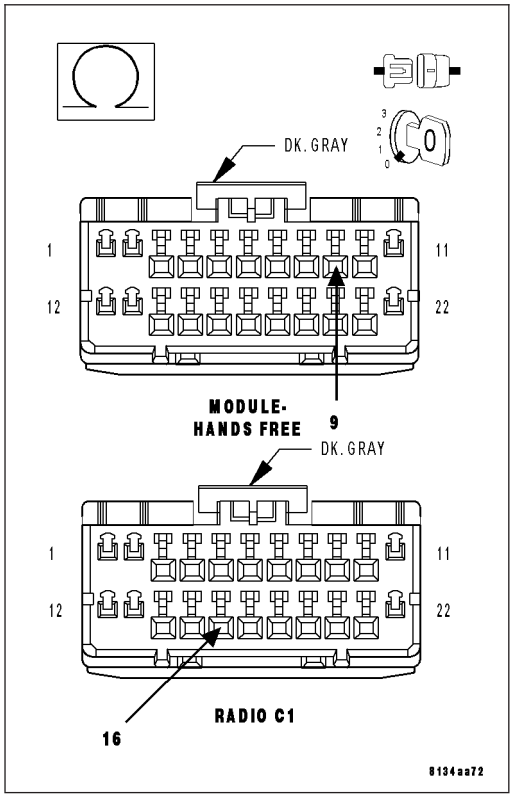

3. (X795) COMMON AUDIO OUTPUT CIRCUIT OPEN

Measure the resistance of the (X795) Common Audio Output circuit between the HFM connector and the radio connector.

Is the resistance below 5.0 ohms?

Yes >> Go To 4

No >> Repair the (X795) Common Audio Output circuit for an open.

Perform BODY VERIFICATION TEST – VER 1. (Refer to BODY VERIFICATION TEST – VER 1).

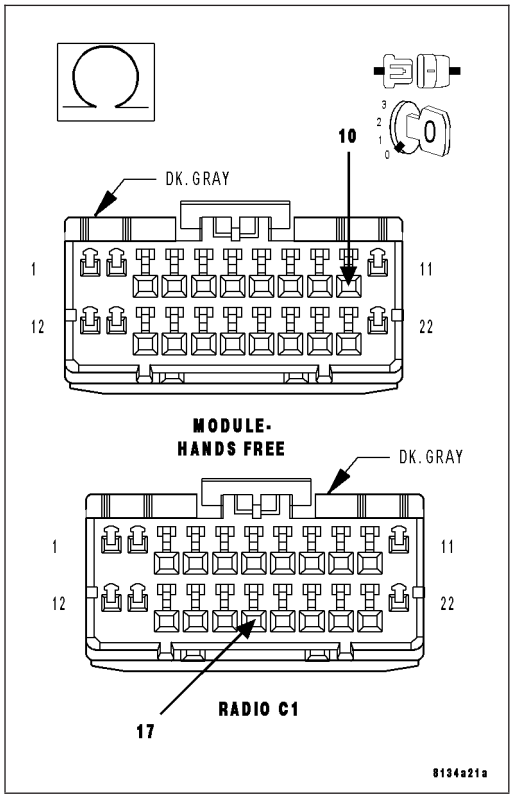

4. (X704) RIGHT AUDIO OUTPUT CIRCUIT SHORT TO VOLTAGE

Turn the ignition on.

Measure the voltage of the (X704) Right Audio Output circuit.

Is the voltage above 1.0 volts?

Yes >> Repair the (X704) Right Audio Output circuit for a short to voltage.

Perform BODY VERIFICATION TEST – VER 1. (Refer to BODY VERIFICATION TEST – VER 1).

No >> Inspect the wiring and connectors for damage or shorted circuits. If ok, replace and program the Hands Free Module in accordance with the service information.

Perform BODY VERIFICATION TEST – VER 1. (Refer to BODY VERIFICATION TEST – VER 1).

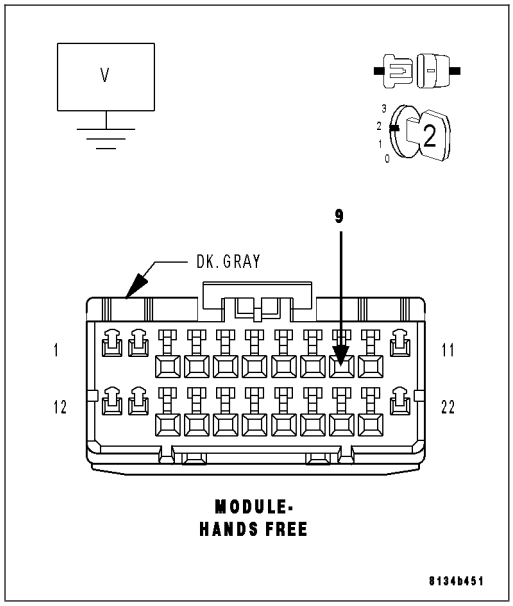

B1435-VOICE RECOGNITION/PHONE SWITCH INPUT CIRCUIT PERFORMANCE

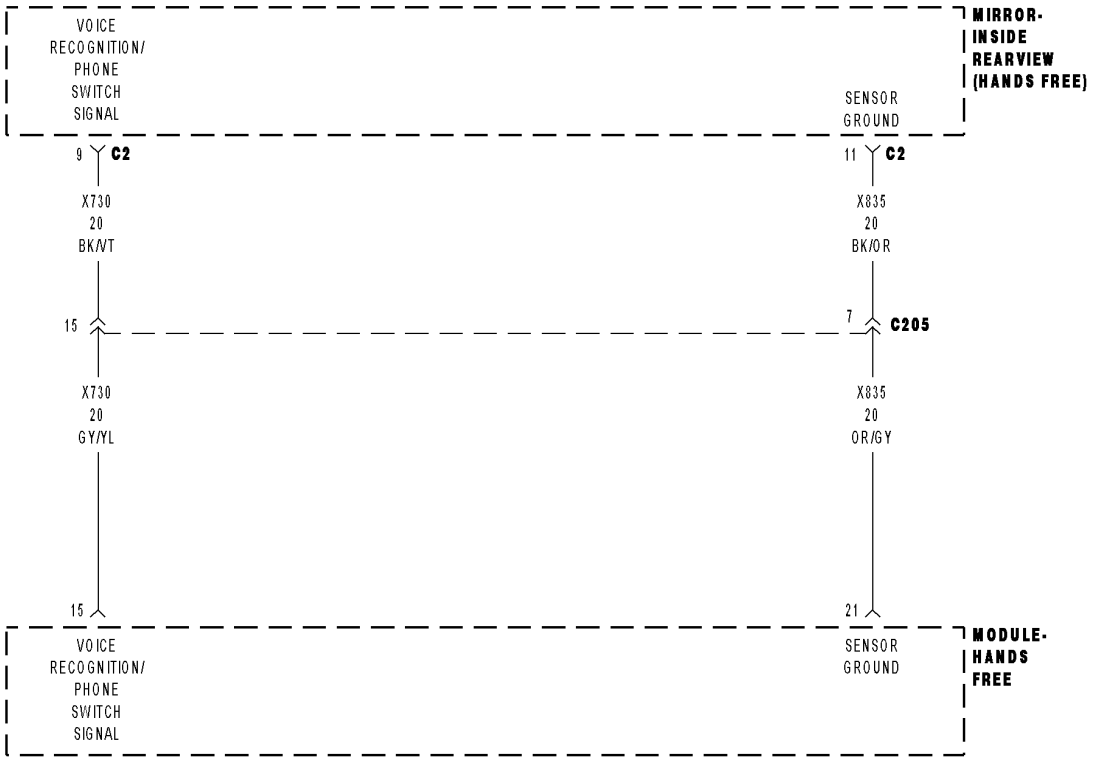

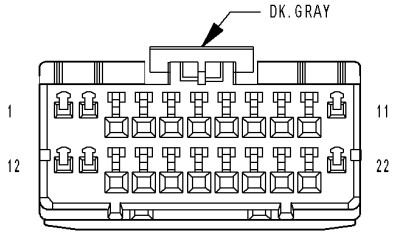

MODULE-
HANDS FREE

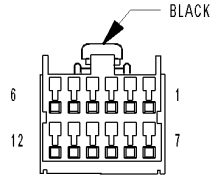

MIRROR-
INSIDE
REARVIEW C2
(HANDS FREE)

8134b708

For a complete wiring diagram **Refer to Section 8W**.

- **When Monitored:**
  With the ignition on.
- **Set Condition:**
  The Hands Free Module detects an invalid voltage signal on the (X730) Voice Recognition/Phone Switch Signal circuit.

Possible Causes
INSIDE REAR VIEW MIRROR
HANDS FREE MODULE

Diagnostic Test

1. CHECK FOR ACTIVE DTC

With the scan tool, read the active DTC's.

Cycle the ignition switch from off to on at least 5 times, leaving the ignition on for a minimum of 90 seconds per cycle.

With the scan tool, read the active DTC's.

Does the scan tool display this DTC as active?

Yes >> Go To 2

No >> If the DTC is stored, check for an intermittent condition. Visually inspect the related wiring harness connectors. Look for broken, bent, pushed out, or corroded terminals.

2. CHECK THE VOLTAGE OF THE (X730) VOICE RECOGNITION/PHONE SWITCH SIGNAL

Turn the ignition off.

Disconnect the Inside Rear View Mirror C2 harness connector.

Turn the ignition on.

With the scan tool, monitor the VR Phone Switch voltage.

While monitoring the VR Phone Switch voltage, momentarily connect a jumper wire between the (X730) Voice Recognition/Phone Switch Signal circuit and ground.

NOTE: The scan tool sensor voltage should switch from above 4.7 volts when the jumper is not connected to below 0.6 volts when the jumper is connected.

Does the sensor voltage switch from above 4.7 volts to below 0.6 volt as described?

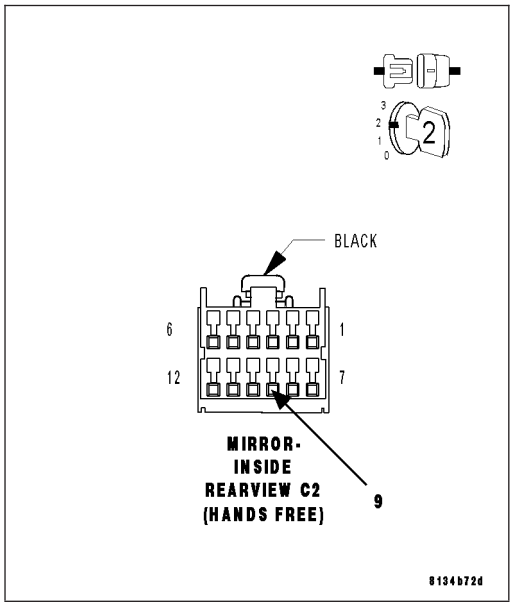

Yes >> Replace the Inside Rear View Mirror in accordance with the service information.
Perform BODY VERIFICATION TEST – VER 1. (Refer to BODY VERIFICATION TEST – VER 1).

No >> Inspect the wiring and connectors for damage or shorted circuits. If ok, replace and program the Hands Free Module in accordance with the service information.
Perform BODY VERIFICATION TEST – VER 1. (Refer to BODY VERIFICATION TEST – VER 1).

B1436-VOICE RECOGNITION/PHONE SWITCH INPUT CIRCUIT LOW

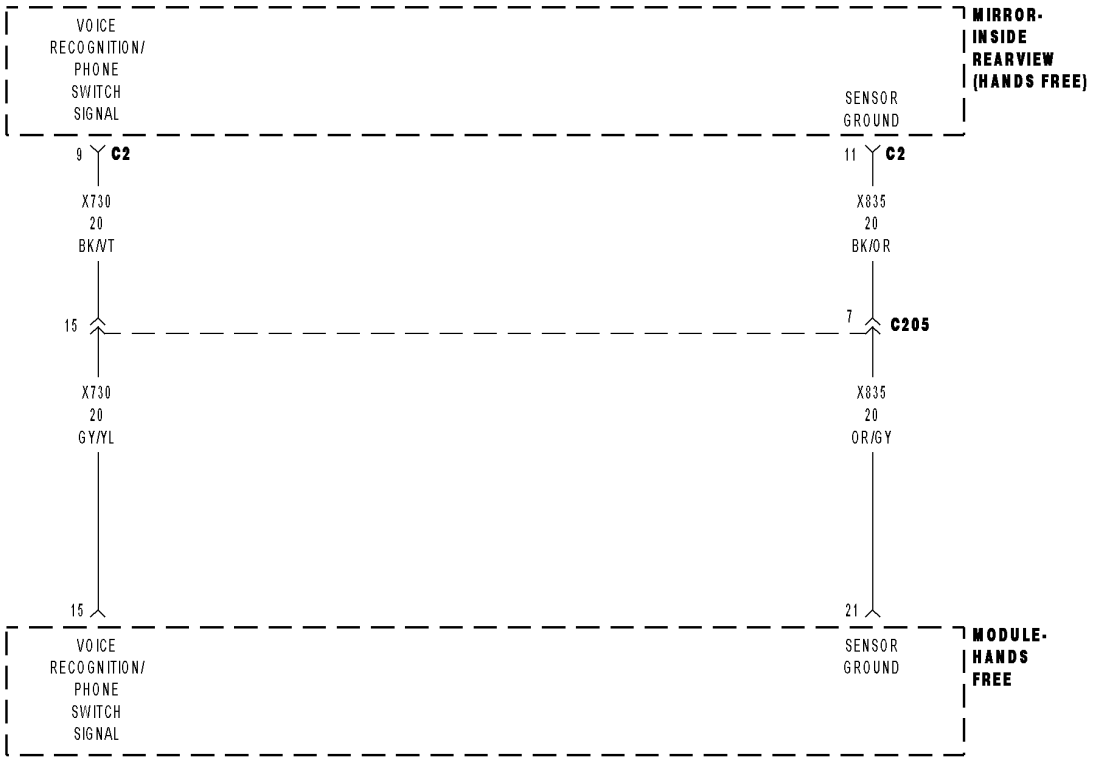

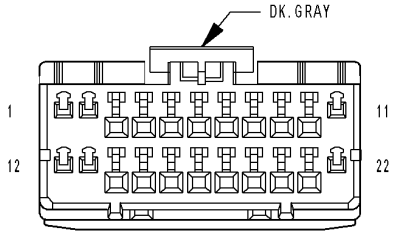

MODULE-
HANDS FREE

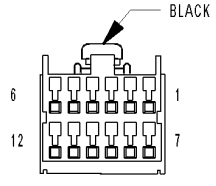

MIRROR-
INSIDE
REARVIEW C2
(HANDS FREE)

8134b708

For a complete wiring diagram **Refer to Section 8W**.

- **When Monitored:**
  With the ignition on.
- **Set Condition:**
  The Hands Free Module detects voltage below 0.6 volts on the (X730) Voice Recognition/Phone Switch Signal circuit.

Possible Causes
INSIDE REAR VIEW MIRROR
(X730) VOICE RECOGNITION/PHONE SWITCH SIGNAL CIRCUIT SHORT TO (X835) SENSOR GROUND CIRCUIT
(X730) VOICE RECOGNITION/PHONE SWITCH SIGNAL CIRCUIT SHORT TO GROUND
HANDS FREE MODULE

Diagnostic Test

1. Check for active DTC

With the scan tool, read the active DTC's.

Cycle the ignition switch from off to on at least 5 times, leaving the ignition on for a minimum of 90 seconds per cycle.

With the scan tool, read the active DTC's.

Does the scan tool display this DTC as active?

Yes >> Go To 2

No >> If the DTC is stored, check for an intermittent condition. Visually inspect the related wiring harness connectors. Look for broken, bent, pushed out, or corroded terminals.

2. CHECK THE VOLTAGE OF THE (X730) VOICE RECOGNITION/PHONE SWITCH SIGNAL

Turn the ignition off.

Disconnect the Inside Rear View Mirror C2 harness connector.

Turn the ignition on.

With the scan tool, monitor the VR Phone Switch voltage.

Is the voltage above 4.7 volts?

Yes >> Replace the Inside Rear View Mirror in accordance with the service information.

Perform BODY VERIFICATION TEST – VER 1. (Refer to BODY VERIFICATION TEST – VER 1).

No >> Go To 3

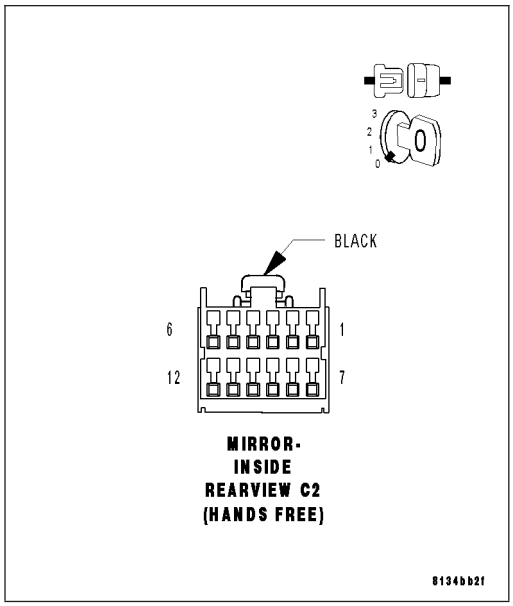

3. (X730) VOICE/RECOGNITION/PHONE SWITCH SIGNAL CIRCUIT SHORTED TO THE (X835) SENSOR GROUND CIRCUIT

Turn the ignition off.

Disconnect the Hands Free Module harness connector.

Measure the resistance between the (X730) Voice Recognition/Phone Switch Signal circuit and the (X835) Sensor Ground circuit.

Is the resistance below 100.0 ohms?

Yes >> Repair the (X730) Voice Recognition/Phone Switch Signal circuit for a short to the (X835) Sensor Ground circuit.

Perform BODY VERIFICATION TEST – VER 1. (Refer to BODY VERIFICATION TEST – VER 1).

No >> Go To 4

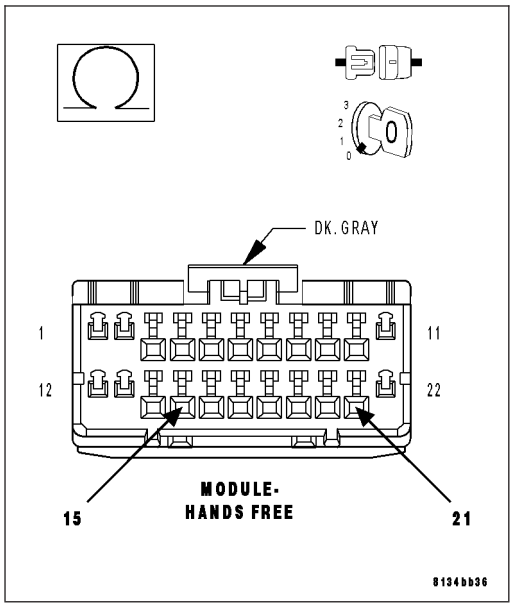

4. (X730) VOICE/RECOGNITION/PHONE SWITCH SIGNAL CIRCUIT SHORTED TO GROUND

Measure the resistance between ground and the (X730) Voice Recognition/Phone Switch Signal circuit.

Is the resistance below 100.0 ohms?

Yes >> Repair the (X730) Voice Recognition/Phone Switch Signal circuit for a short to ground.

Perform BODY VERIFICATION TEST – VER 1. (Refer to BODY VERIFICATION TEST – VER 1).

No >> Inspect the wiring and connectors for damage or shorted circuits. If ok, replace and program the Hands Free Module in accordance with the service information.

Perform BODY VERIFICATION TEST – VER 1. (Refer to BODY VERIFICATION TEST – VER 1).

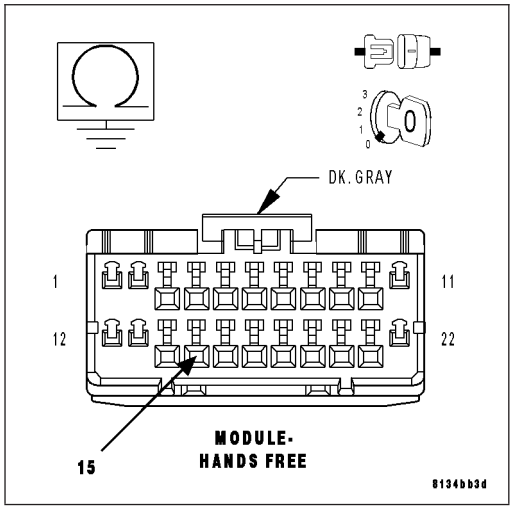

B1437-VOICE RECOGNITION/PHONE SWITCH INPUT CIRCUIT HIGH

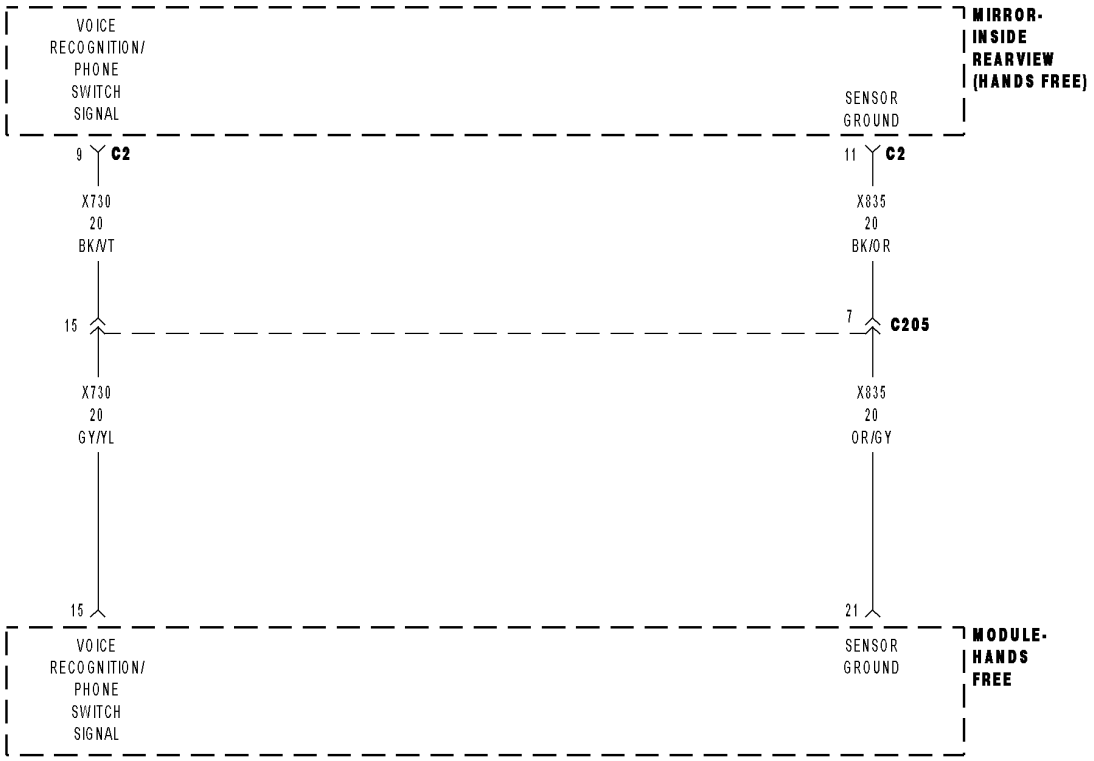

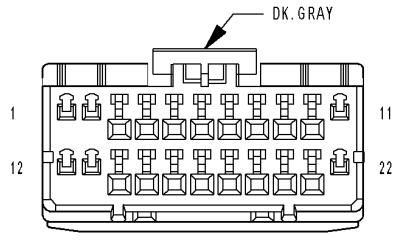

MODULE-
HANDS FREE

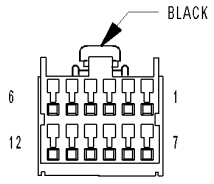

MIRROR-
INSIDE
REARVIEW C2
(HANDS FREE)

8134b708

For a complete wiring diagram **Refer to Section 8W**.

- **When Monitored:**
  With the ignition on.
- **Set Condition:**
  The Hands Free Module detects voltage above 4.7 volts on the (X730) Voice Recognition/Phone Switch Signal circuit.

Possible Causes
(X730) VOICE RECOGNITION/PHONE SWITCH SIGNAL CIRCUIT SHORT TO VOLTAGE
(X730) VOICE RECOGNITION/PHONE SWITCH SIGNAL CIRCUIT OPEN
(X835) SENSOR GROUND CIRCUIT OPEN
INSIDE REAR VIEW MIRROR
HANDS FREE MODULE

Diagnostic Test

1. CHECK FOR ACTIVE DTC

With the scan tool, read the active DTC's.

Cycle the ignition switch from off to on at least 5 times, leaving the ignition on for a minimum of 90 seconds per cycle.

With the scan tool, read the active DTC's.

Does the scan tool display this DTC as active?

Yes >> Go To 2

No >> If the DTC is stored, check for an intermittent condition. Visually inspect the related wiring harness connectors. Look for broken, bent, pushed out, or corroded terminals.

2. CHECK THE VOLTAGE OF THE (X730) VOICE RECOGNITION/PHONE SWITCH SIGNAL

Turn the ignition off.

Disconnect the Inside Rear View Mirror C2 harness connector.

Turn the ignition on.

Measure the voltage of the (X730) Voice Recognition/Phone Switch Signal circuit.

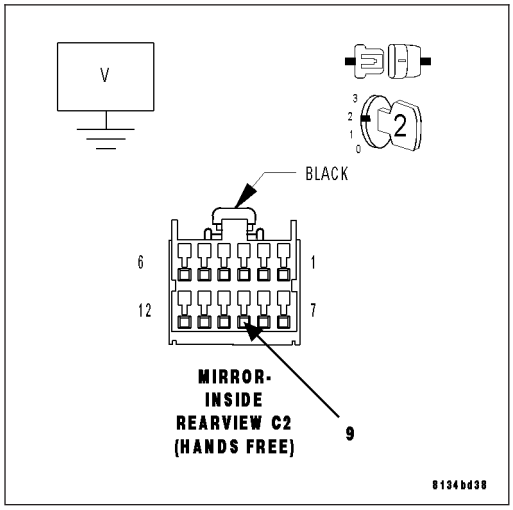

Is the voltage above 5.3 volts?

Yes >> Repair the (X730) Voice Recognition/Phone Switch Signal circuit for a short to voltage.

Perform BODY VERIFICATION TEST – VER 1. (Refer to BODY VERIFICATION TEST – VER 1).

No >> Go To 3

3. INSIDE REAR VIEW MIRROR

Turn the ignition off.

Connect a jumper wire between (X730) Voice Recognition/Phone Switch Signal circuit and the (X835) Sensor Ground circuit.

Turn the ignition on.

With the scan tool, monitor the VR Phone Switch Voltage.

Is the voltage approximately 0 volts?

Yes >> Replace the Inside Rear View Mirror in accordance with the service information.
Perform BODY VERIFICATION TEST – VER 1. (Refer to BODY VERIFICATION TEST – VER 1).

No >> Go To 4

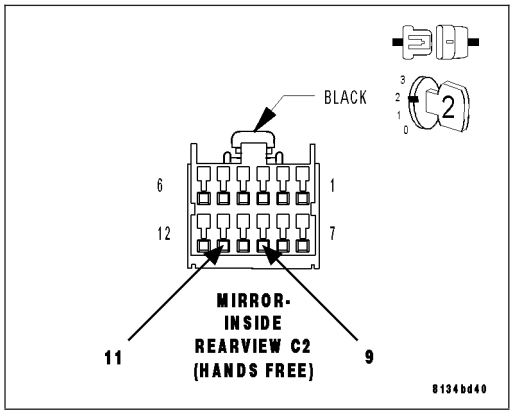

4. (X730) VOICE RECOGNITION/PHONE SWITCH SIGNAL CIRCUIT OPEN

Turn the ignition off.

Disconnect the Hands Free Module harness connector.

Measure the resistance of the (X730) Voice Recognition/Phone Switch Signal circuit between the HFM connector and the inside rear view mirror connector.

Is the resistance below 5.0 ohms?

Yes >> Go To 5

No >> Repair the (X730) Voice Recognition/Phone Switch Signal circuit for an open.
Perform BODY VERIFICATION TEST – VER 1. (Refer to BODY VERIFICATION TEST – VER 1).

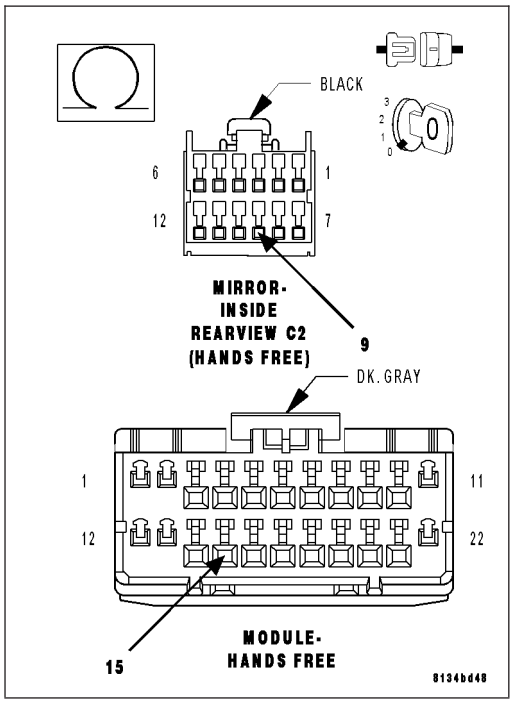

5. (X835) SENSOR GROUND CIRCUIT OPEN

Measure the resistance of the (X835) Sensor Ground circuit between the HFM connector and the inside rear view mirror connector.

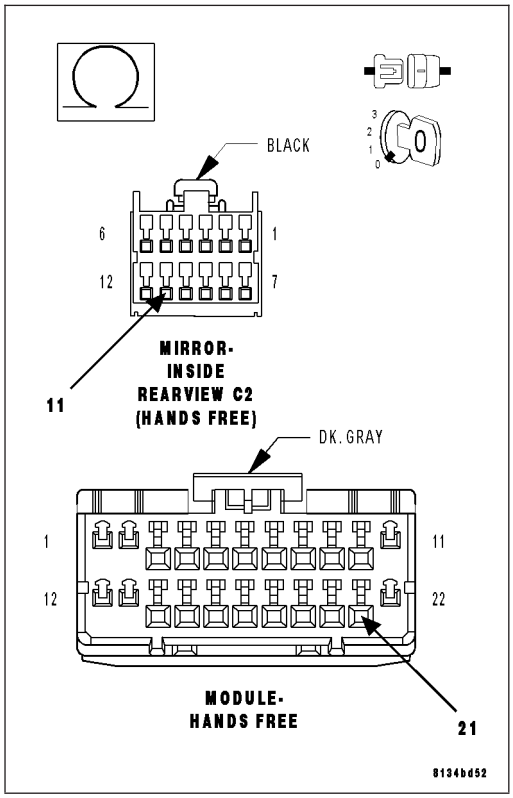

Is the resistance below 5.0 ohms?

Yes >> Inspect the wiring and connectors for damage or shorted circuits. If ok, replace and program the Hands Free Module in accordance with the service information.

Perform BODY VERIFICATION TEST – VER 1. (Refer to BODY VERIFICATION TEST – VER 1).

No >> Repair the (X835) Sensor Ground circuit for an open.

Perform BODY VERIFICATION TEST – VER 1. (Refer to BODY VERIFICATION TEST – VER 1).

B1438–VOICE RECOGNITION SWITCH STUCK

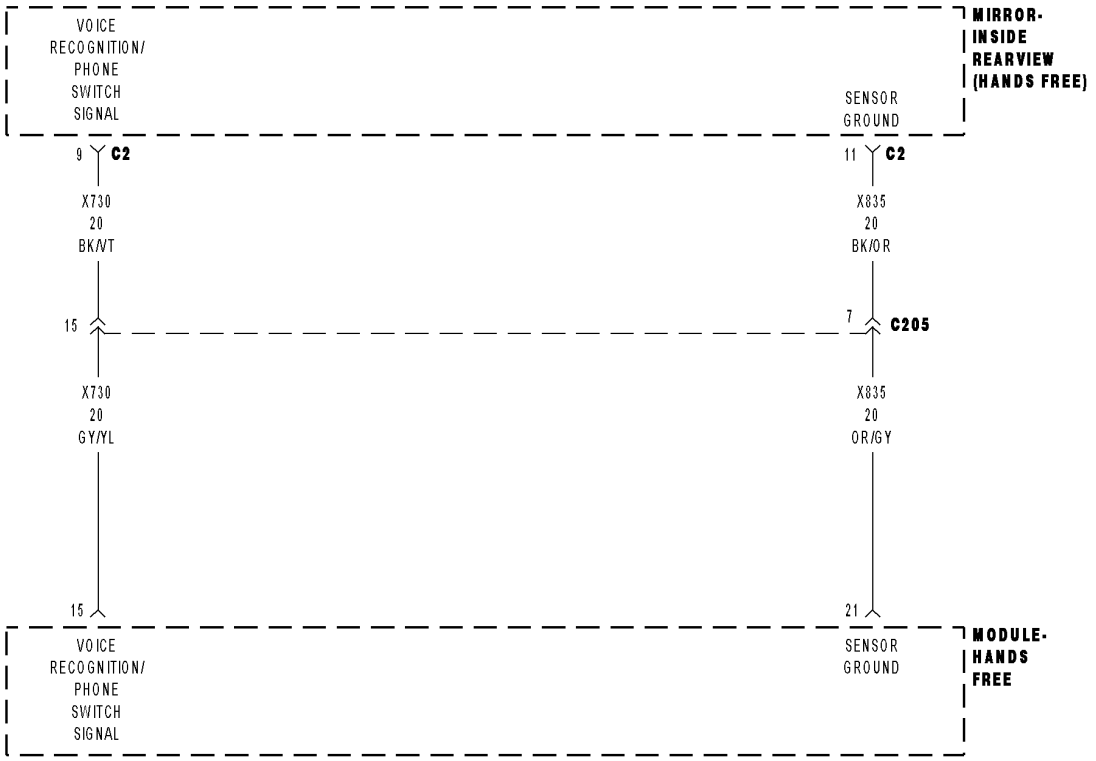

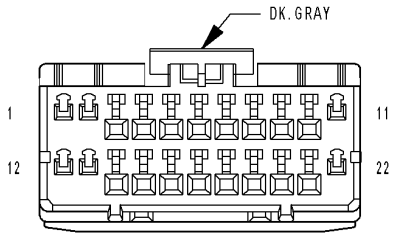

MODULE-
HANDS FREE

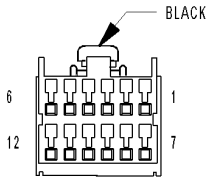

MIRROR-
INSIDE
REARVIEW C2
(HANDS FREE)

8134b708

For a complete wiring diagram **Refer to Section 8W**.

- **When Monitored:**
  With the ignition on.
- **Set Condition:**
  The Hands Free Module detects voltage between 3.5 volts and 4.0 volts on the (X730) Voice Recognition/ Phone Switch Signal circuit for more than 30 seconds.

Possible Causes
INSIDE REAR VIEW MIRROR
HANDS FREE MODULE

Diagnostic Test

1. CHECK FOR ACTIVE DTCS

With the scan tool, read the active DTC's.

Cycle the ignition switch from off to on at least 5 times, leaving the ignition on for a minimum of 90 seconds per cycle.

With the scan tool, read the active DTC's.

Does the scan tool display this DTC as active?

Yes >> Go To 2

No >> If the DTC is stored, check for an intermittent condition. Visually inspect the related wiring harness connectors. Look for broken, bent, pushed out, or corroded terminals.

2. CHECK THE VOLTAGE OF THE (X730) VOICE RECOGNITION/PHONE SWITCH SIGNAL

Turn the ignition off.

Disconnect the Inside Rear View Mirror C2 harness connector.

Turn the ignition on.

With the scan tool, monitor the VR Phone Switch voltage.

While monitoring the VR Phone Switch voltage, momentarily connect a jumper wire between (X730) Voice Recognition/Phone Switch Signal circuit and ground.

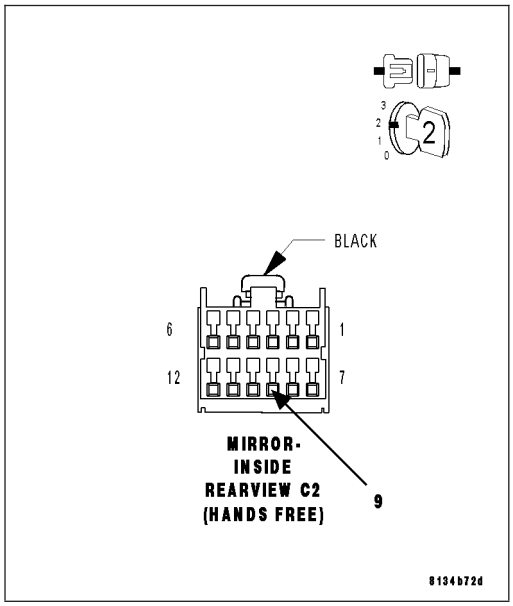

NOTE: The scan tool sensor voltage should switch from above 4.7 volts when the jumper is not connected to below 0.6 volts when the jumper is connected.

Does the sensor voltage switch from above 4.7 volts to below 0.6 volt as described?

Yes >> Replace the Inside Rear View Mirror in accordance with the service information.
Perform BODY VERIFICATION TEST – VER 1. (Refer to BODY VERIFICATION TEST – VER 1).

No >> Inspect the wiring and connectors for damage or shorted circuits. If ok, replace and program the Hands Free Module in accordance with the service information.
Perform BODY VERIFICATION TEST – VER 1. (Refer to BODY VERIFICATION TEST – VER 1).

B1439-PHONE SWITCH STUCK

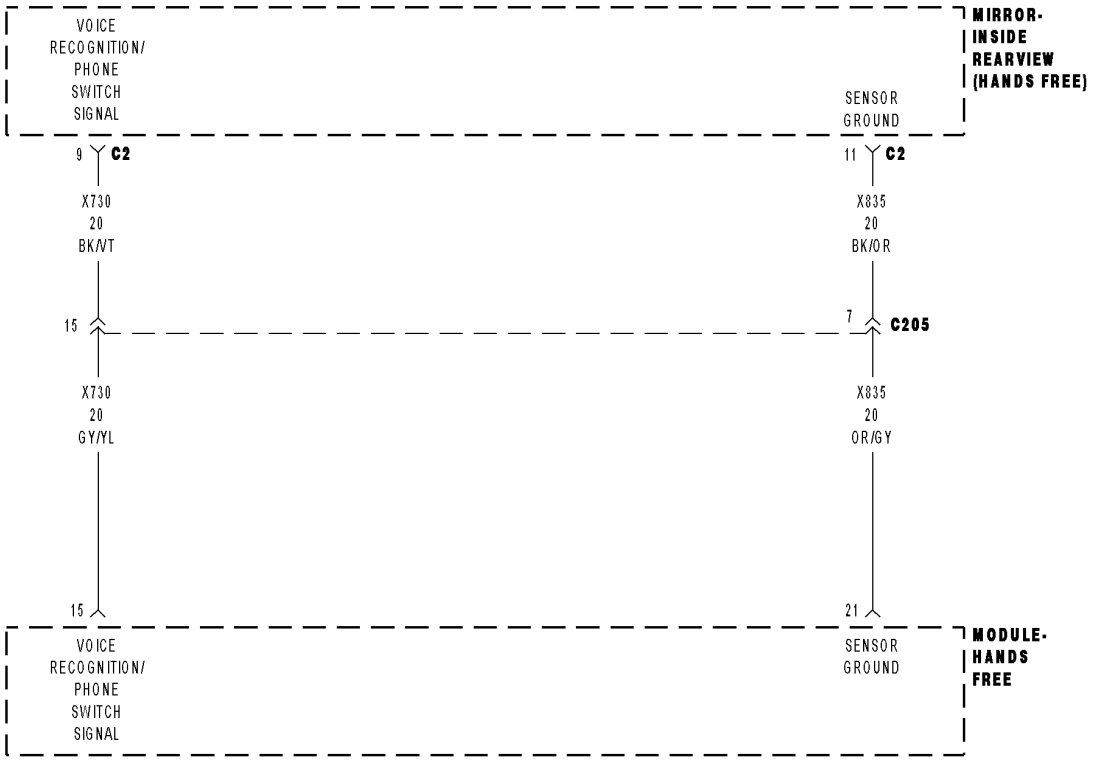

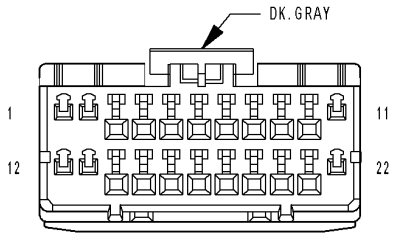

MODULE-
HANDS FREE

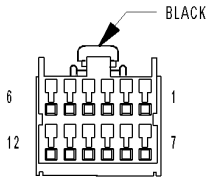

MIRROR-
INSIDE
REARVIEW C2
(HANDS FREE)

8134b708

For a complete wiring diagram **Refer to Section 8W**.

- **When Monitored:**
  With the ignition on.
- **Set Condition:**
  The Hands Free Module detects voltage between 2.8 volts and 3.3 volts on the (X730) Voice Recognition/ Phone Switch Signal circuit for more than 30 seconds.

Possible Causes
INSIDE REAR VIEW MIRROR
HANDS FREE MODULE

Diagnostic Test

1. CHECK FOR ACTIVE DTCS

With the scan tool, read the active DTC's.

Cycle the ignition switch from off to on at least 5 times, leaving the ignition on for a minimum of 90 seconds per cycle.

With the scan tool, read the active DTC's.

Does the scan tool display this DTC as active?

Yes >> Go To 2

No >> If the DTC is stored, check for an intermittent condition. Visually inspect the related wiring harness connectors. Look for broken, bent, pushed out, or corroded terminals.

2. CHECK THE VOLTAGE OF THE (X730) VOICE RECOGNITION/PHONE SWITCH SIGNAL

Turn the ignition off.

Disconnect the Inside Rear View Mirror C2 harness connector.

Turn the ignition on.

With the scan tool, monitor the VR Phone Switch voltage.

While monitoring the VR Phone Switch voltage, momentarily connect a jumper wire between (X730) Voice Recognition/Phone Switch Signal circuit and ground.

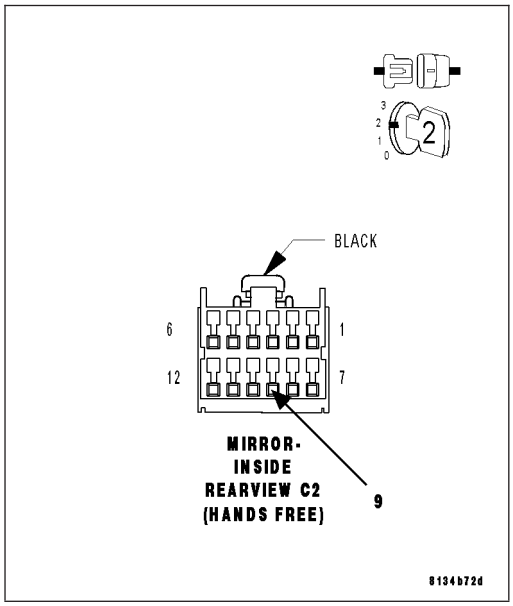

NOTE: The scan tool sensor voltage should switch from above 4.7 volts when the jumper is not connected to below 0.6 volts when the jumper is connected.

Does the sensor voltage switch from above 4.7 volts to below 0.6 volt as described?

Yes >> Replace the Inside Rear View Mirror in accordance with the service information.
Perform BODY VERIFICATION TEST – VER 1. (Refer to BODY VERIFICATION TEST – VER 1).

No >> Inspect the wiring and connectors for damage or shorted circuits. If ok, replace and program the Hands Free Module in accordance with the service information.
Perform BODY VERIFICATION TEST – VER 1. (Refer to BODY VERIFICATION TEST – VER 1).

B145A-TELEMATICS MIRROR CONTROL CIRCUIT HIGH

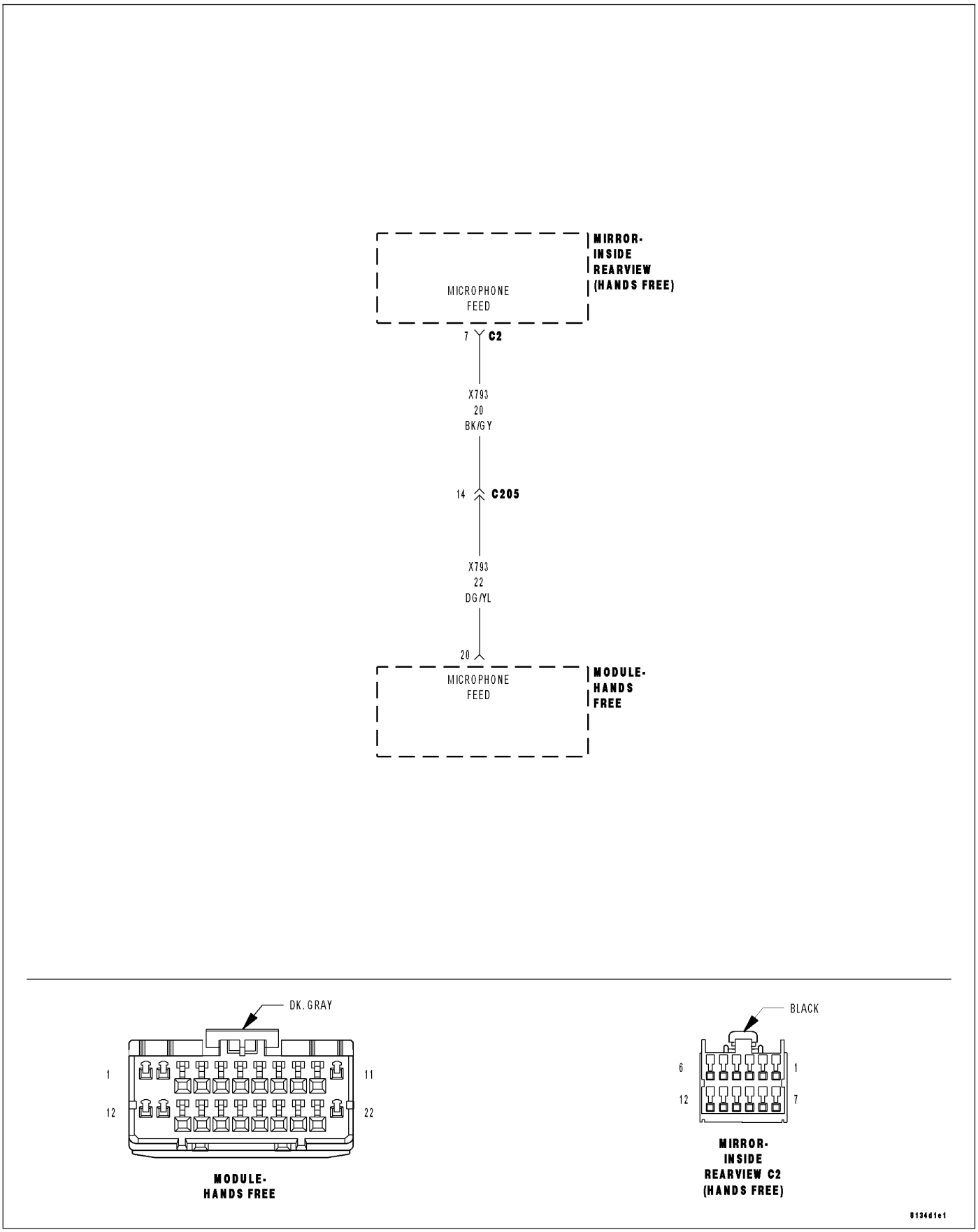

For a complete wiring diagram **Refer to Section 8W**.

- **When Monitored:**
  With the ignition on.
- **Set Condition:**
  The Hands Free Module detects high voltage on the (X793) Microphone Feed circuit.

Possible Causes
(X793) MICROPHONE FEED CIRCUIT OPEN
(X793) MICROPHONE FEED CIRCUIT SHORT TO VOLTAGE
INSIDE REAR VIEW MIRROR
HANDS FREE MODULE

Diagnostic Test

1. CHECK FOR ACTIVE DTC

With the scan tool, read the active DTC's.

Cycle the ignition switch from off to on at least 5 times, leaving the ignition on for a minimum of 90 seconds per cycle.

Attempt to make a phone call with the system.

With the scan tool, read the active DTC's.

Does the scan tool display this DTC as active?

Yes >> Go To 2

No >> If the DTC is stored, check for an intermittent condition. Visually inspect the related wiring harness connectors. Look for broken, bent, pushed out, or corroded terminals.

2. (X793) MICROPHONE FEED CIRCUIT OPEN

Turn the ignition off.

Disconnect the Hands Free Module harness connector.

Disconnect the Inside Rear View Mirror C2 harness connector.

Measure the resistance of the (X793) Microphone Feed circuit between the HFM connector and the inside rear view mirror connector.

Is the resistance below 5.0 ohms?

Yes >> Go To 3

No >> Repair the (X793) Microphone Feed circuit for an open. Perform BODY VERIFICATION TEST – VER 1. (Refer to BODY VERIFICATION TEST – VER 1).

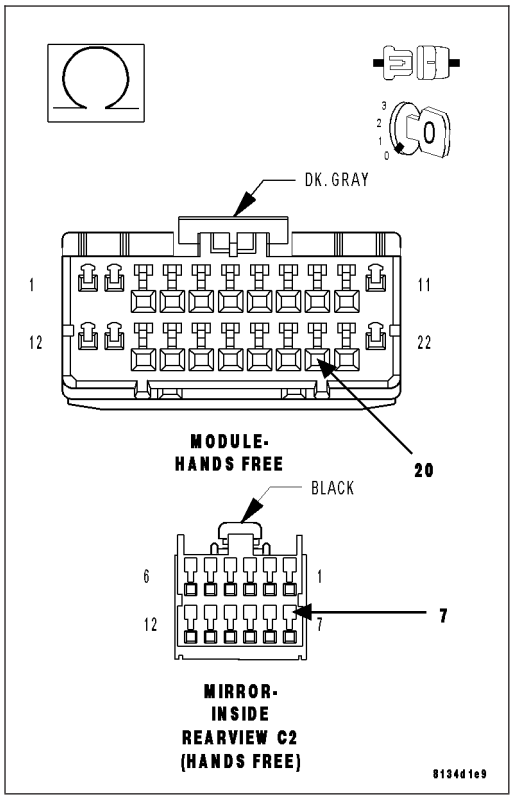

3. (X793) MICROPHONE FEED CIRCUIT SHORT TO VOLTAGE

Turn the ignition on.

Measure the voltage of the (X793) Microphone Feed circuit.

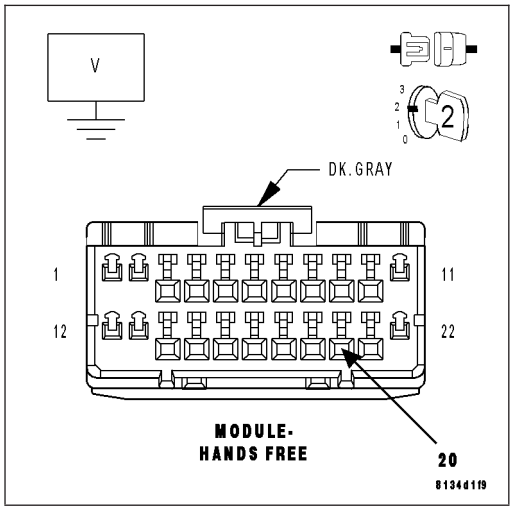

Is the voltage above 1.0 volt?

Yes >> Repair the (X793) Microphone Feed circuit for short to voltage.
Perform BODY VERIFICATION TEST – VER 1. (Refer to BODY VERIFICATION TEST – VER 1).

No >> Go To 4

4. INSIDE REAR VIEW MIRROR

Replace the Inside Rear View Mirror in accordance with the service information.

Cycle the ignition switch from off to on at least 5 times, leaving the ignition on for a minimum of 90 seconds per cycle.

Attempt to make a phone call with the system.

With the scan tool, read the active DTC's.

Does the scan tool display this DTC as active?

Yes >> Inspect the wiring and connectors for damage or shorted circuits. If ok, replace and program the Hands Free Module in accordance with the service information.
Perform BODY VERIFICATION TEST – VER 1. (Refer to BODY VERIFICATION TEST – VER 1).

No >> Repair is complete.
Perform BODY VERIFICATION TEST – VER 1. (Refer to BODY VERIFICATION TEST – VER 1).

B1459-TELEMATICS MIRROR CONTROL CIRCUIT LOW

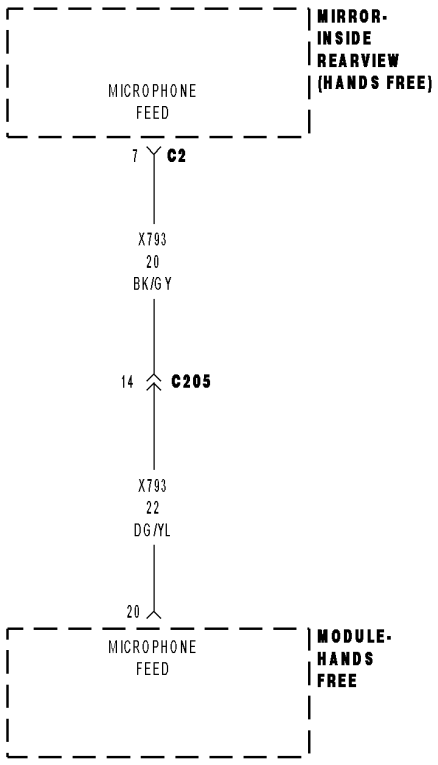

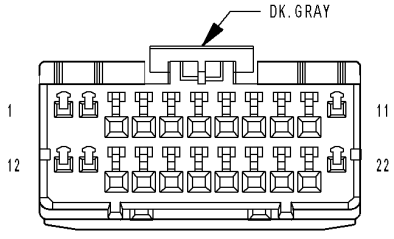

MODULE-
HANDS FREE

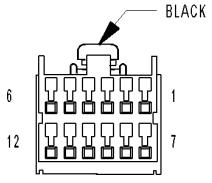

MIRROR-
INSIDE
REARVIEW C2
(HANDS FREE)

8134d1e1

For a complete wiring diagram **Refer to Section 8W**.

- **When Monitored:**
  With the ignition on.
- **Set Condition:**
  The Hands Free Module detects low voltage on the (X793) Microphone Feed circuit.

Possible Causes
(X793) MICROPHONE FEED CIRCUIT OPEN
(X793) MICROPHONE FEED CIRCUIT SHORT TO GROUND
INSIDE REAR VIEW MIRROR
HANDS FREE MODULE

Diagnostic Test

1. CHECK FOR ACTIVE DTC

With the scan tool, read the active DTC's.

Cycle the ignition switch from off to on at least 5 times, leaving the ignition on for a minimum of 90 seconds per cycle.

Attempt to make a phone call with the system.

With the scan tool, read the active DTC's.

Does the scan tool display this DTC as active?

Yes >> Go To 2

No >> If the DTC is stored, check for an intermittent condition. Visually inspect the related wiring harness connectors. Look for broken, bent, pushed out, or corroded terminals.

2. (X793) MICROPHONE FEED CIRCUIT OPEN

Turn the ignition off.

Disconnect the Hands Free Module harness connector.

Disconnect the Inside Rear View Mirror C2 harness connector.

Measure the resistance of the (X793) Microphone Feed circuit between the HFM connector and the inside rear view mirror connector.

Is the resistance below 5.0 ohms?

Yes >> Go To 3

No >> Repair the (X793) Microphone Feed circuit for an open.
Perform BODY VERIFICATION TEST – VER 1. (Refer to BODY VERIFICATION TEST – VER 1).

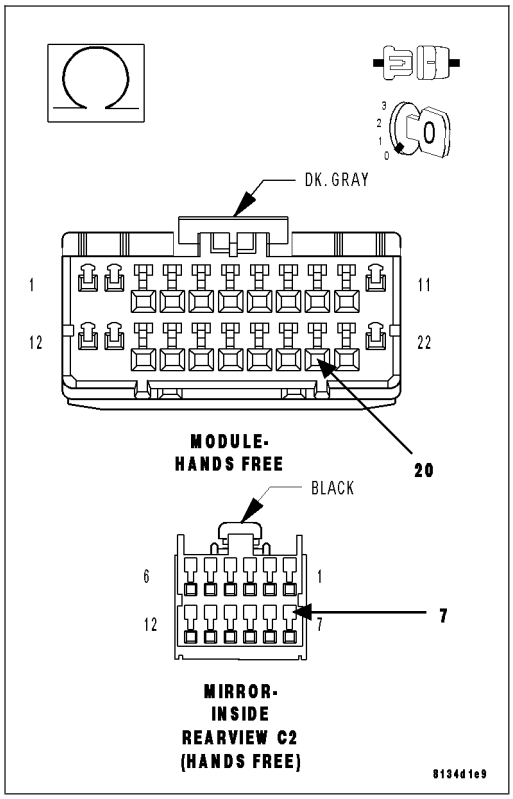

3. (X793) MICROPHONE FEED CIRCUIT SHORT TO GROUND

Measure the resistance between ground and the (X793) Microphone Feed circuit

Is the resistance below 100.0 ohms?

Yes >> Repair the (X793) Microphone Feed circuit for short to ground.
Perform BODY VERIFICATION TEST – VER 1. (Refer to BODY VERIFICATION TEST – VER 1).

No >> Go To 4

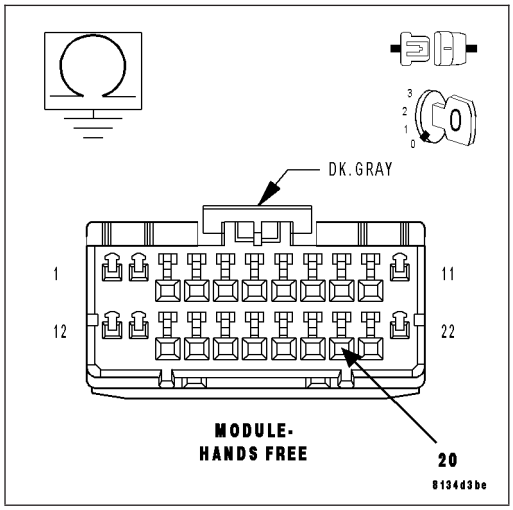

4. INSIDE REAR VIEW MIRROR

Replace the Inside Rear View Mirror in accordance with the service information.

Cycle the ignition switch from off to on at least 5 times, leaving the ignition on for a minimum of 90 seconds per cycle.

Attempt to make a phone call with the system.

With the scan tool, read the active DTC's.

Does the scan tool display this DTC as active?

Yes >> Inspect the wiring and connectors for damage or shorted circuits. If ok, replace and program the Hands Free Module in accordance with the service information.
Perform BODY VERIFICATION TEST – VER 1. (Refer to BODY VERIFICATION TEST – VER 1).

No >> Repair is complete.
Perform BODY VERIFICATION TEST – VER 1. (Refer to BODY VERIFICATION TEST – VER 1).

B1492–GENERAL MICROPHONE PERFORMANCE

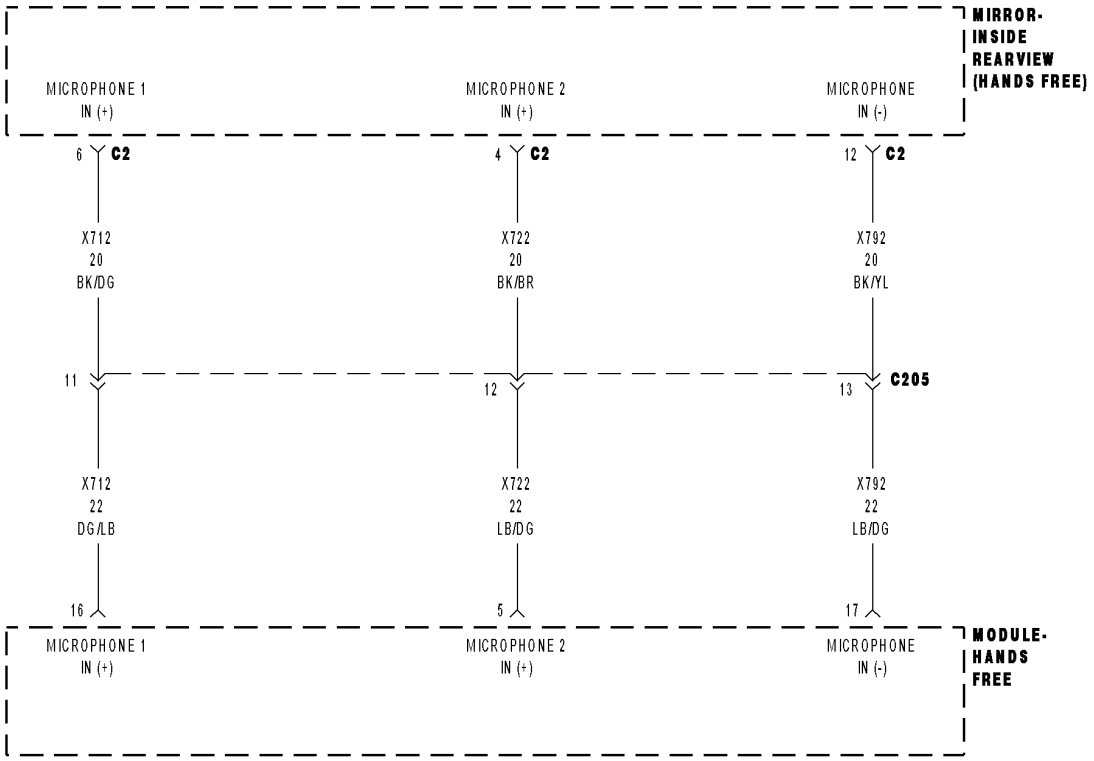

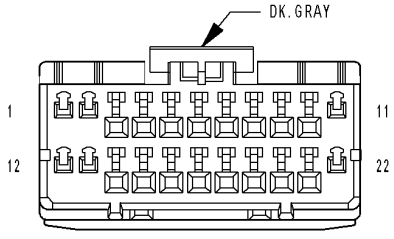

MODULE-
HANDS FREE

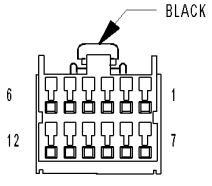

MIRROR-
INSIDE
REARVIEW C2
(HANDS FREE)

8134d5be

For a complete wiring diagram **Refer to Section 8W**.

- **When Monitored:**
  With the ignition on.
- **Set Condition:**
  The Hands Free Module detects a fault in any of the microphone circuits.

Possible Causes
(X712) MICROPHONE 1 IN (+) CIRCUIT OPEN
(X722) MICROPHONE 2 IN (+) CIRCUIT OPEN
(X792) MICROPHONE IN (-) CIRCUIT OPEN
(X712) (X722) (X792) MICROPHONE CIRCUITS SHORTED TO GROUND
(X712) (X722) (X792) MICROPHONE CIRCUITS SHORTED TO VOLTAGE
(X712) (X722) (X792) MICROPHONE CIRCUITS SHORTED TOGETHER
INSIDE REAR VIEW MIRROR
HANDS FREE MODULE

Diagnostic Test

1. CHECK FOR ACTIVE DTC

With the scan tool, read the active DTC's.

Cycle the ignition switch from off to on at least 5 times, leaving the ignition on for a minimum of 90 seconds per cycle.

Attempt to make a phone call with the system.

With the scan tool, read the active DTC's.

Does the scan tool display this DTC as active?

Yes >> Go To 2

No >> If the DTC is stored, check for an intermittent condition. Visually inspect the related wiring harness connectors. Look for broken, bent, pushed out, or corroded terminals.

2. (X712) MICROPHONE 1 IN (+) CIRCUIT OPEN

Turn the ignition off.

Disconnect the Hands Free Module harness connector.

Disconnect the Inside Rear View Mirror C2 harness connector.

Measure the resistance of the (X712) Microphone 1 IN (+) circuit between the HFM connector and the inside rear view mirror connector.

Is the resistance below 5.0 ohms?

Yes >> Go To 3

No >> Repair the (X712) Microphone 1 IN (+) circuit for an open. Perform BODY VERIFICATION TEST – VER 1. (Refer to BODY VERIFICATION TEST – VER 1).

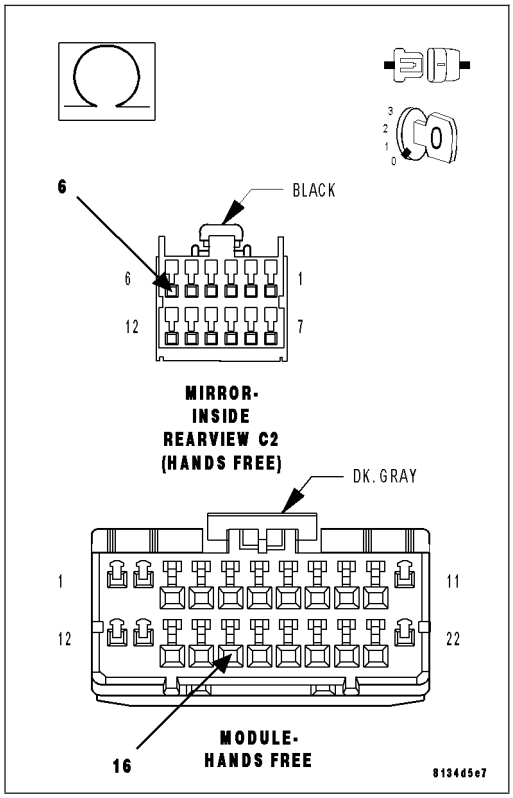

3. (X722) MICROPHONE 2 IN (+) CIRCUIT OPEN

Measure the resistance of the (X722) Microphone 2 IN (+) circuit between the HFM connector and the inside rear view mirror connector.

Is the resistance below 5.0 ohms?

Yes >> Go To 4

No >> Repair the (X722) Microphone 2 IN (+) circuit for an open. Perform BODY VERIFICATION TEST – VER 1. (Refer to BODY VERIFICATION TEST – VER 1).

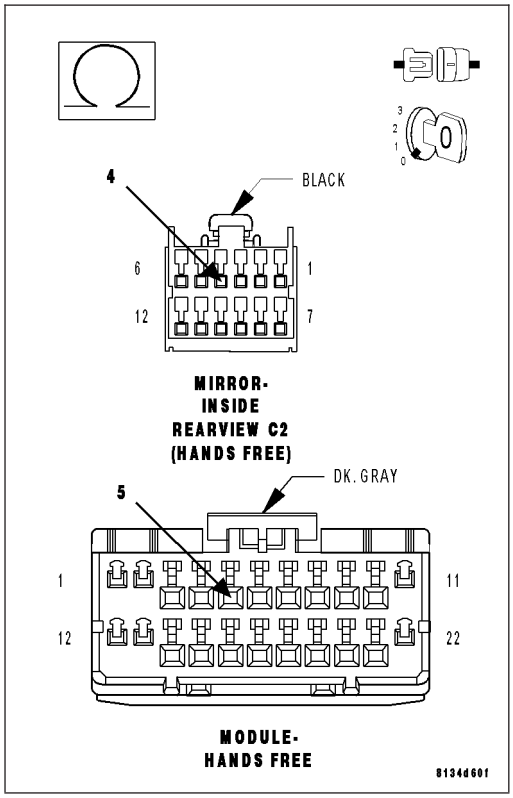

4. (X792) MICROPHONE IN (-) CIRCUIT OPEN

Measure the resistance of the (X792) Microphone IN (-) circuit between the HFM connector and the inside rear view mirror connector.

Is the resistance below 5.0 ohms?

Yes >> Go To 5

No >> Repair the (X792) Microphone IN (-) circuit for an open.
Perform BODY VERIFICATION TEST – VER 1. (Refer to BODY VERIFICATION TEST – VER 1).

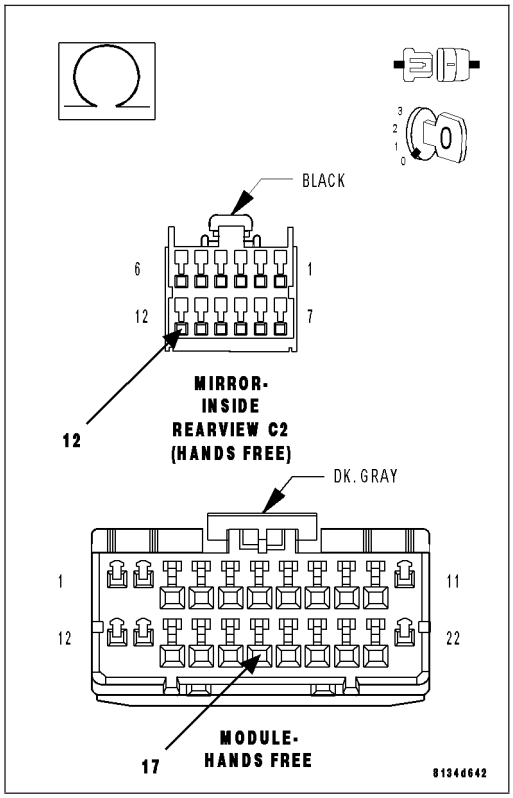

5. (X712) (X722) (X792) MICROPHONE CIRCUITS SHORTED TO GROUND

Measure the resistance between ground and each (X712) (X722) (X792) Microphone circuit.

Is the resistance below 100.0 ohms?

Yes >> Repair the Microphone circuit that measured below 100.0 ohms for short to ground.
Perform BODY VERIFICATION TEST – VER 1. (Refer to BODY VERIFICATION TEST – VER 1).

No >> Go To 6

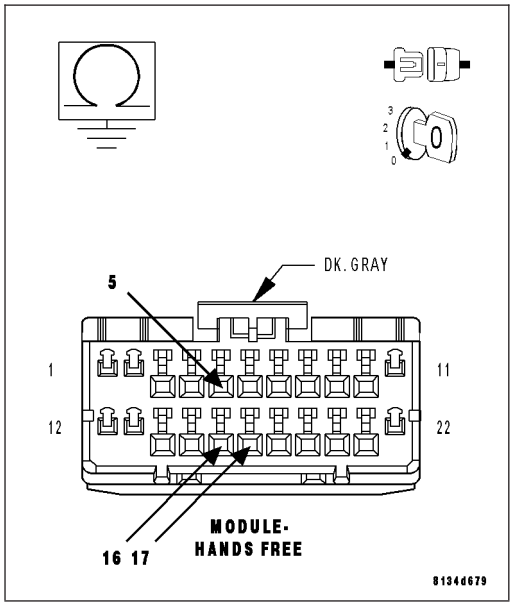

6. (X712) (X722) (X792) MICROPHONE CIRCUITS SHORTED TO VOLTAGE

Turn the ignition on.

Measure the voltage of each (X712) (X722) (X792) Microphone circuit.

Is the voltage above 1.0 volt?

Yes >> Repair the Microphone circuit that measured above 1.0 volt for short to voltage.

Perform BODY VERIFICATION TEST – VER 1. (Refer to BODY VERIFICATION TEST – VER 1).

No >> Go To 7

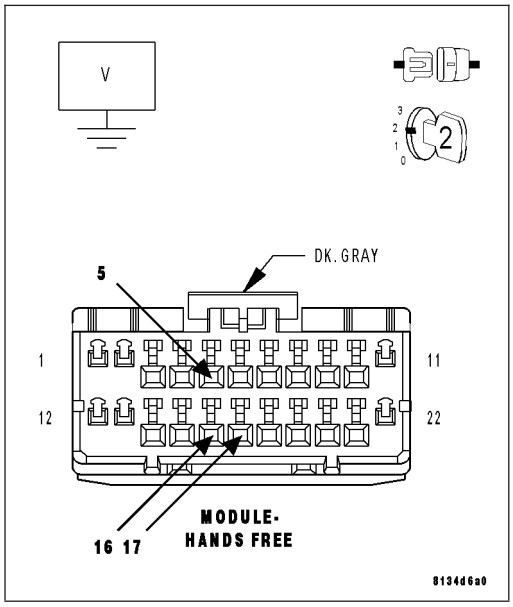

7. (X712) (X722) (X792) MICROPHONE CIRCUITS SHORTED TOGETHER

Turn the ignition off.

Measure the resistance between each (X712) (X722) (X792) Microphone circuit.

Is the resistance below 100.0 ohms?

Yes >> Repair the Microphone circuit that measured below 100.0 ohms for a short together.

Perform BODY VERIFICATION TEST – VER 1. (Refer to BODY VERIFICATION TEST – VER 1).

No >> Go To 8

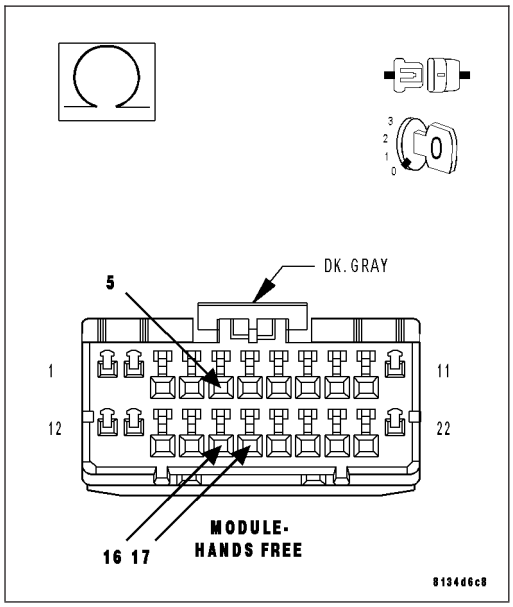

8. INSIDE REAR VIEW MIRROR

Replace the Inside Rear View Mirror in accordance with the service information.

Cycle the ignition switch from off to on at least 5 times, leaving the ignition on for a minimum of 90 seconds per cycle.

Attempt to make a phone call with the system.

With the scan tool, read the active DTC's.

Does the scan tool display this DTC as active?

Yes >> Inspect the wiring and connectors for damage or shorted circuits. If ok, replace and program the Hands Free Module in accordance with the service information.
Perform BODY VERIFICATION TEST – VER 1. (Refer to BODY VERIFICATION TEST – VER 1).

No >> Repair is complete.
Perform BODY VERIFICATION TEST – VER 1. (Refer to BODY VERIFICATION TEST – VER 1).

B2203–ROM CHECKSUM PERFORMANCE

For a complete wiring diagram **Refer to Section 8W**.

- **When Monitored:**
  With the ignition on.
- **Set Condition:**
  The Hands Free Module detects a fault during an internal diagnostic check.

Possible Causes
HANDS FREE MODULE

Diagnostic Test

1. REPLACE THE HANDS FREE MODULE IF DTC IS ACTIVE

With the scan tool, read the active DTC's.

Cycle the ignition switch from off to on at least 5 times, leaving the ignition on for a minimum of 90 seconds per cycle.

With the scan tool, read the active DTC's.

Does the scan tool display this DTC as active?

Yes >> Replace and program the Hands Free Module in accordance with the service information.
Perform BODY VERIFICATION TEST – VER 1. (Refer to BODY VERIFICATION TEST – VER 1).

No >> If the DTC is stored, check for an intermittent condition. Visually inspect the related wiring harness connectors. Look for broken, bent, pushed out, or corroded terminals.

B222A-VEHICLE LINE MISMATCH

For a complete wiring diagram **Refer to Section 8W**.

- **When Monitored:**
  With the ignition on.
- **Set Condition:**
  The Hands Free Module will receive and monitor the vehicle line message from the PCM and record the vehicle line if different from the last vehicle line.

Possible Causes
INCORRECT PCM
HANDS FREE MODULE

Diagnostic Test

1. CHECK FOR ACTIVE DTC

With the scan tool, read the active DTC's.

Cycle the ignition switch from off to on at least 5 times, leaving the ignition on for a minimum of 90 seconds per cycle.

With the scan tool, read the active DTC's.

Does the scan tool display this DTC as active?

Yes >> Go To 2

No >> If the DTC is stored, check for an intermittent condition. Visually inspect the related wiring harness connectors. Look for broken, bent, pushed out, or corroded terminals.

2. CHECK VEHICLE LINE IN PCM

With the scan tool compare the vehicle line that is programmed into the PCM to the vehicle line of the vehicle.

Does the vehicle line programmed into the PCM match the vehicle?

Yes >> Inspect the wiring and connectors for damage or shorted circuits. If ok, replace and program the Hands Free Module in accordance with the service information.
Perform BODY VERIFICATION TEST – VER 1. (Refer to BODY VERIFICATION TEST – VER 1).

No >> Replace and program the Powertrain Control Module in accordance with the service information. Ensure the PCM is replaced with the correct vehicle line PCM.
Perform (NGC) POWERTRAIN VERIFICATION TEST VER - 5.

B222E–FLASH CHECKSUM PERFORMANCE

For a complete wiring diagram **Refer to Section 8W**.

- **When Monitored:**
  With the ignition on.
- **Set Condition:**
  The Hands Free Module detects a fault during an internal diagnostic check.

Possible Causes
HANDS FREE MODULE

Diagnostic Test

1. REPLACE THE HANDS FREE MODULE IF DTC IS ACTIVE

With the scan tool, read the active DTC's.

Cycle the ignition switch from off to on at least 5 times, leaving the ignition on for a minimum of 90 seconds per cycle.

With the scan tool, read the active DTC's.

Does the scan tool display this DTC as active?

Yes >> Replace and program the Hands Free Module in accordance with the service information.
Perform BODY VERIFICATION TEST – VER 1. (Refer to BODY VERIFICATION TEST – VER 1).

No >> If the DTC is stored, check for an intermittent condition. Visually inspect the related wiring harness connectors. Look for broken, bent, pushed out, or corroded terminals.

B222F–FLASH WRITE PERFORMANCE

For a complete wiring diagram **Refer to Section 8W**.

- **When Monitored:**
  With the ignition on.
- **Set Condition:**
  The Hands Free Module detects a fault during an internal diagnostic check.

Possible Causes
HANDS FREE MODULE

Diagnostic Test

1. REPLACE THE HANDS FREE MODULE IF DTC IS ACTIVE

With the scan tool, read the active DTC's.

Cycle the ignition switch from off to on at least 5 times, leaving the ignition on for a minimum of 90 seconds per cycle.

With the scan tool, read the active DTC's.

Does the scan tool display this DTC as active?

Yes >> Replace and program the Hands Free Module in accordance with the service information.
Perform BODY VERIFICATION TEST – VER 1. (Refer to BODY VERIFICATION TEST – VER 1).

No >> If the DTC is stored, check for an intermittent condition. Visually inspect the related wiring harness connectors. Look for broken, bent, pushed out, or corroded terminals.

B2223-(HFM) HANDS FREE PHONE INTERNAL

For a complete wiring diagram **Refer to Section 8W**.

- **When Monitored:**
  With the ignition on.
- **Set Condition:**
  The Hands Free Module detects a fault during an internal diagnostic check.

Possible Causes
HANDS FREE MODULE

Diagnostic Test

1. REPLACE THE HANDS FREE MODULE IF DTC IS ACTIVE

With the scan tool, read the active DTC's.

Cycle the ignition switch from off to on at least 5 times, leaving the ignition on for a minimum of 90 seconds per cycle.

With the scan tool, read the active DTC's.

Does the scan tool display this DTC as active?

Yes >> Replace and program the Hands Free Module in accordance with the service information.
Perform BODY VERIFICATION TEST – VER 1. (Refer to BODY VERIFICATION TEST – VER 1).

No >> If the DTC is stored, check for an intermittent condition. Visually inspect the related wiring harness connectors. Look for broken, bent, pushed out, or corroded terminals.

B2230–RAM WRITE PERFORMANCE

For a complete wiring diagram **Refer to Section 8W**.

- **When Monitored:**
  With the ignition on.
- **Set Condition:**
  The Hands Free Module detects a fault during an internal diagnostic check.

Possible Causes
HANDS FREE MODULE

Diagnostic Test

1. REPLACE THE HANDS FREE MODULE IF DTC IS ACTIVE

With the scan tool, read the active DTC's.

Cycle the ignition switch from off to on at least 5 times, leaving the ignition on for a minimum of 90 seconds per cycle.

With the scan tool, read the active DTC's.

Does the scan tool display this DTC as active?

Yes >> Replace and program the Hands Free Module in accordance with the service information.
Perform BODY VERIFICATION TEST – VER 1. (Refer to BODY VERIFICATION TEST – VER 1).

No >> If the DTC is stored, check for an intermittent condition. Visually inspect the related wiring harness connectors. Look for broken, bent, pushed out, or corroded terminals.

U0019–CAN B BUS

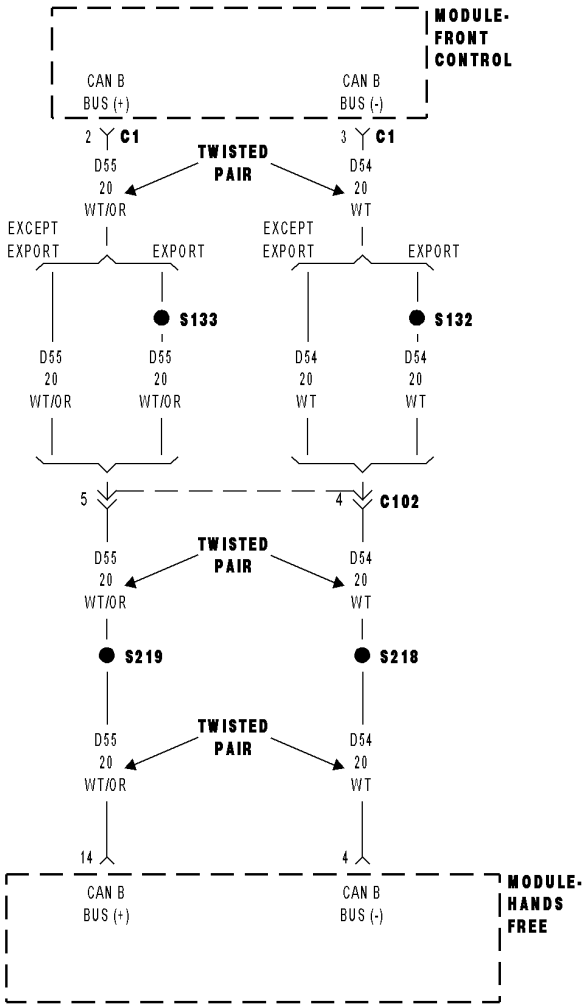

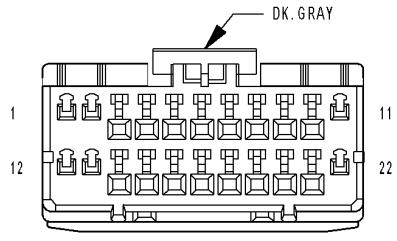

MODULE-
HANDS FREE

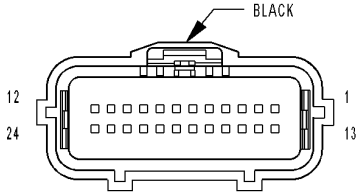

MODULE-
FRONT
CONTROL C1

8134dc5e

For a complete wiring diagram **Refer to Section 8W**.

- **When Monitored:**
  Continuously
- **Set Condition:**
  Whenever the CAN B Bus (+) or CAN B Bus (-) circuit is open, shorted to voltage or shorted to ground.

Possible Causes
CAN B BUS DTC's IN FRONT CONTROL MODULE
(D55) CAN B BUS (+) CIRCUIT OPEN
(D54) CAN B BUS (-) CIRCUIT OPEN
HANDS FREE MODULE

Diagnostic Test

1. CHECK FOR ACTIVE DTCS

With the scan tool, read the active DTC's.

Cycle the ignition switch from off to on at least 5 times, leaving the ignition on for a minimum of 90 seconds per cycle.

With the scan tool, read the active DTC's.

Does the scan tool display this DTC as active?

Yes >> Go To 2

No >> If the DTC is stored, check for an intermittent condition. Visually inspect the related wiring harness connectors. Look for broken, bent, pushed out, or corroded terminals.

2. CHECK FRONT CONTROL MODULE DTC's

With the scan tool, read the Front Control Module active DTC's.

Does the scan tool display any CAN B BUS DTC's – ACTIVE?

Yes >> (Refer to 8 - ELECTRICAL/ELECTRONIC CONTROL MODULES - DIAGNOSIS AND TESTING) and perform the appropriate diagnostic test.

No >> Go To 3

3. (D55) CAN B BUS (+) CIRCUIT OPEN

Turn the ignition off.

Disconnect the negative battery cable.

Disconnect the Hands Free Module harness connector.

Disconnect the Front Control Module C1 harness connector.

Measure the resistance of the (D55) CAN B Bus (+) circuit between the Front Control Module C1 connector and the Hands Free Module connector.

Is the resistance below 2.0 ohms?

Yes >> Go To 4

No >> Repair the (D55) CAN B Bus (+) circuit for an open.
Perform BODY VERIFICATION TEST – VER 1. (Refer to BODY VERIFICATION TEST – VER 1).

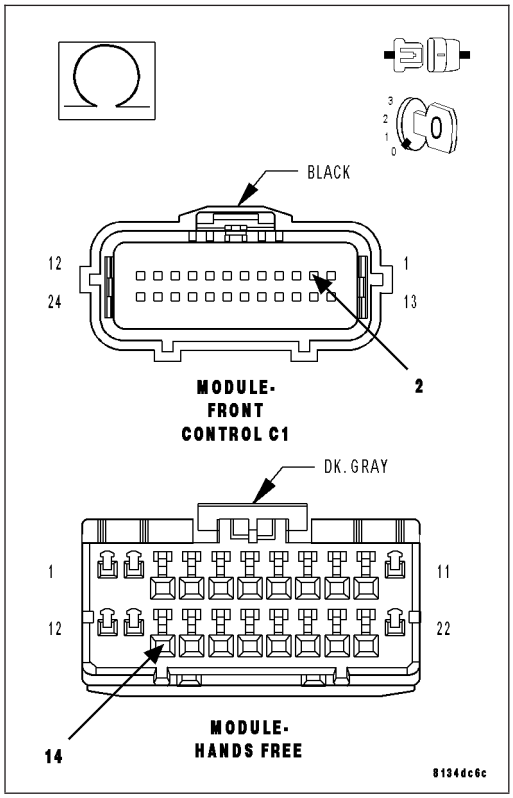

4. (D54) CAN B BUS (–) CIRCUIT OPEN

Measure the resistance of the (D54) CAN B Bus (–) circuit between the Front Control Module C1 connector and the Hands Free Module connector.

Is the resistance below 2.0 ohms?

Yes >> Replace the Hands Free Module in accordance with the service information.
Perform BODY VERIFICATION TEST – VER 1. (Refer to BODY VERIFICATION TEST – VER 1).

No >> Repair the (D54) CAN B Bus (–) circuit for an open.
Perform BODY VERIFICATION TEST – VER 1. (Refer to BODY VERIFICATION TEST – VER 1).

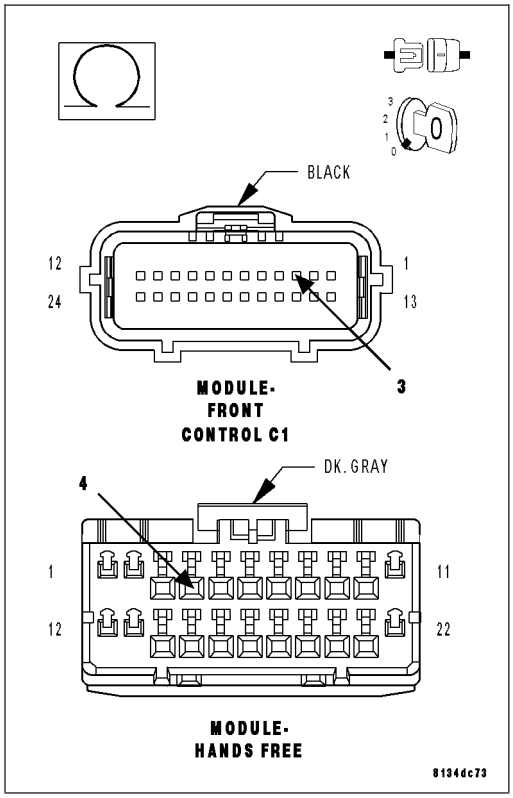

U0141–LOST COMMUNICATION WITH FRONT CONTROL MODULE

For a complete wiring diagram **Refer to Section 8W**.

(Refer to 8 - ELECTRICAL/ELECTRONIC CONTROL MODULES - DIAGNOSIS AND TESTING) for the diagnostic test procedure.

U0151-LOST COMMUNICATION WITH OCCUPANT RESTRAINT CONTROLLER

For a complete wiring diagram **Refer to Section 8W**.

(Refer to 8 - ELECTRICAL/ELECTRONIC CONTROL MODULES - DIAGNOSIS AND TESTING) for the diagnostic test procedure.

U0154-LOST COMMUNICATION WITH OCCUPANT CLASSIFICATION MODULE

For a complete wiring diagram **Refer to Section 8W**.

(Refer to 8 - ELECTRICAL/ELECTRONIC CONTROL MODULES - DIAGNOSIS AND TESTING) for the diagnostic test procedure.

U0155-LOST COMMUNICATION WITH CLUSTER/CCN

For a complete wiring diagram **Refer to Section 8W**.

(Refer to 8 - ELECTRICAL/ELECTRONIC CONTROL MODULES - DIAGNOSIS AND TESTING) for the diagnostic test procedure.

U0156-LOST COMMUNICATION WITH EOM

For a complete wiring diagram **Refer to Section 8W**.

(Refer to 8 - ELECTRICAL/ELECTRONIC CONTROL MODULES - DIAGNOSIS AND TESTING) for the diagnostic test procedure.

U0159-LOST COMMUNICATION WITH PARKING ASSIST CONTROL MODULE

For a complete wiring diagram **Refer to Section 8W**.

(Refer to 8 - ELECTRICAL/ELECTRONIC CONTROL MODULES - DIAGNOSIS AND TESTING) for the diagnostic test procedure.

U0164-LOST COMMUNICATION WITH HVAC CONTROL MODULE

For a complete wiring diagram **Refer to Section 8W**.

(Refer to 8 - ELECTRICAL/ELECTRONIC CONTROL MODULES - DIAGNOSIS AND TESTING) for the diagnostic test procedure.

U0168-LOST COMMUNICATION WITH VEHICLE SECURITY CONTROL MODULE (SKREEM/WCM)

For a complete wiring diagram **Refer to Section 8W**.

(Refer to 8 - ELECTRICAL/ELECTRONIC CONTROL MODULES - DIAGNOSIS AND TESTING) for the diagnostic test procedure.

U0169-LOST COMMUNICATION WITH SUNROOF CONTROL MODULE

For a complete wiring diagram **Refer to Section 8W**.

(Refer to 8 - ELECTRICAL/ELECTRONIC CONTROL MODULES - DIAGNOSIS AND TESTING) for the diagnostic test procedure.

U0181-LOST COMMUNICATION WITH HEADLAMP LEVELING TRANSLATOR

For a complete wiring diagram **Refer to Section 8W**.

(Refer to 8 - ELECTRICAL/ELECTRONIC CONTROL MODULES - DIAGNOSIS AND TESTING) for the diagnostic test procedure.

U0184-LOST COMMUNICATION WITH RADIO

For a complete wiring diagram **Refer to Section 8W**.

(Refer to 8 - ELECTRICAL/ELECTRONIC CONTROL MODULES - DIAGNOSIS AND TESTING) for the diagnostic test procedure.

U0186-LOST COMMUNICATION WITH AUDIO AMPLIFIER

For a complete wiring diagram **Refer to Section 8W**.

(Refer to 8 - ELECTRICAL/ELECTRONIC CONTROL MODULES - DIAGNOSIS AND TESTING) for the diagnostic test procedure.

U0195-LOST COMMUNICATION WITH SDARS

For a complete wiring diagram **Refer to Section 8W**.

(Refer to 8 - ELECTRICAL/ELECTRONIC CONTROL MODULES - DIAGNOSIS AND TESTING) for the diagnostic test procedure.

U0196-LOST COMMUNICATION WITH VEHICLE ENTERTAINMENT CONTROL MODULE

For a complete wiring diagram **Refer to Section 8W**.

(Refer to 8 - ELECTRICAL/ELECTRONIC CONTROL MODULES - DIAGNOSIS AND TESTING) for the diagnostic test procedure.

U0199-LOST COMMUNICATION WITH DRIVER DOOR MODULE

For a complete wiring diagram **Refer to Section 8W**.

(Refer to 8 - ELECTRICAL/ELECTRONIC CONTROL MODULES - DIAGNOSIS AND TESTING) for the diagnostic test procedure.

U0200-LOST COMMUNICATION WITH PASSENGER DOOR MODULE

For a complete wiring diagram **Refer to Section 8W**.

(Refer to 8 - ELECTRICAL/ELECTRONIC CONTROL MODULES - DIAGNOSIS AND TESTING) for the diagnostic test procedure.

U0208-LOST COMMUNICATION WITH HEATED SEAT CONTROL MODULE

For a complete wiring diagram **Refer to Section 8W**.

(Refer to 8 - ELECTRICAL/ELECTRONIC CONTROL MODULES - DIAGNOSIS AND TESTING) for the diagnostic test procedure.

U0209-LOST COMMUNICATION WITH MEMORY SEAT CONTROL MODULE

For a complete wiring diagram **Refer to Section 8W**.

(Refer to 8 - ELECTRICAL/ELECTRONIC CONTROL MODULES - DIAGNOSIS AND TESTING) for the diagnostic test procedure.

U0212-LOST COMMUNICATION WITH SCCM - CAN B

For a complete wiring diagram **Refer to Section 8W**.

(Refer to 8 - ELECTRICAL/ELECTRONIC CONTROL MODULES - DIAGNOSIS AND TESTING) for the diagnostic test procedure.

U0231-LOST COMMUNICATION WITH RAIN SENSING MODULE

For a complete wiring diagram **Refer to Section 8W**.

(Refer to 8 - ELECTRICAL/ELECTRONIC CONTROL MODULES - DIAGNOSIS AND TESTING) for the diagnostic test procedure.

NAVIGATION/TELECOMMUNICATION - SERVICE INFORMATION

TABLE OF CONTENTS

page

NAVIGATION/TELECOMMUNICATION - SERVICE INFORMATION
DESCRIPTION 56
OPERATION 56
DIAGNOSIS AND TESTING - TELECOMMUNICATION 56

page

HANDS FREE MODULE
REMOVAL 59
INSTALLATION 59

NAVIGATION/TELECOMMUNICATION - SERVICE INFORMATION

DESCRIPTION

TELECOMMUNICATIONS

The hands-free cellular system uses Bluetooth™ technology to provide wireless communication between the operator's compatible cellular telephone and the vehicle's on-board receiver.

The system uses voice recognition technology to control operation. The incoming voice is broadcast through the vehicle's radio speakers, automatically overriding any other audio signals on the front speakers when the hands-free system is in use. A microphone in the rear view mirror receives the vehicle occupant's voices. If a call is in progress when the ignition is switched off, the hands-free system will continue to operate for up to 45 seconds as part of the Accessory Relay Delay function. Thereafter, the call can continue on the hand-held telephone.

The system will communicate with a telephone that is anywhere within the vehicle. However, covering the hand held phone or the hands-free phone module with a metal object may block the signal. The system will recognize up to seven telephones, each of which is given a spoken identification by the user during the setup process. The system includes Spanish and French voice recognition in addition to English.

Two buttons on the rearview mirror, identified with ISO icons, control the system: A ″phone″ button turns the system on and off; a ″voice recognition″ (or voice command) button prompts the hands-free system to listen for a voice command.

OPERATION

TELECOMMUNICATION

Two buttons on the rearview mirror, identified with ISO icons, control the system: A ″phone″ button turns the system on and off; a ″voice recognition″ (or voice command) button prompts the hands-free system to listen for a voice command. The system includes the following features:

- Phonebook - Stores telephone numbers for later recall by name or other verbal identification, called a voice tag, and memory location.
- Four memory locations - Home, Work, Cellular and Pager. A maximum of 32 unique names or voice tags may be stored at the same time, with a different number in each of the four memory locations.
- Voice tag dialing - Dials the number associated with a voice tag and memory location.
- Digit dialing - Dials the telephone number by recognizing the names of the digits as they are spoken.
- Receiving calls - A voice prompt notifies the user of an incoming call. A voice response accepts or rejects the call without manual intervention.
- Privacy Mode - Switches the call to the handheld telephone and the hands-free system and back again using the “voice recognition” (or “voice command”) button and a voice command, if desired.

DIAGNOSIS AND TESTING - TELECOMMUNICATION

Any diagnosis of the Telecommunication system should begin with the use of scan tool. For information on the use of the scan tool, refer to the appropriate Diagnostic Service information.

For complete circuit diagrams, refer to the appropriate wiring information.

WARNING: ON VEHICLES EQUIPPED WITH AIRBAGS, REFER TO ELECTRICAL, RESTRAINTS BEFORE ATTEMPTING ANY STEERING WHEEL, STEERING COLUMN, OR INSTRUMENT PANEL COMPONENT DIAGNOSIS OR SERVICE. FAILURE TO TAKE THE PROPER PRECAUTIONS COULD RESULT IN ACCIDENTAL AIRBAG DEPLOYMENT AND POSSIBLE PERSONAL INJURY.

TELECOMMUNICATION SYSTEM DIAGNOSIS

CONDITION	POSSIBLE CAUSE	CORRECTION
Phone Not Available	1. Bluetooth phone not paired to the system.	1. Ensure that phone(s) are paired to the system.
	2. Bluetooth phone not present or turned OFF.	2. Make sure paired phone is present, turned ON and that the Bluetooth option is enabled on the phone.
	3. Bluetooth phone has low battery.	3. At low battery levels, some phones will turn off Bluetooth functionality. Ensure cellular phone is charged to an adequate level.
Phone Pairing Failed	1. Phone does not support Hands Free Profile	1. The Telecommunication system requires the cellular phone to be Bluetooth™ enabled, as well as supporting the Hands Free Profile. The customer will have to upgrade their phone to one supporting Hands Free Profile. A list of suggested phones is available at: http://www.chrysler.com/uconnect.
	2. Phone not Bluetooth enabled.	2. The Telecommunication system requires the cellular phone to be Bluetooth™ enabled. A list of suggested phones is available at: http://www.chrysler.com/uconnect.
	3. PIN entered on the phone is not the same as PIN spoken to the system.	3. The PIN spoken to the system must be the same PIN entered into the phone.
	4. Phone has reached maximum number of allowed devices paired.	4. Remove one of the previously paired devices from it's list.
Poor Voice Recognition	1. Microphone failure	1. Using a scan tool, check for microphone fault codes.
	2. Customer not waiting for the beep before speaking.	2. Ensure customer is waiting for the system ″beep″ prior to beginning the speech to be recognized.
	3. Customer not speaking in a smooth normal manner.	3. Verify that the customer is attempting to use the system with a smooth consistent voice. The system is designed to accept normal speech spoken at a normal tone, some people tend to speak to a computer loud and slow, which results in reduced performance.
	4. Rear view mirror not properly attached to mounting.	4. Mirror must be firmly mounted to the mounting location. Ensure that mirror is tightened to the specified torque.
	5. High levels of noise in vehicle compartment	5. System performance is increased when noise conditions in the vehicle are lowered. Ideal conditions include windows closed.
	6. Object interfering with microphone input	6. Verify that there is no object, hanging from the mirror, that could be obstructing the microphone.
	7. User not saying ″send″ after a pager dialing request	7. User must say ″send″ at the end of a Pager Dialing request.
	8. Other passengers talking while customer is attempting to use the system	8. Although designed for primary use by the driver, the microphone will pick up passengers in any seat of the vehicle. System performance is increased in low noise environments.
Phonebook names not recognized consistently	1. Phonebook names recorded in high noise conditions	1. For increased system performance, it is recommended that the phone book entries are recorded in a low noise environment. That is, vehicle in park, with windows up.

CONDITION	POSSIBLE CAUSE	CORRECTION
	2. Phonebook name(s) short	2. For increased performance it is recommended that the user use both first and last name as a phonebook entry. Example ″ James Johnson″ as opposed to ″James″.
	3. Phonebook names recorded by another user	3. It is recommended that each user of the system record their own phonebook entries. This will increase the recognition performance.
	4. Similar names in phonebook	4. For increased system performance it is recommended that the user do not enter similar sounding names in the phonebook.
	5. Object interfering with microphone input	5. Object interfering with microphone input.
Poor Phone audio quality.	1. Microphone failure	1. Use a scan tool, and check for Microphone faults.
	2. Rear view mirror not properly fixed to mounting button	2. Mirror must be firmly mounted to the mounting location. Tighten mirror to the specified torque.
	3. System being used in high noise conditions	3. System performance is increased when noise conditions in the vehicle are lowered. Ideal conditions include windows closed.
No Phone Audio	1. Phone setting cause phone audio to be routed to handset.	1. Route audio to ″Hands free″ device.

HANDS FREE MODULE

REMOVAL

NOTE: A battery reconnect procedure must be performed anytime the battery has been disconnected. (Refer to 8 - ELECTRICAL/BATTERY SYSTEM - STANDARD PROCEDURE).

1. Disconnect and isolate the battery negative cable.
2. Remove the glove box.
3. Disconnect the electrical harness connector.

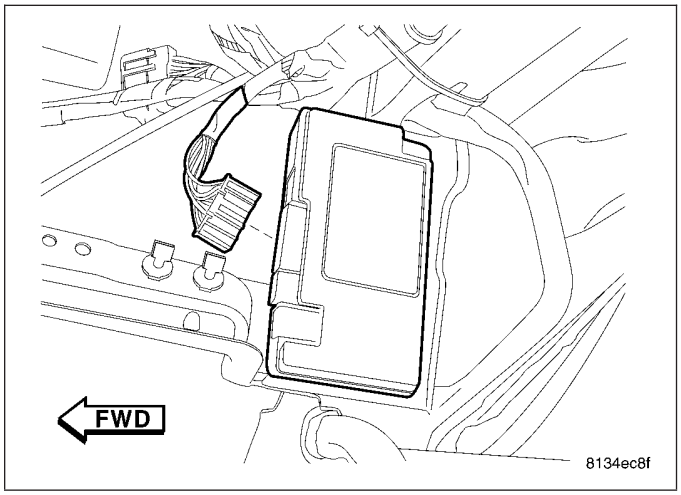

4. Remove the mounting fasteners
5. Remove the hands free module.

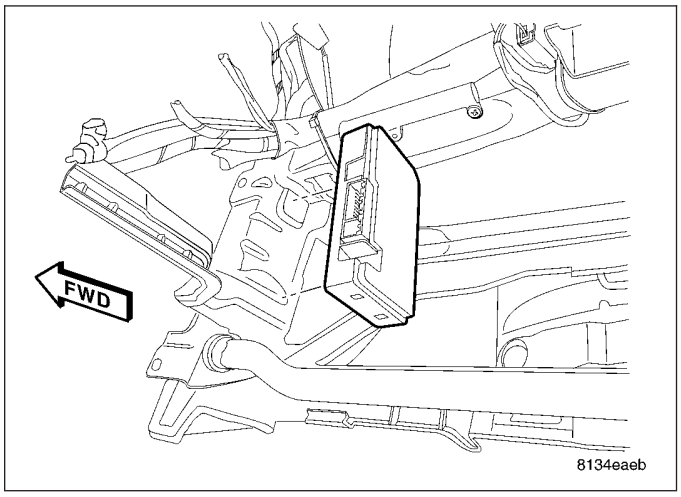

INSTALLATION

NOTE: A battery reconnect procedure must be performed anytime the battery has been disconnected. (Refer to 8 - ELECTRICAL/BATTERY SYSTEM - STANDARD PROCEDURE).

1. Position hands free module. Install and tighten mounting fasteners.

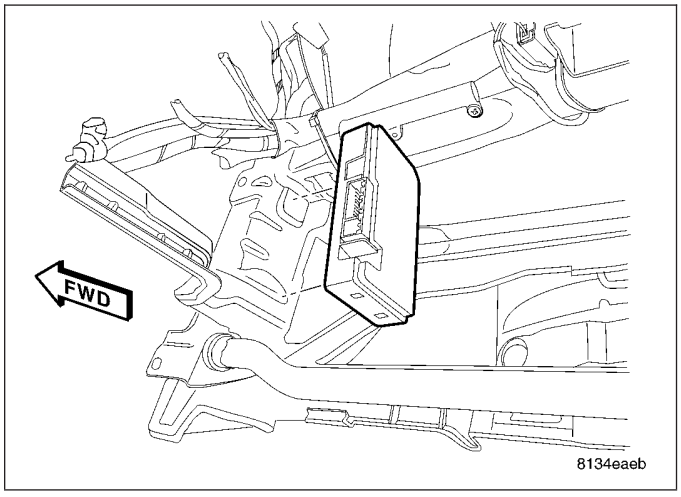

2. Connect wire harness connector.
3. Install glove box.
4. Connect battery negative cable.

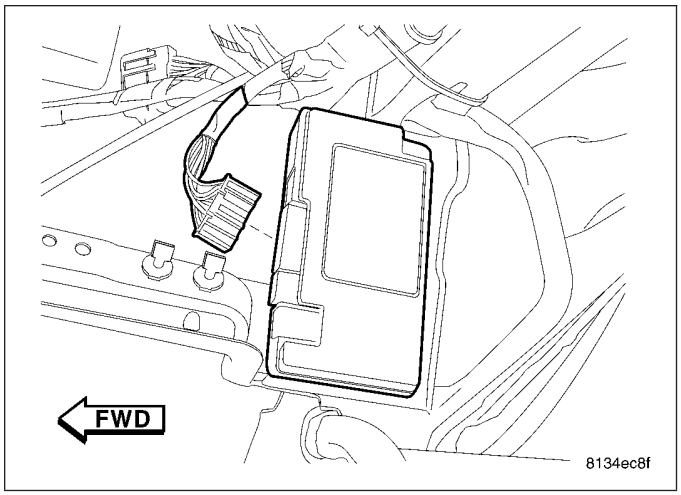

WIRING

TABLE OF CONTENTS

page

WIRING DIAGRAM INFORMATION 8W-01-1
COMPONENT INDEX 8W-02-1
POWER DISTRIBUTION 8W-10-1
FUSE/RELAY BLOCK 8W-11-1
INTEGRATED POWER MODULE 8W-13-1
GROUND DISTRIBUTION 8W-15-1
BUS COMMUNICATIONS 8W-18-1
CHARGING SYSTEM 8W-20-1
STARTING SYSTEM 8W-21-1
FUEL/IGNITION SYSTEM 8W-30-1
TRANSMISSION CONTROL SYSTEM 8W-31-1
VEHICLE SPEED CONTROL 8W-33-1
ANTILOCK BRAKES 8W-35-1
VEHICLE THEFT SECURITY SYSTEM 8W-39-1
INSTRUMENT CLUSTER 8W-40-1
HORN/CIGAR LIGHTER/POWER OUTLET .. 8W-41-1
AIR CONDITIONING/HEATER 8W-42-1
OCCUPANT RESTRAINT SYSTEM 8W-43-1
INTERIOR LIGHTING 8W-44-1
AUDIO SYSTEM 8W-47-1

page

REAR WINDOW DEFOGGER 8W-48-1
OVERHEAD CONSOLE 8W-49-1
FRONT LIGHTING 8W-50-1
REAR LIGHTING 8W-51-1
TURN SIGNALS 8W-52-1
WIPERS 8W-53-1
NAVIGATION/TELECOMMUNICATIONS 8W-55-1
CONVENIENCE SYSTEMS 8W-56-1
POWER WINDOWS 8W-60-1
POWER DOOR LOCKS 8W-61-1
POWER MIRRORS 8W-62-1
POWER SEATS 8W-63-1
POWER SUNROOF 8W-64-1
SPEED PROPORTIONAL STEERING 8W-65-1
SPLICE INFORMATION 8W-70-1
CONNECTOR PIN-OUTS 8W-80-1
CONNECTOR/GROUND/SPLICE LOCATION 8W-91-1
POWER DISTRIBUTION 8W-97-1

8W-01 WIRING DIAGRAM INFORMATION

TABLE OF CONTENTS

page

WIRING DIAGRAM INFORMATION
DESCRIPTION
DESCRIPTION - HOW TO USE WIRING DIAGRAMS . . . 2
DESCRIPTION - CIRCUIT INFORMATION . . . 7
DESCRIPTION - CIRCUIT FUNCTIONS . . . 7
DESCRIPTION - SECTION IDENTIFICATION AND INFORMATION . . . 8
DESCRIPTION - CONNECTOR, GROUND AND SPLICE INFORMATION . . . 9
WARNING
WARNINGS - GENERAL . . . 9
DIAGNOSIS AND TESTING - WIRING HARNESS . . . 10
STANDARD PROCEDURE
STANDARD PROCEDURE - ELECTROSTATIC DISCHARGE (ESD) SENSITIVE DEVICES . . . 11
STANDARD PROCEDURE - TESTING OF VOLTAGE POTENTIAL . . . 12
STANDARD PROCEDURE - TESTING FOR CONTINUITY . . . 12

page

STANDARD PROCEDURE - TESTING FOR A SHORT TO GROUND . . . 12
STANDARD PROCEDURE - TESTING FOR A SHORT TO GROUND ON FUSES POWERING SEVERAL LOADS . . . 13
STANDARD PROCEDURE - TESTING FOR A VOLTAGE DROP . . . 13
SPECIAL TOOLS
WIRING/TERMINAL . . . 14
CONNECTOR
REMOVAL . . . 15
INSTALLATION . . . 18
DIODE
REMOVAL . . . 19
INSTALLATION . . . 19
TERMINAL
REMOVAL . . . 20
INSTALLATION . . . 20
WIRE
STANDARD PROCEDURE - WIRE SPLICING . . . 21

WIRING DIAGRAM INFORMATION

DESCRIPTION

DESCRIPTION - HOW TO USE WIRING DIAGRAMS

DaimlerChrysler Corporation wiring diagrams are designed to provide information regarding the vehicles wiring content. In order to effectively use the wiring diagrams to diagnose and repair DaimlerChrysler Corporation vehicles, it is important to understand all of their features and characteristics.

Diagrams are arranged such that the power (B+) side of the circuit is placed near the top of the page, and the ground (B-) side of the circuit is placed near the bottom of the page.

All switches, components, and modules are shown in the at rest position with the doors closed and the key removed from the ignition.

Components are shown two ways. A solid line around a component indicates that the component is complete. A dashed line around the component indicates that the component is being shown is not complete. Incomplete components have a reference number to indicate the page where the component is shown complete.

It is important to realize that no attempt is made on the diagrams to represent components and wiring as they appear on the vehicle. For example, a short piece of wire is treated the same as a long one. In addition, switches and other components are shown as simply as possible, with regard to function only.

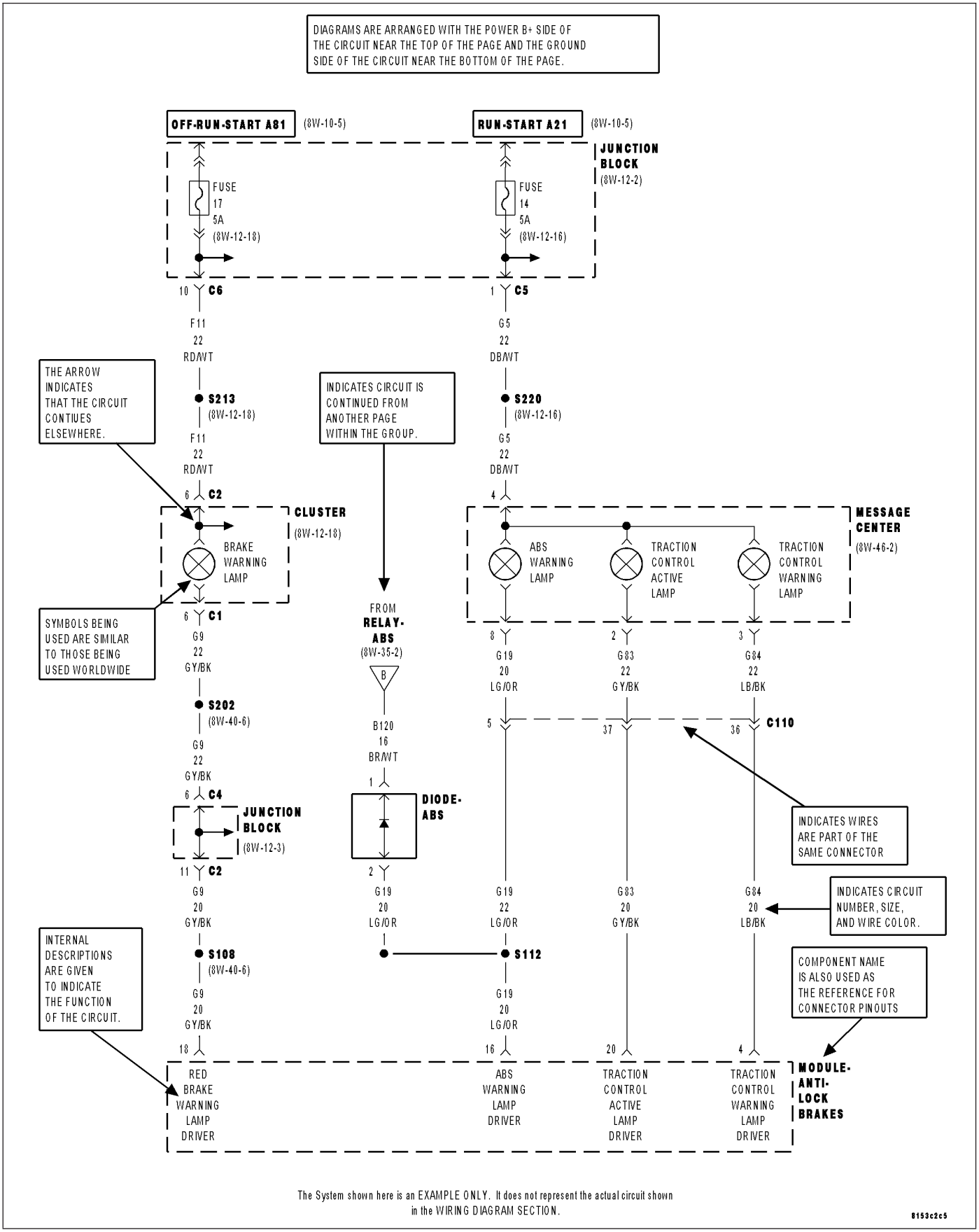

The System shown here is an EXAMPLE ONLY. It does not represent the actual circuit shown in the WIRING DIAGRAM SECTION.

8153c2c5

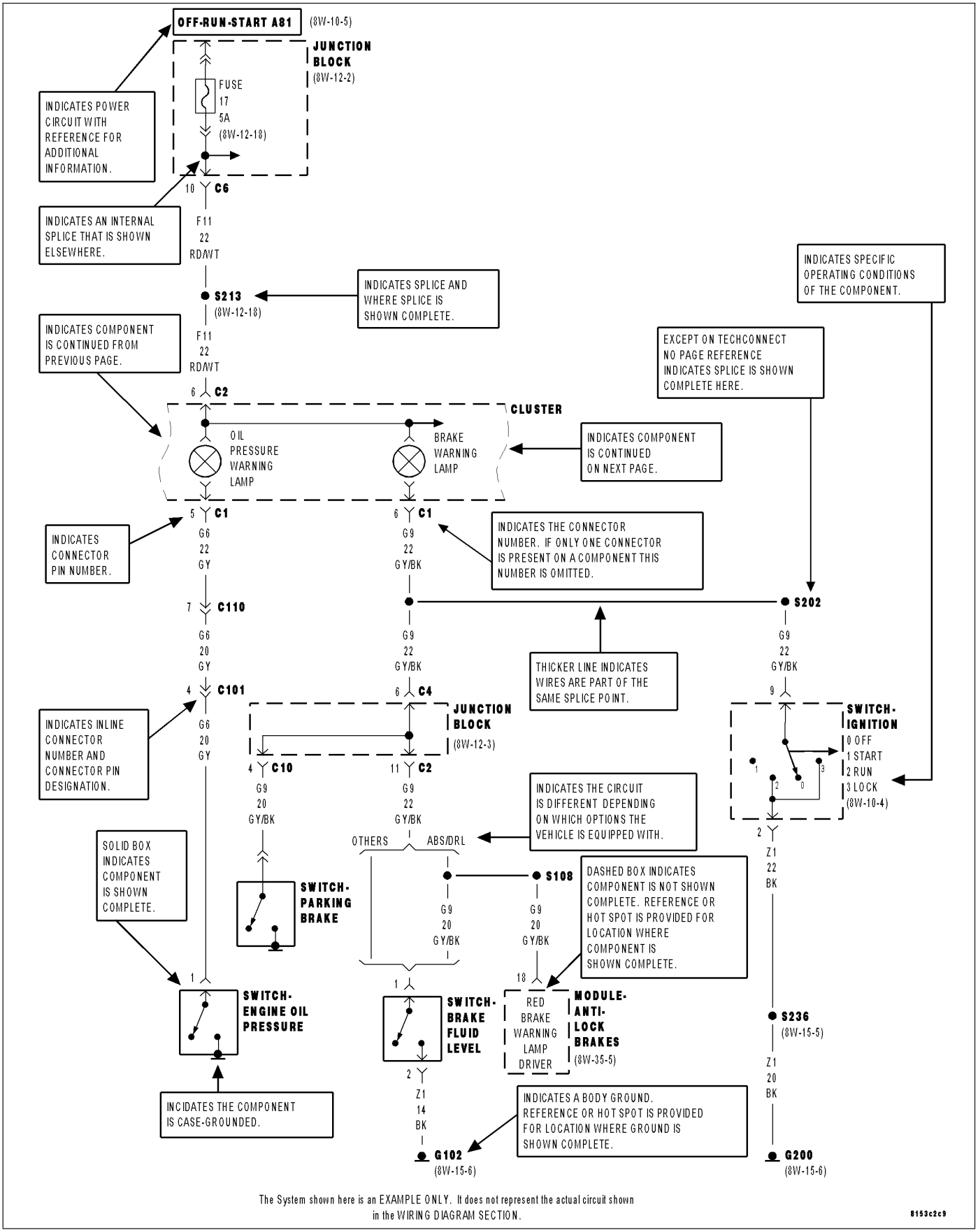

The System shown here is an EXAMPLE ONLY. It does not represent the actual circuit shown in the WIRING DIAGRAM SECTION.

8153c2c9

SYMBOLS

International symbols are used throughout the wiring diagrams. These symbols are consistent with those being used around the world.

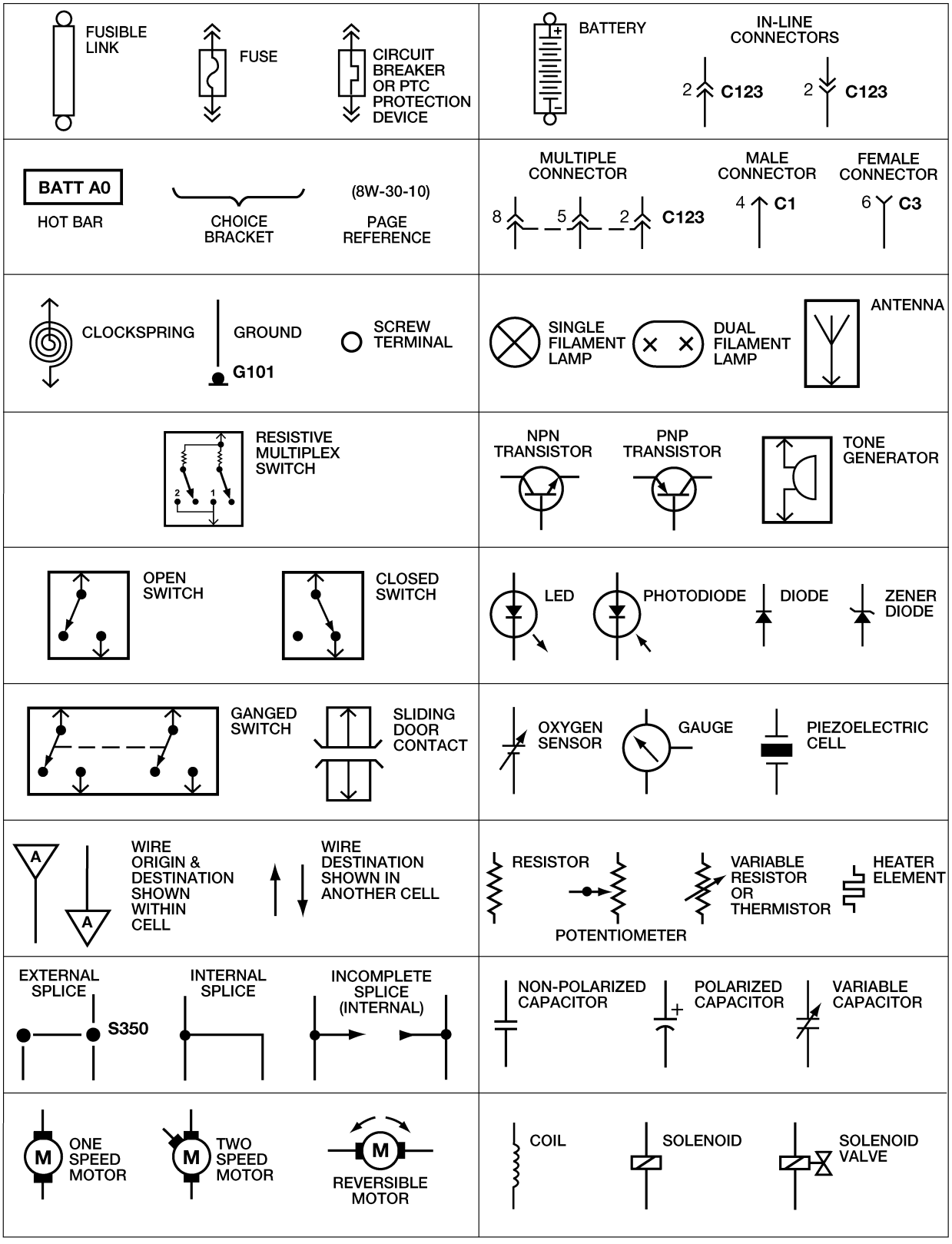
FUSIBLE LINK
FUSE
CIRCUIT BREAKER OR PTC PROTECTION DEVICE
BATTERY
IN-LINE CONNECTORS
2 C123
2 C123
BATT A0
HOT BAR
CHOICE BRACKET
(8W-30-10)
PAGE REFERENCE
MULTIPLE CONNECTOR
8 5 2 C123
MALE CONNECTOR
4 C1
FEMALE CONNECTOR
6 C3
CLOCKSPRING
GROUND
G101
SCREW TERMINAL
SINGLE FILAMENT LAMP
DUAL FILAMENT LAMP
ANTENNA
RESISTIVE MULTIPLEX SWITCH
2
1
NPN TRANSISTOR
PNP TRANSISTOR
TONE GENERATOR
OPEN SWITCH
CLOSED SWITCH
LED
PHOTODIODE
DIODE
ZENER DIODE
GANGED SWITCH
SLIDING DOOR CONTACT
OXYGEN SENSOR
GAUGE
PIEZOELECTRIC CELL
A
A
WIRE ORIGIN & DESTINATION SHOWN WITHIN CELL
WIRE DESTINATION SHOWN IN ANOTHER CELL
RESISTOR
POTENTIOMETER
VARIABLE RESISTOR OR THERMISTOR
HEATER ELEMENT
EXTERNAL SPLICE
S350
INTERNAL SPLICE
INCOMPLETE SPLICE (INTERNAL)
NON-POLARIZED CAPACITOR
POLARIZED CAPACITOR
VARIABLE CAPACITOR
M
ONE SPEED MOTOR
M
TWO SPEED MOTOR
M
REVERSIBLE MOTOR
COIL
SOLENOID
SOLENOID VALVE
80910c6b

TERMINOLOGY

This is a list of terms and definitions used in the wiring diagrams.

LHD . . . . . Left Hand Drive Vehicles
RHD . . . . . Right Hand Drive Vehicles
ATX . . . . . Automatic Transmissions-Front Wheel Drive
MTX . . . . . Manual Transmissions-Front Wheel Drive
AT . . . . . Automatic Transmissions-Rear Wheel Drive
MT . . . . . Manual Transmissions-Rear Wheel Drive
SOHC . . . . . Single Over Head Cam Engine
DOHC . . . . . Double Over Head Cam Engine
Export . . . . . Vehicles Built For Sale In Markets Other Than North America
Except Export . . . . . Vehicles Built For Sale In North America

DESCRIPTION - CIRCUIT INFORMATION

Each wire shown in the diagrams contains a code which identifies the main circuit, a specific part of the main circuit, gage of wire, and color. An example would be **A 2 18 LB/YL**. This is a Battery Feed circuit, level two, eighteen gauge, light blue with a yellow tracer.

WIRE COLOR CODE CHART

COLOR CODE	COLOR
BL	BLUE
BK	BLACK
BR	BROWN
DB	DARK BLUE
DG	DARK GREEN
GY	GRAY
LB	LIGHT BLUE
LG	LIGHT GREEN
OR	ORANGE
PK	PINK
RD	RED
TN	TAN
VT	VIOLET
WT	WHITE
YL	YELLOW
*	WITH TRACER

DESCRIPTION - CIRCUIT FUNCTIONS

All circuits in the diagrams use an alpha/numeric code to identify the wire and it's function. To identify which circuit code applies to a system, refer to the Circuit Identification Code Chart. This chart shows the main circuits only and does not show the secondary codes that may apply to some models.

CIRCUIT IDENTIFICATION CODE CHART

CIRCUIT	FUNCTION
A	BATTERY FEED
B	BRAKE CONTROLS
C	CLIMATE CONTROLS
D	DIAGNOSTIC CIRCUITS
E	DIMMING ILLUMINATION CIRCUITS
F	FUSED CIRCUITS
G	MONITORING CIRCUITS (GAUGES)
H	MULTIPLE
I	NOT USED
J	OPEN
K	POWERTRAIN CONTROL MODULE
L	EXTERIOR LIGHTING
M	INTERIOR LIGHTING
N	MULTIPLE
O	NOT USED
P	POWER OPTION (BATTERY FEED)
Q	POWER OPTIONS (IGNITION FEED)
R	PASSIVE RESTRAINT
S	SUSPENSION/STEERING
T	TRANSMISSION/TRANSAXLE/ TRANSFER CASE
U	OPEN
V	SPEED CONTROL, WIPER/ WASHER
W	WIPERS
X	AUDIO SYSTEMS
Y	TEMPORARY
Z	GROUNDS

DESCRIPTION - SECTION IDENTIFICATION AND INFORMATION

The wiring diagrams are grouped into individual sections. If a component is most likely found in a particular group, it will be shown complete (all wires, connectors, and pins) within that group. For example, the Auto Shutdown Relay is most likely to be found in Group 30, so it is shown there complete. It can, however, be shown partially in another group if it contains some associated wiring.

Splice diagrams in Section 8W-70 show the entire splice and provide references to other sections the splices serves. Section 8W-70 only contains splice diagrams that are not shown in their entirety somewhere else in the wiring diagrams.

Section 8W-80 shows each connector and the circuits involved with that connector. The connectors are identified using the name/number on the diagram pages.

DESCRIPTION - CONNECTOR, GROUND AND SPLICE INFORMATION

CAUTION: Not all connectors are serviced. Some connectors are serviced only with a harness. A typical example might be the Supplemental Restraint System connectors. Always check parts availability before attempting a repair.

IDENTIFICATION

In-line connectors are identified by a number, as follows:

- In-line connectors located in the engine compartment are C100 series numbers.
- In-line connectors located in the instrument panel area are C200 series numbers.
- In-line connectors located in the body are C300 series numbers.
- Jumper harness connectors are C400 series numbers.
- Grounds and ground connectors are identified with a “G” and follow the same series numbering as the in-line connectors.
- Splices are identified with an “S” and follow the same series numbering as the in-line connectors. In addition, S001–S099 numbers are located in the engine compartment.
- Component connectors are identified by the component name instead of a number. Multiple connectors on a component use a C1, C2, etc. identifier.

LOCATIONS

Section 8W-91 contains connector/ground/splice location illustrations. The illustrations contain the connector name (or number)/ground number/splice number and component identification. Connector/ground/splice location charts in section 8W-91 reference the figure numbers of the illustrations.

The abbreviation T/O is used in the component location section to indicate a point in which the wiring harness branches out to a component. The abbreviation N/S means Not Shown in the illustrations

WARNING

WARNINGS - GENERAL

WARNINGS provide information to prevent personal injury and vehicle damage. Below is a list of general warnings that should be followed any time a vehicle is being serviced.

WARNING: Always wear safety glasses for eye protection.

WARNING: Use safety stands anytime a procedure requires being under a vehicle.

WARNING: Be sure that the ignition switch always is in the off position, unless the procedure requires it to be on.

WARNING: Set the parking brake when working on any vehicle. An automatic transmission should be in park. A manual transmission should be in neutral.

WARNING: Operate the engine only in a well-ventilated area.

WARNING: Keep away from moving parts when the engine is running, especially the fan and belts.

WARNING: To prevent serious burns, avoid contact with hot parts such as the radiator, exhaust manifold(s), tail pipe, catalytic converter and muffler.

WARNING: Do not allow flame or sparks near the battery. Gases are always present in and around the battery.

WARNING: Always remove rings, watches, loose hanging jewelry and avoid loose clothing.

DIAGNOSIS AND TESTING - WIRING HARNESS

TROUBLESHOOTING TOOLS

When diagnosing a problem in an electrical circuit there are several common tools necessary. These tools are listed and explained below.

- Jumper Wire - This is a test wire used to connect two points of a circuit. It can be used to bypass an open in a circuit.

WARNING: Never use a jumper wire across a load, such as a motor, connected between a battery feed and ground.

- Voltmeter - Used to check for voltage on a circuit. Always connect the black lead to a known good ground and the red lead to the positive side of the circuit.

CAUTION: Most of the electrical components used in today's vehicles are Solid State. When checking voltages in these circuits, use a meter with a 10 - megohm or greater impedance rating.

- Ohmmeter - Used to check the resistance between two points of a circuit. Low or no resistance in a circuit means good continuity.

CAUTION: Most of the electrical components used in today's vehicles are Solid State. When checking resistance in these circuits use a meter with a 10 - megohm or greater impedance rating. In addition, make sure the power is disconnected from the circuit. Circuits that are powered up by the vehicle's electrical system can cause damage to the equipment and provide false readings.

- Probing Tools - These tools are used for probing terminals in connectors. Select the proper size tool from Special Tool Package 6807, and insert the probing end (2) into the terminal being tested. Use the other end of the tool (1) to insert the meter probe.

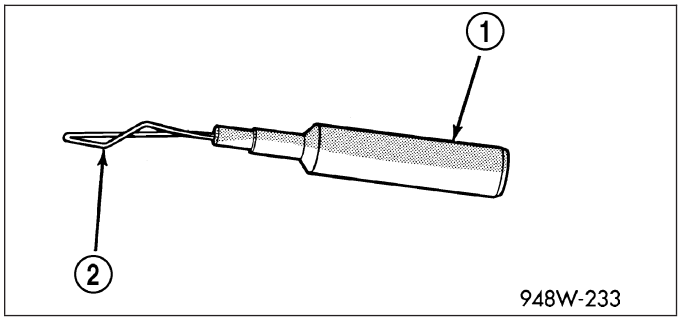

INTERMITTENT AND POOR CONNECTIONS

Most intermittent electrical problems are caused by faulty electrical connections or wiring. It is also possible for a sticking component or relay to cause a problem. Before condemning a component or wiring assembly, check the following items.

- Connectors are fully seated
- Spread terminals, or terminal push out
- Terminals in the wiring assembly are fully seated into the connector/component and locked into position
- Dirt or corrosion on the terminals. Any amount of corrosion or dirt could cause an intermittent problem
- Damaged connector/component casing exposing the item to dirt or moisture
- Wire insulation that has rubbed through causing a short to ground
- Some or all of the wiring strands broken inside of the insulation
- Wiring broken inside of the insulation

TROUBLESHOOTING WIRING PROBLEMS

When troubleshooting wiring problems there are six steps which can aid in the procedure. The steps are listed and explained below. Always check for non-factory items added to the vehicle before doing any diagnosis. If the vehicle is equipped with these items, disconnect them to verify these add-on items are not the cause of the problem.

1. Verify the problem.
2. Verify any related symptoms. Do this by performing operational checks on components that are in the same circuit. Refer to the wiring diagrams.
3. Analyze the symptoms. Use the wiring diagrams to determine what the circuit is doing, where the problem most likely is occurring and where the diagnosis will continue.
4. Isolate the problem area.
5. Repair the problem area.
6. Verify the proper operation. For this step, check for proper operation of all items on the repaired circuit. Refer to the wiring diagrams.

STANDARD PROCEDURE

STANDARD PROCEDURE - ELECTROSTATIC DISCHARGE (ESD) SENSITIVE DEVICES

All ESD sensitive components are solid state and a symbol is used to indicate this. When handling any component with this symbol, comply with the following procedures to reduce the possibility of electrostatic charge build up on the body and inadvertent discharge into the component. If it is not known whether the part is ESD sensitive, assume that it is.

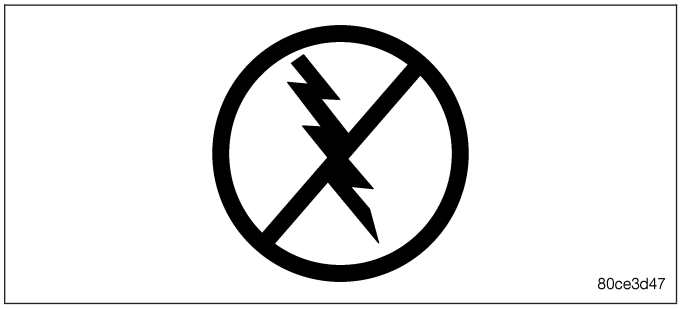

1. Always touch a known good ground before handling the part. This should be repeated while handling the part and more frequently after sliding across a seat, sitting down from a standing position, or walking a distance.
2. Avoid touching electrical terminals of the part, unless instructed to do so by a written procedure.
3. When using a voltmeter, be sure to connect the ground lead first.
4. Do not remove the part from it’s protective packing until it is time to install the part.
5. Before removing the part from it’s package, ground the package to a known good ground on the vehicle.

STANDARD PROCEDURE - TESTING OF VOLTAGE POTENTIAL

1. Connect the ground lead of a voltmeter to a known good ground.
2. Connect the other lead of the voltmeter to the selected test point. The vehicle ignition may need to be turned ON to check voltage. Refer to the appropriate test procedure.

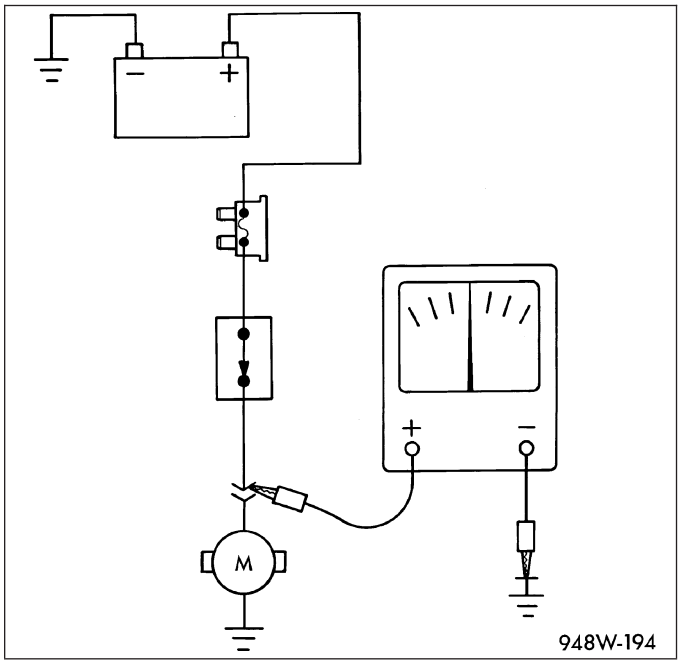

STANDARD PROCEDURE - TESTING FOR CONTINUITY

1. Remove the fuse (1) for the circuit being checked or, disconnect the battery.
2. Connect one lead of the ohmmeter to one side of the circuit being tested
3. Connect the other lead to the other end of the circuit being tested. Low or no resistance means good continuity.

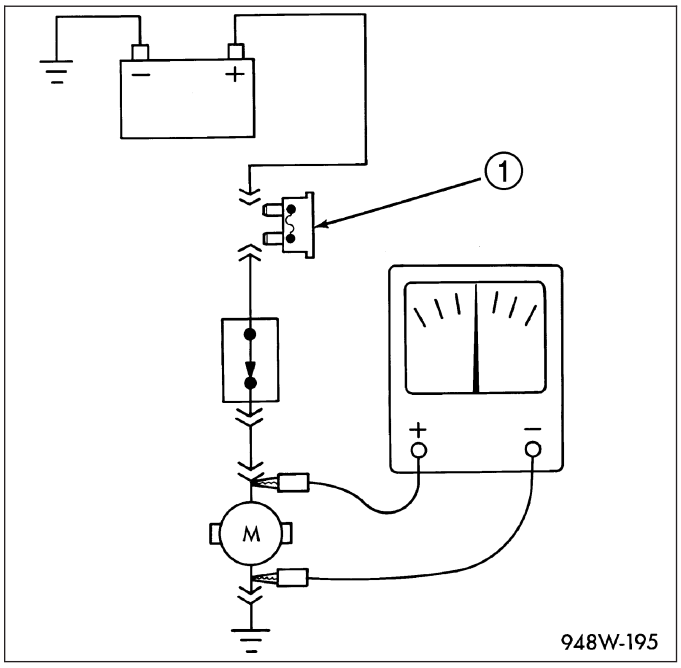

STANDARD PROCEDURE - TESTING FOR A SHORT TO GROUND

1. Remove the fuse and disconnect all items involved with the fuse.
2. Connect a test light or a voltmeter across the terminals of the fuse.
3. Starting at the fuse block, wiggle the wiring harness about six to eight inches apart and watch the voltmeter/test lamp.
4. If the voltmeter registers voltage or the test lamp glows, there is a short to ground in that general area of the wiring harness.

STANDARD PROCEDURE - TESTING FOR A SHORT TO GROUND ON FUSES POWERING SEVERAL LOADS

1. Refer to the wiring diagrams and disconnect or isolate all items on the suspected fused circuits.
2. Replace the blown fuse.
3. Supply power to the fuse by turning ON the ignition switch or re-connecting the battery.
4. Start connecting or energizing the items in the fuse circuit one at a time. When the fuse blows the circuit with the short to ground has been isolated.

STANDARD PROCEDURE - TESTING FOR A VOLTAGE DROP

1. Connect the positive lead of the voltmeter to the side of the circuit closest to the battery.
2. Connect the other lead of the voltmeter to the other side of the switch, component or circuit.
3. Operate the item.
4. The voltmeter will show the difference in voltage between the two points.

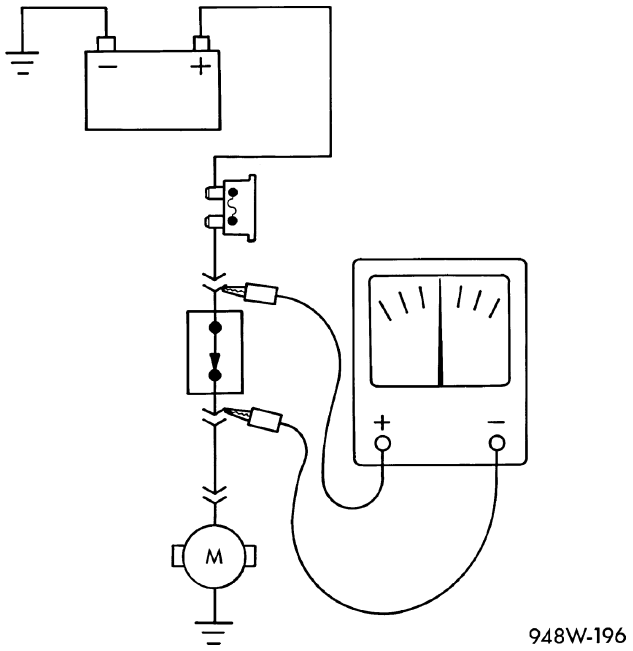

SPECIAL TOOLS

WIRING/TERMINAL

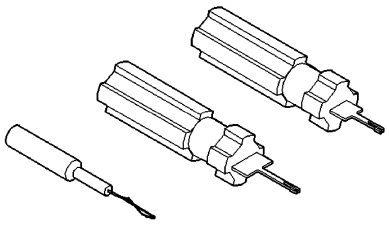

PROBING TOOL PACKAGE 6807

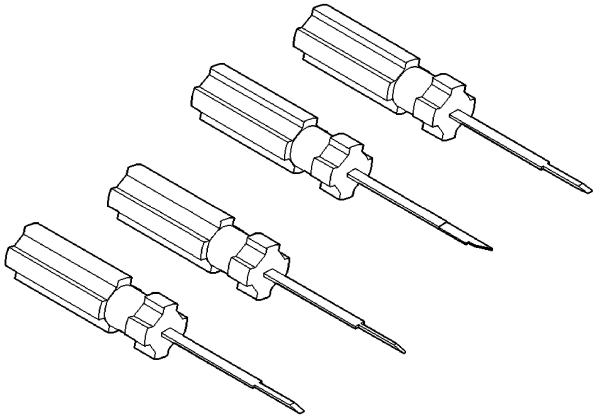

TERMINAL PICK TOOL SET 6680

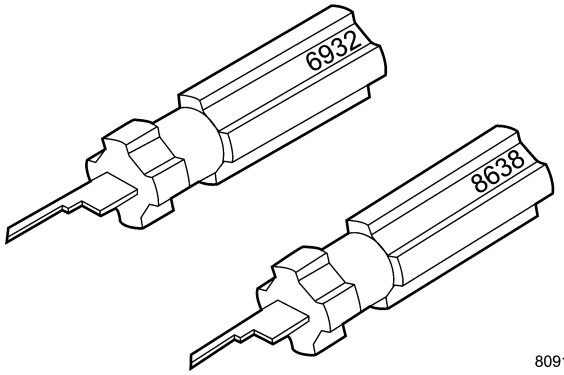

TERMINAL REMOVING TOOLS 6932 AND 8638

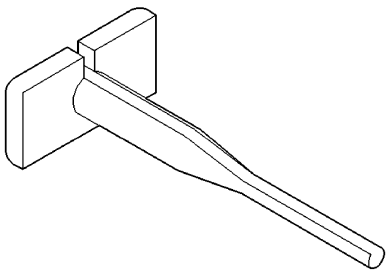

TERMINAL REMOVING TOOL 6934

CONNECTOR

REMOVAL

1. Disconnect battery.
2. Release Connector Lock (2).
3. Disconnect the connector (3) being repaired from its mating half/component.
4. Remove the dress cover (if applicable) (1).

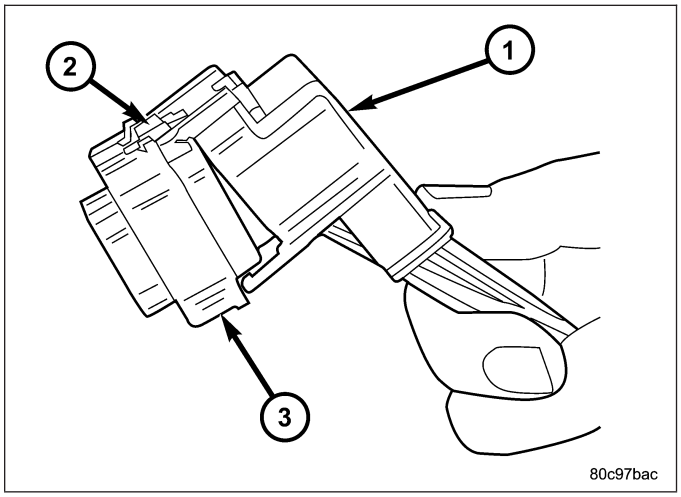

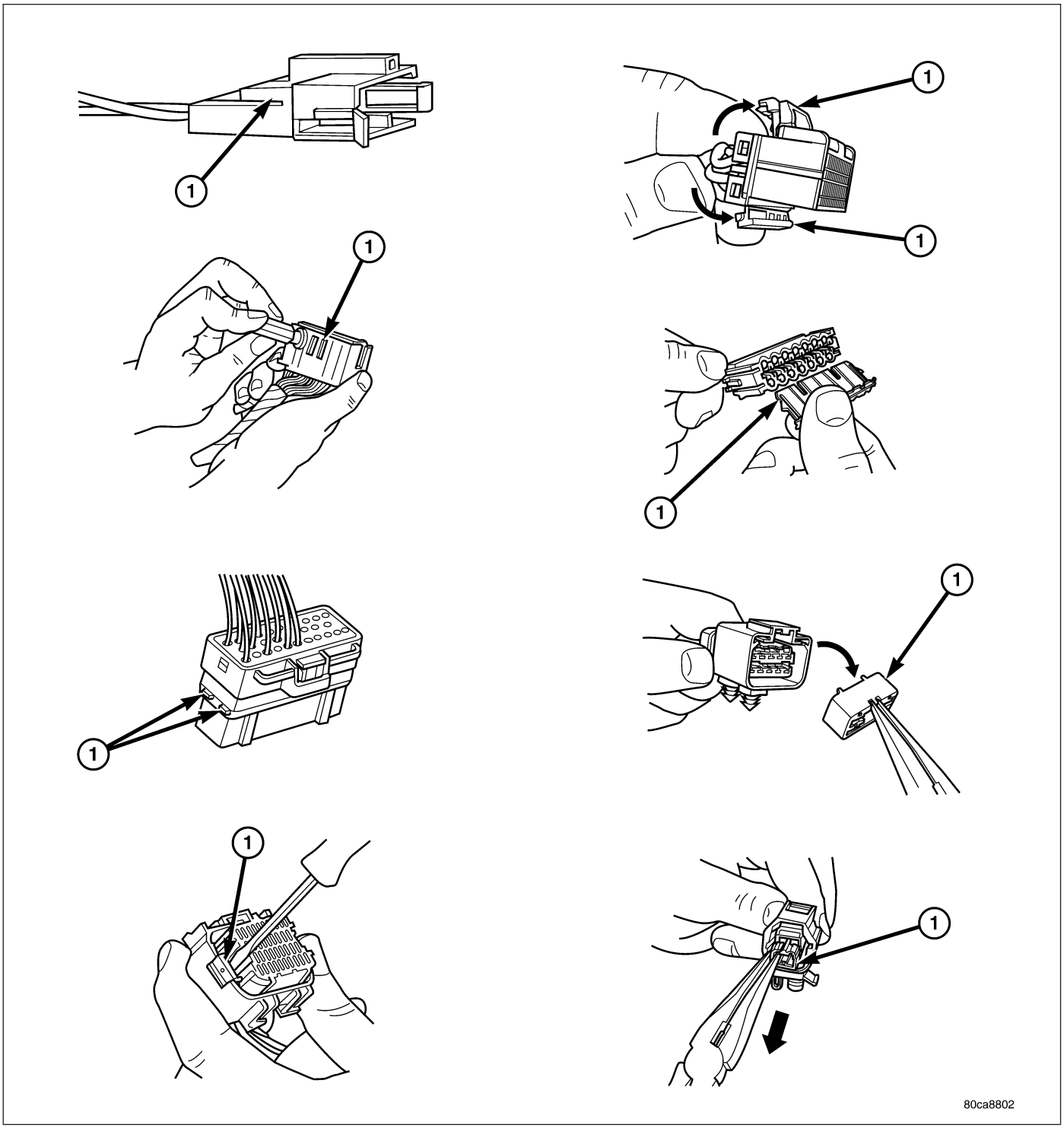

5. Release the Secondary Terminal Lock, if required (1).

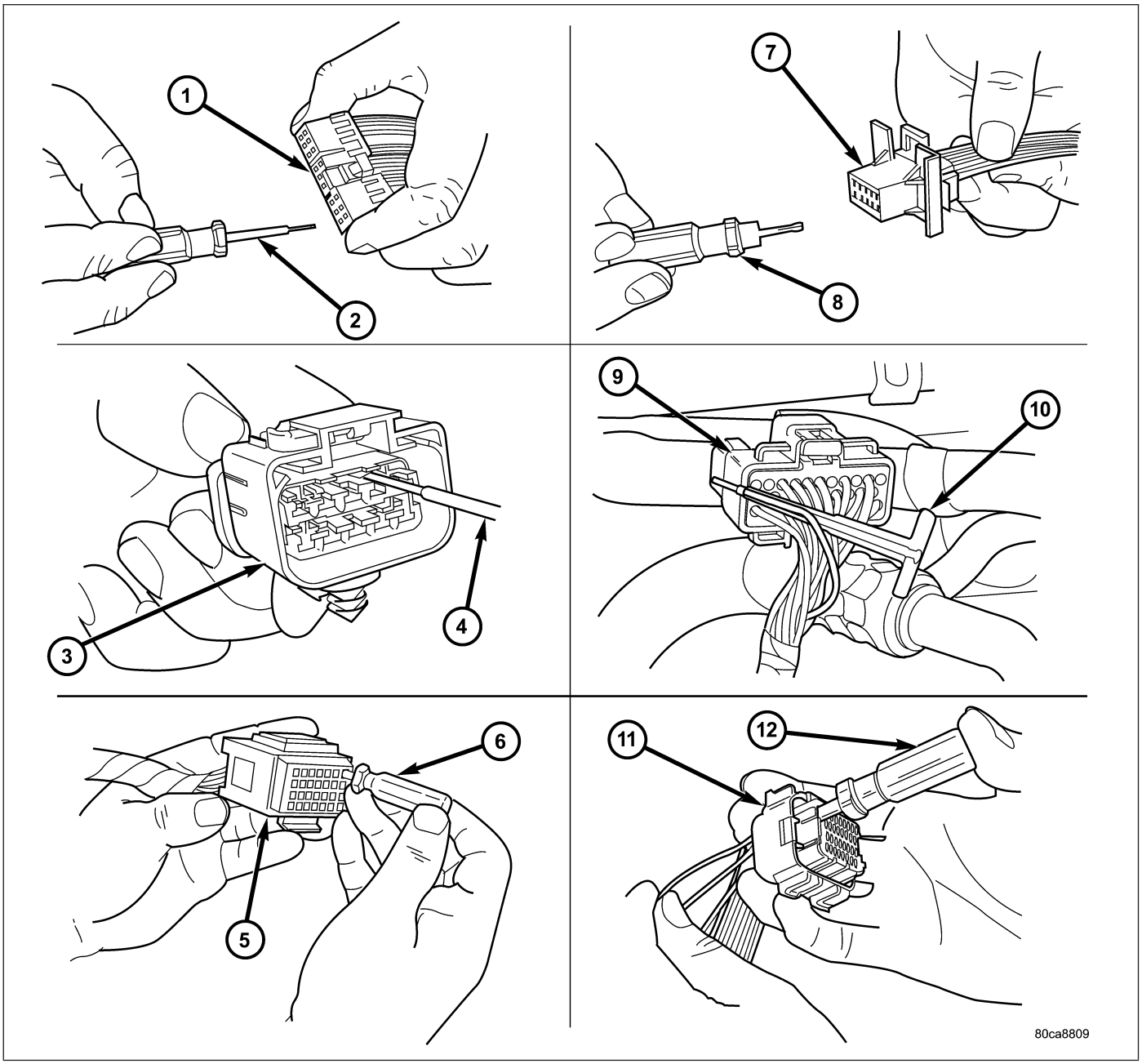

1 - TYPICAL CONNECTOR
2 - PICK FROM SPECIAL TOOL KIT 6680
3 - APEX CONNECTOR
4 - PICK FROM SPECIAL TOOL KIT 6680
5 - AUGAT CONNECTOR
6 - SPECIAL TOOL 6932
7 - MOLEX CONNECTOR
8 - SPECIAL TOOL 6742
9 - THOMAS AND BETTS CONNECTOR
10 - SPECIAL TOOL 6934
11 - TYCO CONNECTOR
12 - SPECIAL TOOL 8638

6. Position the connector locking finger away from the terminal using the proper special tool. Pull on the wire to remove the terminal from the connector.

INSTALLATION

1. Insert the removed terminal in the same cavity on the repair connector.
2. Repeat steps for each terminal in the connector, being sure that all wires are inserted into the proper cavities. For additional connector pin-out identification, refer to the wiring diagrams.
3. When the connector is re-assembled, the secondary terminal lock must be placed in the locked position to prevent terminal push out.
4. Replace dress cover (if applicable).
5. Connect connector to its mating half/component.
6. Connect battery and test all affected systems.

DIODE

REMOVAL

1. Disconnect the battery.
2. Locate the diode in the harness, and remove the protective covering.
3. Remove the diode from the harness, pay attention to the current flow direction (1) (2) (3).

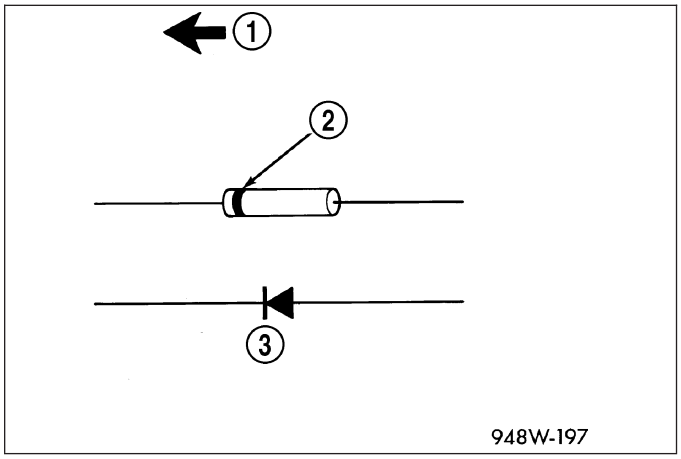

INSTALLATION

1. Remove the insulation from the wires in the harness. Only remove enough insulation to solder in the new diode.
2. Install the new diode in the harness, making sure current flow is correct. If necessary, refer to the appropriate wiring diagram for current flow.
3. Solder the connection together using rosin core type solder only. **Do not use acid core solder.**
4. Tape the diode to the harness using electrical tape. Make sure the diode is completely sealed from the elements.
5. Re-connect the battery and test affected systems.

TERMINAL

REMOVAL

1. Follow steps for removing terminals described in the connector removal section.
2. Cut the wire 6 inches from the back of the connector.

INSTALLATION

1. Select a wire from the terminal repair kit that best matches the color and gage of the wire being repaired.
2. Cut the repair wire to the proper length and remove one–half (1/2) inch of insulation.
3. Splice the repair wire to the wire harness (see wire splicing procedure) (Refer to 8 - ELECTRICAL/WIRING DIAGRAM INFORMATION/WIRE - STANDARD PROCEDURE).
4. Insert the repaired wire into the connector.
5. Install the connector locking wedge, if required, and reconnect the connector to its mating half/component.
6. Re-tape the wire harness starting at 1–1/2 inches behind the connector and 2 inches past the repair.
7. Connect battery and test all affected systems.

WIRE

STANDARD PROCEDURE - WIRE SPLICING

When splicing a wire, it is important that the correct gage be used as shown in the wiring diagrams.

1. Remove one-half (1/2) inch of insulation from each wire that needs to be spliced.
2. Place a piece of adhesive lined heat shrink tubing on one side of the wire. Make sure the tubing will be long enough to cover and seal the entire repair area.
3. Place the strands of wire overlapping each other inside of the splice clip (1).

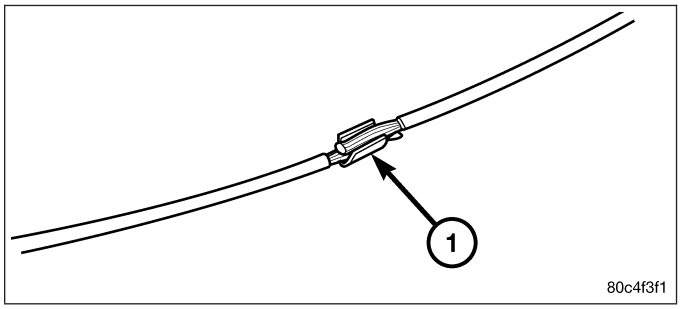

4. Using crimping tool (1), Mopar p/n 05019912AA, crimp the splice clip and wires together.

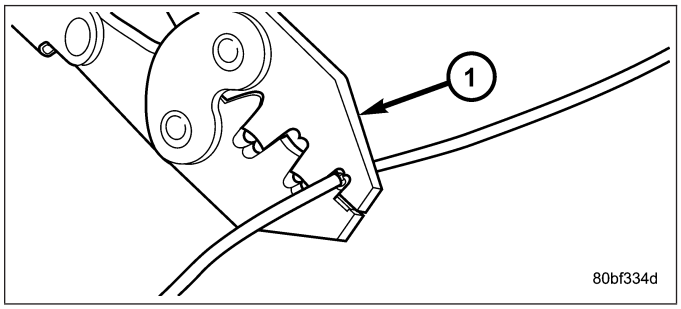

5. Solder (3) the connection (2) together using rosin core type solder (1) only.

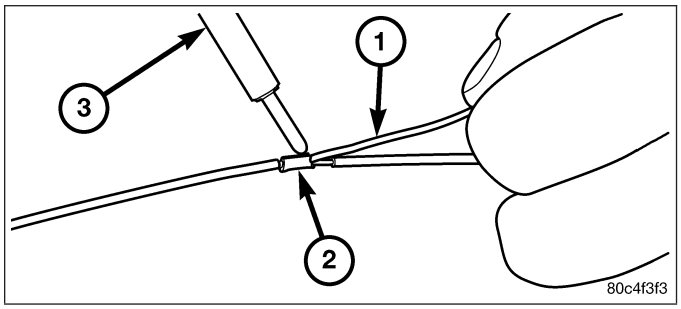

CAUTION: DO NOT USE ACID CORE SOLDER.

6. Center the heat shrink tubing (2) over the joint and heat using a heat gun. Heat the joint until the tubing is tightly sealed and sealant (1) comes out of both ends of the tubing.

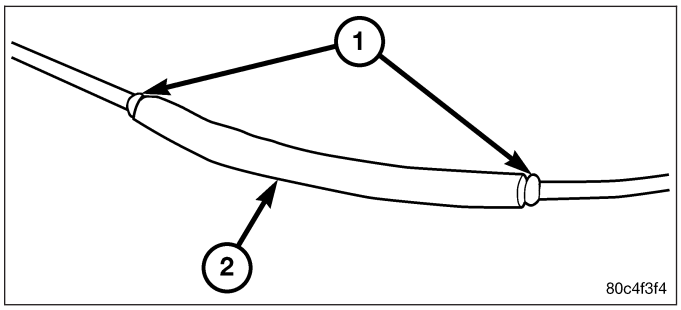

8W-02 COMPONENT INDEX

Component	Page
Actuator-Blend Doors	8W-42
Actuator-Mode Door	8W-42
Actuator-Recirculation Door	8W-42
Airbags	8W-43
Amplifiers	8W-47, 48
Antenna-Global Positioning System	8W-55
Antenna-Satellite	8W-47
Assembly-Electrohydraulic Control Unit	8W-31
Assembly-Exhaust Gas Recirculation Valve	8W-30
Assembly-Natural Vacuum Leak Detection	8W-30
Assembly-Shifter Lever	8W-31
Assembly-Transmission Solenoid/Pressure Switch	8W-31
Assembly-Variable Line Pressure	8W-31
Backlite-Antenna	8W-47
Backlite-Electric Heated	8W-48
Battery	8W-10
Booster-Active Brake	8W-35
Capacitors-Ignition	8W-30
Circuit Breakers	8W-10
Cluster	8W-40
Clutch-A/C Compressor	8W-42
Coils-Ignition	8W-30
Connector-Interface-Police/Taxi	8W-40
Connector-Police Accessories	8W-11
Control-A/C-Heater	8W-42
Data Link Connector	8W-18
Diodes	8W-10
Display-Park Assist	8W-56
Fan-Radiator	8W-30
Flasher-Headlamp	8W-50
Fuse/Relay Block	8W-11
Fuses	8W-10, 11, 13
Fusible Link	8W-10, 13
Generator	8W-20
Glow Plugs	8W-30
Grounds	8W-15
Heater-Cabin	8W-42
Heater-Crankcase Vent	8W-30
Heaters-Seat	8W-63
Horns	8W-41
Injectors-Fuel	8W-30
Lamp-Cargo	8W-44
Lamp-Center High Mounted Stop	8W-51
Lamp-Dome	8W-44
Lamp-Glove Box	8W-44
Lamp-PRNDL	8W-44
Lamp-Reading-Front	8W-44
Lamp-Underhood	8W-44
Lamps-Backup	8W-51
Lamps-Courtesy	8W-44
Lamps-Fog	8W-50, 51
Lamps-High Beam	8W-50
Lamps-High Intensity Discharge	8W-50
Lamps-License	8W-51
Lamps-Low Beam	8W-50
Lamps-Park/Turn Front	8W-50
Lamps-Side Marker	8W-50
Lamps-Side Repeater	8W-52
Lamps-Spot	8W-44
Lamps-Tail Park	8W-51
Lamps-Tail Stop/Park	8W-51
Lamps-Tail Stop/Turn	8W-51, 52
Lamps-Tail Turn	8W-52
Lamps-Tail/Stop	8W-51
Lamps-Turn Rear	8W-52
Lamps-Vanity	8W-44
Latches-Doors	8W-61
Lighter-Cigar	8W-41
Media System-Monitor/DVD	8W-47
Mega Fuse	8W-10
Mirrors	8W-49, 55, 62
Module-Antilock Brakes	8W-35
Module-Brake	8W-51
Module-Clock-Analog	8W-40
Module-Electronic Overhead	8W-49
Module-Electronic Shift	8W-31
Module-Engine Control	8W-30
Module-Front Blower Power	8W-42
Module-Front Control	8W-13, 18
Module-Fuel Pump	8W-30
Module-Glow Plug	8W-30
Module-Hands Free	8W-55
Module-Headlamp Leveling	8W-50
Module-Heated Seats	8W-63
Module-Integrated Power	8W-13
Module-Interface-Police/Taxi	8W-40
Module-Intrusion Transceiver	8W-39
Module-Memory Seat	8W-56, 63
Module-Occupant Classification	8W-43
Module-Occupant Restraint Controller	8W-43
Module-Park Assist	8W-56
Module-Powertrain Control	8W-30, 31
Module-Sentry Key Remote Entry	8W-39
Module-Steering Column-Lock	8W-39
Module-Steering Control	8W-33, 41, 43, 47, 50, 51, 52, 53, 56, 65
Module-Traffic Information Receiver	8W-55

Component	Page
Module-Transmission Control	8W-31
Modules-Door	8W-60, 62
Motor-Adjustable Pedals	8W-56
Motor-Blower-Front	8W-42
Motor-Boost Pressure Servo	8W-30
Motor-Headlamp Washer	8W-53
Motor-Intake Swirl Servo	8W-30
Motor-Steering Telescope	8W-56
Motor-Steering Tilt	8W-56
Motor/Module-Sunroof	8W-64
Motors-Seats Adjuster	8W-63
Motors-Windows	8W-60
Motors-Wipers	8W-53
Post-Pass Through	8W-10
Power Distribution Center	8W-10
Power Outlets	8W-41
Pump-Washer-Windshield	8W-53
Radio	8W-47
Receiver-Intrusion Sensor	8W-39
Receiver-Satellite	8W-47
Relay-A/C Clutch	8W-42
Relay-Accessory Delay	8W-10
Relay-Adjustable Pedals	8W-56
Relay-Auto Shut Down	8W-30
Relay-Fuel Pump	8W-30
Relay-Headlamp Washer	8W-53
Relay-High Intensity Discharge Lamp	8W-50
Relay-Horn	8W-41
Relay-PTCs	8W-42
Relay-Park Lamp	8W-50, 51
Relay-Rear Window Defogger	8W-48
Relay-Run	8W-10
Relay-Starter	8W-21
Relay-Stop Lamp Inhibit	8W-51
Relay-Transmission	8W-31
Relay-Transmission Control	8W-31
Relays-Fog Lamps	8W-50, 51
Relays-Police	8W-11
Relays-Radiator Fan	8W-30
Relays-Wipers	8W-53
Resistor Block-Blower Motor-Front	8W-42
Seat Belt-Tensioners	8W-43
Sensor-Accelerator Pedal Position	8W-30
Sensor-Adjustable Pedals	8W-56
Sensor-Ambient Air Temperature	8W-30
Sensor-Boost Pressure	8W-30
Sensor-Brake Fluid Level	8W-40
Sensor-Brake Pedal Travel	8W-35
Sensor-Brake Pressure	8W-35
Sensor-Camshaft Position	8W-30
Sensor-Crankshaft Position	8W-30
Sensor-Dynamics	8W-65
Sensor-Engine Coolant Temperature	8W-30
Sensor-Evaporator Temperature	8W-42
Sensor-Exhaust Differential Pressure	8W-30
Sensor-Exhaust Gas Pressure	8W-30
Sensor-Fuel Pressure	8W-30
Sensor-Fuel Temperature	8W-30
Sensor-Inlet Air Pressure	8W-30
Sensor-Inlet Air Temperature	8W-30
Sensor-Intake Air Temperature	8W-30
Sensor-Knocks	8W-30
Sensor-Manifold Absolute Pressure	8W-30
Sensor-Mass Air Flow	8W-30
Sensor-Oil Pressure	8W-30
Sensor-Oil Temperature	8W-30
Sensor-Post-Catalyst Exhaust Gas Temperature	8W-30
Sensor-Pre-Catalyst Exhaust Gas Temperature	8W-30
Sensor-Rain	8W-53
Sensor-Seat Track Position-Driver	8W-43
Sensor-Shift Lever Position	8W-31
Sensor-Sun	8W-42
Sensor-Transmission Range	8W-31
Sensor-Washer Fluid Level-Front	8W-53
Sensors Impact	8W-43
Sensors Speed	8W-31
Sensors-Headlamps Level	8W-50
Sensors-Oxygen	8W-30
Sensors-Park Assist	8W-56
Sensors-Seat Weight	8W-43
Sensors-Wheel Speed	8W-35, 40
Siren	8W-39
Solenoid-Brake Transmission Shift Interlock	8W-31
Solenoid-Fuel Pressure	8W-30
Solenoid-Fuel Quantity	8W-30
Solenoid-Manifold Tuning Valve	8W-30
Solenoid-Multi Displacement System Cyls	8W-30
Solenoid-Proportional Purge	8W-30
Solenoid-Short Runner Valve	8W-30
Speakers	8W-47
Splices	8W-70
Starter	8W-21
Switch-Adjustable Pedals	8W-56
Switch-Autostick	8W-31
Switch-Bank	8W-35, 44, 52, 53
Switch-Decklid Release	8W-61
Switch-Headlamp	8W-44, 50
Switch-Horn	8W-41
Switch-Ignition	8W-10
Switch-Liftgate Release	8W-61
Switch-Memory Set	8W-56, 63
Switch-Mirror	8W-62
Switch-Oil Level	8W-30
Switch-Oil Pressure	8W-30
Switch-Parking Brake	8W-40

Component	Page
Switch-Security Hood	8W-39
Switch-Stop Lamp	8W-51
Switch-Sunroof	8W-64
Switches-Heated Seat	8W-63
Switches-Power Windows	8W-60
Switches-Seat Belts	8W-40
Switches-Seats	8W-63
Switches-Steering	8W-41, 47
Switches-Window/Door Locks	8W-60, 61
Throttle Body	8W-30
Transducer-A/C Pressure	8W-42
Transmitter-Intrusion Sensor	8W-39
Transponders-Tire Pressure	8W-40
Valve-EGR	8W-30
Valve-EGR Air Flow Control	8W-30

8W-10 POWER DISTRIBUTION

Component	Page
Amplifier-Antenna-Backlite	8W-10-18, 22
Amplifier-Radio	8W-10-9
Amplifier-Subwoofer	8W-10-12
Backlite-Electric Heated	8W-10-22
Battery	8W-10-7, 8
Circuit Breaker No. 1	8W-10-16
Circuit Breaker No. 2	8W-10-16
Circuit Breaker No. 3	8W-10-17
Cluster	8W-10-8, 12, 14, 16, 19
Control-A/C-Heater	8W-10-8, 13, 20, 22
Data Link Connector	8W-10-12
Diode-No. 1	8W-10-13, 14
Diode-No. 2	8W-10-20
Diode-Zener	8W-10-11
Flasher-Headlamp	8W-10-18
Fuse 1	8W-10-7, 8
Fuse 2	8W-10-7, 10
Fuse 3	8W-10-7, 10
Fuse 4	8W-10-10
Fuse 5	8W-10-11
Fuse 6	8W-10-12
Fuse 7	8W-10-12
Fuse 8	8W-10-12
Fuse 9	8W-10-15
Fuse 10	8W-10-12, 15
Fuse 14	8W-10-8
Fuse 15	8W-10-19
Fuse 16	8W-10-19
Fuse 17	8W-10-19
Fuse 18	8W-10-17
Fuse 19	8W-10-19
Fuse 20	8W-10-19
Fuse 27	8W-10-13
Fuse 28	8W-10-20
Fuse 29	8W-10-13
Fuse 30	8W-10-11
Fuse 35	8W-10-17, 18
Fuse 36	8W-10-8
Fuse 37	8W-10-14
Fuse 38	8W-10-8
Fuse 39	8W-10-22
Fuse 40	8W-10-13
Fuse 41	8W-10-20
Fuse 42	8W-10-20
Fuse 43	8W-10-22
Fuse 44	8W-10-8
Fuse/Relay Block	8W-10-7, 8
Fusible Link	8W-10-7, 10
G302	8W-10-11
G303	8W-10-7
Generator	8W-10-7
Lamp-Cargo	8W-10-8
Lamp-Dome	8W-10-10
Lamp-Fog-Left Rear	8W-10-15
Lamp-Fog-Right Rear	8W-10-15
Lamp-High Intensity Discharge-Left	8W-10-21
Lamp-High Intensity Discharge-Right	8W-10-21
Lamp-Spot-Left	8W-10-15
Lamp-Spot-Right	8W-10-12
Lighter-Cigar	8W-10-17
Media System-Monitor/DVD	8W-10-9
Mega Fuse	8W-10-8
Mirror-Inside Rearview	8W-10-13
Mirror-Outside Rearview-Driver	8W-10-22
Mirror-Outside Rearview-Passenger	8W-10-22
Module-Antilock Brakes	8W-10-14
Module-Brake	8W-10-19
Module-Clock-Analog	8W-10-8
Module-Door-Driver	8W-10-11, 17
Module-Door-Passenger	8W-10-11, 17
Module-Electronic Overhead	8W-10-8, 18
Module-Engine Control	8W-10-12, 14
Module-Front Blower Power	8W-10-20
Module-Front Control	8W-10-8, 14, 15, 17, 20
Module-Fuel Pump	8W-10-12
Module-Glow Plug	8W-10-7
Module-Hands Free	8W-10-9
Module-Headlamp Leveling	8W-10-21
Module-Heated Seats	8W-10-11
Module-Integrated Power	8W-10-7, 8, 10, 12, 14, 15, 17, 20
Module-Interface-Police/Taxi	8W-10-11
Module-Intrusion Transceiver	8W-10-8
Module-Memory Seat	8W-10-16
Module-Occupant Classification	8W-10-12, 13
Module-Occupant Restraint Controller	8W-10-13, 20
Module-Park Assist	8W-10-20
Module-Powertrain Control	8W-10-12, 14
Module-Sentry Key Remote Entry	8W-10-8, 14, 19
Module-Steering Column-Lock	8W-10-12, 19
Module-Steering Control	8W-10-11
Module-Traffic Information Receiver	8W-10-9
Module-Transmission Control	8W-10-14
Motor-Blower-Front	8W-10-20
Motor/Module-Sunroof	8W-10-9
Post-Pass Through	8W-10-7
Power Distribution Center	8W-10-2, 7, 8, 10, 11, 12, 13, 14, 15, 16, 17, 19, 20, 22
Power Outlet-Console	8W-10-15
Power Outlet-Rear	8W-10-19
Radio	8W-10-9
Receiver-Satellite	8W-10-9
Relay-Accessory Delay	8W-10-17
Relay-Fog Lamp-Rear	8W-10-15
Relay-Fuel Pump	8W-10-12, 13
Relay-PTC No. 1	8W-10-7
Relay-PTC No. 2	8W-10-7
Relay-PTC No. 3	8W-10-7
Relay-Police-No. 1	8W-10-18
Relay-Police-No. 2	8W-10-18
Relay-Police-No. 3	8W-10-18
Relay-Rear Window Defogger	8W-10-22
Relay-Run	8W-10-20
Relay-Stop Lamp Inhibit	8W-10-19
Relay-Transmission	8W-10-13, 14
Relay-Wiper-Rear	8W-10-19
Sensor-Headlamp Level-Left	8W-10-21
Sensor-Headlamp Level-Right	8W-10-20
Sensor-Mass Air Flow	8W-10-14
Sensor-Rain	8W-10-18
Siren	8W-10-8
Starter	8W-10-7
Switch-Bank	8W-10-13
Switch-Heated Seat-Left	8W-10-13
Switch-Heated Seat-Right	8W-10-13
Switch-Ignition	8W-10-12
Switch-Mirror	8W-10-11, 18
Switch-Seat-Driver	8W-10-16
Switch-Seat-Passenger	8W-10-16
Switch-Stop Lamp	8W-10-13, 19
Switch-Window/Door Lock-Driver	8W-10-17
Switch-Window/Door Lock-Driver Express	8W-10-17
Switch-Window/Door Lock-Passenger	8W-10-17
Switch-Window/Door Lock-Passenger Express	8W-10-18
Transponder-Tire Pressure-Left Front	8W-10-21
Transponder-Tire Pressure-Right Front	8W-10-21
Transponder-Tire Pressure-Right Rear	8W-10-20

POWER DISTRIBUTION CENTER

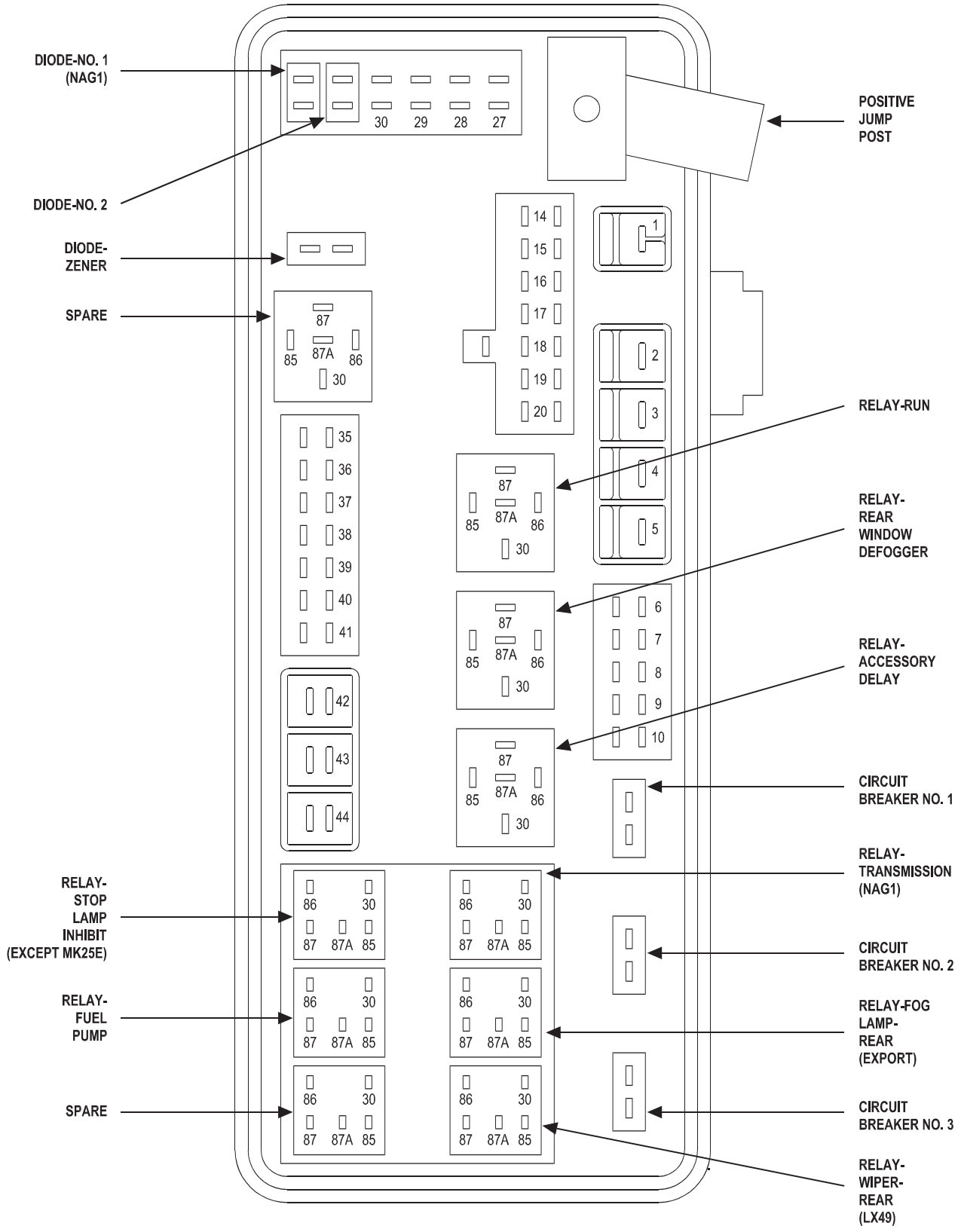

FUSES
(PDC)

FUSE NO.	AMPS	FUSED CIRCUIT	FUNCTION
1	60A	A114 10RD/BK	B(+) (I.O.D.)
2	40A	A22 12RD/WT	FUSED B(+)
3	20A	A932 16RD ◐◐	FUSED B(+)
		A932 18RD ◐	FUSED B(+)
4	40A	A22 12RD/WT	FUSED B(+)
5	30A	A33 14RD/YL ◆◆	FUSED B(+)
5	40A	A33 14RD/YL ◆	FUSED B(+)
6	20A	A109 16RD/DG	FUSED B(+)
7	20A	A139 16RD/YL ◆	FUSED B(+)
	15A	A930 18RD/LG ▬▬▬	FUSED B(+)
8	15A	A106 20LB/RD	FUSED B(+)
9	20A	A305 16RD/LB	FUSED B(+)
10	10A	A35 20RD/DB ▲▲	FUSED B(+)
		A35 20RD/DB ▲▲	FUSED B(+)
	15A	A931 18RD/WT ▬▬▬	FUSED B(+)
14	10A	A23 20RD/YL	FUSED B(+) (I.O.D.)
15	20A	A914 16RD ◆◆◆◆	FUSED B(+)
16	20A	A105 16DB/RD ▼▼	FUSED B(+)
17	20A	A917 18RD/TN	FUSED B(+)
18	20A	A205 18RD/OR	FUSED B(+)
19	10A	A103 20PK/DB	FUSED B(+)
		A103 20PK/DB ▬▬	FUSED B(+)
20	20A	A909 20RD/TN ▼▼	FUSED B(+)
		A909 16RD/TN ▼▼	FUSED B(+)
27	10A	F201 20PK/OR	FUSED IGNITION SWITCH OUTPUT (RUN-START)
28	10A	F214 20PK/LG ◆◆	FUSED RUN RELAY OUTPUT
28	5A	F214 20PK/LG ◆	FUSED RUN RELAY OUTPUT
29	5A	F202 20PK/GY	FUSED IGNITION SWITCH OUTPUT (RUN-START)
30	10A	A913 20RD/GY	FUSED B(+)
35	5A	F880 20PK/DG	FUSED ACCESSORY DELAY RELAY OUTPUT
36	20A	A300 16GY/LG	FUSED B(+) (I.O.D.)
37	15A	F942 18PK/BK ###	FUSED TRANSMISSION RELAY OUTPUT
38	5A	A117 20RD/DG	FUSED B(+) (I.O.D.)
		A117 20RD/DG ▼	FUSED B(+) (I.O.D.)
39	10A	C16 20DB/GY	FUSED REAR WINDOW DEFOGGER RELAY OUTPUT
40	5A	F23 20RD/OR ◆◆	FUSED IGNITION SWITCH OUTPUT (RUN-START)
40	10A	F23 20RD/OR ◆	FUSED IGNITION SWITCH OUTPUT (RUN-START)
41	10A	F500 20DG/PK	FUSED RUN RELAY OUTPUT
42	30A	C7 12DB	FUSED RUN RELAY OUTPUT
43	30A	C15 12DB/WT	FUSED REAR WINDOW DEFOGGER RELAY OUTPUT
44	20A	X13 16DG/GY	FUSED B(+) (I.O.D.)

◆◆◆◆ TRAILER TOW
▲▲ EXPORT
NAG1
▼ LX48
▼▼ LX49
◆ SRT8
◆◆ EXCEPT SRT8
◐ LX48 POLICE
◐◐ LX49 POLICE
▬▬ EXCEPT MK25E
▬▬▬ POLICE

CIRCUIT BREAKERS (PDC)

CB	AMPS	FUSED CIRCUIT	FUNCTION
1	25A	A110 16OR/RD	FUSED B(+)
2	25A	A916 14RD	FUSED B(+)
3	30A	F881 14PK ◆	FUSED ACCESSORY DELAY RELAY OUTPUT
3	25A	F881 14PK ◆◆	FUSED ACCESSORY DELAY RELAY OUTPUT

RELAYS (PDC)

RELAY-ACCESSORY DELAY

CAVITY	CIRCUIT	FUNCTION
30	A1 6RD	B(+)
85	P307 20LG/GY	ACCESSORY DELAY RELAY CONTROL
86	A1 6RD	B(+)
87	F981 12RD/BR	ACCESSORY DELAY RELAY OUTPUT
87A	-	-

RELAY-FOG LAMP-REAR (EXPORT)

CAVITY	CIRCUIT	FUNCTION
30	A35 20RD/DB	FUSED B(+)
85	A35 20RD/DB	FUSED B(+)
86	L239 20WT/DG	REAR FOG LAMP RELAY CONTROL
87	L90 20WT/OR	REAR FOG LAMP RELAY OUTPUT
87A	-	-

RELAY-FUEL PUMP

CAVITY	CIRCUIT	FUNCTION
30	A109 16RD/DG	FUSED B(+)
85	F20 20PK/WT ○	FUSED IGNITION SWITCH OUTPUT (RUN-START)
	K343 16BR/YL ○○	FUSED ASD RELAY OUTPUT 2
86	K31 20BR	FUEL PUMP RELAY CONTROL
87	N1 16DB/OR	FUEL PUMP RELAY OUTPUT
87A	-	-

◆ SRT8 ○ GAS
◆◆ EXCEPT SRT8 ○○ DIESEL

RELAYS
(PDC)
(CONTINUED)

RELAY-REAR WINDOW DEFOGGER

CAVITY	CIRCUIT	FUNCTION
30	A1 6RD	B(+)
85	C115 20DB	REAR WINDOW DEFOGGER RELAY CONTROL
86	A1 6RD	B(+)
87	C515 12RD/GY	REAR WINDOW DEFOGGER RELAY OUTPUT
87A	-	-

RELAY-RUN

CAVITY	CIRCUIT	FUNCTION
30	A1 6RD	B(+)
85	F921 20PK/WT	RUN RELAY CONTROL
86	A1 6RD	B(+)
87	F922 12RD/LB	RUN RELAY OUTPUT
87A	-	-

RELAY-STOP LAMP INHIBIT (EXCEPT MK25E)

CAVITY	CIRCUIT	FUNCTION
30	B29 20DG/WT	BRAKE SWITCH SIGNAL
85	A103 20PK/DB ▭▭▭	FUSED B(+)
86	B121 20DG/DB ▭▭▭	STOP LAMP INHIBIT RELAY CONTROL
87	-	-
87A	L53 20DG/WT	STOP LAMP INHIBIT RELAY OUTPUT

▭▭▭ MK25

RELAYS
(PDC)
(CONTINUED)

RELAY-TRANSMISSION (NAG1)

CAVITY	CIRCUIT	FUNCTION
30	A1 6RD	B(+)
85	F941 20PK/BR	IGNITION SWITCH OUTPUT (RUN-START)
86	Z914 20BK/GY	GROUND
87	F2 18PK/YL	TRANSMISSION RELAY OUTPUT
87A	-	-

RELAY-WIPER-REAR (LX49)

CAVITY	CIRCUIT	FUNCTION
30	W13 16BR/LG	REAR WIPER MOTOR CONTROL
85	W12 20BR/OR	REAR WIPER RELAY CONTROL
86	A909 20RD/TN	FUSED B(+)
87	A909 16RD/TN	FUSED B(+)
87A	Z914 20BK/GY	GROUND

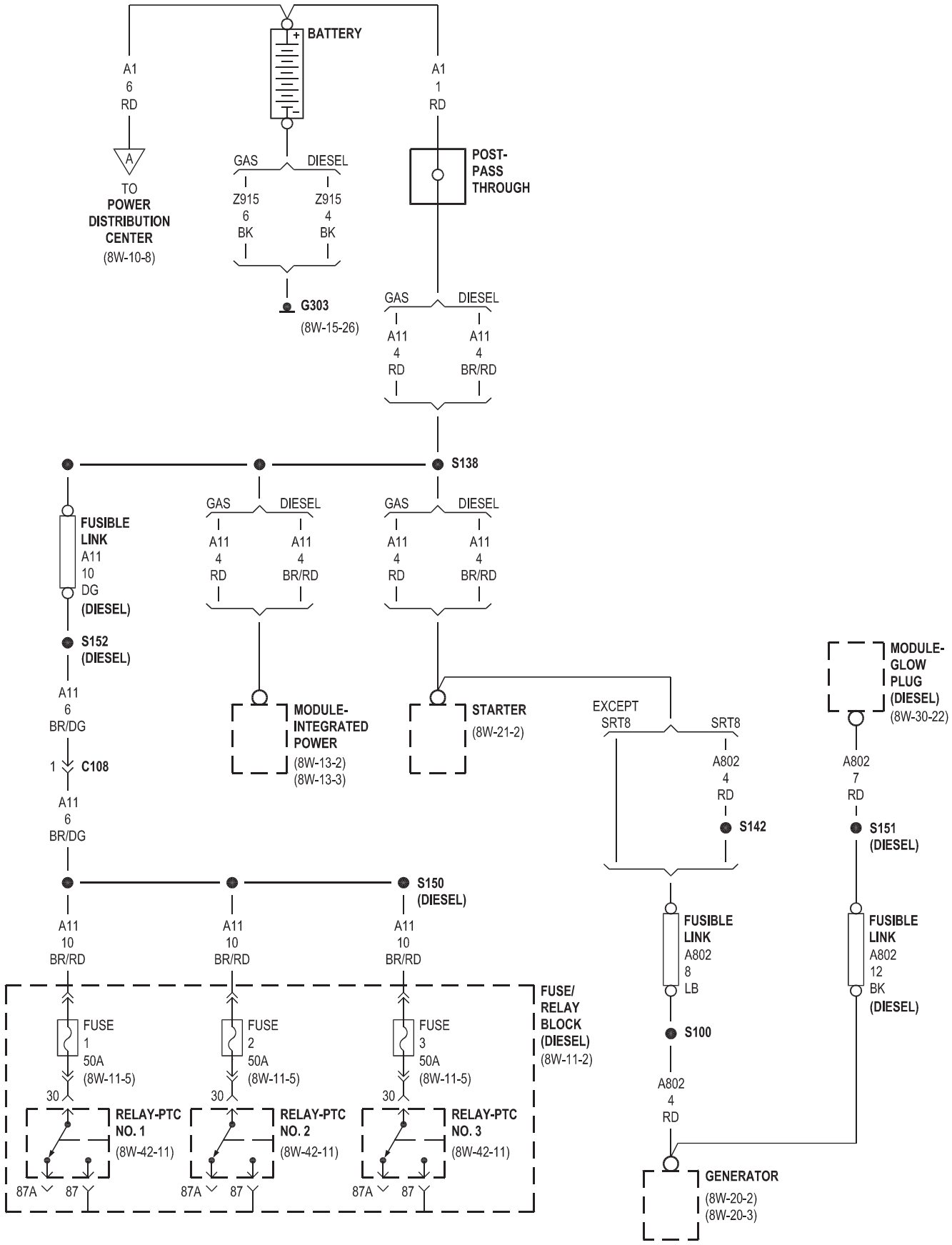
BATTERY
A1
6
RD
A
TO
POWER
DISTRIBUTION
CENTER
(8W-10-8)
GAS
DIESEL
Z915
6
BK
Z915
4
BK
G303
(8W-15-26)
A1
1
RD
POST-
PASS
THROUGH
GAS
DIESEL
A11
4
RD
A11
4
BR/RD
S138
FUSIBLE
LINK
A11
10
DG
(DIESEL)
S152
(DIESEL)
A11
6
BR/DG
1
C108
A11
6
BR/DG
MODULE-
INTEGRATED
POWER
(8W-13-2)
(8W-13-3)
STARTER
(8W-21-2)
EXCEPT
SRT8
SRT8
A802
4
RD
S142
MODULE-
GLOW
PLUG
(DIESEL)
(8W-30-22)
A802
7
RD
S151
(DIESEL)
S150
(DIESEL)
A11
10
BR/RD
A11
10
BR/RD
A11
10
BR/RD
FUSIBLE
LINK
A802
8
LB
S100
A802
4
RD
FUSIBLE
LINK
A802
12
BK
(DIESEL)
FUSE/
RELAY
BLOCK
(DIESEL)
(8W-11-2)
FUSE
1
50A
(8W-11-5)
FUSE
2
50A
(8W-11-5)
FUSE
3
50A
(8W-11-5)
30
30
30
RELAY-PTC
NO. 1
(8W-42-11)
RELAY-PTC
NO. 2
(8W-42-11)
RELAY-PTC
NO. 3
(8W-42-11)
87A
87
87A
87
87A
87
GENERATOR
(8W-20-2)
(8W-20-3)

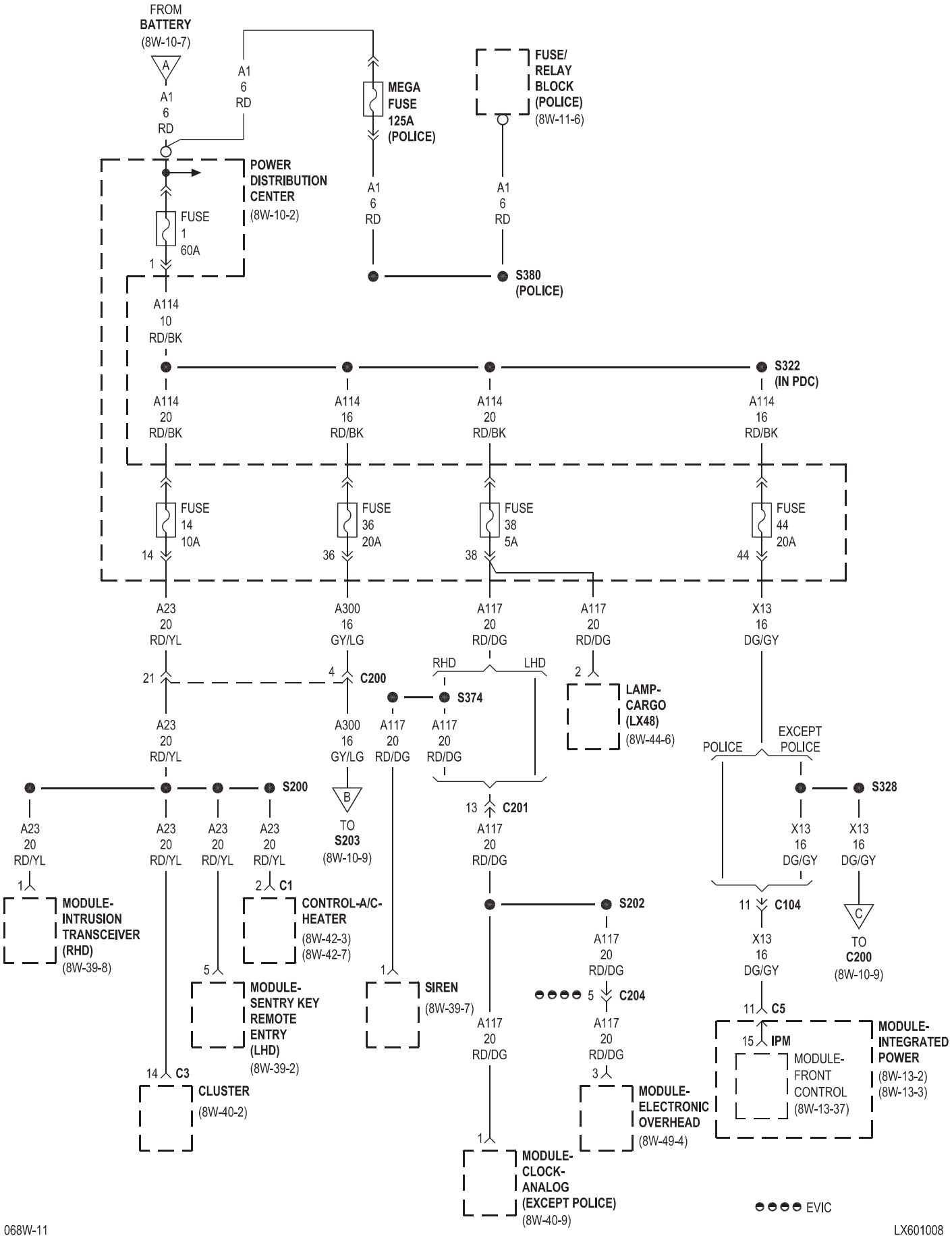
FROM BATTERY (8W-10-7)
A
A1 6 RD
A1 6 RD
MEGA FUSE 125A (POLICE)
FUSE/ RELAY BLOCK (POLICE) (8W-11-6)
POWER DISTRIBUTION CENTER (8W-10-2)
FUSE 1 60A
1
A1 6 RD
A1 6 RD
S380 (POLICE)
A114 10 RD/BK
A114 20 RD/BK
A114 16 RD/BK
A114 20 RD/BK
A114 16 RD/BK
S322 (IN PDC)
FUSE 14 10A
14
FUSE 36 20A
36
FUSE 38 5A
38
FUSE 44 20A
44
A23 20 RD/YL
A300 16 GY/LG
A117 20 RD/DG
A117 20 RD/DG
X13 16 DG/GY
21
4
C200
RHD
LHD
2
LAMP-CARGO (LX48) (8W-44-6)
S374
A23 20 RD/YL
A300 16 GY/LG
A117 20 RD/DG
A117 20 RD/DG
POLICE
EXCEPT POLICE
S200
B
TO S203 (8W-10-9)
13
C201
S328
A23 20 RD/YL
A23 20 RD/YL
A23 20 RD/YL
A23 20 RD/YL
A117 20 RD/DG
X13 16 DG/GY
X13 16 DG/GY
1
2
C1
11
C104
C
TO C200 (8W-10-9)
MODULE-INTRUSION TRANSCEIVER (RHD) (8W-39-8)
CONTROL-A/C-HEATER (8W-42-3) (8W-42-7)
S202
5
MODULE-SENTRY KEY REMOTE ENTRY (LHD) (8W-39-2)
1
SIREN (8W-39-7)
A117 20 RD/DG
C204
X13 16 DG/GY
11
C5
14
C3
CLUSTER (8W-40-2)
A117 20 RD/DG
A117 20 RD/DG
15
IPM
MODULE-INTEGRATED POWER (8W-13-2) (8W-13-3)
MODULE-FRONT CONTROL (8W-13-37)
3
MODULE-ELECTRONIC OVERHEAD (8W-49-4)
1
MODULE-CLOCK-ANALOG (EXCEPT POLICE) (8W-40-9)
EVIC

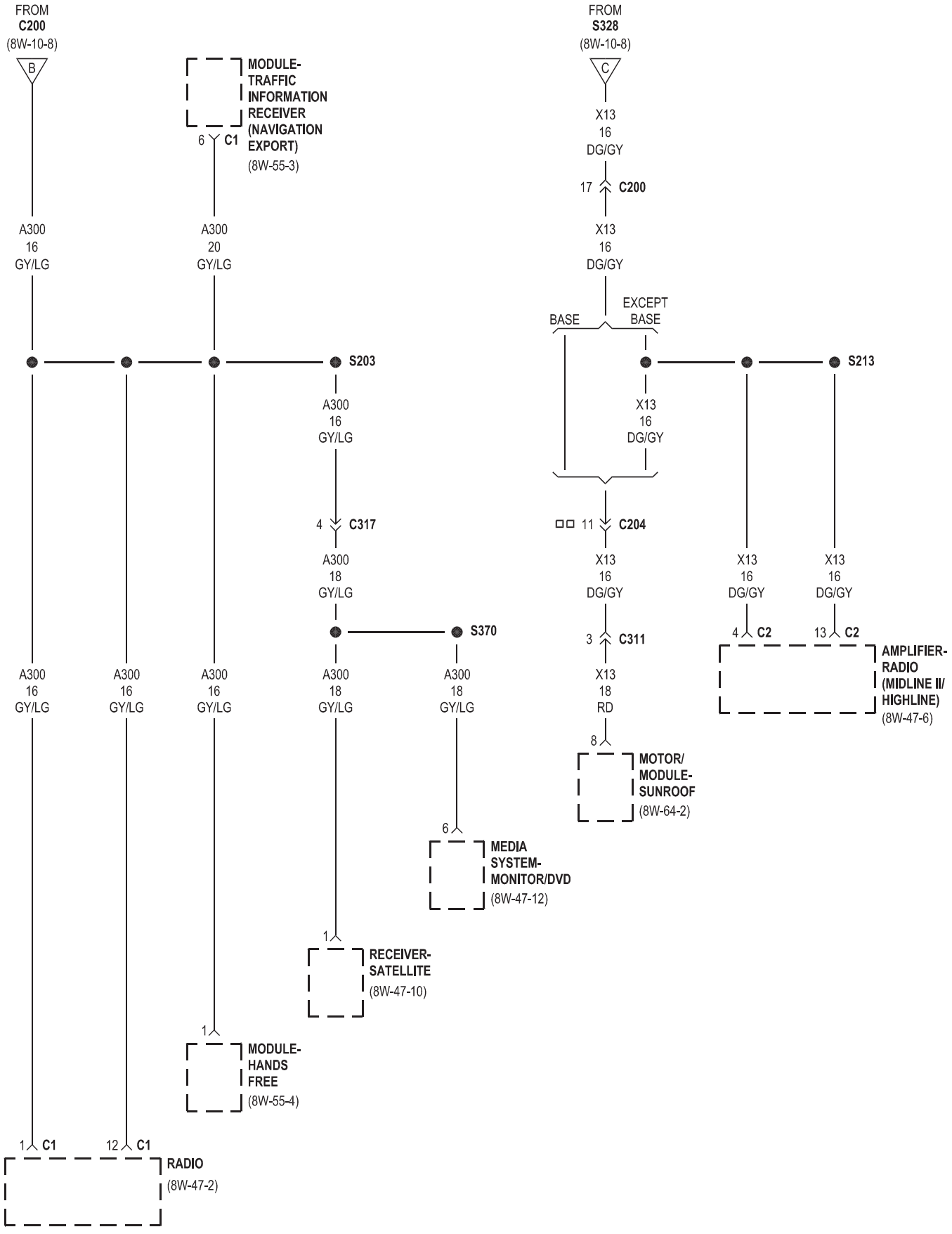

□□ POWER SUNROOF

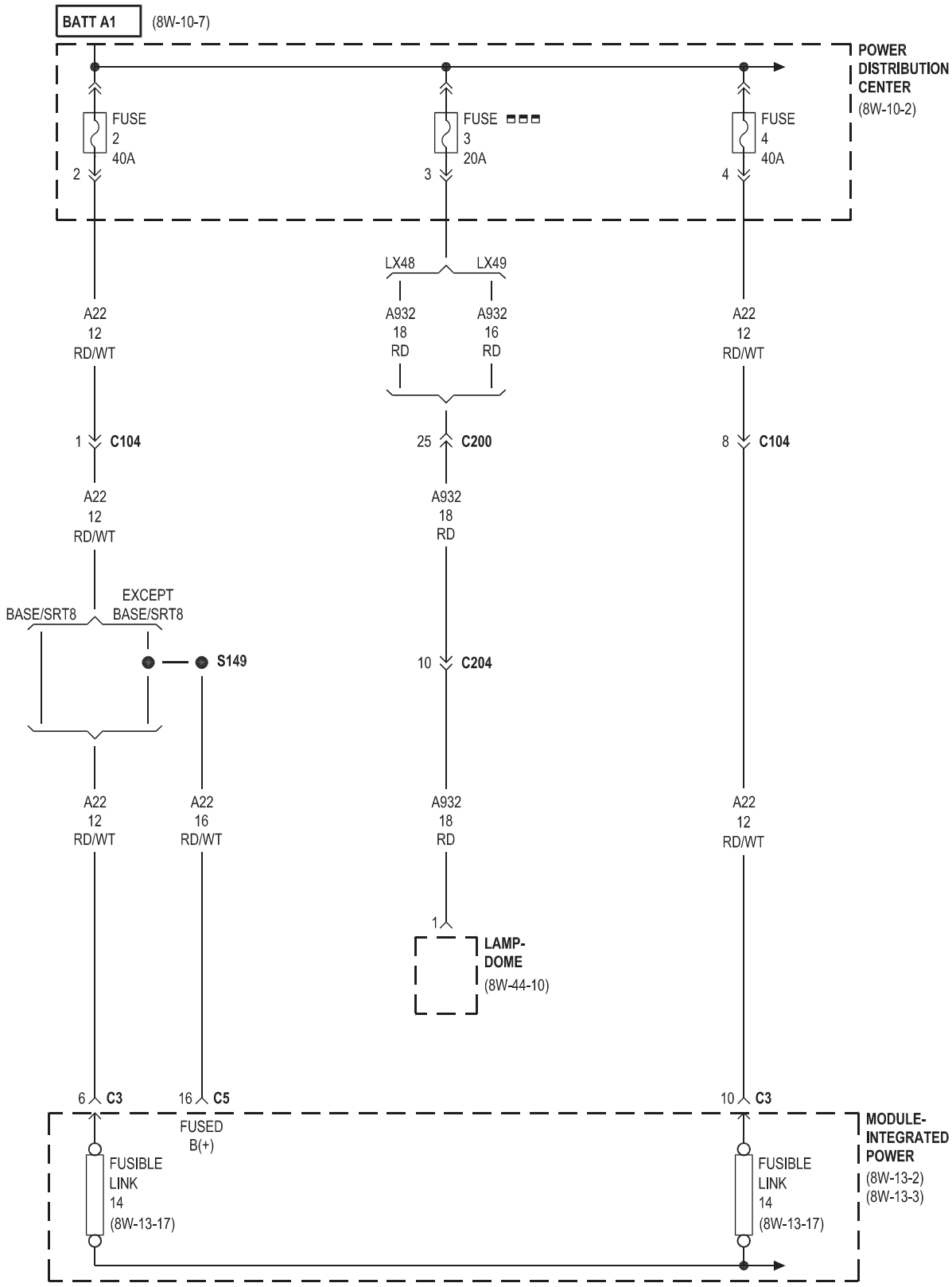
BATT A1
(8W-10-7)
POWER DISTRIBUTION CENTER
(8W-10-2)
FUSE 2 40A
FUSE 3 20A
FUSE 4 40A
2
3
4
LX48
LX49
A22 12 RD/WT
A932 18 RD
A932 16 RD
A22 12 RD/WT
1 C104
25 C200
8 C104
A22 12 RD/WT
A932 18 RD
EXCEPT BASE/SRT8
BASE/SRT8
S149
10 C204
A22 12 RD/WT
A22 16 RD/WT
A932 18 RD
A22 12 RD/WT
1
LAMP-DOME
(8W-44-10)
6 C3
16 C5
10 C3
FUSED B(+)
FUSIBLE LINK 14 (8W-13-17)
FUSIBLE LINK 14 (8W-13-17)
MODULE-INTEGRATED POWER
(8W-13-2)
(8W-13-3)

POLICE

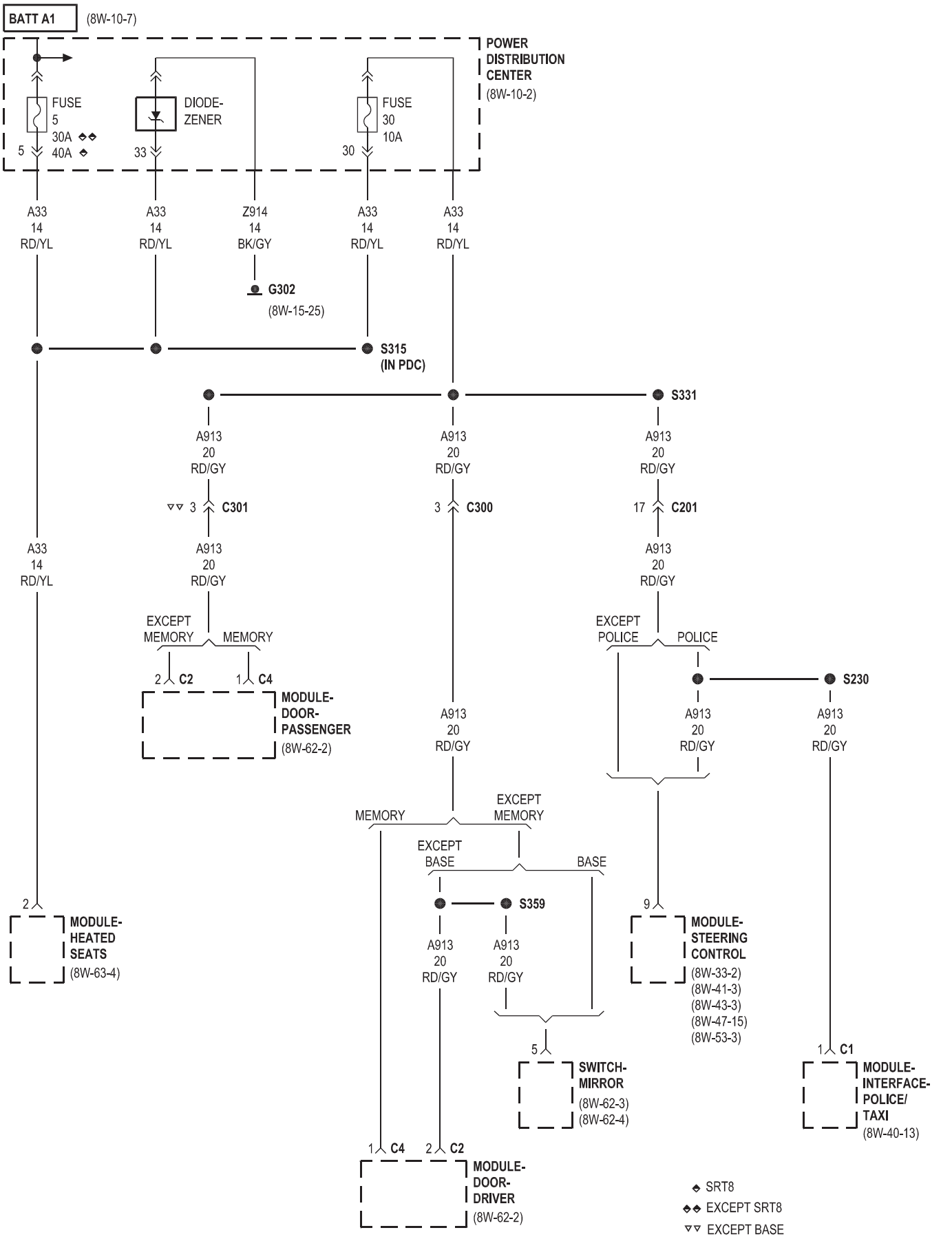
BATT A1
(8W-10-7)
POWER DISTRIBUTION CENTER
(8W-10-2)
FUSE 5 30A ◆◆ 40A ◆
DIODE-ZENER
FUSE 30 10A
5
33
30
A33 14 RD/YL
A33 14 RD/YL
Z914 14 BK/GY
A33 14 RD/YL
A33 14 RD/YL
G302
(8W-15-25)
S315 (IN PDC)
S331
A913 20 RD/GY
A913 20 RD/GY
A913 20 RD/GY
▽▽ 3 C301
3 C300
17 C201
A33 14 RD/YL
A913 20 RD/GY
A913 20 RD/GY
EXCEPT MEMORY
MEMORY
EXCEPT POLICE
POLICE
2 C2
1 C4
MODULE-DOOR-PASSENGER
(8W-62-2)
S230
A913 20 RD/GY
A913 20 RD/GY
A913 20 RD/GY
MEMORY
EXCEPT MEMORY
EXCEPT BASE
BASE
S359
A913 20 RD/GY
A913 20 RD/GY
2
MODULE-HEATED SEATS
(8W-63-4)
9
MODULE-STEERING CONTROL
(8W-33-2)
(8W-41-3)
(8W-43-3)
(8W-47-15)
(8W-53-3)
5
SWITCH-MIRROR
(8W-62-3)
(8W-62-4)
1 C1
MODULE-INTERFACE-POLICE/TAXI
(8W-40-13)
1 C4
2 C2
MODULE-DOOR-DRIVER
(8W-62-2)
◆ SRT8
◆◆ EXCEPT SRT8
▽▽ EXCEPT BASE

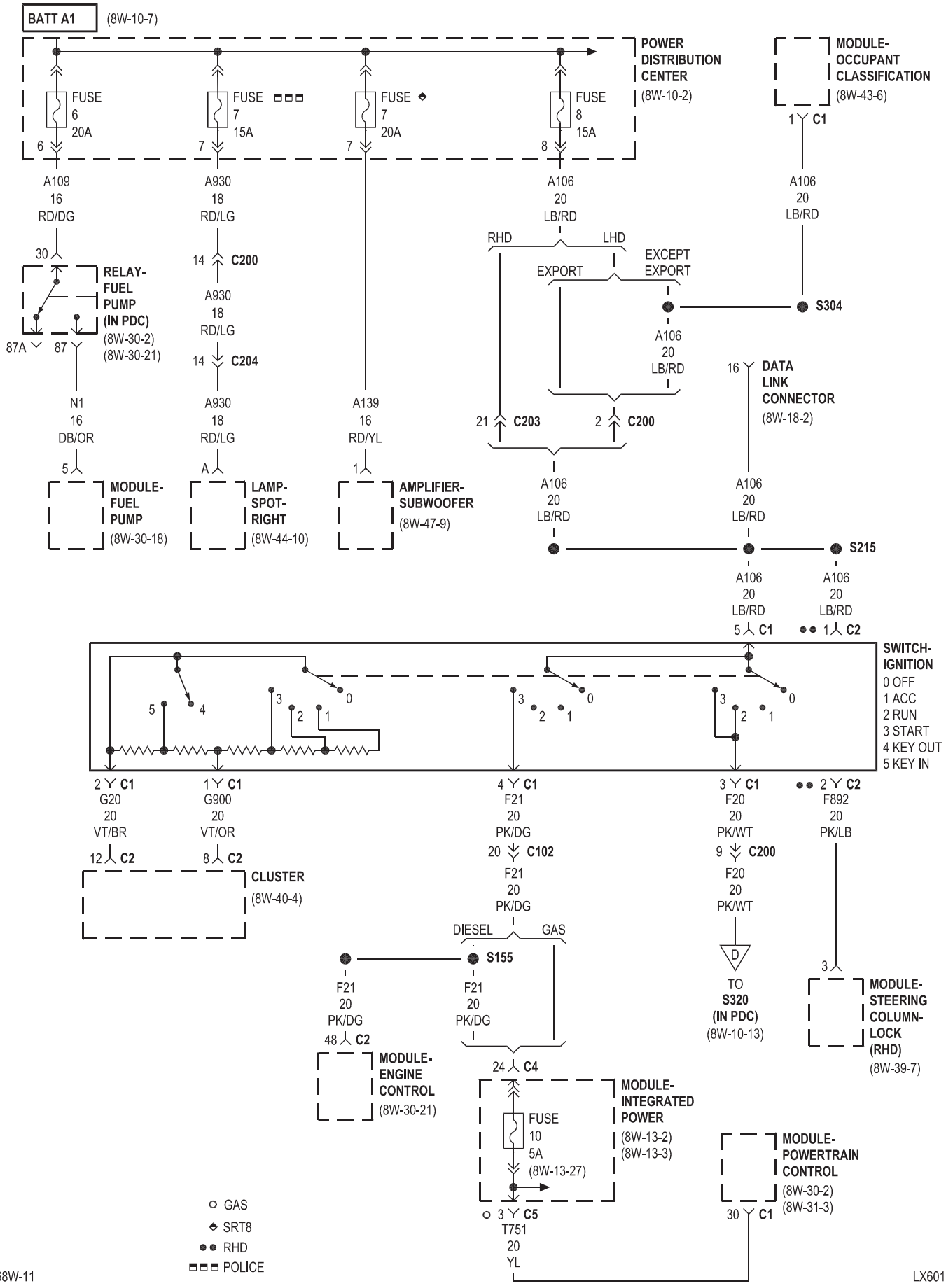
BATT A1
(8W-10-7)
POWER DISTRIBUTION CENTER
(8W-10-2)
FUSE 6 20A
FUSE 7 15A
FUSE 7 20A
FUSE 8 15A
MODULE-OCCUPANT CLASSIFICATION
(8W-43-6)
A109 16 RD/DG
A930 18 RD/LG
A106 20 LB/RD
RHD
LHD
EXPORT
EXCEPT EXPORT
S304
RELAY-FUEL PUMP (IN PDC)
(8W-30-2)
(8W-30-21)
C200
C204
C203
DATA LINK CONNECTOR
(8W-18-2)
N1 16 DB/OR
A139 16 RD/YL
MODULE-FUEL PUMP
(8W-30-18)
LAMP-SPOT-RIGHT
(8W-44-10)
AMPLIFIER-SUBWOOFER
(8W-47-9)
S215
SWITCH-IGNITION
0 OFF
1 ACC
2 RUN
3 START
4 KEY OUT
5 KEY IN
G20 20 VT/BR
G900 20 VT/OR
F21 20 PK/DG
F20 20 PK/WT
F892 20 PK/LB
C102
CLUSTER
(8W-40-4)
DIESEL
GAS
S155
MODULE-ENGINE CONTROL
(8W-30-21)
TO S320 (IN PDC)
(8W-10-13)
MODULE-STEERING COLUMN-LOCK (RHD)
(8W-39-7)
C4
FUSE 10 5A
(8W-13-27)
MODULE-INTEGRATED POWER
(8W-13-2)
(8W-13-3)
MODULE-POWERTRAIN CONTROL
(8W-30-2)
(8W-31-3)
C5
T751 20 YL
GAS
SRT8
RHD
POLICE

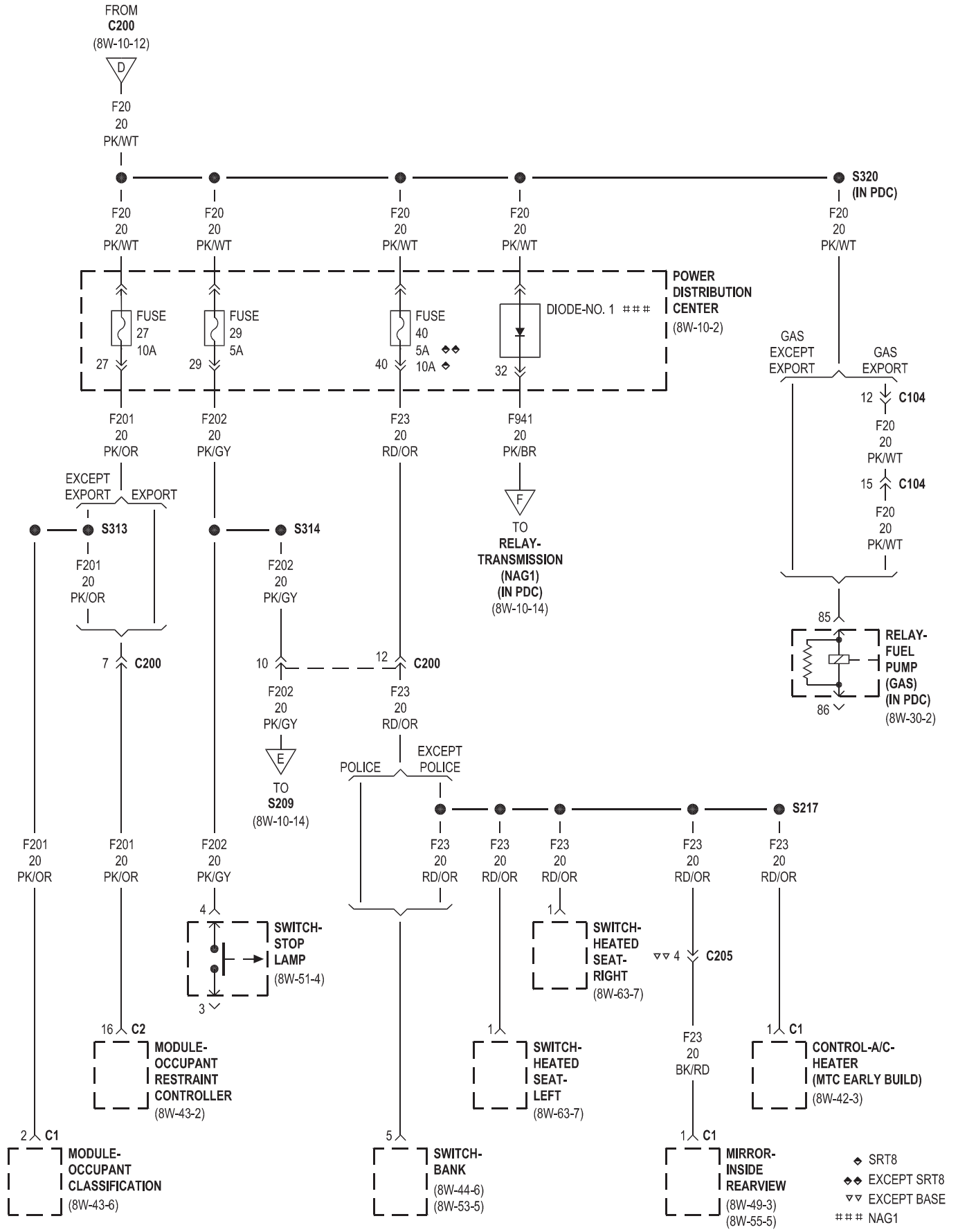
FROM C200 (8W-10-12)
D
F20 20 PK/WT
S320 (IN PDC)
POWER DISTRIBUTION CENTER (8W-10-2)
FUSE 27 10A
FUSE 29 5A
FUSE 40 5A ◆◆ 10A ◆
DIODE-NO. 1 ###
GAS EXCEPT EXPORT
GAS EXPORT
12 C104
15 C104
F201 20 PK/OR
F202 20 PK/GY
F23 20 RD/OR
F941 20 PK/BR
EXCEPT EXPORT
EXPORT
S313
S314
F
TO RELAY-TRANSMISSION (NAG1) (IN PDC) (8W-10-14)
85
86
RELAY-FUEL PUMP (GAS) (IN PDC) (8W-30-2)
7 C200
10
12 C200
E
TO S209 (8W-10-14)
POLICE
EXCEPT POLICE
S217
SWITCH-STOP LAMP (8W-51-4)
SWITCH-HEATED SEAT-RIGHT (8W-63-7)
▽▽ 4 C205
16 C2
MODULE-OCCUPANT RESTRAINT CONTROLLER (8W-43-2)
SWITCH-HEATED SEAT-LEFT (8W-63-7)
F23 20 BK/RD
1 C1
CONTROL-A/C-HEATER (MTC EARLY BUILD) (8W-42-3)
2 C1
MODULE-OCCUPANT CLASSIFICATION (8W-43-6)
5
SWITCH-BANK (8W-44-6) (8W-53-5)
MIRROR-INSIDE REARVIEW (8W-49-3) (8W-55-5)
◆ SRT8
◆◆ EXCEPT SRT8
▽▽ EXCEPT BASE
NAG1

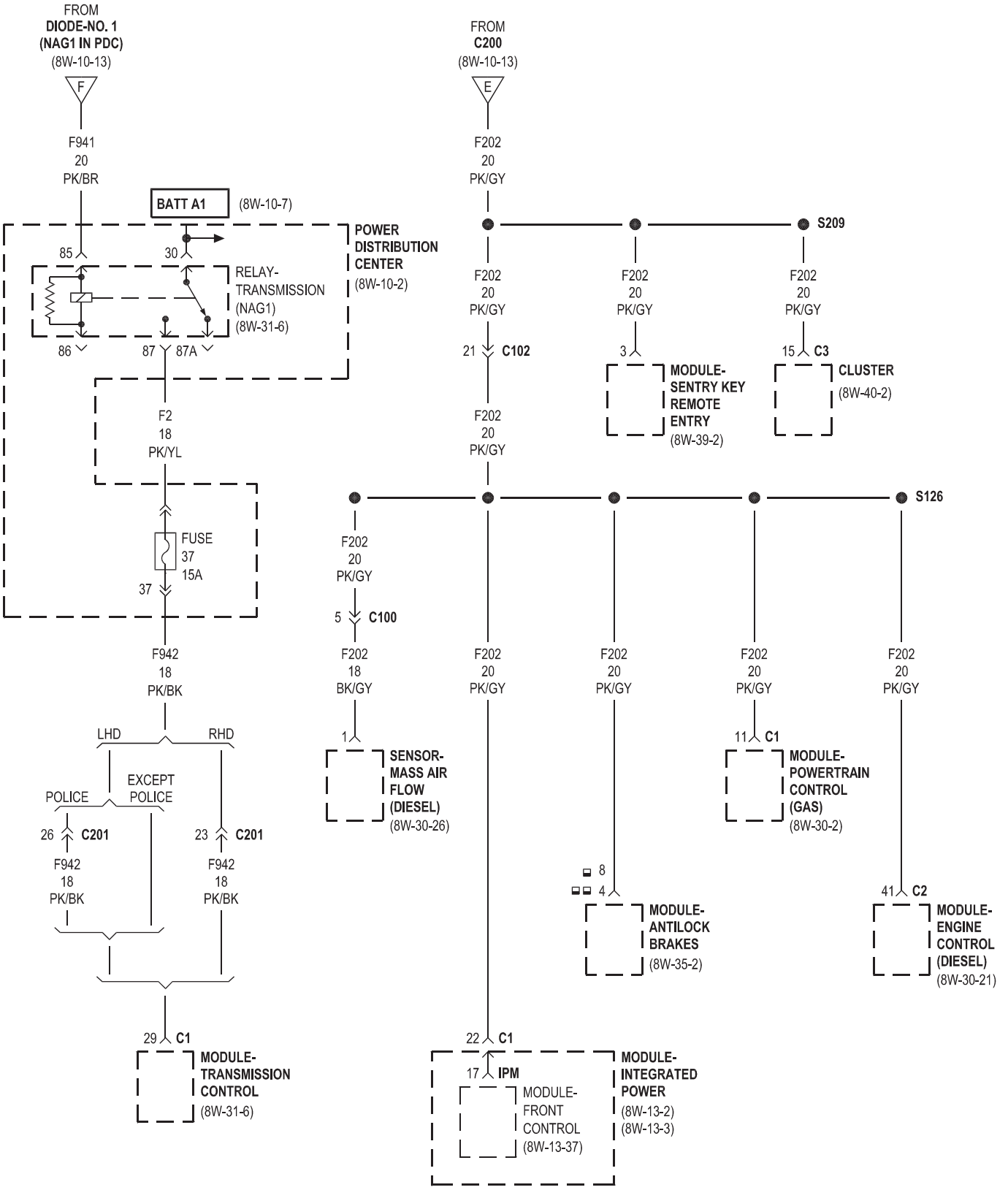

MK25E
EXCEPT MK25E

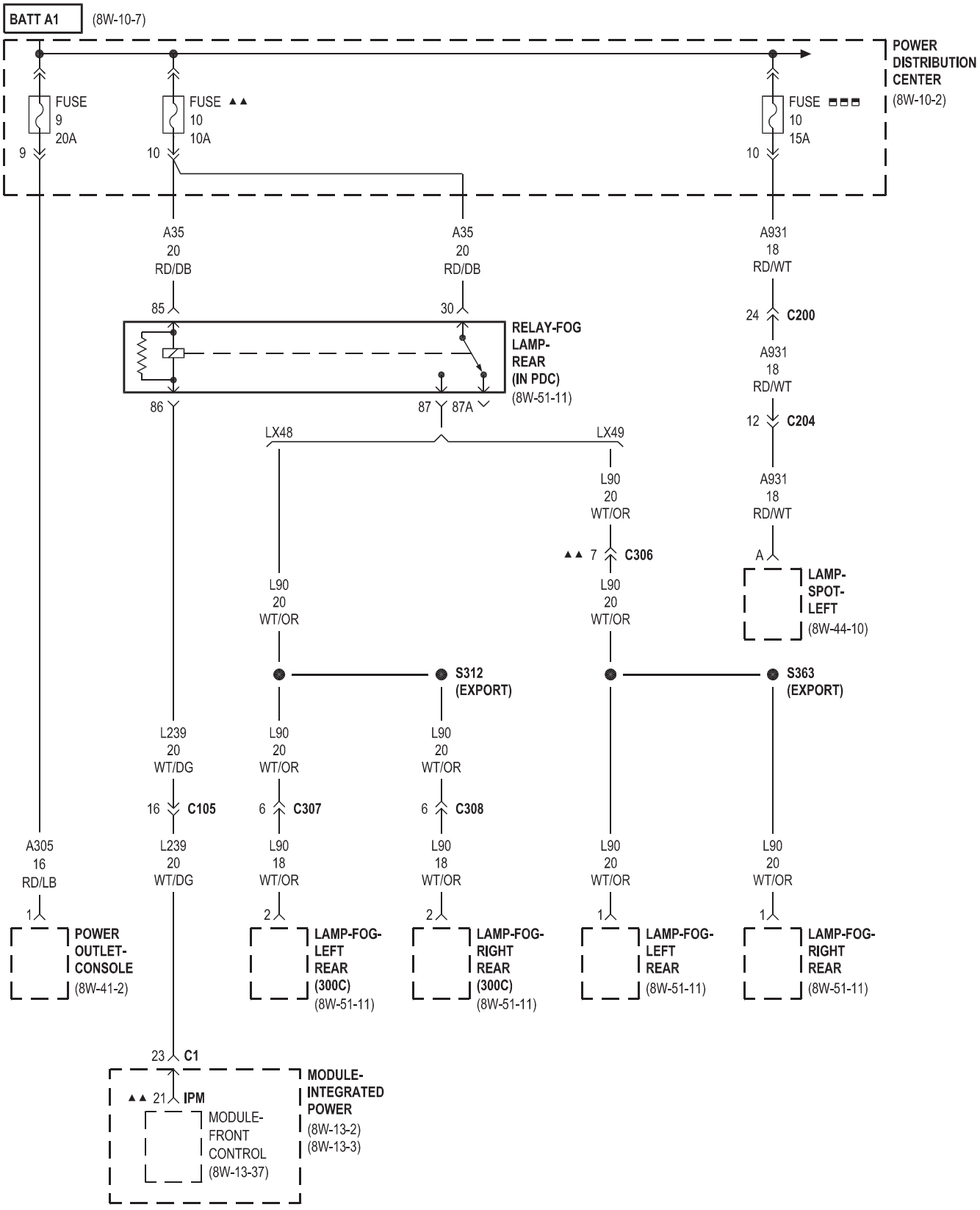

▲▲ EXPORT
▬▬▬ POLICE

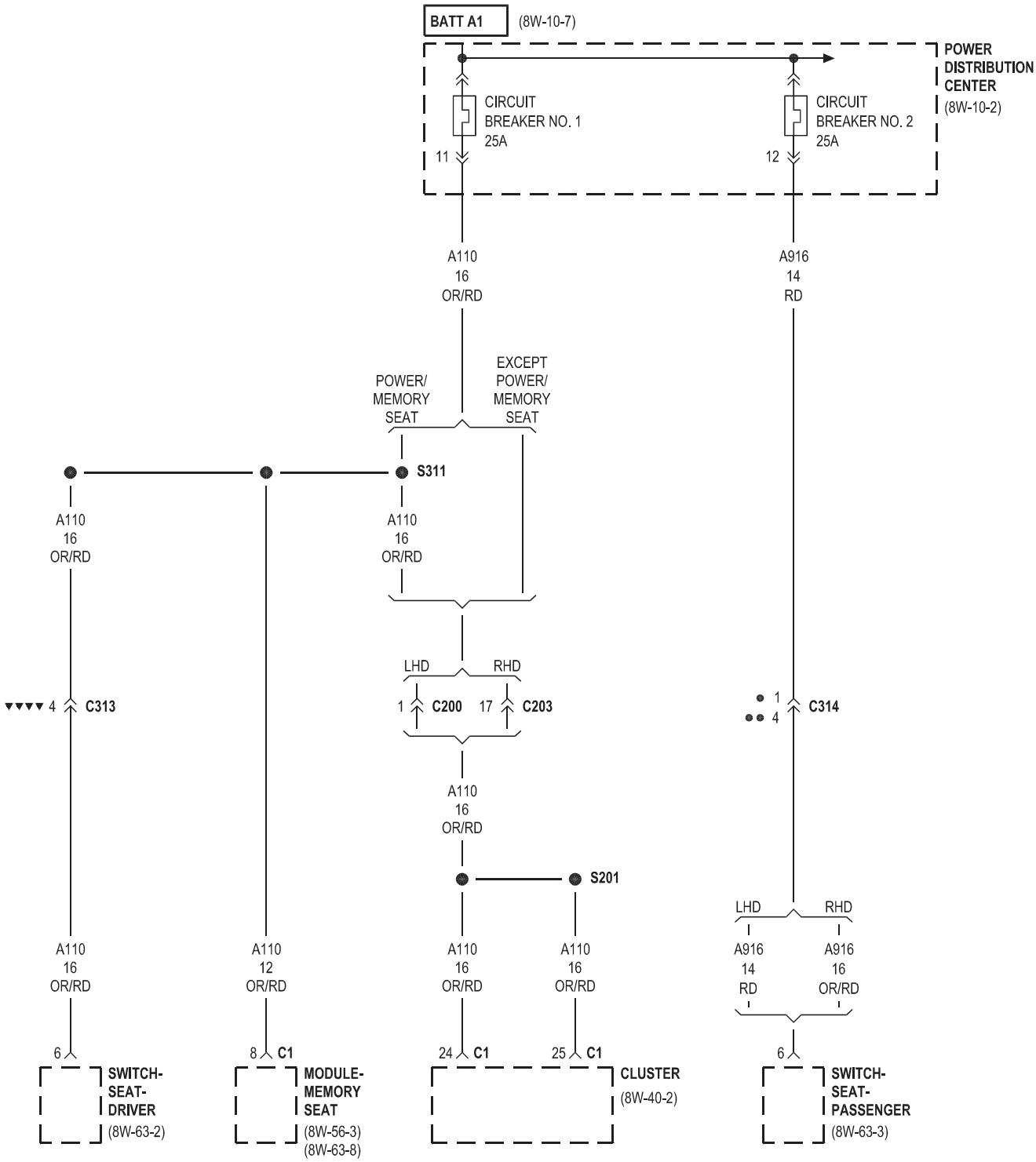

● LHD
●● RHD
▼▼▼▼ EXCEPT MEMORY

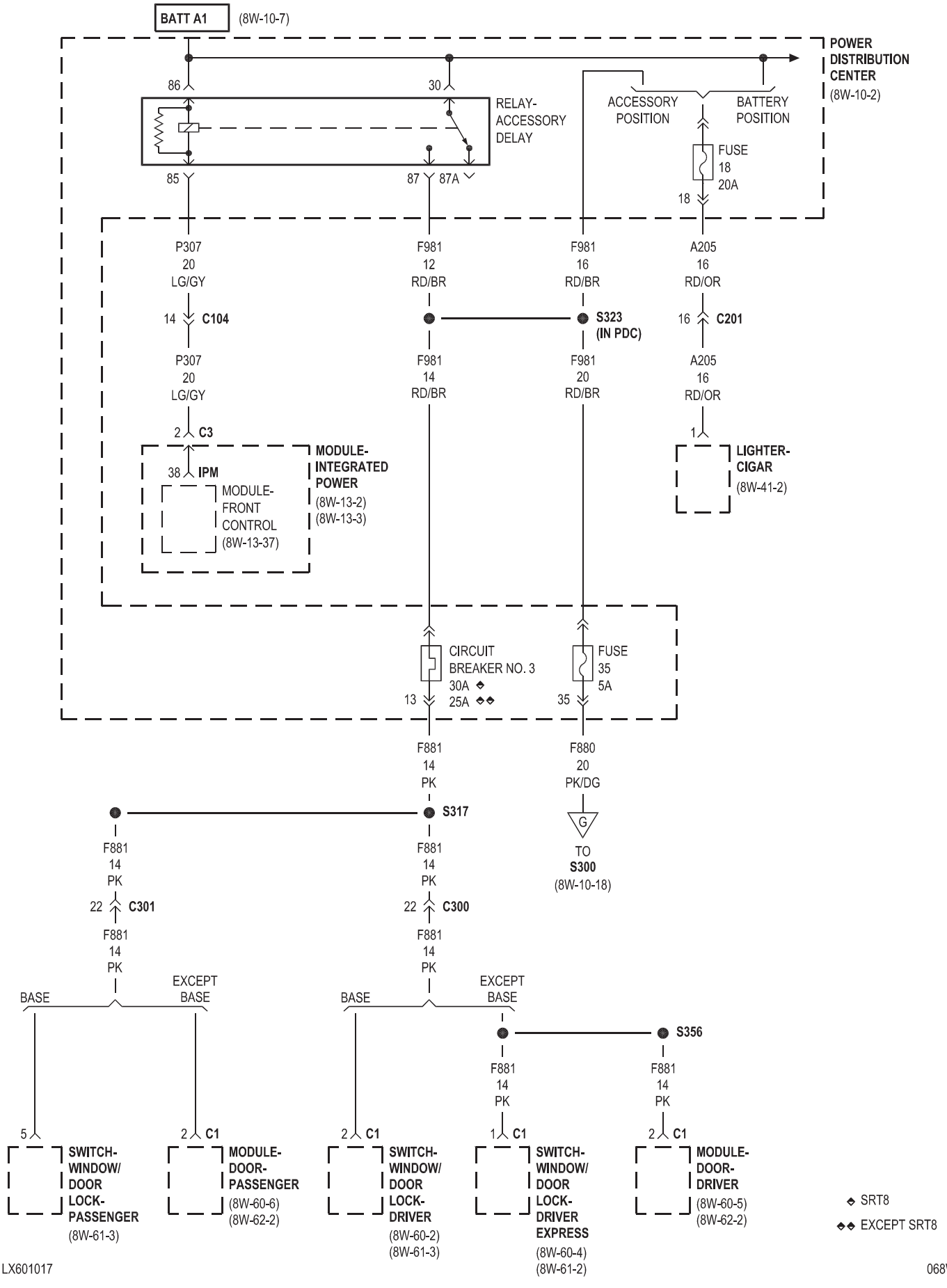
BATT A1
(8W-10-7)
POWER DISTRIBUTION CENTER
(8W-10-2)
86
30
RELAY-ACCESSORY DELAY
85
87
87A
ACCESSORY POSITION
BATTERY POSITION
FUSE 18 20A
18
P307 20 LG/GY
14 C104
P307 20 LG/GY
2 C3
38 IPM
MODULE-FRONT CONTROL
(8W-13-37)
MODULE-INTEGRATED POWER
(8W-13-2)
(8W-13-3)
F981 12 RD/BR
F981 14 RD/BR
F981 16 RD/BR
S323 (IN PDC)
F981 20 RD/BR
A205 16 RD/OR
16 C201
A205 16 RD/OR
1
LIGHTER-CIGAR
(8W-41-2)
CIRCUIT BREAKER NO. 3
30A ◆
25A ◆◆
13
FUSE 35 5A
35
F881 14 PK
F880 20 PK/DG
G
TO S300
(8W-10-18)
S317
F881 14 PK
22 C301
F881 14 PK
BASE
EXCEPT BASE
5
SWITCH-WINDOW/DOOR LOCK-PASSENGER
(8W-61-3)
2 C1
MODULE-DOOR-PASSENGER
(8W-60-6)
(8W-62-2)
F881 14 PK
22 C300
F881 14 PK
BASE
EXCEPT BASE
2 C1
SWITCH-WINDOW/DOOR LOCK-DRIVER
(8W-60-2)
(8W-61-3)
S356
F881 14 PK
1 C1
SWITCH-WINDOW/DOOR LOCK-DRIVER EXPRESS
(8W-60-4)
(8W-61-2)
F881 14 PK
2 C1
MODULE-DOOR-DRIVER
(8W-60-5)
(8W-62-2)
◆ SRT8
◆◆ EXCEPT SRT8

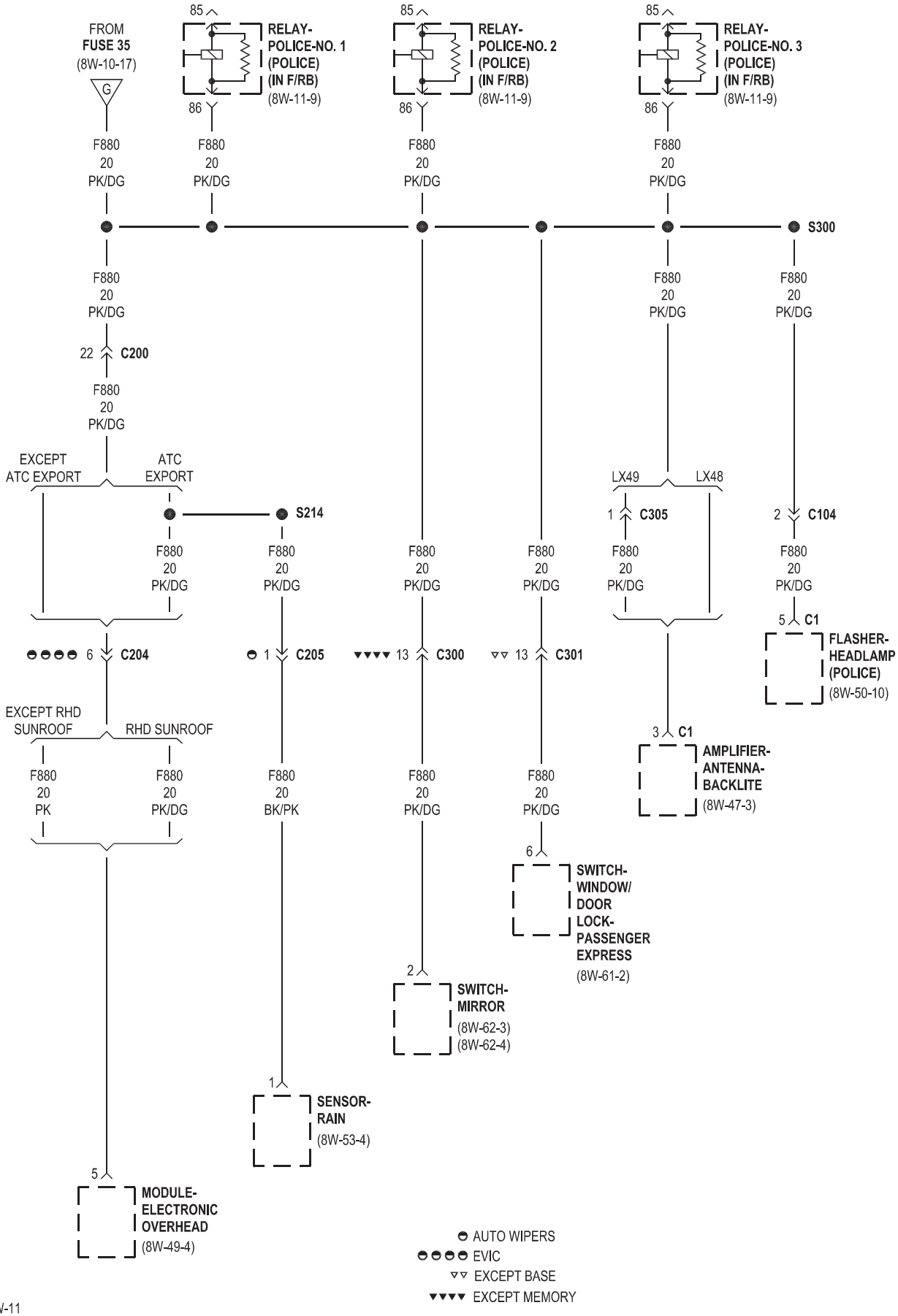
FROM
FUSE 35
(8W-10-17)
G
85
RELAY-
POLICE-NO. 1
(POLICE)
(IN F/RB)
(8W-11-9)
86
F880
20
PK/DG
S300
22 C200
EXCEPT
ATC EXPORT
ATC
EXPORT
S214
LX49
LX48
1 C305
2 C104
6 C204
1 C205
13 C300
13 C301
5 C1
FLASHER-
HEADLAMP
(POLICE)
(8W-50-10)
EXCEPT RHD
SUNROOF
RHD SUNROOF
F880
20
PK
F880
20
BK/PK
3 C1
AMPLIFIER-
ANTENNA-
BACKLITE
(8W-47-3)
6
SWITCH-
WINDOW/
DOOR
LOCK-
PASSENGER
EXPRESS
(8W-61-2)
2
SWITCH-
MIRROR
(8W-62-3)
(8W-62-4)
1
SENSOR-
RAIN
(8W-53-4)
5
MODULE-
ELECTRONIC
OVERHEAD
(8W-49-4)
AUTO WIPERS
EVIC
EXCEPT BASE
EXCEPT MEMORY

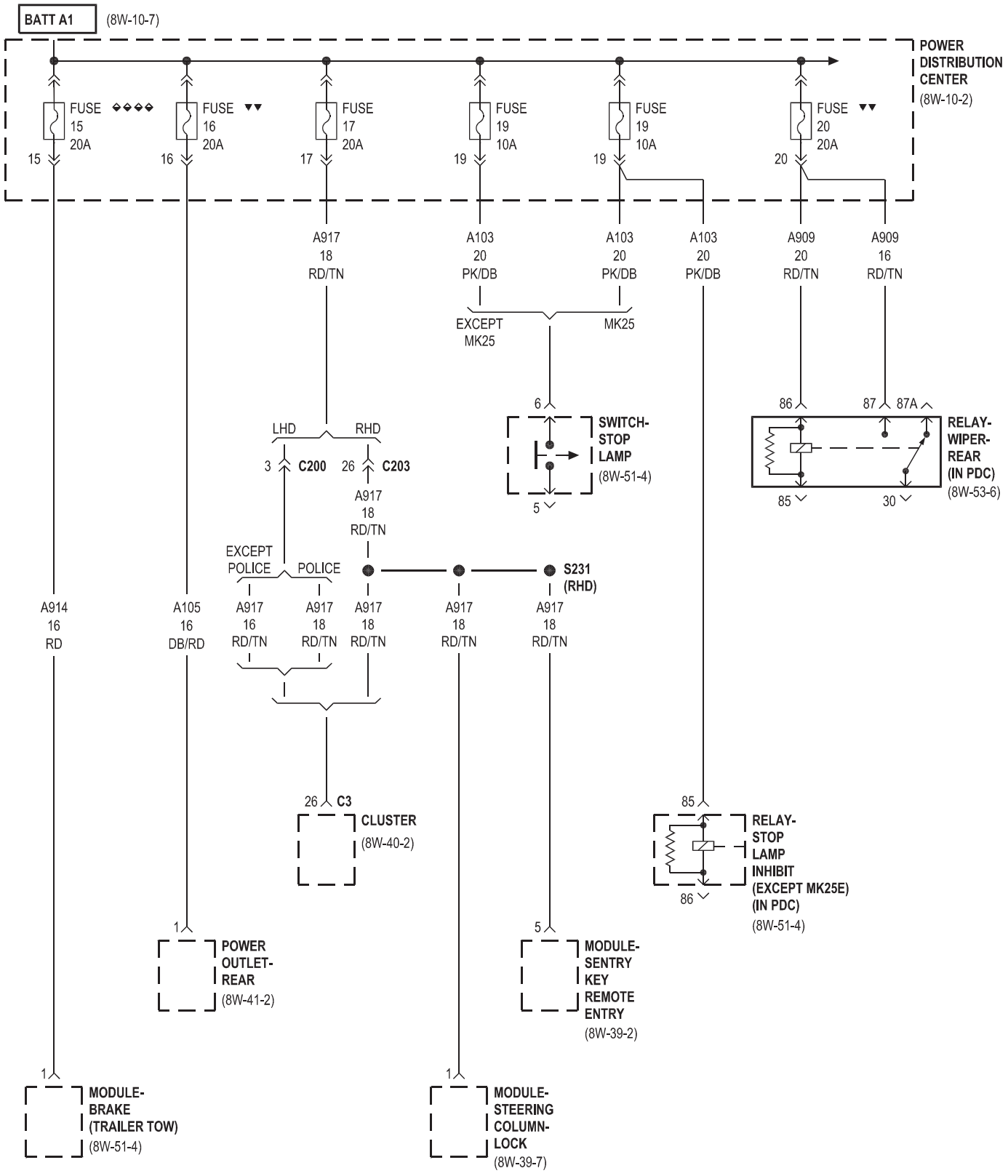

▼▼ LX49
◆◆◆◆ TRAILER TOW

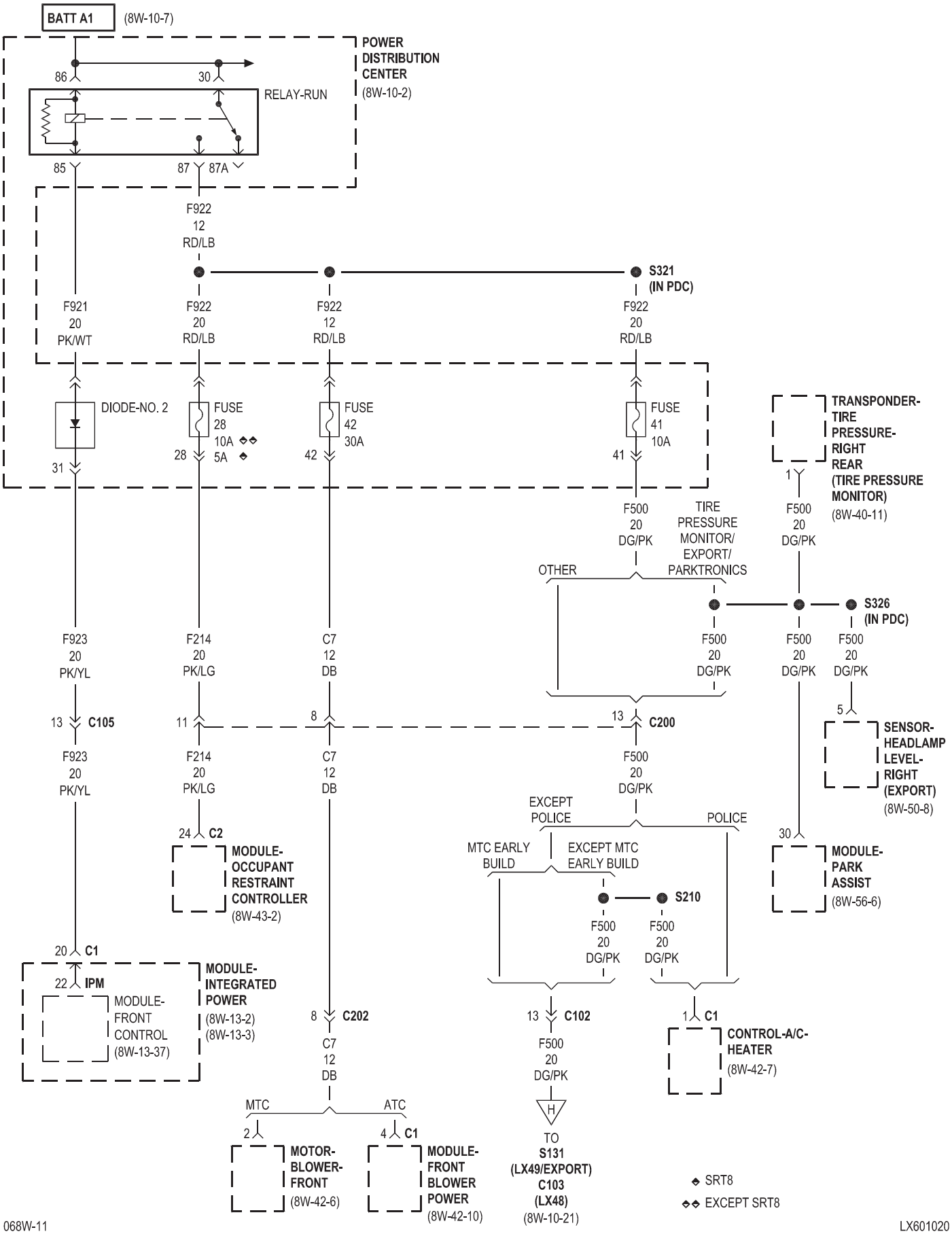
BATT A1
(8W-10-7)
POWER DISTRIBUTION CENTER
(8W-10-2)
86
30
RELAY-RUN
85
87
87A
F922
12
RD/LB
S321
(IN PDC)
F921
20
PK/WT
F922
20
RD/LB
F922
12
RD/LB
F922
20
RD/LB
DIODE-NO. 2
FUSE
28
10A ◆◆
28
5A ◆
FUSE
42
30A
FUSE
41
10A
31
42
41
TRANSPONDER-TIRE PRESSURE-RIGHT REAR (TIRE PRESSURE MONITOR)
(8W-40-11)
1
F500
20
DG/PK
F500
20
DG/PK
TIRE PRESSURE MONITOR/ EXPORT/ PARKTRONICS
OTHER
S326
(IN PDC)
F500
20
DG/PK
F500
20
DG/PK
F500
20
DG/PK
F923
20
PK/YL
F214
20
PK/LG
C7
12
DB
13
C105
11
8
13
C200
5
SENSOR-HEADLAMP LEVEL-RIGHT (EXPORT)
(8W-50-8)
F923
20
PK/YL
F214
20
PK/LG
C7
12
DB
F500
20
DG/PK
EXCEPT POLICE
POLICE
24
C2
MODULE-OCCUPANT RESTRAINT CONTROLLER
(8W-43-2)
MTC EARLY BUILD
EXCEPT MTC EARLY BUILD
30
MODULE-PARK ASSIST
(8W-56-6)
S210
F500
20
DG/PK
F500
20
DG/PK
20
C1
22
IPM
MODULE-FRONT CONTROL
(8W-13-37)
MODULE-INTEGRATED POWER
(8W-13-2)
(8W-13-3)
8
C202
C7
12
DB
13
C102
1
C1
CONTROL-A/C-HEATER
(8W-42-7)
F500
20
DG/PK
H
MTC
ATC
2
4
C1
MOTOR-BLOWER-FRONT
(8W-42-6)
MODULE-FRONT BLOWER POWER
(8W-42-10)
TO
S131
(LX49/EXPORT)
C103
(LX48)
(8W-10-21)
◆ SRT8
◆◆ EXCEPT SRT8

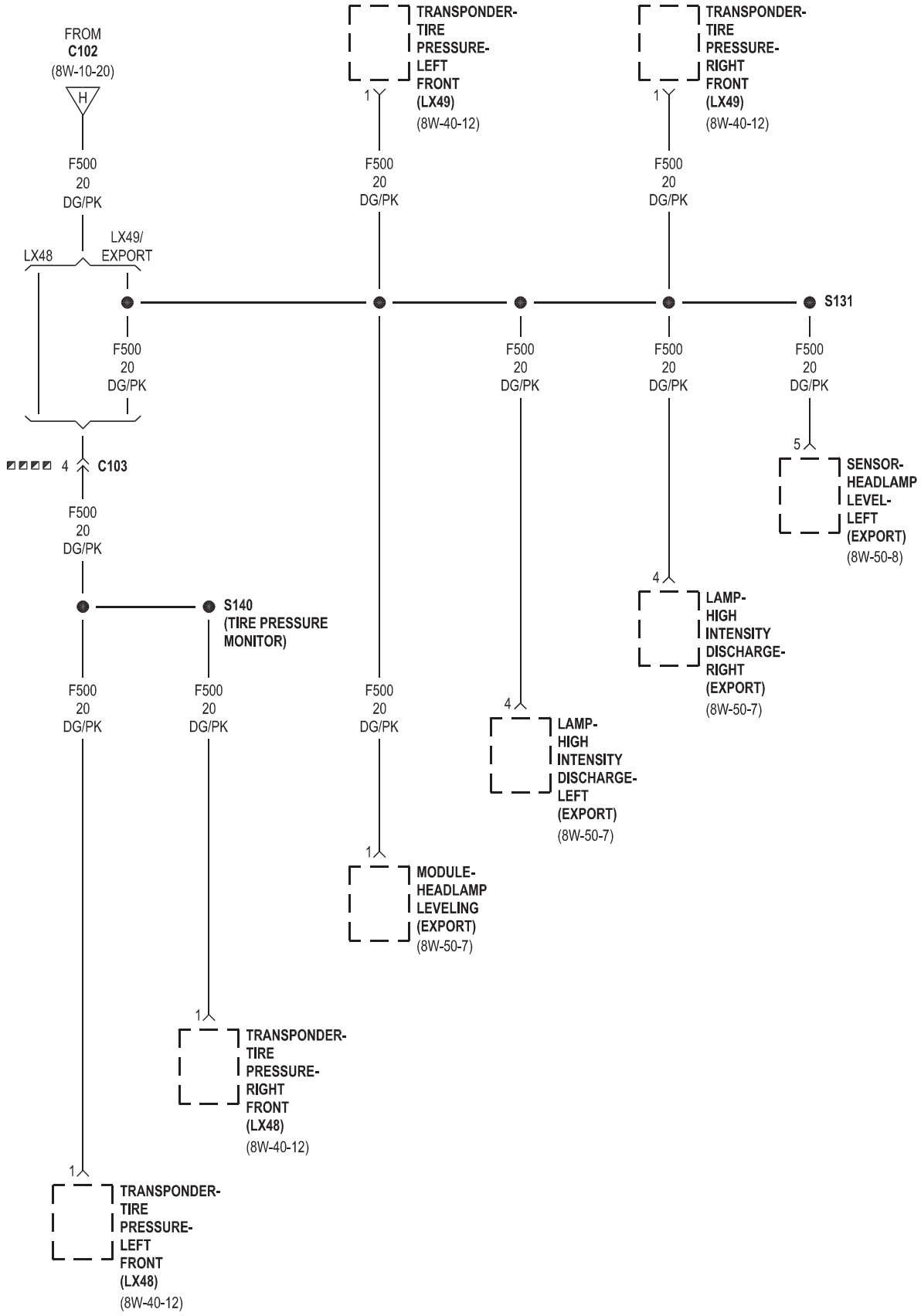

▨▨▨▨ TIRE PRESSURE MONITOR

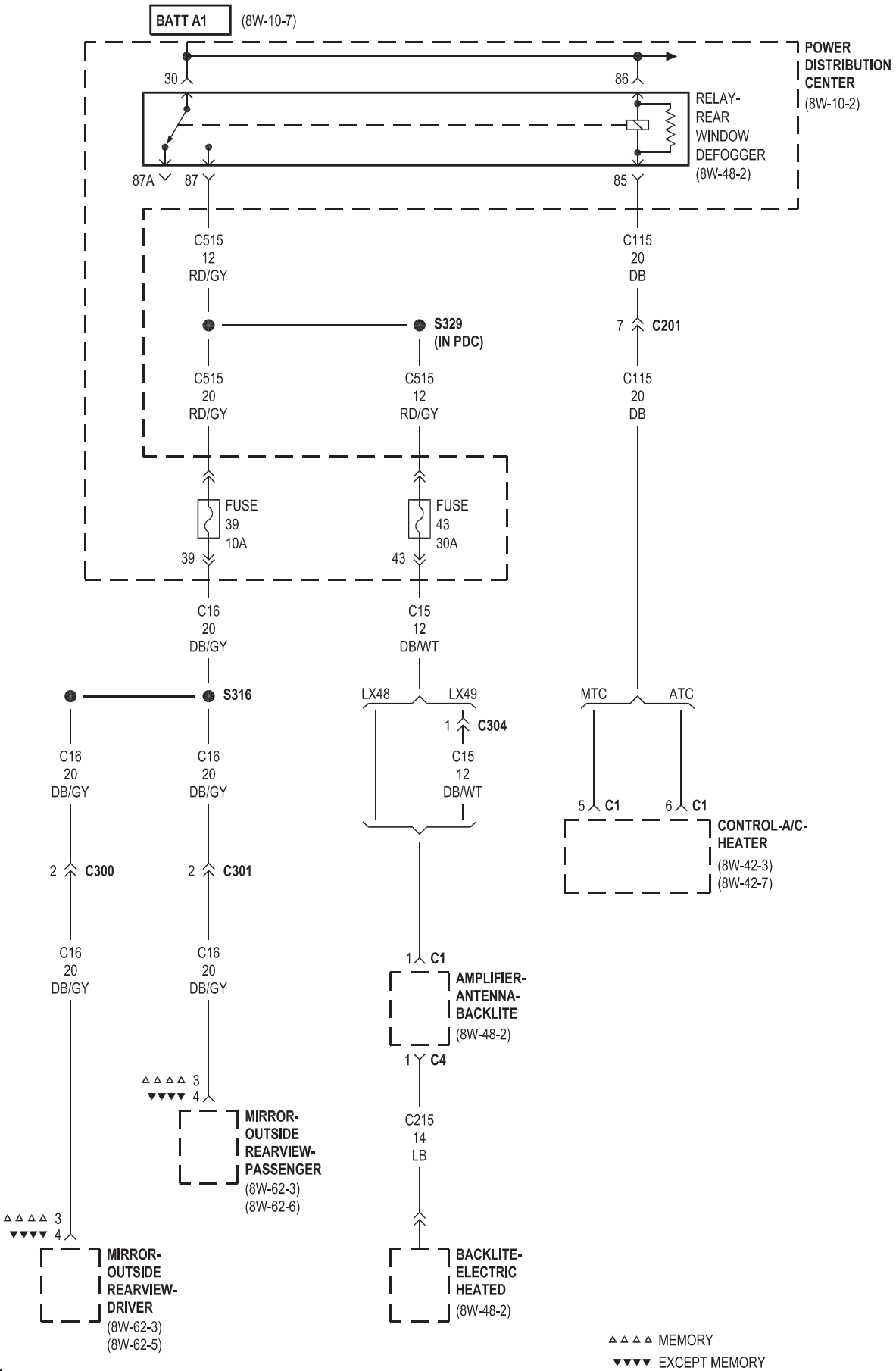
BATT A1
(8W-10-7)
POWER DISTRIBUTION CENTER
(8W-10-2)
30
86
RELAY-REAR WINDOW DEFOGGER
(8W-48-2)
87A
87
85
C515
12
RD/GY
C115
20
DB
S329
(IN PDC)
7
C201
C515
20
RD/GY
C515
12
RD/GY
C115
20
DB
FUSE
39
10A
FUSE
43
30A
39
43
C16
20
DB/GY
C15
12
DB/WT
S316
LX48
LX49
MTC
ATC
1
C304
C16
20
DB/GY
C16
20
DB/GY
C15
12
DB/WT
5
C1
6
C1
CONTROL-A/C-HEATER
(8W-42-3)
(8W-42-7)
2
C300
2
C301
C16
20
DB/GY
C16
20
DB/GY
1
C1
AMPLIFIER-ANTENNA-BACKLITE
(8W-48-2)
1
C4
3
4
MIRROR-OUTSIDE REARVIEW-PASSENGER
(8W-62-3)
(8W-62-6)
C215
14
LB
3
4
MIRROR-OUTSIDE REARVIEW-DRIVER
(8W-62-3)
(8W-62-5)
BACKLITE-ELECTRIC HEATED
(8W-48-2)
MEMORY
EXCEPT MEMORY

8W-11 FUSE/RELAY BLOCK

Component	Page
Battery	8W-11-4, 8
Connector-Police Accessories	8W-11-9
Fuse 1	8W-11-5, 9
Fuse 2	8W-11-5, 9
Fuse 3	8W-11-5, 9
Fuse 4	8W-11-9
Fuse 5	8W-11-9
Fuse 6	8W-11-9
Fuse 35	8W-11-8
Fuse/Relay Block	8W-11-2, 5, 6, 8, 9
Fusible Link	8W-11-4, 8
G301	8W-11-9
Generator	8W-11-4, 8
Heater-Cabin	8W-11-5
Mega Fuse	8W-11-8
Module-Glow Plug	8W-11-4
Module-Integrated Power	8W-11-4, 8
Post-Pass Through	8W-11-4, 8
Power Distribution Center	8W-11-4, 8
Relay-Accessory Delay	8W-11-8
Relay-PTC No. 1	8W-11-5
Relay-PTC No. 2	8W-11-5
Relay-PTC No. 3	8W-11-5
Relay-Police-No. 1	8W-11-8, 9
Relay-Police-No. 2	8W-11-8, 9
Relay-Police-No. 3	8W-11-8, 9
Starter	8W-11-4, 8

FUSE/ RELAY BLOCK

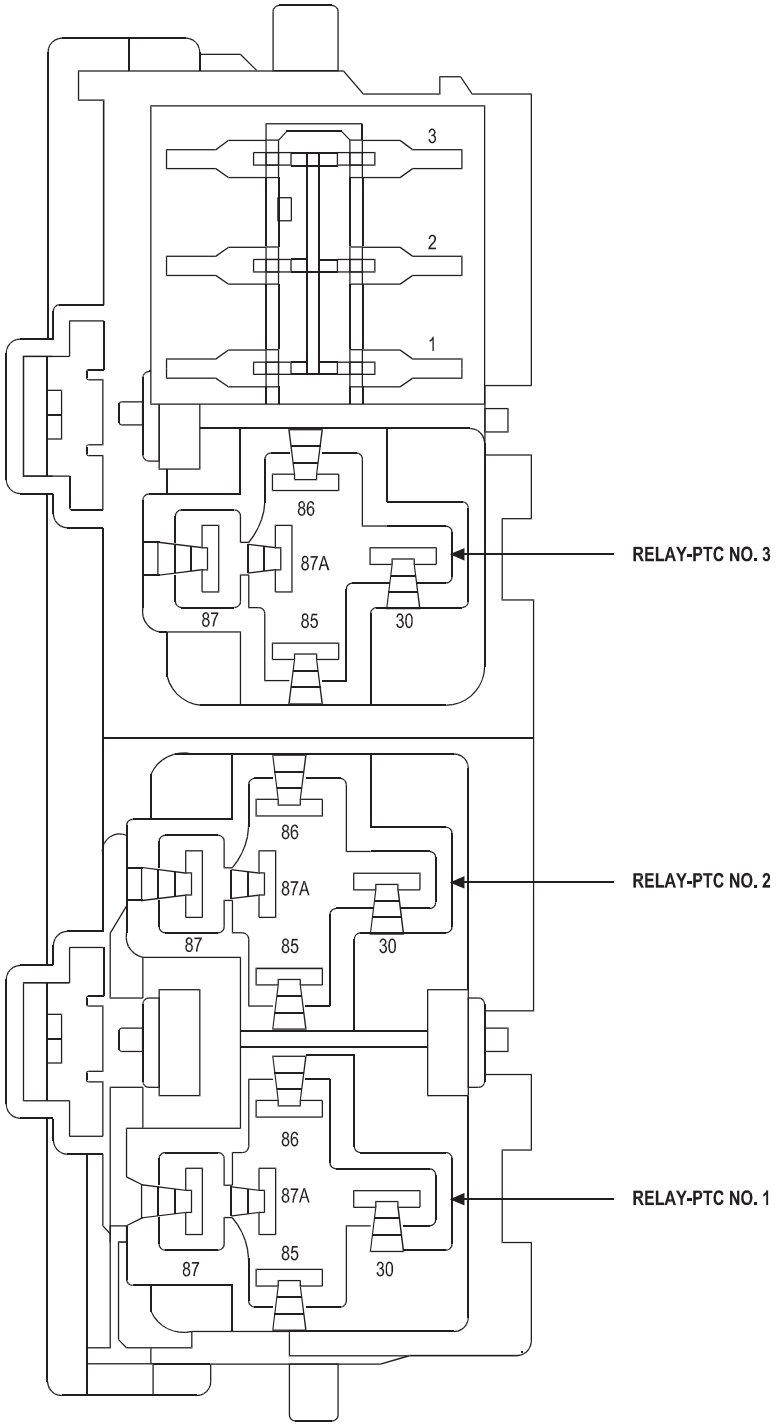

FUSES
(F/RB)

FUSE NO.	AMPS	FUSED CIRCUIT	FUNCTION
1	50A	A920 10RD	FUSED B(+)
2	50A	A921 10RD	FUSED B(+)
3	50A	A922 10RD	FUSED B(+)

RELAYS
(F/RB)

RELAY-PTC NO. 1

CAVITY	CIRCUIT	FUNCTION
30	A920 10RD	FUSED B(+)
85	K360 20GY/BR	PTC NO. 1 RELAY CONTROL
86	K342 16BR/WT	FUSED ASD RELAY OUTPUT 1
87	N113 10DB/OR	PTC NO. 1 RELAY OUTPUT
87A	-	-

RELAY-PTC NO. 2

CAVITY	CIRCUIT	FUNCTION
30	A921 10RD	FUSED B(+)
85	K361 20WT/BR	PTC NO. 2 RELAY CONTROL
86	K342 16BR/WT	FUSED ASD RELAY OUTPUT 1
87	N114 10DB/LB	PTC NO. 2 RELAY OUTPUT
87A	-	-

RELAY-PTC NO. 3

CAVITY	CIRCUIT	FUNCTION
30	A922 10RD	FUSED B(+)
85	K363 20OR/BR	PTC NO. 3 RELAY CONTROL
86	K342 16BR/WT	FUSED ASD RELAY OUTPUT 1
87	N115 10DB/YL	PTC NO. 3 RELAY OUTPUT
87A	-	-

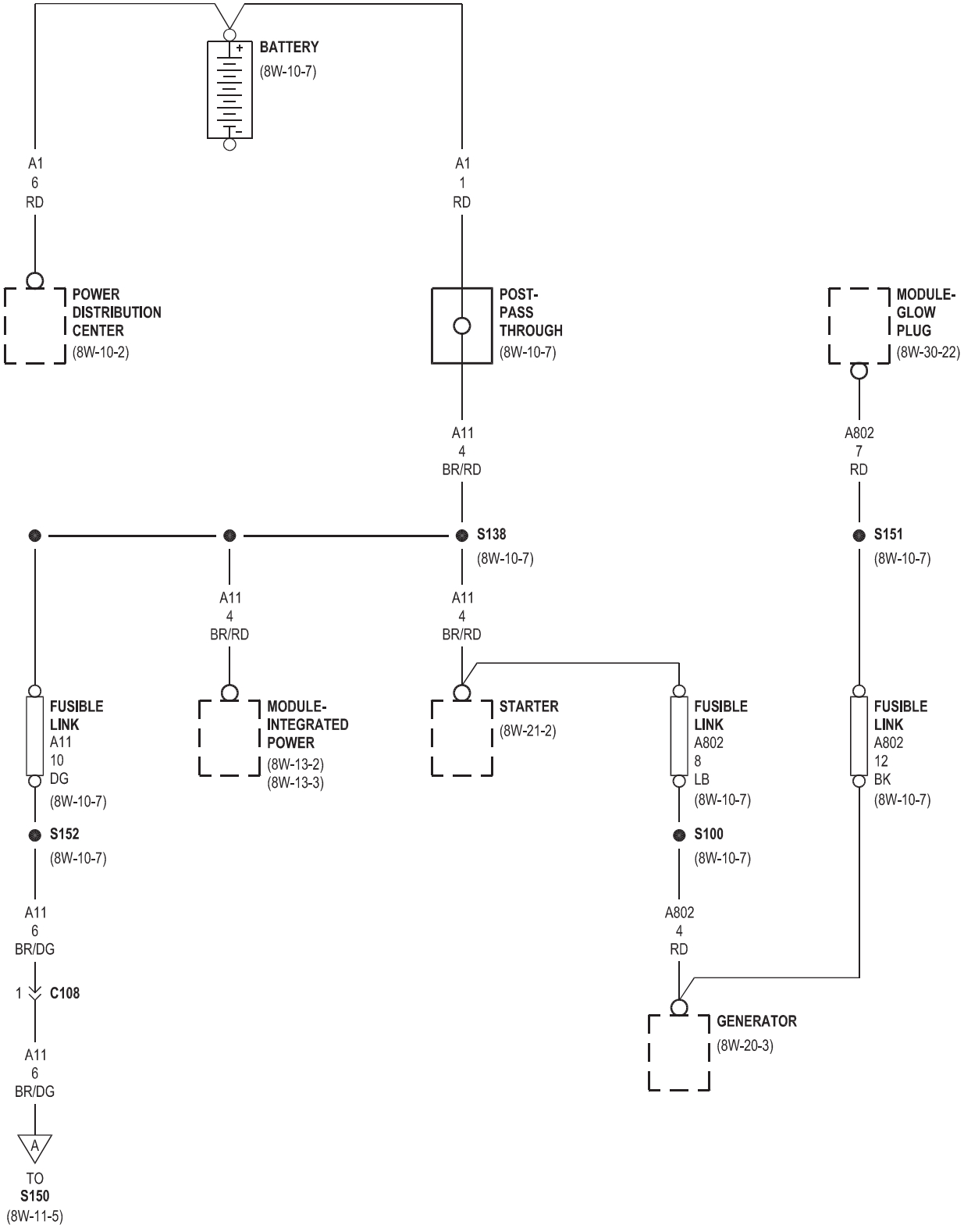
BATTERY
(8W-10-7)
A1
6
RD
A1
1
RD
POWER
DISTRIBUTION
CENTER
(8W-10-2)
POST-
PASS
THROUGH
(8W-10-7)
MODULE-
GLOW
PLUG
(8W-30-22)
A11
4
BR/RD
A802
7
RD
S138
(8W-10-7)
S151
(8W-10-7)
A11
4
BR/RD
A11
4
BR/RD
FUSIBLE
LINK
A11
10
DG
(8W-10-7)
MODULE-
INTEGRATED
POWER
(8W-13-2)
(8W-13-3)
STARTER
(8W-21-2)
FUSIBLE
LINK
A802
8
LB
(8W-10-7)
FUSIBLE
LINK
A802
12
BK
(8W-10-7)
S152
(8W-10-7)
S100
(8W-10-7)
A11
6
BR/DG
A802
4
RD
1
C108
GENERATOR
(8W-20-3)
A11
6
BR/DG
A
TO
S150
(8W-11-5)

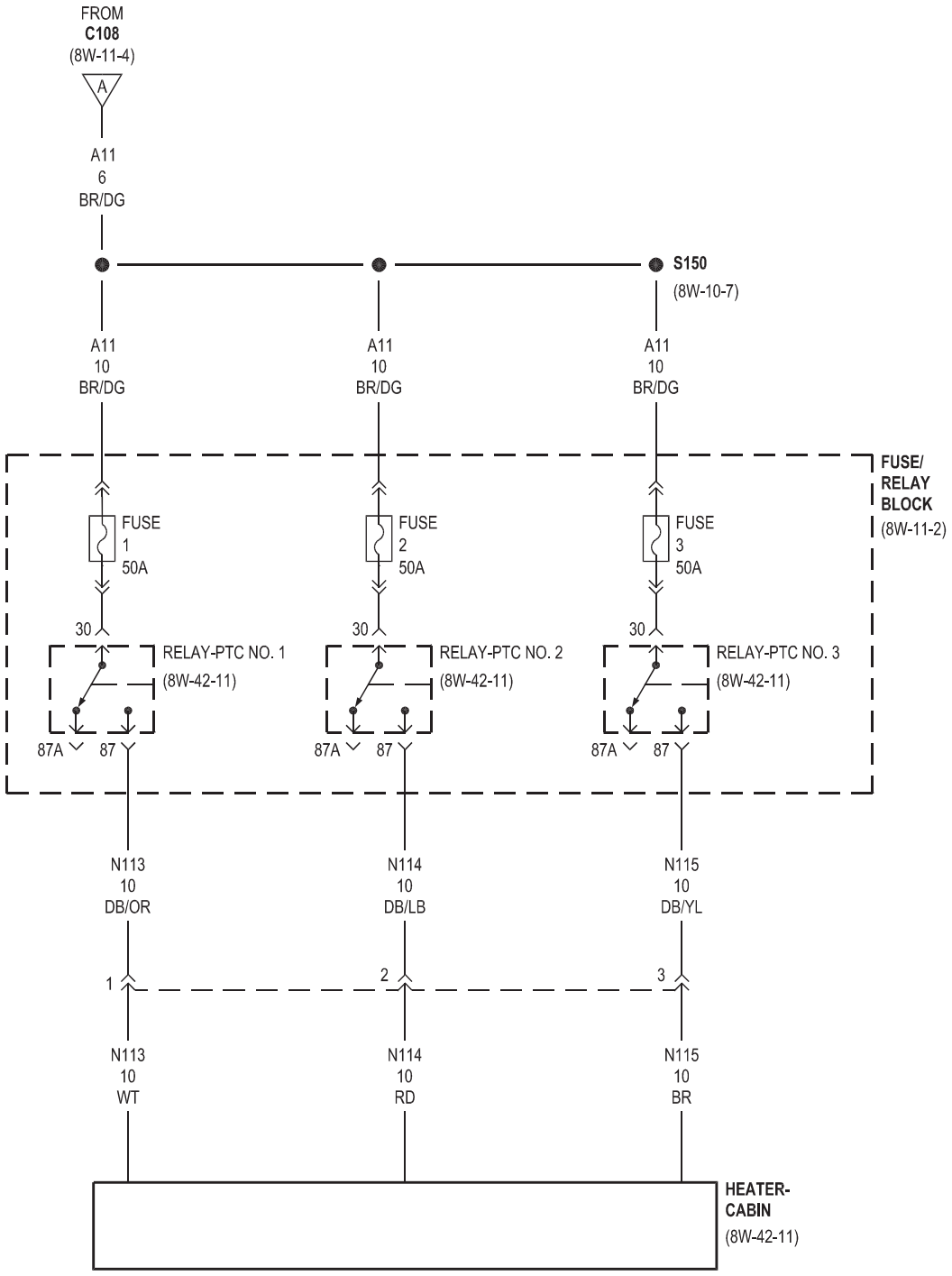
FROM
C108
(8W-11-4)
A
A11
6
BR/DG
S150
(8W-10-7)
A11
10
BR/DG
A11
10
BR/DG
A11
10
BR/DG
FUSE/
RELAY
BLOCK
(8W-11-2)
FUSE
1
50A
FUSE
2
50A
FUSE
3
50A
30
30
30
RELAY-PTC NO. 1
(8W-42-11)
RELAY-PTC NO. 2
(8W-42-11)
RELAY-PTC NO. 3
(8W-42-11)
87A
87
87A
87
87A
87
N113
10
DB/OR
N114
10
DB/LB
N115
10
DB/YL
1
2
3
N113
10
WT
N114
10
RD
N115
10
BR
HEATER-
CABIN
(8W-42-11)

FUSE/ RELAY BLOCK

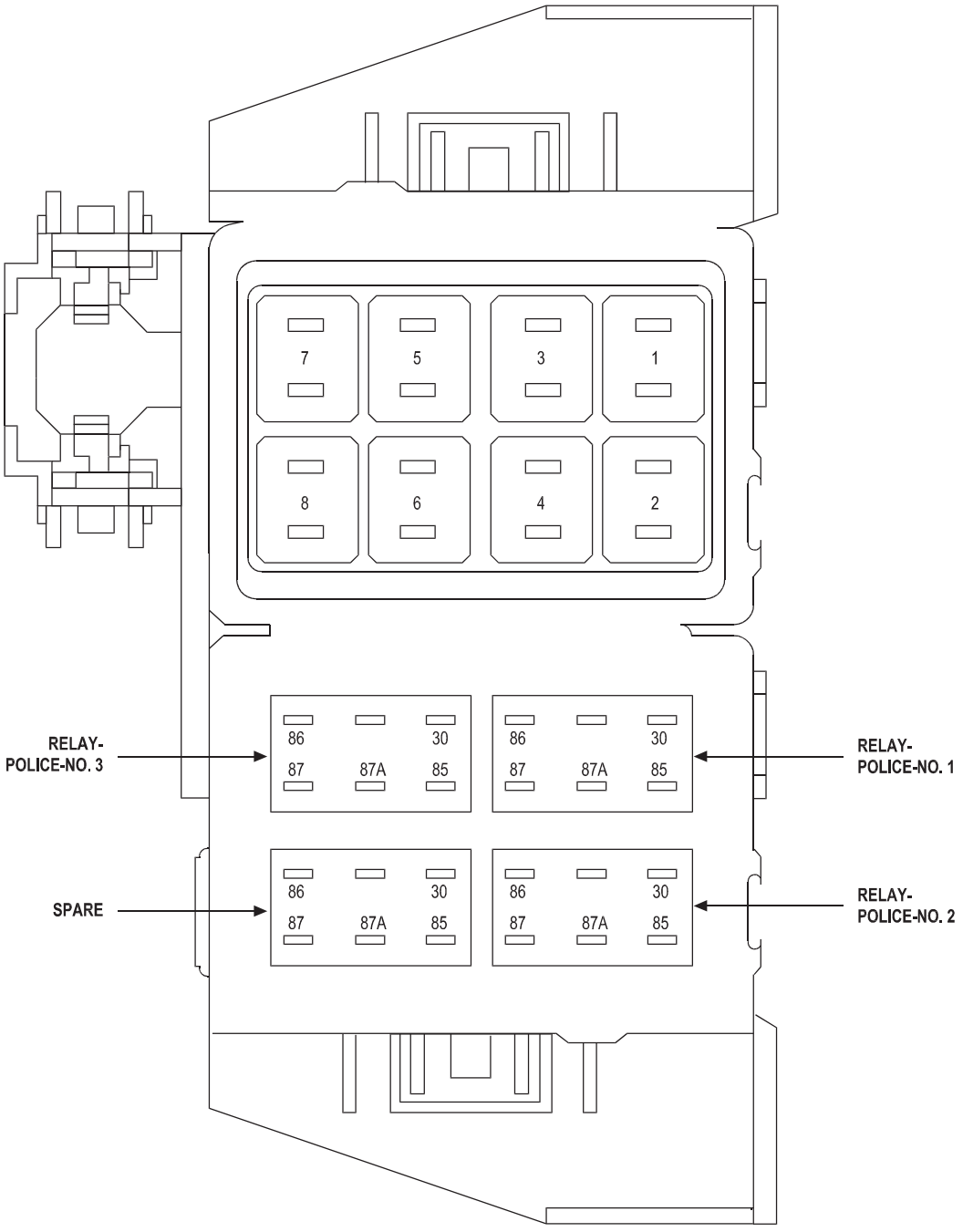

FUSES
(F/RB)

FUSE NO.	AMPS	FUSED CIRCUIT	FUNCTION
1	20A	A100 16RD/WT	FUSED B(+)
2	20A	F3 16YL/RD	FUSED B(+)
3	20A	A101 16VT/RD	FUSED B(+)
4	20A	F4 16RD/YL	FUSED B(+)
5	20A	A102 16WT/RD	FUSED B(+)
6	20A	F5 16WT/YL	FUSED B(+)
7	-	-	-
8	-	-	-

RELAYS
(F/RB)

RELAY-POLICE-NO. 1

CAVITY	CIRCUIT	FUNCTION
30	F3 16YL/RD	FUSED B(+)
85	Z911 20BK/WT	GROUND
86	F880 20PK/DG	FUSED ACCESSORY DELAY RELAY OUTPUT
87	F100 16PK/WT	POLICE NO. 1 RELAY OUTPUT
87A	-	-

RELAY-POLICE-NO. 2

CAVITY	CIRCUIT	FUNCTION
30	F5 16WT/YL	FUSED B(+)
85	Z911 20BK/WT	GROUND
86	F880 20PK/DG	FUSED ACCESSORY DELAY RELAY OUTPUT
87	F102 16WT/PK	POLICE NO. 2 RELAY OUTPUT
87A	-	-

RELAY-POLICE-NO. 3

CAVITY	CIRCUIT	FUNCTION
30	F4 16RD/YL	FUSED B(+)
85	Z911 20BK/WT	GROUND
86	F880 20PK/DG	FUSED ACCESSORY DELAY RELAY OUTPUT
87	F101 16VT/PK	POLICE NO. 3 RELAY OUTPUT
87A	-	-

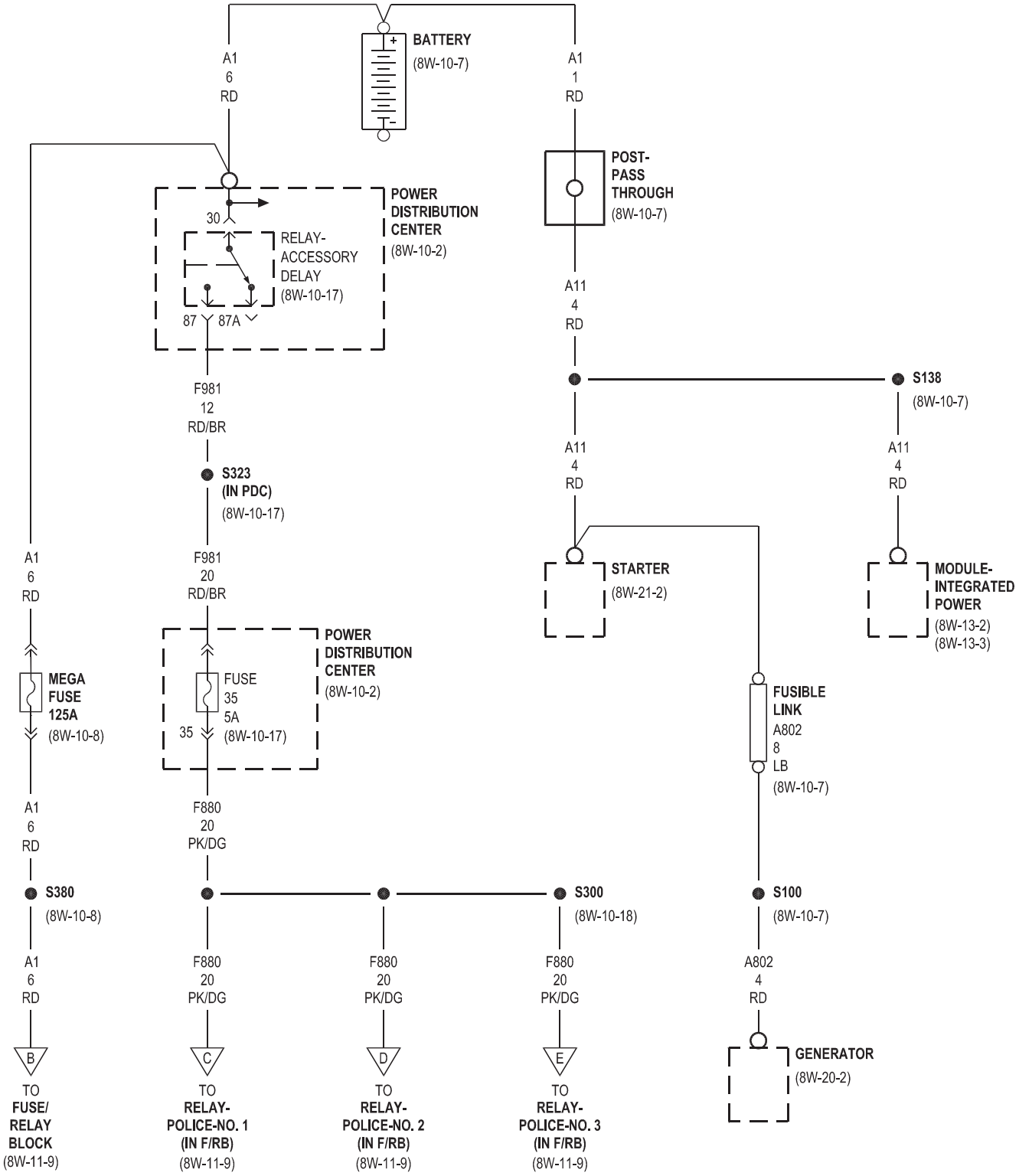
BATTERY
(8W-10-7)
A1
6
RD
A1
1
RD
POST-
PASS
THROUGH
(8W-10-7)
POWER
DISTRIBUTION
CENTER
(8W-10-2)
30
RELAY-
ACCESSORY
DELAY
(8W-10-17)
87
87A
A11
4
RD
S138
(8W-10-7)
F981
12
RD/BR
S323
(IN PDC)
(8W-10-17)
A11
4
RD
A11
4
RD
A1
6
RD
F981
20
RD/BR
STARTER
(8W-21-2)
MODULE-
INTEGRATED
POWER
(8W-13-2)
(8W-13-3)
POWER
DISTRIBUTION
CENTER
(8W-10-2)
FUSE
35
5A
35
(8W-10-17)
MEGA
FUSE
125A
(8W-10-8)
FUSIBLE
LINK
A802
8
LB
(8W-10-7)
A1
6
RD
F880
20
PK/DG
S380
(8W-10-8)
S300
(8W-10-18)
S100
(8W-10-7)
A1
6
RD
F880
20
PK/DG
F880
20
PK/DG
F880
20
PK/DG
A802
4
RD
B
C
D
E
GENERATOR
(8W-20-2)
TO
FUSE/
RELAY
BLOCK
(8W-11-9)
TO
RELAY-
POLICE-NO. 1
(IN F/RB)
(8W-11-9)
TO
RELAY-
POLICE-NO. 2
(IN F/RB)
(8W-11-9)
TO
RELAY-
POLICE-NO. 3
(IN F/RB)
(8W-11-9)

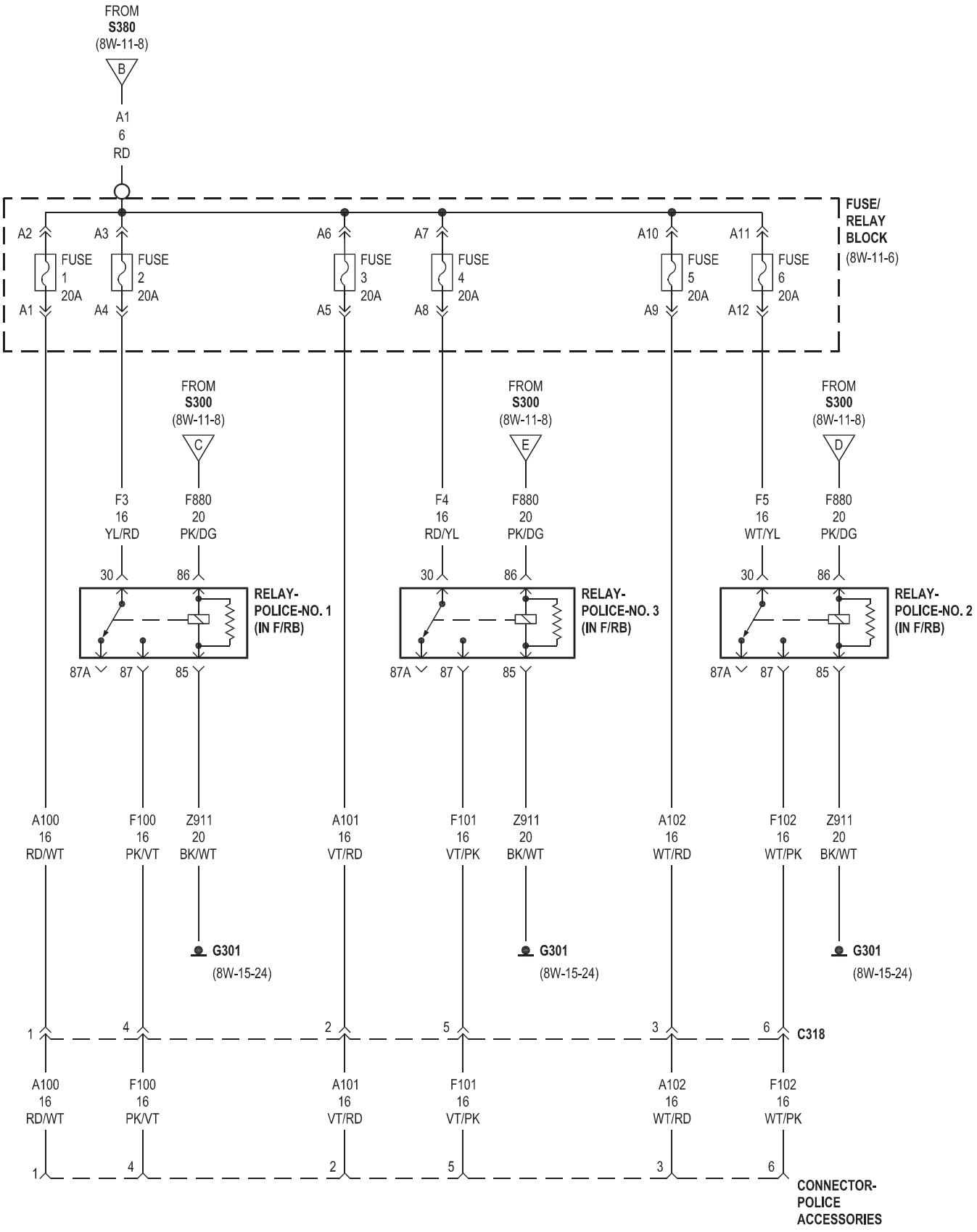
FROM
S380
(8W-11-8)
B
A1
6
RD
FUSE/
RELAY
BLOCK
(8W-11-6)
A2
A3
A6
A7
A10
A11
FUSE
1
20A
FUSE
2
20A
FUSE
3
20A
FUSE
4
20A
FUSE
5
20A
FUSE
6
20A
A1
A4
A5
A8
A9
A12
FROM
S300
(8W-11-8)
C
F3
16
YL/RD
F880
20
PK/DG
30
86
RELAY-
POLICE-NO. 1
(IN F/RB)
87A
87
85
FROM
S300
(8W-11-8)
E
F4
16
RD/YL
F880
20
PK/DG
RELAY-
POLICE-NO. 3
(IN F/RB)
FROM
S300
(8W-11-8)
D
F5
16
WT/YL
F880
20
PK/DG
RELAY-
POLICE-NO. 2
(IN F/RB)
A100
16
RD/WT
F100
16
PK/VT
Z911
20
BK/WT
G301
(8W-15-24)
A101
16
VT/RD
F101
16
VT/PK
Z911
20
BK/WT
G301
(8W-15-24)
A102
16
WT/RD
F102
16
WT/PK
Z911
20
BK/WT
G301
(8W-15-24)
1
4
2
5
3
6
C318
A100
16
RD/WT
F100
16
PK/VT
A101
16
VT/RD
F101
16
VT/PK
A102
16
WT/RD
F102
16
WT/PK
1
4
2
5
3
6
CONNECTOR-
POLICE
ACCESSORIES

8W-13 INTEGRATED POWER MODULE

Component	Page
Assembly-Shifter Lever	8W-13-29, 34
Assembly-Transmission Solenoid/Pressure Switch	8W-13-28
Assembly-Variable Line Pressure	8W-13-28
Battery	8W-13-11
Capacitor-Ignition-No. 1	8W-13-20, 23
Capacitor-Ignition-No. 2	8W-13-19, 20, 22, 23
Clutch-A/C Compressor	8W-13-13
Coil-Ignition-No. 1	8W-13-18, 21
Coil-Ignition-No. 2	8W-13-18, 19, 21
Coil-Ignition-No. 3	8W-13-18, 21
Coil-Ignition-No. 4	8W-13-18, 19, 21
Coil-Ignition-No. 5	8W-13-18, 21
Coil-Ignition-No. 6	8W-13-19, 22
Coil-Ignition-No. 7	8W-13-20, 23
Coil-Ignition-No. 8	8W-13-20, 23
Data Link Connector	8W-13-32
Diode-No. 2	8W-13-37
Fan-Radiator	8W-13-27, 28
Fuse 1	8W-13-12
Fuse 2	8W-13-12
Fuse 3	8W-13-12
Fuse 4	8W-13-13
Fuse 5	8W-13-13
Fuse 6	8W-13-13
Fuse 7	8W-13-14
Fuse 8	8W-13-14
Fuse 9	8W-13-17
Fuse 10	8W-13-27, 37
Fuse 11	8W-13-17
Fuse 14	8W-13-17
Fuse 15	8W-13-17
Fuse 16	8W-13-17
Fuse 17	8W-13-26
Fuse 18	8W-13-26
Fuse 19	8W-13-27
Fuse 20	8W-13-27
Fuse 21	8W-13-28
Fuse 22	8W-13-28
Fuse 23	8W-13-12
Fuse 24	8W-13-28
Fuse 25	8W-13-17
Fuse 26	8W-13-28
Fuse 27	8W-13-17
Fuse 29	8W-13-37
Fuse 44	8W-13-37
Fuse/Relay Block	8W-13-11, 24
Fusible Link	8W-13-11, 17
G100	8W-13-34
G101	8W-13-12, 26
G102	8W-13-12, 28
Generator	8W-13-11
Heater-Crankcase Vent	8W-13-25
Horn-No. 1	8W-13-13
Horn-No. 2	8W-13-13
Injector-Fuel-No. 1	8W-13-18, 19, 22
Injector-Fuel-No. 2	8W-13-19, 22
Injector-Fuel-No. 3	8W-13-18, 19, 22
Injector-Fuel-No. 4	8W-13-19, 22
Injector-Fuel-No. 5	8W-13-18, 20, 23
Injector-Fuel-No. 6	8W-13-19, 20, 23
Injector-Fuel-No. 7	8W-13-20, 23
Injector-Fuel-No. 8	8W-13-20, 23
Lamp-Backup-Left	8W-13-29
Lamp-Backup-Right	8W-13-29
Lamp-Center High Mounted Stop	8W-13-35
Lamp-Fog-Left Front	8W-13-14
Lamp-Fog-Right Front	8W-13-14
Lamp-High Beam-Left	8W-13-36
Lamp-High Beam-Right	8W-13-36
Lamp-High Intensity Discharge-Left	8W-13-12
Lamp-High Intensity Discharge-Right	8W-13-12
Lamp-License	8W-13-15
Lamp-License-Left	8W-13-15
Lamp-License-Right	8W-13-15
Lamp-Low Beam-Left	8W-13-36
Lamp-Low Beam-Right	8W-13-12
Lamp-Park/Turn-Left Front	8W-13-14, 36

Component	Page
Lamp-Park/Turn-Right Front	8W-13-14, 36
Lamp-Side Marker-Left Front	8W-13-14
Lamp-Side Marker-Left Rear	8W-13-16
Lamp-Side Marker-Right Front	8W-13-14
Lamp-Side Marker-Right Rear	8W-13-16
Lamp-Side Repeater-Left	8W-13-36
Lamp-Side Repeater-Right	8W-13-36
Lamp-Tail Park-Left	8W-13-16
Lamp-Tail Park-Right	8W-13-16
Lamp-Tail Stop/Park-Left	8W-13-16, 35
Lamp-Tail Stop/Park-Right	8W-13-16, 35
Lamp-Tail Stop/Turn-Left	8W-13-16, 30
Lamp-Tail Stop/Turn-Right	8W-13-16, 30
Lamp-Tail Turn-Left	8W-13-30
Lamp-Tail Turn-Right	8W-13-30
Lamp-Tail/Stop-Left	8W-13-15, 35
Lamp-Tail/Stop-Right	8W-13-15, 35
Lamp-Turn-Left Rear	8W-13-30
Lamp-Turn-Right Rear	8W-13-30
Lamp-Underhood	8W-13-13
Mega Fuse	8W-13-11
Mirror-Inside Rearview	8W-13-29
Module-Antilock Brakes	8W-13-26, 28
Module-Brake	8W-13-34
Module-Electronic Shift	8W-13-29, 34
Module-Engine Control	8W-13-17, 24, 25, 27, 28
Module-Front Control	8W-13-2, 3, 12, 13, 14, 17, 24, 26, 27, 28, 29, 30, 31, 32, 33, 34, 36, 37
Module-Glow Plug	8W-13-11, 25
Module-Integrated Power	8W-13-2, 3, 11, 12, 13, 14, 17, 24, 25, 26, 27, 28, 29, 30, 31, 37
Module-Powertrain Control	8W-13-17, 27, 28, 29
Motor-Boost Pressure Servo	8W-13-25
Motor-Intake Swirl Servo	8W-13-25
Motor-Wiper-Front	8W-13-26, 31
Motor-Wiper-Rear	8W-13-33
Post-Pass Through	8W-13-11
Power Distribution Center	8W-13-11, 37
Pump-Washer-Windshield	8W-13-31
Relay-A/C Clutch	8W-13-13, 28
Relay-Accessory Delay	8W-13-37
Relay-Adjustable Pedals	8W-13-12
Relay-Auto Shut Down	8W-13-17
Relay-Fog Lamp-Front	8W-13-14
Relay-Fog Lamp-Rear	8W-13-37
Relay-Fuel Pump	8W-13-25
Relay-Headlamp Washer	8W-13-13, 31
Relay-High Intensity Discharge Lamp	8W-13-12
Relay-Horn	8W-13-13
Relay-PTC No. 1	8W-13-24
Relay-PTC No. 2	8W-13-24
Relay-PTC No. 3	8W-13-24
Relay-Park Lamp	8W-13-14
Relay-Radiator Fan Control	8W-13-28
Relay-Radiator Fan High	8W-13-27
Relay-Radiator Fan High/Low Control	8W-13-27
Relay-Run	8W-13-37
Relay-Starter	8W-13-27
Relay-Stop Lamp Inhibit	8W-13-34
Relay-Transmission Control	8W-13-28
Relay-Wiper High/Low	8W-13-26
Relay-Wiper On/Off	8W-13-26
Relay-Wiper-Rear	8W-13-31
Sensor-Ambient Air Temperature	8W-13-34
Sensor-Brake Fluid Level	8W-13-33
Sensor-Oxygen	8W-13-25
Sensor-Washer Fluid Level-Front	8W-13-33
Sensor-Wheel Speed-Right Front	8W-13-33
Solenoid-Short Runner Valve	8W-13-20, 23
Starter	8W-13-11, 27
Switch-Adjustable Pedals	8W-13-12
Switch-Bank	8W-13-33
Switch-Security Hood	8W-13-34
Switch-Stop Lamp	8W-13-34
Transducer-A/C Pressure	8W-13-31, 33
Valve-Egr	8W-13-25

MODULE- INTEGRATED POWER
(FRONT VIEW)

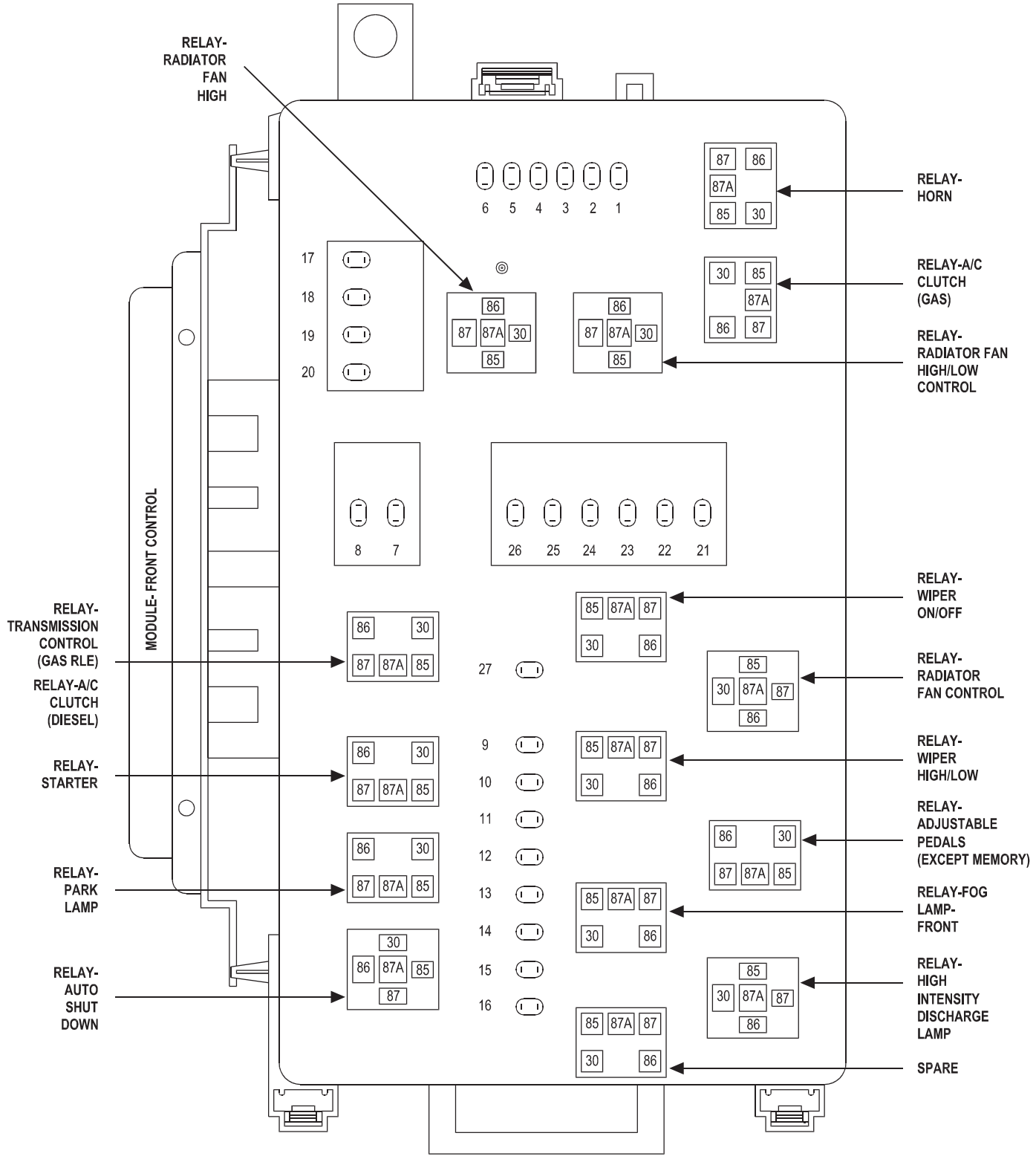

MODULE- INTEGRATED POWER
(REAR VIEW)

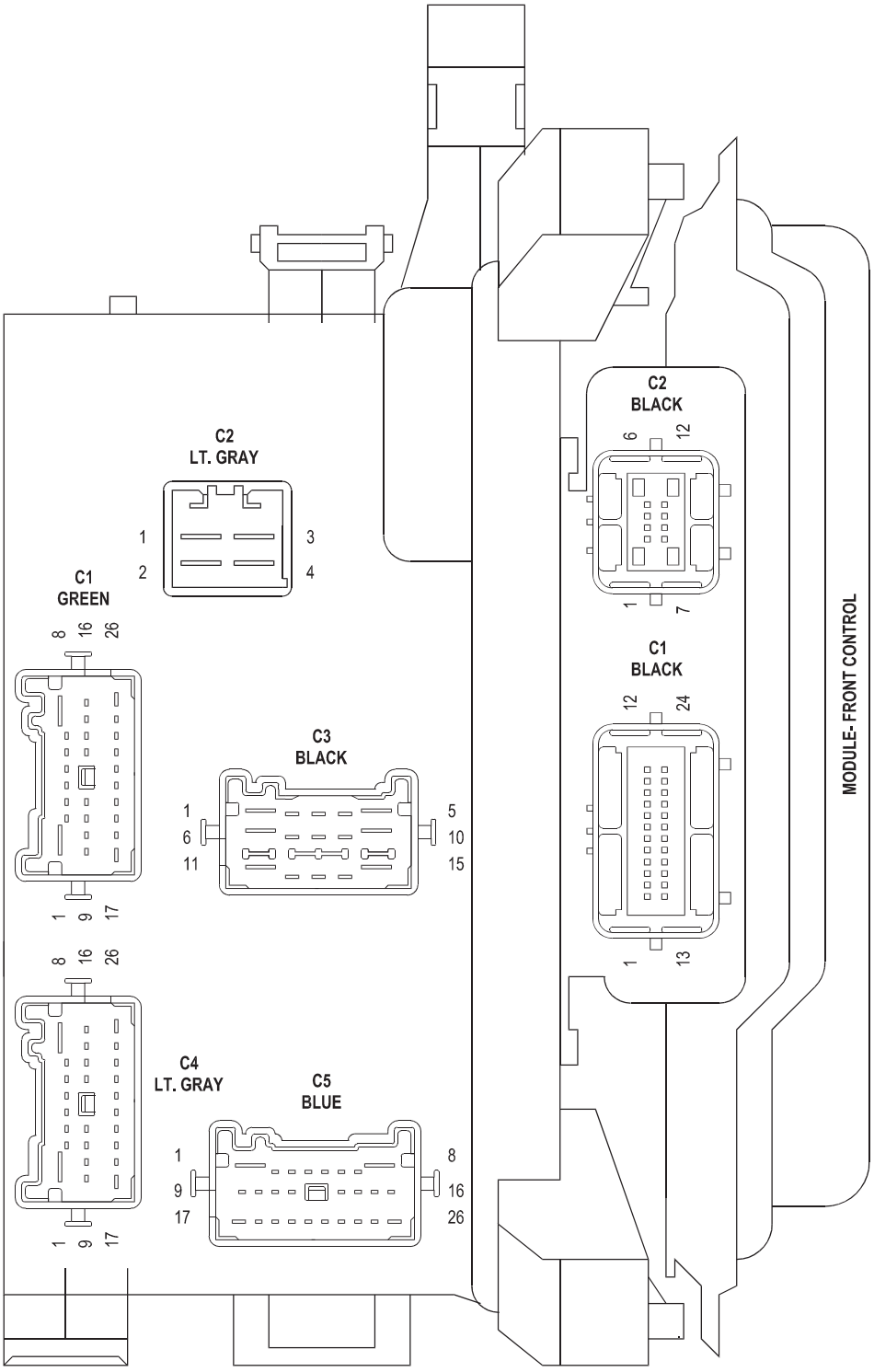

FUSES
(IPM)

FUSE NO.	AMPS	FUSED CIRCUIT	FUNCTION
1	20A	L303 18WT/OR ▼▼▼	LEFT HID LAMP DRIVER
2	20A	L304 18OR/WT ▼▼▼	RIGHT HID LAMP DRIVER
3	15A	INTERNAL	FUSED B(+)
4	20A	INTERNAL	FUSED B(+)
5	20A	A904 16RD	FUSED B(+)
6	15A	A903	FUSED B(+)
7	20A	INTERNAL ○○○	FUSED B(+)
8	15A	INTERNAL	FUSED B(+)
9	15A	A906	FUSED B(+)
10	5A	T751 20YL	FUSED IGNITION SWITCH OUTPUT (START)
11	15A	A209 ◆	FUSED B(+)
11	20A	A209 ◆◆	FUSED B(+)
12	-	-	-
13	-	-	-
14	20A	K342 16BR/WT ◆	FUSED ASD RELAY OUTPUT 1
14	25A	K342 16BR/WT ◆◆	FUSED ASD RELAY OUTPUT 1
15	25A	K343 16BR/YL ◑	FUSED ASD RELAY OUTPUT 2
15	20A	K343 16BR/YL ◆	FUSED ASD RELAY OUTPUT 2
15	25A	K343 14BR/YL ○○	FUSED ASD RELAY OUTPUT 2
16	15A	K344 14BR/GY ○○	FUSED ASD RELAY OUTPUT 3
17	30A	A111 14DG/RD ◇◇◇	FUSED B(+)
18	30A	INTERNAL	FUSED B(+)
19	50A	INTERNAL	FUSED B(+)
20	20A	INTERNAL	FUSED B(+)
21	50A	A107 10TN/RD ◇◇◇	FUSED B(+)
22	40A	INTERNAL	FUSED B(+)
23	50A	INTERNAL ▼▼▼	FUSED B(+)
24	60A	A934 10 RD ◆◆◆◆	FUSED B(+)
25	30A	A901	FUSED B(+)
26	20A	INTERNAL ◑◑◑◑	FUSED B(+)
27	30A	A902	FUSED B(+)

◆ SRT8 # # RLE ▼▼▼ HID LAMPS ◑ GAS EXCEPT SRT8 ◆◆◆◆ AWD/SRT8/DIESEL
◆◆ EXCEPT SRT8 ○○○ FOG LAMPS ◇◇◇ ABS ○○ DIESEL ◑◑◑◑ RLE/DIESEL

RELAYS
(IPM)

RELAY-A/C CLUTCH

CAVITY	CIRCUIT	FUNCTION
30	INTERNAL	FUSED B(+)
85	C13 20LB/OR	A/C CLUTCH RELAY CONTROL
86	INTERNAL ○	FUSED B(+)
86	K343 18 BR/YL ○○	FUSED ASD RELAY OUTPUT 2
87	C3 18DB/YL	A/C CLUTCH RELAY OUTPUT
87A	-	-

RELAY-ADJUSTABLE PEDALS (EXCEPT MEMORY)

CAVITY	CIRCUIT	FUNCTION
30	INTERNAL	FUSED B(+)
85	P201	ADJUSTABLE PEDALS RELAY CONTROL
86	INTERNAL	FUSED B(+)
87	-	-
87A	A72 20RD/OR	ADJUSTABLE PEDALS RELAY OUTPUT

RELAY-AUTO SHUT DOWN

CAVITY	CIRCUIT	FUNCTION
30	A22 12RD/WT	FUSED B(+)
85	K51 20BR/WT	ASD RELAY CONTROL
86	A209 18RD	FUSED B(+)
87	K542	ASD RELAY OUTPUT
87A	-	-

RELAY-FOG LAMP-FRONT

CAVITY	CIRCUIT	FUNCTION
30	INTERNAL	FUSED B(+)
85	L139	FRONT FOG LAMP RELAY CONTROL
86	INTERNAL	FUSED B(+)
87	L89 18 WT/YL	FRONT FOG LAMP RELAY OUTPUT
87A	-	-

○ GAS
○○ DIESEL

RELAYS (IPM) (CONTINUED)

RELAY- HIGH INTENSITY DISCHARGE LAMP

CAVITY	CIRCUIT	FUNCTION
30	INTERNAL	FUSED B(+)
85	L44 18WT/TN	RIGHT LOW BEAM DRIVER
86	Z904 20BK/BR ◑◑◑	GROUND
86	Z901 20BK/DG ◑◑	GROUND
87	INTERNAL	HIGH INTENSITY DISCHARGE LAMP RELAY OUTPUT
87A	-	-

RELAY- HORN

CAVITY	CIRCUIT	FUNCTION
30	INTERNAL	FUSED B(+)
85	X4	HORN RELAY CONTROL
86	INTERNAL	FUSED B(+)
87	X2 18DG/OR	HORN RELAY OUTPUT
87A	-	-

RELAY- PARK LAMP

CAVITY	CIRCUIT	FUNCTION
30	INTERNAL	FUSED B(+)
85	L177	PARK LAMP RELAY CONTROL
86	INTERNAL	FUSED B(+)
87	L777 20WT/VT	PARK LAMP RELAY OUTPUT
87A	-	-

RELAY- RADIATOR FAN CONTROL

CAVITY	CIRCUIT	FUNCTION
30	INTERNAL	FUSED B(+)
85	INTERNAL	FUSED B(+)
86	N201	RADIATOR FAN CONTROL RELAY CONTROL
87	N24 12DG/DB	RADIATOR FAN CONTROL RELAY OUTPUT
87A	-	-

◑◑ SRT8 EARLY BUILD
◑◑◑ EXCEPT SRT8 EARLY BUILD

RELAYS
(IPM)
(CONTINUED)

RELAY-RADIATOR FAN HIGH

CAVITY	CIRCUIT	FUNCTION
30	N23 10DB/DG	RADIATOR FAN HIGH RELAY OUTPUT
85	N112	RADIATOR FAN HIGH RELAY CONTROL
86	INTERNAL	FUSED B(+)
87	INTERNAL	FUSED B(+)
87A	INTERNAL	RADIATOR FAN HIGH/LOW CONTROL OUTPUT

RELAY-RADIATOR FAN HIGH/LOW CONTROL

CAVITY	CIRCUIT	FUNCTION
30	N210 12DB/DG	RADIATOR FAN HIGH/LOW CONTROL FEED
85	INTERNAL	FUSED B(+)
86	N112	RADIATOR FAN HIGH RELAY CONTROL
87	Z901	GROUND
87A	INTERNAL	RADIATOR FAN HIGH/LOW CONTROL OUTPUT

RELAY-STARTER

CAVITY	CIRCUIT	FUNCTION
30	INTERNAL	FUSED B(+)
85	T751 20YL	FUSED IGNITION SWITCH OUTPUT (START)
86	T752 20DG/OR	STARTER RELAY CONTROL
87	T750 16YL/GY	STARTER RELAY OUTPUT
87A	-	-

RELAY-TRANSMISSION CONTROL (RLE)

CAVITY	CIRCUIT	FUNCTION
30	INTERNAL	FUSED B(+)
85	Z901	GROUND
86	T15 20YL/BR	TRANSMISSION CONTROL
87	T16 16YL/OR	TRANSMISSION CONTROL OUTPUT
87A	-	-

RELAYS
(IPM)
(CONTINUED)

RELAY-WIPER HIGH/LOW

CAVITY	CIRCUIT	FUNCTION
30	INTERNAL	WIPER ON/OFF MUX SENSE
85	W2	WIPER HIGH/LOW RELAY CONTROL
86	INTERNAL	FUSED B(+)
87	W4 14BR/OR	FRONT WIPER HIGH/LOW RELAY HIGH SPEED OUTPUT
87A	W3 14BR/WT	FRONT WIPER HIGH/LOW RELAY LOW SPEED OUTPUT

RELAY-WIPER ON/OFF

CAVITY	CIRCUIT	FUNCTION
30	INTERNAL	WIPER ON/OFF MUX SENSE
85	W5	WIPER ON/OFF RELAY CONTROL
86	INTERNAL	FUSED B(+)
87	INTERNAL	FUSED B(+)
87A	Z901	GROUND

MODULE-FRONT CONTROL IPM

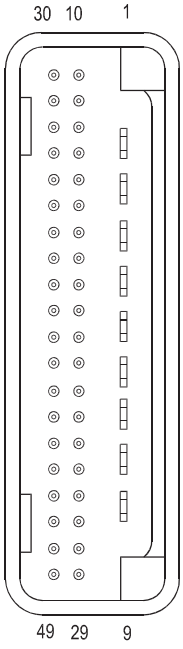

CAVITY	CIRCUIT		FUNCTION
1	-		-
2	A906		FUSED B(+)
3	A902		FUSED B(+)
4	A901		FUSED B(+)
5	A903		FUSED B(+)
6	-		-
7	L1		BACKUP LAMP FEED
8	-		-
9	-		-
10	W24	▼▼▼	HEADLAMP WASHER RELAY CONTROL
11	W20	▼▼	REAR WASHER PUMP MOTOR CONTROL
12	W10		FRONT WASHER PUMP MOTOR CONTROL
13	F902		IGNITION UNLOCK-RUN-START
14	K361	○○	PTC NO. 2 RELAY CONTROL
15	X13		FUSED B(+) (I.O.D.)
16	K360	○○	PTC NO. 1 RELAY CONTROL
17	F202		FUSED IGNITION SWITCH OUTPUT (RUN-START)
18	Z901		GROUND
19	-		-
20	-		-
21	L239	▲▲	REAR FOG LAMP RELAY CONTROL
22	F923		RUN RELAY CONTROL
23	-		-
24	-		-
25	Z901		GROUND
26	L139		FRONT FOG LAMP RELAY CONTROL

○○ DIESEL
▼▼ LX49
▲▲ EXPORT
▼▼▼ HID LAMPS

MODULE-FRONT CONTROL IPM
(CONTINUED)

CAVITY	CIRCUIT	FUNCTION
27	W5	WIPER ON/OFF RELAY CONTROL
28	W12 ▼▼	REAR WIPER RELAY CONTROL
29	W2	WIPER HIGH/LOW RELAY CONTROL
30	K542	ASD RELAY OUTPUT
31	W7	FRONT WIPER PARK SWITCH SENSE
32	-	-
33	Z901	GROUND
34	L62	RIGHT REAR TURN SIGNAL CONTROL
35	C918	A/C PRESSURE SENSOR GROUND
36	-	-
37	-	-
38	P307	ACCESSORY DELAY RELAY CONTROL
39	N201	RADIATOR FAN CONTROL RELAY CONTROL
40	-	-
41	Z901	GROUND
42	-	-
43	L63	LEFT REAR TURN SIGNAL CONTROL
44	-	-
45	N112	RADIATOR FAN HIGH RELAY CONTROL
46	P201 ▼▼▼▼	ADJUSTABLE PEDALS RELAY CONTROL
47	X4	HORN RELAY CONTROL
48	L177	PARK LAMP RELAY CONTROL
49	K175 ◆◆◆◆	RADIATOR FAN RELAY COIL SIGNAL

▼▼ LX49
▼▼▼▼ EXCEPT MEMORY
◆◆◆◆ AWD/SRT8/DIESEL

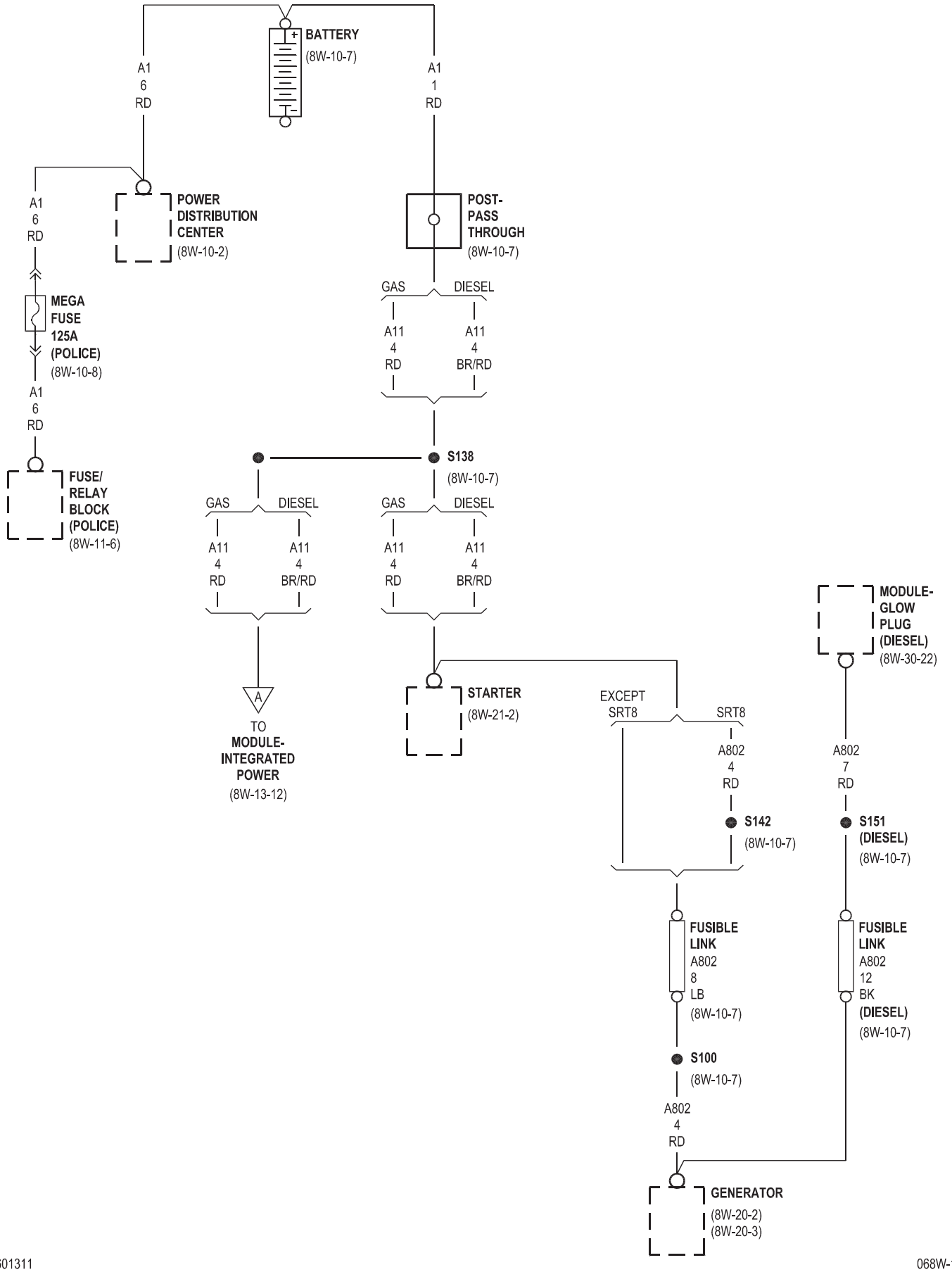
BATTERY
(8W-10-7)
A1
6
RD
A1
1
RD
A1
6
RD
POWER
DISTRIBUTION
CENTER
(8W-10-2)
POST-
PASS
THROUGH
(8W-10-7)
GAS
DIESEL
A11
4
RD
A11
4
BR/RD
MEGA
FUSE
125A
(POLICE)
(8W-10-8)
A1
6
RD
FUSE/
RELAY
BLOCK
(POLICE)
(8W-11-6)
S138
(8W-10-7)
GAS
DIESEL
A11
4
RD
A11
4
BR/RD
GAS
DIESEL
A11
4
RD
A11
4
BR/RD
A
TO
MODULE-
INTEGRATED
POWER
(8W-13-12)
STARTER
(8W-21-2)
EXCEPT
SRT8
SRT8
A802
4
RD
S142
(8W-10-7)
MODULE-
GLOW
PLUG
(DIESEL)
(8W-30-22)
A802
7
RD
S151
(DIESEL)
(8W-10-7)
FUSIBLE
LINK
A802
8
LB
(8W-10-7)
FUSIBLE
LINK
A802
12
BK
(DIESEL)
(8W-10-7)
S100
(8W-10-7)
A802
4
RD
GENERATOR
(8W-20-2)
(8W-20-3)

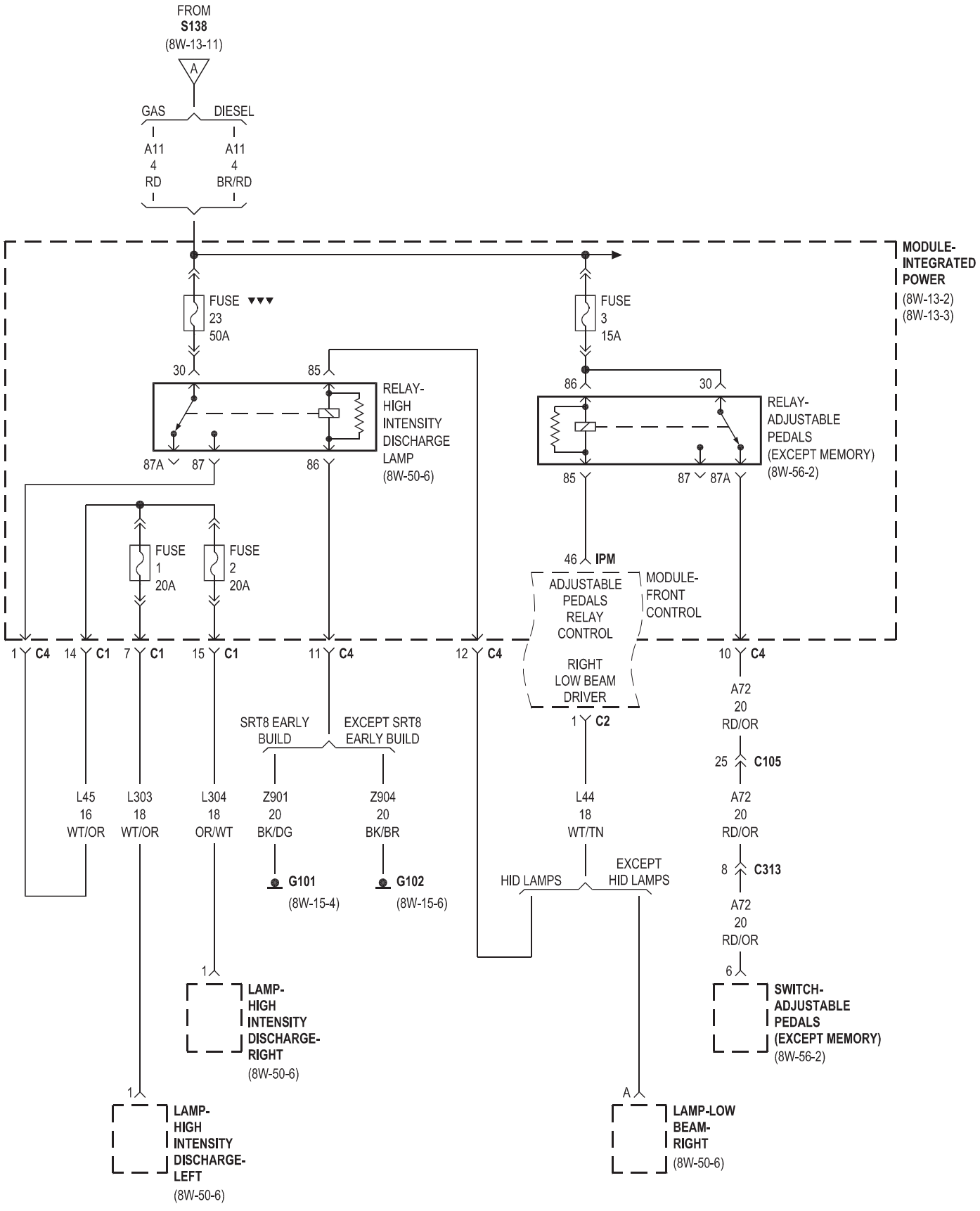
FROM
S138
(8W-13-11)
A
GAS
DIESEL
A11
4
RD
A11
4
BR/RD
MODULE-
INTEGRATED
POWER
(8W-13-2)
(8W-13-3)
FUSE ▼▼▼
23
50A
FUSE
3
15A
30
85
86
30
RELAY-
HIGH
INTENSITY
DISCHARGE
LAMP
(8W-50-6)
RELAY-
ADJUSTABLE
PEDALS
(EXCEPT MEMORY)
(8W-56-2)
87A
87
86
85
87
87A
FUSE
1
20A
FUSE
2
20A
46
IPM
ADJUSTABLE
PEDALS
RELAY
CONTROL
MODULE-
FRONT
CONTROL
RIGHT
LOW BEAM
DRIVER
1
C2
1
C4
14
C1
7
C1
15
C1
11
C4
12
C4
10
C4
SRT8 EARLY
BUILD
EXCEPT SRT8
EARLY BUILD
A72
20
RD/OR
25
C105
L45
16
WT/OR
L303
18
WT/OR
L304
18
OR/WT
Z901
20
BK/DG
Z904
20
BK/BR
L44
18
WT/TN
A72
20
RD/OR
8
C313
G101
(8W-15-4)
G102
(8W-15-6)
HID LAMPS
EXCEPT
HID LAMPS
A72
20
RD/OR
6
1
LAMP-
HIGH
INTENSITY
DISCHARGE-
RIGHT
(8W-50-6)
SWITCH-
ADJUSTABLE
PEDALS
(EXCEPT MEMORY)
(8W-56-2)
1
LAMP-
HIGH
INTENSITY
DISCHARGE-
LEFT
(8W-50-6)
A
LAMP-LOW
BEAM-
RIGHT
(8W-50-6)

▼▼▼ HID LAMPS

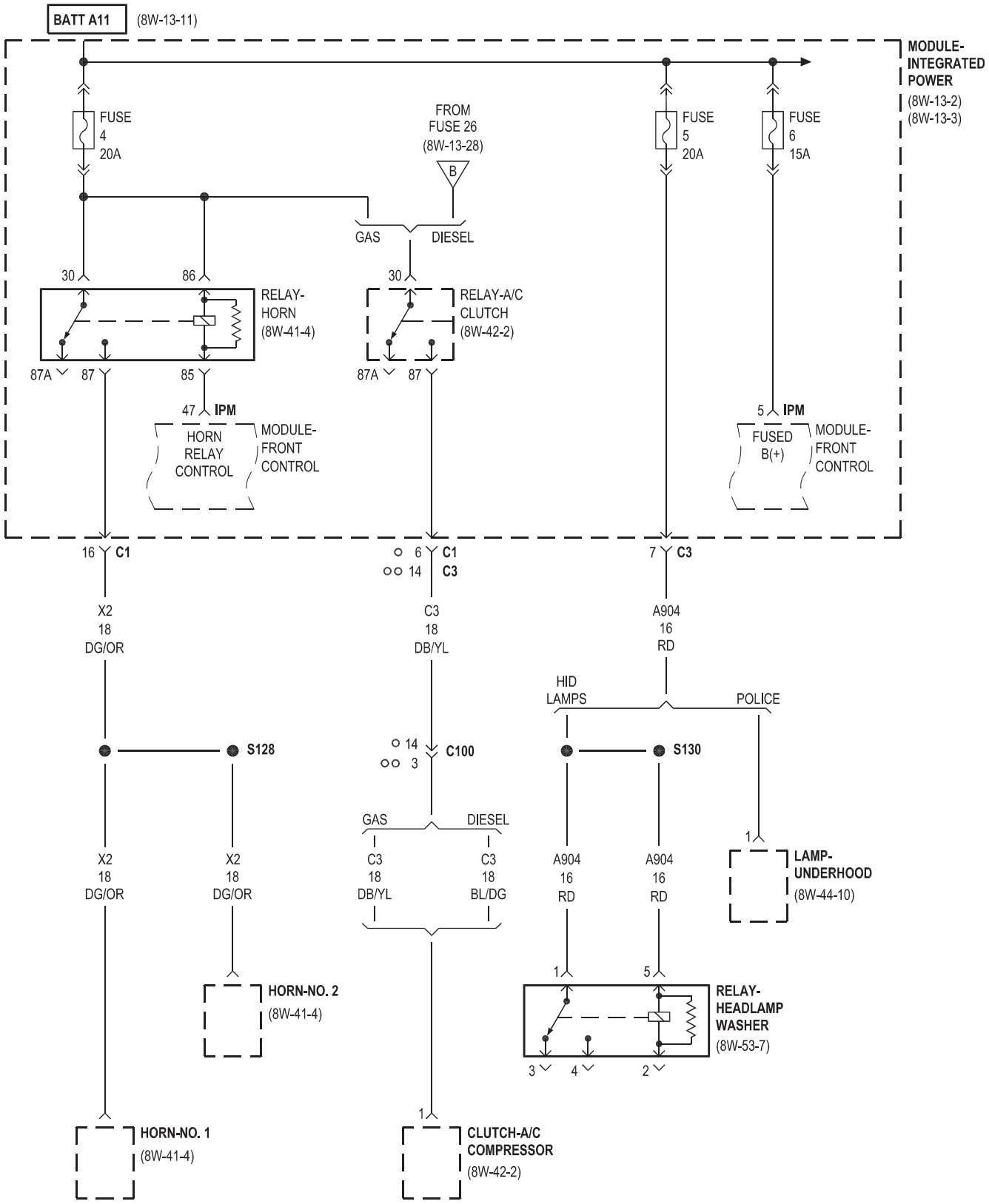
BATT A11
(8W-13-11)
MODULE-INTEGRATED POWER
(8W-13-2)
(8W-13-3)
FUSE 4 20A
FROM FUSE 26
(8W-13-28)
B
GAS
DIESEL
FUSE 5 20A
FUSE 6 15A
30
86
RELAY-HORN
(8W-41-4)
87A
87
85
47 IPM
HORN RELAY CONTROL
MODULE-FRONT CONTROL
30
RELAY-A/C CLUTCH
(8W-42-2)
87A
87
5 IPM
FUSED B(+)
MODULE-FRONT CONTROL
16 C1
6 C1
14 C3
7 C3
X2 18 DG/OR
C3 18 DB/YL
A904 16 RD
HID LAMPS
POLICE
S128
14 C100
3
S130
GAS
DIESEL
1
LAMP-UNDERHOOD
(8W-44-10)
X2 18 DG/OR
X2 18 DG/OR
C3 18 DB/YL
C3 18 BL/DG
A904 16 RD
A904 16 RD
1
5
HORN-NO. 2
(8W-41-4)
RELAY-HEADLAMP WASHER
(8W-53-7)
3
4
2
1
HORN-NO. 1
(8W-41-4)
CLUTCH-A/C COMPRESSOR
(8W-42-2)

GAS
DIESEL

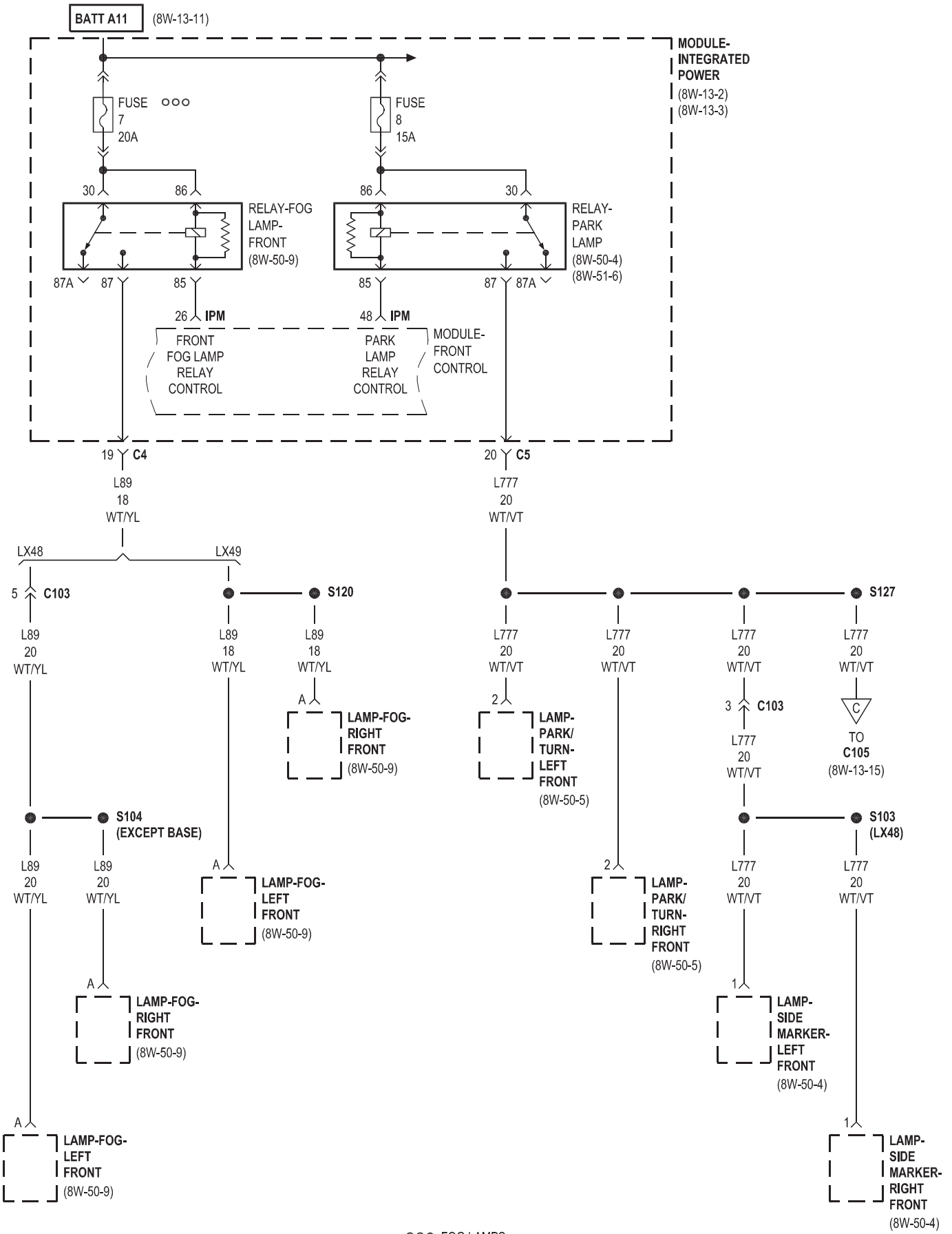
BATT A11
(8W-13-11)
MODULE-
INTEGRATED
POWER
(8W-13-2)
(8W-13-3)
FUSE
7
20A
FUSE
8
15A
30
86
RELAY-FOG
LAMP-
FRONT
(8W-50-9)
86
30
RELAY-
PARK
LAMP
(8W-50-4)
(8W-51-6)
87A
87
85
85
87
87A
26
IPM
48
IPM
FRONT
FOG LAMP
RELAY
CONTROL
PARK
LAMP
RELAY
CONTROL
MODULE-
FRONT
CONTROL
19
C4
20
C5
L89
18
WT/YL
L777
20
WT/VT
LX48
LX49
5
C103
S120
S127
L89
20
WT/YL
L89
18
WT/YL
L89
18
WT/YL
L777
20
WT/VT
L777
20
WT/VT
L777
20
WT/VT
L777
20
WT/VT
A
LAMP-FOG-
RIGHT
FRONT
(8W-50-9)
2
LAMP-
PARK/
TURN-
LEFT
FRONT
(8W-50-5)
3
C103
C
TO
C105
(8W-13-15)
L777
20
WT/VT
S104
(EXCEPT BASE)
S103
(LX48)
L89
20
WT/YL
L89
20
WT/YL
L777
20
WT/VT
L777
20
WT/VT
A
LAMP-FOG-
LEFT
FRONT
(8W-50-9)
2
LAMP-
PARK/
TURN-
RIGHT
FRONT
(8W-50-5)
A
LAMP-FOG-
RIGHT
FRONT
(8W-50-9)
1
LAMP-
SIDE
MARKER-
LEFT
FRONT
(8W-50-4)
A
LAMP-FOG-
LEFT
FRONT
(8W-50-9)
1
LAMP-
SIDE
MARKER-
RIGHT
FRONT
(8W-50-4)

○○○ FOG LAMPS

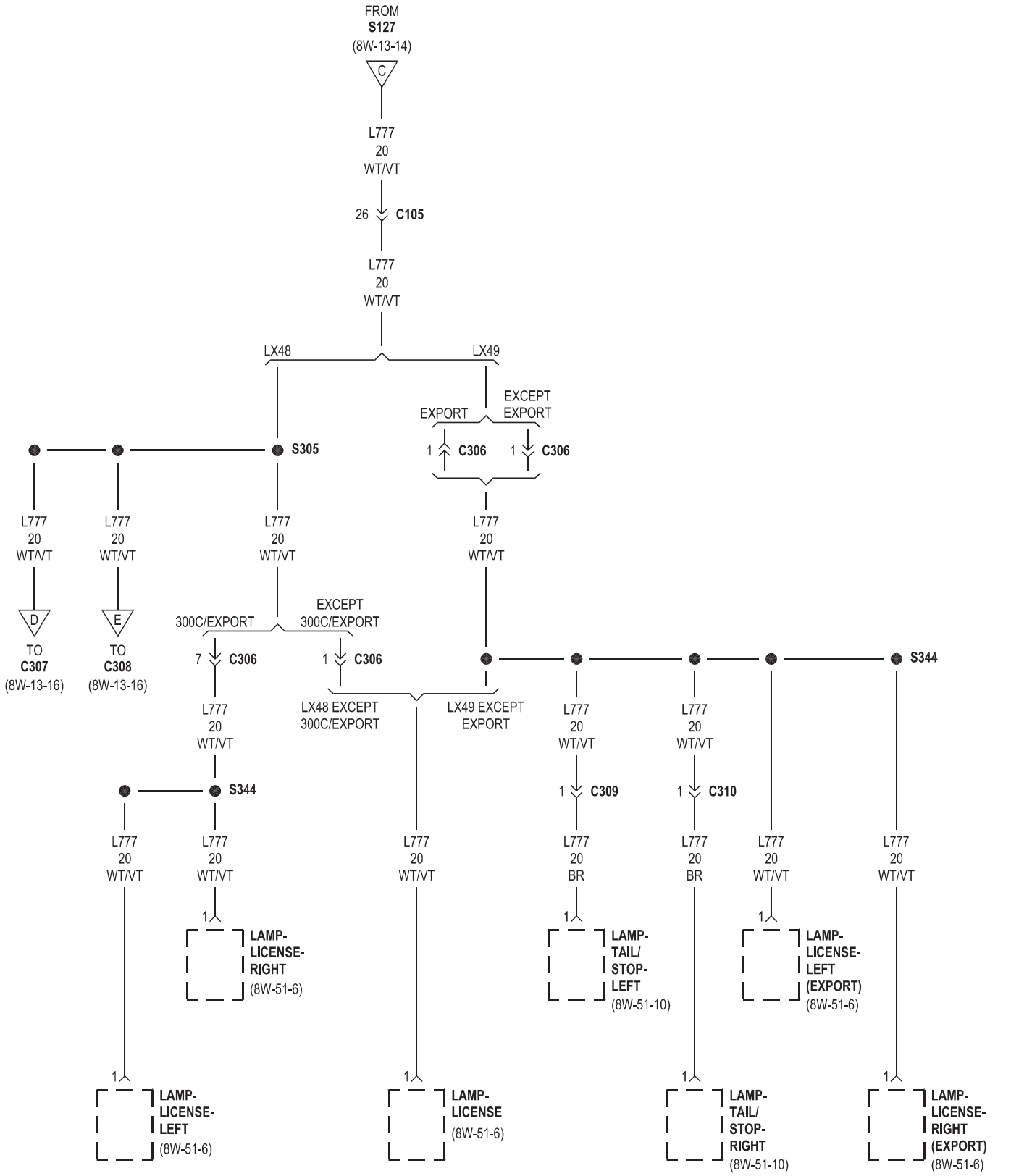
FROM
S127
(8W-13-14)
C
L777
20
WT/VT
26 C105
L777
20
WT/VT
LX48
LX49
EXPORT
EXCEPT
EXPORT
1 C306
1 C306
S305
L777
20
WT/VT
L777
20
WT/VT
L777
20
WT/VT
L777
20
WT/VT
D
E
TO
C307
(8W-13-16)
TO
C308
(8W-13-16)
300C/EXPORT
EXCEPT
300C/EXPORT
7 C306
1 C306
LX48 EXCEPT
300C/EXPORT
LX49 EXCEPT
EXPORT
S344
L777
20
WT/VT
L777
20
WT/VT
1 C309
1 C310
L777
20
WT/VT
L777
20
WT/VT
L777
20
WT/VT
L777
20
BR
L777
20
BR
L777
20
WT/VT
L777
20
WT/VT
1
LAMP-
LICENSE-
RIGHT
(8W-51-6)
1
LAMP-
TAIL/
STOP-
LEFT
(8W-51-10)
1
LAMP-
LICENSE-
LEFT
(EXPORT)
(8W-51-6)
1
LAMP-
LICENSE-
LEFT
(8W-51-6)
1
LAMP-
LICENSE
(8W-51-6)
1
LAMP-
TAIL/
STOP-
RIGHT
(8W-51-10)
1
LAMP-
LICENSE-
RIGHT
(EXPORT)
(8W-51-6)

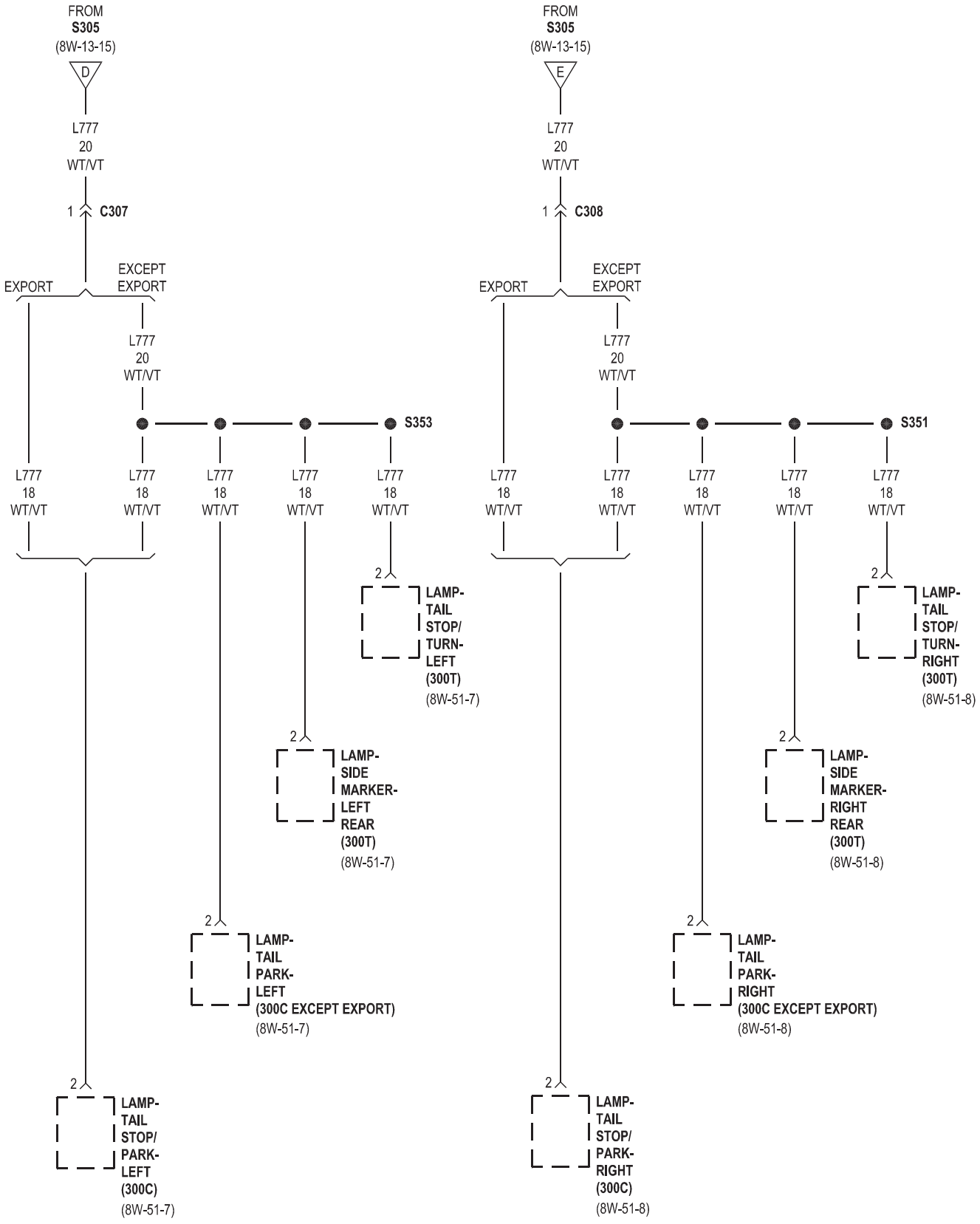
FROM
S305
(8W-13-15)
D
L777
20
WT/VT
1
C307
EXPORT
EXCEPT
EXPORT
L777
20
WT/VT
S353
L777
18
WT/VT
2
LAMP-
TAIL
STOP/
TURN-
LEFT
(300T)
(8W-51-7)
LAMP-
SIDE
MARKER-
LEFT
REAR
(300T)
(8W-51-7)
LAMP-
TAIL
PARK-
LEFT
(300C EXCEPT EXPORT)
(8W-51-7)
LAMP-
TAIL
STOP/
PARK-
LEFT
(300C)
(8W-51-7)
FROM
S305
(8W-13-15)
E
C308
S351
LAMP-
TAIL
STOP/
TURN-
RIGHT
(300T)
(8W-51-8)
LAMP-
SIDE
MARKER-
RIGHT
REAR
(300T)
(8W-51-8)
LAMP-
TAIL
PARK-
RIGHT
(300C EXCEPT EXPORT)
(8W-51-8)
LAMP-
TAIL
STOP/
PARK-
RIGHT
(300C)
(8W-51-8)

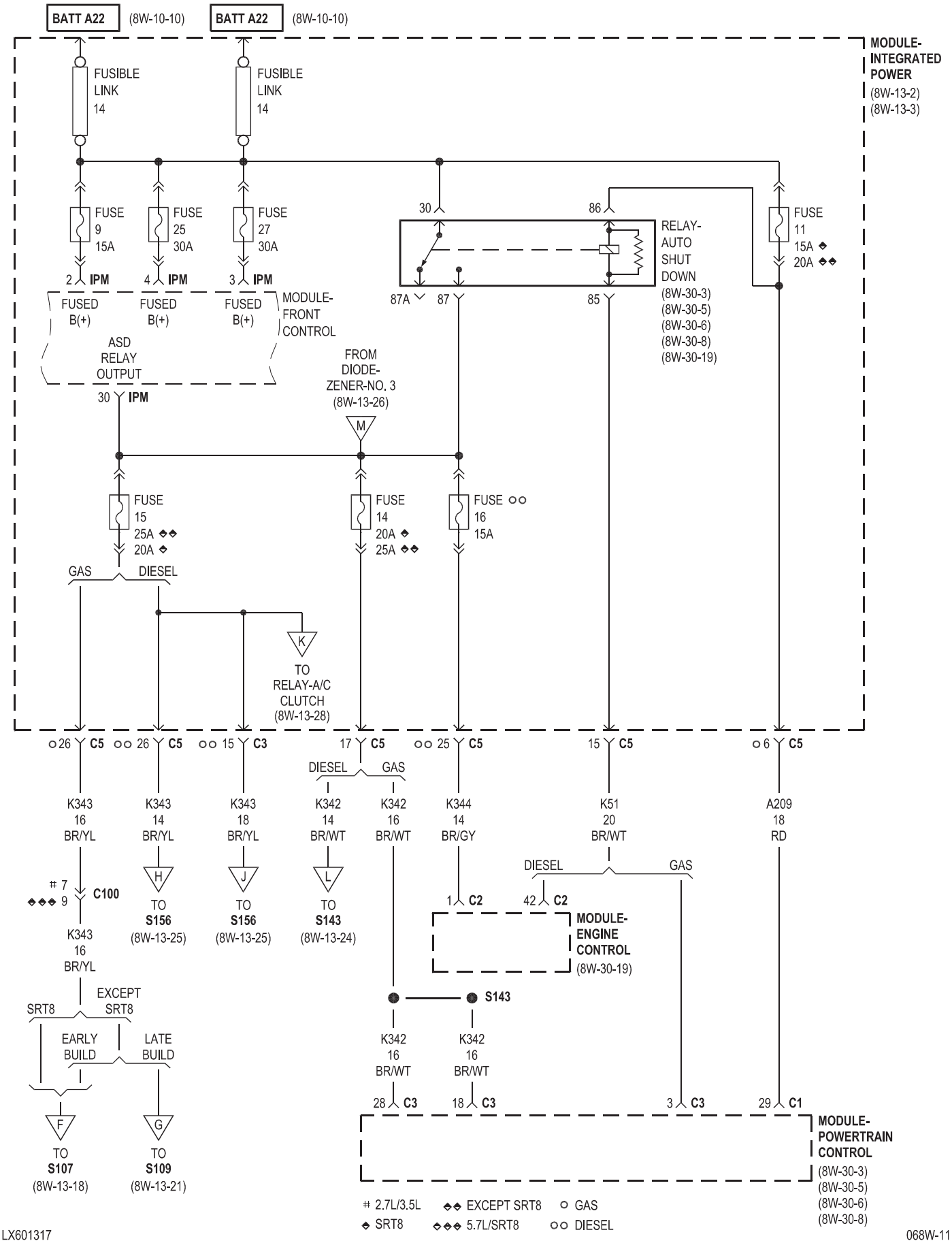
BATT A22 (8W-10-10)
BATT A22 (8W-10-10)
MODULE-INTEGRATED POWER (8W-13-2) (8W-13-3)
FUSIBLE LINK 14
FUSIBLE LINK 14
FUSE 9 15A
FUSE 25 30A
FUSE 27 30A
FUSE 11 15A ◆ 20A ◆◆
RELAY-AUTO SHUT DOWN (8W-30-3) (8W-30-5) (8W-30-6) (8W-30-8) (8W-30-19)
2 IPM
4 IPM
3 IPM
FUSED B(+)
FUSED B(+)
FUSED B(+)
MODULE-FRONT CONTROL
ASD RELAY OUTPUT
30 IPM
FROM DIODE-ZENER-NO. 3 (8W-13-26)
FUSE 15 25A ◆◆ 20A ◆
FUSE 14 20A ◆ 25A ◆◆
FUSE ○○ 16 15A
GAS
DIESEL
TO RELAY-A/C CLUTCH (8W-13-28)
26 C5
26 C5
15 C3
17 C5
25 C5
15 C5
6 C5
K343 16 BR/YL
K343 14 BR/YL
K343 18 BR/YL
K342 14 BR/WT
K342 16 BR/WT
K344 14 BR/GY
K51 20 BR/WT
A209 18 RD
7 ◆◆◆ 9 C100
K343 16 BR/YL
TO S156 (8W-13-25)
TO S156 (8W-13-25)
TO S143 (8W-13-24)
1 C2
42 C2
MODULE-ENGINE CONTROL (8W-30-19)
S143
EXCEPT SRT8
SRT8
EARLY BUILD
LATE BUILD
K342 16 BR/WT
K342 16 BR/WT
28 C3
18 C3
3 C3
29 C1
MODULE-POWERTRAIN CONTROL (8W-30-3) (8W-30-5) (8W-30-6) (8W-30-8)
TO S107 (8W-13-18)
TO S109 (8W-13-21)
2.7L/3.5L ◆◆ EXCEPT SRT8 ○ GAS
◆ SRT8 ◆◆◆ 5.7L/SRT8 ○○ DIESEL

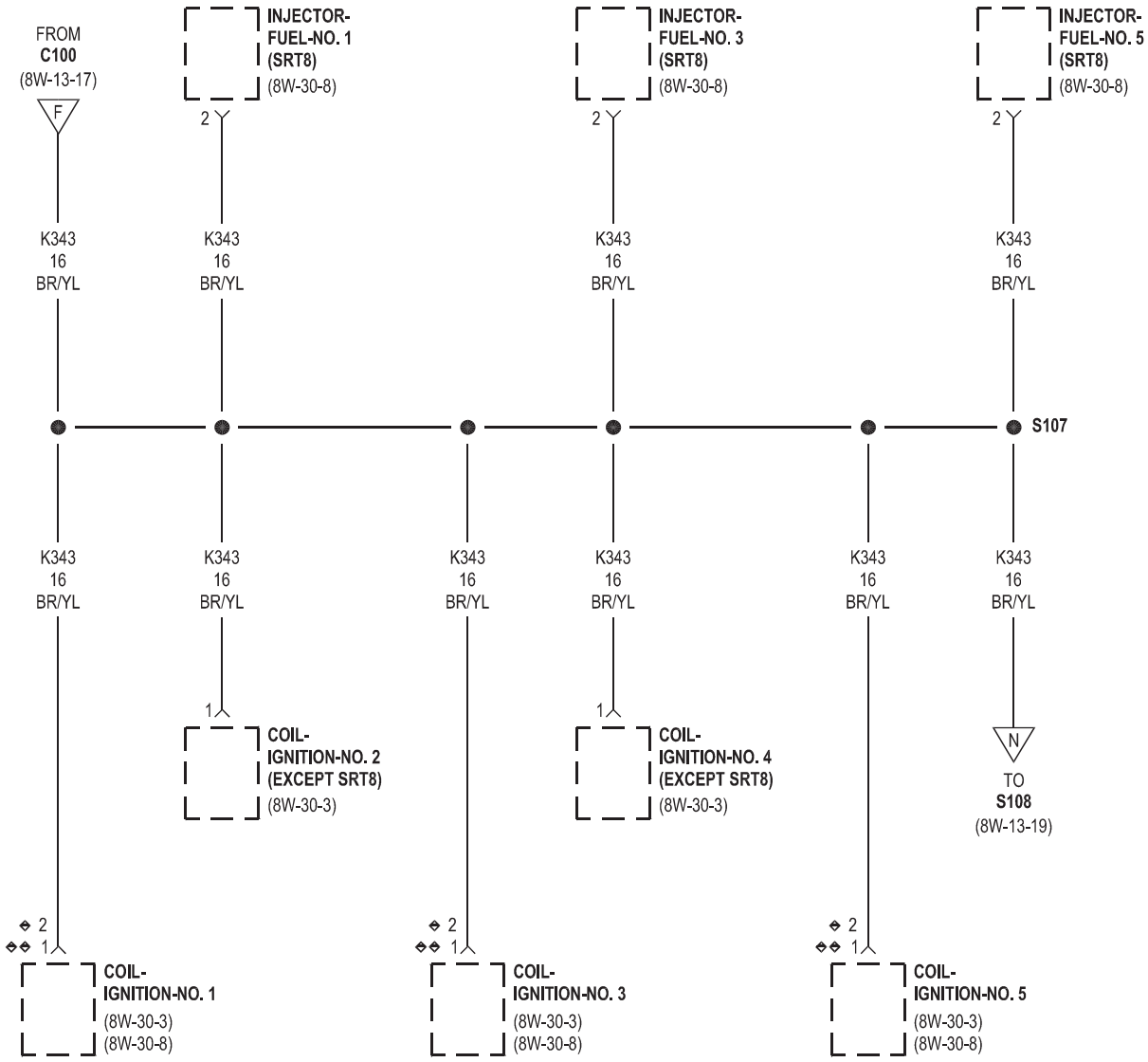

◆ SRT8

◆◆ EXCEPT SRT8

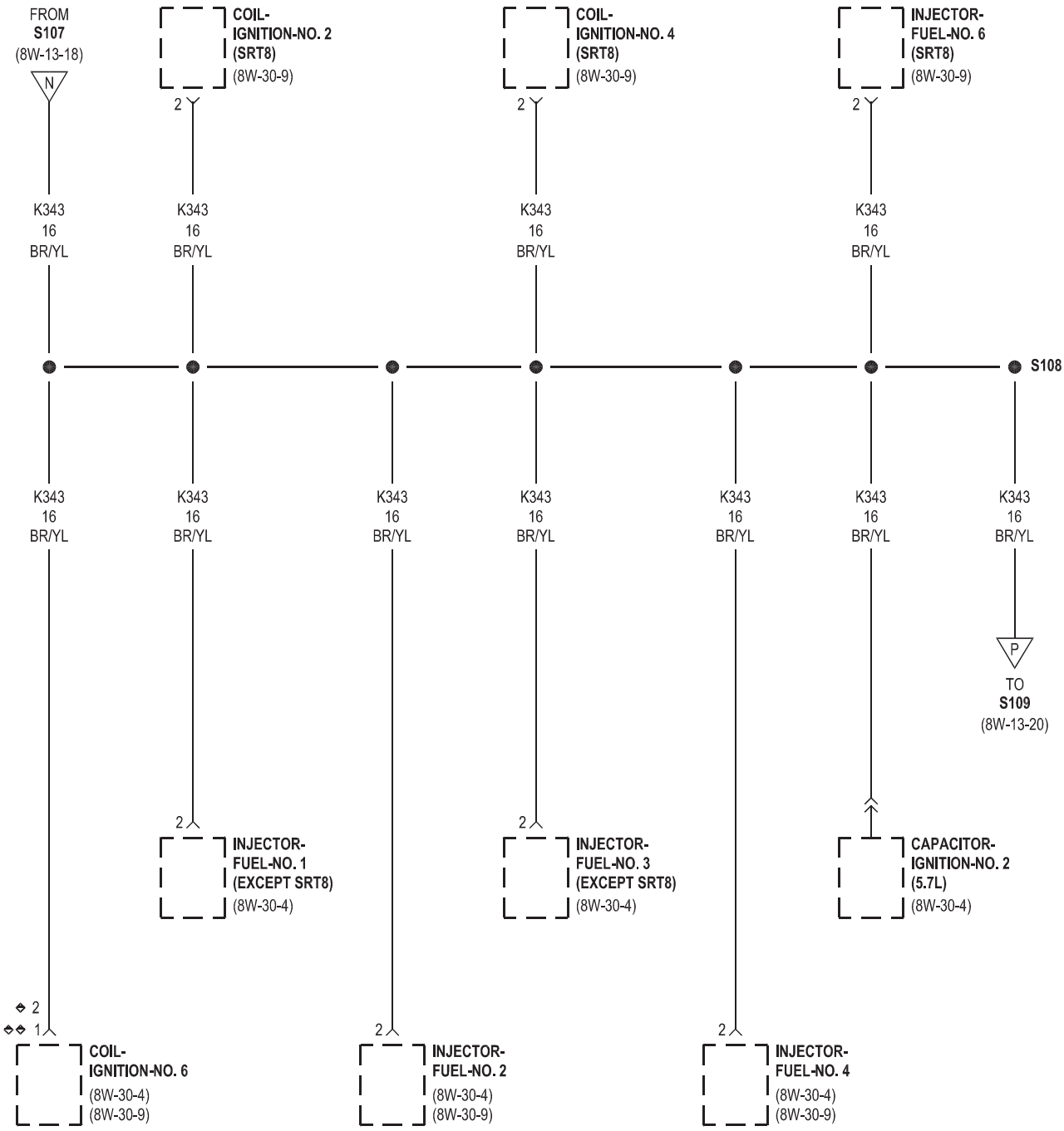

◆ SRT8

◆◆ EXCEPT SRT8

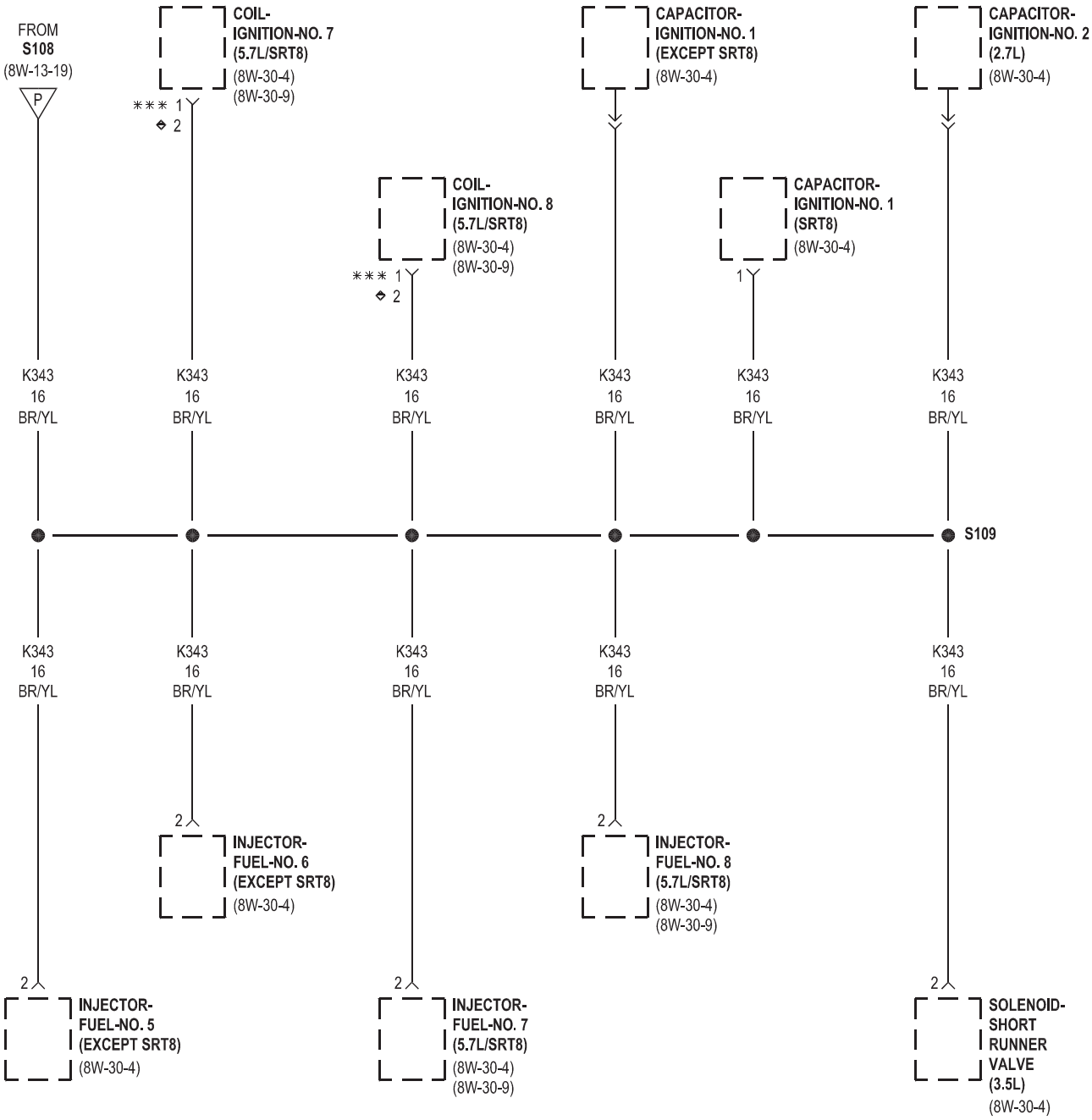
FROM
S108
(8W-13-19)
P
COIL-
IGNITION-NO. 7
(5.7L/SRT8)
(8W-30-4)
(8W-30-9)
*** 1
◆ 2
COIL-
IGNITION-NO. 8
(5.7L/SRT8)
(8W-30-4)
(8W-30-9)
*** 1
◆ 2
CAPACITOR-
IGNITION-NO. 1
(EXCEPT SRT8)
(8W-30-4)
CAPACITOR-
IGNITION-NO. 1
(SRT8)
(8W-30-4)
1
CAPACITOR-
IGNITION-NO. 2
(2.7L)
(8W-30-4)
K343
16
BR/YL
S109
2
INJECTOR-
FUEL-NO. 6
(EXCEPT SRT8)
(8W-30-4)
2
INJECTOR-
FUEL-NO. 8
(5.7L/SRT8)
(8W-30-4)
(8W-30-9)
2
INJECTOR-
FUEL-NO. 5
(EXCEPT SRT8)
(8W-30-4)
2
INJECTOR-
FUEL-NO. 7
(5.7L/SRT8)
(8W-30-4)
(8W-30-9)
2
SOLENOID-
SHORT
RUNNER
VALVE
(3.5L)
(8W-30-4)

◆ SRT8

*** 5.7L

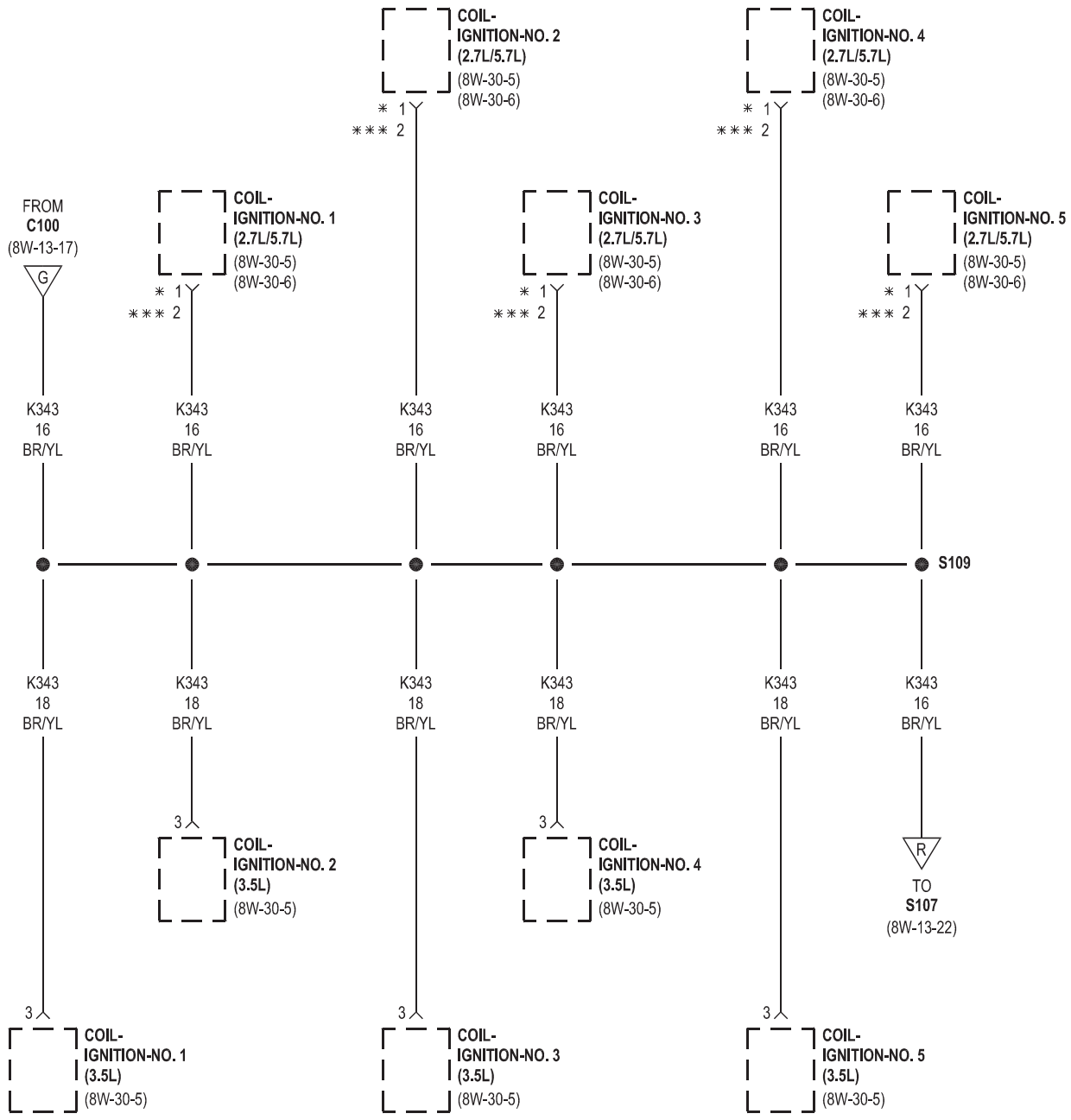
COIL-
IGNITION-NO. 2
(2.7L/5.7L)
(8W-30-5)
(8W-30-6)
COIL-
IGNITION-NO. 4
(2.7L/5.7L)
(8W-30-5)
(8W-30-6)
FROM
C100
(8W-13-17)
G
COIL-
IGNITION-NO. 1
(2.7L/5.7L)
(8W-30-5)
(8W-30-6)
COIL-
IGNITION-NO. 3
(2.7L/5.7L)
(8W-30-5)
(8W-30-6)
COIL-
IGNITION-NO. 5
(2.7L/5.7L)
(8W-30-5)
(8W-30-6)
* 1
*** 2
K343
16
BR/YL
S109
K343
18
BR/YL
K343
16
BR/YL
3
COIL-
IGNITION-NO. 2
(3.5L)
(8W-30-5)
COIL-
IGNITION-NO. 4
(3.5L)
(8W-30-5)
R
TO
S107
(8W-13-22)
COIL-
IGNITION-NO. 1
(3.5L)
(8W-30-5)
COIL-
IGNITION-NO. 3
(3.5L)
(8W-30-5)
COIL-
IGNITION-NO. 5
(3.5L)
(8W-30-5)

* 2.7L
*** 5.7L

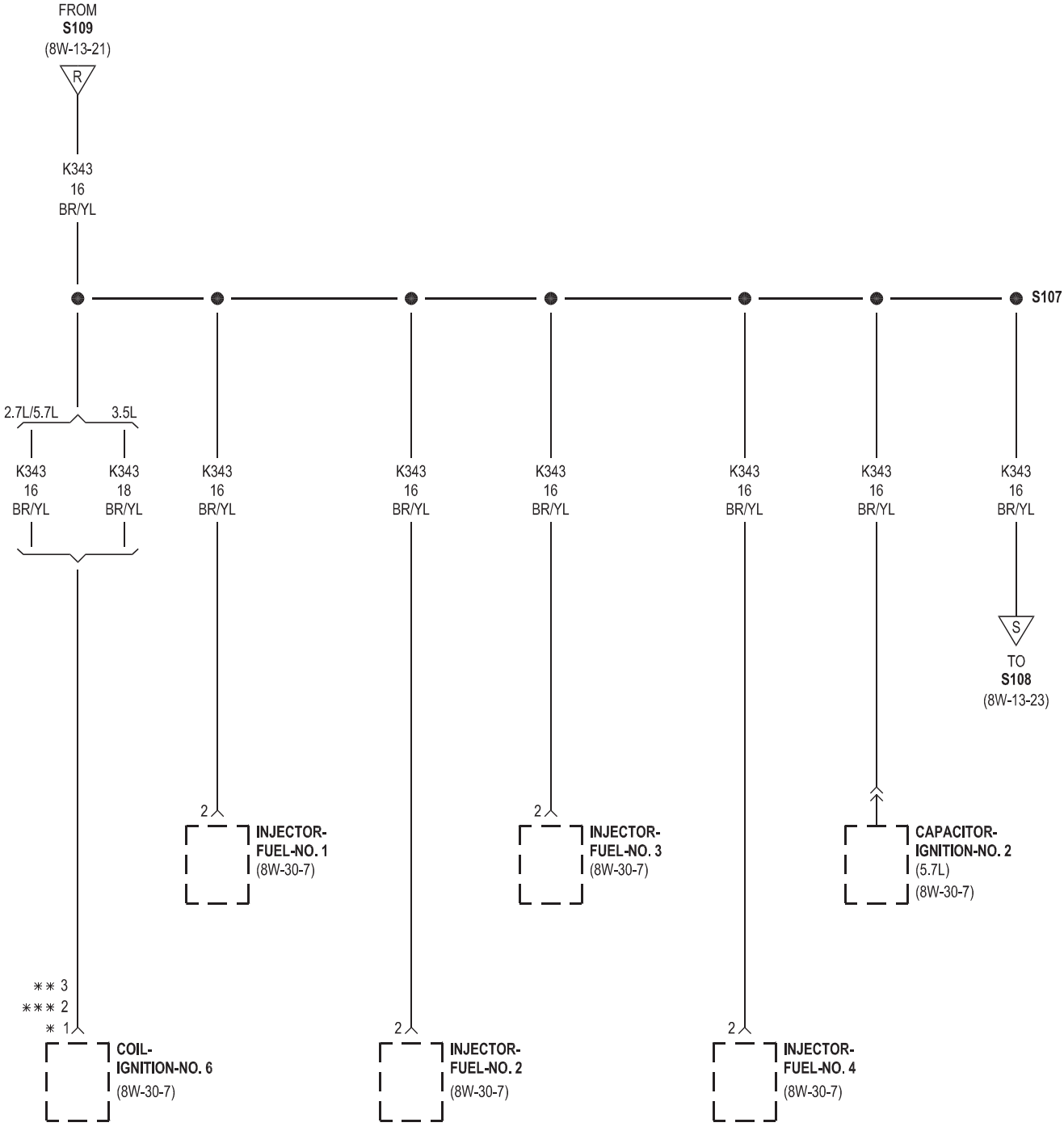
FROM
S109
(8W-13-21)
R
K343
16
BR/YL
S107
2.7L/5.7L
3.5L
K343
16
BR/YL
K343
18
BR/YL
K343
16
BR/YL
K343
16
BR/YL
K343
16
BR/YL
K343
16
BR/YL
K343
16
BR/YL
K343
16
BR/YL
S
TO
S108
(8W-13-23)
2
INJECTOR-
FUEL-NO. 1
(8W-30-7)
2
INJECTOR-
FUEL-NO. 3
(8W-30-7)
CAPACITOR-
IGNITION-NO. 2
(5.7L)
(8W-30-7)
** 3
*** 2
* 1
COIL-
IGNITION-NO. 6
(8W-30-7)
2
INJECTOR-
FUEL-NO. 2
(8W-30-7)
2
INJECTOR-
FUEL-NO. 4
(8W-30-7)

* 2.7L
** 3.5L
*** 5.7L

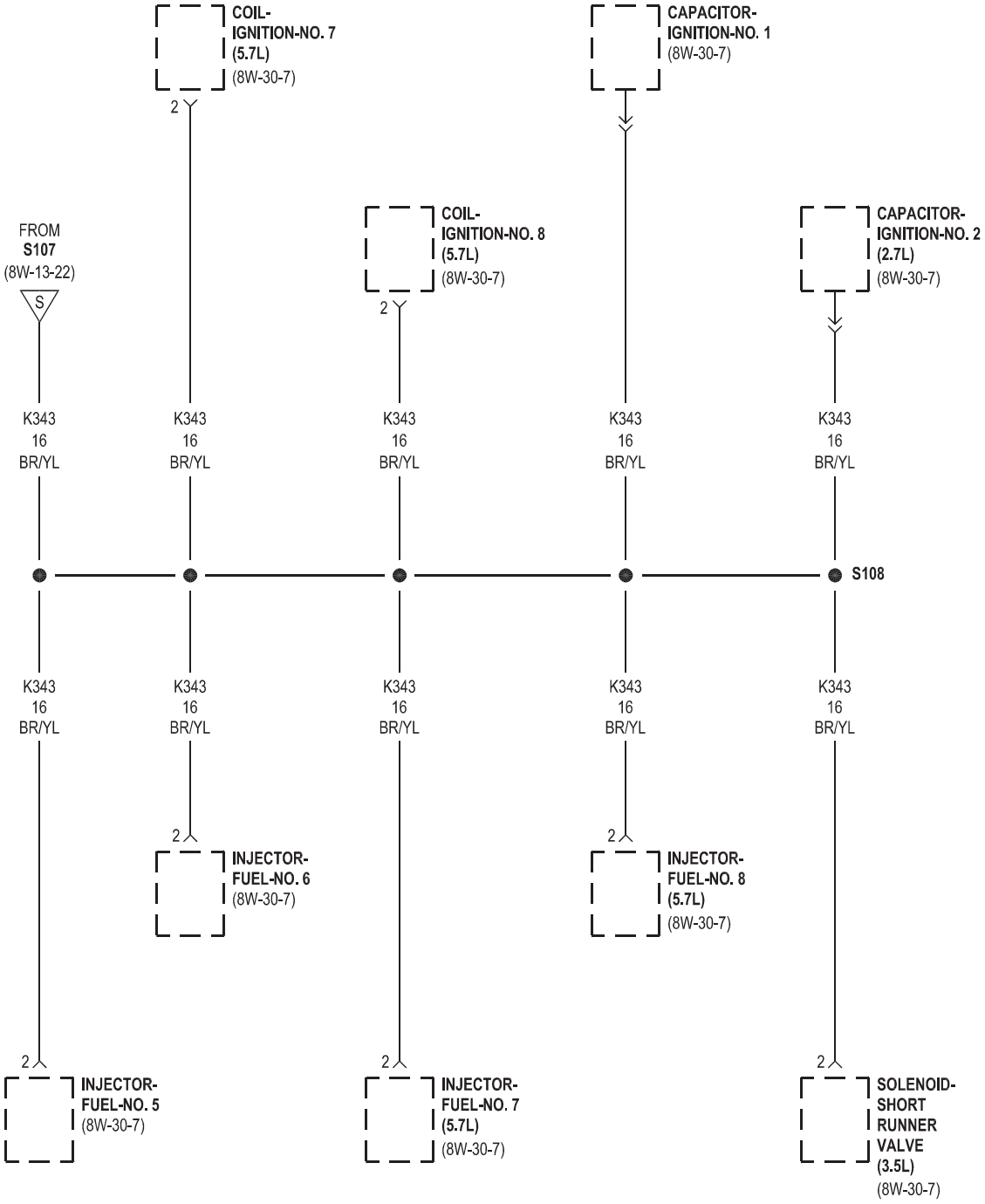
COIL-
IGNITION-NO. 7
(5.7L)
(8W-30-7)
CAPACITOR-
IGNITION-NO. 1
(8W-30-7)
FROM
S107
(8W-13-22)
S
COIL-
IGNITION-NO. 8
(5.7L)
(8W-30-7)
CAPACITOR-
IGNITION-NO. 2
(2.7L)
(8W-30-7)
2
K343
16
BR/YL
S108
INJECTOR-
FUEL-NO. 6
(8W-30-7)
INJECTOR-
FUEL-NO. 8
(5.7L)
(8W-30-7)
INJECTOR-
FUEL-NO. 5
(8W-30-7)
INJECTOR-
FUEL-NO. 7
(5.7L)
(8W-30-7)
SOLENOID-
SHORT
RUNNER
VALVE
(3.5L)
(8W-30-7)

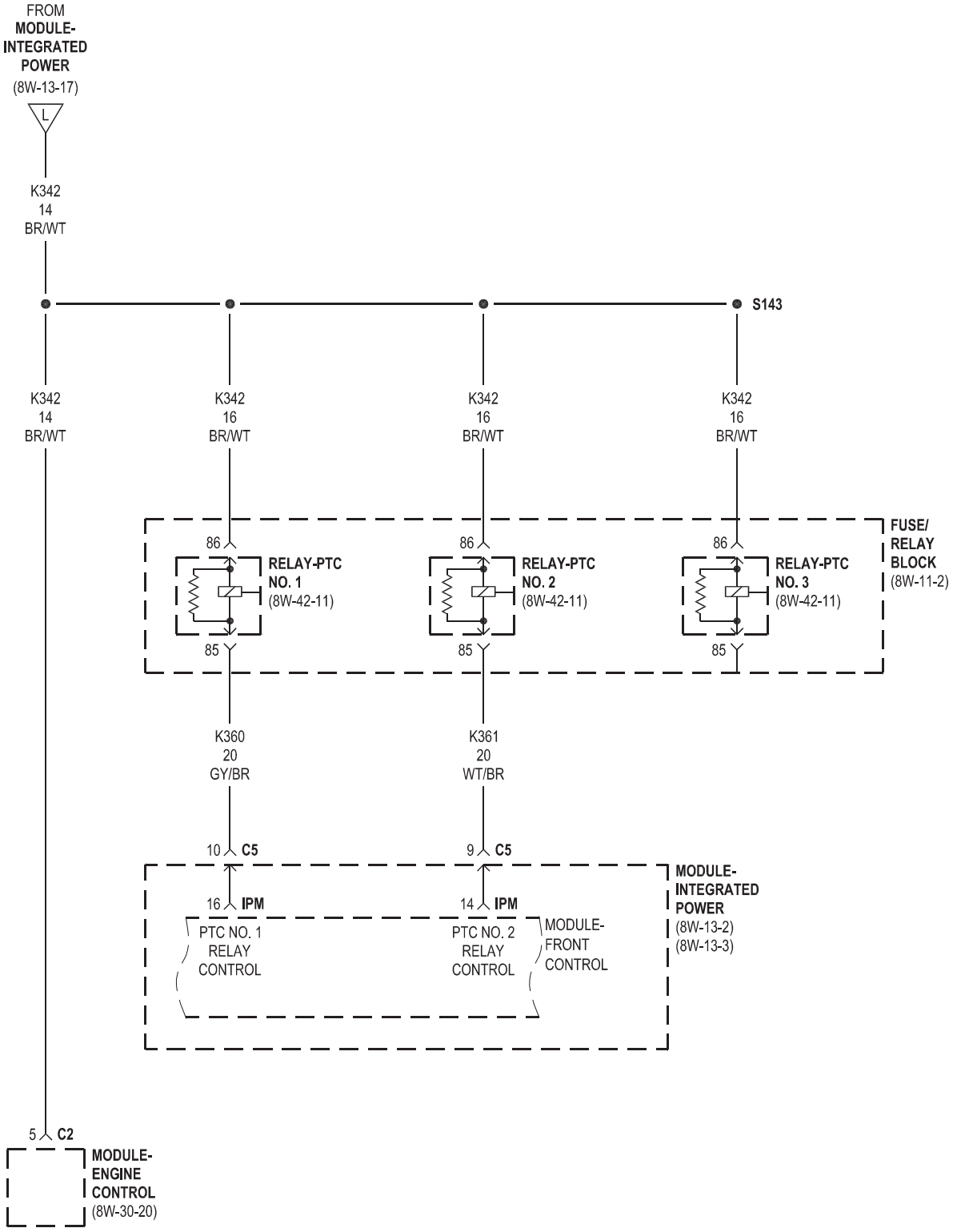
FROM MODULE-INTEGRATED POWER (8W-13-17)
L
K342 14 BR/WT
S143
K342 14 BR/WT
K342 16 BR/WT
K342 16 BR/WT
K342 16 BR/WT
86
85
RELAY-PTC NO. 1 (8W-42-11)
RELAY-PTC NO. 2 (8W-42-11)
RELAY-PTC NO. 3 (8W-42-11)
FUSE/ RELAY BLOCK (8W-11-2)
K360 20 GY/BR
K361 20 WT/BR
10 C5
9 C5
16 IPM
14 IPM
PTC NO. 1 RELAY CONTROL
PTC NO. 2 RELAY CONTROL
MODULE-FRONT CONTROL
MODULE-INTEGRATED POWER (8W-13-2) (8W-13-3)
5 C2
MODULE-ENGINE CONTROL (8W-30-20)

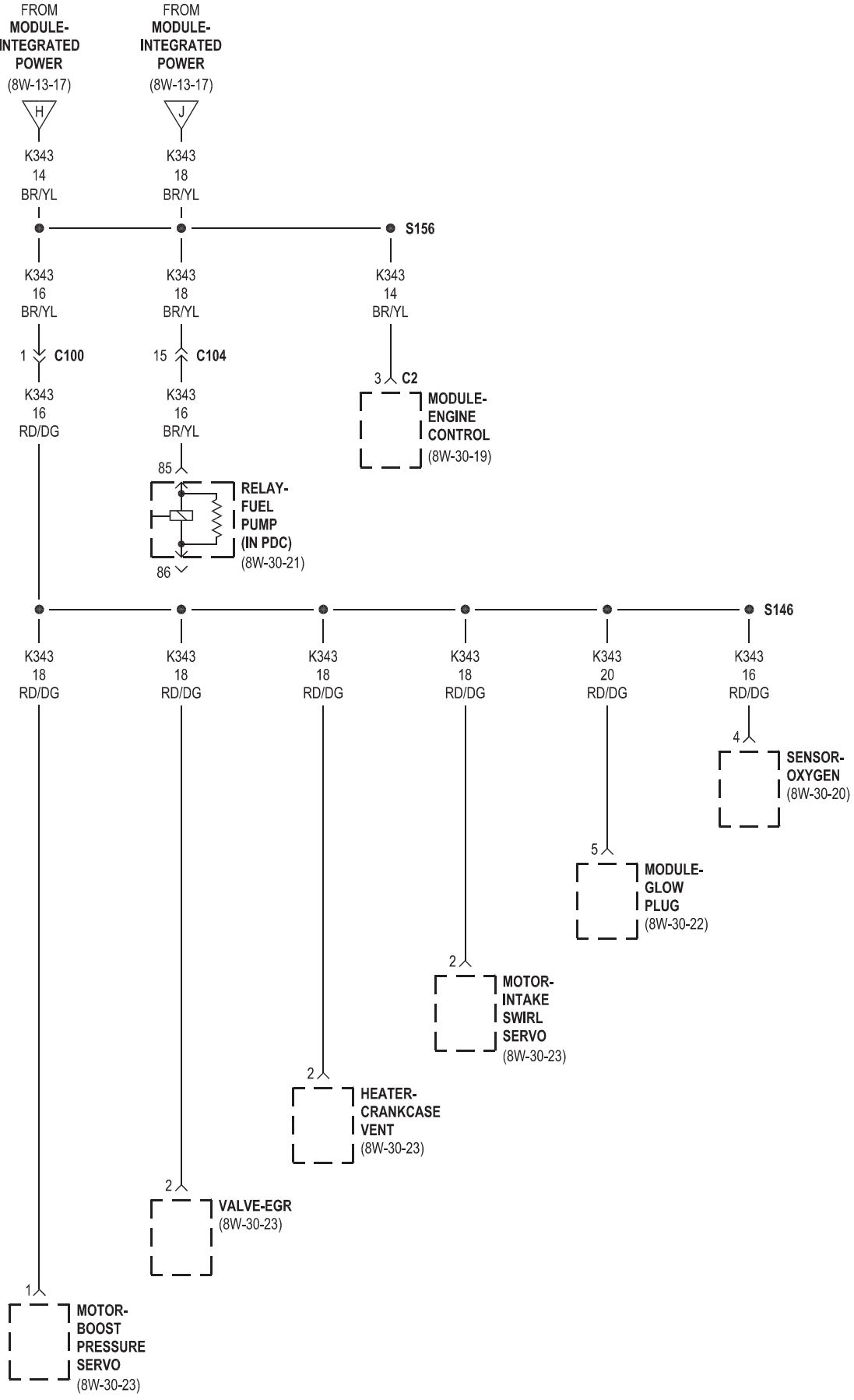
FROM MODULE-INTEGRATED POWER (8W-13-17)
H
J
K343 14 BR/YL
K343 18 BR/YL
S156
K343 16 BR/YL
K343 18 BR/YL
K343 14 BR/YL
1 C100
15 C104
3 C2
K343 16 RD/DG
K343 16 BR/YL
MODULE-ENGINE CONTROL (8W-30-19)
85
RELAY-FUEL PUMP (IN PDC) (8W-30-21)
86
S146
K343 18 RD/DG
K343 18 RD/DG
K343 18 RD/DG
K343 18 RD/DG
K343 20 RD/DG
K343 16 RD/DG
4
SENSOR-OXYGEN (8W-30-20)
5
MODULE-GLOW PLUG (8W-30-22)
2
MOTOR-INTAKE SWIRL SERVO (8W-30-23)
2
HEATER-CRANKCASE VENT (8W-30-23)
2
VALVE-EGR (8W-30-23)
1
MOTOR-BOOST PRESSURE SERVO (8W-30-23)

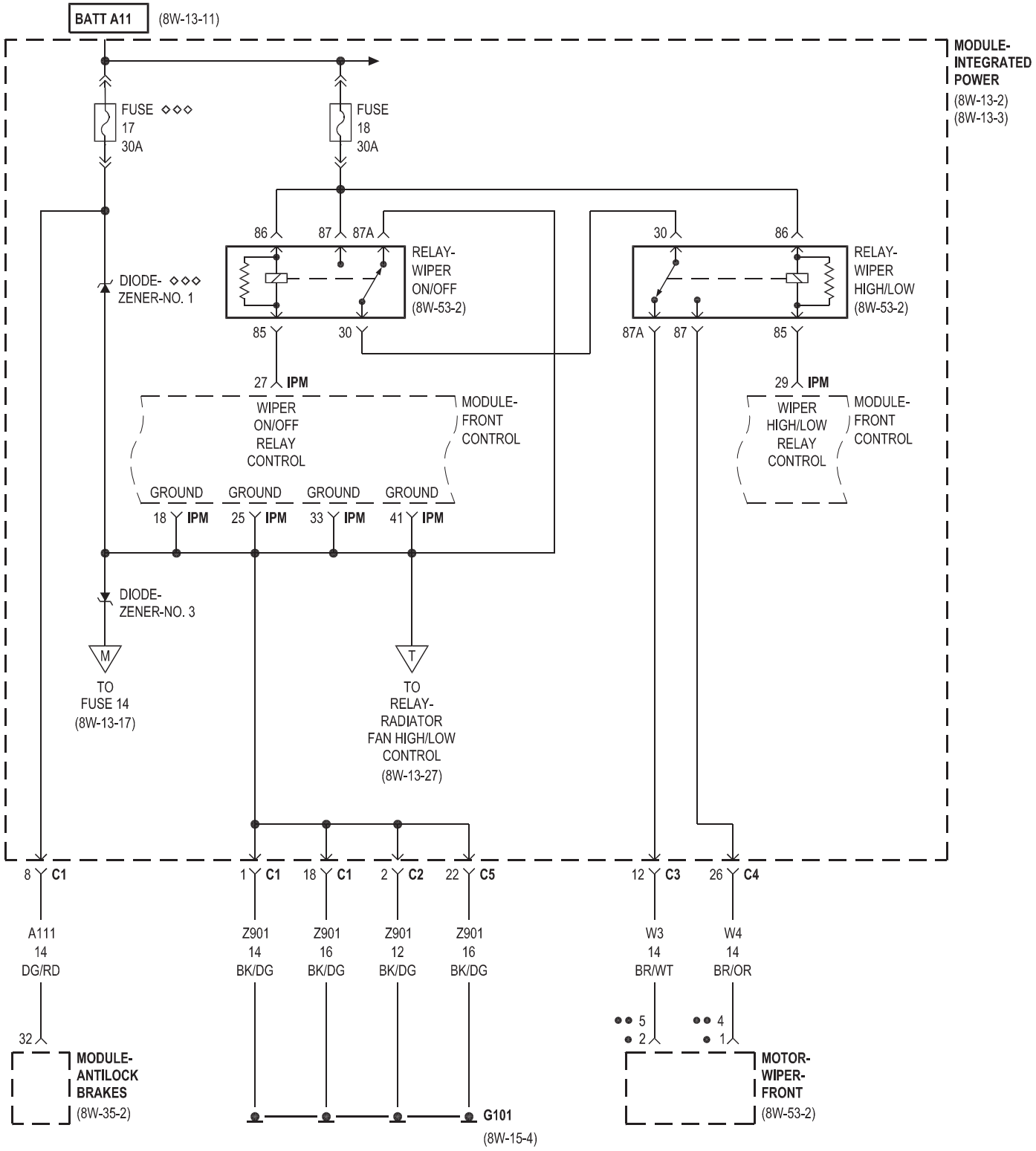
BATT A11
(8W-13-11)
MODULE-
INTEGRATED
POWER
(8W-13-2)
(8W-13-3)
FUSE ◇◇◇
17
30A
FUSE
18
30A
86
87
87A
RELAY-
WIPER
ON/OFF
(8W-53-2)
30
86
RELAY-
WIPER
HIGH/LOW
(8W-53-2)
DIODE- ◇◇◇
ZENER-NO. 1
85
30
87A
87
85
27 IPM
WIPER
ON/OFF
RELAY
CONTROL
MODULE-
FRONT
CONTROL
29 IPM
WIPER
HIGH/LOW
RELAY
CONTROL
MODULE-
FRONT
CONTROL
GROUND
GROUND
GROUND
GROUND
18 IPM
25 IPM
33 IPM
41 IPM
DIODE-
ZENER-NO. 3
M
TO
FUSE 14
(8W-13-17)
T
TO
RELAY-
RADIATOR
FAN HIGH/LOW
CONTROL
(8W-13-27)
8 C1
1 C1
18 C1
2 C2
22 C5
12 C3
26 C4
A111
14
DG/RD
Z901
14
BK/DG
Z901
16
BK/DG
Z901
12
BK/DG
Z901
16
BK/DG
W3
14
BR/WT
W4
14
BR/OR
32
5
2
4
1
MODULE-
ANTILOCK
BRAKES
(8W-35-2)
G101
(8W-15-4)
MOTOR-
WIPER-
FRONT
(8W-53-2)

● LHD
●● RHD
◇◇◇ ABS

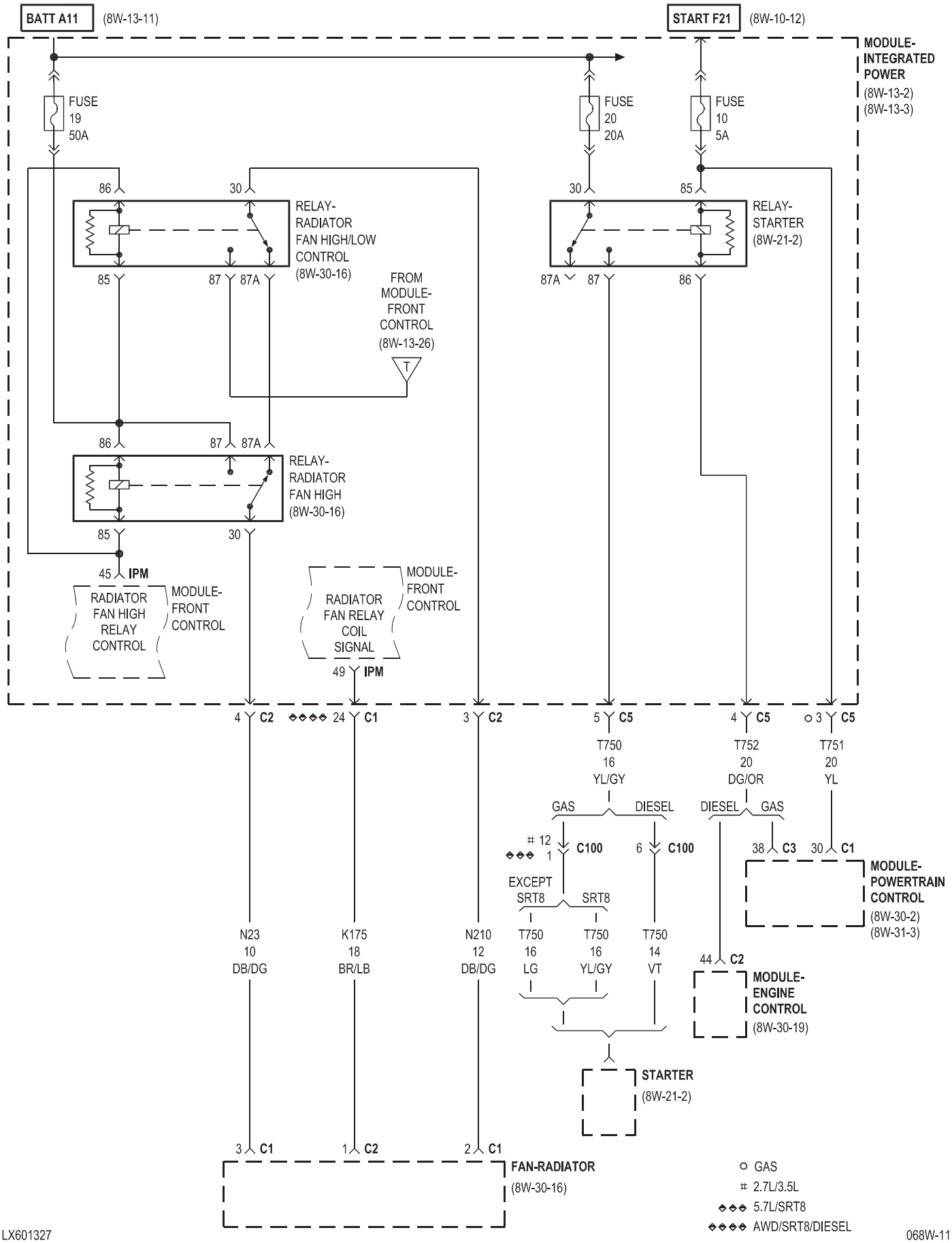
BATT A11
(8W-13-11)
START F21
(8W-10-12)
MODULE-
INTEGRATED
POWER
(8W-13-2)
(8W-13-3)
FUSE
19
50A
FUSE
20
20A
FUSE
10
5A
RELAY-
RADIATOR
FAN HIGH/LOW
CONTROL
(8W-30-16)
RELAY-
STARTER
(8W-21-2)
FROM
MODULE-
FRONT
CONTROL
(8W-13-26)
RELAY-
RADIATOR
FAN HIGH
(8W-30-16)
45 IPM
RADIATOR
FAN HIGH
RELAY
CONTROL
MODULE-
FRONT
CONTROL
RADIATOR
FAN RELAY
COIL
SIGNAL
MODULE-
FRONT
CONTROL
49 IPM
T750
16
YL/GY
T752
20
DG/OR
T751
20
YL
GAS
DIESEL
DIESEL
GAS
C100
C100
EXCEPT
SRT8
SRT8
MODULE-
POWERTRAIN
CONTROL
(8W-30-2)
(8W-31-3)
N23
10
DB/DG
K175
18
BR/LB
N210
12
DB/DG
T750
16
LG
T750
16
YL/GY
T750
14
VT
MODULE-
ENGINE
CONTROL
(8W-30-19)
STARTER
(8W-21-2)
FAN-RADIATOR
(8W-30-16)
GAS
2.7L/3.5L
5.7L/SRT8
AWD/SRT8/DIESEL

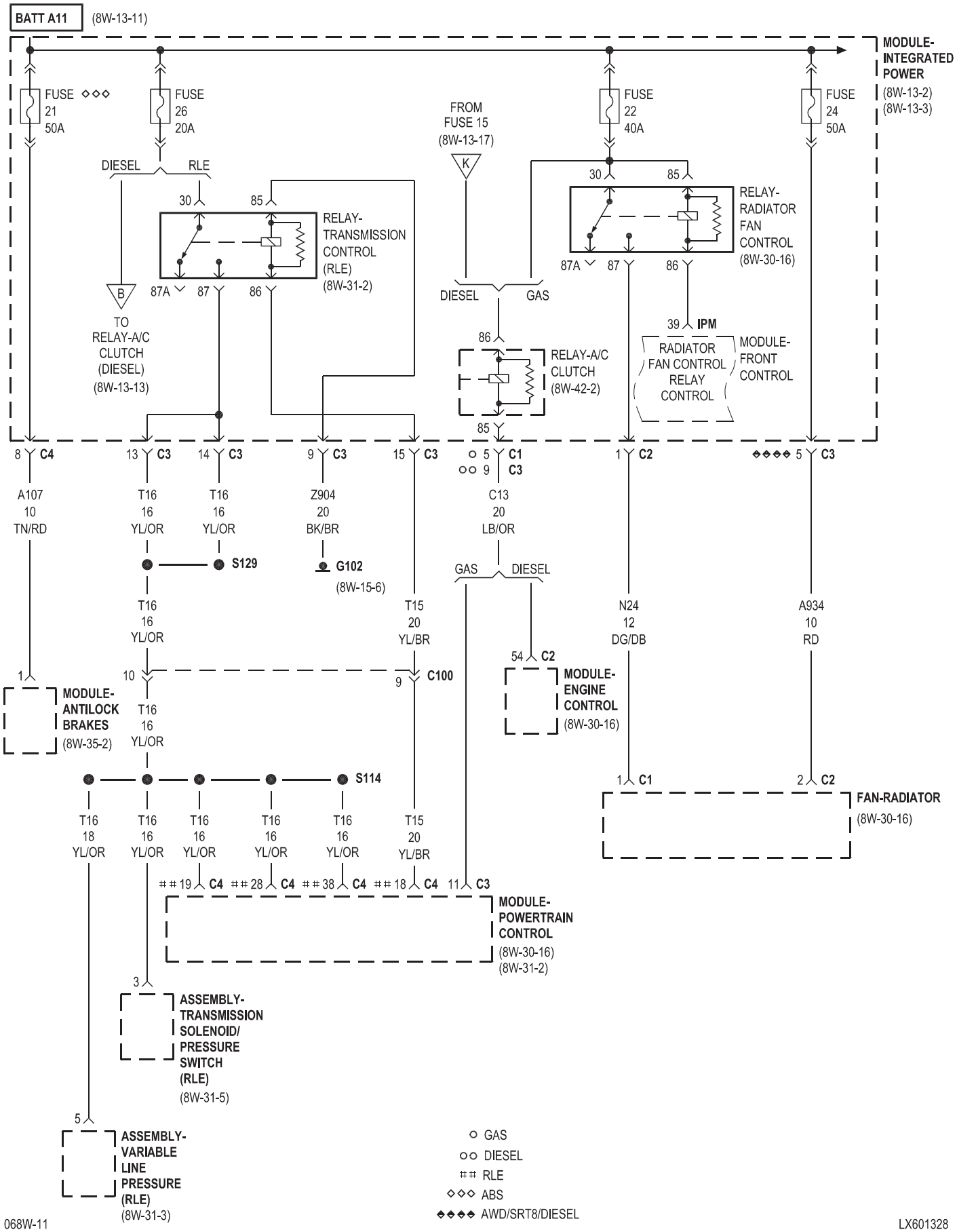
BATT A11
(8W-13-11)
MODULE-INTEGRATED POWER
(8W-13-2)
(8W-13-3)
FUSE 21 50A
FUSE 26 20A
FUSE 22 40A
FUSE 24 50A
FROM FUSE 15
(8W-13-17)
DIESEL
RLE
RELAY-TRANSMISSION CONTROL (RLE)
(8W-31-2)
RELAY-RADIATOR FAN CONTROL
(8W-30-16)
TO RELAY-A/C CLUTCH (DIESEL)
(8W-13-13)
DIESEL
GAS
RELAY-A/C CLUTCH
(8W-42-2)
IPM
RADIATOR FAN CONTROL RELAY
MODULE-FRONT CONTROL
A107 10 TN/RD
T16 16 YL/OR
T16 16 YL/OR
Z904 20 BK/BR
C13 20 LB/OR
N24 12 DG/DB
A934 10 RD
S129
G102
(8W-15-6)
T16 16 YL/OR
T15 20 YL/BR
C100
MODULE-ANTILOCK BRAKES
(8W-35-2)
MODULE-ENGINE CONTROL
(8W-30-16)
T16 16 YL/OR
S114
T16 18 YL/OR
T16 16 YL/OR
T16 16 YL/OR
T16 16 YL/OR
T16 16 YL/OR
T15 20 YL/BR
MODULE-POWERTRAIN CONTROL
(8W-30-16)
(8W-31-2)
FAN-RADIATOR
(8W-30-16)
ASSEMBLY-TRANSMISSION SOLENOID/ PRESSURE SWITCH (RLE)
(8W-31-5)
ASSEMBLY-VARIABLE LINE PRESSURE (RLE)
(8W-31-3)
GAS
DIESEL
RLE
ABS
AWD/SRT8/DIESEL

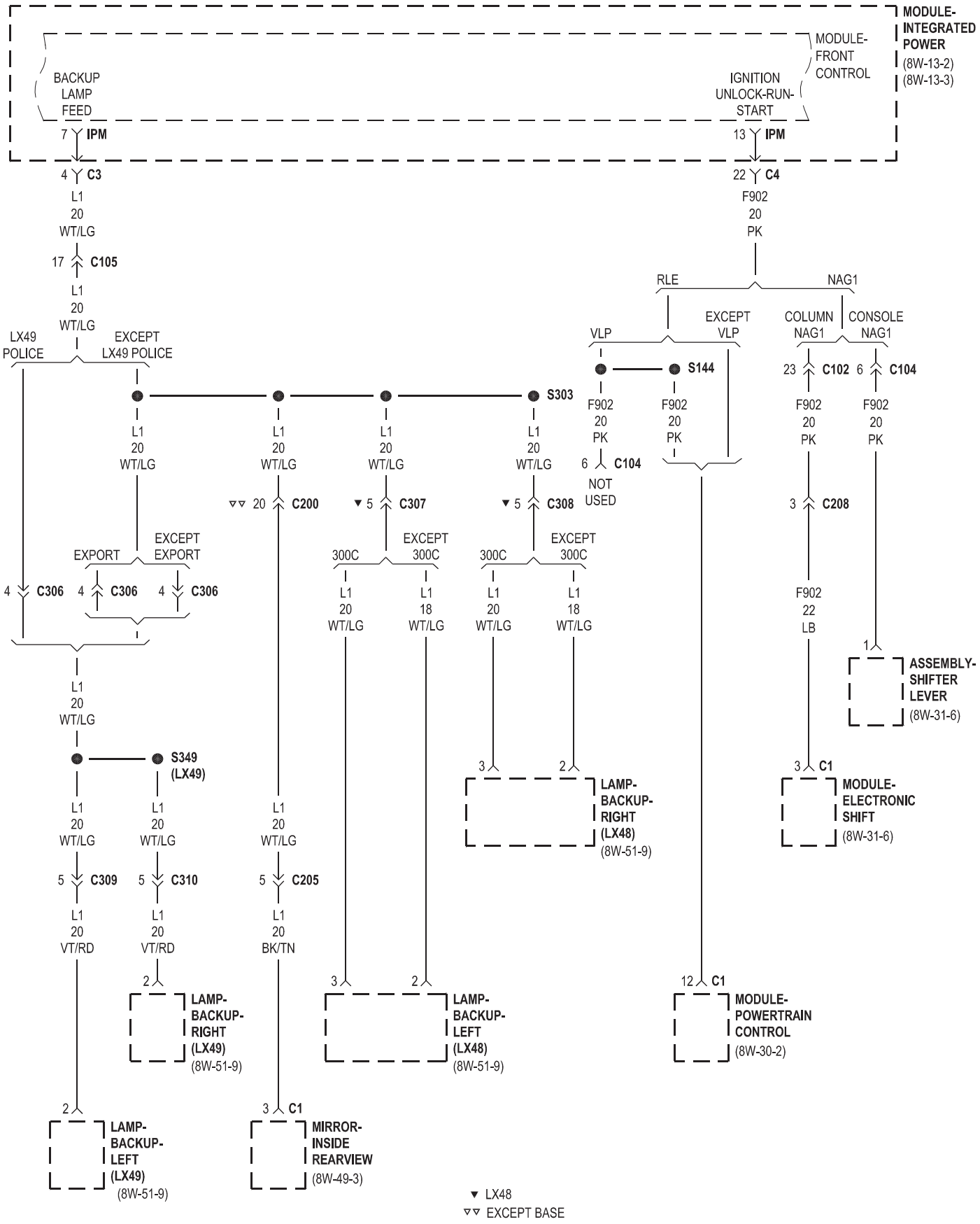
MODULE-INTEGRATED POWER
(8W-13-2)
(8W-13-3)
MODULE-FRONT CONTROL
BACKUP LAMP FEED
IGNITION UNLOCK-RUN-START
7 IPM
13 IPM
4 C3
22 C4
L1 20 WT/LG
F902 20 PK
17 C105
RLE
NAG1
LX49 POLICE
EXCEPT LX49 POLICE
VLP
EXCEPT VLP
COLUMN NAG1
CONSOLE NAG1
S144
23 C102
6 C104
S303
F902 20 PK
6 C104
NOT USED
20 C200
5 C307
5 C308
3 C208
EXPORT
EXCEPT EXPORT
300C
EXCEPT 300C
4 C306
L1 18 WT/LG
F902 22 LB
1
ASSEMBLY-SHIFTER LEVER
(8W-31-6)
S349 (LX49)
3 C1
MODULE-ELECTRONIC SHIFT
(8W-31-6)
5 C309
5 C310
5 C205
VT/RD
BK/TN
LAMP-BACKUP-RIGHT (LX48)
(8W-51-9)
LAMP-BACKUP-RIGHT (LX49)
(8W-51-9)
LAMP-BACKUP-LEFT (LX48)
(8W-51-9)
12 C1
MODULE-POWERTRAIN CONTROL
(8W-30-2)
LAMP-BACKUP-LEFT (LX49)
(8W-51-9)
MIRROR-INSIDE REARVIEW
(8W-49-3)
▼ LX48
▽▽ EXCEPT BASE

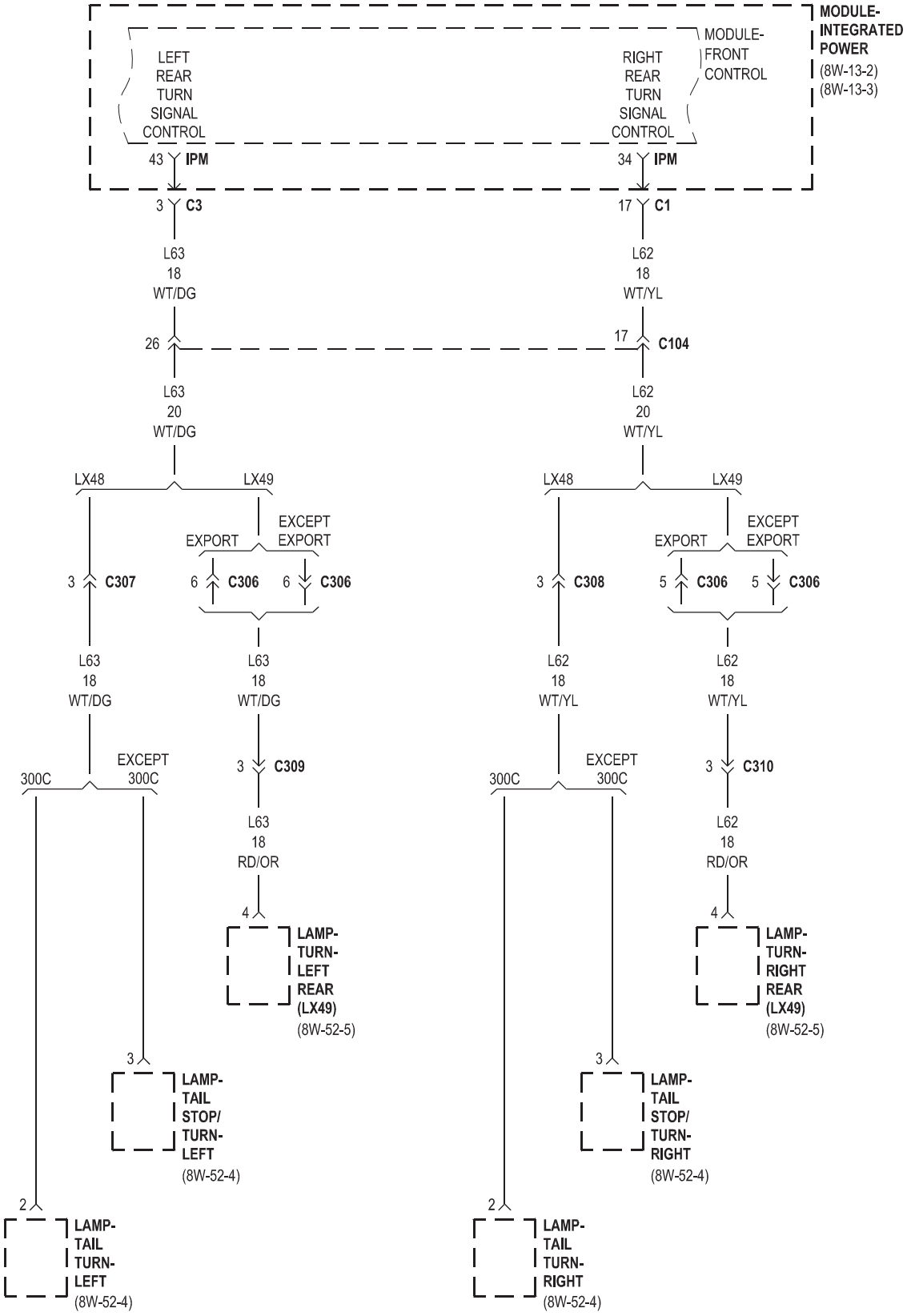
MODULE-INTEGRATED POWER
(8W-13-2)
(8W-13-3)
MODULE-FRONT CONTROL
LEFT REAR TURN SIGNAL CONTROL
RIGHT REAR TURN SIGNAL CONTROL
43 IPM
34 IPM
3 C3
17 C1
L63 18 WT/DG
L62 18 WT/YL
26
17 C104
L63 20 WT/DG
L62 20 WT/YL
LX48
LX49
EXCEPT EXPORT
EXPORT
3 C307
6 C306
6 C306
3 C308
5 C306
5 C306
L63 18 WT/DG
L62 18 WT/YL
EXCEPT 300C
300C
3 C309
3 C310
L63 18 RD/OR
L62 18 RD/OR
4
LAMP-TURN-LEFT REAR (LX49)
(8W-52-5)
LAMP-TURN-RIGHT REAR (LX49)
(8W-52-5)
3
LAMP-TAIL STOP/ TURN-LEFT
(8W-52-4)
LAMP-TAIL STOP/ TURN-RIGHT
(8W-52-4)
2
LAMP-TAIL TURN-LEFT
(8W-52-4)
LAMP-TAIL TURN-RIGHT
(8W-52-4)

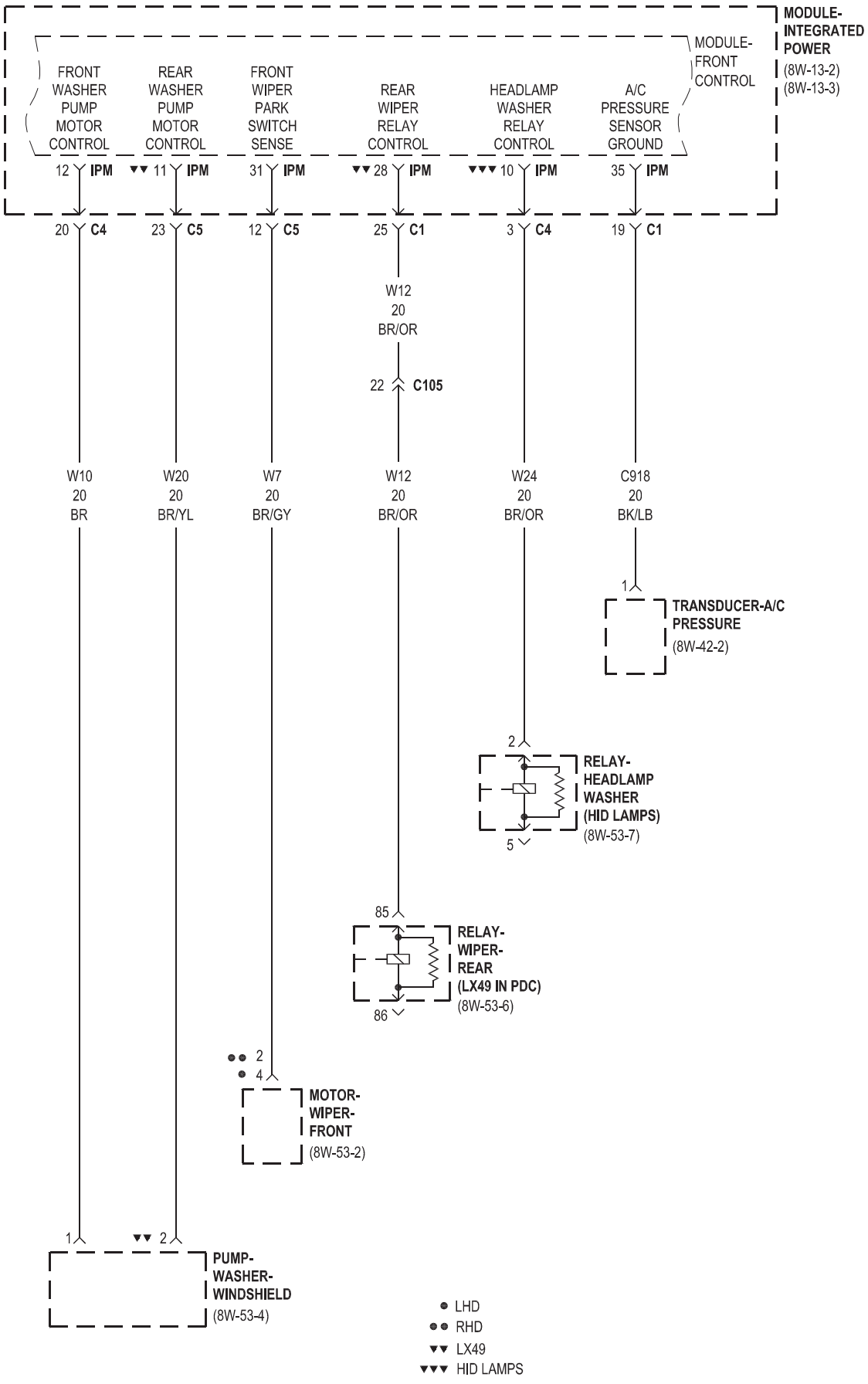
MODULE-INTEGRATED POWER
(8W-13-2)
(8W-13-3)
MODULE-FRONT CONTROL
FRONT WASHER PUMP MOTOR CONTROL
REAR WASHER PUMP MOTOR CONTROL
FRONT WIPER PARK SWITCH SENSE
REAR WIPER RELAY CONTROL
HEADLAMP WASHER RELAY CONTROL
A/C PRESSURE SENSOR GROUND
12 IPM
▼▼ 11 IPM
31 IPM
▼▼ 28 IPM
▼▼▼ 10 IPM
35 IPM
20 C4
23 C5
12 C5
25 C1
3 C4
19 C1
W12 20 BR/OR
22 C105
W10 20 BR
W20 20 BR/YL
W7 20 BR/GY
W12 20 BR/OR
W24 20 BR/OR
C918 20 BK/LB
1
TRANSDUCER-A/C PRESSURE
(8W-42-2)
2
RELAY-HEADLAMP WASHER (HID LAMPS)
(8W-53-7)
5
85
RELAY-WIPER-REAR (LX49 IN PDC)
(8W-53-6)
86
●● 2
● 4
MOTOR-WIPER-FRONT
(8W-53-2)
1
▼▼ 2
PUMP-WASHER-WINDSHIELD
(8W-53-4)
● LHD
●● RHD
▼▼ LX49
▼▼▼ HID LAMPS

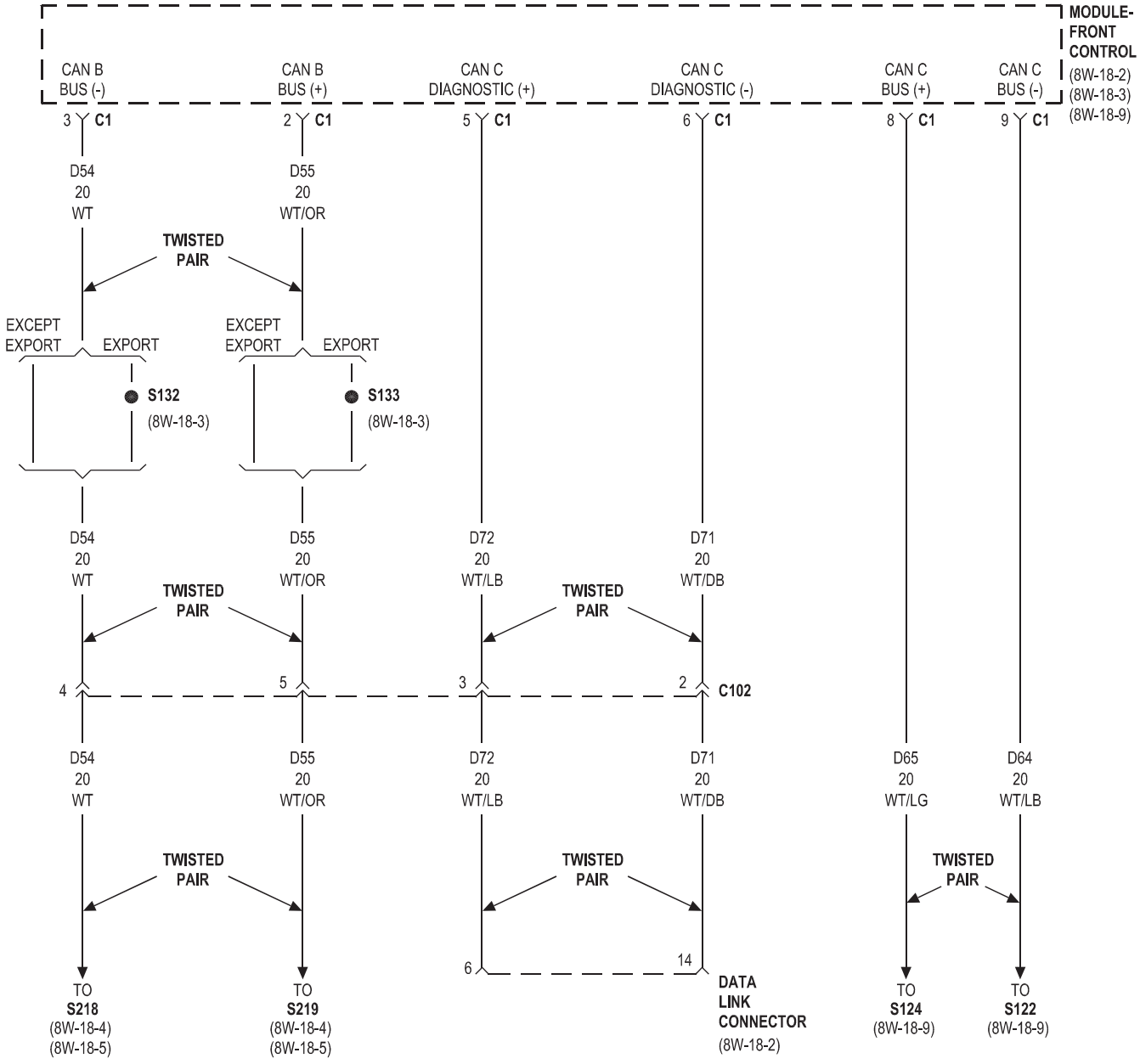
MODULE-
FRONT
CONTROL
(8W-18-2)
(8W-18-3)
(8W-18-9)
CAN B
BUS (-)
CAN B
BUS (+)
CAN C
DIAGNOSTIC (+)
CAN C
DIAGNOSTIC (-)
CAN C
BUS (+)
CAN C
BUS (-)
3 C1
2 C1
5 C1
6 C1
8 C1
9 C1
D54
20
WT
D55
20
WT/OR
TWISTED
PAIR
EXCEPT
EXPORT
EXPORT
EXCEPT
EXPORT
EXPORT
S132
(8W-18-3)
S133
(8W-18-3)
D54
20
WT
D55
20
WT/OR
D72
20
WT/LB
D71
20
WT/DB
TWISTED
PAIR
TWISTED
PAIR
4
5
3
2
C102
D54
20
WT
D55
20
WT/OR
D72
20
WT/LB
D71
20
WT/DB
D65
20
WT/LG
D64
20
WT/LB
TWISTED
PAIR
TWISTED
PAIR
TWISTED
PAIR
6
14
DATA
LINK
CONNECTOR
(8W-18-2)
TO
S218
(8W-18-4)
(8W-18-5)
TO
S219
(8W-18-4)
(8W-18-5)
TO
S124
(8W-18-9)
TO
S122
(8W-18-9)

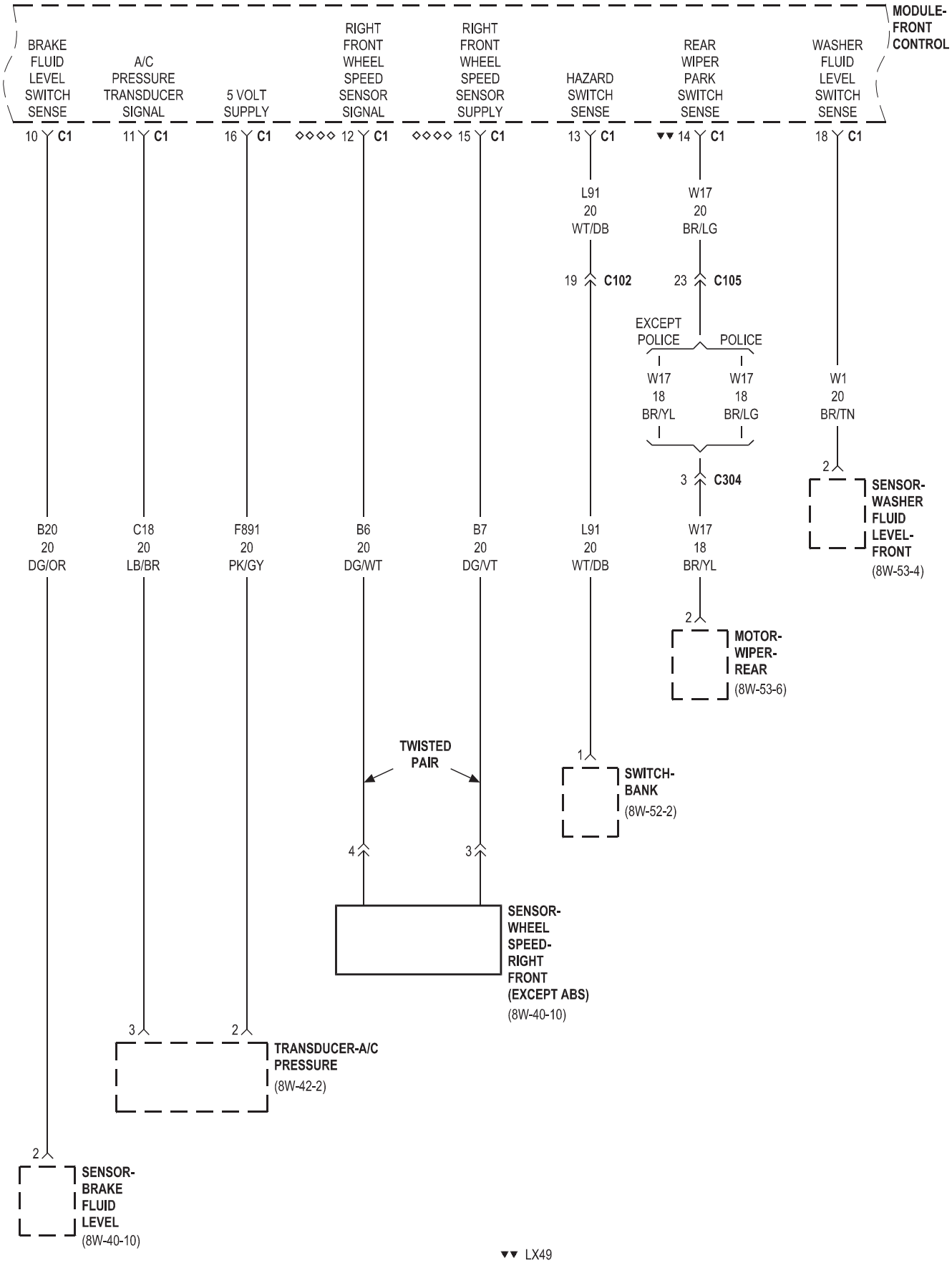
MODULE-FRONT CONTROL
BRAKE FLUID LEVEL SWITCH SENSE
A/C PRESSURE TRANSDUCER SIGNAL
5 VOLT SUPPLY
RIGHT FRONT WHEEL SPEED SENSOR SIGNAL
RIGHT FRONT WHEEL SPEED SENSOR SUPPLY
HAZARD SWITCH SENSE
REAR WIPER PARK SWITCH SENSE
WASHER FLUID LEVEL SWITCH SENSE
10 C1
11 C1
16 C1
12 C1
15 C1
13 C1
14 C1
18 C1
L91 20 WT/DB
W17 20 BR/LG
W1 20 BR/TN
19 C102
23 C105
EXCEPT POLICE
POLICE
W17 18 BR/YL
W17 18 BR/LG
3 C304
2
SENSOR-WASHER FLUID LEVEL-FRONT (8W-53-4)
B20 20 DG/OR
C18 20 LB/BR
F891 20 PK/GY
B6 20 DG/WT
B7 20 DG/VT
L91 20 WT/DB
W17 18 BR/YL
2
MOTOR-WIPER-REAR (8W-53-6)
TWISTED PAIR
1
SWITCH-BANK (8W-52-2)
4
3
SENSOR-WHEEL SPEED-RIGHT FRONT (EXCEPT ABS) (8W-40-10)
3
2
TRANSDUCER-A/C PRESSURE (8W-42-2)
2
SENSOR-BRAKE FLUID LEVEL (8W-40-10)
▼▼ LX49
◇◇◇◇ EXCEPT ABS

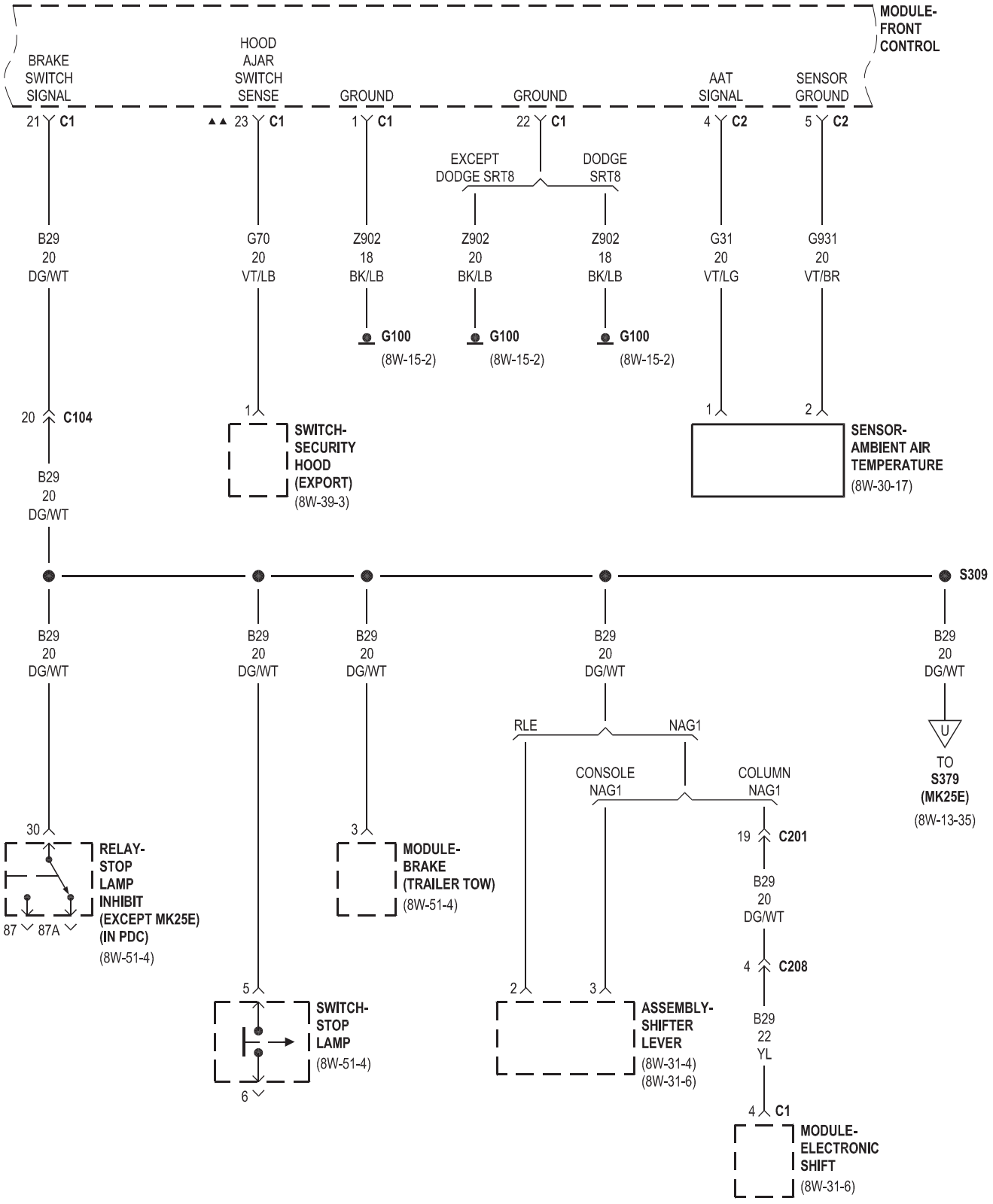

▲▲ EXPORT

▬▬▬ POLICE

▬▬▬▬ EXCEPT POLICE

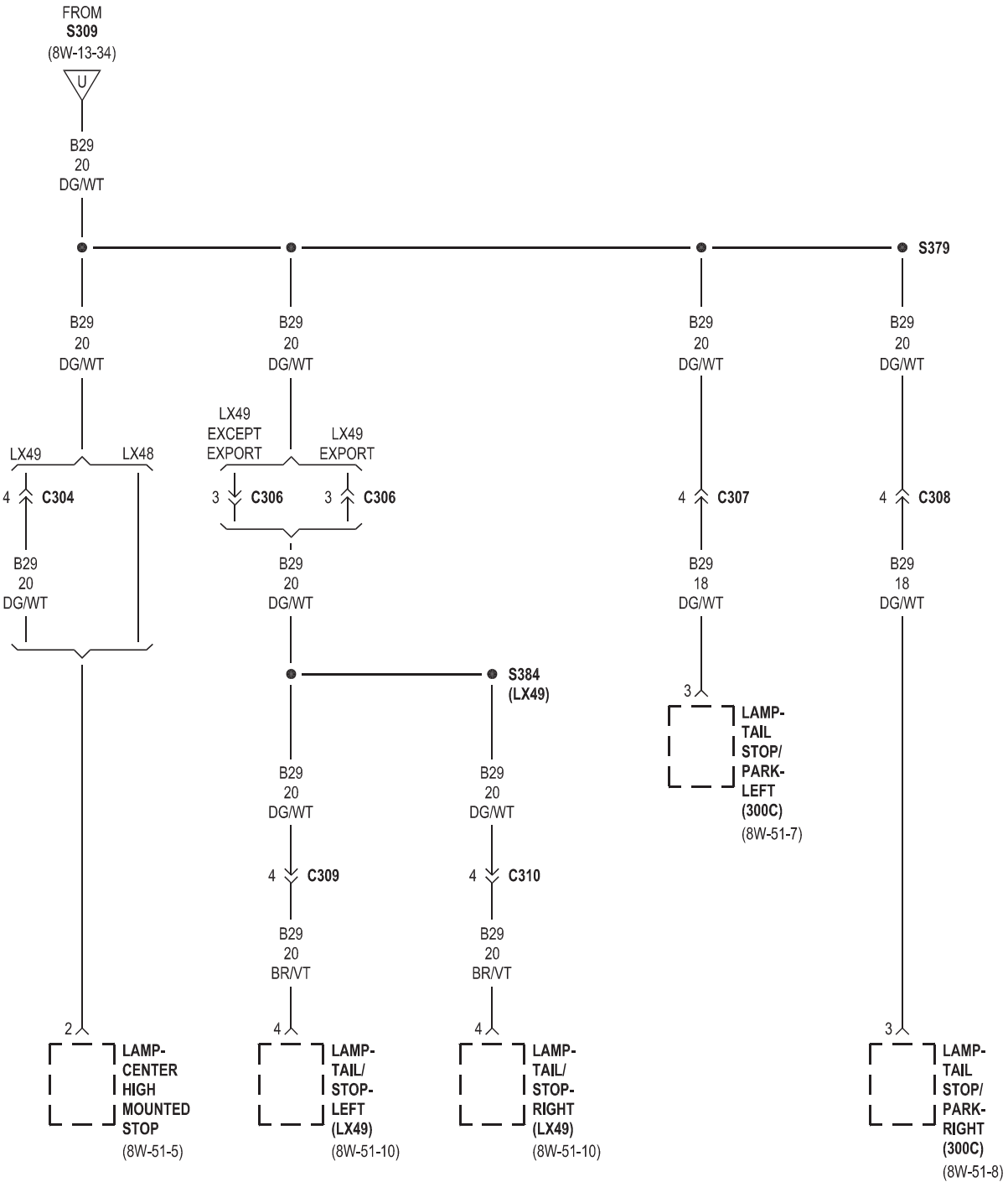
FROM
S309
(8W-13-34)
U
B29
20
DG/WT
S379
LX49
LX48
LX49
EXCEPT
EXPORT
LX49
EXPORT
4 C304
3 C306
3 C306
4 C307
4 C308
B29
18
DG/WT
S384
(LX49)
3
LAMP-
TAIL
STOP/
PARK-
LEFT
(300C)
(8W-51-7)
4 C309
4 C310
BR/VT
2
LAMP-
CENTER
HIGH
MOUNTED
STOP
(8W-51-5)
LAMP-
TAIL/
STOP-
LEFT
(LX49)
(8W-51-10)
LAMP-
TAIL/
STOP-
RIGHT
(LX49)
(8W-51-10)
LAMP-
TAIL
STOP/
PARK-
RIGHT
(300C)
(8W-51-8)

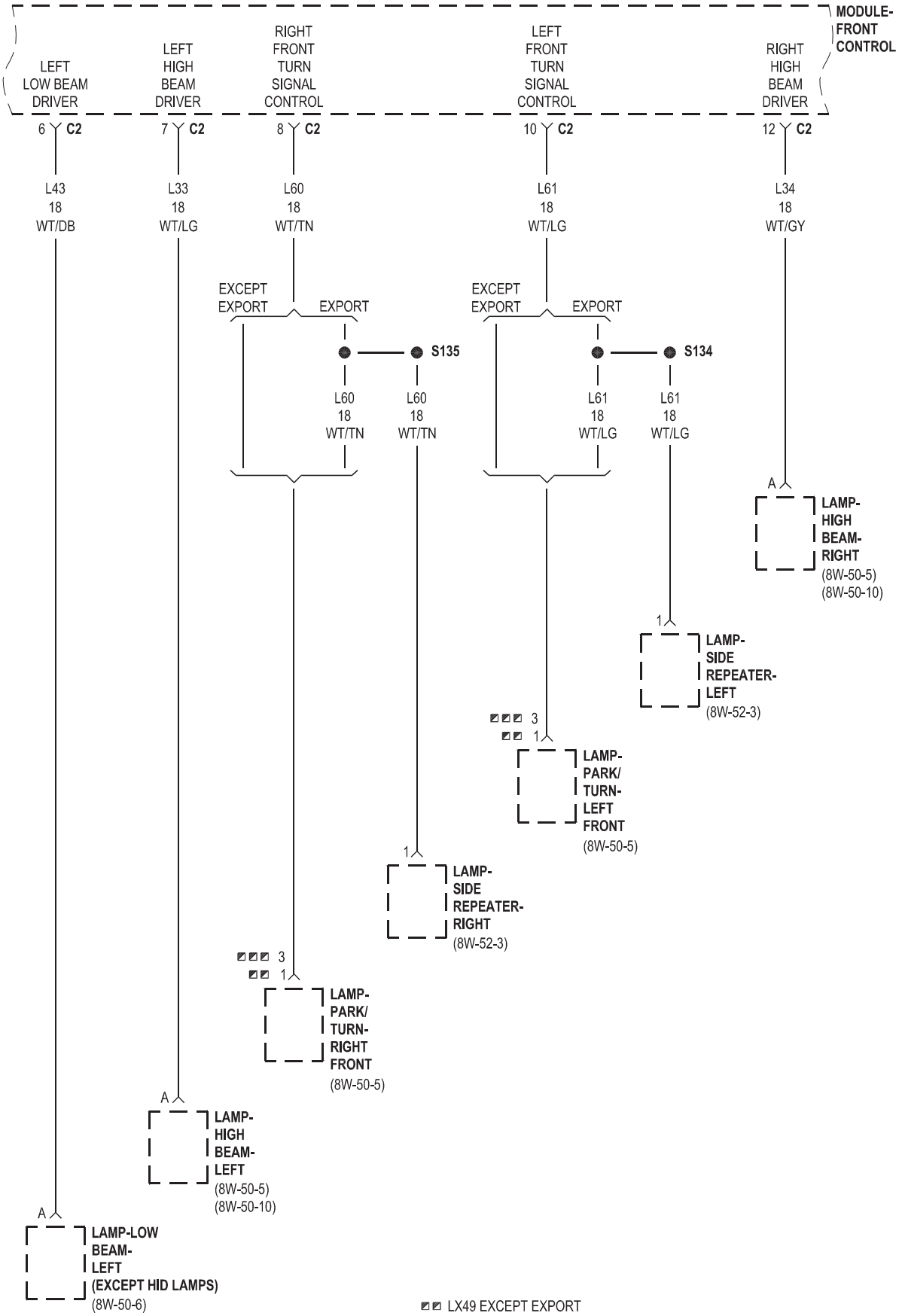
MODULE-
FRONT
CONTROL
LEFT
LOW BEAM
DRIVER
LEFT
HIGH
BEAM
DRIVER
RIGHT
FRONT
TURN
SIGNAL
CONTROL
LEFT
FRONT
TURN
SIGNAL
CONTROL
RIGHT
HIGH
BEAM
DRIVER
6 C2
7 C2
8 C2
10 C2
12 C2
L43
18
WT/DB
L33
18
WT/LG
L60
18
WT/TN
L61
18
WT/LG
L34
18
WT/GY
EXCEPT
EXPORT
EXPORT
EXCEPT
EXPORT
EXPORT
S135
S134
L60
18
WT/TN
L60
18
WT/TN
L61
18
WT/LG
L61
18
WT/LG
A
LAMP-
HIGH
BEAM-
RIGHT
(8W-50-5)
(8W-50-10)
1
LAMP-
SIDE
REPEATER-
LEFT
(8W-52-3)
3
1
LAMP-
PARK/
TURN-
LEFT
FRONT
(8W-50-5)
1
LAMP-
SIDE
REPEATER-
RIGHT
(8W-52-3)
3
1
LAMP-
PARK/
TURN-
RIGHT
FRONT
(8W-50-5)
A
LAMP-
HIGH
BEAM-
LEFT
(8W-50-5)
(8W-50-10)
A
LAMP-LOW
BEAM-
LEFT
(EXCEPT HID LAMPS)
(8W-50-6)
LX49 EXCEPT EXPORT
LX49 EXPORT/LX48

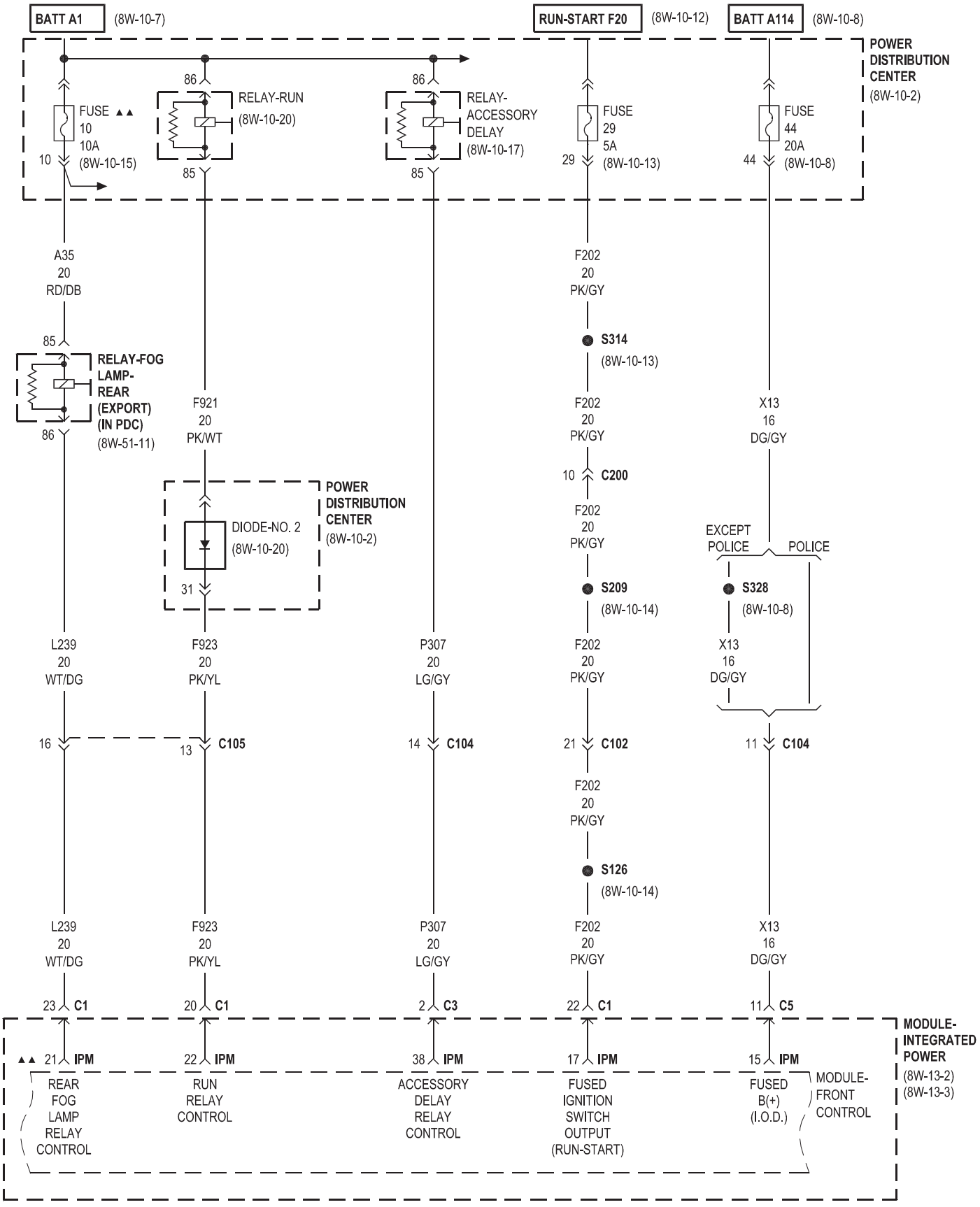
BATT A1
(8W-10-7)
RUN-START F20
(8W-10-12)
BATT A114
(8W-10-8)
POWER DISTRIBUTION CENTER
(8W-10-2)
FUSE ▲▲
10
10A
(8W-10-15)
RELAY-RUN
(8W-10-20)
RELAY-ACCESSORY DELAY
(8W-10-17)
FUSE
29
5A
(8W-10-13)
FUSE
44
20A
(8W-10-8)
A35
20
RD/DB
F202
20
PK/GY
S314
(8W-10-13)
RELAY-FOG LAMP-REAR (EXPORT) (IN PDC)
(8W-51-11)
F921
20
PK/WT
F202
20
PK/GY
X13
16
DG/GY
C200
DIODE-NO. 2
(8W-10-20)
POWER DISTRIBUTION CENTER
(8W-10-2)
EXCEPT POLICE
POLICE
S328
(8W-10-8)
S209
(8W-10-14)
L239
20
WT/DG
F923
20
PK/YL
P307
20
LG/GY
F202
20
PK/GY
X13
16
DG/GY
C105
C104
C102
C104
S126
(8W-10-14)
L239
20
WT/DG
F923
20
PK/YL
P307
20
LG/GY
F202
20
PK/GY
X13
16
DG/GY
C1
C1
C3
C1
C5
MODULE-INTEGRATED POWER
(8W-13-2)
(8W-13-3)
▲▲ IPM
IPM
IPM
IPM
IPM
REAR FOG LAMP RELAY CONTROL
RUN RELAY CONTROL
ACCESSORY DELAY RELAY CONTROL
FUSED IGNITION SWITCH OUTPUT (RUN-START)
FUSED B(+) (I.O.D.)
MODULE-FRONT CONTROL

▲▲ EXPORT

8W-15 GROUND DISTRIBUTION

Component	Page
Amplifier-Radio	8W-15-16
Amplifier-Subwoofer	8W-15-17
Assembly-Exhaust Gas Recirculation Valve	8W-15-7, 8
Assembly-Natural Vacuum Leak Detection	8W-15-25
Assembly-Shifter Lever	8W-15-17, 22, 23
Backlite-Electric Heated	8W-15-17, 23, 26
Battery	8W-15-26
Cluster	8W-15-15
Clutch-A/C Compressor	8W-15-7, 8, 11
Control-A/C-Heater	8W-15-12, 15
Data Link Connector	8W-15-16
Diode-Zener	8W-15-25
Fan-Radiator	8W-15-5, 6
Flasher-Headlamp	8W-15-3
G100	8W-15-2, 3
G101	8W-15-4, 5
G102	8W-15-6, 7, 8, 10
G103	8W-15-11
G104	8W-15-11
G105	8W-15-11
G106	8W-15-11
G107	8W-15-11
G108	8W-15-11
G109	8W-15-11
G110	8W-15-11
G111	8W-15-11
G200	8W-15-12, 13
G201	8W-15-15
G202	8W-15-15, 16
G300	8W-15-17, 18, 19, 20, 21
G301	8W-15-19, 21, 22, 23, 24
G302	8W-15-25, 26, 27, 28, 29, 30
G303	8W-15-26
G304	8W-15-18, 22
Generator	8W-15-7, 8
Heater-Seat Back-Left	8W-15-19
Heater-Seat Back-Right	8W-15-21
Heater-Seat Cushion-Left	8W-15-19
Heater-Seat Cushion-Right	8W-15-21
Lamp-Backup-Left	8W-15-27, 30
Lamp-Backup-Right	8W-15-28, 30
Lamp-Cargo	8W-15-26
Lamp-Center High Mounted Stop	8W-15-18, 22
Lamp-Courtesy-Left Front Door	8W-15-20
Lamp-Courtesy-Left Rear	8W-15-14
Lamp-Courtesy-Right Front Door	8W-15-24
Lamp-Courtesy-Right Rear	8W-15-14
Lamp-Dome	8W-15-14
Lamp-Fog-Left Front	8W-15-3
Lamp-Fog-Left Rear	8W-15-27, 30
Lamp-Fog-Right Front	8W-15-5
Lamp-Fog-Right Rear	8W-15-28, 30
Lamp-Glove Box	8W-15-12
Lamp-High Beam-Left	8W-15-2
Lamp-High Beam-Right	8W-15-4
Lamp-High Intensity Discharge-Left	8W-15-2
Lamp-High Intensity Discharge-Right	8W-15-4
Lamp-License	8W-15-29, 30
Lamp-License-Left	8W-15-29, 30
Lamp-License-Right	8W-15-29, 30
Lamp-Low Beam-Left	8W-15-3
Lamp-Low Beam-Right	8W-15-4
Lamp-PRNDL	8W-15-17, 23
Lamp-Park/Turn-Left Front	8W-15-2
Lamp-Park/Turn-Right Front	8W-15-5
Lamp-Reading-Front	8W-15-14
Lamp-Side Marker-Left Front	8W-15-3
Lamp-Side Marker-Left Rear	8W-15-27
Lamp-Side Marker-Right Front	8W-15-5
Lamp-Side Marker-Right Rear	8W-15-28
Lamp-Side Repeater-Left	8W-15-3
Lamp-Side Repeater-Right	8W-15-6
Lamp-Tail Park-Left	8W-15-27
Lamp-Tail Park-Right	8W-15-28
Lamp-Tail Stop/Park-Left	8W-15-27
Lamp-Tail Stop/Park-Right	8W-15-28
Lamp-Tail Stop/Turn-Left	8W-15-27
Lamp-Tail Stop/Turn-Right	8W-15-28
Lamp-Tail Turn-Left	8W-15-27
Lamp-Tail Turn-Right	8W-15-28
Lamp-Tail/Stop-Left	8W-15-30
Lamp-Tail/Stop-Right	8W-15-30
Lamp-Turn-Left Rear	8W-15-30
Lamp-Turn-Right Rear	8W-15-30
Lamp-Underhood	8W-15-10
Lamp-Vanity-Left	8W-15-14
Lamp-Vanity-Right	8W-15-14
Latch-Door-Decklid	8W-15-18, 22
Latch-Door-Driver	8W-15-20
Latch-Door-Left Rear	8W-15-19
Latch-Door-Liftgate	8W-15-26
Latch-Door-Passenger	8W-15-24
Latch-Door-Right Rear	8W-15-22
Lighter-Cigar	8W-15-15
Media System-Monitor/DVD	8W-15-13
Mirror-Inside Rearview	8W-15-13
Mirror-Outside Rearview-Driver	8W-15-20
Mirror-Outside Rearview-Passenger	8W-15-24
Module-Antilock Brakes	8W-15-4
Module-Brake	8W-15-25
Module-Clock-Analog	8W-15-12
Module-Door-Driver	8W-15-20
Module-Door-Passenger	8W-15-24
Module-Electronic Overhead	8W-15-14
Module-Electronic Shift	8W-15-16
Module-Engine Control	8W-15-10
Module-Front Blower Power	8W-15-15
Module-Front Control	8W-15-2
Module-Fuel Pump	8W-15-17, 23
Module-Glow Plug	8W-15-11
Module-Hands Free	8W-15-12
Module-Headlamp Leveling	8W-15-5
Module-Heated Seats	8W-15-18, 22
Module-Integrated Power	8W-15-4, 6
Module-Interface-Police/Taxi	8W-15-16
Module-Intrusion Transceiver	8W-15-16
Module-Memory Seat	8W-15-19
Module-Occupant Classification	8W-15-22
Module-Occupant Restraint Controller	8W-15-13
Module-Park Assist	8W-15-25
Module-Powertrain Control	8W-15-6, 7
Module-Sentry Key Remote Entry	8W-15-15
Module-Steering Column-Lock	8W-15-16
Module-Steering Control	8W-15-15
Module-Traffic Information Receiver	8W-15-13
Module-Transmission Control	8W-15-16, 17
Motor-Boost Pressure Servo	8W-15-10
Motor-Headlamp Washer	8W-15-6
Motor-Intake Swirl Servo	8W-15-10
Motor-Wiper-Front	8W-15-3, 8
Motor-Wiper-Rear	8W-15-26
Motor/Module-Sunroof	8W-15-14
Power Outlet-Console	8W-15-17, 23
Power Outlet-Rear	8W-15-26
Pump-Washer-Windshield	8W-15-6
Radio	8W-15-13
Receiver-Satellite	8W-15-13
Relay-High Intensity Discharge Lamp	8W-15-6
Relay-Police-No. 1	8W-15-24
Relay-Police-No. 2	8W-15-24
Relay-Police-No. 3	8W-15-24
Relay-Transmission	8W-15-25
Relay-Transmission Control	8W-15-6
Relay-Wiper-Rear	8W-15-25
Sensor-Brake Fluid Level	8W-15-2, 8
Sensor-Headlamp Level-Left	8W-15-5
Sensor-Headlamp Level-Right	8W-15-26
Sensor-Oxygen-Left Front	8W-15-11
Sensor-Oxygen-Left Rear	8W-15-2, 8
Sensor-Oxygen-Right Front	8W-15-11
Sensor-Oxygen-Right Rear	8W-15-2, 8
Sensor-Rain	8W-15-13
Sensor-Washer Fluid Level-Front	8W-15-4
Siren	8W-15-10
Solenoid-Manifold Tuning Valve	8W-15-7, 8
Solenoid-Multi Displacement System Cyl 1	8W-15-9
Solenoid-Multi Displacement System Cyl 4	8W-15-9
Solenoid-Multi Displacement System Cyl 6	8W-15-9
Solenoid-Multi Displacement System Cyl 7	8W-15-9
Switch-Adjustable Pedals	8W-15-19
Switch-Bank	8W-15-12
Switch-Decklid Release	8W-15-16
Switch-Headlamp	8W-15-15
Switch-Heated Seat-Left	8W-15-12
Switch-Heated Seat-Right	8W-15-12
Switch-Liftgate Release	8W-15-26
Switch-Mirror	8W-15-20
Switch-Seat Belt-Driver	8W-15-19, 21
Switch-Seat Belt-Passenger	8W-15-24
Switch-Seat-Driver	8W-15-19
Switch-Seat-Passenger	8W-15-19, 21
Switch-Security Hood	8W-15-6
Switch-Stop Lamp	8W-15-17, 23
Switch-Window/Door Lock-Driver	8W-15-20
Switch-Window/Door Lock-Driver Express	8W-15-20
Transponder-Tire Pressure-Left Front	8W-15-3
Transponder-Tire Pressure-Right Front	8W-15-5
Transponder-Tire Pressure-Right Rear	8W-15-18, 22
Valve-EGR	8W-15-10

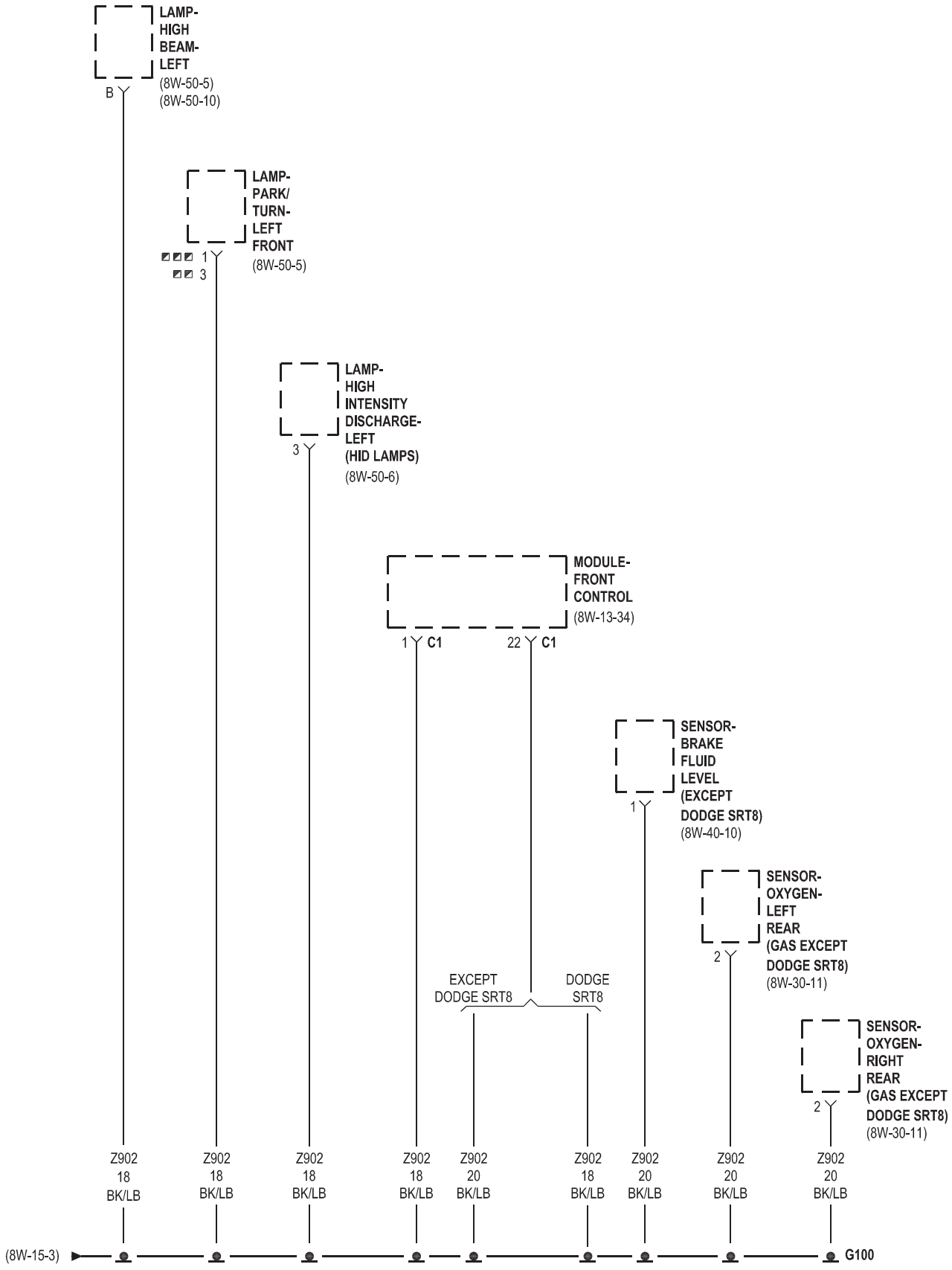

LX49 EXCEPT EXPORT

LX49 EXPORT/LX48

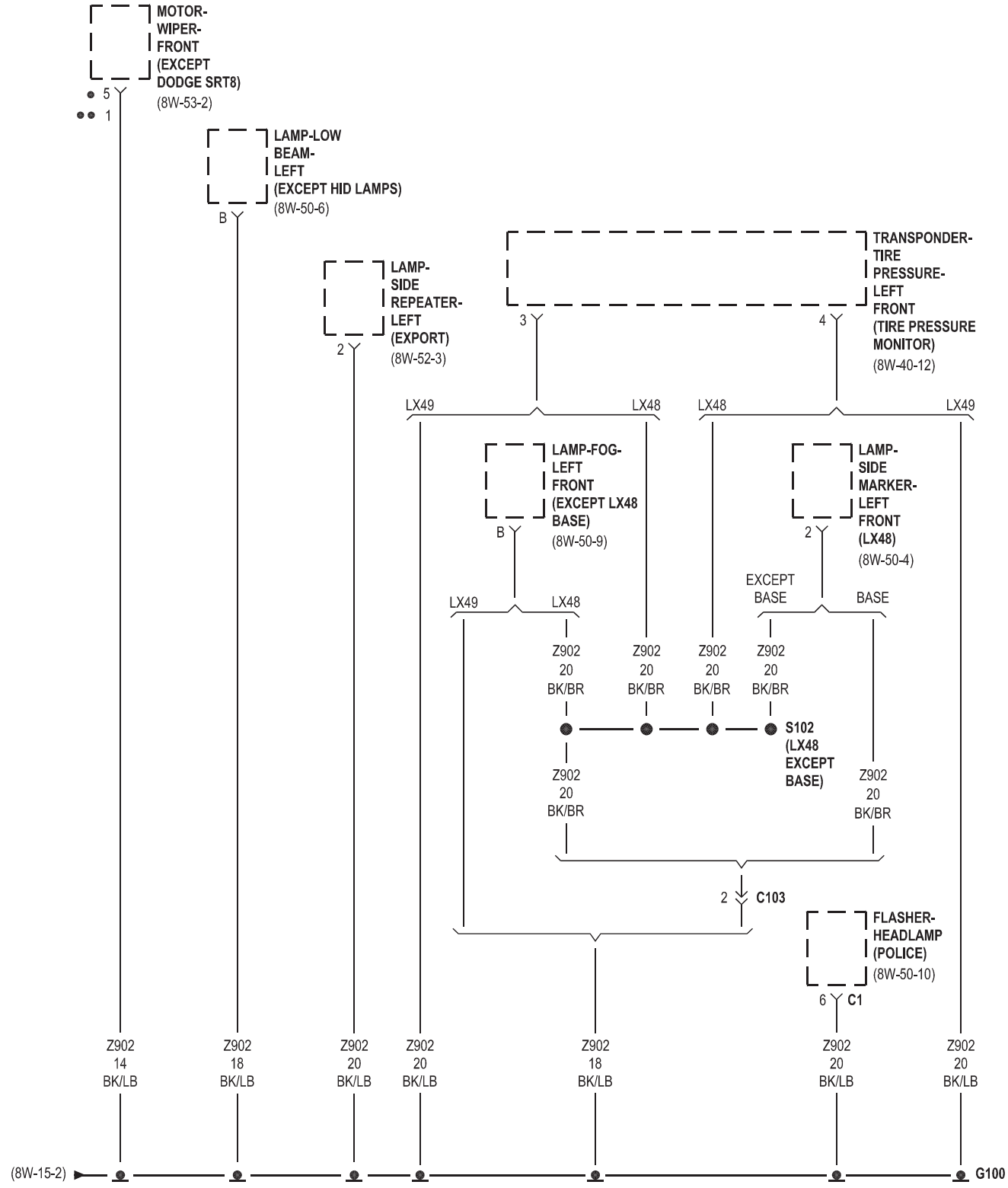
MOTOR-WIPER-FRONT (EXCEPT DODGE SRT8)
(8W-53-2)
LAMP-LOW BEAM-LEFT (EXCEPT HID LAMPS)
(8W-50-6)
LAMP-SIDE REPEATER-LEFT (EXPORT)
(8W-52-3)
TRANSPONDER-TIRE PRESSURE-LEFT FRONT (TIRE PRESSURE MONITOR)
(8W-40-12)
LAMP-FOG-LEFT FRONT (EXCEPT LX48 BASE)
(8W-50-9)
LAMP-SIDE MARKER-LEFT FRONT (LX48)
(8W-50-4)
LX49
LX48
EXCEPT BASE
BASE
Z902 20 BK/BR
S102 (LX48 EXCEPT BASE)
C103
FLASHER-HEADLAMP (POLICE)
(8W-50-10)
C1
Z902 14 BK/LB
Z902 18 BK/LB
Z902 20 BK/LB
(8W-15-2)
G100
LHD
RHD

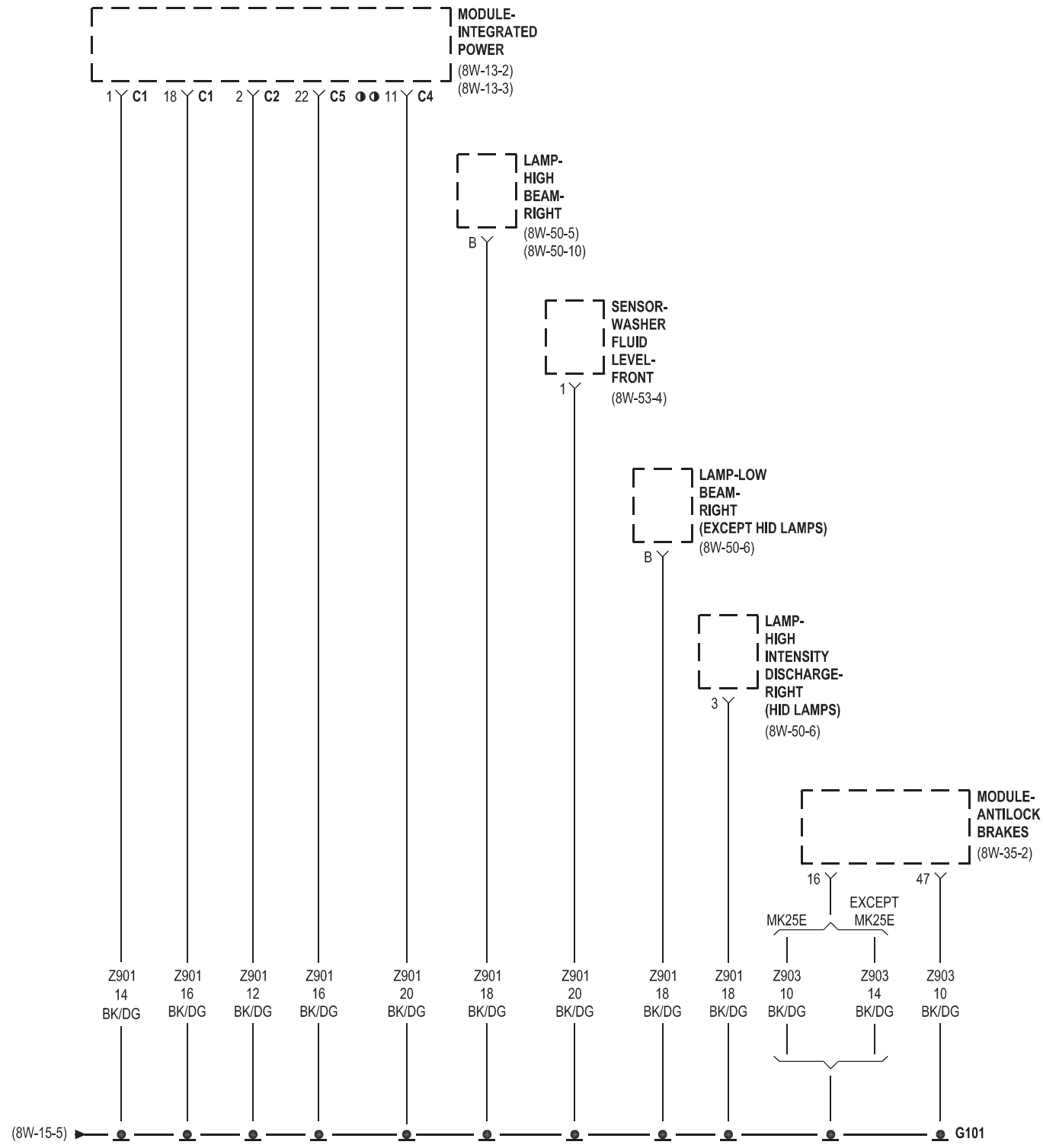

◑◑ SRT8 EARLY BUILD

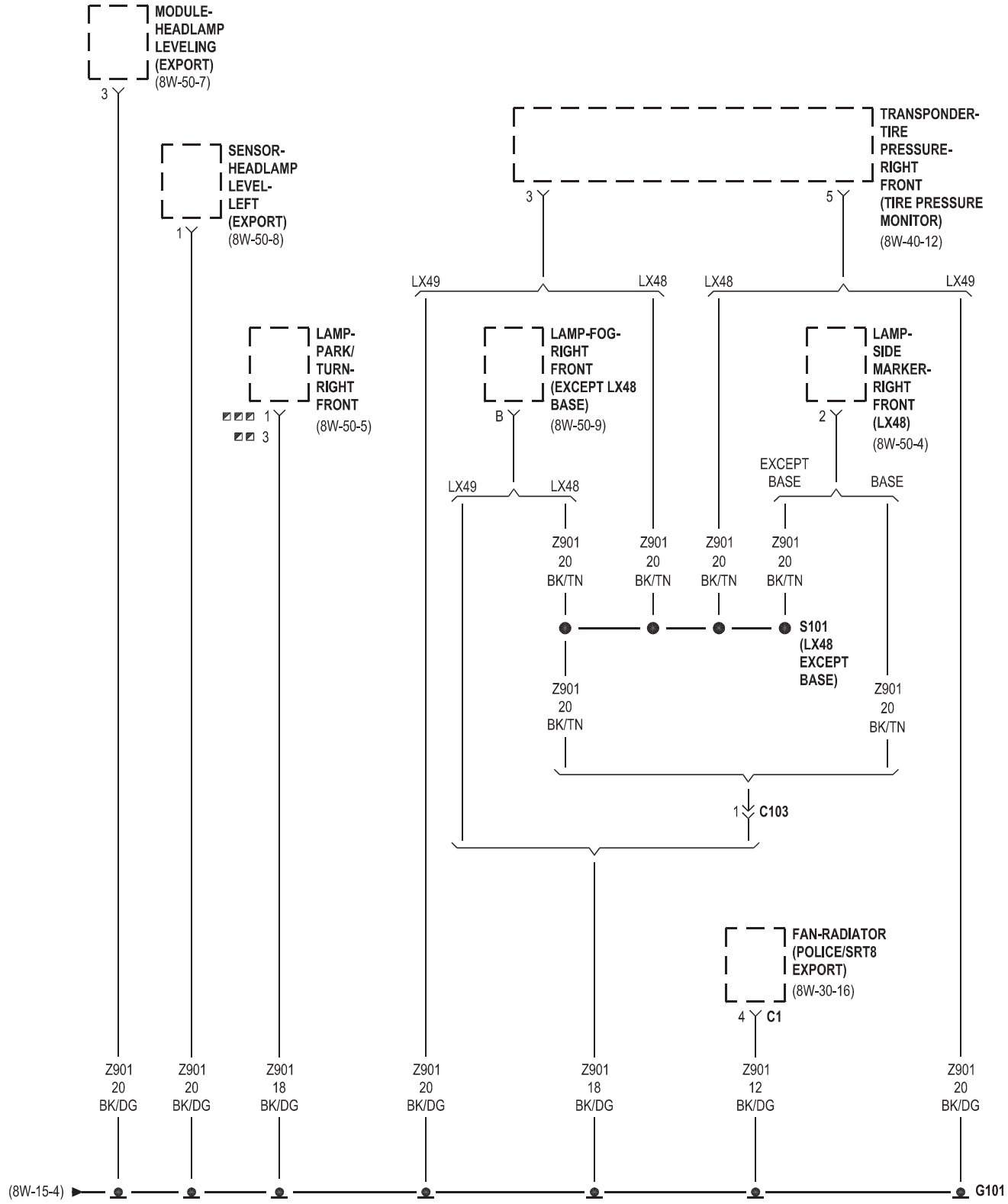
MODULE-HEADLAMP LEVELING (EXPORT)
(8W-50-7)
3
SENSOR-HEADLAMP LEVEL-LEFT (EXPORT)
(8W-50-8)
1
TRANSPONDER-TIRE PRESSURE-RIGHT FRONT (TIRE PRESSURE MONITOR)
(8W-40-12)
3
5
LX49
LX48
LX48
LX49
LAMP-PARK/TURN-RIGHT FRONT
(8W-50-5)
1
3
LAMP-FOG-RIGHT FRONT (EXCEPT LX48 BASE)
(8W-50-9)
B
LAMP-SIDE MARKER-RIGHT FRONT (LX48)
(8W-50-4)
2
EXCEPT BASE
BASE
LX49
LX48
Z901 20 BK/TN
Z901 20 BK/TN
Z901 20 BK/TN
Z901 20 BK/TN
S101 (LX48 EXCEPT BASE)
Z901 20 BK/TN
Z901 20 BK/TN
1
C103
FAN-RADIATOR (POLICE/SRT8 EXPORT)
(8W-30-16)
4
C1
Z901 20 BK/DG
Z901 20 BK/DG
Z901 18 BK/DG
Z901 20 BK/DG
Z901 18 BK/DG
Z901 12 BK/DG
Z901 20 BK/DG
(8W-15-4)
G101
LX49 EXCEPT EXPORT
LX49 EXPORT/LX48

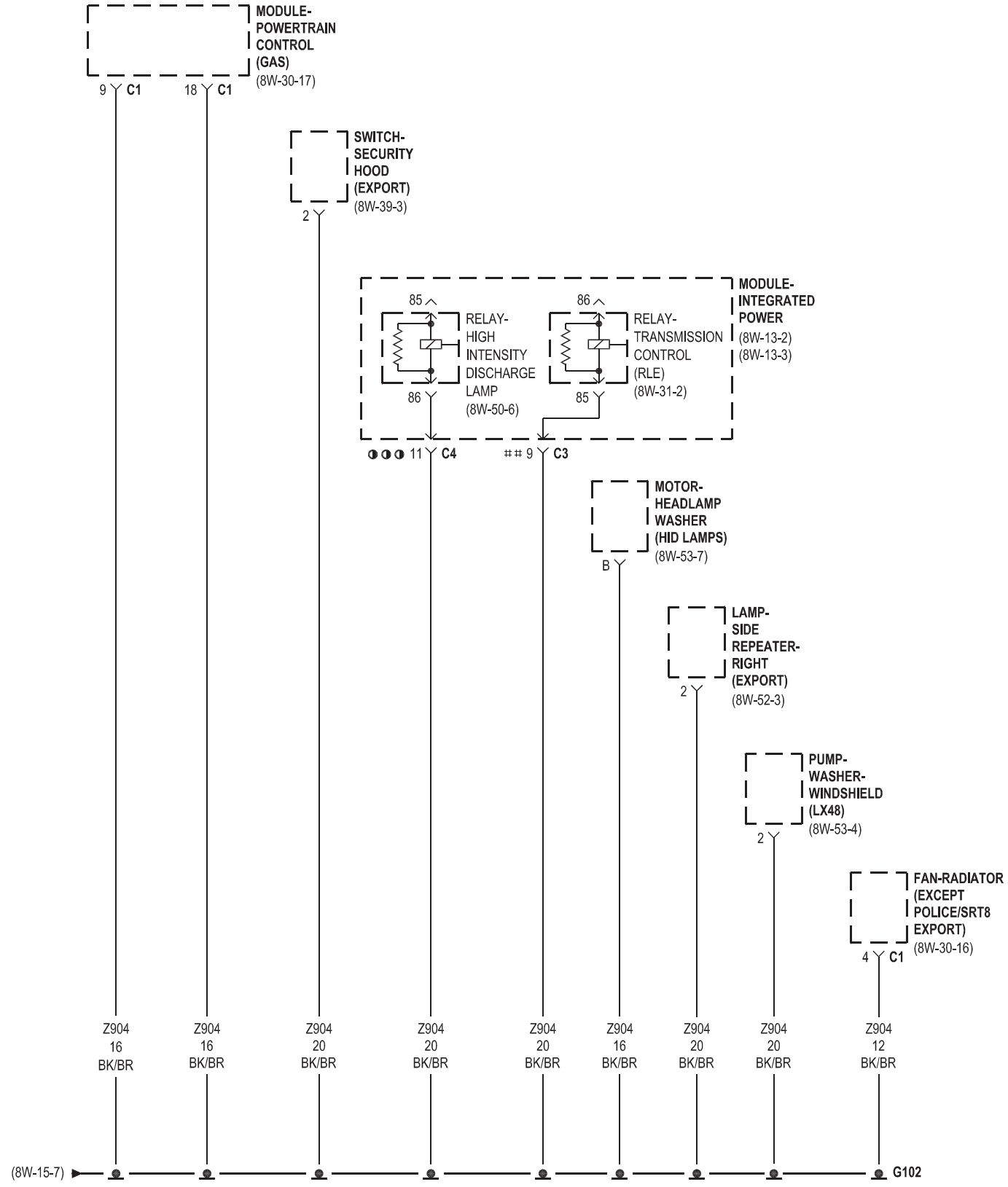

RLE

◑◑◑ EXCEPT SRT8 EARLY BUILD

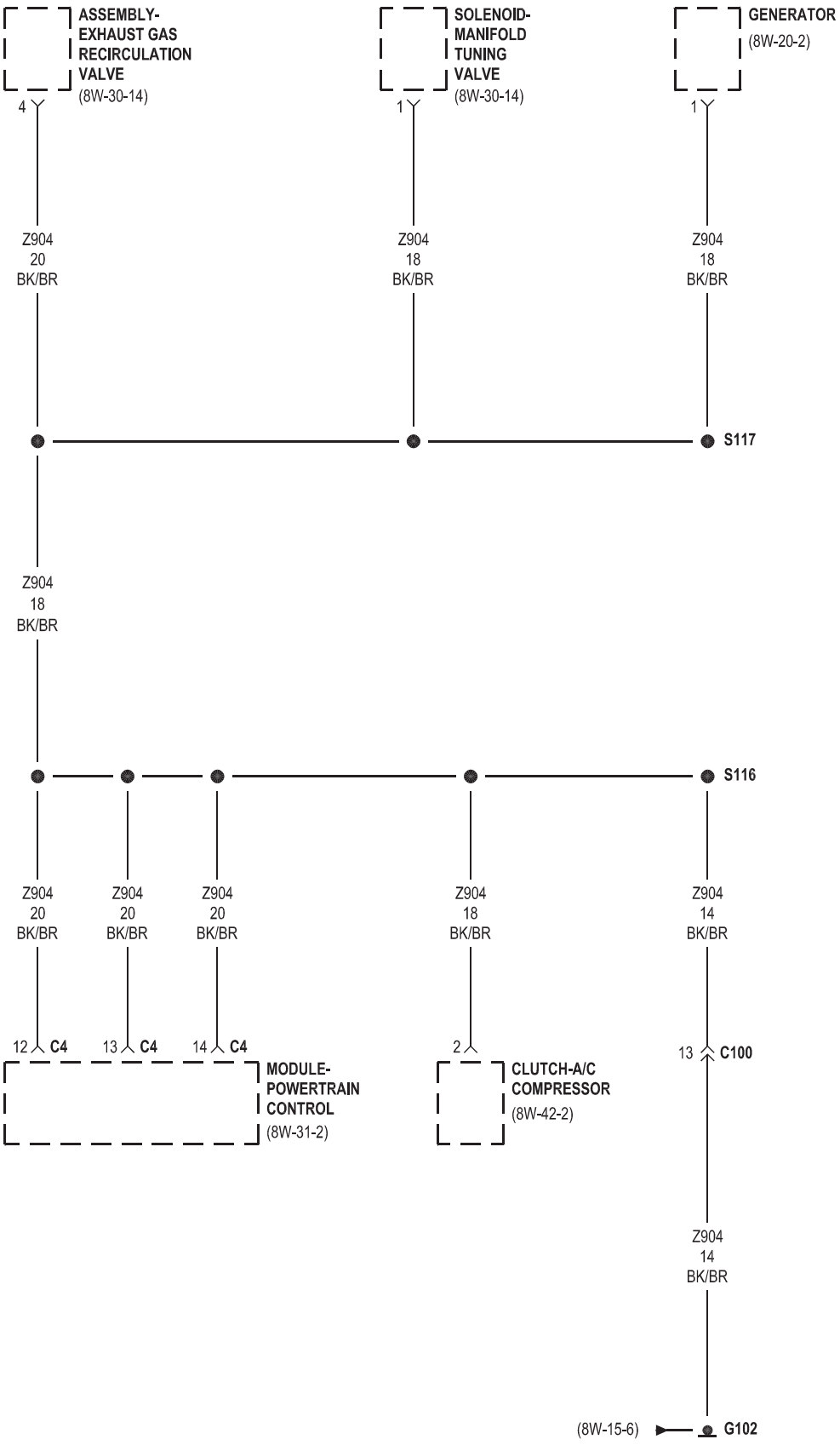
ASSEMBLY-
EXHAUST GAS
RECIRCULATION
VALVE
(8W-30-14)
4
SOLENOID-
MANIFOLD
TUNING
VALVE
(8W-30-14)
1
GENERATOR
(8W-20-2)
1
Z904
20
BK/BR
Z904
18
BK/BR
Z904
18
BK/BR
S117
Z904
18
BK/BR
S116
Z904
20
BK/BR
Z904
20
BK/BR
Z904
20
BK/BR
Z904
18
BK/BR
Z904
14
BK/BR
12 C4
13 C4
14 C4
MODULE-
POWERTRAIN
CONTROL
(8W-31-2)
2
CLUTCH-A/C
COMPRESSOR
(8W-42-2)
13 C100
Z904
14
BK/BR
(8W-15-6)
G102

3.5L LATE BUILD/5.7L/SRT8

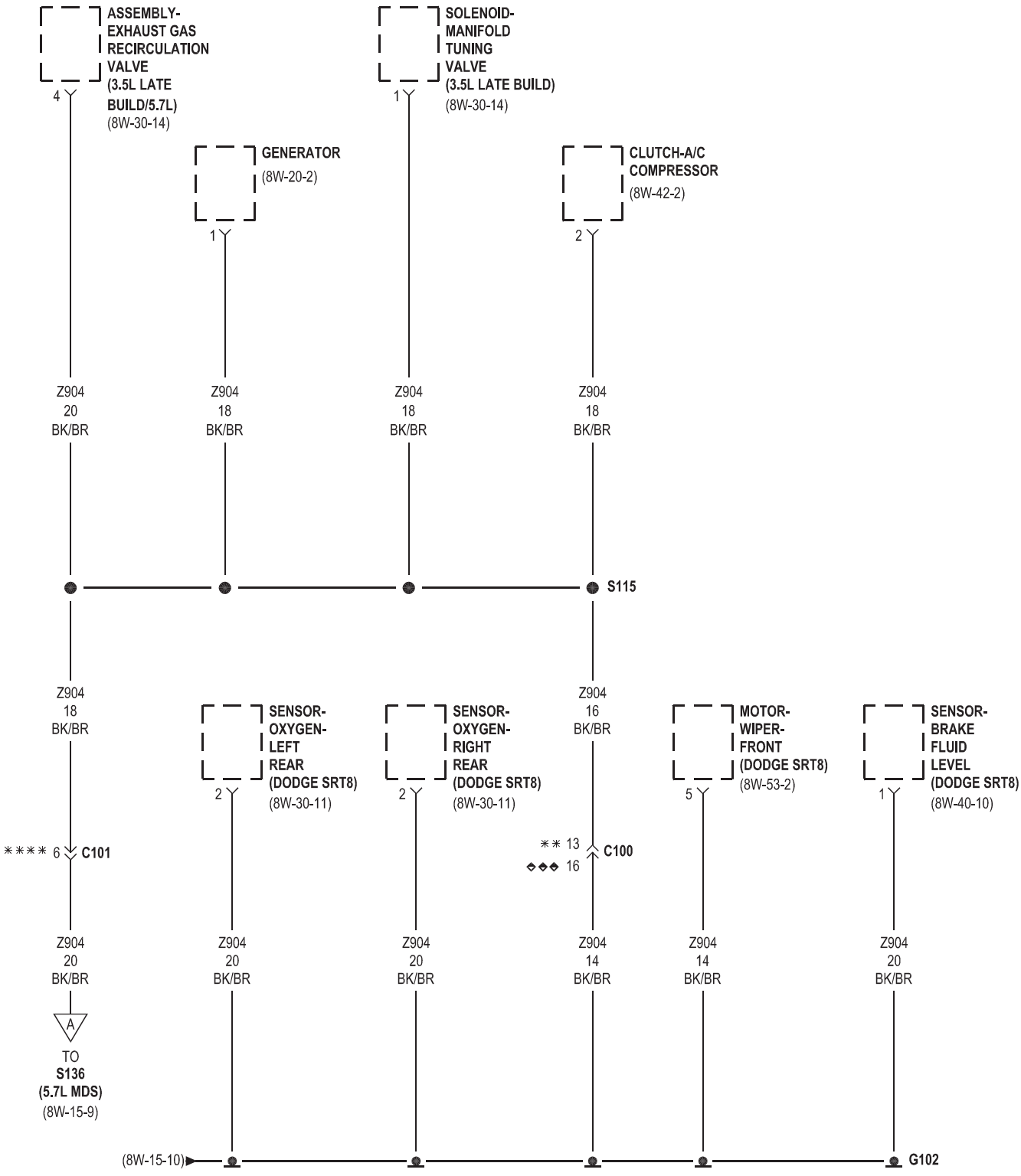

** 3.5L
◆◆◆ 5.7L/SRT8
**** 5.7L MDS

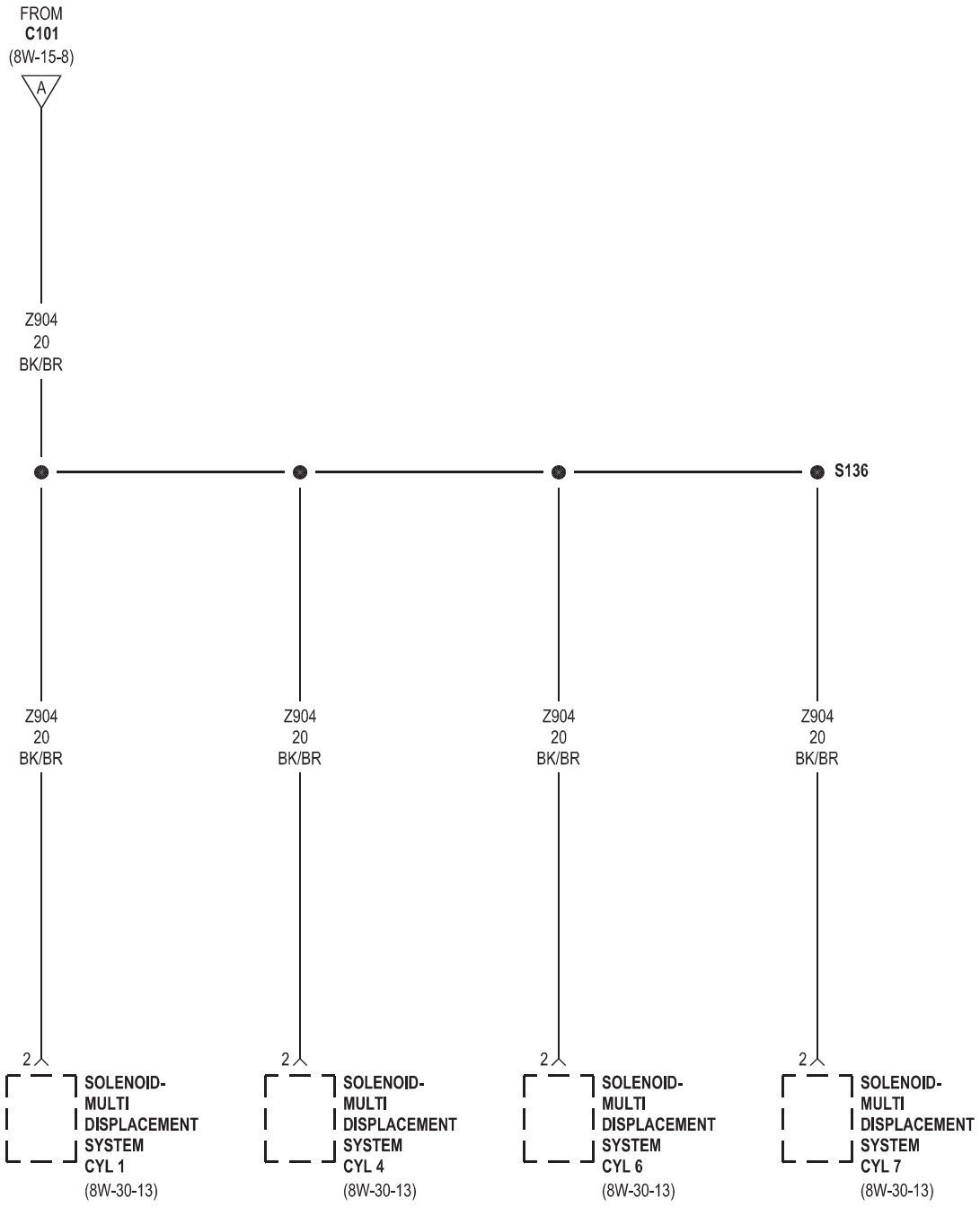
FROM
C101
(8W-15-8)
A
Z904
20
BK/BR
S136
Z904
20
BK/BR
Z904
20
BK/BR
Z904
20
BK/BR
Z904
20
BK/BR
2
2
2
2
SOLENOID-
MULTI
DISPLACEMENT
SYSTEM
CYL 1
(8W-30-13)
SOLENOID-
MULTI
DISPLACEMENT
SYSTEM
CYL 4
(8W-30-13)
SOLENOID-
MULTI
DISPLACEMENT
SYSTEM
CYL 6
(8W-30-13)
SOLENOID-
MULTI
DISPLACEMENT
SYSTEM
CYL 7
(8W-30-13)

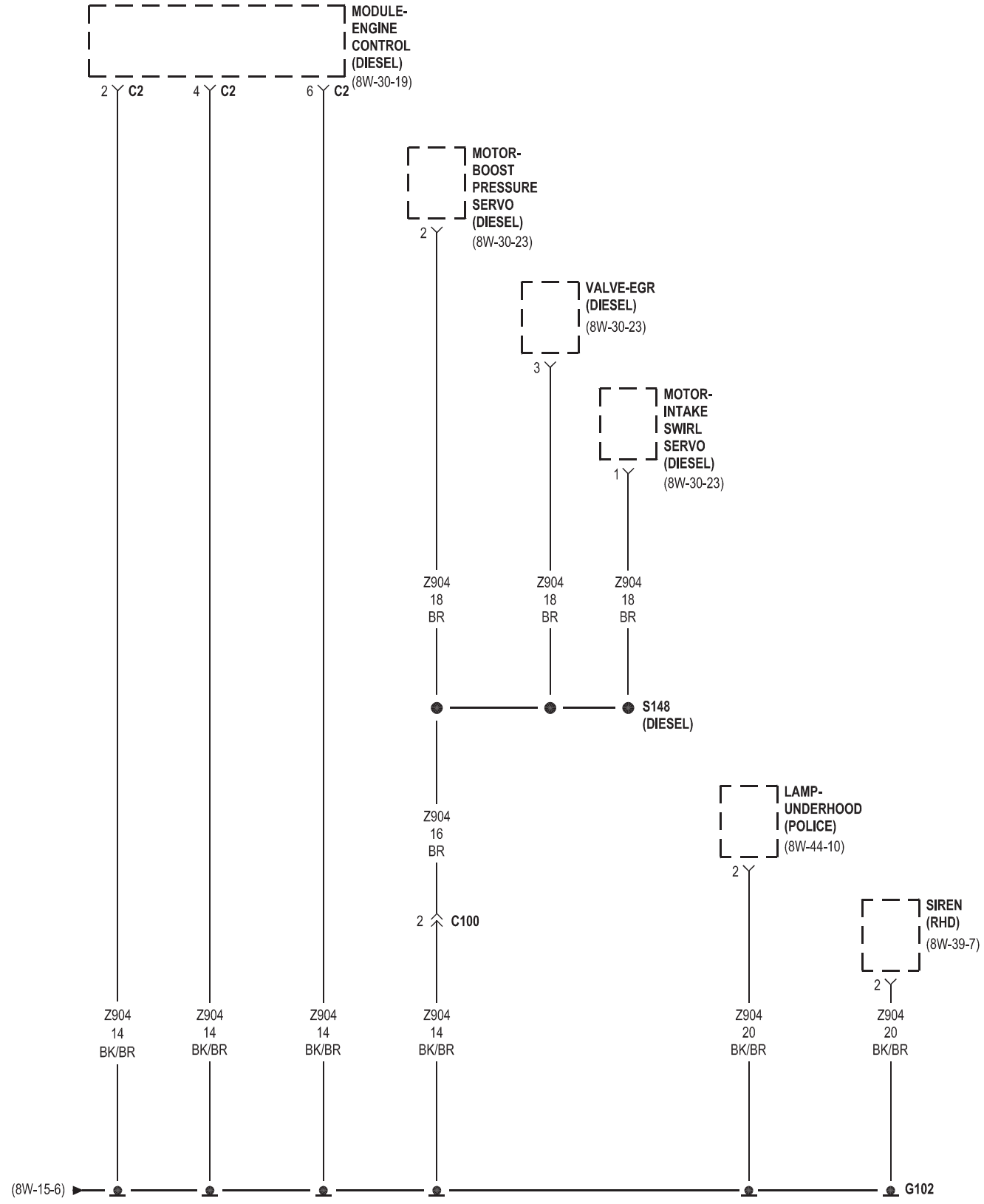
MODULE-
ENGINE
CONTROL
(DIESEL)
(8W-30-19)
2 C2
4 C2
6 C2
MOTOR-
BOOST
PRESSURE
SERVO
(DIESEL)
(8W-30-23)
2
VALVE-EGR
(DIESEL)
(8W-30-23)
3
MOTOR-
INTAKE
SWIRL
SERVO
(DIESEL)
(8W-30-23)
1
Z904
18
BR
Z904
18
BR
Z904
18
BR
S148
(DIESEL)
Z904
16
BR
2 C100
LAMP-
UNDERHOOD
(POLICE)
(8W-44-10)
2
SIREN
(RHD)
(8W-39-7)
2
Z904
14
BK/BR
Z904
14
BK/BR
Z904
14
BK/BR
Z904
14
BK/BR
Z904
20
BK/BR
Z904
20
BK/BR
(8W-15-6)
G102

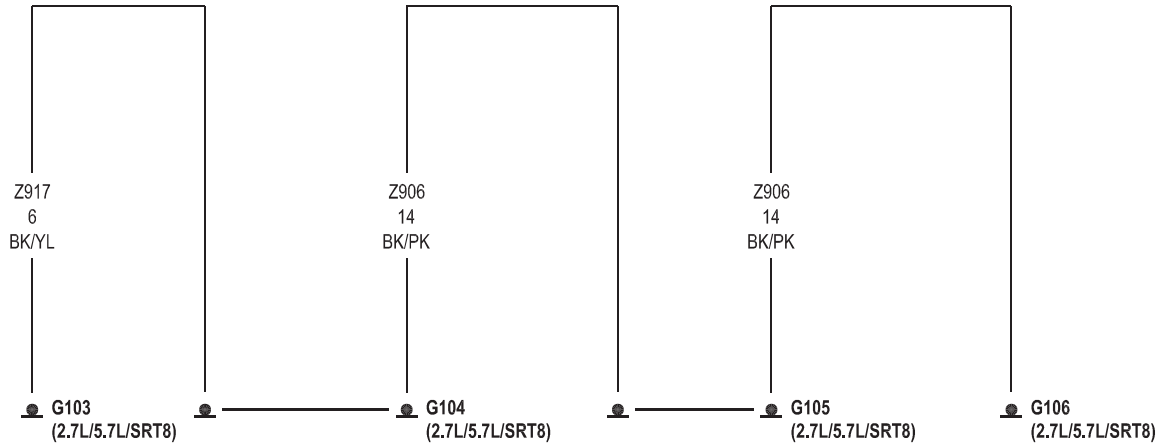
Z917
6
BK/YL
Z906
14
BK/PK
Z906
14
BK/PK
G103
(2.7L/5.7L/SRT8)
G104
(2.7L/5.7L/SRT8)
G105
(2.7L/5.7L/SRT8)
G106
(2.7L/5.7L/SRT8)

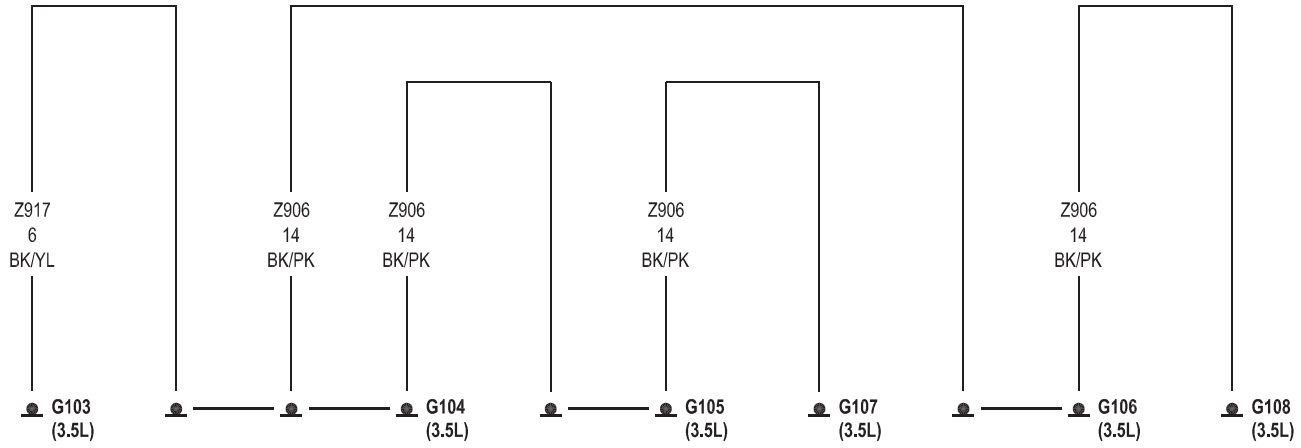
Z917
6
BK/YL
Z906
14
BK/PK
Z906
14
BK/PK
Z906
14
BK/PK
Z906
14
BK/PK
G103
(3.5L)
G104
(3.5L)
G105
(3.5L)
G107
(3.5L)
G106
(3.5L)
G108
(3.5L)

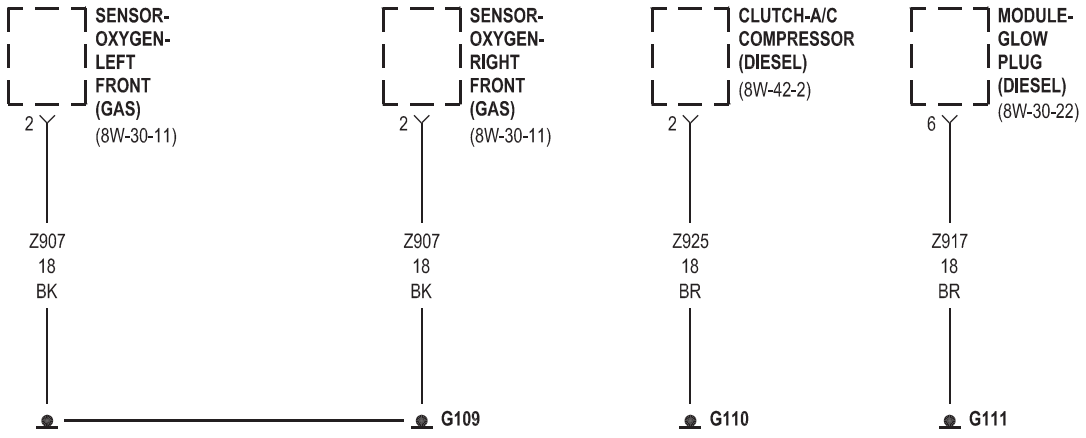
SENSOR-
OXYGEN-
LEFT
FRONT
(GAS)
(8W-30-11)
2
Z907
18
BK
G109
SENSOR-
OXYGEN-
RIGHT
FRONT
(GAS)
(8W-30-11)
2
Z907
18
BK
CLUTCH-A/C
COMPRESSOR
(DIESEL)
(8W-42-2)
2
Z925
18
BR
G110
MODULE-
GLOW
PLUG
(DIESEL)
(8W-30-22)
6
Z917
18
BR
G111

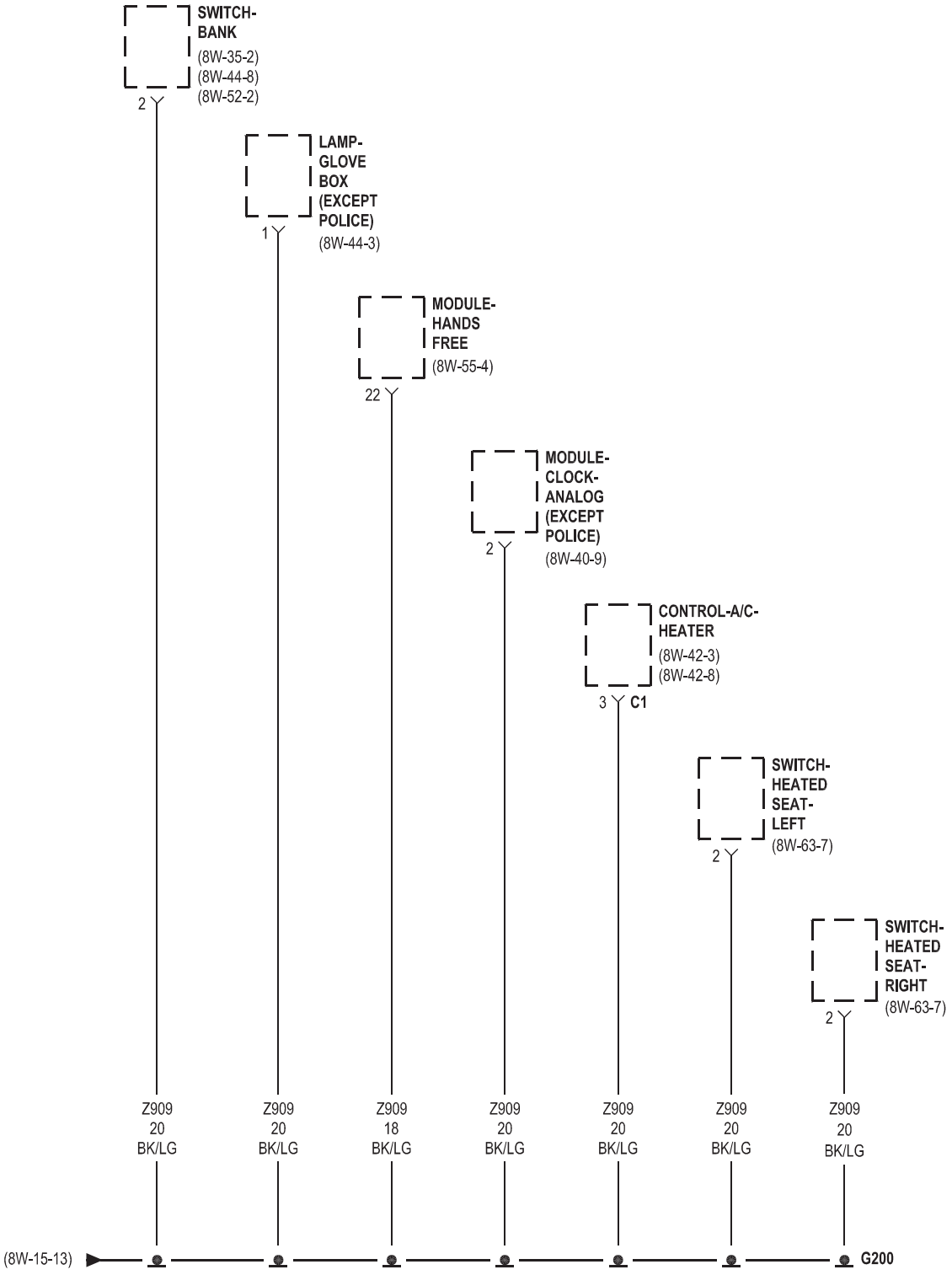
SWITCH-BANK
(8W-35-2)
(8W-44-8)
(8W-52-2)
2
LAMP-GLOVE BOX (EXCEPT POLICE)
(8W-44-3)
1
MODULE-HANDS FREE
(8W-55-4)
22
MODULE-CLOCK-ANALOG (EXCEPT POLICE)
(8W-40-9)
2
CONTROL-A/C-HEATER
(8W-42-3)
(8W-42-8)
3
C1
SWITCH-HEATED SEAT-LEFT
(8W-63-7)
2
SWITCH-HEATED SEAT-RIGHT
(8W-63-7)
2
Z909 20 BK/LG
Z909 20 BK/LG
Z909 18 BK/LG
Z909 20 BK/LG
Z909 20 BK/LG
Z909 20 BK/LG
Z909 20 BK/LG
(8W-15-13)
G200

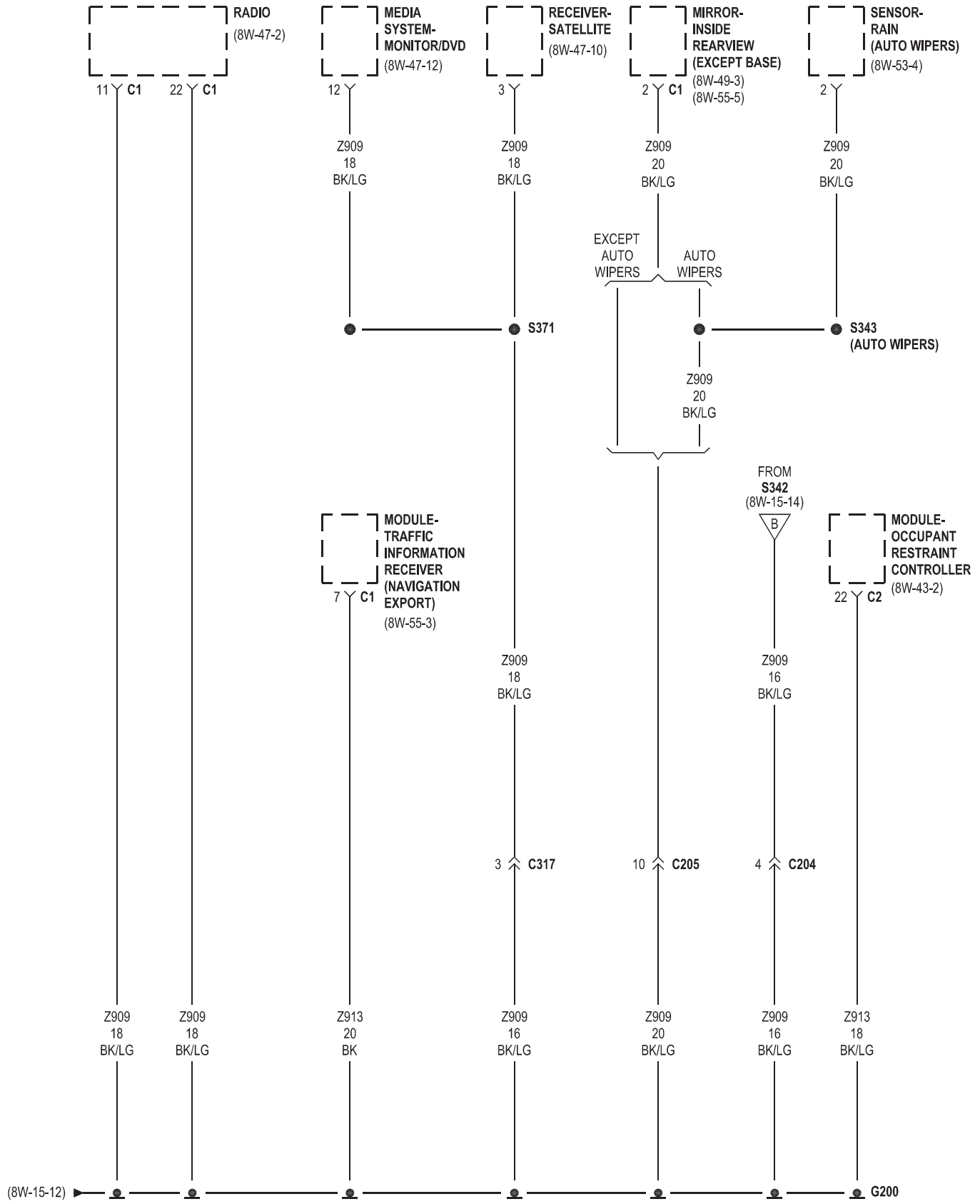
RADIO
(8W-47-2)
11 C1
22 C1
MEDIA SYSTEM-MONITOR/DVD
(8W-47-12)
12
RECEIVER-SATELLITE
(8W-47-10)
3
MIRROR-INSIDE REARVIEW (EXCEPT BASE)
(8W-49-3)
(8W-55-5)
2 C1
SENSOR-RAIN (AUTO WIPERS)
(8W-53-4)
2
Z909 18 BK/LG
Z909 18 BK/LG
Z909 20 BK/LG
Z909 20 BK/LG
EXCEPT AUTO WIPERS
AUTO WIPERS
S371
S343 (AUTO WIPERS)
Z909 20 BK/LG
FROM S342 (8W-15-14)
B
MODULE-TRAFFIC INFORMATION RECEIVER (NAVIGATION EXPORT)
(8W-55-3)
7 C1
MODULE-OCCUPANT RESTRAINT CONTROLLER
(8W-43-2)
22 C2
Z909 18 BK/LG
Z909 16 BK/LG
3 C317
10 C205
4 C204
Z909 18 BK/LG
Z909 18 BK/LG
Z913 20 BK
Z909 16 BK/LG
Z909 20 BK/LG
Z909 16 BK/LG
Z913 18 BK/LG
(8W-15-12)
G200

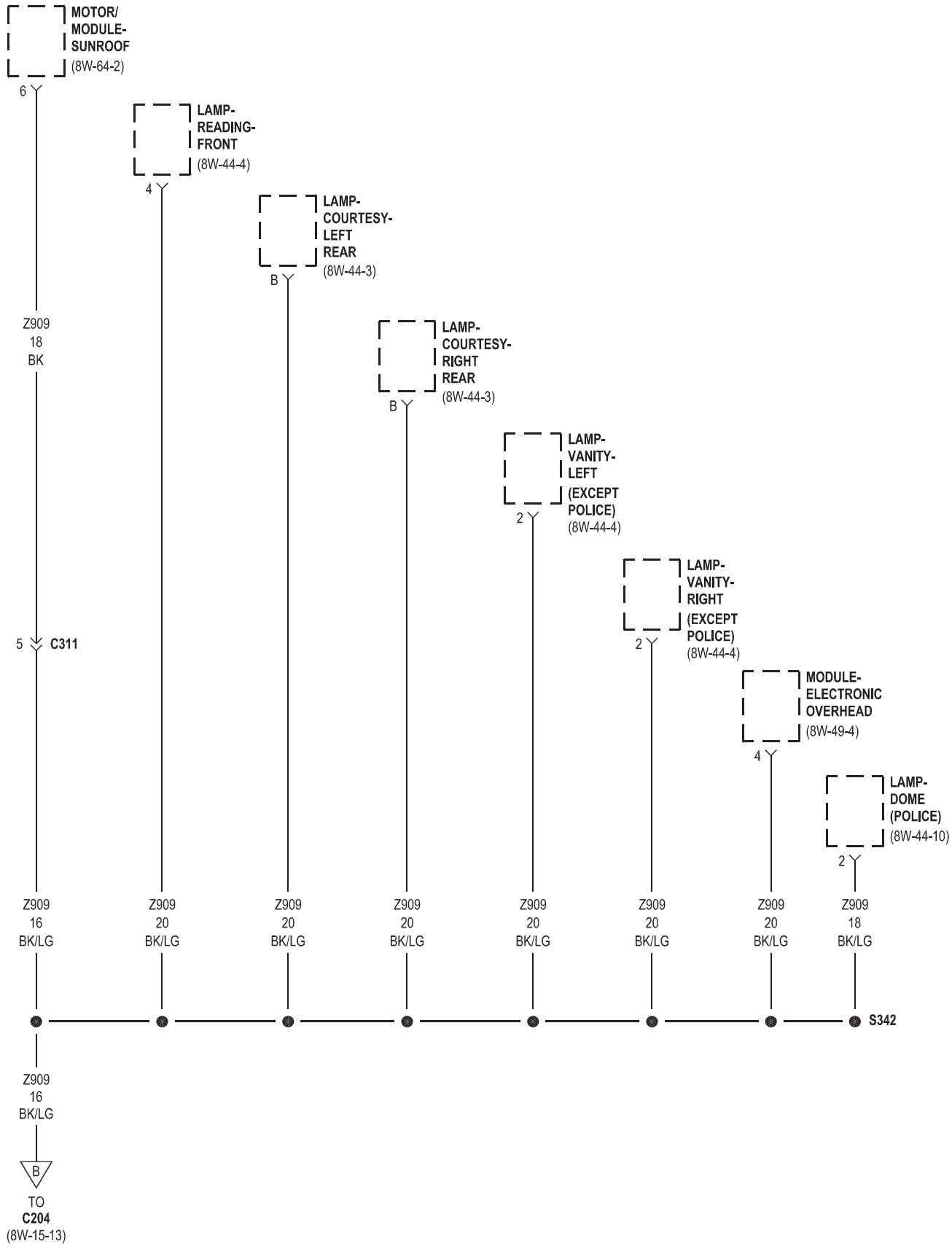
MOTOR/ MODULE- SUNROOF
(8W-64-2)
6
LAMP- READING- FRONT
(8W-44-4)
4
LAMP- COURTESY- LEFT REAR
(8W-44-3)
B
LAMP- COURTESY- RIGHT REAR
(8W-44-3)
B
LAMP- VANITY- LEFT (EXCEPT POLICE)
(8W-44-4)
2
LAMP- VANITY- RIGHT (EXCEPT POLICE)
(8W-44-4)
2
MODULE- ELECTRONIC OVERHEAD
(8W-49-4)
4
LAMP- DOME (POLICE)
(8W-44-10)
2
Z909 18 BK
5 C311
Z909 16 BK/LG
Z909 20 BK/LG
Z909 20 BK/LG
Z909 20 BK/LG
Z909 20 BK/LG
Z909 20 BK/LG
Z909 20 BK/LG
Z909 18 BK/LG
S342
Z909 16 BK/LG
B
TO C204
(8W-15-13)

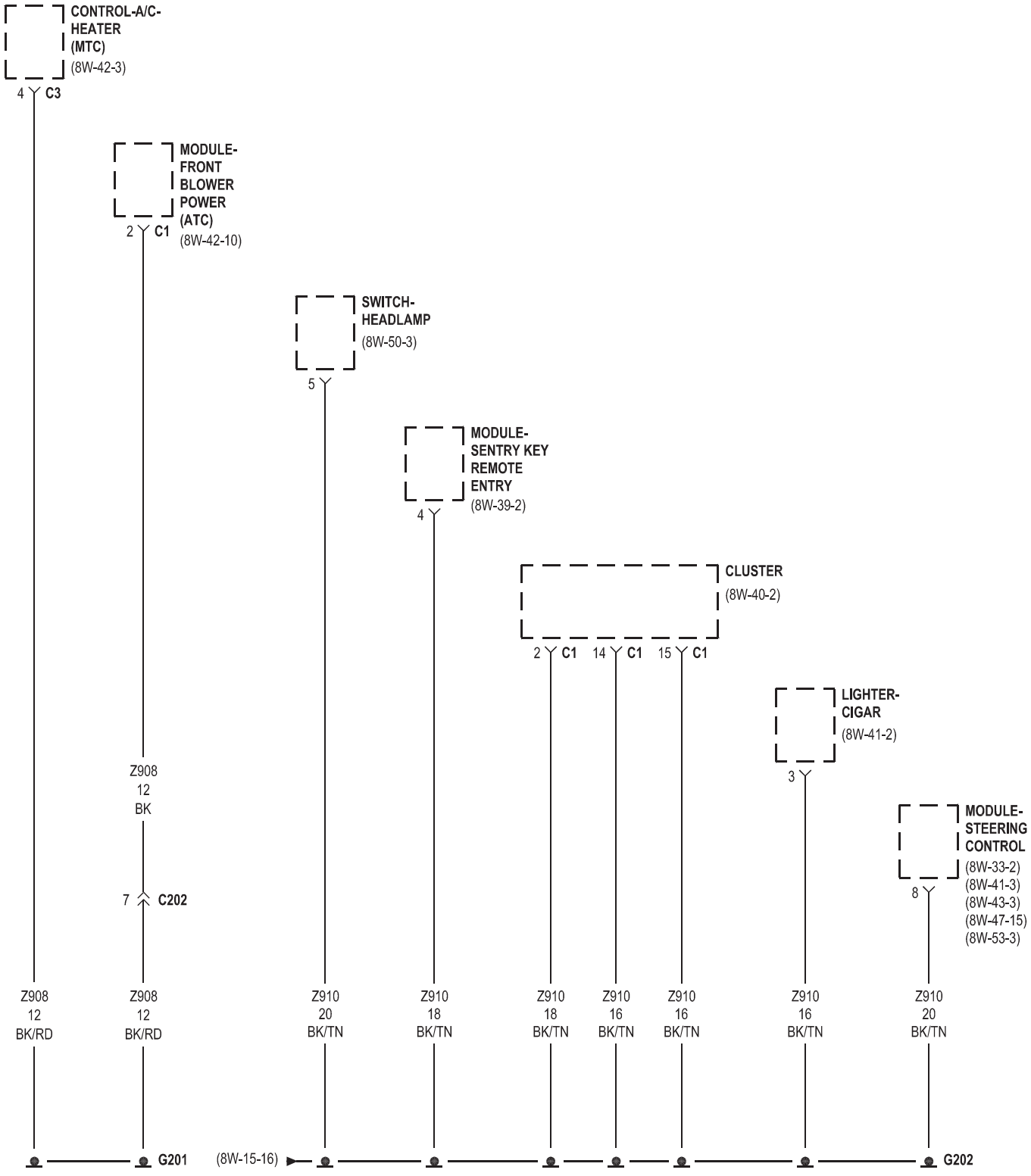
CONTROL-A/C-HEATER (MTC)
(8W-42-3)
4 C3
MODULE-FRONT BLOWER POWER (ATC)
2 C1
(8W-42-10)
SWITCH-HEADLAMP
(8W-50-3)
5
MODULE-SENTRY KEY REMOTE ENTRY
(8W-39-2)
4
CLUSTER
(8W-40-2)
2 C1
14 C1
15 C1
LIGHTER-CIGAR
(8W-41-2)
3
MODULE-STEERING CONTROL
(8W-33-2)
(8W-41-3)
(8W-43-3)
(8W-47-15)
(8W-53-3)
8
Z908 12 BK
7 C202
Z908 12 BK/RD
Z908 12 BK/RD
Z910 20 BK/TN
Z910 18 BK/TN
Z910 18 BK/TN
Z910 16 BK/TN
Z910 16 BK/TN
Z910 16 BK/TN
Z910 20 BK/TN
G201
(8W-15-16)
G202

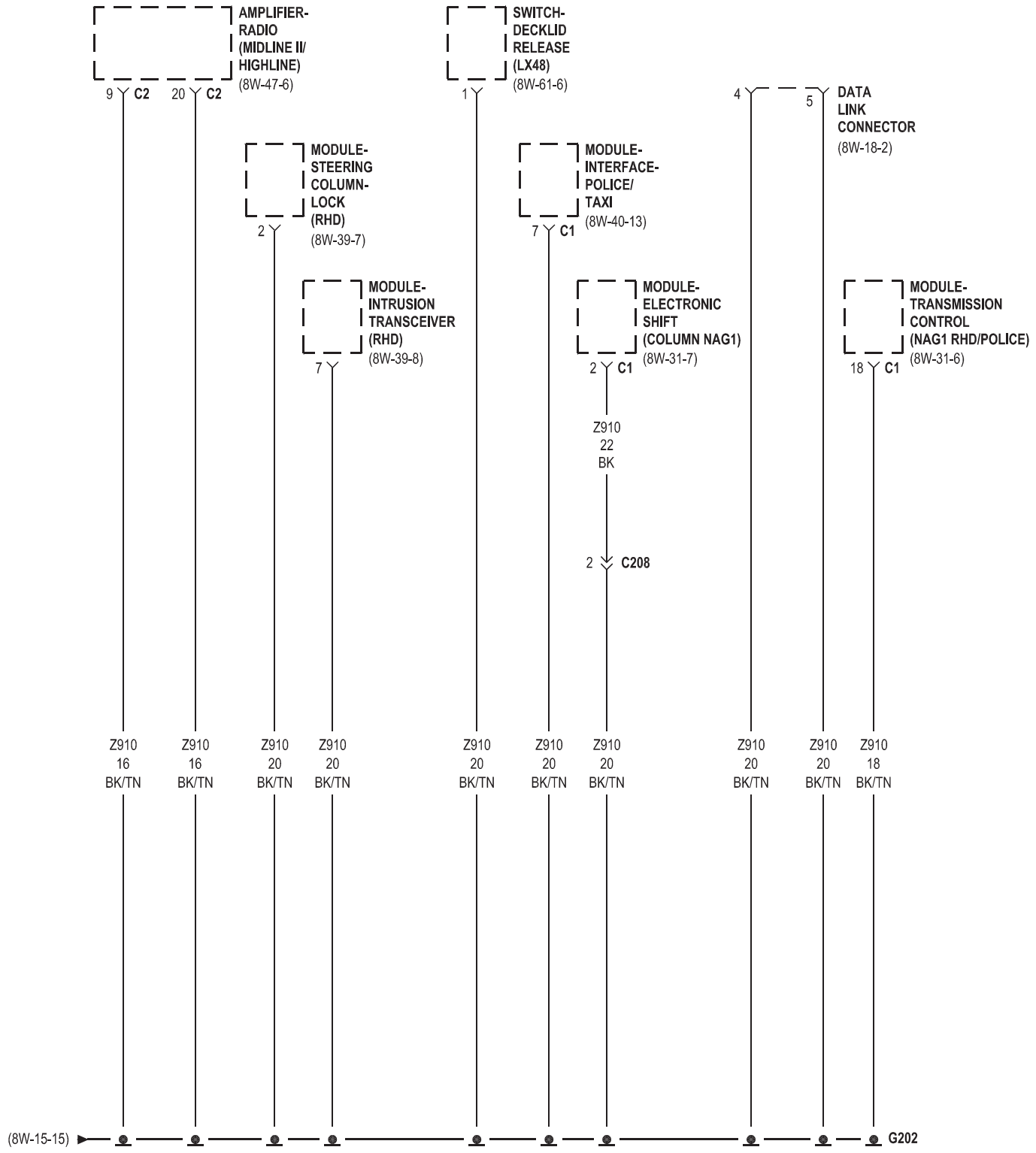
AMPLIFIER-
RADIO
(MIDLINE II/
HIGHLINE)
(8W-47-6)
9 C2
20 C2
MODULE-
STEERING
COLUMN-
LOCK
(RHD)
(8W-39-7)
2
MODULE-
INTRUSION
TRANSCEIVER
(RHD)
(8W-39-8)
7
SWITCH-
DECKLID
RELEASE
(LX48)
(8W-61-6)
1
MODULE-
INTERFACE-
POLICE/
TAXI
(8W-40-13)
7 C1
MODULE-
ELECTRONIC
SHIFT
(COLUMN NAG1)
(8W-31-7)
2 C1
Z910
22
BK
2 C208
4
5
DATA
LINK
CONNECTOR
(8W-18-2)
MODULE-
TRANSMISSION
CONTROL
(NAG1 RHD/POLICE)
(8W-31-6)
18 C1
Z910
16
BK/TN
Z910
16
BK/TN
Z910
20
BK/TN
Z910
20
BK/TN
Z910
20
BK/TN
Z910
20
BK/TN
Z910
20
BK/TN
Z910
20
BK/TN
Z910
20
BK/TN
Z910
18
BK/TN
(8W-15-15)
G202

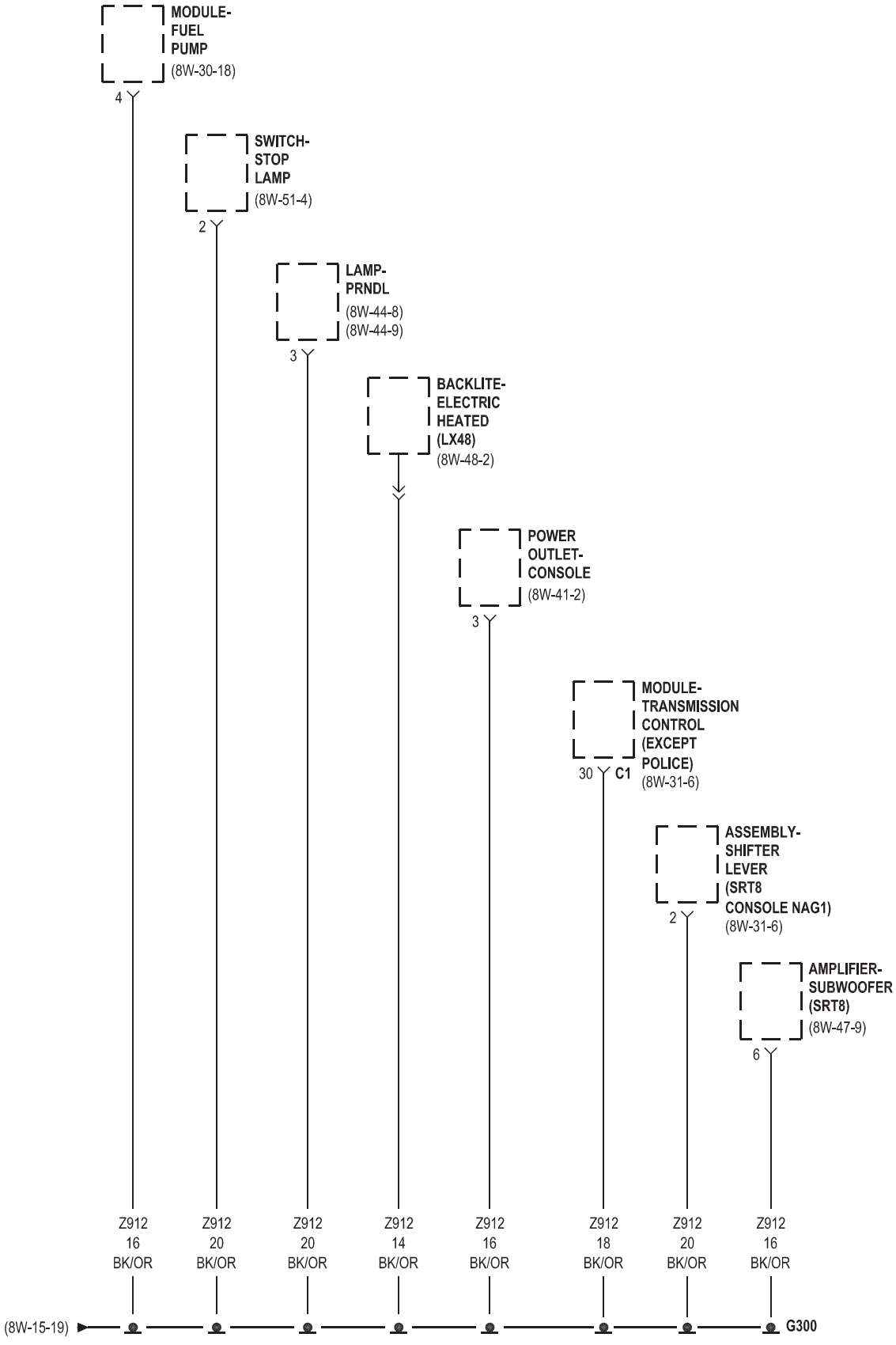
MODULE-
FUEL
PUMP
(8W-30-18)
4
SWITCH-
STOP
LAMP
(8W-51-4)
2
LAMP-
PRNDL
(8W-44-8)
(8W-44-9)
3
BACKLITE-
ELECTRIC
HEATED
(LX48)
(8W-48-2)
POWER
OUTLET-
CONSOLE
(8W-41-2)
3
MODULE-
TRANSMISSION
CONTROL
(EXCEPT
POLICE)
(8W-31-6)
30
C1
ASSEMBLY-
SHIFTER
LEVER
(SRT8
CONSOLE NAG1)
(8W-31-6)
2
AMPLIFIER-
SUBWOOFER
(SRT8)
(8W-47-9)
6
Z912
16
BK/OR
Z912
20
BK/OR
Z912
20
BK/OR
Z912
14
BK/OR
Z912
16
BK/OR
Z912
18
BK/OR
Z912
20
BK/OR
Z912
16
BK/OR
(8W-15-19)
G300

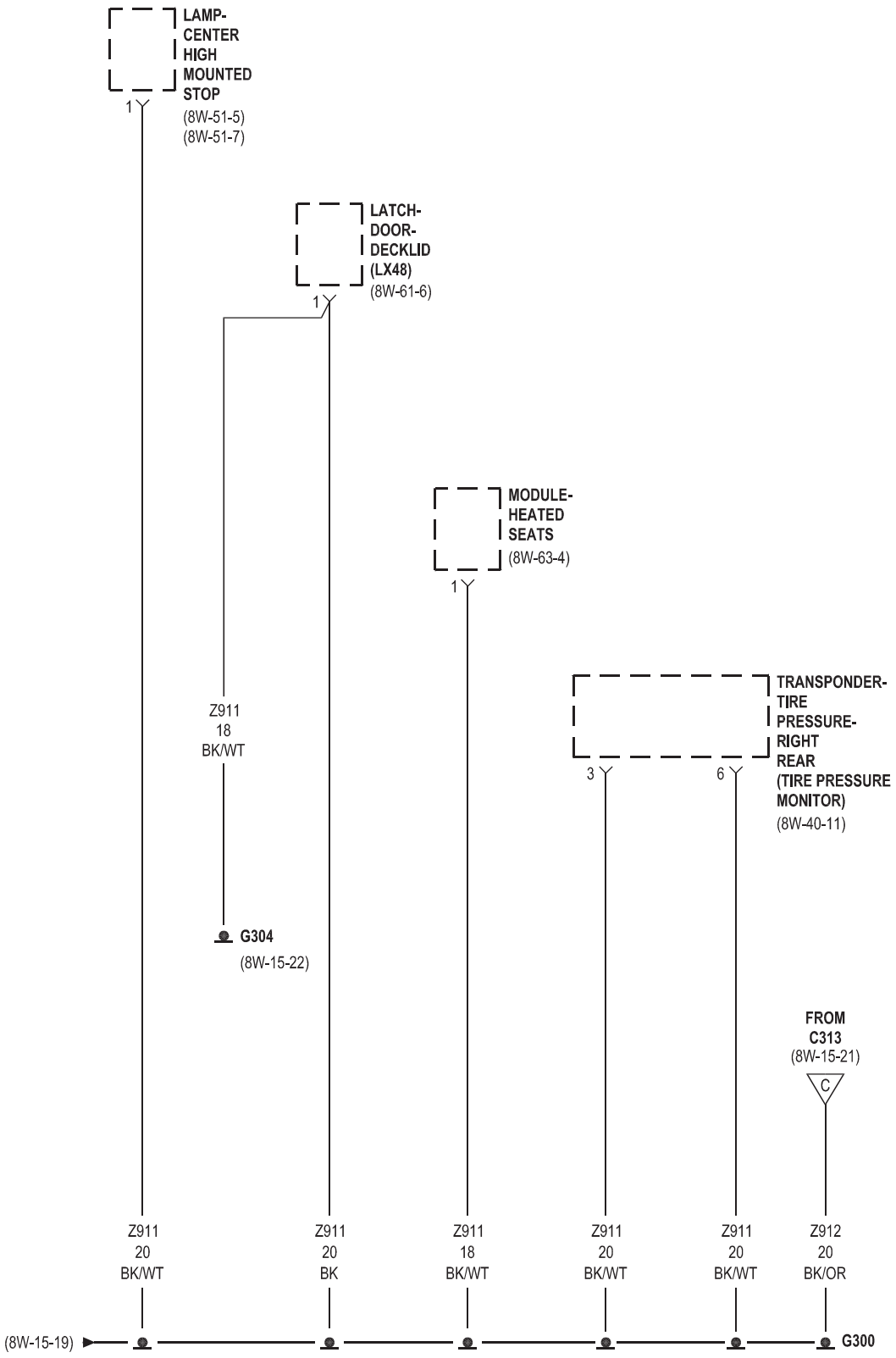
LAMP-
CENTER
HIGH
MOUNTED
STOP
(8W-51-5)
(8W-51-7)
1
LATCH-
DOOR-
DECKLID
(LX48)
(8W-61-6)
1
MODULE-
HEATED
SEATS
(8W-63-4)
1
TRANSPONDER-
TIRE
PRESSURE-
RIGHT
REAR
(TIRE PRESSURE
MONITOR)
(8W-40-11)
3
6
Z911
18
BK/WT
G304
(8W-15-22)
FROM
C313
(8W-15-21)
C
Z911
20
BK/WT
Z911
20
BK
Z911
18
BK/WT
Z911
20
BK/WT
Z911
20
BK/WT
Z912
20
BK/OR
(8W-15-19)
G300

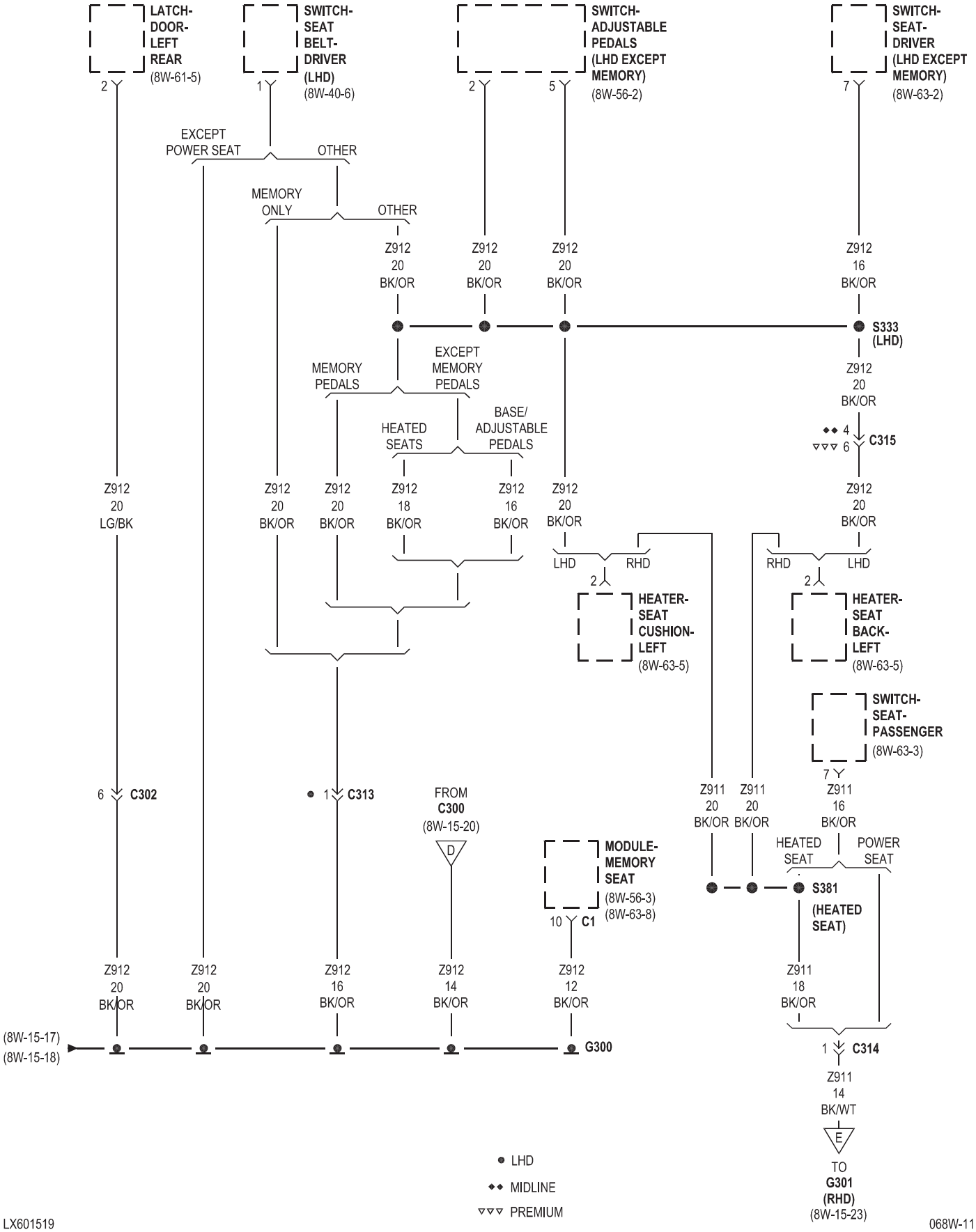
LATCH-DOOR-LEFT REAR (8W-61-5)
SWITCH-SEAT BELT-DRIVER (LHD) (8W-40-6)
SWITCH-ADJUSTABLE PEDALS (LHD EXCEPT MEMORY) (8W-56-2)
SWITCH-SEAT-DRIVER (LHD EXCEPT MEMORY) (8W-63-2)
EXCEPT POWER SEAT
OTHER
MEMORY ONLY
OTHER
Z912 20 BK/OR
Z912 16 BK/OR
S333 (LHD)
MEMORY PEDALS
EXCEPT MEMORY PEDALS
HEATED SEATS
BASE/ ADJUSTABLE PEDALS
C315
Z912 20 LG/BK
Z912 18 BK/OR
Z912 16 BK/OR
LHD
RHD
HEATER-SEAT CUSHION-LEFT (8W-63-5)
HEATER-SEAT BACK-LEFT (8W-63-5)
SWITCH-SEAT-PASSENGER (8W-63-3)
C302
C313
FROM C300 (8W-15-20)
MODULE-MEMORY SEAT (8W-56-3) (8W-63-8)
C1
Z911 20 BK/OR
Z911 16 BK/OR
HEATED SEAT
POWER SEAT
S381 (HEATED SEAT)
Z912 12 BK/OR
Z912 14 BK/OR
Z911 18 BK/OR
C314
Z911 14 BK/WT
TO G301 (RHD) (8W-15-23)
(8W-15-17)
(8W-15-18)
G300
LHD
MIDLINE
PREMIUM

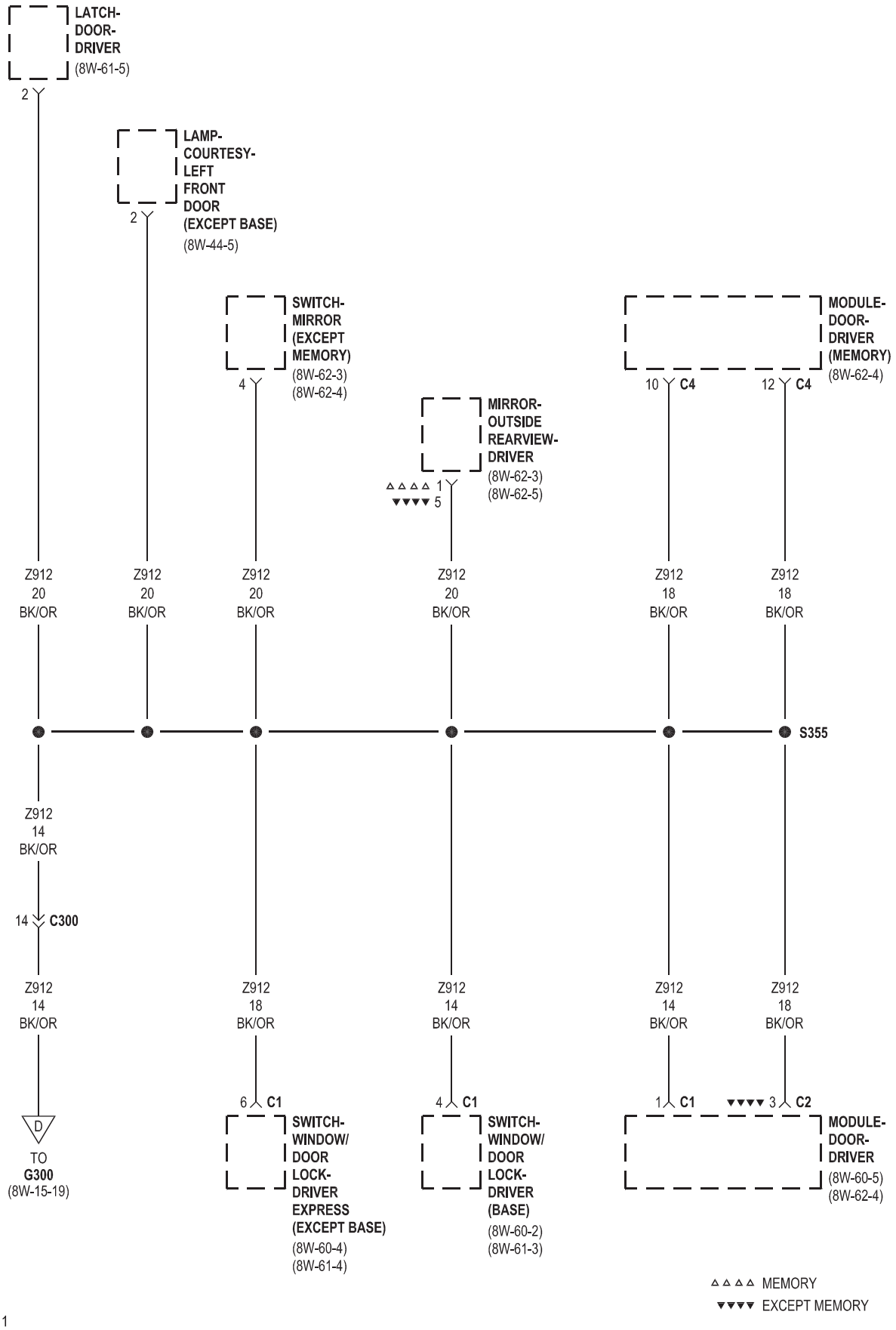
LATCH-
DOOR-
DRIVER
(8W-61-5)
2
LAMP-
COURTESY-
LEFT
FRONT
DOOR
(EXCEPT BASE)
(8W-44-5)
2
SWITCH-
MIRROR
(EXCEPT
MEMORY)
(8W-62-3)
(8W-62-4)
4
MIRROR-
OUTSIDE
REARVIEW-
DRIVER
(8W-62-3)
(8W-62-5)
△△△△ 1
▼▼▼▼ 5
MODULE-
DOOR-
DRIVER
(MEMORY)
(8W-62-4)
10 C4
12 C4
Z912
20
BK/OR
Z912
20
BK/OR
Z912
20
BK/OR
Z912
20
BK/OR
Z912
18
BK/OR
Z912
18
BK/OR
S355
Z912
14
BK/OR
14 C300
Z912
14
BK/OR
D
TO
G300
(8W-15-19)
Z912
18
BK/OR
6 C1
SWITCH-
WINDOW/
DOOR
LOCK-
DRIVER
EXPRESS
(EXCEPT BASE)
(8W-60-4)
(8W-61-4)
Z912
14
BK/OR
4 C1
SWITCH-
WINDOW/
DOOR
LOCK-
DRIVER
(BASE)
(8W-60-2)
(8W-61-3)
Z912
14
BK/OR
1 C1
Z912
18
BK/OR
▼▼▼▼ 3 C2
MODULE-
DOOR-
DRIVER
(8W-60-5)
(8W-62-4)
△△△△ MEMORY
▼▼▼▼ EXCEPT MEMORY

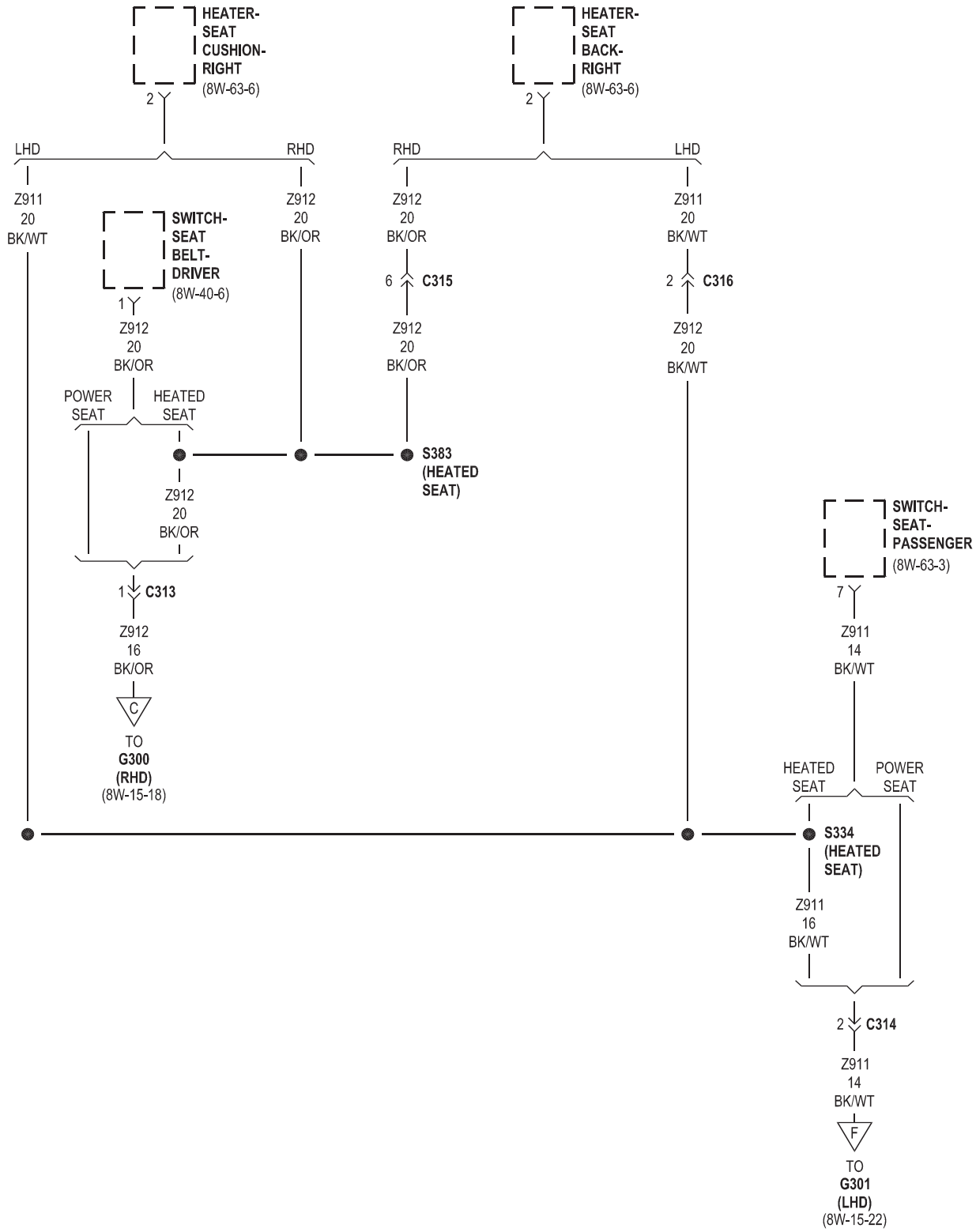
HEATER-SEAT CUSHION-RIGHT
(8W-63-6)
2
HEATER-SEAT BACK-RIGHT
(8W-63-6)
2
LHD
RHD
RHD
LHD
Z911 20 BK/WT
SWITCH-SEAT BELT-DRIVER
(8W-40-6)
1
Z912 20 BK/OR
Z912 20 BK/OR
Z912 20 BK/OR
6 C315
Z912 20 BK/OR
Z911 20 BK/WT
2 C316
Z912 20 BK/WT
POWER SEAT
HEATED SEAT
S383 (HEATED SEAT)
Z912 20 BK/OR
SWITCH-SEAT-PASSENGER
(8W-63-3)
7
1 C313
Z912 16 BK/OR
C
TO G300 (RHD)
(8W-15-18)
Z911 14 BK/WT
HEATED SEAT
POWER SEAT
S334 (HEATED SEAT)
Z911 16 BK/WT
2 C314
Z911 14 BK/WT
F
TO G301 (LHD)
(8W-15-22)

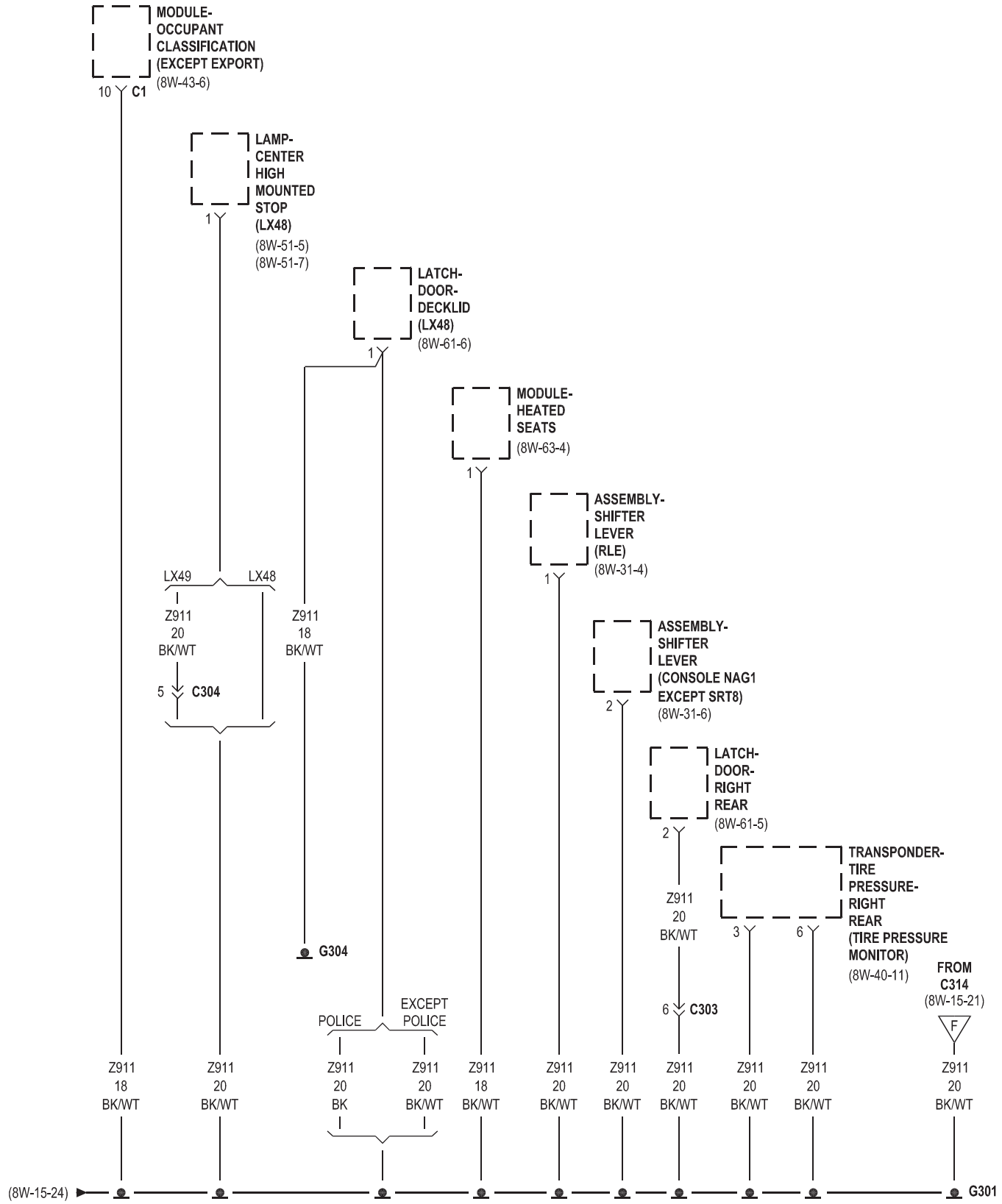
MODULE-
OCCUPANT
CLASSIFICATION
(EXCEPT EXPORT)
(8W-43-6)
10
C1
LAMP-
CENTER
HIGH
MOUNTED
STOP
(LX48)
(8W-51-5)
(8W-51-7)
1
LATCH-
DOOR-
DECKLID
(LX48)
(8W-61-6)
1
MODULE-
HEATED
SEATS
(8W-63-4)
1
ASSEMBLY-
SHIFTER
LEVER
(RLE)
(8W-31-4)
1
ASSEMBLY-
SHIFTER
LEVER
(CONSOLE NAG1
EXCEPT SRT8)
(8W-31-6)
2
LATCH-
DOOR-
RIGHT
REAR
(8W-61-5)
2
TRANSPONDER-
TIRE
PRESSURE-
RIGHT
REAR
(TIRE PRESSURE
MONITOR)
(8W-40-11)
3
6
FROM
C314
(8W-15-21)
F
LX49
LX48
Z911
20
BK/WT
5
C304
Z911
18
BK/WT
G304
Z911
20
BK/WT
6
C303
POLICE
EXCEPT
POLICE
Z911
18
BK/WT
Z911
20
BK/WT
Z911
20
BK
Z911
20
BK/WT
Z911
18
BK/WT
Z911
20
BK/WT
Z911
20
BK/WT
Z911
20
BK/WT
Z911
20
BK/WT
Z911
20
BK/WT
Z911
20
BK/WT
(8W-15-24)
G301

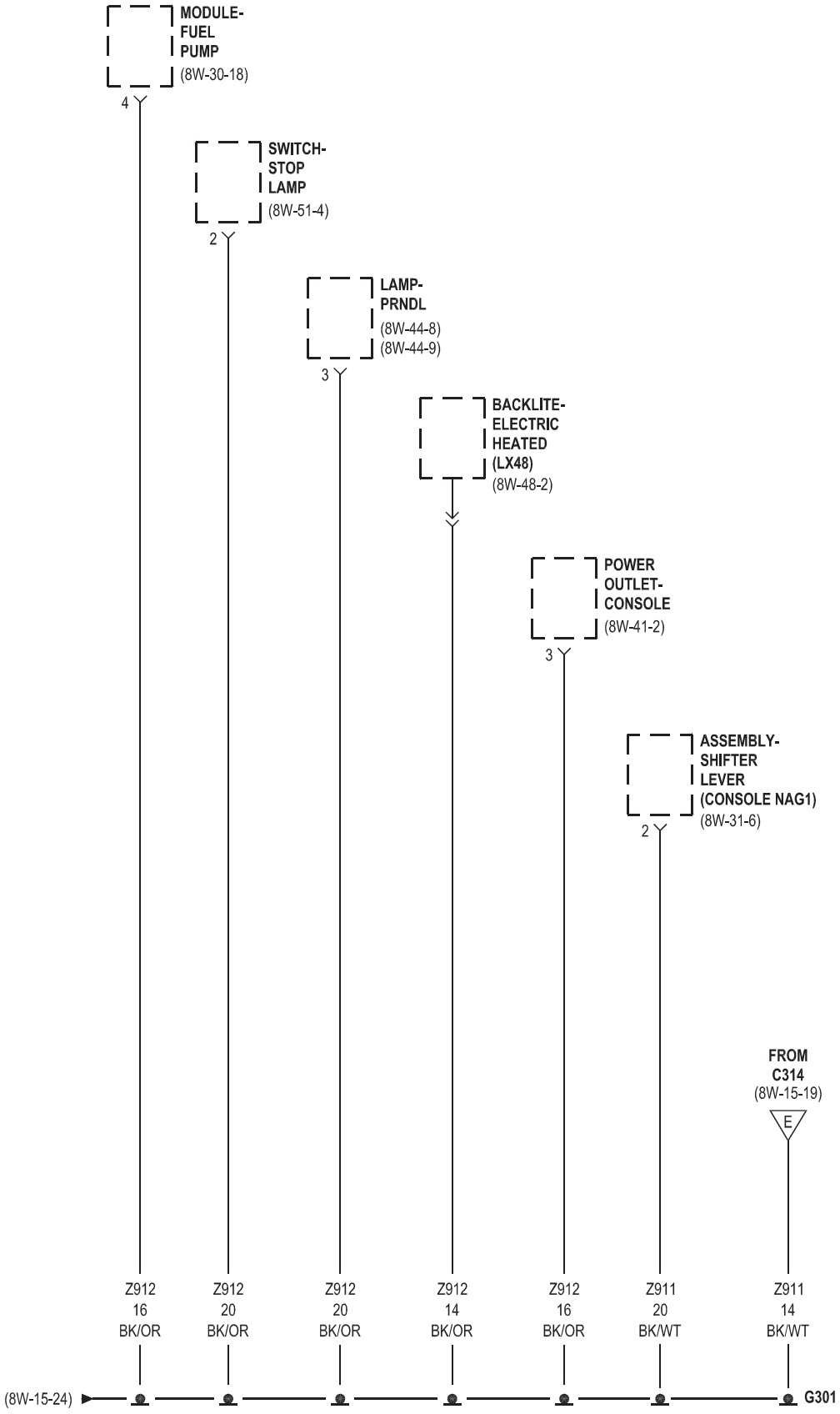
MODULE-
FUEL
PUMP
(8W-30-18)
4
SWITCH-
STOP
LAMP
(8W-51-4)
2
LAMP-
PRNDL
(8W-44-8)
(8W-44-9)
3
BACKLITE-
ELECTRIC
HEATED
(LX48)
(8W-48-2)
POWER
OUTLET-
CONSOLE
(8W-41-2)
3
ASSEMBLY-
SHIFTER
LEVER
(CONSOLE NAG1)
(8W-31-6)
2
FROM
C314
(8W-15-19)
E
Z912
16
BK/OR
Z912
20
BK/OR
Z912
20
BK/OR
Z912
14
BK/OR
Z912
16
BK/OR
Z911
20
BK/WT
Z911
14
BK/WT
(8W-15-24)
G301

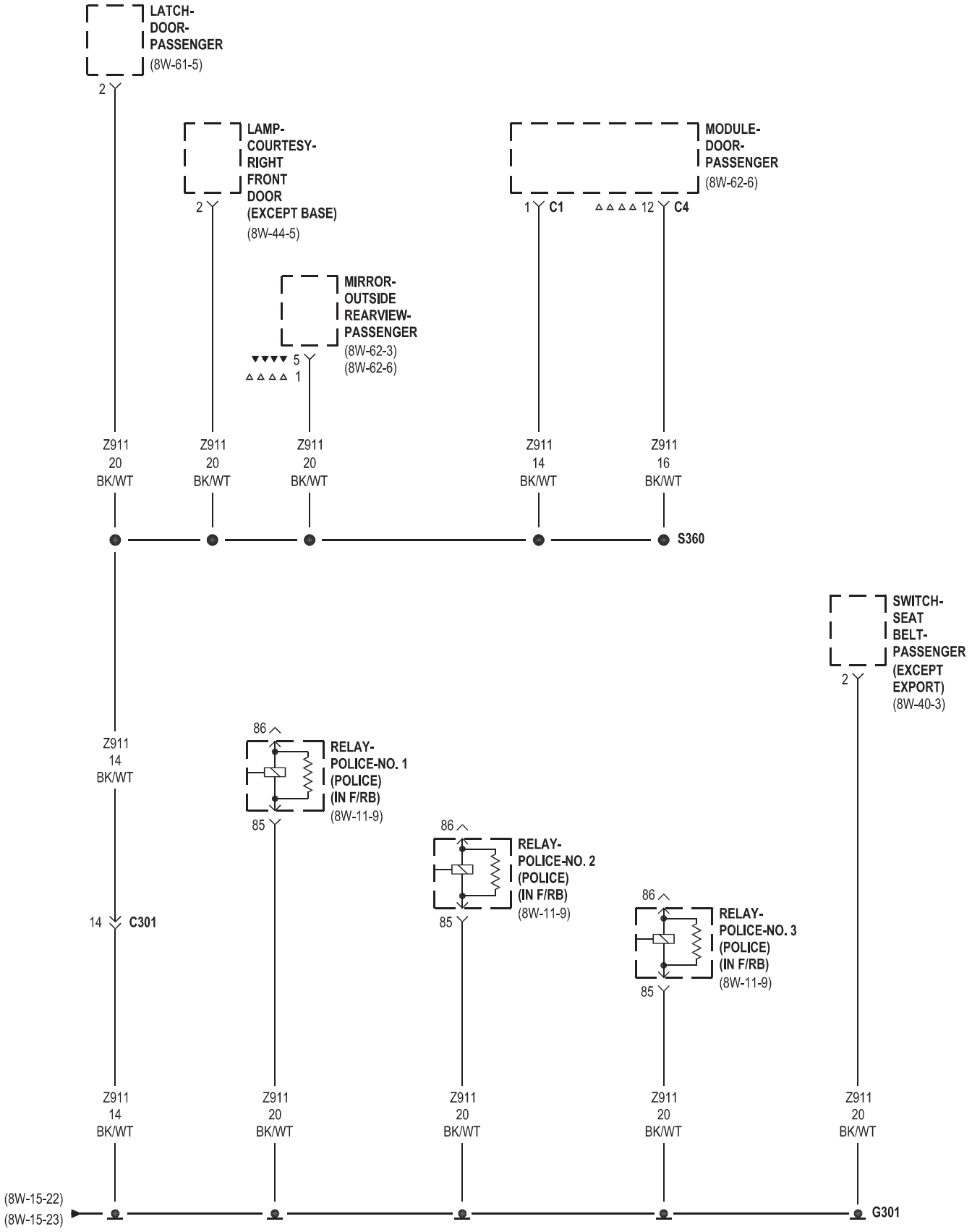
LATCH-
DOOR-
PASSENGER
(8W-61-5)
2
LAMP-
COURTESY-
RIGHT
FRONT
DOOR
(EXCEPT BASE)
(8W-44-5)
2
MODULE-
DOOR-
PASSENGER
(8W-62-6)
1 C1
12 C4
MIRROR-
OUTSIDE
REARVIEW-
PASSENGER
(8W-62-3)
(8W-62-6)
5
1
Z911
20
BK/WT
Z911
20
BK/WT
Z911
20
BK/WT
Z911
14
BK/WT
Z911
16
BK/WT
S360
SWITCH-
SEAT
BELT-
PASSENGER
(EXCEPT
EXPORT)
(8W-40-3)
2
Z911
14
BK/WT
86
RELAY-
POLICE-NO. 1
(POLICE)
(IN F/RB)
(8W-11-9)
85
86
RELAY-
POLICE-NO. 2
(POLICE)
(IN F/RB)
(8W-11-9)
85
86
RELAY-
POLICE-NO. 3
(POLICE)
(IN F/RB)
(8W-11-9)
85
14 C301
Z911
14
BK/WT
Z911
20
BK/WT
Z911
20
BK/WT
Z911
20
BK/WT
Z911
20
BK/WT
(8W-15-22)
(8W-15-23)
G301
MEMORY
EXCEPT MEMORY

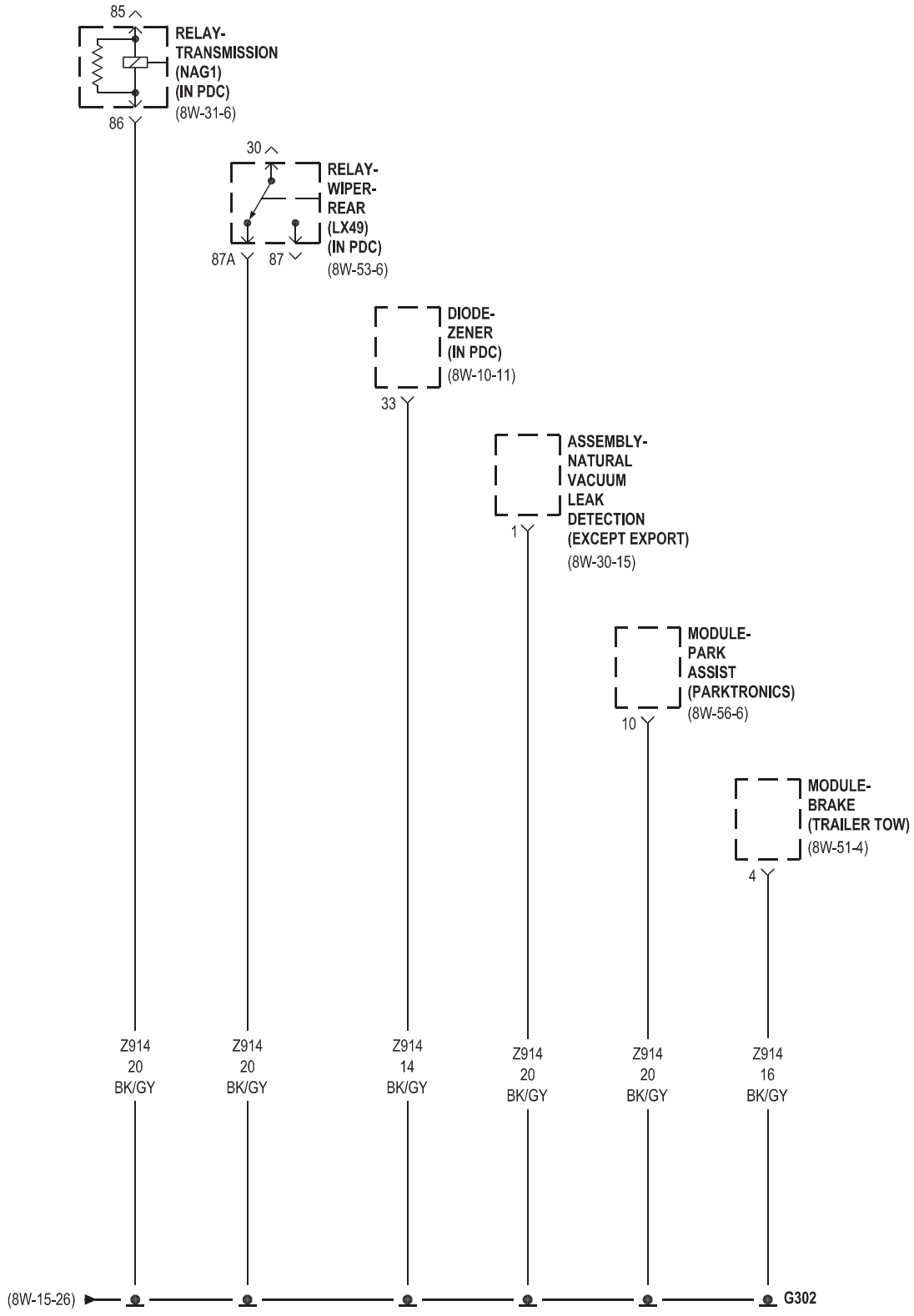
85
RELAY-
TRANSMISSION
(NAG1)
(IN PDC)
(8W-31-6)
86
30
RELAY-
WIPER-
REAR
(LX49)
(IN PDC)
(8W-53-6)
87A
87
DIODE-
ZENER
(IN PDC)
(8W-10-11)
33
ASSEMBLY-
NATURAL
VACUUM
LEAK
DETECTION
(EXCEPT EXPORT)
(8W-30-15)
1
MODULE-
PARK
ASSIST
(PARKTRONICS)
(8W-56-6)
10
MODULE-
BRAKE
(TRAILER TOW)
(8W-51-4)
4
Z914
20
BK/GY
Z914
20
BK/GY
Z914
14
BK/GY
Z914
20
BK/GY
Z914
20
BK/GY
Z914
16
BK/GY
(8W-15-26)
G302

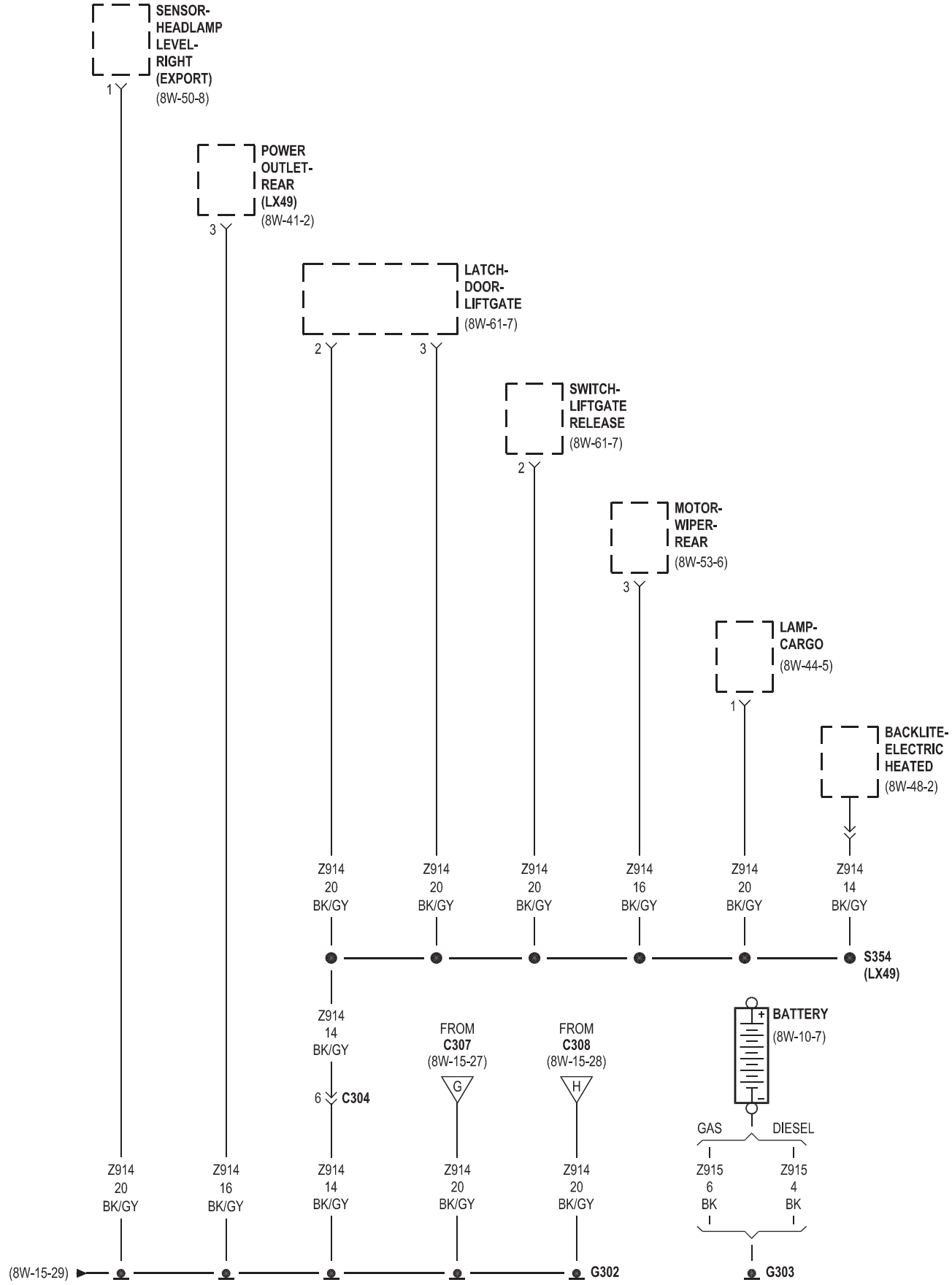
SENSOR-
HEADLAMP
LEVEL-
RIGHT
(EXPORT)
(8W-50-8)
1
POWER
OUTLET-
REAR
(LX49)
(8W-41-2)
3
LATCH-
DOOR-
LIFTGATE
(8W-61-7)
2
3
SWITCH-
LIFTGATE
RELEASE
(8W-61-7)
2
MOTOR-
WIPER-
REAR
(8W-53-6)
3
LAMP-
CARGO
(8W-44-5)
1
BACKLITE-
ELECTRIC
HEATED
(8W-48-2)
Z914
20
BK/GY
Z914
20
BK/GY
Z914
20
BK/GY
Z914
16
BK/GY
Z914
20
BK/GY
Z914
14
BK/GY
S354
(LX49)
Z914
14
BK/GY
6
C304
FROM
C307
(8W-15-27)
G
FROM
C308
(8W-15-28)
H
BATTERY
(8W-10-7)
GAS
DIESEL
Z915
6
BK
Z915
4
BK
G303
Z914
20
BK/GY
Z914
16
BK/GY
Z914
14
BK/GY
Z914
20
BK/GY
Z914
20
BK/GY
(8W-15-29)
G302

LX48

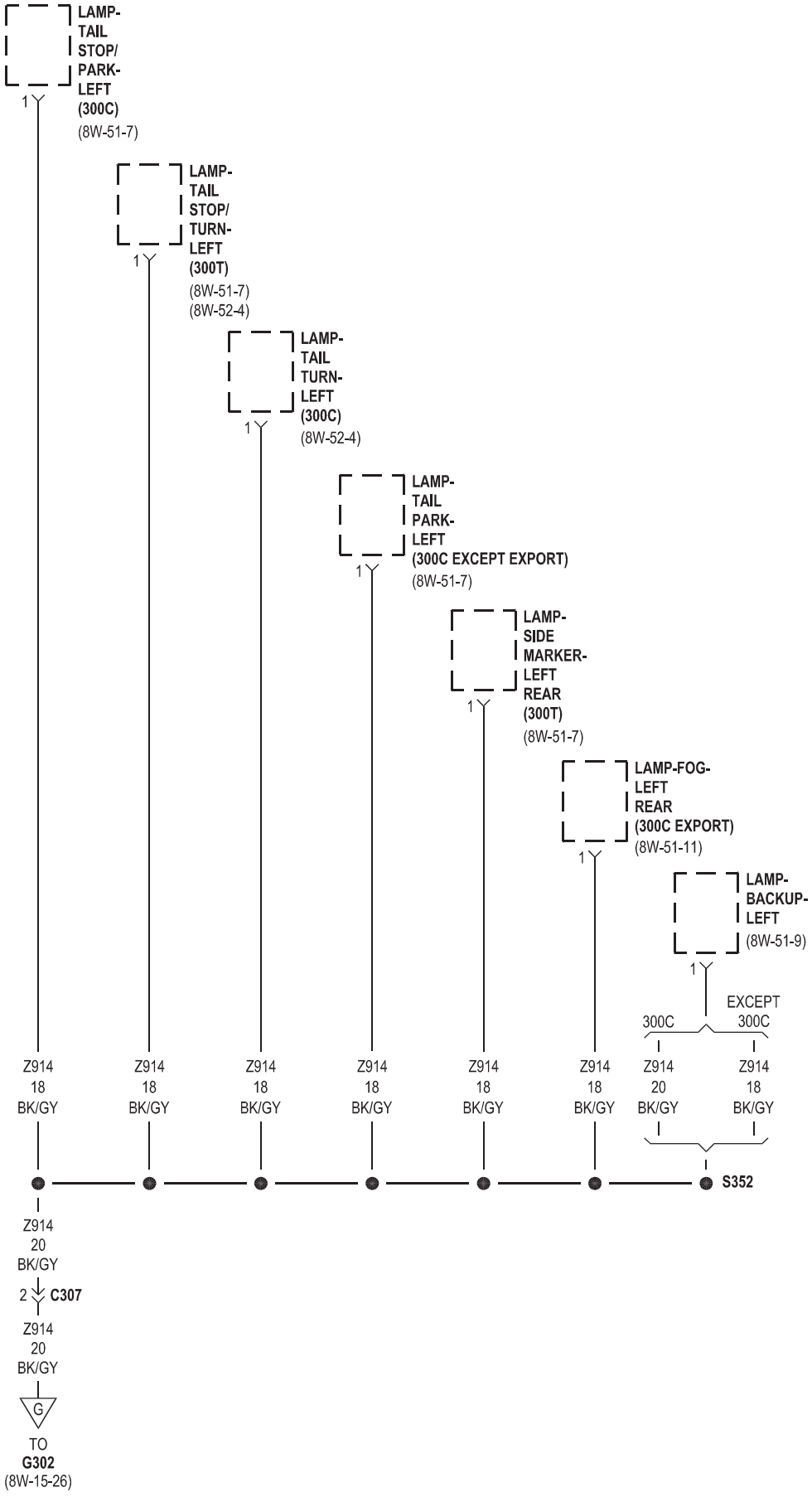
LAMP-TAIL STOP/PARK-LEFT (300C)
(8W-51-7)
LAMP-TAIL STOP/TURN-LEFT (300T)
(8W-51-7)
(8W-52-4)
LAMP-TAIL TURN-LEFT (300C)
(8W-52-4)
LAMP-TAIL PARK-LEFT (300C EXCEPT EXPORT)
(8W-51-7)
LAMP-SIDE MARKER-LEFT REAR (300T)
(8W-51-7)
LAMP-FOG-LEFT REAR (300C EXPORT)
(8W-51-11)
LAMP-BACKUP-LEFT
(8W-51-9)
EXCEPT 300C
300C
Z914 18 BK/GY
Z914 20 BK/GY
S352
C307
TO G302
(8W-15-26)

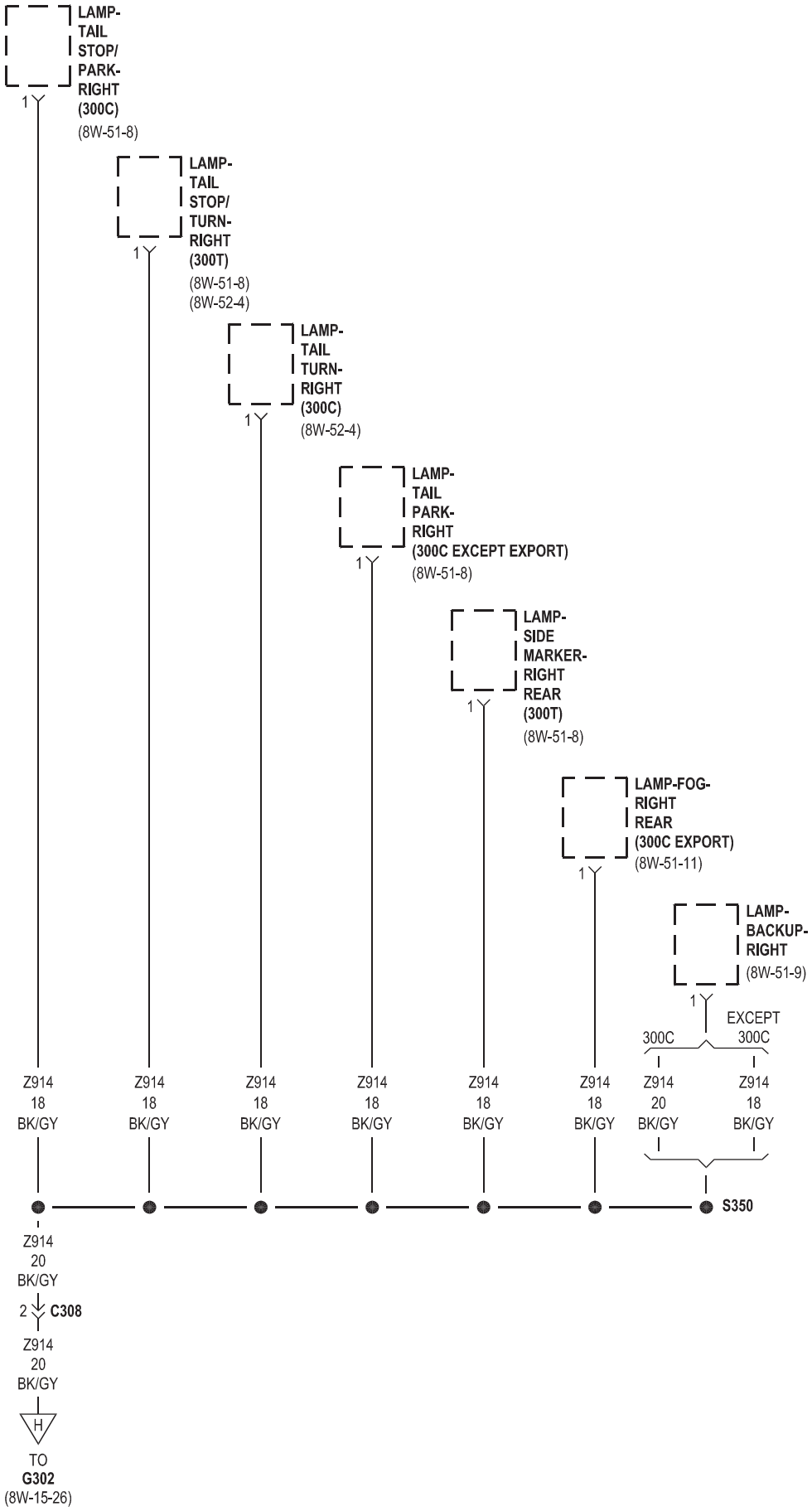
LAMP-TAIL STOP/PARK-RIGHT (300C)
(8W-51-8)
LAMP-TAIL STOP/TURN-RIGHT (300T)
(8W-51-8)
(8W-52-4)
LAMP-TAIL TURN-RIGHT (300C)
(8W-52-4)
LAMP-TAIL PARK-RIGHT (300C EXCEPT EXPORT)
(8W-51-8)
LAMP-SIDE MARKER-RIGHT REAR (300T)
(8W-51-8)
LAMP-FOG-RIGHT REAR (300C EXPORT)
(8W-51-11)
LAMP-BACKUP-RIGHT
(8W-51-9)
EXCEPT 300C
300C
Z914 18 BK/GY
Z914 20 BK/GY
S350
C308
TO G302
(8W-15-26)

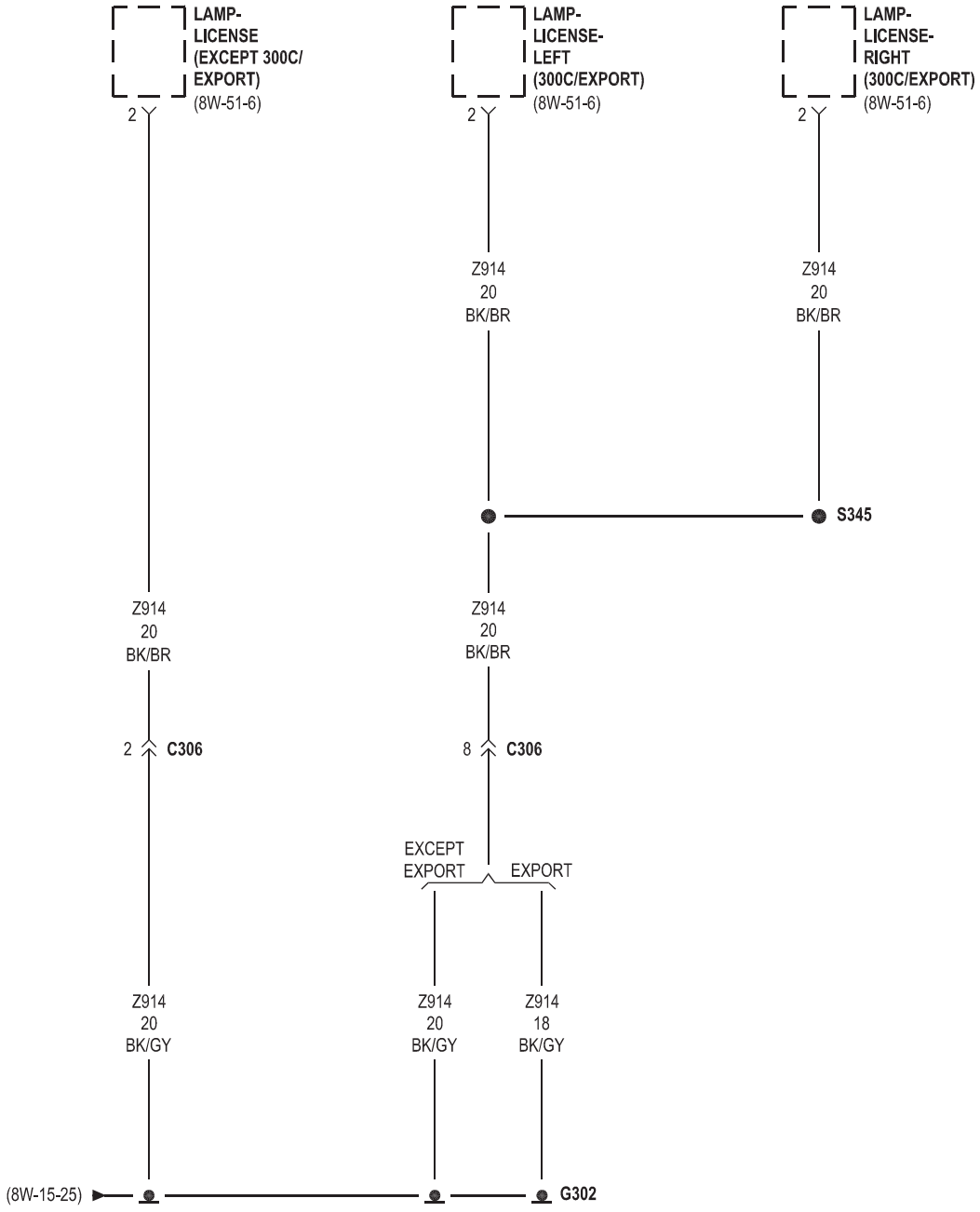
LAMP-
LICENSE
(EXCEPT 300C/
EXPORT)
(8W-51-6)
2
LAMP-
LICENSE-
LEFT
(300C/EXPORT)
(8W-51-6)
2
LAMP-
LICENSE-
RIGHT
(300C/EXPORT)
(8W-51-6)
2
Z914
20
BK/BR
Z914
20
BK/BR
S345
Z914
20
BK/BR
Z914
20
BK/BR
2
C306
8
C306
EXCEPT
EXPORT
EXPORT
Z914
20
BK/GY
Z914
20
BK/GY
Z914
18
BK/GY
(8W-15-25)
G302

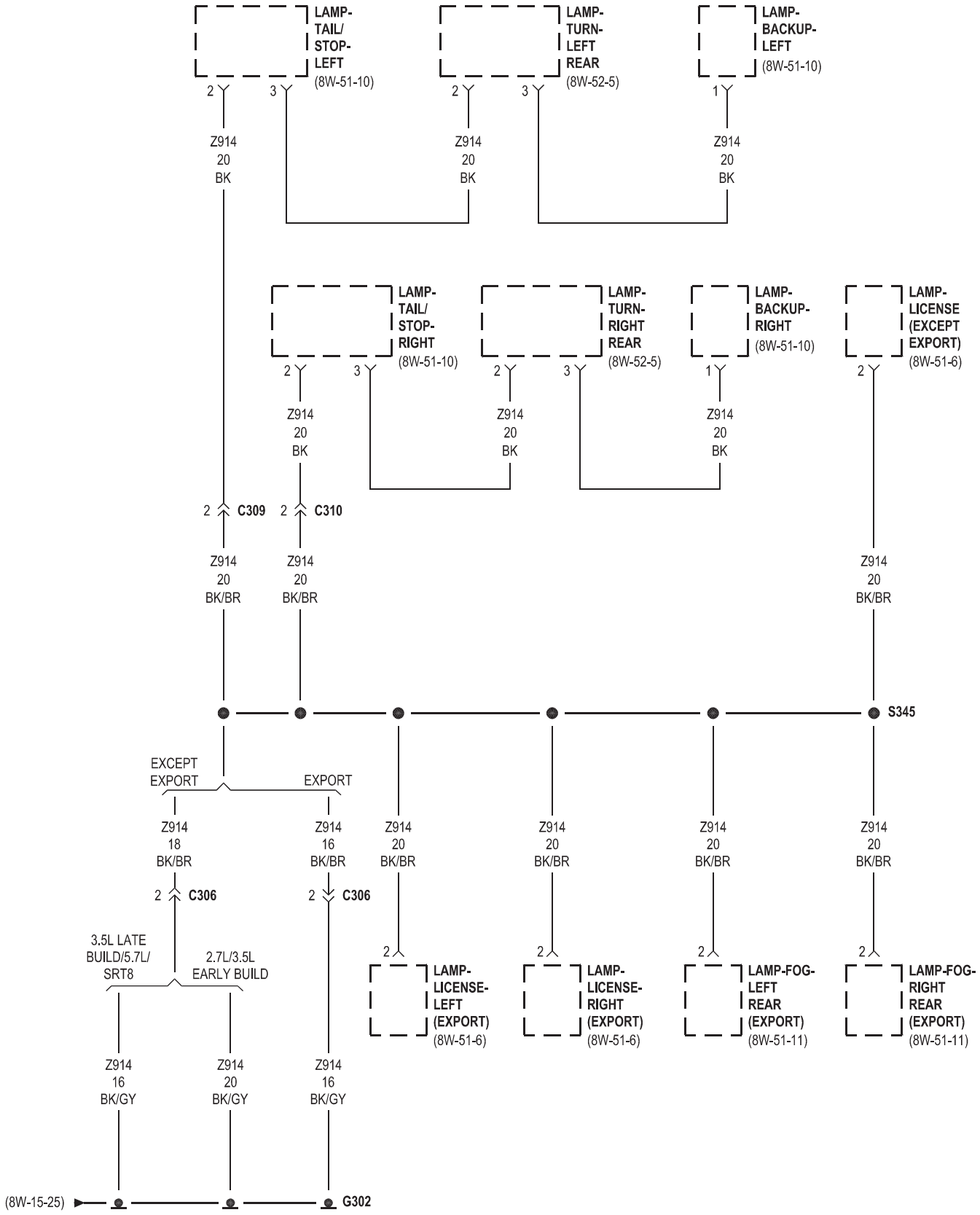
LAMP-TAIL/STOP-LEFT (8W-51-10)
LAMP-TURN-LEFT REAR (8W-52-5)
LAMP-BACKUP-LEFT (8W-51-10)
LAMP-TAIL/STOP-RIGHT (8W-51-10)
LAMP-TURN-RIGHT REAR (8W-52-5)
LAMP-BACKUP-RIGHT (8W-51-10)
LAMP-LICENSE (EXCEPT EXPORT) (8W-51-6)
Z914 20 BK
C309
C310
Z914 20 BK/BR
S345
EXCEPT EXPORT
EXPORT
Z914 18 BK/BR
Z914 16 BK/BR
C306
3.5L LATE BUILD/5.7L/SRT8
2.7L/3.5L EARLY BUILD
LAMP-LICENSE-LEFT (EXPORT) (8W-51-6)
LAMP-LICENSE-RIGHT (EXPORT) (8W-51-6)
LAMP-FOG-LEFT REAR (EXPORT) (8W-51-11)
LAMP-FOG-RIGHT REAR (EXPORT) (8W-51-11)
Z914 16 BK/GY
Z914 20 BK/GY
(8W-15-25)
G302

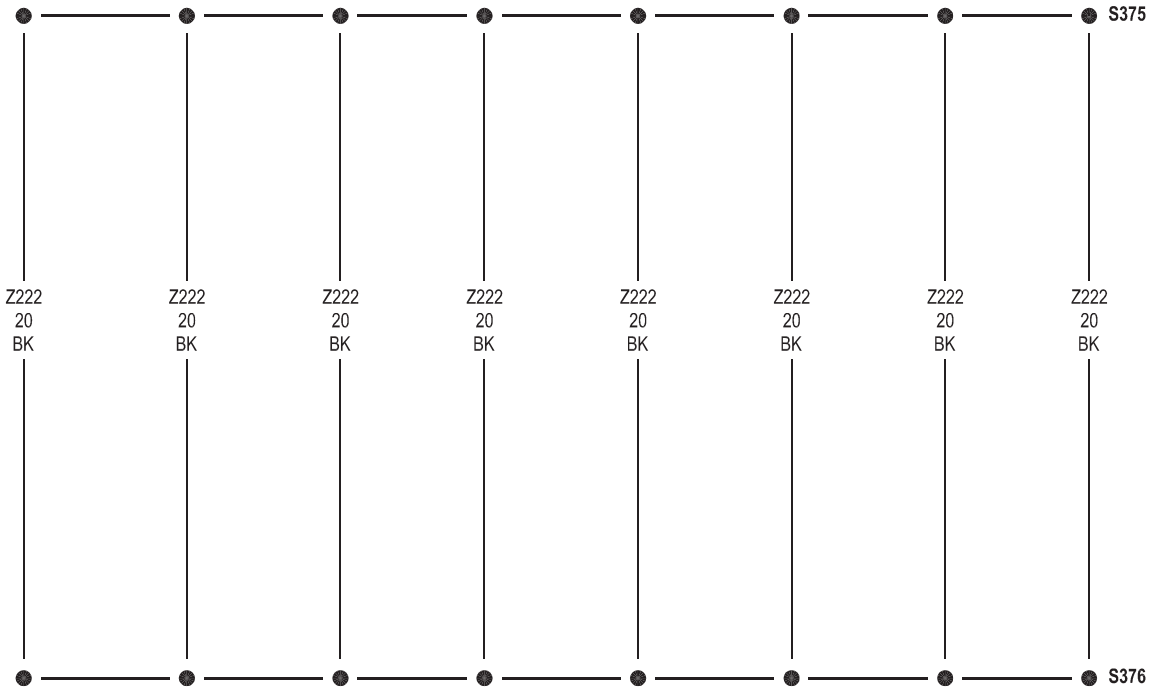
S375
Z222
20
BK
Z222
20
BK
Z222
20
BK
Z222
20
BK
Z222
20
BK
Z222
20
BK
Z222
20
BK
Z222
20
BK
S376

8W-18 BUS COMMUNICATIONS

Component	Page
Amplifier-Radio	8W-18-4, 6
Assembly-Shifter Lever	8W-18-10
Cluster	8W-18-6
Control-A/C-Heater	8W-18-4, 5
Data Link Connector	8W-18-2
Fuse 8	8W-18-2
G202	8W-18-2
Media System-Monitor/DVD	8W-18-3
Module-Antilock Brakes	8W-18-9
Module-Door-Driver	8W-18-7
Module-Door-Passenger	8W-18-7
Module-Electronic Overhead	8W-18-8
Module-Electronic Shift	8W-18-10
Module-Engine Control	8W-18-2, 9
Module-Front Control	8W-18-2, 3, 9
Module-Hands Free	8W-18-4, 5, 6
Module-Headlamp Leveling	8W-18-3
Module-Heated Seats	8W-18-7
Module-Interface-Police/Taxi	8W-18-5
Module-Intrusion Transceiver	8W-18-5
Module-Memory Seat	8W-18-7
Module-Occupant Classification	8W-18-7
Module-Occupant Restraint Controller	8W-18-5, 6
Module-Park Assist	8W-18-7
Module-Powertrain Control	8W-18-2, 9
Module-Sentry Key Remote Entry	8W-18-6
Module-Steering Control	8W-18-6, 10
Module-Traffic Information Receiver	8W-18-6
Module-Transmission Control	8W-18-9
Motor/Module-Sunroof	8W-18-8
Power Distribution Center	8W-18-2
Radio	8W-18-5, 6
Receiver-Satellite	8W-18-3
Sensor-Dynamics	8W-18-9
Sensor-Rain	8W-18-4, 5

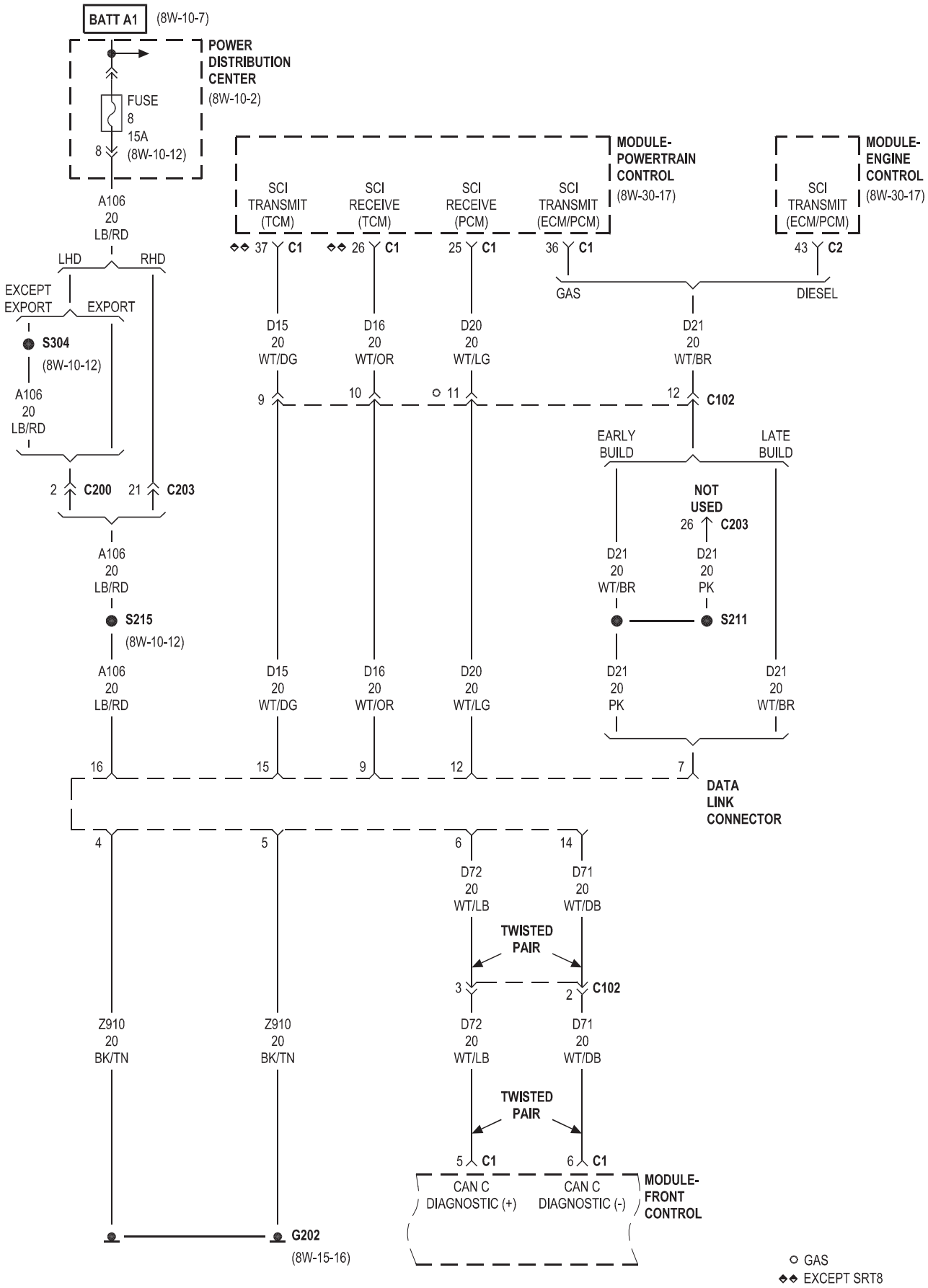
BATT A1
(8W-10-7)
POWER DISTRIBUTION CENTER
(8W-10-2)
FUSE 8 15A
8
(8W-10-12)
A106 20 LB/RD
LHD
RHD
EXCEPT EXPORT
EXPORT
S304
(8W-10-12)
A106 20 LB/RD
2 C200
21 C203
A106 20 LB/RD
S215
(8W-10-12)
A106 20 LB/RD
16
MODULE- POWERTRAIN CONTROL
(8W-30-17)
SCI TRANSMIT (TCM)
SCI RECEIVE (TCM)
SCI RECEIVE (PCM)
SCI TRANSMIT (ECM/PCM)
37 C1
26 C1
25 C1
36 C1
GAS
DIESEL
MODULE- ENGINE CONTROL
(8W-30-17)
SCI TRANSMIT (ECM/PCM)
43 C2
D15 20 WT/DG
D16 20 WT/OR
D20 20 WT/LG
D21 20 WT/BR
9
10
11
12 C102
EARLY BUILD
LATE BUILD
NOT USED
26 C203
D21 20 WT/BR
D21 20 PK
S211
D15 20 WT/DG
D16 20 WT/OR
D20 20 WT/LG
D21 20 PK
D21 20 WT/BR
15
9
12
7
DATA LINK CONNECTOR
4
5
6
14
D72 20 WT/LB
D71 20 WT/DB
TWISTED PAIR
3
2 C102
Z910 20 BK/TN
Z910 20 BK/TN
D72 20 WT/LB
D71 20 WT/DB
TWISTED PAIR
5 C1
6 C1
CAN C DIAGNOSTIC (+)
CAN C DIAGNOSTIC (-)
MODULE- FRONT CONTROL
G202
(8W-15-16)
GAS
EXCEPT SRT8

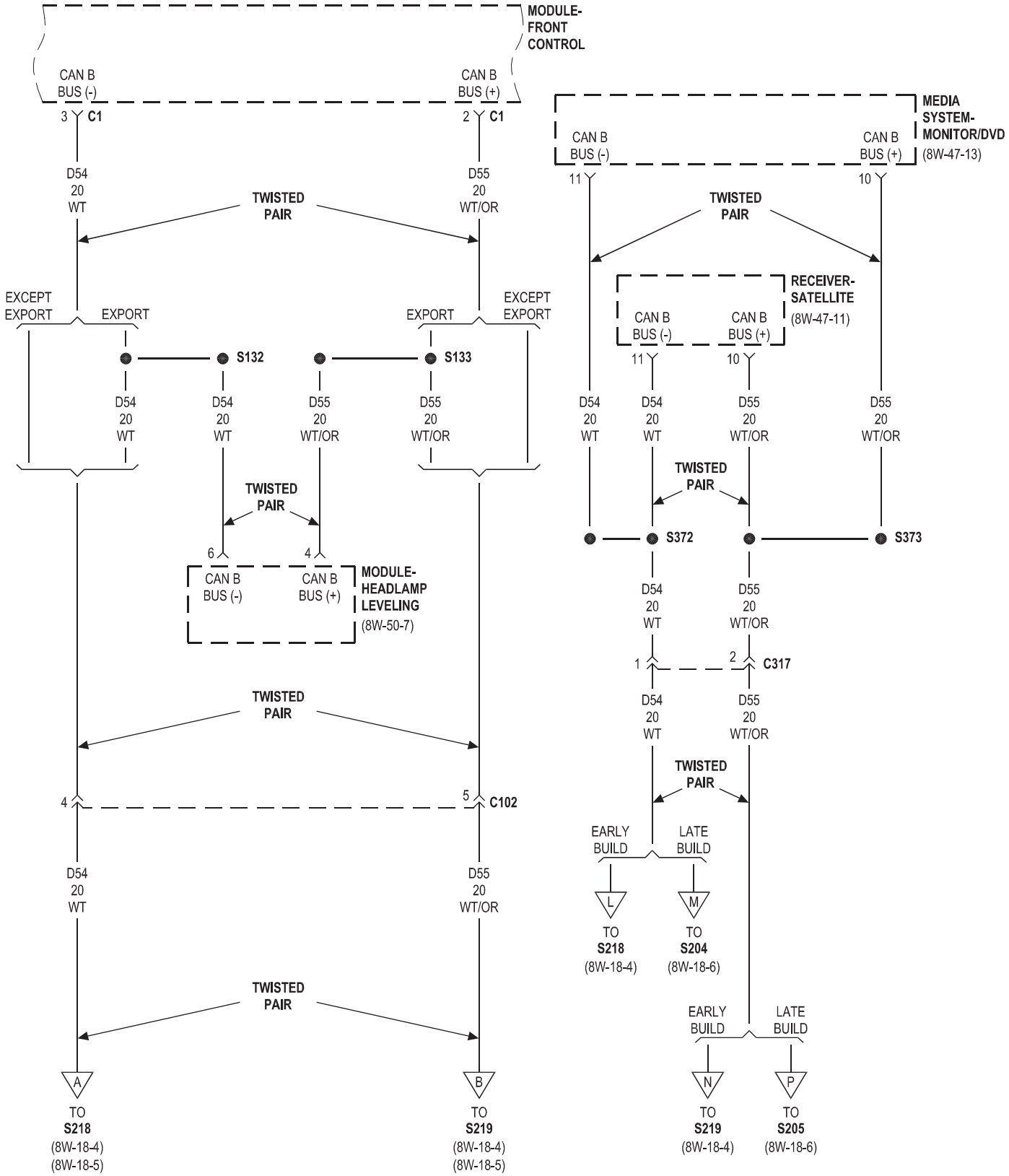
MODULE-
FRONT
CONTROL
CAN B
BUS (-)
CAN B
BUS (+)
3
C1
2
C1
D54
20
WT
D55
20
WT/OR
TWISTED
PAIR
EXCEPT
EXPORT
EXPORT
EXPORT
EXCEPT
EXPORT
S132
S133
D54
20
WT
D54
20
WT
D55
20
WT/OR
D55
20
WT/OR
TWISTED
PAIR
6
4
CAN B
BUS (-)
CAN B
BUS (+)
MODULE-
HEADLAMP
LEVELING
(8W-50-7)
TWISTED
PAIR
4
5
C102
D54
20
WT
D55
20
WT/OR
TWISTED
PAIR
A
B
TO
S218
(8W-18-4)
(8W-18-5)
TO
S219
(8W-18-4)
(8W-18-5)
MEDIA
SYSTEM-
MONITOR/DVD
(8W-47-13)
CAN B
BUS (-)
CAN B
BUS (+)
11
10
TWISTED
PAIR
RECEIVER-
SATELLITE
(8W-47-11)
CAN B
BUS (-)
CAN B
BUS (+)
11
10
D54
20
WT
D54
20
WT
D55
20
WT/OR
D55
20
WT/OR
TWISTED
PAIR
S372
S373
D54
20
WT
D55
20
WT/OR
1
2
C317
D54
20
WT
D55
20
WT/OR
TWISTED
PAIR
EARLY
BUILD
LATE
BUILD
L
M
TO
S218
(8W-18-4)
TO
S204
(8W-18-6)
EARLY
BUILD
LATE
BUILD
N
P
TO
S219
(8W-18-4)
TO
S205
(8W-18-6)

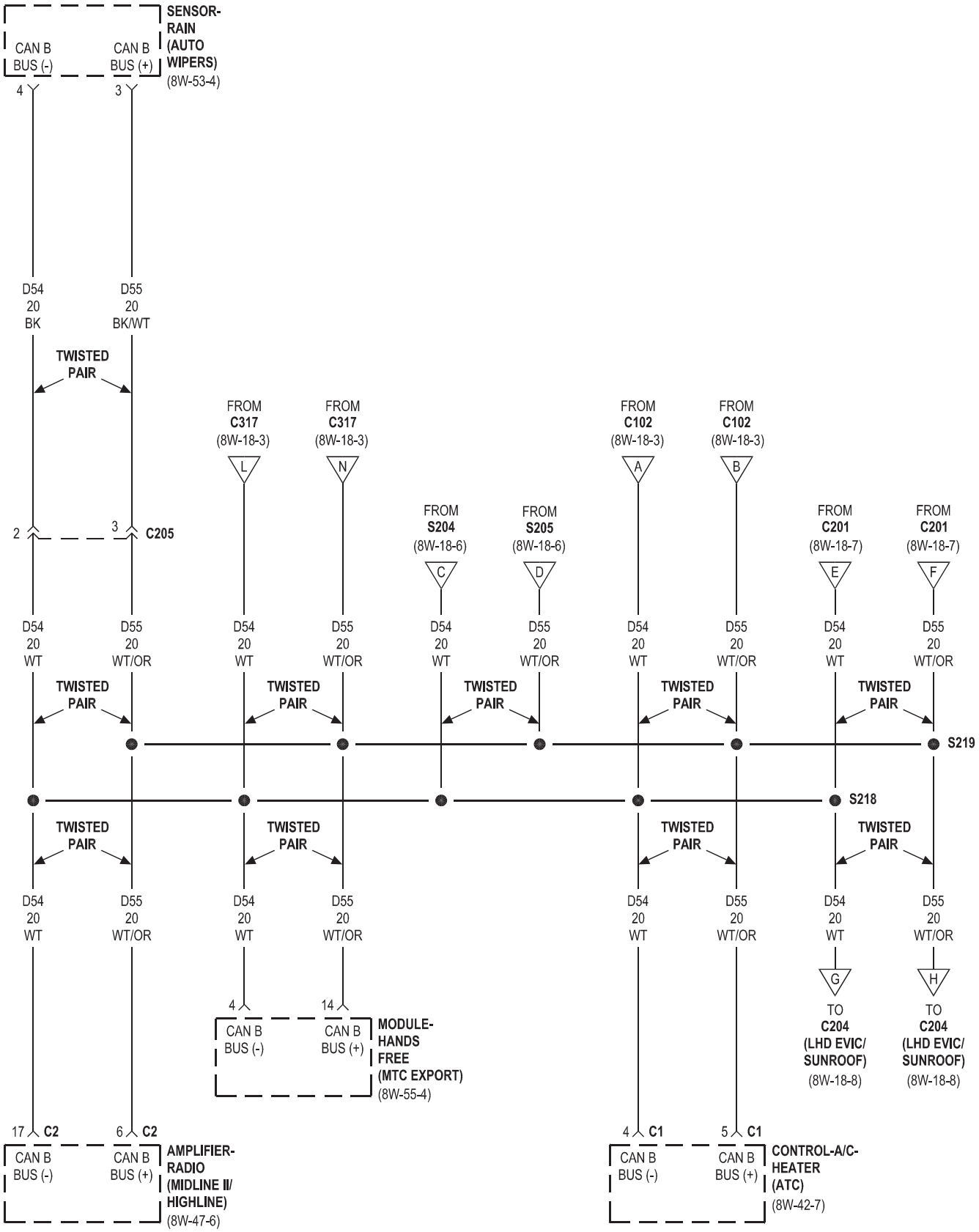
SENSOR-RAIN (AUTO WIPERS) (8W-53-4)
CAN B BUS (-)
CAN B BUS (+)
4
3
D54 20 BK
D55 20 BK/WT
TWISTED PAIR
FROM C317 (8W-18-3)
FROM C317 (8W-18-3)
FROM C102 (8W-18-3)
FROM C102 (8W-18-3)
L
N
A
B
FROM S204 (8W-18-6)
FROM S205 (8W-18-6)
FROM C201 (8W-18-7)
FROM C201 (8W-18-7)
C
D
E
F
2
3
C205
D54 20 WT
D55 20 WT/OR
S219
S218
4
14
MODULE-HANDS FREE (MTC EXPORT) (8W-55-4)
G
H
TO C204 (LHD EVIC/ SUNROOF) (8W-18-8)
17 C2
6 C2
AMPLIFIER-RADIO (MIDLINE II/ HIGHLINE) (8W-47-6)
4 C1
5 C1
CONTROL-A/C-HEATER (ATC) (8W-42-7)

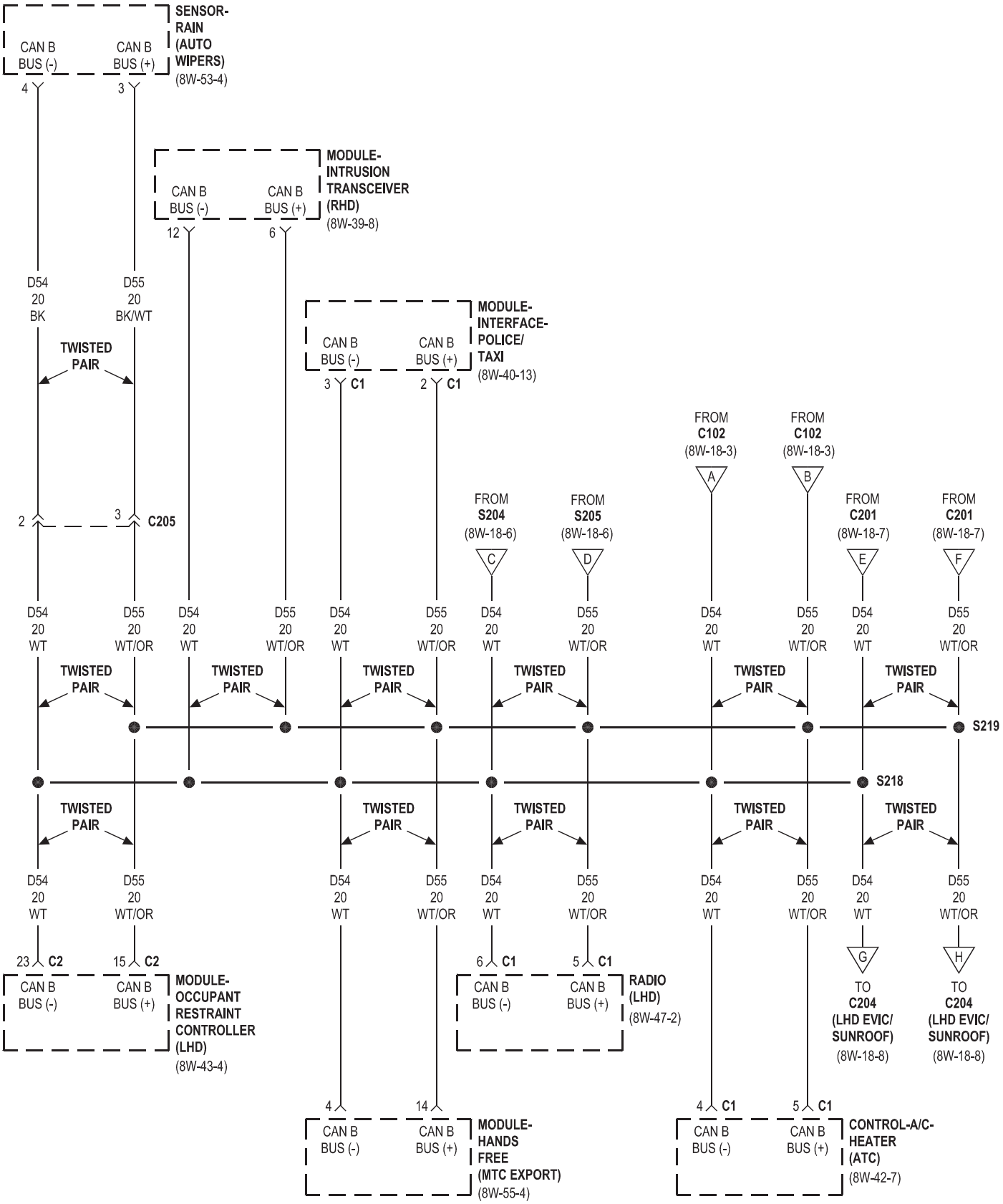
SENSOR-RAIN (AUTO WIPERS) (8W-53-4)
CAN B BUS (-)
CAN B BUS (+)
4
3
MODULE-INTRUSION TRANSCEIVER (RHD) (8W-39-8)
12
6
D54 20 BK
D55 20 BK/WT
TWISTED PAIR
MODULE-INTERFACE-POLICE/ TAXI (8W-40-13)
3 C1
2 C1
2
3 C205
FROM C102 (8W-18-3)
FROM C102 (8W-18-3)
FROM S204 (8W-18-6)
FROM S205 (8W-18-6)
FROM C201 (8W-18-7)
FROM C201 (8W-18-7)
A
B
C
D
E
F
D54 20 WT
D55 20 WT/OR
S219
S218
23 C2
15 C2
6 C1
5 C1
4
14
4 C1
5 C1
MODULE-OCCUPANT RESTRAINT CONTROLLER (LHD) (8W-43-4)
RADIO (LHD) (8W-47-2)
MODULE-HANDS FREE (MTC EXPORT) (8W-55-4)
CONTROL-A/C-HEATER (ATC) (8W-42-7)
G
H
TO C204 (LHD EVIC/ SUNROOF) (8W-18-8)
TO C204 (LHD EVIC/ SUNROOF) (8W-18-8)

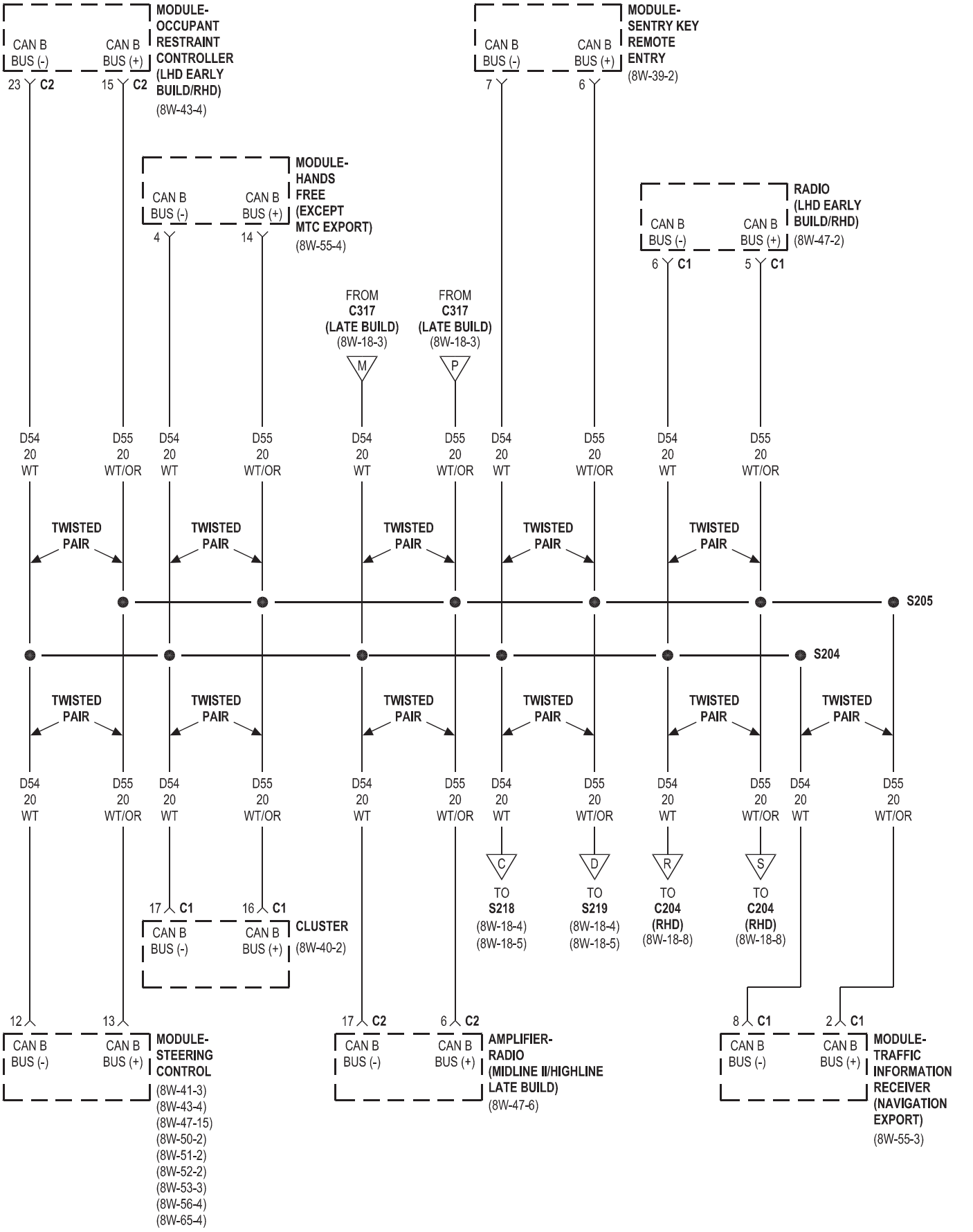
MODULE-
OCCUPANT
RESTRAINT
CONTROLLER
(LHD EARLY
BUILD/RHD)
(8W-43-4)
CAN B
BUS (-)
CAN B
BUS (+)
23 C2
15 C2
MODULE-
SENTRY KEY
REMOTE
ENTRY
(8W-39-2)
7
6
MODULE-
HANDS
FREE
(EXCEPT
MTC EXPORT)
(8W-55-4)
4
14
RADIO
(LHD EARLY
BUILD/RHD)
(8W-47-2)
6 C1
5 C1
FROM
C317
(LATE BUILD)
(8W-18-3)
M
P
D54
20
WT
D55
20
WT/OR
TWISTED
PAIR
S205
S204
C
D
R
S
TO
S218
(8W-18-4)
(8W-18-5)
TO
S219
(8W-18-4)
(8W-18-5)
TO
C204
(RHD)
(8W-18-8)
17 C1
16 C1
CLUSTER
(8W-40-2)
12
13
MODULE-
STEERING
CONTROL
(8W-41-3)
(8W-43-4)
(8W-47-15)
(8W-50-2)
(8W-51-2)
(8W-52-2)
(8W-53-3)
(8W-56-4)
(8W-65-4)
17 C2
6 C2
AMPLIFIER-
RADIO
(MIDLINE II/HIGHLINE
LATE BUILD)
(8W-47-6)
8 C1
2 C1
MODULE-
TRAFFIC
INFORMATION
RECEIVER
(NAVIGATION
EXPORT)
(8W-55-3)

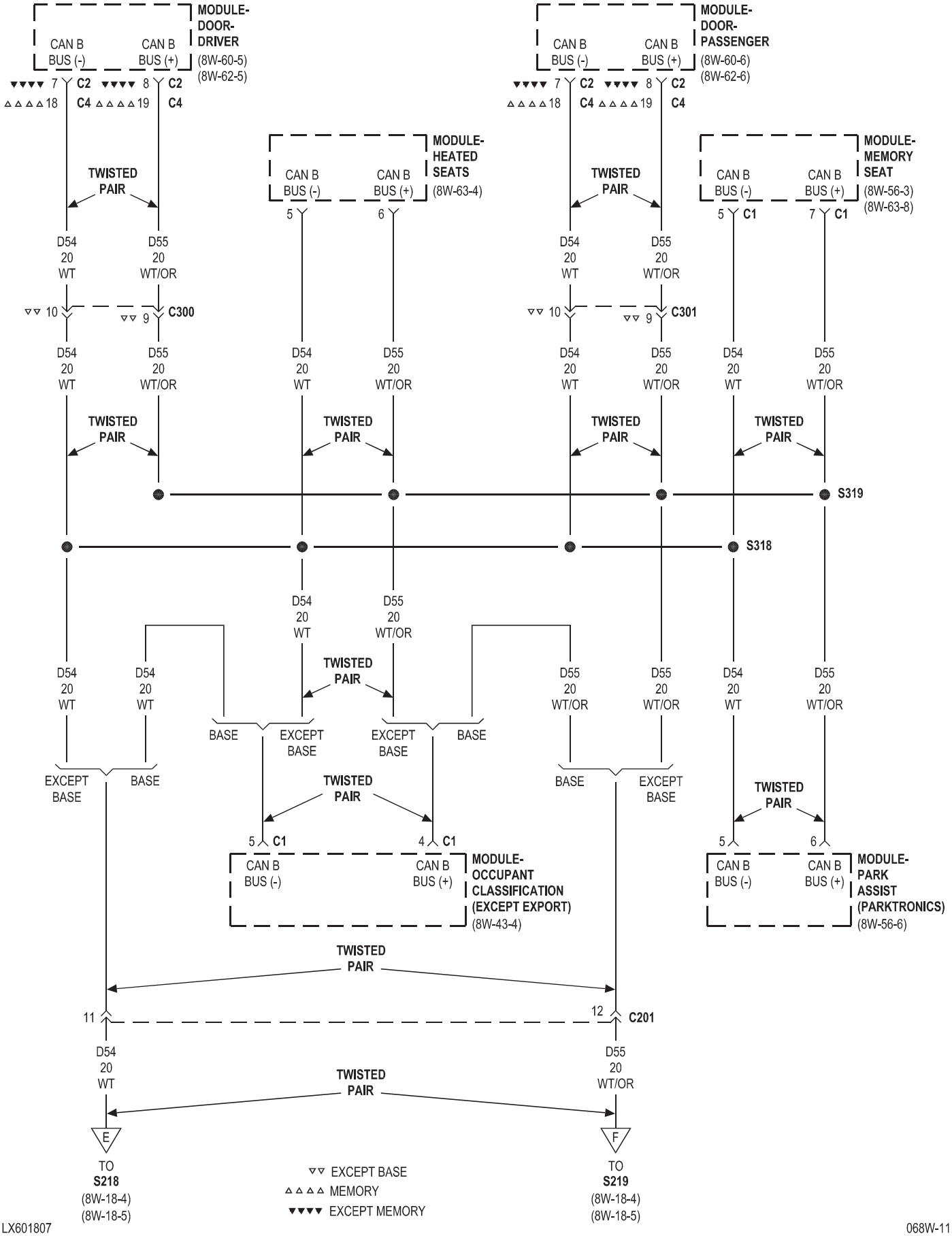
MODULE-
DOOR-
DRIVER
(8W-60-5)
(8W-62-5)
CAN B
BUS (-)
CAN B
BUS (+)
7 C2
18 C4
8 C2
19 C4
TWISTED
PAIR
D54
20
WT
D55
20
WT/OR
10
9
C300
MODULE-
DOOR-
PASSENGER
(8W-60-6)
(8W-62-6)
C301
MODULE-
HEATED
SEATS
(8W-63-4)
5
6
MODULE-
MEMORY
SEAT
(8W-56-3)
(8W-63-8)
C1
7
S319
S318
BASE
EXCEPT
BASE
MODULE-
OCCUPANT
CLASSIFICATION
(EXCEPT EXPORT)
(8W-43-4)
4
MODULE-
PARK
ASSIST
(PARKTRONICS)
(8W-56-6)
11
12
C201
TO
S218
(8W-18-4)
(8W-18-5)
TO
S219
(8W-18-4)
(8W-18-5)
EXCEPT BASE
MEMORY
EXCEPT MEMORY

EVIC/SUNROOF

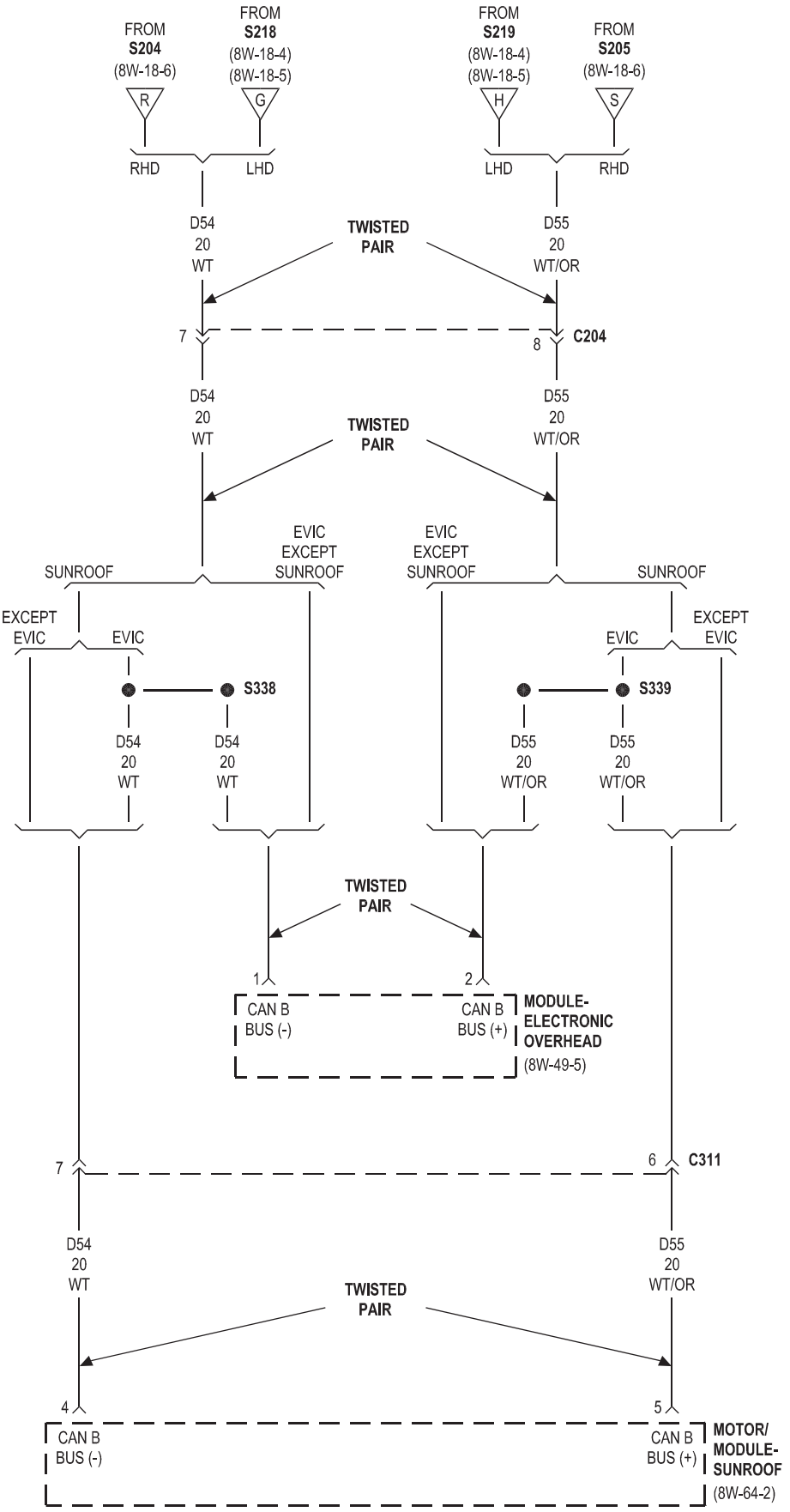

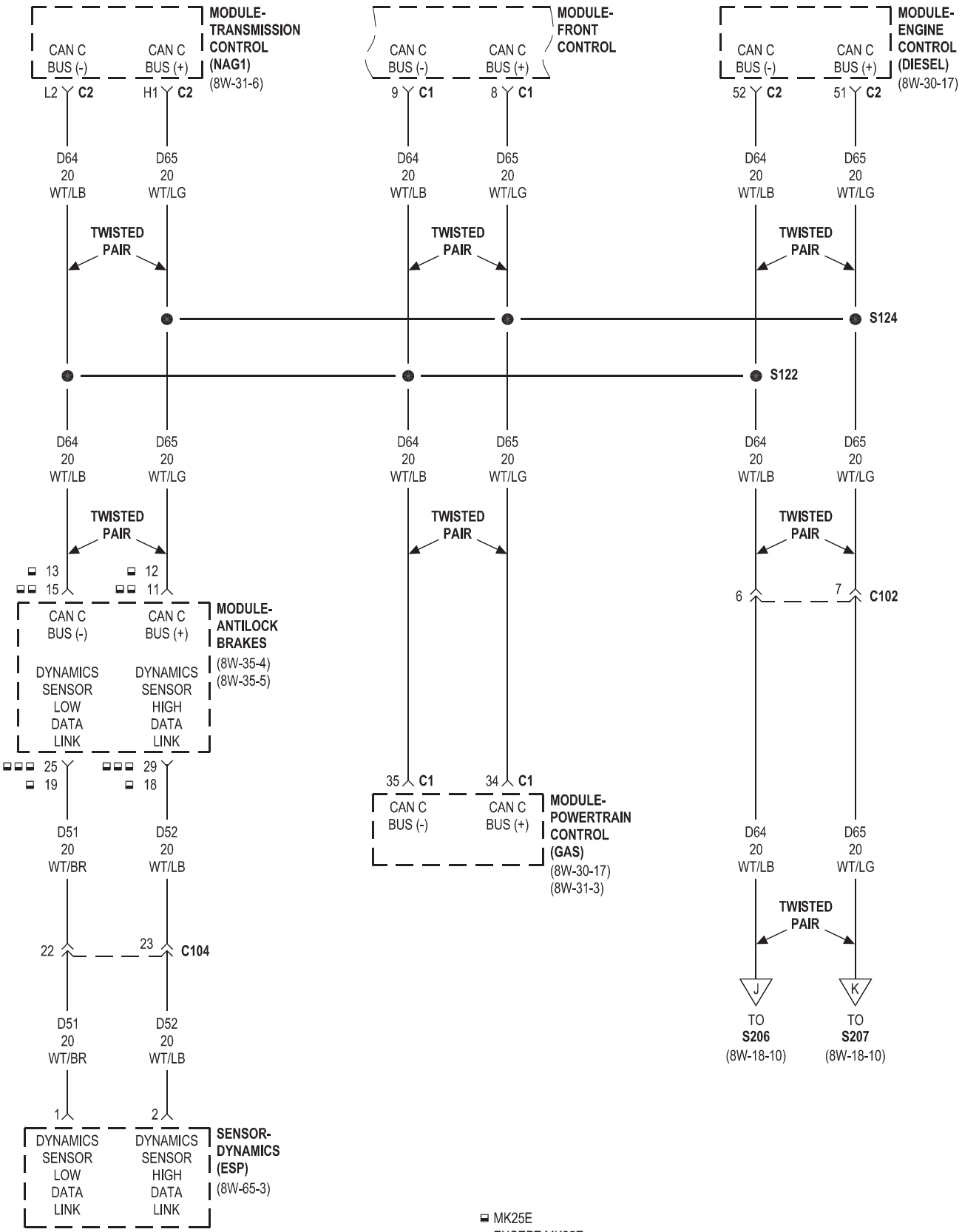
MODULE-TRANSMISSION CONTROL (NAG1) (8W-31-6)
CAN C BUS (-)
CAN C BUS (+)
L2 C2
H1 C2
MODULE-FRONT CONTROL
9 C1
8 C1
MODULE-ENGINE CONTROL (DIESEL) (8W-30-17)
52 C2
51 C2
D64 20 WT/LB
D65 20 WT/LG
TWISTED PAIR
S124
S122
13
15
12
11
MODULE-ANTILOCK BRAKES (8W-35-4) (8W-35-5)
DYNAMICS SENSOR LOW DATA LINK
DYNAMICS SENSOR HIGH DATA LINK
25
19
29
18
D51 20 WT/BR
D52 20 WT/LB
22
23
C104
1
2
SENSOR-DYNAMICS (ESP) (8W-65-3)
35 C1
34 C1
MODULE-POWERTRAIN CONTROL (GAS) (8W-30-17) (8W-31-3)
6
7
C102
J
K
TO S206 (8W-18-10)
TO S207 (8W-18-10)
MK25E
EXCEPT MK25E
MK25

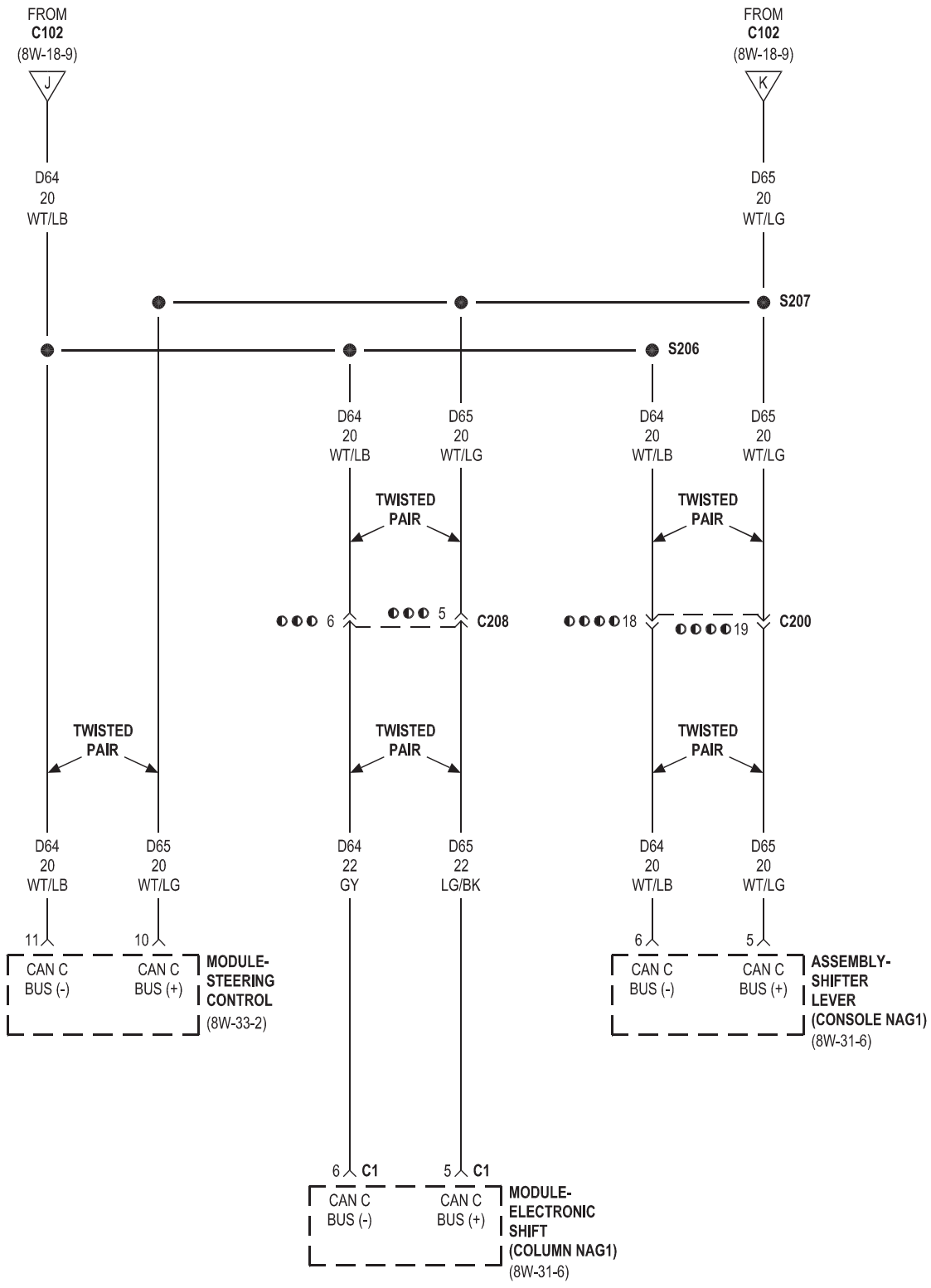
FROM C102 (8W-18-9)
J
FROM C102 (8W-18-9)
K
D64 20 WT/LB
D65 20 WT/LG
S207
S206
TWISTED PAIR
6
5
C208
18
19
C200
D64 22 GY
D65 22 LG/BK
11
10
CAN C BUS (-)
CAN C BUS (+)
MODULE-STEERING CONTROL
(8W-33-2)
ASSEMBLY-SHIFTER LEVER (CONSOLE NAG1)
(8W-31-6)
C1
MODULE-ELECTRONIC SHIFT (COLUMN NAG1)
(8W-31-6)
COLUMN NAG1
CONSOLE NAG1

8W-20 CHARGING SYSTEM

Component	Page
Battery	8W-20-2, 3
Fuse/Relay Block	8W-20-2
Fusible Link	8W-20-2, 3
G102	8W-20-2
G303	8W-20-2, 3
Generator	8W-20-2, 3
Mega Fuse	8W-20-2
Module-Engine Control	8W-20-3
Module-Glow Plug	8W-20-3
Module-Powertrain Control	8W-20-2
Post-Pass Through	8W-20-2, 3
Power Distribution Center	8W-20-2, 3
Starter	8W-20-2, 3

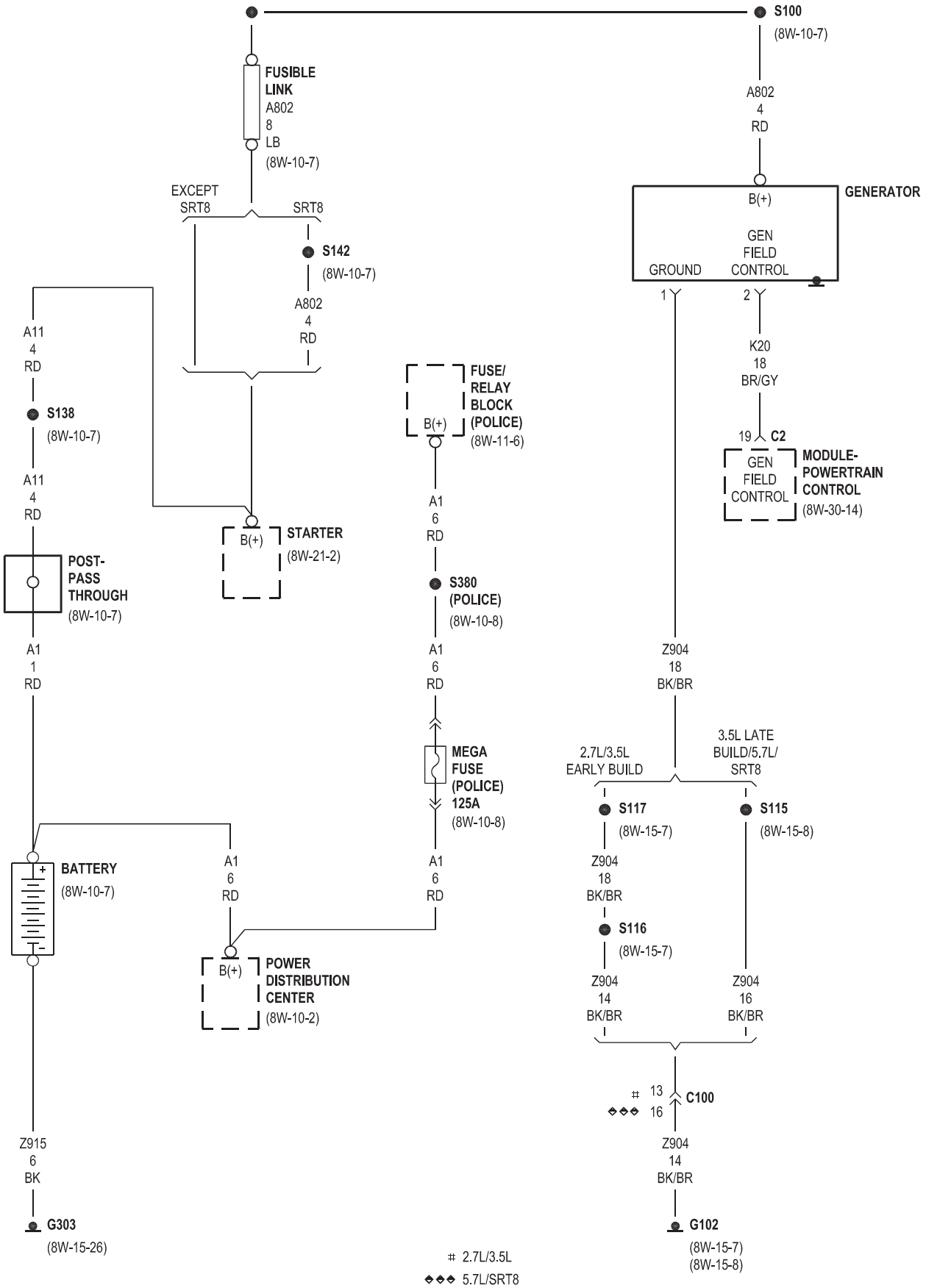
S100
(8W-10-7)
A802
4
RD
FUSIBLE
LINK
A802
8
LB
(8W-10-7)
EXCEPT
SRT8
SRT8
S142
(8W-10-7)
A802
4
RD
GENERATOR
B(+)
GEN
FIELD
CONTROL
GROUND
1
2
K20
18
BR/GY
19
C2
MODULE-
POWERTRAIN
CONTROL
(8W-30-14)
GEN
FIELD
CONTROL
A11
4
RD
S138
(8W-10-7)
A11
4
RD
POST-
PASS
THROUGH
(8W-10-7)
A1
1
RD
STARTER
B(+)
(8W-21-2)
FUSE/
RELAY
BLOCK
(POLICE)
B(+)
(8W-11-6)
A1
6
RD
S380
(POLICE)
(8W-10-8)
A1
6
RD
MEGA
FUSE
(POLICE)
125A
(8W-10-8)
Z904
18
BK/BR
2.7L/3.5L
EARLY BUILD
3.5L LATE
BUILD/5.7L/
SRT8
S117
(8W-15-7)
S115
(8W-15-8)
Z904
18
BK/BR
S116
(8W-15-7)
Z904
14
BK/BR
Z904
16
BK/BR
BATTERY
(8W-10-7)
A1
6
RD
A1
6
RD
B(+)
POWER
DISTRIBUTION
CENTER
(8W-10-2)
13
16
C100
Z904
14
BK/BR
Z915
6
BK
G303
(8W-15-26)
G102
(8W-15-7)
(8W-15-8)
2.7L/3.5L
◆◆◆ 5.7L/SRT8

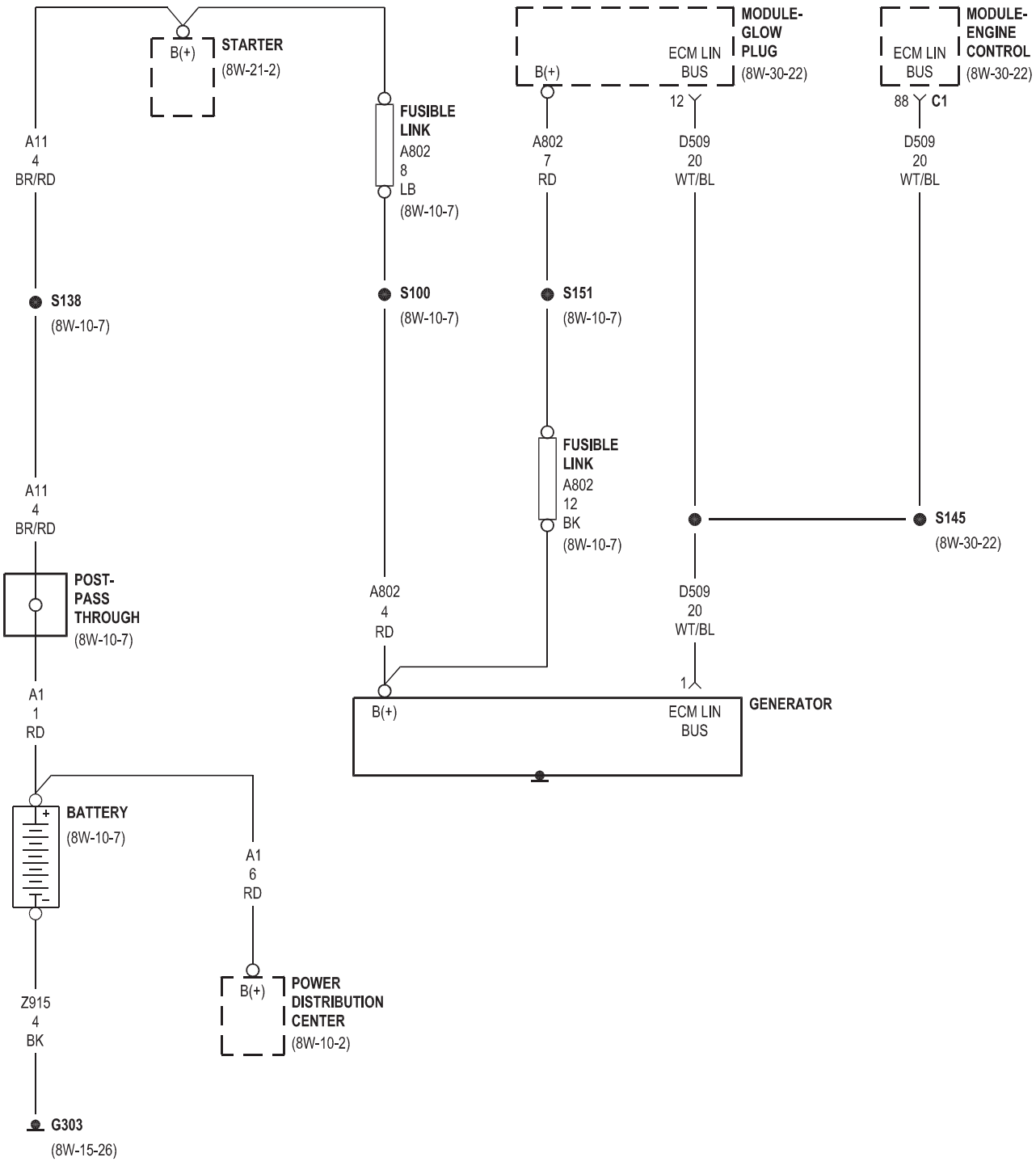
B(+)
STARTER
(8W-21-2)
A11
4
BR/RD
S138
(8W-10-7)
A11
4
BR/RD
POST-
PASS
THROUGH
(8W-10-7)
A1
1
RD
BATTERY
(8W-10-7)
Z915
4
BK
G303
(8W-15-26)
A1
6
RD
B(+)
POWER
DISTRIBUTION
CENTER
(8W-10-2)
FUSIBLE
LINK
A802
8
LB
(8W-10-7)
S100
(8W-10-7)
A802
4
RD
B(+)
MODULE-
GLOW
PLUG
(8W-30-22)
ECM LIN
BUS
12
A802
7
RD
S151
(8W-10-7)
FUSIBLE
LINK
A802
12
BK
(8W-10-7)
B(+)
D509
20
WT/BL
1
ECM LIN
BUS
GENERATOR
MODULE-
ENGINE
CONTROL
(8W-30-22)
ECM LIN
BUS
88
C1
D509
20
WT/BL
S145
(8W-30-22)
D509
20
WT/BL

8W-21 STARTING SYSTEM

Component	Page
Battery	8W-21-2
Fuse 10	8W-21-2
Fuse 20	8W-21-2
Fusible Link	8W-21-2
G303	8W-21-2
Generator	8W-21-2
Module-Engine Control	8W-21-2
Module-Glow Plug	8W-21-2
Module-Integrated Power	8W-21-2
Module-Powertrain Control	8W-21-2
Post-Pass Through	8W-21-2
Relay-Starter	8W-21-2
Starter	8W-21-2

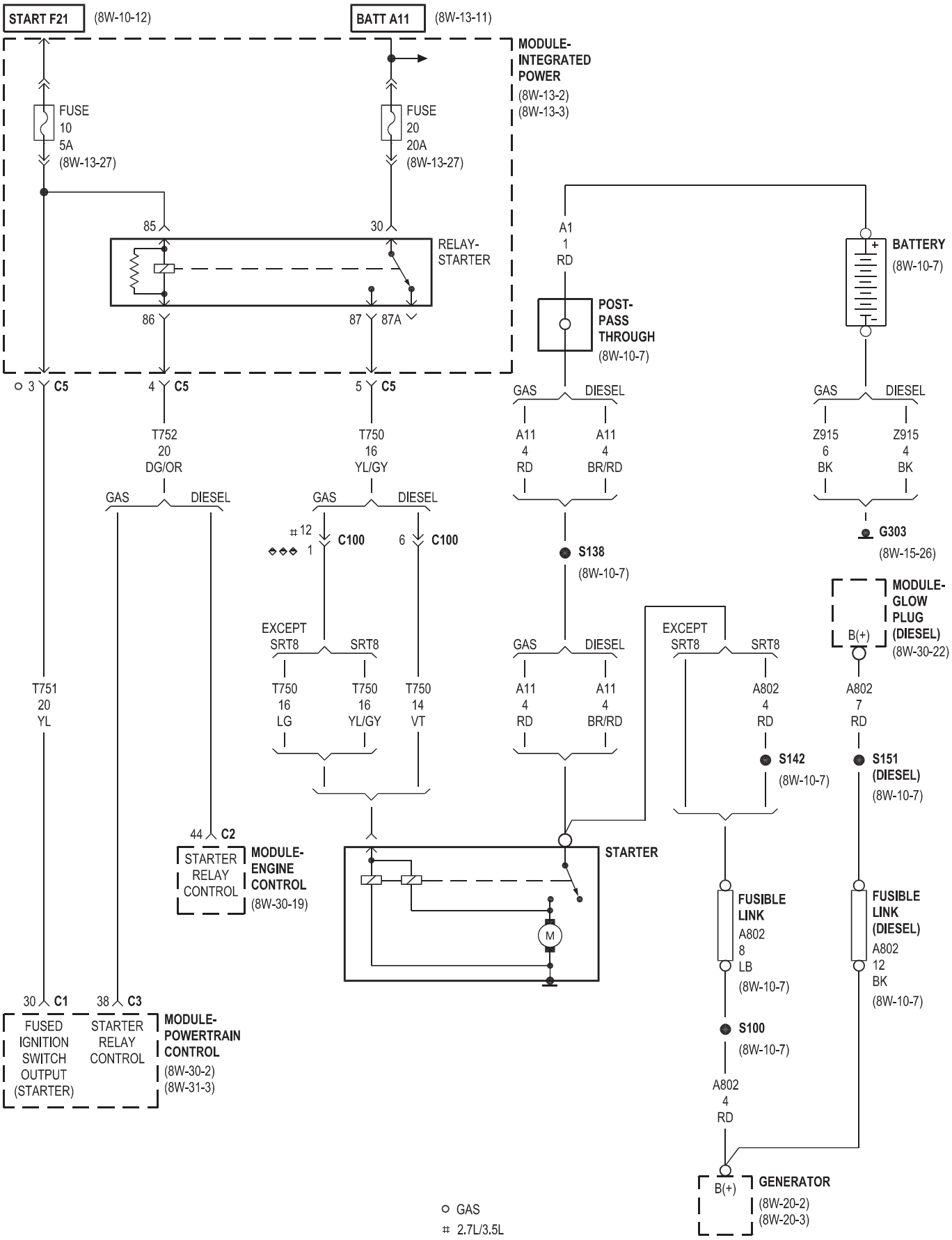
START F21
(8W-10-12)
BATT A11
(8W-13-11)
MODULE-
INTEGRATED
POWER
(8W-13-2)
(8W-13-3)
FUSE
10
5A
(8W-13-27)
FUSE
20
20A
(8W-13-27)
85
30
RELAY-
STARTER
86
87
87A
3 C5
4 C5
5 C5
T752
20
DG/OR
T750
16
YL/GY
A1
1
RD
POST-
PASS
THROUGH
(8W-10-7)
BATTERY
(8W-10-7)
GAS
DIESEL
A11
4
RD
A11
4
BR/RD
Z915
6
BK
Z915
4
BK
G303
(8W-15-26)
S138
(8W-10-7)
12
1
C100
6
C100
EXCEPT
SRT8
SRT8
T750
16
LG
T750
16
YL/GY
T750
14
VT
MODULE-
GLOW
PLUG
(DIESEL)
(8W-30-22)
B(+)
A802
7
RD
T751
20
YL
44 C2
STARTER
RELAY
CONTROL
MODULE-
ENGINE
CONTROL
(8W-30-19)
STARTER
M
A802
4
RD
S142
(8W-10-7)
S151
(DIESEL)
(8W-10-7)
FUSIBLE
LINK
A802
8
LB
(8W-10-7)
FUSIBLE
LINK
(DIESEL)
A802
12
BK
(8W-10-7)
S100
(8W-10-7)
A802
4
RD
30 C1
38 C3
FUSED
IGNITION
SWITCH
OUTPUT
(STARTER)
STARTER
RELAY
CONTROL
MODULE-
POWERTRAIN
CONTROL
(8W-30-2)
(8W-31-3)
B(+)
GENERATOR
(8W-20-2)
(8W-20-3)
GAS
2.7L/3.5L
5.7L/SRT8

8W-30 FUEL/IGNITION SYSTEM

Component	Page
Assembly-Exhaust Gas Recirculation Valve	8W-30-14
Assembly-Natural Vacuum Leak Detection	8W-30-15
Battery	8W-30-22
Capacitor-Ignition-No. 1	8W-30-4, 7, 9
Capacitor-Ignition-No. 2	8W-30-4, 7
Cluster	8W-30-18
Coil-Ignition-No. 1	8W-30-3, 5, 6, 8
Coil-Ignition-No. 2	8W-30-3, 5, 6, 9
Coil-Ignition-No. 3	8W-30-3, 5, 6, 8
Coil-Ignition-No. 4	8W-30-3, 5, 6, 9
Coil-Ignition-No. 5	8W-30-3, 5, 6, 8
Coil-Ignition-No. 6	8W-30-4, 7, 9
Coil-Ignition-No. 7	8W-30-4, 7, 9
Coil-Ignition-No. 8	8W-30-4, 7, 9
Data Link Connector	8W-30-17
Fan-Radiator	8W-30-16
Fuse 6	8W-30-2, 21
Fuse 10	8W-30-2, 19
Fuse 11	8W-30-3, 5, 6, 8, 19
Fuse 14	8W-30-3, 5, 6, 8, 19
Fuse 15	8W-30-3, 5, 6, 8, 16, 19
Fuse 16	8W-30-19
Fuse 19	8W-30-16
Fuse 22	8W-30-16
Fuse 24	8W-30-16
Fuse 29	8W-30-2, 21
Fuse/Relay Block	8W-30-20
Fusible Link	8W-30-22
G100	8W-30-11
G101	8W-30-16
G102	8W-30-11, 13, 14, 16, 17, 19, 23
G109	8W-30-11
G111	8W-30-22
G300	8W-30-15, 18
G301	8W-30-15, 18
G302	8W-30-15
Generator	8W-30-14, 22
Glow Plug No. 1	8W-30-22
Glow Plug No. 2	8W-30-22
Glow Plug No. 3	8W-30-22
Glow Plug No. 4	8W-30-22
Glow Plug No. 5	8W-30-22
Glow Plug No. 6	8W-30-22
Heater-Crankcase Vent	8W-30-23
Injector-Fuel-No. 1	8W-30-4, 7, 8, 24
Injector-Fuel-No. 2	8W-30-4, 7, 9, 24
Injector-Fuel-No. 3	8W-30-4, 7, 8, 24
Injector-Fuel-No. 4	8W-30-4, 7, 9, 24
Injector-Fuel-No. 5	8W-30-4, 7, 8, 24
Injector-Fuel-No. 6	8W-30-4, 7, 9, 24
Injector-Fuel-No. 7	8W-30-4, 7, 9
Injector-Fuel-No. 8	8W-30-4, 7, 9
Module-Antilock Brakes	8W-30-15, 17
Module-Engine Control	8W-30-16, 17, 19, 20, 21, 22, 23, 24, 25, 26, 27, 28, 29
Module-Front Control	8W-30-2, 3, 5, 6, 8, 16, 17, 19, 20
Module-Fuel Pump	8W-30-2, 18, 21
Module-Glow Plug	8W-30-22, 23
Module-Integrated Power	8W-30-2, 3, 5, 6, 8, 16, 19, 20
Module-Powertrain Control	8W-30-2, 3, 4, 5, 6, 7, 8, 9, 10, 11, 12, 13, 14, 15, 16, 17
Motor-Boost Pressure Servo	8W-30-23
Motor-Intake Swirl Servo	8W-30-23
Post-Pass Through	8W-30-22
Power Distribution Center	8W-30-2, 18, 21, 22
Relay-A/C Clutch	8W-30-16
Relay-Auto Shut Down	8W-30-3, 5, 6, 8, 19
Relay-Fuel Pump	8W-30-2, 19, 21
Relay-PTC No. 1	8W-30-20
Relay-PTC No. 2	8W-30-20
Relay-PTC No. 3	8W-30-20
Relay-Radiator Fan Control	8W-30-16
Relay-Radiator Fan High	8W-30-16
Relay-Radiator Fan High/Low Control	8W-30-16
Relay-Starter	8W-30-2, 19
Sensor-Accelerator Pedal Position	8W-30-14, 29
Sensor-Ambient Air Temperature	8W-30-17
Sensor-Boost Pressure	8W-30-27
Sensor-Camshaft Position	8W-30-10, 25
Sensor-Crankshaft Position	8W-30-10, 25
Sensor-Engine Coolant Temperature	8W-30-12, 28
Sensor-Exhaust Differential Pressure	8W-30-28
Sensor-Exhaust Gas Pressure	8W-30-28
Sensor-Fuel Pressure	8W-30-27
Sensor-Fuel Temperature	8W-30-27
Sensor-Inlet Air Pressure	8W-30-26
Sensor-Inlet Air Temperature	8W-30-12
Sensor-Intake Air Temperature	8W-30-26
Sensor-Knock No. 1	8W-30-12
Sensor-Knock No. 2	8W-30-12
Sensor-Manifold Absolute Pressure	8W-30-10
Sensor-Mass Air Flow	8W-30-21, 26
Sensor-Oil Pressure	8W-30-13, 25
Sensor-Oil Temperature	8W-30-13, 25
Sensor-Oxygen	8W-30-20, 23
Sensor-Oxygen-Left Front	8W-30-11
Sensor-Oxygen-Left Rear	8W-30-11
Sensor-Oxygen-Right Front	8W-30-11
Sensor-Oxygen-Right Rear	8W-30-11
Sensor-Post-Catalyst Exhaust Gas Temperature	8W-30-28
Sensor-Pre-Catalyst Exhaust Gas Temperature	8W-30-28
Sensor-Wheel Speed-ABS-Right Front	8W-30-17
Sensor-Wheel Speed-Right Front	8W-30-17
Solenoid-Fuel Pressure	8W-30-27
Solenoid-Fuel Quantity	8W-30-27
Solenoid-Manifold Tuning Valve	8W-30-14
Solenoid-Multi Displacement System Cyl 1	8W-30-13
Solenoid-Multi Displacement System Cyl 4	8W-30-13
Solenoid-Multi Displacement System Cyl 6	8W-30-13
Solenoid-Multi Displacement System Cyl 7	8W-30-13
Solenoid-Proportional Purge	8W-30-15
Solenoid-Short Runner Valve	8W-30-4, 7
Starter	8W-30-22
Switch-Ignition	8W-30-21
Switch-Oil Level	8W-30-25
Switch-Oil Pressure	8W-30-12
Switch-Stop Lamp	8W-30-2, 15
Throttle Body	8W-30-10
Valve-EGR	8W-30-23
Valve-EGR Air Flow Control	8W-30-26

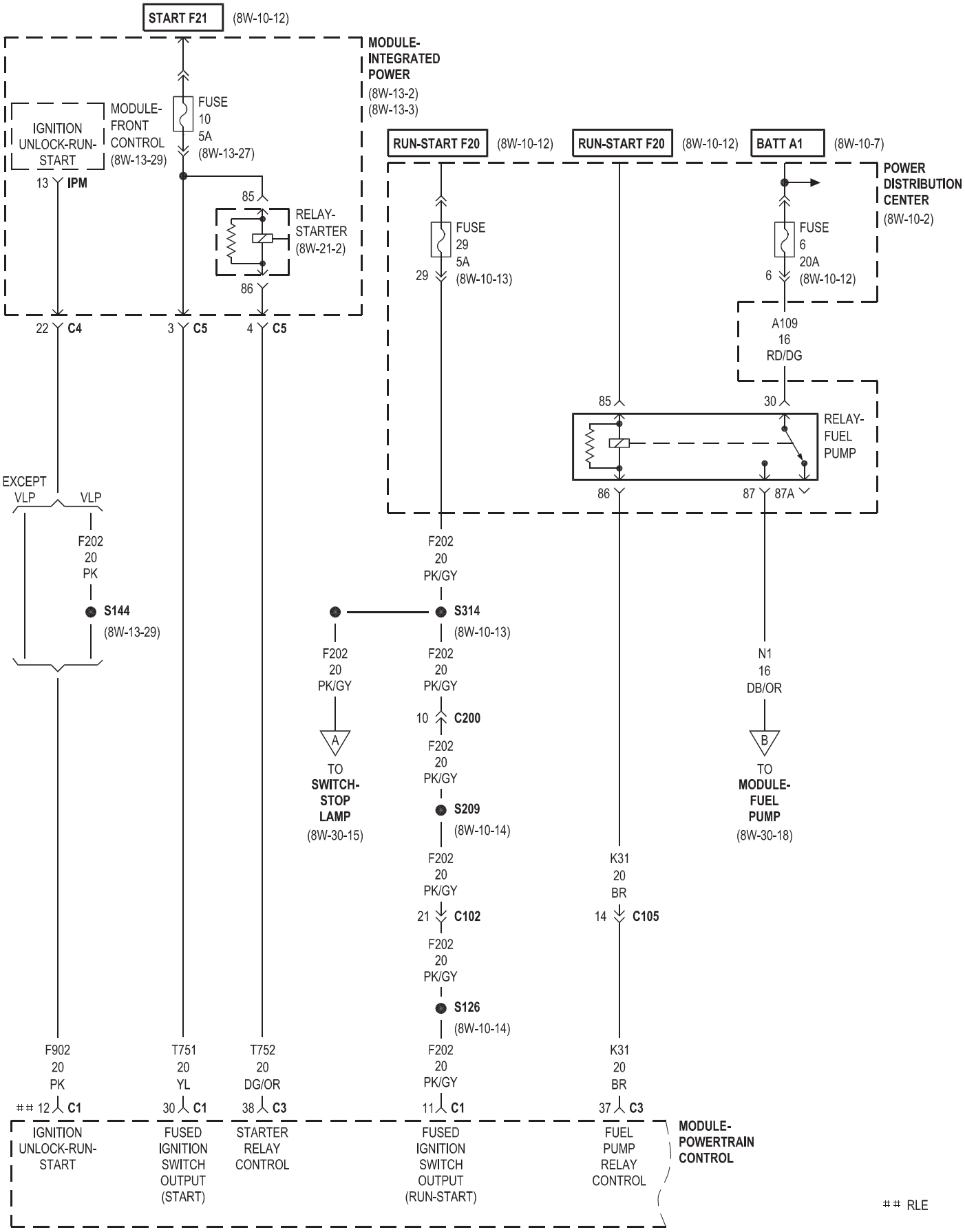
START F21
(8W-10-12)
MODULE-
INTEGRATED
POWER
(8W-13-2)
(8W-13-3)
IGNITION
UNLOCK-RUN-
START
MODULE-
FRONT
CONTROL
(8W-13-29)
13 IPM
FUSE
10
5A
(8W-13-27)
85
RELAY-
STARTER
(8W-21-2)
86
22 C4
3 C5
4 C5
RUN-START F20
(8W-10-12)
RUN-START F20
(8W-10-12)
BATT A1
(8W-10-7)
POWER
DISTRIBUTION
CENTER
(8W-10-2)
FUSE
29
5A
29
(8W-10-13)
FUSE
6
20A
6
(8W-10-12)
A109
16
RD/DG
85
30
RELAY-
FUEL
PUMP
86
87
87A
EXCEPT
VLP
VLP
F202
20
PK
S144
(8W-13-29)
F202
20
PK/GY
S314
(8W-10-13)
F202
20
PK/GY
A
TO
SWITCH-
STOP
LAMP
(8W-30-15)
F202
20
PK/GY
10 C200
F202
20
PK/GY
S209
(8W-10-14)
F202
20
PK/GY
21 C102
F202
20
PK/GY
S126
(8W-10-14)
N1
16
DB/OR
B
TO
MODULE-
FUEL
PUMP
(8W-30-18)
K31
20
BR
14 C105
F902
20
PK
12 C1
T751
20
YL
30 C1
T752
20
DG/OR
38 C3
F202
20
PK/GY
11 C1
K31
20
BR
37 C3
IGNITION
UNLOCK-RUN-
START
FUSED
IGNITION
SWITCH
OUTPUT
(START)
STARTER
RELAY
CONTROL
FUSED
IGNITION
SWITCH
OUTPUT
(RUN-START)
FUEL
PUMP
RELAY
CONTROL
MODULE-
POWERTRAIN
CONTROL
RLE

EARLY BUILD GAS EXCEPT SRT8

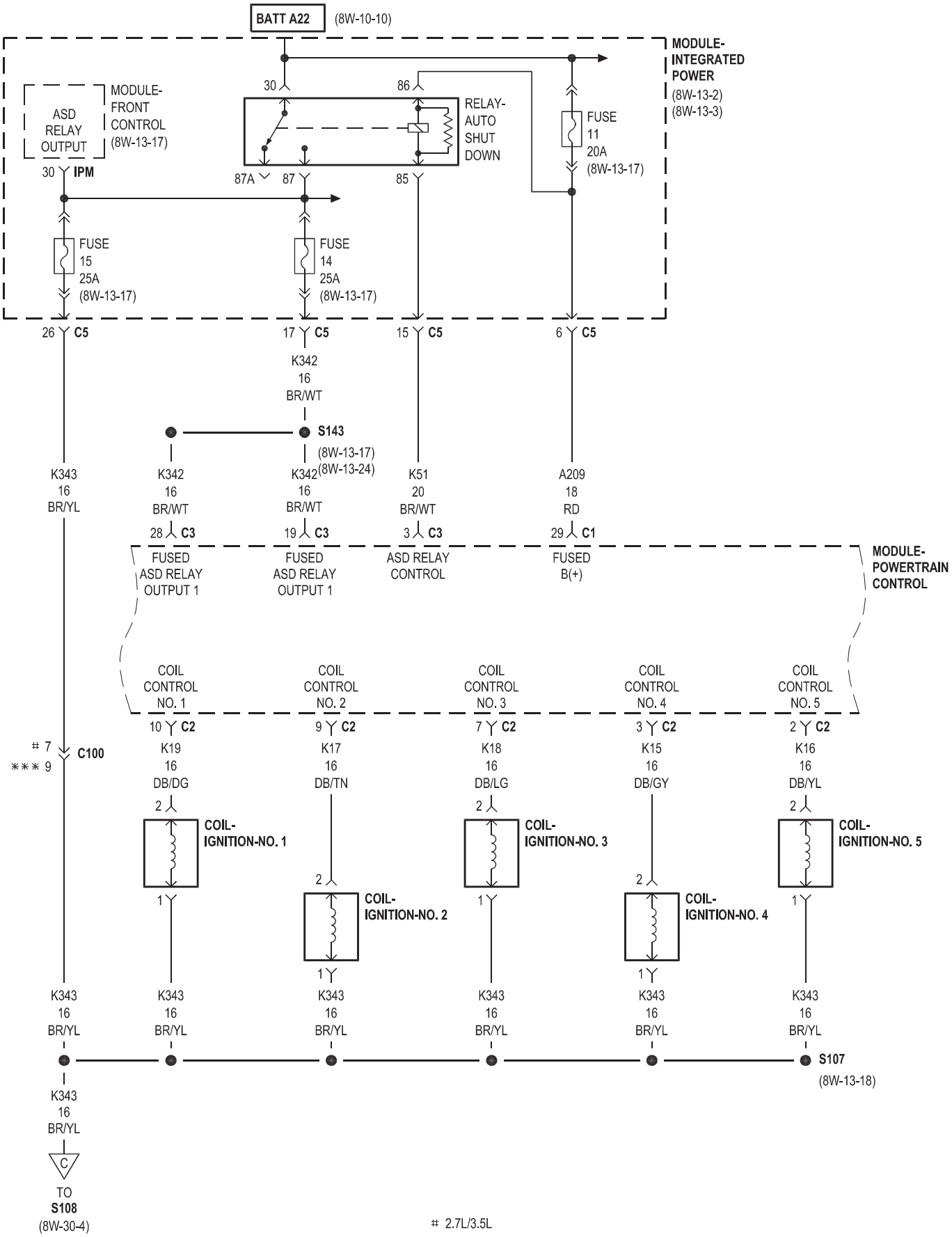

2.7L/3.5L

*** 5.7L

EARLY BUILD GAS EXCEPT SRT8

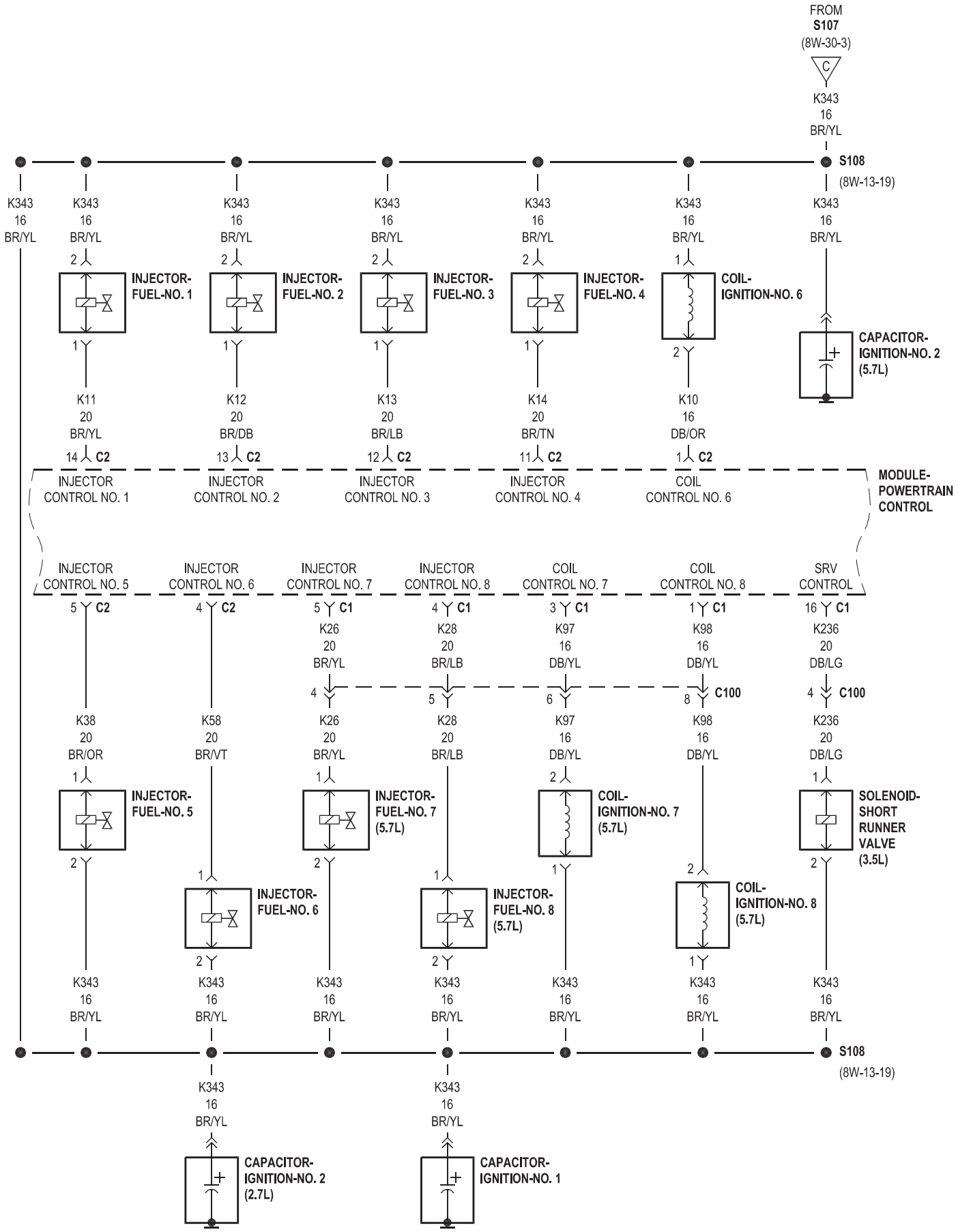

2.7L/3.5L LATE BUILD

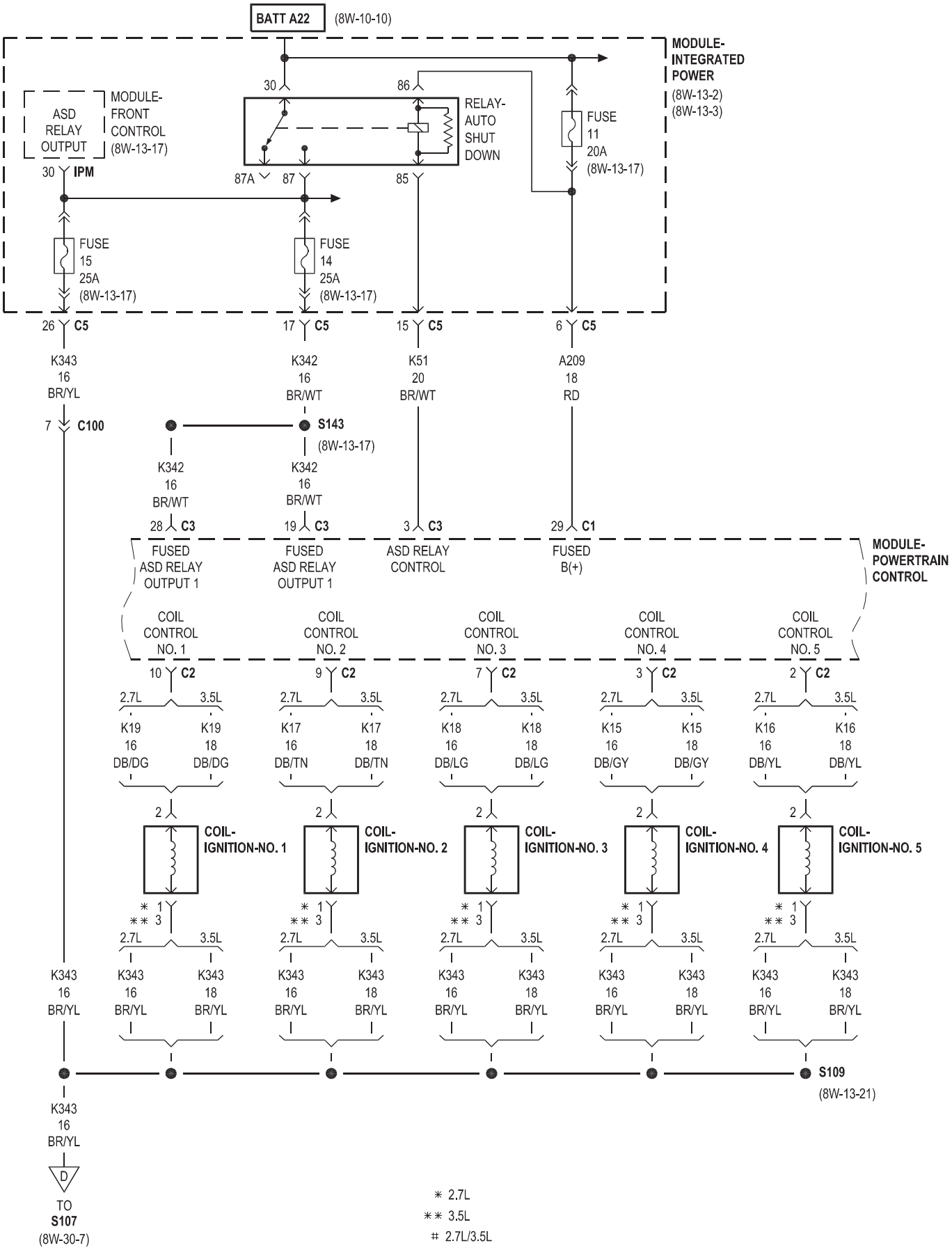

* 2.7L
** 3.5L
# 2.7L/3.5L

5.7L LATE BUILD

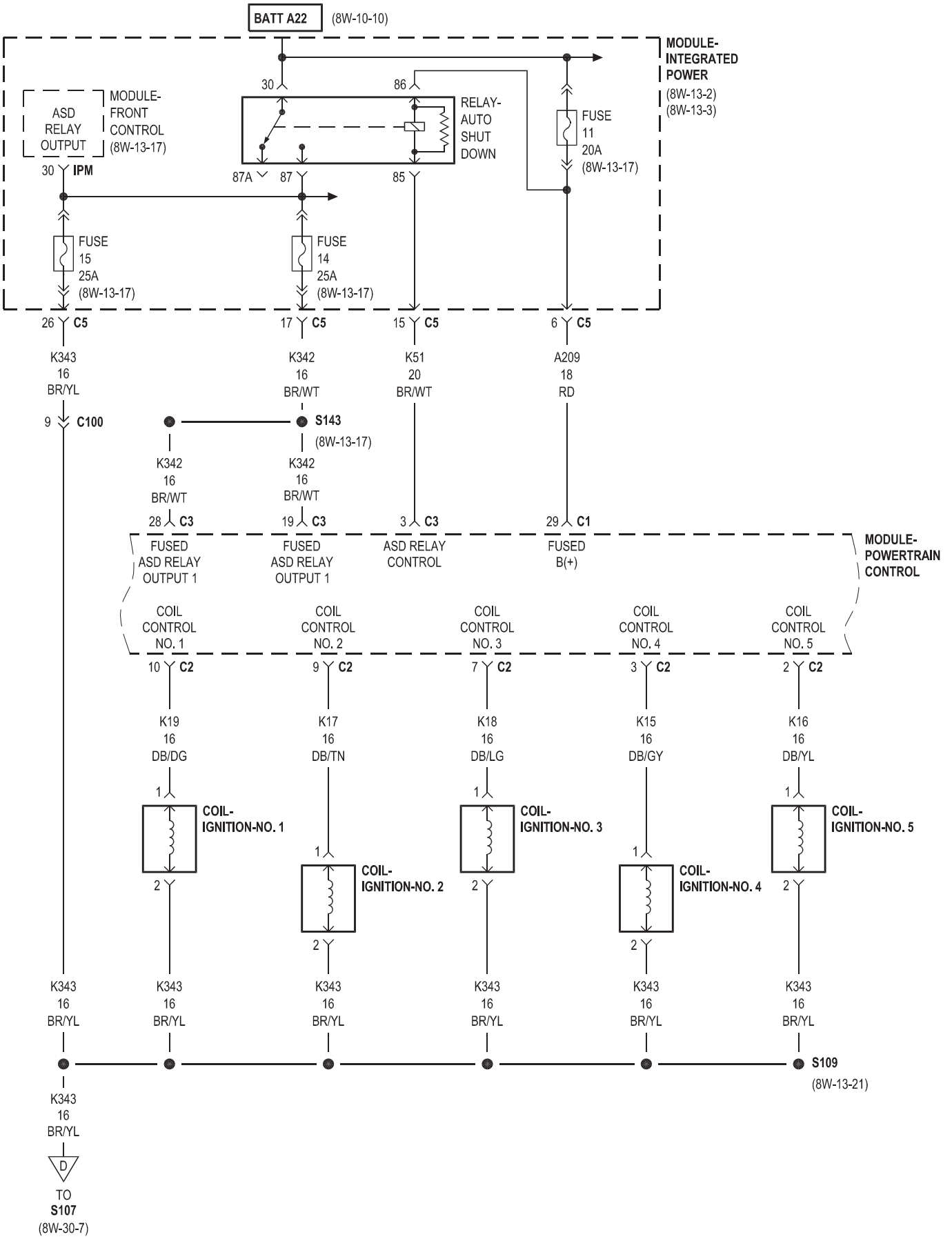

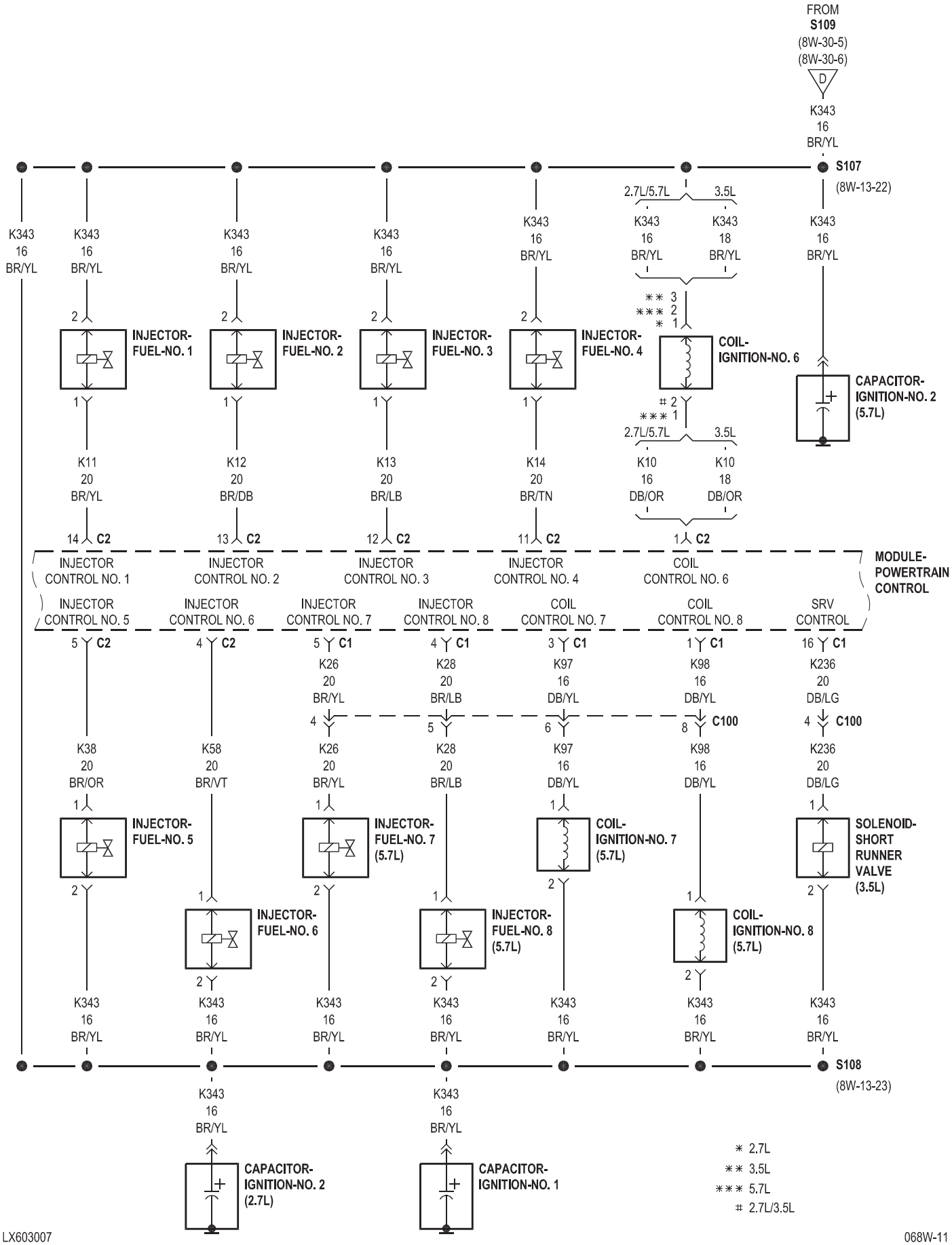
FROM S109 (8W-30-5) (8W-30-6)
D
K343 16 BR/YL
S107
(8W-13-22)
2.7L/5.7L
3.5L
K343 16 BR/YL
K343 18 BR/YL
** 3
*** 2
* 1
COIL- IGNITION-NO. 6
2
*** 1
CAPACITOR- IGNITION-NO. 2 (5.7L)
INJECTOR- FUEL-NO. 1
INJECTOR- FUEL-NO. 2
INJECTOR- FUEL-NO. 3
INJECTOR- FUEL-NO. 4
K11 20 BR/YL
K12 20 BR/DB
K13 20 BR/LB
K14 20 BR/TN
K10 16 DB/OR
K10 18 DB/OR
14 C2
13 C2
12 C2
11 C2
1 C2
MODULE- POWERTRAIN CONTROL
INJECTOR CONTROL NO. 1
INJECTOR CONTROL NO. 2
INJECTOR CONTROL NO. 3
INJECTOR CONTROL NO. 4
COIL CONTROL NO. 6
INJECTOR CONTROL NO. 5
INJECTOR CONTROL NO. 6
INJECTOR CONTROL NO. 7
INJECTOR CONTROL NO. 8
COIL CONTROL NO. 7
COIL CONTROL NO. 8
SRV CONTROL
5 C2
4 C2
5 C1
4 C1
3 C1
1 C1
16 C1
K26 20 BR/YL
K28 20 BR/LB
K97 16 DB/YL
K98 16 DB/YL
K236 20 DB/LG
C100
K38 20 BR/OR
K58 20 BR/VT
INJECTOR- FUEL-NO. 5
INJECTOR- FUEL-NO. 6
INJECTOR- FUEL-NO. 7 (5.7L)
INJECTOR- FUEL-NO. 8 (5.7L)
COIL- IGNITION-NO. 7 (5.7L)
COIL- IGNITION-NO. 8 (5.7L)
SOLENOID- SHORT RUNNER VALVE (3.5L)
S108
(8W-13-23)
CAPACITOR- IGNITION-NO. 2 (2.7L)
CAPACITOR- IGNITION-NO. 1
* 2.7L
** 3.5L
*** 5.7L
# 2.7L/3.5L

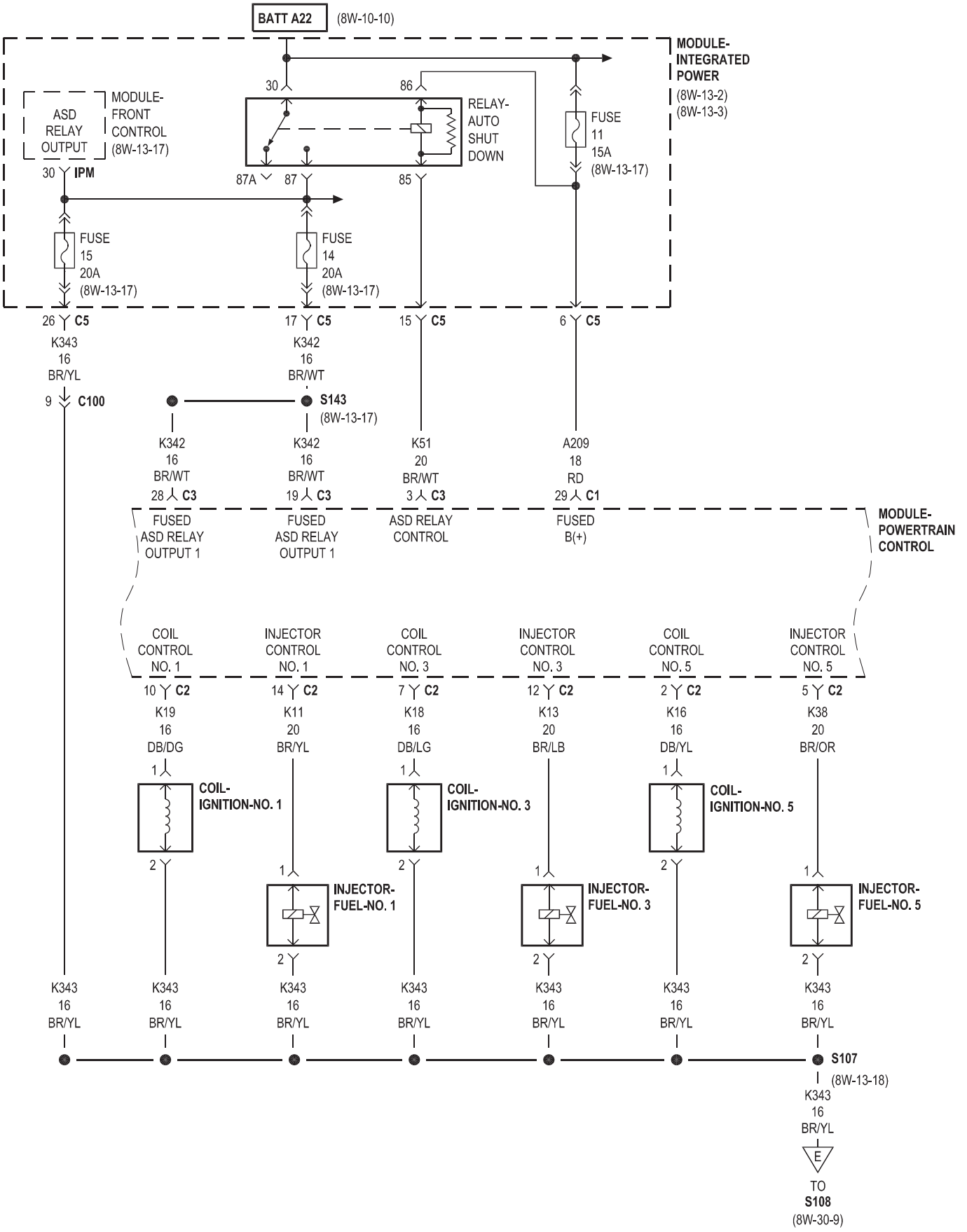
BATT A22
(8W-10-10)
MODULE-
INTEGRATED
POWER
(8W-13-2)
(8W-13-3)
ASD
RELAY
OUTPUT
MODULE-
FRONT
CONTROL
(8W-13-17)
30
IPM
30
86
RELAY-
AUTO
SHUT
DOWN
87A
87
85
FUSE
11
15A
(8W-13-17)
FUSE
15
20A
(8W-13-17)
FUSE
14
20A
(8W-13-17)
26 C5
17 C5
15 C5
6 C5
K343
16
BR/YL
K342
16
BR/WT
9 C100
S143
(8W-13-17)
K342
16
BR/WT
28 C3
K342
16
BR/WT
19 C3
K51
20
BR/WT
3 C3
A209
18
RD
29 C1
FUSED
ASD RELAY
OUTPUT 1
FUSED
ASD RELAY
OUTPUT 1
ASD RELAY
CONTROL
FUSED
B(+)
MODULE-
POWERTRAIN
CONTROL
COIL
CONTROL
NO. 1
INJECTOR
CONTROL
NO. 1
COIL
CONTROL
NO. 3
INJECTOR
CONTROL
NO. 3
COIL
CONTROL
NO. 5
INJECTOR
CONTROL
NO. 5
10 C2
14 C2
7 C2
12 C2
2 C2
5 C2
K19
16
DB/DG
K11
20
BR/YL
K18
16
DB/LG
K13
20
BR/LB
K16
16
DB/YL
K38
20
BR/OR
COIL-
IGNITION-NO. 1
COIL-
IGNITION-NO. 3
COIL-
IGNITION-NO. 5
INJECTOR-
FUEL-NO. 1
INJECTOR-
FUEL-NO. 3
INJECTOR-
FUEL-NO. 5
K343
16
BR/YL
S107
(8W-13-18)
E
TO
S108
(8W-30-9)

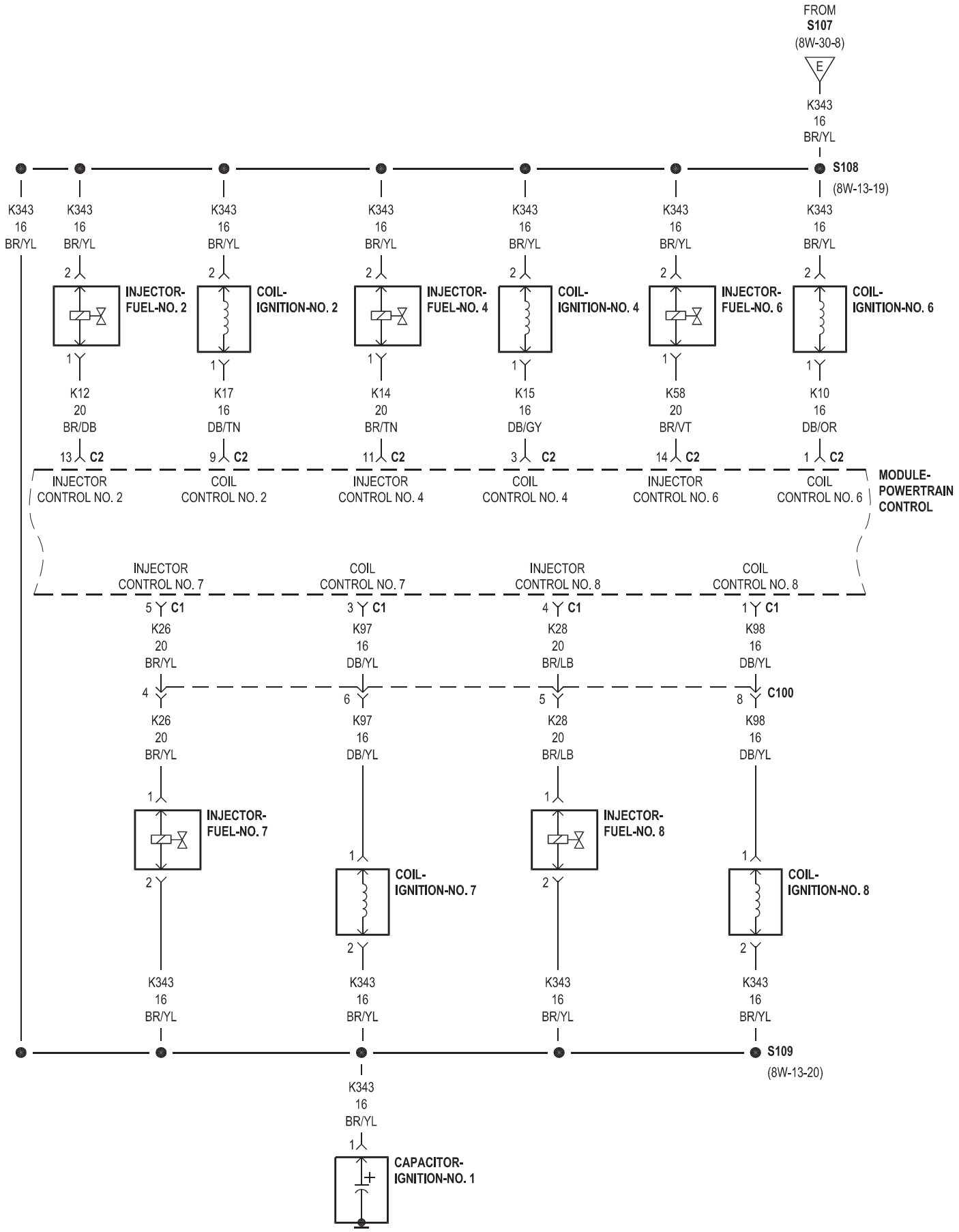
FROM
S107
(8W-30-8)
E
K343
16
BR/YL
S108
(8W-13-19)
K343
16
BR/YL
2
INJECTOR-
FUEL-NO. 2
COIL-
IGNITION-NO. 2
INJECTOR-
FUEL-NO. 4
COIL-
IGNITION-NO. 4
INJECTOR-
FUEL-NO. 6
COIL-
IGNITION-NO. 6
1
K12
20
BR/DB
13 C2
K17
16
DB/TN
9 C2
K14
20
BR/TN
11 C2
K15
16
DB/GY
3 C2
K58
20
BR/VT
14 C2
K10
16
DB/OR
1 C2
INJECTOR
CONTROL NO. 2
COIL
CONTROL NO. 2
INJECTOR
CONTROL NO. 4
COIL
CONTROL NO. 4
INJECTOR
CONTROL NO. 6
COIL
CONTROL NO. 6
MODULE-
POWERTRAIN
CONTROL
INJECTOR
CONTROL NO. 7
COIL
CONTROL NO. 7
INJECTOR
CONTROL NO. 8
COIL
CONTROL NO. 8
5 C1
K26
20
BR/YL
3 C1
K97
16
DB/YL
4 C1
K28
20
BR/LB
1 C1
K98
16
DB/YL
4
6
5
8 C100
INJECTOR-
FUEL-NO. 7
COIL-
IGNITION-NO. 7
INJECTOR-
FUEL-NO. 8
COIL-
IGNITION-NO. 8
S109
(8W-13-20)
CAPACITOR-
IGNITION-NO. 1

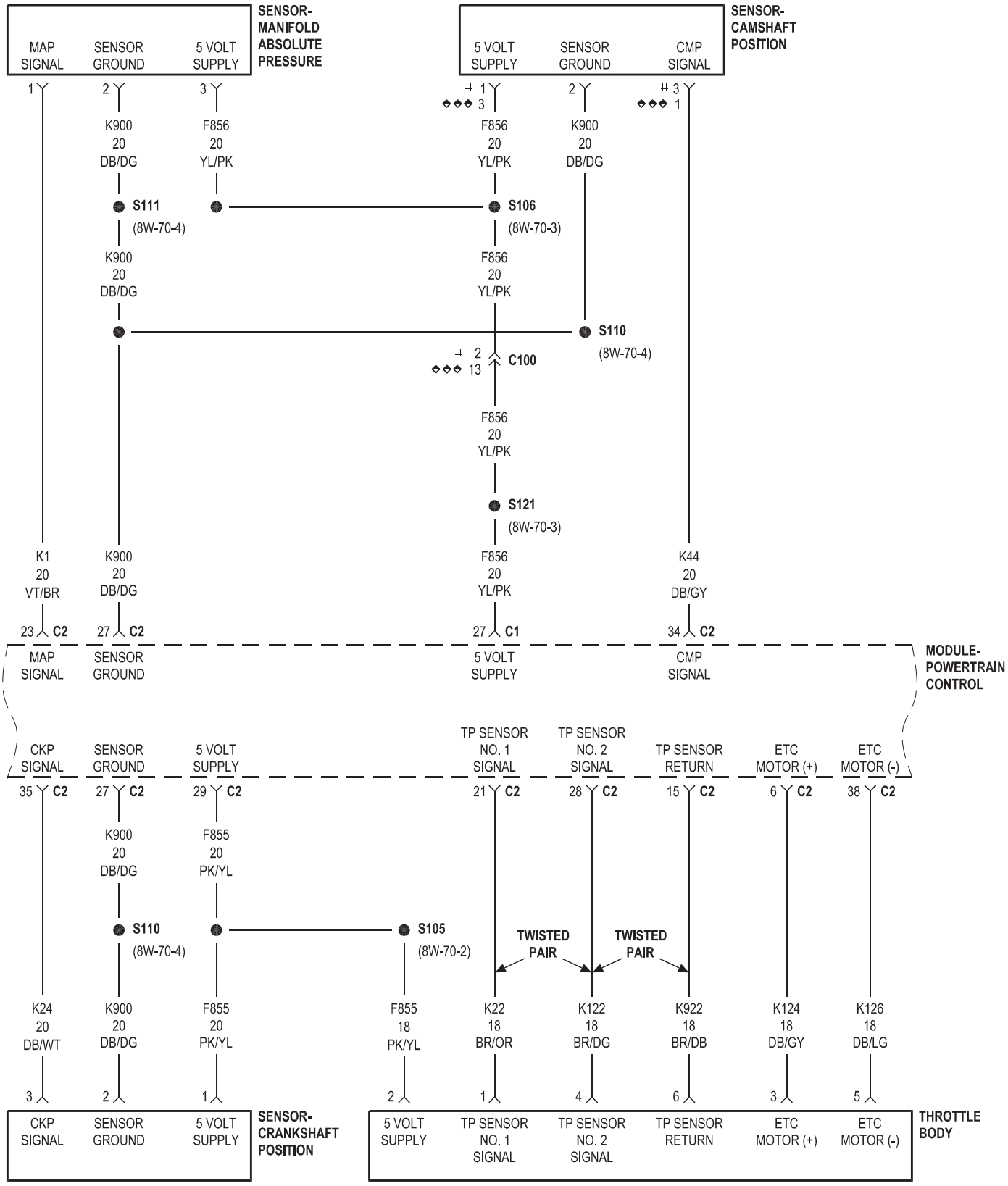

2.7L/3.5L

◆◆◆ 5.7L/SRT8

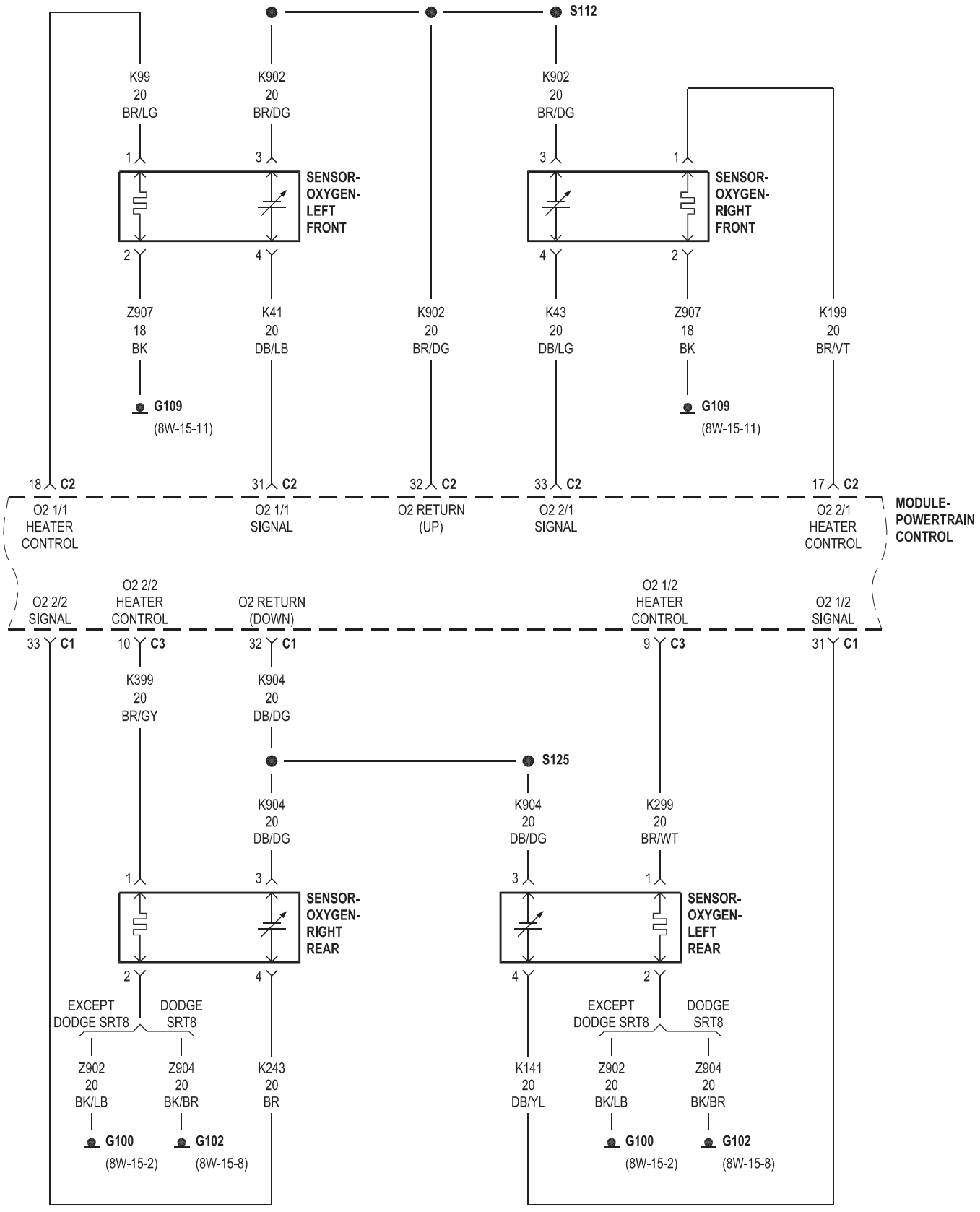
S112
K99
20
BR/LG
K902
20
BR/DG
K902
20
BR/DG
SENSOR-
OXYGEN-
LEFT
FRONT
SENSOR-
OXYGEN-
RIGHT
FRONT
Z907
18
BK
K41
20
DB/LB
K902
20
BR/DG
K43
20
DB/LG
Z907
18
BK
K199
20
BR/VT
G109
(8W-15-11)
G109
(8W-15-11)
18 C2
31 C2
32 C2
33 C2
17 C2
O2 1/1
HEATER
CONTROL
O2 1/1
SIGNAL
O2 RETURN
(UP)
O2 2/1
SIGNAL
O2 2/1
HEATER
CONTROL
MODULE-
POWERTRAIN
CONTROL
O2 2/2
SIGNAL
O2 2/2
HEATER
CONTROL
O2 RETURN
(DOWN)
O2 1/2
HEATER
CONTROL
O2 1/2
SIGNAL
33 C1
10 C3
32 C1
9 C3
31 C1
K399
20
BR/GY
K904
20
DB/DG
S125
K904
20
DB/DG
K904
20
DB/DG
K299
20
BR/WT
SENSOR-
OXYGEN-
RIGHT
REAR
SENSOR-
OXYGEN-
LEFT
REAR
EXCEPT
DODGE SRT8
DODGE
SRT8
EXCEPT
DODGE SRT8
DODGE
SRT8
Z902
20
BK/LB
Z904
20
BK/BR
K243
20
BR
K141
20
DB/YL
Z902
20
BK/LB
Z904
20
BK/BR
G100
(8W-15-2)
G102
(8W-15-8)
G100
(8W-15-2)
G102
(8W-15-8)

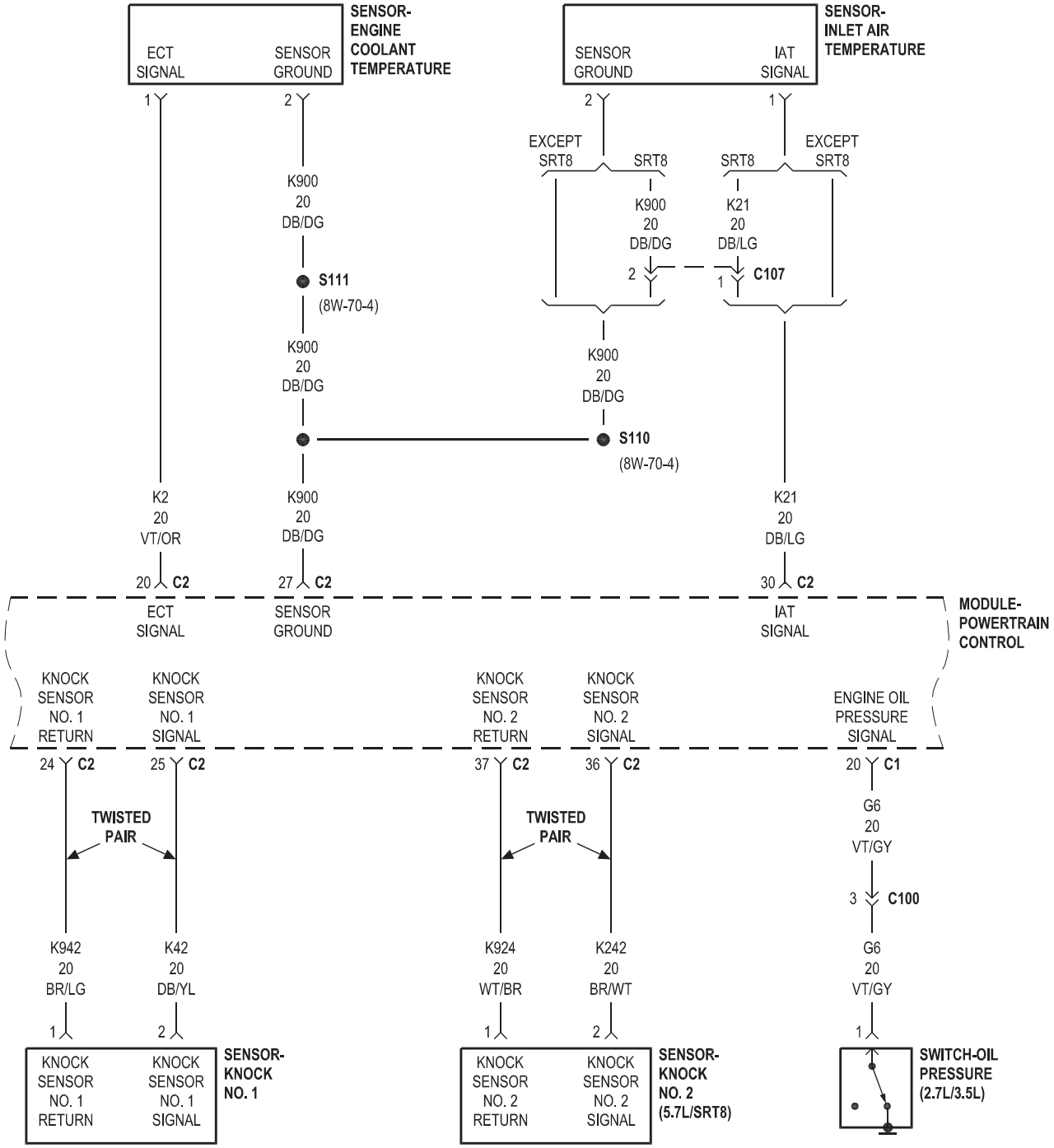
SENSOR-
ENGINE
COOLANT
TEMPERATURE
ECT
SIGNAL
SENSOR
GROUND
1
2
K900
20
DB/DG
S111
(8W-70-4)
K900
20
DB/DG
S110
(8W-70-4)
SENSOR-
INLET AIR
TEMPERATURE
SENSOR
GROUND
IAT
SIGNAL
2
1
EXCEPT
SRT8
SRT8
SRT8
EXCEPT
SRT8
K900
20
DB/DG
K21
20
DB/LG
2
1
C107
K900
20
DB/DG
K2
20
VT/OR
K900
20
DB/DG
K21
20
DB/LG
20
C2
27
C2
30
C2
ECT
SIGNAL
SENSOR
GROUND
IAT
SIGNAL
MODULE-
POWERTRAIN
CONTROL
KNOCK
SENSOR
NO. 1
RETURN
KNOCK
SENSOR
NO. 1
SIGNAL
KNOCK
SENSOR
NO. 2
RETURN
KNOCK
SENSOR
NO. 2
SIGNAL
ENGINE OIL
PRESSURE
SIGNAL
24
C2
25
C2
37
C2
36
C2
20
C1
TWISTED
PAIR
TWISTED
PAIR
G6
20
VT/GY
3
C100
K942
20
BR/LG
K42
20
DB/YL
K924
20
WT/BR
K242
20
BR/WT
G6
20
VT/GY
1
2
1
2
1
KNOCK
SENSOR
NO. 1
RETURN
KNOCK
SENSOR
NO. 1
SIGNAL
SENSOR-
KNOCK
NO. 1
KNOCK
SENSOR
NO. 2
RETURN
KNOCK
SENSOR
NO. 2
SIGNAL
SENSOR-
KNOCK
NO. 2
(5.7L/SRT8)
SWITCH-OIL
PRESSURE
(2.7L/3.5L)

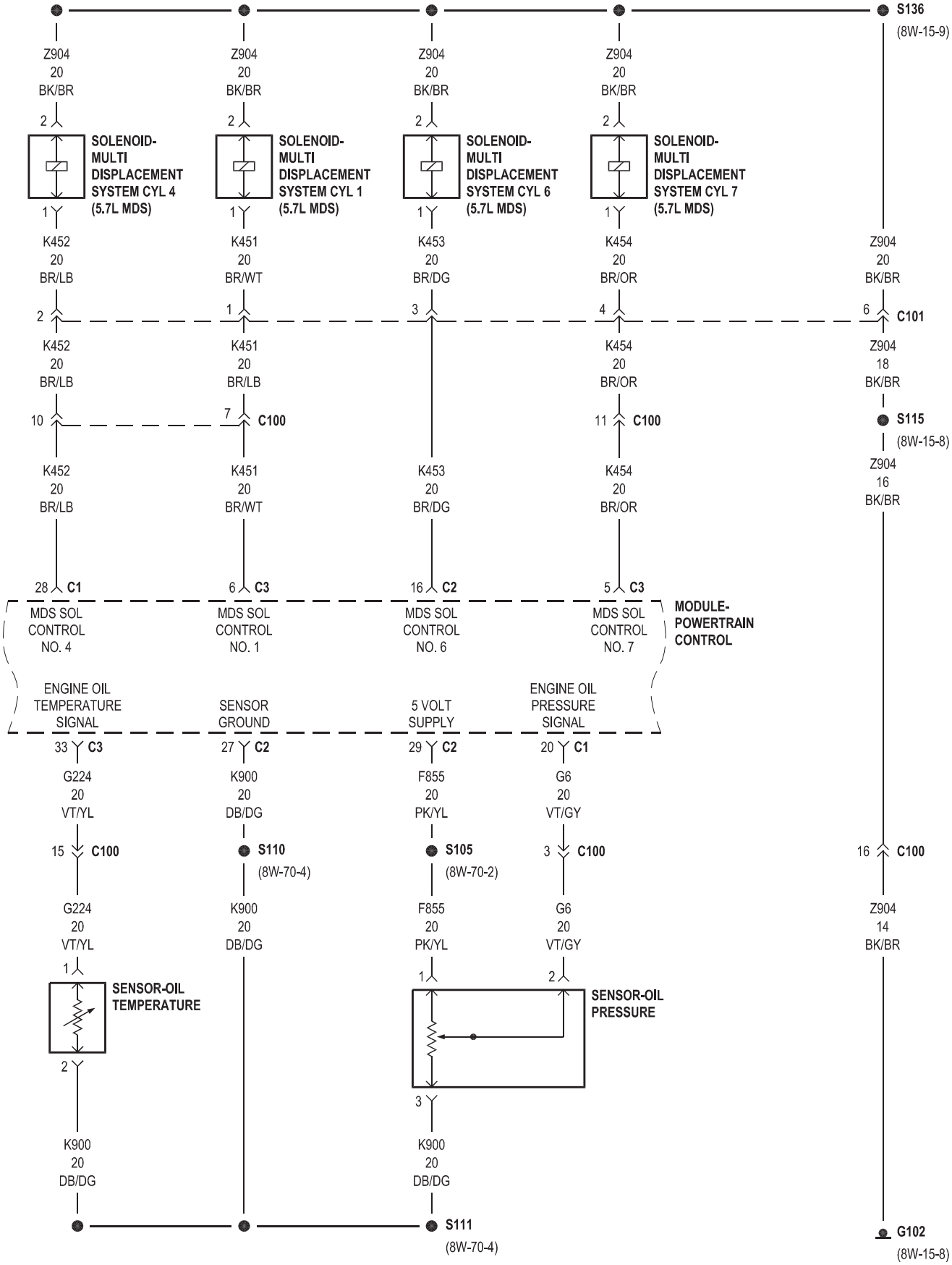
S136
(8W-15-9)
Z904
20
BK/BR
2
SOLENOID-
MULTI
DISPLACEMENT
SYSTEM CYL 4
(5.7L MDS)
1
K452
20
BR/LB
SOLENOID-
MULTI
DISPLACEMENT
SYSTEM CYL 1
(5.7L MDS)
K451
20
BR/WT
SOLENOID-
MULTI
DISPLACEMENT
SYSTEM CYL 6
(5.7L MDS)
K453
20
BR/DG
SOLENOID-
MULTI
DISPLACEMENT
SYSTEM CYL 7
(5.7L MDS)
K454
20
BR/OR
C101
Z904
18
BK/BR
S115
(8W-15-8)
Z904
16
BK/BR
C100
Z904
14
BK/BR
G102
(8W-15-8)
MODULE-
POWERTRAIN
CONTROL
MDS SOL
CONTROL
NO. 4
MDS SOL
CONTROL
NO. 1
MDS SOL
CONTROL
NO. 6
MDS SOL
CONTROL
NO. 7
ENGINE OIL
TEMPERATURE
SIGNAL
SENSOR
GROUND
5 VOLT
SUPPLY
ENGINE OIL
PRESSURE
SIGNAL
C1
C2
C3
G224
20
VT/YL
K900
20
DB/DG
F855
20
PK/YL
G6
20
VT/GY
S110
(8W-70-4)
S105
(8W-70-2)
SENSOR-OIL
TEMPERATURE
SENSOR-OIL
PRESSURE
S111
(8W-70-4)

GAS

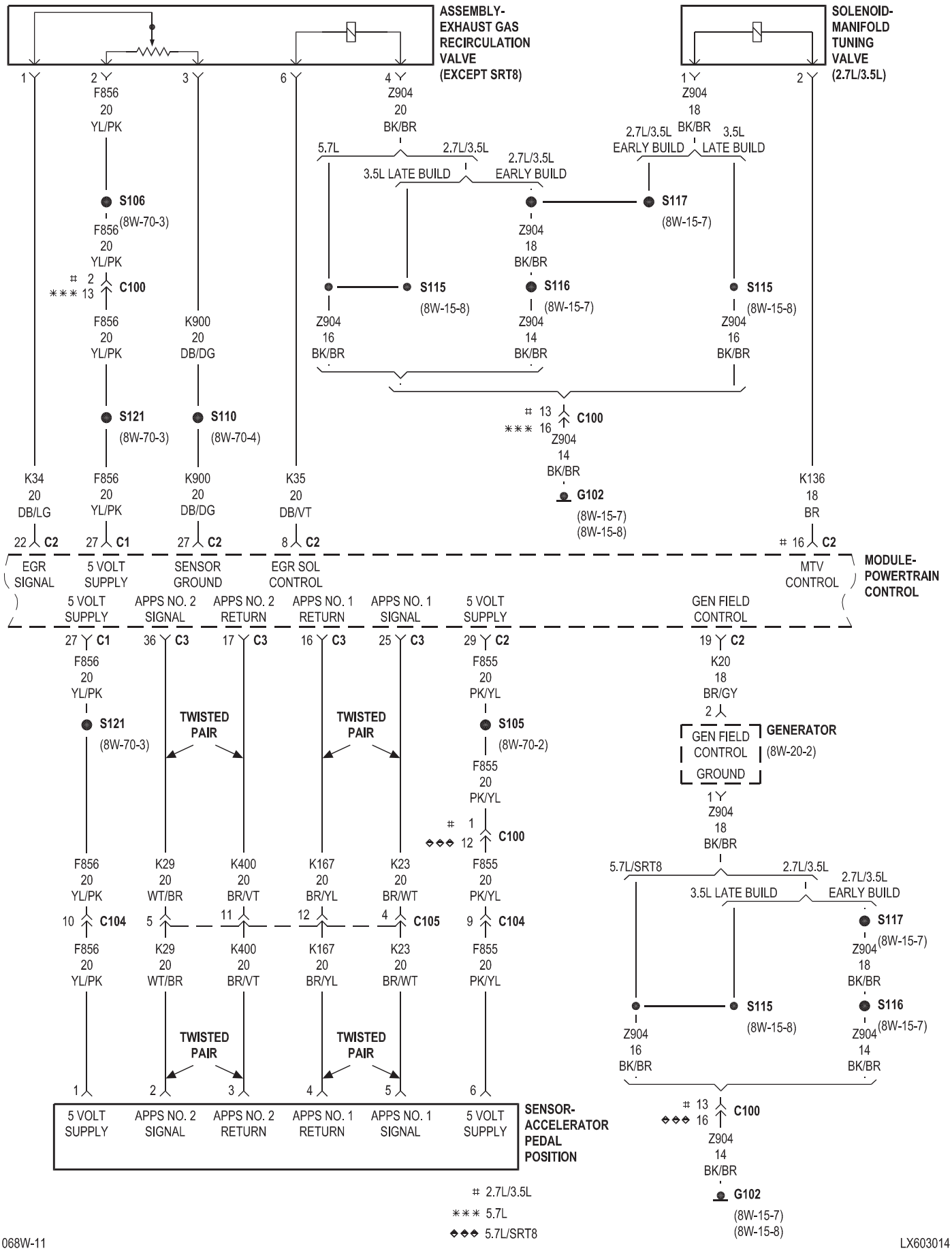
ASSEMBLY-EXHAUST GAS RECIRCULATION VALVE (EXCEPT SRT8)
SOLENOID-MANIFOLD TUNING VALVE (2.7L/3.5L)
1 2 3 6 4
F856 20 YL/PK
Z904 20 BK/BR
1 2
Z904 18 BK/BR
2.7L/3.5L EARLY BUILD
3.5L LATE BUILD
5.7L
2.7L/3.5L
3.5L LATE BUILD
2.7L/3.5L EARLY BUILD
S106
F856 (8W-70-3) 20 YL/PK
S117 (8W-15-7)
Z904 18 BK/BR
2 *** 13 C100
S115 (8W-15-8)
S116 (8W-15-7)
S115 (8W-15-8)
F856 20 YL/PK
K900 20 DB/DG
Z904 16 BK/BR
Z904 14 BK/BR
Z904 16 BK/BR
S121 (8W-70-3)
S110 (8W-70-4)
13 *** 16 C100
Z904 14 BK/BR
G102 (8W-15-7) (8W-15-8)
K34 20 DB/LG
F856 20 YL/PK
K900 20 DB/DG
K35 20 DB/VT
K136 18 BR
22 C2
27 C1
27 C2
8 C2
16 C2
EGR SIGNAL
5 VOLT SUPPLY
SENSOR GROUND
EGR SOL CONTROL
MTV CONTROL
MODULE-POWERTRAIN CONTROL
5 VOLT SUPPLY
APPS NO. 2 SIGNAL
APPS NO. 2 RETURN
APPS NO. 1 RETURN
APPS NO. 1 SIGNAL
5 VOLT SUPPLY
GEN FIELD CONTROL
27 C1
36 C3
17 C3
16 C3
25 C3
29 C2
19 C2
F856 20 YL/PK
F855 20 PK/YL
K20 18 BR/GY
2
S121 (8W-70-3)
TWISTED PAIR
TWISTED PAIR
S105 (8W-70-2)
GENERATOR (8W-20-2)
GEN FIELD CONTROL
GROUND
F855 20 PK/YL
1 ◆◆◆ 12 C100
1
Z904 18 BK/BR
F856 20 YL/PK
K29 20 WT/BR
K400 20 BR/VT
K167 20 BR/YL
K23 20 BR/WT
F855 20 PK/YL
5.7L/SRT8
2.7L/3.5L
3.5L LATE BUILD
2.7L/3.5L EARLY BUILD
10 C104
5 C105
11
12
4 C105
9 C104
S117 (8W-15-7)
Z904 18 BK/BR
F856 20 YL/PK
K29 20 WT/BR
K400 20 BR/VT
K167 20 BR/YL
K23 20 BR/WT
F855 20 PK/YL
S115 (8W-15-8)
S116 (8W-15-7)
Z904 16 BK/BR
Z904 14 BK/BR
TWISTED PAIR
TWISTED PAIR
13 ◆◆◆ 16 C100
Z904 14 BK/BR
1 2 3 4 5 6
G102 (8W-15-7) (8W-15-8)
5 VOLT SUPPLY
APPS NO. 2 SIGNAL
APPS NO. 2 RETURN
APPS NO. 1 RETURN
APPS NO. 1 SIGNAL
5 VOLT SUPPLY
SENSOR-ACCELERATOR PEDAL POSITION
2.7L/3.5L
*** 5.7L
◆◆◆ 5.7L/SRT8

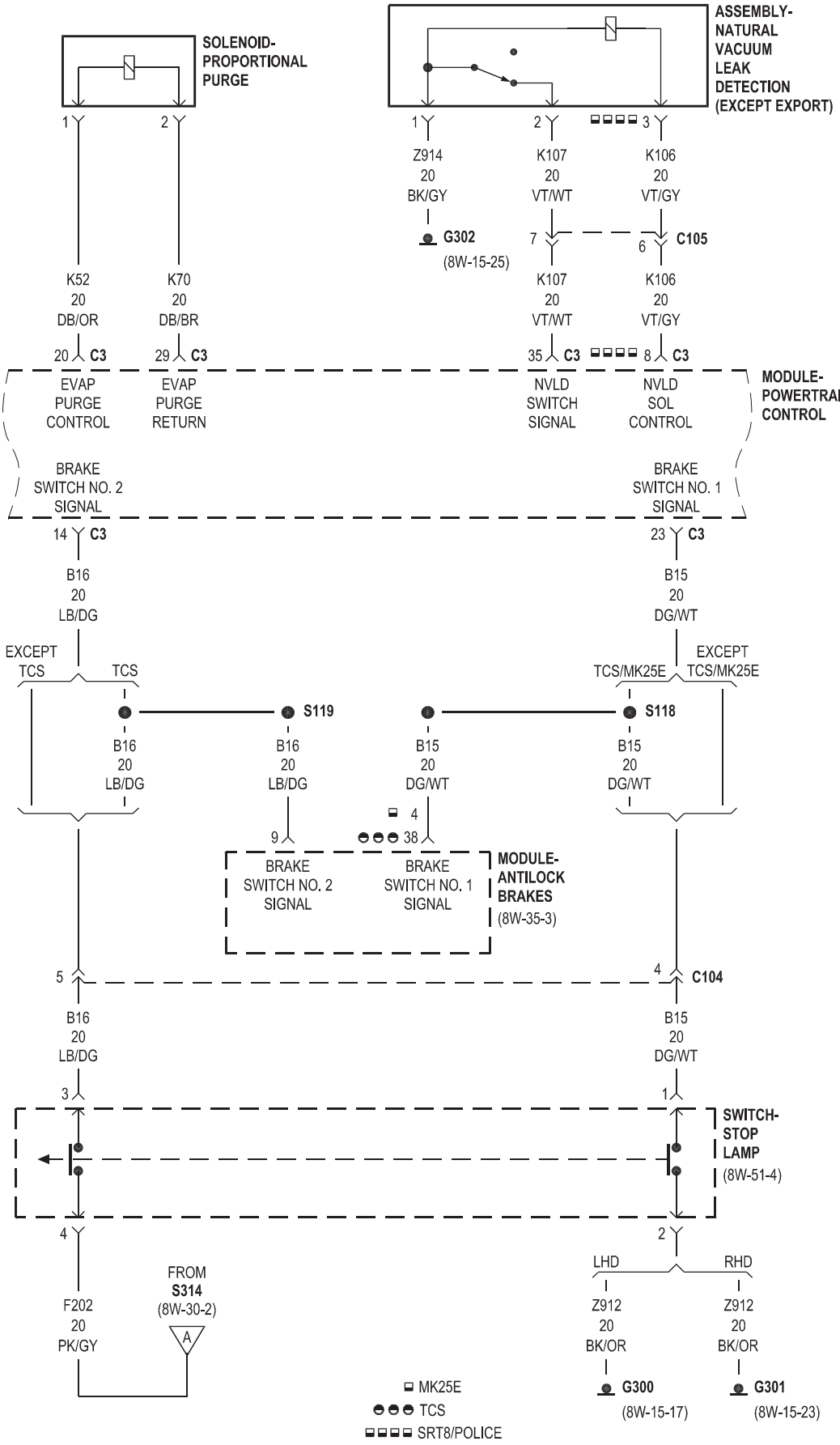
SOLENOID-
PROPORTIONAL
PURGE
ASSEMBLY-
NATURAL
VACUUM
LEAK
DETECTION
(EXCEPT EXPORT)
1
2
1
2
3
Z914
20
BK/GY
K107
20
VT/WT
K106
20
VT/GY
G302
(8W-15-25)
7
6
C105
K52
20
DB/OR
K70
20
DB/BR
K107
20
VT/WT
K106
20
VT/GY
20 C3
29 C3
35 C3
8 C3
EVAP
PURGE
CONTROL
EVAP
PURGE
RETURN
NVLD
SWITCH
SIGNAL
NVLD
SOL
CONTROL
MODULE-
POWERTRAIN
CONTROL
BRAKE
SWITCH NO. 2
SIGNAL
BRAKE
SWITCH NO. 1
SIGNAL
14 C3
23 C3
B16
20
LB/DG
B15
20
DG/WT
EXCEPT
TCS
TCS
TCS/MK25E
EXCEPT
TCS/MK25E
S119
S118
B16
20
LB/DG
B16
20
LB/DG
B15
20
DG/WT
B15
20
DG/WT
4
9
38
BRAKE
SWITCH NO. 2
SIGNAL
BRAKE
SWITCH NO. 1
SIGNAL
MODULE-
ANTILOCK
BRAKES
(8W-35-3)
5
4
C104
B16
20
LB/DG
B15
20
DG/WT
3
1
SWITCH-
STOP
LAMP
(8W-51-4)
4
2
LHD
RHD
FROM
S314
(8W-30-2)
A
F202
20
PK/GY
Z912
20
BK/OR
Z912
20
BK/OR
G300
(8W-15-17)
G301
(8W-15-23)
MK25E
TCS
SRT8/POLICE

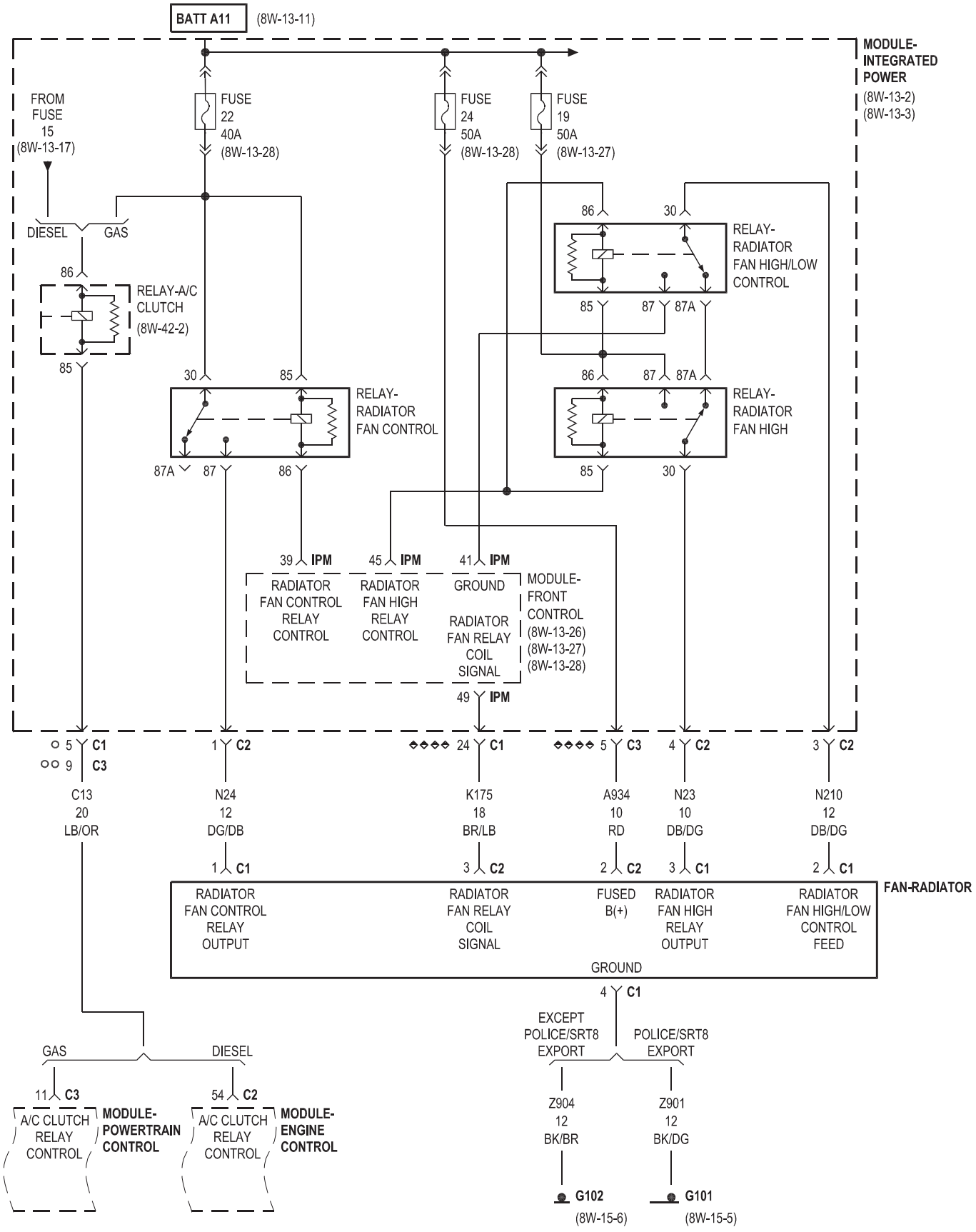
BATT A11
(8W-13-11)
MODULE-
INTEGRATED
POWER
(8W-13-2)
(8W-13-3)
FROM
FUSE
15
(8W-13-17)
FUSE
22
40A
(8W-13-28)
FUSE
24
50A
(8W-13-28)
FUSE
19
50A
(8W-13-27)
DIESEL
GAS
RELAY-A/C
CLUTCH
(8W-42-2)
RELAY-
RADIATOR
FAN CONTROL
RELAY-
RADIATOR
FAN HIGH/LOW
CONTROL
RELAY-
RADIATOR
FAN HIGH
39 IPM
RADIATOR
FAN CONTROL
RELAY
CONTROL
45 IPM
RADIATOR
FAN HIGH
RELAY
CONTROL
41 IPM
GROUND
RADIATOR
FAN RELAY
COIL
SIGNAL
49 IPM
MODULE-
FRONT
CONTROL
(8W-13-26)
(8W-13-27)
(8W-13-28)
C13
20
LB/OR
N24
12
DG/DB
K175
18
BR/LB
A934
10
RD
N23
10
DB/DG
N210
12
DB/DG
RADIATOR
FAN CONTROL
RELAY
OUTPUT
RADIATOR
FAN RELAY
COIL
SIGNAL
FUSED
B(+)
RADIATOR
FAN HIGH
RELAY
OUTPUT
RADIATOR
FAN HIGH/LOW
CONTROL
FEED
FAN-RADIATOR
GROUND
EXCEPT
POLICE/SRT8
EXPORT
POLICE/SRT8
EXPORT
Z904
12
BK/BR
Z901
12
BK/DG
G102
(8W-15-6)
G101
(8W-15-5)
A/C CLUTCH
RELAY
CONTROL
MODULE-
POWERTRAIN
CONTROL
A/C CLUTCH
RELAY
CONTROL
MODULE-
ENGINE
CONTROL
GAS
DIESEL
AWD/SRT8/DIESEL

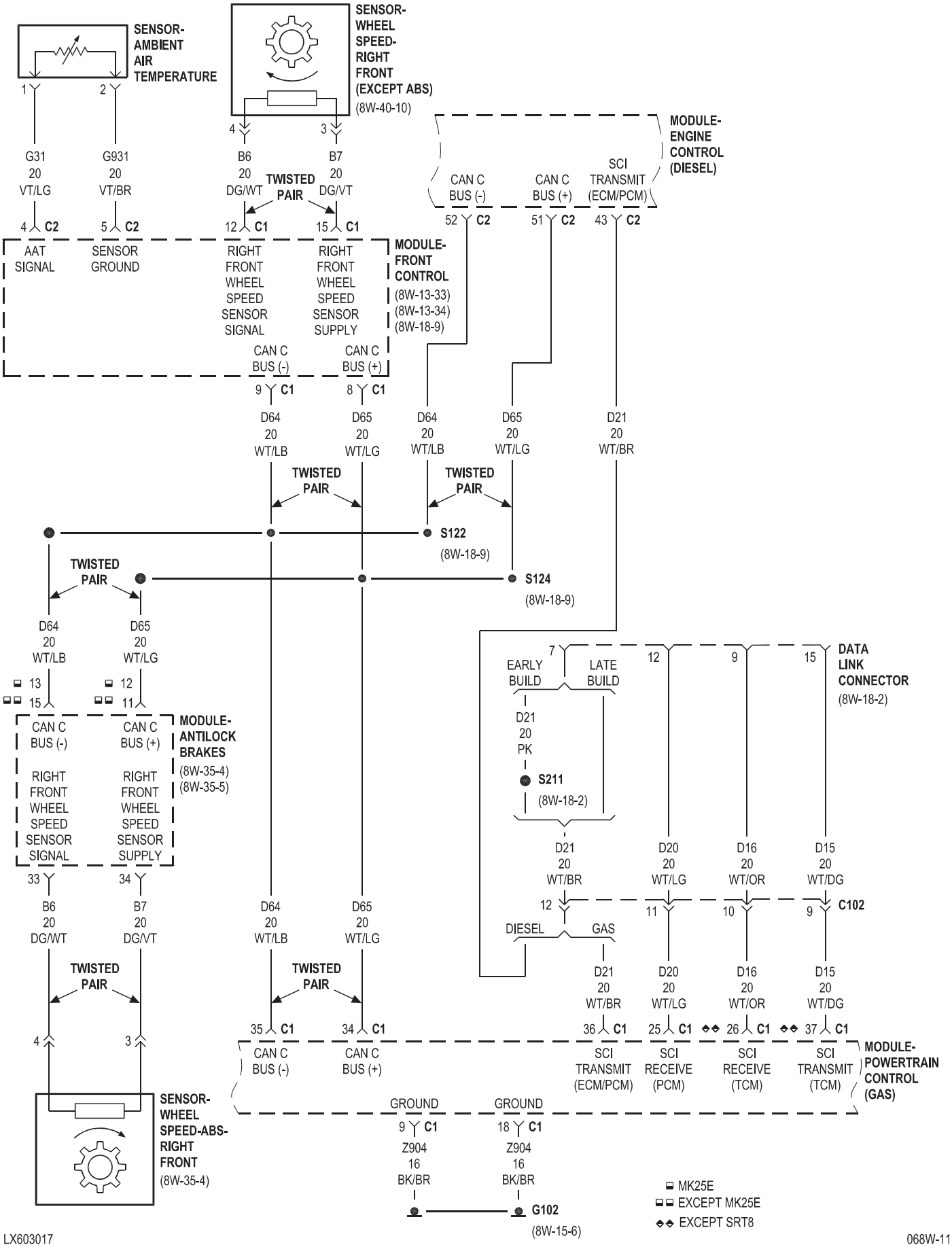
SENSOR- AMBIENT AIR TEMPERATURE
1
2
G31 20 VT/LG
G931 20 VT/BR
4 C2
5 C2
AAT SIGNAL
SENSOR GROUND
SENSOR- WHEEL SPEED- RIGHT FRONT (EXCEPT ABS)
(8W-40-10)
4
3
B6 20 DG/WT
B7 20 DG/VT
TWISTED PAIR
12 C1
15 C1
RIGHT FRONT WHEEL SPEED SENSOR SIGNAL
RIGHT FRONT WHEEL SPEED SENSOR SUPPLY
MODULE- FRONT CONTROL
(8W-13-33)
(8W-13-34)
(8W-18-9)
MODULE- ENGINE CONTROL (DIESEL)
CAN C BUS (-)
CAN C BUS (+)
SCI TRANSMIT (ECM/PCM)
52 C2
51 C2
43 C2
CAN C BUS (-)
CAN C BUS (+)
9 C1
8 C1
D64 20 WT/LB
D65 20 WT/LG
D64 20 WT/LB
D65 20 WT/LG
D21 20 WT/BR
TWISTED PAIR
TWISTED PAIR
TWISTED PAIR
S122
(8W-18-9)
S124
(8W-18-9)
TWISTED PAIR
D64 20 WT/LB
D65 20 WT/LG
13
15
12
11
CAN C BUS (-)
CAN C BUS (+)
RIGHT FRONT WHEEL SPEED SENSOR SIGNAL
RIGHT FRONT WHEEL SPEED SENSOR SUPPLY
MODULE- ANTILOCK BRAKES
(8W-35-4)
(8W-35-5)
33
34
B6 20 DG/WT
B7 20 DG/VT
TWISTED PAIR
4
3
SENSOR- WHEEL SPEED-ABS- RIGHT FRONT
(8W-35-4)
D64 20 WT/LB
D65 20 WT/LG
TWISTED PAIR
35 C1
34 C1
CAN C BUS (-)
CAN C BUS (+)
7
12
9
15
EARLY BUILD
LATE BUILD
DATA LINK CONNECTOR
(8W-18-2)
D21 20 PK
S211
(8W-18-2)
D21 20 WT/BR
D20 20 WT/LG
D16 20 WT/OR
D15 20 WT/DG
12
11
10
9
C102
DIESEL
GAS
D21 20 WT/BR
D20 20 WT/LG
D16 20 WT/OR
D15 20 WT/DG
TWISTED PAIR
36 C1
25 C1
26 C1
37 C1
SCI TRANSMIT (ECM/PCM)
SCI RECEIVE (PCM)
SCI RECEIVE (TCM)
SCI TRANSMIT (TCM)
MODULE- POWERTRAIN CONTROL (GAS)
GROUND
GROUND
9 C1
18 C1
Z904 16 BK/BR
Z904 16 BK/BR
G102
(8W-15-6)
MK25E
EXCEPT MK25E
EXCEPT SRT8

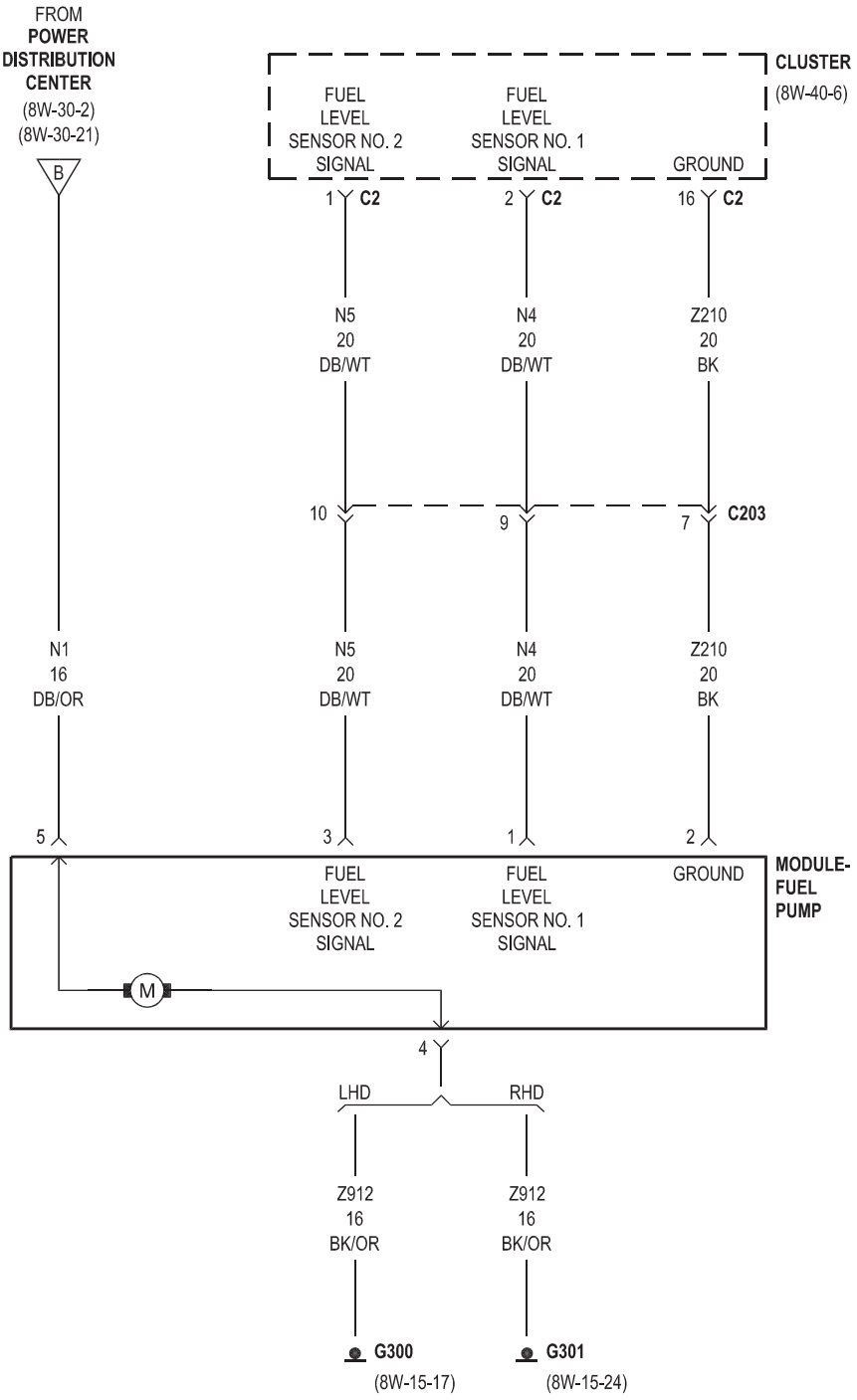
FROM
POWER
DISTRIBUTION
CENTER
(8W-30-2)
(8W-30-21)
B
CLUSTER
(8W-40-6)
FUEL
LEVEL
SENSOR NO. 2
SIGNAL
FUEL
LEVEL
SENSOR NO. 1
SIGNAL
GROUND
1 C2
2 C2
16 C2
N5
20
DB/WT
N4
20
DB/WT
Z210
20
BK
10
9
7 C203
N1
16
DB/OR
N5
20
DB/WT
N4
20
DB/WT
Z210
20
BK
5
3
1
2
FUEL
LEVEL
SENSOR NO. 2
SIGNAL
FUEL
LEVEL
SENSOR NO. 1
SIGNAL
GROUND
MODULE-
FUEL
PUMP
M
4
LHD
RHD
Z912
16
BK/OR
Z912
16
BK/OR
G300
(8W-15-17)
G301
(8W-15-24)

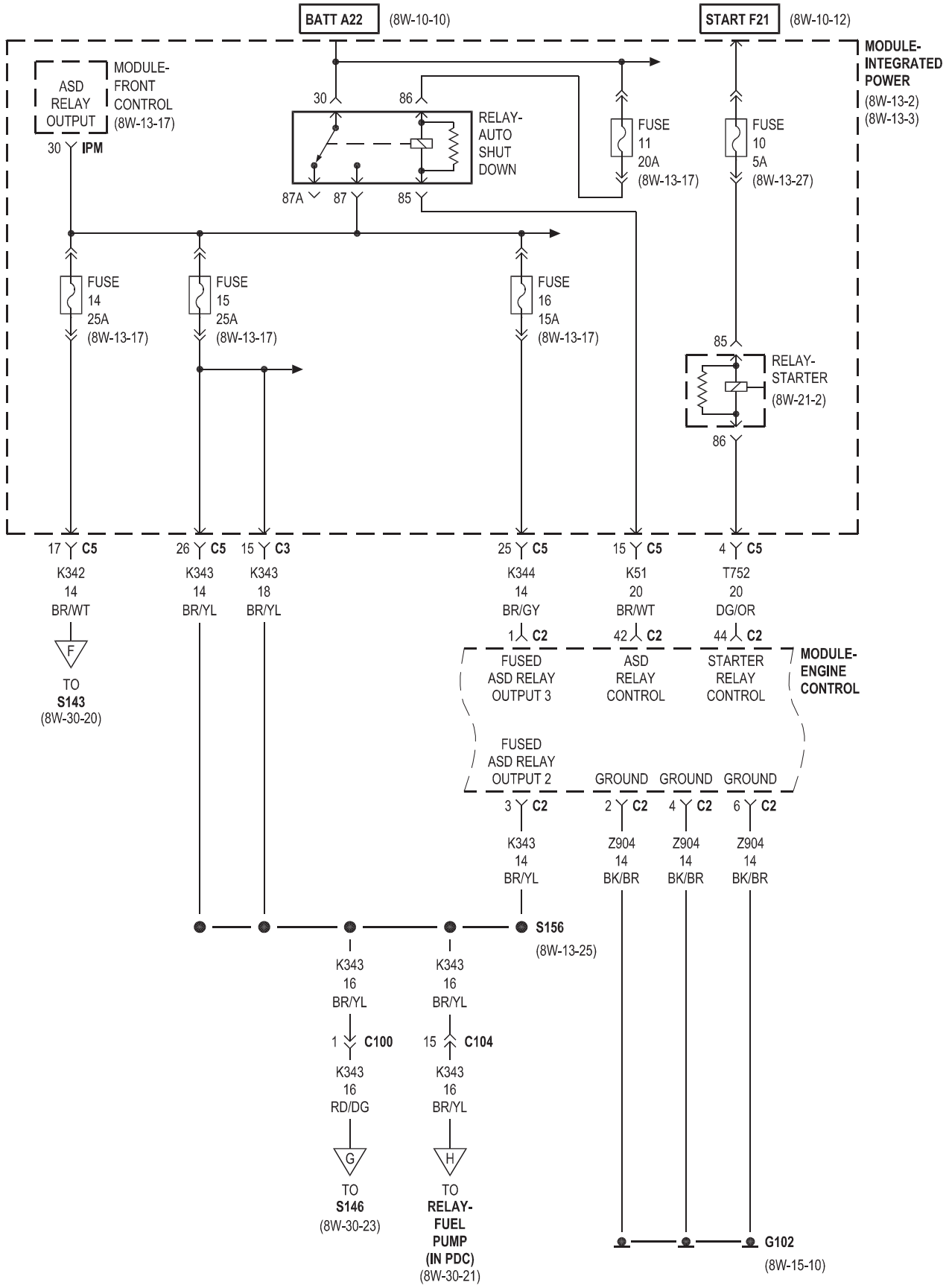
BATT A22
(8W-10-10)
START F21
(8W-10-12)
MODULE-INTEGRATED POWER
(8W-13-2)
(8W-13-3)
ASD RELAY OUTPUT
MODULE-FRONT CONTROL
(8W-13-17)
30 IPM
30
86
87A
87
85
RELAY-AUTO SHUT DOWN
FUSE 11 20A (8W-13-17)
FUSE 10 5A (8W-13-27)
FUSE 14 25A (8W-13-17)
FUSE 15 25A (8W-13-17)
FUSE 16 15A (8W-13-17)
85
RELAY-STARTER
(8W-21-2)
86
17 C5
K342
14
BR/WT
TO S143
(8W-30-20)
26 C5
K343
14
BR/YL
15 C3
K343
18
BR/YL
25 C5
K344
14
BR/GY
15 C5
K51
20
BR/WT
4 C5
T752
20
DG/OR
1 C2
42 C2
44 C2
MODULE-ENGINE CONTROL
FUSED ASD RELAY OUTPUT 3
ASD RELAY CONTROL
STARTER RELAY CONTROL
FUSED ASD RELAY OUTPUT 2
GROUND
GROUND
GROUND
3 C2
2 C2
4 C2
6 C2
K343
14
BR/YL
Z904
14
BK/BR
Z904
14
BK/BR
Z904
14
BK/BR
S156
(8W-13-25)
K343
16
BR/YL
K343
16
BR/YL
1 C100
15 C104
K343
16
RD/DG
K343
16
BR/YL
TO S146
(8W-30-23)
TO RELAY-FUEL PUMP (IN PDC)
(8W-30-21)
G102
(8W-15-10)

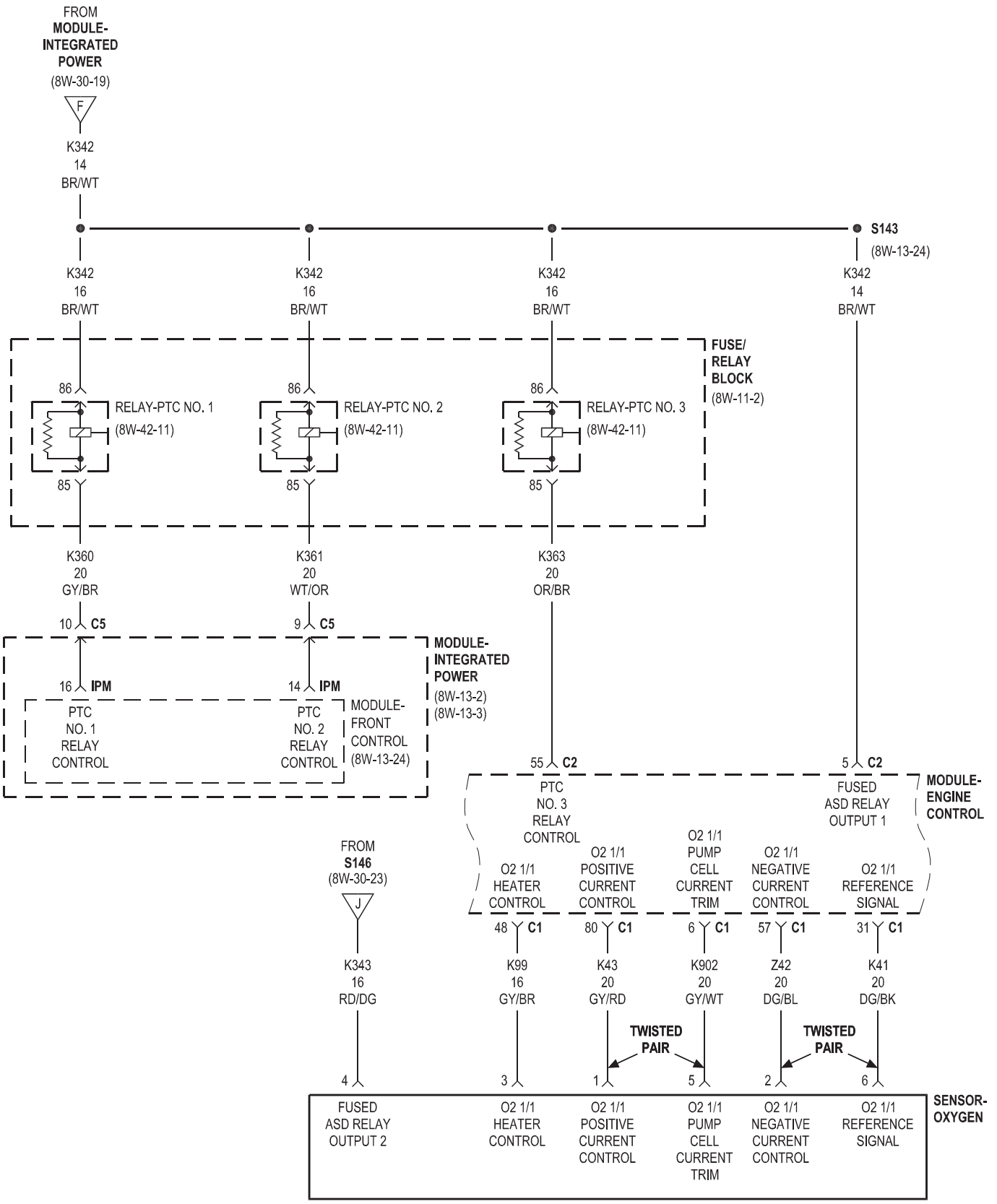
FROM MODULE-INTEGRATED POWER (8W-30-19)
F
K342
14
BR/WT
S143
(8W-13-24)
K342
16
BR/WT
K342
16
BR/WT
K342
16
BR/WT
K342
14
BR/WT
FUSE/ RELAY BLOCK (8W-11-2)
86
RELAY-PTC NO. 1
(8W-42-11)
86
RELAY-PTC NO. 2
(8W-42-11)
86
RELAY-PTC NO. 3
(8W-42-11)
85
85
85
K360
20
GY/BR
K361
20
WT/OR
K363
20
OR/BR
10 C5
9 C5
MODULE-INTEGRATED POWER (8W-13-2) (8W-13-3)
16 IPM
14 IPM
PTC NO. 1 RELAY CONTROL
PTC NO. 2 RELAY CONTROL
MODULE-FRONT CONTROL (8W-13-24)
55 C2
5 C2
MODULE-ENGINE CONTROL
PTC NO. 3 RELAY CONTROL
FUSED ASD RELAY OUTPUT 1
FROM S146 (8W-30-23)
J
O2 1/1 HEATER CONTROL
O2 1/1 POSITIVE CURRENT CONTROL
O2 1/1 PUMP CELL CURRENT TRIM
O2 1/1 NEGATIVE CURRENT CONTROL
O2 1/1 REFERENCE SIGNAL
48 C1
80 C1
6 C1
57 C1
31 C1
K343
16
RD/DG
K99
16
GY/BR
K43
20
GY/RD
K902
20
GY/WT
Z42
20
DG/BL
K41
20
DG/BK
TWISTED PAIR
TWISTED PAIR
4
3
1
5
2
6
FUSED ASD RELAY OUTPUT 2
O2 1/1 HEATER CONTROL
O2 1/1 POSITIVE CURRENT CONTROL
O2 1/1 PUMP CELL CURRENT TRIM
O2 1/1 NEGATIVE CURRENT CONTROL
O2 1/1 REFERENCE SIGNAL
SENSOR-OXYGEN

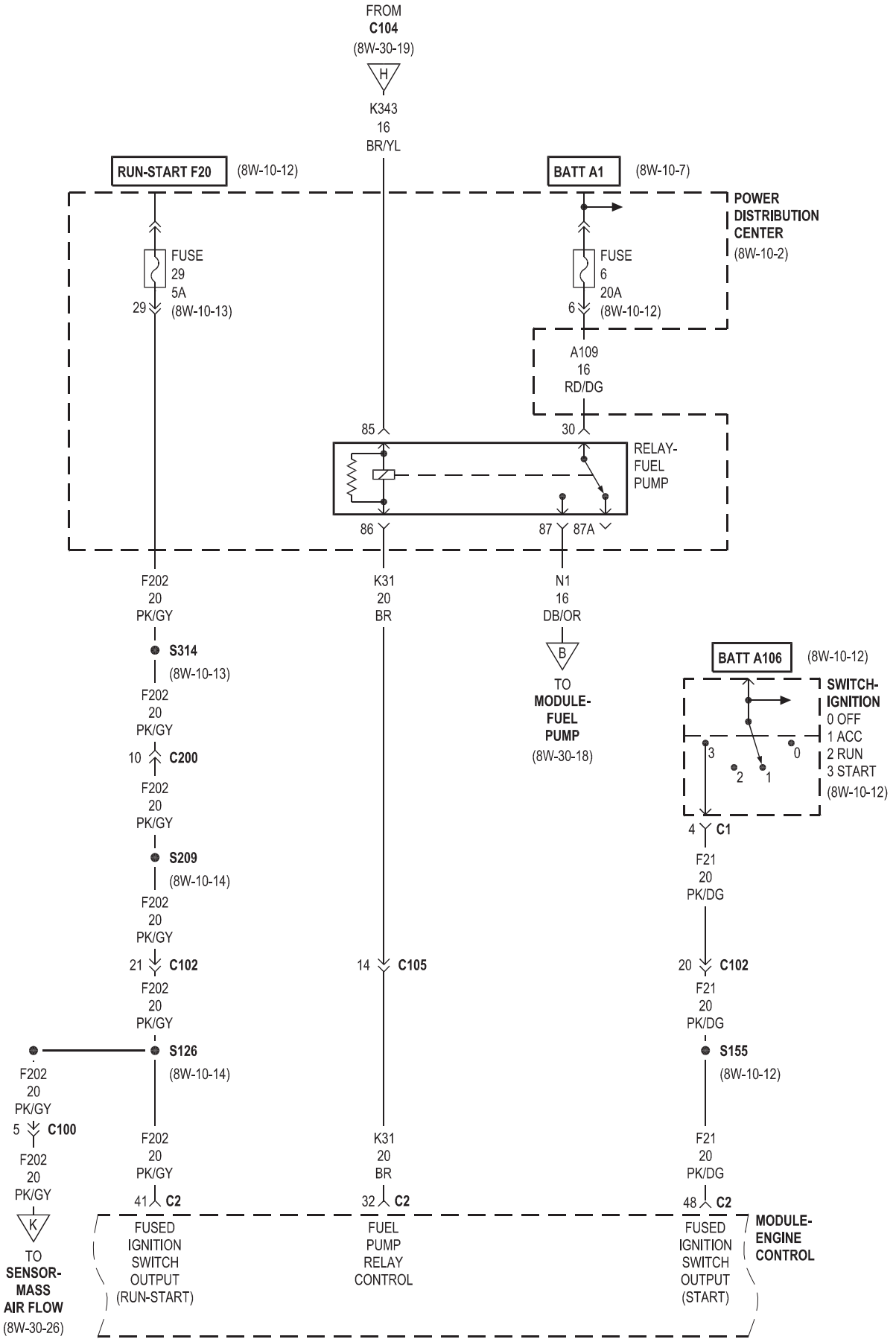
FROM C104 (8W-30-19)
H
K343 16 BR/YL
RUN-START F20
(8W-10-12)
BATT A1
(8W-10-7)
POWER DISTRIBUTION CENTER
(8W-10-2)
FUSE 29 5A
29
(8W-10-13)
FUSE 6 20A
6
(8W-10-12)
A109 16 RD/DG
85
30
RELAY-FUEL PUMP
86
87
87A
F202 20 PK/GY
K31 20 BR
N1 16 DB/OR
B
TO MODULE-FUEL PUMP
(8W-30-18)
BATT A106
(8W-10-12)
SWITCH-IGNITION
0 OFF
1 ACC
2 RUN
3 START
(8W-10-12)
S314
(8W-10-13)
10 C200
S209
(8W-10-14)
21 C102
14 C105
4 C1
F21 20 PK/DG
20 C102
S126
(8W-10-14)
S155
(8W-10-12)
F202 20 PK/GY
5 C100
K
TO SENSOR-MASS AIR FLOW
(8W-30-26)
41 C2
32 C2
48 C2
FUSED IGNITION SWITCH OUTPUT (RUN-START)
FUEL PUMP RELAY CONTROL
FUSED IGNITION SWITCH OUTPUT (START)
MODULE-ENGINE CONTROL

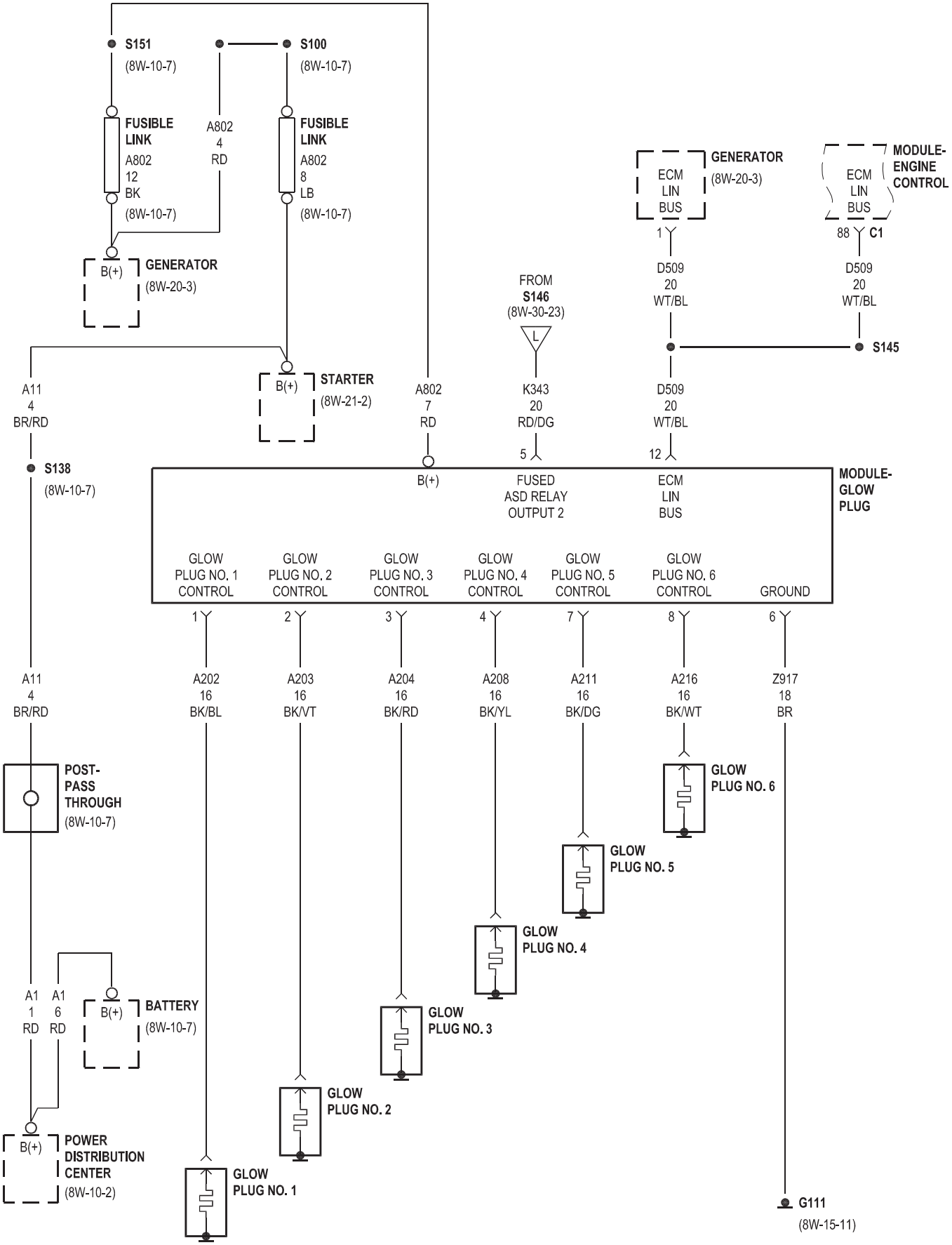
S151
(8W-10-7)
S100
(8W-10-7)
FUSIBLE LINK
A802
12
BK
(8W-10-7)
A802
4
RD
FUSIBLE LINK
A802
8
LB
(8W-10-7)
B(+)
GENERATOR
(8W-20-3)
ECM
LIN
BUS
GENERATOR
(8W-20-3)
ECM
LIN
BUS
MODULE-
ENGINE
CONTROL
1
88
C1
D509
20
WT/BL
D509
20
WT/BL
S145
FROM
S146
(8W-30-23)
L
A11
4
BR/RD
B(+)
STARTER
(8W-21-2)
A802
7
RD
K343
20
RD/DG
D509
20
WT/BL
S138
(8W-10-7)
B(+)
FUSED
ASD RELAY
OUTPUT 2
ECM
LIN
BUS
5
12
MODULE-
GLOW
PLUG
GLOW
PLUG NO. 1
CONTROL
GLOW
PLUG NO. 2
CONTROL
GLOW
PLUG NO. 3
CONTROL
GLOW
PLUG NO. 4
CONTROL
GLOW
PLUG NO. 5
CONTROL
GLOW
PLUG NO. 6
CONTROL
GROUND
1
2
3
4
7
8
6
A11
4
BR/RD
A202
16
BK/BL
A203
16
BK/VT
A204
16
BK/RD
A208
16
BK/YL
A211
16
BK/DG
A216
16
BK/WT
Z917
18
BR
POST-
PASS
THROUGH
(8W-10-7)
GLOW
PLUG NO. 6
GLOW
PLUG NO. 5
GLOW
PLUG NO. 4
A1
1
RD
A1
6
RD
B(+)
BATTERY
(8W-10-7)
GLOW
PLUG NO. 3
GLOW
PLUG NO. 2
B(+)
POWER
DISTRIBUTION
CENTER
(8W-10-2)
GLOW
PLUG NO. 1
G111
(8W-15-11)

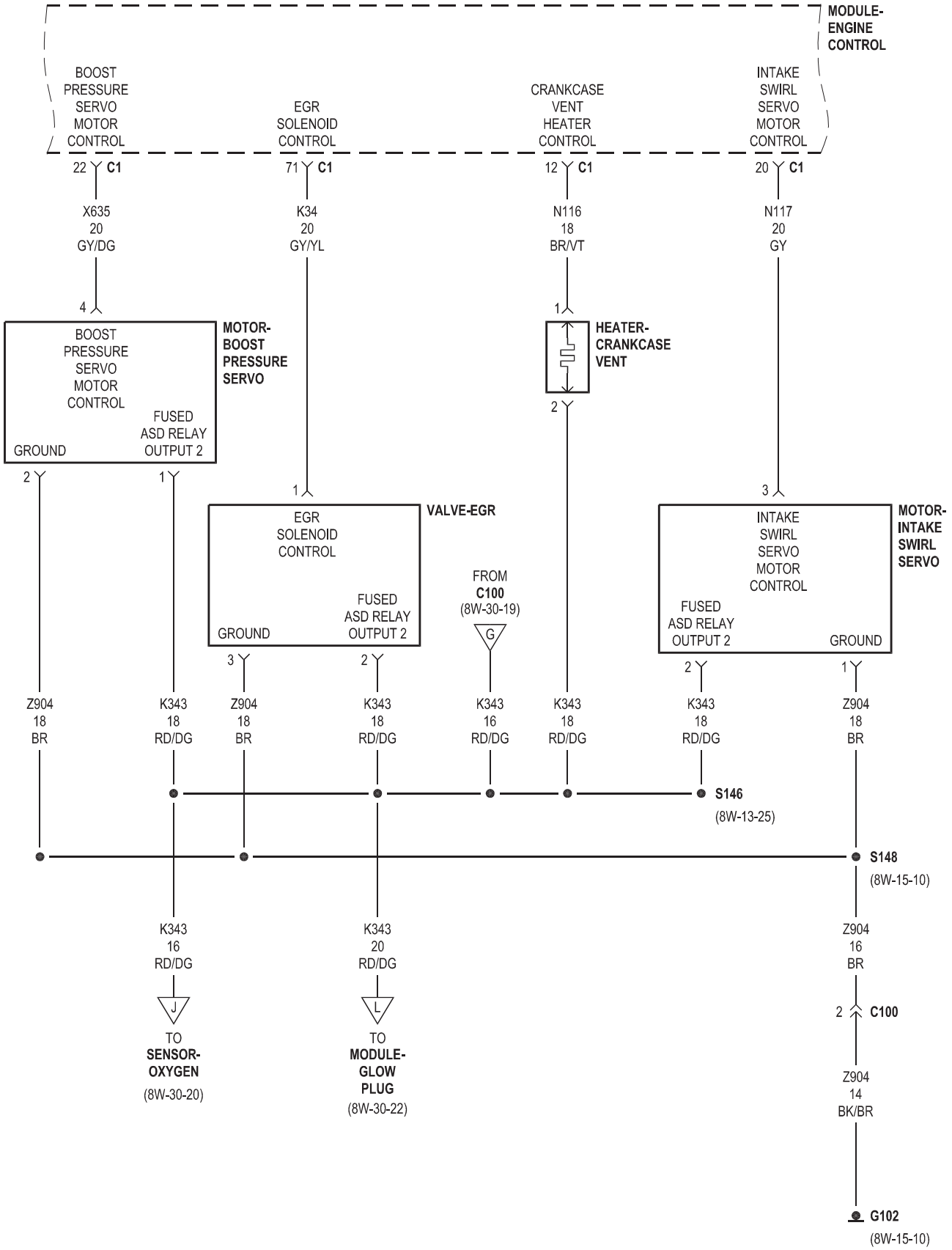
MODULE-ENGINE CONTROL
BOOST PRESSURE SERVO MOTOR CONTROL
EGR SOLENOID CONTROL
CRANKCASE VENT HEATER CONTROL
INTAKE SWIRL SERVO MOTOR CONTROL
22 C1
71 C1
12 C1
20 C1
X635 20 GY/DG
K34 20 GY/YL
N116 18 BR/VT
N117 20 GY
4
1
2
3
MOTOR-BOOST PRESSURE SERVO
BOOST PRESSURE SERVO MOTOR CONTROL
GROUND
FUSED ASD RELAY OUTPUT 2
HEATER-CRANKCASE VENT
VALVE-EGR
EGR SOLENOID CONTROL
FROM C100 (8W-30-19)
G
MOTOR-INTAKE SWIRL SERVO
INTAKE SWIRL SERVO MOTOR CONTROL
Z904 18 BR
K343 18 RD/DG
Z904 18 BR
K343 18 RD/DG
K343 16 RD/DG
K343 18 RD/DG
K343 18 RD/DG
Z904 18 BR
S146
(8W-13-25)
S148
(8W-15-10)
K343 16 RD/DG
K343 20 RD/DG
Z904 16 BR
J
L
C100
TO SENSOR-OXYGEN
(8W-30-20)
TO MODULE-GLOW PLUG
(8W-30-22)
Z904 14 BK/BR
G102
(8W-15-10)

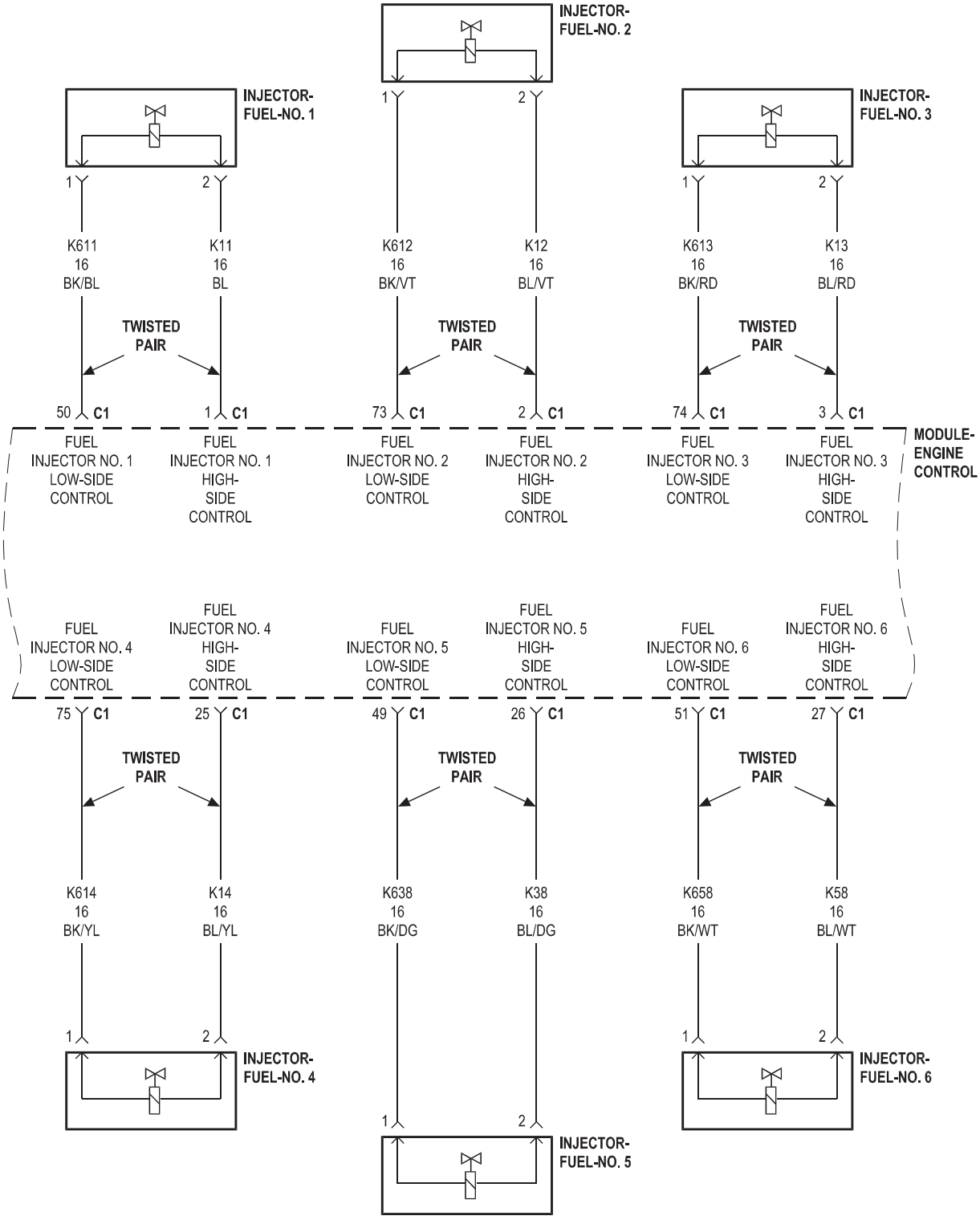
INJECTOR-
FUEL-NO. 2
INJECTOR-
FUEL-NO. 1
INJECTOR-
FUEL-NO. 3
1
2
K611
16
BK/BL
K11
16
BL
K612
16
BK/VT
K12
16
BL/VT
K613
16
BK/RD
K13
16
BL/RD
TWISTED
PAIR
50 C1
1 C1
73 C1
2 C1
74 C1
3 C1
FUEL
INJECTOR NO. 1
LOW-SIDE
CONTROL
FUEL
INJECTOR NO. 1
HIGH-
SIDE
CONTROL
FUEL
INJECTOR NO. 2
LOW-SIDE
CONTROL
FUEL
INJECTOR NO. 2
HIGH-
SIDE
CONTROL
FUEL
INJECTOR NO. 3
LOW-SIDE
CONTROL
FUEL
INJECTOR NO. 3
HIGH-
SIDE
CONTROL
MODULE-
ENGINE
CONTROL
FUEL
INJECTOR NO. 4
LOW-SIDE
CONTROL
FUEL
INJECTOR NO. 4
HIGH-
SIDE
CONTROL
FUEL
INJECTOR NO. 5
LOW-SIDE
CONTROL
FUEL
INJECTOR NO. 5
HIGH-
SIDE
CONTROL
FUEL
INJECTOR NO. 6
LOW-SIDE
CONTROL
FUEL
INJECTOR NO. 6
HIGH-
SIDE
CONTROL
75 C1
25 C1
49 C1
26 C1
51 C1
27 C1
K614
16
BK/YL
K14
16
BL/YL
K638
16
BK/DG
K38
16
BL/DG
K658
16
BK/WT
K58
16
BL/WT
INJECTOR-
FUEL-NO. 4
INJECTOR-
FUEL-NO. 5
INJECTOR-
FUEL-NO. 6

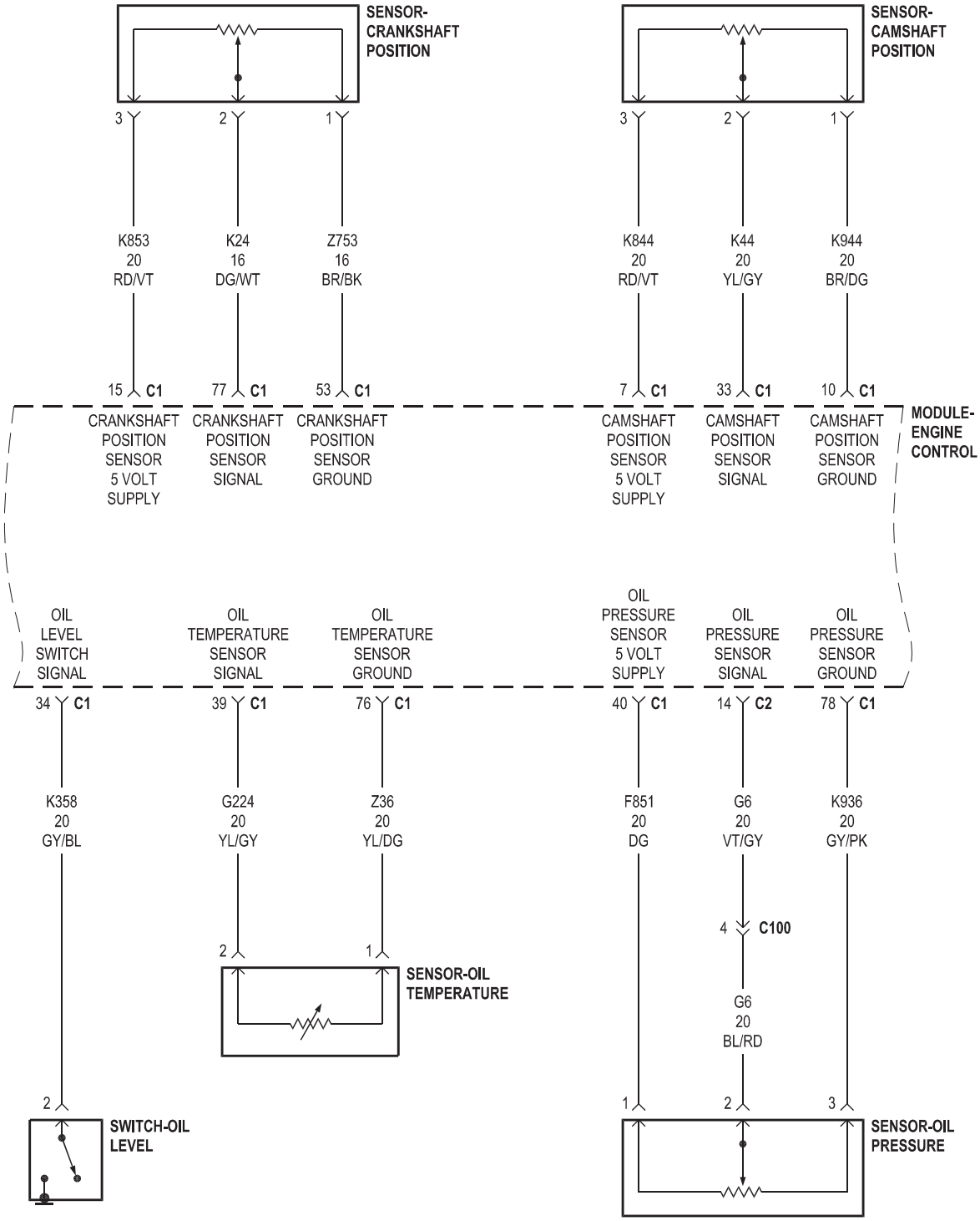
SENSOR-
CRANKSHAFT
POSITION
SENSOR-
CAMSHAFT
POSITION
3
2
1
K853
20
RD/VT
K24
16
DG/WT
Z753
16
BR/BK
K844
20
RD/VT
K44
20
YL/GY
K944
20
BR/DG
15 C1
77 C1
53 C1
7 C1
33 C1
10 C1
CRANKSHAFT
POSITION
SENSOR
5 VOLT
SUPPLY
CRANKSHAFT
POSITION
SENSOR
SIGNAL
CRANKSHAFT
POSITION
SENSOR
GROUND
CAMSHAFT
POSITION
SENSOR
5 VOLT
SUPPLY
CAMSHAFT
POSITION
SENSOR
SIGNAL
CAMSHAFT
POSITION
SENSOR
GROUND
MODULE-
ENGINE
CONTROL
OIL
LEVEL
SWITCH
SIGNAL
OIL
TEMPERATURE
SENSOR
SIGNAL
OIL
TEMPERATURE
SENSOR
GROUND
OIL
PRESSURE
SENSOR
5 VOLT
SUPPLY
OIL
PRESSURE
SENSOR
SIGNAL
OIL
PRESSURE
SENSOR
GROUND
34 C1
39 C1
76 C1
40 C1
14 C2
78 C1
K358
20
GY/BL
G224
20
YL/GY
Z36
20
YL/DG
F851
20
DG
G6
20
VT/GY
K936
20
GY/PK
4 C100
G6
20
BL/RD
2
1
SENSOR-OIL
TEMPERATURE
2
SWITCH-OIL
LEVEL
1
2
3
SENSOR-OIL
PRESSURE

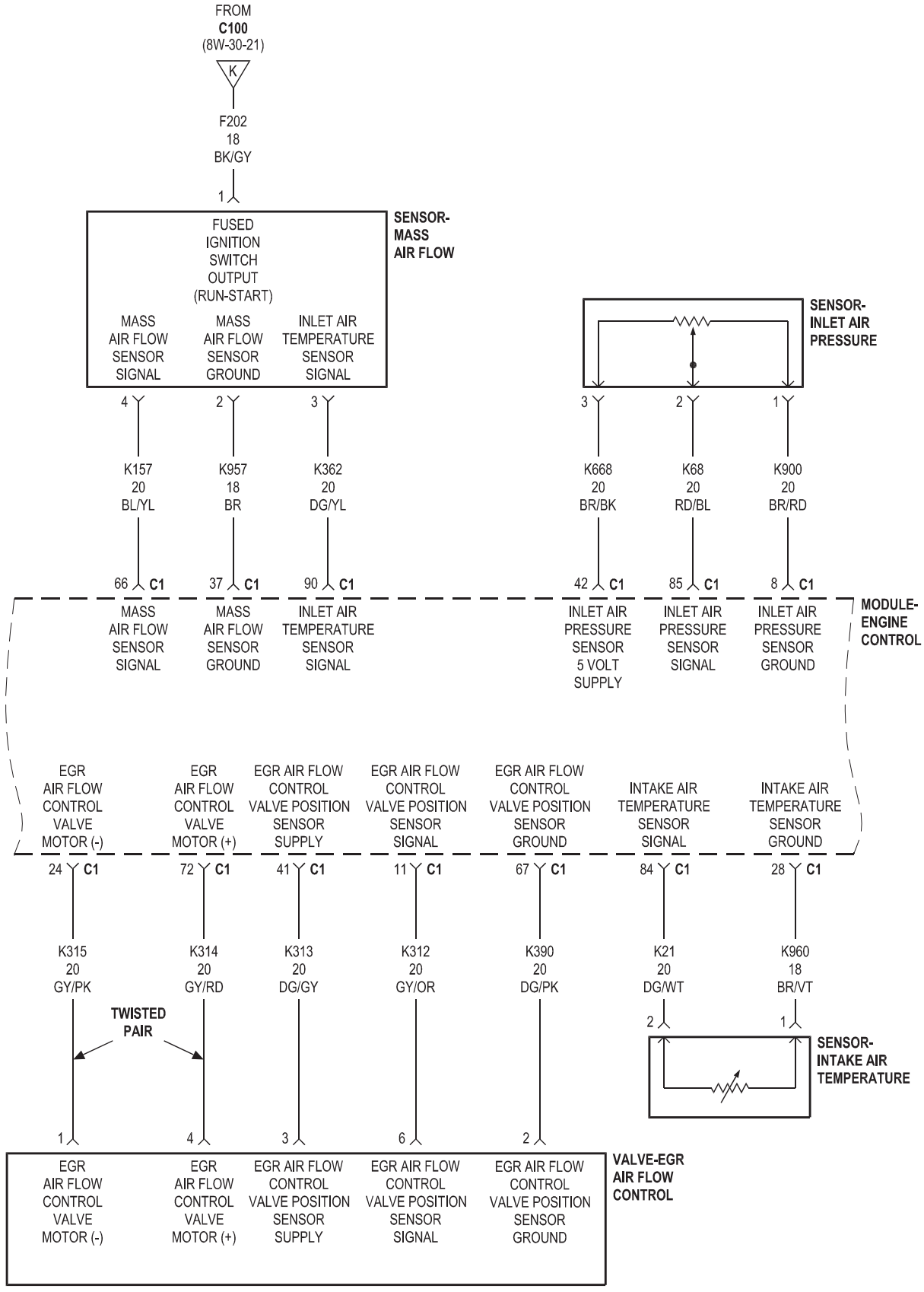
FROM
C100
(8W-30-21)
K
F202
18
BK/GY
1
FUSED
IGNITION
SWITCH
OUTPUT
(RUN-START)
SENSOR-
MASS
AIR FLOW
MASS
AIR FLOW
SENSOR
SIGNAL
MASS
AIR FLOW
SENSOR
GROUND
INLET AIR
TEMPERATURE
SENSOR
SIGNAL
4
2
3
K157
20
BL/YL
K957
18
BR
K362
20
DG/YL
66 C1
37 C1
90 C1
SENSOR-
INLET AIR
PRESSURE
3
2
1
K668
20
BR/BK
K68
20
RD/BL
K900
20
BR/RD
42 C1
85 C1
8 C1
INLET AIR
PRESSURE
SENSOR
5 VOLT
SUPPLY
INLET AIR
PRESSURE
SENSOR
SIGNAL
INLET AIR
PRESSURE
SENSOR
GROUND
MODULE-
ENGINE
CONTROL
EGR
AIR FLOW
CONTROL
VALVE
MOTOR (-)
EGR
AIR FLOW
CONTROL
VALVE
MOTOR (+)
EGR AIR FLOW
CONTROL
VALVE POSITION
SENSOR
SUPPLY
EGR AIR FLOW
CONTROL
VALVE POSITION
SENSOR
SIGNAL
EGR AIR FLOW
CONTROL
VALVE POSITION
SENSOR
GROUND
INTAKE AIR
TEMPERATURE
SENSOR
SIGNAL
INTAKE AIR
TEMPERATURE
SENSOR
GROUND
24 C1
72 C1
41 C1
11 C1
67 C1
84 C1
28 C1
K315
20
GY/PK
K314
20
GY/RD
K313
20
DG/GY
K312
20
GY/OR
K390
20
DG/PK
K21
20
DG/WT
K960
18
BR/VT
TWISTED
PAIR
2
1
SENSOR-
INTAKE AIR
TEMPERATURE
1
4
3
6
2
EGR
AIR FLOW
CONTROL
VALVE
MOTOR (-)
EGR
AIR FLOW
CONTROL
VALVE
MOTOR (+)
EGR AIR FLOW
CONTROL
VALVE POSITION
SENSOR
SUPPLY
EGR AIR FLOW
CONTROL
VALVE POSITION
SENSOR
SIGNAL
EGR AIR FLOW
CONTROL
VALVE POSITION
SENSOR
GROUND
VALVE-EGR
AIR FLOW
CONTROL

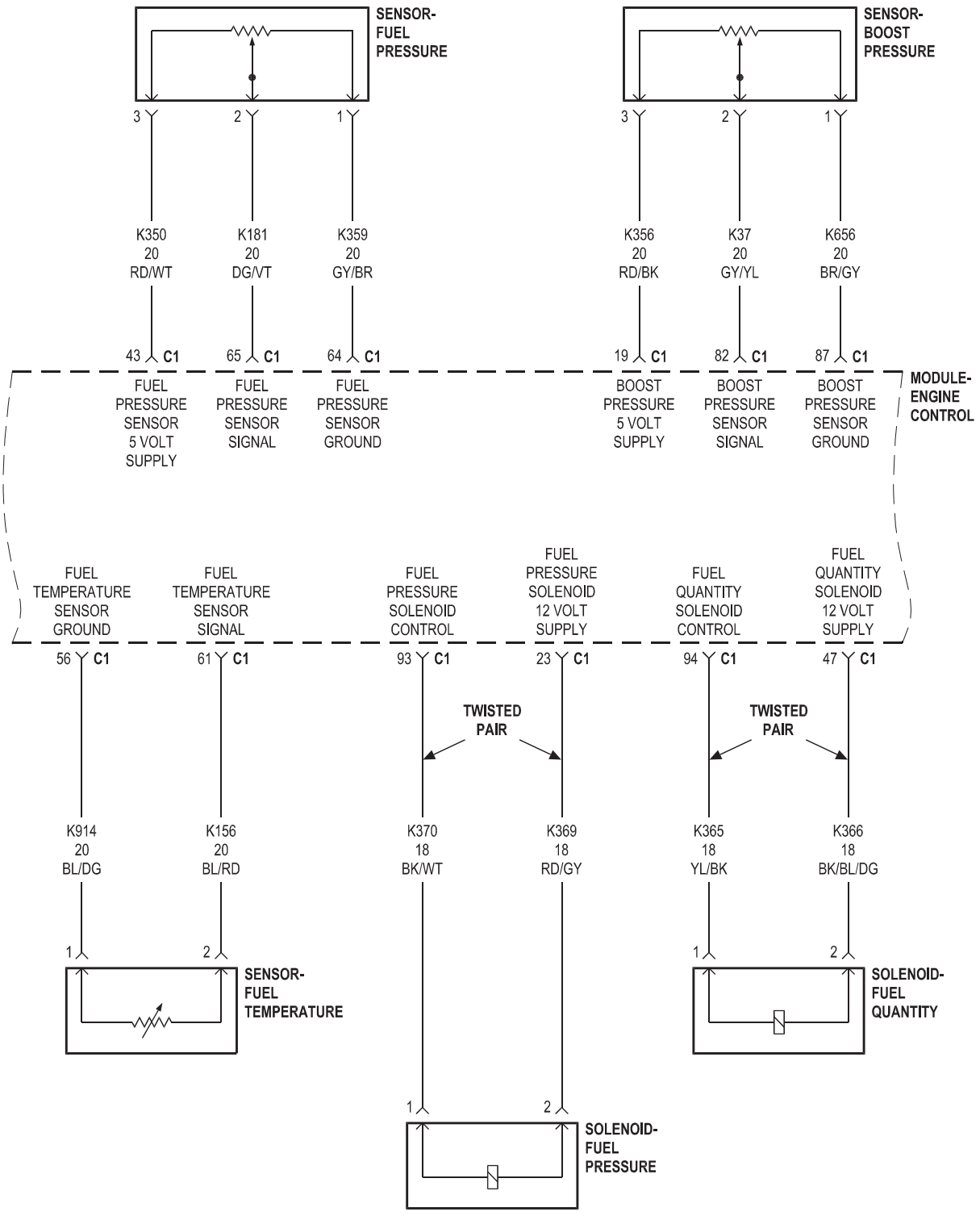
SENSOR-
FUEL
PRESSURE
3
2
1
K350
20
RD/WT
K181
20
DG/VT
K359
20
GY/BR
43 C1
65 C1
64 C1
FUEL
PRESSURE
SENSOR
5 VOLT
SUPPLY
FUEL
PRESSURE
SENSOR
SIGNAL
FUEL
PRESSURE
SENSOR
GROUND
SENSOR-
BOOST
PRESSURE
3
2
1
K356
20
RD/BK
K37
20
GY/YL
K656
20
BR/GY
19 C1
82 C1
87 C1
BOOST
PRESSURE
5 VOLT
SUPPLY
BOOST
PRESSURE
SENSOR
SIGNAL
BOOST
PRESSURE
SENSOR
GROUND
MODULE-
ENGINE
CONTROL
FUEL
TEMPERATURE
SENSOR
GROUND
FUEL
TEMPERATURE
SENSOR
SIGNAL
FUEL
PRESSURE
SOLENOID
CONTROL
FUEL
PRESSURE
SOLENOID
12 VOLT
SUPPLY
FUEL
QUANTITY
SOLENOID
CONTROL
FUEL
QUANTITY
SOLENOID
12 VOLT
SUPPLY
56 C1
61 C1
93 C1
23 C1
94 C1
47 C1
TWISTED
PAIR
TWISTED
PAIR
K914
20
BL/DG
K156
20
BL/RD
K370
18
BK/WT
K369
18
RD/GY
K365
18
YL/BK
K366
18
BK/BL/DG
1
2
1
2
1
2
SENSOR-
FUEL
TEMPERATURE
SOLENOID-
FUEL
QUANTITY
SOLENOID-
FUEL
PRESSURE

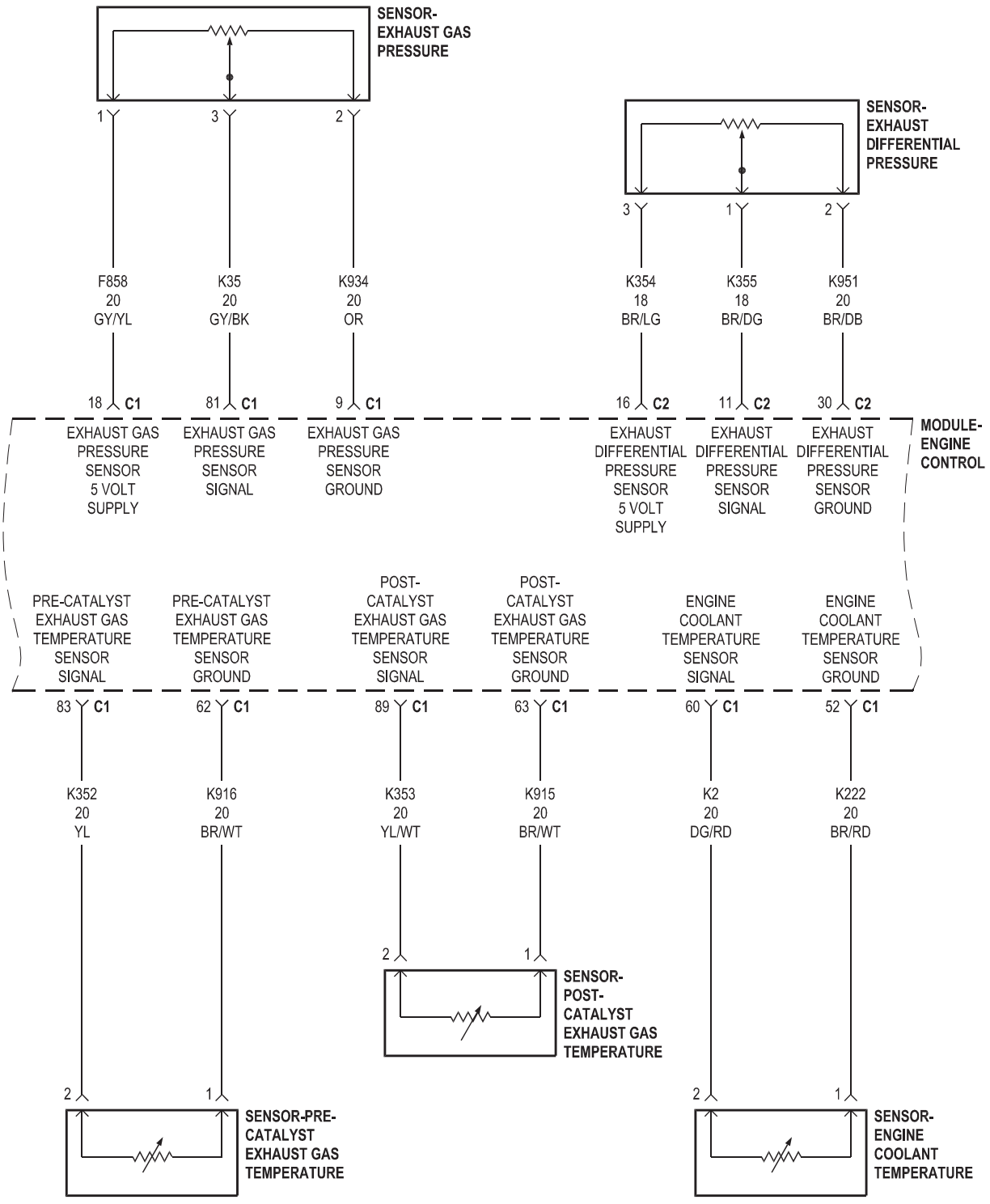
SENSOR-
EXHAUST GAS
PRESSURE
1
3
2
SENSOR-
EXHAUST
DIFFERENTIAL
PRESSURE
3
1
2
F858
20
GY/YL
K35
20
GY/BK
K934
20
OR
K354
18
BR/LG
K355
18
BR/DG
K951
20
BR/DB
18 C1
81 C1
9 C1
16 C2
11 C2
30 C2
EXHAUST GAS
PRESSURE
SENSOR
5 VOLT
SUPPLY
EXHAUST GAS
PRESSURE
SENSOR
SIGNAL
EXHAUST GAS
PRESSURE
SENSOR
GROUND
EXHAUST
DIFFERENTIAL
PRESSURE
SENSOR
5 VOLT
SUPPLY
EXHAUST
DIFFERENTIAL
PRESSURE
SENSOR
SIGNAL
EXHAUST
DIFFERENTIAL
PRESSURE
SENSOR
GROUND
MODULE-
ENGINE
CONTROL
PRE-CATALYST
EXHAUST GAS
TEMPERATURE
SENSOR
SIGNAL
PRE-CATALYST
EXHAUST GAS
TEMPERATURE
SENSOR
GROUND
POST-
CATALYST
EXHAUST GAS
TEMPERATURE
SENSOR
SIGNAL
POST-
CATALYST
EXHAUST GAS
TEMPERATURE
SENSOR
GROUND
ENGINE
COOLANT
TEMPERATURE
SENSOR
SIGNAL
ENGINE
COOLANT
TEMPERATURE
SENSOR
GROUND
83 C1
62 C1
89 C1
63 C1
60 C1
52 C1
K352
20
YL
K916
20
BR/WT
K353
20
YL/WT
K915
20
BR/WT
K2
20
DG/RD
K222
20
BR/RD
2
1
SENSOR-
POST-
CATALYST
EXHAUST GAS
TEMPERATURE
2
1
SENSOR-PRE-
CATALYST
EXHAUST GAS
TEMPERATURE
2
1
SENSOR-
ENGINE
COOLANT
TEMPERATURE

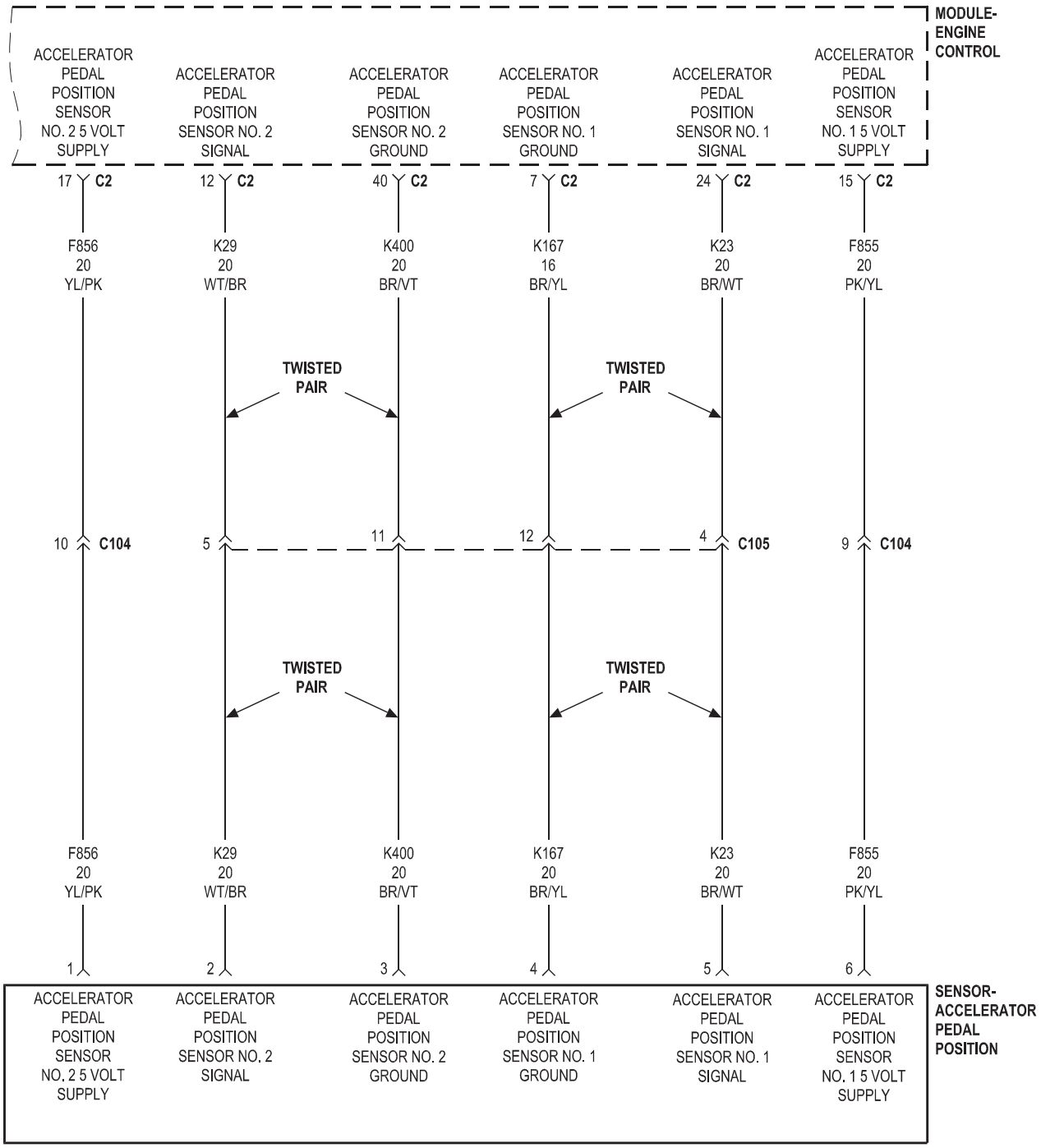
MODULE-ENGINE CONTROL
ACCELERATOR PEDAL POSITION SENSOR NO. 2 5 VOLT SUPPLY
ACCELERATOR PEDAL POSITION SENSOR NO. 2 SIGNAL
ACCELERATOR PEDAL POSITION SENSOR NO. 2 GROUND
ACCELERATOR PEDAL POSITION SENSOR NO. 1 GROUND
ACCELERATOR PEDAL POSITION SENSOR NO. 1 SIGNAL
ACCELERATOR PEDAL POSITION SENSOR NO. 1 5 VOLT SUPPLY
17 C2
12 C2
40 C2
7 C2
24 C2
15 C2
F856 20 YL/PK
K29 20 WT/BR
K400 20 BR/VT
K167 16 BR/YL
K23 20 BR/WT
F855 20 PK/YL
TWISTED PAIR
TWISTED PAIR
10 C104
5
11
12
4 C105
9 C104
TWISTED PAIR
TWISTED PAIR
F856 20 YL/PK
K29 20 WT/BR
K400 20 BR/VT
K167 20 BR/YL
K23 20 BR/WT
F855 20 PK/YL
1
2
3
4
5
6
ACCELERATOR PEDAL POSITION SENSOR NO. 2 5 VOLT SUPPLY
ACCELERATOR PEDAL POSITION SENSOR NO. 2 SIGNAL
ACCELERATOR PEDAL POSITION SENSOR NO. 2 GROUND
ACCELERATOR PEDAL POSITION SENSOR NO. 1 GROUND
ACCELERATOR PEDAL POSITION SENSOR NO. 1 SIGNAL
ACCELERATOR PEDAL POSITION SENSOR NO. 1 5 VOLT SUPPLY
SENSOR-ACCELERATOR PEDAL POSITION

8W-31 TRANSMISSION CONTROL SYSTEM

Component	Page
Assembly-Electrohydraulic Control Unit	8W-31-8
Assembly-Shifter Lever	8W-31-4, 6
Assembly-Transmission Solenoid/Pressure Switch	8W-31-2, 5
Assembly-Variable Line Pressure	8W-31-2, 3
Fuse 10	8W-31-3
Fuse 26	8W-31-2
Fuse 37	8W-31-6
G102	8W-31-2
G202	8W-31-6, 7
G300	8W-31-6
G301	8W-31-4, 6
G302	8W-31-6
Module-Electronic Shift	8W-31-6, 7
Module-Front Control	8W-31-3, 4, 6
Module-Integrated Power	8W-31-2, 3, 6
Module-Powertrain Control	8W-31-2, 3, 4, 5
Module-Transmission Control	8W-31-6, 8
Power Distribution Center	8W-31-6
Relay-Starter	8W-31-3
Relay-Transmission	8W-31-6
Relay-Transmission Control	8W-31-2
Sensor-Input Speed	8W-31-4
Sensor-Output Speed	8W-31-4
Sensor-Shift Lever Position	8W-31-7
Sensor-Transmission Range	8W-31-3
Solenoid-Brake Transmission Shift Interlock	8W-31-7
Switch-Autostick	8W-31-7

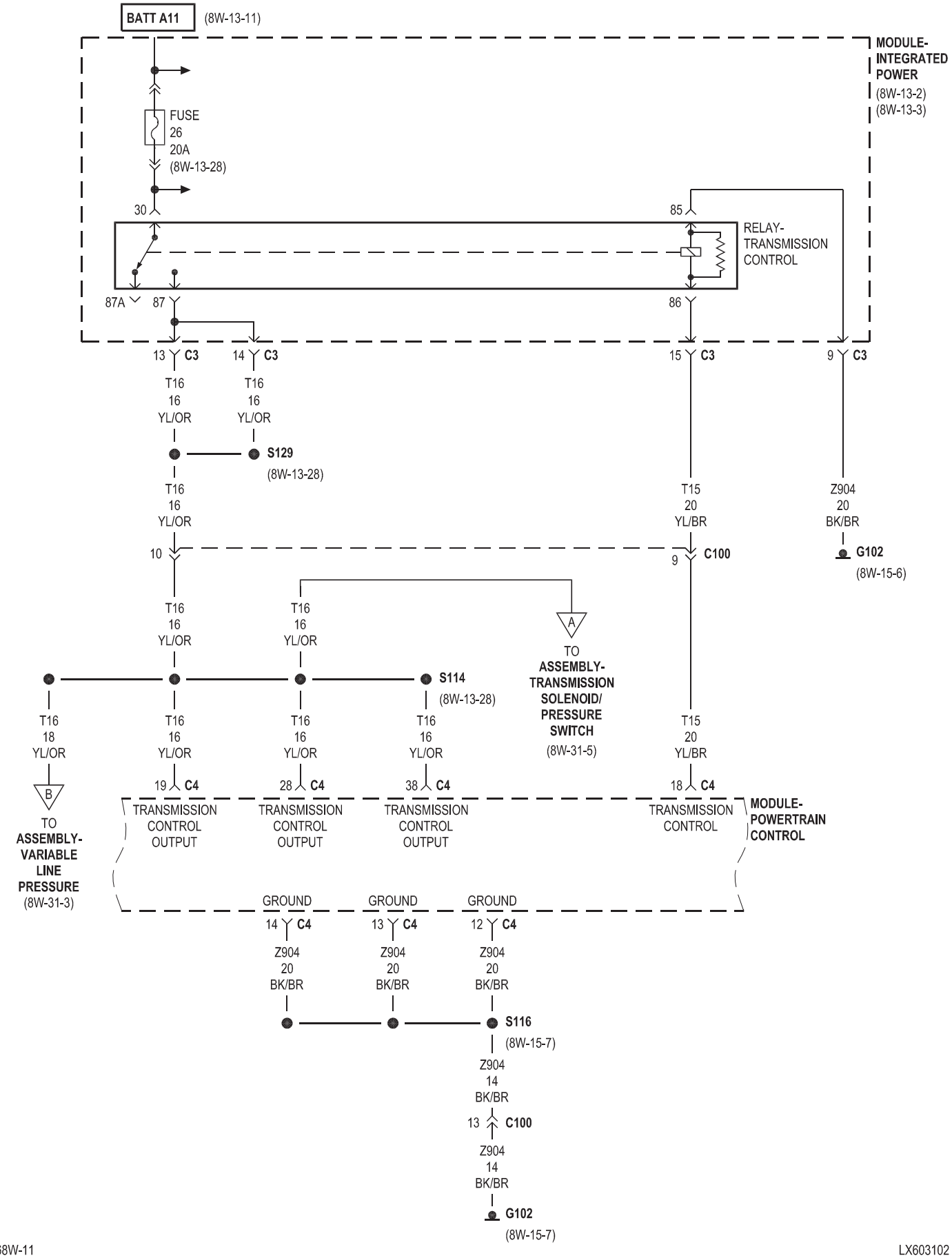
BATT A11
(8W-13-11)
MODULE-INTEGRATED POWER
(8W-13-2)
(8W-13-3)
FUSE
26
20A
(8W-13-28)
30
85
RELAY-TRANSMISSION CONTROL
87A
87
86
13 C3
14 C3
15 C3
9 C3
T16
16
YL/OR
S129
(8W-13-28)
T15
20
YL/BR
Z904
20
BK/BR
G102
(8W-15-6)
10
9 C100
S114
(8W-13-28)
A
TO ASSEMBLY-TRANSMISSION SOLENOID/ PRESSURE SWITCH
(8W-31-5)
T16
18
YL/OR
B
TO ASSEMBLY-VARIABLE LINE PRESSURE
(8W-31-3)
19 C4
28 C4
38 C4
18 C4
TRANSMISSION CONTROL OUTPUT
TRANSMISSION CONTROL
MODULE-POWERTRAIN CONTROL
GROUND
14 C4
13 C4
12 C4
S116
(8W-15-7)
Z904
14
BK/BR
13 C100
G102
(8W-15-7)

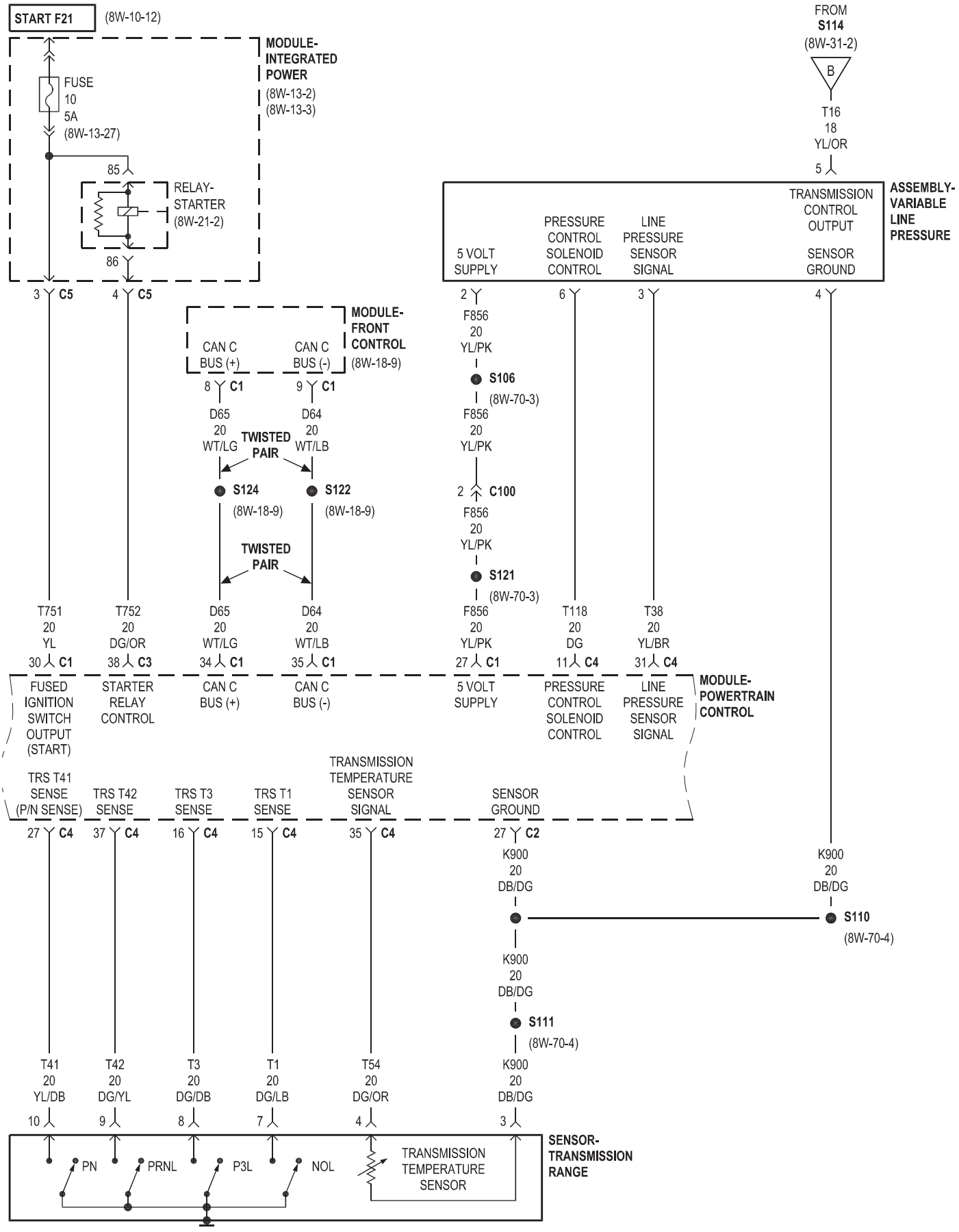
START F21
(8W-10-12)
MODULE-
INTEGRATED
POWER
(8W-13-2)
(8W-13-3)
FUSE
10
5A
(8W-13-27)
85
RELAY-
STARTER
(8W-21-2)
86
3 C5
4 C5
FROM
S114
(8W-31-2)
B
T16
18
YL/OR
5
ASSEMBLY-
VARIABLE
LINE
PRESSURE
5 VOLT
SUPPLY
PRESSURE
CONTROL
SOLENOID
CONTROL
LINE
PRESSURE
SENSOR
SIGNAL
TRANSMISSION
CONTROL
OUTPUT
SENSOR
GROUND
2
6
3
4
F856
20
YL/PK
S106
(8W-70-3)
F856
20
YL/PK
2 C100
F856
20
YL/PK
S121
(8W-70-3)
MODULE-
FRONT
CONTROL
(8W-18-9)
CAN C
BUS (+)
CAN C
BUS (-)
8 C1
9 C1
D65
20
WT/LG
D64
20
WT/LB
TWISTED
PAIR
S124
(8W-18-9)
S122
(8W-18-9)
TWISTED
PAIR
T751
20
YL
30 C1
T752
20
DG/OR
38 C3
D65
20
WT/LG
34 C1
D64
20
WT/LB
35 C1
F856
20
YL/PK
27 C1
T118
20
DG
11 C4
T38
20
YL/BR
31 C4
FUSED
IGNITION
SWITCH
OUTPUT
(START)
STARTER
RELAY
CONTROL
CAN C
BUS (+)
CAN C
BUS (-)
5 VOLT
SUPPLY
PRESSURE
CONTROL
SOLENOID
CONTROL
LINE
PRESSURE
SENSOR
SIGNAL
MODULE-
POWERTRAIN
CONTROL
TRS T41
SENSE
(P/N SENSE)
TRS T42
SENSE
TRS T3
SENSE
TRS T1
SENSE
TRANSMISSION
TEMPERATURE
SENSOR
SIGNAL
SENSOR
GROUND
27 C4
37 C4
16 C4
15 C4
35 C4
27 C2
K900
20
DB/DG
K900
20
DB/DG
S110
(8W-70-4)
K900
20
DB/DG
S111
(8W-70-4)
T41
20
YL/DB
T42
20
DG/YL
T3
20
DG/DB
T1
20
DG/LB
T54
20
DG/OR
K900
20
DB/DG
10
9
8
7
4
3
PN
PRNL
P3L
NOL
TRANSMISSION
TEMPERATURE
SENSOR
SENSOR-
TRANSMISSION
RANGE

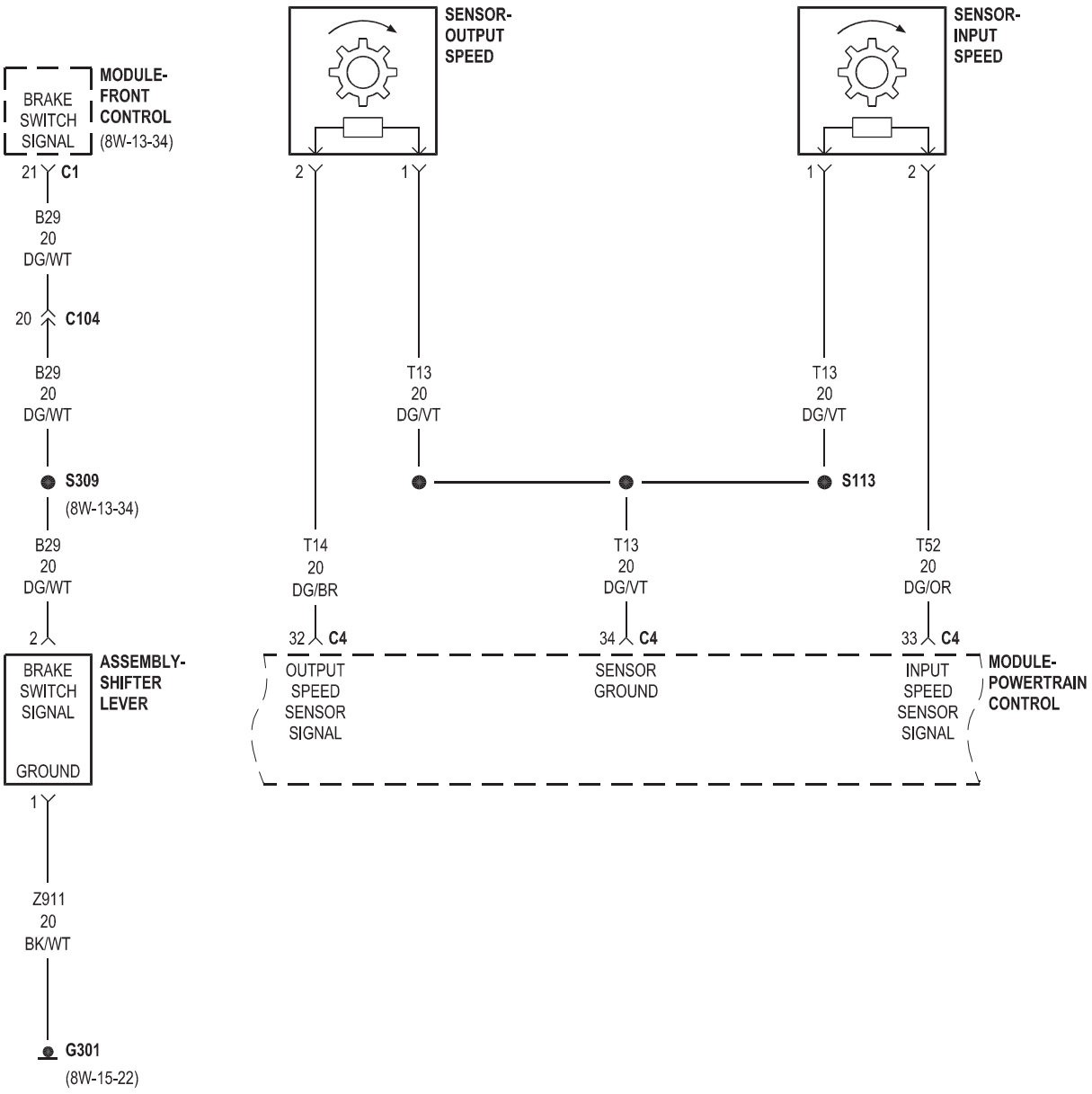
SENSOR-
OUTPUT
SPEED
SENSOR-
INPUT
SPEED
BRAKE
SWITCH
SIGNAL
MODULE-
FRONT
CONTROL
(8W-13-34)
21
C1
B29
20
DG/WT
20
C104
B29
20
DG/WT
S309
(8W-13-34)
B29
20
DG/WT
2
BRAKE
SWITCH
SIGNAL
GROUND
ASSEMBLY-
SHIFTER
LEVER
1
Z911
20
BK/WT
G301
(8W-15-22)
2
1
T13
20
DG/VT
1
2
T13
20
DG/VT
S113
T14
20
DG/BR
T13
20
DG/VT
T52
20
DG/OR
32
C4
34
C4
33
C4
OUTPUT
SPEED
SENSOR
SIGNAL
SENSOR
GROUND
INPUT
SPEED
SENSOR
SIGNAL
MODULE-
POWERTRAIN
CONTROL

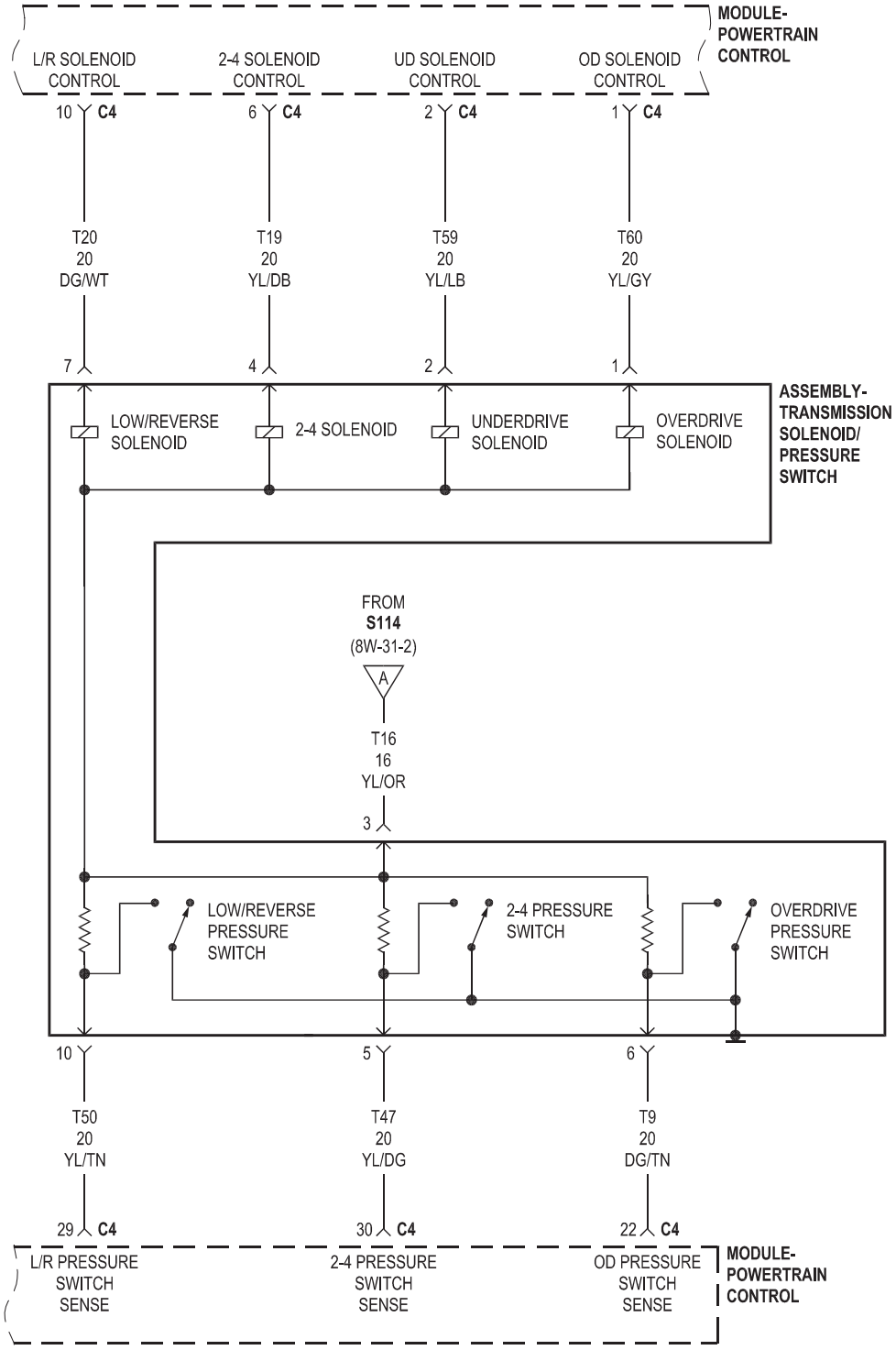
MODULE-
POWERTRAIN
CONTROL
L/R SOLENOID CONTROL
2-4 SOLENOID CONTROL
UD SOLENOID CONTROL
OD SOLENOID CONTROL
10 C4
6 C4
2 C4
1 C4
T20
20
DG/WT
T19
20
YL/DB
T59
20
YL/LB
T60
20
YL/GY
7
4
2
1
ASSEMBLY-
TRANSMISSION
SOLENOID/
PRESSURE
SWITCH
LOW/REVERSE SOLENOID
2-4 SOLENOID
UNDERDRIVE SOLENOID
OVERDRIVE SOLENOID
FROM
S114
(8W-31-2)
A
T16
16
YL/OR
3
LOW/REVERSE PRESSURE SWITCH
2-4 PRESSURE SWITCH
OVERDRIVE PRESSURE SWITCH
10
5
6
T50
20
YL/TN
T47
20
YL/DG
T9
20
DG/TN
29 C4
30 C4
22 C4
L/R PRESSURE SWITCH SENSE
2-4 PRESSURE SWITCH SENSE
OD PRESSURE SWITCH SENSE
MODULE-
POWERTRAIN
CONTROL

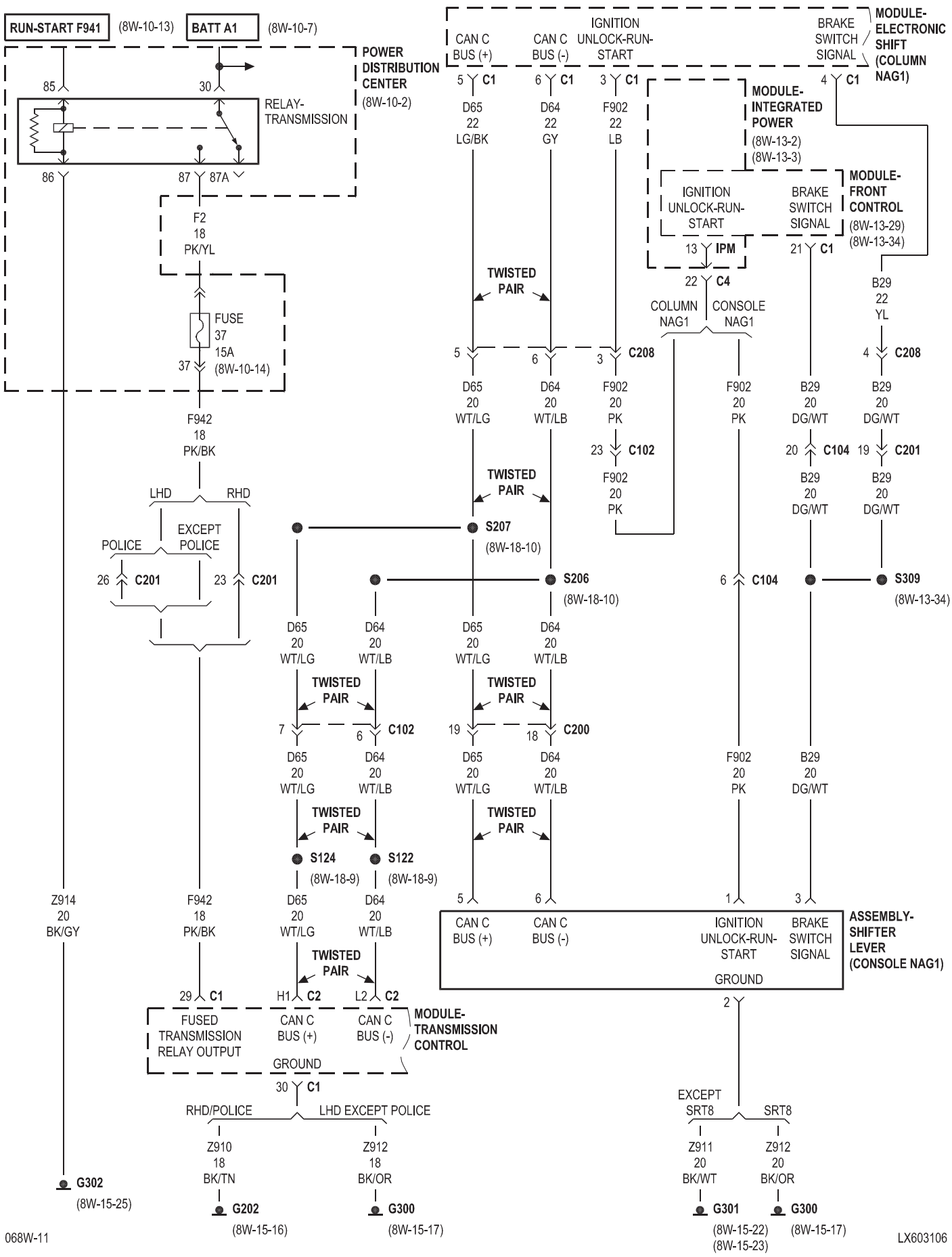
NAG1
RUN-START F941
(8W-10-13)
BATT A1
(8W-10-7)
POWER DISTRIBUTION CENTER
(8W-10-2)
85
30
RELAY-TRANSMISSION
86
87
87A
F2
18
PK/YL
FUSE
37
15A
37
(8W-10-14)
F942
18
PK/BK
LHD
RHD
POLICE
EXCEPT POLICE
26 C201
23 C201
Z914
20
BK/GY
G302
(8W-15-25)
F942
18
PK/BK
29 C1
FUSED TRANSMISSION RELAY OUTPUT
CAN C BUS (+)
CAN C BUS (-)
GROUND
30 C1
MODULE-TRANSMISSION CONTROL
RHD/POLICE
LHD EXCEPT POLICE
Z910
18
BK/TN
G202
(8W-15-16)
Z912
18
BK/OR
G300
(8W-15-17)
CAN C BUS (+)
CAN C BUS (-)
IGNITION UNLOCK-RUN-START
BRAKE SWITCH SIGNAL
MODULE-ELECTRONIC SHIFT (COLUMN NAG1)
5 C1
6 C1
3 C1
4 C1
D65
22
LG/BK
D64
22
GY
F902
22
LB
MODULE-INTEGRATED POWER
(8W-13-2)
(8W-13-3)
IGNITION UNLOCK-RUN-START
BRAKE SWITCH SIGNAL
MODULE-FRONT CONTROL
(8W-13-29)
(8W-13-34)
13 IPM
21 C1
22 C4
COLUMN NAG1
CONSOLE NAG1
B29
22
YL
TWISTED PAIR
5
6
3 C208
4 C208
D65
20
WT/LG
D64
20
WT/LB
F902
20
PK
F902
20
PK
B29
20
DG/WT
B29
20
DG/WT
23 C102
20 C104
19 C201
F902
20
PK
B29
20
DG/WT
B29
20
DG/WT
S207
(8W-18-10)
S206
(8W-18-10)
6 C104
S309
(8W-13-34)
D65
20
WT/LG
D64
20
WT/LB
D65
20
WT/LG
D64
20
WT/LB
7
6 C102
19
18 C200
D65
20
WT/LG
D64
20
WT/LB
D65
20
WT/LG
D64
20
WT/LB
F902
20
PK
B29
20
DG/WT
S124
(8W-18-9)
S122
(8W-18-9)
D65
20
WT/LG
D64
20
WT/LB
5
6
1
3
H1 C2
L2 C2
CAN C BUS (+)
CAN C BUS (-)
IGNITION UNLOCK-RUN-START
BRAKE SWITCH SIGNAL
GROUND
ASSEMBLY-SHIFTER LEVER (CONSOLE NAG1)
2
EXCEPT SRT8
SRT8
Z911
20
BK/WT
Z912
20
BK/OR
G301
(8W-15-22)
(8W-15-23)
G300
(8W-15-17)

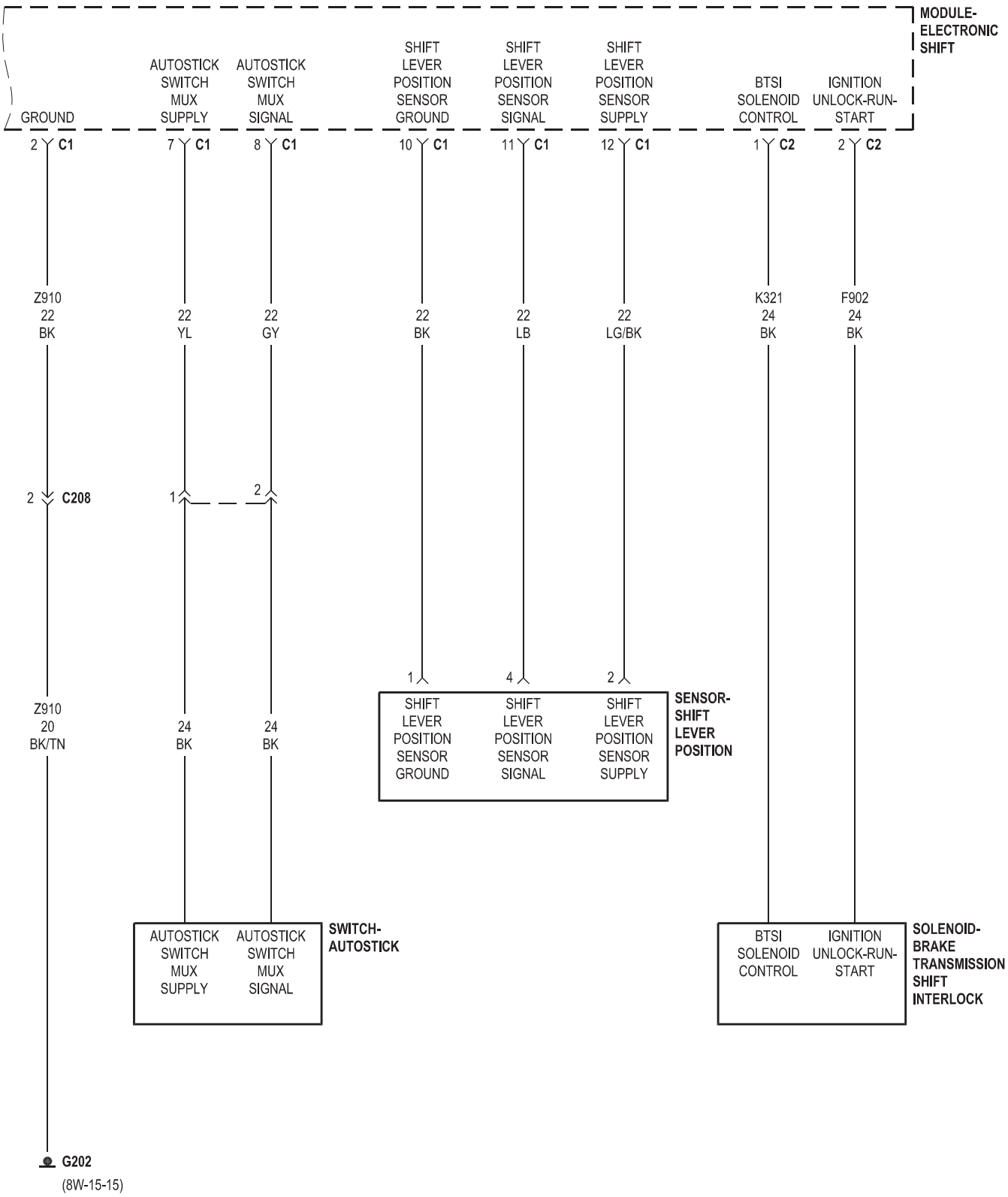
MODULE-
ELECTRONIC
SHIFT
GROUND
AUTOSTICK SWITCH MUX SUPPLY
AUTOSTICK SWITCH MUX SIGNAL
SHIFT LEVER POSITION SENSOR GROUND
SHIFT LEVER POSITION SENSOR SIGNAL
SHIFT LEVER POSITION SENSOR SUPPLY
BTSI SOLENOID CONTROL
IGNITION UNLOCK-RUN-START
2 C1
7 C1
8 C1
10 C1
11 C1
12 C1
1 C2
2 C2
Z910 22 BK
22 YL
22 GY
22 BK
22 LB
22 LG/BK
K321 24 BK
F902 24 BK
2 C208
1
2
1
4
2
Z910 20 BK/TN
24 BK
24 BK
SHIFT LEVER POSITION SENSOR GROUND
SHIFT LEVER POSITION SENSOR SIGNAL
SHIFT LEVER POSITION SENSOR SUPPLY
SENSOR-SHIFT LEVER POSITION
AUTOSTICK SWITCH MUX SUPPLY
AUTOSTICK SWITCH MUX SIGNAL
SWITCH-AUTOSTICK
BTSI SOLENOID CONTROL
IGNITION UNLOCK-RUN-START
SOLENOID-BRAKE TRANSMISSION SHIFT INTERLOCK
G202
(8W-15-15)

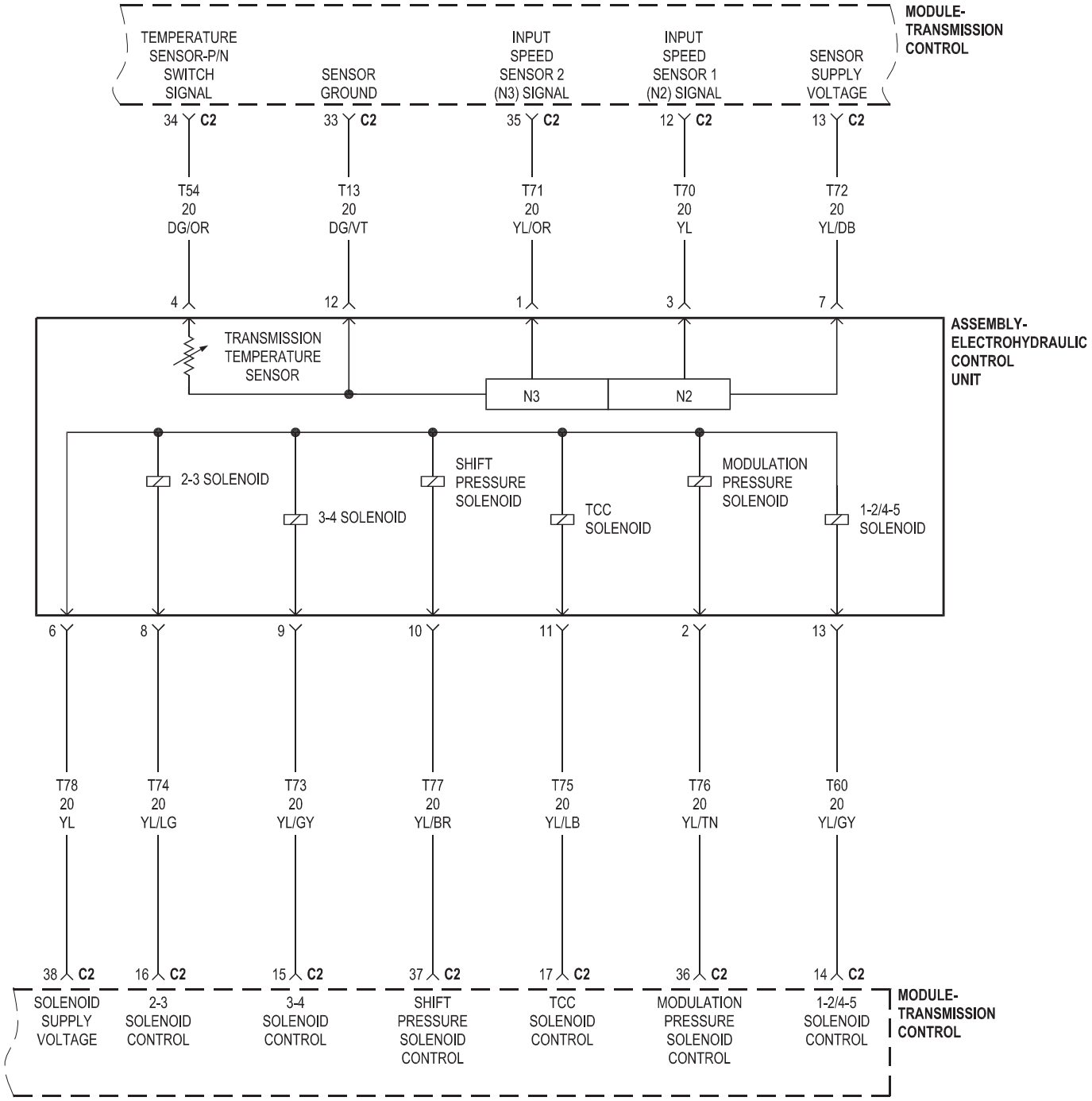
MODULE-TRANSMISSION CONTROL
TEMPERATURE SENSOR-P/N SWITCH SIGNAL
SENSOR GROUND
INPUT SPEED SENSOR 2 (N3) SIGNAL
INPUT SPEED SENSOR 1 (N2) SIGNAL
SENSOR SUPPLY VOLTAGE
34 C2
33 C2
35 C2
12 C2
13 C2
T54 20 DG/OR
T13 20 DG/VT
T71 20 YL/OR
T70 20 YL
T72 20 YL/DB
4
12
1
3
7
ASSEMBLY-ELECTROHYDRAULIC CONTROL UNIT
TRANSMISSION TEMPERATURE SENSOR
N3
N2
2-3 SOLENOID
3-4 SOLENOID
SHIFT PRESSURE SOLENOID
TCC SOLENOID
MODULATION PRESSURE SOLENOID
1-2/4-5 SOLENOID
6
8
9
10
11
2
13
T78 20 YL
T74 20 YL/LG
T73 20 YL/GY
T77 20 YL/BR
T75 20 YL/LB
T76 20 YL/TN
T60 20 YL/GY
38 C2
16 C2
15 C2
37 C2
17 C2
36 C2
14 C2
SOLENOID SUPPLY VOLTAGE
2-3 SOLENOID CONTROL
3-4 SOLENOID CONTROL
SHIFT PRESSURE SOLENOID CONTROL
TCC SOLENOID CONTROL
MODULATION PRESSURE SOLENOID CONTROL
1-2/4-5 SOLENOID CONTROL
MODULE-TRANSMISSION CONTROL

8W-33 VEHICLE SPEED CONTROL

Component	Page
Assembly-Shifter Lever	8W-33-3
Fuse 5	8W-33-2
Fuse 29	8W-33-4
Fuse 30	8W-33-2
G101	8W-33-4
G202	8W-33-2
Module-Antilock Brakes	8W-33-3, 4
Module-Electronic Shift	8W-33-3
Module-Engine Control	8W-33-3
Module-Front Control	8W-33-3
Module-Powertrain Control	8W-33-3
Module-Steering Control	8W-33-2, 3
Power Distribution Center	8W-33-2, 4
Sensor-Wheel Speed-Abs-Right Front	8W-33-4
Sensor-Wheel Speed-Right Front	8W-33-3
Switch-Stop Lamp	8W-33-3
Throttle Body	8W-33-3

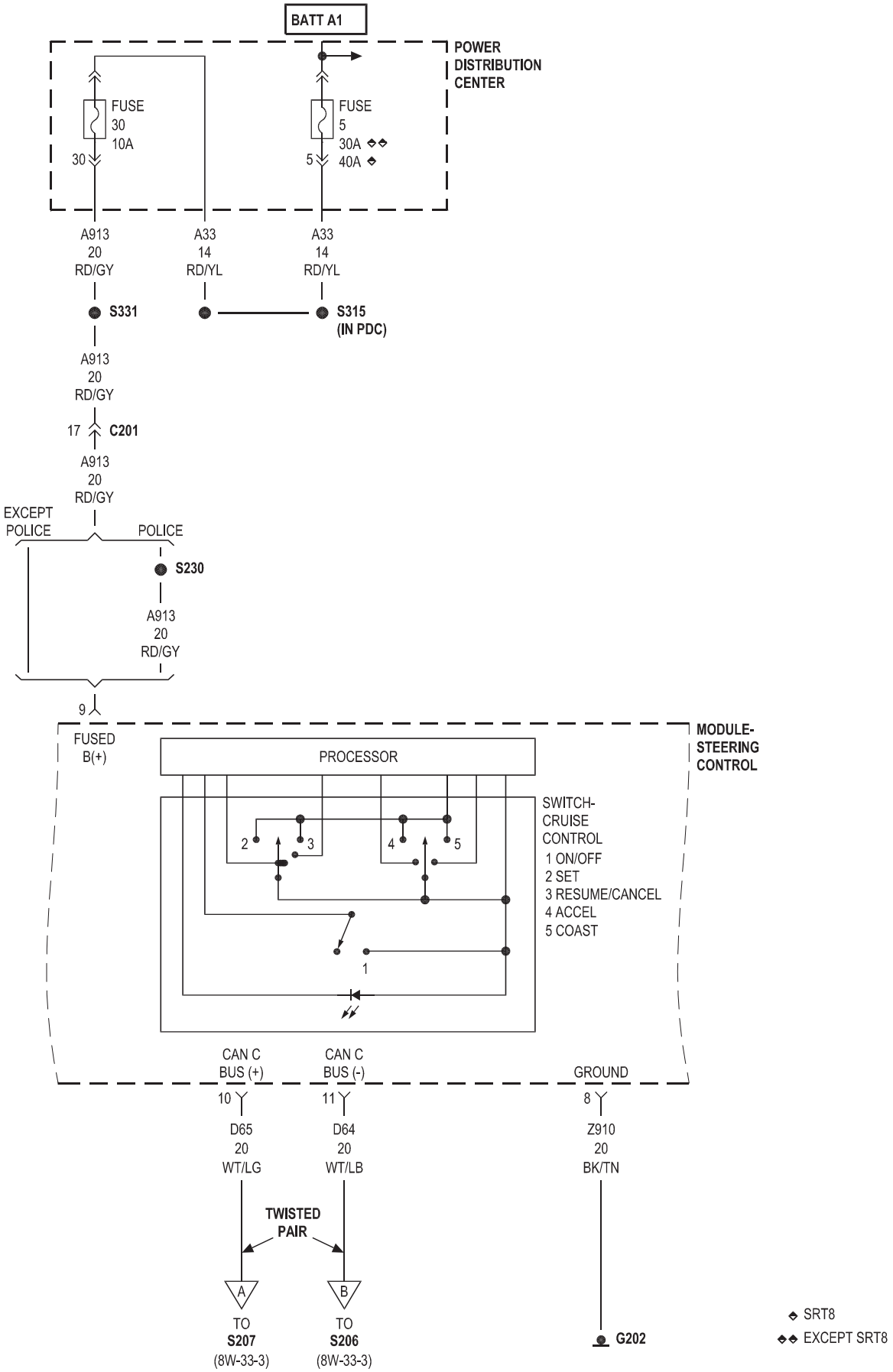
BATT A1
POWER DISTRIBUTION CENTER
FUSE 30 10A
30
FUSE 5 30A ◆◆ 40A ◆
5
A913 20 RD/GY
A33 14 RD/YL
A33 14 RD/YL
S331
S315 (IN PDC)
A913 20 RD/GY
17 C201
A913 20 RD/GY
EXCEPT POLICE
POLICE
S230
A913 20 RD/GY
9
MODULE-STEERING CONTROL
FUSED B(+)
PROCESSOR
SWITCH-CRUISE CONTROL
1 ON/OFF
2 SET
3 RESUME/CANCEL
4 ACCEL
5 COAST
CAN C BUS (+)
CAN C BUS (-)
GROUND
10
11
8
D65 20 WT/LG
D64 20 WT/LB
Z910 20 BK/TN
TWISTED PAIR
A
B
TO S207 (8W-33-3)
TO S206 (8W-33-3)
G202
◆ SRT8
◆◆ EXCEPT SRT8

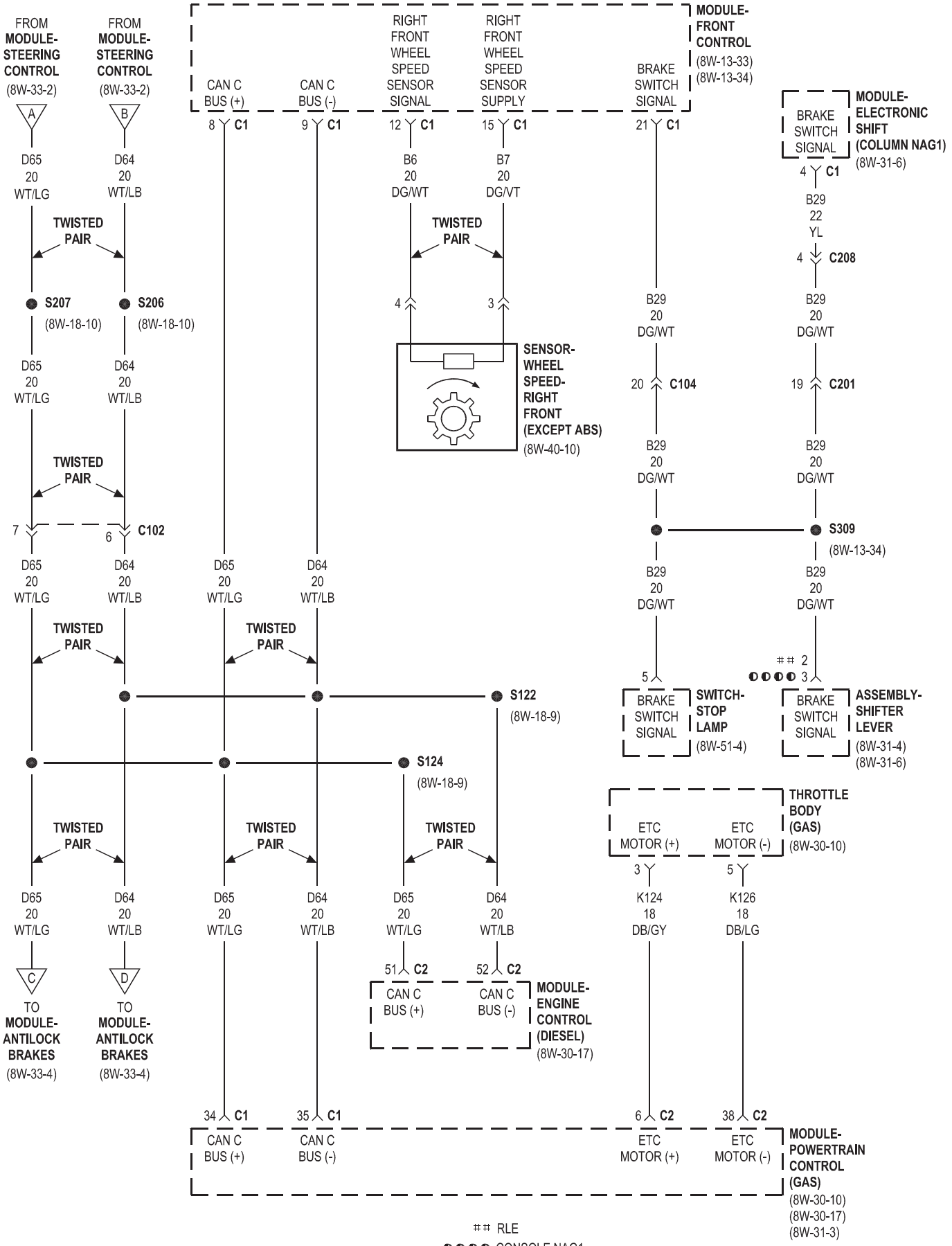
FROM MODULE-STEERING CONTROL (8W-33-2)
A
B
D65 20 WT/LG
D64 20 WT/LB
TWISTED PAIR
S207 (8W-18-10)
S206 (8W-18-10)
7 C102
6 C102
C
D
TO MODULE-ANTILOCK BRAKES (8W-33-4)
CAN C BUS (+)
CAN C BUS (-)
8 C1
9 C1
34 C1
35 C1
RIGHT FRONT WHEEL SPEED SENSOR SIGNAL
RIGHT FRONT WHEEL SPEED SENSOR SUPPLY
12 C1
15 C1
B6 20 DG/WT
B7 20 DG/VT
4
3
SENSOR-WHEEL SPEED-RIGHT FRONT (EXCEPT ABS) (8W-40-10)
MODULE-FRONT CONTROL (8W-13-33) (8W-13-34)
BRAKE SWITCH SIGNAL
21 C1
B29 20 DG/WT
20 C104
19 C201
S309 (8W-13-34)
5
2
3
BRAKE SWITCH SIGNAL
SWITCH-STOP LAMP (8W-51-4)
ASSEMBLY-SHIFTER LEVER (8W-31-4) (8W-31-6)
MODULE-ELECTRONIC SHIFT (COLUMN NAG1) (8W-31-6)
4 C1
B29 22 YL
4 C208
S122 (8W-18-9)
S124 (8W-18-9)
THROTTLE BODY (GAS) (8W-30-10)
ETC MOTOR (+)
ETC MOTOR (-)
3
5
K124 18 DB/GY
K126 18 DB/LG
51 C2
52 C2
MODULE-ENGINE CONTROL (DIESEL) (8W-30-17)
6 C2
38 C2
MODULE-POWERTRAIN CONTROL (GAS) (8W-30-10) (8W-30-17) (8W-31-3)
RLE
CONSOLE NAG1

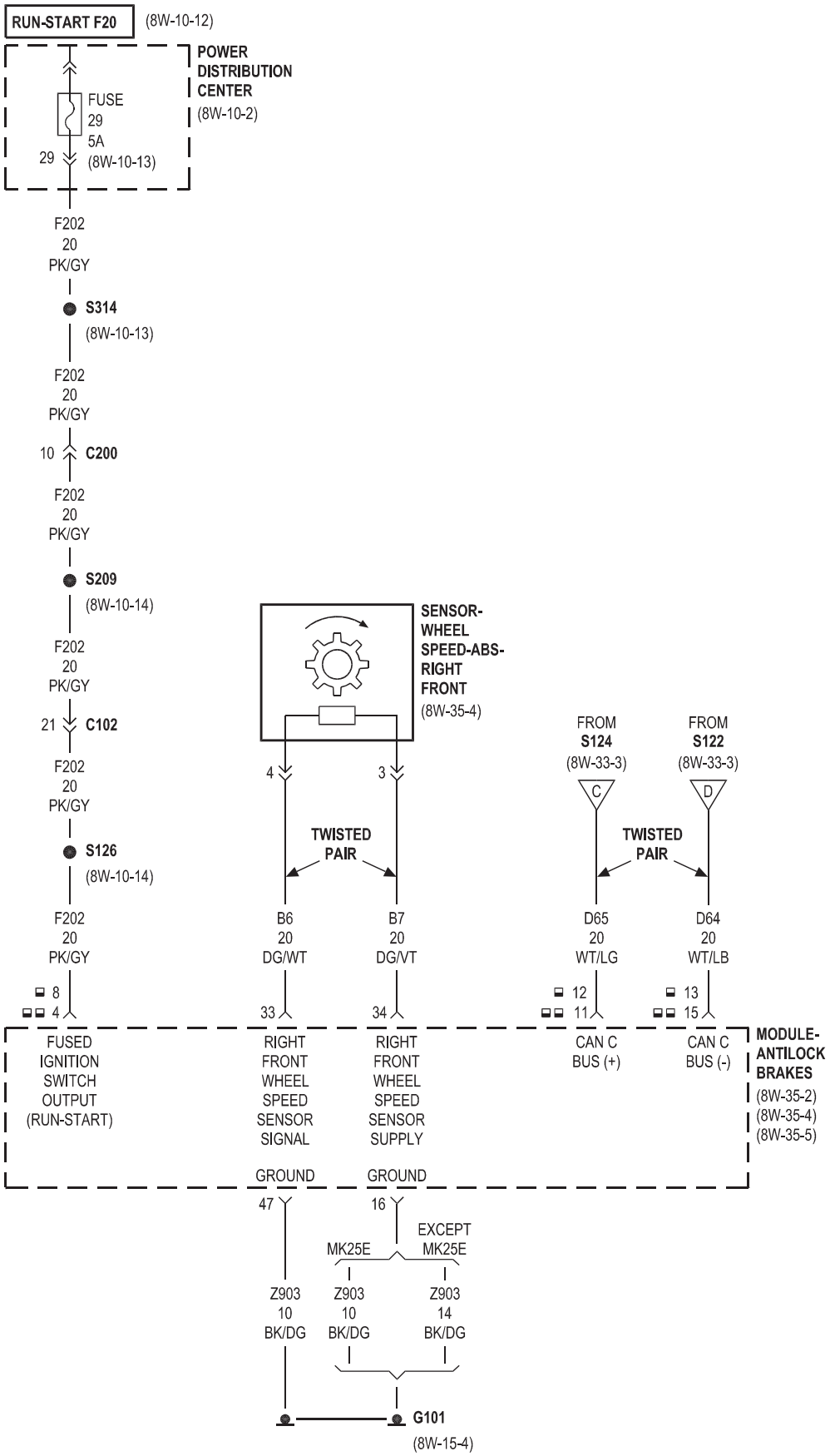
RUN-START F20
(8W-10-12)
POWER DISTRIBUTION CENTER
(8W-10-2)
FUSE 29 5A
29
(8W-10-13)
F202 20 PK/GY
S314
(8W-10-13)
F202 20 PK/GY
10 C200
F202 20 PK/GY
S209
(8W-10-14)
F202 20 PK/GY
21 C102
F202 20 PK/GY
S126
(8W-10-14)
F202 20 PK/GY
8
4
SENSOR-WHEEL SPEED-ABS-RIGHT FRONT
(8W-35-4)
4
3
TWISTED PAIR
B6 20 DG/WT
B7 20 DG/VT
33
34
FROM S124
(8W-33-3)
FROM S122
(8W-33-3)
C
D
TWISTED PAIR
D65 20 WT/LG
D64 20 WT/LB
12
11
13
15
FUSED IGNITION SWITCH OUTPUT (RUN-START)
RIGHT FRONT WHEEL SPEED SENSOR SIGNAL
RIGHT FRONT WHEEL SPEED SENSOR SUPPLY
CAN C BUS (+)
CAN C BUS (-)
MODULE-ANTILOCK BRAKES
(8W-35-2)
(8W-35-4)
(8W-35-5)
GROUND
GROUND
47
16
MK25E
EXCEPT MK25E
Z903 10 BK/DG
Z903 10 BK/DG
Z903 14 BK/DG
G101
(8W-15-4)
MK25E
EXCEPT MK25E

8W-35 ANTILOCK BRAKES

Component	Page
Booster-Active Brake	8W-35-5
Cluster	8W-35-2
Fuse 17	8W-35-2
Fuse 19	8W-35-5
Fuse 21	8W-35-2
Fuse 29	8W-35-2, 3
G101	8W-35-2
G200	8W-35-2
G300	8W-35-3
G301	8W-35-3
Module-Antilock Brakes	8W-35-2, 3, 4, 5
Module-Engine Control	8W-35-5
Module-Front Control	8W-35-5
Module-Integrated Power	8W-35-2
Module-Powertrain Control	8W-35-5
Power Distribution Center	8W-35-2, 3, 5
Relay-Stop Lamp Inhibit	8W-35-5
Sensor-Brake Pedal Travel	8W-35-4
Sensor-Brake Pressure	8W-35-4
Sensor-Dynamics	8W-35-4
Sensor-Wheel Speed-ABS-Left Front	8W-35-4
Sensor-Wheel Speed-ABS-Rear	8W-35-3
Sensor-Wheel Speed-ABS-Right Front	8W-35-4
Switch-Bank	8W-35-2
Switch-Stop Lamp	8W-35-3

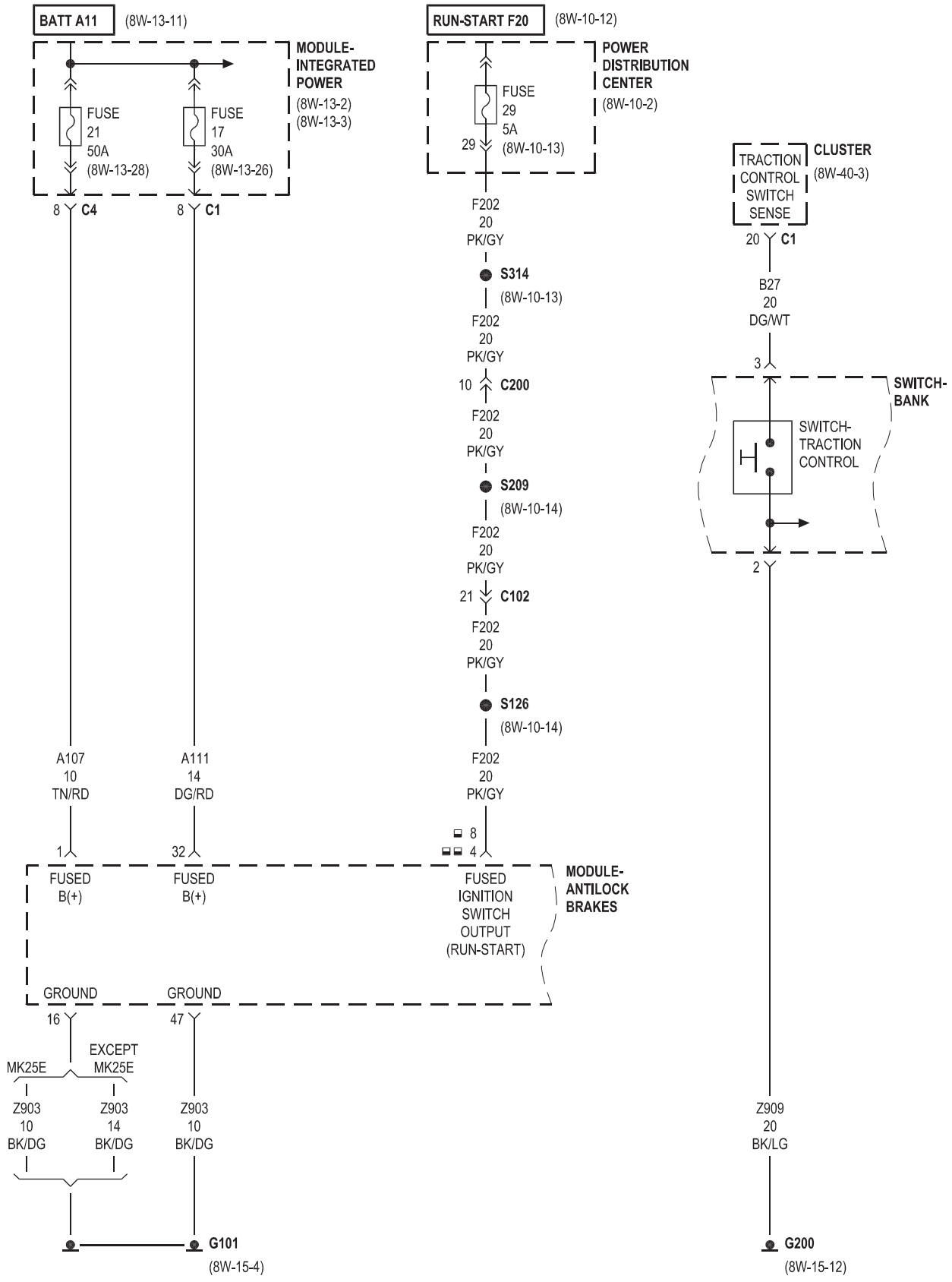
BATT A11
(8W-13-11)
MODULE-
INTEGRATED
POWER
(8W-13-2)
(8W-13-3)
FUSE
21
50A
(8W-13-28)
FUSE
17
30A
(8W-13-26)
8 C4
8 C1
RUN-START F20
(8W-10-12)
POWER
DISTRIBUTION
CENTER
(8W-10-2)
FUSE
29
5A
(8W-10-13)
29
F202
20
PK/GY
S314
(8W-10-13)
F202
20
PK/GY
10 C200
F202
20
PK/GY
S209
(8W-10-14)
F202
20
PK/GY
21 C102
F202
20
PK/GY
S126
(8W-10-14)
F202
20
PK/GY
TRACTION
CONTROL
SWITCH
SENSE
CLUSTER
(8W-40-3)
20 C1
B27
20
DG/WT
3
SWITCH-
BANK
SWITCH-
TRACTION
CONTROL
2
A107
10
TN/RD
A111
14
DG/RD
1
32
8
4
FUSED
B(+)
FUSED
B(+)
FUSED
IGNITION
SWITCH
OUTPUT
(RUN-START)
MODULE-
ANTILOCK
BRAKES
GROUND
16
GROUND
47
EXCEPT
MK25E
MK25E
Z903
10
BK/DG
Z903
14
BK/DG
Z903
10
BK/DG
Z909
20
BK/LG
G101
(8W-15-4)
G200
(8W-15-12)
MK25E
EXCEPT MK25E

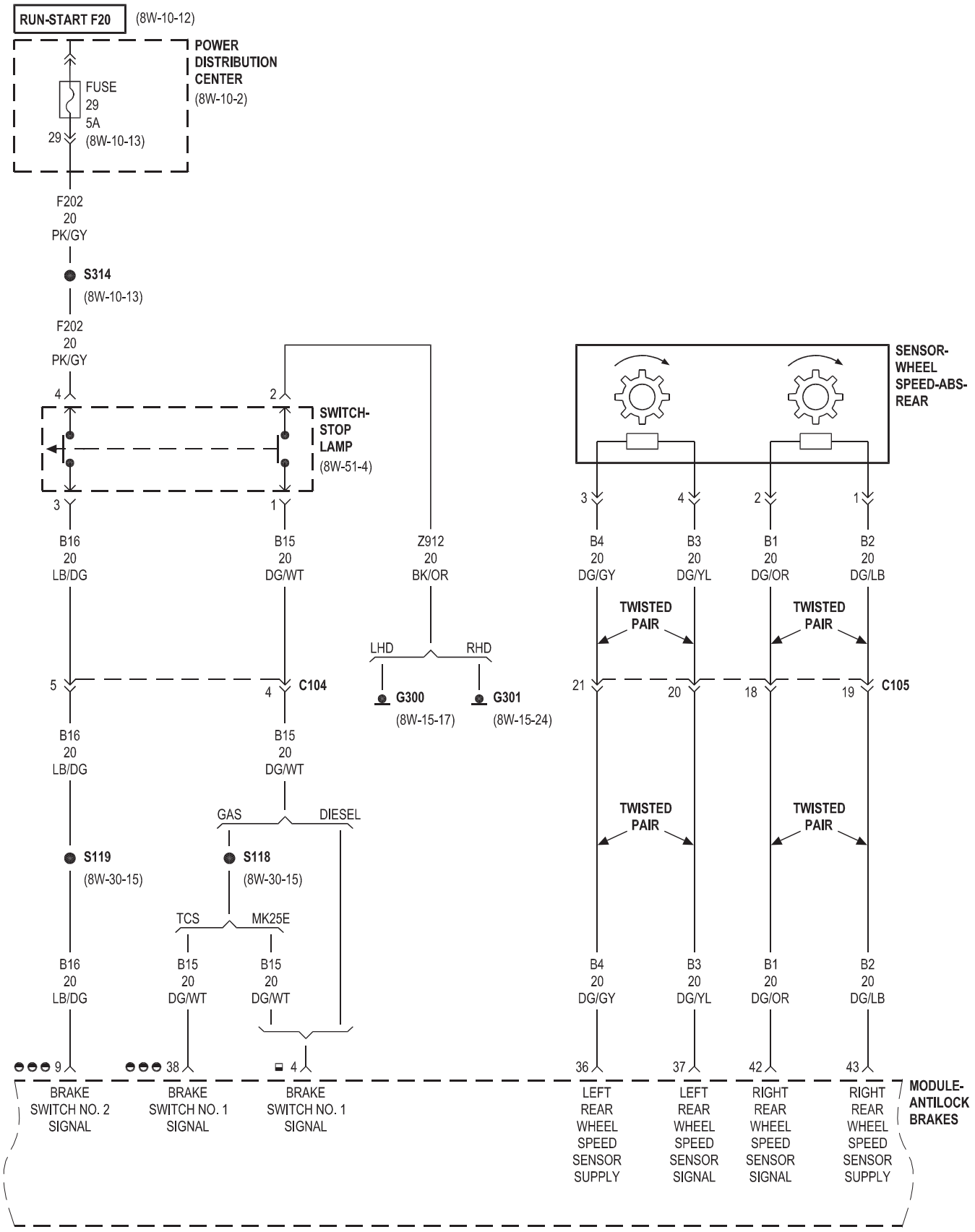
RUN-START F20
(8W-10-12)
POWER DISTRIBUTION CENTER
(8W-10-2)
FUSE 29 5A
29
(8W-10-13)
F202 20 PK/GY
S314
(8W-10-13)
F202 20 PK/GY
4
2
SWITCH-STOP LAMP
(8W-51-4)
3
1
B16 20 LB/DG
B15 20 DG/WT
Z912 20 BK/OR
LHD
RHD
G300
(8W-15-17)
G301
(8W-15-24)
5
4
C104
B16 20 LB/DG
B15 20 DG/WT
GAS
DIESEL
S119
(8W-30-15)
S118
(8W-30-15)
TCS
MK25E
B16 20 LB/DG
B15 20 DG/WT
B15 20 DG/WT
9
38
4
BRAKE SWITCH NO. 2 SIGNAL
BRAKE SWITCH NO. 1 SIGNAL
BRAKE SWITCH NO. 1 SIGNAL
SENSOR-WHEEL SPEED-ABS-REAR
3
4
2
1
B4 20 DG/GY
B3 20 DG/YL
B1 20 DG/OR
B2 20 DG/LB
TWISTED PAIR
TWISTED PAIR
21
20
18
19
C105
TWISTED PAIR
TWISTED PAIR
B4 20 DG/GY
B3 20 DG/YL
B1 20 DG/OR
B2 20 DG/LB
36
37
42
43
LEFT REAR WHEEL SPEED SENSOR SUPPLY
LEFT REAR WHEEL SPEED SENSOR SIGNAL
RIGHT REAR WHEEL SPEED SENSOR SIGNAL
RIGHT REAR WHEEL SPEED SENSOR SUPPLY
MODULE-ANTILOCK BRAKES
MK25E
TCS

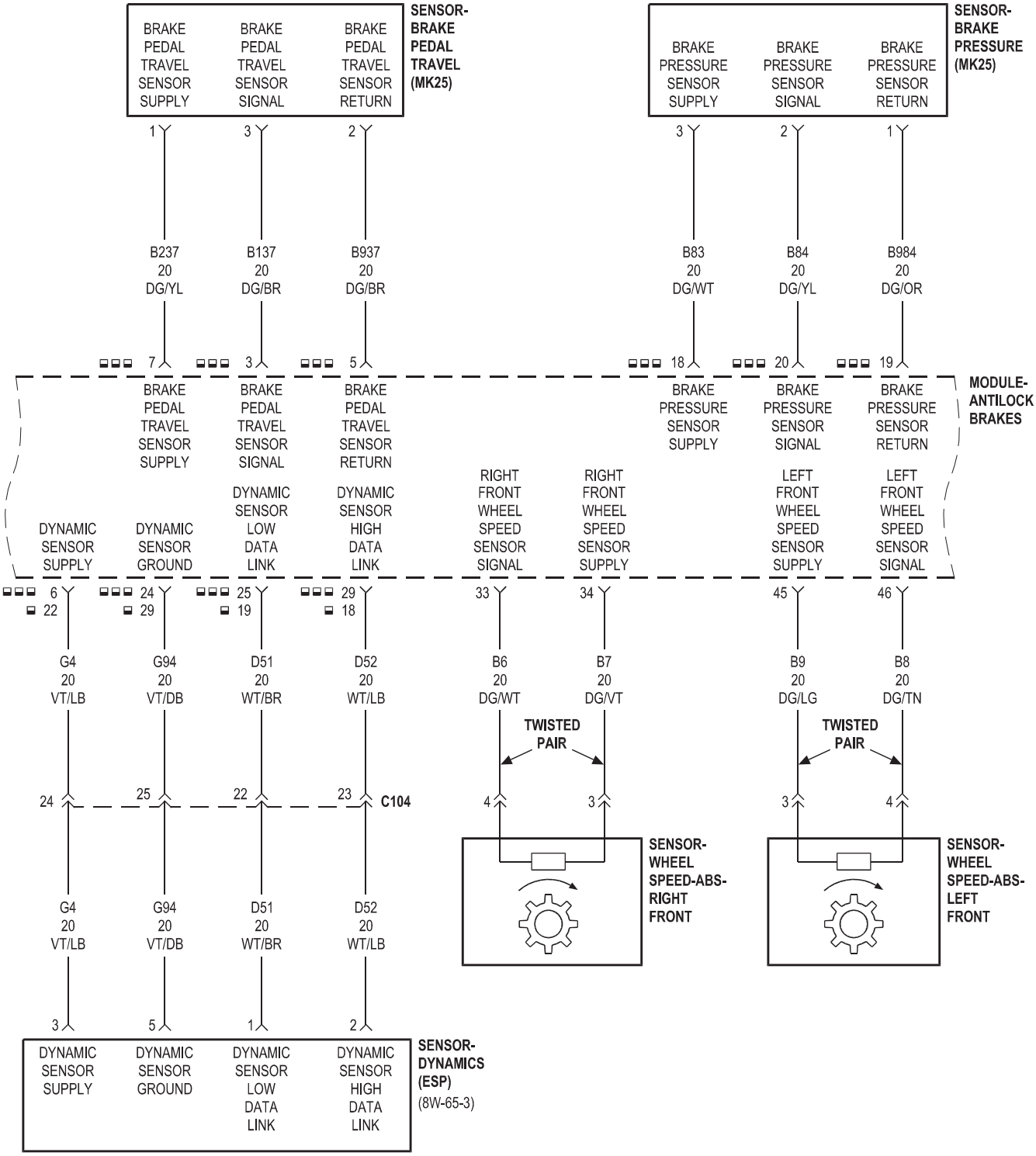
SENSOR-BRAKE PEDAL TRAVEL (MK25)
BRAKE PEDAL TRAVEL SENSOR SUPPLY
BRAKE PEDAL TRAVEL SENSOR SIGNAL
BRAKE PEDAL TRAVEL SENSOR RETURN
SENSOR-BRAKE PRESSURE (MK25)
BRAKE PRESSURE SENSOR SUPPLY
BRAKE PRESSURE SENSOR SIGNAL
BRAKE PRESSURE SENSOR RETURN
B237 20 DG/YL
B137 20 DG/BR
B937 20 DG/BR
B83 20 DG/WT
B84 20 DG/YL
B984 20 DG/OR
MODULE-ANTILOCK BRAKES
DYNAMIC SENSOR SUPPLY
DYNAMIC SENSOR GROUND
DYNAMIC SENSOR LOW DATA LINK
DYNAMIC SENSOR HIGH DATA LINK
RIGHT FRONT WHEEL SPEED SENSOR SIGNAL
RIGHT FRONT WHEEL SPEED SENSOR SUPPLY
LEFT FRONT WHEEL SPEED SENSOR SUPPLY
LEFT FRONT WHEEL SPEED SENSOR SIGNAL
G4 20 VT/LB
G94 20 VT/DB
D51 20 WT/BR
D52 20 WT/LB
B6 20 DG/WT
B7 20 DG/VT
B9 20 DG/LG
B8 20 DG/TN
TWISTED PAIR
C104
SENSOR-WHEEL SPEED-ABS-RIGHT FRONT
SENSOR-WHEEL SPEED-ABS-LEFT FRONT
SENSOR-DYNAMICS (ESP)
(8W-65-3)

MK25E
MK25

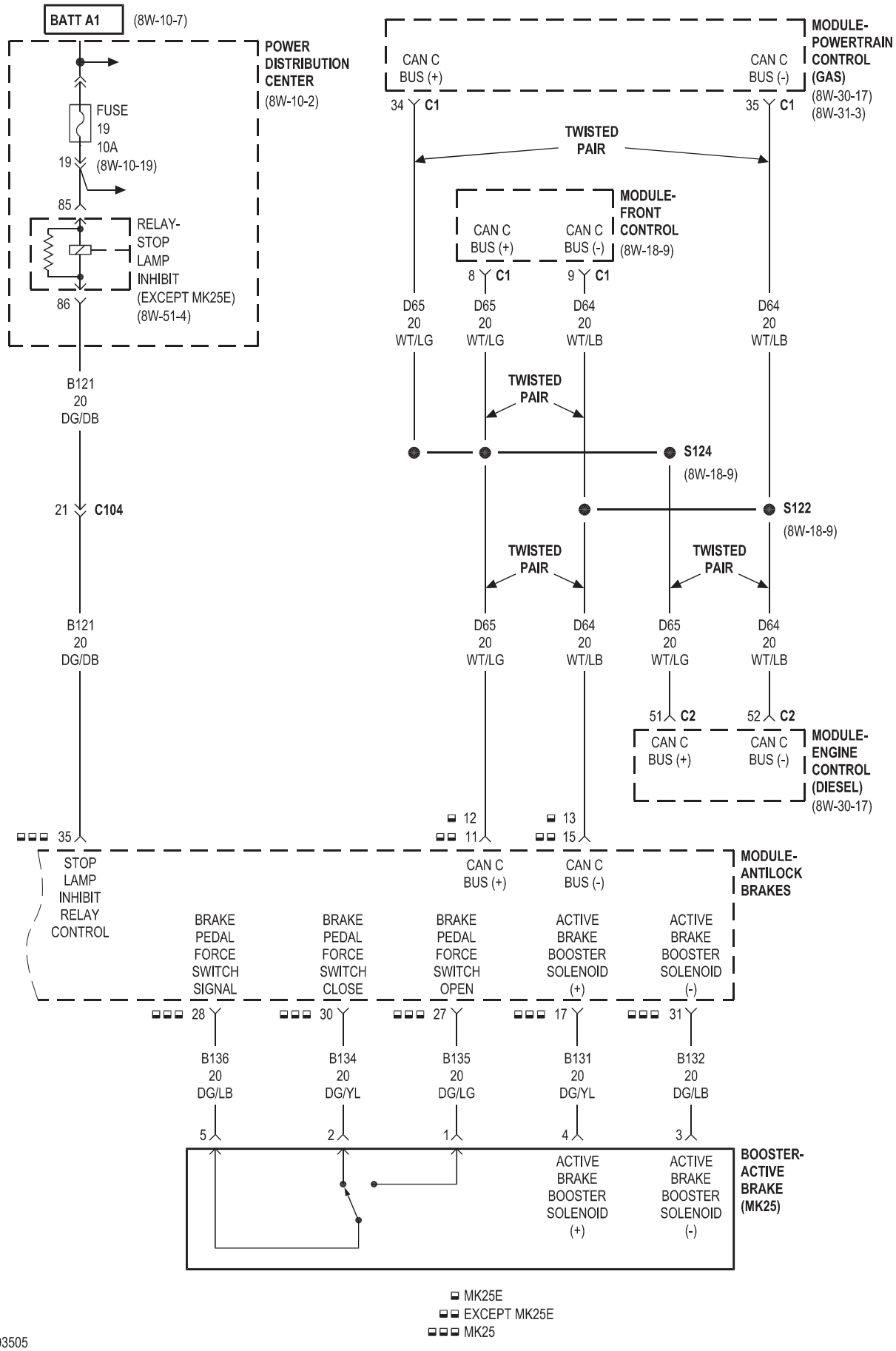
BATT A1
(8W-10-7)
POWER DISTRIBUTION CENTER
(8W-10-2)
FUSE 19 10A
19
(8W-10-19)
85
RELAY-STOP LAMP INHIBIT
(EXCEPT MK25E)
(8W-51-4)
86
B121 20 DG/DB
21 C104
B121 20 DG/DB
35
MODULE-POWERTRAIN CONTROL (GAS)
(8W-30-17)
(8W-31-3)
CAN C BUS (+)
CAN C BUS (-)
34 C1
35 C1
TWISTED PAIR
MODULE-FRONT CONTROL
(8W-18-9)
CAN C BUS (+)
CAN C BUS (-)
8 C1
9 C1
D65 20 WT/LG
D65 20 WT/LG
D64 20 WT/LB
D64 20 WT/LB
TWISTED PAIR
S124
(8W-18-9)
S122
(8W-18-9)
TWISTED PAIR
TWISTED PAIR
D65 20 WT/LG
D64 20 WT/LB
D65 20 WT/LG
D64 20 WT/LB
51 C2
52 C2
CAN C BUS (+)
CAN C BUS (-)
MODULE-ENGINE CONTROL (DIESEL)
(8W-30-17)
12
11
13
15
35
CAN C BUS (+)
CAN C BUS (-)
MODULE-ANTILOCK BRAKES
STOP LAMP INHIBIT RELAY CONTROL
BRAKE PEDAL FORCE SWITCH SIGNAL
BRAKE PEDAL FORCE SWITCH CLOSE
BRAKE PEDAL FORCE SWITCH OPEN
ACTIVE BRAKE BOOSTER SOLENOID (+)
ACTIVE BRAKE BOOSTER SOLENOID (-)
28
30
27
17
31
B136 20 DG/LB
B134 20 DG/YL
B135 20 DG/LG
B131 20 DG/YL
B132 20 DG/LB
5
2
1
4
3
ACTIVE BRAKE BOOSTER SOLENOID (+)
ACTIVE BRAKE BOOSTER SOLENOID (-)
BOOSTER-ACTIVE BRAKE (MK25)
MK25E
EXCEPT MK25E
MK25

8W-39 VEHICLE THEFT SECURITY SYSTEM

Component	Page
Cluster	8W-39-2, 3, 4, 5
Fuse 8	8W-39-7
Fuse 14	8W-39-2
Fuse 17	8W-39-2
Fuse 29	8W-39-2
Fuse 38	8W-39-7
G102	8W-39-3, 7
G202	8W-39-2, 4, 7, 8
G300	8W-39-4
G301	8W-39-4
G302	8W-39-5
G304	8W-39-4
Lamp-Cargo	8W-39-4
Latch-Door-Decklid	8W-39-4
Latch-Door-Driver	8W-39-3
Latch-Door-Left Rear	8W-39-3
Latch-Door-Liftgate	8W-39-5
Latch-Door-Passenger	8W-39-3
Latch-Door-Right Rear	8W-39-3
Module-Front Control	8W-39-2, 3
Module-Intrusion Transceiver	8W-39-2, 7, 8
Module-Sentry Key Remote Entry	8W-39-2
Module-Steering Column-Lock	8W-39-2, 7
Power Distribution Center	8W-39-2, 7
Receiver-Intrusion Sensor	8W-39-8
Siren	8W-39-7, 8
Switch-Decklid Release	8W-39-4
Switch-Ignition	8W-39-7
Switch-Liftgate Release	8W-39-5
Switch-Security Hood	8W-39-3
Transmitter-Intrusion Sensor	8W-39-8
Transponder-Tire Pressure-Left Front	8W-39-6
Transponder-Tire Pressure-Right Front	8W-39-6
Transponder-Tire Pressure-Right Rear	8W-39-6

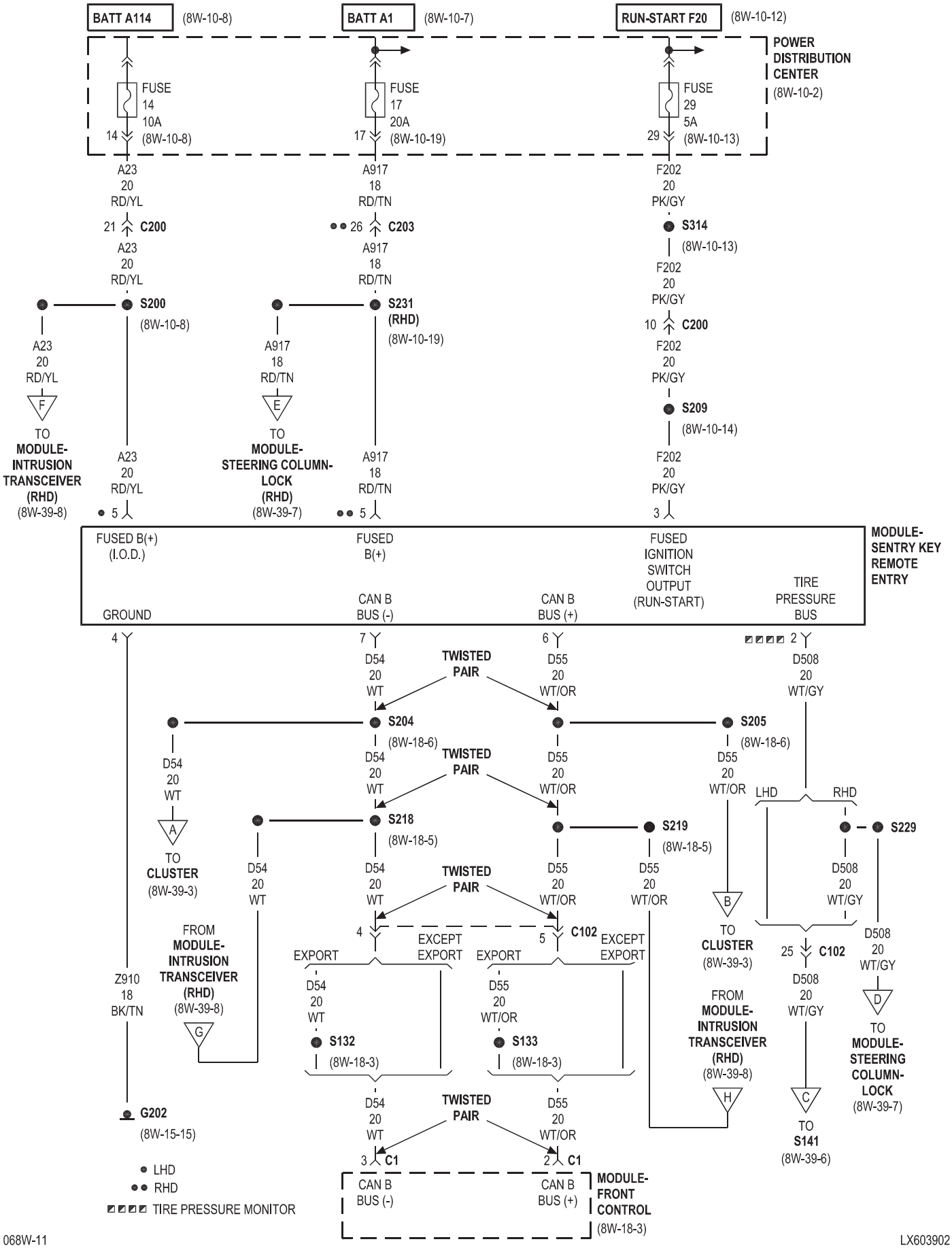
BATT A114
(8W-10-8)
BATT A1
(8W-10-7)
RUN-START F20
(8W-10-12)
POWER DISTRIBUTION CENTER
(8W-10-2)
FUSE 14 10A
14
(8W-10-8)
FUSE 17 20A
17
(8W-10-19)
FUSE 29 5A
29
(8W-10-13)
A23 20 RD/YL
21 C200
A23 20 RD/YL
A917 18 RD/TN
26 C203
A917 18 RD/TN
F202 20 PK/GY
S314
(8W-10-13)
F202 20 PK/GY
10 C200
F202 20 PK/GY
S209
(8W-10-14)
F202 20 PK/GY
3
S200
(8W-10-8)
S231 (RHD)
(8W-10-19)
A23 20 RD/YL
F
TO MODULE-INTRUSION TRANSCEIVER (RHD)
(8W-39-8)
A917 18 RD/TN
E
TO MODULE-STEERING COLUMN-LOCK (RHD)
(8W-39-7)
A23 20 RD/YL
5
A917 18 RD/TN
5
MODULE-SENTRY KEY REMOTE ENTRY
FUSED B(+) (I.O.D.)
FUSED B(+)
FUSED IGNITION SWITCH OUTPUT (RUN-START)
TIRE PRESSURE BUS
GROUND
CAN B BUS (-)
CAN B BUS (+)
4
7
6
2
D54 20 WT
TWISTED PAIR
D55 20 WT/OR
D508 20 WT/GY
S204
(8W-18-6)
S205
(8W-18-6)
D54 20 WT
A
TO CLUSTER
(8W-39-3)
D54 20 WT
TWISTED PAIR
D55 20 WT/OR
D55 20 WT/OR
LHD
RHD
S218
(8W-18-5)
S219
(8W-18-5)
S229
D54 20 WT
D54 20 WT
TWISTED PAIR
D55 20 WT/OR
D55 20 WT/OR
B
D508 20 WT/GY
FROM MODULE-INTRUSION TRANSCEIVER (RHD)
(8W-39-8)
G
4
EXCEPT EXPORT
C102
5
EXCEPT EXPORT
TO CLUSTER
(8W-39-3)
25 C102
D508 20 WT/GY
Z910 18 BK/TN
EXPORT
EXPORT
D54 20 WT
D55 20 WT/OR
D
TO MODULE-STEERING COLUMN-LOCK
(8W-39-7)
S132
(8W-18-3)
S133
(8W-18-3)
FROM MODULE-INTRUSION TRANSCEIVER (RHD)
(8W-39-8)
H
C
TO S141
(8W-39-6)
G202
(8W-15-15)
D54 20 WT
TWISTED PAIR
D55 20 WT/OR
3 C1
2 C1
LHD
RHD
TIRE PRESSURE MONITOR
CAN B BUS (-)
CAN B BUS (+)
MODULE-FRONT CONTROL
(8W-18-3)

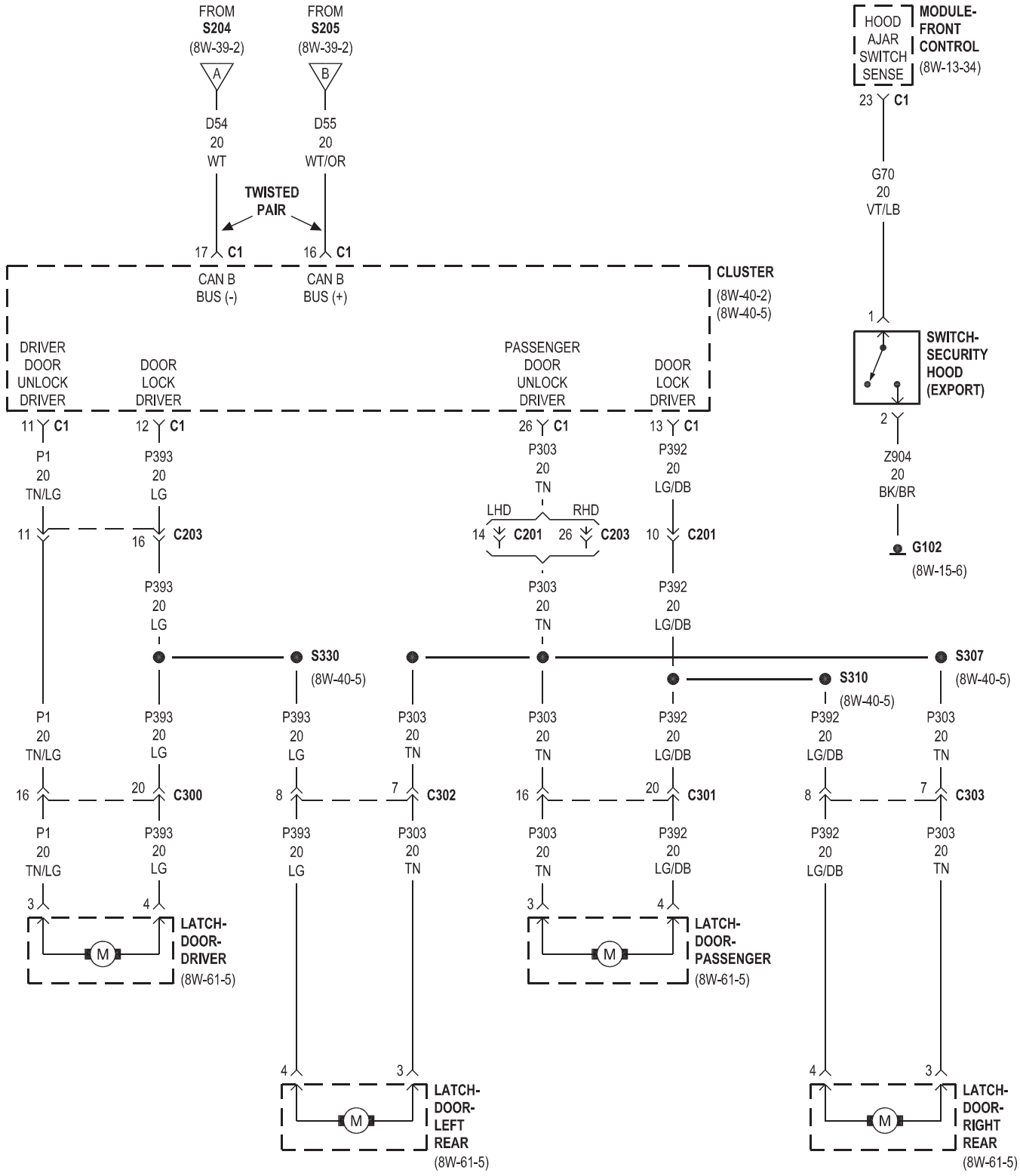
FROM S204 (8W-39-2)
FROM S205 (8W-39-2)
A
B
D54 20 WT
D55 20 WT/OR
TWISTED PAIR
17 C1
16 C1
CAN B BUS (-)
CAN B BUS (+)
CLUSTER (8W-40-2) (8W-40-5)
HOOD AJAR SWITCH SENSE
MODULE-FRONT CONTROL (8W-13-34)
23 C1
G70 20 VT/LB
1
SWITCH-SECURITY HOOD (EXPORT)
2
Z904 20 BK/BR
G102 (8W-15-6)
DRIVER DOOR UNLOCK DRIVER
DOOR LOCK DRIVER
PASSENGER DOOR UNLOCK DRIVER
DOOR LOCK DRIVER
11 C1
12 C1
26 C1
13 C1
P1 20 TN/LG
P393 20 LG
P303 20 TN
P392 20 LG/DB
LHD
RHD
11
16 C203
14 C201
26 C203
10 C201
S330 (8W-40-5)
S307 (8W-40-5)
S310 (8W-40-5)
16
20 C300
8
7 C302
16
20 C301
8
7 C303
3
4
LATCH-DOOR-DRIVER (8W-61-5)
LATCH-DOOR-PASSENGER (8W-61-5)
LATCH-DOOR-LEFT REAR (8W-61-5)
LATCH-DOOR-RIGHT REAR (8W-61-5)
M

LX48

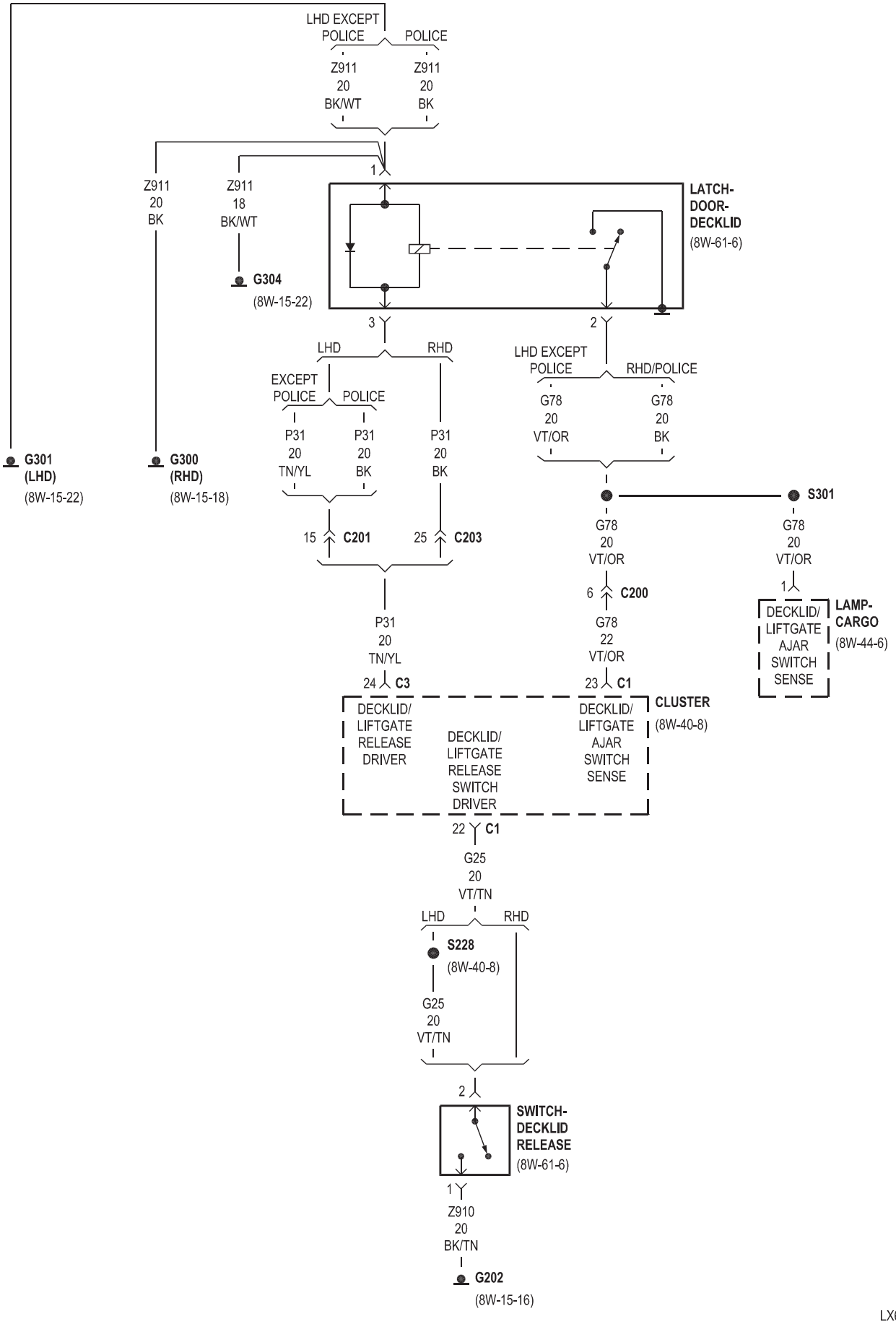
LHD EXCEPT POLICE
POLICE
Z911 20 BK/WT
Z911 20 BK
1
Z911 20 BK
Z911 18 BK/WT
G304
(8W-15-22)
LATCH-DOOR-DECKLID
(8W-61-6)
3
2
LHD
RHD
EXCEPT POLICE
POLICE
LHD EXCEPT POLICE
RHD/POLICE
G78 20 VT/OR
G78 20 BK
P31 20 TN/YL
P31 20 BK
P31 20 BK
G301 (LHD)
(8W-15-22)
G300 (RHD)
(8W-15-18)
S301
15 C201
25 C203
6 C200
G78 20 VT/OR
G78 22 VT/OR
1
LAMP-CARGO
(8W-44-6)
DECKLID/ LIFTGATE AJAR SWITCH SENSE
P31 20 TN/YL
24 C3
23 C1
DECKLID/ LIFTGATE RELEASE DRIVER
DECKLID/ LIFTGATE RELEASE SWITCH DRIVER
DECKLID/ LIFTGATE AJAR SWITCH SENSE
CLUSTER
(8W-40-8)
22 C1
G25 20 VT/TN
LHD
RHD
S228
(8W-40-8)
G25 20 VT/TN
2
SWITCH-DECKLID RELEASE
(8W-61-6)
1
Z910 20 BK/TN
G202
(8W-15-16)

LX49

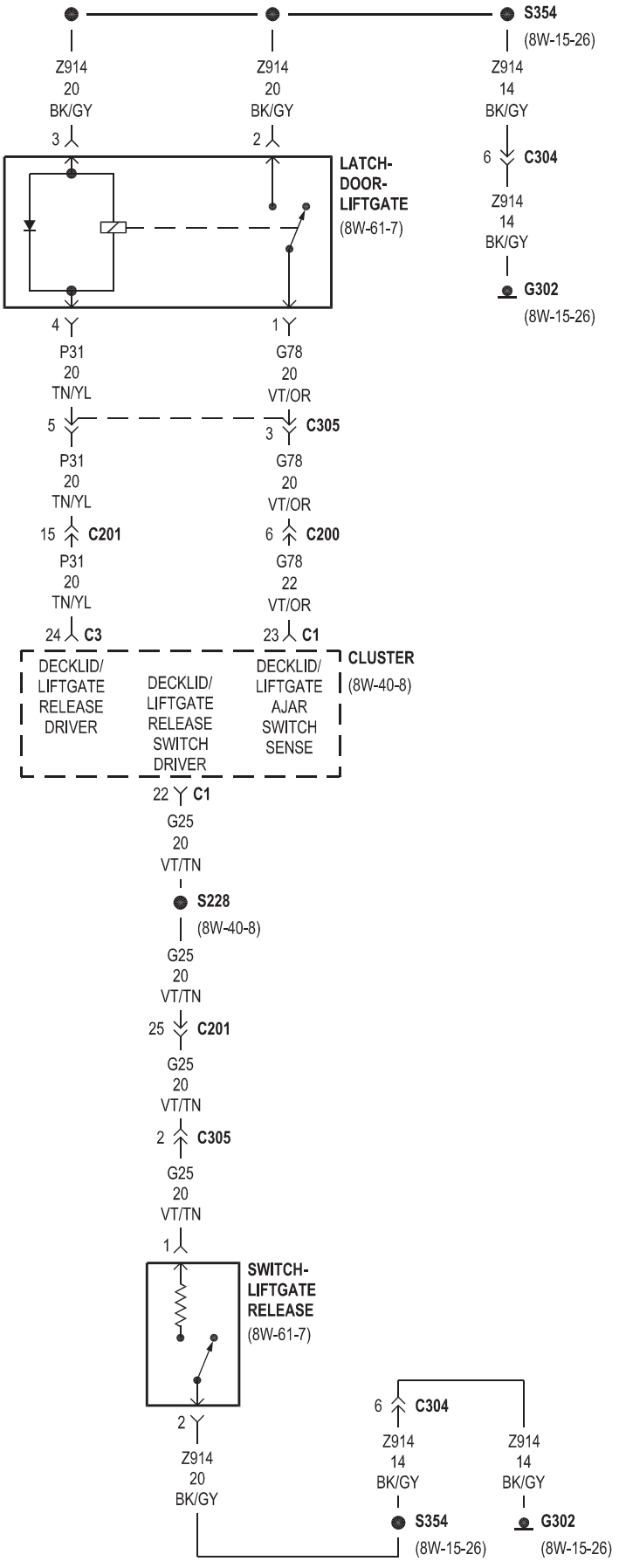
S354
(8W-15-26)
Z914
20
BK/GY
3
Z914
20
BK/GY
2
Z914
14
BK/GY
6
C304
Z914
14
BK/GY
G302
(8W-15-26)
LATCH-
DOOR-
LIFTGATE
(8W-61-7)
4
1
P31
20
TN/YL
G78
20
VT/OR
5
3
C305
P31
20
TN/YL
G78
20
VT/OR
15
C201
6
C200
P31
20
TN/YL
G78
22
VT/OR
24
C3
23
C1
DECKLID/
LIFTGATE
RELEASE
DRIVER
DECKLID/
LIFTGATE
RELEASE
SWITCH
DRIVER
DECKLID/
LIFTGATE
AJAR
SWITCH
SENSE
CLUSTER
(8W-40-8)
22
C1
G25
20
VT/TN
S228
(8W-40-8)
G25
20
VT/TN
25
C201
G25
20
VT/TN
2
C305
G25
20
VT/TN
1
SWITCH-
LIFTGATE
RELEASE
(8W-61-7)
2
Z914
20
BK/GY
6
C304
Z914
14
BK/GY
Z914
14
BK/GY
S354
(8W-15-26)
G302
(8W-15-26)

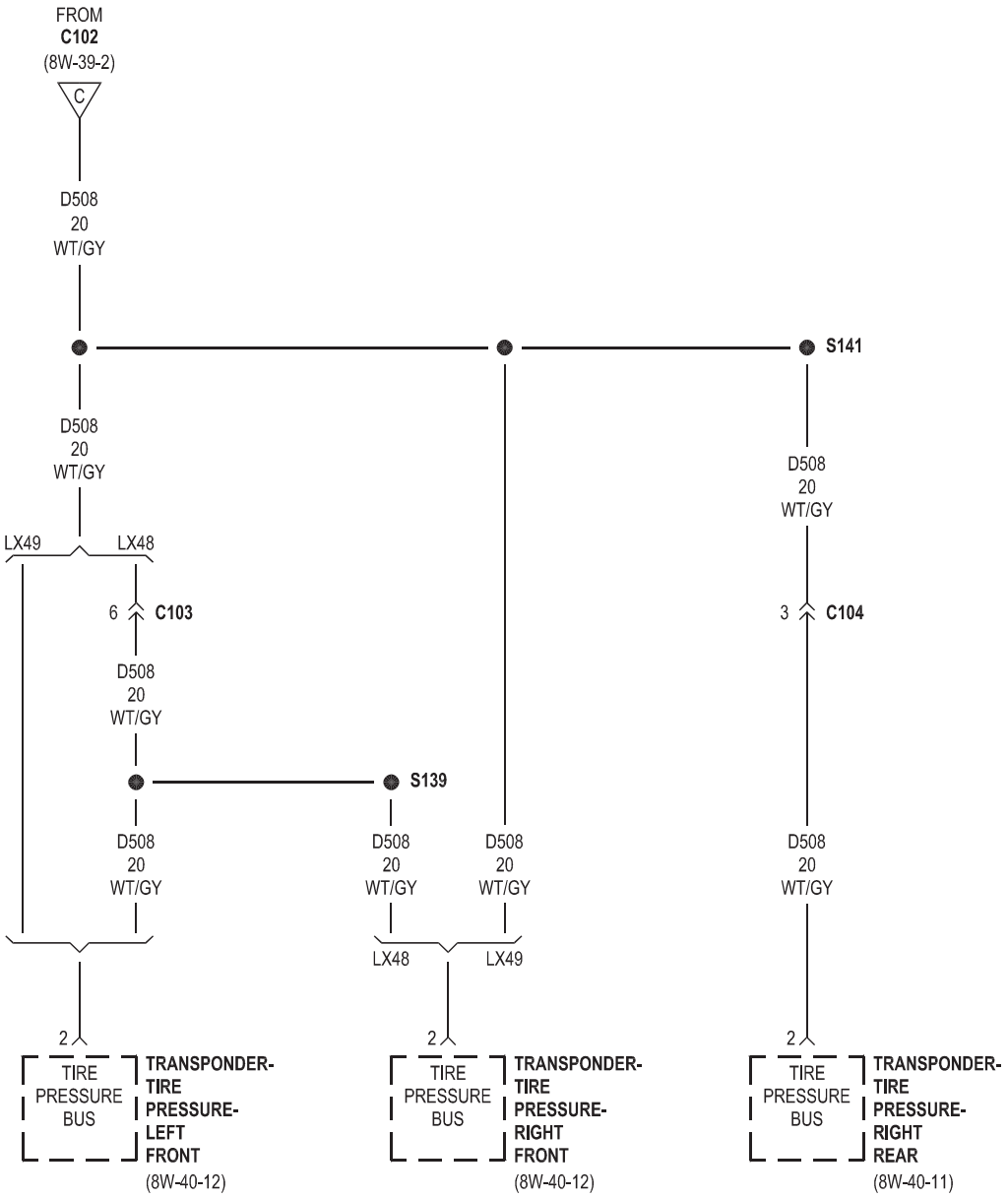
FROM
C102
(8W-39-2)
C
D508
20
WT/GY
S141
D508
20
WT/GY
LX49
LX48
6
C103
3
C104
D508
20
WT/GY
S139
D508
20
WT/GY
D508
20
WT/GY
D508
20
WT/GY
D508
20
WT/GY
LX48
LX49
2
2
2
TIRE
PRESSURE
BUS
TRANSPONDER-
TIRE
PRESSURE-
LEFT
FRONT
(8W-40-12)
TIRE
PRESSURE
BUS
TRANSPONDER-
TIRE
PRESSURE-
RIGHT
FRONT
(8W-40-12)
TIRE
PRESSURE
BUS
TRANSPONDER-
TIRE
PRESSURE-
RIGHT
REAR
(8W-40-11)

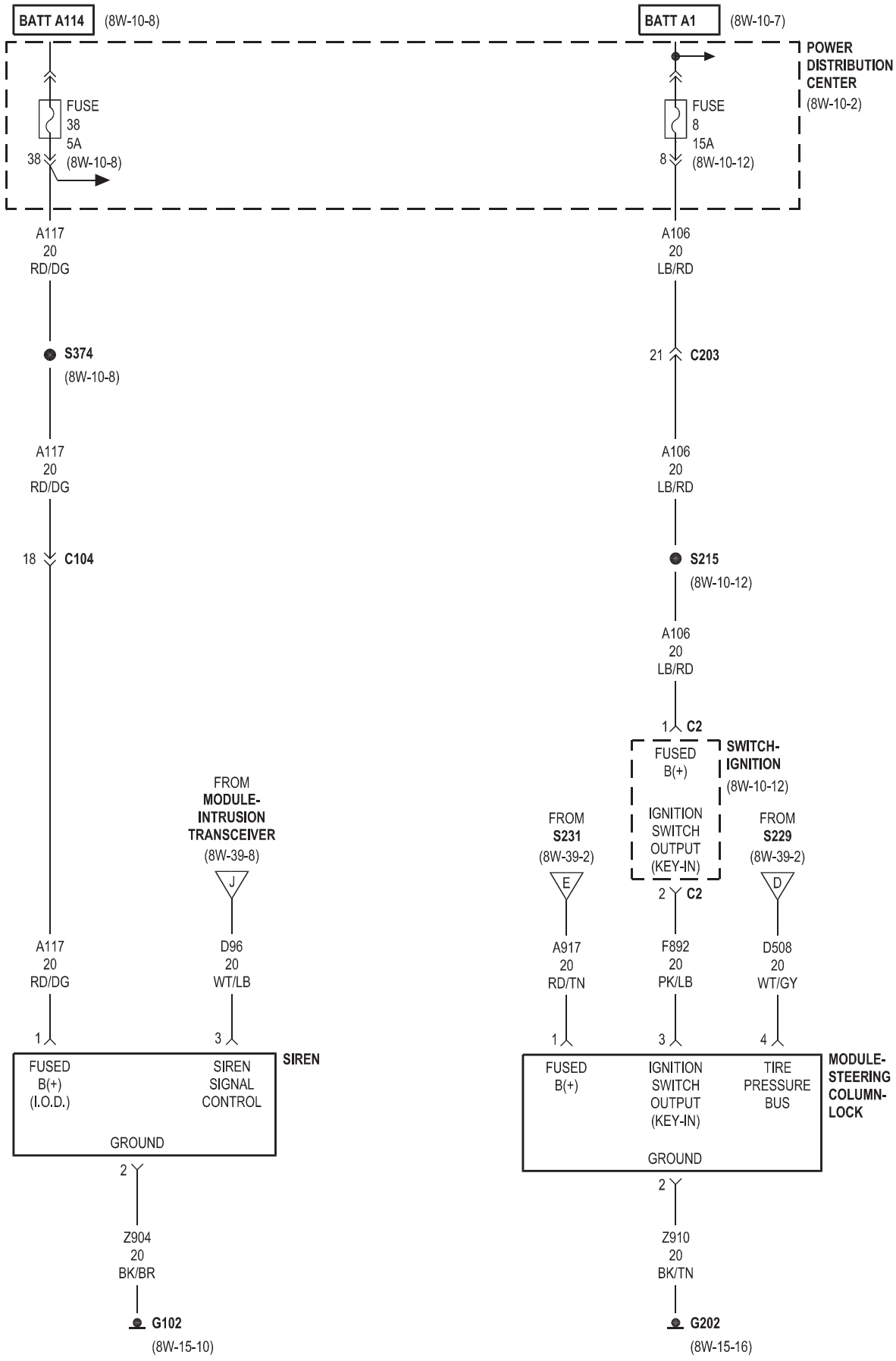
BATT A114
(8W-10-8)
BATT A1
(8W-10-7)
POWER DISTRIBUTION CENTER
(8W-10-2)
FUSE 38 5A
38
(8W-10-8)
FUSE 8 15A
8
(8W-10-12)
A117 20 RD/DG
A106 20 LB/RD
S374
(8W-10-8)
21 C203
A117 20 RD/DG
A106 20 LB/RD
18 C104
S215
(8W-10-12)
A106 20 LB/RD
1 C2
FUSED B(+)
IGNITION SWITCH OUTPUT (KEY-IN)
SWITCH-IGNITION
(8W-10-12)
2 C2
FROM MODULE-INTRUSION TRANSCEIVER
(8W-39-8)
J
FROM S231
(8W-39-2)
E
FROM S229
(8W-39-2)
D
A117 20 RD/DG
D96 20 WT/LB
A917 20 RD/TN
F892 20 PK/LB
D508 20 WT/GY
1
3
1
3
4
FUSED B(+) (I.O.D.)
SIREN SIGNAL CONTROL
SIREN
GROUND
FUSED B(+)
IGNITION SWITCH OUTPUT (KEY-IN)
TIRE PRESSURE BUS
MODULE-STEERING COLUMN-LOCK
GROUND
2
2
Z904 20 BK/BR
Z910 20 BK/TN
G102
(8W-15-10)
G202
(8W-15-16)

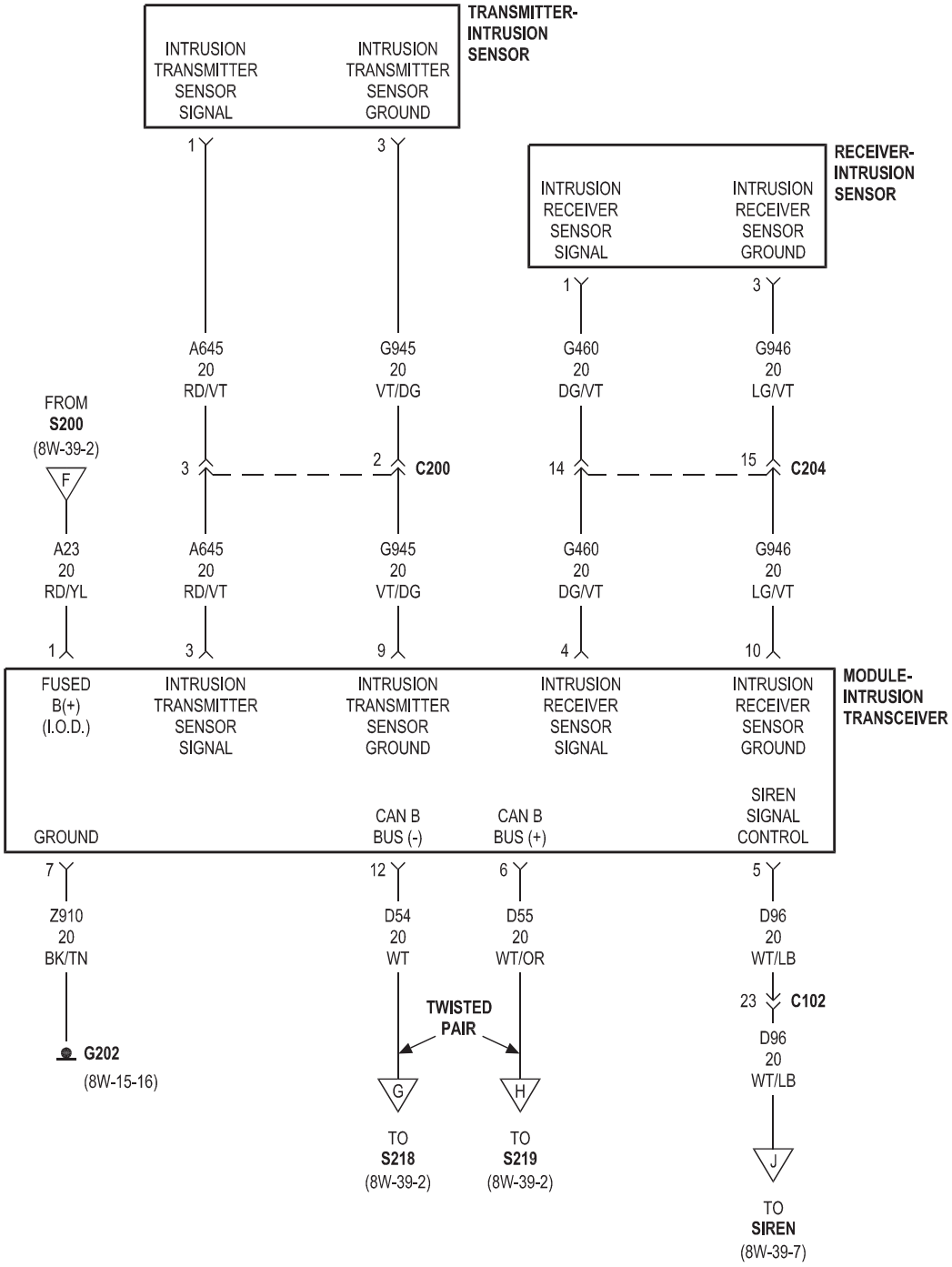
TRANSMITTER-
INTRUSION
SENSOR
INTRUSION
TRANSMITTER
SENSOR
SIGNAL
INTRUSION
TRANSMITTER
SENSOR
GROUND
1
3
RECEIVER-
INTRUSION
SENSOR
INTRUSION
RECEIVER
SENSOR
SIGNAL
INTRUSION
RECEIVER
SENSOR
GROUND
1
3
A645
20
RD/VT
G945
20
VT/DG
G460
20
DG/VT
G946
20
LG/VT
FROM
S200
(8W-39-2)
F
3
2
C200
14
15
C204
A23
20
RD/YL
A645
20
RD/VT
G945
20
VT/DG
G460
20
DG/VT
G946
20
LG/VT
1
3
9
4
10
MODULE-
INTRUSION
TRANSCEIVER
FUSED
B(+)
(I.O.D.)
INTRUSION
TRANSMITTER
SENSOR
SIGNAL
INTRUSION
TRANSMITTER
SENSOR
GROUND
INTRUSION
RECEIVER
SENSOR
SIGNAL
INTRUSION
RECEIVER
SENSOR
GROUND
GROUND
CAN B
BUS (-)
CAN B
BUS (+)
SIREN
SIGNAL
CONTROL
7
12
6
5
Z910
20
BK/TN
D54
20
WT
D55
20
WT/OR
D96
20
WT/LB
TWISTED
PAIR
23
C102
D96
20
WT/LB
G202
(8W-15-16)
G
H
J
TO
S218
(8W-39-2)
TO
S219
(8W-39-2)
TO
SIREN
(8W-39-7)

8W-40 INSTRUMENT CLUSTER

Component	Page
Circuit Breaker No. 1	8W-40-2
Cluster	8W-40-2, 3, 4, 5, 6, 7, 8, 9
Connector-Interface-Police/Taxi	8W-40-14
Control-A/C-Heater	8W-40-4, 8, 9
Fuse 14	8W-40-2
Fuse 17	8W-40-2
Fuse 29	8W-40-2
Fuse 30	8W-40-13
Fuse 38	8W-40-9
Fuse 41	8W-40-11
G100	8W-40-10, 12
G101	8W-40-12
G102	8W-40-10
G200	8W-40-9
G202	8W-40-2, 13
G300	8W-40-5, 6, 11
G301	8W-40-3, 5, 11
Lamp-Cargo	8W-40-7
Lamp-Courtesy-Left Front Door	8W-40-7
Lamp-Courtesy-Left Rear	8W-40-7
Lamp-Courtesy-Right Front Door	8W-40-7
Lamp-Courtesy-Right Rear	8W-40-7
Lamp-Glove Box	8W-40-7
Lamp-Prndl	8W-40-8, 9
Lamp-Reading-Front	8W-40-7
Lamp-Vanity-Left	8W-40-7
Lamp-Vanity-Right	8W-40-7
Latch-Door-Decklid	8W-40-8
Latch-Door-Driver	8W-40-5
Latch-Door-Left Rear	8W-40-5
Latch-Door-Liftgate	8W-40-8
Latch-Door-Passenger	8W-40-5
Latch-Door-Right Rear	8W-40-5
Module-Antilock Brakes	8W-40-10
Module-Clock-Analog	8W-40-8, 9
Module-Front Control	8W-40-2, 10, 13
Module-Fuel Pump	8W-40-6
Module-Interface-Police/Taxi	8W-40-13, 14
Module-Sentry Key Remote Entry	8W-40-11
Power Distribution Center	8W-40-2, 9, 11, 13
Sensor-Ambient Air Temperature	8W-40-10
Sensor-Brake Fluid Level	8W-40-10
Sensor-Wheel Speed-Abs-Right Front	8W-40-10
Sensor-Wheel Speed-Right Front	8W-40-10
Switch-Bank	8W-40-3, 8, 9
Switch-Decklid Release	8W-40-8
Switch-Headlamp	8W-40-3, 8, 9
Switch-Heated Seat-Left	8W-40-4, 8, 9
Switch-Heated Seat-Right	8W-40-4, 8, 9
Switch-Ignition	8W-40-4
Switch-Liftgate Release	8W-40-8
Switch-Parking Brake	8W-40-6
Switch-Seat Belt-Driver	8W-40-6
Switch-Seat Belt-Passenger	8W-40-3
Switch-Window/Door Lock-Driver	8W-40-6
Switch-Window/Door Lock-Driver Express	8W-40-6
Switch-Window/Door Lock-Passenger	8W-40-6, 7
Switch-Window/Door Lock-Passenger Express	8W-40-6, 7
Transponder-Tire Pressure-Left Front	8W-40-11, 12
Transponder-Tire Pressure-Right Front	8W-40-11, 12
Transponder-Tire Pressure-Right Rear	8W-40-11

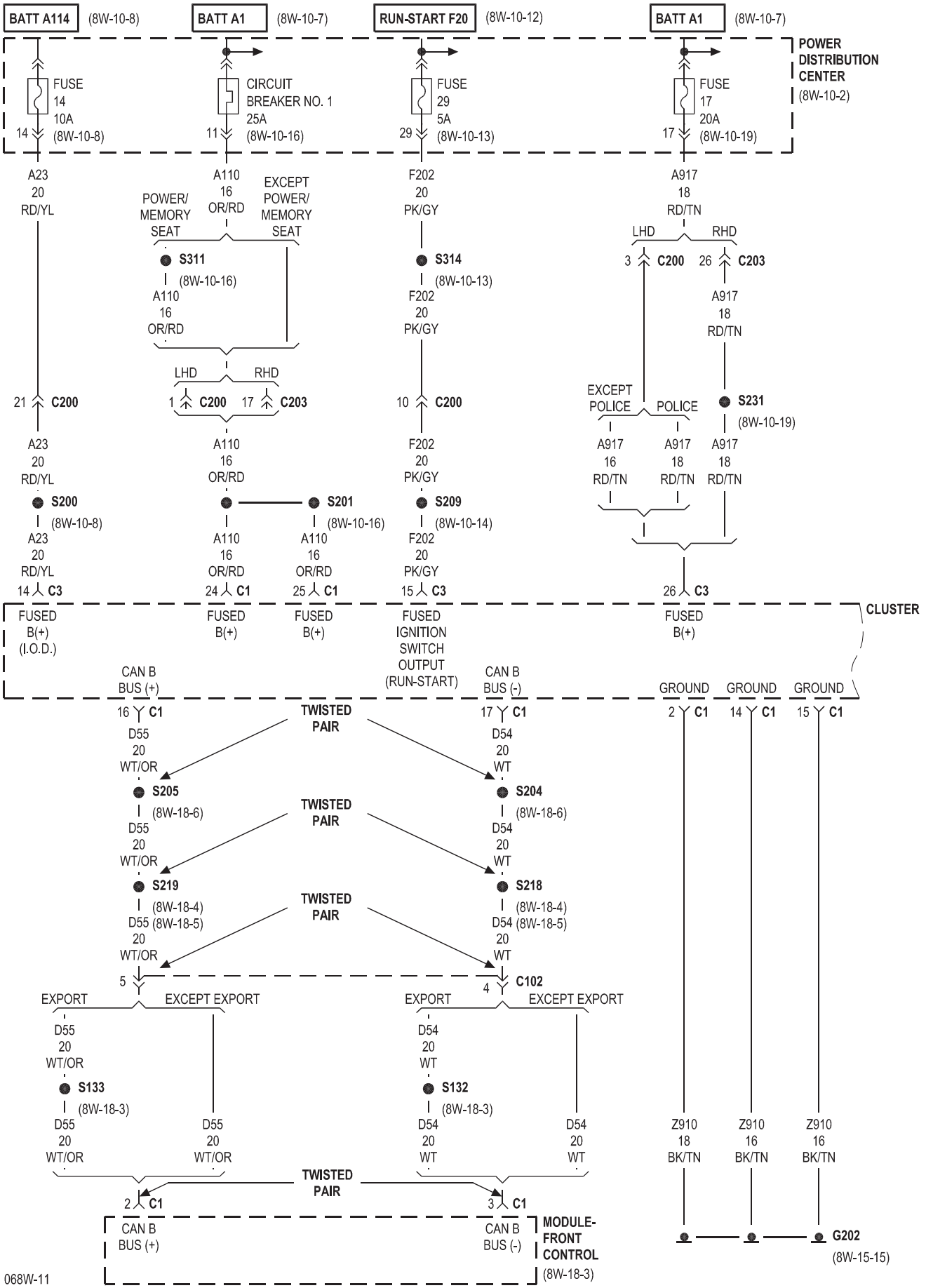
BATT A114 (8W-10-8)
BATT A1 (8W-10-7)
RUN-START F20 (8W-10-12)
BATT A1 (8W-10-7)
POWER DISTRIBUTION CENTER (8W-10-2)
FUSE 14 10A (8W-10-8)
CIRCUIT BREAKER NO. 1 25A (8W-10-16)
FUSE 29 5A (8W-10-13)
FUSE 17 20A (8W-10-19)
A23 20 RD/YL
A110 16 OR/RD
POWER/ MEMORY SEAT
EXCEPT POWER/ MEMORY SEAT
F202 20 PK/GY
A917 18 RD/TN
LHD
RHD
S311 (8W-10-16)
S314 (8W-10-13)
C200
C203
EXCEPT POLICE
POLICE
S231 (8W-10-19)
S200 (8W-10-8)
S201 (8W-10-16)
S209 (8W-10-14)
C3
C1
CLUSTER
FUSED B(+) (I.O.D.)
FUSED B(+)
FUSED IGNITION SWITCH OUTPUT (RUN-START)
CAN B BUS (+)
CAN B BUS (-)
GROUND
TWISTED PAIR
D55 20 WT/OR
D54 20 WT
S205 (8W-18-6)
S204 (8W-18-6)
S219 (8W-18-4) (8W-18-5)
S218 (8W-18-4) (8W-18-5)
C102
EXPORT
EXCEPT EXPORT
S133 (8W-18-3)
S132 (8W-18-3)
Z910 18 BK/TN
Z910 16 BK/TN
G202 (8W-15-15)
MODULE-FRONT CONTROL (8W-18-3)

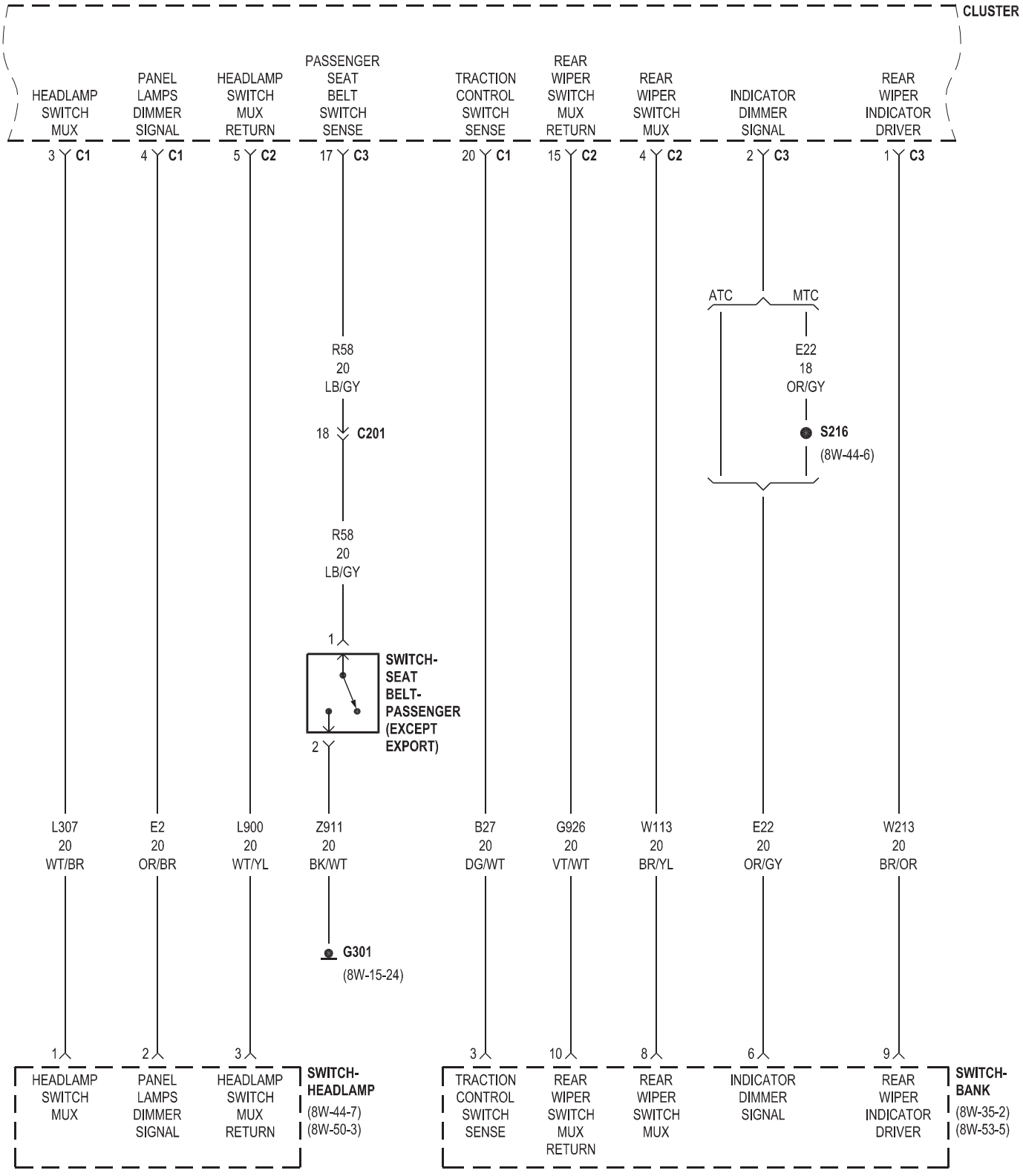
CLUSTER
HEADLAMP SWITCH MUX
PANEL LAMPS DIMMER SIGNAL
HEADLAMP SWITCH MUX RETURN
PASSENGER SEAT BELT SWITCH SENSE
TRACTION CONTROL SWITCH SENSE
REAR WIPER SWITCH MUX RETURN
REAR WIPER SWITCH MUX
INDICATOR DIMMER SIGNAL
REAR WIPER INDICATOR DRIVER
3 C1
4 C1
5 C2
17 C3
20 C1
15 C2
4 C2
2 C3
1 C3
ATC
MTC
R58
20
LB/GY
18 C201
R58
20
LB/GY
1
2
SWITCH-SEAT BELT-PASSENGER (EXCEPT EXPORT)
E22
18
OR/GY
S216
(8W-44-6)
L307
20
WT/BR
E2
20
OR/BR
L900
20
WT/YL
Z911
20
BK/WT
B27
20
DG/WT
G926
20
VT/WT
W113
20
BR/YL
E22
20
OR/GY
W213
20
BR/OR
G301
(8W-15-24)
1
2
3
3
10
8
6
9
HEADLAMP SWITCH MUX
PANEL LAMPS DIMMER SIGNAL
HEADLAMP SWITCH MUX RETURN
SWITCH-HEADLAMP
(8W-44-7)
(8W-50-3)
TRACTION CONTROL SWITCH SENSE
REAR WIPER SWITCH MUX RETURN
REAR WIPER SWITCH MUX
INDICATOR DIMMER SIGNAL
REAR WIPER INDICATOR DRIVER
SWITCH-BANK
(8W-35-2)
(8W-53-5)

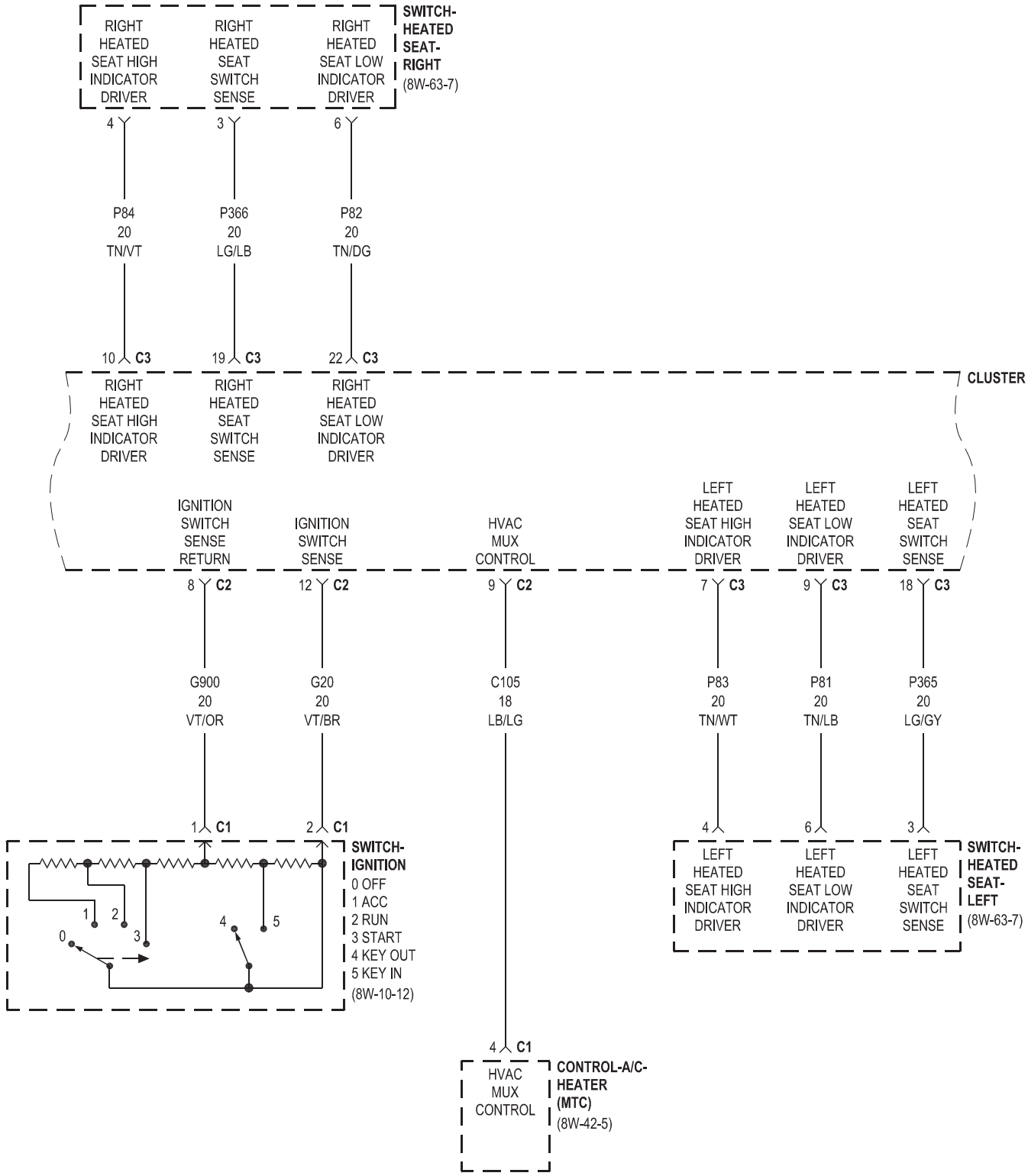
SWITCH-HEATED SEAT-RIGHT
(8W-63-7)
RIGHT HEATED SEAT HIGH INDICATOR DRIVER
RIGHT HEATED SEAT SWITCH SENSE
RIGHT HEATED SEAT LOW INDICATOR DRIVER
4
3
6
P84 20 TN/VT
P366 20 LG/LB
P82 20 TN/DG
10 C3
19 C3
22 C3
CLUSTER
IGNITION SWITCH SENSE RETURN
IGNITION SWITCH SENSE
HVAC MUX CONTROL
LEFT HEATED SEAT HIGH INDICATOR DRIVER
LEFT HEATED SEAT LOW INDICATOR DRIVER
LEFT HEATED SEAT SWITCH SENSE
8 C2
12 C2
9 C2
7 C3
9 C3
18 C3
G900 20 VT/OR
G20 20 VT/BR
C105 18 LB/LG
P83 20 TN/WT
P81 20 TN/LB
P365 20 LG/GY
1 C1
2 C1
4 C1
4
6
3
SWITCH-IGNITION
0 OFF
1 ACC
2 RUN
3 START
4 KEY OUT
5 KEY IN
(8W-10-12)
CONTROL-A/C-HEATER (MTC)
(8W-42-5)
HVAC MUX CONTROL
SWITCH-HEATED SEAT-LEFT
(8W-63-7)
LEFT HEATED SEAT HIGH INDICATOR DRIVER
LEFT HEATED SEAT LOW INDICATOR DRIVER
LEFT HEATED SEAT SWITCH SENSE

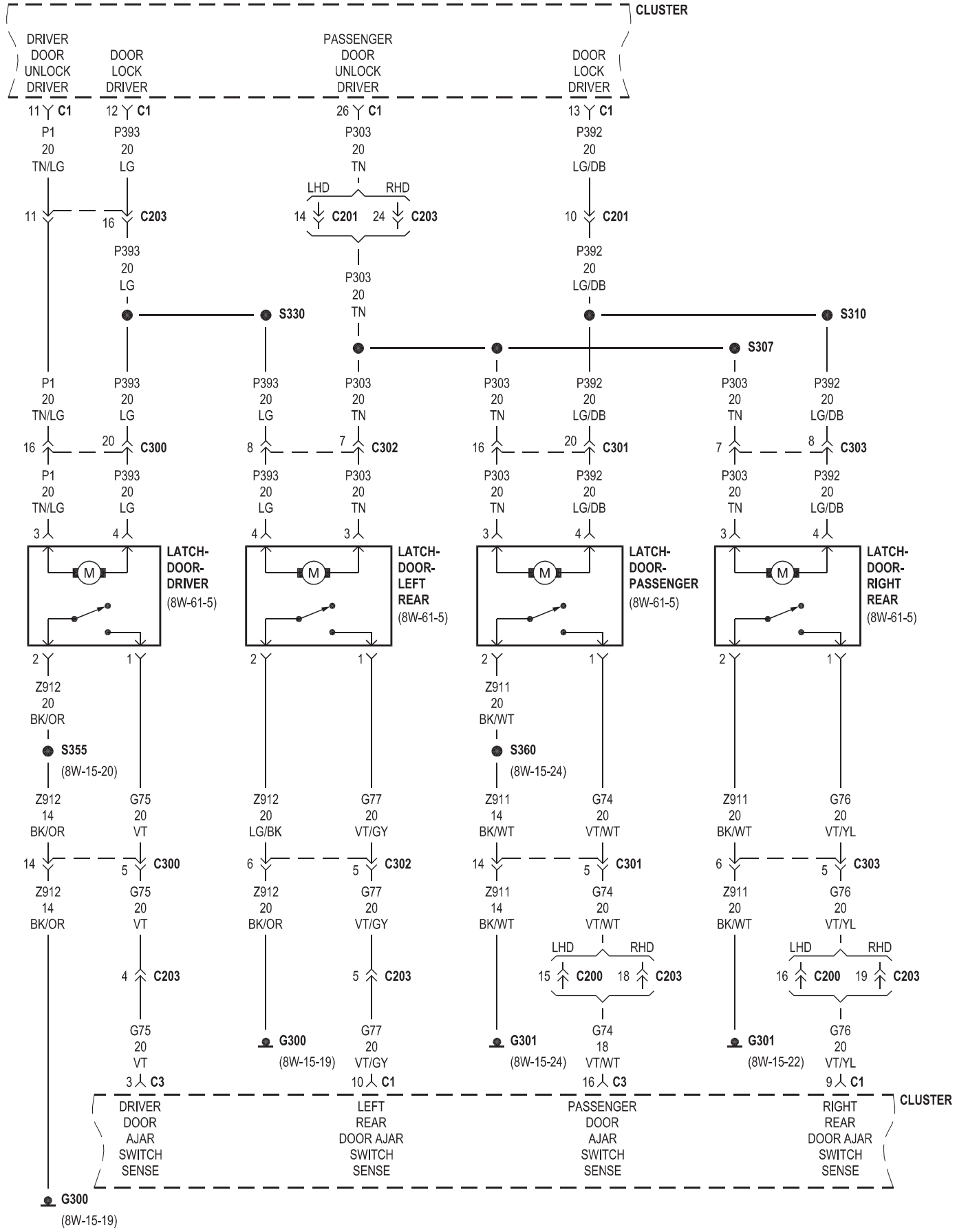
CLUSTER
DRIVER DOOR UNLOCK DRIVER
DOOR LOCK DRIVER
PASSENGER DOOR UNLOCK DRIVER
DOOR LOCK DRIVER
11 C1
12 C1
26 C1
13 C1
P1 20 TN/LG
P393 20 LG
P303 20 TN
P392 20 LG/DB
LHD
RHD
14 C201
24 C203
10 C201
11
16 C203
S330
S310
S307
P303 20 TN
P392 20 LG/DB
P1 20 TN/LG
P393 20 LG
P303 20 TN
P392 20 LG/DB
16 20 C300
8 7 C302
16 20 C301
7 8 C303
3 4
LATCH-DOOR-DRIVER (8W-61-5)
LATCH-DOOR-LEFT REAR (8W-61-5)
LATCH-DOOR-PASSENGER (8W-61-5)
LATCH-DOOR-RIGHT REAR (8W-61-5)
2 1
Z912 20 BK/OR
Z911 20 BK/WT
S355
(8W-15-20)
S360
(8W-15-24)
Z912 14 BK/OR
G75 20 VT
Z912 20 LG/BK
G77 20 VT/GY
Z911 14 BK/WT
G74 20 VT/WT
Z911 20 BK/WT
G76 20 VT/YL
14 5 C300
6 5 C302
14 5 C301
6 5 C303
Z912 14 BK/OR
G75 20 VT
Z912 20 BK/OR
G77 20 VT/GY
Z911 14 BK/WT
G74 20 VT/WT
Z911 20 BK/WT
G76 20 VT/YL
LHD
RHD
15 C200
18 C203
16 C200
19 C203
4 C203
5 C203
G75 20 VT
G300
(8W-15-19)
G77 20 VT/GY
G301
(8W-15-24)
G74 18 VT/WT
G301
(8W-15-22)
G76 20 VT/YL
3 C3
10 C1
16 C3
9 C1
CLUSTER
DRIVER DOOR AJAR SWITCH SENSE
LEFT REAR DOOR AJAR SWITCH SENSE
PASSENGER DOOR AJAR SWITCH SENSE
RIGHT REAR DOOR AJAR SWITCH SENSE
G300
(8W-15-19)

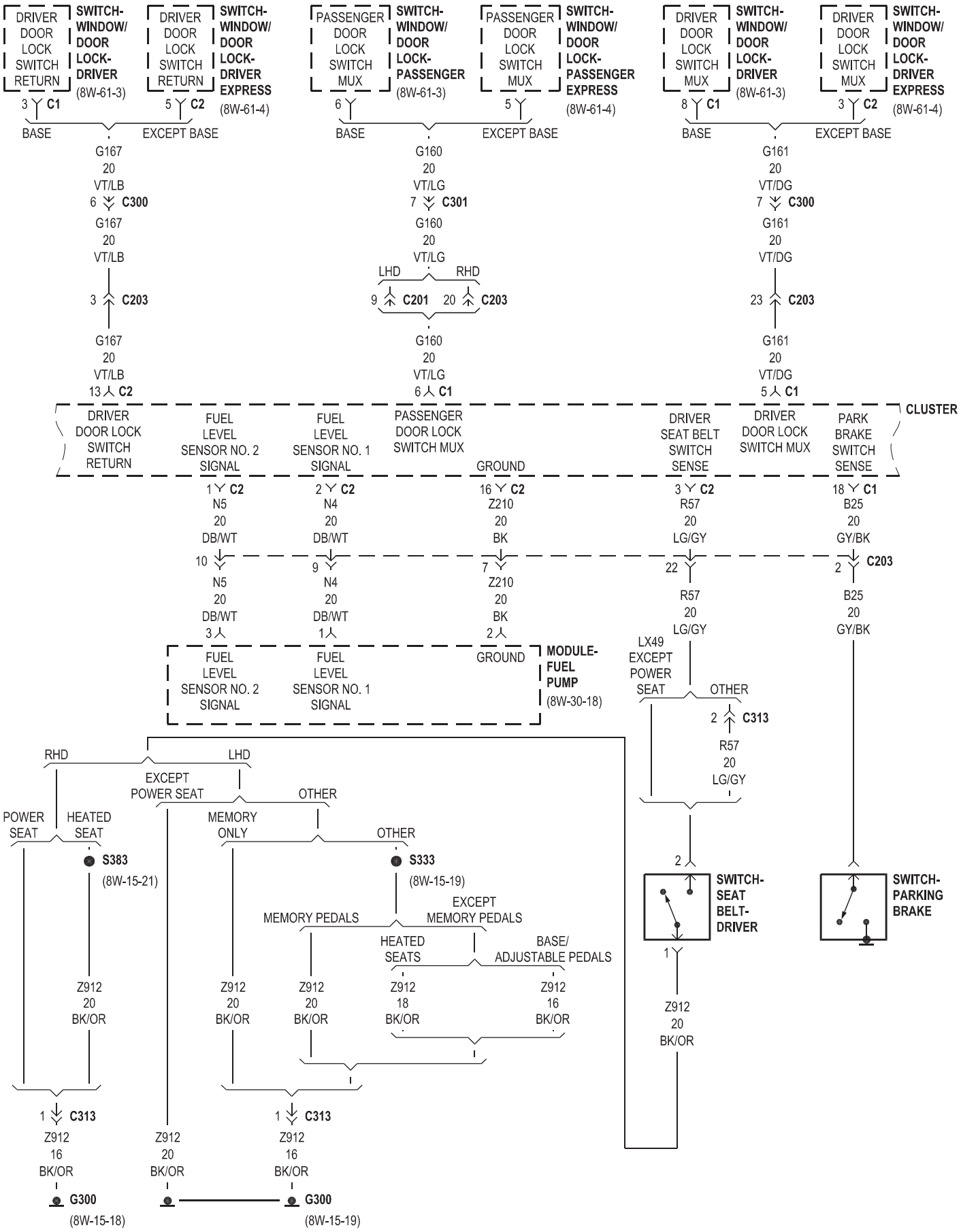
DRIVER DOOR LOCK SWITCH RETURN
SWITCH-WINDOW/ DOOR LOCK-DRIVER (8W-61-3)
DRIVER DOOR LOCK SWITCH RETURN
SWITCH-WINDOW/ DOOR LOCK-DRIVER EXPRESS (8W-61-4)
PASSENGER DOOR LOCK SWITCH MUX
SWITCH-WINDOW/ DOOR LOCK-PASSENGER (8W-61-3)
PASSENGER DOOR LOCK SWITCH MUX
SWITCH-WINDOW/ DOOR LOCK-PASSENGER EXPRESS (8W-61-4)
DRIVER DOOR LOCK SWITCH MUX
SWITCH-WINDOW/ DOOR LOCK-DRIVER (8W-61-3)
DRIVER DOOR LOCK SWITCH MUX
SWITCH-WINDOW/ DOOR LOCK-DRIVER EXPRESS (8W-61-4)
3 C1
5 C2
6
5
8 C1
3 C2
BASE
EXCEPT BASE
G167 20 VT/LB
6 C300
G167 20 VT/LB
3 C203
G167 20 VT/LB
13 C2
G160 20 VT/LG
7 C301
G160 20 VT/LG
LHD
RHD
9 C201
20 C203
G160 20 VT/LG
6 C1
G161 20 VT/DG
7 C300
G161 20 VT/DG
23 C203
G161 20 VT/DG
5 C1
CLUSTER
DRIVER DOOR LOCK SWITCH RETURN
FUEL LEVEL SENSOR NO. 2 SIGNAL
FUEL LEVEL SENSOR NO. 1 SIGNAL
PASSENGER DOOR LOCK SWITCH MUX
GROUND
DRIVER SEAT BELT SWITCH SENSE
DRIVER DOOR LOCK SWITCH MUX
PARK BRAKE SWITCH SENSE
1 C2 N5 20 DB/WT
2 C2 N4 20 DB/WT
16 C2 Z210 20 BK
3 C2 R57 20 LG/GY
18 C1 B25 20 GY/BK
10
9
7
22
2 C203
N5 20 DB/WT
3
N4 20 DB/WT
1
Z210 20 BK
2
R57 20 LG/GY
B25 20 GY/BK
FUEL LEVEL SENSOR NO. 2 SIGNAL
FUEL LEVEL SENSOR NO. 1 SIGNAL
GROUND
MODULE-FUEL PUMP (8W-30-18)
LX49 EXCEPT POWER SEAT
OTHER
2 C313
R57 20 LG/GY
RHD
LHD
EXCEPT POWER SEAT
OTHER
POWER SEAT
HEATED SEAT
MEMORY ONLY
OTHER
S383 (8W-15-21)
S333 (8W-15-19)
EXCEPT MEMORY PEDALS
MEMORY PEDALS
HEATED SEATS
BASE/ ADJUSTABLE PEDALS
Z912 20 BK/OR
Z912 20 BK/OR
Z912 20 BK/OR
Z912 18 BK/OR
Z912 16 BK/OR
2
1
Z912 20 BK/OR
SWITCH-SEAT BELT-DRIVER
SWITCH-PARKING BRAKE
1 C313
Z912 16 BK/OR
Z912 20 BK/OR
1 C313
Z912 16 BK/OR
G300 (8W-15-18)
G300 (8W-15-19)

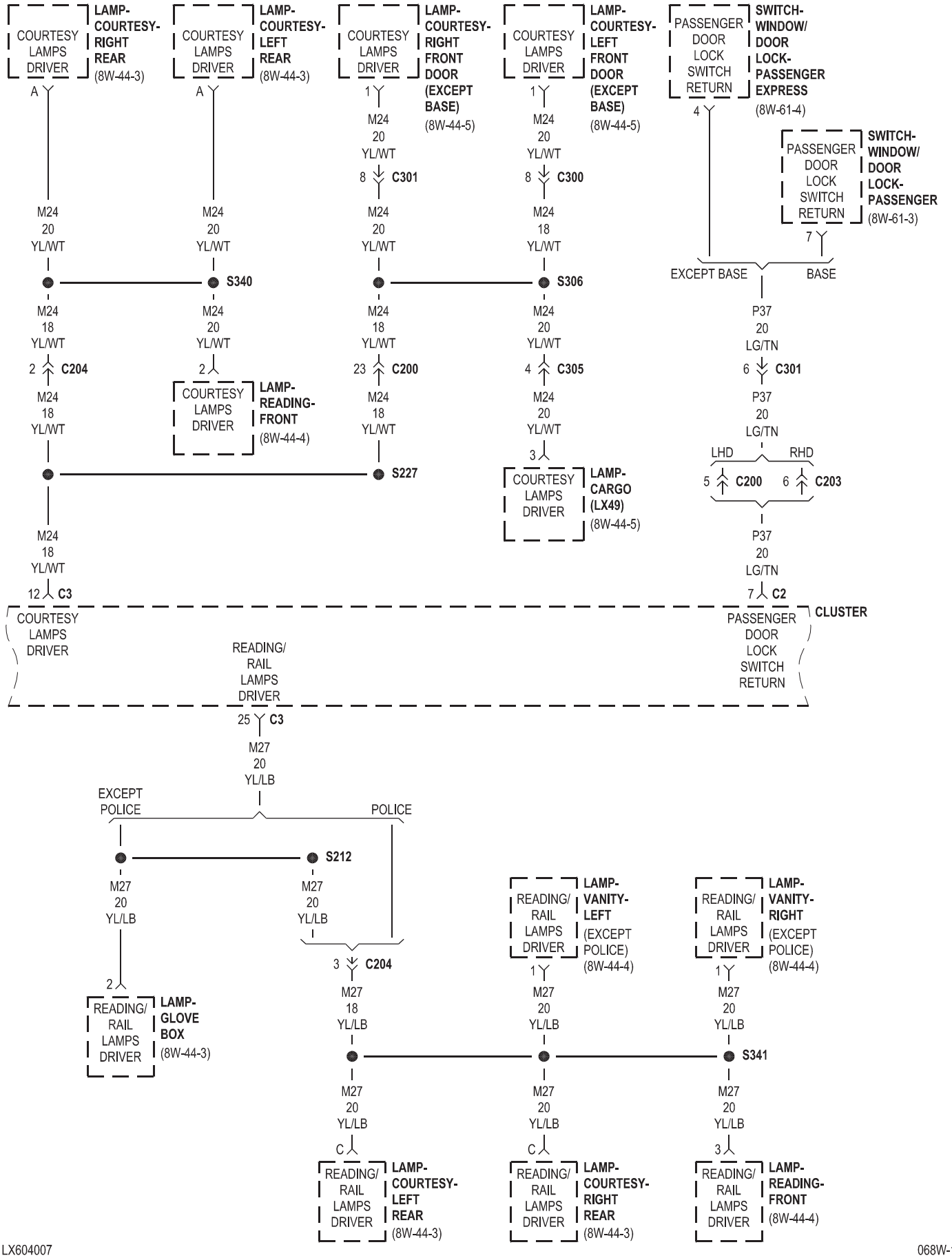
COURTESY LAMPS DRIVER
LAMP-COURTESY-RIGHT REAR (8W-44-3)
LAMP-COURTESY-LEFT REAR (8W-44-3)
LAMP-COURTESY-RIGHT FRONT DOOR (EXCEPT BASE) (8W-44-5)
LAMP-COURTESY-LEFT FRONT DOOR (EXCEPT BASE) (8W-44-5)
PASSENGER DOOR LOCK SWITCH RETURN
SWITCH-WINDOW/DOOR LOCK-PASSENGER EXPRESS (8W-61-4)
SWITCH-WINDOW/DOOR LOCK-PASSENGER (8W-61-3)
M24 20 YL/WT
M24 18 YL/WT
C301
C300
C204
C200
C305
C3
C2
C203
S340
S306
S227
EXCEPT BASE
BASE
P37 20 LG/TN
LHD
RHD
LAMP-READING-FRONT (8W-44-4)
LAMP-CARGO (LX49) (8W-44-5)
CLUSTER
READING/RAIL LAMPS DRIVER
M27 20 YL/LB
EXCEPT POLICE
POLICE
S212
LAMP-GLOVE BOX (8W-44-3)
LAMP-VANITY-LEFT (EXCEPT POLICE) (8W-44-4)
LAMP-VANITY-RIGHT (EXCEPT POLICE) (8W-44-4)
S341
LAMP-COURTESY-LEFT REAR (8W-44-3)
LAMP-COURTESY-RIGHT REAR (8W-44-3)
LAMP-READING-FRONT (8W-44-4)

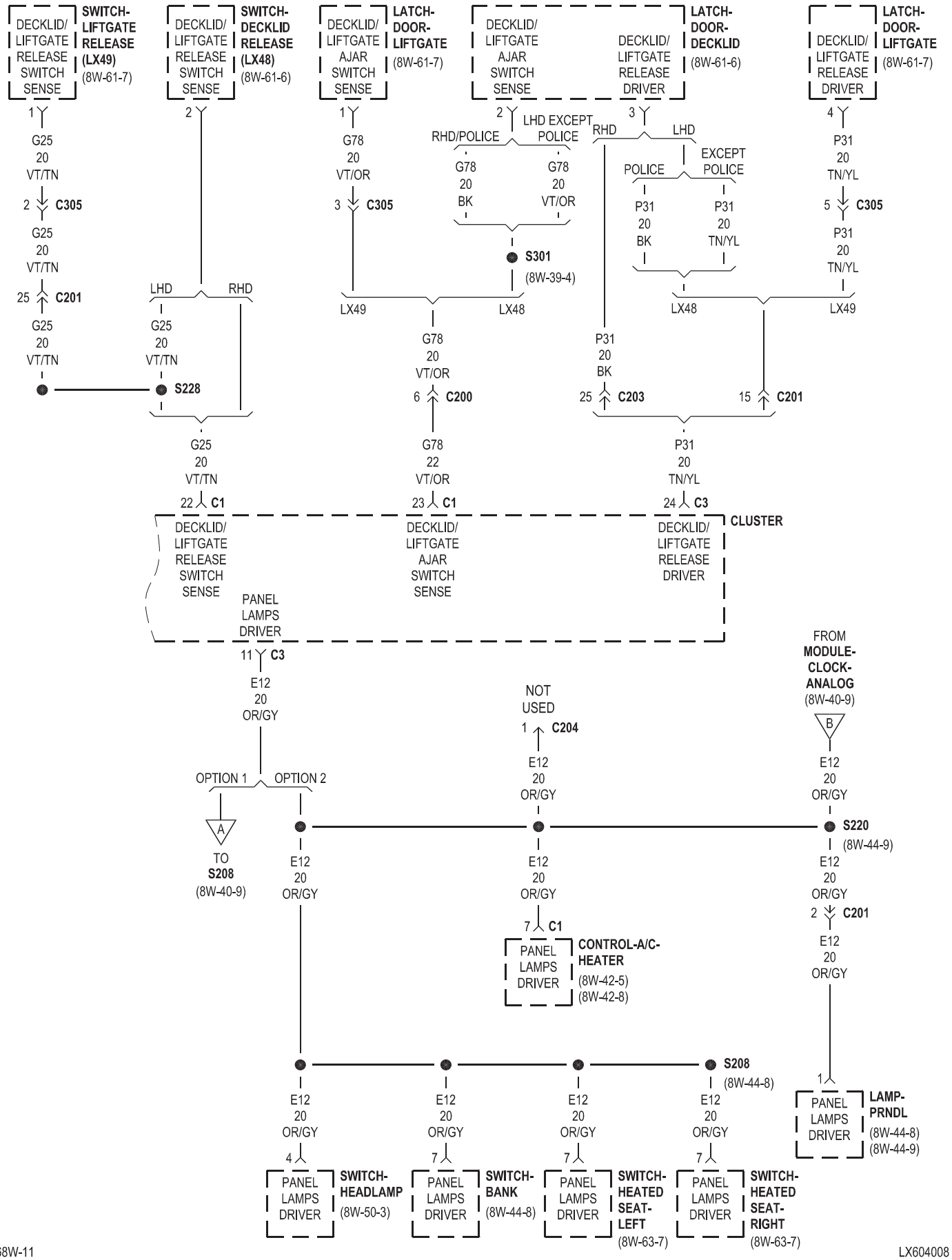
DECKLID/ LIFTGATE RELEASE SWITCH SENSE
SWITCH- LIFTGATE RELEASE (LX49) (8W-61-7)
SWITCH- DECKLID RELEASE (LX48) (8W-61-6)
LATCH- DOOR- LIFTGATE (8W-61-7)
DECKLID/ LIFTGATE AJAR SWITCH SENSE
DECKLID/ LIFTGATE RELEASE DRIVER
LATCH- DOOR- DECKLID (8W-61-6)
LATCH- DOOR- LIFTGATE (8W-61-7)
1 G25 20 VT/TN 2 C305 G25 20 VT/TN 25 C201 G25 20 VT/TN
2
1 G78 20 VT/OR 3 C305
2 LHD EXCEPT POLICE RHD/POLICE G78 20 BK G78 20 VT/OR S301 (8W-39-4)
3 RHD LHD EXCEPT POLICE POLICE P31 20 BK P31 20 TN/YL
4 P31 20 TN/YL 5 C305 P31 20 TN/YL
LHD RHD
G25 20 VT/TN S228
LX49 LX48
G78 20 VT/OR 6 C200
P31 20 BK 25 C203 15 C201
LX48 LX49
G25 20 VT/TN 22 C1
G78 22 VT/OR 23 C1
P31 20 TN/YL 24 C3
CLUSTER
DECKLID/ LIFTGATE RELEASE SWITCH SENSE
DECKLID/ LIFTGATE AJAR SWITCH SENSE
DECKLID/ LIFTGATE RELEASE DRIVER
PANEL LAMPS DRIVER
11 C3
E12 20 OR/GY
OPTION 1 OPTION 2
A
TO S208 (8W-40-9)
E12 20 OR/GY
NOT USED 1 C204
E12 20 OR/GY
7 C1
PANEL LAMPS DRIVER
CONTROL-A/C-HEATER (8W-42-5) (8W-42-8)
FROM MODULE- CLOCK- ANALOG (8W-40-9)
B
E12 20 OR/GY
S220 (8W-44-9)
E12 20 OR/GY
2 C201
E12 20 OR/GY
S208 (8W-44-8)
4 PANEL LAMPS DRIVER SWITCH- HEADLAMP (8W-50-3)
7 PANEL LAMPS DRIVER SWITCH- BANK (8W-44-8)
7 PANEL LAMPS DRIVER SWITCH- HEATED SEAT- LEFT (8W-63-7)
7 PANEL LAMPS DRIVER SWITCH- HEATED SEAT- RIGHT (8W-63-7)
1 PANEL LAMPS DRIVER LAMP- PRNDL (8W-44-8) (8W-44-9)

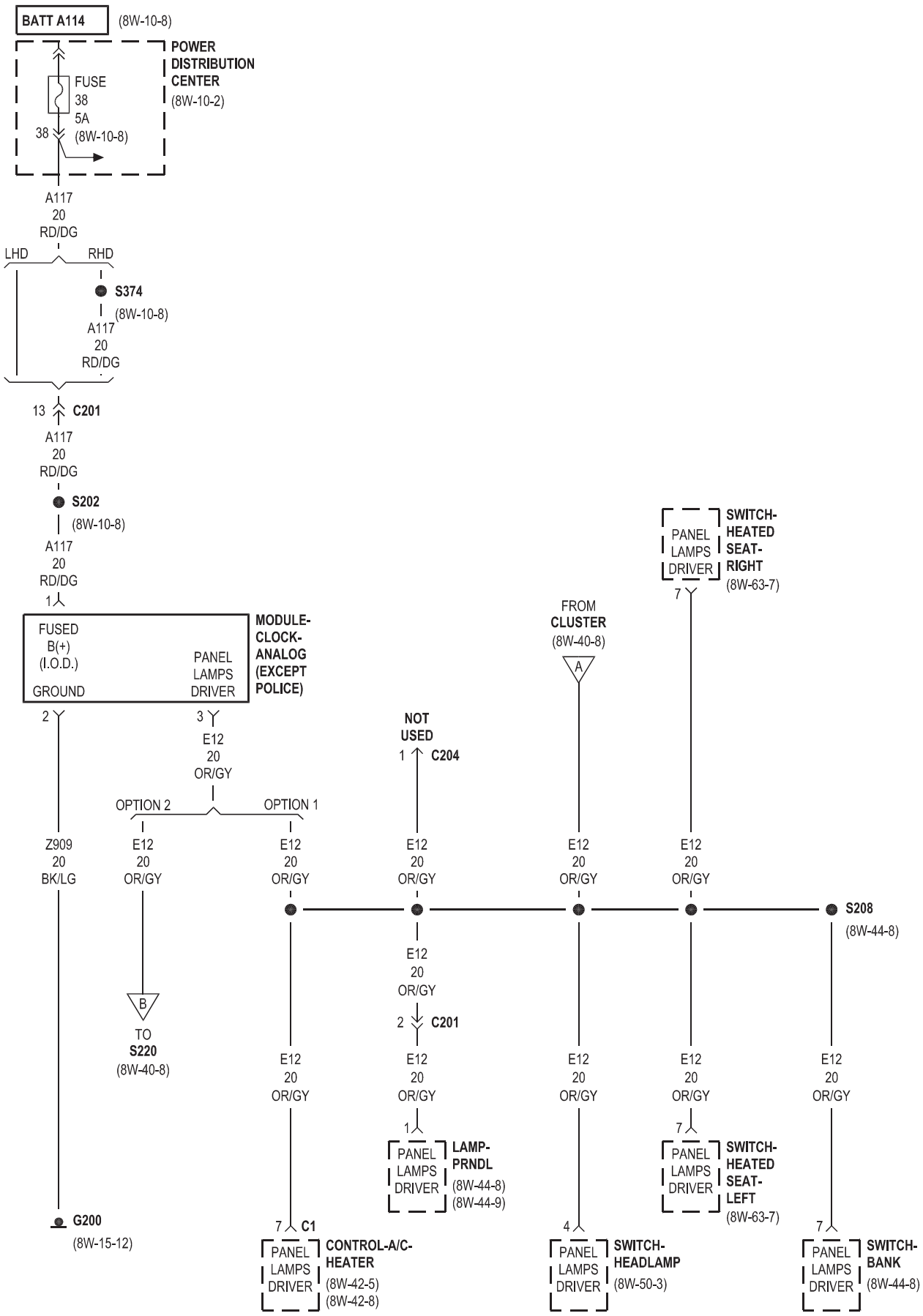
BATT A114
(8W-10-8)
POWER DISTRIBUTION CENTER
(8W-10-2)
FUSE 38 5A
38
(8W-10-8)
A117 20 RD/DG
LHD
RHD
S374
(8W-10-8)
A117 20 RD/DG
13 C201
A117 20 RD/DG
S202
(8W-10-8)
A117 20 RD/DG
1
FUSED B(+) (I.O.D.)
GROUND
PANEL LAMPS DRIVER
MODULE-CLOCK-ANALOG (EXCEPT POLICE)
2
3
E12 20 OR/GY
OPTION 2
OPTION 1
Z909 20 BK/LG
E12 20 OR/GY
E12 20 OR/GY
NOT USED
1 C204
FROM CLUSTER
(8W-40-8)
A
PANEL LAMPS DRIVER
SWITCH-HEATED SEAT-RIGHT
(8W-63-7)
7
E12 20 OR/GY
E12 20 OR/GY
E12 20 OR/GY
S208
(8W-44-8)
B
TO S220
(8W-40-8)
E12 20 OR/GY
2 C201
E12 20 OR/GY
E12 20 OR/GY
E12 20 OR/GY
E12 20 OR/GY
1
PANEL LAMPS DRIVER
LAMP-PRNDL
(8W-44-8)
(8W-44-9)
7
PANEL LAMPS DRIVER
SWITCH-HEATED SEAT-LEFT
(8W-63-7)
G200
(8W-15-12)
7 C1
PANEL LAMPS DRIVER
CONTROL-A/C-HEATER
(8W-42-5)
(8W-42-8)
4
PANEL LAMPS DRIVER
SWITCH-HEADLAMP
(8W-50-3)
7
PANEL LAMPS DRIVER
SWITCH-BANK
(8W-44-8)

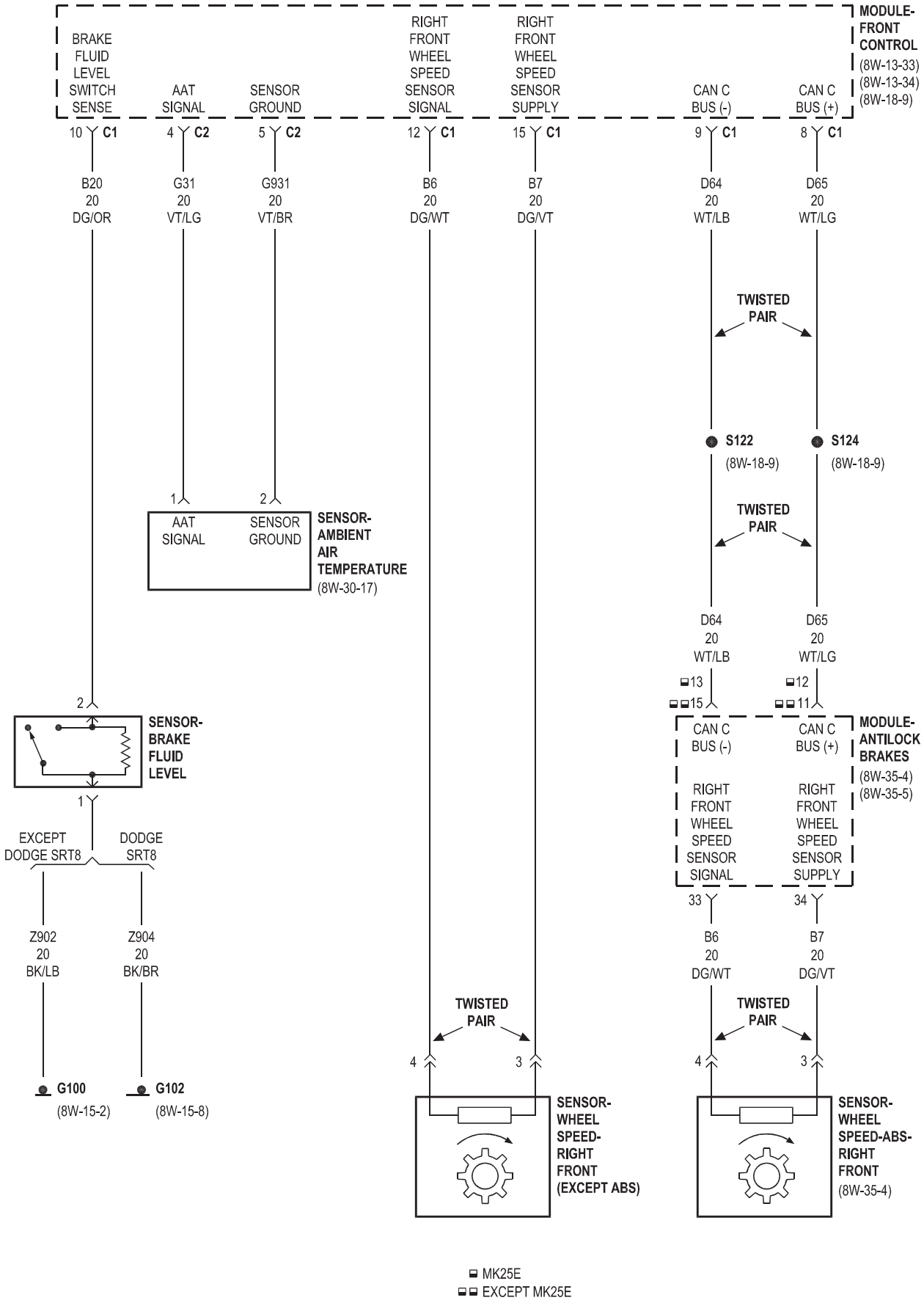
MODULE-FRONT CONTROL
(8W-13-33)
(8W-13-34)
(8W-18-9)
BRAKE FLUID LEVEL SWITCH SENSE
AAT SIGNAL
SENSOR GROUND
RIGHT FRONT WHEEL SPEED SENSOR SIGNAL
RIGHT FRONT WHEEL SPEED SENSOR SUPPLY
CAN C BUS (-)
CAN C BUS (+)
10 C1
4 C2
5 C2
12 C1
15 C1
9 C1
8 C1
B20 20 DG/OR
G31 20 VT/LG
G931 20 VT/BR
B6 20 DG/WT
B7 20 DG/VT
D64 20 WT/LB
D65 20 WT/LG
TWISTED PAIR
S122
(8W-18-9)
S124
(8W-18-9)
1
2
AAT SIGNAL
SENSOR GROUND
SENSOR-AMBIENT AIR TEMPERATURE
(8W-30-17)
D64 20 WT/LB
D65 20 WT/LG
13
15
12
11
MODULE-ANTILOCK BRAKES
(8W-35-4)
(8W-35-5)
CAN C BUS (-)
CAN C BUS (+)
RIGHT FRONT WHEEL SPEED SENSOR SIGNAL
RIGHT FRONT WHEEL SPEED SENSOR SUPPLY
33
34
B6 20 DG/WT
B7 20 DG/VT
2
SENSOR-BRAKE FLUID LEVEL
1
EXCEPT DODGE SRT8
DODGE SRT8
Z902 20 BK/LB
Z904 20 BK/BR
G100
(8W-15-2)
G102
(8W-15-8)
TWISTED PAIR
4
3
SENSOR-WHEEL SPEED-RIGHT FRONT (EXCEPT ABS)
SENSOR-WHEEL SPEED-ABS-RIGHT FRONT
(8W-35-4)
MK25E
EXCEPT MK25E

TIRE PRESSURE MONITOR

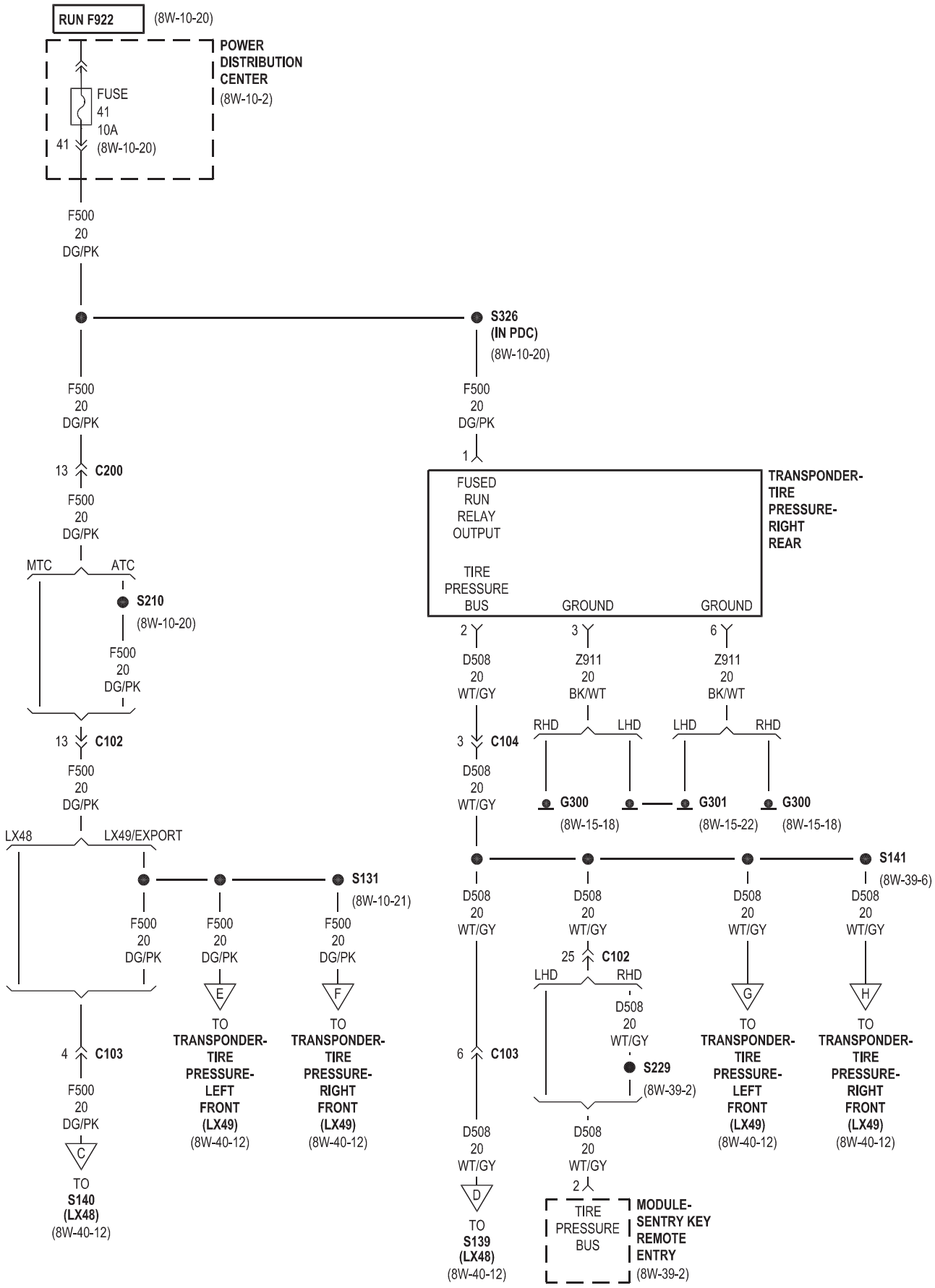

TIRE PRESSURE MONITOR

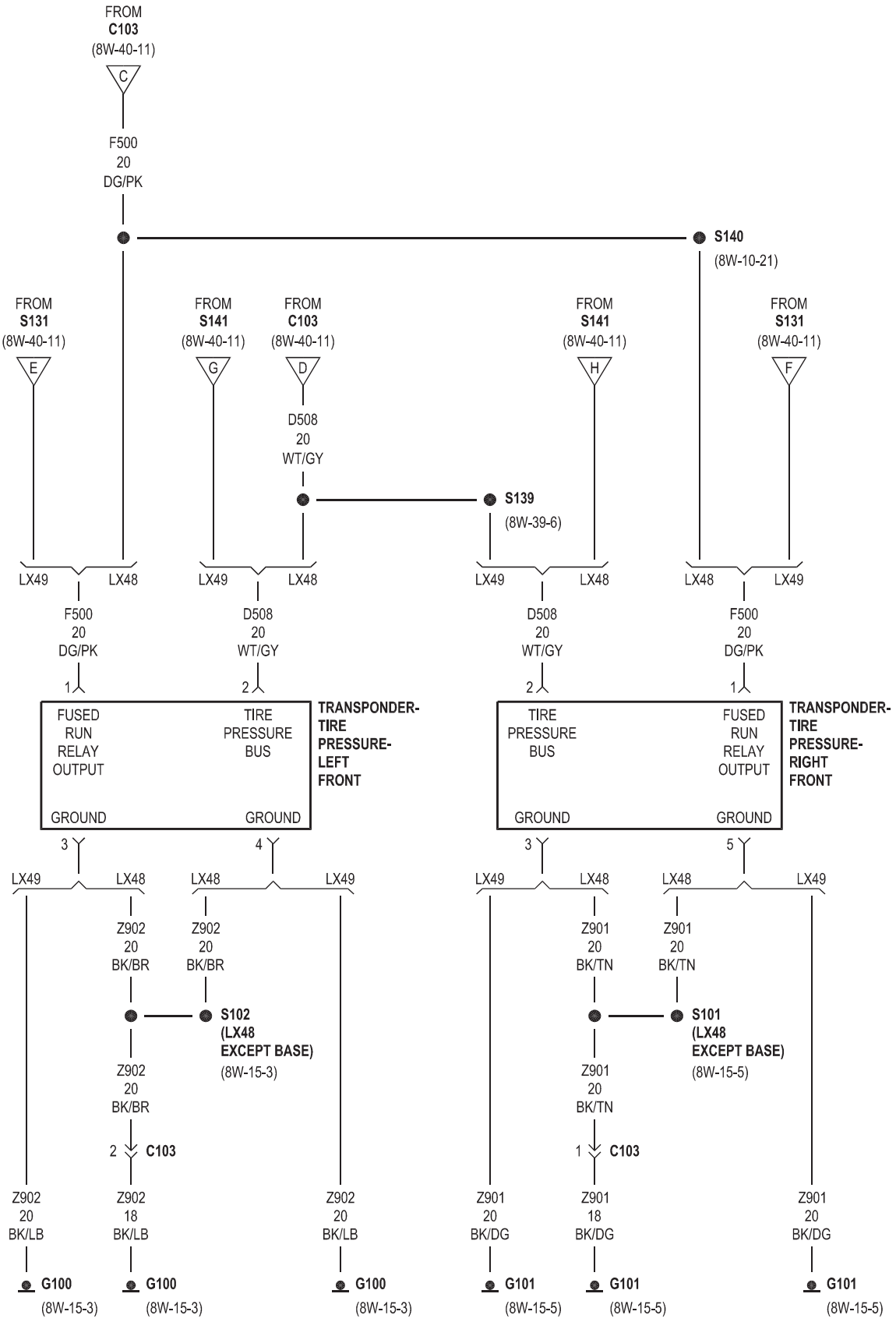

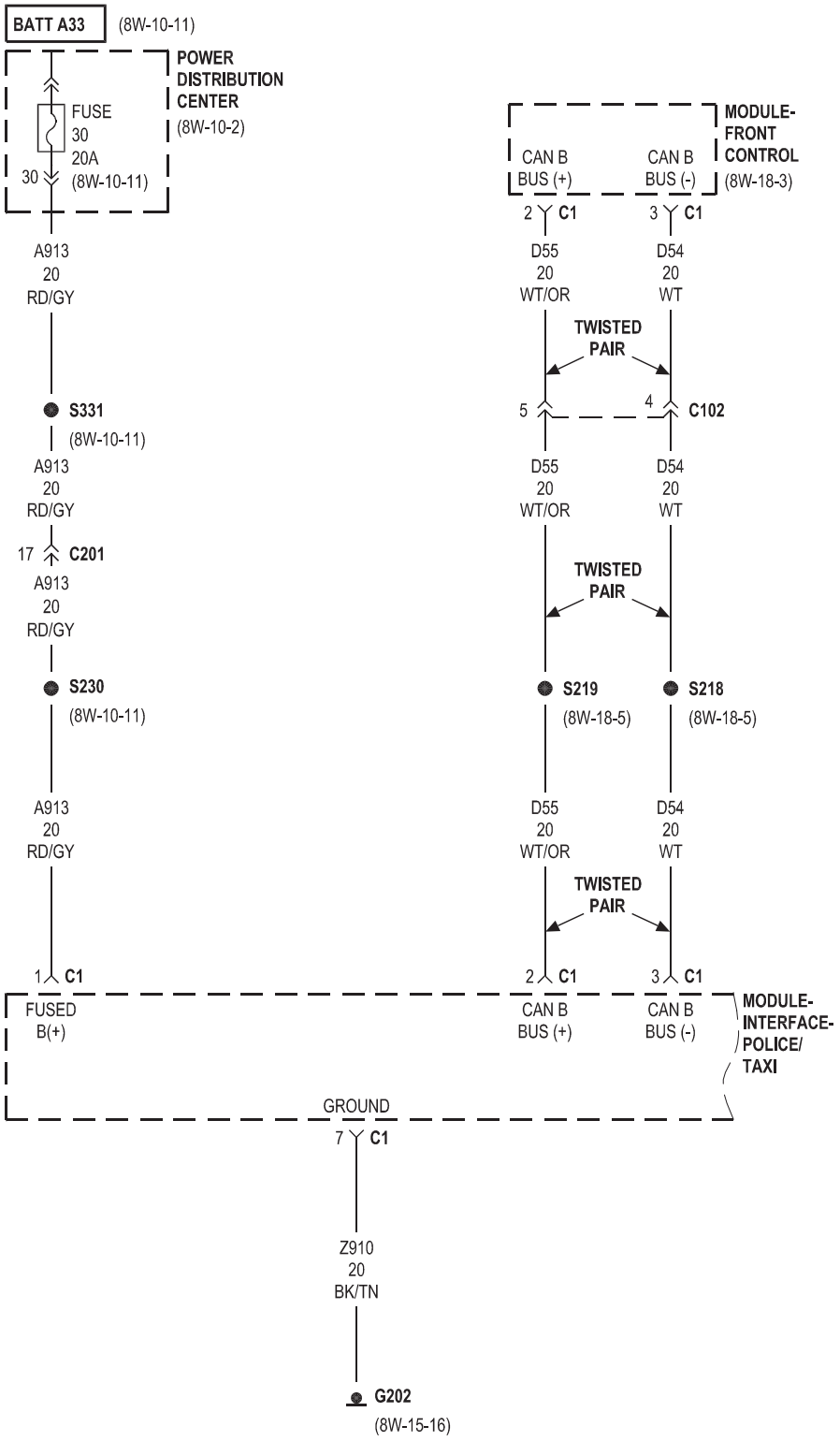
BATT A33
(8W-10-11)
POWER DISTRIBUTION CENTER
(8W-10-2)
FUSE 30 20A
30
(8W-10-11)
A913 20 RD/GY
S331
(8W-10-11)
A913 20 RD/GY
17 C201
A913 20 RD/GY
S230
(8W-10-11)
A913 20 RD/GY
1 C1
FUSED B(+)
MODULE-FRONT CONTROL
(8W-18-3)
CAN B BUS (+)
CAN B BUS (-)
2 C1
3 C1
D55 20 WT/OR
D54 20 WT
TWISTED PAIR
5
4
C102
D55 20 WT/OR
D54 20 WT
TWISTED PAIR
S219
(8W-18-5)
S218
(8W-18-5)
D55 20 WT/OR
D54 20 WT
TWISTED PAIR
2 C1
3 C1
CAN B BUS (+)
CAN B BUS (-)
MODULE-INTERFACE-POLICE/ TAXI
GROUND
7 C1
Z910 20 BK/TN
G202
(8W-15-16)

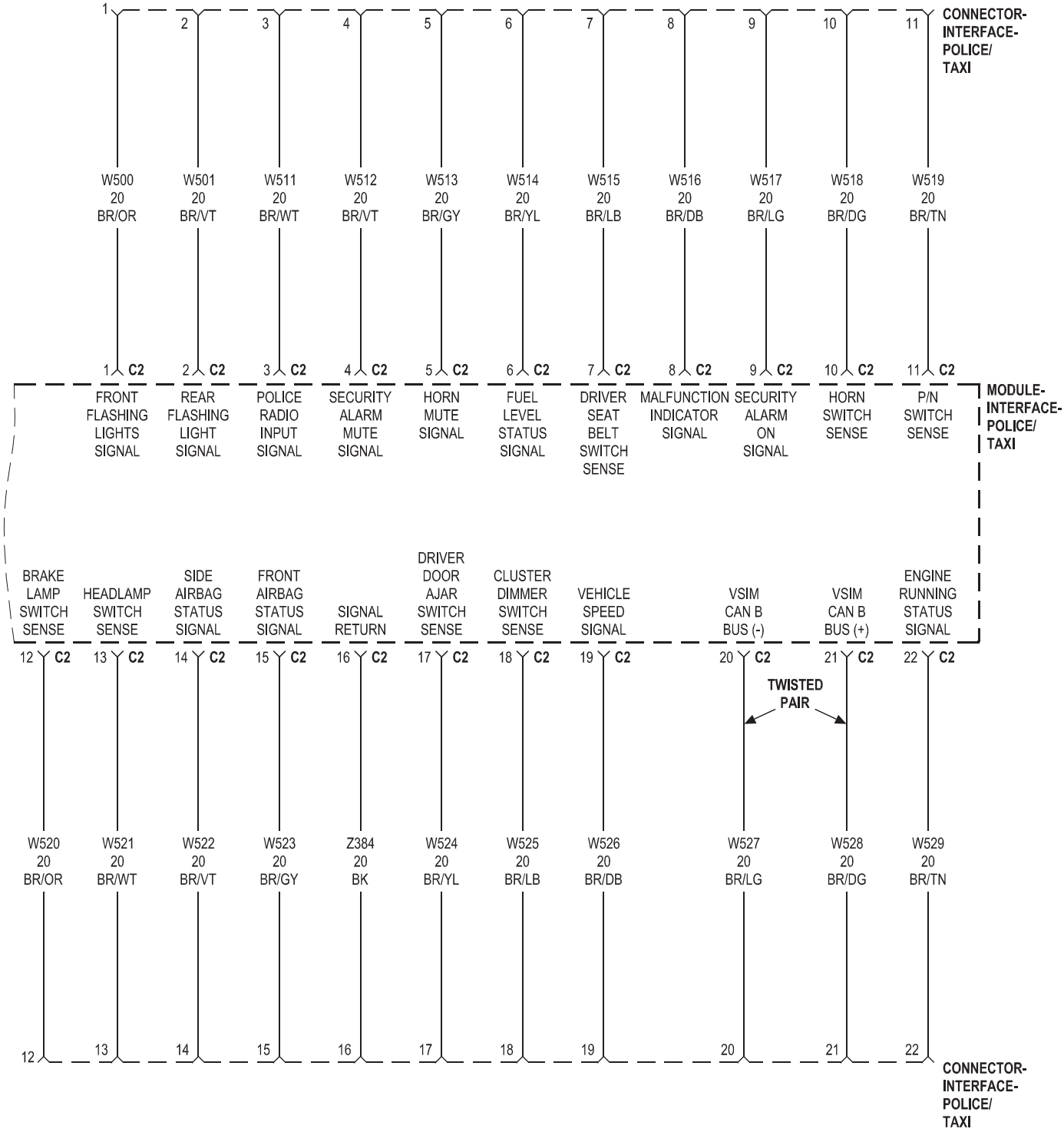
1
2
3
4
5
6
7
8
9
10
11
CONNECTOR-INTERFACE-POLICE/TAXI
W500 20 BR/OR
W501 20 BR/VT
W511 20 BR/WT
W512 20 BR/VT
W513 20 BR/GY
W514 20 BR/YL
W515 20 BR/LB
W516 20 BR/DB
W517 20 BR/LG
W518 20 BR/DG
W519 20 BR/TN
1 C2
2 C2
3 C2
4 C2
5 C2
6 C2
7 C2
8 C2
9 C2
10 C2
11 C2
FRONT FLASHING LIGHTS SIGNAL
REAR FLASHING LIGHT SIGNAL
POLICE RADIO INPUT SIGNAL
SECURITY ALARM MUTE SIGNAL
HORN MUTE SIGNAL
FUEL LEVEL STATUS SIGNAL
DRIVER SEAT BELT SWITCH SENSE
MALFUNCTION INDICATOR SIGNAL
SECURITY ALARM ON SIGNAL
HORN SWITCH SENSE
P/N SWITCH SENSE
MODULE-INTERFACE-POLICE/TAXI
BRAKE LAMP SWITCH SENSE
HEADLAMP SWITCH SENSE
SIDE AIRBAG STATUS SIGNAL
FRONT AIRBAG STATUS SIGNAL
SIGNAL RETURN
DRIVER DOOR AJAR SWITCH SENSE
CLUSTER DIMMER SWITCH SENSE
VEHICLE SPEED SIGNAL
VSIM CAN B BUS (-)
VSIM CAN B BUS (+)
ENGINE RUNNING STATUS SIGNAL
12 C2
13 C2
14 C2
15 C2
16 C2
17 C2
18 C2
19 C2
20 C2
21 C2
22 C2
TWISTED PAIR
W520 20 BR/OR
W521 20 BR/WT
W522 20 BR/VT
W523 20 BR/GY
Z384 20 BK
W524 20 BR/YL
W525 20 BR/LB
W526 20 BR/DB
W527 20 BR/LG
W528 20 BR/DG
W529 20 BR/TN
12
13
14
15
16
17
18
19
20
21
22
CONNECTOR-INTERFACE-POLICE/TAXI

8W-41 HORN/CIGAR LIGHTER/POWER OUTLET

Component	Page
Fuse 4	8W-41-4
Fuse 9	8W-41-2
Fuse 16	8W-41-2
Fuse 18	8W-41-2
Fuse 30	8W-41-3
G202	8W-41-2, 3
G300	8W-41-2
G301	8W-41-2
G302	8W-41-2
Horn-No. 1	8W-41-4
Horn-No. 2	8W-41-4
Lighter-Cigar	8W-41-2
Module-Front Control	8W-41-3, 4
Module-Integrated Power	8W-41-4
Module-Steering Control	8W-41-3
Power Distribution Center	8W-41-2, 3
Power Outlet-Console	8W-41-2
Power Outlet-Rear	8W-41-2
Relay-Accessory Delay	8W-41-2
Relay-Horn	8W-41-4
Switch-Horn	8W-41-3
Switch-Steering-Right	8W-41-3

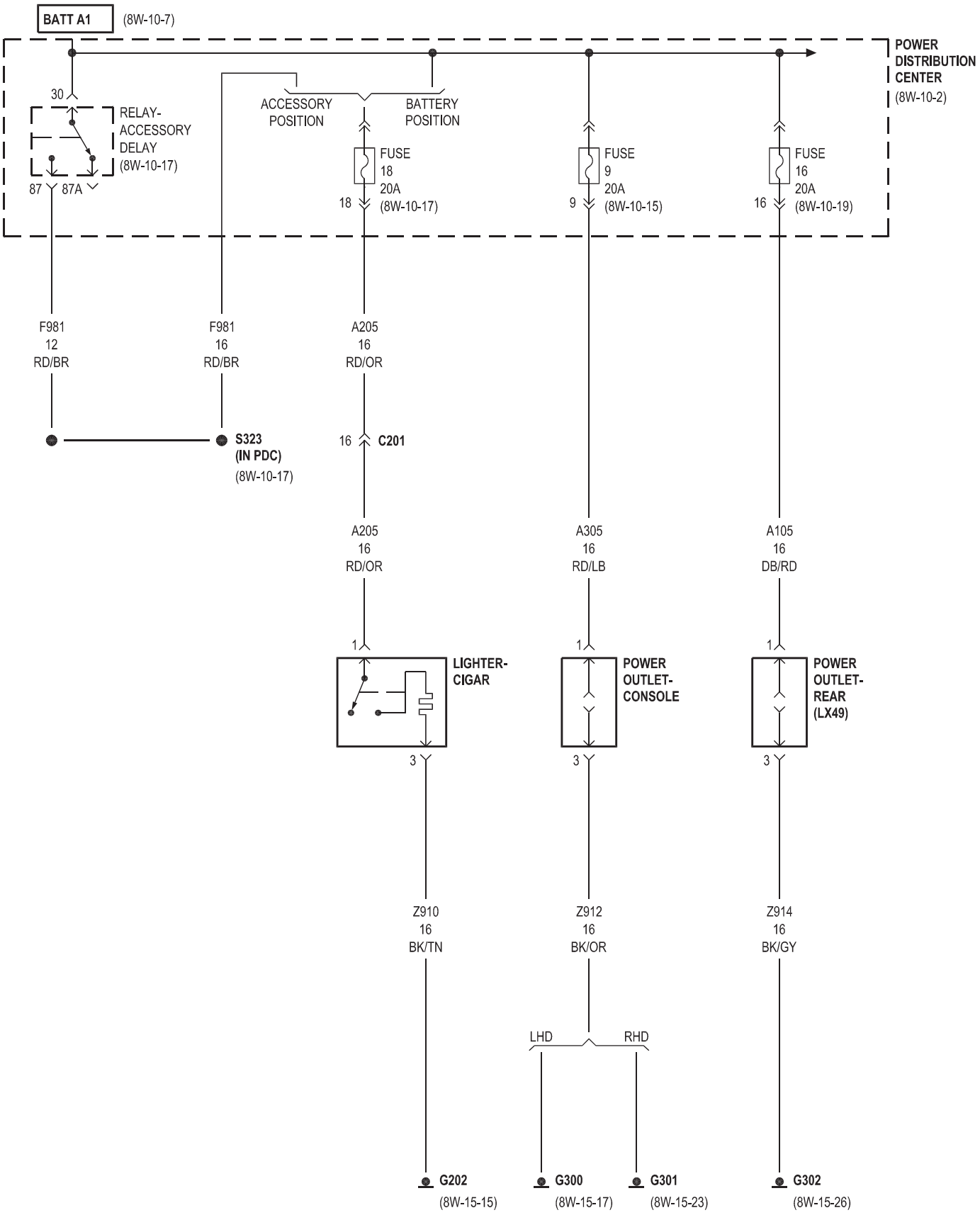
BATT A1
(8W-10-7)
POWER DISTRIBUTION CENTER
(8W-10-2)
30
RELAY-ACCESSORY DELAY
(8W-10-17)
87
87A
ACCESSORY POSITION
BATTERY POSITION
FUSE 18 20A
18
(8W-10-17)
FUSE 9 20A
9
(8W-10-15)
FUSE 16 20A
16
(8W-10-19)
F981 12 RD/BR
F981 16 RD/BR
A205 16 RD/OR
S323 (IN PDC)
(8W-10-17)
16
C201
A205 16 RD/OR
A305 16 RD/LB
A105 16 DB/RD
1
LIGHTER-CIGAR
POWER OUTLET-CONSOLE
POWER OUTLET-REAR (LX49)
3
Z910 16 BK/TN
Z912 16 BK/OR
Z914 16 BK/GY
LHD
RHD
G202
(8W-15-15)
G300
(8W-15-17)
G301
(8W-15-23)
G302
(8W-15-26)

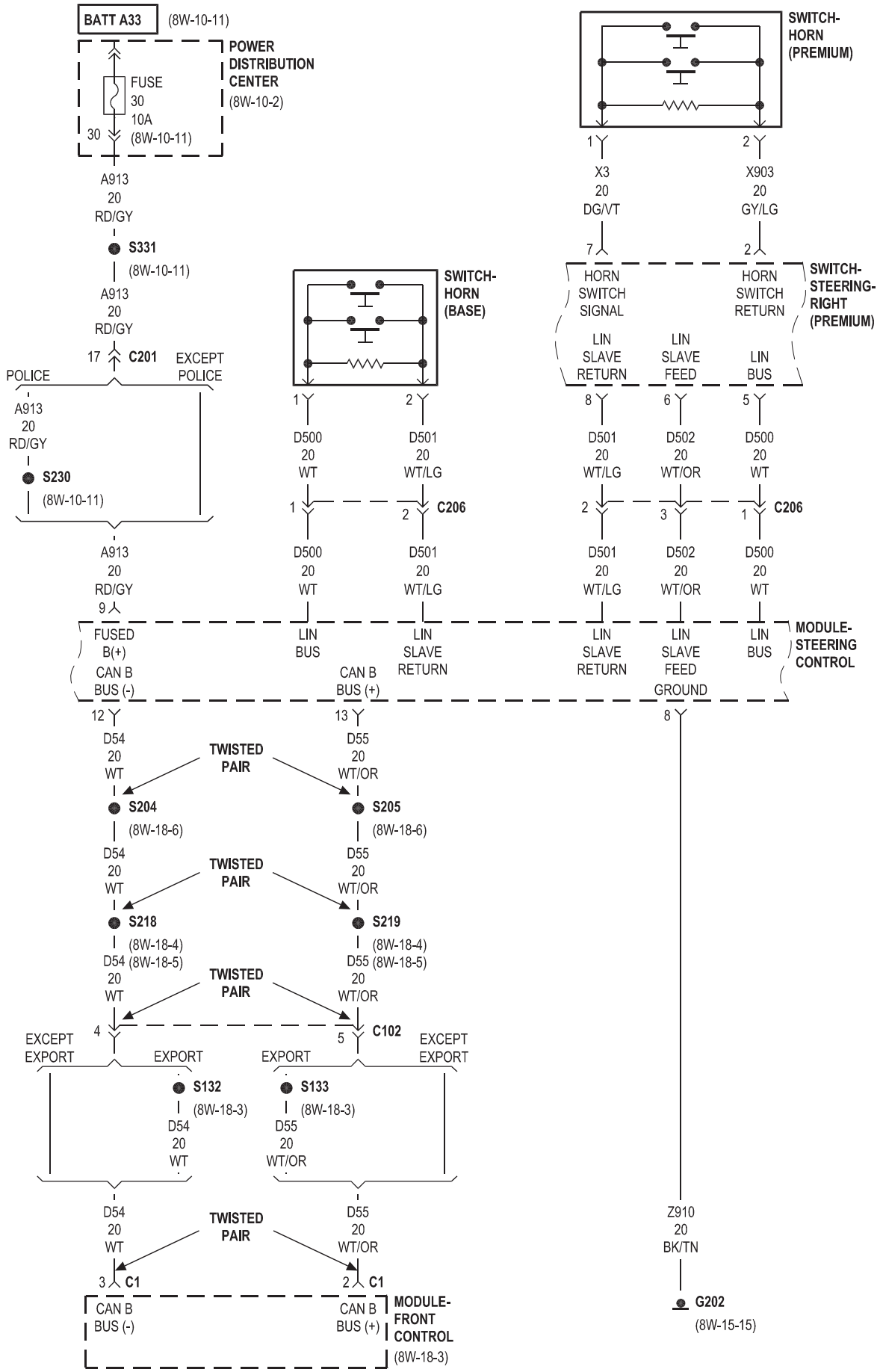
BATT A33
(8W-10-11)
POWER DISTRIBUTION CENTER
(8W-10-2)
FUSE 30 10A
30
(8W-10-11)
A913 20 RD/GY
S331
(8W-10-11)
A913 20 RD/GY
17
C201
POLICE
EXCEPT POLICE
A913 20 RD/GY
S230
(8W-10-11)
A913 20 RD/GY
9
SWITCH-HORN (PREMIUM)
1
2
X3 20 DG/VT
X903 20 GY/LG
7
2
SWITCH-STEERING-RIGHT (PREMIUM)
HORN SWITCH SIGNAL
HORN SWITCH RETURN
LIN SLAVE RETURN
LIN SLAVE FEED
LIN BUS
SWITCH-HORN (BASE)
1
2
D500 20 WT
D501 20 WT/LG
1
2
C206
D500 20 WT
D501 20 WT/LG
8
6
5
D501 20 WT/LG
D502 20 WT/OR
D500 20 WT
2
3
1
C206
D501 20 WT/LG
D502 20 WT/OR
D500 20 WT
MODULE-STEERING CONTROL
FUSED B(+)
CAN B BUS (-)
LIN BUS
CAN B BUS (+)
LIN SLAVE RETURN
LIN SLAVE RETURN
LIN SLAVE FEED
GROUND
LIN BUS
12
13
8
D54 20 WT
D55 20 WT/OR
TWISTED PAIR
S204
(8W-18-6)
S205
(8W-18-6)
D54 20 WT
D55 20 WT/OR
TWISTED PAIR
S218
(8W-18-4)
(8W-18-5)
S219
(8W-18-4)
(8W-18-5)
D54 20 WT
D55 20 WT/OR
TWISTED PAIR
4
5
C102
EXCEPT EXPORT
EXPORT
EXPORT
EXCEPT EXPORT
S132
(8W-18-3)
S133
(8W-18-3)
D54 20 WT
D55 20 WT/OR
D54 20 WT
D55 20 WT/OR
TWISTED PAIR
Z910 20 BK/TN
3
C1
2
C1
G202
(8W-15-15)
CAN B BUS (-)
CAN B BUS (+)
MODULE-FRONT CONTROL
(8W-18-3)

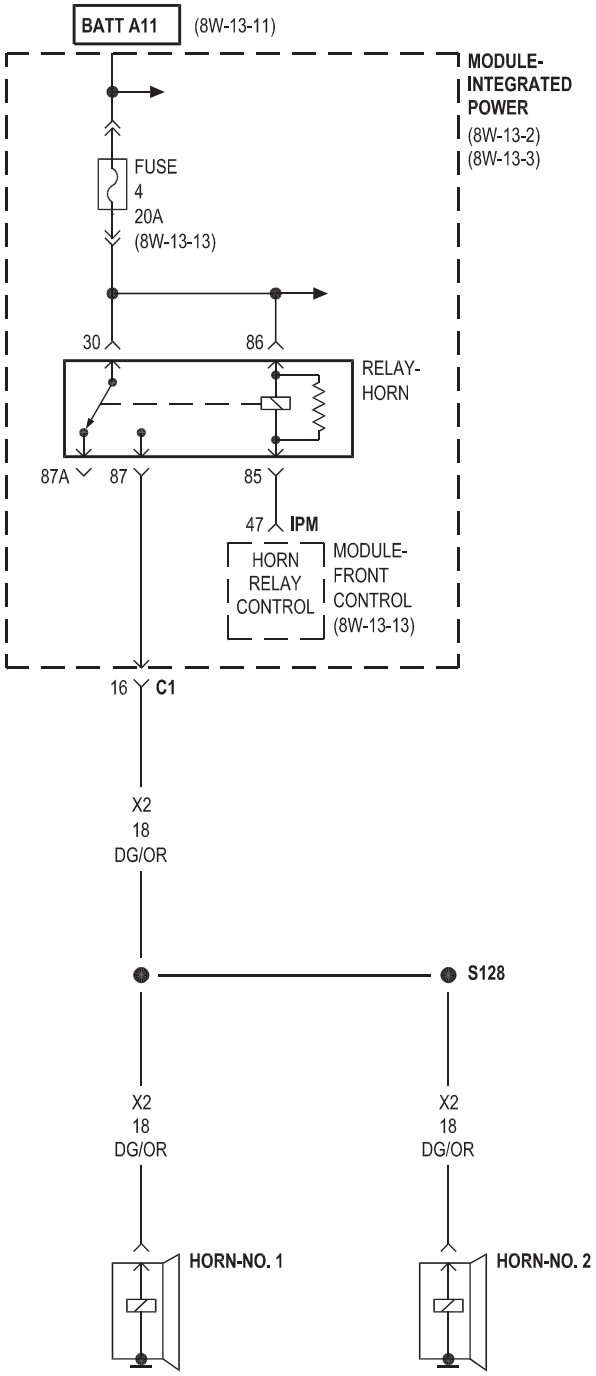
BATT A11
(8W-13-11)
MODULE-
INTEGRATED
POWER
(8W-13-2)
(8W-13-3)
FUSE
4
20A
(8W-13-13)
30
86
RELAY-
HORN
87A
87
85
47
IPM
HORN
RELAY
CONTROL
MODULE-
FRONT
CONTROL
(8W-13-13)
16
C1
X2
18
DG/OR
S128
X2
18
DG/OR
X2
18
DG/OR
HORN-NO. 1
HORN-NO. 2

8W-42 AIR CONDITIONING/HEATER

Component	Page
Actuator-Blend Door-Left	8W-42-4, 9
Actuator-Blend Door-Right	8W-42-9
Actuator-Mode Door	8W-42-5, 9
Actuator-Recirculation Door	8W-42-4, 9
Cluster	8W-42-5, 7, 8
Clutch-A/C Compressor	8W-42-2
Control-A/C-Heater	8W-42-3, 4, 5, 6, 7, 8, 9, 10
Fuse 1	8W-42-11
Fuse 2	8W-42-11
Fuse 3	8W-42-11
Fuse 4	8W-42-2
Fuse 14	8W-42-3, 7
Fuse 15	8W-42-2
Fuse 22	8W-42-2
Fuse 26	8W-42-2
Fuse 40	8W-42-3
Fuse 41	8W-42-3, 7
Fuse 42	8W-42-4, 10
Fuse/Relay Block	8W-42-11
G102	8W-42-2
G110	8W-42-2
G200	8W-42-3, 8
G201	8W-42-3, 10
Heater-Cabin	8W-42-11
Module-Engine Control	8W-42-2, 11
Module-Front Blower Power	8W-42-10
Module-Front Control	8W-42-2, 7, 11
Module-Integrated Power	8W-42-2, 11
Module-Powertrain Control	8W-42-2
Motor-Blower-Front	8W-42-6, 10
Power Distribution Center	8W-42-3, 4, 7, 10
Relay-A/C Clutch	8W-42-2
Relay-PTC No. 1	8W-42-11
Relay-PTC No. 2	8W-42-11
Relay-PTC No. 3	8W-42-11
Relay-Rear Window Defogger	8W-42-3, 7
Relay-Run	8W-42-3, 4, 7, 10
Resistor Block-Blower Motor-Front	8W-42-6
Sensor-Evaporator Temperature	8W-42-4, 10
Sensor-Sun	8W-42-8
Transducer-A/C Pressure	8W-42-2

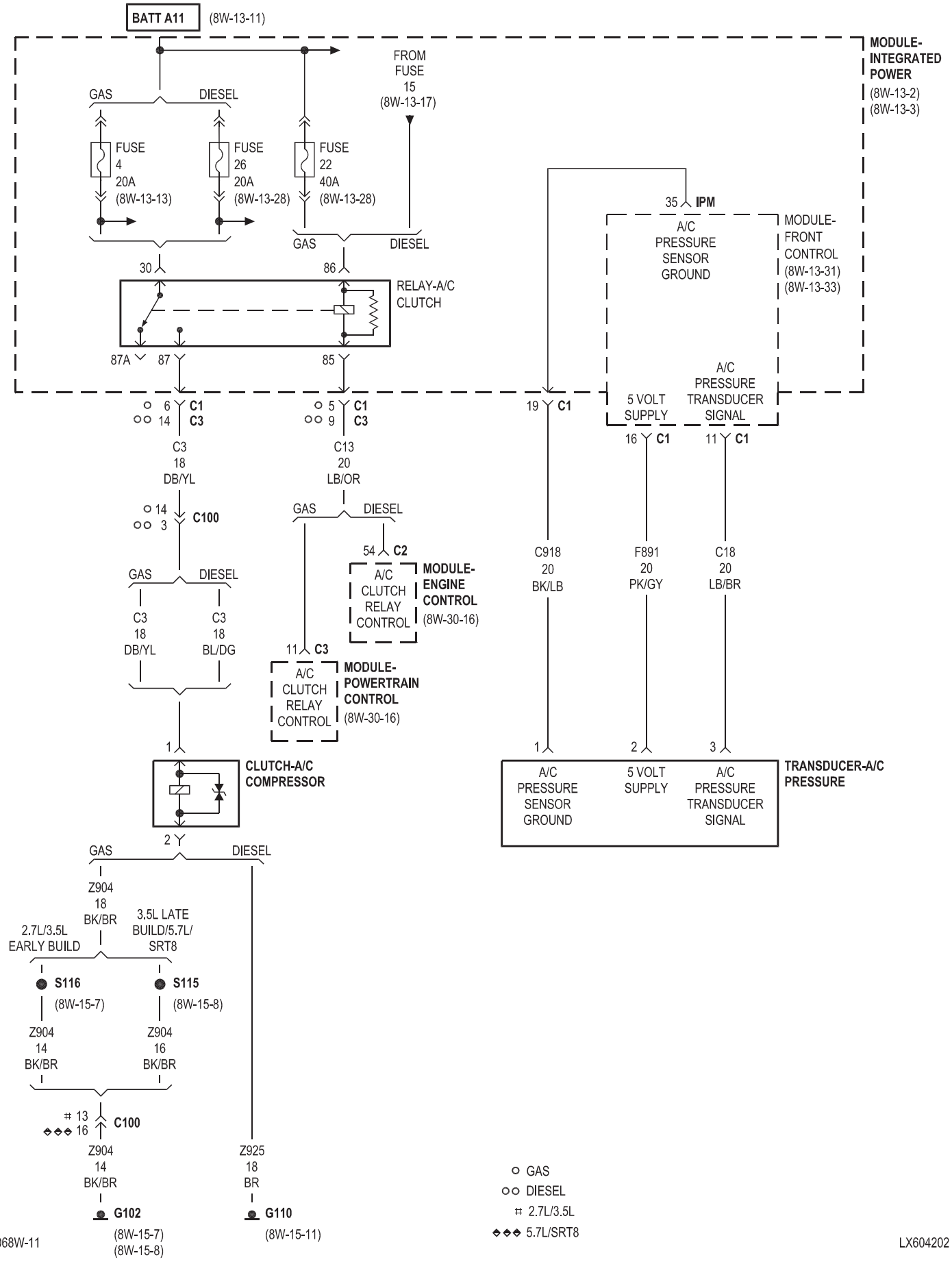
BATT A11
(8W-13-11)
MODULE-
INTEGRATED
POWER
(8W-13-2)
(8W-13-3)
FROM
FUSE
15
(8W-13-17)
GAS
DIESEL
FUSE
4
20A
(8W-13-13)
FUSE
26
20A
(8W-13-28)
FUSE
22
40A
(8W-13-28)
30
86
RELAY-A/C
CLUTCH
87A
87
85
35 IPM
A/C
PRESSURE
SENSOR
GROUND
MODULE-
FRONT
CONTROL
(8W-13-31)
(8W-13-33)
A/C
PRESSURE
TRANSDUCER
SIGNAL
5 VOLT
SUPPLY
6 C1
14 C3
5 C1
9 C3
19 C1
16 C1
11 C1
C3
18
DB/YL
C13
20
LB/OR
14 C100
3
54 C2
A/C
CLUTCH
RELAY
CONTROL
MODULE-
ENGINE
CONTROL
(8W-30-16)
C918
20
BK/LB
F891
20
PK/GY
C18
20
LB/BR
C3
18
DB/YL
C3
18
BL/DG
11 C3
A/C
CLUTCH
RELAY
CONTROL
MODULE-
POWERTRAIN
CONTROL
(8W-30-16)
1
2
3
CLUTCH-A/C
COMPRESSOR
A/C
PRESSURE
SENSOR
GROUND
5 VOLT
SUPPLY
A/C
PRESSURE
TRANSDUCER
SIGNAL
TRANSDUCER-A/C
PRESSURE
Z904
18
BK/BR
2.7L/3.5L
EARLY BUILD
3.5L LATE
BUILD/5.7L/
SRT8
S116
(8W-15-7)
S115
(8W-15-8)
Z904
14
BK/BR
Z904
16
BK/BR
13
◆◆◆ 16
C100
Z904
14
BK/BR
Z925
18
BR
G102
(8W-15-7)
(8W-15-8)
G110
(8W-15-11)
GAS
DIESEL
2.7L/3.5L
◆◆◆ 5.7L/SRT8

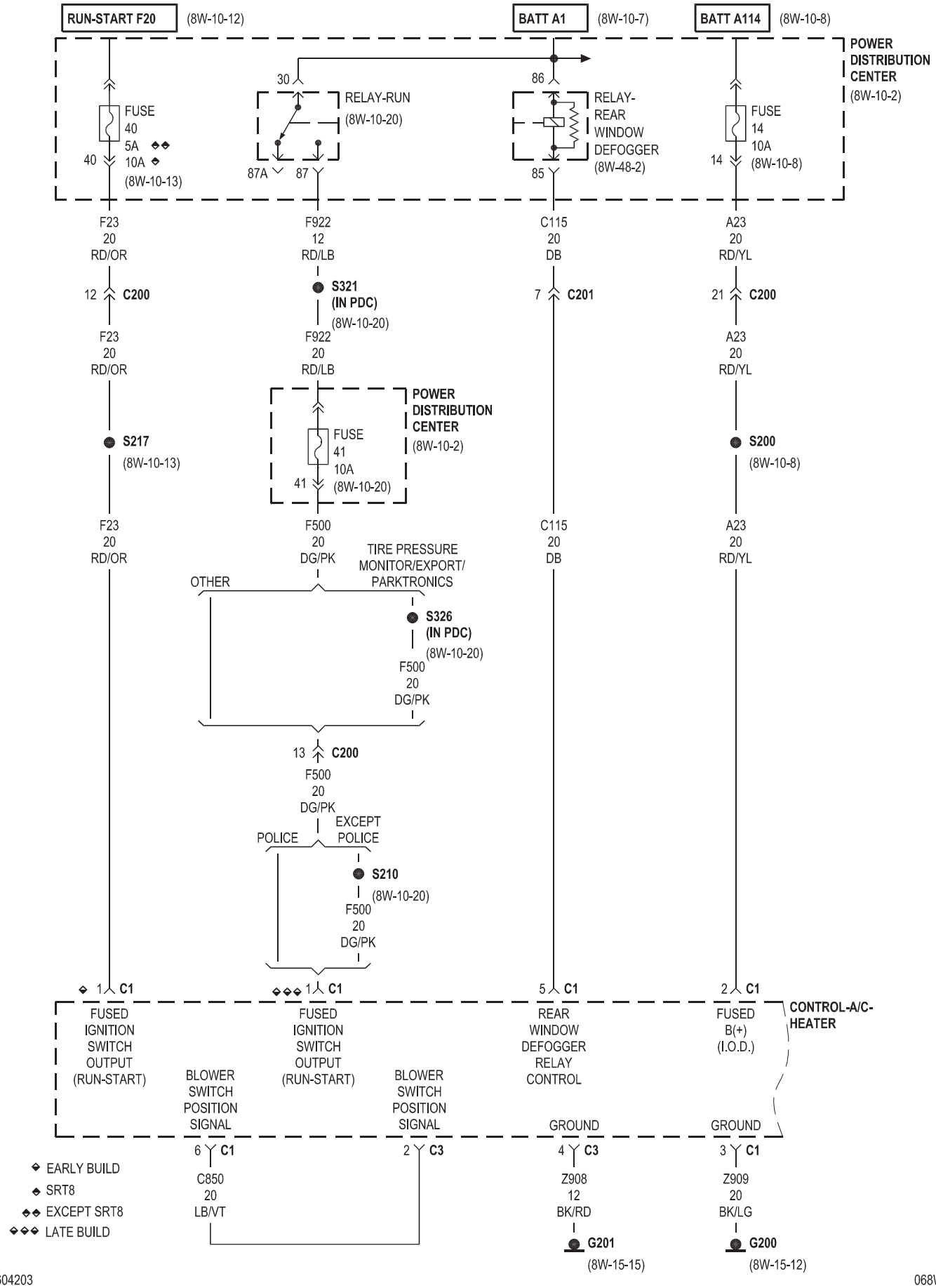
RUN-START F20
(8W-10-12)
BATT A1
(8W-10-7)
BATT A114
(8W-10-8)
POWER DISTRIBUTION CENTER
(8W-10-2)
30
86
RELAY-RUN
(8W-10-20)
RELAY-REAR WINDOW DEFOGGER
(8W-48-2)
FUSE 40 5A ◆◆ 10A ◆
40
(8W-10-13)
87A
87
85
FUSE 14 10A
14
(8W-10-8)
F23 20 RD/OR
F922 12 RD/LB
C115 20 DB
A23 20 RD/YL
12 C200
S321 (IN PDC)
(8W-10-20)
7 C201
21 C200
F922 20 RD/LB
POWER DISTRIBUTION CENTER
(8W-10-2)
FUSE 41 10A
41
(8W-10-20)
S217
(8W-10-13)
S200
(8W-10-8)
F500 20 DG/PK
TIRE PRESSURE MONITOR/EXPORT/ PARKTRONICS
OTHER
S326 (IN PDC)
(8W-10-20)
13 C200
EXCEPT POLICE
POLICE
S210
(8W-10-20)
◆ 1 C1
◆◆◆ 1 C1
5 C1
2 C1
CONTROL-A/C-HEATER
FUSED IGNITION SWITCH OUTPUT (RUN-START)
BLOWER SWITCH POSITION SIGNAL
REAR WINDOW DEFOGGER RELAY CONTROL
FUSED B(+) (I.O.D.)
GROUND
6 C1
2 C3
4 C3
3 C1
C850 20 LB/VT
Z908 12 BK/RD
Z909 20 BK/LG
G201
(8W-15-15)
G200
(8W-15-12)
◆ EARLY BUILD
◆ SRT8
◆◆ EXCEPT SRT8
◆◆◆ LATE BUILD

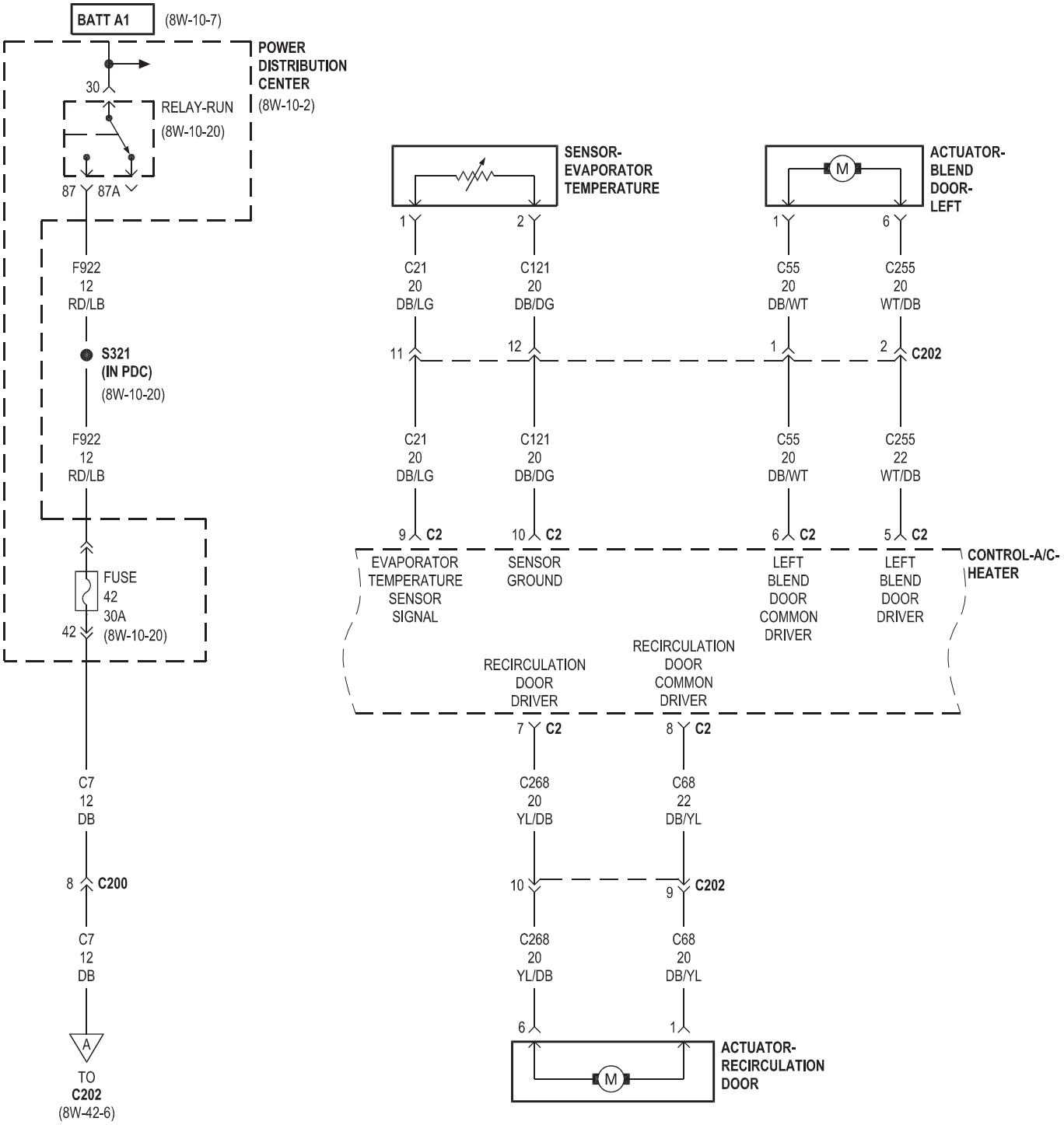
BATT A1
(8W-10-7)
POWER DISTRIBUTION CENTER
(8W-10-2)
30
RELAY-RUN
(8W-10-20)
87
87A
F922
12
RD/LB
S321
(IN PDC)
(8W-10-20)
F922
12
RD/LB
FUSE
42
30A
42
(8W-10-20)
C7
12
DB
8
C200
C7
12
DB
A
TO
C202
(8W-42-6)
SENSOR-
EVAPORATOR
TEMPERATURE
1
2
C21
20
DB/LG
C121
20
DB/DG
11
12
C21
20
DB/LG
C121
20
DB/DG
9
C2
10
C2
EVAPORATOR
TEMPERATURE
SENSOR
SIGNAL
SENSOR
GROUND
ACTUATOR-
BLEND
DOOR-
LEFT
1
6
C55
20
DB/WT
C255
20
WT/DB
1
2
C202
C55
20
DB/WT
C255
22
WT/DB
6
C2
5
C2
LEFT
BLEND
DOOR
COMMON
DRIVER
LEFT
BLEND
DOOR
DRIVER
CONTROL-A/C-
HEATER
RECIRCULATION
DOOR
DRIVER
RECIRCULATION
DOOR
COMMON
DRIVER
7
C2
8
C2
C268
20
YL/DB
C68
22
DB/YL
10
9
C202
C268
20
YL/DB
C68
20
DB/YL
6
1
ACTUATOR-
RECIRCULATION
DOOR

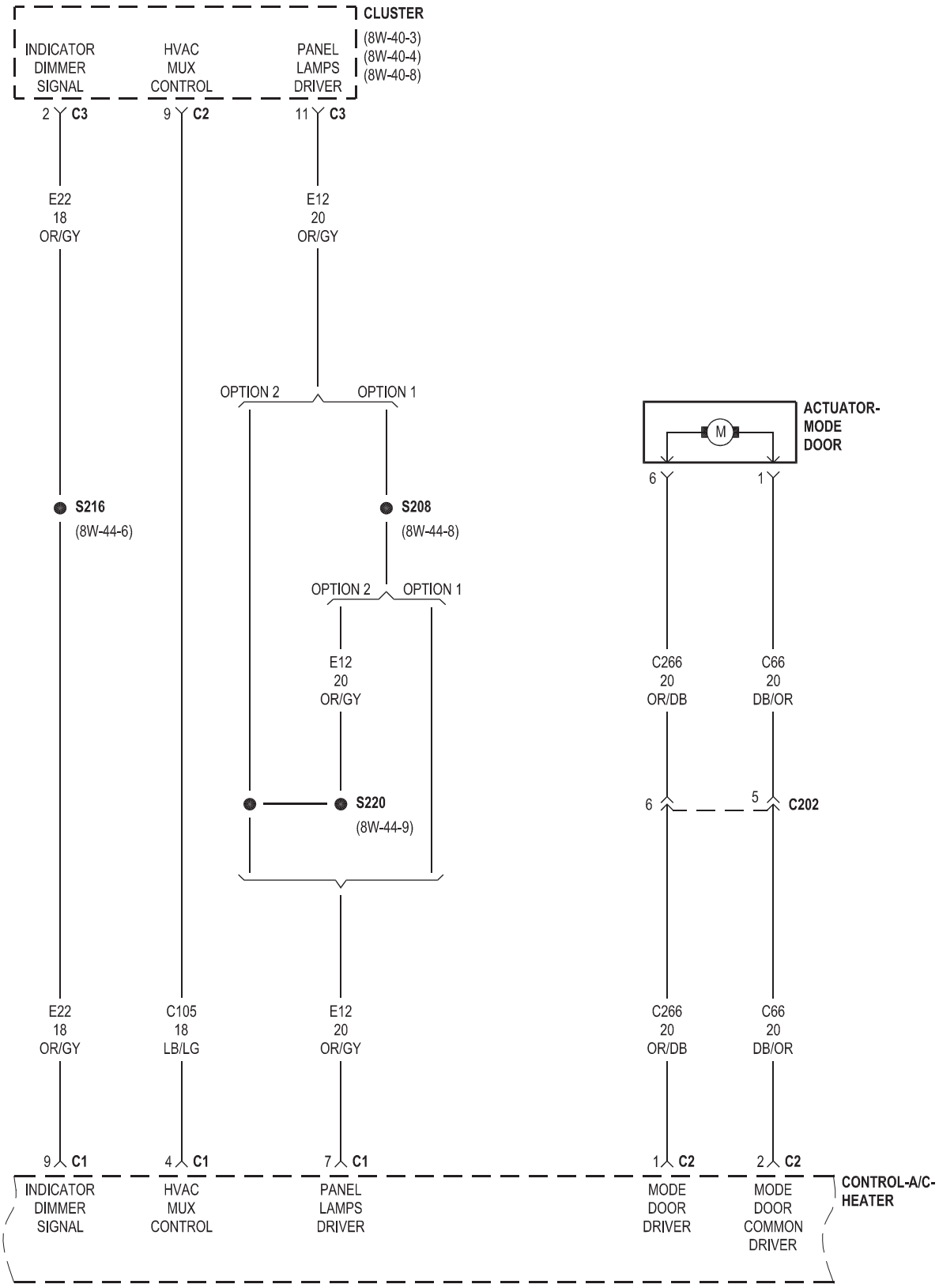
CLUSTER
(8W-40-3)
(8W-40-4)
(8W-40-8)
INDICATOR DIMMER SIGNAL
HVAC MUX CONTROL
PANEL LAMPS DRIVER
2 C3
9 C2
11 C3
E22 18 OR/GY
E12 20 OR/GY
OPTION 2
OPTION 1
ACTUATOR-MODE DOOR
M
6
1
S216
(8W-44-6)
S208
(8W-44-8)
OPTION 2
OPTION 1
E12 20 OR/GY
C266 20 OR/DB
C66 20 DB/OR
S220
(8W-44-9)
6
5
C202
E22 18 OR/GY
C105 18 LB/LG
E12 20 OR/GY
C266 20 OR/DB
C66 20 DB/OR
9 C1
4 C1
7 C1
1 C2
2 C2
CONTROL-A/C-HEATER
INDICATOR DIMMER SIGNAL
HVAC MUX CONTROL
PANEL LAMPS DRIVER
MODE DOOR DRIVER
MODE DOOR COMMON DRIVER

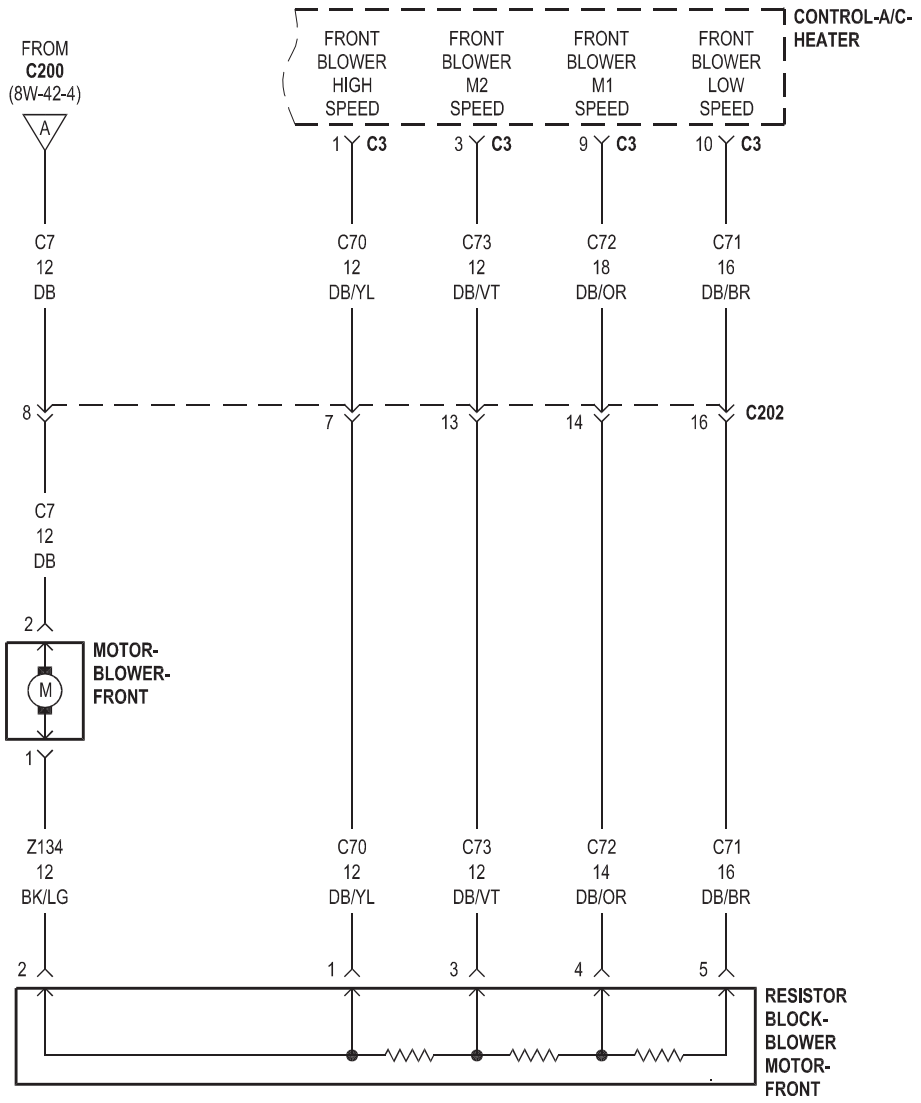
CONTROL-A/C-HEATER
FROM C200 (8W-42-4)
A
FRONT BLOWER HIGH SPEED
FRONT BLOWER M2 SPEED
FRONT BLOWER M1 SPEED
FRONT BLOWER LOW SPEED
1 C3
3 C3
9 C3
10 C3
C7 12 DB
C70 12 DB/YL
C73 12 DB/VT
C72 18 DB/OR
C71 16 DB/BR
8
7
13
14
16
C202
C7 12 DB
2
MOTOR-BLOWER-FRONT
M
1
Z134 12 BK/LG
C70 12 DB/YL
C73 12 DB/VT
C72 14 DB/OR
C71 16 DB/BR
2
1
3
4
5
RESISTOR BLOCK-BLOWER MOTOR-FRONT

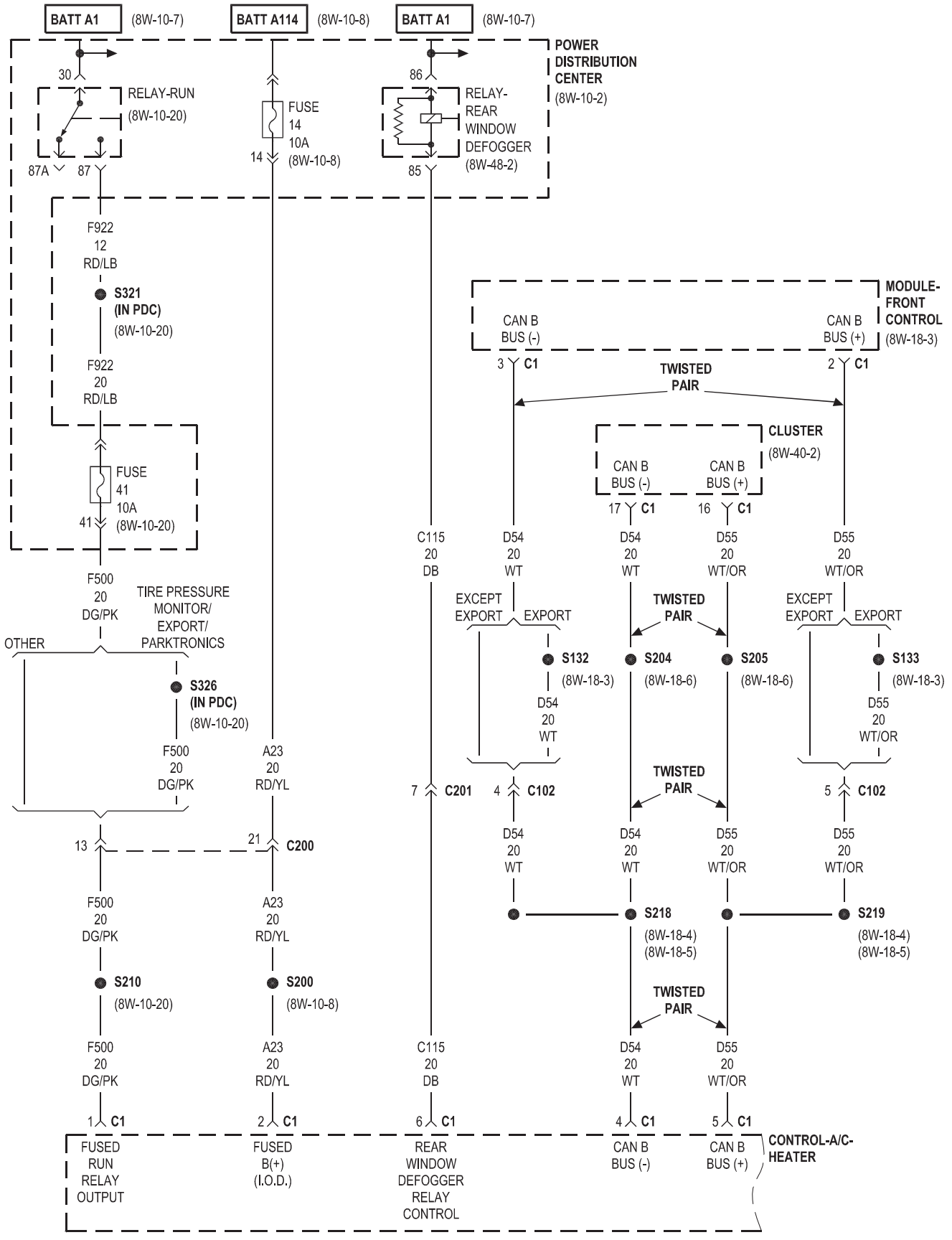
BATT A1
(8W-10-7)
BATT A114
(8W-10-8)
BATT A1
(8W-10-7)
POWER DISTRIBUTION CENTER
(8W-10-2)
30
RELAY-RUN
(8W-10-20)
87A
87
FUSE
14
10A
(8W-10-8)
14
86
RELAY-REAR WINDOW DEFOGGER
(8W-48-2)
85
F922
12
RD/LB
S321
(IN PDC)
(8W-10-20)
F922
20
RD/LB
FUSE
41
10A
(8W-10-20)
41
F500
20
DG/PK
TIRE PRESSURE MONITOR/ EXPORT/ PARKTRONICS
OTHER
S326
(IN PDC)
(8W-10-20)
F500
20
DG/PK
A23
20
RD/YL
13
21
C200
F500
20
DG/PK
A23
20
RD/YL
S210
(8W-10-20)
S200
(8W-10-8)
F500
20
DG/PK
A23
20
RD/YL
1
C1
2
C1
FUSED RUN RELAY OUTPUT
FUSED B(+) (I.O.D.)
C115
20
DB
7
C201
6
C1
REAR WINDOW DEFOGGER RELAY CONTROL
MODULE-FRONT CONTROL
(8W-18-3)
CAN B BUS (-)
CAN B BUS (+)
3
C1
2
C1
TWISTED PAIR
CLUSTER
(8W-40-2)
CAN B BUS (-)
CAN B BUS (+)
17
C1
16
C1
D54
20
WT
D54
20
WT
D55
20
WT/OR
D55
20
WT/OR
EXCEPT EXPORT
EXPORT
TWISTED PAIR
EXCEPT EXPORT
EXPORT
S132
(8W-18-3)
S204
(8W-18-6)
S205
(8W-18-6)
S133
(8W-18-3)
D54
20
WT
D55
20
WT/OR
TWISTED PAIR
4
C102
5
C102
D54
20
WT
D54
20
WT
D55
20
WT/OR
D55
20
WT/OR
S218
(8W-18-4)
(8W-18-5)
S219
(8W-18-4)
(8W-18-5)
TWISTED PAIR
D54
20
WT
D55
20
WT/OR
4
C1
5
C1
CAN B BUS (-)
CAN B BUS (+)
CONTROL-A/C-HEATER

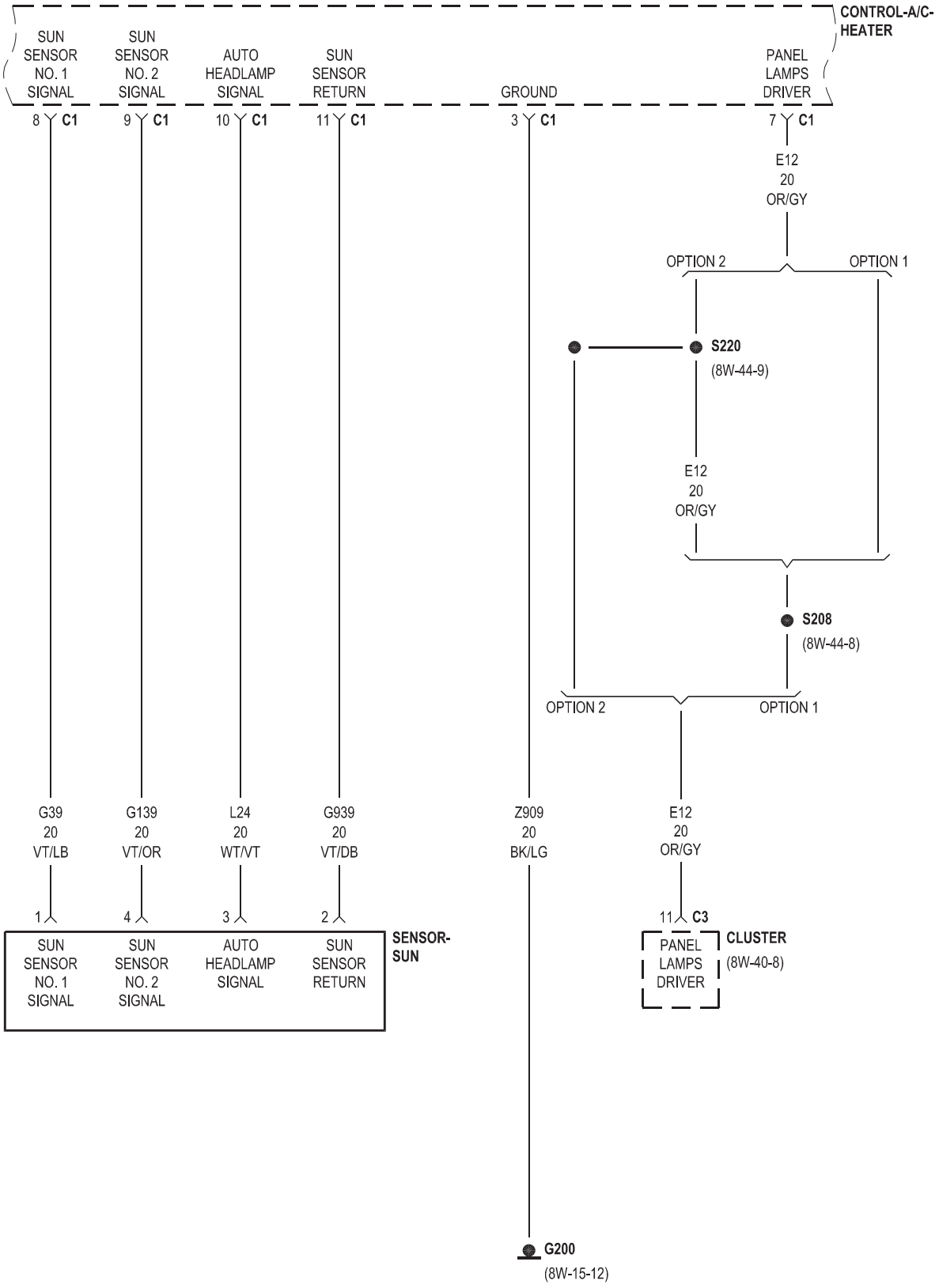
CONTROL-A/C-HEATER
SUN SENSOR NO. 1 SIGNAL
SUN SENSOR NO. 2 SIGNAL
AUTO HEADLAMP SIGNAL
SUN SENSOR RETURN
GROUND
PANEL LAMPS DRIVER
8 C1
9 C1
10 C1
11 C1
3 C1
7 C1
E12 20 OR/GY
OPTION 2
OPTION 1
S220
(8W-44-9)
E12 20 OR/GY
S208
(8W-44-8)
OPTION 2
OPTION 1
G39 20 VT/LB
G139 20 VT/OR
L24 20 WT/VT
G939 20 VT/DB
Z909 20 BK/LG
E12 20 OR/GY
1
4
3
2
11 C3
SUN SENSOR NO. 1 SIGNAL
SUN SENSOR NO. 2 SIGNAL
AUTO HEADLAMP SIGNAL
SUN SENSOR RETURN
SENSOR-SUN
PANEL LAMPS DRIVER
CLUSTER
(8W-40-8)
G200
(8W-15-12)

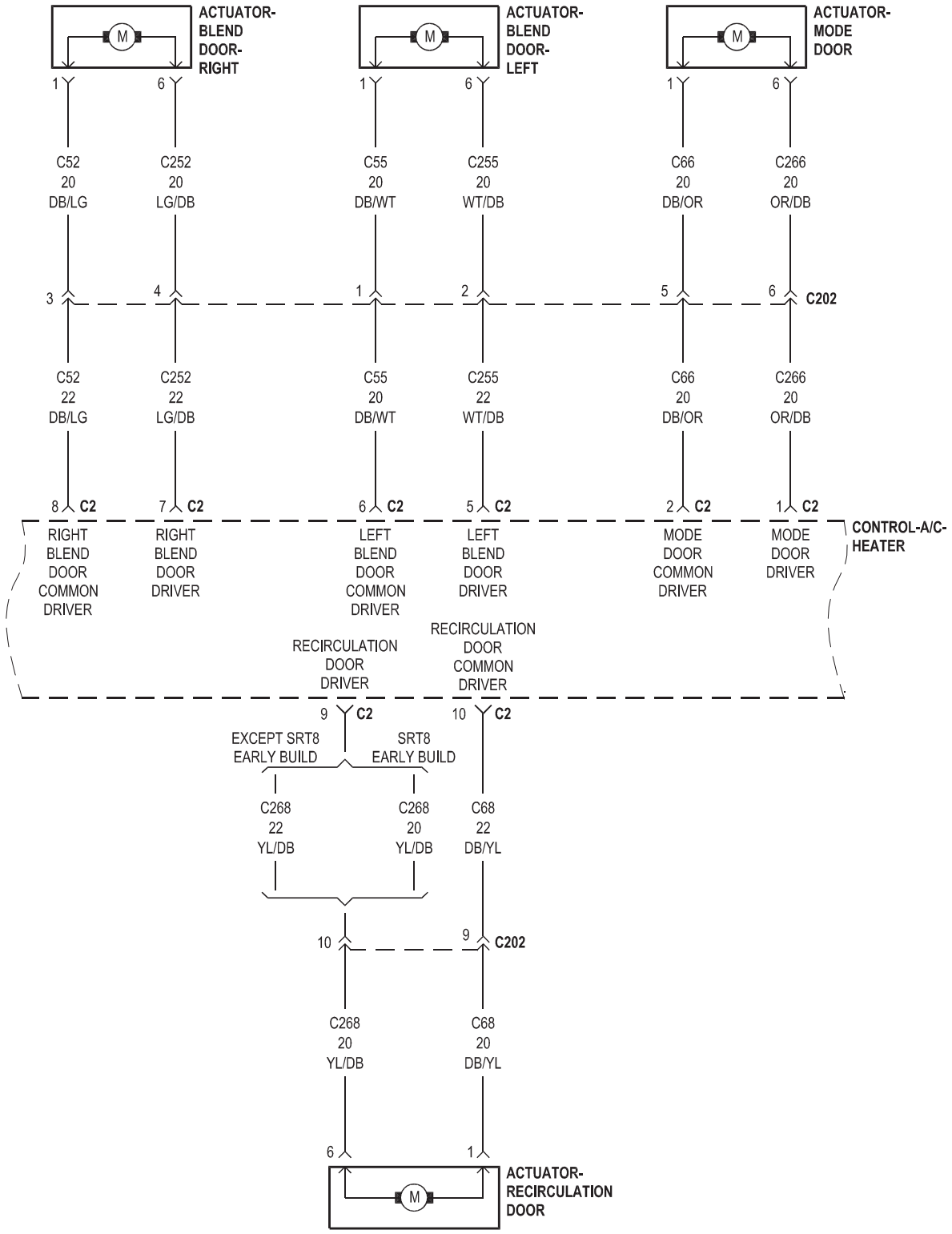
ACTUATOR-
BLEND
DOOR-
RIGHT
ACTUATOR-
BLEND
DOOR-
LEFT
ACTUATOR-
MODE
DOOR
M
1
6
C52
20
DB/LG
C252
20
LG/DB
C55
20
DB/WT
C255
20
WT/DB
C66
20
DB/OR
C266
20
OR/DB
3
4
1
2
5
6
C202
C52
22
DB/LG
C252
22
LG/DB
C55
20
DB/WT
C255
22
WT/DB
C66
20
DB/OR
C266
20
OR/DB
8
C2
7
C2
6
C2
5
C2
2
C2
1
C2
CONTROL-A/C-
HEATER
RIGHT
BLEND
DOOR
COMMON
DRIVER
RIGHT
BLEND
DOOR
DRIVER
LEFT
BLEND
DOOR
COMMON
DRIVER
LEFT
BLEND
DOOR
DRIVER
MODE
DOOR
COMMON
DRIVER
MODE
DOOR
DRIVER
RECIRCULATION
DOOR
DRIVER
RECIRCULATION
DOOR
COMMON
DRIVER
9
C2
10
C2
EXCEPT SRT8
EARLY BUILD
SRT8
EARLY BUILD
C268
22
YL/DB
C268
20
YL/DB
C68
22
DB/YL
10
9
C202
C268
20
YL/DB
C68
20
DB/YL
6
1
ACTUATOR-
RECIRCULATION
DOOR

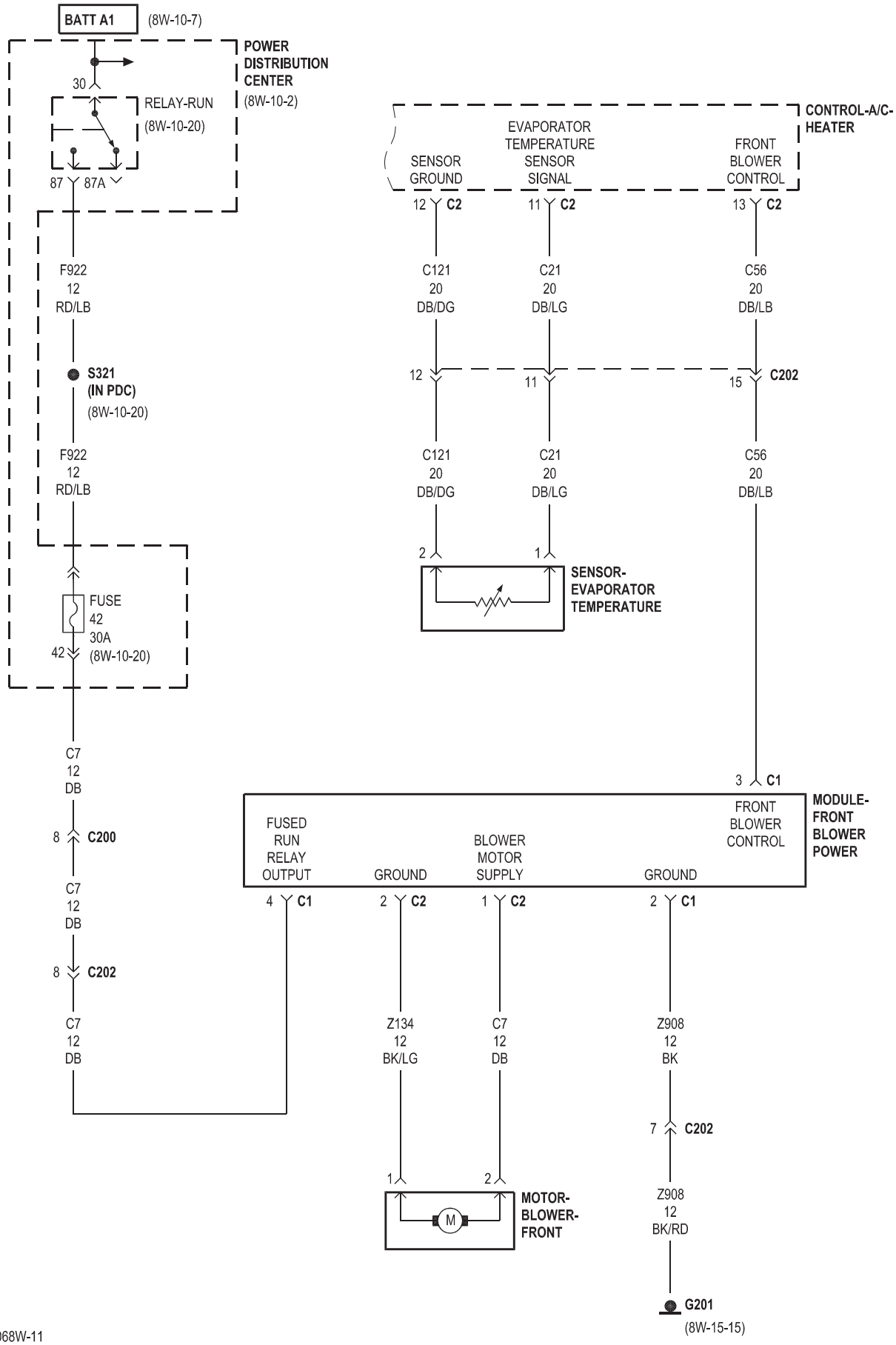
BATT A1
(8W-10-7)
POWER DISTRIBUTION CENTER
(8W-10-2)
30
RELAY-RUN
(8W-10-20)
87
87A
F922
12
RD/LB
S321
(IN PDC)
(8W-10-20)
F922
12
RD/LB
FUSE
42
30A
42
(8W-10-20)
C7
12
DB
8
C200
C7
12
DB
8
C202
C7
12
DB
CONTROL-A/C-HEATER
SENSOR GROUND
EVAPORATOR TEMPERATURE SENSOR SIGNAL
FRONT BLOWER CONTROL
12
C2
11
C2
13
C2
C121
20
DB/DG
C21
20
DB/LG
C56
20
DB/LB
12
11
15
C202
C121
20
DB/DG
C21
20
DB/LG
C56
20
DB/LB
2
1
SENSOR-EVAPORATOR TEMPERATURE
3
C1
MODULE-FRONT BLOWER POWER
FUSED RUN RELAY OUTPUT
GROUND
BLOWER MOTOR SUPPLY
GROUND
FRONT BLOWER CONTROL
4
C1
2
C2
1
C2
2
C1
Z134
12
BK/LG
C7
12
DB
Z908
12
BK
7
C202
1
2
M
MOTOR-BLOWER-FRONT
Z908
12
BK/RD
G201
(8W-15-15)

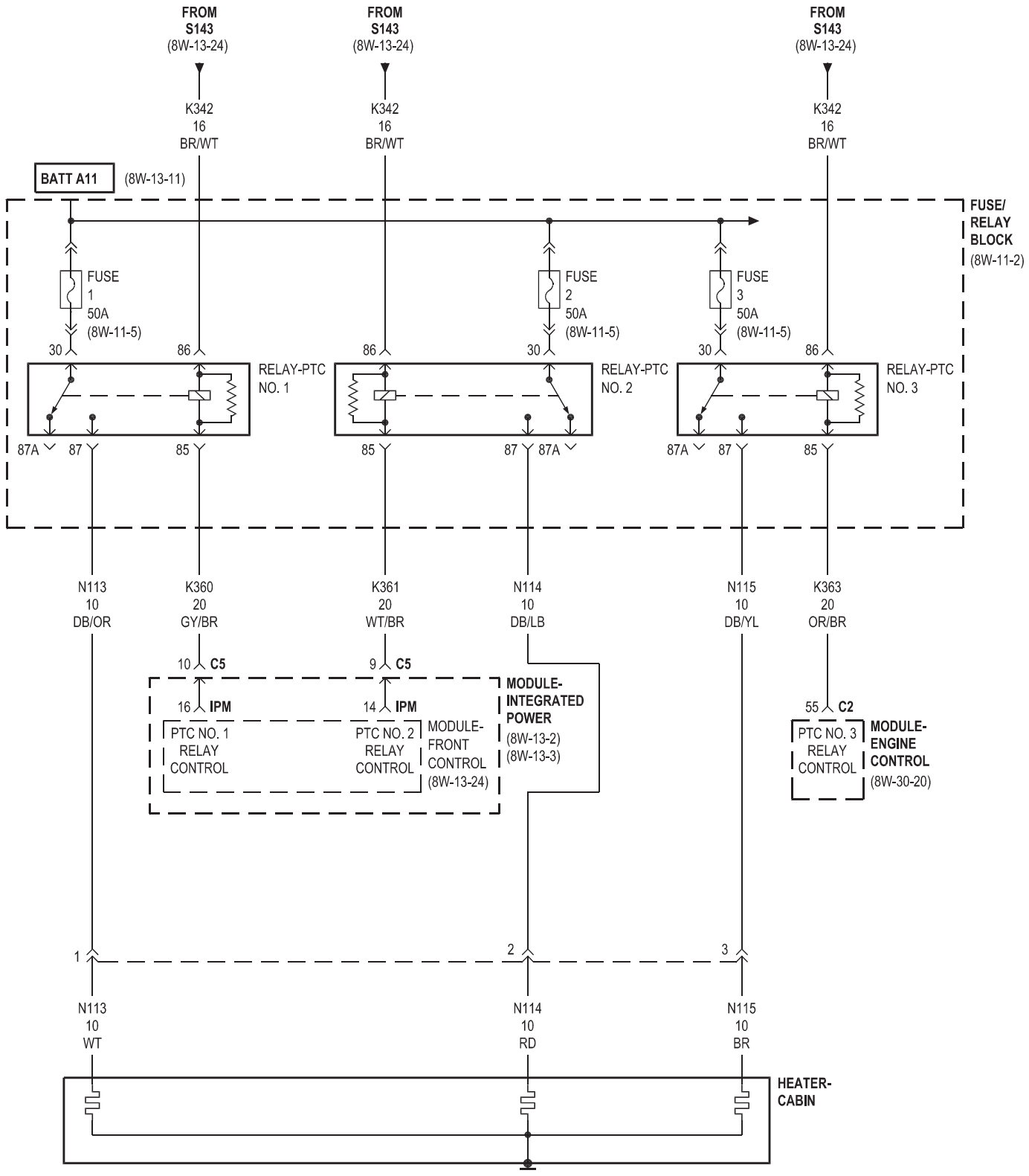
FROM S143 (8W-13-24)
FROM S143 (8W-13-24)
FROM S143 (8W-13-24)
K342 16 BR/WT
K342 16 BR/WT
K342 16 BR/WT
BATT A11
(8W-13-11)
FUSE/ RELAY BLOCK (8W-11-2)
FUSE 1 50A (8W-11-5)
FUSE 2 50A (8W-11-5)
FUSE 3 50A (8W-11-5)
30
86
RELAY-PTC NO. 1
RELAY-PTC NO. 2
RELAY-PTC NO. 3
87A
87
85
N113 10 DB/OR
K360 20 GY/BR
K361 20 WT/BR
N114 10 DB/LB
N115 10 DB/YL
K363 20 OR/BR
10 C5
9 C5
16 IPM
14 IPM
PTC NO. 1 RELAY CONTROL
PTC NO. 2 RELAY CONTROL
MODULE-FRONT CONTROL (8W-13-24)
MODULE-INTEGRATED POWER (8W-13-2) (8W-13-3)
55 C2
PTC NO. 3 RELAY CONTROL
MODULE-ENGINE CONTROL (8W-30-20)
1
2
3
N113 10 WT
N114 10 RD
N115 10 BR
HEATER-CABIN

8W-43 OCCUPANT RESTRAINT SYSTEM

Component	Page
Airbag-Driver Squib 1	8W-43-3
Airbag-Driver Squib 2	8W-43-3
Airbag-Passenger Squib	8W-43-5
Airbag-Side Curtain-Left	8W-43-7
Airbag-Side Curtain-Right	8W-43-7
Cluster	8W-43-2
Fuse 8	8W-43-6
Fuse 27	8W-43-2, 6
Fuse 28	8W-43-2
Fuse 30	8W-43-3
Fuse 40	8W-43-2
G200	8W-43-2
G202	8W-43-3
G301	8W-43-6
Module-Front Control	8W-43-4
Module-Occupant Classification	8W-43-4, 6
Module-Occupant Restraint Controller	8W-43-2, 3, 4, 5, 7
Module-Steering Control	8W-43-3, 4
Power Distribution Center	8W-43-2, 3, 6
Seat Belt-Tensioner-Driver	8W-43-5
Seat Belt-Tensioner-Passenger	8W-43-5
Sensor-Front Impact-Left	8W-43-5
Sensor-Front Impact-Right	8W-43-5
Sensor-Seat Track Position-Driver	8W-43-3, 6
Sensor-Seat Weight-Left Front	8W-43-6
Sensor-Seat Weight-Left Rear	8W-43-6
Sensor-Seat Weight-Right Front	8W-43-6
Sensor-Seat Weight-Right Rear	8W-43-6
Sensor-Side Impact-Left 1	8W-43-7
Sensor-Side Impact-Left 2	8W-43-7
Sensor-Side Impact-Right 1	8W-43-7
Sensor-Side Impact-Right 2	8W-43-7
Switch-Bank	8W-43-2

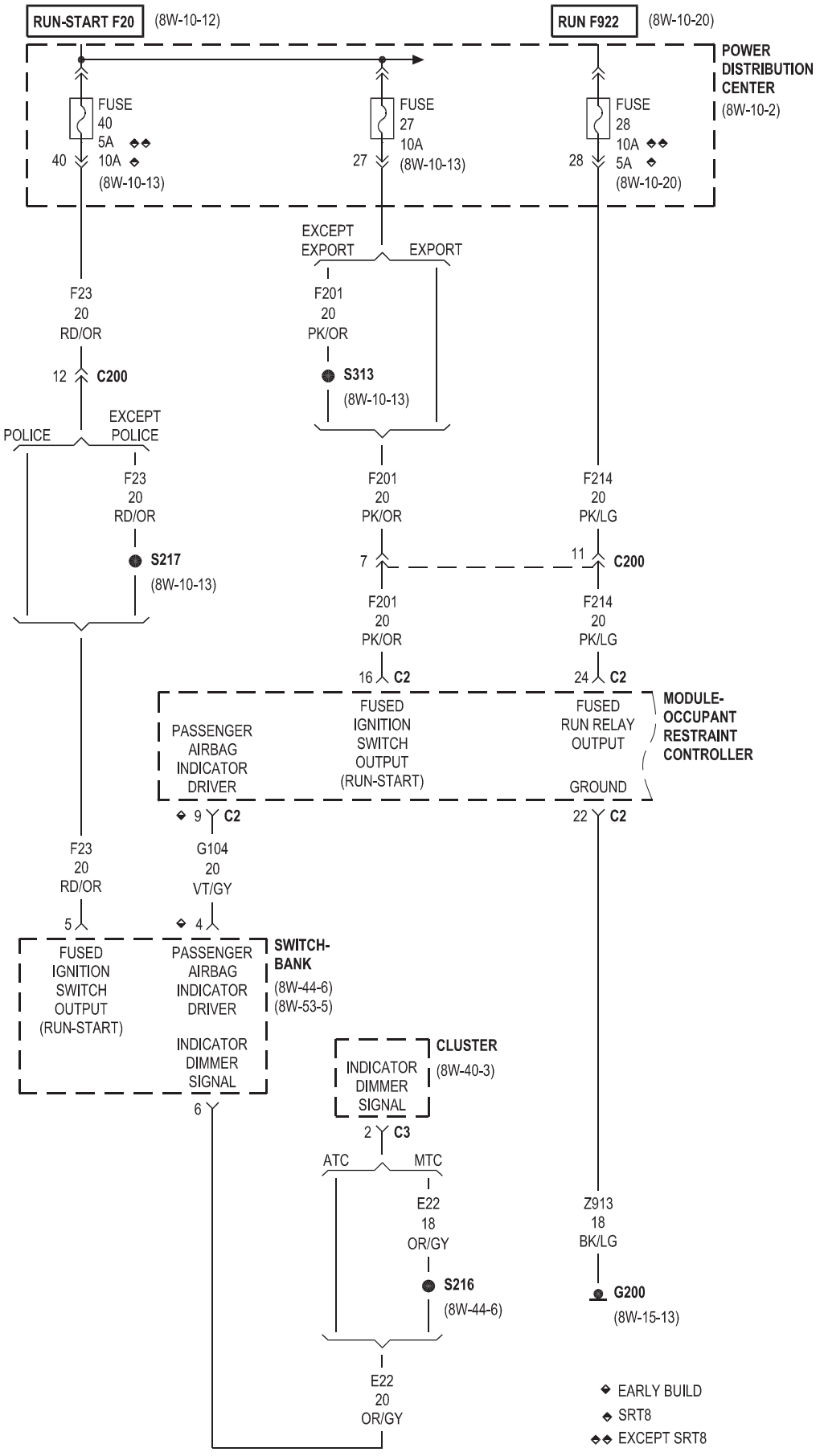
RUN-START F20
(8W-10-12)
RUN F922
(8W-10-20)
POWER DISTRIBUTION CENTER
(8W-10-2)
FUSE 40 5A ◆◆ 10A ◆
40
(8W-10-13)
FUSE 27 10A
27
(8W-10-13)
FUSE 28 10A ◆◆ 5A ◆
28
(8W-10-20)
EXCEPT EXPORT
EXPORT
F23 20 RD/OR
12 C200
F201 20 PK/OR
S313
(8W-10-13)
POLICE
EXCEPT POLICE
F23 20 RD/OR
S217
(8W-10-13)
F201 20 PK/OR
7
F214 20 PK/LG
11 C200
F201 20 PK/OR
16 C2
F214 20 PK/LG
24 C2
MODULE-OCCUPANT RESTRAINT CONTROLLER
PASSENGER AIRBAG INDICATOR DRIVER
FUSED IGNITION SWITCH OUTPUT (RUN-START)
FUSED RUN RELAY OUTPUT
GROUND
◆ 9 C2
22 C2
F23 20 RD/OR
5
G104 20 VT/GY
◆ 4
SWITCH-BANK
(8W-44-6)
(8W-53-5)
FUSED IGNITION SWITCH OUTPUT (RUN-START)
PASSENGER AIRBAG INDICATOR DRIVER
INDICATOR DIMMER SIGNAL
6
CLUSTER
(8W-40-3)
INDICATOR DIMMER SIGNAL
2 C3
ATC
MTC
E22 18 OR/GY
S216
(8W-44-6)
E22 20 OR/GY
Z913 18 BK/LG
G200
(8W-15-13)
◆ EARLY BUILD
◆ SRT8
◆◆ EXCEPT SRT8

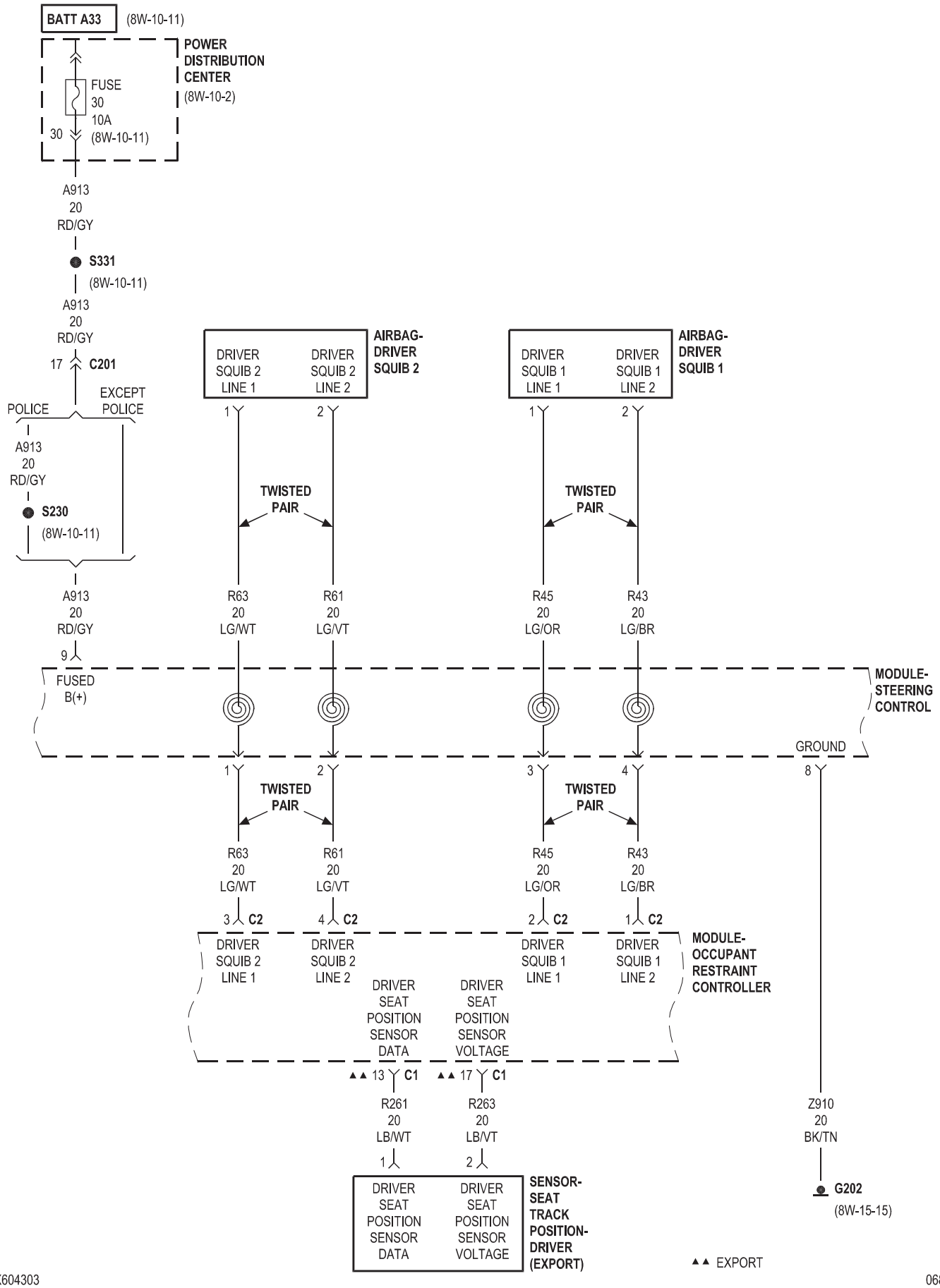
BATT A33
(8W-10-11)
POWER DISTRIBUTION CENTER
(8W-10-2)
FUSE 30 10A
30
(8W-10-11)
A913 20 RD/GY
S331
(8W-10-11)
A913 20 RD/GY
17
C201
POLICE
EXCEPT POLICE
A913 20 RD/GY
S230
(8W-10-11)
A913 20 RD/GY
9
FUSED B(+)
AIRBAG-DRIVER SQUIB 2
DRIVER SQUIB 2 LINE 1
DRIVER SQUIB 2 LINE 2
AIRBAG-DRIVER SQUIB 1
DRIVER SQUIB 1 LINE 1
DRIVER SQUIB 1 LINE 2
TWISTED PAIR
R63 20 LG/WT
R61 20 LG/VT
R45 20 LG/OR
R43 20 LG/BR
MODULE-STEERING CONTROL
GROUND
3 C2
4 C2
2 C2
1 C2
MODULE-OCCUPANT RESTRAINT CONTROLLER
DRIVER SEAT POSITION SENSOR DATA
DRIVER SEAT POSITION SENSOR VOLTAGE
▲▲ 13 C1
▲▲ 17 C1
R261 20 LB/WT
R263 20 LB/VT
SENSOR-SEAT TRACK POSITION-DRIVER (EXPORT)
Z910 20 BK/TN
G202
(8W-15-15)
▲▲ EXPORT

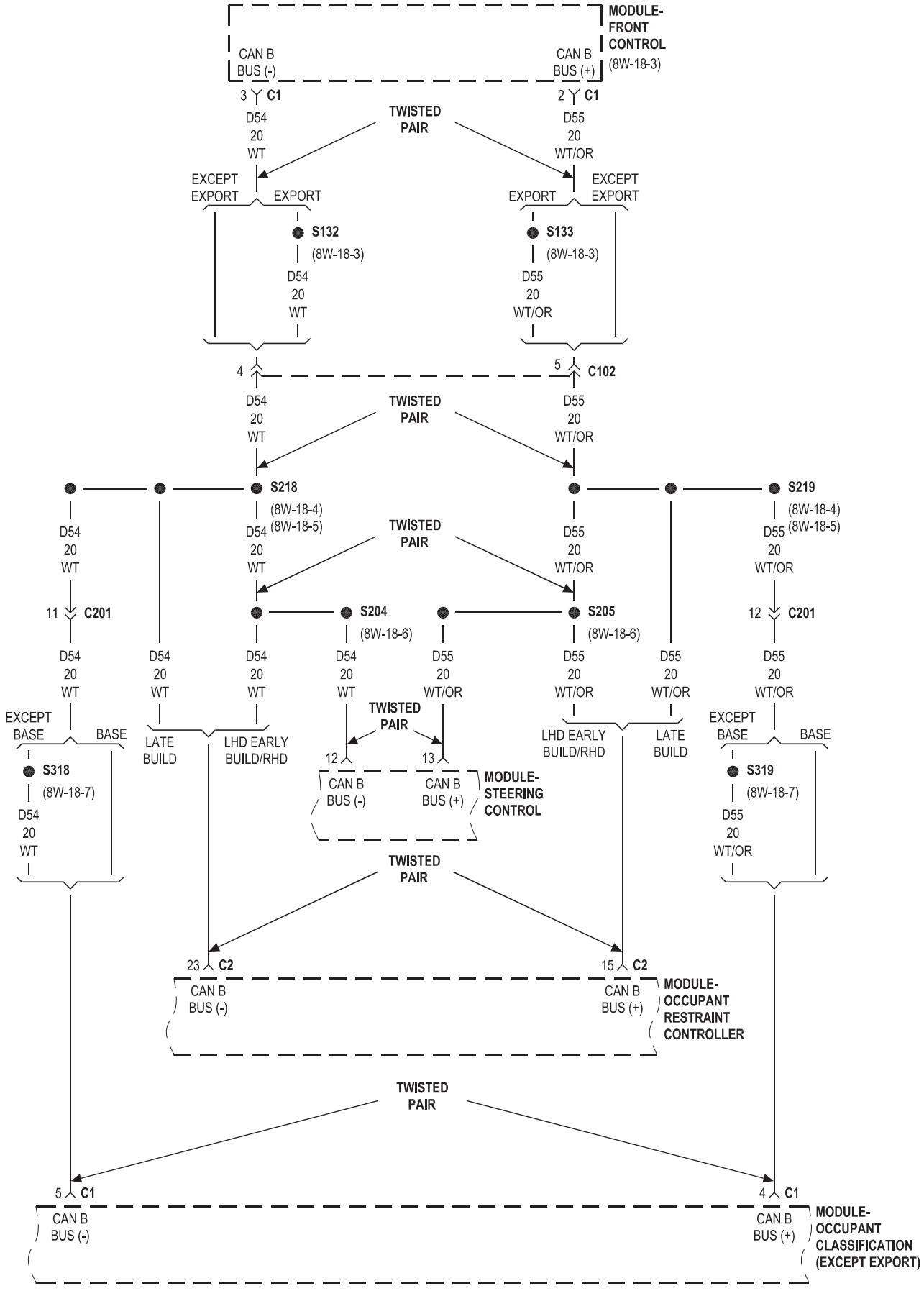
MODULE-
FRONT
CONTROL
(8W-18-3)
CAN B
BUS (-)
CAN B
BUS (+)
3 C1
2 C1
TWISTED
PAIR
D54
20
WT
D55
20
WT/OR
EXCEPT
EXPORT
EXPORT
EXPORT
EXCEPT
EXPORT
S132
(8W-18-3)
S133
(8W-18-3)
4
5
C102
S218
(8W-18-4)
(8W-18-5)
S219
(8W-18-4)
(8W-18-5)
11 C201
12 C201
S204
(8W-18-6)
S205
(8W-18-6)
LATE
BUILD
LHD EARLY
BUILD/RHD
LHD EARLY
BUILD/RHD
LATE
BUILD
EXCEPT
BASE
BASE
BASE
EXCEPT
BASE
S318
(8W-18-7)
S319
(8W-18-7)
12
13
MODULE-
STEERING
CONTROL
23 C2
15 C2
MODULE-
OCCUPANT
RESTRAINT
CONTROLLER
5 C1
4 C1
MODULE-
OCCUPANT
CLASSIFICATION
(EXCEPT EXPORT)

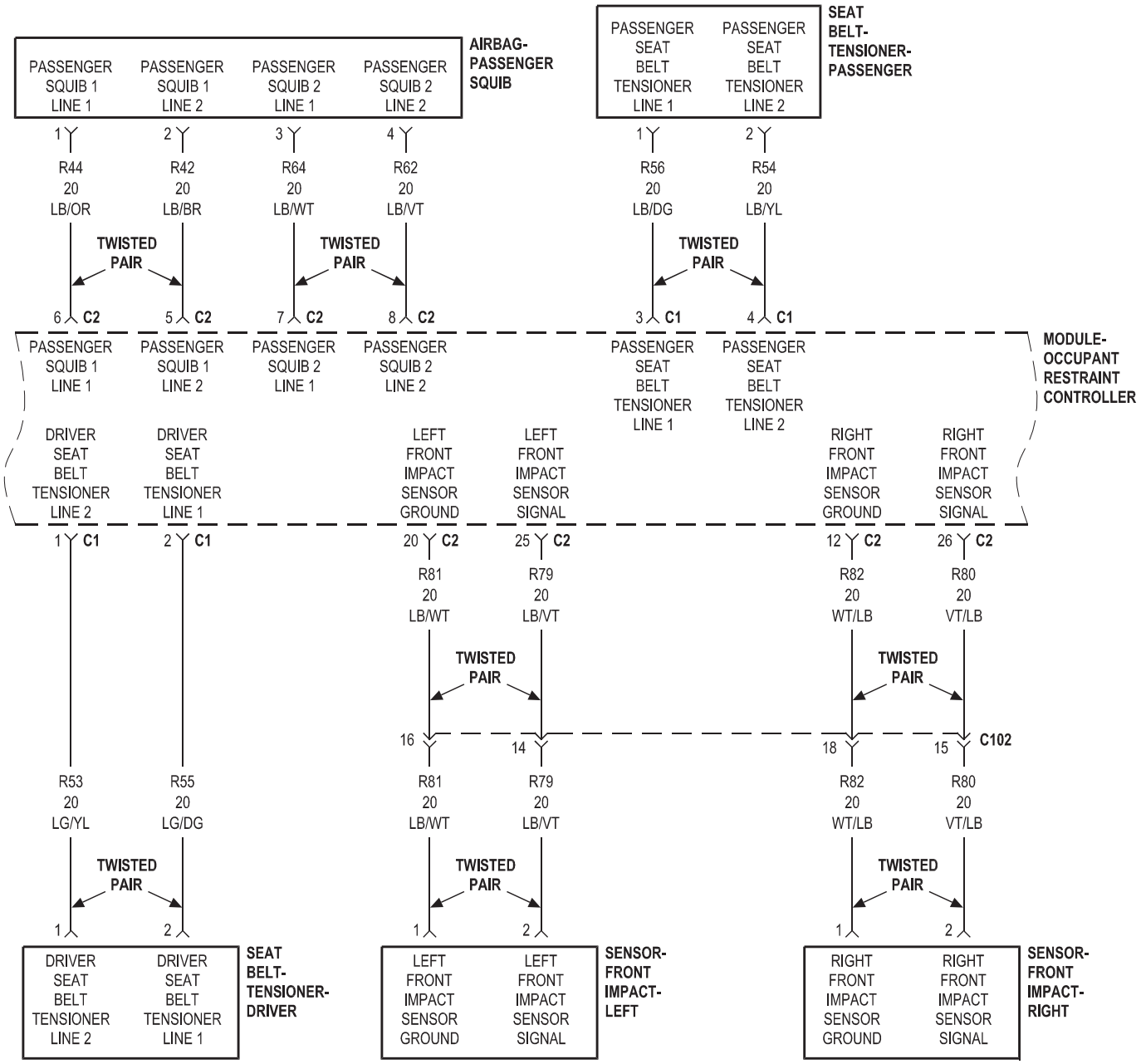
AIRBAG-PASSENGER SQUIB
PASSENGER SQUIB 1 LINE 1
PASSENGER SQUIB 1 LINE 2
PASSENGER SQUIB 2 LINE 1
PASSENGER SQUIB 2 LINE 2
SEAT BELT-TENSIONER-PASSENGER
PASSENGER SEAT BELT TENSIONER LINE 1
PASSENGER SEAT BELT TENSIONER LINE 2
R44 20 LB/OR
R42 20 LB/BR
R64 20 LB/WT
R62 20 LB/VT
R56 20 LB/DG
R54 20 LB/YL
TWISTED PAIR
C2
C1
MODULE-OCCUPANT RESTRAINT CONTROLLER
DRIVER SEAT BELT TENSIONER LINE 2
DRIVER SEAT BELT TENSIONER LINE 1
LEFT FRONT IMPACT SENSOR GROUND
LEFT FRONT IMPACT SENSOR SIGNAL
RIGHT FRONT IMPACT SENSOR GROUND
RIGHT FRONT IMPACT SENSOR SIGNAL
R81 20 LB/WT
R79 20 LB/VT
R82 20 WT/LB
R80 20 VT/LB
C102
R53 20 LG/YL
R55 20 LG/DG
SEAT BELT-TENSIONER-DRIVER
SENSOR-FRONT IMPACT-LEFT
SENSOR-FRONT IMPACT-RIGHT

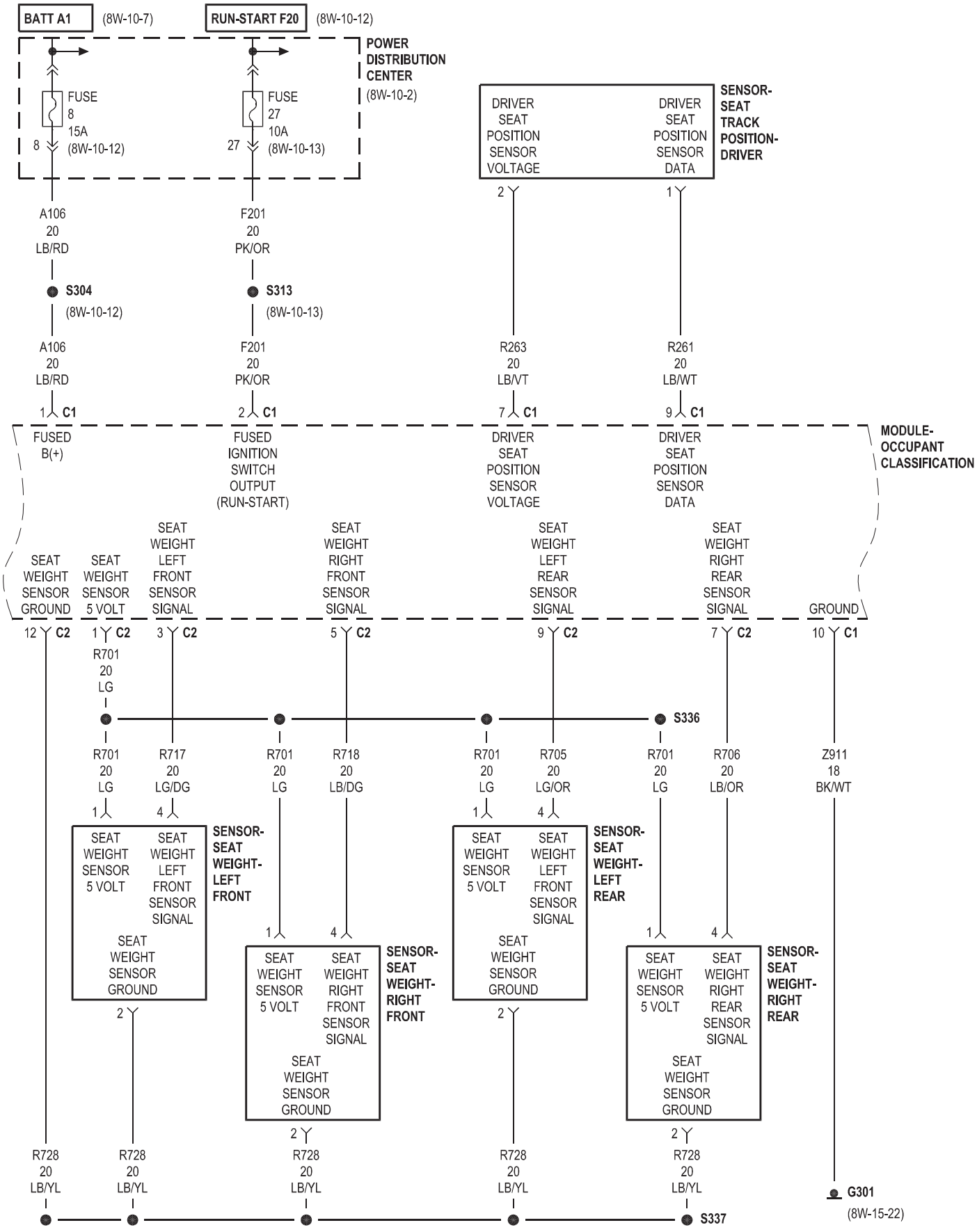
BATT A1
(8W-10-7)
RUN-START F20
(8W-10-12)
POWER DISTRIBUTION CENTER
(8W-10-2)
FUSE 8 15A
8
(8W-10-12)
FUSE 27 10A
27
(8W-10-13)
DRIVER SEAT POSITION SENSOR VOLTAGE
DRIVER SEAT POSITION SENSOR DATA
SENSOR-SEAT TRACK POSITION-DRIVER
A106 20 LB/RD
F201 20 PK/OR
S304
(8W-10-12)
S313
(8W-10-13)
R263 20 LB/VT
R261 20 LB/WT
FUSED B(+)
FUSED IGNITION SWITCH OUTPUT (RUN-START)
DRIVER SEAT POSITION SENSOR VOLTAGE
DRIVER SEAT POSITION SENSOR DATA
MODULE-OCCUPANT CLASSIFICATION
SEAT WEIGHT SENSOR GROUND
SEAT WEIGHT SENSOR 5 VOLT
SEAT WEIGHT LEFT FRONT SENSOR SIGNAL
SEAT WEIGHT RIGHT FRONT SENSOR SIGNAL
SEAT WEIGHT LEFT REAR SENSOR SIGNAL
SEAT WEIGHT RIGHT REAR SENSOR SIGNAL
GROUND
R701 20 LG
S336
R717 20 LG/DG
R718 20 LB/DG
R705 20 LG/OR
R706 20 LB/OR
Z911 18 BK/WT
SENSOR-SEAT WEIGHT-LEFT FRONT
SENSOR-SEAT WEIGHT-LEFT REAR
SENSOR-SEAT WEIGHT-RIGHT FRONT
SENSOR-SEAT WEIGHT-RIGHT REAR
R728 20 LB/YL
S337
G301
(8W-15-22)

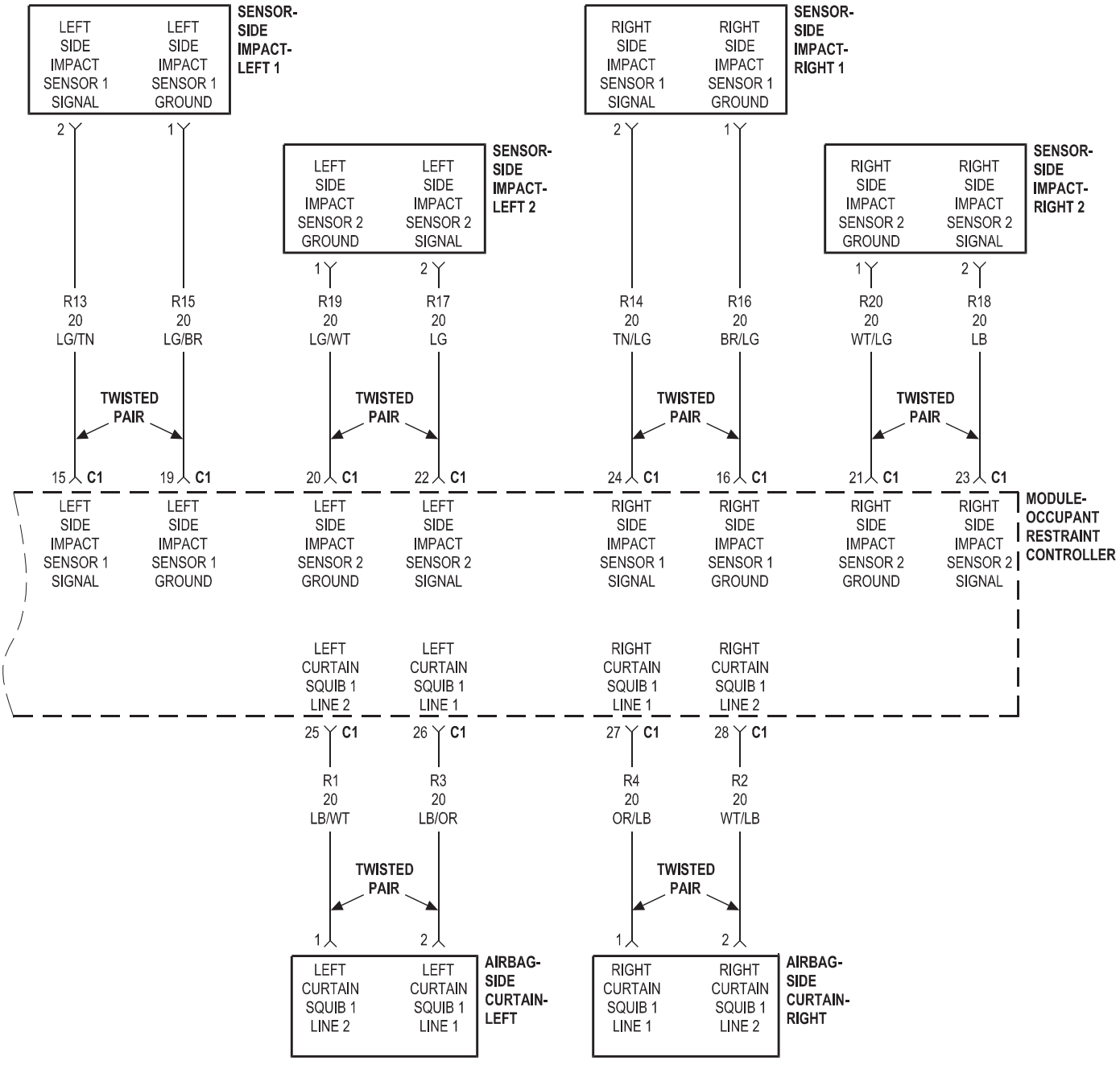
SENSOR-SIDE IMPACT-LEFT 1
LEFT SIDE IMPACT SENSOR 1 SIGNAL
LEFT SIDE IMPACT SENSOR 1 GROUND
2
1
R13 20 LG/TN
R15 20 LG/BR
SENSOR-SIDE IMPACT-LEFT 2
LEFT SIDE IMPACT SENSOR 2 GROUND
LEFT SIDE IMPACT SENSOR 2 SIGNAL
1
2
R19 20 LG/WT
R17 20 LG
SENSOR-SIDE IMPACT-RIGHT 1
RIGHT SIDE IMPACT SENSOR 1 SIGNAL
RIGHT SIDE IMPACT SENSOR 1 GROUND
2
1
R14 20 TN/LG
R16 20 BR/LG
SENSOR-SIDE IMPACT-RIGHT 2
RIGHT SIDE IMPACT SENSOR 2 GROUND
RIGHT SIDE IMPACT SENSOR 2 SIGNAL
1
2
R20 20 WT/LG
R18 20 LB
TWISTED PAIR
TWISTED PAIR
TWISTED PAIR
TWISTED PAIR
15 C1
19 C1
20 C1
22 C1
24 C1
16 C1
21 C1
23 C1
LEFT SIDE IMPACT SENSOR 1 SIGNAL
LEFT SIDE IMPACT SENSOR 1 GROUND
LEFT SIDE IMPACT SENSOR 2 GROUND
LEFT SIDE IMPACT SENSOR 2 SIGNAL
RIGHT SIDE IMPACT SENSOR 1 SIGNAL
RIGHT SIDE IMPACT SENSOR 1 GROUND
RIGHT SIDE IMPACT SENSOR 2 GROUND
RIGHT SIDE IMPACT SENSOR 2 SIGNAL
MODULE-OCCUPANT RESTRAINT CONTROLLER
LEFT CURTAIN SQUIB 1 LINE 2
LEFT CURTAIN SQUIB 1 LINE 1
RIGHT CURTAIN SQUIB 1 LINE 1
RIGHT CURTAIN SQUIB 1 LINE 2
25 C1
26 C1
27 C1
28 C1
R1 20 LB/WT
R3 20 LB/OR
R4 20 OR/LB
R2 20 WT/LB
TWISTED PAIR
TWISTED PAIR
1
2
1
2
AIRBAG-SIDE CURTAIN-LEFT
LEFT CURTAIN SQUIB 1 LINE 2
LEFT CURTAIN SQUIB 1 LINE 1
AIRBAG-SIDE CURTAIN-RIGHT
RIGHT CURTAIN SQUIB 1 LINE 1
RIGHT CURTAIN SQUIB 1 LINE 2

8W-44 INTERIOR LIGHTING

Component	Page
Circuit Breaker No. 1	8W-44-2
Cluster	8W-44-2, 3, 4, 5, 6, 7, 8, 9
Control-A/C-Heater	8W-44-6, 8, 9
Fuse 3	8W-44-10
Fuse 5	8W-44-10
Fuse 7	8W-44-10
Fuse 10	8W-44-10
Fuse 17	8W-44-2
Fuse 29	8W-44-2
Fuse 38	8W-44-6
Fuse 40	8W-44-6
G102	8W-44-10
G200	8W-44-3, 4, 8, 10
G202	8W-44-2, 8
G300	8W-44-5, 8, 9
G301	8W-44-5, 8, 9
G302	8W-44-5
Lamp-Cargo	8W-44-5, 6
Lamp-Courtesy-Left Front Door	8W-44-5
Lamp-Courtesy-Left Rear	8W-44-3
Lamp-Courtesy-Right Front Door	8W-44-5
Lamp-Courtesy-Right Rear	8W-44-3
Lamp-Dome	8W-44-10
Lamp-Glove Box	8W-44-3
Lamp-PRNDL	8W-44-8, 9
Lamp-Reading-Front	8W-44-4
Lamp-Spot-Left	8W-44-10
Lamp-Spot-Right	8W-44-10
Lamp-Underhood	8W-44-10
Lamp-Vanity-Left	8W-44-4
Lamp-Vanity-Right	8W-44-4
Module-Clock-Analog	8W-44-8, 9
Module-Front Control	8W-44-2
Module-Integrated Power	8W-44-10
Module-Occupant Restraint Controller	8W-44-6
Power Distribution Center	8W-44-2, 6, 10
Switch-Bank	8W-44-6, 8
Switch-Headlamp	8W-44-7, 8
Switch-Heated Seat-Left	8W-44-8
Switch-Heated Seat-Right	8W-44-8

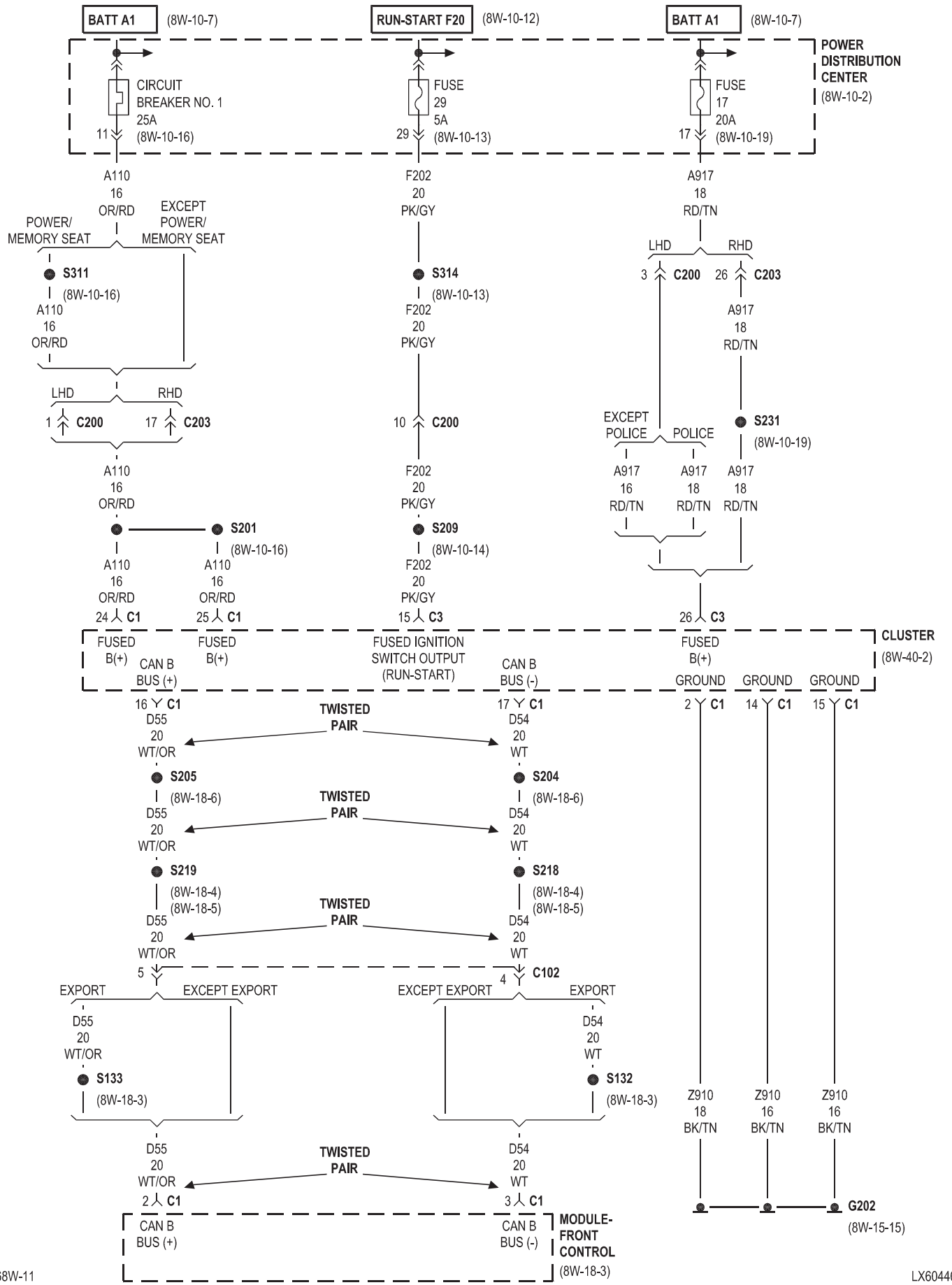
BATT A1
(8W-10-7)
RUN-START F20
(8W-10-12)
BATT A1
(8W-10-7)
POWER DISTRIBUTION CENTER
(8W-10-2)
CIRCUIT BREAKER NO. 1
25A
(8W-10-16)
11
FUSE
29
5A
(8W-10-13)
29
FUSE
17
20A
(8W-10-19)
17
A110
16
OR/RD
F202
20
PK/GY
A917
18
RD/TN
POWER/ MEMORY SEAT
EXCEPT POWER/ MEMORY SEAT
S311
(8W-10-16)
S314
(8W-10-13)
LHD
RHD
3 C200
26 C203
A110
16
OR/RD
F202
20
PK/GY
A917
18
RD/TN
LHD
RHD
1 C200
17 C203
10 C200
EXCEPT POLICE
POLICE
S231
(8W-10-19)
A110
16
OR/RD
F202
20
PK/GY
A917
16
RD/TN
A917
18
RD/TN
A917
18
RD/TN
S201
(8W-10-16)
S209
(8W-10-14)
A110
16
OR/RD
A110
16
OR/RD
F202
20
PK/GY
24 C1
25 C1
15 C3
26 C3
CLUSTER
(8W-40-2)
FUSED B(+)
CAN B BUS (+)
FUSED B(+)
FUSED IGNITION SWITCH OUTPUT (RUN-START)
CAN B BUS (-)
FUSED B(+)
GROUND
GROUND
GROUND
16 C1
17 C1
2 C1
14 C1
15 C1
TWISTED PAIR
D55
20
WT/OR
D54
20
WT
S205
(8W-18-6)
S204
(8W-18-6)
S219
(8W-18-4)
(8W-18-5)
S218
(8W-18-4)
(8W-18-5)
5
4 C102
EXPORT
EXCEPT EXPORT
EXCEPT EXPORT
EXPORT
S133
(8W-18-3)
S132
(8W-18-3)
Z910
18
BK/TN
Z910
16
BK/TN
Z910
16
BK/TN
2 C1
3 C1
G202
(8W-15-15)
CAN B BUS (+)
CAN B BUS (-)
MODULE-FRONT CONTROL
(8W-18-3)

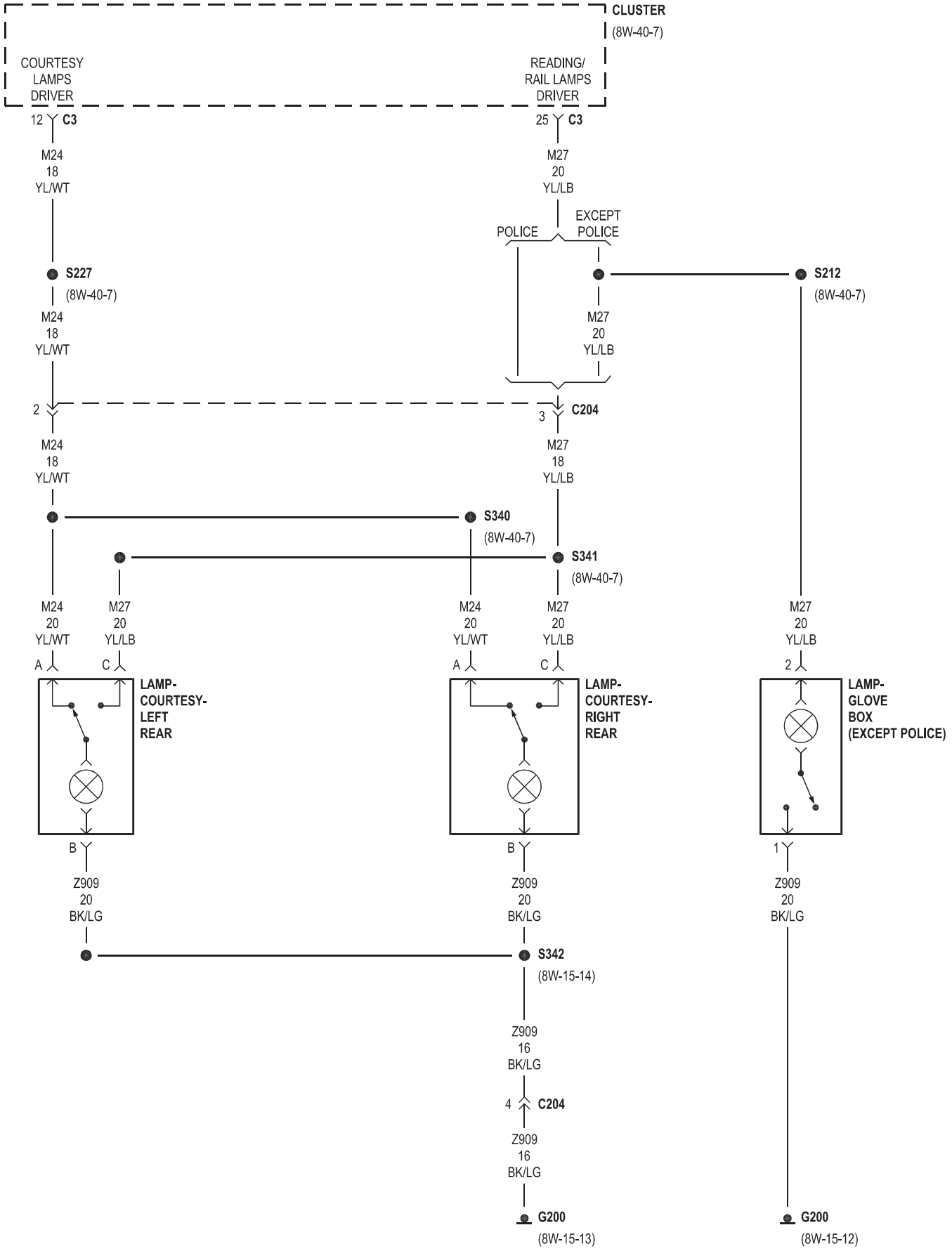
CLUSTER
(8W-40-7)
COURTESY LAMPS DRIVER
READING/ RAIL LAMPS DRIVER
12 C3
25 C3
M24 18 YL/WT
M27 20 YL/LB
POLICE
EXCEPT POLICE
S227
(8W-40-7)
S212
(8W-40-7)
M24 18 YL/WT
M27 20 YL/LB
2
3 C204
M24 18 YL/WT
M27 18 YL/LB
S340
(8W-40-7)
S341
(8W-40-7)
M24 20 YL/WT
M27 20 YL/LB
M24 20 YL/WT
M27 20 YL/LB
M27 20 YL/LB
A
C
A
C
2
LAMP- COURTESY- LEFT REAR
LAMP- COURTESY- RIGHT REAR
LAMP- GLOVE BOX (EXCEPT POLICE)
B
B
1
Z909 20 BK/LG
Z909 20 BK/LG
Z909 20 BK/LG
S342
(8W-15-14)
Z909 16 BK/LG
4 C204
Z909 16 BK/LG
G200
(8W-15-13)
G200
(8W-15-12)

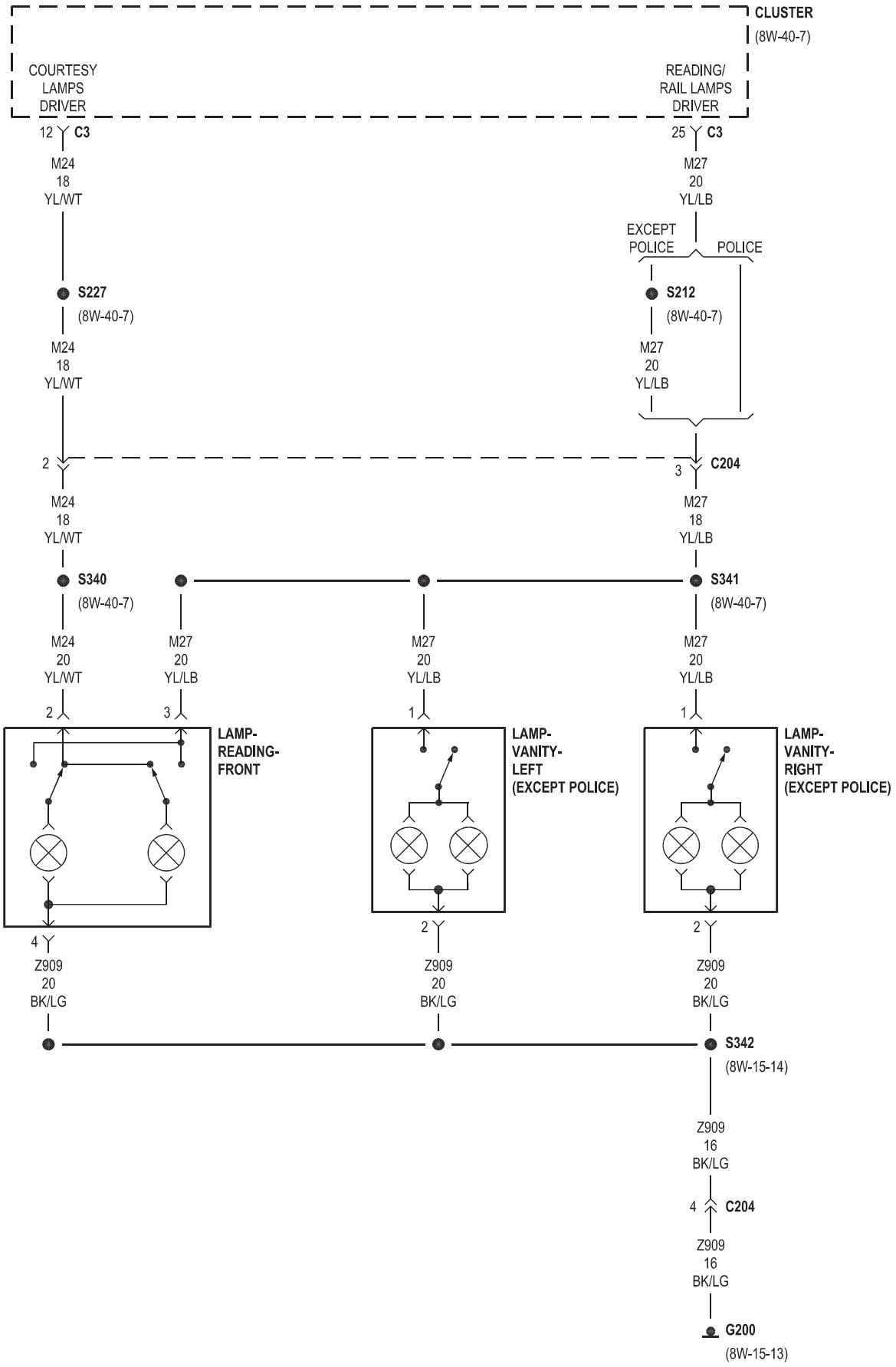
CLUSTER
(8W-40-7)
COURTESY LAMPS DRIVER
READING/ RAIL LAMPS DRIVER
12 C3
25 C3
M24 18 YL/WT
M27 20 YL/LB
EXCEPT POLICE
POLICE
S227
(8W-40-7)
S212
(8W-40-7)
M24 18 YL/WT
M27 20 YL/LB
2
3 C204
M24 18 YL/WT
M27 18 YL/LB
S340
(8W-40-7)
S341
(8W-40-7)
M24 20 YL/WT
M27 20 YL/LB
M27 20 YL/LB
M27 20 YL/LB
2
3
1
1
LAMP- READING- FRONT
LAMP- VANITY- LEFT (EXCEPT POLICE)
LAMP- VANITY- RIGHT (EXCEPT POLICE)
4
2
2
Z909 20 BK/LG
Z909 20 BK/LG
Z909 20 BK/LG
S342
(8W-15-14)
Z909 16 BK/LG
4 C204
Z909 16 BK/LG
G200
(8W-15-13)

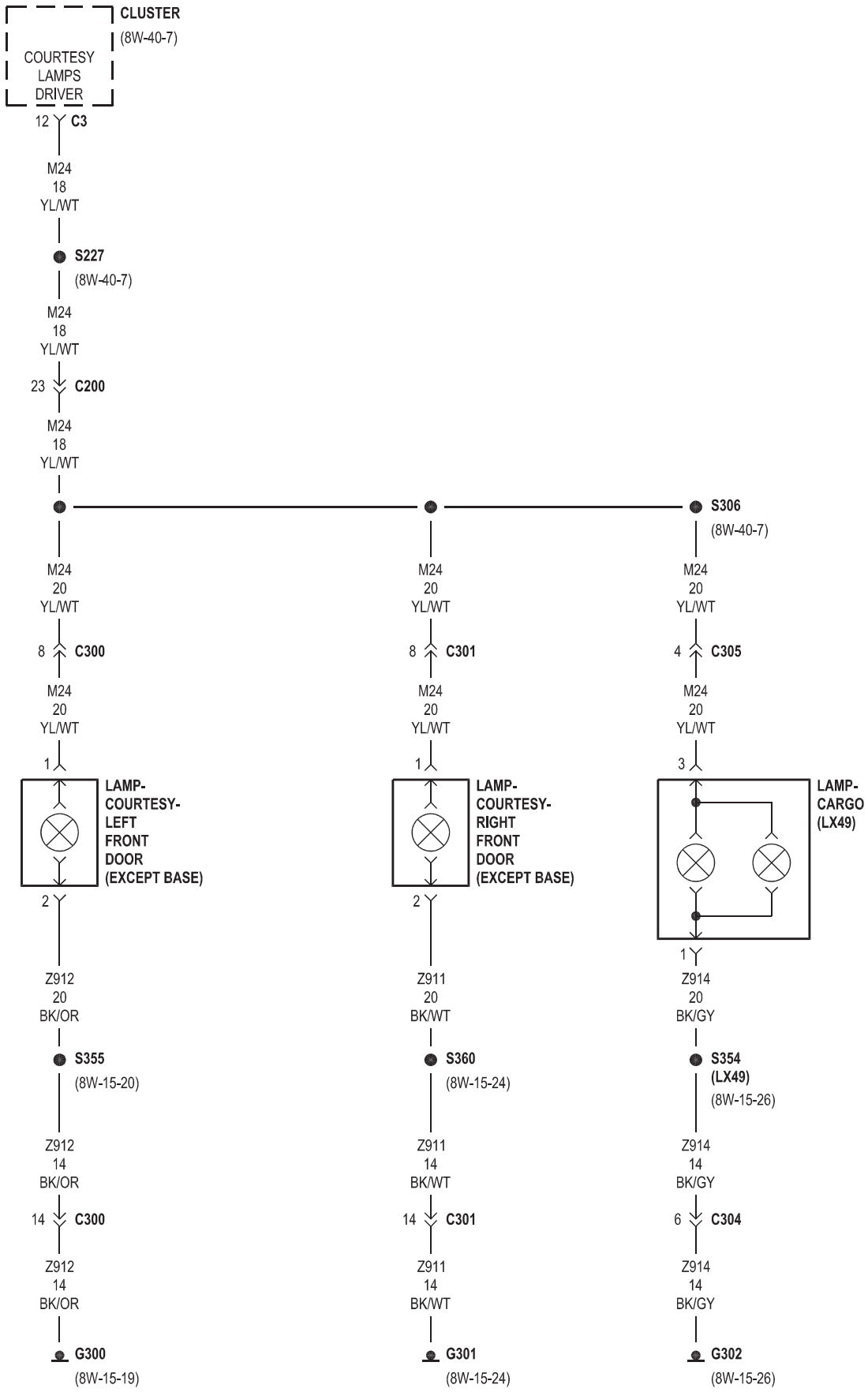
CLUSTER
(8W-40-7)
COURTESY LAMPS DRIVER
12 C3
M24 18 YL/WT
S227
(8W-40-7)
M24 18 YL/WT
23 C200
M24 18 YL/WT
S306
(8W-40-7)
M24 20 YL/WT
8 C300
M24 20 YL/WT
1
LAMP- COURTESY- LEFT FRONT DOOR (EXCEPT BASE)
2
Z912 20 BK/OR
S355
(8W-15-20)
Z912 14 BK/OR
14 C300
Z912 14 BK/OR
G300
(8W-15-19)
M24 20 YL/WT
8 C301
M24 20 YL/WT
1
LAMP- COURTESY- RIGHT FRONT DOOR (EXCEPT BASE)
2
Z911 20 BK/WT
S360
(8W-15-24)
Z911 14 BK/WT
14 C301
Z911 14 BK/WT
G301
(8W-15-24)
M24 20 YL/WT
4 C305
M24 20 YL/WT
3
LAMP- CARGO (LX49)
1
Z914 20 BK/GY
S354 (LX49)
(8W-15-26)
Z914 14 BK/GY
6 C304
Z914 14 BK/GY
G302
(8W-15-26)

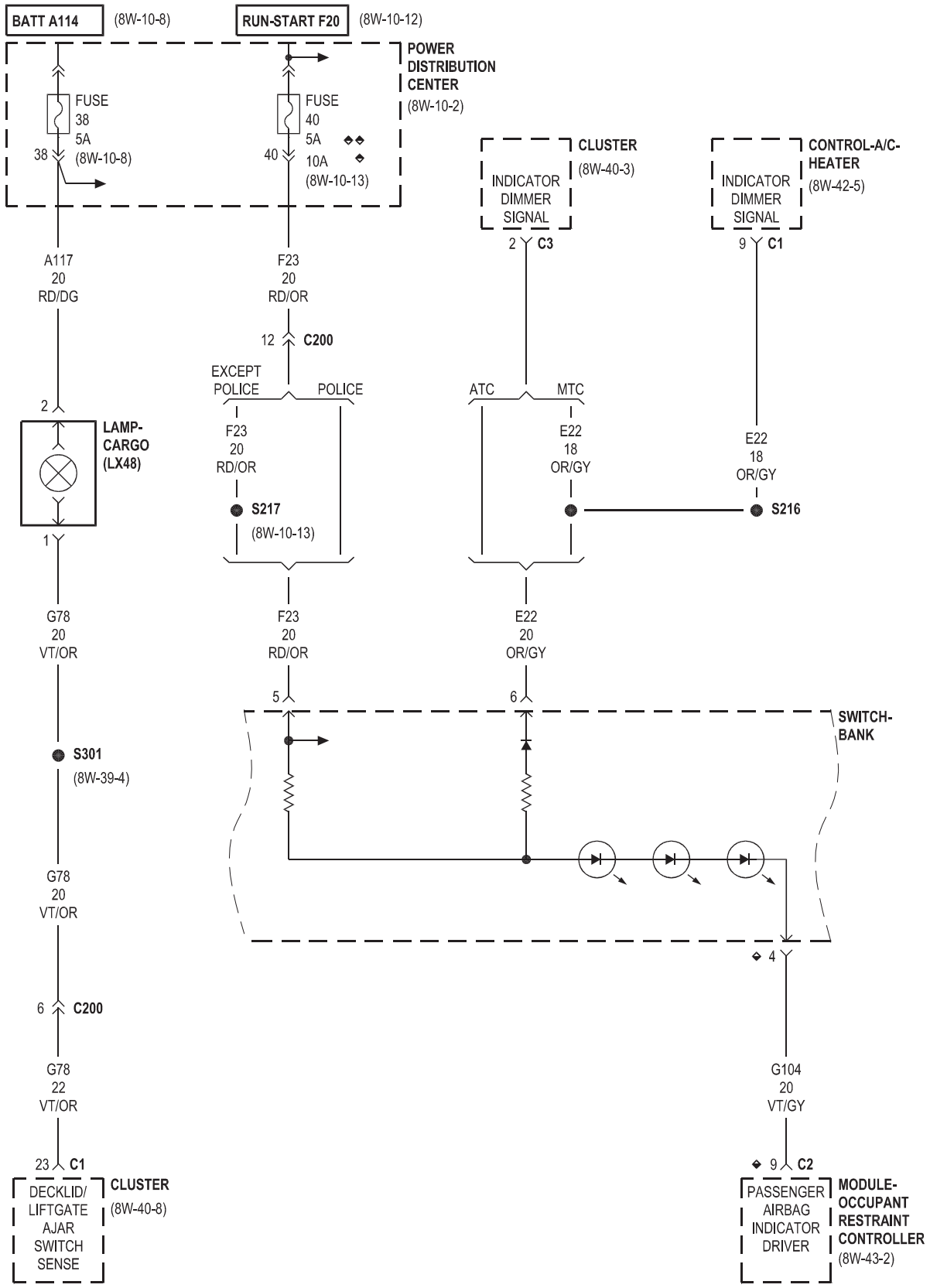

◆ EARLY BUILD
◆ SRT8
◆◆ EXCEPT SRT8

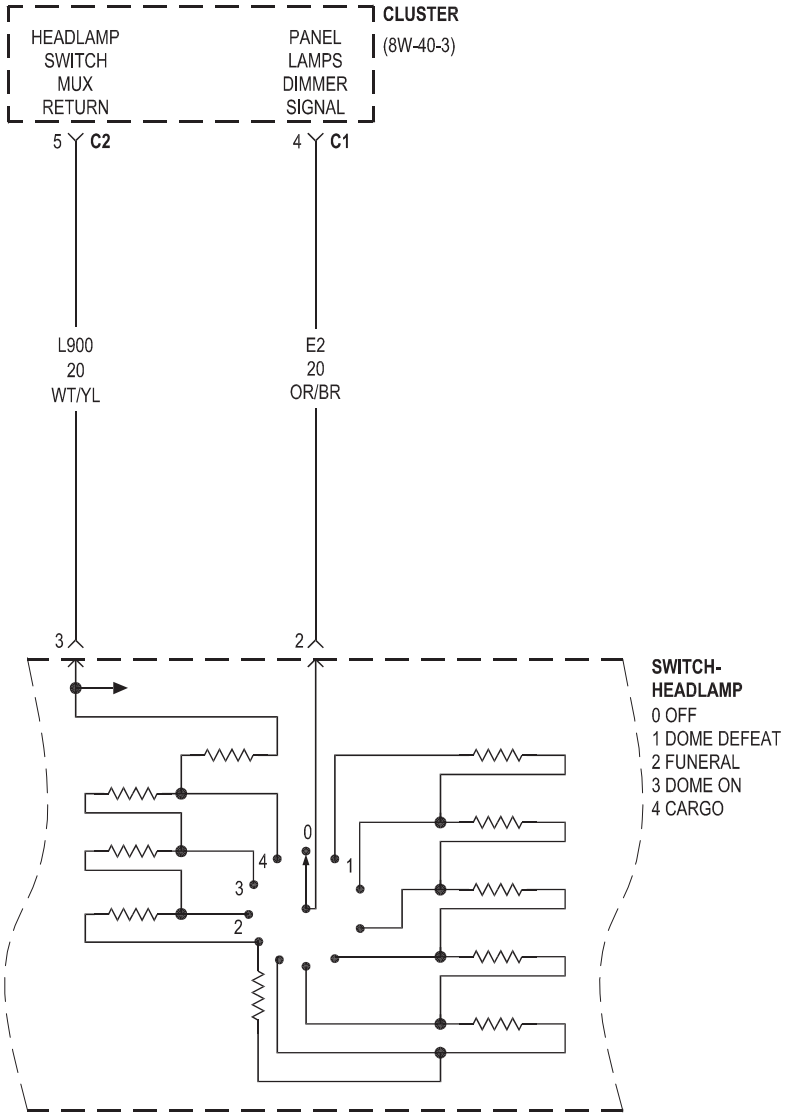
CLUSTER
(8W-40-3)
HEADLAMP SWITCH MUX RETURN
PANEL LAMPS DIMMER SIGNAL
5 C2
4 C1
L900
20
WT/YL
E2
20
OR/BR
3
2
SWITCH-HEADLAMP
0 OFF
1 DOME DEFEAT
2 FUNERAL
3 DOME ON
4 CARGO
0
1
2
3
4

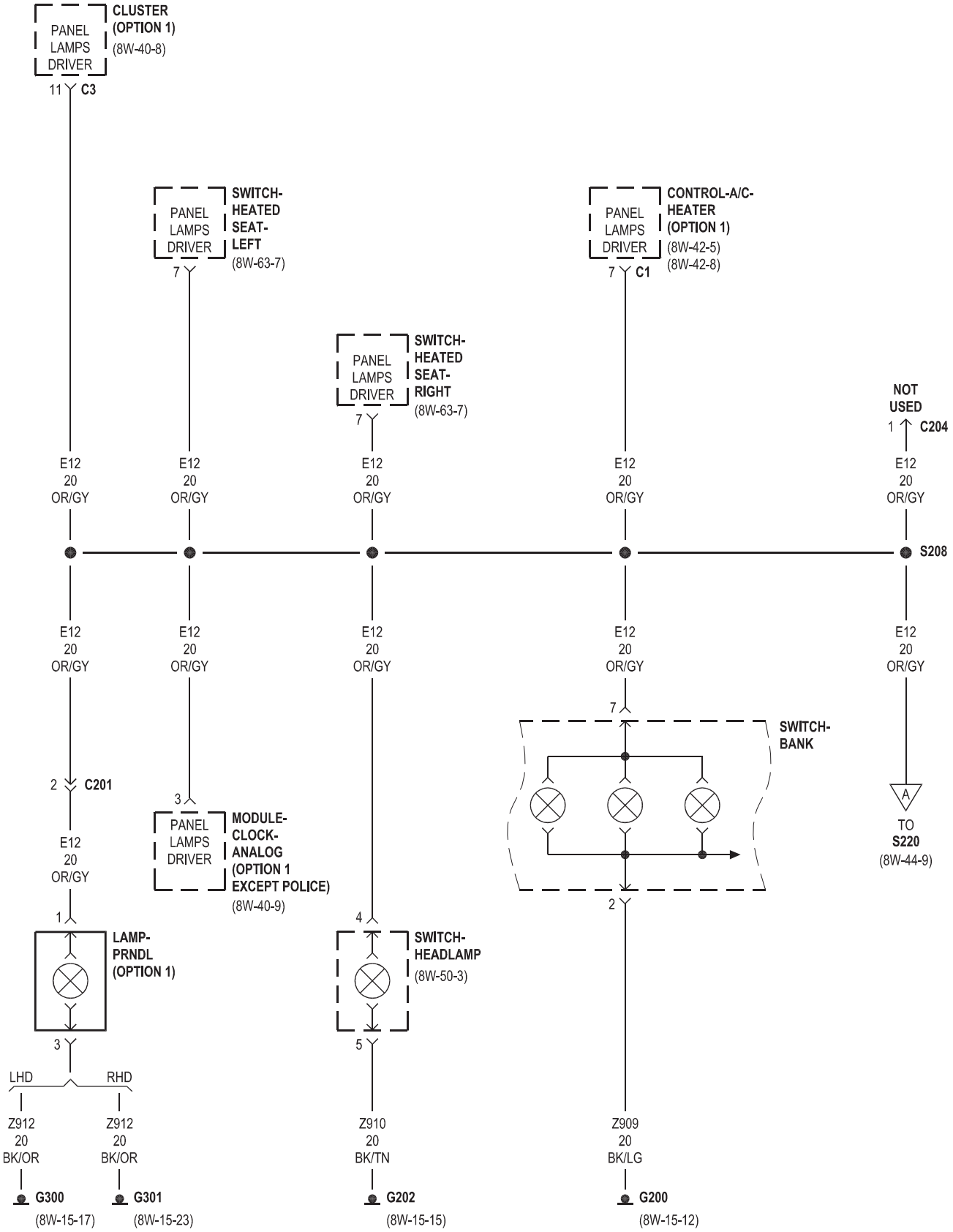
PANEL LAMPS DRIVER
CLUSTER (OPTION 1)
(8W-40-8)
11 C3
PANEL LAMPS DRIVER
SWITCH-HEATED SEAT-LEFT
(8W-63-7)
7
PANEL LAMPS DRIVER
SWITCH-HEATED SEAT-RIGHT
(8W-63-7)
7
PANEL LAMPS DRIVER
CONTROL-A/C-HEATER (OPTION 1)
(8W-42-5)
(8W-42-8)
7 C1
NOT USED
1 C204
E12 20 OR/GY
S208
2 C201
3
PANEL LAMPS DRIVER
MODULE-CLOCK-ANALOG (OPTION 1 EXCEPT POLICE)
(8W-40-9)
7
SWITCH-BANK
2
A
TO S220
(8W-44-9)
1
LAMP-PRNDL (OPTION 1)
3
4
SWITCH-HEADLAMP
(8W-50-3)
5
LHD
RHD
Z912 20 BK/OR
Z912 20 BK/OR
Z910 20 BK/TN
Z909 20 BK/LG
G300
(8W-15-17)
G301
(8W-15-23)
G202
(8W-15-15)
G200
(8W-15-12)

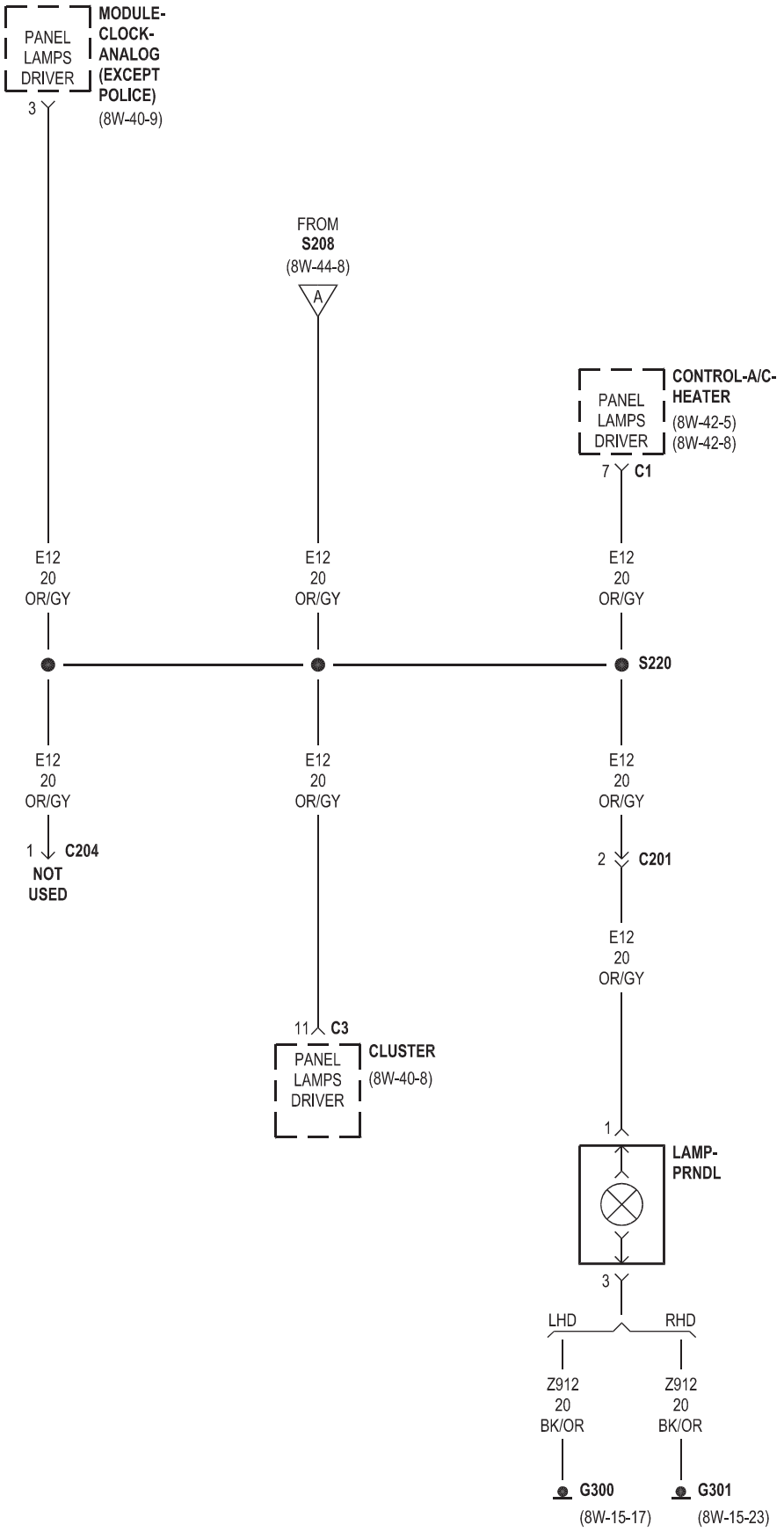
PANEL LAMPS DRIVER
MODULE-CLOCK-ANALOG (EXCEPT POLICE)
(8W-40-9)
3
FROM S208
(8W-44-8)
A
PANEL LAMPS DRIVER
CONTROL-A/C-HEATER
(8W-42-5)
(8W-42-8)
7
C1
E12
20
OR/GY
S220
1
C204
NOT USED
2
C201
11
C3
PANEL LAMPS DRIVER
CLUSTER
(8W-40-8)
LAMP-PRNDL
LHD
RHD
Z912
20
BK/OR
G300
(8W-15-17)
G301
(8W-15-23)

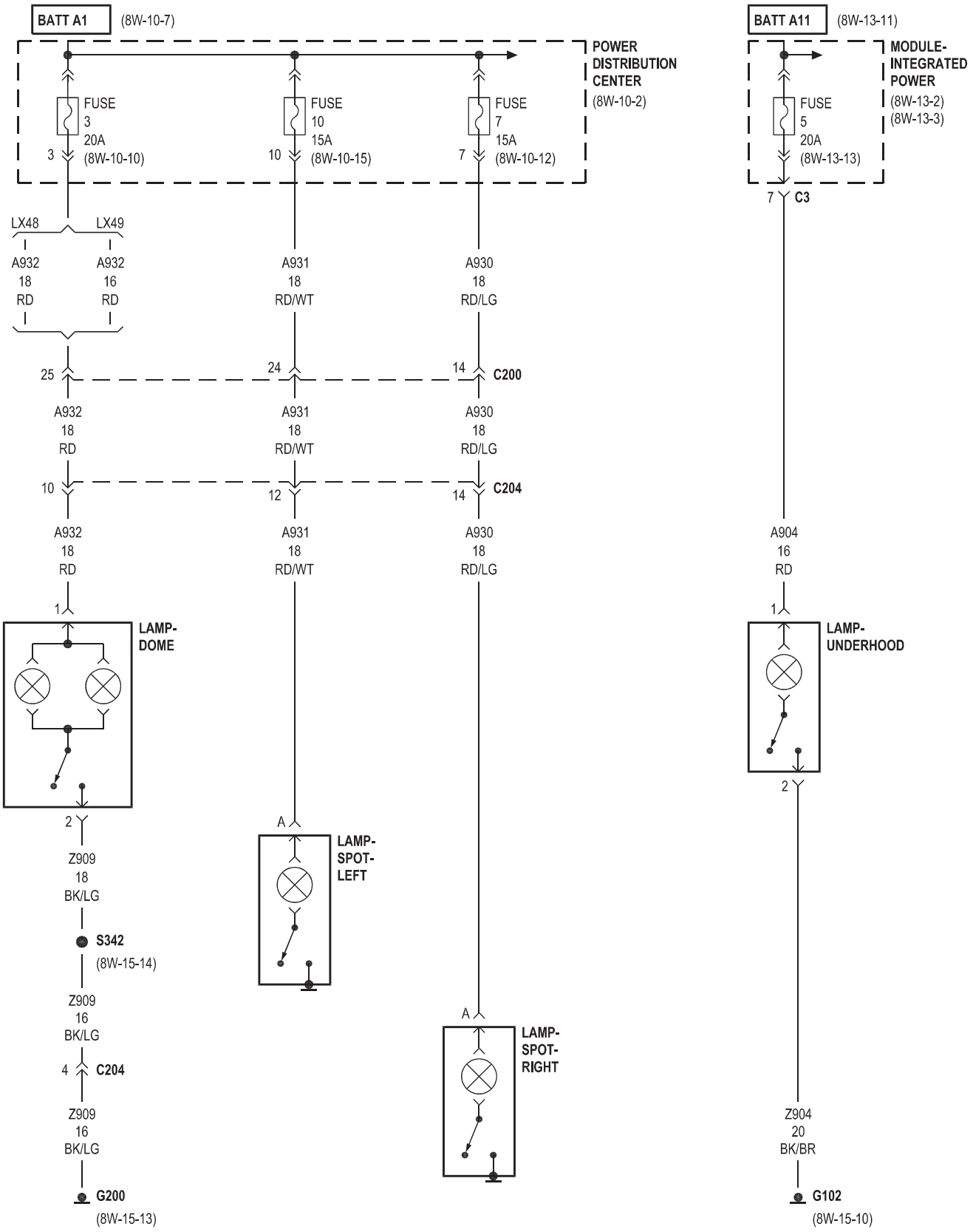
BATT A1
(8W-10-7)
POWER DISTRIBUTION CENTER
(8W-10-2)
FUSE 3 20A
3
(8W-10-10)
FUSE 10 15A
10
(8W-10-15)
FUSE 7 15A
7
(8W-10-12)
BATT A11
(8W-13-11)
MODULE-INTEGRATED POWER
(8W-13-2)
(8W-13-3)
FUSE 5 20A
(8W-13-13)
7
C3
LX48
LX49
A932 18 RD
A932 16 RD
A931 18 RD/WT
A930 18 RD/LG
25
24
14
C200
A932 18 RD
A931 18 RD/WT
A930 18 RD/LG
10
12
14
C204
A932 18 RD
A931 18 RD/WT
A930 18 RD/LG
A904 16 RD
1
LAMP-DOME
2
Z909 18 BK/LG
S342
(8W-15-14)
Z909 16 BK/LG
4
C204
Z909 16 BK/LG
G200
(8W-15-13)
A
LAMP-SPOT-LEFT
A
LAMP-SPOT-RIGHT
LAMP-UNDERHOOD
2
Z904 20 BK/BR
G102
(8W-15-10)

8W-47 AUDIO SYSTEM

Component	Page
Amplifier-Antenna-Backlite	8W-47-3
Amplifier-Radio	8W-47-6, 7, 8, 9
Amplifier-Subwoofer	8W-47-9
Antenna-Global Positioning System	8W-47-3
Antenna-Satellite No. 1	8W-47-10
Antenna-Satellite No. 2	8W-47-10
Backlite-Antenna	8W-47-3
Fuse 1	8W-47-2, 6, 10, 12, 14
Fuse 7	8W-47-9
Fuse 30	8W-47-15
Fuse 35	8W-47-3
Fuse 36	8W-47-2, 10, 12, 14
Fuse 44	8W-47-6
G200	8W-47-2, 10, 12, 14
G202	8W-47-6, 15
G300	8W-47-9
Media System-Monitor/DVD	8W-47-12, 13
Module-Front Control	8W-47-2, 6, 11, 13, 15
Module-Hands Free	8W-47-14
Module-Steering Control	8W-47-15
Module-Traffic Information Receiver	8W-47-3
Power Distribution Center	8W-47-2, 3, 6, 9, 10, 12, 14, 15
Radio	8W-47-2, 3, 4, 5, 6, 11, 12, 14
Receiver-Satellite	8W-47-10, 11
Relay-Accessory Delay	8W-47-3
Speaker-Instrument Panel-Center	8W-47-8
Speaker-Instrument Panel-Left	8W-47-5, 8
Speaker-Instrument Panel-Right	8W-47-5, 8
Speaker-Left Front Door	8W-47-4, 5, 7
Speaker-Left Rear	8W-47-4, 5, 7
Speaker-Right Front Door	8W-47-4, 5, 7
Speaker-Right Rear	8W-47-4, 5, 7
Speaker-Subwoofer	8W-47-8, 9
Switch-Steering-Left	8W-47-15
Switch-Steering-Right	8W-47-15

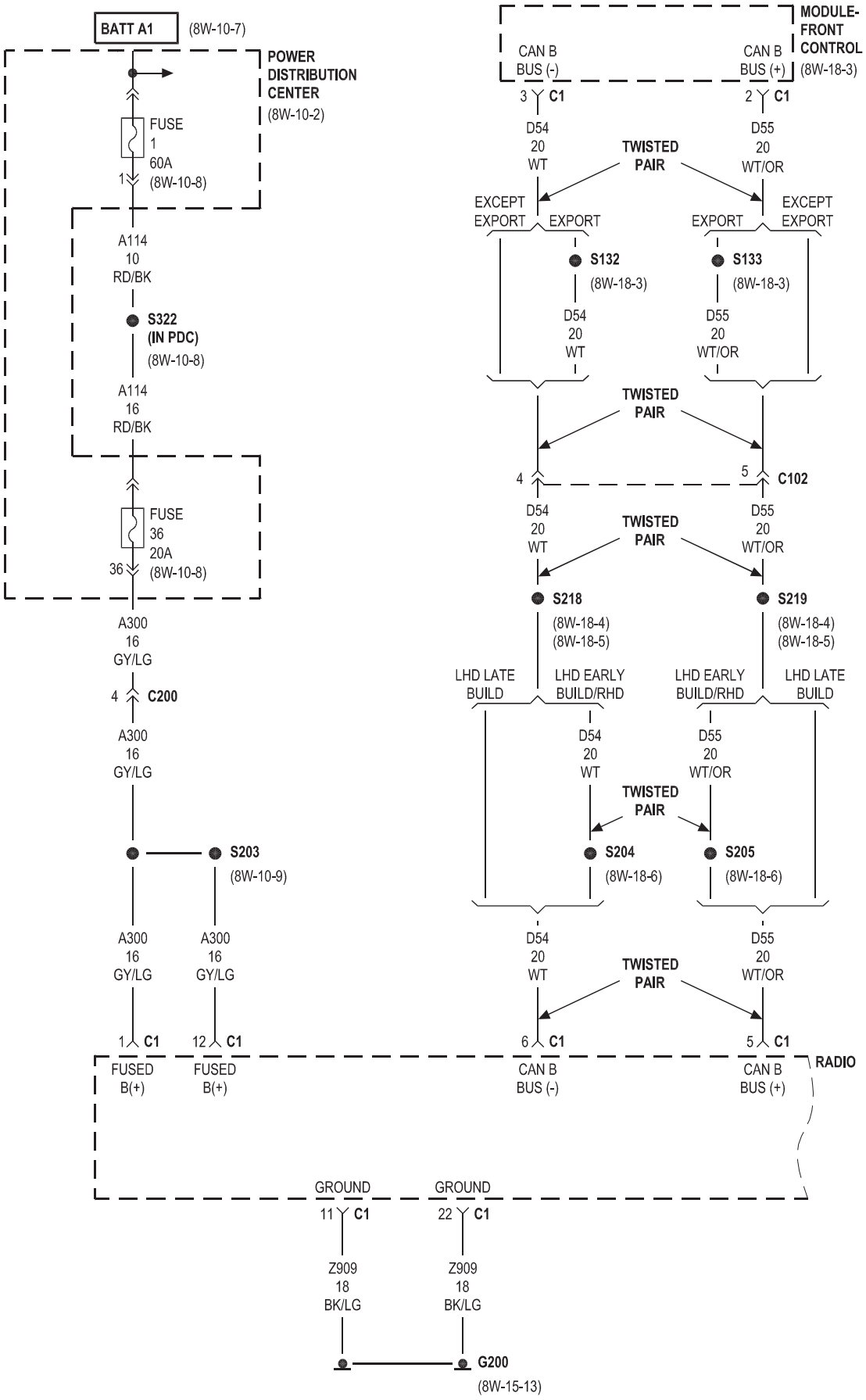
BATT A1
(8W-10-7)
POWER DISTRIBUTION CENTER
(8W-10-2)
FUSE 1 60A
1
(8W-10-8)
A114 10 RD/BK
S322 (IN PDC)
(8W-10-8)
A114 16 RD/BK
FUSE 36 20A
36
(8W-10-8)
A300 16 GY/LG
4 C200
A300 16 GY/LG
S203
(8W-10-9)
A300 16 GY/LG
A300 16 GY/LG
1 C1
FUSED B(+)
12 C1
FUSED B(+)
MODULE-FRONT CONTROL
(8W-18-3)
CAN B BUS (-)
CAN B BUS (+)
3 C1
2 C1
D54 20 WT
D55 20 WT/OR
TWISTED PAIR
EXCEPT EXPORT
EXPORT
EXPORT
EXCEPT EXPORT
S132
(8W-18-3)
S133
(8W-18-3)
D54 20 WT
D55 20 WT/OR
TWISTED PAIR
4
5
C102
D54 20 WT
D55 20 WT/OR
TWISTED PAIR
S218
(8W-18-4)
(8W-18-5)
S219
(8W-18-4)
(8W-18-5)
LHD LATE BUILD
LHD EARLY BUILD/RHD
LHD EARLY BUILD/RHD
LHD LATE BUILD
D54 20 WT
D55 20 WT/OR
TWISTED PAIR
S204
(8W-18-6)
S205
(8W-18-6)
D54 20 WT
D55 20 WT/OR
TWISTED PAIR
6 C1
CAN B BUS (-)
5 C1
CAN B BUS (+)
RADIO
GROUND
11 C1
GROUND
22 C1
Z909 18 BK/LG
Z909 18 BK/LG
G200
(8W-15-13)

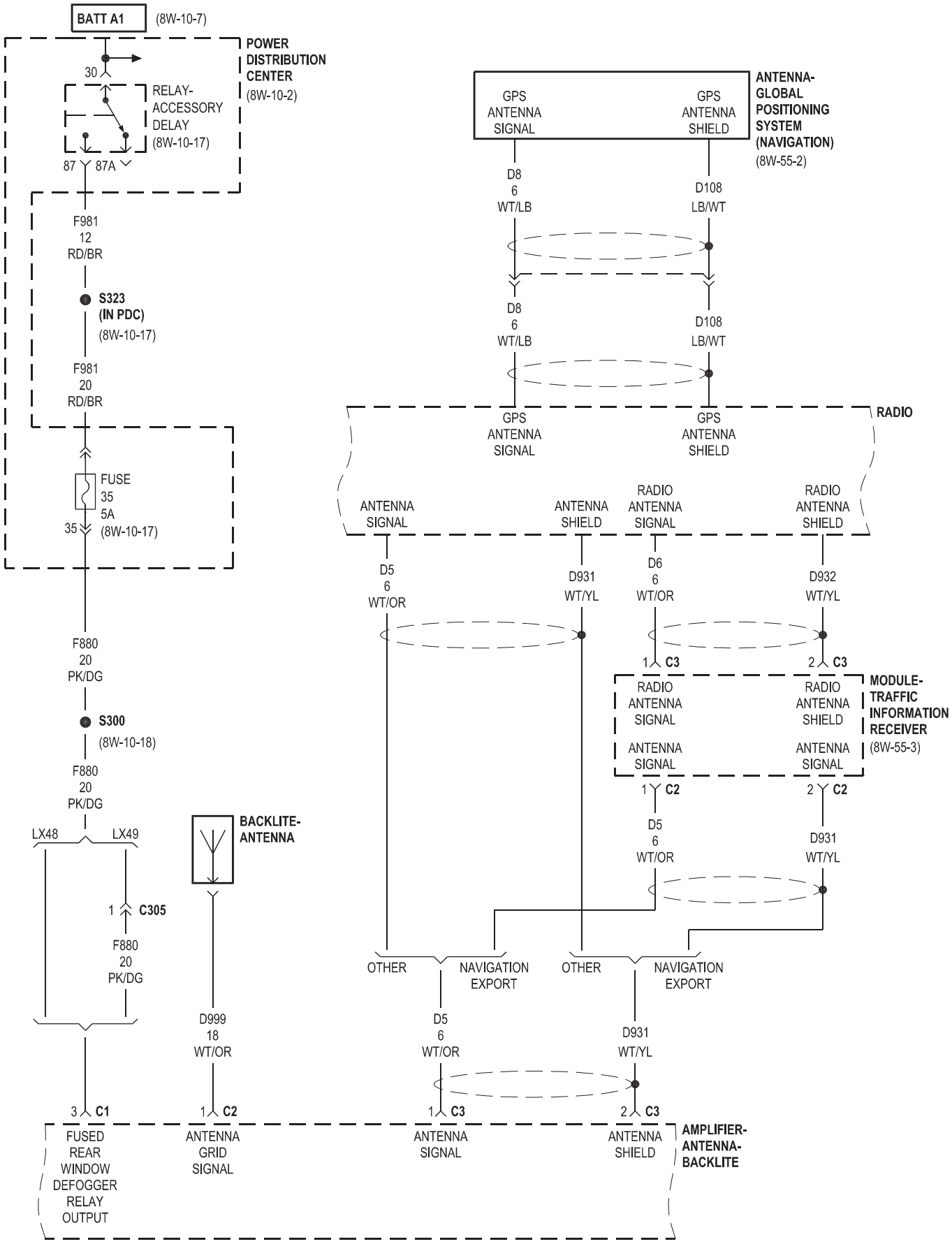
BATT A1
(8W-10-7)
POWER DISTRIBUTION CENTER
(8W-10-2)
30
RELAY-ACCESSORY DELAY
(8W-10-17)
87
87A
F981
12
RD/BR
S323
(IN PDC)
(8W-10-17)
F981
20
RD/BR
FUSE
35
5A
35
(8W-10-17)
F880
20
PK/DG
S300
(8W-10-18)
F880
20
PK/DG
LX48
LX49
1
C305
F880
20
PK/DG
BACKLITE-ANTENNA
D999
18
WT/OR
3
C1
FUSED REAR WINDOW DEFOGGER RELAY OUTPUT
1
C2
ANTENNA GRID SIGNAL
ANTENNA-GLOBAL POSITIONING SYSTEM (NAVIGATION)
(8W-55-2)
GPS ANTENNA SIGNAL
GPS ANTENNA SHIELD
D8
6
WT/LB
D108
LB/WT
RADIO
ANTENNA SIGNAL
ANTENNA SHIELD
RADIO ANTENNA SIGNAL
RADIO ANTENNA SHIELD
D5
6
WT/OR
D931
WT/YL
D6
6
WT/OR
D932
WT/YL
1
C3
2
C3
MODULE-TRAFFIC INFORMATION RECEIVER
(8W-55-3)
1
C2
2
C2
OTHER
NAVIGATION EXPORT
1
C3
2
C3
AMPLIFIER-ANTENNA-BACKLITE

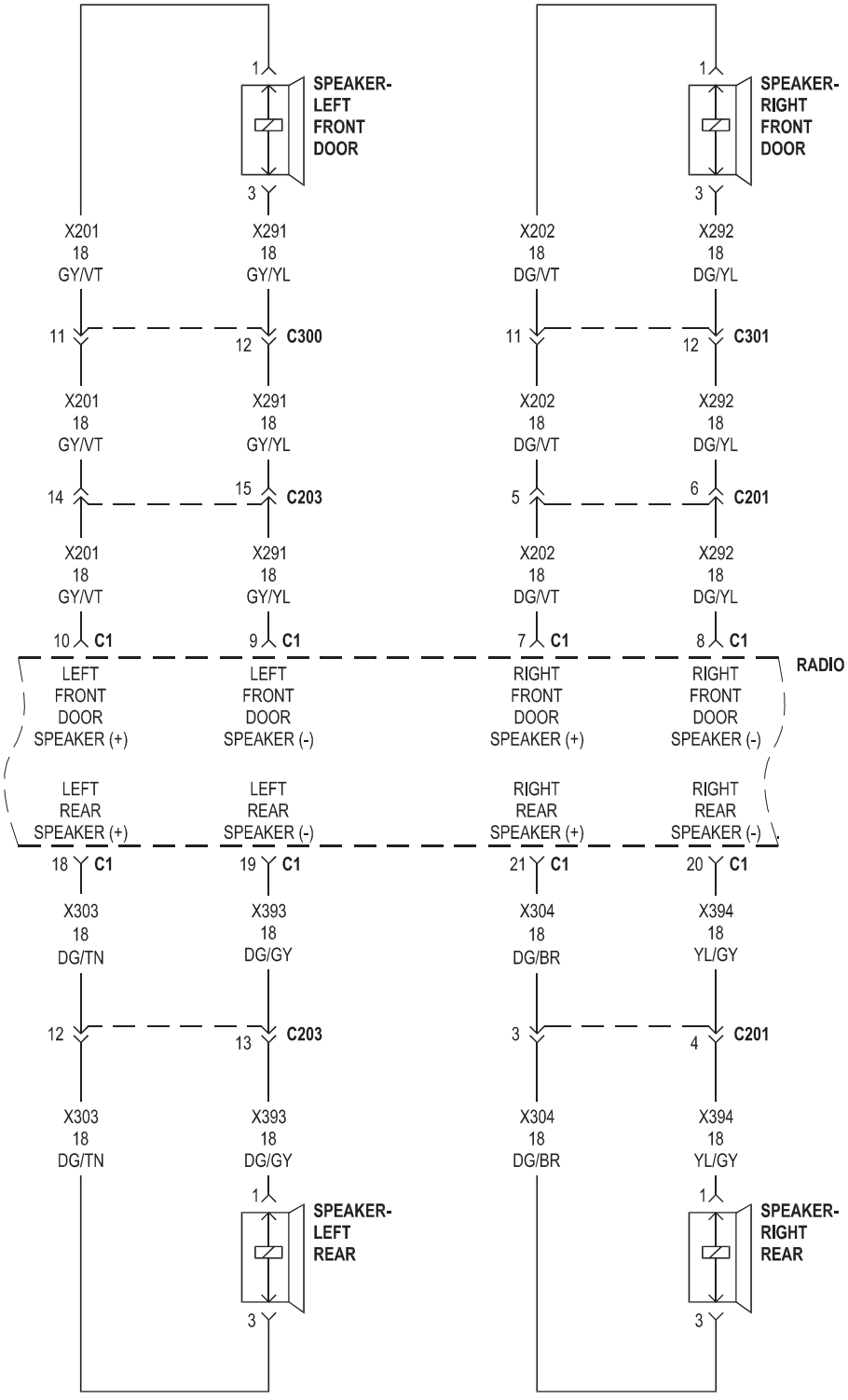
1
SPEAKER-
LEFT
FRONT
DOOR
3
X201
18
GY/VT
X291
18
GY/YL
11
12
C300
X201
18
GY/VT
X291
18
GY/YL
14
15
C203
X201
18
GY/VT
X291
18
GY/YL
10
C1
9
C1
LEFT
FRONT
DOOR
SPEAKER (+)
LEFT
FRONT
DOOR
SPEAKER (-)
LEFT
REAR
SPEAKER (+)
LEFT
REAR
SPEAKER (-)
18
C1
19
C1
X303
18
DG/TN
X393
18
DG/GY
12
13
C203
X303
18
DG/TN
X393
18
DG/GY
1
SPEAKER-
LEFT
REAR
3
1
SPEAKER-
RIGHT
FRONT
DOOR
3
X202
18
DG/VT
X292
18
DG/YL
11
12
C301
X202
18
DG/VT
X292
18
DG/YL
5
6
C201
X202
18
DG/VT
X292
18
DG/YL
7
C1
8
C1
RADIO
RIGHT
FRONT
DOOR
SPEAKER (+)
RIGHT
FRONT
DOOR
SPEAKER (-)
RIGHT
REAR
SPEAKER (+)
RIGHT
REAR
SPEAKER (-)
21
C1
20
C1
X304
18
DG/BR
X394
18
YL/GY
3
4
C201
X304
18
DG/BR
X394
18
YL/GY
1
SPEAKER-
RIGHT
REAR
3

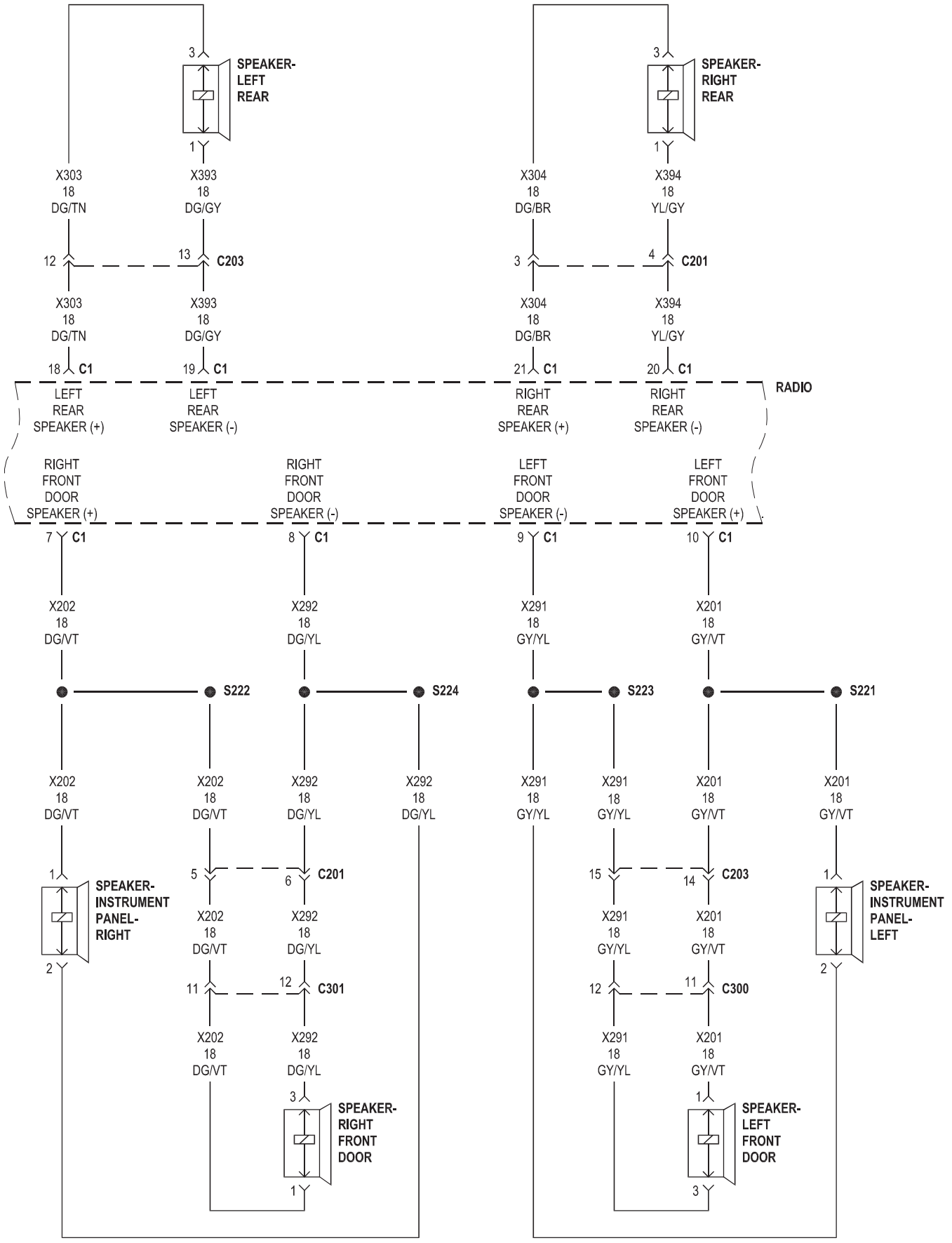
SPEAKER-
LEFT
REAR
SPEAKER-
RIGHT
REAR
X303
18
DG/TN
X393
18
DG/GY
X304
18
DG/BR
X394
18
YL/GY
C203
C201
C1
RADIO
LEFT
REAR
SPEAKER (+)
LEFT
REAR
SPEAKER (-)
RIGHT
REAR
SPEAKER (+)
RIGHT
REAR
SPEAKER (-)
RIGHT
FRONT
DOOR
SPEAKER (+)
RIGHT
FRONT
DOOR
SPEAKER (-)
LEFT
FRONT
DOOR
SPEAKER (-)
LEFT
FRONT
DOOR
SPEAKER (+)
X202
18
DG/VT
X292
18
DG/YL
X291
18
GY/YL
X201
18
GY/VT
S222
S224
S223
S221
SPEAKER-
INSTRUMENT
PANEL-
RIGHT
SPEAKER-
INSTRUMENT
PANEL-
LEFT
C301
C300
SPEAKER-
RIGHT
FRONT
DOOR
SPEAKER-
LEFT
FRONT
DOOR

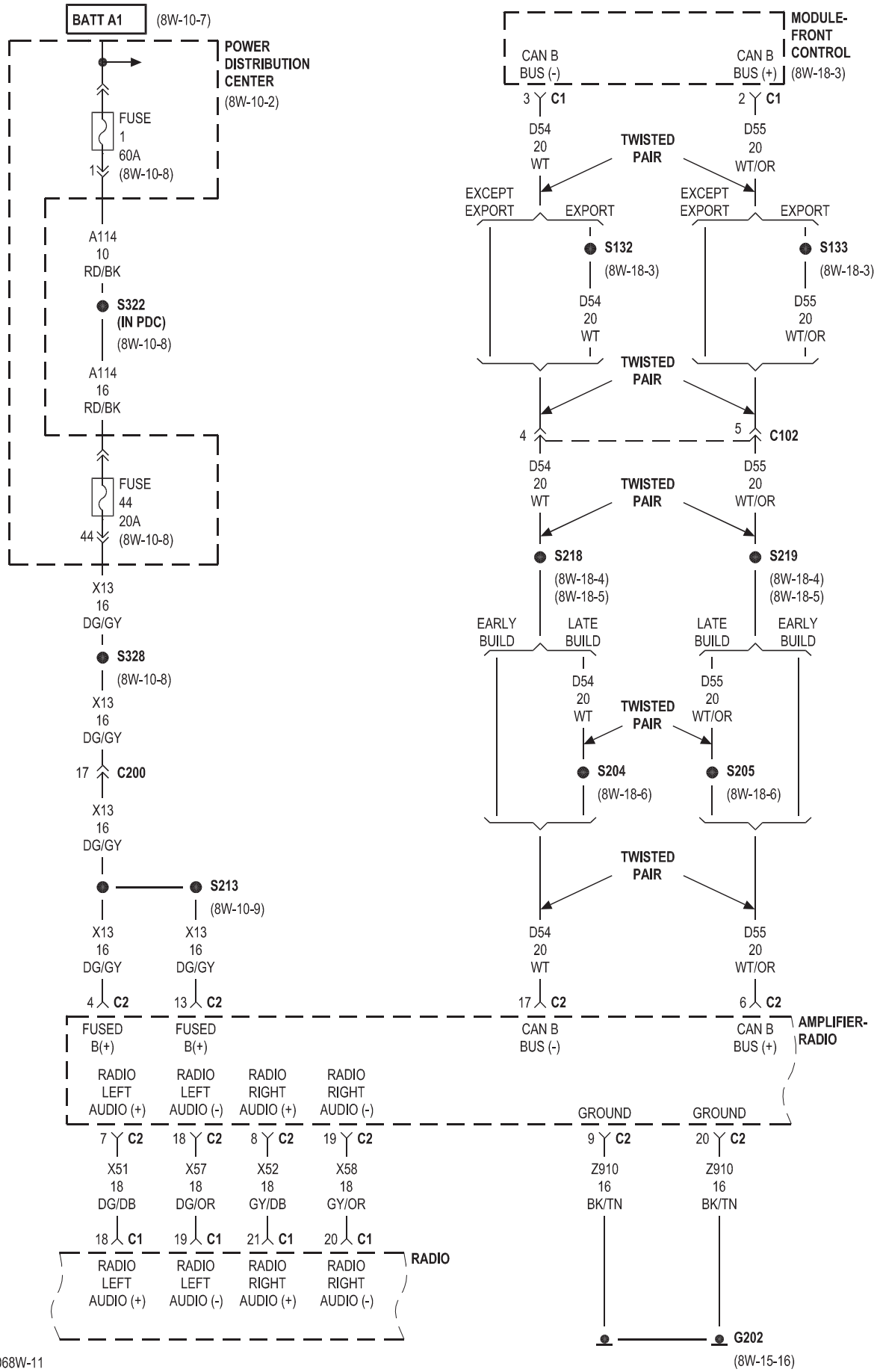
BATT A1
(8W-10-7)
POWER DISTRIBUTION CENTER
(8W-10-2)
FUSE 1 60A
1
(8W-10-8)
A114 10 RD/BK
S322 (IN PDC)
(8W-10-8)
A114 16 RD/BK
FUSE 44 20A
44
(8W-10-8)
X13 16 DG/GY
S328
(8W-10-8)
X13 16 DG/GY
17 C200
X13 16 DG/GY
S213
(8W-10-9)
X13 16 DG/GY
4 C2
X13 16 DG/GY
13 C2
FUSED B(+)
FUSED B(+)
RADIO LEFT AUDIO (+)
RADIO LEFT AUDIO (-)
RADIO RIGHT AUDIO (+)
RADIO RIGHT AUDIO (-)
7 C2
18 C2
8 C2
19 C2
X51 18 DG/DB
X57 18 DG/OR
X52 18 GY/DB
X58 18 GY/OR
18 C1
19 C1
21 C1
20 C1
RADIO
RADIO LEFT AUDIO (+)
RADIO LEFT AUDIO (-)
RADIO RIGHT AUDIO (+)
RADIO RIGHT AUDIO (-)
MODULE-FRONT CONTROL
(8W-18-3)
CAN B BUS (-)
CAN B BUS (+)
3 C1
2 C1
D54 20 WT
D55 20 WT/OR
TWISTED PAIR
EXCEPT EXPORT
EXPORT
EXCEPT EXPORT
EXPORT
S132
(8W-18-3)
S133
(8W-18-3)
D54 20 WT
D55 20 WT/OR
TWISTED PAIR
4
5
C102
D54 20 WT
D55 20 WT/OR
TWISTED PAIR
S218
(8W-18-4)
(8W-18-5)
S219
(8W-18-4)
(8W-18-5)
EARLY BUILD
LATE BUILD
LATE BUILD
EARLY BUILD
D54 20 WT
D55 20 WT/OR
TWISTED PAIR
S204
(8W-18-6)
S205
(8W-18-6)
TWISTED PAIR
D54 20 WT
D55 20 WT/OR
17 C2
6 C2
CAN B BUS (-)
CAN B BUS (+)
AMPLIFIER-RADIO
GROUND
GROUND
9 C2
20 C2
Z910 16 BK/TN
Z910 16 BK/TN
G202
(8W-15-16)

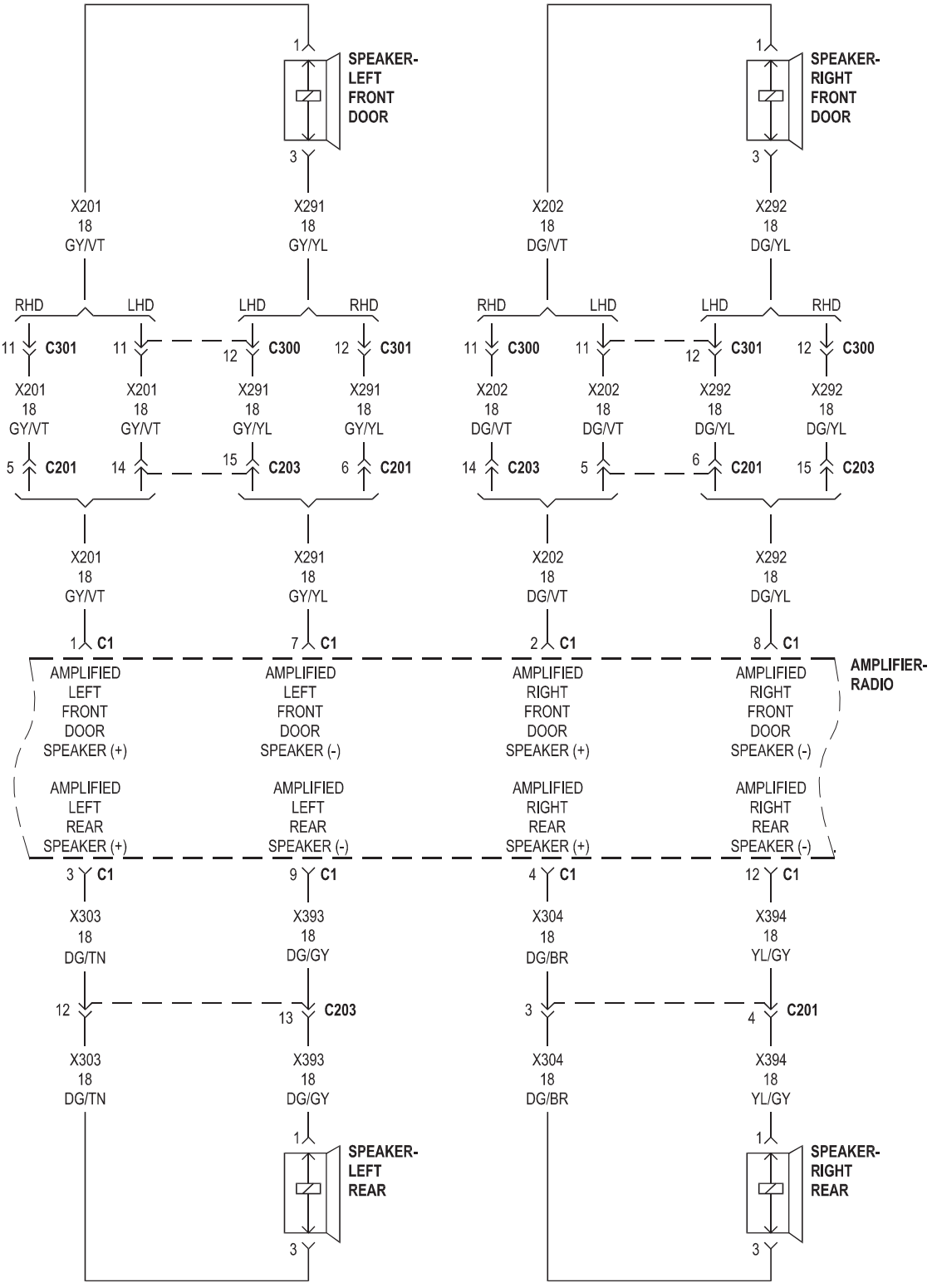
SPEAKER-
LEFT
FRONT
DOOR
SPEAKER-
RIGHT
FRONT
DOOR
X201
18
GY/VT
X291
18
GY/YL
X202
18
DG/VT
X292
18
DG/YL
RHD
LHD
C301
C300
C201
C203
C1
AMPLIFIED
LEFT
FRONT
DOOR
SPEAKER (+)
AMPLIFIED
LEFT
FRONT
DOOR
SPEAKER (-)
AMPLIFIED
RIGHT
FRONT
DOOR
SPEAKER (+)
AMPLIFIED
RIGHT
FRONT
DOOR
SPEAKER (-)
AMPLIFIER-
RADIO
AMPLIFIED
LEFT
REAR
SPEAKER (+)
AMPLIFIED
LEFT
REAR
SPEAKER (-)
AMPLIFIED
RIGHT
REAR
SPEAKER (+)
AMPLIFIED
RIGHT
REAR
SPEAKER (-)
X303
18
DG/TN
X393
18
DG/GY
X304
18
DG/BR
X394
18
YL/GY
SPEAKER-
LEFT
REAR
SPEAKER-
RIGHT
REAR

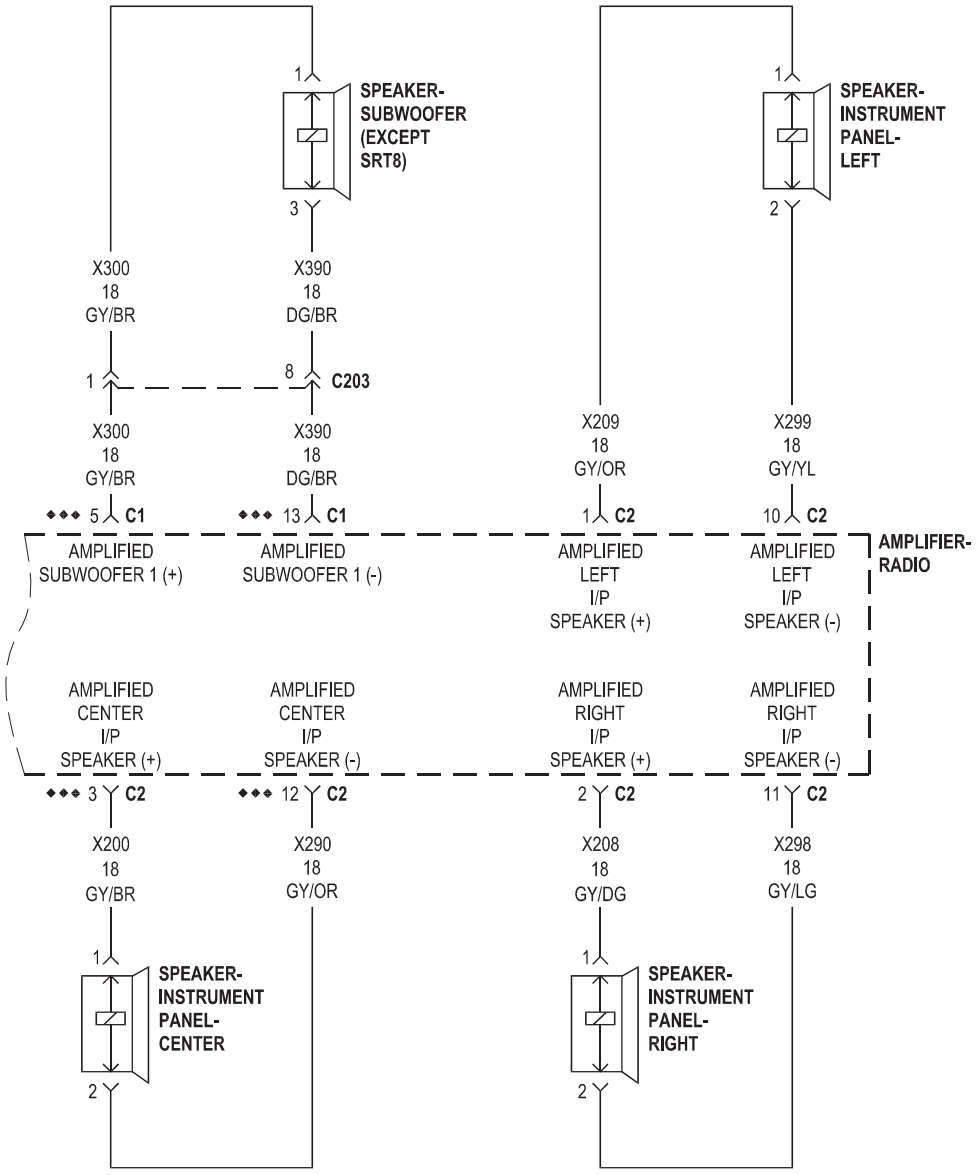
1
SPEAKER-
SUBWOOFER
(EXCEPT
SRT8)
3
1
SPEAKER-
INSTRUMENT
PANEL-
LEFT
2
X300
18
GY/BR
X390
18
DG/BR
1
8
C203
X300
18
GY/BR
X390
18
DG/BR
X209
18
GY/OR
X299
18
GY/YL
5 C1
13 C1
1 C2
10 C2
AMPLIFIER-
RADIO
AMPLIFIED
SUBWOOFER 1 (+)
AMPLIFIED
SUBWOOFER 1 (-)
AMPLIFIED
LEFT
I/P
SPEAKER (+)
AMPLIFIED
LEFT
I/P
SPEAKER (-)
AMPLIFIED
CENTER
I/P
SPEAKER (+)
AMPLIFIED
CENTER
I/P
SPEAKER (-)
AMPLIFIED
RIGHT
I/P
SPEAKER (+)
AMPLIFIED
RIGHT
I/P
SPEAKER (-)
3 C2
12 C2
2 C2
11 C2
X200
18
GY/BR
X290
18
GY/OR
X208
18
GY/DG
X298
18
GY/LG
1
SPEAKER-
INSTRUMENT
PANEL-
CENTER
2
1
SPEAKER-
INSTRUMENT
PANEL-
RIGHT
2

◆◆◆ HIGHLINE

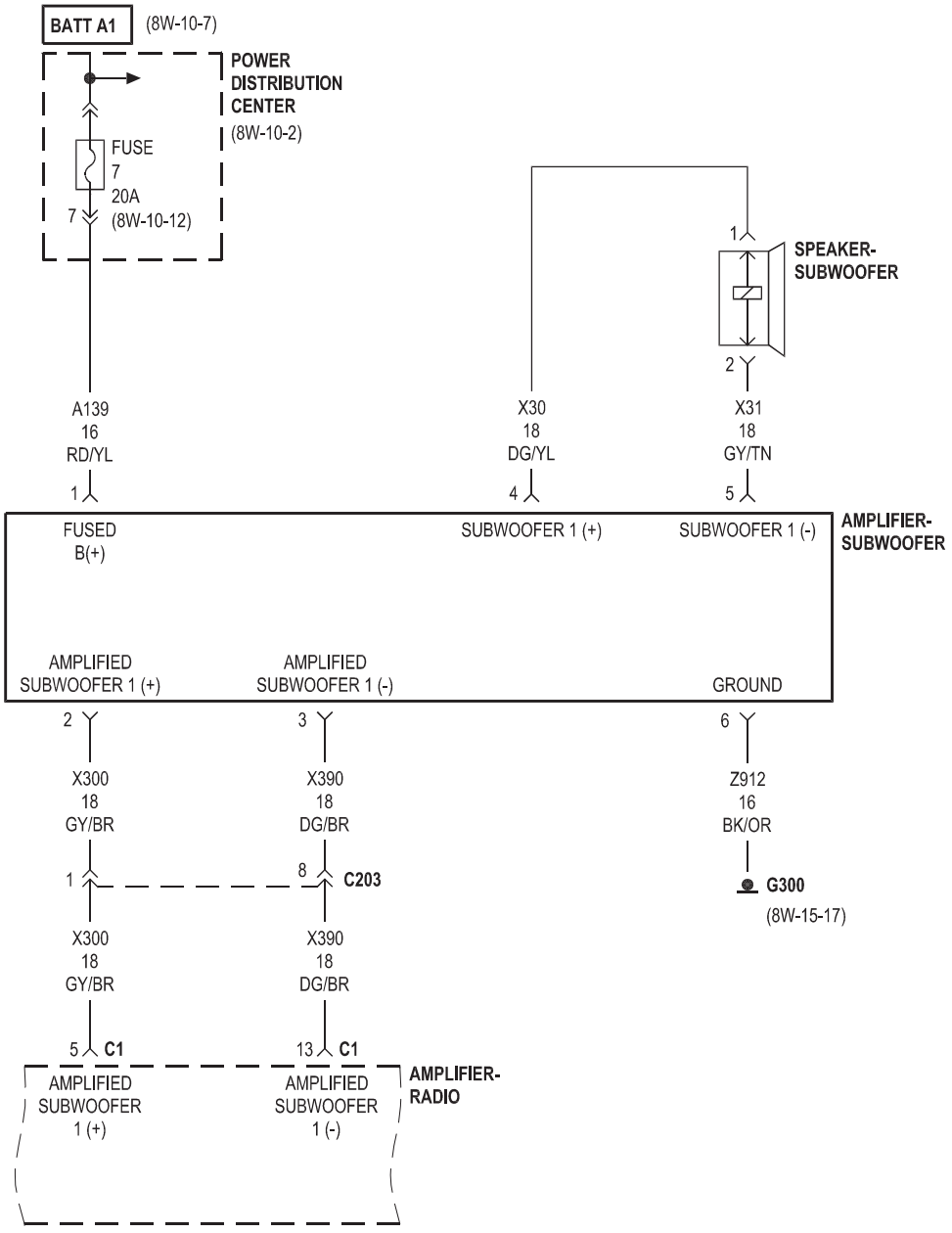
BATT A1
(8W-10-7)
POWER DISTRIBUTION CENTER
(8W-10-2)
FUSE 7 20A
7
(8W-10-12)
1
SPEAKER-SUBWOOFER
2
A139 16 RD/YL
1
X30 18 DG/YL
4
X31 18 GY/TN
5
FUSED B(+)
SUBWOOFER 1 (+)
SUBWOOFER 1 (-)
AMPLIFIER-SUBWOOFER
AMPLIFIED SUBWOOFER 1 (+)
AMPLIFIED SUBWOOFER 1 (-)
GROUND
2
3
6
X300 18 GY/BR
X390 18 DG/BR
Z912 16 BK/OR
1
8
C203
G300
(8W-15-17)
X300 18 GY/BR
X390 18 DG/BR
5 C1
13 C1
AMPLIFIED SUBWOOFER 1 (+)
AMPLIFIED SUBWOOFER 1 (-)
AMPLIFIER-RADIO

SATELLITE RADIO

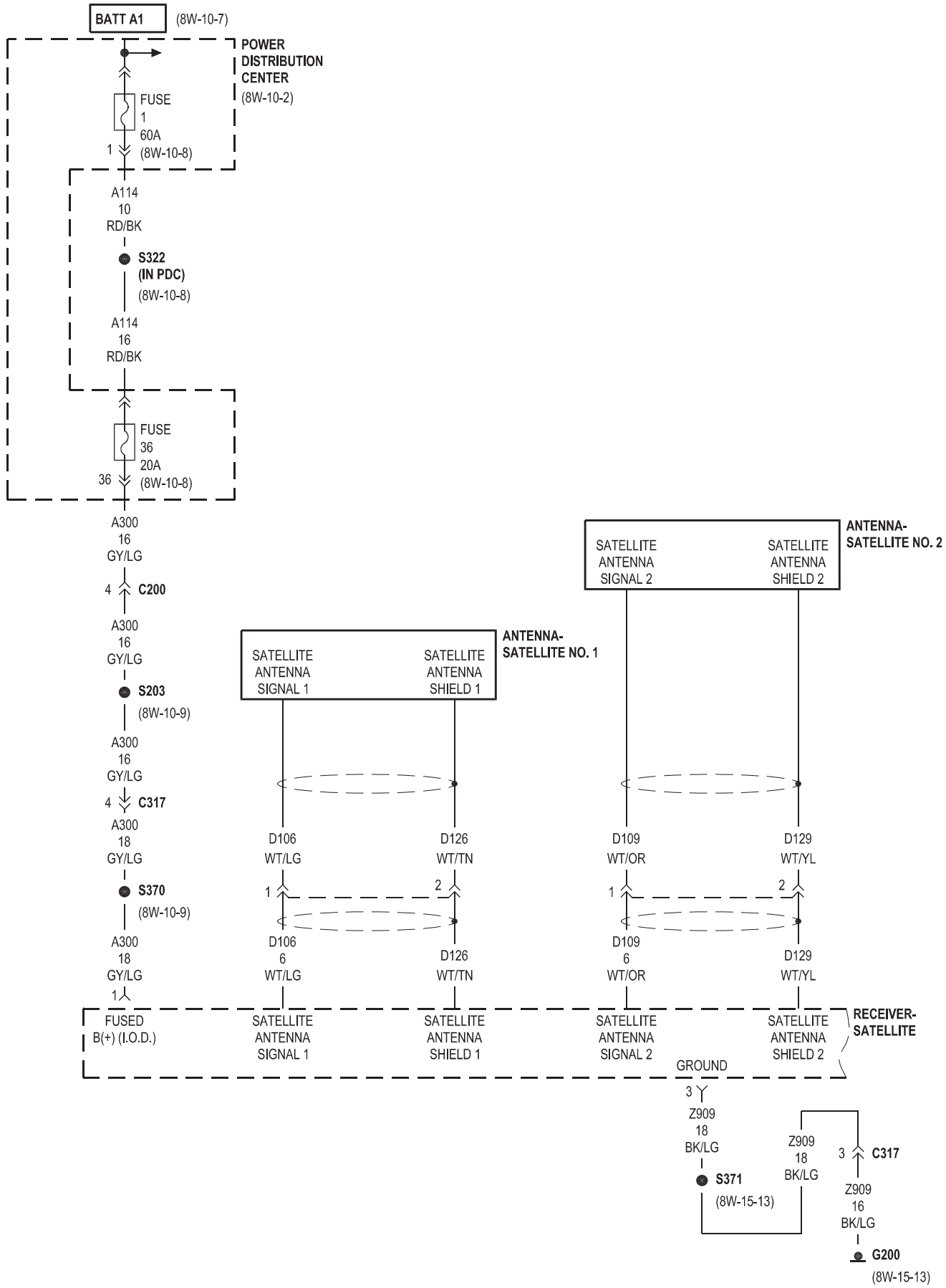

SATELLITE RADIO

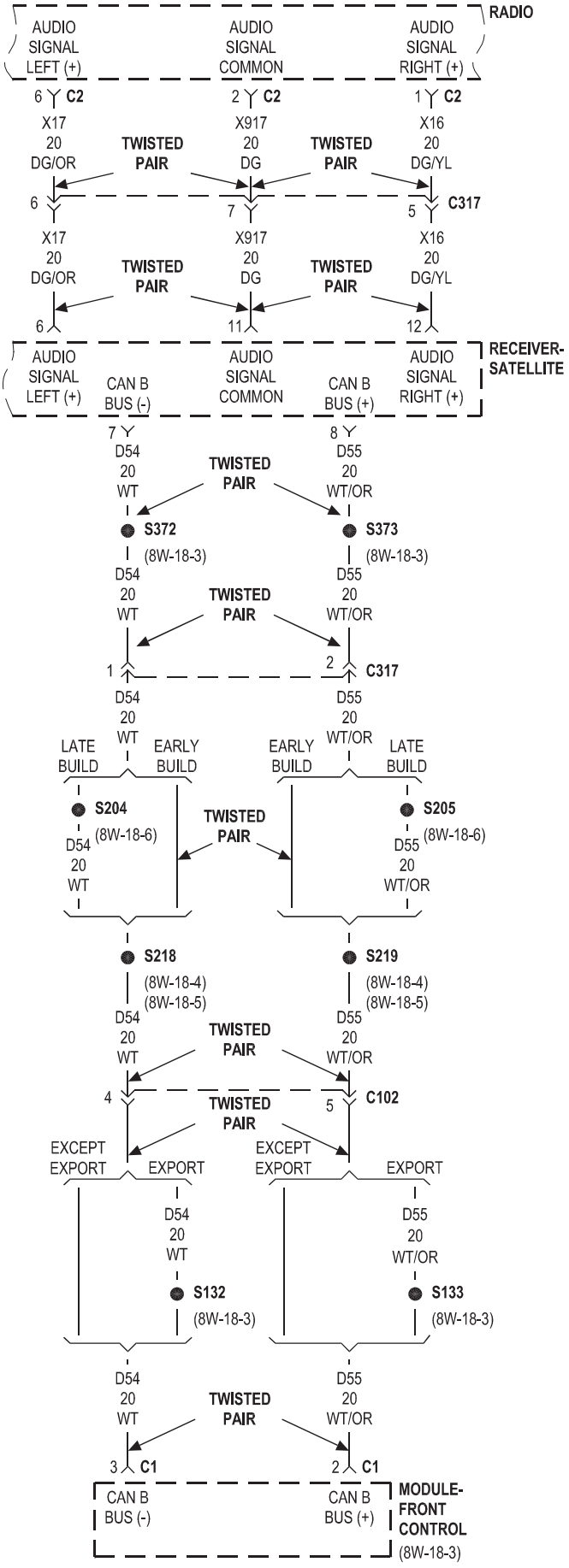

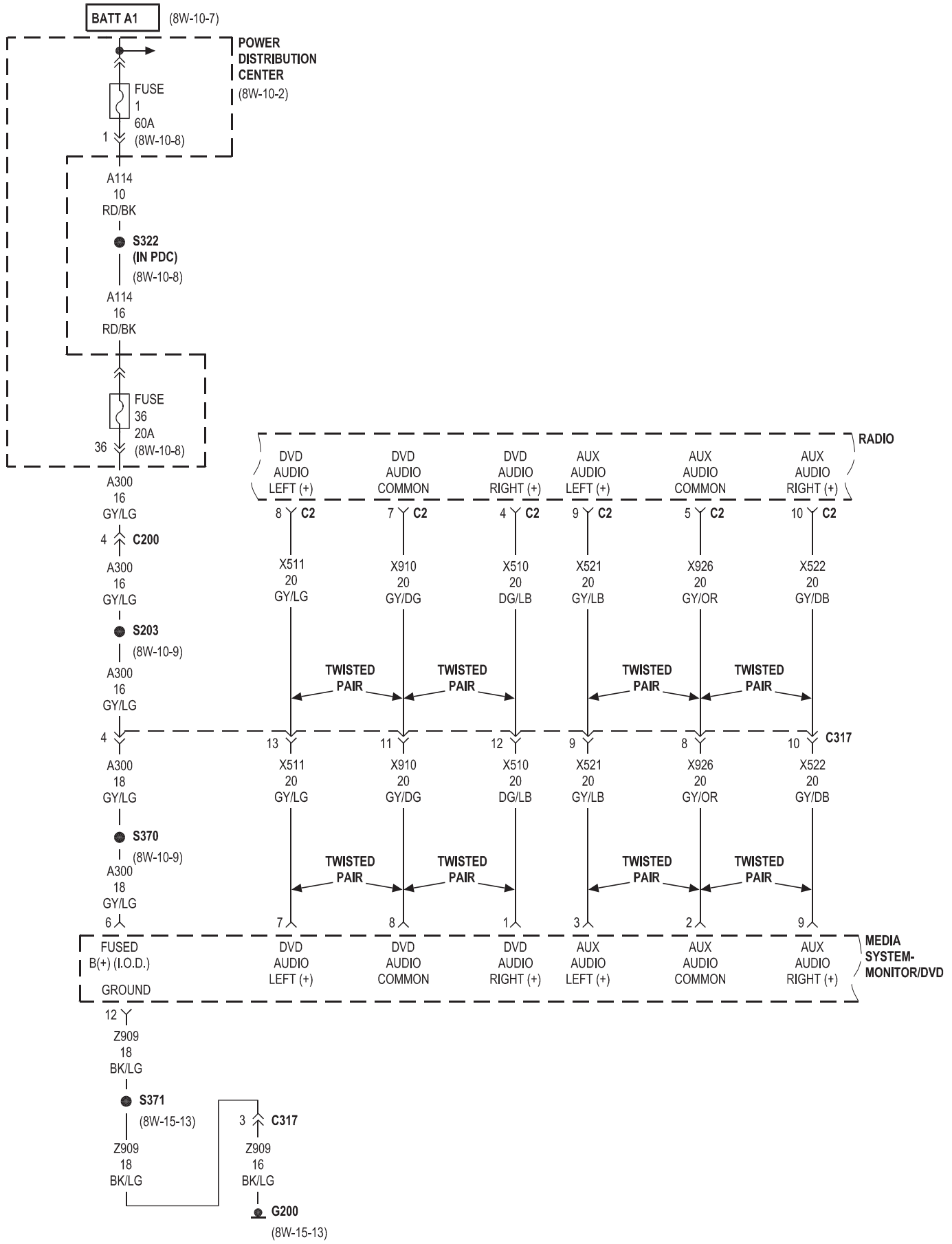
BATT A1
(8W-10-7)
POWER DISTRIBUTION CENTER
(8W-10-2)
FUSE 1 60A
1
(8W-10-8)
A114 10 RD/BK
S322 (IN PDC)
(8W-10-8)
A114 16 RD/BK
FUSE 36 20A
36
(8W-10-8)
A300 16 GY/LG
4 C200
A300 16 GY/LG
S203
(8W-10-9)
A300 16 GY/LG
4
A300 18 GY/LG
S370
(8W-10-9)
A300 18 GY/LG
6
FUSED B(+) (I.O.D.)
GROUND
12
Z909 18 BK/LG
S371
(8W-15-13)
Z909 18 BK/LG
3 C317
Z909 16 BK/LG
G200
(8W-15-13)
RADIO
DVD AUDIO LEFT (+)
DVD AUDIO COMMON
DVD AUDIO RIGHT (+)
AUX AUDIO LEFT (+)
AUX AUDIO COMMON
AUX AUDIO RIGHT (+)
8 C2
7 C2
4 C2
9 C2
5 C2
10 C2
X511 20 GY/LG
X910 20 GY/DG
X510 20 DG/LB
X521 20 GY/LB
X926 20 GY/OR
X522 20 GY/DB
TWISTED PAIR
TWISTED PAIR
TWISTED PAIR
TWISTED PAIR
13
11
12
9
8
10 C317
X511 20 GY/LG
X910 20 GY/DG
X510 20 DG/LB
X521 20 GY/LB
X926 20 GY/OR
X522 20 GY/DB
TWISTED PAIR
TWISTED PAIR
TWISTED PAIR
TWISTED PAIR
7
8
1
3
2
9
DVD AUDIO LEFT (+)
DVD AUDIO COMMON
DVD AUDIO RIGHT (+)
AUX AUDIO LEFT (+)
AUX AUDIO COMMON
AUX AUDIO RIGHT (+)
MEDIA SYSTEM- MONITOR/DVD

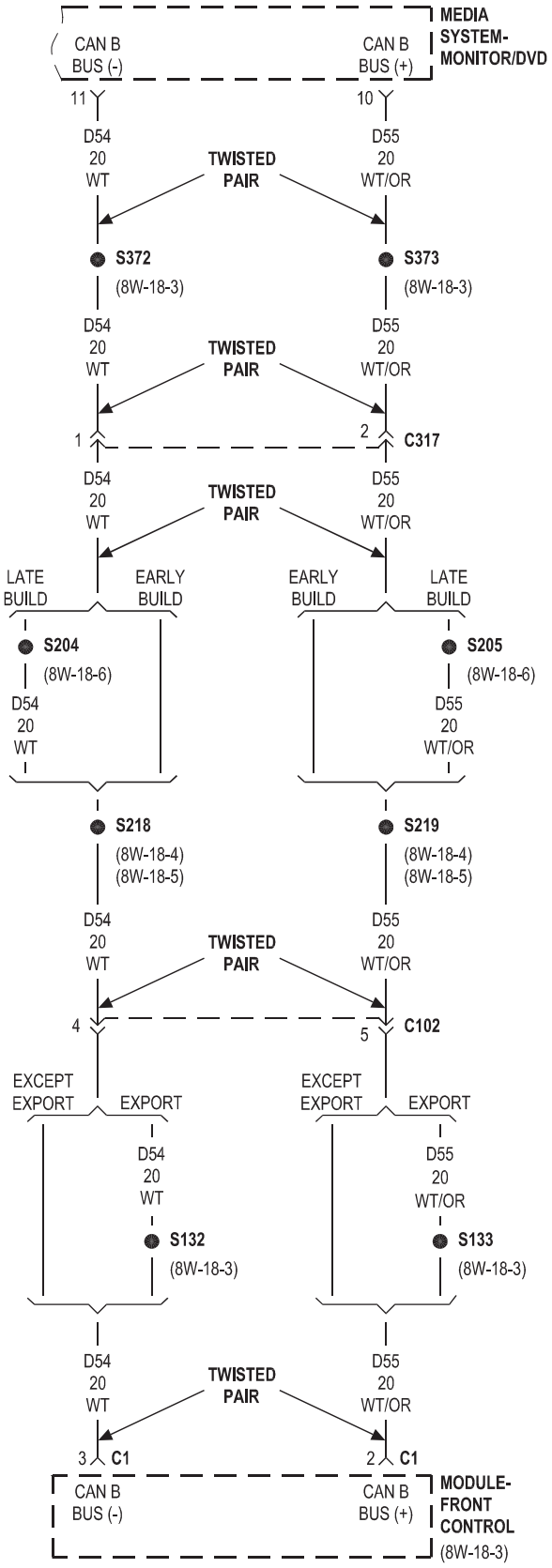
MEDIA SYSTEM-MONITOR/DVD
CAN B BUS (-)
CAN B BUS (+)
11
10
D54 20 WT
D55 20 WT/OR
TWISTED PAIR
S372
S373
(8W-18-3)
(8W-18-3)
1
2
C317
LATE BUILD
EARLY BUILD
EARLY BUILD
LATE BUILD
S204
S205
(8W-18-6)
(8W-18-6)
S218
S219
(8W-18-4)
(8W-18-5)
(8W-18-4)
(8W-18-5)
4
5
C102
EXCEPT EXPORT
EXPORT
EXCEPT EXPORT
EXPORT
S132
S133
(8W-18-3)
(8W-18-3)
3
C1
2
C1
MODULE-FRONT CONTROL
(8W-18-3)

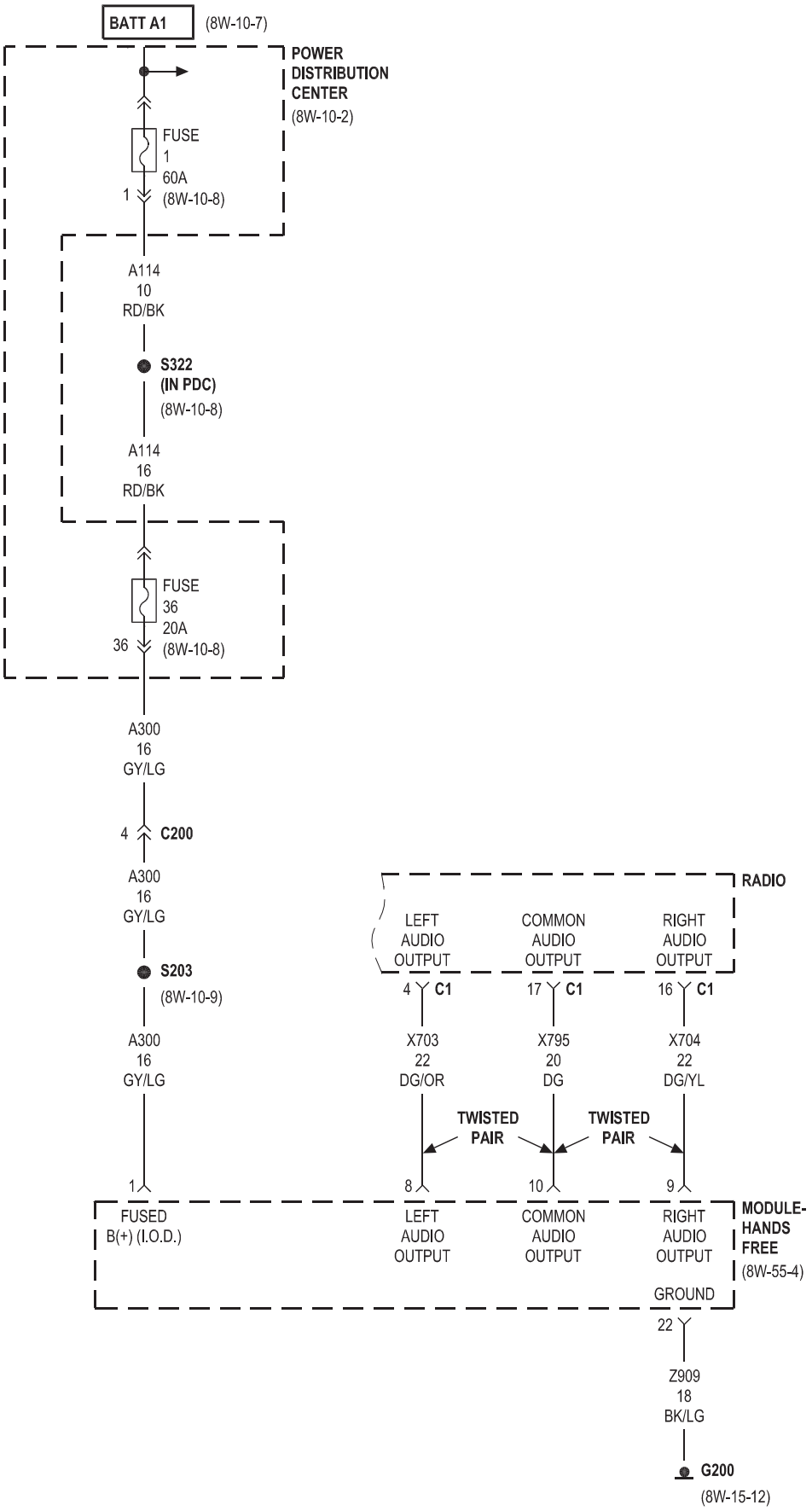
BATT A1
(8W-10-7)
POWER DISTRIBUTION CENTER
(8W-10-2)
FUSE 1 60A
1
(8W-10-8)
A114 10 RD/BK
S322 (IN PDC)
(8W-10-8)
A114 16 RD/BK
FUSE 36 20A
36
(8W-10-8)
A300 16 GY/LG
4 C200
A300 16 GY/LG
S203
(8W-10-9)
A300 16 GY/LG
1
FUSED B(+) (I.O.D.)
RADIO
LEFT AUDIO OUTPUT
COMMON AUDIO OUTPUT
RIGHT AUDIO OUTPUT
4 C1
17 C1
16 C1
X703 22 DG/OR
X795 20 DG
X704 22 DG/YL
TWISTED PAIR
TWISTED PAIR
8
10
9
LEFT AUDIO OUTPUT
COMMON AUDIO OUTPUT
RIGHT AUDIO OUTPUT
MODULE-HANDS FREE
(8W-55-4)
GROUND
22
Z909 18 BK/LG
G200
(8W-15-12)

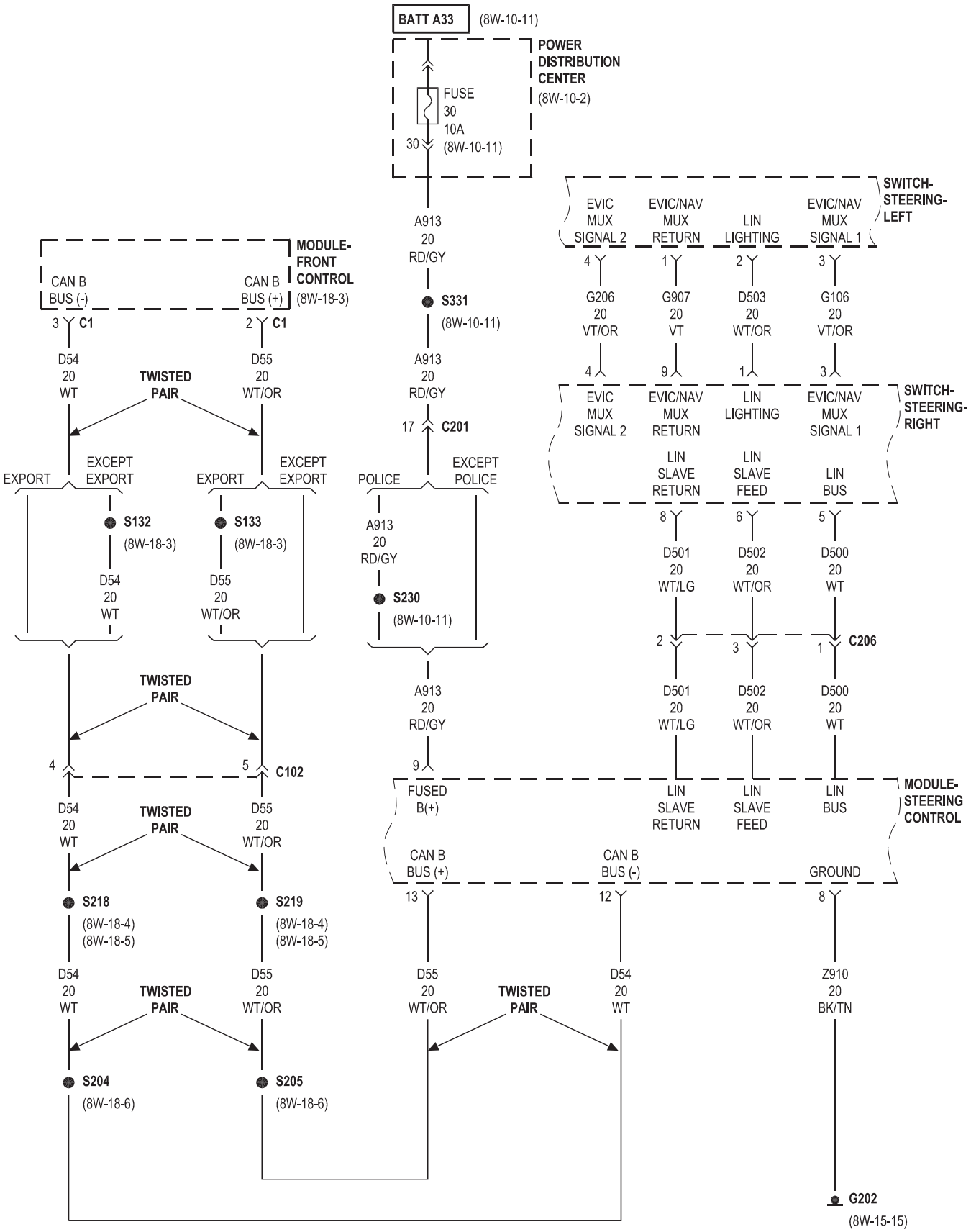
BATT A33
(8W-10-11)
POWER DISTRIBUTION CENTER
(8W-10-2)
FUSE 30 10A
30
(8W-10-11)
A913 20 RD/GY
S331
(8W-10-11)
A913 20 RD/GY
17 C201
A913 20 RD/GY
S230
(8W-10-11)
A913 20 RD/GY
9
FUSED B(+)
MODULE-FRONT CONTROL
(8W-18-3)
CAN B BUS (-)
CAN B BUS (+)
3 C1
2 C1
D54 20 WT
D55 20 WT/OR
TWISTED PAIR
EXPORT
EXCEPT EXPORT
POLICE
EXCEPT POLICE
S132
(8W-18-3)
S133
(8W-18-3)
D54 20 WT
D55 20 WT/OR
TWISTED PAIR
4
5 C102
D54 20 WT
TWISTED PAIR
D55 20 WT/OR
S218
(8W-18-4)
(8W-18-5)
S219
(8W-18-4)
(8W-18-5)
D54 20 WT
TWISTED PAIR
D55 20 WT/OR
S204
(8W-18-6)
S205
(8W-18-6)
SWITCH-STEERING-LEFT
EVIC MUX SIGNAL 2
EVIC/NAV MUX RETURN
LIN LIGHTING
EVIC/NAV MUX SIGNAL 1
4
1
2
3
G206 20 VT/OR
G907 20 VT
D503 20 WT/OR
G106 20 VT/OR
4
9
1
3
SWITCH-STEERING-RIGHT
EVIC MUX SIGNAL 2
EVIC/NAV MUX RETURN
LIN LIGHTING
EVIC/NAV MUX SIGNAL 1
LIN SLAVE RETURN
LIN SLAVE FEED
LIN BUS
8
6
5
D501 20 WT/LG
D502 20 WT/OR
D500 20 WT
2
3
1 C206
D501 20 WT/LG
D502 20 WT/OR
D500 20 WT
MODULE-STEERING CONTROL
FUSED B(+)
LIN SLAVE RETURN
LIN SLAVE FEED
LIN BUS
CAN B BUS (+)
CAN B BUS (-)
GROUND
13
12
8
D55 20 WT/OR
TWISTED PAIR
D54 20 WT
Z910 20 BK/TN
G202
(8W-15-15)

8W-48 REAR WINDOW DEFOGGER

Component	Page
Amplifier-Antenna-Backlite	8W-48-2
Backlite-Electric Heated	8W-48-2
Control-A/C-Heater	8W-48-2
Fuse 39	8W-48-2
Fuse 43	8W-48-2
G300	8W-48-2
G301	8W-48-2
G302	8W-48-2
Mirror-Outside Rearview-Driver	8W-48-2
Mirror-Outside Rearview-Passenger	8W-48-2
Power Distribution Center	8W-48-2
Relay-Rear Window Defogger	8W-48-2

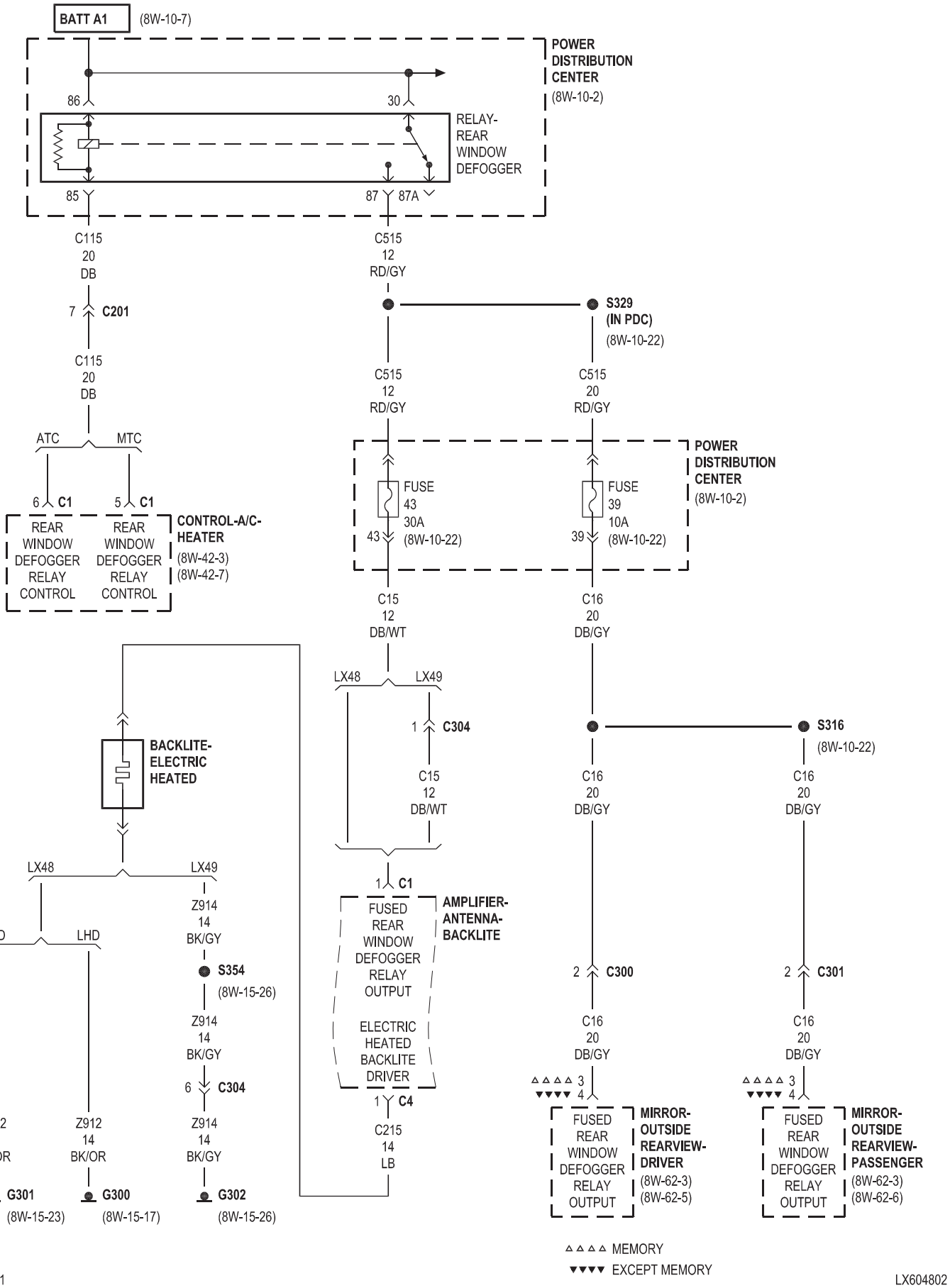
BATT A1
(8W-10-7)
POWER DISTRIBUTION CENTER
(8W-10-2)
86
30
RELAY-REAR WINDOW DEFOGGER
85
87
87A
C115
20
DB
7
C201
C115
20
DB
ATC
MTC
6
C1
5
C1
REAR WINDOW DEFOGGER RELAY CONTROL
REAR WINDOW DEFOGGER RELAY CONTROL
CONTROL-A/C-HEATER
(8W-42-3)
(8W-42-7)
C515
12
RD/GY
S329
(IN PDC)
(8W-10-22)
C515
12
RD/GY
C515
20
RD/GY
POWER DISTRIBUTION CENTER
(8W-10-2)
FUSE
43
30A
43
(8W-10-22)
FUSE
39
10A
39
(8W-10-22)
C15
12
DB/WT
C16
20
DB/GY
LX48
LX49
1
C304
C15
12
DB/WT
S316
(8W-10-22)
C16
20
DB/GY
C16
20
DB/GY
BACKLITE-ELECTRIC HEATED
LX48
LX49
RHD
LHD
Z914
14
BK/GY
S354
(8W-15-26)
Z914
14
BK/GY
6
C304
Z914
14
BK/GY
1
C1
FUSED REAR WINDOW DEFOGGER RELAY OUTPUT
ELECTRIC HEATED BACKLITE DRIVER
AMPLIFIER-ANTENNA-BACKLITE
1
C4
C215
14
LB
2
C300
C16
20
DB/GY
2
C301
C16
20
DB/GY
△△△△ 3
▼▼▼▼ 4
△△△△ 3
▼▼▼▼ 4
Z912
14
BK/OR
Z912
14
BK/OR
Z914
14
BK/GY
G301
(8W-15-23)
G300
(8W-15-17)
G302
(8W-15-26)
FUSED REAR WINDOW DEFOGGER RELAY OUTPUT
MIRROR-OUTSIDE REARVIEW-DRIVER
(8W-62-3)
(8W-62-5)
FUSED REAR WINDOW DEFOGGER RELAY OUTPUT
MIRROR-OUTSIDE REARVIEW-PASSENGER
(8W-62-3)
(8W-62-6)
△△△△ MEMORY
▼▼▼▼ EXCEPT MEMORY

8W-49 OVERHEAD CONSOLE

Component	Page
Cluster	8W-49-2, 5
Fuse 17	8W-49-2
Fuse 35	8W-49-4
Fuse 38	8W-49-4
Fuse 40	8W-49-3
G200	8W-49-2, 3, 4
G202	8W-49-2
Lamp-Reading-Front	8W-49-2
Mirror-Inside Rearview	8W-49-3
Mirror-Outside Rearview-Driver	8W-49-3
Module-Electronic Overhead	8W-49-4, 5
Module-Front Control	8W-49-3, 5
Module-Integrated Power	8W-49-3
Motor/Module-Sunroof	8W-49-6
Power Distribution Center	8W-49-2, 3, 4
Switch-Sunroof	8W-49-6

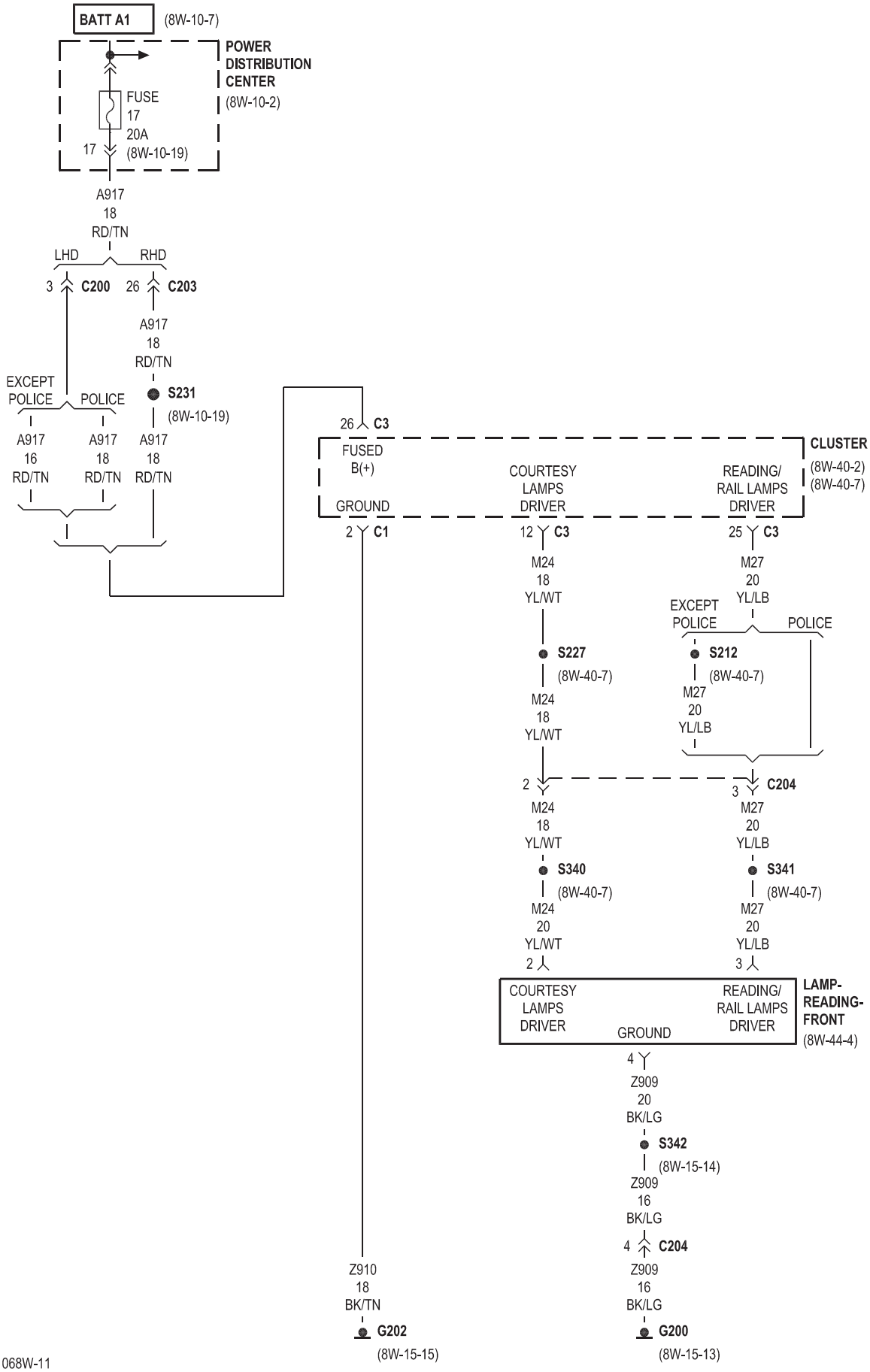
BATT A1
(8W-10-7)
POWER DISTRIBUTION CENTER
(8W-10-2)
FUSE 17 20A
17
(8W-10-19)
A917 18 RD/TN
LHD
RHD
3 C200
26 C203
A917 18 RD/TN
S231
(8W-10-19)
EXCEPT POLICE
POLICE
A917 16 RD/TN
A917 18 RD/TN
A917 18 RD/TN
26 C3
FUSED B(+)
GROUND
2 C1
CLUSTER
(8W-40-2)
(8W-40-7)
COURTESY LAMPS DRIVER
READING/ RAIL LAMPS DRIVER
12 C3
25 C3
M24 18 YL/WT
M27 20 YL/LB
EXCEPT POLICE
POLICE
S227
(8W-40-7)
S212
(8W-40-7)
M24 18 YL/WT
M27 20 YL/LB
2
3 C204
M24 18 YL/WT
M27 20 YL/LB
S340
(8W-40-7)
S341
(8W-40-7)
M24 20 YL/WT
M27 20 YL/LB
2
3
COURTESY LAMPS DRIVER
READING/ RAIL LAMPS DRIVER
GROUND
LAMP-READING-FRONT
(8W-44-4)
4
Z909 20 BK/LG
S342
(8W-15-14)
Z909 16 BK/LG
4 C204
Z909 16 BK/LG
Z910 18 BK/TN
G202
(8W-15-15)
G200
(8W-15-13)

EXCEPT BASE

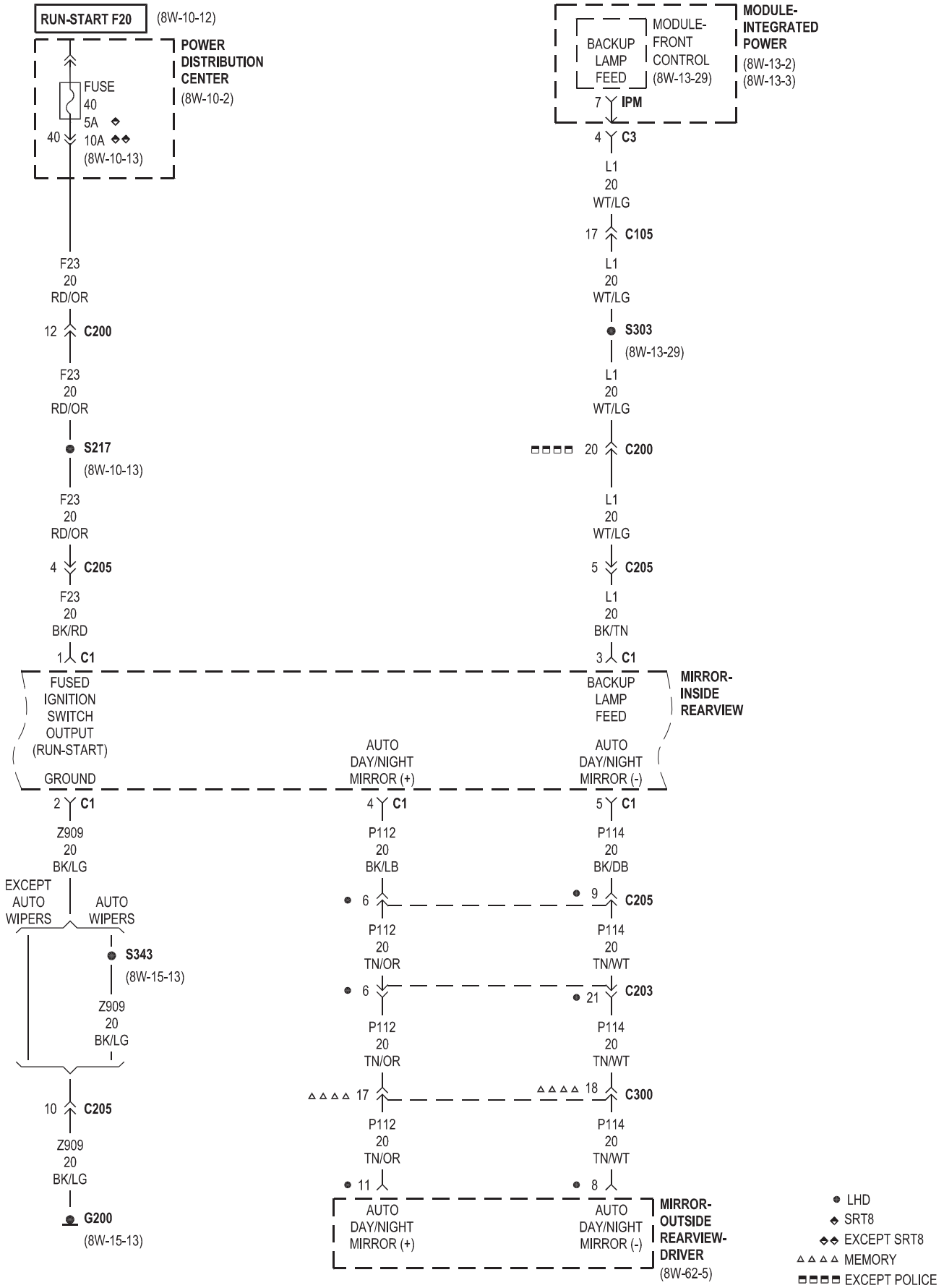
RUN-START F20
(8W-10-12)
POWER DISTRIBUTION CENTER
(8W-10-2)
FUSE 40 5A ◆ 10A ◆◆
40
(8W-10-13)
MODULE-INTEGRATED POWER
(8W-13-2)
(8W-13-3)
MODULE-FRONT CONTROL
(8W-13-29)
BACKUP LAMP FEED
7 IPM
4 C3
L1 20 WT/LG
17 C105
L1 20 WT/LG
S303
(8W-13-29)
L1 20 WT/LG
20 C200
L1 20 WT/LG
5 C205
L1 20 BK/TN
3 C1
BACKUP LAMP FEED
MIRROR-INSIDE REARVIEW
AUTO DAY/NIGHT MIRROR (-)
5 C1
P114 20 BK/DB
9 C205
P114 20 TN/WT
21 C203
P114 20 TN/WT
18 C300
P114 20 TN/WT
8
AUTO DAY/NIGHT MIRROR (-)
F23 20 RD/OR
12 C200
F23 20 RD/OR
S217
(8W-10-13)
F23 20 RD/OR
4 C205
F23 20 BK/RD
1 C1
FUSED IGNITION SWITCH OUTPUT (RUN-START)
GROUND
2 C1
Z909 20 BK/LG
EXCEPT AUTO WIPERS
AUTO WIPERS
S343
(8W-15-13)
Z909 20 BK/LG
10 C205
Z909 20 BK/LG
G200
(8W-15-13)
AUTO DAY/NIGHT MIRROR (+)
4 C1
P112 20 BK/LB
6 C205
P112 20 TN/OR
6 C203
P112 20 TN/OR
17 C300
P112 20 TN/OR
11
AUTO DAY/NIGHT MIRROR (+)
MIRROR-OUTSIDE REARVIEW-DRIVER
(8W-62-5)
● LHD
◆ SRT8
◆◆ EXCEPT SRT8
△△△△ MEMORY
▭▭▭▭ EXCEPT POLICE

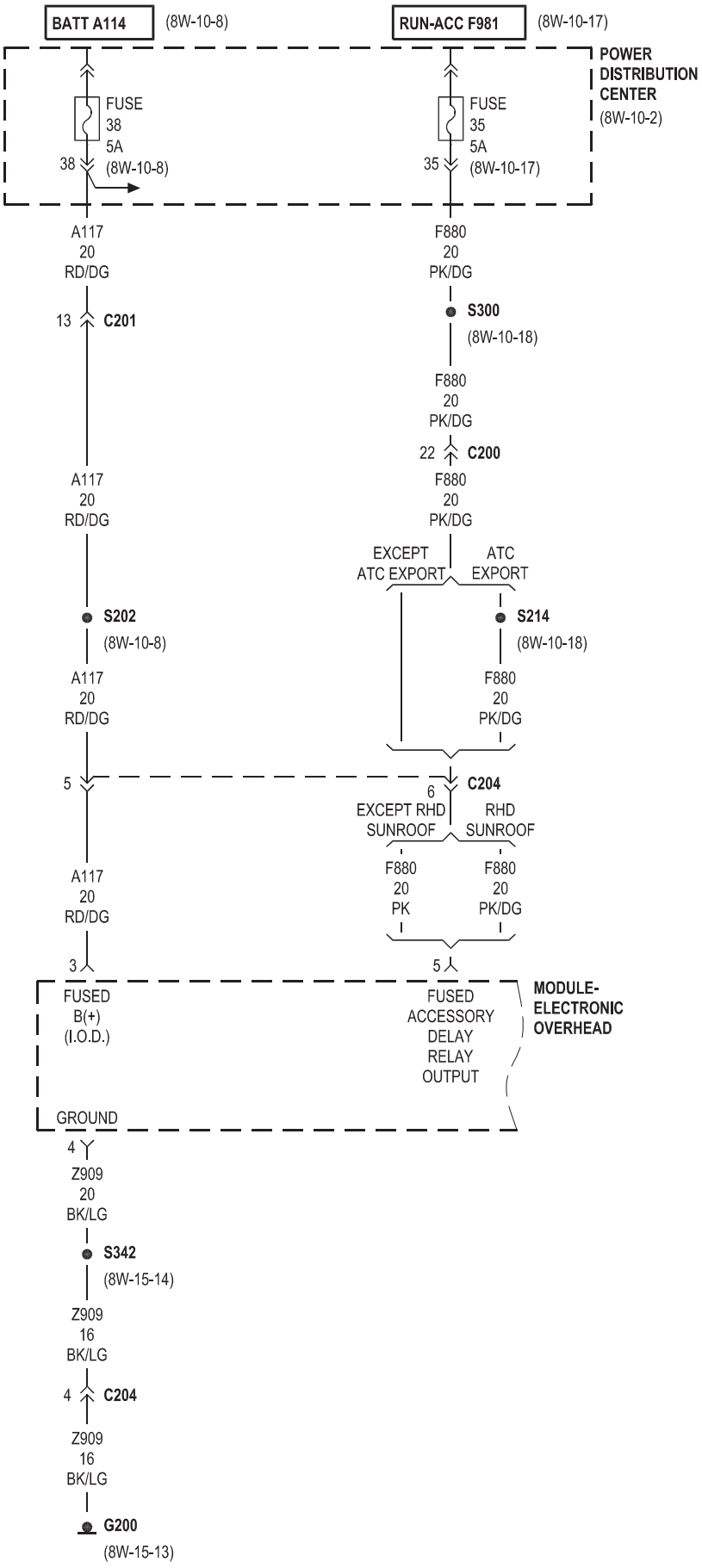
BATT A114
(8W-10-8)
RUN-ACC F981
(8W-10-17)
POWER DISTRIBUTION CENTER
(8W-10-2)
FUSE 38 5A
38
(8W-10-8)
FUSE 35 5A
35
(8W-10-17)
A117 20 RD/DG
13 C201
F880 20 PK/DG
S300
(8W-10-18)
F880 20 PK/DG
22 C200
A117 20 RD/DG
F880 20 PK/DG
EXCEPT ATC EXPORT
ATC EXPORT
S202
(8W-10-8)
S214
(8W-10-18)
A117 20 RD/DG
F880 20 PK/DG
5
6 C204
EXCEPT RHD SUNROOF
RHD SUNROOF
A117 20 RD/DG
F880 20 PK
F880 20 PK/DG
3
5
FUSED B(+) (I.O.D.)
FUSED ACCESSORY DELAY RELAY OUTPUT
MODULE-ELECTRONIC OVERHEAD
GROUND
4
Z909 20 BK/LG
S342
(8W-15-14)
Z909 16 BK/LG
4 C204
Z909 16 BK/LG
G200
(8W-15-13)

EVIC/SUNROOF

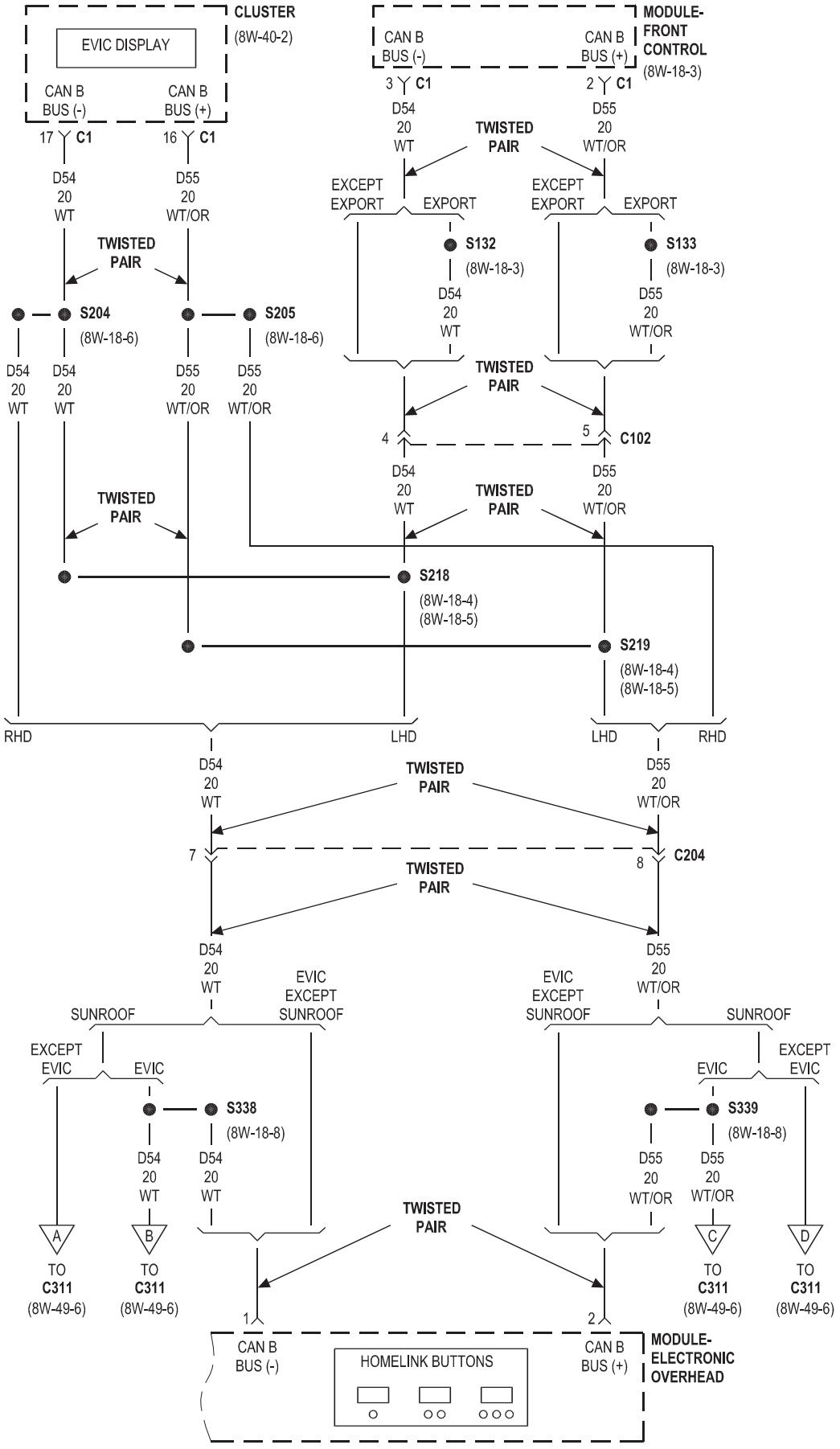

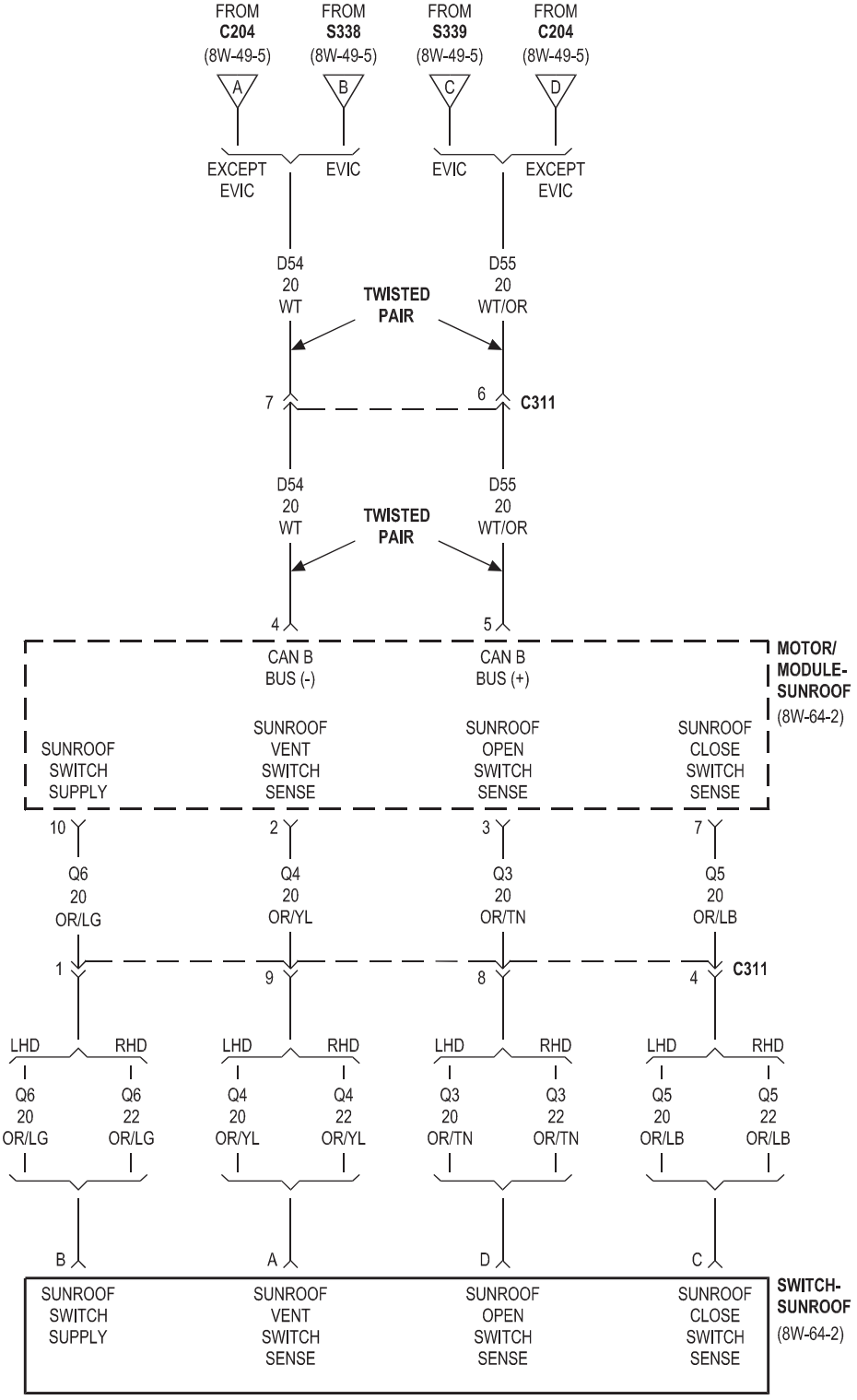
FROM C204 (8W-49-5)
FROM S338 (8W-49-5)
FROM S339 (8W-49-5)
FROM C204 (8W-49-5)
A
B
C
D
EXCEPT EVIC
EVIC
EVIC
EXCEPT EVIC
D54 20 WT
TWISTED PAIR
D55 20 WT/OR
7
6
C311
D54 20 WT
TWISTED PAIR
D55 20 WT/OR
4
5
CAN B BUS (-)
CAN B BUS (+)
MOTOR/ MODULE-SUNROOF (8W-64-2)
SUNROOF SWITCH SUPPLY
SUNROOF VENT SWITCH SENSE
SUNROOF OPEN SWITCH SENSE
SUNROOF CLOSE SWITCH SENSE
10
2
3
7
Q6 20 OR/LG
Q4 20 OR/YL
Q3 20 OR/TN
Q5 20 OR/LB
1
9
8
4
C311
LHD
RHD
Q6 20 OR/LG
Q6 22 OR/LG
Q4 20 OR/YL
Q4 22 OR/YL
Q3 20 OR/TN
Q3 22 OR/TN
Q5 20 OR/LB
Q5 22 OR/LB
B
A
D
C
SUNROOF SWITCH SUPPLY
SUNROOF VENT SWITCH SENSE
SUNROOF OPEN SWITCH SENSE
SUNROOF CLOSE SWITCH SENSE
SWITCH-SUNROOF (8W-64-2)

8W-50 FRONT LIGHTING

Component	Page
Cluster	8W-50-2, 3
Flasher-Headlamp	8W-50-10, 11
Fuse 1	8W-50-6
Fuse 2	8W-50-6
Fuse 7	8W-50-9
Fuse 8	8W-50-4
Fuse 23	8W-50-6
Fuse 35	8W-50-10
Fuse 41	8W-50-7
G100	8W-50-4, 5, 6, 9, 10
G101	8W-50-4, 5, 6, 7, 8, 9, 10
G102	8W-50-5, 6
G202	8W-50-3
G302	8W-50-8
Lamp-Fog-Left Front	8W-50-9
Lamp-Fog-Right Front	8W-50-9
Lamp-High Beam-Left	8W-50-5, 10
Lamp-High Beam-Right	8W-50-5, 10
Lamp-High Intensity Discharge-Left	8W-50-6, 7
Lamp-High Intensity Discharge-Right	8W-50-6, 7
Lamp-Low Beam-Left	8W-50-6
Lamp-Low Beam-Right	8W-50-6
Lamp-Park/Turn-Left Front	8W-50-4, 5
Lamp-Park/Turn-Right Front	8W-50-4, 5
Lamp-Side Marker-Left Front	8W-50-4
Lamp-Side Marker-Right Front	8W-50-4
Lamp-Side Repeater-Left	8W-50-5
Lamp-Side Repeater-Right	8W-50-5
Module-Front Control	8W-50-2, 4, 5, 6, 9, 10
Module-Headlamp Leveling	8W-50-2, 7
Module-Integrated Power	8W-50-4, 6, 9
Module-Steering Control	8W-50-2
Power Distribution Center	8W-50-7, 10
Relay-Accessory Delay	8W-50-10
Relay-Fog Lamp-Front	8W-50-9
Relay-High Intensity Discharge Lamp	8W-50-6
Relay-Park Lamp	8W-50-4
Sensor-Headlamp Level-Left	8W-50-7, 8
Sensor-Headlamp Level-Right	8W-50-7, 8
Switch-Headlamp	8W-50-3

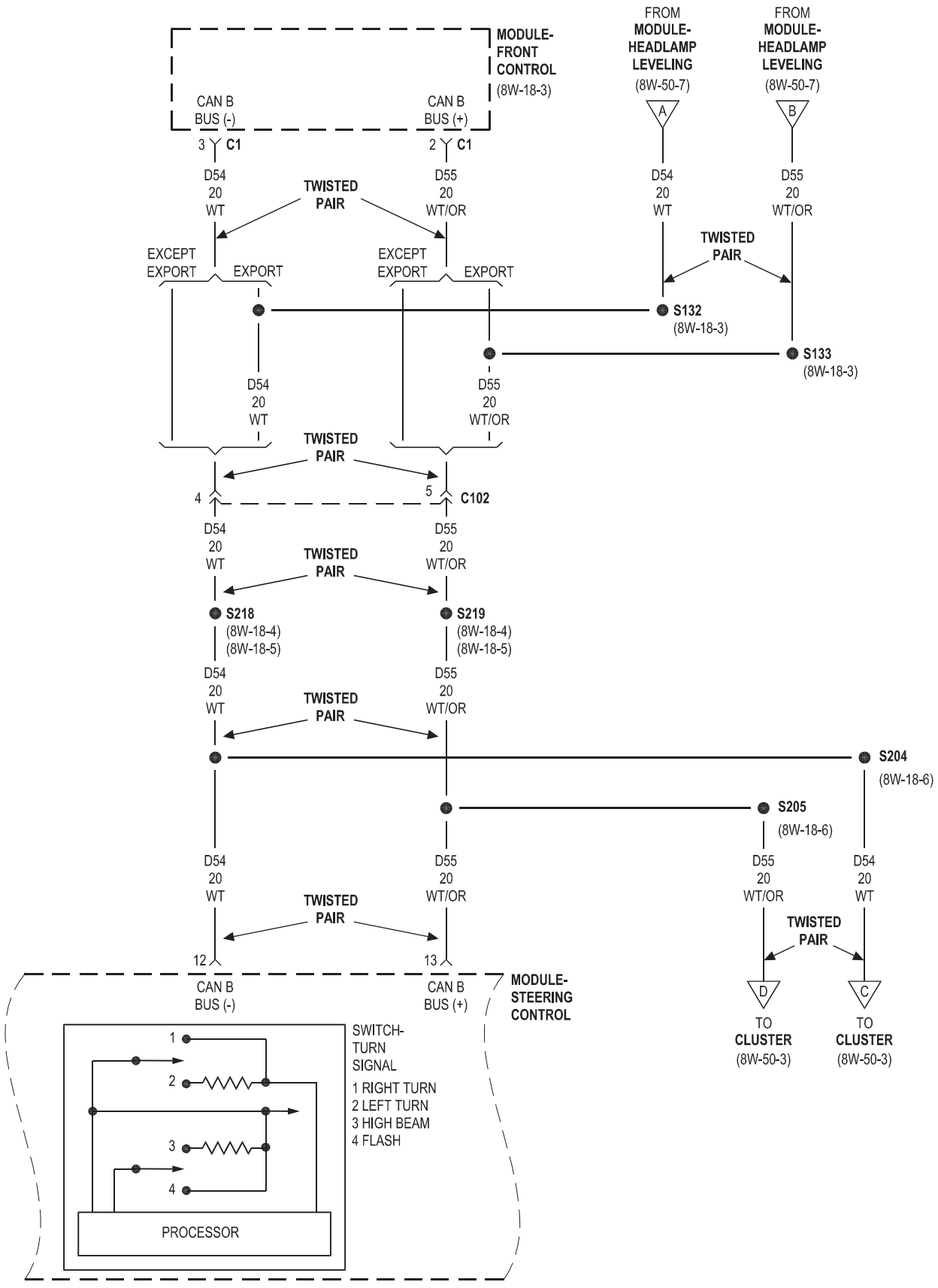
MODULE-
FRONT
CONTROL
(8W-18-3)
CAN B
BUS (-)
CAN B
BUS (+)
3 C1
2 C1
D54
20
WT
D55
20
WT/OR
TWISTED
PAIR
EXCEPT
EXPORT
EXPORT
EXCEPT
EXPORT
EXPORT
FROM
MODULE-
HEADLAMP
LEVELING
(8W-50-7)
A
B
S132
(8W-18-3)
S133
(8W-18-3)
4
5
C102
S218
(8W-18-4)
(8W-18-5)
S219
(8W-18-4)
(8W-18-5)
S204
(8W-18-6)
S205
(8W-18-6)
12
13
MODULE-
STEERING
CONTROL
SWITCH-
TURN
SIGNAL
1 RIGHT TURN
2 LEFT TURN
3 HIGH BEAM
4 FLASH
PROCESSOR
D
C
TO
CLUSTER
(8W-50-3)

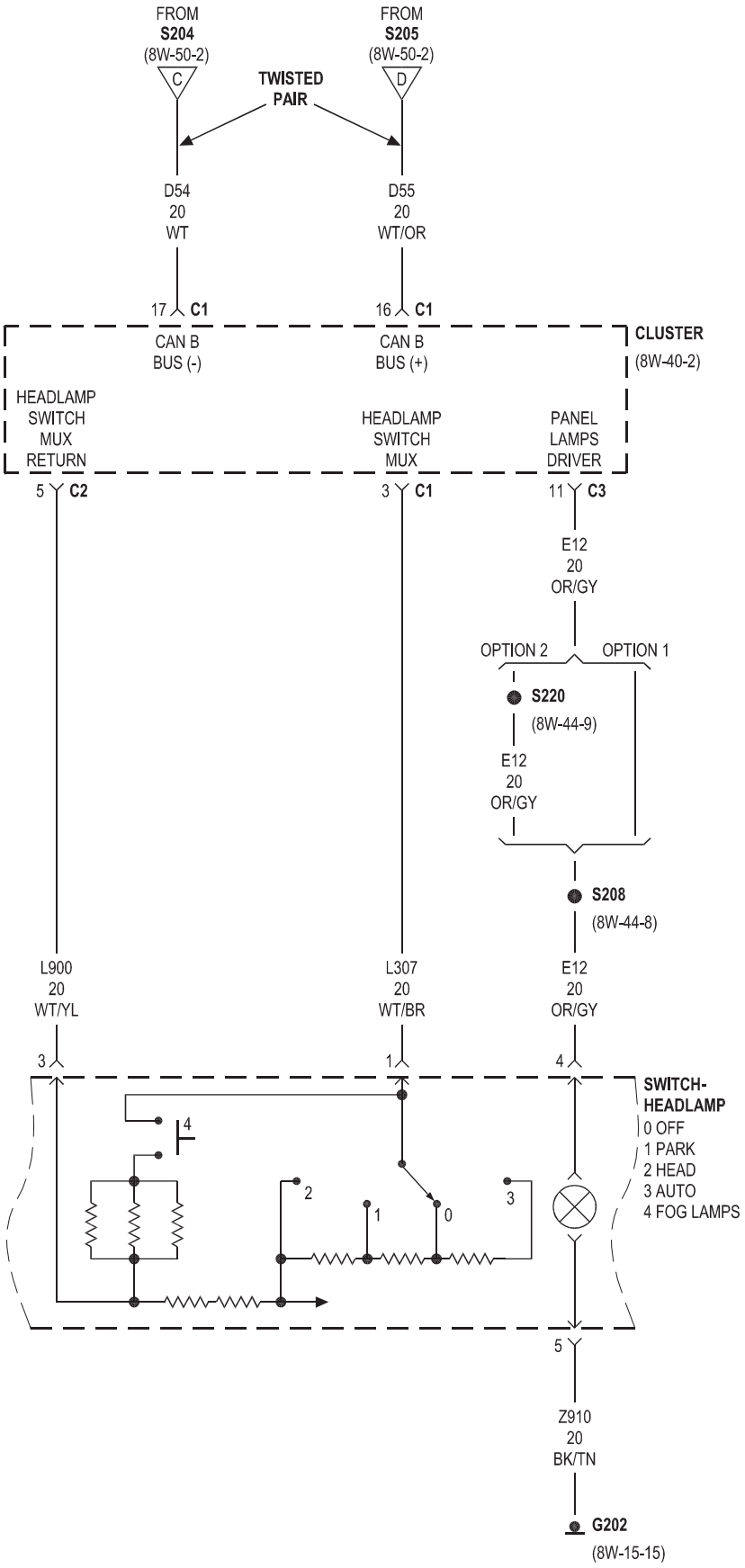
FROM
S204
(8W-50-2)
C
TWISTED
PAIR
FROM
S205
(8W-50-2)
D
D54
20
WT
D55
20
WT/OR
17 C1
16 C1
CAN B
BUS (-)
CAN B
BUS (+)
CLUSTER
(8W-40-2)
HEADLAMP
SWITCH
MUX
RETURN
HEADLAMP
SWITCH
MUX
PANEL
LAMPS
DRIVER
5 C2
3 C1
11 C3
E12
20
OR/GY
OPTION 2
OPTION 1
S220
(8W-44-9)
E12
20
OR/GY
S208
(8W-44-8)
L900
20
WT/YL
L307
20
WT/BR
E12
20
OR/GY
3
1
4
SWITCH-
HEADLAMP
0 OFF
1 PARK
2 HEAD
3 AUTO
4 FOG LAMPS
4
2
1
0
3
5
Z910
20
BK/TN
G202
(8W-15-15)

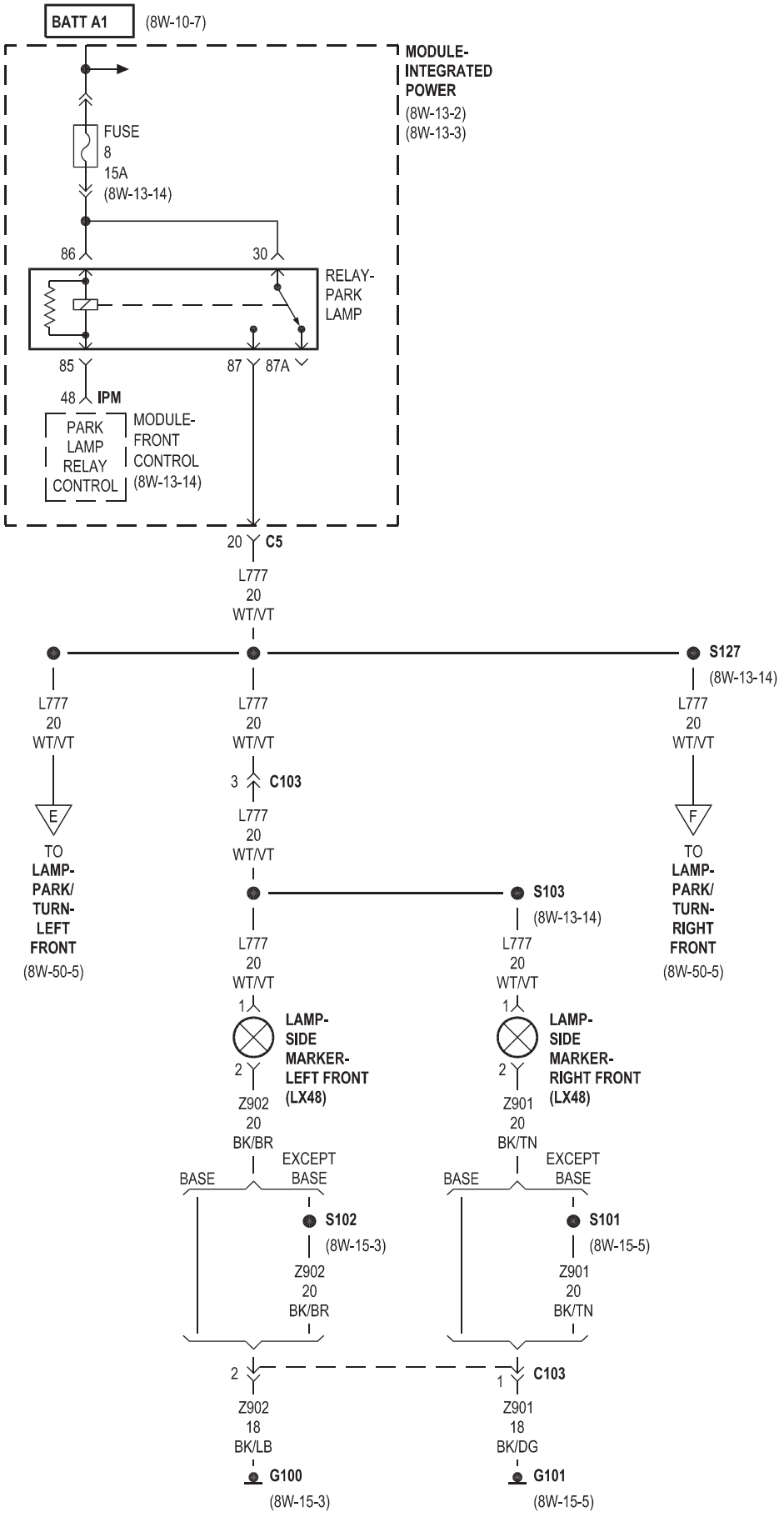
BATT A1
(8W-10-7)
MODULE-
INTEGRATED
POWER
(8W-13-2)
(8W-13-3)
FUSE
8
15A
(8W-13-14)
86
30
RELAY-
PARK
LAMP
85
87
87A
48
IPM
PARK
LAMP
RELAY
CONTROL
MODULE-
FRONT
CONTROL
(8W-13-14)
20
C5
L777
20
WT/VT
S127
(8W-13-14)
L777
20
WT/VT
3
C103
E
TO
LAMP-
PARK/
TURN-
LEFT
FRONT
(8W-50-5)
F
TO
LAMP-
PARK/
TURN-
RIGHT
FRONT
(8W-50-5)
S103
(8W-13-14)
1
2
LAMP-
SIDE
MARKER-
LEFT FRONT
(LX48)
LAMP-
SIDE
MARKER-
RIGHT FRONT
(LX48)
Z902
20
BK/BR
Z901
20
BK/TN
BASE
EXCEPT
BASE
S102
(8W-15-3)
S101
(8W-15-5)
Z902
18
BK/LB
Z901
18
BK/DG
G100
(8W-15-3)
G101
(8W-15-5)

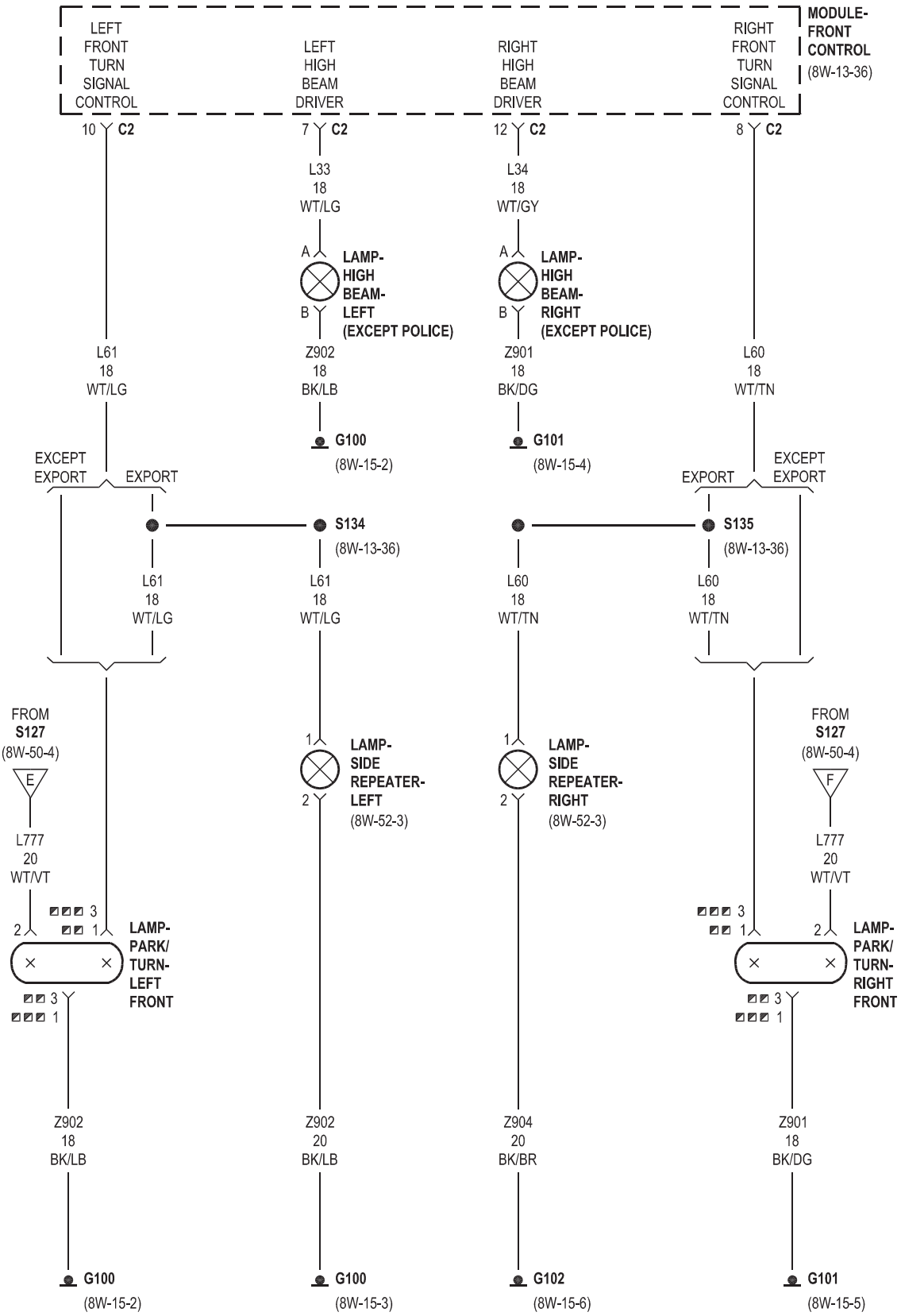

◩◩ LX49 EXCEPT EXPORT
◩◩◩ LX49 EXPORT/LX48

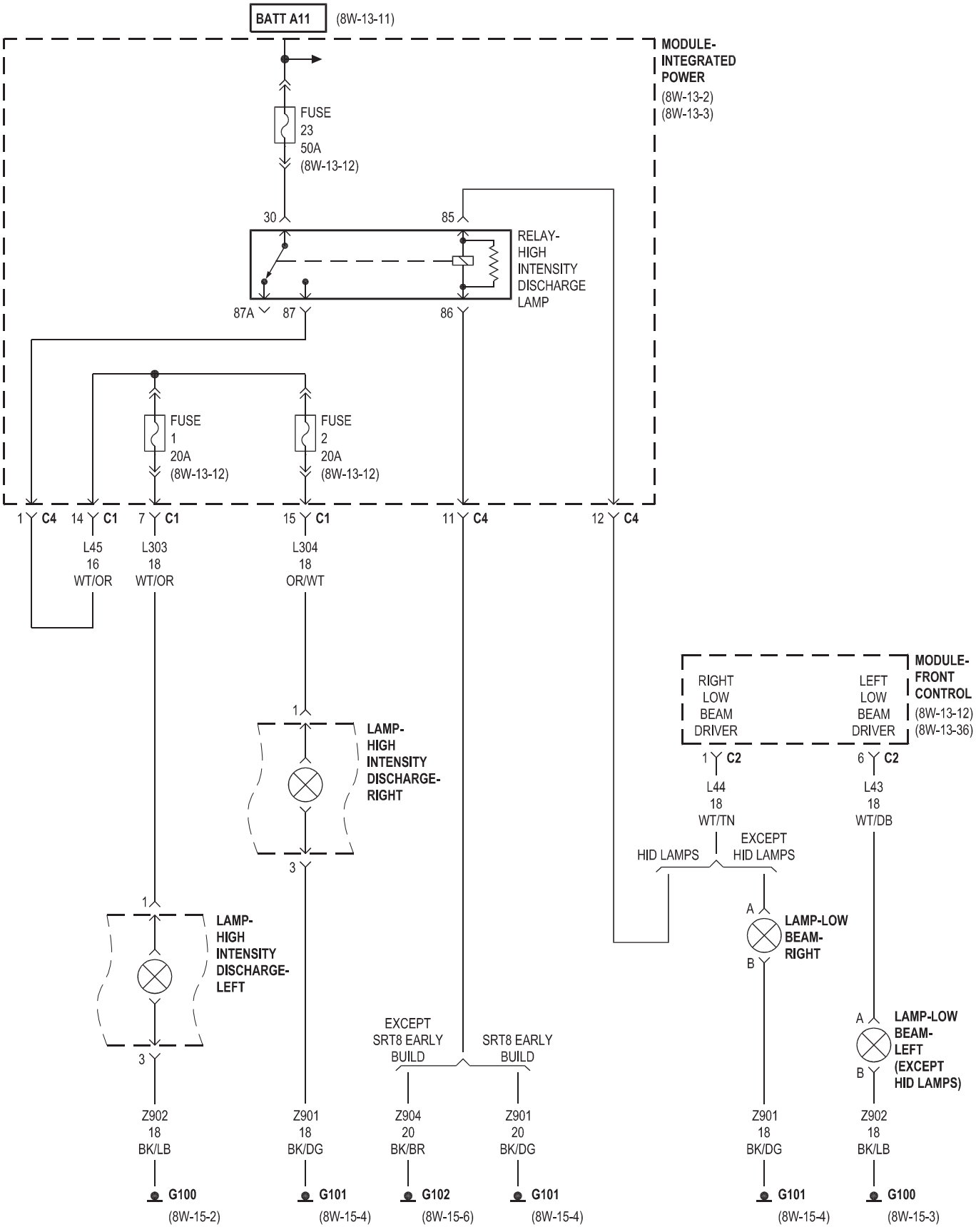
BATT A11
(8W-13-11)
MODULE-
INTEGRATED
POWER
(8W-13-2)
(8W-13-3)
FUSE
23
50A
(8W-13-12)
30
85
RELAY-
HIGH
INTENSITY
DISCHARGE
LAMP
87A
87
86
FUSE
1
20A
(8W-13-12)
FUSE
2
20A
(8W-13-12)
1 C4
14 C1
7 C1
15 C1
11 C4
12 C4
L45
16
WT/OR
L303
18
WT/OR
L304
18
OR/WT
MODULE-
FRONT
CONTROL
(8W-13-12)
(8W-13-36)
RIGHT
LOW
BEAM
DRIVER
LEFT
LOW
BEAM
DRIVER
1 C2
6 C2
L44
18
WT/TN
L43
18
WT/DB
EXCEPT
HID LAMPS
HID LAMPS
LAMP-
HIGH
INTENSITY
DISCHARGE-
RIGHT
LAMP-
HIGH
INTENSITY
DISCHARGE-
LEFT
LAMP-LOW
BEAM-
RIGHT
LAMP-LOW
BEAM-
LEFT
(EXCEPT
HID LAMPS)
EXCEPT
SRT8 EARLY
BUILD
SRT8 EARLY
BUILD
Z902
18
BK/LB
Z901
18
BK/DG
Z904
20
BK/BR
Z901
20
BK/DG
Z901
18
BK/DG
Z902
18
BK/LB
G100
(8W-15-2)
G101
(8W-15-4)
G102
(8W-15-6)
G101
(8W-15-4)
G101
(8W-15-4)
G100
(8W-15-3)

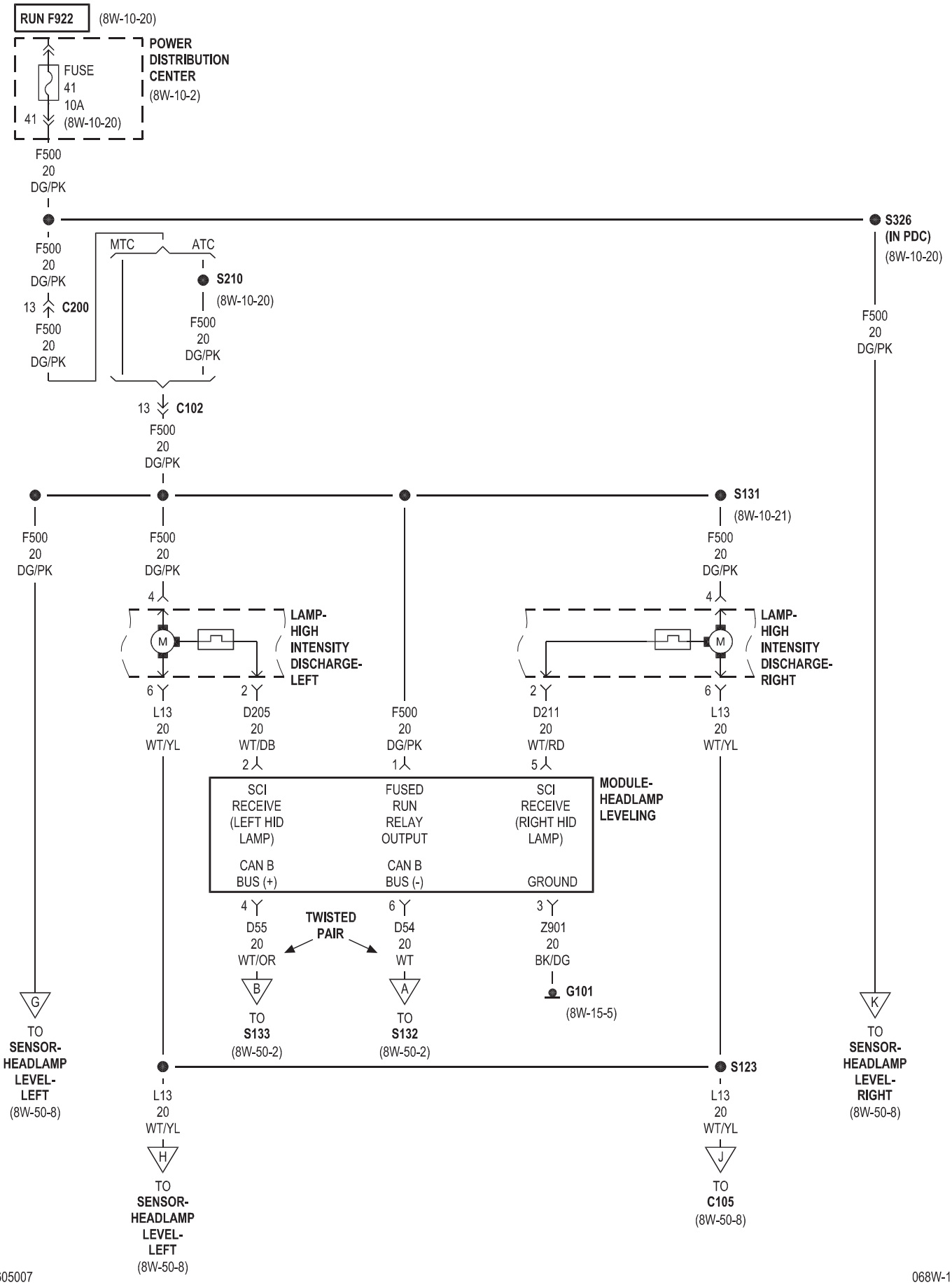
RUN F922
(8W-10-20)
POWER DISTRIBUTION CENTER
(8W-10-2)
FUSE 41 10A
41
(8W-10-20)
F500 20 DG/PK
S326 (IN PDC)
(8W-10-20)
MTC
ATC
S210
(8W-10-20)
13 C200
13 C102
S131
(8W-10-21)
LAMP- HIGH INTENSITY DISCHARGE- LEFT
LAMP- HIGH INTENSITY DISCHARGE- RIGHT
L13 20 WT/YL
D205 20 WT/DB
D211 20 WT/RD
MODULE- HEADLAMP LEVELING
SCI RECEIVE (LEFT HID LAMP)
FUSED RUN RELAY OUTPUT
SCI RECEIVE (RIGHT HID LAMP)
CAN B BUS (+)
CAN B BUS (-)
GROUND
TWISTED PAIR
D55 20 WT/OR
D54 20 WT
Z901 20 BK/DG
G101
(8W-15-5)
TO S133
(8W-50-2)
TO S132
(8W-50-2)
TO SENSOR- HEADLAMP LEVEL- LEFT
(8W-50-8)
TO SENSOR- HEADLAMP LEVEL- RIGHT
(8W-50-8)
S123
TO C105
(8W-50-8)
TO SENSOR- HEADLAMP LEVEL- LEFT
(8W-50-8)

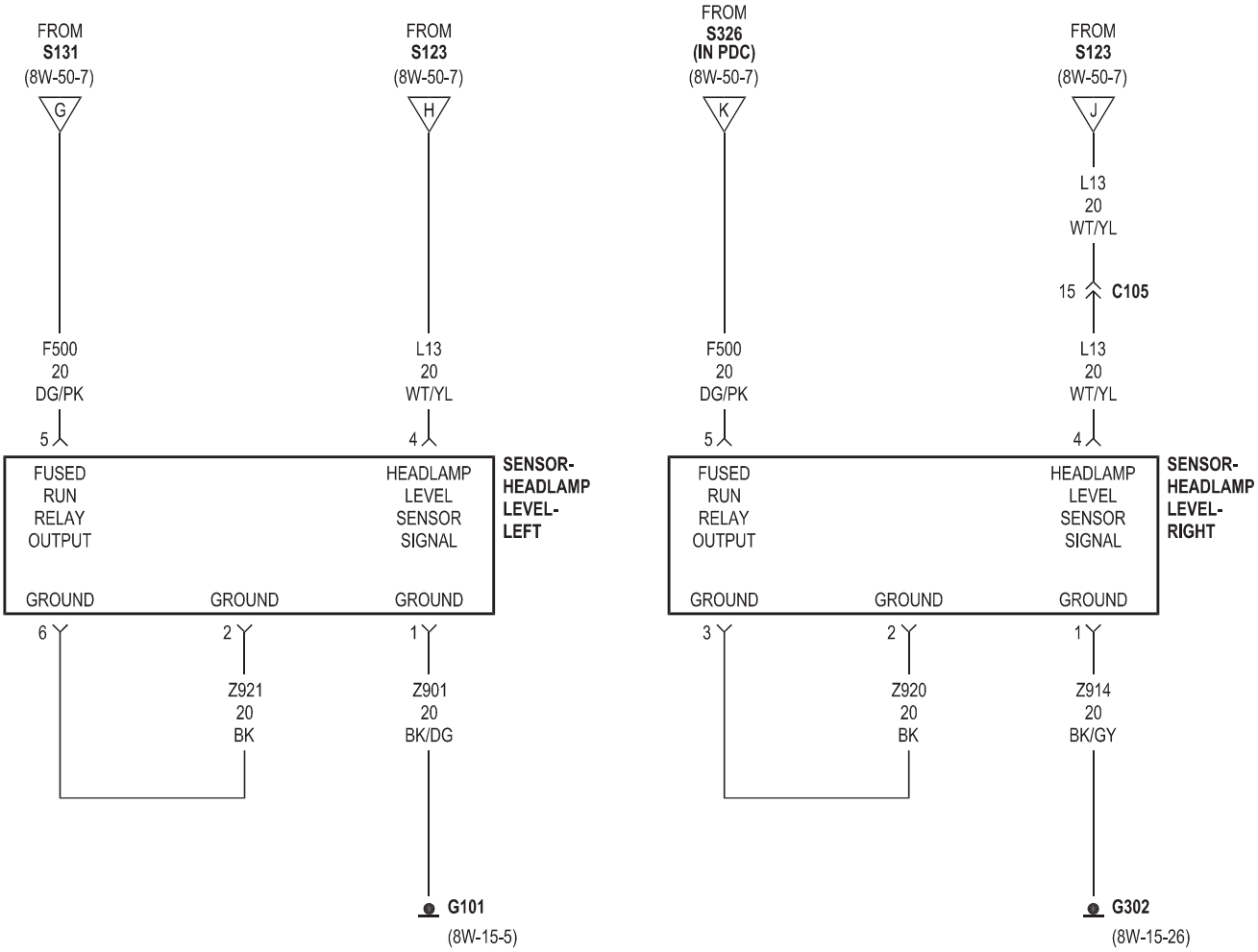
FROM
S131
(8W-50-7)
G
F500
20
DG/PK
5
FUSED
RUN
RELAY
OUTPUT
FROM
S123
(8W-50-7)
H
L13
20
WT/YL
4
HEADLAMP
LEVEL
SENSOR
SIGNAL
SENSOR-
HEADLAMP
LEVEL-
LEFT
GROUND
GROUND
GROUND
6
2
1
Z921
20
BK
Z901
20
BK/DG
G101
(8W-15-5)
FROM
S326
(IN PDC)
(8W-50-7)
K
F500
20
DG/PK
5
FUSED
RUN
RELAY
OUTPUT
FROM
S123
(8W-50-7)
J
L13
20
WT/YL
15
C105
L13
20
WT/YL
4
HEADLAMP
LEVEL
SENSOR
SIGNAL
SENSOR-
HEADLAMP
LEVEL-
RIGHT
GROUND
GROUND
GROUND
3
2
1
Z920
20
BK
Z914
20
BK/GY
G302
(8W-15-26)

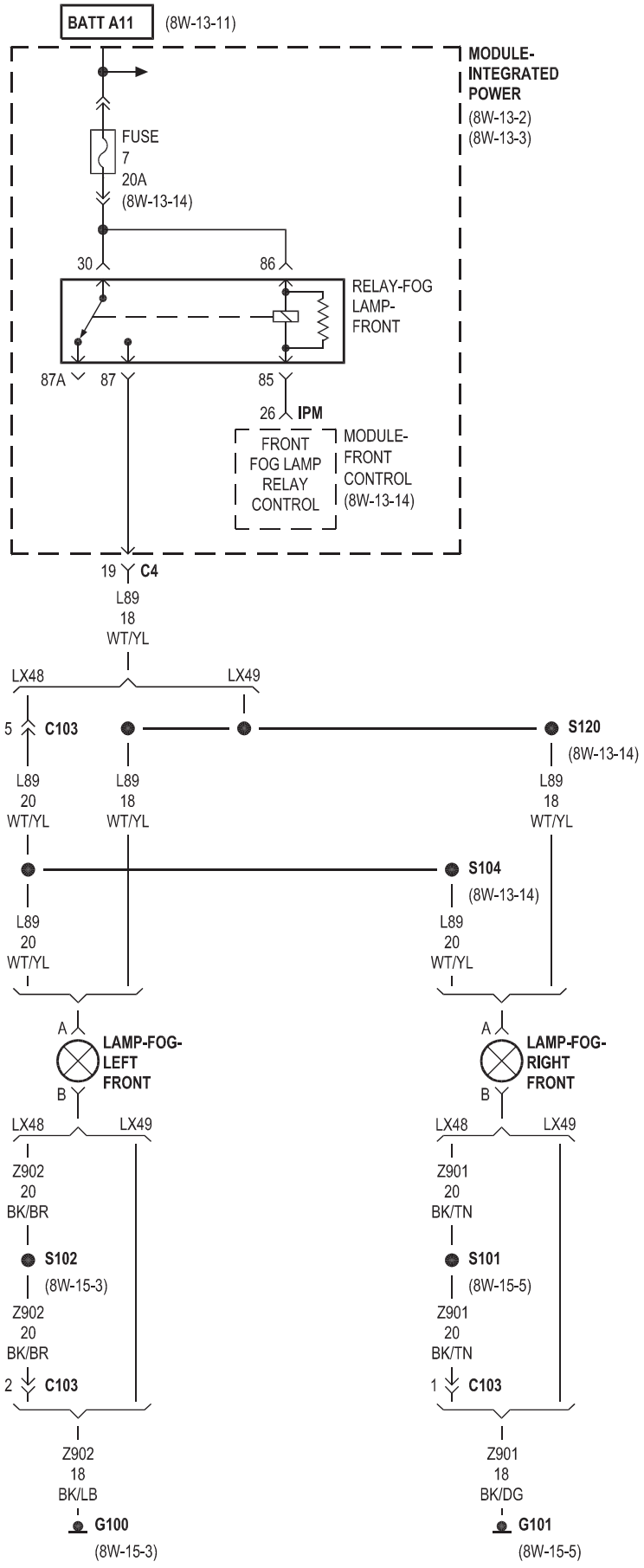
BATT A11
(8W-13-11)
MODULE-
INTEGRATED
POWER
(8W-13-2)
(8W-13-3)
FUSE
7
20A
(8W-13-14)
30
86
RELAY-FOG
LAMP-
FRONT
87A
87
85
26
IPM
FRONT
FOG LAMP
RELAY
CONTROL
MODULE-
FRONT
CONTROL
(8W-13-14)
19
C4
L89
18
WT/YL
LX48
LX49
5
C103
S120
(8W-13-14)
L89
20
WT/YL
L89
18
WT/YL
L89
18
WT/YL
S104
(8W-13-14)
L89
20
WT/YL
L89
20
WT/YL
A
B
LAMP-FOG-
LEFT
FRONT
A
B
LAMP-FOG-
RIGHT
FRONT
LX48
LX49
LX48
LX49
Z902
20
BK/BR
Z901
20
BK/TN
S102
(8W-15-3)
S101
(8W-15-5)
Z902
20
BK/BR
Z901
20
BK/TN
2
C103
1
C103
Z902
18
BK/LB
Z901
18
BK/DG
G100
(8W-15-3)
G101
(8W-15-5)

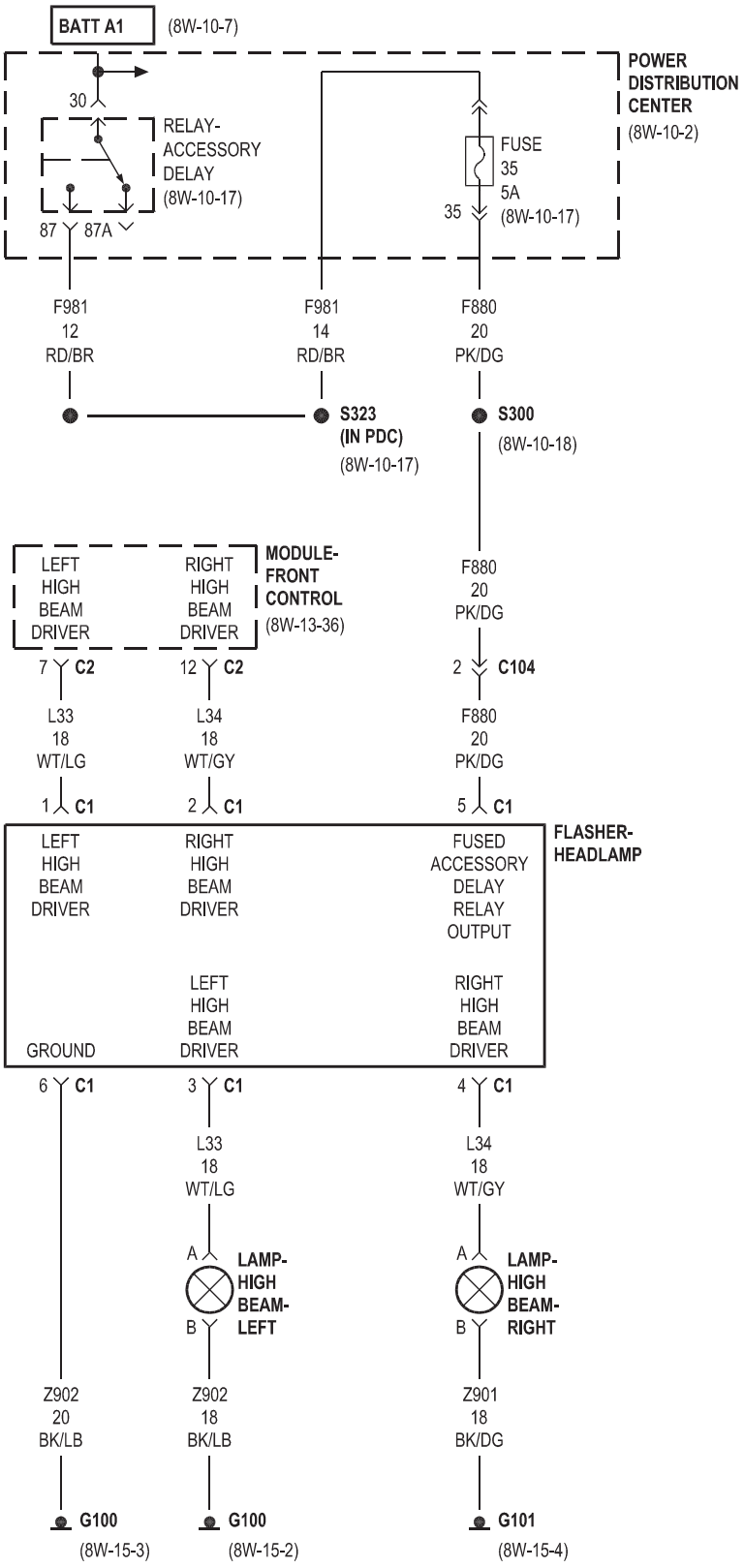
BATT A1
(8W-10-7)
POWER DISTRIBUTION CENTER
(8W-10-2)
30
RELAY-ACCESSORY DELAY
(8W-10-17)
87
87A
FUSE 35 5A
(8W-10-17)
35
F981 12 RD/BR
F981 14 RD/BR
F880 20 PK/DG
S323 (IN PDC)
(8W-10-17)
S300
(8W-10-18)
LEFT HIGH BEAM DRIVER
RIGHT HIGH BEAM DRIVER
MODULE-FRONT CONTROL
(8W-13-36)
7 C2
12 C2
2 C104
L33 18 WT/LG
L34 18 WT/GY
F880 20 PK/DG
1 C1
2 C1
5 C1
FLASHER-HEADLAMP
LEFT HIGH BEAM DRIVER
RIGHT HIGH BEAM DRIVER
FUSED ACCESSORY DELAY RELAY OUTPUT
GROUND
LEFT HIGH BEAM DRIVER
RIGHT HIGH BEAM DRIVER
6 C1
3 C1
4 C1
L33 18 WT/LG
L34 18 WT/GY
A
B
LAMP-HIGH BEAM-LEFT
LAMP-HIGH BEAM-RIGHT
Z902 20 BK/LB
Z902 18 BK/LB
Z901 18 BK/DG
G100
(8W-15-3)
G100
(8W-15-2)
G101
(8W-15-4)

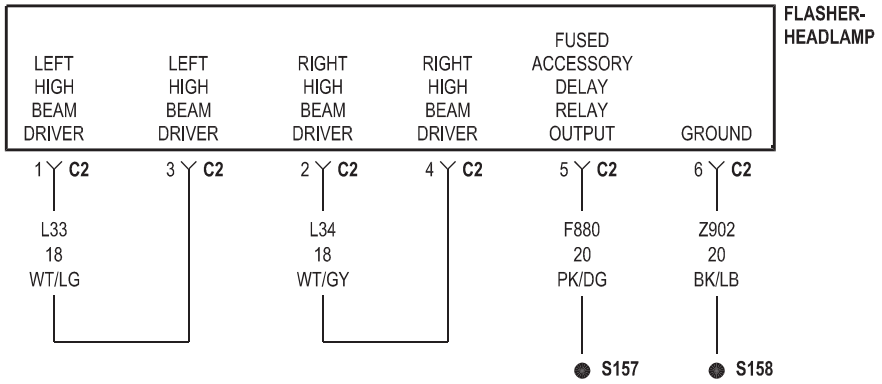
FLASHER-
HEADLAMP
LEFT HIGH BEAM DRIVER
LEFT HIGH BEAM DRIVER
RIGHT HIGH BEAM DRIVER
RIGHT HIGH BEAM DRIVER
FUSED ACCESSORY DELAY RELAY OUTPUT
GROUND
1 C2
3 C2
2 C2
4 C2
5 C2
6 C2
L33 18 WT/LG
L34 18 WT/GY
F880 20 PK/DG
Z902 20 BK/LB
S157
S158

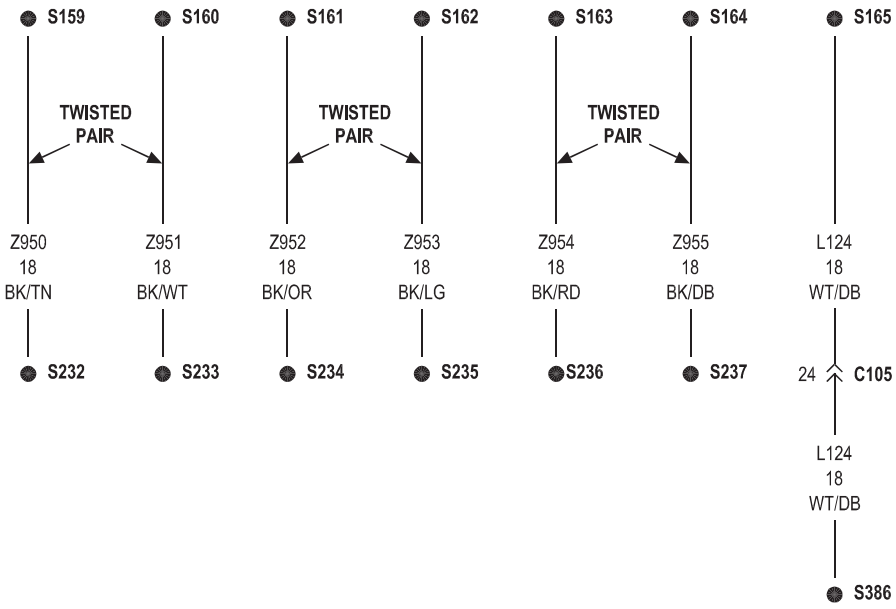
S159
S160
S161
S162
S163
S164
S165
TWISTED PAIR
TWISTED PAIR
TWISTED PAIR
Z950 18 BK/TN
Z951 18 BK/WT
Z952 18 BK/OR
Z953 18 BK/LG
Z954 18 BK/RD
Z955 18 BK/DB
L124 18 WT/DB
S232
S233
S234
S235
S236
S237
24 C105
L124 18 WT/DB
S386

8W-51 REAR LIGHTING

Component	Page
Cluster	8W-51-2, 3
Fuse 8	8W-51-6
Fuse 10	8W-51-11
Fuse 15	8W-51-4
Fuse 19	8W-51-4
Fuse 29	8W-51-4
G202	8W-51-3
G300	8W-51-4, 5, 7
G301	8W-51-4, 5, 7
G302	8W-51-4, 6, 7, 8, 9, 10, 11
Lamp-Backup-Left	8W-51-9, 10
Lamp-Backup-Right	8W-51-9, 10
Lamp-Center High Mounted Stop	8W-51-5, 7
Lamp-Fog-Left Rear	8W-51-11
Lamp-Fog-Right Rear	8W-51-11
Lamp-License	8W-51-6
Lamp-License-Left	8W-51-6
Lamp-License-Right	8W-51-6
Lamp-Side Marker-Left Rear	8W-51-7
Lamp-Side Marker-Right Rear	8W-51-8
Lamp-Tail Park-Left	8W-51-7
Lamp-Tail Park-Right	8W-51-8
Lamp-Tail Stop/Park-Left	8W-51-5, 7
Lamp-Tail Stop/Park-Right	8W-51-5, 8
Lamp-Tail Stop/Turn-Left	8W-51-7
Lamp-Tail Stop/Turn-Right	8W-51-8
Lamp-Tail/Stop-Left	8W-51-5, 6, 10
Lamp-Tail/Stop-Right	8W-51-5, 6, 10
Lamp-Turn-Left Rear	8W-51-10
Lamp-Turn-Right Rear	8W-51-10
Module-Antilock Brakes	8W-51-4
Module-Brake	8W-51-4
Module-Front Control	8W-51-2, 6, 9, 11
Module-Integrated Power	8W-51-6, 9, 11
Module-Powertrain Control	8W-51-4
Module-Steering Control	8W-51-2
Power Distribution Center	8W-51-4, 11
Relay-Fog Lamp-Rear	8W-51-11
Relay-Park Lamp	8W-51-6
Relay-Stop Lamp Inhibit	8W-51-4, 7
Switch-Headlamp	8W-51-3
Switch-Stop Lamp	8W-51-4

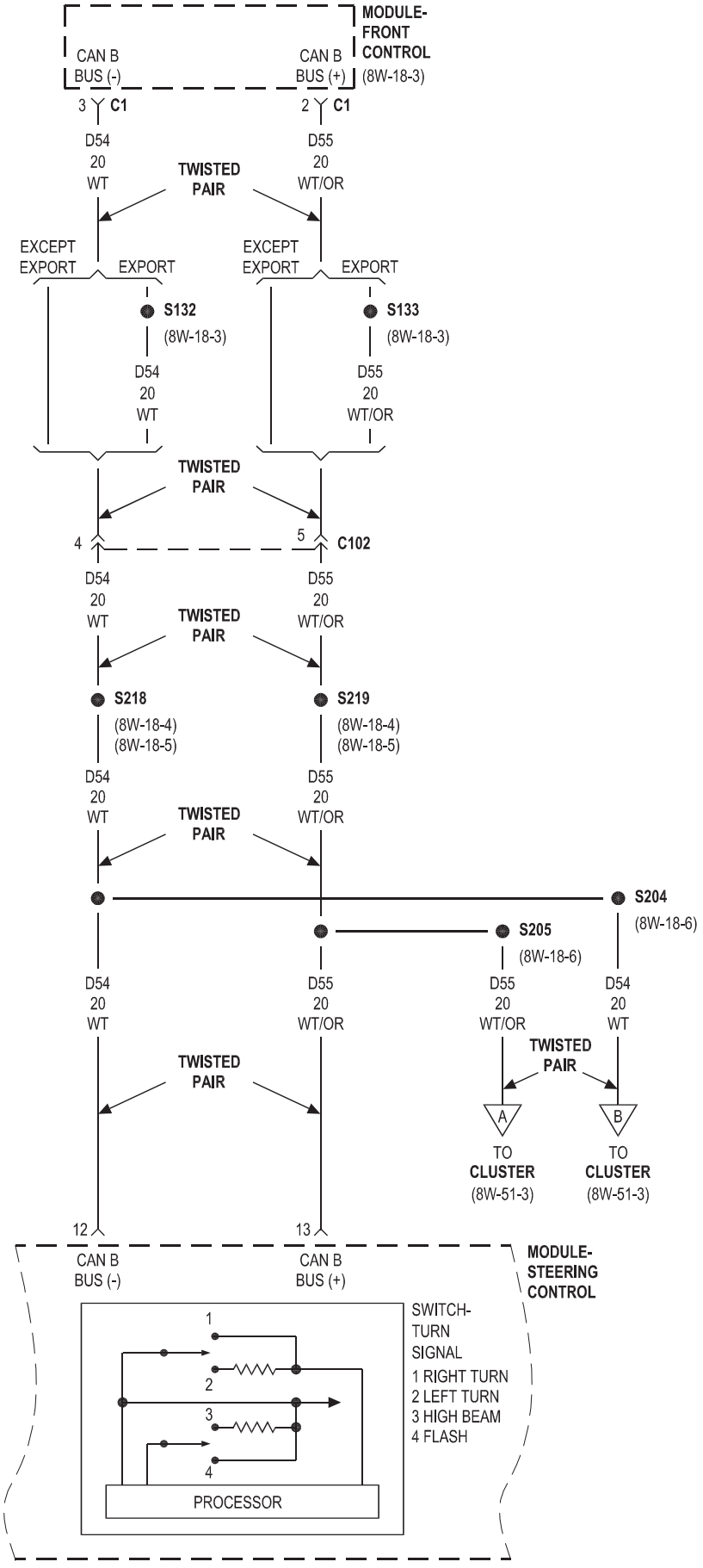
MODULE-
FRONT
CONTROL
(8W-18-3)
CAN B
BUS (-)
CAN B
BUS (+)
3
C1
2
C1
D54
20
WT
D55
20
WT/OR
TWISTED
PAIR
EXCEPT
EXPORT
EXPORT
EXCEPT
EXPORT
EXPORT
S132
(8W-18-3)
S133
(8W-18-3)
D54
20
WT
D55
20
WT/OR
TWISTED
PAIR
4
5
C102
D54
20
WT
D55
20
WT/OR
TWISTED
PAIR
S218
(8W-18-4)
(8W-18-5)
S219
(8W-18-4)
(8W-18-5)
D54
20
WT
D55
20
WT/OR
TWISTED
PAIR
S204
(8W-18-6)
S205
(8W-18-6)
D54
20
WT
D55
20
WT/OR
D55
20
WT/OR
D54
20
WT
TWISTED
PAIR
TWISTED
PAIR
A
B
TO
CLUSTER
(8W-51-3)
TO
CLUSTER
(8W-51-3)
12
13
CAN B
BUS (-)
CAN B
BUS (+)
MODULE-
STEERING
CONTROL
1
2
3
4
PROCESSOR
SWITCH-
TURN
SIGNAL
1 RIGHT TURN
2 LEFT TURN
3 HIGH BEAM
4 FLASH

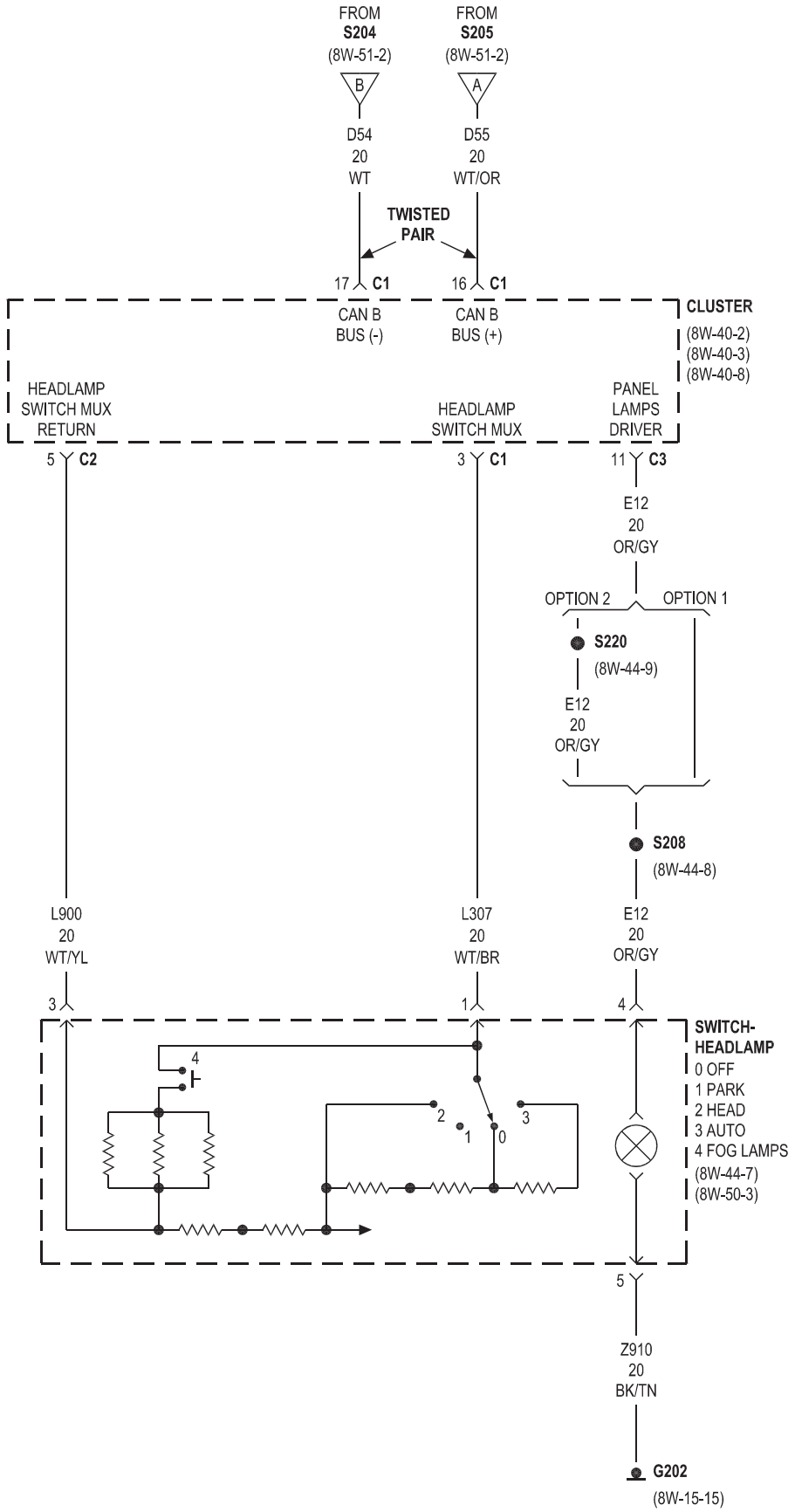
FROM
S204
(8W-51-2)
B
D54
20
WT
FROM
S205
(8W-51-2)
A
D55
20
WT/OR
TWISTED
PAIR
17 C1
CAN B
BUS (-)
16 C1
CAN B
BUS (+)
CLUSTER
(8W-40-2)
(8W-40-3)
(8W-40-8)
HEADLAMP
SWITCH MUX
RETURN
5 C2
HEADLAMP
SWITCH MUX
3 C1
PANEL
LAMPS
DRIVER
11 C3
E12
20
OR/GY
OPTION 2
OPTION 1
S220
(8W-44-9)
E12
20
OR/GY
S208
(8W-44-8)
L900
20
WT/YL
3
L307
20
WT/BR
1
E12
20
OR/GY
4
SWITCH-
HEADLAMP
0 OFF
1 PARK
2 HEAD
3 AUTO
4 FOG LAMPS
(8W-44-7)
(8W-50-3)
5
Z910
20
BK/TN
G202
(8W-15-15)

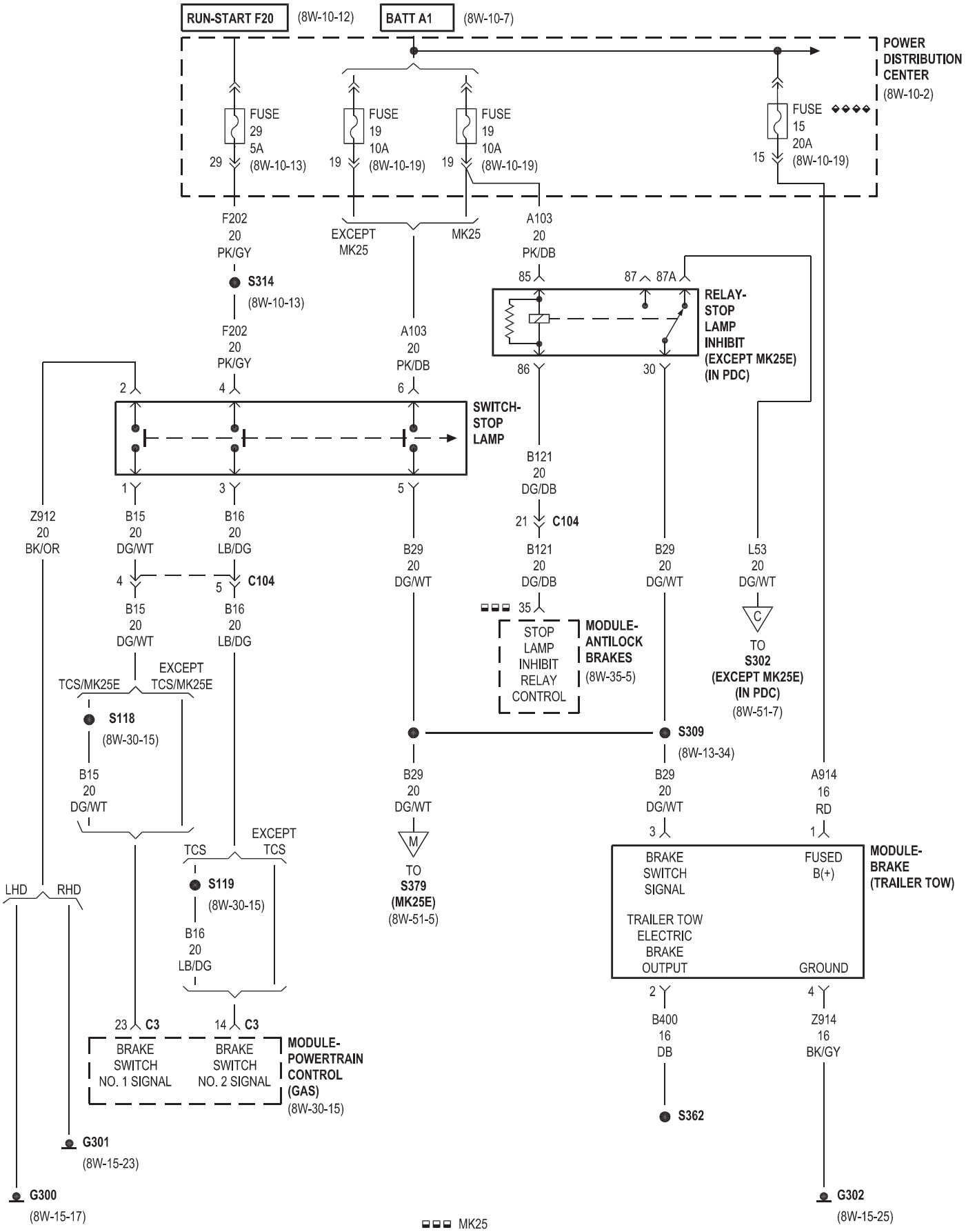
RUN-START F20
(8W-10-12)
BATT A1
(8W-10-7)
POWER DISTRIBUTION CENTER
(8W-10-2)
FUSE 29 5A
29
(8W-10-13)
FUSE 19 10A
19
(8W-10-19)
FUSE 19 10A
19
(8W-10-19)
FUSE 15 20A
15
(8W-10-19)
F202 20 PK/GY
EXCEPT MK25
MK25
A103 20 PK/DB
S314
(8W-10-13)
RELAY-STOP LAMP INHIBIT (EXCEPT MK25E) (IN PDC)
85
87
87A
86
30
SWITCH-STOP LAMP
2
4
6
1
3
5
B121 20 DG/DB
21
C104
Z912 20 BK/OR
B15 20 DG/WT
B16 20 LB/DG
B29 20 DG/WT
L53 20 DG/WT
STOP LAMP INHIBIT RELAY CONTROL
35
MODULE-ANTILOCK BRAKES
(8W-35-5)
TO S302 (EXCEPT MK25E) (IN PDC)
(8W-51-7)
EXCEPT TCS/MK25E
TCS/MK25E
S118
(8W-30-15)
S309
(8W-13-34)
TCS
EXCEPT TCS
S119
(8W-30-15)
TO S379 (MK25E)
(8W-51-5)
A914 16 RD
LHD
RHD
BRAKE SWITCH SIGNAL
FUSED B(+)
TRAILER TOW ELECTRIC BRAKE OUTPUT
GROUND
MODULE-BRAKE (TRAILER TOW)
B400 16 DB
Z914 16 BK/GY
S362
23
C3
14
C3
BRAKE SWITCH NO. 1 SIGNAL
BRAKE SWITCH NO. 2 SIGNAL
MODULE-POWERTRAIN CONTROL (GAS)
(8W-30-15)
G301
(8W-15-23)
G300
(8W-15-17)
G302
(8W-15-25)
MK25
TRAILER TOW

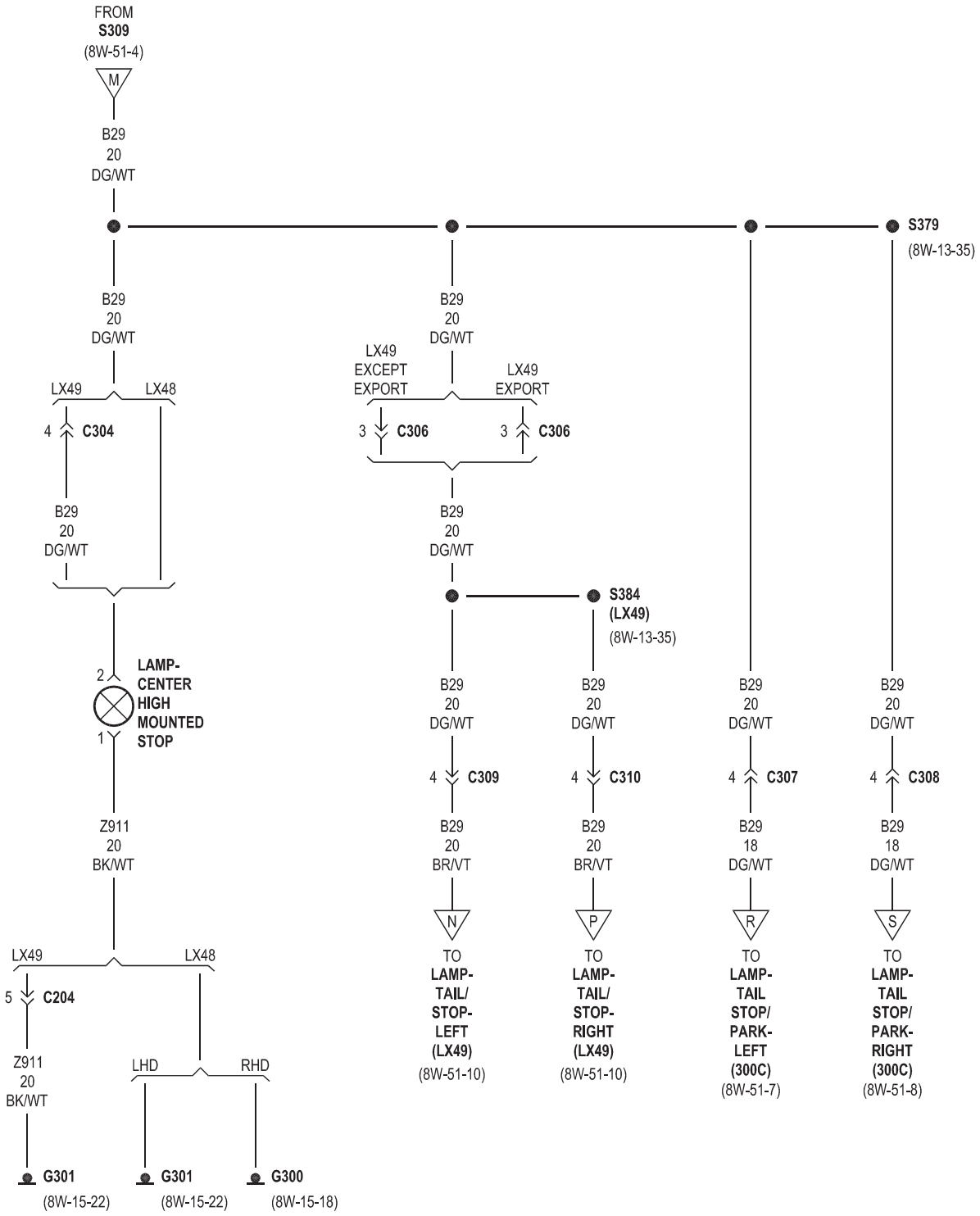
FROM
S309
(8W-51-4)
M
B29
20
DG/WT
S379
(8W-13-35)
LX49
LX48
4 C304
LX49
EXCEPT
EXPORT
LX49
EXPORT
3 C306
3 C306
S384
(LX49)
(8W-13-35)
2
LAMP-
CENTER
HIGH
MOUNTED
STOP
1
Z911
20
BK/WT
LX49
LX48
5 C204
LHD
RHD
4 C309
4 C310
4 C307
4 C308
B29
18
DG/WT
B29
20
BR/VT
N
P
R
S
TO
LAMP-
TAIL/
STOP-
LEFT
(LX49)
(8W-51-10)
TO
LAMP-
TAIL/
STOP-
RIGHT
(LX49)
(8W-51-10)
TO
LAMP-
TAIL
STOP/
PARK-
LEFT
(300C)
(8W-51-7)
TO
LAMP-
TAIL
STOP/
PARK-
RIGHT
(300C)
(8W-51-8)
G301
(8W-15-22)
G301
(8W-15-22)
G300
(8W-15-18)

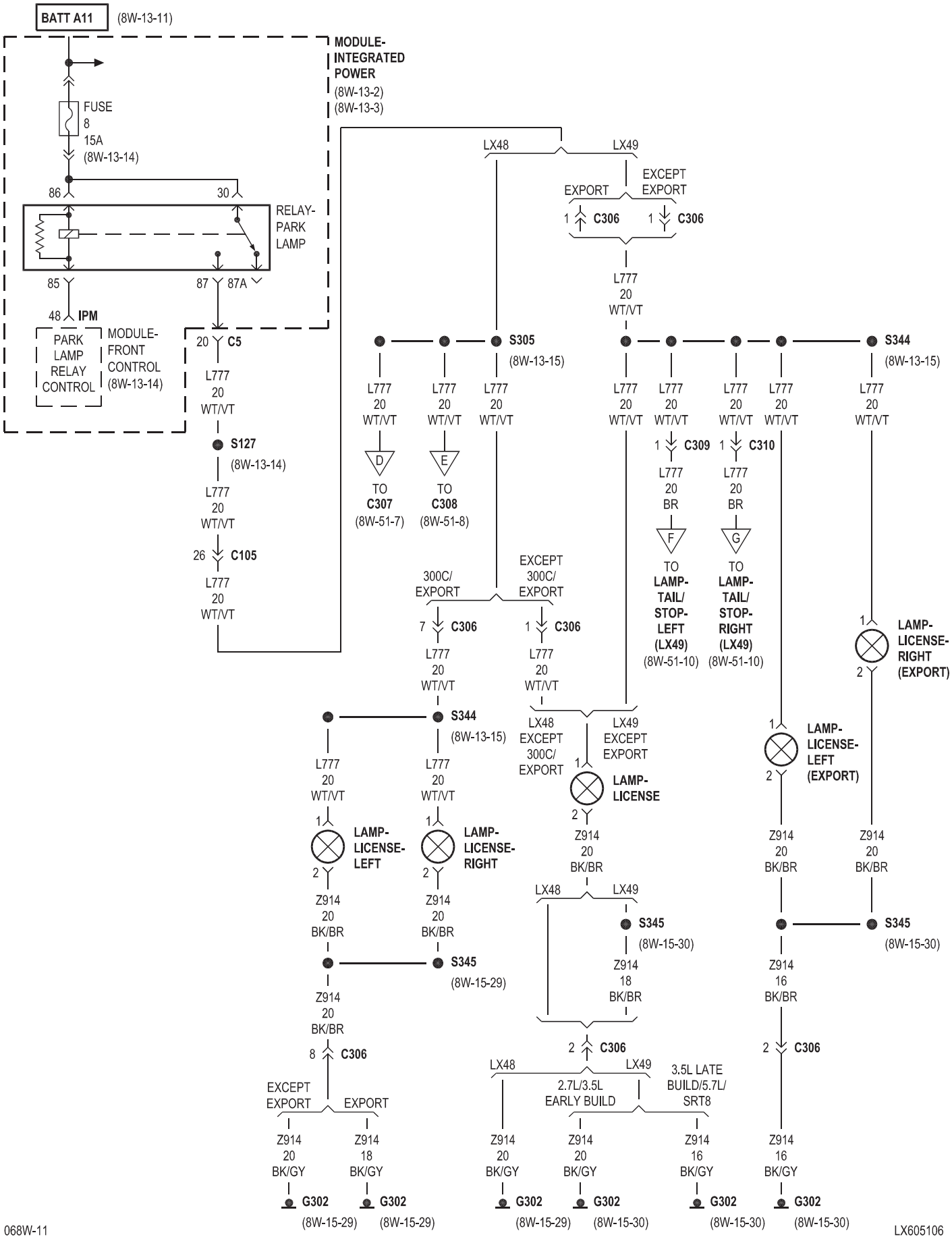
BATT A11
(8W-13-11)
MODULE-
INTEGRATED
POWER
(8W-13-2)
(8W-13-3)
FUSE
8
15A
(8W-13-14)
86
30
RELAY-
PARK
LAMP
85
87
87A
48 IPM
PARK
LAMP
RELAY
CONTROL
MODULE-
FRONT
CONTROL
(8W-13-14)
20 C5
L777
20
WT/VT
S127
(8W-13-14)
L777
20
WT/VT
26 C105
L777
20
WT/VT
LX48
LX49
EXCEPT
EXPORT
EXPORT
1 C306
1 C306
L777
20
WT/VT
S305
(8W-13-15)
S344
(8W-13-15)
L777
20
WT/VT
L777
20
WT/VT
L777
20
WT/VT
D
E
TO
C307
(8W-51-7)
TO
C308
(8W-51-8)
1 C309
1 C310
L777
20
BR
L777
20
BR
F
G
TO
LAMP-
TAIL/
STOP-
LEFT
(LX49)
(8W-51-10)
TO
LAMP-
TAIL/
STOP-
RIGHT
(LX49)
(8W-51-10)
300C/
EXPORT
EXCEPT
300C/
EXPORT
7 C306
1 C306
L777
20
WT/VT
L777
20
WT/VT
S344
(8W-13-15)
LX48
EXCEPT
300C/
EXPORT
LX49
EXCEPT
EXPORT
1
LAMP-
LICENSE
2
L777
20
WT/VT
L777
20
WT/VT
1
LAMP-
LICENSE-
LEFT
2
1
LAMP-
LICENSE-
RIGHT
2
Z914
20
BK/BR
Z914
20
BK/BR
LX48
LX49
S345
(8W-15-30)
Z914
18
BK/BR
Z914
20
BK/BR
S345
(8W-15-29)
Z914
20
BK/BR
8 C306
2 C306
EXCEPT
EXPORT
EXPORT
LX48
LX49
2.7L/3.5L
EARLY BUILD
3.5L LATE
BUILD/5.7L/
SRT8
Z914
20
BK/GY
Z914
18
BK/GY
Z914
20
BK/GY
Z914
20
BK/GY
Z914
16
BK/GY
G302
(8W-15-29)
G302
(8W-15-29)
G302
(8W-15-29)
G302
(8W-15-30)
G302
(8W-15-30)
1
LAMP-
LICENSE-
LEFT
(EXPORT)
2
1
LAMP-
LICENSE-
RIGHT
(EXPORT)
2
Z914
20
BK/BR
Z914
20
BK/BR
S345
(8W-15-30)
Z914
16
BK/BR
2 C306
Z914
16
BK/GY
G302
(8W-15-30)
G302
(8W-15-30)

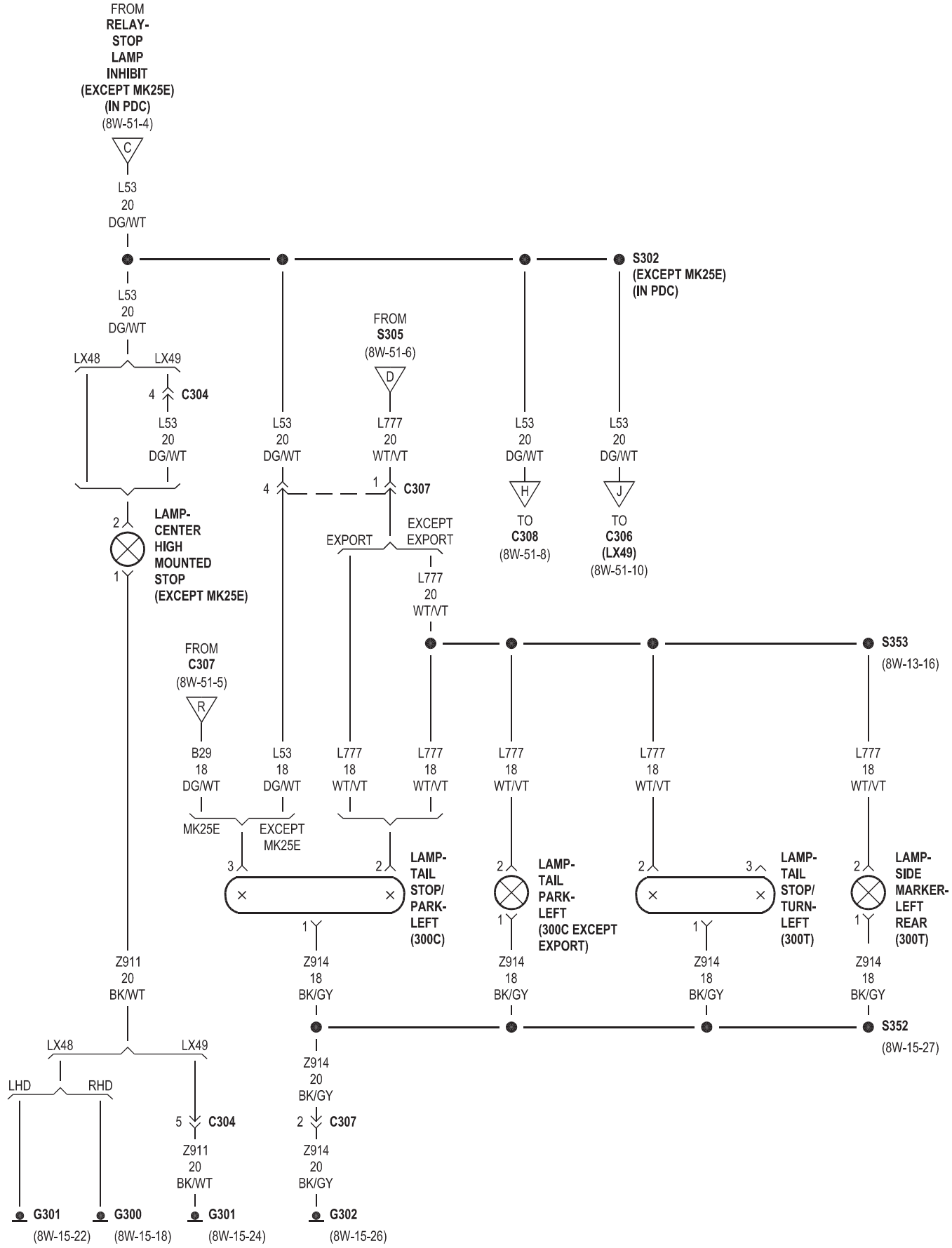
FROM
RELAY-
STOP
LAMP
INHIBIT
(EXCEPT MK25E)
(IN PDC)
(8W-51-4)
C
L53
20
DG/WT
S302
(EXCEPT MK25E)
(IN PDC)
LX48
LX49
4
C304
FROM
S305
(8W-51-6)
D
L777
20
WT/VT
1
C307
TO
C308
(8W-51-8)
H
TO
C306
(LX49)
(8W-51-10)
J
2
LAMP-
CENTER
HIGH
MOUNTED
STOP
(EXCEPT MK25E)
1
EXPORT
EXCEPT
EXPORT
FROM
C307
(8W-51-5)
R
S353
(8W-13-16)
B29
18
DG/WT
L53
18
DG/WT
L777
18
WT/VT
MK25E
EXCEPT
MK25E
3
2
LAMP-
TAIL
STOP/
PARK-
LEFT
(300C)
LAMP-
TAIL
PARK-
LEFT
(300C EXCEPT
EXPORT)
LAMP-
TAIL
STOP/
TURN-
LEFT
(300T)
LAMP-
SIDE
MARKER-
LEFT
REAR
(300T)
Z911
20
BK/WT
Z914
18
BK/GY
S352
(8W-15-27)
LHD
RHD
5
C304
2
C307
Z914
20
BK/GY
G301
(8W-15-22)
G300
(8W-15-18)
G301
(8W-15-24)
G302
(8W-15-26)

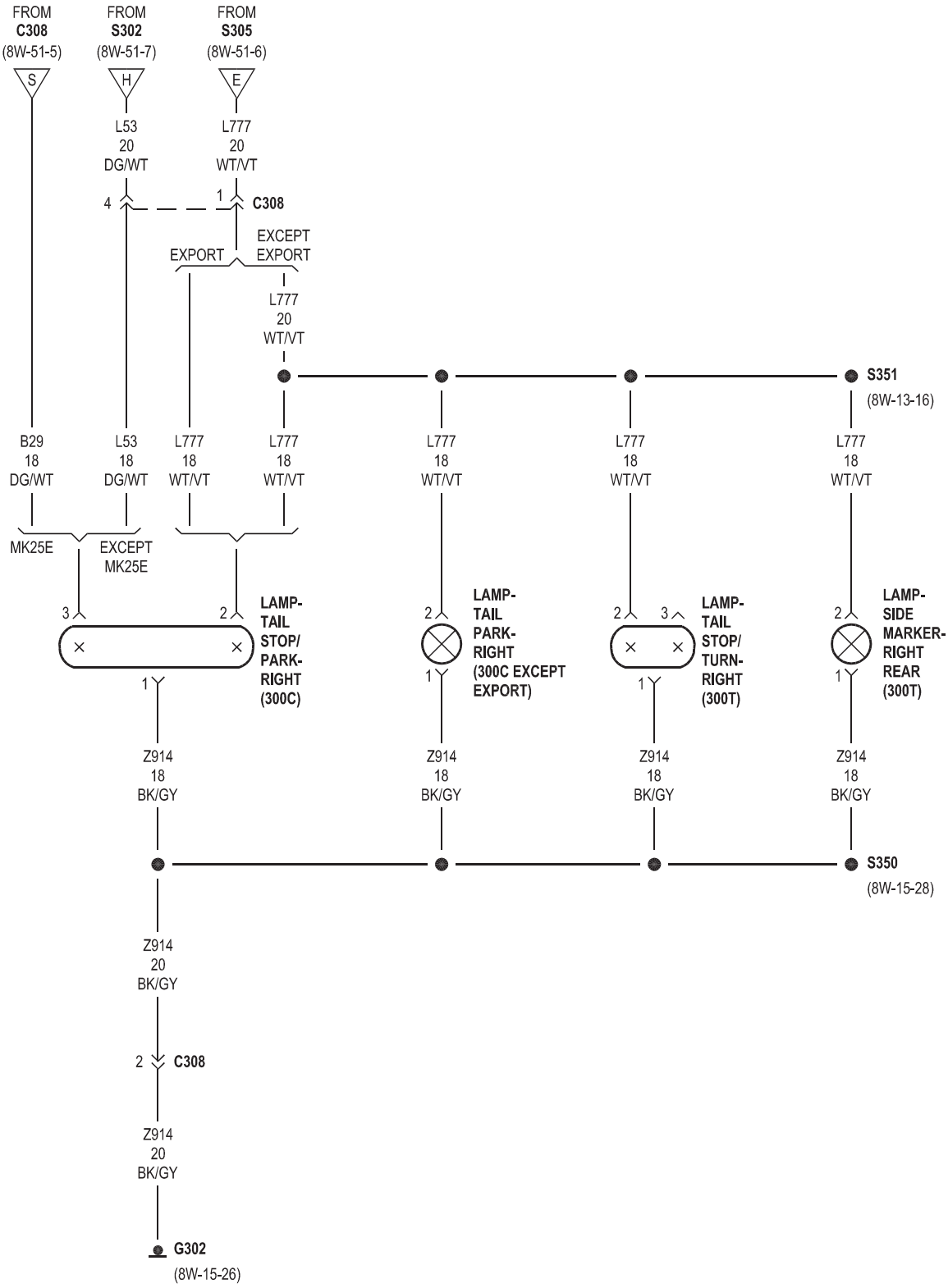
FROM C308 (8W-51-5)
FROM S302 (8W-51-7)
FROM S305 (8W-51-6)
S
H
E
L53 20 DG/WT
L777 20 WT/VT
4
1
C308
EXPORT
EXCEPT EXPORT
L777 20 WT/VT
S351
(8W-13-16)
B29 18 DG/WT
L53 18 DG/WT
L777 18 WT/VT
L777 18 WT/VT
L777 18 WT/VT
L777 18 WT/VT
L777 18 WT/VT
MK25E
EXCEPT MK25E
3
2
LAMP-TAIL STOP/ PARK-RIGHT (300C)
2
LAMP-TAIL PARK-RIGHT (300C EXCEPT EXPORT)
2
3
LAMP-TAIL STOP/ TURN-RIGHT (300T)
2
LAMP-SIDE MARKER-RIGHT REAR (300T)
1
Z914 18 BK/GY
Z914 18 BK/GY
Z914 18 BK/GY
Z914 18 BK/GY
S350
(8W-15-28)
Z914 20 BK/GY
2
C308
Z914 20 BK/GY
G302
(8W-15-26)

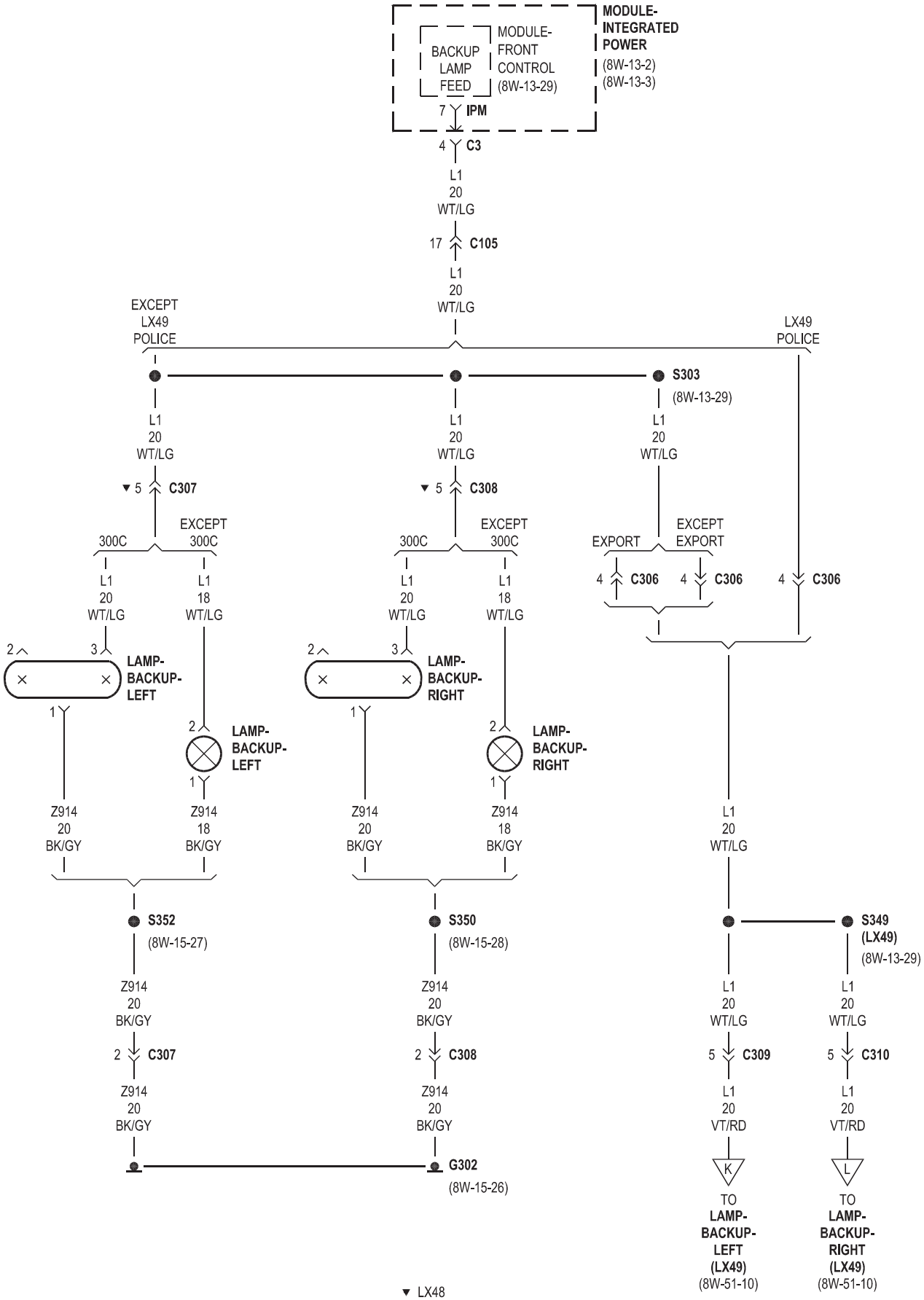
MODULE-INTEGRATED POWER
(8W-13-2)
(8W-13-3)
BACKUP LAMP FEED
MODULE-FRONT CONTROL
(8W-13-29)
7 IPM
4 C3
L1 20 WT/LG
17 C105
L1 20 WT/LG
EXCEPT LX49 POLICE
LX49 POLICE
S303
(8W-13-29)
▼ 5 C307
▼ 5 C308
300C
EXCEPT 300C
EXPORT
EXCEPT EXPORT
4 C306
L1 18 WT/LG
LAMP-BACKUP-LEFT
LAMP-BACKUP-RIGHT
Z914 20 BK/GY
Z914 18 BK/GY
S352
(8W-15-27)
S350
(8W-15-28)
S349 (LX49)
(8W-13-29)
2 C307
2 C308
G302
(8W-15-26)
5 C309
5 C310
L1 20 VT/RD
TO LAMP-BACKUP-LEFT (LX49)
(8W-51-10)
TO LAMP-BACKUP-RIGHT (LX49)
(8W-51-10)
▼ LX48

LX49

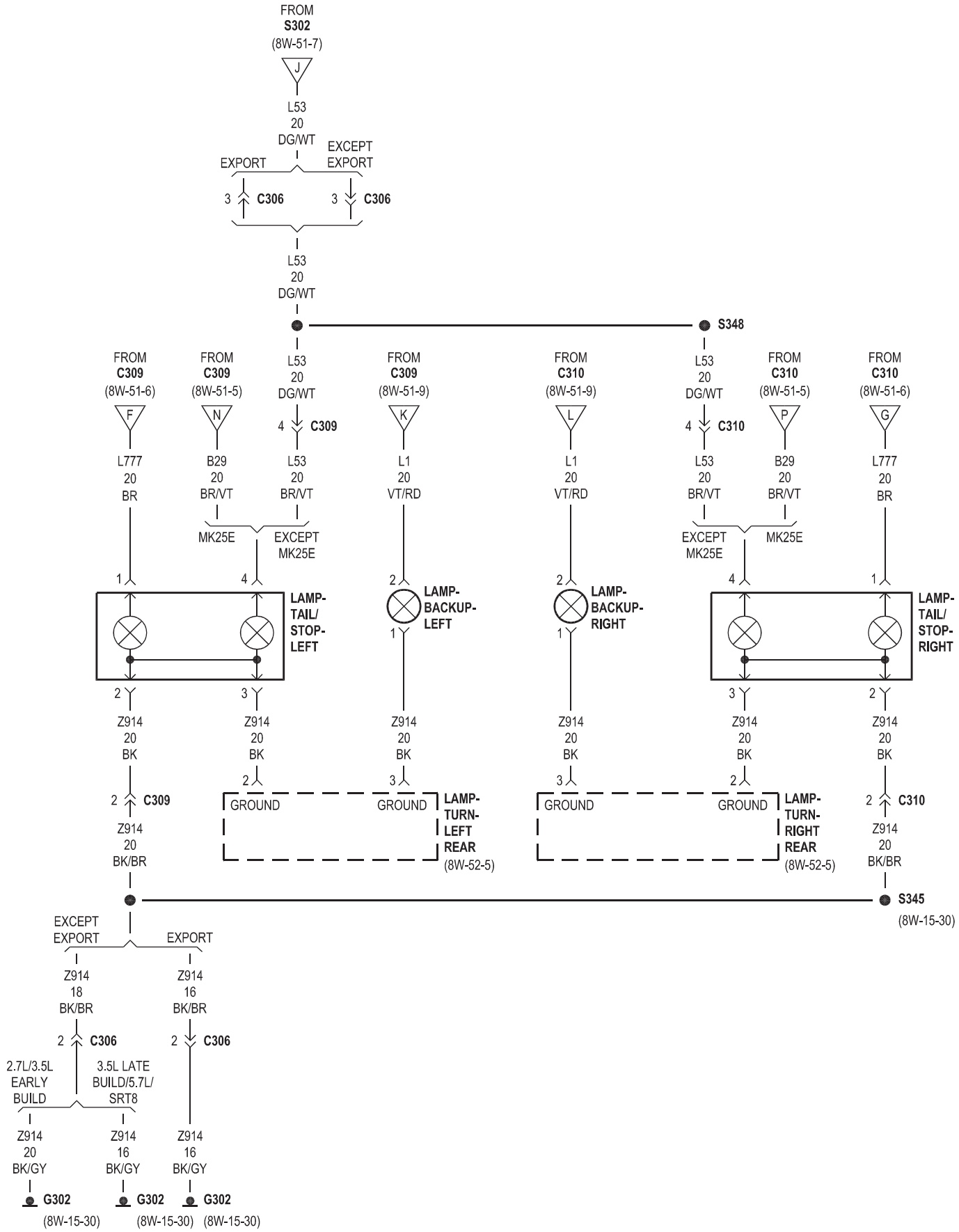
FROM S302 (8W-51-7)
J
L53 20 DG/WT
EXPORT
EXCEPT EXPORT
3 C306
3 C306
L53 20 DG/WT
S348
FROM C309 (8W-51-6)
F
L777 20 BR
FROM C309 (8W-51-5)
N
B29 20 BR/VT
MK25E
L53 20 DG/WT
4 C309
L53 20 BR/VT
EXCEPT MK25E
FROM C309 (8W-51-9)
K
L1 20 VT/RD
FROM C310 (8W-51-9)
L
L1 20 VT/RD
L53 20 DG/WT
4 C310
L53 20 BR/VT
EXCEPT MK25E
FROM C310 (8W-51-5)
P
B29 20 BR/VT
MK25E
FROM C310 (8W-51-6)
G
L777 20 BR
1
4
LAMP- TAIL/ STOP- LEFT
2
LAMP- BACKUP- LEFT
1
2
LAMP- BACKUP- RIGHT
1
4
1
LAMP- TAIL/ STOP- RIGHT
2
3
Z914 20 BK
2 C309
Z914 20 BK/BR
2
3
GROUND
GROUND
LAMP- TURN- LEFT REAR
(8W-52-5)
3
2
GROUND
GROUND
LAMP- TURN- RIGHT REAR
(8W-52-5)
2 C310
Z914 20 BK/BR
S345
(8W-15-30)
EXCEPT EXPORT
EXPORT
Z914 18 BK/BR
Z914 16 BK/BR
2 C306
2 C306
2.7L/3.5L EARLY BUILD
3.5L LATE BUILD/5.7L/ SRT8
Z914 20 BK/GY
Z914 16 BK/GY
Z914 16 BK/GY
G302
(8W-15-30)
G302
(8W-15-30)
G302
(8W-15-30)

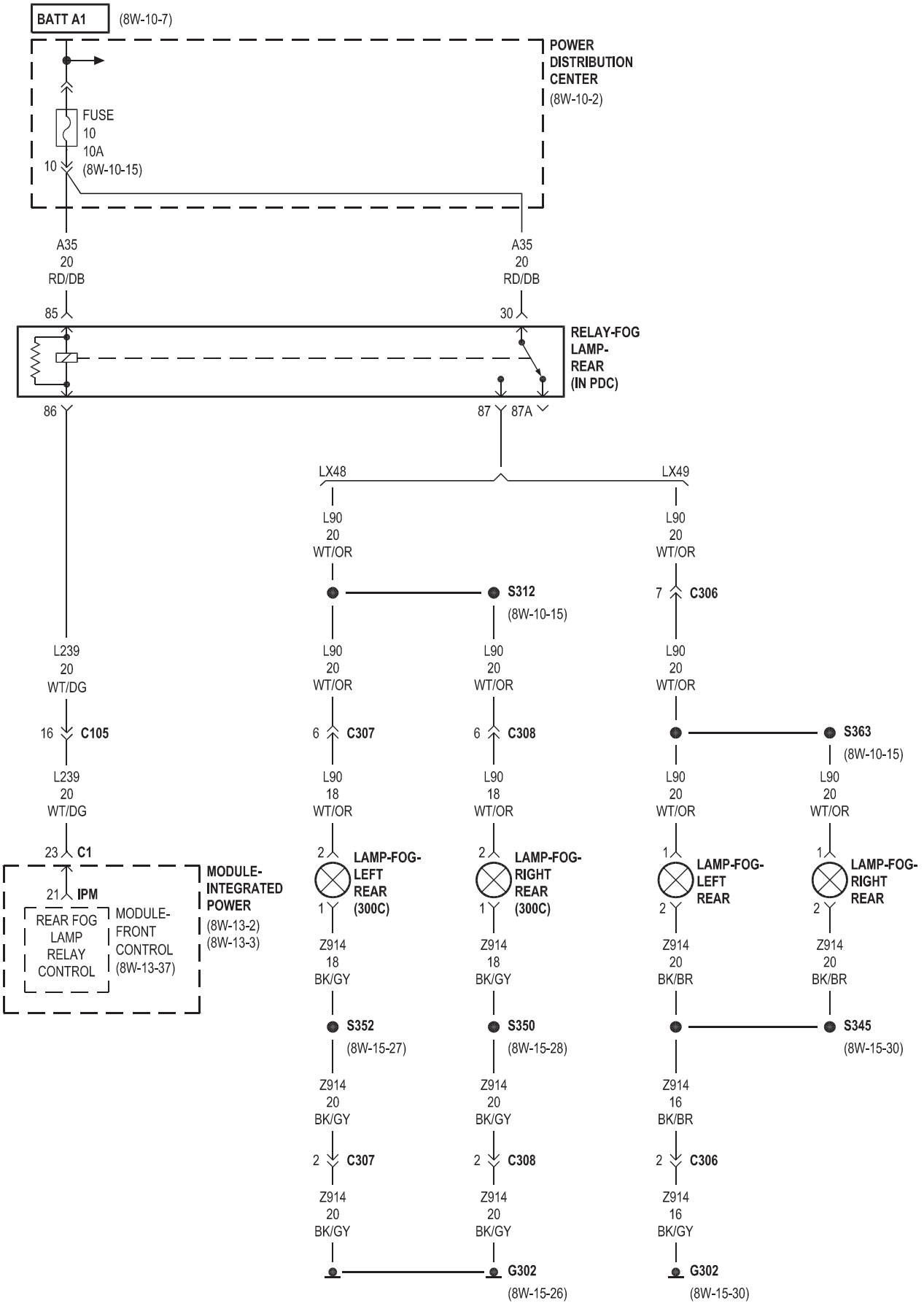
BATT A1
(8W-10-7)
POWER DISTRIBUTION CENTER
(8W-10-2)
FUSE
10
10A
10
(8W-10-15)
A35
20
RD/DB
85
A35
20
RD/DB
30
RELAY-FOG LAMP-REAR (IN PDC)
86
87
87A
LX48
LX49
L90
20
WT/OR
S312
(8W-10-15)
7
C306
L239
20
WT/DG
16
C105
6
C307
6
C308
S363
(8W-10-15)
L90
18
WT/OR
L90
20
WT/OR
23
C1
21
IPM
REAR FOG LAMP RELAY CONTROL
MODULE-FRONT CONTROL
(8W-13-37)
MODULE-INTEGRATED POWER
(8W-13-2)
(8W-13-3)
2
1
LAMP-FOG-LEFT REAR (300C)
LAMP-FOG-RIGHT REAR (300C)
LAMP-FOG-LEFT REAR
LAMP-FOG-RIGHT REAR
Z914
18
BK/GY
Z914
20
BK/BR
S352
(8W-15-27)
S350
(8W-15-28)
S345
(8W-15-30)
Z914
20
BK/GY
Z914
16
BK/BR
G302
(8W-15-26)
G302
(8W-15-30)

8W-52 TURN SIGNALS

Component	Page
Cluster	8W-52-2
G100	8W-52-3
G101	8W-52-3
G102	8W-52-3
G200	8W-52-2
G302	8W-52-4, 5
Lamp-Backup-Left	8W-52-5
Lamp-Backup-Right	8W-52-5
Lamp-Park/Turn-Left Front	8W-52-3
Lamp-Park/Turn-Right Front	8W-52-3
Lamp-Side Repeater-Left	8W-52-3
Lamp-Side Repeater-Right	8W-52-3

Component	Page
Lamp-Tail Stop/Turn-Left	8W-52-4
Lamp-Tail Stop/Turn-Right	8W-52-4
Lamp-Tail Turn-Left	8W-52-4
Lamp-Tail Turn-Right	8W-52-4
Lamp-Tail/Stop-Left	8W-52-5
Lamp-Tail/Stop-Right	8W-52-5
Lamp-Turn-Left Rear	8W-52-5
Lamp-Turn-Right Rear	8W-52-5
Module-Front Control	8W-52-2, 3, 4, 5
Module-Integrated Power	8W-52-4, 5
Module-Steering Control	8W-52-2
Switch-Bank	8W-52-2

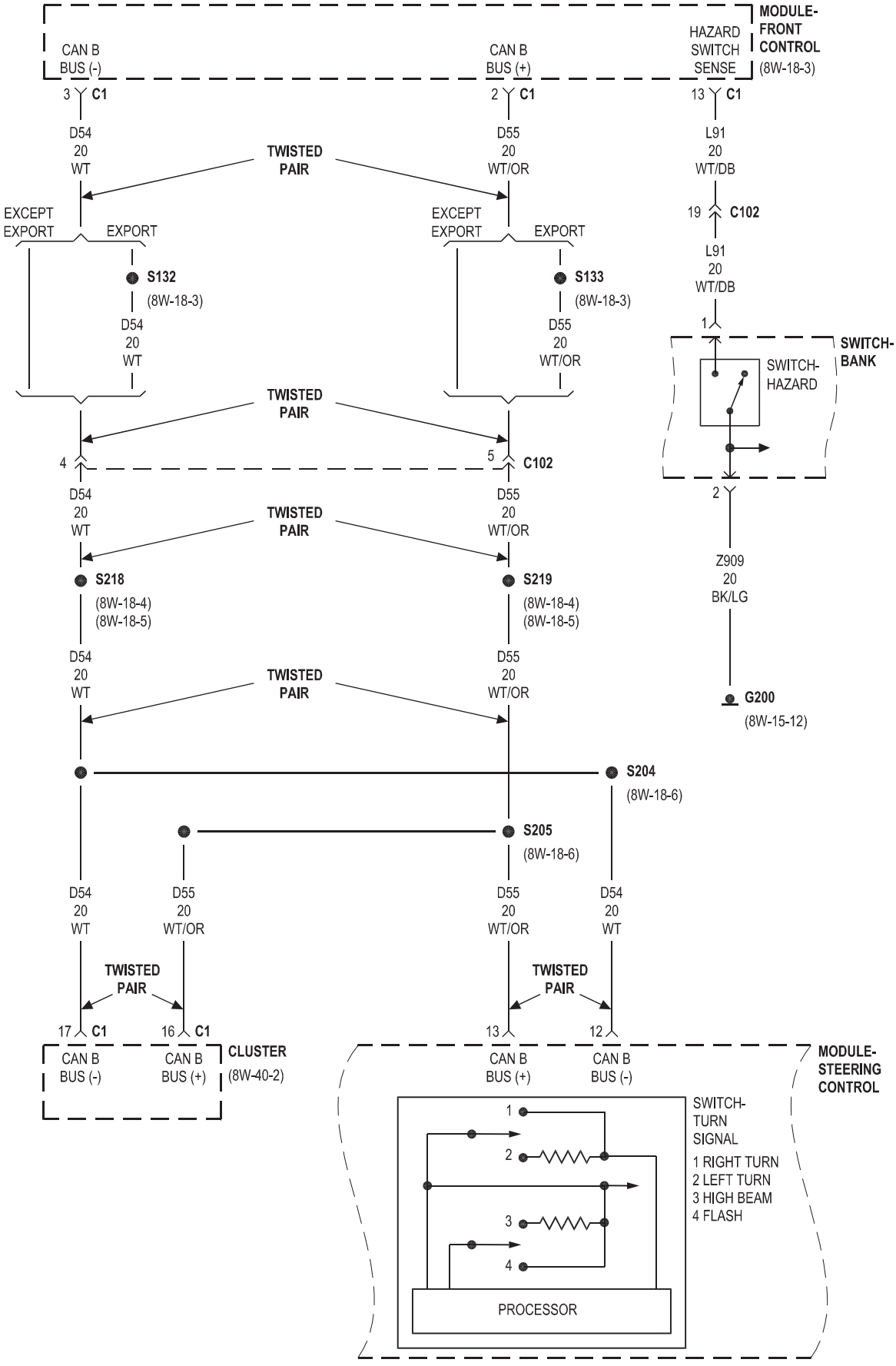
MODULE-
FRONT
CONTROL
(8W-18-3)
CAN B
BUS (-)
CAN B
BUS (+)
HAZARD
SWITCH
SENSE
3 C1
2 C1
13 C1
D54
20
WT
D55
20
WT/OR
L91
20
WT/DB
TWISTED
PAIR
EXCEPT
EXPORT
EXPORT
EXCEPT
EXPORT
EXPORT
19 C102
S132
(8W-18-3)
S133
(8W-18-3)
D54
20
WT
D55
20
WT/OR
L91
20
WT/DB
1
SWITCH-
BANK
SWITCH-
HAZARD
TWISTED
PAIR
4
5 C102
2
D54
20
WT
D55
20
WT/OR
TWISTED
PAIR
Z909
20
BK/LG
S218
(8W-18-4)
(8W-18-5)
S219
(8W-18-4)
(8W-18-5)
D54
20
WT
D55
20
WT/OR
TWISTED
PAIR
G200
(8W-15-12)
S204
(8W-18-6)
S205
(8W-18-6)
D54
20
WT
D55
20
WT/OR
D55
20
WT/OR
D54
20
WT
TWISTED
PAIR
TWISTED
PAIR
17 C1
16 C1
13
12
CAN B
BUS (-)
CAN B
BUS (+)
CLUSTER
(8W-40-2)
CAN B
BUS (+)
CAN B
BUS (-)
MODULE-
STEERING
CONTROL
1
2
3
4
SWITCH-
TURN
SIGNAL
1 RIGHT TURN
2 LEFT TURN
3 HIGH BEAM
4 FLASH
PROCESSOR

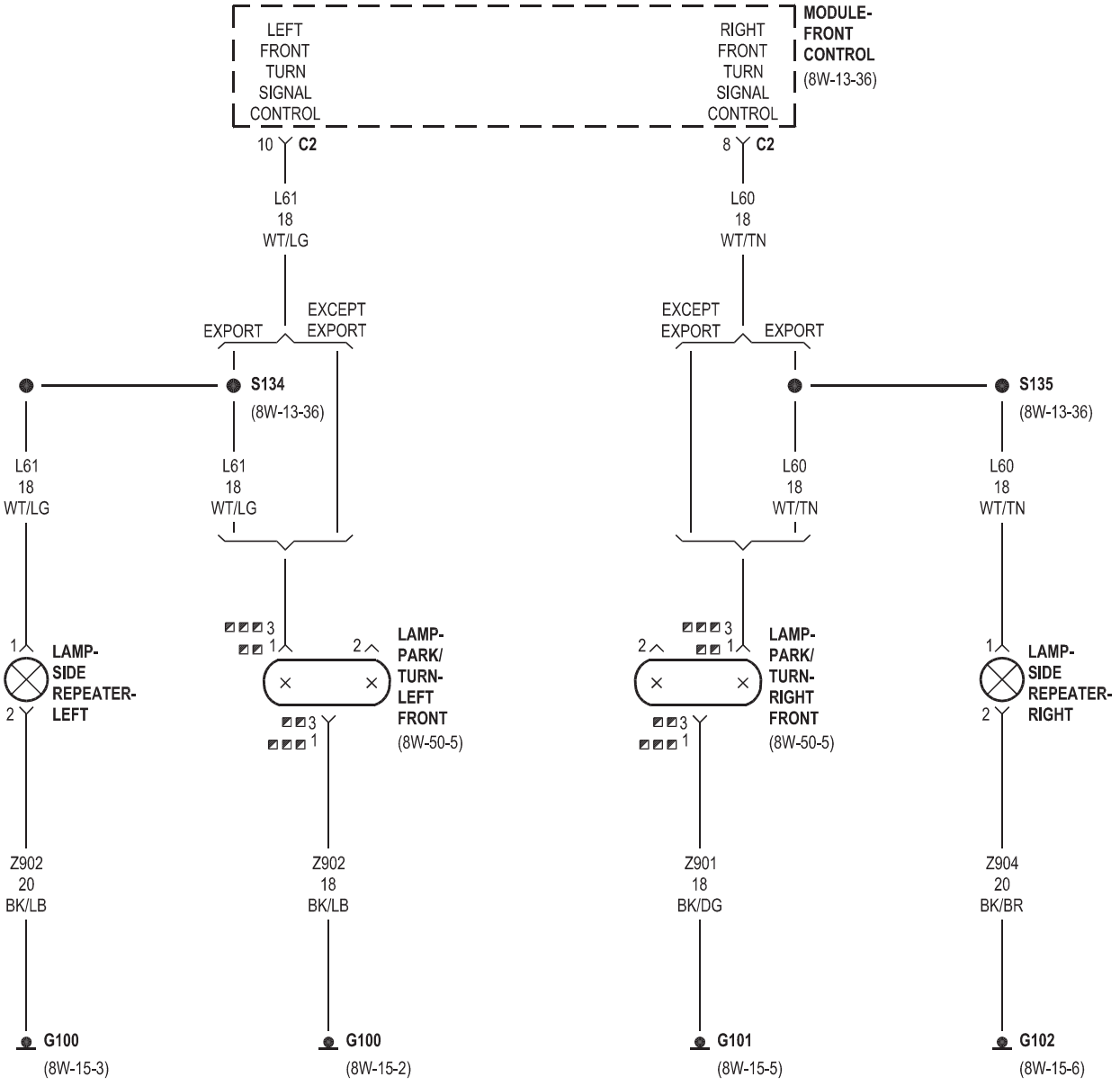

◪◪ LX49 EXCEPT EXPORT
◪◪◪ LX49 EXPORT/LX48

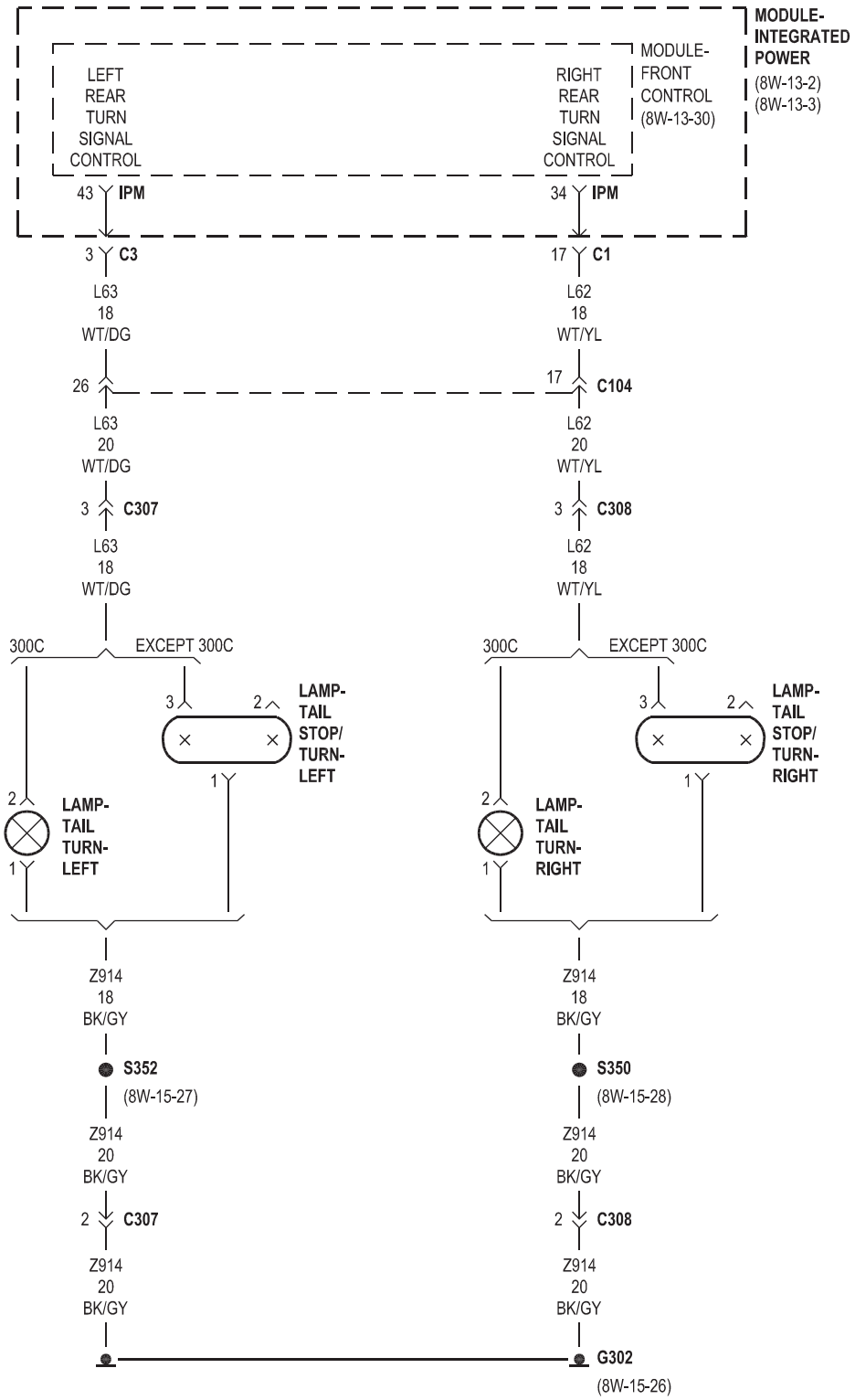
MODULE-
INTEGRATED
POWER
(8W-13-2)
(8W-13-3)
MODULE-
FRONT
CONTROL
(8W-13-30)
LEFT
REAR
TURN
SIGNAL
CONTROL
RIGHT
REAR
TURN
SIGNAL
CONTROL
43 IPM
34 IPM
3 C3
17 C1
L63
18
WT/DG
L62
18
WT/YL
26
17 C104
L63
20
WT/DG
L62
20
WT/YL
3 C307
3 C308
L63
18
WT/DG
L62
18
WT/YL
300C
EXCEPT 300C
300C
EXCEPT 300C
LAMP-
TAIL
STOP/
TURN-
LEFT
LAMP-
TAIL
STOP/
TURN-
RIGHT
LAMP-
TAIL
TURN-
LEFT
LAMP-
TAIL
TURN-
RIGHT
Z914
18
BK/GY
Z914
18
BK/GY
S352
(8W-15-27)
S350
(8W-15-28)
Z914
20
BK/GY
Z914
20
BK/GY
2 C307
2 C308
Z914
20
BK/GY
Z914
20
BK/GY
G302
(8W-15-26)

LX49

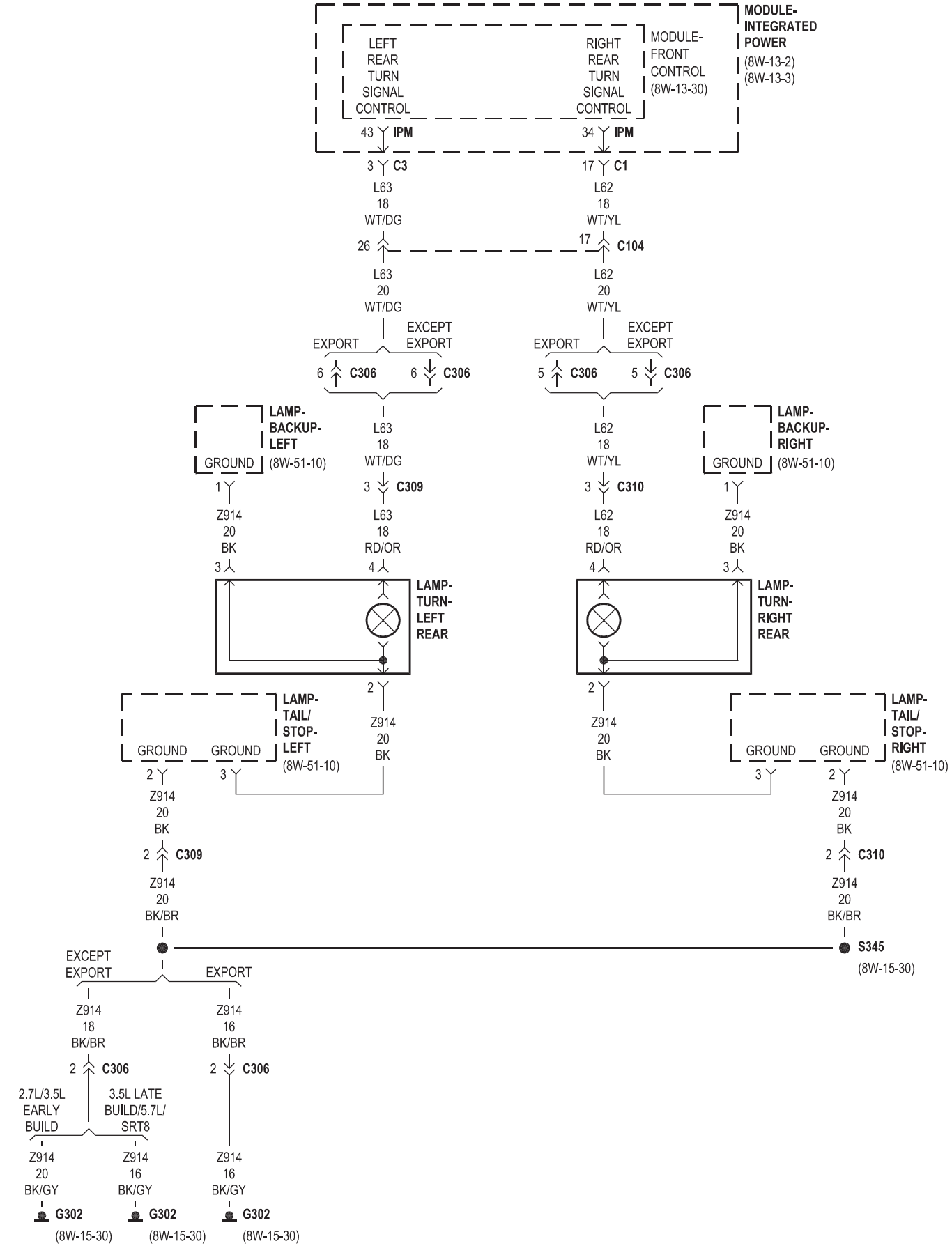
MODULE-INTEGRATED POWER
(8W-13-2)
(8W-13-3)
LEFT REAR TURN SIGNAL CONTROL
RIGHT REAR TURN SIGNAL CONTROL
MODULE-FRONT CONTROL
(8W-13-30)
43 IPM
34 IPM
3 C3
17 C1
L63 18 WT/DG
L62 18 WT/YL
26
17 C104
L63 20 WT/DG
L62 20 WT/YL
EXPORT
EXCEPT EXPORT
6 C306
6 C306
5 C306
5 C306
LAMP-BACKUP-LEFT
LAMP-BACKUP-RIGHT
GROUND
(8W-51-10)
1
Z914 20 BK
3 C309
3 C310
L63 18 RD/OR
L62 18 RD/OR
3
4
LAMP-TURN-LEFT REAR
LAMP-TURN-RIGHT REAR
2
Z914 20 BK
LAMP-TAIL/STOP-LEFT
LAMP-TAIL/STOP-RIGHT
GROUND
GROUND
2 C309
2 C310
Z914 20 BK/BR
S345
(8W-15-30)
EXCEPT EXPORT
EXPORT
Z914 18 BK/BR
Z914 16 BK/BR
2 C306
2 C306
2.7L/3.5L EARLY BUILD
3.5L LATE BUILD/5.7L/SRT8
Z914 20 BK/GY
Z914 16 BK/GY
Z914 16 BK/GY
G302
G302
G302
(8W-15-30)
(8W-15-30)
(8W-15-30)

8W-53 WIPERS

Component	Page
Cluster	8W-53-5
Fuse 5	8W-53-7
Fuse 17	8W-53-5
Fuse 18	8W-53-2
Fuse 20	8W-53-6
Fuse 30	8W-53-3
Fuse 35	8W-53-4
Fuse 40	8W-53-5
G100	8W-53-2
G101	8W-53-2, 4
G102	8W-53-2, 4, 7
G200	8W-53-4
G202	8W-53-3, 5
G302	8W-53-6
Module-Front Control	8W-53-2, 4, 6, 7
Module-Integrated Power	8W-53-2, 4, 6, 7
Module-Steering Control	8W-53-3
Motor-Headlamp Washer	8W-53-7
Motor-Wiper-Front	8W-53-2
Motor-Wiper-Rear	8W-53-6
Power Distribution Center	8W-53-3, 4, 5, 6
Pump-Washer-Windshield	8W-53-4
Relay-Headlamp Washer	8W-53-7
Relay-Wiper High/Low	8W-53-2
Relay-Wiper On/Off	8W-53-2
Relay-Wiper-Rear	8W-53-6
Sensor-Rain	8W-53-4
Sensor-Washer Fluid Level-Front	8W-53-4
Switch-Bank	8W-53-5

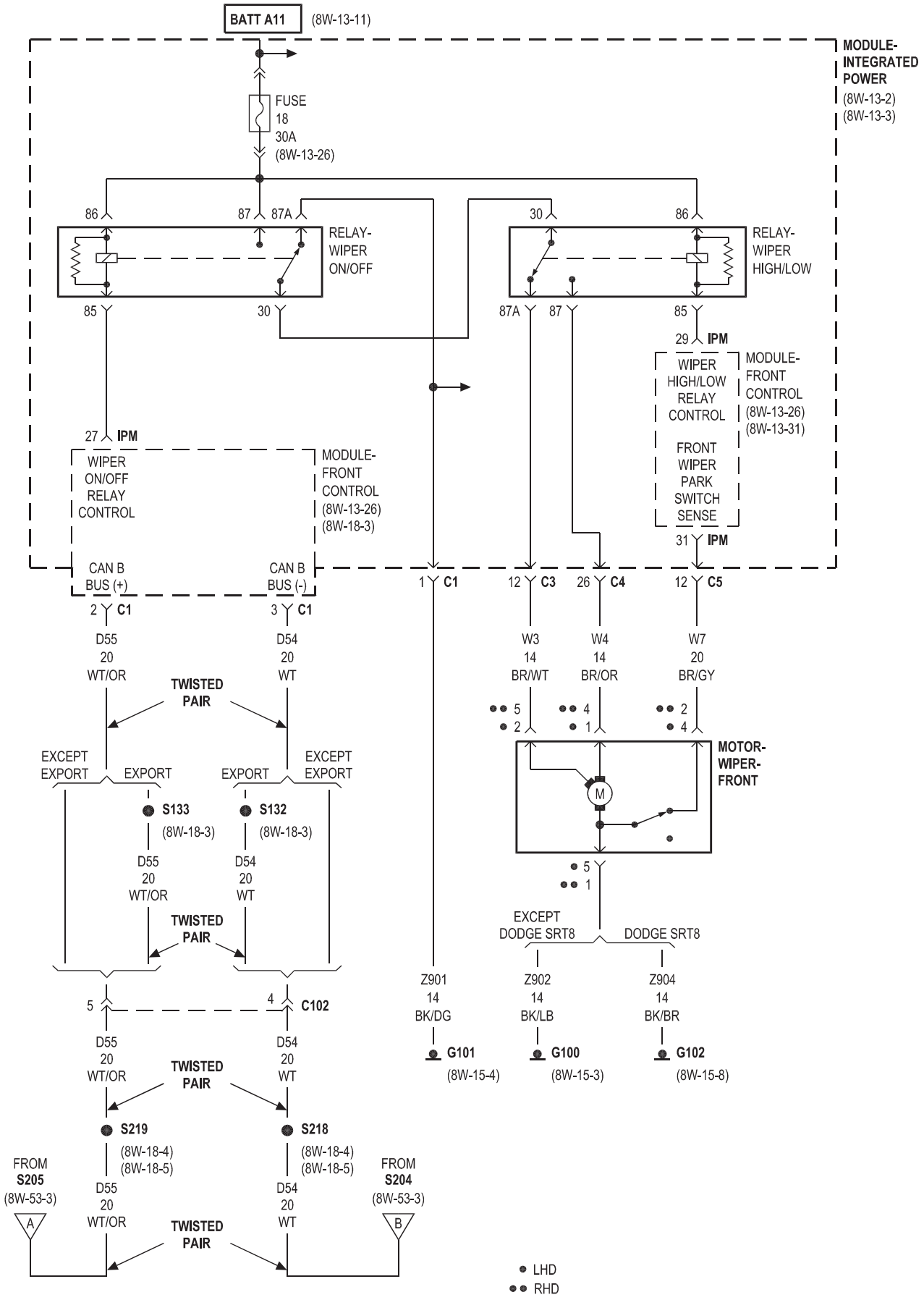
BATT A11
(8W-13-11)
MODULE-
INTEGRATED
POWER
(8W-13-2)
(8W-13-3)
FUSE
18
30A
(8W-13-26)
86
87
87A
RELAY-
WIPER
ON/OFF
85
30
30
86
RELAY-
WIPER
HIGH/LOW
87A
87
85
29 IPM
WIPER
HIGH/LOW
RELAY
CONTROL
FRONT
WIPER
PARK
SWITCH
SENSE
MODULE-
FRONT
CONTROL
(8W-13-26)
(8W-13-31)
31 IPM
27 IPM
WIPER
ON/OFF
RELAY
CONTROL
MODULE-
FRONT
CONTROL
(8W-13-26)
(8W-18-3)
CAN B
BUS (+)
CAN B
BUS (-)
1 C1
12 C3
26 C4
12 C5
2 C1
3 C1
D55
20
WT/OR
D54
20
WT
W3
14
BR/WT
W4
14
BR/OR
W7
20
BR/GY
TWISTED
PAIR
5
2
4
1
2
4
EXCEPT
EXPORT
EXPORT
EXPORT
EXCEPT
EXPORT
MOTOR-
WIPER-
FRONT
M
S133
(8W-18-3)
S132
(8W-18-3)
D55
20
WT/OR
D54
20
WT
TWISTED
PAIR
5
1
EXCEPT
DODGE SRT8
DODGE SRT8
5
4
C102
Z901
14
BK/DG
Z902
14
BK/LB
Z904
14
BK/BR
D55
20
WT/OR
D54
20
WT
TWISTED
PAIR
G101
(8W-15-4)
G100
(8W-15-3)
G102
(8W-15-8)
S219
(8W-18-4)
(8W-18-5)
S218
(8W-18-4)
(8W-18-5)
FROM
S205
(8W-53-3)
FROM
S204
(8W-53-3)
D55
20
WT/OR
D54
20
WT
A
B
TWISTED
PAIR
LHD
RHD

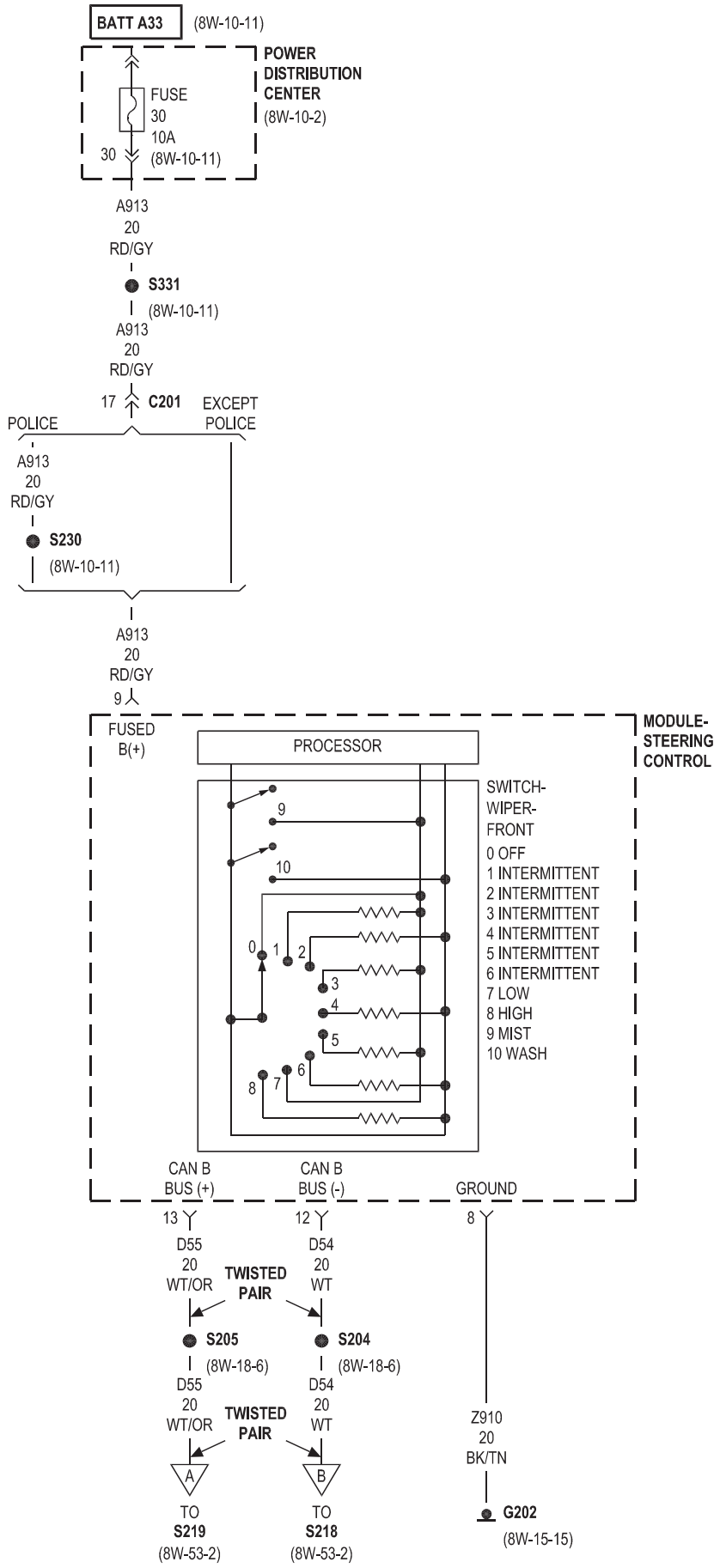
BATT A33
(8W-10-11)
POWER DISTRIBUTION CENTER
(8W-10-2)
FUSE 30 10A
30
(8W-10-11)
A913 20 RD/GY
S331
(8W-10-11)
A913 20 RD/GY
17
C201
EXCEPT POLICE
POLICE
A913 20 RD/GY
S230
(8W-10-11)
A913 20 RD/GY
9
MODULE-STEERING CONTROL
FUSED B(+)
PROCESSOR
SWITCH-WIPER-FRONT
0 OFF
1 INTERMITTENT
2 INTERMITTENT
3 INTERMITTENT
4 INTERMITTENT
5 INTERMITTENT
6 INTERMITTENT
7 LOW
8 HIGH
9 MIST
10 WASH
CAN B BUS (+)
CAN B BUS (-)
GROUND
13
12
8
D55 20 WT/OR
TWISTED PAIR
D54 20 WT
S205
(8W-18-6)
S204
(8W-18-6)
D55 20 WT/OR
TWISTED PAIR
D54 20 WT
A
B
TO S219
(8W-53-2)
TO S218
(8W-53-2)
Z910 20 BK/TN
G202
(8W-15-15)

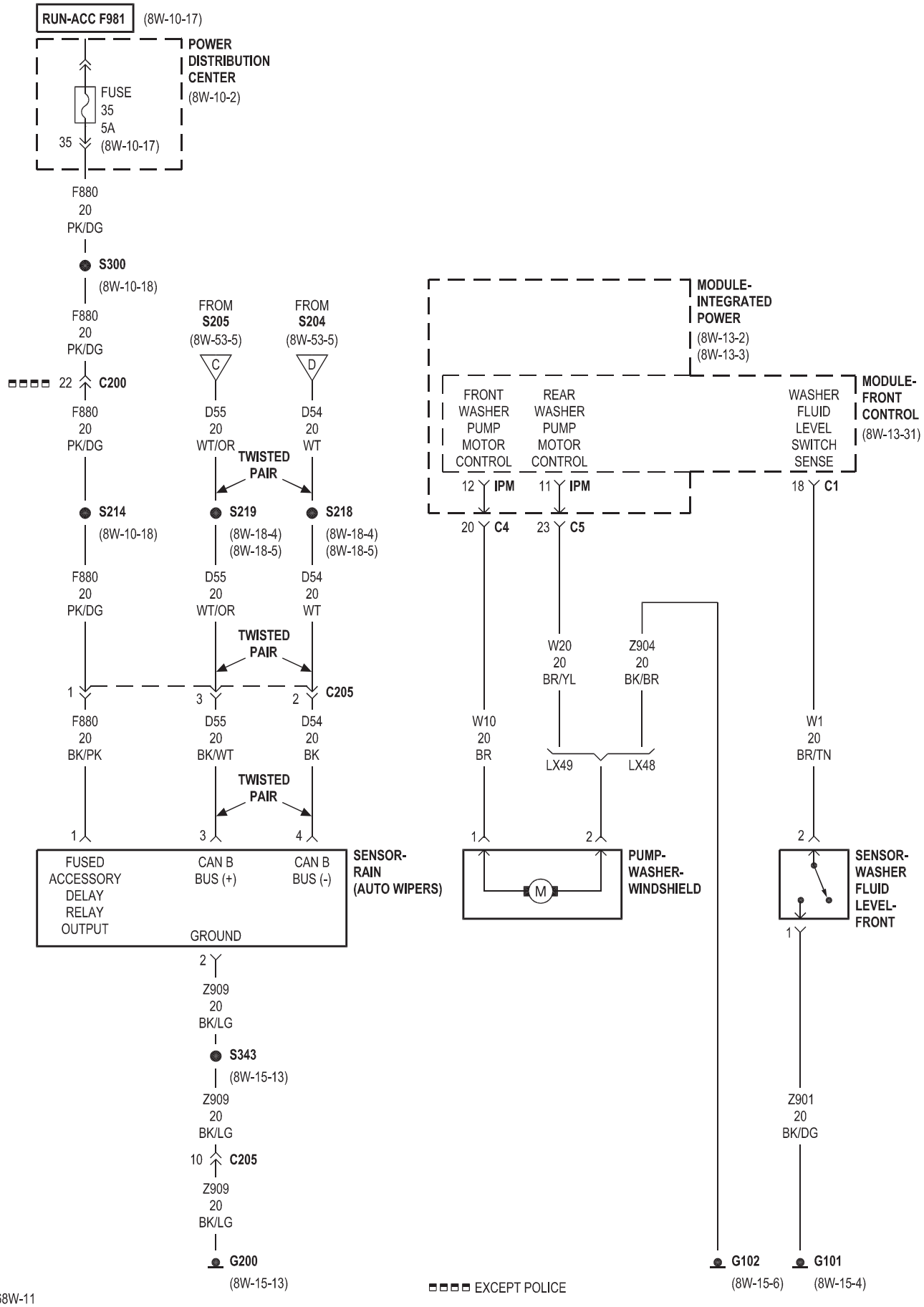
RUN-ACC F981
(8W-10-17)
POWER DISTRIBUTION CENTER
(8W-10-2)
FUSE 35 5A
35
(8W-10-17)
F880 20 PK/DG
S300
(8W-10-18)
F880 20 PK/DG
22 C200
F880 20 PK/DG
S214
(8W-10-18)
F880 20 PK/DG
1
F880 20 BK/PK
1
FUSED ACCESSORY DELAY RELAY OUTPUT
FROM S205
(8W-53-5)
C
D55 20 WT/OR
TWISTED PAIR
S219
(8W-18-4)
(8W-18-5)
D55 20 WT/OR
TWISTED PAIR
3
D55 20 BK/WT
TWISTED PAIR
3
CAN B BUS (+)
FROM S204
(8W-53-5)
D
D54 20 WT
TWISTED PAIR
S218
(8W-18-4)
(8W-18-5)
D54 20 WT
2 C205
D54 20 BK
4
CAN B BUS (-)
SENSOR-RAIN (AUTO WIPERS)
GROUND
2
Z909 20 BK/LG
S343
(8W-15-13)
Z909 20 BK/LG
10 C205
Z909 20 BK/LG
G200
(8W-15-13)
MODULE-INTEGRATED POWER
(8W-13-2)
(8W-13-3)
FRONT WASHER PUMP MOTOR CONTROL
REAR WASHER PUMP MOTOR CONTROL
WASHER FLUID LEVEL SWITCH SENSE
MODULE-FRONT CONTROL
(8W-13-31)
12 IPM
11 IPM
18 C1
20 C4
23 C5
W10 20 BR
W20 20 BR/YL
Z904 20 BK/BR
LX49
LX48
1
2
PUMP-WASHER-WINDSHIELD
M
W1 20 BR/TN
2
SENSOR-WASHER FLUID LEVEL-FRONT
1
Z901 20 BK/DG
G102
(8W-15-6)
G101
(8W-15-4)
EXCEPT POLICE

LX49

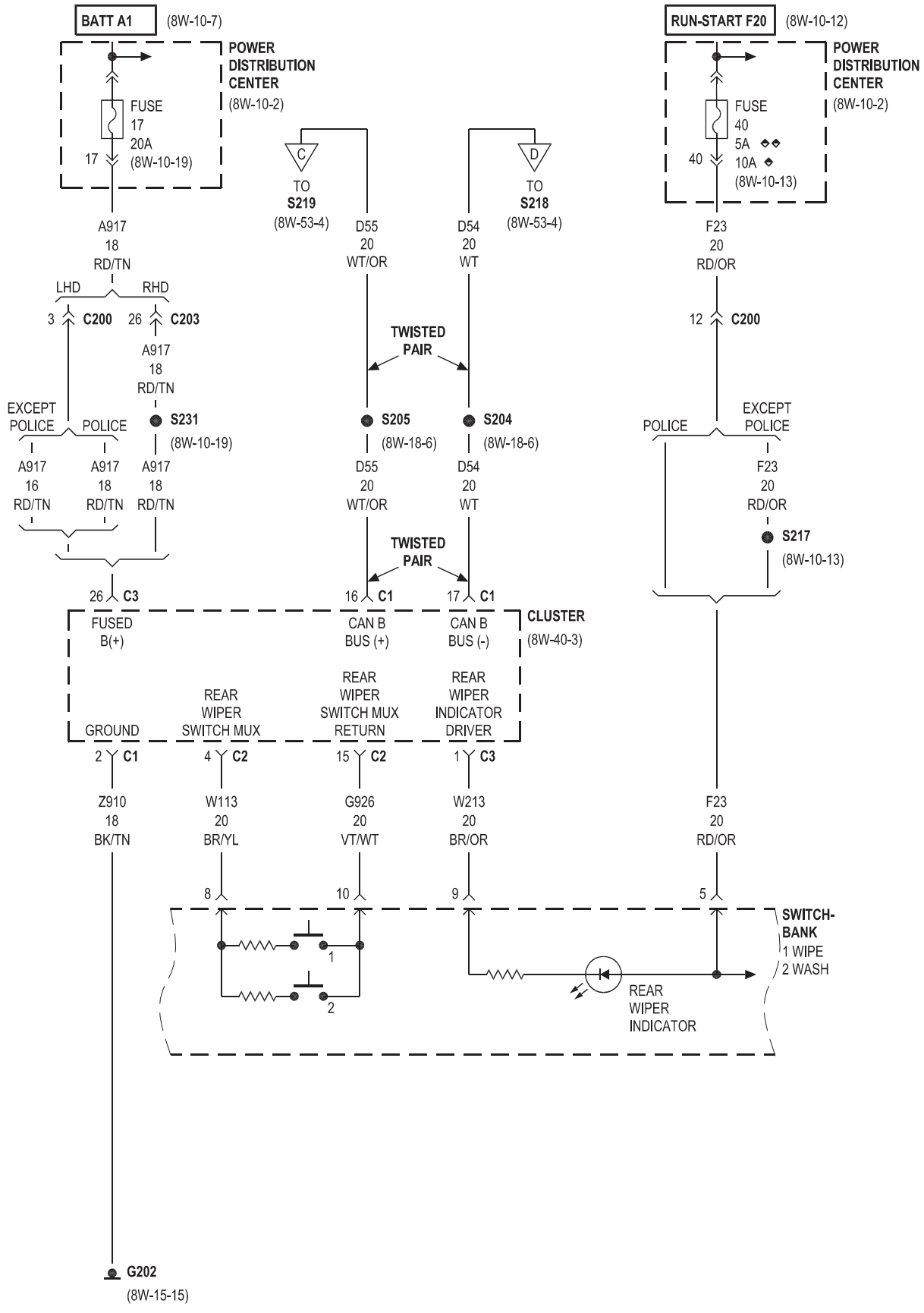

◆ SRT8

◆◆ EXCEPT SRT8

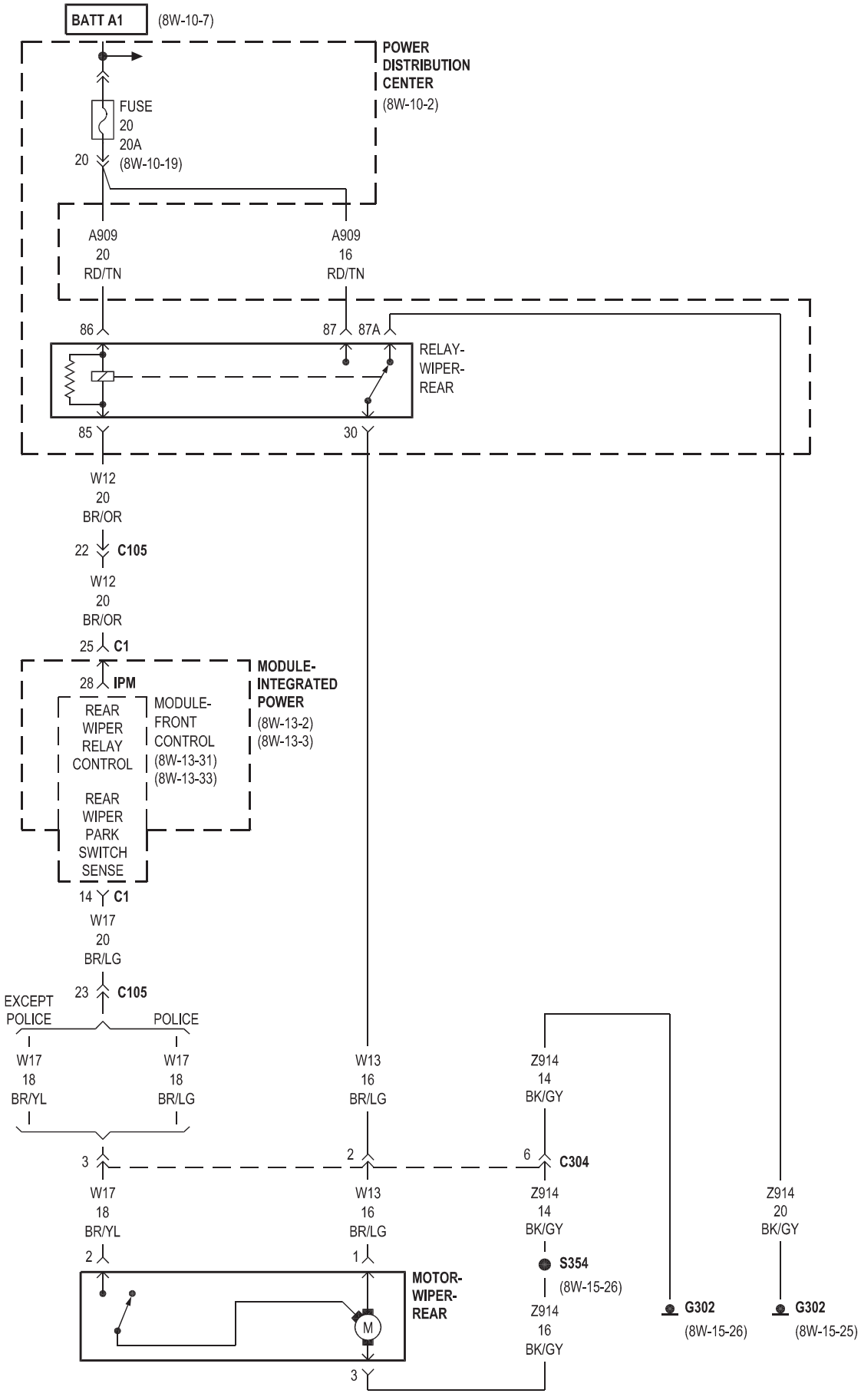
BATT A1
(8W-10-7)
POWER DISTRIBUTION CENTER
(8W-10-2)
FUSE
20
20A
(8W-10-19)
20
A909
20
RD/TN
A909
16
RD/TN
86
87
87A
RELAY-WIPER-REAR
85
30
W12
20
BR/OR
22
C105
W12
20
BR/OR
25
C1
28
IPM
MODULE-INTEGRATED POWER
(8W-13-2)
(8W-13-3)
REAR WIPER RELAY CONTROL
MODULE-FRONT CONTROL
(8W-13-31)
(8W-13-33)
REAR WIPER PARK SWITCH SENSE
14
C1
W17
20
BR/LG
23
C105
EXCEPT POLICE
POLICE
W17
18
BR/YL
W17
18
BR/LG
W13
16
BR/LG
Z914
14
BK/GY
3
2
6
C304
W17
18
BR/YL
W13
16
BR/LG
Z914
14
BK/GY
Z914
20
BK/GY
2
1
S354
(8W-15-26)
MOTOR-WIPER-REAR
M
Z914
16
BK/GY
3
G302
(8W-15-26)
G302
(8W-15-25)

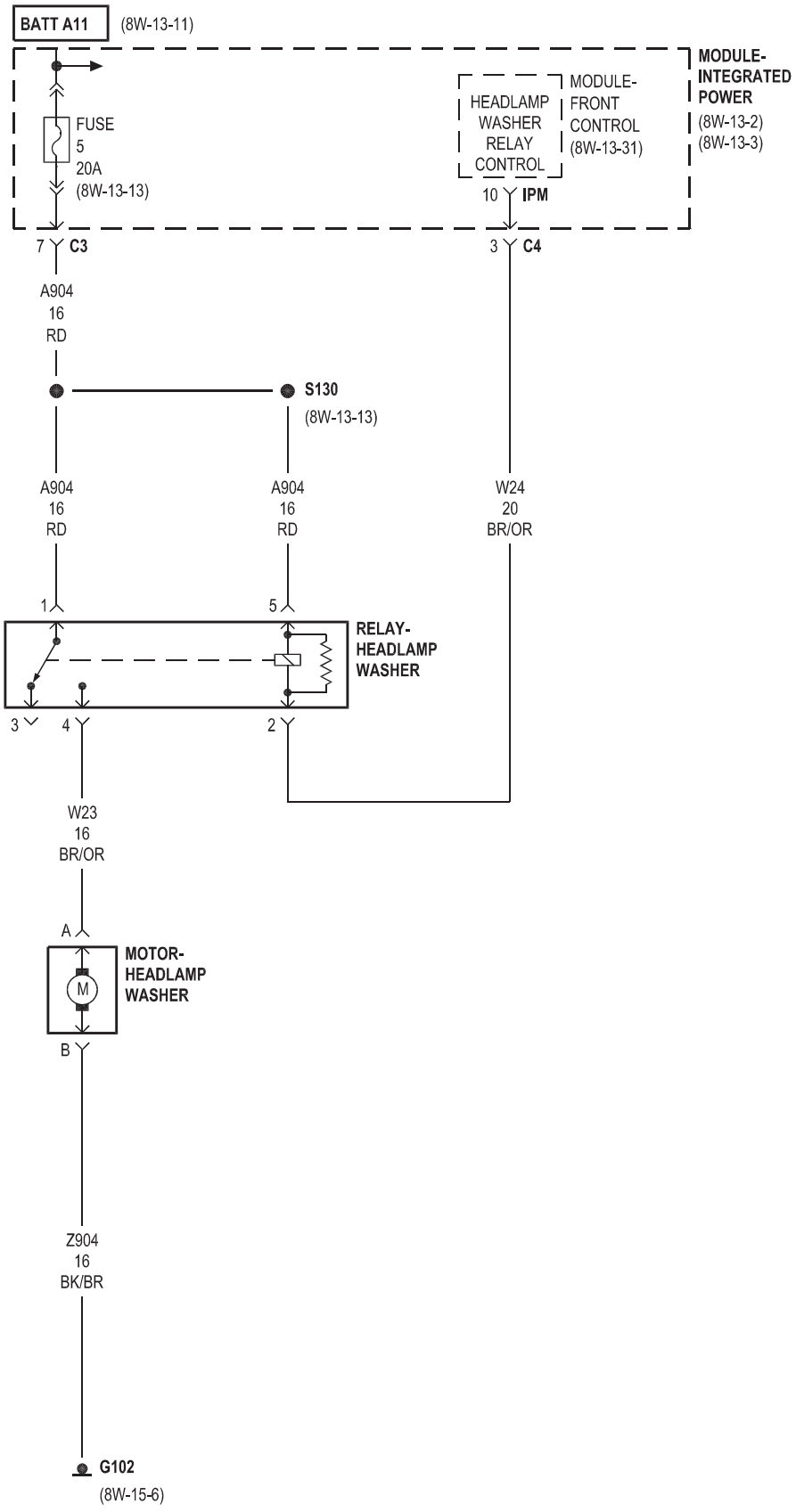
BATT A11
(8W-13-11)
MODULE-
INTEGRATED
POWER
(8W-13-2)
(8W-13-3)
FUSE
5
20A
(8W-13-13)
HEADLAMP
WASHER
RELAY
CONTROL
MODULE-
FRONT
CONTROL
(8W-13-31)
10
IPM
7
C3
3
C4
A904
16
RD
S130
(8W-13-13)
A904
16
RD
A904
16
RD
W24
20
BR/OR
1
5
RELAY-
HEADLAMP
WASHER
3
4
2
W23
16
BR/OR
A
M
MOTOR-
HEADLAMP
WASHER
B
Z904
16
BK/BR
G102
(8W-15-6)

8W-55 NAVIGATION/TELECOMMUNICATIONS

Component	Page
Amplifier-Antenna-Backlite	8W-55-3
Antenna-Global Positioning System	8W-55-2
Backlite-Antenna	8W-55-3
Fuse 36	8W-55-2, 3, 4
Fuse 40	8W-55-5
G200	8W-55-2, 3, 4, 5
Mirror-Inside Rearview	8W-55-5
Module-Front Control	8W-55-3, 4
Module-Hands Free	8W-55-4, 5
Module-Traffic Information Receiver	8W-55-3
Power Distribution Center	8W-55-2, 3, 4, 5
Radio	8W-55-2, 3, 4

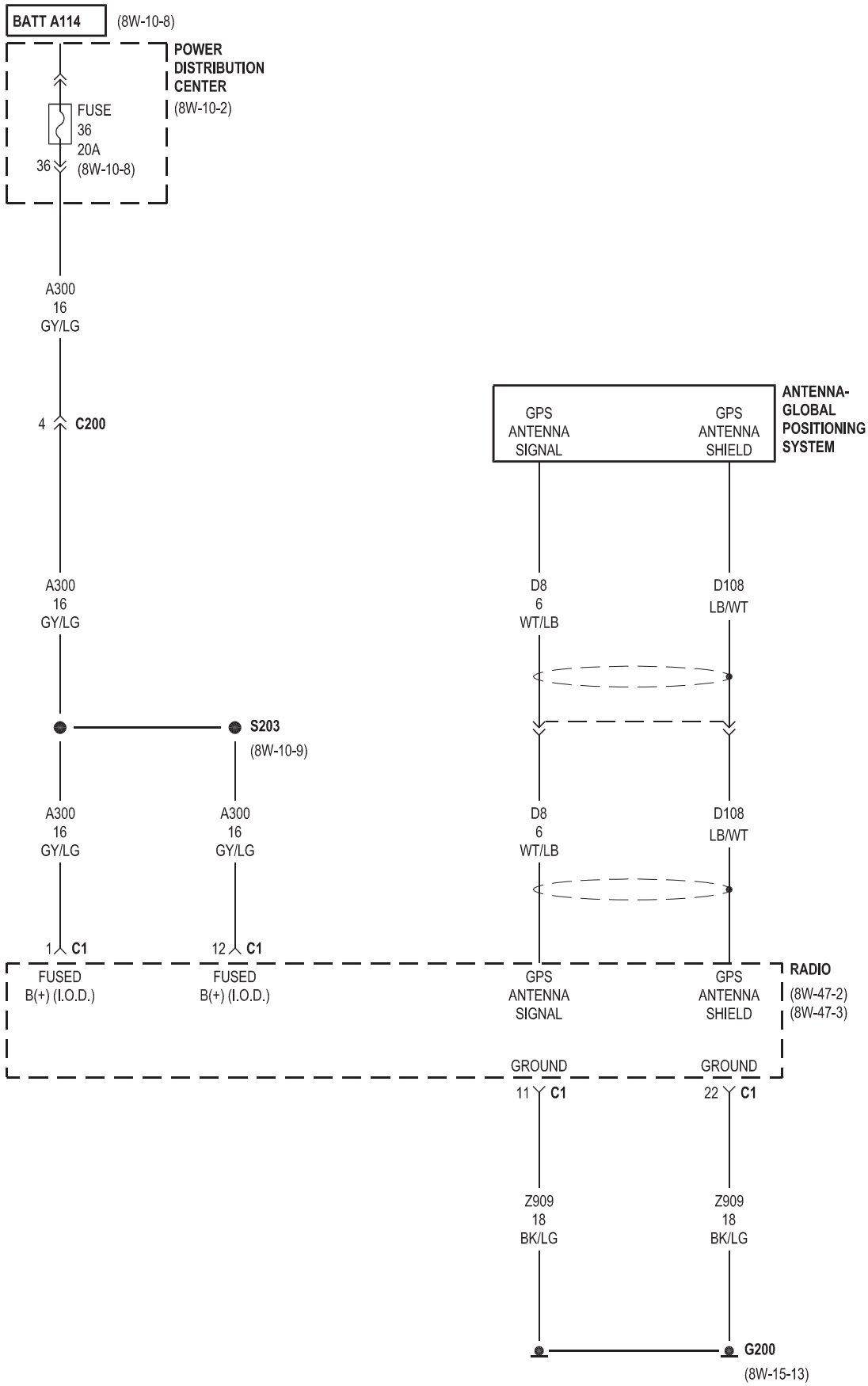
BATT A114
(8W-10-8)
POWER DISTRIBUTION CENTER
(8W-10-2)
FUSE
36
20A
36
(8W-10-8)
A300
16
GY/LG
4
C200
ANTENNA-GLOBAL POSITIONING SYSTEM
GPS ANTENNA SIGNAL
GPS ANTENNA SHIELD
D8
6
WT/LB
D108
LB/WT
S203
(8W-10-9)
1
C1
12
C1
FUSED B(+) (I.O.D.)
FUSED B(+) (I.O.D.)
RADIO
(8W-47-2)
(8W-47-3)
GROUND
11
C1
22
C1
Z909
18
BK/LG
G200
(8W-15-13)

NAVIGATION EXPORT

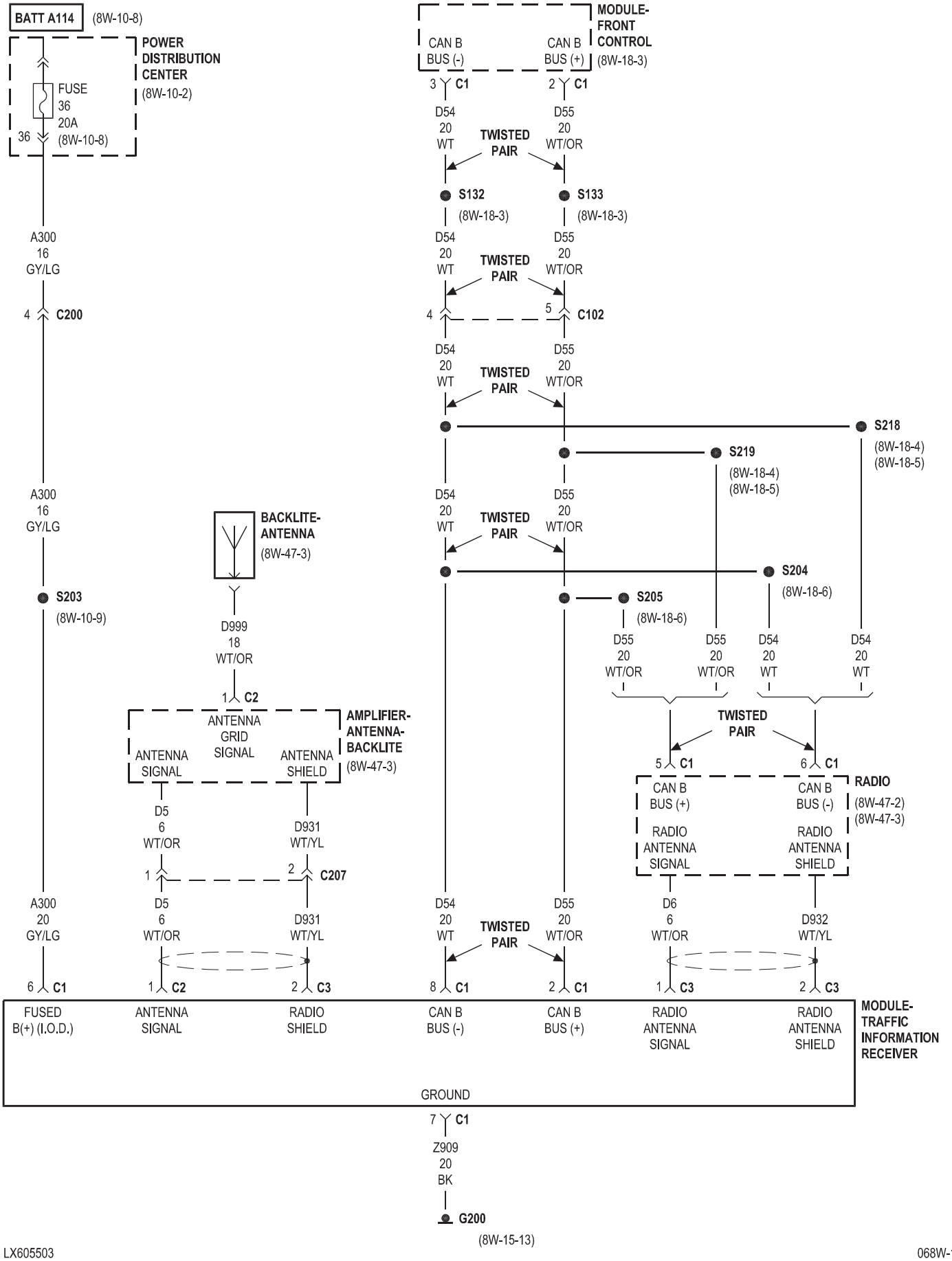

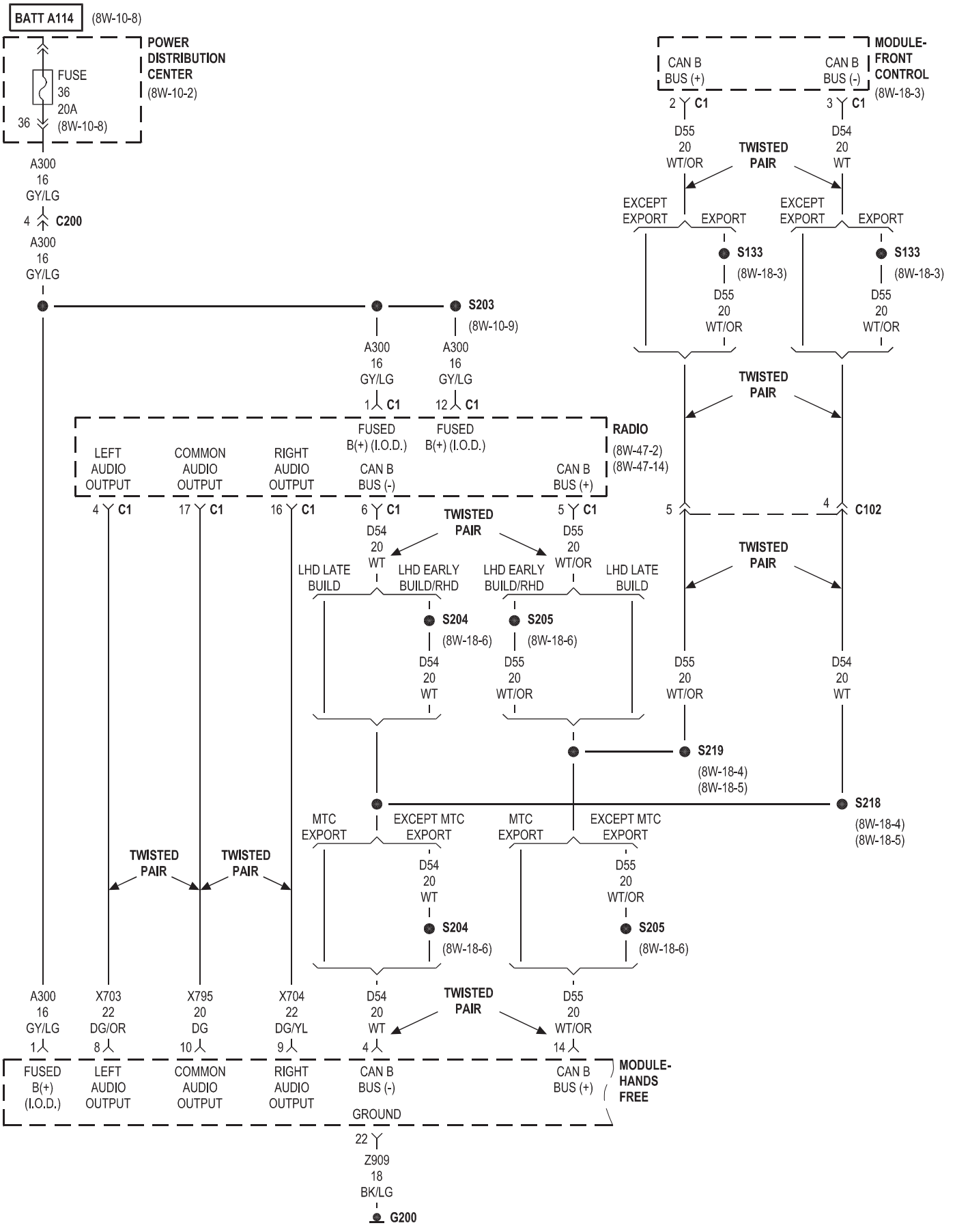
BATT A114
(8W-10-8)
POWER DISTRIBUTION CENTER
(8W-10-2)
FUSE 36 20A
36
(8W-10-8)
A300 16 GY/LG
4 C200
A300 16 GY/LG
S203
(8W-10-9)
A300 16 GY/LG
1 C1
A300 16 GY/LG
12 C1
RADIO
(8W-47-2)
(8W-47-14)
LEFT AUDIO OUTPUT
COMMON AUDIO OUTPUT
RIGHT AUDIO OUTPUT
FUSED B(+) (I.O.D.)
CAN B BUS (-)
FUSED B(+) (I.O.D.)
CAN B BUS (+)
4 C1
17 C1
16 C1
6 C1
5 C1
TWISTED PAIR
D54 20 WT
D55 20 WT/OR
LHD LATE BUILD
LHD EARLY BUILD/RHD
LHD EARLY BUILD/RHD
LHD LATE BUILD
S204
(8W-18-6)
S205
(8W-18-6)
D54 20 WT
D55 20 WT/OR
MODULE-FRONT CONTROL
(8W-18-3)
CAN B BUS (+)
CAN B BUS (-)
2 C1
3 C1
D55 20 WT/OR
D54 20 WT
TWISTED PAIR
EXCEPT EXPORT
EXPORT
EXCEPT EXPORT
EXPORT
S133
(8W-18-3)
S133
(8W-18-3)
D55 20 WT/OR
D55 20 WT/OR
TWISTED PAIR
5
4 C102
TWISTED PAIR
D55 20 WT/OR
D54 20 WT
S219
(8W-18-4)
(8W-18-5)
S218
(8W-18-4)
(8W-18-5)
MTC EXPORT
EXCEPT MTC EXPORT
MTC EXPORT
EXCEPT MTC EXPORT
TWISTED PAIR
TWISTED PAIR
D54 20 WT
D55 20 WT/OR
S204
(8W-18-6)
S205
(8W-18-6)
A300 16 GY/LG
1
X703 22 DG/OR
8
X795 20 DG
10
X704 22 DG/YL
9
D54 20 WT
4
TWISTED PAIR
D55 20 WT/OR
14
FUSED B(+) (I.O.D.)
LEFT AUDIO OUTPUT
COMMON AUDIO OUTPUT
RIGHT AUDIO OUTPUT
CAN B BUS (-)
CAN B BUS (+)
MODULE-HANDS FREE
GROUND
22
Z909 18 BK/LG
G200
(8W-15-12)

HANDS FREE

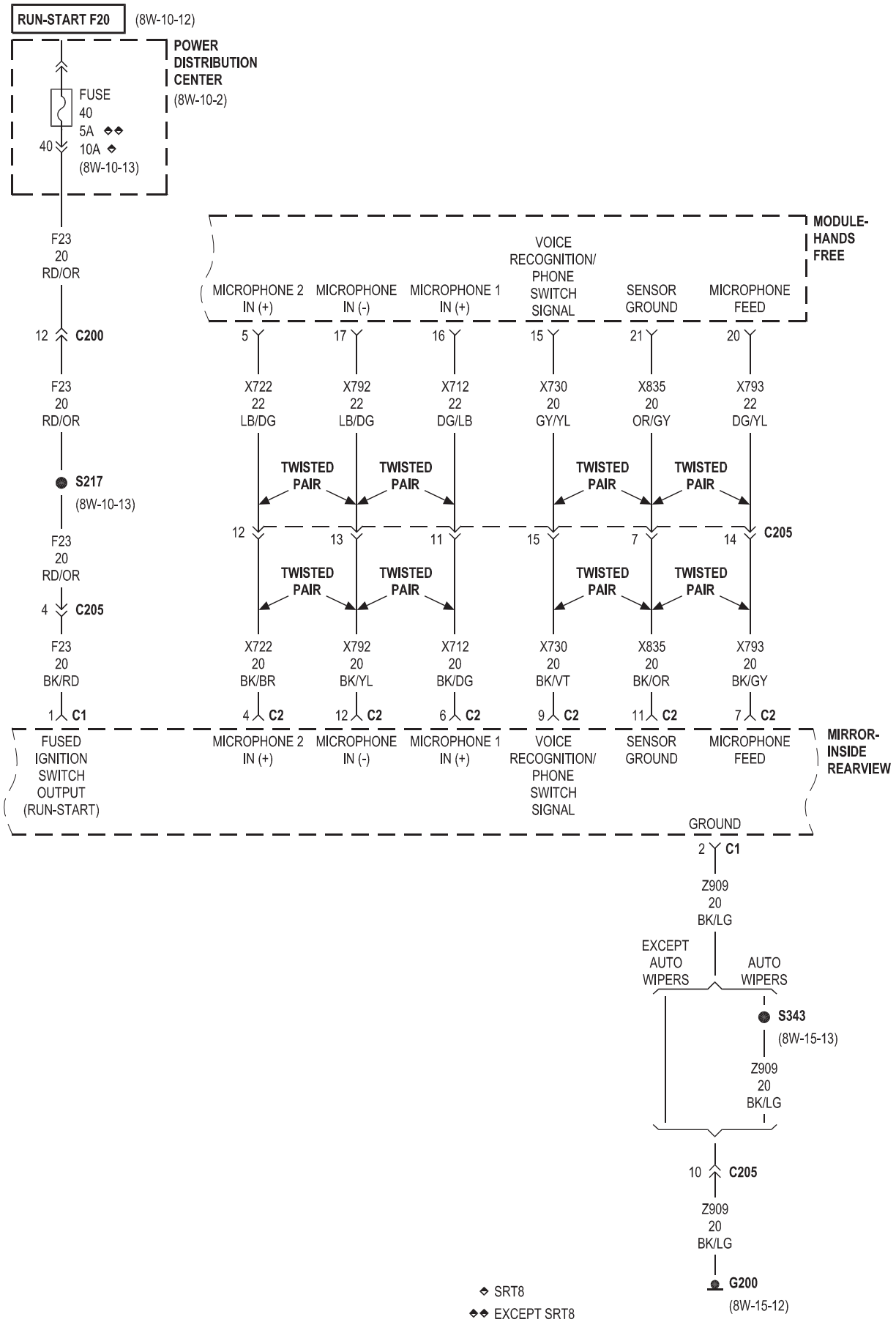
RUN-START F20
(8W-10-12)
POWER DISTRIBUTION CENTER
(8W-10-2)
FUSE 40 5A ◆◆ 10A ◆
40
(8W-10-13)
F23 20 RD/OR
12 C200
F23 20 RD/OR
S217
(8W-10-13)
F23 20 RD/OR
4 C205
F23 20 BK/RD
1 C1
FUSED IGNITION SWITCH OUTPUT (RUN-START)
MODULE-HANDS FREE
MICROPHONE 2 IN (+)
MICROPHONE IN (-)
MICROPHONE 1 IN (+)
VOICE RECOGNITION/ PHONE SWITCH SIGNAL
SENSOR GROUND
MICROPHONE FEED
5
17
16
15
21
20
X722 22 LB/DG
X792 22 LB/DG
X712 22 DG/LB
X730 20 GY/YL
X835 20 OR/GY
X793 22 DG/YL
TWISTED PAIR
12
13
11
15
7
14
C205
X722 20 BK/BR
X792 20 BK/YL
X712 20 BK/DG
X730 20 BK/VT
X835 20 BK/OR
X793 20 BK/GY
4 C2
12 C2
6 C2
9 C2
11 C2
7 C2
MIRROR-INSIDE REARVIEW
GROUND
2 C1
Z909 20 BK/LG
EXCEPT AUTO WIPERS
AUTO WIPERS
S343
(8W-15-13)
Z909 20 BK/LG
10 C205
Z909 20 BK/LG
G200
(8W-15-12)
◆ SRT8
◆◆ EXCEPT SRT8

8W-56 CONVENIENCE SYSTEMS

Component	Page
Circuit Breaker No. 1	8W-56-3
Display-Park Assist	8W-56-6
Fuse 3	8W-56-2
Fuse 41	8W-56-6
G300	8W-56-2, 3
G302	8W-56-6
Module-Door-Driver	8W-56-3
Module-Front Control	8W-56-2, 4, 6
Module-Integrated Power	8W-56-2
Module-Memory Seat	8W-56-3, 5
Module-Park Assist	8W-56-6, 7, 8
Module-Steering Control	8W-56-4
Motor-Adjustable Pedals	8W-56-2, 3
Motor-Steering Telescope	8W-56-5
Motor-Steering Tilt	8W-56-5
Power Distribution Center	8W-56-3, 6
Relay-Adjustable Pedals	8W-56-2
Relay-Run	8W-56-6
Sensor-Adjustable Pedals	8W-56-5
Sensor-Park Assist-No. 7	8W-56-7, 8
Sensor-Park Assist-No. 8	8W-56-7, 8
Sensor-Park Assist-No. 9	8W-56-7, 8
Sensor-Park Assist-No. 10	8W-56-7, 8
Switch-Adjustable Pedals	8W-56-2, 3
Switch-Memory Set	8W-56-3

LHD ADJUSTABLE PEDALS EXCEPT MEMORY

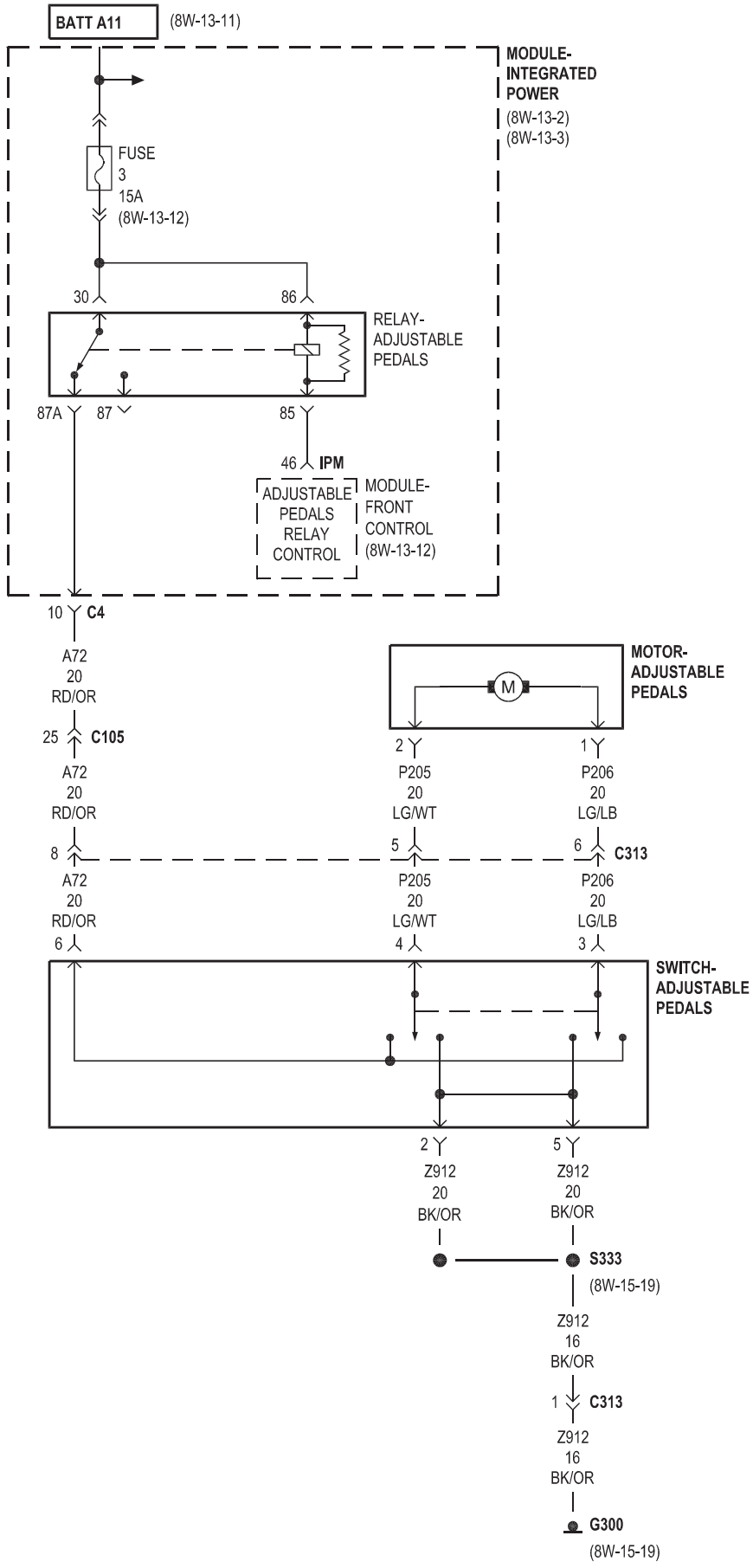

MEMORY

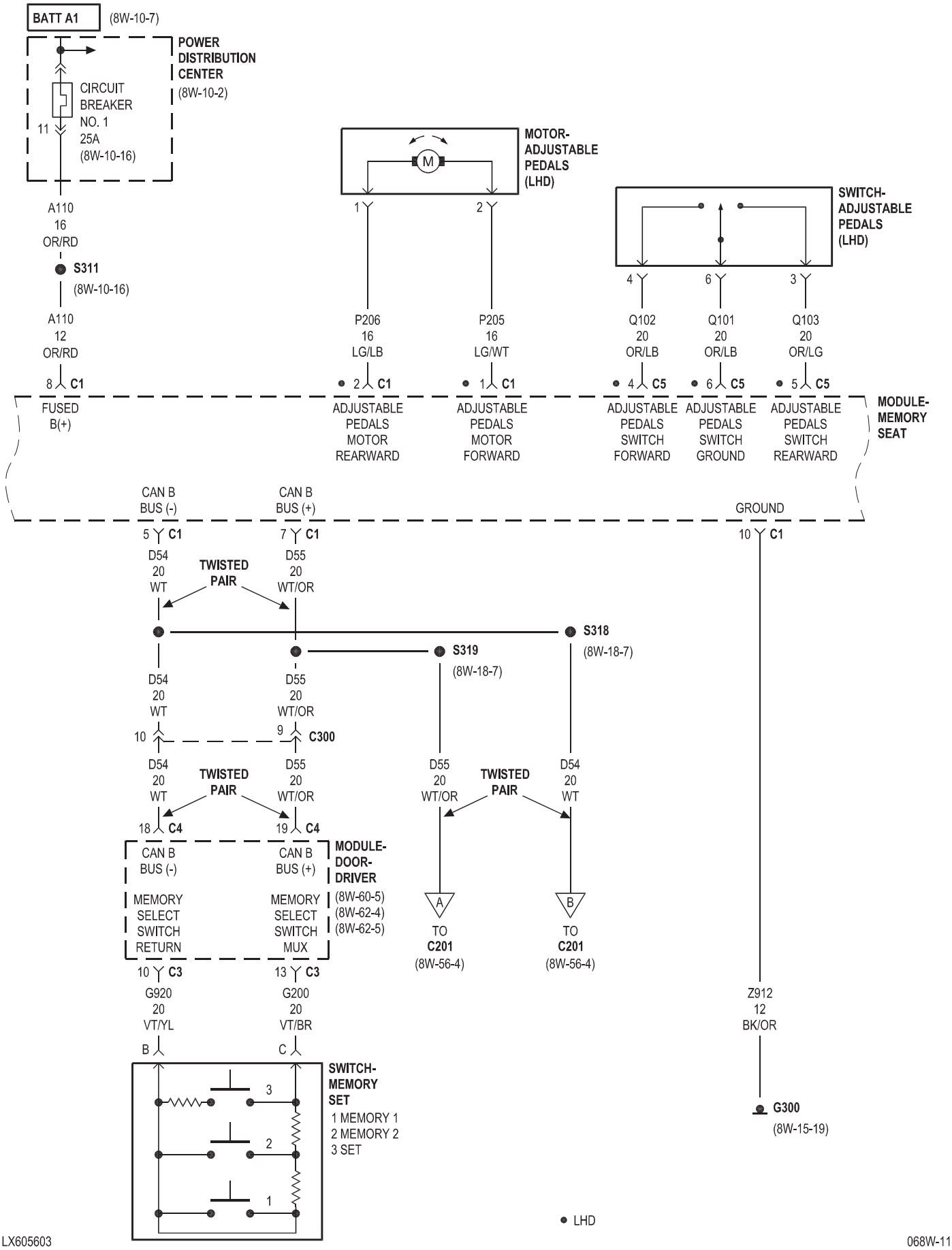
BATT A1
(8W-10-7)
POWER DISTRIBUTION CENTER
(8W-10-2)
CIRCUIT BREAKER NO. 1 25A
(8W-10-16)
11
A110 16 OR/RD
S311
(8W-10-16)
A110 12 OR/RD
8 C1
FUSED B(+)
MOTOR-ADJUSTABLE PEDALS (LHD)
M
1
2
P206 16 LG/LB
2 C1
ADJUSTABLE PEDALS MOTOR REARWARD
P205 16 LG/WT
1 C1
ADJUSTABLE PEDALS MOTOR FORWARD
SWITCH-ADJUSTABLE PEDALS (LHD)
4
6
3
Q102 20 OR/LB
4 C5
ADJUSTABLE PEDALS SWITCH FORWARD
Q101 20 OR/LB
6 C5
ADJUSTABLE PEDALS SWITCH GROUND
Q103 20 OR/LG
5 C5
ADJUSTABLE PEDALS SWITCH REARWARD
MODULE-MEMORY SEAT
CAN B BUS (-)
5 C1
CAN B BUS (+)
7 C1
GROUND
10 C1
D54 20 WT
TWISTED PAIR
D55 20 WT/OR
S318
(8W-18-7)
S319
(8W-18-7)
D54 20 WT
D55 20 WT/OR
10
9 C300
D54 20 WT
TWISTED PAIR
D55 20 WT/OR
18 C4
19 C4
D55 20 WT/OR
TWISTED PAIR
D54 20 WT
CAN B BUS (-)
CAN B BUS (+)
MODULE-DOOR-DRIVER
MEMORY SELECT SWITCH RETURN
MEMORY SELECT SWITCH MUX
(8W-60-5)
(8W-62-4)
(8W-62-5)
A
B
TO C201
(8W-56-4)
TO C201
(8W-56-4)
10 C3
13 C3
G920 20 VT/YL
G200 20 VT/BR
Z912 12 BK/OR
B
C
G300
(8W-15-19)
SWITCH-MEMORY SET
1 MEMORY 1
2 MEMORY 2
3 SET
3
2
1
LHD

LHD MEMORY

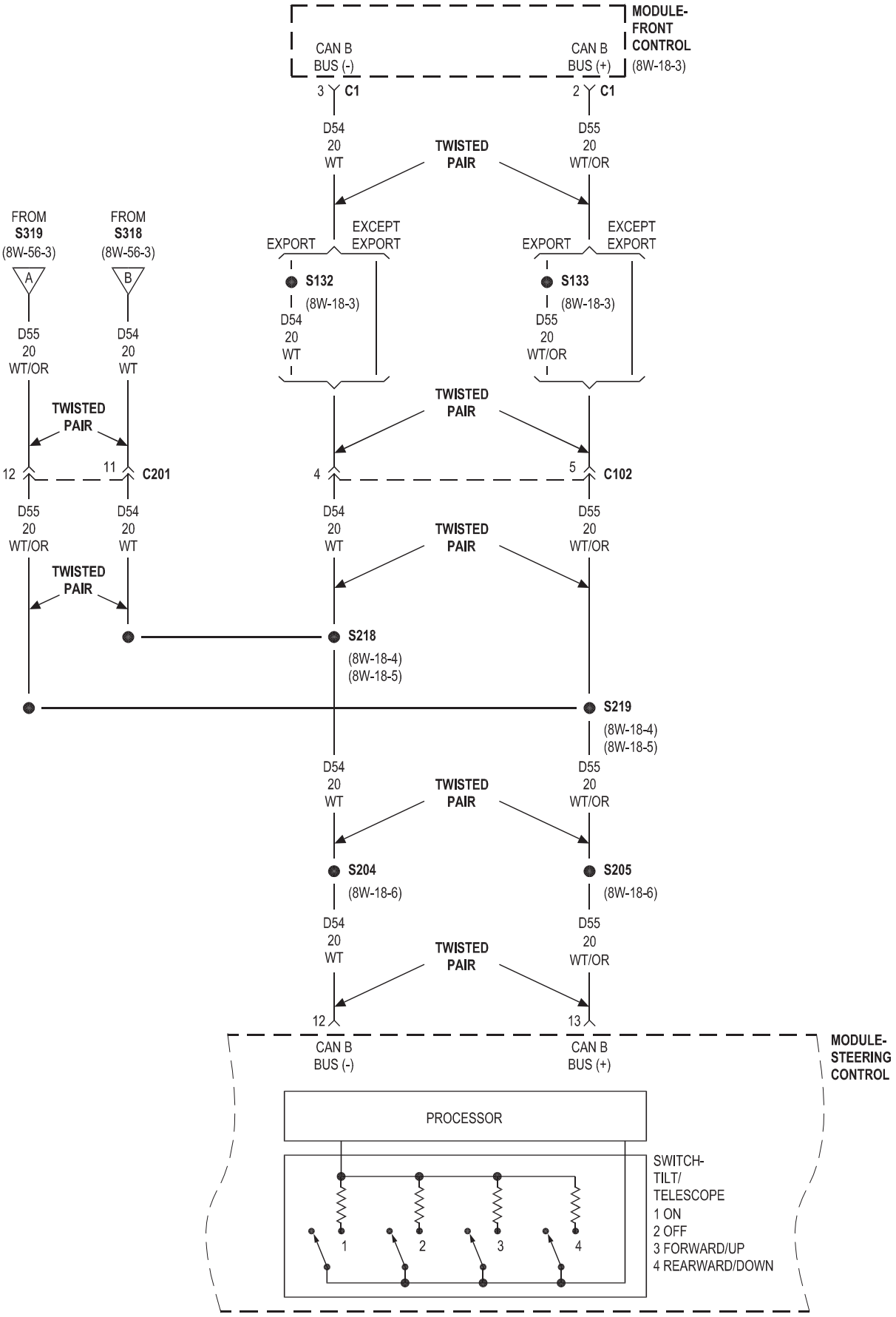
MODULE-
FRONT
CONTROL
(8W-18-3)
CAN B
BUS (-)
CAN B
BUS (+)
3 C1
2 C1
D54
20
WT
D55
20
WT/OR
TWISTED
PAIR
FROM
S319
(8W-56-3)
FROM
S318
(8W-56-3)
A
B
EXPORT
EXCEPT
EXPORT
S132
(8W-18-3)
S133
(8W-18-3)
12
11
C201
4
5
C102
S218
(8W-18-4)
(8W-18-5)
S219
(8W-18-4)
(8W-18-5)
S204
(8W-18-6)
S205
(8W-18-6)
MODULE-
STEERING
CONTROL
PROCESSOR
SWITCH-
TILT/
TELESCOPE
1 ON
2 OFF
3 FORWARD/UP
4 REARWARD/DOWN

LHD MEMORY

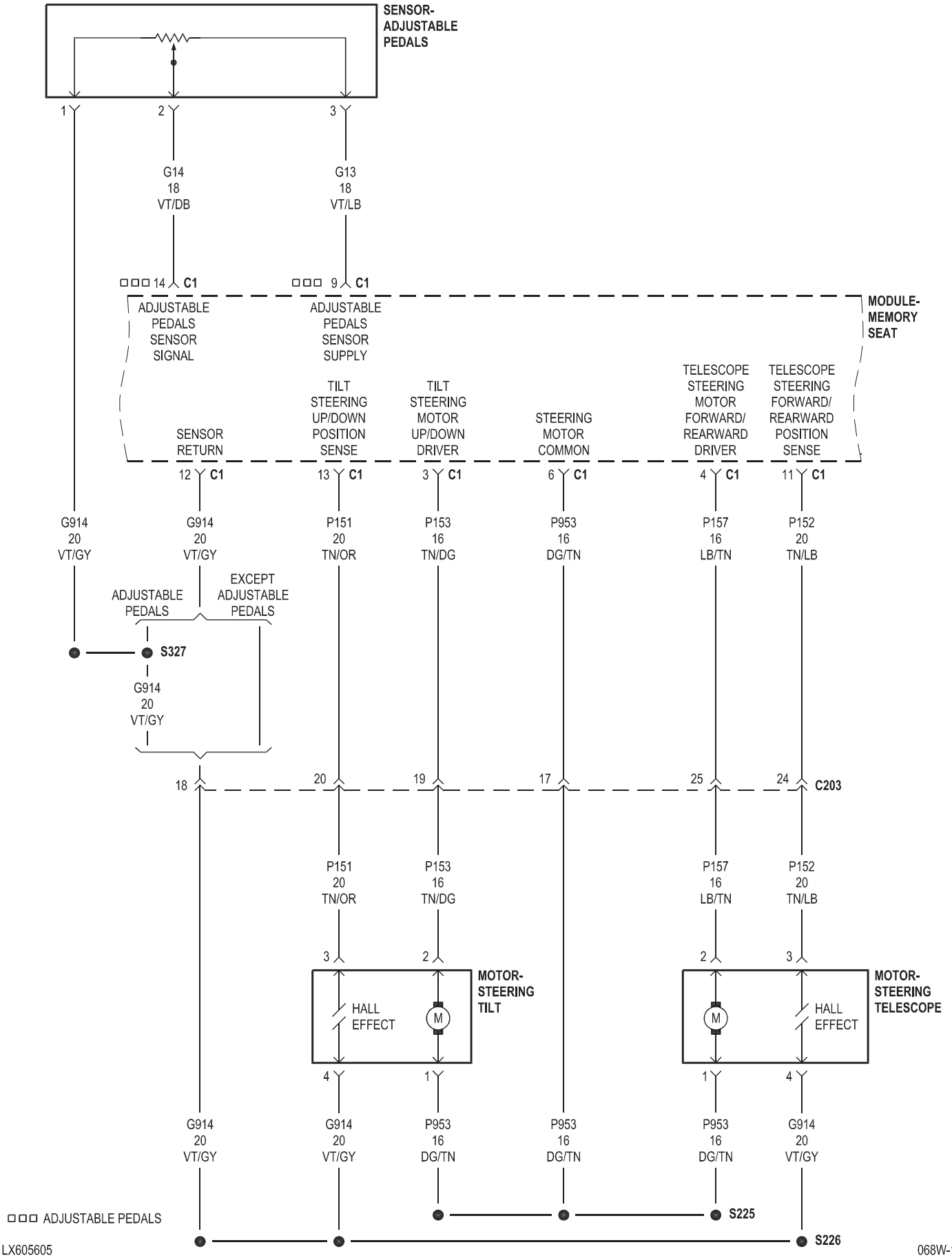

LX605605

068W-11

PARKTRONICS

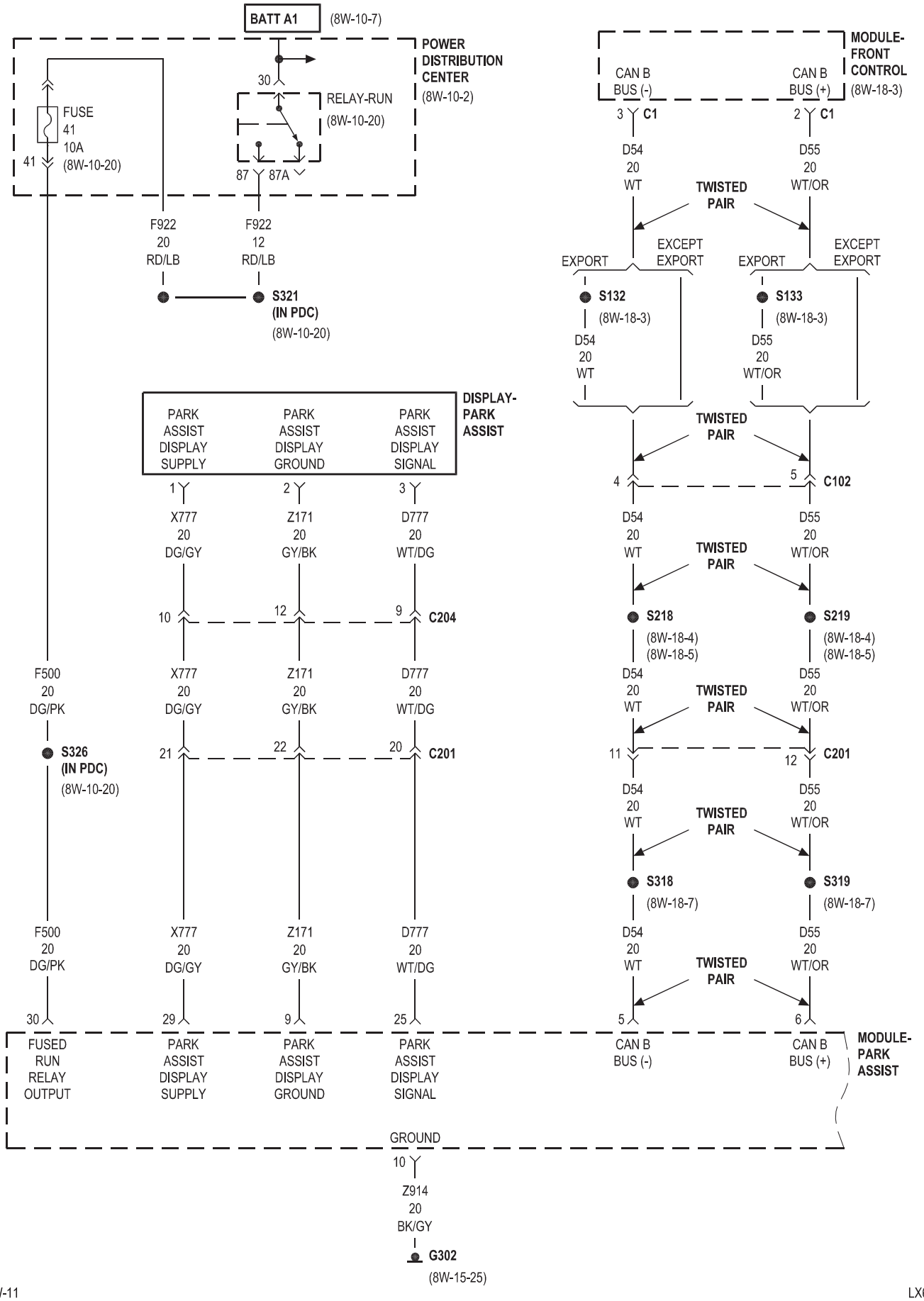

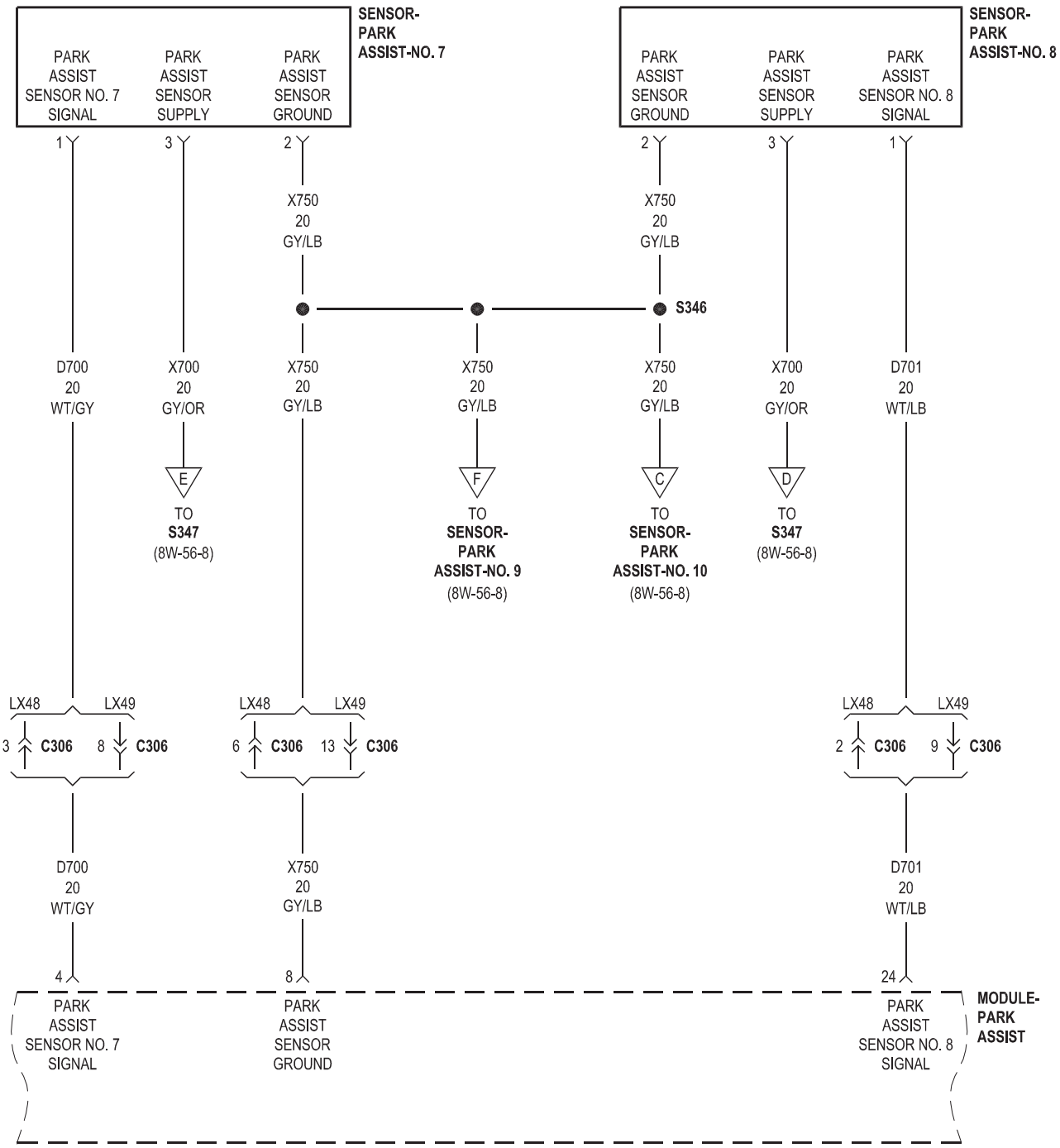
SENSOR-PARK ASSIST-NO. 7
PARK ASSIST SENSOR NO. 7 SIGNAL
PARK ASSIST SENSOR SUPPLY
PARK ASSIST SENSOR GROUND
SENSOR-PARK ASSIST-NO. 8
PARK ASSIST SENSOR GROUND
PARK ASSIST SENSOR SUPPLY
PARK ASSIST SENSOR NO. 8 SIGNAL
1
3
2
2
3
1
X750 20 GY/LB
X750 20 GY/LB
S346
D700 20 WT/GY
X700 20 GY/OR
X750 20 GY/LB
X750 20 GY/LB
X750 20 GY/LB
X700 20 GY/OR
D701 20 WT/LB
E
F
C
D
TO S347 (8W-56-8)
TO SENSOR-PARK ASSIST-NO. 9 (8W-56-8)
TO SENSOR-PARK ASSIST-NO. 10 (8W-56-8)
TO S347 (8W-56-8)
LX48
LX49
3 C306 8 C306
6 C306 13 C306
2 C306 9 C306
D700 20 WT/GY
X750 20 GY/LB
D701 20 WT/LB
4
8
24
PARK ASSIST SENSOR NO. 7 SIGNAL
PARK ASSIST SENSOR GROUND
PARK ASSIST SENSOR NO. 8 SIGNAL
MODULE-PARK ASSIST

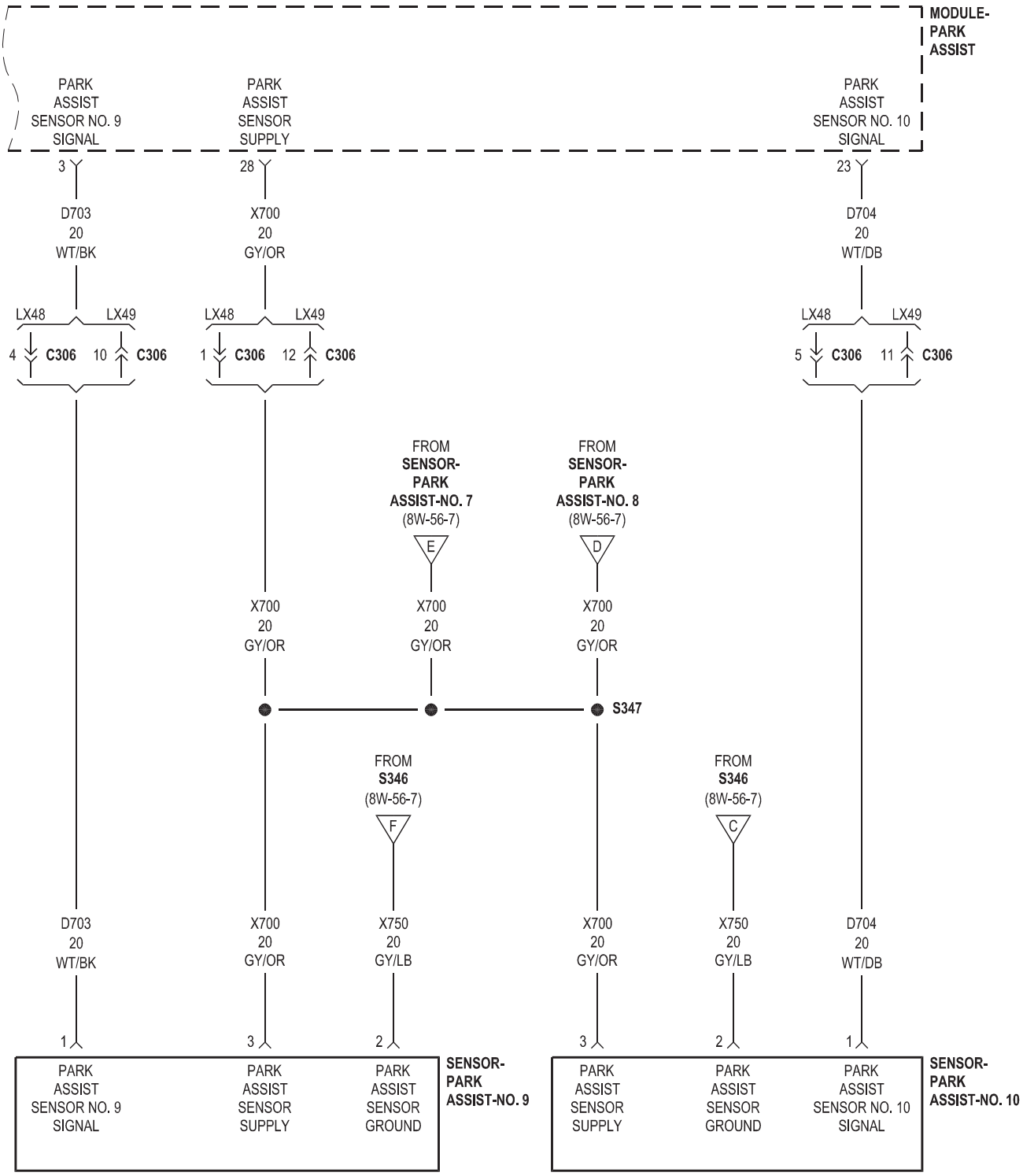
MODULE-PARK ASSIST
PARK ASSIST SENSOR NO. 9 SIGNAL
PARK ASSIST SENSOR SUPPLY
PARK ASSIST SENSOR NO. 10 SIGNAL
3
28
23
D703 20 WT/BK
X700 20 GY/OR
D704 20 WT/DB
LX48
LX49
4 C306 10 C306
1 C306 12 C306
5 C306 11 C306
FROM SENSOR-PARK ASSIST-NO. 7 (8W-56-7)
FROM SENSOR-PARK ASSIST-NO. 8 (8W-56-7)
E
D
X700 20 GY/OR
S347
FROM S346 (8W-56-7)
F
C
X750 20 GY/LB
1
3
2
PARK ASSIST SENSOR NO. 9 SIGNAL
PARK ASSIST SENSOR SUPPLY
PARK ASSIST SENSOR GROUND
SENSOR-PARK ASSIST-NO. 9
PARK ASSIST SENSOR NO. 10 SIGNAL
SENSOR-PARK ASSIST-NO. 10

8W-60 POWER WINDOWS

Component	Page
Circuit Breaker No. 3	8W-60-2, 4, 5, 6
G300	8W-60-2, 4, 5
Module-Door-Driver	8W-60-4, 5
Module-Door-Passenger	8W-60-6
Module-Front Control	8W-60-5
Motor-Window-Driver	8W-60-3
Motor-Window-Driver Express	8W-60-5
Motor-Window-Left Rear	8W-60-2, 4
Motor-Window-Passenger	8W-60-3
Motor-Window-Passenger Express	8W-60-6
Motor-Window-Right Rear	8W-60-2, 4
Power Distribution Center	8W-60-2, 4, 5, 6
Relay-Accessory Delay	8W-60-2, 4, 5, 6
Switch-Power Window-Left Rear	8W-60-2, 4
Switch-Power Window-Right Rear	8W-60-2, 4
Switch-Window/Door Lock-Driver	8W-60-2, 3
Switch-Window/Door Lock-Driver Express	8W-60-4, 5
Switch-Window/Door Lock-Passenger	8W-60-3
Switch-Window/Door Lock-Passenger Express	8W-60-6

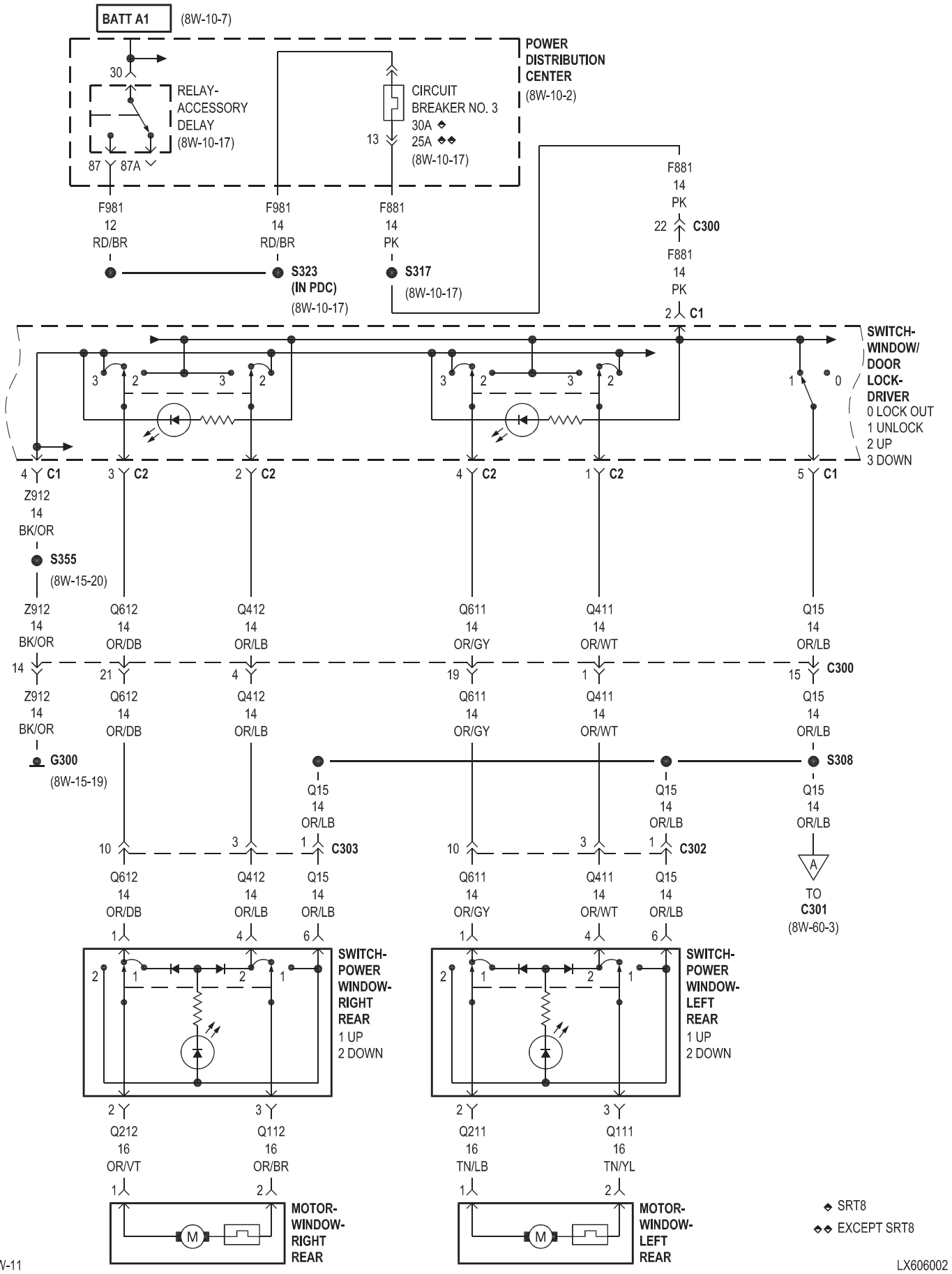
BATT A1
(8W-10-7)
POWER DISTRIBUTION CENTER
(8W-10-2)
RELAY-ACCESSORY DELAY
(8W-10-17)
CIRCUIT BREAKER NO. 3
30A ◆
25A ◆◆
(8W-10-17)
F981 12 RD/BR
F981 14 RD/BR
F881 14 PK
F881 14 PK
22 C300
F881 14 PK
2 C1
S323 (IN PDC)
(8W-10-17)
S317
(8W-10-17)
SWITCH-WINDOW/DOOR LOCK-DRIVER
0 LOCK OUT
1 UNLOCK
2 UP
3 DOWN
4 C1
3 C2
2 C2
4 C2
1 C2
5 C1
Z912 14 BK/OR
S355
(8W-15-20)
Q612 14 OR/DB
Q412 14 OR/LB
Q611 14 OR/GY
Q411 14 OR/WT
Q15 14 OR/LB
14 C300
15 C300
G300
(8W-15-19)
S308
C303
C302
TO C301
(8W-60-3)
SWITCH-POWER WINDOW-RIGHT REAR
1 UP
2 DOWN
SWITCH-POWER WINDOW-LEFT REAR
1 UP
2 DOWN
Q212 16 OR/VT
Q112 16 OR/BR
Q211 16 TN/LB
Q111 16 TN/YL
MOTOR-WINDOW-RIGHT REAR
MOTOR-WINDOW-LEFT REAR
◆ SRT8
◆◆ EXCEPT SRT8

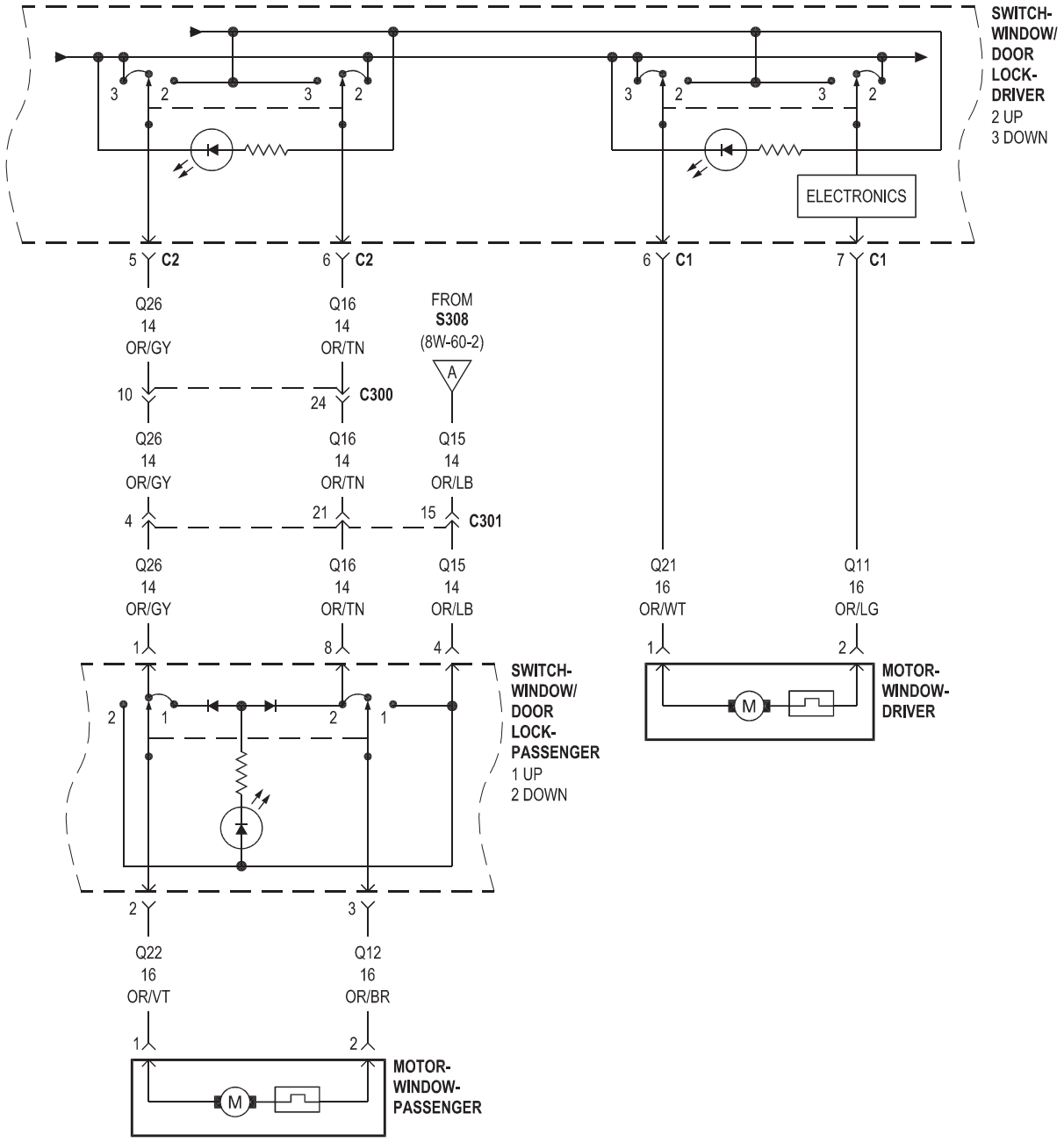
SWITCH-
WINDOW/
DOOR
LOCK-
DRIVER
2 UP
3 DOWN
ELECTRONICS
5 C2
6 C2
6 C1
7 C1
Q26
14
OR/GY
Q16
14
OR/TN
FROM
S308
(8W-60-2)
A
10
24
C300
Q15
14
OR/LB
4
21
15
C301
Q21
16
OR/WT
Q11
16
OR/LG
1
8
4
2
SWITCH-
WINDOW/
DOOR
LOCK-
PASSENGER
1 UP
2 DOWN
MOTOR-
WINDOW-
DRIVER
3
Q22
16
OR/VT
Q12
16
OR/BR
MOTOR-
WINDOW-
PASSENGER
M

EXCEPT BASE

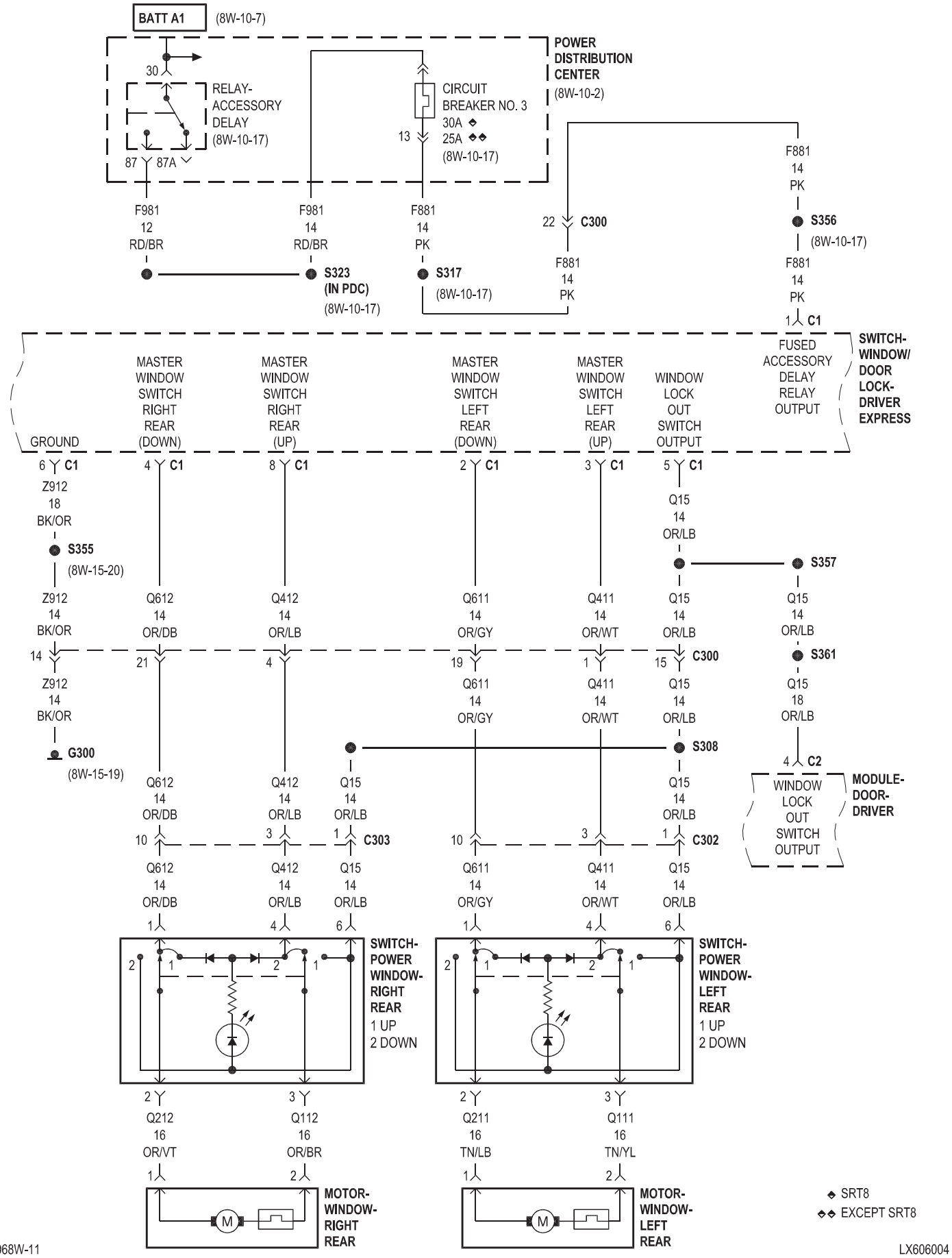
BATT A1
(8W-10-7)
POWER DISTRIBUTION CENTER
(8W-10-2)
30
RELAY-ACCESSORY DELAY
(8W-10-17)
87
87A
CIRCUIT BREAKER NO. 3
30A ◆
25A ◆◆
(8W-10-17)
13
F981 12 RD/BR
F981 14 RD/BR
F881 14 PK
22
C300
F881 14 PK
S323 (IN PDC)
(8W-10-17)
S317
(8W-10-17)
F881 14 PK
S356
(8W-10-17)
F881 14 PK
1
C1
SWITCH-WINDOW/DOOR LOCK-DRIVER EXPRESS
FUSED ACCESSORY DELAY RELAY OUTPUT
GROUND
MASTER WINDOW SWITCH RIGHT REAR (DOWN)
MASTER WINDOW SWITCH RIGHT REAR (UP)
MASTER WINDOW SWITCH LEFT REAR (DOWN)
MASTER WINDOW SWITCH LEFT REAR (UP)
WINDOW LOCK OUT SWITCH OUTPUT
6 C1
4 C1
8 C1
2 C1
3 C1
5 C1
Z912 18 BK/OR
S355
(8W-15-20)
Z912 14 BK/OR
Q612 14 OR/DB
Q412 14 OR/LB
Q611 14 OR/GY
Q411 14 OR/WT
Q15 14 OR/LB
Q15 14 OR/LB
S357
Q15 14 OR/LB
S361
Q15 18 OR/LB
4 C2
14
21
4
19
1
15
C300
Z912 14 BK/OR
G300
(8W-15-19)
Q612 14 OR/DB
Q412 14 OR/LB
Q15 14 OR/LB
S308
Q15 14 OR/LB
WINDOW LOCK OUT SWITCH OUTPUT
MODULE-DOOR-DRIVER
10
3
1
C303
10
3
1
C302
Q612 14 OR/DB
Q412 14 OR/LB
Q15 14 OR/LB
Q611 14 OR/GY
Q411 14 OR/WT
Q15 14 OR/LB
1
4
6
1
4
6
SWITCH-POWER WINDOW-RIGHT REAR
1 UP
2 DOWN
SWITCH-POWER WINDOW-LEFT REAR
1 UP
2 DOWN
2
3
Q212 16 OR/VT
Q112 16 OR/BR
Q211 16 TN/LB
Q111 16 TN/YL
1
2
M
MOTOR-WINDOW-RIGHT REAR
MOTOR-WINDOW-LEFT REAR
◆ SRT8
◆◆ EXCEPT SRT8

EXCEPT BASE

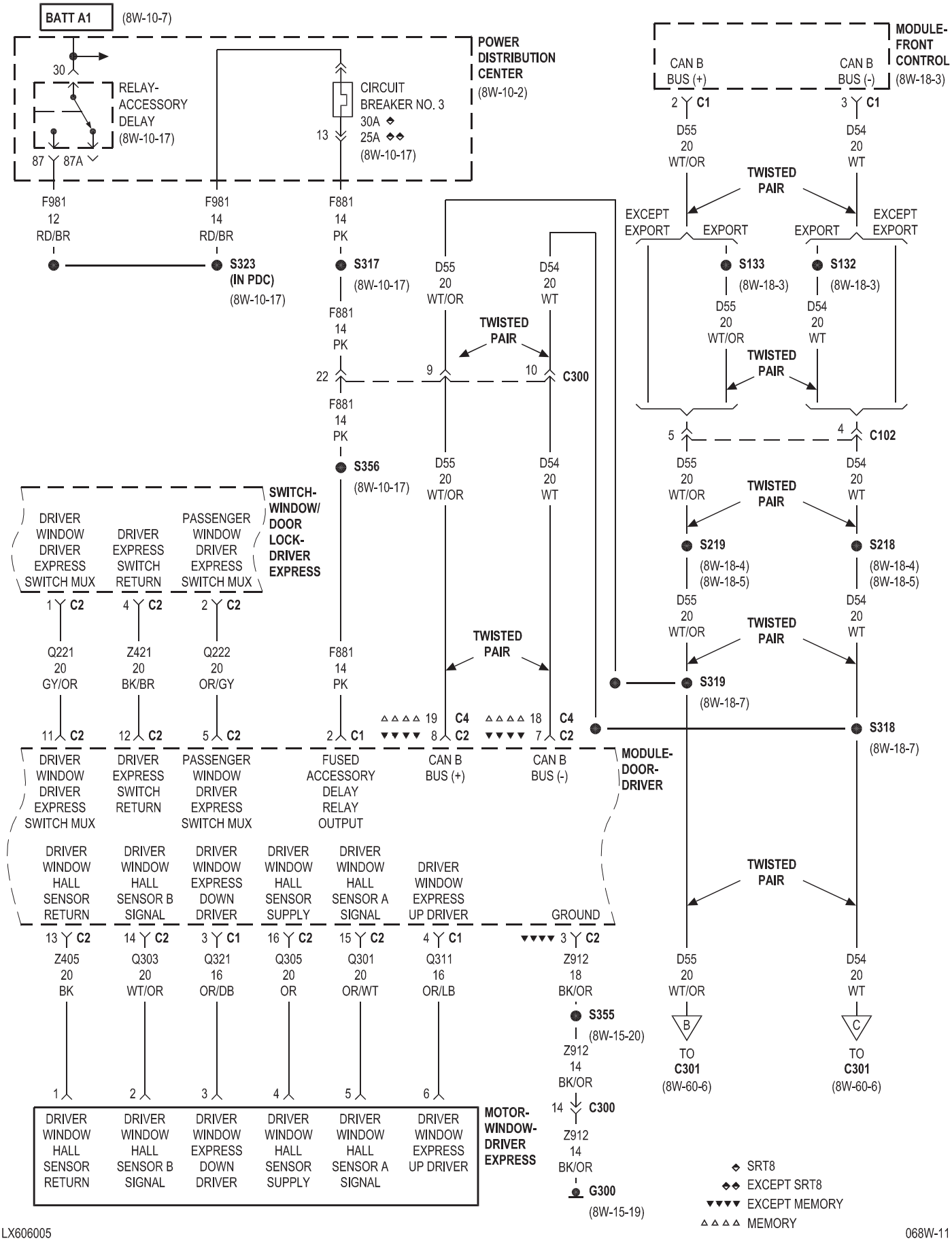
BATT A1
(8W-10-7)
POWER DISTRIBUTION CENTER
(8W-10-2)
RELAY-ACCESSORY DELAY
(8W-10-17)
CIRCUIT BREAKER NO. 3
30A
25A
(8W-10-17)
MODULE-FRONT CONTROL
(8W-18-3)
CAN B BUS (+)
CAN B BUS (-)
F981 12 RD/BR
F981 14 RD/BR
F881 14 PK
S323 (IN PDC)
(8W-10-17)
S317
(8W-10-17)
D55 20 WT/OR
D54 20 WT
TWISTED PAIR
EXCEPT EXPORT
EXPORT
S133
(8W-18-3)
S132
(8W-18-3)
C300
C102
S356
(8W-10-17)
S219
(8W-18-4)
(8W-18-5)
S218
(8W-18-4)
(8W-18-5)
SWITCH-WINDOW/DOOR LOCK-DRIVER EXPRESS
DRIVER WINDOW DRIVER EXPRESS SWITCH MUX
DRIVER EXPRESS SWITCH RETURN
PASSENGER WINDOW DRIVER EXPRESS SWITCH MUX
Q221 20 GY/OR
Z421 20 BK/BR
Q222 20 OR/GY
S319
(8W-18-7)
S318
(8W-18-7)
MODULE-DOOR-DRIVER
FUSED ACCESSORY DELAY RELAY OUTPUT
DRIVER WINDOW HALL SENSOR RETURN
DRIVER WINDOW HALL SENSOR B SIGNAL
DRIVER WINDOW EXPRESS DOWN DRIVER
DRIVER WINDOW HALL SENSOR SUPPLY
DRIVER WINDOW HALL SENSOR A SIGNAL
DRIVER WINDOW EXPRESS UP DRIVER
GROUND
Z405 20 BK
Q303 20 WT/OR
Q321 16 OR/DB
Q305 20 OR
Q301 20 OR/WT
Q311 16 OR/LB
Z912 18 BK/OR
S355
(8W-15-20)
Z912 14 BK/OR
Z912 14 BK/OR
G300
(8W-15-19)
TO C301
(8W-60-6)
MOTOR-WINDOW-DRIVER EXPRESS
SRT8
EXCEPT SRT8
EXCEPT MEMORY
MEMORY

EXCEPT BASE

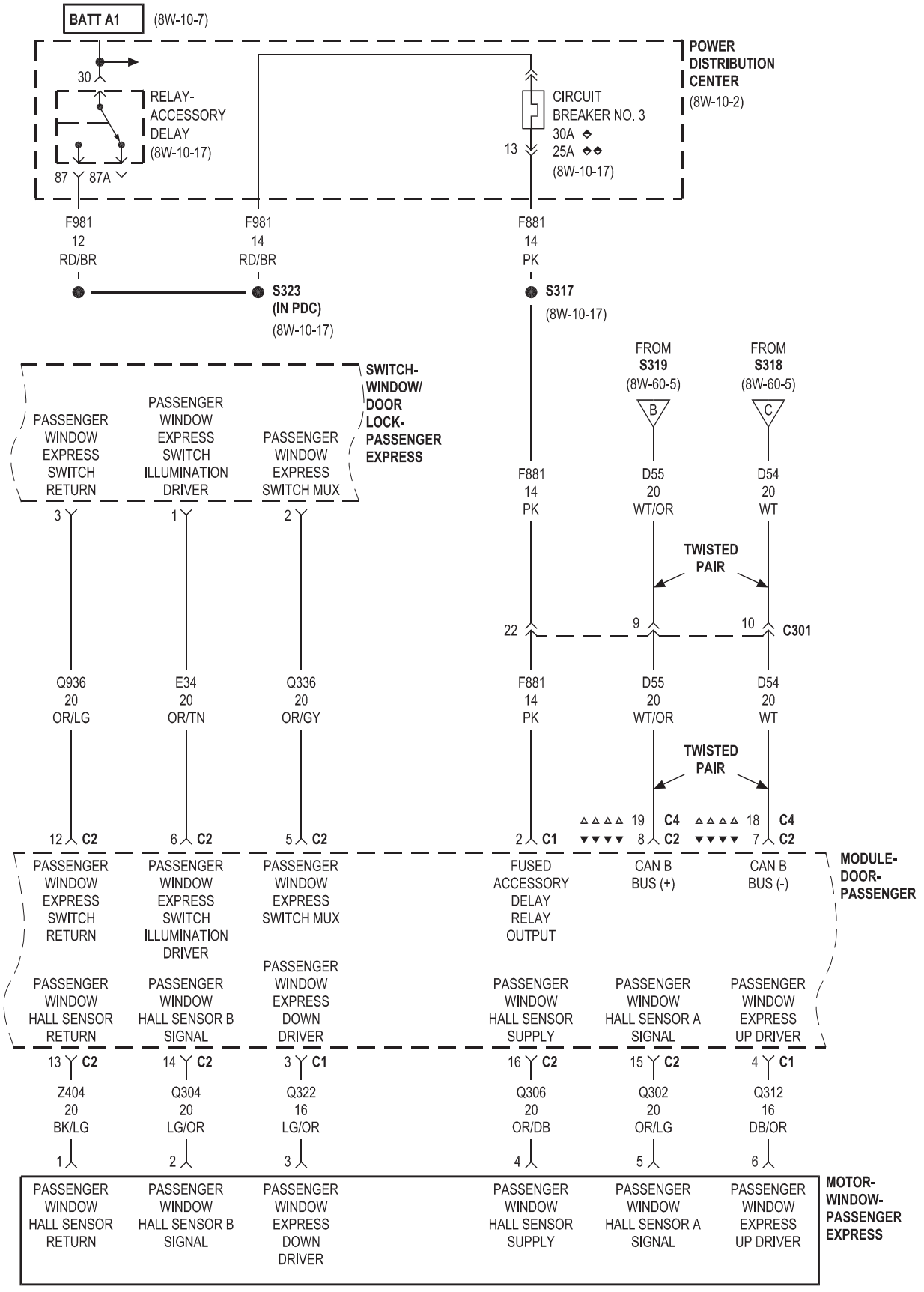

◆ SRT8
◆◆ EXCEPT SRT8
▼▼▼▼ EXCEPT MEMORY
△△△△ MEMORY

8W-61 POWER DOOR LOCKS

Component	Page
Circuit Breaker No. 3	8W-61-2
Cluster	8W-61-3, 4, 5, 6, 7
Fuse 35	8W-61-2
G202	8W-61-6
G300	8W-61-3, 4, 5, 6
G301	8W-61-5, 6
G302	8W-61-7
G304	8W-61-6
Latch-Door-Decklid	8W-61-6
Latch-Door-Driver	8W-61-5
Latch-Door-Left Rear	8W-61-5
Latch-Door-Liftgate	8W-61-7
Latch-Door-Passenger	8W-61-5
Latch-Door-Right Rear	8W-61-5
Power Distribution Center	8W-61-2
Relay-Accessory Delay	8W-61-2
Switch-Decklid Release	8W-61-6
Switch-Liftgate Release	8W-61-7
Switch-Window/Door Lock-Driver	8W-61-2, 3
Switch-Window/Door Lock-Driver Express	8W-61-2, 4
Switch-Window/Door Lock-Passenger	8W-61-2, 3
Switch-Window/Door Lock-Passenger Express	8W-61-2, 4

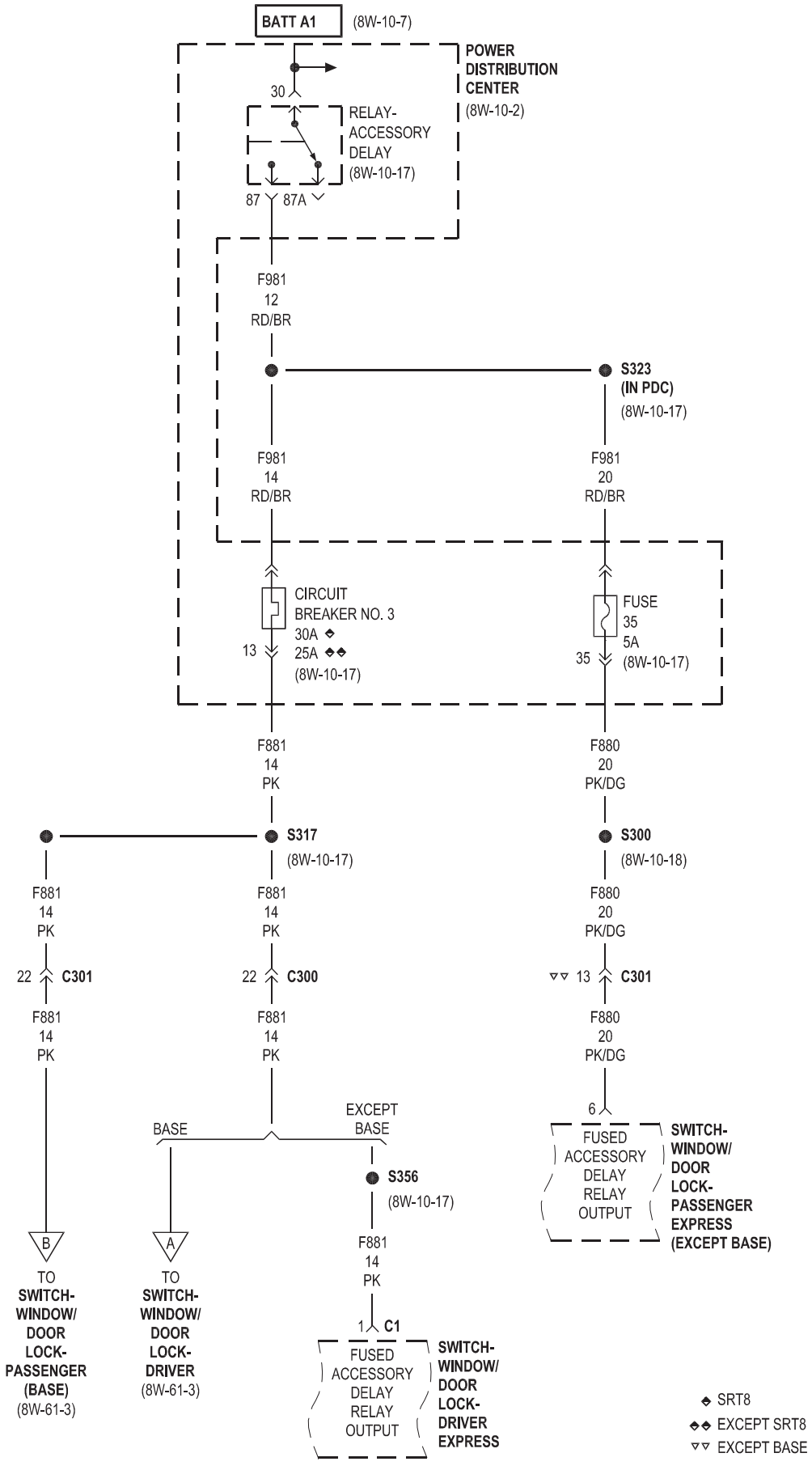
BATT A1
(8W-10-7)
POWER DISTRIBUTION CENTER
(8W-10-2)
30
RELAY-ACCESSORY DELAY
(8W-10-17)
87
87A
F981
12
RD/BR
S323
(IN PDC)
(8W-10-17)
F981
14
RD/BR
F981
20
RD/BR
CIRCUIT BREAKER NO. 3
30A ◆
25A ◆◆
(8W-10-17)
13
FUSE
35
5A
35
(8W-10-17)
F881
14
PK
F880
20
PK/DG
S317
(8W-10-17)
S300
(8W-10-18)
F881
14
PK
F881
14
PK
F880
20
PK/DG
22
C301
22
C300
▽▽ 13
C301
F881
14
PK
F881
14
PK
F880
20
PK/DG
BASE
EXCEPT BASE
6
FUSED ACCESSORY DELAY RELAY OUTPUT
SWITCH-WINDOW/ DOOR LOCK-PASSENGER EXPRESS (EXCEPT BASE)
S356
(8W-10-17)
B
A
F881
14
PK
TO SWITCH-WINDOW/ DOOR LOCK-PASSENGER (BASE)
(8W-61-3)
TO SWITCH-WINDOW/ DOOR LOCK-DRIVER
(8W-61-3)
1
C1
FUSED ACCESSORY DELAY RELAY OUTPUT
SWITCH-WINDOW/ DOOR LOCK-DRIVER EXPRESS
◆ SRT8
◆◆ EXCEPT SRT8
▽▽ EXCEPT BASE

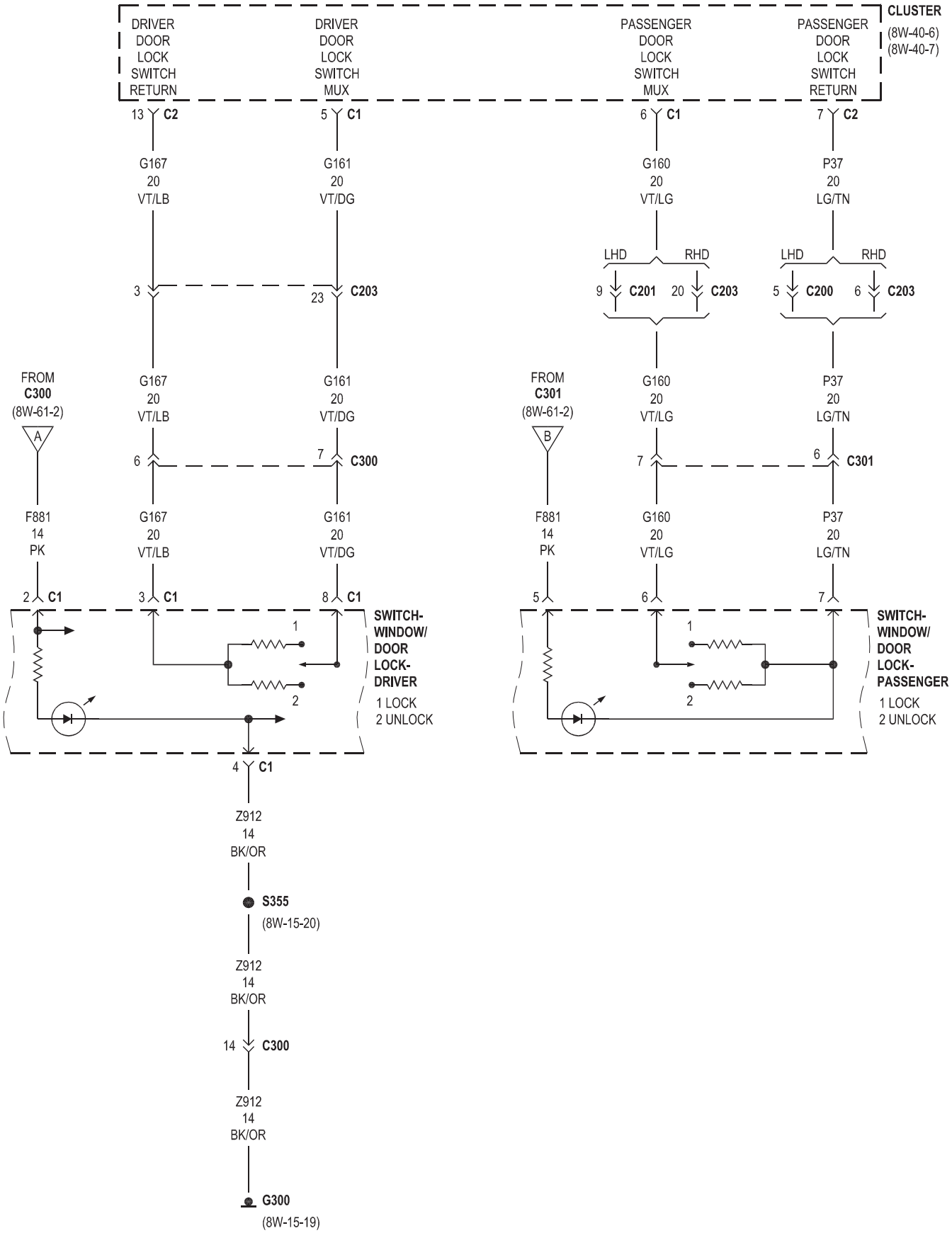
CLUSTER
(8W-40-6)
(8W-40-7)
DRIVER DOOR LOCK SWITCH RETURN
DRIVER DOOR LOCK SWITCH MUX
PASSENGER DOOR LOCK SWITCH MUX
PASSENGER DOOR LOCK SWITCH RETURN
13 C2
5 C1
6 C1
7 C2
G167 20 VT/LB
G161 20 VT/DG
G160 20 VT/LG
P37 20 LG/TN
LHD
RHD
3
23 C203
9 C201
20 C203
5 C200
6 C203
FROM C300 (8W-61-2)
FROM C301 (8W-61-2)
A
B
6
7 C300
7
6 C301
F881 14 PK
2 C1
3 C1
8 C1
5
6
7
1
2
SWITCH-WINDOW/ DOOR LOCK- DRIVER
1 LOCK
2 UNLOCK
SWITCH-WINDOW/ DOOR LOCK- PASSENGER
4 C1
Z912 14 BK/OR
S355
(8W-15-20)
14 C300
G300
(8W-15-19)

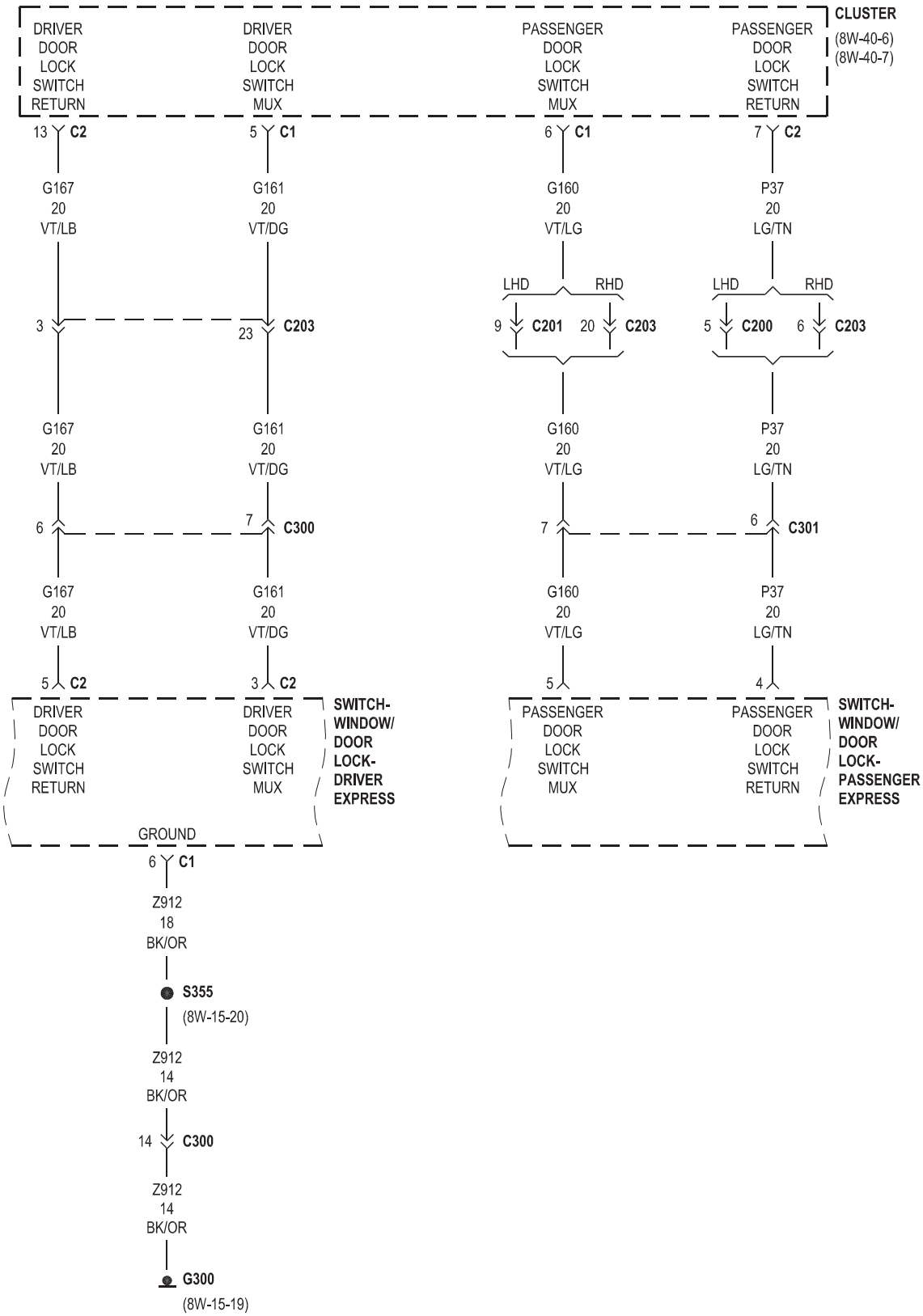
CLUSTER
(8W-40-6)
(8W-40-7)
DRIVER DOOR LOCK SWITCH RETURN
DRIVER DOOR LOCK SWITCH MUX
PASSENGER DOOR LOCK SWITCH MUX
PASSENGER DOOR LOCK SWITCH RETURN
13 C2
5 C1
6 C1
7 C2
G167 20 VT/LB
G161 20 VT/DG
G160 20 VT/LG
P37 20 LG/TN
LHD
RHD
3
23 C203
9 C201
20 C203
5 C200
6 C203
G167 20 VT/LB
G161 20 VT/DG
G160 20 VT/LG
P37 20 LG/TN
6
7 C300
7
6 C301
G167 20 VT/LB
G161 20 VT/DG
G160 20 VT/LG
P37 20 LG/TN
5 C2
3 C2
5
4
DRIVER DOOR LOCK SWITCH RETURN
DRIVER DOOR LOCK SWITCH MUX
SWITCH-WINDOW/ DOOR LOCK- DRIVER EXPRESS
PASSENGER DOOR LOCK SWITCH MUX
PASSENGER DOOR LOCK SWITCH RETURN
SWITCH-WINDOW/ DOOR LOCK- PASSENGER EXPRESS
GROUND
6 C1
Z912 18 BK/OR
S355
(8W-15-20)
Z912 14 BK/OR
14 C300
Z912 14 BK/OR
G300
(8W-15-19)

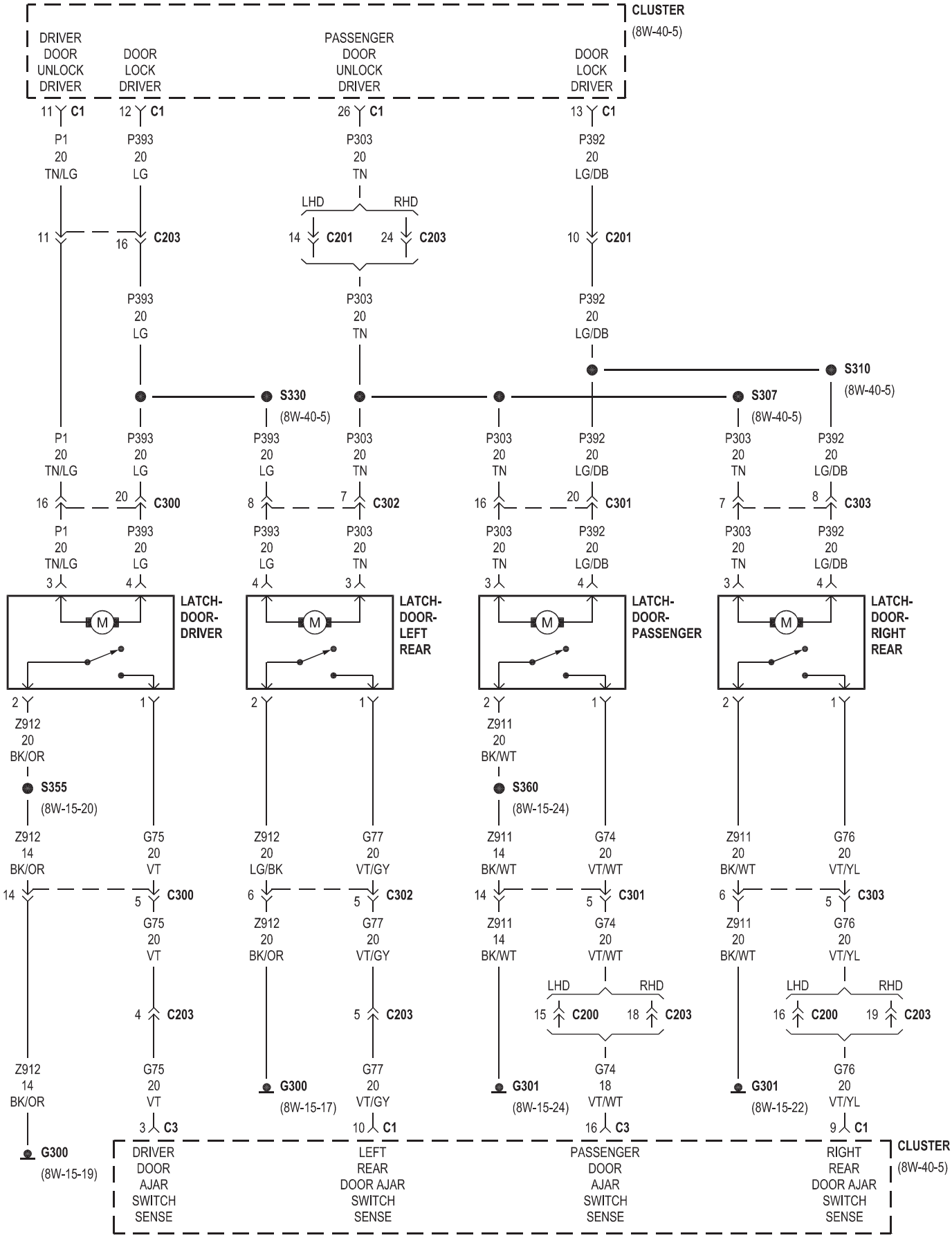
CLUSTER
(8W-40-5)
DRIVER DOOR UNLOCK DRIVER
DOOR LOCK DRIVER
PASSENGER DOOR UNLOCK DRIVER
DOOR LOCK DRIVER
11 C1
12 C1
26 C1
13 C1
P1 20 TN/LG
P393 20 LG
P303 20 TN
P392 20 LG/DB
LHD
RHD
11
16 C203
14 C201
24 C203
10 C201
S330
(8W-40-5)
S310
(8W-40-5)
S307
(8W-40-5)
16 20 C300
8 7 C302
16 20 C301
7 8 C303
LATCH-DOOR-DRIVER
LATCH-DOOR-LEFT REAR
LATCH-DOOR-PASSENGER
LATCH-DOOR-RIGHT REAR
Z912 20 BK/OR
Z911 20 BK/WT
S355
(8W-15-20)
S360
(8W-15-24)
Z912 14 BK/OR
G75 20 VT
Z912 20 LG/BK
G77 20 VT/GY
Z911 14 BK/WT
G74 20 VT/WT
Z911 20 BK/WT
G76 20 VT/YL
14 5 C300
6 5 C302
14 5 C301
6 5 C303
Z912 20 BK/OR
G77 20 VT/GY
Z911 14 BK/WT
G74 20 VT/WT
Z911 20 BK/WT
G76 20 VT/YL
15 C200
18 C203
16 C200
19 C203
4 C203
5 C203
Z912 14 BK/OR
G75 20 VT
G74 18 VT/WT
G76 20 VT/YL
G300
(8W-15-17)
G301
(8W-15-24)
G301
(8W-15-22)
3 C3
10 C1
16 C3
9 C1
G300
(8W-15-19)
DRIVER DOOR AJAR SWITCH SENSE
LEFT REAR DOOR AJAR SWITCH SENSE
PASSENGER DOOR AJAR SWITCH SENSE
RIGHT REAR DOOR AJAR SWITCH SENSE
CLUSTER
(8W-40-5)

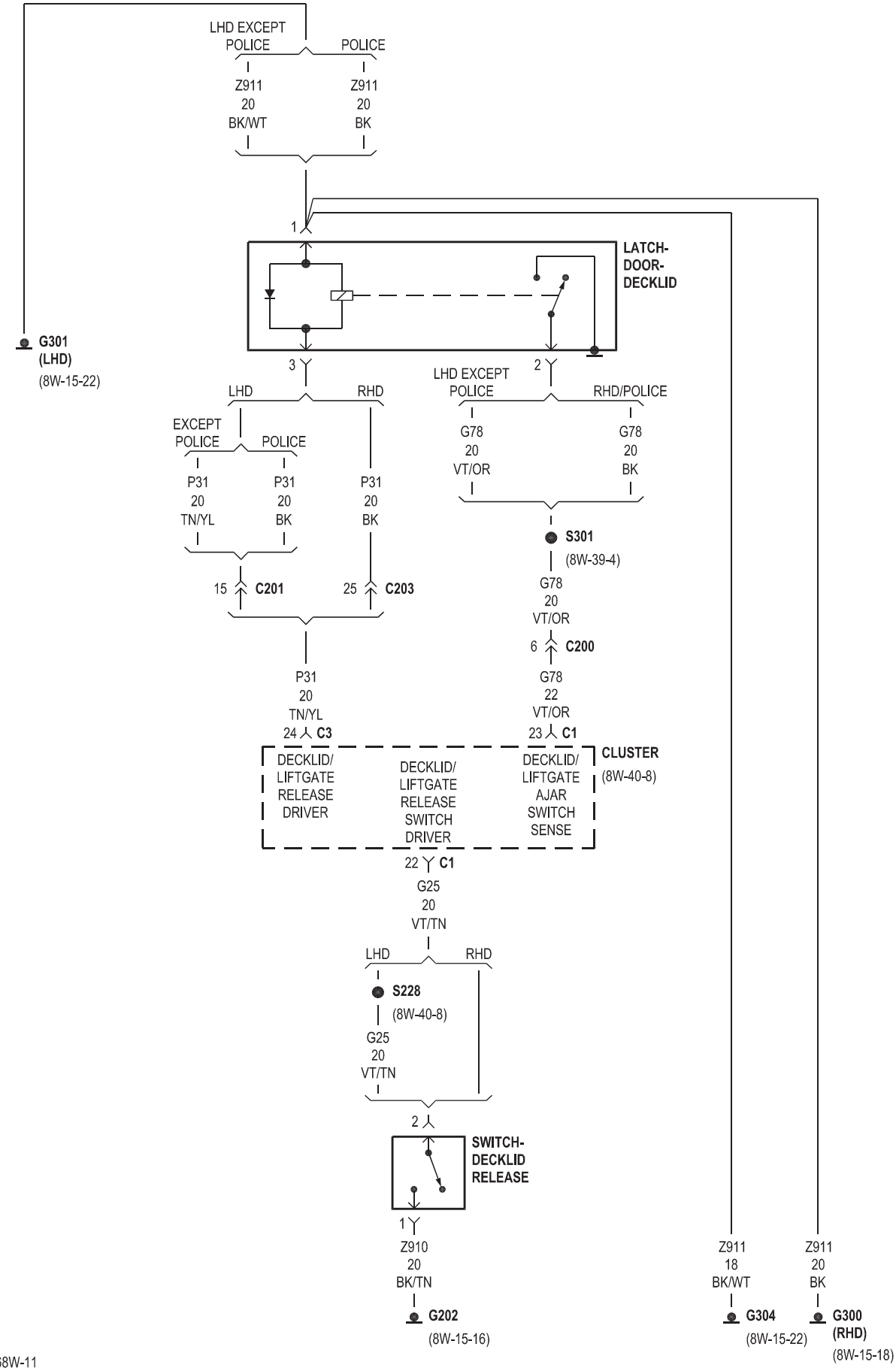
LHD EXCEPT POLICE
POLICE
Z911 20 BK/WT
Z911 20 BK
1
LATCH-DOOR-DECKLID
G301 (LHD)
(8W-15-22)
3
2
LHD
RHD
LHD EXCEPT POLICE
RHD/POLICE
EXCEPT POLICE
POLICE
G78 20 VT/OR
G78 20 BK
P31 20 TN/YL
P31 20 BK
P31 20 BK
S301
(8W-39-4)
15 C201
25 C203
G78 20 VT/OR
6 C200
P31 20 TN/YL
24 C3
G78 22 VT/OR
23 C1
CLUSTER
(8W-40-8)
DECKLID/ LIFTGATE RELEASE DRIVER
DECKLID/ LIFTGATE RELEASE SWITCH DRIVER
DECKLID/ LIFTGATE AJAR SWITCH SENSE
22 C1
G25 20 VT/TN
LHD
RHD
S228
(8W-40-8)
G25 20 VT/TN
2
SWITCH-DECKLID RELEASE
1
Z910 20 BK/TN
G202
(8W-15-16)
Z911 18 BK/WT
Z911 20 BK
G304
(8W-15-22)
G300 (RHD)
(8W-15-18)

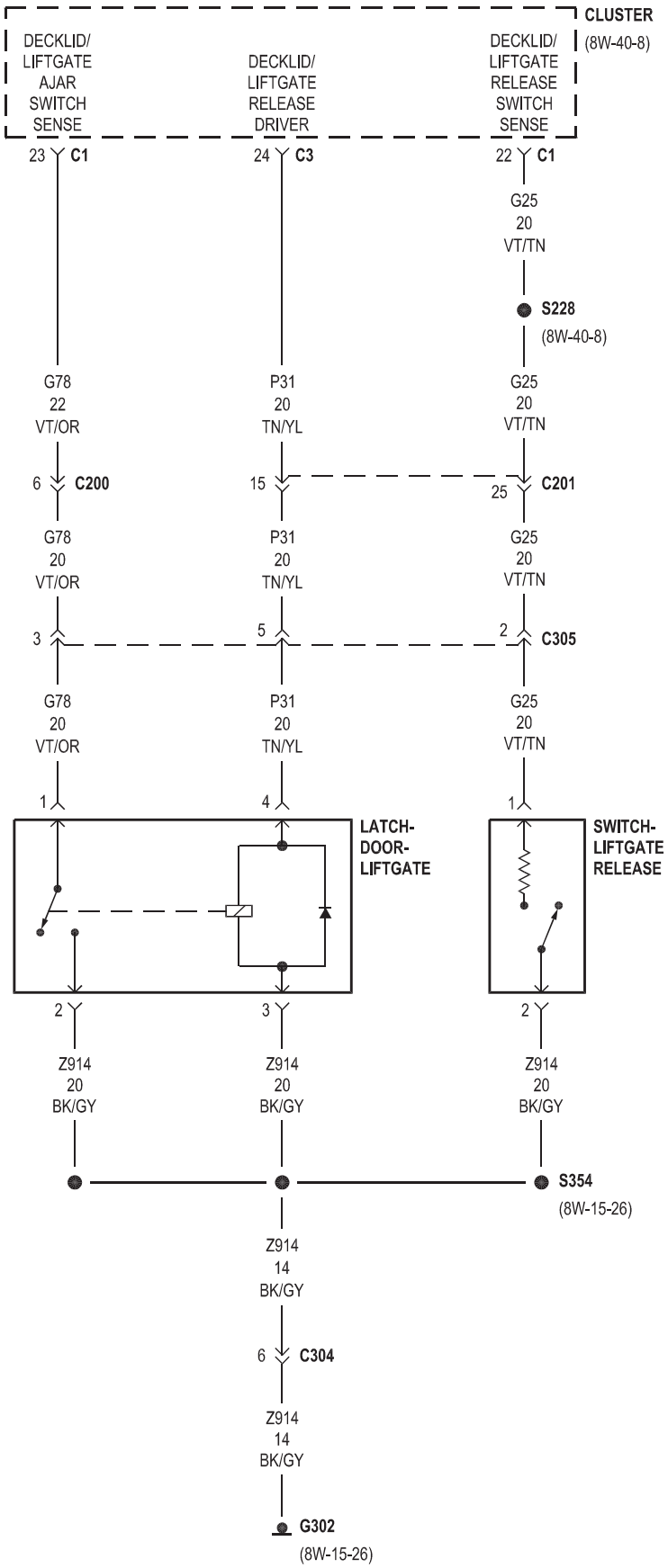
CLUSTER
(8W-40-8)
DECKLID/ LIFTGATE AJAR SWITCH SENSE
DECKLID/ LIFTGATE RELEASE DRIVER
DECKLID/ LIFTGATE RELEASE SWITCH SENSE
23 C1
24 C3
22 C1
G25
20
VT/TN
S228
(8W-40-8)
G78
22
VT/OR
P31
20
TN/YL
G25
20
VT/TN
6 C200
15
25 C201
G78
20
VT/OR
P31
20
TN/YL
G25
20
VT/TN
3
5
2 C305
G78
20
VT/OR
P31
20
TN/YL
G25
20
VT/TN
1
4
1
LATCH- DOOR- LIFTGATE
SWITCH- LIFTGATE RELEASE
2
3
2
Z914
20
BK/GY
Z914
20
BK/GY
Z914
20
BK/GY
S354
(8W-15-26)
Z914
14
BK/GY
6 C304
Z914
14
BK/GY
G302
(8W-15-26)

8W-62 POWER MIRRORS

Component	Page
Circuit Breaker No. 3	8W-62-2
Control-A/C-Heater	8W-62-2
Fuse 30	8W-62-2
Fuse 35	8W-62-2
Fuse 39	8W-62-2, 3, 5, 6
G300	8W-62-2, 3, 4, 5
G301	8W-62-3, 6
Mirror-Inside Rearview	8W-62-5
Mirror-Outside Rearview-Driver	8W-62-3, 5
Mirror-Outside Rearview-Passenger	8W-62-3, 5, 6
Module-Door-Driver	8W-62-2, 4, 5
Module-Door-Passenger	8W-62-2, 6
Power Distribution Center	8W-62-2
Relay-Accessory Delay	8W-62-2
Relay-Rear Window Defogger	8W-62-2
Switch-Memory Set	8W-62-4
Switch-Mirror	8W-62-2, 3, 4, 5

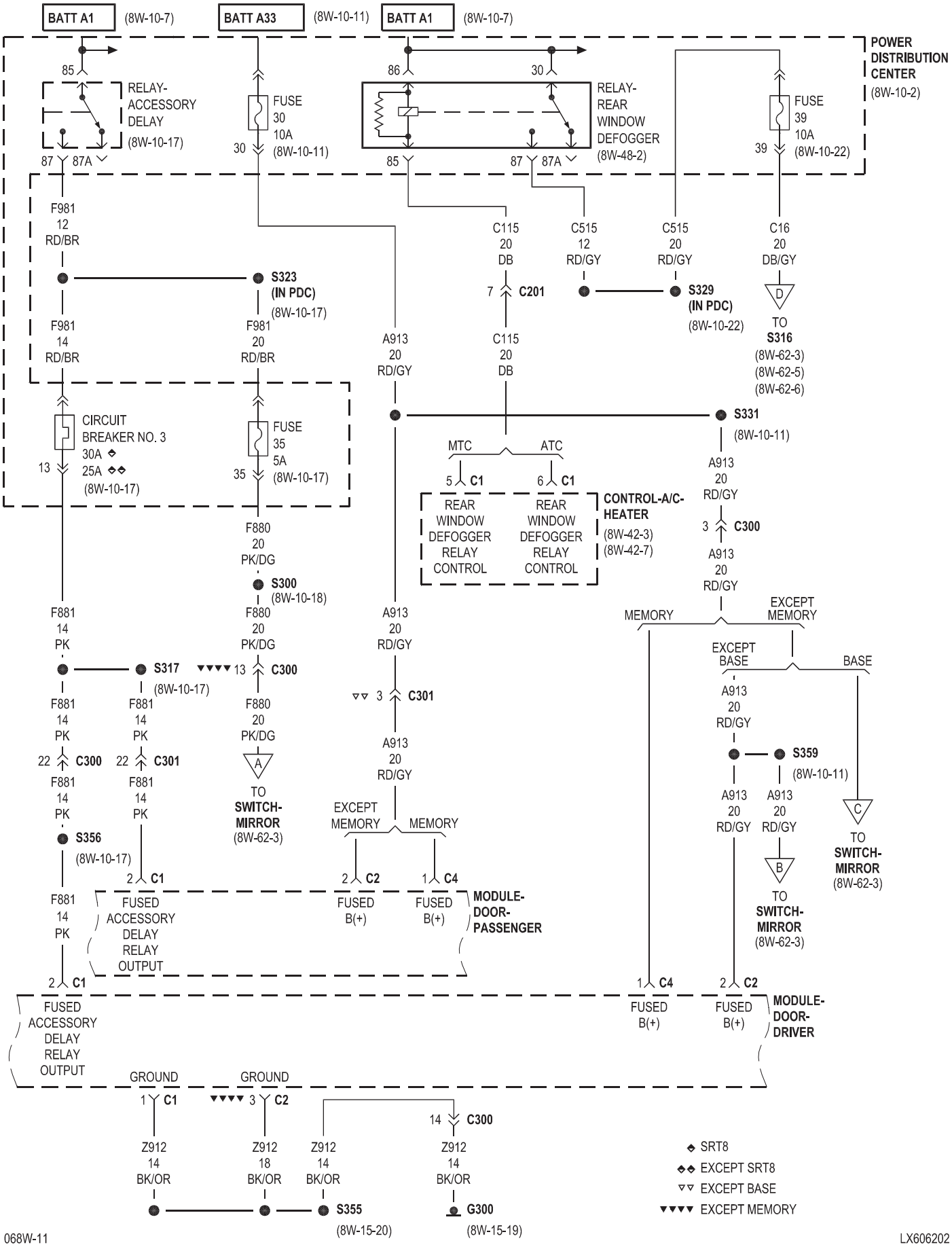
BATT A1 (8W-10-7)
BATT A33 (8W-10-11)
BATT A1 (8W-10-7)
POWER DISTRIBUTION CENTER (8W-10-2)
RELAY-ACCESSORY DELAY (8W-10-17)
FUSE 30 10A (8W-10-11)
RELAY-REAR WINDOW DEFOGGER (8W-48-2)
FUSE 39 10A (8W-10-22)
F981 12 RD/BR
S323 (IN PDC) (8W-10-17)
C115 20 DB
C201
C515 12 RD/GY
C515 20 RD/GY
S329 (IN PDC) (8W-10-22)
C16 20 DB/GY
TO S316 (8W-62-3) (8W-62-5) (8W-62-6)
F981 14 RD/BR
F981 20 RD/BR
A913 20 RD/GY
C115 20 DB
S331 (8W-10-11)
CIRCUIT BREAKER NO. 3 30A 25A (8W-10-17)
FUSE 35 5A (8W-10-17)
MTC
ATC
C1
REAR WINDOW DEFOGGER RELAY CONTROL
CONTROL-A/C-HEATER (8W-42-3) (8W-42-7)
A913 20 RD/GY
C300
F880 20 PK/DG
S300 (8W-10-18)
F881 14 PK
S317 (8W-10-17)
F880 20 PK/DG
C301
MEMORY
EXCEPT MEMORY
EXCEPT BASE
BASE
S359 (8W-10-11)
TO SWITCH-MIRROR (8W-62-3)
S356 (8W-10-17)
FUSED ACCESSORY DELAY RELAY OUTPUT
EXCEPT MEMORY
MEMORY
FUSED B(+)
MODULE-DOOR-PASSENGER
MODULE-DOOR-DRIVER
GROUND
Z912 14 BK/OR
Z912 18 BK/OR
S355 (8W-15-20)
G300 (8W-15-19)
SRT8
EXCEPT SRT8
EXCEPT BASE
EXCEPT MEMORY

EXCEPT MEMORY

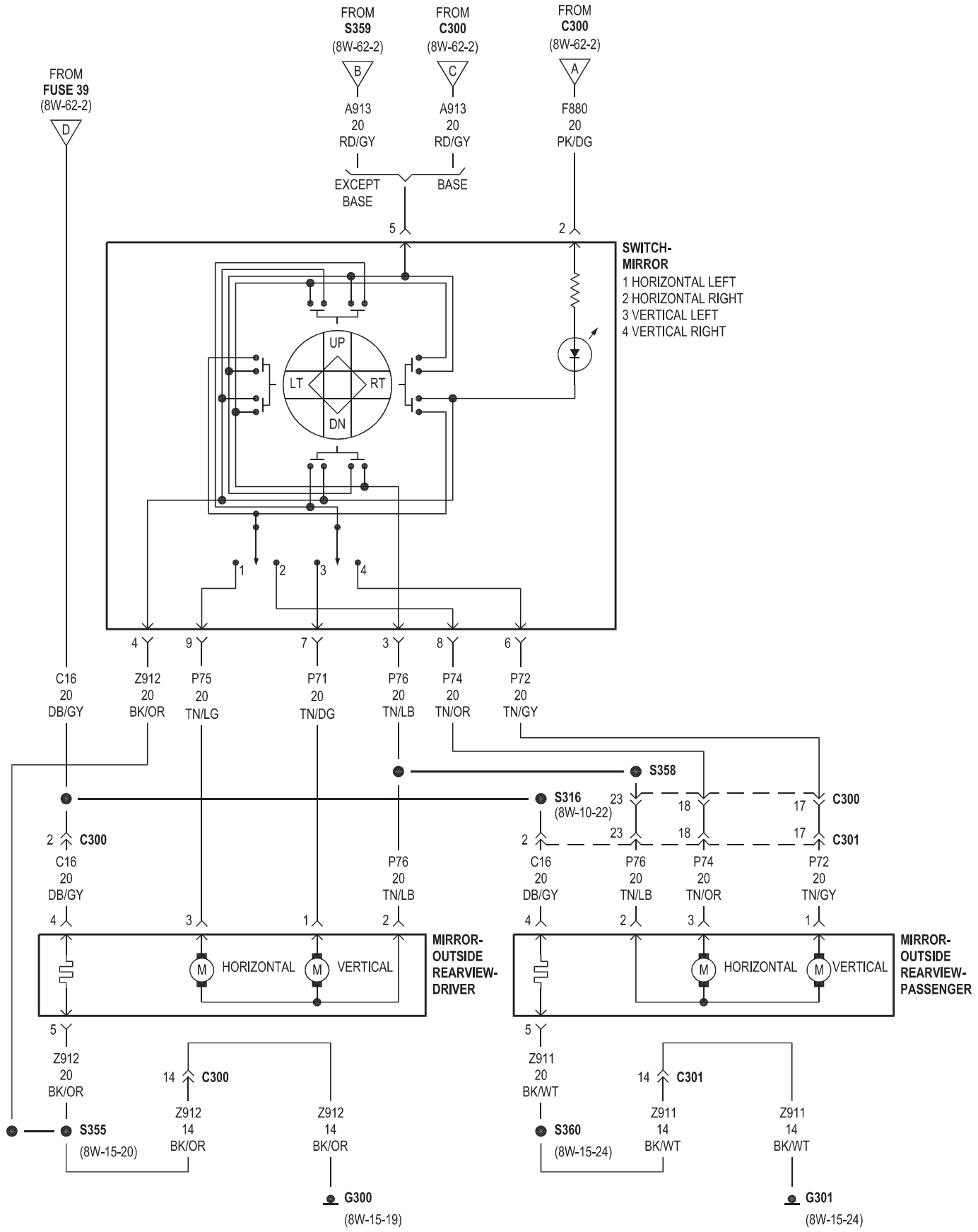

MEMORY

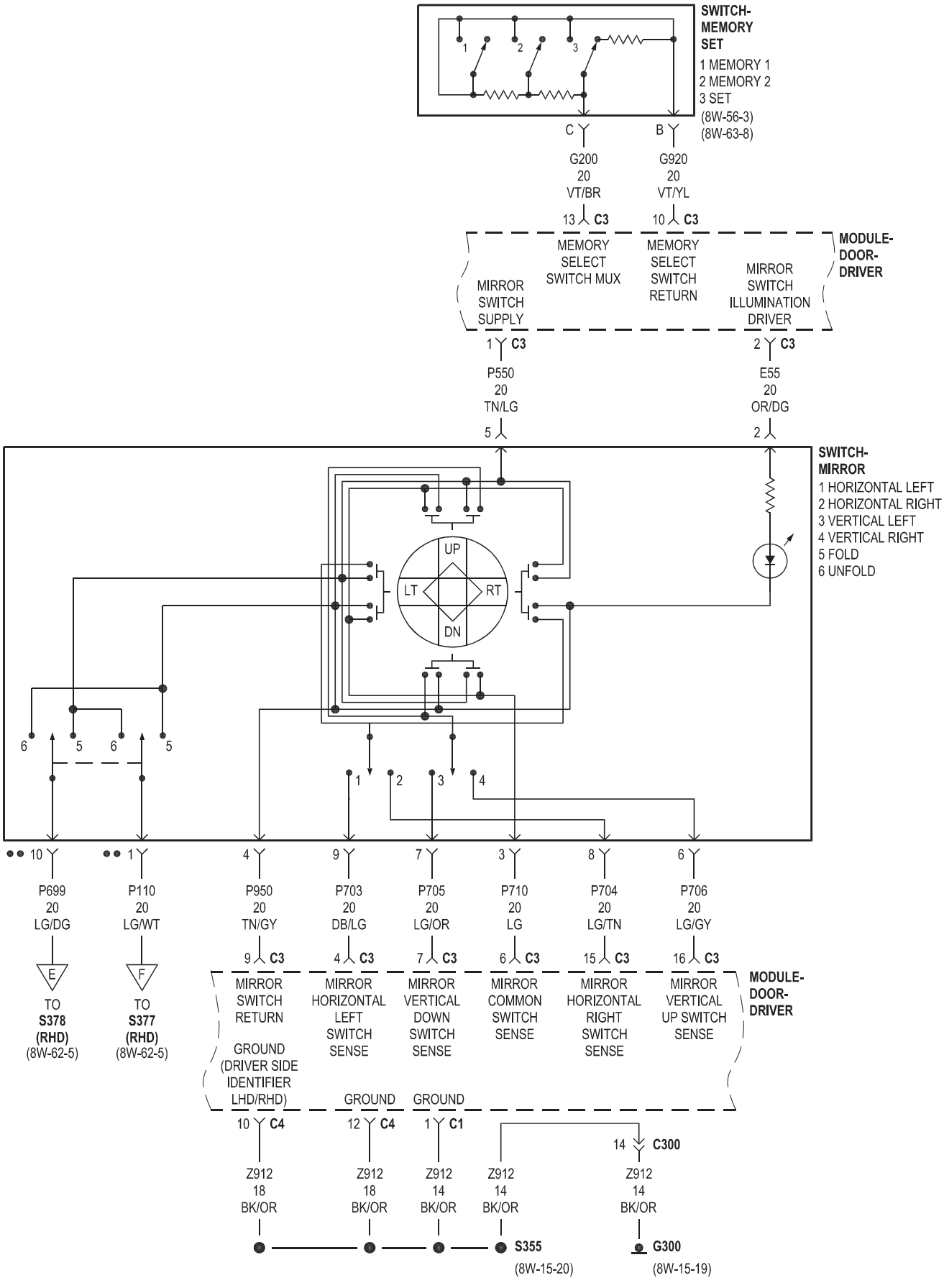
SWITCH-MEMORY SET
1 MEMORY 1
2 MEMORY 2
3 SET
(8W-56-3)
(8W-63-8)
C
B
G200
20
VT/BR
G920
20
VT/YL
13 C3
10 C3
MODULE-DOOR-DRIVER
MEMORY SELECT SWITCH MUX
MEMORY SELECT SWITCH RETURN
MIRROR SWITCH ILLUMINATION DRIVER
MIRROR SWITCH SUPPLY
1 C3
2 C3
P550
20
TN/LG
E55
20
OR/DG
5
2
SWITCH-MIRROR
1 HORIZONTAL LEFT
2 HORIZONTAL RIGHT
3 VERTICAL LEFT
4 VERTICAL RIGHT
5 FOLD
6 UNFOLD
UP
LT
RT
DN
6 5 6 5
1 2 3 4
10
1
4
9
7
3
8
6
P699
20
LG/DG
P110
20
LG/WT
P950
20
TN/GY
P703
20
DB/LG
P705
20
LG/OR
P710
20
LG
P704
20
LG/TN
P706
20
LG/GY
E
F
TO S378 (RHD) (8W-62-5)
TO S377 (RHD) (8W-62-5)
9 C3
4 C3
7 C3
6 C3
15 C3
16 C3
MODULE-DOOR-DRIVER
MIRROR SWITCH RETURN
MIRROR HORIZONTAL LEFT SWITCH SENSE
MIRROR VERTICAL DOWN SWITCH SENSE
MIRROR COMMON SWITCH SENSE
MIRROR HORIZONTAL RIGHT SWITCH SENSE
MIRROR VERTICAL UP SWITCH SENSE
GROUND (DRIVER SIDE IDENTIFIER LHD/RHD)
GROUND
GROUND
10 C4
12 C4
1 C1
14 C300
Z912
18
BK/OR
Z912
18
BK/OR
Z912
14
BK/OR
Z912
14
BK/OR
Z912
14
BK/OR
S355
(8W-15-20)
G300
(8W-15-19)
RHD

MEMORY

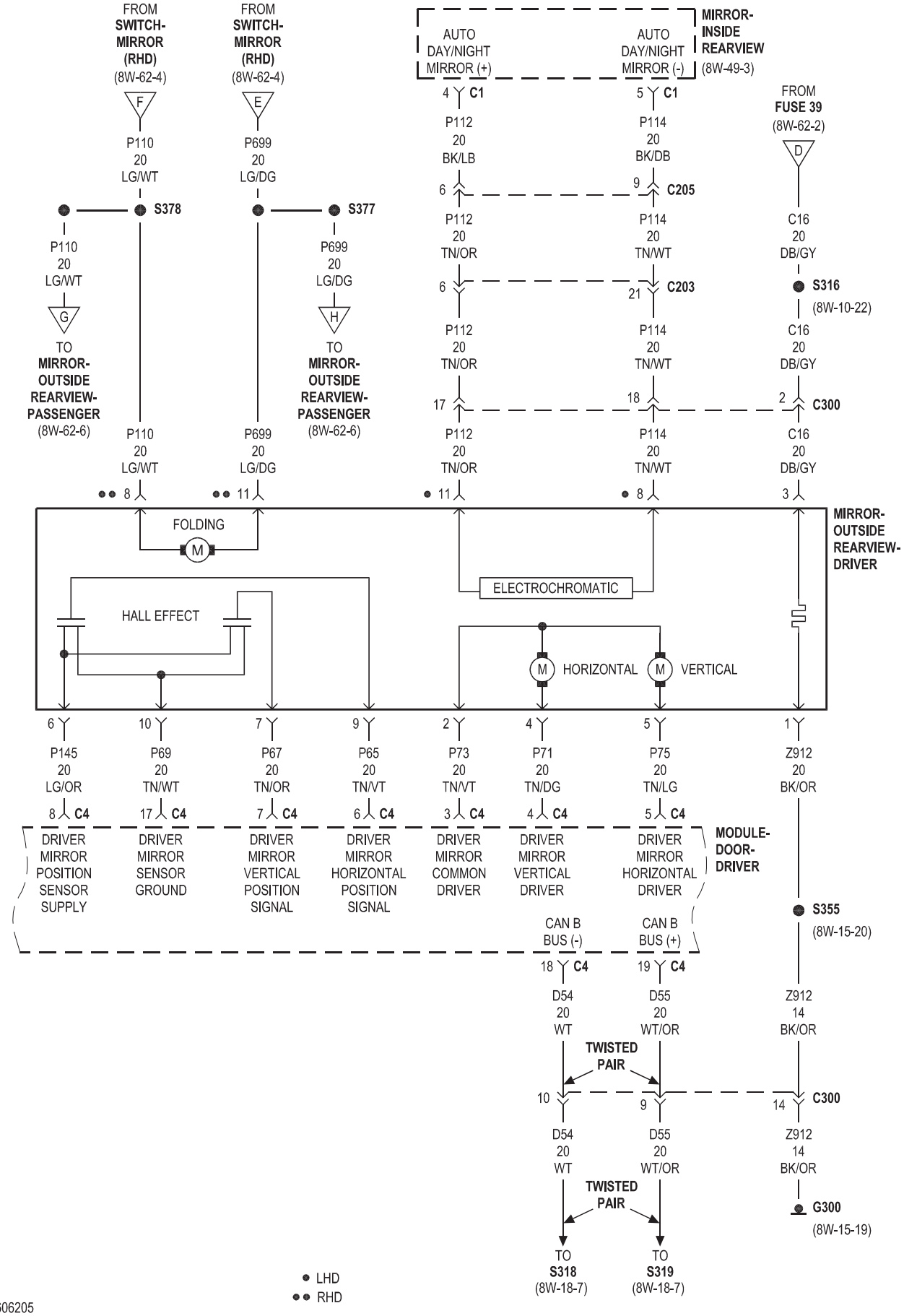
FROM SWITCH-MIRROR (RHD) (8W-62-4)
F
P110 20 LG/WT
S378
P110 20 LG/WT
G
TO MIRROR-OUTSIDE REARVIEW-PASSENGER (8W-62-6)
FROM SWITCH-MIRROR (RHD) (8W-62-4)
E
P699 20 LG/DG
S377
P699 20 LG/DG
H
TO MIRROR-OUTSIDE REARVIEW-PASSENGER (8W-62-6)
MIRROR-INSIDE REARVIEW (8W-49-3)
AUTO DAY/NIGHT MIRROR (+)
AUTO DAY/NIGHT MIRROR (-)
4 C1
5 C1
P112 20 BK/LB
P114 20 BK/DB
6 9 C205
P112 20 TN/OR
P114 20 TN/WT
6 21 C203
P112 20 TN/OR
P114 20 TN/WT
17 18 2 C300
P112 20 TN/OR
P114 20 TN/WT
FROM FUSE 39 (8W-62-2)
D
C16 20 DB/GY
S316
(8W-10-22)
C16 20 DB/GY
C16 20 DB/GY
P110 20 LG/WT
P699 20 LG/DG
8 11 11 8 3
MIRROR-OUTSIDE REARVIEW-DRIVER
FOLDING
M
ELECTROCHROMATIC
HALL EFFECT
M HORIZONTAL M VERTICAL
6 10 7 9 2 4 5 1
P145 20 LG/OR
P69 20 TN/WT
P67 20 TN/OR
P65 20 TN/VT
P73 20 TN/VT
P71 20 TN/DG
P75 20 TN/LG
Z912 20 BK/OR
8 C4
17 C4
7 C4
6 C4
3 C4
4 C4
5 C4
DRIVER MIRROR POSITION SENSOR SUPPLY
DRIVER MIRROR SENSOR GROUND
DRIVER MIRROR VERTICAL POSITION SIGNAL
DRIVER MIRROR HORIZONTAL POSITION SIGNAL
DRIVER MIRROR COMMON DRIVER
DRIVER MIRROR VERTICAL DRIVER
DRIVER MIRROR HORIZONTAL DRIVER
MODULE-DOOR-DRIVER
S355
(8W-15-20)
CAN B BUS (-)
CAN B BUS (+)
18 C4
19 C4
D54 20 WT
D55 20 WT/OR
Z912 14 BK/OR
TWISTED PAIR
10 9 14 C300
D54 20 WT
D55 20 WT/OR
Z912 14 BK/OR
TWISTED PAIR
G300
(8W-15-19)
TO S318 (8W-18-7)
TO S319 (8W-18-7)
LHD
RHD

MEMORY

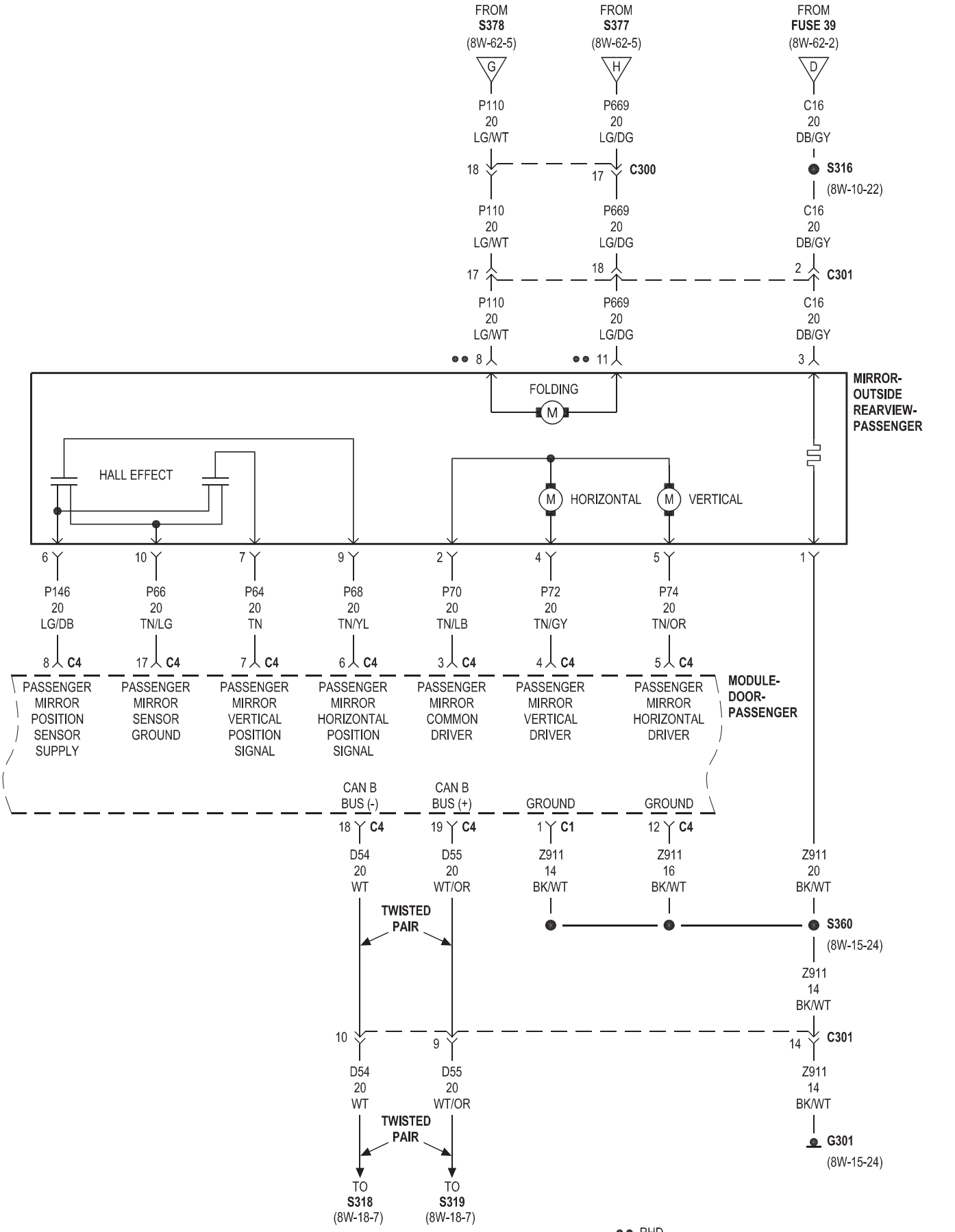
FROM S378 (8W-62-5)
FROM S377 (8W-62-5)
FROM FUSE 39 (8W-62-2)
G
H
D
P110 20 LG/WT
P669 20 LG/DG
C16 20 DB/GY
18
17
C300
S316
(8W-10-22)
17
18
2
C301
8
11
3
FOLDING
M
MIRROR- OUTSIDE REARVIEW- PASSENGER
HALL EFFECT
HORIZONTAL
VERTICAL
6
10
7
9
2
4
5
1
P146 20 LG/DB
P66 20 TN/LG
P64 20 TN
P68 20 TN/YL
P70 20 TN/LB
P72 20 TN/GY
P74 20 TN/OR
8 C4
17 C4
7 C4
6 C4
3 C4
4 C4
5 C4
PASSENGER MIRROR POSITION SENSOR SUPPLY
PASSENGER MIRROR SENSOR GROUND
PASSENGER MIRROR VERTICAL POSITION SIGNAL
PASSENGER MIRROR HORIZONTAL POSITION SIGNAL
PASSENGER MIRROR COMMON DRIVER
PASSENGER MIRROR VERTICAL DRIVER
PASSENGER MIRROR HORIZONTAL DRIVER
MODULE- DOOR- PASSENGER
CAN B BUS (-)
CAN B BUS (+)
GROUND
GROUND
18 C4
19 C4
1 C1
12 C4
D54 20 WT
D55 20 WT/OR
Z911 14 BK/WT
Z911 16 BK/WT
Z911 20 BK/WT
TWISTED PAIR
S360
(8W-15-24)
Z911 14 BK/WT
10
9
14
C301
D54 20 WT
D55 20 WT/OR
Z911 14 BK/WT
TWISTED PAIR
G301
(8W-15-24)
TO S318 (8W-18-7)
TO S319 (8W-18-7)
RHD

8W-63 POWER SEATS

Component	Page
Circuit Breaker No. 1	8W-63-2, 8
Circuit Breaker No. 2	8W-63-3
Cluster	8W-63-7
Fuse 5	8W-63-4
Fuse 40	8W-63-7
G200	8W-63-7
G300	8W-63-2, 4, 5, 6, 8
G301	8W-63-3, 4, 5, 6
Heater-Seat Back-Left	8W-63-5
Heater-Seat Back-Right	8W-63-6
Heater-Seat Cushion-Left	8W-63-5
Heater-Seat Cushion-Right	8W-63-6
Module-Door-Driver	8W-63-8
Module-Front Control	8W-63-4
Module-Heated Seats	8W-63-4
Module-Memory Seat	8W-63-4, 8, 9
Motor-Seat Adjuster-Driver Horizontal	8W-63-2, 9
Motor-Seat Adjuster-Driver Recliner	8W-63-2, 9
Motor-Seat Adjuster-Front Driver Vertical	8W-63-2, 9
Motor-Seat Adjuster-Front Passenger Vertical	8W-63-3
Motor-Seat Adjuster-Passenger Horizontal	8W-63-3
Motor-Seat Adjuster-Passenger Recliner	8W-63-3
Motor-Seat Adjuster-Rear Driver Vertical	8W-63-2, 9
Motor-Seat Adjuster-Rear Passenger Vertical	8W-63-3
Power Distribution Center	8W-63-2, 3, 4, 7, 8
Switch-Heated Seat-Left	8W-63-7
Switch-Heated Seat-Right	8W-63-7
Switch-Memory Set	8W-63-8
Switch-Seat-Driver	8W-63-2, 8
Switch-Seat-Passenger	8W-63-3

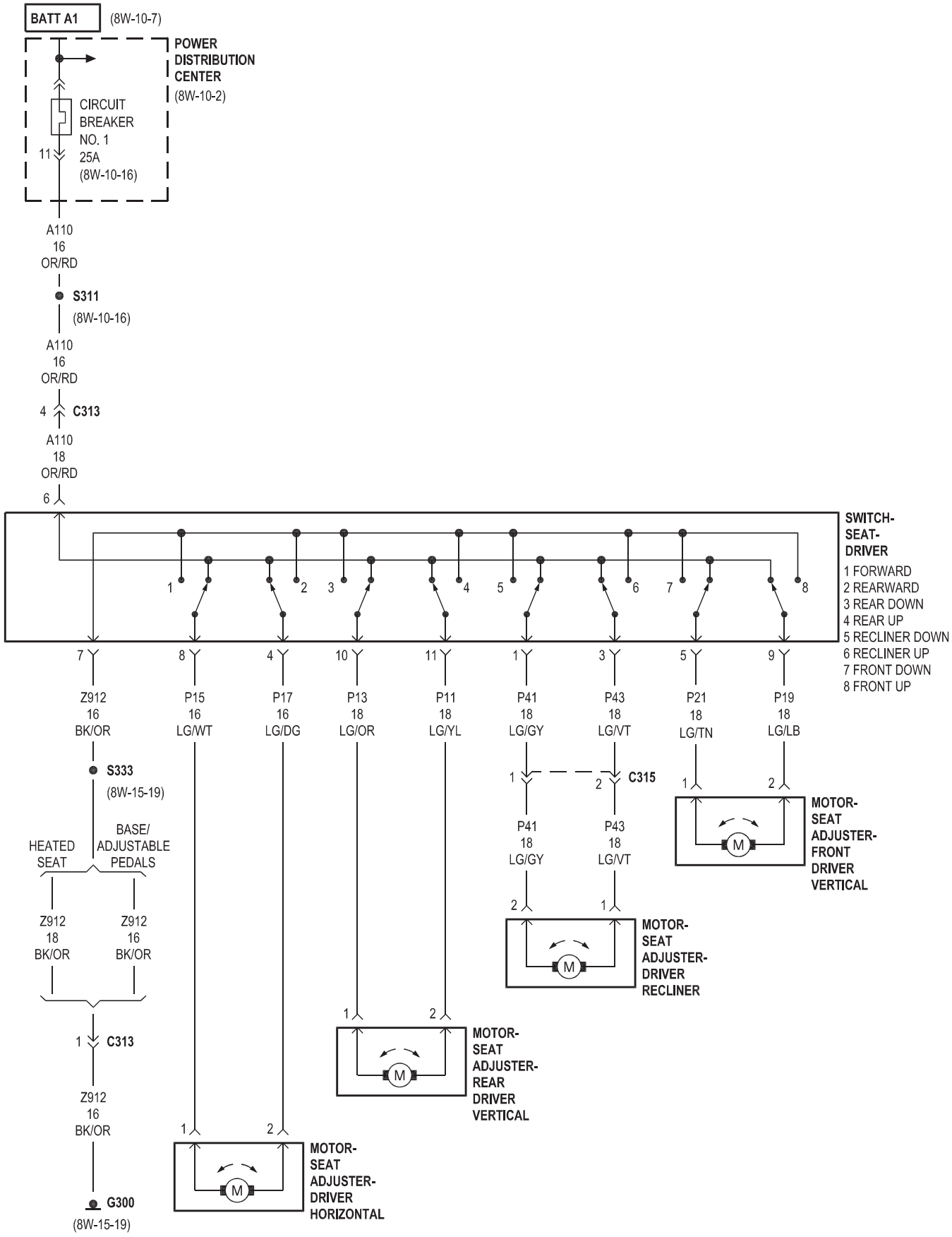
BATT A1
(8W-10-7)
POWER DISTRIBUTION CENTER
(8W-10-2)
CIRCUIT BREAKER NO. 1 25A
(8W-10-16)
11
A110 16 OR/RD
S311
(8W-10-16)
A110 16 OR/RD
4 C313
A110 18 OR/RD
6
SWITCH-SEAT-DRIVER
1 FORWARD
2 REARWARD
3 REAR DOWN
4 REAR UP
5 RECLINER DOWN
6 RECLINER UP
7 FRONT DOWN
8 FRONT UP
7 Z912 16 BK/OR
8 P15 16 LG/WT
4 P17 16 LG/DG
10 P13 18 LG/OR
11 P11 18 LG/YL
1 P41 18 LG/GY
3 P43 18 LG/VT
5 P21 18 LG/TN
9 P19 18 LG/LB
S333
(8W-15-19)
HEATED SEAT
BASE/ ADJUSTABLE PEDALS
Z912 18 BK/OR
Z912 16 BK/OR
1 C313
Z912 16 BK/OR
G300
(8W-15-19)
C315
P41 18 LG/GY
P43 18 LG/VT
MOTOR-SEAT ADJUSTER-FRONT DRIVER VERTICAL
MOTOR-SEAT ADJUSTER-DRIVER RECLINER
MOTOR-SEAT ADJUSTER-REAR DRIVER VERTICAL
MOTOR-SEAT ADJUSTER-DRIVER HORIZONTAL
M

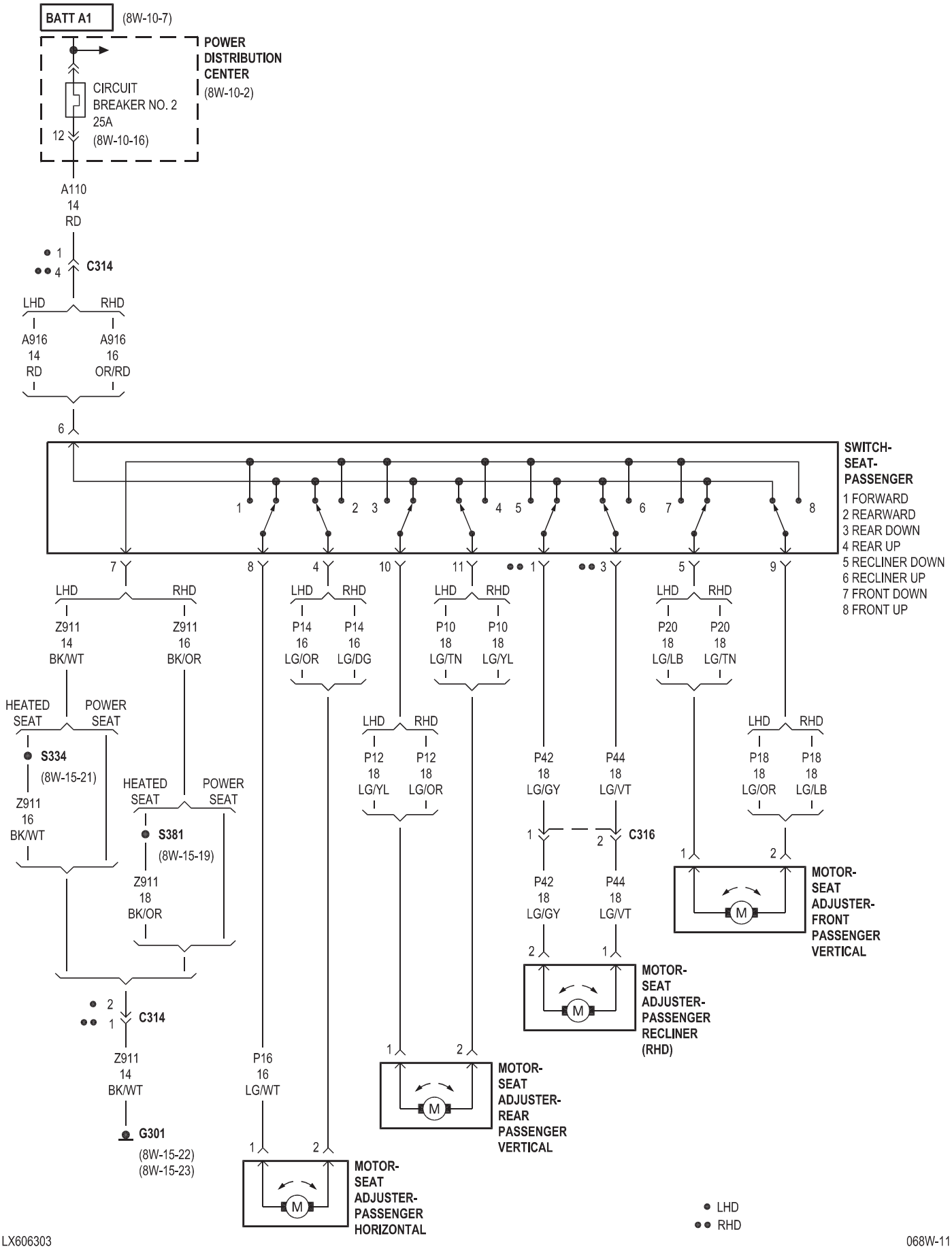
BATT A1
(8W-10-7)
POWER DISTRIBUTION CENTER
(8W-10-2)
CIRCUIT BREAKER NO. 2
25A
(8W-10-16)
12
A110
14
RD
C314
LHD
RHD
A916
14
RD
A916
16
OR/RD
SWITCH-SEAT-PASSENGER
1 FORWARD
2 REARWARD
3 REAR DOWN
4 REAR UP
5 RECLINER DOWN
6 RECLINER UP
7 FRONT DOWN
8 FRONT UP
Z911
14
BK/WT
Z911
16
BK/OR
P14
16
LG/OR
P14
16
LG/DG
P10
18
LG/TN
P10
18
LG/YL
P20
18
LG/LB
P20
18
LG/TN
P18
18
LG/OR
P18
18
LG/LB
P12
18
LG/YL
P12
18
LG/OR
P42
18
LG/GY
P44
18
LG/VT
HEATED SEAT
POWER SEAT
S334
(8W-15-21)
S381
(8W-15-19)
C316
MOTOR-SEAT ADJUSTER-FRONT PASSENGER VERTICAL
MOTOR-SEAT ADJUSTER-PASSENGER RECLINER (RHD)
MOTOR-SEAT ADJUSTER-REAR PASSENGER VERTICAL
MOTOR-SEAT ADJUSTER-PASSENGER HORIZONTAL
P16
16
LG/WT
G301
(8W-15-22)
(8W-15-23)
LHD
RHD

HEATED SEATS

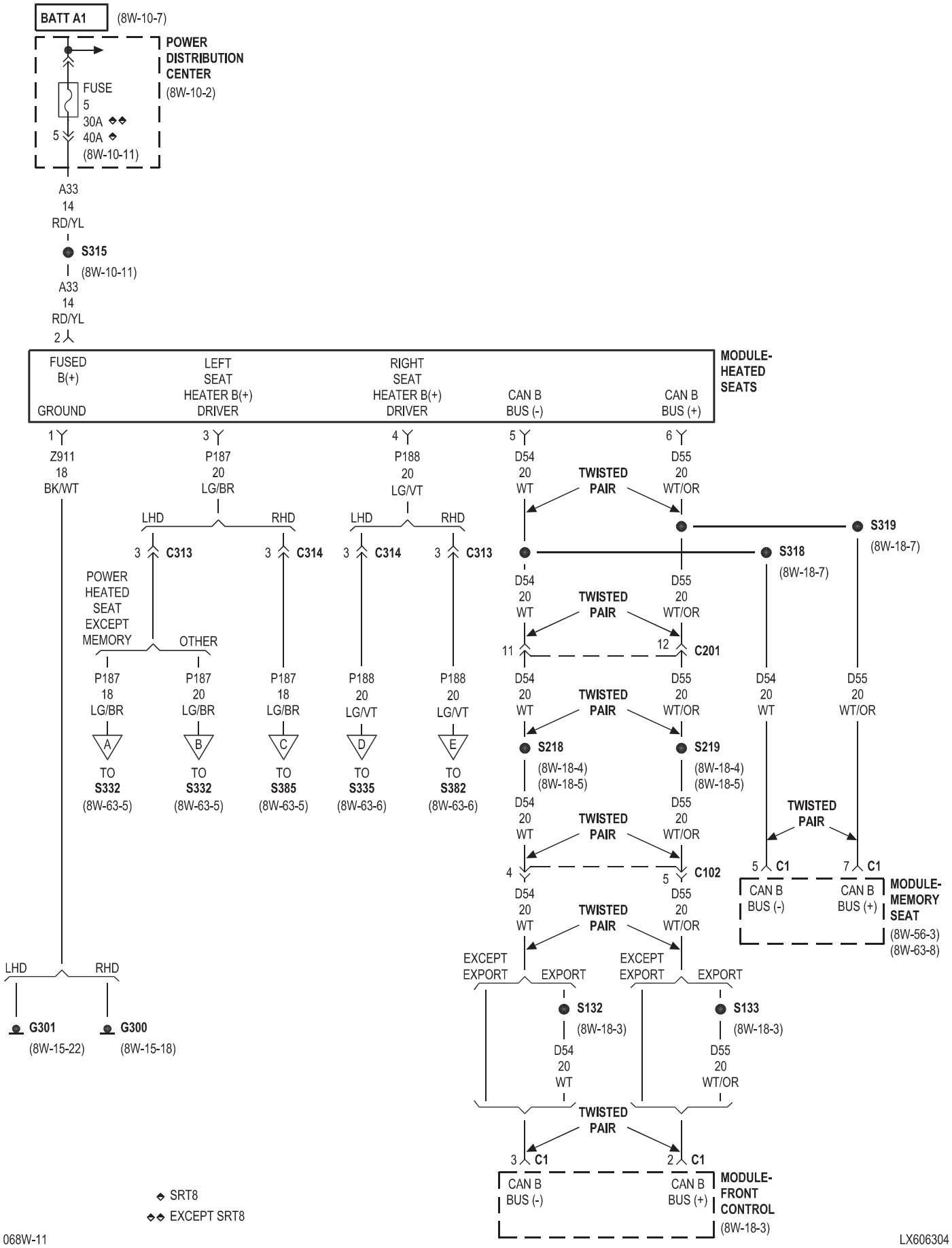

HEATED SEATS

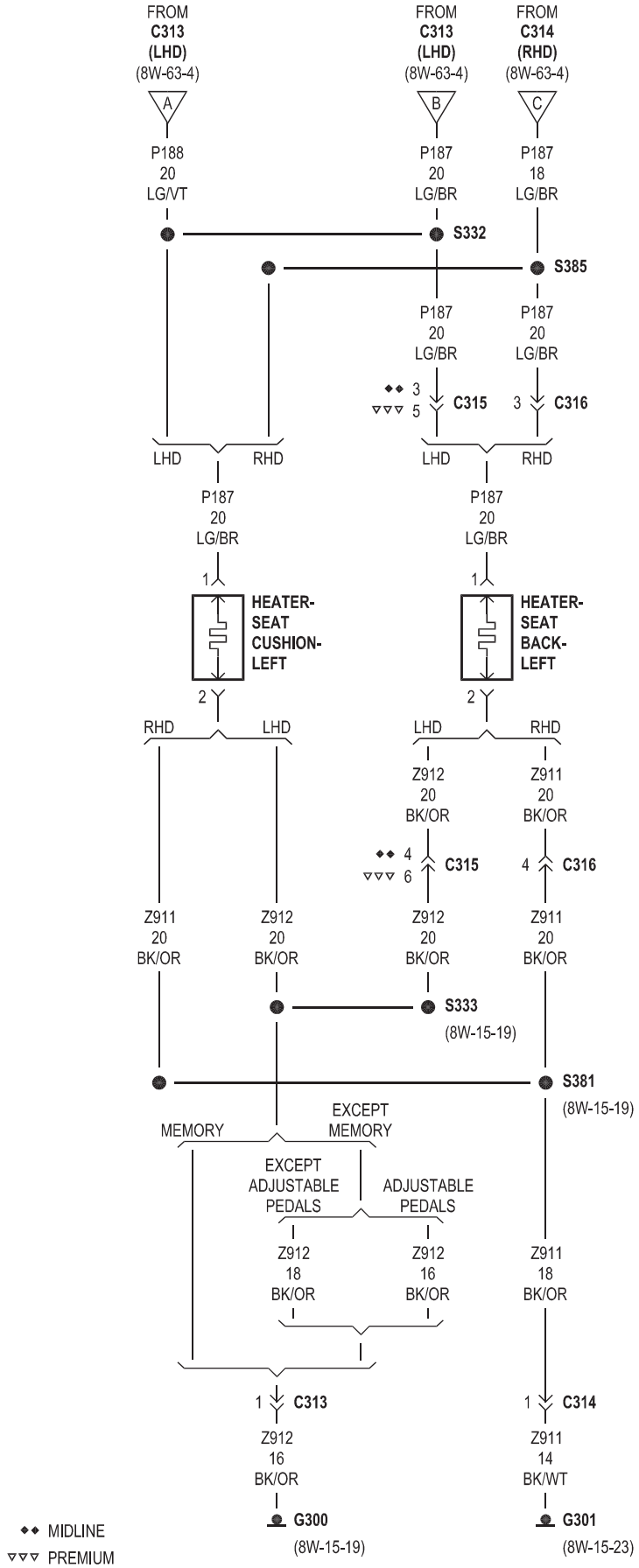

HEATED SEATS

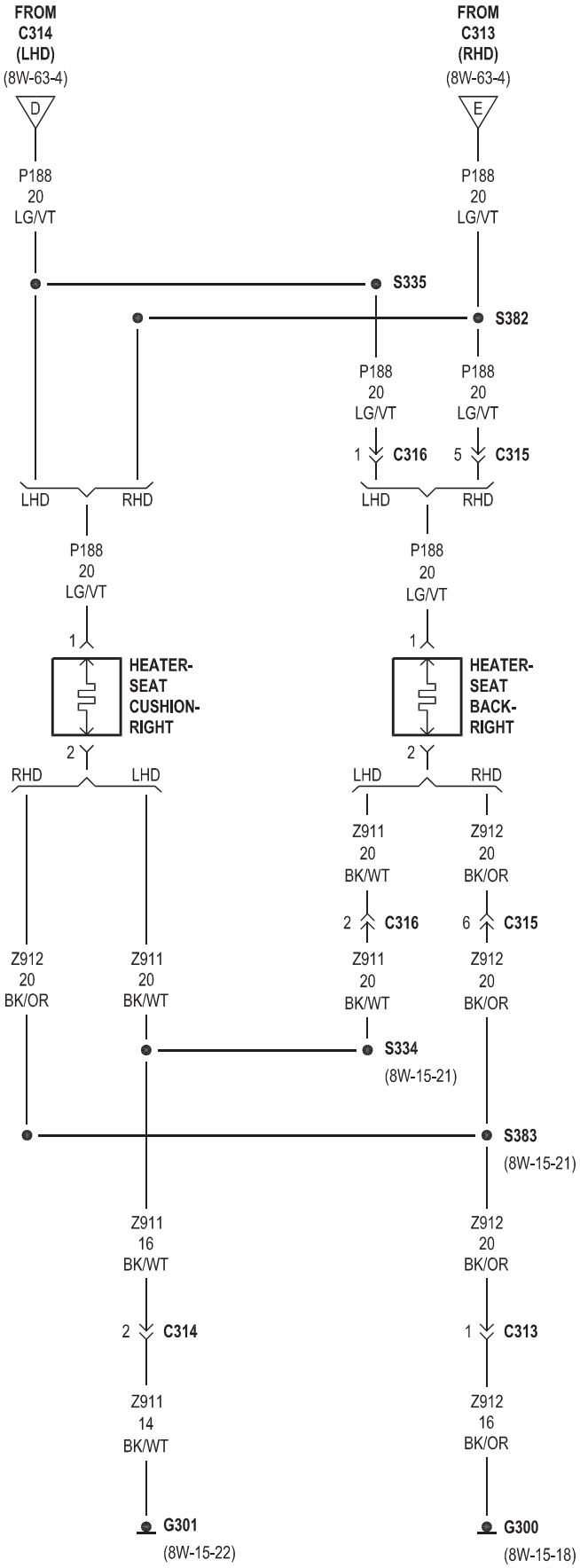

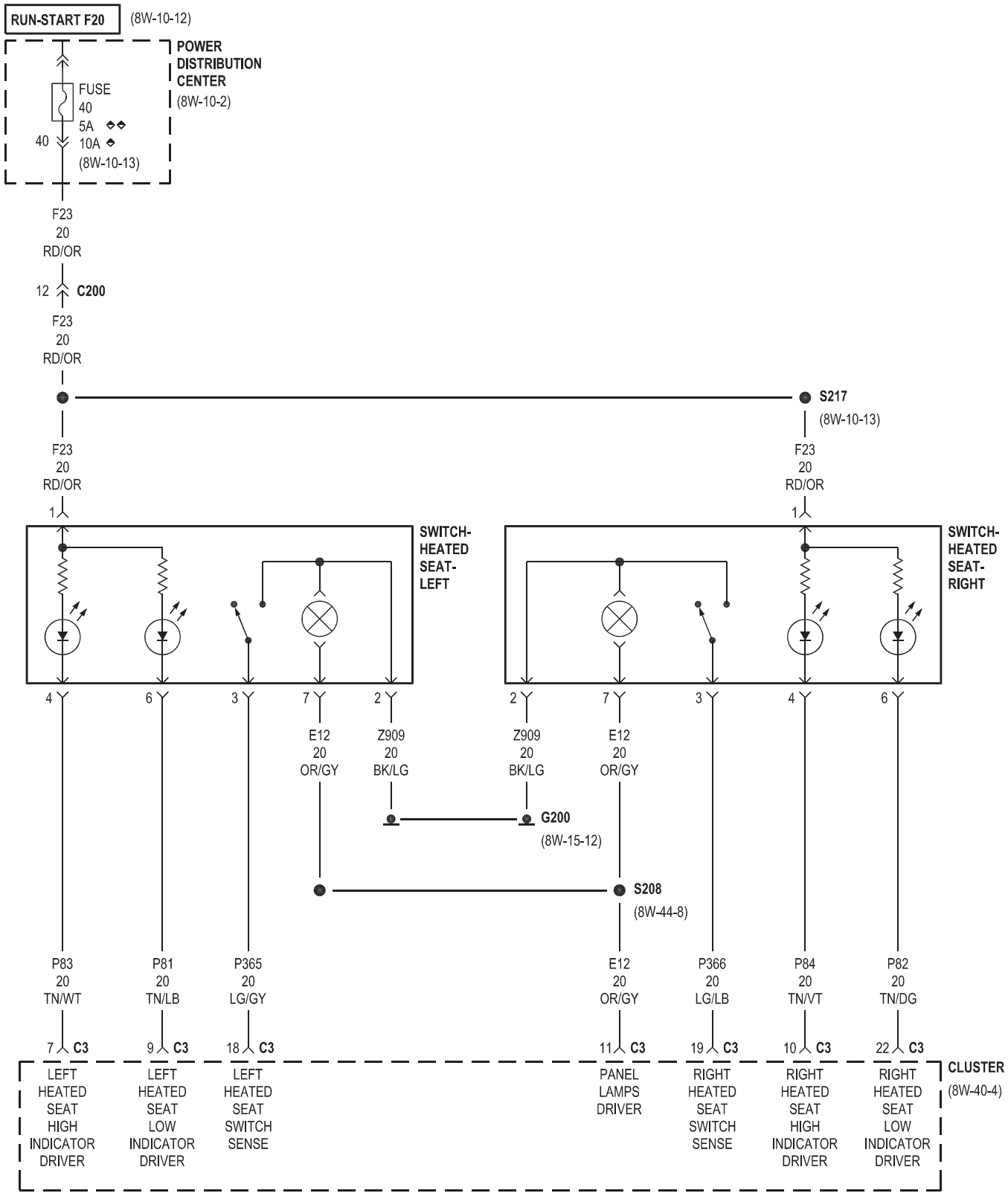

◆ SRT8

◆◆ EXCEPT SRT8

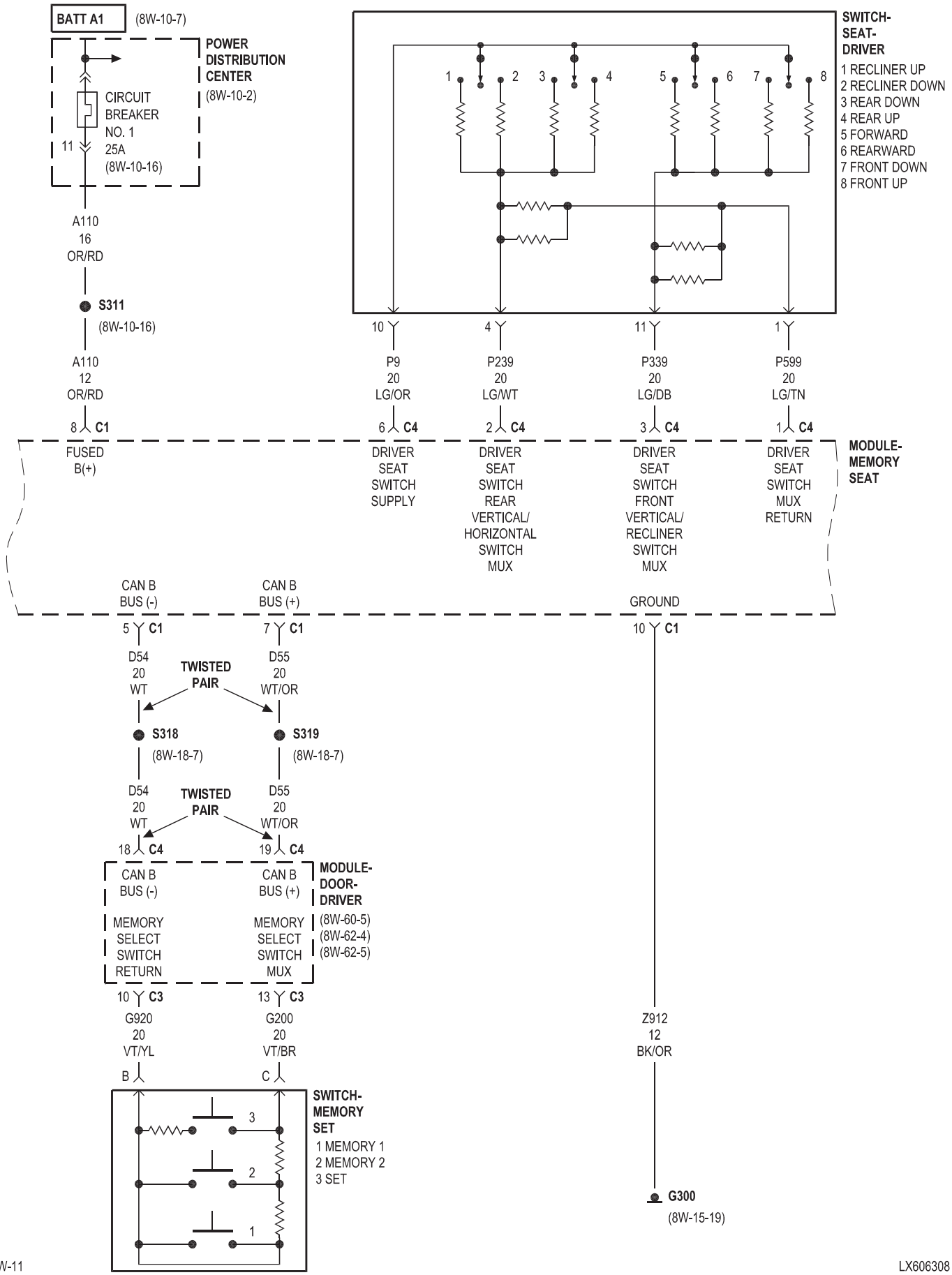
BATT A1
(8W-10-7)
POWER DISTRIBUTION CENTER
(8W-10-2)
CIRCUIT BREAKER NO. 1 25A
(8W-10-16)
11
A110 16 OR/RD
S311
(8W-10-16)
A110 12 OR/RD
8 C1
FUSED B(+)
SWITCH-SEAT-DRIVER
1 RECLINER UP
2 RECLINER DOWN
3 REAR DOWN
4 REAR UP
5 FORWARD
6 REARWARD
7 FRONT DOWN
8 FRONT UP
10 P9 20 LG/OR
6 C4
DRIVER SEAT SWITCH SUPPLY
4 P239 20 LG/WT
2 C4
DRIVER SEAT SWITCH REAR VERTICAL/ HORIZONTAL SWITCH MUX
11 P339 20 LG/DB
3 C4
DRIVER SEAT SWITCH FRONT VERTICAL/ RECLINER SWITCH MUX
1 P599 20 LG/TN
1 C4
DRIVER SEAT SWITCH MUX RETURN
MODULE-MEMORY SEAT
CAN B BUS (-)
5 C1
D54 20 WT
TWISTED PAIR
S318
(8W-18-7)
D54 20 WT
18 C4
CAN B BUS (+)
7 C1
D55 20 WT/OR
S319
(8W-18-7)
D55 20 WT/OR
19 C4
GROUND
10 C1
Z912 12 BK/OR
G300
(8W-15-19)
MODULE-DOOR-DRIVER
CAN B BUS (-)
CAN B BUS (+)
MEMORY SELECT SWITCH RETURN
MEMORY SELECT SWITCH MUX
(8W-60-5)
(8W-62-4)
(8W-62-5)
10 C3
G920 20 VT/YL
B
13 C3
G200 20 VT/BR
C
SWITCH-MEMORY SET
1 MEMORY 1
2 MEMORY 2
3 SET
3
2
1

MEMORY

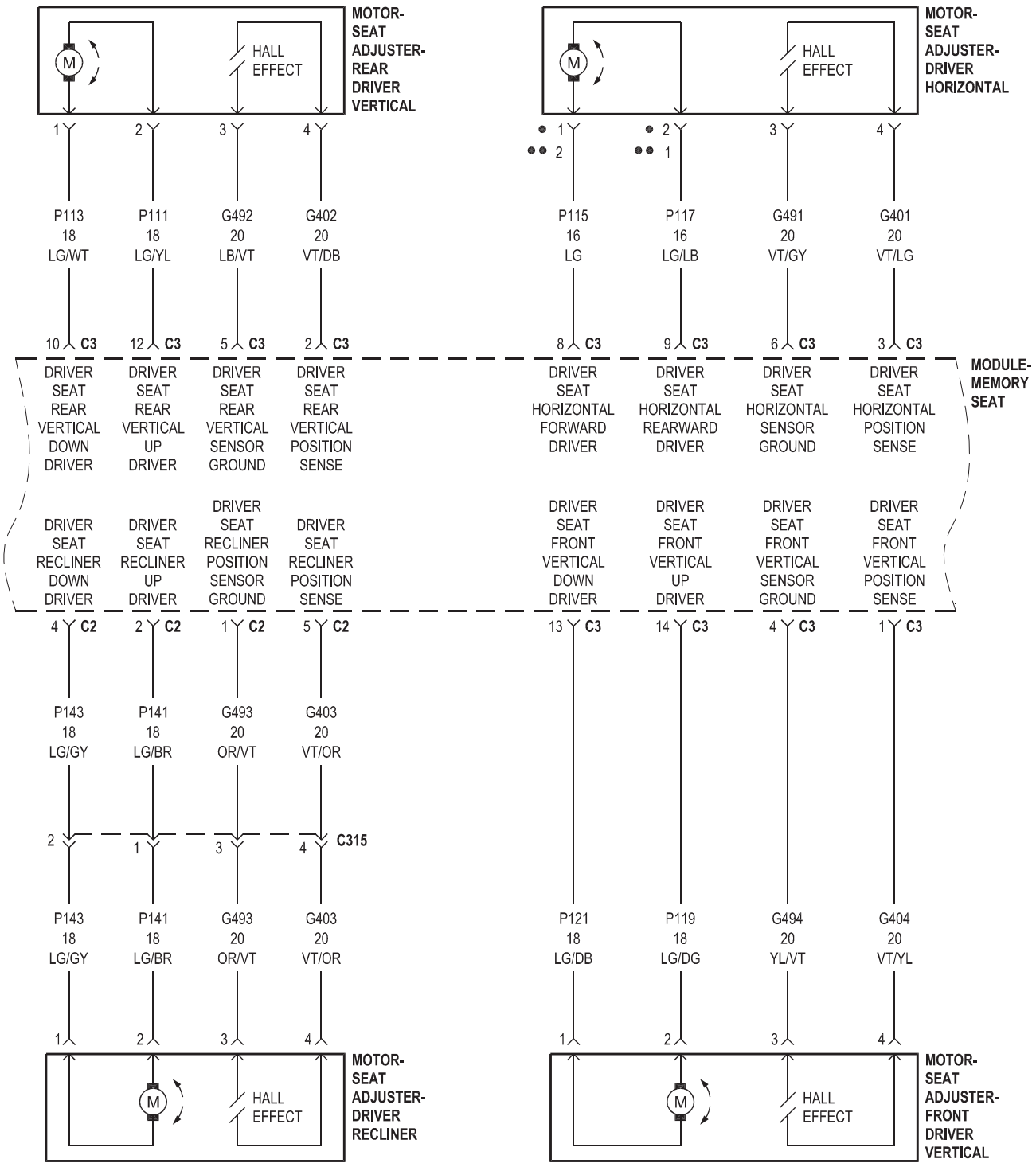

● LHD
●● RHD

8W-64 POWER SUNROOF

Component	Page
Fuse 44	8W-64-2
G200	8W-64-2
Module-Front Control	8W-64-2
Motor/Module-Sunroof	8W-64-2
Power Distribution Center	8W-64-2
Switch-Sunroof	8W-64-2

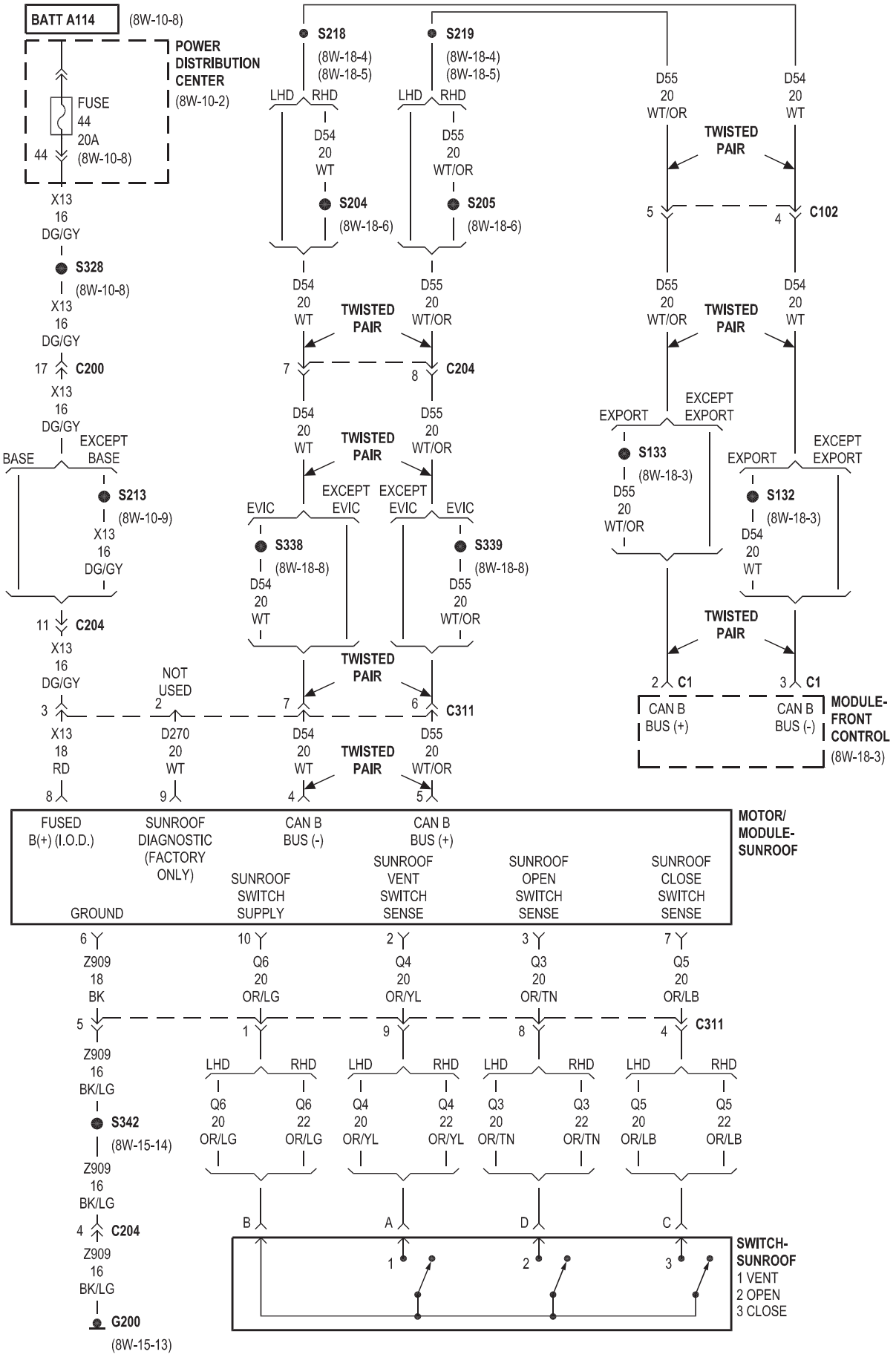
BATT A114
(8W-10-8)
POWER DISTRIBUTION CENTER
(8W-10-2)
FUSE 44 20A
44
(8W-10-8)
X13 16 DG/GY
S328
(8W-10-8)
X13 16 DG/GY
17 C200
X13 16 DG/GY
BASE
EXCEPT BASE
S213
(8W-10-9)
X13 16 DG/GY
11 C204
X13 16 DG/GY
3
NOT USED
2
X13 18 RD
8
D270 20 WT
9
S218
(8W-18-4)
(8W-18-5)
LHD
RHD
D54 20 WT
S204
(8W-18-6)
S219
(8W-18-4)
(8W-18-5)
LHD
RHD
D55 20 WT/OR
S205
(8W-18-6)
D54 20 WT
TWISTED PAIR
D55 20 WT/OR
7
8
C204
D54 20 WT
TWISTED PAIR
D55 20 WT/OR
EVIC
EXCEPT EVIC
EXCEPT EVIC
EVIC
S338
(8W-18-8)
S339
(8W-18-8)
D54 20 WT
D55 20 WT/OR
TWISTED PAIR
7
6
C311
D54 20 WT
TWISTED PAIR
D55 20 WT/OR
4
5
D55 20 WT/OR
D54 20 WT
TWISTED PAIR
5
4
C102
D55 20 WT/OR
TWISTED PAIR
D54 20 WT
EXPORT
EXCEPT EXPORT
S133
(8W-18-3)
D55 20 WT/OR
EXPORT
EXCEPT EXPORT
S132
(8W-18-3)
D54 20 WT
TWISTED PAIR
2
C1
3
C1
CAN B BUS (+)
CAN B BUS (-)
MODULE-FRONT CONTROL
(8W-18-3)
FUSED B(+) (I.O.D.)
SUNROOF DIAGNOSTIC (FACTORY ONLY)
CAN B BUS (-)
CAN B BUS (+)
GROUND
SUNROOF SWITCH SUPPLY
SUNROOF VENT SWITCH SENSE
SUNROOF OPEN SWITCH SENSE
SUNROOF CLOSE SWITCH SENSE
MOTOR/ MODULE-SUNROOF
6
Z909 18 BK
10
Q6 20 OR/LG
2
Q4 20 OR/YL
3
Q3 20 OR/TN
7
Q5 20 OR/LB
5
1
9
8
4
C311
Z909 16 BK/LG
S342
(8W-15-14)
Z909 16 BK/LG
4
C204
Z909 16 BK/LG
G200
(8W-15-13)
LHD
RHD
Q6 20 OR/LG
Q6 22 OR/LG
LHD
RHD
Q4 20 OR/YL
Q4 22 OR/YL
LHD
RHD
Q3 20 OR/TN
Q3 22 OR/TN
LHD
RHD
Q5 20 OR/LB
Q5 22 OR/LB
B
A
D
C
1
2
3
SWITCH-SUNROOF
1 VENT
2 OPEN
3 CLOSE

8W-65 SPEED PROPORTIONAL STEERING

Component	Page
Assembly-Shifter Lever	8W-65-2
Fuse 30	8W-65-2
G202	8W-65-2
Module-Antilock Brakes	8W-65-3
Module-Electronic Shift	8W-65-2
Module-Engine Control	8W-65-3
Module-Front Control	8W-65-3, 4
Module-Powertrain Control	8W-65-3
Module-Steering Control	8W-65-2, 4
Module-Transmission Control	8W-65-3
Power Distribution Center	8W-65-2
Sensor-Dynamics	8W-65-3

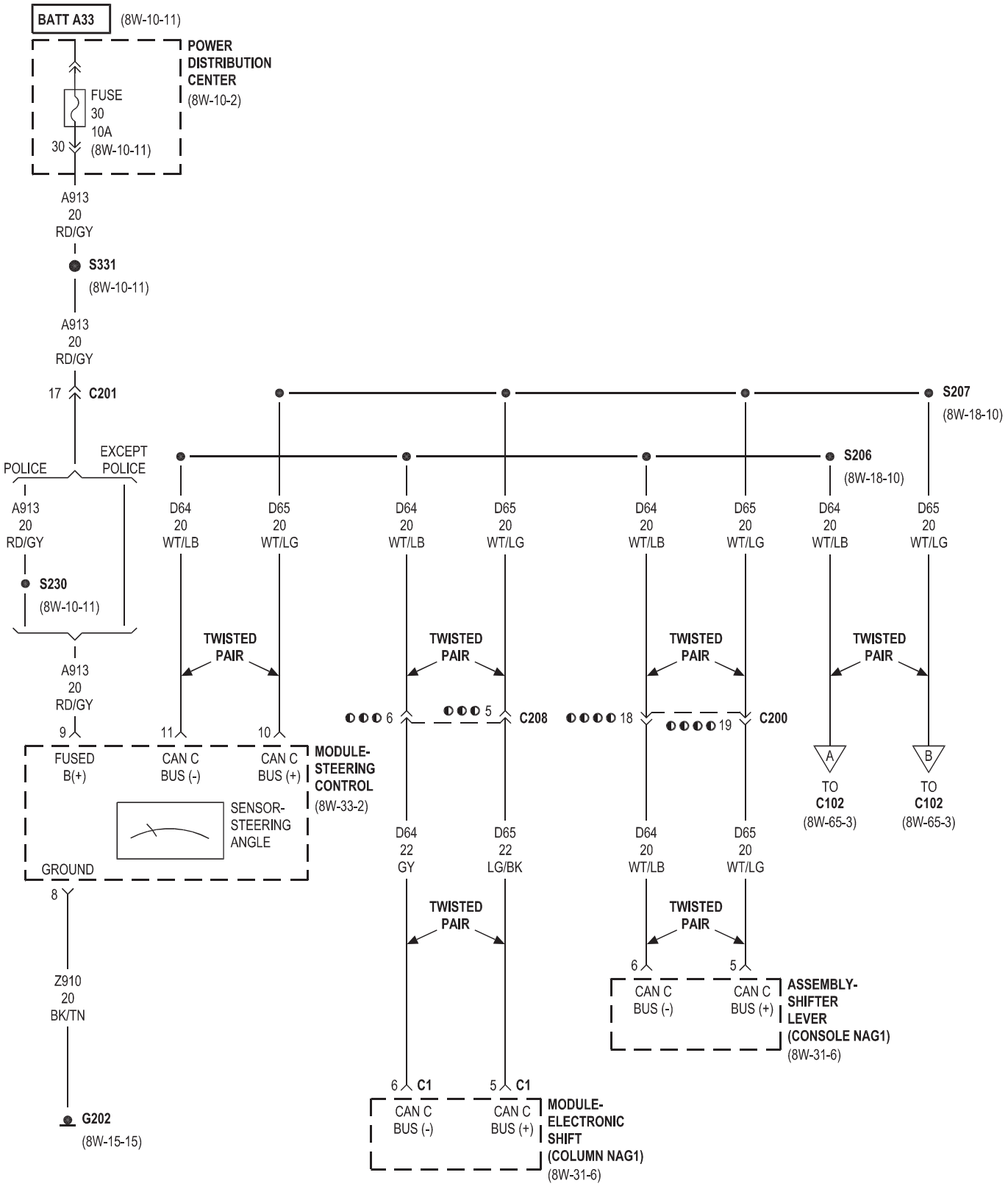

◐◐◐ COLUMN NAG1
◐◐◐◐ CONSOLE NAG1

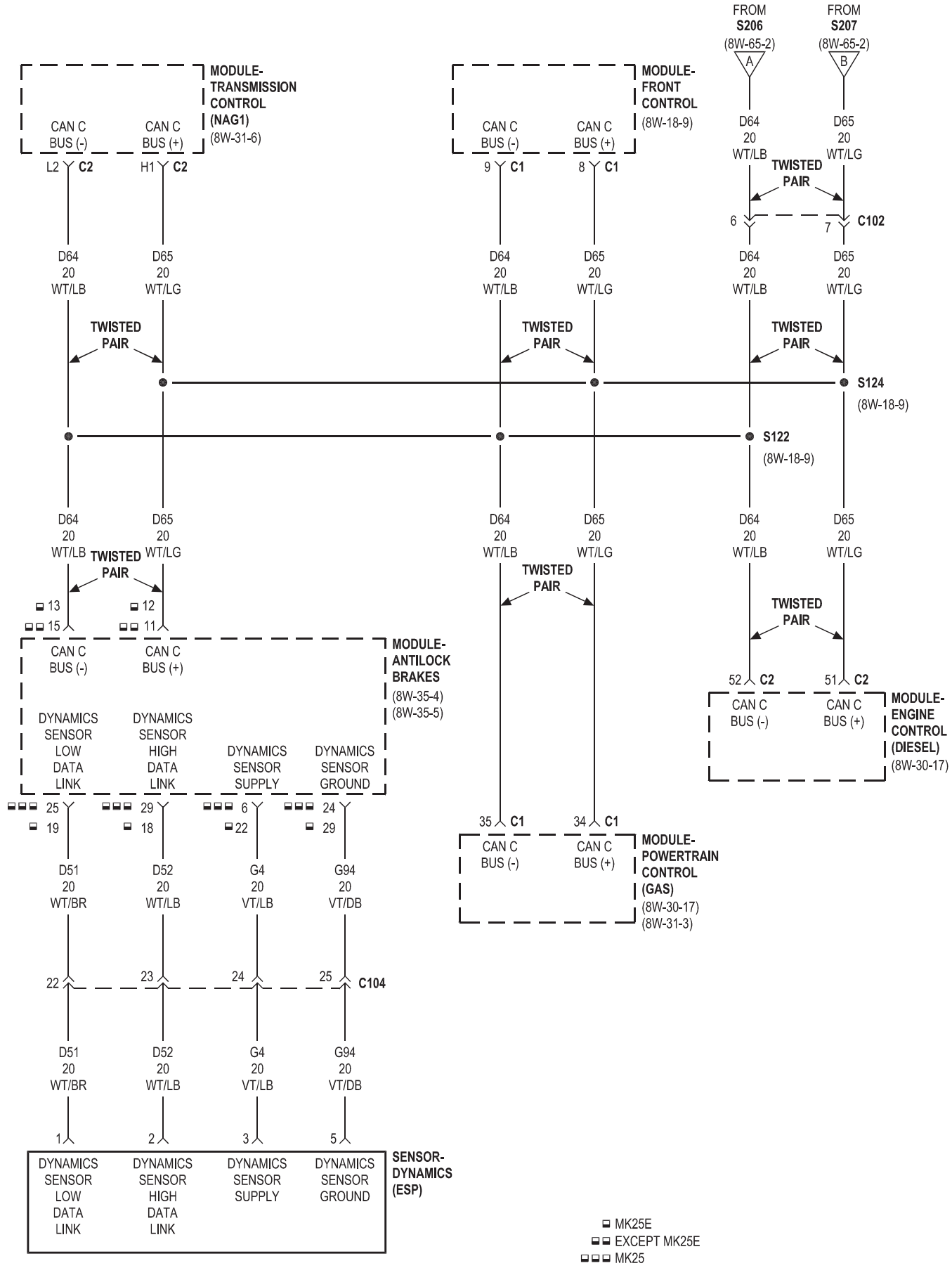
FROM S206 (8W-65-2)
FROM S207 (8W-65-2)
A
B
MODULE-TRANSMISSION CONTROL (NAG1) (8W-31-6)
MODULE-FRONT CONTROL (8W-18-9)
CAN C BUS (-)
CAN C BUS (+)
L2 C2
H1 C2
9 C1
8 C1
D64 20 WT/LB
D65 20 WT/LG
TWISTED PAIR
6
7 C102
S124 (8W-18-9)
S122 (8W-18-9)
13
15
12
11
MODULE-ANTILOCK BRAKES (8W-35-4) (8W-35-5)
DYNAMICS SENSOR LOW DATA LINK
DYNAMICS SENSOR HIGH DATA LINK
DYNAMICS SENSOR SUPPLY
DYNAMICS SENSOR GROUND
25
19
29
18
6
22
24
29
D51 20 WT/BR
D52 20 WT/LB
G4 20 VT/LB
G94 20 VT/DB
22
23
24
25 C104
1
2
3
5
SENSOR-DYNAMICS (ESP)
52 C2
51 C2
MODULE-ENGINE CONTROL (DIESEL) (8W-30-17)
35 C1
34 C1
MODULE-POWERTRAIN CONTROL (GAS) (8W-30-17) (8W-31-3)
MK25E
EXCEPT MK25E
MK25

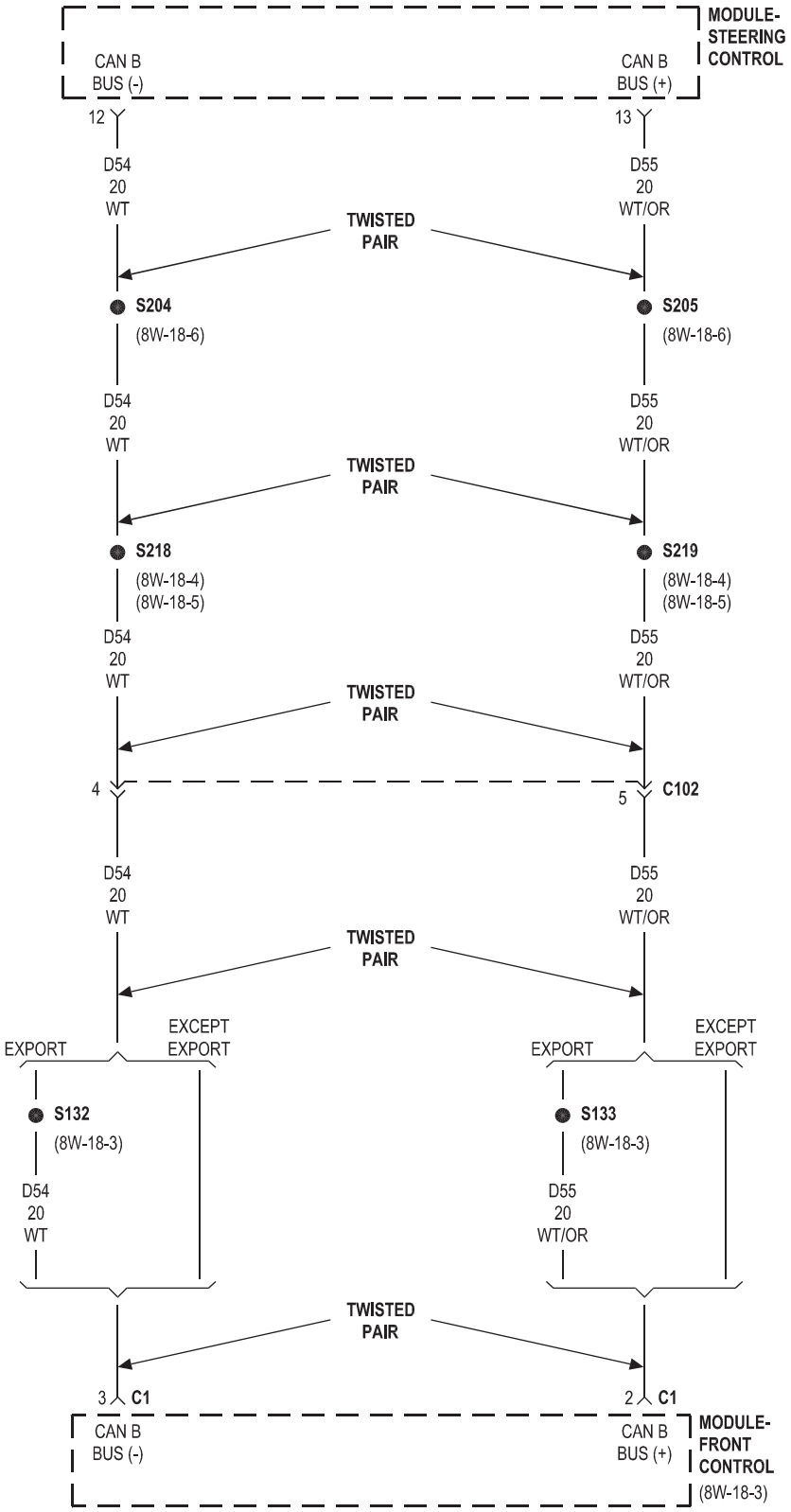
MODULE-
STEERING
CONTROL
CAN B
BUS (-)
CAN B
BUS (+)
12
13
D54
20
WT
D55
20
WT/OR
TWISTED
PAIR
S204
(8W-18-6)
S205
(8W-18-6)
D54
20
WT
D55
20
WT/OR
TWISTED
PAIR
S218
(8W-18-4)
(8W-18-5)
S219
(8W-18-4)
(8W-18-5)
D54
20
WT
D55
20
WT/OR
TWISTED
PAIR
4
5
C102
D54
20
WT
D55
20
WT/OR
TWISTED
PAIR
EXPORT
EXCEPT
EXPORT
EXPORT
EXCEPT
EXPORT
S132
(8W-18-3)
S133
(8W-18-3)
D54
20
WT
D55
20
WT/OR
TWISTED
PAIR
3
C1
2
C1
CAN B
BUS (-)
CAN B
BUS (+)
MODULE-
FRONT
CONTROL
(8W-18-3)

8W-70 SPLICE INFORMATION

Component	Page
S100	8W-10-7
S101	8W-15-5
S102	8W-15-3
S103	8W-13-14
S104	8W-13-14
S105	8W-70-2
S106	8W-70-3
S107	8W-13-18, 22
S108	8W-13-19, 23
S109	8W-13-20, 21
S110	8W-70-4
S111	8W-70-4
S112	8W-30-11
S113	8W-31-4
S114	8W-13-28
S115	8W-15-8
S116	8W-15-7
S117	8W-15-7
S118	8W-30-15
S119	8W-30-15
S120	8W-13-14
S121	8W-70-3
S122	8W-18-9
S123	8W-50-7
S124	8W-18-9
S125	8W-30-11
S126	8W-10-14
S127	8W-13-14
S128	8W-13-13
S129	8W-13-28
S130	8W-13-13
S131	8W-10-21
S132	8W-18-3
S133	8W-18-3
S134	8W-13-36
S135	8W-13-36
S136	8W-15-9
S138	8W-10-7
S139	8W-39-6
S140	8W-10-21
S141	8W-39-6
S142	8W-10-7
S143	8W-13-17, 24
S144	8W-13-29
S145	8W-30-22
S146	8W-13-25
S148	8W-15-10
S149	8W-10-10
S150	8W-10-7
S151	8W-10-7
S152	8W-10-7
S155	8W-10-12
S156	8W-13-25
S157	8W-50-11
S158	8W-50-11
S159	8W-50-11
S160	8W-50-11
S161	8W-50-11
S162	8W-50-11
S163	8W-50-11
S164	8W-50-11
S165	8W-50-11
S200	8W-10-8
S201	8W-10-16
S202	8W-10-8
S203	8W-10-9
S204	8W-18-6
S205	8W-18-6
S206	8W-18-10
S207	8W-18-10
S208	8W-44-8
S209	8W-10-14
S210	8W-10-20
S211	8W-18-2
S212	8W-40-7
S213	8W-10-9
S214	8W-10-18
S215	8W-10-12
S216	8W-44-6
S217	8W-10-13
S218	8W-18-4, 5
S219	8W-18-4, 5
S220	8W-44-9
S221	8W-47-5
S222	8W-47-5
S223	8W-47-5
S224	8W-47-5
S225	8W-56-5
S226	8W-56-5
S227	8W-40-7

Component	Page
S228	8W-40-8
S229	8W-39-2
S230	8W-10-11
S231	8W-10-19
S232	8W-50-11
S233	8W-50-11
S234	8W-50-11
S235	8W-50-11
S236	8W-50-11
S237	8W-50-11
S300	8W-10-18
S301	8W-39-4
S302	8W-51-7
S303	8W-13-29
S304	8W-10-12
S305	8W-13-15
S306	8W-40-7
S307	8W-40-5
S308	8W-60-2, 4
S309	8W-13-34
S310	8W-40-5
S311	8W-10-16
S312	8W-10-15
S313	8W-10-13
S314	8W-10-13
S315	8W-10-11
S316	8W-10-22
S317	8W-10-17
S318	8W-18-7
S319	8W-18-7
S320	8W-10-13
S321	8W-10-20
S322	8W-10-8
S323	8W-10-17
S326	8W-10-20
S327	8W-56-5
S328	8W-10-8
S329	8W-10-22
S330	8W-40-5
S331	8W-10-11
S332	8W-63-5
S333	8W-15-19
S334	8W-15-21
S335	8W-63-6
S336	8W-43-6
S337	8W-43-6
S338	8W-18-8
S339	8W-18-8
S340	8W-40-7
S341	8W-40-7
S342	8W-15-14
S343	8W-15-13
S344	8W-13-15
S345	8W-15-29, 30
S346	8W-56-7
S347	8W-56-8
S348	8W-51-10
S349	8W-13-29
S350	8W-15-28
S351	8W-13-16
S352	8W-15-27
S353	8W-13-16
S354	8W-15-26
S355	8W-15-20
S356	8W-10-17
S357	8W-60-4
S358	8W-62-3
S359	8W-10-11
S360	8W-15-24
S361	8W-60-4
S362	8W-51-4
S363	8W-10-15
S370	8W-10-9
S371	8W-15-13
S372	8W-18-3
S373	8W-18-3
S374	8W-10-8
S375	8W-15-31
S376	8W-15-31
S377	8W-62-5
S378	8W-62-5
S379	8W-13-35
S380	8W-10-8
S381	8W-15-19
S382	8W-63-6
S383	8W-15-21
S384	8W-13-35
S385	8W-63-5
S386	8W-50-11

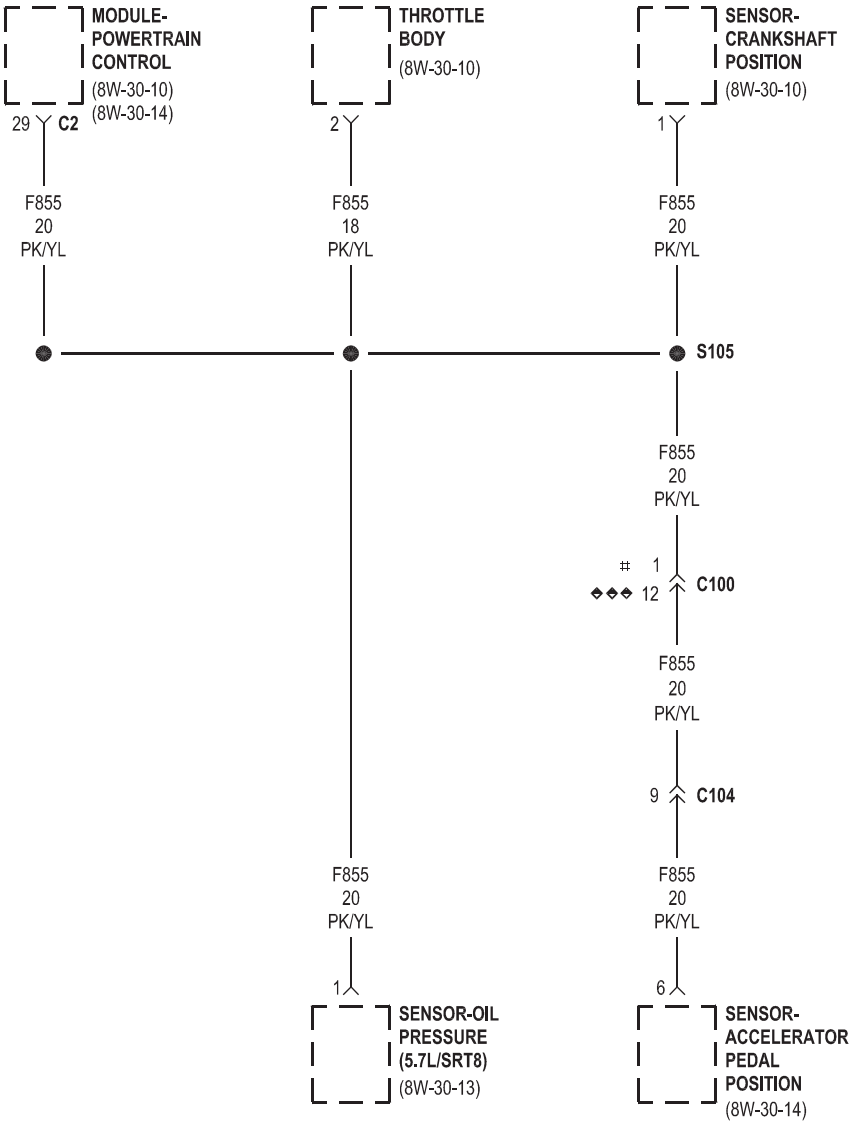

2.7L/3.5L

◆◆◆ 5.7L/SRT8

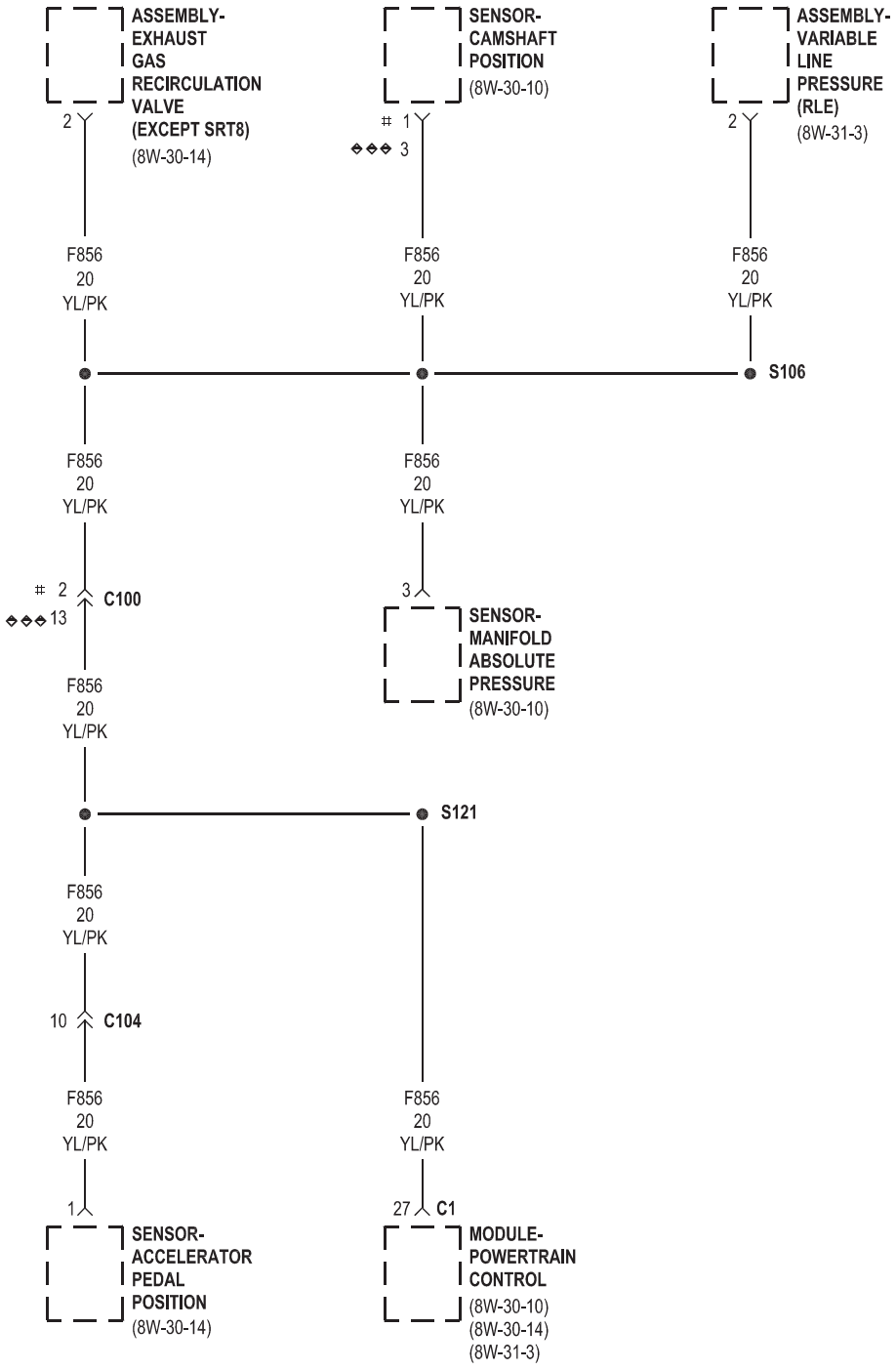

2.7L/3.5L

◆◆◆ 5.7L/SRT8

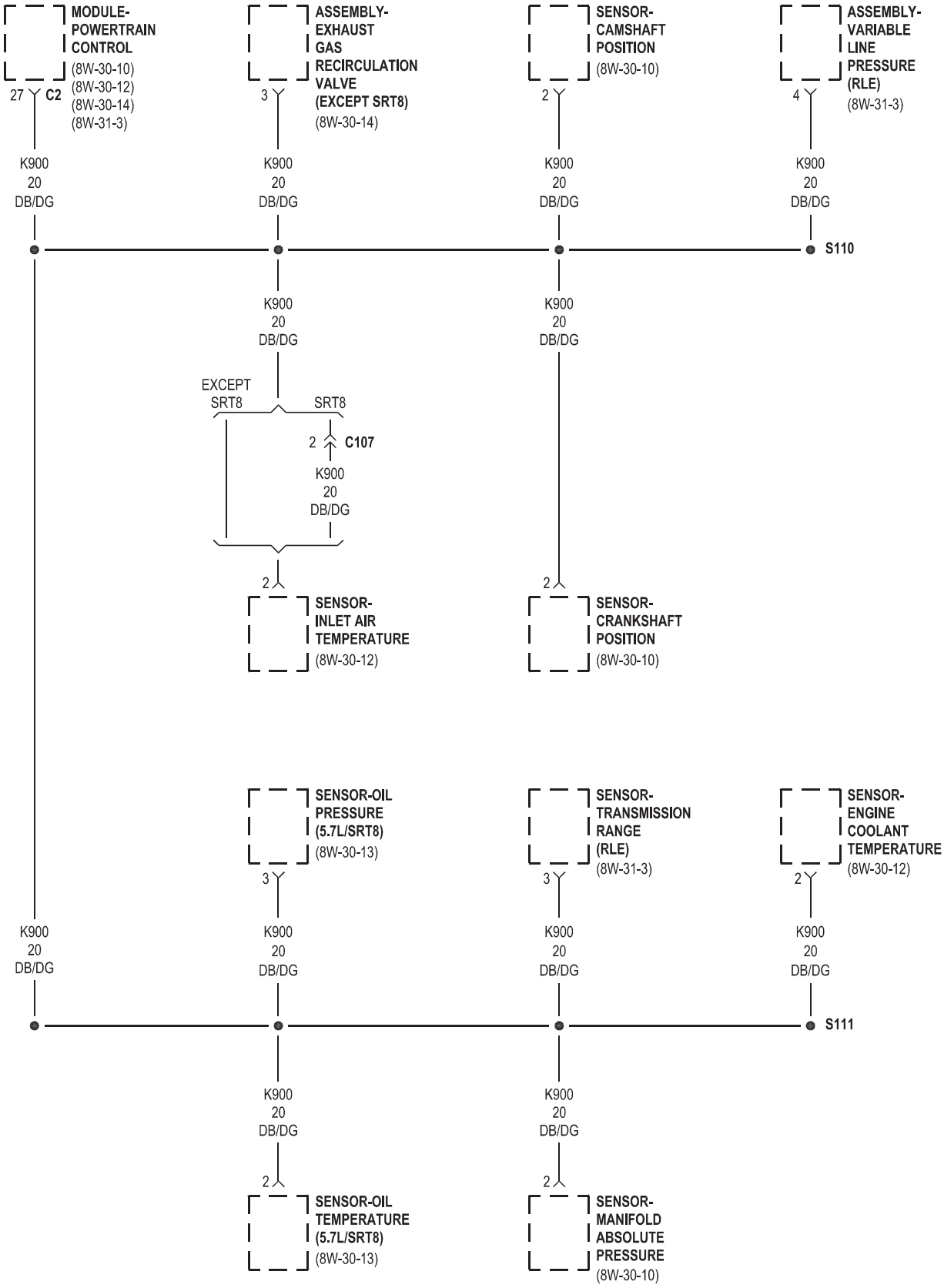
MODULE-POWERTRAIN CONTROL
(8W-30-10)
(8W-30-12)
(8W-30-14)
(8W-31-3)
27 C2
ASSEMBLY-EXHAUST GAS RECIRCULATION VALVE (EXCEPT SRT8)
(8W-30-14)
3
SENSOR-CAMSHAFT POSITION
(8W-30-10)
2
ASSEMBLY-VARIABLE LINE PRESSURE (RLE)
(8W-31-3)
4
K900 20 DB/DG
S110
EXCEPT SRT8
SRT8
2 C107
SENSOR-INLET AIR TEMPERATURE
(8W-30-12)
SENSOR-CRANKSHAFT POSITION
(8W-30-10)
SENSOR-OIL PRESSURE (5.7L/SRT8)
(8W-30-13)
SENSOR-TRANSMISSION RANGE (RLE)
(8W-31-3)
SENSOR-ENGINE COOLANT TEMPERATURE
(8W-30-12)
S111
SENSOR-OIL TEMPERATURE (5.7L/SRT8)
(8W-30-13)
SENSOR-MANIFOLD ABSOLUTE PRESSURE
(8W-30-10)

8W-80 CONNECTOR PIN-OUTS

Component	Page
Actuator-Blend Door-Left	8W-80-7
Actuator-Blend Door-Right (ATC)	8W-80-7
Actuator-Mode Door	8W-80-7
Actuator-Recirculation Door	8W-80-7
Airbag-Driver Squib 1	8W-80-8
Airbag-Driver Squib 2	8W-80-8
Airbag-Passenger Squib	8W-80-8
Airbag-Side Curtain-Left	8W-80-8
Airbag-Side Curtain-Right	8W-80-9
Amplifier-Antenna-Backlite C1	8W-80-9
Amplifier-Antenna-Backlite C2	8W-80-9
Amplifier-Antenna-Backlite C3	8W-80-9
Amplifier-Antenna-Backlite C4	8W-80-10
Amplifier-Radio C1 (Midline II/Highline)	8W-80-10
Amplifier-Radio C2 (Midline II/Highline)	8W-80-10
Amplifier-Subwoofer (SRT8 Except Export)	8W-80-11
Antenna Cable-Satellite Radio No. 1	8W-80-11
Antenna Cable-Satellite Radio No. 2	8W-80-11
Antenna-Global Positioning System (Navigation)	8W-80-11
Antenna-Satellite No. 1	8W-80-12
Antenna-Satellite No. 2	8W-80-12
Assembly-Electrohydraulic Control Unit (NAG1)	8W-80-12
Assembly-Exhaust Gas Recirculation Valve (Gas Except SRT8)	8W-80-12
Assembly-Natural Vacuum Leak Detection (Gas Except Export Except SRT8/Police)	8W-80-13
Assembly-Natural Vacuum Leak Detection (Police/SRT8 Except Export)	8W-80-13
Assembly-Shifter Lever (Console NAG1)	8W-80-13
Assembly-Shifter Lever (RLE)	8W-80-13
Assembly-Transmission Solenoid/Pressure Switch (RLE)	8W-80-13
Assembly-Variable Line Pressure (RLE)	8W-80-14
Backlite-Antenna	8W-80-14
Backlite-Electric Heated (Ground)	8W-80-14
Backlite-Electric Heated (Power)	8W-80-14
Battery-Negative	8W-80-14
Battery-Positive	8W-80-15
Booster-Active Brake (MK25)	8W-80-15
C100 (2.7L/3.5L)	8W-80-15
C100 (2.7L/3.5L)	8W-80-16
C100 (5.7L/SRT8)	8W-80-16
C100 (5.7L/SRT8)	8W-80-17
C100 (Diesel)	8W-80-17
C100 (Diesel)	8W-80-17
C101 (5.7L MDS)	8W-80-18
C101 (5.7L MDS)	8W-80-18
C102	8W-80-18
C102	8W-80-19
C103 (LX48)	8W-80-19
C103 (LX48)	8W-80-20
C104	8W-80-20
C104	8W-80-21
C105	8W-80-21
C105	8W-80-22
C107 (SRT8)	8W-80-22
C107 (SRT8)	8W-80-22
C108 (Diesel)	8W-80-23
C108 (Diesel)	8W-80-23
C200	8W-80-23
C200	8W-80-24
C201	8W-80-24
C201	8W-80-25
C202	8W-80-26
C202	8W-80-26
C203	8W-80-27
C203	8W-80-28
C204	8W-80-29
C204	8W-80-29
C205 (Except Base)	8W-80-30
C205 (Except Base)	8W-80-30
C206	8W-80-31
C206	8W-80-31
C207	8W-80-31
C207	8W-80-31
C208 (Column NAG1)	8W-80-31
C208 (Column NAG1)	8W-80-32
C300	8W-80-32
C300	8W-80-33
C301	8W-80-33
C301	8W-80-34
C302	8W-80-35
C302	8W-80-35
C303	8W-80-35
C303	8W-80-36
C304 (LX49)	8W-80-36
C304 (LX49)	8W-80-36
C305 (LX49)	8W-80-36
C305 (LX49)	8W-80-37
C306 (LX48 Base)	8W-80-37
C306 (LX48 Base)	8W-80-37
C306 (LX48 Except Base/LX49 Except Export)	8W-80-37
C306 (LX48 Except Base/LX49 Except Export)	8W-80-38

Component	Page
C306 (LX49 Export)	8W-80-38
C306 (LX49 Export)	8W-80-39
C307 (LX48)	8W-80-39
C307 (LX48)	8W-80-39
C308 (LX48)	8W-80-40
C308 (LX48)	8W-80-40
C309 (LX49)	8W-80-40
C309 (LX49)	8W-80-40
C310 (LX49)	8W-80-41
C310 (LX49)	8W-80-41
C311 (Sunroof)	8W-80-41
C311 (Sunroof)	8W-80-42
C313	8W-80-42
C313	8W-80-42
C314	8W-80-43
C314	8W-80-43
C315 (Base)	8W-80-43
C315 (Base)	8W-80-43
C315 (Midline)	8W-80-44
C315 (Midline)	8W-80-44
C315 (Premium)	8W-80-44
C315 (Premium)	8W-80-45
C316 (LHD Heated Seat/RHD Power Seat)	8W-80-45
C316 (LHD Heated Seat/RHD Power Seat)	8W-80-45
C316 (RHD Power/Heated Seat)	8W-80-45
C316 (RHD Power/Heated Seat)	8W-80-46
C317 (Satellite Radio)	8W-80-46
C317 (Satellite Radio)	8W-80-46
C318 (Police)	8W-80-47
C318 (Police)	8W-80-47
Capacitor-Ignition-No. 1 (2.7L/3.5L)	8W-80-47
Capacitor-Ignition-No. 1 (SRT8)	8W-80-47
Capacitor-Ignition-No. 2 (2.7L/5.7L)	8W-80-48
Cluster C1	8W-80-48
Cluster C2	8W-80-49
Cluster C3	8W-80-49
Clutch-A/C Compressor (Gas)	8W-80-50
Clutch-A/C Compressor (Diesel)	8W-80-50
Coil-Ignition-No. 1 (5.7L Early Build)	8W-80-50
Coil-Ignition-No. 1 (3.5L Late Build)	8W-80-50
Coil-Ignition-No. 1 (2.7L/3.5L Early Build)	8W-80-51
Coil-Ignition-No. 1 (5.7L Late Build/ SRT8)	8W-80-51
Coil-Ignition-No. 2 (2.7L/3.5L Early Build)	8W-80-51
Coil-Ignition-No. 2 (5.7L Late Build/ SRT8)	8W-80-51
Coil-Ignition-No. 2 (3.5L Late Build)	8W-80-52
Coil-Ignition-No. 2 (5.7L Early Build)	8W-80-52
Coil-Ignition-No. 3 (5.7L Early Build)	8W-80-52
Coil-Ignition-No. 3 (3.5L Late Build)	8W-80-52
Coil-Ignition-No. 3 (2.7L/3.5L Early Build)	8W-80-52
Coil-Ignition-No. 3 (5.7L Late Build/ SRT8)	8W-80-53
Coil-Ignition-No. 4 (2.7L/3.5L Early Build)	8W-80-53
Coil-Ignition-No. 4 (5.7L Late Build/ SRT8)	8W-80-53
Coil-Ignition-No. 4 (3.5L Late Build)	8W-80-53
Coil-Ignition-No. 4 (5.7L Early Build)	8W-80-54
Coil-Ignition-No. 5 (5.7L Early Build)	8W-80-54
Coil-Ignition-No. 5 (3.5L Late Build)	8W-80-54
Coil-Ignition-No. 5 (2.7L/3.5L Early Build)	8W-80-54
Coil-Ignition-No. 5 (5.7L Late Build/ SRT8)	8W-80-54
Coil-Ignition-No. 6 (2.7L/3.5L Early Build)	8W-80-55
Coil-Ignition-No. 6 (5.7L Late Build/ SRT8)	8W-80-55
Coil-Ignition-No. 6 (3.5L Late Build)	8W-80-55
Coil-Ignition-No. 6 (5.7L Early Build)	8W-80-55
Coil-Ignition-No. 7 (5.7L Early Build)	8W-80-56
Coil-Ignition-No. 7 (5.7L Late Build/ SRT8)	8W-80-56
Coil-Ignition-No. 8 (5.7L Late Build/ SRT8)	8W-80-56
Coil-Ignition-No. 8 (5.7L Early Build)	8W-80-56
Connector-Interface-Police/Taxi	8W-80-57
Connector-Police Accessories (Police)	8W-80-57
Control-A/C-Heater C1 (ATC)	8W-80-58
Control-A/C-Heater C1 (MTC)	8W-80-58
Control-A/C-Heater C2 (ATC)	8W-80-59
Control-A/C-Heater C2 (MTC)	8W-80-59
Control-A/C-Heater C3 (MTC)	8W-80-59
Data Link Connector	8W-80-60
Display-Park Assist (Parktronics)	8W-80-60
Fan-Radiator C1	8W-80-60
Fan-Radiator C2 (AWD/Diesel/SRT8 Export)	8W-80-61
Fan-Radiator C2 (SRT8 Except Export)	8W-80-61
Flasher-Headlamp C1 (Police)	8W-80-61
Flasher-Headlamp C2 (Police)	8W-80-61
Generator (Diesel)	8W-80-62
Generator (Gas)	8W-80-62
Generator-Eyelet	8W-80-62
Glow Plug No. 1 (Diesel)	8W-80-62
Glow Plug No. 2 (Diesel)	8W-80-62
Glow Plug No. 3 (Diesel)	8W-80-63
Glow Plug No. 4 (Diesel)	8W-80-63
Glow Plug No. 5 (Diesel)	8W-80-63
Glow Plug No. 6 (Diesel)	8W-80-63
Heater-Cabin (Diesel)	8W-80-63
Heater-Crankcase Vent (Diesel)	8W-80-64

Component	Page
Heater-Seat Back-Left	8W-80-64
Heater-Seat Back-Right	8W-80-64
Heater-Seat Cushion-Left	8W-80-64
Heater-Seat Cushion-Right	8W-80-65
Horn-No. 1	8W-80-65
Horn-No. 2	8W-80-65
Injector-Fuel-No. 1 (Gas)	8W-80-65
Injector-Fuel-No. 1 (Diesel)	8W-80-66
Injector-Fuel-No. 2 (Diesel)	8W-80-66
Injector-Fuel-No. 2 (Gas)	8W-80-66
Injector-Fuel-No. 3 (Gas)	8W-80-66
Injector-Fuel-No. 3 (Diesel)	8W-80-66
Injector-Fuel-No. 4 (Diesel)	8W-80-67
Injector-Fuel-No. 4 (Gas)	8W-80-67
Injector-Fuel-No. 5 (Gas)	8W-80-67
Injector-Fuel-No. 5 (Diesel)	8W-80-67
Injector-Fuel-No. 6 (Diesel)	8W-80-67
Injector-Fuel-No. 6 (Gas)	8W-80-68
Injector-Fuel-No. 7 (5.7L/SRT8)	8W-80-68
Injector-Fuel-No. 8 (5.7L/SRT8)	8W-80-68
Lamp-Backup-Left (300C)	8W-80-68
Lamp-Backup-Left (300T)	8W-80-69
Lamp-Backup-Left (LX49)	8W-80-69
Lamp-Backup-Right (300C)	8W-80-69
Lamp-Backup-Right (300T)	8W-80-69
Lamp-Backup-Right (LX49)	8W-80-70
Lamp-Cargo (LX48 Chrysler)	8W-80-70
Lamp-Cargo (LX48 Dodge)	8W-80-70
Lamp-Cargo (LX49)	8W-80-70
Lamp-Center High Mounted Stop (LX48 Chrysler)	8W-80-70
Lamp-Center High Mounted Stop (LX48 Dodge)	8W-80-71
Lamp-Center High Mounted Stop (LX49)	8W-80-71
Lamp-Courtesy-Left Front Door (Except Base)	8W-80-71
Lamp-Courtesy-Left Rear	8W-80-71
Lamp-Courtesy-Right Front Door (Except Base)	8W-80-72
Lamp-Courtesy-Right Rear	8W-80-72
Lamp-Dome (Police)	8W-80-72
Lamp-Fog-Left Front	8W-80-72
Lamp-Fog-Left Rear (300C Export)	8W-80-72
Lamp-Fog-Left Rear (LX49 Export)	8W-80-73
Lamp-Fog-Right Front	8W-80-73
Lamp-Fog-Right Rear (300C Export)	8W-80-73
Lamp-Fog-Right Rear (LX49 Export)	8W-80-73
Lamp-Glove Box (Except Police)	8W-80-74
Lamp-High Beam-Left	8W-80-74
Lamp-High Beam-Right	8W-80-74
Lamp-High Intensity Discharge-Left (HID Lamps)	8W-80-74
Lamp-High Intensity Discharge-Right (HID Lamps)	8W-80-75
Lamp-License (Except 300C/Export)	8W-80-75
Lamp-License-Left (300C/Export)	8W-80-75
Lamp-License-Right (300C/Export)	8W-80-76
Lamp-Low Beam-Left (Except HID Lamps)	8W-80-76
Lamp-Low Beam-Right (Except HID Lamps)	8W-80-76
Lamp-Park/Turn-Left Front (300C Except Export)	8W-80-76
Lamp-Park/Turn-Left Front (300T/ Export)	8W-80-77
Lamp-Park/Turn-Left Front (LX49 Except Export)	8W-80-77
Lamp-Park/Turn-Right Front (300C Except Export)	8W-80-77
Lamp-Park/Turn-Right Front (300T/ Export)	8W-80-78
Lamp-Park/Turn-Right Front (LX49 Except Export)	8W-80-78
Lamp-PRNDL	8W-80-78
Lamp-Reading-Front	8W-80-79
Lamp-Side Marker-Left Front (LX48)	8W-80-79
Lamp-Side Marker-Left Rear (300T)	8W-80-79
Lamp-Side Marker-Right Front (LX48)	8W-80-79
Lamp-Side Marker-Right Rear (300T)	8W-80-80
Lamp-Side Repeater-Left (Export)	8W-80-80
Lamp-Side Repeater-Right (Export)	8W-80-80
Lamp-Spot-Left (Police)	8W-80-80
Lamp-Spot-Right (Police)	8W-80-81
Lamp-Tail Park-Left (300C Except Export)	8W-80-81
Lamp-Tail Park-Right (300C Except Export)	8W-80-81
Lamp-Tail Stop/Park-Left (300C)	8W-80-81
Lamp-Tail Stop/Park-Right (300C)	8W-80-82
Lamp-Tail Stop/Turn-Left (300T)	8W-80-82
Lamp-Tail Stop/Turn-Right (300T)	8W-80-82
Lamp-Tail Turn-Left (300C Except Export)	8W-80-82
Lamp-Tail Turn-Left (300C Export)	8W-80-83
Lamp-Tail Turn-Right (300C Except Export)	8W-80-83
Lamp-Tail Turn-Right (300C Export)	8W-80-83
Lamp-Tail/Stop-Left (LX49)	8W-80-83
Lamp-Tail/Stop-Right (LX49)	8W-80-84
Lamp-Turn-Left Rear (LX49)	8W-80-84
Lamp-Turn-Right Rear (LX49)	8W-80-84
Lamp-Underhood (Police)	8W-80-84
Lamp-Vanity-Left (Except Police)	8W-80-85
Lamp-Vanity-Right (Except Police)	8W-80-85
Latch-Door-Decklid (LX48)	8W-80-85
Latch-Door-Driver	8W-80-85
Latch-Door-Left Rear	8W-80-86
Latch-Door-Liftgate (LX49)	8W-80-86

Component	Page
Latch-Door-Passenger	8W-80-86
Latch-Door-Right Rear	8W-80-87
Lighter-Cigar	8W-80-87
Media System-Monitor/DVD	8W-80-87
Mirror-Inside Rearview C1 (Except Base)	8W-80-88
Mirror-Inside Rearview C2 (Hands Free)	8W-80-88
Mirror-Outside Rearview-Driver (Except Memory)	8W-80-88
Mirror-Outside Rearview-Driver (Memory)	8W-80-89
Mirror-Outside Rearview-Passenger (Except Memory)	8W-80-89
Mirror-Outside Rearview-Passenger (Memory)	8W-80-89
Module-Antilock Brakes	8W-80-90
Module-Brake (Trailer Tow)	8W-80-91
Module-Clock-Analog (Except Police)	8W-80-91
Module-Door-Driver C1	8W-80-91
Module-Door-Driver C2	8W-80-91
Module-Door-Driver C3 (Memory)	8W-80-92
Module-Door-Driver C4 (Memory)	8W-80-92
Module-Door-Passenger C1	8W-80-93
Module-Door-Passenger C2	8W-80-93
Module-Door-Passenger C4 (Memory)	8W-80-93
Module-Electronic Overhead	8W-80-94
Module-Electronic Shift C1 (Column NAG1)	8W-80-94
Module-Electronic Shift C2 (Column NAG1)	8W-80-94
Module-Engine Control C1 (Diesel)	8W-80-95
Module-Engine Control C2 (Diesel)	8W-80-97
Module-Front Blower Power C1 (ATC)	8W-80-98
Module-Front Blower Power C2 (ATC)	8W-80-98
Module-Front Control C1	8W-80-98
Module-Front Control C2	8W-80-99
Module-Front Control IPM	8W-80-99
Module-Fuel Pump	8W-80-100
Module-Glow Plug (Diesel)	8W-80-100
Module-Glow Plug-Eyelet (Diesel)	8W-80-101
Module-Hands Free	8W-80-101
Module-Headlamp Leveling (Export)	8W-80-101
Module-Heated Seats	8W-80-102
Module-Integrated Power C1	8W-80-102
Module-Integrated Power C2	8W-80-103
Module-Integrated Power C3	8W-80-103
Module-Integrated Power C4	8W-80-103
Module-Integrated Power C5	8W-80-104
Module-Interface-Police/Taxi C1	8W-80-105
Module-Interface-Police/Taxi C2	8W-80-105
Module-Intrusion Transceiver (RHD)	8W-80-106
Module-Memory Seat C1	8W-80-106
Module-Memory Seat C2	8W-80-106
Module-Memory Seat C3	8W-80-107
Module-Memory Seat C4	8W-80-107
Module-Memory Seat C5 (Adjustable Pedals)	8W-80-107
Module-Occupant Classification C1 (Except Export)	8W-80-107
Module-Occupant Classification C2 (Except Export)	8W-80-108
Module-Occupant Restraint Controller C1	8W-80-108
Module-Occupant Restraint Controller C2	8W-80-109
Module-Park Assist (Parktronics)	8W-80-109
Module-Powertrain Control C1	8W-80-110
Module-Powertrain Control C2	8W-80-111
Module-Powertrain Control C3	8W-80-112
Module-Powertrain Control C4 (RLE)	8W-80-113
Module-Sentry Key Remote Entry	8W-80-114
Module-Steering Column-Lock (RHD)	8W-80-114
Module-Steering Control	8W-80-114
Module-Traffic Information Receiver C1 (Export)	8W-80-115
Module-Traffic Information Receiver C2 (Export)	8W-80-115
Module-Traffic Information Receiver C3 (Export)	8W-80-115
Module-Transmission Control C1 (NAG1)	8W-80-115
Module-Transmission Control C2 (NAG1)	8W-80-116
Motor-Adjustable Pedals (LHD)	8W-80-116
Motor-Blower-Front	8W-80-116
Motor-Boost Pressure Servo (Diesel)	8W-80-116
Motor-Headlamp Washer (HID Lamps)	8W-80-117
Motor-Intake Swirl Servo (Diesel)	8W-80-117
Motor-Seat Adjuster-Driver Horizontal	8W-80-117
Motor-Seat Adjuster-Driver Recliner (Except Memory)	8W-80-117
Motor-Seat Adjuster-Driver Recliner (Memory)	8W-80-118
Motor-Seat Adjuster-Front Driver Vertical	8W-80-118
Motor-Seat Adjuster-Front Passenger Vertical	8W-80-118
Motor-Seat Adjuster-Passenger Horizontal	8W-80-118
Motor-Seat Adjuster-Passenger Recliner (RHD)	8W-80-119
Motor-Seat Adjuster-Rear Driver Vertical	8W-80-119
Motor-Seat Adjuster-Rear Passenger Vertical	8W-80-119
Motor-Steering Telescope (LHD Memory)	8W-80-119
Motor-Steering Tilt (LHD Memory)	8W-80-120
Motor-Window-Driver (Base)	8W-80-120

Component	Page
Motor-Window-Driver Express (Except Base)	8W-80-120
Motor-Window-Left Rear	8W-80-120
Motor-Window-Passenger (Base)	8W-80-121
Motor-Window-Passenger Express (Except Base)	8W-80-121
Motor-Window-Right Rear	8W-80-121
Motor-Wiper-Front	8W-80-121
Motor-Wiper-Rear (LX49)	8W-80-122
Motor/Module-Sunroof	8W-80-122
Post-Pass Through-Eyelet	8W-80-122
Post-Pass Through-Eyelet	8W-80-122
Power Outlet-Console	8W-80-123
Power Outlet-Rear (LX49)	8W-80-123
Pump-Washer-Windshield	8W-80-123
Radio C1	8W-80-124
Radio C2 (Satellite Radio)	8W-80-124
Radio-Antenna (Navigation)	8W-80-125
Radio-Antenna	8W-80-125
Receiver-Intrusion Sensor (RHD)	8W-80-125
Receiver-Satellite	8W-80-125
Relay-Headlamp Washer (HID Lamps)	8W-80-126
Resistor Block-Blower Motor-Front (MTC)	8W-80-126
Seat Belt-Tensioner-Driver	8W-80-126
Seat Belt-Tensioner-Passenger	8W-80-126
Sensor-Accelerator Pedal Position	8W-80-127
Sensor-Adjustable Pedals (LHD Memory)	8W-80-127
Sensor-Ambient Air Temperature	8W-80-127
Sensor-Boost Pressure (Diesel)	8W-80-127
Sensor-Brake Fluid Level	8W-80-128
Sensor-Brake Pedal Travel (MK25)	8W-80-128
Sensor-Brake Pressure (MK25)	8W-80-128
Sensor-Camshaft Position (2.7L/3.5L)	8W-80-128
Sensor-Camshaft Position (5.7L/SRT8)	8W-80-129
Sensor-Camshaft Position (Diesel)	8W-80-129
Sensor-Crankshaft Position (Diesel)	8W-80-129
Sensor-Crankshaft Position (Gas)	8W-80-129
Sensor-Dynamics (ESP)	8W-80-129
Sensor-Engine Coolant Temperature (Gas)	8W-80-130
Sensor-Engine Coolant Temperature (Diesel)	8W-80-130
Sensor-Evaporator Temperature	8W-80-130
Sensor-Exhaust Differential Pressure (Diesel)	8W-80-130
Sensor-Exhaust Gas Pressure (Diesel)	8W-80-131
Sensor-Front Impact-Left	8W-80-131
Sensor-Front Impact-Right	8W-80-131
Sensor-Fuel Pressure (Diesel)	8W-80-131
Sensor-Fuel Temperature (Diesel)	8W-80-132
Sensor-Headlamp Level-Left (Export)	8W-80-132
Sensor-Headlamp Level-Right (Export)	8W-80-132
Sensor-Inlet Air Pressure (Diesel)	8W-80-132
Sensor-Inlet Air Temperature (Gas)	8W-80-133
Sensor-Input Speed (RLE)	8W-80-133
Sensor-Intake Air Temperature (Diesel)	8W-80-133
Sensor-Knock No. 1 (Gas)	8W-80-133
Sensor-Knock No. 2 (5.7L/SRT8)	8W-80-134
Sensor-Manifold Absolute Pressure (Gas)	8W-80-134
Sensor-Mass Air Flow (Diesel)	8W-80-134
Sensor-Oil Pressure (Diesel)	8W-80-134
Sensor-Oil Pressure (5.7L/SRT8)	8W-80-135
Sensor-Oil Temperature (5.7L/SRT8)	8W-80-135
Sensor-Oil Temperature (Diesel)	8W-80-135
Sensor-Output Speed (RLE)	8W-80-135
Sensor-Oxygen (Diesel)	8W-80-135
Sensor-Oxygen-Left Front (Gas)	8W-80-136
Sensor-Oxygen-Left Rear (Gas)	8W-80-136
Sensor-Oxygen-Right Front (Gas)	8W-80-136
Sensor-Oxygen-Right Rear (Gas)	8W-80-136
Sensor-Park Assist-No. 10 (Parktronics)	8W-80-137
Sensor-Park Assist-No. 7 (Parktronics)	8W-80-137
Sensor-Park Assist-No. 8 (Parktronics)	8W-80-137
Sensor-Park Assist-No. 9 (Parktronics)	8W-80-137
Sensor-Post-Catalyst Exhaust Gas Temperature (Diesel)	8W-80-138
Sensor-Pre-Catalyst Exhaust Gas Temperature (Diesel)	8W-80-138
Sensor-Rain (Auto Wipers)	8W-80-138
Sensor-Seat Track Position-Driver	8W-80-138
Sensor-Seat Weight-Left Front (Except Export)	8W-80-138
Sensor-Seat Weight-Left Rear (Except Export)	8W-80-139
Sensor-Seat Weight-Right Front (Except Export)	8W-80-139
Sensor-Seat Weight-Right Rear (Except Export)	8W-80-139
Sensor-Shift Lever Position (Column NAG1)	8W-80-139
Sensor-Side Impact-Left 1	8W-80-140
Sensor-Side Impact-Left 2	8W-80-140
Sensor-Side Impact-Right 1	8W-80-140
Sensor-Side Impact-Right 2	8W-80-140
Sensor-Sun (ATC)	8W-80-141
Sensor-Transmission Range (RLE)	8W-80-141
Sensor-Washer Fluid Level-Front	8W-80-141
Sensor-Wheel Speed-ABS-Left Front	8W-80-141
Sensor-Wheel Speed-ABS-Rear	8W-80-142
Sensor-Wheel Speed-ABS-Right Front	8W-80-142
Sensor-Wheel Speed-Right Front (Except ABS)	8W-80-142
Siren (RHD)	8W-80-143
Solenoid-Fuel Pressure (Diesel)	8W-80-143
Solenoid-Fuel Quantity (Diesel)	8W-80-143

Component	Page
Solenoid-Manifold Tuning Valve (2.7L/ 3.5L)	8W-80-143
Solenoid-Multi Displacement System Cyl 1 (5.7L MDS)	8W-80-144
Solenoid-Multi Displacement System Cyl 4 (5.7L MDS)	8W-80-144
Solenoid-Multi Displacement System Cyl 6 (5.7L MDS)	8W-80-144
Solenoid-Multi Displacement System Cyl 7 (5.7L MDS)	8W-80-144
Solenoid-Proportional Purge (Gas)	8W-80-145
Solenoid-Short Runner Valve (3.5L)	8W-80-145
Speaker-Instrument Panel-Center (Highline)	8W-80-145
Speaker-Instrument Panel-Left	8W-80-145
Speaker-Instrument Panel-Right	8W-80-146
Speaker-Left Front Door	8W-80-146
Speaker-Left Rear	8W-80-146
Speaker-Right Front Door	8W-80-146
Speaker-Right Rear	8W-80-146
Speaker-Subwoofer (Highline Except SRT8)	8W-80-147
Speaker-Subwoofer (SRT8 Except Export)	8W-80-147
Starter (2.7L/3.5L/5.7L AWD)	8W-80-147
Starter (5.7L RWD/SRT8)	8W-80-147
Starter (Diesel)	8W-80-147
Starter-Fusible Link-Eyelet (Except 5.7L RWD/ SRT8)	8W-80-148
Starter-Fusible Link-Eyelet (5.7L RWD/ SRT8)	8W-80-148
Starter-Post-Pass Through-Eyelet (Except 5.7L RWD/SRT8)	8W-80-148
Starter-Post-Pass Through-Eyelet (5.7L RWD/ SRT8)	8W-80-148
Switch-Adjustable Pedals (LHD)	8W-80-149
Switch-Autostick (Column NAG1)	8W-80-149
Switch-Bank	8W-80-149
Switch-Decklid Release (LX48)	8W-80-149
Switch-Headlamp	8W-80-150
Switch-Heated Seat-Left	8W-80-150
Switch-Heated Seat-Right	8W-80-150
Switch-Horn	8W-80-150
Switch-Ignition C1	8W-80-151
Switch-Ignition C2 (RHD)	8W-80-151
Switch-Liftgate Release (LX49)	8W-80-151
Switch-Memory Set	8W-80-151
Switch-Mirror	8W-80-152
Switch-Oil Level (Diesel)	8W-80-152
Switch-Oil Pressure (2.7L/3.5L)	8W-80-152
Switch-Parking Brake	8W-80-152
Switch-Power Window-Left Rear	8W-80-153
Switch-Power Window-Right Rear	8W-80-153
Switch-Seat Belt-Driver	8W-80-153
Switch-Seat Belt-Passenger (Except Export)	8W-80-153
Switch-Seat-Driver (Except Memory)	8W-80-154
Switch-Seat-Driver (Memory)	8W-80-154
Switch-Seat-Passenger	8W-80-154
Switch-Security Hood (Export)	8W-80-155
Switch-Steering-Left (Premium)	8W-80-155
Switch-Steering-Right (Premium)	8W-80-155
Switch-Stop Lamp	8W-80-155
Switch-Sunroof	8W-80-156
Switch-Window/Door Lock-Driver C1 (Base)	8W-80-156
Switch-Window/Door Lock-Driver C2 (Base)	8W-80-156
Switch-Window/Door Lock-Driver Express C1 (Except Base)	8W-80-156
Switch-Window/Door Lock-Driver Express C2 (Except Base)	8W-80-157
Switch-Window/Door Lock-Passenger (Base)	8W-80-157
Switch-Window/Door Lock-Passenger Express (Except Base)	8W-80-157
Throttle Body (Gas)	8W-80-157
Transducer-A/C Pressure	8W-80-158
Transmitter-Intrusion Sensor (RHD)	8W-80-158
Transponder-Tire Pressure-Left Front (Tire Pressure Monitor)	8W-80-158
Transponder-Tire Pressure-Right Front (Tire Pressure Monitor)	8W-80-158
Transponder-Tire Pressure-Right Rear (Tire Pressure Monitor)	8W-80-159
Valve-EGR (Diesel)	8W-80-159
Valve-EGR Air Flow Control (Diesel)	8W-80-159

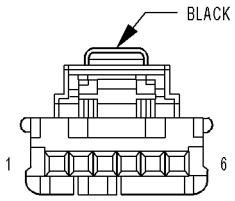

**ACTUATOR-
BLEND DOOR-
LEFT**

ACTUATOR-BLEND DOOR-LEFT - BLACK 6 WAY

CAV	CIRCUIT	FUNCTION
1	C55 20DB/WT	LEFT BLEND DOOR COMMON DRIVER
2	-	-
3	-	-
4	-	-
5	-	-
6	C255 20WT/DB	LEFT BLEND DOOR DRIVER

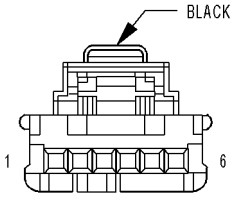

**ACTUATOR-
BLEND DOOR-
RIGHT
(ATC)**

ACTUATOR-BLEND DOOR-RIGHT (ATC) - BLACK 6 WAY

CAV	CIRCUIT	FUNCTION
1	C52 20DB/LG	RIGHT BLEND DOOR COMMON DRIVER
2	-	-
3	-	-
4	-	-
5	-	-
6	C252 20LG/DB	RIGHT BLEND DOOR DRIVER

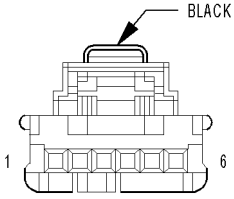

**ACTUATOR-
MODE
DOOR**

ACTUATOR-MODE DOOR - BLACK 6 WAY

CAV	CIRCUIT	FUNCTION
1	C66 20DB/OR	MODE DOOR COMMON DRIVER
2	-	-
3	-	-
4	-	-
5	-	-
6	C266 20OR/DB	MODE DOOR DRIVER

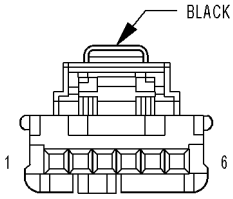

**ACTUATOR-
RECIRCULATION
DOOR**

ACTUATOR-RECIRCULATION DOOR - BLACK 6 WAY

CAV	CIRCUIT	FUNCTION
1	C68 20DB/YL	RECIRCULATION DOOR COMMON DRIVER
2	-	-
3	-	-
4	-	-
5	-	-
6	C268 20YL/DB	RECIRCULATION DOOR DRIVER

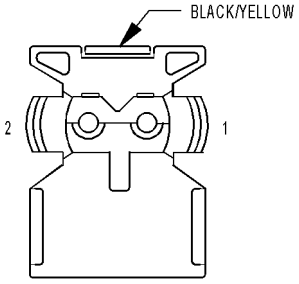

**AIRBAG-
DRIVER
SQUIB 1**

AIRBAG-DRIVER SQUIB 1 - BLACK/YELLOW 2 WAY

CAV	CIRCUIT	FUNCTION
1	R45 20LG/OR	DRIVER SQUIB 1 LINE 1
2	R43 20LG/BR	DRIVER SQUIB 1 LINE 2

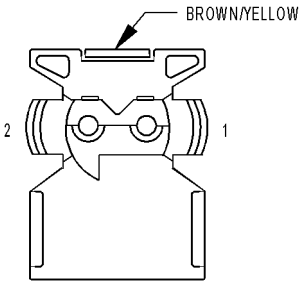

**AIRBAG-
DRIVER
SQUIB 2**

AIRBAG-DRIVER SQUIB 2 - BROWN/YELLOW 2 WAY

CAV	CIRCUIT	FUNCTION
1	R63 20LG/WT	DRIVER SQUIB 2 LINE 1
2	R61 20LG/VT	DRIVER SQUIB 2 LINE 2

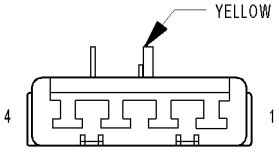

**AIRBAG-
PASSENGER
SQUIB**

AIRBAG-PASSENGER SQUIB - YELLOW 4 WAY

CAV	CIRCUIT	FUNCTION
1	R44 20LB/OR	PASSENGER SQUIB 1 LINE 1
2	R42 20LB/BR	PASSENGER SQUIB 1 LINE 2
3	R64 20LB/WT	PASSENGER SQUIB 2 LINE 1
4	R62 20LB/VT	PASSENGER SQUIB 2 LINE 2

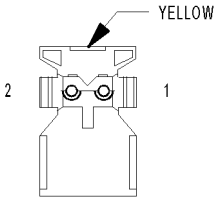

**AIRBAG-
SIDE CURTAIN-
LEFT**

AIRBAG-SIDE CURTAIN-LEFT - YELLOW 2 WAY

CAV	CIRCUIT	FUNCTION
1	R1 20LB/WT	LEFT CURTAIN SQUIB 1 LINE 2
2	R3 20LB/OR	LEFT CURTAIN SQUIB 1 LINE 1

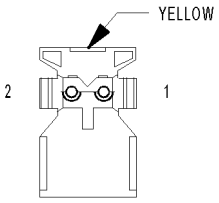

**AIRBAG-
SIDE CURTAIN-
RIGHT**

AIRBAG-SIDE CURTAIN-RIGHT - YELLOW 2 WAY

CAV	CIRCUIT	FUNCTION
1	R4 20OR/LB	RIGHT CURTAIN SQUIB 1 LINE 1
2	R2 20WT/LB	RIGHT CURTAIN SQUIB 1 LINE 2

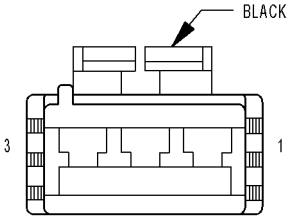

**AMPLIFIER-
ANTENNA-
BACKLITE C1**

AMPLIFIER-ANTENNA-BACKLITE C1 - BLACK 3 WAY

CAV	CIRCUIT	FUNCTION
1	C15 12DB/WT	FUSED REAR WINDOW DEFOGGER RELAY OUTPUT
2	-	-
3	F880 20PK/DG	FUSED ACCESSORY DELAY RELAY OUTPUT

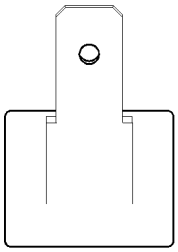

**AMPLIFIER-
ANTENNA-
BACKLITE C2**

AMPLIFIER-ANTENNA-BACKLITE C2 - 1 WAY

CAV	CIRCUIT	FUNCTION
1	D999 18WT/OR	ANTENNA GRID SIGNAL

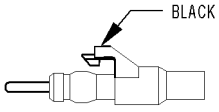

**AMPLIFIER-
ANTENNA-
BACKLITE C3**

AMPLIFIER-ANTENNA-BACKLITE C3 - BLACK 2 WAY

CAV	CIRCUIT	FUNCTION
1	D5 6WT/OR	ANTENNA SIGNAL
2	D931 WT/YL	ANTENNA SHIELD

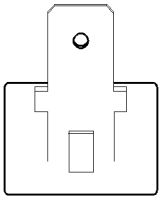

**AMPLIFIER-
ANTENNA-
BACKLITE C4**

AMPLIFIER-ANTENNA-BACKLITE C4 - 1 WAY

CAV	CIRCUIT	FUNCTION
1	C215 14LB	ELECTRIC HEATED BACKLITE DRIVER

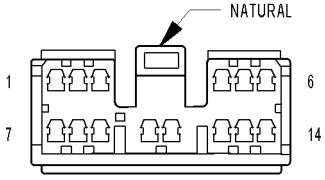

**AMPLIFIER-
RADIO C1
(MIDLINE II/HIGHLINE)**

AMPLIFIER-RADIO C1 (MIDLINE II/HIGHLINE) - NATURAL 14 WAY

CAV	CIRCUIT	FUNCTION
1	X201 18GY/VT	AMPLIFIED LEFT FRONT DOOR SPEAKER (+)
2	X202 18DG/VT	AMPLIFIED RIGHT FRONT DOOR SPEAKER (+)
3	X303 18DG/TN	AMPLIFIED LEFT REAR SPEAKER (+)
4	X304 18DG/BR	AMPLIFIED RIGHT REAR SPEAKER (+)
5	X300 18GY/BR	AMPLIFIED SUBWOOFER 1 (+)
6	-	-
7	X291 18GY/YL	AMPLIFIED LEFT FRONT DOOR SPEAKER (-)
8	X292 18DG/YL	AMPLIFIED RIGHT FRONT DOOR SPEAKER (-)
9	X393 18DG/GY	AMPLIFIED LEFT REAR SPEAKER (-)
10	-	-
11	-	-
12	X394 18YL/GY	AMPLIFIED RIGHT REAR SPEAKER (-)
13	X390 18DG/BR	AMPLIFIED SUBWOOFER 1 (-)
14	-	-

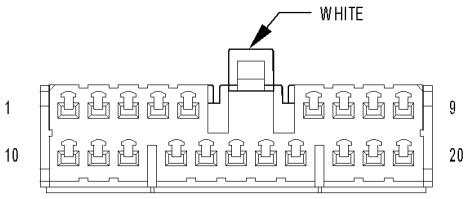

**AMPLIFIER-
RADIO C2
(MIDLINE II/HIGHLINE)**

AMPLIFIER-RADIO C2 (MIDLINE II/HIGHLINE) - WHITE 20 WAY

CAV	CIRCUIT	FUNCTION
1	X209 18GY/OR	AMPLIFIED LEFT I/P SPEAKER (+)
2	X208 18GY/DG	AMPLIFIED RIGHT I/P SPEAKER (+)
3	X200 18GY/BR (HIGHLINE)	AMPLIFIED CENTER I/P SPEAKER (+)
4	X13 16DG/GY	FUSED B(+) (I.O.D.)
5	-	-
6	D55 20WT/OR	CAN B BUS (+)
7	X51 18DG/DB	RADIO LEFT AUDIO (+)
8	X52 18GY/DB	RADIO RIGHT AUDIO (+)
9	Z910 16BK/TN	GROUND
10	X299 18GY/YL	AMPLIFIED LEFT I/P SPEAKER (-)
11	X298 18GY/LG	AMPLIFIED RIGHT I/P SPEAKER (-)
12	X290 18GY/OR (HIGHLINE)	AMPLIFIED CENTER I/P SPEAKER (-)
13	X13 16DG/GY	FUSED B(+) (I.O.D.)
14	-	-
15	-	-
16	-	-
17	D54 20WT	CAN B BUS (-)
18	X57 18DG/OR	RADIO LEFT AUDIO (-)
19	X58 18GY/OR	RADIO RIGHT AUDIO (-)
20	Z910 16BK/TN	GROUND

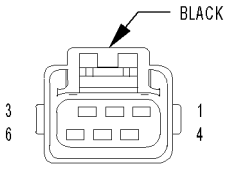

AMPLIFIER-SUBWOOFER (SRT8 EXCEPT EXPORT)

AMPLIFIER-SUBWOOFER (SRT8 EXCEPT EXPORT) - BLACK 6 WAY

CAV	CIRCUIT	FUNCTION
1	A139 16RD/YL	FUSED B(+)
2	X300 18GY/BR	AMPLIFIED SUBWOOFER 1 (+)
3	X390 18DG/BR	AMPLIFIED SUBWOOFER 1 (-)
4	X30 18DG/YL	SUBWOOFER 1 (+)
5	X31 18GY/TN	SUBWOOFER 1 (-)
6	Z912 16BK/OR	GROUND

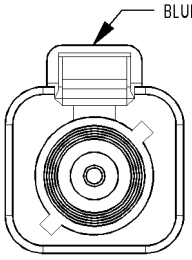

ANTENNA CABLE-SATELLITE RADIO NO. 1

ANTENNA CABLE-SATELLITE RADIO NO. 1 - BLUE 2 WAY

CAV	CIRCUIT	FUNCTION
1	D106 6WT/LG	SATELLITE ANTENNA SIGNAL 1
2	D126 WT/TN	SATELLITE ANTENNA SHIELD 1

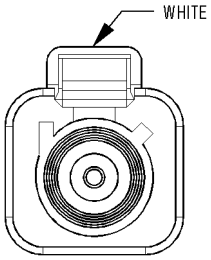

ANTENNA CABLE-SATELLITE RADIO NO. 2

ANTENNA CABLE-SATELLITE RADIO NO. 2 - WHITE 2 WAY

CAV	CIRCUIT	FUNCTION
1	D109 6WT/OR	SATELLITE ANTENNA SIGNAL 2
2	D129 WT/YL	SATELLITE ANTENNA SHIELD 2

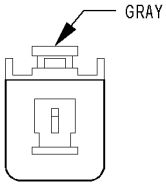

ANTENNA-GLOBAL POSITIONING SYSTEM (NAVIGATION)

ANTENNA-GLOBAL POSITIONING SYSTEM (NAVIGATION) - GRAY 2 WAY

CAV	CIRCUIT	FUNCTION
1	D8 6WT/LB	GPS ANTENNA SIGNAL
2	D108 LB/WT	GPS ANTENNA SHIELD

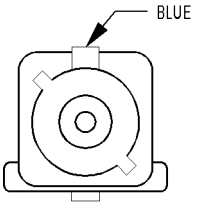

ANTENNA-SATELLITE NO. 1

ANTENNA-SATELLITE NO. 1 - BLUE 2 WAY

CAV	CIRCUIT	FUNCTION
1	D106 WT/LG	SATELLITE ANTENNA SIGNAL 1
2	D126 WT/TN	SATELLITE ANTENNA SHIELD 1

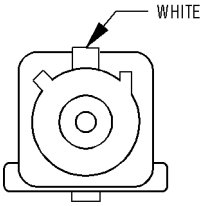

ANTENNA-SATELLITE NO. 2

ANTENNA-SATELLITE NO. 2 - WHITE 2 WAY

CAV	CIRCUIT	FUNCTION
1	D109 WT/OR	SATELLITE ANTENNA SIGNAL 2
2	D129 WT/YL	SATELLITE ANTENNA SHIELD 2

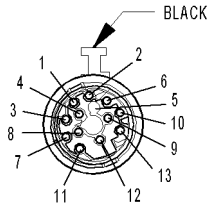

ASSEMBLY-ELECTROHYDRAULIC CONTROL UNIT (NAG1)

ASSEMBLY-ELECTROHYDRAULIC CONTROL UNIT (NAG1) - BLACK 13 WAY

CAV	CIRCUIT	FUNCTION
1	T71 20YL/OR	INPUT SPEED SENSOR 2 (N3) SIGNAL
2	T76 20YL/TN	MODULATION PRESSURE SOLENOID CONTROL
3	T70 20YL	INPUT SPEED SENSOR 1 (N2) SIGNAL
4	T54 20DG/OR	TEMPERATURE SENSOR-P/N SWITCH SIGNAL
5	-	-
6	T78 20YL	SOLENOID SUPPLY VOLTAGE
7	T72 20YL/DB	SENSOR SUPPLY VOLTAGE
8	T74 20YL/LG	2-3 SOLENOID CONTROL
9	T73 20YL/GY	3-4 SOLENOID CONTROL
10	T77 20YL/BR	SHIFT PRESSURE SOLENOID CONTROL
11	T75 20YL/LB	TCC SOLENOID CONTROL
12	T13 20DG/VT	SENSOR GROUND
13	T60 20YL/GY	1-2/4-5 SOLENOID CONTROL

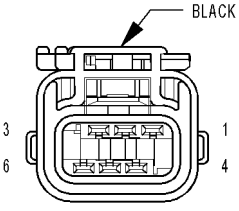

ASSEMBLY-EXHAUST GAS RECIRCULATION VALVE (GAS EXCEPT SRT8)

ASSEMBLY-EXHAUST GAS RECIRCULATION VALVE (GAS EXCEPT SRT8) - BLACK 6 WAY

CAV	CIRCUIT	FUNCTION
1	K34 20DB/LG	EGR SIGNAL
2	F856 20YL/PK	5 VOLT SUPPLY
3	K900 20DB/DG	SENSOR GROUND
4	Z904 20BK/BR	GROUND
5	-	-
6	K35 20DB/VT	EGR SOL CONTROL

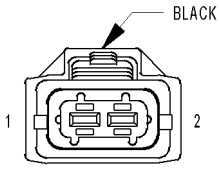

**ASSEMBLY-
NATURAL VACUUM
LEAK DETECTION
(GAS EXCEPT EXPORT
EXCEPT SRT8/POLICE)**

ASSEMBLY-NATURAL VACUUM LEAK DETECTION (GAS EXCEPT EXPORT EXCEPT SRT8/POLICE) - BLACK 2 WAY

CAV	CIRCUIT	FUNCTION
1	Z914 20BK/GY	GROUND
2	K107 20VT/WT	NVLD SWITCH SIGNAL

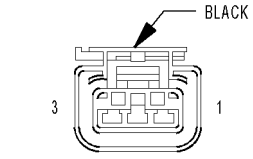

**ASSEMBLY-
NATURAL VACUUM
LEAK DETECTION
(POLICE/SRT8 EXCEPT EXPORT)**

ASSEMBLY-NATURAL VACUUM LEAK DETECTION (POLICE/SRT8 EXCEPT EXPORT) - BLACK 3 WAY

CAV	CIRCUIT	FUNCTION
1	Z914 20BK/GY	GROUND
2	K107 20VT/WT	NVLD SWITCH SIGNAL
3	K106 20VT/GY	NVLD SOL CONTROL

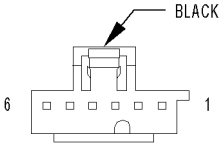

**ASSEMBLY-
SHIFTER LEVER
(CONSOLE NAG1)**

ASSEMBLY-SHIFTER LEVER (CONSOLE NAG1) - BLACK 6 WAY

CAV	CIRCUIT	FUNCTION
1	F902 20PK	IGNITION UNLOCK-RUN-START
2	Z911 20BK/WT (EXCEPT SRT8)	GROUND
2	Z912 20BK/OR (SRT8)	GROUND
3	B29 20DG/WT	BRAKE SWITCH SIGNAL
4	-	-
5	D65 20WT/LG	CAN C BUS (+)
6	D64 20WT/LB	CAN C BUS (-)

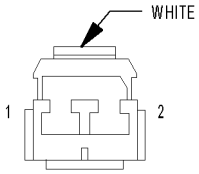

**ASSEMBLY-
SHIFTER LEVER
(RLE)**

ASSEMBLY-SHIFTER LEVER (RLE) - WHITE 2 WAY

CAV	CIRCUIT	FUNCTION
1	Z911 20BK/WT	GROUND
2	B29 20DG/WT	BRAKE SWITCH SIGNAL

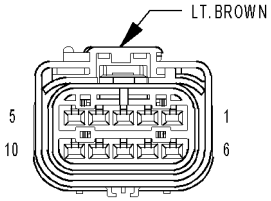

**ASSEMBLY-
TRANSMISSION SOLENOID/
PRESSURE SWITCH
(RLE)**

ASSEMBLY-TRANSMISSION SOLENOID/PRESSURE SWITCH (RLE) - LT. BROWN 10 WAY

CAV	CIRCUIT	FUNCTION
1	T60 20YL/GY	OD SOLENOID CONTROL
2	T59 20YL/LB	UD SOLENOID CONTROL
3	T16 16YL/OR	TRANSMISSION CONTROL OUTPUT
4	T19 20YL/DB	2-4 SOLENOID CONTROL
5	T47 20YL/DG	2-4 PRESSURE SWITCH SENSE
6	T9 20DG/TN	OD PRESSURE SWITCH SENSE
7	T20 20DG/WT	L/R SOLENOID CONTROL
8	-	-
9	-	-
10	T50 20YL/TN	L/R PRESSURE SWITCH SENSE

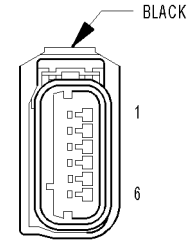

ASSEMBLY-VARIABLE LINE PRESSURE (RLE)

ASSEMBLY-VARIABLE LINE PRESSURE (RLE) - BLACK 6 WAY

CAV	CIRCUIT	FUNCTION
1	-	-
2	F856 20YL/PK	5 VOLT SUPPLY
3	T38 20YL/BR	LINE PRESSURE SENSOR SIGNAL
4	K900 20DB/DG	SENSOR GROUND
5	T16 18YL/OR	TRANSMISSION CONTROL OUTPUT
6	T118 20DG	PRESSURE CONTROL SOLENOID CONTROL

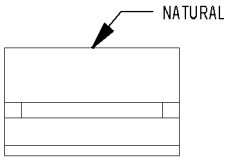

BACKLITE-ANTENNA

BACKLITE-ANTENNA - NATURAL 1 WAY

CAV	CIRCUIT	FUNCTION
1	D999 18WT/OR	ANTENNA GRID SIGNAL

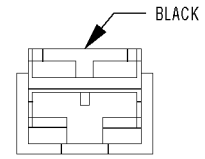

BACKLITE-ELECTRIC HEATED (GROUND)

BACKLITE-ELECTRIC HEATED (GROUND) - BLACK 1 WAY

CAV	CIRCUIT	FUNCTION
1	Z912 14BK/OR (LX48)	GROUND
1	Z914 14BK/GY (LX49)	GROUND

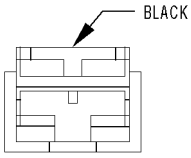

BACKLITE-ELECTRIC HEATED (POWER)

BACKLITE-ELECTRIC HEATED (POWER) - BLACK 1 WAY

CAV	CIRCUIT	FUNCTION
1	C215 14LB	ELECTRIC HEATED BACKLITE DRIVER

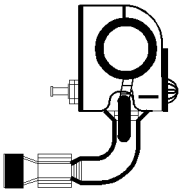

BATTERY-NEGATIVE

BATTERY-NEGATIVE - 1 WAY

CAV	CIRCUIT	FUNCTION
1	Z915 4BK (DIESEL)	GROUND
1	Z915 6BK (GAS)	GROUND

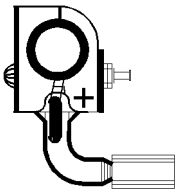

BATTERY-POSITIVE

BATTERY-POSITIVE - 1 WAY

CAV	CIRCUIT	FUNCTION
1	A1 1RD	B(+)
1	A1 6RD	B(+)

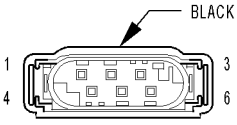

BOOSTER-ACTIVE BRAKE (MK25)

BOOSTER-ACTIVE BRAKE (MK25) - BLACK 6 WAY

CAV	CIRCUIT	FUNCTION
1	B135 20DG/LG	BRAKE PEDAL FORCE SWITCH OPEN
2	B134 20DG/YL	BRAKE PEDAL FORCE SWITCH CLOSE
3	B132 20DG/LB	ACTIVE BRAKE BOOSTER SOLENOID (-)
4	B131 20DG/YL	ACTIVE BRAKE BOOSTER SOLENOID (+)
5	B136 20DG/LB	BRAKE PEDAL FORCE SWITCH SIGNAL
6	-	-

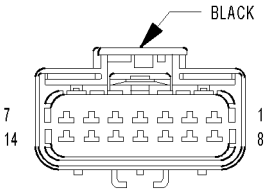

C100 (2.7L/3.5L)

C100 (2.7L/3.5L) - BLACK (ENGINE SIDE)

CAV	CIRCUIT
1	F855 20PK/YL
2	F856 20YL/PK
3	G6 20VT/GY
4	K236 20DB/LG (3.5L)
5	-
6	-
7	K343 16BR/YL
8	-
9	T15 20YL/BR (2.7L)
10	T16 16YL/OR (2.7L)
11	-
12	T750 16LG
13	Z904 14BK/BR (2.7L)
13	Z904 16BK/BR (3.5L)
14	C3 18DB/YL

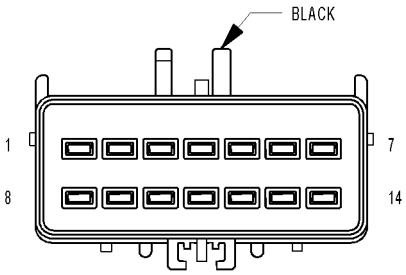

C100
(2.7L/3.5L)

C100 (2.7L/3.5L) - BLACK (HEADLAMP AND DASH SIDE)

CAV	CIRCUIT
1	F855 20PK/YL
2	F856 20YL/PK
3	G6 20VT/GY
4	K236 20DB/LG
5	-
6	-
7	K343 16BR/YL
8	-
9	T15 20YL/BR
10	T16 16YL/OR
11	-
12	T750 16YL/GY
13	Z904 14BK/BR
14	C3 18DB/YL

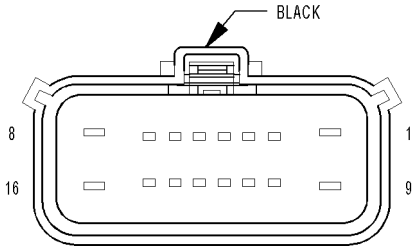

C100
(5.7L/SRT8)

C100 (5.7L/SRT8) - BLACK (ENGINE SIDE)

CAV	CIRCUIT
1	T750 16LG (5.7L)
1	T750 16YL/GY (SRT8)
2	-
3	G6 20VT/GY
4	K26 20BR/YL
5	K28 20BR/LB
6	K97 16DB/YL
7	K451 20BR/LB (5.7L)
8	K98 16DB/YL
9	K343 16BR/YL
10	K452 20BR/LB (5.7L)
11	K454 20BR/OR (5.7L)
12	F855 20PK/YL
13	F856 20YL/PK
14	C3 18DB/YL
15	G224 20VT/YL
16	Z904 16BK/BR

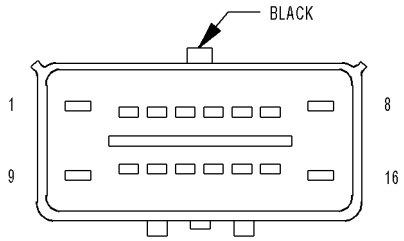

C100
(5.7L/SRT8)

C100 (5.7L/SRT8) - BLACK (HEADLAMP AND DASH SIDE)

CAV	CIRCUIT
1	T750 16YL/GY
2	-
3	G6 20VT/GY
4	K26 20BR/YL
5	K28 20BR/LB
6	K97 16DB/YL
7	K451 20BR/WT (5.7L)
8	K98 16DB/YL
9	K343 16BR/YL
10	K452 20BR/LB (5.7L)
11	K454 20BR/OR (5.7L)
12	F855 20PK/YL
13	F856 20YL/PK
14	C3 18DB/YL
15	G224 20VT/YL
16	Z904 14BK/BR

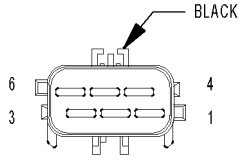

C100
(DIESEL)

C100 (DIESEL) - BLACK (HEADLAMP AND DASH SIDE)

CAV	CIRCUIT
1	K343 16BR/YL
2	Z904 14BK/BR
3	C3 18DB/YL
4	G6 20VT/GY
5	F202 20PK/GY
6	T750 16YL/GY

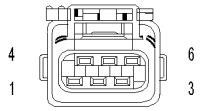

C100
(DIESEL)

C100 (DIESEL) - (ENGINE SIDE)

CAV	CIRCUIT
1	K343 16RD/DG
2	Z904 16BR
3	C3 18BL/DG
4	G6 20BL/RD
5	F202 18BK/GY
6	T750 14VT

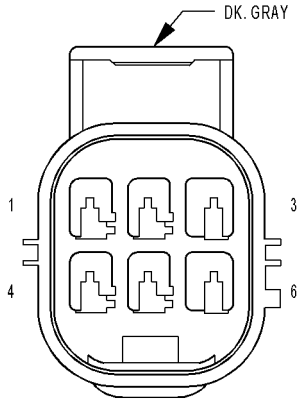

C101
(5.7L MDS)

C101 (5.7L MDS) - DK. GRAY (ENGINE SIDE)

CAV	CIRCUIT
1	K451 20BR/LB
2	K452 20BR/LB
3	K453 20BR/DG
4	K454 20BR/OR
5	-
6	Z904 18BK/BR

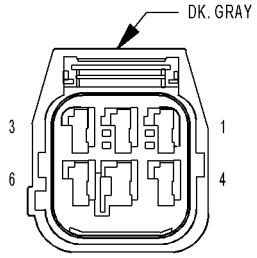

C101
(5.7L MDS)

C101 (5.7L MDS) - DK. GRAY (MULTI DISPLACEMENT SOLENOID SIDE)

CAV	CIRCUIT
1	K451 20BR/WT
2	K452 20BR/LB
3	K453 20BR/DG
4	K454 20BR/OR
5	-
6	Z904 20BK/BR

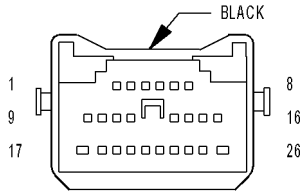

C102

C102 - BLACK (INSTRUMENT PANEL SIDE)

CAV	CIRCUIT
1	-
2	D71 20WT/DB
3	D72 20WT/LB
4	D54 20WT
5	D55 20WT/OR
6	D64 20WT/LB
7	D65 20WT/LG
8	-
9	D15 20WT/DG
10	D16 20WT/OR
11	D20 20WT/LG
12	D21 20WT/BR
13	F500 20DG/PK (EXCEPT POLICE)
14	R79 20LB/VT
15	R80 20VT/LB
16	R81 20LB/WT
17	-
18	R82 20WT/LB
19	L91 20WT/DB
20	F21 20PK/DG
21	F202 20PK/GY
22	-
23	F902 20PK (POLICE)
23	D96 20WT/LB (RHD)
24	-
25	D508 20WT/GY
26	-

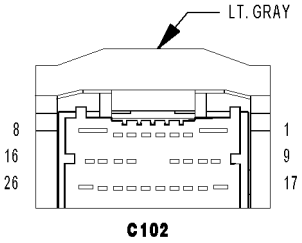

C102

C102 - LT. GRAY (HEADLAMP AND DASH SIDE)

CAV	CIRCUIT
1	-
2	D71 20WT/DB
3	D72 20WT/LB
4	D54 20WT
5	D55 20WT/OR
6	D64 20WT/LB
7	D65 20WT/LG
8	-
9	D15 20WT/DG (EXCEPT SRT8)
10	D16 20WT/OR (EXCEPT SRT8)
11	D20 20WT/LG (GAS)
12	D21 20WT/BR
13	F500 20DG/PK (TIRE PRESSURE MONITOR)
14	R79 20LB/VT
15	R80 20VT/LB
16	R81 20LB/WT
17	-
18	R82 20WT/LB
19	L91 20WT/DB
20	F21 20PK/DG
21	F202 20PK/GY
22	-
23	F902 20PK (POLICE)
23	D96 20WT/LB (RHD)
24	-
25	D508 20WT/GY (TIRE PRESSURE MONITOR)
26	-

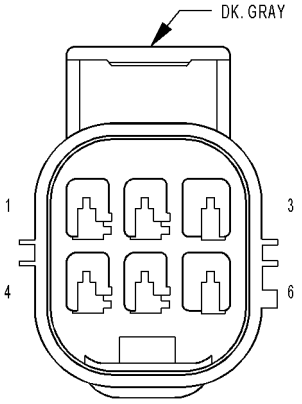

C103
(LX48)

C103 (LX48) - DK. GRAY (FRONT END LIGHTING SIDE)

CAV	CIRCUIT
1	Z901 20BK/TN
2	Z902 20BK/BR
3	L777 20WT/VT
4	F500 20DG/PK (TIRE PRESSURE MONITOR)
5	L89 20WT/YL (EXCEPT BASE)
6	D508 20WT/GY (TIRE PRESSURE MONITOR)

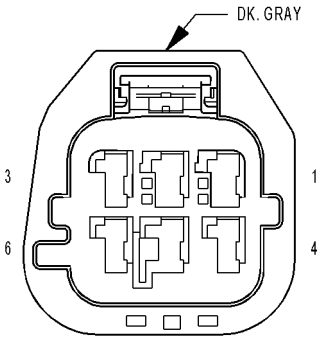

C103
(LX48)

C103 (LX48) - DK. GRAY (HEADLAMP AND DASH SIDE)

CAV	CIRCUIT
1	Z901 18BK/DG
2	Z902 18BK/LB
3	L777 20WT/VT
4	F500 20DG/PK (TIRE PRESSURE MONITOR)
5	L89 18WT/YL (EXCEPT BASE)
6	D508 20WT/GY (TIRE PRESSURE MONITOR)

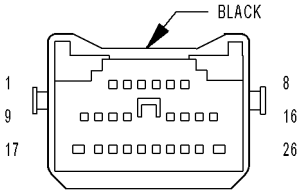

C104

C104 - BLACK (BODY SIDE)

CAV	CIRCUIT
1	A22 12RD/WT
2	F880 20PK/DG (POLICE)
3	D508 20WT/GY (TIRE PRESSURE MONITOR)
4	B15 20DG/WT
5	B16 20LB/DG
6	F902 20PK (NAG1)
7	-
8	A22 12RD/WT
9	F855 20PK/YL
10	F856 20YL/PK
11	X13 16DG/GY
12	F20 20PK/WT (EXPORT)
13	-
14	P307 20LG/GY
15	K343 16BR/YL (EXPORT)
16	-
17	L62 20WT/YL
18	A117 20RD/DG (RHD)
19	-
20	B29 20DG/WT
21	B121 20DG/DB (MK25)
22	D51 20WT/BR (ESP)
23	D52 20WT/LB (ESP)
24	G4 20VT/LB (ESP)
25	G94 20VT/DB (ESP)
26	L63 20WT/DG

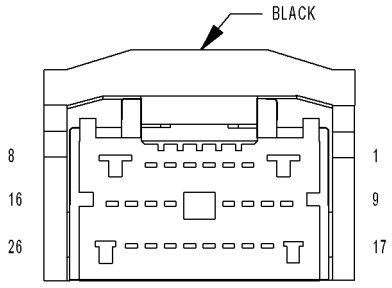

C104

C104 - BLACK (HEADLAMP AND DASH SIDE)

CAV	CIRCUIT
1	A22 12RD/WT
2	F880 20PK/DG (POLICE)
3	D508 20WT/GY (TIRE PRESSURE MONITOR)
4	B15 20DG/WT
5	B16 20LB/DG
6	F902 20PK (NAG1/RLE VLP)
7	-
8	A22 12RD/WT
9	F855 20PK/YL
10	F856 20YL/PK
11	X13 16DG/GY
12	F20 20PK/WT (EXPORT)
13	-
14	P307 20LG/GY
15	K343 18BR/YL (DIESEL)
15	F20 20PK/WT (GAS EXPORT)
16	-
17	L62 18WT/YL
18	A117 20RD/DG (RHD)
19	-
20	B29 20DG/WT
21	B121 20DG/DB (MK25)
22	D51 20WT/BR (ESP)
23	D52 20WT/LB (ESP)
24	G4 20VT/LB (ESP)
25	G94 20VT/DB (ESP)
26	L63 18WT/DG

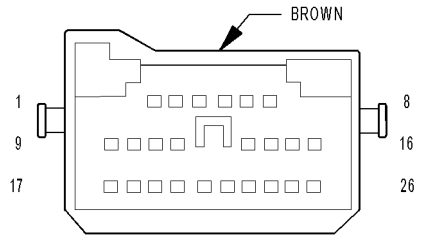

C105

C105 - BROWN (BODY SIDE)

CAV	CIRCUIT
1	-
2	-
3	-
4	K23 20BR/WT
5	K29 20WT/BR
6	K106 20VT/GY (POLICE/SRT8 EXCEPT EXPORT)
7	K107 20VT/WT (EXCEPT EXPORT)
8	-
9	-
10	-
11	K400 20BR/VT
12	K167 20BR/YL
13	F923 20PK/YL
14	K31 20BR
15	L13 20WT/YL (EXPORT)
16	L239 20WT/DG (EXPORT)
17	L1 20WT/LG
18	B1 20DG/OR (ABS)
19	B2 20DG/LB (ABS)
20	B3 20DG/YL (ABS)
21	B4 20DG/GY (ABS)
22	W12 20BR/OR (LX49)
23	W17 18BR/YL (LX49 EXCEPT POLICE)
23	W17 18BR/LG (LX49 POLICE)
24	L124 18WT/DB (POLICE)
25	A72 20RD/OR (LHD ADJUSTABLE PEDALS EXCEPT MEMORY)
26	L777 20WT/VT

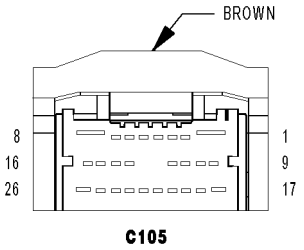

C105

C105 - BROWN (HEADLAMP AND DASH SIDE)

CAV	CIRCUIT
1	-
2	-
3	-
4	K23 20BR/WT
5	K29 20WT/BR
6	K106 20VT/GY (POLICE/SRT8 EXCEPT EXPORT)
7	K107 20VT/WT (GAS)
8	-
9	-
10	-
11	K400 20BR/VT
12	K167 16BR/YL (DIESEL)
12	K167 20BR/YL (GAS)
13	F923 20PK/YL
14	K31 20BR
15	L13 20WT/YL (EXPORT)
16	L239 20WT/DG (EXPORT)
17	L1 20WT/LG
18	B1 20DG/OR (ABS)
19	B2 20DG/LB (ABS)
20	B3 20DG/YL (ABS)
21	B4 20DG/GY (ABS)
22	W12 20BR/OR (LX49)
23	W17 20BR/LG (LX49)
24	L124 18WT/DB (POLICE)
25	A72 20RD/OR
26	L777 20WT/VT

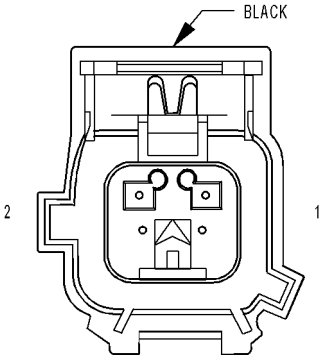

C107
(SRT8)

C107 (SRT8) - BLACK (ENGINE SIDE)

CAV	CIRCUIT
1	K21 20DB/LG
2	K900 20DB/DG

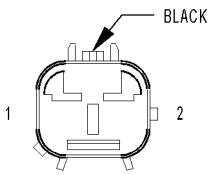

C107
(SRT8)

C107 (SRT8) - BLACK (INLET AIR TEMPERATURE SENSOR JUMPER SIDE)

CAV	CIRCUIT
1	K21 20DB/LG
2	K900 20DB/DG

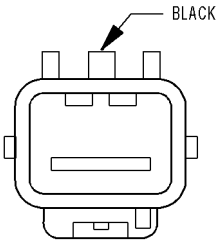

C108
(DIESEL)

C108 (DIESEL) - BLACK (STARTER SIDE)

CAV	CIRCUIT
1	A11 6BR/RD

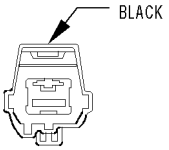

C108
(DIESEL)

C108 (DIESEL) - BLACK (HEADLAMP AND DASH SIDE)

CAV	CIRCUIT
1	A11 6BR/RD

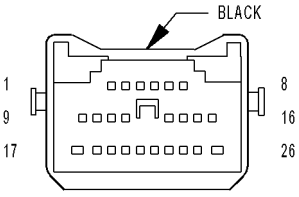

C200

C200 - BLACK (INSTRUMENT PANEL SIDE)

CAV	CIRCUIT
1	A110 16OR/RD (LHD)
2	A106 20LB/RD (LHD)
2	G945 20VT/DG (RHD)
3	A917 16RD/TN (LHD EXCEPT POLICE)
3	A917 18RD/TN (POLICE)
3	A645 20RD/VT (RHD)
4	A300 16GY/LG
5	P37 20LG/TN (LHD)
6	G78 22VT/OR
7	F201 20PK/OR
8	C7 12DB
9	F20 20PK/WT
10	F202 20PK/GY
11	F214 20PK/LG
12	F23 20RD/OR
13	F500 20DG/PK
14	A930 18RD/LG (POLICE)
15	G74 18VT/WT (LHD)
16	G76 20VT/YL (LHD)
17	X13 16DG/GY (EXCEPT POLICE)
18	D64 20WT/LB (CONSOLE NAG1)
19	D65 20WT/LG (CONSOLE NAG1)
20	L1 20WT/LG (AUTO DAY/NIGHT MIRROR)
21	A23 20RD/YL
22	F880 20PK/DG (EXCEPT POLICE)
23	M24 18YL/WT
24	A931 18RD/WT (POLICE)
25	A932 18RD (POLICE)
26	-

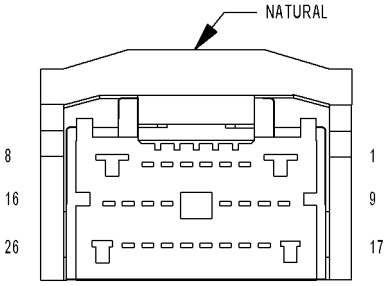

C200

C200 - NATURAL (BODY SIDE)

CAV	CIRCUIT
1	A110 16OR/RD (LHD)
2	A106 20LB/RD (LHD)
2	G945 20VT/DG (RHD)
3	A917 18RD/TN (LHD)
3	A645 20RD/VT (RHD)
4	A300 16GY/LG
5	P37 20LG/TN (LHD)
6	G78 20VT/OR
7	F201 20PK/OR
8	C7 12DB
9	F20 20PK/WT
10	F202 20PK/GY
11	F214 20PK/LG
12	F23 20RD/OR
13	F500 20DG/PK
14	A930 18RD/LG (POLICE)
15	G74 20VT/WT (LHD)
16	G76 20VT/YL (LHD)
17	X13 16DG/GY (EXCEPT POLICE)
18	D64 20WT/LB (CONSOLE NAG1)
19	D65 20WT/LG (CONSOLE NAG1)
20	L1 20WT/LG (EXCEPT POLICE)
21	A23 20RD/YL
22	F880 20PK/DG (EXCEPT POLICE)
23	M24 18YL/WT
24	A931 18RD/WT (POLICE)
25	A932 18RD (LX48 POLICE)
25	A932 16RD (LX49 POLICE)
26	-

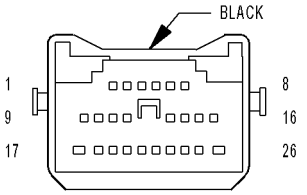

C201

C201 - BLACK (INSTRUMENT PANEL SIDE)

CAV	CIRCUIT
1	-
2	E12 20OR/GY
3	X304 18DG/BR
4	X394 18YL/GY
5	X202 18DG/VT (LHD)
5	X201 18GY/VT (RHD)
6	X292 18DG/YL (LHD)
6	X291 18DG/YL (RHD)
7	C115 20DB
8	-
9	G160 20VT/LG (LHD)
10	P392 20LG/DB
11	D54 20WT
12	D55 20WT/OR
13	A117 20RD/DG (EXCEPT POLICE)
14	P303 20TN (LHD)
15	P31 20TN/YL (LHD)
16	A205 16RD/OR
17	A913 20RD/GY
18	R58 20LB/GY (LHD)

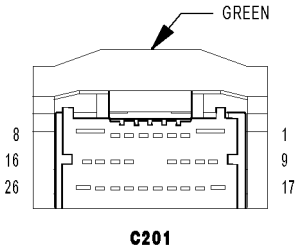

C201

C201 - BLACK (INSTRUMENT PANEL SIDE)

CAV	CIRCUIT
19	B29 20DG/WT (POLICE)
20	D777 20WT/DG (PARKTRONICS)
21	X777 20DG/GY (PARKTRONICS)
22	Z171 20GY/BK (PARKTRONICS)
23	F942 18PK/BK (RHD)
24	-
25	G25 20VT/TN (LHD)
26	F942 18PK/BK (POLICE)

C201 - GREEN (BODY SIDE)

CAV	CIRCUIT
1	-
2	E12 20OR/GY
3	X304 18DG/BR
4	X394 18YL/GY
5	X202 18DG/VT (LHD)
5	X201 18GY/VT (RHD)
6	X292 18DG/YL (LHD)
6	X291 18GY/YL (RHD)
7	C115 20DB
8	-
9	G160 20VT/LG (LHD)
10	P392 20LG/DB
11	D54 20WT
12	D55 20WT/OR
13	A117 20RD/DG
14	P303 20TN (LHD)
15	P31 20TN/YL (LHD EXCEPT LX48 POLICE)
15	P31 20BK (LX48 POLICE)
16	A205 16RD/OR
17	A913 20RD/GY
18	R58 20LB/GY (LHD)
19	B29 20DG/WT (POLICE)
20	D777 20WT/DG (PARKTRONICS)
21	X777 20DG/GY (PARKTRONICS)
22	Z171 20GY/BK (PARKTRONICS)
23	F942 18PK/BK (RHD)
24	-
25	G25 20VT/TN (LX49)
26	F942 18PK/BK (POLICE)

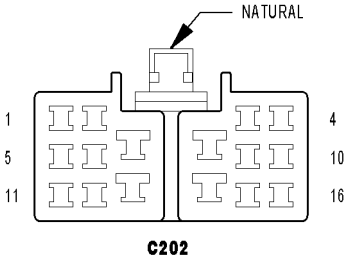

C202 - NATURAL (HVAC SIDE)

CAV	CIRCUIT
1	C55 20DB/WT
2	C255 20WT/DB
3	C52 20DB/LG (ATC)
4	C252 20LG/DB (ATC)
5	C66 20DB/OR
6	C266 20OR/DB
7	Z908 12BK (ATC)
7	C70 12DB/YL (MTC)
8	C7 12DB
9	C68 20DB/YL
10	C268 20YL/DB
11	C21 20DB/LG
12	C121 20DB/DG
13	C73 14DB/VT (MTC)
14	C72 14DB/OR (MTC)
15	C56 20DB/LB (ATC)
16	C71 16DB/BR (MTC)

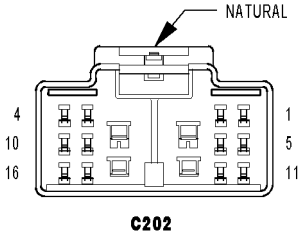

C202 - NATURAL (INSTRUMENT PANEL SIDE)

CAV	CIRCUIT
1	C55 20DB/WT
2	C255 22WT/DB
3	C52 22DB/LG (ATC)
4	C252 22LG/DB (ATC)
5	C66 20DB/OR
6	C266 20OR/DB
7	Z908 12BK/RD (ATC)
7	C70 12DB/YL (MTC)
8	C7 12DB
9	C68 22DB/YL
10	C268 22YL/DB (ATC EXCEPT SRT8 EARLY BUILD)
10	C268 20YL/DB (ATC SRT8 EARLY BUILD/MTC)
11	C21 20DB/LG
12	C121 20DB/DG
13	C73 12DB/VT (MTC)
14	C72 18DB/OR (MTC)
15	C56 20DB/LB (ATC)
16	C71 16DB/BR (MTC)

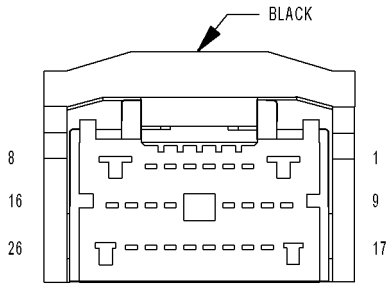

C203

C203 - BLACK (BODY SIDE)

CAV	CIRCUIT
1	X300 18GY/BR (HIGHLINE)
2	B25 20GY/BK
3	G167 20VT/LB
4	G75 20VT
5	G77 20VT/GY
6	P112 20TN/OR (LHD AUTO DAY/NIGHT MIRROR)
6	P37 20LG/TN (RHD)
7	Z210 20BK
8	X390 18DG/BR (HIGHLINE)
9	N4 20DB/WT
10	N5 20DB/WT
11	P1 20TN/LG
12	X303 18DG/TN
13	X393 18DG/GY
14	X201 18GY/VT (LHD)
14	X202 18DG/VT (RHD)
15	X291 18GY/YL (LHD)
15	X292 18DG/YL (RHD)
16	P393 20LG
17	P953 16DG/TN (LHD MEMORY)
17	A110 16OR/RD (RHD)
18	G914 20VT/GY (LHD MEMORY)
18	G74 20VT/WT (RHD)
19	P153 16TN/DG (LHD MEMORY)
19	G76 20VT/YL (RHD)
20	P151 20TN/OR (LHD MEMORY)
20	G160 20VT/LG (RHD)
21	P114 20TN/WT (LHD AUTO DAY/NIGHT MIRROR)
21	A106 20LB/RD (RHD)
22	R57 20LG/GY
23	G161 20VT/DG
24	P152 20TN/LB (LHD MEMORY)
24	P303 20TN (RHD)
25	P157 16LB/TN (LHD MEMORY)
25	P31 20BK (RHD)
26	A917 18RD/TN (RHD)

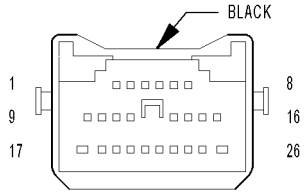

C203

C203 - BLACK (INSTRUMENT PANEL SIDE)

CAV	CIRCUIT
1	X300 18GY/BR (HIGHLINE)
2	B25 20GY/BK
3	G167 20VT/LB
4	G75 20VT
5	G77 20VT/GY
6	P112 20TN/OR (LHD AUTO DAY/NIGHT MIRROR)
6	P37 20LG/TN (RHD)
7	Z210 20BK
8	X390 18DG/BR (HIGHLINE)
9	N4 20DB/WT
10	N5 20DB/WT
11	P1 20TN/LG
12	X303 18DG/TN
13	X393 18DG/GY
14	X201 18GY/VT (LHD)
14	X202 18DG/VT (RHD)
15	X291 18GY/YL (LHD)
15	X292 18DG/YL (RHD)
16	P393 20LG
17	P953 16DG/TN (LHD MEMORY)
17	A110 16OR/RD (RHD)
18	G914 20VT/GY (LHD MEMORY)
18	G74 18VT/WT (RHD)
19	P153 16TN/DG (LHD MEMORY)
19	G76 20VT/YL (RHD)
20	P151 20TN/OR (LHD MEMORY)
20	G160 20VT/LG (RHD)
21	P114 20TN/WT (LHD AUTO DAY/NIGHT MIRROR)
21	A106 20LB/RD (RHD)
22	R57 20LG/GY
23	G161 20VT/DG
24	P152 20TN/LB (LHD MEMORY)
24	P303 20TN (RHD)
25	P157 16LB/TN (LHD MEMORY)
25	P31 20TN/YL (RHD)
26	D21 20PK (LHD EXCEPT POLICE)
26	A917 18RD/TN (RHD)

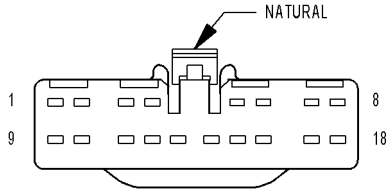

C204

C204 - NATURAL (DOME SIDE)

CAV	CIRCUIT
1	-
2	M24 18YL/WT
3	M27 18YL/LB
4	Z909 16BK/LG
5	A117 20RD/DG (EVIC)
6	F880 20PK (EVIC EXCEPT RHD SUN-ROOF)
6	F880 20PK/DG (RHD SUNROOF)
7	D54 20WT (EVIC/SUNROOF)
8	D55 20WT/OR (EVIC/SUNROOF)
9	D777 20WT/DG (PARKTRONICS)
10	X777 20DG/GY (PARKTRONICS)
10	A932 18RD (POLICE)
11	X13 16DG/GY (SUNROOF)
12	Z171 20GY/BK (PARKTRONICS)
12	A931 18RD/WT (POLICE)
13	-
14	A930 18RD/LG (POLICE)
14	G460 20DG/VT (RHD)
15	G946 20LG/VT (RHD)
16	-
17	-
18	-

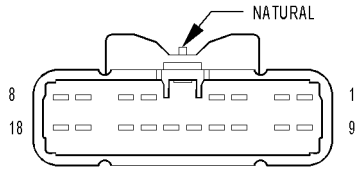

C204

C204 - NATURAL (INSTRUMENT PANEL SIDE)

CAV	CIRCUIT
1	E12 20OR/GY
2	M24 18YL/WT
3	M27 20YL/LB
4	Z909 16BK/LG
5	A117 20RD/DG (EXCEPT POLICE)
6	F880 20PK/DG (EXCEPT POLICE)
7	D54 20WT (EXCEPT POLICE)
8	D55 20WT/OR (EXCEPT POLICE)
9	D777 20WT/DG (PARKTRONICS)
10	X777 20DG/GY (PARKTRONICS)
10	A932 18RD (POLICE)
11	X13 16DG/GY (EXCEPT POLICE)
12	Z171 20GY/BK (PARKTRONICS)
12	A931 18RD/WT (POLICE)
13	-
14	A930 18RD/LG (POLICE)
14	G460 20DG/VT (RHD)
15	G946 20LG/VT (RHD)
16	-
17	-
18	-

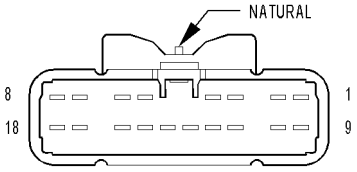

C205
(EXCEPT BASE)

C205 (EXCEPT BASE) - NATURAL (INSTRUMENT PANEL SIDE)

CAV	CIRCUIT
1	F880 20PK/DG (AUTO WIPERS)
2	D54 20WT (AUTO WIPERS)
3	D55 20WT/OR (AUTO WIPERS)
4	F23 20RD/OR
5	L1 20WT/LG
6	P112 20TN/OR (LHD)
7	X835 20OR/GY (LHD HANDS FREE)
8	-
9	P114 20TN/WT (LHD)
10	Z909 20BK/LG
11	X712 22DG/LB (LHD HANDS FREE)
12	X722 22LB/DG (LHD HANDS FREE)
13	X792 22LB/DG (LHD HANDS FREE)
14	X793 22DG/YL (LHD HANDS FREE)
15	X730 20GY/YL (LHD HANDS FREE)
16	-
17	-
18	-

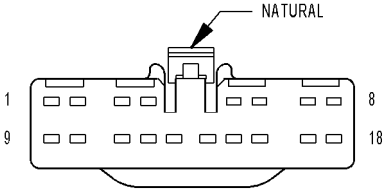

C205
(EXCEPT BASE)

C205 (EXCEPT BASE) - NATURAL (INTERIOR MIRROR JUMPER SIDE)

CAV	CIRCUIT
1	F880 20BK/PK (AUTO WIPERS)
2	D54 20BK (AUTO WIPERS)
3	D55 20BK/WT (AUTO WIPERS)
4	F23 20BK/RD (AUTO DAY/NIGHT MIRROR)
5	L1 20BK/TN (AUTO DAY/NIGHT MIRROR)
6	P112 20BK/LB (AUTO DAY/NIGHT MIRROR)
7	X835 20BK/OR (HANDS FREE)
8	-
9	P114 20BK/DB (AUTO DAY/NIGHT MIRROR)
10	Z909 20BK/LG (AUTO DAY/NIGHT MIRROR)
11	X712 20BK/DG (HANDS FREE)
12	X722 20BK/BR (HANDS FREE)
13	X792 20BK/YL (HANDS FREE)
14	X793 20BK/GY (HANDS FREE)
15	X730 20BK/VT (HANDS FREE)
16	-
17	-
18	-

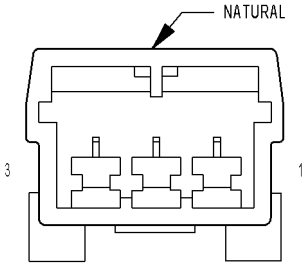

C206

C206 - NATURAL (STEERING PAD SIDE)

CAV	CIRCUIT
1	D500 20WT
2	D501 20WT/LG
3	D502 20WT/OR (PREMIUM)

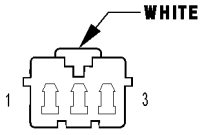

C206

C206 - WHITE (CLOCKSPRING SIDE)

CAV	CIRCUIT
1	D500 20WT
2	D501 20WT/LG
3	D502 20WT/OR (PREMIUM)

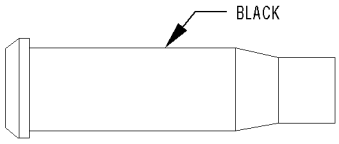

C207

C207 - BLACK (BODY SIDE)

CAV	CIRCUIT
1	D5 6WT/OR
2	D931 WT/YL

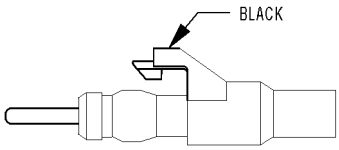

C207

C207 - BLACK (INSTRUMENT PANEL SIDE)

CAV	CIRCUIT
1	D5 6WT/OR
2	D931 WT/YL

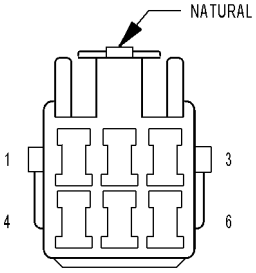

C208
(COLUMN NAG1)

C208 (COLUMN NAG1) - NATURAL (INSTRUMENT PANEL SIDE)

CAV	CIRCUIT
1	-
2	Z910 20BK/TN
3	F902 20PK
4	B29 20DG/WT
5	D65 20WT/LG
6	D64 20WT/LB

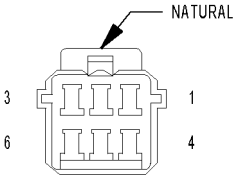

C208
(COLUMN NAG1)

C208 (COLUMN NAG1) - NATURAL (STEERING COLUMN SIDE)

CAV	CIRCUIT
1	-
2	Z910 22BK
3	F902 22LB
4	B29 22YL
5	D65 22LG/BK
6	D64 22GY

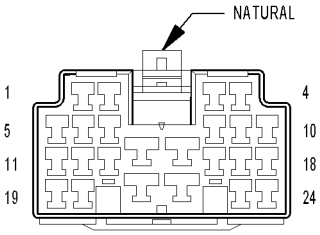

C300

C300 - NATURAL (BODY SIDE)

CAV	CIRCUIT
1	Q411 14OR/WT
2	C16 20DB/GY
3	A913 20RD/GY
4	Q412 14OR/LB
5	G75 20VT
6	G167 20VT/LB
7	G161 20VT/DG
8	M24 18YL/WT
9	D55 20WT/OR (EXCEPT BASE)
10	Q26 14OR/GY (BASE)
10	D54 20WT (EXCEPT BASE)
11	X201 18GY/VT
12	X291 18GY/YL
13	F880 20PK/DG (EXCEPT MEMORY)
14	Z912 14BK/OR
15	Q15 14OR/LB
16	P1 20TN/LG
17	P72 20TN/GY (EXCEPT MEMORY)
17	P112 20TN/OR (LHD MEMORY)
17	P699 20LG/DG (RHD)
18	P74 20TN/OR (EXCEPT MEMORY)
18	P114 20TN/WT (LHD MEMORY)
18	P110 20LG/WT (RHD)
19	Q611 14OR/GY
20	P393 20LG (LHD)
20	P392 20LG (RHD)
21	Q612 14OR/DB
22	F881 14PK
23	P76 22TN/LB (EXCEPT MEMORY)
24	Q16 14OR/TN (BASE)

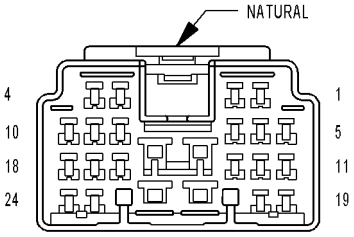

C300

C300 - NATURAL (DRIVER DOOR SIDE)

CAV	CIRCUIT
1	Q411 14OR/WT
2	C16 20DB/GY
3	A913 20RD/GY
4	Q412 14OR/LB
5	G75 20VT
6	G167 20VT/LB
7	G161 20VT/DG
8	M24 20YL/WT (EXCEPT BASE)
9	D55 20WT/OR (EXCEPT BASE)
10	Q26 14OR/GY (BASE)
10	D54 20WT (EXCEPT BASE)
11	X201 18GY/VT
12	X291 18GY/YL
13	F880 20PK/DG (EXCEPT MEMORY)
14	Z912 14BK/OR
15	Q15 14OR/LB
16	P1 20TN/LG
17	P72 20TN/GY (EXCEPT MEMORY)
17	P112 20TN/OR (LHD MEMORY)
17	P699 20LG/DG (RHD)
18	P74 20TN/OR (EXCEPT MEMORY)
18	P114 20TN/WT (LHD MEMORY)
18	P110 20LG/WT (RHD)
19	Q611 14OR/GY
20	P393 20LG (LHD)
20	P392 20LG (RHD)
21	Q612 14OR/DB
22	F881 14PK
23	P76 20TN/LB (EXCEPT MEMORY)
24	Q16 14OR/TN (BASE)

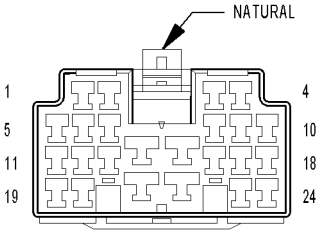

C301

C301 - NATURAL (BODY SIDE)

CAV	CIRCUIT
1	-
2	C16 20DB/GY
3	A913 20RD/GY (EXCEPT BASE)
4	Q26 14OR/GY (BASE)
5	G74 20VT/WT
6	P37 20LG/TN
7	G160 20VT/LG
8	M24 20YL/WT
9	D55 20WT/OR (EXCEPT BASE)
10	D54 20WT (EXCEPT BASE)
11	X202 18DG/VT (LHD)
11	X201 18GY/VT (RHD)
12	X292 18DG/YL (LHD)
12	X291 18GY/YL (RHD)
13	F880 20PK/DG (EXCEPT BASE)
14	Z911 14BK/WT
15	Q15 14OR/LB (BASE)
16	P303 20TN
17	P72 20TN/GY (EXCEPT MEMORY)

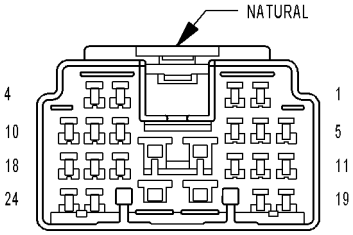

C301

C301 - NATURAL (BODY SIDE)

CAV	CIRCUIT
17	P110 20LG/WT (RHD)
18	P74 20TN/OR (EXCEPT MEMORY)
18	P699 20LG/DG (RHD)
19	-
20	P392 20LG/DB (LHD)
20	P393 20LG/DB (RHD)
21	Q16 14OR/TN (BASE)
22	F881 14PK
23	P76 22TN/LB (EXCEPT MEMORY)
24	-

C301 - NATURAL (PASSENGER DOOR SIDE)

CAV	CIRCUIT
1	-
2	C16 20DB/GY
3	A913 20RD/GY (EXCEPT BASE)
4	Q26 14OR/GY (BASE)
5	G74 20VT/WT
6	P37 20LG/TN
7	G160 20VT/LG
8	M24 20YL/WT (EXCEPT BASE)
9	D55 20WT/OR (EXCEPT BASE)
10	D54 20WT (EXCEPT BASE)
11	X202 18DG/VT (LHD)
11	X201 18GY/VT (RHD)
12	X292 18DG/YL (LHD)
12	X291 18GY/YL (RHD)
13	F880 20PK/DG (EXCEPT BASE)
14	Z911 14BK/WT
15	Q15 14OR/LB (BASE)
16	P303 20TN
17	P72 20TN/GY (EXCEPT MEMORY)
17	P110 20LG/WT (RHD)
18	P74 20TN/OR (EXCEPT MEMORY)
18	P699 20LG/DG (RHD)
19	-
20	P392 20LG/DB (LHD)
20	P393 20LG/DB (RHD)
21	Q16 14OR/TN (BASE)
22	F881 14PK
23	P76 20TN/LB (EXCEPT MEMORY)
24	-

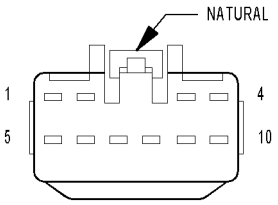

C302

C302 - NATURAL (BODY SIDE)

CAV	CIRCUIT
1	Q15 14OR/LB
2	-
3	Q411 14OR/WT
4	-
5	G77 20VT/GY
6	Z912 20BK/OR
7	P303 20TN
8	P393 20LG
9	-
10	Q611 14OR/GY

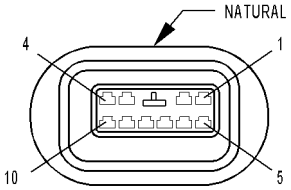

C302

C302 - NATURAL (LEFT REAR DOOR SIDE)

CAV	CIRCUIT
1	Q15 14OR/LB
2	-
3	Q411 14OR/WT
4	-
5	G77 20VT/GY
6	Z912 20LG/BK
7	P303 20TN
8	P393 20LG
9	-
10	Q611 14OR/GY

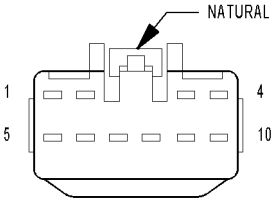

C303

C303 - NATURAL (BODY SIDE)

CAV	CIRCUIT
1	Q15 14OR/LB
2	-
3	Q412 14OR/LB
4	-
5	G76 20VT/YL
6	Z911 20BK/WT
7	P303 20TN
8	P392 20LG/DB
9	-
10	Q612 14OR/DB

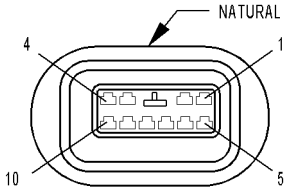

C303

C303 - NATURAL (RIGHT REAR DOOR SIDE)

CAV	CIRCUIT
1	Q15 14OR/LB
2	-
3	Q412 14OR/LB
4	-
5	G76 20VT/YL
6	Z911 20BK/WT
7	P303 20TN
8	P392 20LG/DB
9	-
10	Q612 14OR/DB

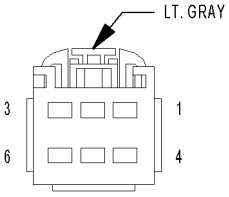

C304
(LX49)

C304 (LX49) - LT. GRAY (BODY SIDE)

CAV	CIRCUIT
1	C15 12DB/WT
2	W13 16BR/LG
3	W17 18BR/YL (EXCEPT POLICE)
3	W17 18BR/LG (POLICE)
4	L53 20DG/WT (MK25)
4	B29 20DG/WT (MK25E)
5	Z911 20BK/WT
6	Z914 14BK/GY

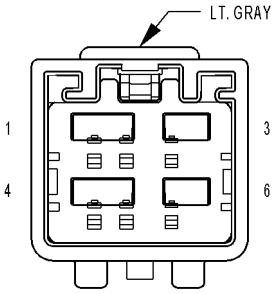

C304
(LX49)

C304 (LX49) - LT. GRAY (LIFTGATE SIDE)

CAV	CIRCUIT
1	C15 12DB/WT
2	W13 16BR/LG
3	W17 18BR/YL
4	L53 20DG/WT (MK25)
4	B29 20DG/WT (MK25E)
5	Z911 20BK/WT
6	Z914 14BK/GY

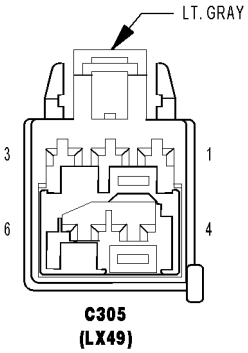

C305
(LX49)

C305 (LX49) - LT. GRAY (BODY SIDE)

CAV	CIRCUIT
1	F880 20PK/DG
2	G25 20VT/TN
3	G78 20VT/OR
4	M24 20YL/WT
5	P31 20TN/YL
6	-

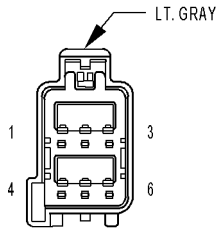

C305
(LX49)

C305 (LX49) - LT. GRAY (LIFTGATE SIDE)

CAV	CIRCUIT
1	F880 20PK/DG
2	G25 20VT/TN
3	G78 20VT/OR
4	M24 20YL/WT
5	P31 20TN/YL
6	-

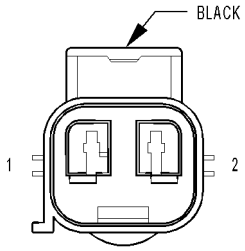

C306
(LX48 BASE)

C306 (LX48 BASE) - BLACK (BODY SIDE)

CAV	CIRCUIT
1	L777 20WT/VT
2	Z914 20BK/GY

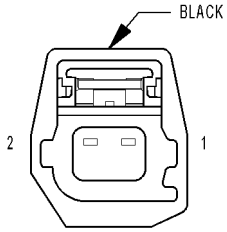

C306
(LX48 BASE)

C306 (LX48 BASE) - BLACK (REAR END LIGHTING SIDE)

CAV	CIRCUIT
1	L777 20WT/VT
2	Z914 20BK/BR

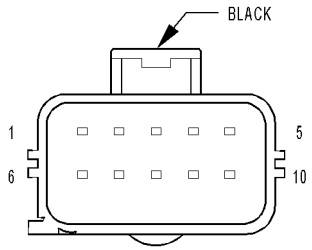

C306
(LX48 EXCEPT BASE/
LX49 EXCEPT EXPORT)

C306 (LX48 EXCEPT BASE/LX49 EXCEPT EXPORT) - BLACK (BODY SIDE)

CAV	CIRCUIT
1	X700 20GY/OR (LX48 PARKTRONICS)
1	L777 20WT/VT (LX49)
2	Z914 20BK/GY (2.7L/3.5L LX49)
2	Z914 16BK/GY (5.7L LX49)
2	D701 20WT/LB (LX48 PARKTRONICS)
3	D700 20WT/GY (LX48 PARKTRONICS)
3	L53 20DG/WT (LX49 MK25)
3	B29 20DG/WT (LX49 MK25E)
4	D703 20WT/BK (LX48 PARKTRONICS)
4	L1 20WT/LG (LX49)
5	D704 20WT/DB (LX48 PARKTRONICS)
5	L62 20WT/YL (LX49)
6	X750 20GY/LB (LX48 PARKTRONICS)
6	L63 20WT/DG (LX49)
7	L777 20WT/VT (LX48)
8	Z914 20BK/GY (LX48 EXCEPT EXPORT)
8	Z914 18BK/GY (LX48 EXPORT)
9	-
10	-

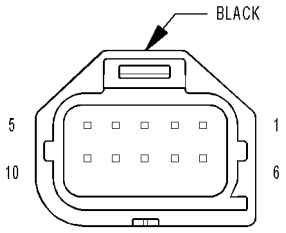

C306
(LX48 EXCEPT BASE/
LX49 EXCEPT EXPORT)

C306 (LX48 EXCEPT BASE/LX49 EXCEPT EXPORT) - BLACK (REAR END LIGHTING SIDE)

CAV	CIRCUIT
1	X700 20GY/OR (LX48 PARKTRONICS)
1	L777 20WT/VT (LX49)
2	D701 20WT/LB (LX48 PARKTRONICS)
2	Z914 18BK/BR (LX49)
3	D700 20WT/GY (LX48 PARKTRONICS)
3	L53 20DG/WT (LX49 MK25)
3	B29 20DG/WT (LX49 MK25E)
4	D703 20WT/BK (LX48 PARKTRONICS)
4	L1 20WT/LG (LX49)
5	D704 20WT/DB (LX48 PARKTRONICS)
5	L62 18WT/YL (LX49)
6	X750 20GY/LB (LX48 PARKTRONICS)
6	L63 18WT/DG (LX49)
7	L777 20WT/VT (LX48)
8	Z914 20BK/BR (LX48)
9	-
10	-

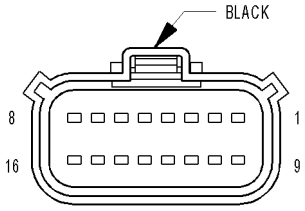

C306
(LX49 EXPORT)

C306 (LX49 EXPORT) - BLACK (BODY SIDE)

CAV	CIRCUIT
1	L777 20WT/VT
2	Z914 16BK/GY
3	L53 20DG/WT (MK25)
3	B29 20DG/WT (MK25E)
4	L1 20WT/LG
5	L62 20WT/YL
6	L63 20WT/DG
7	L90 20WT/OR
8	D700 20WT/GY
9	D701 20WT/LB
10	D703 20WT/BK
11	D704 20WT/DB
12	X700 20GY/OR
13	X750 20GY/LB
14	-
15	-
16	-

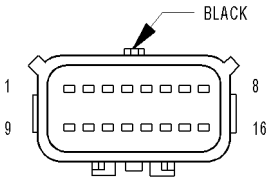

C306
(LX49 EXPORT)

C306 (LX49 EXPORT) - BLACK (REAR END LIGHTING SIDE)

CAV	CIRCUIT
1	L777 20WT/VT
2	Z914 16BK/BR
3	L53 20DG/WT (MK25)
3	B29 20DG/WT (MK25E)
4	L1 20WT/LG
5	L62 18WT/YL
6	L63 18WT/DG
7	L90 20WT/OR
8	D700 20WT/GY
9	D701 20WT/LB
10	D703 20WT/BK
11	D704 20WT/DB
12	X700 20GY/OR
13	X750 20GY/LB
14	-
15	-
16	-

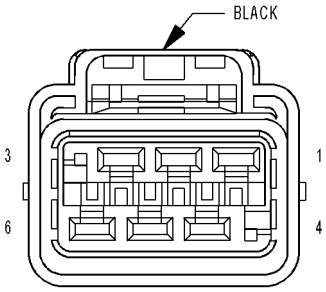

C307
(LX48)

C307 (LX48) - BLACK (BODY SIDE)

CAV	CIRCUIT
1	L777 20WT/VT
2	Z914 20BK/GY
3	L63 20WT/DG
4	L53 20DG/WT (MK25)
4	B29 20DG/WT (MK25E)
5	L1 20WT/LG
6	L90 20WT/OR (EXPORT)

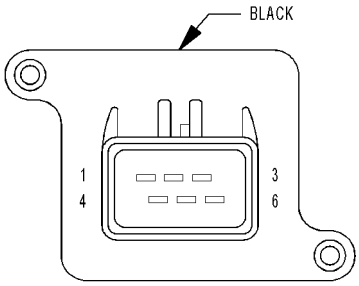

C307
(LX48)

C307 (LX48) - BLACK (LEFT TAIL LAMP SIDE)

CAV	CIRCUIT
1	L777 20WT/VT (EXCEPT EXPORT)
1	L777 18WT/VT (EXPORT)
2	Z914 20BK/GY
3	L63 18WT/DG
4	L53 18DG/WT (MK25)
4	B29 18DG/WT (MK25E)
5	L1 20WT/LG (300C)
5	L1 18WT/LG (EXCEPT 300C)
6	L90 18WT/OR (EXPORT)

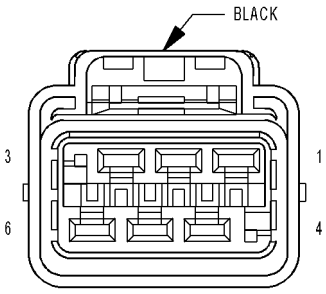

C308
(LX48)

C308 (LX48) - BLACK (BODY SIDE)

CAV	CIRCUIT
1	L777 20WT/VT
2	Z914 20BK/GY
3	L62 20WT/YL
4	L53 20DG/WT (MK25)
4	B29 20DG/WT (MK25E)
5	L1 20WT/LG
6	L90 20WT/OR (EXPORT)

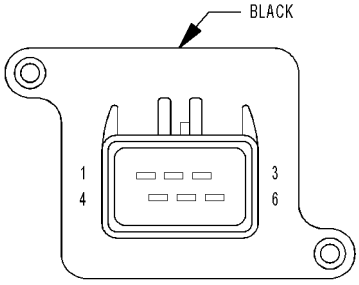

C308
(LX48)

C308 (LX48) - BLACK (RIGHT TAIL LAMP SIDE)

CAV	CIRCUIT
1	L777 20WT/VT (EXCEPT EXPORT)
1	L777 18WT/VT (EXPORT)
2	Z914 20BK/GY
3	L62 18WT/YL
4	L53 18DG/WT (MK25)
4	B29 18DG/WT (MK25E)
5	L1 20WT/LG (300C)
5	L1 18WT/LG (EXCEPT 300C)
6	L90 18WT/OR (EXPORT)

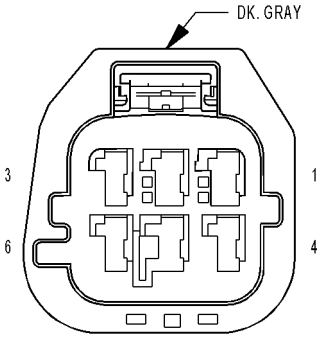

C309
(LX49)

C309 (LX49) - DK. GRAY (LEFT TAIL LAMP SIDE)

CAV	CIRCUIT
1	L777 20BR
2	Z914 20BK
3	L63 18RD/OR
4	L53 20BR/VT (MK25)
4	B29 20BR/VT (MK25E)
5	L1 20VT/RD
6	-

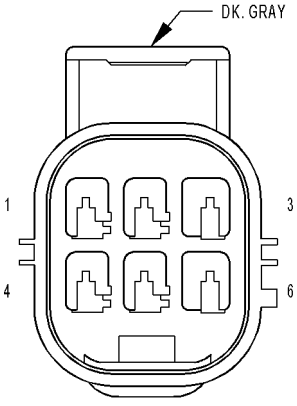

C309
(LX49)

C309 (LX49) - DK. GRAY (REAR END LIGHTING SIDE)

CAV	CIRCUIT
1	L777 20WT/VT
2	Z914 20BK/BR
3	L63 18WT/DG
4	L53 20DG/WT (MK25)
4	B29 20DG/WT (MK25E)
5	L1 20WT/LG
6	-

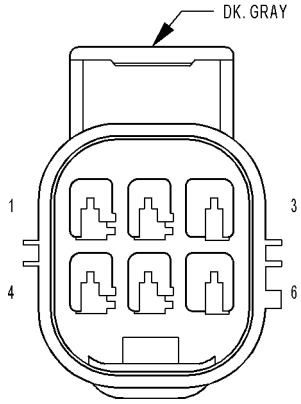

C310
(LX49)

C310 (LX49) - DK. GRAY (REAR END LIGHTING SIDE)

CAV	CIRCUIT
1	L777 20WT/VT
2	Z914 20BK/BR
3	L62 18WT/YL
4	L53 20DG/WT (MK25)
4	B29 20DG/WT (MK25E)
5	L1 20WT/LG
6	-

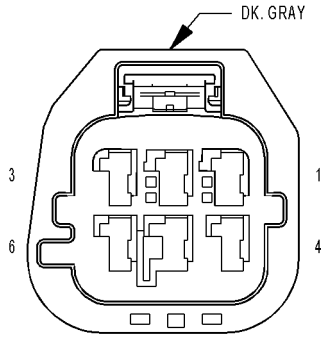

C310
(LX49)

C310 (LX49) - DK. GRAY (RIGHT TAIL LAMP SIDE)

CAV	CIRCUIT
1	L777 20BR
2	Z914 20BK
3	L62 18RD/OR
4	L53 20BR/VT (MK25)
4	B29 20BR/VT (MK25E)
5	L1 20VT/RD
6	-

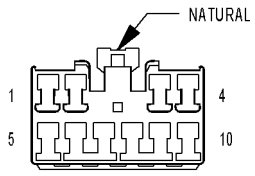

C311
(SUNROOF)

C311 (SUNROOF) - NATURAL (DOME SIDE)

CAV	CIRCUIT
1	Q6 20OR/LG (LHD)
1	Q6 22OR/LG (RHD)
2	-
3	X13 16DG/GY
4	Q5 20OR/LB (LHD)
4	Q5 22OR/LB (RHD)
5	Z909 16BK/LG
6	D55 20WT/OR
7	D54 20WT
8	Q3 20OR/TN (LHD)
8	Q3 22OR/TN (RHD)
9	Q4 20OR/YL (LHD)
9	Q4 22OR/YL (RHD)
10	-

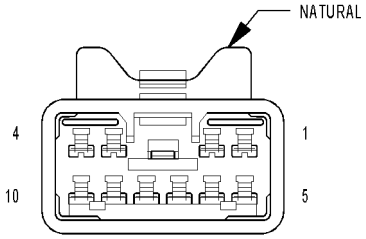

C311
(SUNROOF)

C311 (SUNROOF) - NATURAL (SUNROOF SIDE)

CAV	CIRCUIT
1	Q6 20OR/LG
2	D270 20WT (FACTORY ONLY)
3	X13 18RD
4	Q5 20OR/LB
5	Z909 18BK
6	D55 20WT/OR
7	D54 20WT
8	Q3 20OR/TN
9	Q4 20OR/YL
10	-

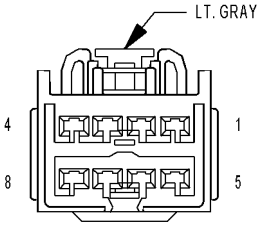

C313

C313 - LT. GRAY (BODY SIDE)

CAV	CIRCUIT
1	Z912 16BK/OR
2	R57 20LG/GY
3	P187 20LG/BR (LHD HEATED SEAT)
3	P188 20LG/VT (RHD HEATED SEAT)
4	A110 16OR/RD (EXCEPT MEMORY)
5	P205 20LG/WT (ADJUSTABLE PEDALS EXCEPT MEMORY)
6	P206 20LG/LB (ADJUSTABLE PEDALS EXCEPT MEMORY)
7	-
8	A72 20RD/OR (ADJUSTABLE PEDALS EXCEPT MEMORY)

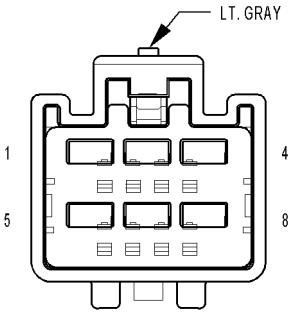

C313

C313 - LT. GRAY (DRIVER SEAT SIDE)

CAV	CIRCUIT
1	Z912 20BK/OR (MEMORY)
1	Z912 18BK/OR (POWER HEATED SEAT EXCEPT MEMORY)
1	Z912 16BK/OR (POWER SEAT/ADJUSTABLE PEDALS EXCEPT MEMORY)
2	R57 20LG/GY
3	P187 20LG/BR (LHD HEATED SEAT)
3	P187 18LG/BR (LHD POWER HEATED SEAT EXCEPT MEMORY)
3	P188 20LG/VT (RHD HEATED SEAT)
4	A110 16OR/RD (EXCEPT MEMORY)
5	P205 20LG/WT (ADJUSTABLE PEDALS EXCEPT MEMORY)
6	P206 20LG/LB (ADJUSTABLE PEDALS EXCEPT MEMORY)
7	-
8	A72 20RD/OR (ADJUSTABLE PEDALS EXCEPT MEMORY)

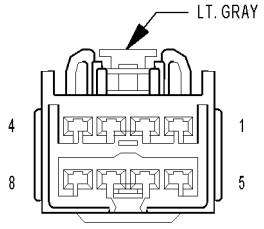

C314

C314 - LT. GRAY (BODY SIDE)

CAV	CIRCUIT
1	A916 14RD (LHD)
1	Z911 14BK/WT (RHD)
2	Z911 14BK/WT (LHD)
3	P188 20LG/VT (LHD HEATED SEAT)
3	P187 20LG/BR (RHD HEATED SEAT)
4	A916 14RD (RHD)
5	-
6	-
7	-
8	-

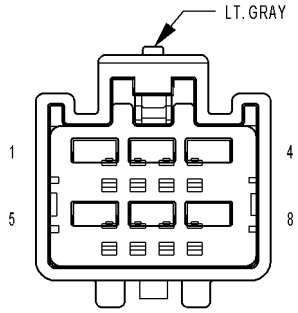

C314

C314 - LT. GRAY (PASSENGER SEAT SIDE)

CAV	CIRCUIT
1	A916 14RD (LHD POWER SEAT)
1	Z911 18BK/OR (RHD HEATED SEAT)
1	Z911 16BK/OR (RHD POWER SEAT)
2	Z911 16BK/WT (LHD HEATED SEAT)
2	Z911 14BK/WT (LHD POWER SEAT)
3	P188 20LG/VT (LHD HEATED SEAT)
3	P187 18LG/BR (RHD HEATED SEAT)
4	A916 16OR/RD (RHD POWER SEAT)
5	-
6	-
7	-
8	-

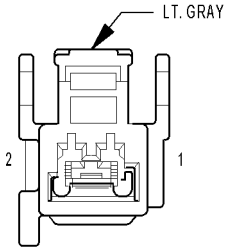

C315 (BASE)

C315 (BASE) - LT. GRAY (DRIVER SEAT BACK JUMPER SIDE)

CAV	CIRCUIT
1	P41 18LG/GY
2	P43 18LG/VT

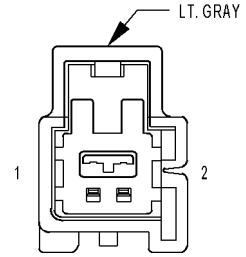

C315 (BASE)

C315 (BASE) - LT. GRAY (DRIVER SEAT SIDE)

CAV	CIRCUIT
1	P41 18LG/GY
2	P43 18LG/VT

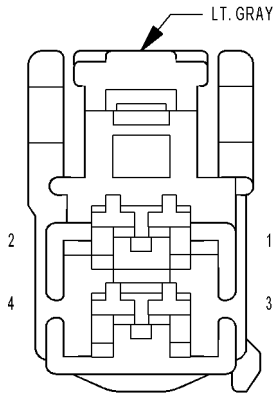

C315
(MIDLINE)

C315 (MIDLINE) - LT. GRAY (DRIVER SEAT BACK JUMPER SIDE)

CAV	CIRCUIT
1	P41 18LG/GY (LHD HEATED SEAT)
1	P141 18LG/BR (MEMORY)
2	P43 18LG/VT (LHD HEATED SEAT)
2	P143 18LG/GY (MEMORY)
3	P187 20LG/BR (LHD HEATED SEAT)
3	G493 20OR/VT (MEMORY)
4	Z912 20BK/OR (LHD HEATED SEAT)
4	G403 20VT/OR (MEMORY)

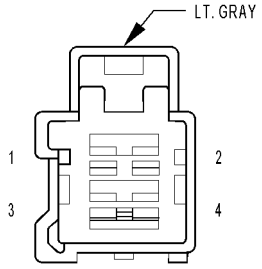

C315
(MIDLINE)

C315 (MIDLINE) - LT. GRAY (DRIVER SEAT SIDE)

CAV	CIRCUIT
1	P41 18LG/GY (LHD HEATED SEAT)
1	P141 18LG/BR (MEMORY)
2	P43 18LG/VT (LHD HEATED SEAT)
2	P143 18LG/GY (MEMORY)
3	P187 20LG/BR (LHD HEATED SEAT)
3	G493 20OR/VT (MEMORY)
4	Z912 20BK/OR (LHD HEATED SEAT)
4	G403 20VT/OR (MEMORY)

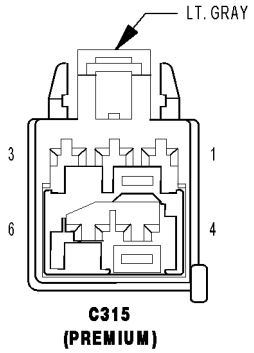

C315
(PREMIUM)

C315 (PREMIUM) - LT. GRAY (DRIVER SEAT BACK JUMPER SIDE)

CAV	CIRCUIT
1	P141 18LG/BR
2	P143 18LG/GY
3	G493 20OR/VT
4	G403 20VT/OR
5	P187 20LG/BR (LHD)
5	P188 20LG/VT (RHD)
6	Z912 20BK/OR

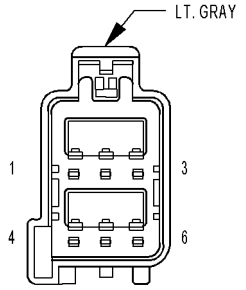

C315
(PREMIUM)

C315 (PREMIUM) - LT. GRAY (DRIVER SEAT SIDE)

CAV	CIRCUIT
1	P141 18LG/BR
2	P143 18LG/GY
3	G493 20OR/VT
4	G403 20VT/OR
5	P187 20LG/BR (LHD)
5	P188 20LG/VT (RHD)
6	Z912 20BK/OR

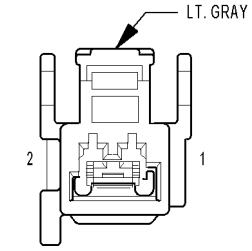

C316
(LHD HEATED SEAT/RHD POWER SEAT)

C316 (LHD HEATED SEAT/RHD POWER SEAT) - LT. GRAY (PASSENGER SEAT BACK JUMPER SIDE)

CAV	CIRCUIT
1	P188 20LG/VT (LHD)
1	P42 18LG/GY (RHD)
2	Z911 20BK/WT (LHD)
2	P44 18LG/VT (RHD)

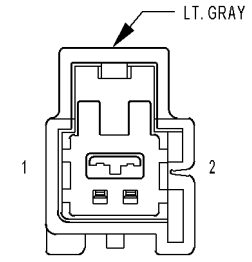

C316
(LHD HEATED SEAT/RHD POWER SEAT)

C316 (LHD HEATED SEAT/RHD POWER SEAT) - LT. GRAY (PASSENGER SEAT SIDE)

CAV	CIRCUIT
1	P188 20LG/VT (LHD)
1	P42 18LG/GY (RHD)
2	Z911 20BK/WT (LHD)
2	P44 18LG/VT (RHD)

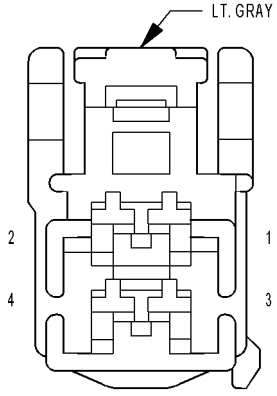

C316
(RHD POWER/ HEATED SEAT)

C316 (RHD POWER/HEATED SEAT) - LT. GRAY (PASSENGER SEAT BACK JUMPER SIDE)

CAV	CIRCUIT
1	P42 18LG/GY
2	P44 18LG/VT
3	P187 20LG/BR
4	Z911 20BK/OR

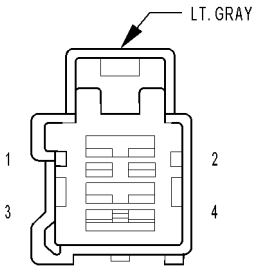

C316
(RHD POWER/
HEATED SEAT)

C316 (RHD POWER/HEATED SEAT) - LT. GRAY (PASSENGER SEAT SIDE)

CAV	CIRCUIT
1	P42 18LG/GY
2	P44 18LG/VT
3	P187 20LG/BR
4	Z911 20BK/OR

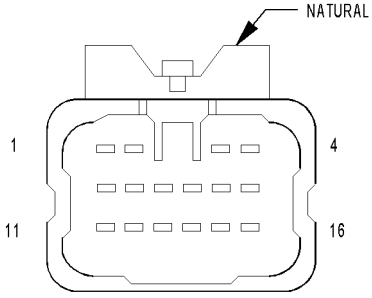

C317
(SATELLITE RADIO)

C317 (SATELLITE RADIO) - NATURAL (INSTRUMENT PANEL SIDE)

CAV	CIRCUIT
1	D54 20WT
2	D55 20WT/OR
3	Z909 16BK/LG
4	A300 16GY/LG
5	X16 20DG/YL
6	X17 20DG/OR
7	X917 20DG
8	X926 20GY/OR
9	X521 20GY/LB
10	X522 20GY/DB
11	X910 20GY/DG
12	X510 20DG/LB
13	X511 20GY/LG
14	-
15	-
16	-

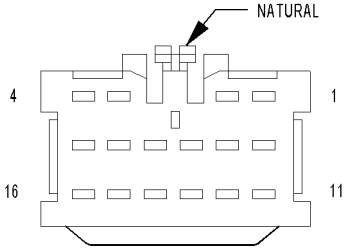

C317
(SATELLITE RADIO)

C317 (SATELLITE RADIO) - NATURAL (SATELLITE RADIO JUMPER SIDE)

CAV	CIRCUIT
1	D54 20WT
2	D55 20WT/OR
3	Z909 18BK/LG
4	A300 18GY/LG
5	X16 20DG/YL
6	X17 20DG/OR
7	X917 20DG
8	X926 20GY/OR (DVD)
9	X521 20GY/LB (DVD)
10	X522 20GY/DB (DVD)
11	X910 20GY/DG (DVD)
12	X510 20DG/LB (DVD)
13	X511 20GY/LG (DVD)
14	-
15	-
16	-

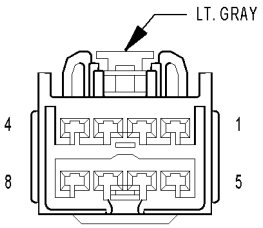

C318 (POLICE)

C318 (POLICE) - LT. GRAY (BODY SIDE)

CAV	CIRCUIT
1	A100 16RD/WT
2	A101 16VT/RD
3	A102 16WT/RD
4	F100 16PK/VT
5	F101 16VT/PK
6	F102 16WT/PK
7	-
8	-

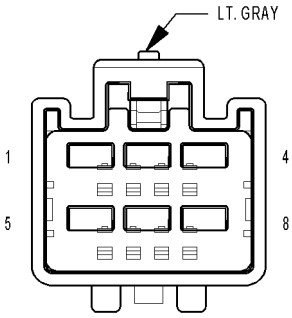

C318 (POLICE)

C318 (POLICE) - LT. GRAY (ACCESSORY JUMPER SIDE)

CAV	CIRCUIT
1	A100 16RD/WT
2	A101 16VT/RD
3	A102 16WT/RD
4	F100 16PK/VT
5	F101 16VT/PK
6	F102 16WT/PK
7	-
8	-

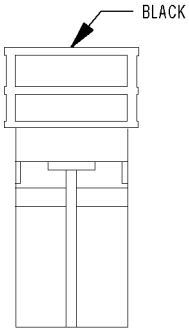

CAPACITOR-IGNITION-NO. 1 (2.7L/3.5L)

CAPACITOR-IGNITION-NO. 1 (2.7L/3.5L) - BLACK 1 WAY

CAV	CIRCUIT	FUNCTION
1	K343 16BR/YL	FUSED ASD RELAY OUTPUT 2

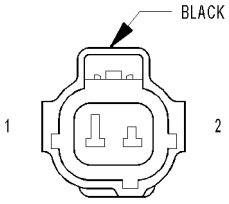

CAPACITOR-IGNITION-NO. 1 (SRT8)

CAPACITOR-IGNITION-NO. 1 (SRT8) - BLACK 2 WAY

CAV	CIRCUIT	FUNCTION
1	K343 16BR/YL	FUSED ASD RELAY OUTPUT 2
2	-	-

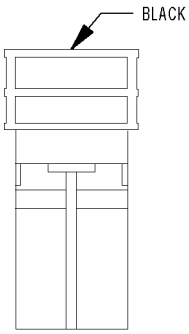

CAPACITOR-IGNITION-NO. 2 (2.7L/5.7L)

CAPACITOR-IGNITION-NO. 2 (2.7L/5.7L) - BLACK 1 WAY

CAV	CIRCUIT	FUNCTION
1	K343 16BR/YL	FUSED ASD RELAY OUTPUT 2

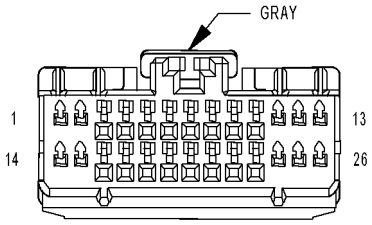

CLUSTER C1

CLUSTER C1 - GRAY 26 WAY

CAV	CIRCUIT	FUNCTION
1	-	-
2	Z910 18BK/TN	GROUND
3	L307 20WT/BR	HEADLAMP SWITCH MUX
4	E2 20OR/BR	PANEL LAMPS DIMMER SIGNAL
5	G161 20VT/DG	DRIVER DOOR LOCK SWITCH MUX
6	G160 20VT/LG	PASSENGER DOOR LOCK SWITCH MUX
7	-	-
8	-	-
9	G76 20VT/YL	RIGHT REAR DOOR AJAR SWITCH SENSE
10	G77 20VT/GY	LEFT REAR DOOR AJAR SWITCH SENSE
11	P1 20TN/LG	DRIVER DOOR UNLOCK DRIVER
12	P393 20LG	DOOR LOCK DRIVER
13	P392 20LG/DB	DOOR LOCK DRIVER
14	Z910 16BK/TN	GROUND
15	Z910 16BK/TN	GROUND
16	D55 20WT/OR	CAN B BUS (+)
17	D54 20WT	CAN B BUS (-)
18	B25 20GY/BK	PARK BRAKE SWITCH SENSE
19	-	-
20	B27 20DG/WT	TRACTION CONTROL SWITCH SENSE
21	-	-
22	G25 20VT/TN	DECKLID/LIFTGATE RELEASE SWITCH SENSE
23	G78 22VT/OR	DECKLID/LIFTGATE AJAR SWITCH SENSE
24	A110 16OR/RD	FUSED B(+)
25	A110 16OR/RD	FUSED B(+)
26	P303 20TN	PASSENGER DOOR UNLOCK DRIVER

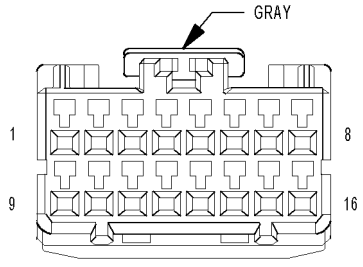

CLUSTER C2

CLUSTER C2 - GRAY 16 WAY

CAV	CIRCUIT	FUNCTION
1	N5 20DB/WT	FUEL LEVEL SENSOR NO. 2 SIGNAL
2	N4 20DB/WT	FUEL LEVEL SENSOR NO. 1 SIGNAL
3	R57 20LG/GY	DRIVER SEAT BELT SWITCH SENSE
4	W113 20BR/YL	REAR WIPER SWITCH MUX
5	L900 20WT/YL	HEADLAMP SWITCH MUX RETURN
6	-	-
7	P37 20LG/TN	PASSENGER DOOR LOCK SWITCH RETURN
8	G900 20VT/OR	IGNITION SWITCH SENSE RETURN
9	C105 18LB/LG (MTC)	HVAC MUX CONTROL
10	-	-
11	-	-
12	G20 20VT/BR	IGNITION SWITCH SENSE
13	G167 20VT/LB	DRIVER DOOR LOCK SWITCH RETURN
14	-	-
15	G926 20VT/WT	REAR WIPER SWITCH MUX RETURN
16	Z210 20BK	GROUND

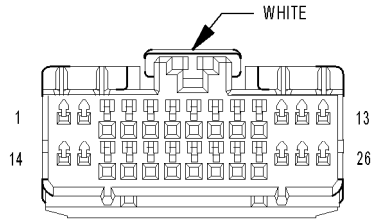

CLUSTER C3

CLUSTER C3 - WHITE 26 WAY

CAV	CIRCUIT	FUNCTION
1	W213 20BR/OR	REAR WIPER INDICATOR DRIVER
2	E22 20OR/GY (ATC)	INDICATOR DIMMER SIGNAL
2	E22 18OR/GY (MTC)	INDICATOR DIMMER SIGNAL
3	G75 20VT	DRIVER DOOR AJAR SWITCH SENSE
4	-	-
5	-	-
6	-	-
7	P83 20TN/WT (HEATED SEATS)	LEFT HEATED SEAT HIGH INDICATOR DRIVER
8	-	-
9	P81 20TN/LB (HEATED SEATS)	LEFT HEATED SEAT LOW INDICATOR DRIVER
10	P84 20TN/VT (HEATED SEATS)	RIGHT HEATED SEAT HIGH INDICATOR DRIVER
11	E12 20OR/GY	PANEL LAMPS DRIVER
12	M24 18YL/WT	COURTESY LAMPS DRIVER
13	-	-
14	A23 20RD/YL	FUSED B(+) (I.O.D.)
15	F202 20PK/GY	FUSED IGNITION SWITCH OUTPUT (RUN-START)
16	G74 18VT/WT	PASSENGER DOOR AJAR SWITCH SENSE
17	R58 20LB/GY (LHD)	PASSENGER SEAT BELT SWITCH SENSE
18	P365 20LG/GY (HEATED SEATS)	LEFT HEATED SEAT SWITCH SENSE
19	P366 20LG/LB (HEATED SEATS)	RIGHT HEATED SEAT SWITCH SENSE
20	-	-
21	-	-
22	P82 20TN/DG (HEATED SEATS)	RIGHT HEATED SEAT LOW INDICATOR DRIVER
23	-	-
24	P31 20TN/YL	DECKLID/LIFTGATE RELEASE DRIVER
25	M27 20YL/LB	READING/RAIL LAMPS DRIVER
26	A917 16RD/TN (LHD EXCEPT POLICE)	FUSED B(+)
26	A917 18RD/TN (RHD/POLICE)	FUSED B(+)

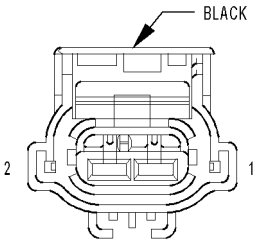

CLUTCH-A/C COMPRESSOR (GAS)

CLUTCH-A/C COMPRESSOR (GAS) - BLACK 2 WAY

CAV	CIRCUIT	FUNCTION
1	C3 18DB/YL	A/C CLUTCH RELAY OUTPUT
2	Z904 18BK/BR	GROUND

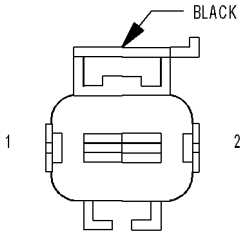

CLUTCH-A/C COMPRESSOR (DIESEL)

CLUTCH-A/C COMPRESSOR (DIESEL) - BLACK 2 WAY

CAV	CIRCUIT	FUNCTION
1	C3 18BL/DG	A/C CLUTCH RELAY OUTPUT
2	Z925 18BR	GROUND

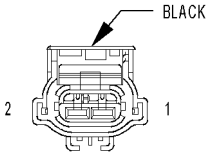

COIL-IGNITION-NO. 1 (5.7L EARLY BUILD)

COIL-IGNITION-NO. 1 (5.7L EARLY BUILD) - BLACK 2 WAY

CAV	CIRCUIT	FUNCTION
1	K343 16BR/YL	FUSED ASD RELAY OUTPUT 2
2	K19 16DB/DG	COIL CONTROL NO. 1

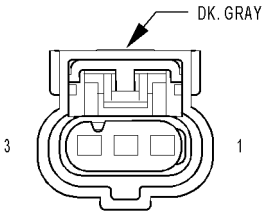

COIL-IGNITION-NO. 1 (3.5L LATE BUILD)

COIL-IGNITION-NO. 1 (3.5L LATE BUILD) - DK. GRAY 3 WAY

CAV	CIRCUIT	FUNCTION
1	-	-
2	K19 18DB/DG	COIL CONTROL NO. 1
3	K343 18BR/YL	FUSED ASD RELAY OUTPUT 2

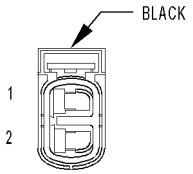

**COIL-
IGNITION-NO. 1
(2.7L/3.5L EARLY BUILD)**

COIL-IGNITION-NO. 1 (2.7L/3.5L EARLY BUILD) - BLACK 2 WAY

CAV	CIRCUIT	FUNCTION
1	K343 16BR/YL	FUSED ASD RELAY OUTPUT 2
2	K19 16DB/DG	COIL CONTROL NO. 1

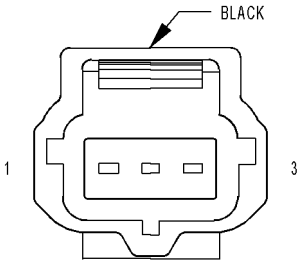

**COIL-
IGNITION-NO. 1
(5.7L LATE BUILD/SRT8)**

COIL-IGNITION-NO. 1 (5.7L LATE BUILD/SRT8) - BLACK 3 WAY

CAV	CIRCUIT	FUNCTION
1	K19 16DB/DG	COIL CONTROL NO. 1
2	K343 16BR/YL	FUSED ASD RELAY OUTPUT 2
3	-	-

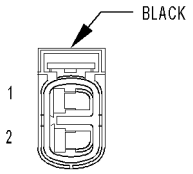

**COIL-
IGNITION-NO. 2
(2.7L/3.5L EARLY BUILD)**

COIL-IGNITION-NO. 2 (2.7L/3.5L EARLY BUILD) - BLACK 2 WAY

CAV	CIRCUIT	FUNCTION
1	K343 16BR/YL	FUSED ASD RELAY OUTPUT 2
2	K17 16DB/TN	COIL CONTROL NO. 2

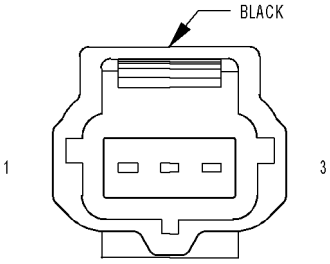

**COIL-
IGNITION-NO. 2
(5.7L LATE BUILD/SRT8)**

COIL-IGNITION-NO. 2 (5.7L LATE BUILD/SRT8) - BLACK 3 WAY

CAV	CIRCUIT	FUNCTION
1	K17 16DB/TN	COIL CONTROL NO. 2
2	K343 16BR/YL	FUSED ASD RELAY OUTPUT 2
3	-	-

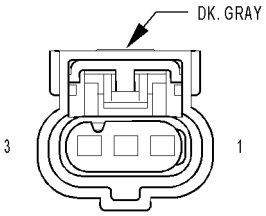

**COIL-
IGNITION-NO. 2
(3.5L LATE BUILD)**

COIL-IGNITION-NO. 2 (3.5L LATE BUILD) - DK. GRAY 3 WAY

CAV	CIRCUIT	FUNCTION
1	-	-
2	K17 18DB/TN	COIL CONTROL NO. 2
3	K343 18BR/YL	FUSED ASD RELAY OUTPUT 2

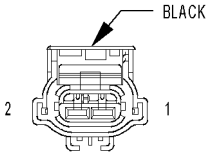

**COIL-
IGNITION-NO. 2
(5.7L EARLY BUILD)**

COIL-IGNITION-NO. 2 (5.7L EARLY BUILD) - BLACK 2 WAY

CAV	CIRCUIT	FUNCTION
1	K343 16BR/YL	FUSED ASD RELAY OUTPUT 2
2	K17 16DB/TN	COIL CONTROL NO. 2

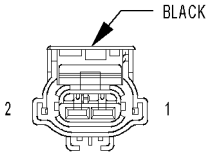

**COIL-
IGNITION-NO. 3
(5.7L EARLY BUILD)**

COIL-IGNITION-NO. 3 (5.7L EARLY BUILD) - BLACK 2 WAY

CAV	CIRCUIT	FUNCTION
1	K343 16BR/YL	FUSED ASD RELAY OUTPUT 2
2	K18 16DB/LG	COIL CONTROL NO. 3

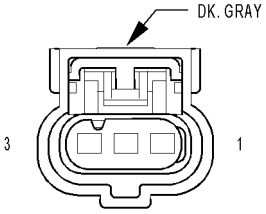

**COIL-
IGNITION-NO. 3
(3.5L LATE BUILD)**

COIL-IGNITION-NO. 3 (3.5L LATE BUILD) - DK. GRAY 3 WAY

CAV	CIRCUIT	FUNCTION
1	-	-
2	K18 18DB/LG	COIL CONTROL NO. 3
3	K343 18BR/YL	FUSED ASD RELAY OUTPUT 2

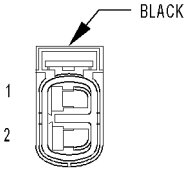

**COIL-
IGNITION-NO. 3
(2.7L/3.5L EARLY BUILD)**

COIL-IGNITION-NO. 3 (2.7L/3.5L EARLY BUILD) - BLACK 2 WAY

CAV	CIRCUIT	FUNCTION
1	K343 16BR/YL	FUSED ASD RELAY OUTPUT 2
2	K18 16DB/LG	COIL CONTROL NO. 3

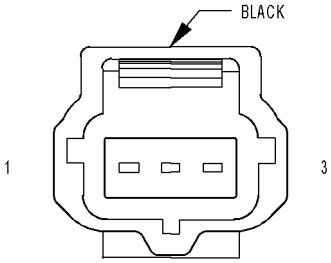

**COIL-
IGNITION-NO. 3
(5.7L LATE BUILD/SRT8)**

COIL-IGNITION-NO. 3 (5.7L LATE BUILD/SRT8) - BLACK 3 WAY

CAV	CIRCUIT	FUNCTION
1	K18 16DB/LG	COIL CONTROL NO. 3
2	K343 16BR/YL	FUSED ASD RELAY OUTPUT 2
3	-	-

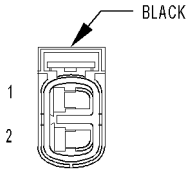

**COIL-
IGNITION-NO. 4
(2.7L/3.5L EARLY BUILD)**

COIL-IGNITION-NO. 4 (2.7L/3.5L EARLY BUILD) - BLACK 2 WAY

CAV	CIRCUIT	FUNCTION
1	K343 16BR/YL	FUSED ASD RELAY OUTPUT 2
2	K15 16DB/GY	COIL CONTROL NO. 4

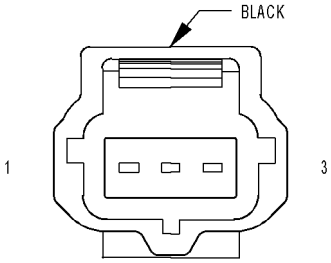

**COIL-
IGNITION-NO. 4
(5.7L LATE BUILD/SRT8)**

COIL-IGNITION-NO. 4 (5.7L LATE BUILD/SRT8) - BLACK 3 WAY

CAV	CIRCUIT	FUNCTION
1	K15 16DB/GY	COIL CONTROL NO. 4
2	K343 16BR/YL	FUSED ASD RELAY OUTPUT 2
3	-	-

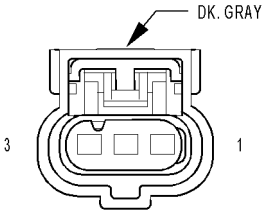

**COIL-
IGNITION-NO. 4
(3.5L LATE BUILD)**

COIL-IGNITION-NO. 4 (3.5L LATE BUILD) - DK. GRAY 3 WAY

CAV	CIRCUIT	FUNCTION
1	-	-
2	K15 18DB/GY	COIL CONTROL NO. 4
3	K343 18BR/YL	FUSED ASD RELAY OUTPUT 2

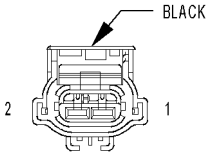

**COIL-
IGNITION-NO. 4
(5.7L EARLY BUILD)**

COIL-IGNITION-NO. 4 (5.7L EARLY BUILD) - BLACK 2 WAY

CAV	CIRCUIT	FUNCTION
1	K343 16BR/YL	FUSED ASD RELAY OUTPUT 2
2	K15 16DB/GY	COIL CONTROL NO. 4

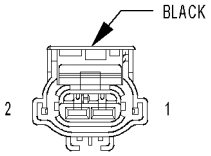

**COIL-
IGNITION-NO. 5
(5.7L EARLY BUILD)**

COIL-IGNITION-NO. 5 (5.7L EARLY BUILD) - BLACK 2 WAY

CAV	CIRCUIT	FUNCTION
1	K343 16BR/YL	FUSED ASD RELAY OUTPUT 2
2	K16 16DB/YL	COIL CONTROL NO. 5

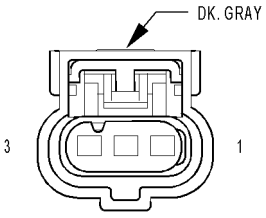

**COIL-
IGNITION-NO. 5
(3.5L LATE BUILD)**

COIL-IGNITION-NO. 5 (3.5L LATE BUILD) - DK. GRAY 3 WAY

CAV	CIRCUIT	FUNCTION
1	-	-
2	K16 18DB/YL	COIL CONTROL NO. 5
3	K343 18BR/YL	FUSED ASD RELAY OUTPUT 2

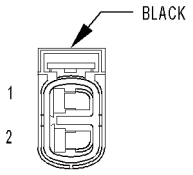

**COIL-
IGNITION-NO. 5
(2.7L/3.5L EARLY BUILD)**

COIL-IGNITION-NO. 5 (2.7L/3.5L EARLY BUILD) - BLACK 2 WAY

CAV	CIRCUIT	FUNCTION
1	K343 16BR/YL	FUSED ASD RELAY OUTPUT 2
2	K16 16DB/YL	COIL CONTROL NO. 5

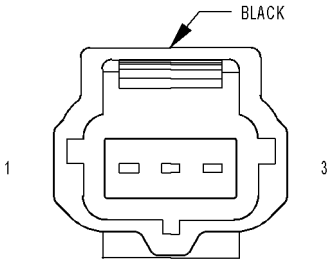

**COIL-
IGNITION-NO. 5
(5.7L LATE BUILD/SRT8)**

COIL-IGNITION-NO. 5 (5.7L LATE BUILD/SRT8) - BLACK 3 WAY

CAV	CIRCUIT	FUNCTION
1	K16 16DB/YL	COIL CONTROL NO. 5
2	K343 16BR/YL	FUSED ASD RELAY OUTPUT 2
3	-	-

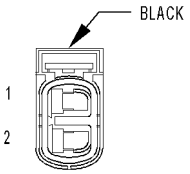

**COIL-
IGNITION-NO. 6
(2.7L/3.5L EARLY BUILD)**

COIL-IGNITION-NO. 6 (2.7L/3.5L EARLY BUILD) - BLACK 2 WAY

CAV	CIRCUIT	FUNCTION
1	K343 16BR/YL	FUSED ASD RELAY OUTPUT 2
2	K10 16DB/OR	COIL CONTROL NO. 6

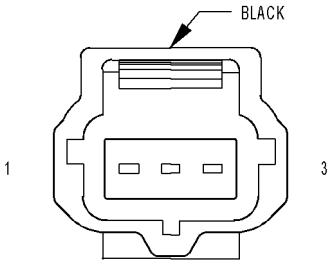

**COIL-
IGNITION-NO. 6
(5.7L LATE BUILD/SRT8)**

COIL-IGNITION-NO. 6 (5.7L LATE BUILD/SRT8) - BLACK 3 WAY

CAV	CIRCUIT	FUNCTION
1	K10 16DB/OR	COIL CONTROL NO. 6
2	K343 16BR/YL	FUSED ASD RELAY OUTPUT 2
3	-	-

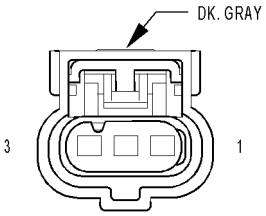

**COIL-
IGNITION-NO. 6
(3.5L LATE BUILD)**

COIL-IGNITION-NO. 6 (3.5L LATE BUILD) - DK. GRAY 3 WAY

CAV	CIRCUIT	FUNCTION
1	-	-
2	K10 18DB/OR	COIL CONTROL NO. 6
3	K343 18BR/YL	FUSED ASD RELAY OUTPUT 2

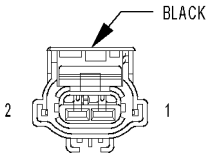

**COIL-
IGNITION-NO. 6
(5.7L EARLY BUILD)**

COIL-IGNITION-NO. 6 (5.7L EARLY BUILD) - BLACK 2 WAY

CAV	CIRCUIT	FUNCTION
1	K343 16BR/YL	FUSED ASD RELAY OUTPUT 2
2	K10 16DB/OR	COIL CONTROL NO. 6

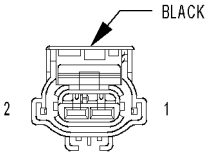

**COIL-
IGNITION-NO. 7
(5.7L EARLY BUILD)**

COIL-IGNITION-NO. 7 (5.7L EARLY BUILD) - BLACK 2 WAY

CAV	CIRCUIT	FUNCTION
1	K343 16BR/YL	FUSED ASD RELAY OUTPUT 2
2	K97 16DB/YL	COIL CONTROL NO. 7

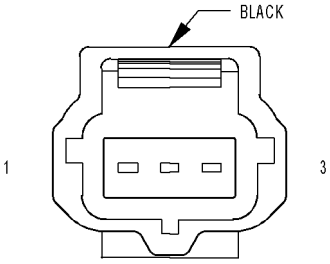

**COIL-
IGNITION-NO. 7
(5.7L LATE BUILD/SRT8)**

COIL-IGNITION-NO. 7 (5.7L LATE BUILD/SRT8) - BLACK 3 WAY

CAV	CIRCUIT	FUNCTION
1	K97 16DB/YL	COIL CONTROL NO. 7
2	K343 16BR/YL	FUSED ASD RELAY OUTPUT 2
3	-	-

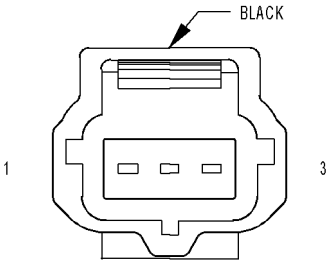

**COIL-
IGNITION-NO. 8
(5.7L LATE BUILD/SRT8)**

COIL-IGNITION-NO. 8 (5.7L LATE BUILD/SRT8) - BLACK 3 WAY

CAV	CIRCUIT	FUNCTION
1	K98 16DB/YL	COIL CONTROL NO. 8
2	K343 16BR/YL	FUSED ASD RELAY OUTPUT 2
3	-	-

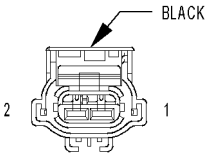

**COIL-
IGNITION-NO. 8
(5.7L EARLY BUILD)**

COIL-IGNITION-NO. 8 (5.7L EARLY BUILD) - BLACK 2 WAY

CAV	CIRCUIT	FUNCTION
1	K343 16BR/YL	FUSED ASD RELAY OUTPUT 2
2	K98 16DB/YL	COIL CONTROL NO. 8

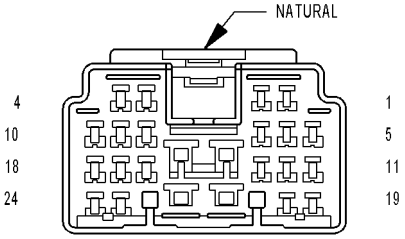

CONNECTOR-INTERFACE-POLICE/TAXI

CONNECTOR-INTERFACE-POLICE/TAXI - NATURAL 24 WAY

CAV	CIRCUIT	FUNCTION
1	W500 20BR/OR	FRONT FLASHING LIGHTS SIGNAL
2	W501 20BR/VT	REAR FLASHING LIGHTS SIGNAL
3	W511 20BR/WT	POLICE RADIO INPUT SIGNAL
4	W512 20BR/VT	SECURITY ALARM MUTE SIGNAL
5	W513 20BR/GY	HORN MUTE SIGNAL
6	W514 20BR/YL	FUEL LEVEL STATUS SIGNAL
7	W515 20BR/LB	DRIVER SEAT BELT SWITCH SENSE
8	W516 20BR/DB	MALFUNCTION INDICATOR SIGNAL
9	W517 20BR/LG	SECURITY ALARM ON SIGNAL
10	W518 20BR/DG	HORN SWITCH SENSE
11	W519 20BR/TN	P/N SWITCH SENSE
12	W520 20BR/OR	BRAKE LAMP SWITCH SENSE
13	W521 20BR/WT	HEADLAMP SWITCH SENSE
14	W522 20BR/VT	SIDE AIRBAG STATUS SIGNAL
15	W523 20BR/GY	FRONT AIRBAG STATUS SIGNAL
16	Z384 20BK	SIGNAL RETURN
17	W524 20BR/YL	DRIVER DOOR AJAR SWITCH SENSE
18	W525 20BR/LB	CLUSTER DIMMER SWITCH SENSE
19	W526 20BR/DB	VEHICLE SPEED SIGNAL
20	W527 20BR/LG	VSIM CAN B BUS (+)
21	W528 20BR/DG	VSIM CAN B BUS (-)
22	W529 20BR/TN	ENGINE RUNNING STATUS SIGNAL
23	-	-
24	-	-

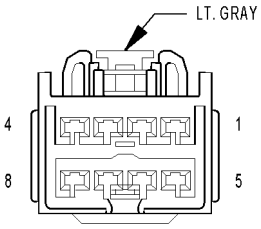

CONNECTOR-POLICE ACCESSORIES (POLICE)

CONNECTOR-POLICE ACCESSORIES (POLICE) - LT. GRAY 8 WAY

CAV	CIRCUIT	FUNCTION
1	A100 16RD/WT	FUSED B(+)
2	A101 16VT/RD	FUSED B(+)
3	A102 16WT/RD	FUSED B(+)
4	F100 16PK/VT	POLICE NO. 1 RELAY OUTPUT
5	F101 16VT/PK	POLICE NO. 3 RELAY OUTPUT
6	F102 16WT/PK	POLICE NO. 2 RELAY OUTPUT
7	-	-
8	-	-

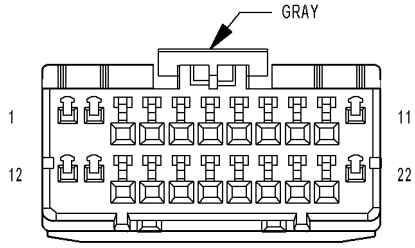

CONTROL-A/C-HEATER C1 (ATC)

CONTROL-A/C-HEATER C1 (ATC) - GRAY 22 WAY

CAV	CIRCUIT	FUNCTION
1	F500 20DG/PK	FUSED RUN RELAY OUTPUT
2	A23 20RD/YL	FUSED B(+) (I.O.D.)
3	Z909 20BK/LG	GROUND
4	D54 20WT	CAN B BUS (-)
5	D55 20WT/OR	CAN B BUS (+)
6	C115 20DB	REAR WINDOW DEFOGGER RELAY CONTROL
7	E12 20OR/GY	PANEL LAMPS DRIVER
8	G39 20VT/LB	SUN SENSOR NO. 1 SIGNAL
9	G139 20VT/OR	SUN SENSOR NO. 2 SIGNAL
10	L24 20WT/VT	AUTO HEADLAMPS SIGNAL
11	G939 20VT/DB	SUN SENSOR RETURN
12	-	-
13	-	-
14	-	-
15	-	-
16	-	-
17	-	-
18	-	-
19	-	-
20	-	-
21	-	-
22	-	-

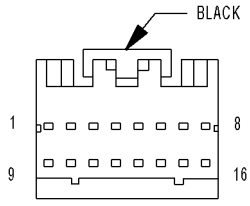

CONTROL-A/C-HEATER C1 (MTC)

CONTROL-A/C-HEATER C1 (MTC) - BLACK 16 WAY

CAV	CIRCUIT	FUNCTION
1	F23 20RD/OR (EARLY BUILD)	FUSED IGNITION SWITCH OUTPUT (RUN-START)
1	F500 20DG/PK (LATE BUILD)	FUSED RUN RELAY OUTPUT
2	A23 20RD/YL	FUSED B(+) (I.O.D.)
3	Z909 20BK/LG	GROUND
4	C105 18LB/LG	HVAC MUX CONTROL
5	C115 20DB	REAR WINDOW DEFOGGER RELAY CONTROL
6	C850 20LB/VT	BLOWER SWITCH POSITION SIGNAL
7	E12 20OR/GY	PANEL LAMPS DRIVER
8	-	-
9	E22 18OR/GY	INDICATOR DIMMER SIGNAL
10	-	-
11	-	-
12	-	-
13	-	-
14	-	-
15	-	-
16	-	-

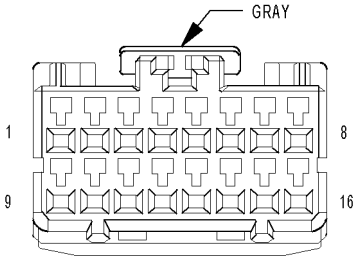

CONTROL-A/C-HEATER C2 (ATC)

CONTROL-A/C-HEATER C2 (ATC) - GRAY 16 WAY

CAV	CIRCUIT	FUNCTION
1	C266 20OR/DB	MODE DOOR DRIVER
2	C66 20DB/OR	MODE DOOR COMMON DRIVER
3	-	-
4	-	-
5	C255 22WT/DB	LEFT BLEND DOOR DRIVER
6	C55 20DB/WT	LEFT BLEND DOOR COMMON DRIVER
7	C252 22LG/DB	RIGHT BLEND DOOR DRIVER
8	C52 22DB/LG	RIGHT BLEND DOOR COMMON DRIVER
9	C268 22YL/DB (EXCEPT SRT8 EARLY BUILD)	RECIRCULATION DOOR DRIVER
9	C268 20YL/DB (SRT8 EARLY BUILD)	RECIRCULATION DOOR DRIVER
10	C68 22DB/YL	RECIRCULATION DOOR COMMON DRIVER
11	C21 20DB/LG	EVAPORATOR TEMPERATURE SENSOR SIGNAL
12	C121 20DB/DG	SENSOR GROUND
13	C56 20DB/LB	FRONT BLOWER CONTROL
14	-	-
15	-	-
16	-	-

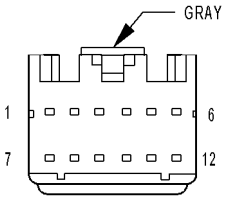

CONTROL-A/C-HEATER C2 (MTC)

CONTROL-A/C-HEATER C2 (MTC) - GRAY 12 WAY

CAV	CIRCUIT	FUNCTION
1	C266 20OR/DB	MODE DOOR DRIVER
2	C66 20DB/OR	MODE DOOR COMMON DRIVER
3	-	-
4	-	-
5	C255 22WT/DB	LEFT BLEND DOOR DRIVER
6	C55 20DB/WT	LEFT BLEND DOOR COMMON DRIVER
7	C268 20YL/DB	RECIRCULATION DOOR DRIVER
8	C68 22DB/YL	RECIRCULATION DOOR COMMON DRIVER
9	C21 20DB/LG	EVAPORATOR TEMPERATURE SENSOR SIGNAL
10	C121 20DB/DG	SENSOR GROUND
11	-	-
12	-	-

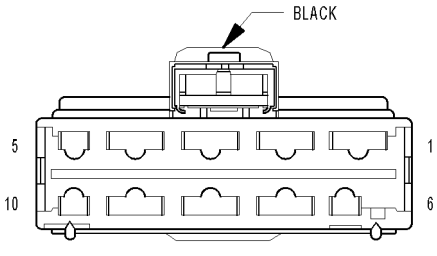

CONTROL-A/C-HEATER C3 (MTC)

CONTROL-A/C-HEATER C3 (MTC) - BLACK 10 WAY

CAV	CIRCUIT	FUNCTION
1	C70 12DB/YL	FRONT BLOWER HIGH SPEED
2	C850 20LB/VT	BLOWER SWITCH POSITION SIGNAL
3	C73 12DB/VT	FRONT BLOWER M2 SPEED
4	Z908 12BK/RD	GROUND
5	-	-
6	-	-
7	-	-
8	-	-
9	C72 18DB/OR	FRONT BLOWER M1 SPEED
10	C71 16DB/BR	FRONT BLOWER LOW SPEED

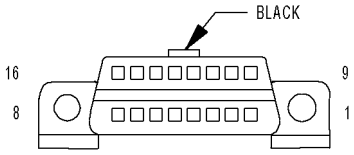

DATA LINK CONNECTOR

DATA LINK CONNECTOR - BLACK 16 WAY

CAV	CIRCUIT	FUNCTION
1	-	-
2	-	-
3	-	-
4	Z910 20BK/TN	GROUND
5	Z910 20BK/TN	GROUND
6	D72 20WT/LB	CAN C DIAGNOSTIC (+)
7	D21 20PK (EARLY BUILD)	SCI TRANSMIT (ECM/PCM)
7	D21 20WT/BR (LATE BUILD)	SCI TRANSMIT (ECM/PCM)
8	-	-
9	D16 20WT/OR	SCI RECEIVE (TCM)
10	-	-
11	-	-
12	D20 20WT/LG	SCI RECEIVE (PCM)
13	-	-
14	D71 20WT/DB	CAN C DIAGNOSTIC (-)
15	D15 20WT/DG	SCI TRANSMIT (TCM)
16	A106 20LB/RD	FUSED B(+)

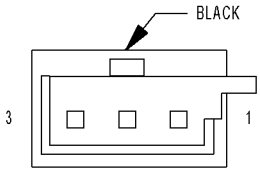

**DISPLAY-
PARK ASSIST
(PARKTRONICS)**

DISPLAY-PARK ASSIST (PARKTRONICS) - BLACK 3 WAY

CAV	CIRCUIT	FUNCTION
1	X777 20DG/GY	PARK ASSIST DISPLAY SUPPLY
2	Z171 20GY/BK	PARK ASSIST DISPLAY GROUND
3	D777 20WT/DG	PARK ASSIST DISPLAY SIGNAL

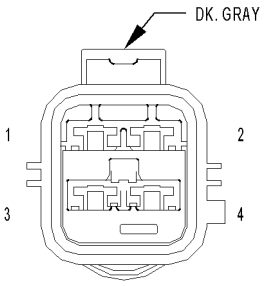

FAN-RADIATOR C1

FAN-RADIATOR C1 - DK. GRAY 4 WAY

CAV	CIRCUIT	FUNCTION
1	N24 12DG/DB	RADIATOR FAN CONTROL RELAY OUTPUT
2	N210 12DB/DG	RADIATOR FAN HIGH/LOW CONTROL FEED
3	N23 10DB/DG	RADIATOR FAN HIGH RELAY OUTPUT
4	Z904 12BK/BR (EXCEPT POLICE/SRT8 EXPORT)	GROUND
4	Z401 12BK/DG (POLICE/SRT8 EXPORT)	GROUND

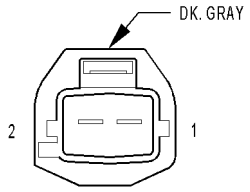

FAN-RADIATOR C2 (AWD/DIESEL/ SRT8 EXPORT)

FAN-RADIATOR C2 (AWD/DIESEL/SRT8 EXPORT) - DK. GRAY 2 WAY

CAV	CIRCUIT	FUNCTION
1	K175 18BR/LB	RADIATOR FAN RELAY COIL SIGNAL
2	A934 10RD	FUSED B(+)

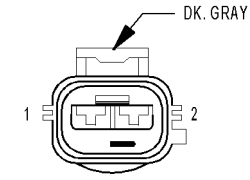

FAN-RADIATOR C2 (SRT8 EXCEPT EXPORT)

FAN-RADIATOR C2 (SRT8 EXCEPT EXPORT) - DK. GRAY 2 WAY

CAV	CIRCUIT	FUNCTION
1	K175 18BR/LB	RADIATOR FAN RELAY COIL SIGNAL
2	A934 10RD	FUSED B(+)

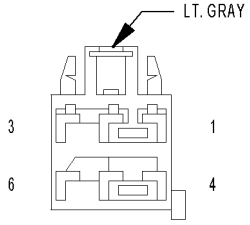

FLASHER-HEADLAMP C1 (POLICE)

FLASHER-HEADLAMP C1 (POLICE) - LT. GRAY 6 WAY

CAV	CIRCUIT	FUNCTION
1	L33 18WT/LG	LEFT HIGH BEAM DRIVER
2	L34 18WT/GY	RIGHT HIGH BEAM DRIVER
3	L33 18WT/LG	LEFT HIGH BEAM DRIVER
4	L34 18WT/GY	RIGHT HIGH BEAM DRIVER
5	F880 20PK/DG	FUSED ACCESSORY DELAY RELAY OUTPUT
6	Z902 20BK/LB	GROUND

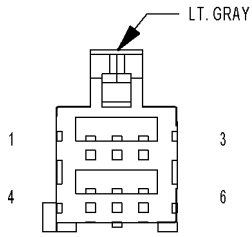

FLASHER-HEADLAMP C2 (POLICE)

FLASHER-HEADLAMP C2 (POLICE) - LT. GRAY 6 WAY

CAV	CIRCUIT	FUNCTION
1	L33 18WT/LG	LEFT HIGH BEAM DRIVER
2	L34 18WT/GY	RIGHT HIGH BEAM DRIVER
3	L33 18WT/LG	LEFT HIGH BEAM DRIVER
4	L34 18WT/GY	RIGHT HIGH BEAM DRIVER
5	F880 20PK/DG	FUSED ACCESSORY DELAY RELAY OUTPUT
6	Z902 20BK/LB	GROUND

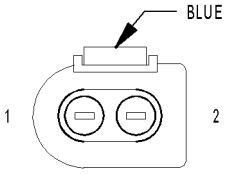

GENERATOR (DIESEL)

GENERATOR (DIESEL) - BLUE 2 WAY

CAV	CIRCUIT	FUNCTION
1	D509 20WT/BL	ECM LIN BUS
2	-	-

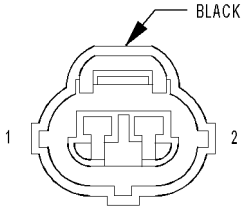

GENERATOR (GAS)

GENERATOR (GAS) - BLACK 2 WAY

CAV	CIRCUIT	FUNCTION
1	Z904 18BK/BR	GROUND
2	K20 18BR/GY	GEN FIELD CONTROL

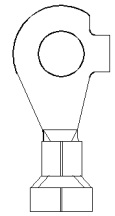

GENERATOR-EYELET

GENERATOR-EYELET - 1 WAY

CAV	CIRCUIT	FUNCTION
1	A802 4RD	B(+)
1	A802 12BK (DIESEL)	B(+)

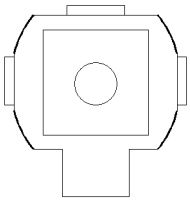

GLOW PLUG NO. 1 (DIESEL)

GLOW PLUG NO. 1 (DIESEL) - 1 WAY

CAV	CIRCUIT	FUNCTION
1	A202 16BK/BL	GLOW PLUG NO. 1 CONTROL

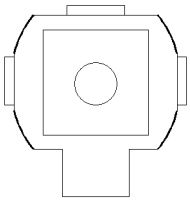

GLOW PLUG NO. 2 (DIESEL)

GLOW PLUG NO. 2 (DIESEL) - 1 WAY

CAV	CIRCUIT	FUNCTION
1	A203 16BK/VT	GLOW PLUG NO. 2 CONTROL

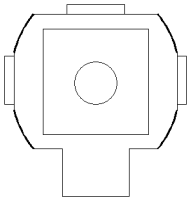

GLOW PLUG NO. 3 (DIESEL)

GLOW PLUG NO. 3 (DIESEL) - 1 WAY

CAV	CIRCUIT	FUNCTION
1	A204 16BK/RD	GLOW PLUG NO. 3 CONTROL

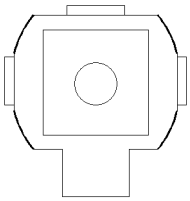

GLOW PLUG NO. 4 (DIESEL)

GLOW PLUG NO. 4 (DIESEL) - 1 WAY

CAV	CIRCUIT	FUNCTION
1	A208 16BK/YL	GLOW PLUG NO. 4 CONTROL

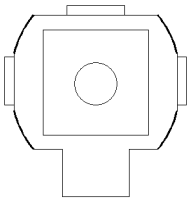

GLOW PLUG NO. 5 (DIESEL)

GLOW PLUG NO. 5 (DIESEL) - 1 WAY

CAV	CIRCUIT	FUNCTION
1	A211 16BK/DG	GLOW PLUG NO. 5 CONTROL

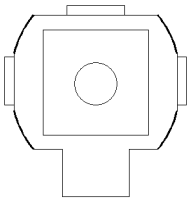

GLOW PLUG NO. 6 (DIESEL)

GLOW PLUG NO. 6 (DIESEL) - 1 WAY

CAV	CIRCUIT	FUNCTION
1	A216 16BK/WT	GLOW PLUG NO. 6 CONTROL

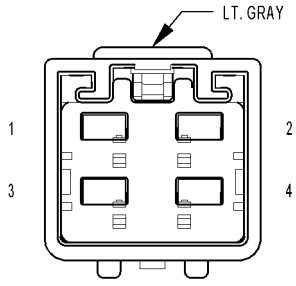

HEATER-CABIN (DIESEL)

HEATER-CABIN (DIESEL) - LT. GRAY 4 WAY

CAV	CIRCUIT	FUNCTION
1	N113 10DB/OR	PTC NO. 1 RELAY OUTPUT
2	N114 10DB/LB	PTC NO. 2 RELAY OUTPUT
3	N115 10DB/YL	PTC NO. 3 RELAY OUTPUT
4	-	-

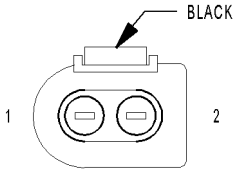

HEATER-CRANKCASE VENT (DIESEL)

HEATER-CRANKCASE VENT (DIESEL) - BLACK 2 WAY

CAV	CIRCUIT	FUNCTION
1	N116 18BR/VT	CRANKCASE VENT HEATER CONTROL
2	K343 18RD/DG	FUSED ASD RELAY OUTPUT 2

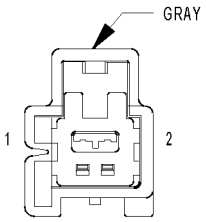

HEATER-SEAT BACK-LEFT

HEATER-SEAT BACK-LEFT - GRAY 2 WAY

CAV	CIRCUIT	FUNCTION
1	P187 20LG/BR	LEFT SEAT HEATER B(+) DRIVER
2	Z912 20BK/OR (LHD)	GROUND
2	Z911 20BK/OR (RHD)	GROUND

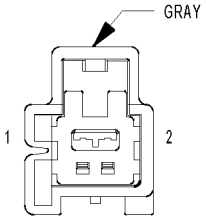

HEATER-SEAT BACK-RIGHT

HEATER-SEAT BACK-RIGHT - GRAY 2 WAY

CAV	CIRCUIT	FUNCTION
1	P188 20LG/VT	RIGHT SEAT HEATER B(+) DRIVER
2	Z911 20BK/WT (LHD)	GROUND
3	Z912 20BK/OR (RHD)	GROUND

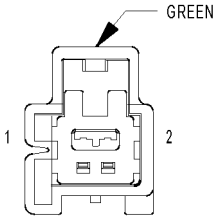

HEATER-SEAT CUSHION-LEFT

HEATER-SEAT CUSHION-LEFT - GREEN 2 WAY

CAV	CIRCUIT	FUNCTION
1	P187 20LG/BR	LEFT SEAT HEATER B(+) DRIVER
2	Z912 20BK/OR (LHD)	GROUND
2	Z911 20BK/OR (RHD)	GROUND

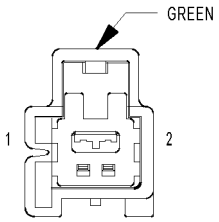

HEATER-SEAT CUSHION-RIGHT

HEATER-SEAT CUSHION-RIGHT - GREEN 2 WAY

CAV	CIRCUIT	FUNCTION
1	P188 20LG/VT	RIGHT SEAT HEATER B(+) DRIVER
2	Z911 20BK/WT (LHD)	GROUND
2	Z912 20BK/OR (RHD)	GROUND

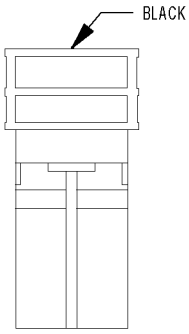

HORN-NO. 1

HORN-NO. 1 - BLACK 1 WAY

CAV	CIRCUIT	FUNCTION
1	X2 18DG/OR	HORN RELAY OUTPUT

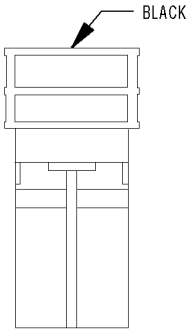

HORN-NO. 2

HORN-NO. 2 - BLACK 1 WAY

CAV	CIRCUIT	FUNCTION
1	X2 18DG/OR	HORN RELAY OUTPUT

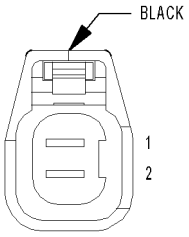

INJECTOR-FUEL-NO. 1 (GAS)

INJECTOR-FUEL-NO. 1 (GAS) - BLACK 2 WAY

CAV	CIRCUIT	FUNCTION
1	K11 20BR/YL	INJECTOR CONTROL NO. 1
2	K343 16BR/YL	FUSED ASD RELAY OUTPUT 2

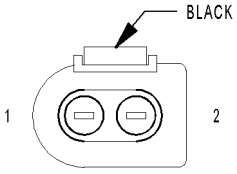

INJECTOR-FUEL-NO. 1 (DIESEL)

INJECTOR-FUEL-NO. 1 (DIESEL) - BLACK 2 WAY

CAV	CIRCUIT	FUNCTION
1	K611 16BK/BL	FUEL INJECTOR NO. 1 LOW-SIDE CONTROL
2	K11 16BL	FUEL INJECTOR NO. 1 HIGH-SIDE CONTROL

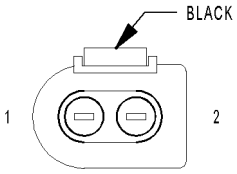

INJECTOR-FUEL-NO. 2 (DIESEL)

INJECTOR-FUEL-NO. 2 (DIESEL) - BLACK 2 WAY

CAV	CIRCUIT	FUNCTION
1	K612 16BK/VT	FUEL INJECTOR NO. 2 LOW-SIDE CONTROL
2	K12 16BL/VT	FUEL INJECTOR NO. 2 HIGH-SIDE CONTROL

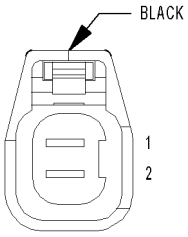

INJECTOR-FUEL-NO. 2 (GAS)

INJECTOR-FUEL-NO. 2 (GAS) - BLACK 2 WAY

CAV	CIRCUIT	FUNCTION
1	K12 20BR/DB	INJECTOR CONTROL NO. 2
2	K343 16BR/YL	FUSED ASD RELAY OUTPUT 2

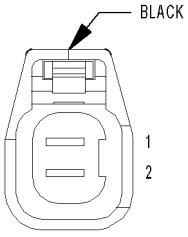

INJECTOR-FUEL-NO. 3 (GAS)

INJECTOR-FUEL-NO. 3 (GAS) - BLACK 2 WAY

CAV	CIRCUIT	FUNCTION
1	K13 20BR/LB	INJECTOR CONTROL NO. 3
2	K343 16BR/YL	FUSED ASD RELAY OUTPUT 2

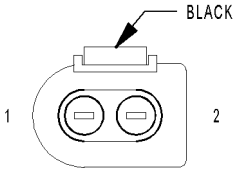

INJECTOR-FUEL-NO. 3 (DIESEL)

INJECTOR-FUEL-NO. 3 (DIESEL) - BLACK 2 WAY

CAV	CIRCUIT	FUNCTION
1	K613 16BK/RD	FUEL INJECTOR NO. 3 LOW-SIDE CONTROL
2	K13 16BL/RD	FUEL INJECTOR NO. 3 HIGH-SIDE CONTROL

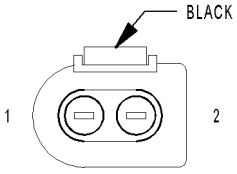

INJECTOR-FUEL-NO. 4 (DIESEL)

INJECTOR-FUEL-NO. 4 (DIESEL) - BLACK 2 WAY

CAV	CIRCUIT	FUNCTION
1	K614 16BK/YL	FUEL INJECTOR NO. 4 LOW-SIDE CONTROL
2	K14 16BL/YL	FUEL INJECTOR NO. 4 HIGH-SIDE CONTROL

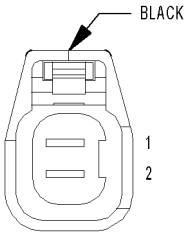

INJECTOR-FUEL-NO. 4 (GAS)

INJECTOR-FUEL-NO. 4 (GAS) - BLACK 2 WAY

CAV	CIRCUIT	FUNCTION
1	K14 20BR/TN	INJECTOR CONTROL NO. 4
2	K343 16BR/YL	FUSED ASD RELAY OUTPUT 2

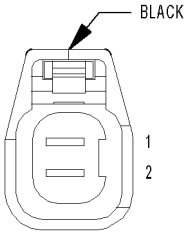

INJECTOR-FUEL-NO. 5 (GAS)

INJECTOR-FUEL-NO. 5 (GAS) - BLACK 2 WAY

CAV	CIRCUIT	FUNCTION
1	K38 20BR/OR	INJECTOR CONTROL NO. 5
2	K343 16BR/YL	FUSED ASD RELAY OUTPUT 2

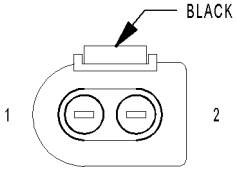

INJECTOR-FUEL-NO. 5 (DIESEL)

INJECTOR-FUEL-NO. 5 (DIESEL) - BLACK 2 WAY

CAV	CIRCUIT	FUNCTION
1	K638 16BK/DG	FUEL INJECTOR NO. 5 LOW-SIDE CONTROL
2	K38 16BL/DG	FUEL INJECTOR NO. 5 HIGH-SIDE CONTROL

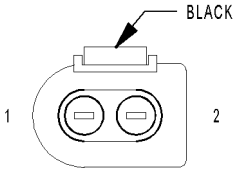

INJECTOR-FUEL-NO. 6 (DIESEL)

INJECTOR-FUEL-NO. 6 (DIESEL) - BLACK 2 WAY

CAV	CIRCUIT	FUNCTION
1	K658 16BK/WT	FUEL INJECTOR NO. 6 LOW-SIDE CONTROL
2	K58 16BL/WT	FUEL INJECTOR NO. 6 HIGH-SIDE CONTROL

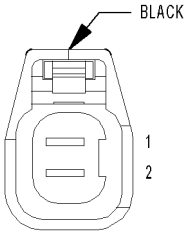

INJECTOR-FUEL-NO. 6 (GAS)

INJECTOR-FUEL-NO. 6 (GAS) - BLACK 2 WAY

CAV	CIRCUIT	FUNCTION
1	K58 20BR/VT	INJECTOR CONTROL NO. 6
2	K343 16BR/YL	FUSED ASD RELAY OUTPUT 2

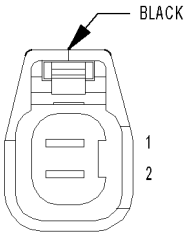

INJECTOR-FUEL-NO. 7 (5.7L/SRT8)

INJECTOR-FUEL-NO. 7 (5.7L/SRT8) - BLACK 2 WAY

CAV	CIRCUIT	FUNCTION
1	K26 20BR/YL	INJECTOR CONTROL NO. 7
2	K343 16BR/YL	FUSED ASD RELAY OUTPUT 2

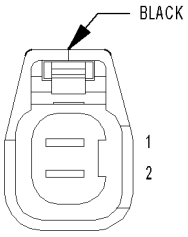

INJECTOR-FUEL-NO. 8 (5.7L/SRT8)

INJECTOR-FUEL-NO. 8 (5.7L/SRT8) - BLACK 2 WAY

CAV	CIRCUIT	FUNCTION
1	K28 20BR/LB	INJECTOR CONTROL NO. 8
2	K343 16BR/YL	FUSED ASD RELAY OUTPUT 2

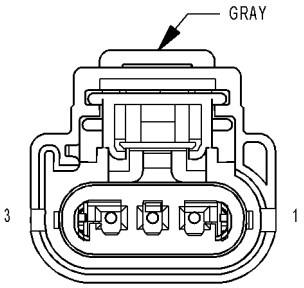

LAMP-BACKUP-LEFT (300C)

LAMP-BACKUP-LEFT (300C) - GRAY 3 WAY

CAV	CIRCUIT	FUNCTION
1	Z914 20BK/GY	GROUND
2	-	-
3	L1 20WT/LG	BACKUP LAMP FEED

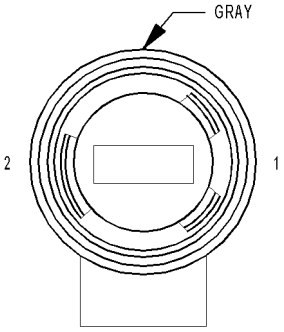

LAMP-BACKUP-LEFT (300T)

LAMP-BACKUP-LEFT (300T) - GRAY 2 WAY

CAV	CIRCUIT	FUNCTION
1	Z914 18BK/GY	GROUND
2	L1 18WT/LG	BACKUP LAMP FEED

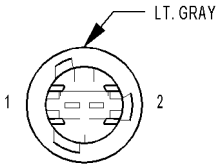

LAMP-BACKUP-LEFT (LX49)

LAMP-BACKUP-LEFT (LX49) - LT. GRAY 2 WAY

CAV	CIRCUIT	FUNCTION
1	Z914 20BK	GROUND
2	L1 20VT/RD	BACKUP LAMP FEED

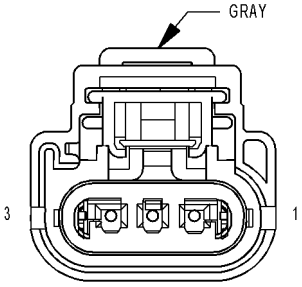

LAMP-BACKUP-RIGHT (300C)

LAMP-BACKUP-RIGHT (300C) - GRAY 3 WAY

CAV	CIRCUIT	FUNCTION
1	Z914 20BK/GY	GROUND
2	-	-
3	L1 20WT/LG	BACKUP LAMP FEED

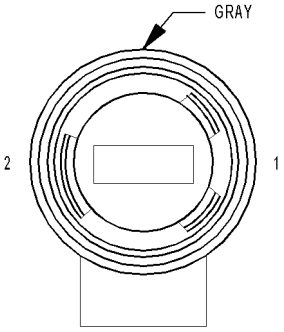

LAMP-BACKUP-RIGHT (300T)

LAMP-BACKUP-RIGHT (300T) - GRAY 2 WAY

CAV	CIRCUIT	FUNCTION
1	Z914 18BK/GY	GROUND
2	L1 18WT/LG	BACKUP LAMP FEED

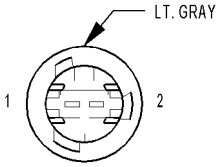

LAMP-BACKUP-RIGHT (LX49)

LAMP-BACKUP-RIGHT (LX49) - LT. GRAY 2 WAY

CAV	CIRCUIT	FUNCTION
1	Z914 20BK	GROUND
2	L1 20VT/RD	BACKUP LAMP FEED

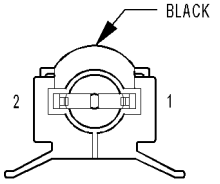

LAMP-CARGO (LX48 CHRYSLER)

LAMP-CARGO (LX48 CHRYSLER) - BLACK 2 WAY

CAV	CIRCUIT	FUNCTION
1	G78 20VT/OR	DECKLID/LIFTGATE AJAR SWITCH SENSE
2	A117 20RD/DG	FUSED B(+) (I.O.D.)

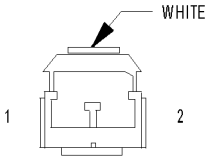

LAMP-CARGO (LX48 DODGE)

LAMP-CARGO (LX48 DODGE) - WHITE 2 WAY

CAV	CIRCUIT	FUNCTION
1	G78 20VT/OR	DECKLID/LIFTGATE AJAR SWITCH SENSE
2	A117 20RD/DG	FUSED B(+) (I.O.D.)

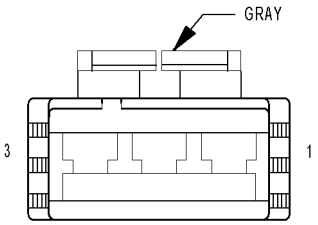

LAMP-CARGO (LX49)

LAMP-CARGO (LX49) - GRAY 3 WAY

CAV	CIRCUIT	FUNCTION
1	Z914 20BK/GY	GROUND
2	-	-
3	M24 20YL/WT	COURTESY LAMPS DRIVER

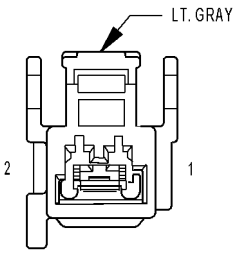

LAMP-CENTER HIGH MOUNTED STOP (LX48 CHRYSLER)

LAMP-CENTER HIGH MOUNTED STOP (LX48 CHRYSLER) - LT. GRAY 2 WAY

CAV	CIRCUIT	FUNCTION
1	Z911 20BK/WT	GROUND
2	L53 20DG/WT (MK25)	STOP LAMP INHIBIT RELAY OUTPUT
2	B29 20DG/WT (MK25E)	BRAKE SWITCH SIGNAL

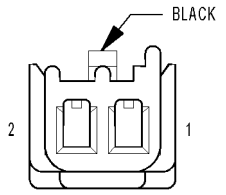

**LAMP-
CENTER HIGH
MOUNTED STOP
(LX48 DODGE)**

LAMP-CENTER HIGH MOUNTED STOP (LX48 DODGE) - BLACK 2 WAY

CAV	CIRCUIT	FUNCTION
1	Z911 20BK/WT	GROUND
2	L53 20DG/WT (MK25)	STOP LAMP INHIBIT RELAY OUTPUT
2	B29 20DG/WT (MK25E)	BRAKE SWITCH SIGNAL

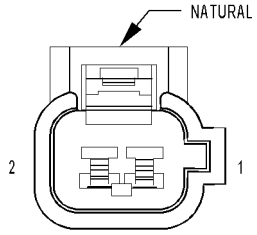

**LAMP-
CENTER HIGH
MOUNTED STOP
(LX49)**

LAMP-CENTER HIGH MOUNTED STOP (LX49) - NATURAL 2 WAY

CAV	CIRCUIT	FUNCTION
1	Z911 20BK/WT	GROUND
2	L53 20DG/WT (MK25)	STOP LAMP INHIBIT RELAY OUTPUT
2	B29 20DG/WT (MK25E)	BRAKE SWITCH SIGNAL

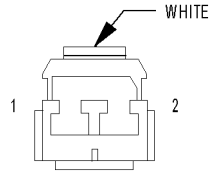

**LAMP-
COURTESY-
LEFT FRONT
DOOR
(EXCEPT BASE)**

LAMP-COURTESY-LEFT FRONT DOOR (EXCEPT BASE) - WHITE 2 WAY

CAV	CIRCUIT	FUNCTION
1	M24 20YL/WT	COURTESY LAMPS DRIVER
2	Z912 20BK/OR	GROUND

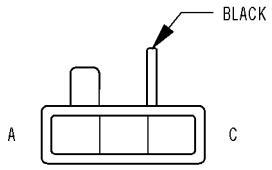

**LAMP-
COURTESY-
LEFT REAR**

LAMP-COURTESY-LEFT REAR - BLACK 3 WAY

CAV	CIRCUIT	FUNCTION
A	M24 20YL/WT	COURTESY LAMPS DRIVER
B	Z909 20BK/LG	GROUND
C	M27 20YL/LB	READING/RAIL LAMPS DRIVER

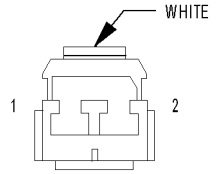

**LAMP-
COURTESY-
RIGHT FRONT
DOOR
(EXCEPT BASE)**

LAMP-COURTESY-RIGHT FRONT DOOR (EXCEPT BASE) - WHITE 2 WAY

CAV	CIRCUIT	FUNCTION
1	M24 20YL/WT	COURTESY LAMPS DRIVER
2	Z911 20BK/WT	GROUND

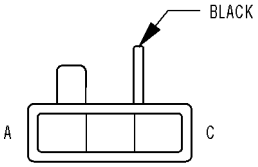

**LAMP-
COURTESY-
RIGHT REAR**

LAMP-COURTESY-RIGHT REAR - BLACK 3 WAY

CAV	CIRCUIT	FUNCTION
A	M24 20YL/WT	COURTESY LAMPS DRIVER
B	Z909 20BK/LG	GROUND
C	M27 20YL/LB	READING/RAIL LAMPS DRIVER

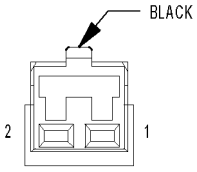

**LAMP-
DOME
(POLICE)**

LAMP-DOME (POLICE) - BLACK 2 WAY

CAV	CIRCUIT	FUNCTION
1	A932 18RD	FUSED B(+)
2	Z909 18BK/LG	GROUND

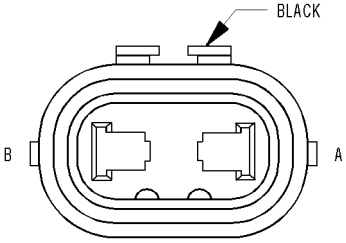

**LAMP-FOG-
LEFT FRONT**

LAMP-FOG-LEFT FRONT - BLACK 2 WAY

CAV	CIRCUIT	FUNCTION
A	L89 20WT/YL (LX48 EXCEPT BASE)	FRONT FOG LAMP RELAY OUTPUT
A	L89 18WT/YL (LX49)	FRONT FOG LAMP RELAY OUTPUT
B	Z902 20BK/BR (LX48 EXCEPT BASE)	GROUND
B	Z902 18BK/LB (LX49)	GROUND

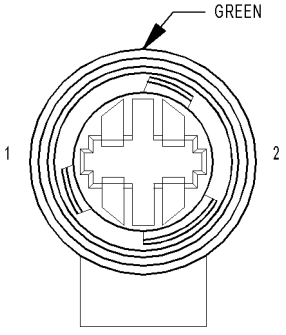

**LAMP-FOG-
LEFT REAR
(300C EXPORT)**

LAMP-FOG-LEFT REAR (300C EXPORT) - GREEN 2 WAY

CAV	CIRCUIT	FUNCTION
1	Z914 18BK/GY	GROUND
2	L90 18WT/OR	REAR FOG LAMP RELAY OUTPUT

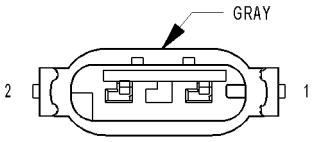

**LAMP-FOG-
LEFT
REAR
(LX49 EXPORT)**

LAMP-FOG-LEFT REAR (LX49 EXPORT) - GRAY 2 WAY

CAV	CIRCUIT	FUNCTION
1	L90 20WT/OR	REAR FOG LAMP RELAY OUTPUT
2	Z914 20BK/BR	GROUND

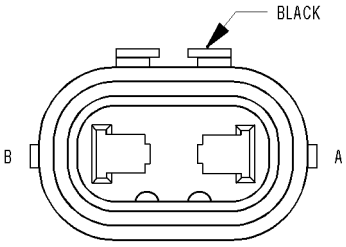

**LAMP-FOG-
RIGHT FRONT**

LAMP-FOG-RIGHT FRONT - BLACK 2 WAY

CAV	CIRCUIT	FUNCTION
A	L89 20WT/YL (LX48 EXCEPT BASE)	FRONT FOG LAMP RELAY OUTPUT
A	L89 18WT/YL (LX49)	FRONT FOG LAMP RELAY OUTPUT
B	Z901 20BK/TN (LX48 EXCEPT BASE)	GROUND
B	Z901 18BK/DG (LX49)	GROUND

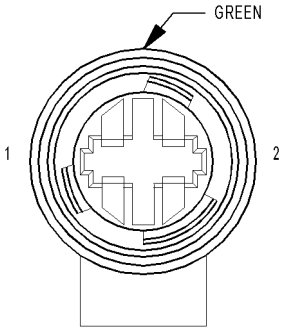

**LAMP-FOG-
RIGHT REAR
(300C EXPORT)**

LAMP-FOG-RIGHT REAR (300C EXPORT) - GREEN 2 WAY

CAV	CIRCUIT	FUNCTION
1	Z914 18BK/GY	GROUND
2	L90 18WT/OR	REAR FOG LAMP RELAY OUTPUT

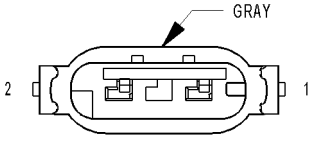

**LAMP-FOG-
RIGHT
REAR
(LX49 EXPORT)**

LAMP-FOG-RIGHT REAR (LX49 EXPORT) - GRAY 2 WAY

CAV	CIRCUIT	FUNCTION
1	L90 20WT/OR	REAR FOG LAMP RELAY OUTPUT
2	Z914 20BK/BR	GROUND

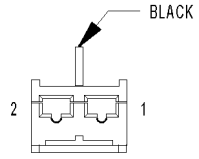

**LAMP-
GLOVE BOX
(EXCEPT POLICE)**

LAMP-GLOVE BOX (EXCEPT POLICE) - BLACK 2 WAY

CAV	CIRCUIT	FUNCTION
1	Z909 20BK/LG	GROUND
2	M27 20YL/LB	READING/RAIL LAMPS DRIVER

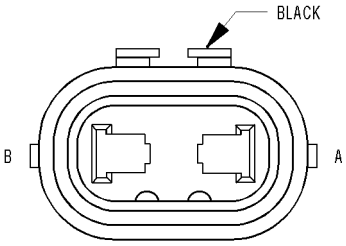

**LAMP-
HIGH BEAM-
LEFT**

LAMP-HIGH BEAM-LEFT - BLACK 2 WAY

CAV	CIRCUIT	FUNCTION
A	L33 18WT/LG	LEFT HIGH BEAM DRIVER
B	Z902 18BK/LB	GROUND

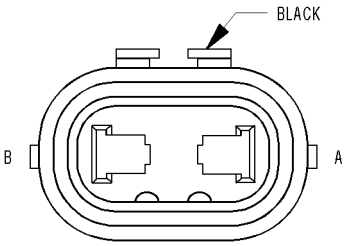

**LAMP-
HIGH BEAM-
RIGHT**

LAMP-HIGH BEAM-RIGHT - BLACK 2 WAY

CAV	CIRCUIT	FUNCTION
A	L34 18WT/GY	RIGHT HIGH BEAM DRIVER
B	Z901 18BK/DG	GROUND

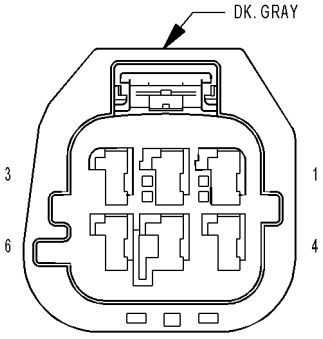

**LAMP-
HIGH INTENSITY
DISCHARGE-
LEFT
(HID LAMPS)**

LAMP-HIGH INTENSITY DISCHARGE-LEFT (HID LAMPS) - DK. GRAY 6 WAY

CAV	CIRCUIT	FUNCTION
1	L303 18WT/OR	LEFT HID LAMP DRIVER
2	D205 20WT/DB (EXPORT)	SCI RECEIVE (LEFT HID LAMP)
3	Z902 18BK/LB	GROUND
4	F500 20DG/PK (EXPORT)	FUSED RUN RELAY OUTPUT
5	-	-
6	L13 20WT/YL (EXPORT)	HEADLAMP LEVEL SENSOR SIGNAL

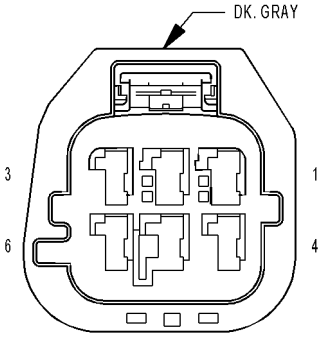

**LAMP-
HIGH INTENSITY
DISCHARGE-
RIGHT
(HID LAMPS)**

LAMP-HIGH INTENSITY DISCHARGE-RIGHT (HID LAMPS) - DK. GRAY 6 WAY

CAV	CIRCUIT	FUNCTION
1	L304 18OR/WT	RIGHT HID LAMP DRIVER
2	D211 20WT/RD (EXPORT)	SCI RECEIVE (RIGHT HID LAMP)
3	Z901 18BK/DG	GROUND
4	F500 20DG/PK (EXPORT)	FUSED RUN RELAY OUTPUT
5	-	-
6	L13 20WT/YL (EXPORT)	HEADLAMP LEVEL SENSOR SIGNAL

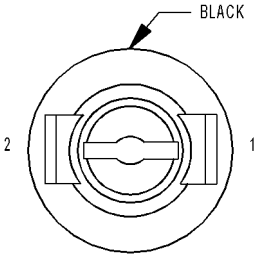

**LAMP-
LICENSE
(EXCEPT 300C/
EXPORT)**

LAMP-LICENSE (EXCEPT 300C/EXPORT) - BLACK 2 WAY

CAV	CIRCUIT	FUNCTION
1	L777 20WT/VT	PARK LAMP RELAY OUTPUT
2	Z914 20BK/BR	GROUND

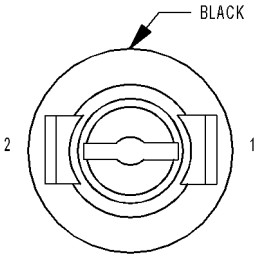

**LAMP-
LICENSE-
LEFT
(300C/
EXPORT)**

LAMP-LICENSE-LEFT (300C/EXPORT) - BLACK 2 WAY

CAV	CIRCUIT	FUNCTION
1	L777 20WT/VT	PARK LAMP RELAY OUTPUT
2	Z914 20BK/BR	GROUND

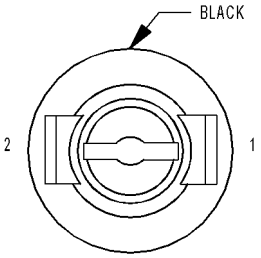

**LAMP-
LICENSE-
RIGHT
(300C/
EXPORT)**

LAMP-LICENSE-RIGHT (300C/EXPORT) - BLACK 2 WAY

CAV	CIRCUIT	FUNCTION
1	L777 20WT/VT	PARK LAMP RELAY OUTPUT
2	Z914 20BK/BR	GROUND

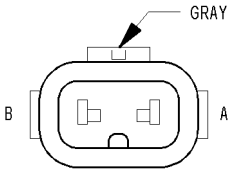

**LAMP-LOW
BEAM-
LEFT
(EXCEPT HID LAMPS)**

LAMP-LOW BEAM-LEFT (EXCEPT HID LAMPS) - GRAY 2 WAY

CAV	CIRCUIT	FUNCTION
A	L43 18WT/DB	LEFT LOW BEAM DRIVER
B	Z902 18BK/LB	GROUND

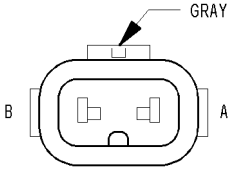

**LAMP-LOW
BEAM-
RIGHT
(EXCEPT HID LAMPS)**

LAMP-LOW BEAM-RIGHT (EXCEPT HID LAMPS) - GRAY 2 WAY

CAV	CIRCUIT	FUNCTION
A	L44 18WT/TN	RIGHT LOW BEAM DRIVER
B	Z901 18BK/DG	GROUND

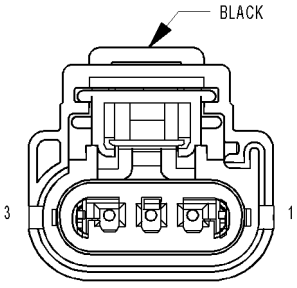

**LAMP-
PARK/
TURN-
LEFT FRONT
(300C EXCEPT EXPORT)**

LAMP-PARK/TURN-LEFT FRONT (300C EXCEPT EXPORT) - BLACK 3 WAY

CAV	CIRCUIT	FUNCTION
1	Z902 18BK/LB	GROUND
2	L777 20WT/VT	PARK LAMP RELAY OUTPUT
3	L61 18WT/LG	LEFT FRONT TURN SIGNAL CONTROL

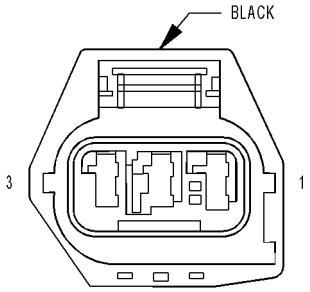

**LAMP-
PARK/
TURN-
LEFT FRONT
(300T/
EXPORT)**

LAMP-PARK/TURN-LEFT FRONT (300T/EXPORT) - BLACK 3 WAY

CAV	CIRCUIT	FUNCTION
1	Z902 18BK/LB	GROUND
2	L777 20WT/VT	PARK LAMP RELAY OUTPUT
3	L61 18WT/LG	LEFT FRONT TURN SIGNAL CONTROL

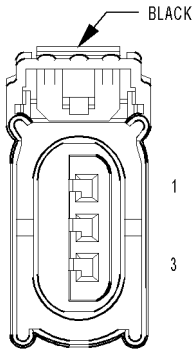

**LAMP-
PARK/
TURN-
LEFT FRONT
(LX49 EXCEPT EXPORT)**

LAMP-PARK/TURN-LEFT FRONT (LX49 EXCEPT EXPORT) - BLACK 3 WAY

CAV	CIRCUIT	FUNCTION
1	L61 18WT/LG	LEFT FRONT TURN SIGNAL CONTROL
2	L777 20WT/VT	PARK LAMP RELAY OUTPUT
3	Z902 18BK/LB	GROUND

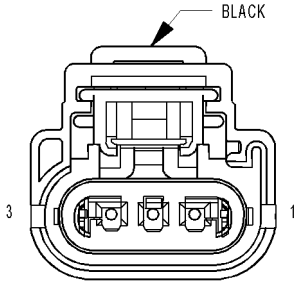

**LAMP-
PARK/
TURN-
RIGHT FRONT
(300C EXCEPT EXPORT)**

LAMP-PARK/TURN-RIGHT FRONT (300C EXCEPT EXPORT) - BLACK 3 WAY

CAV	CIRCUIT	FUNCTION
1	Z901 18BK/DG	GROUND
2	L777 20WT/VT	PARK LAMP RELAY OUTPUT
3	L60 18WT/TN	RIGHT FRONT TURN SIGNAL CONTROL

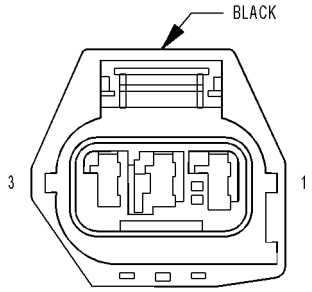

**LAMP-
PARK/
TURN-
RIGHT FRONT
(300T/
EXPORT)**

LAMP-PARK/TURN-RIGHT FRONT (300T/EXPORT) - BLACK 3 WAY

CAV	CIRCUIT	FUNCTION
1	Z901 18BK/DG	GROUND
2	L777 20WT/VT	PARK LAMP RELAY OUTPUT
3	L60 18WT/TN	RIGHT FRONT TURN SIGNAL CONTROL

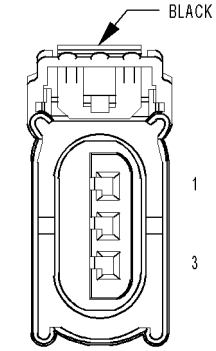

**LAMP-
PARK/
TURN-
RIGHT FRONT
(LX49 EXCEPT EXPORT)**

LAMP-PARK/TURN-RIGHT FRONT (LX49 EXCEPT EXPORT) - BLACK 3 WAY

CAV	CIRCUIT	FUNCTION
1	L60 18WT/TN	RIGHT FRONT TURN SIGNAL CONTROL
2	L777 20WT/VT	PARK LAMP RELAY OUTPUT
3	Z901 18BK/DG	GROUND

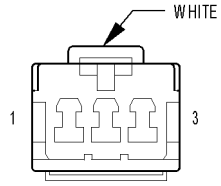

**LAMP-
PRNDL**

LAMP-PRNDL - WHITE 3 WAY

CAV	CIRCUIT	FUNCTION
1	E12 20OR/GY	PANEL LAMPS DRIVER
2	-	-
3	Z912 20BK/OR	GROUND

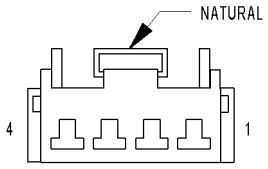

LAMP-READING-FRONT

LAMP-READING-FRONT - NATURAL 4 WAY

CAV	CIRCUIT	FUNCTION
1	-	-
2	M24 20YL/WT	COURTESY LAMPS DRIVER
3	M27 20YL/LB	READING/RAIL LAMPS DRIVER
4	Z909 20BK/LG	GROUND

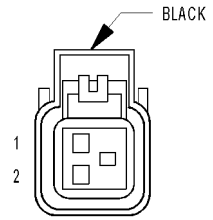

LAMP-SIDE MARKER-LEFT FRONT (LX48)

LAMP-SIDE MARKER-LEFT FRONT (LX48) - BLACK 2 WAY

CAV	CIRCUIT	FUNCTION
1	L777 20WT/VT	PARK LAMP RELAY OUTPUT
2	Z902 20BK/BR	GROUND

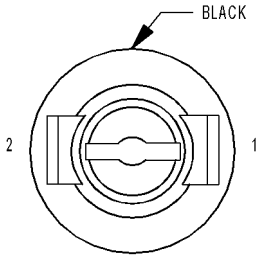

LAMP-SIDE MARKER-LEFT REAR (300T)

LAMP-SIDE MARKER-LEFT REAR (300T) - BLACK 2 WAY

CAV	CIRCUIT	FUNCTION
1	Z914 18BK/GY	GROUND
2	L777 18WT/VT	PARK LAMP RELAY OUTPUT

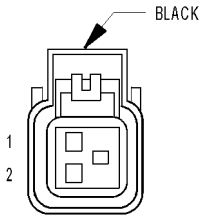

LAMP-SIDE MARKER-RIGHT FRONT (LX48)

LAMP-SIDE MARKER-RIGHT FRONT (LX48) - BLACK 2 WAY

CAV	CIRCUIT	FUNCTION
1	L777 20WT/VT	PARK LAMP RELAY OUTPUT
2	Z901 20BK/TN	GROUND

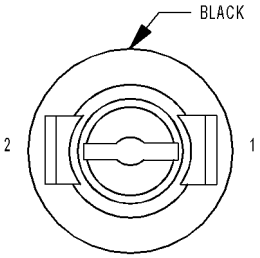

**LAMP-
SIDE
MARKER-
RIGHT REAR
(300T)**

LAMP-SIDE MARKER-RIGHT REAR (300T) - BLACK 2 WAY

CAV	CIRCUIT	FUNCTION
1	Z914 18BK/GY	GROUND
2	L777 18WT/VT	PARK LAMP RELAY OUTPUT

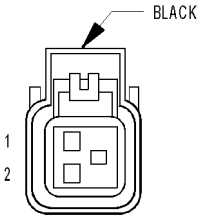

**LAMP-
SIDE REPEATER-
LEFT
(EXPORT)**

LAMP-SIDE REPEATER-LEFT (EXPORT) - BLACK 2 WAY

CAV	CIRCUIT	FUNCTION
1	L61 18WT/LG	LEFT FRONT TURN SIGNAL CONTROL
2	Z902 20BK/LB	GROUND

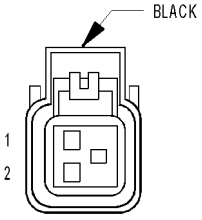

**LAMP-
SIDE REPEATER-
RIGHT
(EXPORT)**

LAMP-SIDE REPEATER-RIGHT (EXPORT) - BLACK 2 WAY

CAV	CIRCUIT	FUNCTION
1	L60 18WT/TN	RIGHT FRONT TURN SIGNAL CONTROL
2	Z904 20BK/BR	GROUND

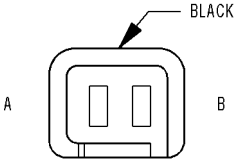

**LAMP-
SPOT-
LEFT
(POLICE)**

LAMP-SPOT-LEFT (POLICE) - BLACK 2 WAY

CAV	CIRCUIT	FUNCTION
A	A931 18RD/WT	FUSED B(+)
B	-	-

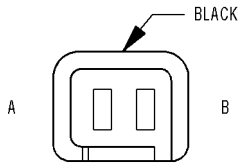

**LAMP-
SPOT-
RIGHT
(POLICE)**

LAMP-SPOT-RIGHT (POLICE) - BLACK 2 WAY

CAV	CIRCUIT	FUNCTION
A	A930 18RD/LG	FUSED B(+)
B	-	-

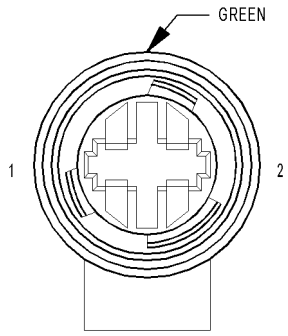

**LAMP-
TAIL PARK-
LEFT
(300C EXCEPT EXPORT)**

LAMP-TAIL PARK-LEFT (300C EXCEPT EXPORT) - GREEN 2 WAY

CAV	CIRCUIT	FUNCTION
1	Z914 18BK/GY	GROUND
2	L777 18WT/VT	PARK LAMP RELAY OUTPUT

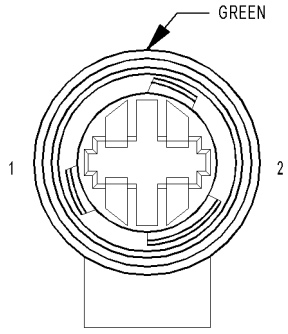

**LAMP-
TAIL PARK-
RIGHT
(300C EXCEPT EXPORT)**

LAMP-TAIL PARK-RIGHT (300C EXCEPT EXPORT) - GREEN 2 WAY

CAV	CIRCUIT	FUNCTION
1	Z914 18BK/GY	GROUND
2	L777 18WT/VT	PARK LAMP RELAY OUTPUT

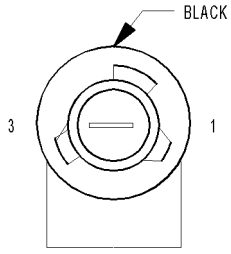

**LAMP-
TAIL STOP/
PARK-
LEFT
(300C)**

LAMP-TAIL STOP/PARK-LEFT (300C) - BLACK 3 WAY

CAV	CIRCUIT	FUNCTION
1	Z914 18BK/GY	GROUND
2	L777 18WT/VT	PARK LAMP RELAY OUTPUT
3	L53 18DG/WT (MK25)	STOP LAMP INHIBIT RELAY OUTPUT
3	B29 18DG/WT (MK25E)	BRAKE SWITCH SIGNAL

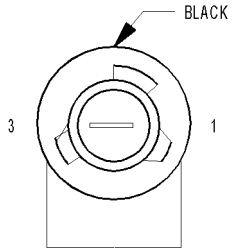

**LAMP-
TAIL STOP/
PARK-
RIGHT
(300C)**

LAMP-TAIL STOP/PARK-RIGHT (300C) - BLACK 3 WAY

CAV	CIRCUIT	FUNCTION
1	Z914 18BK/GY	GROUND
2	L777 18WT/VT	PARK LAMP RELAY OUTPUT
3	L53 18DG/WT (MK25)	STOP LAMP INHIBIT RELAY OUTPUT
3	B29 18DG/WT (MK25E)	BRAKE SWITCH SIGNAL

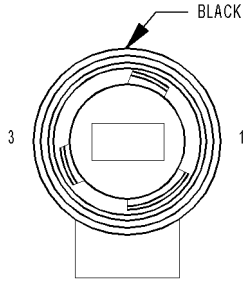

**LAMP-
TAIL STOP/
TURN-
LEFT
(300T)**

LAMP-TAIL STOP/TURN-LEFT (300T) - BLACK 3 WAY

CAV	CIRCUIT	FUNCTION
1	Z914 18BK/GY	GROUND
2	L777 18WT/VT	PARK LAMP RELAY OUTPUT
3	L63 18WT/DG	LEFT REAR TURN SIGNAL CONTROL

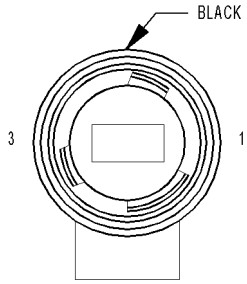

**LAMP-
TAIL STOP/
TURN-
RIGHT
(300T)**

LAMP-TAIL STOP/TURN-RIGHT (300T) - BLACK 3 WAY

CAV	CIRCUIT	FUNCTION
1	Z914 18BK/GY	GROUND
2	L777 18WT/VT	PARK LAMP RELAY OUTPUT
3	L62 18WT/YL	RIGHT REAR TURN SIGNAL CONTROL

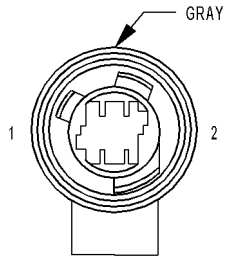

**LAMP-
TAIL TURN-
LEFT
(300C EXCEPT
EXPORT)**

LAMP-TAIL TURN-LEFT (300C EXCEPT EXPORT) - GRAY 2 WAY

CAV	CIRCUIT	FUNCTION
1	Z914 18BK/GY	GROUND
2	L63 18WT/DG	LEFT REAR TURN SIGNAL CONTROL

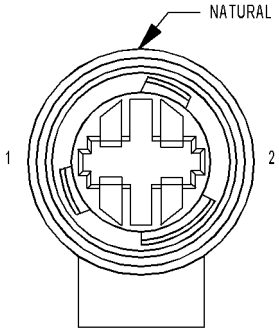

**LAMP-
TAIL TURN-
LEFT
(300C EXPORT)**

LAMP-TAIL TURN-LEFT (300C EXPORT) - NATURAL 2 WAY

CAV	CIRCUIT	FUNCTION
1	Z914 18BK/GY	GROUND
2	L63 18WT/DG	LEFT REAR TURN SIGNAL CONTROL

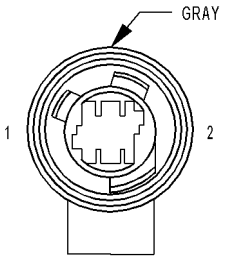

**LAMP-
TAIL TURN-
RIGHT
(300C EXCEPT
EXPORT)**

LAMP-TAIL TURN-RIGHT (300C EXCEPT EXPORT) - GRAY 2 WAY

CAV	CIRCUIT	FUNCTION
1	Z914 18BK/GY	GROUND
2	L62 18WT/YL	RIGHT REAR TURN SIGNAL CONTROL

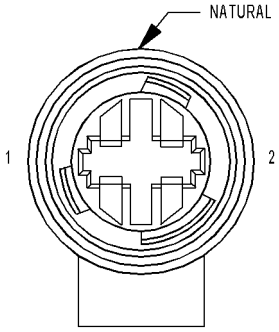

**LAMP-
TAIL TURN-
RIGHT
(300C EXPORT)**

LAMP-TAIL TURN-RIGHT (300C EXPORT) - NATURAL 2 WAY

CAV	CIRCUIT	FUNCTION
1	Z914 18BK/GY	GROUND
2	L62 18WT/YL	RIGHT REAR TURN SIGNAL CONTROL

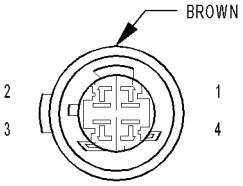

**LAMP-
TAIL/
STOP-
LEFT
(LX49)**

LAMP-TAIL/STOP-LEFT (LX49) - BROWN 4 WAY

CAV	CIRCUIT	FUNCTION
1	L777 20BR	PARK LAMP RELAY OUTPUT
2	Z914 20BK	GROUND
3	Z914 20BK	GROUND
4	L53 20BR/VT (MK25)	STOP LAMP INHIBIT RELAY OUTPUT
4	B29 20BR/VT (MK25E)	BRAKE SWITCH SIGNAL

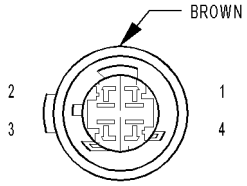

LAMP-TAIL/STOP-RIGHT (LX49)

LAMP-TAIL/STOP-RIGHT (LX49) - BROWN 4 WAY

CAV	CIRCUIT	FUNCTION
1	L777 20BR	PARK LAMP RELAY OUTPUT
2	Z914 20BK	GROUND
3	Z914 20BK	GROUND
4	L53 20BR/VT (MK25)	STOP LAMP INHIBIT RELAY OUTPUT
4	B29 20BR/VT (MK25E)	BRAKE SWITCH SIGNAL

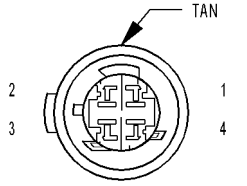

LAMP-TURN-LEFT REAR (LX49)

LAMP-TURN-LEFT REAR (LX49) - TAN 4 WAY

CAV	CIRCUIT	FUNCTION
1	-	-
2	Z914 20BK	GROUND
3	Z914 20BK	GROUND
4	L63 18RD/OR	LEFT REAR TURN SIGNAL CONTROL

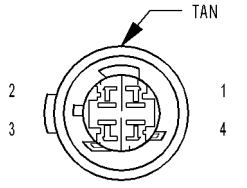

LAMP-TURN-RIGHT REAR (LX49)

LAMP-TURN-RIGHT REAR (LX49) - TAN 4 WAY

CAV	CIRCUIT	FUNCTION
1	-	-
2	Z914 20BK	GROUND
3	Z914 20BK	GROUND
4	L62 18RD/OR	RIGHT REAR TURN SIGNAL CONTROL

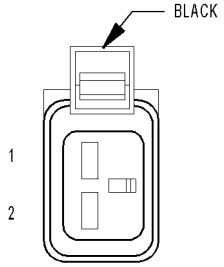

LAMP-UNDERHOOD (POLICE)

LAMP-UNDERHOOD (POLICE) - BLACK 2 WAY

CAV	CIRCUIT	FUNCTION
1	A904 16RD	FUSED B(+)
2	Z904 20BK/BR	GROUND

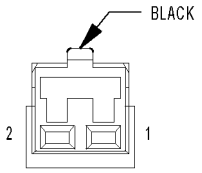

LAMP-VANITY-LEFT (EXCEPT POLICE)

LAMP-VANITY-LEFT (EXCEPT POLICE) - BLACK 2 WAY

CAV	CIRCUIT	FUNCTION
1	M27 20YL/LB	READING/RAIL LAMPS DRIVER
2	Z909 20BK/LG	GROUND

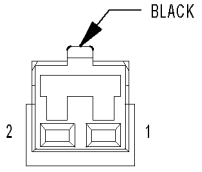

LAMP-VANITY-RIGHT (EXCEPT POLICE)

LAMP-VANITY-RIGHT (EXCEPT POLICE) - BLACK 2 WAY

CAV	CIRCUIT	FUNCTION
1	M27 20YL/LB	READING/RAIL LAMPS DRIVER
2	Z909 20BK/LG	GROUND

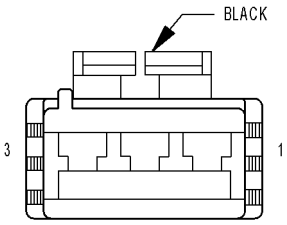

LATCH-DOOR-DECKLID (LX48)

LATCH-DOOR-DECKLID (LX48) - BLACK 3 WAY

CAV	CIRCUIT	FUNCTION
1	Z911 18BK/WT	GROUND
1	Z911 20BK/WT (LHD EXCEPT POLICE)	GROUND
1	Z911 20BK (RHD/POLICE)	GROUND
2	G78 20VT/OR (LHD EXCEPT POLICE)	DECKLID/LIFTGATE AJAR SWITCH SENSE
2	G78 20BK (RHD/POLICE)	DECKLID/LIFTGATE AJAR SWITCH SENSE
3	P31 20TN/YL (LHD EXCEPT POLICE)	DECKLID/LIFTGATE RELEASE DRIVER
3	P31 20BK (RHD/POLICE)	DECKLID/LIFTGATE RELEASE DRIVER

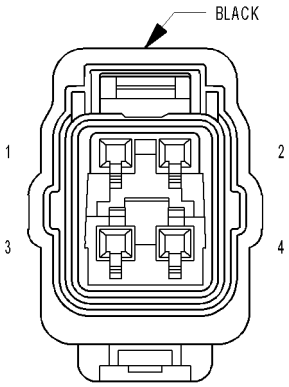

LATCH-DOOR-DRIVER

LATCH-DOOR-DRIVER - BLACK 4 WAY

CAV	CIRCUIT	FUNCTION
1	G75 20VT	DRIVER DOOR AJAR SWITCH SENSE
2	Z912 20BK/OR	GROUND
3	P1 20TN/LG	DRIVER DOOR UNLOCK DRIVER
4	P393 20LG	DOOR LOCK DRIVER

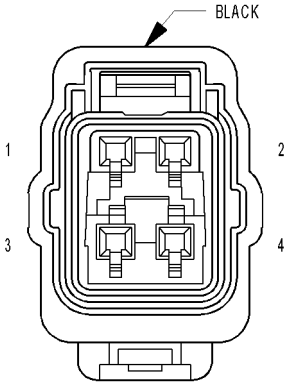

**LATCH-
DOOR-
LEFT REAR**

LATCH-DOOR-LEFT REAR - BLACK 4 WAY

CAV	CIRCUIT	FUNCTION
1	G77 20VT/GY	LEFT REAR DOOR AJAR SWITCH SENSE
2	Z912 20LG/BK	GROUND
3	P303 20TN	PASSENGER DOOR UNLOCK DRIVER
4	P393 20LG	DOOR LOCK DRIVER

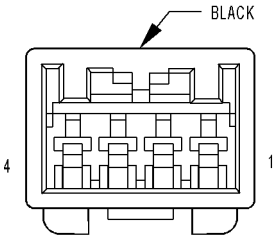

**LATCH-
DOOR-
LIFTGATE
(LX49)**

LATCH-DOOR-LIFTGATE (LX49) - BLACK 4 WAY

CAV	CIRCUIT	FUNCTION
1	G78 20VT/OR	DECKLID/LIFTGATE AJAR SWITCH SENSE
2	Z914 20BK/GY	GROUND
3	Z914 20BK/GY	GROUND
4	P31 20TN/YL	DECKLID/LIFTGATE RELEASE DRIVER

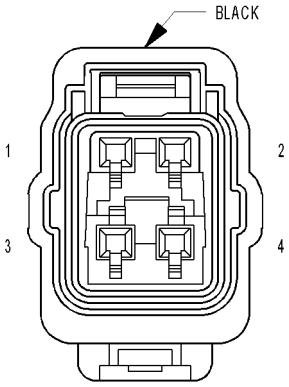

**LATCH-
DOOR-
PASSENGER**

LATCH-DOOR-PASSENGER - BLACK 4 WAY

CAV	CIRCUIT	FUNCTION
1	G74 20VT/WT	PASSENGER DOOR AJAR SWITCH SENSE
2	Z911 20BK/WT	GROUND
3	P303 20TN	PASSENGER DOOR UNLOCK DRIVER
4	P392 20LG/DB	DOOR LOCK DRIVER

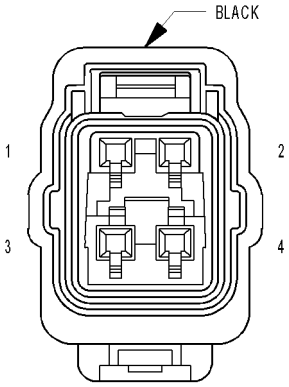

**LATCH-
DOOR-
RIGHT REAR**

LATCH-DOOR-RIGHT REAR - BLACK 4 WAY

CAV	CIRCUIT	FUNCTION
1	G76 20VT/YL	RIGHT REAR DOOR AJAR SWITCH SENSE
2	Z911 20BK/WT	GROUND
3	P303 20TN	PASSENGER DOOR UNLOCK DRIVER
4	P392 20LG/DB	DOOR LOCK DRIVER

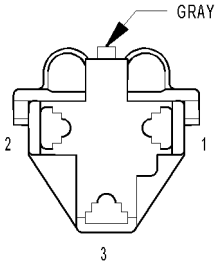

**LIGHTER-
CIGAR**

LIGHTER-CIGAR - GRAY 3 WAY

CAV	CIRCUIT	FUNCTION
1	A205 16RD/OR	FUSED B(+)
2	-	-
3	Z910 16BK/TN	GROUND

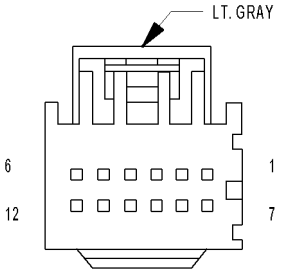

**MEDIA SYSTEM-
MONITOR/DVD**

MEDIA SYSTEM-MONITOR/DVD - LT. GRAY 12 WAY

CAV	CIRCUIT	FUNCTION
1	X510 20DG/LB	DVD AUDIO RIGHT (+)
2	X926 20GY/OR	AUX AUDIO COMMON
3	X521 20GY/LB	AUX AUDIO LEFT (+)
4	-	-
5	-	-
6	A300 18GY/LG	FUSED B(+) (I.O.D.)
7	X511 20GY/LG	DVD AUDIO LEFT (+)
8	X910 20GY/DG	DVD AUDIO COMMON
9	X522 20GY/DB	AUX AUDIO RIGHT (+)
10	D55 20WT/OR	CAN B BUS (+)
11	D54 20WT	CAN B BUS (-)
12	Z909 18BK/LG	GROUND

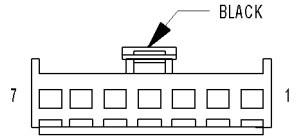

**MIRROR-
INSIDE
REARVIEW C1
(EXCEPT BASE)**

MIRROR-INSIDE REARVIEW C1 (EXCEPT BASE) - BLACK 7 WAY

CAV	CIRCUIT	FUNCTION
1	F23 20BK/RD	FUSED IGNITION SWITCH OUTPUT (RUN-START)
2	Z909 20BK/LG	GROUND
3	L1 20BK/TN	BACKUP LAMP FEED
4	P112 20BK/LB	AUTO DAY/NIGHT MIRROR (+)
5	P114 20BK/DB	AUTO DAY/NIGHT MIRROR (-)
6	-	-
7	-	-

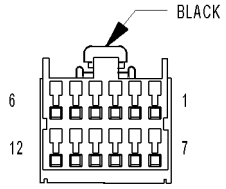

**MIRROR-
INSIDE
REARVIEW C2
(HANDS FREE)**

MIRROR-INSIDE REARVIEW C2 (HANDS FREE) - BLACK 12 WAY

CAV	CIRCUIT	FUNCTION
1	-	-
2	-	-
3	-	-
4	X722 20BK/BR	MICROPHONE 2 IN (+)
5	-	-
6	X712 20BK/DG	MICROPHONE 1 IN (+)
7	X793 20BK/GY	MICROPHONE FEED
8	-	-
9	X730 20BK/VT	VOICE RECOGNITION/PHONE SWITCH SIGNAL
10	-	-
11	X835 20BK/OR	SENSOR GROUND
12	X792 20BK/YL	MICROPHONE IN (-)

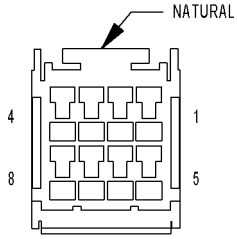

**MIRROR-
OUTSIDE REARVIEW-
DRIVER
(EXCEPT MEMORY)**

MIRROR-OUTSIDE REARVIEW-DRIVER (EXCEPT MEMORY) - NATURAL 8 WAY

CAV	CIRCUIT	FUNCTION
1	P71 20TN/DG	DRIVER MIRROR VERTICAL DRIVER
2	P76 20TN/LB	MIRROR COMMON DRIVER
3	P75 20TN/LG	DRIVER MIRROR HORIZONTAL DRIVER
4	C16 20DB/GY	FUSED REAR WINDOW DEFOGGER RELAY OUTPUT
5	Z912 20BK/OR	GROUND
6	-	-
7	-	-
8	-	-

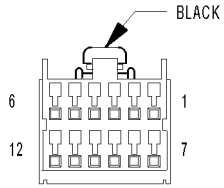

**MIRROR-
OUTSIDE REARVIEW-
DRIVER
(MEMORY)**

MIRROR-OUTSIDE REARVIEW-DRIVER (MEMORY) - BLACK 12 WAY

CAV	CIRCUIT	FUNCTION
1	Z912 20BK/OR	GROUND
2	P73 20TN/VT	DRIVER MIRROR COMMON DRIVER
3	C16 20DB/GY	FUSED REAR WINDOW DEFOGGER RELAY OUTPUT
4	P71 20TN/DG	DRIVER MIRROR VERTICAL DRIVER
5	P75 20TN/LG	DRIVER MIRROR HORIZONTAL DRIVER
6	P145 20LG/OR	DRIVER MIRROR POSITION SENSOR SUPPLY
7	P67 20TN/OR	DRIVER MIRROR VERTICAL POSITION SIGNAL
8	P114 20TN/WT (LHD)	AUTO DAY/NIGHT MIRROR (-)
8	P110 20LG/WT (RHD)	POWER FOLDING MIRROR RETURN
9	P65 20TN/VT	DRIVER MIRROR HORIZONTAL POSITION SIGNAL
10	P69 20TN/WT	DRIVER MIRROR SENSOR GROUND
11	P112 20TN/OR (LHD)	AUTO DAY/NIGHT MIRROR (+)
11	P699 20LG/DG (RHD)	POWER FOLDING MIRROR DRIVER
12	-	-

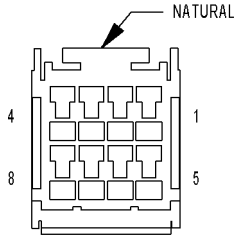

**MIRROR-
OUTSIDE REARVIEW-
PASSENGER
(EXCEPT MEMORY)**

MIRROR-OUTSIDE REARVIEW-PASSENGER (EXCEPT MEMORY) - NATURAL 8 WAY

CAV	CIRCUIT	FUNCTION
1	P72 20TN/GY	PASSENGER MIRROR VERTICAL DRIVER
2	P76 20TN/LB	MIRROR COMMON DRIVER
3	P74 20TN/OR	PASSENGER MIRROR HORIZONTAL DRIVER
4	C16 20DB/GY	FUSED REAR WINDOW DEFOGGER RELAY OUTPUT
5	Z911 20BK/WT	GROUND
6	-	-
7	-	-
8	-	-

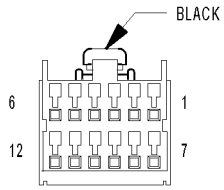

**MIRROR-
OUTSIDE REARVIEW-
PASSENGER
(MEMORY)**

MIRROR-OUTSIDE REARVIEW-PASSENGER (MEMORY) - BLACK 12 WAY

CAV	CIRCUIT	FUNCTION
1	Z911 20BK/WT	GROUND
2	P70 20TN/LB	PASSENGER MIRROR COMMON DRIVER
3	C16 20DB/GY	FUSED REAR WINDOW DEFOGGER RELAY OUTPUT
4	P72 20TN/GY	PASSENGER MIRROR VERTICAL DRIVER
5	P74 20TN/OR	PASSENGER MIRROR HORIZONTAL DRIVER
6	P146 20LG/DB	PASSENGER MIRROR POSITION SENSOR SUPPLY
7	P64 20TN	PASSENGER MIRROR VERTICAL POSITION SIGNAL
8	P110 20LG/WT (RHD)	POWER FOLDING MIRROR RETURN
9	P68 20TN/YL	PASSENGER MIRROR HORIZONTAL POSITION SIGNAL
10	P66 20TN/LG	PASSENGER MIRROR SENSOR GROUND
11	P699 20LG/DG (RHD)	POWER FOLDING MIRROR DRIVER
12	-	-

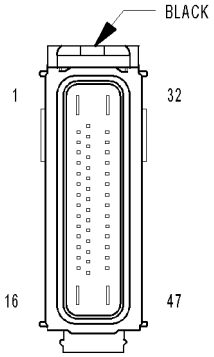

MODULE-ANTILOCK BRAKES

MODULE-ANTILOCK BRAKES - BLACK 47 WAY

CAV	CIRCUIT	FUNCTION
1	A107 10TN/RD	FUSED B(+)
2	-	-
3	B137 20DG/BR (MK25)	BRAKE PEDAL TRAVEL SENSOR SIGNAL
4	F202 20PK/GY (EXCEPT MK25E)	FUSED IGNITION SWITCH OUTPUT (RUN-START)
4	B15 20DG/WT (MK25E)	BRAKE SWITCH NO. 1 SIGNAL
5	B937 20DG/BR (MK25)	BRAKE PEDAL TRAVEL SENSOR RETURN
6	G4 20VT/LB (MK25)	DYNAMICS SENSOR SUPPLY
7	B237 20DG/YL (MK25)	BRAKE PEDAL TRAVEL SENSOR SUPPLY
8	F202 20PK/GY (MK25E)	FUSED IGNITION SWITCH OUTPUT (RUN-START)
9	B16 20LB/DG (TCS)	BRAKE SWITCH NO. 2 SIGNAL
10	-	-
11	D65 20WT/LG (EXCEPT MK25E)	CAN C BUS (+)
12	D65 20WT/LG (MK25E)	CAN C BUS (+)
13	D64 20WT/LB (MK25E)	CAN C BUS (-)
14	-	-
15	D64 20WT/LB (EXCEPT MK25E)	CAN C BUS (-)
16	Z903 14BK/DG (EXCEPT MK25E)	GROUND
16	Z903 10BK/DG (MK25E)	GROUND
17	B131 20DG/YL (MK25)	ACTIVE BRAKE BOOSTER SOLENOID (+)
18	B83 20DG/WT (MK25)	BRAKE PRESSURE SENSOR SUPPLY
18	D52 20WT/LB (MK25E)	DYNAMICS SENSOR HIGH DATA LINK
19	B984 20DG/OR (MK25)	BRAKE PRESSURE SENSOR RETURN
19	D51 20WT/BR (MK25E)	DYNAMICS SENSOR LOW DATA LINK
20	B84 20DG/YL (MK25)	BRAKE PRESSURE SENSOR SIGNAL
21	-	-
22	G4 20VT/LB (MK25E)	DYNAMICS SENSOR SUPPLY
23	-	-
24	G94 20VT/DB (MK25)	DYNAMICS SENSOR GROUND
25	D51 20WT/BR (MK25)	DYNAMICS SENSOR LOW DATA LINK
26	-	-
27	B135 20DG/LG (MK25)	BRAKE PEDAL FORCE SWITCH OPEN
28	B136 20DG/LB (MK25)	BRAKE PEDAL FORCE SWITCH SIGNAL
29	D52 20WT/LB (MK25)	DYNAMICS SENSOR HIGH DATA LINK
29	G94 20VT/DB (MK25E)	DYNAMICS SENSOR GROUND
30	B134 20DG/YL (MK25)	BRAKE PEDAL FORCE SWITCH CLOSE
31	B132 20DG/LB (MK25)	ACTIVE BRAKE BOOSTER SOLENOID (-)
32	A111 14DG/RD	FUSED B(+)
33	B6 20DG/WT	RIGHT FRONT WHEEL SPEED SENSOR SIGNAL
34	B7 20DG/VT	RIGHT FRONT WHEEL SPEED SENSOR SUPPLY
35	B121 20DG/DB (MK25)	STOP LAMP INHIBIT RELAY CONTROL
36	B4 20DG/GY	LEFT REAR WHEEL SPEED SENSOR SUPPLY
37	B3 20DG/YL	LEFT REAR WHEEL SPEED SENSOR SIGNAL
38	B15 20DG/WT (TCS)	BRAKE SWITCH NO. 1 SIGNAL
39	-	-
40	-	-
41	-	-
42	B1 20DG/OR	RIGHT REAR WHEEL SPEED SENSOR SIGNAL
43	B2 20DG/LB	RIGHT REAR WHEEL SPEED SENSOR SUPPLY
44	-	-
45	B9 20DG/LG	LEFT FRONT WHEEL SPEED SENSOR SUPPLY
46	B8 20DG/TN	LEFT FRONT WHEEL SPEED SENSOR SIGNAL
47	Z903 10BK/DG	GROUND

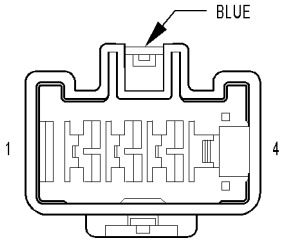

**MODULE-
BRAKE
(TRAILER TOW)**

MODULE-BRAKE (TRAILER TOW) - BLUE 4 WAY

CAV	CIRCUIT	FUNCTION
1	A914 16RD	FUSED B(+)
2	B400 16DB	TRAILER TOW ELECTRIC BRAKE OUTPUT
3	B29 20DG/WT	BRAKE SWITCH SIGNAL
4	Z914 16BK/GY	GROUND

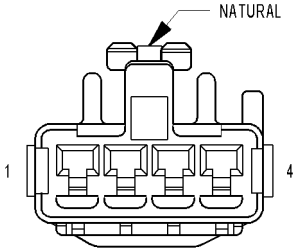

**MODULE-
CLOCK-ANALOG
(EXCEPT POLICE)**

MODULE-CLOCK-ANALOG (EXCEPT POLICE) - NATURAL 4 WAY

CAV	CIRCUIT	FUNCTION
1	A117 20RD/DG	FUSED B(+) (I.O.D.)
2	Z909 20BK/LG	GROUND
3	E12 20OR/GY	PANEL LAMPS DRIVER
4	-	-

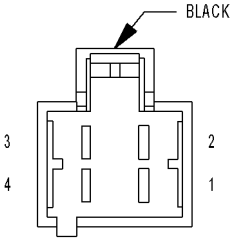

**MODULE-
DOOR-
DRIVER C1**

MODULE-DOOR-DRIVER C1 - BLACK 4 WAY

CAV	CIRCUIT	FUNCTION
1	Z912 14BK/OR	GROUND
2	F881 14PK	FUSED ACCESSORY DELAY RELAY OUTPUT
3	Q321 16OR/DB	DRIVER WINDOW EXPRESS DOWN DRIVER
4	Q311 16OR/LB	DRIVER WINDOW EXPRESS UP DRIVER

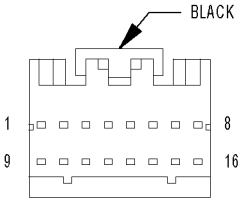

**MODULE-
DOOR-
DRIVER C2**

MODULE-DOOR-DRIVER C2 - BLACK 16 WAY

CAV	CIRCUIT	FUNCTION
1	-	-
2	A913 20RD/GY (EXCEPT MEMORY)	FUSED B(+)
3	Z912 18BK/OR (EXCEPT MEMORY)	GROUND
4	Q15 18OR/LB	WINDOW LOCK OUT SWITCH OUTPUT
5	Q222 20OR/GY	PASSENGER WINDOW DRIVER EXPRESS SWITCH MUX
6	-	-
7	D54 20WT (EXCEPT MEMORY)	CAN B BUS (-)
8	D55 20WT/OR (EXCEPT MEMORY)	CAN B BUS (+)
9	-	-
10	-	-
11	Q221 20GY/OR	DRIVER WINDOW DRIVER EXPRESS SWITCH MUX
12	Z421 20BK/BR	DRIVER EXPRESS SWITCH RETURN
13	Z405 20BK	DRIVER WINDOW HALL SENSOR RETURN
14	Q303 20WT/OR	DRIVER WINDOW HALL SENSOR B SIGNAL
15	Q301 20OR/WT	DRIVER WINDOW HALL SENSOR A SIGNAL
16	Q305 20OR	DRIVER WINDOW HALL SENSOR SUPPLY

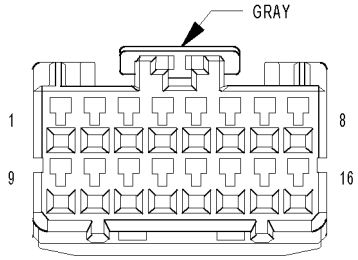

**MODULE-
DOOR-
DRIVER C3
(MEMORY)**

MODULE-DOOR-DRIVER C3 (MEMORY) - GRAY 16 WAY

CAV	CIRCUIT	FUNCTION
1	P550 20TN/LG	MIRROR SWITCH SUPPLY
2	E55 20OR/DG	MIRROR SWITCH ILLUMINATION DRIVER
3	-	-
4	P703 20DB/LG	MIRROR HORIZONTAL LEFT SWITCH SENSE
5	-	-
6	P710 20LG	MIRROR COMMON SWITCH SENSE
7	P705 20LG/OR	MIRROR VERTICAL DOWN SWITCH SENSE
8	-	-
9	P950 20TN/GY	MIRROR SWITCH RETURN
10	G920 20VT/YL	MEMORY SELECT SWITCH RETURN
11	-	-
12	-	-
13	G200 20VT/BR	MEMORY SELECT SWITCH MUX
14	-	-
15	P704 20LG/TN	MIRROR HORIZONTAL RIGHT SWITCH SENSE
16	P706 20LG/GY	MIRROR VERTICAL UP SWITCH SENSE

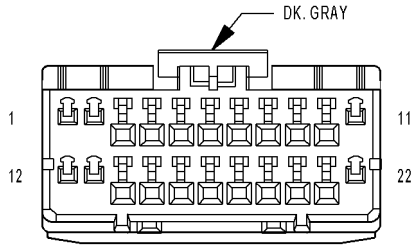

**MODULE-
DOOR-
DRIVER C4
(MEMORY)**

MODULE-DOOR-DRIVER C4 (MEMORY) - DK. GRAY 22 WAY

CAV	CIRCUIT	FUNCTION
1	A913 20RD/GY	FUSED B(+)
2	-	-
3	P73 20TN/VT	DRIVER MIRROR COMMON DRIVER
4	P71 20TN/DG	DRIVER MIRROR VERTICAL DRIVER
5	P75 20TN/LG	DRIVER MIRROR HORIZONTAL DRIVER
6	P65 20TN/VT	DRIVER MIRROR HORIZONTAL POSITION SIGNAL
7	P67 20TN/OR	DRIVER MIRROR VERTICAL POSITION SIGNAL
8	P145 20LG/OR	DRIVER MIRROR POSITION SENSOR SUPPLY
9	-	-
10	Z912 18BK/OR	GROUND (DRIVER SIDE IDENTIFIER LHD/RHD)
11	-	-
12	Z912 18BK/OR	GROUND
13	-	-
14	-	-
15	-	-
16	-	-
17	P69 20TN/WT	DRIVER MIRROR SENSOR GROUND
18	D54 20WT	CAN B BUS (-)
19	D55 20WT/OR	CAN B BUS (+)
20	-	-
21	-	-
22	-	-

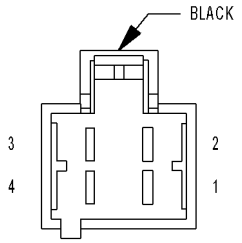

MODULE-DOOR-PASSENGER C1

MODULE-DOOR-PASSENGER C1 - BLACK 4 WAY

CAV	CIRCUIT	FUNCTION
1	Z911 14BK/WT	GROUND
2	F881 14PK	FUSED ACCESSORY DELAY RELAY OUTPUT
3	Q322 16LG/OR	PASSENGER WINDOW EXPRESS DOWN DRIVER
4	Q312 16DB/OR	PASSENGER WINDOW EXPRESS UP DRIVER

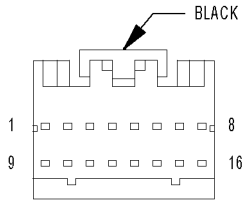

MODULE-DOOR-PASSENGER C2

MODULE-DOOR-PASSENGER C2 - BLACK 16 WAY

CAV	CIRCUIT	FUNCTION
1	-	-
2	A913 20RD/GY (EXCEPT MEMORY)	FUSED B(+)
3	-	-
4	-	-
5	Q336 20OR/GY	PASSENGER WINDOW EXPRESS SWITCH MUX
6	E34 20OR/TN	PASSENGER WINDOW EXPRESS SWITCH ILLUMINATION DRIVER
7	D54 20WT (EXCEPT MEMORY)	CAN B BUS (-)
8	D55 20WT/OR (EXCEPT MEMORY)	CAN B BUS (+)
9	-	-
10	-	-
11	-	-
12	Q936 20OR/LG	PASSENGER WINDOW EXPRESS SWITCH RETURN
13	Z404 20BK/LG	PASSENGER WINDOW HALL SENSOR RETURN
14	Q304 20LG/OR	PASSENGER WINDOW HALL SENSOR B SIGNAL
15	Q302 20OR/LG	PASSENGER WINDOW HALL SENSOR A SIGNAL
16	Q306 20OR/DB	PASSENGER WINDOW HALL SENSOR SUPPLY

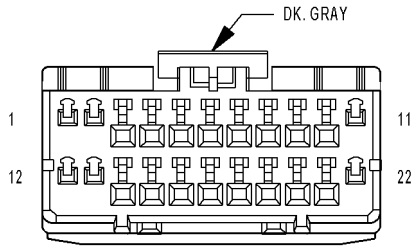

MODULE-DOOR-PASSENGER C4 (MEMORY)

MODULE-DOOR-PASSENGER C4 (MEMORY) - DK. GRAY 22 WAY

CAV	CIRCUIT	FUNCTION
1	A913 20RD/GY	FUSED B(+)
2	-	-
3	P70 20TN/LB	PASSENGER MIRROR COMMON DRIVER
4	P72 20TN/GY	PASSENGER MIRROR VERTICAL DRIVER
5	P74 20TN/OR	PASSENGER MIRROR HORIZONTAL DRIVER
6	P68 20TN/YL	PASSENGER MIRROR HORIZONTAL POSITION SIGNAL
7	P64 20TN	PASSENGER MIRROR VERTICAL POSITION SIGNAL
8	P146 20LG/DB	PASSENGER MIRROR POSITION SENSOR SUPPLY
9	-	-
10	-	-
11	-	-
12	Z911 16BK/WT	GROUND
13	-	-
14	-	-
15	-	-
16	-	-
17	P66 20TN/LG	PASSENGER MIRROR SENSOR GROUND
18	D54 20WT	CAN B BUS (-)
19	D55 20WT/OR	CAN B BUS (+)
20	-	-
21	-	-
22	-	-

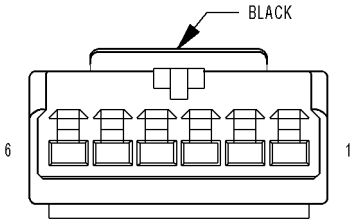

**MODULE-
ELECTRONIC OVERHEAD**

MODULE-ELECTRONIC OVERHEAD - BLACK 6 WAY

CAV	CIRCUIT	FUNCTION
1	D55 20WT/OR	CAN B BUS (+)
2	D54 20WT	CAN B BUS (-)
3	A117 20RD/DG	FUSED B(+) (I.O.D.)
4	Z909 20BK/LG	GROUND
5	F880 20PK (EXCEPT RHD SUNROOF)	FUSED ACCESSORY DELAY RELAY OUTPUT
5	F880 20PK/DG (RHD SUNROOF)	FUSED ACCESSORY DELAY RELAY OUTPUT
6	-	-

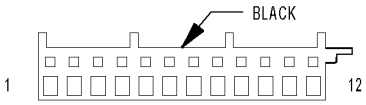

**MODULE-
ELECTRONIC
SHIFT C1
(COLUMN NAG1)**

MODULE-ELECTRONIC SHIFT C1 (COLUMN NAG1) - BLACK 12 WAY

CAV	CIRCUIT	FUNCTION
1	-	-
2	Z910 22BK	GROUND
3	F902 22LB	IGNITION UNLOCK-RUN-START
4	B29 22YL	BRAKE SWITCH SIGNAL
5	D65 22LG/BK	CAN C BUS (+)
6	D64 22GY	CAN C BUS (-)
7	22YL	AUTOSTICK SWITCH MUX SUPPLY
8	22GY	AUTOSTICK SWITCH MUX SIGNAL
9	-	-
10	22BK	SHIFT LEVER POSITION SENSOR GROUND
11	22LB	SHIFT LEVER POSITION SENSOR SIGNAL
12	22LG/BK	SHIFT LEVER POSITION SENSOR SUPPLY

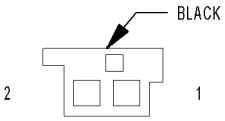

**MODULE-
ELECTRONIC
SHIFT C2
(COLUMN NAG1)**

MODULE-ELECTRONIC SHIFT C2 (COLUMN NAG1) - BLACK 2 WAY

CAV	CIRCUIT	FUNCTION
1	K321 24BK	BTSI SOLENOID CONTROL
2	F902 24BK	IGNITION UNLOCK-RUN-START

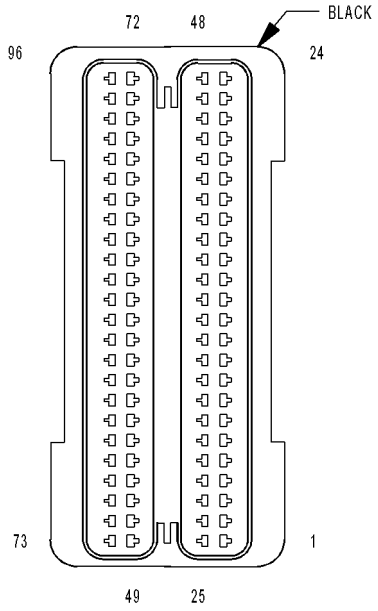

**MODULE-
ENGINE CONTROL C1
(DIESEL)**

MODULE-ENGINE CONTROL C1 (DIESEL) - BLACK 96 WAY

CAV	CIRCUIT	FUNCTION
1	K11 16BL	FUEL INJECTOR NO. 1 HIGH-SIDE CONTROL
2	K12 16BL/VT	FUEL INJECTOR NO. 2 HIGH-SIDE CONTROL
3	K13 16BL/RD	FUEL INJECTOR NO. 3 HIGH-SIDE CONTROL
4	-	-
5	-	-
6	K902 20GY/WT	O2 1/1 PUMP CELL CURRENT TRIM
7	K844 20RD/VT	CAMSHAFT POSITION SENSOR 5 VOLT SUPPLY
8	K900 20BR/RD	INLET AIR PRESSURE SENSOR GROUND
9	K934 20OR	EXHAUST GAS PRESSURE SENSOR GROUND
10	K944 20BR/DG	CAMSHAFT POSITION SENSOR GROUND
11	K312 20GY/OR	EGR AIR FLOW CONTROL VALVE POSITION SENSOR SIGNAL
12	N116 18BR/VT	CRANKCASE VENT HEATER CONTROL
13	-	-
14	-	-
15	K853 20RD/VT	CRANKSHAFT POSITION SENSOR 5 VOLT SUPPLY
16	-	-
17	-	-
18	F858 20GY/YL	EXHAUST GAS PRESSURE SENSOR 5 VOLT SUPPLY
19	K356 20RD/BK	BOOST PRESSURE SENSOR 5 VOLT SUPPLY
20	N117 20GY	INTAKE SWIRL SERVO MOTOR CONTROL
21	-	-
22	X635 20GY/DG	BOOST PRESSURE SERVO MOTOR CONTROL
23	K369 18RD/GY	FUEL PRESSURE SOLENOID 12 VOLT SUPPLY
24	K315 20GY/PK	EGR AIR FLOW CONTROL VALVE MOTOR (-)
25	K14 16BL/YL	FUEL INJECTOR NO. 4 HIGH-SIDE CONTROL
26	K38 16BL/DG	FUEL INJECTOR NO. 5 HIGH-SIDE CONTROL
27	K58 16BL/WT	FUEL INJECTOR NO. 6 HIGH-SIDE CONTROL
28	K960 18BR/VT	INTAKE AIR TEMPERATURE SENSOR GROUND
29	-	-
30	-	-
31	K41 20DG/BK	O2 1/1 REFERENCE SIGNAL
32	-	-
33	K44 20YL/GY	CAMSHAFT POSITION SENSOR SIGNAL
34	K358 20GY/BL	OIL LEVEL SWITCH SIGNAL
35	-	-
36	-	-
37	K957 18BR	MASS AIR FLOW SENSOR GROUND
38	-	-
39	G224 20YL/GY	OIL TEMPERATURE SENSOR SIGNAL
40	F851 20DG	OIL PRESSURE SENSOR 5 VOLT SUPPLY
41	K313 20DG/GY	EGR AIR FLOW CONTROL VALVE POSITION SENSOR SUPPLY
42	K668 20BR/BK	INLET AIR PRESSURE SENSOR 5 VOLT SUPPLY
43	K350 20RD/WT	FUEL PRESSURE SENSOR 5 VOLT SUPPLY
44	-	-
45	-	-
46	-	-
47	K366 18BK/BL/DG	FUEL QUANTITY SOLENOID 12 VOLT SUPPLY
48	K99 16GY/BR	O2 1/1 HEATER CONTROL
49	K638 16BK/DG	FUEL INJECTOR NO. 5 LOW-SIDE CONTROL
50	K611 16BK/BL	FUEL INJECTOR NO. 1 LOW-SIDE CONTROL
51	K658 16BK/WT	FUEL INJECTOR NO. 6 LOW-SIDE CONTROL
52	K222 20BR/RD	ENGINE COOLANT TEMPERATURE SENSOR GROUND
53	Z753 16BR/BK	CRANKSHAFT POSITION SENSOR GROUND

MODULE-ENGINE CONTROL C1 (DIESEL) - BLACK 96 WAY

CAV	CIRCUIT	FUNCTION
54	-	-
55	-	-
56	K914 20BL/DG	FUEL TEMPERATURE SENSOR GROUND
57	Z42 20DG/BL	O2 1/1 NEGATIVE CURRENT CONTROL
58	-	-
59	-	-
60	K2 20DG/RD	ENGINE COOLANT TEMPERATURE SENSOR SIGNAL
61	K156 20BL/RD	FUEL TEMPERATURE SENSOR SIGNAL
62	K916 20BR/WT	PRE-CATALYST EXHAUST GAS TEMPERATURE SENSOR GROUND
63	K915 20BR/WT	POST-CATALYST EXHAUST GAS TEMPERATURE SENSOR GROUND
64	K359 20GY/BR	FUEL PRESSURE SENSOR GROUND
65	K181 20DG/VT	FUEL PRESSURE SENSOR SIGNAL
66	K157 20BL/YL	MASS AIR FLOW SENSOR SIGNAL
67	K390 20DG/PK	EGR AIR FLOW CONTROL VALVE POSITION SENSOR RETURN
68	-	-
69	-	-
70	-	-
71	K34 20GY/YL	EGR SOLENOID CONTROL
72	K314 20GY/RD	EGR AIR FLOW CONTROL VALVE MOTOR (+)
73	K612 16BK/VT	FUEL INJECTOR NO. 2 LOW-SIDE CONTROL
74	K613 16BK/RD	FUEL INJECTOR NO. 3 LOW-SIDE CONTROL
75	K614 16BK/YL	FUEL INJECTOR NO. 4 LOW-SIDE CONTROL
76	Z36 20YL/DG	OIL TEMPERATURE SENSOR GROUND
77	K24 16DG/WT	CRANKSHAFT POSITION SENSOR SIGNAL
78	K936 20GY/PK	OIL PRESSURE SENSOR GROUND
79	-	-
80	K43 20GY/RD	O2 1/1 POSITIVE CURRENT CONTROL
81	K35 20GY/BK	EXHAUST GAS PRESSURE SENSOR SIGNAL
82	K37 20GY/YL	BOOST PRESSURE SENSOR SIGNAL
83	K352 20YL	PRE-CATALYST EXHAUST GAS TEMPERATURE SENSOR SIGNAL
84	K21 20DG/WT	INTAKE AIR TEMPERATURE SENSOR SIGNAL
85	K68 20RD/BL	INLET AIR PRESSURE SENSOR SIGNAL
86	-	-
87	K656 20BR/GY	BOOST PRESSURE SENSOR GROUND
88	D509 20WT/BL	ECM LIN BUS
89	K353 20YL/WT	POST-CATALYST EXHAUST GAS TEMPERATURE SENSOR SIGNAL
90	K362 20DG/YL	INLET AIR TEMPERATURE SENSOR SIGNAL
91	-	-
92	-	-
93	K370 18BK/WT	FUEL PRESSURE SOLENOID CONTROL
94	K365 18YL/BK	FUEL QUANTITY SOLENOID CONTROL
95	-	-
96	-	-

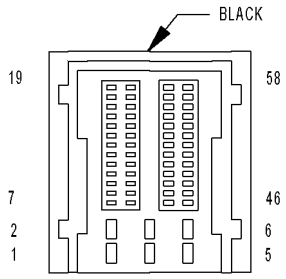

MODULE-ENGINE CONTROL C2 (DIESEL)

MODULE-ENGINE CONTROL C2 (DIESEL) - BLACK 58 WAY

CAV	CIRCUIT	FUNCTION
1	K344 14BR/GY	FUSED ASD RELAY OUTPUT 3
2	Z904 14BK/BR	GROUND
3	K343 14BR/YL	FUSED ASD RELAY OUTPUT 2
4	Z904 14BK/BR	GROUND
5	K342 14BR/WT	FUSED ASD RELAY OUTPUT 1
6	Z904 14BK/BR	GROUND
7	K167 16BR/YL	ACCELERATOR PEDAL POSITION SENSOR NO. 1 GROUND
8	-	-
9	-	-
10	-	-
11	K355 18BR/DG	EXHAUST DIFFERENTIAL PRESSURE SENSOR SIGNAL
12	K29 20WT/BR	ACCELERATOR PEDAL POSITION SENSOR NO. 2 SIGNAL
13	-	-
14	G6 20VT/GY	OIL PRESSURE SENSOR SIGNAL
15	F855 20PK/YL	ACCELERATOR PEDAL POSITION SENSOR NO. 1 5 VOLT SUPPLY
16	K354 18BR/LG	EXHAUST DIFFERENTIAL PRESSURE SENSOR 5 VOLT SUPPLY
17	F856 20YL/PK	ACCELERATOR PEDAL POSITION SENSOR NO. 2 5 VOLT SUPPLY
18	-	-
19	-	-
20	-	-
21	-	-
22	-	-
23	-	-
24	K23 20BR/WT	ACCELERATOR PEDAL POSITION SENSOR NO. 1 SIGNAL
25	-	-
26	-	-
27	-	-
28	-	-
29	-	-
30	K951 20BR/DB	EXHAUST DIFFERENTIAL PRESSURE SENSOR GROUND
31	-	-
32	K31 20BR	FUEL PUMP RELAY CONTROL
33	-	-
34	-	-
35	-	-
36	-	-
37	-	-
38	-	-
39	-	-
40	K400 20BR/VT	ACCELERATOR PEDAL POSITION SENSOR NO. 2 GROUND
41	F202 20PK/GY	FUSED IGNITION SWITCH OUTPUT (RUN-START)
42	K51 20BR/WT	ASD RELAY CONTROL
43	D21 20WT/BR	SCI TRANSMIT (ECM/PCM)
44	T752 20DG/OR	STARTER RELAY CONTROL
45	-	-
46	-	-
47	-	-
48	F21 20PK/DG	FUSED IGNITION SWITCH OUTPUT (START)
49	-	-
50	-	-
51	D65 20WT/LG	CAN C BUS (+)
52	D64 20WT/LB	CAN C BUS (-)
53	-	-
54	C13 20LB/OR	A/C CLUTCH RELAY CONTROL
55	K363 20OR/BR	PTC NO. 3 RELAY CONTROL
56	-	-
57	-	-
58	-	-

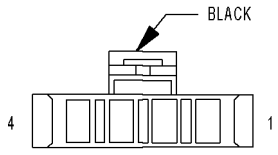

**MODULE-
FRONT BLOWER
POWER C1
(ATC)**

MODULE-FRONT BLOWER POWER C1 (ATC) - BLACK 4 WAY

CAV	CIRCUIT	FUNCTION
1	-	-
2	Z908 12BK	GROUND
3	C56 20DB/LB	FRONT BLOWER CONTROL
4	C7 12DB	FUSED RUN RELAY OUTPUT

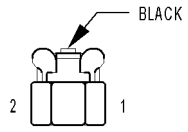

**MODULE-
FRONT BLOWER
POWER C2
(ATC)**

MODULE-FRONT BLOWER POWER C2 (ATC) - BLACK 2 WAY

CAV	CIRCUIT	FUNCTION
1	C7 12DB	BLOWER MOTOR SUPPLY
2	Z134 12BK/LG	GROUND

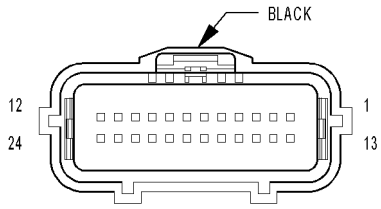

**MODULE-
FRONT
CONTROL C1**

MODULE-FRONT CONTROL C1 - BLACK 24 WAY

CAV	CIRCUIT	FUNCTION
1	Z902 18BK/LB	GROUND
2	D55 20WT/OR	CAN B BUS (+)
3	D54 20WT	CAN B BUS (-)
4	-	-
5	D72 20WT/LB	CAN C DIAGNOSTIC (+)
6	D71 20WT/DB	CAN C DIAGNOSTIC (-)
7	-	-
8	D65 20WT/LG	CAN C BUS (+)
9	D64 20WT/LB	CAN C BUS (-)
10	B20 20DG/OR	BRAKE FLUID LEVEL SWITCH SENSE
11	C18 20LB/BR	A/C PRESSURE TRANSDUCER SIGNAL
12	B6 20DG/WT (EXCEPT ABS)	RIGHT FRONT WHEEL SPEED SENSOR SIGNAL
13	L91 20WT/DB	HAZARD SWITCH SENSE
14	W17 20BR/LG (LX49)	REAR WIPER PARK SWITCH SENSE
15	B7 20DG/VT (EXCEPT ABS)	RIGHT FRONT WHEEL SPEED SENSOR SUPPLY
16	F891 20PK/GY	5 VOLT SUPPLY
17	-	-
18	W1 20BR/TN	WASHER FLUID LEVEL SWITCH SENSE
19	-	-
20	-	-
21	B29 20DG/WT	BRAKE SWITCH SIGNAL
22	Z902 18BK/LB (DODGE SRT8)	GROUND
22	Z902 20BK/LB (EXCEPT DODGE SRT8)	GROUND
23	G70 20VT/LB (EXPORT)	HOOD AJAR SWITCH SENSE
24	-	-

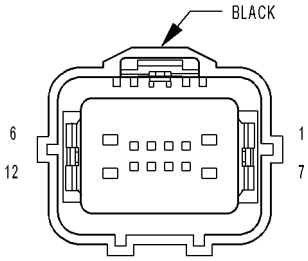

**MODULE-
FRONT
CONTROL C2**

MODULE-FRONT CONTROL C2 - BLACK 12 WAY

CAV	CIRCUIT	FUNCTION
1	L44 18WT/TN	RIGHT LOW BEAM DRIVER
2	-	-
3	-	-
4	G31 20VT/LG	AAT SIGNAL
5	G931 20VT/BR	SENSOR GROUND
6	L43 18WT/DB (EXCEPT HID LAMPS)	LEFT LOW BEAM DRIVER
7	L33 18WT/LG	LEFT HIGH BEAM DRIVER
8	L60 18WT/TN	RIGHT FRONT TURN SIGNAL CONTROL
9	-	-
10	L61 18WT/LG	LEFT FRONT TURN SIGNAL CONTROL
11	-	-
12	L34 18WT/GY	RIGHT HIGH BEAM DRIVER

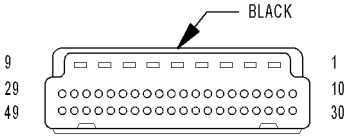

**MODULE-
FRONT
CONTROL IPM**

MODULE-FRONT CONTROL IPM - BLACK 49 WAY

CAV	CIRCUIT	FUNCTION
1	-	-
2	A906	FUSED B(+)
3	A902	FUSED B(+)
4	A901	FUSED B(+)
5	A903	FUSED B(+)
6	-	-
7	L1	BACKUP LAMP FEED
8	-	-
9	-	-
10	W24 (HID LAMPS)	HEADLAMP WASHER RELAY CONTROL
11	W20 (LX49)	REAR WASHER PUMP MOTOR CONTROL
12	W10	FRONT WASHER PUMP MOTOR CONTROL
13	F902	IGNITION UNLOCK-RUN-START
14	K361 (DIESEL)	PTC NO. 2 RELAY CONTROL
15	X13	FUSED B(+) (I.O.D.)
16	K360 (DIESEL)	PTC NO. 1 RELAY CONTROL
17	F202	FUSED IGNITION SWITCH OUTPUT (RUN-START)
18	Z901	GROUND
19	-	-
20	-	-
21	L239 (EXPORT)	REAR FOG LAMP RELAY CONTROL
22	F923	RUN RELAY CONTROL
23	-	-
24	-	-
25	Z901	GROUND
26	L139	FRONT FOG LAMP RELAY CONTROL
27	W5	WIPER ON/OFF RELAY CONTROL
28	W12 (LX49)	REAR WIPER RELAY CONTROL
29	W2	WIPER HIGH/LOW RELAY CONTROL
30	K542	ASD RELAY OUTPUT
31	W7	FRONT WIPER PARK SWITCH SENSE
32	-	-
33	Z901	GROUND
34	L62	RIGHT REAR TURN SIGNAL CONTROL
35	C918	A/C PRESSURE SENSOR GROUND
36	-	-
37	-	-

MODULE-FRONT CONTROL IPM - BLACK 49 WAY

CAV	CIRCUIT	FUNCTION
38	P307	ACCESSORY DELAY RELAY CONTROL
39	N201	RADIATOR FAN CONTROL RELAY CONTROL
40	-	-
41	Z901	GROUND
42	-	-
43	L63	LEFT REAR TURN SIGNAL CONTROL
44	-	-
45	N112	RADIATOR FAN HIGH RELAY CONTROL
46	P201 (EXCEPT MEMORY)	ADJUSTABLE PEDALS RELAY CONTROL
47	X4	HORN RELAY CONTROL
48	L177	PARK LAMP RELAY CONTROL
49	K175 (AWD/SRT8/DIESEL)	RADIATOR FAN RELAY COIL SIGNAL

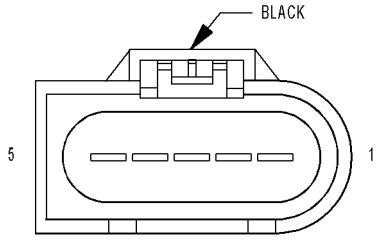

**MODULE-
FUEL PUMP**

MODULE-FUEL PUMP - BLACK 5 WAY

CAV	CIRCUIT	FUNCTION
1	N4 20DB/WT	FUEL LEVEL SENSOR NO. 1 SIGNAL
2	Z210 20BK	GROUND
3	N5 20DB/WT	FUEL LEVEL SENSOR NO. 2 SIGNAL
4	Z912 16BK/OR	GROUND
5	N1 16DB/OR	FUEL PUMP RELAY OUTPUT

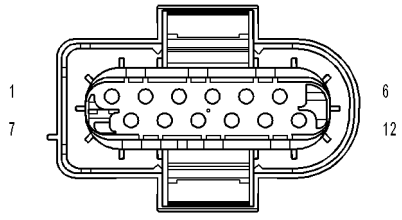

**MODULE-
GLOW PLUG
(DIESEL)**

MODULE-GLOW PLUG (DIESEL) - 12 WAY

CAV	CIRCUIT	FUNCTION
1	A202 16BK/BL	GLOW PLUG NO. 1 CONTROL
2	A203 16BK/VT	GLOW PLUG NO. 2 CONTROL
3	A204 16BK/RD	GLOW PLUG NO. 3 CONTROL
4	A208 16BK/YL	GLOW PLUG NO. 4 CONTROL
5	K343 20RD/DG	FUSED ASD RELAY OUTPUT 2
6	Z917 18BR	GROUND
7	A211 16BK/DG	GLOW PLUG NO. 5 CONTROL
8	A216 16BK/WT	GLOW PLUG NO. 6 CONTROL
9	-	-
10	-	-
11	-	-
12	D509 20WT/BL	ECM LIN BUS

CONNECTOR
NOT
AVAILABLE

MODULE-GLOW PLUG-EYELET (DIESEL) - 1 WAY

CAV	CIRCUIT	FUNCTION
1	A802 7RD	B(+)

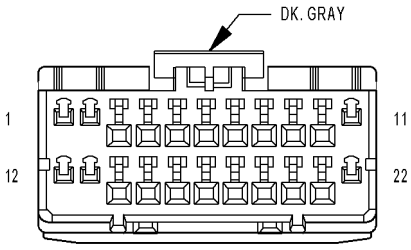

MODULE-
HANDS FREE

MODULE-HANDS FREE - DK. GRAY 22 WAY

CAV	CIRCUIT	FUNCTION
1	A300 16GY/LG	FUSED B(+) (I.O.D.)
2	-	-
3	-	-
4	D54 20WT	CAN B BUS (-)
5	X722 22LB/DG	MICROPHONE 2 IN (+)
6	-	-
7	-	-
8	X703 22DG/OR	LEFT AUDIO OUTPUT
9	X704 22DG/YL	RIGHT AUDIO OUTPUT
10	X795 20DG	COMMON AUDIO OUTPUT
11	-	-
12	-	-
13	-	-
14	D55 20WT/OR	CAN B BUS (+)
15	X730 20GY/YL	VOICE RECOGNITION/PHONE SWITCH SIGNAL
16	X712 22DG/LB	MICROPHONE 1 IN (+)
17	X792 22LB/DG	MICROPHONE IN (-)
18	-	-
19	-	-
20	X793 22DG/YL	MICROPHONE FEED
21	X835 20OR/GY	SENSOR GROUND
22	Z909 18BK/LG	GROUND

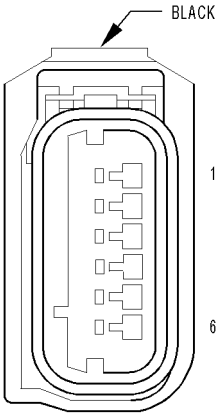

MODULE-
HEADLAMP
LEVELING
(EXPORT)

MODULE-HEADLAMP LEVELING (EXPORT) - BLACK 6 WAY

CAV	CIRCUIT	FUNCTION
1	F500 20DG/PK	FUSED RUN RELAY OUTPUT
2	D205 20WT/DB	SCI RECEIVE (LEFT HID LAMP)
3	Z901 20BK/DG	GROUND
4	D55 20WT/OR	CAN B BUS (+)
5	D211 20WT/RD	SCI RECEIVE (RIGHT HID LAMP)
6	D54 20WT	CAN B BUS (-)

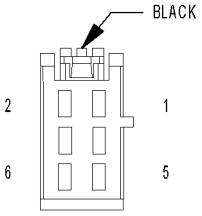

**MODULE-
HEATED SEATS**

MODULE-HEATED SEATS - BLACK 6 WAY

CAV	CIRCUIT	FUNCTION
1	Z911 18BK/WT	GROUND
2	A33 14RD/YL	FUSED B(+)
3	P187 20LG/BR	LEFT SEAT HEATER B(+) DRIVER
4	P188 20LG/VT	RIGHT SEAT HEATER B(+) DRIVER
5	D54 20WT	CAN B BUS (-)
6	D55 20WT/OR	CAN B BUS (+)

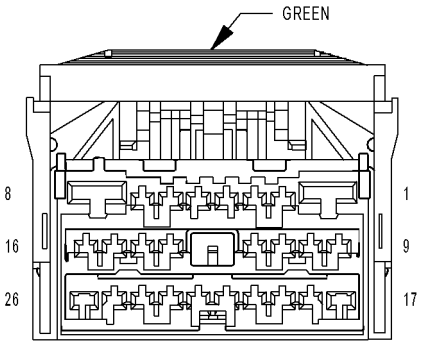

**MODULE-
INTEGRATED
POWER C1**

MODULE-INTEGRATED POWER C1 - GREEN 26 WAY

CAV	CIRCUIT	FUNCTION
1	Z901 14BK/DG	GROUND
2	-	-
3	-	-
4	-	-
5	C13 20LB/OR (GAS)	A/C CLUTCH RELAY CONTROL
6	C3 18DB/YL (GAS)	A/C CLUTCH RELAY OUTPUT
7	L303 18WT/OR (HID LAMPS)	LEFT HID LAMP DRIVER
8	A111 14DG/RD (ABS)	FUSED B(+)
9	-	-
10	-	-
11	-	-
12	-	-
13	-	-
14	L45 16WT/OR (HID LAMPS)	FUSED B(+)
15	L304 18OR/WT (HID LAMPS)	RIGHT HID LAMP DRIVER
16	X2 18DG/OR	HORN RELAY OUTPUT
17	L62 18WT/YL	RIGHT REAR TURN SIGNAL CONTROL
18	Z901 16BK/DG	GROUND
19	C918 20BK/LB	A/C PRESSURE SENSOR GROUND
20	F923 20PK/YL	RUN RELAY CONTROL
21	-	-
22	F202 20PK/GY	FUSED IGNITION SWITCH OUTPUT (RUN-START)
23	L239 20WT/DG (EXPORT)	REAR FOG LAMP RELAY CONTROL
24	K175 18BR/LB (AWD/SRT8/DIESEL)	RADIATOR FAN RELAY COIL SIGNAL
25	W12 20BR/OR (LX49)	REAR WIPER RELAY CONTROL
26	-	-

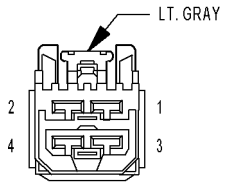

MODULE-INTEGRATED POWER C2

MODULE-INTEGRATED POWER C2 - LT. GRAY 4 WAY

CAV	CIRCUIT	FUNCTION
1	N24 12DG/DB	RADIATOR FAN CONTROL RELAY OUTPUT
2	Z901 12BK/DG	GROUND
3	N210 12DB/DG	RADIATOR FAN HIGH/LOW CONTROL FEED
4	N23 10DB/DG	RADIATOR FAN HIGH RELAY OUTPUT

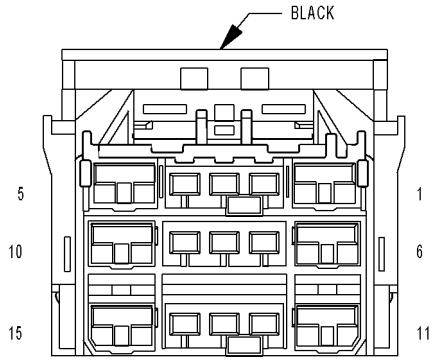

MODULE-INTEGRATED POWER C3

MODULE-INTEGRATED POWER C3 - BLACK 15 WAY

CAV	CIRCUIT	FUNCTION
1	-	-
2	P307 20LG/GY	ACCESSORY DELAY RELAY CONTROL
3	L63 18WT/DG	LEFT REAR TURN SIGNAL CONTROL
4	L1 20WT/LG	BACKUP LAMP FEED
5	A934 10RD (AWD/SRT8/DIESEL)	FUSED B(+)
6	A22 12RD/WT	FUSED B(+)
7	A904 16RD (EXCEPT SRT8 EXCEPT HID LAMPS)	FUSED B(+)
8	-	-
9	Z904 20BK/BR (2.7L/3.5L)	GROUND
9	C13 20LB/OR (DIESEL)	A/C CLUTCH RELAY CONTROL
10	A22 12RD/WT	FUSED B(+)
11	-	-
12	W3 14BR/WT	FRONT WIPER HIGH/LOW RELAY LOW SPEED OUTPUT
13	T16 16YL/OR (2.7L/3.5L)	TRANSMISSION CONTROL OUTPUT
14	T16 16YL/OR (2.7L/3.5L)	TRANSMISSION CONTROL OUTPUT
14	C3 18DB/YL (DIESEL)	A/C CLUTCH RELAY OUTPUT
15	T15 20YL/BR (2.7L/3.5L)	TRANSMISSION CONTROL
15	K343 18BR/YL (DIESEL)	FUSED ASD RELAY OUTPUT 2

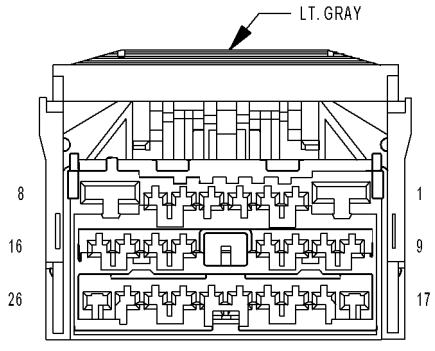

MODULE-INTEGRATED POWER C4

MODULE-INTEGRATED POWER C4 - LT. GRAY 26 WAY

CAV	CIRCUIT	FUNCTION
1	L45 16WT/OR (HID LAMPS)	FUSED B(+)
2	-	-
3	W24 20BR/OR (HID LAMPS)	HEADLAMP WASHER RELAY CONTROL
4	-	-
5	-	-
6	-	-
7	-	-
8	A107 10TN/RD (ABS)	FUSED B(+)
9	-	-
10	A72 20RD/OR	ADJUSTABLE PEDALS RELAY OUTPUT
11	Z904 20BK/BR (HID LAMPS EXCEPT SRT8 EARLY BUILD)	GROUND
11	Z901 20BK/DG (HID LAMPS SRT8 EARLY BUILD)	GROUND
12	L44 18WT/TN (HID LAMPS)	RIGHT LOW BEAM DRIVER
13	-	-
14	-	-
15	-	-
16	-	-

MODULE-INTEGRATED POWER C4 - LT. GRAY 26 WAY

CAV	CIRCUIT	FUNCTION
17	-	-
18	-	-
19	L89 18WT/YL (FOG LAMPS)	FRONT FOG LAMP RELAY OUTPUT
20	W10 20BR	FRONT WASHER PUMP MOTOR CONTROL
21	-	-
22	F902 20PK	IGNITION UNLOCK-RUN-START
23	-	-
24	F21 20PK/DG	FUSED IGNITION SWITCH OUTPUT (START)
25	-	-
26	W4 14BR/OR	FRONT WIPER HIGH/LOW RELAY HIGH SPEED OUTPUT

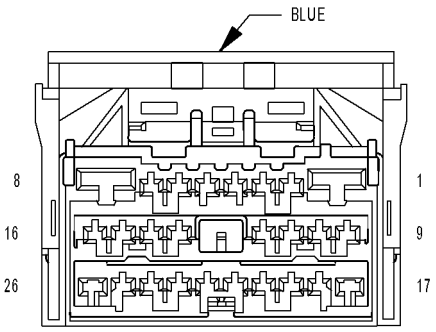

MODULE-INTEGRATED POWER C5

MODULE-INTEGRATED POWER C5 - BLUE 26 WAY

CAV	CIRCUIT	FUNCTION
1	-	-
2	-	-
3	T751 20YL (GAS)	FUSED IGNITION SWITCH OUTPUT (START)
4	T752 20DG/OR	STARTER RELAY CONTROL
5	T750 16YL/GY	STARTER RELAY OUTPUT
6	A209 18RD (GAS)	FUSED B(+)
7	-	-
8	-	-
9	K361 20WT/BR (DIESEL)	PTC NO. 2 RELAY CONTROL
10	K360 20GY/BR (DIESEL)	PTC NO. 1 RELAY CONTROL
11	X13 16DG/GY	FUSED B(+) (I.O.D.)
12	W7 20BR/GY	FRONT WIPER PARK SWITCH SENSE
13	-	-
14	-	-
15	K51 20BR/WT	ASD RELAY CONTROL
16	A22 16RD/WT (EXCEPT BASE/SRT8)	FUSED B(+)
17	K342 14BR/WT (DIESEL)	FUSED ASD RELAY OUTPUT 1
17	K342 16BR/WT (GAS)	FUSED ASD RELAY OUTPUT 1
18	-	-
19	-	-
20	L777 20WT/VT	PARK LAMP RELAY OUTPUT
21	-	-
22	Z901 16BK/DG	GROUND
23	W20 20BR/YL (LX49)	REAR WASHER PUMP MOTOR CONTROL
24	-	-
25	K344 14BR/GY (DIESEL)	FUSED ASD RELAY OUTPUT 3
26	K343 14BR/YL (DIESEL)	FUSED ASD RELAY OUTPUT 2
26	K343 16BR/YL (GAS)	FUSED ASD RELAY OUTPUT 2

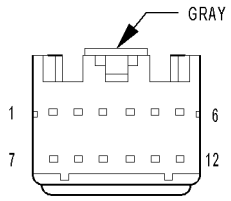

MODULE-INTERFACE-POLICE/TAXI C1

MODULE-INTERFACE-POLICE/TAXI C1 - GRAY 12 WAY

CAV	CIRCUIT	FUNCTION
1	A913 20RD/GY	FUSED B(+)
2	D55 20WT/OR	CAN B BUS (+)
3	D54 20WT	CAN B BUS (-)
4	-	-
5	-	-
6	-	-
7	Z910 20BK/TN	GROUND
8	-	-
9	-	-
10	-	-
11	-	-
12	-	-

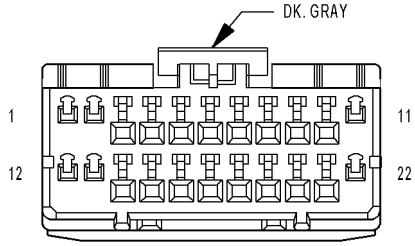

MODULE-INTERFACE-POLICE/TAXI C2

MODULE-INTERFACE-POLICE/TAXI C2 - DK. GRAY 22 WAY

CAV	CIRCUIT	FUNCTION
1	W500 20BR/OR	FRONT FLASHING LIGHTS SIGNAL
2	W501 20BR/VT	REAR FLASHING LIGHTS SIGNAL
3	W511 20BR/WT	POLICE RADIO INPUT SIGNAL
4	W512 20BR/VT	SECURITY ALARM MUTE SIGNAL
5	W513 20BR/GY	HORN MUTE SIGNAL
6	W514 20BR/YL	FUEL LEVEL STATUS SIGNAL
7	W515 20BR/LB	DRIVER SEAT BELT SWITCH SENSE
8	W516 20BR/DB	MALFUNCTION INDICATOR SIGNAL
9	W517 20BR/LG	SECURITY ALARM ON SIGNAL
10	W518 20BR/DG	HORN SWITCH SENSE
11	W519 20BR/TN	P/N SWITCH SENSE
12	W520 20BR/OR	BRAKE LAMP SWITCH SENSE
13	W521 20BR/WT	HEADLAMP SWITCH SENSE
14	W522 20BR/VT	SIDE AIRBAG STATUS SIGNAL
15	W523 20BR/GY	FRONT AIRBAG STATUS SIGNAL
16	Z384 20BK	SIGNAL RETURN
17	W524 20BR/YL	DRIVER DOOR AJAR SWITCH SENSE
18	W525 20BR/LB	CLUSTER DIMMER SWITCH SENSE
19	W526 20BR/DB	VEHICLE SPEED SIGNAL
20	W527 20BR/LG	VSIM CAN B BUS (+)
21	W528 20BR/DG	VSIM CAN B BUS (-)
22	W529 20BR/TN	ENGINE RUNNING STATUS SIGNAL

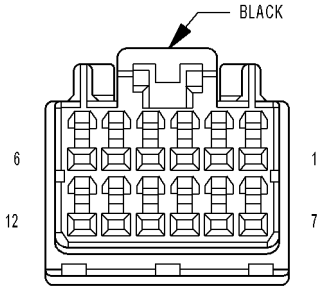

MODULE-INTRUSION TRANSCEIVER (RHD)

MODULE-INTRUSION TRANSCEIVER (RHD) - BLACK 12 WAY

CAV	CIRCUIT	FUNCTION
1	A23 20RD/YL	FUSED B(+) (I.O.D.)
2	-	-
3	A645 20RD/VT	INTRUSION TRANSMITTER SENSOR SIGNAL
4	G460 20DG/VT	INTRUSION RECEIVER SENSOR SIGNAL
5	D96 20WT/LB	SIREN SIGNAL CONTROL
6	D55 20WT/OR	CAN B BUS (+)
7	Z910 20BK/TN	GROUND
8	-	-
9	G945 20VT/DG	INTRUSION TRANSMITTER SENSOR GROUND
10	G946 20LG/VT	INTRUSION RECEIVER SENSOR GROUND
11	-	-
12	D54 20WT	CAN B BUS (-)

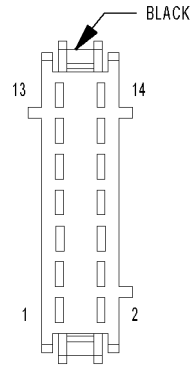

MODULE-MEMORY SEAT C1

MODULE-MEMORY SEAT C1 - BLACK 14 WAY

CAV	CIRCUIT	FUNCTION
1	P205 16LG/WT (LHD ADJUSTABLE PEDALS)	ADJUSTABLE PEDALS MOTOR FORWARD
2	P206 16LG/LB (LHD ADJUSTABLE PEDALS)	ADJUSTABLE PEDALS MOTOR REARWARD
3	P153 16TN/DG (LHD)	TILT STEERING MOTOR UP/DOWN DRIVER
4	P157 16LB/TN (LHD)	TELESCOPE STEERING MOTOR FORWARD/REARWARD DRIVER
5	D54 20WT	CAN B BUS (-)
6	P953 16DG/TN (LHD)	STEERING MOTOR COMMON
7	D55 20WT/OR	CAN B BUS (+)
8	A110 12OR/RD	FUSED B(+)
9	G13 18VT/LB (LHD ADJUSTABLE PEDALS)	ADJUSTABLE PEDALS SENSOR SUPPLY
10	Z912 12BK/OR	GROUND
11	P152 20TN/LB (LHD)	TELESCOPE STEERING FORWARD/REARWARD POSITION SENSE
12	G914 20VT/GY (LHD)	SENSOR RETURN
13	P151 20TN/OR (LHD)	TILT STEERING UP/DOWN POSITION SENSE
14	G14 18VT/DB (LHD ADJUSTABLE PEDALS)	ADJUSTABLE PEDALS SENSOR SIGNAL

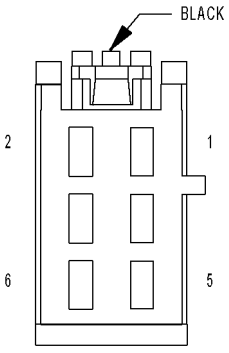

MODULE-MEMORY SEAT C2

MODULE-MEMORY SEAT C2 - BLACK 6 WAY

CAV	CIRCUIT	FUNCTION
1	G493 20OR/VT	DRIVER SEAT RECLINER POSITION SENSOR GROUND
2	P141 18LG/BR	DRIVER SEAT RECLINER UP DRIVER
3	-	-
4	P143 18LG/GY	DRIVER SEAT RECLINER DOWN DRIVER
5	G403 20VT/OR	DRIVER SEAT RECLINER POSITION SENSE
6	-	-

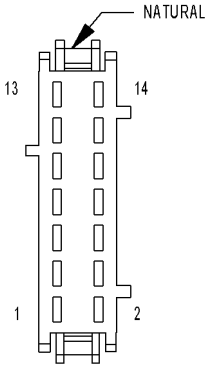

MODULE-MEMORY SEAT C3

MODULE-MEMORY SEAT C3 - NATURAL 14 WAY

CAV	CIRCUIT	FUNCTION
1	G404 20VT/YL	DRIVER SEAT FRONT VERTICAL POSITION SENSE
2	G402 20VT/DB	DRIVER SEAT REAR VERTICAL POSITION SENSE
3	G401 20VT/LG	DRIVER SEAT HORIZONTAL POSITION SENSE
4	G494 20YL/VT	DRIVER SEAT FRONT VERTICAL SENSOR GROUND
5	G492 20LB/VT	DRIVER SEAT REAR VERTICAL SENSOR GROUND
6	G491 20VT/GY	DRIVER SEAT HORIZONTAL SENSOR GROUND
7	-	-
8	P115 16LG	DRIVER SEAT HORIZONTAL FORWARD DRIVER
9	P117 16LG/LB	DRIVER SEAT HORIZONTAL REARWARD DRIVER
10	P113 18LG/WT	DRIVER SEAT REAR VERTICAL DOWN DRIVER
11	-	-
12	P111 18LG/YL	DRIVER SEAT REAR VERTICAL UP DRIVER
13	P121 18LG/DB	DRIVER SEAT FRONT VERTICAL DOWN DRIVER
14	P119 18LG/DG	DRIVER SEAT FRONT VERTICAL UP DRIVER

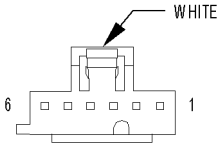

MODULE-MEMORY SEAT C4

MODULE-MEMORY SEAT C4 - WHITE 6 WAY

CAV	CIRCUIT	FUNCTION
1	P599 20LG/TN	DRIVER SEAT SWITCH MUX RETURN
2	P239 20LG/WT	DRIVER SEAT SWITCH REAR VERTICAL/HORIZONTAL SWITCH MUX
3	P339 20LG/DB	DRIVER SEAT SWITCH FRONT VERTICAL/RECLINER SWITCH MUX
4	-	-
5	-	-
6	P9 20LG/OR	DRIVER SEAT SWITCH SUPPLY

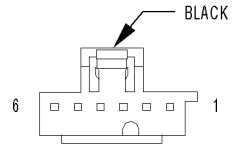

MODULE-MEMORY SEAT C5 (ADJUSTABLE PEDALS)

MODULE-MEMORY SEAT C5 (ADJUSTABLE PEDALS) - BLACK 6 WAY

CAV	CIRCUIT	FUNCTION
1	-	-
2	-	-
3	-	-
4	Q102 20OR/LB	ADJUSTABLE PEDALS SWITCH FORWARD
5	Q103 20OR/LG	ADJUSTABLE PEDALS SWITCH REARWARD
6	Q101 20OR/LB	ADJUSTABLE PEDALS SWITCH GROUND

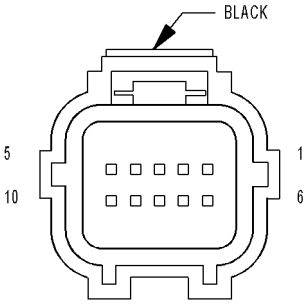

MODULE-OCCUPANT CLASSIFICATION C1 (EXCEPT EXPORT)

MODULE-OCCUPANT CLASSIFICATION C1 (EXCEPT EXPORT) - BLACK 10 WAY

CAV	CIRCUIT	FUNCTION
1	A106 20LB/RD	FUSED B(+)
2	F201 20PK/OR	FUSED IGNITION SWITCH OUTPUT (RUN-START)
3	-	-
4	D55 20WT/OR	CAN B BUS (+)
5	D54 20WT	CAN B BUS (-)
6	-	-
7	R263 20LB/VT	DRIVER SEAT POSITION SENSOR VOLTAGE
8	-	-
9	R261 20LB/WT	DRIVER SEAT POSITION SENSOR DATA
10	Z911 18BK/WT	GROUND

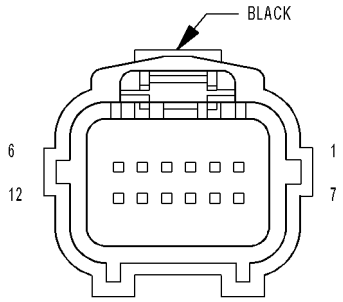

**MODULE-
OCCUPANT
CLASSIFICATION C2
(EXCEPT EXPORT)**

MODULE-OCCUPANT CLASSIFICATION C2 (EXCEPT EXPORT) - BLACK 12 WAY

CAV	CIRCUIT	FUNCTION
1	R701 20LG	SEAT WEIGHT SENSOR 5 VOLT
2	-	-
3	R717 20LG/DG	SEAT WEIGHT LEFT FRONT SENSOR SIGNAL
4	-	-
5	R718 20LB/DG	SEAT WEIGHT RIGHT FRONT SENSOR SIGNAL
6	-	-
7	R706 20LB/OR	SEAT WEIGHT RIGHT REAR SENSOR SIGNAL
8	-	-
9	R705 20LG/OR	SEAT WEIGHT LEFT REAR SENSOR SIGNAL
10	-	-
11	-	-
12	R728 20LB/YL	SEAT WEIGHT SENSOR GROUND

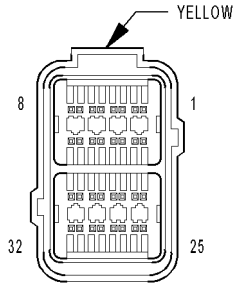

**MODULE-
OCCUPANT
RESTRAINT
CONTROLLER C1**

MODULE-OCCUPANT RESTRAINT CONTROLLER C1 - YELLOW 32 WAY

CAV	CIRCUIT	FUNCTION
1	R53 20LG/YL	DRIVER SEAT BELT TENSIONER LINE 2
2	R55 20LG/DG	DRIVER SEAT BELT TENSIONER LINE 1
3	R56 20LB/DG	PASSENGER SEAT BELT TENSIONER LINE 1
4	R54 20LB/YL	PASSENGER SEAT BELT TENSIONER LINE 2
5	-	-
6	-	-
7	-	-
8	-	-
9	-	-
10	-	-
11	-	-
12	-	-
13	R261 20LB/WT (EXPORT)	DRIVER SEAT POSITION SENSOR DATA
14	-	-
15	R13 20LG/TN (SIDE AIRBAGS)	LEFT SIDE IMPACT SENSOR 1 SIGNAL
16	R16 20BR/LG (SIDE AIRBAGS)	RIGHT SIDE IMPACT SENSOR 1 GROUND
17	R263 20LB/VT (EXPORT)	DRIVER SEAT POSITION SENSOR VOLTAGE
18	-	-
19	R15 20LG/BR (SIDE AIRBAGS)	LEFT SIDE IMPACT SENSOR 1 GROUND
20	R19 20LG/WT (SIDE AIRBAGS)	LEFT SIDE IMPACT SENSOR 2 GROUND
21	R20 20WT/LG (SIDE AIRBAGS)	RIGHT SIDE IMPACT SENSOR 2 GROUND
22	R17 20LG (SIDE AIRBAGS)	LEFT SIDE IMPACT SENSOR 2 SIGNAL
23	R18 20LB (SIDE AIRBAGS)	RIGHT SIDE IMPACT SENSOR 2 SIGNAL
24	R14 20TN/LG (SIDE AIRBAGS)	RIGHT SIDE IMPACT SENSOR 1 SIGNAL
25	R1 20LB/WT (SIDE AIRBAGS)	LEFT CURTAIN SQUIB 1 LINE 2
26	R3 20LB/OR (SIDE AIRBAGS)	LEFT CURTAIN SQUIB 1 LINE 1
27	R4 20OR/LB (SIDE AIRBAGS)	RIGHT CURTAIN SQUIB 1 LINE 1
28	R2 20WT/LB (SIDE AIRBAGS)	RIGHT CURTAIN SQUIB 1 LINE 2
29	-	-
30	-	-
31	-	-
32	-	-

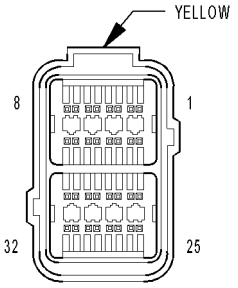

**MODULE-
OCCUPANT
RESTRAINT
CONTROLLER C2**

MODULE-OCCUPANT RESTRAINT CONTROLLER C2 - YELLOW 32 WAY

CAV	CIRCUIT	FUNCTION
1	R43 20LG/BR	DRIVER SQUIB 1 LINE 2
2	R45 20LG/OR	DRIVER SQUIB 1 LINE 1
3	R63 20LG/WT	DRIVER SQUIB 2 LINE 1
4	R61 20LG/VT	DRIVER SQUIB 2 LINE 2
5	R42 20LB/BR	PASSENGER SQUIB 1 LINE 2
6	R44 20LB/OR	PASSENGER SQUIB 1 LINE 1
7	R64 20LB/WT	PASSENGER SQUIB 2 LINE 1
8	R62 20LB/VT	PASSENGER SQUIB 2 LINE 2
9	G104 20VT/GY (EARLY BUILD)	PASSENGER AIRBAG INDICATOR DRIVER
10	-	-
11	-	-
12	R82 20WT/LB	RIGHT FRONT IMPACT SENSOR GROUND
13	-	-
14	-	-
15	D55 20WT/OR	CAN B BUS (+)
16	F201 20PK/OR	FUSED IGNITION SWITCH OUTPUT (RUN-START)
17	-	-
18	-	-
19	-	-
20	R81 20LB/WT	LEFT FRONT IMPACT SENSOR GROUND
21	-	-
22	Z913 18BK/LG	GROUND
23	D54 20WT	CAN B BUS (-)
24	F214 20PK/LG	FUSED RUN RELAY OUTPUT
25	R79 20LB/VT	LEFT FRONT IMPACT SENSOR SIGNAL
26	R80 20VT/LB	RIGHT FRONT IMPACT SENSOR SIGNAL
27	-	-
28	-	-
29	-	-
30	-	-
31	-	-
32	-	-

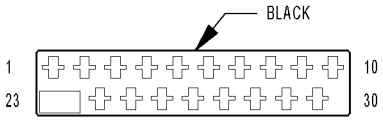

**MODULE-
PARK ASSIST
(PARKTRONICS)**

MODULE-PARK ASSIST (PARKTRONICS) - BLACK 18 WAY

CAV	CIRCUIT	FUNCTION
1	-	-
2	-	-
3	D703 20WT/BK	PARK ASSIST SENSOR NO. 9 SIGNAL
4	D700 20WT/GY	PARK ASSIST SENSOR NO. 7 SIGNAL
5	D54 20WT	CAN B BUS (-)
6	D55 20WT/OR	CAN B BUS (+)
7	-	-
8	X750 20GY/LB	PARK ASSIST SENSOR GROUND
9	Z171 20GY/BK	PARK ASSIST DISPLAY GROUND
10	Z914 20BK/GY	GROUND
23	D704 20WT/DB	PARK ASSIST SENSOR NO. 10 SIGNAL
24	D701 20WT/LB	PARK ASSIST SENSOR NO. 8 SIGNAL
25	D777 20WT/DG	PARK ASSIST DISPLAY SIGNAL
26	-	-
27	-	-
28	X700 20GY/OR	PARK ASSIST SENSOR SUPPLY
29	X777 20DG/GY	PARK ASSIST DISPLAY SUPPLY
30	F500 20DG/PK	FUSED RUN RELAY OUTPUT

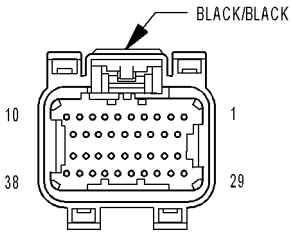

MODULE-POWERTRAIN CONTROL C1

MODULE-POWERTRAIN CONTROL C1 - BLACK/BLACK 38 WAY

CAV	CIRCUIT	FUNCTION
1	K98 16DB/YL (5.7L/SRT8)	COIL CONTROL NO. 8
2	-	-
3	K97 16DB/YL (5.7L/SRT8)	COIL CONTROL NO. 7
4	K28 20BR/LB (5.7L/SRT8)	INJECTOR CONTROL NO. 8
5	K26 20BR/YL (5.7L/SRT8)	INJECTOR CONTROL NO. 7
6	-	-
7	-	-
8	-	-
9	Z904 16BK/BR	GROUND
10	-	-
11	F202 20PK/GY	FUSED IGNITION SWITCH OUTPUT (RUN-START)
12	F902 20PK (RLE)	IGNITION UNLOCK-RUN-START
13	-	-
14	-	-
15	-	-
16	K236 20DB/LG (3.5L)	SRV CONTROL
17	-	-
18	Z904 16BK/BR	GROUND
19	-	-
20	G6 20VT/GY	ENGINE OIL PRESSURE SIGNAL
21	-	-
22	-	-
23	-	-
24	-	-
25	D20 20WT/LG	SCI RECEIVE (PCM)
26	D16 20WT/OR (EXCEPT SRT8)	SCI RECEIVE (TCM)
27	F856 20YL/PK	5 VOLT SUPPLY
28	K452 20BR/LB (5.7L MDS)	MDS SOL CONTROL NO. 4
29	A209 18RD	FUSED B(+)
30	T751 20YL	FUSED IGNITION SWITCH OUTPUT (START)
31	K141 20DB/YL	O2 1/2 SIGNAL
32	K904 20DB/DG	O2 RETURN (DOWN)
33	K243 20BR	O2 2/2 SIGNAL
34	D65 20WT/LG	CAN C BUS (+)
35	D64 20WT/LB	CAN C BUS (-)
36	D21 20WT/BR	SCI TRANSMIT (ECM/PCM)
37	D15 20WT/DG (EXCEPT SRT8)	SCI TRANSMIT (TCM)
38	-	-

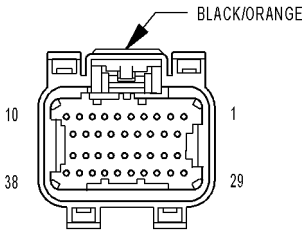

MODULE-POWERTRAIN CONTROL C2

MODULE-POWERTRAIN CONTROL C2 - BLACK/ORANGE 38 WAY

CAV	CIRCUIT	FUNCTION
1	K10 18DB/OR (3.5L LATE BUILD)	COIL CONTROL NO. 6
1	K10 16DB/OR (EXCEPT 3.5L LATE BUILD)	COIL CONTROL NO. 6
2	K16 18DB/YL (3.5L LATE BUILD)	COIL CONTROL NO. 5
2	K16 16DB/YL (EXCEPT 3.5L LATE BUILD)	COIL CONTROL NO. 5
3	K15 18DB/GY (3.5L LATE BUILD)	COIL CONTROL NO. 4
3	K15 16DB/GY (EXCEPT 3.5L LATE BUILD)	COIL CONTROL NO. 4
4	K58 20BR/VT	INJECTOR CONTROL NO. 6
5	K38 20BR/OR	INJECTOR CONTROL NO. 5
6	K124 18DB/GY	ETC MOTOR (+)
7	K18 18DB/LG (3.5L LATE BUILD)	COIL CONTROL NO. 3
7	K18 16DB/LG (EXCEPT 3.5L LATE BUILD)	COIL CONTROL NO. 3
8	K35 20DB/VT (EXCEPT SRT8)	EGR SOL CONTROL
9	K17 18DB/TN (3.5L LATE BUILD)	COIL CONTROL NO. 2
9	K17 16DB/TN (EXCEPT 3.5L LATE BUILD)	COIL CONTROL NO. 2
10	K19 18DB/DG (3.5L LATE BUILD)	COIL CONTROL NO. 1
10	K19 16DB/DG (EXCEPT 3.5L LATE BUILD)	COIL CONTROL NO. 1
11	K14 20BR/TN	INJECTOR CONTROL NO. 4
12	K13 20BR/LB	INJECTOR CONTROL NO. 3
13	K12 20BR/DB	INJECTOR CONTROL NO. 2
14	K11 20BR/YL	INJECTOR CONTROL NO. 1
15	K922 18BR/DB	TP SENSOR RETURN
16	K136 18BR (2.7L/3.5L)	MTV CONTROL
16	K453 20BR/DG (5.7L MDS)	MDS SOL CONTROL NO. 6
17	K199 20BR/VT	O2 2/1 HEATER CONTROL
18	K99 20BR/LG	O2 1/1 HEATER CONTROL
19	K20 18BR/GY	GEN FIELD CONTROL
20	K2 20VT/OR	ECT SIGNAL
21	K22 18BR/OR	TP SENSOR NO. 1 SIGNAL
22	K34 20DB/LG (EXCEPT SRT8)	EGR SIGNAL
23	K1 20VT/BR	MAP SIGNAL
24	K942 20BR/LG	KNOCK SENSOR NO. 1 RETURN
25	K42 20DB/YL	KNOCK SENSOR NO. 1 SIGNAL
26	-	-
27	K900 20DB/DG	SENSOR GROUND
28	K122 18BR/DG	TP SENSOR NO. 2 SIGNAL
29	F855 20PK/YL	5 VOLT SUPPLY
30	K21 20DB/LG	IAT SIGNAL
31	K41 20DB/LB	O2 1/1 SIGNAL
32	K902 20BR/DG	O2 RETURN (UP)
33	K43 20DB/LG	O2 2/1 SIGNAL
34	K44 20DB/GY	CMP SIGNAL
35	K24 20DB/WT	CKP SIGNAL
36	K242 20BR/WT (5.7L/SRT8)	KNOCK SENSOR NO. 2 SIGNAL
37	K924 20WT/BR (5.7L/SRT8)	KNOCK SENSOR NO. 2 RETURN
38	K126 18DB/LG	ETC MOTOR (-)

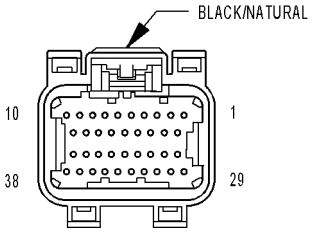

MODULE-POWERTRAIN CONTROL C3

MODULE-POWERTRAIN CONTROL C3 - BLACK/NATURAL 38 WAY

CAV	CIRCUIT	FUNCTION
1	-	-
2	-	-
3	K51 20BR/WT	ASD RELAY CONTROL
4	-	-
5	K454 20BR/OR (5.7L MDS)	MDS SOL CONTROL NO. 7
6	K451 20BR/WT (5.7L MDS)	MDS SOL CONTROL NO. 1
7	-	-
8	K106 20VT/GY (POLICE/SRT8 EXCEPT EXPORT)	NVLD SOL CONTROL
9	K299 20BR/WT	O2 1/2 HEATER CONTROL
10	K399 20BR/GY	O2 2/2 HEATER CONTROL
11	C13 20LB/OR	A/C CLUTCH RELAY CONTROL
12	-	-
13	-	-
14	B16 20LB/DG	BRAKE SWITCH NO. 2 SIGNAL
15	-	-
16	K167 20BR/YL	APPS NO. 1 RETURN
17	K400 20BR/VT	APPS NO. 2 RETURN
18	-	-
19	K342 16BR/WT	FUSED ASD RELAY OUTPUT 1
20	K52 20DB/OR	EVAP PURGE CONTROL
21	-	-
22	-	-
23	B15 20DG/WT	BRAKE SWITCH NO. 1 SIGNAL
24	-	-
25	K23 20BR/WT	APPS NO. 1 SIGNAL
26	-	-
27	-	-
28	K342 16BR/WT	FUSED ASD RELAY OUTPUT 1
29	K70 20DB/BR	EVAP PURGE RETURN
30	-	-
31	-	-
32	-	-
33	G224 20VT/YL (5.7L/SRT8)	ENGINE OIL TEMPERATURE SIGNAL
34	-	-
35	K107 20VT/WT	NVLD SWITCH SIGNAL
36	K29 20WT/BR	APPS NO. 2 SIGNAL
37	K31 20BR	FUEL PUMP RELAY CONTROL
38	T752 20DG/OR	STARTER RELAY CONTROL

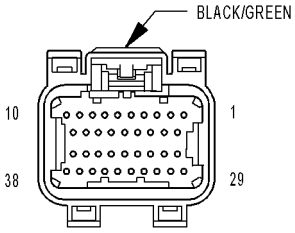

MODULE-POWERTRAIN CONTROL C4 (RLE)

MODULE-POWERTRAIN CONTROL C4 (RLE) - BLACK/GREEN 38 WAY

CAV	CIRCUIT	FUNCTION
1	T60 20YL/GY	OD SOLENOID CONTROL
2	T59 20YL/LB	UD SOLENOID CONTROL
3	-	-
4	-	-
5	-	-
6	T19 20YL/DB	2-4 SOLENOID CONTROL
7	-	-
8	-	-
9	-	-
10	T20 20DG/WT	L/R SOLENOID CONTROL
11	T118 20DG (VLP)	PRESSURE CONTROL SOLENOID CONTROL
12	Z904 20BK/BR	GROUND
13	Z904 20BK/BR	GROUND
14	Z904 20BK/BR	GROUND
15	T1 20DG/LB	TRS T1 SENSE
16	T3 20DG/DB	TRS T3 SENSE
17	-	-
18	T15 20YL/BR	TRANSMISSION CONTROL
19	T16 16YL/OR	TRANSMISSION CONTROL OUTPUT
20	-	-
21	-	-
22	T9 20DG/TN	OD PRESSURE SWITCH SENSE
23	-	-
24	-	-
25	-	-
26	-	-
27	T41 20YL/DB	TRS T41 SENSE (P/N SENSE)
28	T16 16YL/OR	TRANSMISSION CONTROL OUTPUT
29	T50 20YL/TN	L/R PRESSURE SWITCH SENSE
30	T47 20YL/DG	2-4 PRESSURE SWITCH SENSE
31	T38 20YL/BR (VLP)	LINE PRESSURE SENSOR SIGNAL
32	T14 20DG/BR	OUTPUT SPEED SENSOR SIGNAL
33	T52 20DG/OR	INPUT SPEED SENSOR SIGNAL
34	T13 20DG/VT	SENSOR GROUND
35	T54 20DG/OR	TRANSMISSION TEMPERATURE SENSOR SIGNAL
36	-	-
37	T42 20DG/YL	TRS T42 SENSE
38	T16 16YL/OR	TRANSMISSION CONTROL OUTPUT

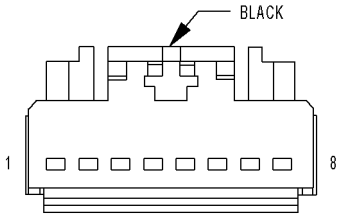

**MODULE-
SENTRY KEY
REMOTE ENTRY**

MODULE-SENTRY KEY REMOTE ENTRY - BLACK 8 WAY

CAV	CIRCUIT	FUNCTION
1	-	-
2	D508 20WT/GY	TIRE PRESSURE BUS
3	F202 20PK/GY	FUSED IGNITION SWITCH OUTPUT (RUN-START)
4	Z910 18BK/TN	GROUND
5	A23 20RD/YL (LHD)	FUSED B(+) (I.O.D.)
5	A917 18RD/TN (RHD)	FUSED B(+)
6	D55 20WT/OR	CAN B BUS (+)
7	D54 20WT	CAN B BUS (-)
8	-	-

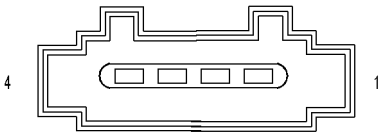

**MODULE-
STEERING
COLUMN-
LOCK
(RHD)**

MODULE-STEERING COLUMN-LOCK (RHD) - 4 WAY

CAV	CIRCUIT	FUNCTION
1	A917 18RD/TN	FUSED B(+)
2	Z910 20BK/TN	GROUND
3	F892 20PK/LB	IGNITION SWITCH OUTPUT (KEY-IN)
4	D508 20WT/GY	TIRE PRESSURE BUS

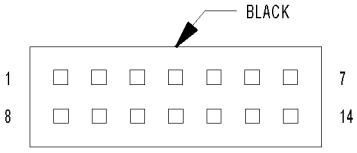

**MODULE-
STEERING CONTROL**

MODULE-STEERING CONTROL - BLACK 14 WAY

CAV	CIRCUIT	FUNCTION
1	R63 20LG/WT	DRIVER SQUIB 2 LINE 1
2	R61 20LG/VT	DRIVER SQUIB 2 LINE 2
3	R45 20LG/OR	DRIVER SQUIB 1 LINE 1
4	R43 20LG/BR	DRIVER SQUIB 1 LINE 2
5	-	-
6	-	-
7	-	-
8	Z910 20BK/TN	GROUND
9	A913 20RD/GY	FUSED B(+)
10	D65 20WT/LG	CAN C BUS (+)
11	D64 20WT/LB	CAN C BUS (-)
12	D54 20WT	CAN B BUS (-)
13	D55 20WT/OR	CAN B BUS (+)
14	-	-

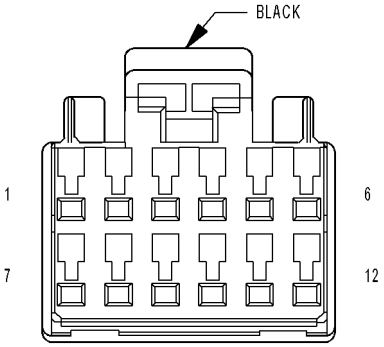

**MODULE-
TRAFFIC INFORMATION
RECEIVER C1
(EXPORT)**

MODULE-TRAFFIC INFORMATION RECEIVER C1 (EXPORT) - BLACK 12 WAY

CAV	CIRCUIT	FUNCTION
1	-	-
2	D55 20WT/OR	CAN B BUS (+)
3	-	-
4	-	-
5	-	-
6	A300 20GY/LG	FUSED B(+) (I.O.D.)
7	Z909 20BK	GROUND
8	D54 20WT	CAN B BUS (-)
9	-	-
10	-	-
11	-	-
12	-	-

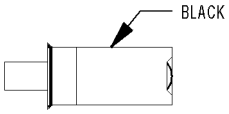

**MODULE-
TRAFFIC INFORMATION
RECEIVER C2
(EXPORT)**

MODULE-TRAFFIC INFORMATION RECEIVER C2 (EXPORT) - BLACK 2 WAY

CAV	CIRCUIT	FUNCTION
1	D5 6WT/OR	ANTENNA SIGNAL
2	D931 WT/YL	ANTENNA SHIELD

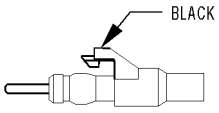

**MODULE-
TRAFFIC INFORMATION
RECEIVER C3
(EXPORT)**

MODULE-TRAFFIC INFORMATION RECEIVER C3 (EXPORT) - BLACK 2 WAY

CAV	CIRCUIT	FUNCTION
1	D6 6WT/OR	RADIO ANTENNA SIGNAL
2	D932 WT/YL	RADIO ANTENNA SHIELD

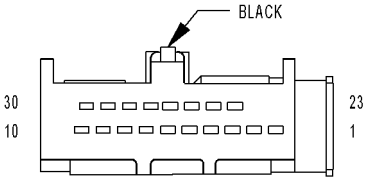

**MODULE-
TRANSMISSION
CONTROL C1
(NAG1)**

MODULE-TRANSMISSION CONTROL C1 (NAG1) - BLACK 18 WAY

CAV	CIRCUIT	FUNCTION
1	-	-
2	-	-
3	-	-
4	-	-
5	-	-
6	-	-
7	-	-
8	-	-
9	-	-
10	-	-
23	-	-
24	-	-
25	-	-
26	-	-
27	-	-
28	-	-
29	F942 18PK/BK	FUSED TRANSMISSION RELAY OUTPUT
30	Z912 18BK/OR (LHD EXCEPT POLICE)	GROUND
30	Z910 18BK/TN (RHD/POLICE)	GROUND

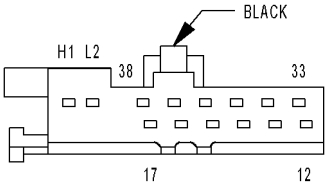

MODULE-TRANSMISSION CONTROL C2 (NAG1)

MODULE-TRANSMISSION CONTROL C2 (NAG1) - BLACK 14 WAY

CAV	CIRCUIT	FUNCTION
12	T70 20YL	INPUT SPEED SENSOR 1 (N2) SIGNAL
13	T72 20YL/DB	SENSOR SUPPLY VOLTAGE
14	T60 20YL/GY	1-2/4-5 SOLENOID CONTROL
15	T73 20YL/GY	3-4 SOLENOID CONTROL
16	T74 20YL/LG	2-3 SOLENOID CONTROL
17	T75 20YL/LB	TCC SOLENOID CONTROL
33	T13 20DG/VT	SENSOR GROUND
34	T54 20DG/OR	TEMPERATURE SENSOR-P/N SWITCH SIGNAL
35	T71 20YL/OR	INPUT SPEED SENSOR 2 (N3) SIGNAL
36	T76 20YL/TN	MODULATION PRESSURE SOLENOID CONTROL
37	T77 20YL/BR	SHIFT PRESSURE SOLENOID CONTROL
38	T78 20YL	SOLENOID SUPPLY VOLTAGE
H1	D65 20WT/LG	CAN C BUS (+)
L2	D64 20WT/LB	CAN C BUS (-)

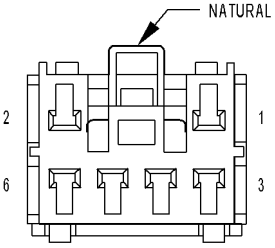

MOTOR-ADJUSTABLE PEDALS (LHD)

MOTOR-ADJUSTABLE PEDALS (LHD) - NATURAL 6 WAY

CAV	CIRCUIT	FUNCTION
1	P206 20LG/LB (EXCEPT MEMORY)	ADJUSTABLE PEDALS MOTOR REARWARD
1	P206 16LG/LB (MEMORY)	ADJUSTABLE PEDALS MOTOR REARWARD
2	P205 20LG/WT (EXCEPT MEMORY)	ADJUSTABLE PEDALS MOTOR FORWARD
2	P205 16LG/WT (MEMORY)	ADJUSTABLE PEDALS MOTOR FORWARD
3	-	-
4	-	-
5	-	-
6	-	-

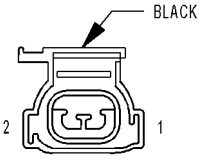

MOTOR-BLOWER-FRONT

MOTOR-BLOWER-FRONT - BLACK 2 WAY

CAV	CIRCUIT	FUNCTION
1	Z134 12BK/LG	GROUND
2	C7 12DB (ATC)	BLOWER MOTOR SUPPLY
2	C7 12DB (MTC)	FUSED RUN RELAY OUTPUT

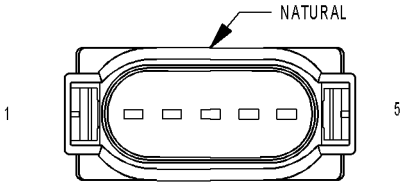

MOTOR-BOOST PRESSURE SERVO (DIESEL)

MOTOR-BOOST PRESSURE SERVO (DIESEL) - NATURAL 5 WAY

CAV	CIRCUIT	FUNCTION
1	K343 18RD/DG	FUSED ASD RELAY OUTPUT 2
2	Z904 18BR	GROUND
3	-	-
4	X635 20GY/DG	BOOST PRESSURE SERVO MOTOR CONTROL
5	-	-

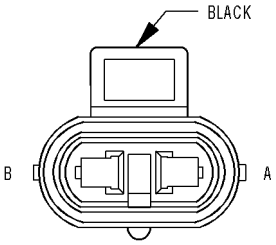

**MOTOR-
HEADLAMP WASHER
(HID LAMPS)**

MOTOR-HEADLAMP WASHER (HID LAMPS) - BLACK 2 WAY

CAV	CIRCUIT	FUNCTION
A	W23 16BR/OR	HEADLAMP WASHER RELAY OUTPUT
B	Z904 16BK/BR	GROUND

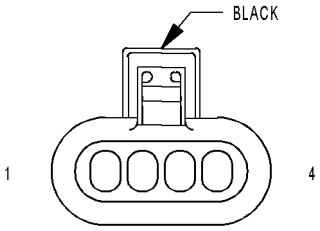

**MOTOR-
INTAKE SWIRL
SERVO
(DIESEL)**

MOTOR-INTAKE SWIRL SERVO (DIESEL) - BLACK 4 WAY

CAV	CIRCUIT	FUNCTION
1	Z904 18BR	GROUND
2	K343 18RD/DG	FUSED ASD RELAY OUTPUT 2
3	N117 20GY	INTAKE SWIRL SERVO MOTOR CONTROL
4	-	-

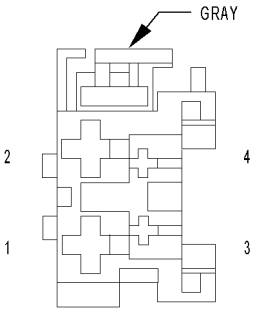

**MOTOR-
SEAT ADJUSTER-
DRIVER HORIZONTAL**

MOTOR-SEAT ADJUSTER-DRIVER HORIZONTAL - GRAY 4 WAY

CAV	CIRCUIT	FUNCTION
1	P15 16LG/WT (EXCEPT MEMORY)	DRIVER SEAT HORIZONTAL FORWARD DRIVER
1	P115 16LG (LHD MEMORY)	DRIVER SEAT HORIZONTAL FORWARD DRIVER
1	P117 16LG/LB (RHD MEMORY)	DRIVER SEAT HORIZONTAL REARWARD DRIVER
2	P17 16LG/DG (EXCEPT MEMORY)	DRIVER SEAT HORIZONTAL REARWARD DRIVER
2	P117 16LG/LB (LHD MEMORY)	DRIVER SEAT HORIZONTAL REARWARD DRIVER
2	P115 16LG (RHD MEMORY)	DRIVER SEAT HORIZONTAL FORWARD DRIVER
3	G491 20VT/GY (MEMORY)	DRIVER SEAT HORIZONTAL SENSOR GROUND
4	G401 20VT/LG (MEMORY)	DRIVER SEAT HORIZONTAL POSITION SENSE

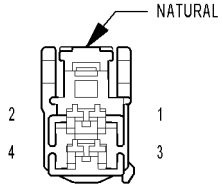

**MOTOR-
SEAT ADJUSTER-
DRIVER RECLINER
(EXCEPT MEMORY)**

MOTOR-SEAT ADJUSTER-DRIVER RECLINER (EXCEPT MEMORY) - NATURAL 4 WAY

CAV	CIRCUIT	FUNCTION
1	P43 18LG/VT	DRIVER SEAT RECLINER UP DRIVER
2	P41 18LG/GY	DRIVER SEAT RECLINER DOWN DRIVER
3	-	-
4	-	-

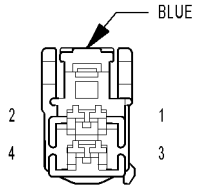

**MOTOR-
SEAT ADJUSTER-
DRIVER RECLINER
(MEMORY)**

MOTOR-SEAT ADJUSTER-DRIVER RECLINER (MEMORY) - BLUE 4 WAY

CAV	CIRCUIT	FUNCTION
1	P143 18LG/GY	DRIVER SEAT RECLINER DOWN DRIVER
2	P141 18LG/BR	DRIVER SEAT RECLINER UP DRIVER
3	G493 20OR/VT	DRIVER SEAT RECLINER POSITION SENSOR GROUND
4	G403 20VT/OR	DRIVER SEAT RECLINER POSITION SENSE

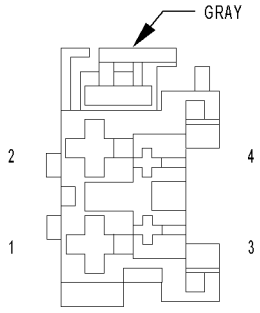

**MOTOR-
SEAT ADJUSTER-
FRONT DRIVER
VERTICAL**

MOTOR-SEAT ADJUSTER-FRONT DRIVER VERTICAL - GRAY 4 WAY

CAV	CIRCUIT	FUNCTION
1	P21 18LG/TN (EXCEPT MEMORY)	DRIVER SEAT FRONT RISER DOWN DRIVER
1	P121 18LG/DB (MEMORY)	DRIVER SEAT FRONT VERTICAL DOWN DRIVER
2	P19 18LG/LB (EXCEPT MEMORY)	DRIVER SEAT FRONT RISER UP DRIVER
2	P119 18LG/DG (MEMORY)	DRIVER SEAT FRONT VERTICAL UP DRIVER
3	G494 20YL/VT (MEMORY)	DRIVER SEAT FRONT VERTICAL SENSOR GROUND
4	G404 20VT/YL (MEMORY)	DRIVER SEAT FRONT VERTICAL POSITION SENSE

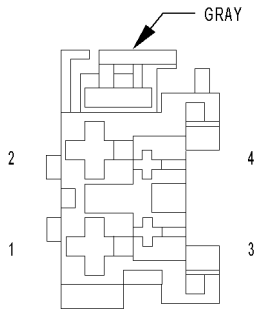

**MOTOR-
SEAT ADJUSTER-
FRONT PASSENGER
VERTICAL**

MOTOR-SEAT ADJUSTER-FRONT PASSENGER VERTICAL - GRAY 4 WAY

CAV	CIRCUIT	FUNCTION
1	P20 18LG/LB (LHD)	PASSENGER SEAT FRONT RISER DOWN DRIVER
1	P20 18LG/TN (RHD)	PASSENGER SEAT FRONT RISER DOWN DRIVER
2	P18 18LG/OR (LHD)	PASSENGER SEAT FRONT RISER UP DRIVER
2	P18 18LG/LB (RHD)	PASSENGER SEAT FRONT RISER UP DRIVER
3	-	-
4	-	-

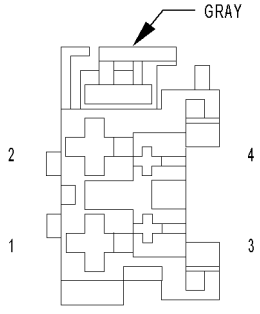

**MOTOR-
SEAT ADJUSTER-
PASSENGER
HORIZONTAL**

MOTOR-SEAT ADJUSTER-PASSENGER HORIZONTAL - GRAY 4 WAY

CAV	CIRCUIT	FUNCTION
1	P16 16LG/WT	PASSENGER SEAT HORIZONTAL REARWARD DRIVER
2	P14 16LG/OR (LHD)	PASSENGER SEAT HORIZONTAL FORWARD DRIVER
2	P14 16LG/DG (RHD)	PASSENGER SEAT HORIZONTAL FORWARD DRIVER
3	-	-
4	-	-

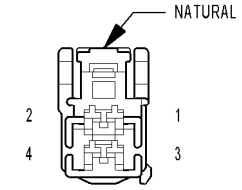

**MOTOR-
SEAT ADJUSTER-
PASSENGER RECLINER
(RHD)**

MOTOR-SEAT ADJUSTER-PASSENGER RECLINER (RHD) - NATURAL 4 WAY

CAV	CIRCUIT	FUNCTION
1	P44 18LG/VT	PASSENGER SEAT RECLINER UP DRIVER
2	P42 18LG/GY	PASSENGER SEAT RECLINER DOWN DRIVER
3	-	-
4	-	-

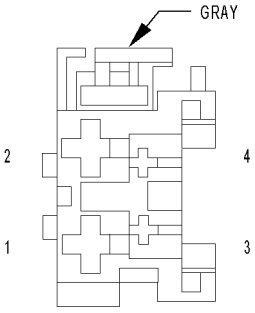

**MOTOR-
SEAT ADJUSTER-
REAR DRIVER
VERTICAL**

MOTOR-SEAT ADJUSTER-REAR DRIVER VERTICAL - GRAY 4 WAY

CAV	CIRCUIT	FUNCTION
1	P13 18LG/OR (EXCEPT MEMORY)	DRIVER SEAT REAR RISER DOWN DRIVER
1	P113 18LG/WT (MEMORY)	DRIVER SEAT REAR VERTICAL DOWN DRIVER
2	P11 18LG/YL (EXCEPT MEMORY)	DRIVER SEAT REAR RISER UP DRIVER
2	P111 18LG/YL (MEMORY)	DRIVER SEAT REAR VERTICAL UP DRIVER
3	G492 20LB/VT (MEMORY)	DRIVER SEAT REAR VERTICAL SENSOR GROUND
4	G402 20VT/DB (MEMORY)	DRIVER SEAT REAR VERTICAL POSITION SENSE

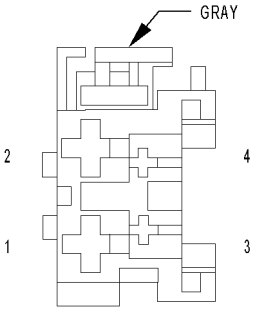

**MOTOR-
SEAT ADJUSTER-
REAR PASSENGER
VERTICAL**

MOTOR-SEAT ADJUSTER-REAR PASSENGER VERTICAL - GRAY 4 WAY

CAV	CIRCUIT	FUNCTION
1	P12 18LG/YL (LHD)	PASSENGER SEAT REAR RISER DOWN DRIVER
1	P12 18LG/OR (RHD)	PASSENGER SEAT REAR RISER DOWN DRIVER
2	P10 18LG/TN (LHD)	PASSENGER SEAT REAR RISER UP DRIVER
2	P10 18LG/YL (RHD)	PASSENGER SEAT REAR RISER UP DRIVER
3	-	-
4	-	-

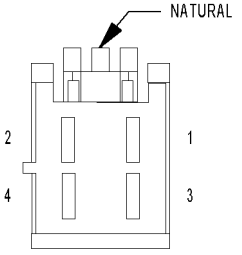

**MOTOR-
STEERING TELESCOPE
(LHD MEMORY)**

MOTOR-STEERING TELESCOPE (LHD MEMORY) - NATURAL 4 WAY

CAV	CIRCUIT	FUNCTION
1	P953 16DG/TN	STEERING MOTOR COMMON
2	P157 16LB/TN	TELESCOPE STEERING MOTOR FORWARD/REARWARD DRIVER
3	P152 20TN/LB	TELESCOPE STEERING FORWARD/REARWARD POSITION SENSE
4	G914 20VT/GY	SENSOR RETURN

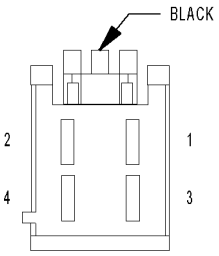

**MOTOR-
STEERING TILT
(LHD MEMORY)**

MOTOR-STEERING TILT (LHD MEMORY) - BLACK 4 WAY

CAV	CIRCUIT	FUNCTION
1	P953 16DG/TN	STEERING MOTOR COMMON
2	P153 16TN/DG	TILT STEERING MOTOR UP/DOWN DRIVER
3	P151 20TN/OR	TILT STEERING UP/DOWN POSITION SENSE
4	G914 20VT/GY	SENSOR RETURN

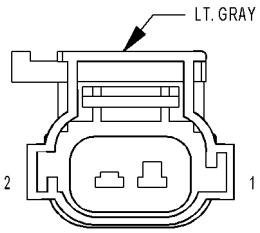

**MOTOR-
WINDOW-
DRIVER
(BASE)**

MOTOR-WINDOW-DRIVER (BASE) - LT. GRAY 2 WAY

CAV	CIRCUIT	FUNCTION
1	Q21 16OR/WT	DRIVER WINDOW DRIVER (DOWN)
2	Q11 16OR/LG	DRIVER WINDOW DRIVER (UP)

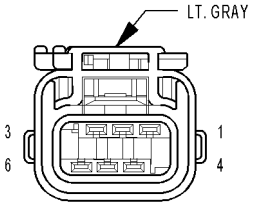

**MOTOR-
WINDOW-
DRIVER
EXPRESS
(EXCEPT BASE)**

MOTOR-WINDOW-DRIVER EXPRESS (EXCEPT BASE) - LT. GRAY 6 WAY

CAV	CIRCUIT	FUNCTION
1	Z405 20BK	DRIVER WINDOW HALL SENSOR RETURN
2	Q303 20WT/OR	DRIVER WINDOW HALL SENSOR B SIGNAL
3	Q321 16OR/DB	DRIVER WINDOW EXPRESS DOWN DRIVER
4	Q305 20OR	DRIVER WINDOW HALL SENSOR SUPPLY
5	Q301 20OR/WT	DRIVER WINDOW HALL SENSOR A SIGNAL
6	Q311 16OR/LB	DRIVER WINDOW EXPRESS UP DRIVER

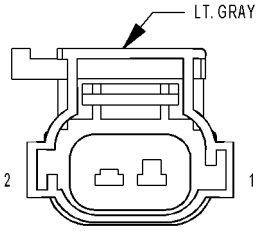

**MOTOR-
WINDOW-
LEFT REAR**

MOTOR-WINDOW-LEFT REAR - LT. GRAY 2 WAY

CAV	CIRCUIT	FUNCTION
1	Q211 16TN/LB	LEFT REAR WINDOW DRIVER (DOWN)
2	Q111 16TN/YL	LEFT REAR WINDOW DRIVER (UP)

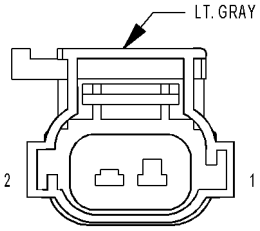

MOTOR-WINDOW-PASSENGER (BASE)

MOTOR-WINDOW-PASSENGER (BASE) - LT. GRAY 2 WAY

CAV	CIRCUIT	FUNCTION
1	Q22 16OR/VT	PASSENGER WINDOW DRIVER (DOWN)
2	Q12 16OR/BR	PASSENGER WINDOW DRIVER (UP)

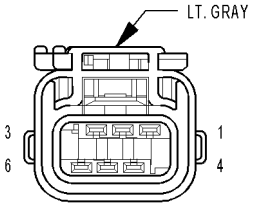

MOTOR-WINDOW-PASSENGER EXPRESS (EXCEPT BASE)

MOTOR-WINDOW-PASSENGER EXPRESS (EXCEPT BASE) - LT. GRAY 6 WAY

CAV	CIRCUIT	FUNCTION
1	Z404 20BK/LG	PASSENGER WINDOW HALL SENSOR RETURN
2	Q304 20LG/OR	PASSENGER WINDOW HALL SENSOR B SIGNAL
3	Q322 16LG/OR	PASSENGER WINDOW EXPRESS DOWN DRIVER
4	Q306 20OR/DB	PASSENGER WINDOW HALL SENSOR SUPPLY
5	Q302 20OR/LG	PASSENGER WINDOW HALL SENSOR A SIGNAL
6	Q312 16DB/OR	PASSENGER WINDOW EXPRESS UP DRIVER

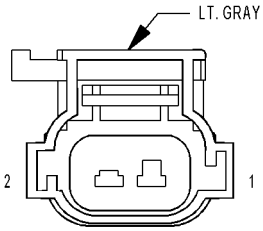

MOTOR-WINDOW-RIGHT REAR

MOTOR-WINDOW-RIGHT REAR - LT. GRAY 2 WAY

CAV	CIRCUIT	FUNCTION
1	Q212 16OR/VT	RIGHT REAR WINDOW DRIVER (DOWN)
2	Q112 16OR/BR	RIGHT REAR WINDOW DRIVER (UP)

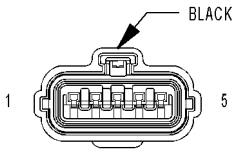

MOTOR-WIPER-FRONT

MOTOR-WIPER-FRONT - BLACK 5 WAY

CAV	CIRCUIT	FUNCTION
1	W4 14BR/OR (LHD)	FRONT WIPER HIGH/LOW RELAY HIGH SPEED OUTPUT
1	Z902 14BK/LB (RHD)	GROUND
2	W3 14BR/WT (LHD)	FRONT WIPER HIGH/LOW RELAY LOW SPEED OUTPUT
2	W7 20BR/GY (RHD)	FRONT WIPER PARK SWITCH SENSE
3	-	-
4	W7 20BR/GY (LHD)	FRONT WIPER PARK SWITCH SENSE
4	W4 14BR/OR (RHD)	FRONT WIPER HIGH/LOW RELAY HIGH SPEED OUTPUT
5	Z904 14BK/BR (DODGE SRT8)	GROUND
5	Z902 14BK/LB (EXCEPT DODGE SRT8)	GROUND
5	W3 14BR/WT (RHD)	FRONT WIPER HIGH/LOW RELAY LOW SPEED OUTPUT

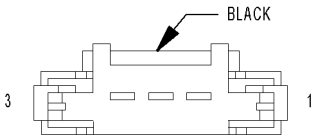

MOTOR-WIPER-REAR (LX49)

MOTOR-WIPER-REAR (LX49) - BLACK 3 WAY

CAV	CIRCUIT	FUNCTION
1	W13 16BR/LG	REAR WIPER MOTOR CONTROL
2	W17 18BR/YL	REAR WIPER PARK SWITCH SENSE
3	Z914 16BK/GY	GROUND

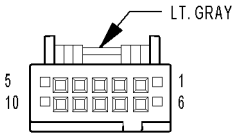

MOTOR/MODULE-SUNROOF

MOTOR/MODULE-SUNROOF - LT. GRAY 10 WAY

CAV	CIRCUIT	FUNCTION
1	-	-
2	Q4 20OR/YL	SUNROOF VENT SWITCH SENSE
3	Q3 20OR/TN	SUNROOF OPEN SWITCH SENSE
4	D54 20WT	CAN B BUS (-)
5	D55 20WT/OR	CAN B BUS (+)
6	Z909 18BK	GROUND
7	Q5 20OR/LB	SUNROOF CLOSE SWITCH SENSE
8	X13 18RD	FUSED B(+) (I.O.D.)
9	D270 20WT (FACTORY ONLY)	SUNROOF DIAGNOSTIC
10	Q6 20OR/LG	SUNROOF SWITCH SUPPLY

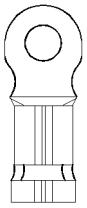

POST-PASS THROUGH-EYELET

POST-PASS THROUGH-EYELET - (BATTERY SIDE) 1 WAY

CAV	CIRCUIT	FUNCTION
1	A1 1RD	B(+)

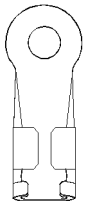

POST-PASS THROUGH-EYELET

POST-PASS THROUGH-EYELET - (STARTER SIDE) 1 WAY

CAV	CIRCUIT	FUNCTION
1	A11 4BR/RD (DIESEL)	B(+)
1	A11 4RD (GAS)	B(+)

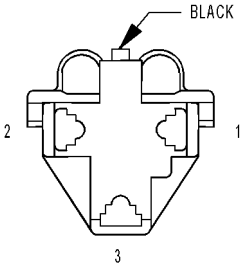

POWER OUTLET-CONSOLE

POWER OUTLET-CONSOLE - BLACK 3 WAY

CAV	CIRCUIT	FUNCTION
1	A305 16RD/LB	FUSED B(+)
2	-	-
3	Z912 16BK/OR	GROUND

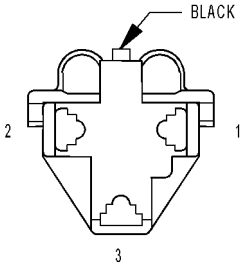

POWER OUTLET-REAR (LX49)

POWER OUTLET-REAR (LX49) - BLACK 3 WAY

CAV	CIRCUIT	FUNCTION
1	A105 16DB/RD	FUSED B(+)
2	-	-
3	Z914 16BK/GY	GROUND

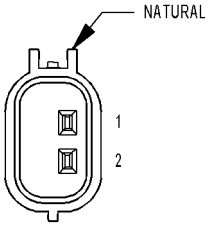

PUMP-WASHER-WINDSHIELD

PUMP-WASHER-WINDSHIELD - NATURAL 2 WAY

CAV	CIRCUIT	FUNCTION
1	W10 20BR	FRONT WASHER PUMP MOTOR CONTROL
2	Z904 20BK/BR (LX48)	GROUND
2	W20 20BR/YL (LX49)	REAR WASHER PUMP MOTOR CONTROL

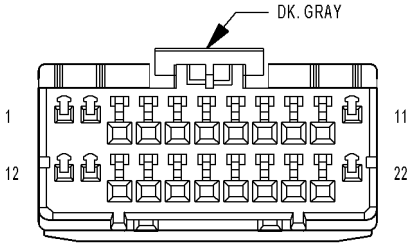

RADIO C1

RADIO C1 - DK. GRAY 22 WAY

CAV	CIRCUIT	FUNCTION
1	A300 16GY/LG	FUSED B(+) (I.O.D.)
2	-	-
3	-	-
4	X703 22DG/OR (HANDS FREE)	LEFT AUDIO OUTPUT
5	D55 20WT/OR	CAN B BUS (+)
6	D54 20WT	CAN B BUS (-)
7	X202 18DG/VT (LOWLINE/MIDLINE I)	RIGHT FRONT DOOR SPEAKER (+)
8	X292 18DG/YL (LOWLINE/MIDLINE I)	RIGHT FRONT DOOR SPEAKER (-)
9	X291 18GY/YL (LOWLINE/MIDLINE I)	LEFT FRONT DOOR SPEAKER (-)
10	X201 18GY/VT (LOWLINE/MIDLINE I)	LEFT FRONT DOOR SPEAKER (+)
11	Z909 18BK/LG	GROUND
12	A300 16GY/LG	FUSED B(+) (I.O.D.)
13	-	-
14	-	-
15	-	-
16	X704 22DG/YL (HANDS FREE)	RIGHT AUDIO OUTPUT
17	X795 20DG (HANDS FREE)	COMMON AUDIO OUTPUT
18	X303 18DG/TN (LOWLINE/MIDLINE I)	LEFT REAR SPEAKER (+)
18	X51 18DG/DB (MIDLINE II/HIGHLINE)	RADIO LEFT AUDIO (+)
19	X393 18DG/GY (LOWLINE/MIDLINE I)	LEFT REAR SPEAKER (-)
19	X57 18DG/OR (MIDLINE II/HIGHLINE)	RADIO LEFT AUDIO (-)
20	X394 18YL/GY (LOWLINE/MIDLINE I)	RIGHT REAR SPEAKER (-)
20	X58 18GY/OR (MIDLINE II/HIGHLINE)	RADIO RIGHT AUDIO (-)
21	X304 18DG/BR (LOWLINE/MIDLINE I)	RIGHT REAR SPEAKER (+)
21	X52 18GY/DB (MIDLINE II/HIGHLINE)	RADIO RIGHT AUDIO (+)
22	Z909 18BK/LG	GROUND

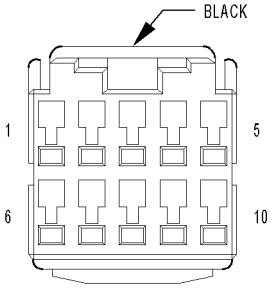

RADIO C2
(SATELLITE RADIO)

RADIO C2 (SATELLITE RADIO) - BLACK 10 WAY

CAV	CIRCUIT	FUNCTION
1	X16 20DG/YL	AUDIO SIGNAL RIGHT (+)
2	X917 20DG	AUDIO SIGNAL COMMON
3	-	-
4	X510 20DG/LB	DVD AUDIO RIGHT (+)
5	X926 20GY/OR	AUX AUDIO COMMON
6	X17 20DG/OR	AUDIO SIGNAL LEFT (+)
7	X910 20GY/DG	DVD AUDIO COMMON
8	X511 20GY/LG	DVD AUDIO LEFT (+)
9	X521 20GY/LB	AUX AUDIO LEFT (+)
10	X522 20GY/DB	AUX AUDIO RIGHT (+)

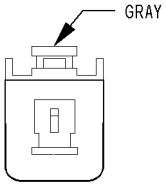

RADIO-ANTENNA (NAVIGATION)

RADIO-ANTENNA (NAVIGATION) - GRAY 2 WAY

CAV	CIRCUIT	FUNCTION
1	D8 WT/LB	GPS ANTENNA SIGNAL
2	D108 LB/WT	GPS ANTENNA SHIELD

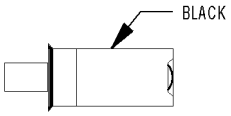

RADIO-ANTENNA

RADIO-ANTENNA - BLACK 2 WAY

CAV	CIRCUIT	FUNCTION
1	D5 6WT/OR (EXCEPT EXPORT)	ANTENNA SIGNAL
1	D6 6WT/OR (EXPORT)	RADIO ANTENNA SIGNAL
2	D931 WT/YL (EXCEPT EXPORT)	ANTENNA SHIELD
2	D932 WT/YL (EXPORT)	RADIO ANTENNA SHIELD

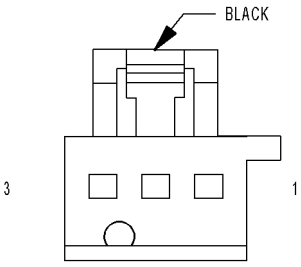

RECEIVER-INTRUSION SENSOR (RHD)

RECEIVER-INTRUSION SENSOR (RHD) - BLACK 3 WAY

CAV	CIRCUIT	FUNCTION
1	G460 20DG/VT	INTRUSION RECEIVER SENSOR SIGNAL
2	-	-
3	G946 20LG/VT	INTRUSION RECEIVER SENSOR GROUND

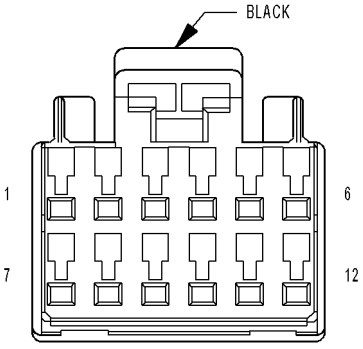

RECEIVER-SATELLITE

RECEIVER-SATELLITE - BLACK 12 WAY

CAV	CIRCUIT	FUNCTION
1	A300 18GY/LG	FUSED B(+) (I.O.D.)
2	-	-
3	Z909 18BK/LG	GROUND
4	-	-
5	-	-
6	X17 20DG/OR	AUDIO SIGNAL LEFT (+)
7	D54 20WT	CAN B BUS (-)
8	D55 20WT/OR	CAN B BUS (+)
9	-	-
10	-	-
11	X917 20DG	AUDIO SIGNAL COMMON
12	X16 20DG/YL	AUDIO SIGNAL RIGHT (+)

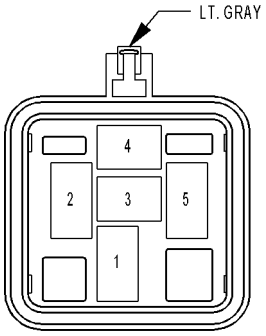

**RELAY-
HEADLAMP WASHER
(HID LAMPS)**

RELAY-HEADLAMP WASHER (HID LAMPS) - LT. GRAY 5 WAY

CAV	CIRCUIT	FUNCTION
1	A904 16RD	FUSED B(+)
2	W24 20BR/OR	HEADLAMP WASHER RELAY CONTROL
3	-	-
4	W23 16BR/OR	HEADLAMP WASHER RELAY OUTPUT
5	A904 16RD	FUSED B(+)

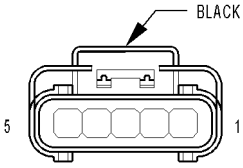

**RESISTOR BLOCK-
BLOWER MOTOR-
FRONT
(MTC)**

RESISTOR BLOCK-BLOWER MOTOR-FRONT (MTC) - BLACK 5 WAY

CAV	CIRCUIT	FUNCTION
1	C70 12DB/YL	FRONT BLOWER HIGH SPEED
2	Z134 12BK/LG	GROUND
3	C73 14DB/VT	FRONT BLOWER M2 SPEED
4	C72 14DB/OR	FRONT BLOWER M1 SPEED
5	C71 16DB/BR	FRONT BLOWER LOW SPEED

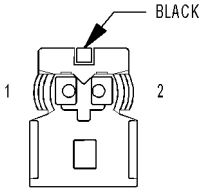

**SEAT BELT-
TENSIONER-
DRIVER**

SEAT BELT-TENSIONER-DRIVER - BLACK 2 WAY

CAV	CIRCUIT	FUNCTION
1	R53 20LG/YL	DRIVER SEAT BELT TENSIONER LINE 2
2	R55 20LG/DG	DRIVER SEAT BELT TENSIONER LINE 1

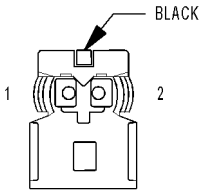

**SEAT BELT-
TENSIONER-
PASSENGER**

SEAT BELT-TENSIONER-PASSENGER - BLACK 2 WAY

CAV	CIRCUIT	FUNCTION
1	R56 20LB/DG	PASSENGER SEAT BELT TENSIONER LINE 1
2	R54 20LB/YL	PASSENGER SEAT BELT TENSIONER LINE 2

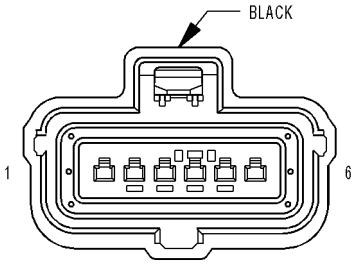

**SENSOR-
ACCELERATOR
PEDAL POSITION**

SENSOR-ACCELERATOR PEDAL POSITION - BLACK 6 WAY

CAV	CIRCUIT	FUNCTION
1	F856 20YL/PK (DIESEL)	ACCELERATOR PEDAL POSITION SENSOR NO. 2 5 VOLT SUPPLY
1	F856 20YL/PK (GAS)	5 VOLT SUPPLY
2	K29 20WT/BR (DIESEL)	ACCELERATOR PEDAL POSITION SENSOR NO. 2 SIGNAL
2	K29 20WT/BR (GAS)	APPS NO. 2 SIGNAL
3	K400 20BR/VT (DIESEL)	ACCELERATOR PEDAL POSITION SENSOR NO. 2 GROUND
3	K400 20BR/VT (GAS)	APPS NO. 2 RETURN
4	K167 20BR/YL (DIESEL)	ACCELERATOR PEDAL POSITION SENSOR NO. 1 GROUND
4	K167 20BR/YL (GAS)	APPS NO. 1 RETURN
5	K23 20BR/WT (DIESEL)	ACCELERATOR PEDAL POSITION SENSOR NO. 1 SIGNAL
5	K23 20BR/WT (GAS)	APPS NO. 1 SIGNAL
6	F855 20PK/YL (DIESEL)	ACCELERATOR PEDAL POSITION SENSOR NO. 1 5 VOLT SUPPLY
6	F855 20PK/YL (GAS)	5 VOLT SUPPLY

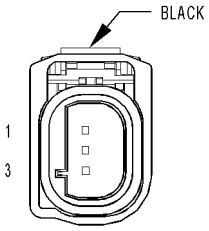

**SENSOR-
ADJUSTABLE
PEDALS
(LHD MEMORY)**

SENSOR-ADJUSTABLE PEDALS (LHD MEMORY) - BLACK 3 WAY

CAV	CIRCUIT	FUNCTION
1	G914 20VT/GY	SENSOR RETURN
2	G14 18VT/DB	ADJUSTABLE PEDALS SENSOR SIGNAL
3	G13 18VT/LB	ADJUSTABLE PEDALS SENSOR SUPPLY

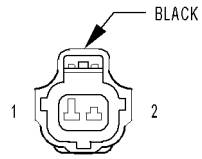

**SENSOR-
AMBIENT AIR
TEMPERATURE**

SENSOR-AMBIENT AIR TEMPERATURE - BLACK 2 WAY

CAV	CIRCUIT	FUNCTION
1	G31 20VT/LG	AAT SIGNAL
2	G931 20VT/BR	SENSOR GROUND

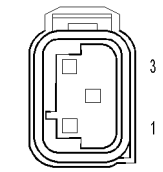

**SENSOR-
BOOST PRESSURE
(DIESEL)**

SENSOR-BOOST PRESSURE (DIESEL) - 3 WAY

CAV	CIRCUIT	FUNCTION
1	K656 20BR/GY	BOOST PRESSURE SENSOR GROUND
2	K37 20GY/YL	BOOST PRESSURE SENSOR SIGNAL
3	K356 20RD/BK	BOOST PRESSURE SENSOR 5 VOLT SUPPLY

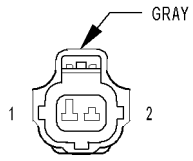

**SENSOR-
BRAKE FLUID
LEVEL**

SENSOR-BRAKE FLUID LEVEL - GRAY 2 WAY

CAV	CIRCUIT	FUNCTION
1	Z904 20BK/BR (DODGE SRT8)	GROUND
1	Z902 20BK/LB (EXCEPT DODGE SRT8)	GROUND
2	B20 20DG/OR	BRAKE FLUID LEVEL SWITCH SENSE

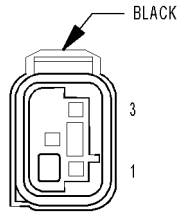

**SENSOR-
BRAKE PEDAL
TRAVEL
(MK25)**

SENSOR-BRAKE PEDAL TRAVEL (MK25) - BLACK 3 WAY

CAV	CIRCUIT	FUNCTION
1	B237 20DG/YL	BRAKE PEDAL TRAVEL SENSOR SUPPLY
2	B937 20DG/BR	BRAKE PEDAL TRAVEL SENSOR RETURN
3	B137 20DG/BR	BRAKE PEDAL TRAVEL SENSOR SIGNAL

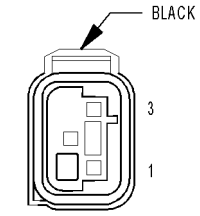

**SENSOR-
BRAKE PRESSURE
(MK25)**

SENSOR-BRAKE PRESSURE (MK25) - BLACK 3 WAY

CAV	CIRCUIT	FUNCTION
1	B984 20DG/OR	BRAKE PRESSURE SENSOR RETURN
2	B84 20DG/YL	BRAKE PRESSURE SENSOR SIGNAL
3	B83 20DG/WT	BRAKE PRESSURE SENSOR SUPPLY

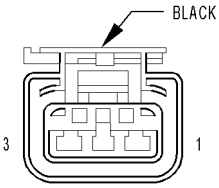

**SENSOR-
CAMSHAFT POSITION
(2.7L/3.5L)**

SENSOR-CAMSHAFT POSITION (2.7L/3.5L) - BLACK 3 WAY

CAV	CIRCUIT	FUNCTION
1	F856 20YL/PK	5 VOLT SUPPLY
2	K900 20DB/DG	SENSOR GROUND
3	K44 20DB/GY	CMP SIGNAL

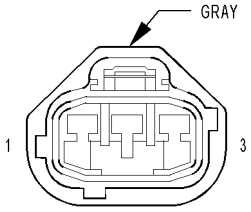

**SENSOR-
CAMSHAFT POSITION
(5.7L/SRT8)**

SENSOR-CAMSHAFT POSITION (5.7L/SRT8) - GRAY 3 WAY

CAV	CIRCUIT	FUNCTION
1	K44 20DB/GY	CMP SIGNAL
2	K900 20DB/DG	SENSOR GROUND
3	F856 20YL/PK	5 VOLT SUPPLY

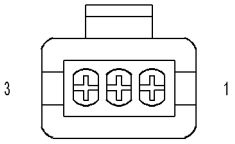

**SENSOR-
CAMSHAFT
POSITION
(DIESEL)**

SENSOR-CAMSHAFT POSITION (DIESEL) - 3 WAY

CAV	CIRCUIT	FUNCTION
1	K944 20BR/DG	CAMSHAFT POSITION SENSOR GROUND
2	K44 20YL/GY	CAMSHAFT POSITION SENSOR SIGNAL
3	K844 20RD/VT	CAMSHAFT POSITION SENSOR 5 VOLT SUPPLY

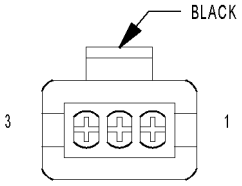

**SENSOR-
CRANKSHAFT
POSITION
(DIESEL)**

SENSOR-CRANKSHAFT POSITION (DIESEL) - BLACK 3 WAY

CAV	CIRCUIT	FUNCTION
1	Z753 16BR/BK	CRANKSHAFT POSITION SENSOR GROUND
2	K24 16DG/WT	CRANKSHAFT POSITION SENSOR SIGNAL
3	K853 20RD/VT	CRANKSHAFT POSITION SENSOR 5 VOLT SUPPLY

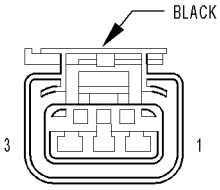

**SENSOR-
CRANKSHAFT
POSITION
(GAS)**

SENSOR-CRANKSHAFT POSITION (GAS) - BLACK 3 WAY

CAV	CIRCUIT	FUNCTION
1	F855 20PK/YL	5 VOLT SUPPLY
2	K900 20DB/DG	SENSOR GROUND
3	K24 20DB/WT	CKP SIGNAL

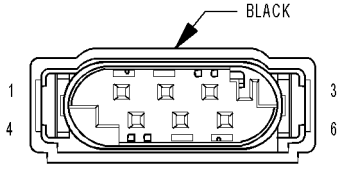

**SENSOR-
DYNAMICS
(ESP)**

SENSOR-DYNAMICS (ESP) - BLACK 6 WAY

CAV	CIRCUIT	FUNCTION
1	D51 20WT/BR	DYNAMICS SENSOR LOW DATA LINK
2	D52 20WT/LB	DYNAMICS SENSOR HIGH DATA LINK
3	G4 20VT/LB	DYNAMICS SENSOR SUPPLY
4	-	-
5	G94 20VT/DB	DYNAMICS SENSOR GROUND
6	-	-

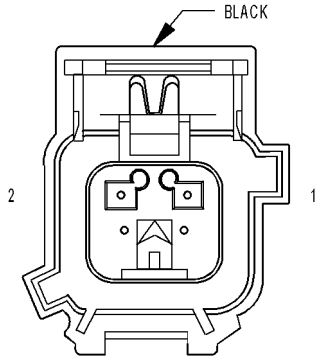

**SENSOR-
ENGINE COOLANT
TEMPERATURE
(GAS)**

SENSOR-ENGINE COOLANT TEMPERATURE (GAS) - BLACK 2 WAY

CAV	CIRCUIT	FUNCTION
1	K2 20VT/OR	ECT SIGNAL
2	K900 20DB/DG	SENSOR GROUND

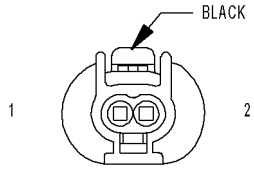

**SENSOR-
ENGINE COOLANT
TEMPERATURE
(DIESEL)**

SENSOR-ENGINE COOLANT TEMPERATURE (DIESEL) - BLACK 2 WAY

CAV	CIRCUIT	FUNCTION
1	K222 20BR/RD	ENGINE COOLANT TEMPERATURE SENSOR GROUND
2	K2 20DG/RD	ENGINE COOLANT TEMPERATURE SENSOR SIGNAL

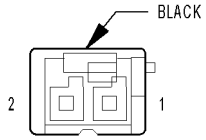

**SENSOR-
EVAPORATOR
TEMPERATURE**

SENSOR-EVAPORATOR TEMPERATURE - BLACK 2 WAY

CAV	CIRCUIT	FUNCTION
1	C21 20DB/LG	EVAPORATOR TEMPERATURE SENSOR SIGNAL
2	C121 20DB/DG	SENSOR GROUND

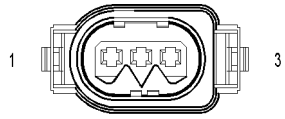

**SENSOR-
EXHAUST
DIFFERENTIAL
PRESSURE
(DIESEL)**

SENSOR-EXHAUST DIFFERENTIAL PRESSURE (DIESEL) - 3 WAY

CAV	CIRCUIT	FUNCTION
1	K355 18BR/DG	EXHAUST DIFFERENTIAL PRESSURE SENSOR SIGNAL
2	K951 20BR/DB	EXHAUST DIFFERENTIAL PRESSURE SENSOR GROUND
3	K354 18BR/LG	EXHAUST DIFFERENTIAL PRESSURE SENSOR 5 VOLT SUPPLY

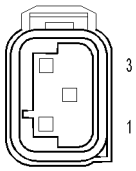

**SENSOR-
EXHAUST GAS
PRESSURE
(DIESEL)**

SENSOR-EXHAUST GAS PRESSURE (DIESEL) - 3 WAY

CAV	CIRCUIT	FUNCTION
1	F858 20GY/YL	EXHAUST GAS PRESSURE SENSOR 5 VOLT SUPPLY
2	K934 20OR	EXHAUST GAS PRESSURE SENSOR GROUND
3	K35 20GY/BK	EXHAUST GAS PRESSURE SENSOR SIGNAL

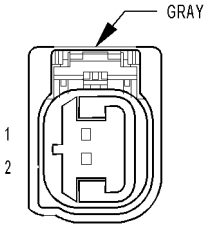

**SENSOR-
FRONT IMPACT-
LEFT**

SENSOR-FRONT IMPACT-LEFT - GRAY 2 WAY

CAV	CIRCUIT	FUNCTION
1	R81 20LB/WT	LEFT FRONT IMPACT SENSOR GROUND
2	R79 20LB/VT	LEFT FRONT IMPACT SENSOR SIGNAL

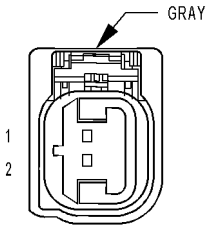

**SENSOR-
FRONT IMPACT-
RIGHT**

SENSOR-FRONT IMPACT-RIGHT - GRAY 2 WAY

CAV	CIRCUIT	FUNCTION
1	R82 20WT/LB	RIGHT FRONT IMPACT SENSOR GROUND
2	R80 20VT/LB	RIGHT FRONT IMPACT SENSOR SIGNAL

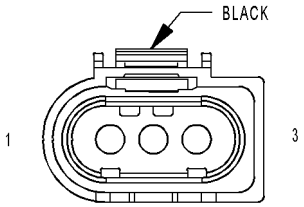

**SENSOR-
FUEL
PRESSURE
(DIESEL)**

SENSOR-FUEL PRESSURE (DIESEL) - BLACK 3 WAY

CAV	CIRCUIT	FUNCTION
1	K359 20GY/BR	FUEL PRESSURE SENSOR GROUND
2	K181 20DG/VT	FUEL PRESSURE SENSOR SIGNAL
3	K350 20RD/WT	FUEL PRESSURE SENSOR 5 VOLT SUPPLY

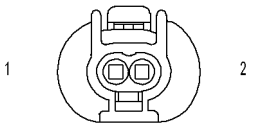

**SENSOR-
FUEL
TEMPERATURE
(DIESEL)**

SENSOR-FUEL TEMPERATURE (DIESEL) - 2 WAY

CAV	CIRCUIT	FUNCTION
1	K914 20BL/DG	FUEL TEMPERATURE SENSOR GROUND
2	K156 20BL/RD	FUEL TEMPERATURE SENSOR SIGNAL

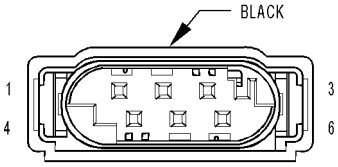

**SENSOR-
HEADLAMP LEVEL-
LEFT
(EXPORT)**

SENSOR-HEADLAMP LEVEL-LEFT (EXPORT) - BLACK 6 WAY

CAV	CIRCUIT	FUNCTION
1	Z901 20BK/DG	GROUND
2	Z921 20BK	GROUND
3	-	-
4	L13 20WT/YL	HEADLAMP LEVEL SENSOR SIGNAL
5	F500 20DG/PK	FUSED RUN RELAY OUTPUT
6	Z921 20BK	GROUND

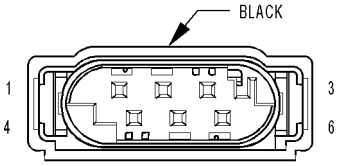

**SENSOR-
HEADLAMP LEVEL-
RIGHT
(EXPORT)**

SENSOR-HEADLAMP LEVEL-RIGHT (EXPORT) - BLACK 6 WAY

CAV	CIRCUIT	FUNCTION
1	Z914 20BK/GY	GROUND
2	Z920 20BK	GROUND
3	Z920 20BK	GROUND
4	L13 20WT/YL	HEADLAMP LEVEL SENSOR SIGNAL
5	F500 20DG/PK	FUSED RUN RELAY OUTPUT
6	-	-

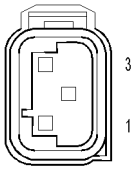

**SENSOR-
INLET AIR
PRESSURE
(DIESEL)**

SENSOR-INLET AIR PRESSURE (DIESEL) - 3 WAY

CAV	CIRCUIT	FUNCTION
1	K900 20BR/RD	INLET AIR PRESSURE SENSOR GROUND
2	K68 20RD/BL	INLET AIR PRESSURE SENSOR SIGNAL
3	K668 20BR/BK	INLET AIR PRESSURE SENSOR 5 VOLT SUPPLY

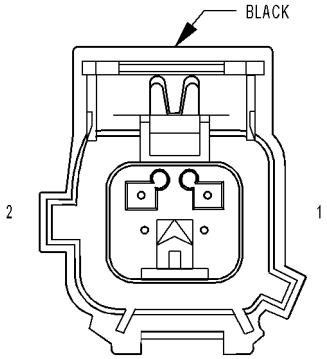

**SENSOR-
INLET AIR
TEMPERATURE
(GAS)**

SENSOR-INLET AIR TEMPERATURE (GAS) - BLACK 2 WAY

CAV	CIRCUIT	FUNCTION
1	K21 20DB/LG	IAT SIGNAL
2	K900 20DB/DG	SENSOR GROUND

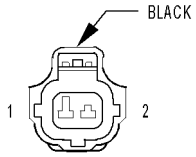

**SENSOR-
INPUT SPEED
(RLE)**

SENSOR-INPUT SPEED (RLE) - BLACK 2 WAY

CAV	CIRCUIT	FUNCTION
1	T13 20DG/VT	SENSOR GROUND
2	T52 20DG/OR	INPUT SPEED SENSOR SIGNAL

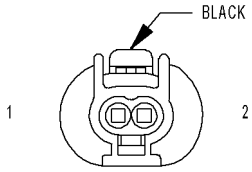

**SENSOR-
INTAKE AIR
TEMPERATURE
(DIESEL)**

SENSOR-INTAKE AIR TEMPERATURE (DIESEL) - BLACK 2 WAY

CAV	CIRCUIT	FUNCTION
1	K960 18BR/VT	INTAKE AIR TEMPERATURE SENSOR GROUND
2	K21 20DG/WT	INTAKE AIR TEMPERATURE SENSOR SIGNAL

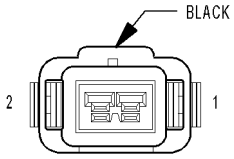

**SENSOR-
KNOCK NO. 1
(GAS)**

SENSOR-KNOCK NO. 1 (GAS) - BLACK 2 WAY

CAV	CIRCUIT	FUNCTION
1	K942 20BR/LG	KNOCK SENSOR NO. 1 RETURN
2	K42 20DB/YL	KNOCK SENSOR NO. 1 SIGNAL

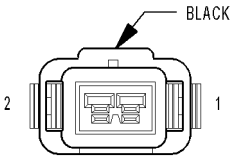

**SENSOR-
KNOCK NO. 2
(5.7L/SRT8)**

SENSOR-KNOCK NO. 2 (5.7L/SRT8) - BLACK 2 WAY

CAV	CIRCUIT	FUNCTION
1	K924 20WT/BR	KNOCK SENSOR NO. 2 RETURN
2	K242 20BR/WT	KNOCK SENSOR NO. 2 SIGNAL

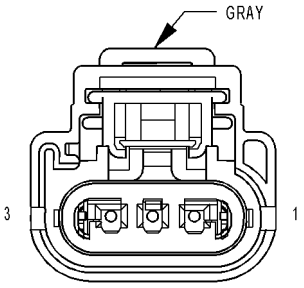

**SENSOR-
MANIFOLD ABSOLUTE
PRESSURE
(GAS)**

SENSOR-MANIFOLD ABSOLUTE PRESSURE (GAS) - GRAY 3 WAY

CAV	CIRCUIT	FUNCTION
1	K1 20VT/BR	MAP SIGNAL
2	K900 20DB/DG	SENSOR GROUND
3	F856 20YL/PK	5 VOLT SUPPLY

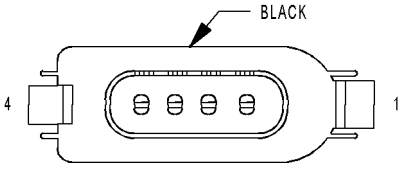

**SENSOR-
MASS
AIR FLOW
(DIESEL)**

SENSOR-MASS AIR FLOW (DIESEL) - BLACK 4 WAY

CAV	CIRCUIT	FUNCTION
1	F202 18RD/DG	FUSED IGNITION SWITCH OUTPUT (RUN-START)
2	K957 18BR	MASS AIR FLOW SENSOR GROUND
3	K362 20DG/YL	INLET AIR TEMPERATURE SENSOR SIGNAL
4	K157 20BL/YL	MASS AIR FLOW SENSOR SIGNAL

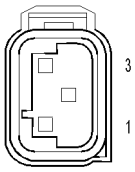

**SENSOR-OIL
PRESSURE
(DIESEL)**

SENSOR-OIL PRESSURE (DIESEL) - 3 WAY

CAV	CIRCUIT	FUNCTION
1	F851 20DG	OIL PRESSURE SENSOR 5 VOLT SUPPLY
2	G6 20BL/RD	OIL PRESSURE SENSOR SIGNAL
3	K936 20GY/PK	OIL PRESSURE SENSOR GROUND

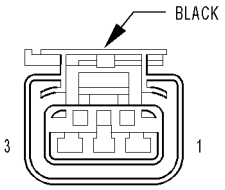

SENSOR-OIL PRESSURE (5.7L/SRT8)

SENSOR-OIL PRESSURE (5.7L/SRT8) - BLACK 3 WAY

CAV	CIRCUIT	FUNCTION
1	F855 20PK/YL	5 VOLT SUPPLY
2	G6 20VT/GY	ENGINE OIL PRESSURE SIGNAL
3	K900 20DB/DG	SENSOR GROUND

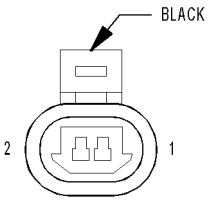

SENSOR-OIL TEMPERATURE (5.7L/SRT8)

SENSOR-OIL TEMPERATURE (5.7L/SRT8) - BLACK 2 WAY

CAV	CIRCUIT	FUNCTION
1	G224 20VT/YL	ENGINE OIL TEMPERATURE SIGNAL
2	K900 20DB/DG	SENSOR GROUND

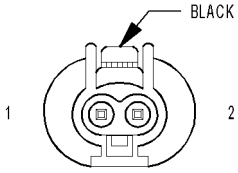

SENSOR-OIL TEMPERATURE (DIESEL)

SENSOR-OIL TEMPERATURE (DIESEL) - BLACK 2 WAY

CAV	CIRCUIT	FUNCTION
1	Z36 20YL/DG	OIL TEMPERATURE SENSOR GROUND
2	G224 20YL/GY	OIL TEMPERATURE SENSOR SIGNAL

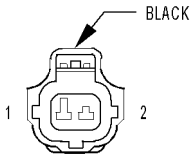

SENSOR-OUTPUT SPEED (RLE)

SENSOR-OUTPUT SPEED (RLE) - BLACK 2 WAY

CAV	CIRCUIT	FUNCTION
1	T13 20DG/VT	SENSOR GROUND
2	T14 20DG/BR	OUTPUT SPEED SENSOR SIGNAL

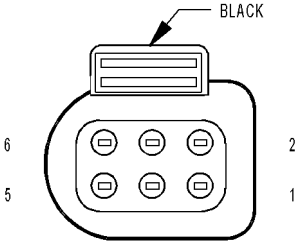

SENSOR-OXYGEN (DIESEL)

SENSOR-OXYGEN (DIESEL) - BLACK 6 WAY

CAV	CIRCUIT	FUNCTION
1	K43 20GY/RD	O2 1/1 POSITIVE CURRENT CONTROL
2	Z42 20DG/BL	O2 1/1 NEGATIVE CURRENT CONTROL
3	K99 16GY/BR	O2 1/1 HEATER CONTROL
4	K343 16RD/DG	FUSED ASD RELAY OUTPUT 2
5	K902 20GY/WT	O2 1/1 PUMP CELL CURRENT TRIM
6	K41 20DG/BK	O2 1/1 REFERENCE SIGNAL

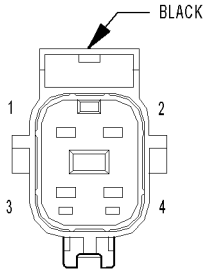

SENSOR-OXYGEN-LEFT FRONT (GAS)

SENSOR-OXYGEN-LEFT FRONT (GAS) - BLACK 4 WAY

CAV	CIRCUIT	FUNCTION
1	K99 20BR/LG	O2 1/1 HEATER CONTROL
2	Z907 18BK	GROUND
3	K902 20BR/DG	O2 RETURN (UP)
4	K41 20DB/LB	O2 1/1 SIGNAL

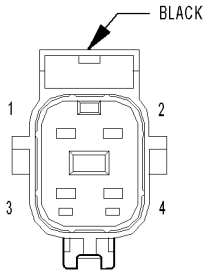

SENSOR-OXYGEN-LEFT REAR (GAS)

SENSOR-OXYGEN-LEFT REAR (GAS) - BLACK 4 WAY

CAV	CIRCUIT	FUNCTION
1	K299 20BR/WT	O2 1/2 HEATER CONTROL
2	Z904 20BK/BR (DODGE SRT8)	GROUND
2	Z902 20BK/LB (EXCEPT DODGE SRT8)	GROUND
3	K904 20DB/DG	O2 RETURN (DOWN)
4	K141 20DB/YL	O2 1/2 SIGNAL

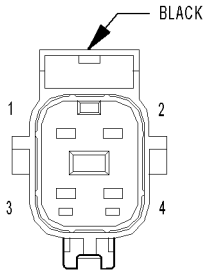

SENSOR-OXYGEN-RIGHT FRONT (GAS)

SENSOR-OXYGEN-RIGHT FRONT (GAS) - BLACK 4 WAY

CAV	CIRCUIT	FUNCTION
1	K199 20BR/VT	O2 2/1 HEATER CONTROL
2	Z907 18BK	GROUND
3	K902 20BR/DG	O2 RETURN (UP)
4	K43 20DB/LG	O2 2/1 SIGNAL

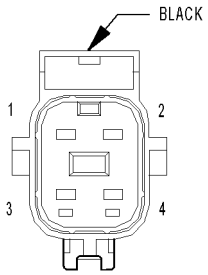

SENSOR-OXYGEN-RIGHT REAR (GAS)

SENSOR-OXYGEN-RIGHT REAR (GAS) - BLACK 4 WAY

CAV	CIRCUIT	FUNCTION
1	K399 20BR/GY	O2 2/2 HEATER CONTROL
2	Z904 20BK/BR (DODGE SRT8)	GROUND
2	Z902 20BK/LB (EXCEPT DODGE SRT8)	GROUND
3	K904 20DB/DG	O2 RETURN (DOWN)
4	K243 20BR	O2 2/2 SIGNAL

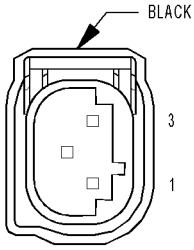

**SENSOR-
PARK
ASSIST-NO. 10
(PARKTRONICS)**

SENSOR-PARK ASSIST-NO. 10 (PARKTRONICS) - BLACK 3 WAY

CAV	CIRCUIT	FUNCTION
1	D704 20WT/DB	PARK ASSIST SENSOR NO. 10 SIGNAL
2	X750 20GY/LB	PARK ASSIST SENSOR GROUND
3	X700 20GY/OR	PARK ASSIST SENSOR SUPPLY

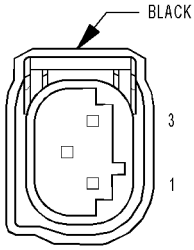

**SENSOR-
PARK
ASSIST-NO. 7
(PARKTRONICS)**

SENSOR-PARK ASSIST-NO. 7 (PARKTRONICS) - BLACK 3 WAY

CAV	CIRCUIT	FUNCTION
1	D700 20WT/GY	PARK ASSIST SENSOR NO. 7 SIGNAL
2	X750 20GY/LB	PARK ASSIST SENSOR GROUND
3	X700 20GY/OR	PARK ASSIST SENSOR SUPPLY

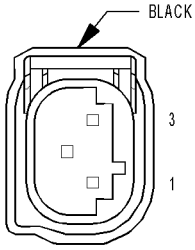

**SENSOR-
PARK
ASSIST-NO. 8
(PARKTRONICS)**

SENSOR-PARK ASSIST-NO. 8 (PARKTRONICS) - BLACK 3 WAY

CAV	CIRCUIT	FUNCTION
1	D701 20WT/LB	PARK ASSIST SENSOR NO. 8 SIGNAL
2	X750 20GY/LB	PARK ASSIST SENSOR GROUND
3	X700 20GY/OR	PARK ASSIST SENSOR SUPPLY

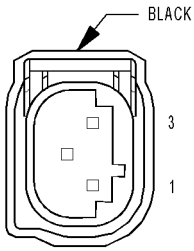

**SENSOR-
PARK
ASSIST-NO. 9
(PARKTRONICS)**

SENSOR-PARK ASSIST-NO. 9 (PARKTRONICS) - BLACK 3 WAY

CAV	CIRCUIT	FUNCTION
1	D703 20WT/BK	PARK ASSIST SENSOR NO. 9 SIGNAL
2	X750 20GY/LB	PARK ASSIST SENSOR GROUND
3	X700 20GY/OR	PARK ASSIST SENSOR SUPPLY

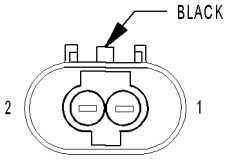

**SENSOR-
POST-
CATALYST
EXHAUST GAS
TEMPERATURE
(DIESEL)**

SENSOR-POST-CATALYST EXHAUST GAS TEMPERATURE (DIESEL) - BLACK 2 WAY

CAV	CIRCUIT	FUNCTION
1	K915 20BR/WT	POST-CATALYST EXHAUST GAS TEMPERATURE SENSOR GROUND
2	K353 20YL/WT	POST-CATALYST EXHAUST GAS TEMPERATURE SENSOR SIGNAL

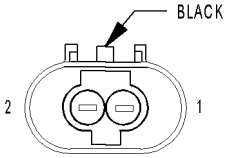

**SENSOR-
PRE-CATALYST
EXHAUST GAS
TEMPERATURE
(DIESEL)**

SENSOR-PRE-CATALYST EXHAUST GAS TEMPERATURE (DIESEL) - BLACK 2 WAY

CAV	CIRCUIT	FUNCTION
1	K916 20BR/WT	PRE-CATALYST EXHAUST GAS TEMPERATURE SENSOR GROUND
2	K352 20YL	PRE-CATALYST EXHAUST GAS TEMPERATURE SENSOR SIGNAL

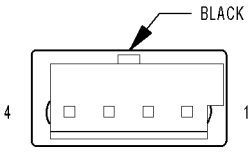

**SENSOR-
RAIN
(AUTO WIPERS)**

SENSOR-RAIN (AUTO WIPERS) - BLACK 4 WAY

CAV	CIRCUIT	FUNCTION
1	F880 20BK/PK	FUSED ACCESSORY DELAY RELAY OUTPUT
2	Z909 20BK/LG	GROUND
3	D55 20BK/WT	CAN B BUS (+)
4	D54 20BK	CAN B BUS (-)

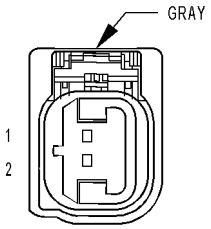

**SENSOR-
SEAT TRACK
POSITION-
DRIVER**

SENSOR-SEAT TRACK POSITION-DRIVER - GRAY 2 WAY

CAV	CIRCUIT	FUNCTION
1	R261 20LB/WT	DRIVER SEAT POSITION SENSOR DATA
2	R263 20LB/VT	DRIVER SEAT POSITION SENSOR VOLTAGE

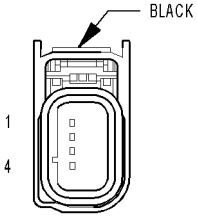

**SENSOR-
SEAT WEIGHT-
LEFT FRONT
(EXCEPT EXPORT)**

SENSOR-SEAT WEIGHT-LEFT FRONT (EXCEPT EXPORT) - BLACK 4 WAY

CAV	CIRCUIT	FUNCTION
1	R701 20LG	SEAT WEIGHT SENSOR 5 VOLT
2	R728 20LB/YL	SEAT WEIGHT SENSOR GROUND
3	-	-
4	R717 20LG/DG	SEAT WEIGHT LEFT FRONT SENSOR SIGNAL

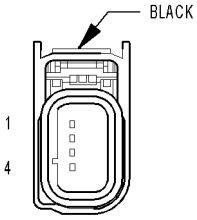

**SENSOR-
SEAT WEIGHT-
LEFT REAR
(EXCEPT EXPORT)**

SENSOR-SEAT WEIGHT-LEFT REAR (EXCEPT EXPORT) - BLACK 4 WAY

CAV	CIRCUIT	FUNCTION
1	R701 20LG	SEAT WEIGHT SENSOR 5 VOLT
2	R728 20LB/YL	SEAT WEIGHT SENSOR GROUND
3	-	-
4	R705 20LG/OR	SEAT WEIGHT LEFT REAR SENSOR SIGNAL

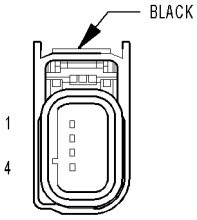

**SENSOR-
SEAT WEIGHT-
RIGHT FRONT
(EXCEPT EXPORT)**

SENSOR-SEAT WEIGHT-RIGHT FRONT (EXCEPT EXPORT) - BLACK 4 WAY

CAV	CIRCUIT	FUNCTION
1	R701 20LG	SEAT WEIGHT SENSOR 5 VOLT
2	R728 20LB/YL	SEAT WEIGHT SENSOR GROUND
3	-	-
4	R718 20LB/DG	SEAT WEIGHT RIGHT FRONT SENSOR SIGNAL

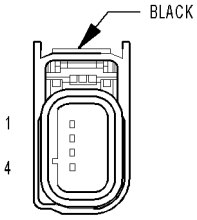

**SENSOR-
SEAT WEIGHT-
RIGHT REAR
(EXCEPT EXPORT)**

SENSOR-SEAT WEIGHT-RIGHT REAR (EXCEPT EXPORT) - BLACK 4 WAY

CAV	CIRCUIT	FUNCTION
1	R701 20LG	SEAT WEIGHT SENSOR 5 VOLT
2	R728 20LB/YL	SEAT WEIGHT SENSOR GROUND
3	-	-
4	R706 20LB/OR	SEAT WEIGHT RIGHT REAR SENSOR SIGNAL

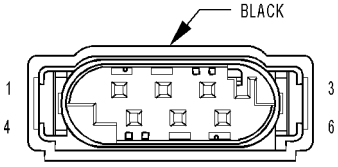

**SENSOR-
SHIFT LEVER
POSITION
(COLUMN NAG1)**

SENSOR-SHIFT LEVER POSITION (COLUMN NAG1) - BLACK 6 WAY

CAV	CIRCUIT	FUNCTION
1	22BK	SHIFT LEVER POSITION SENSOR GROUND
2	22LG/BK	SHIFT LEVER POSITION SENSOR SUPPLY
3	-	-
4	22LB	SHIFT LEVER POSITION SENSOR SIGNAL
5	-	-
6	-	-

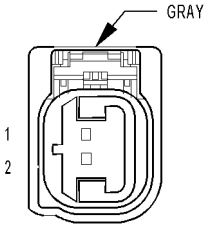

**SENSOR-
SIDE IMPACT-
LEFT 1**

SENSOR-SIDE IMPACT-LEFT 1 - GRAY 2 WAY

CAV	CIRCUIT	FUNCTION
1	R15 20LG/BR	LEFT SIDE IMPACT SENSOR 1 GROUND
2	R13 20LG/TN	LEFT SIDE IMPACT SENSOR 1 SIGNAL

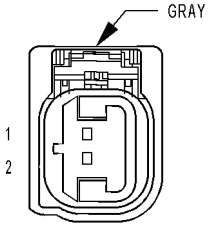

**SENSOR-
SIDE IMPACT-
LEFT 2**

SENSOR-SIDE IMPACT-LEFT 2 - GRAY 2 WAY

CAV	CIRCUIT	FUNCTION
1	R19 20LG/WT	LEFT SIDE IMPACT SENSOR 2 GROUND
2	R17 20LG	LEFT SIDE IMPACT SENSOR 2 SIGNAL

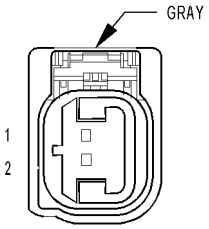

**SENSOR-
SIDE IMPACT-
RIGHT 1**

SENSOR-SIDE IMPACT-RIGHT 1 - GRAY 2 WAY

CAV	CIRCUIT	FUNCTION
1	R16 20BR/LG	RIGHT SIDE IMPACT SENSOR 1 GROUND
2	R14 20TN/LG	RIGHT SIDE IMPACT SENSOR 1 SIGNAL

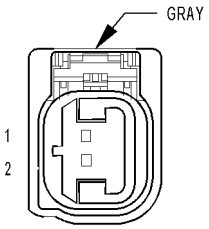

**SENSOR-
SIDE IMPACT-
RIGHT 2**

SENSOR-SIDE IMPACT-RIGHT 2 - GRAY 2 WAY

CAV	CIRCUIT	FUNCTION
1	R20 20WT/LG	RIGHT SIDE IMPACT SENSOR 2 GROUND
2	R18 20LB	RIGHT SIDE IMPACT SENSOR 2 SIGNAL

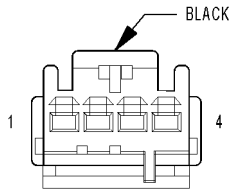

SENSOR-SUN (ATC)

SENSOR-SUN (ATC) - BLACK 4 WAY

CAV	CIRCUIT	FUNCTION
1	G39 20VT/LB	SUN SENSOR NO. 1 SIGNAL
2	G939 20VT/DB	SUN SENSOR RETURN
3	L24 20WT/VT	AUTO HEADLAMPS SIGNAL
4	G139 20VT/OR	SUN SENSOR NO. 2 SIGNAL

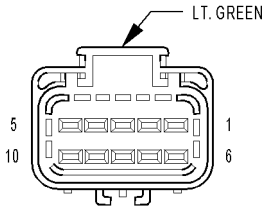

SENSOR-TRANSMISSION RANGE (RLE)

SENSOR-TRANSMISSION RANGE (RLE) - LT. GREEN 10 WAY

CAV	CIRCUIT	FUNCTION
1	-	-
2	-	-
3	K900 20DB/DG	SENSOR GROUND
4	T54 20DG/OR	TRANSMISSION TEMPERATURE SENSOR SIGNAL
5	-	-
6	-	-
7	T1 20DG/LB	TRS T1 SENSE
8	T3 20DG/DB	TRS T3 SENSE
9	T42 20DG/YL	TRS T42 SENSE
10	T41 20YL/DB	TRS T41 SENSE (P/N SENSE)

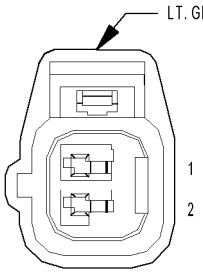

SENSOR-WASHER FLUID LEVEL-FRONT

SENSOR-WASHER FLUID LEVEL-FRONT - LT. GRAY 2 WAY

CAV	CIRCUIT	FUNCTION
1	Z901 20BK/DG	GROUND
2	W1 20BR/TN	WASHER FLUID LEVEL SWITCH SENSE

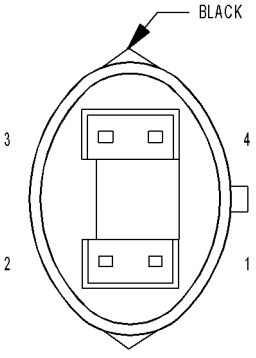

SENSOR-WHEEL SPEED-ABS-LEFT FRONT

SENSOR-WHEEL SPEED-ABS-LEFT FRONT - BLACK 4 WAY

CAV	CIRCUIT	FUNCTION
1	-	-
2	-	-
3	B9 20DG/LG	LEFT FRONT WHEEL SPEED SENSOR SUPPLY
4	B8 20DG/TN	LEFT FRONT WHEEL SPEED SENSOR SIGNAL

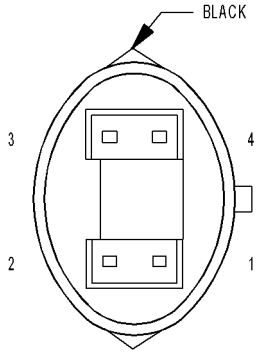

SENSOR-WHEEL SPEED-ABS-REAR

SENSOR-WHEEL SPEED-ABS-REAR - BLACK 4 WAY

CAV	CIRCUIT	FUNCTION
1	B2 20DG/LB	RIGHT REAR WHEEL SPEED SENSOR SUPPLY
2	B1 20DG/OR	RIGHT REAR WHEEL SPEED SENSOR SIGNAL
3	B4 20DG/GY	LEFT REAR WHEEL SPEED SENSOR SUPPLY
4	B3 20DG/YL	LEFT REAR WHEEL SPEED SENSOR SIGNAL

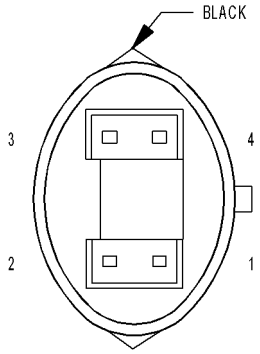

SENSOR-WHEEL SPEED-ABS-RIGHT FRONT

SENSOR-WHEEL SPEED-ABS-RIGHT FRONT - BLACK 4 WAY

CAV	CIRCUIT	FUNCTION
1	-	-
2	-	-
3	B7 20DG/VT	RIGHT FRONT WHEEL SPEED SENSOR SUPPLY
4	B6 20DG/WT	RIGHT FRONT WHEEL SPEED SENSOR SIGNAL

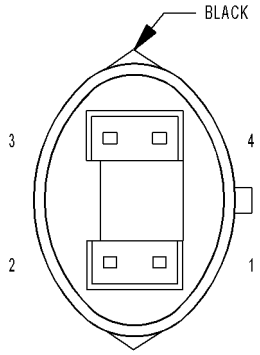

SENSOR-WHEEL SPEED-RIGHT FRONT (EXCEPT ABS)

SENSOR-WHEEL SPEED-RIGHT FRONT (EXCEPT ABS) - BLACK 4 WAY

CAV	CIRCUIT	FUNCTION
1	-	-
2	-	-
3	B7 20DG/VT	RIGHT FRONT WHEEL SPEED SENSOR SUPPLY
4	B6 20DG/WT	RIGHT FRONT WHEEL SPEED SENSOR SIGNAL

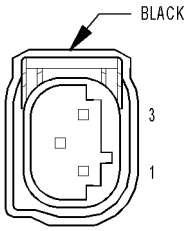

SIREN (RHD)

SIREN (RHD) - BLACK 3 WAY

CAV	CIRCUIT	FUNCTION
1	A117 20RD/DG	FUSED B(+) (I.O.D.)
2	Z904 20BK/BR	GROUND
3	D96 20WT/LB	SIREN SIGNAL CONTROL

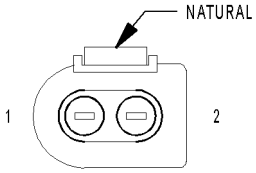

SOLENOID-FUEL PRESSURE (DIESEL)

SOLENOID-FUEL PRESSURE (DIESEL) - NATURAL 2 WAY

CAV	CIRCUIT	FUNCTION
1	K370 18BK/WT	FUEL PRESSURE SOLENOID CONTROL
2	K369 18RD/GY	FUEL PRESSURE SOLENOID 12 VOLT SUPPLY

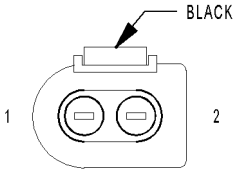

SOLENOID-FUEL QUANTITY (DIESEL)

SOLENOID-FUEL QUANTITY (DIESEL) - BLACK 2 WAY

CAV	CIRCUIT	FUNCTION
1	K365 18YL/BK	FUEL QUANTITY SOLENOID CONTROL
2	K366 18BK/BL/DG	FUEL QUANTITY SOLENOID 12 VOLT SUPPLY

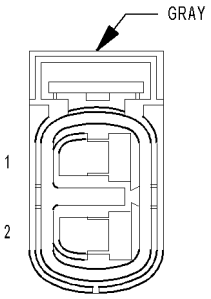

SOLENOID-MANIFOLD TUNING VALVE (2.7L/3.5L)

SOLENOID-MANIFOLD TUNING VALVE (2.7L/3.5L) - GRAY 2 WAY

CAV	CIRCUIT	FUNCTION
1	Z904 18BK/BR	GROUND
2	K136 18BR	MTV CONTROL

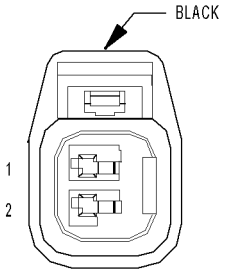

**SOLENOID-
MULTI DISPLACEMENT
SYSTEM CYL 1
(5.7L MDS)**

SOLENOID-MULTI DISPLACEMENT SYSTEM CYL 1 (5.7L MDS) - BLACK 2 WAY

CAV	CIRCUIT	FUNCTION
1	K451 20BR/WT	MDS SOL CONTROL NO. 1
2	Z904 20BK/BR	GROUND

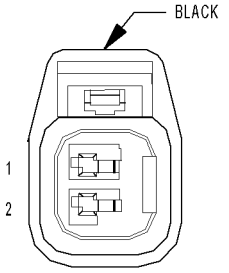

**SOLENOID-
MULTI DISPLACEMENT
SYSTEM CYL 4
(5.7L MDS)**

SOLENOID-MULTI DISPLACEMENT SYSTEM CYL 4 (5.7L MDS) - BLACK 2 WAY

CAV	CIRCUIT	FUNCTION
1	K452 20BR/LB	MDS SOL CONTROL NO. 4
2	Z904 20BK/BR	GROUND

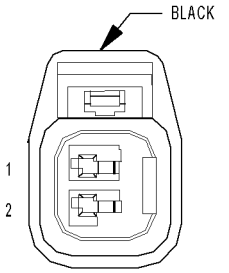

**SOLENOID-
MULTI DISPLACEMENT
SYSTEM CYL 6
(5.7L MDS)**

SOLENOID-MULTI DISPLACEMENT SYSTEM CYL 6 (5.7L MDS) - BLACK 2 WAY

CAV	CIRCUIT	FUNCTION
1	K453 20BR/DG	MDS SOL CONTROL NO. 6
2	Z904 20BK/BR	GROUND

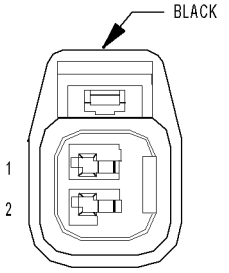

**SOLENOID-
MULTI DISPLACEMENT
SYSTEM CYL 7
(5.7L MDS)**

SOLENOID-MULTI DISPLACEMENT SYSTEM CYL 7 (5.7L MDS) - BLACK 2 WAY

CAV	CIRCUIT	FUNCTION
1	K454 20BR/OR	MDS SOL CONTROL NO. 7
2	Z904 20BK/BR	GROUND

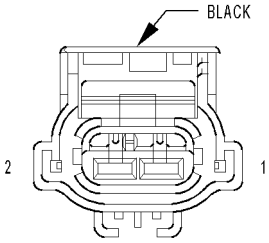

**SOLENOID-
PROPORTIONAL
PURGE
(GAS)**

SOLENOID-PROPORTIONAL PURGE (GAS) - BLACK 2 WAY

CAV	CIRCUIT	FUNCTION
1	K52 20DB/OR	EVAP PURGE CONTROL
2	K70 20DB/BR	EVAP PURGE RETURN

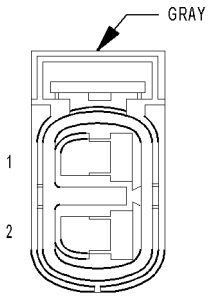

**SOLENOID-
SHORT RUNNER
VALVE
(3.5L)**

SOLENOID-SHORT RUNNER VALVE (3.5L) - GRAY 2 WAY

CAV	CIRCUIT	FUNCTION
1	K236 20DB/LG	SRV CONTROL
2	K343 16BR/YL	FUSED ASD RELAY OUTPUT 2

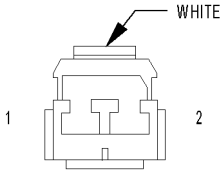

**SPEAKER-
INSTRUMENT PANEL-
CENTER
(HIGHLINE)**

SPEAKER-INSTRUMENT PANEL-CENTER (HIGHLINE) - WHITE 2 WAY

CAV	CIRCUIT	FUNCTION
1	X200 18GY/BR	AMPLIFIED CENTER I/P SPEAKER (+)
2	X290 18GY/OR	AMPLIFIED CENTER I/P SPEAKER (-)

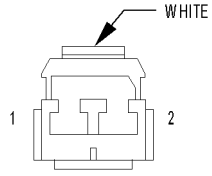

**SPEAKER-
INSTRUMENT PANEL-
LEFT**

SPEAKER-INSTRUMENT PANEL-LEFT - WHITE 2 WAY

CAV	CIRCUIT	FUNCTION
1	X201 18GY/VT (MIDLINE I)	LEFT FRONT DOOR SPEAKER (+)
1	X209 18GY/OR (MIDLINE II/HIGHLINE)	AMPLIFIED LEFT I/P SPEAKER (+)
2	X291 18GY/YL (MIDLINE I)	LEFT FRONT DOOR SPEAKER (-)
2	X299 18GY/YL (MIDLINE II/HIGHLINE)	AMPLIFIED LEFT I/P SPEAKER (-)

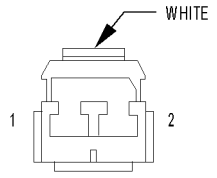

SPEAKER-INSTRUMENT PANEL-RIGHT

SPEAKER-INSTRUMENT PANEL-RIGHT - WHITE 2 WAY

CAV	CIRCUIT	FUNCTION
1	X202 18DG/VT (MIDLINE I)	RIGHT FRONT DOOR SPEAKER (+)
1	X208 18GY/DG (MIDLINE II/HIGHLINE)	AMPLIFIED RIGHT I/P SPEAKER (+)
2	X292 18DG/YL (MIDLINE I)	RIGHT FRONT DOOR SPEAKER (-)
2	X298 18GY/LG (MIDLINE II/HIGHLINE)	AMPLIFIED RIGHT I/P SPEAKER (-)

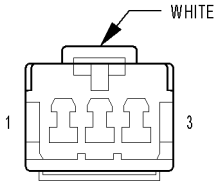

SPEAKER-LEFT FRONT DOOR

SPEAKER-LEFT FRONT DOOR - WHITE 3 WAY

CAV	CIRCUIT	FUNCTION
1	X201 18GY/VT (LOWLINE/MIDLINE I)	LEFT FRONT DOOR SPEAKER (+)
1	X201 18GY/VT (MIDLINE II/HIGHLINE)	AMPLIFIED LEFT FRONT DOOR SPEAKER (+)
2	-	-
3	X291 18GY/YL (LOWLINE/MIDLINE I)	LEFT FRONT DOOR SPEAKER (-)
3	X291 18GY/YL (MIDLINE II/HIGHLINE)	AMPLIFIED LEFT FRONT DOOR SPEAKER (-)

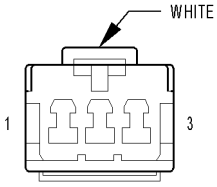

SPEAKER-LEFT REAR

SPEAKER-LEFT REAR - WHITE 3 WAY

CAV	CIRCUIT	FUNCTION
1	X393 18DG/GY (LOWLINE/MIDLINE I)	LEFT REAR SPEAKER (-)
1	X393 18DG/GY (MIDLINE II/HIGHLINE)	AMPLIFIED LEFT REAR SPEAKER (-)
2	-	-
3	X303 18DG/TN (LOWLINE/MIDLINE I)	LEFT REAR SPEAKER (+)
3	X303 18DG/TN (MIDLINE II/HIGHLINE)	AMPLIFIED LEFT REAR SPEAKER (+)

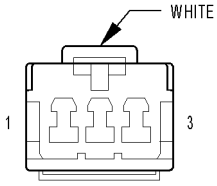

SPEAKER-RIGHT FRONT DOOR

SPEAKER-RIGHT FRONT DOOR - WHITE 3 WAY

CAV	CIRCUIT	FUNCTION
1	X202 18DG/VT (LOWLINE/MIDLINE I)	RIGHT FRONT DOOR SPEAKER (+)
1	X202 18DG/VT (MIDLINE II/HIGHLINE)	AMPLIFIED RIGHT FRONT DOOR SPEAKER (+)
2	-	-
3	X292 18DG/YL (LOWLINE I)	RIGHT FRONT DOOR SPEAKER (-)
3	X292 18DG/YL (MIDLINE II/HIGHLINE)	AMPLIFIED RIGHT FRONT DOOR SPEAKER (-)

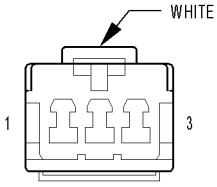

SPEAKER-RIGHT REAR

SPEAKER-RIGHT REAR - WHITE 3 WAY

CAV	CIRCUIT	FUNCTION
1	X394 18YL/GY (LOWLINE/MIDLINE I)	RIGHT REAR SPEAKER (-)
1	X394 18YL/GY (MIDLINE II/HIGHLINE)	AMPLIFIED RIGHT REAR SPEAKER (-)
2	-	-
3	X304 18DG/BR (LOWLINE/MIDLINE I)	RIGHT REAR SPEAKER (+)
3	X304 18DG/BR (MIDLINE II/HIGHLINE)	AMPLIFIED RIGHT REAR SPEAKER (+)

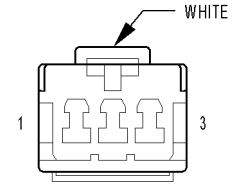

SPEAKER-SUBWOOFER (HIGHLINE EXCEPT SRT8)

SPEAKER-SUBWOOFER (HIGHLINE EXCEPT SRT8) - WHITE 3 WAY

CAV	CIRCUIT	FUNCTION
1	X300 18GY/BR	AMPLIFIED SUBWOOFER 1 (+)
2	-	-
3	X390 18DG/BR	AMPLIFIED SUBWOOFER 1 (-)

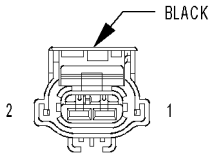

SPEAKER-SUBWOOFER (SRT8 EXCEPT EXPORT)

SPEAKER-SUBWOOFER (SRT8 EXCEPT EXPORT) - BLACK 2 WAY

CAV	CIRCUIT	FUNCTION
1	X30 18DG/YL	SUBWOOFER 1 (+)
2	X31 18GY/TN	SUBWOOFER 1 (-)

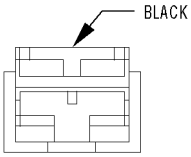

STARTER (2.7L/3.5L/5.7L AWD)

STARTER (2.7L/3.5L/5.7L AWD) - BLACK 1 WAY

CAV	CIRCUIT	FUNCTION
1	T750 16LG	STARTER RELAY OUTPUT

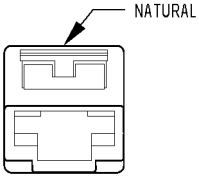

STARTER (5.7L RWD/SRT8)

STARTER (5.7L RWD/SRT8) - NATURAL 1 WAY

CAV	CIRCUIT	FUNCTION
1	T750 16LG (5.7L RWD)	STARTER RELAY OUTPUT
1	T750 16YL/GY (SRT8)	STARTER RELAY OUTPUT

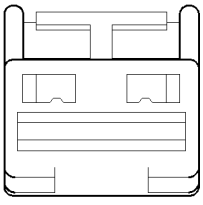

STARTER (DIESEL)

STARTER (DIESEL) - 1 WAY

CAV	CIRCUIT	FUNCTION
1	T750 14VT	STARTER RELAY OUTPUT

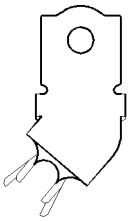

**STARTER-
FUSIBLE LINK-
EYELET
(EXCEPT 5.7L RWD/SRT8)**

STARTER-FUSIBLE LINK-EYELET (EXCEPT 5.7L RWD/SRT8) - 1 WAY

CAV	CIRCUIT	FUNCTION
1	A802 8LB	B(+)

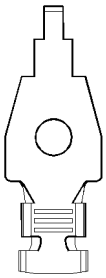

**STARTER-
FUSIBLE LINK-
EYELET
(5.7L RWD/SRT8)**

STARTER-FUSIBLE LINK-EYELET (5.7L RWD/SRT8) - 1 WAY

CAV	CIRCUIT	FUNCTION
1	A802 8LB (5.7L RWD)	B(+)
1	A802 4RD (SRT8)	B(+)

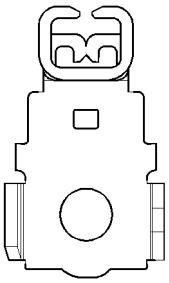

**STARTER-
POST-
PASS THROUGH-
EYELET
(EXCEPT 5.7L RWD/SRT8)**

STARTER-POST-PASS THROUGH-EYELET (EXCEPT 5.7L RWD/SRT8) - 1 WAY

CAV	CIRCUIT	FUNCTION
1	A11 4BR/RD (DIESEL)	B(+)
1	A11 4RD (GAS)	B(+)

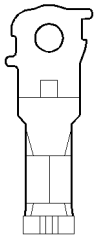

**STARTER-
POST-
PASS THROUGH-
EYELET
(5.7L RWD/SRT8)**

STARTER-POST-PASS THROUGH-EYELET (5.7L RWD/SRT8) - 1 WAY

CAV	CIRCUIT	FUNCTION
1	A11 4RD	B(+)

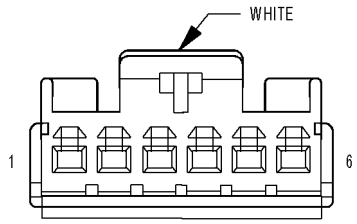

**SWITCH-
ADJUSTABLE PEDALS
(LHD)**

SWITCH-ADJUSTABLE PEDALS (LHD) - WHITE 6 WAY

CAV	CIRCUIT	FUNCTION
1	-	-
2	Z912 20BK/OR (EXCEPT MEMORY)	GROUND
3	P206 20LG/LB (EXCEPT MEMORY)	ADJUSTABLE PEDALS MOTOR REARWARD
3	Q103 20OR/LG (MEMORY)	ADJUSTABLE PEDALS SWITCH REARWARD
4	P205 20LG/WT (EXCEPT MEMORY)	ADJUSTABLE PEDALS MOTOR FORWARD
4	Q102 20OR/LB (MEMORY)	ADJUSTABLE PEDALS SWITCH FORWARD
5	Z912 20BK/OR (EXCEPT MEMORY)	GROUND
6	A72 20RD/OR (EXCEPT MEMORY)	ADJUSTABLE PEDALS RELAY OUTPUT
6	Q101 20OR/LB (MEMORY)	ADJUSTABLE PEDALS SWITCH GROUND

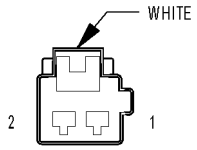

**SWITCH-
AUTOSTICK
(COLUMN NAG1)**

SWITCH-AUTOSTICK (COLUMN NAG1) - WHITE 2 WAY

CAV	CIRCUIT	FUNCTION
1	22YL	AUTOSTICK SWITCH MUX SUPPLY
2	22GY	AUTOSTICK SWITCH MUX SIGNAL

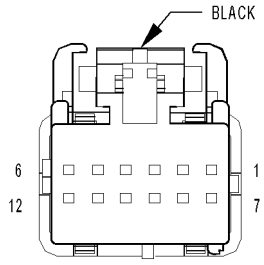

**SWITCH-
BANK**

SWITCH-BANK - BLACK 12 WAY

CAV	CIRCUIT	FUNCTION
1	L91 20WT/DB	HAZARD SWITCH SENSE
2	Z909 20BK/LG	GROUND
3	B27 20DG/WT	TRACTION CONTROL SWITCH SENSE
4	G104 20VT/GY (EARLY BUILD)	PASSENGER AIRBAG INDICATOR DRIVER
5	F23 20RD/OR	FUSED IGNITION SWITCH OUTPUT (RUN-START)
6	E22 20OR/GY	INDICATOR DIMMER SIGNAL
7	E12 20OR/GY	PANEL LAMPS DRIVER
8	W113 20BR/YL	REAR WIPER SWITCH MUX
9	W213 20BR/OR	REAR WIPER INDICATOR DRIVER
10	G926 20VT/WT	REAR WIPER SWITCH MUX RETURN
11	-	-
12	-	-

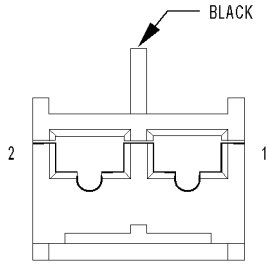

**SWITCH-
DECKLID RELEASE
(LX48)**

SWITCH-DECKLID RELEASE (LX48) - BLACK 2 WAY

CAV	CIRCUIT	FUNCTION
1	Z910 20BK/TN	GROUND
2	G25 20VT/TN	DECKLID/LIFTGATE RELEASE SWITCH SENSE

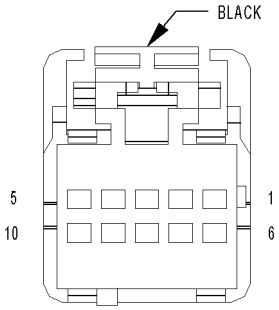

**SWITCH-
HEADLAMP**

SWITCH-HEADLAMP - BLACK 10 WAY

CAV	CIRCUIT	FUNCTION
1	L307 20WT/BR	HEADLAMP SWITCH MUX
2	E2 20OR/BR	PANEL LAMPS DIMMER SIGNAL
3	L900 20WT/YL	HEADLAMP SWITCH MUX RETURN
4	E12 20OR/GY	PANEL LAMPS DRIVER
5	Z910 20BK/TN	GROUND
6	-	-
7	-	-
8	-	-
9	-	-
10	-	-

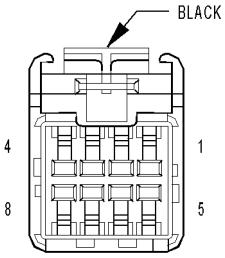

**SWITCH-
HEATED SEAT-
LEFT**

SWITCH-HEATED SEAT-LEFT - BLACK 8 WAY

CAV	CIRCUIT	FUNCTION
1	F23 20RD/OR	FUSED IGNITION SWITCH OUTPUT (RUN-START)
2	Z909 20BK/LG	GROUND
3	P365 20LG/GY	LEFT HEATED SEAT SWITCH SENSE
4	P83 20TN/WT	LEFT HEATED SEAT HIGH INDICATOR DRIVER
5	-	-
6	P81 20TN/LB	LEFT HEATED SEAT LOW INDICATOR DRIVER
7	E12 20OR/GY	PANEL LAMPS DRIVER
8	-	-

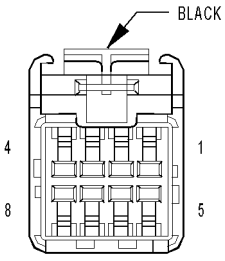

**SWITCH-
HEATED SEAT-
RIGHT**

SWITCH-HEATED SEAT-RIGHT - BLACK 8 WAY

CAV	CIRCUIT	FUNCTION
1	F23 20RD/OR	FUSED IGNITION SWITCH OUTPUT (RUN-START)
2	Z909 20BK/LG	GROUND
3	P366 20LG/LB	RIGHT HEATED SEAT SWITCH SENSE
4	P84 20TN/VT	RIGHT HEATED SEAT HIGH INDICATOR DRIVER
5	-	-
6	P82 20TN/DG	RIGHT HEATED SEAT LOW INDICATOR DRIVER
7	E12 20OR/GY	PANEL LAMPS DRIVER
8	-	-

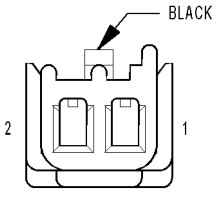

**SWITCH-
HORN**

SWITCH-HORN - BLACK 2 WAY

CAV	CIRCUIT	FUNCTION
1	D500 20WT (BASE)	LIN BUS
1	X3 20DG/VT (PREMIUM)	HORN SWITCH SIGNAL
2	D501 20WT/LG (BASE)	LIN SLAVE RETURN
2	X903 20GY/LG (PREMIUM)	HORN SWITCH RETURN

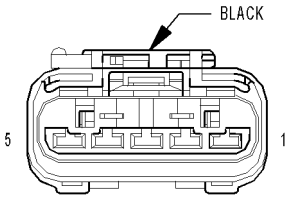

**SWITCH-
IGNITION C1**

SWITCH-IGNITION C1 - BLACK 5 WAY

CAV	CIRCUIT	FUNCTION
1	G900 20VT/OR	IGNITION SWITCH SENSE RETURN
2	G20 20VT/BR	IGNITION SWITCH SENSE
3	F20 20PK/WT	FUSED IGNITION SWITCH OUTPUT (RUN-START)
4	F21 20PK/DG	FUSED IGNITION SWITCH OUTPUT (START)
5	A106 20LB/RD	FUSED B(+)

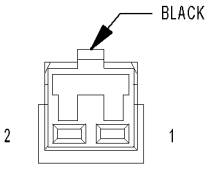

**SWITCH-
IGNITION C2
(RHD)**

SWITCH-IGNITION C2 (RHD) - BLACK 2 WAY

CAV	CIRCUIT	FUNCTION
1	A106 20LB/RD	FUSED B(+)
2	F892 20PK/LB	IGNITION SWITCH OUTPUT (KEY-IN)

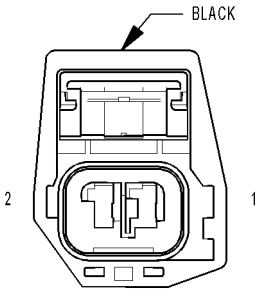

**SWITCH-
LIFTGATE RELEASE
(LX49)**

SWITCH-LIFTGATE RELEASE (LX49) - BLACK 2 WAY

CAV	CIRCUIT	FUNCTION
1	G25 20VT/TN	DECKLID/LIFTGATE RELEASE SWITCH SENSE
2	Z914 20BK/GY	GROUND

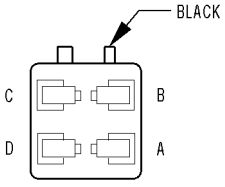

**SWITCH-
MEMORY SET**

SWITCH-MEMORY SET - BLACK 4 WAY

CAV	CIRCUIT	FUNCTION
A	-	-
B	G920 20VT/YL	MEMORY SELECT SWITCH RETURN
C	G200 20VT/BR	MEMORY SELECT SWITCH MUX
D	-	-

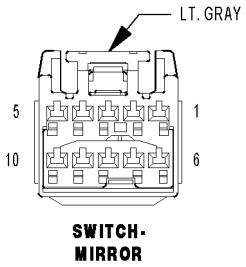

SWITCH-MIRROR

SWITCH-MIRROR - LT. GRAY 10 WAY

CAV	CIRCUIT	FUNCTION
1	P110 20LG/WT (RHD)	POWER FOLDING MIRROR RETURN
2	F880 20PK/DG (EXCEPT MEMORY)	FUSED ACCESSORY DELAY RELAY OUTPUT
2	E55 20OR/DG (MEMORY)	MIRROR SWITCH ILLUMINATION DRIVER
3	P76 20TN/LB (EXCEPT MEMORY)	MIRROR COMMON DRIVER
3	P710 20LG (MEMORY)	MIRROR COMMON SWITCH SENSE
4	Z912 20BK/OR (EXCEPT MEMORY)	GROUND
4	P950 20TN/GY (MEMORY)	MIRROR SWITCH RETURN
5	A913 20RD/GY (EXCEPT MEMORY)	FUSED B(+)
5	P550 20TN/LG (MEMORY)	MIRROR SWITCH SUPPLY
6	P72 20TN/GY (EXCEPT MEMORY)	PASSENGER MIRROR VERTICAL DRIVER
6	P706 20LG/GY (MEMORY)	MIRROR VERTICAL UP SWITCH SENSE
7	P71 20TN/DG (EXCEPT MEMORY)	DRIVER MIRROR VERTICAL DRIVER
7	P705 20LG/OR (MEMORY)	MIRROR VERTICAL DOWN SWITCH SENSE
8	P74 20TN/OR (EXCEPT MEMORY)	PASSENGER MIRROR HORIZONTAL DRIVER
8	P704 20LG/TN (MEMORY)	MIRROR HORIZONTAL RIGHT SWITCH SENSE
9	P75 20TN/LG (EXCEPT MEMORY)	DRIVER MIRROR HORIZONTAL DRIVER
9	P703 20DB/LG (MEMORY)	MIRROR HORIZONTAL LEFT SWITCH SENSE
10	P699 20LG/DG (RHD)	POWER FOLDING MIRROR DRIVER

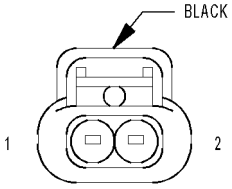

SWITCH-OIL LEVEL (DIESEL)

SWITCH-OIL LEVEL (DIESEL) - BLACK 2 WAY

CAV	CIRCUIT	FUNCTION
1	-	-
2	K358 20GY/BL	OIL LEVEL SWITCH SIGNAL

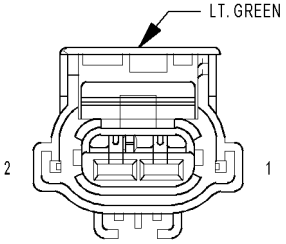

SWITCH-OIL PRESSURE (2.7L/3.5L)

SWITCH-OIL PRESSURE (2.7L/3.5L) - LT. GREEN 2 WAY

CAV	CIRCUIT	FUNCTION
1	G6 20VT/GY	ENGINE OIL PRESSURE SIGNAL
2	-	-

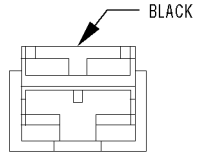

SWITCH-PARKING BRAKE

SWITCH-PARKING BRAKE - BLACK 1 WAY

CAV	CIRCUIT	FUNCTION
1	B25 20GY/BK	PARK BRAKE SWITCH SENSE

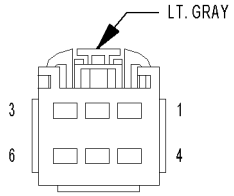

**SWITCH-
POWER WINDOW-
LEFT REAR**

SWITCH-POWER WINDOW-LEFT REAR - LT. GRAY 6 WAY

CAV	CIRCUIT	FUNCTION
1	Q611 14OR/GY	MASTER WINDOW SWITCH LEFT REAR (DOWN)
2	Q211 16TN/LB	LEFT REAR WINDOW DRIVER (DOWN)
3	Q111 16TN/YL	LEFT REAR WINDOW DRIVER (UP)
4	Q411 14OR/WT	MASTER WINDOW SWITCH LEFT REAR (UP)
5	-	-
6	Q15 14OR/LB	WINDOW LOCK OUT SWITCH OUTPUT

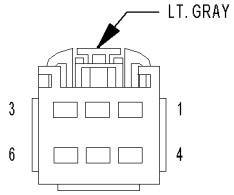

**SWITCH-
POWER WINDOW-
RIGHT REAR**

SWITCH-POWER WINDOW-RIGHT REAR - LT. GRAY 6 WAY

CAV	CIRCUIT	FUNCTION
1	Q612 14OR/DB	MASTER WINDOW SWITCH RIGHT REAR (DOWN)
2	Q212 16OR/VT	RIGHT REAR WINDOW DRIVER (DOWN)
3	Q112 16OR/BR	RIGHT REAR WINDOW DRIVER (UP)
4	Q412 14OR/LB	MASTER WINDOW SWITCH RIGHT REAR (UP)
5	-	-
6	Q15 14OR/LB	WINDOW LOCK OUT SWITCH OUTPUT

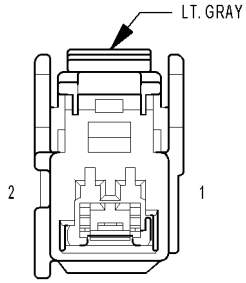

**SWITCH-
SEAT BELT-
DRIVER**

SWITCH-SEAT BELT-DRIVER - LT. GRAY 2 WAY

CAV	CIRCUIT	FUNCTION
1	Z912 20BK/OR	GROUND
2	R57 20LG/GY	DRIVER SEAT BELT SWITCH SENSE

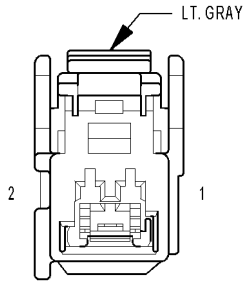

**SWITCH-
SEAT BELT-
PASSENGER
(EXCEPT EXPORT)**

SWITCH-SEAT BELT-PASSENGER (EXCEPT EXPORT) - LT. GRAY 2 WAY

CAV	CIRCUIT	FUNCTION
1	R58 20LB/GY	PASSENGER SEAT BELT SWITCH SENSE
2	Z911 20BK/WT	GROUND

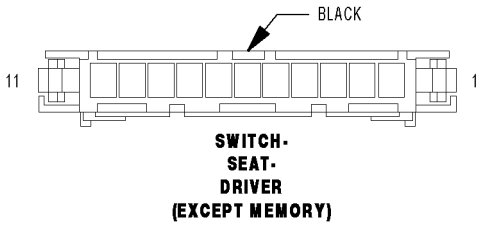

SWITCH-SEAT-DRIVER (EXCEPT MEMORY) - BLACK 11 WAY

CAV	CIRCUIT	FUNCTION
1	P41 18LG/GY	DRIVER SEAT RECLINER DOWN DRIVER
2	-	-
3	P43 18LG/VT	DRIVER SEAT RECLINER UP DRIVER
4	P17 16LG/DG	DRIVER SEAT HORIZONTAL REARWARD DRIVER
5	P21 18LG/TN	DRIVER SEAT FRONT RISER DOWN DRIVER
6	A110 16OR/RD	FUSED B(+)
7	Z912 16BK/OR	GROUND
8	P15 16LG/WT	DRIVER SEAT HORIZONTAL FORWARD DRIVER
9	P19 18LG/LB	DRIVER SEAT FRONT RISER UP DRIVER
10	P13 18LG/OR	DRIVER SEAT REAR RISER DOWN DRIVER
11	P11 18LG/YL	DRIVER SEAT REAR RISER UP DRIVER

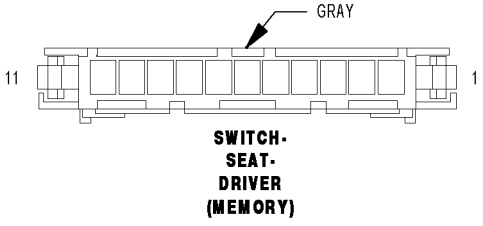

SWITCH-SEAT-DRIVER (MEMORY) - GRAY 11 WAY

CAV	CIRCUIT	FUNCTION
1	P599 20LG/TN	DRIVER SEAT SWITCH MUX RETURN
2	-	-
3	-	-
4	P239 20LG/WT	DRIVER SEAT SWITCH REAR VERTICAL/HORIZONTAL SWITCH MUX
5	-	-
6	-	-
7	-	-
8	-	-
9	-	-
10	P9 20LG/OR	DRIVER SEAT SWITCH SUPPLY
11	P339 20LG/DB	DRIVER SEAT SWITCH FRONT VERTICAL/RECLINER SWITCH MUX

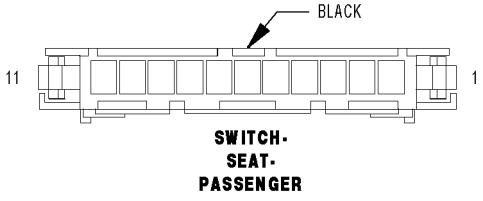

SWITCH-SEAT-PASSENGER - BLACK 11 WAY

CAV	CIRCUIT	FUNCTION
1	P42 18LG/GY (RHD)	PASSENGER SEAT RECLINER DOWN DRIVER
2	-	-
3	P44 18LG/VT (RHD)	PASSENGER SEAT RECLINER UP DRIVER
4	P16 16LG/WT (LHD)	PASSENGER SEAT HORIZONTAL REARWARD DRIVER
4	P16 16LG/DG (RHD)	PASSENGER SEAT HORIZONTAL REARWARD DRIVER
5	P20 18LG/LB (LHD)	PASSENGER SEAT FRONT RISER DOWN DRIVER
5	P20 18LG/TN (RHD)	PASSENGER SEAT FRONT RISER DOWN DRIVER
6	A916 14RD (LHD)	FUSED B(+)
6	A916 16OR/RD (RHD)	FUSED B(+)
7	Z911 14BK/WT (LHD)	GROUND
7	Z911 16BK/OR (RHD)	GROUND
8	P14 16LG/OR (LHD)	PASSENGER SEAT HORIZONTAL FORWARD DRIVER
8	P14 16LG/WT (RHD)	PASSENGER SEAT HORIZONTAL FORWARD DRIVER
9	P18 18LG/OR (LHD)	PASSENGER SEAT FRONT RISER UP DRIVER
9	P18 18LG/LB (RHD)	PASSENGER SEAT FRONT RISER UP DRIVER
10	P12 18LG/YL (LHD)	PASSENGER SEAT REAR RISER DOWN DRIVER
10	P12 18LG/OR (RHD)	PASSENGER SEAT REAR RISER DOWN DRIVER
11	P10 18LG/TN (LHD)	PASSENGER SEAT REAR RISER UP DRIVER
11	P10 18LG/YL (RHD)	PASSENGER SEAT REAR RISER UP DRIVER

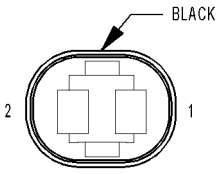

**SWITCH-
SECURITY HOOD
(EXPORT)**

SWITCH-SECURITY HOOD (EXPORT) - BLACK 2 WAY

CAV	CIRCUIT	FUNCTION
1	G70 20VT/LB	HOOD AJAR SWITCH SENSE
2	Z904 20BK/BR	GROUND

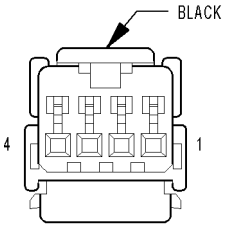

**SWITCH-
STEERING-
LEFT
(PREMIUM)**

SWITCH-STEERING-LEFT (PREMIUM) - BLACK 4 WAY

CAV	CIRCUIT	FUNCTION
1	G907 20VT	EVIC/NAV MUX RETURN
2	D503 20WT/OR	LIN LIGHTING
3	G106 20VT/OR	EVIC MUX SIGNAL 1
4	G206 20VT/OR	EVIC MUX SIGNAL 2

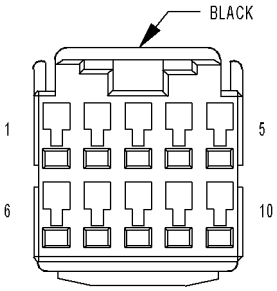

**SWITCH-
STEERING-
RIGHT
(PREMIUM)**

SWITCH-STEERING-RIGHT (PREMIUM) - BLACK 10 WAY

CAV	CIRCUIT	FUNCTION
1	D503 20WT/OR	LIN LIGHTING
2	X903 20GY/LG	HORN SWITCH RETURN
3	G106 20VT/OR	EVIC MUX SIGNAL 1
4	G206 20VT/OR	EVIC MUX SIGNAL 2
5	D500 20WT	LIN BUS
6	D502 20WT/OR	LIN SLAVE FEED
7	X3 20DG/VT	HORN SWITCH SIGNAL
8	D501 20WT/LG	LIN SLAVE RETURN
9	G907 20VT	EVIC/NAV MUX RETURN
10	-	-

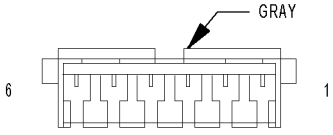

**SWITCH-
STOP LAMP**

SWITCH-STOP LAMP - GRAY 6 WAY

CAV	CIRCUIT	FUNCTION
1	B15 20DG/WT	BRAKE SWITCH NO. 1 SIGNAL
2	Z912 20BK/OR	GROUND
3	B16 20LB/DG	BRAKE SWITCH NO. 2 SIGNAL
4	F202 20PK/GY	FUSED IGNITION SWITCH OUTPUT (RUN-START)
5	B29 20DG/WT	BRAKE SWITCH SIGNAL
6	A103 20PK/DB	FUSED B(+)

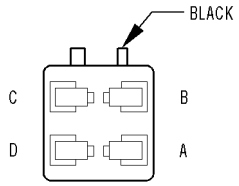

**SWITCH-
SUNROOF**

SWITCH-SUNROOF - BLACK 4 WAY

CAV	CIRCUIT	FUNCTION
A	Q4 20OR/YL (LHD)	SUNROOF VENT SWITCH SENSE
A	Q4 22OR/YL (RHD)	SUNROOF VENT SWITCH SENSE
B	Q6 20OR/LG (LHD)	SUNROOF SWITCH SUPPLY
B	Q6 22OR/LG (RHD)	SUNROOF SWITCH SUPPLY
C	Q5 20OR/LB (LHD)	SUNROOF CLOSE SWITCH SENSE
C	Q5 22OR/LB (RHD)	SUNROOF CLOSE SWITCH SENSE
D	Q3 20OR/TN (LHD)	SUNROOF OPEN SWITCH SENSE
D	Q3 22OR/TN (RHD)	SUNROOF OPEN SWITCH SENSE

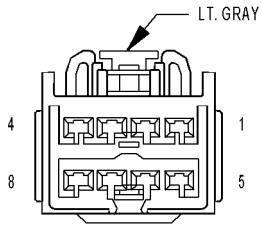

**SWITCH-
WINDOW/
DOOR LOCK-
DRIVER C1
(BASE)**

SWITCH-WINDOW/DOOR LOCK-DRIVER C1 (BASE) - LT. GRAY 8 WAY

CAV	CIRCUIT	FUNCTION
1	-	-
2	F881 14PK	FUSED ACCESSORY DELAY RELAY OUTPUT
3	G167 20VT/LB	DRIVER DOOR LOCK SWITCH RETURN
4	Z912 14BK/OR	GROUND
5	Q15 14OR/LB	WINDOW LOCK OUT SWITCH OUTPUT
6	Q21 16OR/WT	DRIVER WINDOW DRIVER (DOWN)
7	Q11 16OR/LG	DRIVER WINDOW DRIVER (UP)
8	G161 20VT/DG	DRIVER DOOR LOCK SWITCH MUX

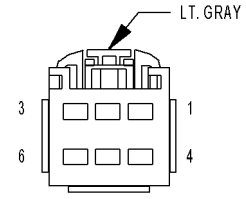

**SWITCH-
WINDOW/
DOOR LOCK-
DRIVER C2
(BASE)**

SWITCH-WINDOW/DOOR LOCK-DRIVER C2 (BASE) - LT. GRAY 6 WAY

CAV	CIRCUIT	FUNCTION
1	Q411 14OR/WT	MASTER WINDOW SWITCH LEFT REAR (UP)
2	Q412 14OR/LB	MASTER WINDOW SWITCH RIGHT REAR (UP)
3	Q612 14OR/DB	MASTER WINDOW SWITCH RIGHT REAR (DOWN)
4	Q611 14OR/GY	MASTER WINDOW SWITCH LEFT REAR (DOWN)
5	Q26 14OR/GY	MASTER WINDOW SWITCH PASSENGER (DOWN)
6	Q16 14OR/TN	MASTER WINDOW SWITCH PASSENGER (UP)

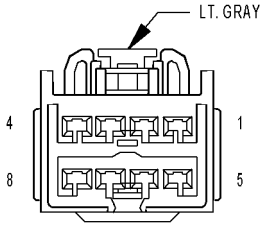

**SWITCH-
WINDOW/
DOOR LOCK-
DRIVER
EXPRESS C1
(EXCEPT BASE)**

SWITCH-WINDOW/DOOR LOCK-DRIVER EXPRESS C1 (EXCEPT BASE) - LT. GRAY 8 WAY

CAV	CIRCUIT	FUNCTION
1	F881 14PK	FUSED ACCESSORY DELAY RELAY OUTPUT
2	Q611 14OR/GY	MASTER WINDOW SWITCH LEFT REAR (DOWN)
3	Q411 14OR/WT	MASTER WINDOW SWITCH LEFT REAR (UP)
4	Q612 14OR/DB	MASTER WINDOW SWITCH RIGHT REAR (DOWN)
5	Q15 14OR/LB	WINDOW LOCK OUT SWITCH OUTPUT
6	Z912 18BK/OR	GROUND
7	-	-
8	Q412 14OR/LB	MASTER WINDOW SWITCH RIGHT REAR (UP)

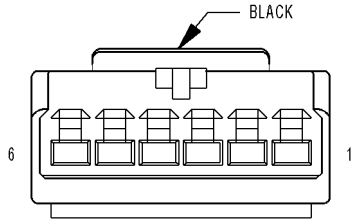

**SWITCH-
WINDOW/
DOOR LOCK-
DRIVER
EXPRESS C2
(EXCEPT BASE)**

SWITCH-WINDOW/DOOR LOCK-DRIVER EXPRESS C2 (EXCEPT BASE) - BLACK 6 WAY

CAV	CIRCUIT	FUNCTION
1	Q221 20GY/OR	DRIVER WINDOW DRIVER EXPRESS SWITCH MUX
2	Q222 20OR/GY	PASSENGER WINDOW DRIVER EXPRESS SWITCH MUX
3	G161 20VT/DG	DRIVER DOOR LOCK SWITCH MUX
4	Z421 20BK/BR	DRIVER EXPRESS SWITCH RETURN
5	G167 20VT/LB	DRIVER DOOR LOCK SWITCH RETURN
6	-	-

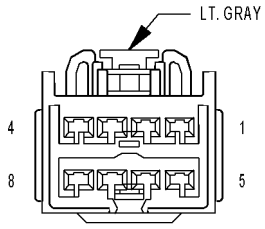

**SWITCH-
WINDOW/
DOOR LOCK-
PASSENGER
(BASE)**

SWITCH-WINDOW/DOOR LOCK-PASSENGER (BASE) - LT. GRAY 8 WAY

CAV	CIRCUIT	FUNCTION
1	Q26 14OR/GY	MASTER WINDOW SWITCH PASSENGER (DOWN)
2	Q22 16OR/VT	PASSENGER WINDOW DRIVER (DOWN)
3	Q12 16OR/BR	PASSENGER WINDOW DRIVER (UP)
4	Q15 14OR/LB	WINDOW LOCK OUT SWITCH OUTPUT
5	F881 14PK	FUSED ACCESSORY DELAY RELAY OUTPUT
6	G160 20VT/LG	PASSENGER DOOR LOCK SWITCH MUX
7	P37 20LG/TN	PASSENGER DOOR LOCK SWITCH RETURN
8	Q16 14OR/TN	MASTER WINDOW SWITCH PASSENGER (UP)

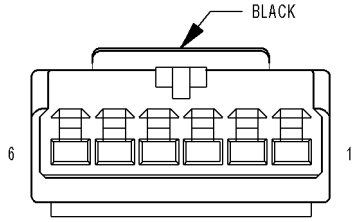

**SWITCH-
WINDOW/
DOOR LOCK-
PASSENGER
EXPRESS
(EXCEPT BASE)**

SWITCH-WINDOW/DOOR LOCK-PASSENGER EXPRESS (EXCEPT BASE) - BLACK 6 WAY

CAV	CIRCUIT	FUNCTION
1	E34 20OR/TN	PASSENGER WINDOW EXPRESS SWITCH ILLUMINATION DRIVER
2	Q336 20OR/GY	PASSENGER WINDOW EXPRESS SWITCH MUX
3	Q936 20OR/LG	PASSENGER WINDOW EXPRESS SWITCH RETURN
4	P37 20LG/TN	PASSENGER DOOR LOCK SWITCH RETURN
5	G160 20VT/LG	PASSENGER DOOR LOCK SWITCH MUX
6	F880 20PK/DG	FUSED ACCESSORY DELAY RELAY OUTPUT

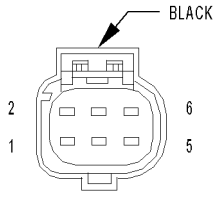

**THROTTLE
BODY
(GAS)**

THROTTLE BODY (GAS) - BLACK 6 WAY

CAV	CIRCUIT	FUNCTION
1	K22 18BR/OR	TP SENSOR NO. 1 SIGNAL
2	F855 18PK/YL	5 VOLT SUPPLY
3	K124 18DB/GY	ETC MOTOR (+)
4	K122 18BR/DG	TP SENSOR NO. 2 SIGNAL
5	K126 18DB/LG	ETC MOTOR (-)
6	K922 18BR/DB	TP SENSOR RETURN

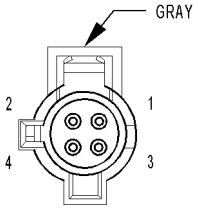

TRANSDUCER-A/C PRESSURE

TRANSDUCER-A/C PRESSURE - GRAY 4 WAY

CAV	CIRCUIT	FUNCTION
1	C918 20BK/LB	A/C PRESSURE SENSOR GROUND
2	F891 20PK/GY	5 VOLT SUPPLY
3	C18 20LB/BR	A/C PRESSURE TRANSDUCER SIGNAL
4	-	-

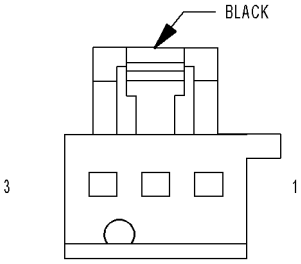

TRANSMITTER-INTRUSION SENSOR (RHD)

TRANSMITTER-INTRUSION SENSOR (RHD) - BLACK 3 WAY

CAV	CIRCUIT	FUNCTION
1	A645 20RD/VT	INTRUSION TRANSMITTER SENSOR SIGNAL
2	-	-
3	G945 20VT/DG	INTRUSION TRANSMITTER SENSOR GROUND

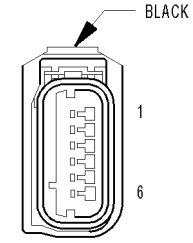

TRANSPONDER-TIRE PRESSURE-LEFT FRONT (TIRE PRESSURE MONITOR)

TRANSPONDER-TIRE PRESSURE-LEFT FRONT (TIRE PRESSURE MONITOR) - BLACK 6 WAY

CAV	CIRCUIT	FUNCTION
1	F500 20DG/PK	FUSED RUN RELAY OUTPUT
2	D508 20WT/GY	TIRE PRESSURE BUS
3	Z902 20BK/BR (LX48)	GROUND
3	Z902 20BK/LB (LX49)	GROUND
4	Z902 20BK/BR (LX48)	GROUND
4	Z902 20BK/LB (LX49)	GROUND
5	-	-
6	-	-

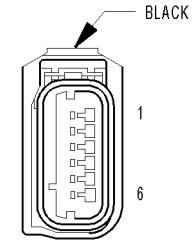

TRANSPONDER-TIRE PRESSURE-RIGHT FRONT (TIRE PRESSURE MONITOR)

TRANSPONDER-TIRE PRESSURE-RIGHT FRONT (TIRE PRESSURE MONITOR) - BLACK 6 WAY

CAV	CIRCUIT	FUNCTION
1	F500 20DG/PK	FUSED RUN RELAY OUTPUT
2	D508 20WT/GY	TIRE PRESSURE BUS
3	Z901 20BK/TN (LX48)	GROUND
3	Z901 20BK/DG (LX49)	GROUND
4	-	-
5	Z901 20BK/TN (LX48)	GROUND
5	Z901 20BK/DG (LX49)	GROUND
6	-	-

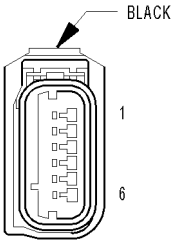

TRANSPONDER-TIRE PRESSURE-RIGHT REAR (TIRE PRESSURE MONITOR)

TRANSPONDER-TIRE PRESSURE-RIGHT REAR (TIRE PRESSURE MONITOR) - BLACK 6 WAY

CAV	CIRCUIT	FUNCTION
1	F500 20DG/PK	FUSED RUN RELAY OUTPUT
2	D508 20WT/GY	TIRE PRESSURE BUS
3	Z911 20BK/WT	GROUND
4	-	-
5	-	-
6	Z911 20BK/WT	GROUND

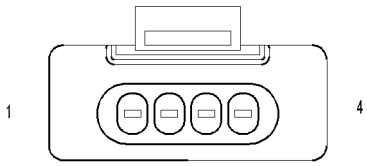

VALVE-EGR (DIESEL)

VALVE-EGR (DIESEL) - 4 WAY

CAV	CIRCUIT	FUNCTION
1	K34 20GY/YL	EGR SOLENOID CONTROL
2	K343 18RD/DG	FUSED ASD RELAY OUTPUT 2
3	Z904 18BR	GROUND
4	-	-

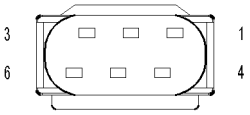

VALVE-EGR AIR FLOW CONTROL (DIESEL)

VALVE-EGR AIR FLOW CONTROL (DIESEL) - 6 WAY

CAV	CIRCUIT	FUNCTION
1	K315 20GY/PK	EGR AIR FLOW CONTROL VALVE MOTOR (-)
2	K390 20DG/PK	EGR AIR FLOW CONTROL VALVE POSITION SENSOR RETURN
3	K313 20DG/GY	EGR AIR FLOW CONTROL VALVE POSITION SENSOR SUPPLY
4	K314 20GY/RD	EGR AIR FLOW CONTROL VALVE MOTOR (+)
5	-	-
6	K312 20GY/OR	EGR AIR FLOW CONTROL VALVE POSITION SENSOR SIGNAL

8W-91 CONNECTOR/GROUND/SPLICE LOCATION

TABLE OF CONTENTS

page

CONNECTOR/GROUND/SPLICE LOCATION
DESCRIPTION 2

CONNECTOR/GROUND/SPLICE LOCATION

DESCRIPTION

This section provides illustrations identifying connector, ground and splice locations in the vehicle. Connector, ground and splice indexes are provided. Use the wiring diagrams in each section for connector, ground and splice identification. Refer to the appropriate index for the proper figure number. For items that are not shown in this section N/S is placed in the Fig. column.

CONNECTORS

CONNECTOR NAME/ NUMBER	COLOR	LOCATION	FIG.
Actuator-Blend Door-Left	BK	Left Side of HVAC Unit	36
Actuator-Blend Door-Right (ATC)	BK	Center of HVAC Unit	34
Actuator-Mode Door	BK	Left Side of HVAC Unit	36
Actuator-Recirculation Door	BK	Right Side of HVAC Unit	35
Airbag-Driver Squib 1	BK/YL	At Steering Wheel	42
Airbag-Driver Squib 2	BR/YL	At Steering Wheel	42
Airbag-Passenger Squib	YL	Passenger side of Instrument Panel	37, 38, 49
Airbag-Side Curtain-Left	YL	Body Behind Left Rear Seat	62, 63
Airbag-Side Curtain-Right	YL	Body Behind Right Rear Seat	64, 74
Amplifier-Antenna-Backlite C1	BK	Upper Right Backlite	64, 73, 78
Amplifier-Antenna-Backlite C2	-		N/S
Amplifier-Antenna-Backlite C3	BK	Upper Right Backlite	64, 73, 78
Amplifier-Antenna-Backlite C4	-		N/S
Amplifier-Radio C1	NAT	Driver Side of Instrument Panel	37, 39, 40
Amplifier-Radio C2	WT	Driver Side of Instrument Panel	37, 39, 40
Amplifier-Subwoofer (SRT8)	BK	Center Rear Shelf	64
Antenna Cable-Satellite Radio No. 1	BL	Rear Center Headliner	71, 72
Antenna Cable-Satellite Radio No. 2	WT	Rear Center Headliner	71, 72
Antenna-Global Positioning System (Navigation)	GY		N/S
Antenna-Satellite No. 1	BL	Left Rear Trunk	71, 72
Antenna-Satellite No. 2	WT	Left Rear Trunk	71, 72
Assembly-Electrohydraulic Control Unit (NAG1)	BK	Right Side Transmission	7, 33
Assembly-Exhaust Gas Recirculation valve (2.7L)	BK	Rear of Engine	17
Assembly-Exhaust Gas Recirculation valve (3.5L)	BK	Rear of Engine	20
Assembly-Exhaust Gas Recirculation valve (5.7L)	BK	Right Front Engine	24
Assembly-Natural Vacuum Leak Detection (Except Export)	BK	In Right Rear Wheel Well	64, 65

CONNECTOR NAME/ NUMBER	COLOR	LOCATION	FIG.
Assembly-Shifter Lever (Console NAG1)	BK	Below Center Console	53
Assembly-Shifter Lever (RLE)	WT	Below Center Console	53
Assembly-Transmission Solenoid/Pressure Switch	LT-BR	At Top of Transmission	17, 20
Assembly-Variable Line Pressure (RLE)	BK	On Transmission	N/S
Backlite-Antenna	NAT	Right Backlite	73
Backlite-Electric Heated (POWER)	BK	Right Backlite	73
Backlite-Electric Heated (GROUND)	BK	Left Backlite	62, 78
Battery-Negative		Right Rear Trunk	80, 81
Battery-Positive		Right Rear Trunk	81, 82
Booster-Active Brake	BK	Left Rear Engine Compartment	8
C100 (2.7L/3.5L)	BK	Right Engine Compartment	7, 9, 17, 20
C100 (5.7L/SRT8)	BK	Right Engine Compartment	7, 25, 28, 29
C100 (DIESEL)	BK	Left Rear Engine Compartment	8, 9, 30
C101 (5.7L	DK GY	Left Rear Engine Compartment	26
C102	LT GY/BK	Passenger Side of Instrument Panel	37, 38, 47, 53
C103 (LX48)	DK GY	Right Front Engine Compartment	3
C104	BK	Passenger Side of Instrument Panel	52, 53
C105	BR	Passenger Side of Instrument Panel	52, 53
C106 (NAG1)	LT GY	Left Kick Panel	N/S
C107	BK	Top Front of Engine	28
C108 (DIESEL)	BK	Right Rear Engine Compartment	7, 15
C200	NAT/BK	Passenger Side of Instrument Panel	37, 38, 47, 52, 53
C201	GN/BK	Passenger Side of Instrument Panel	37, 38, 47, 52, 53
C202	NAT	Right Side of HVAC Unit	35, 37, 38, 47
C203	BK	Driver Side Kick Panel	37, 39, 40, 43, 51, 54
C204	NAT	Right Side Instrument Panel	37, 39, 49, 66
C205	NAT	Left Instrument Panel	36, 37, 38, 50
C206	NAT/WT	At Steering Wheel	42
C207	BK	Right Side Instrument Panel	37, 39, 47, 53, 54
C208 (Column NAG1)	NAT	At Bottom of Steering Column	N/S
C300	NAT	Front of Driver Door	51, 54, 60
C301	NAT	Front of Passenger Door	52, 53, 60
C302 (Body)	NAT	Front of Left Rear Door	57
C302 (Door)	NAT	Front of Left Rear Door	61
C303 (Body)	NAT	Front of Right Rear Door	58
C303 (Door)	NAT	At Right B-Pillar	61
C304 (LX49)	LT GY	Top Front of Liftgate	78
C305 (LX49)	LT GY	Top Front of Liftgate	78

CONNECTOR NAME/ NUMBER	COLOR	LOCATION	FIG.
C306	BK	Right Rear Body	75, 76, 86
C307 (LX48)	BK	Left Rear Taillamp Assembly	76, 85
C308 (LX48)	BK	Right Rear Taillamp Assembly	76, 85
C309 (LX49)	DK GY	Left Rear Fascia	83, 84, 86
C310 (LX49)	DK GY	Right Rear Fascia	83, 84, 86
C311	NAT	Rear of Sunroof	66, 70
C313	LT GY	Below Driver Seat	51, 55
C314	LT GY	Below Passenger Seat	52, 53, 56
C315	LT GY	Rear Driver Seat	N/S
C316	LT GY	Passenger Seat	56
C317	NAT	Left Kick Panel	37, 38, 40, 43, 59
Capacitor-Ignition-No. 1	BK	Right Side Engine Near T/O for Ignition Coil No. 5	N/S
Capacitor-Ignition-No. 1 (6.1L)	BK	At Rear of Left Engine Head	N/S
Capacitor-Ignition-No. 2 (2.7L/5.7L)	BK	Top Left of Engine	18
Cluster C1	GY	Rear of Instrment Cluster	37, 39, 44
Cluster C2	GY	Rear of Instrment Cluster	37, 39, 44
Cluster C3	WT	Rear of Instrment Cluster	37, 39, 44
Clutch-A/C Compressor	BK	Front of Engine	18, 26, 29
Clutch-A/C Compressor (DIESEL)	BK	On Engine Harness	N/S
Coil-Ignition-No. 1 (2.7L/3.5L)	BK	Top Right Front of Engine	N/S
Coil-Ignition-No. 1 (5.7L/6.1L)	BK	Top Left Front of Engine	26, 28, 29
Coil-Ignition-No. 2 (2.7L/3.5L)	BK	Top Left Front of Engine	18, 22
Coil-Ignition-No. 2 (5.7L/6.1L)	BK	Top Right Front of Engine	25, 28
Coil-Ignition-No. 3 (2.7L/3.5L)	BK	Top Right of Engine	N/S
Coil-Ignition-No. 3 (5.7L/6.1L)	BK	Top Left of Engine	26, 28, 29
Coil-Ignition-No. 4 (2.7L/3.5L)	BK	Top Left of Engine	18, 22
Coil-Ignition-No. 4 (5.7L/6.1L)	BK	Top Right of Engine	25, 28
Coil-Ignition-No. 5 (2.7L/3.5L)	BK	Top Right Rear of Engine	N/S
Coil-Ignition-No. 5 (5.7L/6.1L)	BK	Top Left Rear of Engine	26, 28, 29
Coil-Ignition-No. 6 (2.7L/3.5L)	BK	Top Left Rear of Engine	18, 22
Coil-Ignition-No. 6 (5.7L/6.1L)	BK	Top Right Rear of Engine	25, 28
Coil-Ignition-No. 7 (5.7L/6.1L)	BK	Top Left Rear of Engine	26, 28, 29
Coil-Ignition-No. 8 (5.7L/6.1L)	BK	Top Right Rear of Engine	25, 28
Connector-Interface-Police/ Taxi	NAT	At Mini Console	N/S
Connector-Police Accessories	Lt. GY		N/S
Control-A/C-Heater C1 (ATC)	GY	At Center Stack	37, 38, 46
Control-A/C-Heater C1 (MTC)	BK	At Center Stack	37, 38, 46
Control-A/C-Heater C2	GY	At Center Stack	37, 38, 46

CONNECTOR NAME/ NUMBER	COLOR	LOCATION	FIG.
Control-A/C-Heater C3 (MTC)	BK	At Center Stack	37, 46
Data Link Connector	BK	Driver Side of Instrument Panel Above Pedals	37, 39, 40, 43
Diode-No. 1 (NAG1)			N/S
Diode-No. 2			N/S
Diode-Zener			N/S
Display-Park Assist (Parktronics)	BK	Center Rear Headliner, Above Backlite	66
Fan-Radiator C1	DK GY	Right Front of Engine Compartment	3, 4
Fan-Radiator C2 (SRT8/ DIESEL)	DK-GY	Right Front of Engine Compartment	3, 4
Flasher-Headlamp C1 (Police)	LT GY		N/S
Flasher-Headlamp C2 (Police)	LT GY		N/S
Fuse Block A (Police)		Right Kick Pannel	53
Fuse Block B (Police)		Right Kick Pannel	53
Fuse/Relay Block 1 (DIESEL)		Behind Right Shocktower, Engine Compartment	7, 15
Fuse/Relay Block 2 (DIESEL)		Behind Right Shocktower, Engine Compartment	7, 15
Generator (GAS)	BK	Right Front of Engine	17, 20, 25, 28
Generator (DIESEL)	BL	On Engine Harness	N/S
Generator-Eyelet	-	Right Front of Engine	17, 20, 25, 28
Glow Plug-No. 1	BK	Right Top of Engine	31
Glow Plug-No. 2	BK	Left Top of Engine	31
Glow Plug-No. 3	BK	Right Top of Engine	31
Glow Plug-No. 4	BK	Left Top of Engine	31
Glow Plug-No. 5	BK	Right Top of Engine	31
Glow Plug-No. 6	BK	Left Top of Engine	31
Heater-Cabin (DIESEL)	LT GY	At Left Side of HVAC	53
Heater-Crankcase Vent (DIESEL)	BK	Top Center of Engine	N/S
Heater-Seat Back-Left	GY	Near Driver Seat Back Pivot	N/S
Heater-Seat Back-Right	GY	Near Passenger Seat Back Pivot	56
Heater-Seat Cushion-Left	GN	Under Driver Seat	55
Heater-Seat Cushion-Right	GN	Under Passenger Seat	56
Horn-No. 1	BK	Right Front of Engine Compartment	3
Horn-No. 2	BK	Right Front of Engine Compartment	3
Injector-Fuel-No.1 (2.7L/3.5L)	BK	Top Right Front of Engine	N/S
Injector-Fuel-No.1 (5.7L)	BK	Top Left Front of Engine	26
Injector-Fuel-No.1 (6.1L)	BK	At Left Side of Intake Manifold	29
Injector-Fuel-No.1 (DIESEL)	BK	Right Top of Engine	31
Injector-Fuel-No.2 (2.7L/3.5L)	BK	Top Left Front of Engine	18

CONNECTOR NAME/ NUMBER	COLOR	LOCATION	FIG.
Injector-Fuel-No.2 (5.7L/6.1L)	BK	Top Right Front of Engine	25, 28
Injector-Fuel-No.2 (DIESEL)	BK	Left Top of Engine	31
Injector-Fuel-No.3 (2.7L/3.5L)	BK	Top Right of Engine	N/S
Injector-Fuel-No.3 (5.7L)	BK	Top Left of Engine	26
Injector-Fuel-No.3 (6.1L)	BK	At Left Side of Intake Manifold	29
Injector-Fuel-No.3 (DIESEL)	BK	Right Top of Engine	31
Injector-Fuel-No.4 (2.7L)	BK	Top Left of Engine	18
Injector-Fuel-No.4 (5.7L/6.1L)	BK	Top Right of Engine	25, 28
Injector-Fuel-No.4 (DIESEL)	BK	Left Top of Engine	31
Injector-Fuel-No.5 (2.7L)	BK	Top Right Rear of Engine	N/S
Injector-Fuel-No.5 (5.7L)	BK	Top Left Rear of Engine	26
Injector-Fuel-No.5 (6.1L)	BK	At Left Side of Intake Manifold	29
Injector-Fuel-No.5 (DIESEL)	BK	Right Top of Engine	31
Injector-Fuel-No.6 (2.7L)	BK	Top Left Rear of Engine	18
Injector-Fuel-No.6 (5.7L/6.1L)	BK	Top Right Rear of Engine	25, 28
Injector-Fuel-No.6 (DIESEL)	BK	Left Top of Engine	31
Injector-Fuel-No.7 (5.7L)	BK	Top Left Rear of Engine	26
Injector-Fuel-No.7 (6.1L)	BK	At Left Side of Intake Manifold	29
Injector-Fuel-No.8 (5.7L/6.1L)	BK	Top Right Rear of Engine	25, 28
Lamp-Back-Up-Left (300C)	GY	Right Tail Lamp Assembly	85
Lamp-Back-Up-Left (300T)	GY	Left Tail Lamp Assembly	83
Lamp-Back-Up-Left (LX49)	LT GY	Left Tail Lamp Assembly	84
Lamp-Back-Up-Right (300C)	GY	Right Tail Lamp Assembly	85
Lamp-Back-Up-Right (300T)	GY	Right Tail Lamp Assembly	83
Lamp-Back-Up-Right (LX49)	LT GY	Right Tail Lamp Assembly	84
Lamp-Cargo (LX48 Chrysler)	BK	Bottom Center of Backlite	64
Lamp-Cargo (LX48 Dodge)	WT	Bottom Center of Backlite	64
Lamp-Cargo (LX49)	GY	Rear of Liftgate	78
Lamp-Center High Mounted Stop (LX48 Chrysler)	LT GY	Bottom Center of Backlite	64
Lamp-Center High Mounted Stop (LX48 Dodge)	BK	Bottom Center of Backlite	64
Lamp-Center High Mounted Stop (LX49)	NAT	Right of Liftgate	78
Lamp-Courtesy-Left Front Door (Except Base)	WT	At Bottom of Door	60
Lamp-Courtesy-Left Rear	BK	Left Rear of Headliner	66
Lamp-Courtesy-Right Front Door (Except Base)	WT	At Bottom of Door	60
Lamp-Courtesy-Right Rear	BK	Right Rear of Headliner	66
Lamp-Dome (Police)		Rear of Overhead Console	68
Lamp-Fog-Left Front	BK	Inside of Left Front Fascia	4

CONNECTOR NAME/ NUMBER	COLOR	LOCATION	FIG.
Lamp-Fog-Left Rear (300C Export)	GN	Left Rear Taillamp Assembly	85
Lamp-Fog-Left Rear (LX49 Export)	GY	Left Rear Fascia	86
Lamp-Fog-Right Front	BK	Inside of Right Front Fascia	2
Lamp-Fog-Right Rear (300C Export)	GN	Right Rear Taillamp Assembly	85
Lamp-Fog-Right Rear (LX49 Export)	GY	Right Rear Fascia	86
Lamp-Glove Box	BK	Passenger Side of Instrument Panel	37, 38, 49
Lamp-High Beam-Left	BK	Left Front Lamp Assembly	1, 4
Lamp-High Beam-Right	BK	Right Front Lamp Assembly	1, 2
Lamp-High Intensity Discharge-Left (HID Lamps)	DK GY	Left Front Lamp Assembly	1
Lamp-High Intensity Discharge-Right (HID Lamps)	DK GY	Right Front Lamp Assembly	1
Lamp-License (Except 300C Export)	BK	Center of Rear Fascia	86
Lamp-License-Left (Export)	BK	Center of Rear Fascia	86
Lamp-License-Right (Export)	BK	Center of Rear Fascia	86
Lamp-Low Beam-Left (Except HID Lamps)	GY	Left Front Lamp Assembly	1, 4
Lamp-Low Beam-Right (Except HID Lamps)	GY	Right Front Lamp Assembly	1, 2
Lamp-Park/Turn-Left Front	BK	Left Front Lamp Assembly	1, 4
Lamp-Park/Turn-Right Front	BK	Right Front Lamp Assembly	1, 2
Lamp-PRNDL	WT	Below Center Console	53
Lamp-Reading-Front	NAT	Overhead Console	69
Lamp-Side Marker-Left Front (LX48)	BK	Behind Left Front Fender	5
Lamp-Side Marker-Left Rear (300T)	BK	Left Tail Lamp Assembly	83
Lamp-Side Marker-Right Front (LX48)	BK	Behind Right Front Fender	5
Lamp-Side Marker-Right Rear (300T)	BK	Right Tail Lamp Assembly	83
Lamp-Side Repeater-Left (Export)	BK	Behind Left Front Fender	5
Lamp-Side Repeater-Right (Export)	BK	Behind Right Front Fender	5
Lamp-Spot-Left (Police)		Top of Left A-Pillar	67
Lamp-Spot-Right (Police)		Top of Right A-Pillar	67
Lamp-Tail Park-Left (300C Except Export)	GN	Right Tail Lamp Assembly	85

CONNECTOR NAME/ NUMBER	COLOR	LOCATION	FIG.
Lamp-Tail Park-Right (300C Except Export)	GN	Right Tail Lamp Assembly	85
Lamp-Tail Stop/Park-Left (300C)	BK	Left Tail Lamp Assembly	85
Lamp-Tail Stop/Park-Right (300C)	BK	Right Tail Lamp Assembly	85
Lamp-Tail Stop/Turn-Left (300T)	BK	Left Tail Lamp Assembly	83
Lamp-Tail Stop/Turn-Right (300T)	BK	Right Tail Lamp Assembly	83
Lamp-Tail Turn-Left (300C Except Export)	GY	Left Tail Lamp Assembly	85
Lamp-Tail Turn-Left (300C Export)	NAT	Left Tail Lamp Assembly	85
Lamp-Tail Turn-Right (300C Except Export)	NAT	Right Tail Lamp Assembly	85
Lamp-Tail Turn-Right (300C Export)	GY	Right Tail Lamp Assembly	85
Lamp-Tail/Stop-Left (LX49)	BR	Left Tail Lamp Assembly	84
Lamp-Tail/Stop-Right (LX49)	BR	Right Tail Lamp Assembly	84
Lamp-Turn-Left Rear (LX49)	TN	Left Tail Lamp Assembly	84
Lamp-Turn-Right Rear (LX49)	TN	Right Tail Lamp Assembly	84
Lamp-Underhood (Police)	BK	Right Rear Under Hood	16
Lamp-Vanity-Left	BK	Left Visor	66
Lamp-Vanity-Right	BK	Right Visor	66
Latch-Door-Decklid (LX48)	BK	At Decklid Latch	77
Latch-Door-Driver	BK	Left Front Door	60
Latch-Door-Left Rear	BK	Rear of Left Rear Door	61
Latch-Door-Liftgate (LX49)	BK	At Liftgate Latch	78
Latch-Door-Passenger	BK	Right Front Door	60
Latch-Door-Right Rear	BK	Rear of Right Rear Door	61
Lighter-Cigar	GY	Center Stack	37, 38, 47
Media System-Monitor/DVD	LT-GY	Rear Center Console	N/S
Mirror-Inside Rearview C1 (Except Base)	BK	Center Top of Windshield	50
Mirror-Inside Rearview C2 (Hands Free)	BK	Center Top of Windshield	50
Mirror-Outside Rearview-Driver (Except Memory)	NAT	Driver Door	60
Mirror-Outside Rearview-Driver (Memory)	BK	Driver Door	60
Mirror-Outside Rearview-Passenger (Except Memory)	NAT	Passenger Door	60
Mirror-Outside Rearview-Passenger (Memory)	BK	Passenger Door	60

CONNECTOR NAME/ NUMBER	COLOR	LOCATION	FIG.
Module-Antilock Brakes	BK	Right Front Engine Compartment	6
Module-Brake (Trailer Tow)	BL	Left Kick Panel	51
Module-Clock Analog	NAT	Top Center Indstrument Panel	37, 38, 46
Module-Door-Driver C1	BK	Middle of Driver Door	60
Module-Door-Driver C2	BK	Middle of Driver Door	60
Module-Door-Driver C3 (Memory)	GY	Middle of Driver Door	60
Module-Door-Driver C4 (Memory)	DK GY	Middle of Driver Door	60
Module-Door-Passenger C1	BK	Middle of Passenger Door	N/S
Module-Door-Passenger C2	BK	Middle of Passenger Door	N/S
Module-Door-Passenger C4 (Memory)	DK GY	Middle of Passenger Door	N/S
Module-Electronic Overhead	BK	Overhead Console	66, 69
Module-Electronic Shift C1 (Column NAG1)	BK	At Bottom of Steering Column	N/S
Module-Electronic Shift C2 (Column NAG1)	BK	At Bottom of Steering Column	N/S
Module-Engine Control C1 (DIESEL)	BK	Left Rear Engine Compartment	N/S
Module-Engine Control C2 (DIESEL)	BK	Left Rear Engine Compartment	8, 9
Module-Front Blower Power C1 (ATC)	BK	Center HVAC Unit	34
Module-Front Blower Power C2 (ATC)	BK	Center HVAC Unit	34
Module-Front Control C1	BK	Right Engine Compartment	6
Module-Front Control C2	BK	Right Engine Compartment	6
Module-Front Control IPM	BK	At End of IPM	N/S
Module-Fuel Pump	BK	Top of Fuel Tank	57
Module-Glow Plug		Top Center of Engine	31, 32
Module-Glow Plug-Eyelet		In Starter Harness	N/S
Module-Hands Free	DK GY	Right Side Instrument Panel	37, 47
Module-Headlamp Leveling (Export)	BK	Right Front Engine Compartment	2, 6
Module-Heated Seats	BK	Below Passenger Seat	53, 54
Module-Integrated Power C1	GN	Right Engine Compartment	6
Module-Integrated Power C2	LT GY	Right Engine Compartment	6
Module-Integrated Power C3	BK	Right Engine Compartment	6
Module-Integrated Power C4	LT GY	Right Engine Compartment	6
Module-Integrated Power C5	BL	Right Engine Compartment	6
Module-Integrated Power-Eyelet	-	Right Engine Compartment	14
Module-Interface-Police/Taxi C1	GY	In Mini Console, at Center Stack end	48

CONNECTOR NAME/ NUMBER	COLOR	LOCATION	FIG.
Module-Interface-Police/Taxi C2	DK GY	In Mini Console, at Center Stack end	48
Module-Intrusion Transceiver (RHD)	BK	Left Side of Instrument Pannel	38
Module-Memory Seat C1	BK	Below Driver Seat	51, 55
Module-Memory Seat C2	BK	Below Driver Seat	55
Module-Memory Seat C3	NAT	Below Driver Seat	55
Module-Memory Seat C4	WT	Below Driver Seat	55
Module-Memory Seat C5	BK	Below Driver Seat	55
Module-Occupant Classification C1 (Except Export)	BK	Below Passenger Seat	53, 56
Module-Occupant Classification C2 (Except Export)	BK	Below Passenger Seat	56
Module-Occupant Restraint Controller C1	YL	In Center Console	53
Module-Occupant Restraint Controller C2	YL	In Center Console	37, 38, 43
Module-Park Assist (Parktronics)	BK	Behind Right Rear Seat	76
Module-Powertrain Control C1 (LHD)	BK/BK	Right Engine Compartment	7
Module-Powertrain Control C1 (RHD)	BK/BK	Left Rear Engine Compartment	9
Module-Powertrain Control C2	BK/OR	Right Engine Compartment	17, 20, 25, 28, 29
Module-Powertrain Control C3 (LHD)	BK/NAT	Right Engine Compartment	7
Module-Powertrain Control C3 (RHD)	BK/NAT	Left Rear Engine Compartment	9
Module-Powertrain Control C4	BK/GN	Right Engine Compartment	17, 20
Module-Sentry Key Remote Entry	BK	Steering Column	37, 39, 40
Module-Steering Column-Lock (RHD)		Right Side of Steering Column	39
Module-Steering Control	BK	Steering Column	37, 39, 41, 44
Module-Traffic Information Receiver C1 (EXPORT)	BK	Instrument Panel Near Radio	N/S
Module-Traffic Information Receiver C2 (EXPORT)	BK	Instrument Panel Near Radio	N/S
Module-Traffic Information Receiver C3 (EXPORT)	BK	Instrument Panel Near Radio	N/S
Module-Transmission Control C1 (NAG1)	BK	Below Steering Column	39, 43, 51, 54

CONNECTOR NAME/ NUMBER	COLOR	LOCATION	FIG.
Module-Transmission Control C2 (NAG1)	BK	Below Steering Column	8, 43, 51, 54
Motor-Adjustable Pedals	NAT	At Adjustable Pedal Assembly	53
Motor-Blower-Front	BK	Right Side HVAC Unit	34, 35
Motor-Boost Pressure Servo	NAT	On Turbocharger Assembly	31
Motor-Headlamp Washer (HID Lamps)	BK	Behind Right Front Bumper	2
Motor-Intake Swirl Servo	BK	At Top Center of Engine, Intake Valley	31
Motor/Module-Sunroof	LT GY	Rear Center Headliner	70
Motor-Seat Adjuster-Driver Horizontal	GY	Below Driver Seat	55
Motor-Seat Adjuster-Driver Recliner (Except Memory)	NAT	Driver Seat Back	N/S
Motor-Seat Adjuster-Driver Recliner (Memory)	BL		N/S
Motor-Seat Adjuster-Front Driver Vertical	GY	Below Driver Seat	55
Motor-Seat Adjuster-Front Passenger Vertical	GY	Front Passenger Seat	56
Motor-Seat Adjuster-Passenger Horizontal	GY	Below Passenger Seat	56
Motor-Seat Adjuster-Rear Driver Vertical	GY	Rear Driver Seat	N/S
Motor-Seat Adjuster-Rear Passenger Vertical	GY	Below Passenger Seat	56
Motor-Steering Telescope (Memory)	NAT	Steering Column	37, 40
Motor-Steering Tilt (Memory)	BK	Steering Column	37, 40
Motor-Window-Driver (Base)	LT GY	Middle of Driver Door	60
Motor-Window-Driver-Express (Except Base)	LT GY	Middle of Driver Door	60
Motor-Window-Left Rear	LT GY	Middle of Left Rear Door	61
Motor-Window-Passenger (Base)	LT GY	Middle of Passenger Door	60
Motor-Window-Passenger Express (Except Base)	LT GY	Middle of Passenger Door	60
Motor-Window-Right Rear	LT GY	Middle of Right Rear Door	61
Motor-Wiper-Front (RHD)	BK	Right Rear Engine Compartment	7, 15
Motor-Wiper-Front (LHD)	BK	Left Rear Engine Compartment	8
Motor-Wipe-Rear (LX49)	BK	Rear Decklid	78
Post-Pass Through-Eyelet (Battery Side)		Right Front Kick Panel	79
Post-Pass Through-Eyelet (Starter Side)		Right Wheel Well	10
Power Distribution Center-Eyelet		Right Rear Trunk	81

CONNECTOR NAME/ NUMBER	COLOR	LOCATION	FIG.
Power Outlet-Console	BK	In Center of Console	53
Power Outlet-Rear (LX49)	BK	Right Rear Cargo Area	65, 74
Pump-Washer-Windshield	NAT	Right Front Engine Compartment	2
Radio C1	DK GY	Rear of Radio	37, 38, 45
Radio C2	BK	Rear of Radio	37, 38, 45
Radio-Antenna (Navigation)	GY		N/S
Radio-Antenna	BK	Rear of Radio	37, 38, 49
Receiver-Intrusion Sensor (RHD)	BK	Above the Glove Box	N/S
Receiver-Satellite	BK	Left Rear Side Trunk	59
Relay-Headlamp Washer (HID Lamps)	LT GY	Below Right Front Lamp Housing	2
Resistor Block-Blower Motor-Front (MTC)	BK	Center HVAC Unit	34
Seat Belt-Tensioner-Driver (LHD)	BK	Left B-Pillar	57
Seat Belt-Tensioner-Driver (RHD)	BK	At Base of Right B-Pillar	58
Seat Belt-Tensioner-Passenger (LHD)	BK	Right B-Pillar	58
Seat Belt-Tensioner-Passenger (RHD)	BK	At Base of Left B-Pillar	57
Sensor-Accelerator Pedal Position	BK	At Adjustable Pedal Assembly	53, 54
Sensor-Adjustable Pedals	BK	At Adjustable Pedal Assembly	51
Sensor-Ambient Air Temperature	BK	Right Front Engine Compartment	3
Sensor-Boost Pressure		At Front Side of Air Control Valve	31
Sensor-Brake Fluid Level (LHD)	GY	Left Rear Engine Compartment	8
Sensor-Brake Fluid Level (RHD)	GY	Right Rear Engine Compartment	7, 15
Sensor-Brake Pedal Travel	BK	Left Rear Engine Compartment	8
Sensor-Brake Pressure	BK	Left Rear Engine Compartment	8
Sensor-Camshaft Position (2.7L/3.5L)	BK	Top Front of Engine	19
Sensor-Camshaft Position (5.7L)	GY	Top Front of Engine	N/S
Sensor-Camshaft Position (6.1L)	GY	Top Right Front of Engine	N/S
Sensor-Camshaft Position (DIESEL)		On Top of Right Valve Cover	31
Sensor-Crankshaft Position (2.7L)	BK	Right Rear of Engine	17
Sensor-Crankshaft Position (3.5L)	BK	Right Rear of Engine	20

CONNECTOR NAME/ NUMBER	COLOR	LOCATION	FIG.
Sensor-Crankshaft Position (5.7L/6.1L)	BK	Right Rear of Engine	25, 28
Sensor-Crankshaft Position (DIESEL)	BK	Left Rear Engine Block, Near Bellhousing	30
Sensor-Dynamics	BK	Below Center Console	53
Sensor-Engine Coolant Temperature	BK	Front of Engine	19
Sensor-Engine Coolant Temperature (6.1L)	BK	Left Front of Engine	N/S
Sensor-Engine Coolant Temperature (DIESEL)	BK	Top of Left Engine Head, Under Center of Fuel Rail	31
Sensor-Evaporator Temperature	BK	Center HVAC Unit	34
Sensor-Exhaust Differential Pressure (LHD DIESEL)		Left Rear Engine Compartment	8
Sensor-Exhaust Differential Pressure (RHD DIESEL)		Right Rear Engine Compartment	7
Sensor-Exhaust Gas Pressure (DIESEL)		Next to EGR Valve, Center of Engine side	30, 31
Sensor-Front Impact-Left	GY	Left Front Engine Compartment	4
Sensor-Front Impact-Right	GY	Right Front Engine Compartment	3
Sensor-Fuel Pressure (DIESEL)	BK	At Rear of Right Fuel Rail	31
Sensor-Fuel Temperature (DIESEL)		On Front of High Pressure Fuel Pump	31
Sensor-Headlamp Level-Left (Export)	BK	Right Front Engine Compartment	N/S
Sensor-Headlamp Level-Right (Export)	BK	Under Right Side Body	2, 64
Sensor-Inlet Air Pressure (DIESEL)		On Rear of Air Filter Box	32
Sensor-Inlet Air Temperature	BK	Top of Engine, or in Air Intake System	18, 21, 25
Sensor-Input Speed	BK	Right Side of Transmission	17, 20
Sensor-Intake Air Temperature (DIESEL)	BK	On Rear of Air Inlet Tube, Just before Air Control Valve	31
Sensor-Knock No. 1	BK	Rear of Engine	18, 26, 29
Sensor-Knock No. 2 (5.7L/6.1L)	BK	Right Rear of Engine	25, 28
Sensor-Manifold Absolute Pressure	GY	Top of Engine, or in Intake Manifold	18, 21, 22, 26, 28, 29
Sensor-Mass Air Flow (DIESEL)	BK	At Air Filter Box	32
Sensor-Oil Pressure (5.7L)	BK	Right Front of Engine	N/S
Sensor-Oil Pressure (6.1L)	BK	Right Front of Engine	28
Sensor-Oil Pressure (DIESEL)		Left Front of Engine Near Fuel Quantity Solenoid	N/S

CONNECTOR NAME/ NUMBER	COLOR	LOCATION	FIG.
Sensor-Oil Temperature (5.7L/6.1L)	BK	Right Front of Engine	25, 28
Sensor-Oil Temperature (DIESEL)	BK	At Rear of Oil Pan	30
Sensor-Output Speed	BK	Right Side of Transmission	17, 20
Sensor-Oxygen (DIESEL)		AT Rear of Engine	N/S
Sensor-Oxygen-Left Front (2.7L/ 3.5L)	BK	Right Rear Engine Compartment	17, 20
Sensor-Oxygen-Left Front (5.7L)	BK	Left Rear Engine Compartment	25, 26
Sensor-Oxygen-Left Front (6.1L)	BK	Left Rear Engine Compartment	28, 29
Sensor-Oxygen-Left Rear	BK	Left Rear Engine Compartment	8, 11, 12, 13
Sensor-Oxygen-Right Front (2.7L/3.5L)	BK	Left Side of Engine	18, 21
Sensor-Oxygen-Right Front (5.7L)	BK	Right Side of Engine	25
Sensor-Oxygen-Right Front (6.1L)	BK	Right Side of Engine	28, 29
Sensor-Oxygen-Right Rear	BK	Lower Rear of Engine Compartment	11, 12, 13
Sensor-Park Assist-No. 7	BK	Right Rear Fascia	86
Sensor-Park Assist-No. 8	BK	Right Rear Fascia	86
Sensor-Park Assist-No. 9	BK	Left Rear Fascia	86
Sensor-Park Assist-No. 10	BK	Left Rear Fascia	86
Sensor-Post-Catalyst Exhaust Gas Temperature (DIESEL)	BK	At Rear of Engine	N/S
Sensor-Pre-Catalyst Exhaust Gas Temperature (DIESEL)	BK	At Rear of Engine	N/S
Sensor-Rain (Auto wipers)	BK	At Inside Rearview Mirror	50
Sensor-Seat Track Position-Driver	GY	Below Driver Seat	51, 54, 55
Sensor-Seat Weight-Left Front (Except Export)	BK	Below Passenger Seat	56
Sensor-Seat Weight-Left Rear (Except Export)	BK	Below Passenger Seat	56
Sensor-Seat Weight-Right Front (Except Export)	BK	Below Passenger Seat	56
Sensor-Seat Weight-Right Rear (Except Export)	BK	Below Passenger Seat	56
Sensor-Shift Lever Position (Column NAG1)	BK	Steering Column	N/S
Sensor-Side Impact-Left 1	GY	Left B-Pillar	57
Sensor-Side Impact-Left 2	GY	Rear of Left Rear Door	62, 63
Sensor-Side Impact-Right 1	GY	Right B-Pillar	58
Sensor-Side Impact-Right 2	GY	Rear of Right Rear Door	64, 65
Sensor-Sun (ATC)	BK	Top Center Instrument Panel	37, 38, 45

CONNECTOR NAME/ NUMBER	COLOR	LOCATION	FIG.
Sensor-Transmission Range	LT GN	Right Side of Transmission	17, 20
Sensor-Washer Fluid Level-Front	LT GY	Right Front of Engine Compartment	2
Sensor-Wheel Speed-ABS-Left Front	BK	Left Front Wheel Well	4
Sensor-Wheel Speed-Left Front (Except ABS)	BK	Left Front Wheel Well	4
Sensor-Wheel Speed-ABS-Rear	BK	Right Front of Cargo Pan	65
Sensor-Wheel Speed-ABS-Right Front	BK	Right Front Wheel Well	6
Sensor-Wheel Speed-Right Front (Except ABS)	BK	Right Front Wheel Well	6
Siren	BK	Left Front Wheel Well	5
Solenoid-Fuel Pressure (DIESEL)	NAT	At Front of Left Fuel Rail	31
Solenoid-Fuel Quantity (DIESEL)	BK	On Front of Hi Pressure Fuel Pump	31
Solenoid-Manifold Tuning Valve (2.7L/3.5L)	GY	Front of Engine	19, 21
Solenoid-Multi Displacement System Cyl 1 (5.7L MDS)	BK	In Valley Under Intake	N/S
Solenoid-Multi Displacement System Cyl 4 (5.7L MDS)	BK	In Valley Under Intake	N/S
Solenoid-Multi Displacement System Cyl 6 (5.7L MDS)	BK	In Valley Under Intake	N/S
Solenoid-Multi Displacement System Cyl 7 (5.7L MDS)	BK	In Valley Under Intake	N/S
Solenoid-Proportional Purge (GAS)	BK	Right Engine Compartment	7
Solenoid-Short Runner Valve (3.5L)	GY	Top of Engine	19, 21
Solenoid-Starter		Right Rear of Engine	N/S
Speaker-Insturment Panel-Center (Highline)	WT	Top Center Instrument Panel	37, 38, 45
Speaker-Insturment Panel-Left	WT	Top Left Instrument Panel	37, 38, 40
Speaker-Insturment Panel-Right	WT	Right Instrument Panel	37, 39, 49
Speaker-Left Front Door	WT	Bottom of Door	60
Speaker-Left Rear (LX48)	WT	Left Rear Shelf	62
Speaker-Left Rear (LX49)	WT	Body Behind Left Rear Seat	63
Speaker-Right Front Door	WT	Bottom of Door	60
Speaker-Right Rear (LX48)	WT	Right Rear Shelf	64
Speaker-Right Rear (LX49)	WT	Body Behind Right Rear Seat	65

CONNECTOR NAME/ NUMBER	COLOR	LOCATION	FIG.
Speaker-Subwoofer (Highline Except SRT8)	WT	Center Rear Shelf	64
Speaker-Subwoofer (SRT8)	BK	Center Rear Shelf	62
Starter (2.7L/3.5L/5.7L AWD)	BK	Left Rear of Engine	18, 21
Starter (5.7L RWD)	NAT	Right Rear fo Engine	25
Starter (6.1L)	NAT	Right Rear fo Engine	28
Starter (DIESEL)		Rear of Engine	N/S
Starter-Fusible Link-Eyelet (2.7L/3.5L/5.7L AWD)	-	Left Side of Engine	18, 21, 23
Starter-Fusible Link-Eyelet (5.7L RWD)	-	Right Side of Engnie	25, 27
Starter-Fusible Link-Eyelet (6.1L)	-	Right Rear of Engnie	28
Starter-Post-Pass Through-Eyelet (2.7L/3.5L)	-	Left Side of Engine	23
Starter-Post-Pass Through-Eyelet (V8)	-	Right Side of Engine	27
Switch-Adjustable Pedals	WT	Right Side of Driver Seat	N/S
Switch-Autostick (Column NAG1)	WT	Steering Column	N/S
Switch-Bank	BK	Top Center Instrument Panel	37, 38, 46
Switch-Decklid Release (LX48)	BK	Driver Side of Instrument Panel	37, 44
Switch-Decklid Release (RHD)	BK	Driver Side of Instrument Panel	39
Switch-Headlamp	BK	Driver Side of Instrument Panel	37, 39, 44
Switch-Heated Seat-Left	BK	Center Stack	37, 38, 43, 47
Switch-Heated Seat-Right	BK	Center Stack	37, 38, 43, 47
Switch-Horn	BK	Steering Wheel	42
Switch-Ignition (LHD)	BK	In IP to Right of Steering Cloumn	37, 40
Switch-Ignition C1 (RHD)	BK	In IP to Right of Steering Cloumn	39
Switch-Ignition C2 (RHD)	BK	In IP to Right of Steering Cloumn	39
Switch-Liftgate Release (LX49)	BK	Left Rear Liftgate	78
Switch-Memory Set	BK	Middle of Driver Door	60
Switch-Mirror	LT GY	Middle of Driver Door	60
Switch-Oil Level	BK	Bottom Left of Oil Pan	30
Switch-Oil Pressure (2.7L/3.5L)	LT GN	Front of Engine	N/S
Switch-Parking Brake	BK	Base of Parking Brake	51
Switch-Power Window-Left Rear	LT GY	Left Rear Door	61
Switch-Power Window-Right Rear	LT GY	Right Rear Door	61

CONNECTOR NAME/ NUMBER	COLOR	LOCATION	FIG.
Switch-Seat Belt-Driver (LX48)	LT GY	Below Driver Seat	55
Switch-Seat Belt-Driver (LX49)	LT GY	Below Left B-Pillar	51
Switch-Seat Belt-Passenger	LT GY	Below Passenger Seat	53
Switch-Seat-Driver (Except Memory)	BK	Right Side of Driver Seat	N/S
Switch-Seat-Driver (Memory)	GY	Right Side of Driver Seat	N/S
Switch-Seat-Passenger	BK	Side of Passenger Seat	56
Switch-Security Hood (LHD)	BK	Right Engine Compartment	7, 15
Switch-Security Hood (RHD)	BK	Left Rear Engine Compartment	9
Switch-Steering-Left (Premium)	BK	Left Steering Wheel	42
Switch-Steering-Right (Premium)	BK	Right Steering Wheel	42
Switch-Stop Lamp	GY	Base of Brake Pedal	51, 54
Switch-Sunroof	BK	Overhead Console	69
Switch-Window/Door Lock-Driver C1 (Base)	LT GY	Middle of Driver Door	60
Switch-Window/Door Lock-Driver C2 (Base)	LT GY	Middle of Driver Door	60
Switch-Window/Door Lock-Driver Express C1 (Except Base)	LT GY	Middle of Driver Door	60
Switch-Window/Door Lock-Driver Express C2 (Except Base)	BK	Middle of Driver Door	60
Switch-Window/Door Lock-Passenger (Base)	LT GY	Middle of Passenger Door, Similar to Driver Door	N/S
Switch-Window/Door Lock-Passenger Express (Except Base)	BK	Middle of Passenger Door, Similar to Driver Door	N/S
Throttle Body	BK	Top of Intake Manifold	18, 21, 26, 28
Transducer-A/C Pressure	GY	Left Rear Engine Compartment	8, 9, 32
Transmitter-Intrusion Sensor (RHD)	BK	Near Glove Box	N/S
Transponder-Tire Pressure-Left Front	BK	Left Front Side of Engine Compartment	4
Transponder-Tire Pressure-Right Front	BK	Right Front of Engine Compartment	2
Transponder-Tire Pressure-Right Rear	BK	High in Right Rear Wheel Well	64, 65
Valve-Air Flow Control	BK	Right Front Corner of Engine	31
Valve-EGR (DIESEL)		On Top of Engine, Left Rear	30
Valve-EGR Airflow Control (DIESEL)	BK	Right Front of Engine	31

GROUNDS

GROUND	LOCATION	FIG.
G100	Left Front of Engine Compartment	4
G101	Right Front of Engine Compartment	6
G102	Right of Engine Compartment	6, 15
G104	Right of Engine Compartment	17, 20, 25, 28, 29
G105 (2.7L/3.5L)	On Engine Near T/O for Ignition Coil No. 5	N/S
G105 (5.7L/6.1L)	Rear of Engine	25, 28
G106 (2.7L/3.5L)	Left Side of Engine	18, 21
G106 (5.7L/6.1L)	Rear of Engine	25, 28, 29
G107 (3.5L)	Right Side of Engine Near Generator	N/S
G108	Left Side of Engine	21
G109 (SRT8)	On Right Shock Tower, Near Purge Solenoid	28, 29
G110	On Engine Harness	N/S
G111	Right Front of Engine	31
G200 (LHD)	Left Instrument Panel Near T/O for Ignition Switch	37, 40
G200 (RHD)	Left Side of Center Stack	38
G201	Passenger side of Instrument Panel	37, 38, 49
G202	Driver Side of Instrument Panel Near T/O for Cluster C3	37, 39, 40
G300	Below Left B-Pillar	51, 52
G301	Below Right B-Pillar	53, 54
G302	Right Front of Cargo Pan	65
G303	Right Rear Cargo Pan	80
G304	Next to Decklid Latch	77

SPLICES

SPLICE	LOCATION	FIG.
S100	Rear of Engine	18, 21, 25, 28, 29
S101		N/S
S102		N/S
S105	Right Rear of Engine Compartment	17, 20, 25, 28
S106	Right Rear of Engine Compartment	17, 20, 25, 28
S107 (2.7L)	Top of Engine	18
S107 (3.5L)	Top of Engine Between Take Outs for Fuel Injectors No. 3 and No. 5	N/S
S107 (5.7L/6.1L)	Top of Engine	25, 28, 29
S108 (2.7L)	Rear of Engine	18
S108 (3.5L)	Between Take Outs for Fuel Injectors No. 4 and No. 6	22
S108 (5.7L)	Top of Engine Between Fuel Injectors No. 5 and No. 7	26
S108 (SRT8)	Right Rear Top of Engine, Next to Ign Coil No. 8	28, 29
S109	Right Rear of Engine	20, 25, 28
S110	Rear Engine Compartment	17, 21, 25, 28
S111	Left Side of Engine	18, 25, 28

SPLICE	LOCATION	FIG.
S112	Right Rear Engine Compartment	17, 20, 25, 28
S113	Rear Engine Compartment	17, 20
S114	Right Rear Engine Compartment	17, 20
S115	Right Side of Engine	25, 28
S116	Right Rear Engine Compartment	17, 20
S117	Right Rear Engine Compartment	17
S118 (LHD)	Right Engine Compartment	7
S118 (RHD)	Left Rear Engine Compartment	9
S119 (GAS)	Right Rear Engine Compartment	7
S120		N/S
S121 (LHD)	Right Rear Engine Compartment	7
S121 (RHD) (3.5L/5.7L)	Left Rear Engine Compartment	9
S122	Right Engine Compartment	6, 7
S123 (LHD) (GAS)	Right Front Engine Compartment	4
S123 (LHD) (DIESEL)	Right Front Engine Compartment	4
S123 (RHD) (DIESEL)	Right Front Engine Compartment	2
S124 (LHD)	Right Engine Compartment	6
S124 (RHD)	Right Rear Engine Compartment	7
S125 (LHD)	Left Rear Engine Compartment	8
S125 (RHD) (GAS)	Right Rear Engine Compartment	7
S126	Right Rear Engine Compartment	7
S126 (RHD)	Right Side Engine Compartment	6
S127	Right Engine Compartment	6
S127 (RHD)	Right Engine Compartment	6
S128 (LHD)	Front Engine Compartment	4
S128 (RHD)	Right Front Engine Compartment	3
S129 (Except SRT8)	Right Engine Compartment	7
S129 (RHD) (GAS)	Right Engine Compartment	7
S130 (LHD DIESEL)	Right Front Engine Compartment	2
S130 (GAS)	Front Engine Compartment	4
S130 (RHD)	Right Front Engine Compartment	6
S131 (LHD) (GAS)	Front Engine Compartment	4
S131 (RHD) (DIESEL)	Right Front Engine Compartment	3
S132 (LHD Export)	Right Rear Engine Compartment	7
S132 (RHD)	Right Rear Engine Compartment	6
S133 (LHD Export)	Right Rear Engine Compartment	7
S133 (RHD)	Right Rear Engine Compartment	6
S134 (LHD) (Export)	Front Engine Compartment	4
S134 (RHD)	Right Side of Engine Compartment	9
S135 (LHD)	Front Engine Compartment	4
S135 (LHD) (DIESEL)	Front Engine Compartment	6
S135 (RHD)	Right Front Engine Compartment	2
S136		N/S

SPLICE	LOCATION	FIG.
S138		N/S
S139		N/S
S140		N/S
S141(SRT8)	Right Instrument Panel	53
S142 (SRT8)	Right Rear of Engine, on Fusible Link eyelet T/O	28
S143	Right Engine Compartment	7
S143 (DIESEL)	In T/O for Diesel Fuse Block	7, 15
S143 (SRT8)	In T/O to C100	7
S144		N/S
S145	Right Front on Engine	31
S146	Left Rear Top of Engine	30
S148	Left Rear Top of Engine	31
S149	Right Side on Engine Compartment	6
S150	In T/O for C108	7
S155 (DIESEL)	Right Rear of Engine Compartment	7, 15
S156 (LHD)	Rear Engine Compartment	7
S156 (RHD)	Left Rear Engine Compartment	9
S200 (LHD)	Right Instrument Panel	49
S200 (RHD)	Center Instrument Panel	38
S201 (LHD)	Left Instrument Panel	40
S201 (RHD)	In Center Stack	38
S202 (LHD)	Right Instrument Panel	49
S202 (RHD)	Left Instrument Panel	38
S203 (LHD)	Right Instrument Panel	49
S203 (RHD)	Left Instrument Panel	38
S204	Above Steering Column	39, 45
S205	Above Steering Column	39, 45
S206 (LHD)	Left Instrument Panel	45
S206 (RHD)	Right Side of Center Stack	39
S207 (LHD)	Left Instrument Panel	45
S207 (RHD)	Right Side of Center Stack	39
S208 (LHD)	Left Instrument Panel	40
S208 (RHD)	Right Instrument Panel	39
S209 (LHD)	Left Instrument Panel	40
S209 (RHD)	Right Instrument Panel	39
S210	Left Center Instrument Panel	38, 45
S211 (LHD)	Center Instrument Panel	45
S211 (RHD)	Right Side of Center Stack	39
S212 (LHD)	Left Instrument Panel	45
S212 (RHD)	Right Side of Center Stack	39
S213 (LHD)	Right Instrument Panel	49
S213 (RHD)	Left Instrument Panel	38
S214 (LHD Export)	Right Instrument Panel	49

SPLICE	LOCATION	FIG.
S214 (RHD)	Left Instrument Panel	38
S215 (LHD)	Right Instrument Panel	49
S215 (RHD)	Left of Center Stack	38
S216	Behind Center Stack	46
S217 (LHD)	Right Instrument Panel	49
S217 (RHD)	Left of Center Stack	38
S218 (LHD)	Right Instrument Panel	49
S218 (RHD)	Left Instrument Panel	38
S219 (LHD)	Right Instrument Panel	49
S219 (RHD)	Left Instrument Panel	38
S220 (LHD)	Right Instrument Panel	49
S220 (RHD)	Left Instrument Panel	38
S221	In T/O for Left Instrument Panel Speaker	40
S222 (LHD)	In T/O for Rightt Instrument Panel Speaker	49
S222 (RHD)	Right Side of Center Stack	38
S223 (LHD)	In T/O for Left Instrument Panel Speaker	40
S223 (RHD)	Right Side of Center Stack	38
S224	In T/O for Right Instrument Panel Speaker	49
S225	Left Instrument Panel	40
S226 (LHD)	Left Instrument Panel	40
S227 (LHD)	Left Instrument Panel	45
S227 (RHD)	Right Side of Center Stack	38
S228	Left Side Instrument Panel	44
S229 (RHD)	Right Instrument Panel	39
S231 (RHD)	Right Instrument Panel	39
S300 (Except SRT8)	Below Right Front Door	53
S300 (SRT8)	Near T/O for Right Taillamp	76
S300 (RHD)	Body Below Driver Seat	54
S301	Rear of Right Rear Door	64
S302	In Power Distribution Center	75, 76
S303	Below Right Rear Door	58
S304	Below Right Rear Door	53
S305	Right Rear Body	76
S306 (LHD)	Right Kick Panel	53
S306 (RHD)	Body Below Driver Seat	54
S307	Right Kick Panel	53, 54
S308	Left Kick Panel	51, 52
S309 (LHD)	Right Kick Panel	53
S309 (RHD)	Body Below Driver Seat	54
S310	Right Kick Panel	53, 54
S311	Right Kick Panel	53, 54
S312 (Export)	Right Rear Body	75, 76
S313 (LHD)	Below Right Rear Door	58

SPLICE	LOCATION	FIG.
S314 (LHD)	Right Kick Panel	53
S314 (RHD)	Body Below Driver Seat	54
S315	In Power Distribution Center	75, 76
S316 (LHD)	Right Kick Panel	53
S316 (RHD)	Body Below Driver Seat	54
S317 (LHD)	Right Kick Panel	53
S317 (RHD)	Body Below Driver Seat	54
S318	Below Right B-Pillar	53, 54
S319	Below Right B-Pillar	58
S320	In Power Distribution Center	75, 76
S321	In Power Distribution Center	75, 76
S322	In Power Distribution Center	75, 76
S323	In Power Distribution Center	75, 76
S324 (RHD)	Body Below Passenger Seat	52
S325 (RHD)	Body Below Passenger Seat	52
S326	In Power Distribution Center	75, 76
S327	Left Kick Panel	51, 52
S328	Below Right Front Door	53, 54
S329	In Power Distribution Center	75, 76
S330	Left Kick Panel	51, 52
S331	Below Right B-Pillar	58
S332	Below Driver Seat	55
S333	Below Driver Seat	55
S334	Below Passenger Seat	56
S335	Below Passenger Seat	56
S336	Below Passenger Seat	56
S337	Below Passenger Seat	56
S338	Front Headliner	66
S339	Front Headliner	66
S340	Front Headliner	66
S341	Front Headliner	66
S342	Front Headliner	66
S343	Near T/O for Inside Rearview Mirror	50
S344	Right Rear Fascia	86
S345	Right Rear Fascia	86
S346 (Parktronics)	Middle Rear Fascia	86
S347 (Parktronics)	Middle Rear Fascia	86
S348 (LX49)	Middle Rear Fascia	86
S349 (LX49)	Left Rear Fascia	86
S350 (Right)	Right Tail lamp Assembly	83, 85
S351 (Right)	Right Tail lamp Assembly	83, 85
S352 (Left)	Left Tail lamp Assembly	83, 85
S353 (Left)	Left Tail lamp Assembly	83, 85

SPLICE	LOCATION	FIG.
S354		N/S
S355	Bottom of Left Front Door	60
S356 (Driver Except Base)	Bottom of Left Front Door	60
S357	Bottom of Left Front Door	60
S358	Bottom of Left Front Door	60
S359	Bottom of Left Front Door	60
S360 (Passenger)	Bottom of Right Front Door	60
S361	Right Rear Fascia	N/S
S362 (Trailer Tow)	Right Side of Trunk	75
S362 (RHD)	Near Right Taillamp Connector	76
S363 (LX49 Export)	Right Rear Fascia	86
S364		N/S
S370	Center Console	N/S
S371	Center Console	N/S
S372	Center Console	N/S
S373	Center Console	N/S

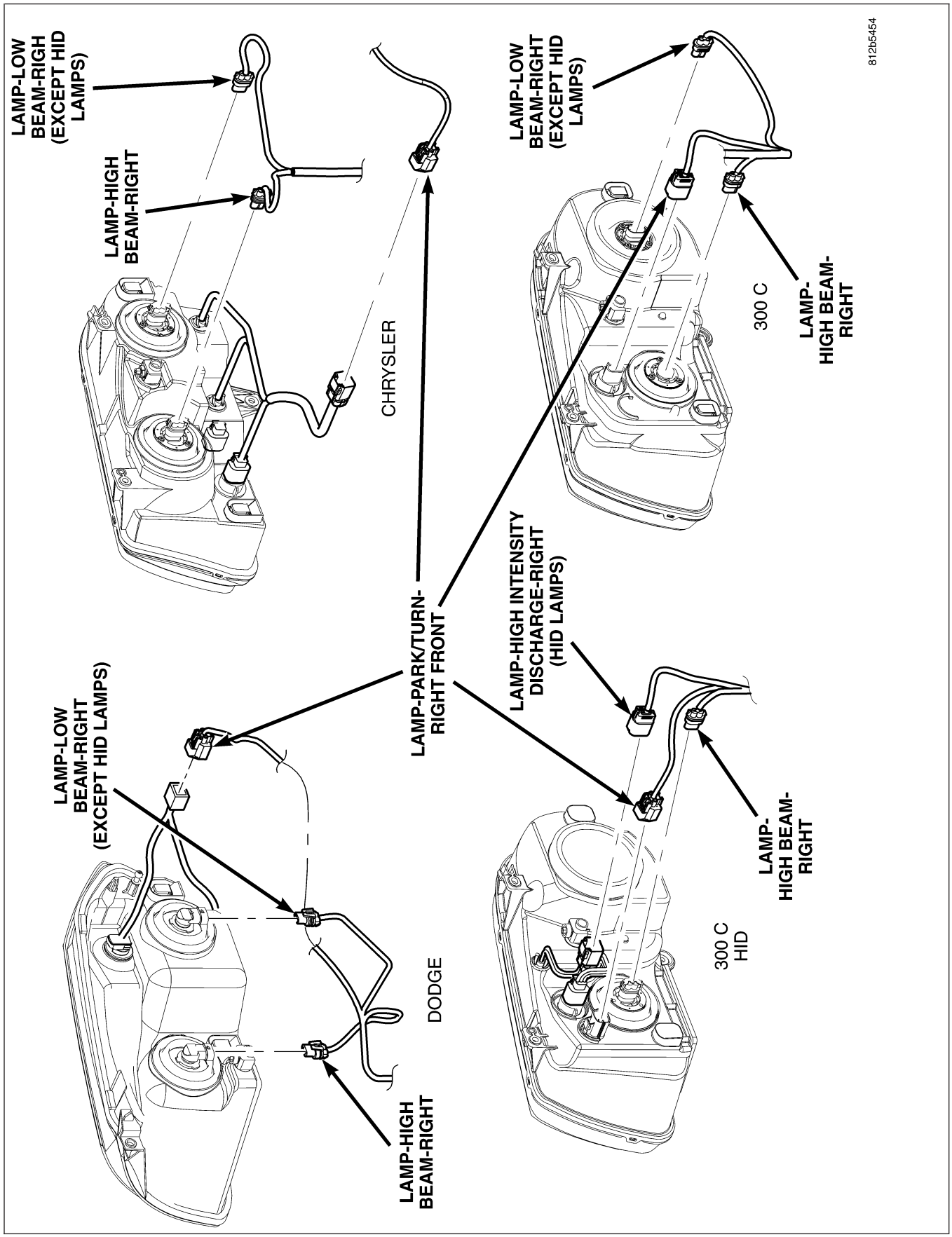

Fig. 1 FRONT LIGHTING RIGHT (LEFT SIMILAR)

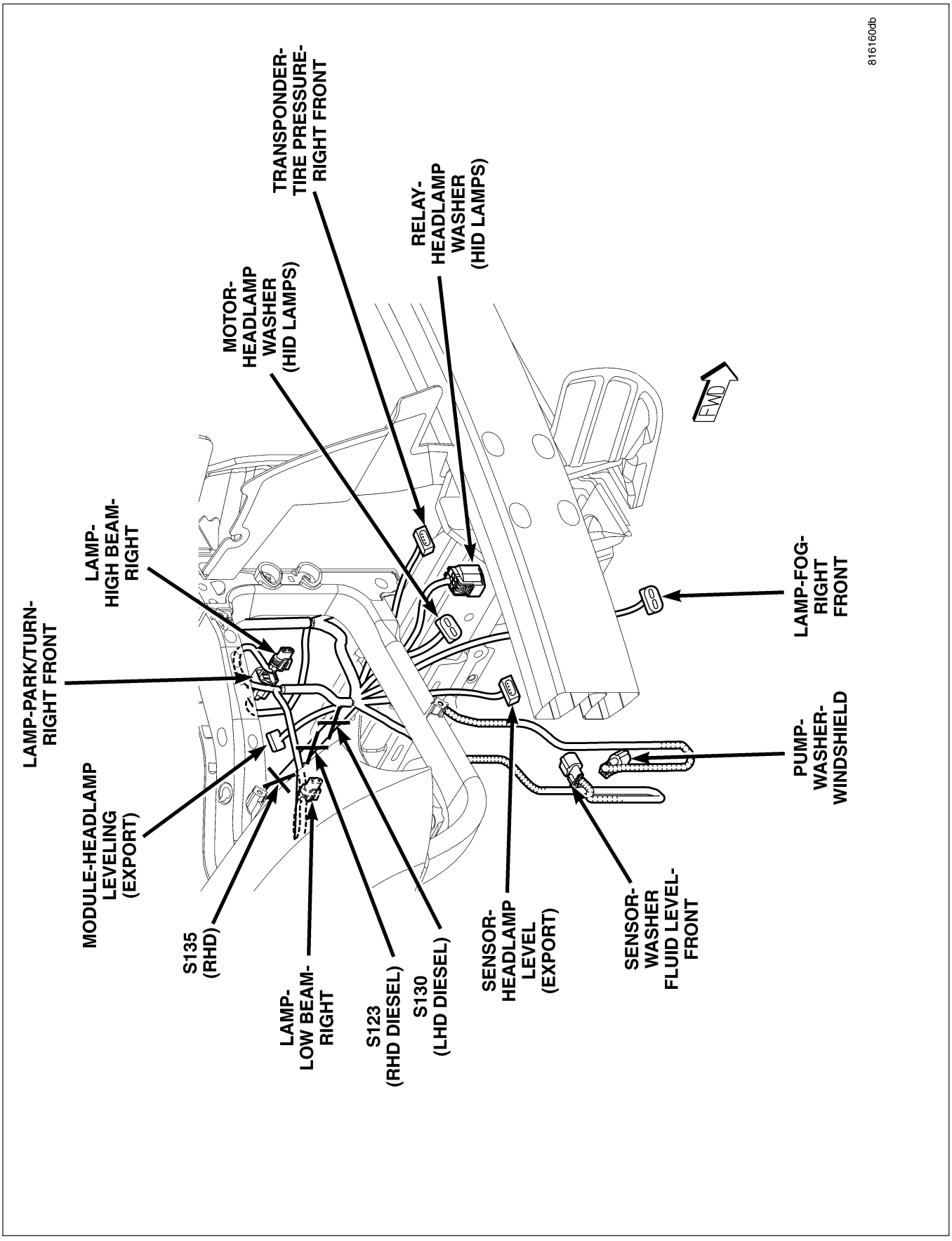

Fig. 2 RIGHT FRONT ENGINE COMPARTMENT

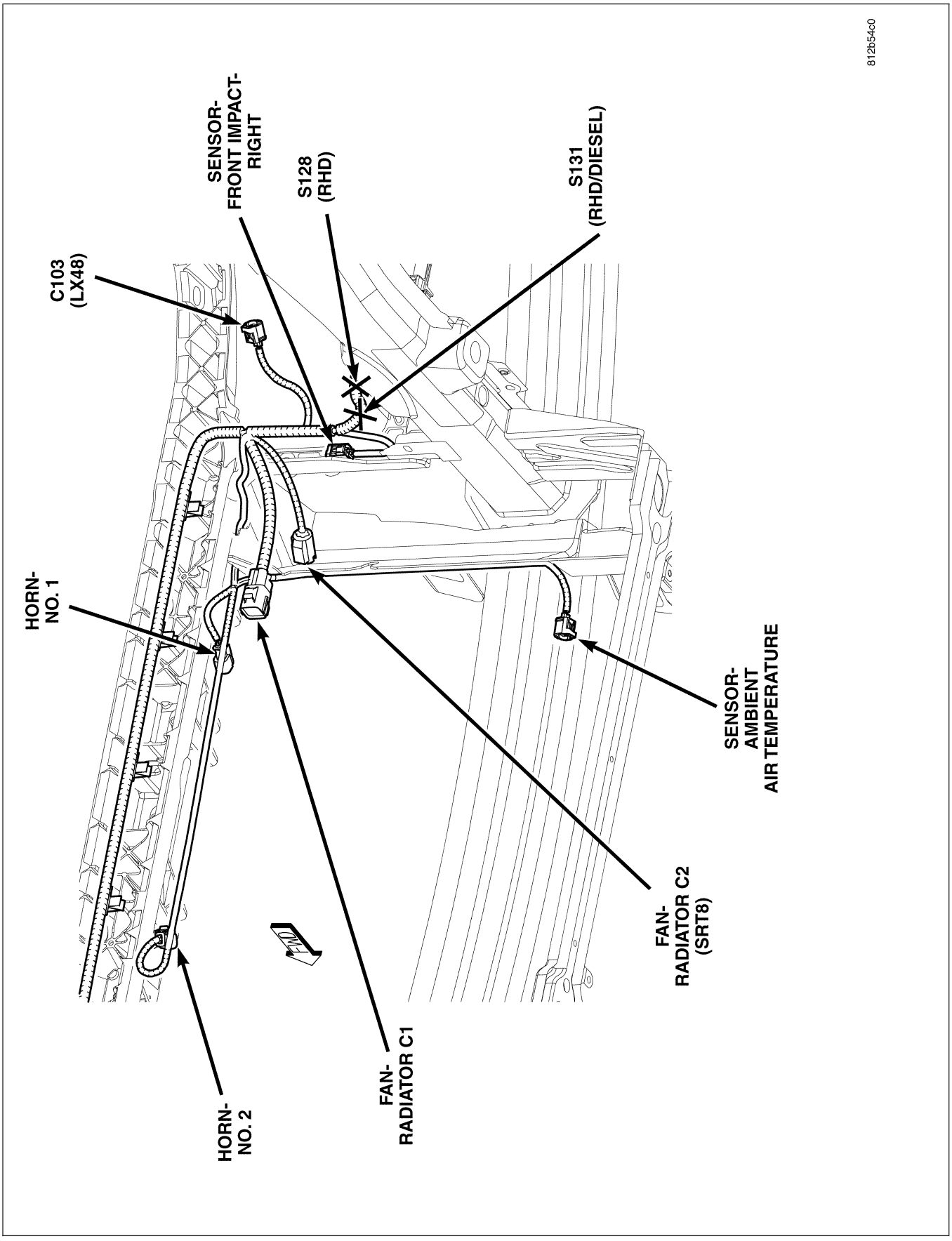

Fig. 3 RIGHT FRONT ENG COMP RAD YOKE

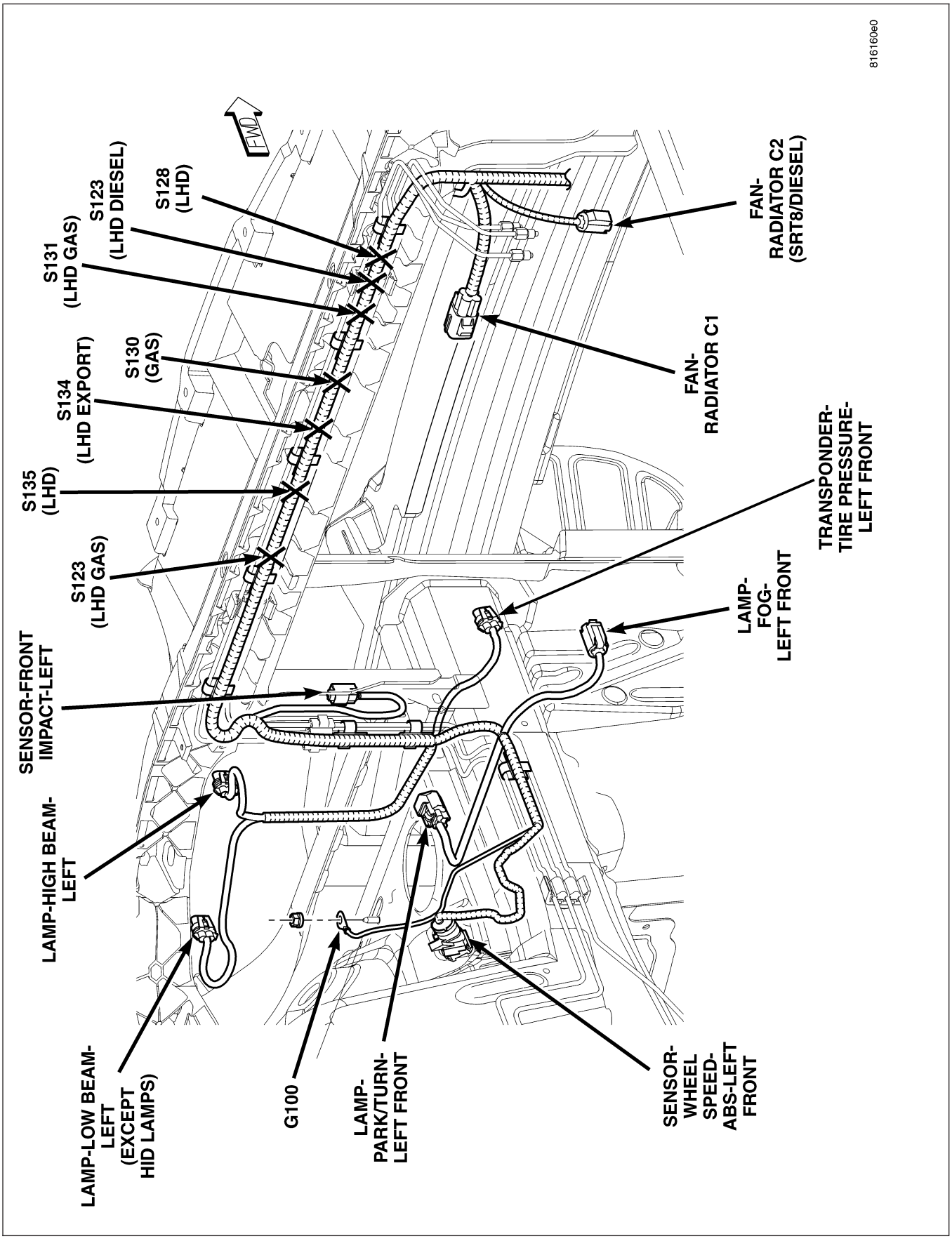

Fig. 4 FRONT ENGINE COMPARTMENT

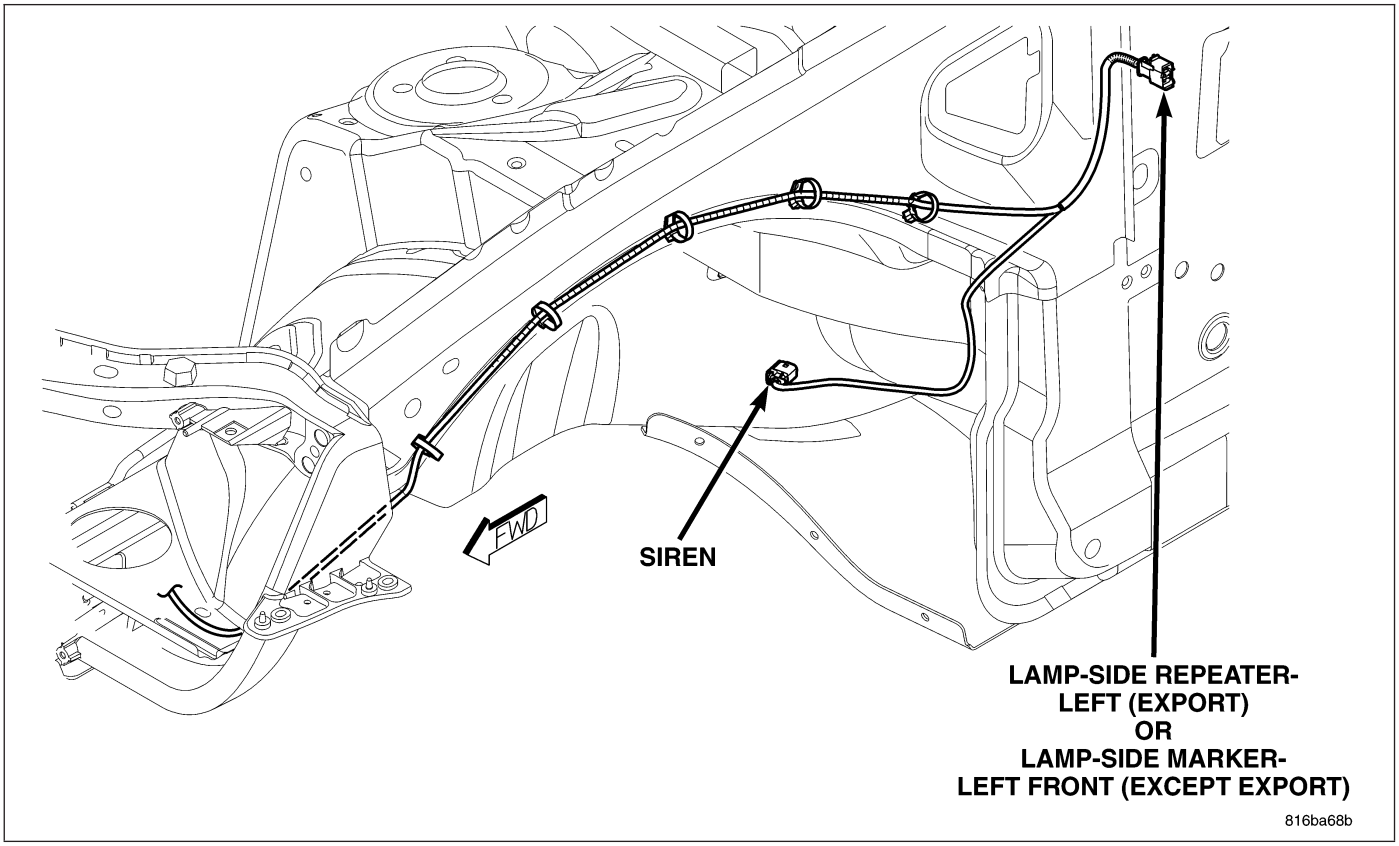

Fig. 5 RIGHT SIDE LIGHTING

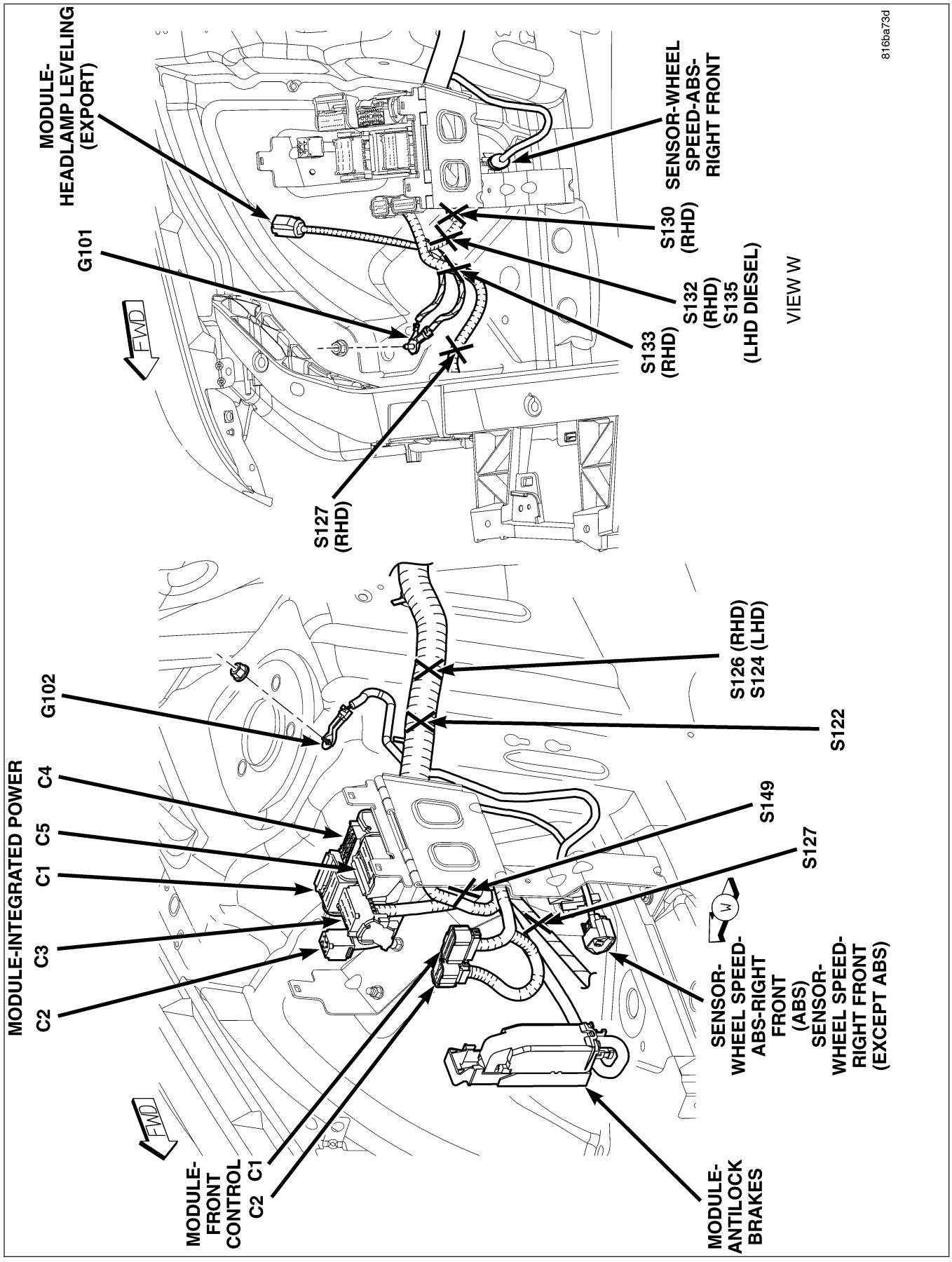

Fig. 6 RIGHT SIDE ENGINE COMPARTMENT

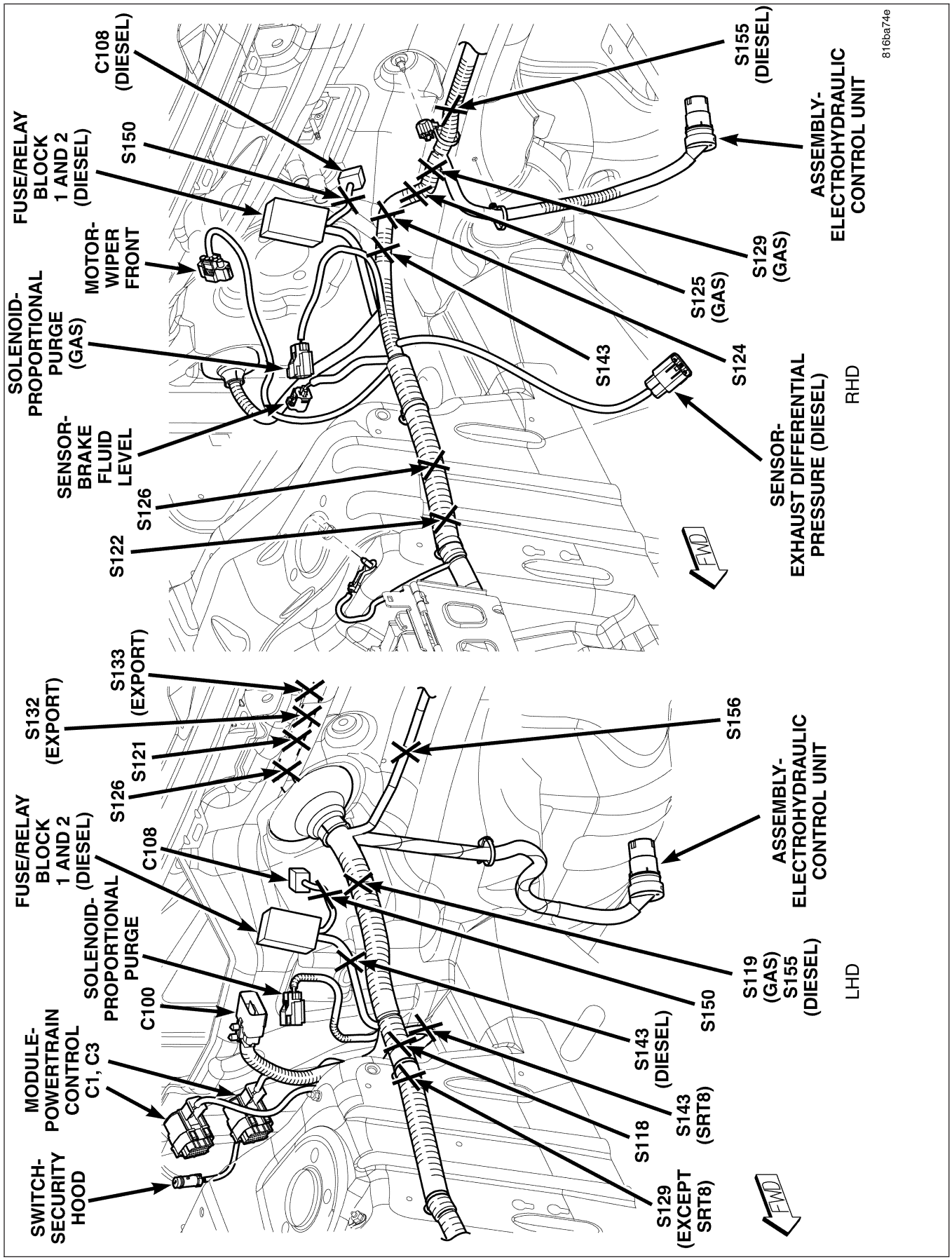

Fig. 7 RIGHT INNER FENDER SHIELD

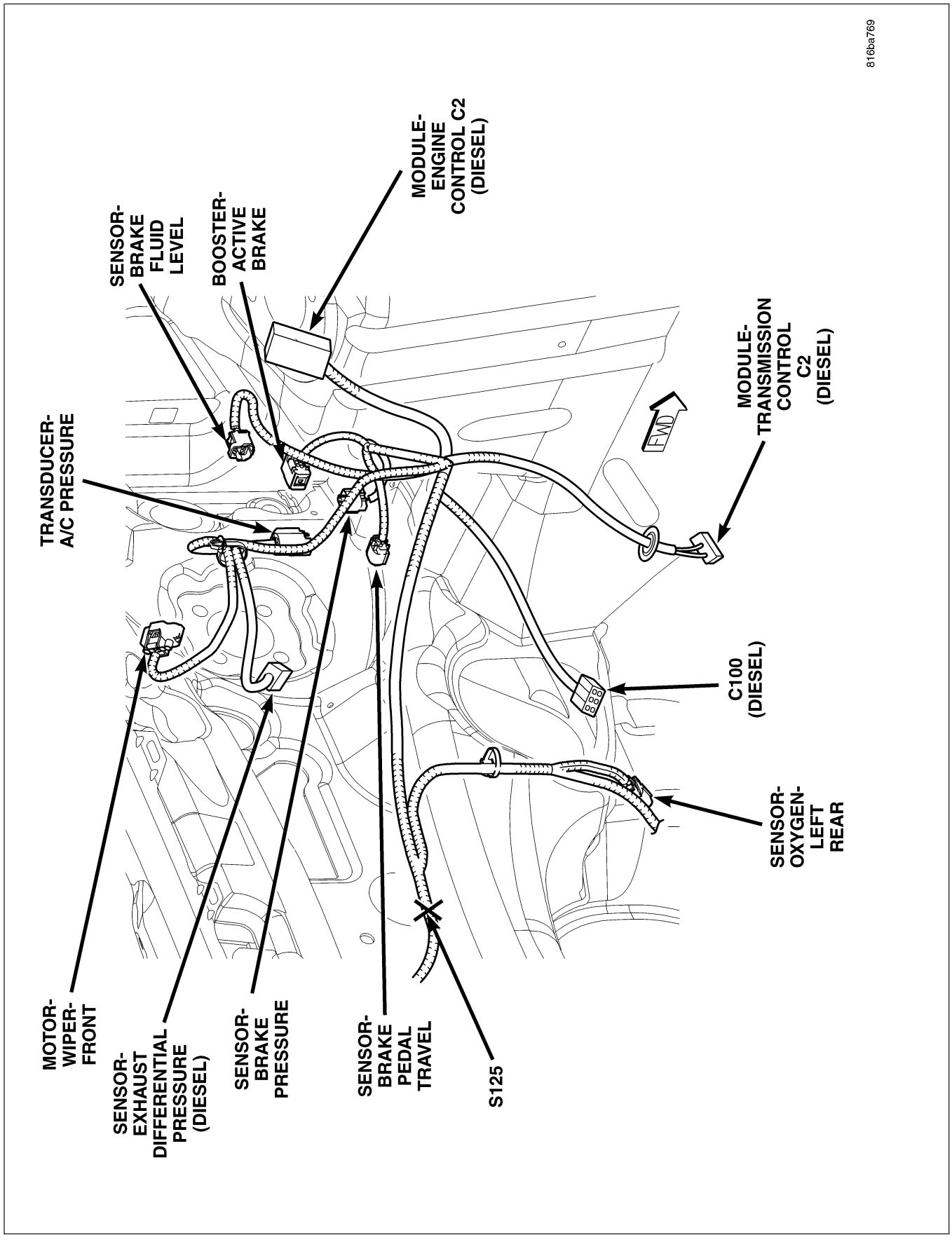

Fig. 8 LEFT REAR ENGINE COMPARTMENT (LHD)

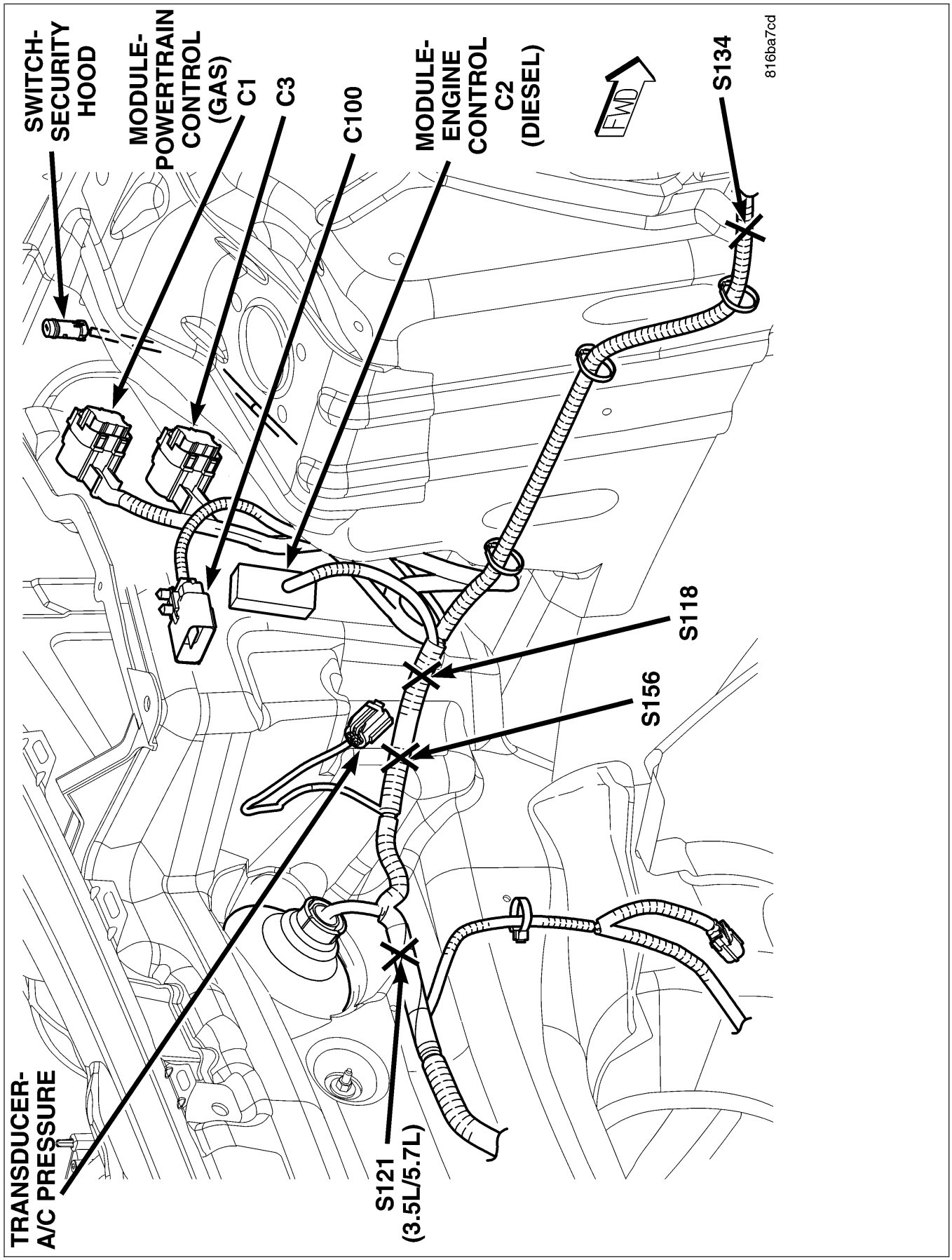

Fig. 9 LEFT REAR ENGINE COMPARTMENT (RHD)

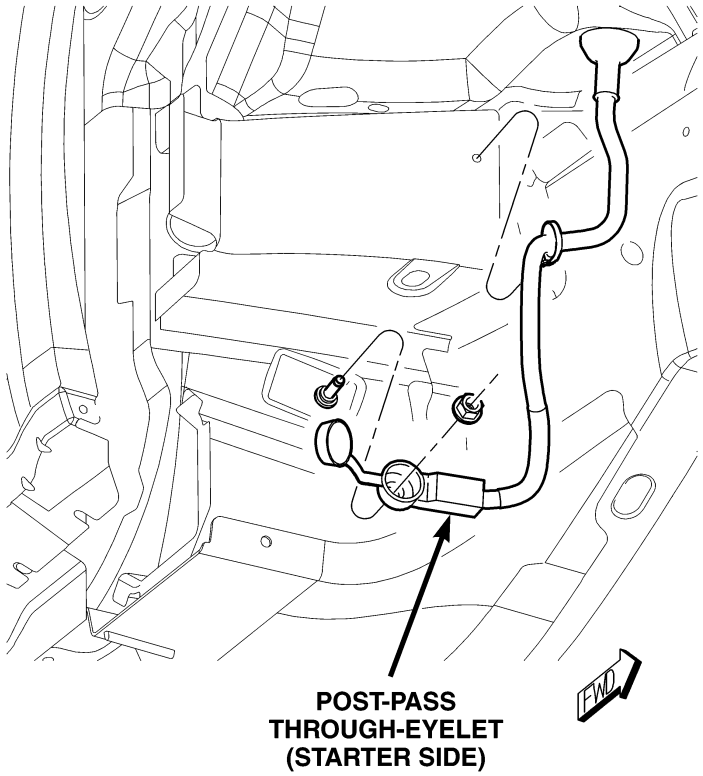

Fig. 10 RIGHT WHEEL WELL

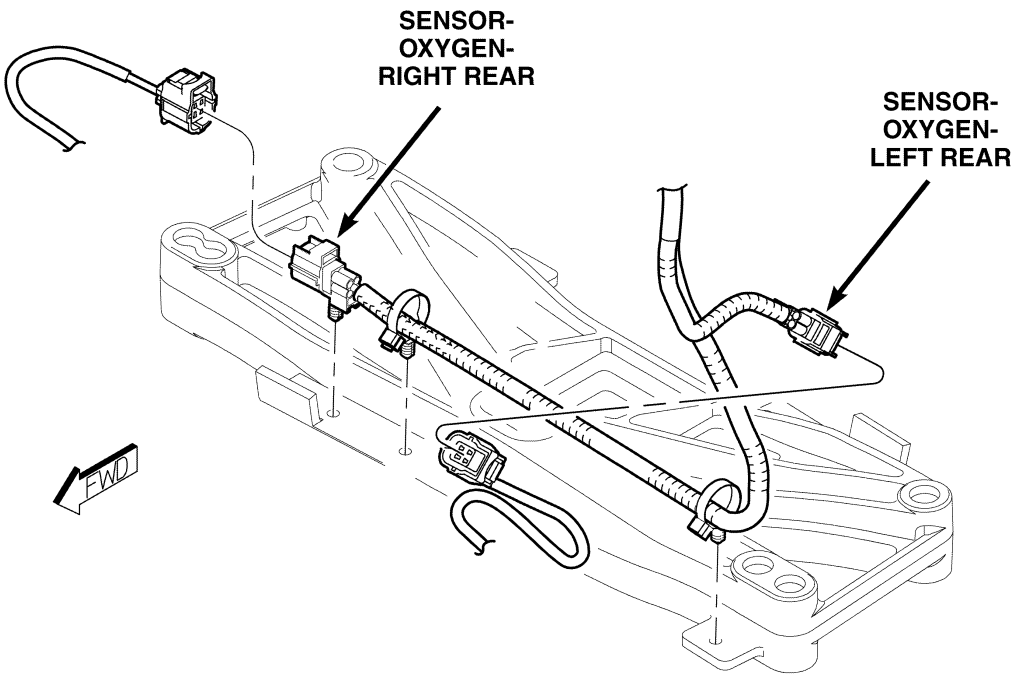

Fig. 11 REAR ENGINE COMPARTMENT V6

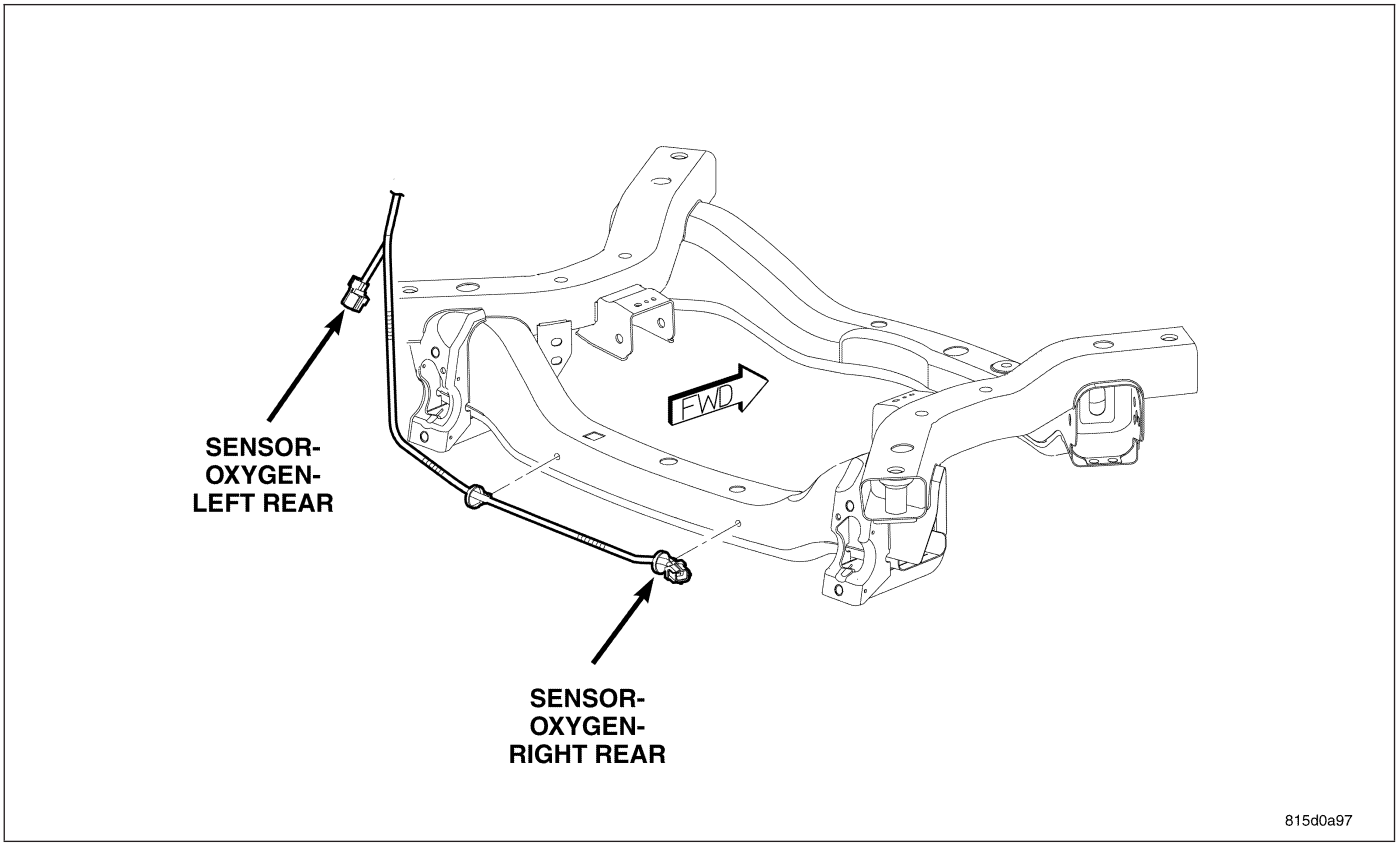

Fig. 12 REAR ENGINE COMPARTMENT V8

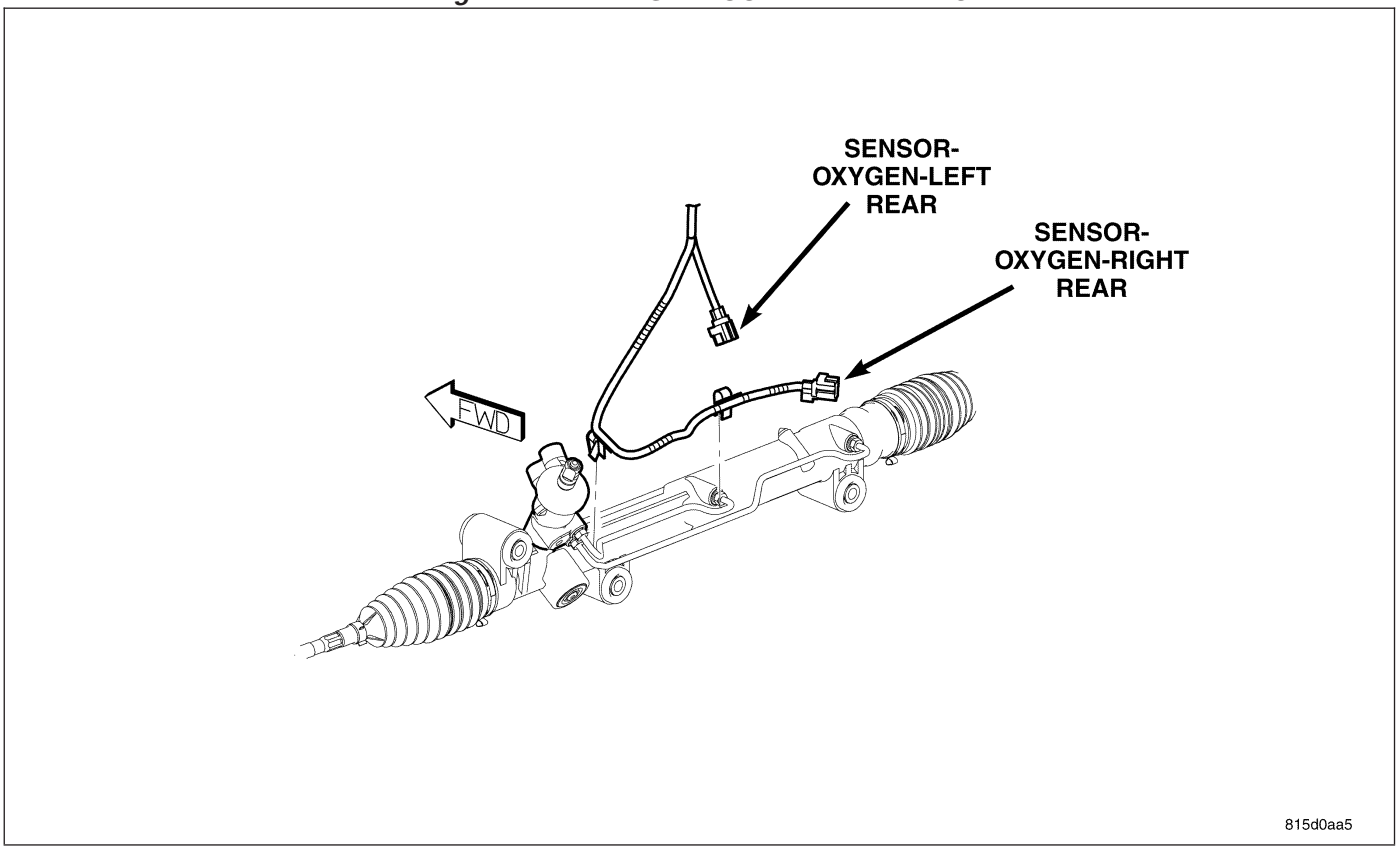

Fig. 13 REAR ENGINE COMPARTMENT (AWD)

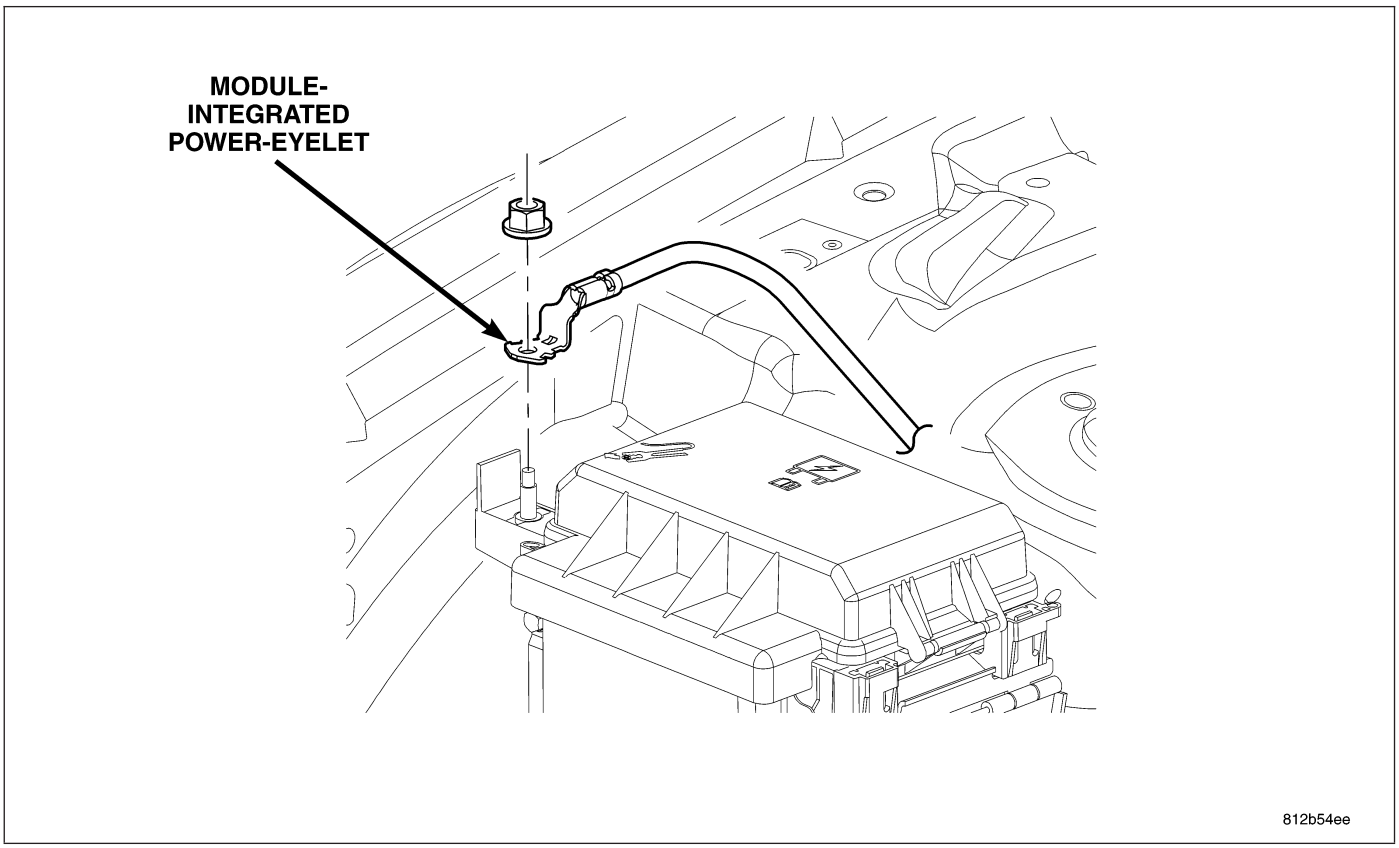

Fig. 14 INTEGRATED POWER MODULE

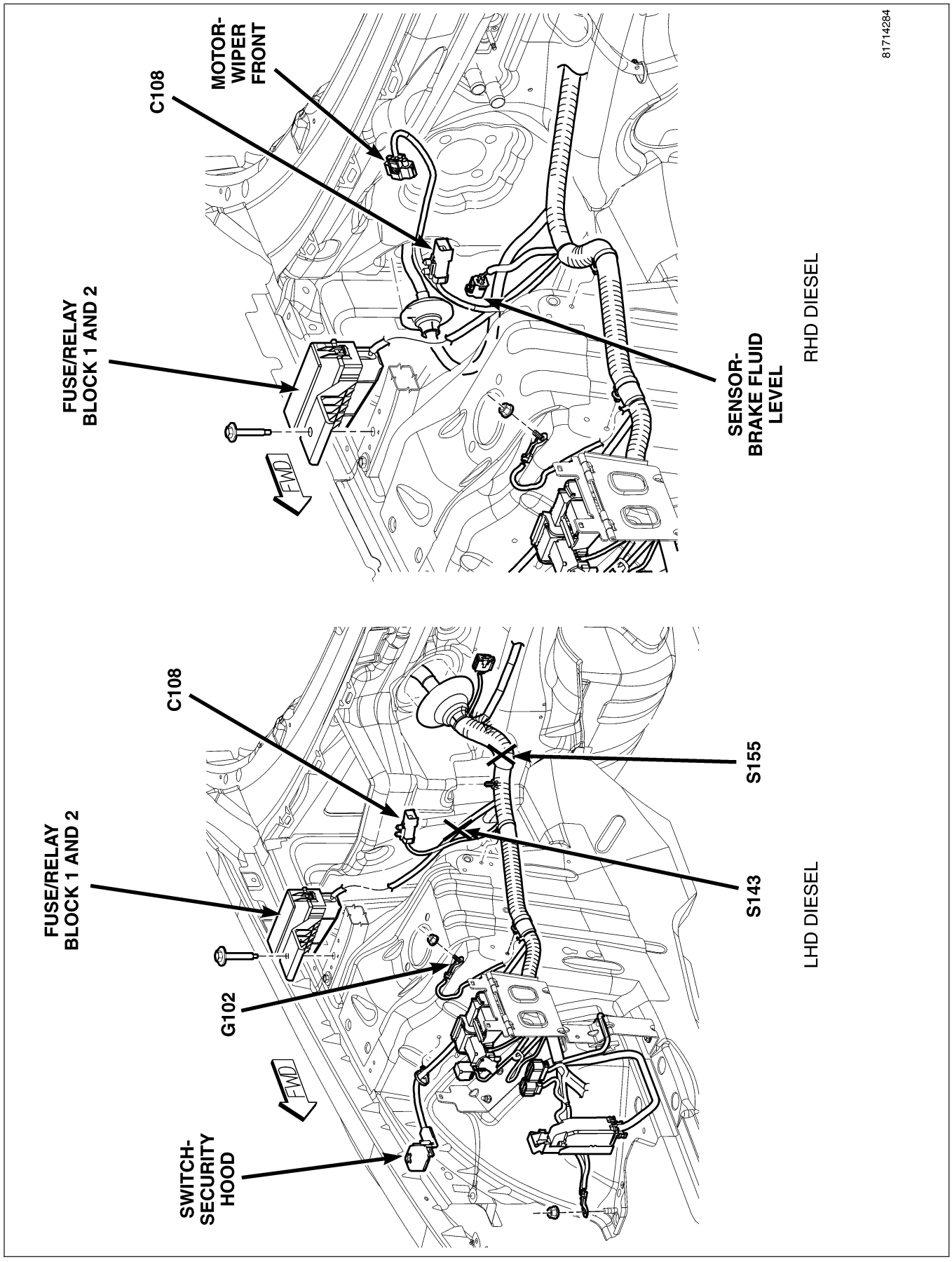

Fig. 15 FUSE RELAY BLOCK (DIESEL)

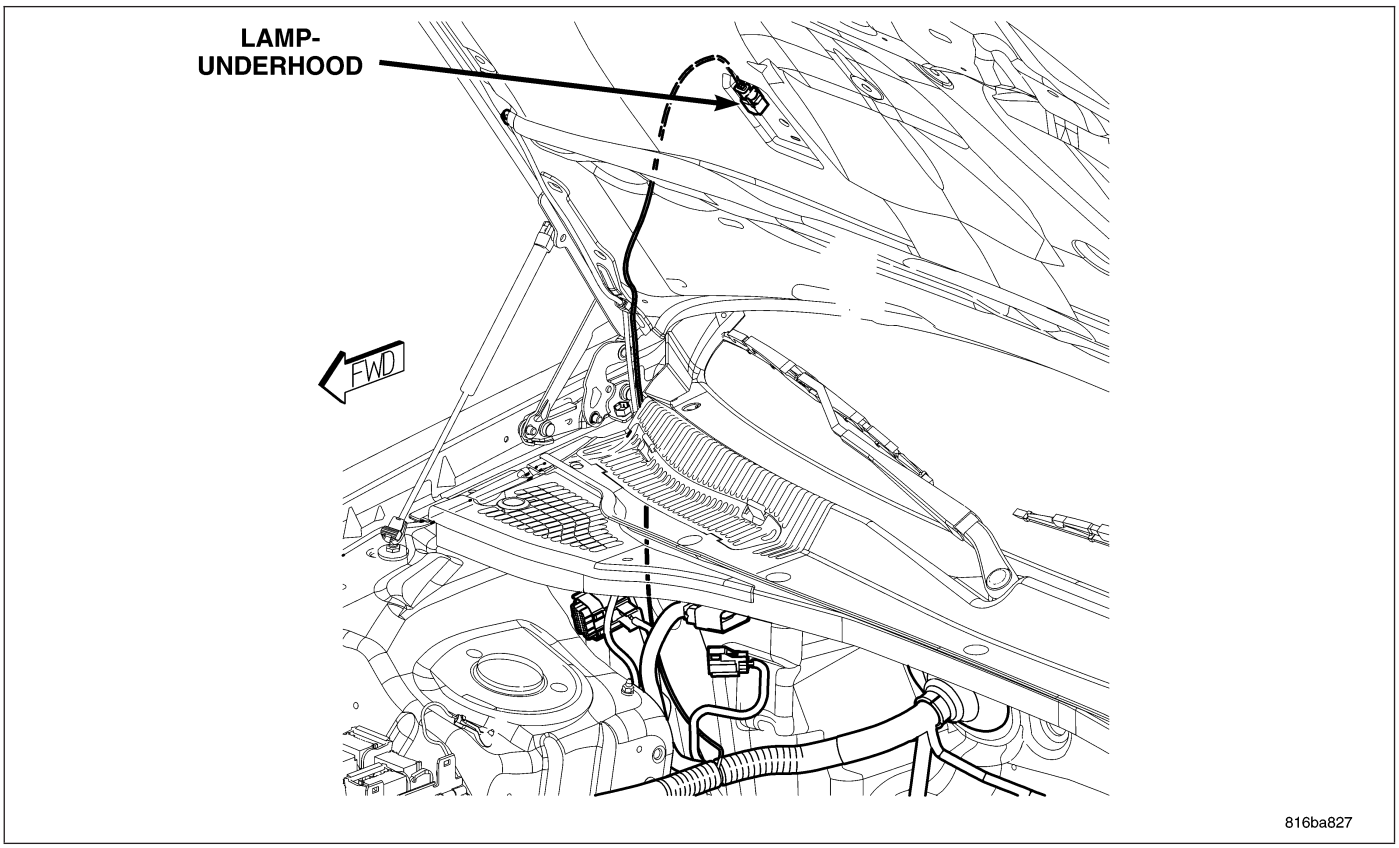

Fig. 16 HOOD (POLICE)

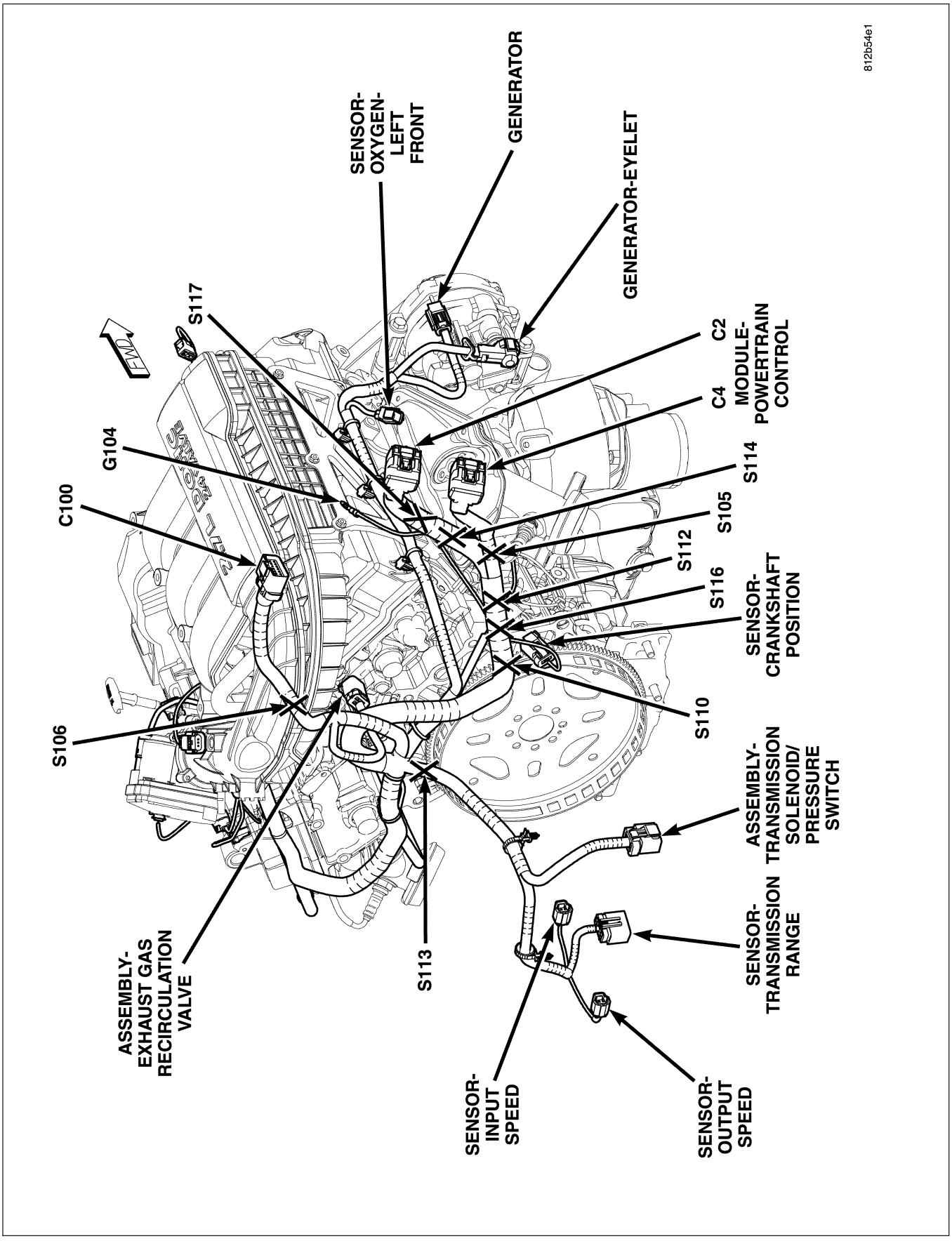

Fig. 17 ENGINE 2.7L RIGHT REAR

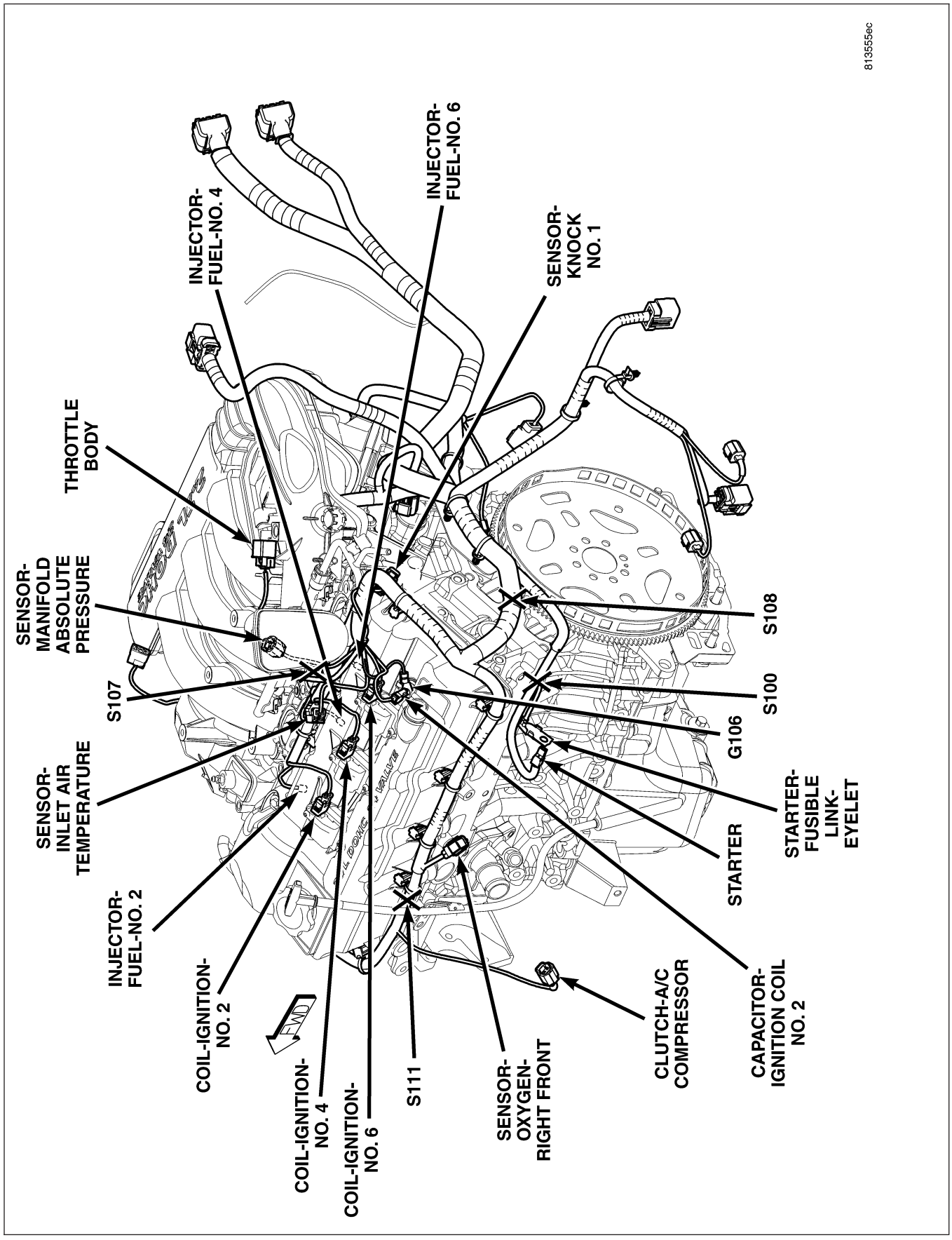

Fig. 18 ENGINE 2.7L LEFT REAR

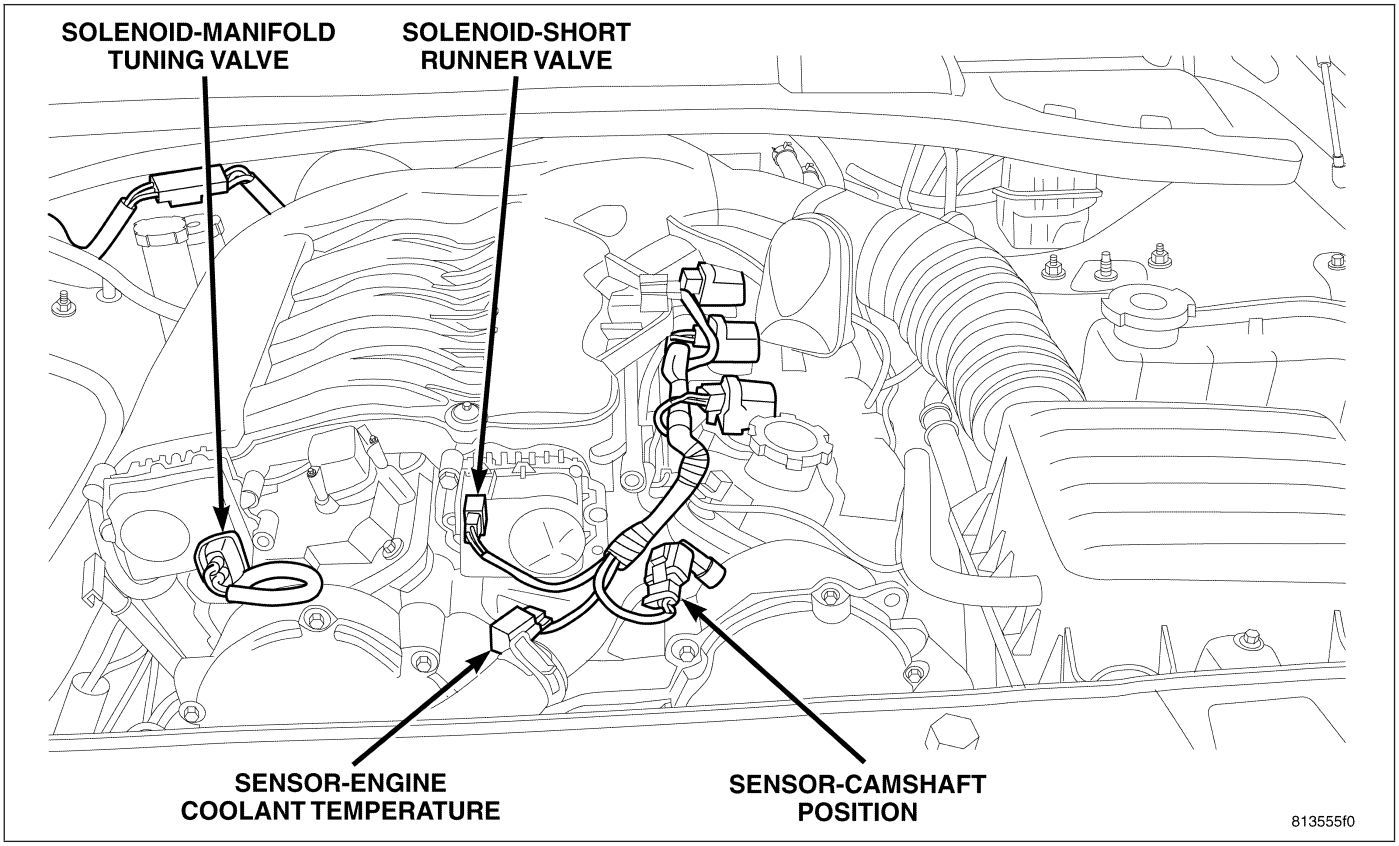

Fig. 19 ENGINE 2.7L/3.5L FRONT

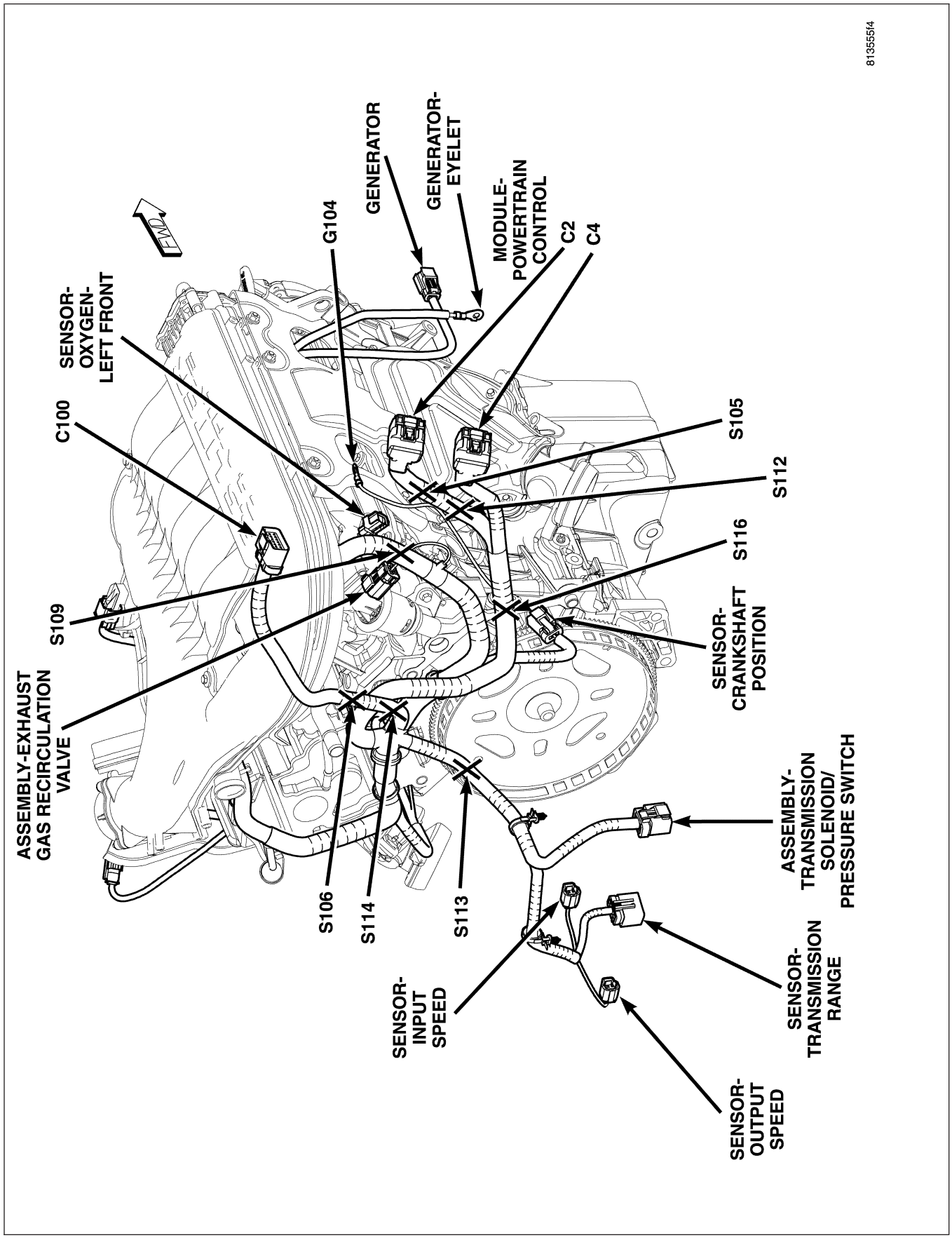

Fig. 20 ENGINE 3.5L RIGHT REAR

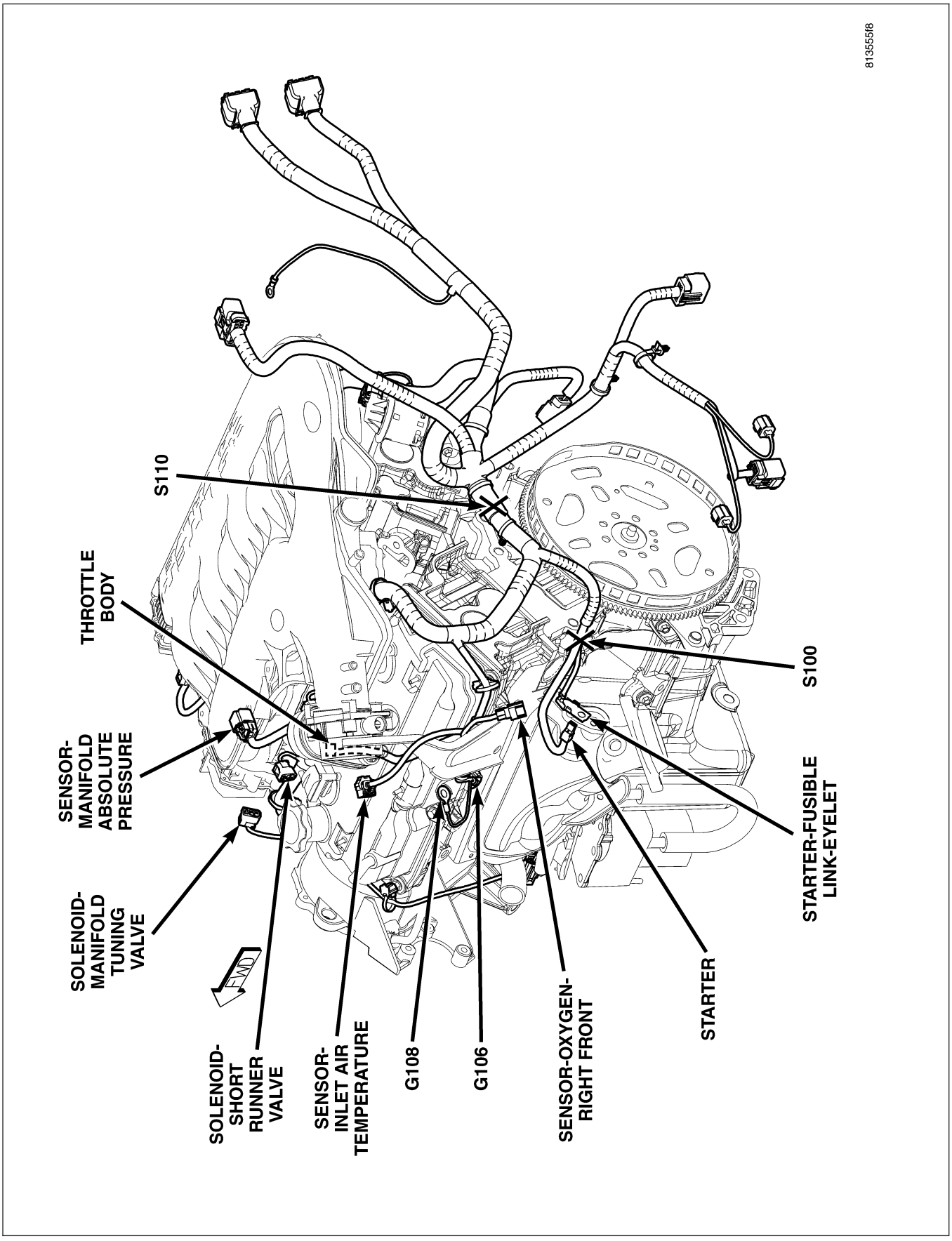

Fig. 21 ENGINE 3.5L LEFT REAR

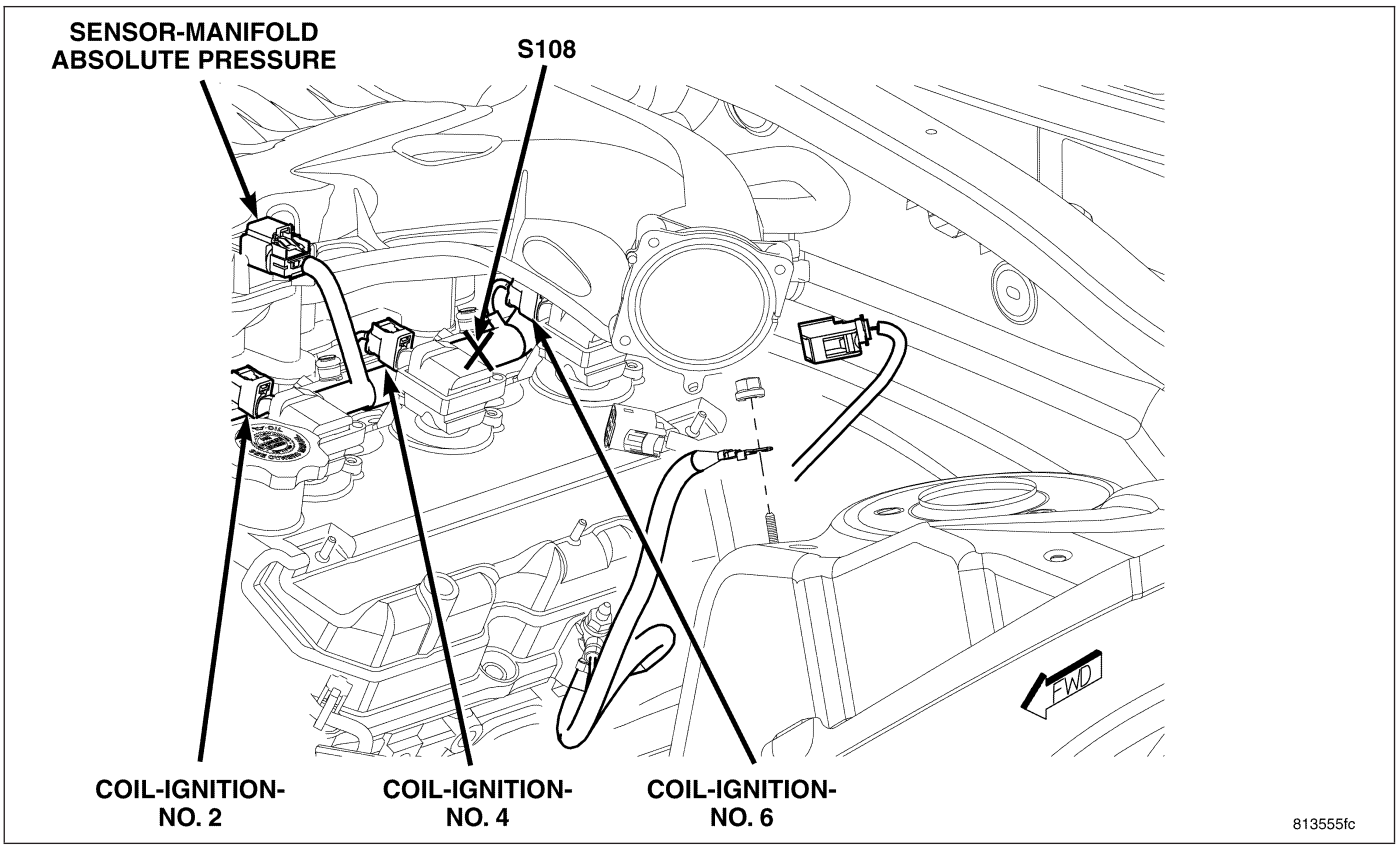

Fig. 22 ENGINE 3.5L LEFT SIDE

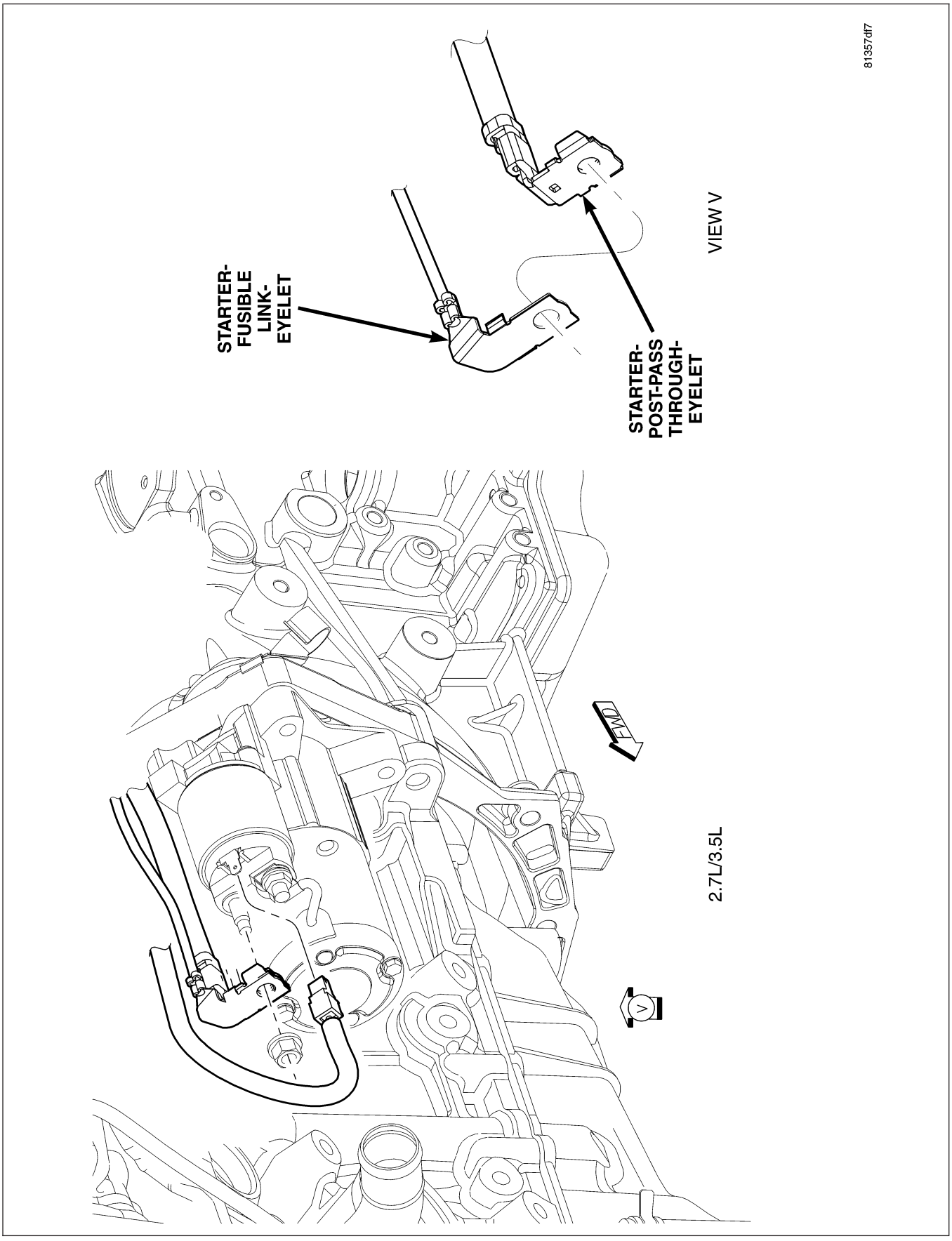

Fig. 23 STARTER CONNECTIONS (2.7L/3.5L)

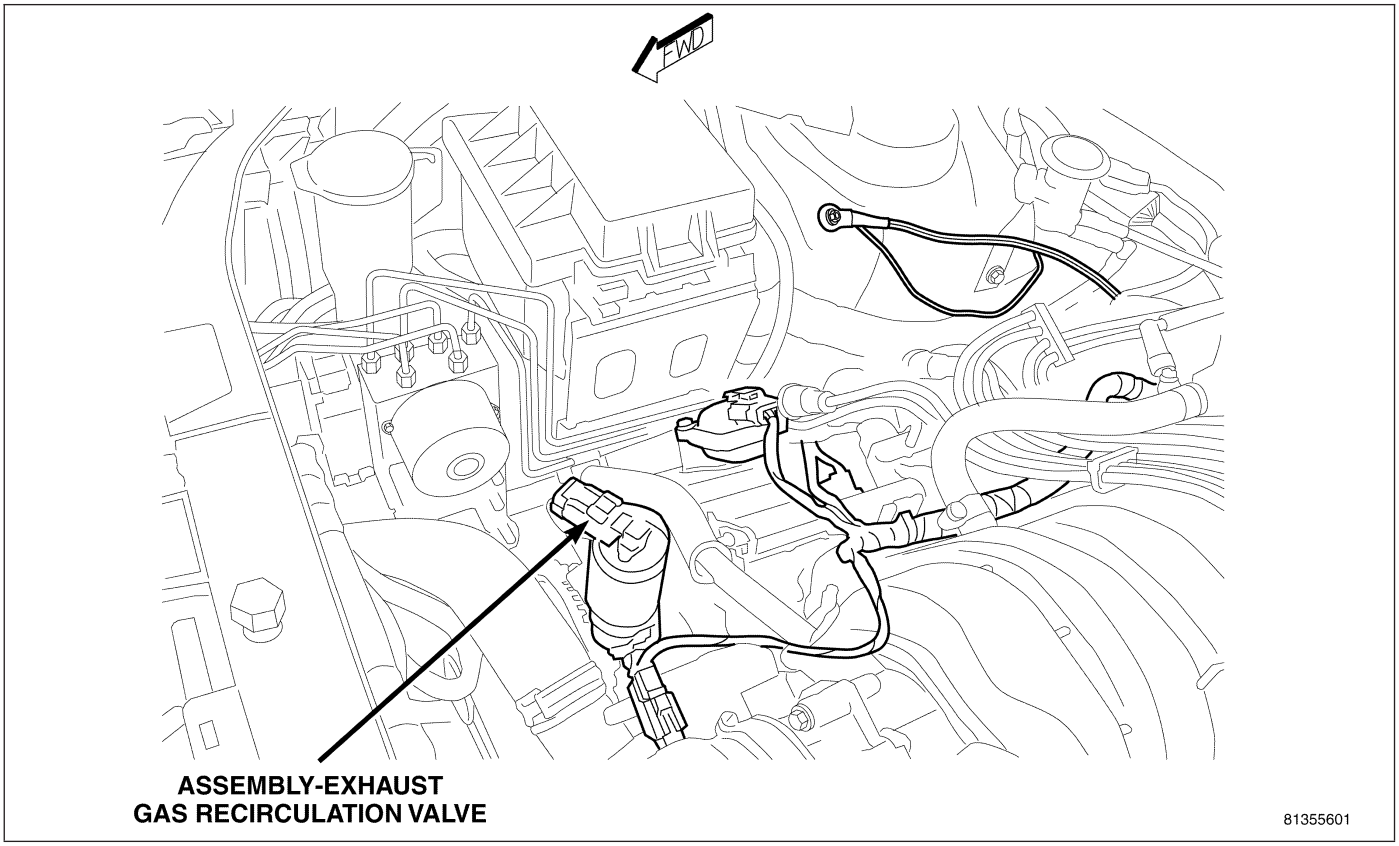

Fig. 24 ENGINE 5.7L RIGHT FRONT

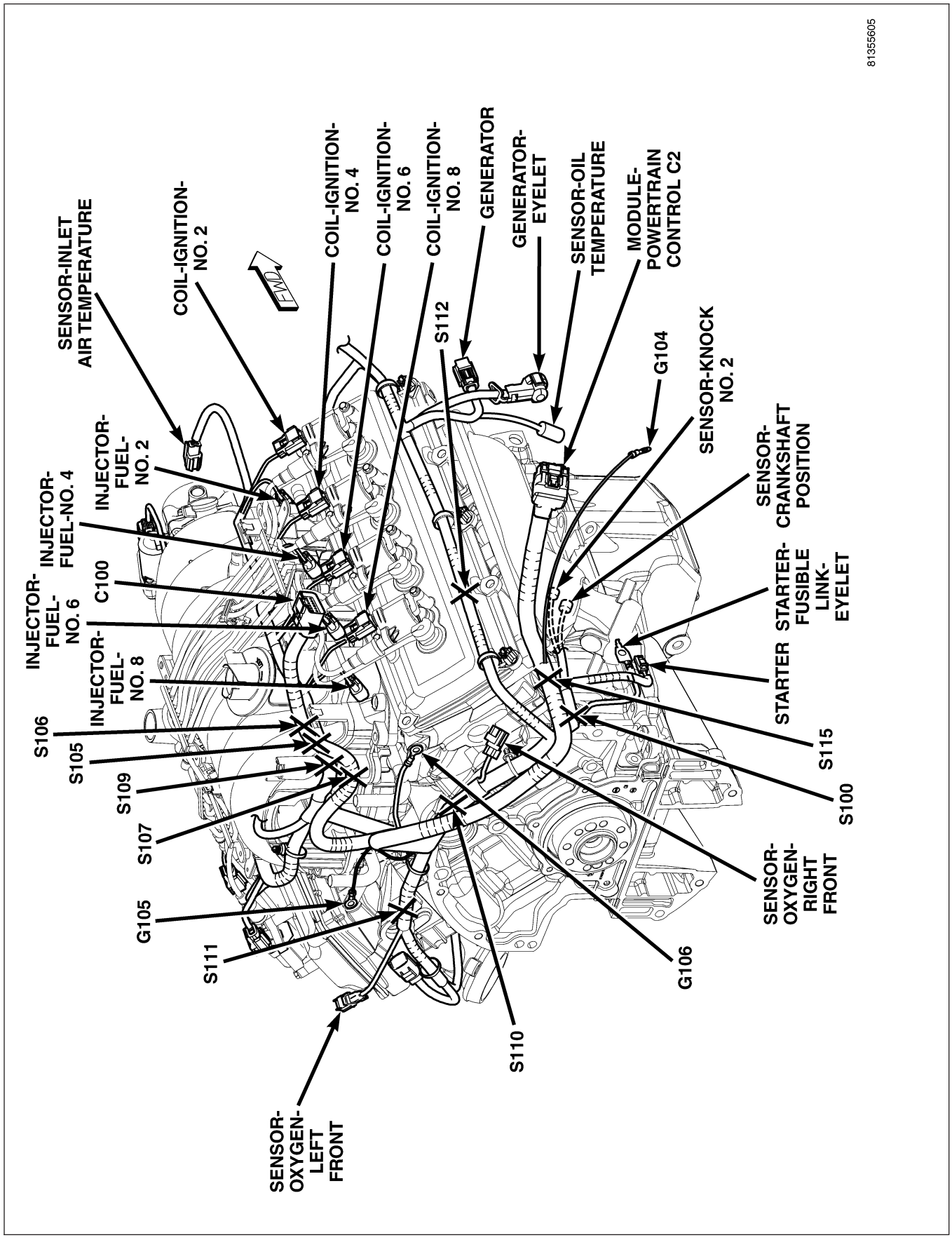

Fig. 25 ENGINE 5.7L RIGHT REAR

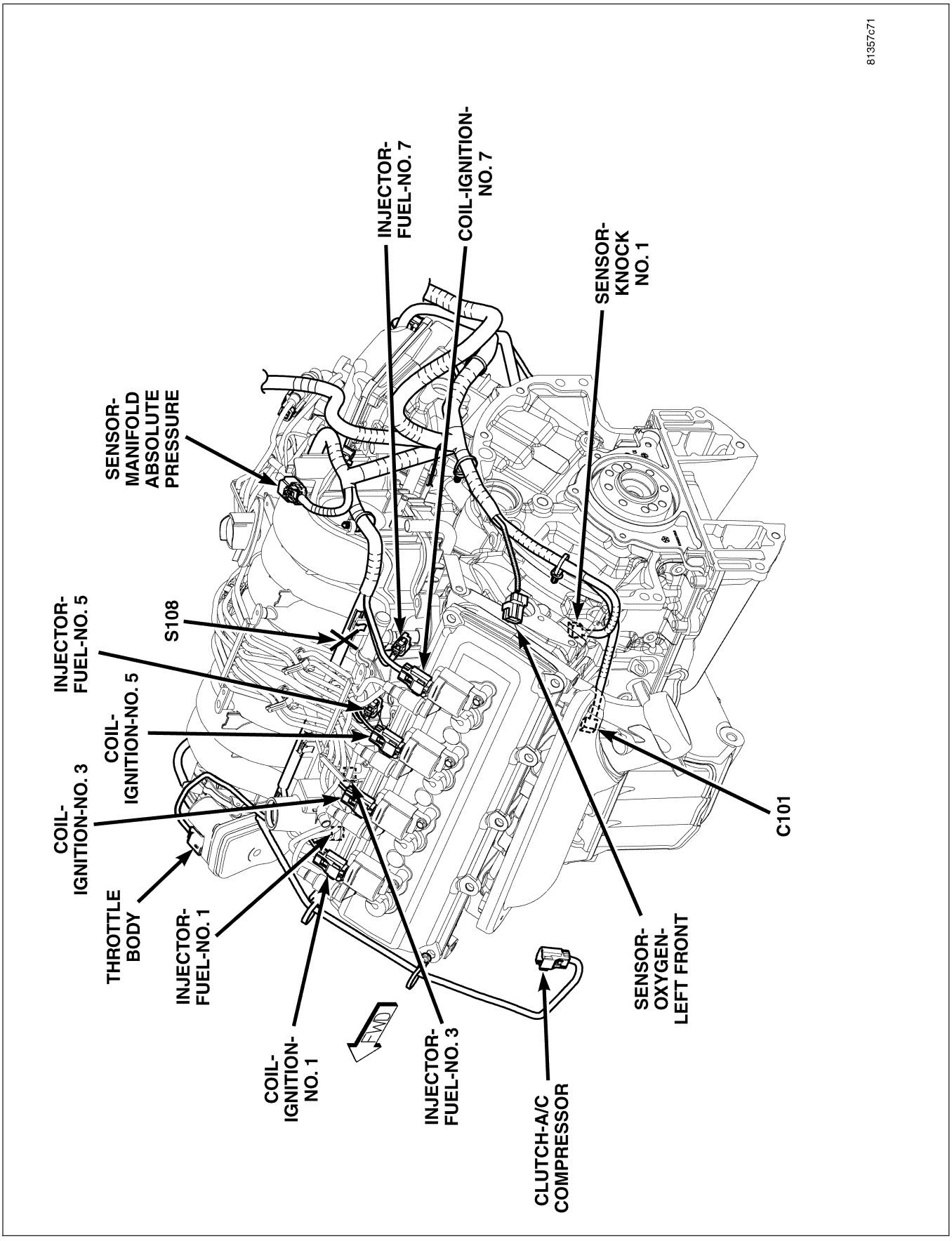

Fig. 26 ENGINE 5.7L LEFT REAR

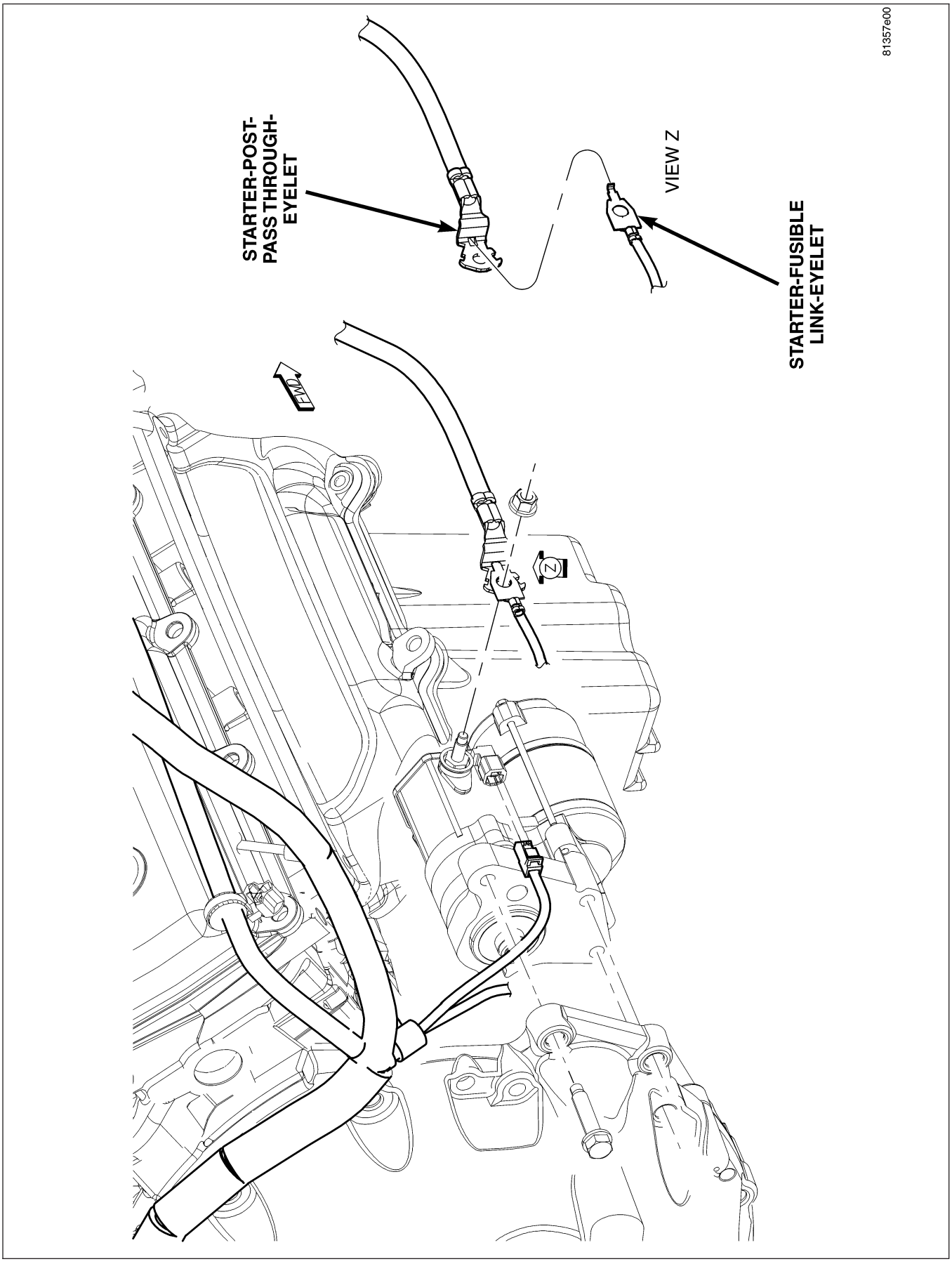

Fig. 27 STARTER CONNECTIONS (V8)

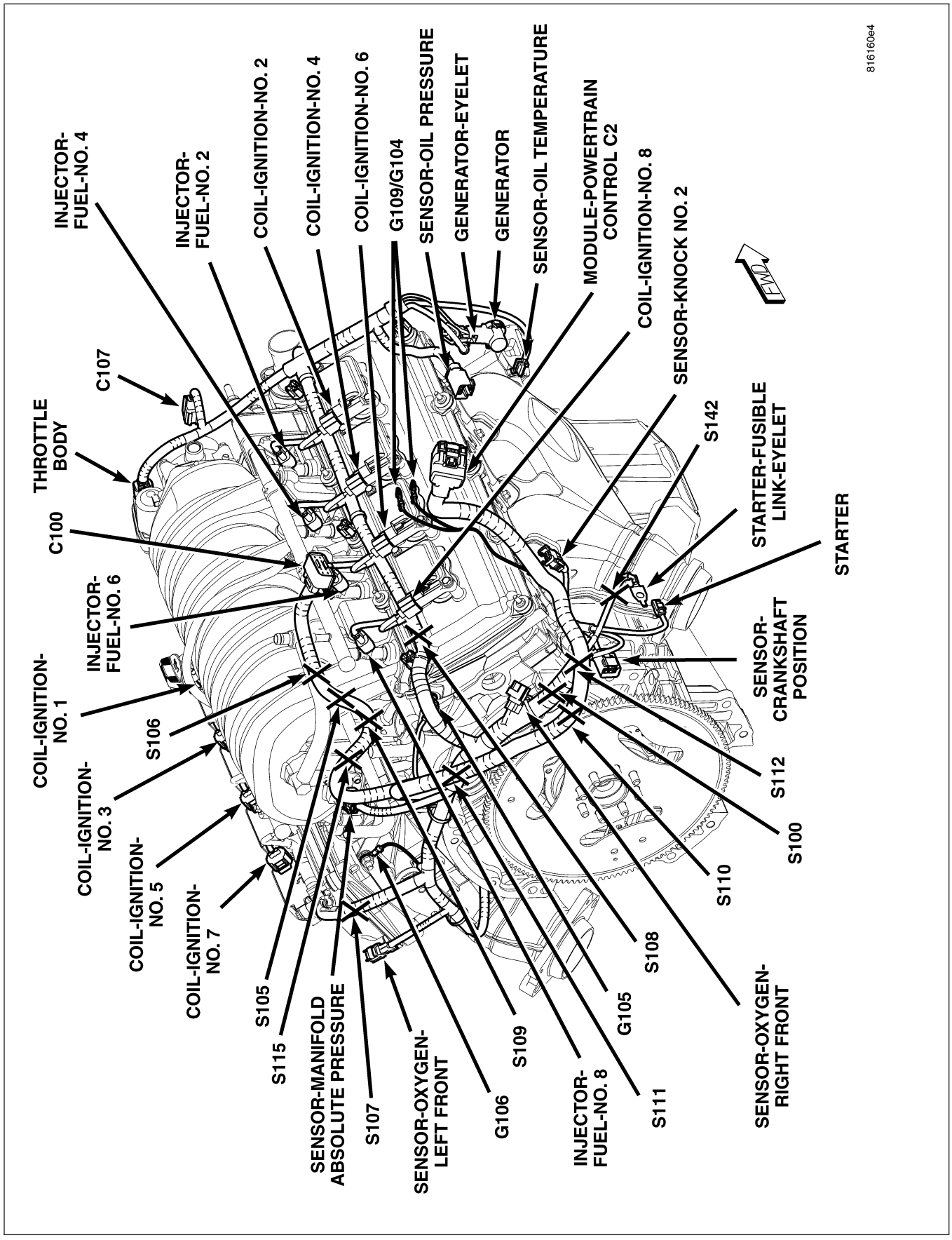

Fig. 28 ENGINE 6.1L RIGHT REAR (SRT8)

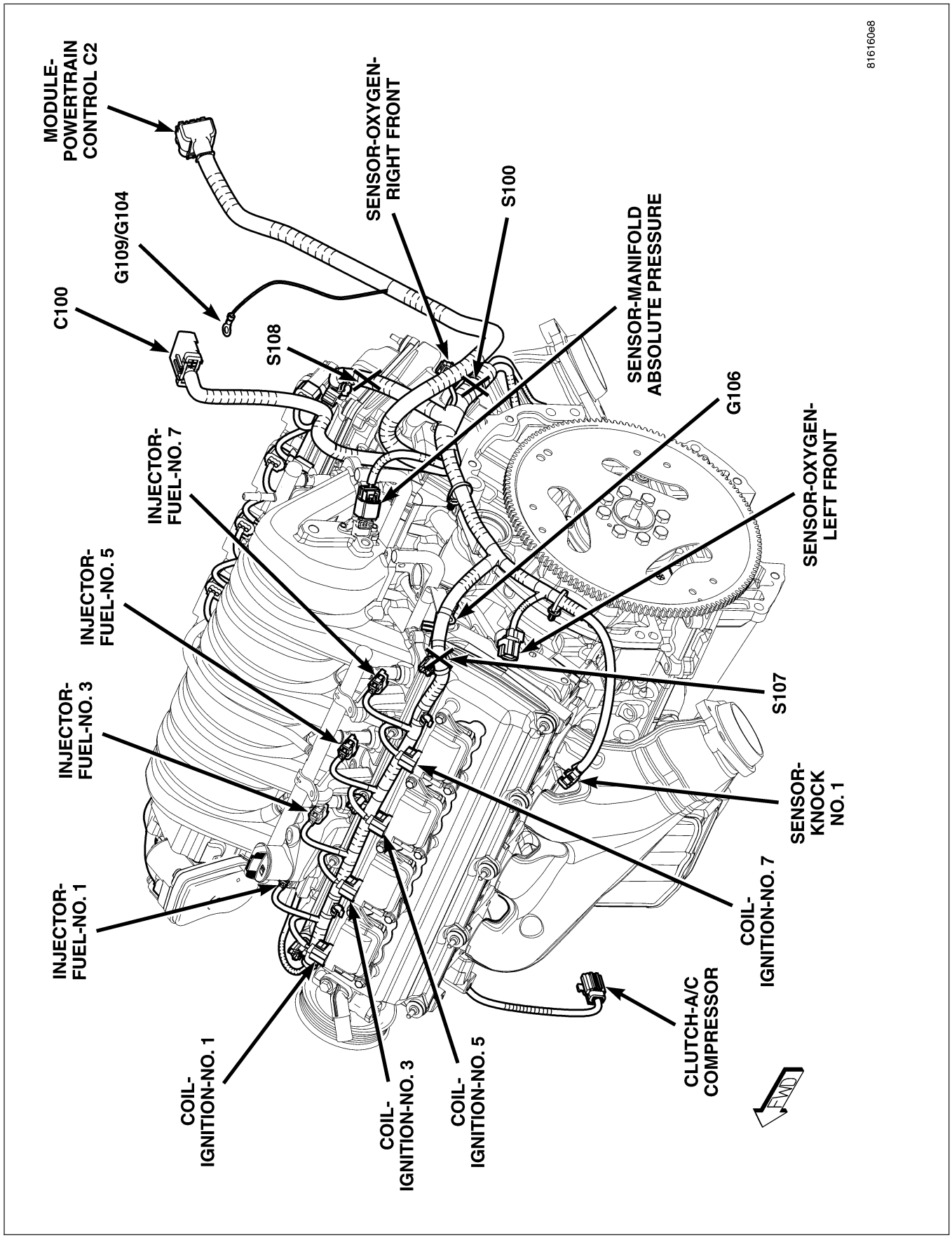

Fig. 29 ENGINE 6.1L LEFT REAR (SRT8)

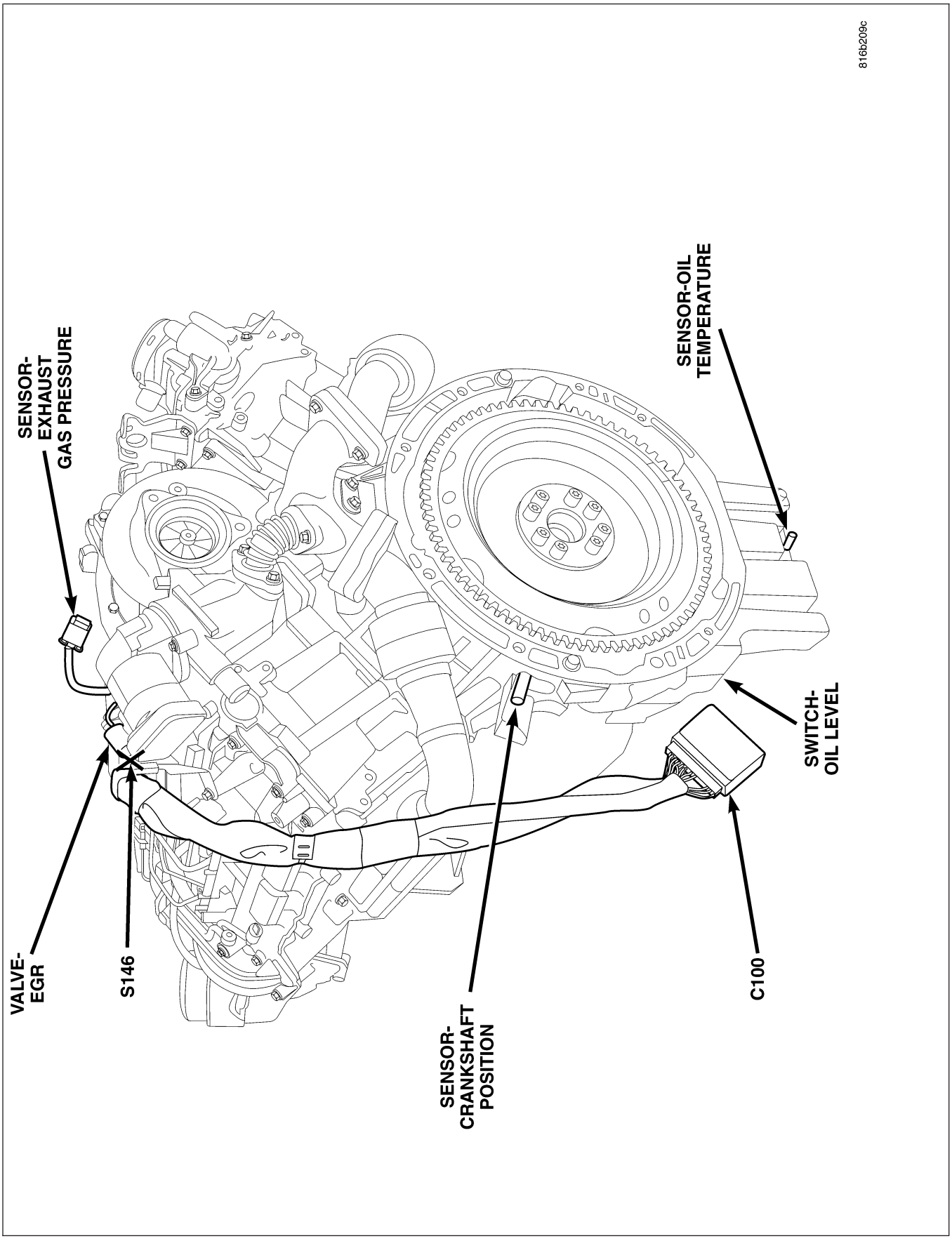

Fig. 30 LEFT REAR ENGINE (3.0L DIESEL)

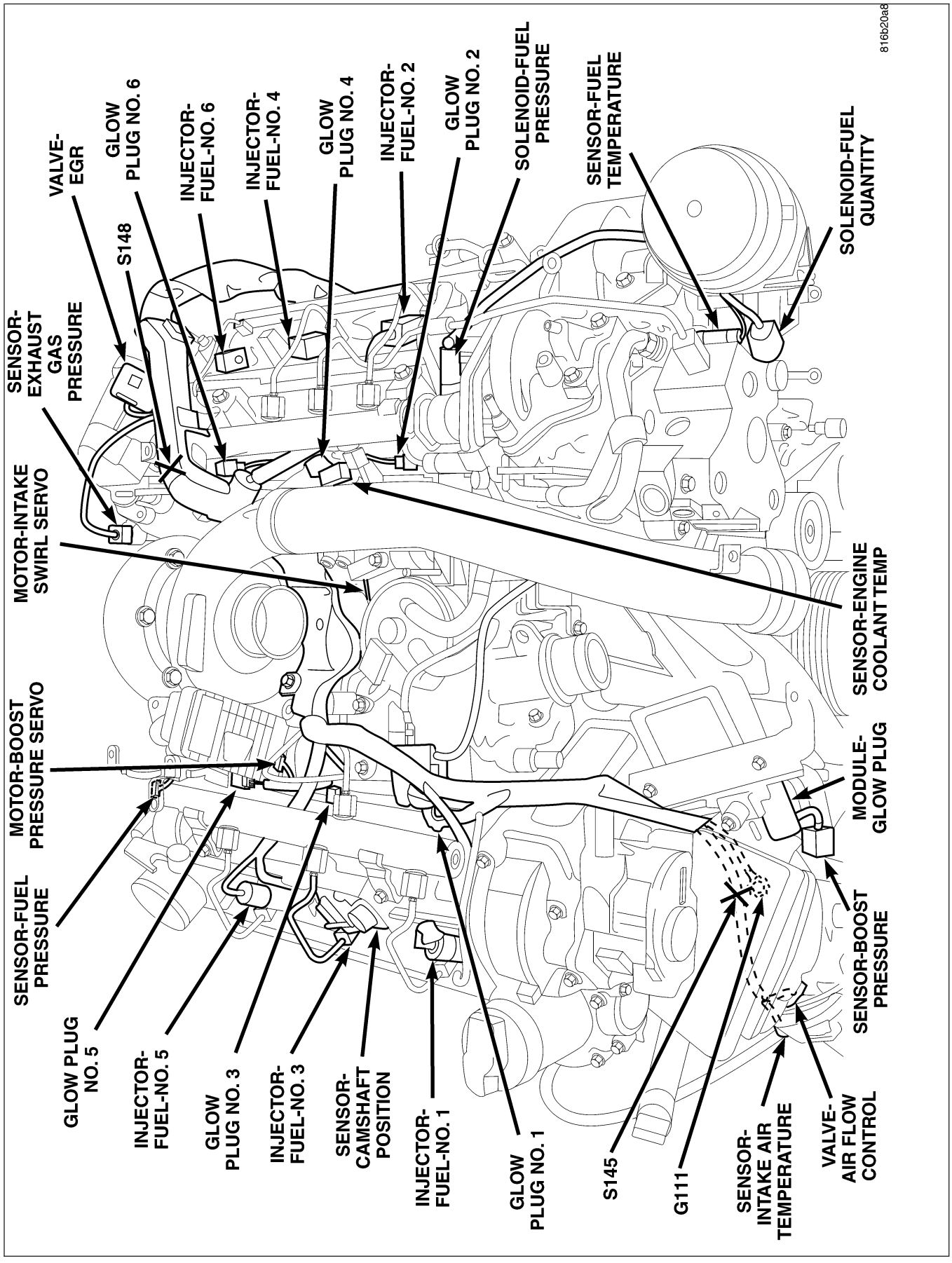

Fig. 31 ENGINE (3.0L DIESEL)

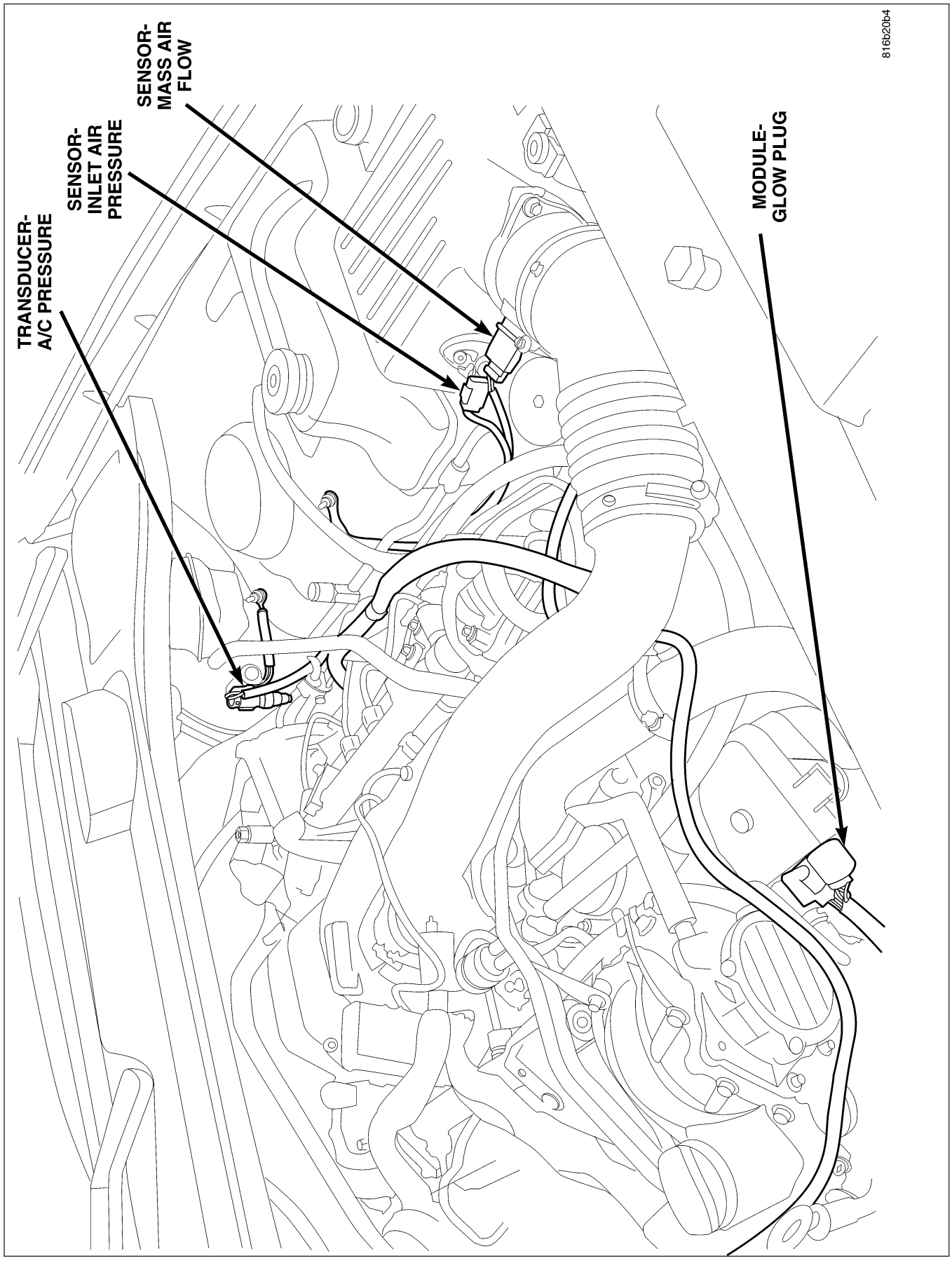

Fig. 32 AIR INTAKE BOX (3.0L DIESEL)

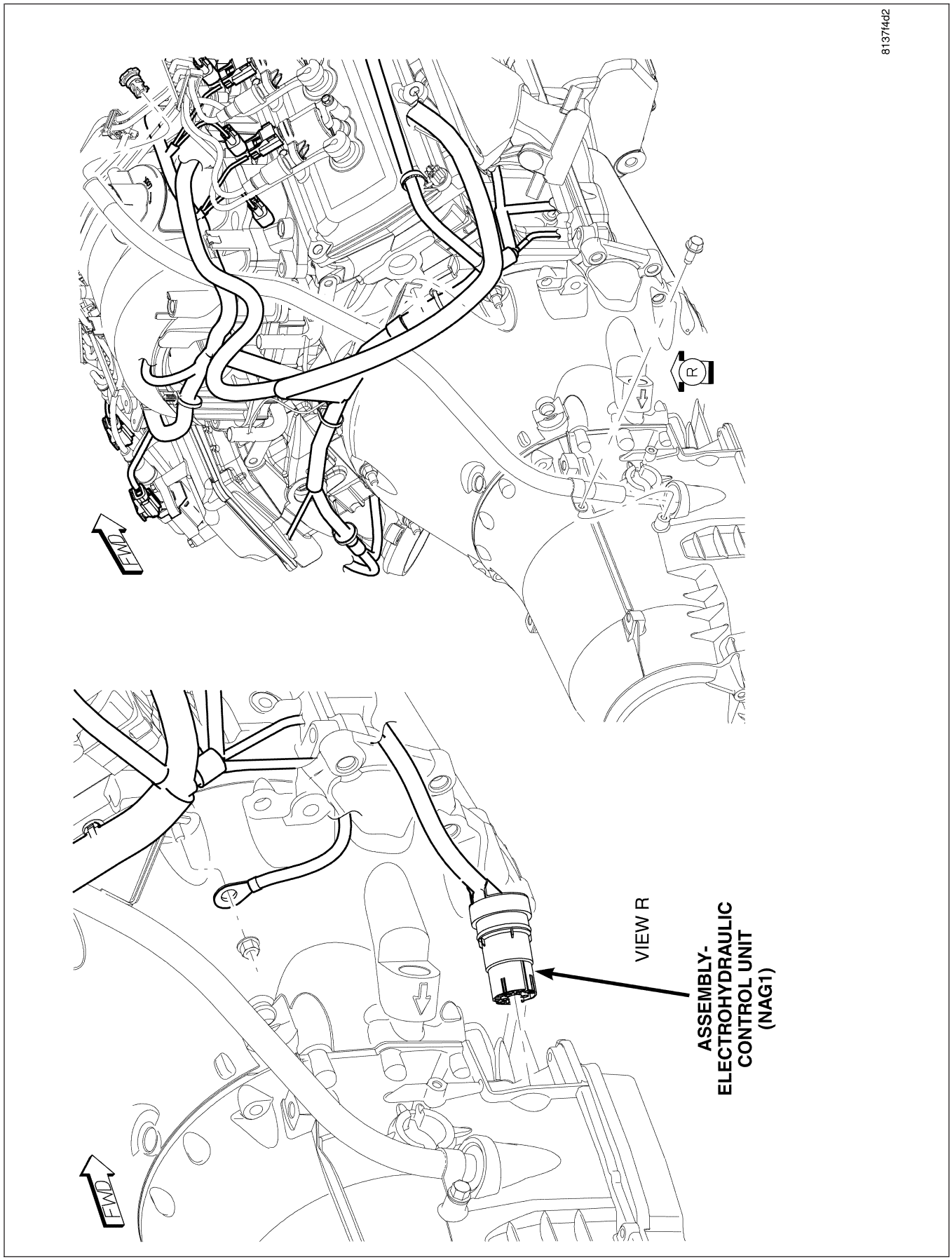

Fig. 33 TRANSMISSION

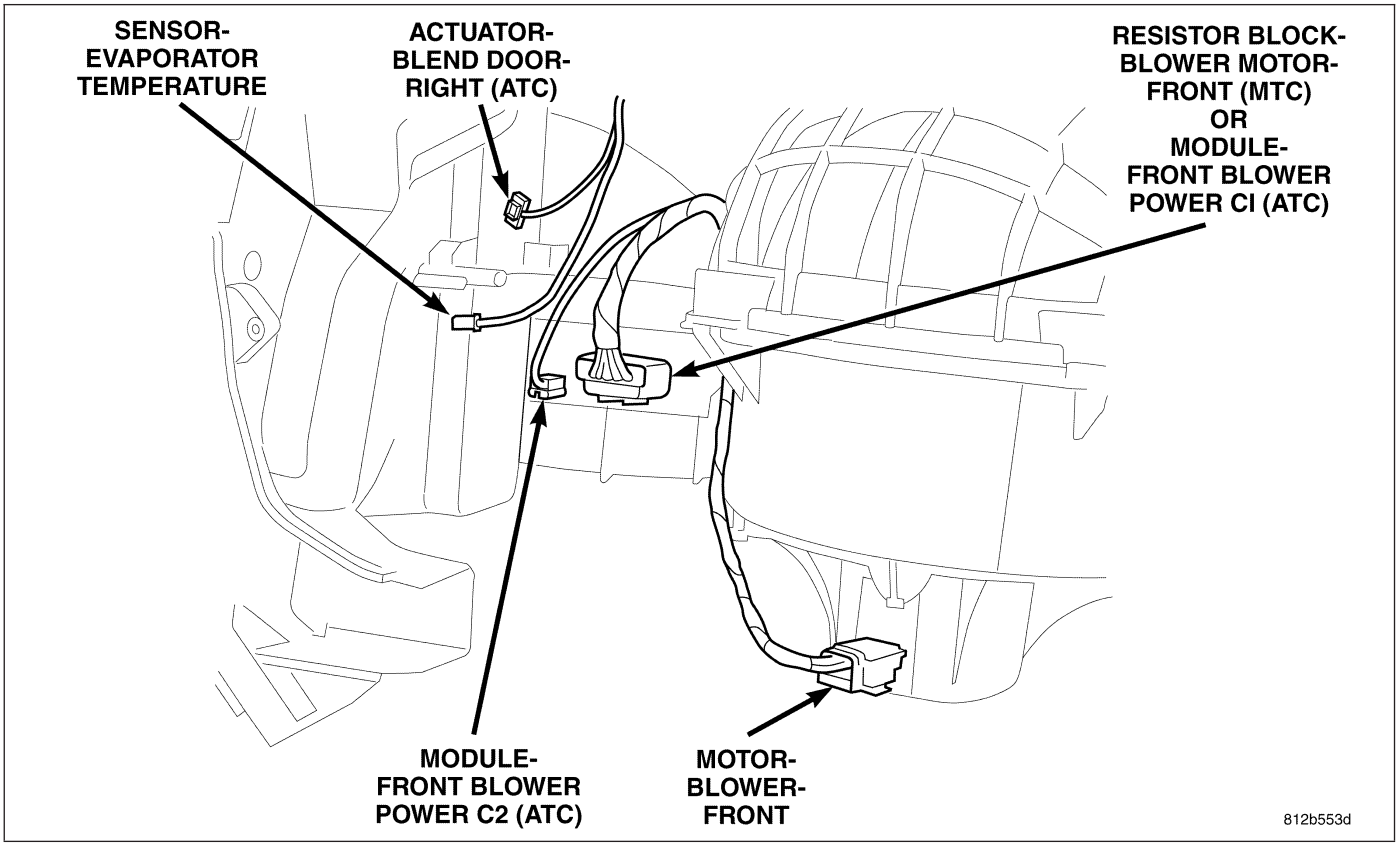

Fig. 34 HVAC CENTER

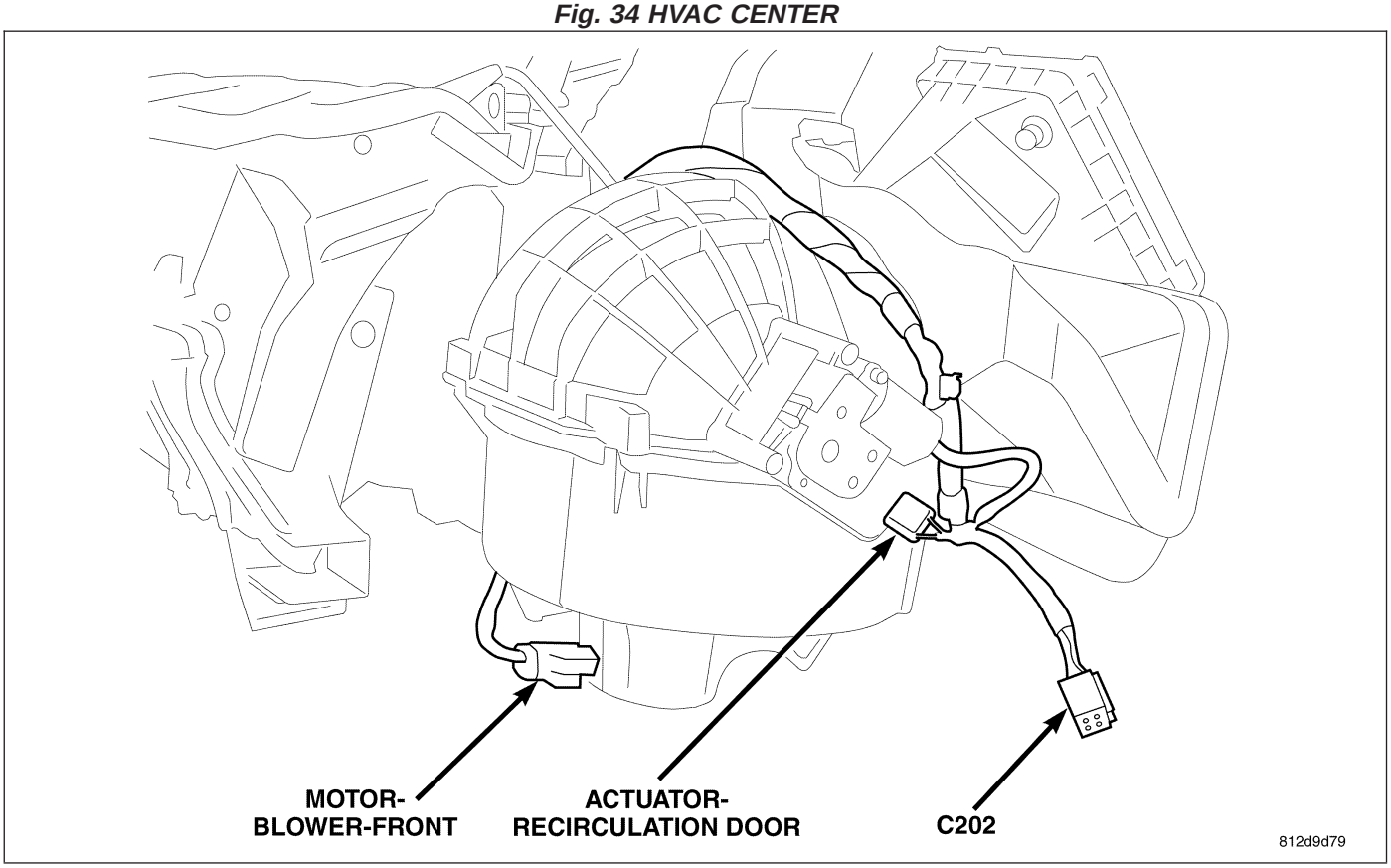

Fig. 35 HVAC RIGHT

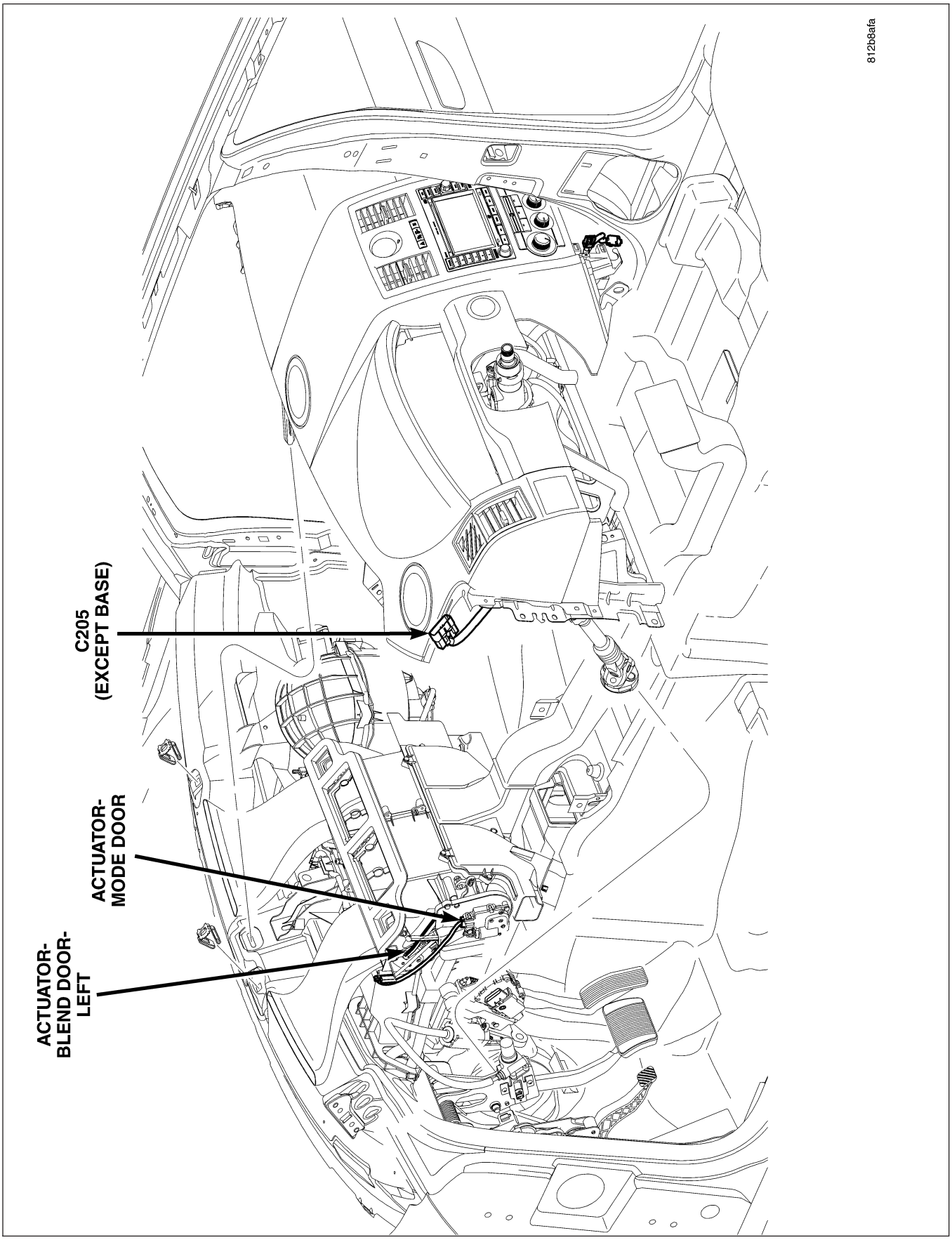

Fig. 36 HVAC AND INSTRUMENT PANEL

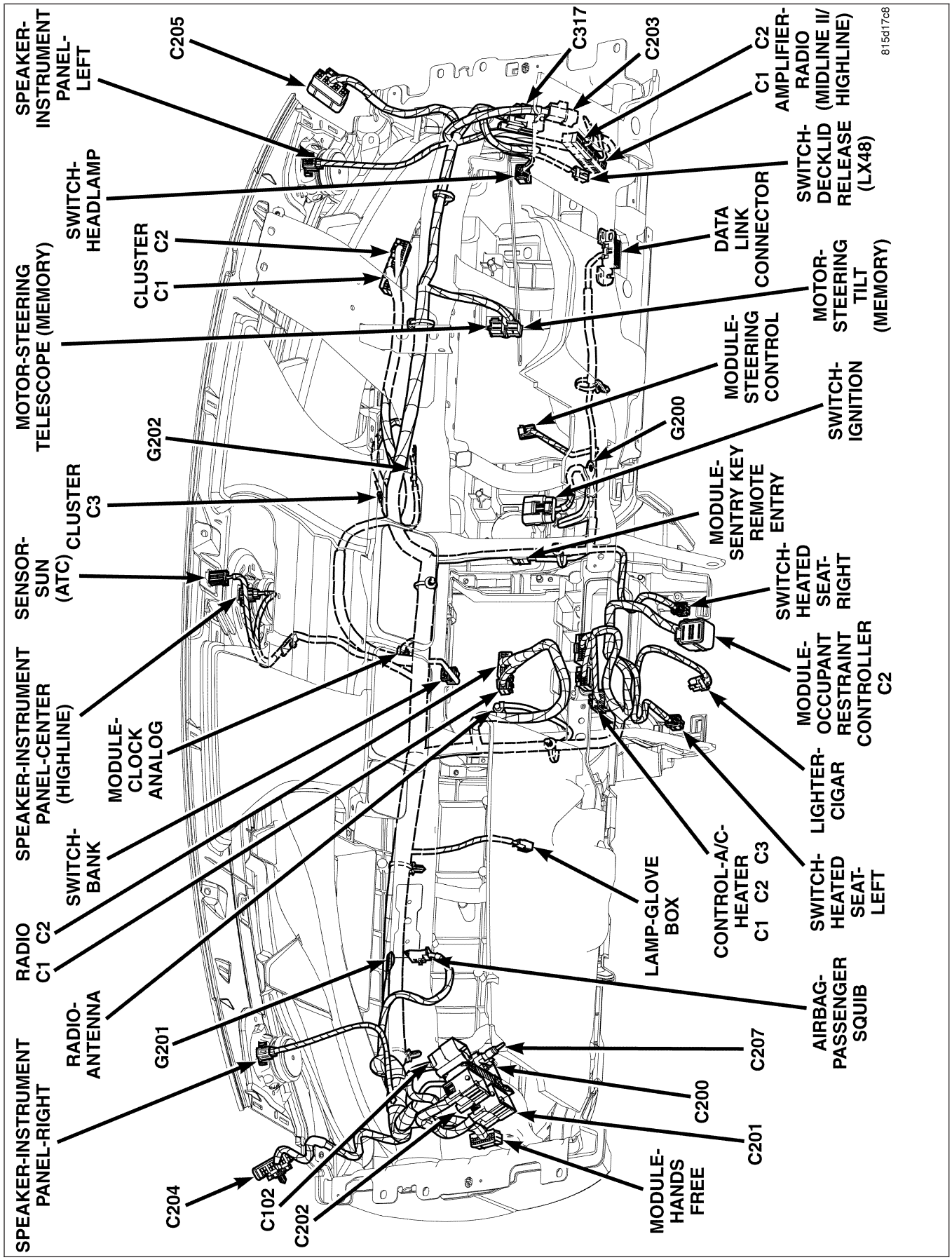

Fig. 37 INSTRUMENT PANEL (LHD)

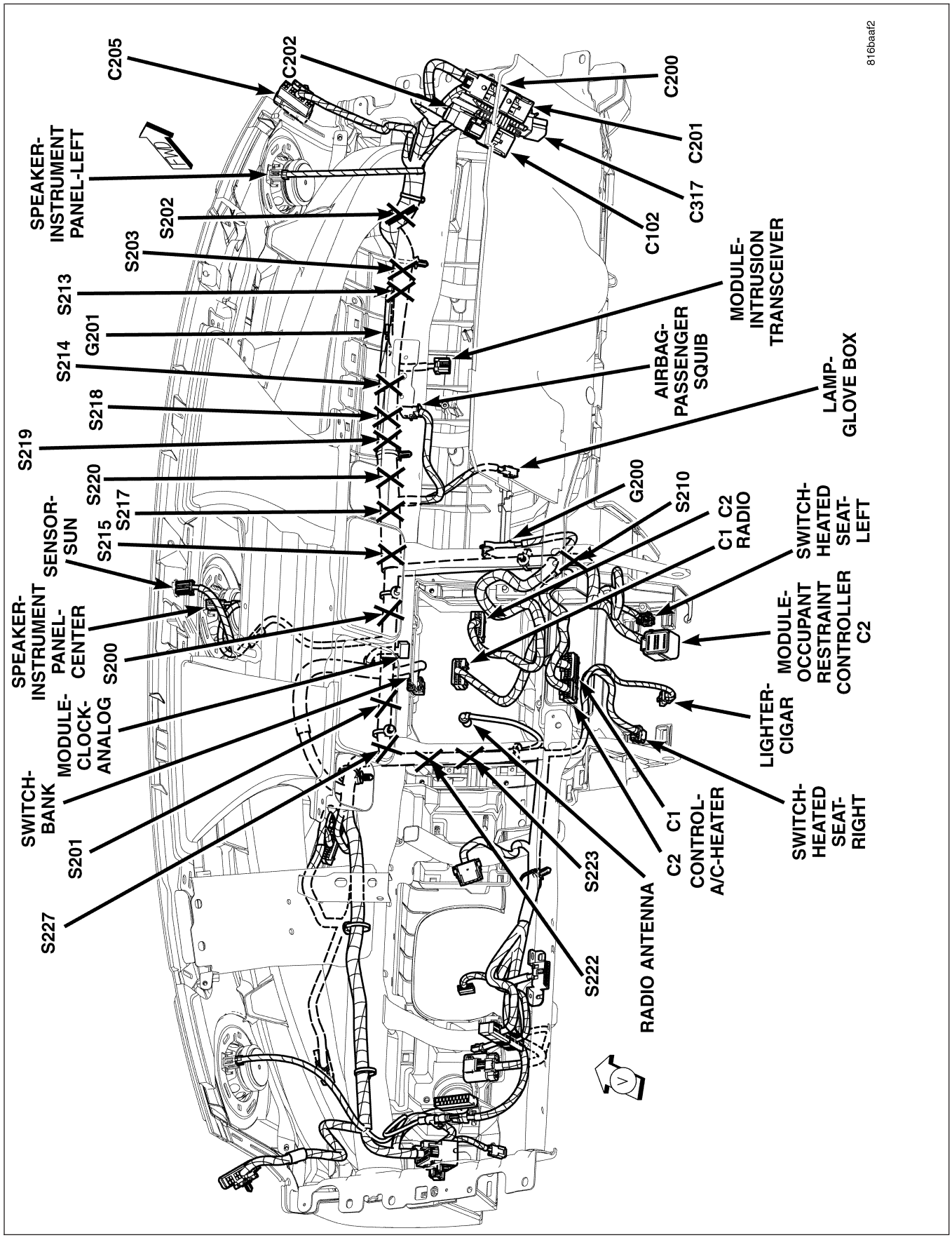

Fig. 38 INSTRUMENT PANEL (RHD)

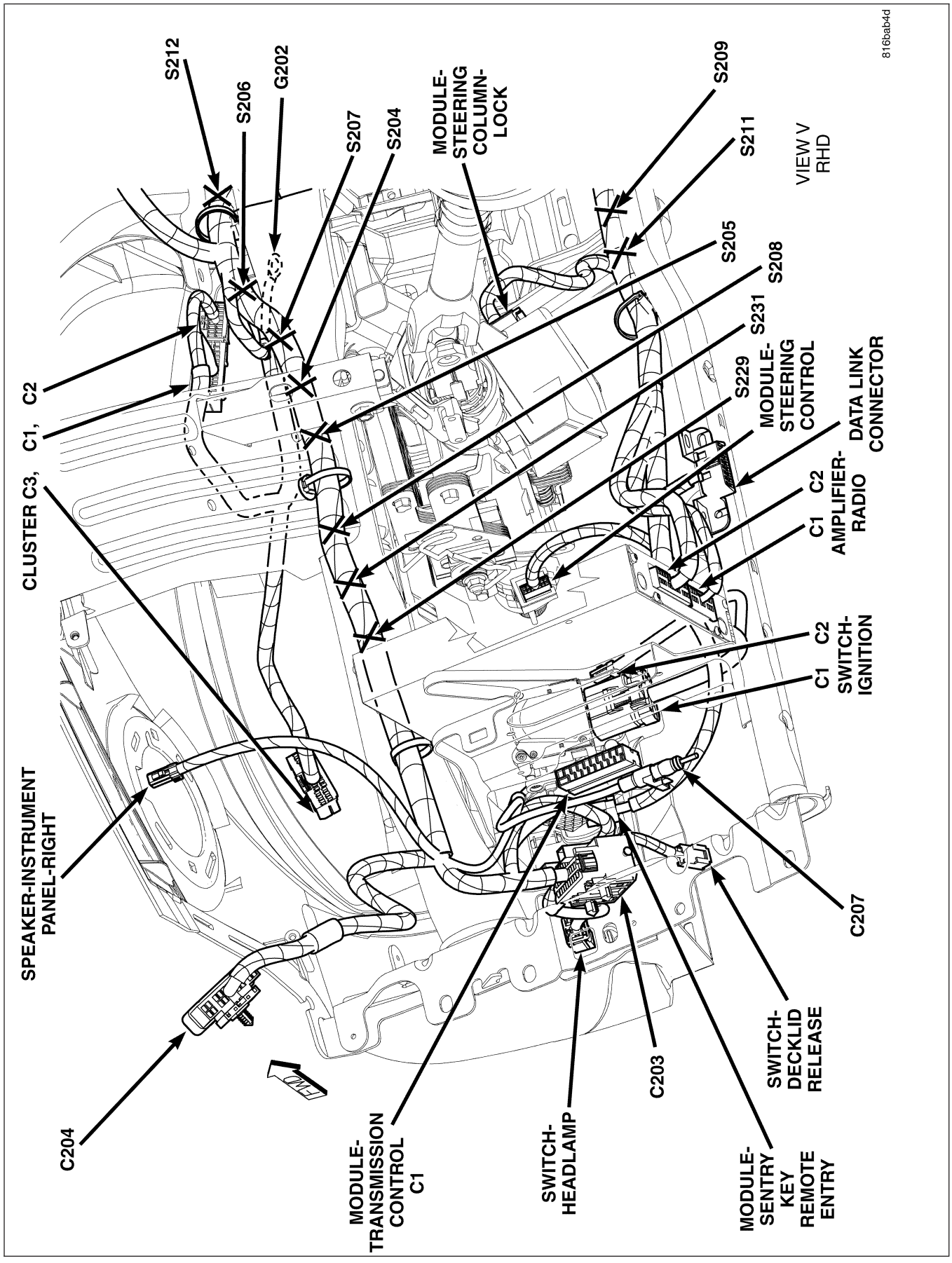

Fig. 39 INSTRUMENT PANEL RIGHT (RHD)

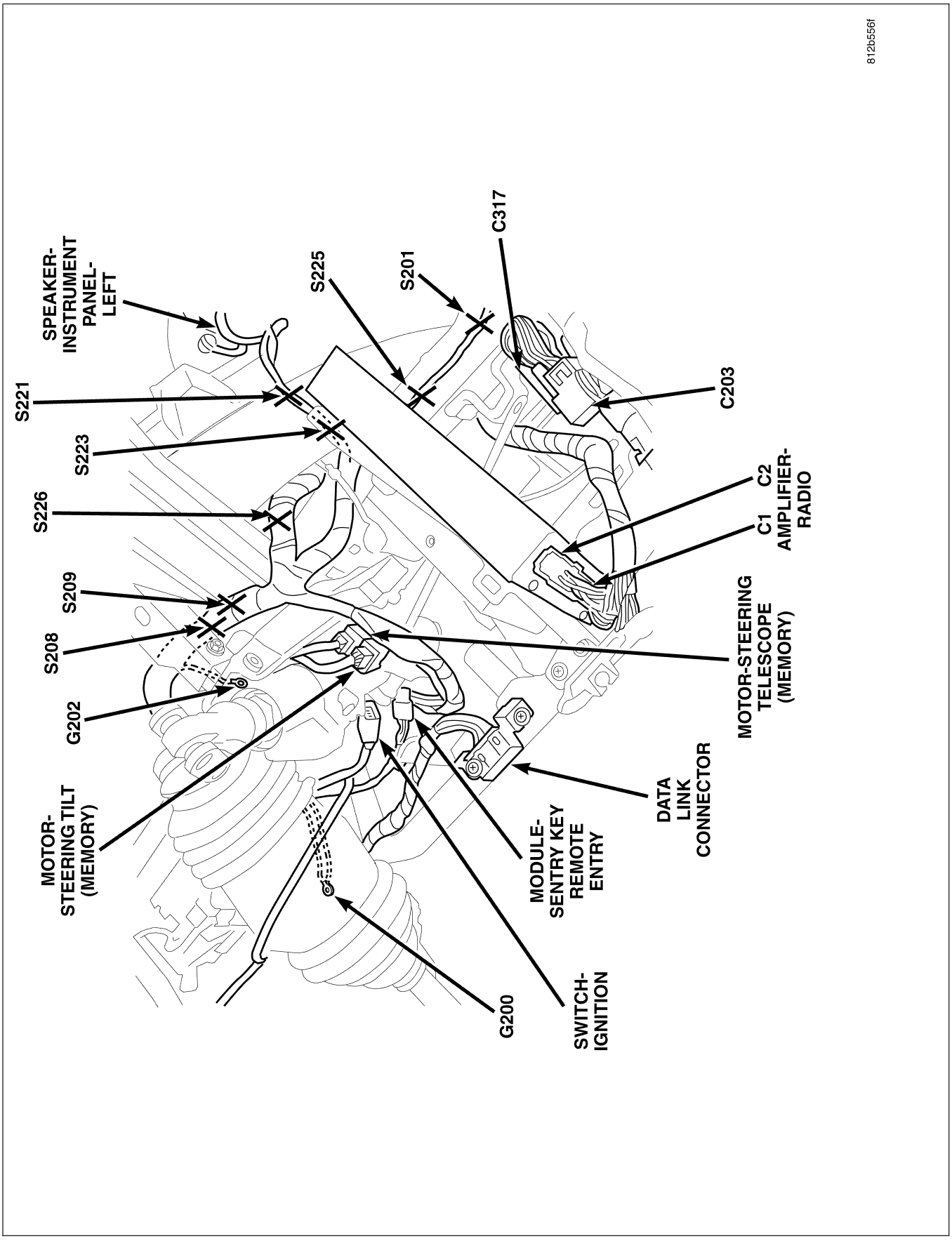

Fig. 40 STEERING COLUMN (LHD)

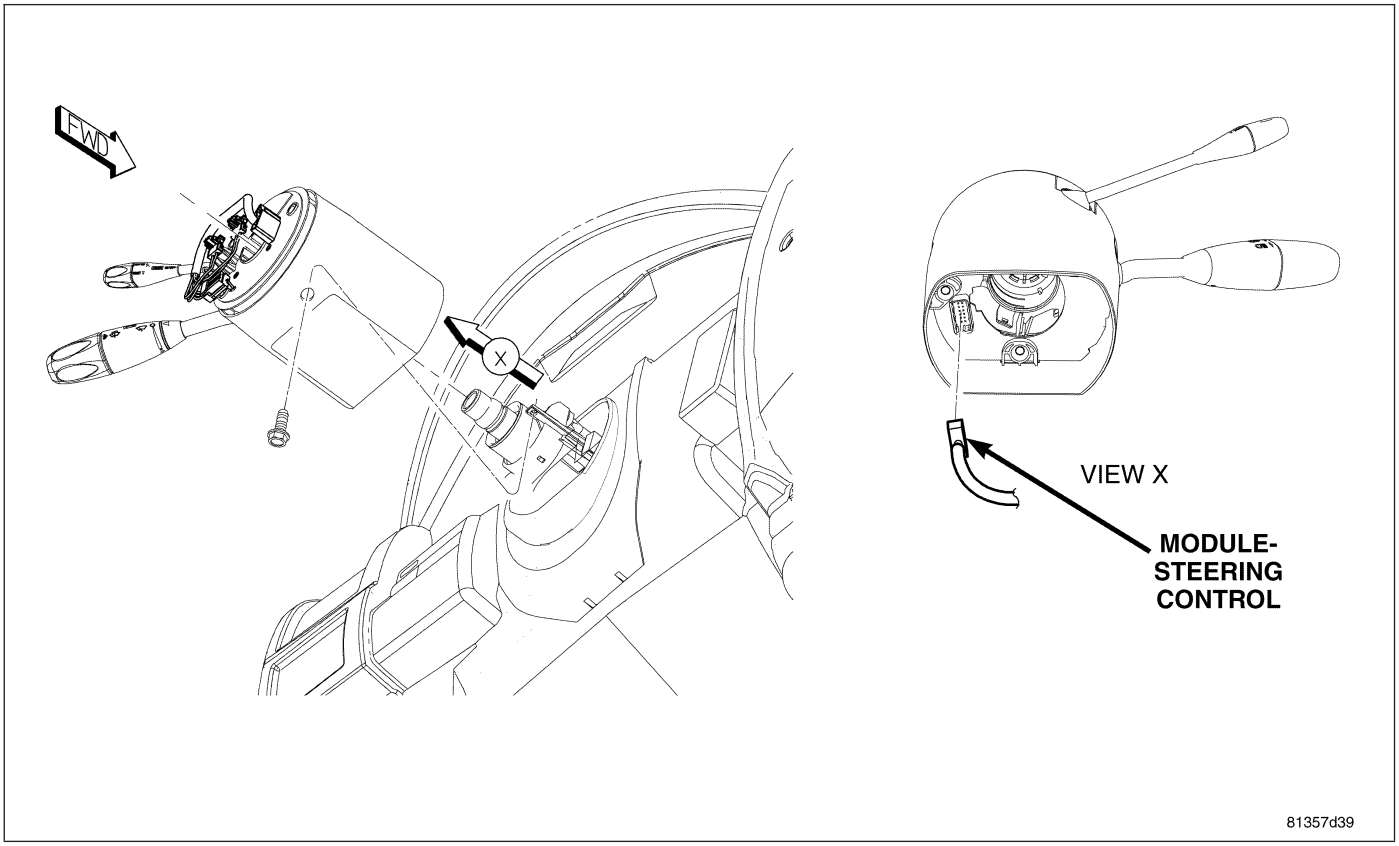

Fig. 41 MULTIFUNCTION SWITCHES

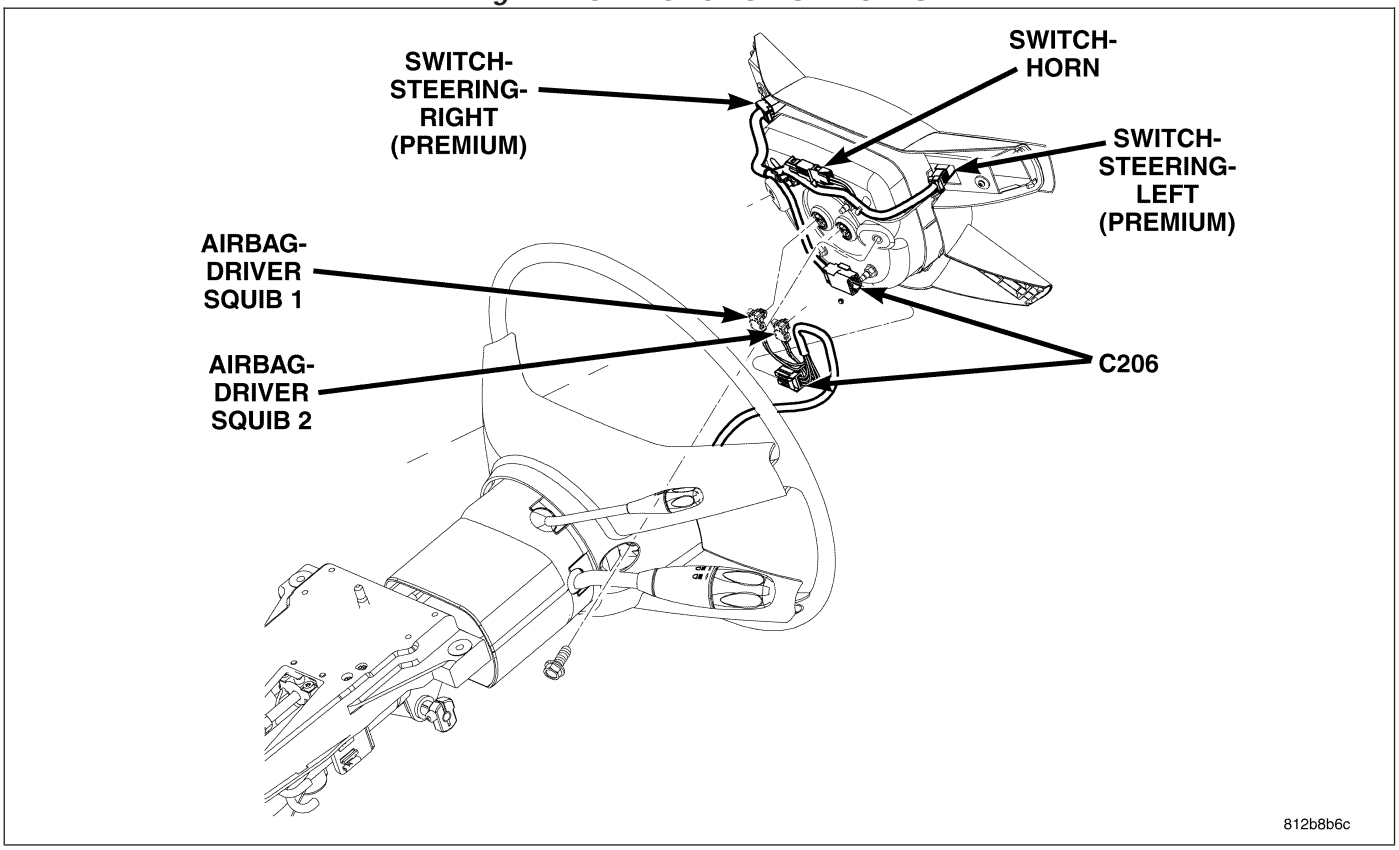

Fig. 42 HORN PAD SWITCHES

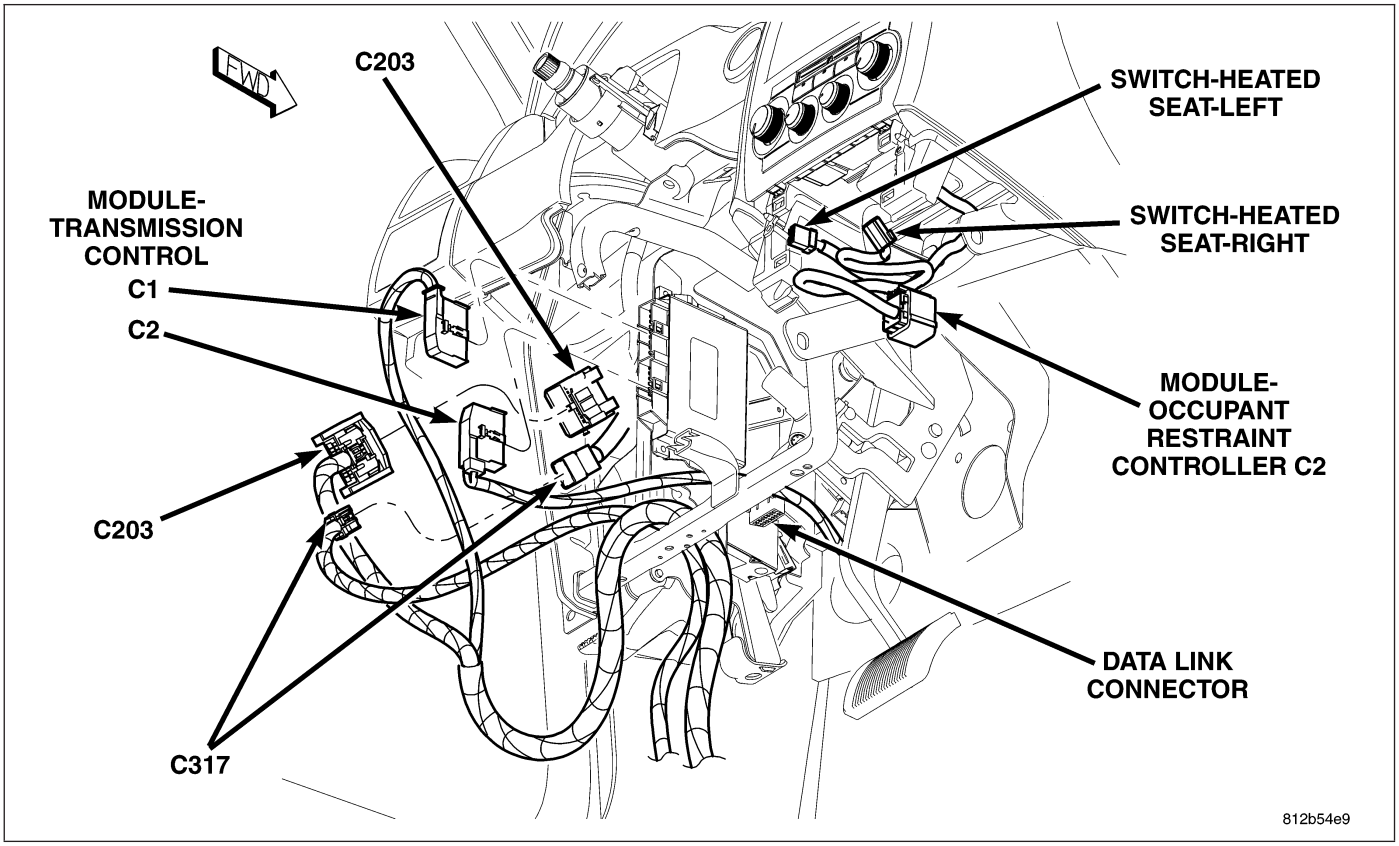

Fig. 43 INSTRUMENT PANEL LEFT

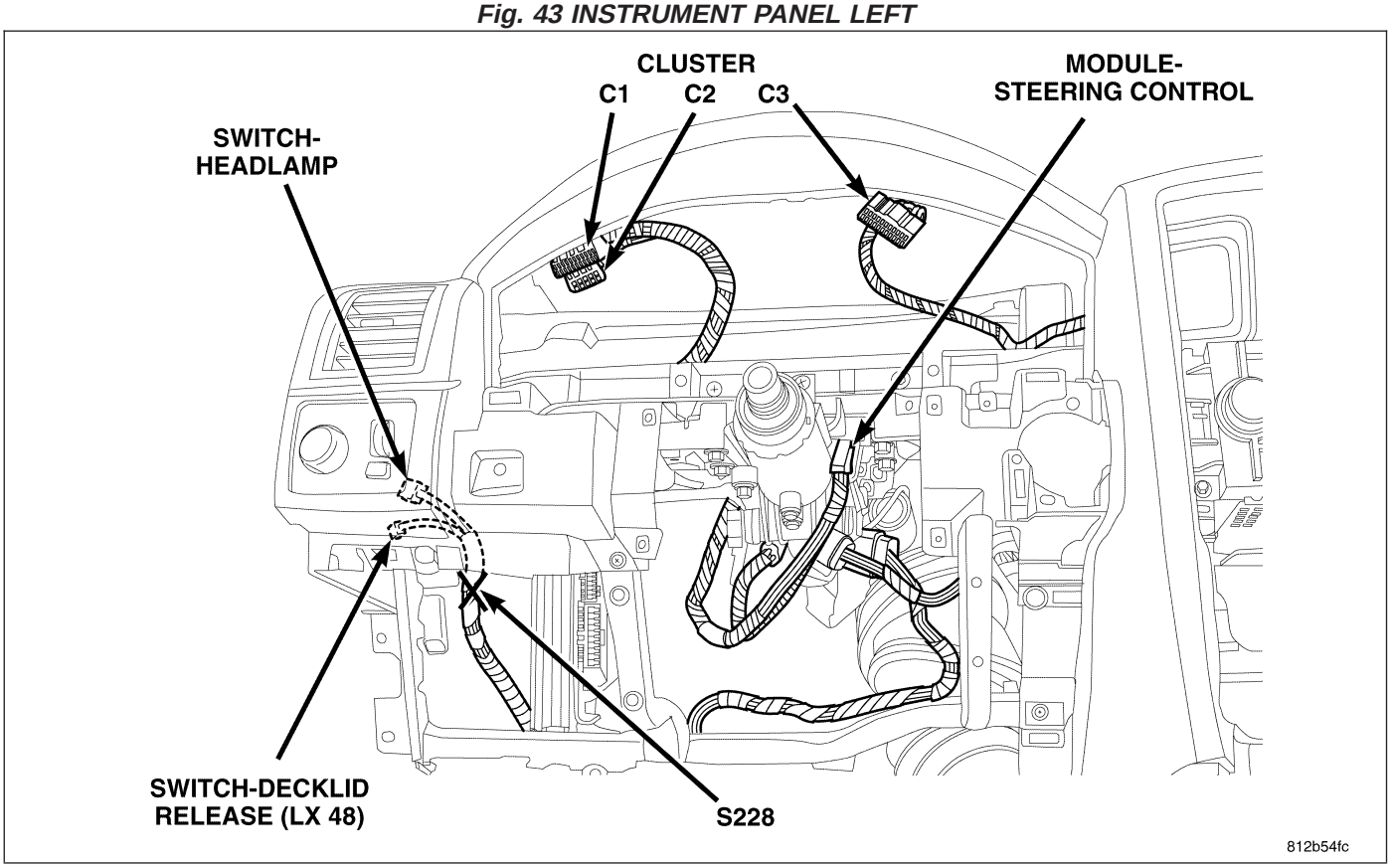

Fig. 44 INSTRUMENT PANEL - COLUMN

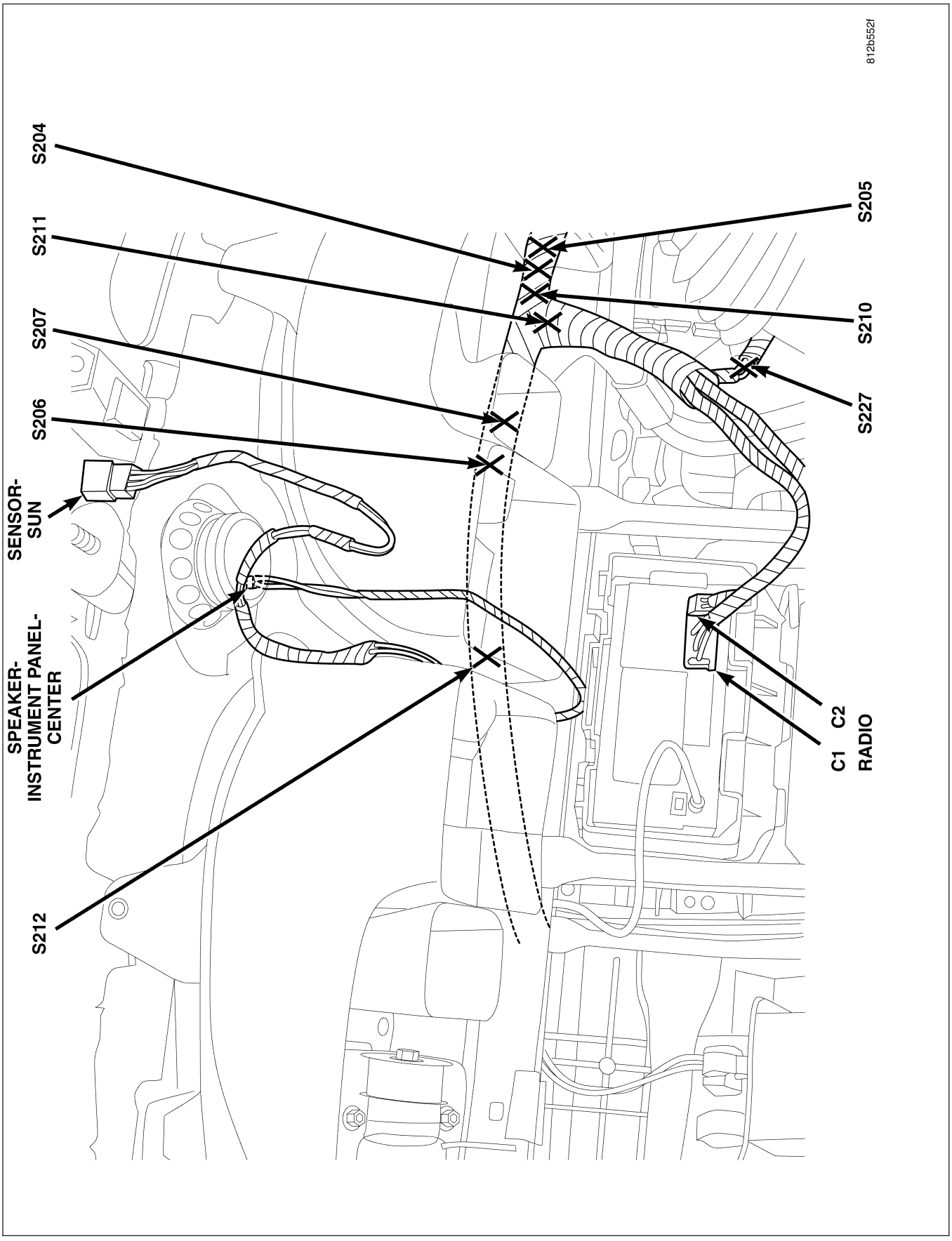

Fig. 45 INSTRUMENT PANEL CENTER FRONT (LHD)

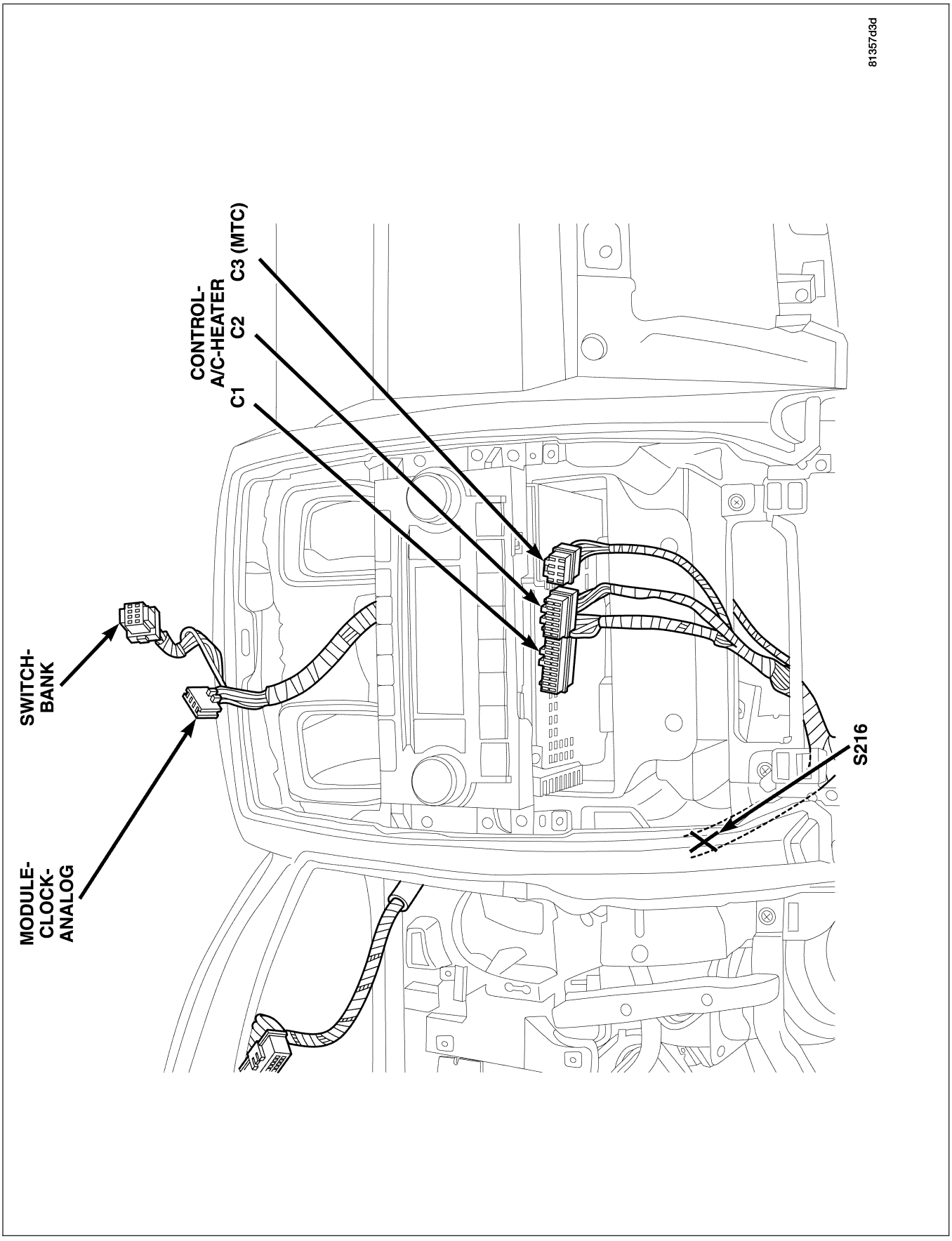

Fig. 46 INSTRUMENT PANEL CENTER STACK

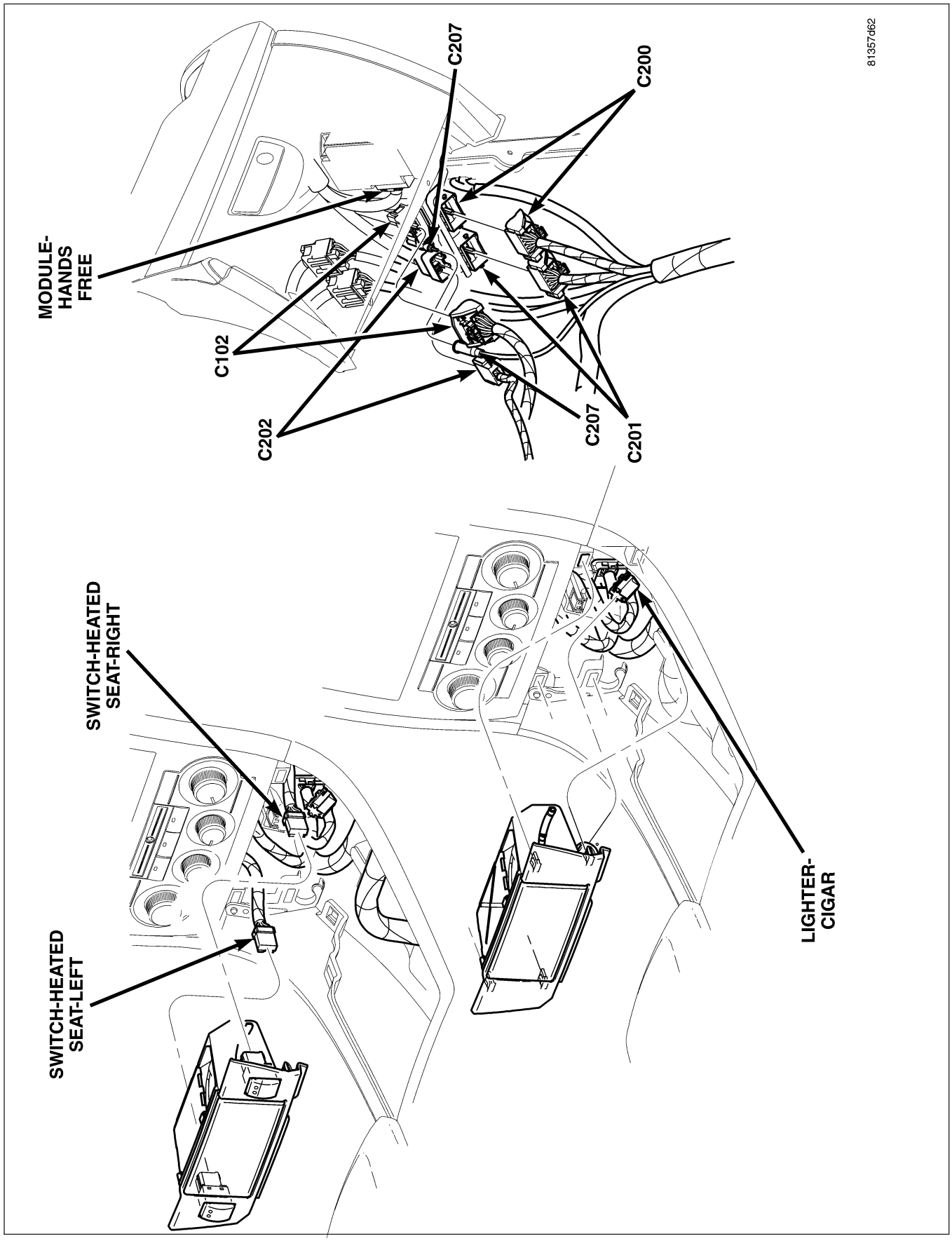

Fig. 47 INSTRUMENT PANEL CENTER AND RIGHT

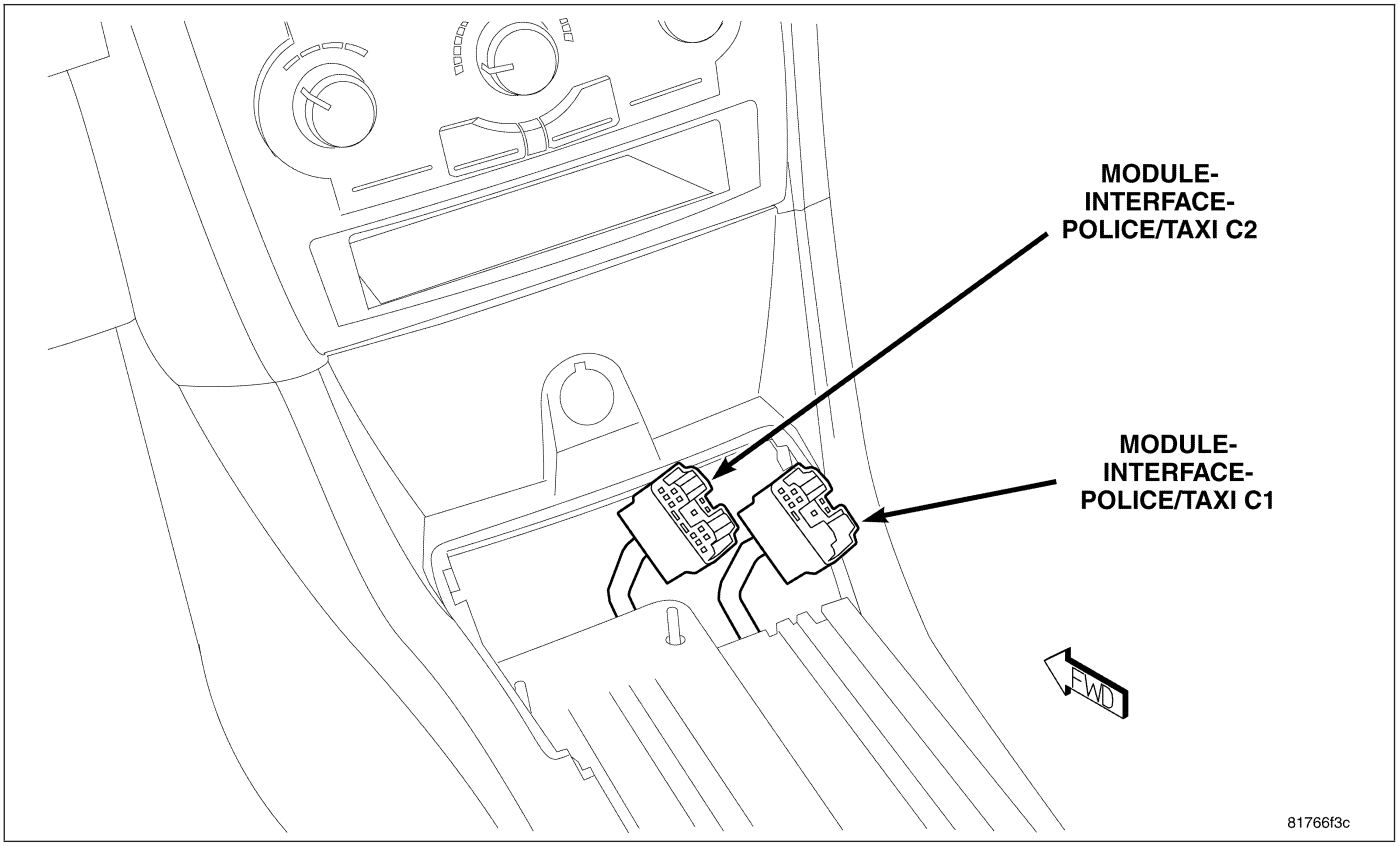

Fig. 48 POLICE/TAXI INTERFACE MODULE (LHD)

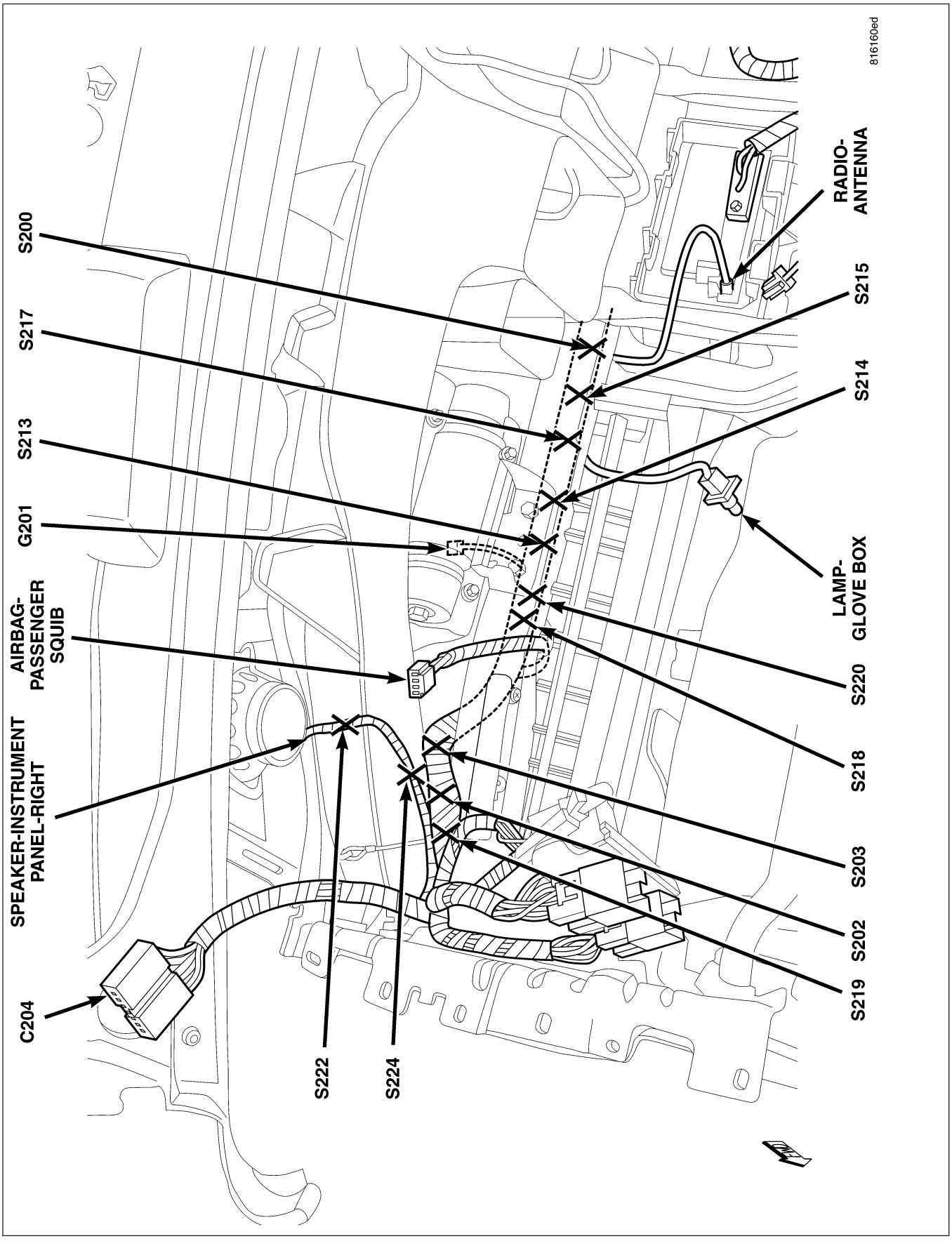

Fig. 49 INSTRUMENT PANEL RIGHT

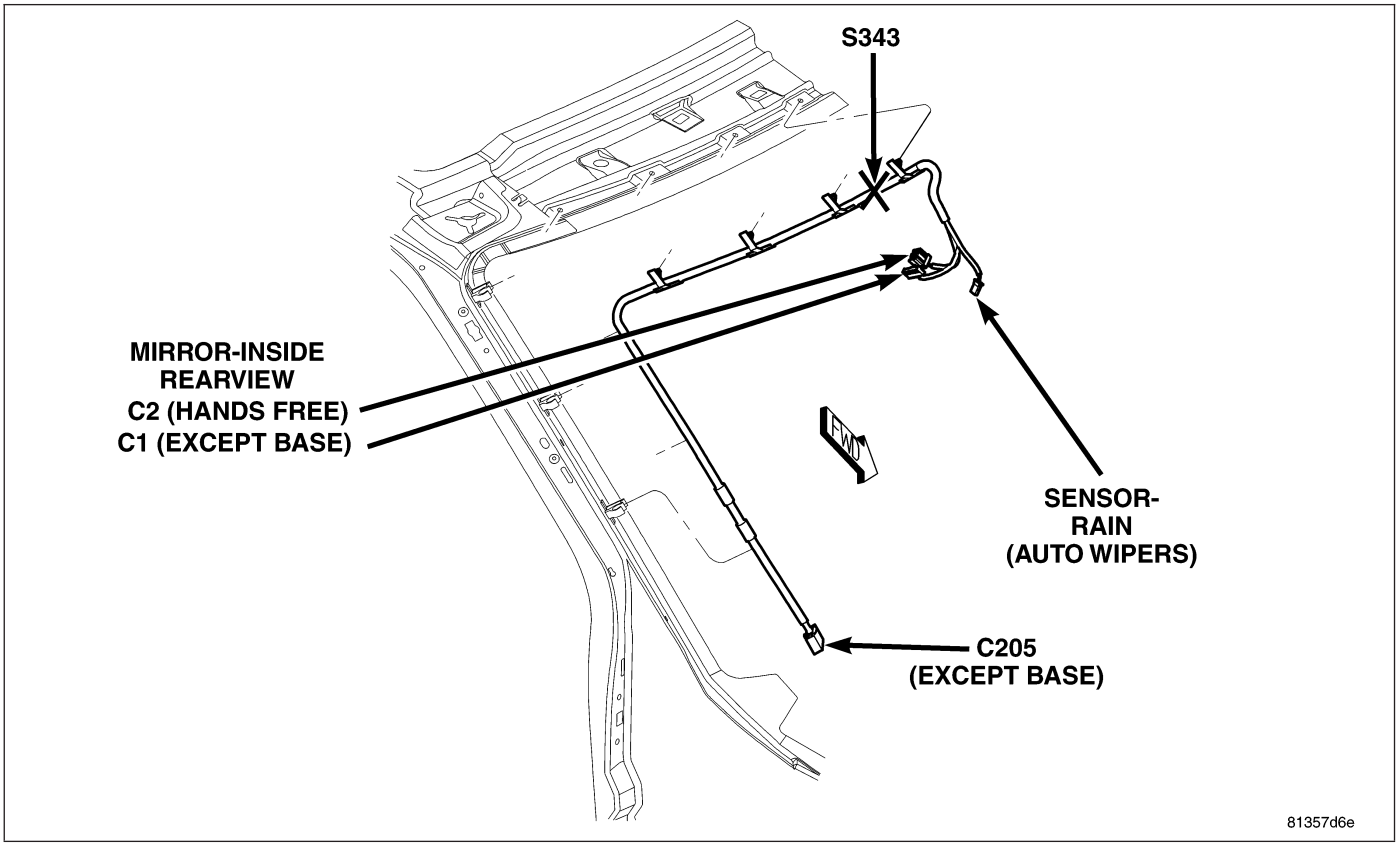

Fig. 50 LEFT A-PILLAR

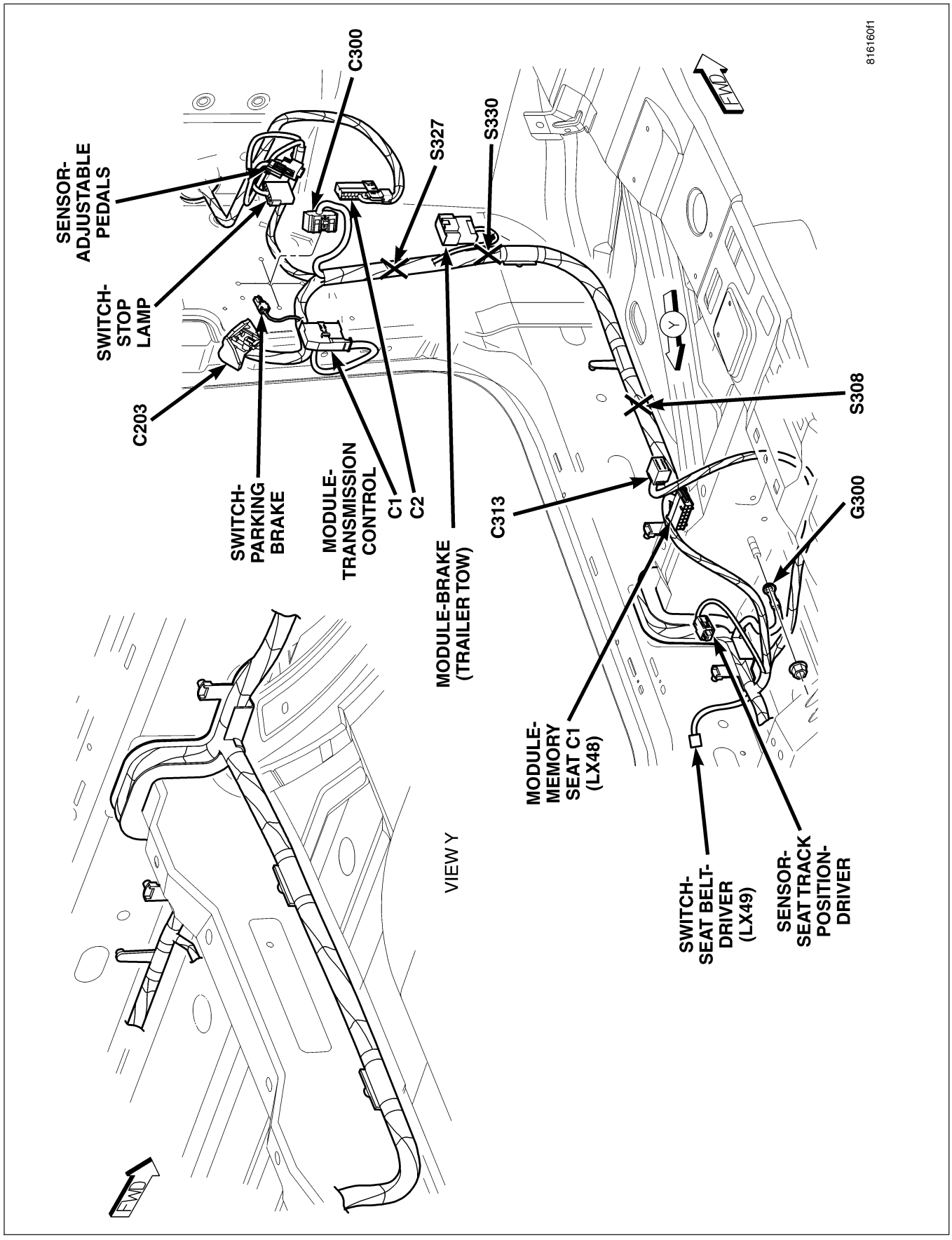

Fig. 51 BODY LEFT FRONT (LHD)

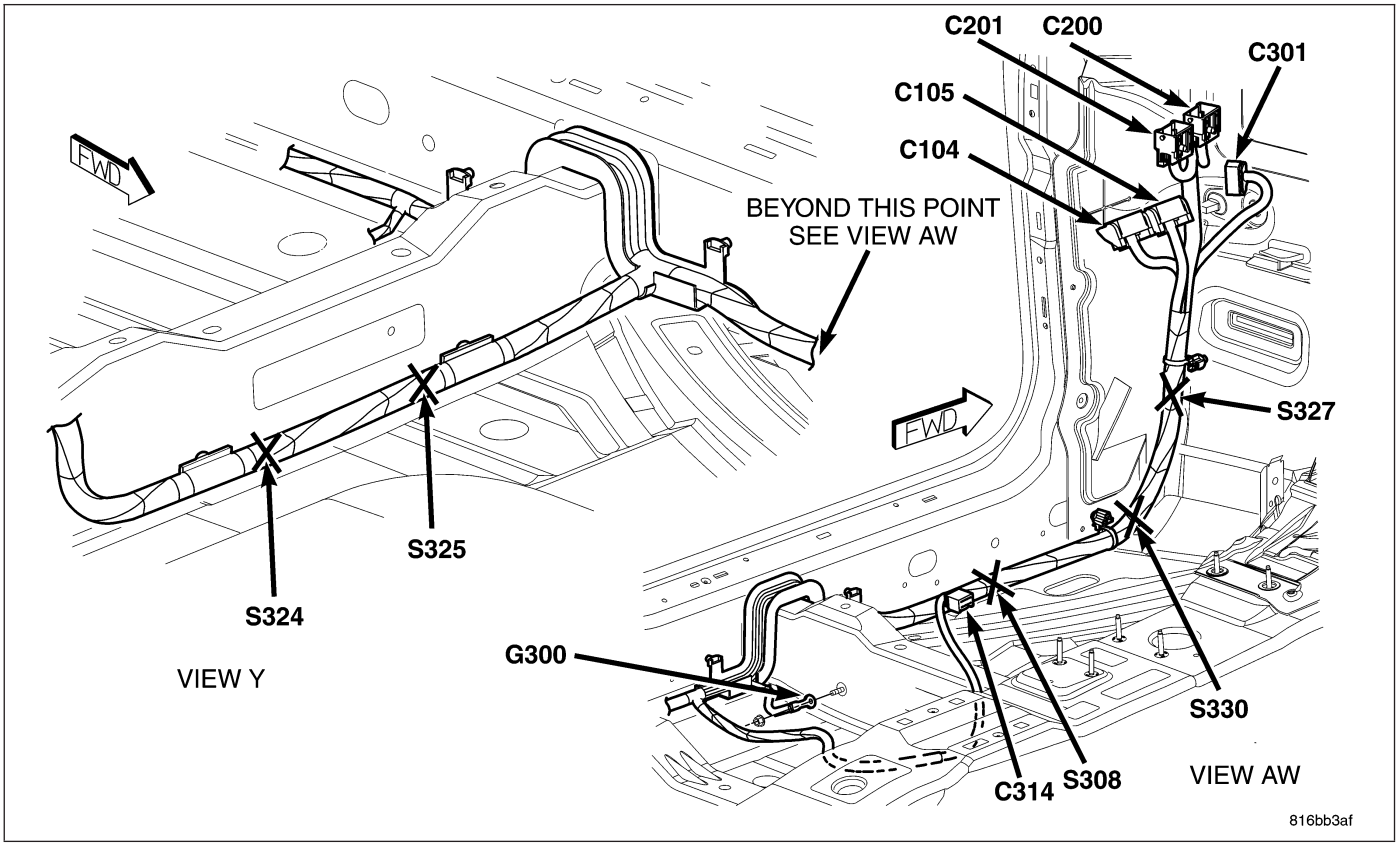

Fig. 52 BODY LEFT FRONT (RHD)

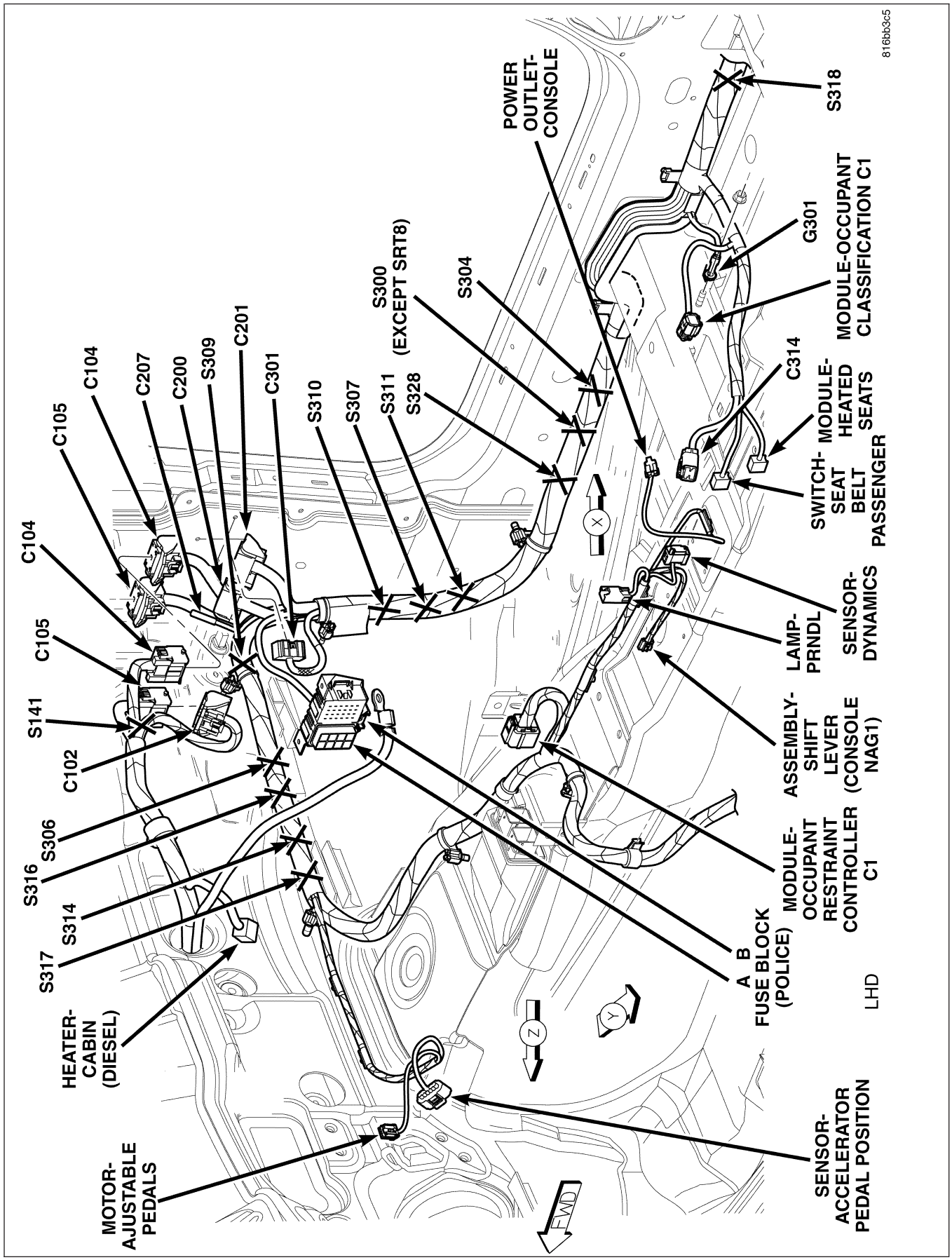

Fig. 53 BODY RIGHT FRONT (LHD)

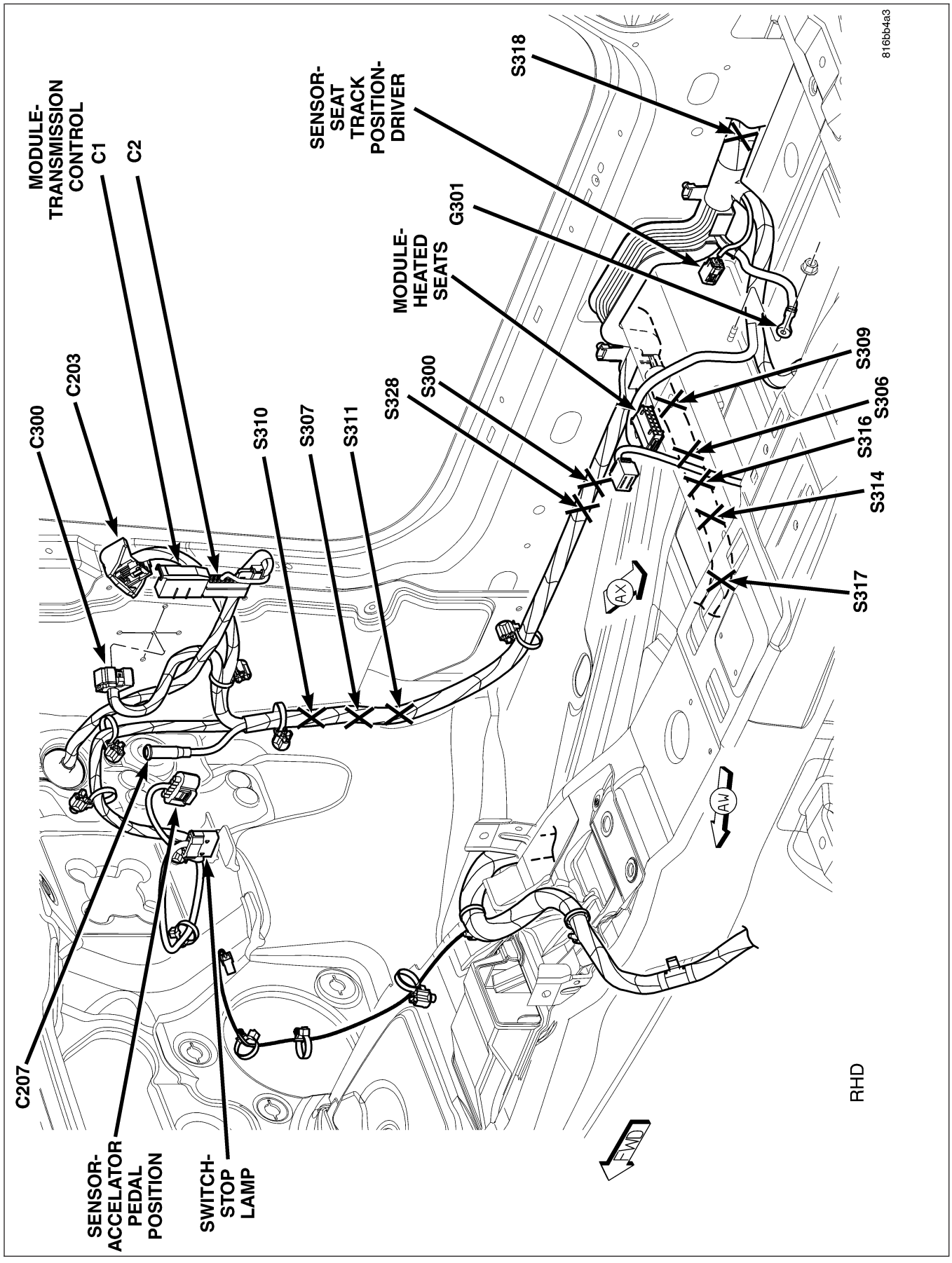

Fig. 54 BODY RIGHT FRONT

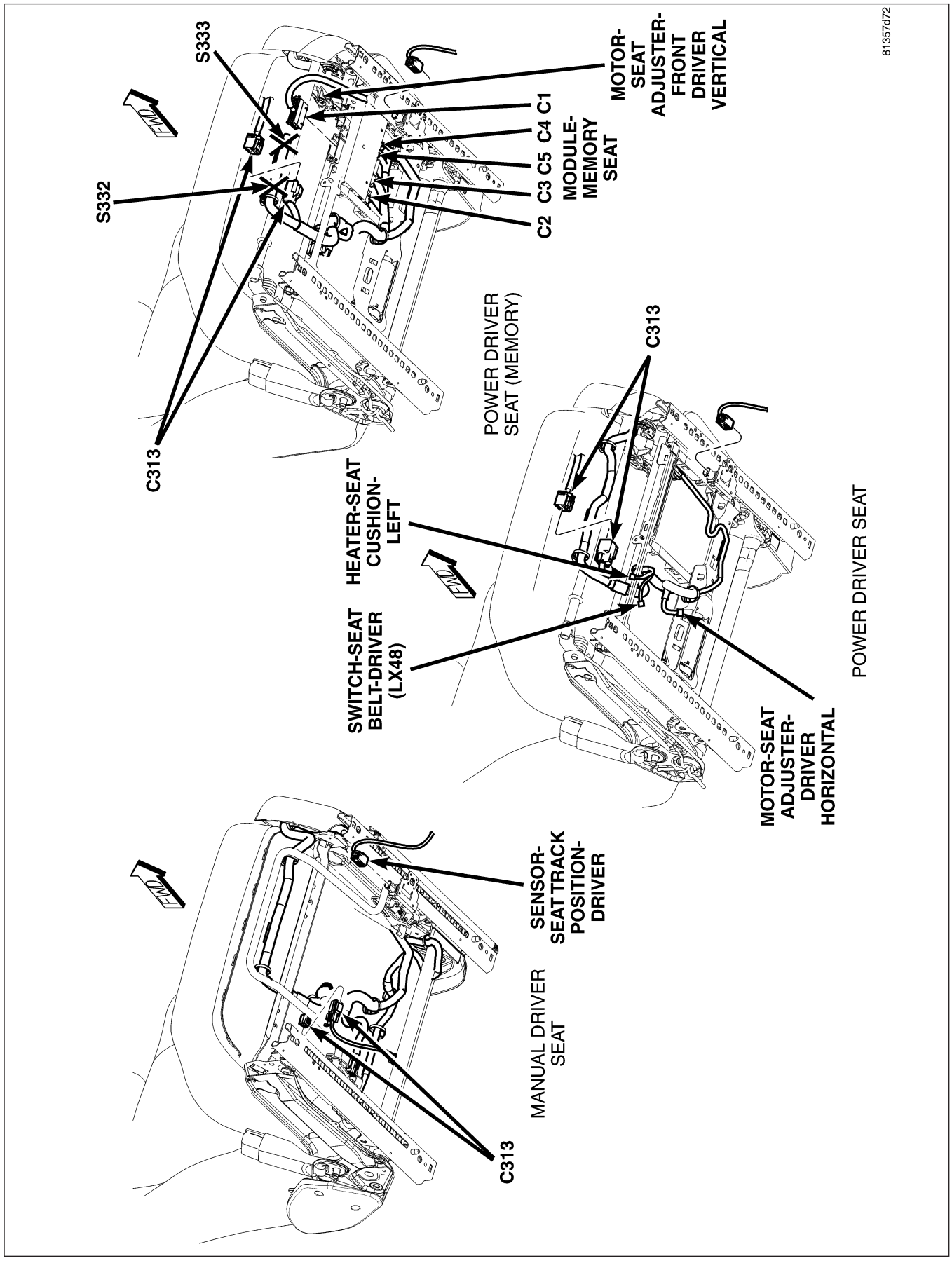

Fig. 55 DRIVER SEAT

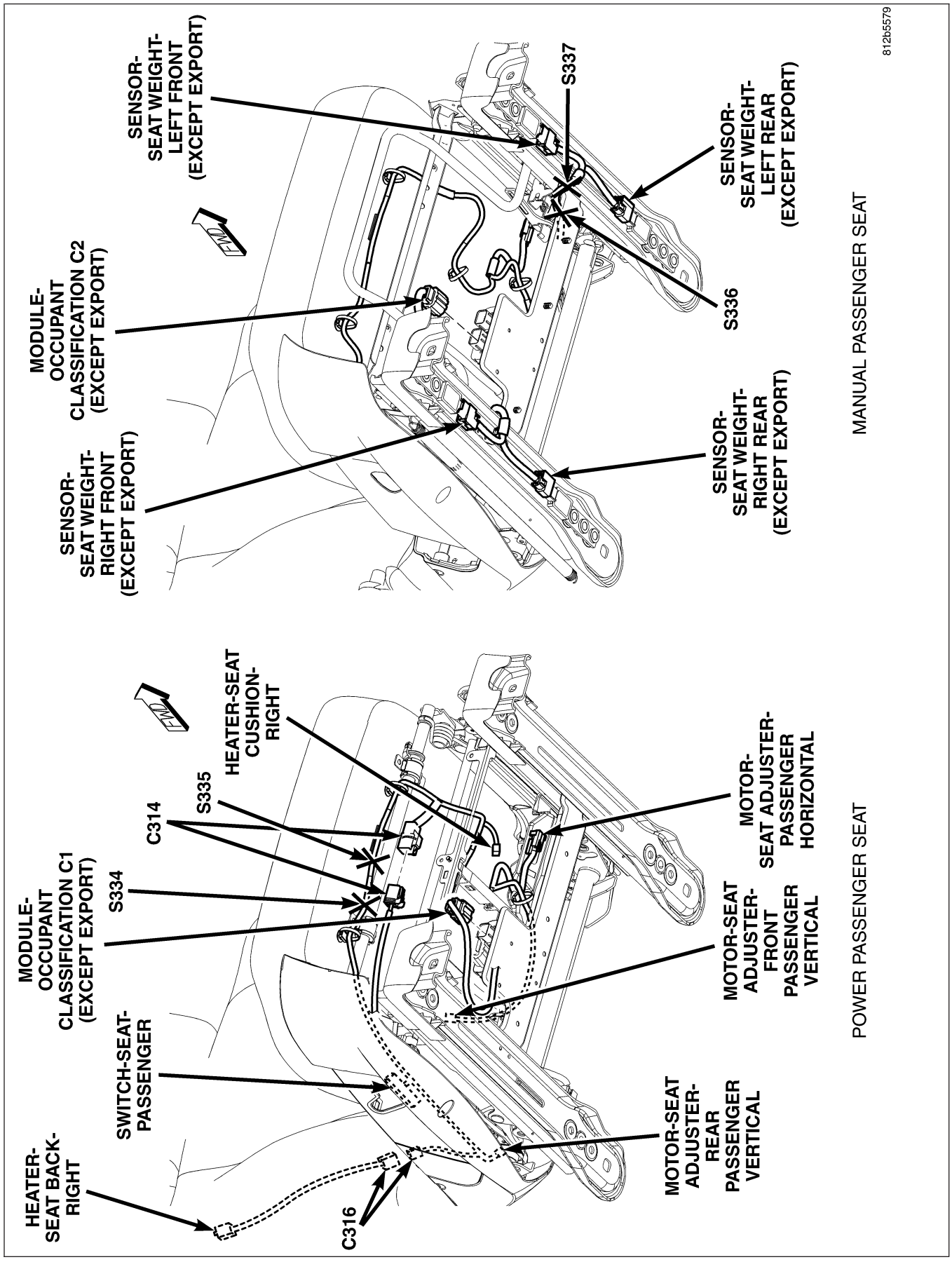

Fig. 56 PASSENGER SEAT

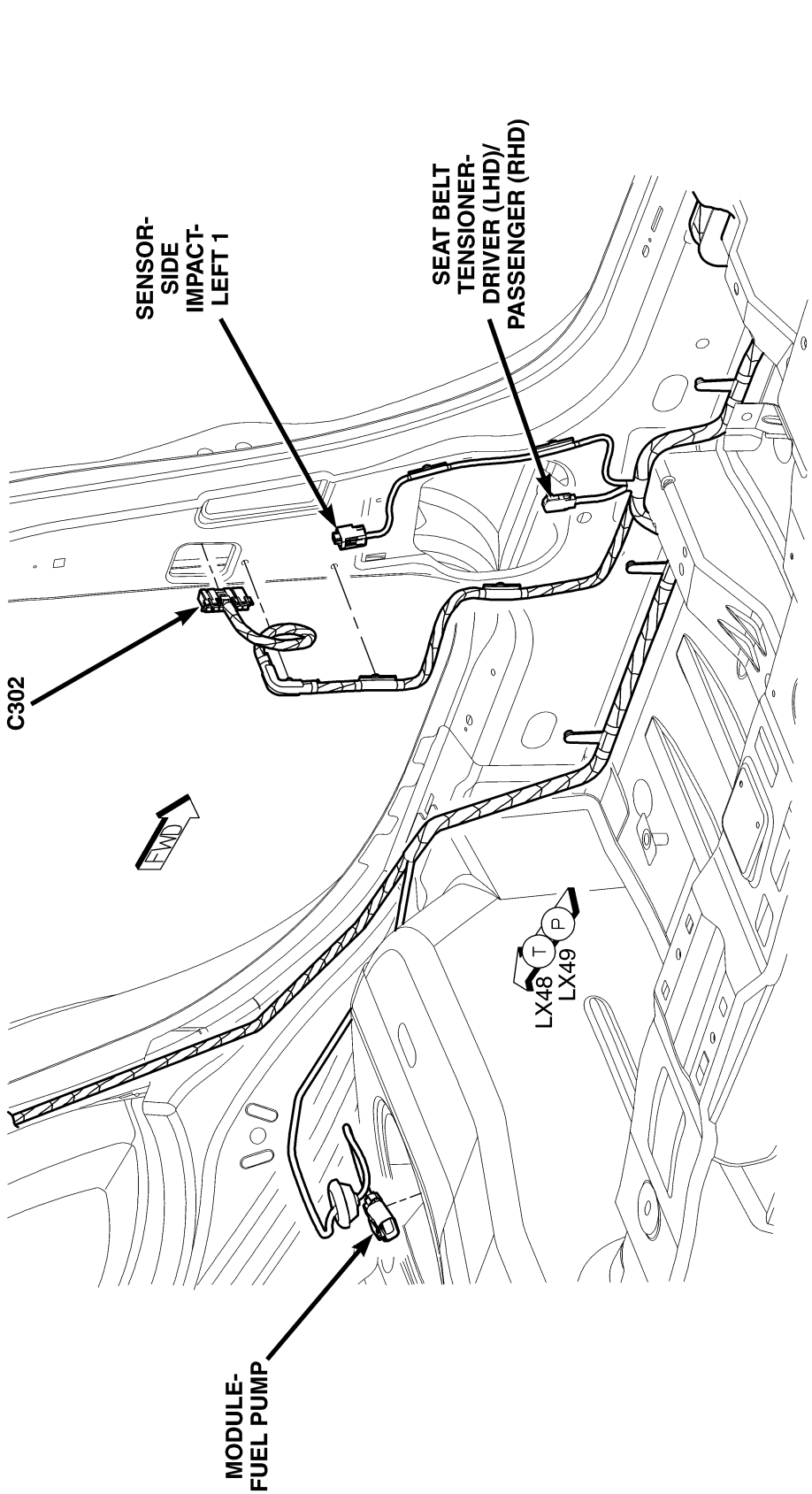

Fig. 57 BODY LEFT SIDE

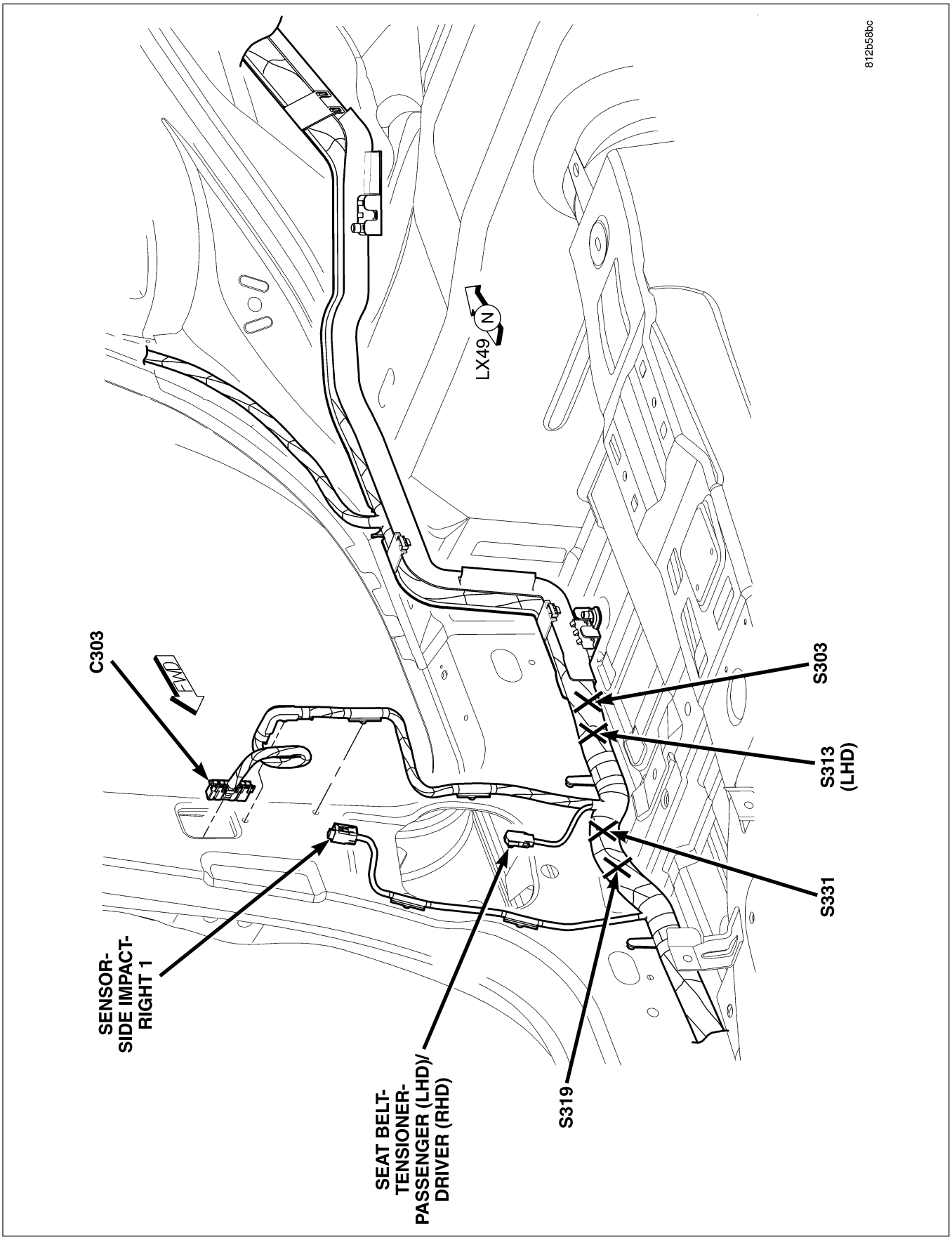

Fig. 58 BODY RIGHT SIDE

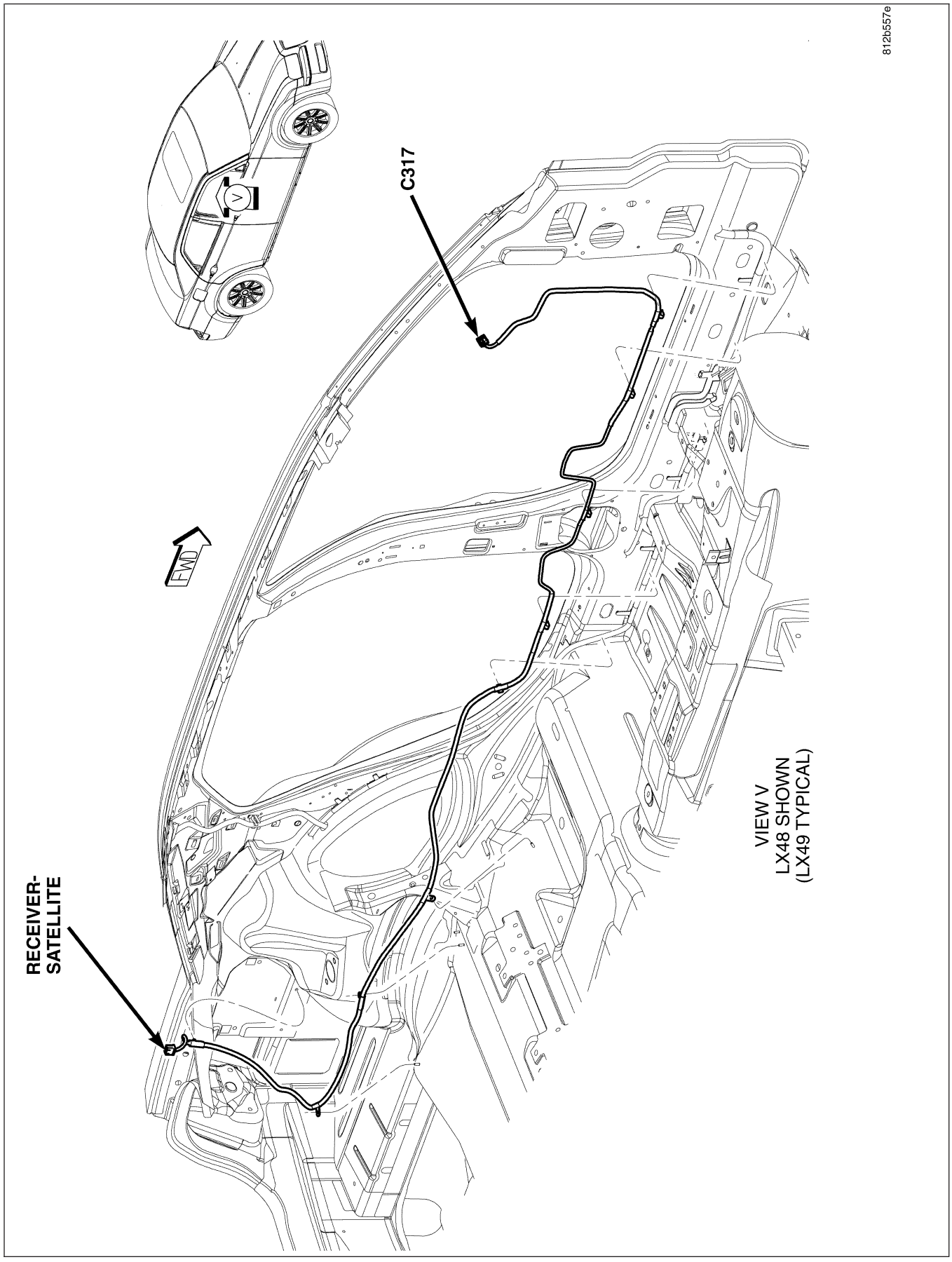

Fig. 59 SATELLITE RADIO JUMPER

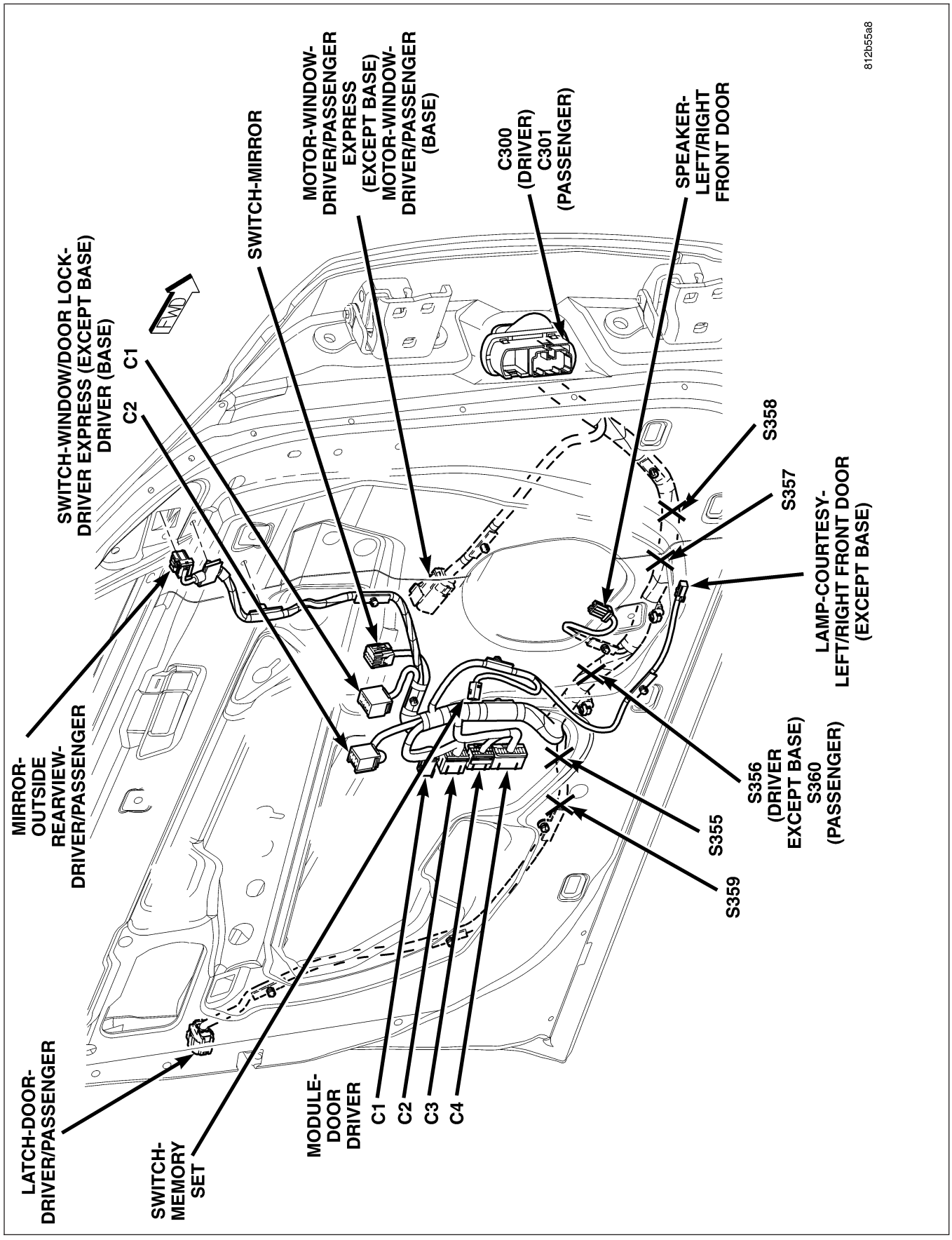

Fig. 60 LEFT FRONT DOOR (RIGHT SIMILAR)

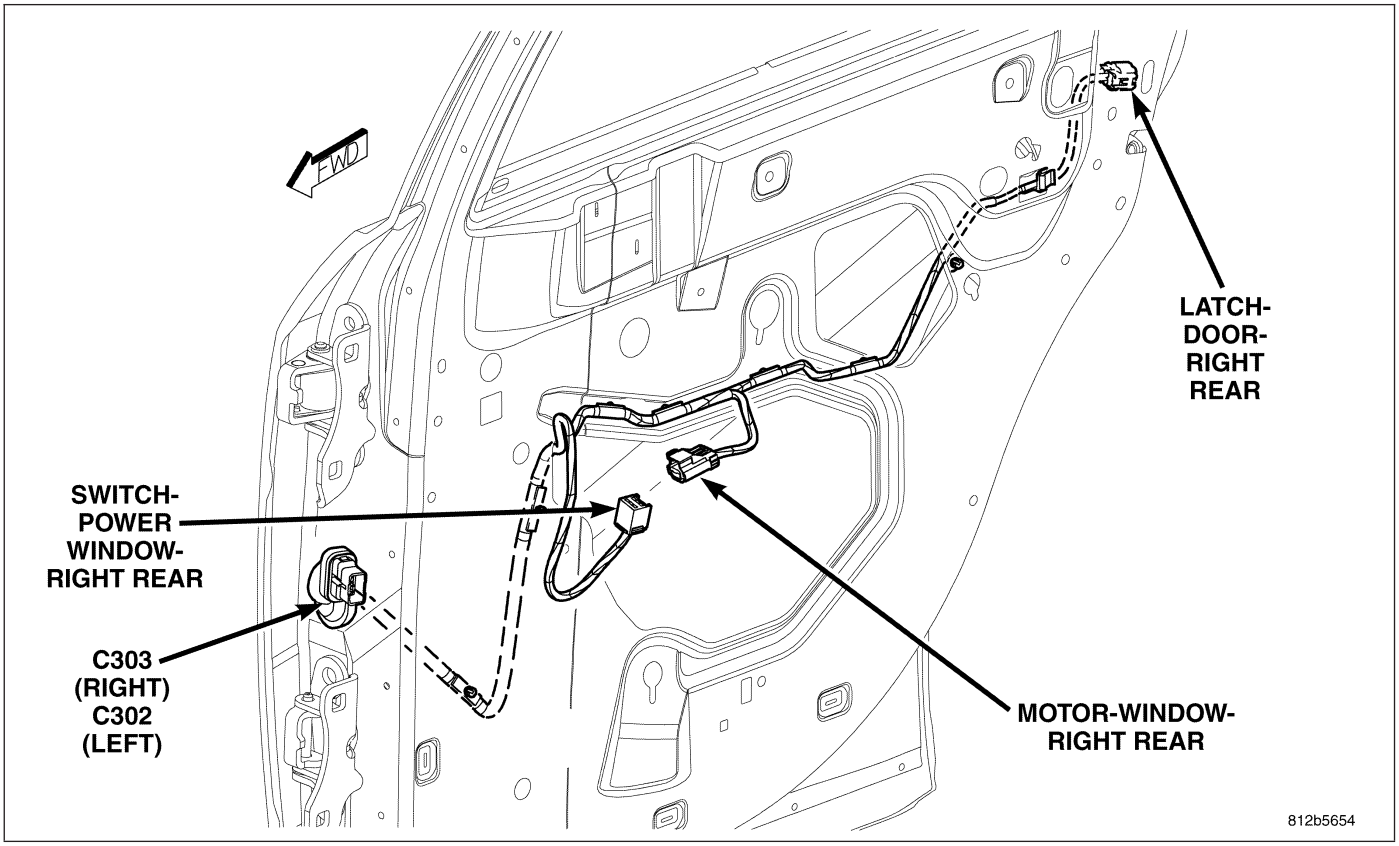

Fig. 61 RIGHT REAR DOOR (LEFT SIMILAR)

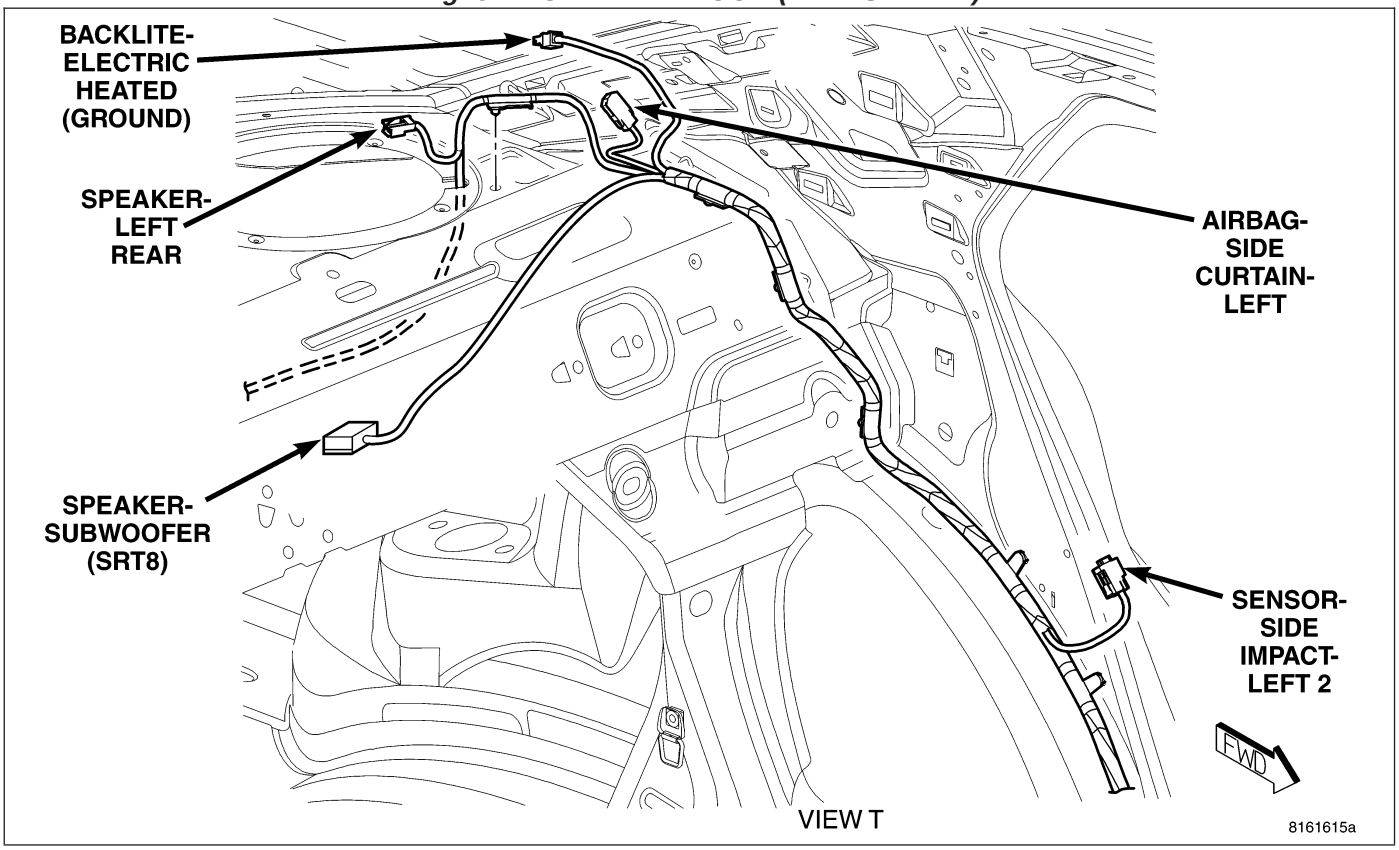

Fig. 62 LEFT REAR QUARTER (LX48)

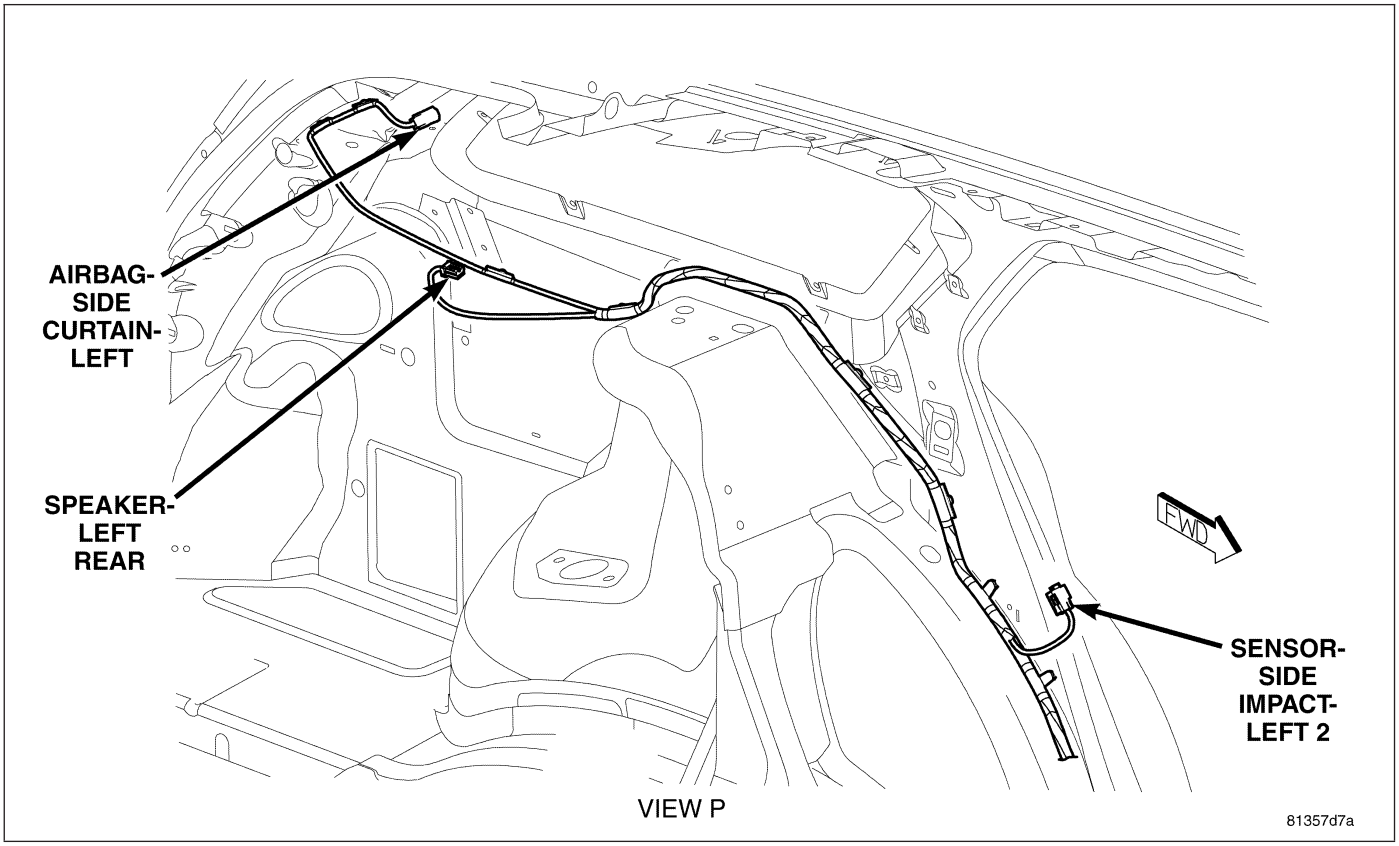

Fig. 63 BODY LEFT REAR QUARTER (LX49)

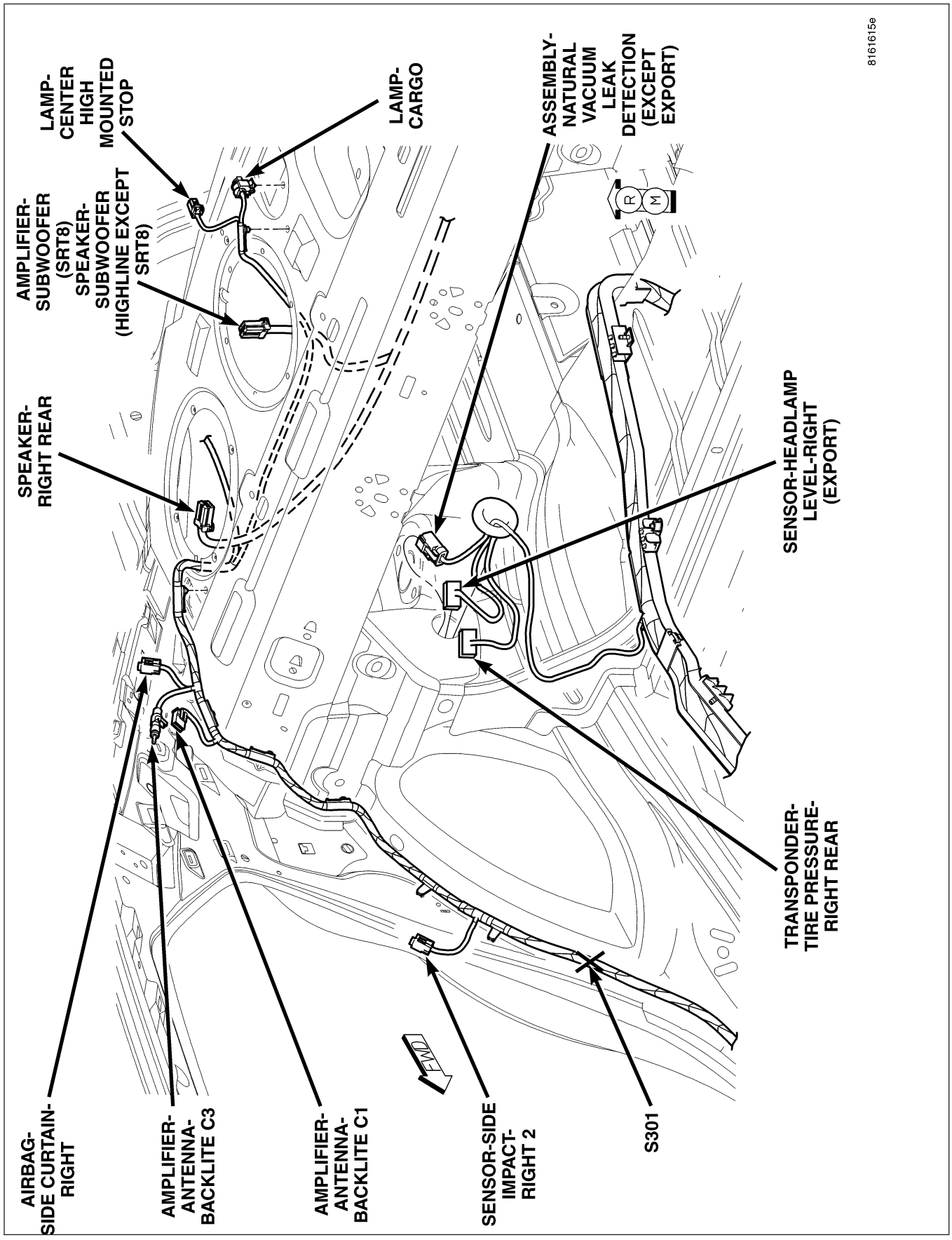

Fig. 64 BODY RIGHT REAR QUARTER (LX48)

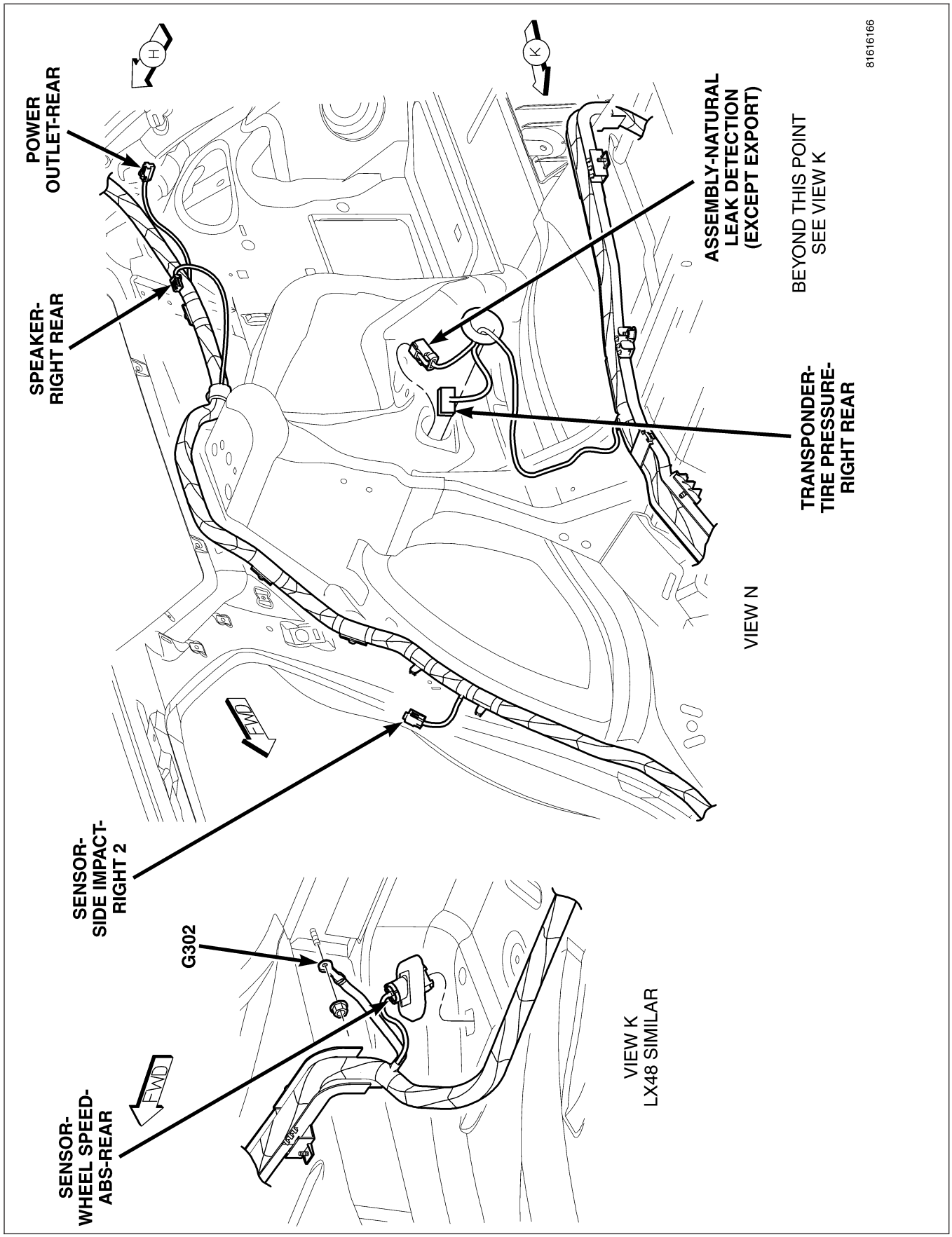

Fig. 65 BODY RIGHT REAR QUARTER (LX49)

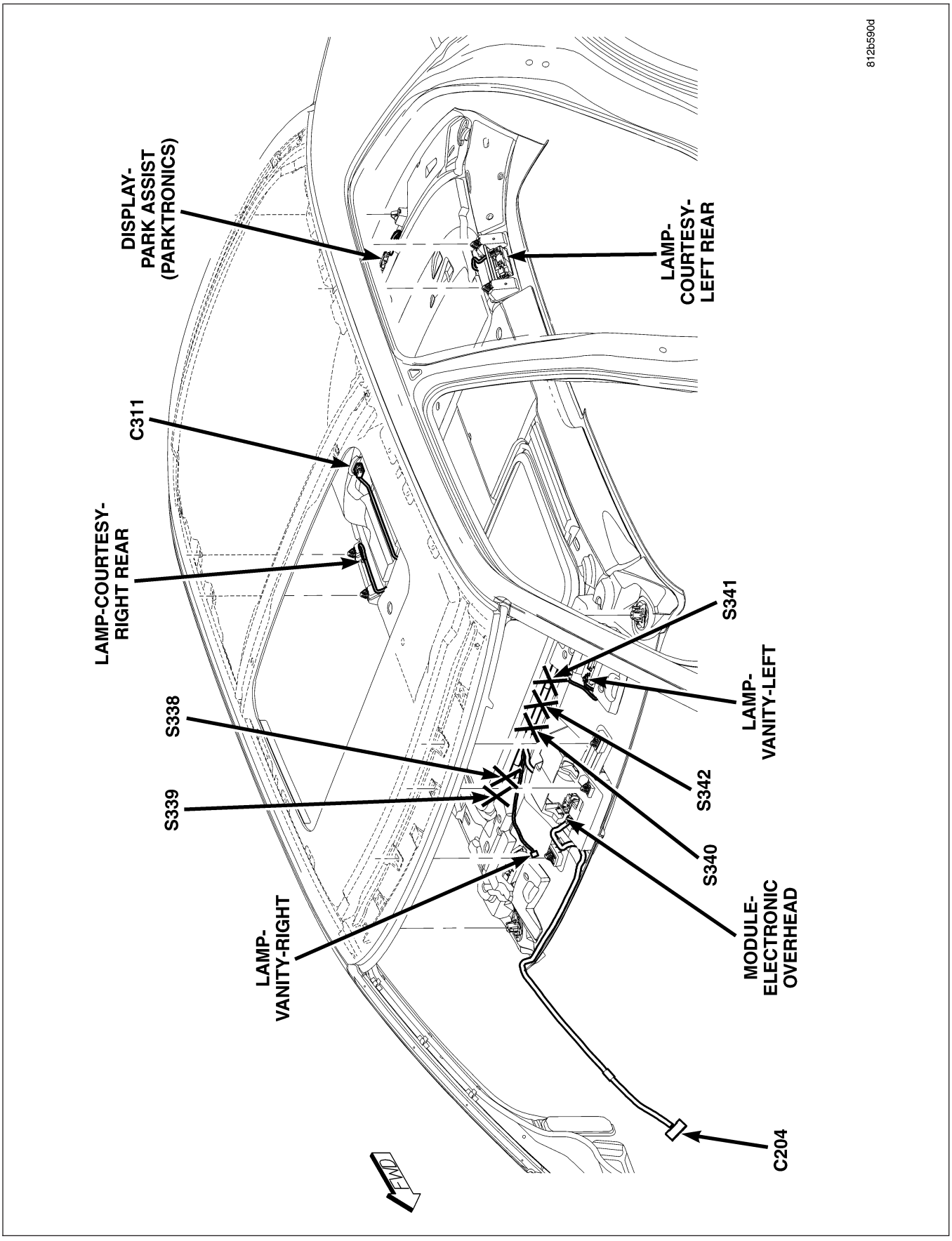

Fig. 66 HEADLINER

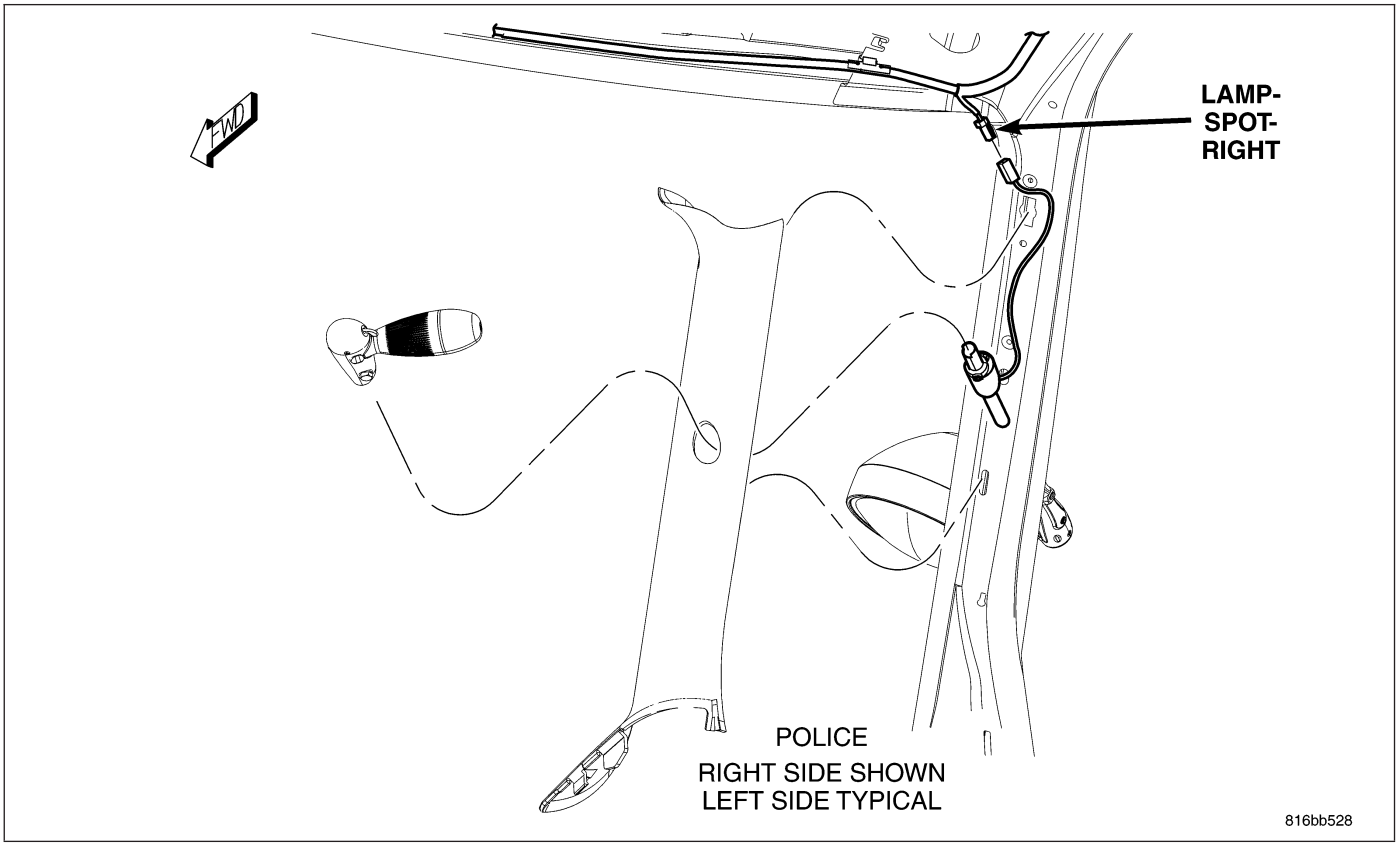

Fig. 67 HEADLINER

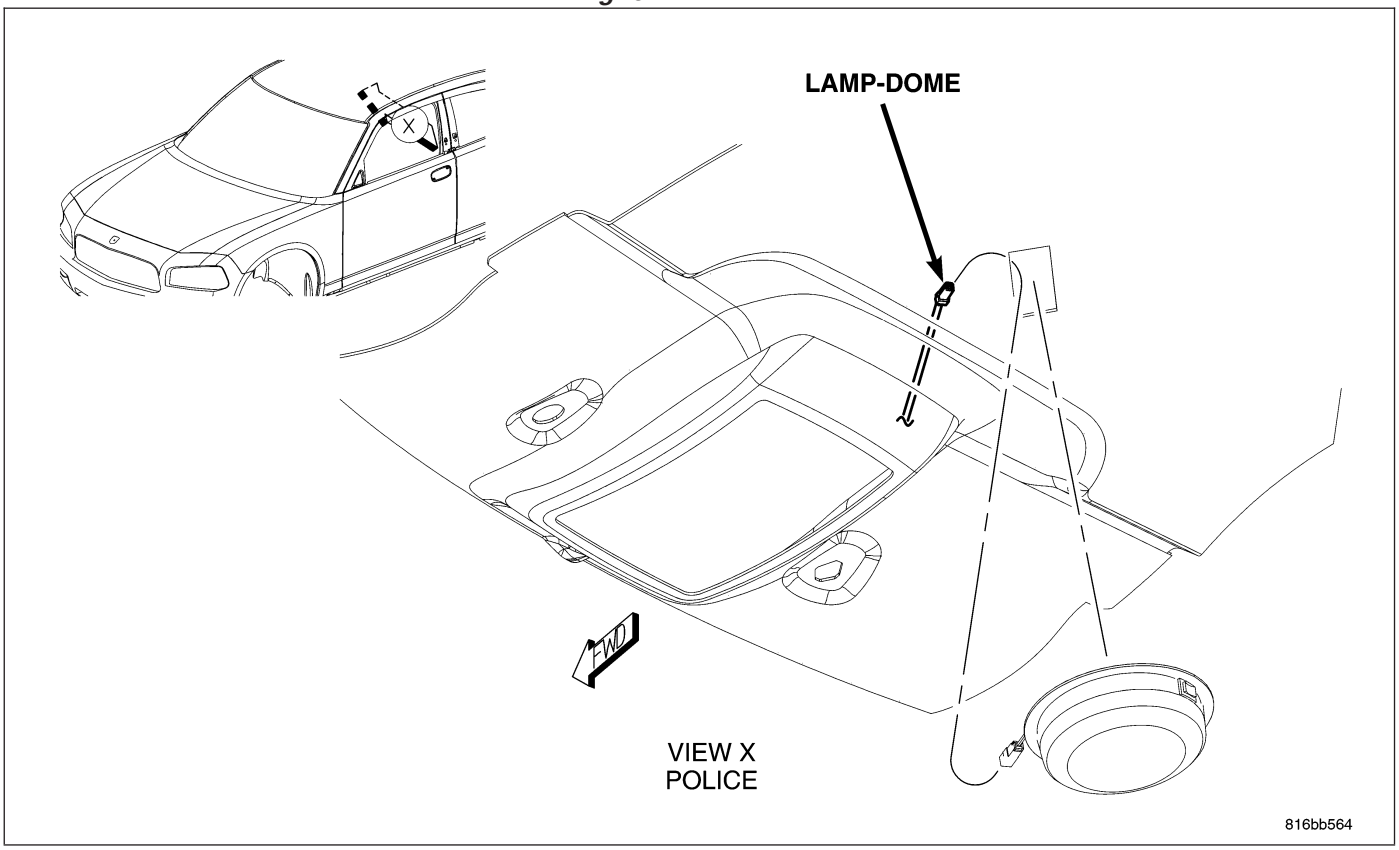

Fig. 68 CENTER HEADLINER

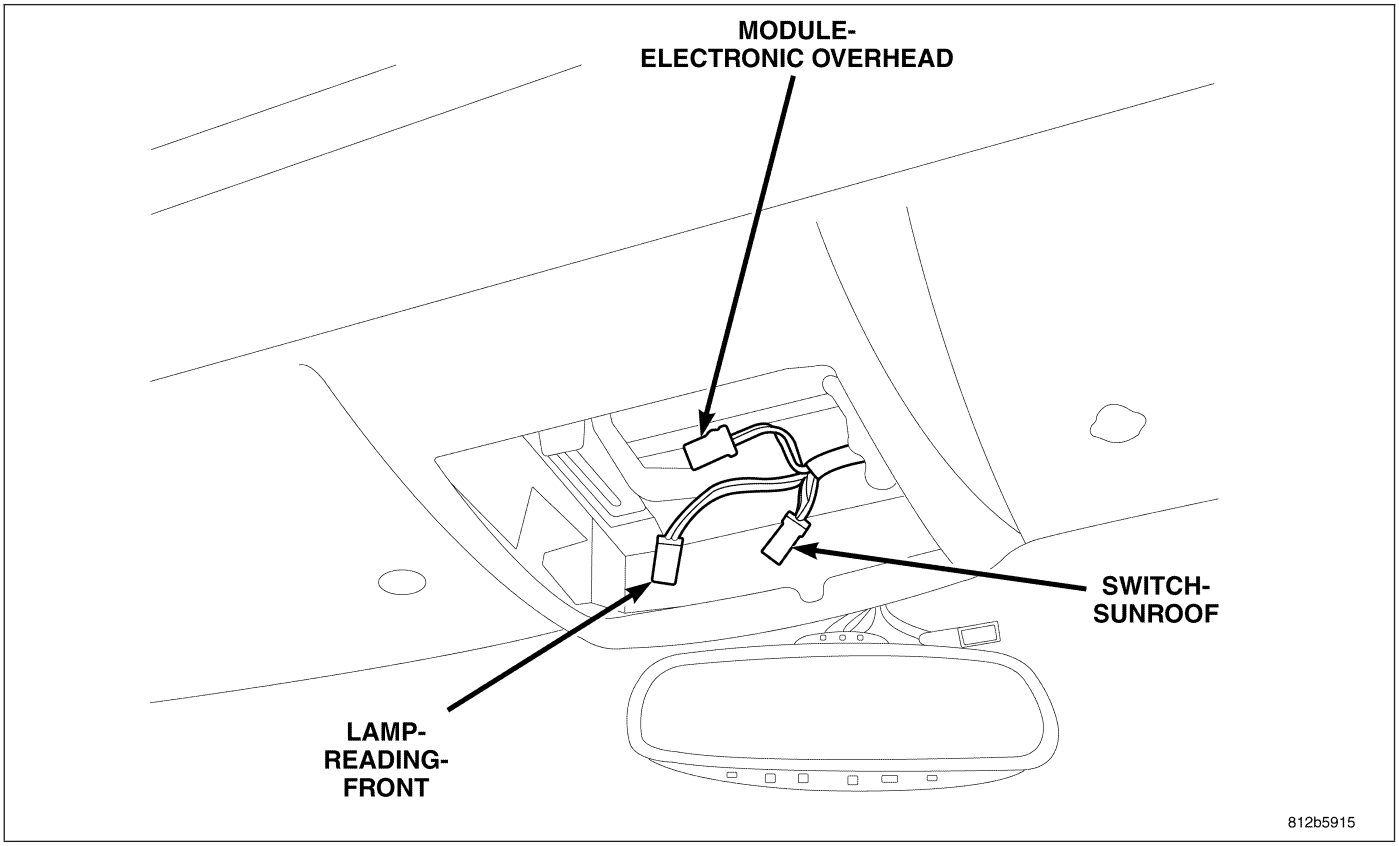

Fig. 69 OVERHEAD CONSOLE

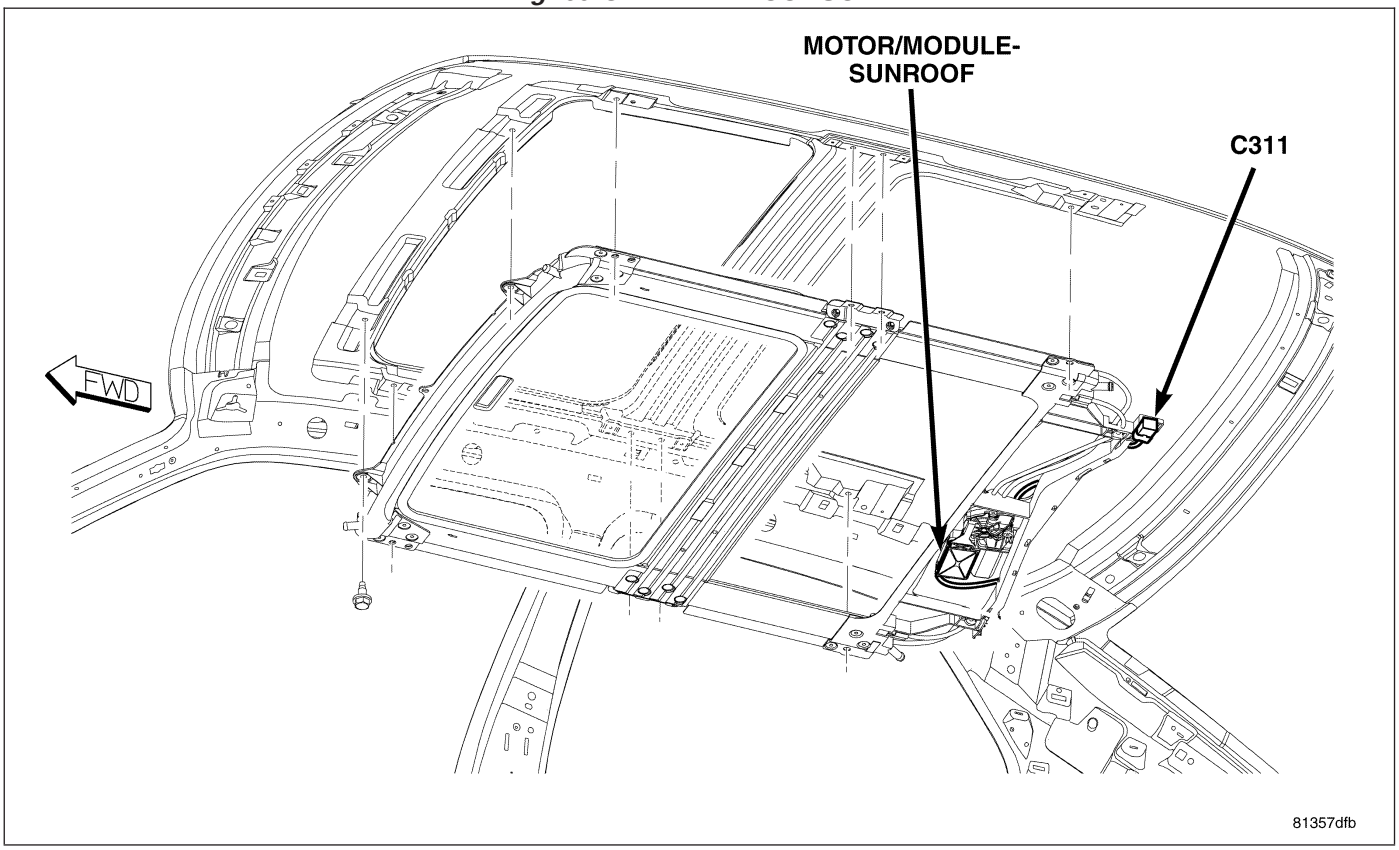

Fig. 70 SUNROOF

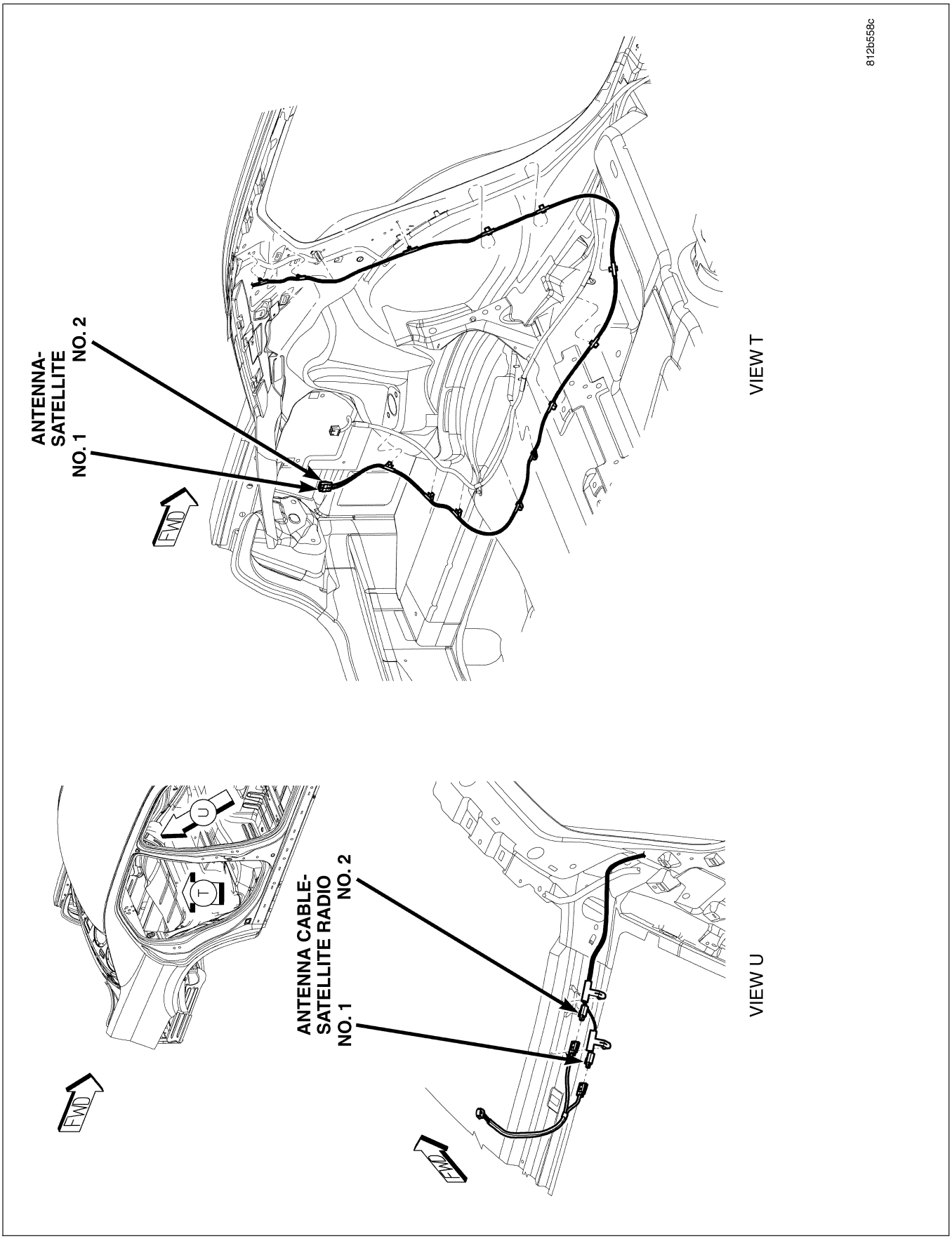

Fig. 71 SATELLITE RADIO ANTENNA CABLES (LX48)

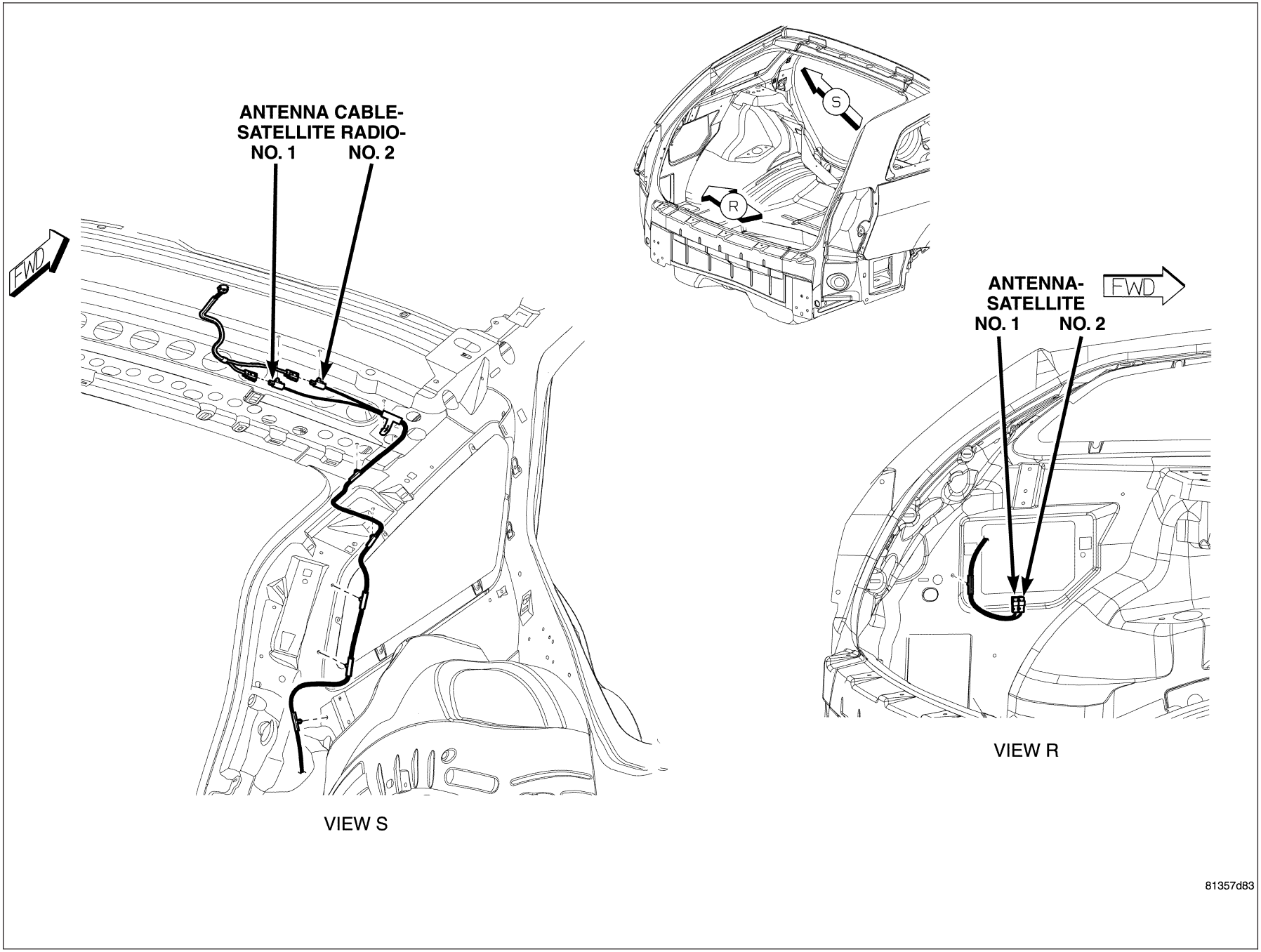

Fig. 72 SATELLITE RADIO ANTENNA CABLES (LX49)

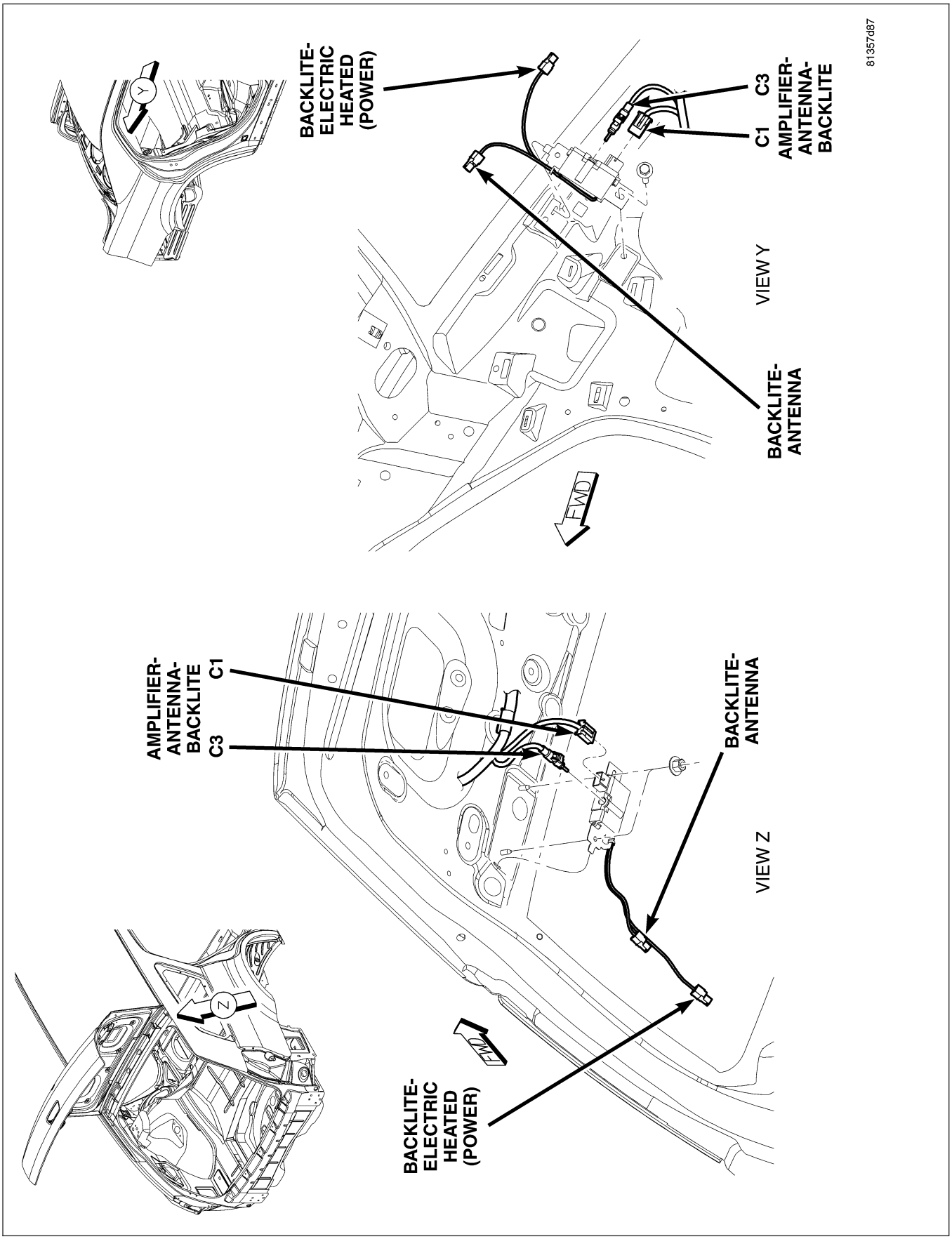

Fig. 73 BACKLITE

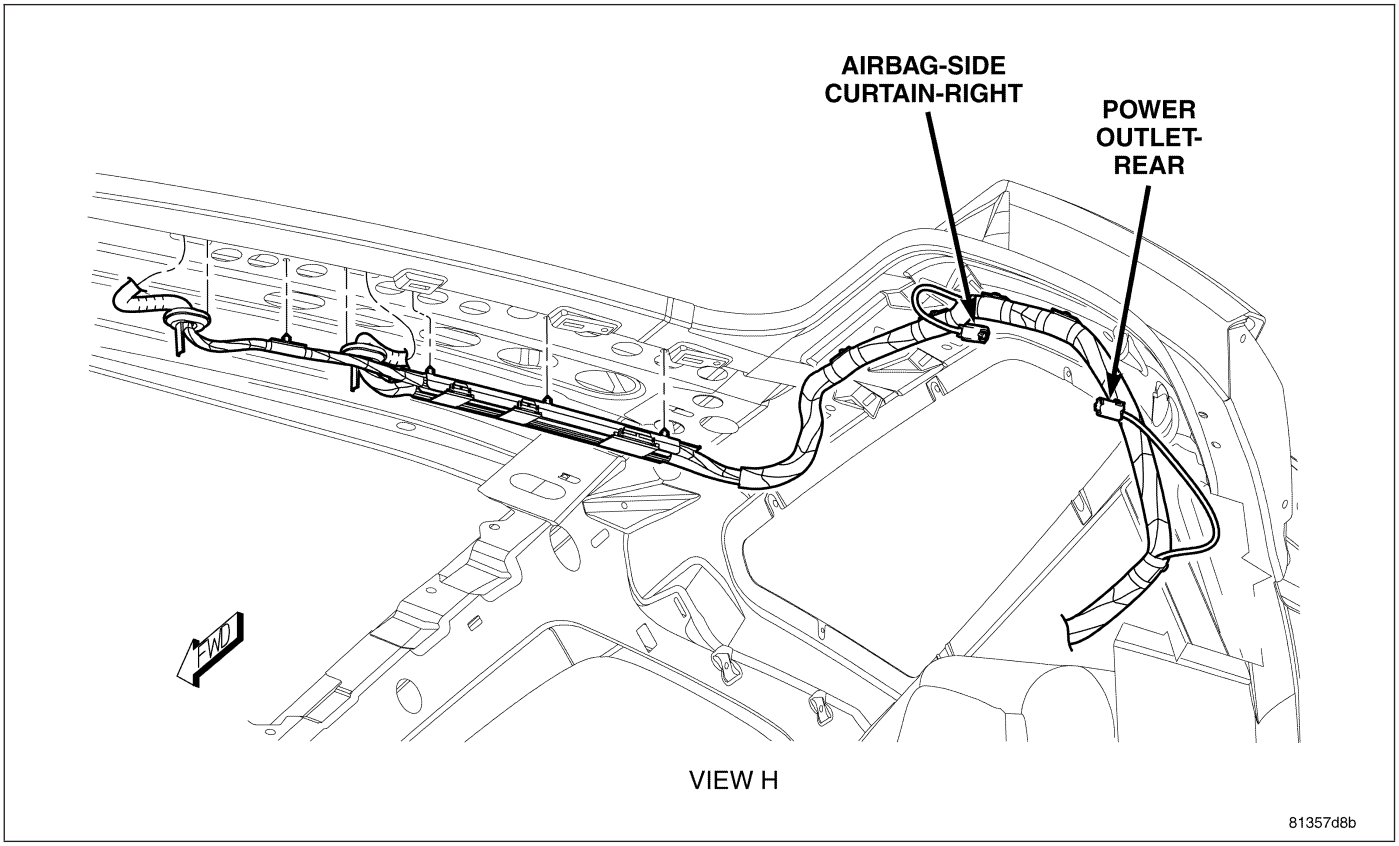

Fig. 74 REAR CARGO RIGHT (LX49)

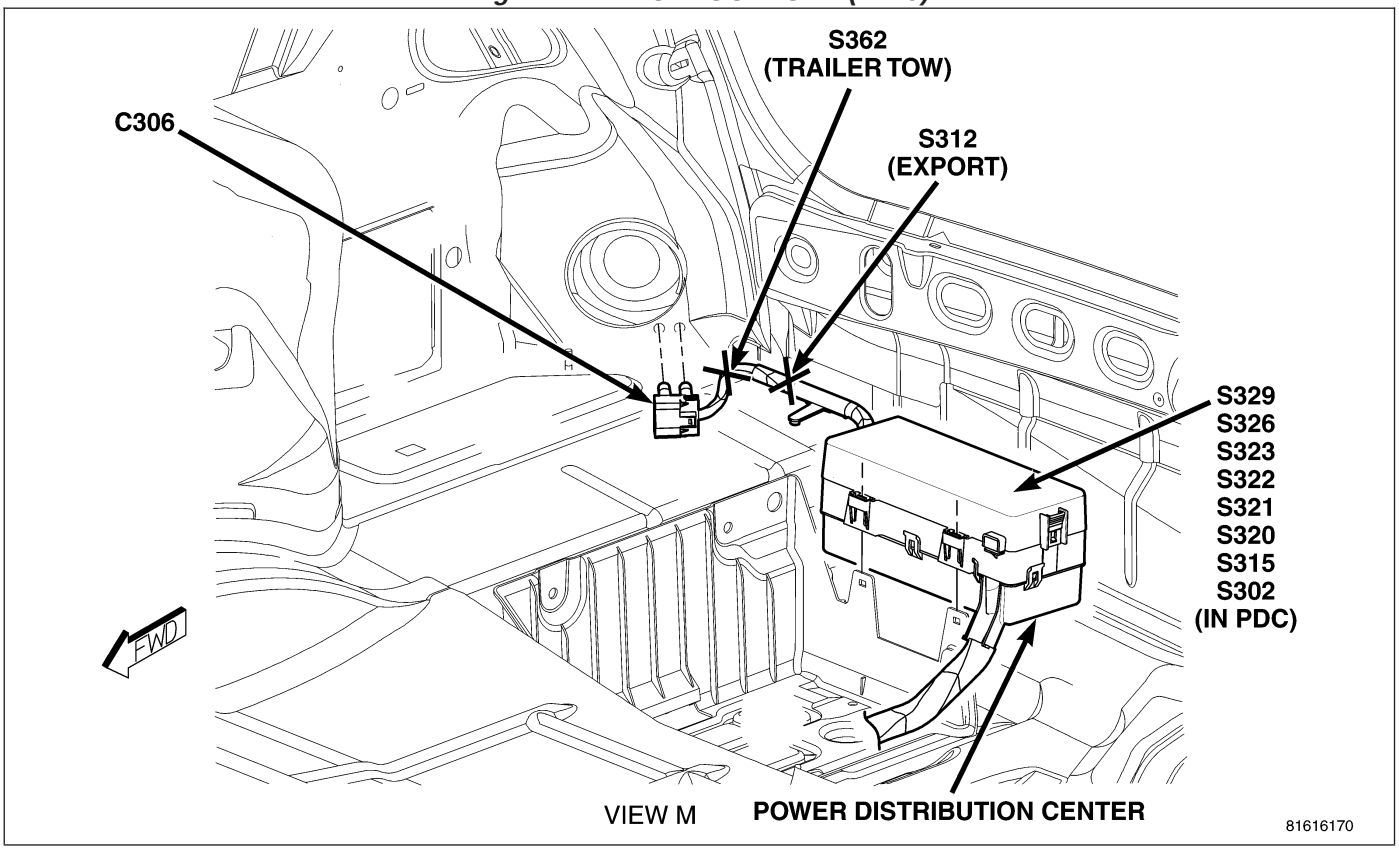

Fig. 75 RIGHT REAR AND PDC (LX49)

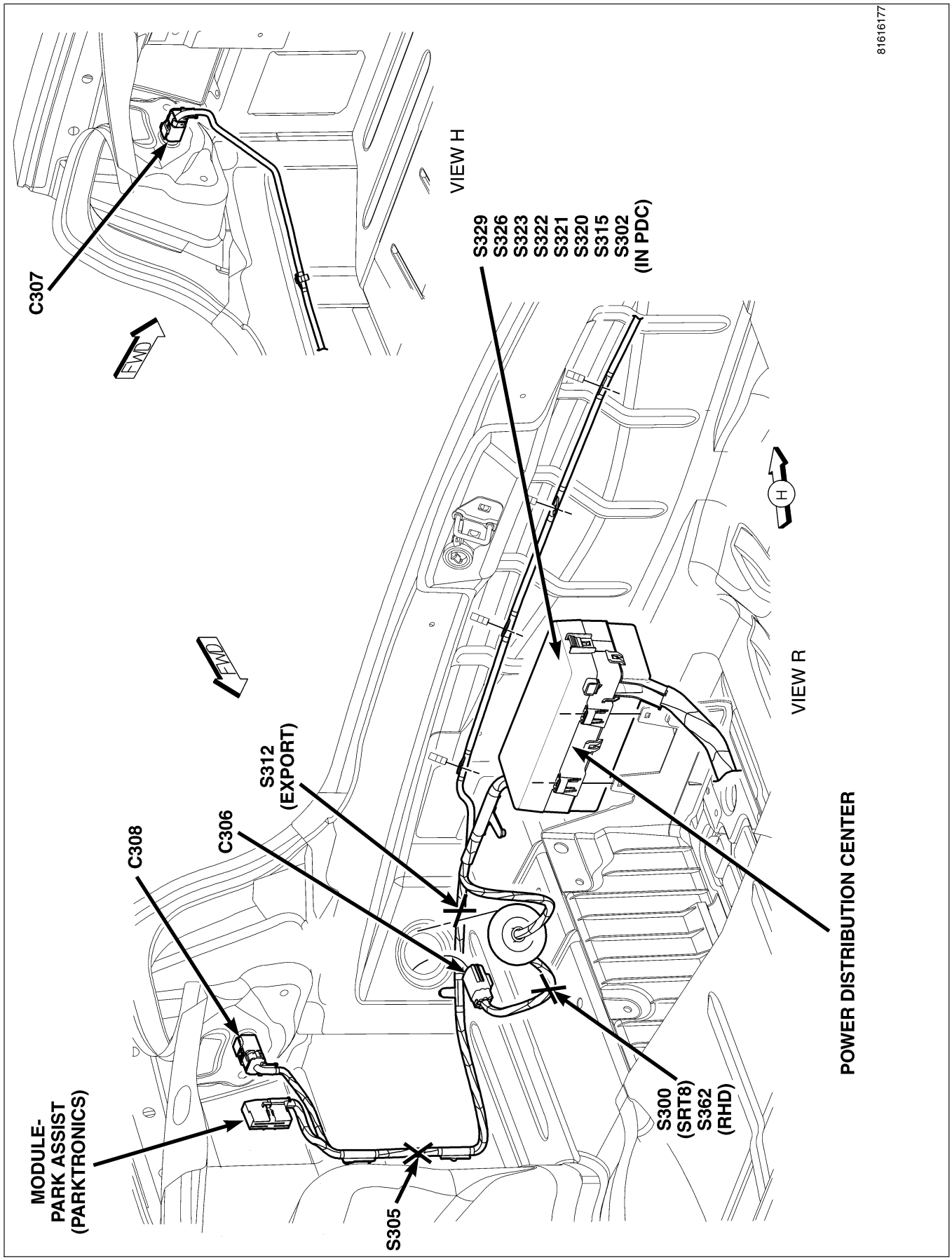

Fig. 76 TRUNK (LX48)

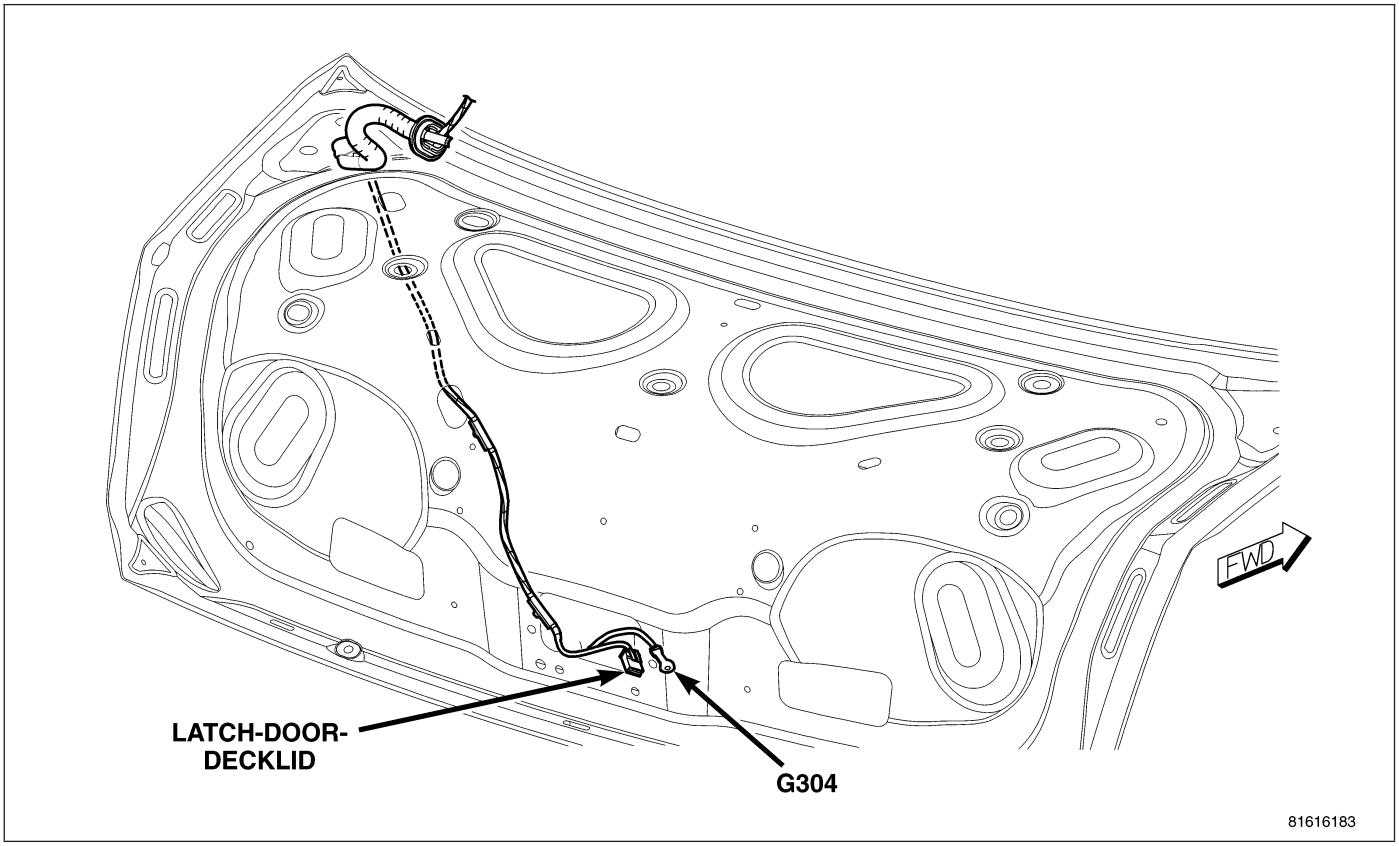

Fig. 77 DECKLID (LX48)

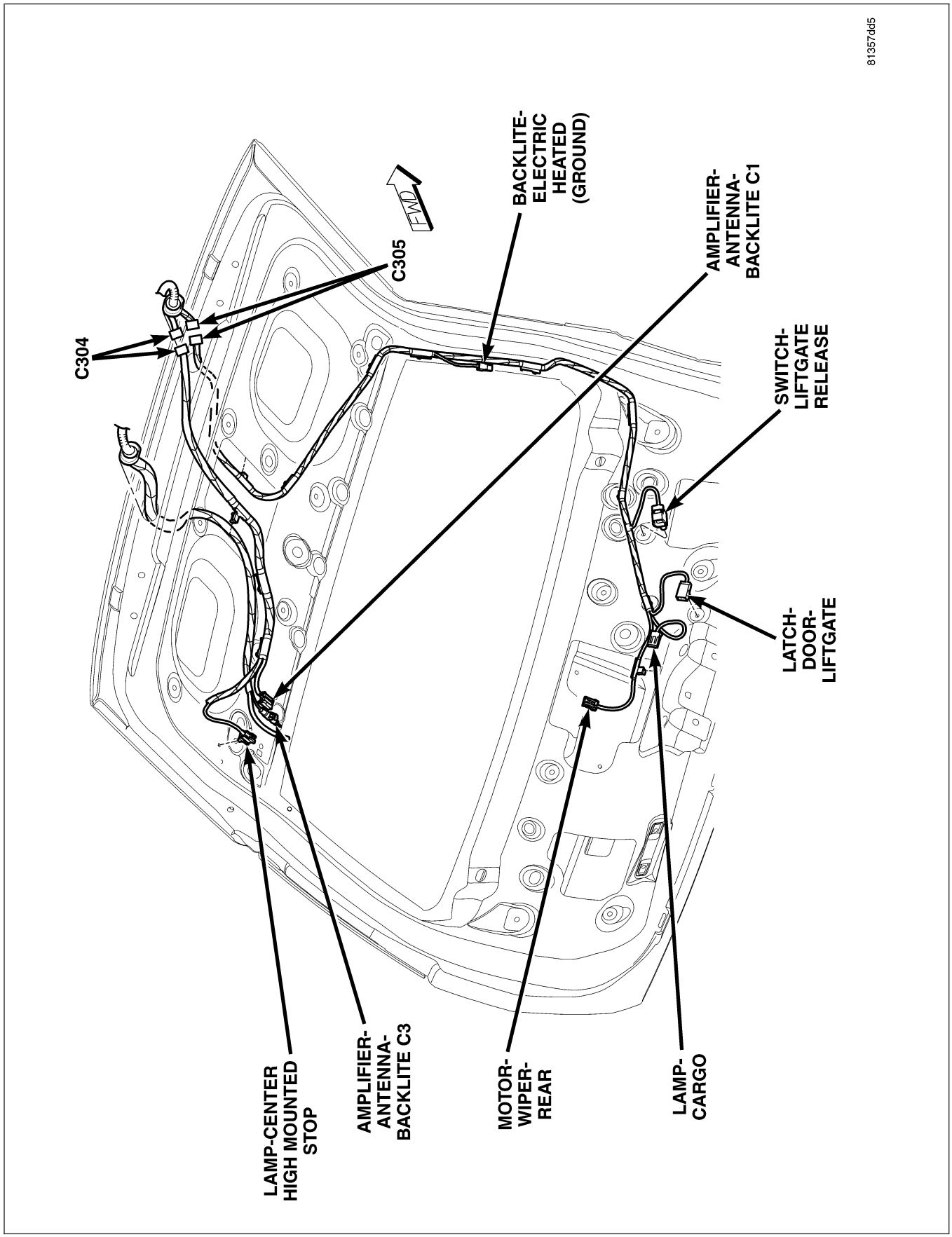

Fig. 78 LIFTGATE (LX49)

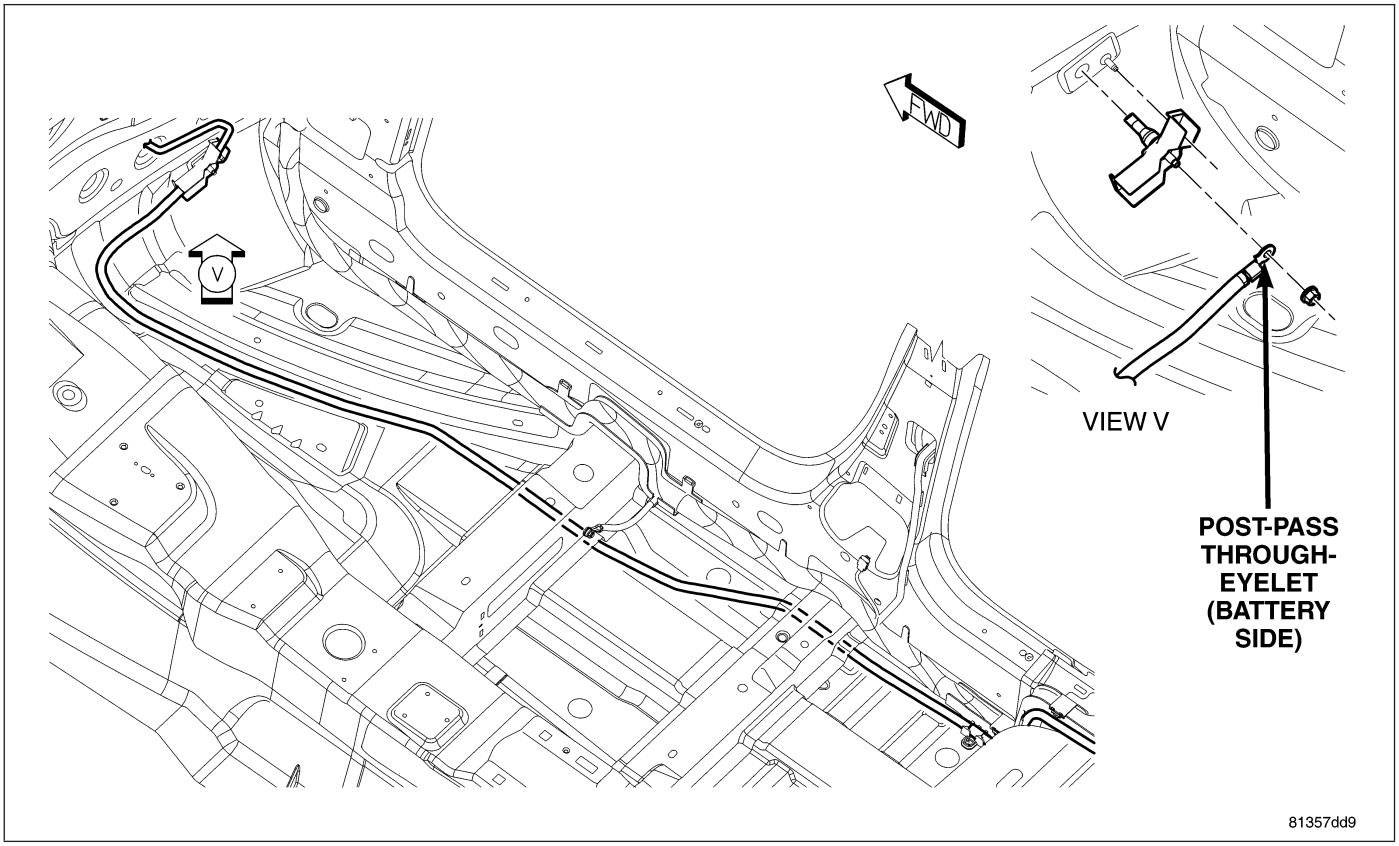

Fig. 79 BODY RIGHT POWER CABLES

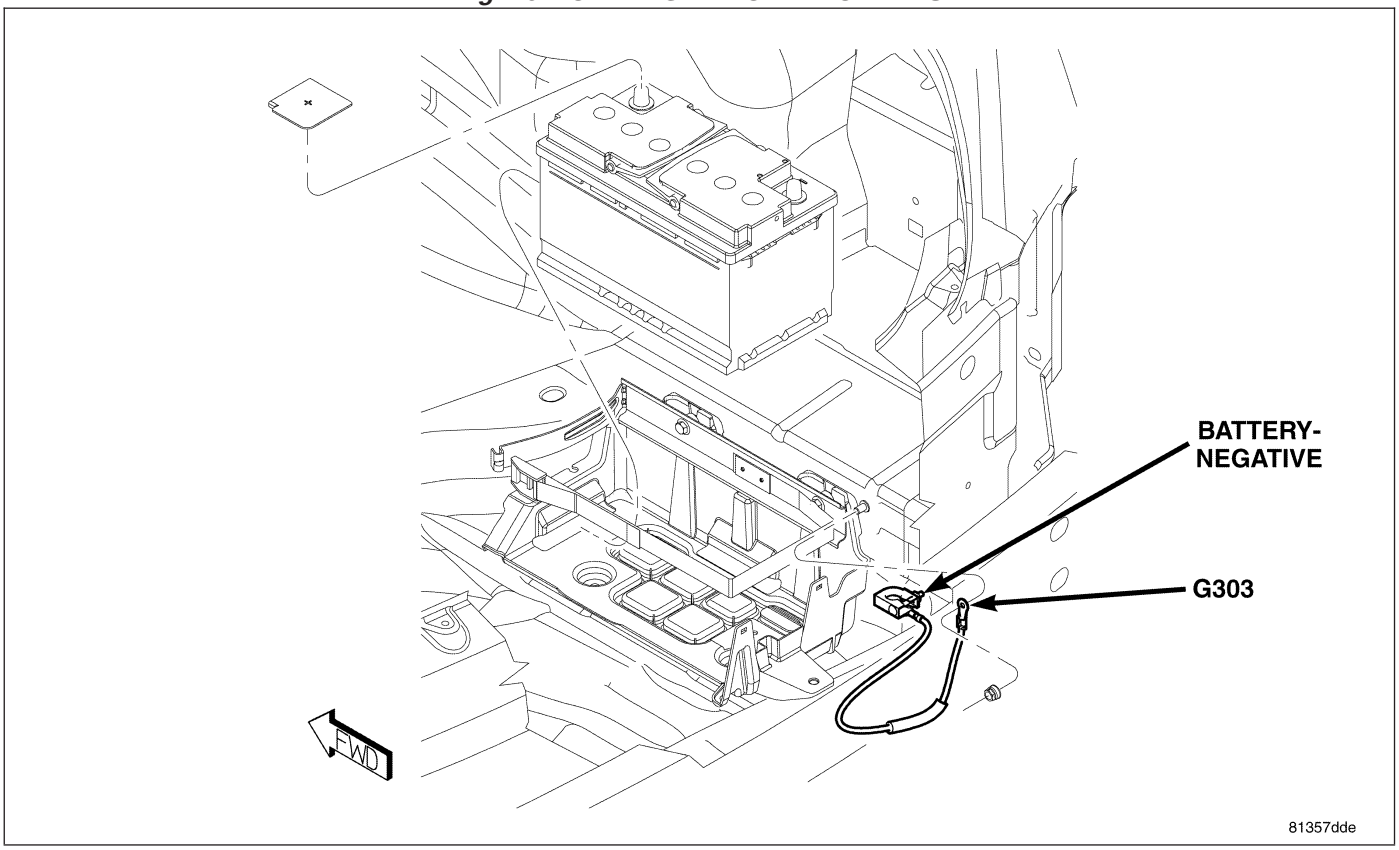

Fig. 80 TRUNK BATTERY CONNECTIONS

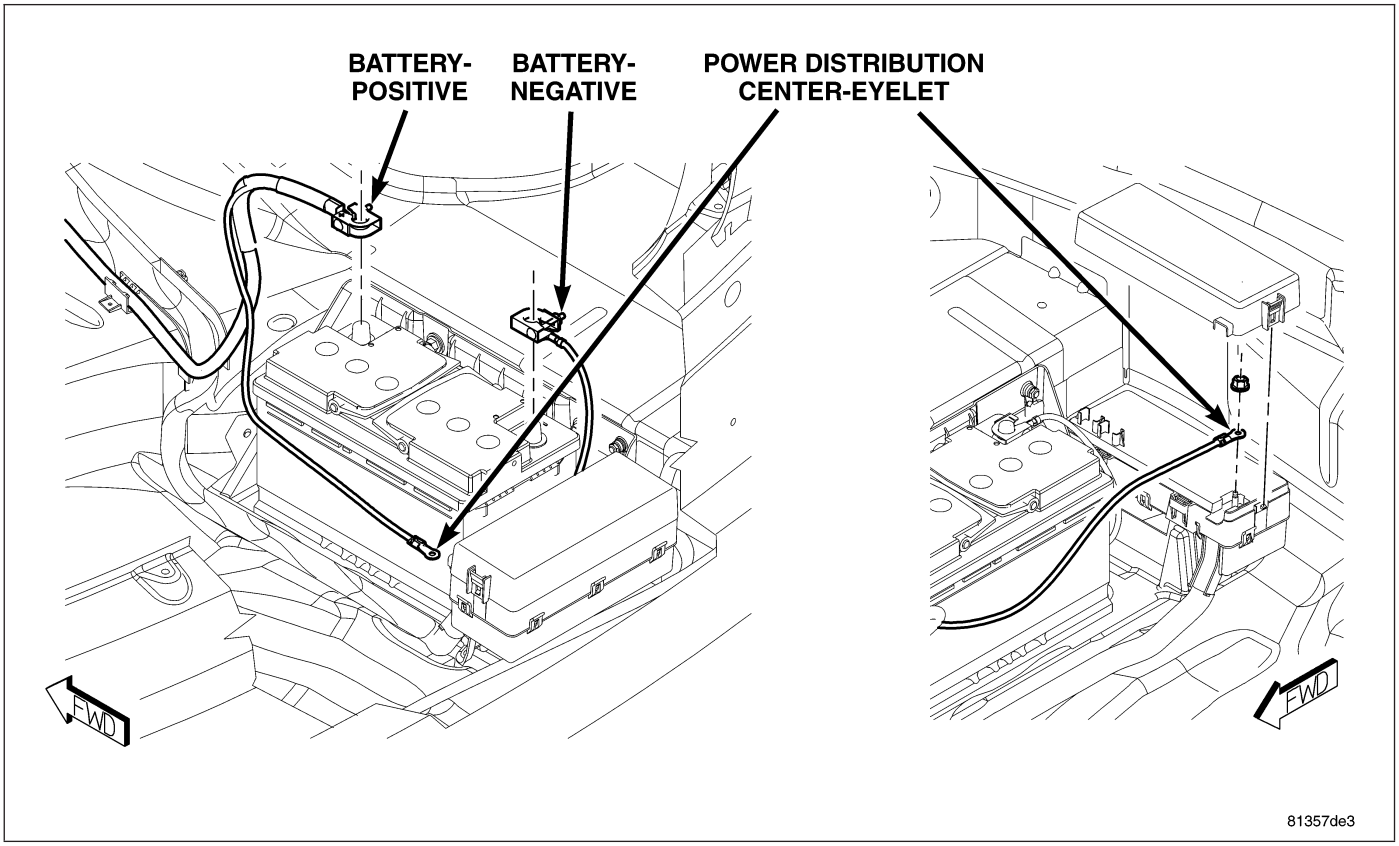

Fig. 81 TRUNK BATTERY AND PDC CONNECTIONS

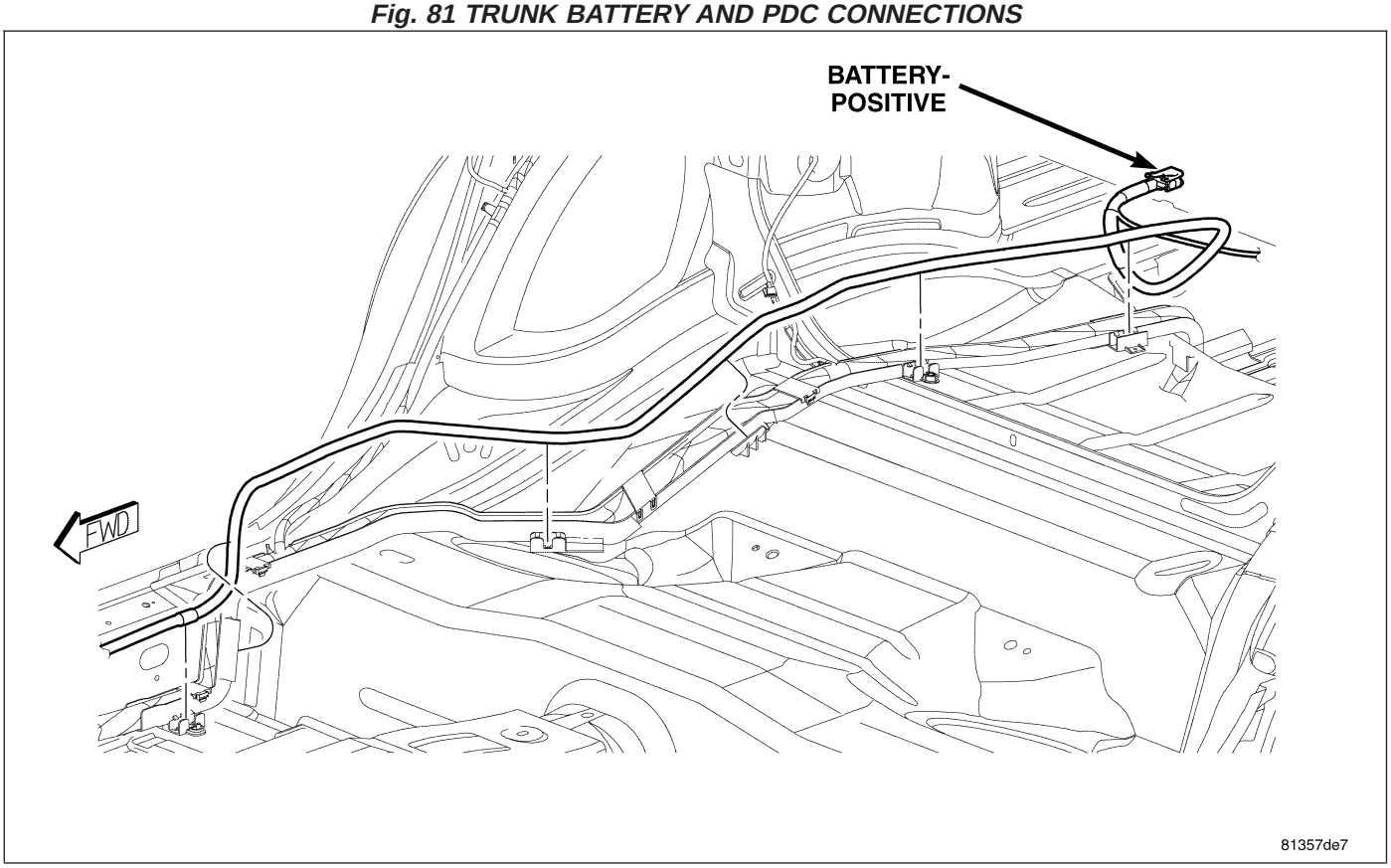

Fig. 82 BODY B+ REAR ROUTE

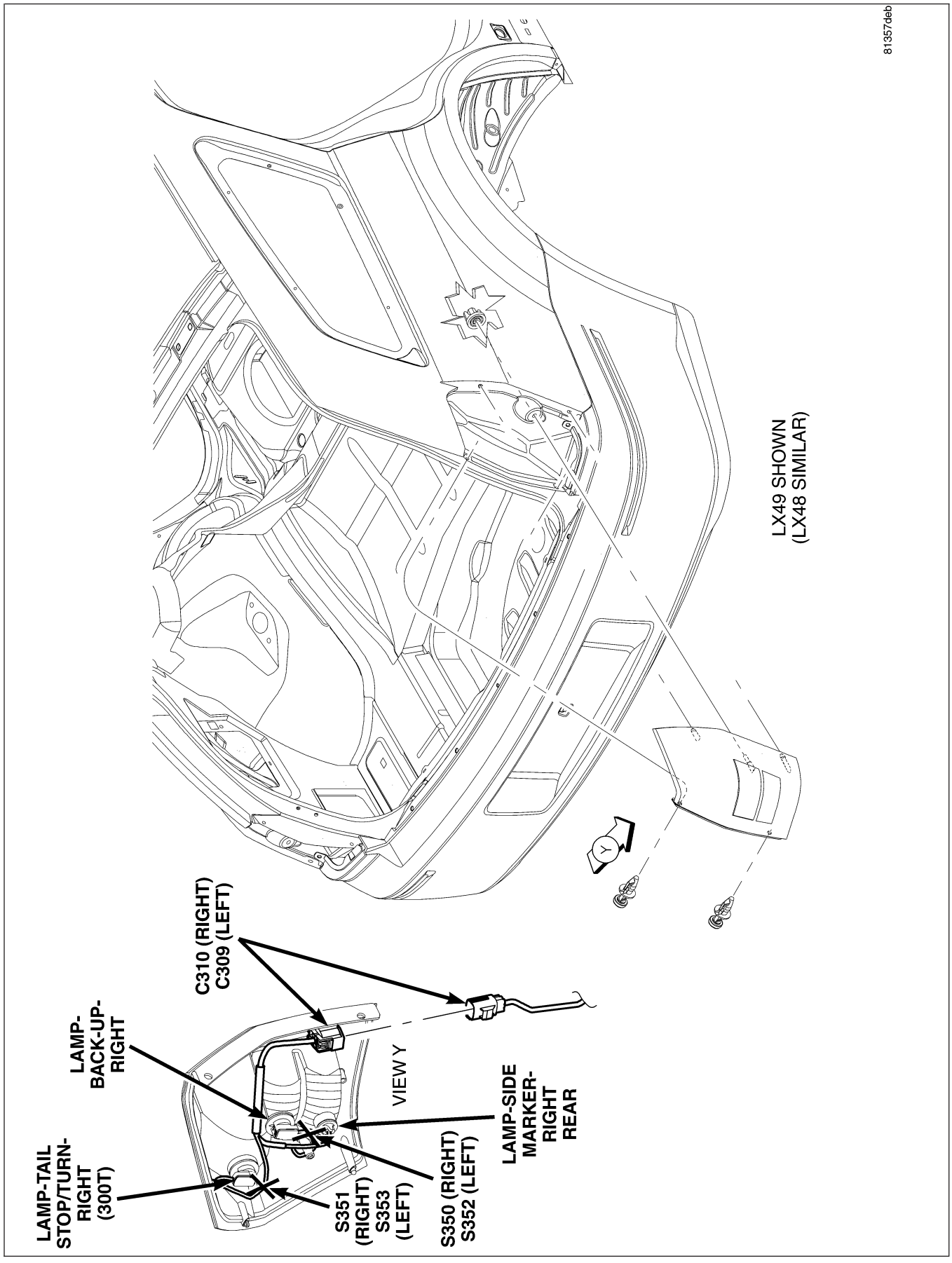

Fig. 83 RIGHT TAIL LAMP (LX49) (LEFT SIMILAR)

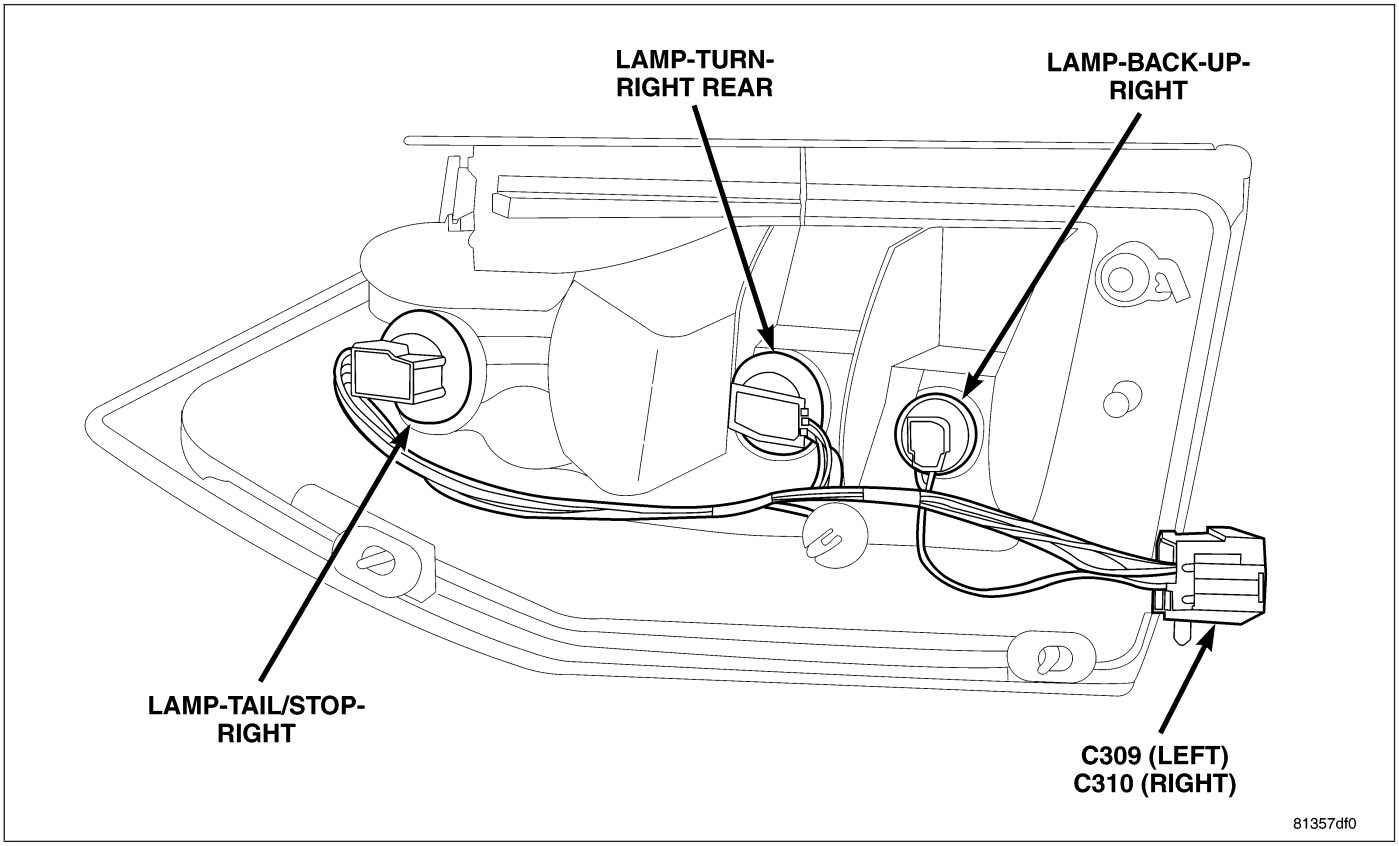

Fig. 84 RIGHT TAIL LAMP (LX49) (LEFT SIMILAR)

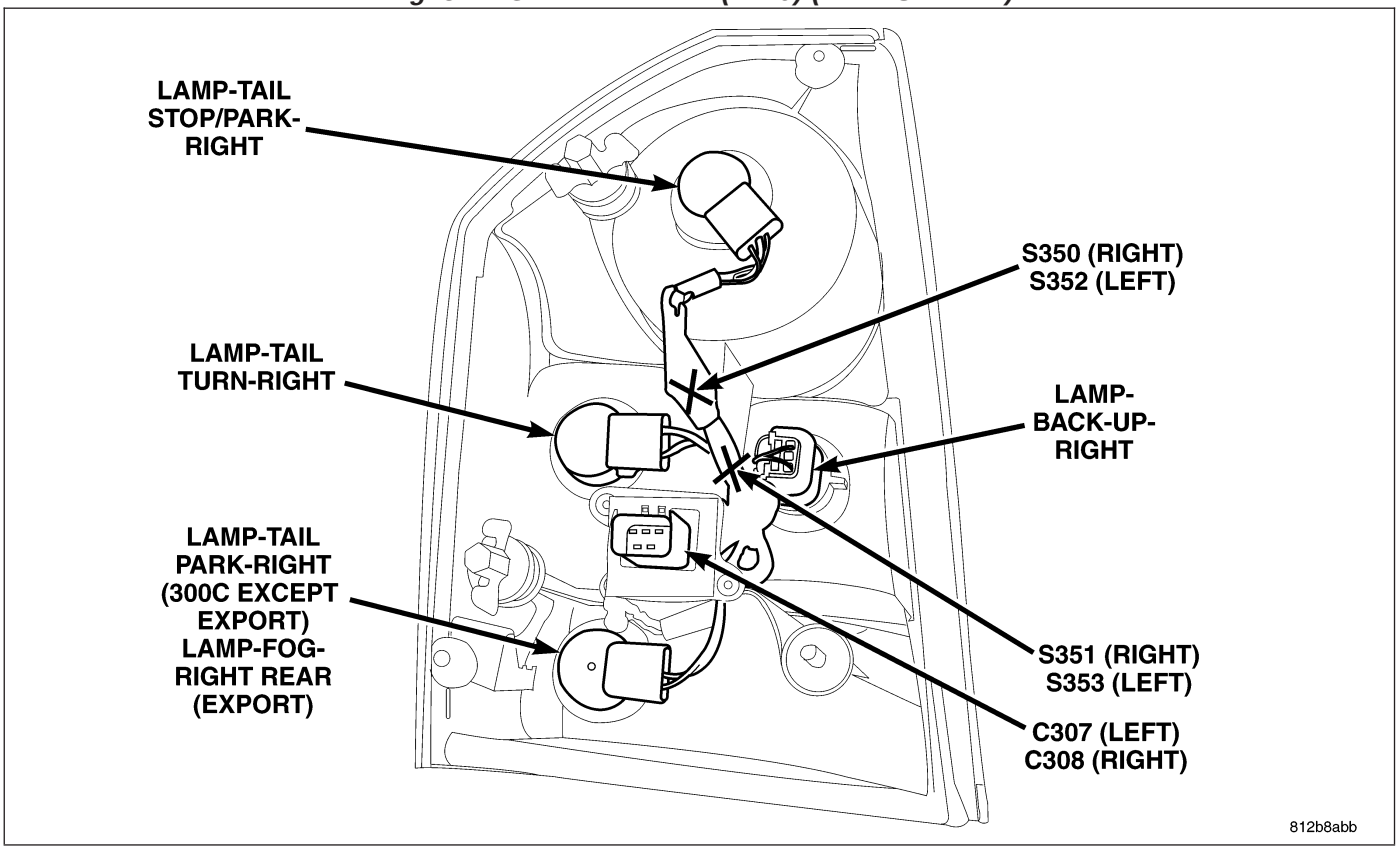

Fig. 85 RIGHT TAIL LAMPS (LX48) (LEFT SIMILAR)

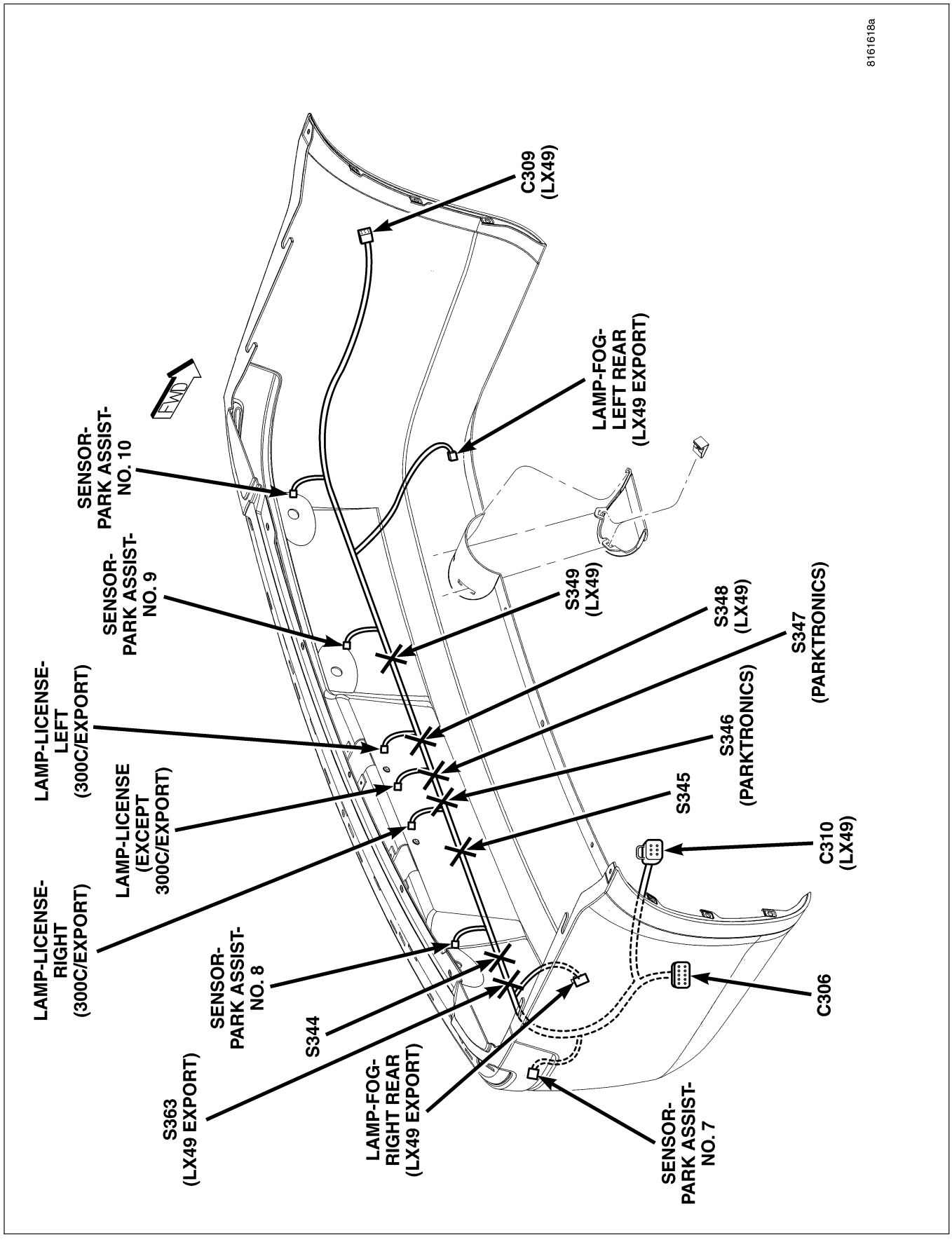

Fig. 86 REAR FASCIA

8W-97 POWER DISTRIBUTION

TABLE OF CONTENTS

page

POWER DISTRIBUTION
DESCRIPTION 2
OPERATION 2
INTEGRATED POWER MODULE
DESCRIPTION 3
REMOVAL 3
INSTALLATION 4

page

POWER DISTRIBUTION CENTER
DESCRIPTION 6
POWER OUTLET
DESCRIPTION 7
REMOVAL 7
INSTALLATION 7

POWER DISTRIBUTION

DESCRIPTION

CAUTION: Within the power distribution system there are replaceable diodes that can be installed incorrectly. Ensure when replacing a diode that it is inserted in the correct orientation.

The power distribution system for this vehicle consists of the following components:

- Cigar Lighter Outlet
- Front Control Module (FCM) - located underhood
- Integrated Power Module (IPM) - located underhood
- Power Distribution Center (PDC) - located in trunk
- Power Outlets

Refer to Wiring Diagrams for complete circuit schematics.

The power distribution system also incorporates various types of circuit control and protection features, including:

- Automatic resetting circuit breakers
- Blade-type fuses
- Cartridge fuses
- Relays

OPERATION

The power distribution system for this vehicle is designed to provide safe, reliable, and centralized distribution points for the electrical current required to operate all of the many standard and optional factory-installed electrical and electronic powertrain, chassis, safety, security, comfort and convenience systems. At the same time, the power distribution system was designed to provide ready access to these electrical distribution points for the technician to use when conducting diagnosis and repair of inoperative circuits. The power distribution system can also prove useful for the sourcing of additional electrical circuits that may be required to provide the electrical current needed to operate many accessories that the vehicle owner may choose to have installed.

INTEGRATED POWER MODULE

DESCRIPTION

The majority of electrical system fuses and relays are housed in the two Power Distribution Centers (PDC). One is located in the engine compartment, combined with the Front Control Module (FCM) to form the Integrated Power Module (IPM). The other is next to the battery at the rear of the vehicle.

REMOVAL

NOTE: A battery reconnect procedure must be performed anytime the battery has been disconnected. (Refer to 8 - ELECTRICAL/BATTERY SYSTEM - STANDARD PROCEDURE).

1. Disconnect and isolate the battery negative cable (2).

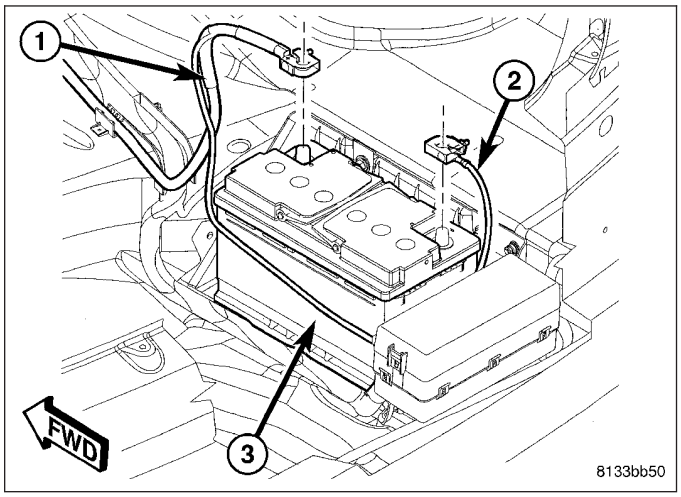

2. Open the battery cable nut cover to expose nut.
3. Remove battery cable nut and battery cable from the Integrated Power Module (IPM).

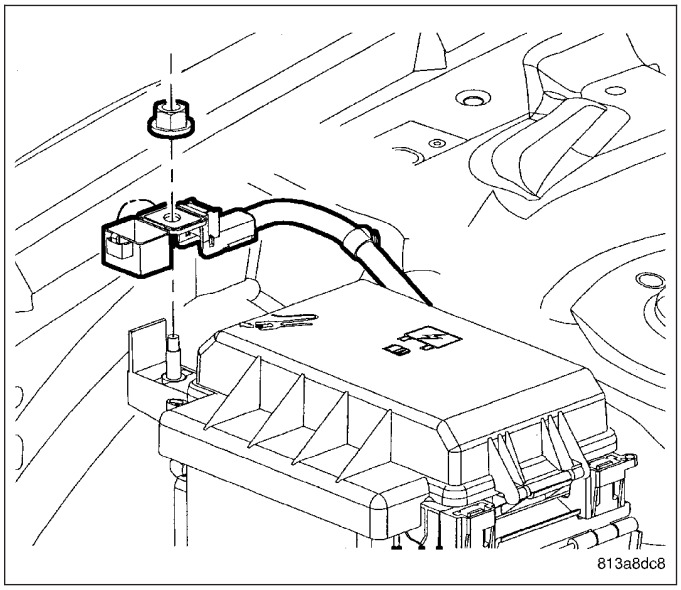

4. Disengage the outboard retaining clip, and rotate the IPM to access wire harness connectors.
5. Disconnect wire harness connectors from IPM.
6. Disengage the two inboard retaining clips.

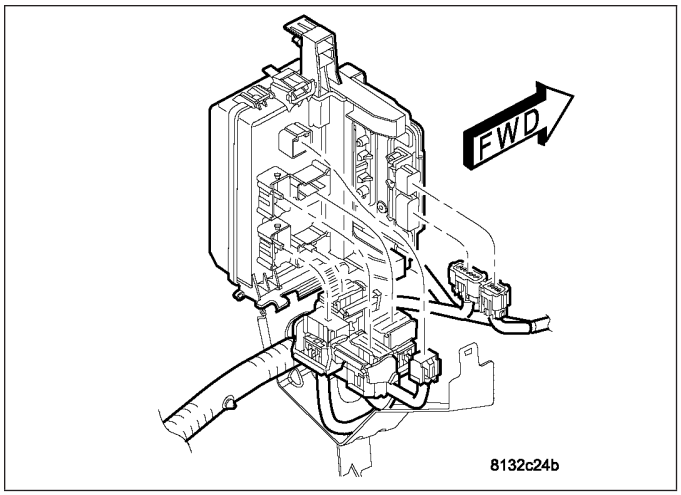

7. Remove IPM from vehicle.

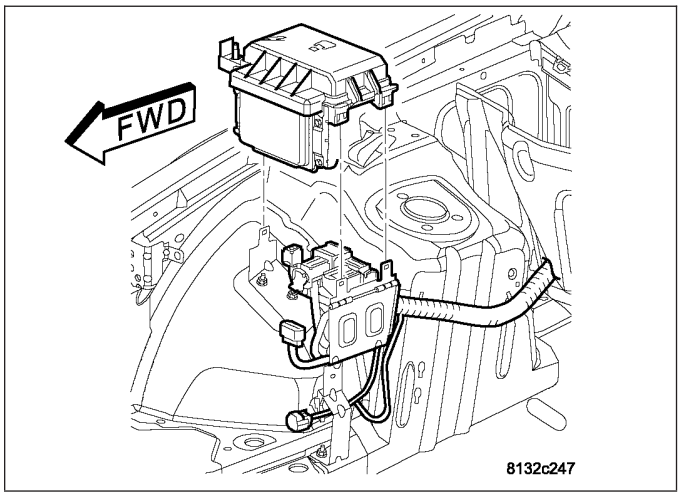

INSTALLATION

NOTE: A battery reconnect procedure must be performed anytime the battery has been disconnected. (Refer to 8 - ELECTRICAL/BATTERY SYSTEM - STANDARD PROCEDURE).

1. Position Integrated Power Module (IPM) to vehicle. Engage the three retaining clips.

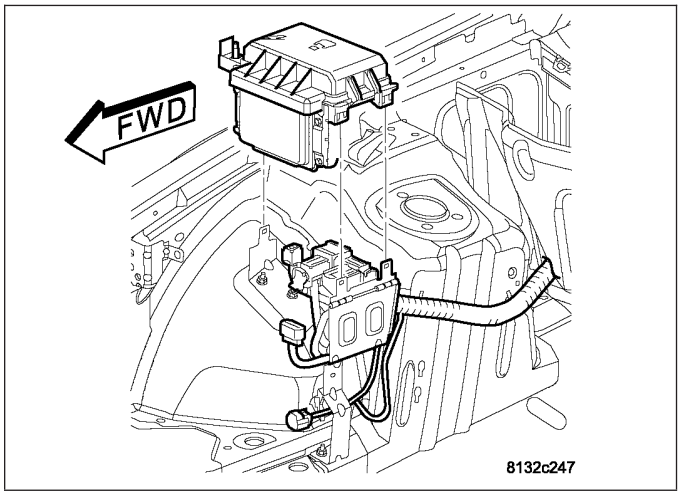

2. Disengage the outboard retaining clip and rotate the IPM to access wire harness connectors.
3. Connect electrical harness connectors to IPM.

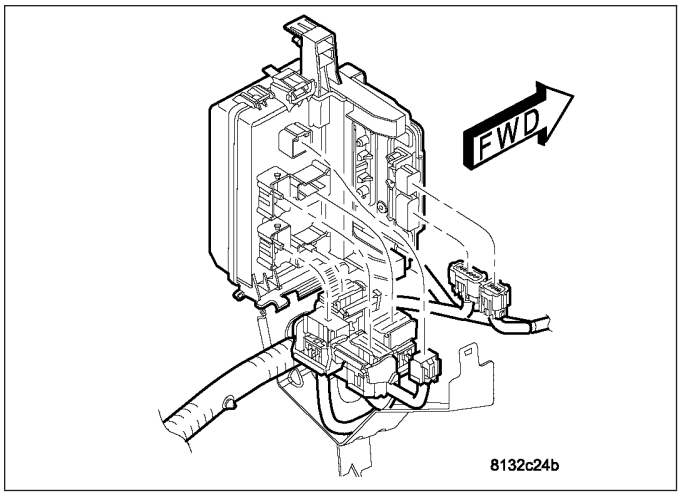

4. Connect battery cable to IPM.
5. Install and tighten retaining nut.
6. Close the battery cable nut cover.

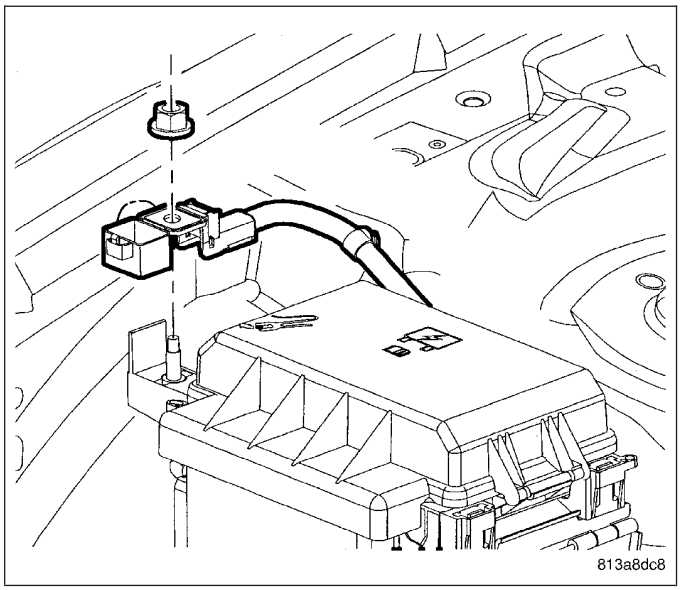

7. Connect battery negative cable (2).

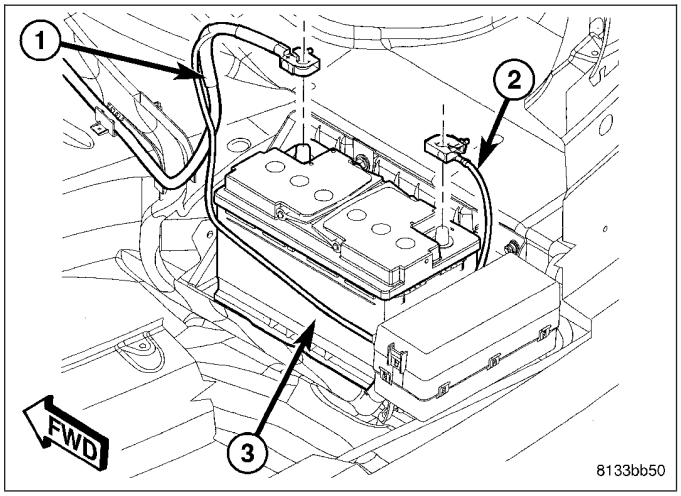

POWER DISTRIBUTION CENTER

DESCRIPTION

The majority of electrical system fuses and relays are housed in the two Power Distribution Centers (PDC). One is located in the engine compartment, combined with the Front Control Module (FCM) to form the Integrated Power Module (IPM). The other is next to the battery at the rear of the vehicle. The PDC located next to the battery is replaced only as part of the body wiring harness.

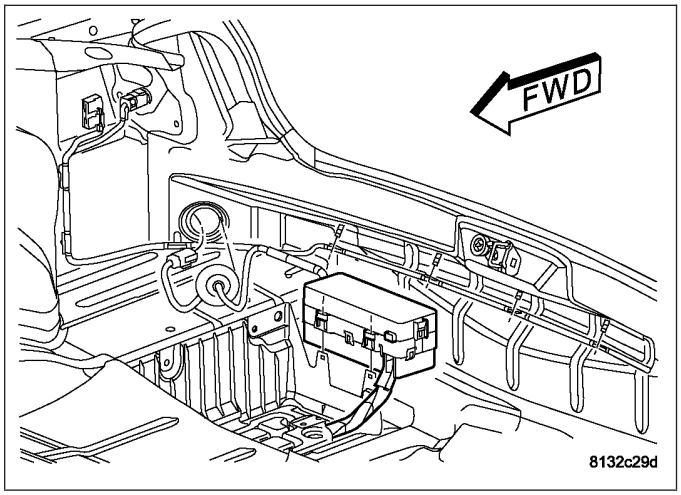

POWER OUTLET

DESCRIPTION

Sedans are equipped with two 12–volt electrical outlets. Wagons are equipped with three 12–volt electrical outlets. The outlets are located in the following locations:

- Cargo area right quarter trim panel (wagons only).
- Inside the center console.
- Next to the ash receiver in the center stack.

The outlets in the console and quarter trim panel have power at all times, and include tethered covers. The outlet in the ash receiver tray is shipped with power available only when the ignition is in the ON position. This outlet can be changed to provide power at all times by moving a fuse in the fuse block.

REMOVAL

NOTE: A battery reconnect procedure must be performed anytime the battery has been disconnected. (Refer to 8 - ELECTRICAL/BATTERY SYSTEM - STANDARD PROCEDURE).

1. Disconnect and isolate the battery negative cable.
2. Pull the cigar lighter knob and element out of the cigar lighter receptacle base, or unsnap the protective cap from the power outlet.
3. Look inside the cigar lighter or power outlet and note the position of the rectangular retaining bosses of the mount that secures the receptacle base.
4. Insert a pair of external snap ring pliers into the cigar lighter or power outlet receptacle base and engage the tips of the pliers with the retaining bosses of the mount.
5. Squeeze the pliers to disengage the mount retaining bosses from the receptacle base and, using a gentle rocking motion, pull the pliers and the receptacle base out of the mount.
6. Pull the receptacle base away far enough to access the wire harness connector.
7. Disconnect the wire harness connector from the cigar lighter or power outlet.
8. Remove the cigar lighter or power outlet.

INSTALLATION

NOTE: A battery reconnect procedure must be performed anytime the battery has been disconnected. (Refer to 8 - ELECTRICAL/BATTERY SYSTEM - STANDARD PROCEDURE).

1. Connect the wire harness connector to the cigar lighter or power outlet receptacle base connector receptacle.
2. Install the cigar lighter or power outlet mount into position.
3. Align the splines on the outside of the cigar lighter or power outlet receptacle base connector receptacle with the grooves on the inside of the mount.
4. Press firmly on the cigar lighter or power outlet receptacle base until the retaining bosses of the mount are fully engaged in their receptacles.
5. Install the cigar lighter knob and element into the cigar lighter receptacle base, or the protective cap into the power outlet receptacle base.
6. Connect the battery negative cable.

ENGINE

TABLE OF CONTENTS

page

ENGINE ELECTRICAL DIAGNOSTICS 1
ENGINE ELECTRICAL DIAGNOSTICS - DIESEL. 1039
ENGINE - 2.7L DOHC - SERVICE INFORMATION 1899

page

ENGINE - 3.5L - SERVICE INFORMATION 2095
ENGINE - 5.7L SERVICE INFORMATION 2285
ENGINE - 6.1L SERVICE INFORMATION 2452
ENGINE - 3.0L TD SERVICE INFORMATION . . 2602

ENGINE ELECTRICAL DIAGNOSTICS

TABLE OF CONTENTS

page

ENGINE ELECTRICAL DIAGNOSTICS
DIAGNOSIS AND TESTING
PRE-DIAGNOSTIC TROUBLESHOOTING PROCEDURE. 7
INTERMITTENT CONDITION 9
P0016–CRANKSHAFT / CAMSHAFT TIMING MISALIGNMENT 10
P0031-O2 SENSOR 1/1 HEATER CIRCUIT LOW. 14
P0032-O2 SENSOR 1/1 HEATER CIRCUIT HIGH 17
P0037-O2 SENSOR 1/2 HEATER CIRCUIT LOW. 21
P0038-O2 SENSOR 1/2 HEATER CIRCUIT HIGH 24
P0051-O2 SENSOR 2/1 HEATER CIRCUIT LOW. 28
P0052-O2 SENSOR 2/1 HEATER CIRCUIT HIGH 31
P0057-O2 SENSOR 2/2 HEATER CIRCUIT LOW. 35
P0058-O2 SENSOR 2/2 HEATER CIRCUIT HIGH 38
P0071-AMBIENT AIR TEMPERATURE SENSOR PERFORMANCE. 42
P0072-AMBIENT AIR TEMPERATURE SENSOR CIRCUIT LOW. 46
P0073–AMBIENT AIR TEMPERATURE SENSOR CIRCUIT HIGH 49
P0107-MANIFOLD ABSOLUTE PRESSURE SENSOR CIRCUIT LOW. 53
P0108-MANIFOLD ABSOLUTE PRESSURE SENSOR CIRCUIT HIGH 58

page

P0111-INTAKE AIR TEMPERATURE SENSOR RATIONALITY 63
P0112-INTAKE AIR TEMPERATURE SENSOR CIRCUIT LOW. 67
P0113-INTAKE AIR TEMPERATURE SENSOR CIRCUIT HIGH 71
P0116–ENGINE COOLANT TEMPERATURE SENSOR CIRCUIT PERFORMANCE. 75
P0117-ENGINE COOLANT TEMPERATURE SENSOR CIRCUIT LOW. 79
P0118-ENGINE COOLANT TEMPERATURE SENSOR CIRCUIT HIGH 83
P0121-THROTTLE POSITION SENSOR 1 PERFORMANCE. 87
P0122-THROTTLE POSITION SENSOR 1 CIRCUIT LOW 92
P0123-THROTTLE POSITION SENSOR 1 CIRCUIT HIGH. 97
P0125-INSUFFICIENT COOLANT TEMP FOR CLOSED-LOOP FUEL CONTROL. 102
P0128-THERMOSTAT RATIONALITY 105
P0129-BAROMETRIC PRESSURE OUT-OF-RANGE LOW 115
P0131-O2 SENSOR 1/1 CIRCUIT LOW 121
P0132-O2 SENSOR 1/1 CIRCUIT HIGH 125
P0133-O2 SENSOR 1/1 SLOW RESPONSE . . 130
P0135-O2 SENSOR 1/1 HEATER PERFORMANCE. 134
P0137-O2 SENSOR 1/2 CIRCUIT LOW 137
P0138-O2 SENSOR 1/2 CIRCUIT HIGH 141
P0139-O2 SENSOR 1/2 SLOW RESPONSE . . 146
P0141-O2 SENSOR 1/2 HEATER PERFORMANCE. 150
P0151-O2 SENSOR 2/1 CIRCUIT LOW 153

P0152-O2 SENSOR 2/1 CIRCUIT HIGH 157
P0153-O2 SENSOR 2/1 SLOW RESPONSE .. 162
P0155-O2 SENSOR 2/1 HEATER PERFORMANCE..... 166
P0157-O2 SENSOR 2/2 CIRCUIT LOW 169
P0158-O2 SENSOR 2/2 CIRCUIT HIGH 173
P0159-O2 SENSOR 2/2 SLOW RESPONSE .. 178
P0161-O2 SENSOR 2/2 HEATER PERFORMANCE..... 182
P0171-FUEL SYSTEM 1/1 LEAN 185
P0172-FUEL SYSTEM 1/1 RICH 192
P0174-FUEL SYSTEM 2/1 LEAN 198
P0175-FUEL SYSTEM 2/1 RICH 205
P0196–ENGINE OIL TEMPERATURE SENSOR CIRCUIT PERFORMANCE..... 211
P0197-ENGINE OIL TEMPERATURE SENSOR CIRCUIT LOW..... 216
P0198-ENGINE OIL TEMPERATURE SENSOR CIRCUIT HIGH 219
P0201-FUEL INJECTOR 1 CIRCUIT 223
P0202-FUEL INJECTOR 2 CIRCUIT 227
P0203-FUEL INJECTOR 3 CIRCUIT 231
P0204-FUEL INJECTOR 4 CIRCUIT 235
P0205-FUEL INJECTOR 5 CIRCUIT 239
P0206-FUEL INJECTOR 6 CIRCUIT 243
P0207-FUEL INJECTOR 7 CIRCUIT 247
P0208-FUEL INJECTOR 8 CIRCUIT 251
P0221-THROTTLE POSITION SENSOR 2 PERFORMANCE..... 255
P0222-THROTTLE POSITION SENSOR 2 CIRCUIT LOW..... 260
P0223-THROTTLE POSITION SENSOR 2 CIRCUIT HIGH 266
P0300- MULTIPLE CYLINDER 1 MISFIRE 270
P0301-CYLINDER 1 MISFIRE 277
P0302-CYLINDER 2 MISFIRE 286
P0303-CYLINDER 3 MISFIRE 295
P0304-CYLINDER 4 MISFIRE 304
P0305-CYLINDER 5 MISFIRE 313
P0306-CYLINDER 6 MISFIRE 322
P0307-CYLINDER 7 MISFIRE 331
P0308-CYLINDER 8 MISFIRE 340
P0315-NO CRANK SENSOR LEARNED 349
P0325-KNOCK SENSOR 1 CIRCUIT 352
P0330-KNOCK SENSOR 2 CIRCUIT 356
P0335-CRANKSHAFT POSITION SENSOR CIRCUIT 361
P0339-CRANKSHAFT POSITION SENSOR INTERMITTENT..... 369
P0340-CAMSHAFT POSITION SENSOR CIRCUIT 375
P0344-CAMSHAFT POSITION SENSOR INTERMITTENT..... 383
P0401-EGR SYSTEM PERFORMANCE 389
P0403-EGR SOLENOID CIRCUIT 393
P0404-EGR POSITION SENSOR PERFORMANCE..... 397
P0405-EGR POSITION SENSOR CIRCUIT LOW..... 401
P0406-EGR POSITION SENSOR CIRCUIT HIGH 405
P0420-CATALYST 1/1 EFFICIENCY 410
P0430-CATALYST 2/1 EFFICIENCY 413
P0440-GENERAL EVAP SYSTEM FAILURE ... 416
P0441-EVAP PURGE SYSTEM PERFORMANCE..... 424
P0442-EVAP PURGE SYSTEM MEDIUM LEAK 428
P0443-EVAP PURGE SOLENOID CIRCUIT ... 434
P0452-NVLD PRESSURE SWITCH STUCK CLOSED 439
P0453-NVLD PRESSURE SWITCH STUCK OPEN..... 444
P0455-EVAP PURGE SYSTEM LARGE LEAK . 448
P0456-EVAP PURGE SYSTEM SMALL LEAK . 454
P0457-LOOSE FUEL CAP 460
P0461-FUEL LEVEL SENSOR 1 PERFORMANCE..... 466
P0462-FUEL LEVEL SENSOR 1 CIRCUIT LOW..... 470
P0463-FUEL LEVEL SENSOR 1 CIRCUIT HIGH 474
P0480-COOLING FAN 1 CONTROL CIRCUIT . 478
P0481-COOLING FAN 2 CONTROL CIRCUIT . 481
P0498-NVLD CANISTER VENT VALVE SOLENOID CIRCUIT LOW..... 485
P0499-NVLD CANISTER VENT VALVE SOLENOID CIRCUIT HIGH 488
P0501-VEHICLE SPEED SENSOR 1 PERFORMANCE (Not Equipped with ABS)... 493
P0503-VEHICLE SPEED SENSOR 1 ERRATIC (Not Equipped with ABS)..... 496
P0501-VEHICLE SPEED SENSOR 1 PERFORMANCE (Equipped with ABS) 499
P0503-VEHICLE SPEED SENSOR 1 ERRATIC (Equipped with ABS) 502
P0506-IDLE SPEED PERFORMANCE LOWER THAN EXCEPTED 505
P0507-IDLE SPEED PERFORMANCE HIGHER THAN EXCEPTED..... 507
P0513-INVALID SKIM KEY 509
P0520-ENGINE OIL PRESSURE SENSOR CIRCUIT 512
P0521-ENGINE OIL PRESSURE SENSOR PERFORMANCE..... 516
P0522-ENGINE OIL PRESSURE SENSOR CIRCUIT LOW..... 522
P0523-ENGINE OIL PRESSURE SENSOR CIRCUIT HIGH 526
P0524-ENGINE OIL PRESSURE TOO LOW .. 530
P0532-A/C PRESSURE SENSOR CIRCUIT LOW..... 536
P0533-A/C PRESSURE SENSOR CIRCUIT HIGH 540
P0551-POWER STEERING PRESSURE SWITCH PERFORMANCE 545
P0562-BATTERY VOLTAGE LOW 547
P0563-BATTERY VOLTAGE HIGH 552

P0571-BRAKE SWITCH 1 PERFORMANCE . . 555
P0572-BRAKE SWITCH 1 STUCK ON 560
P0573-BRAKE SWITCH 1 STUCK OFF 564
P0579–SPEED CONTROL MULTIPLEXED SWITCH #1 PERFORMANCE 569
P0580–SPEED CONTROL MULTIPLEXED SWITCH #1 LOW 572
P0585-SPEED CONTROL MULTIPLEXED SWITCH 1/2 CORRELATION 575
P0591–SPEED CONTROL MULTIPLEXED SWITCH PERFORMANCE 578
P0600-SERIAL COMMUNICATION LINK 581
P0601-INTERNAL MEMORY CHECKSUM INVALID. 582
P0606-INTERNAL ECM PROCESSOR 583
P060B-ETC A/D GROUND PERFORMANCE . . 584
P060D-ETC LEVEL 2 APP PERFORMANCE . . 585
P060E-ETC LEVEL 2 TPS PERFORMANCE . . 586
P060F-ETC LEVEL 2 ECT PERFORMANCE . . 587
P061A-ETC LEVEL 2 TORQUE PERFORMANCE. 588
P061C-ETC LEVEL 2 RPM PERFORMANCE . . 589
P0622-GENERATOR FIELD CONTROL CIRCUIT 590
P0627-FUEL PUMP RELAY CIRCUIT 594
P062C-ETC LEVEL 2 MPH PERFORMANCE . . 598
P0630-VIN NOT PROGRAMMED IN PCM 599
P0632-ODOMETER NOT PROGRAMMED IN PCM. 600
P0633-SKIM KEY NOT PROGRAMMED IN PCM. 601
P0642-SENSOR REFERENCE VOLTAGE 1 CIRCUIT LOW 602
P0643-PRIMARY 5-VOLT SUPPLY CIRCUIT HIGH 604
P0645-A/C CLUTCH RELAY CIRCUIT 606
P0652-SENSOR REFERENCE VOLTAGE 2 CIRCUIT LOW 609
P0653-SENSOR REFERENCE VOLTAGE 2 CIRCUIT HIGH 612
P0660–MANIFOLD TUNE VALVE SOLENOID CIRCUIT 614
P0685-AUTO SHUTDOWN RELAY CONTROL CIRCUIT 618
P0688-AUTO SHUTDOWN RELAY SENSE CIRCUIT LOW 622
P0700-TRANSMISSION CONTROL SYSTEM (MIL REQUEST) 627
P0703-BRAKE SWITCH 2 PERFORMANCE . . 628
P0850-PARK/NEUTRAL SWITCH PERFORMANCE. 633
P1115-GENERAL TEMPERATURE RATIONALITY 634
P01404-EGR POSITION SENSOR RATIONALITY CLOSED 637
P1411–CYLINDER 1 REACTIVATION CONTROL PERFORMANCE 641
P1414–CYLINDER 4 REACTIVATION CONTROL PERFORMANCE 645
P1416–CYLINDER 6 REACTIVATION CONTROL PERFORMANCE 649
P1417–CYLINDER 7 REACTIVATION CONTROL PERFORMANCE 653
P1501–VEHICLE SPEED SENSOR 1/2 CORRELATION — DRIVE WHEELS (Not Equipped with ABS) 657
P1502–VEHICLE SPEED SENSOR 1/2 CORRELATION — NON DRIVE WHEELS (Not Equipped with ABS) 660
P1501–VEHICLE SPEED SENSOR 1/2 CORRELATION — DRIVE WHEELS (Equipped with ABS). 663
P1502–VEHICLE SPEED SENSOR 1/2 CORRELATION — NON DRIVE WHEELS (Equipped with ABS). 666
P1521–INCORRECT ENGINE OIL TYPE 669
P1572-BRAKE SWITCH STUCK ON 670
P1573-BRAKE SWITCH STUCK OFF 674
P1593–SPEED CONTROL SWITCH 1/2 STUCK 679
P1603-PCM INTERNAL DUAL-PORT RAM COMMUNICATION FAILURE 682
P1604-PCM INTERNAL DUAL-PORT RAM READ/WRITE INTEGRITY FAILURE 684
P1607-PCM INTERNAL SHUTDOWN TIMER RATIONALITY 686
P1618-SENSOR REFERENCE VOLTAGE 1 CIRCUIT ERRATIC. 688
P1628-SENSOR REFERENCE VOLTAGE 2 CIRCUIT ERRATIC. 691
P1696-EEPROM MEMORY WRITE DENIED/ INVALID. 695
P1697-EMR (SRI) MILEAGE NOT STORED . . . 697
P1897–PCM PROCESSOR 699
P2008–SHORT RUNNER VALVE SOLENOID CIRCUIT 700
P2066-FUEL LEVEL SENSOR 2 PERFORMANCE. 704
P2067-FUEL LEVEL SENSOR 2 CIRCUIT LOW. 708
P2068-FUEL LEVEL SENSOR 2 CIRCUIT HIGH 712
P2072-ELECTRONIC THROTTLE CONTROL SYSTEM - ICE BLOCKAGE 716
P2097-DOWNSTREAM FUEL TRIM SYSTEM 1 LEAN 717
P2097-DOWNSTREAM FUEL TRIM SYSTEM 1 RICH. 723
P2098-DOWNSTREAM FUEL TRIM SYSTEM 2 LEAN 729
P2099-DOWNSTREAM FUEL TRIM SYSTEM 2 RICH. 735
P2100-ELECTRONIC THROTTLE CONTROL MOTOR CIRCUIT 741
P2101-ELECTRONIC THROTTLE CONTROL MOTOR PERFORMANCE. 747
P2107-ELECTRONIC THROTTLE CONTROL MODULE PROCESSOR 749

P2108-ELECTRONIC THROTTLE CONTROL MODULE PERFORMANCE 750
P2110-ELECTRONIC THROTTLE CONTROL - FORCED LIMITED RPM 751
P2111-ELECTRONIC THROTTLE CONTROL - UNABLE TO CLOSE 756
P2112-ELECTRONIC THROTTLE CONTROL - UNABLE TO OPEN 761
P2115-ACCELERATOR PEDAL POSITION SENSOR 1 MINIMUM STOP PERFORMANCE. 766
P2116-ACCELERATOR PEDAL POSITION SENSOR 2 MINIMUM STOP PERFORMANCE. 767
P2118-ELECTRONIC THROTTLE CONTROL MOTOR CIRCUIT 768
P2122-ACCELERATOR PEDAL POSITION SENSOR 1 CIRCUIT LOW 774
P2123-ACCELERATOR PEDAL POSITION SENSOR 1 CIRCUIT HIGH. 780
P2127-ACCELERATOR PEDAL POSITION SENSOR 2 CIRCUIT LOW 785
P2128-ACCELERATOR PEDAL POSITION SENSOR 2 CIRCUIT HIGH. 791
P2135-THROTTLE POSITION SENSOR 1/2 CORRELATION 795
P2138-ACCELERATOR PEDAL POSITION SENSOR 1/2 CORRELATION 803
P2161-VEHICLE SPEED SENSOR 2 ERRATIC (Not Equipped with ABS). 809
P2161-VEHICLE SPEED SENSOR 2 ERRATIC (Equipped with ABS) 812
P2166-ACCELERATOR PEDAL POSITION SENSOR 1 MAXIMUM STOP PERFORMANCE. 815
P2167-ACCELERATOR PEDAL POSITION SENSOR 2 MAXIMUM STOP PERFORMANCE. 816
P2172-HIGH AIRFLOW/VACUUM LEAK DETECTED (INSTANTANEOUS ACCUMULATION). 817
P2173-HIGH AIRFLOW/VACUUM LEAK DETECTED (SLOW ACCUMULATION) 828
P2174-LOW AIRFLOW/RESTRICTION DETECTED (INSTANTANEOUS ACCUMULATION). 839
P2175-LOW AIRFLOW/RESTRICTION DETECTED (SLOW ACCUMULATION) 850
P2181-COOLING SYSTEM PERFORMANCE . 861
P2299-BRAKE PEDAL POSITION / ACCELERATOR PEDAL POSITION INCOMPATIBLE. 867
P2302-IGNITION COIL 1 SECONDARY CIRCUIT- INSUFFICIENT IONIZATION 870
P2305-IGNITION COIL 2 SECONDARY CIRCUIT- INSUFFICIENT IONIZATION 875
P2308-IGNITION COIL 3 SECONDARY CIRCUIT- INSUFFICIENT IONIZATION 880
P2311-IGNITION COIL 4 SECONDARY CIRCUIT- INSUFFICIENT IONIZATION 885
P2314-IGNITION COIL 5 SECONDARY CIRCUIT- INSUFFICIENT IONIZATION 890
P2317-IGNITION COIL 6 SECONDARY CIRCUIT- INSUFFICIENT IONIZATION 895
P2320-IGNITION COIL 7 SECONDARY CIRCUIT- INSUFFICIENT IONIZATION 900
P2323-IGNITION COIL 8 SECONDARY CIRCUIT- INSUFFICIENT IONIZATION 905
P2503-CHARGING SYSTEM OUTPUT LOW . . 910
P3400-MDS RATIONALITY BANK 1 915
P3402-CYLINDER 1 DEACTIVATION CONTROL PERFORMANCE 917
P3426-CYLINDER 4 DEACTIVATION CONTROL PERFORMANCE 923
P3442-CYLINDER 6 DEACTIVATION CONTROL PERFORMANCE 929
P3450-CYLINDER 7 DEACTIVATION CONTROL PERFORMANCE 934
P3401-MDS SOLENOID 1 CIRCUIT 940
P3425-MDS SOLENOID 4 CIRCUIT 948
P3441-MDS SOLENOID 6 CIRCUIT 956
P3449-MDS SOLENOID 7 CIRCUIT 964
P3497-MDS RATIONALITY BANK 2 972
U0001-CAN C BUS 974
U0101-LOST COMMUNICATION WITH TCM . . 976
U0103-LOST COMMUNICATION WITH ELECTRIC GEAR SHIFT MODULE 977
U0121-LOST COMMUNICATION WITH ANTI-LOCK BRAKE MODULE. 979
U0141-LOST COMMUNICATION WITH FRONT CONTROL MODULE. 981
U0155-LOST COMMUNICATION WITH CLUSTER/CCN 983
U0168-LOST COMMUNICATION WITH VEHICLE SECURITY CONTROL MODULE (SKREEM/WCM) 985
U110A-LOST COMMUNICATION WITH SCCM - CAN - C. 987
U110C-NO FUEL LEVEL BUS MESSAGE RECEIVED 989
U110E-LOST AMBIENT TEMPERATURE MESSAGE 991
U110F-LOST FUEL VOLUME MESSAGE 993
U1110-LOST VEHICLE SPEED MESSAGE 995
U1120-LOST WHEEL DISTANCE MESSAGE . . 997
U1403-IMPLAUSIBLE FUEL LEVEL SIGNAL . . 999
U1411-IMPLAUSIBLE FUEL VOLUME SIGNAL RECEIVED 1001
U1412-IMPLAUSIBLE VEHICLE SPEED SIGNAL RECEIVED 1003
U1417-IMPLAUSIBLE LEFT WHEEL DISTANCE SIGNAL RECEIVED 1006
U1418-IMPLAUSIBLE RIGHT WHEEL DISTANCE SIGNAL RECEIVED 1009
*5.7L INTERMITTENT NO CRANK CONDITION 1012
*CHECKING THE FUEL DELIVERY SYSTEM . 1013

*HARD START FUEL SYSTEM 1016
*ENGINE CRANKS BUT DOES NOT START . 1019
*FUEL PRESSURE LEAK DOWN 1022
*NO CRANK CONDITION 1023
*NO RESPONSE WITH A NO START CONDITION 1027
*START AND STALL CONDITION 1033
STANDARD PROCEDURE
POWERTRAIN VERIFICATION TEST 1036

ENGINE ELECTRICAL DIAGNOSTICS

DIAGNOSIS AND TESTING

PRE-DIAGNOSTIC TROUBLESHOOTING PROCEDURE

For a complete wiring diagram **Refer to Section 8W**.

Diagnostic Test

1. NO RESPONSE WITH A NO START CONDITION

Is the customer complaint a NO RESPONSE WITH A NO START condition?

Yes >> Check the vehicle for any NO START related PCM DTC(s) or Vehicle Theft Security related DTC(s). If no Theft related DTC(s) are present, refer to the NO RESPONSE WITH A NO START CONDITION test.

No >> Go To 2

2. NO RESPONSE

Make sure the scan tool will communicate with the appropriate modules.

Are you currently experiencing a NO RESPONSE condition with the PCM?

Yes >> The NO RESPONSE condition must be properly diagnosed before continuing. Refer to Section 8 ELECTRONIC CONTROL MODULES - ELECTRICAL DIAGNOSTICS and perform the appropriate Communication test.

No >> Go To 3

3. NO START

Is the customer complaint a NO START condition?

Yes >> Check the vehicle for any NO START related PCM DTC(s) or Vehicle Theft Security related DTC(s). If no Theft related DTC(s) are present, refer to the Non DTC Diagnostic Procedures that relate to Fuel and Starting.

No >> Go To 4

4. VEHICLE HISTORY AND TSB(s)

Continue by reading PCM DTC(s) and record the related Freeze Frame data if any DTC(s) are present.

Whether or not any DTC(s) are present you will want to check the following items which may assist in repairing the customers complaint successfully.

Check the vehicles repair history.

If the vehicle has a repair history that pertains to the customer's current complaint, review the repair.

Inspect the vehicle for any aftermarket accessories that may have been installed incorrectly.

Check for any TSB(s) related to the customer's complaint or DTC(s).

If a TSB applies, follow the instructions per the TSB.

Choose the following scenario that best applies.

The TSB repaired the customers complaint.
Testing complete.

A DTC is present, no TSB applies, or the TSB didn't repair the customers complaint.
Go To 5

No DTC(s) are present.
Refer to the INTERMITTENT CONDITION Diagnostic Procedure.

5. WIRE HARNESS INSPECTION

Clear the DTC(s).

Attempt to duplicate the customer complaint.

Whether the customer complaint can be duplicated or not, make a quick wire harness inspection related to the DTC(s) that were previously cleared.

Check the Powertrain Control Module connectors, the suspected component connection, in-line connectors, wire harness splices, PCM power and ground circuits, and any related fuses.

If the DTC(s) are fuel or air related, check the fuel level, quality and the air duct system.

Were any repairs made that fixed the customer's complaint?

Yes >> Testing complete.

No >> Refer to the diagnostic test procedure related to the DTC.

INTERMITTENT CONDITION

For a complete wiring diagram **Refer to Section 8W**.

POSSIBLE CAUSES
INTERMITTENT CONDITION

Diagnostic Test

1. INTERMITTENT CONDITION

NOTE: The conditions that set the DTC are not present at this time. The following list may help in identifying the intermittent condition.

WARNING: When the engine is operating, do not stand in direct line with the fan. Do not put your hands near the pulleys, belts, or fan. Do not wear loose clothing. Failure to follow these instructions can result in personal injury or death.

Refer to any Technical Service Bulletins (TSBs) that may apply.

Review the scan tool Freeze Frame information. If possible, try to duplicate the conditions under which the DTC set.

With the engine running at normal operating temperature, monitor the scan tool parameters related to the DTC while wiggling the wire harness. Look for parameter values to change and/or a DTC to set.

Turn the ignition off.

Visually inspect the related wire harness. Disconnect all the related harness connectors. Look for any chafed, pierced, pinched, partially broken wires and broken, bent, pushed out, or corroded terminals.

Perform a voltage drop test on the related circuits between the suspected faulty component and the PCM.

CAUTION: Do not probe the PCM harness connectors. Probing the PCM harness connectors will damage the PCM terminals resulting in poor terminal to pin connection. Install Miller Special Tool #8815 to perform diagnosis.

Inspect and clean all PCM, engine, and chassis grounds that are related to the most current DTC.

If numerous trouble codes were set, use a wire schematic and look for any common ground or supply circuits.

For any Relay DTCs, actuate the Relay with the scan tool and wiggle the related wire harness to try to interrupt the actuation.

For intermittent Evaporative Emission trouble codes perform a visual and physical inspection of the related parts including hoses and the Fuel Filler cap.

For intermittent Misfire DTC's check for restrictions in the Intake and Exhaust system, proper installation of Sensors, vacuum leaks, and binding components that are run by the accessory drive belt.

Use the scan tool to perform a System Test if one applies to the failing component.

A co-pilot, data recorder, and/or lab scope should be used to help diagnose intermittent conditions.

Were any problems found during the above inspections?

Yes >> Perform the necessary repairs.
Perform the POWERTRAIN VERIFICATION TEST. (Refer to 9 - ENGINE - STANDARD PROCEDURE)

No >> Test Complete.

P0016–CRANKSHAFT / CAMSHAFT TIMING MISALIGNMENT

For a complete wiring diagram **Refer to Section 8W**.

- **When Monitored:**
  Engine cranking and Engine running
- **Set Condition:**
  Powertrain Control Module detects an error when the camshaft position is out of phase with the crankshaft position. One Trip Fault. Three good trips to turn off the MIL.

Possible Causes
ERRATIC CAM POSITION SENSOR SIGNAL
CAMSHAFT POSITION SENSOR TONE WHEEL/PULSE RING
ERRATIC CRANKSHAFT POSITION SENSOR SIGNAL
CRANKSHAFT POSITION SENSOR TONE WHEEL/PULSE RING
CAMSHAFT POSITION SENSOR
CRANKSHAFT POSITION SENSOR

Always perform the Pre-Diagnostic Troubleshooting procedure before proceeding. (Refer to 9 - ENGINE - DIAGNOSIS AND TESTING).

Diagnostic Test

1. ACTIVE DTC

WARNING: When the engine is operating, do not stand in direct line with the fan. Do not put your hands near the pulleys, belts, or fan. Do not wear loose clothing. Failure to follow these instructions can result in personal injury or death.

With the scan tool clear the DTC(s).

Start the engine and run until operating temp is reached. (Closed Loop)

If the DTC does not reset it may be necessary to test drive the vehicle.

Does the P0016 return?

Yes >> Go To 2

No >> Refer to the INTERMITTENT CONDITION Diagnostic Procedure.
Perform the POWERTRAIN VERIFICATION TEST. (Refer to 9 - ENGINE - STANDARD PROCEDURE)

2. CHECKING THE CMP SIGNAL WITH A LAB SCOPE

With a lab scope, backprobe the (K44) CMP Signal circuit at the CMP Sensor harness connector.

WARNING: When the engine is operating, do not stand in direct line with the fan. Do not put your hands near the pulleys, belts, or fan. Do not wear loose clothing. Failure to follow these instructions can result in personal injury or death.

Start the engine.

Observe the lab scope screen.

Are there any irregular or missing signals?

Yes >> Go To 3

No >> Go To 6

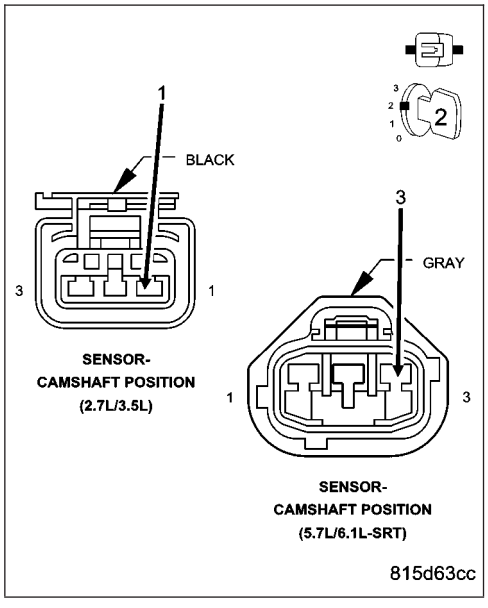

3. CMP WIRE HARNESS INSPECTION

Turn the ignition off.

Visually inspect the related wire harness. Look for any chafed, pierced, pinched, or partially broken wires.

Visually inspect the related wire harness connectors. Look for broken, bent, pushed out, or corroded terminals.

Make sure the Crankshaft Position Sensor and the Camshaft Position Sensor are properly installed and the mounting bolt(s) are torqued to their proper specification.

Refer to any TSBs that may apply.

Were any of the above conditions present?

Yes >> Repair as necessary.
Perform the POWERTRAIN VERIFICATION TEST. (Refer to 9 - ENGINE - STANDARD PROCEDURE)

No >> Go To 4

4. TONE WHEEL/PULSE RING INSPECTION

Remove the Camshaft Position Sensor.

Inspect the Tone Wheel/Pulse Ring for damage, foreign material, or excessive movement.

Were any problems found?

Yes >> Repair or replace the Tone Wheel/Pulse Ring as necessary.
Perform the POWERTRAIN VERIFICATION TEST. (Refer to 9 - ENGINE - STANDARD PROCEDURE)

No >> Go To 5

5. CAMSHAFT POSITION SENSOR

If there are no possible causes remaining, view repair.

Repair

Replace the Camshaft Position Sensor.
Perform the POWERTRAIN VERIFICATION TEST. (Refer to 9 - ENGINE - STANDARD PROCEDURE)

6. ERRATIC CMP SIGNAL

Turn the ignition off.

Remove the lab scope probe.

WARNING: When the engine is operating, do not stand in direct line with the fan. Do not put your hands near the pulleys, belts, or fan. Do not wear loose clothing. Failure to follow these instructions can result in personal injury or death.

Ignition on, engine not running.

With scan tool, erase DTCs.

Start the engine.

Gently tap on and wiggle the Cam Position Sensor.

Ignition on, engine not running.

Inspect the Sensor connector and harness connector, and inspect the PCM connector and harness connector for loose, bent, corroded, or pushed out pins/terminals.

Inspect the related wire harness and the splices in the CMP circuit.

Does the P0016 return?

Yes >> Repair the wiring/connector concerns as needed or replace the Camshaft Position Sensor.
Perform the POWERTRAIN VERIFICATION TEST. (Refer to 9 - ENGINE - STANDARD PROCEDURE)

No >> Go To 7

7. CHECKING THE CKP SIGNAL WITH A LAB SCOPE

Turn the ignition off.

With a lab scope, backprobe the (K24) CKP Signal circuit at the CKP harness connector.

WARNING: When the engine is operating, do not stand in direct line with the fan. Do not put your hands near the pulleys, belts, or fan. Do not wear loose clothing. Failure to follow these instructions can result in personal injury or death.

Start the engine.

Observe the lab scope screen.

Are there any irregular or missing signals?

Yes >> Go To 8

No >> Go To 10

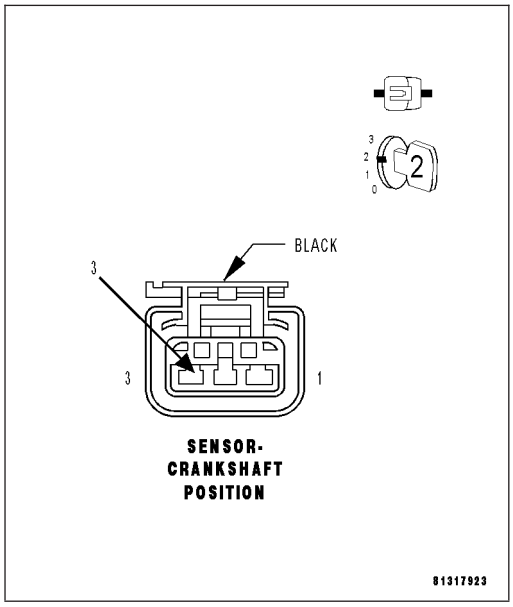

8. CKP WIRE HARNESS INSPECTION

Turn the ignition off.

Visually inspect the related wire harness. Look for any chafed, pierced, pinched, or partially broken wires.

Visually inspect the related wire harness connectors. Look for broken, bent, pushed out, or corroded terminals.

Make sure the Crankshaft Position Sensor and the Camshaft Position Sensor are properly installed and the mounting bolt(s) are torqued to their proper specification.

Refer to any TSBs that may apply.

Were any of the above conditions present?

Yes >> Repair as necessary.
Perform the POWERTRAIN VERIFICATION TEST. (Refer to 9 - ENGINE - STANDARD PROCEDURE)

No >> Go To 9

9. TONE WHEEL/FLEX PLATE INSPECTION

Remove the Crankshaft Position Sensor.

Inspect the Tone Wheel/Flex Plate slots for damage, foreign material, or excessive movement.

Were any problems found?

Yes >> Repair or replace the Tone Wheel/Flex Plate as necessary.
Perform the POWERTRAIN VERIFICATION TEST. (Refer to 9 - ENGINE - STANDARD PROCEDURE)

No >> Replace the Crankshaft Position Sensor.
Perform the POWERTRAIN VERIFICATION TEST. (Refer to 9 - ENGINE - STANDARD PROCEDURE)

10. ERRATIC CKP SIGNAL

NOTE: The conditions that set this DTC are not present at this time. The following test may help in identifying the intermittent condition.

WARNING: When the engine is operating, do not stand in direct line with the fan. Do not put your hands near the pulleys, belts, or fan. Do not wear loose clothing. Failure to follow these instructions can result in personal injury or death.

Start the engine.

Gently tap on and wiggle the Crank Position Sensor.

Turn the ignition off.

Inspect the Sensor connector and harness connector, and inspect the PCM connector and harness connector for loose, bent, corroded, or pushed out pins/terminals.

Inspect the related wire harness and the splices in the CKP circuits.

Were any problems found?

Yes >> Repair the wiring/connector concerns as needed or replace the Crankshaft Position Sensor. Perform the POWERTRAIN VERIFICATION TEST. (Refer to 9 - ENGINE - STANDARD PROCEDURE)

No >> Test Complete.

P0031-O2 SENSOR 1/1 HEATER CIRCUIT LOW

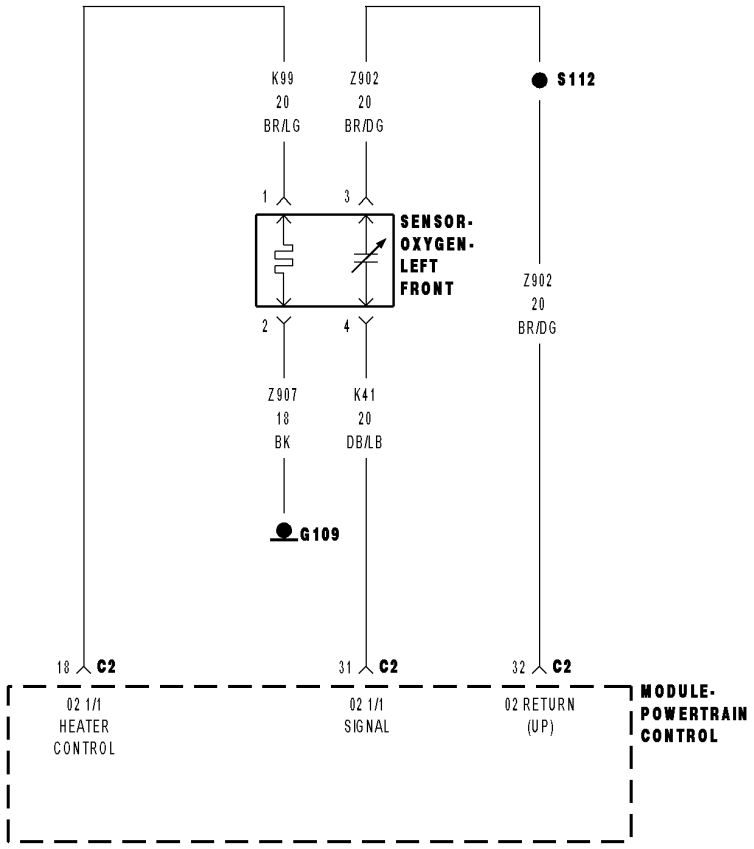

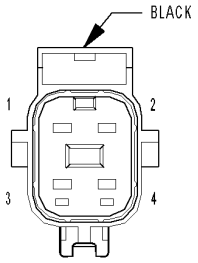

SENSOR-
OXYGEN-
LEFT FRONT

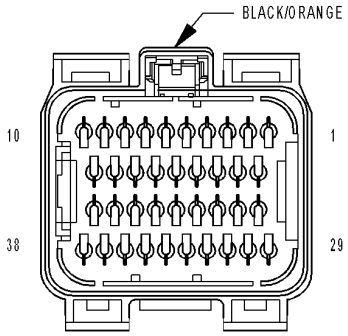

MODULE-
POWERTRAIN
CONTROL C2

8131a07e

For a complete wiring diagram **Refer to Section 8W**.

- **When Monitored:**
  Battery voltage above 10.6 volts, ASD is powered up, and O2 heater is powered.
- **Set Condition:**
  Desired state does not match Actual state. One Trip Fault. Three good trips to turn off the MIL.

Possible Causes
(K99) O2 SENSOR 1/1 HEATER CONTROL CIRCUIT SHORTED TO GROUND
O2 SENSOR
PCM

Always perform the Pre-Diagnostic Troubleshooting procedure before proceeding. (Refer to 9 - ENGINE - DIAGNOSIS AND TESTING).

Diagnostic Test

1. O2 SENSOR HEATER OPERATION

Turn the ignition off.

NOTE: Wait a minimum of 8 minutes to allow the O2 Sensor to cool down before continuing the test. Allow the O2 Sensor voltage to stabilize at 5.0 volts.
Ignition on, engine not running.

With a scan tool, actuate the O2 Heater Test.

With the scan tool, monitor 1/1 O2 Sensor voltage for at least 2 minutes.

Does the O2 Sensor voltage stay above 4.5 volts?

Yes >> Go To 2

No >> Refer to the INTERMITTENT CONDITION Diagnostic Procedure.
Perform the POWERTRAIN VERIFICATION TEST. (Refer to 9 - ENGINE - STANDARD PROCEDURE)

2. O2 HEATER ELEMENT

Turn the ignition off.

NOTE: Allow the O2 Sensor to cool down to room temperature.
Disconnect the 1/1 O2 Sensor harness connector.

Measure the resistance across the O2 Sensor Heater element, between the Heater Control terminal and the Heater ground terminal at the component.

NOTE: O2 Heater Element resistance values should be measured at 70°F (21.1°C). The resistance value will vary with different temperature values.

Is the O2 Sensor Heater Element resistance between 2.0 and 30.0 ohms?

Yes >> Go To 3

No >> Replace the O2 Sensor.
Perform the POWERTRAIN VERIFICATION TEST. (Refer to 9 - ENGINE - STANDARD PROCEDURE)

3. O2 SENSOR

Ignition on, engine not running.

With a scan tool, actuate the O2 1/1Heater Test with the O2 Sensor harness connector still disconnected.

Using a 12-volt test light connected to ground, probe the (K99) O2 1/1 Heater Control circuit in the O2 Sensor harness connector.

Does the test light illuminate brightly and flash on and off during the actuation?

Yes >> Replace the O2 Sensor.
Perform the POWERTRAIN VERIFICATION TEST. (Refer to 9 - ENGINE - STANDARD PROCEDURE)

No >> Go To 4

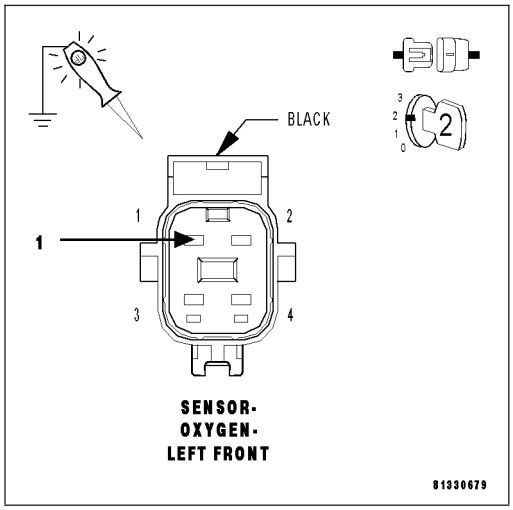

4. (K99) O2 1/1 HEATER CONTROL CIRCUIT SHORTED TO GROUND

Turn the ignition off.

Disconnect the PCM harness connectors.

Measure the resistance between ground and the (K99) O2 1/1 Heater Control circuit in the O2 Sensor harness connector.

Is the resistance below 5.0 ohms?

Yes >> Repair the short to ground in the (K99) O2 1/1 Heater Control circuit.
Perform the POWERTRAIN VERIFICATION TEST. (Refer to 9 - ENGINE - STANDARD PROCEDURE)

No >> Go To 5

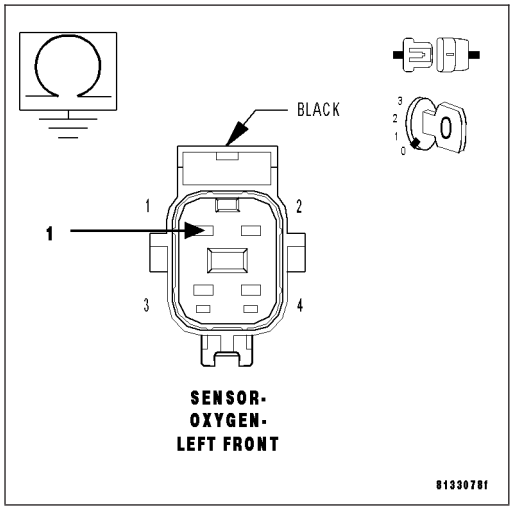

5. PCM

NOTE: Before continuing, check the PCM harness connector terminals for corrosion, damage, or terminal push out. Repair as necessary.

Using the schematics as a guide, inspect the wire harness and connectors. Pay particular attention to all Power and Ground circuits.

Were there any problems found?

Yes >> Repair as necessary.
Perform the POWERTRAIN VERIFICATION TEST. (Refer to 9 - ENGINE - STANDARD PROCEDURE)

No >> Replace and program the Powertrain Control Module per Service Information.
Perform the POWERTRAIN VERIFICATION TEST. (Refer to 9 - ENGINE - STANDARD PROCEDURE)

P0032-O2 SENSOR 1/1 HEATER CIRCUIT HIGH

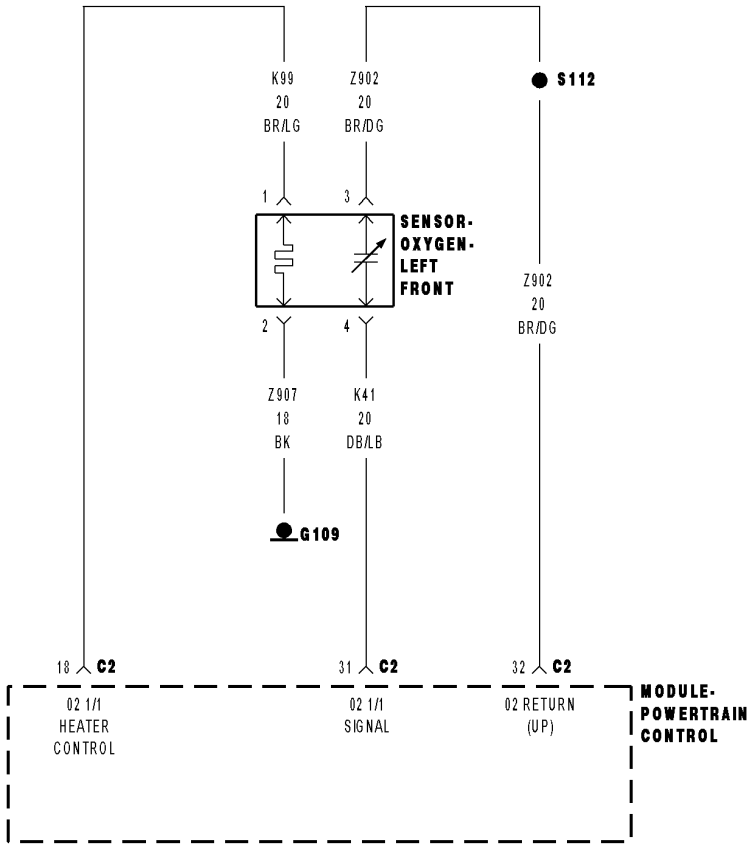

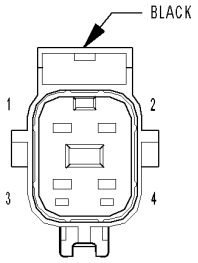

SENSOR-
OXYGEN-
LEFT FRONT

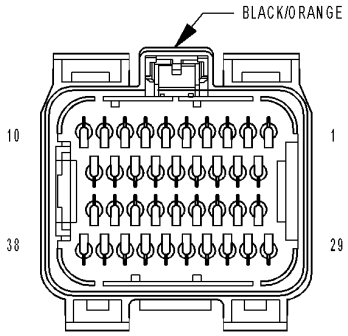

MODULE-
POWERTRAIN
CONTROL C2

8131a07e

For a complete wiring diagram **Refer to Section 8W**.

- **When Monitored:**
  Battery voltage above 10.6 volts, ASD is powered up, and O2 heater is off.
- **Set Condition:**
  Desired state does not equal Actual state. One Trip Fault. Three good trips to turn off the MIL.

Possible Causes
(K99) O2 1/1 HEATER CONTROL CIRCUIT OPEN
(Z904) O2 1/1 HEATER GROUND CIRCUIT OPEN
(K99) O2 1/1 HEATER CONTROL SHORTED TO BATTERY VOLTAGE
O2 SENSOR
PCM

Always perform the Pre-Diagnostic Troubleshooting procedure before proceeding. (Refer to 9 - ENGINE - DIAGNOSIS AND TESTING).

Diagnostic Test

1. ACTIVE DTC

Ignition on, engine not running.

With a scan tool, read DTCs.

Is the DTC active at this time?

Yes >> Go To 2

No >> Refer to the INTERMITTENT CONDITION Diagnostic Procedure.
Perform the POWERTRAIN VERIFICATION TEST. (Refer to 9 - ENGINE - STANDARD PROCEDURE)

2. O2 HEATER ELEMENT

Turn the ignition off.

NOTE: Allow the O2 Sensor to cool down to room temperature.
Disconnect the 1/1 O2 Sensor harness connector.

Measure the resistance across the O2 Sensor Heater element between the O2 Heater Control terminal and the O2 Heater ground terminal at the component.

NOTE: O2 Heater Element resistance values should be measured at 70°F (21.1°C). The resistance value will vary with different temperature values.

Is the O2 Sensor Heater Element resistance between 2.0 and 30.0 ohms?

Yes >> Go To 3

No >> Replace the O2 Sensor.
Perform the POWERTRAIN VERIFICATION TEST. (Refer to 9 - ENGINE - STANDARD PROCEDURE)

3. (K99) O2 1/1 HEATER CONTROL CIRCUIT

Ignition on, engine not running.

With a scan tool, actuate the O2 1/1 Heater Test with the Sensor harness connector still disconnected.

Using a 12-volt test light connected to ground, probe the (K99) O2 1/1 Heater Control circuit in the O2 Sensor harness connector.

Does the test light illuminate brightly and flash on and off during the actuation?

Yes >> Go To 4

No >> Go To 5

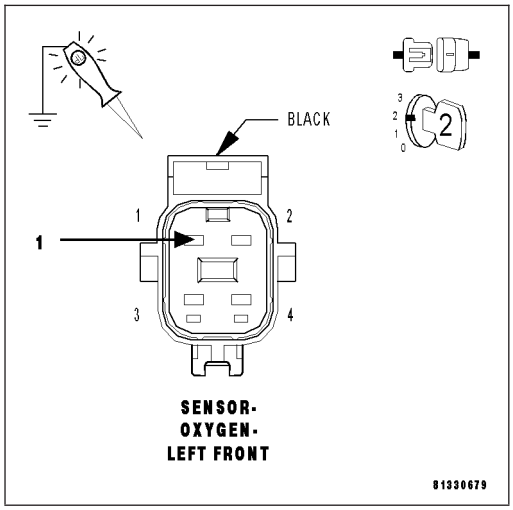

4. (Z904) O2 HEATER GROUND CIRCUIT OPEN

Turn the ignition off.

Measure the resistance between an engine ground and the (Z904) O2 1/1 Heater ground circuit in the O2 Sensor harness connector.

Is the resistance below 5.0 ohms?

Yes >> Replace the O2 Sensor.
Perform the POWERTRAIN VERIFICATION TEST. (Refer to 9 - ENGINE - STANDARD PROCEDURE)

No >> Repair the open in the (Z904) O2 1/1Heater ground circuit.
Perform the POWERTRAIN VERIFICATION TEST. (Refer to 9 - ENGINE - STANDARD PROCEDURE)

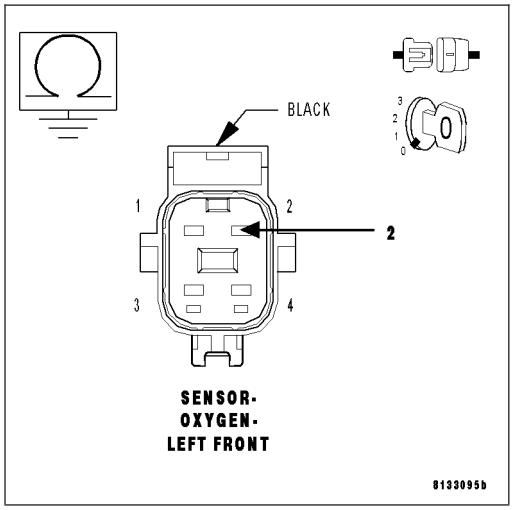

5. (K99) O2 1/1 HEATER CONTROL CIRCUIT SHORTED TO BATTERY VOLTAGE

Turn the ignition off.

Disconnect the PCM harness connectors.

Ignition on, engine not running.

Measure the voltage on the (K99) O2 1/1 Heater Control circuit in the O2 Sensor harness connector.

Does the voltmeter indicate any voltage present?

Yes >> Repair the short to battery voltage in the (K99) O2 1/1 Heater Control circuit.
Perform the POWERTRAIN VERIFICATION TEST. (Refer to 9 - ENGINE - STANDARD PROCEDURE)

No >> Go To 6

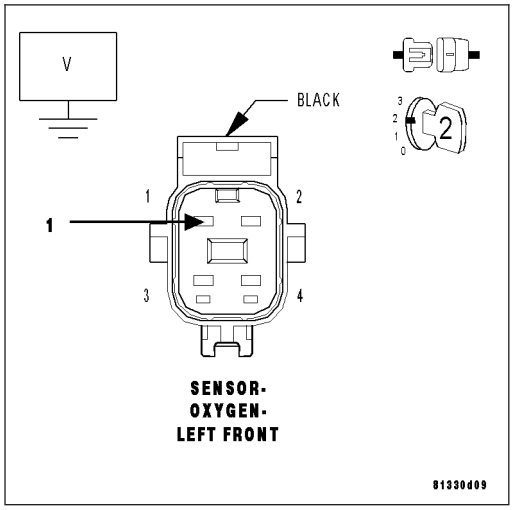

6. (K99) O2 1/1 HEATER CONTROL CIRCUIT OPEN

Turn the ignition off.

CAUTION: Do not probe the PCM harness connectors. Probing the PCM harness connectors will damage the PCM terminals resulting in poor terminal to pin connection. Install Miller Special Tool #8815 to perform diagnosis.

Measure the resistance of the (K99) O2 1/1 Heater Control circuit from the O2 Sensor harness connector to the appropriate terminal of special tool #8815.

Is the resistance below 5.0 ohms?

Yes >> Go To 7

No >> Repair the open in the (K99) O2 1/1 Heater Control circuit. Perform the POWERTRAIN VERIFICATION TEST. (Refer to 9 - ENGINE - STANDARD PROCEDURE)

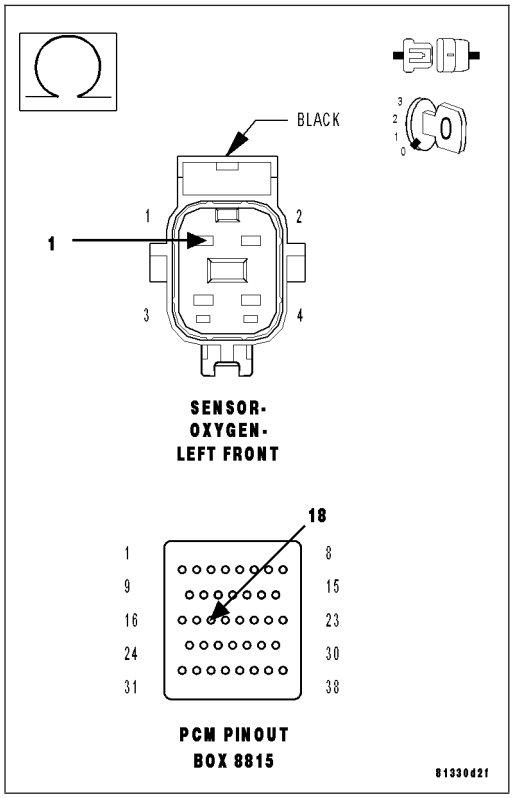

7. PCM

NOTE: Before continuing, check the PCM harness connector terminals for corrosion, damage, or terminal push out. Repair as necessary.

Using the schematics as a guide, inspect the wire harness and connectors. Pay particular attention to all Power and Ground circuits.

Were there any problems found?

Yes >> Repair as necessary.
Perform (NGC) POWERTRAIN VERIFICATION TEST VER - 5.

No >> Replace and program the Powertrain Control Module per Service Information.
Perform the POWERTRAIN VERIFICATION TEST. (Refer to 9 - ENGINE - STANDARD PROCEDURE)

P0037-O2 SENSOR 1/2 HEATER CIRCUIT LOW

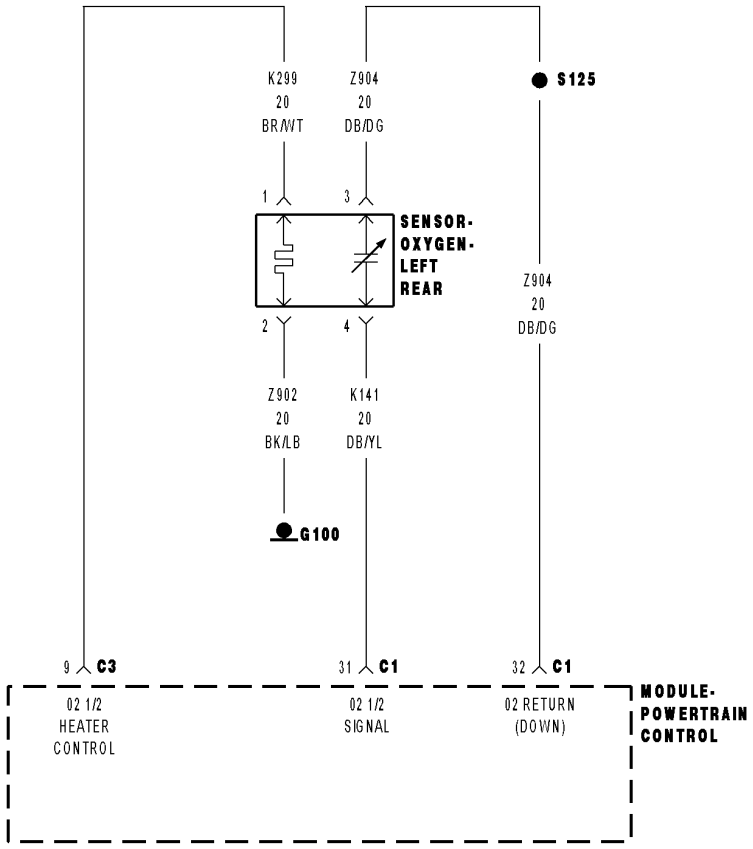

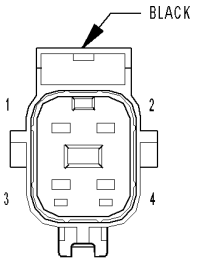

SENSOR-
OXYGEN-
LEFT REAR

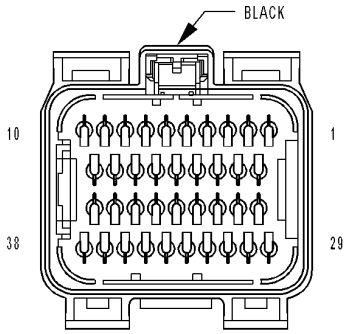

MODULE-
POWERTRAIN
CONTROL C1

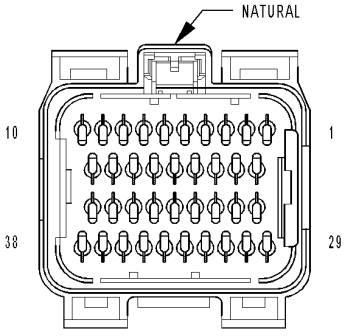

MODULE-
POWERTRAIN
CONTROL C3

8131a0c6

For a complete wiring diagram **Refer to Section 8W**.

- **When Monitored:**
  Battery voltage above 10.6 volts, ASD is powered up, and O2 heater is on.
- **Set Condition:**
  Desired state does not match Actual state. One Trip Fault. Three good trips to turn off the MIL.

Possible Causes
(K299) O2 1/2 HEATER CONTROL CIRCUIT SHORTED TO GROUND
O2 SENSOR
PCM

Always perform the Pre-Diagnostic Troubleshooting procedure before proceeding. (Refer to 9 - ENGINE - DIAGNOSIS AND TESTING).

Diagnostic Test

1. O2 SENSOR HEATER OPERATION

Turn the ignition off.

NOTE: Wait a minimum of 8 minutes to allow the O2 Sensor to cool down before continuing the test. Allow the O2 Sensor voltage to stabilize at 5.0 volts.
Ignition on, engine not running.

With a scan tool, actuate the O2 1/2 Heater Test.

With the scan tool, monitor 1/2 O2 Sensor voltage for at least 2 minutes.

Does the O2 Sensor voltage stay above 4.5 volts?

Yes >> Go To 2

No >> Refer to the INTERMITTENT CONDITION Diagnostic Procedure.
Perform the POWERTRAIN VERIFICATION TEST. (Refer to 9 - ENGINE - STANDARD PROCEDURE)

2. O2 HEATER ELEMENT

Turn the ignition off.

NOTE: Allow the O2 Sensor to cool down to room temperature.
Disconnect the 1/2 O2 Sensor harness connector.

Measure the resistance across the O2 Sensor Heater element, between the O2 Heater Control terminal and the O2 Heater ground terminal at the component.

NOTE: O2 Heater Element resistance values should be measured at 70°F (21.1°C). The resistance value will vary with different temperature values.

Is the O2 Sensor Heater Element resistance between 2.0 and 30.0 ohms?

Yes >> Go To 3

No >> Replace the O2 Sensor.
Perform the POWERTRAIN VERIFICATION TEST. (Refer to 9 - ENGINE - STANDARD PROCEDURE)

3. O2 SENSOR

Ignition on, engine not running.

With a scan tool, actuate the O2 Heater Test with the 1/2 O2 Sensor harness connector still disconnected.

Using a 12-volt test light connected to ground, probe the (K299) O2 1/2 Heater Control circuit in the O2 Sensor harness connector.

Does the test light illuminate brightly and flash on and off during the actuation?

Yes >> Replace the O2 Sensor.
Perform the POWERTRAIN VERIFICATION TEST. (Refer to 9 - ENGINE - STANDARD PROCEDURE)

No >> Go To 4

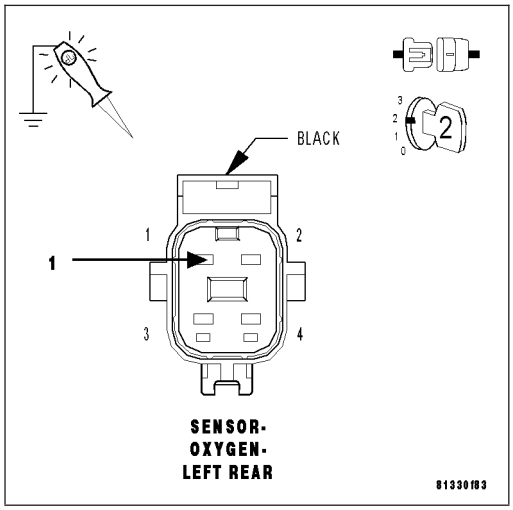

4. (K299) O2 1/2 HEATER CONTROL CIRCUIT SHORTED TO GROUND

Turn the ignition off.

Disconnect the PCM harness connectors.

Measure the resistance between ground and the (K299) O2 1/2 Heater Control circuit in the O2 Sensor harness connector.

Is the resistance below 5.0 ohms?

Yes >> Repair the short to ground in the (K299) O2 1/2 Heater Control circuit.
Perform the POWERTRAIN VERIFICATION TEST. (Refer to 9 - ENGINE - STANDARD PROCEDURE)

No >> Go To 5

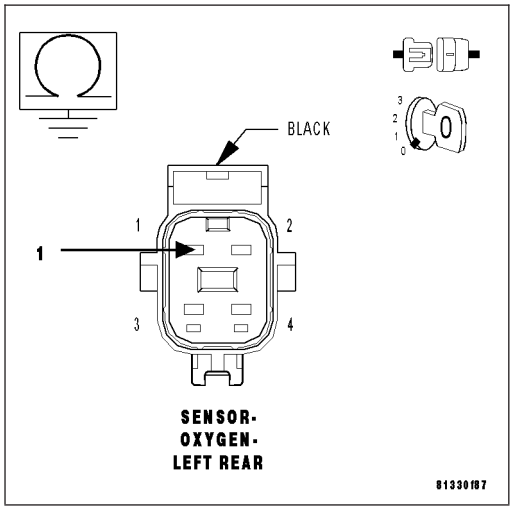

5. PCM

NOTE: Before continuing, check the PCM harness connector terminals for corrosion, damage, or terminal push out. Repair as necessary.

Using the schematics as a guide, inspect the wire harness and connectors. Pay particular attention to all Power and Ground circuits.

Were there any problems found?

Yes >> Repair as necessary.
Perform the POWERTRAIN VERIFICATION TEST. (Refer to 9 - ENGINE - STANDARD PROCEDURE)

No >> Replace and program the Powertrain Control Module per Service Information.
Perform the POWERTRAIN VERIFICATION TEST. (Refer to 9 - ENGINE - STANDARD PROCEDURE)

P0038-O2 SENSOR 1/2 HEATER CIRCUIT HIGH

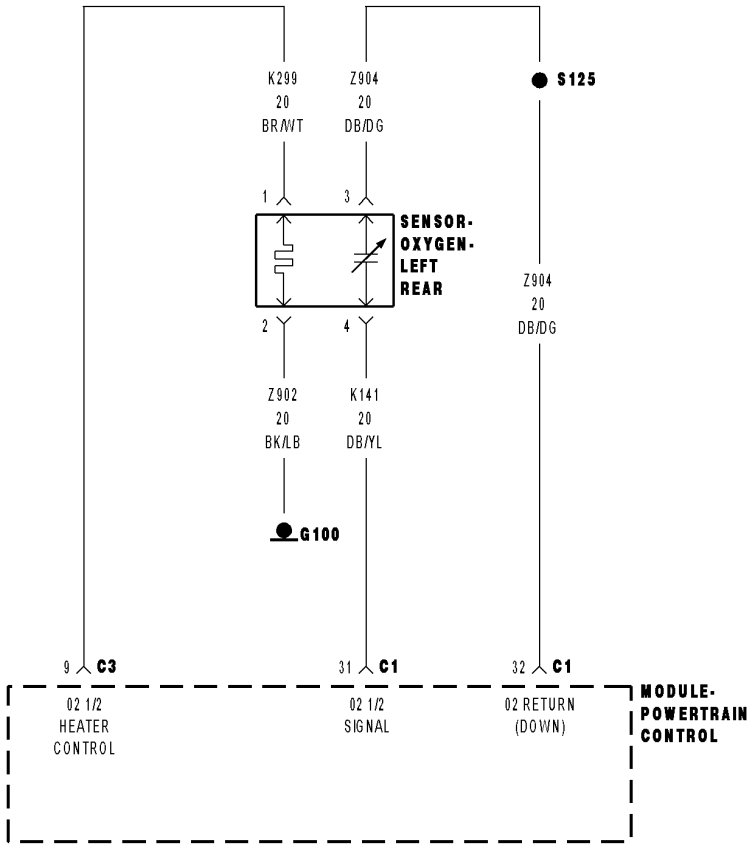

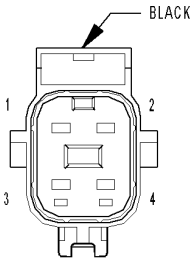

SENSOR-
OXYGEN-
LEFT REAR

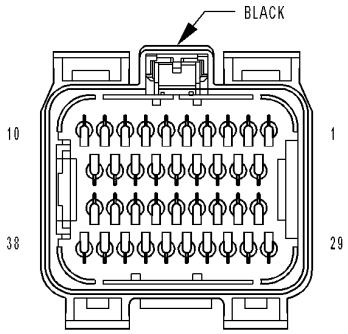

MODULE-
POWERTRAIN
CONTROL C1

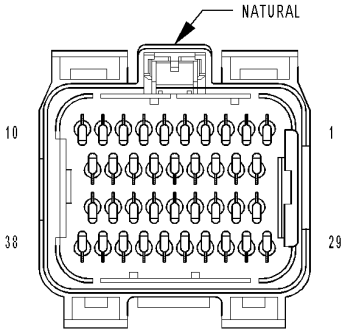

MODULE-
POWERTRAIN
CONTROL C3

8131a0c6

For a complete wiring diagram **Refer to Section 8W**.

- **When Monitored:**
  Battery voltage above 10.6 volts, ASD is powered up, and O2 heater is off.
- **Set Condition:**
  Desired state does not equal Actual state. One Trip Fault. Three good trips to turn off the MIL.

Possible Causes
(K299) O2 1/2 HEATER CONTROL CIRCUIT OPEN
(Z902) O2 1/2 HEATER GROUND CIRCUIT OPEN
(K299) O2 SENSOR 1/2 HEATER CONTROL SHORTED TO BATTERY VOLTAGE
O2 SENSOR
PCM

Always perform the Pre-Diagnostic Troubleshooting procedure before proceeding. (Refer to 9 - ENGINE - DIAGNOSIS AND TESTING).

Diagnostic Test

1. ACTIVE DTC

Ignition on, engine not running.

With a scan tool, read DTCs.

Is the DTC active at this time?

Yes >> Go To 2

No >> Refer to the INTERMITTENT CONDITION Diagnostic Procedure.
Perform the POWERTRAIN VERIFICATION TEST. (Refer to 9 - ENGINE - STANDARD PROCEDURE)

2. O2 HEATER ELEMENT

Turn the ignition off.

NOTE: Allow the O2 Sensor to cool down to room temperature.

Disconnect the 1/2 O2 Sensor harness connector.

Measure the resistance across the O2 Sensor Heater element, between the Heater Control terminal and the Heater ground terminal at the component.

NOTE: O2 Heater Element resistance values should be measured at 70°F (21.1°C). The resistance value will vary with different temperature values.

Is the O2 Sensor Heater Element resistance between 2.0 and 30.0 ohms?

Yes >> Go To 3

No >> Replace the O2 Sensor.
Perform the POWERTRAIN VERIFICATION TEST. (Refer to 9 - ENGINE - STANDARD PROCEDURE)

3. (K299) O2 1/2 HEATER CONTROL CIRCUIT

Ignition on, engine not running.

With a scan tool, actuate the O2 1/2 Heater Test with the O2 Sensor harness connector still disconnected.

Using a 12-volt test light connected to ground, probe the (K299) O2 1/2 Heater Control circuit in the O2 Sensor harness connector.

Does the test light illuminate brightly and flash on and off during the actuation?

Yes >> Go To 4

No >> Go To 5

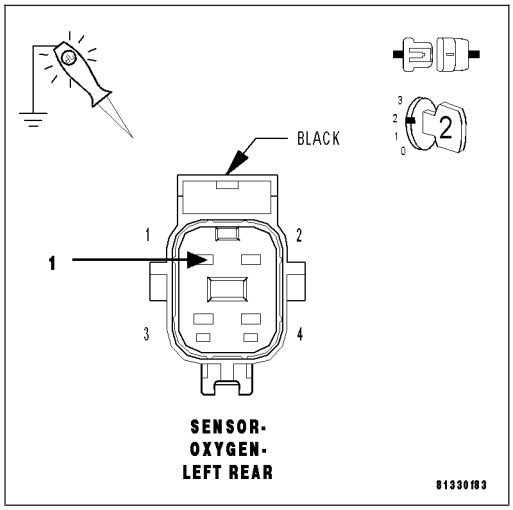

4. (Z902) O2 HEATER GROUND CIRCUIT OPEN

Turn the ignition off.

Measure the resistance between an engine ground and the (Z902) O2 1/2 Heater ground circuit in the O2 Sensor harness connector.

Is the resistance below 5.0 ohms?

Yes >> Replace the O2 Sensor.
Perform the POWERTRAIN VERIFICATION TEST. (Refer to 9 - ENGINE - STANDARD PROCEDURE)

No >> Repair the open in the (Z902) O2 1/2 Heater ground circuit.
Perform the POWERTRAIN VERIFICATION TEST. (Refer to 9 - ENGINE - STANDARD PROCEDURE)

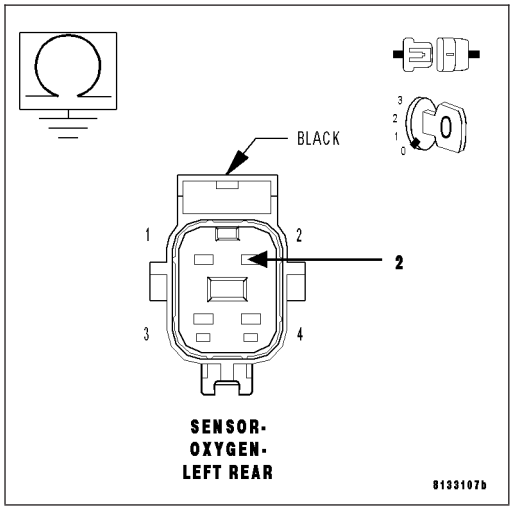

5. (K299) O2 1/2 HEATER CONTROL CIRCUIT SHORTED TO BATTERY VOLTAGE

Turn the ignition off.

Disconnect the PCM harness connectors.

Ignition on, engine not running.

Measure the voltage on the (K299) O2 1/2 Heater Control circuit in the O2 Sensor harness connector.

Does the voltmeter indicate any voltage present?

Yes >> Repair the short to battery voltage in the (K299) O2 1/2 Heater Control circuit.
Perform the POWERTRAIN VERIFICATION TEST. (Refer to 9 - ENGINE - STANDARD PROCEDURE)

No >> Go To 6

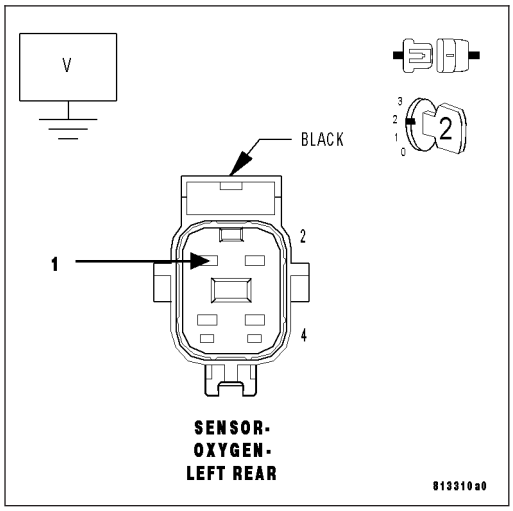

6. (K299) O2 1/2 HEATER CONTROL CIRCUIT OPEN

Turn the ignition off.

CAUTION: Do not probe the PCM harness connectors. Probing the PCM harness connectors will damage the PCM terminals resulting in poor terminal to pin connection. Install Miller Special Tool #8815 to perform diagnosis.

Measure the resistance of the (K299) O2 1/2 Heater Control circuit from the O2 Sensor harness connector to the appropriate terminal of special tool #8815.

Is the resistance below 5.0 ohms?

Yes >> Go To 7

No >> Repair the open in the (K299) O2 1/2 Heater Control circuit. Perform the POWERTRAIN VERIFICATION TEST. (Refer to 9 - ENGINE - STANDARD PROCEDURE)

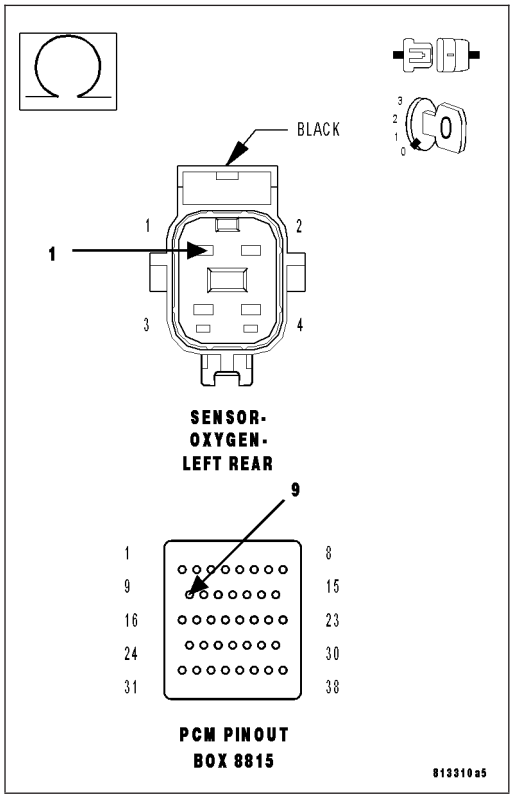

7. PCM

NOTE: Before continuing, check the PCM harness connector terminals for corrosion, damage, or terminal push out. Repair as necessary.

Using the schematics as a guide, inspect the wire harness and connectors. Pay particular attention to all Power and Ground circuits.

Were there any problems found?

Yes >> Repair as necessary.
Perform the POWERTRAIN VERIFICATION TEST. (Refer to 9 - ENGINE - STANDARD PROCEDURE)

No >> Replace and program the Powertrain Control Module per Service Information.
Perform the POWERTRAIN VERIFICATION TEST. (Refer to 9 - ENGINE - STANDARD PROCEDURE)

P0051-O2 SENSOR 2/1 HEATER CIRCUIT LOW

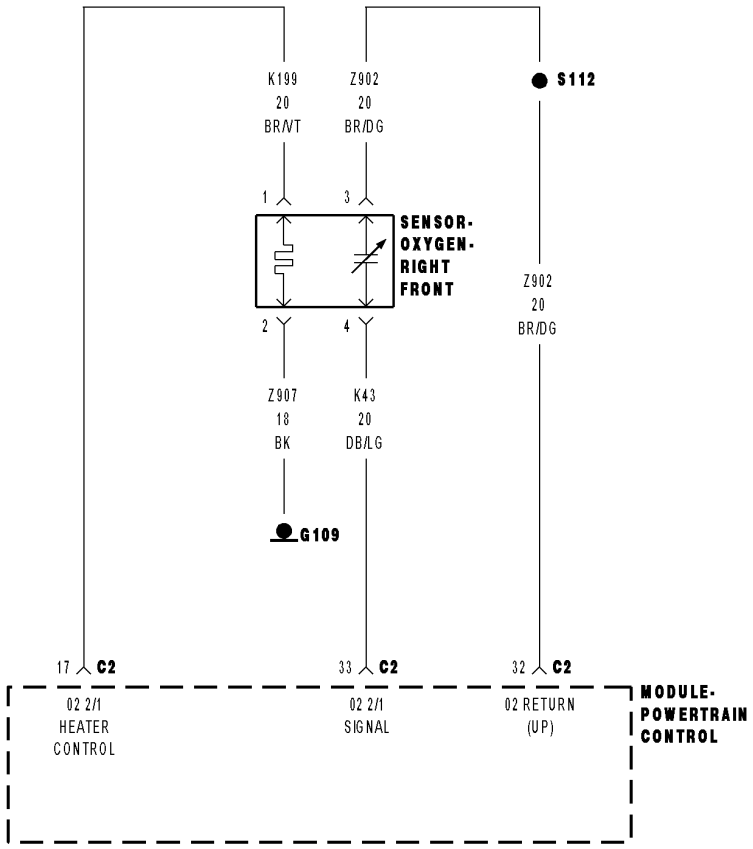

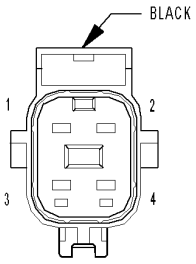

SENSOR-
OXYGEN-
RIGHT FRONT

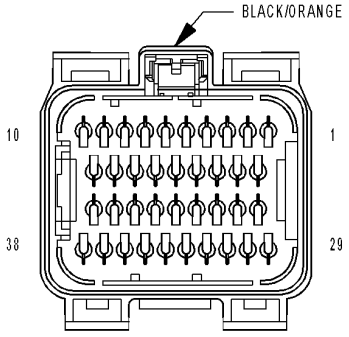

MODULE-
POWERTRAIN
CONTROL C2

8131a0de

For a complete wiring diagram **Refer to Section 8W**.

- **When Monitored:**
  Battery voltage above 10.6 volts, ASD is powered up, and O2 heater is on.
- **Set Condition:**
  Desired state does not match Actual state. One Trip Fault. Three good trips to turn off the MIL.

Possible Causes
(K199) O2 2/1 HEATER CONTROL CIRCUIT SHORTED TO GROUND
O2 SENSOR
PCM

Always perform the Pre-Diagnostic Troubleshooting procedure before proceeding. (Refer to 9 - ENGINE - DIAGNOSIS AND TESTING).

Diagnostic Test

1. O2 SENSOR HEATER OPERATION

Turn the ignition off.

NOTE: Wait a minimum of 8 minutes to allow the O2 Sensor to cool down before continuing the test. Allow the O2 Sensor voltage to stabilize at 5.0 volts.
Ignition on, engine not running.
With a scan tool, actuate the O2 Heater Test.
With a scan tool, monitor 2/1 O2 Sensor voltage for at least 2 minutes.

Does the O2 Sensor voltage stay above 4.5 volts?

Yes >> Go To 2

No >> Refer to the INTERMITTENT CONDITION Diagnostic Procedure.
Perform the POWERTRAIN VERIFICATION TEST. (Refer to 9 - ENGINE - STANDARD PROCEDURE)

2. O2 HEATER ELEMENT

Turn the ignition off.

NOTE: Allow the O2 Sensor to cool down to room temperature.
Disconnect the 2/1 O2 Sensor harness connector.
Measure the resistance across the O2 Sensor Heater element, between the Heater Control terminal and the Heater ground terminal at the component.

NOTE: O2 Heater Element resistance values should be measured at 70°F (21.1°C). The resistance value will vary with different temperature values.

Is the O2 Sensor Heater Element resistance between 2.0 and 30.0 ohms?

Yes >> Go To 3

No >> Replace the O2 Sensor.
Perform the POWERTRAIN VERIFICATION TEST. (Refer to 9 - ENGINE - STANDARD PROCEDURE)

3. O2 SENSOR

Ignition on, engine not running.

With a scan tool, actuate the O2 Heater Test with the O2 Sensor harness connector still disconnected.

Using a 12-volt test light connected to ground, probe the (K199) O2 2/1 Heater Control circuit in the O2 Sensor harness connector.

Does the test light illuminate brightly and flash on and off during the actuation?

Yes >> Replace the O2 Sensor.
Perform the POWERTRAIN VERIFICATION TEST. (Refer to 9 - ENGINE - STANDARD PROCEDURE)

No >> Go To 4

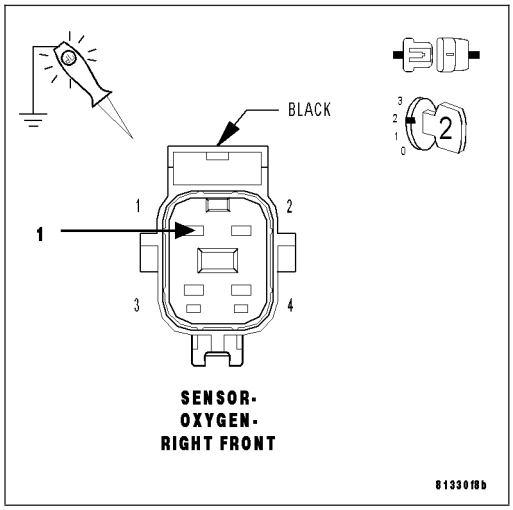

4. (K199) O2 2/1 HEATER CONTROL CIRCUIT SHORTED TO GROUND

Turn the ignition off.

Disconnect the PCM harness connectors.

Measure the resistance between ground and the (K199) O2 2/1 Heater Control circuit in the O2 Sensor harness connector.

Is the resistance below 5.0 ohms?

Yes >> Repair the short to ground in the (K199) O2 2/1 Sensor Heater Control circuit.
Perform the POWERTRAIN VERIFICATION TEST. (Refer to 9 - ENGINE - STANDARD PROCEDURE)

No >> Go To 5

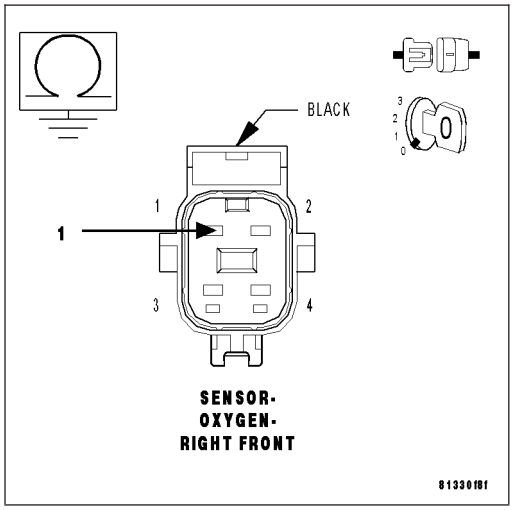

5. PCM

NOTE: Before continuing, check the PCM harness connector terminals for corrosion, damage, or terminal push out. Repair as necessary.

Using the schematics as a guide, inspect the wire harness and connectors. Pay particular attention to all Power and Ground circuits.

Were there any problems found?

Yes >> Repair as necessary.
Perform the POWERTRAIN VERIFICATION TEST. (Refer to 9 - ENGINE - STANDARD PROCEDURE)

No >> Replace and program the Powertrain Control Module per Service Information.
Perform the POWERTRAIN VERIFICATION TEST. (Refer to 9 - ENGINE - STANDARD PROCEDURE)

P0052-O2 SENSOR 2/1 HEATER CIRCUIT HIGH

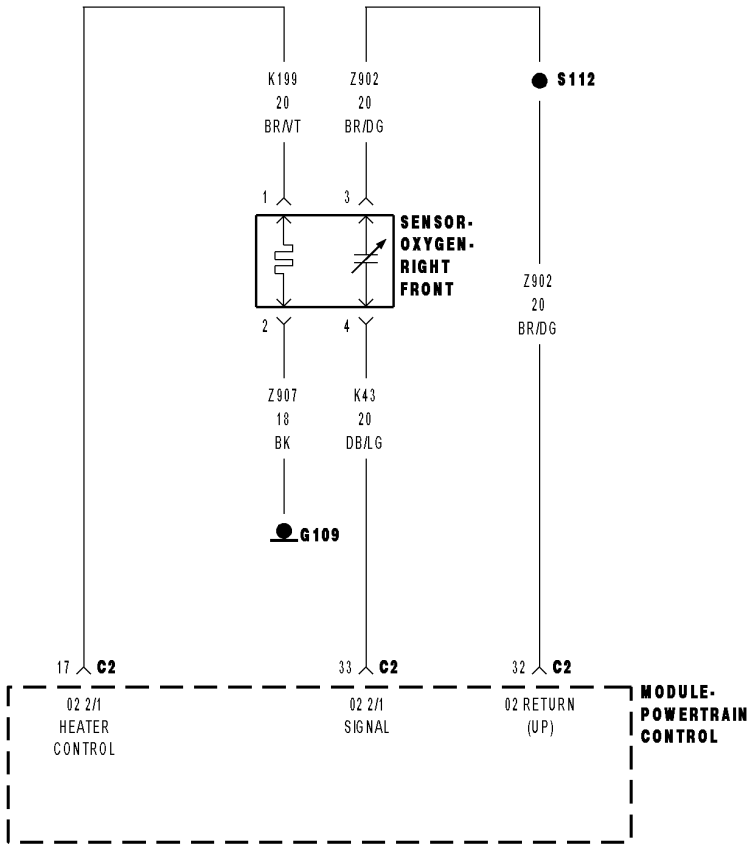

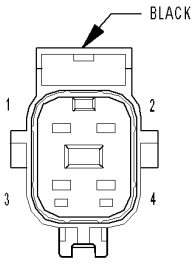

SENSOR-
OXYGEN-
RIGHT FRONT

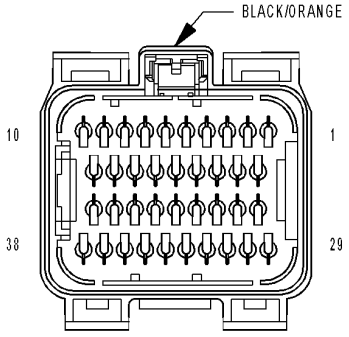

MODULE-
POWERTRAIN
CONTROL C2

8131a0de

For a complete wiring diagram **Refer to Section 8W**.

- **When Monitored:**
  Battery voltage above 10.6 volts, ASD is powered up, and O2 heater is off.
- **Set Condition:**
  Desired state does not equal Actual state. One Trip Fault. Three good trips to turn off the MIL.

Possible Causes
(K199) O2 2/1 HEATER CONTROL CIRCUIT OPEN
(Z904) O2 2/1 HEATER GROUND CIRCUIT OPEN
(K199) O2 2/1 HEATER CONTROL SHORTED TO BATTERY VOLTAGE
O2 SENSOR
PCM

Always perform the Pre-Diagnostic Troubleshooting procedure before proceeding. (Refer to 9 - ENGINE - DIAGNOSIS AND TESTING).

Diagnostic Test

1. ACTIVE DTC

Ignition on, engine not running.

With a scan tool, read DTCs.

Is the DTC active at this time?

Yes >> Go To 2

No >> Refer to the INTERMITTENT CONDITION Diagnostic Procedure.
Perform the POWERTRAIN VERIFICATION TEST. (Refer to 9 - ENGINE - STANDARD PROCEDURE)

2. O2 HEATER ELEMENT

Turn the ignition off.

NOTE: Allow the O2 Sensor to cool down to room temperature.

Disconnect the 2/1 O2 Sensor harness connector.

Measure the resistance across the O2 Sensor Heater element, between the O2 Heater Control terminal and the Heater ground terminal at the component connector.

NOTE: O2 Heater Element resistance values should be measured at 70°F (21.1°C). The resistance value will vary with different temperature values.

Is the O2 Sensor Heater Element resistance between 2.0 and 30.0 ohms?

Yes >> Go To 3

No >> Replace the O2 Sensor.
Perform the POWERTRAIN VERIFICATION TEST. (Refer to 9 - ENGINE - STANDARD PROCEDURE)

3. (K199) O2 2/1 HEATER CONTROL CIRCUIT

Ignition on, engine not running.

With the scan tool, actuate the O2 Heater Test with the Sensor harness connector still disconnected.

Using a 12-volt test light connected to ground, probe the (K199) O2 2/1 Heater Control circuit in the O2 Sensor harness connector.

Does the test light illuminate brightly and flash on and off during the actuation?

Yes >> Go To 4

No >> Go To 5

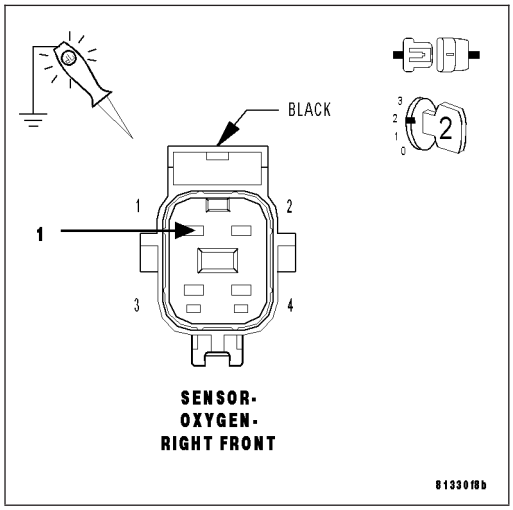

4. (Z904) O2 2/1 HEATER GROUND CIRCUIT OPEN

Turn the ignition off.

Measure the resistance between an engine ground and the (Z904) O2 2/1 Heater ground circuit in the O2 Sensor harness connector.

Is the resistance below 5.0 ohms?

Yes >> Replace the O2 Sensor.
Perform the POWERTRAIN VERIFICATION TEST. (Refer to 9 - ENGINE - STANDARD PROCEDURE)

No >> Repair the open in the (Z904) O2 2/1 Heater ground circuit.
Perform the POWERTRAIN VERIFICATION TEST. (Refer to 9 - ENGINE - STANDARD PROCEDURE)

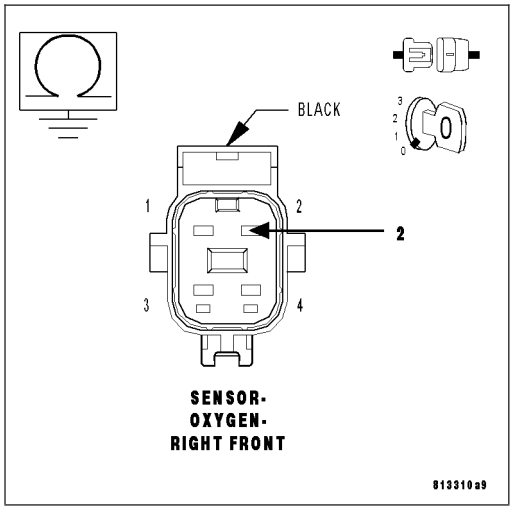

5. (K199) O2 2/1 HEATER CONTROL CIRCUIT SHORTED TO BATTERY VOLTAGE

Turn the ignition off.

Disconnect the PCM harness connectors.

Ignition on, engine not running.

Measure the voltage on the (K199) O2 2/1 Heater Control circuit in the O2 Sensor harness connector.

Does the voltmeter indicate any voltage present?

Yes >> Repair the short to battery voltage in the (K199) O2 2/1 Heater Control circuit.
Perform the POWERTRAIN VERIFICATION TEST. (Refer to 9 - ENGINE - STANDARD PROCEDURE)

No >> Go To 6

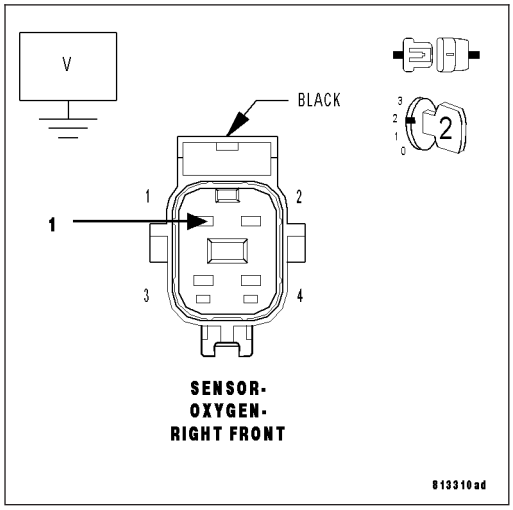

6. (K199) O2 2/1 HEATER CONTROL CIRCUIT OPEN

Turn the ignition off.

CAUTION: Do not probe the PCM harness connectors. Probing the PCM harness connectors will damage the PCM terminals resulting in poor terminal to pin connection. Install Miller Special Tool #8815 to perform diagnosis.

Measure the resistance of the (K199) O2 2/1 Heater Control circuit from the O2 Sensor harness connector to the appropriate terminal of special tool #8815.

Is the resistance below 5.0 ohms?

Yes >> Go To 7

No >> Repair the open in the (K199) O2 2/1 Heater Control circuit. Perform the POWERTRAIN VERIFICATION TEST. (Refer to 9 - ENGINE - STANDARD PROCEDURE)

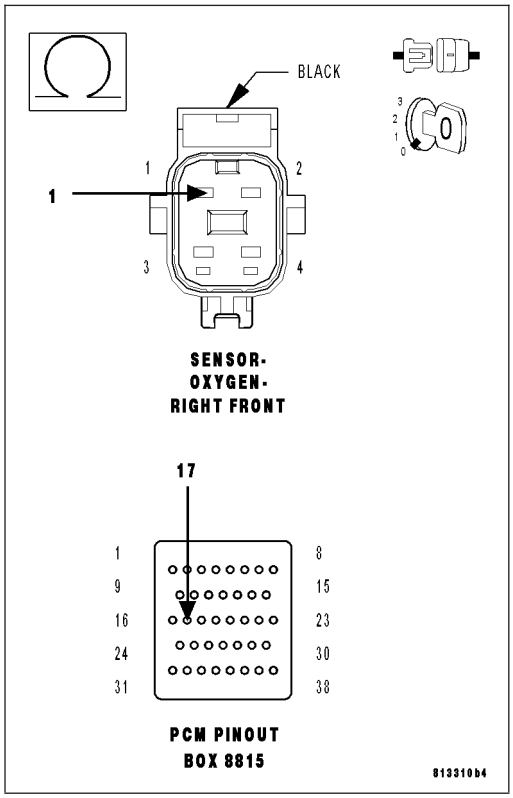

7. PCM

NOTE: Before continuing, check the PCM harness connector terminals for corrosion, damage, or terminal push out. Repair as necessary.

Using the schematics as a guide, inspect the wire harness and connectors. Pay particular attention to all Power and Ground circuits.

If there are no possible causes remaining, view repair.

Repair

Replace and program the Powertrain Control Module per Service Information.

Perform the POWERTRAIN VERIFICATION TEST. (Refer to 9 - ENGINE - STANDARD PROCEDURE)

P0057-O2 SENSOR 2/2 HEATER CIRCUIT LOW

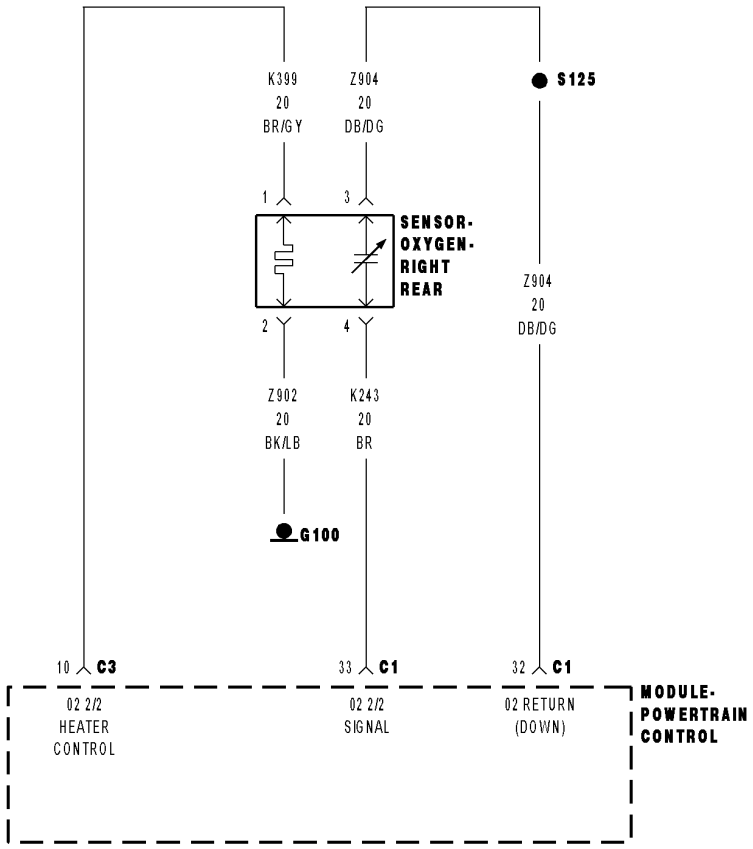

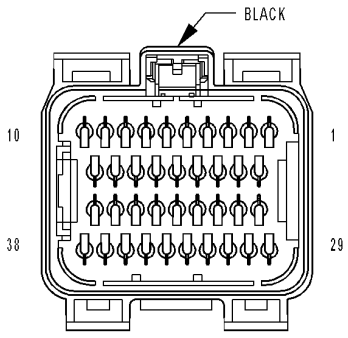

MODULE-
POWERTRAIN
CONTROL C1

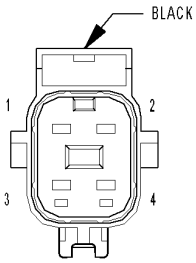

SENSOR-
OXYGEN-
RIGHT REAR

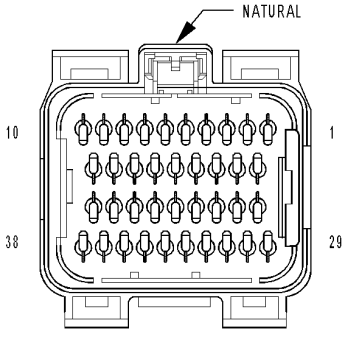

MODULE-
POWERTRAIN
CONTROL C3

8131a0ef

For a complete wiring diagram **Refer to Section 8W**.

- **When Monitored:**
  Battery voltage above 10.6 volts, ASD is powered up, and O2 heater is on.
- **Set Condition:**
  Desired state does not match Actual state. One Trip Fault. Three good trips to turn off the MIL.

Possible Causes
(K399) O2 SENSOR 2/2 HEATER CONTROL CIRCUIT SHORTED TO GROUND
O2 SENSOR
PCM

Always perform the Pre-Diagnostic Troubleshooting procedure before proceeding. (Refer to 9 - ENGINE - DIAGNOSIS AND TESTING).

Diagnostic Test

1. O2 SENSOR HEATER OPERATION

Turn the ignition off.

NOTE: Wait a minimum of 8 minutes to allow the O2 Sensor to cool down before continuing the test. Allow the O2 Sensor voltage to stabilize at 5.0 volts.
Ignition on, engine not running.

With a scan tool, actuate the O2 Heater Test.

With the scan tool, monitor 2/2 O2 Sensor voltage for at least 2 minutes.

Does the O2 Sensor voltage stay above 4.5 volts?

Yes >> Go To 2

No >> Refer to the INTERMITTENT CONDITION Diagnostic Procedure.
Perform the POWERTRAIN VERIFICATION TEST. (Refer to 9 - ENGINE - STANDARD PROCEDURE)

2. O2 HEATER ELEMENT

Turn the ignition off.

NOTE: Allow the O2 Sensor to cool down to room temperature.
Disconnect the 2/2 O2 Sensor harness connector.

Measure the resistance across the O2 Sensor Heater element, between the O2 Heater Control terminal and the O2 Heater ground terminal in the component connector.

NOTE: O2 Heater Element resistance values should be measured at 70°F (21.1°C). The resistance value will vary with different temperature values.

Is the O2 Sensor Heater Element resistance between 2.0 and 30.0 ohms?

Yes >> Go To 3

No >> Replace the O2 Sensor.
Perform the POWERTRAIN VERIFICATION TEST. (Refer to 9 - ENGINE - STANDARD PROCEDURE)

3. O2 SENSOR

Ignition on, engine not running.

With a scan tool, actuate the O2 Heater Test with the O2 Sensor harness connector still disconnected.

Using a 12-volt test light connected to ground, probe the (K399) O2 2/2 Heater Control circuit in the O2 Sensor harness connector.

Does the test light illuminate brightly and flash on and off during the actuation?

Yes >> Replace the O2 Sensor.
Perform the POWERTRAIN VERIFICATION TEST. (Refer to 9 - ENGINE - STANDARD PROCEDURE)

No >> Go To 4

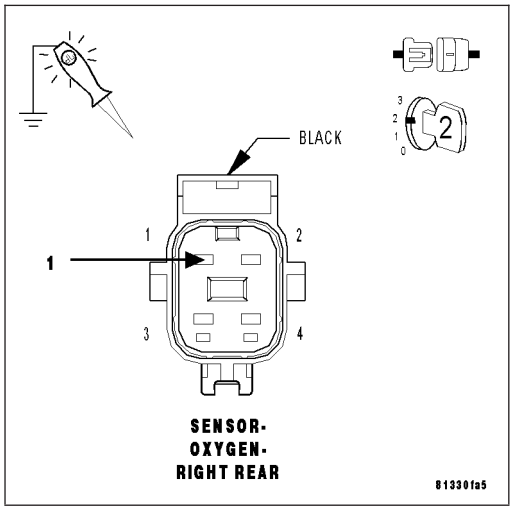

4. (K399) O2 2/2 HEATER CONTROL CIRCUIT SHORTED TO GROUND

Turn the ignition off.

Disconnect the PCM harness connectors.

Measure the resistance between ground and the (K399) O2 2/2 Heater Control circuit in the O2 Sensor harness connector.

Is the resistance below 5.0 ohms?

Yes >> Repair the short to ground in the (K399) O2 2/2 Sensor Heater Control circuit.
Perform the POWERTRAIN VERIFICATION TEST. (Refer to 9 - ENGINE - STANDARD PROCEDURE)

No >> Go To 5

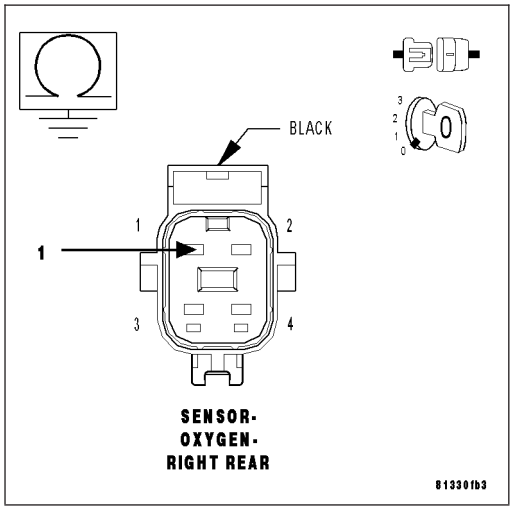

5. PCM

NOTE: Before continuing, check the PCM harness connector terminals for corrosion, damage, or terminal push out. Repair as necessary.

Using the schematics as a guide, inspect the wire harness and connectors. Pay particular attention to all Power and Ground circuits.

Were there any problems found?

Yes >> Repair as necessary.
Perform the POWERTRAIN VERIFICATION TEST. (Refer to 9 - ENGINE - STANDARD PROCEDURE)

No >> Replace and program the Powertrain Control Module per Service Information.
Perform the POWERTRAIN VERIFICATION TEST. (Refer to 9 - ENGINE - STANDARD PROCEDURE)

P0058-O2 SENSOR 2/2 HEATER CIRCUIT HIGH

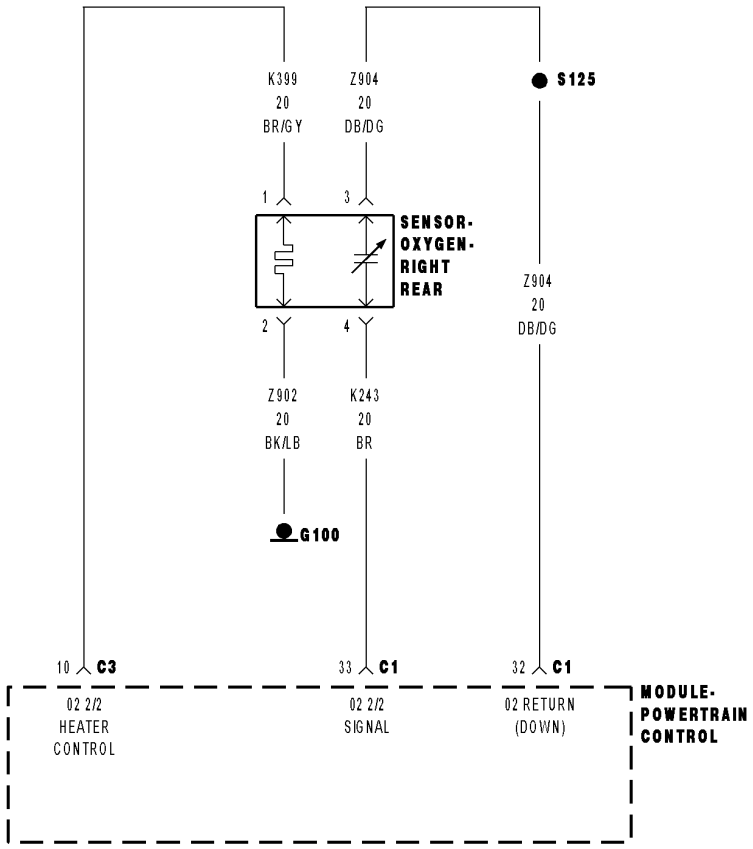

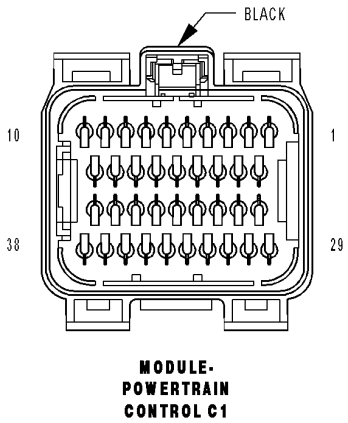

MODULE-
POWERTRAIN
CONTROL C1

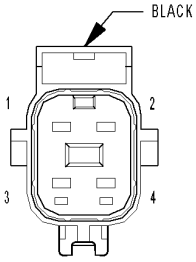

SENSOR-
OXYGEN-
RIGHT REAR

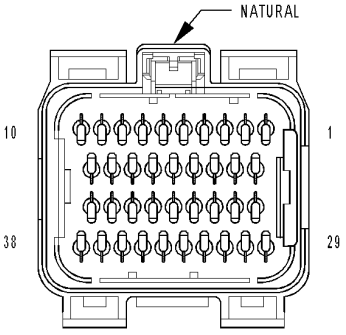

MODULE-
POWERTRAIN
CONTROL C3

8131a0ef

For a complete wiring diagram **Refer to Section 8W**.

- **When Monitored:**
  Battery voltage above 10.6 volts, ASD is powered up, and O2 heater is off.
- **Set Condition:**
  Desired state does not equal Actual state. One Trip Fault. Three good trips to turn off the MIL.

Possible Causes
(K399) O2 2/2 HEATER CONTROL CIRCUIT OPEN
(Z902) O2 2/2 HEATER GROUND CIRCUIT OPEN
(K399) O2 2/2 HEATER CONTROL SHORTED TO BATTERY VOLTAGE
O2 SENSOR
PCM

Always perform the Pre-Diagnostic Troubleshooting procedure before proceeding. (Refer to 9 - ENGINE - DIAGNOSIS AND TESTING).

Diagnostic Test

1. ACTIVE DTC

Ignition on, engine not running.

With a scan tool, read DTCs.

Is the DTC active at this time?

Yes >> Go To 2

No >> Refer to the INTERMITTENT CONDITION Diagnostic Procedure.
Perform the POWERTRAIN VERIFICATION TEST. (Refer to 9 - ENGINE - STANDARD PROCEDURE)

2. O2 HEATER ELEMENT

Turn the ignition off.

NOTE: Allow the O2 Sensor to cool down to room temperature.

Disconnect the 2/2 O2 Sensor harness connector.

Measure the resistance across the O2 Sensor Heater element, between the O2 Heater Control terminal and the O2 Heater ground terminal in the component connector.

NOTE: O2 Heater Element resistance values should be measured at 70°F (21.1°C). The resistance value will vary with different temperature values.

Is the O2 Sensor Heater Element resistance between 2.0 and 30.0 ohms?

Yes >> Go To 3

No >> Replace the O2 Sensor.
Perform the POWERTRAIN VERIFICATION TEST. (Refer to 9 - ENGINE - STANDARD PROCEDURE)

3. (K399) O2 2/2 HEATER CONTROL CIRCUIT

Ignition on, engine not running.

With a scan tool, actuate the O2 2/2 Heater Test with the Sensor harness connector still disconnected.

Using a 12-volt test light connected to ground, probe the (K399) O2 2/2 Heater Control circuit in the O2 Sensor harness connector.

Does the test light illuminate brightly and flash on and off during the actuation?

Yes >> Go To 4

No >> Go To 5

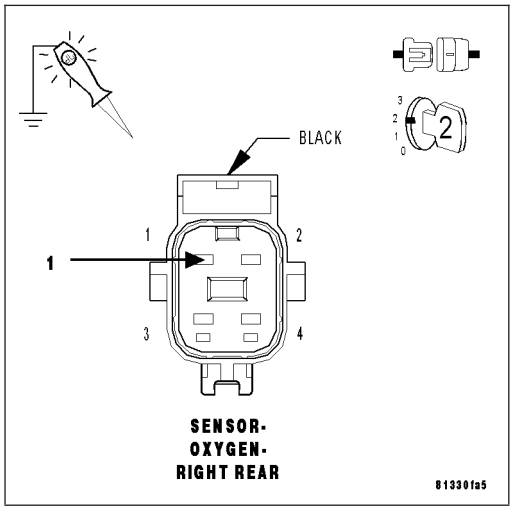

4. (Z902) O2 HEATER GROUND CIRCUIT OPEN

Turn the ignition off.

Measure the resistance between an engine ground and the (Z902) O2 2/2 Heater ground circuit in the O2 Sensor harness connector.

Is the resistance below 5.0 ohms?

Yes >> Replace the O2 Sensor.
Perform the POWERTRAIN VERIFICATION TEST. (Refer to 9 - ENGINE - STANDARD PROCEDURE)

No >> Repair the open in the (Z902) O2 2/2 Heater ground circuit.
Perform the POWERTRAIN VERIFICATION TEST. (Refer to 9 - ENGINE - STANDARD PROCEDURE)

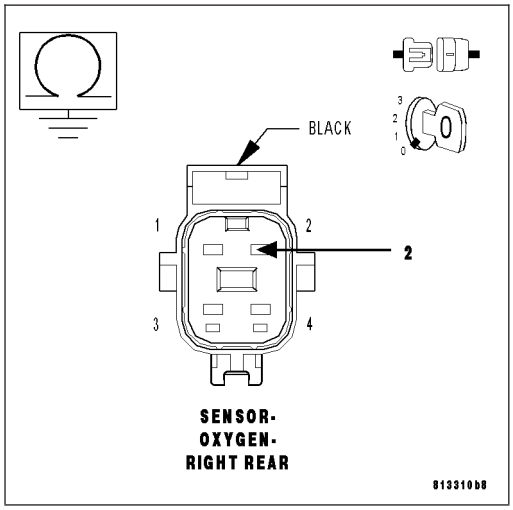

5. (K399) O2 2/2 HEATER CONTROL CIRCUIT SHORTED TO BATTERY VOLTAGE

Turn the ignition off.

Disconnect the PCM harness connectors.

Ignition on, engine not running.

Measure the voltage on the (K399) O2 Heater 2/2 Control circuit in the O2 Sensor harness connector.

Does the voltmeter indicate any voltage present?

Yes >> Repair the short to battery voltage in the (K399) O2 2/2 Heater Control circuit.
Perform the POWERTRAIN VERIFICATION TEST. (Refer to 9 - ENGINE - STANDARD PROCEDURE)

No >> Go To 6

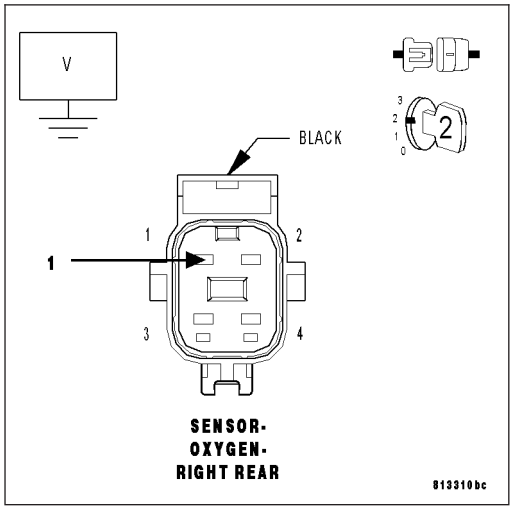

6. (K399) O2 2/2 HEATER CONTROL CIRCUIT OPEN

Turn the ignition off.

CAUTION: Do not probe the PCM harness connectors. Probing the PCM harness connectors will damage the PCM terminals resulting in poor terminal to pin connection. Install Miller Special Tool #8815 to perform diagnosis.

Measure the resistance of the (K399) O2 2/2 Heater Control circuit from the O2 Sensor harness connector to the appropriate terminal of special tool #8815.

Is the resistance below 5.0 ohms?

Yes >> Go To 7

No >> Repair the open in the (K399) O2 2/2 Heater Control circuit. Perform the POWERTRAIN VERIFICATION TEST. (Refer to 9 - ENGINE - STANDARD PROCEDURE)

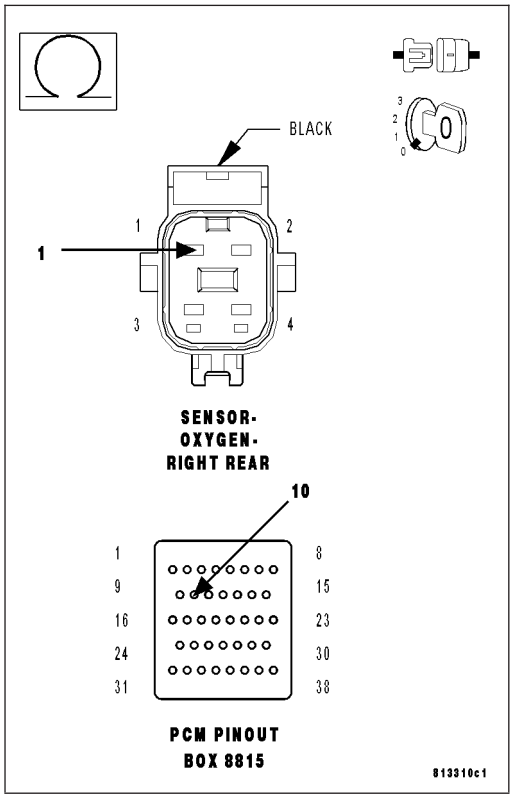

7. PCM

NOTE: Before continuing, check the PCM harness connector terminals for corrosion, damage, or terminal push out. Repair as necessary.

Using the schematics as a guide, inspect the wire harness and connectors. Pay particular attention to all Power and Ground circuits.

Were there any problems found?

Yes >> Repair as necessary.
Perform the POWERTRAIN VERIFICATION TEST. (Refer to 9 - ENGINE - STANDARD PROCEDURE)

No >> Replace and program the Powertrain Control Module per Service Information.
Perform the POWERTRAIN VERIFICATION TEST. (Refer to 9 - ENGINE - STANDARD PROCEDURE)

P0071-AMBIENT AIR TEMPERATURE SENSOR PERFORMANCE

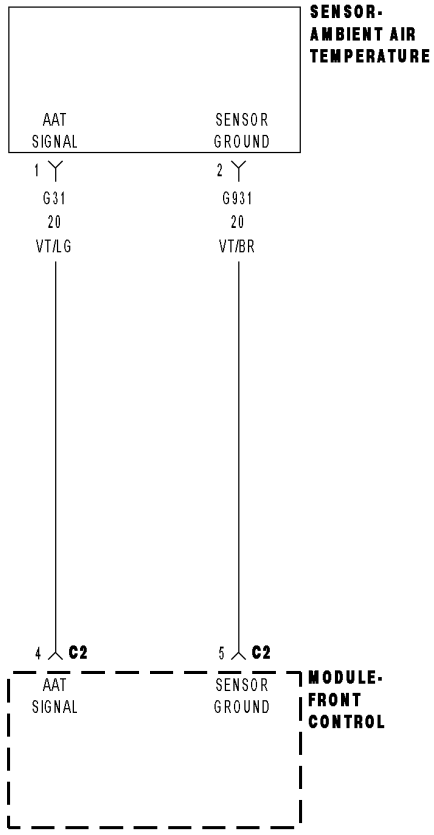

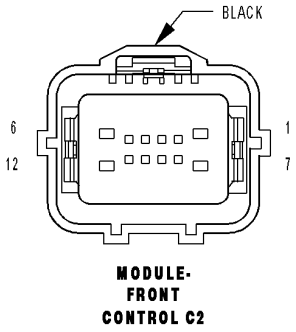

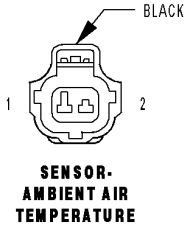

8131a110

For a complete wiring diagram **Refer to Section 8W**.

Theory of Operation

Ambient Air Temperature Sensor performance looks at the outputs of three temperature sensors and compares them under cold start conditions. Following a start to run delay time, the outputs of the ambient, engine coolant, and intake air temperature sensors will be compared. If the engine coolant and intake air temperature sensors agree and the ambient air temperature does not agree, the ambient air temperature sensor is declared as irrational.

- **When Monitored:**
  Engine off time is greater than 480 minutes. Ambient temperature is greater than 4° C (38° F).
- **Set Condition:**
  After a calibrated amount of cool down time the PCM compares the ECT Sensor, IAT Sensor, and the Ambient Air Temp Sensor values. If the IAT Sensor value is not within -10 °C (18 °F) of the other two temperature sensors. Two Trip Fault. Three good trips to turn off the MIL.

Possible Causes
(G31) AAT SIGNAL CIRCUIT HIGH RESISTANCE
(G931) SENSOR GROUND HIGH RESISTANCE
AMBIENT AIR TEMPERATURE SENSOR
FRONT CONTROL MODULE

Always perform the Pre-Diagnostic Troubleshooting procedure before proceeding. (Refer to 9 - ENGINE - DIAGNOSIS AND TESTING).

Diagnostic Test

1. ACTIVE DTC

NOTE: Diagnose any CAN - C Communication DTCs before continuing.
Ignition on, engine not running.
With a scan tool, read DTCs.

Is the DTC active at this time?

Yes >> Go To 2

No >> Refer to the INTERMITTENT CONDITION Diagnostic Procedure.
Perform the POWERTRAIN VERIFICATION TEST. (Refer to 9 - ENGINE - STANDARD PROCEDURE)

2. AAT SENSOR VOLTAGE ABOVE 4.6 VOLTS

Turn the ignition off.
Disconnect the AAT sensor harness connector.
Ignition on, engine not running.
With a scan tool, read the AAT voltage.

Is the voltage above 4.6 volts?

Yes >> Go To 3

No >> Go To 4

3. AAT SENSOR

Connect a jumper wire between the (G31) AAT Signal circuit and the (G931) Sensor ground circuit in the AAT Sensor harness connector.

With a scan tool, read the AAT voltage.

Is the voltage below 1.0 volt with the jumper wire installed?

Yes >> Replace the AAT Sensor.
Perform the POWERTRAIN VERIFICATION TEST. (Refer to 9 - ENGINE - STANDARD PROCEDURE)

No >> Go To 4

NOTE: Remove the jumper wire before continuing.

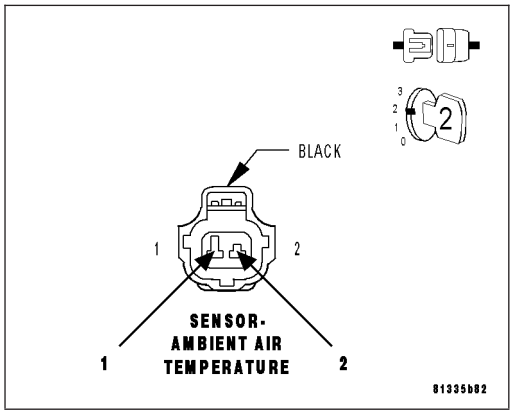

4. (G31) AAT SIGNAL CIRCUIT HIGH RESISTANCE

Turn the ignition off.

Reconnect the AAT sensor harness connector.

Using a voltmeter perform a voltage drop test. Backprobe the (G31) AAT Signal circuit at the AAT sensor harness connector and the FCM.

WARNING: WARNING: When the engine is operating, do not stand in direct line with the fan. Do not put your hands near the pulleys, belts, or fan. Do not wear loose clothing. Failure to follow these instructions can result in personal injury or death.

Start the engine and allow it to reach normal operating temperature.

Monitor the voltmeter.

Is the voltage below 0.5 volts?

Yes >> Go To 5

No >> Repair the high resistance in the (G31) AAT Signal circuit.
Perform the POWERTRAIN VERIFICATION TEST. (Refer to 9 - ENGINE - STANDARD PROCEDURE)

5. (G931) SENSOR GROUND CIRCUIT HIGH RESISTANCE

Turn the ignition off.

Reconnect the AAT sensor harness connector.

Using a voltmeter perform a voltage drop test. Backprobe the (G931) Sensor ground circuit at the AAT sensor harness connector and the FCM.

WARNING: When the engine is operating, do not stand in direct line with the fan. Do not put your hands near the pulleys, belts, or fan. Do not wear loose clothing. Failure to follow these instructions can result in personal injury or death.

Start the engine and allow it to reach normal operating temperature.

Monitor the voltmeter.

Is the voltage below 0.5 volts?

Yes >> Go To 6

No >> Repair the high resistance in the (G931) Sensor ground circuit.
Perform the POWERTRAIN VERIFICATION TEST. (Refer to 9 - ENGINE - STANDARD PROCEDURE)

6. FRONT CONTROL MODULE

NOTE: Before continuing, check the FCM harness connector terminals for corrosion, damage, or terminal push out. Repair as necessary.
Using the schematics as a guide, inspect the wire harness and connectors. Pay particular attention to all Power and Ground circuits.

Were there any problems found?

Yes >> Repair as necessary.
Perform BODY VERIFICATION TEST VER - 1.

No >> Replace the Front Control Module per Service Information.
Perform BODY VERIFICATION TEST VER - 1.

P0072-AMBIENT AIR TEMPERATURE SENSOR CIRCUIT LOW

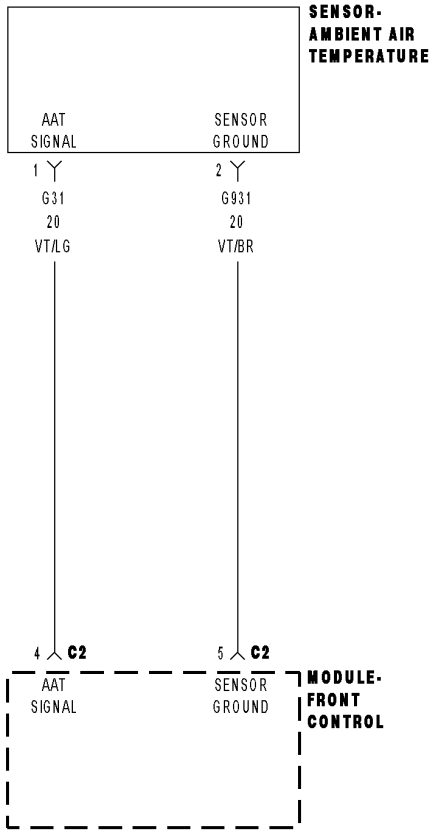

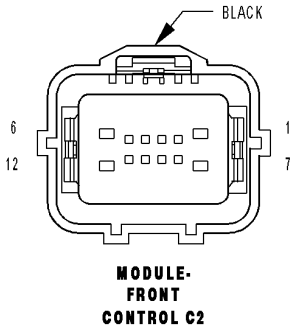

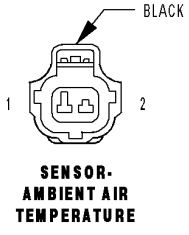

8131a110

For a complete wiring diagram **Refer to Section 8W**.

- **When Monitored:**
  The ignition key on.
- **Set Condition:**
  Ambient Temperature Sensor is less than 0.078 of a volt at the PCM for 2.8 seconds. One Trip Fault. Three good trips to turn off the MIL.

Possible Causes
(G31) AAT SIGNAL CIRCUIT SHORTED TO GROUND
(G31) AAT SIGNAL CIRCUIT SHORTED TO THE (G931) SENSOR GROUND CIRCUIT
AMBIENT AIR TEMPERATURE SENSOR
FRONT CONTROL MODULE

Always perform the Pre-Diagnostic Troubleshooting procedure before proceeding. (Refer to 9 - ENGINE - DIAGNOSIS AND TESTING).

Diagnostic Test

1. AAT SENSOR VOLTAGE BELOW 0.078 OF A VOLT

NOTE: Diagnose any CAN - C Communication DTCs before continuing.
Ignition on, engine not running.
With a scan tool, read the Ambient Air Temperature Sensor voltage.

Is the voltage below 0.078 of a volt?

Yes >> Go To 2

No >> Refer to the INTERMITTENT CONDITION Diagnostic Procedure.
Perform the POWERTRAIN VERIFICATION TEST. (Refer to 9 - ENGINE - STANDARD PROCEDURE)

2. CHECKING AAT SENSOR

Turn the ignition off.
Disconnect the Ambient Air Temperature Sensor harness connector.
Ignition on, engine not running.
With a scan tool, read the AAT Sensor voltage.

Is the voltage above 4.6 volts?

Yes >> Replace the Ambient Temperature Sensor.
Perform the POWERTRAIN VERIFICATION TEST. (Refer to 9 - ENGINE - STANDARD PROCEDURE)

No >> Go To 3

3. (G31) AAT SIGNAL CIRCUIT SHORTED TO GROUND

Turn the ignition off.

Disconnect the C2 FCM harness connectors.

Measure the resistance between ground and the (G31) AAT Signal circuit in the AAT Sensor harness connector.

Is the resistance below 100 ohms?

Yes >> Repair the short to ground in the (G31) AAT Signal circuit. Perform the POWERTRAIN VERIFICATION TEST. (Refer to 9 - ENGINE - STANDARD PROCEDURE)

No >> Go To 4

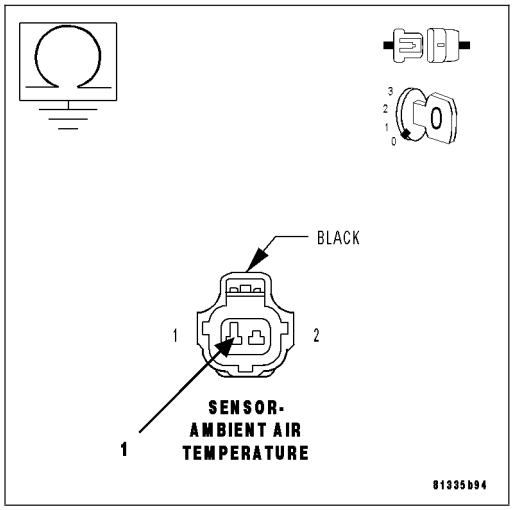

4. (G31) AAT SIGNAL CIRCUIT SHORTED TO THE (G931) SENSOR GROUND CIRCUIT

Measure the resistance between the (G931) Sensor ground circuit and the (G31) AAT Signal circuit in the AAT Sensor harness connector.

Is the resistance below 5.0 ohms?

Yes >> Repair the short between the (G931) Sensor ground circuit and the (G31) AAT Signal circuit. Perform the POWERTRAIN VERIFICATION TEST. (Refer to 9 - ENGINE - STANDARD PROCEDURE)

No >> Go To 5

5. FRONT CONTROL MODULE

NOTE: Before continuing, check the FCM harness connector terminals for corrosion, damage, or terminal push out. Repair as necessary.

Using the schematics as a guide, inspect the wire harness and connectors. Pay particular attention to all Power and Ground circuits.

Were there any problems found?

Yes >> Repair as necessary.
Perform BODY VERIFICATION TEST VER - 1.

No >> Replace and program the Front Control Module per Service Information.
Perform BODY VERIFICATION TEST VER - 1.

P0073–AMBIENT AIR TEMPERATURE SENSOR CIRCUIT HIGH

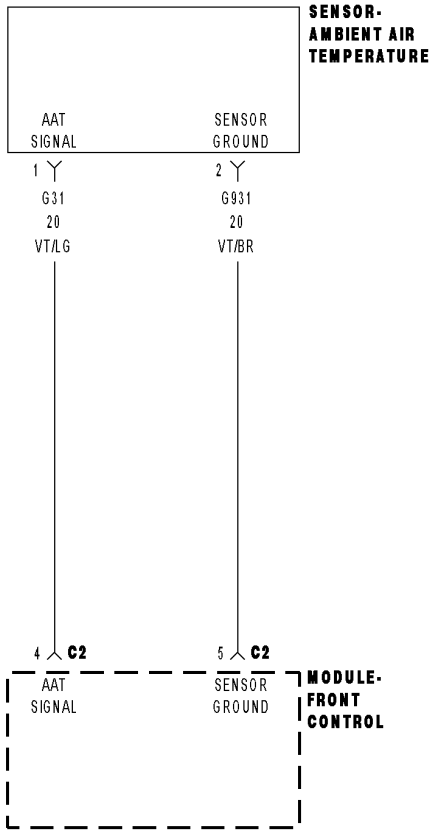

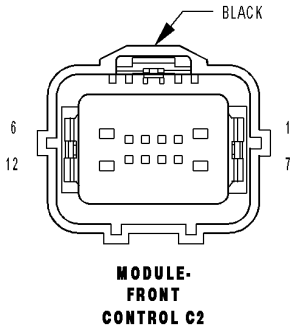

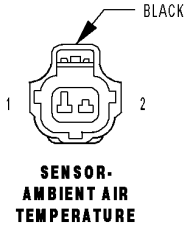

8131a110

For a complete wiring diagram **Refer to Section 8W**.

- **When Monitored:**
  With the ignition on. Battery voltage greater than 10 volts.
- **Set Condition:**
  The Ambient Temperature Sensor voltage is greater than 4.98 volts at the PCM for 2.8 seconds. One Trip Fault. Three good trips to turn off the MIL.

Possible Causes
(G31) AAT SIGNAL CIRCUIT SHORTED TO BATTERY VOLTAGE
(G31) AAT SIGNAL CIRCUIT OPEN
(G931) SENSOR GROUND CIRCUIT OPEN
AMBIENT AIR TEMPERATURE SENSOR
FRONT CONTROL MODULE

Always perform the Pre-Diagnostic Troubleshooting procedure before proceeding. (Refer to 9 - ENGINE - DIAGNOSIS AND TESTING).

Diagnostic Test

1. AAT SENSOR VOLTAGE ABOVE 4.98 VOLTS

Ignition on, engine not running.

With a scan tool, read the Ambient Air Temperature Sensor voltage.

Is the voltage above 4.98 volts?

Yes >> Go To 2

No >> Refer to the INTERMITTENT CONDITION Diagnostic Procedure.
Perform the POWERTRAIN VERIFICATION TEST. (Refer to 9 - ENGINE - STANDARD PROCEDURE)

2. AAT SENSOR

Turn the ignition off.

Disconnect the Ambient Air Temperature Sensor harness connector.

Connect a jumper wire between the (G31) AAT Signal circuit and the (G931) Sensor ground circuit in the AAT Sensor harness connector.

Ignition on, engine not running.

With a scan tool, read AAT Sensor voltage.

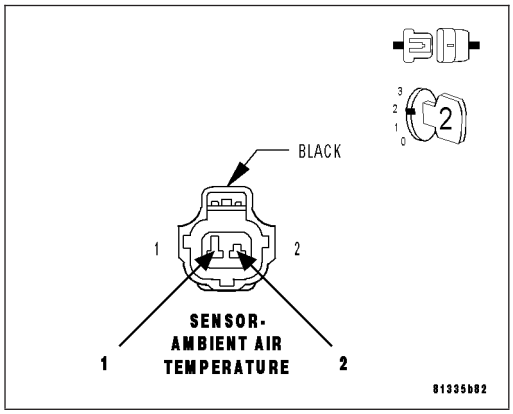

Is the voltage below 1.0 volt with the jumper wire installed?

Yes >> Replace the Ambient Air Temperature Sensor.
Perform the POWERTRAIN VERIFICATION TEST. (Refer to 9 - ENGINE - STANDARD PROCEDURE)

No >> Go To 3

NOTE: Remove the jumper wire before continuing.

3. (G31) AAT SIGNAL CIRCUIT SHORTED TO BATTERY VOLTAGE

Disconnect the C2 FCM harness connector.

Ignition on, engine not running.

Measure the voltage on the (G31) AAT Signal circuit in the AAT Sensor harness connector.

Is the voltage above 5.2 volts?

Yes >> Repair the short to battery voltage in the (G31) AAT Signal circuit.
Perform the POWERTRAIN VERIFICATION TEST. (Refer to 9 - ENGINE - STANDARD PROCEDURE)

No >> Go To 4

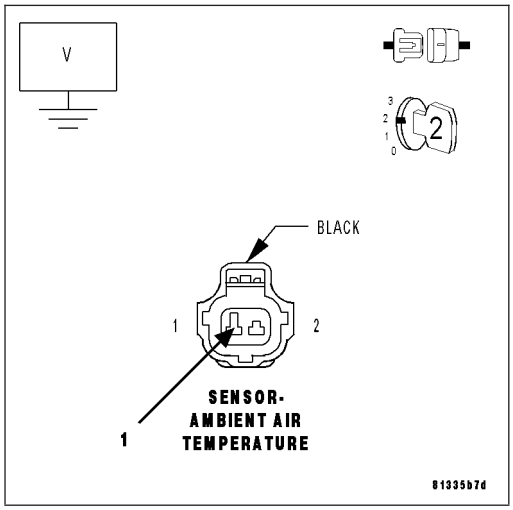

4. (G31) AAT SIGNAL CIRCUIT OPEN

Turn the ignition off.

Measure the resistance of the (G31) AAT Signal circuit from the AAT Sensor harness connector to the C2 FCM harness connector.

Is the resistance below 5.0 ohms?

Yes >> Go To 5

No >> Repair the open in the (G31) AAT Signal circuit.
Perform the POWERTRAIN VERIFICATION TEST. (Refer to 9 - ENGINE - STANDARD PROCEDURE)

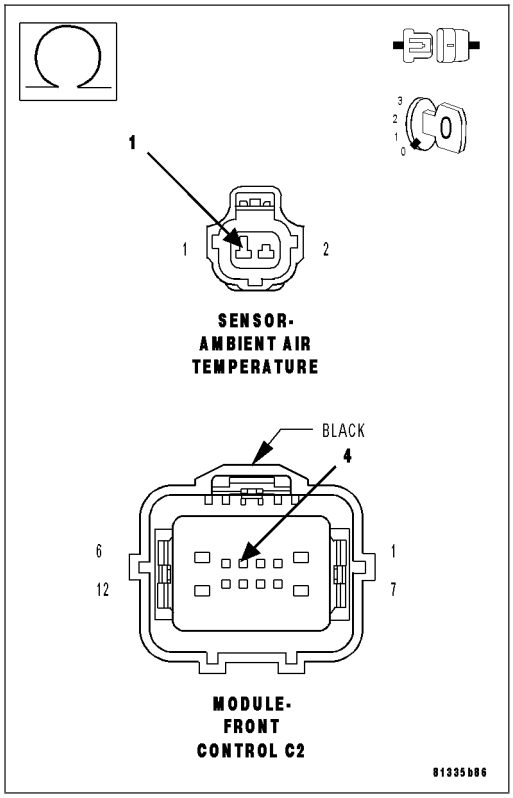

5. (G931) SENSOR GROUND CIRCUIT OPEN

Measure the resistance of the (G931) Sensor ground circuit from the AAT Sensor harness connector to the C2 FCM harness connector.

Is the resistance below 5.0 ohms?

Yes >> Go To 6

No >> Repair the open in the (G931) Sensor ground circuit.
Perform the POWERTRAIN VERIFICATION TEST. (Refer to 9 - ENGINE - STANDARD PROCEDURE)

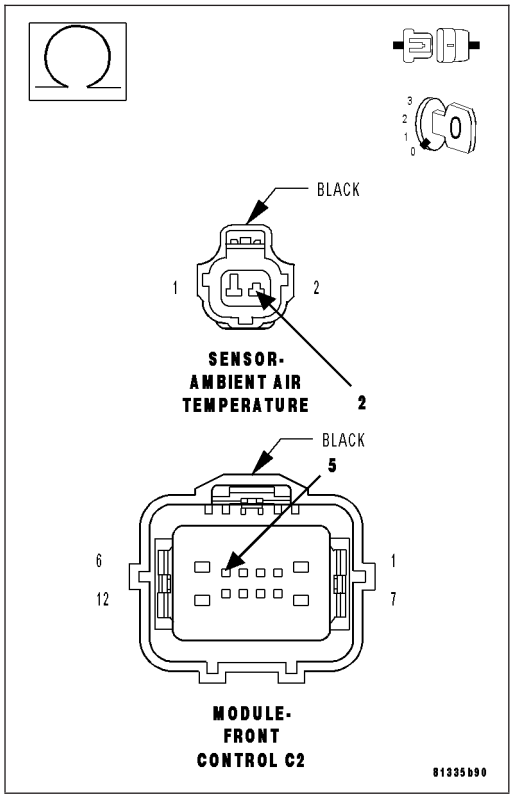

6. FRONT CONTROL MODULE

NOTE: Before continuing, check the FCM harness connector terminals for corrosion, damage, or terminal push out. Repair as necessary.
Using the schematics as a guide, inspect the wire harness and connectors. Pay particular attention to all Power and Ground circuits.

Were there any problems found?

Yes >> Repair as necessary.
Perform BODY VERIFICATION TEST VER - 1.

No >> Replace the Front Control Module per Service Information.
Perform BODY VERIFICATION TEST VER - 1.

P0107-MANIFOLD ABSOLUTE PRESSURE SENSOR CIRCUIT LOW

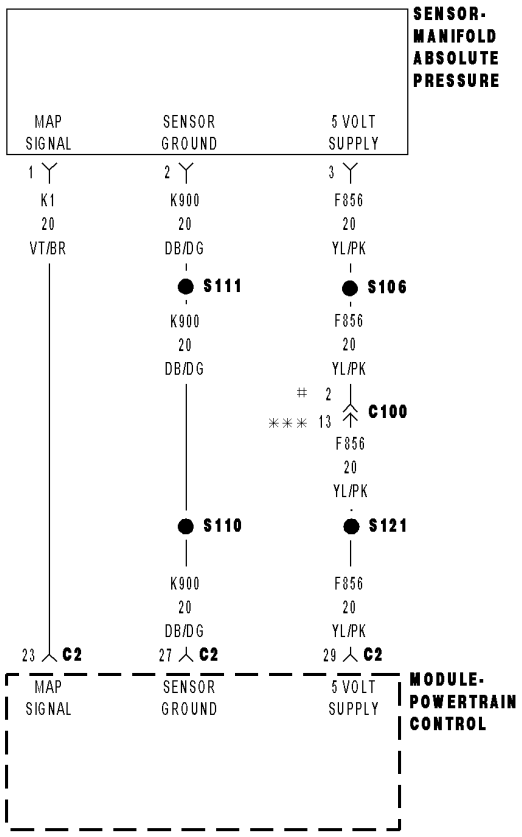

2.7L/3.5L
*** 5.7L

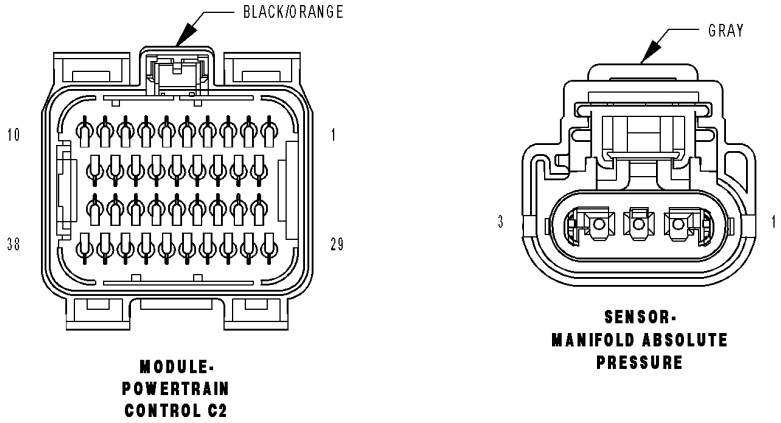

8131a249

For a complete wiring diagram **Refer to Section 8W**.

- **When Monitored:**
  Engine speed between 600 to 3500 RPM. Battery voltage greater than 10 volts.
- **Set Condition:**
  The MAP sensor signal voltage is below 0.0782 of a volt for 1.7 seconds. One Trip Fault. Three good trips to turn off the MIL, (ETC light will flash.)

Possible Causes
(F856) 5-VOLT SUPPLY CIRCUIT OPEN
(F856) 5-VOLT SUPPLY CIRCUIT SHORTED TO GROUND
(K1) MAP SIGNAL CIRCUIT SHORTED TO GROUND
(K1) MAP SIGNAL CIRCUIT SHORTED TO THE (K900) SENSOR GROUND CIRCUIT
MAP SENSOR
PCM

Always perform the Pre-Diagnostic Troubleshooting procedure before proceeding. (Refer to 9 - ENGINE - DIAGNOSIS AND TESTING).

Diagnostic Test

1. MAP SENSOR VOLTAGE BELOW 0.0782 OF A VOLT

Ignition on, engine not running.

With a scan tool, read the MAP Sensor voltage.

Is the voltage below 0.0782 of a volt?

Yes >> Go To 2

No >> Refer to the INTERMITTENT CONDITION Diagnostic Procedure.
Perform the POWERTRAIN VERIFICATION TEST. (Refer to 9 - ENGINE - STANDARD PROCEDURE)

2. (F856) 5-VOLT SUPPLY CIRCUIT

Turn the ignition off.

Disconnect the MAP Sensor harness connector.

Ignition on, engine not running.

Measure the voltage on the (F856) 5-volt Supply circuit in the MAP Sensor harness connector.

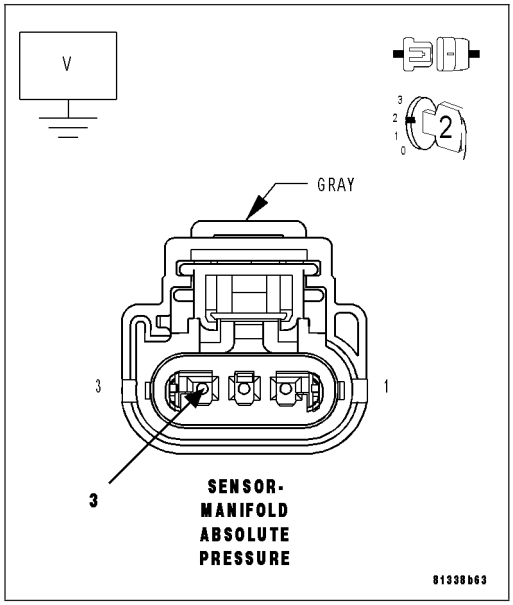

Is the voltage between 4.5 to 5.2 volts?

Yes >> Go To 3

No >> Go To 6

3. MAP SENSOR

With a scan tool, monitor the MAP Sensor voltage with the Sensor harness connector disconnected.

Is the voltage above 4.5 volts?

Yes >> Replace the MAP Sensor.
Perform the POWERTRAIN VERIFICATION TEST. (Refer to 9 - ENGINE - STANDARD PROCEDURE)

No >> Go To 4

4. (K1) MAP SIGNAL CIRCUIT SHORTED TO GROUND

Turn the ignition off.

Disconnect the PCM harness connectors.

Measure the resistance between ground and the (K1) MAP Signal circuit in the MAP Sensor harness connector.

Is the resistance below 100 ohms?

Yes >> Repair the short to ground in the (K1) MAP Signal circuit.
Perform the POWERTRAIN VERIFICATION TEST. (Refer to 9 - ENGINE - STANDARD PROCEDURE)

No >> Go To 5

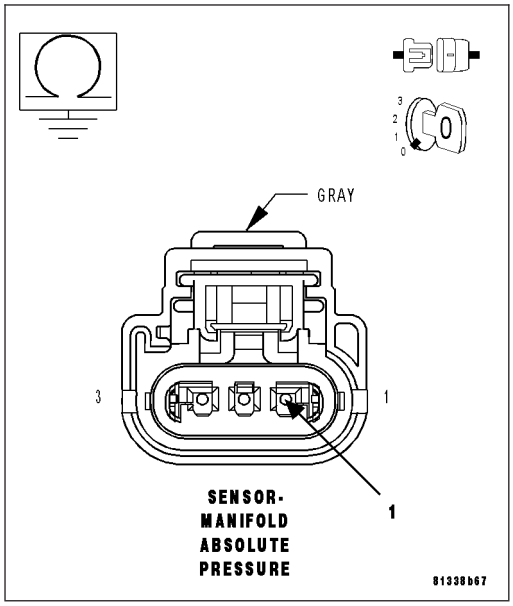

5. (K1) MAP SIGNAL CIRCUIT SHORTED TO THE (K900) SENSOR GROUND CIRCUIT

Measure the resistance between the (K1) MAP Signal circuit and the (K900) Sensor ground circuit in the MAP Sensor harness connector.

Is the resistance below 100 ohms?

Yes >> Repair the short between the (K900) Sensor ground and the (K1) MAP Signal circuit.
Perform the POWERTRAIN VERIFICATION TEST. (Refer to 9 - ENGINE - STANDARD PROCEDURE)

No >> Go To 8

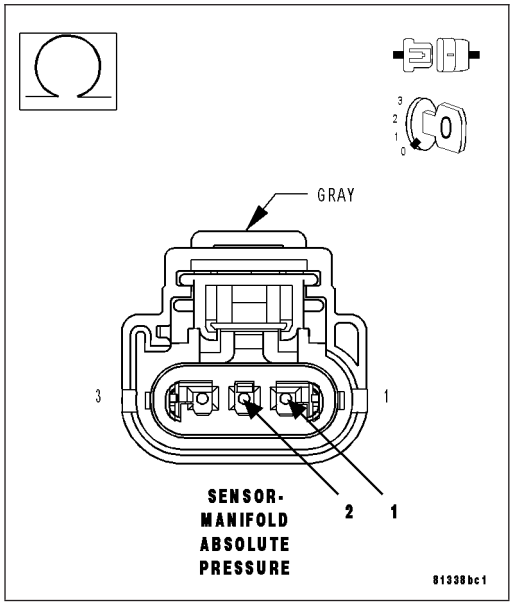

6. (F856) 5-VOLT SUPPLY CIRCUIT OPEN

Turn the ignition off.

Disconnect the PCM harness connectors.

CAUTION: Do not probe the PCM harness connectors. Probing the PCM harness connectors will damage the PCM terminals resulting in poor terminal to pin connection. Install Miller Special Tool #8815 to perform diagnosis.

Measure the resistance of the (F856) 5-volt Supply circuit from the MAP Sensor harness connector to the appropriate terminal of special tool #8815.

Is the resistance below 5.0 ohms?

Yes >> Go To 7

No >> Repair the open in the (F856) 5-volt Supply circuit.
Perform the POWERTRAIN VERIFICATION TEST. (Refer to 9 - ENGINE - STANDARD PROCEDURE)

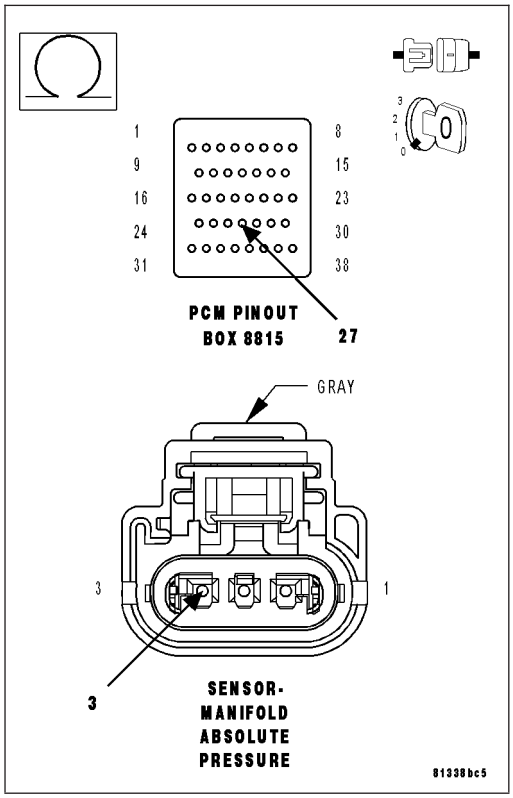

7. (F856) 5-VOLT SUPPLY CIRCUIT SHORTED TO GROUND

Measure the resistance between ground and the (F856) 5-volt Supply circuit in the MAP Sensor harness connector.

Is the resistance below 100 ohms?

Yes >> Repair the short to ground in the (F856) 5-volt Supply circuit.
Perform the POWERTRAIN VERIFICATION TEST. (Refer to 9 - ENGINE - STANDARD PROCEDURE)

No >> Go To 8

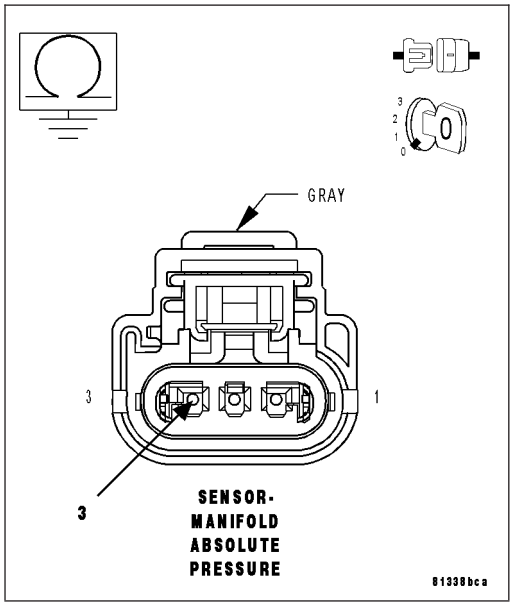

8. PCM

NOTE: Before continuing, check the PCM harness connector terminals for corrosion, damage, or terminal push out. Repair as necessary.
Using the schematics as a guide, inspect the wire harness and connectors. Pay particular attention to all Power and Ground circuits.

Were there any problems found?

Yes >> Repair as necessary.
Perform the POWERTRAIN VERIFICATION TEST. (Refer to 9 - ENGINE - STANDARD PROCEDURE)

No >> Replace and program the Powertrain Control Module per Service Information.
Perform the POWERTRAIN VERIFICATION TEST. (Refer to 9 - ENGINE - STANDARD PROCEDURE)

P0108-MANIFOLD ABSOLUTE PRESSURE SENSOR CIRCUIT HIGH

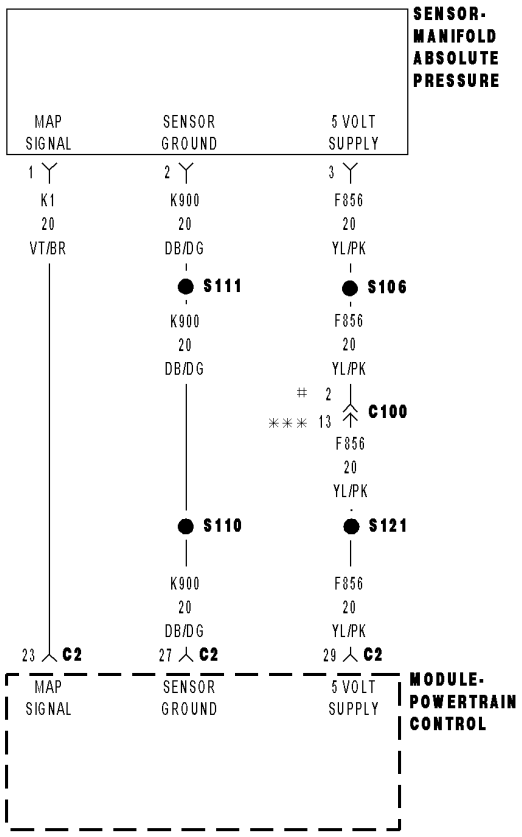

2.7L/3.5L
*** 5.7L

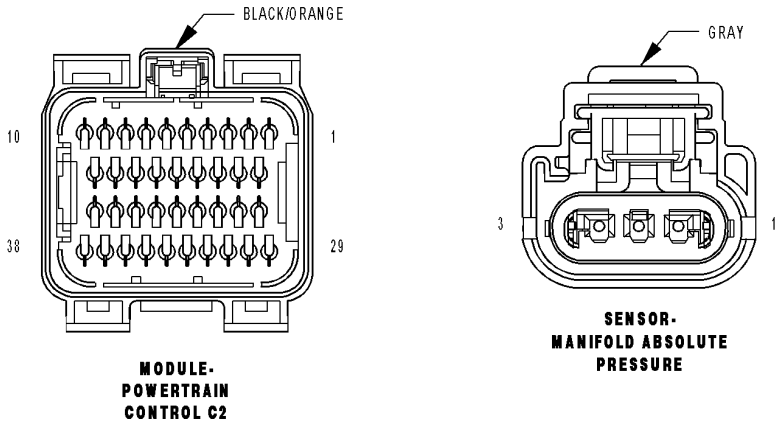

8131a249

For a complete wiring diagram **Refer to Section 8W**.

- **When Monitored:**
  Engine speed between 600 to 3500 RPM. Battery voltage greater than 10.37 volts.
- **Set Condition:**
  The MAP sensor signal voltage is greater than 4.92 volts for 3.0 seconds. One trip fault. Three good trips to turn off the MIL. (ETC light will flash).

Possible Causes
(K1) MAP SIGNAL CIRCUIT SHORTED TO BATTERY VOLTAGE
(K1) MAP SIGNAL CIRCUIT OPEN
(K1) MAP SIGNAL CIRCUIT SHORTED TO THE (F856) 5-VOLT SUPPLY CIRCUIT
(K900) SENSOR GROUND CIRCUIT OPEN
MAP SENSOR
PCM

Always perform the Pre-Diagnostic Troubleshooting procedure before proceeding. (Refer to 9 - ENGINE - DIAGNOSIS AND TESTING).

Diagnostic Test

1. MAP SENSOR VOLTAGE ABOVE 4.92 VOLTS

Start the engine.

With a scan tool, read the MAP Sensor voltage.

Is the voltage above 4.92 volts?

Yes >> Go To 2

No >> Refer to the INTERMITTENT CONDITION Diagnostic Procedure.
Perform the POWERTRAIN VERIFICATION TEST. (Refer to 9 - ENGINE - STANDARD PROCEDURE)

2. MAP SENSOR

Turn the ignition off.

Disconnect the MAP Sensor harness connector.

Connect a jumper wire between the (K1) MAP Signal circuit and the (K900) Sensor ground circuit in the Sensor harness connector.

Ignition on, engine not running.

With a scan tool, monitor the MAP Sensor voltage.

Is the voltage below 1.0 volt with the jumper wire installed?

Yes >> Replace the MAP Sensor.
Perform the POWERTRAIN VERIFICATION TEST. (Refer to 9 - ENGINE - STANDARD PROCEDURE)

No >> Go To 3

NOTE: Remove the jumper wire before continuing.

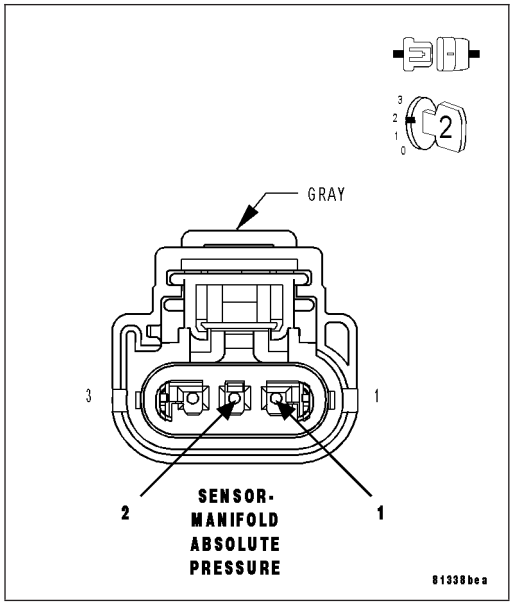

3. (K1) MAP SIGNAL CIRCUIT SHORTED TO BATTERY VOLTAGE

Turn the ignition off.

Disconnect the PCM harness connectors.

Ignition on, engine not running.

Measure the voltage on the (K1) MAP Signal circuit in the MAP Sensor harness connector.

Is the voltage above 5.2 volts?

Yes >> Repair the short to battery voltage in the (K1) MAP Signal circuit.
Perform the POWERTRAIN VERIFICATION TEST. (Refer to 9 - ENGINE - STANDARD PROCEDURE)

No >> Go To 4

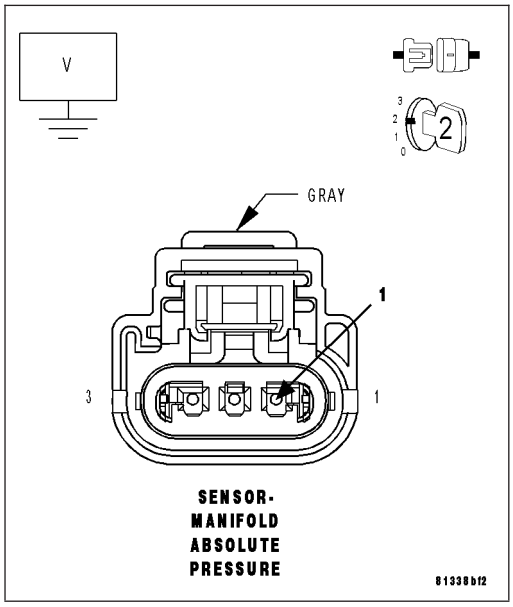

4. (K1) MAP SIGNAL CIRCUIT OPEN

Turn the ignition off.

CAUTION: Do not probe the PCM harness connectors. Probing the PCM harness connectors will damage the PCM terminals resulting in poor terminal to pin connection. Install Miller Special Tool #8815 to perform diagnosis.

Measure the resistance of the (K1) MAP Signal circuit from the MAP Sensor harness connector to the appropriate terminal of special tool #8815.

Is the resistance below 5.0 ohms?

Yes >> Go To 5

No >> Repair the open in the (K1) MAP Signal circuit.
Perform the POWERTRAIN VERIFICATION TEST. (Refer to 9 - ENGINE - STANDARD PROCEDURE)

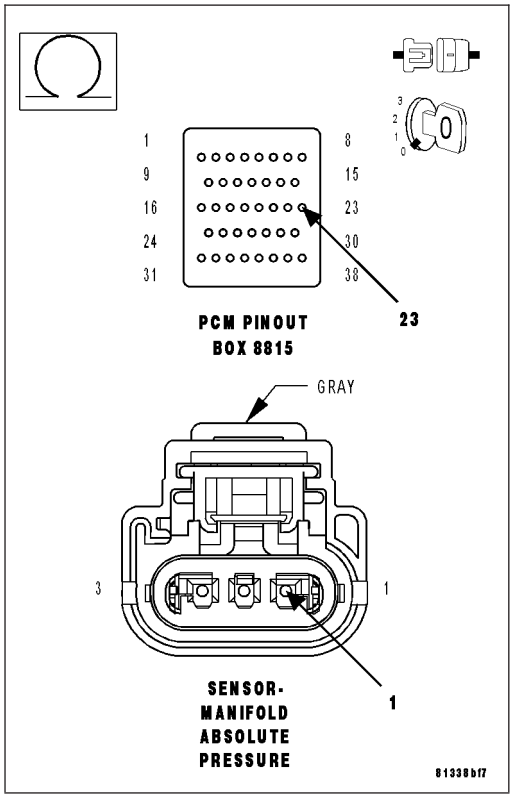

5. (K1) MAP SIGNAL CIRCUIT SHORTED TO THE (F856) 5-VOLT SUPPLY CIRCUIT

Measure the resistance between the (K1) MAP Signal circuit and the (F856) 5-volt Supply circuit in the MAP Sensor harness connector.

Is the resistance below 100 ohms?

Yes >> Repair the short between the (F856) 5-volt Supply circuit and the (K1) MAP Signal circuit.
Perform the POWERTRAIN VERIFICATION TEST. (Refer to 9 - ENGINE - STANDARD PROCEDURE)

No >> Go To 6

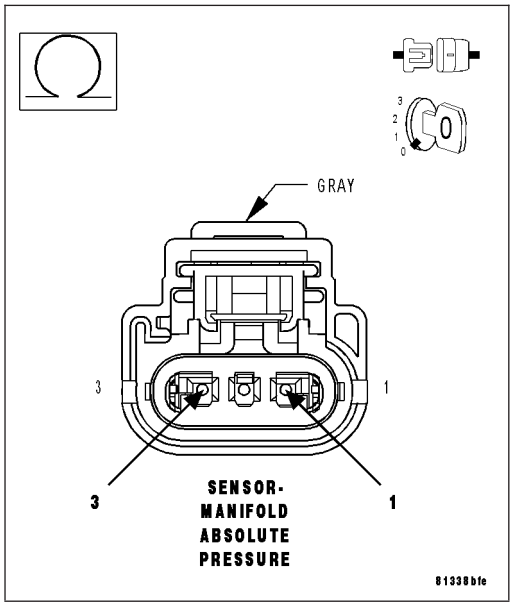

6. (K900) SENSOR GROUND CIRCUIT OPEN

Measure the resistance of the (K900) Sensor ground circuit from the MAP Sensor harness connector to the appropriate terminal of special tool #8815.

Is the resistance below 5.0 ohms?

Yes >> Go To 7

No >> Repair the open in the (K900) Sensor ground circuit.
Perform the POWERTRAIN VERIFICATION TEST. (Refer to 9 - ENGINE - STANDARD PROCEDURE)

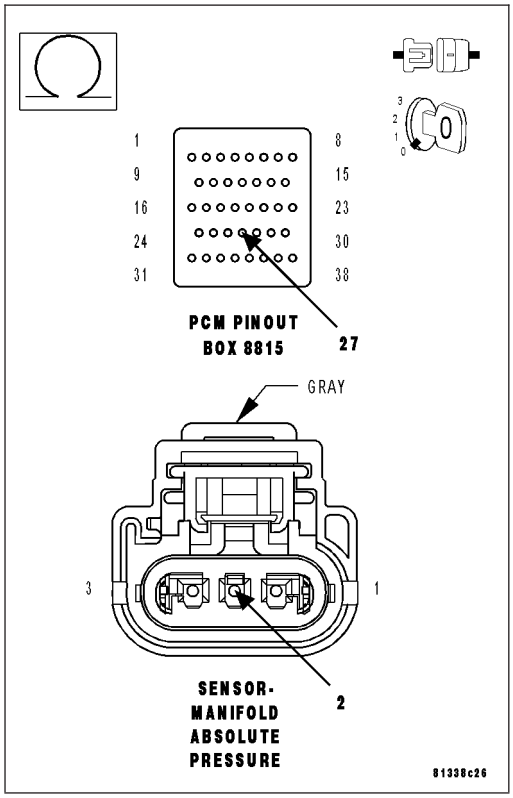

7. PCM

NOTE: Before continuing, check the PCM harness connector terminals for corrosion, damage, or terminal push out. Repair as necessary.
Using the schematics as a guide, inspect the wire harness and connectors. Pay particular attention to all Power and Ground circuits.

Were there any problems found?

Yes >> Repair as necessary.
Perform the POWERTRAIN VERIFICATION TEST. (Refer to 9 - ENGINE - STANDARD PROCEDURE)

No >> Replace and program the Powertrain Control Module per Service Information.
Perform the POWERTRAIN VERIFICATION TEST. (Refer to 9 - ENGINE - STANDARD PROCEDURE)

P0111-INTAKE AIR TEMPERATURE SENSOR RATIONALITY

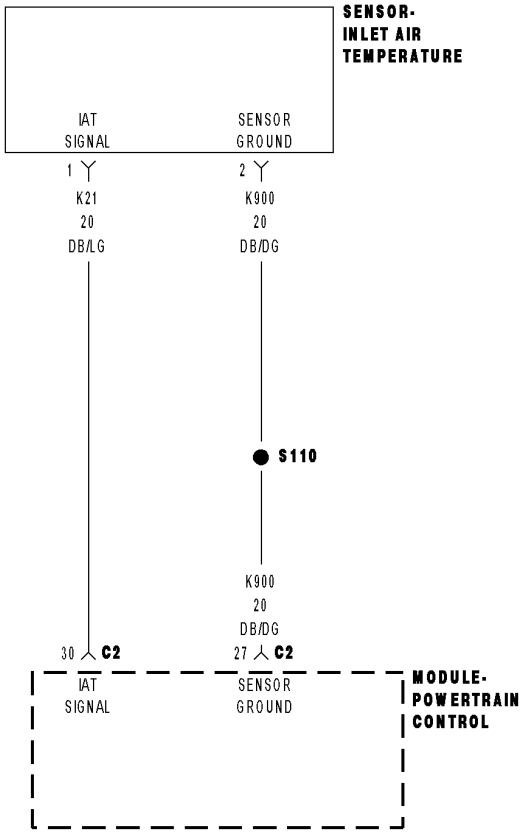

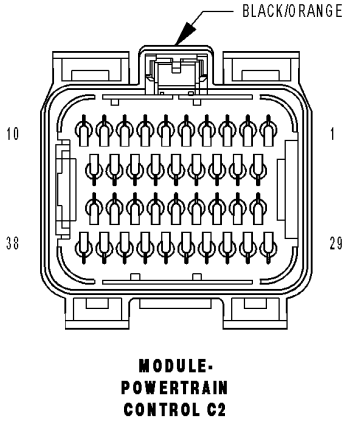

MODULE-
POWERTRAIN
CONTROL C2

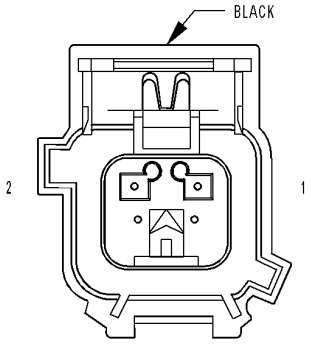

SENSOR-
INLET AIR
TEMPERATURE

8131a269

For a complete wiring diagram **Refer to Section 8W**.

Theory of Operation

Intake Air Temperature Sensor performance looks at the outputs of three temperature sensors and compares them under cold start conditions. Following a start to run delay time, the outputs of the ambient, engine coolant, and intake air temperature sensors will be compared. If the engine coolant and ambient air temperature sensors agree and the intake air temperature does not agree, the intake air temperature sensor is declared as irrational.

- **When Monitored:**
  The engine off time is greater than 480 minutes. Ambient Temperature if greater than 4°C (38°F).
- **Set Condition:**
  After a calibrated amount of cool down time the PCM compares the ECT Sensor, IAT Sensor, and the Ambient Air Temp Sensor values. If the IAT Sensor value is not within 10°C of the other two temperature sensors. Two Trip Fault. Three good trips to turn off the MIL.

Possible Causes
(K21) IAT SIGNAL CIRCUIT HIGH RESISTANCE
(K900) SENSOR GROUND CIRCUIT HIGH RESISTANCE
INTAKE AIR TEMPERATURE SENSOR
PCM

Always perform the Pre-Diagnostic Troubleshooting procedure before proceeding. (Refer to 9 - ENGINE - DIAGNOSIS AND TESTING).

Diagnostic Test

1. ACTIVE DTC

Ignition on, engine not running.
With a scan tool, read DTCs.

Is the DTC active at this time?

Yes >> Go To 2

No >> Refer to the INTERMITTENT CONDITION Diagnostic Procedure.
Perform the POWERTRAIN VERIFICATION TEST. (Refer to 9 - ENGINE - STANDARD PROCEDURE)

2. IAT SENSOR VOLTAGE ABOVE 4.6 VOLTS

Turn the ignition off.
Disconnect the IAT Sensor harness connector.
Ignition on, engine not running.
With a scan tool, read the IAT voltage.

Is the voltage above 4.6 volts?

Yes >> Go To 3

No >> Go To 4

3. IAT SENSOR

Connect a jumper wire between the (K21) IAT Signal circuit and the (K900) Sensor ground circuit in the IAT Sensor harness connector.

With a scan tool, read the IAT voltage.

Is the voltage below 1.0 volt with the jumper wire installed?

Yes >> Replace the IAT Sensor.
Perform the POWERTRAIN VERIFICATION TEST. (Refer to 9 - ENGINE - STANDARD PROCEDURE)

No >> Go To 4

NOTE: Remove the jumper wire before continuing.

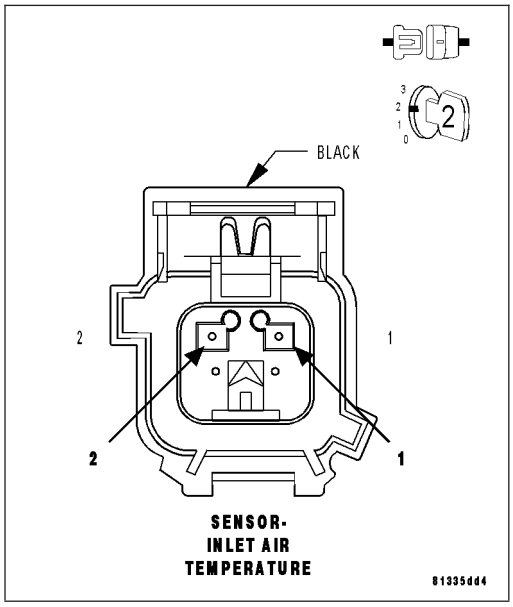

4. (K21) IAT SIGNAL CIRCUIT HIGH RESISTANCE

Turn the ignition off.

Disconnect the C2 PCM harness connector.

CAUTION: Do not probe the PCM harness connectors. Probing the PCM harness connectors will damage the PCM terminals resulting in poor terminal to pin connection. Install Miller Special Tool #8815 along with the #8815-1 to perform the diagnosis.

Using a voltmeter perform a voltage drop test. Backprobe the (K21) IAT Signal circuit at the IAT Sensor harness connector to the appropriate terminal of the special tool #8815. Ensure the voltmeter leads are connected with the circuit's correct polarity.

WARNING: When the engine is operating, do not stand in direct line with the fan. Do not put your hands near the pulleys, belts, or fan. Do not wear loose clothing. Failure to follow these instructions can result in personal injury or death.

Start the engine and allow it to reach normal operating temperature.

Monitor the voltmeter.

Is the voltage below 0.5 volts?

Yes >> Go To 5

No >> Repair the high resistance in the (K21) IAT Signal circuit.
Perform the POWERTRAIN VERIFICATION TEST. (Refer to 9 - ENGINE - STANDARD PROCEDURE)

5. (K900) SENSOR GROUND CIRCUIT HIGH RESISTANCE

Turn the ignition off.

Using a voltmeter perform a voltage drop test. Backprobe the (K900) Sensor Ground circuit at the IAT Sensor harness connector to the appropriate terminal of the special tool #8815. Ensure the voltmeter leads are connected with the circuit's correct polarity.

WARNING: When the engine is operating, do not stand in direct line with the fan. Do not put your hands near the pulleys, belts, or fan. Do not wear loose clothing. Failure to follow these instructions can result in personal injury or death.

Start the engine and allow it to reach normal operating temperature.

Monitor the voltmeter.

Is the voltage below 0.5 volts?

Yes >> Go To 6

No >> Repair the open in the (K900) Sensor ground circuit.
Perform the POWERTRAIN VERIFICATION TEST. (Refer to 9 - ENGINE - STANDARD PROCEDURE)

6. PCM

NOTE: Before continuing, check the PCM harness connector terminals for corrosion, damage, or terminal push out. Repair as necessary.
Using the schematics as a guide, inspect the wire harness and connectors. Pay particular attention to all Power and Ground circuits.

Were there any problems found?

Yes >> Repair as necessary.
Perform the POWERTRAIN VERIFICATION TEST. (Refer to 9 - ENGINE - STANDARD PROCEDURE)

No >> Replace and program the Powertrain Control Module per Service Information.
Perform the POWERTRAIN VERIFICATION TEST. (Refer to 9 - ENGINE - STANDARD PROCEDURE)

P0112-INTAKE AIR TEMPERATURE SENSOR CIRCUIT LOW

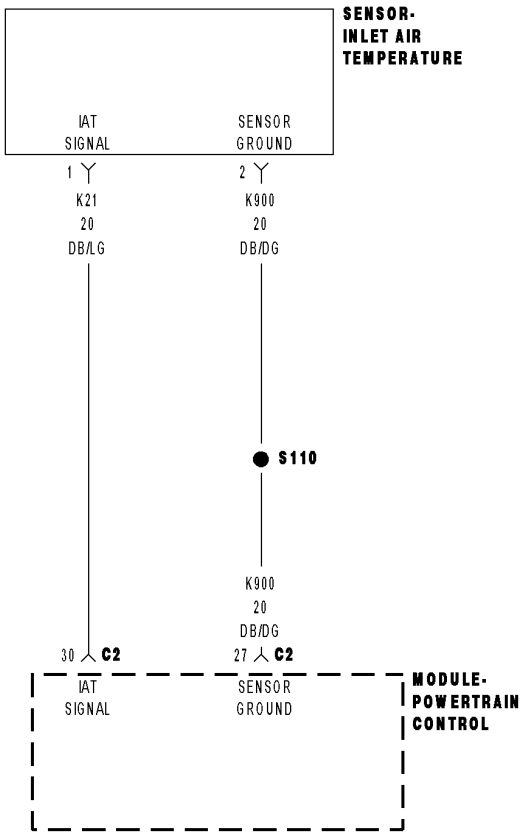

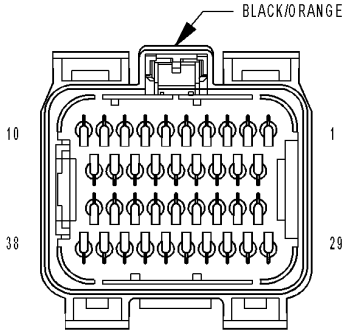

MODULE-
POWERTRAIN
CONTROL C2

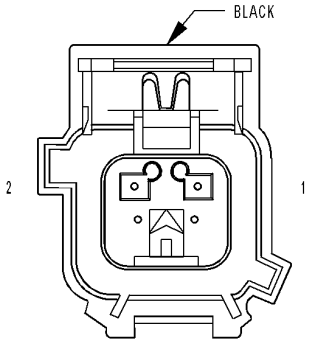

SENSOR-
INLET AIR
TEMPERATURE

8131a269

For a complete wiring diagram **Refer to Section 8W**.

- **When Monitored:**
  With the ignition on and battery voltage greater than 10.4 volts.
- **Set Condition:**
  When the Inlet Air Temp Sensor Signal circuit voltage is less than .078 volt for more than 2.8 seconds. One trip failure. Three good trips to clear the MIL.

Possible Causes
(K21) IAT SENSOR SIGNAL SHORTED TO GROUND
(K21) IAT SENSOR SIGNAL SHORTED TO (K900) SENSOR GROUND CIRCUIT
INTAKE AIR TEMPERATURE SENSOR
PCM

Always perform the Pre-Diagnostic Troubleshooting procedure before proceeding. (Refer to 9 - ENGINE - DIAGNOSIS AND TESTING).

Diagnostic Test

1. IAT SENSOR VOLTAGE BELOW 0.078 OF A VOLT

Ignition on, engine not running.
With a scan tool, read the IAT voltage.

Is the voltage below 0.078 of a volt?

Yes >> Go To 2

No >> Refer to the INTERMITTENT CONDITION Diagnostic Procedure.
Perform the POWERTRAIN VERIFICATION TEST. (Refer to 9 - ENGINE - STANDARD PROCEDURE)

2. IAT SENSOR

Turn the ignition off.
Disconnect the IAT Sensor harness connector.
Ignition on, engine not running.
With a scan tool, read IAT voltage.

Is the voltage above 4.5 of a volts?

Yes >> Replace the Intake Air Temperature Sensor.
Perform the POWERTRAIN VERIFICATION TEST. (Refer to 9 - ENGINE - STANDARD PROCEDURE)

No >> Go To 3

3. (K21) IAT SENSOR SIGNAL SHORTED TO GROUND

Turn the ignition off.

Disconnect the PCM harness connectors.

Measure the resistance between ground and the (K21) IAT Sensor Signal circuit in the IAT Sensor harness connector.

Is the resistance below 100 ohms?

Yes >> Repair the short to ground in the (K21) IAT Sensor Signal circuit.

Perform the POWERTRAIN VERIFICATION TEST. (Refer to 9 - ENGINE - STANDARD PROCEDURE)

No >> Go To 4

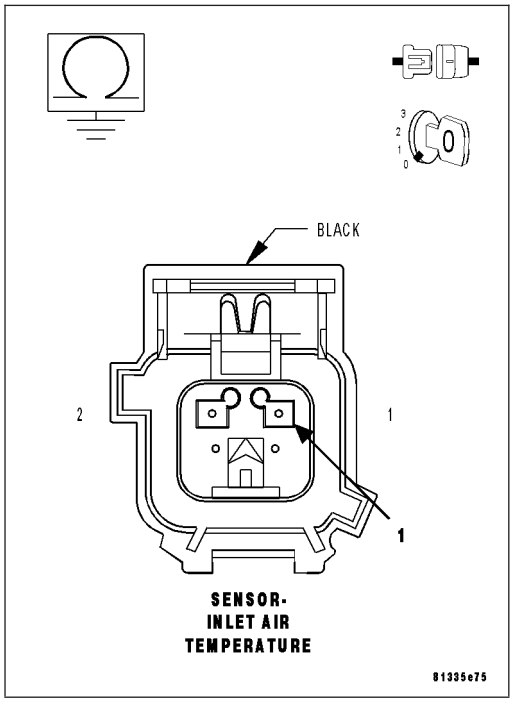

4. (K21) IAT SENSOR SIGNAL SHORTED TO THE (K900) SENSOR GROUND CIRCUIT

Measure the resistance between the (K21) IAT Sensor Signal circuit and the (K900) Sensor ground circuit in the IAT Sensor harness connector.

Is the resistance below 100 ohms?

Yes >> Repair the short between the (K900) Sensor ground circuit and the (K21) IAT Sensor Signal circuit.

Perform the POWERTRAIN VERIFICATION TEST. (Refer to 9 - ENGINE - STANDARD PROCEDURE)

No >> Go To 5

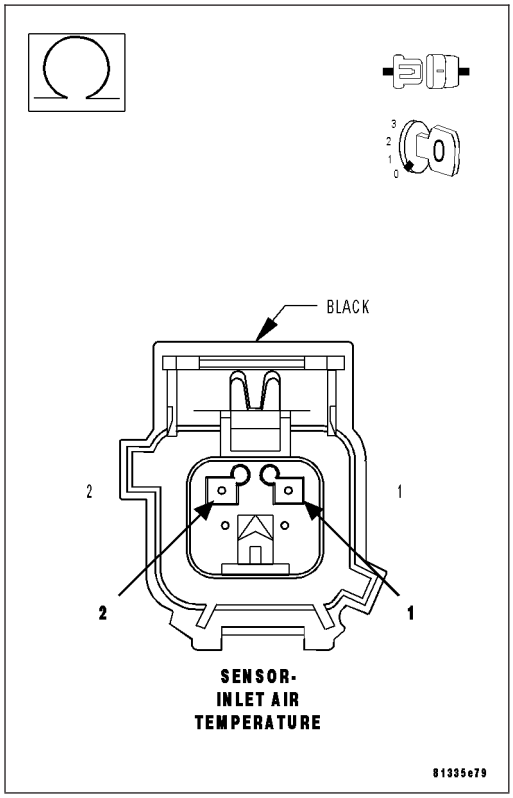

5. PCM

NOTE: Before continuing, check the PCM harness connector terminals for corrosion, damage, or terminal push out. Repair as necessary.
Using the schematics as a guide, inspect the wire harness and connectors. Pay particular attention to all Power and Ground circuits.

Were there any problems found?

Yes >> Repair as necessary.
Perform the POWERTRAIN VERIFICATION TEST. (Refer to 9 - ENGINE - STANDARD PROCEDURE)

No >> Replace and program the Powertrain Control Module per Service Information.
Perform the POWERTRAIN VERIFICATION TEST. (Refer to 9 - ENGINE - STANDARD PROCEDURE)

P0113-INTAKE AIR TEMPERATURE SENSOR CIRCUIT HIGH

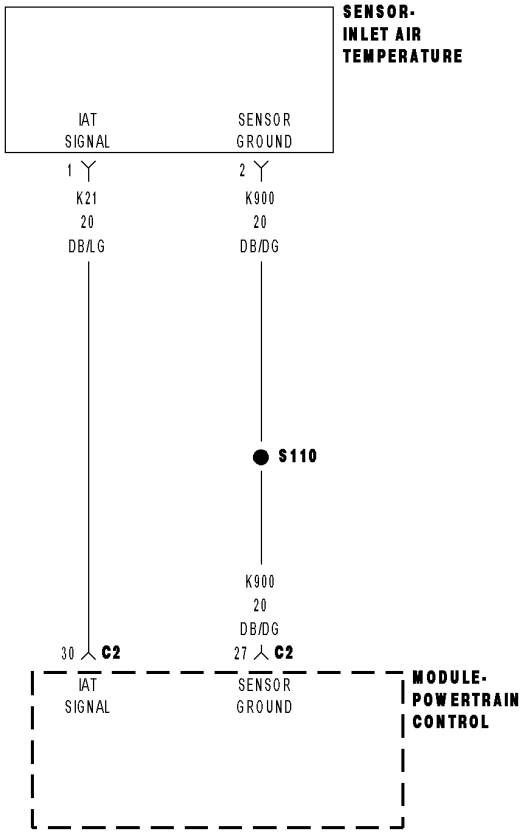

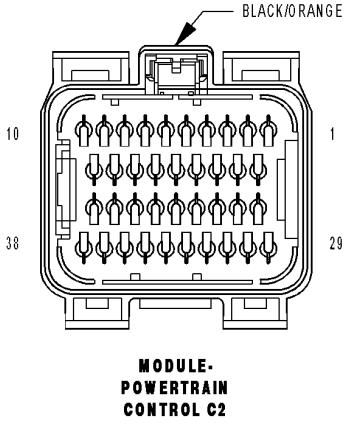

MODULE-
POWERTRAIN
CONTROL C2

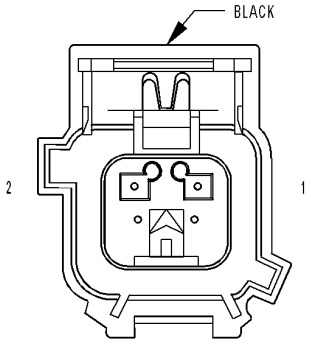

SENSOR-
INLET AIR
TEMPERATURE

8131a269

For a complete wiring diagram **Refer to Section 8W**.

- **When Monitored:**
  With the ignition on. Battery voltage greater than 10.4 volts.
- **Set Condition:**
  The Intake Air Temperature (IAT) sensor circuit voltage at the PCM goes above 4.98 volts for 2.8 seconds. One Trip Fault. Three good trips to turn off the MIL.

Possible Causes
(K21) IAT SIGNAL CIRCUIT SHORTED TO BATTERY VOLTAGE
(K21) IAT SIGNAL CIRCUIT OPEN
(K900) SENSOR GROUND CIRCUIT OPEN
IAT SENSOR
PCM

Always perform the Pre-Diagnostic Troubleshooting procedure before proceeding. (Refer to 9 - ENGINE - DIAGNOSIS AND TESTING).

Diagnostic Test

1. IAT SENSOR VOLTAGE ABOVE 4.98 VOLTS

Ignition on, engine not running.

With a scan tool, read the Intake Air Temperature Sensor voltage.

Is the voltage above 4.98 volts?

Yes >> Go To 2

No >> Refer to the INTERMITTENT CONDITION Diagnostic Procedure.
Perform the POWERTRAIN VERIFICATION TEST. (Refer to 9 - ENGINE - STANDARD PROCEDURE)

2. IAT SENSOR

Turn the ignition off.

Disconnect the Intake Air Temperature Sensor harness connector.

Connect a jumper wire between the (K21) IAT Signal circuit and the (K900) Sensor ground circuit in the IAT Sensor harness connector.

Ignition on, engine not running.

With a scan tool, read the IAT Sensor voltage.

Is the voltage below 1.0 volt with the jumper wire installed?

Yes >> Replace the IAT Sensor.
Perform the POWERTRAIN VERIFICATION TEST. (Refer to 9 - ENGINE - STANDARD PROCEDURE)

No >> Go To 3

NOTE: Remove the jumper wire before continuing.

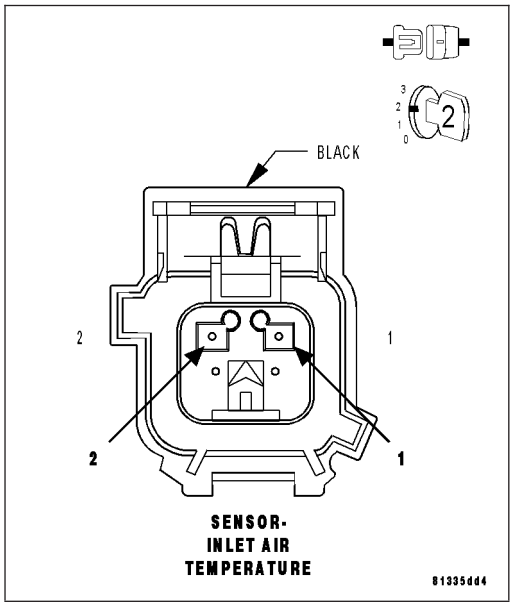

3. (K21) IAT SIGNAL CIRCUIT SHORTED TO BATTERY VOLTAGE

Ignition on, engine not running.

Measure the voltage on the (K21) IAT Signal circuit in the IAT Sensor harness connector.

Is the voltage above 5.2 volts?

Yes >> Repair the short to battery voltage in the (K21) IAT Signal circuit.
Perform the POWERTRAIN VERIFICATION TEST. (Refer to 9 - ENGINE - STANDARD PROCEDURE)

No >> Go To 4

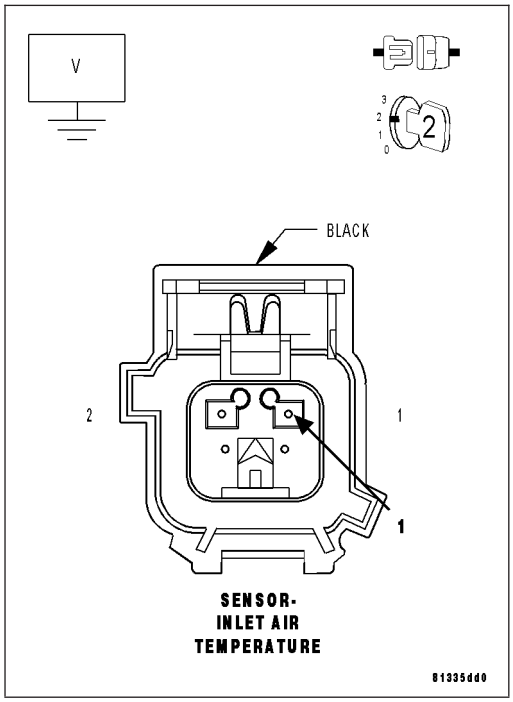

4. (K21) IAT SIGNAL CIRCUIT OPEN

Turn the ignition off.

Disconnect the PCM harness connector.

CAUTION: Do not probe the PCM harness connectors. Probing the PCM harness connectors will damage the PCM terminals resulting in poor terminal to pin connection. Install Miller Special Tool #8815 to perform diagnosis.

Measure the resistance of the (K21) IAT Signal circuit from the IAT Sensor harness connector to the appropriate terminal of special tool #8815.

Is the resistance below 5.0 ohms?

Yes >> Go To 5

No >> Repair the open in the (K21) IAT Signal circuit.
Perform the POWERTRAIN VERIFICATION TEST. (Refer to 9 - ENGINE - STANDARD PROCEDURE)

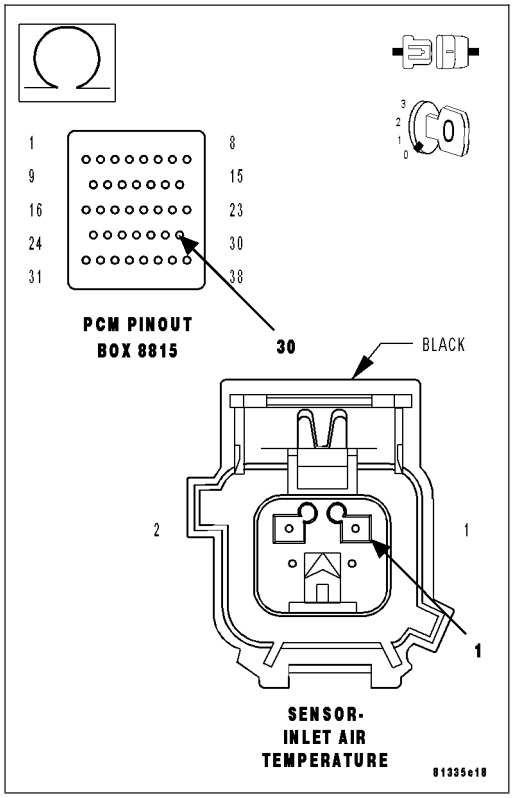

5. (K900) SENSOR GROUND CIRCUIT OPEN

Measure the resistance of the (K900) Sensor ground circuit from the IAT Sensor harness connector to the appropriate terminal of special tool #8815.

Is the resistance below 5.0 ohms?

Yes >> Go To 6

No >> Repair the open in the (K900) Sensor ground circuit.
Perform the POWERTRAIN VERIFICATION TEST. (Refer to 9 - ENGINE - STANDARD PROCEDURE)

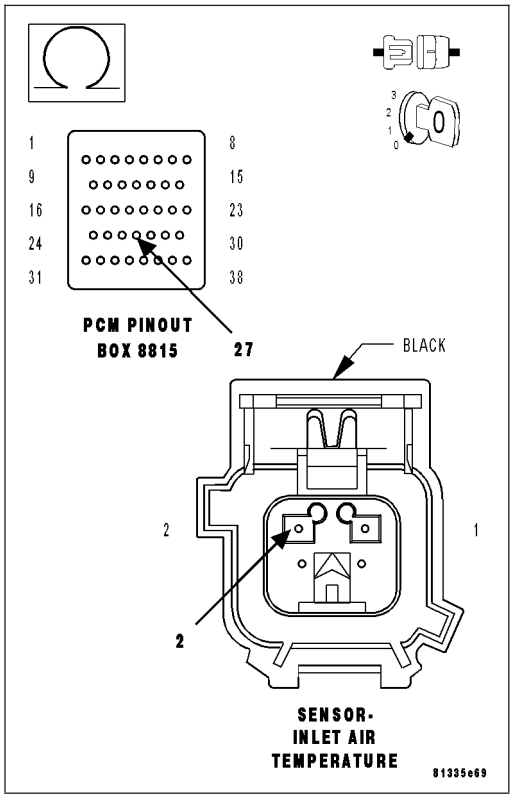

6. PCM

NOTE: Before continuing, check the PCM harness connector terminals for corrosion, damage, or terminal push out. Repair as necessary.
Using the schematics as a guide, inspect the wire harness and connectors. Pay particular attention to all Power and Ground circuits.

Were there any problems found?

Yes >> Repair as necessary.
Perform the POWERTRAIN VERIFICATION TEST. (Refer to 9 - ENGINE - STANDARD PROCEDURE)

No >> Replace and program the Powertrain Control Module per Service Information.
Perform the POWERTRAIN VERIFICATION TEST. (Refer to 9 - ENGINE - STANDARD PROCEDURE)

P0116–ENGINE COOLANT TEMPERATURE SENSOR CIRCUIT PERFORMANCE

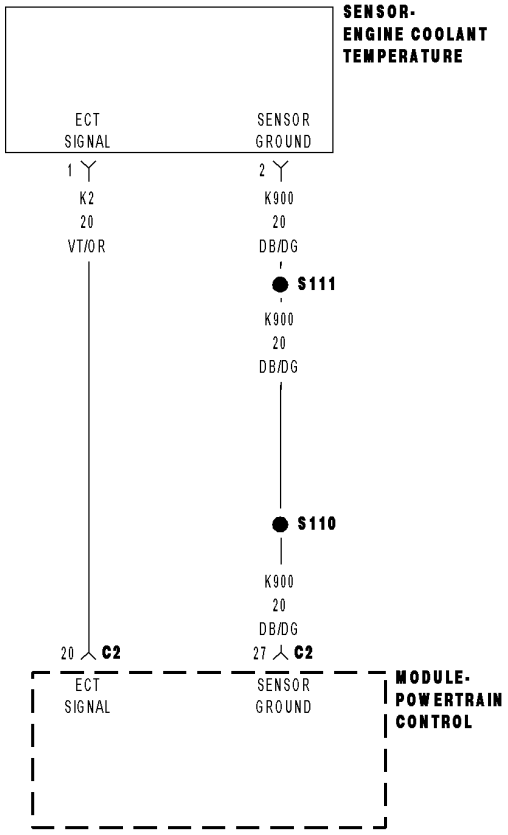

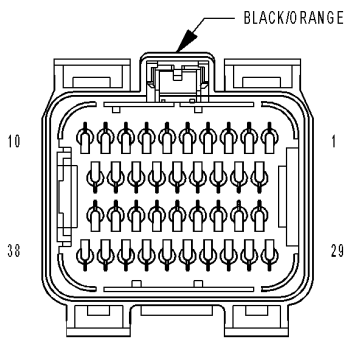

MODULE-
POWERTRAIN
CONTROL C2

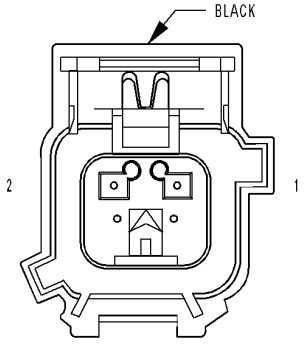

SENSOR-
ENGINE COOLANT
TEMPERATURE

8131a28f

For a complete wiring diagram **Refer to Section 8W**.

- **When Monitored:**
  Engine off time is greater than 480 minutes. Ambient temperature is greater than 4 ° C (38 ° F).
- **Set Condition:**
  After a calibrated amount of cool down time, the PCM compares the ECT Sensor, IAT Sensor and the Ambient Air Temperature Sensor values. If the ECT Sensor value is not within calibrated temperature amount of the other two temperature sensors an error is detected. Two Trip Fault. Three good trips to turn off the MIL. (ETC lamp will illuminate with the MIL.)

Possible Causes
(K2) ECT SIGNAL CIRCUIT HIGH RESISTANCE
(K900) SENSOR GROUND CIRCUIT HIGH RESISTANCE
ENGINE COOLANT TEMPERATURE SENSOR
PCM

Always perform the Pre-Diagnostic Troubleshooting procedure before proceeding. (Refer to 9 - ENGINE - DIAGNOSIS AND TESTING).

Diagnostic Test

1. ACTIVE DTC

Ignition on, engine not running.
With a scan tool, read DTCs.

Is the DTC active at this time?

Yes >> Go To 2

No >> Refer to the INTERMITTENT CONDITION Diagnostic Procedure.
Perform the POWERTRAIN VERIFICATION TEST. (Refer to 9 - ENGINE - STANDARD PROCEDURE)

2. ECT SENSOR VOLTAGE ABOVE 4.6 VOLTS

Turn the ignition off.
Disconnect the ECT Sensor harness connector.
Ignition on, engine not running.
With a scan tool, read the ECT voltage.

Is the voltage above 4.6 volts?

Yes >> Go To 3

No >> Go To 4

3. ECT SENSOR

Connect a jumper wire between the (K2) ECT Signal circuit and the (K900) Sensor ground circuit in the ECT Sensor harness connector.

With a scan tool, read the ECT voltage.

Is the voltage below 1.0 volt with the jumper wire installed?

Yes >> Replace the ECT Sensor.
Perform the POWERTRAIN VERIFICATION TEST. (Refer to 9 - ENGINE - STANDARD PROCEDURE)

No >> Go To 4

NOTE: Remove the jumper wire before continuing.

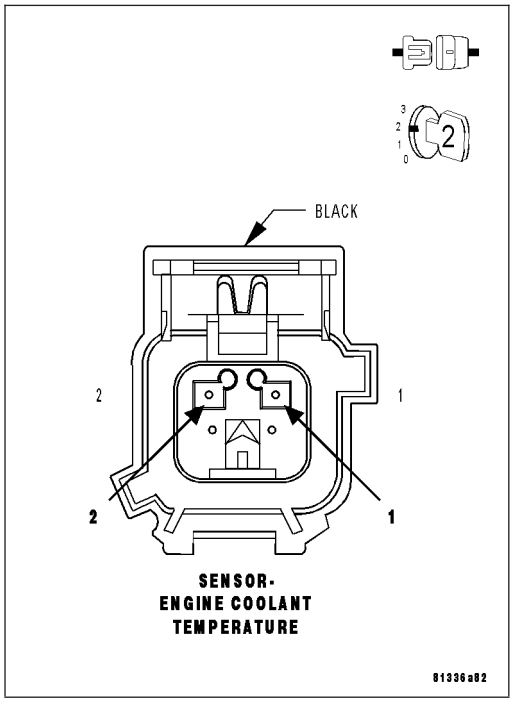

4. (K2) ECT SIGNAL CIRCUIT HIGH RESISTANCE

Turn the ignition off.

Disconnect the C2 PCM harness connector.

CAUTION: CAUTION: Do not probe the PCM harness connectors. Probing the PCM harness connectors will damage the PCM terminals resulting in poor terminal to pin connection. Install Miller Special Tool #8815 along with the #8815-1 to perform the diagnosis.

Using a voltmeter perform a voltage drop test. Backprobe the (K2) ECT Signal circuit at the ECT Sensor harness connector to the appropriate terminal of the special tool #8815. Ensure the voltmeter leads are connected with the circuit's correct polarity.

WARNING: When the engine is operating, do not stand in direct line with the fan. Do not put your hands near the pulleys, belts, or fan. Do not wear loose clothing. Failure to follow these instructions can result in personal injury or death.

Start the engine and allow it to reach normal operating temperature.

Monitor the voltmeter.

Is the voltage below 0.5 volts?

Yes >> Go To 5

No >> Repair the high resistance in the (K2) ECT Signal circuit.
Perform the POWERTRAIN VERIFICATION TEST. (Refer to 9 - ENGINE - STANDARD PROCEDURE)

5. (K900) SENSOR GROUND CIRCUIT HIGH RESISTANCE

Turn the ignition off.

Using a voltmeter perform a voltage drop test. Backprobe the (K900) Sensor Ground circuit at the ECT Sensor harness connector to the appropriate terminal of the special tool #8815. Ensure the voltmeter leads are connected with the circuit's correct polarity.

WARNING: When the engine is operating, do not stand in direct line with the fan. Do not put your hands near the pulleys, belts, or fan. Do not wear loose clothing. Failure to follow these instructions can result in personal injury or death.

Start the engine and allow it to reach normal operating temperature.

Monitor the voltmeter.

Is the voltage below 0.5 volts?

Yes >> Go To 6

No >> Repair the open in the (K900) Sensor ground circuit.
Perform the POWERTRAIN VERIFICATION TEST. (Refer to 9 - ENGINE - STANDARD PROCEDURE)

6. PCM

NOTE: Before continuing, check the PCM harness connector terminals for corrosion, damage, or terminal push out. Repair as necessary.

Using the schematics as a guide, inspect the wire harness and connectors. Pay particular attention to all Power and Ground circuits.

Were there any problems found?

Yes >> Repair as necessary.
Perform the POWERTRAIN VERIFICATION TEST. (Refer to 9 - ENGINE - STANDARD PROCEDURE)

No >> Replace and program the Powertrain Control Module per Service Information.
Perform the POWERTRAIN VERIFICATION TEST. (Refer to 9 - ENGINE - STANDARD PROCEDURE)

P0117-ENGINE COOLANT TEMPERATURE SENSOR CIRCUIT LOW

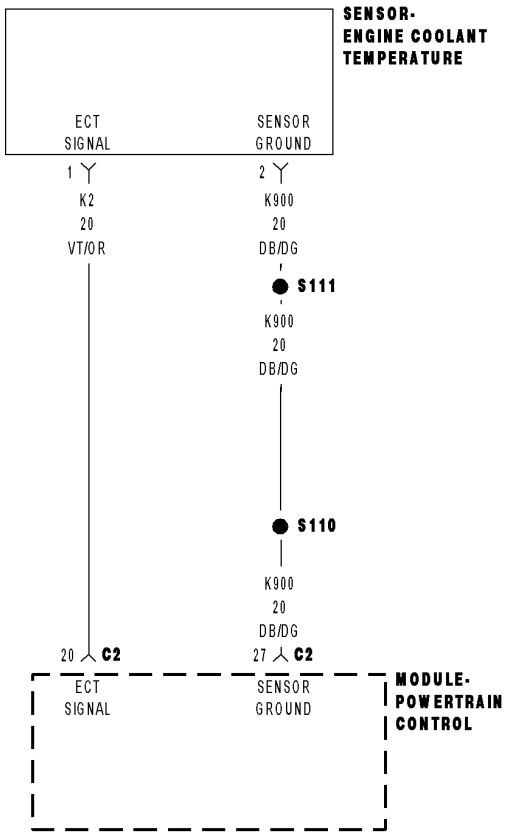

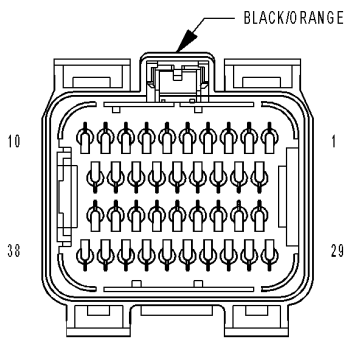

MODULE-
POWERTRAIN
CONTROL C2

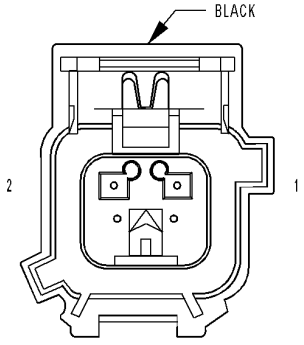

SENSOR-
ENGINE COOLANT
TEMPERATURE

8131a28f

For a complete wiring diagram **Refer to Section 8W**.

- **When Monitored:**
  With the ignition on. Battery voltage greater than 10.4 volts.
- **Set Condition:**
  The Engine Coolant Temperature (ECT) sensor circuit voltage at the PCM is less than 0.078 of a volt for more than 2.8 seconds. One Trip Fault. Three good trips to clear the MIL.

Possible Causes
(K2) ECT SIGNAL CIRCUIT SHORTED TO GROUND
(K2) ECT SIGNAL CIRCUIT SHORTED TO THE (K900) SENSOR GROUND
ECT SENSOR
PCM

Always perform the Pre-Diagnostic Troubleshooting procedure before proceeding. (Refer to 9 - ENGINE - DIAGNOSIS AND TESTING).

Diagnostic Test

1. ECT SENSOR VOLTAGE BELOW 0.078 OF A VOLT

Ignition on, engine not running.
With a scan tool, read the ECT voltage.

Is the voltage below 0.078 of a volt?

Yes >> Go To 2

No >> Refer to the INTERMITTENT CONDITION Diagnostic Procedure.
Perform the POWERTRAIN VERIFICATION TEST. (Refer to 9 - ENGINE - STANDARD PROCEDURE)

2. ECT SENSOR

Turn the ignition off.
Disconnect the ECT harness connector.
Ignition on, engine not running.
With a scan tool, read ECT voltage.

Is the voltage above 1.0 volt?

Yes >> Replace the ECT Sensor.
Perform the POWERTRAIN VERIFICATION TEST. (Refer to 9 - ENGINE - STANDARD PROCEDURE)

No >> Go To 3

3. (K2) ECT SIGNAL CIRCUIT SHORTED TO THE (K900) SENSOR GROUND CIRCUIT

Turn the ignition off.

Disconnect the PCM harness connectors.

Measure the resistance between the (K900) Sensor ground circuit and the (K2) ECT Signal circuit in the ECT Sensor harness connector.

Is the resistance below 5.0 ohms?

Yes >> Repair the short to between the (K900) Sensor ground circuit and the (K2) ECT Signal circuit.
Perform the POWERTRAIN VERIFICATION TEST. (Refer to 9 - ENGINE - STANDARD PROCEDURE)

No >> Go To 4

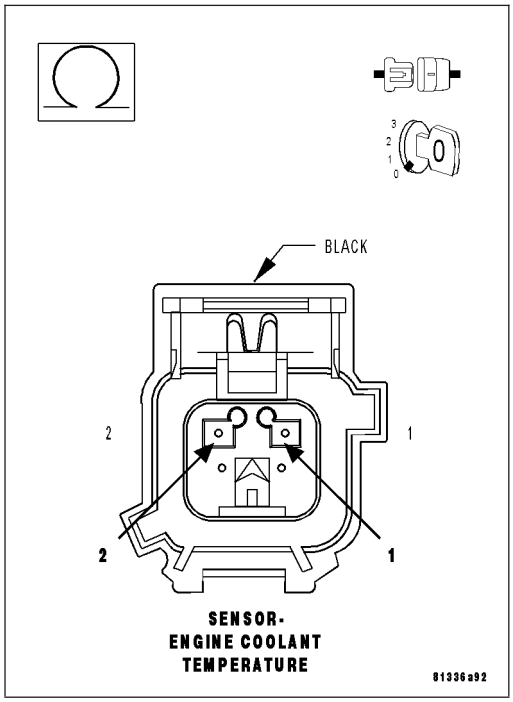

4. (K2) ECT SIGNAL CIRCUIT SHORTED GROUND

Measure the resistance between ground and the (K2) ECT Signal circuit in the ECT Sensor harness connector.

Is the resistance below 100 ohms?

Yes >> Repair the short to ground in the (K2) ECT Signal circuit.
Perform the POWERTRAIN VERIFICATION TEST. (Refer to 9 - ENGINE - STANDARD PROCEDURE)

No >> Go To 5

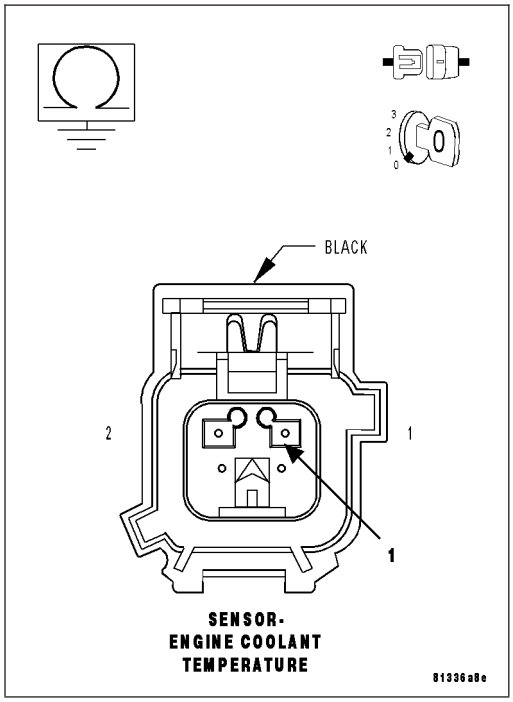

5. PCM

NOTE: Before continuing, check the PCM harness connector terminals for corrosion, damage, or terminal push out. Repair as necessary.
Using the schematics as a guide, inspect the wire harness and connectors. Pay particular attention to all Power and Ground circuits.

Were there any problems found?

Yes >> Repair as necessary.
Perform the POWERTRAIN VERIFICATION TEST. (Refer to 9 - ENGINE - STANDARD PROCEDURE)

No >> Replace and program the Powertrain Control Module per Service Information.
Perform the POWERTRAIN VERIFICATION TEST. (Refer to 9 - ENGINE - STANDARD PROCEDURE)

P0118-ENGINE COOLANT TEMPERATURE SENSOR CIRCUIT HIGH

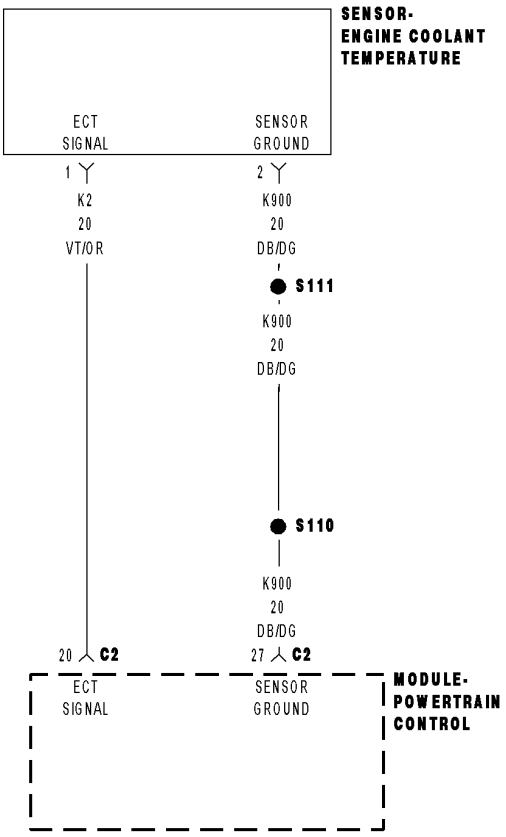

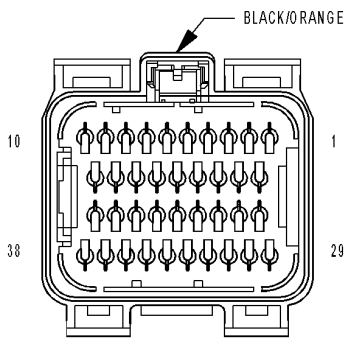

MODULE-
POWERTRAIN
CONTROL C2

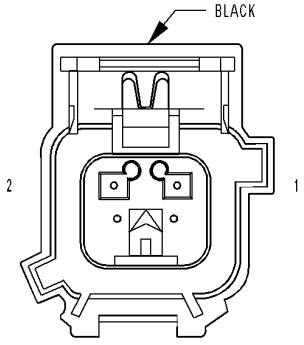

SENSOR-
ENGINE COOLANT
TEMPERATURE

8131a28f

For a complete wiring diagram **Refer to Section 8W**.

- **When Monitored:**
  With the ignition on. Battery voltage greater than 10.4 volts.
- **Set Condition:**
  The Engine Coolant Temperature (ECT) sensor circuit voltage at the PCM is greater than 4.98 volts for more than 2.8 seconds. One Trip Fault. Three good trips to turn off the MIL. (ETC lamp will illuminate with the MIL.)

Possible Causes
(K2) ECT SIGNAL CIRCUIT SHORTED TO BATTERY VOLTAGE
(K2) ECT SIGNAL CIRCUIT OPEN
(K900) SENSOR GROUND CIRCUIT OPEN
ECT SENSOR
PCM

Always perform the Pre-Diagnostic Troubleshooting procedure before proceeding. (Refer to 9 - ENGINE - DIAGNOSIS AND TESTING).

Diagnostic Test

1. ECT SENSOR VOLTAGE ABOVE 4.98 VOLTS

Ignition on, engine not running.

With a scan tool, read the ECT voltage.

Is the voltage above 4.98 volts?

Yes >> Go To 2

No >> Refer to the INTERMITTENT CONDITION Diagnostic Procedure.
Perform the POWERTRAIN VERIFICATION TEST. (Refer to 9 - ENGINE - STANDARD PROCEDURE)

2. ECT SENSOR

Turn the ignition off.

Disconnect the ECT harness connector.

Connect a jumper wire between the (K2) ECT Signal circuit and the (K900) Sensor ground circuit in the ECT harness connector.

Ignition on, engine not running.

With a scan tool, read ECT voltage.

Is the voltage below 1.0 volt with the jumper wire installed?

Yes >> Replace the ECT Sensor.
Perform the POWERTRAIN VERIFICATION TEST. (Refer to 9 - ENGINE - STANDARD PROCEDURE)

No >> Go To 3

NOTE: Remove the jumper wire before continuing.

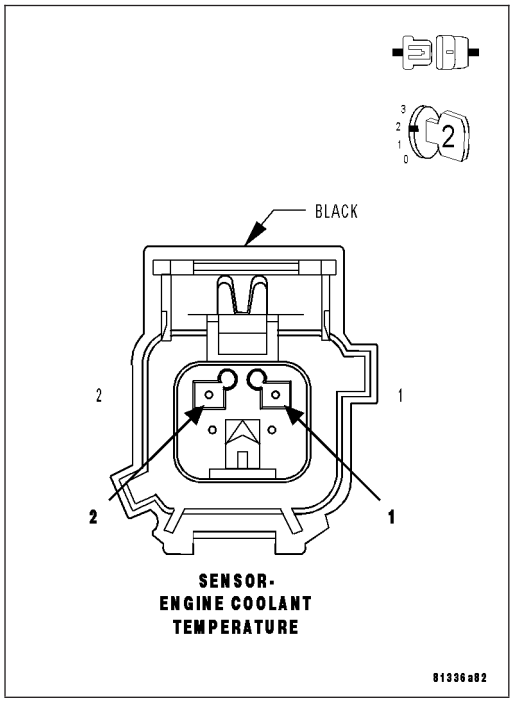

3. (K2) ECT SIGNAL CIRCUIT SHORTED TO BATTERY VOLTAGE

Turn the ignition off.

Disconnect the PCM harness connectors.

Ignition on, engine not running.

Measure the voltage on the (K2) ECT Signal circuit in the ECT Sensor harness connector.

Is voltage present?

Yes >> Repair the short to battery voltage in the (K2) ECT Signal circuit.
Perform the POWERTRAIN VERIFICATION TEST. (Refer to 9 - ENGINE - STANDARD PROCEDURE)

No >> Go To 4

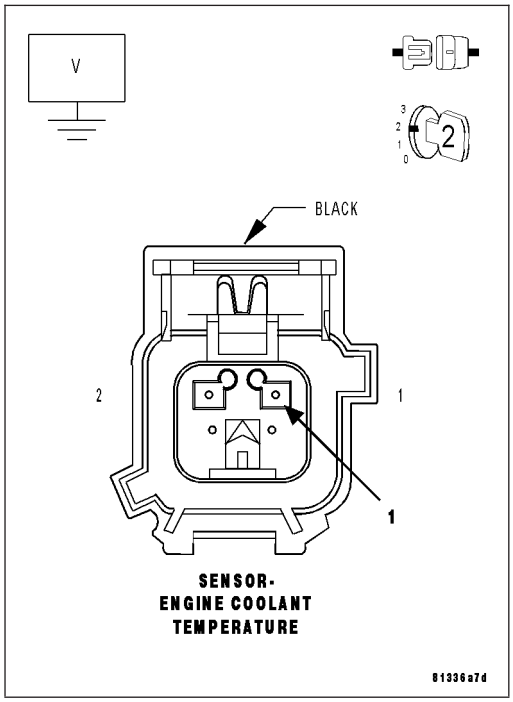

4. (K2) ECT SIGNAL CIRCUIT OPEN

Turn the ignition off.

CAUTION: Do not probe the PCM harness connectors. Probing the PCM harness connectors will damage the PCM terminals resulting in poor terminal to pin connection. Install Miller Special Tool #8815 to perform diagnosis.

Measure the resistance of the (K2) ECT Signal circuit from the ECT Sensor harness connector to the appropriate terminal of special tool #8815.

Is the resistance below 5.0 ohms?

Yes >> Go To 5

No >> Repair the open in the (K2) ECT Signal circuit.
Perform the POWERTRAIN VERIFICATION TEST. (Refer to 9 - ENGINE - STANDARD PROCEDURE)

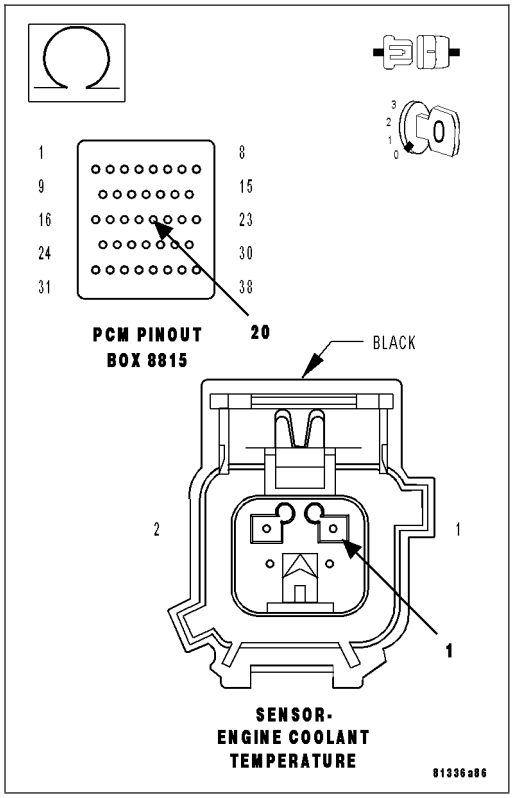

5. (K900) SENSOR GROUND CIRCUIT OPEN

Measure the resistance of the (K900) Sensor ground circuit from the ECT Sensor harness connector to the appropriate terminal of special tool #8815.

Is the resistance below 5.0 ohms?

Yes >> Go To 6

No >> Repair the open in the (K900) Sensor ground circuit.
Perform the POWERTRAIN VERIFICATION TEST. (Refer to 9 - ENGINE - STANDARD PROCEDURE)

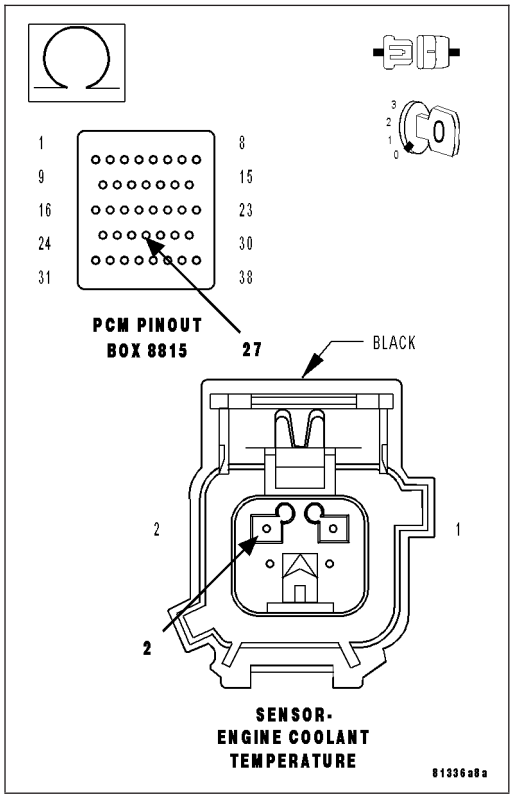

6. PCM

NOTE: Before continuing, check the PCM harness connector terminals for corrosion, damage, or terminal push out. Repair as necessary.
Using the schematics as a guide, inspect the wire harness and connectors. Pay particular attention to all Power and Ground circuits.

Were there any problems found?

Yes >> Repair as necessary.
Perform the POWERTRAIN VERIFICATION TEST. (Refer to 9 - ENGINE - STANDARD PROCEDURE)

No >> Replace and program the Powertrain Control Module per Service Information.
Perform the POWERTRAIN VERIFICATION TEST. (Refer to 9 - ENGINE - STANDARD PROCEDURE)

P0121-THROTTLE POSITION SENSOR 1 PERFORMANCE

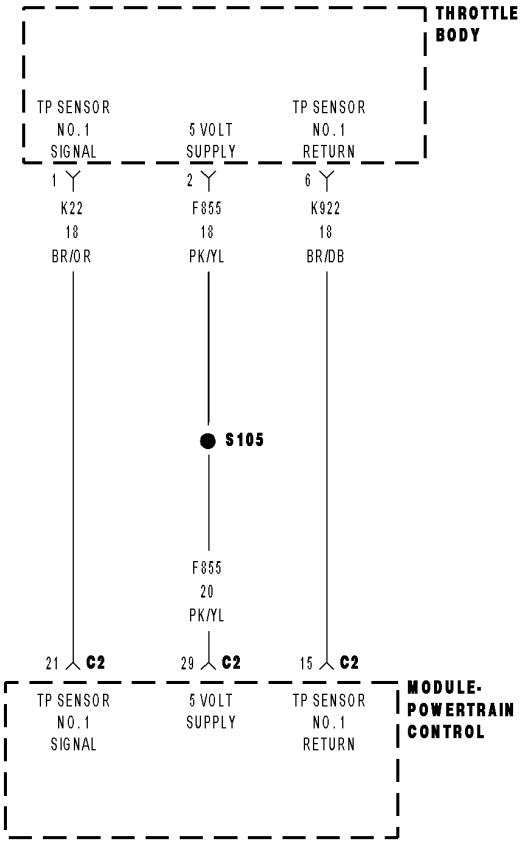

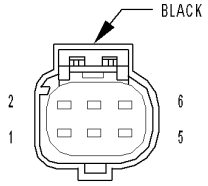

THROTTLE BODY

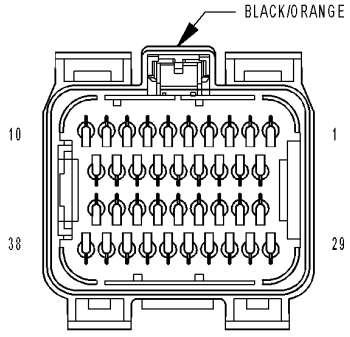

MODULE-POWERTRAIN CONTROL C2

8131a2a0

For a complete wiring diagram **Refer to Section 8W**.

- **When Monitored:**
  Ignition on and No MAP Sensor DTCs set.
- **Set Condition:**
  TP Sensor signals do not correlate to the MAP Sensor signal. Two Trip Fault. ETC light will illuminate. P2135 should set with this code also.

Possible Causes
RESISTANCE IN THE (K22) TP SENSOR NO.1 OR (K122) TP SENSOR NO.2 SIGNAL CIRCUIT
RESISTANCE IN (F855) 5-VOLT SUPPLY CIRCUIT
RESISTANCE IN THE (K922) SENSOR RETURN CIRCUIT
(K22) TP SENSOR NO.1 SIGNAL CIRCUIT SHORTED TO (K122) TP SENSOR NO.2 SIGNAL CIRCUIT
THROTTLE POSITION SENSOR/THROTTLE BODY
PCM

Always perform the Pre-Diagnostic Troubleshooting procedure before proceeding. (Refer to 9 - ENGINE - DIAGNOSIS AND TESTING).

Diagnostic Test

1. ACTIVE DTC

NOTE: Diagnose any other TP Sensor DTC(s) before continuing.

NOTE: The throttle plate should be free from binding and carbon build up, make sure the throttle plate is at the idle position.
Ignition on, engine not running.

NOTE: Inspect the engine for vacuum leaks, repair before continuing.
With a scan tool, read DTCs.

Is the DTC active at this time?

Yes >> Go To 2

No >> Go To 8

2. THROTTLE POSITION SENSOR

Turn the ignition off.

Connect the PCM harness connectors.

Ignition on, engine not running.

With a scan tool, monitor the TP Sensor No.1 and No.2 voltage.

Connect a jumper wire between the (K922) Sensor Return circuit and the (K22) TP Sensor No.1 Signal circuit.

NOTE: TP Sensor No.1 voltage should change from approximately 4.5 volts to less than 0.5 of a volt.
For TP Sensor No.2, connect a jumper wire between (F855) 5-volt supply circuit and the (K122) TP Sensor No.2 signal circuit.

NOTE: TP Sensor No.2 voltage should change from approximately 0 volts to 5.0 volts?

Is the voltage reading within the listed specification when the jumper wire is installed?

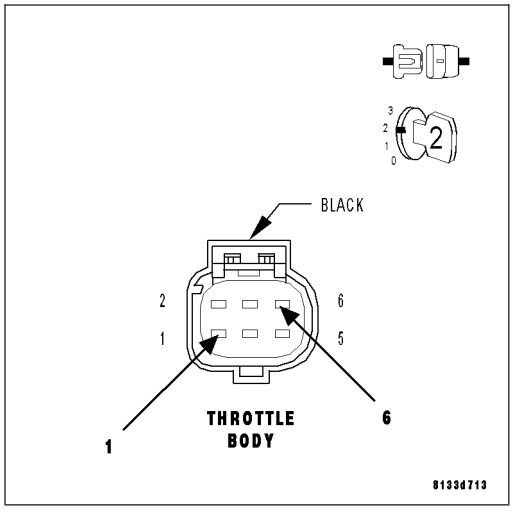

Yes >> Replace the Throttle Body Assembly. Disconnect the Battery when replacing the Throttle Body Assembly. After

installation is complete, use a scan tool and select the ETC RELEARN function.

Perform the POWERTRAIN VERIFICATION TEST. (Refer to 9 - ENGINE - STANDARD PROCEDURE)

No >> Go To 3

NOTE: Remove the jumper wire before continuing.

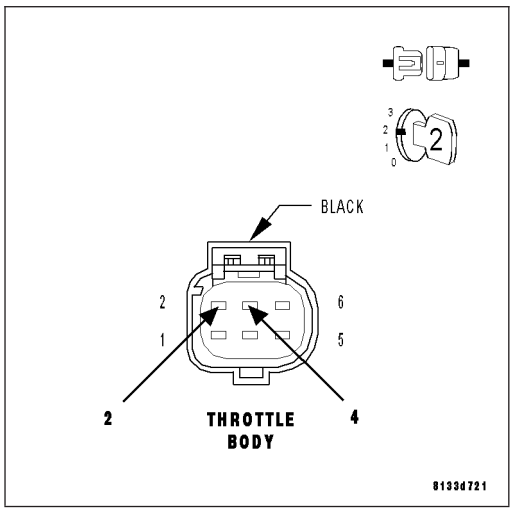

3. EXCESSIVE RESISTANCE IN THE (K22) TP SENSOR NO.1 SIGNAL CIRCUIT AND (K122) TP SENSOR NO.2 SIGNAL CIRCUIT

Turn the ignition off.

CAUTION: Do not probe the PCM harness connectors. Probing the PCM harness connectors will damage the PCM terminals resulting in poor terminal to pin connection. Install Miller Special Tool #8815 along with the #8815-1 to perform the diagnosis.

Using a voltmeter perform a voltage drop test. Backprobe the (K22) TP Sensor No.1 Signal circuit at the Throttle Body harness connector to the appropriate terminal of the special tool #8815. Ensure the voltmeter leads are connected with the circuit's correct polarity.

WARNING: When the engine is operating, do not stand in direct line with the fan. Do not put your hands near the pulleys, belts, or fan. Do not wear loose clothing. Failure to follow these instructions can result in personal injury or death.

Start the engine and allow it to reach normal operating temperature.

Monitor the voltmeter.

Repeat the voltage drop test for the (K122) TP Sensor No.2 Signal circuit.

Is the voltage below 0.5 volts?

Yes >> Go To 4

No >> Repair the excessive resistance in the (K22) TP Sensor No.1 Signal circuit or the (K122) TP Sensor No.2 Signal circuit.

Perform the POWERTRAIN VERIFICATION TEST. (Refer to 9 - ENGINE - STANDARD PROCEDURE)

4. EXCESSIVE RESISTANCE IN THE (F855) 5-VOLT SUPPLY CIRCUIT

Turn the ignition off.

Perform a voltage drop test. Backprobe the (F855) 5-volt Supply circuit at the Throttle Body harness connector to the appropriate terminal of the special tool #8815. Ensure the voltmeter leads are connected with the circuit's correct polarity.

WARNING: When the engine is operating, do not stand in direct line with the fan. Do not put your hands near the pulleys, belts, or fan. Do not wear loose clothing. Failure to follow these instructions can result in personal injury or death.

Start the engine and allow it to reach normal operating temperature.

Monitor the voltmeter.

Is the voltage below 0.5 volts?

Yes >> Go To 5

No >> Repair the excessive resistance in the (F855) 5-volt Supply circuit.
Perform the POWERTRAIN VERIFICATION TEST. (Refer to 9 - ENGINE - STANDARD PROCEDURE)

5. EXCESSIVE RESISTANCE IN THE (K922) SENSOR RETURN CIRCUIT

Turn the ignition off.

Perform a voltage drop test. Backprobe the (K922) Sensor Return circuit at the Throttle Body harness connector to the appropriate terminal of the special tool #8815. Ensure the voltmeter leads are connected with the circuit's correct polarity.

WARNING: When the engine is operating, do not stand in direct line with the fan. Do not put your hands near the pulleys, belts, or fan. Do not wear loose clothing. Failure to follow these instructions can result in personal injury or death.

Start the engine and allow it to reach normal operating temperature.

Monitor the voltmeter.

Is the voltage below 0.5 volts?

Yes >> Go To 6

No >> Repair the excessive resistance in the (K922) Sensor Return circuit.
Perform the POWERTRAIN VERIFICATION TEST. (Refer to 9 - ENGINE - STANDARD PROCEDURE)

6. (K22) TP SENSOR NO.1 SIGNAL CIRCUIT SHORTED TO (K122) TP SENSOR NO.2 SIGNAL CIRCUIT

Measure the resistance between the (K22) TP Sensor No.1 Signal circuit and the (K122) TP Sensor No.2 Signal circuit in the Throttle Body harness connector.

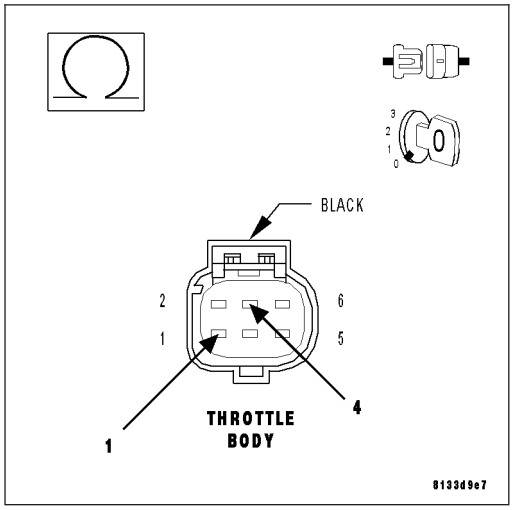

Is the resistance below 5.0 ohms?

Yes >> Repair the short between the (K122) TP Sensor No.2 Signal circuit and the (K22) TP Sensor No.1 Signal circuit.
Perform the POWERTRAIN VERIFICATION TEST. (Refer to 9 - ENGINE - STANDARD PROCEDURE)

No >> Go To 7

7. PCM

NOTE: Before continuing, check the PCM harness connector terminals for corrosion, damage, or terminal push out. Repair as necessary.

Using the schematics as a guide, inspect the wire harness and connectors. Pay particular attention to all Power and Ground circuits.

Were there any problems found?

Yes >> Repair as necessary.
Perform the POWERTRAIN VERIFICATION TEST. (Refer to 9 - ENGINE - STANDARD PROCEDURE)

No >> Replace and program the Powertrain Control Module per Service Information.
Perform the POWERTRAIN VERIFICATION TEST. (Refer to 9 - ENGINE - STANDARD PROCEDURE)

8. THROTTLE FOLLOWER TEST

Ignition on, engine not running.

With a scan tool, perform the Throttle Follower Test and monitor the TP Sensor No.1 or No.2 voltage.

Slowly press the throttle pedal down.

The voltage for TP Sensor No.1 should start at approximately 0.3 of a volt and increase to above 4.7 volts.

The voltage for TP Sensor No.2 should start at approximately 4.7 volts and decrease to approximately 0.3 of a volt.

Is the voltage within the range of the listed specification for the appropriate Sensor?

Yes >> Refer to the INTERMITTENT CONDITION Diagnostic Procedure.
Perform the POWERTRAIN VERIFICATION TEST. (Refer to 9 - ENGINE - STANDARD PROCEDURE)

No >> Disconnect the Battery when replacing the Throttle Body Assembly. Replace the Throttle Body Assembly. After installation is complete, use a scan tool and select the ETC RELEARN function.
Perform the POWERTRAIN VERIFICATION TEST. (Refer to 9 - ENGINE - STANDARD PROCEDURE)

P0122-THROTTLE POSITION SENSOR 1 CIRCUIT LOW

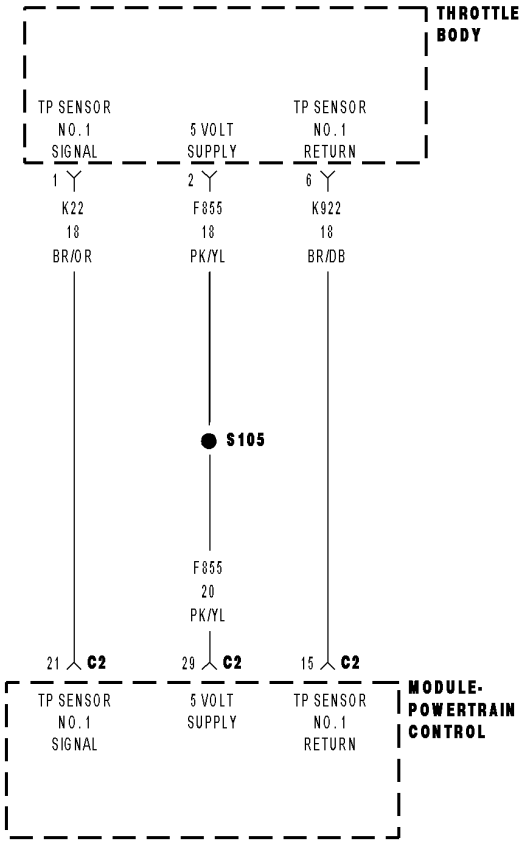

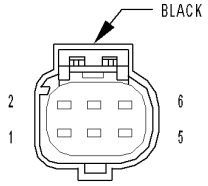

THROTTLE BODY

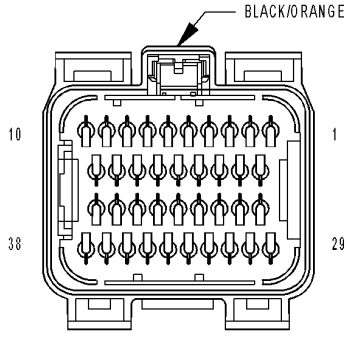

MODULE-POWERTRAIN CONTROL C2

8131a2a0

For a complete wiring diagram **Refer to Section 8W**.

- **When Monitored:**
  With the ignition on. Battery voltage greater than 10 volts.
- **Set Condition:**
  Throttle Position Sensor voltage at the PCM is less than 0.16 of a volt for 0.7 of a second. One Trip Fault. Three good trips to turn off the MIL. ETC light will illuminate.

Possible Causes
(F855) 5-VOLT SUPPLY CIRCUIT OPEN
(F855) 5-VOLT SUPPLY CIRCUIT SHORTED TO GROUND
(K22) TP SENSOR NO.1 SIGNAL CIRCUIT SHORTED TO GROUND
(K22) TP SENSOR NO.1 SIGNAL CIRCUIT SHORTED TO THE (K922) SENSOR RETURN CIRCUIT
THROTTLE POSITION SENSOR/THROTTLE BODY
PCM

Always perform the Pre-Diagnostic Troubleshooting procedure before proceeding. (Refer to 9 - ENGINE - DIAGNOSIS AND TESTING).

Diagnostic Test

1. ACTIVE DTC

NOTE: If a 5-Volt Supply DTC has also set, diagnose the 5-Volt DTC before continuing.
Ignition on, engine not running.
With a scan tool, read DTCs.

Is the DTC active at this time?

Yes >> Go To 2
No >> Go To 10

2. P0222 ALSO SET

Was the P0222-TP SENSOR NO.2 VOLTAGE LOW DTC set along with the P0122?

Yes >> Go To 3
No >> Go To 4

3. (F855) 5-VOLT SUPPLY CIRCUIT

Turn the ignition off.
Disconnect the Throttle Body harness connector.
Ignition on, engine not running.
Measure the voltage on the (F855) 5-volt Supply circuit in the Throttle Body harness connector.

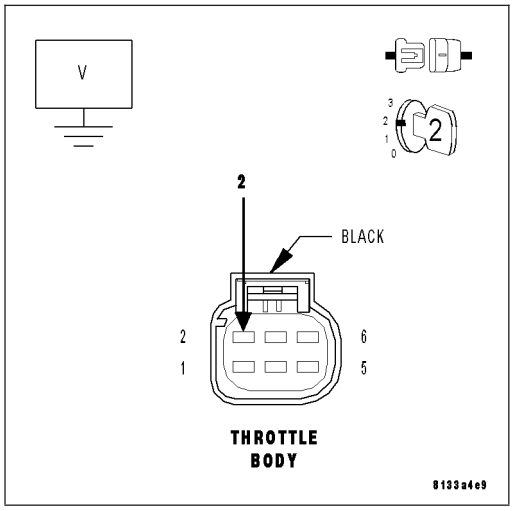

Is the voltage between 4.8 to 5.2 volts?

Yes >> Go To 4
No >> Go To 7

4. THROTTLE POSITION SENSOR

With a scan tool, monitor the TP Sensor No.1 voltage with the Sensor harness connector disconnected.

Is the voltage above 4.5 volts?

Yes >> Disconnect the Battery when replacing the Throttle Body Assembly. Replace the Throttle Body Assembly. After installation is complete, using a scan tool select the ETC RELEARN function.
Perform the POWERTRAIN VERIFICATION TEST. (Refer to 9 - ENGINE - STANDARD PROCEDURE)

No >> Go To 5

5. (K22) TP SENSOR NO.1 SIGNAL CIRCUIT SHORTED TO GROUND

Turn the ignition off.

Disconnect the PCM harness connectors.

Measure the resistance between ground and the (K22) TP Sensor No.1 Signal circuit in the Throttle Body harness connector.

Is the resistance below 100 ohms?

Yes >> Repair the short to ground in the (K22) TP Sensor No.1 Signal circuit.
Perform the POWERTRAIN VERIFICATION TEST. (Refer to 9 - ENGINE - STANDARD PROCEDURE)

No >> Go To 6

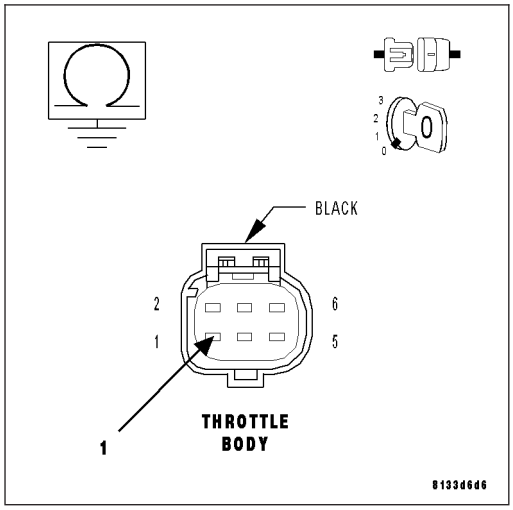

6. (K22) TP SENSOR NO.1 SIGNAL CIRCUIT SHORTED TO THE (K922) SENSOR RETURN CIRCUIT

Measure the resistance between the (K22) TP Sensor No.1 Signal circuit and the (K922) Sensor Return circuit in the Throttle Body harness connector.

Is the resistance below 100 ohms?

Yes >> Repair the short between the (K922) Sensor Return circuit and the (K22) TP Sensor No.1 Signal circuit.
Perform the POWERTRAIN VERIFICATION TEST. (Refer to 9 - ENGINE - STANDARD PROCEDURE)

No >> Go To 9

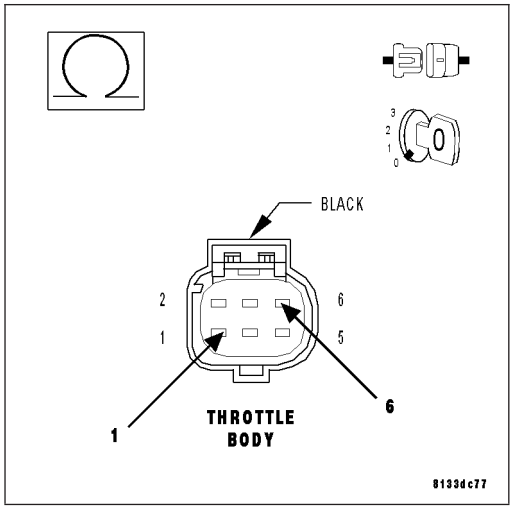

7. (F855) 5-VOLT SUPPLY CIRCUIT OPEN

Turn the ignition off.

Disconnect the PCM harness connectors.

CAUTION: Do not probe the PCM harness connectors. Probing the PCM harness connectors will damage the PCM terminals resulting in poor terminal to pin connection. Install Miller Special Tool #8815 to perform diagnostics.

Measure the resistance of the (F855) 5-volt Supply circuit from the Throttle Body harness connector to the appropriate terminal of special tool #8815.

Is the resistance below 5.0 ohms?

Yes >> Go To 8

No >> Repair the open in the (F855) 5-volt Supply circuit.
Perform the POWERTRAIN VERIFICATION TEST. (Refer to 9 - ENGINE - STANDARD PROCEDURE)

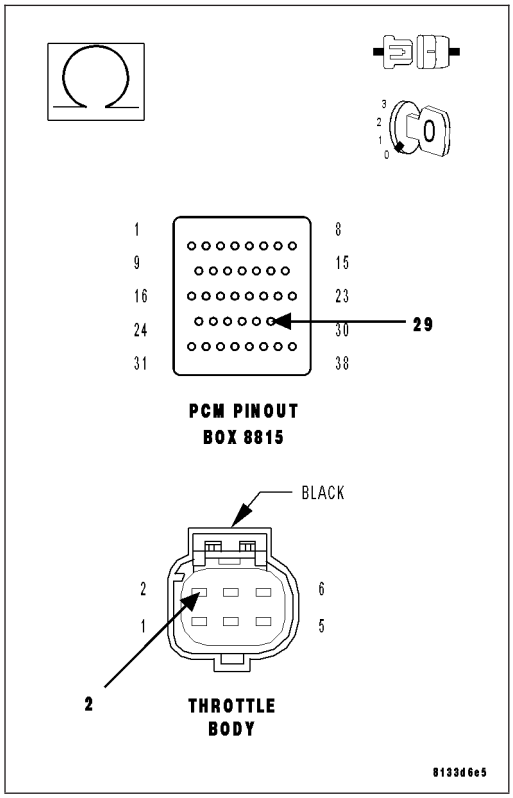

8. (F855) 5-VOLT SUPPLY CIRCUIT SHORTED TO GROUND

Measure the resistance between ground and the (F855) 5-volt Supply circuit in the Throttle Body harness connector.

Is the resistance below 100 ohms?

Yes >> Repair the short to ground in the (F855) 5-volt Supply circuit.
Perform the POWERTRAIN VERIFICATION TEST. (Refer to 9 - ENGINE - STANDARD PROCEDURE)

No >> Go To 9

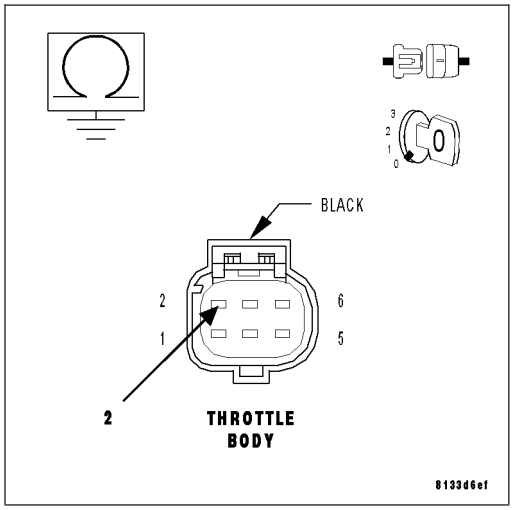

9. PCM

NOTE: Before continuing, check the PCM harness connector terminals for corrosion, damage, or terminal push out. Repair as necessary.
Using the schematics as a guide, inspect the wire harness and connectors. Pay particular attention to all Power and Ground circuits.

Were there any problems found?

Yes >> Repair as necessary.
Perform the POWERTRAIN VERIFICATION TEST. (Refer to 9 - ENGINE - STANDARD PROCEDURE)

No >> Replace and program the Powertrain Control Module per Service Information.
Perform the POWERTRAIN VERIFICATION TEST. (Refer to 9 - ENGINE - STANDARD PROCEDURE)

10. THROTTLE FOLLOWER TEST

With a scan tool, perform the Throttle Follower Test.
Monitor the TP Sensor No.1 voltage.

Does voltage start at approximately 0.8 of a volt and go above 3.5 volts with a smooth transition?

Yes >> Refer to the INTERMITTENT CONDITION Diagnostic Procedure.
Perform the POWERTRAIN VERIFICATION TEST. (Refer to 9 - ENGINE - STANDARD PROCEDURE)

No >> Disconnect the Battery when replacing the Throttle Body Assembly. Replace the Throttle Body Assembly. After installation is complete, using a scan tool select ETC RELEARN function.
Perform the POWERTRAIN VERIFICATION TEST. (Refer to 9 - ENGINE - STANDARD PROCEDURE)

P0123-THROTTLE POSITION SENSOR 1 CIRCUIT HIGH

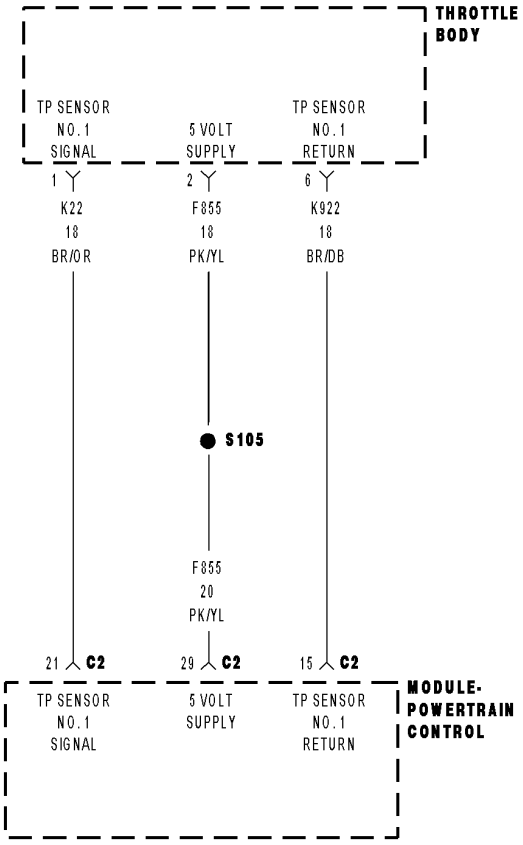

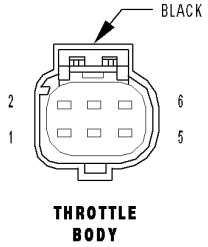

THROTTLE BODY

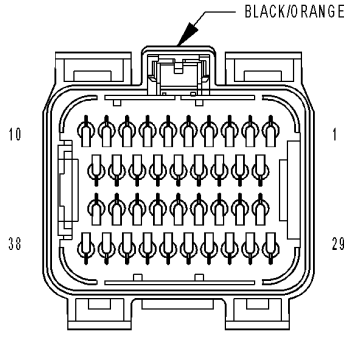

MODULE-POWERTRAIN CONTROL C2

8131a2a0

For a complete wiring diagram **Refer to Section 8W**.

- **When Monitored:**
  With the ignition on. Battery voltage greater than 10 volts.
- **Set Condition:**
  Throttle Position Sensor No.1 voltage is greater than 4.8 volts for 25 ms. One Trip Fault. ETC light will illuminate.

Possible Causes
(K22) TP SENSOR NO.1 SIGNAL CIRCUIT SHORTED TO BATTERY VOLTAGE
(K22) TP SENSOR NO.1 SIGNAL CIRCUIT OPEN
(K22) TP SENSOR NO.1 SIGNAL CIRCUIT SHORTED TO THE (F855) 5-VOLT SUPPLY CIRCUIT
(K922) SENSOR RETURN CIRCUIT OPEN
THROTTLE POSITION SENSOR/THROTTLE BODY
THROTTLE PLATE JAMMED AGAINST THE MAXIMUM STOP
PCM

Always perform the Pre-Diagnostic Troubleshooting procedure before proceeding. (Refer to 9 - ENGINE - DIAGNOSIS AND TESTING).

Diagnostic Test

1. TP SENSOR NO.1 VOLTAGE ABOVE 4.8 VOLTS

NOTE: Make sure the throttle is fully closed and free from binding or carbon build up.

NOTE: If a 5-Volt Supply DTC has also set, diagnose the 5-Volt DTC before continuing.

NOTE: If P2101 is also set, then make sure that the blade moves freely and does not hang up near Wide Open Throttle before trying to repair P0123.

Start the engine.

With a scan tool, read the TP Sensor No.1 voltage.

Is the voltage above 4.8 volts?

Yes >> Go To 2

No >> Go To 8

2. THROTTLE POSITION SENSOR

Turn the ignition off.

Disconnect the Throttle Body harness connector.

Connect a jumper wire between the (K22) TP Sensor No.1 Signal circuit and the (K922) Sensor Return circuit in the Throttle Body harness connector.

With a scan tool, monitor the TP Sensor No.1 voltage.

Ignition on, engine not running.

Is the voltage below 0.5 of a volt with the jumper wire installed?

Yes >> Disconnect the Battery when replacing the Throttle Body Assembly. Replace the Throttle Body Assembly. After installation is complete, using a scan tool, select the ETC RELEARN function.

Perform the POWERTRAIN VERIFICATION TEST. (Refer to 9 - ENGINE - STANDARD PROCEDURE)

No >> Go To 3

NOTE: Remove the jumper wire before continuing.

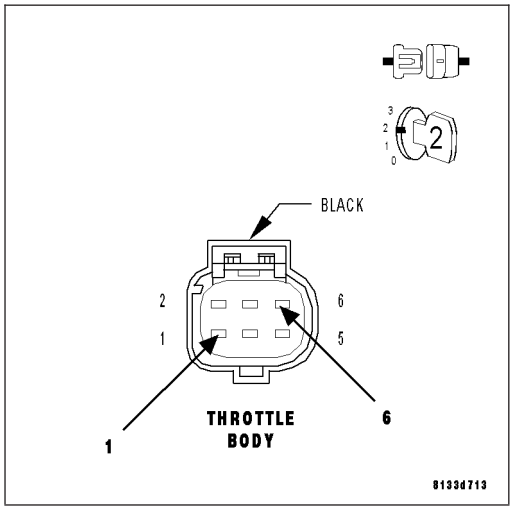

3. (K22) TP SENSOR NO.1 SIGNAL CIRCUIT SHORTED TO BATTERY VOLTAGE

Turn the ignition off.

Disconnect the PCM harness connectors.

Ignition on, engine not running.

Measure the voltage on the (K22) TP Sensor No.1 Signal circuit in the Throttle Body harness connector.

Is voltage present?

Yes >> Repair the short to battery voltage in the (K22) TP Sensor No.1 Signal circuit. Perform the POWERTRAIN VERIFICATION TEST. (Refer to 9 - ENGINE - STANDARD PROCEDURE)

No >> Go To 4

4. (K22) TP SENSOR NO.1 SIGNAL CIRCUIT OPEN

Turn the ignition off.

CAUTION: Do not probe the PCM harness connectors. Probing the PCM harness connectors will damage the PCM terminals resulting in poor terminal to pin connection. Install Miller Special Tool #8815 to perform diagnosis.

Measure the resistance of the (K22) TP Sensor No.1 Signal circuit from the Throttle Body harness connector to the appropriate terminal of special tool #8815.

Is the resistance below 5.0 ohms?

Yes >> Go To 5

No >> Repair the open in the (K22) TP Sensor No.1 Signal circuit. Perform the POWERTRAIN VERIFICATION TEST. (Refer to 9 - ENGINE - STANDARD PROCEDURE)

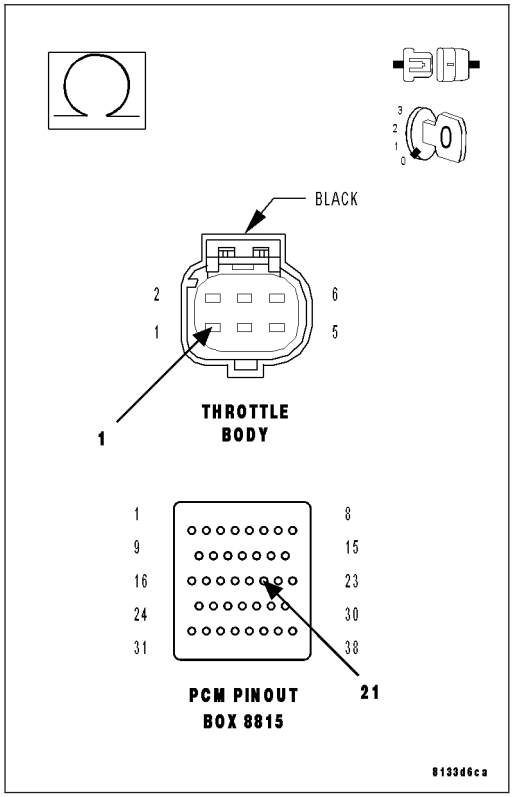

5. (K22) TP SENSOR NO.1 SIGNAL CIRCUIT SHORTED TO THE (F855) 5-VOLT SUPPLY CIRCUIT

Measure the resistance between the (K22) TP Sensor No.1 Signal circuit and the (F855) 5-volt Supply circuit in the Throttle Body harness connector.

Is the resistance below 100 ohms?

Yes >> Repair the short between the (F855) 5-volt Supply circuit and the (K22) TP Sensor No.1 Signal circuit.
Perform the POWERTRAIN VERIFICATION TEST. (Refer to 9 - ENGINE - STANDARD PROCEDURE)

No >> Go To 6

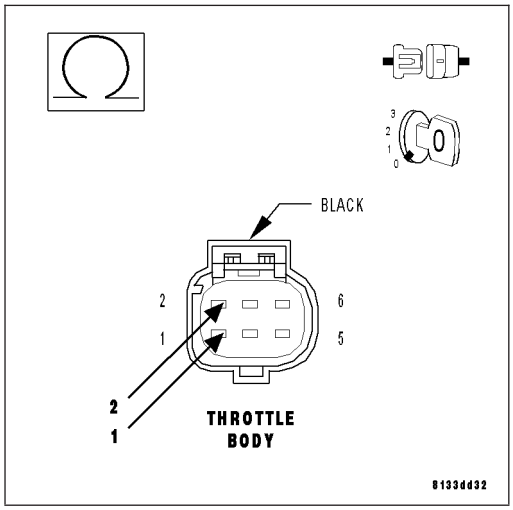

6. (K922) SENSOR RETURN CIRCUIT OPEN

Measure the resistance of the (K922) Sensor Return circuit from the Throttle Body harness connector to the appropriate terminal of special tool #8815.

Is the resistance below 5.0 ohms?

Yes >> Go To 7

No >> Repair the open in the (K922) Sensor Return circuit.
Perform the POWERTRAIN VERIFICATION TEST. (Refer to 9 - ENGINE - STANDARD PROCEDURE)

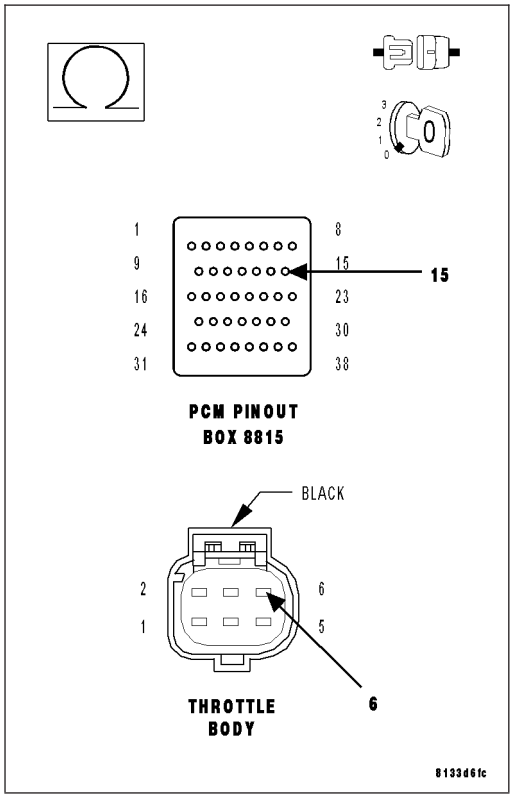

7. PCM

NOTE: Before continuing, check the PCM harness connector terminals for corrosion, damage, or terminal push out. Repair as necessary.
Using the schematics as a guide, inspect the wire harness and connectors. Pay particular attention to all Power and Ground circuits.

Were there any problems found?

Yes >> Repair as necessary.
Perform the POWERTRAIN VERIFICATION TEST. (Refer to 9 - ENGINE - STANDARD PROCEDURE)

No >> Replace and program the Powertrain Control Module per Service Information.
Perform the POWERTRAIN VERIFICATION TEST. (Refer to 9 - ENGINE - STANDARD PROCEDURE)

8. THROTTLE FOLLOWER TEST

With a scan tool, perform the Throttle Follower Test.
Monitor the TP Sensor No.1 voltage.

Does voltage start at approximately 0.3 of a volt and go above 4.7 volts with a smooth transition?

Yes >> Refer to the INTERMITTENT CONDITION Diagnostic Procedure.
Perform the POWERTRAIN VERIFICATION TEST. (Refer to 9 - ENGINE - STANDARD PROCEDURE)

No >> Disconnect the Battery when replacing the Throttle Body Assembly. Replace the Throttle Body Assembly. After installation is complete, using a scan tool select the ETC RELEARN function.
Perform the POWERTRAIN VERIFICATION TEST. (Refer to 9 - ENGINE - STANDARD PROCEDURE)

P0125-INSUFFICIENT COOLANT TEMP FOR CLOSED-LOOP FUEL CONTROL

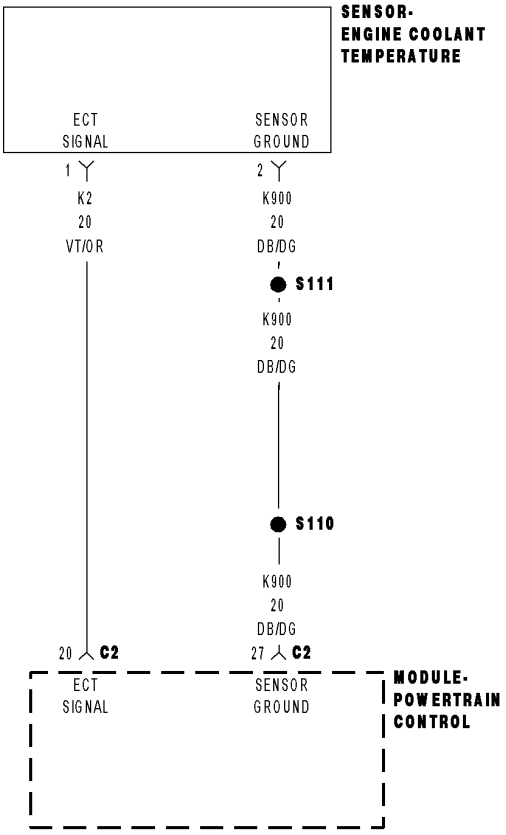

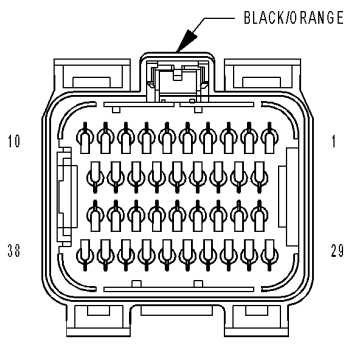

MODULE-
POWERTRAIN
CONTROL C2

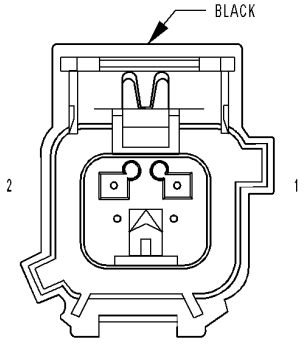

SENSOR-
ENGINE COOLANT
TEMPERATURE

8131a28f

For a complete wiring diagram **Refer to Section 8W**.

- **When Monitored:**
  With battery voltage greater than 10.4 volts and after engine is started.
- **Set Condition:**
  The engine temperature does not enable closed loop. Failure time depends on start-up coolant temperature and ambient temperature. (i.e. 2 minutes for a start temp of 10°C (50°F) or up to 10 minutes for a vehicle with a start-up temp of -28°C (19°F). Two Trip Fault. Three good trips to turn off the MIL.

Possible Causes
LOW COOLANT LEVEL
THERMOSTAT
ECT SENSOR

Always perform the Pre-Diagnostic Troubleshooting procedure before proceeding. (Refer to 9 - ENGINE - DIAGNOSIS AND TESTING).

Diagnostic Test

1. CHECKING COOLANT LEVEL AND CONDITION

Ignition on, engine not running.

With a scan tool, read DTCs.

NOTE: If an Engine Coolant Temperature (ECT) DTC is set along with this code, diagnose the ECT DTC first.

NOTE: Inspect the ECT terminals and related PCM terminals. Make sure the terminals are free from corrosion and damage.

NOTE: The best way to diagnose this DTC is to allow the vehicle to sit overnight outside in order to have a totally cold soaked engine.

NOTE: Extremely cold outside ambient temperatures may have caused this DTC to set.

WARNING: Never open the cooling system when the engine is hot. The system is under pressure. Extreme burns or scalding may result. Failure to follow these instructions can result in personal injury or death. Allow the engine to cool before opening the cooling system.

Inspect the coolant system for proper level and condition.

Is the coolant level and condition OK?

Yes >> Go To 2

No >> Inspect the vehicle for a coolant leak, make the appropriate repairs, and add the correct amount of coolant.
Perform the POWERTRAIN VERIFICATION TEST. (Refer to 9 - ENGINE - STANDARD PROCEDURE)

2. THERMOSTAT OPERATION

NOTE: This test works best if performed on a cold engine (cold soak).

Ignition on, engine not running.

With a scan tool, read the Eng Coolant Temp Deg value. If the engine was allowed to sit overnight (cold soak), the temperature value should be a sensible value that is somewhere close to the ambient temperature.

NOTE: If engine coolant temperature is above 82°C (180°F), allow the engine to cool until 65°C (150°F) is reached.

Start the Engine.

During engine warm-up monitor the Eng Coolant Temp Deg value. The temp deg value change should be a smooth transition from start up to normal operating temp 82°C (180°F). Also monitor the actual coolant temperature with a thermometer.

NOTE: As the engine warms up to operating temperature, the actual coolant temperature (thermometer reading) and the scan tool Eng Coolant Temp Deg values should stay relatively close to each other.
Using the appropriate service information, determine the proper opening temperature of the thermostat.

Did the thermostat open at the proper temperature?

Yes >> Go To 3

No >> Replace the thermostat.
Perform the POWERTRAIN VERIFICATION TEST. (Refer to 9 - ENGINE - STANDARD PROCEDURE)

3. ECT SENSOR OPERATION

Ignition on, engine not running.
With a scan tool, read the Eng Coolant Temp Deg value. If the engine was allowed to sit overnight (cold soak), the temperature value should be a sensible value that is somewhere close to the ambient temperature.

NOTE: If engine coolant temperature is above 82°C (180°F), allow the engine to cool until 65°C (150°F) is reached.
Start the Engine.
During engine warm-up monitor the Eng Coolant Temp Deg value. The temp deg value change should be a smooth transition from start up to normal operating temp 82°C (180°F). Also monitor the actual coolant temperature with a thermometer.

NOTE: As the engine warms up to operating temperature, the actual coolant temperature (thermometer reading) and the scan tools Eng Coolant Temp Deg value should stay relatively close to each other.

Is the thermometer reading relatively close to the scan tool ECT reading?

Yes >> Test Complete.

No >> Replace the Engine Coolant Temperature Sensor.
Perform the POWERTRAIN VERIFICATION TEST. (Refer to 9 - ENGINE - STANDARD PROCEDURE)

P0128-THERMOSTAT RATIONALITY

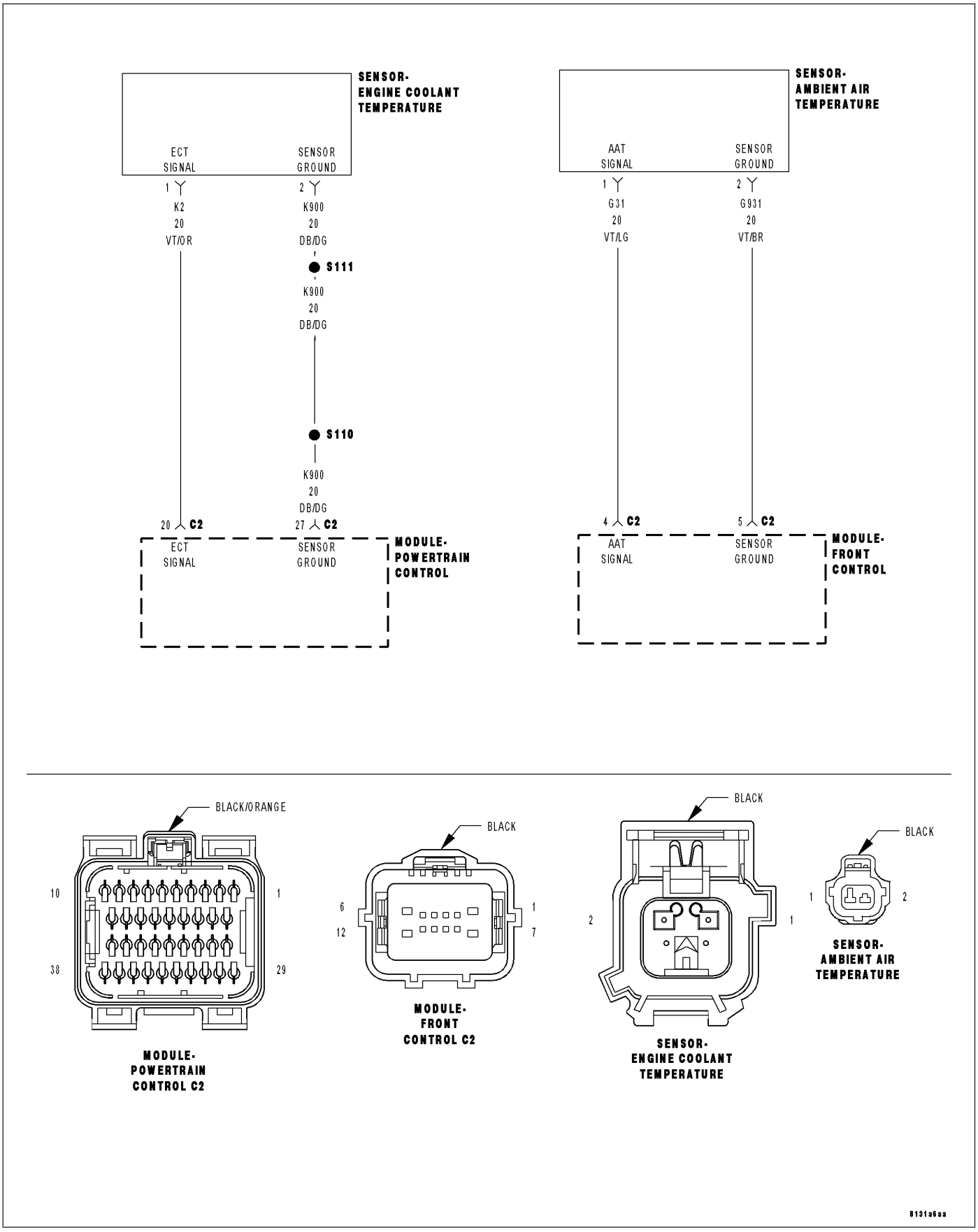

For a complete wiring diagram **Refer to Section 8W**.

Theory of Operation

The PCM predicts what the engine coolant temperature should be, based on the engine coolant temperature at start-up, ambient temperature and how the vehicle is subsequently driven. The predicted engine coolant temperature is compared to the Engine Coolant Temperature Sensor reading. The error between the two is calculated and integrated with respect to time. When the Thermostat diagnostic runs, the integrated error is compared to a calibrated threshold and pass/fail is determined. Separate pass and fail thresholds are used in order to improve accuracy of the diagnostic.

- **When Monitored:**
  Engine running.
- **Set Condition:**
  The PCM predicts a coolant temperature value that it will compare to the actual coolant temperature. A significant difference results in an error. Two Trip Fault. Three good trips to turn off the MIL.

Possible Causes
LOW COOLANT LEVEL
THERMOSTAT OPERATION
SIGNAL CIRCUIT SHORTED TO BATTERY VOLTAGE
TEMPERATURE SENSOR
SIGNAL CIRCUIT OPEN
(K900) SENSOR GROUND CIRCUIT OPEN
SIGNAL CIRCUIT SHORTED TO GROUND
SIGNAL CIRCUIT SHORTED TO (K900), (G931) SENSOR GROUND
OTHER POSSIBLE CAUSES
PCM

Always perform the Pre-Diagnostic Troubleshooting procedure before proceeding. (Refer to 9 - ENGINE - DIAGNOSIS AND TESTING).

Diagnostic Test

1. ACTIVE DTC

NOTE: If any ECT, AAT, CMP or CKP sensor DTCs have set along with P0128, diagnose them before continuing.

NOTE: Make sure that the Pinion Factor has been programmed correctly into the PCM.
Ignition on, engine not running.
With a scan tool, read DTCs.

Is the DTC active at this time?

Yes >> Go To 2

No >> Refer to the INTERMITTENT CONDITION Diagnostic Procedure.
Perform the POWERTRAIN VERIFICATION TEST. (Refer to 9 - ENGINE - STANDARD PROCEDURE)

2. LOW COOLANT LEVEL

NOTE: If an Engine Coolant Temperature (ECT) DTC is set along with this code, diagnose the ECT DTC first.

NOTE: Inspect the ECT terminals and related PCM terminals. Make sure the terminals are free from corrosion and damage.

NOTE: The best way to diagnose this DTC is to allow the vehicle to sit overnight outside in order to have a totally cold soaked engine.

NOTE: Extremely cold outside ambient temperatures may have caused this DTC to set.

WARNING: Never open the cooling system when the engine is hot. The system is under pressure. Failure to follow these instructions can result in personal injury including extreme burns, scalding, or death. Allow the engine to cool before opening the cooling system.

Check the coolant system to make sure that the coolant is in good condition and at the proper level.

Is the coolant level and condition OK?

Yes >> Go To 3

No >> Inspect the vehicle for a coolant leak and add the necessary amount of coolant.
Perform the POWERTRAIN VERIFICATION TEST. (Refer to 9 - ENGINE - STANDARD PROCEDURE)

3. THERMOSTAT OPERATION

NOTE: This test works best if performed on a cold engine (cold soak).

Ignition on, engine not running.

With a scan tool, read the ECT Deg value. If the engine was allowed to sit overnight (cold soak), the temperature value should be a sensible value that is somewhere close to the ambient temperature.

NOTE: If engine coolant temperature is above 82°C (180°F), allow the engine to cool until 65°C (150°F) is reached.

Start the Engine.

During engine warm-up, monitor the ECT Deg value. The temp deg value change should be a smooth transition from start up to normal operating temp 82°C (180°F). Also monitor the actual coolant temperature with a thermometer.

NOTE: As the engine warms up to operating temperature, the actual coolant temperature (thermometer reading) and the scan tool, ECT Temperature value should stay relatively close to each other.

Using the appropriate service information, determine the proper opening temperature of the thermostat.

Did the thermostat open at the proper temperature?

Yes >> Go To 4

No >> Replace the thermostat.
Perform the POWERTRAIN VERIFICATION TEST. (Refer to 9 - ENGINE - STANDARD PROCEDURE)

4. AMBIENT AIR TEMP SENSOR OPERATION

Ignition on, engine not running.

With a scan tool, read and record the AAT Sensor Temperature value.

Using the DRB Temperature Probe #CH7050, or an equivalent temperature measuring tool, measure the ambient air temperature near the AAT Sensor.

Is the AAT Sensor value with -15°C (5°F) of the temperature probe reading?

Yes >> Go To 5

No >> Go To 7

5. ECT SENSOR OPERATION

WARNING: Make sure the engine cooling system is cool before removing the pressure cap or any hose. The cooling system is pressurized when hot. Failure to follow these instructions can result in personal injury including extreme burns, scalding, or death.

With a scan tool, read and record the ECT Sensor Temperature value.

Use the DRB Temperature Probe #CH7050, or an equivalent temperature measuring tool, measure the engine coolant temperature.

Is the ECT Sensor value with -15°C (5°F) of the temperature probe reading?

Yes >> Go To 6

No >> Go To 7

6. OTHER POSSIBLE CAUSES

Inspect the Temperature Sensors for any physical damage.

Inspect the engine coolant. Make sure the coolant is at the proper level. Refer to the Service Information COOLING.

Make sure the Temperature Sensors are properly installed.

Make sure the CMP and CKP sensors are installed properly. Check the connectors for any signs of damage.

WARNING: When the engine is operating, do not stand in direct line with the fan. Do not put your hands near the pulleys, belts, or fan. Do not wear loose clothing. Failure to follow these instructions can result in personal injury or death.

Refer to any Technical Service Bulletins (TSBs) that may apply.

With the engine running at normal operating temperature, monitor the Temperature sensor parameters while wiggling the wire harness. Look for parameter values to change.

Visually inspect the related wire harness. Look for any chafed, pierced, pinched, partially broken wires and broken, bent, pushed out, or corroded terminals.

CAUTION: Do not probe the PCM harness connectors. Probing the PCM harness connectors will damage the PCM terminals resulting in poor terminal to pin connection. Install Miller Special Tool #8815 to perform diagnosis.

Inspect and clean all PCM, engine, and chassis grounds.

Were any problems found during the above inspections?

Yes >> Repair as necessary.
Perform the POWERTRAIN VERIFICATION TEST. (Refer to 9 - ENGINE - STANDARD PROCEDURE)

No >> Test Complete.

7. SIGNAL CIRCUIT SHORTED TO BATTERY VOLTAGE

NOTE: Visually inspect both the component and the PCM/FCM connectors. Look for damage, partially broken wires and backed out or corroded terminals

Turn the ignition off.

Disconnect the applicable Temperature Sensor harness connector.

Disconnect the applicable controller harness connectors.

Ignition on, engine not running.

Measure the voltage on the Signal circuit at the Temperature Sensor harness connector.

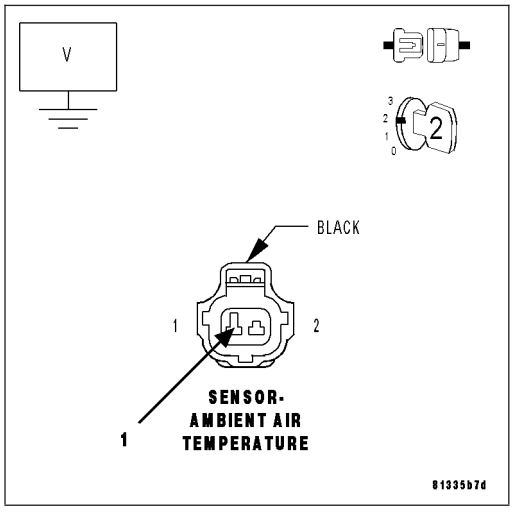

Is voltage present?

Yes >> Repair the short to battery voltage in the Signal circuit.
Perform the POWERTRAIN VERIFICATION TEST. (Refer to 9 - ENGINE - STANDARD PROCEDURE)

No >> Go To 8

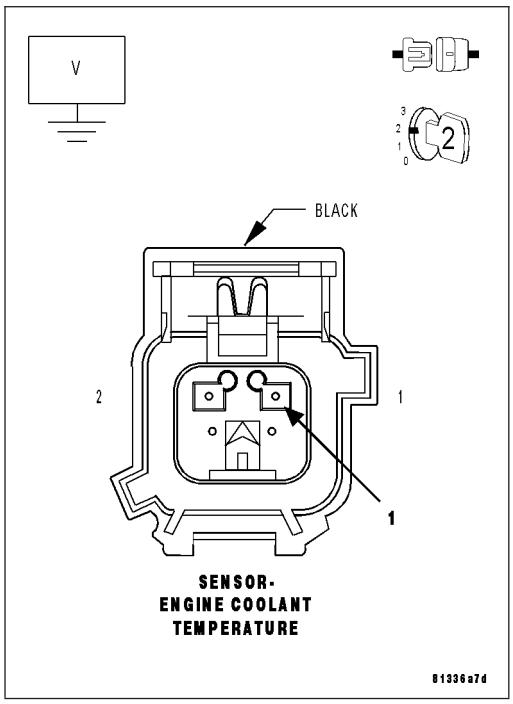

8. TEMPERATURE SENSOR

Turn the ignition off.

Connect the controller harness connectors.

Connect a jumper wire across Sensor harness connectors.

Ignition on, engine not running.

With a scan tool, read the Temperature Sensor voltage.

Does the voltage start at 5.0 volts and drop below 1.0 volt when the jumper wire is installed?

Yes >> Replace the appropriate Temperature Sensor.
Perform the POWERTRAIN VERIFICATION TEST. (Refer to 9 - ENGINE - STANDARD PROCEDURE)

No >> Go To 9

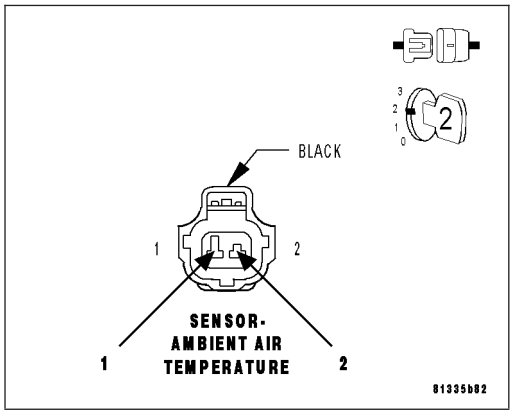

NOTE: Disconnect the jumper wire before continuing.

9. SIGNAL CIRCUIT OPEN

Turn the ignition off.

CAUTION: Do not probe the PCM harness connectors. Probing the PCM harness connectors will damage the PCM terminals resulting in poor terminal to pin connection. Install Miller Special Tool #8815 to perform diagnosis.

Measure the resistance of the Sensor Signal circuit Sensor harness connector to the appropriate terminal of special tool #8815 or the FCM.

Is the resistance below 5.0 ohms?

Yes >> Go To 10

No >> Repair the open in the Sensor Signal circuit.
Perform the POWERTRAIN VERIFICATION TEST. (Refer to 9 - ENGINE - STANDARD PROCEDURE)

10. SENSOR GROUND CIRCUIT OPEN

Measure the resistance of the Sensor ground circuit from the appropriate Temperature Sensor harness connector to the appropriate terminal of special tool #8815 or the FCM.

Is the resistance below 5.0 ohms?

Yes >> Go To 11

No >> Repair the open in the Sensor ground circuit.
Perform the POWERTRAIN VERIFICATION TEST. (Refer to 9 - ENGINE - STANDARD PROCEDURE)

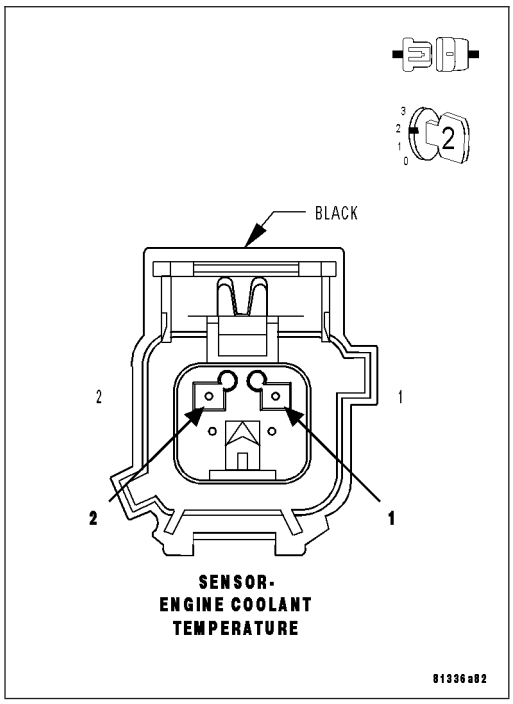

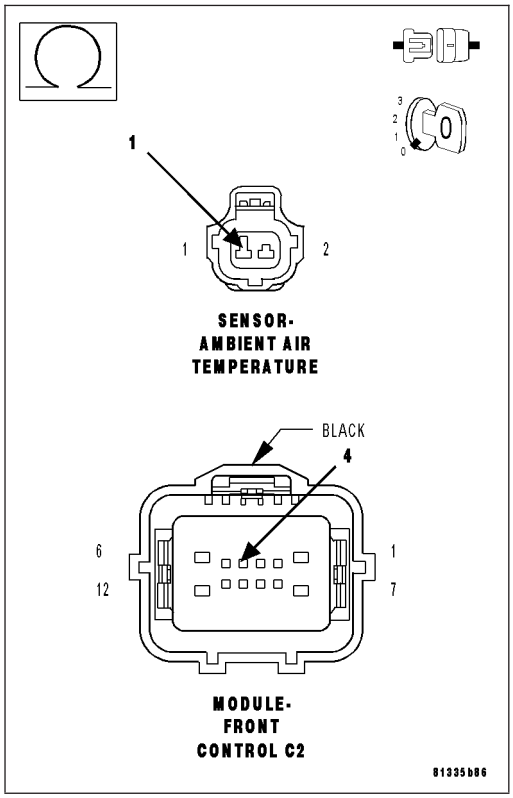

11. SIGNAL CIRCUIT SHORTED TO GROUND

Measure the resistance between ground and the Sensor Signal circuit in the Temperature Sensor harness connector.

Is the resistance below 100 ohms?

Yes >> Repair the short to ground in the Signal circuit.
Perform the POWERTRAIN VERIFICATION TEST. (Refer to 9 - ENGINE - STANDARD PROCEDURE)

No >> Go To 12

12. SIGNAL CIRCUIT SHORTED TO SENSOR GROUND CIRCUIT

Measure the resistance between the Signal circuit and the Sensor ground circuit in the Sensor harness connector.

Is the resistance below 100 ohms?

Yes >> Repair the short between the Sensor ground circuit and the Sensor Signal circuit.

Perform the POWERTRAIN VERIFICATION TEST. (Refer to 9 - ENGINE - STANDARD PROCEDURE)

No >> Go To 13

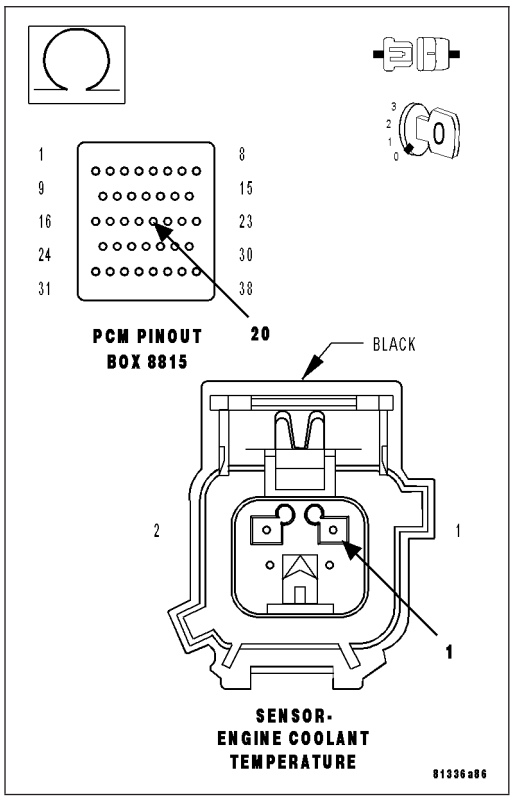

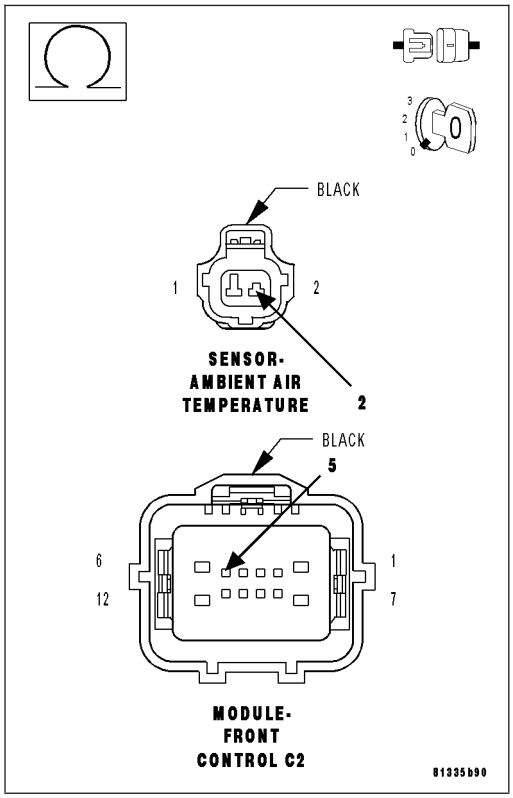

13. FCM/PCM

NOTE: Before continuing, check the FCM/PCM harness connector terminals for corrosion, damage, or terminal push out. Repair as necessary.
Using the schematics as a guide, inspect the wire harness and connectors. Pay particular attention to all Power and Ground circuits.

Were there any problems found?

Yes >> Repair as necessary.
Perform the POWERTRAIN VERIFICATION TEST. (Refer to 9 - ENGINE - STANDARD PROCEDURE)

No >> Replace applicable Control Module per Service Information.
Perform the POWERTRAIN VERIFICATION TEST. (Refer to 9 - ENGINE - STANDARD PROCEDURE)

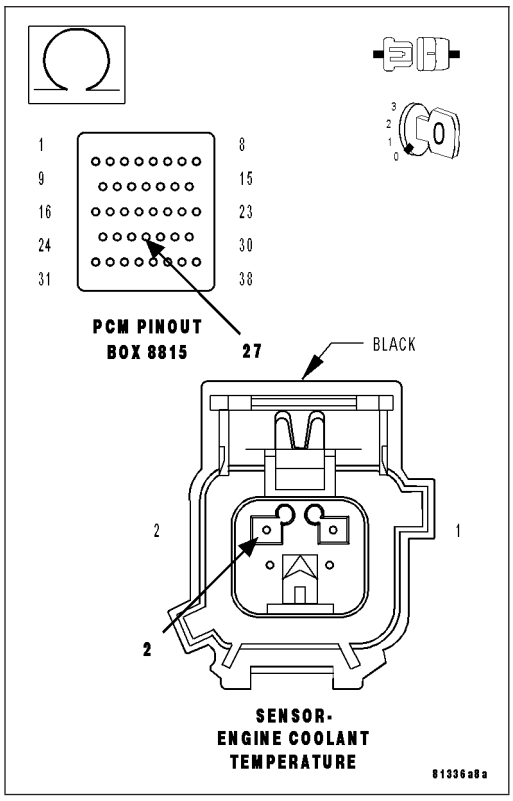

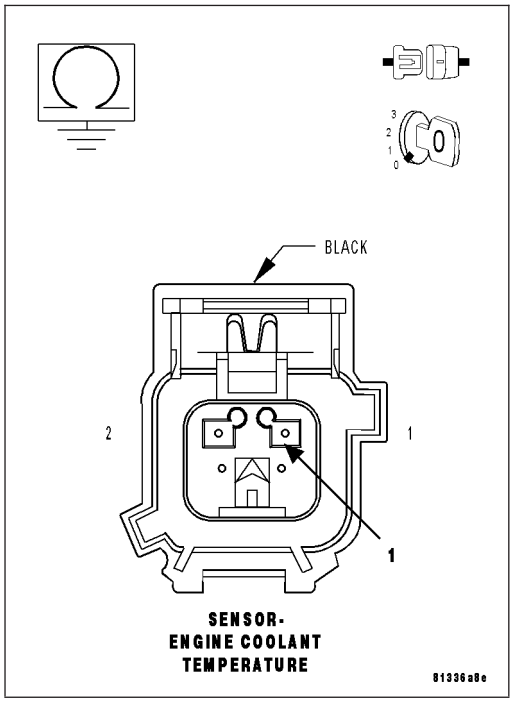

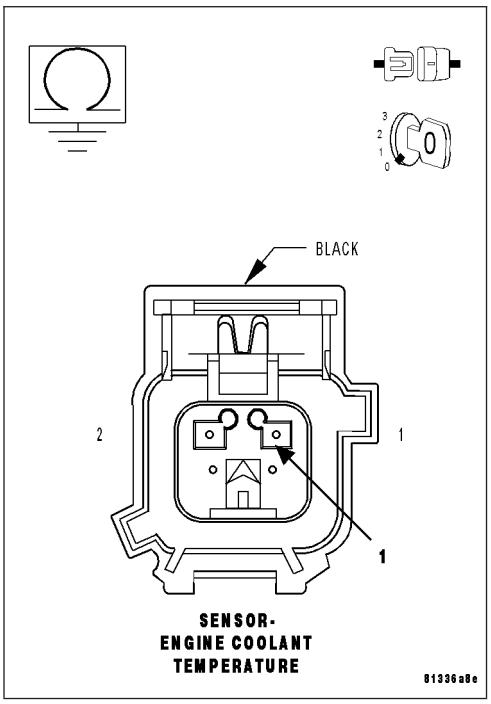
BLACK
2
1
1
SENSOR-
ENGINE COOLANT
TEMPERATURE
81336a8e

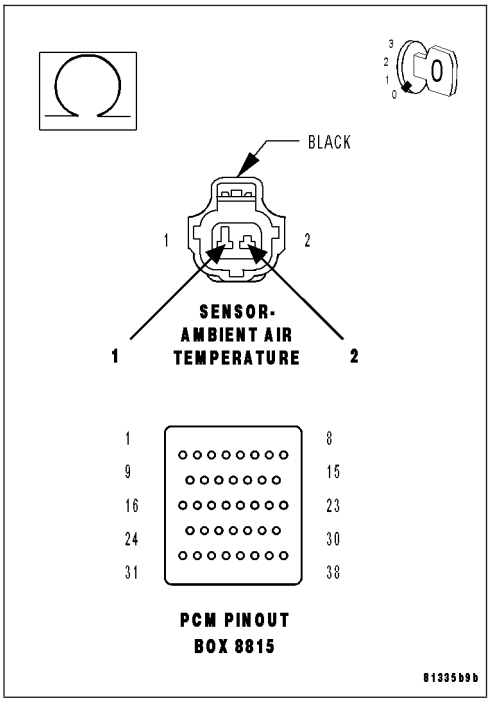
BLACK
1
2
SENSOR-
AMBIENT AIR
TEMPERATURE
1
2
1
9
16
24
31
8
15
23
30
38
PCM PINOUT
BOX 8815
81335b9b

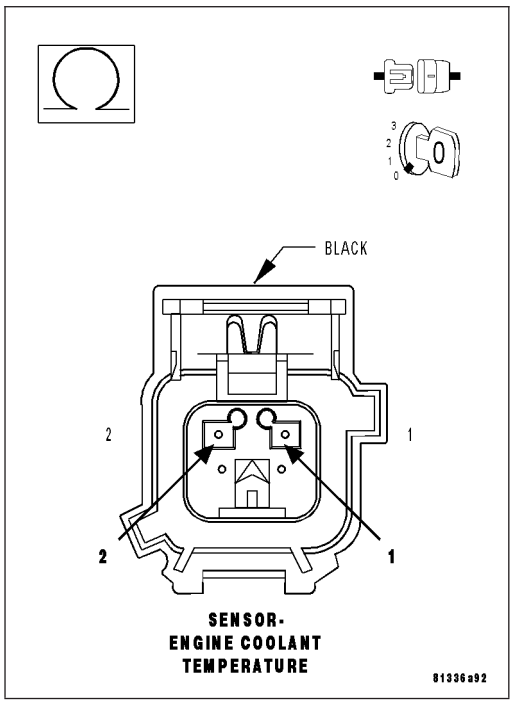
BLACK
2
1
2
1
SENSOR-
ENGINE COOLANT
TEMPERATURE
81336a92

P0129-BAROMETRIC PRESSURE OUT-OF-RANGE LOW

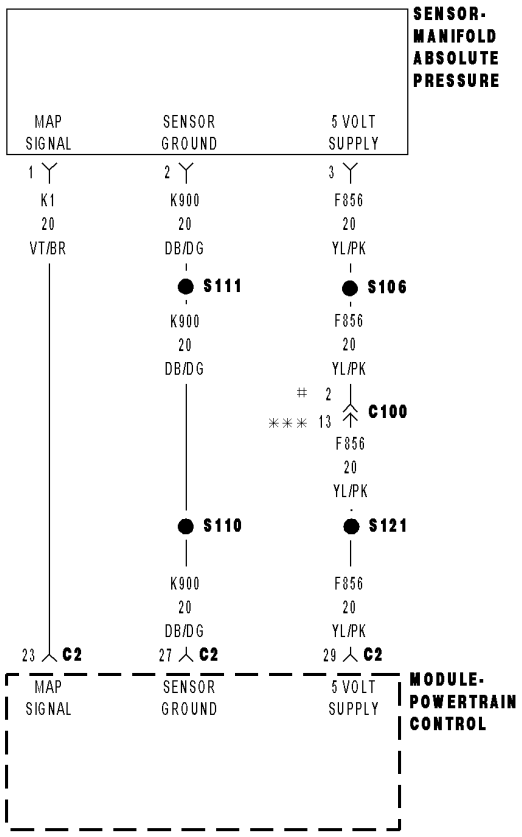

2.7L/3.5L
*** 5.7L

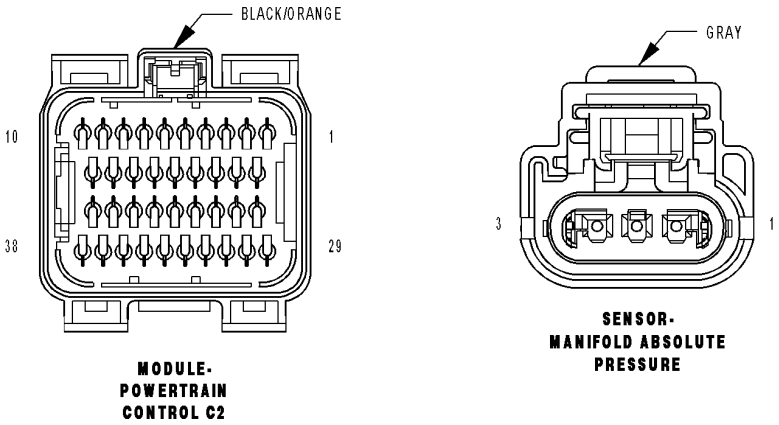

8131a249

For a complete wiring diagram **Refer to Section 8W**.

- **When Monitored:**
  With the ignition key on. No Cam or Crank signal within 75 ms. Engine speed less than 250 RPM.
- **Set Condition:**
  The PCM senses the voltage from the MAP sensor to be less than 2.2 volts but above 0.04 of a volt for 300 milliseconds. One Trip Fault. Three good trips to turn off the MIL. (ETC lamp will flash)

Possible Causes
(F856) 5-VOLT SUPPLY CIRCUIT SHORTED TO BATTERY VOLTAGE
(F856) 5-VOLT SUPPLY CIRCUIT OPEN
(F856) 5-VOLT SUPPLY CIRCUIT SHORTED TO GROUND
(K1) MAP SIGNAL CIRCUIT OPEN
(K1) MAP SIGNAL CIRCUIT SHORTED TO GROUND
(K1) MAP SIGNAL CIRCUIT SHORTED TO (K900) SENSOR GROUND
MAP SENSOR
PCM

Always perform the Pre-Diagnostic Troubleshooting procedure before proceeding. (Refer to 9 - ENGINE - DIAGNOSIS AND TESTING).

Diagnostic Test

1. ACTIVE DTC

Ignition on, engine not running.
With a scan tool, read DTCs.

Is the DTC active at this time.

Yes >> Go To 2

No >> Refer to the INTERMITTENT CONDITION Diagnostic Procedure.
Perform the POWERTRAIN VERIFICATION TEST. (Refer to 9 - ENGINE - STANDARD PROCEDURE)

2. (F856) 5-VOLT SUPPLY CIRCUIT

Turn the ignition off.
Disconnect the MAP Sensor harness connector.
Ignition on, engine not running.
Measure the voltage on the (F856) 5-volt Supply circuit in the MAP Sensor harness connector.

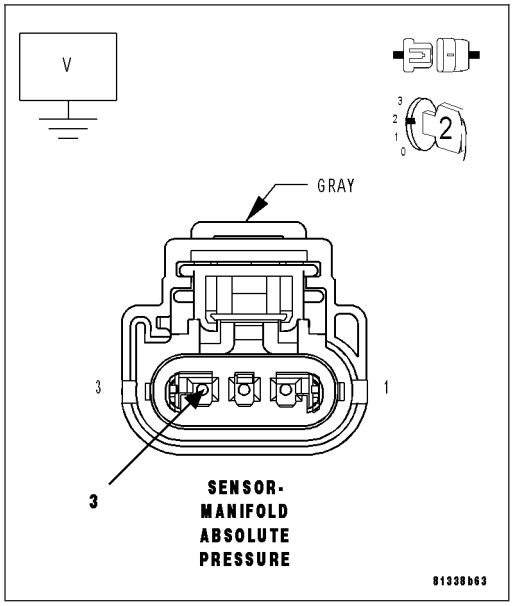

Is the voltage between 4.5 to 5.2 volts?

Yes >> Go To 3

No >> Go To 7

3. MAP SENSOR

With a scan tool, monitor the MAP Sensor voltage with the Sensor harness connector disconnected.

Is the voltage above 2.2 volts?

Yes >> Replace the MAP Sensor.
Perform the POWERTRAIN VERIFICATION TEST. (Refer to 9 - ENGINE - STANDARD PROCEDURE)

No >> Go To 4

4. (K1) MAP SIGNAL CIRCUIT OPEN

Turn the ignition off.

Disconnect the PCM harness connectors.

CAUTION: Do not probe the PCM harness connectors. Probing the PCM harness connectors will damage the PCM terminals resulting in poor terminal to pin connection. Install Miller Special Tool #8815 to perform diagnosis.

Measure the resistance of the (K1) MAP Signal circuit from the MAP Sensor harness connector to the appropriate terminal of special tool #8815.

Is the resistance below 5.0 ohms?

Yes >> Go To 5

No >> Repair the open in the (K1) MAP Signal circuit.
Perform the POWERTRAIN VERIFICATION TEST. (Refer to 9 - ENGINE - STANDARD PROCEDURE)

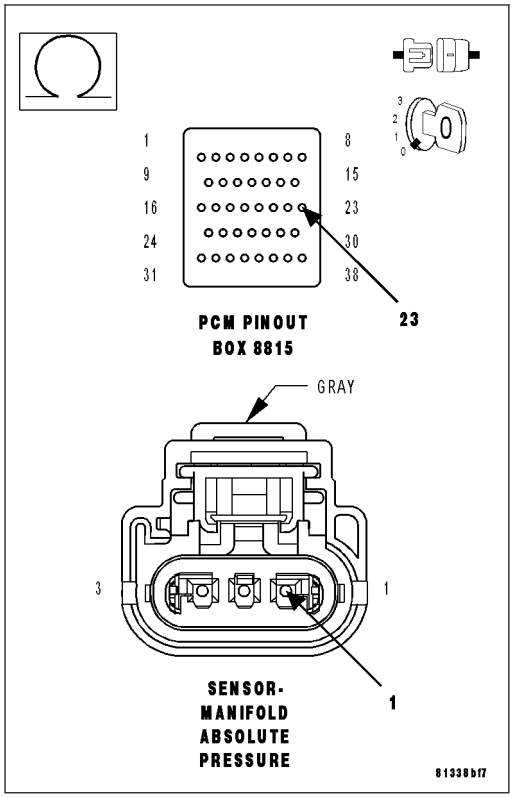

5. (K1) MAP SIGNAL CIRCUIT SHORTED TO THE (K900) SENSOR GROUND CIRCUIT

Measure the resistance between the (K900) Sensor ground circuit and the (K1) MAP Signal circuit in the MAP Sensor harness connector.

Is the resistance below 5.0 ohms?

Yes >> Repair the short between the (K900) Sensor ground circuit and the (K1) MAP Signal circuit.
Perform the POWERTRAIN VERIFICATION TEST. (Refer to 9 - ENGINE - STANDARD PROCEDURE)

No >> Go To 6

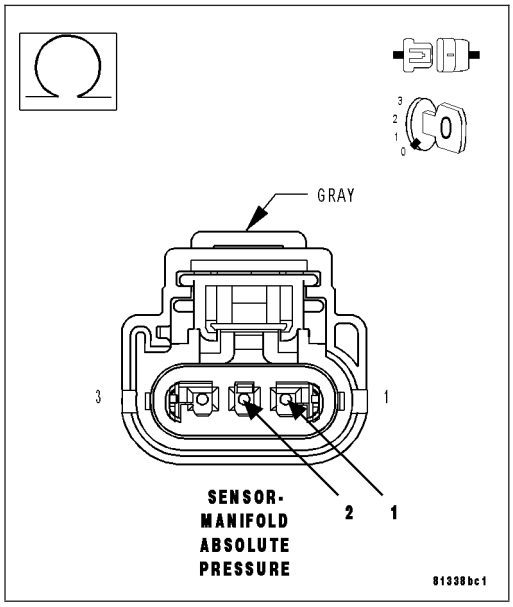

6. (K1) MAP SIGNAL CIRCUIT SHORTED TO GROUND

Measure the resistance between ground and the (K1) MAP Signal circuit in the MAP Sensor harness connector.

Is the resistance below 100 ohms?

Yes >> Repair the short to ground in the (K1) MAP Signal circuit.
Perform the POWERTRAIN VERIFICATION TEST. (Refer to 9 - ENGINE - STANDARD PROCEDURE)

No >> Replace the Powertrain Control Module in accordance with the Service information.
Perform the POWERTRAIN VERIFICATION TEST. (Refer to 9 - ENGINE - STANDARD PROCEDURE)

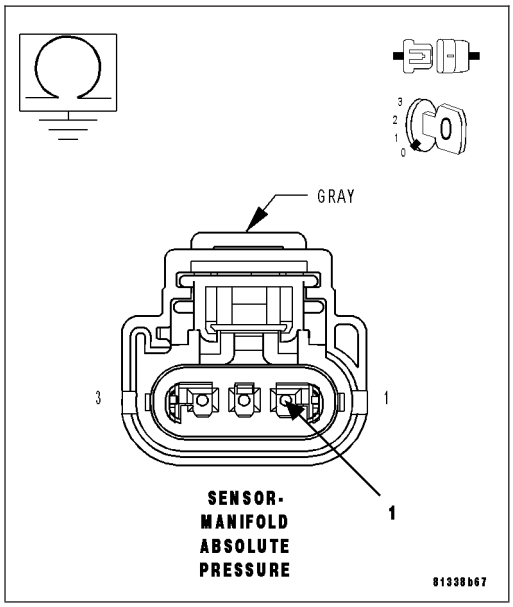

7. (F856) 5-VOLT SUPPLY CIRCUIT SHORTED TO BATTERY VOLTAGE

Turn the ignition off.

Disconnect the PCM harness connectors.

Ignition on, engine not running.

Measure the voltage on the (F856) 5-volt Supply circuit in the MAP Sensor harness connector.

Is the voltage above 5.2 volts?

Yes >> Repair the short to battery voltage in the (F856) 5-volt Supply circuit.
Perform the POWERTRAIN VERIFICATION TEST. (Refer to 9 - ENGINE - STANDARD PROCEDURE)

No >> Go To 8

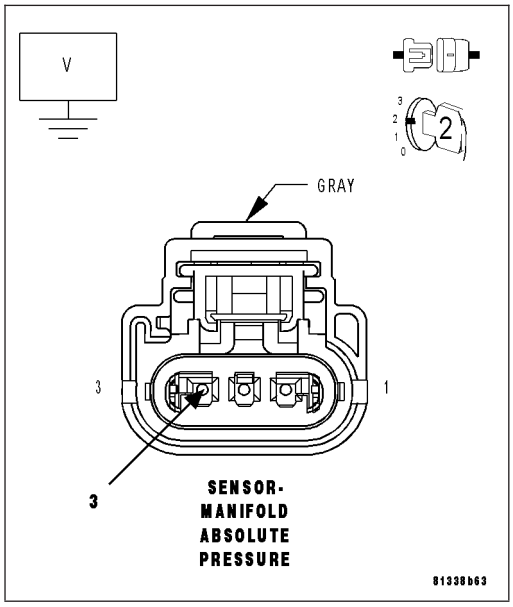

8. (F856) 5-VOLT SUPPLY CIRCUIT OPEN

Turn the ignition off.

CAUTION: Do not probe the PCM harness connectors. Probing the PCM harness connectors will damage the PCM terminals resulting in poor terminal to pin connection. Install Miller Special Tool #8815 to perform diagnosis.

Measure the resistance of the (F856) 5-volt Supply circuit from the MAP Sensor harness connector to the appropriate terminal of special tool #8815.

Is the resistance below 5.0 ohms?

Yes >> Go To 9

No >> Repair the open in the (F856) 5-volt Supply circuit.
Perform the POWERTRAIN VERIFICATION TEST. (Refer to 9 - ENGINE - STANDARD PROCEDURE)

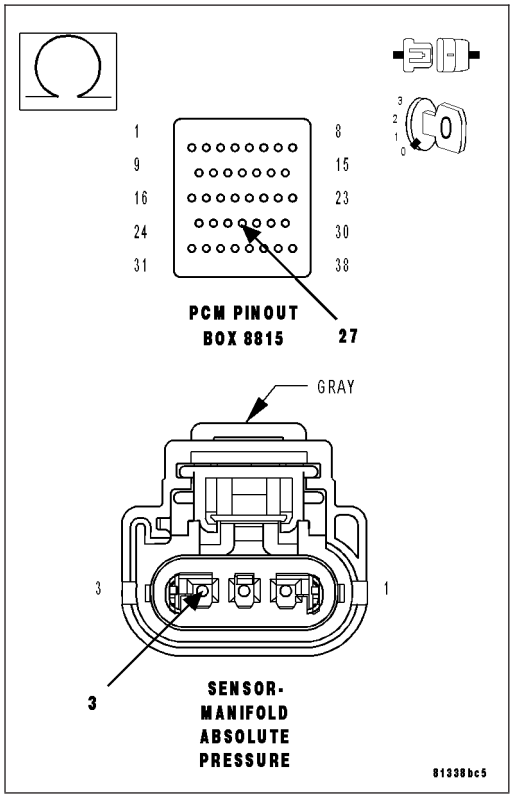

9. (F856) 5-VOLT SUPPLY CIRCUIT SHORTED TO GROUND

Measure the resistance between ground and the (F856) 5-volt Supply circuit in the MAP Sensor harness connector.

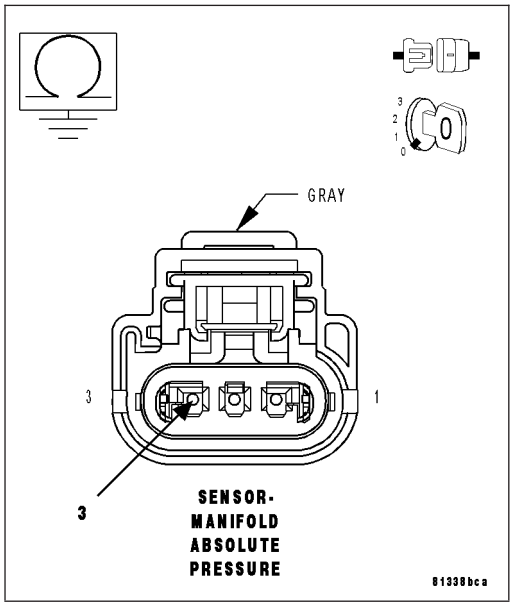

Is the resistance below 100 ohms?

Yes >> Repair the short to ground in the (F856) 5-volt Supply circuit.
Perform the POWERTRAIN VERIFICATION TEST. (Refer to 9 - ENGINE - STANDARD PROCEDURE)

No >> Go To 10

10. PCM

NOTE: Before continuing, check the PCM harness connector terminals for corrosion, damage, or terminal push out. Repair as necessary.
Using the schematics as a guide, inspect the wire harness and connectors. Pay particular attention to all Power and Ground circuits.

Were there any problems found?

Yes >> Repair as necessary.
Perform the POWERTRAIN VERIFICATION TEST. (Refer to 9 - ENGINE - STANDARD PROCEDURE)

No >> Replace and program the Powertrain Control Module per Service Information.
Perform the POWERTRAIN VERIFICATION TEST. (Refer to 9 - ENGINE - STANDARD PROCEDURE)

P0131-O2 SENSOR 1/1 CIRCUIT LOW

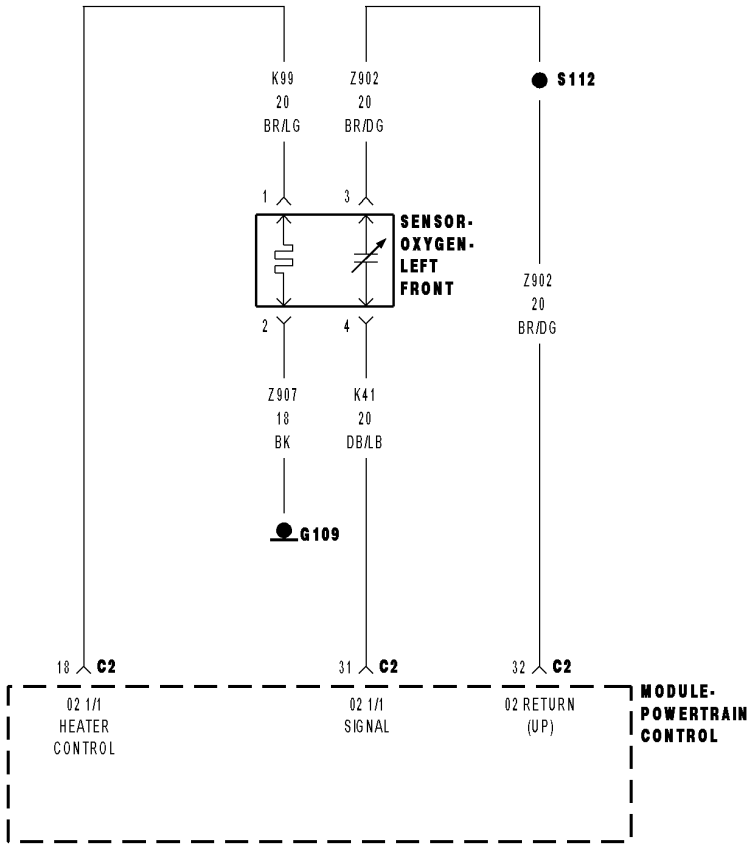

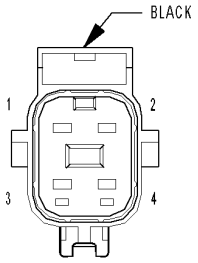

SENSOR-
OXYGEN-
LEFT FRONT

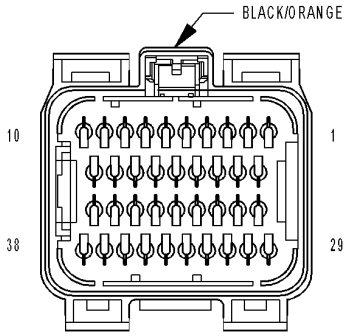

MODULE-
POWERTRAIN
CONTROL C2

8131a07e

For a complete wiring diagram **Refer to Section 8W**.

- **When Monitored:**
  Engine running for less than 30 seconds and the O2 Sensor Heater Temperature is less than 251°C (484°F) with battery voltage greater 10.4 volts.
- **Set Condition:**
  The oxygen sensor signal voltage is below 1.5 volts for 3 seconds after starting engine. One Trip Fault. Three good trips to turn off the MIL.

Possible Causes
(K902) O2 RETURN UPSTREAM CIRCUIT SHORTED TO GROUND
(K41) O2 1/1 SIGNAL CIRCUIT SHORTED TO GROUND
(K41) O2 1/1 SIGNAL CIRCUIT SHORTED TO (K902) O2 RETURN UPSTREAM CIRCUIT
(K41) O2 1/1 SIGNAL SHORTED TO THE (Z904) O2 1/1 HEATER GROUND CIRCUIT
O2 SENSOR
PCM

Always perform the Pre-Diagnostic Troubleshooting procedure before proceeding. (Refer to 9 - ENGINE - DIAGNOSIS AND TESTING).

Diagnostic Test

1. O2 SENSOR BELOW 1.5 VOLTS

Start the engine.
Allow the engine to reach normal operating temperature.
With a scan tool, read the 1/1 O2 Sensor voltage.

Is the voltage below 1.5 volts?

Yes >> Go To 2

No >> Refer to the INTERMITTENT CONDITION Diagnostic Procedure.
Perform the POWERTRAIN VERIFICATION TEST. (Refer to 9 - ENGINE - STANDARD PROCEDURE)

2. (K41) O2 SENSOR 1/1 SIGNAL CIRCUIT

Turn the ignition off.
Disconnect the 1/1 O2 Sensor harness connector.
Ignition on, engine not running.
With a scan tool, monitor the O2 Sensor voltage.

Is the 1/1 O2 Sensor voltage above 4.8 volts?

Yes >> Go To 3

No >> Go To 5

3. O2 SENSOR

Measure the voltage on the (K902) O2 Return Upstream circuit in the O2 Sensor harness connector.

Is the voltage at 2.5 volts?

Yes >> Replace the O2 Sensor.
Perform the POWERTRAIN VERIFICATION TEST. (Refer to 9 - ENGINE - STANDARD PROCEDURE)

No >> Go To 4

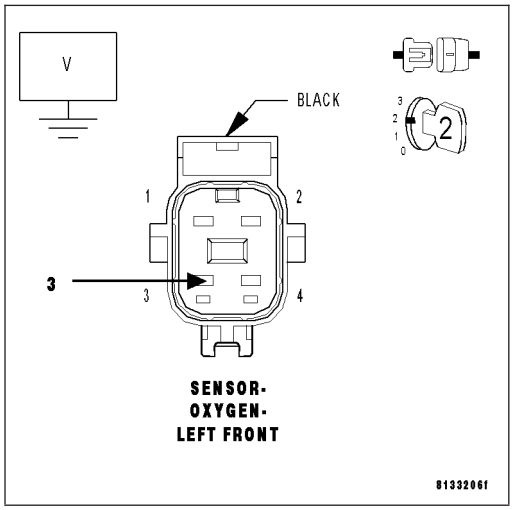

4. (K902) O2 RETURN UPSTREAM CIRCUIT SHORTED TO GROUND

Turn the ignition off.

Disconnect the PCM harness connectors.

Measure the resistance between ground and the (K902) O2 Upstream Return circuit in the O2 Sensor harness connector.

Is the resistance below 100 ohms?

Yes >> Repair the short to ground in the (K902) O2 Return Upstream circuit.
Perform the POWERTRAIN VERIFICATION TEST. (Refer to 9 - ENGINE - STANDARD PROCEDURE)

No >> Go To 8

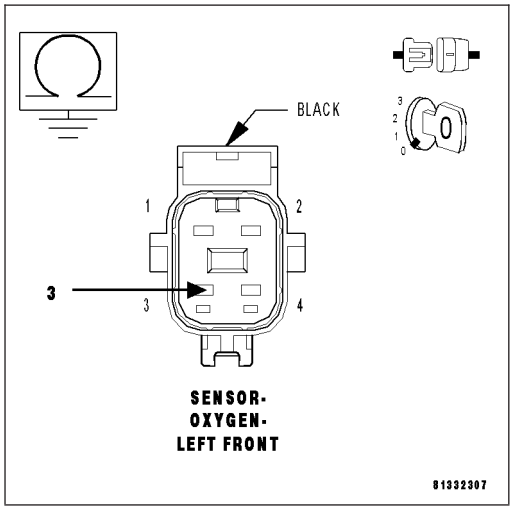

5. (K41) O2 SENSOR 1/1 SIGNAL CIRCUIT SHORTED TO GROUND

Turn the ignition off.

Disconnect the PCM harness connectors.

Measure the resistance between ground and the (K41) O2 Sensor 1/1 Signal circuit in the O2 Sensor harness connector.

Is the resistance below 100 ohms?

Yes >> Repair the short to ground in the (K41) O2 Sensor 1/1 Signal circuit.
Perform the POWERTRAIN VERIFICATION TEST. (Refer to 9 - ENGINE - STANDARD PROCEDURE)

No >> Go To 6

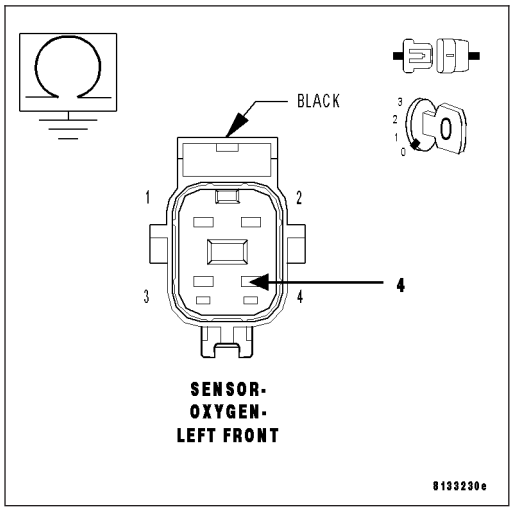

6. (K41) O2 SENSOR 1/1 SIGNAL CIRCUIT SHORTED TO (K902) O2 RETURN UPSTREAM CIRCUIT

Measure the resistance between the (K41) O2 Sensor 1/1 Signal circuit and the (K902) O2 Return Upstream circuit in the O2 Sensor harness connector.

Is the resistance below 100 ohms?

Yes >> Repair the short between the (K902) O2 Return Upstream circuit and the (K41) O2 Sensor 1/1 Signal circuit.
Perform the POWERTRAIN VERIFICATION TEST. (Refer to 9 - ENGINE - STANDARD PROCEDURE)

No >> Go To 7

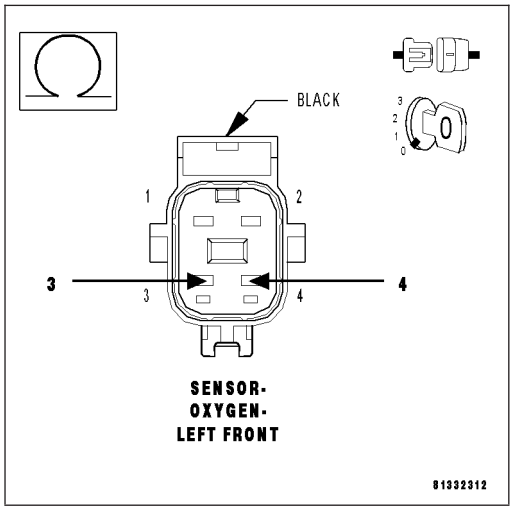

7. (K41) O2 SENSOR 1/1 SIGNAL CIRCUIT SHORTED TO THE (Z904) O2 1/1 HEATER GROUND CIRCUIT

Measure the resistance between the (K41) O2 Sensor 1/1 Signal circuit and the (Z904) O2 1/1Heater ground circuit in the O2 Sensor harness connector.

Is the resistance below 100 ohms?

Yes >> Repair the short between the (Z904) O2 1/1 Heater ground circuit and the (K41) O2 Sensor 1/1 Signal circuit.
Perform the POWERTRAIN VERIFICATION TEST. (Refer to 9 - ENGINE - STANDARD PROCEDURE)

No >> Go To 8

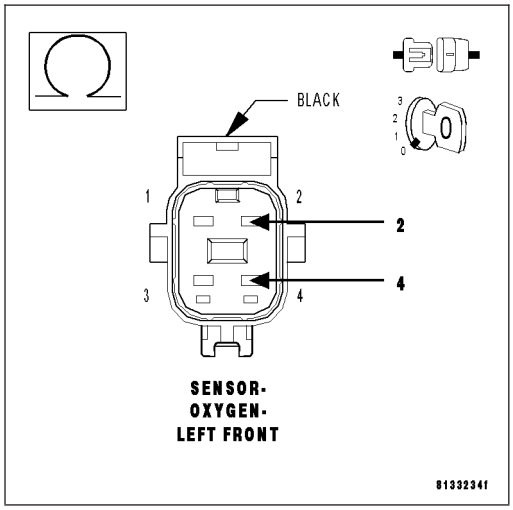

8. PCM

NOTE: Before continuing, check the PCM harness connector terminals for corrosion, damage, or terminal push out. Repair as necessary.
Using the schematics as a guide, inspect the wire harness and connectors. Pay particular attention to all Power and Ground circuits.

Were there any problems found?

Yes >> Repair as necessary.
Perform the POWERTRAIN VERIFICATION TEST. (Refer to 9 - ENGINE - STANDARD PROCEDURE)

No >> Replace and program the Powertrain Control Module per Service Information.
Perform the POWERTRAIN VERIFICATION TEST. (Refer to 9 - ENGINE - STANDARD PROCEDURE)

P0132-O2 SENSOR 1/1 CIRCUIT HIGH

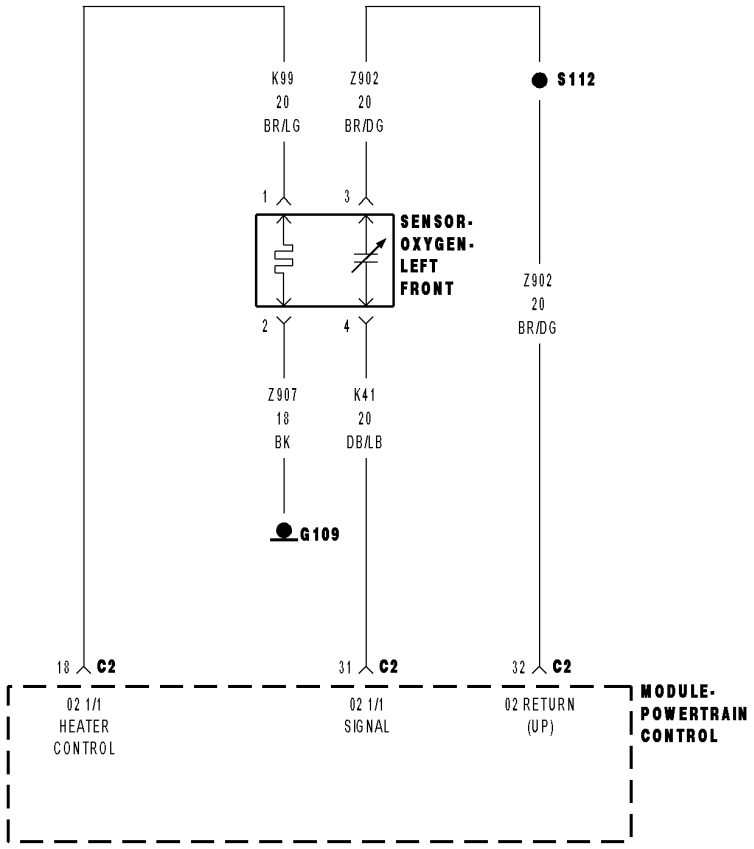

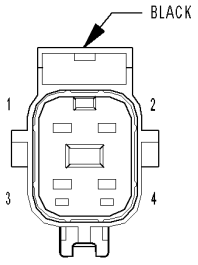

SENSOR-
OXYGEN-
LEFT FRONT

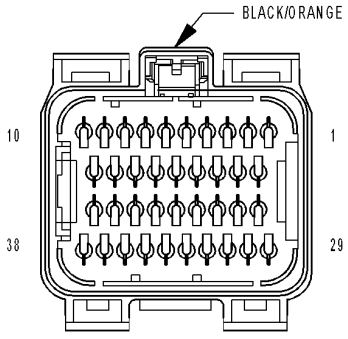

MODULE-
POWERTRAIN
CONTROL C2

8131a07e

For a complete wiring diagram **Refer to Section 8W**.

- **When Monitored:**
  O2 Sensor Heater Temperature is greater than 496°C (925°F) and battery voltage greater than 10.4 volts.
- **Set Condition:**
  The Oxygen Sensor voltage is above 3.7 volts for 40 seconds. One Trip Fault. Three good trips to turn off the MIL.

Possible Causes
(K41) O2 1/1 SIGNAL CIRCUIT SHORTED TO BATTERY VOLTAGE
(K902) O2 UPSTREAM RETURN CIRCUIT SHORTED TO BATTERY VOLTAGE
(K41) O2 1/1 SIGNAL CIRCUIT OPEN
(K902) O2 UPSTREAM RETURN CIRCUIT OPEN
O2 SENSOR
PCM

Always perform the Pre-Diagnostic Troubleshooting procedure before proceeding. (Refer to 9 - ENGINE - DIAGNOSIS AND TESTING).

Diagnostic Test

1. O2 SENSOR ABOVE 3.7 VOLTS

NOTE: When only one O2 Sensor is shorted to voltage, the scan tool will display all O2 Sensor voltage readings at approximately 5.0 volts. When diagnosing this DTC, only diagnose the O2 Sensor that set the DTC.

Start the engine.

Allow the engine to reach normal operating temperature.

With a scan tool, read the 1/1 O2 Sensor voltage.

Is the voltage above 3.7 volts?

Yes >> Go To 2

No >> Refer to the INTERMITTENT CONDITION Diagnostic Procedure.
Perform the POWERTRAIN VERIFICATION TEST. (Refer to 9 - ENGINE - STANDARD PROCEDURE)

2. (K41) O2 1/1 SIGNAL CIRCUIT SHORTED TO BATTERY VOLTAGE

Start the engine and allow the engine to idle.

Disconnect the 1/1 O2 Sensor harness connector.

Measure the voltage on the (K41) O2 Sensor 1/1 Signal circuit in the 1/1 O2 Sensor harness connector.

NOTE: Measure the voltage in reference to ground, not the (K902) O2 Upstream Return circuit.

Is the voltage above 5.2 volts?

Yes >> Repair the short to battery voltage in the (K41) O2 Sensor 1/1 Signal circuit.
Perform the POWERTRAIN VERIFICATION TEST. (Refer to 9 - ENGINE - STANDARD PROCEDURE)

No >> Go To 3

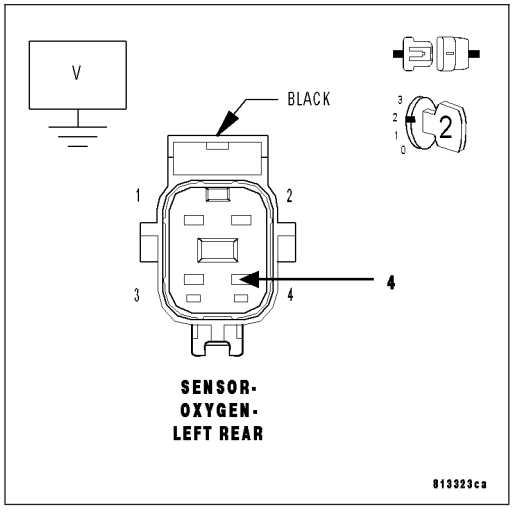

3. (K902) O2 UPSTREAM RETURN CIRCUIT SHORTED TO BATTERY VOLTAGE

Turn the ignition off.

Disconnect the PCM harness connectors.

Ignition on, engine not running.

Measure the voltage on the (K902) O2 Upstream Return circuit in the 1/1 O2 Sensor harness connector.

Is there any voltage present?

Yes >> Repair the short to battery voltage in the (K902) O2 Upstream Return circuit.
Perform the POWERTRAIN VERIFICATION TEST. (Refer to 9 - ENGINE - STANDARD PROCEDURE)

No >> Go To 4

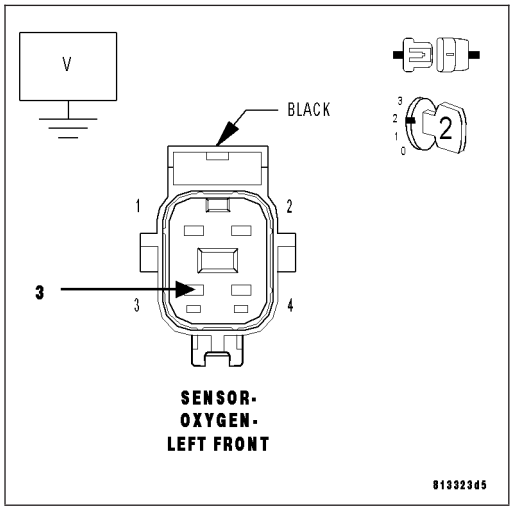

4. 1/1 O2 SENSOR

Turn the ignition off.

Connect the PCM harness connectors.

Connect a jumper wire between the (K41) O2 1/1 Signal circuit and the (K902) O2 Upstream Return circuit in the O2 Sensor harness connector.

Ignition on, engine not running.

With a scan tool, monitor the 1/1 O2 Sensor voltage.

Is the voltage between 2.3 and 2.7 volts with the jumper wire installed?

Yes >> Replace the O2 Sensor.
Perform the POWERTRAIN VERIFICATION TEST. (Refer to 9 - ENGINE - STANDARD PROCEDURE)

No >> Go To 5

NOTE: Remove the jumper wire before continuing.

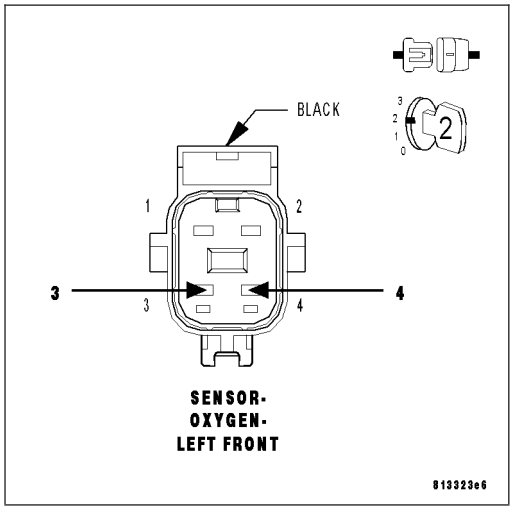

5. (K41) O2 1/1 SIGNAL CIRCUIT OPEN

Turn the ignition off.

Disconnect the PCM harness connector.

CAUTION: Do not probe the PCM harness connectors. Probing the PCM harness connectors will damage the PCM terminals resulting in poor terminal to pin connection. Install Miller Special Tool #8815 to perform diagnosis.

Measure the resistance of the (K41) O2 1/1 Signal circuit from the 1/1 O2 Sensor harness connector to the appropriate terminal of special tool #8815.

Is the resistance below 5.0 ohms?

Yes >> Go To 6

No >> Repair the open in the (K41) O2 1/1 Signal circuit. Perform the POWERTRAIN VERIFICATION TEST. (Refer to 9 - ENGINE - STANDARD PROCEDURE)

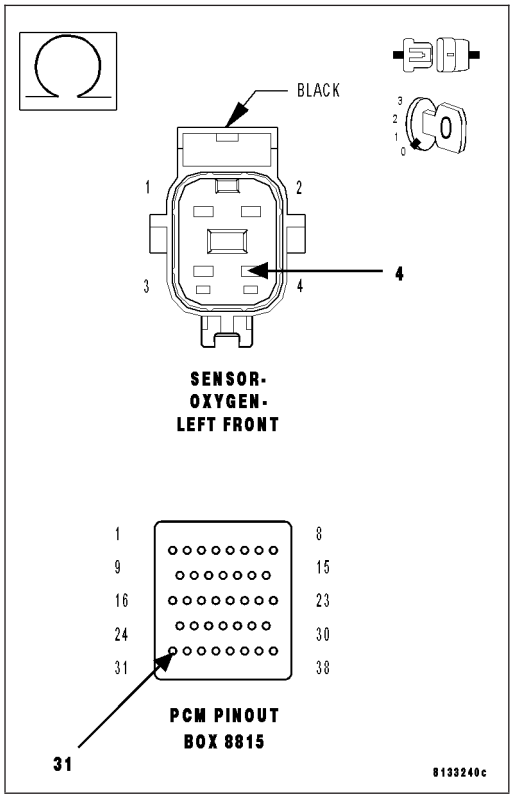

6. (K902) O2 UPSTREAM RETURN CIRCUIT OPEN

Measure the resistance of the (K902) O2 Upstream Return circuit from the O2 Sensor harness connector to the appropriate terminal of special tool #8815.

Is the resistance below 5.0 ohms?

Yes >> Go To 7

No >> Repair the open in the (K902) O2 Upstream Return circuit. Perform the POWERTRAIN VERIFICATION TEST. (Refer to 9 - ENGINE - STANDARD PROCEDURE)

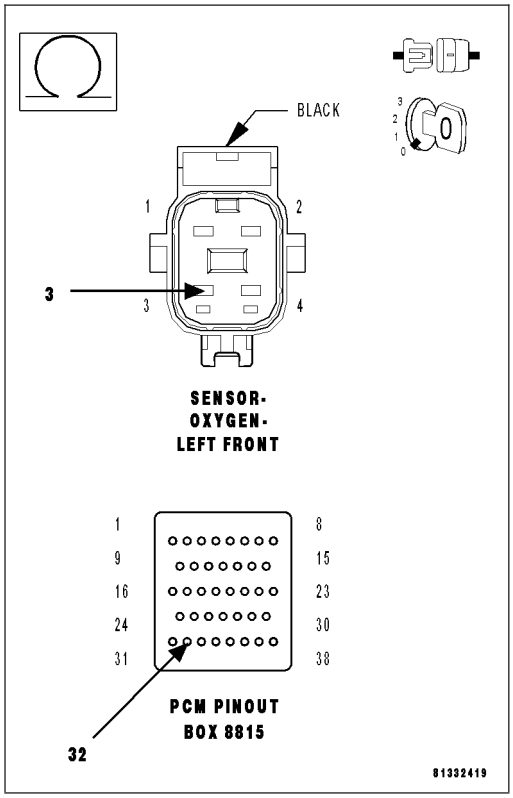

7. PCM

NOTE: Before continuing, check the PCM harness connector terminals for corrosion, damage, or terminal push out. Repair as necessary.
Using the schematics as a guide, inspect the wire harness and connectors. Pay particular attention to all Power and Ground circuits.

Were there any problems found?

Yes >> Repair as necessary.
Perform the POWERTRAIN VERIFICATION TEST. (Refer to 9 - ENGINE - STANDARD PROCEDURE)

No >> Replace and program the Powertrain Control Module per Service Information.
Perform the POWERTRAIN VERIFICATION TEST. (Refer to 9 - ENGINE - STANDARD PROCEDURE)

P0133-O2 SENSOR 1/1 SLOW RESPONSE

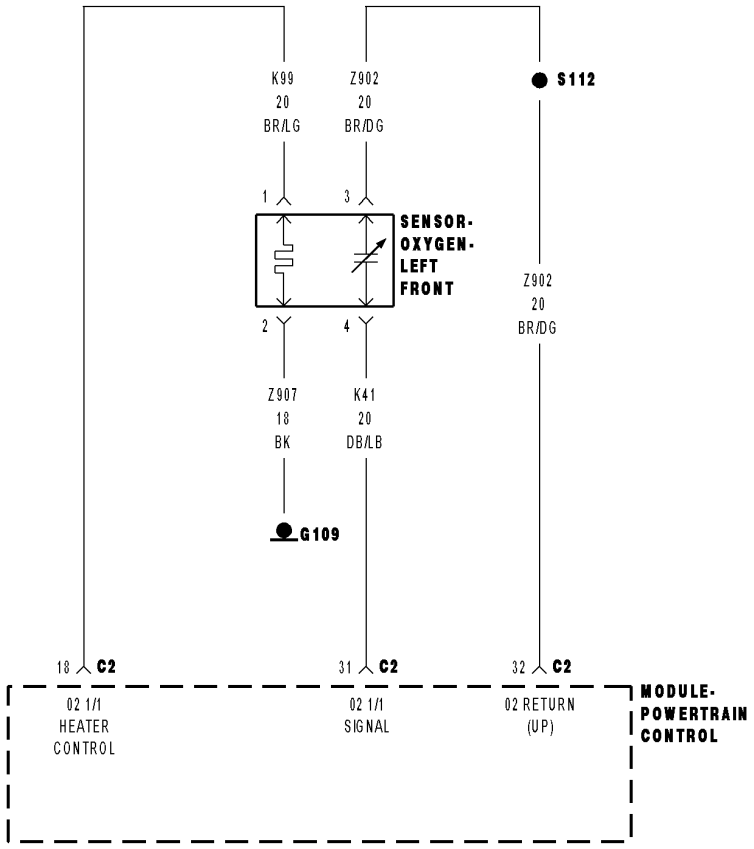

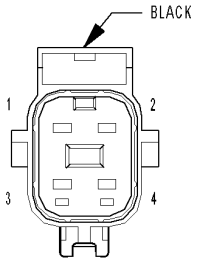

SENSOR-
OXYGEN-
LEFT FRONT

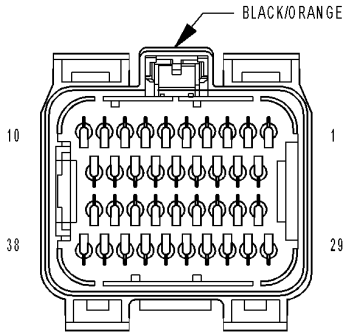

MODULE-
POWERTRAIN
CONTROL C2

8131a07e

For a complete wiring diagram **Refer to Section 8W**.

Theory of Operation

For an aged O2 sensor, the response rate to the air/fuel change is slower than when it was new. The O2 sensor tends to move less with the same air/fuel changes in a given time frame. Therefore by observing the activity of voltage readings from the upstream O2 sensor, the quality of the O2 sensor can be detected.

- **When Monitored:**
  Vehicle is started and driven between 20 and 55 MPH with the Throttle open for a minimum of 120 seconds. Coolant greater than 70°C (158°F). Catalytic Converter Temp greater than 600°C, (1112°F) and EVAP Purge is active.
- **Set Condition:**
  O2 Sensor response is too slow for a calibrated amount of time. Two Trip Fault. Three good trips to turn off the MIL.

Possible Causes
EXHAUST LEAK
(K41) O2 1/1 SIGNAL CIRCUIT
(K902) O2 RETURN UPSTREAM CIRCUIT
O2 SENSOR

Always perform the Pre-Diagnostic Troubleshooting procedure before proceeding. (Refer to 9 - ENGINE - DIAGNOSIS AND TESTING).

Diagnostic Test

1. ACTIVE DTC

NOTE: Check for contaminants that may have damaged the O2 Sensor: contaminated fuel, unapproved silicone, oil and coolant.
Ignition on, engine not running.

NOTE: After the repairs have been made, verify proper O2 Sensor operation. If all the O2 Sensor voltage readings have not returned to normal, follow the diagnostic procedure for the remaining O2 Sensors.
With a scan tool, read DTCs.

Is the DTC active at this time?

Yes >> Go To 2

No >> Refer to the INTERMITTENT CONDITION Diagnostic Procedure.
Perform the POWERTRAIN VERIFICATION TEST. (Refer to 9 - ENGINE - STANDARD PROCEDURE)

2. EXHAUST LEAK

Start the engine.

Inspect the exhaust for leaks between the engine and the O2 Sensor.

Turn the ignition off.

If a leak is heard but unable to be located, it may be necessary to use special tool Miller Tool #8404A Evaporative Emissions Leak Detector (EELD) on the exhaust system to find leaks.

Connect the SMOKE supply tip (black hose) to the exhaust cone adapter (if equipped) and place it into the tail pipe.

Set the smoke/air control switch to SMOKE.

Press the remote smoke/air start button.

While still holding the remote smoke/air start button, use the white light (#8404-CLL) to follow the EVAP system path, and look for the source of the leak indicated by exiting smoke.

If a leak is concealed from view, release the remote smoke/air start button, and use the ultraviolet (UV) black light #8404-UVL and the yellow goggles 8404-20 to look for residual traces of dye that is left behind by the smoke.

The exiting smoke deposits a residual fluid that is either bright green or bright yellow in color when viewed with a UV light.

Be sure to check the exhaust manifold to cylinder head connection for leaks.

Are there any exhaust leaks?

Yes >> Repair or replace the leaking exhaust parts as necessary.
Perform the POWERTRAIN VERIFICATION TEST. (Refer to 9 - ENGINE - STANDARD PROCEDURE)

No >> Go To 3

3. (K41) O2 1/1 SIGNAL CIRCUIT HIGH RESISTANCE

Turn the ignition off.

Disconnect the C2 PCM harness connector.

CAUTION: CAUTION: Do not probe the PCM harness connectors. Probing the PCM harness connectors will damage the PCM terminals resulting in poor terminal to pin connection. Install Miller Special Tool #8815 along with the #8815-1 to perform the diagnosis.

Using a voltmeter perform a voltage drop test. Backprobe the (K41) O2 1/1 Signal circuit at the O2 Sensor harness connector to the appropriate terminal of the special tool #8815. Ensure the voltmeter leads are connected with the circuit's correct polarity.

WARNING: When the engine is operating, do not stand in direct line with the fan. Do not put your hands near the pulleys, belts, or fan. Do not wear loose clothing. Failure to follow these instructions can result in personal injury or death.

Start the engine and allow it to reach normal operating temperature.

Monitor the voltmeter.

Is the voltage below 0.5 volts?

Yes >> Go To 4

No >> Repair the high resistance in the (K41) O2 1/1 Signal circuit.
Perform the POWERTRAIN VERIFICATION TEST. (Refer to 9 - ENGINE - STANDARD PROCEDURE)

4. (K902) O2 RETURN CIRCUIT HIGH RESISTANCE

Turn the ignition off.

Using a voltmeter perform a voltage drop test. Backprobe the (K902) O2 Return circuit at the O2 Sensor harness connector to the appropriate terminal of the special tool #8815. Ensure the voltmeter leads are connected with the circuit's correct polarity.

WARNING: When the engine is operating, do not stand in direct line with the fan. Do not put your hands near the pulleys, belts, or fan. Do not wear loose clothing. Failure to follow these instructions can result in personal injury or death.

Start the engine and allow it to reach normal operating temperature.

Monitor the voltmeter.

Is the voltage below 0.5 volts?

Yes >> Go To 5

No >> Repair the open in the (K902) O2 Return circuit.
Perform the POWERTRAIN VERIFICATION TEST. (Refer to 9 - ENGINE - STANDARD PROCEDURE)

5. O2 SENSOR

If there are no possible causes remaining, view repair.

Repair

Replace the O2 Sensor

Perform the POWERTRAIN VERIFICATION TEST. (Refer to 9 - ENGINE - STANDARD PROCEDURE)

P0135-O2 SENSOR 1/1 HEATER PERFORMANCE

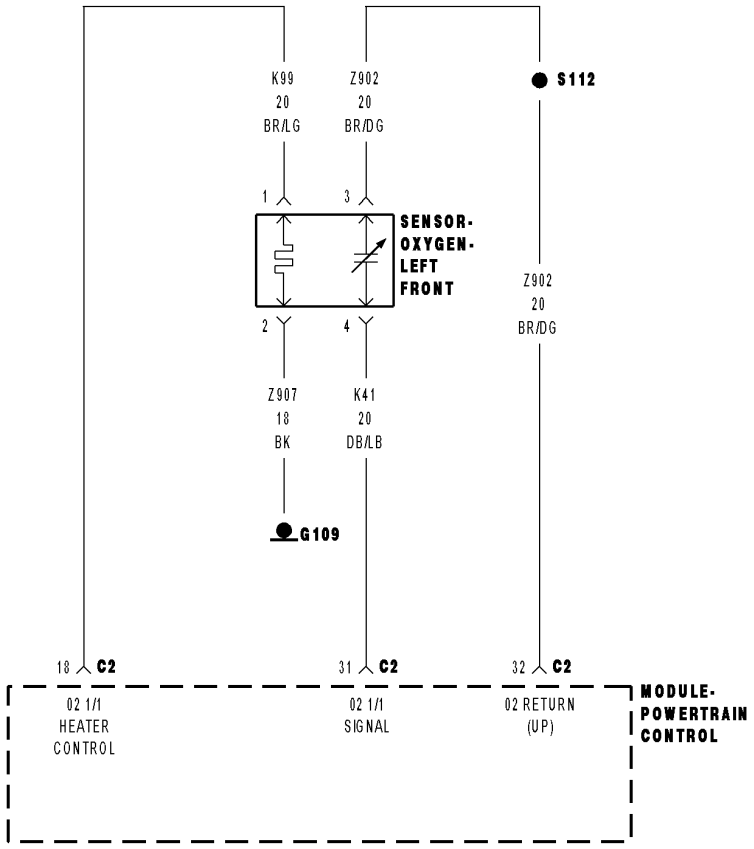

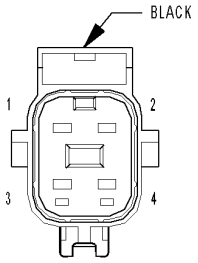

SENSOR-
OXYGEN-
LEFT FRONT

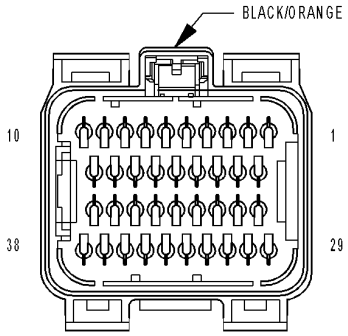

MODULE-
POWERTRAIN
CONTROL C2

8131a07e

For a complete wiring diagram **Refer to Section 8W**.

- **When Monitored:**
  Engine running and heater duty cycle greater than 0%. Battery voltage greater than 11.0 volts.
- **Set Condition:**
  No sensor output is received when the PCM powers up the sensor heater. Two trip fault. Three good trips to turn off the MIL.

Possible Causes
(K99) O2 1/1 HEATER CONTROL CIRCUIT
(Z904) O2 1/1 HEATER GROUND CIRCUIT
O2 SENSOR HEATER ELEMENT
PCM

Always perform the Pre-Diagnostic Troubleshooting procedure before proceeding. (Refer to 9 - ENGINE - DIAGNOSIS AND TESTING).

Diagnostic Test

1. O2 SENSOR HEATER OPERATION

Turn the ignition off.

NOTE: Wait a minimum of 8 minutes to allow the O2 Sensor to cool down before continuing the test. Allow the O2 Sensor voltage to stabilize between 4.6 and 5.0 volts.
Ignition on, engine not running.
With a scan tool, actuate the O2 Heater Test.
With the scan tool, monitor 1/1 O2 Sensor voltage for at least 2 minutes.

Does the voltage stay above 4.5 volts?

Yes >> Go To 2

No >> Refer to the INTERMITTENT CONDITION Diagnostic Procedure.
Perform the POWERTRAIN VERIFICATION TEST. (Refer to 9 - ENGINE - STANDARD PROCEDURE)

2. O2 SENSOR HEATER ELEMENT

Turn the ignition off.

NOTE: Allow the O2 sensor to cool down to room temperature.
Disconnect the O2 Sensor harness connector.
Measure the resistance of the O2 Heater Element across the 1/1 O2 Sensor connector between the O2 Heater Control terminal and the Heater ground terminal.

NOTE: O2 Heater Element resistance values should be measured at 70°F (21.1°C). The resistance value will vary with different temperature values.

Is the resistance of the O2 Sensor Heater Element between 2.0 and 30.0 ohms?

Yes >> Go To 3

No >> Replace the O2 Sensor.
Perform the POWERTRAIN VERIFICATION TEST. (Refer to 9 - ENGINE - STANDARD PROCEDURE)

3. (K99) O2 1/1 HEATER CONTROL CIRCUIT HIGH RESISTANCE

Disconnect the O2 harness connectors.

With the scan tool, actuate the O2 Heater.

Using a 12-volt test light connected ground, probe the (K99) O2 1/1 Heater Control circuit from the O2 harness connector.

NOTE: The test light should be illuminated and bright. Compare the brightness to that of a direct connection to the battery.

Does the test light illuminate brightly?

Yes >> Go To 4

No >> Repair the excessive resistance in the (K99) O2 1/1 Heater Control circuit.
Perform the POWERTRAIN VERIFICATION TEST. (Refer to 9 - ENGINE - STANDARD PROCEDURE)

4. (Z904) O2 1/1 HEATER GROUND CIRCUIT HIGH RESISTANCE

Using a 12-volt test light connected battery voltage, probe the (Z904) O2 Heater ground circuit in the O2 Sensor harness connector.

NOTE: The test light should be illuminated and bright. Compare the brightness to that of a direct connection to the battery.

Does the test light illuminate brightly?

Yes >> Go To 5

No >> Repair the excessive resistance in the (Z904) O2 1/1 Heater ground circuit.
Perform the POWERTRAIN VERIFICATION TEST. (Refer to 9 - ENGINE - STANDARD PROCEDURE)

5. PCM

NOTE: Before continuing, check the PCM harness connector terminals for corrosion, damage, or terminal push out. Repair as necessary.

Using the schematics as a guide, inspect the wire harness and connectors. Pay particular attention to all Power and Ground circuits.

Were there any problems found?

Yes >> Repair as necessary.
Perform the POWERTRAIN VERIFICATION TEST. (Refer to 9 - ENGINE - STANDARD PROCEDURE)

No >> Replace and program the Powertrain Control Module per Service Information.
Perform the POWERTRAIN VERIFICATION TEST. (Refer to 9 - ENGINE - STANDARD PROCEDURE)

P0137-O2 SENSOR 1/2 CIRCUIT LOW

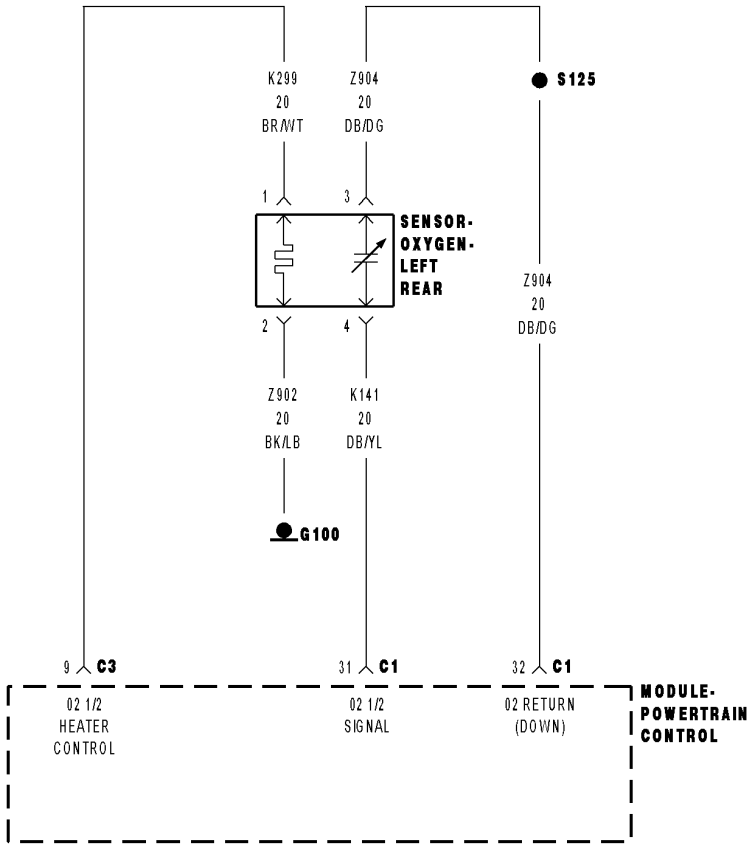

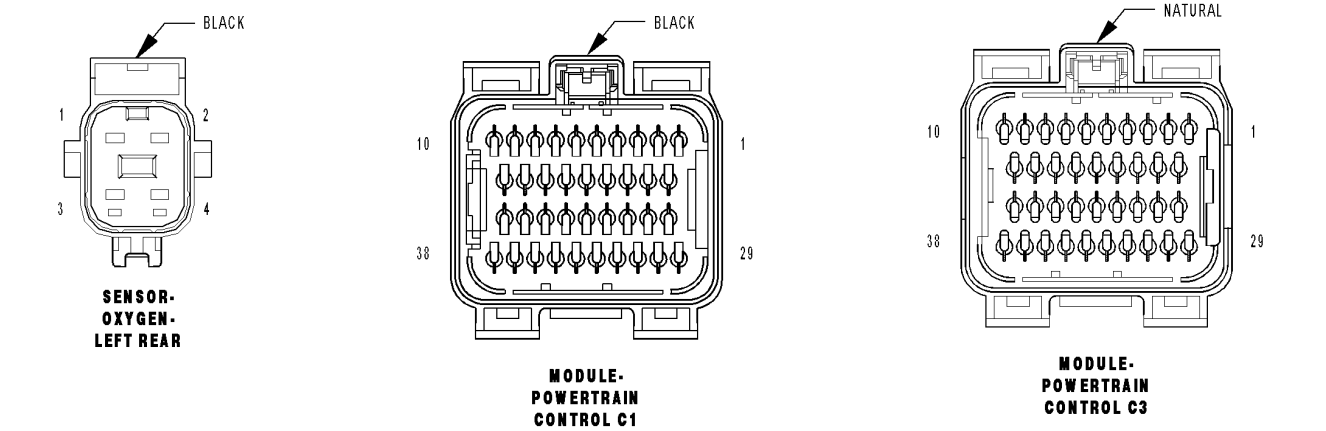

8131a0c6

For a complete wiring diagram **Refer to Section 8W**.

- **When Monitored:**
  Engine running for less than 30 seconds and the O2 Sensor Heater Temperature is less than 251°C (484°F) with battery voltage greater 10.99 volts.
- **Set Condition:**
  The oxygen sensor signal voltage is below 1.5 volts for 3 seconds after starting engine. One Trip Fault. Three good trips to turn off the MIL.

Possible Causes
(K904) O2 DOWNSTREAM RETURN CIRCUIT SHORTED TO GROUND
(K141) O2 1/2 SIGNAL CIRCUIT SHORTED TO GROUND
(K141) O2 1/2 SIGNAL CIRCUIT SHORTED TO (K904) O2 DOWNSTREAM RETURN CIRCUIT
(K141) O2 1/2 SIGNAL SHORTED TO THE (Z902) O2 1/2 HEATER GROUND CIRCUIT
O2 SENSOR
PCM

Always perform the Pre-Diagnostic Troubleshooting procedure before proceeding. (Refer to 9 - ENGINE - DIAGNOSIS AND TESTING).

Diagnostic Test

1. O2 SENSOR BELOW 1.5 VOLTS

Start the engine.
Allow the engine to reach normal operating temperature.
With a scan tool, read the 1/2 O2 Sensor voltage.

Is the voltage below 1.5 volts?

Yes >> Go To 2

No >> Refer to the INTERMITTENT CONDITION Diagnostic Procedure.
Perform the POWERTRAIN VERIFICATION TEST. (Refer to 9 - ENGINE - STANDARD PROCEDURE)

2. (K141) O2 1/2 SIGNAL CIRCUIT

Turn the ignition off.
Disconnect the 1/2 O2 Sensor harness connector.
Ignition on, engine not running.
With a scan tool, monitor the 1/2 O2 Sensor voltage.

Is the O2 Sensor voltage above 4.8 volts?

Yes >> Go To 3

No >> Go To 5

3. O2 SENSOR

Measure the voltage on the (K904) O2 Downstream Return circuit in the O2 Sensor harness connector.

Is the voltage at 2.5 volts?

Yes >> Replace the O2 Sensor.
Perform the POWERTRAIN VERIFICATION TEST. (Refer to 9 - ENGINE - STANDARD PROCEDURE)

No >> Go To 4

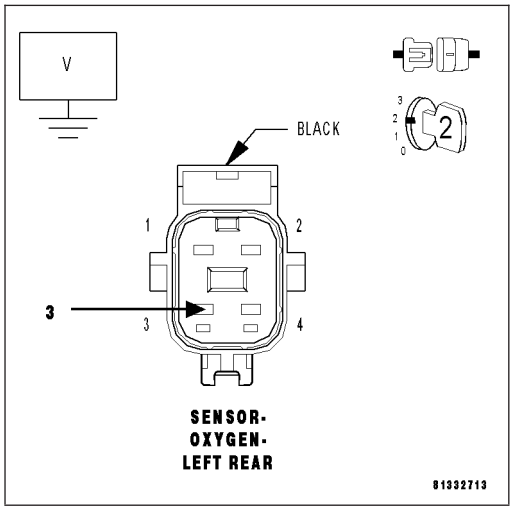

4. (K904) O2 DOWNSTREAM RETURN CIRCUIT SHORTED TO GROUND

Turn the ignition off.

Disconnect the PCM harness connectors.

Measure the resistance between ground and the (K904) O2 Downstream Return circuit in the O2 Sensor harness connector.

Is the resistance below 100 ohms?

Yes >> Repair the short to ground in the (K904) O2 Downstream Return circuit.
Perform the POWERTRAIN VERIFICATION TEST. (Refer to 9 - ENGINE - STANDARD PROCEDURE)

No >> Go To 8

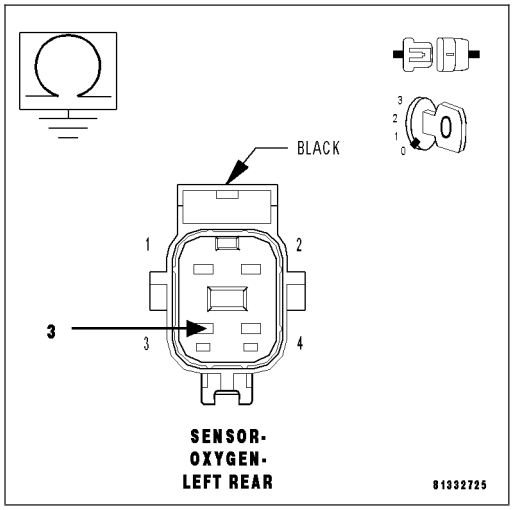

5. (K141) O2 1/2 SIGNAL CIRCUIT SHORTED TO GROUND

Turn the ignition off.

Disconnect the PCM harness connectors.

Measure the resistance between ground and the (K141) O2 1/2 Signal circuit in the O2 Sensor harness connector.

Is the resistance below 100 ohms?

Yes >> Repair the short to ground in the (K141) O2 1/2 Signal circuit.
Perform the POWERTRAIN VERIFICATION TEST. (Refer to 9 - ENGINE - STANDARD PROCEDURE)

No >> Go To 6

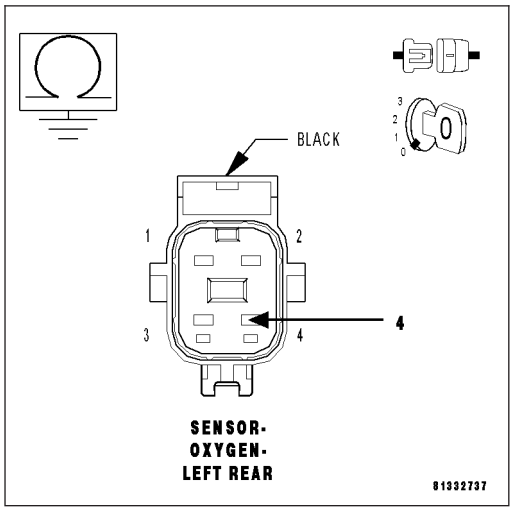

6. (K141) O2 1/2 SIGNAL CIRCUIT SHORTED TO (K904) O2 DOWNSTREAM RETURN CIRCUIT

Measure the resistance between the (K141) O2 1/2 Signal circuit and the (K904) O2 Downstream Return circuit in the O2 Sensor harness connector.

Is the resistance below 100 ohms?

Yes >> Repair the short between the (K904) O2 Downstream Return circuit and the (K141) O2 1/2 Signal circuit.
Perform the POWERTRAIN VERIFICATION TEST. (Refer to 9 - ENGINE - STANDARD PROCEDURE)

No >> Go To 7

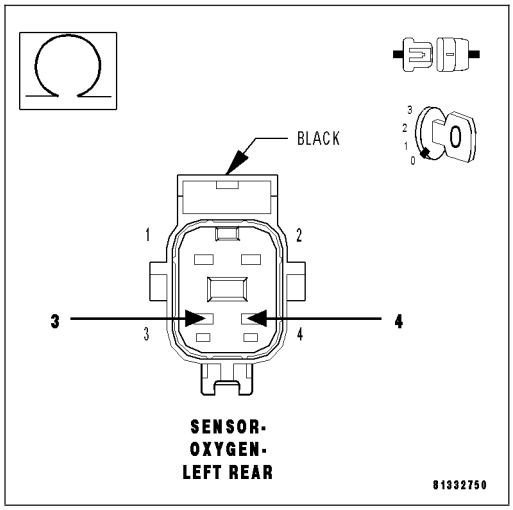

7. (K141) O2 1/2 SIGNAL CIRCUIT SHORTED TO (Z902) O2 1/2 HEATER GROUND CIRCUIT

Measure the resistance between the (K141) O2 1/2 Signal circuit and the (Z902) O2 1/2 Heater ground circuit in the O2 Sensor harness connector.

Is the resistance below 100 ohms?

Yes >> Repair the short between the (Z902) O2 1/2 Heater ground circuit and the (K141) O2 1/2 Signal circuit.
Perform the POWERTRAIN VERIFICATION TEST. (Refer to 9 - ENGINE - STANDARD PROCEDURE)

No >> Go To 8

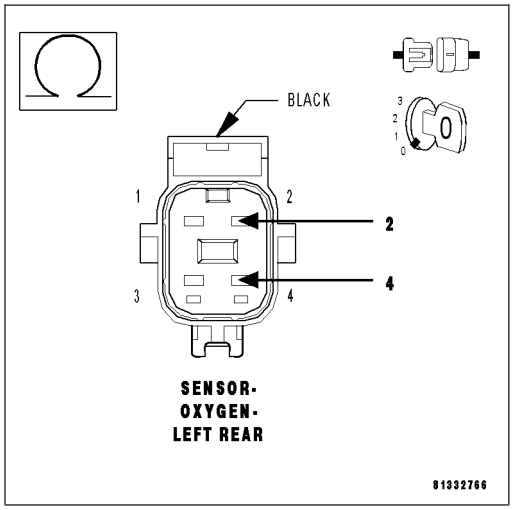

8. PCM

NOTE: Before continuing, check the PCM harness connector terminals for corrosion, damage, or terminal push out. Repair as necessary.
Using the schematics as a guide, inspect the wire harness and connectors. Pay particular attention to all Power and Ground circuits.

Were there any problems found?

Yes >> Repair as necessary.
Perform the POWERTRAIN VERIFICATION TEST. (Refer to 9 - ENGINE - STANDARD PROCEDURE)

No >> Replace and program the Powertrain Control Module per Service Information.
Perform the POWERTRAIN VERIFICATION TEST. (Refer to 9 - ENGINE - STANDARD PROCEDURE)

P0138-O2 SENSOR 1/2 CIRCUIT HIGH

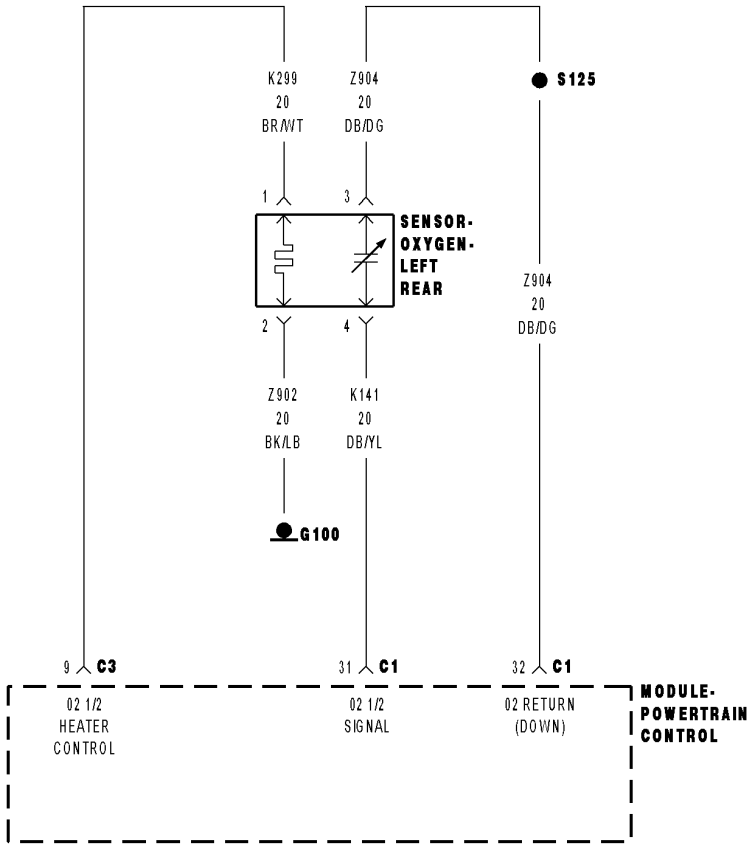

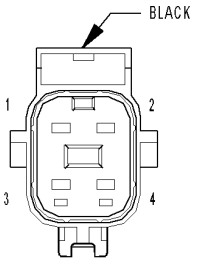

SENSOR-
OXYGEN-
LEFT REAR

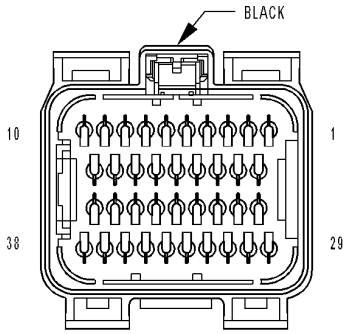

MODULE-
POWERTRAIN
CONTROL C1

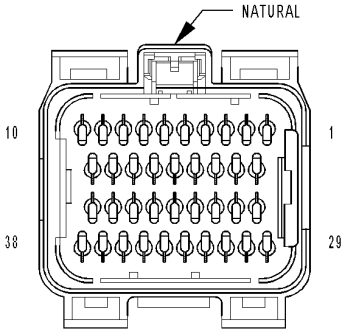

MODULE-
POWERTRAIN
CONTROL C3

8131a0c6

For a complete wiring diagram **Refer to Section 8W**.

- **When Monitored:**
  O2 Sensor Heater Temperature is greater than 496°C (925°F) and battery voltage greater than 10.99 volts.
- **Set Condition:**
  The Oxygen Sensor voltage is above 3.7 volts for 30 seconds. One Trip Fault. Three good trips to turn off the MIL.

Possible Causes
(K141) O2 1/2 SIGNAL CIRCUIT SHORTED TO BATTERY VOLTAGE
(K904) O2 DOWNSTREAM RETURN CIRCUIT SHORTED TO BATTERY VOLTAGE
(K141) O2 1/2 SENSOR SIGNAL CIRCUIT OPEN
(K904) O2 DOWNSTREAM RETURN CIRCUIT OPEN
O2 SENSOR
PCM

Always perform the Pre-Diagnostic Troubleshooting procedure before proceeding. (Refer to 9 - ENGINE - DIAGNOSIS AND TESTING).

Diagnostic Test

1. O2 SENSOR ABOVE 3.7 VOLTS

NOTE: When only one O2 Sensor is shorted to voltage, the scan tool will display all O2 Sensor voltage readings at approximately 5.0 volts. When diagnosing this DTC, only diagnose the O2 Sensor that set the DTC.

Start the engine.

Allow the engine to reach normal operating temperature.

With a scan tool, read the 1/2 O2 Sensor voltage.

Is the voltage above 3.7 volts?

Yes >> Go To 2

No >> Refer to the INTERMITTENT CONDITION Diagnostic Procedure.
Perform the POWERTRAIN VERIFICATION TEST. (Refer to 9 - ENGINE - STANDARD PROCEDURE)

2. (K141) O2 1/2 SIGNAL CIRCUIT SHORTED TO BATTERY VOLTAGE

Start the engine and allow the engine to idle.

Disconnect the 1/2 O2 Sensor harness connector.

Measure the voltage on the (K141) O2 Sensor 1/2 Signal circuit in the O2 Sensor harness connector.

NOTE: Measure the voltage in reference to ground, not the (K904) O2 Downstream Return circuit.

Is the voltage above 5.2 volts?

Yes >> Repair the short to battery voltage in the (K141) O2 Sensor 1/2 Signal circuit.
Perform the POWERTRAIN VERIFICATION TEST. (Refer to 9 - ENGINE - STANDARD PROCEDURE)

No >> Go To 3

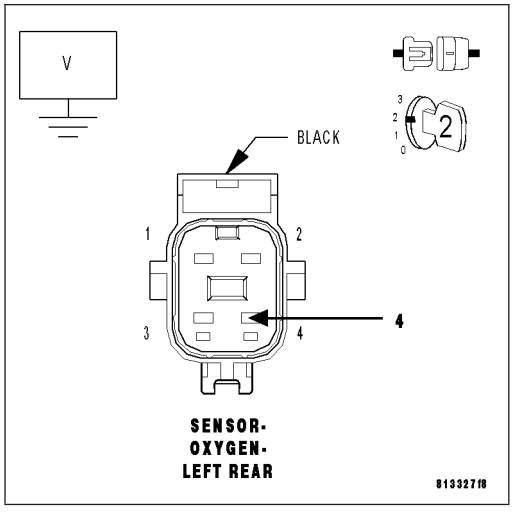

3. (K904) O2 DOWNSTREAM RETURN CIRCUIT SHORTED TO BATTERY VOLTAGE

Turn the ignition off.

Disconnect the PCM harness connectors.

Ignition on, engine not running.

Measure the voltage on the (K904) O2 Downstream Return circuit in the O2 Sensor harness connector.

Is there any voltage present?

Yes >> Repair the short to battery voltage in the (K904) O2 Downstream Return circuit.
Perform the POWERTRAIN VERIFICATION TEST. (Refer to 9 - ENGINE - STANDARD PROCEDURE)

No >> Go To 4

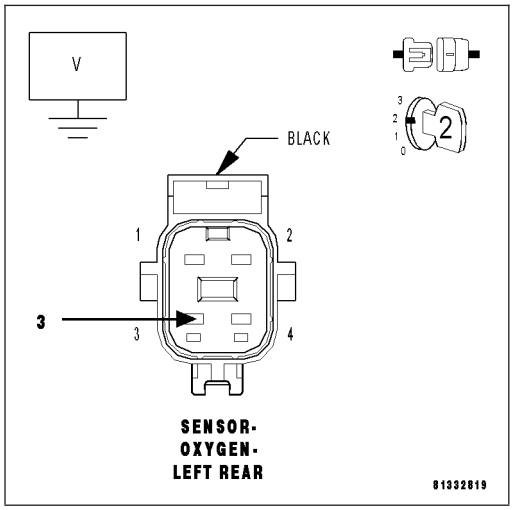

4. O2 SENSOR

Turn the ignition off.

Connect the PCM harness connectors.

Connect a jumper wire between the (K141) O2 1/2 Signal circuit and the (K904) O2 Downstream Return circuit in the 1/2 O2 Sensor harness connector.

Ignition on, engine not running.

With a scan tool, monitor the 1/2 O2 Sensor voltage.

Is the voltage between 2.3 and 2.7 volts with the jumper wire installed?

Yes >> Replace the O2 Sensor.
Perform the POWERTRAIN VERIFICATION TEST. (Refer to 9 - ENGINE - STANDARD PROCEDURE)

No >> Go To 5

NOTE: Remove the jumper wire before continuing.

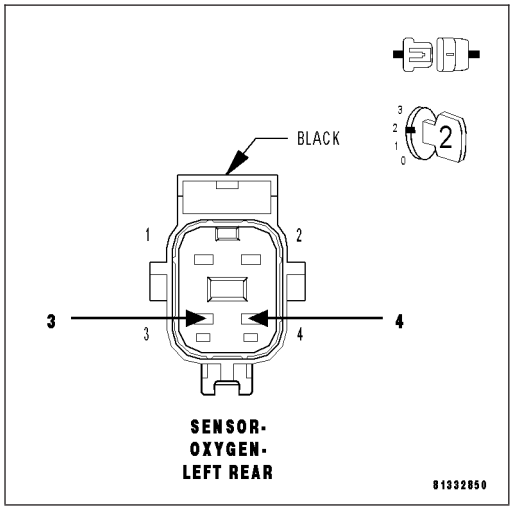

5. (K141) O2 1/2 SIGNAL CIRCUIT OPEN

Turn the ignition off.

CAUTION: Do not probe the PCM harness connectors. Probing the PCM harness connectors will damage the PCM terminals resulting in poor terminal to pin connection. Install Miller Special Tool #8815 to perform diagnosis.

Measure the resistance of the (K141) O2 1/2 Signal circuit from the O2 Sensor harness connector to the appropriate terminal of special tool #8815.

Is the resistance below 5.0 ohms?

Yes >> Go To 6

No >> Repair the open in the (K141) O2 1/2 Signal circuit.
Perform the POWERTRAIN VERIFICATION TEST. (Refer to 9 - ENGINE - STANDARD PROCEDURE)

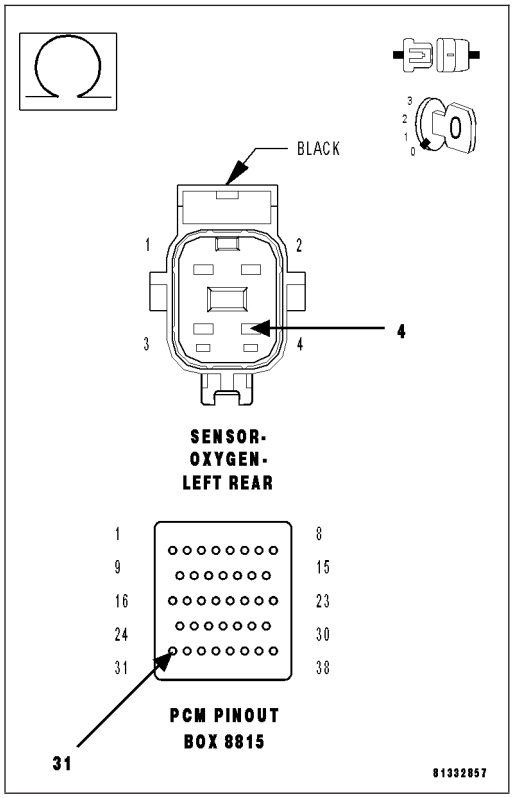

6. (K904) O2 DOWNSTREAM RETURN CIRCUIT OPEN

Measure the resistance of the (K904) O2 Downstream Return circuit from the O2 Sensor harness connector to the appropriate terminal of special tool #8815.

Is the resistance below 5.0 ohms?

Yes >> Go To 7

No >> Repair the open in the (K904) O2 Downstream Return circuit.
Perform the POWERTRAIN VERIFICATION TEST. (Refer to 9 - ENGINE - STANDARD PROCEDURE)

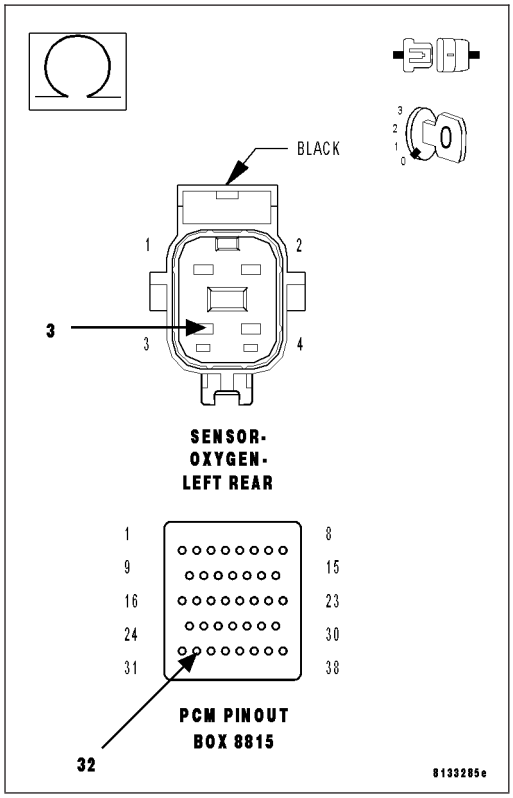

7. PCM

NOTE: Before continuing, check the PCM harness connector terminals for corrosion, damage, or terminal push out. Repair as necessary.
Using the schematics as a guide, inspect the wire harness and connectors. Pay particular attention to all Power and Ground circuits.

Were there any problems found?

Yes >> Repair as necessary.
Perform the POWERTRAIN VERIFICATION TEST. (Refer to 9 - ENGINE - STANDARD PROCEDURE)

No >> Replace and program the Powertrain Control Module per Service Information.
Perform the POWERTRAIN VERIFICATION TEST. (Refer to 9 - ENGINE - STANDARD PROCEDURE)

P0139-O2 SENSOR 1/2 SLOW RESPONSE

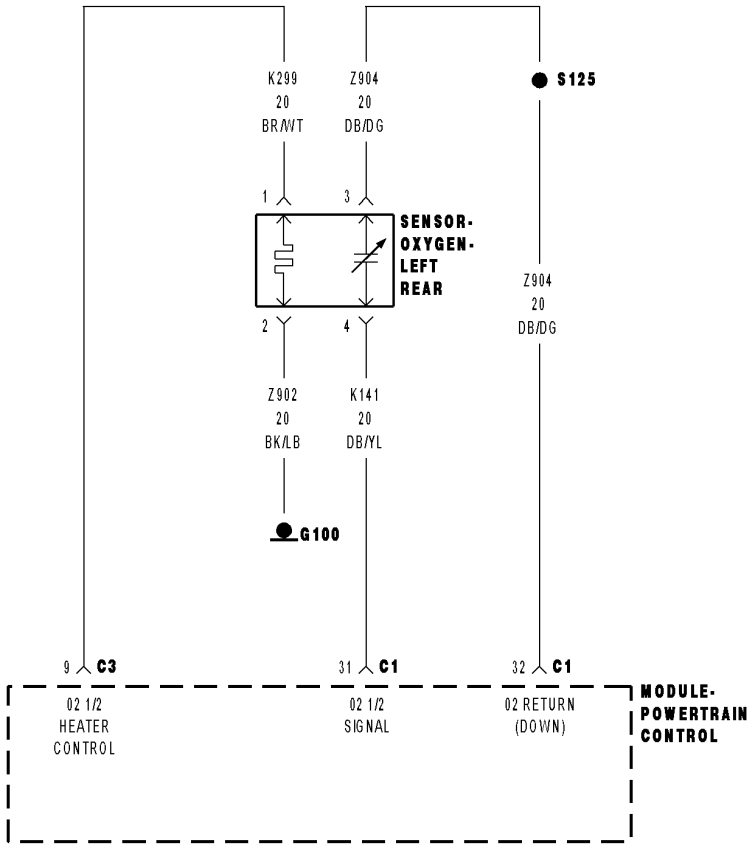

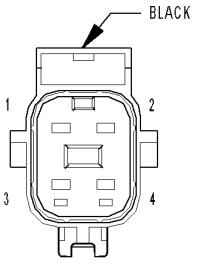

SENSOR-
OXYGEN-
LEFT REAR

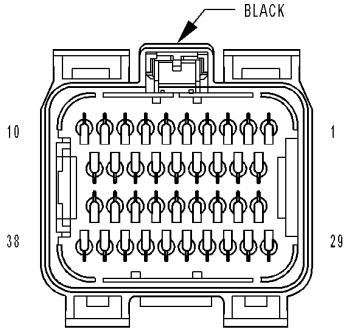

MODULE-
POWERTRAIN
CONTROL C1

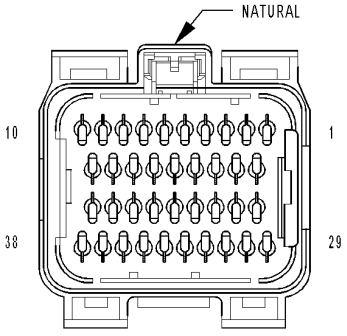

MODULE-
POWERTRAIN
CONTROL C3

8131a0c6

For a complete wiring diagram **Refer to Section 8W**.

- **When Monitored:**
  Vehicle is started and driven between 20 and 55 MPH with the Throttle open for a minimum of 120 seconds. Coolant greater than 70°C (158°F). Catalytic Converter Temp greater than 600°C (1112°F) and EVAP Purge is active.
- **Set Condition:**
  The oxygen sensor signal voltage switches less than 16 times from lean to rich within 20 seconds during monitoring. Two Trip Fault. Three good trips to turn off the MIL.

Possible Causes
EXHAUST LEAK
(K141) O2 1/2 SIGNAL CIRCUIT
(K904) O2 DOWNSTREAM RETURN CIRCUIT
O2 SENSOR

Always perform the Pre-Diagnostic Troubleshooting procedure before proceeding. (Refer to 9 - ENGINE - DIAGNOSIS AND TESTING).

Diagnostic Test

1. ACTIVE DTC

NOTE: Check for contaminants that may have damaged the O2 Sensor: contaminated fuel, unapproved silicone, oil and coolant.
Ignition on, engine not running.

NOTE: After the repairs have been made, verify proper O2 Sensor operation. If all the O2 Sensor voltage readings have not returned to normal, follow the diagnostic procedure for the remaining O2 Sensors.
With a scan tool, read DTCs.

Is the DTC active at this time?

Yes >> Go To 2

No >> Refer to the INTERMITTENT CONDITION Diagnostic Procedure.
Perform the POWERTRAIN VERIFICATION TEST. (Refer to 9 - ENGINE - STANDARD PROCEDURE)

2. EXHAUST LEAK

Start the engine.

Inspect the exhaust for leaks between the engine and the O2 Sensor.

Turn the ignition off.

If a leak is heard but unable to be located, it may be necessary to use special tool Miller Tool #8404A Evaporative Emissions Leak Detector (EELD) on the exhaust system to find leaks.

Connect the SMOKE supply tip (black hose) to the exhaust cone adapter (if equipped) and place it into the tail pipe.

Set the smoke/air control switch to SMOKE.

Press the remote smoke/air start button.

While still holding the remote smoke/air start button, use the white light (#8404-CLL) to follow the EVAP system path, and look for the source of the leak indicated by exiting smoke.

If a leak is concealed from view, release the remote smoke/air start button, and use the ultraviolet (UV) black light #8404-UVL and the yellow goggles 8404-20 to look for residual traces of dye that is left behind by the smoke.

The exiting smoke deposits a residual fluid that is either bright green or bright yellow in color when viewed with a UV light.

Be sure to check the exhaust manifold to cylinder head connection for leaks.

Are there any exhaust leaks?

Yes >> Repair or replace the leaking exhaust parts as necessary.
Perform the POWERTRAIN VERIFICATION TEST. (Refer to 9 - ENGINE - STANDARD PROCEDURE)

No >> Go To 3

3. (K141) O2 1/2 SIGNAL CIRCUIT HIGH RESISTANCE

Turn the ignition off.

Disconnect the C1 PCM harness connector.

CAUTION: CAUTION: Do not probe the PCM harness connectors. Probing the PCM harness connectors will damage the PCM terminals resulting in poor terminal to pin connection. Install Miller Special Tool #8815 along with the #8815-1 to perform the diagnosis.

Using a voltmeter perform a voltage drop test. Backprobe the (K141) O2 1/2 Signal circuit at the O2 Sensor harness connector to the appropriate terminal of the special tool #8815. Ensure the voltmeter leads are connected with the circuit's correct polarity.

WARNING: When the engine is operating, do not stand in direct line with the fan. Do not put your hands near the pulleys, belts, or fan. Do not wear loose clothing. Failure to follow these instructions can result in personal injury or death.

Start the engine and allow it to reach normal operating temperature.

Monitor the voltmeter.

Is the voltage below 0.5 volts?

Yes >> Go To 4

No >> Repair the high resistance in the (K141) O2 1/2 Signal circuit.
Perform the POWERTRAIN VERIFICATION TEST. (Refer to 9 - ENGINE - STANDARD PROCEDURE)

4. (K904) O2 RETURN CIRCUIT HIGH RESISTANCE

Turn the ignition off.

Using a voltmeter perform a voltage drop test. Backprobe the (K904) O2 Return circuit at the O2 Sensor harness connector to the appropriate terminal of the special tool #8815. Ensure the voltmeter leads are connected with the circuit's correct polarity.

WARNING: When the engine is operating, do not stand in direct line with the fan. Do not put your hands near the pulleys, belts, or fan. Do not wear loose clothing. Failure to follow these instructions can result in personal injury or death.

Start the engine and allow it to reach normal operating temperature.

Monitor the voltmeter.

Is the voltage below 0.5 volts?

Yes >> Go To 5

No >> Repair the open in the (K904) O2 Return circuit.
Perform the POWERTRAIN VERIFICATION TEST. (Refer to 9 - ENGINE - STANDARD PROCEDURE)

5. O2 SENSOR

If there are no possible causes remaining, view repair.

Repair

Replace the O2 Sensor

Perform the POWERTRAIN VERIFICATION TEST. (Refer to 9 - ENGINE - STANDARD PROCEDURE)

P0141-O2 SENSOR 1/2 HEATER PERFORMANCE

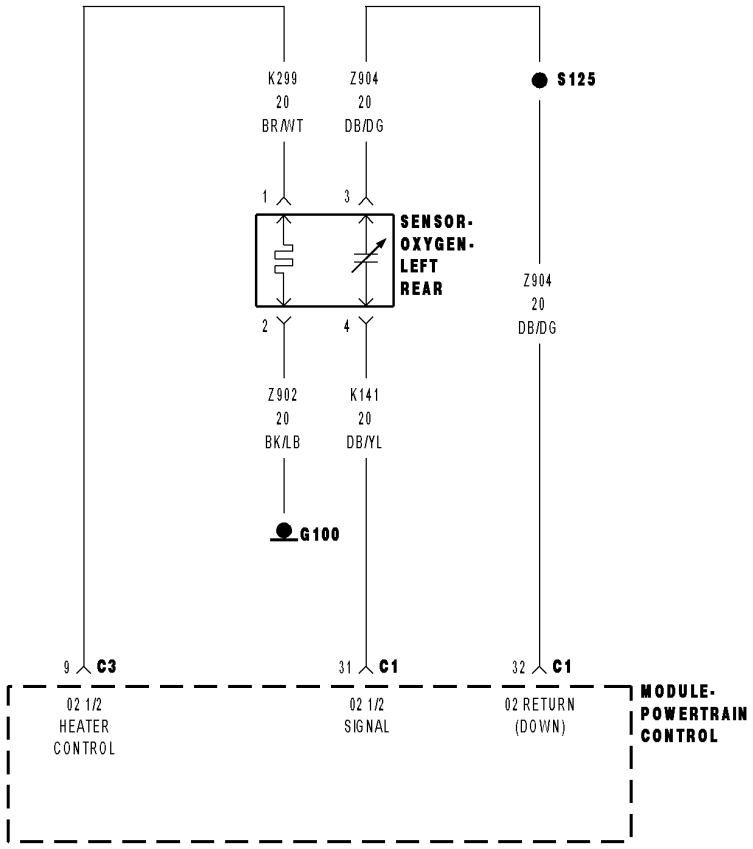

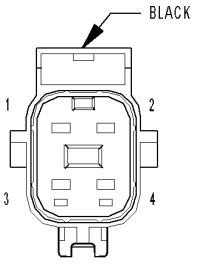

SENSOR-
OXYGEN-
LEFT REAR

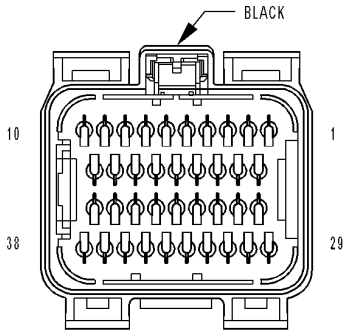

MODULE-
POWERTRAIN
CONTROL C1

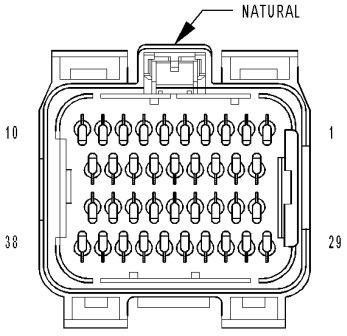

MODULE-
POWERTRAIN
CONTROL C3

8131a0c6

For a complete wiring diagram **Refer to Section 8W**.

- **When Monitored:**
  Engine running and heater duty cycle greater than 0%. Battery voltage greater than 11.0 volts.
- **Set Condition:**
  No sensor output is received when the PCM powers up the sensor heater. Two trip fault. Three good trips to turn off the MIL.

Possible Causes
(K299) O2 1/2 HEATER CONTROL CIRCUIT
(Z902) O2 HEATER GROUND CIRCUIT
O2 SENSOR HEATER ELEMENT
PCM

Always perform the Pre-Diagnostic Troubleshooting procedure before proceeding. (Refer to 9 - ENGINE - DIAGNOSIS AND TESTING).

Diagnostic Test

1. O2 SENSOR HEATER OPERATION

Turn the ignition off.

NOTE: Wait a minimum of 8 minutes to allow the O2 Sensor to cool down before continuing the test. Allow the O2 Sensor voltage to stabilize between 4.6 and 5.0 volts.
Ignition on, engine not running.
With a scan tool, actuate the O2 Heater Test.
With the scan tool, monitor 1/2 O2 Sensor voltage for at least 2 minutes.

Does the voltage stay above 4.5 volts?

Yes >> Go To 2

No >> Refer to the INTERMITTENT CONDITION Diagnostic Procedure.
Perform the POWERTRAIN VERIFICATION TEST. (Refer to 9 - ENGINE - STANDARD PROCEDURE)

2. O2 SENSOR HEATER ELEMENT

Turn the ignition off.

NOTE: Allow the O2 sensor to cool down to room temperature.
Disconnect the O2 Sensor harness connector.
Measure the resistance of the O2 Heater Element across the O2 Sensor connector between the O2 Heater Control terminal and the Heater ground terminal.

NOTE: O2 Heater Element resistance values should be measured at 70°F (21.1°C). The resistance value will vary with different temperature values.

Is the resistance of the O2 Sensor Heater Element between 2.0 and 30.0 ohms?

Yes >> Go To 3

No >> Replace the O2 Sensor.
Perform the POWERTRAIN VERIFICATION TEST. (Refer to 9 - ENGINE - STANDARD PROCEDURE)

3. (K299) O2 1/2 HEATER CONTROL CIRCUIT HIGH RESISTANCE

Disconnect the O2 harness connectors.

With the scan tool, actuate the O2 Heater.

Using a 12-volt test light connected ground, probe the (K299) O2 2/2 Heater Control circuit from the O2 harness connector.

NOTE: The test light should be illuminated and bright. Compare the brightness to that of a direct connection to the battery.

Does the test light illuminate brightly?

Yes >> Go To 4

No >> Repair the excessive resistance in the (K299) O2 1/2 Heater Control circuit.
Perform the POWERTRAIN VERIFICATION TEST. (Refer to 9 - ENGINE - STANDARD PROCEDURE)

4. (Z902) O2 1/2 HEATER GROUND CIRCUITHIGH HIGH RESISTANCE

Using a 12-volt test light connected battery voltage, probe the (Z902) O2 Heater ground circuit in the O2 Sensor harness connector.

NOTE: The test light should be illuminated and bright. Compare the brightness to that of a direct connection to the battery.

Does the test light illuminate brightly?

Yes >> Go To 5

No >> Repair the excessive resistance in the (Z902) O2 1/2 Heater ground circuit.
Perform the POWERTRAIN VERIFICATION TEST. (Refer to 9 - ENGINE - STANDARD PROCEDURE)

5. PCM

NOTE: Before continuing, check the PCM harness connector terminals for corrosion, damage, or terminal push out. Repair as necessary.
Using the schematics as a guide, inspect the wire harness and connectors. Pay particular attention to all Power and Ground circuits.

Were there any problems found?

Yes >> Repair as necessary.
Perform the POWERTRAIN VERIFICATION TEST. (Refer to 9 - ENGINE - STANDARD PROCEDURE)

No >> Replace and program the Powertrain Control Module per Service Information.
Perform the POWERTRAIN VERIFICATION TEST. (Refer to 9 - ENGINE - STANDARD PROCEDURE)

P0151-O2 SENSOR 2/1 CIRCUIT LOW

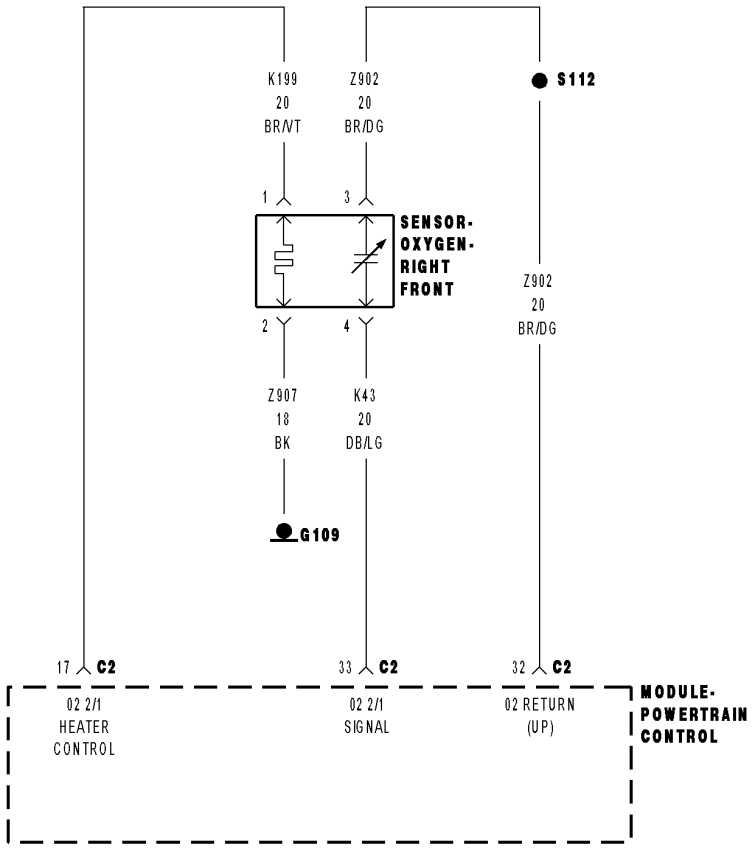

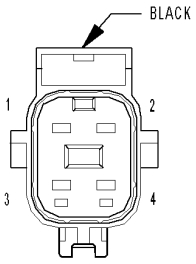

SENSOR-
OXYGEN-
RIGHT FRONT

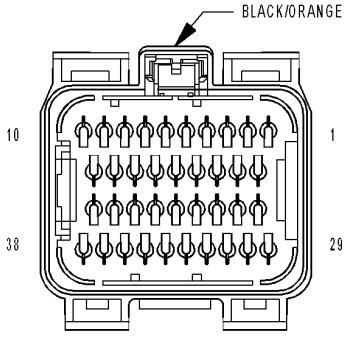

MODULE-
POWERTRAIN
CONTROL C2

8131a0de

For a complete wiring diagram **Refer to Section 8W**.

- **When Monitored:**
  Engine running for less than 30 seconds and the O2 Sensor Heater Temperature is less than 251°C (484°F) with battery voltage greater 10.99 volts.
- **Set Condition:**
  The oxygen sensor signal voltage is below 1.5 volts for 3 seconds after starting engine. One Trip Fault. Three good trips to turn off the MIL.

Possible Causes
(K902) O2 UPSTREAM RETURN CIRCUIT SHORTED TO GROUND
(K43) O2 2/1 SIGNAL CIRCUIT SHORTED TO GROUND
(K43) O2 2/1 SIGNAL CIRCUIT SHORTED TO (K902) O2 UPSTREAM RETURN CIRCUIT
(K43) O2 2/1 SIGNAL SHORTED TO THE (Z904) HEATER GROUND CIRCUIT
O2 SENSOR
PCM

Always perform the Pre-Diagnostic Troubleshooting procedure before proceeding. (Refer to 9 - ENGINE - DIAGNOSIS AND TESTING).

Diagnostic Test

1. O2 SENSOR BELOW 1.5 VOLTS

Start the engine.
Allow the engine to reach normal operating temperature.
With a scan tool, read the 2/1 O2 Sensor voltage.

Is the voltage below 1.5 volts?

Yes >> Go To 2

No >> Refer to the INTERMITTENT CONDITION Diagnostic Procedure.
Perform the POWERTRAIN VERIFICATION TEST. (Refer to 9 - ENGINE - STANDARD PROCEDURE)

2. (K43) O2 2/1 SIGNAL CIRCUIT

Turn the ignition off.
Disconnect the 2/1 O2 Sensor harness connector.
Ignition on, engine not running.
With a scan tool, monitor the 2/1 O2 Sensor voltage.

Is the O2 Sensor voltage above 4.8 volts?

Yes >> Go To 3

No >> Go To 5

3. O2 SENSOR

Measure the voltage on the (K902) O2 Upstream Return circuit in the O2 Sensor harness connector.

Is the voltage at 2.5 volts?

Yes >> Replace the 2/1 O2 Sensor.
Perform the POWERTRAIN VERIFICATION TEST. (Refer to 9 - ENGINE - STANDARD PROCEDURE)

No >> Go To 4

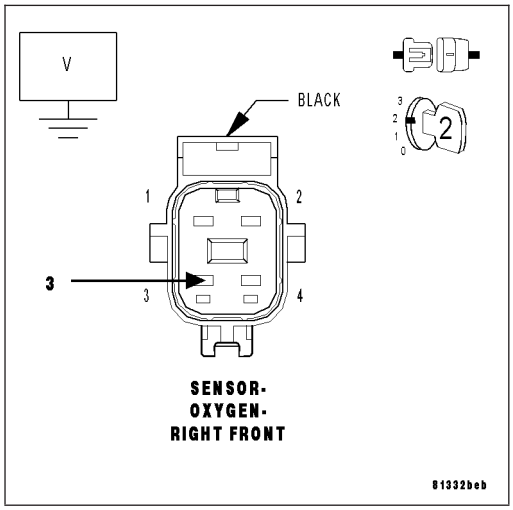

4. (K902) O2 UPSTREAM RETURN CIRCUIT SHORTED TO GROUND

Turn the ignition off.

Disconnect the PCM harness connectors.

Measure the resistance between ground and the (K902) O2 Upstream Return circuit in the O2 Sensor harness connector.

Is the resistance below 100 ohms?

Yes >> Repair the short to ground in the (K902) O2 Upstream Return circuit.
Perform the POWERTRAIN VERIFICATION TEST. (Refer to 9 - ENGINE - STANDARD PROCEDURE)

No >> Go To 8

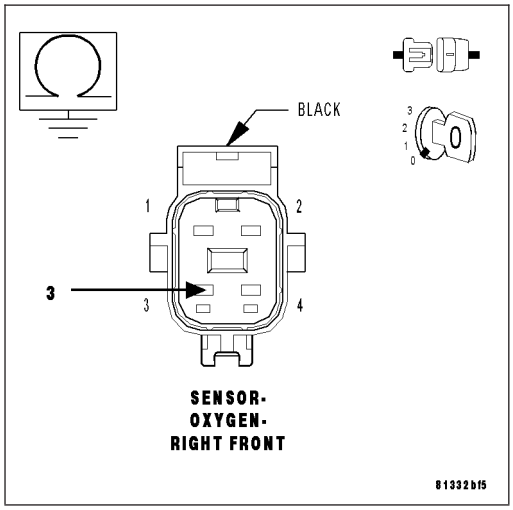

5. (K43) O2 2/1 SIGNAL CIRCUIT SHORTED TO GROUND

Turn the ignition off.

Disconnect the PCM harness connectors.

Measure the resistance between ground and the (K43) O2 2/1 Signal circuit in the O2 Sensor harness connector.

Is the resistance below 100 ohms?

Yes >> Repair the short to ground in the (K43) O2 2/1 Signal circuit.
Perform the POWERTRAIN VERIFICATION TEST. (Refer to 9 - ENGINE - STANDARD PROCEDURE)

No >> Go To 6

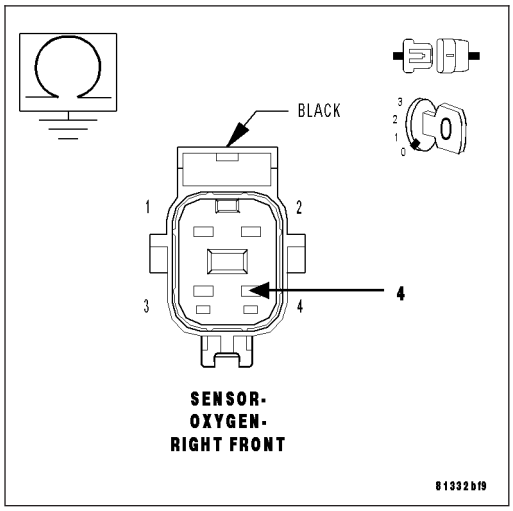

6. (K43) O2 2/1 SIGNAL CIRCUIT SHORTED TO (K902) O2 UPSTREAM RETURN CIRCUIT

Measure the resistance between the (K43) O2 2/1 Signal circuit and the (K902) O2 Upstream Return circuit in the O2 Sensor harness connector.

Is the resistance below 100 ohms?

Yes >> Repair the short between the (K902) O2 Upstream Return circuit and the (K43) O2 2/1 Signal circuit.
Perform the POWERTRAIN VERIFICATION TEST. (Refer to 9 - ENGINE - STANDARD PROCEDURE)

No >> Go To 7

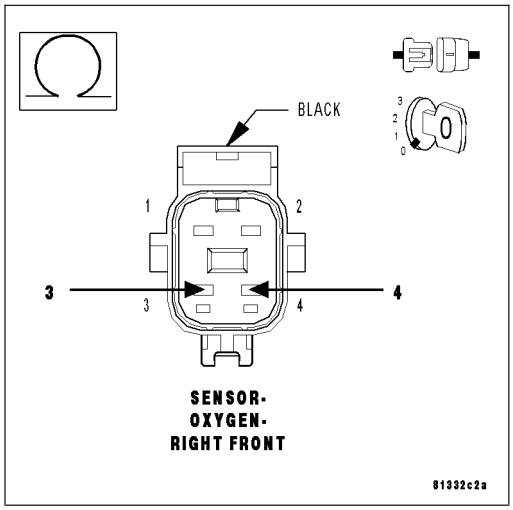

7. (K43) O2 2/1 SIGNAL CIRCUIT SHORTED TO (Z904) HEATER GROUND CIRCUIT

Measure the resistance between the (K43) O2 2/1 Signal circuit and the (Z904) O2 Heater ground circuit in the O2 Sensor harness connector.

Is the resistance below 100 ohms?

Yes >> Repair the short between the (Z904) O2 Heater ground circuit and the (K43) O2 2/1 Signal circuit.
Perform the POWERTRAIN VERIFICATION TEST. (Refer to 9 - ENGINE - STANDARD PROCEDURE)

No >> Go To 8

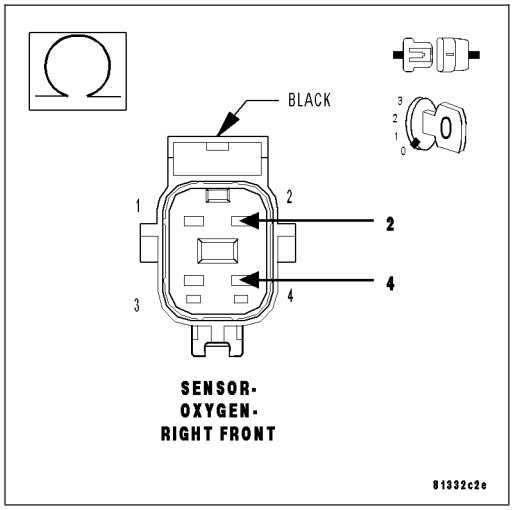

8. PCM

NOTE: Before continuing, check the PCM harness connector terminals for corrosion, damage, or terminal push out. Repair as necessary.
Using the schematics as a guide, inspect the wire harness and connectors. Pay particular attention to all Power and Ground circuits.

Were there any problems found?

Yes >> Repair as necessary.
Perform the POWERTRAIN VERIFICATION TEST. (Refer to 9 - ENGINE - STANDARD PROCEDURE)

No >> Replace and program the Powertrain Control Module per Service Information.
Perform the POWERTRAIN VERIFICATION TEST. (Refer to 9 - ENGINE - STANDARD PROCEDURE)

P0152-O2 SENSOR 2/1 CIRCUIT HIGH

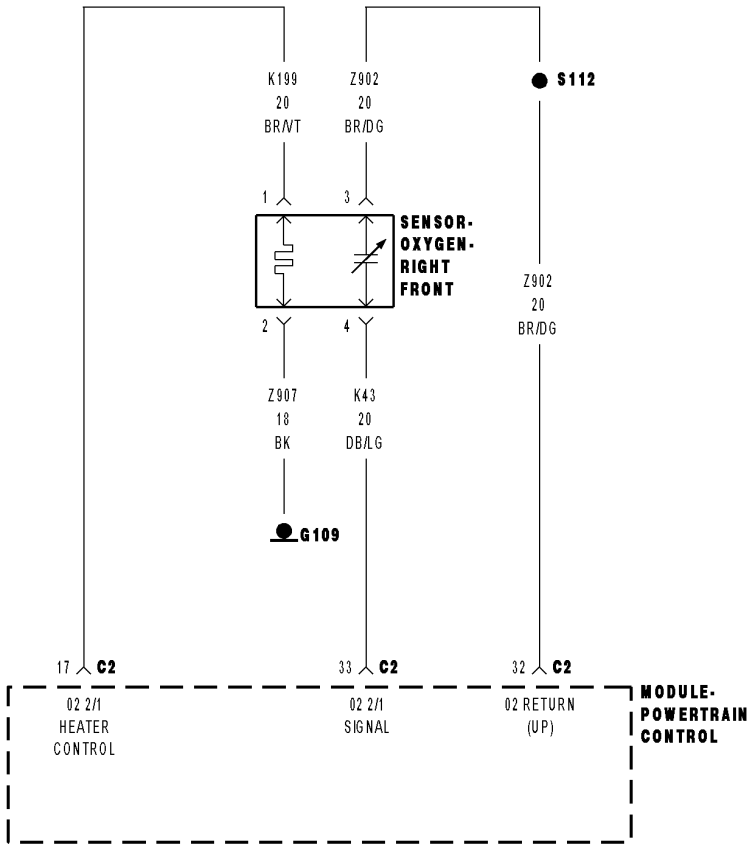

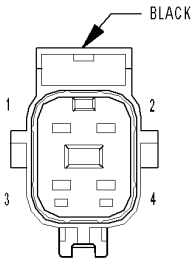

SENSOR-
OXYGEN-
RIGHT FRONT

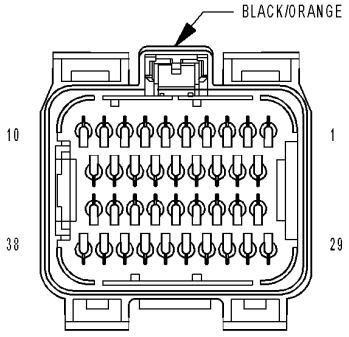

MODULE-
POWERTRAIN
CONTROL C2

8131a0de

For a complete wiring diagram **Refer to Section 8W**.

- **When Monitored:**
  O2 Sensor Heater Temperature is greater than 496°C (925°F) and battery voltage greater than 10.99 volts.
- **Set Condition:**
  The Oxygen Sensor voltage is above 3.7 volts for 30 seconds. One Trip Fault. Three good trips to turn off the MIL.

Possible Causes
(K43) O2 2/1 SIGNAL CIRCUIT SHORTED TO BATTERY VOLTAGE
(K902) O2 UPSTREAM RETURN CIRCUIT SHORTED TO BATTERY VOLTAGE
(K43) O2 2/1 SIGNAL CIRCUIT OPEN
(K902) O2 UPSTREAM RETURN CIRCUIT OPEN
O2 SENSOR
PCM

Always perform the Pre-Diagnostic Troubleshooting procedure before proceeding. (Refer to 9 - ENGINE - DIAGNOSIS AND TESTING).

Diagnostic Test

1. O2 SENSOR ABOVE 3.7 VOLTS

NOTE: When only one O2 Sensor is shorted to voltage, the scan tool will display all O2 Sensor voltage readings at approximately 5.0 volts. When diagnosing this DTC, only diagnose the O2 Sensor that set the DTC.

Start the engine.

Allow the engine to reach normal operating temperature.

With a scan tool, read the 2/1 O2 Sensor voltage.

Is the voltage above 3.7 volts?

Yes >> Go To 2

No >> Refer to the INTERMITTENT CONDITION Diagnostic Procedure.
Perform the POWERTRAIN VERIFICATION TEST. (Refer to 9 - ENGINE - STANDARD PROCEDURE)

2. (K43) O2 2/1 SIGNAL CIRCUIT SHORTED TO BATTERY VOLTAGE

Start the engine and allow the engine to idle.

Disconnect the 2/1 O2 Sensor harness connector.

Measure the voltage on the (K43) O2 Sensor 2/1 Signal circuit in the 2/1 O2 Sensor harness connector.

NOTE: Measure the voltage in reference to ground, not the (K902) O2 Upstream Return circuit.

Is the voltage above 5.2 volts?

Yes >> Repair the short to battery voltage in the (K43) O2 Sensor 2/1 Signal circuit.
Perform the POWERTRAIN VERIFICATION TEST. (Refer to 9 - ENGINE - STANDARD PROCEDURE)

No >> Go To 3

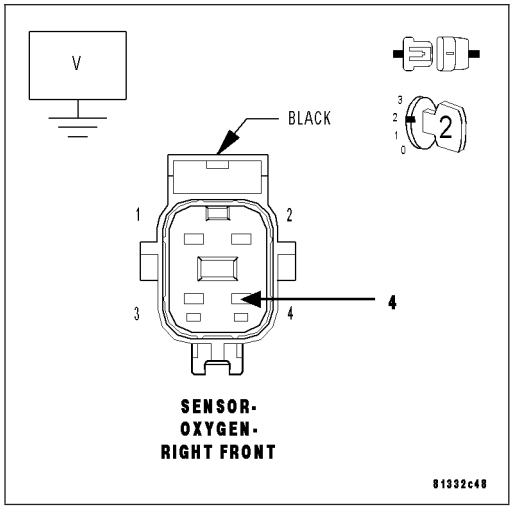

3. (K902) O2 UPSTREAM RETURN CIRCUIT SHORTED TO BATTERY VOLTAGE

Turn the ignition off.

Disconnect the PCM harness connectors.

Ignition on, engine not running.

Measure the voltage on the (K902) O2 Upstream Return circuit in the 2/1 O2 Sensor harness connector.

Is there any voltage present?

Yes >> Repair the short to battery voltage in the (K902) O2 Upstream Return circuit.
Perform the POWERTRAIN VERIFICATION TEST. (Refer to 9 - ENGINE - STANDARD PROCEDURE)

No >> Go To 4

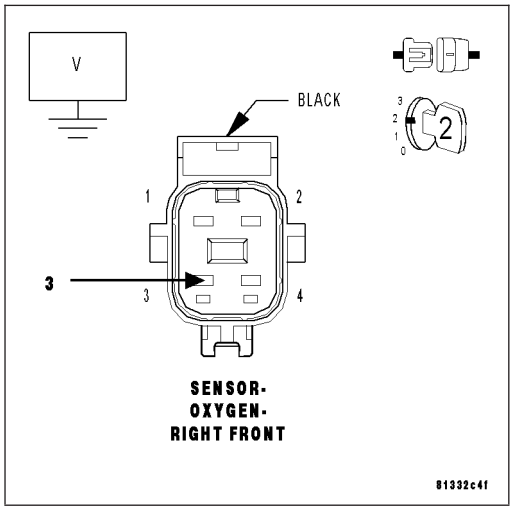

4. O2 SENSOR

Turn the ignition off.

Connect the PCM harness connectors.

Connect a jumper wire between the (K43) O2 2/1 Signal circuit and the (K902) O2 Upstream Return circuit in the O2 Sensor harness connector.

Ignition on, engine not running.

With a scan tool, monitor the 2/1 O2 Sensor voltage.

Is the voltage between 2.3 and 2.7 volts with the jumper wire in place?

Yes >> Replace the O2 Sensor.
Perform the POWERTRAIN VERIFICATION TEST. (Refer to 9 - ENGINE - STANDARD PROCEDURE)

No >> Go To 5

NOTE: Remove the jumper wire before continuing.

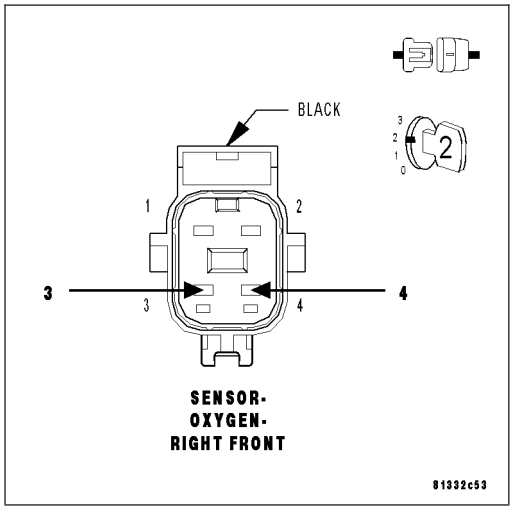

5. (K43) O2 2/1 SIGNAL CIRCUIT OPEN

Turn the ignition off.

Disconnect the PCM harness connector.

CAUTION: Do not probe the PCM harness connectors. Probing the PCM harness connectors will damage the PCM terminals resulting in poor terminal to pin connection. Install Miller Special Tool #8815 to perform diagnosis.

Measure the resistance of the (K43) O2 2/1 Signal circuit from the 2/1 O2 Sensor harness connector to the appropriate terminal of special tool #8815.

Is the resistance below 5.0 ohms?

Yes >> Go To 6

No >> Repair the open in the (K43) O2 2/1 Signal circuit. Perform the POWERTRAIN VERIFICATION TEST. (Refer to 9 - ENGINE - STANDARD PROCEDURE)

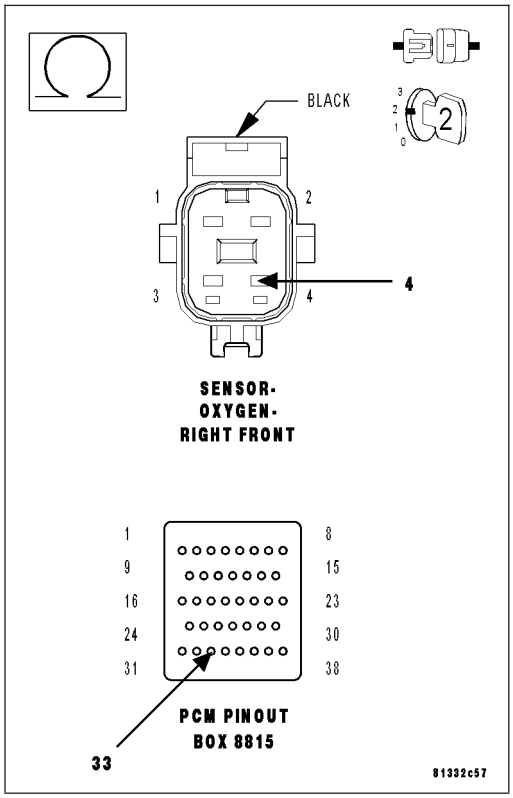

6. (K902) O2 UPSTREAM RETURN CIRCUIT OPEN

Measure the resistance of the (K902) O2 Upstream Return circuit from the O2 Sensor harness connector to the appropriate terminal of special tool #8815.

Is the resistance below 5.0 ohms?

Yes >> Go To 7

No >> Repair the open in the (K902) O2 Upstream Return circuit. Perform the POWERTRAIN VERIFICATION TEST. (Refer to 9 - ENGINE - STANDARD PROCEDURE)

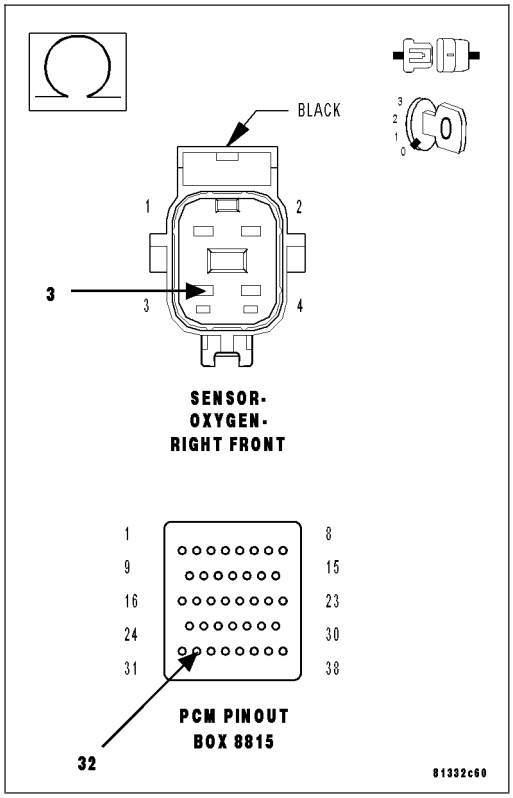

7. PCM

NOTE: Before continuing, check the PCM harness connector terminals for corrosion, damage, or terminal push out. Repair as necessary.
Using the schematics as a guide, inspect the wire harness and connectors. Pay particular attention to all Power and Ground circuits.

Were there any problems found?

Yes >> Repair as necessary.
Perform the POWERTRAIN VERIFICATION TEST. (Refer to 9 - ENGINE - STANDARD PROCEDURE)

No >> Replace and program the Powertrain Control Module per Service Information.
Perform the POWERTRAIN VERIFICATION TEST. (Refer to 9 - ENGINE - STANDARD PROCEDURE)

P0153-O2 SENSOR 2/1 SLOW RESPONSE

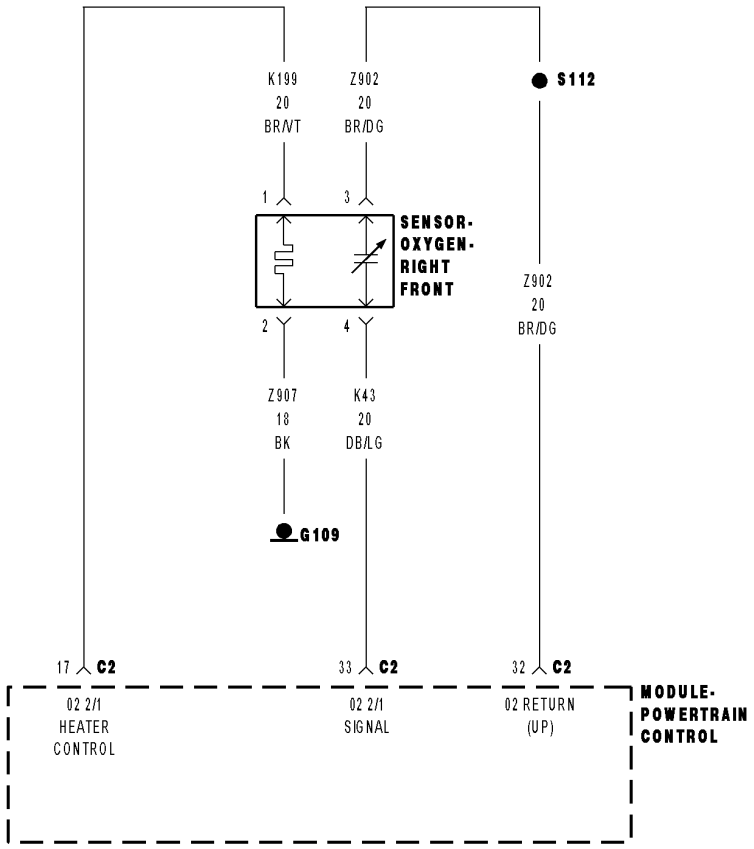

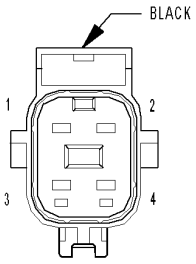

SENSOR-
OXYGEN-
RIGHT FRONT

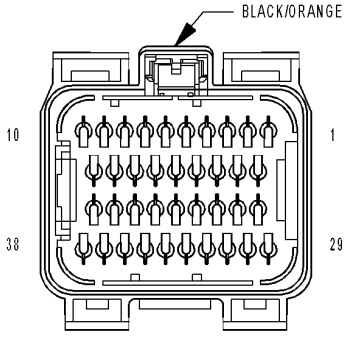

MODULE-
POWERTRAIN
CONTROL C2

8131a0de

For a complete wiring diagram **Refer to Section 8W**.

Theory of Operation

For an aged O2 sensor , the response rate to the air/fuel change is slower than when it was new. The O2 sensor tends to move less with the same air/fuel changes in a given time frame. Therefore by observing the activity of voltage readings from the upstream O2 sensor, the quality of the O2 sensor can be detected.

- **When Monitored:**
  Vehicle is started and driven between 20 and 55 MPH with the Throttle open for a minimum of 120 seconds. Coolant greater than 70°C (158°F). Catalytic Converter Temp greater than 600°C, (1112°F) and EVAP Purge is active.
- **Set Condition:**
  O2 Sensor response is too slow for a calibrated amount of time. Two Trip Fault. Three good trips to turn off the MIL.

Possible Causes
EXHAUST LEAK
(K43) O2 2/1 SIGNAL CIRCUIT
(K902) O2 UPSTREAM RETURN CIRCUIT
O2 SENSOR

Always perform the Pre-Diagnostic Troubleshooting procedure before proceeding. (Refer to 9 - ENGINE - DIAGNOSIS AND TESTING).

Diagnostic Test

1. ACTIVE DTC

NOTE: Check for contaminants that may have damaged the O2 Sensor: contaminated fuel, unapproved silicone, oil and coolant.
Ignition on, engine not running.

NOTE: After the repairs have been made, verify proper O2 Sensor operation. If all the O2 Sensor voltage readings have not returned to normal, follow the diagnostic procedure for the remaining O2 Sensors.
With a scan tool, read DTCs and record the related Freeze Frame data.

Is the DTC active at this time?

Yes >> Go To 2

No >> Refer to the INTERMITTENT CONDITION Diagnostic Procedure.
Perform the POWERTRAIN VERIFICATION TEST. (Refer to 9 - ENGINE - STANDARD PROCEDURE)

2. EXHAUST LEAK

Start the engine.

Inspect the exhaust for leaks between the engine and the O2 Sensor.

Turn the ignition off.

If a leak is heard but unable to be located, it may be necessary to use special tool Miller Tool #8404A Evaporative Emissions Leak Detector (EELD) on the exhaust system to find leaks.

Connect the SMOKE supply tip (black hose) to the exhaust cone adapter (if equipped) and place it into the tail pipe.

Set the smoke/air control switch to SMOKE.

Press the remote smoke/air start button.

While still holding the remote smoke/air start button, use the white light (#8404-CLL) to follow the EVAP system path, and look for the source of the leak indicated by exiting smoke.

If a leak is concealed from view, release the remote smoke/air start button, and use the ultraviolet (UV) black light #8404-UVL and the yellow goggles 8404-20 to look for residual traces of dye that is left behind by the smoke.

The exiting smoke deposits a residual fluid that is either bright green or bright yellow in color when viewed with a UV light.

Be sure to check the exhaust manifold to cylinder head connection for leaks.

Are there any exhaust leaks?

Yes >> Repair or replace the leaking exhaust parts as necessary.
Perform the POWERTRAIN VERIFICATION TEST. (Refer to 9 - ENGINE - STANDARD PROCEDURE)

No >> Go To 3

3. (K43) O2 2/1 SIGNAL CIRCUIT HIGH RESISTANCE

Turn the ignition off.

Disconnect the C2 PCM harness connector.

CAUTION: CAUTION: Do not probe the PCM harness connectors. Probing the PCM harness connectors will damage the PCM terminals resulting in poor terminal to pin connection. Install Miller Special Tool #8815 along with the #8815-1 to perform the diagnosis.

Using a voltmeter perform a voltage drop test. Backprobe the (K43) O2 2/1 Signal circuit at the O2 Sensor harness connector to the appropriate terminal of the special tool #8815. Ensure the voltmeter leads are connected with the circuit's correct polarity.

WARNING: When the engine is operating, do not stand in direct line with the fan. Do not put your hands near the pulleys, belts, or fan. Do not wear loose clothing. Failure to follow these instructions can result in personal injury or death.

Start the engine and allow it to reach normal operating temperature.

Monitor the voltmeter.

Is the voltage below 0.5 volts?

Yes >> Go To 4

No >> Repair the high resistance in the (K43) O2 2/1 Signal circuit.
Perform the POWERTRAIN VERIFICATION TEST. (Refer to 9 - ENGINE - STANDARD PROCEDURE)

4. (K902) O2 RETURN CIRCUIT HIGH RESISTANCE

Turn the ignition off.

Using a voltmeter perform a voltage drop test. Backprobe the (K902) O2 Return circuit at the O2 Sensor harness connector to the appropriate terminal of the special tool #8815. Ensure the voltmeter leads are connected with the circuit's correct polarity.

WARNING: When the engine is operating, do not stand in direct line with the fan. Do not put your hands near the pulleys, belts, or fan. Do not wear loose clothing. Failure to follow these instructions can result in personal injury or death.

Start the engine and allow it to reach normal operating temperature.

Monitor the voltmeter.

Is the voltage below 0.5 volts?

Yes >> Go To 5

No >> Repair the open in the (K902) O2 Return circuit.
Perform the POWERTRAIN VERIFICATION TEST. (Refer to 9 - ENGINE - STANDARD PROCEDURE)

5. O2 SENSOR

If there are no possible causes remaining, view repair.

Repair

Replace the O2 Sensor.
Perform the POWERTRAIN VERIFICATION TEST. (Refer to 9 - ENGINE - STANDARD PROCEDURE)

P0155-O2 SENSOR 2/1 HEATER PERFORMANCE

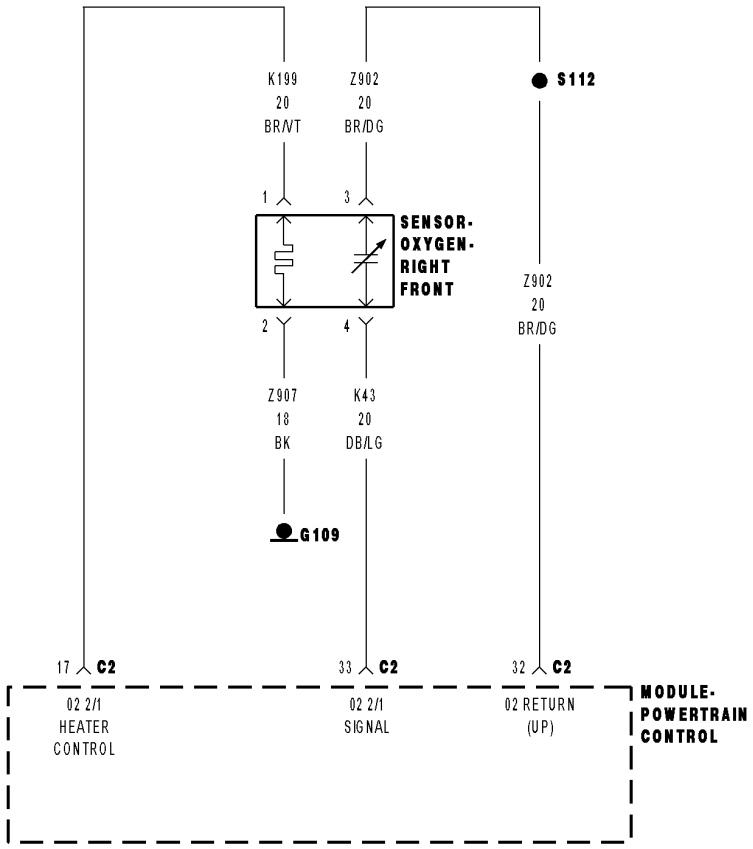

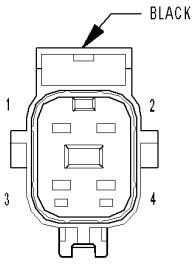

SENSOR-
OXYGEN-
RIGHT FRONT

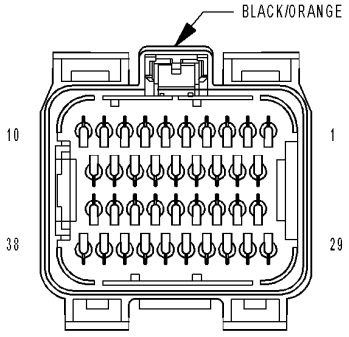

MODULE-
POWERTRAIN
CONTROL C2

8131a0de

For a complete wiring diagram **Refer to Section 8W**.

- **When Monitored:**
  Engine running and heater duty cycle greater than 0%. Battery voltage greater than 11.0 volts.
- **Set Condition:**
  No sensor output is received when the PCM powers up the sensor heater. Two trip fault. Three good trips to turn off the MIL.

Possible Causes
(K199) O2 2/1 HEATER CONTROL CIRCUIT
(Z904) O2 HEATER GROUND CIRCUIT
O2 SENSOR HEATER ELEMENT
PCM

Always perform the Pre-Diagnostic Troubleshooting procedure before proceeding. (Refer to 9 - ENGINE - DIAGNOSIS AND TESTING).

Diagnostic Test

1. O2 SENSOR HEATER OPERATION

Turn the ignition off.

NOTE: Wait a minimum of 8 minutes to allow the O2 Sensor to cool down before continuing the test. Allow the O2 Sensor voltage to stabilize between 4.6 and 5.0 volts.
Ignition on, engine not running.
With a scan tool, actuate the O2 Heater Test.
With the scan tool, monitor 2/1 O2 Sensor voltage for at least 2 minutes.

Does the voltage stay above 4.5 volts?

Yes >> Go To 2

No >> Refer to the INTERMITTENT CONDITION Diagnostic Procedure.
Perform the POWERTRAIN VERIFICATION TEST. (Refer to 9 - ENGINE - STANDARD PROCEDURE)

2. O2 SENSOR HEATER ELEMENT

Turn the ignition off.

NOTE: Allow the O2 sensor to cool down to room temperature.
Disconnect the 2/1 O2 Sensor harness connector.
Measure the resistance of the O2 Heater Element across the O2 Sensor connector between the O2 Heater Control terminal and the O2 Heater ground terminal.

NOTE: O2 Heater Element resistance values should be measured at 70°F (21.1°C). The resistance value will vary with different temperature values.

Is the resistance of the O2 Sensor Heater Element between 2.0 and 30.0 ohms?

Yes >> Go To 3

No >> Replace the O2 Sensor.
Perform the POWERTRAIN VERIFICATION TEST. (Refer to 9 - ENGINE - STANDARD PROCEDURE)

3. (K199) O2 2/1 HEATER CONTROL CIRCUIT HIGH RESISTANCE

Disconnect the O2 harness connectors.

With the scan tool, actuate the O2 Heater.

Using a 12-volt test light connected ground, probe the (K199) O2 2/1 Heater Control circuit from the O2 harness connector.

NOTE: The test light should be illuminated and bright. Compare the brightness to that of a direct connection to the battery.

Does the test light illuminate brightly?

Yes >> Go To 4

No >> Repair the excessive resistance in the (K199) O2 2/1 Heater Control circuit.
Perform the POWERTRAIN VERIFICATION TEST. (Refer to 9 - ENGINE - STANDARD PROCEDURE)

4. (Z904) O2 SENSOR HEATER GROUND CIRCUIT HIGH RESISTANCE

Using a 12-volt test light connected battery voltage, probe the (Z904) O2 Heater ground circuit in the O2 Sensor harness connector.

NOTE: The test light should be illuminated and bright. Compare the brightness to that of a direct connection to the battery.

Does the test light illuminate brightly?

Yes >> Go To 5

No >> Repair the excessive resistance in the (Z904) O2 Heater ground circuit.
Perform the POWERTRAIN VERIFICATION TEST. (Refer to 9 - ENGINE - STANDARD PROCEDURE)

5. PCM

NOTE: Before continuing, check the PCM harness connector terminals for corrosion, damage, or terminal push out. Repair as necessary.

Using the schematics as a guide, inspect the wire harness and connectors. Pay particular attention to all Power and Ground circuits.

Were there any problems found?

Yes >> Repair as necessary.
Perform the POWERTRAIN VERIFICATION TEST. (Refer to 9 - ENGINE - STANDARD PROCEDURE)

No >> Replace and program the Powertrain Control Module per Service Information.
Perform the POWERTRAIN VERIFICATION TEST. (Refer to 9 - ENGINE - STANDARD PROCEDURE)

P0157-O2 SENSOR 2/2 CIRCUIT LOW

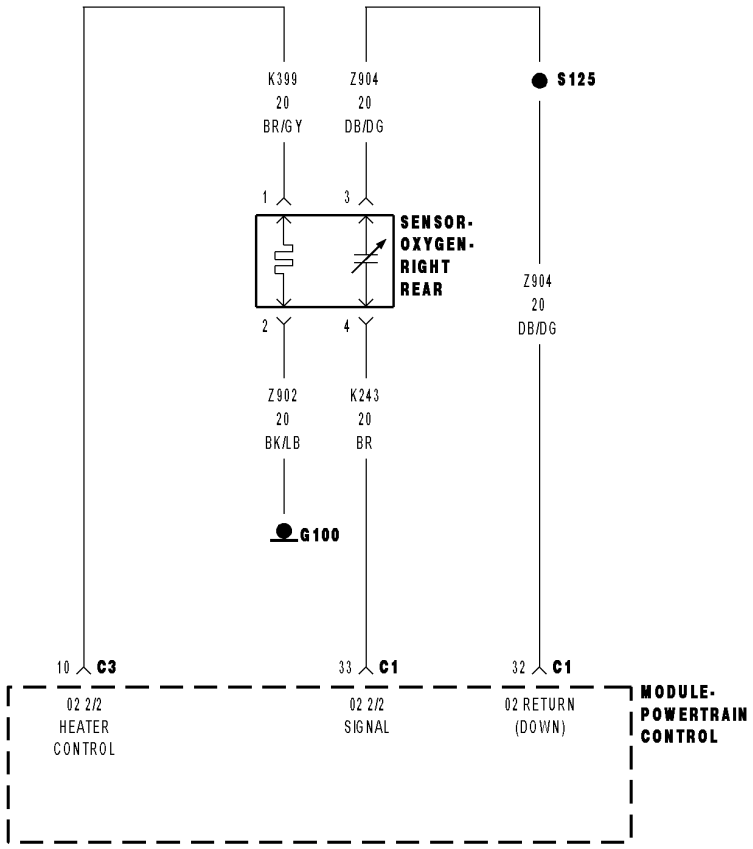

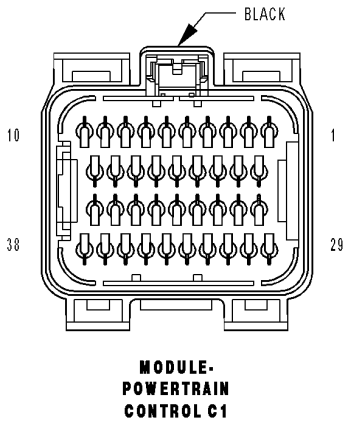

MODULE-
POWERTRAIN
CONTROL C1

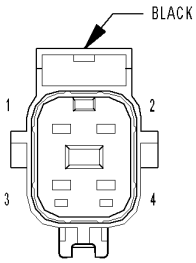

SENSOR-
OXYGEN-
RIGHT REAR

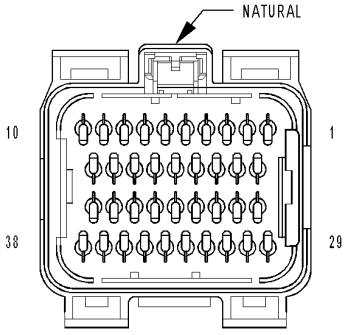

MODULE-
POWERTRAIN
CONTROL C3

8131a0ef

For a complete wiring diagram **Refer to Section 8W**.

- **When Monitored:**
  Engine running for less than 30 seconds and the O2 Sensor Heater Temperature is less than 251°C (484°F) with battery voltage greater 10.99 volts.
- **Set Condition:**
  The oxygen sensor signal voltage is below 1.5 volts for 3 seconds after starting engine. One Trip Fault. Three good trips to turn off the MIL.

Possible Causes
(K904) O2 DOWNSTREAM RETURN CIRCUIT SHORTED TO GROUND
(K243) O2 2/2 SIGNAL CIRCUIT SHORTED TO GROUND
(K243) O2 SIGNAL CIRCUIT SHORTED TO (K904) O2 DOWNSTREAM RETURN CIRCUIT
(K243) O2 SIGNAL SHORTED TO THE (Z902) O2 2/2 HEATER GROUND CIRCUIT
O2 SENSOR
PCM

Always perform the Pre-Diagnostic Troubleshooting procedure before proceeding. (Refer to 9 - ENGINE - DIAGNOSIS AND TESTING).

Diagnostic Test

1. O2 SENSOR BELOW 1.5 VOLTS

Start the engine.
Allow the engine to reach normal operating temperature.
With a scan tool, read the 2/2 O2 Sensor voltage.

Is the voltage below 1.5 volts?

Yes >> Go To 2

No >> Refer to the INTERMITTENT CONDITION Diagnostic Procedure.
Perform the POWERTRAIN VERIFICATION TEST. (Refer to 9 - ENGINE - STANDARD PROCEDURE)

2. (K243) O2 2/2 SIGNAL CIRCUIT

Turn the ignition off.
Disconnect the 2/2 O2 Sensor harness connector.
Ignition on, engine not running.
With a scan tool, monitor the 2/2 O2 Sensor voltage.

Is the O2 Sensor voltage above 4.8 volts?

Yes >> Go To 3

No >> Go To 5

3. O2 SENSOR

Measure the voltage on the (K904) O2 Donwstream Return circuit in the O2 Sensor harness connector.

Is the voltage at 2.5 volts?

Yes >> Replace the O2 Sensor.
Perform the POWERTRAIN VERIFICATION TEST. (Refer to 9 - ENGINE - STANDARD PROCEDURE)

No >> Go To 4

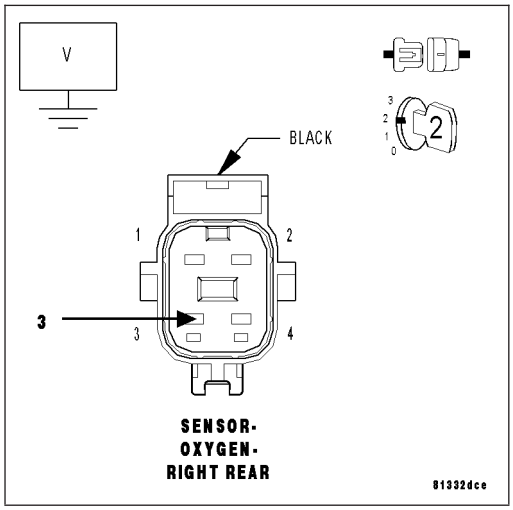

4. (K904) O2 DOWNSTREAM RETURN CIRCUIT SHORTED TO GROUND

Turn the ignition off.

Disconnect the PCM harness connectors.

Measure the resistance between ground and the (K904) O2 Downstream Return circuit in the O2 Sensor harness connector.

Is the resistance below 100 ohms?

Yes >> Repair the short to ground in the (K904) O2 Downstream Return circuit.
Perform the POWERTRAIN VERIFICATION TEST. (Refer to 9 - ENGINE - STANDARD PROCEDURE)

No >> Go To 8

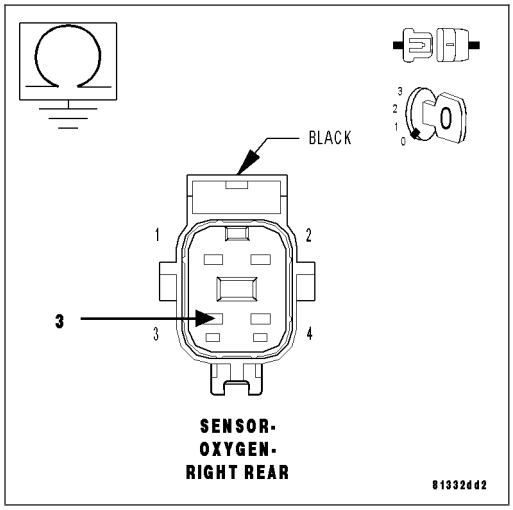

5. (K243) O2 2/2 SIGNAL CIRCUIT SHORTED TO GROUND

Turn the ignition off.

Disconnect the PCM harness connectors.

Measure the resistance between ground and the (K243) O2 2/2 Signal circuit in the O2 Sensor harness connector.

Is the resistance below 100 ohms?

Yes >> Repair the short to ground in the (K243) O2 2/2 Signal circuit.
Perform the POWERTRAIN VERIFICATION TEST. (Refer to 9 - ENGINE - STANDARD PROCEDURE)

No >> Go To 6

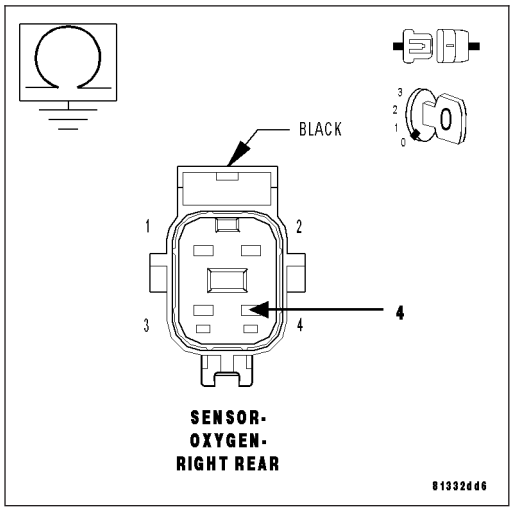

6. (K243) O2 2/2 SIGNAL CIRCUIT SHORTED TO THE (K904) O2 DOWNSTREAM RETURN CIRCUIT

Measure the resistance between the (K243) O2 2/2 Signal circuit and the (K904) O2 Dowstream Return circuit in the O2 Sensor harness connector.

Is the resistance below 100 ohms?

Yes >> Repair the short between the (K904) O2 Downstream Return circuit and the (K243) O2 2/2 Signal circuit.
Perform the POWERTRAIN VERIFICATION TEST. (Refer to 9 - ENGINE - STANDARD PROCEDURE)

No >> Go To 7

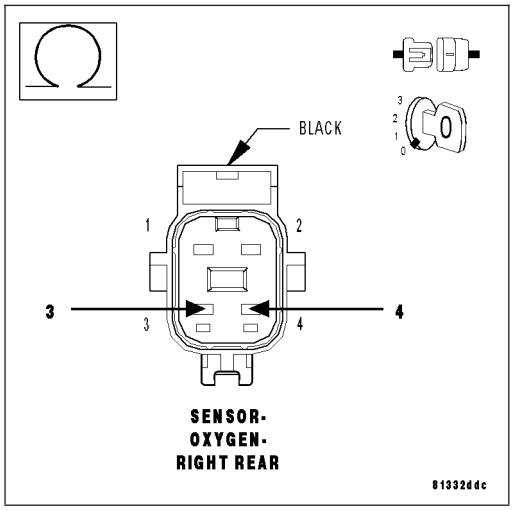

7. (K243) O2 2/2 SIGNAL CIRCUIT SHORTED TO (Z902) O2 2/2 HEATER GROUND CIRCUIT

Measure the resistance between the (K243) O2 2/2 Signal circuit and the (Z902) O2 2/2 Heater ground circuit in the O2 Sensor harness connector.

Is the resistance below 100 ohms?

Yes >> Repair the short between the (Z902) O2 2/2 Heater ground circuit and the (K243) O2 2/2 Signal circuit.
Perform the POWERTRAIN VERIFICATION TEST. (Refer to 9 - ENGINE - STANDARD PROCEDURE)

No >> Go To 8

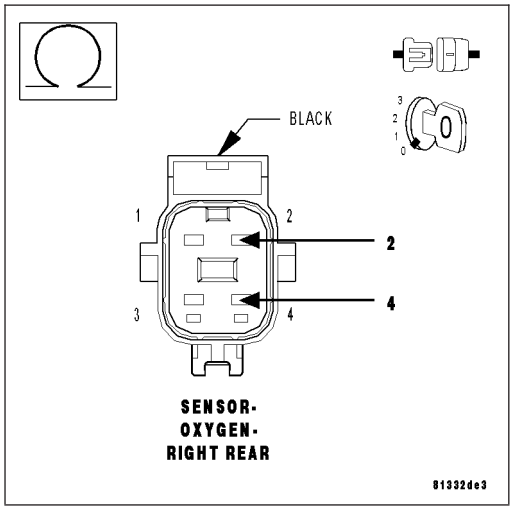

8. PCM

NOTE: Before continuing, check the PCM harness connector terminals for corrosion, damage, or terminal push out. Repair as necessary.
Using the schematics as a guide, inspect the wire harness and connectors. Pay particular attention to all Power and Ground circuits.

Were there any problems found?

Yes >> Repair as necessary.
Perform the POWERTRAIN VERIFICATION TEST. (Refer to 9 - ENGINE - STANDARD PROCEDURE)

No >> Replace and program the Powertrain Control Module per Service Information.
Perform the POWERTRAIN VERIFICATION TEST. (Refer to 9 - ENGINE - STANDARD PROCEDURE)

P0158-O2 SENSOR 2/2 CIRCUIT HIGH

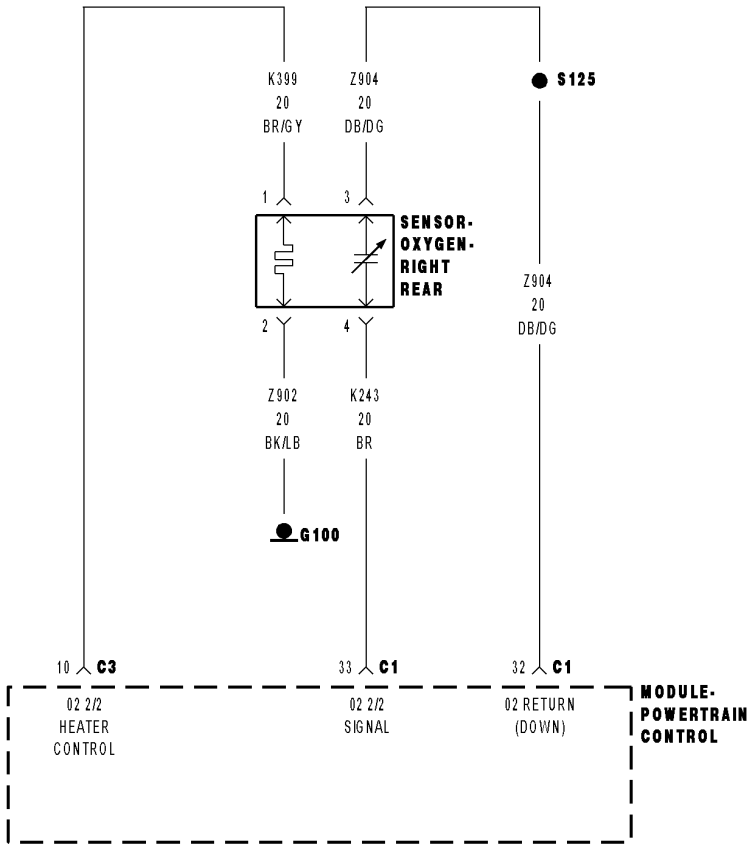

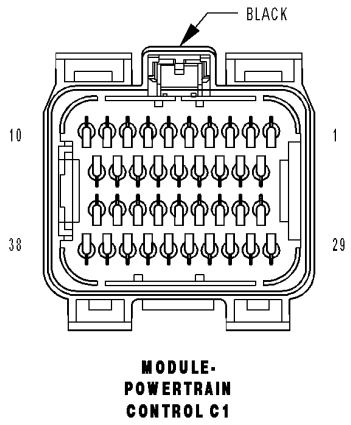

MODULE-
POWERTRAIN
CONTROL C1

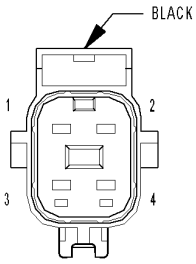

SENSOR-
OXYGEN-
RIGHT REAR

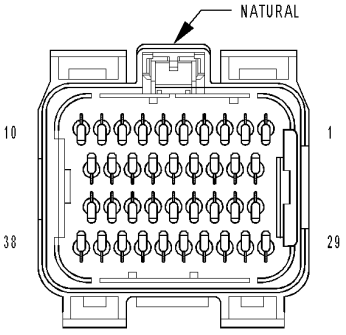

MODULE-
POWERTRAIN
CONTROL C3

8131a0ef

For a complete wiring diagram **Refer to Section 8W**.

- **When Monitored:**
  O2 Sensor Heater Temperature is greater than 496°C (925°F) and battery voltage greater than 10.99 volts.
- **Set Condition:**
  The Oxygen Sensor voltage is above 3.7 volts for 30 seconds. One Trip Fault. Three good trips to turn off the MIL.

Possible Causes
(K243) O22/2 SIGNAL CIRCUIT SHORTED TO BATTERY VOLTAGE
(K904) O2 DOWNSTREAM RETURN CIRCUIT SHORTED TO BATTERY VOLTAGE
(K243) O2 2/2 SIGNAL CIRCUIT OPEN
(K904) O2 DOWNSTREAM RETURN CIRCUIT OPEN
O2 SENSOR
PCM

Always perform the Pre-Diagnostic Troubleshooting procedure before proceeding. (Refer to 9 - ENGINE - DIAGNOSIS AND TESTING).

Diagnostic Test

1. O2 SENSOR ABOVE 3.7 VOLTS

NOTE: When only one O2 Sensor is shorted to voltage, the scan tool will display all O2 Sensor voltage readings at approximately 5.0 volts. When diagnosing this DTC, only diagnose the O2 Sensor that set the DTC.

Start the engine.

Allow the engine to reach normal operating temperature.

With a scan tool, read the 2/2 O2 Sensor voltage.

Is the voltage above 3.7 volts?

Yes >> Go To 2

No >> Refer to the INTERMITTENT CONDITION Diagnostic Procedure.
Perform the POWERTRAIN VERIFICATION TEST. (Refer to 9 - ENGINE - STANDARD PROCEDURE)

2. (K243) O2 2/2 SIGNAL CIRCUIT SHORTED TO BATTERY VOLTAGE

Start the engine and allow the engine to idle.

Disconnect the 2/2 O2 Sensor harness connector.

Measure the voltage on the (K243) O2 Sensor 2/2 Signal circuit in the O2 Sensor harness connector.

NOTE: Measure the voltage in reference to ground, not the (K904) O2 Downstream Return circuit.

Is the voltage above 5.2 volts?

Yes >> Repair the short to battery voltage in the (K243) O2 Sensor 2/2 Signal circuit.
Perform the POWERTRAIN VERIFICATION TEST. (Refer to 9 - ENGINE - STANDARD PROCEDURE)

No >> Go To 3

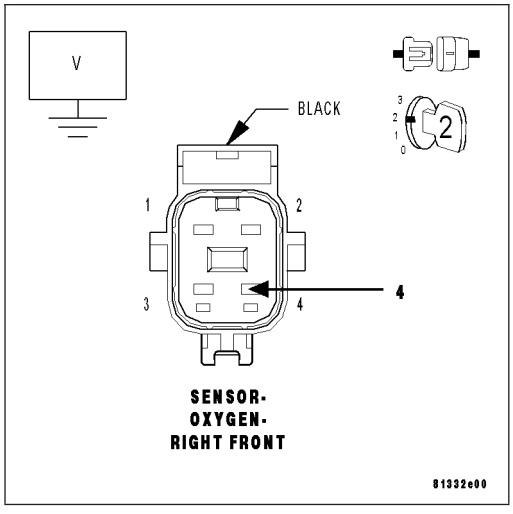

3. (K904) O2 DOWNSTREAM RETURN CIRCUIT SHORTED TO BATTERY VOLTAGE

Turn the ignition off.

Disconnect the PCM harness connectors.

Ignition on, engine not running.

Measure the voltage on the (K904) O2 Downstream Return circuit in the 2/2 O2 Sensor harness connector.

Is there any voltage present?

Yes >> Repair the short to battery voltage in the (K904) O2 Downstream Return circuit.
Perform the POWERTRAIN VERIFICATION TEST. (Refer to 9 - ENGINE - STANDARD PROCEDURE)

No >> Go To 4

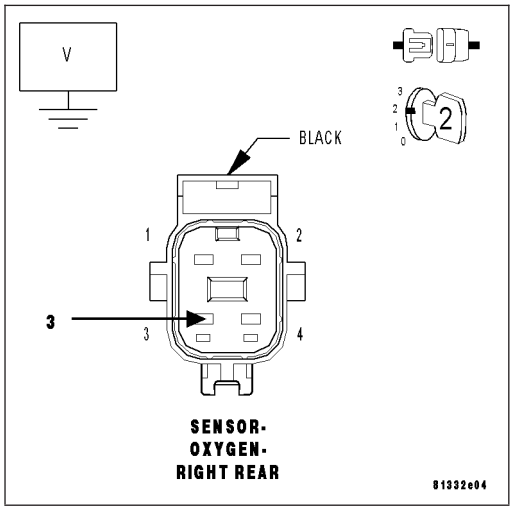

4. O2 SENSOR

Turn the ignition off.

Connect the PCM harness connectors.

Connect a jumper wire between the (K243) O2 2/2 Signal circuit and the (K904) O2 Downstream Return circuit in the 2/2 O2 Sensor harness connector.

Ignition on, engine not running.

With a scan tool, monitor the 2/2 O2 Sensor voltage.

Is the voltage between 2.3 and 2.7 volts with the jumper wire installed?

Yes >> Replace the O2 Sensor.
Perform the POWERTRAIN VERIFICATION TEST. (Refer to 9 - ENGINE - STANDARD PROCEDURE)

No >> Go To 5

NOTE: Remove the jumper wire before continuing.

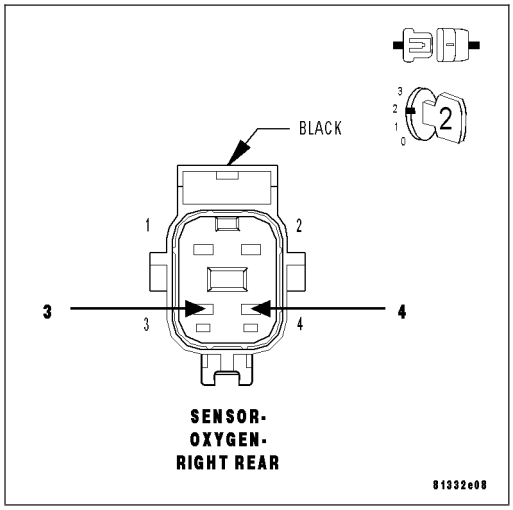

5. (K243) O2 2/2 SIGNAL CIRCUIT OPEN

Turn the ignition off.

CAUTION: Do not probe the PCM harness connectors. Probing the PCM harness connectors will damage the PCM terminals resulting in poor terminal to pin connection. Install Miller Special Tool #8815 to perform diagnosis.

Measure the resistance of the (K243) O2 2/2 Signal circuit from the O2 Sensor harness connector to the appropriate terminal of special tool #8815.

Is the resistance below 5.0 ohms?

Yes >> Go To 6

No >> Repair the open in the (K243) O2 2/2 Signal circuit.
Perform the POWERTRAIN VERIFICATION TEST. (Refer to 9 - ENGINE - STANDARD PROCEDURE)

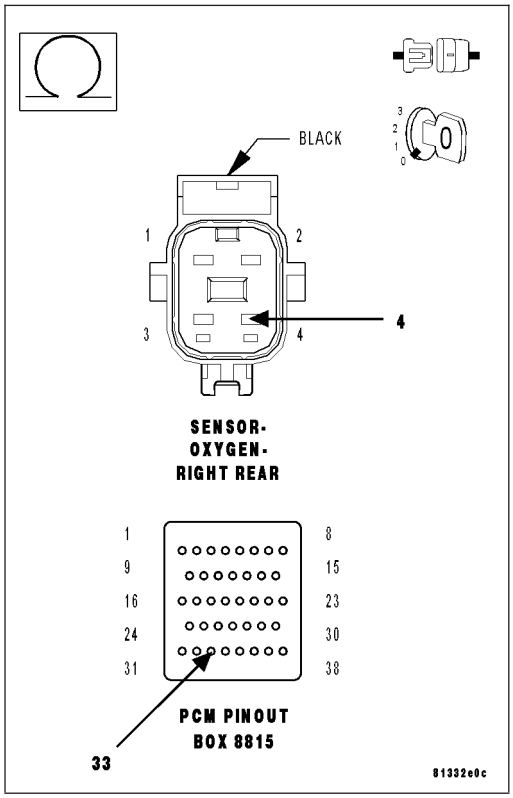

6. (K904) O2 DOWNSTREAM RETURN CIRCUIT OPEN

Measure the resistance of the (K904) O2 Downstream Return circuit from the O2 Sensor harness connector to the appropriate terminal of special tool #8815.

Is the resistance below 5.0 ohms?

Yes >> Go To 7

No >> Repair the open in the (K904) O2 Downstream Return circuit.
Perform the POWERTRAIN VERIFICATION TEST. (Refer to 9 - ENGINE - STANDARD PROCEDURE)

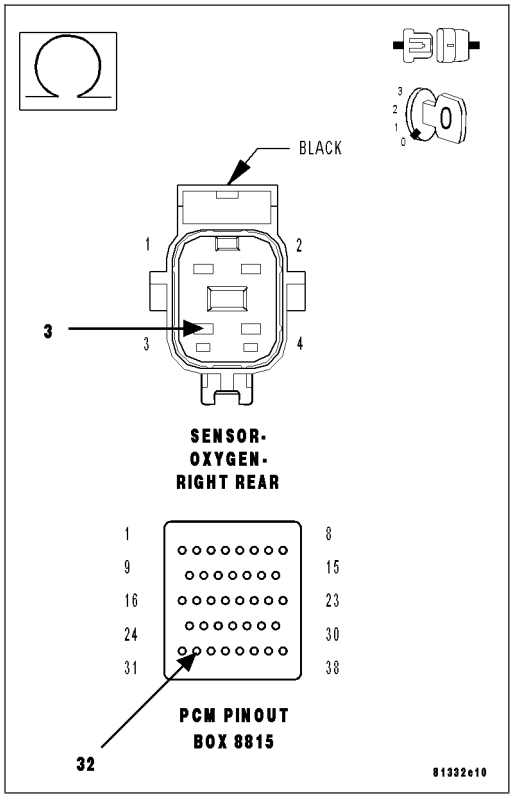

7. PCM

NOTE: Before continuing, check the PCM harness connector terminals for corrosion, damage, or terminal push out. Repair as necessary.
Using the schematics as a guide, inspect the wire harness and connectors. Pay particular attention to all Power and Ground circuits.

Were there any problems found?

Yes >> Repair as necessary.
Perform the POWERTRAIN VERIFICATION TEST. (Refer to 9 - ENGINE - STANDARD PROCEDURE)

No >> Replace and program the Powertrain Control Module per Service Information.
Perform the POWERTRAIN VERIFICATION TEST. (Refer to 9 - ENGINE - STANDARD PROCEDURE)

P0159-O2 SENSOR 2/2 SLOW RESPONSE

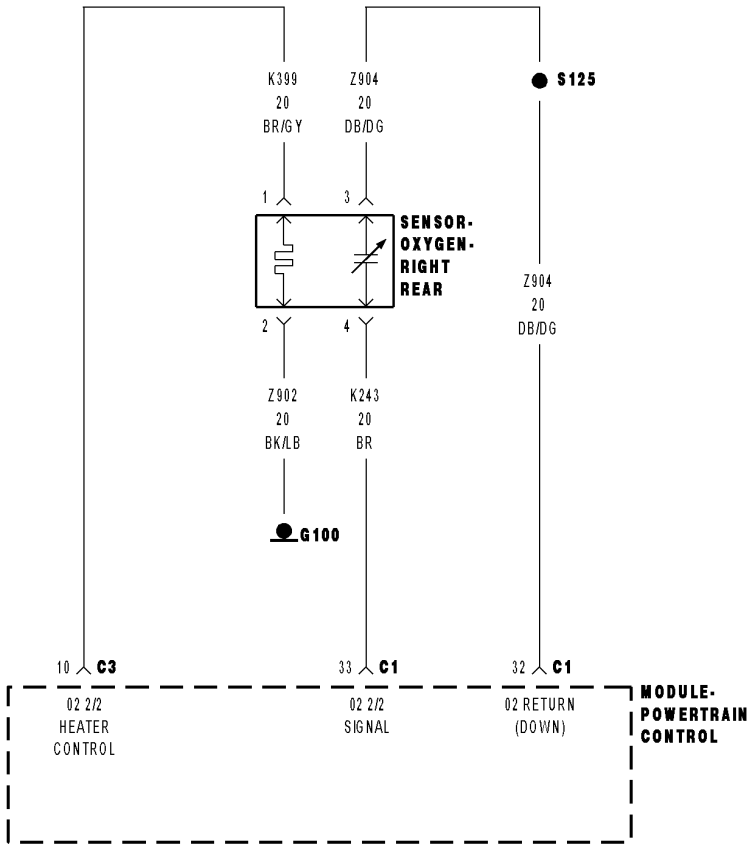

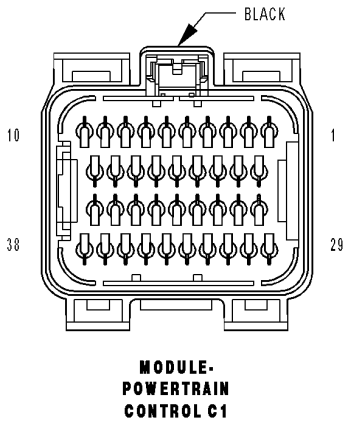

MODULE-
POWERTRAIN
CONTROL C1

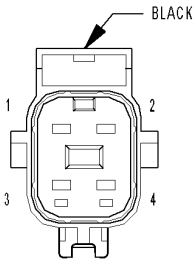

SENSOR-
OXYGEN-
RIGHT REAR

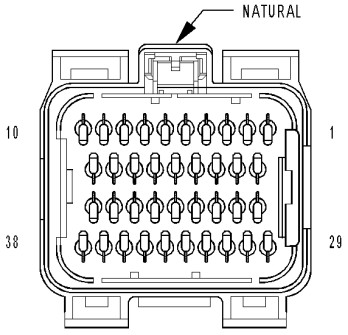

MODULE-
POWERTRAIN
CONTROL C3

8131a0ef

For a complete wiring diagram **Refer to Section 8W**.

- **When Monitored:**
  Vehicle is started and driven between 20 and 55 MPH with the Throttle open for a minimum of 120 seconds. Coolant greater than 70°C (158°F). Catalytic Converter Temp greater than 600°C (1112°F) and EVAP Purge is active.
- **Set Condition:**
  The oxygen sensor signal voltage switches less than 16 times from lean to rich within 20 seconds during monitoring. Two Trip Fault. Three good trips to turn off the MIL.

Possible Causes
EXHAUST LEAK
(K243) O2 2/2 SIGNAL CIRCUIT
(K904) O2 DOWNSTREAM RETURN CIRCUIT
O2 SENSOR

Always perform the Pre-Diagnostic Troubleshooting procedure before proceeding. (Refer to 9 - ENGINE - DIAGNOSIS AND TESTING).

Diagnostic Test

1. ACTIVE DTC

NOTE: Check for contaminants that may have damaged the O2 Sensor: contaminated fuel, unapproved silicone, oil and coolant.
Ignition on, engine not running.

NOTE: After the repairs have been made, verify proper O2 Sensor operation. If all the O2 Sensor voltage readings have not returned to normal, follow the diagnostic procedure for the remaining O2 Sensors.
With a scan tool, read DTCs.

Is the DTC active at this time?

Yes >> Go To 2

No >> Refer to the INTERMITTENT CONDITION Diagnostic Procedure.
Perform the POWERTRAIN VERIFICATION TEST. (Refer to 9 - ENGINE - STANDARD PROCEDURE)

2. EXHAUST LEAK

Start the engine.

Inspect the exhaust for leaks between the engine and the O2 Sensor.

Turn the ignition off.

If a leak is heard but unable to be located, it may be necessary to use special tool Miller Tool #8404A Evaporative Emissions Leak Detector (EELD) on the exhaust system to find leaks.

Connect the SMOKE supply tip (black hose) to the exhaust cone adapter (if equipped) and place it into the tail pipe.

Set the smoke/air control switch to SMOKE.

Press the remote smoke/air start button.

While still holding the remote smoke/air start button, use the white light (#8404-CLL) to follow the EVAP system path, and look for the source of the leak indicated by exiting smoke.

If a leak is concealed from view, release the remote smoke/air start button, and use the ultraviolet (UV) black light #8404-UVL and the yellow goggles 8404-20 to look for residual traces of dye that is left behind by the smoke.

The exiting smoke deposits a residual fluid that is either bright green or bright yellow in color when viewed with a UV light.

Be sure to check the exhaust manifold to cylinder head connection for leaks.

Are there any exhaust leaks?

Yes >> Repair or replace the leaking exhaust parts as necessary.
Perform the POWERTRAIN VERIFICATION TEST. (Refer to 9 - ENGINE - STANDARD PROCEDURE)

No >> Go To 3

3. (K243) O2 2/2 SIGNAL CIRCUIT HIGH RESISTANCE

Turn the ignition off.

Disconnect the C1 PCM harness connector.

CAUTION: CAUTION: Do not probe the PCM harness connectors. Probing the PCM harness connectors will damage the PCM terminals resulting in poor terminal to pin connection. Install Miller Special Tool #8815 along with the #8815-1 to perform the diagnosis.

Using a voltmeter perform a voltage drop test. Backprobe the (K243) O2 2/2 Signal circuit at the O2 Sensor harness connector to the appropriate terminal of the special tool #8815. Ensure the voltmeter leads are connected with the circuit's correct polarity.

WARNING: When the engine is operating, do not stand in direct line with the fan. Do not put your hands near the pulleys, belts, or fan. Do not wear loose clothing. Failure to follow these instructions can result in personal injury or death.

Start the engine and allow it to reach normal operating temperature.

Monitor the voltmeter.

Is the voltage below 0.5 volts?

Yes >> Go To 4

No >> Repair the high resistance in the (K243) O2 2/2 Signal circuit.
Perform the POWERTRAIN VERIFICATION TEST. (Refer to 9 - ENGINE - STANDARD PROCEDURE)

4. (K904) O2 RETURN CIRCUIT HIGH RESISTANCE

Turn the ignition off.

Using a voltmeter perform a voltage drop test. Backprobe the (K904) O2 Return circuit at the O2 Sensor harness connector to the appropriate terminal of the special tool #8815. Ensure the voltmeter leads are connected with the circuit's correct polarity.

WARNING: When the engine is operating, do not stand in direct line with the fan. Do not put your hands near the pulleys, belts, or fan. Do not wear loose clothing. Failure to follow these instructions can result in personal injury or death.

Start the engine and allow it to reach normal operating temperature.

Monitor the voltmeter.

Is the voltage below 0.5 volts?

Yes >> Go To 5

No >> Repair the open in the (K904) O2 Return circuit.
Perform the POWERTRAIN VERIFICATION TEST. (Refer to 9 - ENGINE - STANDARD PROCEDURE)

5. O2 SENSOR

If there are no possible causes remaining, view repair.

Repair

Replace the O2 Sensor.
Perform the POWERTRAIN VERIFICATION TEST. (Refer to 9 - ENGINE - STANDARD PROCEDURE)

P0161-O2 SENSOR 2/2 HEATER PERFORMANCE

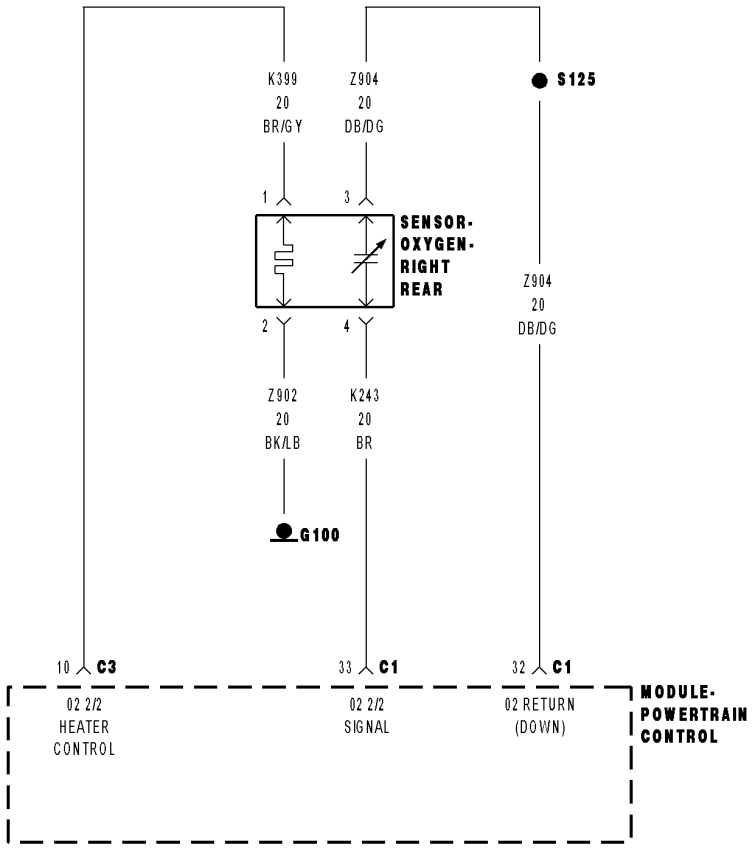

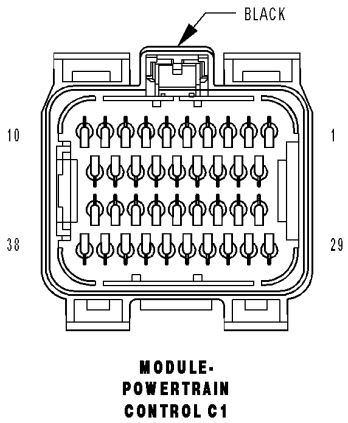

MODULE-
POWERTRAIN
CONTROL C1

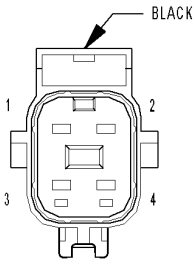

SENSOR-
OXYGEN-
RIGHT REAR

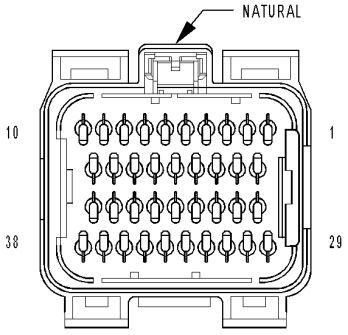

MODULE-
POWERTRAIN
CONTROL C3

8131a0ef

For a complete wiring diagram **Refer to Section 8W**.

- **When Monitored:**
  Engine running and heater duty cycle greater than 0%. Battery voltage greater than 11.0 volts.
- **Set Condition:**
  No sensor output is received when the PCM powers up the sensor heater. Two trip fault. Three good trips to turn off the MIL.

Possible Causes
(K399) O2 2/2 HEATER CONTROL CIRCUIT
(Z902) O2 2/2 HEATER GROUND CIRCUIT
O2 SENSOR HEATER ELEMENT
PCM

Always perform the Pre-Diagnostic Troubleshooting procedure before proceeding. (Refer to 9 - ENGINE - DIAGNOSIS AND TESTING.

Diagnostic Test

1. O2 SENSOR HEATER OPERATION

Turn the ignition off.

NOTE: Wait a minimum of 8 minutes to allow the O2 Sensor to cool down before continuing the test. Allow the O2 Sensor voltage to stabilize between 4.6 and 5.0 volts.
Ignition on, engine not running.
With a scan tool, actuate the O2 Heater Test.
With a scan tool, monitor 2/2 O2 Sensor voltage for at least 2 minutes.

Does the voltage stay above 4.5 volts?

Yes >> Go To 2

No >> Refer to the INTERMITTENT CONDITION Diagnostic Procedure.
Perform the POWERTRAIN VERIFICATION TEST. (Refer to 9 - ENGINE - STANDARD PROCEDURE)

2. O2 SENSOR HEATER ELEMENT

Turn the ignition off.

NOTE: Allow the O2 sensor to cool down to room temperature.
Disconnect the O2 Sensor harness connector.
Measure the resistance of the 2/2 O2 Heater Element, between the O2 Heater Control terminal and the O2 Heater ground terminal in the O2 Sensor connector.

NOTE: O2 Heater Element resistance values should be measured at 70°F (21.1°C). The resistance value will vary with different temperature values.

Is the resistance of the O2 Sensor Heater Element between 2.0 and 30.0 ohms?

Yes >> Go To 3

No >> Replace the O2 Sensor.
Perform the POWERTRAIN VERIFICATION TEST. (Refer to 9 - ENGINE - STANDARD PROCEDURE)

3. (K399) O2 2/2 HEATER CONTROL CIRCUIT

Disconnect the O2 harness connectors.

With the scan tool, actuate the O2 Heater.

Using a 12-volt test light connected ground, probe the (K399) O2 2/2 Heater Control circuit from the O2 harness connector.

NOTE: The test light should be illuminated and bright. Compare the brightness to that of a direct connection to the battery.

Does the test light illuminate brightly?

Yes >> Go To 4

No >> Repair the excessive resistance in the (K399) O2 2/2 Heater Control circuit.
Perform the POWERTRAIN VERIFICATION TEST. (Refer to 9 - ENGINE - STANDARD PROCEDURE)

4. (Z902) O2 2/2 HEATER GROUND CIRCUIT

Using a 12-volt test light connected battery voltage, probe the (Z902) O2 Heater ground circuit in the O2 Sensor harness connector.

NOTE: The test light should be illuminated and bright. Compare the brightness to that of a direct connection to the battery.

Does the test light illuminate brightly?

Yes >> Go To 5

No >> Repair the excessive resistance in the (Z902) O2 Heater ground circuit.
Perform the POWERTRAIN VERIFICATION TEST. (Refer to 9 - ENGINE - STANDARD PROCEDURE)

5. PCM

NOTE: Before continuing, check the PCM harness connector terminals for corrosion, damage, or terminal push out. Repair as necessary.

Using the schematics as a guide, inspect the wire harness and connectors. Pay particular attention to all Power and Ground circuits.

Were there any problems found?

Yes >> Repair as necessary.
Perform the POWERTRAIN VERIFICATION TEST. (Refer to 9 - ENGINE - STANDARD PROCEDURE)

No >> Replace and program the Powertrain Control Module per Service Information.
Perform the POWERTRAIN VERIFICATION TEST. (Refer to 9 - ENGINE - STANDARD PROCEDURE)

P0171-FUEL SYSTEM 1/1 LEAN

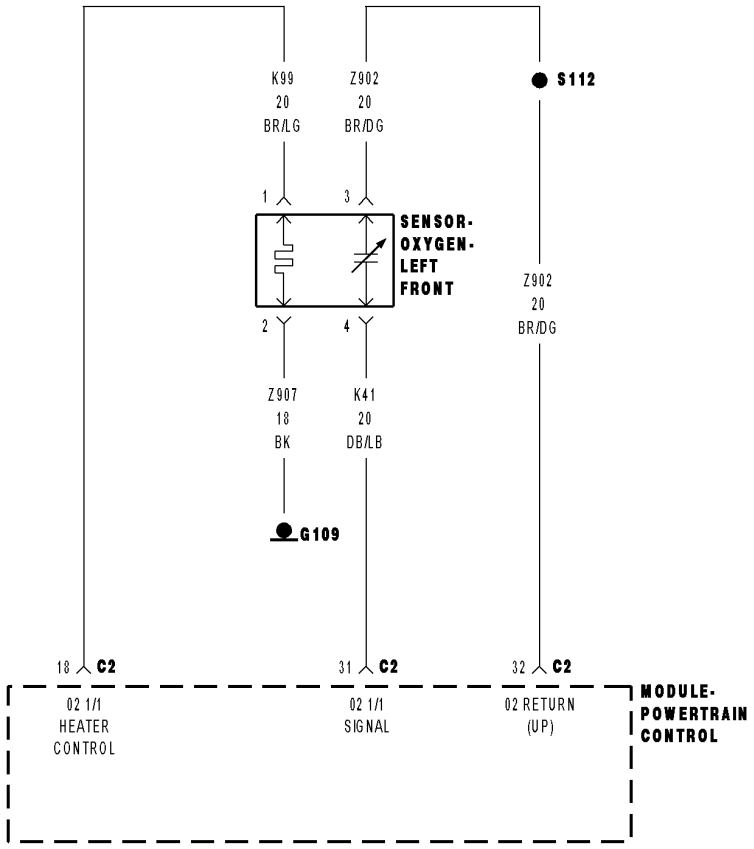

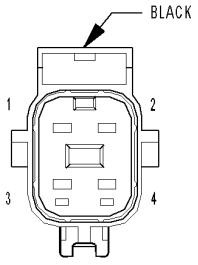

SENSOR-
OXYGEN-
LEFT FRONT

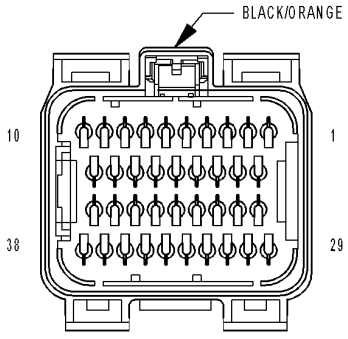

MODULE-
POWERTRAIN
CONTROL C2

8131a07e

For a complete wiring diagram **Refer to Section 8W**.

- **When Monitored:**
  With the engine running in closed loop mode, the ambient/battery temperature above 20°. F and altitude below 8500 ft.
- **Set Condition:**
  If the PCM multiplies short term compensation by long term adaptive and a certain percentage is exceeded for two trips, a freeze frame is stored, the MIL illuminates and a trouble code is stored. Two Trip Fault. Three good trips to turn off the MIL.

Possible Causes
RESTRICTED FUEL SUPPLY LINE
FUEL PUMP INLET STRAINER PLUGGED
FUEL PUMP MODULE
O2 SIGNAL CIRCUIT
O2 RETURN CIRCUIT
O2 SENSOR HEATER OPERATION
O2 SENSOR
MAP SENSOR OPERATION
ECT SENSOR OPERATION
ENGINE MECHANICAL PROBLEM
FUEL FILTER/PRESSURE REGULATOR (HIGH)
PCM

Always perform the Pre-Diagnostic Troubleshooting procedure before proceeding. (Refer to 9 - ENGINE - DIAGNOSIS AND TESTING).

Diagnostic Test

1. ACTIVE DTC

Diagnose all other trouble codes before continuing.

NOTE: Check for contaminants that may have damaged an O2 Sensor: contaminated fuel, unapproved silicone, oil and coolant.
Ignition on, engine not running.
With a scan tool, read DTCs.

Is the DTC active at this time?

Yes >> Go To 2

No >> Refer to the INTERMITTENT CONDITION Diagnostic Procedure.
Perform the POWERTRAIN VERIFICATION TEST. (Refer to 9 - ENGINE - STANDARD PROCEDURE)

2. CHECKING FUEL PRESSURE

WARNING: The fuel system is under a constant pressure (even with the engine off). Before testing or servicing any fuel system hose, fitting or line, the fuel system pressure must be released. Failure to follow these instructions can result in personal injury or death.
Install a fuel pressure gauge to the fuel rail.
Ignition on, engine not running.
With a scan tool, actuate the ASD Fuel System test and observe the fuel pressure gauge.

NOTE: Fuel pressure specification is 407 KPa +/- 34 KPa (59 psi +/- 5 psi).
Turn the ignition off.

CAUTION: Stop All Actuations.

Choose a conclusion that best matches your fuel pressure reading.

Within Specification
Go To 3

Above Specification
Replace the fuel filter/pressure regulator.
Perform the POWERTRAIN VERIFICATION TEST. (Refer to 9 - ENGINE - STANDARD PROCEDURE)

Below Specification
Go To 12

3. O2 SENSOR OPERATION

Start the engine.
Allow the engine to reach normal operating temperature.

NOTE: If one of the O2 Sensor's Signal or Return circuit is shorted to ground the scan tool will display all O2 Sensor voltage readings low. The O2 Sensor that is shorted to ground will display a voltage reading near or at 0 volts.

NOTE: If one of the O2 Sensor Signal or Return circuits are shorted to voltage, the scan tool will display all O2 Sensor voltage readings high.

NOTE: After the repairs have been made, verify proper O2 Sensor operation. If all the O2 Sensor voltage readings have not returned to normal, follow the diagnostic procedure for the remaining O2 Sensors.
With a scan tool, monitor all of the O2 Sensor voltage readings.

Is the voltage switching between 2.5 and 3.4 volts for all the O2 Sensors?

Yes >> Go To 4

No >> Go To 8

4. 1/1 O2 SENSOR HEATER OPERATION

Turn the ignition off.

NOTE: Wait a minimum of 10 minutes to allow the O2 Sensor to cool down before continuing the test. Allow the O2 Sensor voltage to stabilize at 5.0 volts.
Ignition on, engine not running.
With a scan tool, actuate the 1/1 O2 Heater Test.
With the scan tool, monitor 1/1 O2 Sensor voltage for at least 2 minutes.

Does the voltage stay above 4.5 volts?

Yes >> Replace the 1/1 O2 Sensor.
Perform the POWERTRAIN VERIFICATION TEST. (Refer to 9 - ENGINE - STANDARD PROCEDURE)

No >> Go To 5

5. MAP SENSOR OPERATION

Turn the ignition off.

Connect a Vacuum Gauge to a Manifold Vacuum source.

Start the engine.

Allow the engine to idle.

NOTE: If engine will not idle, maintain a constant RPM above idle.
With the scan tool, read the MAP Sensor vacuum value.

Is the scan tool reading within 1″ of the Vacuum Gauge reading?

Yes >> Go To 6

No >> Replace the MAP Sensor.
Perform the POWERTRAIN VERIFICATION TEST. (Refer to 9 - ENGINE - STANDARD PROCEDURE)

6. ECT SENSOR OPERATION

NOTE: For this test to be valid, the thermostat must be operating correctly.

NOTE: This test works best if performed on a cold engine (cold soak).
Ignition on, engine not running.

With a scan tool, read the Engine Coolant Temperature (ECT) Sensor value. If the engine was allowed to sit overnight (cold soak), the temperature value should be a sensible value that is somewhere close to the ambient temperature.

NOTE: If engine coolant temperature is above 82°C (180°F), allow the engine to cool until 65°C (150°F) is reached.
Start the Engine.

During engine warm-up, monitor the ECT Sensor value. The temperature value change should be a smooth transition from start up to normal operating temperature 82°C (180°F). The value should reach at least 82°C (180°F).

Did the ECT value increase smoothly and did it reach at least 180°F (82°C)?

Yes >> Go To 7

No >> Replace the Engine Coolant Temperature Sensor.
Perform the POWERTRAIN VERIFICATION TEST. (Refer to 9 - ENGINE - STANDARD PROCEDURE)

7. ENGINE MECHANICAL PROBLEM

Turn the ignition off.

Check for any of the following conditions/mechanical problems.

AIR INDUCTION SYSTEM - must be free from leaks.

ENGINE VACUUM - must be at least 13 inches in neutral.

ENGINE VALVE TIMING - must be within specifications.

ENGINE COMPRESSION - must be within specifications.

ENGINE EXHAUST SYSTEM - must be free of any restrictions or leaks.

ENGINE PCV SYSTEM - must flow freely.

TORQUE CONVERTER STALL SPEED - must be within specifications.

POWER BRAKE BOOSTER - no internal vacuum leaks.

FUEL - must be free of contamination.

FUEL INJECTOR - plugged or restricted injector; control wire not connected to correct injector.

Are there any engine mechanical problems?

Yes >> Repair as necessary.
Perform the POWERTRAIN VERIFICATION TEST. (Refer to 9 - ENGINE - STANDARD PROCEDURE)

No >> Go To 11

8. 1/1 O2 SENSOR

Ignition on, engine not running.

Disconnect the 1/1 O2 Sensor harness connector.

With a scan tool, monitor the 1/1 O2 Sensor voltage.

O2 Sensor voltage should read 5.0 volts on the scan tool with the connector disconnected.

Connect a jumper wire between the (K41) Signal circuit and the (K902) O2 Upstream Return circuit in the O2 Sensor harness connector.

NOTE: The voltage should drop from 5.0 volts to 2.5 volts with the jumper wire in place.

Did the O2 Sensor voltage change from 5.0 volts to 2.5 volts with the jumper wire installed?

Yes >> Replace the O2 Sensor.
Perform the POWERTRAIN VERIFICATION TEST. (Refer to 9 - ENGINE - STANDARD PROCEDURE)

No >> Go To 9

NOTE: Remove the jumper wire before continuing.

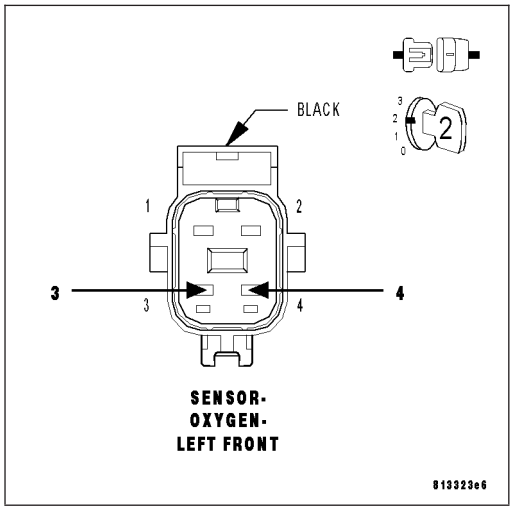

9. (K41) O2 SENSOR 1/1 SIGNAL CIRCUIT

With a scan tool, monitor the 1/1 O2 Sensor voltage reading with the jumper wire removed.

NOTE: The scan tool will display all O2 Sensor voltage readings approximately 5.0 volts when only one O2 Sensor's Signal circuit is shorted to voltage.

NOTE: The scan tool will display one O2 Sensor voltage close to zero and the others will read lower than normal when one O2 Sensor Signal circuit contains excessive resistance.

Is the voltage above 4.8 volts?

Yes >> Go To 10

No >> Check the (K41) O2 Sensor 1/1 Signal circuit for a short to ground, open, or short to voltage. Inspect the O2 Sensor connector and the PCM harness connector. If OK, replace and program the Powertrain Control Module per Service Information.
Perform the POWERTRAIN VERIFICATION TEST. (Refer to 9 - ENGINE - STANDARD PROCEDURE)

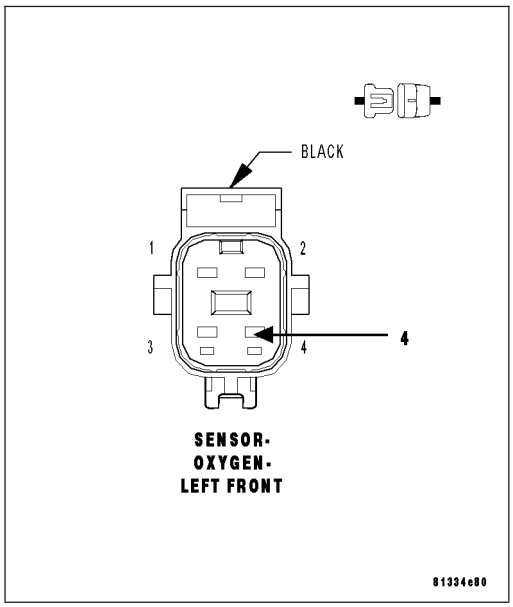

10. (K902) O2 UPSTREAM RETURN CIRCUIT

Disconnect the 1/1 O2 Sensor harness connector.

Measure the voltage on the (K902) O2 Upstream Return circuit in the O2 Sensor harness connector.

Is the voltage at 2.5 volts?

Yes >> Go To 11

No >> Check the O2 Return circuit for a short to ground, open, or short to voltage. Inspect the O2 Sensor connector and the PCM harness connector. If OK, replace and program the Powertrain Control Module per Service Information.
Perform the POWERTRAIN VERIFICATION TEST. (Refer to 9 - ENGINE - STANDARD PROCEDURE)

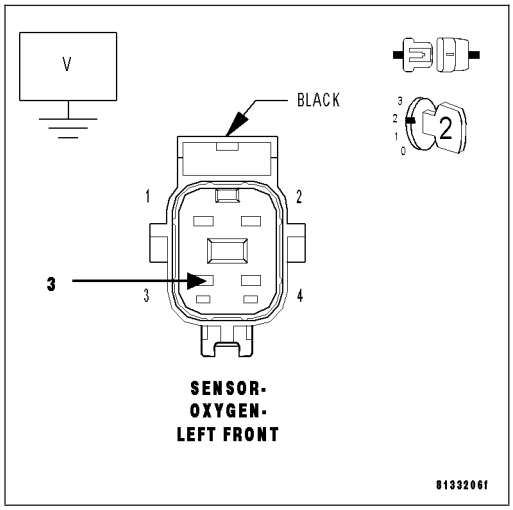

11. PCM

NOTE: Before continuing, check the PCM harness connector terminals for corrosion, damage, or terminal push out. Repair as necessary.

Using the schematics as a guide, inspect the wire harness and connectors. Pay particular attention to all Power and Ground circuits.

Were there any problems found?

Yes >> Repair as necessary.
Perform the POWERTRAIN VERIFICATION TEST. (Refer to 9 - ENGINE - STANDARD PROCEDURE)

No >> Replace and program the Powertrain Control Module per Service Information.
Perform the POWERTRAIN VERIFICATION TEST. (Refer to 9 - ENGINE - STANDARD PROCEDURE)

12. RESTRICTED FUEL SUPPLY LINE

WARNING: The fuel system is under a constant pressure (even with the engine off). Before testing or servicing any fuel system hose, fitting or line, the fuel system pressure must be released. Failure to follow these instructions can result in personal injury or death.

Raise vehicle on hoist, and disconnect the fuel pressure line at the fuel pump module.

Install special 5/16 fuel line adapter tool #6539 between disconnected fuel line and the fuel pump module.

Attach a fuel pressure test gauge to the T fitting on tool #6539.

Ignition on, engine not running.

With a scan tool, actuate the ASD Fuel System test and observe the fuel pressure gauge.

NOTE: Fuel pressure specification is 407 KPa +/- 34 KPa (59 psi +/- 5 psi).

CAUTION: Stop All Actuations.

Is the fuel pressure within specification?

Yes >> Repair or replace fuel supply line as necessary.
Perform the POWERTRAIN VERIFICATION TEST. (Refer to 9 - ENGINE - STANDARD PROCEDURE)

No >> Go To 13

13. FUEL PUMP INLET STRAINER

Turn the ignition off.

WARNING: The fuel system is under a constant pressure (even with the engine off). Before testing or servicing any fuel system hose, fitting or line, the fuel system pressure must be released.
Remove the Fuel Pump Module and inspect the Fuel Inlet Strainer.

Is the Fuel Inlet Strainer plugged?

Yes >> Replace the Fuel Pump Inlet Strainer.
Perform the POWERTRAIN VERIFICATION TEST. (Refer to 9 - ENGINE - STANDARD PROCEDURE)

No >> Go To 14

14. FUEL PUMP MODULE

If there are no possible causes remaining, view repair.

Repair

Replace the Fuel Pump Module.
Perform the POWERTRAIN VERIFICATION TEST. (Refer to 9 - ENGINE - STANDARD PROCEDURE)

P0172-FUEL SYSTEM 1/1 RICH

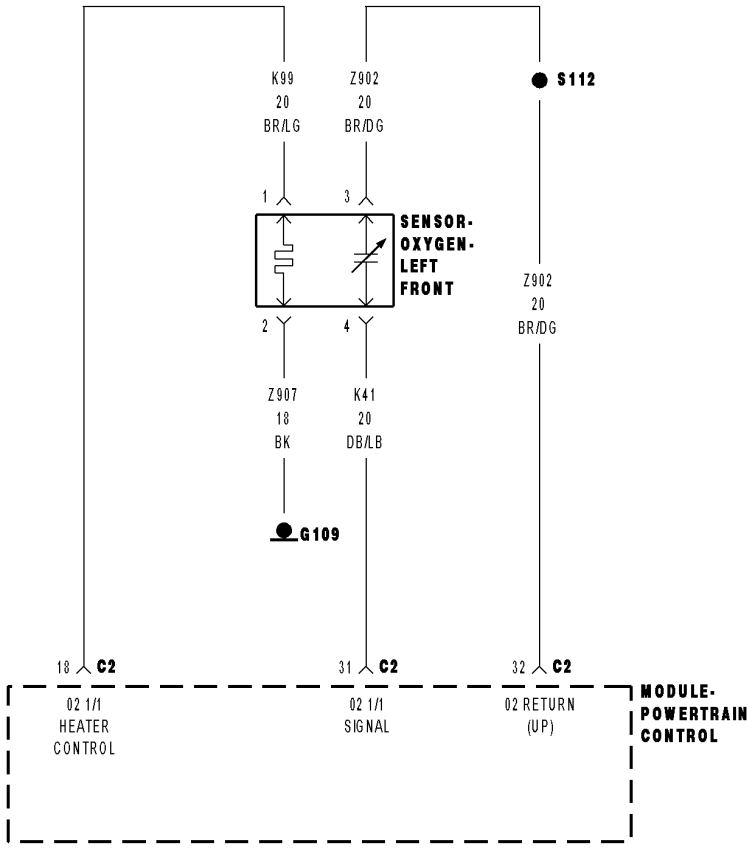

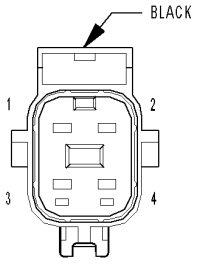

SENSOR-
OXYGEN-
LEFT FRONT

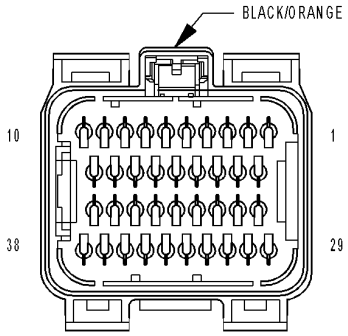

MODULE-
POWERTRAIN
CONTROL C2

8131a07e

For a complete wiring diagram **Refer to Section 8W**.

- **When Monitored:**
  With the engine running in closed loop mode, the ambient/battery temperature above 20°. F and altitude below 8500 ft.
- **Set Condition:**
  If the PCM multiplies short term compensation by long term adaptive and a purge fuel multiplier and the result is below a certain value for 30 seconds over two trips, a freeze frame is stored, the MIL illuminates and a trouble code is stored. Two Trip Fault. Three good trips to turn off the MIL.

Possible Causes
O2 SENSOR HEATER OPERATION
EVAP PURGE SOLENOID OPERATION
O2 SIGNAL CIRCUIT
O2 RETURN CIRCUIT
O2 SENSOR
MAP SENSOR
ECT SENSOR
ENGINE MECHANICAL PROBLEM
FUEL FILTER/PRESSURE REGULATOR (HIGH)
PCM

Always perform the Pre-Diagnostic Troubleshooting procedure before proceeding. (Refer to 9 - ENGINE - DIAGNOSIS AND TESTING).

Diagnostic Test

1. ACTIVE DTC

NOTE: Check for contaminates that may have damaged an O2 Sensor: contaminated fuel, unapproved silicone, oil and coolant.
Ignition on, engine not running.
With a scan tool, read DTCs.

Is the DTC active at this time?

Yes >> Go To 2

No >> Refer to the INTERMITTENT CONDITION Diagnostic Procedure.
Perform the POWERTRAIN VERIFICATION TEST. (Refer to 9 - ENGINE - STANDARD PROCEDURE)

2. CHECKING FUEL PRESSURE

WARNING: The fuel system is under a constant pressure (even with the engine off). Before testing or servicing any fuel system hose, fitting or line, the fuel system pressure must be released. Failure to follow these instructions can result in personal injury or death.
Install a fuel pressure gauge to the fuel rail.
Ignition on, engine not running.
With the scan tool, actuate the ASD Fuel System test and observe the fuel pressure gauge.

NOTE: Fuel pressure specification is 407 KPa +/- 34 KPa (59 psi +/- 5 psi).
Turn the ignition off.

CAUTION: Stop All Actuations.

Choose a conclusion that best matches your fuel pressure reading.

Within Specification
Go To 3

Above Specification

Replace the fuel filter/pressure regulator.
Perform the POWERTRAIN VERIFICATION TEST. (Refer to 9 - ENGINE - STANDARD PROCEDURE)

3. O2 SENSOR OPERATION

Start the engine.
Allow the engine to reach normal operating temperature.

NOTE: If one of the O2 Sensors Signal or Return circuit is shorted to ground or voltage, all the other O2 Sensor voltage readings will be affected.

NOTE: After the repairs have been made, verify proper O2 Sensor operation. If all the O2 Sensor voltage readings have not returned to normal, follow the diagnostic procedure for the remaining O2 Sensors.
With the scan tool, monitor the 1/1 O2 Sensor voltage reading.

Is the voltage switching between 2.5 and 3.4 volts?

Yes >> Go To 4

No >> Go To 9

4. 1/1 O2 SENSOR HEATER OPERATION

Turn the ignition off.

NOTE: Wait a minimum of 10 minutes to allow the O2 Sensor to cool down before continuing the test. Allow the O2 Sensor voltage to stabilize at 5.0 volts.
Ignition on, engine not running.
With the scan tool, perform the 1/1 O2 Heater Test.
With the scan tool, monitor the O2 Sensor voltage while performing the Heater test for at least 2 minutes.

Does the voltage stay above 4.5 volts during the Heater test?

Yes >> Replace the O2 Sensor.
Perform the POWERTRAIN VERIFICATION TEST. (Refer to 9 - ENGINE - STANDARD PROCEDURE)

No >> Go To 5

5. MAP SENSOR OPERATION

Turn the ignition off.
Connect a Vacuum Gauge to a Manifold Vacuum source.
Start the engine.
Allow the engine to idle.

NOTE: If engine will not idle, maintain a constant RPM above idle.
With a scan tool, read the MAP Sensor vacuum value.

Is the scan tool reading within 1″ of the Vacuum Gauge reading?

Yes >> Go To 6

No >> Replace the MAP Sensor.
Perform the POWERTRAIN VERIFICATION TEST. (Refer to 9 - ENGINE - STANDARD PROCEDURE)

NOTE: Remove the vacuum gauge before continuing.

6. ECT SENSOR OPERATION

NOTE: For this test to be valid, the thermostat must be operating correctly.

NOTE: This test works best if performed on a cold engine (cold soak).

Ignition on, engine not running.

With a scan tool, read the Engine Coolant Temperature Sensor value. If the engine was allowed to sit overnight (cold soak), the temperature value should be a sensible value that is somewhere close to the ambient temperature.

NOTE: If engine coolant temperature is above 82°C (180°F), allow the engine to cool until 65°C (150°F) is reached.

Start the Engine.

During engine warm-up, monitor the Engine Coolant Temperature value. The temp value change should be a smooth transition from start up to normal operating temp 82°C (180°F). The value should reach at least 82°C (180°F).

Did the ECT value increase smoothly and reach at least 180°F (82°C)?

Yes >> Go To 7

No >> Replace the Engine Coolant Temperature Sensor.
Perform the POWERTRAIN VERIFICATION TEST. (Refer to 9 - ENGINE - STANDARD PROCEDURE)

7. EVAP PURGE SOLENOID OPERATION

Turn the ignition off.

Disconnect the hoses at the Evap Purge Solenoid.

Using a hand vacuum pump, apply 10 inches of vacuum to the Evap Purge Solenoid vacuum source port on the component side.

Did the Evap Purge Solenoid hold vacuum?

Yes >> Go To 8

No >> Replace the EVAP Purge Solenoid.
Perform the POWERTRAIN VERIFICATION TEST. (Refer to 9 - ENGINE - STANDARD PROCEDURE)

NOTE: Connect the vacuum hoses before continuing.

8. ENGINE MECHANICAL PROBLEM

Check for any of the following conditions/mechanical problems.

AIR INDUCTION SYSTEM - must be free from restrictions.

ENGINE VACUUM - must be at least 13 inches in neutral.

ENGINE VALVE TIMING - must be within specifications.

ENGINE COMPRESSION - must be within specifications.

ENGINE EXHAUST SYSTEM - must be free of any restrictions or leaks.

ENGINE PCV SYSTEM - must flow freely.

TORQUE CONVERTER STALL SPEED - must be within specifications.

POWER BRAKE BOOSTER - no internal vacuum leaks.

FUEL - must be free of contamination.

FUEL INJECTOR - plugged or restricted injector; control wire not connected to correct injector.

Are there any engine mechanical problems?

Yes >> Repair as necessary.
Perform the POWERTRAIN VERIFICATION TEST. (Refer to 9 - ENGINE - STANDARD PROCEDURE)

No >> Go To 12

9. 1/1 O2 SENSOR

NOTE: Perform the following test on the O2 Sensors whose voltage was not switching properly in the previous step.

Ignition on, engine not running.

Disconnect the 1/1 O2 Sensor harness connector.

With a scan tool, monitor the 1/1 O2 Sensor voltage.

O2 Sensor voltage should read 5.0 volts on the scan tool with the connector disconnected.

Connect a jumper wire between the (K41) O2 Sensor 1/1 Signal circuit and the (K902) O2 Upstream Return circuit in the O2 Sensor harness connector.

NOTE: The voltage should drop from 5.0 volts down to 2.5 volts with the jumper wire connected.

Did the O2 Sensor voltage drop from 5 volts to 2.5 volts when the jumper wire was installed?

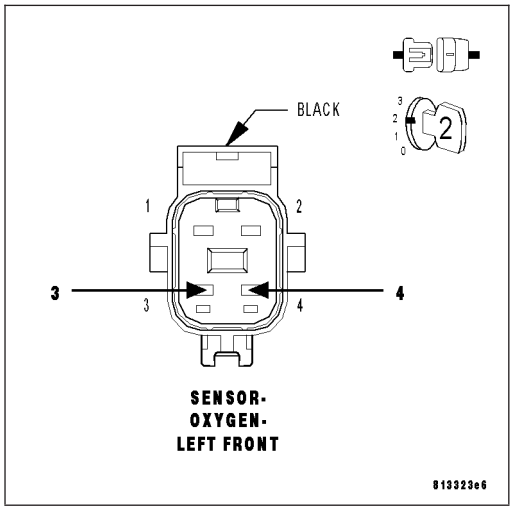

Yes >> Replace the 1/1 O2 Sensor

Perform the POWERTRAIN VERIFICATION TEST. (Refer to 9 - ENGINE - STANDARD PROCEDURE)

No >> Go To 10

NOTE: Remove the jumper wire before continuing.

10. (K41) O2 SENSOR 1/1 SIGNAL CIRCUIT

WARNING: When the engine is operating, do not stand in direct line with the fan. Do not put your hands near the pulleys, belts, or fan. Do not wear loose clothing. Failure to follow these instructions can result in personal injury or death.

Start the engine.

Measure the voltage on the (K41) O2 Sensor 1/1 Signal circuit in the O2 Sensor harness connector.

Is the voltage above 4.8 volts?

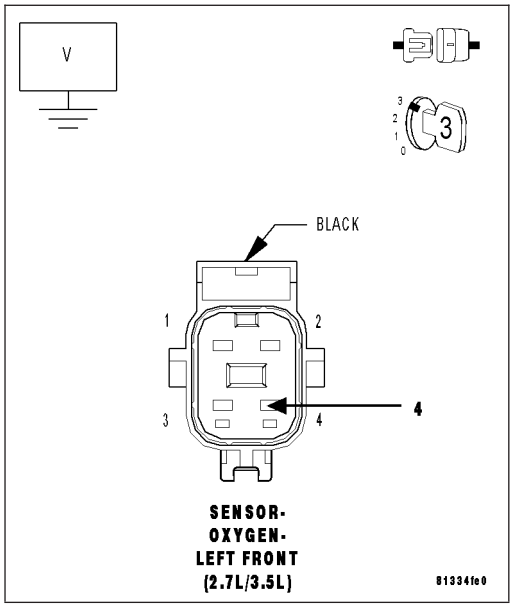

Yes >> Check the (K41) O2 Sensor 1/1 Signal circuit for damage, short to ground, open, or short to voltage. Inspect the O2 Sensor connector and the PCM harness connector. If OK, replace and program the Powertrain Control Module per Service Information.

Perform the POWERTRAIN VERIFICATION TEST. (Refer to 9 - ENGINE - STANDARD PROCEDURE)

No >> Go To 11

11. (K902) O2 SENSOR UPSTREAM RETURN CIRCUIT

Engine still running.

Measure the voltage on the (K902) O2 Upstream Return circuit in the 1/1 O2 Sensor harness connector.

Is the voltage at 2.5 volts?

Yes >> Go To 12

No >> Check the (K902) O2 Upstream Return circuit for damage, short to ground, open, or short to voltage. Inspect the O2 Sensor connector and the PCM harness connector. If OK, replace and program the Powertrain Control Module per Service Information.

Perform the POWERTRAIN VERIFICATION TEST. (Refer to 9 - ENGINE - STANDARD PROCEDURE)

NOTE: Turn the ignition off before continuing.

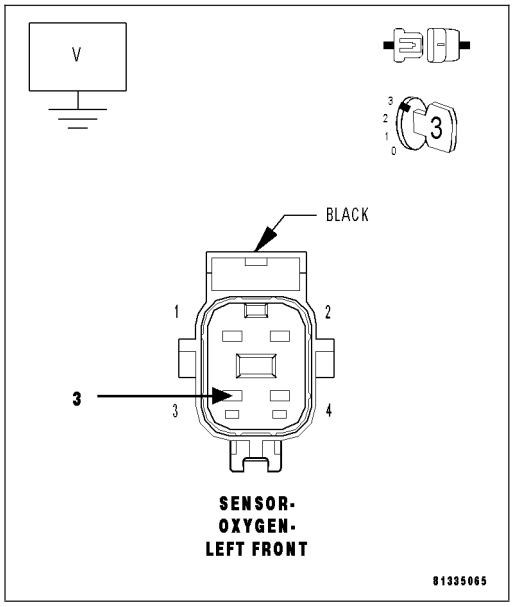

12. PCM

NOTE: Before continuing, check the PCM harness connector terminals for corrosion, damage, or terminal push out. Repair as necessary.

Using the schematics as a guide, inspect the wire harness and connectors. Pay particular attention to all Power and Ground circuits.

Were there any problems found?

Yes >> Repair as necessary.

Perform the POWERTRAIN VERIFICATION TEST. (Refer to 9 - ENGINE - STANDARD PROCEDURE)

No >> Replace and program the Powertrain Control Module per Service Information.

Perform the POWERTRAIN VERIFICATION TEST. (Refer to 9 - ENGINE - STANDARD PROCEDURE)

P0174-FUEL SYSTEM 2/1 LEAN

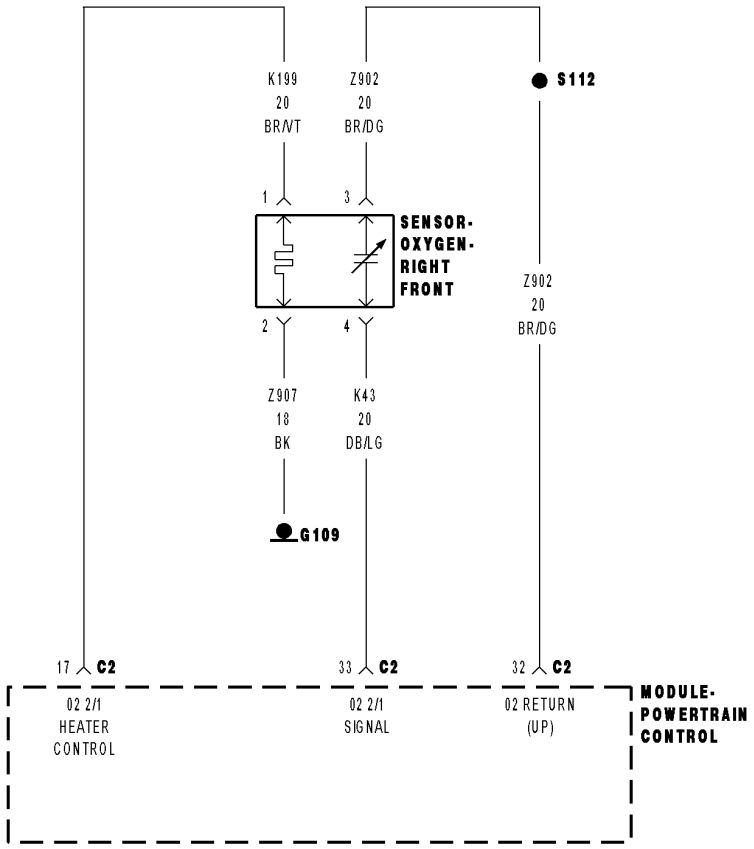

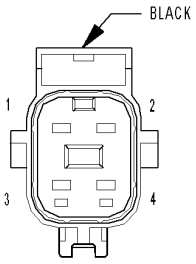

SENSOR-
OXYGEN-
RIGHT FRONT

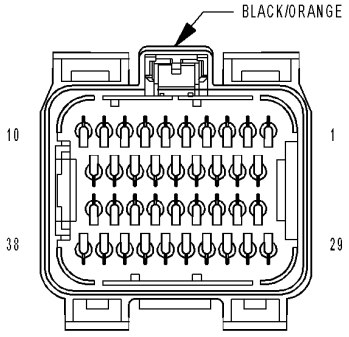

MODULE-
POWERTRAIN
CONTROL C2

8131a0de

For a complete wiring diagram **Refer to Section 8W**.

- **When Monitored:**
  With the engine running in closed loop mode, the ambient/battery temperature above 20° F and altitude below 8500 ft.
- **Set Condition:**
  If the PCM multiplies short term compensation by long term adaptive and a certain percentage is exceeded for two trips, a freeze frame is stored, the MIL illuminates and a trouble code is stored. Two Trip Fault. Three good trips to turn off the MIL.

Possible Causes
RESTRICTED FUEL SUPPLY LINE
FUEL PUMP INLET STRAINER PLUGGED
FUEL PUMP MODULE
O2 SIGNAL CIRCUIT
O2 RETURN CIRCUIT
O2 SENSOR HEATER OPERATION
O2 SENSOR
MAP SENSOR OPERATION
ECT SENSOR OPERATION
ENGINE MECHANICAL PROBLEM
FUEL FILTER/PRESSURE REGULATOR (HIGH)
PCM

Always perform the Pre-Diagnostic Troubleshooting procedure before proceeding. (Refer to 9 - ENGINE - DIAGNOSIS AND TESTING).

Diagnostic Test

1. ACTIVE DTC

Diagnose all other trouble codes before continuing.

NOTE: Check for contaminants that may have damaged an O2 Sensor: contaminated fuel, unapproved silicone, oil and coolant.
Ignition on, engine not running.
With a scan tool, read DTCs.

Is the DTC active at this time?

Yes >> Go To 2

No >> Refer to the INTERMITTENT CONDITION Diagnostic Procedure.
Perform the POWERTRAIN VERIFICATION TEST. (Refer to 9 - ENGINE - STANDARD PROCEDURE)

2. CHECKING FUEL PRESSURE

WARNING: The fuel system is under a constant pressure (even with the engine off). Before testing or servicing any fuel system hose, fitting or line, the fuel system pressure must be released. Failure to follow these instructions can result in personal injury or death.
Install a fuel pressure gauge to the fuel rail.
Ignition on, engine not running.
With the scan tool, actuate the ASD Fuel System test and observe the fuel pressure gauge.

NOTE: Fuel pressure specification is 407 KPa +/- 34 KPa (59 psi +/- 5 psi).
Turn the ignition off.

CAUTION: Stop All Actuations.

Choose a conclusion that best matches your fuel pressure reading.

Within Specification
Go To 3

Above Specification
Replace the fuel filter/pressure regulator.
Perform the POWERTRAIN VERIFICATION TEST. (Refer to 9 - ENGINE - STANDARD PROCEDURE)

Below Specification
Go To 12

3. O2 SENSOR OPERATION

Start the engine.

Allow the engine to reach normal operating temperature.

NOTE: If one of the O2 Sensor's Signal or Return circuit is shorted to ground the scan tool will display all O2 Sensor voltage readings low. The O2 Sensor that is shorted to ground will display a voltage reading near or at 0 volts.

NOTE: If one of the O2 Sensor Signal or Return circuits are shorted to voltage, the scan tool will display all O2 Sensor voltage readings high.

NOTE: After the repairs have been made, verify proper O2 Sensor operation. If all the O2 Sensor voltage readings have not returned to normal, follow the diagnostic procedure for the remaining O2 Sensors.
With the scan tool, monitor the 2/1 O2 Sensor voltage reading.

Is the voltage switching between 2.5 and 3.4 volts?

Yes >> Go To 4

No >> Go To 8

4. 2/1 O2 SENSOR HEATER OPERATION

Turn the ignition off.

NOTE: Wait a minimum of 10 minutes to allow the O2 Sensor to cool down before continuing the test. Allow the O2 Sensor voltage to stabilize at 5.0 volts.

NOTE: Perform the following test on all O2 Sensors.
Ignition on, engine not running.

With a scan tool, actuate the 2/1 O2 Heater Test.

With the scan tool, monitor 2/1 O2 Sensor voltage for at least 2 minutes.

Does the voltage stay above 4.5 volts?

Yes >> Replace the 2/1 O2 Sensor.
Perform the POWERTRAIN VERIFICATION TEST. (Refer to 9 - ENGINE - STANDARD PROCEDURE)

No >> Go To 5

5. MAP SENSOR OPERATION

Turn the ignition off.

Connect a Vacuum Gauge to a Manifold Vacuum source.

Start the engine.

Allow the engine to idle.

NOTE: If engine will not idle, maintain a constant RPM above idle.
With the scan tool, read the MAP Sensor vacuum value.

Is the scan tool reading within 1″ of the Vacuum Gauge reading?

Yes >> Go To 6

No >> Replace the MAP Sensor.
Perform the POWERTRAIN VERIFICATION TEST. (Refer to 9 - ENGINE - STANDARD PROCEDURE)

6. ECT SENSOR OPERATION

NOTE: For this test to be valid, the thermostat must be operating correctly.

NOTE: This test works best if performed on a cold engine (cold soak).
Ignition on, engine not running.

With the scan tool, read the Engine Coolant Temperature (ECT) Sensor value. If the engine was allowed to sit overnight (cold soak), the temperature value should be a sensible value that is somewhere close to the ambient temperature.

NOTE: If engine coolant temperature is above 82°C (180°F), allow the engine to cool until 65°C (150°F) is reached.
Start the Engine.

During engine warm-up, monitor the ECT Sensor value. The temperature value change should be a smooth transition from start up to normal operating temperature 82°C (180°F). The value should reach at least 82°C (180°F).

Did the ECT value increase smoothly and did it reach at least 180°F (82°C)?

Yes >> Go To 7

No >> Replace the Engine Coolant Temperature Sensor.
Perform the POWERTRAIN VERIFICATION TEST. (Refer to 9 - ENGINE - STANDARD PROCEDURE)

7. ENGINE MECHANICAL PROBLEM

Turn the ignition off.

Check for any of the following conditions/mechanical problems.

AIR INDUCTION SYSTEM - must be free from leaks.

ENGINE VACUUM - must be at least 13 inches in neutral.

ENGINE VALVE TIMING - must be within specifications.

ENGINE COMPRESSION - must be within specifications.

ENGINE EXHAUST SYSTEM - must be free of any restrictions or leaks.

ENGINE PCV SYSTEM - must flow freely.

TORQUE CONVERTER STALL SPEED - must be within specifications.

POWER BRAKE BOOSTER - no internal vacuum leaks.

FUEL - must be free of contamination.

FUEL INJECTOR - plugged or restricted injector; control wire not connected to correct injector.

Are there any engine mechanical problems?

Yes >> Repair as necessary.
Perform the POWERTRAIN VERIFICATION TEST. (Refer to 9 - ENGINE - STANDARD PROCEDURE)

No >> Go To 11

8. O2 SENSOR

Ignition on, engine not running.

Disconnect the 2/1 O2 Sensor harness connector.

With the scan tool, monitor the 2/1 O2 Sensor voltage.

O2 Sensor voltage should read 5.0 volts on the scan tool with the connector disconnected.

Connect a jumper wire between the (K43) O2 Sensor 2/1 Signal circuit and the (K902) O2 Upstream Return circuit in the O2 Sensor harness connector.

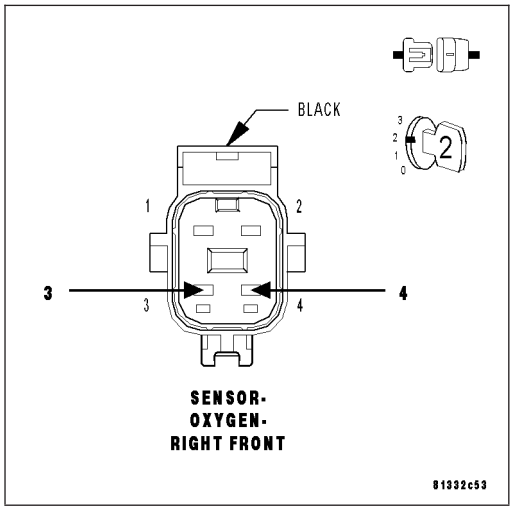

NOTE: The voltage should drop from 5.0 volts to 2.5 volts with the jumper wire in place.

Did the O2 Sensor voltage change from 5.0 volts to 2.5 volts when the jumper wire was installed?

Yes >> Replace the 2/1 O2 Sensor.
Perform the POWERTRAIN VERIFICATION TEST. (Refer to 9 - ENGINE - STANDARD PROCEDURE)

No >> Go To 9

NOTE: Remove the jumper wire before continuing.

9. O2 SENSOR SIGNAL CIRCUIT

With the scan tool, monitor all the O2 Sensor voltage reading with the jumper wire removed.

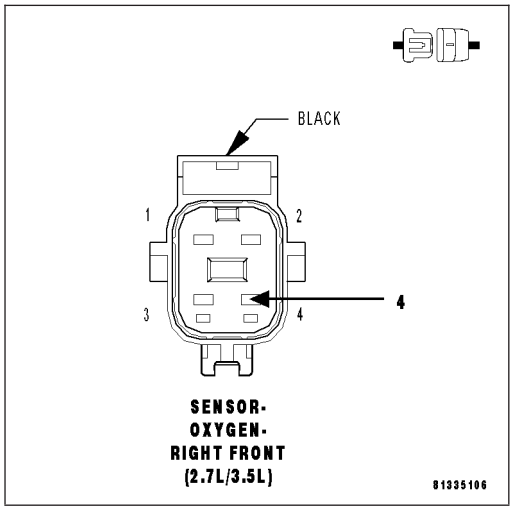

NOTE: The scan tool will display all O2 Sensor voltage readings approximately 5.0 volts when only one O2 Sensor's Signal circuit is shorted to voltage.

NOTE: The scan tool will display one O2 Sensor voltage close to zero and the others will read lower than normal when one O2 Sensor Signal circuit contains excessive resistance.

Is the voltage above 4.8 volts?

Yes >> Go To 10

No >> Check all the O2 Signal circuits for a short to ground, open, or short to voltage. Inspect the O2 Sensor connector and the PCM harness connector. If OK, replace and program the Powertrain Control Module per Service Information.
Perform the POWERTRAIN VERIFICATION TEST. (Refer to 9 - ENGINE - STANDARD PROCEDURE)

10. (K902) O2 UPSTREAM RETURN CIRCUIT

Disconnect the 2/1 O2 Sensor harness connector.

Measure the voltage on the (K902) O2 Upstream Return circuit in the O2 Sensor harness connector.

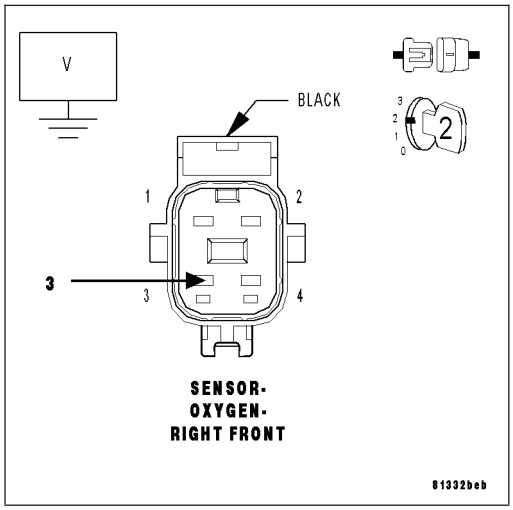

Is the voltage at 2.5 volts?

Yes >> Go To 11

No >> Check the (K902) O2 Upstream Return circuit for a short to ground, open, or short to voltage. Inspect the O2 Sensor connector and the PCM harness connector. If OK, replace and program the Powertrain Control Module per Service Information.

Perform the POWERTRAIN VERIFICATION TEST. (Refer to 9 - ENGINE - STANDARD PROCEDURE)

11. PCM

NOTE: Before continuing, check the PCM harness connector terminals for corrosion, damage, or terminal push out. Repair as necessary.

Using the schematics as a guide, inspect the wire harness and connectors. Pay particular attention to all Power and Ground circuits.

Were there any problems found?

Yes >> Repair as necessary.

Perform the POWERTRAIN VERIFICATION TEST. (Refer to 9 - ENGINE - STANDARD PROCEDURE)

No >> Replace and program the Powertrain Control Module per Service Information.

Perform the POWERTRAIN VERIFICATION TEST. (Refer to 9 - ENGINE - STANDARD PROCEDURE)

12. RESTRICTED FUEL SUPPLY LINE

WARNING: The fuel system is under a constant pressure (even with the engine off). Before testing or servicing any fuel system hose, fitting or line, the fuel system pressure must be released. Failure to follow these instructions can result in personal injury or death.

Raise vehicle on hoist, and disconnect the fuel pressure line at the fuel pump module.

Install special 5/16 fuel line adapter tool #6539 between disconnected fuel line and the fuel pump module.

Attach a fuel pressure test gauge to the T fitting on tool #6539.

Ignition on, engine not running.

With the scan tool, actuate the ASD Fuel System test and observe the fuel pressure gauge.

NOTE: Fuel pressure specification is 407 KPa +/- 34 KPa (59 psi +/- 5 psi).

CAUTION: Stop All Actuations.

Is the fuel pressure within specification?

Yes >> Repair or replace fuel supply line as necessary.

Perform the POWERTRAIN VERIFICATION TEST. (Refer to 9 - ENGINE - STANDARD PROCEDURE)

No >> Go To 13

13. FUEL PUMP INLET STRAINER

Turn the ignition off.

WARNING: The fuel system is under a constant pressure (even with the engine off). Before testing or servicing any fuel system hose, fitting or line, the fuel system pressure must be released.
Remove the Fuel Pump Module and inspect the Fuel Inlet Strainer.

Is the Fuel Inlet Strainer plugged?

Yes >> Replace the Fuel Pump Inlet Strainer.
Perform the POWERTRAIN VERIFICATION TEST. (Refer to 9 - ENGINE - STANDARD PROCEDURE)

No >> Go To 14

14. FUEL PUMP MODULE

If there are no possible causes remaining, view repair.

Repair

Replace the Fuel Pump Module.
Perform the POWERTRAIN VERIFICATION TEST. (Refer to 9 - ENGINE - STANDARD PROCEDURE)

P0175-FUEL SYSTEM 2/1 RICH

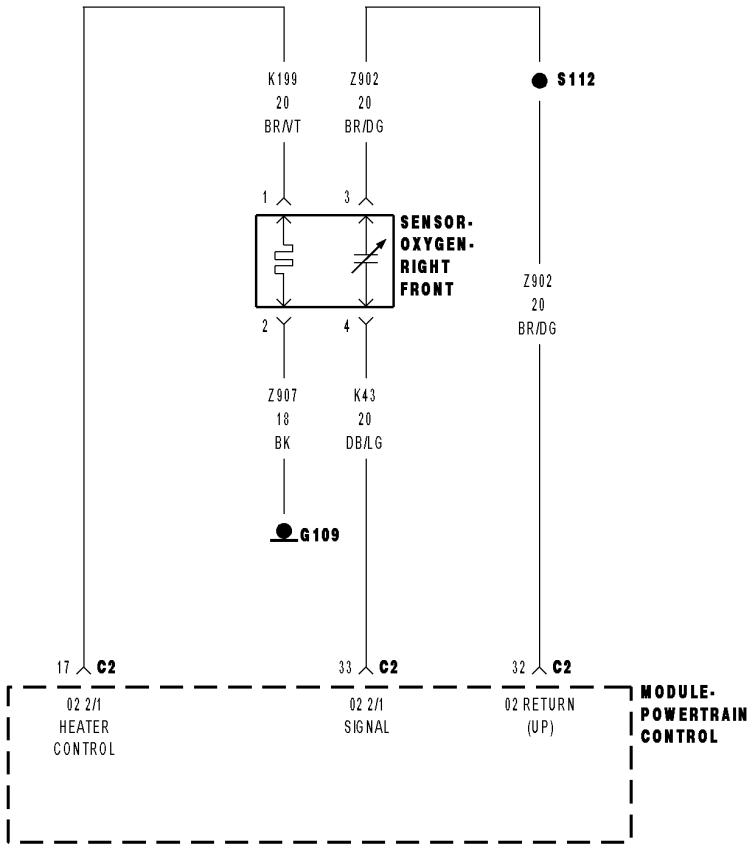

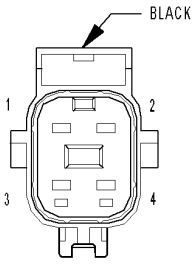

SENSOR-
OXYGEN-
RIGHT FRONT

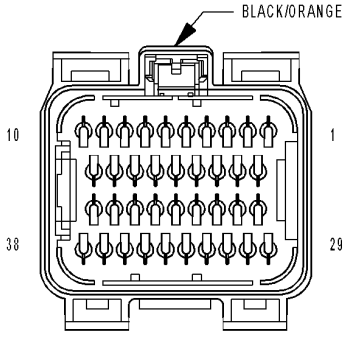

MODULE-
POWERTRAIN
CONTROL C2

8131a0de

For a complete wiring diagram **Refer to Section 8W**.

- **When Monitored:**
  With the engine running in closed loop mode, the ambient/battery temperature above 20° F and altitude below 8500 ft.
- **Set Condition:**
  If the PCM multiplies short term compensation by long term adaptive and a purge fuel multiplier and the result is below a certain value for 30 seconds over two trips, a freeze frame is stored, the MIL illuminates and a trouble code is stored. Two Trip Fault. Three good trips to turn off the MIL.

Possible Causes
O2 SENSOR HEATER OPERATION
EVAP PURGE SOLENOID OPERATION
O2 SIGNAL CIRCUIT
O2 RETURN CIRCUIT
O2 SENSOR
MAP SENSOR
ECT SENSOR
ENGINE MECHANICAL PROBLEM
FUEL FILTER/PRESSURE REGULATOR (HIGH)
PCM

Always perform the Pre-Diagnostic Troubleshooting procedure before proceeding. (Refer to 9 - ENGINE - DIAGNOSIS AND TESTING).

Diagnostic Test

1. ACTIVE DTC

NOTE: Check for contaminates that may have damaged an O2 Sensor: contaminated fuel, unapproved silicone, oil and coolant.
Ignition on, engine not running.
With a scan tool, read DTCs.

Is the DTC active at this time?

Yes >> Go To 2

No >> Refer to the INTERMITTENT CONDITION Diagnostic Procedure.
Perform the POWERTRAIN VERIFICATION TEST. (Refer to 9 - ENGINE - STANDARD PROCEDURE)

2. CHECKING FUEL PRESSURE

WARNING: The fuel system is under a constant pressure (even with the engine off). Before testing or servicing any fuel system hose, fitting or line, the fuel system pressure must be released. Failure to follow these instructions can result in personal injury or death.
Install a fuel pressure gauge to the fuel rail.
Ignition on, engine not running.
With the scan tool, actuate the ASD Fuel System test and observe the fuel pressure gauge.

NOTE: Fuel pressure specification is 407 KPa +/- 34 KPa (59 psi +/- 5 psi).
Turn the ignition off.

CAUTION: Stop All Actuations.

Choose a conclusion that best matches your fuel pressure reading.

Within Specification
Go To 3

Above Specification

Replace the fuel filter/pressure regulator.
Perform the POWERTRAIN VERIFICATION TEST. (Refer to 9 - ENGINE - STANDARD PROCEDURE)

3. O2 SENSOR OPERATION

Start the engine.
Allow the engine to reach normal operating temperature.

NOTE: If one of the O2 Sensors Signal or Return circuit is shorted to ground or voltage, all the other O2 Sensor voltage readings will be affected.

NOTE: After the repairs have been made, verify proper O2 Sensor operation. If all the O2 Sensor voltage readings have not returned to normal, follow the diagnostic procedure for the remaining O2 Sensors.
With the scan tool, monitor the 2/1 O2 Sensor voltage reading.

Is the voltage switching between 2.5 and 3.4 volts?

Yes >> Go To 4

No >> Go To 9

4. 2/1 O2 SENSOR HEATER OPERATION

Turn the ignition off.

NOTE: Wait a minimum of 10 minutes to allow the O2 Sensor to cool down before continuing the test. Allow the O2 Sensor voltage to stabilize at 5.0 volts.
Ignition on, engine not running.
With the scan tool, perform the 2/1 O2 Heater Test for each O2 Sensor.
With the scan tool, monitor the 2/1 O2 Sensor voltage while performing the Heater test for at least 2 minutes.

Does the voltage stay above 4.5 volts for each Sensor?

Yes >> Replace the 2/1 O2 Sensor.
Perform the POWERTRAIN VERIFICATION TEST. (Refer to 9 - ENGINE - STANDARD PROCEDURE)

No >> Go To 5

5. MAP SENSOR OPERATION

Connect a Vacuum Gauge to a Manifold Vacuum source.
Start the engine.
Allow the engine to idle.

NOTE: If engine will not idle, maintain a constant RPM above idle.
With the scan tool, read the MAP Sensor vacuum value.

Is the scan tool reading within 1″ of the Vacuum Gauge reading?

Yes >> Go To 6

No >> Replace the MAP Sensor.
Perform the POWERTRAIN VERIFICATION TEST. (Refer to 9 - ENGINE - STANDARD PROCEDURE)

NOTE: Remove the vacuum gauge before continuing.

6. ECT SENSOR OPERATION

NOTE: For this test to be valid, the thermostat must be operating correctly.

NOTE: This test works best if performed on a cold engine (cold soak).

Ignition on, engine not running.

With the scan tool, read the Engine Coolant Temperature Sensor value. If the engine was allowed to sit overnight (cold soak), the temperature value should be a sensible value that is somewhere close to the ambient temperature.

NOTE: If engine coolant temperature is above 82°C (180°F), allow the engine to cool until 65°C (150°F) is reached.

Start the Engine.

During engine warm-up, monitor the Engine Coolant Temperature value. The temp value change should be a smooth transition from start up to normal operating temp 82°C (180°F). The value should reach at least 82°C (180°F).

Did the ECT value increase smoothly and reach at least 180°F (82°C)?

Yes >> Go To 7

No >> Replace the Engine Coolant Temperature Sensor.
Perform the POWERTRAIN VERIFICATION TEST. (Refer to 9 - ENGINE - STANDARD PROCEDURE)

7. EVAP PURGE SOLENOID OPERATION

Turn the ignition off.

Disconnect the hoses at the Evap Purge Solenoid.

Using a hand vacuum pump, apply 10 inches of vacuum to the Evap Purge Solenoid vacuum source port on the component side.

Did the Evap Purge Solenoid hold vacuum?

Yes >> Go To 8

No >> Replace the EVAP Purge Solenoid.
Perform the POWERTRAIN VERIFICATION TEST. (Refer to 9 - ENGINE - STANDARD PROCEDURE)

NOTE: Connect the vacuum hoses before continuing.

8. ENGINE MECHANICAL PROBLEM

Check for any of the following conditions/mechanical problems.

AIR INDUCTION SYSTEM - must be free from restrictions.

ENGINE VACUUM - must be at least 13 inches in neutral.

ENGINE VALVE TIMING - must be within specifications.

ENGINE COMPRESSION - must be within specifications.

ENGINE EXHAUST SYSTEM - must be free of any restrictions or leaks.

ENGINE PCV SYSTEM - must flow freely.

TORQUE CONVERTER STALL SPEED - must be within specifications.

POWER BRAKE BOOSTER - no internal vacuum leaks.

FUEL - must be free of contamination.

FUEL INJECTOR - plugged or restricted injector; control wire not connected to correct injector.

Are there any engine mechanical problems?

Yes >> Repair as necessary.
Perform the POWERTRAIN VERIFICATION TEST. (Refer to 9 - ENGINE - STANDARD PROCEDURE)

No >> Go To 12

9. 2/1 O2 SENSOR

Ignition on, engine not running.

Disconnect the 2/1 O2 Sensor harness connector.

With the scan tool, monitor the 2/1 O2 Sensor voltage.

O2 Sensor voltage should read 5.0 volts on the scan tool with the connector disconnected.

Connect a jumper wire between the (K43) O2 Sensor 2/1 Signal circuit and the (K902) O2 Upstream Return circuit in the O2 Sensor harness connector.

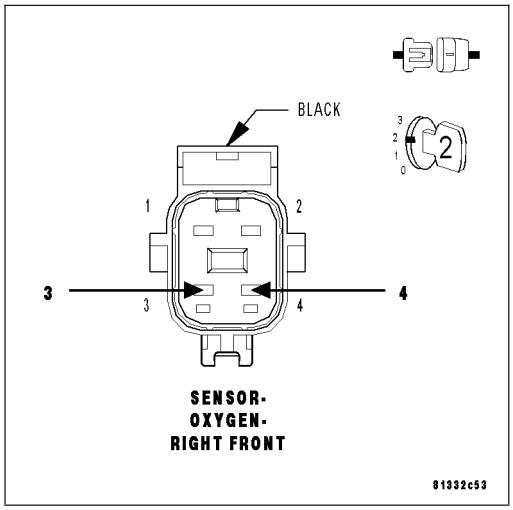

NOTE: The voltage should drop from 5.0 volts down to 2.5 volts with the jumper wire connected.

Did the O2 Sensor voltage drop from 5 volts to 2.5 volts when the jumper wire was installed?

Yes >> Replace the O2 Sensor

Perform the POWERTRAIN VERIFICATION TEST. (Refer to 9 - ENGINE - STANDARD PROCEDURE)

No >> Go To 10

NOTE: Remove the jumper wire before continuing.

10. O2 SENSOR SIGNAL CIRCUIT

WARNING: When the engine is operating, do not stand in direct line with the fan. Do not put your hands near the pulleys, belts, or fan. Do not wear loose clothing. Failure to follow these instructions can result in personal injury or death.

Start the engine.

Measure the voltage on the (K43) O2 Sensor 2/1 Signal circuit in the O2 Sensor harness connector.

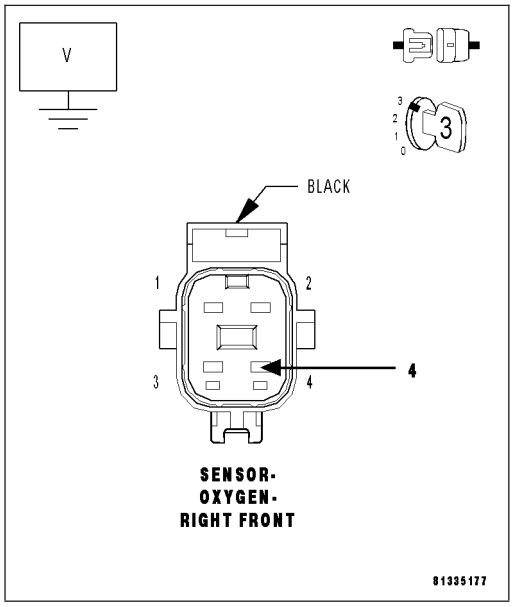

Is the voltage above 4.8 volts?

Yes >> Check the (K43) O2 Sensor 2/1 Signal circuit for damage, short to ground, open, or short to voltage. Inspect the O2 Sensor connector and the PCM harness connector. If OK, replace and program the Powertrain Control Module per Service Information.

Perform the POWERTRAIN VERIFICATION TEST. (Refer to 9 - ENGINE - STANDARD PROCEDURE)

No >> Go To 11

11. (K902) O2 SENSOR UPSTREAM RETURN CIRCUIT

Engine still running.

Measure the voltage on the (K902) O2 Upstream Return circuit in the O2 Sensor harness connector.

Is the voltage at 2.5 volts?

Yes >> Go To 12

No >> Check the (K902) O2 Upstream Return circuit for damage, short to ground, open, or short to voltage. Inspect the O2 Sensor connector and the PCM harness connector. If OK, replace and program the Powertrain Control Module per Service Information.

Perform the POWERTRAIN VERIFICATION TEST. (Refer to 9 - ENGINE - STANDARD PROCEDURE)

NOTE: Turn the ignition off before continuing.

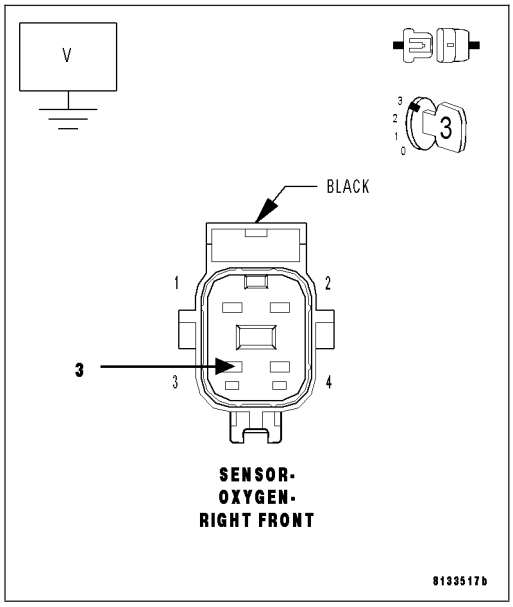

12. PCM

NOTE: Before continuing, check the PCM harness connector terminals for corrosion, damage, or terminal push out. Repair as necessary.

Using the schematics as a guide, inspect the wire harness and connectors. Pay particular attention to all Power and Ground circuits.

Were there any problems found?

Yes >> Repair as necessary.

Perform the POWERTRAIN VERIFICATION TEST. (Refer to 9 - ENGINE - STANDARD PROCEDURE)

No >> Replace and program the Powertrain Control Module per Service Information.

Perform the POWERTRAIN VERIFICATION TEST. (Refer to 9 - ENGINE - STANDARD PROCEDURE)

P0196–ENGINE OIL TEMPERATURE SENSOR CIRCUIT PERFORMANCE

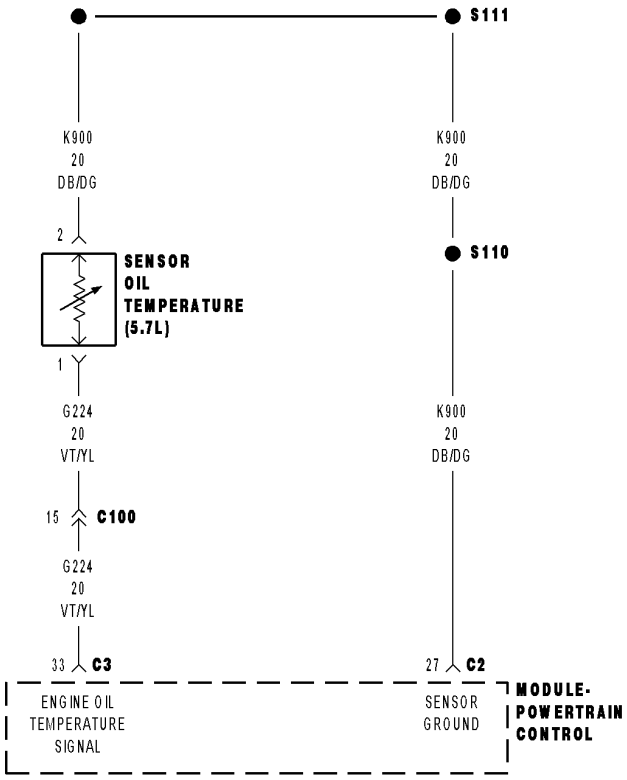

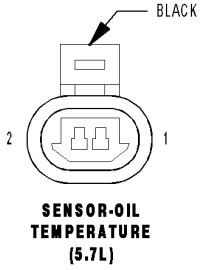

SENSOR-OIL
TEMPERATURE
(5.7L)

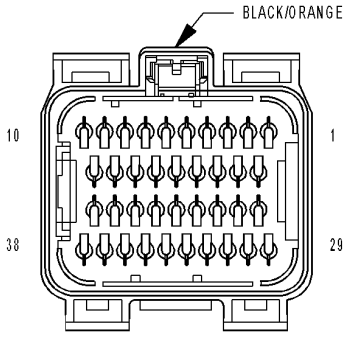

MODULE-
POWERTRAIN
CONTROL C2

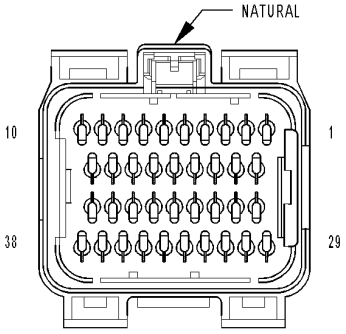

MODULE-
POWERTRAIN
CONTROL C3

81382304

For a complete wiring diagram **Refer to Section 8W**.

- **When Monitored:**
  Engine off time is greater than 480 minutes. Ambient temperature is greater than 4°C (38° F).
- **Set Condition:**
  The PCM detects the Engine Oil Temp value is incorrect by comparing it with the other engine inputs. Three good trips to turn off the MIL.

Possible Causes
(G224) ENGINE OIL TEMP SIGNAL CIRCUIT SHORTED TO BATTERY VOLTAGE
(G224) ENGINE OIL TEMP SIGNAL CIRCUIT OPEN
(K900) SENSOR GROUND CIRCUIT OPEN
(G224) ENGINE OIL TEMP SIGNAL CIRCUIT SHORTED TO GROUND
(G224) ENGINE OIL TEMP SIGNAL CIRCUIT SHORTED TO THE (K900) SENSOR GROUND
ENGINE OIL TEMPERATURE SENSOR
PCM

Always perform the Pre-Diagnostic Troubleshooting procedure before proceeding. (Refer to 9 - ENGINE - DIAGNOSIS AND TESTING).

Diagnostic Test

1. ACTIVE DTC

Ignition on, engine not running.
With a scan tool, read DTCs.

Is the DTC active at this time?

Yes >> Go To 2

No >> Refer to the INTERMITTENT CONDITION Diagnostic Procedure.
Perform the POWERTRAIN VERIFICATION TEST. (Refer to 9 - ENGINE - STANDARD PROCEDURE)

2. ENGINE OIL TEMP SIGNAL CIRCUIT

Turn the ignition off.
Disconnect the Engine Oil Temp Sensor harness connector.
Ignition on, engine not running.
Measure the voltage on the (G224) Engine Oil Temp Signal circuit in the Engine Oil Temp Sensor harness connector.

Is the voltage between 4.8 to 5.2 volts?

Yes >> Go To 3

No >> Go To 4

3. (K900) SENSOR GROUND CIRCUIT

Measure the resistance between ground and the (K900) Sensor Ground circuit in the Engine Oil Temp Sensor harness connector.

Is the resistance below 15.0 ohms?

Yes >> Replace the Engine Oil Temperature Sensor.
Perform the POWERTRAIN VERIFICATION TEST. (Refer to 9 - ENGINE - STANDARD PROCEDURE)

No >> Go To 8

4. (G224) ENGINE OIL TEMP SIGNAL CIRCUIT SHORTED TO BATTERY VOLTAGE

Turn the ignition off.

Disconnect the PCM harness connectors.

NOTE: Visually inspect both the component and the PCM connectors. Look for damaged, partially broken wires, and backed out or corroded terminals.

Ignition on, engine not running.

Measure the voltage on the (G224) Engine Oil Temp Signal circuit in the Engine Oil Temp Sensor harness connector.

Is voltage present?

Yes >> Repair the short to battery voltage in the (G224) Engine Oil Temp Signal circuit.

Perform the POWERTRAIN VERIFICATION TEST. (Refer to 9 - ENGINE - STANDARD PROCEDURE)

No >> Go To 5

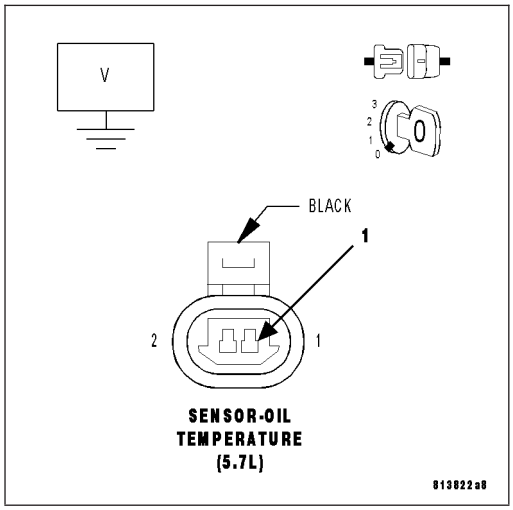

5. (G224) ENGINE OIL TEMP SIGNAL CIRCUIT OPEN

Turn the ignition off.

CAUTION: Do not probe the PCM harness connectors. Probing the PCM harness connectors will damage the PCM terminals resulting in poor terminal to pin connection. Install Miller Special Tool #8815 to perform diagnosis.

Measure the resistance of the (G224) Engine Oil Temp Signal circuit from the Engine Oil Temp Sensor harness connector to the appropriate terminal of special tool #8815.

Is the resistance below 5.0 ohms?

Yes >> Go To 6

No >> Repair the open in the (G224) Engine Oil Temp Signal circuit.

Perform the POWERTRAIN VERIFICATION TEST. (Refer to 9 - ENGINE - STANDARD PROCEDURE)

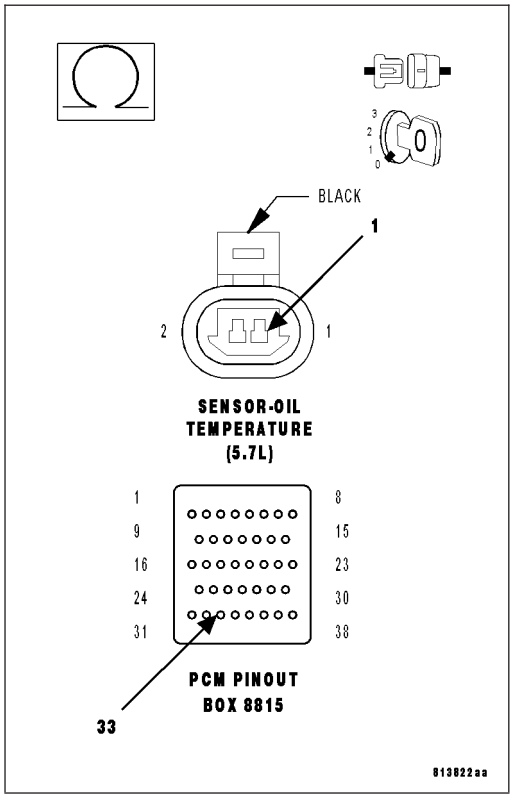

6. (G224) ENGINE OIL TEMP SIGNAL CIRCUIT SHORTED TO GROUND

Measure the resistance between ground and the (G224) Engine Oil Temp Signal circuit in the Engine Oil Temp Sensor harness connector.

Is the resistance below 100 ohms?

Yes >> Repair the short to ground in the (G224) Engine Oil Temp Signal circuit.
Perform the POWERTRAIN VERIFICATION TEST. (Refer to 9 - ENGINE - STANDARD PROCEDURE)

No >> Go To 7

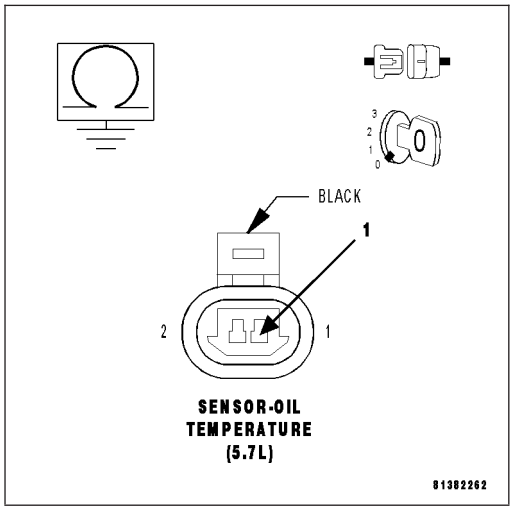

7. (G224) ENGINE OIL TEMP SIGNAL SHORTED TO THE (K900) SENSOR GROUND

Measure the resistance between the (G224) Engine Oil Temp Signal circuit and the (K900) Sensor ground circuit in the Engine Oil Temp Sensor harness connector.

Is the resistance below 5.0 ohms?

Yes >> Repair the short between the (K900) Sensor ground and the (G224) Engine Oil Temp Signal circuit.
Perform the POWERTRAIN VERIFICATION TEST. (Refer to 9 - ENGINE - STANDARD PROCEDURE)

No >> Go To 9

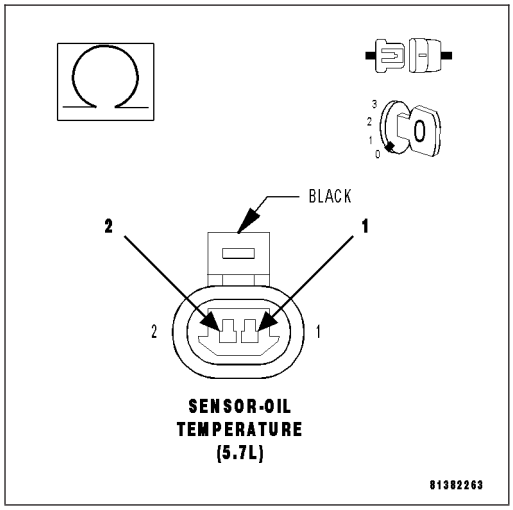

8. (K900) SENSOR GROUND CIRCUIT OPEN

Disconnect the PCM harness connectors.

Measure the resistance of the (K900) Sensor ground circuit from the Engine Oil Temp Sensor harness connector to the appropriate terminal of special tool #8815.

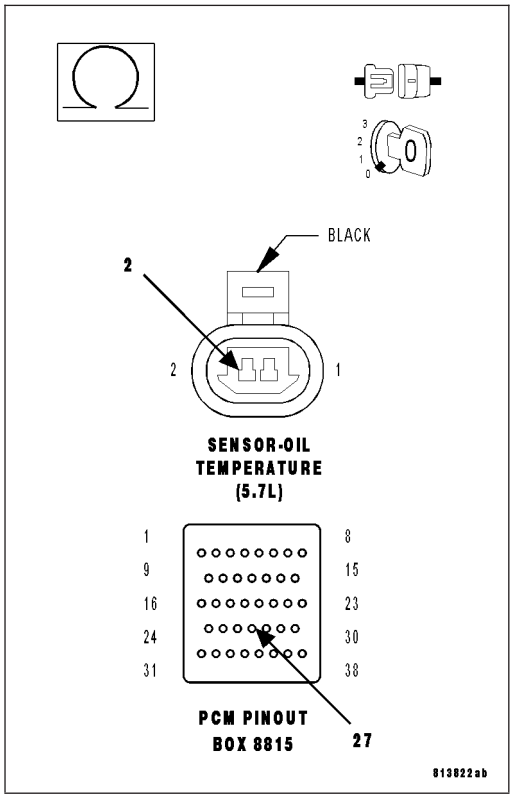

Is the resistance below 5.0 ohms?

Yes >> Go To 9

No >> Repair the open in the (K900) Sensor ground circuit.
Perform the POWERTRAIN VERIFICATION TEST. (Refer to 9 - ENGINE - STANDARD PROCEDURE)

9. PCM

NOTE: Before continuing, check the PCM harness connector terminals for corrosion, damage, or terminal push out. Repair as necessary.

Using the schematics as a guide, inspect the wire harness and connectors. Pay particular attention to all Power and Ground circuits.

Were there any problems found?

Yes >> Repair as necessary.
Perform the POWERTRAIN VERIFICATION TEST. (Refer to 9 - ENGINE - STANDARD PROCEDURE)

No >> Replace and program the Powertrain Control Module per Service Information.
Perform the POWERTRAIN VERIFICATION TEST. (Refer to 9 - ENGINE - STANDARD PROCEDURE)

P0197-ENGINE OIL TEMPERATURE SENSOR CIRCUIT LOW

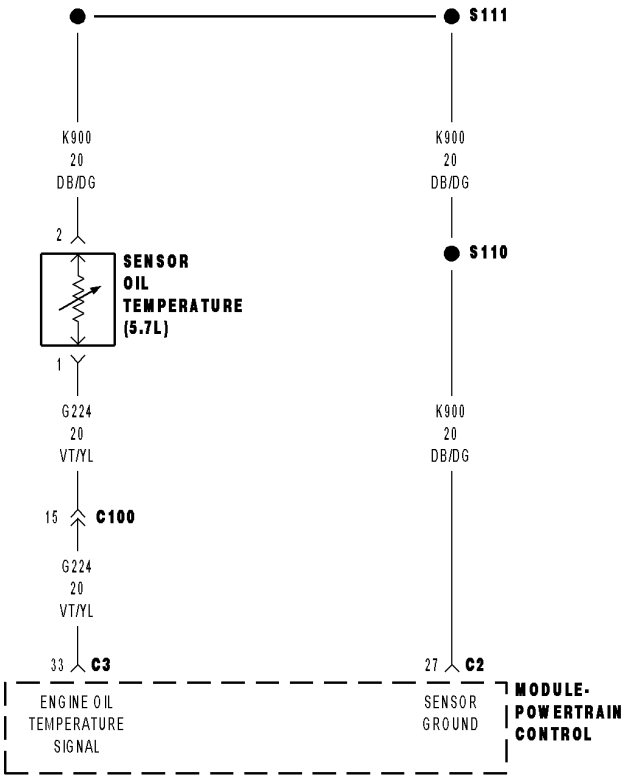

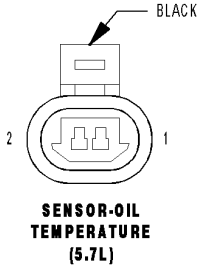

SENSOR-OIL
TEMPERATURE
(5.7L)

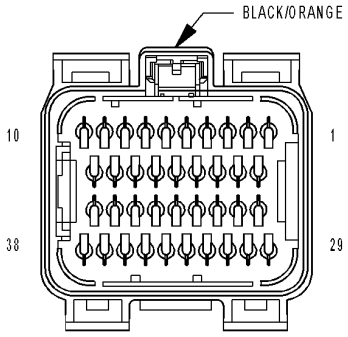

MODULE-
POWERTRAIN
CONTROL C2

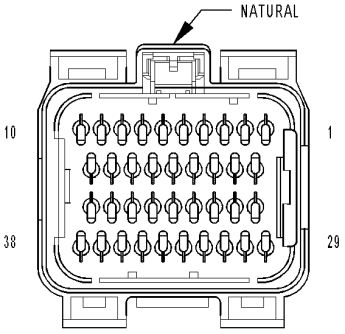

MODULE-
POWERTRAIN
CONTROL C3

81382304

For a complete wiring diagram **Refer to Section 8W**.

- **When Monitored:**
  With the ignition on. Battery voltage greater than 10.4 volts.
- **Set Condition:**
  The Engine Oil Temperature sensor circuit voltage at the PCM is less than the calibrated amount. One Trip Fault. Three good trips to clear the MIL.

Possible Causes
(G224) ENGINE OIL TEMP SIGNAL CIRCUIT SHORTED TO GROUND
(G224) ENGINE OIL TEMP SIGNAL CIRCUIT SHORTED TO THE (K900) SENSOR GROUND
ENGINE OIL TEMPERATURE SENSOR
PCM

Always perform the Pre-Diagnostic Troubleshooting procedure before proceeding. (Refer to 9 - ENGINE - DIAGNOSIS AND TESTING).

Diagnostic Test

1. ACTIVE DTC

Ignition on, engine not running.
With a scan tool, read DTCs.

Is the DTC active at this time?

Yes >> Go To 2

No >> Refer to the INTERMITTENT CONDITION Diagnostic Procedure.
Perform the POWERTRAIN VERIFICATION TEST. (Refer to 9 - ENGINE - STANDARD PROCEDURE)

2. ENGINE OIL TEMPERATURE SENSOR

With the scan tool, clear the DTC.
Turn the ignition off.
Disconnect the Engine Oil Temp Sensor harness connector.
Ignition on, engine not running.
With the scan tool, read DTCs.

Does the P0198-ENGINE OIL TEMPERATURE SENSOR CIRCUIT HIGH set?

Yes >> Replace the Engine Oil Temp Sensor.
Perform the POWERTRAIN VERIFICATION TEST. (Refer to 9 - ENGINE - STANDARD PROCEDURE)

No >> Go To 3

3. (G224) ENGINE OIL TEMP SIGNAL CIRCUIT SHORTED TO THE (K900) SENSOR GROUND CIRCUIT

Turn the ignition off.

Disconnect the PCM harness connectors.

Measure the resistance between the (K900) Sensor ground circuit and the (G224) Engine Oil Temp Signal circuit in the Engine Oil Temp Sensor harness connector.

Is the resistance below 5.0 ohms?

Yes >> Repair the short to between the (K900) Sensor ground circuit and the (G224) Engine Oil Temp Signal circuit.
Perform the POWERTRAIN VERIFICATION TEST. (Refer to 9 - ENGINE - STANDARD PROCEDURE)

No >> Go To 4

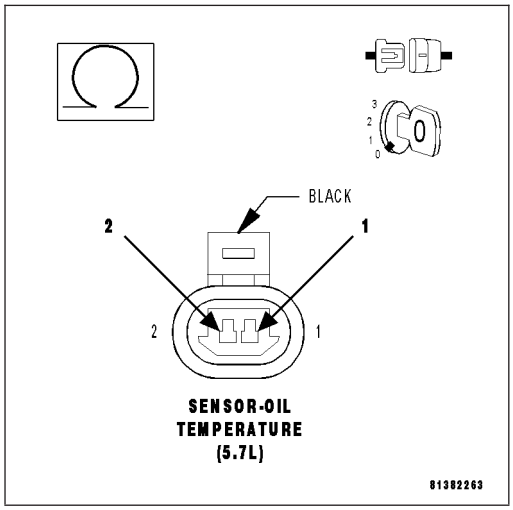

4. (G224) ENGINE OIL TEMP SIGNAL CIRCUIT SHORTED GROUND

Measure the resistance between ground and the (G224) Engine Oil Temp Signal circuit in the Engine Oil Temp Sensor harness connector.

Is the resistance below 100 ohms?

Yes >> Repair the short to ground in the (G224) Engine Oil Temp Signal circuit.
Perform the POWERTRAIN VERIFICATION TEST. (Refer to 9 - ENGINE - STANDARD PROCEDURE)

No >> Go To 5

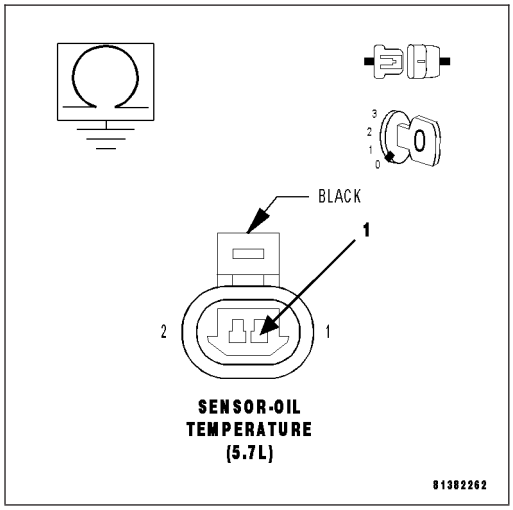

5. PCM

NOTE: Before continuing, check the PCM harness connector terminals for corrosion, damage, or terminal push out. Repair as necessary.

Using the schematics as a guide, inspect the wire harness and connectors. Pay particular attention to all Power and Ground circuits.

Were there any problems found?

Yes >> Repair as necessary.
Perform the POWERTRAIN VERIFICATION TEST. (Refer to 9 - ENGINE - STANDARD PROCEDURE)

No >> Replace and program the Powertrain Control Module per Service Information.
Perform the POWERTRAIN VERIFICATION TEST. (Refer to 9 - ENGINE - STANDARD PROCEDURE)

P0198-ENGINE OIL TEMPERATURE SENSOR CIRCUIT HIGH

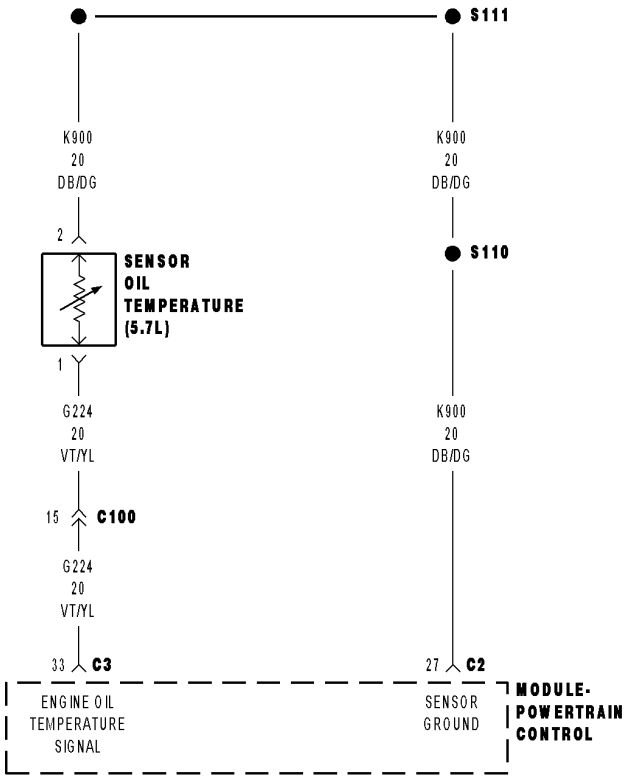

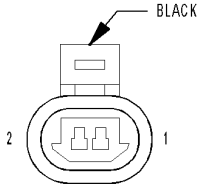

SENSOR-OIL
TEMPERATURE
(5.7L)

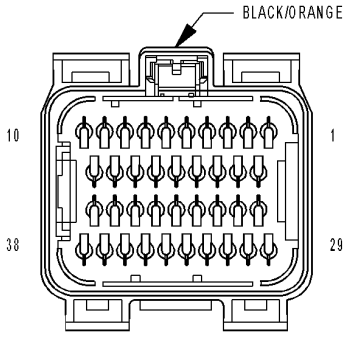

MODULE-
POWERTRAIN
CONTROL C2

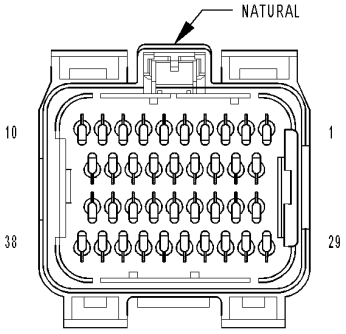

MODULE-
POWERTRAIN
CONTROL C3

81382304

For a complete wiring diagram **Refer to Section 8W**.

- **When Monitored:**
  With the ignition on. Battery voltage greater than 10.4 volts.
- **Set Condition:**
  The Engine Oil Temperature sensor circuit voltage at the PCM is greater than the calibrated amount. One Trip Fault. Three good trips to turn off the MIL.

Possible Causes
(G224) ENGINE OIL TEMP SIGNAL CIRCUIT SHORTED TO BATTERY VOLTAGE
(G224) ENGINE OIL TEMP SIGNAL CIRCUIT OPEN
(K900) SENSOR GROUND CIRCUIT OPEN
ENGINE OIL TEMPERATURE SENSOR
PCM

Always perform the Pre-Diagnostic Troubleshooting procedure before proceeding. (Refer to 9 - ENGINE - DIAGNOSIS AND TESTING).

Diagnostic Test

1. ACTIVE DTC

Ignition on, engine not running.

With a scan tool, read DTCs.

IS the DTC active at this time?

Yes >> Go To 2

No >> Refer to the INTERMITTENT CONDITION Diagnostic Procedure.
Perform the POWERTRAIN VERIFICATION TEST. (Refer to 9 - ENGINE - STANDARD PROCEDURE)

2. ENGINE OIL TEMP SENSOR

- With the scan tool, clear the DTC.

Turn the ignition off.

Disconnect the Engine Oil Temp Sensor harness connector.

Connect a jumper wire between the (G224) Engine Oil Temp Signal circuit and the (K900) Sensor ground circuit in the Engine Oil Temp Sensor harness connector.

Ignition on, engine not running.

With a scan tool, read DTCs.

Does the P0197-ENGINE OIL TEMPERATURE SENSOR CIRCUIT LOW DTC set?

Yes >> Replace the Engine Oil Temp Sensor.
Perform the POWERTRAIN VERIFICATION TEST. (Refer to 9 - ENGINE - STANDARD PROCEDURE)

No >> Go To 3

NOTE: Remove the jumper wire before continuing.

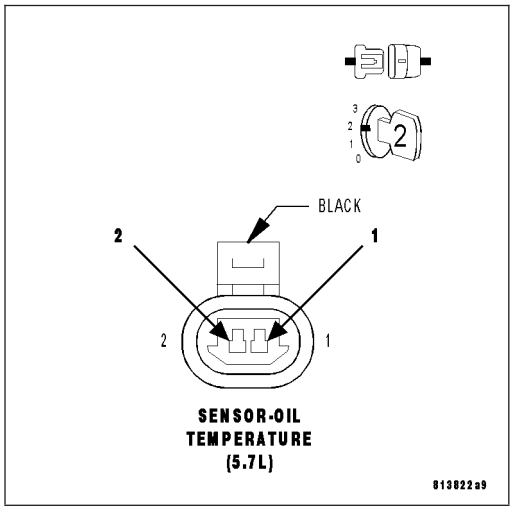

3. (G224) ENGINE OIL TEMP SIGNAL CIRCUIT SHORTED TO BATTERY VOLTAGE

Turn the ignition off.

Disconnect the PCM harness connectors.

Ignition on, engine not running.

Measure the voltage on the (G224) Engine Oil Temp Signal circuit in the Engine Oil Temp Sensor harness connector.

Is the voltage above 5.2 volts?

Yes >> Repair the short to battery voltage in the (G224) Engine Oil Temp Signal circuit.
Perform the POWERTRAIN VERIFICATION TEST. (Refer to 9 - ENGINE - STANDARD PROCEDURE)

No >> Go To 4

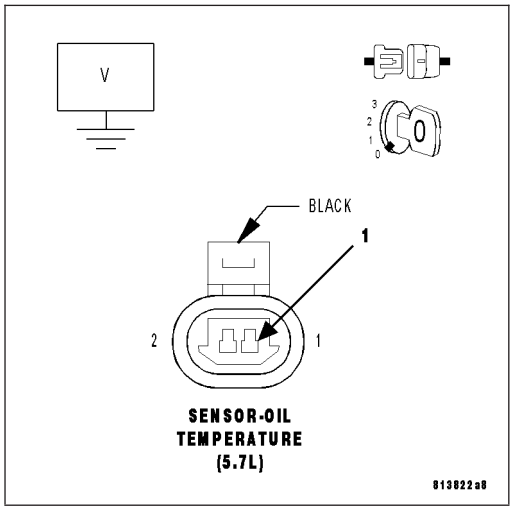

4. (G224) ENGINE OIL TEMP SIGNAL CIRCUIT OPEN

Turn the ignition off.

CAUTION: Do not probe the PCM harness connectors. Probing the PCM harness connectors will damage the PCM terminals resulting in poor terminal to pin connection. Install Miller Special Tool #8815 to perform diagnosis.

Measure the resistance of the (G224) Engine Oil Temp Signal circuit from the Engine Oil Temp Sensor harness connector to the appropriate terminal of special tool #8815.

Is the resistance below 5.0 ohms?

Yes >> Go To 5

No >> Repair the open in the (G224) Engine Oil Temp Signal circuit.
Perform the POWERTRAIN VERIFICATION TEST. (Refer to 9 - ENGINE - STANDARD PROCEDURE)

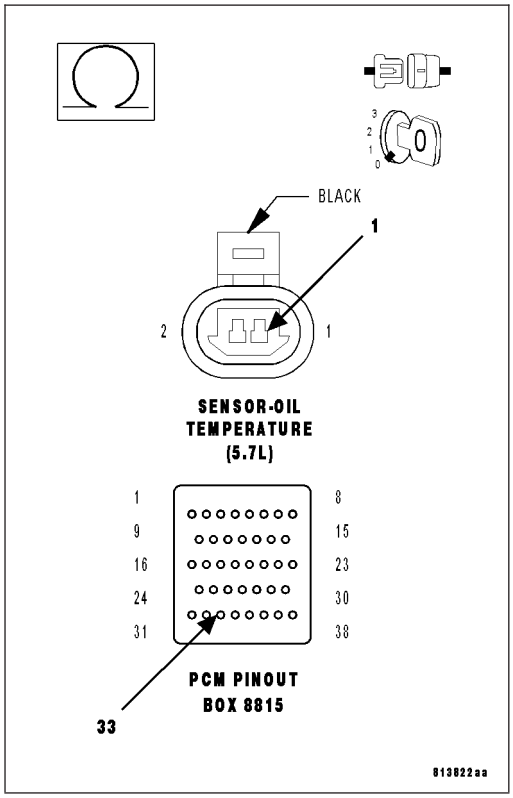

5. (K900) SENSOR GROUND CIRCUIT OPEN

Measure the resistance of the (K900) Sensor ground circuit from the Engine Oil Temp Sensor harness connector to the appropriate terminal of special tool #8815.

Is the resistance below 5.0 ohms?

Yes >> Go To 6

No >> Repair the open in the (K900) Sensor ground circuit.
Perform the POWERTRAIN VERIFICATION TEST. (Refer to 9 - ENGINE - STANDARD PROCEDURE)

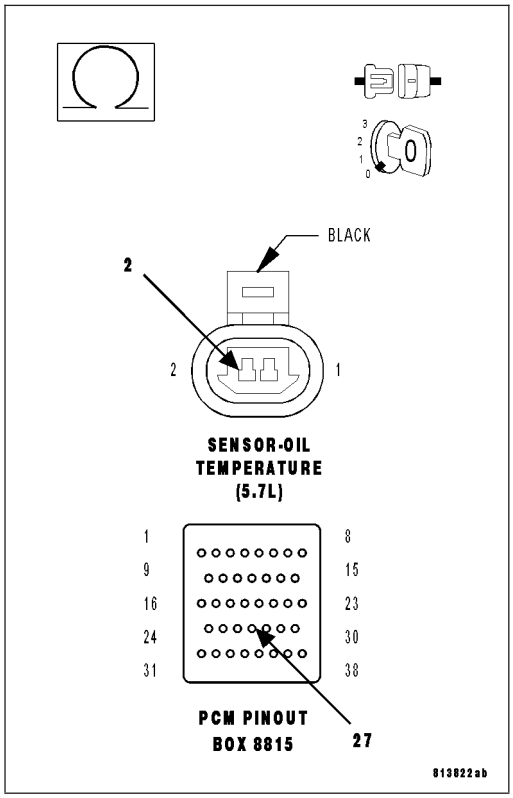

6. PCM

NOTE: Before continuing, check the PCM harness connector terminals for corrosion, damage, or terminal push out. Repair as necessary.
Using the schematics as a guide, inspect the wire harness and connectors. Pay particular attention to all Power and Ground circuits.

Were there any problems found?

Yes >> Repair as necessary.
Perform the POWERTRAIN VERIFICATION TEST. (Refer to 9 - ENGINE - STANDARD PROCEDURE)

No >> Replace and program the Powertrain Control Module per Service Information.
Perform the POWERTRAIN VERIFICATION TEST. (Refer to 9 - ENGINE - STANDARD PROCEDURE)

P0201-FUEL INJECTOR 1 CIRCUIT

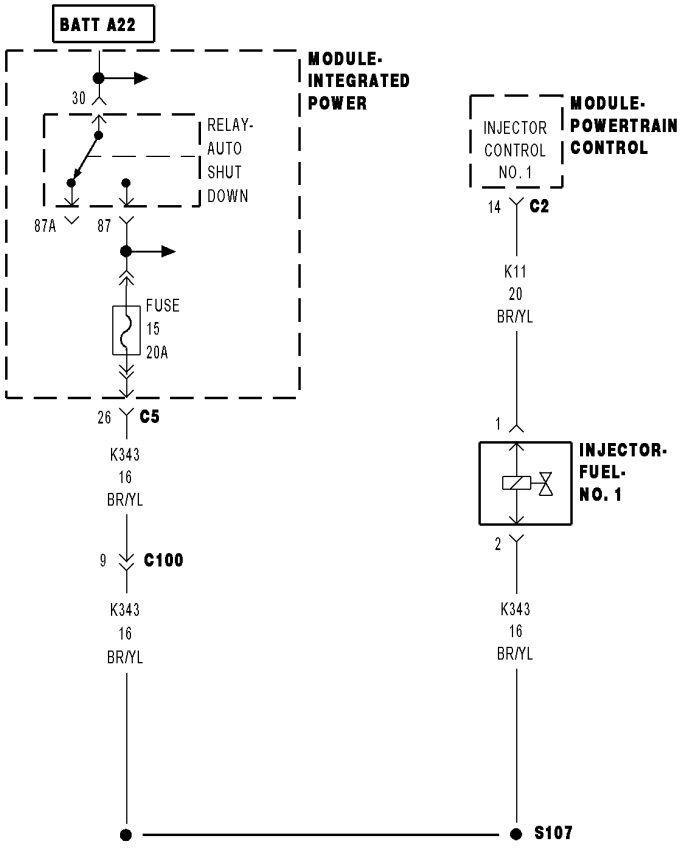

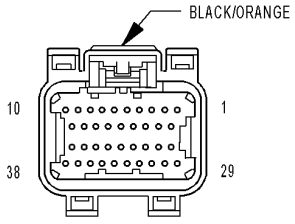

MODULE-
POWERTRAIN
CONTROL C2

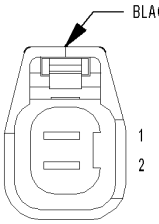

INJECTOR-
FUEL-NO. 1

815f6fa1

For a complete wiring diagram **Refer to Section 8W**.

- **When Monitored:**
  With battery voltage greater than 10 volts. Auto Shutdown Relay energized. Engine speed less than 3000 rpm.
- **Set Condition:**
  No inductive spike is detected after injector turn off.

Possible Causes
(K343) ASD RELAY OUTPUT 2 CIRCUIT
(K11) INJECTOR CONTROL NO.1 CIRCUIT OPEN
(K11) INJECTOR CONTROL NO.1 CIRCUIT SHORTED TO GROUND
FUEL INJECTOR
PCM

Always perform the Pre-Diagnostic Troubleshooting procedure before proceeding. (Refer to 9 - ENGINE - DIAGNOSIS AND TESTING).

Diagnostic Test

1. ACTIVE DTC

Ignition on, engine not running.

With a scan tool, read DTCs.

Is the DTC active at this time?

Yes >> Go To 2

No >> Refer to the INTERMITTENT CONDITION Diagnostic Procedure.
Perform the POWERTRAIN VERIFICATION TEST. (Refer to 9 - ENGINE - STANDARD PROCEDURE)

2. (K33) ASD RELAY OUTPUT 2 CIRCUIT

Turn the ignition off.

Disconnect the No.1 Fuel Injector harness connector.

Ignition on, engine not running.

With the scan tool, actuate the ASD Relay.

Using a 12-volt test light connected to ground, backprobe the (K343) ASD Relay Output 2 circuit in the Fuel Injector harness connector.

Does the test light illuminate brightly?

Yes >> Go To 3

No >> Repair the excessive resistance or short to ground in the (K343) ASD Relay Output 2 circuit.
Perform the POWERTRAIN VERIFICATION TEST. (Refer to 9 - ENGINE - STANDARD PROCEDURE)

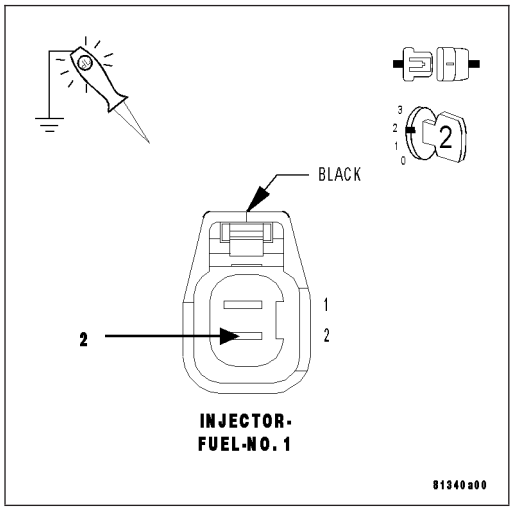

3. FUEL INJECTOR

Using a 12-volt test light connected to 12-volts, backprobe the (K11) Injector Control No.1 circuit.

With the scan tool, actuate the Fuel Injector.

What is the state of the test light during the actuation?

Brightly Blinking.

Replace the Fuel Injector.

Perform the POWERTRAIN VERIFICATION TEST. (Refer to 9 - ENGINE - STANDARD PROCEDURE)

ON Constantly.

Go To 4

OFF Constantly.

Go To 5

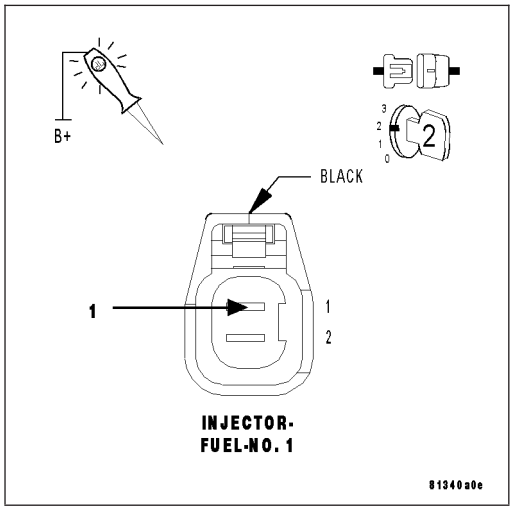

4. (K11) INJECTOR CONTROL NO.1 CIRCUIT SHORTED TO GROUND

Turn the ignition off.

Disconnect the PCM harness connectors.

Measure the resistance between ground and the (K11) Injector Control No.1 circuit in the Injector harness connector.

Is the resistance below 100 ohms?

Yes >> Repair the short to ground in the (K11) Injector Control No.1 circuit.

Perform the POWERTRAIN VERIFICATION TEST. (Refer to 9 - ENGINE - STANDARD PROCEDURE)

No >> Go To 6

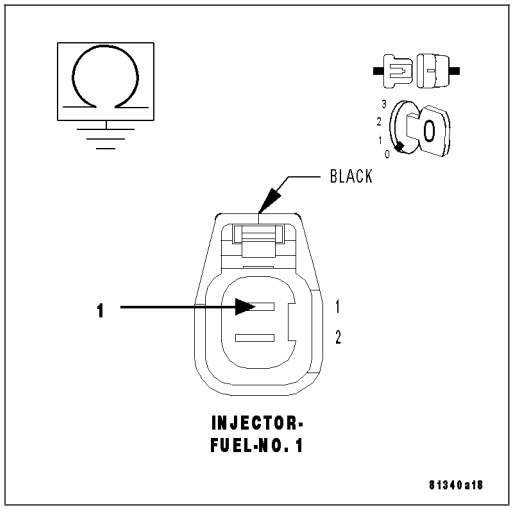

5. (K11) INJECTOR CONTROL NO.1 CIRCUIT OPEN

Turn the ignition off.

Disconnect the PCM harness connectors.

CAUTION: Do not probe the PCM harness connectors. Probing the PCM harness connectors will damage the PCM terminals resulting in poor terminal to pin connection. Install Miller Special Tool #8815 to perform diagnosis.

Measure the resistance of the (K11) Injector Control No.1 circuit from the Fuel Injector harness connector to the appropriate terminal of special tool #8815.

Is the resistance below 5.0 ohms?

Yes >> Go To 6

No >> Repair the open in the (K11) Injector Control No.1 circuit.
Perform the POWERTRAIN VERIFICATION TEST. (Refer to 9 - ENGINE - STANDARD PROCEDURE)

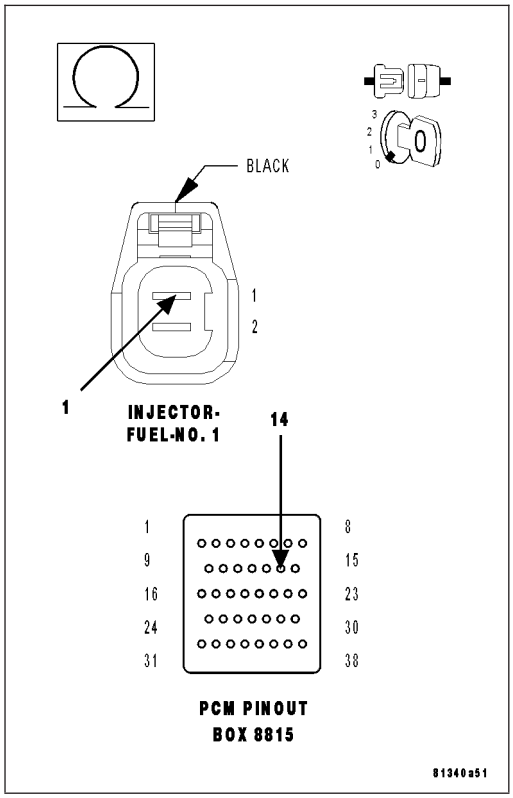

6. PCM

NOTE: Before continuing, check the PCM harness connector terminals for corrosion, damage, or terminal push out. Repair as necessary.

Using the schematics as a guide, inspect the wire harness and connectors. Pay particular attention to all Power and Ground circuits.

Were there any problems found?

Yes >> Repair as necessary.
Perform the POWERTRAIN VERIFICATION TEST. (Refer to 9 - ENGINE - STANDARD PROCEDURE)

No >> Replace and program the Powertrain Control Module per Service Information.
Perform the POWERTRAIN VERIFICATION TEST. (Refer to 9 - ENGINE - STANDARD PROCEDURE)

P0202-FUEL INJECTOR 2 CIRCUIT

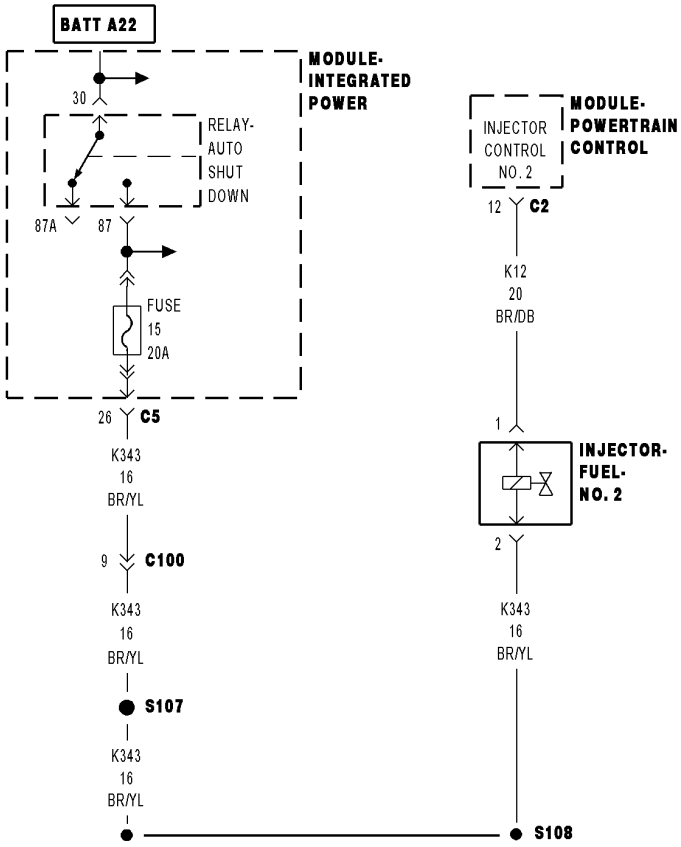

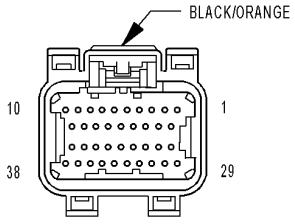

MODULE-
POWERTRAIN
CONTROL C2

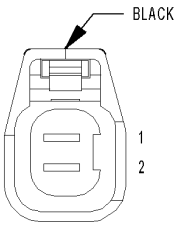

INJECTOR-
FUEL-NO. 2

81516b5

For a complete wiring diagram **Refer to Section 8W**.

- **When Monitored:**
  With battery voltage greater than 10 volts. Auto Shutdown Relay energized. Engine speed less than 3000 rpm.
- **Set Condition:**
  No inductive spike is detected after injector turn off.

Possible Causes
(K343) ASD RELAY OUTPUT 2 CIRCUIT
(K12) INJECTOR CONTROL NO.2 CIRCUIT OPEN
(K12) INJECTOR CONTROL NO.2 CIRCUIT SHORTED TO GROUND
FUEL INJECTOR
PCM

Always perform the Pre-Diagnostic Troubleshooting procedure before proceeding. (Refer to 9 - ENGINE - DIAGNOSIS AND TESTING).

Diagnostic Test

1. ACTIVE DTC

Ignition on, engine not running.

With a scan tool, read DTCs.

Is the DTC active at this time?

Yes >> Go To 2

No >> Refer to the INTERMITTENT CONDITION Diagnostic Procedure.
Perform the POWERTRAIN VERIFICATION TEST. (Refer to 9 - ENGINE - STANDARD PROCEDURE)

2. (K343) ASD RELAY OUTPUT 2 CIRCUIT

Turn the ignition off.

Disconnect the No.2 Fuel Injector harness connector.

Ignition on, engine not running.

With the scan tool, actuate the ASD Relay.

Using a 12-volt test light connected to ground, backprobe the (K343) ASD Relay Output 2 circuit in the No.2 Fuel Injector harness connector.

Does the test light illuminate brightly?

Yes >> Go To 3

No >> Repair the excessive resistance or short to ground in the (K343) ASD Relay Output 2 circuit.
Perform the POWERTRAIN VERIFICATION TEST. (Refer to 9 - ENGINE - STANDARD PROCEDURE)

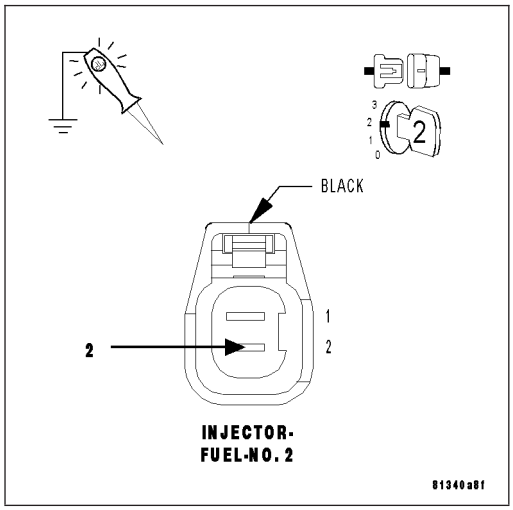

3. FUEL INJECTOR

Using a 12-volt test light connected to 12-volts, backprobe the (K12) Injector Control No.2 circuit.

With the scan tool, actuate the No.2 Fuel Injector.

What is the state of the test light during the actuation?

Brightly Blinking.

Replace the Fuel Injector.

Perform the POWERTRAIN VERIFICATION TEST. (Refer to 9 - ENGINE - STANDARD PROCEDURE)

ON Constantly.

Go To 4

OFF Constantly.

Go To 5

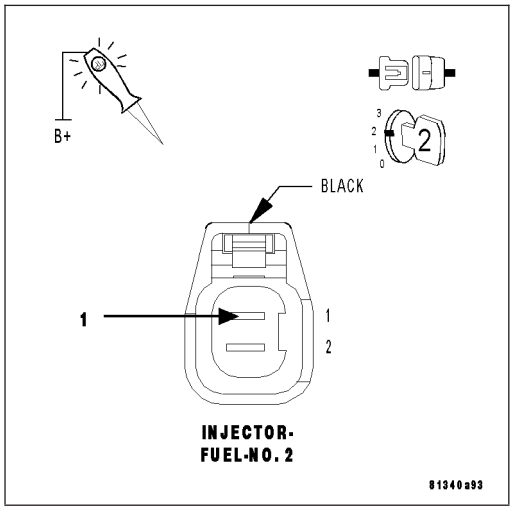

4. (K12) INJECTOR CONTROL NO.2 CIRCUIT SHORTED TO GROUND

Turn the ignition off.

Disconnect the PCM harness connectors.

Measure the resistance between ground and the (K12) Injector Control No.2 circuit in the Injector harness connector.

Is the resistance below 100 ohms?

Yes >> Repair the short to ground in the (K12) Injector Control No.2 circuit.

Perform the POWERTRAIN VERIFICATION TEST. (Refer to 9 - ENGINE - STANDARD PROCEDURE)

No >> Go To 6

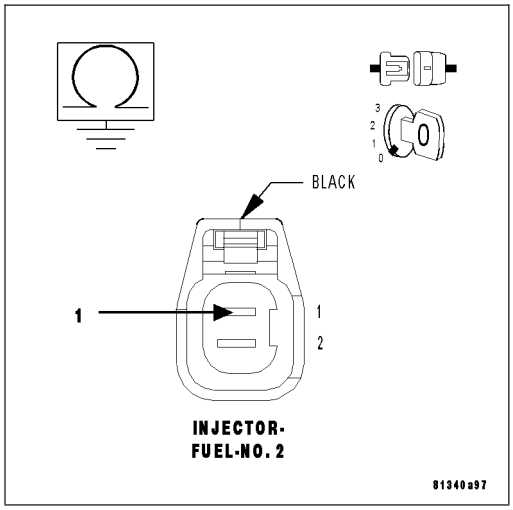

5. (K12) INJECTOR CONTROL NO.2 CIRCUIT OPEN

Turn the ignition off.

Disconnect the PCM harness connectors.

CAUTION: Do not probe the PCM harness connectors. Probing the PCM harness connectors will damage the PCM terminals resulting in poor terminal to pin connection. Install Miller Special Tool #8815 to perform diagnosis.

Measure the resistance of the (K12) Injector Control No.2 circuit from the Fuel Injector harness connector to the appropriate terminal of special tool #8815.

Is the resistance below 5.0 ohms?

Yes >> Go To 6

No >> Repair the open in the (K12) Injector Control No.2 circuit.
Perform the POWERTRAIN VERIFICATION TEST. (Refer to 9 - ENGINE - STANDARD PROCEDURE)

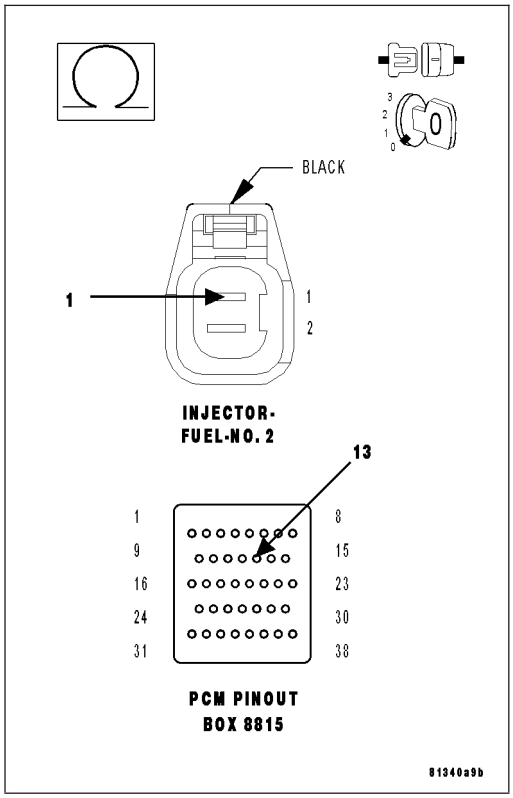

6. PCM

NOTE: Before continuing, check the PCM harness connector terminals for corrosion, damage, or terminal push out. Repair as necessary.

Using the schematics as a guide, inspect the wire harness and connectors. Pay particular attention to all Power and Ground circuits.

Were there any problems found?

Yes >> Repair as necessary.
Perform the POWERTRAIN VERIFICATION TEST. (Refer to 9 - ENGINE - STANDARD PROCEDURE)

No >> Replace and program the Powertrain Control Module per Service Information.
Perform the POWERTRAIN VERIFICATION TEST. (Refer to 9 - ENGINE - STANDARD PROCEDURE)

P0203-FUEL INJECTOR 3 CIRCUIT

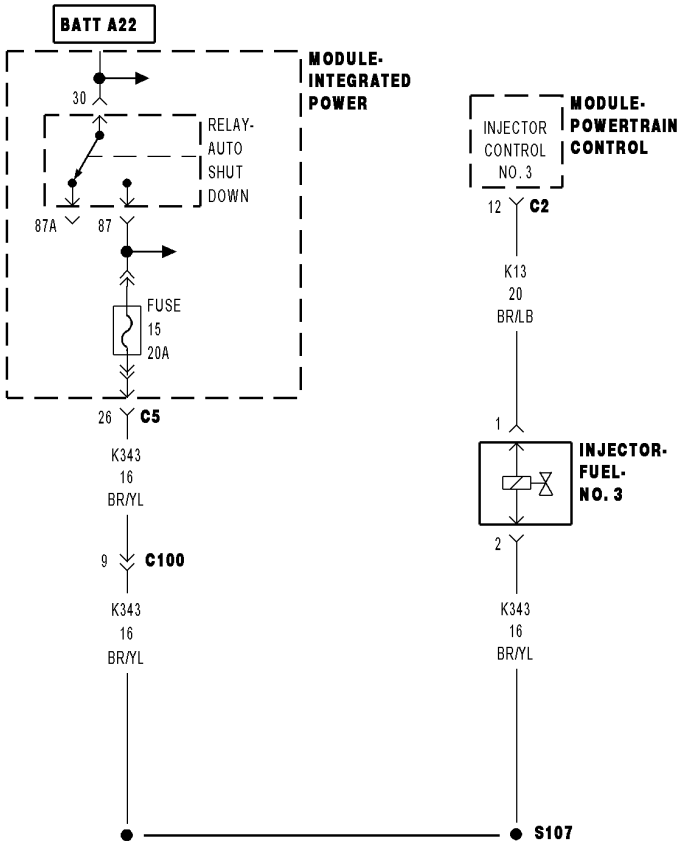

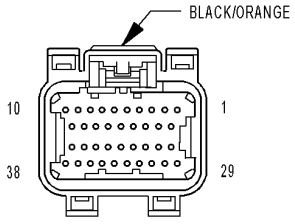

MODULE-
POWERTRAIN
CONTROL C2

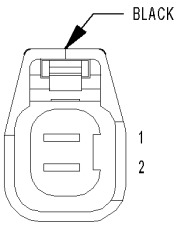

INJECTOR-
FUEL-NO. 3

81516b1

For a complete wiring diagram **Refer to Section 8W**.

- **When Monitored:**
  With battery voltage greater than 10 volts. Auto Shutdown Relay energized. Engine speed less than 3000 rpm.
- **Set Condition:**
  No inductive spike is detected after injector turn off.

Possible Causes
(K343) ASD RELAY OUTPUT 2 CIRCUIT
(K13) INJECTOR CONTROL NO.3 CIRCUIT OPEN
(K13) INJECTOR CONTROL NO.3 CIRCUIT SHORTED TO GROUND
FUEL INJECTOR
PCM

Always perform the Pre-Diagnostic Troubleshooting procedure before proceeding. (Refer to 9 - ENGINE - DIAGNOSIS AND TESTING).

Diagnostic Test

1. ACTIVE DTC

Ignition on, engine not running.
With a scan tool, read DTCs.

Is the DTC active at this time?

Yes >> Go To 2

No >> Refer to the INTERMITTENT CONDITION Diagnostic Procedure.
Perform the POWERTRAIN VERIFICATION TEST. (Refer to 9 - ENGINE - STANDARD PROCEDURE)

2. (K343) ASD RELAY OUTPUT 2 CIRCUIT

Turn the ignition off.
Disconnect the No.3 Fuel Injector harness connector.
Ignition on, engine not running.
With the scan tool, actuate the ASD Relay.
Using a 12-volt test light connected to ground, backprobe the (K343) ASD Relay Output 2circuit in the No.3 Fuel Injector harness connector.

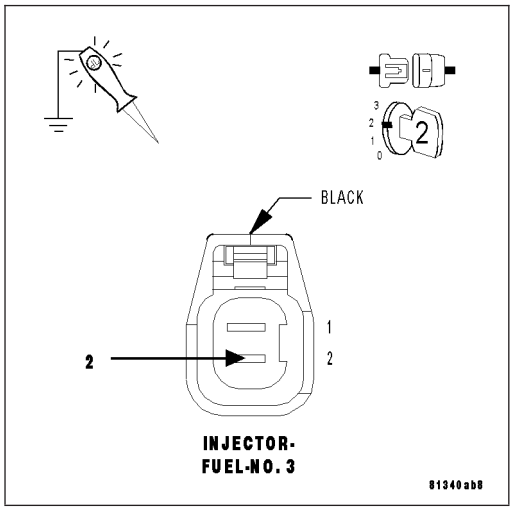

Does the test light illuminate brightly?

Yes >> Go To 3

No >> Repair the excessive resistance or short to ground in the (K343) ASD Relay Output 2circuit.
Perform the POWERTRAIN VERIFICATION TEST. (Refer to 9 - ENGINE - STANDARD PROCEDURE)

3. FUEL INJECTOR

Using a 12-volt test light connected to 12-volts, backprobe the (K13) Injector Control No.3 circuit.
With the scan tool, actuate the No.3 Fuel Injector.

What is the state of the test light during the actuation?

Brightly Blinking.
Replace the Fuel Injector.
Perform the POWERTRAIN VERIFICATION TEST. (Refer to 9 - ENGINE - STANDARD PROCEDURE)

ON Constantly.
Go To 4

OFF Constantly.
Go To 5

4. (K13) INJECTOR CONTROL NO.3 CIRCUIT SHORTED TO GROUND

Turn the ignition off.

Disconnect the PCM harness connectors.

Measure the resistance between ground and the (K13) Injector Control No.3 circuit in the Injector harness connector.

Is the resistance below 100 ohms?

Yes >> Repair the short to ground in the (K13) Injector Control No.3 circuit.
Perform the POWERTRAIN VERIFICATION TEST. (Refer to 9 - ENGINE - STANDARD PROCEDURE)

No >> Go To 6

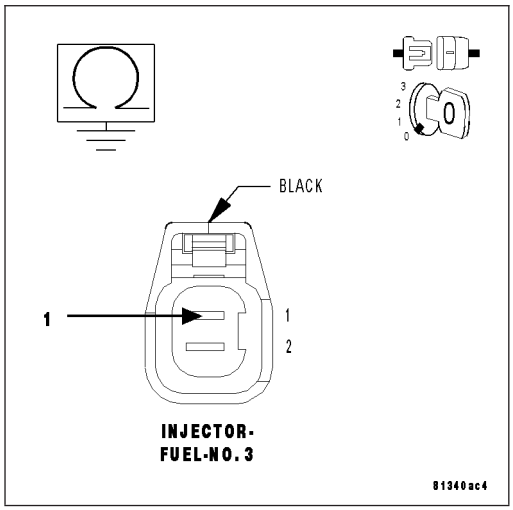

5. (K13) INJECTOR CONTROL NO.3 CIRCUIT OPEN

Turn the ignition off.

Disconnect the PCM harness connectors.

CAUTION: Do not probe the PCM harness connectors. Probing the PCM harness connectors will damage the PCM terminals resulting in poor terminal to pin connection. Install Miller Special Tool #8815 to perform diagnosis.

Measure the resistance of the (K13) Injector Control No.3 circuit from the Fuel Injector harness connector to the appropriate terminal of special tool #8815.

Is the resistance below 5.0 ohms?

Yes >> Go To 6

No >> Repair the open in the (K13) Injector Control No.3 circuit.
Perform the POWERTRAIN VERIFICATION TEST. (Refer to 9 - ENGINE - STANDARD PROCEDURE)

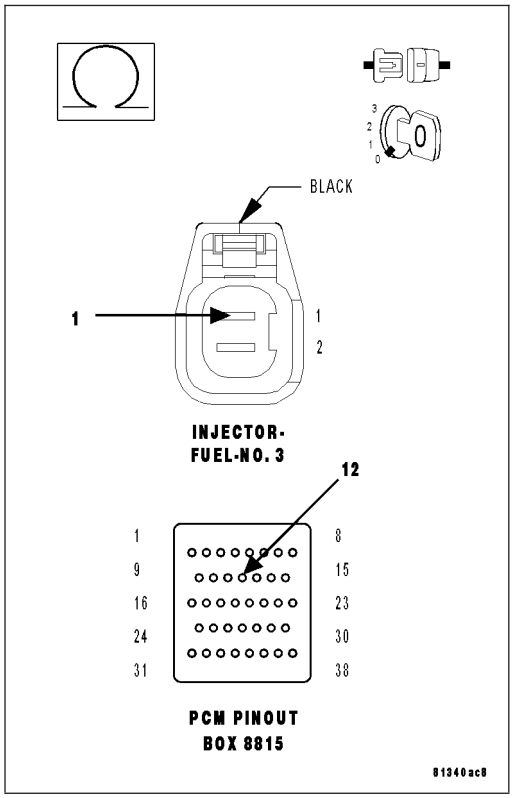

6. PCM

NOTE: Before continuing, check the PCM harness connector terminals for corrosion, damage, or terminal push out. Repair as necessary.
Using the schematics as a guide, inspect the wire harness and connectors. Pay particular attention to all Power and Ground circuits.

Were there any problems found?

Yes >> Repair as necessary.
Perform the POWERTRAIN VERIFICATION TEST. (Refer to 9 - ENGINE - STANDARD PROCEDURE)

No >> Replace and program the Powertrain Control Module per Service Information.
Perform the POWERTRAIN VERIFICATION TEST. (Refer to 9 - ENGINE - STANDARD PROCEDURE)

P0204-FUEL INJECTOR 4 CIRCUIT

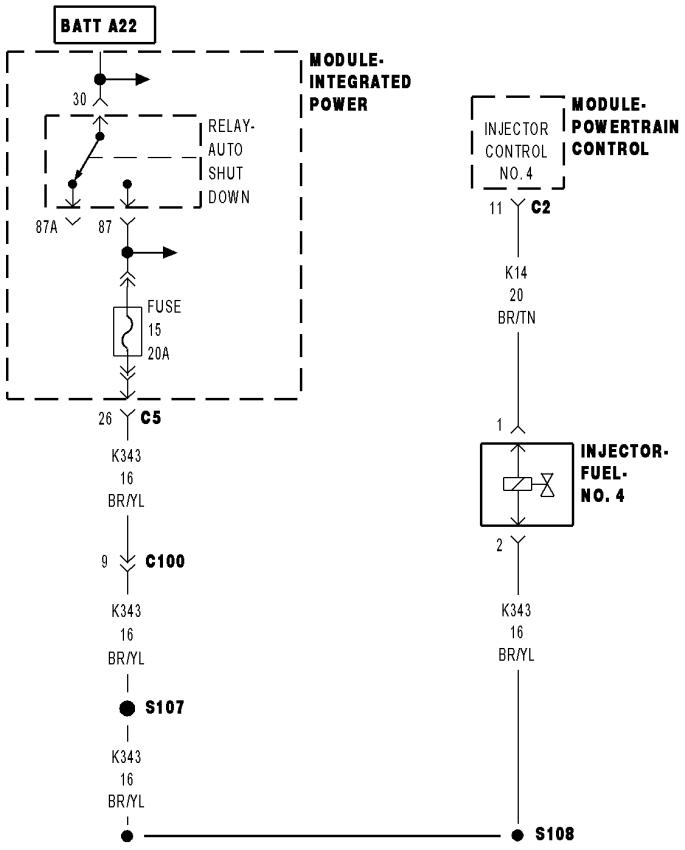

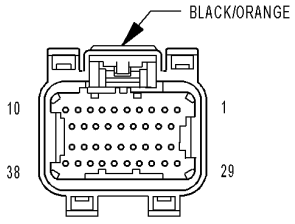

MODULE-
POWERTRAIN
CONTROL C2

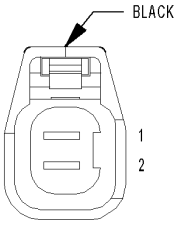

INJECTOR-
FUEL-NO. 4

81516fad

For a complete wiring diagram **Refer to Section 8W**.

- **When Monitored:**
  With battery voltage greater than 10 volts. Auto Shutdown Relay energized. Engine speed less than 3000 rpm.
- **Set Condition:**
  No inductive spike is detected after injector turn off.

Possible Causes
(K343) ASD RELAY OUTPUT 2 CIRCUIT
(K14) INJECTOR CONTROL NO.4 CIRCUIT OPEN
(K14) INJECTOR CONTROL NO.4 CIRCUIT SHORTED TO GROUND
FUEL INJECTOR
PCM

Always perform the Pre-Diagnostic Troubleshooting procedure before proceeding. (Refer to 9 - ENGINE - DIAGNOSIS AND TESTING).

Diagnostic Test

1. ACTIVE DTC

Ignition on, engine not running.

With a scan tool, read DTCs.

Is the DTC active at this time?

Yes >> Go To 2

No >> Refer to the INTERMITTENT CONDITION Diagnostic Procedure.
Perform the POWERTRAIN VERIFICATION TEST. (Refer to 9 - ENGINE - STANDARD PROCEDURE)

2. (K343) ASD RELAY OUTPUT 2 CIRCUIT

Turn the ignition off.

Disconnect the No.4 Fuel Injector harness connector.

Ignition on, engine not running.

With the scan tool, actuate the ASD Relay.

Using a 12-volt test light connected to ground, backprobe the (K343) ASD Relay Output 2 circuit in the No.4 Fuel Injector harness connector.

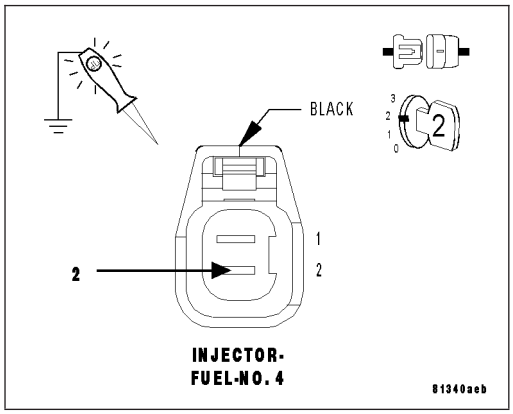

Does the test light illuminate brightly?

Yes >> Go To 3

No >> Repair the excessive resistance or short to ground in the (K343) ASD Relay Output 2 circuit.
Perform the POWERTRAIN VERIFICATION TEST. (Refer to 9 - ENGINE - STANDARD PROCEDURE)

3. FUEL INJECTOR

Using a 12-volt test light connected to 12-volts, backprobe the (K14) Injector Control No.4 circuit.

With the scan tool, actuate the No.4 Fuel Injector.

What is the state of the test light during the actuation?

Brightly Blinking.

Replace the Fuel Injector.

Perform the POWERTRAIN VERIFICATION TEST. (Refer to 9 - ENGINE - STANDARD PROCEDURE)

ON Constantly.

Go To 4

OFF Constantly.

Go To 5

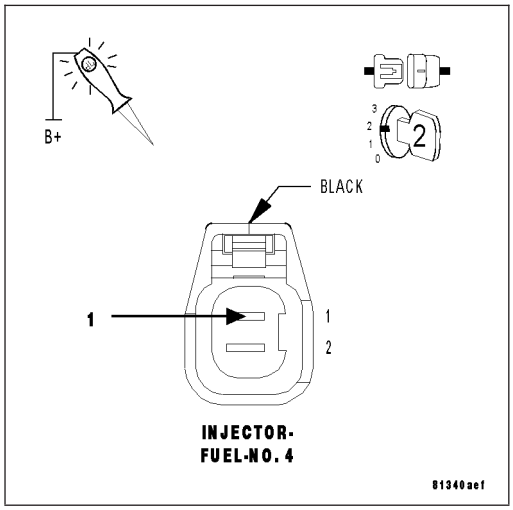

4. (K14) INJECTOR CONTROL NO.4 CIRCUIT SHORTED TO GROUND

Turn the ignition off.

Disconnect the PCM harness connectors.

Measure the resistance between ground and the (K14) Injector Control No.4 circuit in the Injector harness connector.

Is the resistance below 100 ohms?

Yes >> Repair the short to ground in the (K14) Injector Control No.4 circuit.

Perform the POWERTRAIN VERIFICATION TEST. (Refer to 9 - ENGINE - STANDARD PROCEDURE)

No >> Go To 6

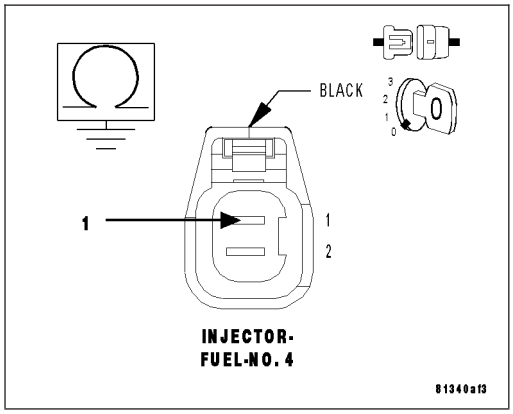

5. (K14) INJECTOR CONTROL NO.4 CIRCUIT OPEN

Turn the ignition off.

Disconnect the PCM harness connectors.

CAUTION: Do not probe the PCM harness connectors. Probing the PCM harness connectors will damage the PCM terminals resulting in poor terminal to pin connection. Install Miller Special Tool #8815 to perform diagnosis.

Measure the resistance of the (K14) Injector Control No.4 circuit from the Fuel Injector harness connector to the appropriate terminal of special tool #8815.

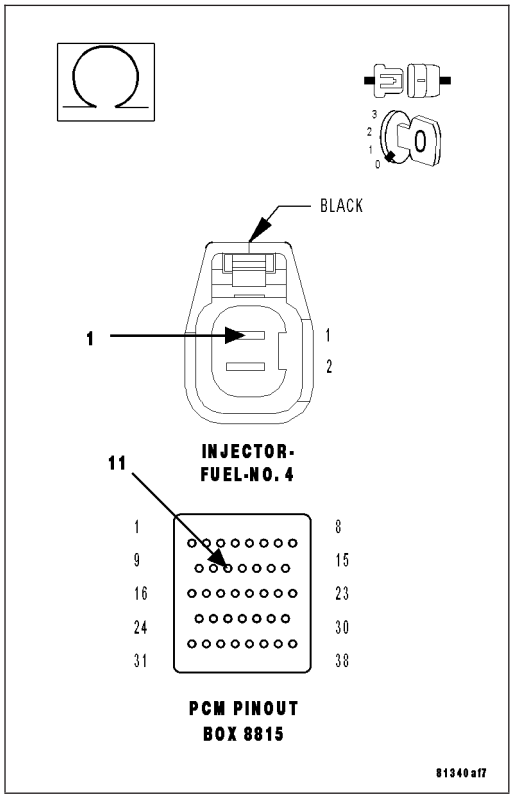

Is the resistance below 5.0 ohms?

Yes >> Go To 6

No >> Repair the open in the (K14) Injector Control No.4 circuit.
Perform the POWERTRAIN VERIFICATION TEST. (Refer to 9 - ENGINE - STANDARD PROCEDURE)

6. PCM

NOTE: Before continuing, check the PCM harness connector terminals for corrosion, damage, or terminal push out. Repair as necessary.

Using the schematics as a guide, inspect the wire harness and connectors. Pay particular attention to all Power and Ground circuits.

Were there any problems found?

Yes >> Repair as necessary.
Perform the POWERTRAIN VERIFICATION TEST. (Refer to 9 - ENGINE - STANDARD PROCEDURE)

No >> Replace and program the Powertrain Control Module per Service Information.
Perform the POWERTRAIN VERIFICATION TEST. (Refer to 9 - ENGINE - STANDARD PROCEDURE)

P0205-FUEL INJECTOR 5 CIRCUIT

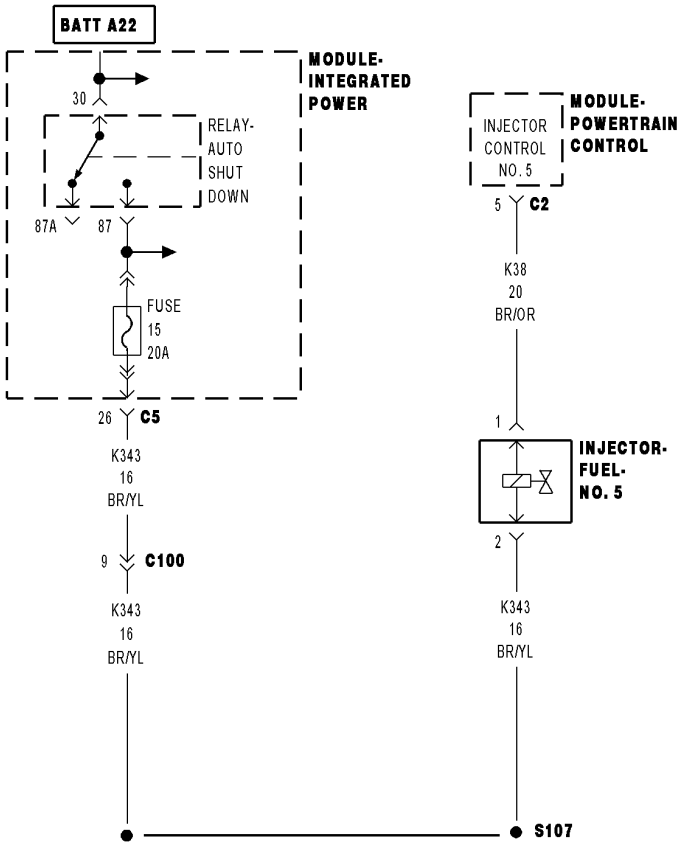

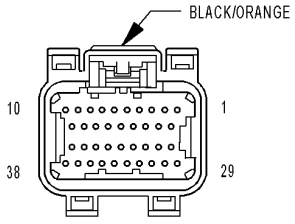

MODULE-
POWERTRAIN
CONTROL C2

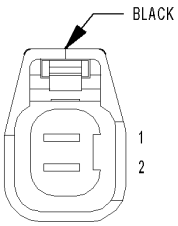

INJECTOR-
FUEL-NO. 5

815f6fa9

For a complete wiring diagram **Refer to Section 8W**.

- **When Monitored:**
  With battery voltage greater than 10 volts. Auto Shutdown Relay energized. Engine speed less than 3000 rpm.
- **Set Condition:**
  No inductive spike is detected after injector turn off.

Possible Causes
(K343) ASD RELAY OUTPUT 2 CIRCUIT
(K38) INJECTOR CONTROL NO.5 CIRCUIT OPEN
(K38) INJECTOR CONTROL NO.5 CIRCUIT SHORTED TO GROUND
FUEL INJECTOR
PCM

Always perform the Pre-Diagnostic Troubleshooting procedure before proceeding. (Refer to 9 - ENGINE - DIAGNOSIS AND TESTING).

Diagnostic Test

1. ACTIVE DTC

Ignition on, engine not running.

With a scan tool, read DTCs.

Is the DTC active at this time?

Yes >> Go To 2

No >> Refer to the INTERMITTENT CONDITION Diagnostic Procedure.
Perform the POWERTRAIN VERIFICATION TEST. (Refer to 9 - ENGINE - STANDARD PROCEDURE)

2. (K343) ASD RELAY OUTPUT 2 CIRCUIT

Turn the ignition off.

Disconnect the No.5 Fuel Injector harness connector.

Ignition on, engine not running.

With the scan tool, actuate the ASD Relay.

Using a 12-volt test light connected to ground, backprobe the (K343) ASD Relay Output 2 circuit in the No.5 Fuel Injector harness connector.

Does the test light illuminate brightly?

Yes >> Go To 3

No >> Repair the excessive resistance or short to ground in the (K343) ASD Relay Output 2 circuit.
Perform the POWERTRAIN VERIFICATION TEST. (Refer to 9 - ENGINE - STANDARD PROCEDURE)

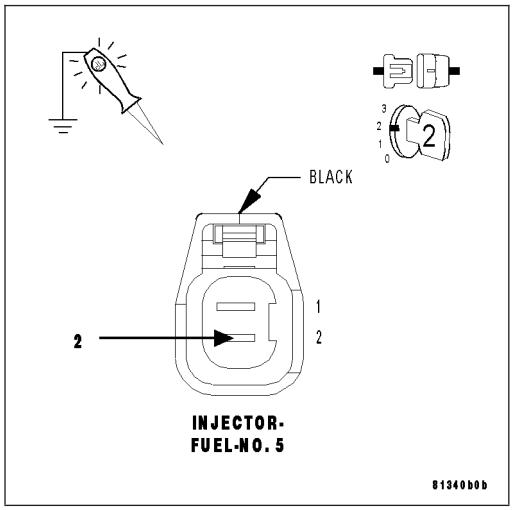

3. FUEL INJECTOR

Using a 12-volt test light connected to 12-volts, backprobe the (K38) Injector Control No.5 circuit.

With the scan tool, actuate the No.5 Fuel Injector.

What is the state of the test light during the actuation?

Brightly Blinking.

Replace the Fuel Injector.

Perform the POWERTRAIN VERIFICATION TEST. (Refer to 9 - ENGINE - STANDARD PROCEDURE)

ON Constantly.

Go To 4

OFF Constantly.

Go To 5

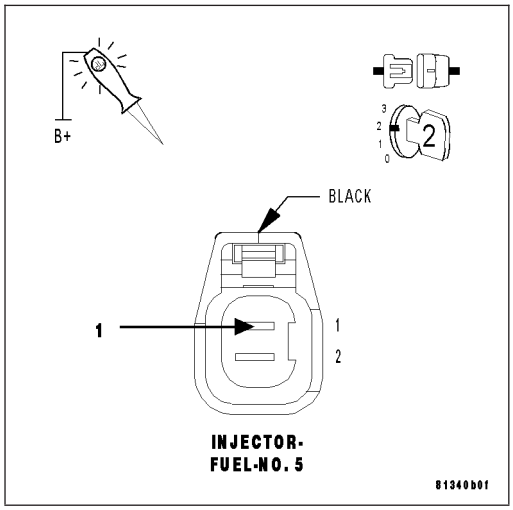

4. (K38) INJECTOR CONTROL NO.5 CIRCUIT SHORTED TO GROUND

Turn the ignition off.

Disconnect the PCM harness connectors.

Measure the resistance between ground and the (K38) Injector Control No.5 circuit in the Injector harness connector.

Is the resistance below 100 ohms?

Yes >> Repair the short to ground in the (K38) Injector Control No.5 circuit.

Perform the POWERTRAIN VERIFICATION TEST. (Refer to 9 - ENGINE - STANDARD PROCEDURE)

No >> Go To 6

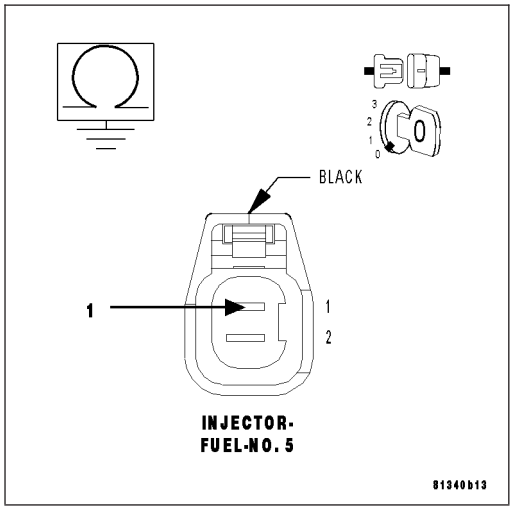

5. (K38) INJECTOR CONTROL NO.5 CIRCUIT OPEN

Turn the ignition off.

Disconnect the PCM harness connectors.

CAUTION: Do not probe the PCM harness connectors. Probing the PCM harness connectors will damage the PCM terminals resulting in poor terminal to pin connection. Install Miller Special Tool #8815 to perform diagnosis.

Measure the resistance of the (K38) Injector Control No.5 circuit from the Fuel Injector harness connector to the appropriate terminal of special tool #8815.

Is the resistance below 5.0 ohms?

Yes >> Go To 6

No >> Repair the open in the (K38) Injector Control No.5 circuit. Perform the POWERTRAIN VERIFICATION TEST. (Refer to 9 - ENGINE - STANDARD PROCEDURE)

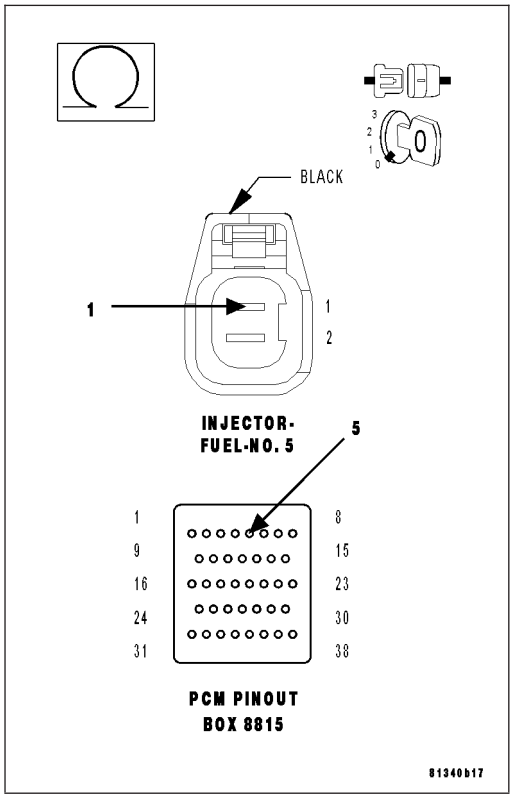

6. PCM

NOTE: Before continuing, check the PCM harness connector terminals for corrosion, damage, or terminal push out. Repair as necessary.

Using the schematics as a guide, inspect the wire harness and connectors. Pay particular attention to all Power and Ground circuits.

Were there any problems found?

Yes >> Repair as necessary.
Perform the POWERTRAIN VERIFICATION TEST. (Refer to 9 - ENGINE - STANDARD PROCEDURE)

No >> Replace and program the Powertrain Control Module per Service Information.
Perform the POWERTRAIN VERIFICATION TEST. (Refer to 9 - ENGINE - STANDARD PROCEDURE)

P0206-FUEL INJECTOR 6 CIRCUIT

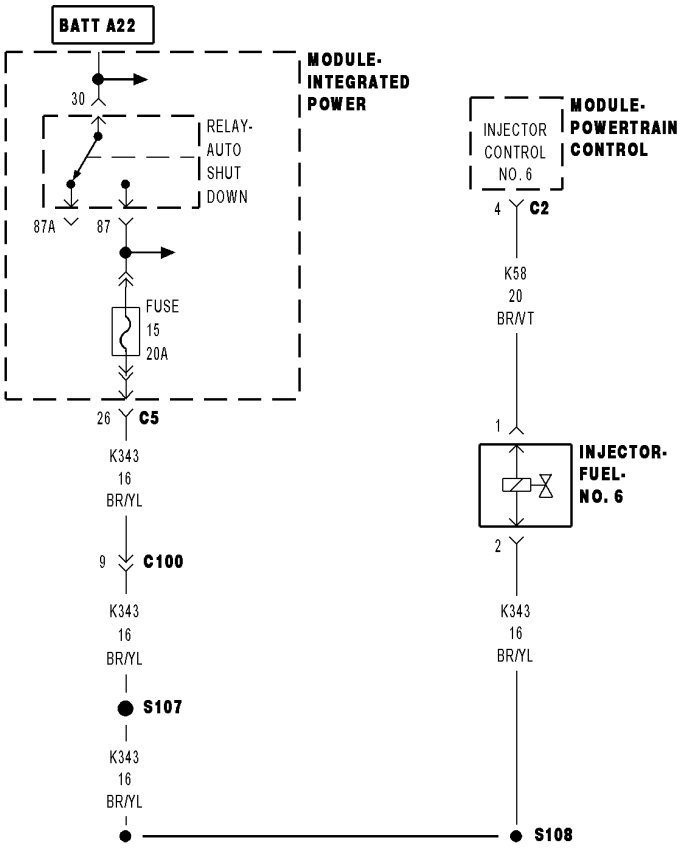

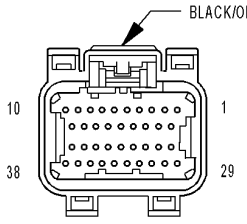

MODULE-
POWERTRAIN
CONTROL C2

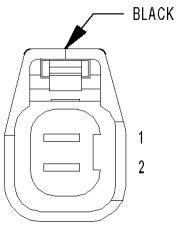

INJECTOR-
FUEL-NO. 6

815f6fa5

For a complete wiring diagram **Refer to Section 8W**.

- **When Monitored:**
  With battery voltage greater than 10 volts. Auto Shutdown Relay energized. Engine speed less than 3000 rpm.
- **Set Condition:**
  No inductive spike is detected after injector turn off.

Possible Causes
(K343) ASD RELAY OUTPUT 2 CIRCUIT
(K58) INJECTOR CONTROL NO.6 CIRCUIT OPEN
(K58) INJECTOR CONTROL NO.6 CIRCUIT SHORTED TO GROUND
FUEL INJECTOR
PCM

Always perform the Pre-Diagnostic Troubleshooting procedure before proceeding. (Refer to 9 - ENGINE - DIAGNOSIS AND TESTING).

Diagnostic Test

1. ACTIVE DTC

Ignition on, engine not running.

With a scan tool, read DTCs.

Is the DTC active at this time?

Yes >> Go To 2

No >> Refer to the INTERMITTENT CONDITION Diagnostic Procedure.
Perform the POWERTRAIN VERIFICATION TEST. (Refer to 9 - ENGINE - STANDARD PROCEDURE)

2. (K343) ASD RELAY OUTPUT 2 CIRCUIT

Turn the ignition off.

Disconnect the No.6 Fuel Injector harness connector.

Ignition on, engine not running.

With the scan tool, actuate the ASD Relay.

Using a 12-volt test light connected to ground, backprobe the (K343) ASD Relay Output 2 circuit in the No.6 Fuel Injector harness connector.

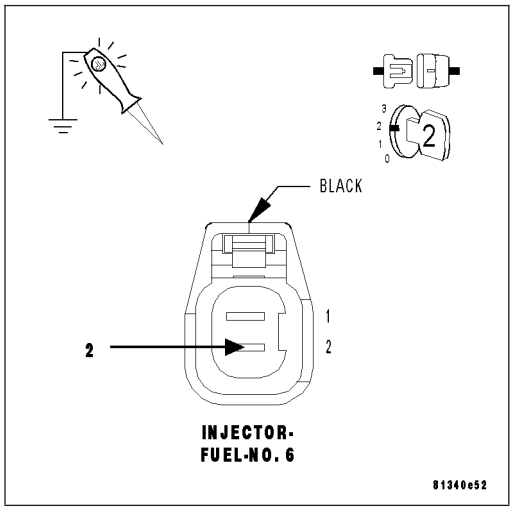

Does the test light illuminate brightly?

Yes >> Go To 3

No >> Repair the excessive resistance or short to ground in the (K343) ASD Relay Output 2 circuit.
Perform the POWERTRAIN VERIFICATION TEST. (Refer to 9 - ENGINE - STANDARD PROCEDURE)

3. FUEL INJECTOR

Using a 12-volt test light connected to 12-volts, backprobe the (K58) Injector Control No.6 circuit.

With the scan tool, actuate the No.6 Fuel Injector.

What is the state of the test light during the actuation?

Brightly Blinking.

Replace the Fuel Injector.

Perform the POWERTRAIN VERIFICATION TEST. (Refer to 9 - ENGINE - STANDARD PROCEDURE)

ON Constantly.

Go To 4

OFF Constantly.

Go To 5

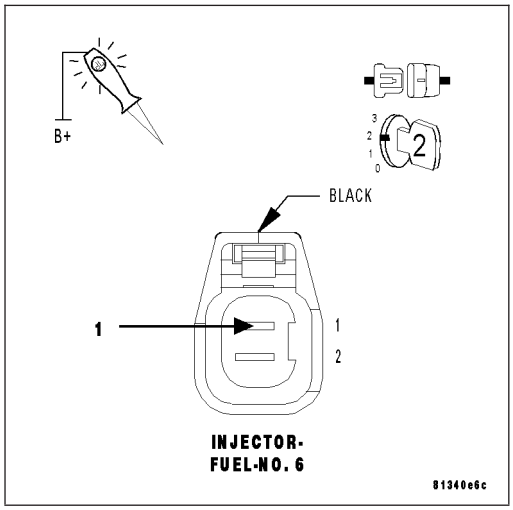

4. (K58) INJECTOR CONTROL NO.6 CIRCUIT SHORTED TO GROUND

Turn the ignition off.

Disconnect the PCM harness connectors.

Measure the resistance between ground and the (K58) Injector Control No.6 circuit in the Injector harness connector.

Is the resistance below 100 ohms?

Yes >> Repair the short to ground in the (K58) Injector Control No.6 circuit.

Perform the POWERTRAIN VERIFICATION TEST. (Refer to 9 - ENGINE - STANDARD PROCEDURE)

No >> Go To 6

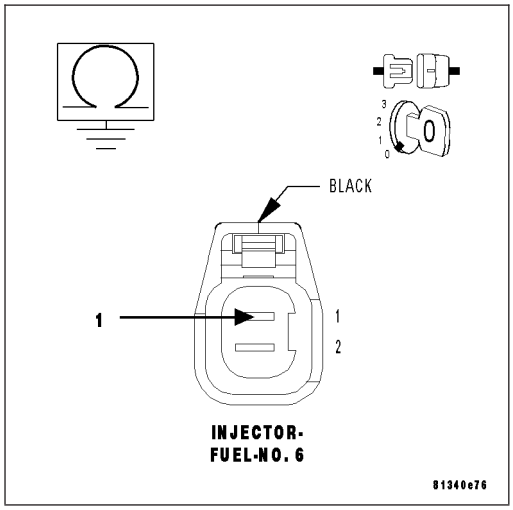

5. (K58) INJECTOR CONTROL NO.6 CIRCUIT OPEN

Turn the ignition off.

Disconnect the PCM harness connectors.

CAUTION: Do not probe the PCM harness connectors. Probing the PCM harness connectors will damage the PCM terminals resulting in poor terminal to pin connection. Install Miller Special Tool #8815 to perform diagnosis.

Measure the resistance of the (K58) Injector Control No.6 circuit from the Fuel Injector harness connector to the appropriate terminal of special tool #8815.

Is the resistance below 5.0 ohms?

Yes >> Go To 6

No >> Repair the open in the (K58) Injector Control No.6 circuit.
Perform the POWERTRAIN VERIFICATION TEST. (Refer to 9 - ENGINE - STANDARD PROCEDURE)

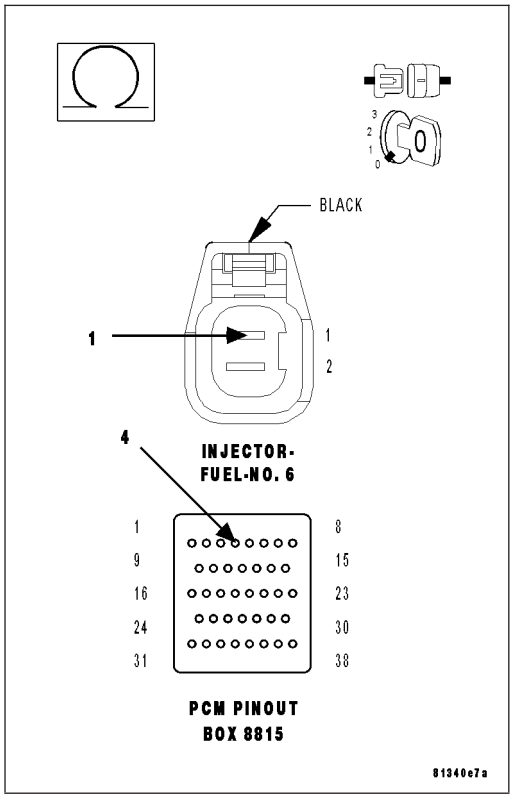

6. PCM

NOTE: Before continuing, check the PCM harness connector terminals for corrosion, damage, or terminal push out. Repair as necessary.

Using the schematics as a guide, inspect the wire harness and connectors. Pay particular attention to all Power and Ground circuits.

Were there any problems found?

Yes >> Repair as necessary.
Perform the POWERTRAIN VERIFICATION TEST. (Refer to 9 - ENGINE - STANDARD PROCEDURE)

No >> Replace and program the Powertrain Control Module per Service Information.
Perform the POWERTRAIN VERIFICATION TEST. (Refer to 9 - ENGINE - STANDARD PROCEDURE)

P0207-FUEL INJECTOR 7 CIRCUIT

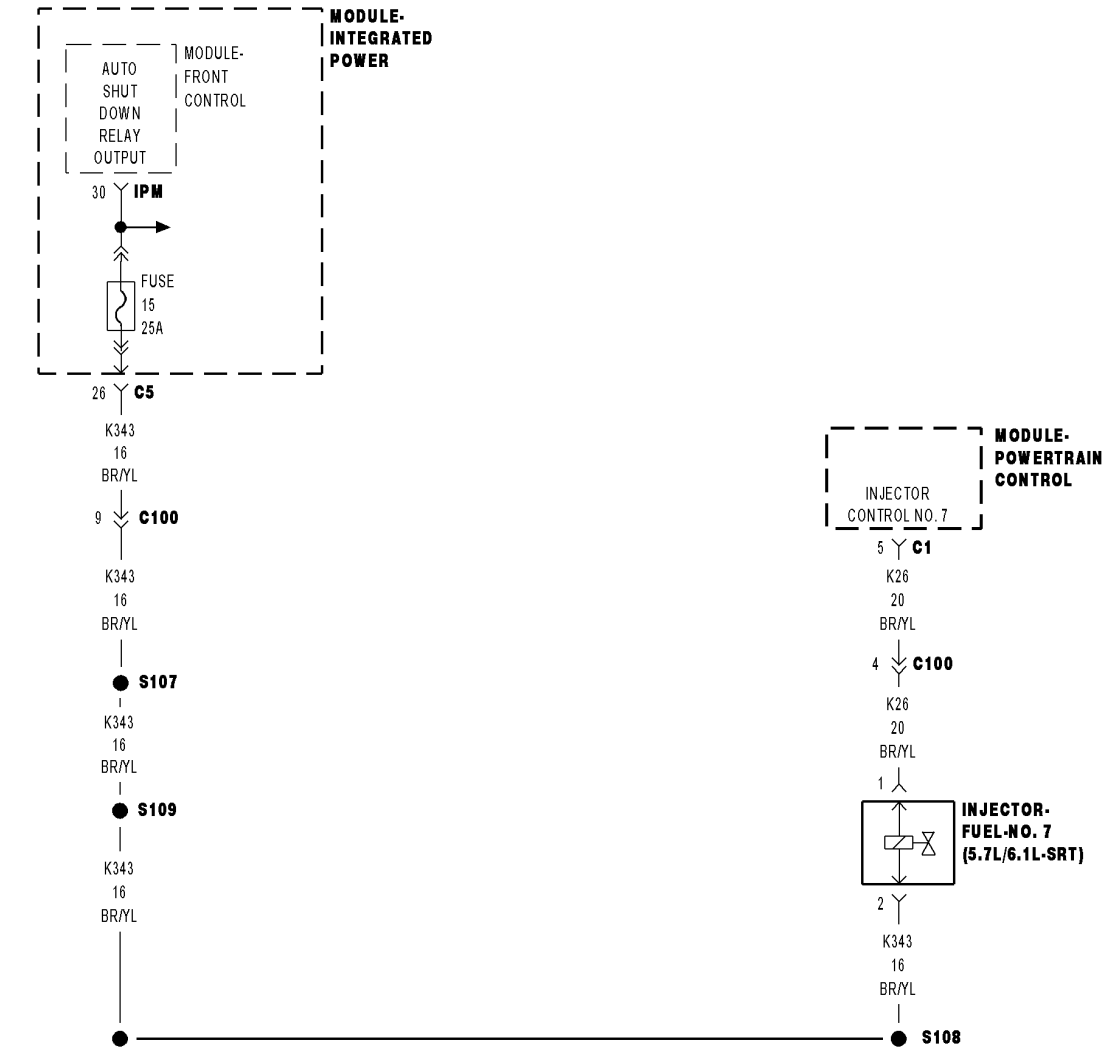



815b587c

For a complete wiring diagram **Refer to Section 8W**.

- **When Monitored:**
  With battery voltage greater than 10 volts. Auto Shutdown Relay energized. Engine speed less than 3000 rpm.
- **Set Condition:**
  No inductive spike is detected after injector turn off.

Possible Causes
(K343) ASD RELAY OUTPUT 2 CIRCUIT
(K26) INJECTOR CONTROL NO.7 CIRCUIT OPEN
(K26) INJECTOR CONTROL NO.7 CIRCUIT SHORTED TO GROUND
FUEL INJECTOR
PCM

Always perform the Pre-Diagnostic Troubleshooting procedure before proceeding. (Refer to 9 - ENGINE - DIAGNOSIS AND TESTING).

Diagnostic Test

1. ACTIVE DTC

Ignition on, engine not running.

With a scan tool, read DTCs.

Is the DTC active at this time?

Yes >> Go To 2

No >> Refer to the INTERMITTENT CONDITION Diagnostic Procedure.
Perform the POWERTRAIN VERIFICATION TEST. (Refer to 9 - ENGINE - STANDARD PROCEDURE)

2. (K343) ASD RELAY OUTPUT 2 CIRCUIT

Turn the ignition off.

Disconnect the No.7 Fuel Injector harness connector.

Ignition on, engine not running.

With the scan tool, actuate the ASD Relay.

Using a 12-volt test light connected to ground, backprobe the (K343) ASD Relay Output 2 circuit in the No.7 Fuel Injector harness connector.

Does the test light illuminate brightly?

Yes >> Go To 3

No >> Repair the excessive resistance or short to ground in the (K343) ASD Relay Output 2 circuit.
Perform the POWERTRAIN VERIFICATION TEST. (Refer to 9 - ENGINE - STANDARD PROCEDURE)

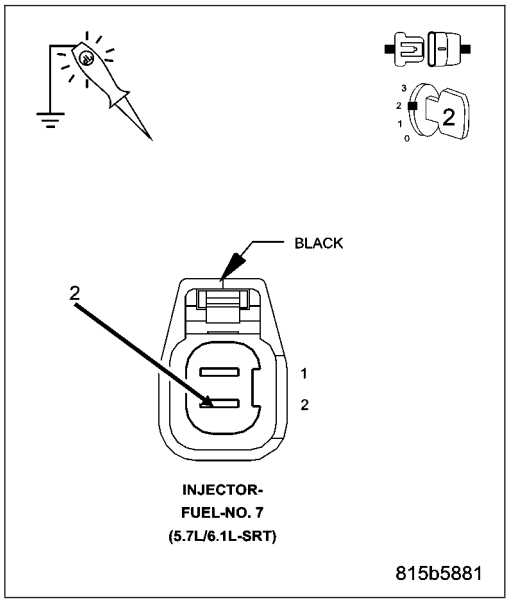

3. FUEL INJECTOR

Using a 12-volt test light connected to 12-volts, backprobe the (K26) Injector Control No.7 circuit.

With the scan tool, actuate the No.7 Fuel Injector.

What is the state of the test light during the actuation?

Brightly Blinking.

Replace the Fuel Injector.

Perform the POWERTRAIN VERIFICATION TEST. (Refer to 9 - ENGINE - STANDARD PROCEDURE)

ON Constantly.

Go To 4

OFF Constantly.

Go To 5

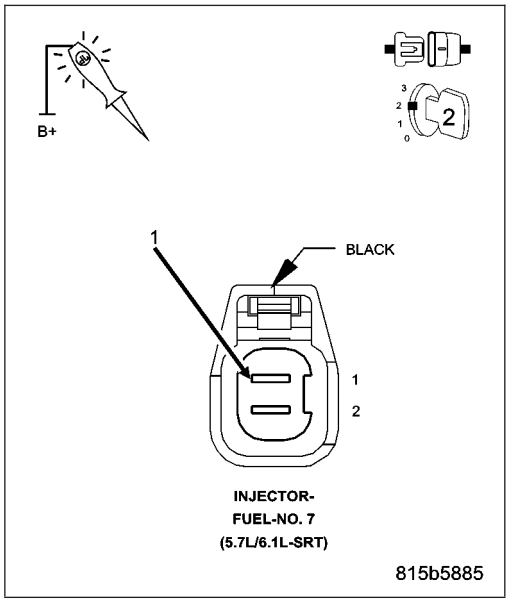

4. (K26) INJECTOR CONTROL NO.7 CIRCUIT SHORTED TO GROUND

Turn the ignition off.

Disconnect the PCM harness connectors.

Measure the resistance between ground and the (K26) Injector Control No.7 circuit in the Injector harness connector.

Is the resistance below 100 ohms?

Yes >> Repair the short to ground in the (K26) Injector Control No.7 circuit.

Perform the POWERTRAIN VERIFICATION TEST. (Refer to 9 - ENGINE - STANDARD PROCEDURE)

No >> Go To 6

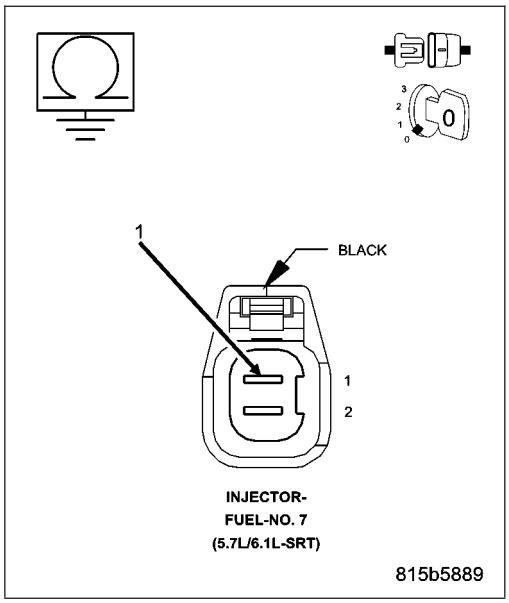

5. (K26) INJECTOR CONTROL NO.7 CIRCUIT OPEN

Turn the ignition off.

Disconnect the PCM harness connectors.

CAUTION: Do not probe the PCM harness connectors. Probing the PCM harness connectors will damage the PCM terminals resulting in poor terminal to pin connection. Install Miller Special Tool #8815 to perform diagnosis.

Measure the resistance of the (K26) Injector Control No.7 circuit from the Fuel Injector harness connector to the appropriate terminal of special tool #8815.

Is the resistance below 5.0 ohms?

Yes >> Go To 6

No >> Repair the open in the (K26) Injector Control No.7 circuit.
Perform the POWERTRAIN VERIFICATION TEST. (Refer to 9 - ENGINE - STANDARD PROCEDURE)

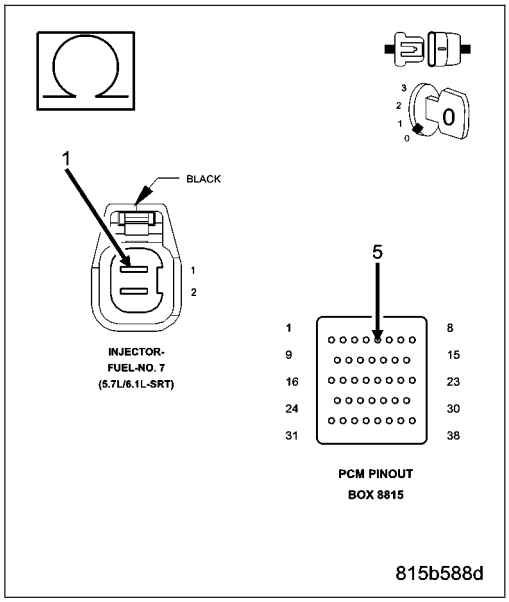

6. PCM

NOTE: Before continuing, check the PCM harness connector terminals for corrosion, damage, or terminal push out. Repair as necessary.

Using the schematics as a guide, inspect the wire harness and connectors. Pay particular attention to all Power and Ground circuits.

Were there any problems found?

Yes >> Repair as necessary.
Perform the POWERTRAIN VERIFICATION TEST. (Refer to 9 - ENGINE - STANDARD PROCEDURE)

No >> Replace and program the Powertrain Control Module per Service Information.
Perform the POWERTRAIN VERIFICATION TEST. (Refer to 9 - ENGINE - STANDARD PROCEDURE)

P0208-FUEL INJECTOR 8 CIRCUIT

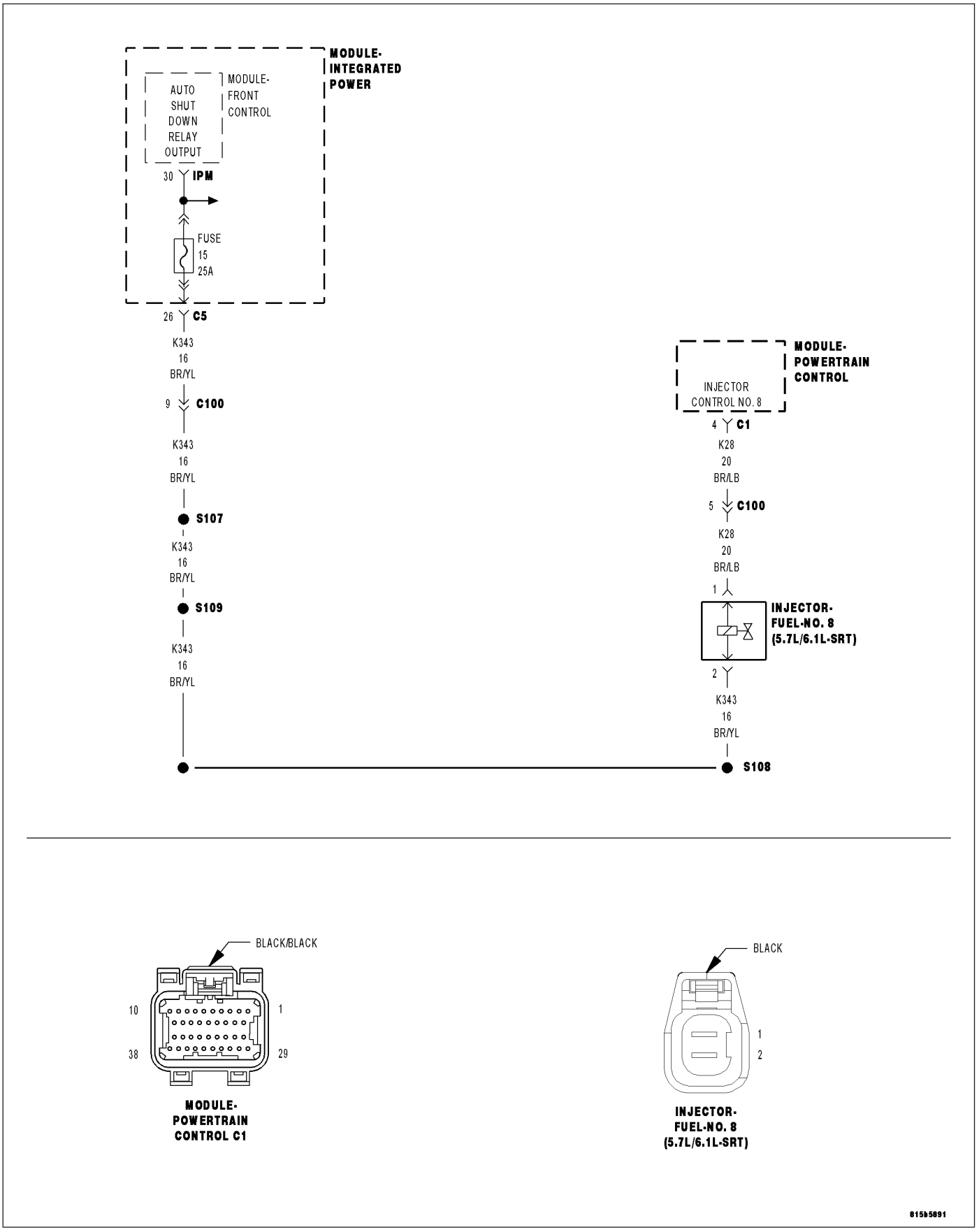

For a complete wiring diagram **Refer to Section 8W**.

- **When Monitored:**
  With battery voltage greater than 10 volts. Auto Shutdown Relay energized. Engine speed less than 3000 rpm.
- **Set Condition:**
  No inductive spike is detected after injector turn off.

Possible Causes
(K343) ASD RELAY OUTPUT 2 CIRCUIT
(K28) INJECTOR CONTROL NO.8 CIRCUIT OPEN
(K28) INJECTOR CONTROL NO.8 CIRCUIT SHORTED TO GROUND
FUEL INJECTOR
PCM

Always perform the Pre-Diagnostic Troubleshooting procedure before proceeding. (Refer to 9 - ENGINE - DIAGNOSIS AND TESTING).

Diagnostic Test

1. ACTIVE DTC

Ignition on, engine not running.
With a scan tool, read DTC.

Is the DTC active at this time?

Yes >> Go To 2

No >> Refer to the INTERMITTENT CONDITION Diagnostic Procedure.
Perform the POWERTRAIN VERIFICATION TEST. (Refer to 9 - ENGINE - STANDARD PROCEDURE)

2. (K343) ASD RELAY OUTPUT 2 CIRCUIT

Turn the ignition off.
Disconnect the No.8 Fuel Injector harness connector.
Ignition on, engine not running.
With the scan tool, actuate the ASD Relay.
Using a 12-volt test light connected to ground, backprobe the (K343) ASD Relay Output 2 circuit in the No.8 Fuel Injector harness connector.

Does the test light illuminate brightly?

Yes >> Go To 3

No >> Repair the excessive resistance or short to ground in the (K343) ASD Relay Output 2 circuit.
Perform the POWERTRAIN VERIFICATION TEST. (Refer to 9 - ENGINE - STANDARD PROCEDURE)

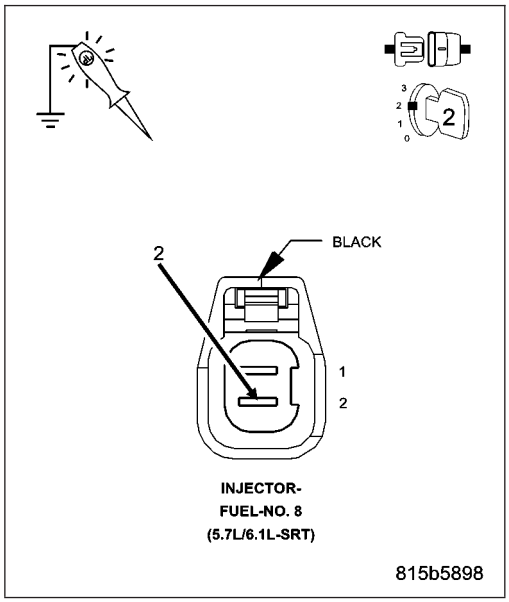

3. FUEL INJECTOR

Using a 12-volt test light connected to 12-volts, backprobe the (K28) Injector Control No.8 circuit.

With the scan tool, actuate the No.8 Fuel Injector.

What is the state of the test light during the actuation?

Brightly Blinking.

Replace the Fuel Injector.

Perform the POWERTRAIN VERIFICATION TEST. (Refer to 9 - ENGINE - STANDARD PROCEDURE)

ON Constantly.

Go To 4

OFF Constantly.

Go To 5

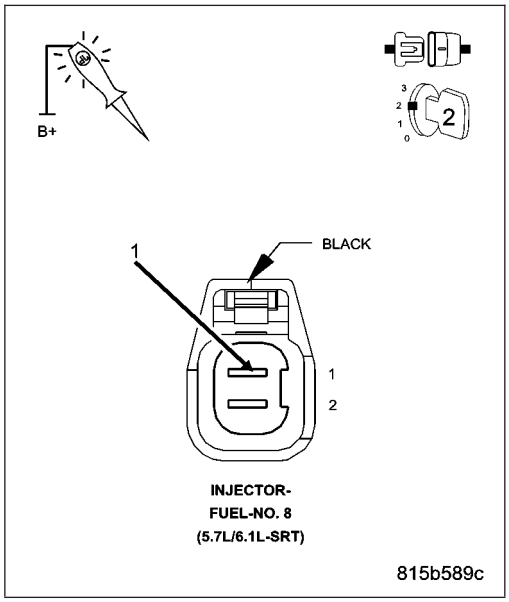

4. (K28) INJECTOR CONTROL NO.8 CIRCUIT SHORTED TO GROUND

Turn the ignition off.

Disconnect the PCM harness connectors.

Measure the resistance between ground and the (K28) Injector Control No.8 circuit in the Injector harness connector.

Is the resistance below 100 ohms?

Yes >> Repair the short to ground in the (K28) Injector Control No.8 circuit.

Perform the POWERTRAIN VERIFICATION TEST. (Refer to 9 - ENGINE - STANDARD PROCEDURE)

No >> Go To 6

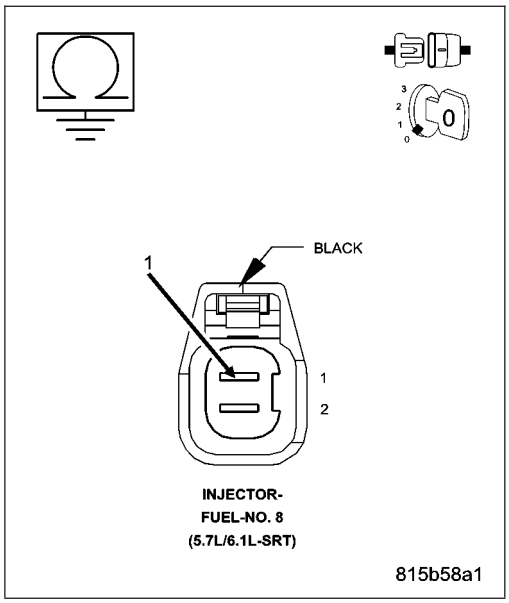

5. (K28) INJECTOR CONTROL NO.8 CIRCUIT OPEN

Turn the ignition off.

Disconnect the PCM harness connectors.

CAUTION: Do not probe the PCM harness connectors. Probing the PCM harness connectors will damage the PCM terminals resulting in poor terminal to pin connection. Install Miller Special Tool #8815 to perform diagnosis.

Measure the resistance of the (K28) Injector Control No.8 circuit from the Fuel Injector harness connector to the appropriate terminal of special tool #8815.

Is the resistance below 5.0 ohms?

Yes >> Go To 6

No >> Repair the open in the (K28) Injector Control No.8 circuit.
Perform the POWERTRAIN VERIFICATION TEST. (Refer to 9 - ENGINE - STANDARD PROCEDURE)

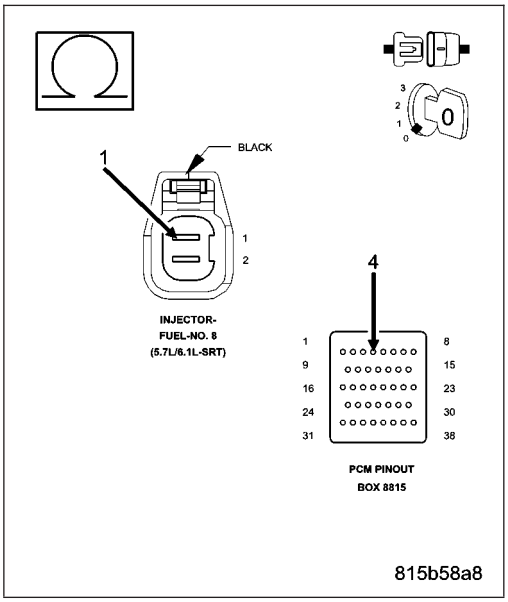

6. PCM

NOTE: Before continuing, check the PCM harness connector terminals for corrosion, damage, or terminal push out. Repair as necessary.

Using the schematics as a guide, inspect the wire harness and connectors. Pay particular attention to all Power and Ground circuits.

Were there any problems found?

Yes >> Repair as necessary.
Perform the POWERTRAIN VERIFICATION TEST. (Refer to 9 - ENGINE - STANDARD PROCEDURE)

No >> Replace and program the Powertrain Control Module per Service Information.
Perform the POWERTRAIN VERIFICATION TEST. (Refer to 9 - ENGINE - STANDARD PROCEDURE)

P0221-THROTTLE POSITION SENSOR 2 PERFORMANCE

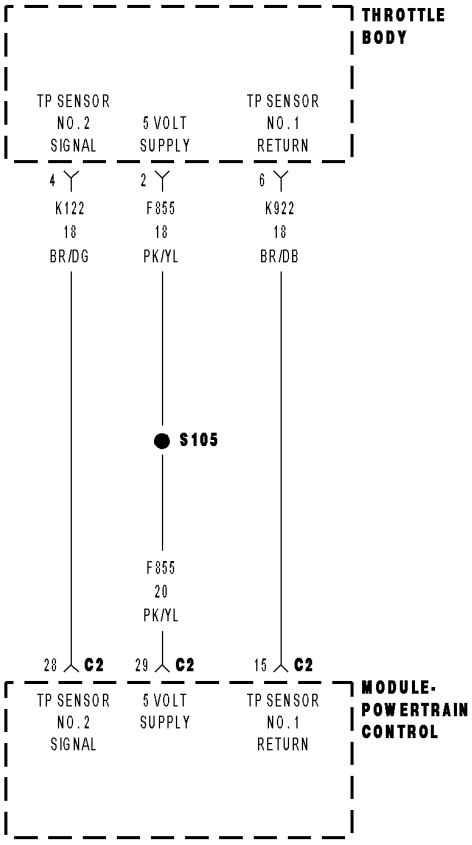

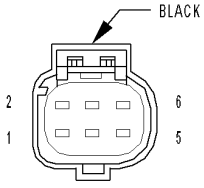

THROTTLE BODY

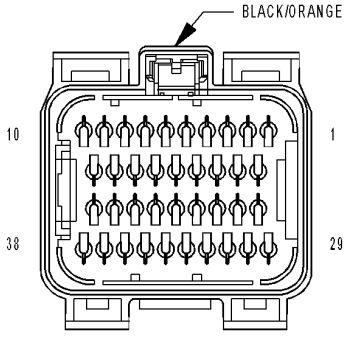

MODULE-POWERTRAIN CONTROL C2

8131a7cf

For a complete wiring diagram **Refer to Section 8W**.

- **When Monitored:**
  Ignition on and No MAP Sensor DTCs set.
- **Set Condition:**
  TP Sensor signals do not correlate to the MAP Sensor signal. Two Trip Fault. ETC light will illuminate. P2135 should set with this code also.

Possible Causes
RESISTANCE IN THE (K22) TP SENSOR NO.1 OR (K122) TP SENSOR NO.2 SIGNAL CIRCUIT
RESISTANCE IN (F855) 5-VOLT SUPPLY CIRCUIT
RESISTANCE IN THE (K922) SENSOR RETURN CIRCUIT
(K22) TP SENSOR NO.1 SIGNAL CIRCUIT SHORTED TO (K122) TP SENSOR NO.2 SIGNAL CIRCUIT
THROTTLE POSITION SENSOR/THROTTLE BODY
PCM

Always perform the Pre-Diagnostic Troubleshooting procedure before proceeding. (Refer to 9 - ENGINE - DIAGNOSIS AND TESTING).

Diagnostic Test

1. ACTIVE DTC

NOTE: Diagnose any other TP Sensor DTC(s) before continuing.

NOTE: The throttle plate and linkage should be free from binding and carbon build up.

NOTE: Make sure the throttle plate is at the idle position.
Ignition on, engine not running.

NOTE: Inspect the engine for vacuum leaks.
With a scan tool, read DTCs.

Is the DTC active at this time?

Yes >> Go To 2

No >> Go To 8

2. THROTTLE POSITION SENSOR

Turn the ignition off.

Connect the PCM harness connectors.

Ignition on, engine not running.

With a scan tool, monitor the TP Sensor No.1 and No.2 voltage.

Connect a jumper wire between the (K922) Sensor Return circuit and the (K22) TP Sensor No.1 Signal circuit.

NOTE: TP Sensor No.1 voltage should change from approximately 4.5 volts to less than 0.5 of a volt.
For TP Sensor No.2, connect a jumper wire between (F855) 5-volt supply circuit and the (K122) TP Sensor No.2 signal circuit.

NOTE: TP Sensor No.2 voltage should change from approximately 0 volts to 5.0 volts?

Is the voltage reading within the listed specification when the jumper wire is installed?

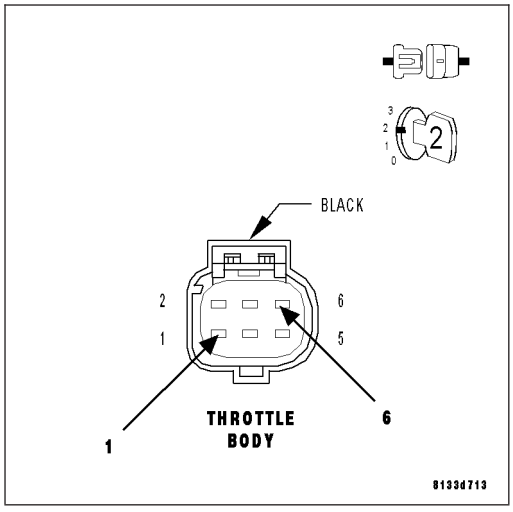

Yes >> Replace the Throttle Body Assembly. Disconnect the Battery when replacing the Throttle Body Assembly. After

installation is complete, use a scan tool and select the ETC RELEARN function.

Perform the POWERTRAIN VERIFICATION TEST. (Refer to 9 - ENGINE - STANDARD PROCEDURE)

No >> Go To 3

NOTE: Remove the jumper wire before continuing.

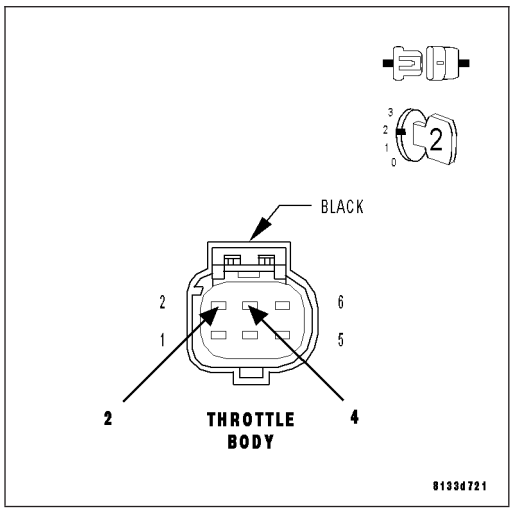

3. EXCESSIVE RESISTANCE IN THE (K22) TP SENSOR NO.1 SIGNAL CIRCUIT AND (K122) TP SENSOR NO.2 SIGNAL CIRCUIT

Turn the ignition off.

CAUTION: CAUTION: Do not probe the PCM harness connectors. Probing the PCM harness connectors will damage the PCM terminals resulting in poor terminal to pin connection. Install Miller Special Tool #8815 along with the #8815-1 to perform the diagnosis.

Using a voltmeter perform a voltage drop test. Backprobe the (K22) TP Sensor No.1 Signal circuit at the Throttle Body harness connector to the appropriate terminal of the special tool #8815. Ensure the voltmeter leads are connected with the circuit's correct polarity.

WARNING: When the engine is operating, do not stand in direct line with the fan. Do not put your hands near the pulleys, belts, or fan. Do not wear loose clothing. Failure to follow these instructions can result in personal injury or death.

Start the engine and allow it to reach normal operating temperature.

Monitor the voltmeter.

Repeat the voltage drop test for the (K122) TP Sensor No.2 Signal circuit.

Is the voltage below 0.5 volts?

Yes >> Go To 4

No >> Repair the excessive resistance in the (K22) TP Sensor No.1 Signal circuit or the (K122) TP Sensor No.2 Signal circuit.

Perform the POWERTRAIN VERIFICATION TEST. (Refer to 9 - ENGINE - STANDARD PROCEDURE)

4. EXCESSIVE RESISTANCE IN THE (F855) 5-VOLT SUPPLY CIRCUIT

Turn the ignition off.

Perform a voltage drop test. Backprobe the (F855) 5-volt Supply circuit at the Throttle Body harness connector to the appropriate terminal of the special tool #8815. Ensure the voltmeter leads are connected with the circuit's correct polarity.

WARNING: When the engine is operating, do not stand in direct line with the fan. Do not put your hands near the pulleys, belts, or fan. Do not wear loose clothing. Failure to follow these instructions can result in personal injury or death.

Start the engine and allow it to reach normal operating temperature.

Monitor the voltmeter.

Is the voltage below 0.5 volts?

Yes >> Go To 5

No >> Repair the excessive resistance in the (F855) 5-volt Supply circuit.
Perform the POWERTRAIN VERIFICATION TEST. (Refer to 9 - ENGINE - STANDARD PROCEDURE)

5. EXCESSIVE RESISTANCE IN THE (K922) SENSOR RETURN CIRCUIT

Turn the ignition off.

Perform a voltage drop test. Backprobe the (K922) Sensor Return circuit at the Throttle Body harness connector to the appropriate terminal of the special tool #8815. Ensure the voltmeter leads are connected with the circuit's correct polarity.

WARNING: When the engine is operating, do not stand in direct line with the fan. Do not put your hands near the pulleys, belts, or fan. Do not wear loose clothing. Failure to follow these instructions can result in personal injury or death.

Start the engine and allow it to reach normal operating temperature.

Monitor the voltmeter.

Is the voltage below 0.5 volts?

Yes >> Go To 6

No >> Repair the excessive resistance in the (K922) Sensor Return circuit.
Perform the POWERTRAIN VERIFICATION TEST. (Refer to 9 - ENGINE - STANDARD PROCEDURE)

6. (K22) TP SENSOR NO.1 SIGNAL CIRCUIT SHORTED TO (K122) TP SENSOR NO.2 SIGNAL CIRCUIT

Measure the resistance between the (K22) TP Sensor No.1 Signal circuit and the (K122) TP Sensor No.2 Signal circuit in the Throttle Body harness connector.

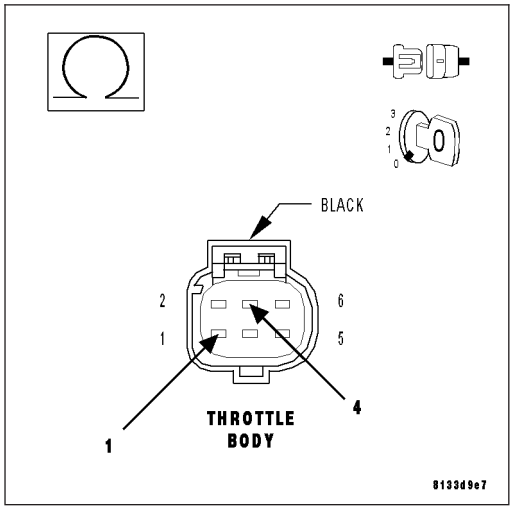

Is the resistance below 5.0 ohms?

Yes >> Repair the short between the (K122) TP Sensor No.2 Signal circuit and the (K22) TP Sensor No.1 Signal circuit.
Perform the POWERTRAIN VERIFICATION TEST. (Refer to 9 - ENGINE - STANDARD PROCEDURE)

No >> Go To 7

7. PCM

NOTE: Before continuing, check the PCM harness connector terminals for corrosion, damage, or terminal push out. Repair as necessary.

Using the schematics as a guide, inspect the wire harness and connectors. Pay particular attention to all Power and Ground circuits.

Were there any problems found?

Yes >> Repair as necessary.
Perform the POWERTRAIN VERIFICATION TEST. (Refer to 9 - ENGINE - STANDARD PROCEDURE)

No >> Replace and program the Powertrain Control Module per Service Information.
Perform the POWERTRAIN VERIFICATION TEST. (Refer to 9 - ENGINE - STANDARD PROCEDURE)

8. THROTTLE FOLLOWER TEST

Ignition on, engine not running.

With a scan tool, perform the Throttle Follower Test and monitor the TP Sensor No.1 or No.2 voltage.

Slowly press the throttle pedal down.

The voltage for TP Sensor No.1 should start at approximately 0.3 of a volt and increase to above 4.7 volts.

The voltage for TP Sensor No.2 should start at approximately 4.7 volts and decrease to approximately 0.3 of a volt.

Is the voltage within the range of the listed specification for the appropriate Sensor?

Yes >> Refer to the INTERMITTENT CONDITION Diagnostic Procedure.
Perform the POWERTRAIN VERIFICATION TEST. (Refer to 9 - ENGINE - STANDARD PROCEDURE)

No >> Disconnect the Battery when replacing the Throttle Body Assembly. Replace the Throttle Body Assembly. After installation is complete, use a scan tool and select the ETC RELEARN function.
Perform the POWERTRAIN VERIFICATION TEST. (Refer to 9 - ENGINE - STANDARD PROCEDURE)

P0222-THROTTLE POSITION SENSOR 2 CIRCUIT LOW

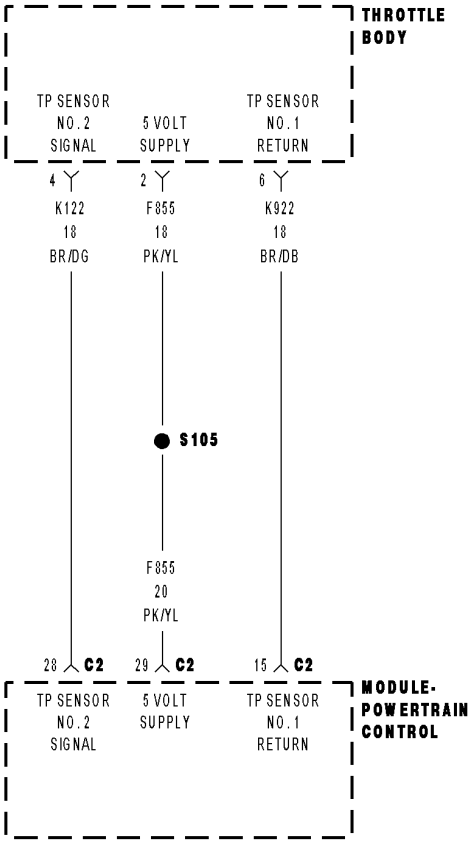

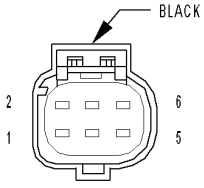

THROTTLE BODY

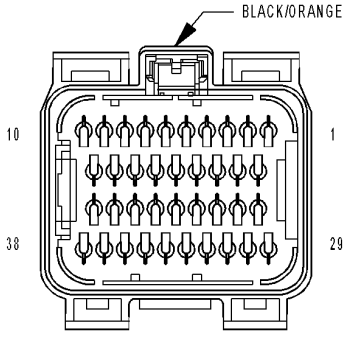

MODULE-POWERTRAIN CONTROL C2

8131a7cf

For a complete Engine wiring diagram **Refer to Section 8W**.

- **When Monitored:**
  With the ignition on. Battery voltage greater than 10 volts.
- **Set Condition:**
  Throttle Position Sensor voltage at the PCM is less than 0.16 of a volt for 0.7 of a second. One Trip Fault. Three good trips to turn off the MIL.

Possible Causes
(F855) 5-VOLT SUPPLY CIRCUIT OPEN
(F855) 5-VOLT SUPPLY CIRCUIT SHORTED TO GROUND
(K122) TP SENSOR NO.2 SIGNAL CIRCUIT SHORTED TO GROUND
(K122) TP SENSOR NO.2 SIGNAL CIRCUIT SHORTED TO THE (K922) SENSOR RETURN CIRCUIT
THROTTLE POSITION SENSOR/THROTTLE BODY
THROTTLE PLATE JAMMED AGAINST THE MAXIMUM STOP
PCM

Always perform the Pre-Diagnostic Troubleshooting procedure before proceeding. (Refer to 9 - ENGINE - DIAGNOSIS AND TESTING).

Diagnostic Test

1. TP SENSOR NO.2 BELOW 0.35 OF A VOLT

NOTE: If a 5-Volt supply DTC has also set, diagnose the 5-Volt DTC before continuing.

NOTE: Make sure the throttle moves freely and does not hang up at Wide Open Throttle, by performing the Throttle Follower Test

NOTE: If P2101 is also set, then make sure that the blade moves freely and does not hang up near Wide Open Throttle before trying to repair P0222.

Ignition on, engine not running.

With the scan tool, read the TP Sensor voltage.

Is the voltage below 0.35 of a volt?

Yes >> Go To 2

No >> Go To 11

2. P0122 ALSO SET

Was the P0122-TP SENSOR NO.1 VOLTAGE LOW DTC set along with the P0222?

Yes >> Go To 3

No >> Go To 4

3. (F855) 5-VOLT SUPPLY CIRCUIT

Turn the ignition off.

Disconnect the Throttle Body harness connector.

Ignition on, engine not running.

Measure the voltage on the (F855) 5-volt Supply circuit in the Throttle Body harness connector.

Is the voltage between 4.5 to 5.2 volts?

Yes >> Go To 4

No >> Go To 8

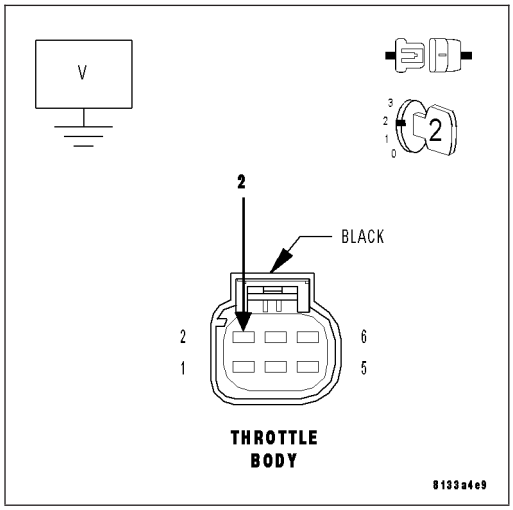

4. THROTTLE POSITION SENSOR

Connect a jumper wire between the (F855) 5-volt Supply circuit and the (K122) TP Sensor No.2 Signal circuit in the Throttle Body harness connector.

With the scan tool, monitor the TP Sensor No.2 voltage.

Is the voltage between 4.8 and 5.2 volts with the jumper wire installed?

Yes >> Disconnect the Battery when replacing the Throttle Body Assembly. Replace the Throttle Body Assembly. After installation is complete, with a scan tool select the ETC RELEARN function.

Perform the POWERTRAIN VERIFICATION TEST. (Refer to 9 - ENGINE - STANDARD PROCEDURE)

No >> Go To 5

NOTE: Remove the jumper wire before continuing.

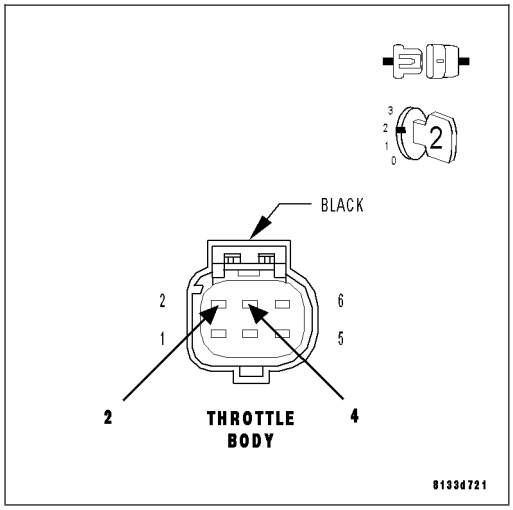

5. (K122) TP SENSOR NO.2 SIGNAL CIRCUIT OPEN

Turn the ignition off.

Disconnect the PCM harness connectors.

CAUTION: Do not probe the PCM harness connectors. Probing the PCM harness connectors will damage the PCM terminals resulting in poor terminal to pin connection. Install Miller Special Tool #8815 to perform diagnosis.

Measure the resistance of the (K122) TP Sensor No.2 Signal circuit from the Throttle Body harness connector to the appropriate terminal of special tool #8815.

Is the resistance below 5.0 ohms?

Yes >> Go To 6

No >> Repair the open in the (K122) TP Sensor No.2 Signal circuit.

Perform the POWERTRAIN VERIFICATION TEST. (Refer to 9 - ENGINE - STANDARD PROCEDURE)

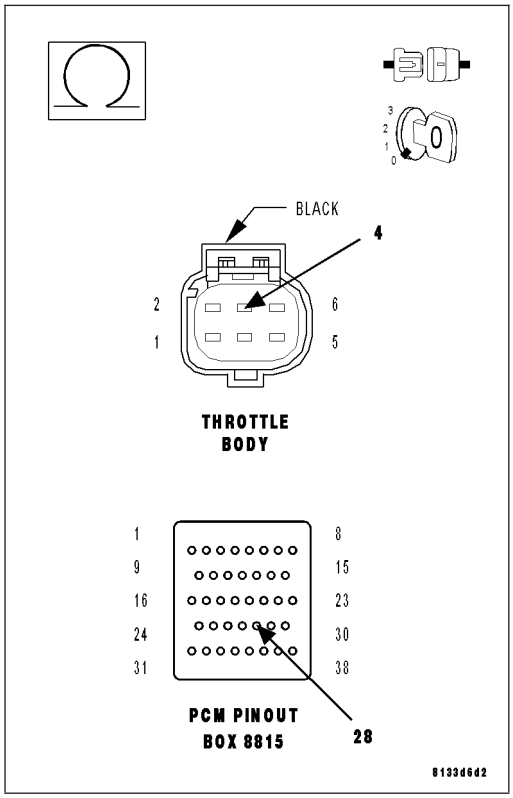

6. (K122) TP SENSOR NO.2 SIGNAL CIRCUIT SHORTED TO GROUND

Measure the resistance between ground and the (K122) TP Sensor No.2 Signal circuit at the Throttle Body harness connector.

Is the resistance below 100 ohms?

Yes >> Repair the short to ground in the (K122) TP Sensor No.2 Signal.

Perform the POWERTRAIN VERIFICATION TEST. (Refer to 9 - ENGINE - STANDARD PROCEDURE)

No >> Go To 7

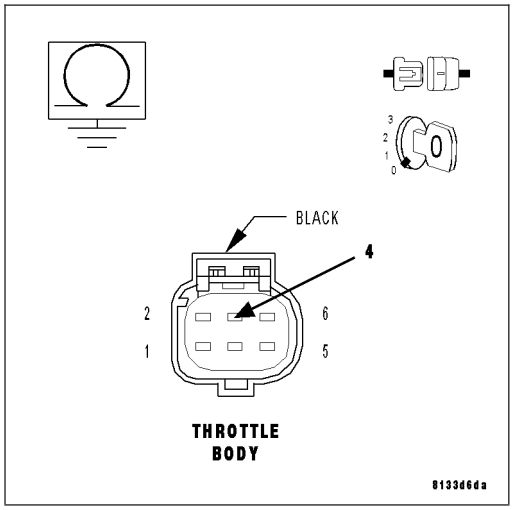

7. (K122) TP SENSOR NO.2 SIGNAL CIRCUIT SHORTED TO (K922) SENSOR RETURN CIRCUIT

Measure the resistance between the (K122) TP Sensor No.2 Signal circuit and the (K922) TP Sensor Return circuit at the Throttle Body harness connector.

Is the resistance below 100 ohms?

Yes >> Repair the short between the (K922) Sensor Return circuit and the (K122) TP Sensor No.2 Signal circuit.
Perform the POWERTRAIN VERIFICATION TEST. (Refer to 9 - ENGINE - STANDARD PROCEDURE)

No >> Go To 10

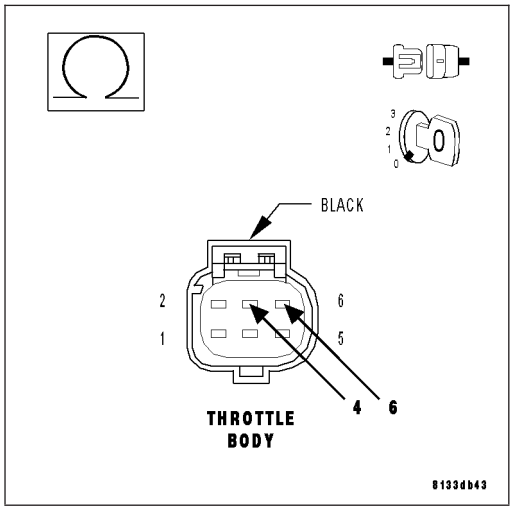

8. (F855) 5-VOLT SUPPLY CIRCUIT OPEN

Turn the ignition off.

Disconnect the PCM harness connectors.

CAUTION: Do not probe the PCM harness connectors. Probing the PCM harness connectors will damage the PCM terminals resulting in poor terminal to pin connection. Install Miller Special Tool #8815 to perform diagnosis.

Measure the resistance of the (F855) 5-volt Supply circuit from the Throttle Body harness connector to the appropriate terminal of special tool #8815.

Is the resistance below 5.0 ohms?

Yes >> Go To 9

No >> Repair the open in the (F855) 5-volt Supply circuit.
Perform the POWERTRAIN VERIFICATION TEST. (Refer to 9 - ENGINE - STANDARD PROCEDURE)

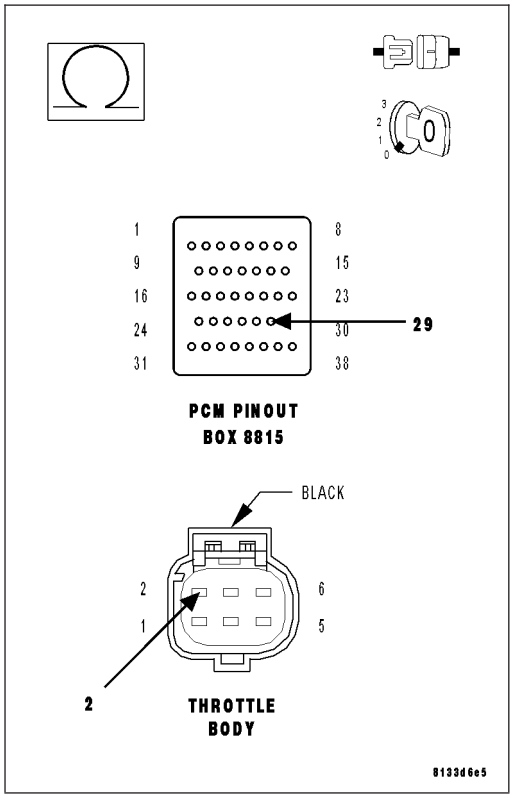

9. (F855) 5-VOLT SUPPLY CIRCUIT SHORTED TO GROUND

Measure the resistance between ground and the (F855) 5-volt Supply circuit at the Throttle Body harness connector.

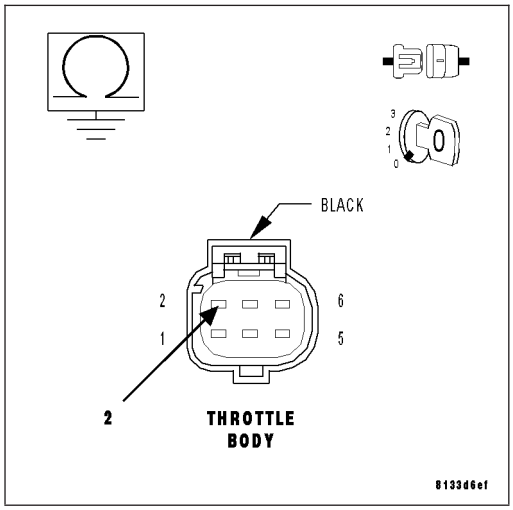

Is the resistance below 100 ohms?

Yes >> Repair the short to ground in the (F855) 5-volt Supply circuit.
Perform the POWERTRAIN VERIFICATION TEST. (Refer to 9 - ENGINE - STANDARD PROCEDURE)

No >> Go To 10

10. PCM

NOTE: Before continuing, check the PCM harness connector terminals for corrosion, damage, or terminal push out. Repair as necessary.
Using the schematics as a guide, inspect the wire harness and connectors. Pay particular attention to all Power and Ground circuits.

Were there any problems found?

Yes >> Repair as necessary.
Perform the POWERTRAIN VERIFICATION TEST. (Refer to 9 - ENGINE - STANDARD PROCEDURE)

No >> Replace and program the Powertrain Control Module per Service Information.
Perform the POWERTRAIN VERIFICATION TEST. (Refer to 9 - ENGINE - STANDARD PROCEDURE)

11. THROTTLE FOLLOWER TEST

Ignition on, engine not running.
With the scan tool, perform the Throttle Follower Test.
Monitor the TP Sensor No.2 voltage while slowly pressing the Throttle pedal down.

Is there a smooth voltage change from high to low?

Yes >> Refer to the INTERMITTENT CONDITION Diagnostic Procedure.
Perform the POWERTRAIN VERIFICATION TEST. (Refer to 9 - ENGINE - STANDARD PROCEDURE)

No >> Disconnect the Battery when replacing the Throttle Body Assembly. Replace the Throttle Body Assembly. After installation is complete, with a scan tool select the ETC RELEARN function.
Perform the POWERTRAIN VERIFICATION TEST. (Refer to 9 - ENGINE - STANDARD PROCEDURE)

P0223-THROTTLE POSITION SENSOR 2 CIRCUIT HIGH

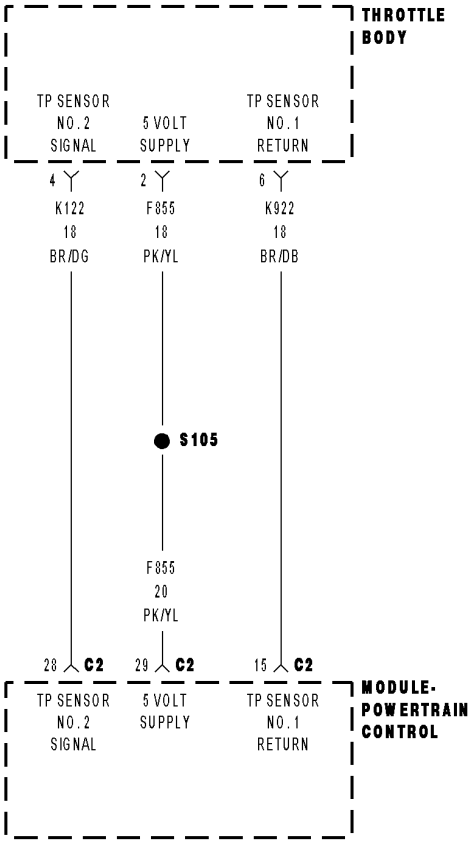

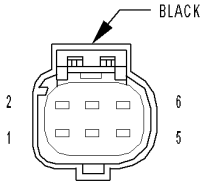

THROTTLE BODY

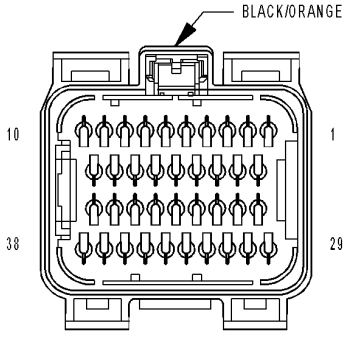

MODULE-POWERTRAIN CONTROL C2

8131a7cf

For a complete wiring diagram **Refer to Section 8W**.

- **When Monitored:**
  With the ignition on.
- **Set Condition:**
  Throttle Position Sensor No.2 Signal circuit voltage is greater than 4.9 volts for 25 ms. One Trip Fault. ETC light will illuminate.

Possible Causes
(K122) TP SENSOR NO.2 SIGNAL CIRCUIT SHORTED TO BATTERY VOLTAGE
(K122) TP SENSOR NO.2 SIGNAL CIRCUIT SHORTED TO (F855) 5-VOLT SUPPLY CIRCUIT
(K922) SENSOR RETURN CIRCUIT OPEN
THROTTLE POSITION SENSOR/THROTTLE BODY
PCM

Always perform the Pre-Diagnostic Troubleshooting procedure before proceeding. (Refer to 9 - ENGINE - DIAGNOSIS AND TESTING).

Diagnostic Test

1. ACTIVE DTC

NOTE: If a 5-Volt supply DTC has also set, diagnose the 5-Volt DTC before continuing.
Ignition on, engine not running.
With a scan tool, read DTCs.

Is the DTC active at this time?

Yes >> Go To 2

No >> Go To 7

2. THROTTLE POSITION SENSOR

Turn the ignition off.
Disconnect the Throttle Body Assembly harness connector.
Ignition on, engine not running.
With the scan tool monitor the TP Sensor No.2 voltage.

Is the voltage below 0.5 volt?

Yes >> Disconnect the Battery when replacing the Throttle Body Assembly. Replace the Throttle Body Assembly. After installation is complete, with the scan tool select the ETC RELEARN function.
Perform the POWERTRAIN VERIFICATION TEST. (Refer to 9 - ENGINE - STANDARD PROCEDURE)

No >> Go To 3

3. (K122) TP SENSOR NO.2 SIGNAL CIRCUIT SHORTED TO BATTERY VOLTAGE

Turn the ignition off.

Disconnect the PCM harness connectors.

Ignition on, engine not running.

Measure the voltage on the (K122) TP Sensor No.2 Signal circuit at the Throttle Body harness connector.

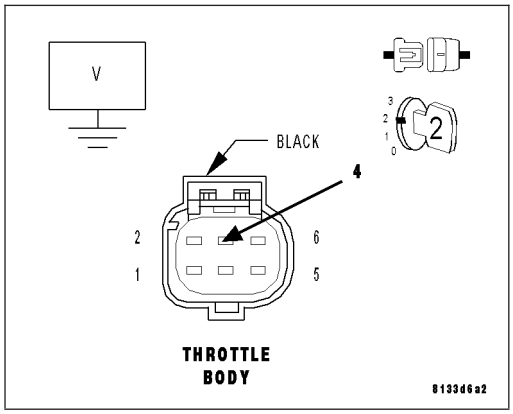

Is the voltage above 5.2 volts?

Yes >> Repair the short to battery voltage in the (K122) TP Sensor No.2 Signal circuit.
Perform the POWERTRAIN VERIFICATION TEST. (Refer to 9 - ENGINE - STANDARD PROCEDURE)

No >> Go To 4

4. (K122) TP SENSOR NO.2 SIGNAL CIRCUIT SHORTED TO (F855) 5-VOLT SUPPLY CIRCUIT

Measure the resistance between the (K122) TP Sensor No.2 Signal circuit and the (F855) 5-volt Supply circuit at the Throttle Body harness connector.

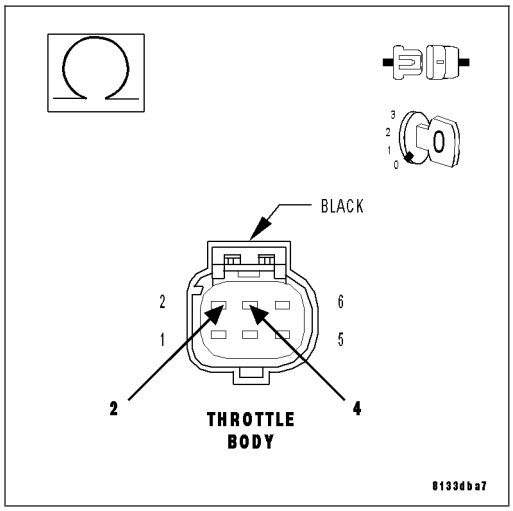

Is the resistance below 100 ohms?

Yes >> Repair the short between the (K122) TP Sensor No.2 Signal circuit and the (F855) 5-volt Supply circuit.
Perform the POWERTRAIN VERIFICATION TEST. (Refer to 9 - ENGINE - STANDARD PROCEDURE)

No >> Go To 5

5. (K922) SENSOR RETURN CIRCUIT OPEN

Measure the resistance of the (K922) Sensor Return circuit from the Throttle Body harness connector to the appropriate terminal of special tool #8815.

Is the resistance below 5.0 ohms?

Yes >> Go To 6

No >> Repair the open in the (K922) Sensor Return circuit.
Perform the POWERTRAIN VERIFICATION TEST. (Refer to 9 - ENGINE - STANDARD PROCEDURE)

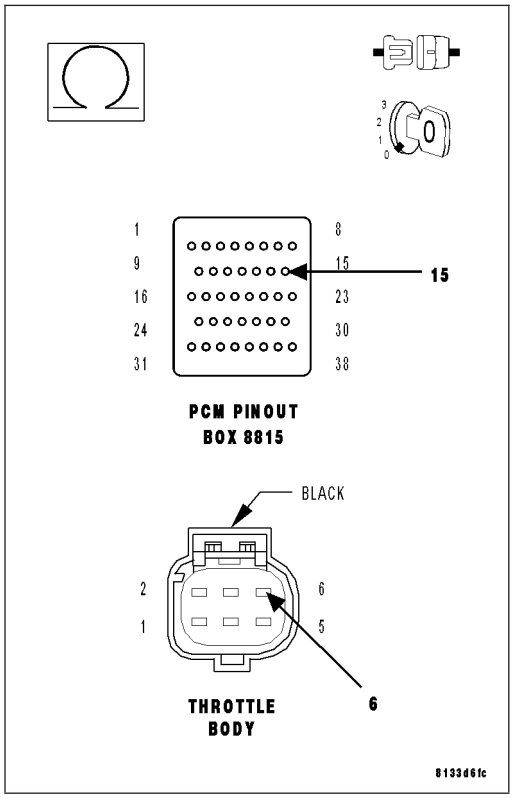

6. PCM

NOTE: Before continuing, check the PCM harness connector terminals for corrosion, damage, or terminal push out. Repair as necessary.
Using the schematics as a guide, inspect the wire harness and connectors. Pay particular attention to all Power and Ground circuits.

Were there any problems found?

Yes >> Repair as necessary.
Perform the POWERTRAIN VERIFICATION TEST. (Refer to 9 - ENGINE - STANDARD PROCEDURE)

No >> Replace and program the Powertrain Control Module per Service Information.
Perform the POWERTRAIN VERIFICATION TEST. (Refer to 9 - ENGINE - STANDARD PROCEDURE)

7. THROTTLE FOLLOWER TEST

With the scan tool, perform the Throttle Follower Test.
Monitor the TP Sensor No.2 voltage while slowly pressing the Throttle pedal down.

Is there a smooth voltage change from high to low?

Yes >> Refer to the INTERMITTENT CONDITION Diagnostic Procedure.
Perform the POWERTRAIN VERIFICATION TEST. (Refer to 9 - ENGINE - STANDARD PROCEDURE)

No >> Disconnect the Battery when replacing the Throttle Body Assembly. Replace the Throttle Body Assembly. After installation is complete, with the scan tool select the ETC RELEARN function.
Perform the POWERTRAIN VERIFICATION TEST. (Refer to 9 - ENGINE - STANDARD PROCEDURE)

P0300- MULTIPLE CYLINDER 1 MISFIRE

For a complete wiring diagram **Refer to Section 8W**.

- **When Monitored:**
  Any time the engine is running, and the adaptive numerator has been successfully updated.
- **Set Condition:**
  The threshold to set the fault is application specific; it is tied to the level of misfire that will cause emissions to increase to 1.5 times the standard or in some cases 1%. It is always a two trip fault above the calibrated RPM. It takes 1 soft fail to set a malfunction and two trips to set the MIL. Three good trips to turn off the MIL.

Possible Causes
(K343) ASD RELAY OUTPUT 2 CIRCUIT
INJECTOR CONTROL CIRCUIT
COIL CONTROL CIRCUIT
IGNITION WIRE
SPARK PLUG
IGNITION COIL
FUEL PUMP INLET STRAINER PLUGGED
RESTRICTED FUEL SUPPLY LINE
FUEL PUMP MODULE
FUEL PRESSURE LEAK DOWN
FUEL INJECTOR
ENGINE MECHANICAL PROBLEM
PCM

Always perform the Pre-Diagnostic Troubleshooting procedure before proceeding. (Refer to 9 - ENGINE - DIAGNOSIS AND TESTING).

Diagnostic Test

1. CYLINDER MIS-FIRE CONDITION ACTIVE

NOTE: Check for any TSB's that apply to a Misfire condition. Review the vehicle repair history for any misfire condition repairs that have been performed.

Engine running.

Observe the WHICH CYLINDER IS MISFIRING screen and identify the cylinders that have a misfire present.

Is there a misfire present at this time?

Yes >> Go To 2

NOTE: Repeat the below checks for each cylinder that is indicating a misfire present.

No >> Refer to the INTERMITTENT CONDITION Diagnostic Procedure.
Perform the POWERTRAIN VERIFICATION TEST. (Refer to 9 - ENGINE - STANDARD PROCEDURE)

2. VISUAL INSPECTION

NOTE: Anything that affects the speed of the crankshaft can cause a misfire DTC.

NOTE: When a Misfire is detected for a particular cylinder, the PCM will shut down that cylinders Injector Control circuit.

- Visually inspect the engine for any of the following conditions.
- Worn serpentine belt
- Binding Engine-Driven accessories: A/C Compressor, P/S Pump, Water pump.
- Misalignment Water pump, P/S Pump and A/C Compressor pulleys
- Corroded PCM power and ground circuits.
- Improper CKP, CMP, MAP, and TP Sensor mounting
- Poor connector/terminal to component connection. i.e., CKP sensor, Fuel Injector, Ign coil, etc.
- Vacuum leaks
- Restricted Air Induction system or Exhaust system.
- Internal engine component failures.

Were any of the above conditions present?

Yes >> Repair as necessary.
Perform the POWERTRAIN VERIFICATION TEST. (Refer to 9 - ENGINE - STANDARD PROCEDURE)

No >> Go To 3

3. (K343) ASD RELAY OUTPUT 2 CIRCUIT

NOTE: On the 2.7 and 3.5L engines, cylinders 1, 3 and 5, it is necessary to remove the upper intake to access the ignition coils and the Fuel Injector harness connectors.

Turn the ignition off.

Disconnect the Ignition Coil harness connector.

Disconnect the Fuel Injector harness connector.

Ignition on, engine not running.

With the scan tool, actuate the ASD Relay.

Using a 12-volt test light connected to ground, probe the (K343) ASD Relay Output 2 circuit in the Ignition Coil harness connector and Fuel Injector harness connector while the relay is actuating.

Does the test light illuminate brightly?

Yes >> Go To 4

No >> Repair the excessive resistance or short to ground in the (K343) ASD Relay Output 2 circuit.
Perform the POWERTRAIN VERIFICATION TEST. (Refer to 9 - ENGINE - STANDARD PROCEDURE)

4. IGNITION SYSTEM OPERATION

NOTE: On the 2.7 and 3.5L engines, cylinders 1, 3 and 5, it is necessary to remove the upper intake to access the ignition coils. Once the ignition coil has been removed from the cylinder head, the intake must be reinstall to be able to crank the engine. Move the ignition coil harness connector through the slots in the upper intake and then connect the coil to the harness connector. Secure the upper intake to the lower intake in accordance with the service information.

Turn the ignition off.

Connect the Ignition Coil harness connector.

Remove the Ignition Coil.

Leave the Fuel Injector harness connector of the cylinder being tested disconnected.

Install a spark tester on the Ignition Coil.

While cranking the engine observe the spark coming from the spark tester.

NOTE: A crisp blue spark that is able to jump the gap of the spark tester should be generated.

Is good spark present?

Yes >> Go To 5

No >> Go To 14

NOTE: Connect the Fuel Injector harness connector before continuing.

5. SPARK PLUG

NOTE: Vehicles that are equipped with the 5.7L or 6.1L engines must have both sparks (per cylinder) removed and inspected to ensure proper operation.

Turn the ignition off.

Remove the Spark Plug.

Inspect the Spark Plug for the following conditions.

- Cracks
- Carbon Tracking
- Foreign Material
- Gap size out of specifications
- Loose or broke electrode

NOTE: Lightly tap the bottom of the spark plug on a solid surface. The electrode in the spark plug should not move.

Were any of the above conditions present?

Yes >> Replace the Spark Plug.
Perform the POWERTRAIN VERIFICATION TEST. (Refer to 9 - ENGINE - STANDARD PROCEDURE)

No >> Go To 6

6. FUEL PRESSURE CHECK

WARNING: The fuel system is under a constant pressure (even with the engine off). Before testing or servicing any fuel system hose, fitting or line, the fuel system pressure must be released. Failure to follow these instructions can result in personal injury or death.

Install a fuel pressure gauge to the fuel rail.

Start the engine and observe the fuel pressure reading.

NOTE: Fuel pressure specification is 407 KPa +/- 34 KPa (59 psi +/- 5 psi).

Choose a conclusion that best matches your fuel pressure reading.

Within Specification
Go To 7

Below Specification
Go To 12

Above Specification
Replace the fuel filter/pressure regulator.
Perform the POWERTRAIN VERIFICATION TEST. (Refer to 9 - ENGINE - STANDARD PROCEDURE)

7. FUEL PRESSURE LEAK DOWN

NOTE: Before continuing visually and physically inspect the fuel delivery system for external leaks or damage. Repair/replace as necessary.
Turn the ignition off.

WARNING: The fuel system is under a constant pressure (even with the engine off). Before testing or servicing any fuel system hose, fitting or line, the fuel system pressure must be released. Failure to follow these instructions can result in personal injury or death
Install special tool #6539 (5/16″) or #6631 (3/8″) fuel line adapter.

Install the fuel pressure gauge.

Start the engine and allow the fuel system to reach maximum pressure.

Turn the ignition off.

NOTE: Fuel specification is 407 KPa +/- 34 KPa (59 psi +/- 5 psi).
Using special tool #C4390, Hose Clamp Pliers, pinch the rubber fuel line between the fuel pressure gauge and the engine.

Monitor the fuel pressure gauge for a minimum of 5 minutes.

NOTE: The pressure should not fall below 241 KPa (35 psi).

Does the gauge fall below the listed specification?

Yes >> Replace the leaking Fuel Injector(s).
Perform the POWERTRAIN VERIFICATION TEST. (Refer to 9 - ENGINE - STANDARD PROCEDURE)

No >> Go To 8

8. FUEL INJECTOR OPERATION

WARNING: The fuel system is under a constant pressure (even with the engine off). Before testing or servicing any fuel system hose, fitting or line, the fuel system pressure must be released. Failure to follow these instructions can result in personal injury or death.

CAUTION: After each Fuel Injector actuation, start the engine to clean the cylinder of fuel. Failure to do so could cause engine damage.
Remove special tool #C4390.

Start the engine and allow the fuel pressure to reach maximum pressure.

Ignition on, engine not running.

Using the scan tool, actuate the Fuel Injector.

Monitor the fuel pressure gauge.

Does the fuel pressure gauge indicate a drop in fuel pressure?

Yes >> Go To 9

No >> Go To 10

NOTE: Turn the ignition off, remove the Fuel Pressure gauge, and connect the fuel lines before continuing.

9. ENGINE MECHANICAL PROBLEM

Check for any of the following conditions/mechanical problems.
ENGINE VACUUM - must be at least 13 inches in neutral
ENGINE VALVE TIMING - must be within specifications
ENGINE COMPRESSION - must be within specifications
ENGINE EXHAUST SYSTEM - must be free of any restrictions or leaks.
ENGINE PCV SYSTEM - must flow freely
TORQUE CONVERTER STALL SPEED - must be within specifications
POWER BRAKE BOOSTER - no internal vacuum leaks
FUEL - must be free of contamination
CAM LOBES - must not be worn excessively
CYLINDER LEAKAGE TEST - must be within specifications
VALVE SPRINGS - cannot be weak or broken

Are there any engine mechanical problems?

Yes >> Repair as necessary.
Perform the POWERTRAIN VERIFICATION TEST. (Refer to 9 - ENGINE - STANDARD PROCEDURE)

No >> Go To 17

10. FUEL INJECTOR

Turn the ignition off.
Disconnect the Fuel Injector harness connector.
Ignition on, engine not running.

NOTE: When a Misfire is detected for a particular cylinder, the PCM will shut down that cylinders Injector Control circuit.
With the scan tool, erase DTCs.
Using a 12-volt test light connected to 12-volts, probe the Injector Control circuit.
With the scan tool, actuate the Fuel Injector.

Does the test light blink/flicker?

Yes >> Replace the Fuel Injector.
Perform the POWERTRAIN VERIFICATION TEST. (Refer to 9 - ENGINE - STANDARD PROCEDURE)

No >> Go To 11

11. INJECTOR CONTROL CIRCUIT

Turn the ignition off.
Disconnect the PCM harness connectors.

CAUTION: Do not probe the PCM harness connectors. Probing the PCM harness connectors will damage the PCM terminals resulting in poor terminal to pin connection. Install Miller Special Tool #8815 to perform diagnosis.
Check the Injector Control circuit for an open, short to ground, and short to voltage.

Was a problem found with the Injector Control circuit?

Yes >> Repair the excessive resistance or short in the Injector Control circuit.
Perform the POWERTRAIN VERIFICATION TEST. (Refer to 9 - ENGINE - STANDARD PROCEDURE)

No >> Go To 17

12. FUEL SUPPLY LINE RESTRICTED

Turn the ignition off.

WARNING: The fuel system is under a constant pressure (even with the engine off). Before testing or servicing any fuel system hose, fitting or line, the fuel system pressure must be released. Failure to follow these instructions can result in personal injury or death.

Raise vehicle on hoist, and disconnect the fuel pressure line at the fuel pump module.

Install special tool #6539 (5/16″) #6631(3/8″) fuel line adapter and the fuel pressure gauge between the fuel supply line and the fuel pump module.

Ignition on, engine not running.

With the scan tool, actuate the ASD Fuel System test and observe the fuel pressure gauge.

NOTE: Fuel pressure specification is 407 KPa +/- 34 KPa (59 psi +/- 5 psi).

Is the fuel pressure within specification?

Yes >> Repair or replace fuel supply line as necessary.
Perform the POWERTRAIN VERIFICATION TEST. (Refer to 9 - ENGINE - STANDARD PROCEDURE)

No >> Go To 13

13. FUEL PUMP INLET STRAINER

Turn the ignition off.

WARNING: The fuel system is under a constant pressure (even with the engine off). Before testing or servicing any fuel system hose, fitting or line, the fuel system pressure must be released. Failure to follow these instructions can result in personal injury or death.

Remove the Fuel Pump Module and inspect the Fuel Inlet Strainer.

Is the Fuel Inlet Strainer plugged?

Yes >> Replace the Fuel Pump Inlet Strainer.
Perform the POWERTRAIN VERIFICATION TEST. (Refer to 9 - ENGINE - STANDARD PROCEDURE)

No >> Before continuing, check the Fuel Pump Module harness connector terminals for corrosion, damage, or terminal push out. Make sure the ground circuit is operating properly. Repair as necessary. Replace the Fuel Pump Module.
Perform the POWERTRAIN VERIFICATION TEST. (Refer to 9 - ENGINE - STANDARD PROCEDURE)

14. IGNITION WIRE

NOTE: If the vehicle being tested does not have an ignition wire answer YES to this test and continue.

Turn the ignition off.

Remove the ignition wire.

Measure the resistance of the ignition wire.

Is the resistance below 10K ohms?

Yes >> Go To 15

No >> Replace the Ignition Wire.
Perform the POWERTRAIN VERIFICATION TEST. (Refer to 9 - ENGINE - STANDARD PROCEDURE)

15. IGNITION COIL

Disconnect the Ignition Coil harness connector.
Remove the Fuel Pump Relay.
Using a 12-volt test light connected to 12-volts, probe the Coil Control circuit.
Crank the engine for 5 second while observing the test light.

Does the test light brightly blink/flicker?

Yes >> Replace the Ignition Coil.
Perform the POWERTRAIN VERIFICATION TEST. (Refer to 9 - ENGINE - STANDARD PROCEDURE)

No >> Go To 16

16. COIL CONTROL CIRCUIT

Turn the ignition off.
Disconnect the PCM harness connectors.

CAUTION: Do not probe the PCM harness connectors. Probing the PCM harness connectors will damage the PCM terminals resulting in poor terminal to pin connection. Install Miller Special Tool #8815 to perform diagnosis.
Check the Coil Control circuit for an open, short to ground, and short to voltage.

Was a problem found with the Coil Control circuit?

Yes >> Repair the Coil Control circuit.
Perform the POWERTRAIN VERIFICATION TEST. (Refer to 9 - ENGINE - STANDARD PROCEDURE)

No >> Go To 17

17. PCM

NOTE: Before continuing, check the PCM harness connector terminals for corrosion, damage, or terminal push out. Repair as necessary.
Using the schematics as a guide, inspect the wire harness and connectors. Pay particular attention to all Power and Ground circuits.

Were there any problems found?

Yes >> Repair as necessary.
Perform the POWERTRAIN VERIFICATION TEST. (Refer to 9 - ENGINE - STANDARD PROCEDURE)

No >> Replace and program the Powertrain Control Module per Service Information.
Perform the POWERTRAIN VERIFICATION TEST. (Refer to 9 - ENGINE - STANDARD PROCEDURE)

P0301-CYLINDER 1 MISFIRE

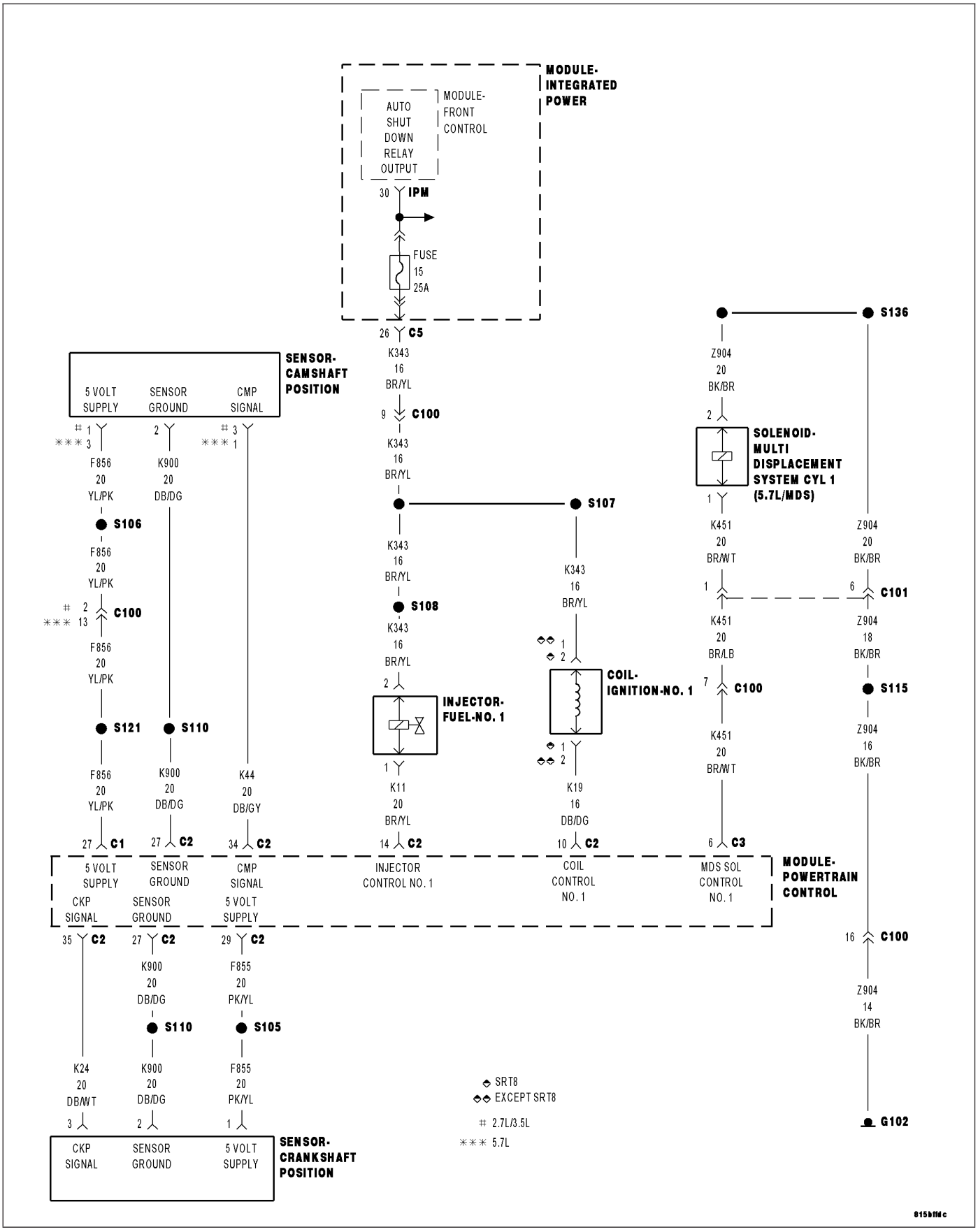

For a complete wiring diagram **Refer to Section 8W**.

- **When Monitored:**
  Any time the engine is running, and the adaptive numerator has been successfully updated.
- **Set Condition:**
  The threshold to set the fault is application specific; it is tied to the level of misfire that will cause emissions to increase to 1.5 times the standard or in some cases 1%. It is always a two trip fault above the calibrated RPM. It takes 1 soft fail to set a malfunction and two trips to set the MIL. Three good trips to turn off the MIL.

Possible Causes
(K343) ASD RELAY OUTPUT 2 CIRCUIT
(K11) INJECTOR CONTROL NO.1 CIRCUIT
(K19) COIL CONTROL NO.1 CIRCUIT
IGNITION WIRE
SPARK PLUG
IGNITION COIL
FUEL PUMP INLET STRAINER PLUGGED
RESTRICTED FUEL SUPPLY LINE
FUEL PUMP MODULE
FUEL PRESSURE LEAK DOWN
FUEL INJECTOR
ENGINE MECHANICAL PROBLEM
PCM

Always perform the Pre-Diagnostic Troubleshooting procedure before proceeding. (Refer to 9 - ENGINE - DIAGNOSIS AND TESTING).

Diagnostic Test

1. CYLINDER MIS-FIRE CONDITION ACTIVE

Engine running.

Observe the WHICH CYLINDER IS MISFIRING screen for at least one minute on the scan tool.

Is there a misfire present at this time?

Yes >> Go To 2

No >> Refer to the INTERMITTENT CONDITION Diagnostic Procedure.
Perform the POWERTRAIN VERIFICATION TEST. (Refer to 9 - ENGINE - STANDARD PROCEDURE)

2. VISUAL INSPECTION

NOTE: Anything that affects the speed of the crankshaft can cause a misfire DTC.

NOTE: When a Misfire is detected for a particular cylinder, the PCM will shut down that cylinders Injector Control circuit.

- Visually inspect the engine for any of the following conditions.
- Worn serpentine belt
- Binding Engine-Driven accessories: A/C Compressor, P/S Pump, Water pump.
- Misalignment Water pump, P/S Pump and A/C Compressor pulleys
- Corroded PCM power and ground circuits.
- Improper CKP, CMP, MAP, and TP Sensor mounting
- Poor connector/terminal to component connection. i.e., CKP sensor, Fuel Injector, Ign coil, etc.
- Vacuum leaks
- Restricted Air Induction system or Exhaust system.

- Internal engine component failures.

Were any of the above conditions present?

Yes >> Repair as necessary.
Perform the POWERTRAIN VERIFICATION TEST. (Refer to 9 - ENGINE - STANDARD PROCEDURE)

No >> Go To 3

3. (K343) ASD RELAY OUTPUT 2 CIRCUIT

NOTE: On the 2.7 and 3.5L engines, cylinders 1, 3 and 5, it is necessary to remove the upper intake to access the ignition coils and the Fuel Injector harness connectors.

Turn the ignition off.

Disconnect the Ignition Coil No.1 harness connector.

Disconnect the Fuel Injector No.1 harness connector.

Ignition on, engine not running.

With the scan tool, actuate the ASD Relay.

Using a 12-volt test light connected to ground, probe the (K343) ASD Relay Output 2 circuit in the Ignition Coil harness connector and Fuel Injector harness connector while the relay is actuating.

Does the test light illuminate brightly?

Yes >> Go To 4

No >> Repair the excessive resistance or short to ground in the (K343) ASD Relay Output 2 circuit.
Perform the POWERTRAIN VERIFICATION TEST. (Refer to 9 - ENGINE - STANDARD PROCEDURE)

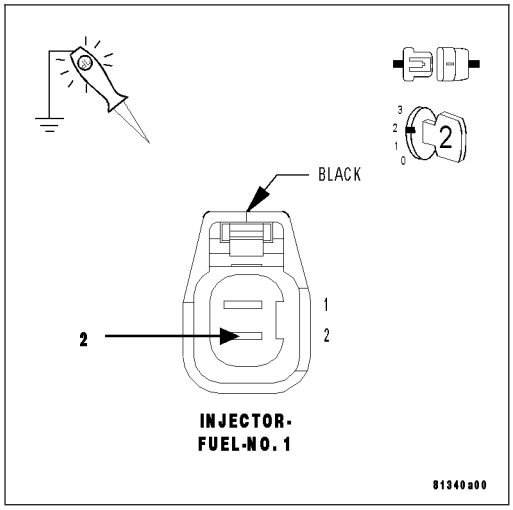

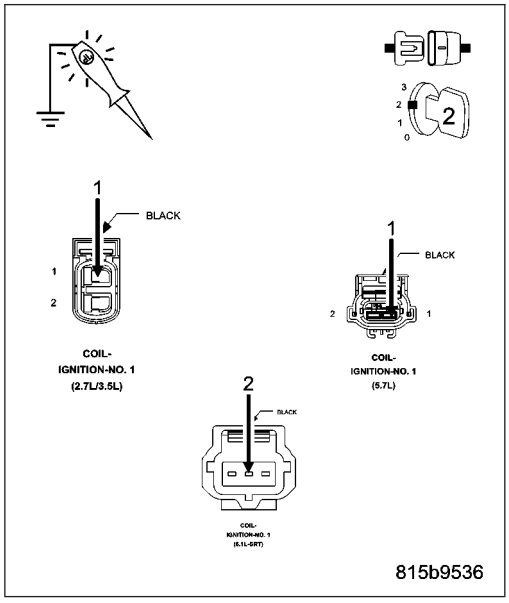

4. IGNITION SYSTEM OPERATION

NOTE: On the 2.7 and 3.5L engines, cylinders 1, 3 and 5, it is necessary to remove the upper intake to access the ignition coils. Once the ignition coil has been removed from the cylinder head, the intake must be reinstall to be able to crank the engine. Move the ignition coil harness connector through the slots in the upper intake and then connect the coil to the harness connector. Secure the upper intake to the lower intake in accordance with the service information.

Turn the ignition off.

Connect the Ignition Coil No.1 harness connector.

Remove the Ignition Coil.

Leave the Fuel Injector harness connector of the cylinder being tested disconnected.
Install a spark tester on the Ignition Coil.
While cranking the engine observe the spark coming from the spark tester.

NOTE: A crisp blue spark that is able to jump the gap of the spark tester should be generated.

Is good spark present?

Yes >> Go To 5

No >> Go To 14

NOTE: Connect the Fuel Injector harness connector before continuing.

5. SPARK PLUG

NOTE: Vehicles that are equipped with the 5.7L or 6.1L engines must have both spark plugs (per cylinder) removed and inspected to ensure proper operation.
Turn the ignition off.
Remove the Spark Plug.
Inspect the Spark Plug for the following conditions.
- Cracks
- Carbon Tracking
- Foreign Material
- Gap size out of specifications
- Loose or broke electrode

NOTE: Lightly tap the bottom of the spark plug on a solid surface. The electrode in the spark plug should not move.

Were any of the above conditions present?

Yes >> Replace the Spark Plug.
Perform the POWERTRAIN VERIFICATION TEST. (Refer to 9 - ENGINE - STANDARD PROCEDURE)

No >> Go To 6

6. FUEL PRESSURE CHECK

WARNING: The fuel system is under a constant pressure (even with the engine off). Before testing or servicing any fuel system hose, fitting or line, the fuel system pressure must be released. Failure to follow these instructions can result in personal injury or death.
Install a fuel pressure gauge to the fuel rail.
Start the engine and observe the fuel pressure reading.

NOTE: Fuel pressure specification is 407 KPa +/- 34 KPa (59 psi +/- 5 psi).

Choose a conclusion that best matches your fuel pressure reading.

Within Specification
Go To 7

Below Specification
Go To 12

Above Specification
Replace the fuel filter/pressure regulator.
Perform the POWERTRAIN VERIFICATION TEST. (Refer to 9 - ENGINE - STANDARD PROCEDURE)

7. FUEL PRESSURE LEAK DOWN

NOTE: Before continuing visually and physically inspect the fuel delivery system for external leaks or damage. Repair/replace as necessary.
Turn the ignition off.

WARNING: The fuel system is under a constant pressure (even with the engine off). Before testing or servicing any fuel system hose, fitting or line, the fuel system pressure must be released. Failure to follow these instructions can result in personal injury or death
Install special tool #6539 (5/16″) or #6631 (3/8″) fuel line adapter.

Install the fuel pressure gauge.

Start the engine and allow the fuel system to reach maximum pressure.

Turn the ignition off.

NOTE: Fuel specification is 407 KPa +/- 34 KPa (59 psi +/- 5 psi).
Using special tool #C4390, Hose Clamp Pliers, pinch the rubber fuel line between the fuel pressure gauge and the engine.

Monitor the fuel pressure gauge for a minimum of 5 minutes.

NOTE: The pressure should not fall below 241 KPa (35 psi).

Does the gauge fall below the listed specification?

Yes >> Replace the leaking Fuel Injector(s).
Perform the POWERTRAIN VERIFICATION TEST. (Refer to 9 - ENGINE - STANDARD PROCEDURE)

No >> Go To 8

8. FUEL INJECTOR OPERATION

WARNING: The fuel system is under a constant pressure (even with the engine off). Before testing or servicing any fuel system hose, fitting or line, the fuel system pressure must be released. Failure to follow these instructions can result in personal injury or death.

CAUTION: After each Fuel Injector actuation, start the engine to clean the cylinder of fuel. Failure to do so could cause engine damage.
Remove special tool #C4390.

Start the engine and allow the fuel pressure to reach maximum pressure.

Ignition on, engine not running.

Using the scan tool, actuate the No.1 Fuel Injector.

Monitor the fuel pressure gauge.

Does the fuel pressure gauge indicate a drop in fuel pressure?

Yes >> Go To 9

No >> Go To 10

NOTE: Turn the ignition off, remove the Fuel Pressure gauge, and connect the fuel lines before continuing.

9. ENGINE MECHANICAL PROBLEM

Check for any of the following conditions/mechanical problems.
ENGINE VACUUM - must be at least 13 inches in neutral
ENGINE VALVE TIMING - must be within specifications
ENGINE COMPRESSION - must be within specifications
ENGINE EXHAUST SYSTEM - must be free of any restrictions or leaks.
ENGINE PCV SYSTEM - must flow freely
TORQUE CONVERTER STALL SPEED - must be within specifications
POWER BRAKE BOOSTER - no internal vacuum leaks
FUEL - must be free of contamination
CAM LOBES - must not be worn excessively
CYLINDER LEAKAGE TEST - must be within specifications
VALVE SPRINGS - cannot be weak or broken

Are there any engine mechanical problems?

Yes >> Repair as necessary.
Perform the POWERTRAIN VERIFICATION TEST. (Refer to 9 - ENGINE - STANDARD PROCEDURE)

No >> Go To 17

10. FUEL INJECTOR

Turn the ignition off.
Disconnect the No.1 Fuel Injector harness connector.
Ignition on, engine not running.

NOTE: When a Misfire is detected for a particular cylinder, the PCM will shut down that cylinders Injector Control circuit.
With the scan tool, erase DTCs.
Using a 12-volt test light connected to 12-volts, probe the (K11) Injector Control No.1 circuit.
With the scan tool, actuate the Fuel Injector.

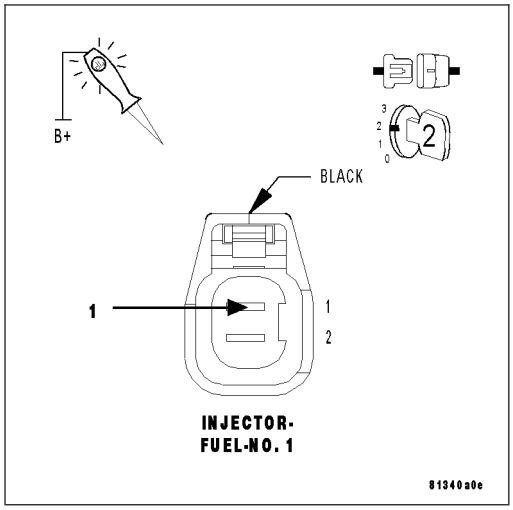

Does the test light blink/flicker?

Yes >> Replace the Fuel Injector.
Perform the POWERTRAIN VERIFICATION TEST. (Refer to 9 - ENGINE - STANDARD PROCEDURE)

No >> Go To 11

11. (K11) INJECTOR CONTROL NO.1 CIRCUIT

Turn the ignition off.

Disconnect the PCM harness connectors.

CAUTION: Do not probe the PCM harness connectors. Probing the PCM harness connectors will damage the PCM terminals resulting in poor terminal to pin connection. Install Miller Special Tool #8815 to perform diagnosis.

Check the (K11) Injector Control No.1 circuit for an open, short to ground, and short to voltage.

Was a problem found with the (K11) Injector Control No.1 circuit?

Yes >> Repair the excessive resistance or short in the (K11) Injector Control No.1 circuit.
Perform the POWERTRAIN VERIFICATION TEST. (Refer to 9 - ENGINE - STANDARD PROCEDURE)

No >> Go To 17

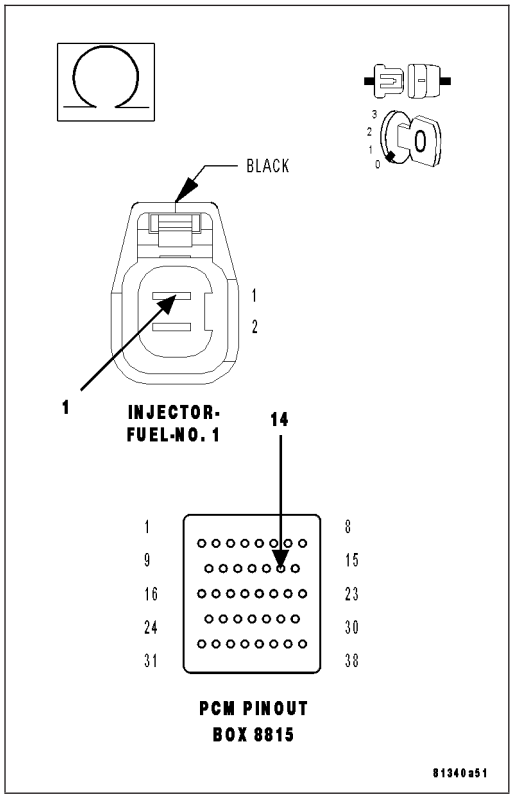

12. FUEL SUPPLY LINE RESTRICTED

Turn the ignition off.

WARNING: The fuel system is under a constant pressure (even with the engine off). Before testing or servicing any fuel system hose, fitting or line, the fuel system pressure must be released. Failure to follow these instructions can result in personal injury or death.

Raise vehicle on hoist, and disconnect the fuel pressure line at the fuel pump module.

Install special tool #6539 (5/16″) #6631(3/8″) fuel line adapter and the fuel pressure gauge between the fuel supply line and the fuel pump module.

Ignition on, engine not running.

With the scan tool, actuate the ASD Fuel System test and observe the fuel pressure gauge.

NOTE: Fuel pressure specification is 407 KPa +/- 34 KPa (59 psi +/- 5 psi).

Is the fuel pressure within specification?

Yes >> Repair or replace fuel supply line as necessary.
Perform the POWERTRAIN VERIFICATION TEST. (Refer to 9 - ENGINE - STANDARD PROCEDURE)

No >> Go To 13

13. FUEL PUMP INLET STRAINER

Turn the ignition off.

WARNING: The fuel system is under a constant pressure (even with the engine off). Before testing or servicing any fuel system hose, fitting or line, the fuel system pressure must be released. Failure to follow these instructions can result in personal injury or death.

Remove the Fuel Pump Module and inspect the Fuel Inlet Strainer.

Is the Fuel Inlet Strainer plugged?

Yes >> Replace the Fuel Pump Inlet Strainer.
Perform the POWERTRAIN VERIFICATION TEST. (Refer to 9 - ENGINE - STANDARD PROCEDURE)

No >> Before continuing, check the Fuel Pump Module harness connector terminals for corrosion, damage, or terminal push out. Make sure the ground circuit is operating properly. Repair as necessary. Replace the Fuel Pump Module.
Perform the POWERTRAIN VERIFICATION TEST. (Refer to 9 - ENGINE - STANDARD PROCEDURE)

14. IGNITION WIRE

NOTE: If the vehicle being tested does not have an ignition wire answer YES to this test and continue.

Turn the ignition off.

Remove the ignition wire.

Measure the resistance of the ignition wire.

Is the resistance below 10K ohms?

Yes >> Go To 15

No >> Replace the Ignition Wire.
Perform the POWERTRAIN VERIFICATION TEST. (Refer to 9 - ENGINE - STANDARD PROCEDURE)

15. IGNITION COIL

Disconnect the Ignition Coil harness connector.

Remove the Fuel Pump Relay.

Using a 12-volt test light connected to 12-volts, probe the (K19) Coil Control No.1 circuit.

Crank the engine for 5 second while observing the test light.

Does the test light brightly blink/flicker?

Yes >> Replace the Ignition Coil.
Perform the POWERTRAIN VERIFICATION TEST. (Refer to 9 - ENGINE - STANDARD PROCEDURE)

No >> Go To 16

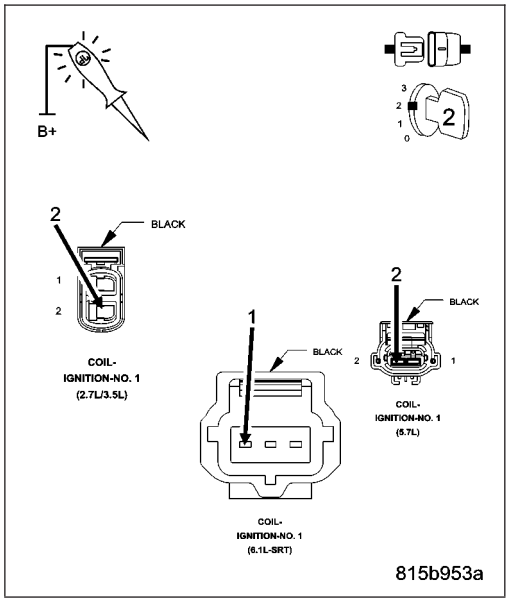

16. (K19) COIL CONTROL NO.1 CIRCUIT

Turn the ignition off.

Disconnect the PCM harness connectors.

CAUTION: Do not probe the PCM harness connectors. Probing the PCM harness connectors will damage the PCM terminals resulting in poor terminal to pin connection. Install Miller Special Tool #8815 to perform diagnosis.

Check the (K19) Coil Control No.1 circuit for an open, short to ground, and short to voltage.

Was a problem found with the (K19) Coil Control No.1 circuit?

Yes >> Repair the (K19) Coil Control No.1 circuit.
Perform the POWERTRAIN VERIFICATION TEST. (Refer to 9 - ENGINE - STANDARD PROCEDURE)

No >> Go To 17

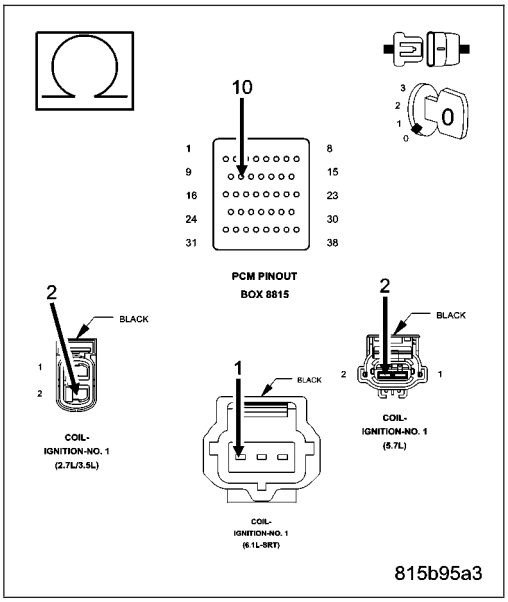

17. PCM

NOTE: Before continuing, check the PCM harness connector terminals for corrosion, damage, or terminal push out. Repair as necessary.

Using the schematics as a guide, inspect the wire harness and connectors. Pay particular attention to all Power and Ground circuits.

Were there any problems found?

Yes >> Repair as necessary.
Perform the POWERTRAIN VERIFICATION TEST. (Refer to 9 - ENGINE - STANDARD PROCEDURE)

No >> Replace and program the Powertrain Control Module per Service Information.
Perform the POWERTRAIN VERIFICATION TEST. (Refer to 9 - ENGINE - STANDARD PROCEDURE)

P0302-CYLINDER 2 MISFIRE

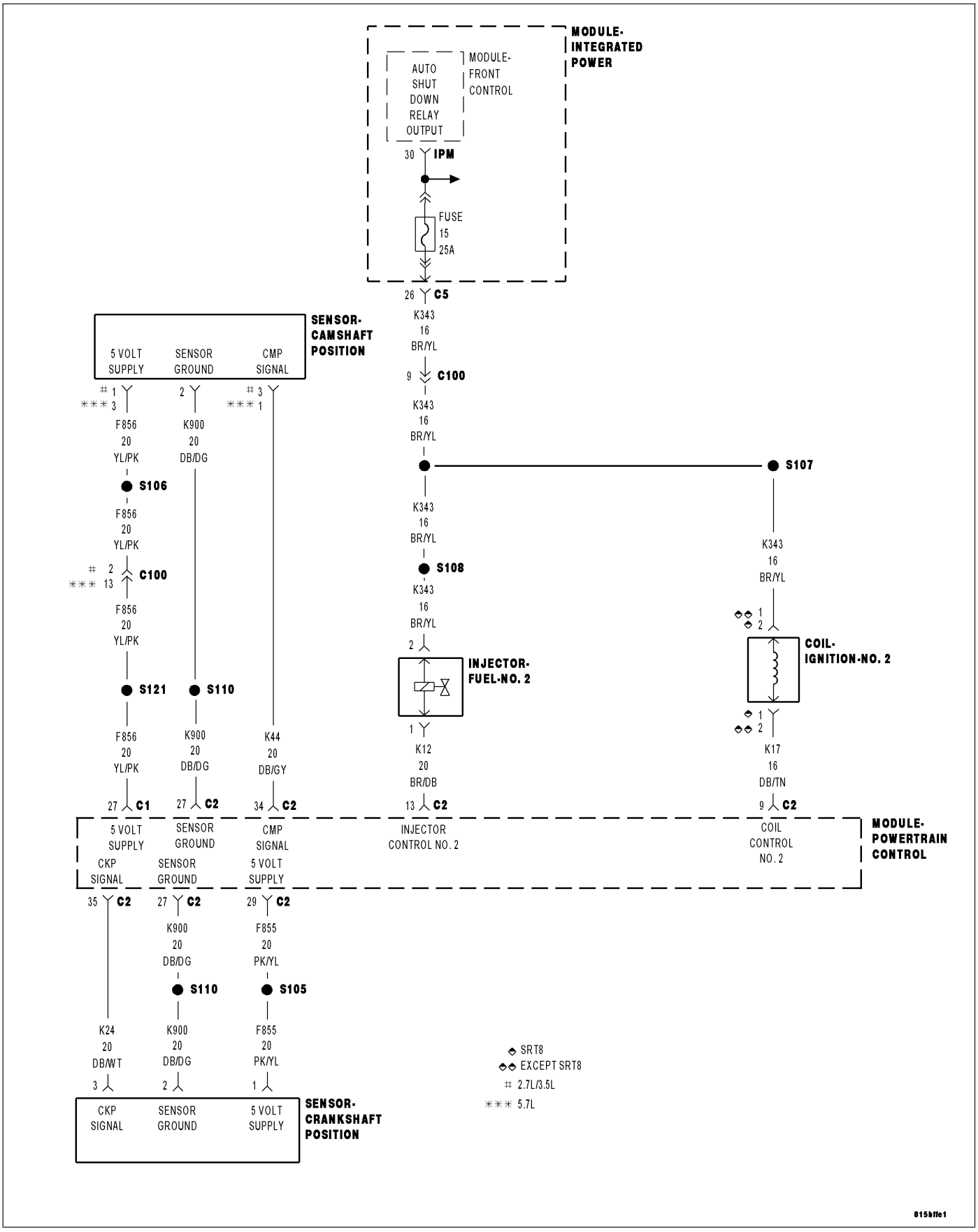

For a complete wiring diagram **Refer to Section 8W**.

- **When Monitored:**
  Any time the engine is running, and the adaptive numerator has been successfully updated.
- **Set Condition:**
  The threshold to set the fault is application specific; it is tied to the level of misfire that will cause emissions to increase to 1.5 times the standard or in some cases 1%. It is always a two trip fault above the calibrated RPM. It takes 1 soft fail to set a malfunction and two trips to set the MIL. Three good trips to turn off the MIL.

Possible Causes
(K343) ASD RELAY OUTPUT 2 CIRCUIT
(K12) INJECTOR CONTROL NO.2 CIRCUIT
(K17) COIL CONTROL NO.2 CIRCUIT
IGNITION WIRE
SPARK PLUG
IGNITION COIL
FUEL PUMP INLET STRAINER PLUGGED
RESTRICTED FUEL SUPPLY LINE
FUEL PUMP MODULE
FUEL PRESSURE LEAK DOWN
FUEL INJECTOR
ENGINE MECHANICAL PROBLEM
PCM

Always perform the Pre-Diagnostic Troubleshooting procedure before proceeding. (Refer to 9 - ENGINE - DIAGNOSIS AND TESTING).

Diagnostic Test

1. CYLINDER MIS-FIRE CONDITION ACTIVE

Engine running.

Observe the WHICH CYLINDER IS MISFIRING screen for at least one minute with the scan tool.

Is there a misfire present?

Yes >> Go To 2

No >> Refer to the INTERMITTENT CONDITION Diagnostic Procedure.
Perform the POWERTRAIN VERIFICATION TEST. (Refer to 9 - ENGINE - STANDARD PROCEDURE)

2. VISUAL INSPECTION

NOTE: Anything that affects the speed of the crankshaft can cause a misfire DTC.

NOTE: When a Misfire is detected for a particular cylinder, the PCM will shut down that cylinders Injector Control circuit.

Visually inspect the engine for any of the following conditions.

- Worn serpentine belt
- Binding Engine-Driven accessories: A/C Compressor, P/S Pump, Water pump.
- Misalignment Water pump, P/S Pump and A/C Compressor pulleys
- Corroded PCM power and ground circuits.
- Improper CKP, CMP, MAP, and TP Sensor mounting
- Poor connector/terminal to component connection. i.e., CKP sensor, Fuel Injector, Ign coil, etc.
- Vacuum leaks
- Restricted Air Induction system or Exhaust system.

- Internal engine component failures.

Were any of the above conditions present?

Yes >> Repair as necessary.
Perform the POWERTRAIN VERIFICATION TEST. (Refer to 9 - ENGINE - STANDARD PROCEDURE)

No >> Go To 3

3. (K343) ASD RELAY OUTPUT 2 CIRCUIT

NOTE: On the 2.7 and 3.5L engines, cylinders 1, 3 and 5, it is necessary to remove the upper intake to access the ignition coils and the Fuel Injector harness connectors.

Turn the ignition off.

Disconnect the Ignition Coil No.2 harness connector.

Disconnect the Fuel Injector No.2 harness connector.

Ignition on, engine not running.

With the scan tool, actuate the ASD Relay.

Using a 12-volt test light connected to ground, probe the (K343) ASD Relay Output 2 circuit in the Ignition Coil harness connector and Fuel Injector harness connector while the relay is actuating.

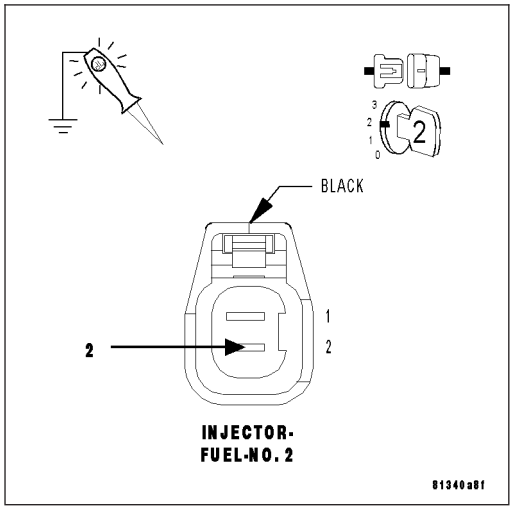

Does the test light illuminate brightly?

Yes >> Go To 4

No >> Repair the excessive resistance or short to ground in the (K343) ASD Relay Output 2 circuit.
Perform the POWERTRAIN VERIFICATION TEST. (Refer to 9 - ENGINE - STANDARD PROCEDURE)

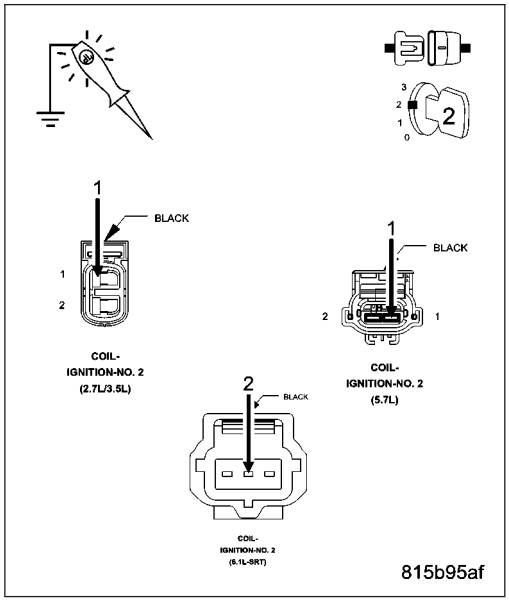

4. IGNITION SYSTEM OPERATION

NOTE: On the 2.7 and 3.5L engines, cylinders 1, 3 and 5, it is necessary to remove the upper intake to access the ignition coils. Once the ignition coil has been removed from the cylinder head, the intake must be reinstall to be able to crank the engine. Move the ignition coil harness connector through the slots in the upper intake and then connect the coil to the harness connector. Secure the upper intake to the lower intake in accordance with the service information.

Turn the ignition off.

Connect the Ignition Coil No.2 harness connector.

Remove the Ignition Coil.

Leave the Fuel Injector harness connector of the cylinder being tested disconnected.
Install a spark tester on the Ignition Coil.
While cranking the engine observe the spark coming from the spark tester.

NOTE: A crisp blue spark that is able to jump the gap of the spark tester should be generated.

Is good spark present?

Yes >> Go To 5

No >> Go To 14

NOTE: Connect the Fuel Injector harness connector before continuing.

5. SPARK PLUG

NOTE: Vehicles that are equipped with the 5.7L or 6.1L engines must have both spark plugs (per cylinder) removed and inspected to ensure proper operation.
Turn the ignition off.
Remove the Spark Plug.
Inspect the Spark Plug for the following conditions.
- Cracks
- Carbon Tracking
- Foreign Material
- Gap size out of specifications
- Loose or broke electrode

NOTE: Lightly tap the bottom of the spark plug on a solid surface. The electrode in the spark plug should not move.

Were any of the above conditions present?

Yes >> Replace the Spark Plug.
Perform the POWERTRAIN VERIFICATION TEST. (Refer to 9 - ENGINE - STANDARD PROCEDURE)

No >> Go To 6

6. FUEL PRESSURE CHECK

WARNING: The fuel system is under a constant pressure (even with the engine off). Before testing or servicing any fuel system hose, fitting or line, the fuel system pressure must be released. Failure to follow these instructions can result in personal injury or death.
Install a fuel pressure gauge to the fuel rail.
Start the engine and observe the fuel pressure reading.

NOTE: Fuel pressure specification is 407 KPa +/- 34 KPa (59 psi +/- 5 psi).

Choose a conclusion that best matches your fuel pressure reading.

Within Specification
Go To 7

Below Specification
Go To 12

Above Specification
Replace the fuel filter/pressure regulator.
Perform the POWERTRAIN VERIFICATION TEST. (Refer to 9 - ENGINE - STANDARD PROCEDURE)

7. FUEL PRESSURE LEAK DOWN

NOTE: Before continuing visually and physically inspect the fuel delivery system for external leaks or damage. Repair /replace as necessary.
Turn the ignition off.

WARNING: The fuel system is under a constant pressure (even with the engine off). Before testing or servicing any fuel system hose, fitting or line, the fuel system pressure must be released. Failure to follow these instructions can result in personal injury or death.
Install special tool #6539 (5/16″) or #6631 (3/8″) fuel line adapter.

Install the fuel pressure gauge.

Start the engine and allow the fuel system to reach maximum pressure.

Turn the ignition off.

NOTE: Fuel specification is 407 KPa +/- 34 KPa (59 psi +/- 5 psi).
Using special tool #C4390, Hose Clamp Pliers, pinch the rubber fuel line between the fuel pressure gauge and the engine.

Monitor the fuel pressure gauge for a minimum of 5 minutes.

NOTE: The pressure should not fall below 241 KPa (35 psi)

Does the gauge fall below the listed specification?

Yes >> Replace the leaking Fuel Injector(s).
Perform the POWERTRAIN VERIFICATION TEST. (Refer to 9 - ENGINE - STANDARD PROCEDURE)

No >> Go To 8

8. FUEL INJECTOR OPERATION

WARNING: The fuel system is under a constant pressure (even with the engine off). Before testing or servicing any fuel system hose, fitting or line, the fuel system pressure must be released. Failure to follow these instructions can result in personal injury or death.

CAUTION: After each Fuel Injector actuation, start the engine to clean the cylinder of fuel. Failure to do so could cause engine damage.
Remove special tool #C4390.

Start the engine and allow the fuel pressure to reach maximum pressure.

Ignition on, engine not running.

Using scan tool, actuate the No.2 Fuel Injector.

Monitor the fuel pressure gauge.

Does the fuel pressure gauge indicate a drop in fuel pressure?

Yes >> Go To 9

No >> Go To 10

NOTE: Turn the ignition off, remove the Fuel Pressure gauge, and connect the fuel lines before continuing.

9. ENGINE MECHANICAL PROBLEM

Check for any of the following conditions/mechanical problems.
ENGINE VACUUM - must be at least 13 inches in neutral
ENGINE VALVE TIMING - must be within specifications
ENGINE COMPRESSION - must be within specifications
ENGINE EXHAUST SYSTEM - must be free of any restrictions or leaks.
ENGINE PCV SYSTEM - must flow freely
TORQUE CONVERTER STALL SPEED - must be within specifications
POWER BRAKE BOOSTER - no internal vacuum leaks
FUEL - must be free of contamination
CAM LOBES - must not be worn excessively
CYLINDER LEAKAGE TEST - must be within specifications
VALVE SPRINGS - cannot be weak or broken

Are there any engine mechanical problems?

Yes >> Repair as necessary.
Perform the POWERTRAIN VERIFICATION TEST. (Refer to 9 - ENGINE - STANDARD PROCEDURE)

No >> Go To 17

10. FUEL INJECTOR

Turn the ignition off.
Disconnect the No.2 Fuel Injector harness connector.
Ignition on, engine not running.

NOTE: When a Misfire is detected for a particular cylinder, the PCM will shut down that cylinders Injector Control circuit.
With the scan tool, erase DTCs.
Using a 12-volt test light connected to 12-volts, probe the (K12) Injector Control No.2 circuit.
With the scan tool, actuate the Fuel Injector.

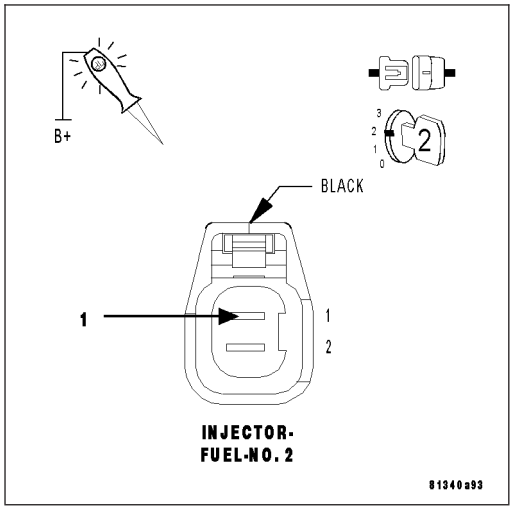

Does the test light blink/flicker?

Yes >> Replace the Fuel Injector.
Perform the POWERTRAIN VERIFICATION TEST. (Refer to 9 - ENGINE - STANDARD PROCEDURE)

No >> Go To 11

11. (K12) INJECTOR CONTROL NO.2 CIRCUIT

Turn the ignition off.

Disconnect the PCM harness connectors.

CAUTION: Do not probe the PCM harness connectors. Probing the PCM harness connectors will damage the PCM terminals resulting in poor terminal to pin connection. Install Miller Special Tool #8815 to perform diagnosis.

Check the (K12) Injector Control No.2 circuit for an open, short to ground, and short to voltage.

Was a problem found with the (K12) Injector Control No.2 circuit?

Yes >> Repair the excessive resistance or short in the (K12) Injector Control No.2 circuit.
Perform the POWERTRAIN VERIFICATION TEST. (Refer to 9 - ENGINE - STANDARD PROCEDURE)

No >> Go To 17

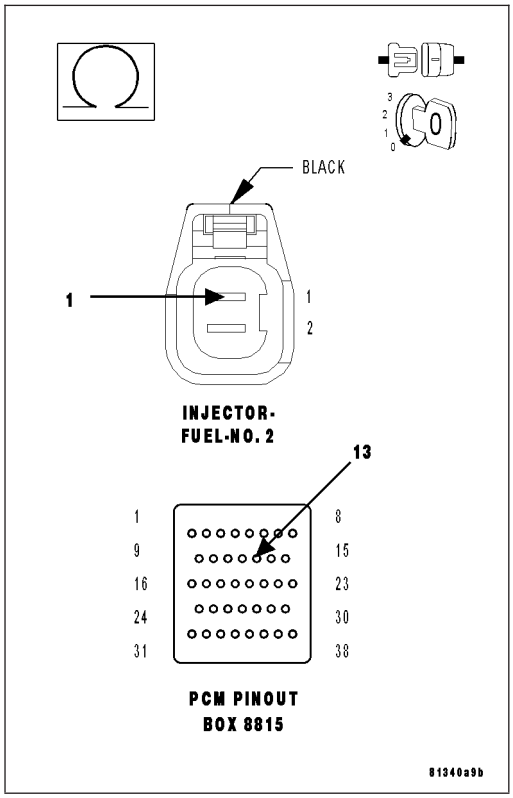

12. FUEL SUPPLY LINE RESTRICTED

Turn the ignition off.

WARNING: The fuel system is under a constant pressure (even with the engine off). Before testing or servicing any fuel system hose, fitting or line, the fuel system pressure must be released. Failure to follow these instructions can result in personal injury or death.

Raise vehicle on hoist, and disconnect the fuel pressure line at the fuel pump module.

Install special tool #6539 (5/16″) #6631(3/8″) fuel line adapter and the fuel pressure gauge between the fuel supply line and the fuel pump module.

Ignition on, engine not running.

With the scan tool, actuate the ASD Fuel System test and observe the fuel pressure gauge.

NOTE: Fuel pressure specification is 407 KPa +/- 34 KPa (59 psi +/- 5 psi).

Is the fuel pressure within specification?

Yes >> Repair or replace fuel supply line as necessary.
Perform the POWERTRAIN VERIFICATION TEST. (Refer to 9 - ENGINE - STANDARD PROCEDURE)

No >> Go To 13

13. FUEL PUMP INLET STRAINER

Turn the ignition off.

WARNING: The fuel system is under a constant pressure (even with the engine off). Before testing or servicing any fuel system hose, fitting or line, the fuel system pressure must be released. Failure to follow these instructions can result in personal injury or death.

Remove the Fuel Pump Module and inspect the Fuel Inlet Strainer.

Is the Fuel Inlet Strainer plugged?

Yes >> Replace the Fuel Pump Inlet Strainer.
Perform the POWERTRAIN VERIFICATION TEST. (Refer to 9 - ENGINE - STANDARD PROCEDURE)

No >> Before continuing, check the Fuel Pump Module harness connector terminals for corrosion, damage, or terminal push out. Ensure the ground circuit is operating properly. Repair as necessary. Replace the Fuel Pump Module.
Perform the POWERTRAIN VERIFICATION TEST. (Refer to 9 - ENGINE - STANDARD PROCEDURE)

14. IGNITION WIRE

NOTE: If the vehicle being tested does not have an ignition wire answer YES to this test and continue.

Turn the ignition off.

Remove the ignition wire.

Measure the resistance of the ignition wire.

Is the resistance below 10K ohms?

Yes >> Go To 15

No >> Replace the Ignition Wire.
Perform the POWERTRAIN VERIFICATION TEST. (Refer to 9 - ENGINE - STANDARD PROCEDURE)

15. IGNITION COIL

Disconnect the Ignition Coil harness connector.

Remove the Fuel Pump Relay.

Using a 12-volt test light connected to 12-volts, probe the (K17) Coil Control No.2 circuit.

Crank the engine for 5 second while observing the test light.

Does the test light brightly blink/flicker?

Yes >> Replace the Ignition Coil.
Perform the POWERTRAIN VERIFICATION TEST. (Refer to 9 - ENGINE - STANDARD PROCEDURE)

No >> Go To 16

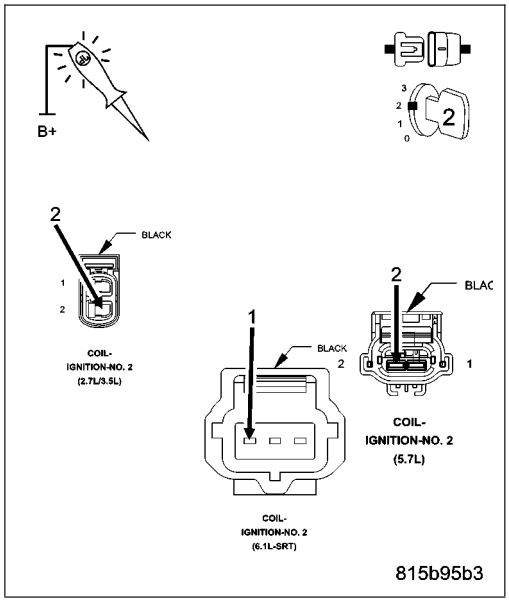

16. (K17) COIL CONTROL NO.2 CIRCUIT

Turn the ignition off.

Disconnect the PCM harness connectors.

CAUTION: Do not probe the PCM harness connectors. Probing the PCM harness connectors will damage the PCM terminals resulting in poor terminal to pin connection. Install Miller Special Tool #8815 to perform diagnosis.

Check the (K17) Coil Control No.2 circuit for an open, short to ground, and short to voltage.

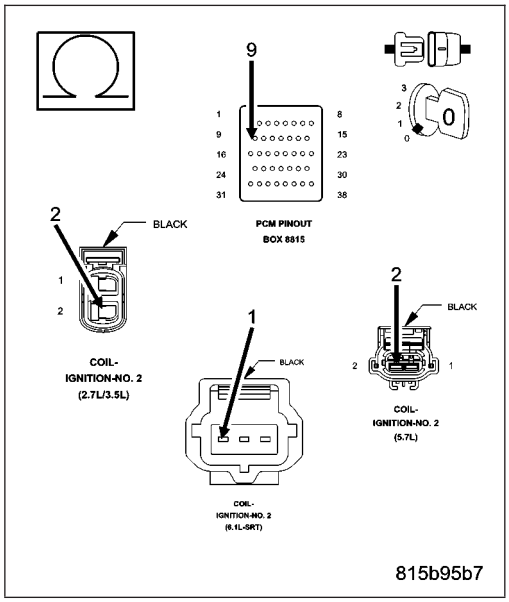

Was a problem found with the (K17) Coil Control No.2 circuit?

Yes >> Repair the (K17) Coil Control No.2 circuit.
Perform the POWERTRAIN VERIFICATION TEST. (Refer to 9 - ENGINE - STANDARD PROCEDURE)

No >> Go To 17

17. PCM

NOTE: Before continuing, check the PCM harness connector terminals for corrosion, damage, or terminal push out. Repair as necessary.

Using the schematics as a guide, inspect the wire harness and connectors. Pay particular attention to all Power and Ground circuits.

Were there any problems found?

Yes >> Repair as necessary.
Perform the POWERTRAIN VERIFICATION TEST. (Refer to 9 - ENGINE - STANDARD PROCEDURE)

No >> Replace and program the Powertrain Control Module per Service Information.
Perform the POWERTRAIN VERIFICATION TEST. (Refer to 9 - ENGINE - STANDARD PROCEDURE)

P0303-CYLINDER 3 MISFIRE

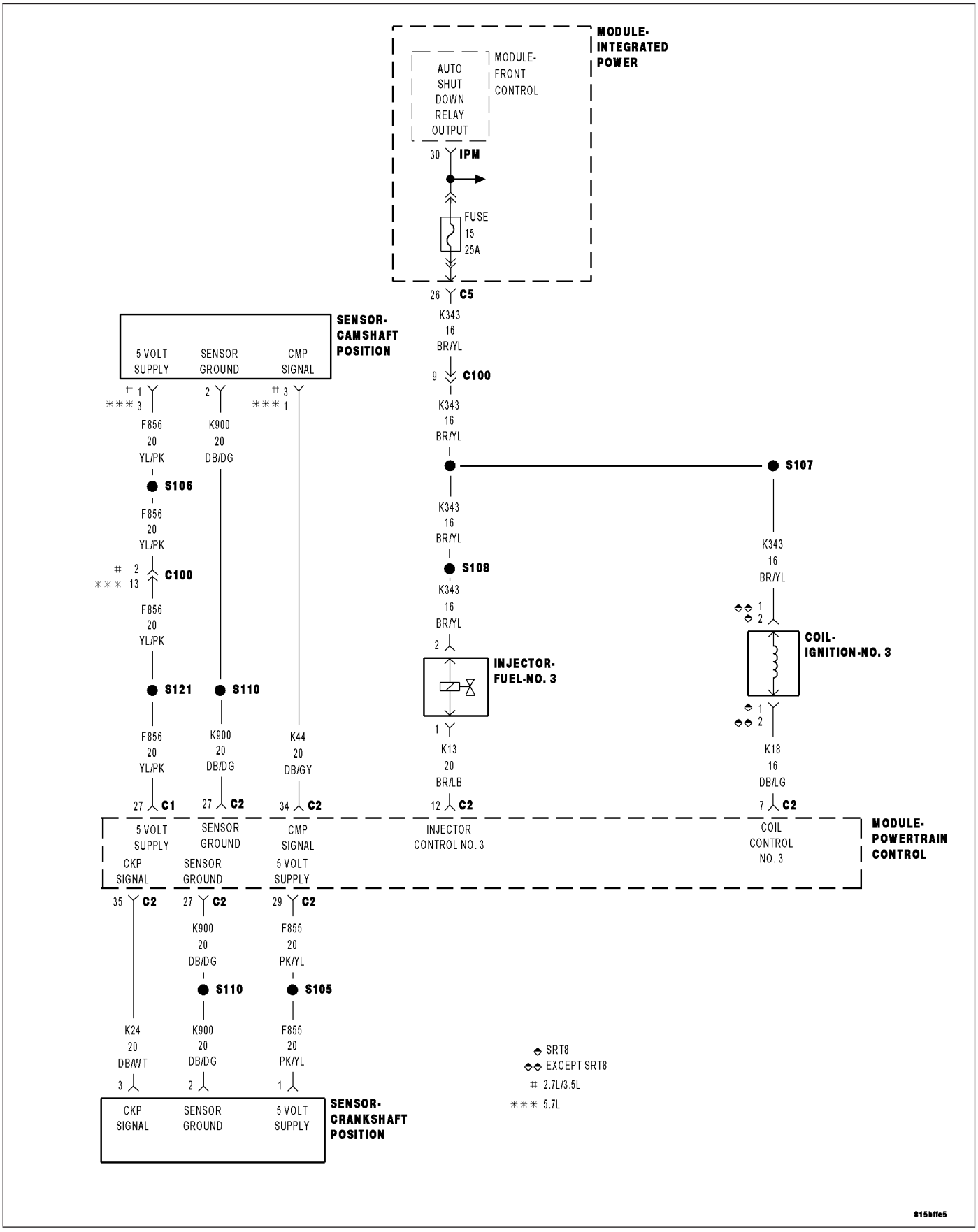

For a complete wiring diagram **Refer to Section 8W**.

- **When Monitored:**
  Any time the engine is running, and the adaptive numerator has been successfully updated.
- **Set Condition:**
  The threshold to set the fault is application specific; it is tied to the level of misfire that will cause emissions to increase to 1.5 times the standard or in some cases 1%. It is always a two trip fault above the calibrated RPM. It takes 1 soft fail to set a malfunction and two trips to set the MIL. Three good trips to turn off the MIL.

Possible Causes
(K343) ASD RELAY OUTPUT 2 CIRCUIT
(K13) INJECTOR CONTROL NO.3 CIRCUIT
(K18) COIL CONTROL NO.3 CIRCUIT
IGNITION WIRE
SPARK PLUG
IGNITION COIL
FUEL PUMP INLET STRAINER PLUGGED
RESTRICTED FUEL SUPPLY LINE
FUEL PUMP MODULE
FUEL PRESSURE LEAK DOWN
FUEL INJECTOR
ENGINE MECHANICAL PROBLEM
PCM

Always perform the Pre-Diagnostic Troubleshooting procedure before proceeding. (Refer to 9 - ENGINE - DIAGNOSIS AND TESTING).

Diagnostic Test

1. CYLINDER MIS-FIRE CONDITION ACTIVE

Engine running.

Observe the WHICH CYLINDER IS MISFIRING screen for at least one minute with the scan tool.

Is there a misfire present at this time?

Yes >> Go To 2

No >> Refer to the INTERMITTENT CONDITION Diagnostic Procedure.
Perform the POWERTRAIN VERIFICATION TEST. (Refer to 9 - ENGINE - STANDARD PROCEDURE)

2. VISUAL INSPECTION

NOTE: Anything that affects the speed of the crankshaft can cause a misfire DTC.

NOTE: When a Misfire is detected for a particular cylinder, the PCM will shut down that cylinders Injector Control circuit.

Visually inspect the engine for any of the following conditions.

- Worn serpentine belt
- Binding Engine-Driven accessories: A/C Compressor, P/S Pump, Water pump.
- Misalignment Water pump, P/S Pump and A/C Compressor pulleys
- Corroded PCM power and ground circuits.
- Improper CKP, CMP, MAP, and TP Sensor mounting
- Poor connector/terminal to component connection. i.e., CKP sensor, Fuel Injector, Ign coil, etc.
- Vacuum leaks
- Restricted Air Induction system or Exhaust system.

- Internal engine component failures.

Were any of the above conditions present?

Yes >> Repair as necessary.
Perform the POWERTRAIN VERIFICATION TEST. (Refer to 9 - ENGINE - STANDARD PROCEDURE)

No >> Go To 3

3. (K343) ASD RELAY OUTPUT CIRCUIT

NOTE: On the 2.7 and 3.5L engines, cylinders 1, 3 and 5, it is necessary to remove the upper intake to access the ignition coils and the Fuel Injector harness connectors.

Turn the ignition off.

Disconnect the No.3 Ignition Coil harness connector.

Disconnect the No.3 Fuel Injector harness connector.

Ignition on, engine not running.

With a scan tool, actuate the ASD Relay.

Using a 12-volt test light connected to ground, probe the (K343) ASD Relay Output circuit in the Ignition Coil harness connector and Fuel Injector harness connector while the relay is actuating.

Does the test light illuminate brightly?

Yes >> Go To 4

No >> Repair the excessive resistance or short to ground in the (K343) ASD Relay Output 2 circuit.
Perform the POWERTRAIN VERIFICATION TEST. (Refer to 9 - ENGINE - STANDARD PROCEDURE)

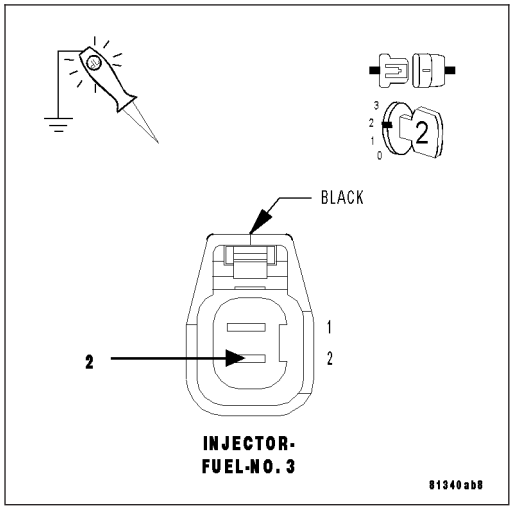

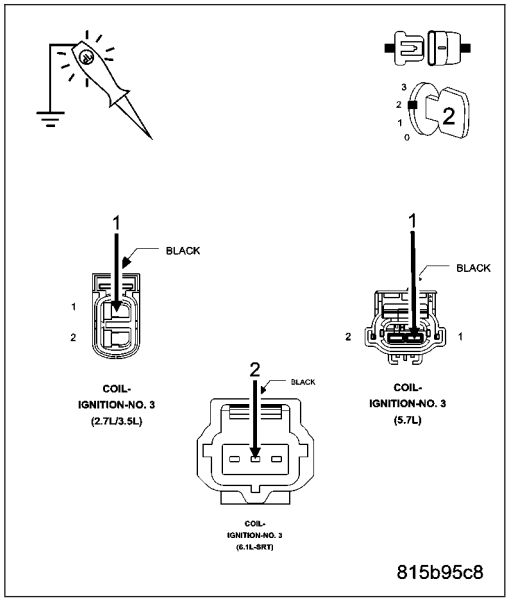

4. IGNITION SYSTEM OPERATION

NOTE: On the 2.7 and 3.5L engines, cylinders 1, 3 and 5, it is necessary to remove the upper intake to access the ignition coils. Once the ignition coil has been removed from the cylinder head, the intake must be reinstall to be able to crank the engine. Move the ignition coil harness connector through the slots in the upper intake and then connect the coil to the harness connector. Secure the upper intake to the lower intake in accordance with the service information.

Turn the ignition off.

Connect the Ignition Coil No.3 harness connector.

Remove the Ignition Coil.

Leave the Fuel Injector harness connector of the cylinder being tested disconnected.
Install a spark tester on the Ignition Coil.
While cranking the engine observe the spark coming from the spark tester.

NOTE: A crisp blue spark that is able to jump the gap of the spark tester should be generated.

Is good spark present?

Yes >> Go To 5

No >> Go To 14

NOTE: Connect the Fuel Injector harness connector before continuing.

5. SPARK PLUG

NOTE: Vehicles that are equipped with the 5.7L or 6.1L engines must have both spark plugs (per cylinder) removed and inspected to ensure proper operation.
Turn the ignition off.
Remove the Spark Plug.
Inspect the Spark Plug for the following conditions.
- Cracks
- Carbon Tracking
- Foreign Material
- Gap size out of specifications
- Loose or broke electrode

NOTE: Lightly tap the bottom of the spark plug on a solid surface. The electrode in the spark plug should not move.

Were any of the above conditions present?

Yes >> Replace the Spark Plug.
Perform the POWERTRAIN VERIFICATION TEST. (Refer to 9 - ENGINE - STANDARD PROCEDURE)

No >> Go To 6

6. FUEL PRESSURE CHECK

WARNING: The fuel system is under a constant pressure (even with the engine off). Before testing or servicing any fuel system hose, fitting or line, the fuel system pressure must be released. Failure to follow these instructions can result in personal injury or death.
Install a fuel pressure gauge to the fuel rail.
Start the engine and observe the fuel pressure reading.

NOTE: Fuel pressure specification is 407 KPa +/- 34 KPa (59 psi +/- 5 psi).

Choose a conclusion that best matches your fuel pressure reading.

Within Specification
Go To 7

Below Specification
Go To 12

Above Specification
Replace the fuel filter/pressure regulator.
Perform the POWERTRAIN VERIFICATION TEST. (Refer to 9 - ENGINE - STANDARD PROCEDURE)

7. FUEL PRESSURE LEAK DOWN

NOTE: Before continuing visually and physically inspect the fuel delivery system for external leaks or damage. Repair /replace as necessary.
Turn the ignition off.

WARNING: The fuel system is under a constant pressure (even with the engine off). Before testing or servicing any fuel system hose, fitting or line, the fuel system pressure must be released. Failure to follow these instructions can result in personal injury or death
Install special tool #6539 (5/16″) or #6631 (3/8″) fuel line adapter.

Install the fuel pressure gauge.

Start the engine and allow the fuel system to reach maximum pressure.

Turn the ignition off.

NOTE: Fuel specification is 407 KPa +/- 34 KPa (59 psi +/- 5 psi).
Using special tool #C4390, Hose Clamp Pliers, pinch the rubber fuel line between the fuel pressure gauge and the engine.

Monitor the fuel pressure gauge for a minimum of 5 minutes.

NOTE: The pressure should not fall below 241 KPa (35 psi).

Does the gauge fall below the listed specification?

Yes >> Replace the leaking Fuel Injector(s).
Perform the POWERTRAIN VERIFICATION TEST. (Refer to 9 - ENGINE - STANDARD PROCEDURE)

No >> Go To 8

8. FUEL INJECTOR OPERATION

WARNING: The fuel system is under a constant pressure (even with the engine off). Before testing or servicing any fuel system hose, fitting or line, the fuel system pressure must be released. Failure to follow these instructions can result in personal injury or death.

CAUTION: After each Fuel Injector actuation, start the engine to clean the cylinder of fuel. Failure to do so could cause engine damage.
Remove special tool #C4390.

Start the engine and allow the fuel pressure to reach maximum pressure.

Ignition on, engine not running.

Using a scan tool, actuate the No.3 Fuel Injector.

Monitor the fuel pressure gauge.

Does the fuel pressure gauge indicate a drop in fuel pressure?

Yes >> Go To 9

No >> Go To 10

NOTE: Turn the ignition off, remove the Fuel Pressure gauge, and connect the fuel lines before continuing.

9. ENGINE MECHANICAL PROBLEM

Check for any of the following conditions/mechanical problems.
ENGINE VACUUM - must be at least 13 inches in neutral
ENGINE VALVE TIMING - must be within specifications
ENGINE COMPRESSION - must be within specifications
ENGINE EXHAUST SYSTEM - must be free of any restrictions or leaks.
ENGINE PCV SYSTEM - must flow freely
TORQUE CONVERTER STALL SPEED - must be within specifications
POWER BRAKE BOOSTER - no internal vacuum leaks
FUEL - must be free of contamination
CAM LOBES - must not be worn excessively
CYLINDER LEAKAGE TEST - must be within specifications
VALVE SPRINGS - cannot be weak or broken

Are there any engine mechanical problems?

Yes >> Repair as necessary.
Perform the POWERTRAIN VERIFICATION TEST. (Refer to 9 - ENGINE - STANDARD PROCEDURE)

No >> Go To 17

10. FUEL INJECTOR

Turn the ignition off.
Disconnect the No.3 Fuel Injector harness connector.
Ignition on, engine not running.

NOTE: When a Misfire is detected for a particular cylinder, the PCM will shut down that cylinders Injector Control circuit.
With the scan tool, erase DTCs.
Using a 12-volt test light connected to 12-volts, probe the (K13) Injector Control No.3 circuit.
With the scan tool, actuate the Fuel Injector.

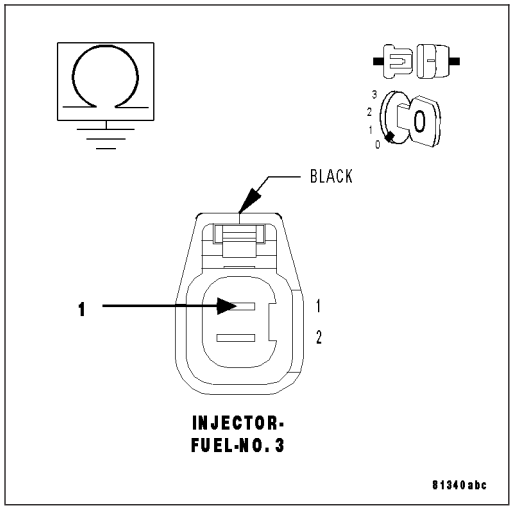

Does the test light blink/flicker?

Yes >> Replace the Fuel Injector.
Perform the POWERTRAIN VERIFICATION TEST. (Refer to 9 - ENGINE - STANDARD PROCEDURE)

No >> Go To 11

11. (K13) INJECTOR CONTROL NO.3 CIRCUIT

Turn the ignition off.

Disconnect the PCM harness connectors.

CAUTION: Do not probe the PCM harness connectors. Probing the PCM harness connectors will damage the PCM terminals resulting in poor terminal to pin connection. Install Miller Special Tool #8815 to perform diagnosis.

Check the (K13) Injector Control No.3 circuit for an open, short to ground, and short to voltage.

Was a problem found with the (K13) Injector Control No.3 circuit?

Yes >> Repair the excessive resistance or short in the (K13) Injector Control No.3 circuit.
Perform the POWERTRAIN VERIFICATION TEST. (Refer to 9 - ENGINE - STANDARD PROCEDURE)

No >> Go To 17

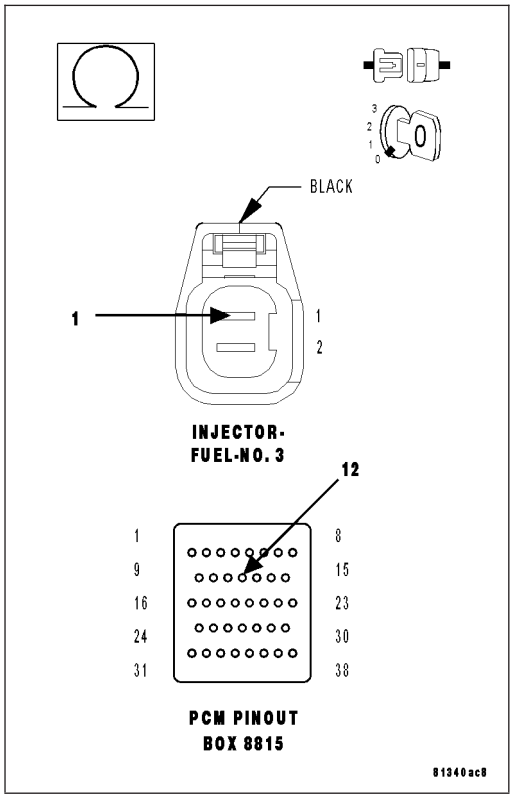

12. FUEL SUPPLY LINE RESTRICTED

Turn the ignition off.

WARNING: The fuel system is under a constant pressure (even with the engine off). Before testing or servicing any fuel system hose, fitting or line, the fuel system pressure must be released. Failure to follow these instructions can result in personal injury or death.

Raise vehicle on hoist, and disconnect the fuel pressure line at the fuel pump module.

Install special tool #6539 (5/16″) #6631(3/8″) fuel line adapter and the fuel pressure gauge between the fuel supply line and the fuel pump module.

Ignition on, engine not running.

With a scan tool, actuate the ASD Fuel System test and observe the fuel pressure gauge.

NOTE: Fuel pressure specification is 407 KPa +/- 34 KPa (59 psi +/- 5 psi).

Is the fuel pressure within specification?

Yes >> Repair or replace fuel supply line as necessary.
Perform the POWERTRAIN VERIFICATION TEST. (Refer to 9 - ENGINE - STANDARD PROCEDURE)

No >> Go To 13

13. FUEL PUMP INLET STRAINER

Turn the ignition off.

WARNING: The fuel system is under a constant pressure (even with the engine off). Before testing or servicing any fuel system hose, fitting or line, the fuel system pressure must be released. Failure to follow these instructions can result in personal injury or death.

Remove the Fuel Pump Module and inspect the Fuel Inlet Strainer.

Is the Fuel Inlet Strainer plugged?

Yes >> Replace the Fuel Pump Inlet Strainer.
Perform the POWERTRAIN VERIFICATION TEST. (Refer to 9 - ENGINE - STANDARD PROCEDURE)

No >> Before continuing, check the Fuel Pump Module harness connector terminals for corrosion, damage, or terminal push out. Make sure the ground circuit is operating properly. Repair as necessary. Replace the Fuel Pump Module.
Perform the POWERTRAIN VERIFICATION TEST. (Refer to 9 - ENGINE - STANDARD PROCEDURE)

14. IGNITION WIRE

NOTE: If the vehicle being tested does not have an ignition wire answer YES to this test and continue.

Turn the ignition off.

Remove the ignition wire.

Measure the resistance of the ignition wire.

Is the resistance below 10K ohms?

Yes >> Go To 15

No >> Replace the Ignition Wire.
Perform the POWERTRAIN VERIFICATION TEST. (Refer to 9 - ENGINE - STANDARD PROCEDURE)

15. IGNITION COIL

Disconnect the No.3 Ignition Coil harness connector.

Remove the Fuel Pump Relay.

Using a 12-volt test light connected to 12-volts, probe the (K18) Coil Control No.3 circuit.

Crank the engine for 5 second while observing the test light.

Does the test light brightly blink/flicker?

Yes >> Replace the Ignition Coil.
Perform the POWERTRAIN VERIFICATION TEST. (Refer to 9 - ENGINE - STANDARD PROCEDURE)

No >> Go To 16

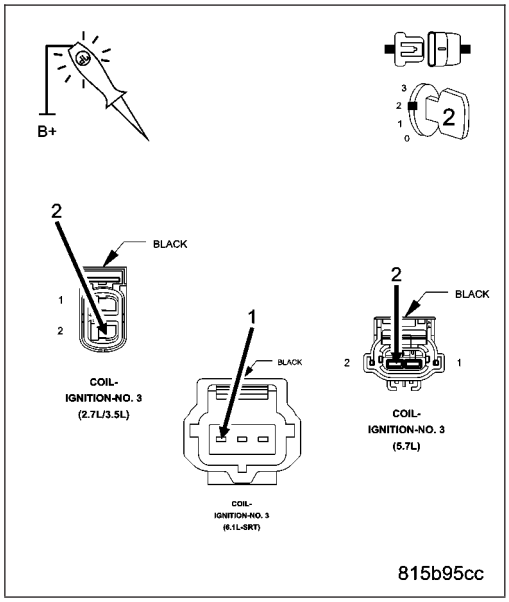

16. (K18) COIL CONTROL NO.3 CIRCUIT

Turn the ignition off.

Disconnect the PCM harness connectors.

CAUTION: Do not probe the PCM harness connectors. Probing the PCM harness connectors will damage the PCM terminals resulting in poor terminal to pin connection. Install Miller Special Tool #8815 to perform diagnosis.

Check the (K18) Coil Control No.3 circuit for an open, short to ground, and short to voltage.

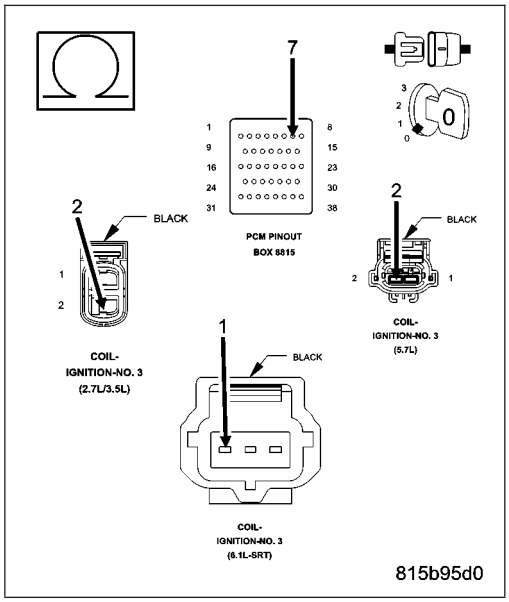

Was a problem found with the (K18) Coil Control No.3 circuit?

Yes >> Repair the (K18) Coil Control No.3 circuit.
Perform the POWERTRAIN VERIFICATION TEST. (Refer to 9 - ENGINE - STANDARD PROCEDURE)

No >> Go To 17

17. PCM

NOTE: Before continuing, check the PCM harness connector terminals for corrosion, damage, or terminal push out. Repair as necessary.

Using the schematics as a guide, inspect the wire harness and connectors. Pay particular attention to all Power and Ground circuits.

Were there any problems found?

Yes >> Repair as necessary.
Perform the POWERTRAIN VERIFICATION TEST. (Refer to 9 - ENGINE - STANDARD PROCEDURE)

No >> Replace and program the Powertrain Control Module per Service Information.
Perform the POWERTRAIN VERIFICATION TEST. (Refer to 9 - ENGINE - STANDARD PROCEDURE)

P0304-CYLINDER 4 MISFIRE

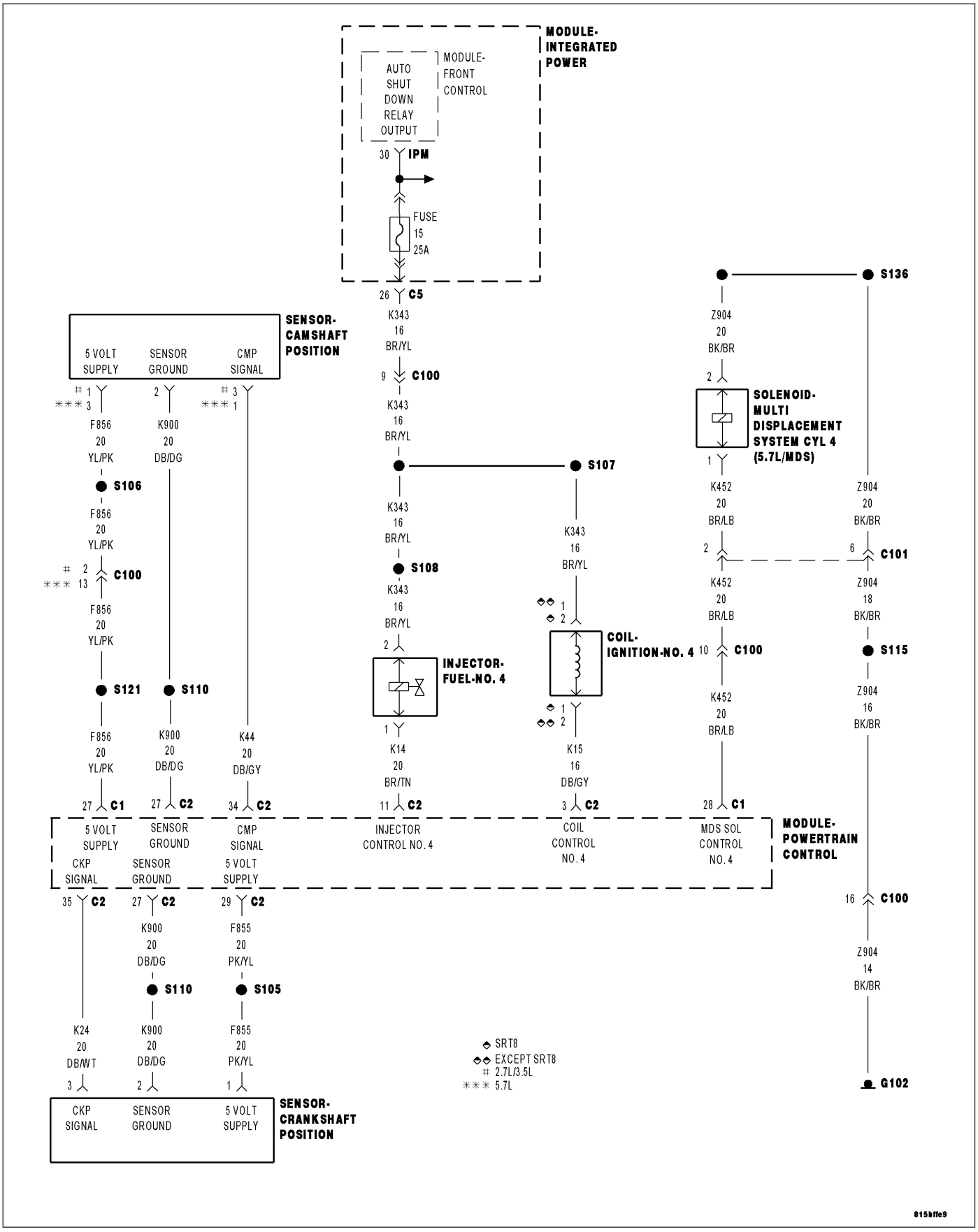

For a complete wiring diagram **Refer to Section 8W**.

- **When Monitored:**
  Any time the engine is running, and the adaptive numerator has been successfully updated.
- **Set Condition:**
  The threshold to set the fault is application specific; it is tied to the level of misfire that will cause emissions to increase to 1.5 times the standard or in some cases 1%. It is always a two trip fault above the calibrated RPM. It takes 1 soft fail to set a malfunction and two trips to set the MIL. Three good trips to turn off the MIL.

Possible Causes
(K343) ASD RELAY OUTPUT 2 CIRCUIT
(K14) INJECTOR CONTROL NO.4 CIRCUIT
(K15) COIL CONTROL NO.4 CIRCUIT
IGNITION WIRE
SPARK PLUG
IGNITION COIL
FUEL PUMP INLET STRAINER PLUGGED
RESTRICTED FUEL SUPPLY LINE
FUEL PUMP MODULE
FUEL PRESSURE LEAK DOWN
FUEL INJECTOR
ENGINE MECHANICAL PROBLEM
PCM

Always perform the Pre-Diagnostic Troubleshooting procedure before proceeding. (Refer to 9 - ENGINE - DIAGNOSIS AND TESTING).

Diagnostic Test

1. CYLINDER MIS-FIRE CONDITION ACTIVE

Engine running.

Observe the WHICH CYLINDER IS MISFIRING screen for at least one minute with the scan tool.

Is there a misfire present at this time?

Yes >> Go To 2

No >> Refer to the INTERMITTENT CONDITION Diagnostic Procedure.
Perform the POWERTRAIN VERIFICATION TEST. (Refer to 9 - ENGINE - STANDARD PROCEDURE)

2. VISUAL INSPECTION

NOTE: Anything that affects the speed of the crankshaft can cause a misfire DTC.

NOTE: When a Misfire is detected for a particular cylinder, the PCM will shut down that cylinders Injector Control circuit.

Visually inspect the engine for any of the following conditions.

- Worn serpentine belt
- Binding Engine-Driven accessories: A/C Compressor, P/S Pump, Water pump.
- Misalignment Water pump, P/S Pump and A/C Compressor pulleys
- Corroded PCM power and ground circuits.
- Improper CKP, CMP, MAP, and TP Sensor mounting
- Poor connector/terminal to component connection. i.e., CKP sensor, Fuel Injector, Ign coil, etc.
- Vacuum leaks
- Restricted Air Induction system or Exhaust system.

- Internal engine component failures.

Were any of the above conditions present?

Yes >> Repair as necessary.
Perform the POWERTRAIN VERIFICATION TEST. (Refer to 9 - ENGINE - STANDARD PROCEDURE)

No >> Go To 3

3. (K343) ASD RELAY OUTPUT 2 CIRCUIT

NOTE: On the 2.7 and 3.5L engines, cylinders 1, 3 and 5, it is necessary to remove the upper intake to access the ignition coils and the Fuel Injector harness connectors.

Turn the ignition off.

Disconnect the No.4 Ignition Coil harness connector.

Disconnect the No.4 Fuel Injector harness connector.

Ignition on, engine not running.

With the scan tool, actuate the ASD Relay.

Using a 12-volt test light connected to ground, probe the (K343) ASD Relay Output circuit in the Ignition Coil harness connector and Fuel Injector harness connector while the relay is actuating.

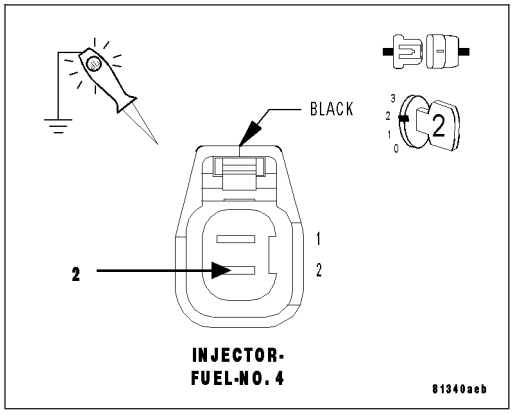

Does the test light illuminate brightly?

Yes >> Go To 4

No >> Repair the excessive resistance or short to ground in the (K343) ASD Relay Output 2 circuit.
Perform the POWERTRAIN VERIFICATION TEST. (Refer to 9 - ENGINE - STANDARD PROCEDURE)

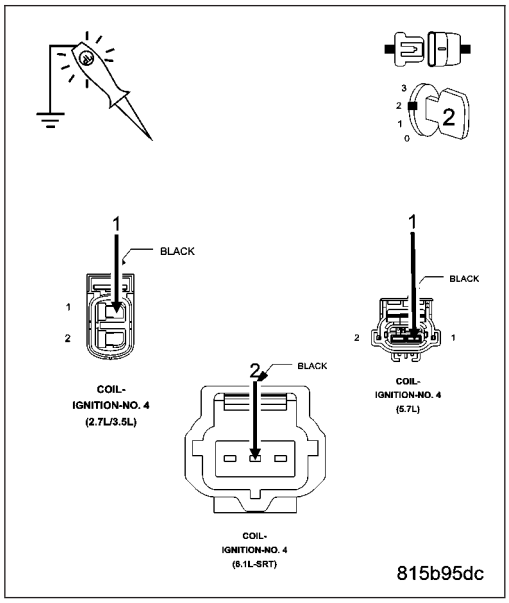

4. IGNITION SYSTEM OPERATION

NOTE: On the 2.7 and 3.5L engines, cylinders 1, 3 and 5, it is necessary to remove the upper intake to access the ignition coils. Once the ignition coil has been removed from the cylinder head, the intake must be reinstall to be able to crank the engine. Move the ignition coil harness connector through the slots in the upper intake and then connect the coil to the harness connector. Secure the upper intake to the lower intake in accordance with the service information.

Turn the ignition off.

Connect the No.4 Ignition Coil harness connector.

Remove the No.4 Ignition Coil.

Leave the Fuel Injector harness connector of the cylinder being tested disconnected.

Install a spark tester on the Ignition Coil.

While cranking the engine observe the spark coming from the spark tester.

NOTE: A crisp blue spark that is able to jump the gap of the spark tester should be generated.

Is good spark present?

Yes >> Go To 5

No >> Go To 14

NOTE: Connect the Fuel Injector harness connector before continuing.

5. SPARK PLUG

NOTE: Vehicles that are equipped with the 5.7L or 6.1L engines must have both spark plugs (per cylinder) removed and inspected to ensure proper operation.

Turn the ignition off.

Remove the Spark Plug.

Inspect the Spark Plug for the following conditions.

- Cracks
- Carbon Tracking
- Foreign Material
- Gap size out of specifications
- Loose or broke electrode

NOTE: Lightly tap the bottom of the spark plug on a solid surface. The electrode in the spark plug should not move.

Were any of the above conditions present?

Yes >> Replace the Spark Plug.
Perform the POWERTRAIN VERIFICATION TEST. (Refer to 9 - ENGINE - STANDARD PROCEDURE)

No >> Go To 6

6. FUEL PRESSURE CHECK

WARNING: The fuel system is under a constant pressure (even with the engine off). Before testing or servicing any fuel system hose, fitting or line, the fuel system pressure must be released. Failure to follow these instructions can result in personal injury or death.

Install a fuel pressure gauge to the fuel rail.

Start the engine and observe the fuel pressure reading.

NOTE: Fuel pressure specification is 407 KPa +/- 34 KPa (59 psi +/- 5 psi).

Choose a conclusion that best matches your fuel pressure reading.

Within Specification
Go To 7

Below Specification
Go To 12

Above Specification
Replace the fuel filter/pressure regulator.
Perform the POWERTRAIN VERIFICATION TEST. (Refer to 9 - ENGINE - STANDARD PROCEDURE)

7. FUEL PRESSURE LEAK DOWN

NOTE: Before continuing visually and physically inspect the fuel delivery system for external leaks or damage. Repair /replace as necessary.
Turn the ignition off.

WARNING: The fuel system is under a constant pressure (even with the engine off). Before testing or servicing any fuel system hose, fitting or line, the fuel system pressure must be released. Failure to follow these instructions can result in personal injury or death
Install special tool #6539 (5/16″) or #6631 (3/8″) fuel line adapter.

Install the fuel pressure gauge.

Start the engine and allow the fuel system to reach maximum pressure.

Turn the ignition off.

NOTE: Fuel specification is 407 KPa +/- 34 KPa (59 psi +/- 5 psi).
Using special tool #C4390, Hose Clamp Pliers, pinch the rubber fuel line between the fuel pressure gauge and the engine.

Monitor the fuel pressure gauge for a minimum of 5 minutes.

NOTE: The pressure should not fall below 241 KPa (35 psi)

Does the gauge fall below the listed specification?

Yes >> Replace the leaking Fuel Injector(s).
Perform the POWERTRAIN VERIFICATION TEST. (Refer to 9 - ENGINE - STANDARD PROCEDURE)

No >> Go To 8

8. FUEL INJECTOR OPERATION

WARNING: The fuel system is under a constant pressure (even with the engine off). Before testing or servicing any fuel system hose, fitting or line, the fuel system pressure must be released. Failure to follow these instructions can result in personal injury or death.

CAUTION: After each Fuel Injector actuation, start the engine to clean the cylinder of fuel. Failure to do so could cause engine damage.
Remove special tool #C4390.

Start the engine and allow the fuel pressure to reach maximum pressure.

Ignition on, engine not running.

Using the scan tool, actuate the No.4 Fuel Injector.

Monitor the fuel pressure gauge.

Does the fuel pressure gauge indicate a drop in fuel pressure?

Yes >> Go To 9

No >> Go To 10

NOTE: Turn the ignition off, remove the Fuel Pressure gauge, and connect the fuel lines before continuing.

9. ENGINE MECHANICAL PROBLEM

Check for any of the following conditions/mechanical problems.
ENGINE VACUUM - must be at least 13 inches in neutral
ENGINE VALVE TIMING - must be within specifications
ENGINE COMPRESSION - must be within specifications
ENGINE EXHAUST SYSTEM - must be free of any restrictions or leaks.
ENGINE PCV SYSTEM - must flow freely
TORQUE CONVERTER STALL SPEED - must be within specifications
POWER BRAKE BOOSTER - no internal vacuum leaks
FUEL - must be free of contamination
CAM LOBES - must not be worn excessively
CYLINDER LEAKAGE TEST - must be within specifications
VALVE SPRINGS - cannot be weak or broken

Are there any engine mechanical problems?

Yes >> Repair as necessary.
Perform the POWERTRAIN VERIFICATION TEST. (Refer to 9 - ENGINE - STANDARD PROCEDURE)

No >> Go To 17

10. FUEL INJECTOR

Turn the ignition off.
Disconnect the No.4 Fuel Injector harness connector.
Ignition on, engine not running.

NOTE: When a Misfire is detected for a particular cylinder, the PCM will shut down that cylinders Injector Control circuit.
With the scan tool, erase DTCs.
Using a 12-volt test light connected to 12-volts, probe the (K14) Injector Control No.4 circuit.
With the scan tool, actuate the Fuel Injector.

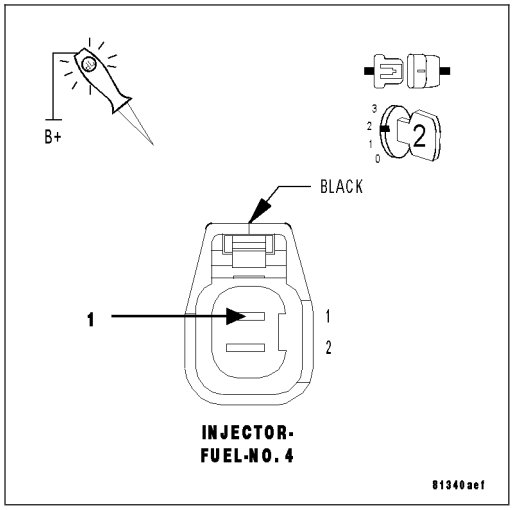

Does the test light blink/flicker?

Yes >> Replace the Fuel Injector.
Perform the POWERTRAIN VERIFICATION TEST. (Refer to 9 - ENGINE - STANDARD PROCEDURE)

No >> Go To 11

11. (K14) INJECTOR CONTROL NO.4 CIRCUIT

Turn the ignition off.

Disconnect the PCM harness connectors.

CAUTION: Do not probe the PCM harness connectors. Probing the PCM harness connectors will damage the PCM terminals resulting in poor terminal to pin connection. Install Miller Special Tool #8815 to perform diagnosis.

Check the (K14) Injector Control No.4 circuit for an open, short to ground, and short to voltage.

Was a problem found with the (K14) Injector Control No.4 circuit?

Yes >> Repair the excessive resistance or short in the (K14) Injector Control No.4 circuit.
Perform the POWERTRAIN VERIFICATION TEST. (Refer to 9 - ENGINE - STANDARD PROCEDURE)

No >> Go To 17

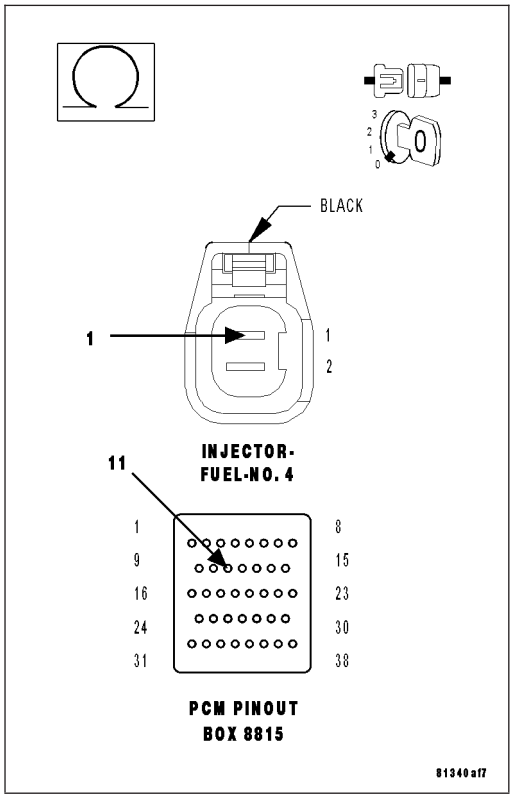

12. FUEL SUPPLY LINE RESTRICTED

Turn the ignition off.

WARNING: The fuel system is under a constant pressure (even with the engine off). Before testing or servicing any fuel system hose, fitting or line, the fuel system pressure must be released. Failure to follow these instructions can result in personal injury or death.

Raise vehicle on hoist, and disconnect the fuel pressure line at the fuel pump module.

Install special tool #6539 (5/16″) #6631(3/8″) fuel line adapter and the fuel pressure gauge between the fuel supply line and the fuel pump module.

Ignition on, engine not running.

With the scan tool, actuate the ASD Fuel System test and observe the fuel pressure gauge.

NOTE: Fuel pressure specification is 407 KPa +/- 34 KPa (59 psi +/- 5 psi).

Is the fuel pressure within specification?

Yes >> Repair or replace fuel supply line as necessary.
Perform the POWERTRAIN VERIFICATION TEST. (Refer to 9 - ENGINE - STANDARD PROCEDURE)

No >> Go To 13

13. FUEL PUMP INLET STRAINER

Turn the ignition off.

WARNING: The fuel system is under a constant pressure (even with the engine off). Before testing or servicing any fuel system hose, fitting or line, the fuel system pressure must be released. Failure to follow these instructions can result in personal injury or death.

Remove the Fuel Pump Module and inspect the Fuel Inlet Strainer.

Is the Fuel Inlet Strainer plugged?

Yes >> Replace the Fuel Pump Inlet Strainer.
Perform the POWERTRAIN VERIFICATION TEST. (Refer to 9 - ENGINE - STANDARD PROCEDURE)

No >> Before continuing, check the Fuel Pump Module harness connector terminals for corrosion, damage, or terminal push out. Make sure the ground circuit is operating properly. Repair as necessary. Replace the Fuel Pump Module.
Perform the POWERTRAIN VERIFICATION TEST. (Refer to 9 - ENGINE - STANDARD PROCEDURE)

14. IGNITION WIRE

NOTE: If the vehicle being tested does not have an ignition wire answer YES to this test and continue.

Turn the ignition off.

Remove the ignition wire.

Measure the resistance of the ignition wire.

Is the resistance below 10K ohms?

Yes >> Go To 15

No >> Replace the Ignition Wire.
Perform the POWERTRAIN VERIFICATION TEST. (Refer to 9 - ENGINE - STANDARD PROCEDURE)

15. IGNITION COIL

Disconnect the No.4 Ignition Coil harness connector.

Remove the Fuel Pump Relay.

Using a 12-volt test light connected to 12-volts, probe the (K15) Coil Control No.4 circuit.

Crank the engine for 5 second while observing the test light.

Does the test light brightly blink/flicker?

Yes >> Replace the Ignition Coil.
Perform the POWERTRAIN VERIFICATION TEST. (Refer to 9 - ENGINE - STANDARD PROCEDURE)

No >> Go To 16

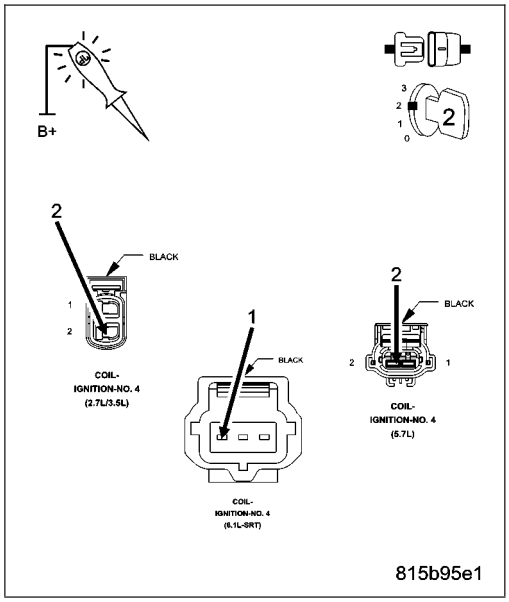

16. (K15) COIL CONTROL NO.4 CIRCUIT

Turn the ignition off.

Disconnect the PCM harness connectors.

CAUTION: Do not probe the PCM harness connectors. Probing the PCM harness connectors will damage the PCM terminals resulting in poor terminal to pin connection. Install Miller Special Tool #8815 to perform diagnosis.

Check the (K15) Coil Control No.4 circuit for an open, short to ground, and short to voltage.

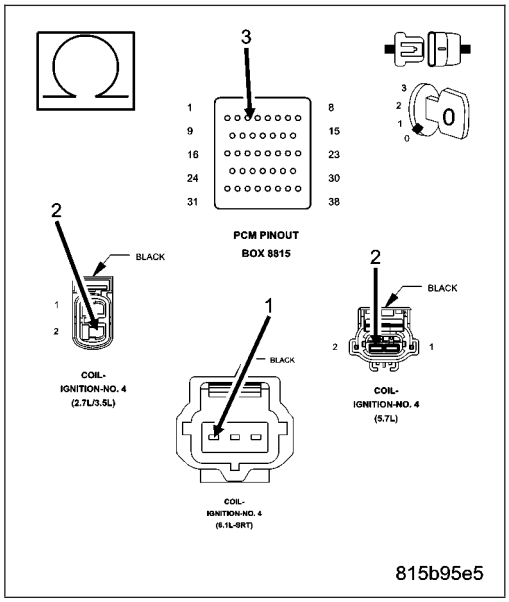

Was a problem found with the (K15) Coil Control No.4 circuit?

Yes >> Repair the (K15) Coil Control No.4 circuit.
Perform the POWERTRAIN VERIFICATION TEST. (Refer to 9 - ENGINE - STANDARD PROCEDURE)

No >> Go To 17

17. PCM

NOTE: Before continuing, check the PCM harness connector terminals for corrosion, damage, or terminal push out. Repair as necessary.

Using the schematics as a guide, inspect the wire harness and connectors. Pay particular attention to all Power and Ground circuits.

Were there any problems found?

Yes >> Repair as necessary.
Perform the POWERTRAIN VERIFICATION TEST. (Refer to 9 - ENGINE - STANDARD PROCEDURE)

No >> Replace and program the Powertrain Control Module per Service Information.
Perform the POWERTRAIN VERIFICATION TEST. (Refer to 9 - ENGINE - STANDARD PROCEDURE)

P0305-CYLINDER 5 MISFIRE

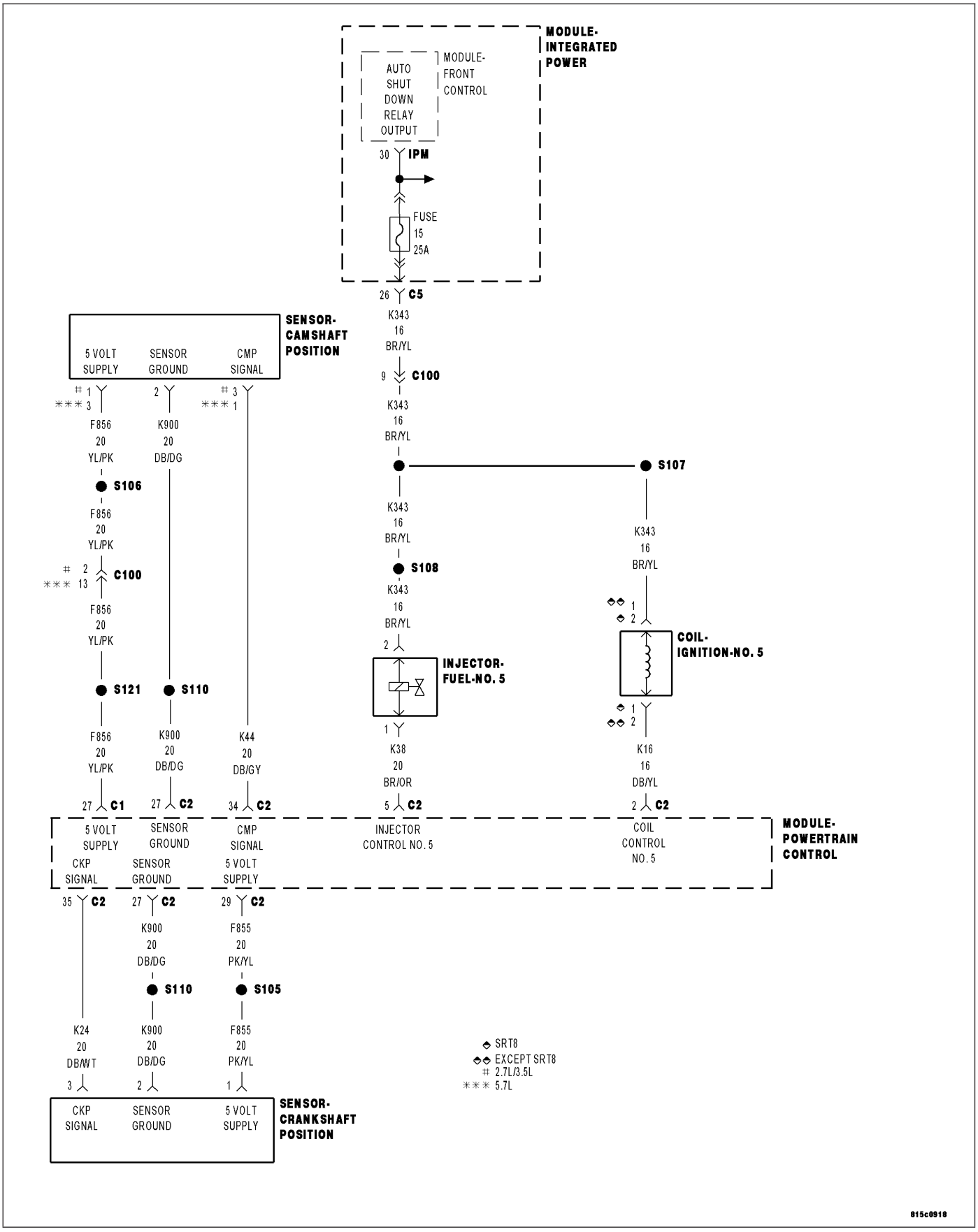

For a complete wiring diagram **Refer to Section 8W**.

- **When Monitored:**
  Any time the engine is running, and the adaptive numerator has been successfully updated.
- **Set Condition:**
  The threshold to set the fault is application specific; it is tied to the level of misfire that will cause emissions to increase to 1.5 times the standard or in some cases 1%. It is always a two trip fault above the calibrated RPM. It takes 1 soft fail to set a malfunction and two trips to set the MIL. Three good trips to turn off the MIL.

Possible Causes
(K343) ASD RELAY OUTPUT 2 CIRCUIT
(K38) INJECTOR CONTROL NO.5 CIRCUIT
(K16) COIL CONTROL NO.5 CIRCUIT
IGNITION WIRE
SPARK PLUG
IGNITION COIL
FUEL PUMP INLET STRAINER PLUGGED
RESTRICTED FUEL SUPPLY LINE
FUEL PUMP MODULE
FUEL PRESSURE LEAK DOWN
FUEL INJECTOR
ENGINE MECHANICAL PROBLEM
PCM

Always perform the Pre-Diagnostic Troubleshooting procedure before proceeding. (Refer to 9 - ENGINE - DIAGNOSIS AND TESTING).

Diagnostic Test

1. CYLINDER MIS-FIRE CONDITION ACTIVE

Engine running.

Observe the WHICH CYLINDER IS MISFIRING screen for at least one minute with a scan tool.

Is there a misfire present at this time?

Yes >> Go To 2

No >> Refer to the INTERMITTENT CONDITION Diagnostic Procedure.
Perform the POWERTRAIN VERIFICATION TEST. (Refer to 9 - ENGINE - STANDARD PROCEDURE)

2. VISUAL INSPECTION

NOTE: Anything that affects the speed of the crankshaft can cause a misfire DTC.

NOTE: When a Misfire is detected for a particular cylinder, the PCM will shut down that cylinders Injector Control circuit.

Visually inspect the engine for any of the following conditions.

- Worn serpentine belt
- Binding Engine-Driven accessories: A/C Compressor, P/S Pump, Water pump.
- Misalignment Water pump, P/S Pump and A/C Compressor pulleys
- Corroded PCM power and ground circuits.
- Improper CKP, CMP, MAP, and TP Sensor mounting
- Poor connector/terminal to component connection. i.e., CKP sensor, Fuel Injector, Ign coil, etc.
- Vacuum leaks
- Restricted Air Induction system or Exhaust system.

- Internal engine component failures.

Were any of the above conditions present?

Yes >> Repair as necessary.
Perform the POWERTRAIN VERIFICATION TEST. (Refer to 9 - ENGINE - STANDARD PROCEDURE)

No >> Go To 3

3. (K343) ASD RELAY OUTPUT 2 CIRCUIT

NOTE: On the 2.7 and 3.5L engines, cylinders 1, 3 and 5, it is necessary to remove the upper intake to access the ignition coils and the Fuel Injector harness connectors.

Turn the ignition off.

Disconnect the No.5 Ignition Coil harness connector.

Disconnect the No.5 Fuel Injector harness connector.

Ignition on, engine not running.

With the scan tool, actuate the ASD Relay.

Using a 12-volt test light connected to ground, probe the (K343) ASD Relay Output 2 circuit in the Ignition Coil harness connector and Fuel Injector harness connector while the relay is actuating.

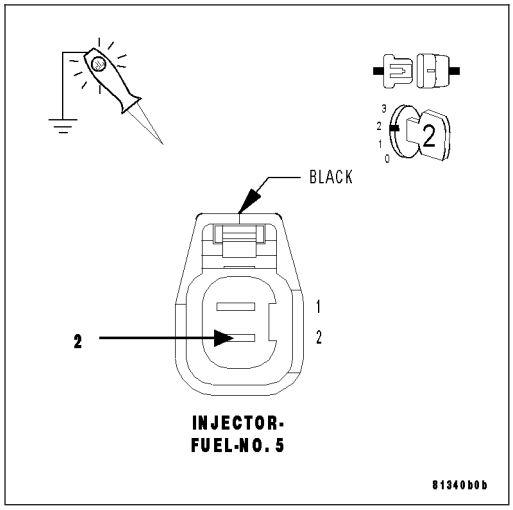

Does the test light illuminate brightly?

Yes >> Go To 4

No >> Repair the excessive resistance or short to ground in the (K343) ASD Relay Output 2 circuit.
Perform the POWERTRAIN VERIFICATION TEST. (Refer to 9 - ENGINE - STANDARD PROCEDURE)

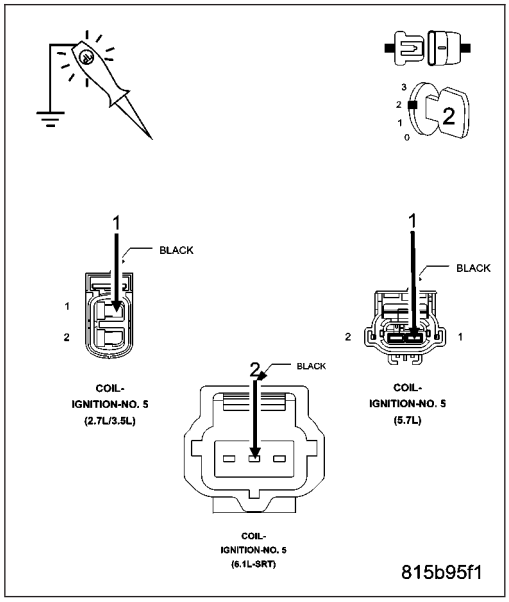

4. IGNITION SYSTEM OPERATION

NOTE: On the 2.7 and 3.5L engines, cylinders 1, 3 and 5, it is necessary to remove the upper intake to access the ignition coils. Once the ignition coil has been removed from the cylinder head, the intake must be reinstall to be able to crank the engine. Move the ignition coil harness connector through the slots in the upper intake and then connect the coil to the harness connector. Secure the upper intake to the lower intake in accordance with the service information.

Turn the ignition off.

Connect the Ignition Coil No.5 harness connector.

Remove the Ignition Coil.

Leave the Fuel Injector harness connector of the cylinder being tested disconnected.
Install a spark tester on the Ignition Coil.
While cranking the engine observe the spark coming from the spark tester.

NOTE: A crisp blue spark that is able to jump the gap of the spark tester should be generated.

Is good spark present?

Yes >> Go To 5

No >> Go To 14

NOTE: Connect the Fuel Injector harness connector before continuing.

5. SPARK PLUG

NOTE: Vehicles that are equipped with the 5.7L or 6.1L engines must have both spark plugs (per cylinder) removed and inspected to ensure proper operation.
Turn the ignition off.
Remove the Spark Plug.
Inspect the Spark Plug for the following conditions.
- Cracks
- Carbon Tracking
- Foreign Material
- Gap size out of specifications
- Loose or broke electrode

NOTE: Lightly tap the bottom of the spark plug on a solid surface. The electrode in the spark plug should not move.

Were any of the above conditions present?

Yes >> Replace the Spark Plug.
Perform the POWERTRAIN VERIFICATION TEST. (Refer to 9 - ENGINE - STANDARD PROCEDURE)

No >> Go To 6

6. FUEL PRESSURE CHECK

WARNING: The fuel system is under a constant pressure (even with the engine off). Before testing or servicing any fuel system hose, fitting or line, the fuel system pressure must be released. Failure to follow these instructions can result in personal injury or death.
Install a fuel pressure gauge to the fuel rail.
Start the engine and observe the fuel pressure reading.

NOTE: Fuel pressure specification is 407 KPa +/- 34 KPa (59 psi +/- 5 psi).

Choose a conclusion that best matches your fuel pressure reading.

Within Specification
Go To 7

Below Specification
Go To 12

Above Specification
Replace the fuel filter/pressure regulator.
Perform the POWERTRAIN VERIFICATION TEST. (Refer to 9 - ENGINE - STANDARD PROCEDURE)

7. FUEL PRESSURE LEAK DOWN

NOTE: Before continuing visually and physically inspect the fuel delivery system for external leaks or damage. Repair/replace as necessary.
Turn the ignition off.

WARNING: The fuel system is under a constant pressure (even with the engine off). Before testing or servicing any fuel system hose, fitting or line, the fuel system pressure must be released. Failure to follow these instructions can result in personal injury or death.
Install special tool #6539 (5/16″) or #6631 (3/8″) fuel line adapter.

Install the fuel pressure gauge.

Start the engine and allow the fuel system to reach maximum pressure.

Turn the ignition off.

NOTE: Fuel specification is 407 KPa +/- 34 KPa (59 psi +/- 5 psi).
Using special tool #C4390, Hose Clamp Pliers, pinch the rubber fuel line between the fuel pressure gauge and the engine.

Monitor the fuel pressure gauge for a minimum of 5 minutes.

NOTE: The pressure should not fall below 241 KPa (35 psi).

Does the gauge fall below the listed specification?

Yes >> Replace the leaking Fuel Injector(s).
Perform the POWERTRAIN VERIFICATION TEST. (Refer to 9 - ENGINE - STANDARD PROCEDURE)

No >> Go To 8

8. FUEL INJECTOR OPERATION

WARNING: The fuel system is under a constant pressure (even with the engine off). Before testing or servicing any fuel system hose, fitting or line, the fuel system pressure must be released. Failure to follow these instructions can result in personal injury or death.

CAUTION: After each Fuel Injector actuation, start the engine to clean the cylinder of fuel. Failure to do so could cause engine damage.
Remove special tool #C4390.

Start the engine and allow the fuel pressure to reach maximum pressure.

Ignition on, engine not running.

Using the scan tool, actuate the No.5 Fuel Injector.

Monitor the fuel pressure gauge.

Does the fuel pressure gauge indicate a drop in fuel pressure?

Yes >> Go To 9

No >> Go To 10

NOTE: Turn the ignition off, remove the Fuel Pressure gauge, and connect the fuel lines before continuing.

9. ENGINE MECHANICAL PROBLEM

Check for any of the following conditions/mechanical problems.
ENGINE VACUUM - must be at least 13 inches in neutral
ENGINE VALVE TIMING - must be within specifications
ENGINE COMPRESSION - must be within specifications
ENGINE EXHAUST SYSTEM - must be free of any restrictions or leaks.
ENGINE PCV SYSTEM - must flow freely
TORQUE CONVERTER STALL SPEED - must be within specifications
POWER BRAKE BOOSTER - no internal vacuum leaks
FUEL - must be free of contamination
CAM LOBES - must not be worn excessively
CYLINDER LEAKAGE TEST - must be within specifications
VALVE SPRINGS - cannot be weak or broken

Are there any engine mechanical problems?

Yes >> Repair as necessary.
Perform the POWERTRAIN VERIFICATION TEST. (Refer to 9 - ENGINE - STANDARD PROCEDURE)

No >> Go To 17

10. FUEL INJECTOR

Turn the ignition off.
Disconnect the No.5 Fuel Injector harness connector.
Ignition on, engine not running.

NOTE: When a Misfire is detected for a particular cylinder, the PCM will shut down that cylinders Injector Control circuit.
With the scan tool, erase DTCs.
Using a 12-volt test light connected to 12-volts, probe the (K38) Injector Control No.5 circuit.
With the scan tool, actuate the Fuel Injector.

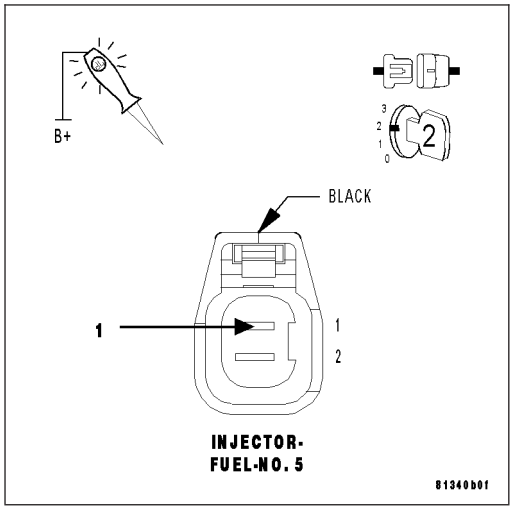

Does the test light blink/flicker?

Yes >> Replace the Fuel Injector.
Perform the POWERTRAIN VERIFICATION TEST. (Refer to 9 - ENGINE - STANDARD PROCEDURE)

No >> Go To 11

11. (K38) INJECTOR CONTROL NO.5 CIRCUIT

Turn the ignition off.

Disconnect the PCM harness connectors.

CAUTION: Do not probe the PCM harness connectors. Probing the PCM harness connectors will damage the PCM terminals resulting in poor terminal to pin connection. Install Miller Special Tool #8815 to perform diagnosis.

Check the (K38) Injector Control No.5 circuit for an open, short to ground, and short to voltage.

Was a problem found with the (K38) Injector Control No.5 circuit?

Yes >> Repair the excessive resistance or short in the (K38) Injector Control No.5 circuit.
Perform the POWERTRAIN VERIFICATION TEST. (Refer to 9 - ENGINE - STANDARD PROCEDURE)

No >> Go To 17

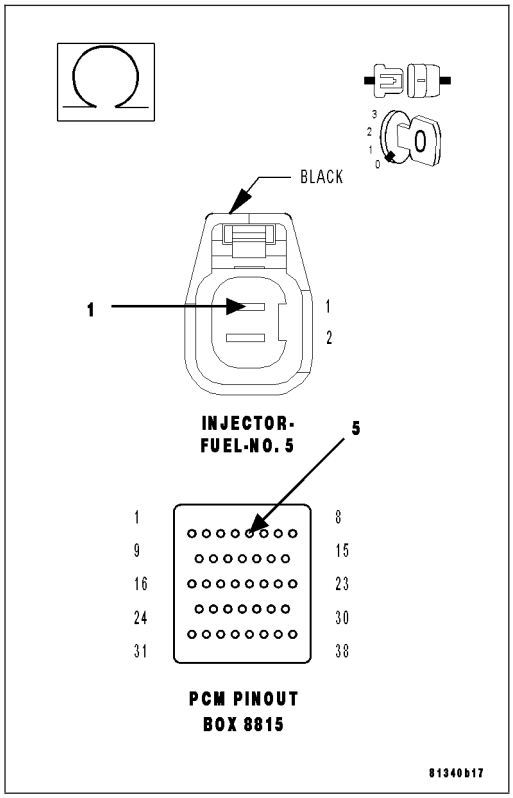

12. FUEL SUPPLY LINE RESTRICTED

Turn the ignition off.

WARNING: The fuel system is under a constant pressure (even with the engine off). Before testing or servicing any fuel system hose, fitting or line, the fuel system pressure must be released. Failure to follow these instructions can result in personal injury or death.

Raise vehicle on hoist, and disconnect the fuel pressure line at the fuel pump module.

Install special tool #6539 (5/16″) #6631(3/8″) fuel line adapter and the fuel pressure gauge between the fuel supply line and the fuel pump module.

Ignition on, engine not running.

With the scan tool, actuate the ASD Fuel System test and observe the fuel pressure gauge.

NOTE: Fuel pressure specification is 407 KPa +/- 34 KPa (59 psi +/- 5 psi).

Is the fuel pressure within specification?

Yes >> Repair or replace fuel supply line as necessary.
Perform the POWERTRAIN VERIFICATION TEST. (Refer to 9 - ENGINE - STANDARD PROCEDURE)

No >> Go To 13

13. FUEL PUMP INLET STRAINER

Turn the ignition off.

WARNING: The fuel system is under a constant pressure (even with the engine off). Before testing or servicing any fuel system hose, fitting or line, the fuel system pressure must be released. Failure to follow these instructions can result in personal injury or death.

Remove the Fuel Pump Module and inspect the Fuel Inlet Strainer.

Is the Fuel Inlet Strainer plugged?

Yes >> Replace the Fuel Pump Inlet Strainer.
Perform (NGC) POWERTRAIN VERIFICATION TEST VER - 5. (Refer to 8 - ELECTRICAL/ELECTRONIC CONTROL MODULES/POWERTRAIN CONTROL MODULE -DIAGNOSIS AND TESTING)

No >> Before continuing, check the Fuel Pump Module harness connector terminals for corrosion, damage, or terminal push out. Make sure the ground circuit is operating properly. Repair as necessary. Replace the Fuel Pump Module.
Perform the POWERTRAIN VERIFICATION TEST. (Refer to 9 - ENGINE - STANDARD PROCEDURE)

14. IGNITION WIRE

NOTE: If the vehicle being tested does not have an ignition wire answer YES to this test and continue.

Turn the ignition off.

Remove the ignition wire.

Measure the resistance of the ignition wire.

Is the resistance below 10K ohms?

Yes >> Go To 15

No >> Replace the Ignition Wire.
Perform the POWERTRAIN VERIFICATION TEST. (Refer to 9 - ENGINE - STANDARD PROCEDURE)

15. IGNITION COIL

Disconnect the No.5 Ignition Coil harness connector.

Remove the Fuel Pump Relay.

Using a 12-volt test light connected to 12-volts, probe the (K16) Coil Control No.5 circuit.

Crank the engine for 5 second while observing the test light.

Does the test light brightly blink/flicker?

Yes >> Replace the Ignition Coil.
Perform the POWERTRAIN VERIFICATION TEST. (Refer to 9 - ENGINE - STANDARD PROCEDURE)

No >> Go To 16

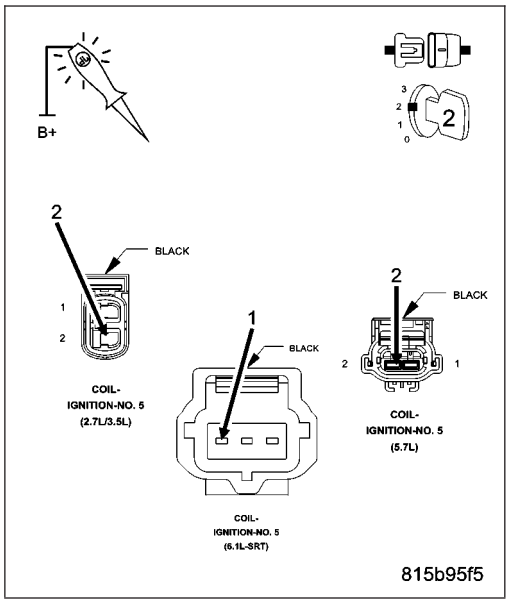

16. (K16) COIL CONTROL NO.5 CIRCUIT

Turn the ignition off.

Disconnect the PCM harness connectors.

CAUTION: Do not probe the PCM harness connectors. Probing the PCM harness connectors will damage the PCM terminals resulting in poor terminal to pin connection. Install Miller Special Tool #8815 to perform diagnosis.

Check the (K16) Coil Control No.5 circuit for an open, short to ground, and short to voltage.

Was a problem found with the (K16) Coil Control No.5 circuit?

Yes >> Repair the (K16) Coil Control No.5 circuit.
Perform the POWERTRAIN VERIFICATION TEST. (Refer to 9 - ENGINE - STANDARD PROCEDURE)

No >> Go To 17

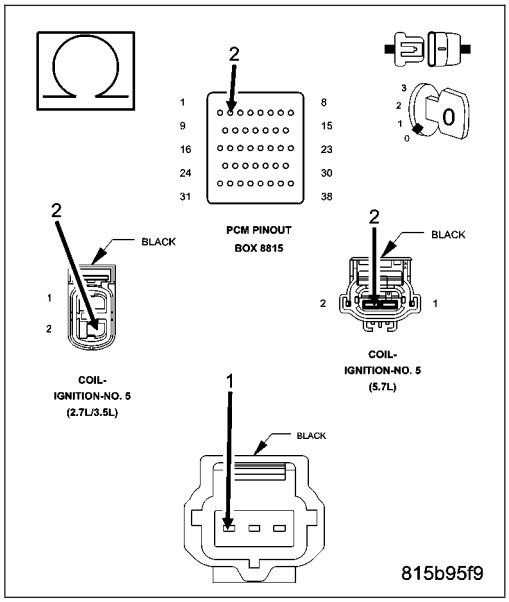

17. PCM

NOTE: Before continuing, check the PCM harness connector terminals for corrosion, damage, or terminal push out. Repair as necessary.

Using the schematics as a guide, inspect the wire harness and connectors. Pay particular attention to all Power and Ground circuits.

Were there any problems found?

Yes >> Repair as necessary.
Perform (NGC) POWERTRAIN VERIFICATION TEST VER - 5. (Refer to 8 - ELECTRICAL/ELECTRONIC CONTROL MODULES/POWERTRAIN CONTROL MODULE -DIAGNOSIS AND TESTING)

No >> Replace and program the Powertrain Control Module per Service Information.
Perform the POWERTRAIN VERIFICATION TEST. (Refer to 9 - ENGINE - STANDARD PROCEDURE)

P0306-CYLINDER 6 MISFIRE

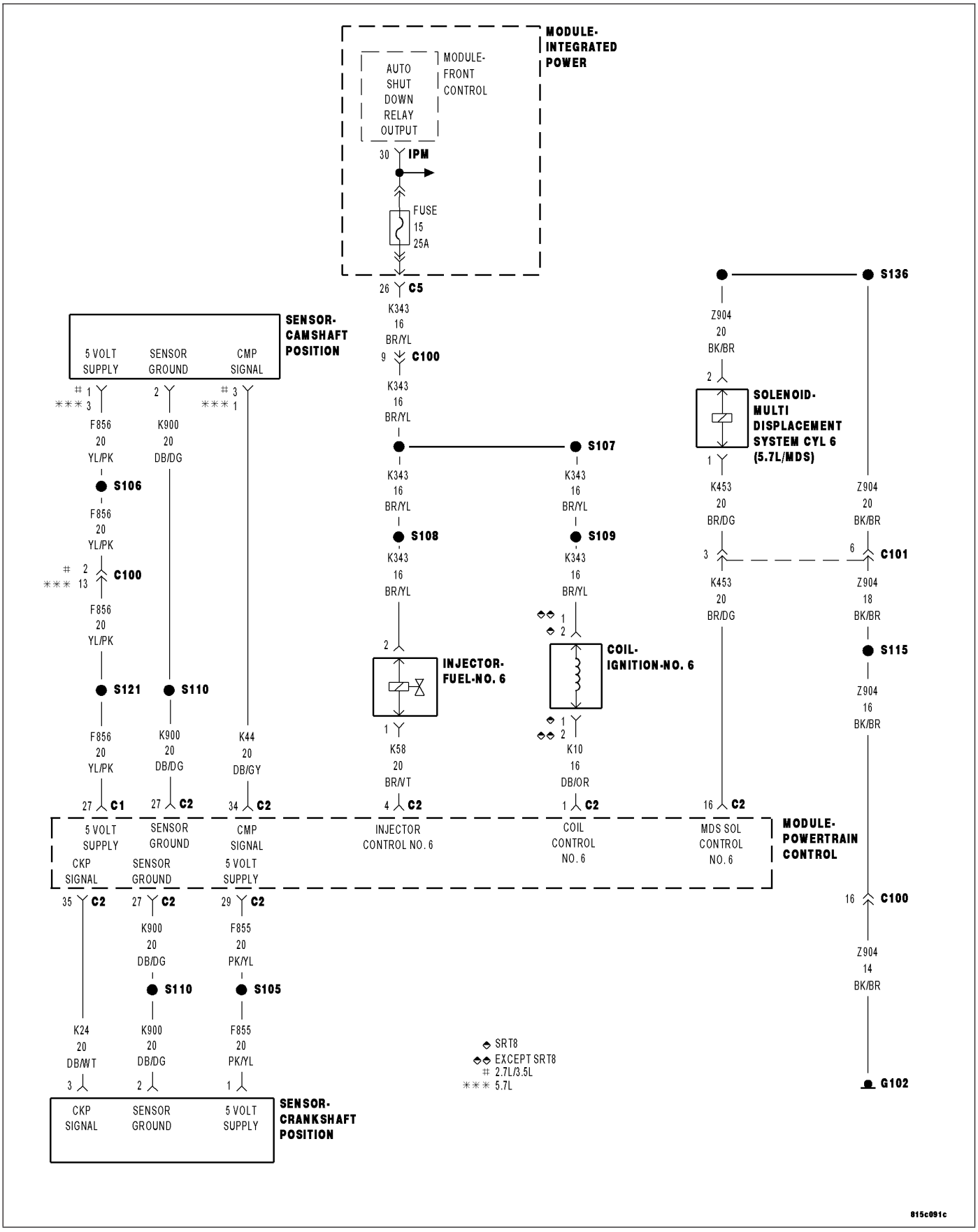

For a complete wiring diagram **Refer to Section 8W**.

- **When Monitored:**
  Any time the engine is running, and the adaptive numerator has been successfully updated.
- **Set Condition:**
  The threshold to set the fault is application specific; it is tied to the level of misfire that will cause emissions to increase to 1.5 times the standard or in some cases 1%. It is always a two trip fault above the calibrated RPM. It takes 1 soft fail to set a malfunction and two trips to set the MIL. Three good trips to turn off the MIL.

Possible Causes
(K343) ASD RELAY OUTPUT 2 CIRCUIT
(K58) INJECTOR CONTROL NO.6 CIRCUIT
(K10) COIL CONTROL NO.6 CIRCUIT
IGNITION WIRE
SPARK PLUG
IGNITION COIL
FUEL PUMP INLET STRAINER PLUGGED
RESTRICTED FUEL SUPPLY LINE
FUEL PUMP MODULE
FUEL PRESSURE LEAK DOWN
FUEL INJECTOR
ENGINE MECHANICAL PROBLEM
PCM

Always perform the Pre-Diagnostic Troubleshooting procedure before proceeding. (Refer to 9 - ENGINE - DIAGNOSIS AND TESTING).

Diagnostic Test

1. CYLINDER MIS-FIRE CONDITION ACTIVE

Engine running.

Observe the WHICH CYLINDER IS MISFIRING screen for at least one minute with a scan tool.

Is there a misfire present at this time?

Yes >> Go To 2

No >> Refer to the INTERMITTENT CONDITION Diagnostic Procedure.
Perform the POWERTRAIN VERIFICATION TEST. (Refer to 9 - ENGINE - STANDARD PROCEDURE)

2. VISUAL INSPECTION

NOTE: Anything that affects the speed of the crankshaft can cause a misfire DTC.

NOTE: When a Misfire is detected for a particular cylinder, the PCM will shut down that cylinders Injector Control circuit.

Visually inspect the engine for any of the following conditions.

- Worn serpentine belt
- Binding Engine-Driven accessories: A/C Compressor, P/S Pump, Water pump.
- Misalignment Water pump, P/S Pump and A/C Compressor pulleys
- Corroded PCM power and ground circuits.
- Improper CKP, CMP, MAP, and TP Sensor mounting
- Poor connector/terminal to component connection. i.e., CKP sensor, Fuel Injector, Ign coil, etc.
- Vacuum leaks
- Restricted Air Induction system or Exhaust system.

- Internal engine component failures.

Were any of the above conditions present?

Yes >> Repair as necessary.
Perform the POWERTRAIN VERIFICATION TEST. (Refer to 9 - ENGINE - STANDARD PROCEDURE)

No >> Go To 3

3. (K343) ASD RELAY OUTPUT 2 CIRCUIT

NOTE: On the 2.7 and 3.5L engines, cylinders 1, 3 and 5, it is necessary to remove the upper intake to access the ignition coils and the Fuel Injector harness connectors.

Turn the ignition off.

Disconnect the No.6 Ignition Coil harness connector.

Disconnect the No.6 Fuel Injector harness connector.

Ignition on, engine not running.

With the scan tool, actuate the ASD Relay.

Using a 12-volt test light connected to ground, probe the (K343) ASD Relay Output 2 circuit in the Ignition Coil harness connector and Fuel Injector harness connector while the relay is actuating.

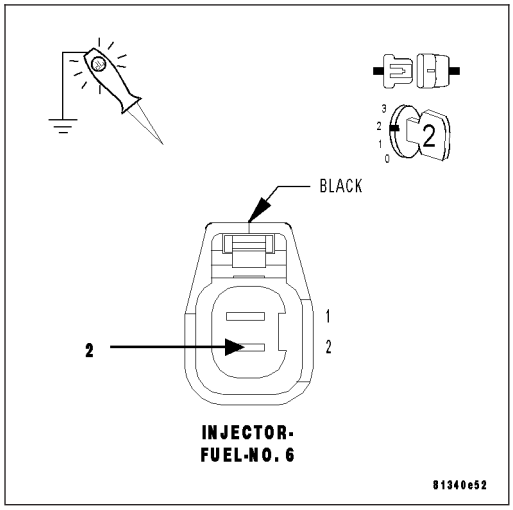

Does the test light illuminate brightly?

Yes >> Go To 4

No >> Repair the excessive resistance or short to ground in the (K343) ASD Relay Output 2 circuit.
Perform the POWERTRAIN VERIFICATION TEST. (Refer to 9 - ENGINE - STANDARD PROCEDURE)

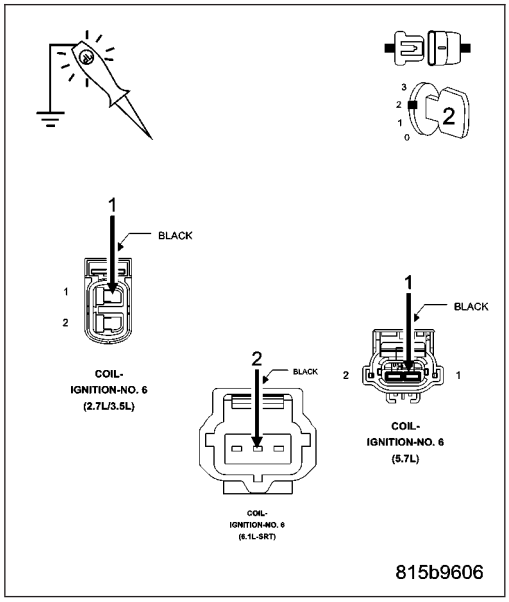

4. IGNITION SYSTEM OPERATION

NOTE: On the 2.7 and 3.5L engines, cylinders 1, 3 and 5, it is necessary to remove the upper intake to access the ignition coils. Once the ignition coil has been removed from the cylinder head, the intake must be reinstall to be able to crank the engine. Move the ignition coil harness connector through the slots in the upper intake and then connect the coil to the harness connector. Secure the upper intake to the lower intake in accordance with the service information.

Turn the ignition off.

Connect the Ignition Coil No.6 harness connector.

Remove the Ignition Coil.

Leave the Fuel Injector harness connector of the cylinder being tested disconnected.
Install a spark tester on the Ignition Coil.
While cranking the engine observe the spark coming from the spark tester.

NOTE: A crisp blue spark that is able to jump the gap of the spark tester should be generated.

Is good spark present?

Yes >> Go To 5

No >> Go To 14

NOTE: Connect the Fuel Injector harness connector before continuing.

5. SPARK PLUG

NOTE: Vehicles that are equipped with the 5.7L or 6.1L engines must have both spark plugs (per cylinder) removed and inspected to ensure proper operation.
Turn the ignition off.
Remove the Spark Plug.
Inspect the Spark Plug for the following conditions.
- Cracks
- Carbon Tracking
- Foreign Material
- Gap size out of specifications
- Loose or broke electrode

NOTE: Lightly tap the bottom of the spark plug on a solid surface. The electrode in the spark plug should not move.

Were any of the above conditions present?

Yes >> Replace the Spark Plug.
Perform the POWERTRAIN VERIFICATION TEST. (Refer to 9 - ENGINE - STANDARD PROCEDURE)

No >> Go To 6

6. FUEL PRESSURE CHECK

WARNING: The fuel system is under a constant pressure (even with the engine off). Before testing or servicing any fuel system hose, fitting or line, the fuel system pressure must be released. Failure to follow these instructions can result in personal injury or death.
Install a fuel pressure gauge to the fuel rail.
Start the engine and observe the fuel pressure reading.

Choose a conclusion that best matches your fuel pressure reading.

Within Specification
Go To 7

Below Specification
Go To 12

Above Specification
Replace the fuel filter/pressure regulator.
Perform the POWERTRAIN VERIFICATION TEST. (Refer to 9 - ENGINE - STANDARD PROCEDURE)

NOTE: Fuel pressure specification is 407 KPa +/- 34 KPa (59 psi +/- 5 psi).

7. FUEL PRESSURE LEAK DOWN

NOTE: Before continuing visually and physically inspect the fuel delivery system for external leaks or damage. Repair /replace as necessary.
Turn the ignition off.

WARNING: The fuel system is under a constant pressure (even with the engine off). Before testing or servicing any fuel system hose, fitting or line, the fuel system pressure must be released. Failure to follow these instructions can result in personal injury or death
Install special tool #6539 (5/16″) or #6631 (3/8″) fuel line adapter.

Install the fuel pressure gauge.

Start the engine and allow the fuel system to reach maximum pressure.

Turn the ignition off.

NOTE: Fuel specification is 407 KPa +/- 34 KPa (59 psi +/- 5 psi).
Using special tool #C4390, Hose Clamp Pliers, pinch the rubber fuel line between the fuel pressure gauge and the engine.

Monitor the fuel pressure gauge for a minimum of 5 minutes.

NOTE: The pressure should not fall below 241 KPa (35 psi).

Does the gauge fall below the listed specification?

Yes >> Replace the leaking Fuel Injector(s).
Perform the POWERTRAIN VERIFICATION TEST. (Refer to 9 - ENGINE - STANDARD PROCEDURE)

No >> Go To 8

8. FUEL INJECTOR OPERATION

WARNING: The fuel system is under a constant pressure (even with the engine off). Before testing or servicing any fuel system hose, fitting or line, the fuel system pressure must be released. Failure to follow these instructions can result in personal injury or death.

CAUTION: After each Fuel Injector actuation, start the engine to clean the cylinder of fuel. Failure to do so could cause engine damage.
Remove special tool #C4390.

Start the engine and allow the fuel pressure to reach maximum pressure.

Ignition on, engine not running.

Using the scan tool, actuate the No.6 Fuel Injector.

Monitor the fuel pressure gauge.

Does the fuel pressure gauge indicate a drop in fuel pressure?

Yes >> Go To 9

No >> Go To 10

NOTE: Turn the ignition off, remove the Fuel Pressure gauge, and connect the fuel lines before continuing.

9. ENGINE MECHANICAL PROBLEM

Check for any of the following conditions/mechanical problems.
ENGINE VACUUM - must be at least 13 inches in neutral
ENGINE VALVE TIMING - must be within specifications
ENGINE COMPRESSION - must be within specifications
ENGINE EXHAUST SYSTEM - must be free of any restrictions or leaks.
ENGINE PCV SYSTEM - must flow freely
TORQUE CONVERTER STALL SPEED - must be within specifications
POWER BRAKE BOOSTER - no internal vacuum leaks
FUEL - must be free of contamination
CAM LOBES - must not be worn excessively
CYLINDER LEAKAGE TEST - must be within specifications
VALVE SPRINGS - cannot be weak or broken

Are there any engine mechanical problems?

Yes >> Repair as necessary.
Perform the POWERTRAIN VERIFICATION TEST. (Refer to 9 - ENGINE - STANDARD PROCEDURE)

No >> Go To 17

10. FUEL INJECTOR

Turn the ignition off.
Disconnect the No.6 Fuel Injector harness connector.
Ignition on, engine not running.

NOTE: When a Misfire is detected for a particular cylinder, the PCM will shut down that cylinders Injector Control circuit.
With the scan tool, erase DTCs.
Using a 12-volt test light connected to 12-volts, probe the (K58) Injector Control No.6 circuit.
With the scan tool, actuate the Fuel Injector.

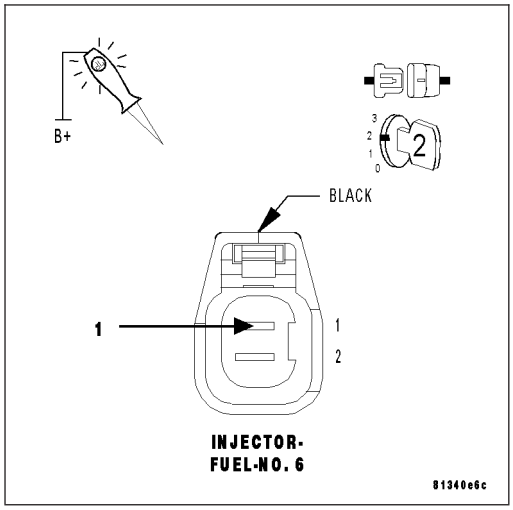

Does the test light blink/flicker?

Yes >> Replace the Fuel Injector.
Perform (NGC) POWERTRAIN VERIFICATION TEST VER - 5. (Refer to 8 - ELECTRICAL/ELECTRONIC CONTROL MODULES/POWERTRAIN CONTROL MODULE -DIAGNOSIS AND TESTING)

No >> Go To 11

11. (K58) INJECTOR CONTROL NO.6 CIRCUIT

Turn the ignition off.

Disconnect the PCM harness connectors.

CAUTION: Do not probe the PCM harness connectors. Probing the PCM harness connectors will damage the PCM terminals resulting in poor terminal to pin connection. Install Miller Special Tool #8815 to perform diagnosis.

Check the (K58) Injector Control No.6 circuit for an open, short to ground, and short to voltage.

Was a problem found with the (K58) Injector Control No.6 circuit?

Yes >> Repair the excessive resistance or short in the (K58) Injector Control No.6 circuit.
Perform the POWERTRAIN VERIFICATION TEST. (Refer to 9 - ENGINE - STANDARD PROCEDURE)

No >> Go To 17

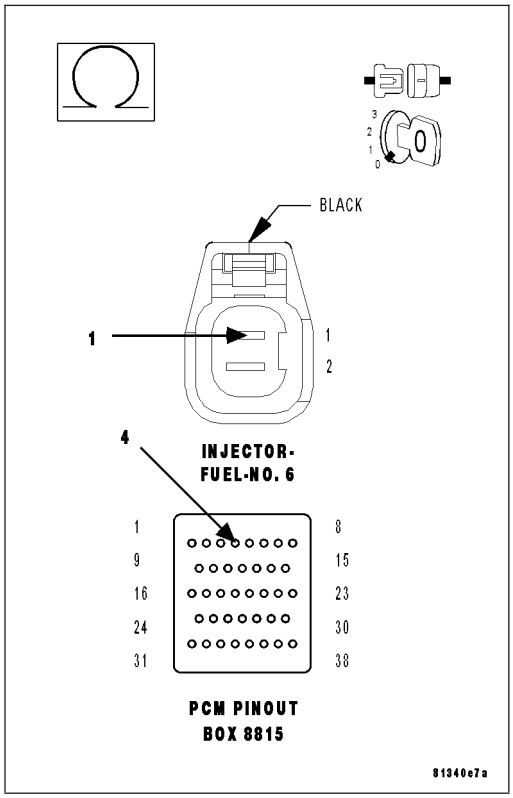

12. FUEL SUPPLY LINE RESTRICTED

Turn the ignition off.

WARNING: The fuel system is under a constant pressure (even with the engine off). Before testing or servicing any fuel system hose, fitting or line, the fuel system pressure must be released. Failure to follow these instructions can result in personal injury or death.

Raise vehicle on hoist, and disconnect the fuel pressure line at the fuel pump module.

Install special tool #6539 (5/16″) #6631(3/8″) fuel line adapter and the fuel pressure gauge between the fuel supply line and the fuel pump module.

Ignition on, engine not running.

With the scan tool, actuate the ASD Fuel System test and observe the fuel pressure gauge.

NOTE: Fuel pressure specification is 407 KPa +/- 34 KPa (59 psi +/- 5 psi).

Is the fuel pressure within specification?

Yes >> Repair or replace fuel supply line as necessary.
Perform the POWERTRAIN VERIFICATION TEST. (Refer to 9 - ENGINE - STANDARD PROCEDURE)

No >> Go To 13

13. FUEL PUMP INLET STRAINER

Turn the ignition off.

WARNING: The fuel system is under a constant pressure (even with the engine off). Before testing or servicing any fuel system hose, fitting or line, the fuel system pressure must be released. Failure to follow these instructions can result in personal injury or death.

Remove the Fuel Pump Module and inspect the Fuel Inlet Strainer.

Is the Fuel Inlet Strainer plugged?

Yes >> Replace the Fuel Pump Inlet Strainer.
Perform the POWERTRAIN VERIFICATION TEST. (Refer to 9 - ENGINE - STANDARD PROCEDURE)

No >> Before continuing, check the Fuel Pump Module harness connector terminals for corrosion, damage, or terminal push out. Make sure the ground circuit is operating properly. Repair as necessary. Replace the Fuel Pump Module.
Perform the POWERTRAIN VERIFICATION TEST. (Refer to 9 - ENGINE - STANDARD PROCEDURE)

14. IGNITION WIRE

NOTE: If the vehicle being tested does not have an ignition wire answer YES to this test and continue.

Turn the ignition off.

Remove the ignition wire.

Measure the resistance of the ignition wire.

Is the resistance below 10K ohms?

Yes >> Go To 15

No >> Replace the Ignition Wire.
Perform the POWERTRAIN VERIFICATION TEST. (Refer to 9 - ENGINE - STANDARD PROCEDURE)

15. IGNITION COIL

Disconnect the No.6 Ignition Coil harness connector.

Remove the Fuel Pump Relay.

Using a 12-volt test light connected to 12-volts, probe the (K10) Coil Control No.6 circuit.

Crank the engine for 5 second while observing the test light.

Does the test light brightly blink/flicker?

Yes >> Replace the Ignition Coil.
Perform the POWERTRAIN VERIFICATION TEST. (Refer to 9 - ENGINE - STANDARD PROCEDURE)

No >> Go To 16

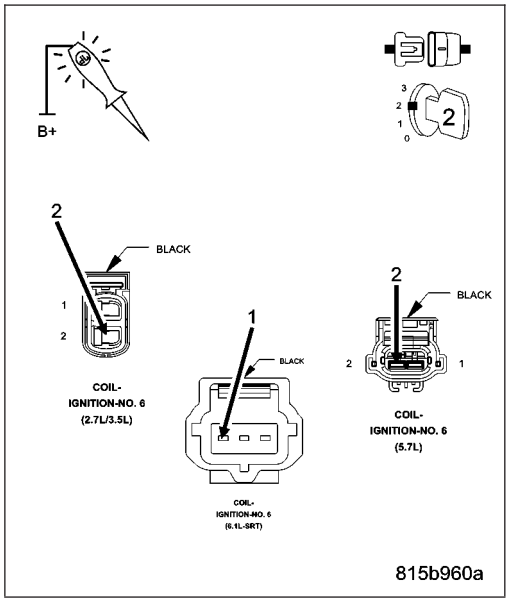

16. (K10) COIL CONTROL NO.6 CIRCUIT

Turn the ignition off.

Disconnect the PCM harness connectors.

CAUTION: Do not probe the PCM harness connectors. Probing the PCM harness connectors will damage the PCM terminals resulting in poor terminal to pin connection. Install Miller Special Tool #8815 to perform diagnosis.

Check the (K10) Coil Control No.6 circuit for an open, short to ground, and short to voltage.

Was a problem found with the (K10) Coil Control No.6 circuit?

Yes >> Repair the (K10) Coil Control No.6 circuit.
Perform the POWERTRAIN VERIFICATION TEST. (Refer to 9 - ENGINE - STANDARD PROCEDURE)

No >> Go To 17

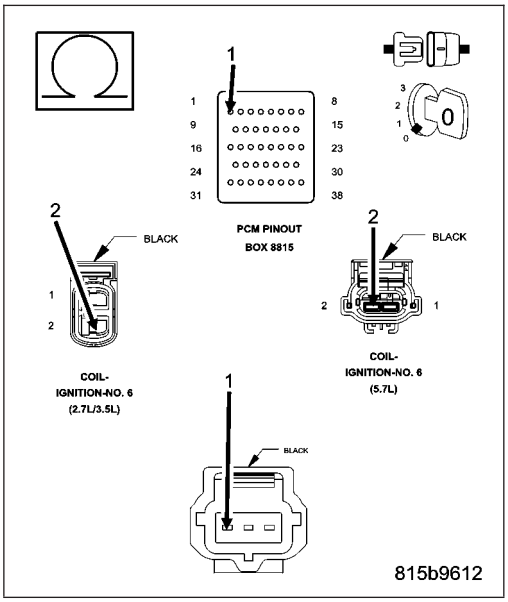

17. PCM

NOTE: Before continuing, check the PCM harness connector terminals for corrosion, damage, or terminal push out. Repair as necessary.

Using the schematics as a guide, inspect the wire harness and connectors. Pay particular attention to all Power and Ground circuits.

Were there any problems found?

Yes >> Repair as necessary.
Perform the POWERTRAIN VERIFICATION TEST. (Refer to 9 - ENGINE - STANDARD PROCEDURE)

No >> Replace and program the Powertrain Control Module per Service Information.
Perform the POWERTRAIN VERIFICATION TEST. (Refer to 9 - ENGINE - STANDARD PROCEDURE)

P0307-CYLINDER 7 MISFIRE

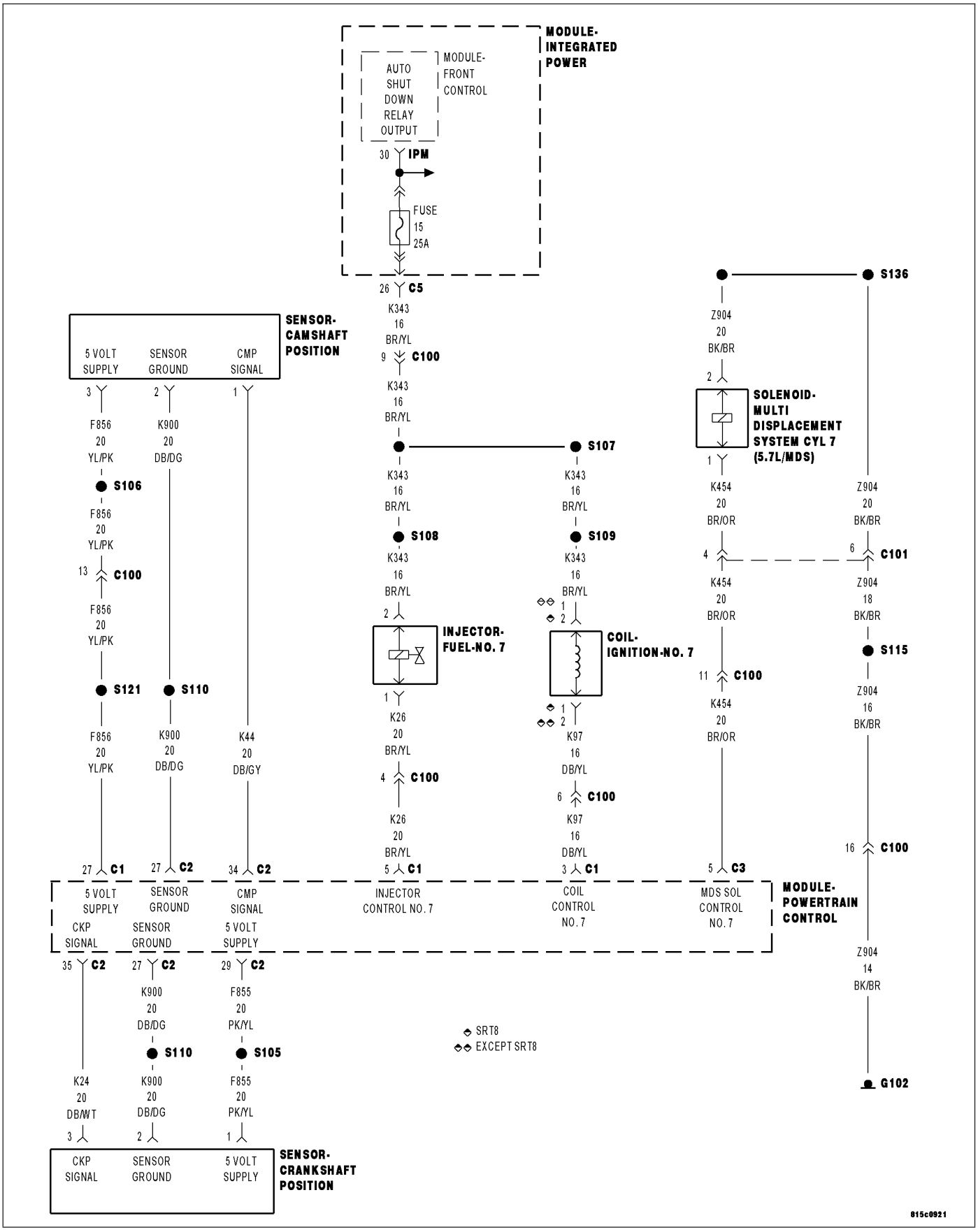

For a complete wiring diagram **Refer to Section 8W**.

- **When Monitored:**
  Any time the engine is running, and the adaptive numerator has been successfully updated.
- **Set Condition:**
  The threshold to set the fault is application specific; it is tied to the level of misfire that will cause emissions to increase to 1.5 times the standard or in some cases 1%. It is always a two trip fault above the calibrated RPM. It takes 1 soft fail to set a malfunction and two trips to set the MIL. Three good trips to turn off the MIL.

Possible Causes
(K343) ASD RELAY OUTPUT 2 CIRCUIT
(K26) INJECTOR CONTROL NO.7 CIRCUIT
(K97) COIL CONTROL NO.7 CIRCUIT
IGNITION WIRE
SPARK PLUG
IGNITION COIL
FUEL PUMP INLET STRAINER PLUGGED
RESTRICTED FUEL SUPPLY LINE
FUEL PUMP MODULE
FUEL PRESSURE LEAK DOWN
FUEL INJECTOR
ENGINE MECHANICAL PROBLEM
PCM

Always perform the Pre-Diagnostic Troubleshooting procedure before proceeding. (Refer to 9 - ENGINE - DIAGNOSIS AND TESTING).

Diagnostic Test

1. CYLINDER MIS-FIRE CONDITION ACTIVE

Engine running.

Observe the WHICH CYLINDER IS MISFIRING screen for at least one minute with a scan tool.

Is there a misfire present at this time?

Yes >> Go To 2

No >> Refer to the INTERMITTENT CONDITION Diagnostic Procedure.
Perform the POWERTRAIN VERIFICATION TEST. (Refer to 9 - ENGINE - STANDARD PROCEDURE)

2. VISUAL INSPECTION

NOTE: Anything that affects the speed of the crankshaft can cause a misfire DTC.

NOTE: When a Misfire is detected for a particular cylinder, the PCM will shut down that cylinders Injector Control circuit.

Visually inspect the engine for any of the following conditions.

- Worn serpentine belt
- Binding Engine-Driven accessories: A/C Compressor, P/S Pump, Water pump.
- Misalignment Water pump, P/S Pump and A/C Compressor pulleys
- Corroded PCM power and ground circuits.
- Improper CKP, CMP, MAP, and TP Sensor mounting
- Poor connector/terminal to component connection. i.e., CKP sensor, Fuel Injector, Ign coil, etc.
- Vacuum leaks
- Restricted Air Induction system or Exhaust system.

- Internal engine component failures.

Were any of the above conditions present?

Yes >> Repair as necessary.
Perform the POWERTRAIN VERIFICATION TEST. (Refer to 9 - ENGINE - STANDARD PROCEDURE)

No >> Go To 3

3. (K343) ASD RELAY OUTPUT 2 CIRCUIT

Turn the ignition off.

Disconnect the No.7 Ignition Coil harness connector.

Disconnect the No.7 Fuel Injector harness connector.

Ignition on, engine not running.

With the scan tool, actuate the ASD Relay.

Using a 12-volt test light connected to ground, probe the (K343) ASD Relay Output 2 circuit in the Ignition Coil harness connector and Fuel Injector harness connector while the relay is actuating.

Does the test light illuminate brightly?

Yes >> Go To 4

No >> Repair the excessive resistance or short to ground in the (K343) ASD Relay Output 2 circuit.
Perform the POWERTRAIN VERIFICATION TEST. (Refer to 9 - ENGINE - STANDARD PROCEDURE)

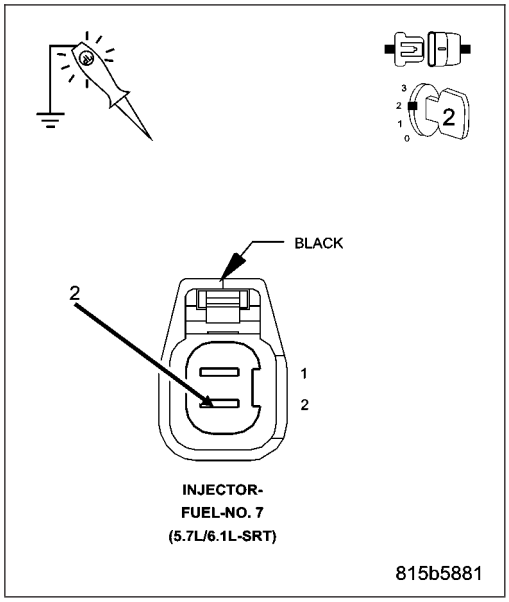

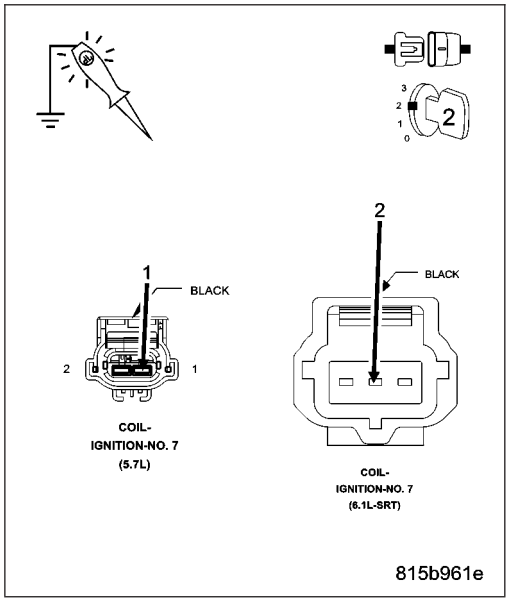

4. IGNITION SYSTEM OPERATION

Turn the ignition off.
Connect the Ignition Coil No.7 harness connector.
Remove the Ignition Coil.
Leave the Fuel Injector harness connector of the cylinder being tested disconnected.
Install a spark tester on the Ignition Coil.
While cranking the engine observe the spark coming from the spark tester.

Is good spark present?

Yes >> Go To 5

No >> Go To 14

NOTE: Connect the Fuel Injector harness connector before continuing.

5. SPARK PLUG

NOTE: Vehicles that are equipped with the 5.7L or 6.1L engines must have both spark plugs (per cylinder) removed and inspected to ensure proper operation.
Turn the ignition off.
Remove the Spark Plug.
Inspect the Spark Plug for the following conditions.
- Cracks
- Carbon Tracking
- Foreign Material
- Gap size out of specifications
- Loose or broke electrode

NOTE: Lightly tap the bottom of the spark plug on a solid surface. The electrode in the spark plug should not move.

Were any of the above conditions present?

Yes >> Replace the Spark Plug.
Perform the POWERTRAIN VERIFICATION TEST. (Refer to 9 - ENGINE - STANDARD PROCEDURE)

No >> Go To 6

6. FUEL PRESSURE CHECK

WARNING: The fuel system is under a constant pressure (even with the engine off). Before testing or servicing any fuel system hose, fitting or line, the fuel system pressure must be released. Failure to follow these instructions can result in personal injury or death.
Install a fuel pressure gauge to the fuel rail.
Start the engine and observe the fuel pressure reading.

NOTE: Fuel pressure specification is 407 KPa +/- 34 KPa (59 psi +/- 5 psi).

Choose a conclusion that best matches your fuel pressure reading.

Within Specification
Go To 7

Below Specification
Go To 12

Above Specification
Replace the fuel filter/pressure regulator.
Perform the POWERTRAIN VERIFICATION TEST. (Refer to 9 - ENGINE - STANDARD PROCEDURE)

7. FUEL PRESSURE LEAK DOWN

NOTE: Before continuing visually and physically inspect the fuel delivery system for external leaks or damage. Repair /replace as necessary.
Turn the ignition off.

WARNING: The fuel system is under a constant pressure (even with the engine off). Before testing or servicing any fuel system hose, fitting or line, the fuel system pressure must be released. Failure to follow these instructions can result in personal injury or death.
Install special tool #6539 (5/16″) or #6631 (3/8″) fuel line adapter.

Install the fuel pressure gauge.

Start the engine and allow the fuel system to reach maximum pressure.

Turn the ignition off.

NOTE: Fuel specification is 407 KPa +/- 34 KPa (59 psi +/- 5 psi).
Using special tool #C4390, Hose Clamp Pliers, pinch the rubber fuel line between the fuel pressure gauge and the engine.

Monitor the fuel pressure gauge for a minimum of 5 minutes.

NOTE: The pressure should not fall below 241 KPa (35 psi).

Does the gauge fall below the listed specification?

Yes >> Replace the leaking Fuel Injector(s).
Perform the POWERTRAIN VERIFICATION TEST. (Refer to 9 - ENGINE - STANDARD PROCEDURE)

No >> Go To 8

8. FUEL INJECTOR OPERATION

WARNING: The fuel system is under a constant pressure (even with the engine off). Before testing or servicing any fuel system hose, fitting or line, the fuel system pressure must be released. Failure to follow these instructions can result in personal injury or death.

CAUTION: After each Fuel Injector actuation, start the engine to clean the cylinder of fuel. Failure to do so could cause engine damage.
Remove special tool #C4390.

Start the engine and allow the fuel pressure to reach maximum pressure.

Ignition on, engine not running.

Using the scan tool, actuate the No.7 Fuel Injector.

Monitor the fuel pressure gauge.

Does the fuel pressure gauge indicate a drop in fuel pressure?

Yes >> Go To 9

No >> Go To 10

NOTE: Turn the ignition off, remove the Fuel Pressure gauge, and connect the fuel lines before continuing.

9. ENGINE MECHANICAL PROBLEM

Check for any of the following conditions/mechanical problems.
ENGINE VACUUM - must be at least 13 inches in neutral
ENGINE VALVE TIMING - must be within specifications
ENGINE COMPRESSION - must be within specifications
ENGINE EXHAUST SYSTEM - must be free of any restrictions or leaks.
ENGINE PCV SYSTEM - must flow freely
TORQUE CONVERTER STALL SPEED - must be within specifications
POWER BRAKE BOOSTER - no internal vacuum leaks
FUEL - must be free of contamination
CAM LOBES - must not be worn excessively
CYLINDER LEAKAGE TEST - must be within specifications
VALVE SPRINGS - cannot be weak or broken

Are there any engine mechanical problems?

Yes >> Repair as necessary.
Perform the POWERTRAIN VERIFICATION TEST. (Refer to 9 - ENGINE - STANDARD PROCEDURE)

No >> Go To 17

10. FUEL INJECTOR

Turn the ignition off.
Disconnect the No.7 Fuel Injector harness connector.
Ignition on, engine not running.

NOTE: When a Misfire is detected for a particular cylinder, the PCM will shut down that cylinders Injector Control circuit.
With the scan tool, erase DTCs.
Using a 12-volt test light connected to 12-volts, probe the (K26) Injector Control No.7 circuit.
With the scan tool, actuate the Fuel Injector.

Does the test light blink/flicker?

Yes >> Replace the Fuel Injector.
Perform the POWERTRAIN VERIFICATION TEST. (Refer to 9 - ENGINE - STANDARD PROCEDURE)

No >> Go To 11

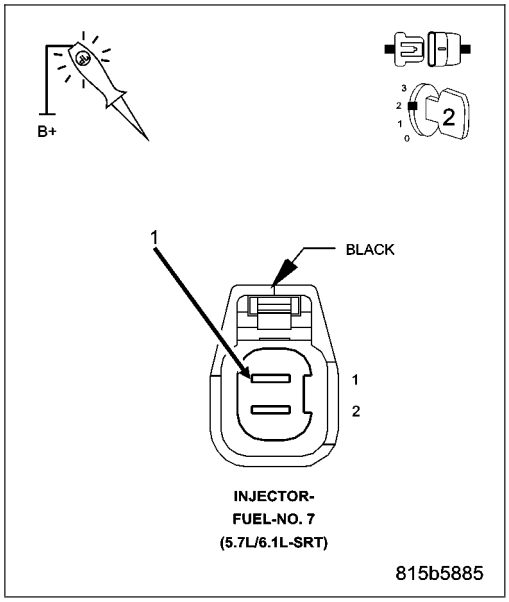

11. (K26) INJECTOR CONTROL NO.7 CIRCUIT

Turn the ignition off.

Disconnect the PCM harness connectors.

CAUTION: Do not probe the PCM harness connectors. Probing the PCM harness connectors will damage the PCM terminals resulting in poor terminal to pin connection. Install Miller Special Tool #8815 to perform diagnosis.

Check the (K26) Injector Control No.7 circuit for an open, short to ground, and short to voltage.

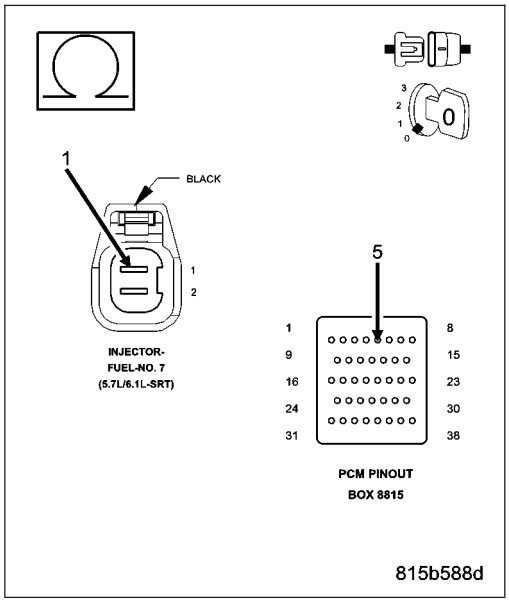

Was a problem found with the (K26) Injector Control No.7 circuit?

Yes >> Repair the excessive resistance or short in the (K26) Injector Control No.7 circuit.
Perform the POWERTRAIN VERIFICATION TEST. (Refer to 9 - ENGINE - STANDARD PROCEDURE)

No >> Go To 17

12. FUEL SUPPLY LINE RESTRICTED

Turn the ignition off.

WARNING: The fuel system is under a constant pressure (even with the engine off). Before testing or servicing any fuel system hose, fitting or line, the fuel system pressure must be released. Failure to follow these instructions can result in personal injury or death.

Raise vehicle on hoist, and disconnect the fuel pressure line at the fuel pump module.

Install special tool #6539 (5/16″) #6631(3/8″) fuel line adapter and the fuel pressure gauge between the fuel supply line and the fuel pump module.

Ignition on, engine not running.

With the scan tool, actuate the ASD Fuel System test and observe the fuel pressure gauge.

NOTE: Fuel pressure specification is 407 KPa +/- 34 KPa (59 psi +/- 5 psi).

Is the fuel pressure within specification?

Yes >> Repair or replace fuel supply line as necessary.
Perform the POWERTRAIN VERIFICATION TEST. (Refer to 9 - ENGINE - STANDARD PROCEDURE)

No >> Go To 13

13. FUEL PUMP INLET STRAINER

Turn the ignition off.

WARNING: The fuel system is under a constant pressure (even with the engine off). Before testing or servicing any fuel system hose, fitting or line, the fuel system pressure must be released. Failure to follow these instructions can result in personal injury or death.

Remove the Fuel Pump Module and inspect the Fuel Inlet Strainer.

Is the Fuel Inlet Strainer plugged?

Yes >> Replace the Fuel Pump Inlet Strainer.
Perform the POWERTRAIN VERIFICATION TEST. (Refer to 9 - ENGINE - STANDARD PROCEDURE)

No >> Before continuing, check the Fuel Pump Module harness connector terminals for corrosion, damage, or terminal push out. Make sure the ground circuit is operating properly. Repair as necessary. Replace the Fuel Pump Module.
Perform the POWERTRAIN VERIFICATION TEST. (Refer to 9 - ENGINE - STANDARD PROCEDURE)

14. IGNITION WIRE

NOTE: If the vehicle being tested does not have an ignition wire answer YES to this test and continue.
Turn the ignition off.

Remove the ignition wire.

Measure the resistance of the ignition wire.

Is the resistance below 10K ohms?

Yes >> Go To 15

No >> Replace the Ignition Wire.
Perform the POWERTRAIN VERIFICATION TEST. (Refer to 9 - ENGINE - STANDARD PROCEDURE)

15. IGNITION COIL

Disconnect the No.7 Ignition Coil harness connector.

Remove the Fuel Pump Relay.

Using a 12-volt test light connected to 12-volts, probe the (K97) Coil Control No.7 circuit.

Crank the engine for 5 second while observing the test light.

Does the test light brightly blink/flicker?

Yes >> Replace the Ignition Coil.
Perform the POWERTRAIN VERIFICATION TEST. (Refer to 9 - ENGINE - STANDARD PROCEDURE)

No >> Go To 16

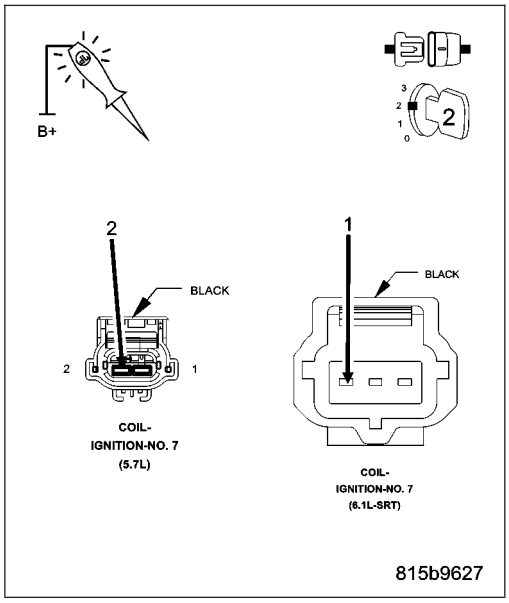

16. (K97) COIL CONTROL NO.7 CIRCUIT

Turn the ignition off.

Disconnect the PCM harness connectors.

CAUTION: Do not probe the PCM harness connectors. Probing the PCM harness connectors will damage the PCM terminals resulting in poor terminal to pin connection. Install Miller Special Tool #8815 to perform diagnosis.
Check the (K97) Coil Control No.7 circuit for an open, short to ground, and short to voltage.

Was a problem found with the (K97) Coil Control No.7 circuit?

Yes >> Repair the (K97) Coil Control No.7 circuit.
Perform the POWERTRAIN VERIFICATION TEST. (Refer to 9 - ENGINE - STANDARD PROCEDURE)

No >> Go To 17

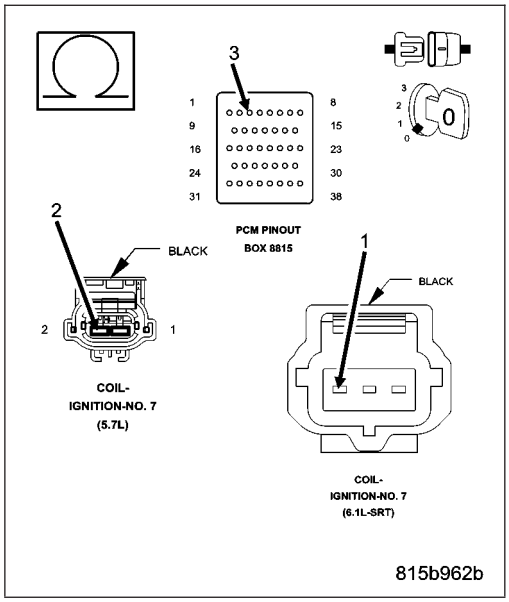

17. PCM

NOTE: Before continuing, check the PCM harness connector terminals for corrosion, damage, or terminal push out. Repair as necessary.
Using the schematics as a guide, inspect the wire harness and connectors. Pay particular attention to all Power and Ground circuits.

Were there any problems found?

Yes >> Repair as necessary.
Perform the POWERTRAIN VERIFICATION TEST. (Refer to 9 - ENGINE - STANDARD PROCEDURE)

No >> Replace and program the Powertrain Control Module per Service Information.
Perform the POWERTRAIN VERIFICATION TEST. (Refer to 9 - ENGINE - STANDARD PROCEDURE)

P0308-CYLINDER 8 MISFIRE

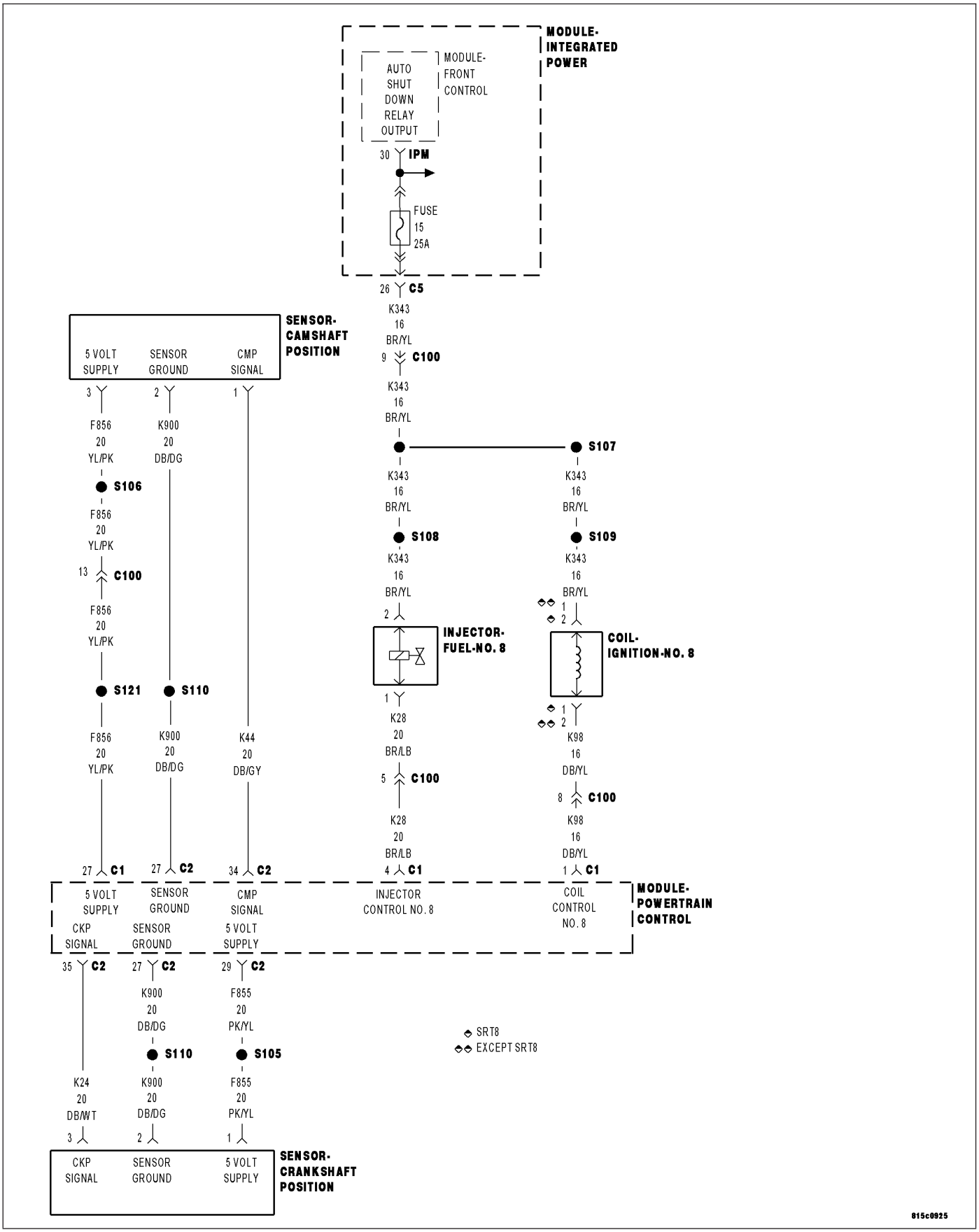

For a complete wiring diagram **Refer to Section 8W**.

- **When Monitored:**
  Any time the engine is running, and the adaptive numerator has been successfully updated.
- **Set Condition:**
  The threshold to set the fault is application specific; it is tied to the level of misfire that will cause emissions to increase to 1.5 times the standard or in some cases 1%. It is always a two trip fault above the calibrated RPM. It takes 1 soft fail to set a malfunction and two trips to set the MIL. Three good trips to turn off the MIL.

Possible Causes
(K343) ASD RELAY OUTPUT 2 CIRCUIT
(K28) INJECTOR CONTROL NO.8 CIRCUIT
(K98) COIL CONTROL NO.8 CIRCUIT
IGNITION WIRE
SPARK PLUG
IGNITION COIL
FUEL PUMP INLET STRAINER PLUGGED
RESTRICTED FUEL SUPPLY LINE
FUEL PUMP MODULE
FUEL PRESSURE LEAK DOWN
FUEL INJECTOR
ENGINE MECHANICAL PROBLEM
PCM

Always perform the Pre-Diagnostic Troubleshooting procedure before proceeding. (Refer to 9 - ENGINE - DIAGNOSIS AND TESTING).

Diagnostic Test

1. CYLINDER MIS-FIRE CONDITION ACTIVE

Engine running.

Observe the WHICH CYLINDER IS MISFIRING screen for at least one minute with a scan tool.

Is there misfire present at this time?

Yes >> Go To 2

No >> Refer to the INTERMITTENT CONDITION Diagnostic Procedure.
Perform the POWERTRAIN VERIFICATION TEST. (Refer to 9 - ENGINE - STANDARD PROCEDURE)

2. VISUAL INSPECTION

NOTE: Anything that affects the speed of the crankshaft can cause a misfire DTC.

NOTE: When a Misfire is detected for a particular cylinder, the PCM will shut down that cylinders Injector Control circuit.

- Visually inspect the engine for any of the following conditions.
- Worn serpentine belt
- Binding Engine-Driven accessories: A/C Compressor, P/S Pump, Water pump.
- Misalignment Water pump, P/S Pump and A/C Compressor pulleys
- Corroded PCM power and ground circuits.
- Improper CKP, CMP, MAP, and TP Sensor mounting
- Poor connector/terminal to component connection. i.e., CKP sensor, Fuel Injector, Ign coil, etc.
- Vacuum leaks
- Restricted Air Induction system or Exhaust system.

- Internal engine component failures.

Were any of the above conditions present?

Yes >> Repair as necessary.
Perform the POWERTRAIN VERIFICATION TEST. (Refer to 9 - ENGINE - STANDARD PROCEDURE)

No >> Go To 3

3. (K343) ASD RELAY OUTPUT 2 CIRCUIT

Turn the ignition off.
Disconnect the No.8 Ignition Coil harness connector.
Disconnect the No.8 Fuel Injector harness connector.
Ignition on, engine not running.
With the scan tool, actuate the ASD Relay.
Using a 12-volt test light connected to ground, probe the (K343) ASD Relay Output 2 circuit in the Ignition Coil harness connector and Fuel Injector harness connector while the relay is actuating.

Does the test light illuminate brightly?

Yes >> Go To 4

No >> Repair the excessive resistance or short to ground in the (K343) ASD Relay Output 2 circuit.
Perform the POWERTRAIN VERIFICATION TEST. (Refer to 9 - ENGINE - STANDARD PROCEDURE)

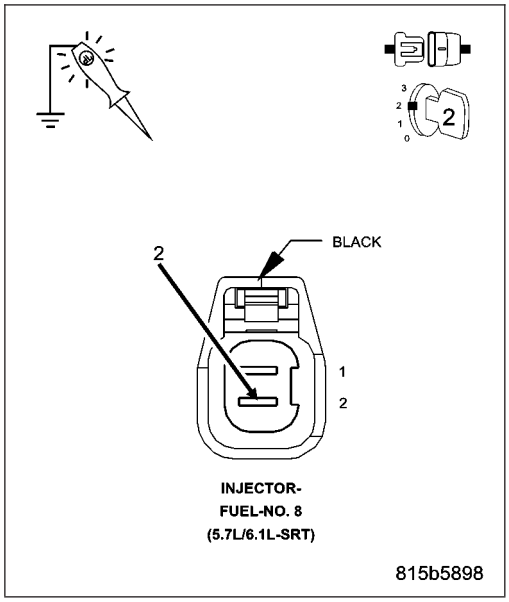

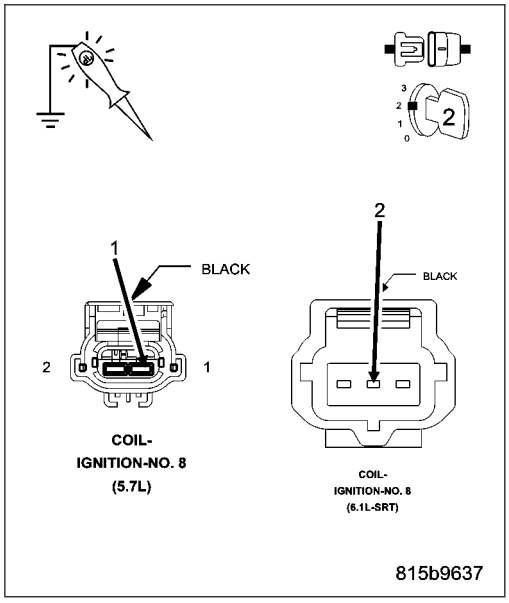

4. IGNITION SYSTEM OPERATION

Turn the ignition off.
Connect the Ignition Coil No.8 harness connector.
Remove the Ignition Coil.
Leave the Fuel Injector harness connector of the cylinder being tested disconnected.
Install a spark tester on the Ignition Coil.
While cranking the engine observe the spark coming from the spark tester.

NOTE: A crisp blue spark that is able to jump the gap of the spark tester should be generated.

Is good spark present?

Yes >> Go To 5

No >> Go To 14

NOTE: Connect the Fuel Injector harness connector before continuing.

5. SPARK PLUG

NOTE: Vehicles that are equipped with the 5.7L or 6.1L engines must have both spark plugs (per cylinder) removed and inspected to ensure proper operation.

Turn the ignition off.

Remove the Spark Plug.

Inspect the Spark Plug for the following conditions.

- Cracks
- Carbon Tracking
- Foreign Material
- Gap size out of specifications
- Loose or broke electrode

NOTE: Lightly tap the bottom of the spark plug on a solid surface. The electrode in the spark plug should not move.

Were any of the above conditions present?

Yes >> Replace the Spark Plug.
Perform the POWERTRAIN VERIFICATION TEST. (Refer to 9 - ENGINE - STANDARD PROCEDURE)

No >> Go To 6

6. FUEL PRESSURE CHECK

WARNING: The fuel system is under a constant pressure (even with the engine off). Before testing or servicing any fuel system hose, fitting or line, the fuel system pressure must be released. Failure to follow these instructions can result in personal injury or death.

Install a fuel pressure gauge to the fuel rail.

Start the engine and observe the fuel pressure reading.

NOTE: Fuel pressure specification is 407 KPa +/- 34 KPa (59 psi +/- 5 psi).

Choose a conclusion that best matches your fuel pressure reading.

Within Specification
Go To 7

Below Specification
Go To 12

Above Specification
Replace the fuel filter/pressure regulator.
Perform the POWERTRAIN VERIFICATION TEST. (Refer to 9 - ENGINE - STANDARD PROCEDURE)

7. FUEL PRESSURE LEAK DOWN

NOTE: Before continuing visually and physically inspect the fuel delivery system for external leaks or damage. Repair /replace as necessary.
Turn the ignition off.

WARNING: The fuel system is under a constant pressure (even with the engine off). Before testing or servicing any fuel system hose, fitting or line, the fuel system pressure must be released. Failure to follow these instructions can result in personal injury or death.
Install special tool #6539 (5/16″) or #6631 (3/8″) fuel line adapter.

Install the fuel pressure gauge.

Start the engine and allow the fuel system to reach maximum pressure.

Turn the ignition off.

NOTE: Fuel specification is 407 KPa +/- 34 KPa (59 psi +/- 5 psi).
Using special tool #C4390, Hose Clamp Pliers, pinch the rubber fuel line between the fuel pressure gauge and the engine.

Monitor the fuel pressure gauge for a minimum of 5 minutes.

NOTE: The pressure should not fall below 241 KPa (35 psi).

Does the gauge fall below the listed specification?

Yes >> Replace the leaking Fuel Injector(s).
Perform the POWERTRAIN VERIFICATION TEST. (Refer to 9 - ENGINE - STANDARD PROCEDURE)

No >> Go To 8

8. FUEL INJECTOR OPERATION

WARNING: The fuel system is under a constant pressure (even with the engine off). Before testing or servicing any fuel system hose, fitting or line, the fuel system pressure must be released. Failure to follow these instructions can result in personal injury or death.

CAUTION: After each Fuel Injector actuation, start the engine to clean the cylinder of fuel. Failure to do so could cause engine damage.
Remove special tool #C4390.

Start the engine and allow the fuel pressure to reach maximum pressure.

Ignition on, engine not running.

Using the scan tool, actuate the No.8 Fuel Injector.

Monitor the fuel pressure gauge.

Does the fuel pressure gauge indicate a drop in fuel pressure?

Yes >> Go To 9

No >> Go To 10

NOTE: Turn the ignition off, remove the Fuel Pressure gauge, and connect the fuel lines before continuing.

9. ENGINE MECHANICAL PROBLEM

Check for any of the following conditions/mechanical problems.
ENGINE VACUUM - must be at least 13 inches in neutral
ENGINE VALVE TIMING - must be within specifications
ENGINE COMPRESSION - must be within specifications
ENGINE EXHAUST SYSTEM - must be free of any restrictions or leaks.
ENGINE PCV SYSTEM - must flow freely
TORQUE CONVERTER STALL SPEED - must be within specifications
POWER BRAKE BOOSTER - no internal vacuum leaks
FUEL - must be free of contamination
CAM LOBES - must not be worn excessively
CYLINDER LEAKAGE TEST - must be within specifications
VALVE SPRINGS - cannot be weak or broken

Are there any engine mechanical problems?

Yes >> Repair as necessary.
Perform the POWERTRAIN VERIFICATION TEST. (Refer to 9 - ENGINE - STANDARD PROCEDURE)

No >> Go To 17

10. FUEL INJECTOR

Turn the ignition off.
Disconnect the No.8 Fuel Injector harness connector.
Ignition on, engine not running.

NOTE: When a Misfire is detected for a particular cylinder, the PCM will shut down that cylinders Injector Control circuit.
With the scan tool, erase DTCs.
Using a 12-volt test light connected to 12-volts, probe the (K28) Injector Control No.8 circuit.
With the scan tool, actuate the Fuel Injector.

Does the test light blink/flicker?

Yes >> Replace the Fuel Injector.
Perform the POWERTRAIN VERIFICATION TEST. (Refer to 9 - ENGINE - STANDARD PROCEDURE)

No >> Go To 11

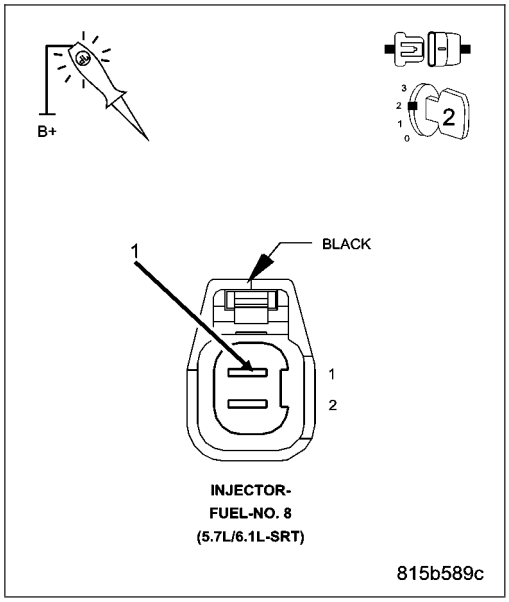

11. (K28) INJECTOR CONTROL NO.8 CIRCUIT

Turn the ignition off.

Disconnect the PCM harness connectors.

CAUTION: Do not probe the PCM harness connectors. Probing the PCM harness connectors will damage the PCM terminals resulting in poor terminal to pin connection. Install Miller Special Tool #8815 to perform diagnosis.

Check the (K28) Injector Control No.8 circuit for an open, short to ground, and short to voltage.

Was a problem found with the (K28) Injector Control No.8 circuit?

Yes >> Repair the excessive resistance or short in the (K28) Injector Control No.8 circuit.
Perform the POWERTRAIN VERIFICATION TEST. (Refer to 9 - ENGINE - STANDARD PROCEDURE)

No >> Go To 17

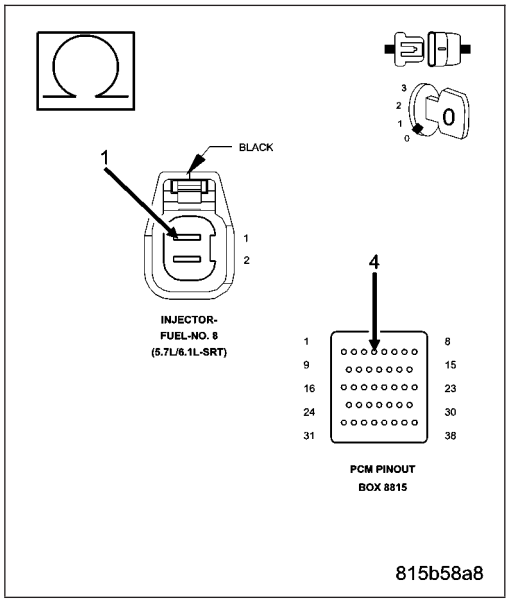

12. FUEL SUPPLY LINE RESTRICTED

Turn the ignition off.

WARNING: The fuel system is under a constant pressure (even with the engine off). Before testing or servicing any fuel system hose, fitting or line, the fuel system pressure must be released. Failure to follow these instructions can result in personal injury or death.

Raise vehicle on hoist, and disconnect the fuel pressure line at the fuel pump module.

Install special tool #6539 (5/16″) #6631(3/8″) fuel line adapter and the fuel pressure gauge between the fuel supply line and the fuel pump module.

Ignition on, engine not running.

With the scan tool, actuate the ASD Fuel System test and observe the fuel pressure gauge.

NOTE: Fuel pressure specification is 407 KPa +/- 34 KPa (59 psi +/- 5 psi).

Is the fuel pressure within specification?

Yes >> Repair or replace fuel supply line as necessary.
Perform the POWERTRAIN VERIFICATION TEST. (Refer to 9 - ENGINE - STANDARD PROCEDURE)

No >> Go To 13

13. FUEL PUMP INLET STRAINER

Turn the ignition off.

WARNING: The fuel system is under a constant pressure (even with the engine off). Before testing or servicing any fuel system hose, fitting or line, the fuel system pressure must be released. Failure to follow these instructions can result in personal injury or death.

Remove the Fuel Pump Module and inspect the Fuel Inlet Strainer.

Is the Fuel Inlet Strainer plugged?

Yes >> Replace the Fuel Pump Inlet Strainer.
Perform the POWERTRAIN VERIFICATION TEST. (Refer to 9 - ENGINE - STANDARD PROCEDURE)

No >> Before continuing, check the Fuel Pump Module harness connector terminals for corrosion, damage, or terminal push out. Make sure the ground circuit is operating properly. Repair as necessary. Replace the Fuel Pump Module.
Perform the POWERTRAIN VERIFICATION TEST. (Refer to 9 - ENGINE - STANDARD PROCEDURE)

14. IGNITION WIRE

NOTE: If the vehicle being tested does not have an ignition wire answer YES to this test and continue.
Turn the ignition off.

Remove the ignition wire.

Measure the resistance of the ignition wire.

Is the resistance below 10K ohms?

Yes >> Go To 15

No >> Replace the Ignition Wire.
Perform the POWERTRAIN VERIFICATION TEST. (Refer to 9 - ENGINE - STANDARD PROCEDURE)

15. IGNITION COIL

Disconnect the No.8 Ignition Coil harness connector.

Remove the Fuel Pump Relay.

Using a 12-volt test light connected to 12-volts, probe the (K98) Coil Control No.8 circuit.

Crank the engine for 5 second while observing the test light.

Does the test light brightly blink/flicker?

Yes >> Replace the Ignition Coil.
Perform the POWERTRAIN VERIFICATION TEST. (Refer to 9 - ENGINE - STANDARD PROCEDURE)

No >> Go To 16

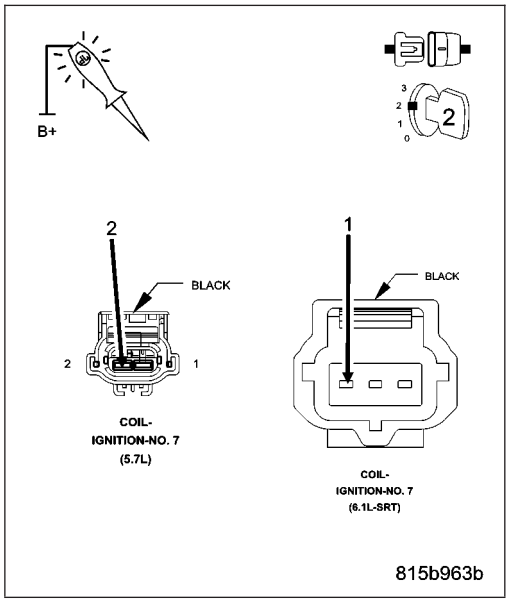

16. (K98) COIL CONTROL NO.8 CIRCUIT

Turn the ignition off.

Disconnect the PCM harness connectors.

CAUTION: Do not probe the PCM harness connectors. Probing the PCM harness connectors will damage the PCM terminals resulting in poor terminal to pin connection. Install Miller Special Tool #8815 to perform diagnosis.
Check the (K98) Coil Control No.8 circuit for an open, short to ground, and short to voltage.

Was a problem found with the (K98) Coil Control No.8 circuit?

Yes >> Repair the (K98) Coil Control No.8 circuit.
Perform the POWERTRAIN VERIFICATION TEST. (Refer to 9 - ENGINE - STANDARD PROCEDURE)

No >> Go To 17

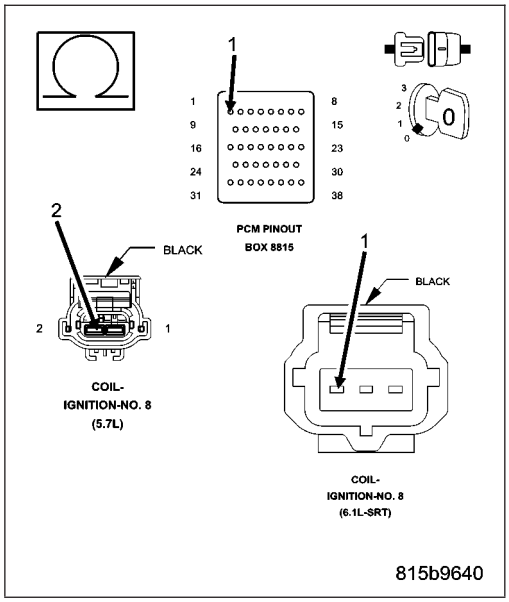

17. PCM

NOTE: Before continuing, check the PCM harness connector terminals for corrosion, damage, or terminal push out. Repair as necessary.
Using the schematics as a guide, inspect the wire harness and connectors. Pay particular attention to all Power and Ground circuits.

Were there any problems found?

Yes >> Repair as necessary.
Perform the POWERTRAIN VERIFICATION TEST. (Refer to 9 - ENGINE - STANDARD PROCEDURE)

No >> Replace and program the Powertrain Control Module per Service Information.
Perform the POWERTRAIN VERIFICATION TEST. (Refer to 9 - ENGINE - STANDARD PROCEDURE)

P0315-NO CRANK SENSOR LEARNED

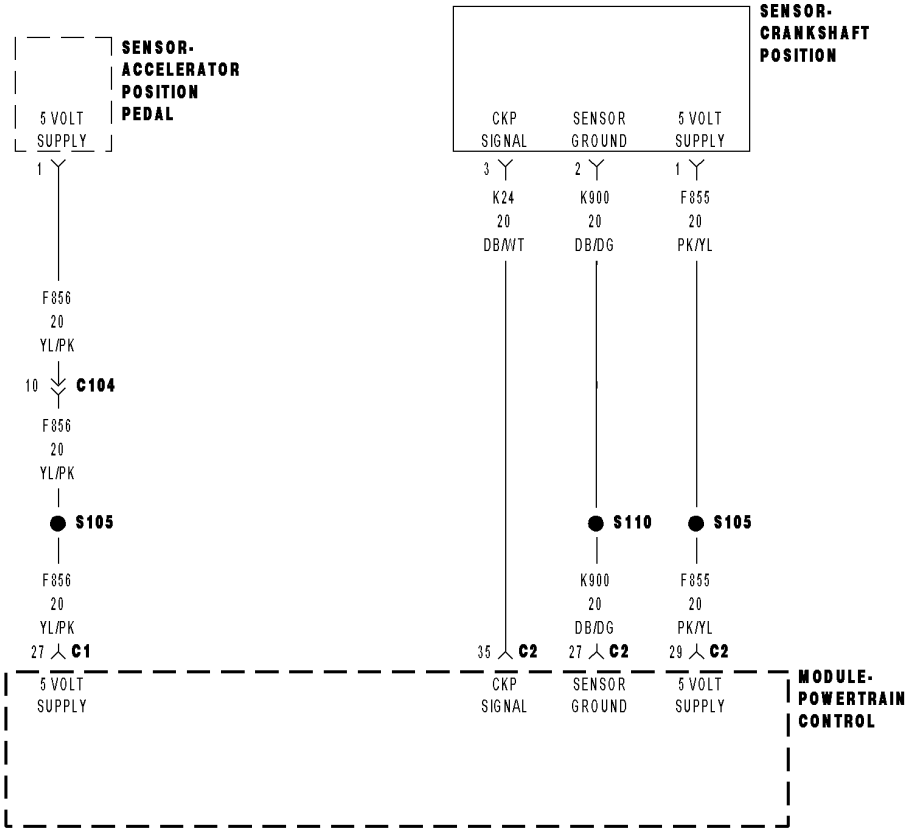

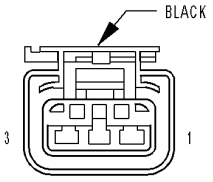

SENSOR-
CRANKSHAFT
POSITION

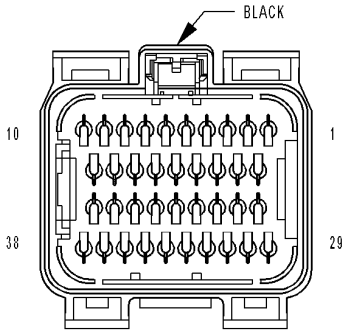

MODULE-
POWERTRAIN
CONTROL C1

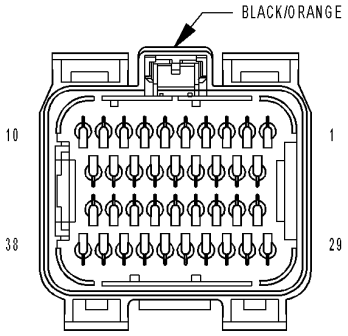

MODULE-
POWERTRAIN
CONTROL C2

8131adf7

For a complete wiring diagram **Refer to Section 8W**.

- **When Monitored:**
  Under closed throttle decel and A/C off. ECT above 75°C (167°F). Engine start time is greater than 50 seconds.
- **Set Condition:**
  One of the CKP sensor target windows has more than 2.86% variance from the reference. One Trip Fault. Three good trips to turn off the MIL.

Possible Causes
TONE WHEEL/PULSE RING
WIRE HARNESS
CRANKSHAFT POSITION SENSOR

Always perform the Pre-Diagnostic Troubleshooting procedure before proceeding. (Refer to 9 - ENGINE - DIAGNOSIS AND TESTING).

Diagnostic Test

1. ACTIVE DTC

Ignition on, engine not running.

With a scan tool, clear DTCs, PCM battery disconnect to reset the PCM.

Start the engine.

If the MIL has not yet illuminated, test drive the vehicle to try to get the code to reset.

Does the code reset while cranking or during the test drive?

Yes >> Go To 2

No >> Refer to the INTERMITTENT CONDITION Diagnostic Procedure.
Perform the POWERTRAIN VERIFICATION TEST. (Refer to 9 - ENGINE - STANDARD PROCEDURE)

2. WIRE HARNESS INSPECTION

Turn the ignition off.

Visually inspect the CKP wire harness. Look for any chafed, pierced, pinched, or partially broken wires.

Visually inspect the CKP wire harness connectors. Look for broken, bent, pushed out, or corroded terminals.

Make sure the Crankshaft Position Sensor is properly installed and the mounting bolt(s) are torqued to the proper specification.

Were any of the above conditions present?

Yes >> Repair as necessary
Perform the POWERTRAIN VERIFICATION TEST. (Refer to 9 - ENGINE - STANDARD PROCEDURE)

No >> Go To 3

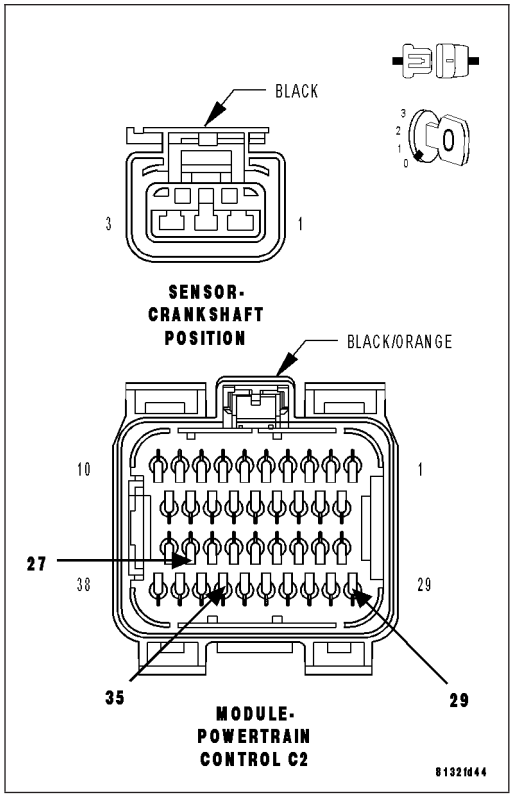

3. TONE WHEEL/FLEX PLATE INSPECTION

Remove the Crankshaft Position Sensor.

Inspect the Tone Wheel/Flex Plate slots for damage, foreign material, or excessive movement.

Were any problems found?

Yes >> Repair or replace the Tone Wheel/Flex Plate as necessary.
Perform the POWERTRAIN VERIFICATION TEST. (Refer to 9 - ENGINE - STANDARD PROCEDURE)

No >> Go To 4

4. CRANKSHAFT POSITION SENSOR

If there are no possible causes remaining, view repair.

Repair

Replace the Crankshaft Position Sensor.
Perform the POWERTRAIN VERIFICATION TEST. (Refer to 9 - ENGINE - STANDARD PROCEDURE)

P0325-KNOCK SENSOR 1 CIRCUIT

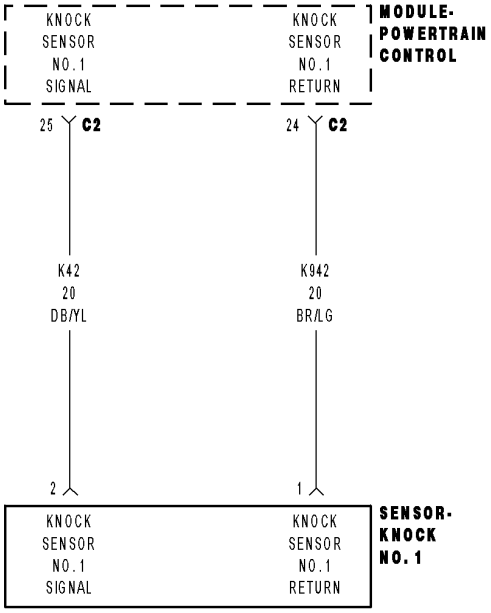

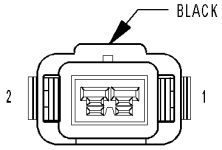

SENSOR-KNOCK NO. 1

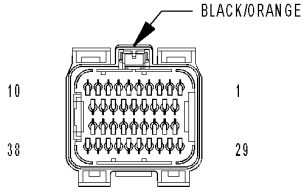

MODULE-POWERTRAIN CONTROL C2

8131ae22

For a complete wiring diagram **Refer to Section 8W**.

- **When Monitored:**
  This monitor runs above 2000 rpm, under open throttle conditions. The high voltage test runs all the times the engine is running.
- **Set Condition:**
  The High voltage fault will set at 4.8 volts. Two Trip Fault. Three good trips to turn off the MIL.

Possible Causes
(K42) KNOCK SENSOR NO.1 SIGNAL CIRCUIT SHORTED TO BATTERY VOLTAGE
(K42) KNOCK SENSOR NO.1 SIGNAL CIRCUIT OPEN
(K942) KNOCK SENSOR NO.1 RETURN CIRCUIT OPEN
(K42) KNOCK SENSOR NO.1 SIGNAL CIRCUIT SHORTED TO (K942) KNOCK SENSOR NO.1 RETURN CIRCUIT
(K42) KNOCK SENSOR NO.1 SIGNAL CIRCUIT SHORTED TO GROUND
KNOCK SENSOR
PCM

Always perform the Pre-Diagnostic Troubleshooting procedure before proceeding. (Refer to 9 - ENGINE - DIAGNOSIS AND TESTING).

Diagnostic Test

1. ACTIVE DTC

Ignition on, engine not running.
With a scan tool, read DTCs.

Is the DTC active at this time?

Yes >> Go To 2

No >> Refer to the INTERMITTENT CONDITION Diagnostic Procedure.
Perform the POWERTRAIN VERIFICATION TEST. (Refer to 9 - ENGINE - STANDARD PROCEDURE)

2. (K42) KNOCK SENSOR NO.1 SIGNAL SHORTED TO BATTERY VOLTAGE

Turn the ignition off.
Disconnect the No.1 Knock Sensor harness connector.
Disconnect the PCM harness connectors.
Ignition on, engine not running.
Measure the voltage on the (K42) Knock Sensor No.1 Signal circuit in the Knock Sensor harness connector.

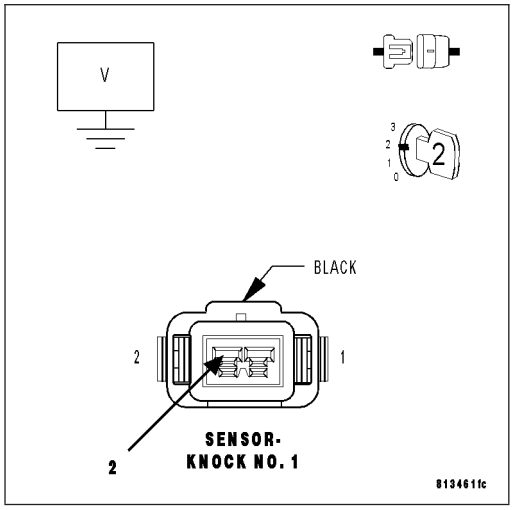

Does the voltmeter indicate voltage present?

Yes >> Repair the short to battery voltage in the (K42) Knock Sensor No.1 Signal circuit.
Perform the POWERTRAIN VERIFICATION TEST. (Refer to 9 - ENGINE - STANDARD PROCEDURE)

No >> Go To 3

3. (K42) KNOCK SENSOR NO.1 SIGNAL CIRCUIT OPEN

Turn the ignition off.

CAUTION: Do not probe the PCM harness connectors. Probing the PCM harness connectors will damage the PCM terminals resulting in poor terminal to pin connection. Install Miller Special Tool #8815 to perform diagnosis.

Measure the resistance of the (K42) Knock Sensor No.1 Signal circuit from the Knock Sensor harness connector to the appropriate terminal of special tool #8815.

Is the resistance below 5.0 ohms?

Yes >> Go To 4

No >> Repair the open in the (K42) Knock Sensor No.1 Signal circuit.

Perform the POWERTRAIN VERIFICATION TEST. (Refer to 9 - ENGINE - STANDARD PROCEDURE)

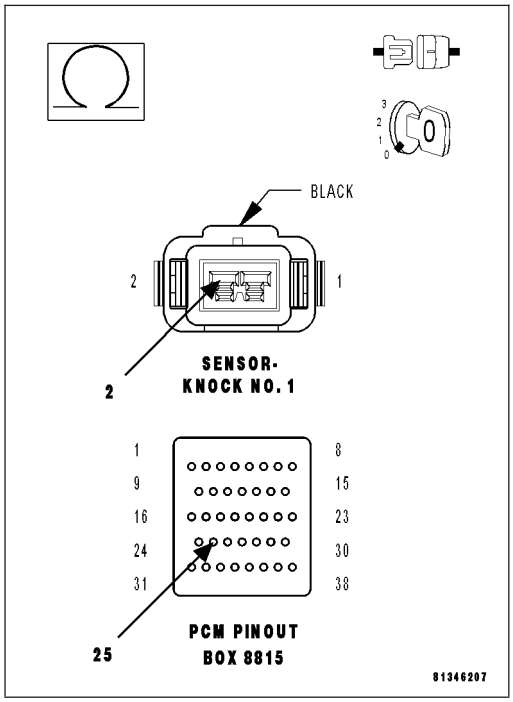

4. (K942) KNOCK SENSOR NO.1 RETURN CIRCUIT OPEN

Measure the resistance of the (K942) Knock Sensor No.1 Return circuit from the Knock Sensor harness connector to the appropriate terminal of special tool #8815.

Is the resistance below 5.0 ohms?

Yes >> Go To 5

No >> Repair the open in the (K942) Knock Sensor No.1 Return circuit.

Perform the POWERTRAIN VERIFICATION TEST. (Refer to 9 - ENGINE - STANDARD PROCEDURE)

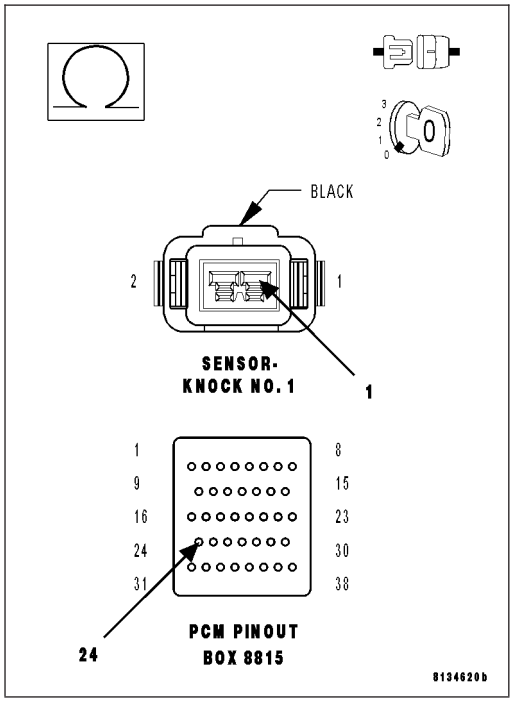

5. (K42) KNOCK SENSOR NO.1 SIGNAL SHORTED TO THE (K942) KNOCK SENSOR NO.1 RETURN CIRCUIT

Measure the resistance between the (K42) Knock Sensor No.1 Signal circuit and the (K942) Knock Sensor No.1 Return circuit in the Knock Sensor harness connector.

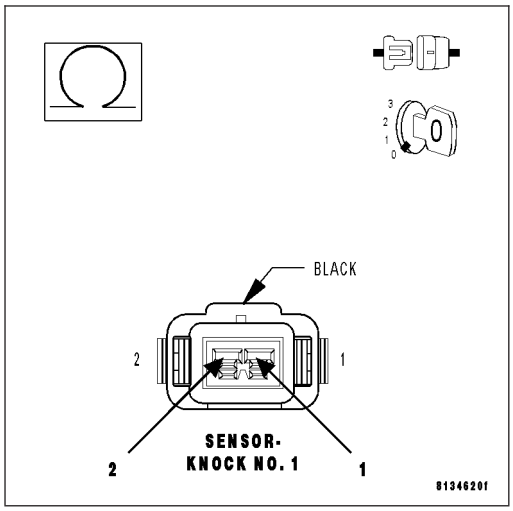

Is the resistance below 100 ohms?

Yes >> Repair the short between the (K42) Knock Sensor No.1 Signal circuit and the (K942) Knock Sensor No.1 Return circuit.

Perform the POWERTRAIN VERIFICATION TEST. (Refer to 9 - ENGINE - STANDARD PROCEDURE)

No >> Go To 6

6. (K42) KNOCK SENSOR NO.1 SIGNAL SHORTED TO GROUND

Measure the resistance between ground and the (K42) Knock Sensor No.1 Signal circuit in the Knock Sensor harness connector.

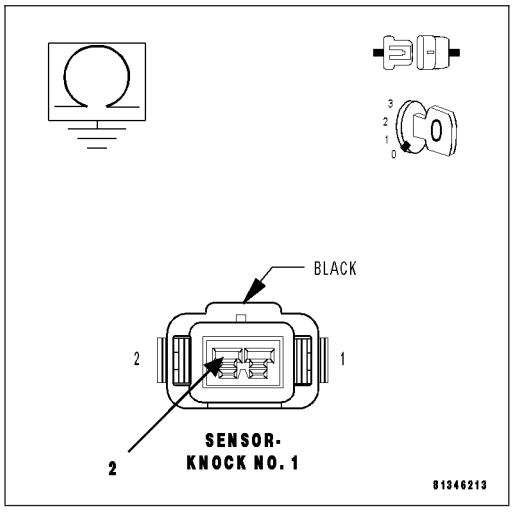

Is the resistance below 100 ohms?

Yes >> Repair the short to ground in the (K42) Knock Sensor No.1 Signal circuit.

Perform the POWERTRAIN VERIFICATION TEST. (Refer to 9 - ENGINE - STANDARD PROCEDURE)

No >> Go To 7

7. KNOCK SENSOR

Replace the Knock Sensor.

Ignition on, engine not running.

With the scan tool, erase DTC.

Attempt to operate the vehicle using the information noted in the Freeze Frame.

With the scan tool, read DTCs.

Does the scan tool display the DTC that was previously erased?

Yes >>

NOTE: Before continuing, check the PCM harness connector terminals for corrosion, damage, or terminal push out. Repair as necessary. Replace and program the Powertrain Control Module per Service Information.

Perform the POWERTRAIN VERIFICATION TEST. (Refer to 9 - ENGINE - STANDARD PROCEDURE)

No >> Test Complete.

P0330-KNOCK SENSOR 2 CIRCUIT

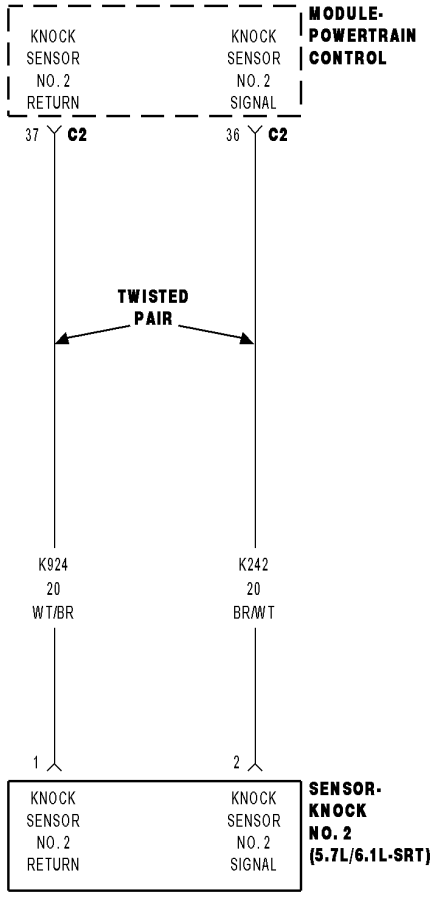

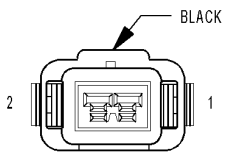

SENSOR-KNOCK NO. 2 (5.7L/6.1L-SRT)

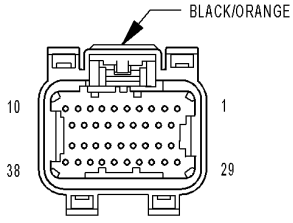

MODULE-POWERTRAIN CONTROL C2

81547c1e

For a complete wiring diagram **Refer to Section 8W**.

- **When Monitored:**
  This monitor runs above 2000 rpm, under open throttle conditions. The high voltage test runs all the times the engine is running.
- **Set Condition:**
  The High voltage fault will set at 4.8 volts. Two Trip Fault. Three good trips to turn off the MIL.

Possible Causes
(K242) KNOCK SENSOR NO.2 SIGNAL CIRCUIT SHORTED TO BATTERY VOLTAGE
(K242) KNOCK SENSOR NO.2 SIGNAL CIRCUIT OPEN
(K924) KNOCK SENSOR NO.2 RETURN CIRCUIT OPEN
(K242) KNOCK SENSOR NO.2 SIGNAL CIRCUIT SHORTED TO (K924) KNOCK SENSOR NO.2 RETURN CIRCUIT
(K242) KNOCK SENSOR NO.2 SIGNAL CIRCUIT SHORTED TO GROUND
KNOCK SENSOR
PCM

Always perform the Pre-Diagnostic Troubleshooting procedure before proceeding. (Refer to 9 - ENGINE - DIAGNOSIS AND TESTING).

Diagnostic Test

1. ACTIVE DTC

Ignition on, engine not running.
With a scan tool, read DTCs.

Is the DTC active at this time?

Yes >> Go To 2

No >> Refer to the INTERMITTENT CONDITION Diagnostic Procedure.
Perform the POWERTRAIN VERIFICATION TEST. (Refer to 9 - ENGINE - STANDARD PROCEDURE)

2. (K242) KNOCK SENSOR NO.2 SIGNAL SHORTED TO BATTERY VOLTAGE

Turn the ignition off.
Disconnect the No.2 Knock Sensor harness connector.
Disconnect the PCM harness connectors.
Ignition on, engine not running.
Measure the voltage on the (K242) Knock Sensor No.2 Signal circuit in the Knock Sensor harness connector.

Does the voltmeter indicate voltage present?

Yes >> Repair the short to battery voltage in the (K242) Knock Sensor No.2 Signal circuit.
Perform the POWERTRAIN VERIFICATION TEST. (Refer to 9 - ENGINE - STANDARD PROCEDURE)

No >> Go To 3

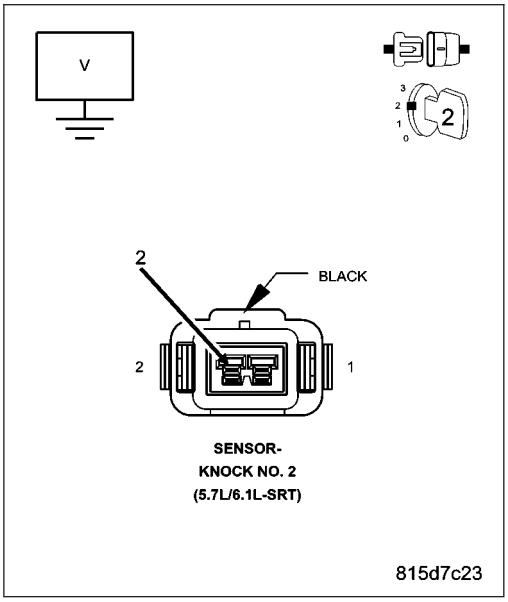

3. (K242) KNOCK SENSOR NO.2 SIGNAL CIRCUIT OPEN

Turn the ignition off.

CAUTION: Do not probe the PCM harness connectors. Probing the PCM harness connectors will damage the PCM terminals resulting in poor terminal to pin connection. Install Miller Special Tool #8815 to perform diagnosis.

Measure the resistance of the (K242) Knock Sensor No.2 Signal circuit from the Knock Sensor harness connector to the appropriate terminal of special tool #8815.

Is the resistance below 5.0 ohms?

Yes >> Go To 4

No >> Repair the open in the (K242) Knock Sensor No.2 Signal circuit.

Perform the POWERTRAIN VERIFICATION TEST. (Refer to 9 - ENGINE - STANDARD PROCEDURE)

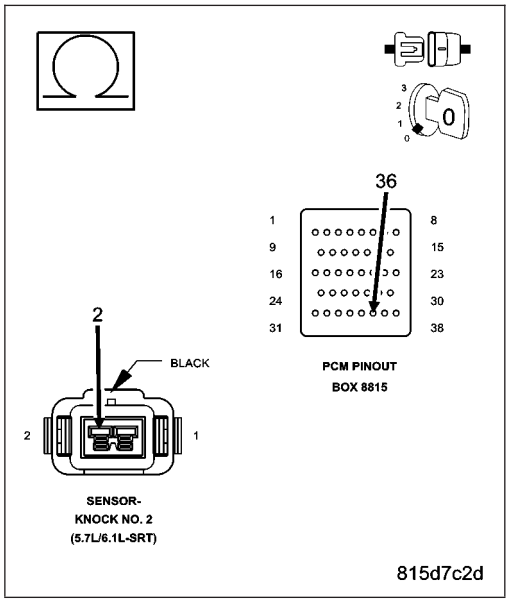

4. (K924) KNOCK SENSOR NO.2 RETURN CIRCUIT OPEN

Measure the resistance of the (K924) Knock Sensor No.2 Return circuit from the Knock Sensor harness connector to the appropriate terminal of special tool #8815.

Is the resistance below 5.0 ohms?

Yes >> Go To 5

No >> Repair the open in the (K924) Knock Sensor No.2 Return circuit.

Perform the POWERTRAIN VERIFICATION TEST. (Refer to 9 - ENGINE - STANDARD PROCEDURE)

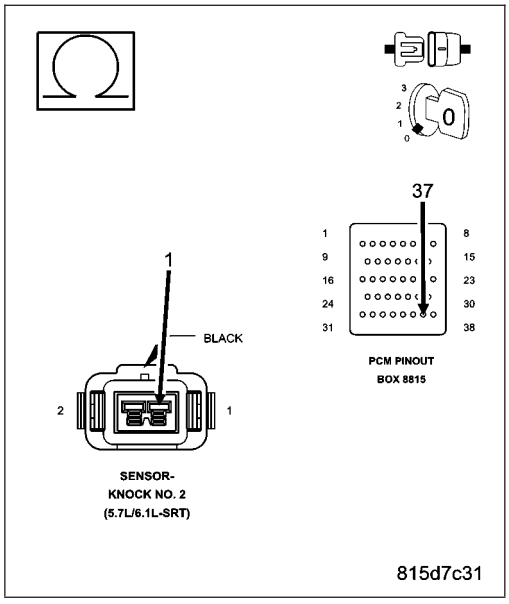

5. (K242) KNOCK SENSOR NO.2 SIGNAL SHORTED TO THE (K924) KNOCK SENSOR NO.2 RETURN CIRCUIT

Measure the resistance between the (K242) Knock Sensor No.2 Signal circuit and the (K924) Knock Sensor No.2 Return circuit in the Knock Sensor harness connector.

Is the resistance below 100 ohms?

Yes >> Repair the short between the (K242) Knock Sensor No.2 Signal circuit and the (K924) Knock Sensor No.2 Return circuit.

Perform the POWERTRAIN VERIFICATION TEST. (Refer to 9 - ENGINE - STANDARD PROCEDURE)

No >> Go To 6

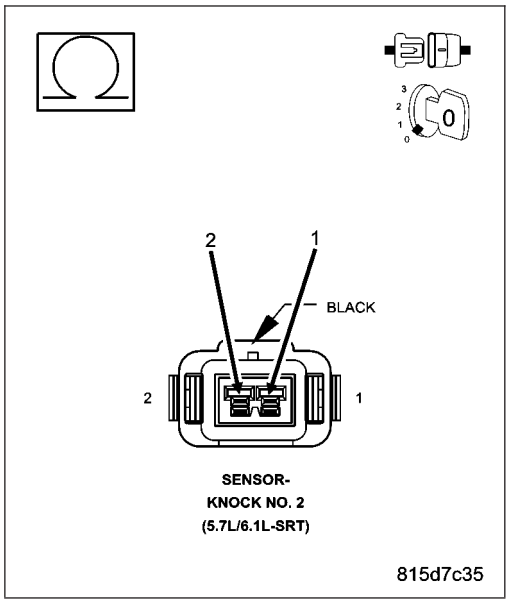

6. (K242) KNOCK SENSOR NO.2 SIGNAL SHORTED TO GROUND

Measure the resistance between ground and the (K242) Knock Sensor No.2 Signal circuit in the Knock Sensor harness connector.

Is the resistance below 100 ohms?

Yes >> Repair the short to ground in the (K242) Knock Sensor No.2 Signal circuit.

Perform the POWERTRAIN VERIFICATION TEST. (Refer to 9 - ENGINE - STANDARD PROCEDURE)

No >> Go To 7

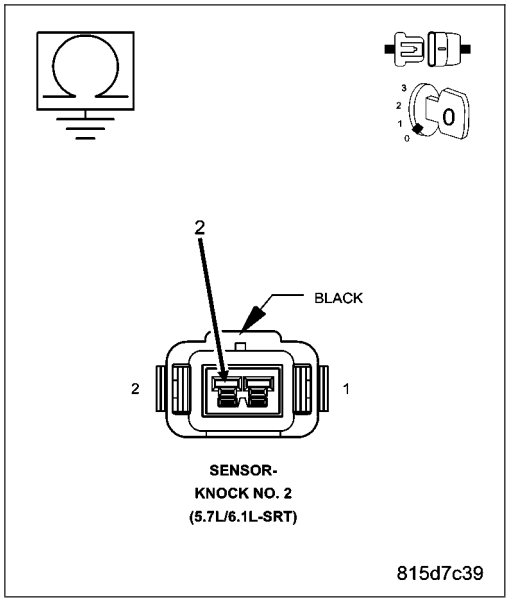

7. KNOCK SENSOR

Replace the Knock Sensor.
Ignition on, engine not running.
With the scan tool, erase DTC.
Attempt to operate the vehicle using the information noted in the Freeze Frame.
With the scan tool, read DTCs.

Does the scan tool display the DTC that was previously erased?

Yes >>

NOTE: Before continuing, check the PCM harness connector terminals for corrosion, damage, or terminal push out. Repair as necessary. Replace and program the Powertrain Control Module per Service Information.

Perform the POWERTRAIN VERIFICATION TEST. (Refer to 9 - ENGINE - STANDARD PROCEDURE)

No >> Test Complete.

P0335-CRANKSHAFT POSITION SENSOR CIRCUIT

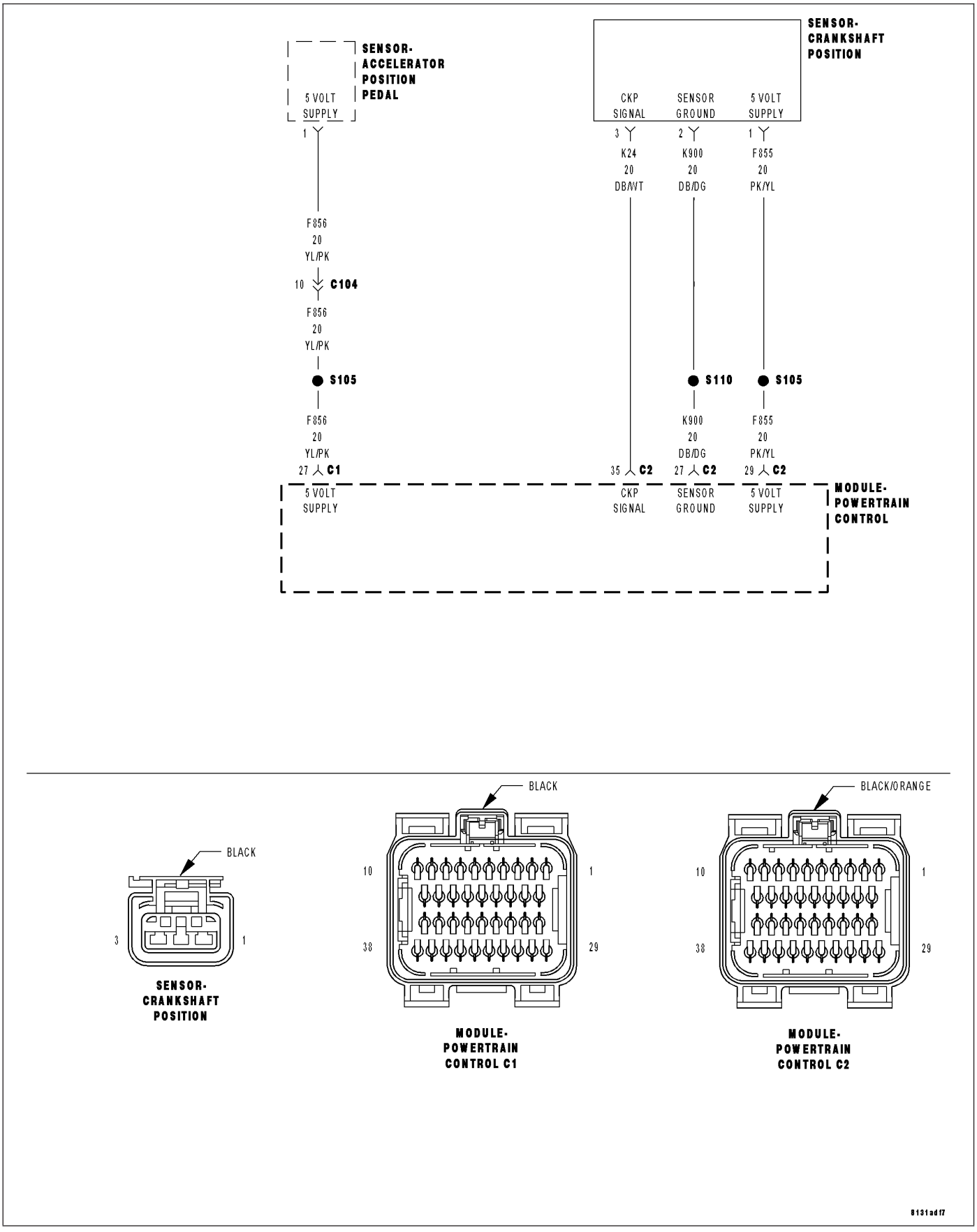

For a complete wiring diagram **Refer to Section 8W**.

- **When Monitored:**
  Engine cranking.
- **Set Condition:**
  No CKP signal is present during engine cranking, and at least 8 camshaft position sensor signals have occurred. One Trip Fault. Three good trips to turn off the MIL.

Possible Causes
(F855) 5-VOLT SUPPLY CIRCUIT SHORTED TO BATTERY VOLTAGE
(F855) 5-VOLT SUPPLY CIRCUIT OPEN
(F855) 5-VOLT SUPPLY CIRCUIT SHORTED TO GROUND
(K24) CKP SIGNAL CIRCUIT OPEN
(K24) CKP SIGNAL CIRCUIT SHORTED TO BATTERY VOLTAGE
(K24) CKP SIGNAL CIRCUIT SHORTED GROUND
(K24) CKP SIGNAL CIRCUIT SHORTED TO (F855) 5-VOLT SUPPLY CIRCUIT
(K900) SENSOR GROUND CIRCUIT OPEN
CRANKSHAFT POSITION SENSOR
CAMSHAFT POSITION SENSOR
PCM

Always perform the Pre-Diagnostic Troubleshooting procedure before proceeding. (Refer to 9 - ENGINE - DIAGNOSIS AND TESTING).

Diagnostic Test

1. ACTIVE DTC

Crank the engine.
Ignition on, engine not running.
With a scan tool, read DTCs.

Is the DTC active at this time?

Yes >> Go To 2
No >> Go To 14

2. (F855) 5-VOLT SUPPLY CIRCUIT

Turn the ignition off.
Disconnect the CKP Sensor harness connector.
Ignition on, engine not running.
Measure the voltage on the (F855) 5-volt Supply circuit in the CKP Sensor harness connector.

Is the voltage between 4.5 and 5.2 volts?

Yes >> Go To 3
No >> Go To 10

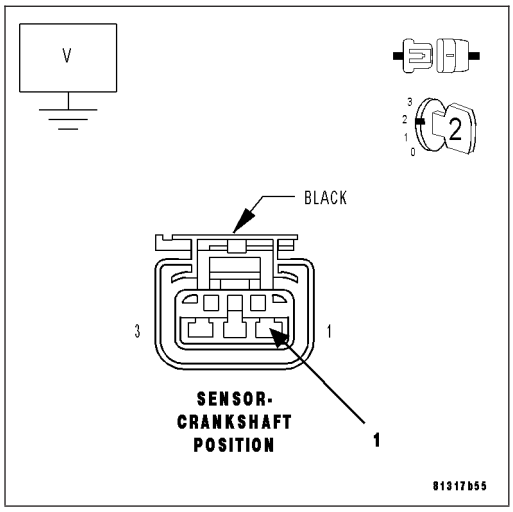

3. (K24) CKP SIGNAL CIRCUIT

Measure the voltage on the (K24) CKP Signal circuit in the CKP Sensor harness connector.

Is the voltage between 4.5 and 5.0 volts?

Yes >> Go To 4

No >> Go To 7

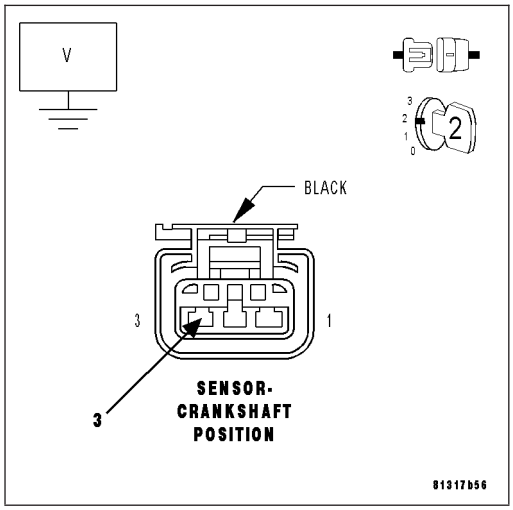

4. (K900) SENSOR GROUND CIRCUIT OPEN

Turn the ignition off.

Disconnect the PCM harness connectors.

CAUTION: Do not probe the PCM harness connectors. Probing the PCM harness connectors will damage the PCM terminals resulting in poor terminal to pin connection. Install Miller Special Tool #8815 to perform diagnosis.

Measure the resistance of the (K900) Sensor ground circuit from the CKP Sensor harness connector to the appropriate terminal of special tool #8815.

Is the resistance below 5.0 ohms?

Yes >> Go To 5

No >> Repair the open in the (K900) Sensor ground circuit. Perform the POWERTRAIN VERIFICATION TEST. (Refer to 9 - ENGINE - STANDARD PROCEDURE)

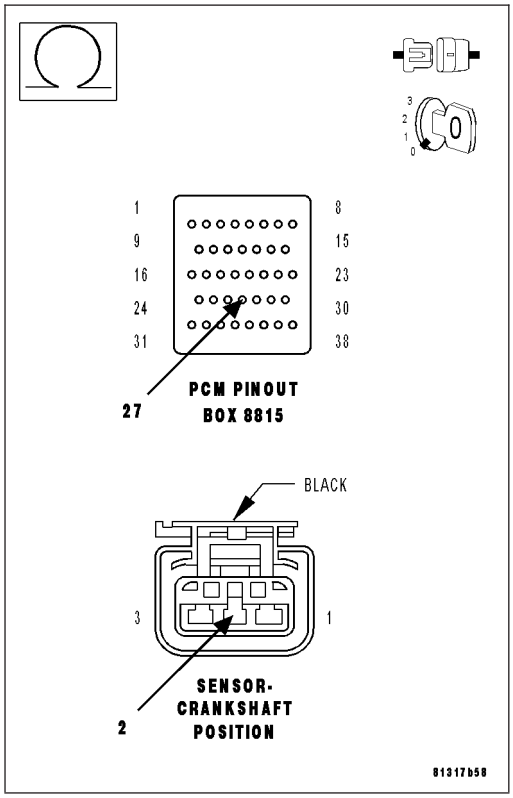

5. (K24) CKP SIGNAL CIRCUIT SHORTED TO THE (F855) 5-VOLT SUPPLY CIRCUIT

Measure the resistance between the (K24) CKP Signal circuit and the (F855) 5-volt Supply circuit in the CKP Sensor harness connector.

Is the resistance below 5.0 ohms?

Yes >> Repair the short between the (K24) CKP Signal circuit and the (F855) 5-volt Supply circuit.
Perform the POWERTRAIN VERIFICATION TEST. (Refer to 9 - ENGINE - STANDARD PROCEDURE)

No >> Go To 6

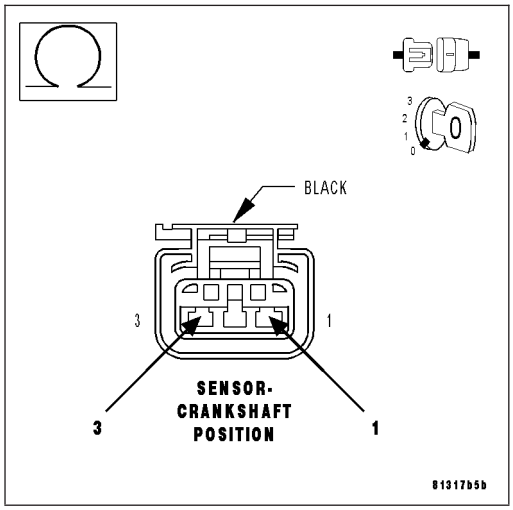

6. CRANKSHAFT POSITION SENSOR

NOTE: Inspect the slots on the flywheel for damage. If a problem is found repair as necessary.

If there are no possible causes remaining, view repair.

Repair

Replace the Crankshaft Position Sensor.
Perform the POWERTRAIN VERIFICATION TEST. (Refer to 9 - ENGINE - STANDARD PROCEDURE)

7. (K24) CKP SIGNAL CIRCUIT SHORTED TO BATTERY VOLTAGE

Turn the ignition off.
Disconnect the PCM harness connectors.
Ignition on, engine not running.
Measure the voltage on the (K24) CKP Signal circuit in the CKP Sensor harness connector.

Is the voltage above 5.2 volts?

Yes >> Repair the short to battery voltage in the (K24) CKP Signal circuit.
Perform the POWERTRAIN VERIFICATION TEST. (Refer to 9 - ENGINE - STANDARD PROCEDURE)

No >> Go To 8

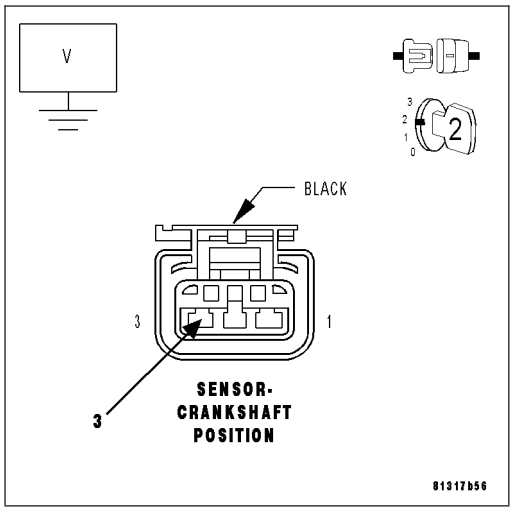

8. (K24) CKP SIGNAL CIRCUIT OPEN

Turn the ignition off.

CAUTION: Do not probe the PCM harness connectors. Probing the PCM harness connectors will damage the PCM terminals resulting in poor terminal to pin connection. Install Miller Special Tool #8815 to perform diagnosis.

Measure the resistance of the (K24) CKP Signal circuit from the CKP Sensor harness connector to the appropriate terminal of special tool #8815.

Is the resistance below 5.0 ohms?

Yes >> Go To 9

No >> Repair the open in the (K24) CKP Signal circuit.
Perform the POWERTRAIN VERIFICATION TEST. (Refer to 9 - ENGINE - STANDARD PROCEDURE)

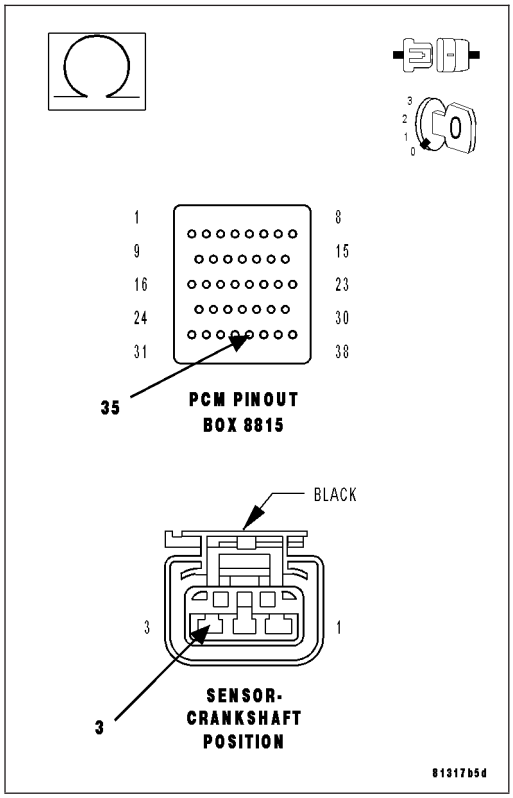

9. (K24) CKP SIGNAL CIRCUIT SHORTED TO GROUND

Measure the resistance between ground and the (K24) CKP Signal circuit in the CKP Sensor harness connector.

Is the resistance below 5.0 ohms?

Yes >> Repair the short to ground in the (K24) CKP Signal circuit.
Perform the POWERTRAIN VERIFICATION TEST. (Refer to 9 - ENGINE - STANDARD PROCEDURE)

No >> Go To 13

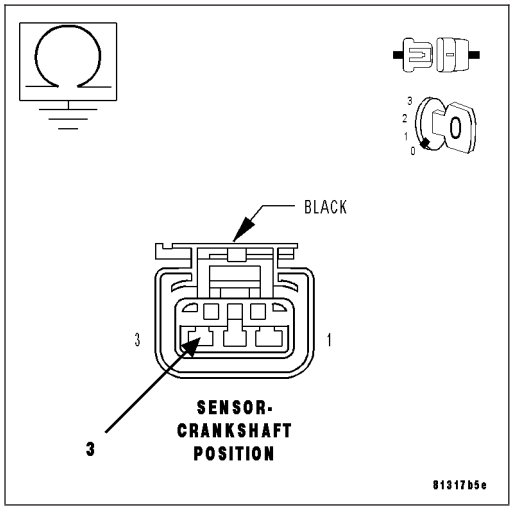

10. (F855) 5-VOLT SUPPLY CIRCUIT SHORTED TO BATTERY VOLTAGE

Turn the ignition off.

Disconnect the PCM harness connectors.

Ignition on, engine not running.

Measure the voltage on the (F855) 5-volt Supply circuit in the CKP Sensor harness connector.

Is the voltage above 5.5 volts?

Yes >> Repair the short to battery voltage in the (F855) 5-volt Supply circuit.
Perform the POWERTRAIN VERIFICATION TEST. (Refer to 9 - ENGINE - STANDARD PROCEDURE)

No >> Go To 11

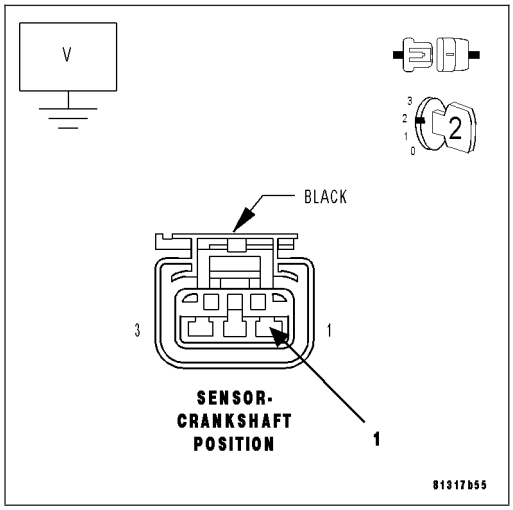

11. (F855) 5-VOLT SUPPLY CIRCUIT OPEN

Turn the ignition off.

CAUTION: Do not probe the PCM harness connectors. Probing the PCM harness connectors will damage the PCM terminals resulting in poor terminal to pin connection. Install Miller Special Tool #8815 to perform diagnosis.

Measure the resistance of the (F855) 5-volt Supply circuit from the CKP Sensor harness connector to the appropriate terminal of special tool #8815.

Is the resistance below 5.0 ohms?

Yes >> Go To 12

No >> Repair the open in the (F855) 5-volt Supply circuit.
Perform the POWERTRAIN VERIFICATION TEST. (Refer to 9 - ENGINE - STANDARD PROCEDURE)

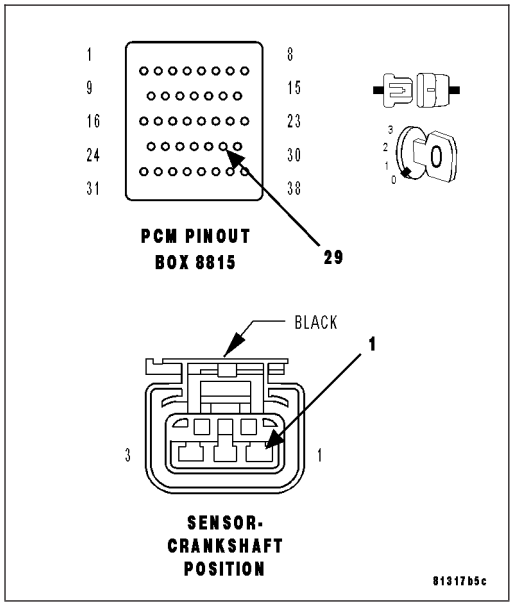

12. (F855) 5-VOLT SUPPLY CIRCUIT SHORTED TO GROUND

Measure the resistance between ground and the (F855) 5-volt Supply circuit in the CKP Sensor harness connector.

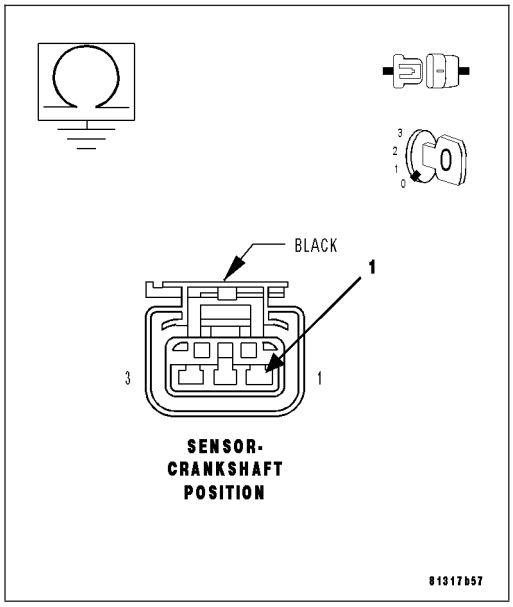

Is the resistance below 100 ohms?

Yes >> Repair the short to ground in the (F855) 5-volt Supply circuit.

Perform the POWERTRAIN VERIFICATION TEST. (Refer to 9 - ENGINE - STANDARD PROCEDURE)

No >> Go To 13

13. PCM

NOTE: Before continuing, check the PCM harness connector terminals for corrosion, damage, or terminal push out. Repair as necessary.

Using the schematics as a guide, inspect the wire harness and connectors. Pay particular attention to all Power and Ground circuits.

If there are no possible causes remaining, view repair.

Repair

Replace and program the Powertrain Control Module per Service Information.

Perform the POWERTRAIN VERIFICATION TEST. (Refer to 9 - ENGINE - STANDARD PROCEDURE)

14. ERRATIC CKP SENSOR SIGNAL

Turn the ignition off.

With a lab scope probe and the Miller special tool #6801, backprobe the (K24) CKP Signal circuit in the CKP harness connector.

WARNING: When the engine is operating, do not stand in direct line with the fan. Do not put your hands near the pulleys, belts, or fan. Do not wear loose clothing. Failure to follow these instructions can result in personal injury or death.

Ignition on, engine not running.

Wiggle the related wire harness and lightly tap on the Crank Position Sensor.

Observe the lab scope screen.

Look for any pulses generated by the CKP Sensor.

Allow the engine to idle.

Observe the lab scope screen.

Did the CKP Sensor generate any erratic pulses?

Yes >> Inspect the related wire harness and replace the Crankshaft Position Sensor if no wiring problems were found.

Perform the POWERTRAIN VERIFICATION TEST. (Refer to 9 - ENGINE - STANDARD PROCEDURE)

No >> Go To 15

15. ERRATIC CMP SIGNAL

Turn the ignition off.

With a lab scope probe and the Miller special tool #6801, backprobe the (K44) CMP Signal circuit in the CMP harness connector.

WARNING: When the engine is operating, do not stand in direct line with the fan. Do not put your hands near the pulleys, belts, or fan. Do not wear loose clothing. Failure to follow these instructions can result in personal injury or death.

Ignition on, engine not running.

Wiggle the related wire harness and lightly tap on the Cam Position Sensor.

Observe the lab scope screen.

Look for any pulses generated by the CMP Sensor.

Allow the engine to idle.

Observe the lab scope screen.

Did the CMP Sensor generate any pulses?

Yes >> Inspect the related wire harness and replace the Camshaft Position Sensor if no wiring problems were found.

Perform the POWERTRAIN VERIFICATION TEST. (Refer to 9 - ENGINE - STANDARD PROCEDURE)

No >> Test Complete.

P0339-CRANKSHAFT POSITION SENSOR INTERMITTENT

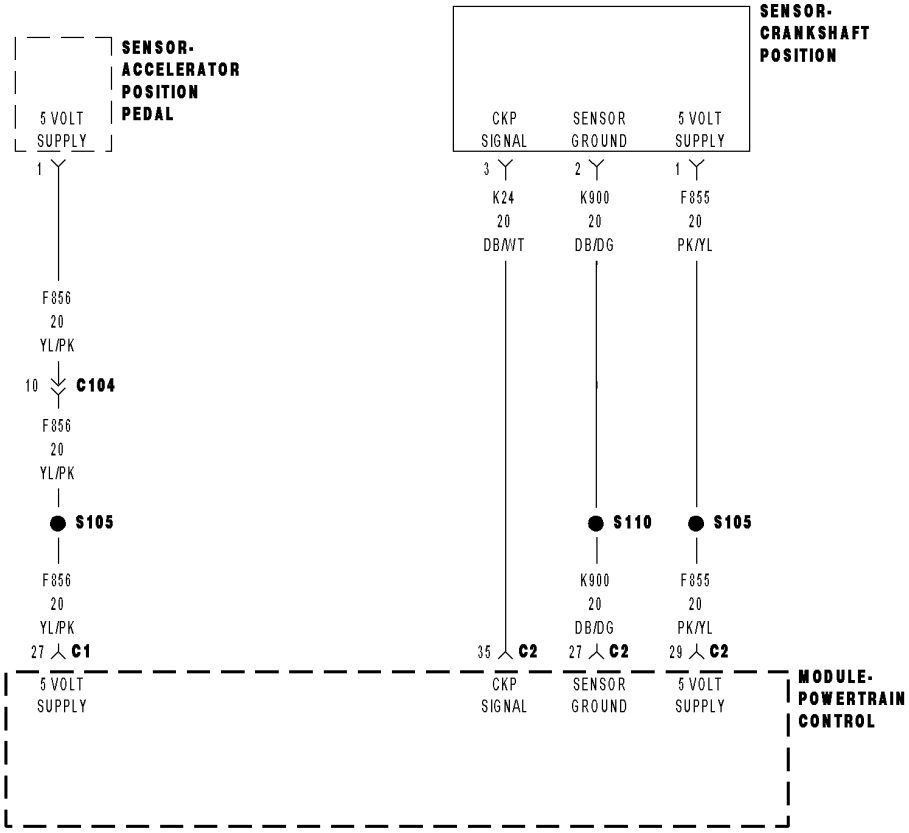

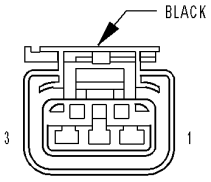

SENSOR-
CRANKSHAFT
POSITION

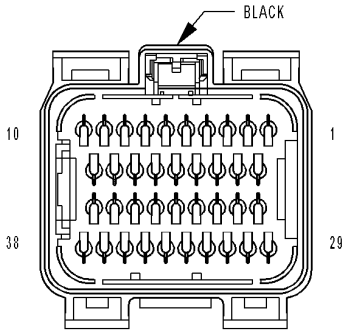

MODULE-
POWERTRAIN
CONTROL C1

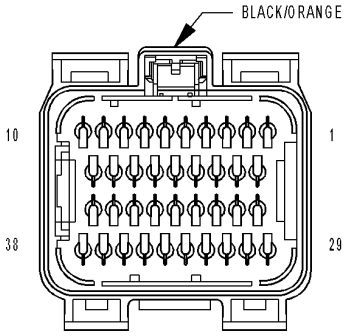

MODULE-
POWERTRAIN
CONTROL C2

8131adf7

For a complete wiring diagram **Refer to Section 8W**.

- **When Monitored:**
  While cranking the engine and with the engine running.
- **Set Condition:**
  When the CKP Sensor failure counter reaches 20. One Trip Fault. Three good trips to turn off the MIL.

Possible Causes
(F855) 5-VOLT SUPPLY CIRCUIT OPEN
(F855) 5-VOLT SUPPLY CIRCUIT SHORTED TO GROUND
(K24) CKP SIGNAL CIRCUIT SHORTED TO BATTERY VOLTAGE
(K24) CKP SIGNAL CIRCUIT OPEN
(K24) CKP SIGNAL CIRCUIT SHORTED TO GROUND
(K24) CKP SIGNAL CIRCUIT SHORTED TO THE (F855) 5-VOLT SUPPLY CIRCUIT
CRANKSHAFT POSITION SENSOR
TONE WHEEL/PULSE RING
PCM

Always perform the Pre-Diagnostic Troubleshooting procedure before proceeding. (Refer to 9 - ENGINE - DIAGNOSIS AND TESTING).

Diagnostic Test

1. ACTIVE DTC

Ignition on, engine not running.
With a scan tool read DTCs.

Is the DTC active at this time?

Yes >> Go To 2

No >> Refer to the INTERMITTENT CONDITION Diagnostic Procedure.

2. CHECKING CRANKSHAFT POSITION SENSOR SIGNAL WITH A LAB SCOPE

Turn the ignition off.
Install Miller Special Tools #8815 and #8815-1 to perform diagnosis.
Using a lab scope, probe the (K24) CKP Signal circuit in the appropriate terminal of special tool #8815.

WARNING: When the engine is operating, do not stand in direct line with the fan. Do not put your hands near the pulleys, belts, or fan. Do not wear loose clothing. Failure to follow these instructions can result in personal injury or death.
Ignition on, engine not running.
Observe the lab scope screen.
Start the engine.
Observe the lab scope screen.

Are there any irregular or missing signals?

Yes >> Go To 3

No >> Go To 8

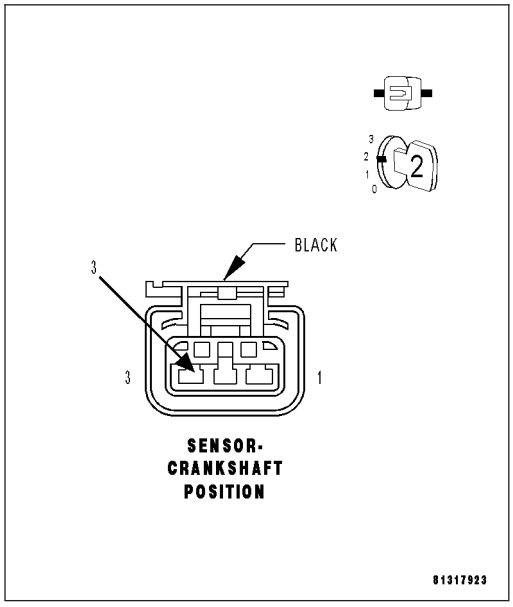

3. WIRE HARNESS INSPECTION

Turn the ignition off.

Visually inspect the related wire harness including the ground circuit. Look for any chafed, pierced, pinched, or partially broken wires.

Visually inspect the related wire harness connectors. Look for broken, bent, pushed out, or corroded terminals.

Make sure the Crankshaft Position Sensor and the Camshaft Position Sensor are properly installed and the mounting bolt(s) are torqued to the proper specification.

Refer to any TSBs that may apply.

Were any of the above conditions present?

Yes >> Repair as necessary.
Perform the POWERTRAIN VERIFICATION TEST. (Refer to 9 - ENGINE - STANDARD PROCEDURE)

No >> Go To 4

4. (F855) 5-VOLT SUPPLY CIRCUIT OPEN OR SHORTED TO GROUND

Disconnect the CKP Sensor connector.

Ignition on, engine not running.

Measure the voltage on the (F855) 5-volt Supply circuit in the Sensor harness connector.

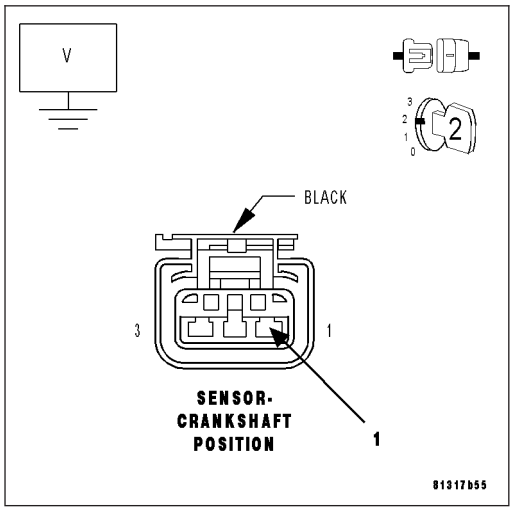

Is the voltage between 4.5 and 5.2 volts?

Yes >> Go To 5

No >> Repair the open or short to ground in the (F855) 5-volt Supply circuit. Use Miller special tool #8815 when checking for an open circuit to prevent PCM harness connector terminal damage.
Perform the POWERTRAIN VERIFICATION TEST. (Refer to 9 - ENGINE - STANDARD PROCEDURE)

5. TONE WHEEL/FLEX PLATE INSPECTION

Turn the ignition off.

Carefully disconnect the Negative Battery (Ground) cable.

Remove the Crankshaft Position Sensor.

Inspect the Tone Wheel/Flex Plate slots for damage, foreign material, or excessive movement.

Were any problems found?

Yes >> Repair or replace the Tone Wheel/Flex Plate as necessary.
Perform the POWERTRAIN VERIFICATION TEST. (Refer to 9 - ENGINE - STANDARD PROCEDURE)

No >> Go To 6

6. CHECKING CAMSHAFT POSITION SENSOR SIGNAL WITH A LAB SCOPE

Install the CKP Sensor and connect the battery cable.

NOTE: An intermittent condition in the Cam Position Sensor can cause the P0339 to set.

Install Miller Special Tools #8815 and #8815-1 to perform diagnosis.

Using a lab scope, probe the (K44) CMP Signal circuit in the appropriate terminal of special tool #8815.

WARNING: When the engine is operating, do not stand in direct line with the fan. Do not put your hands near the pulleys, belts, or fan. Do not wear loose clothing. Failure to follow these instructions can result in personal injury or death.

Ignition on, engine not running.

Wiggle the related wire harness and lightly tap on the Cam Position Sensor.

Observe the lab scope screen.

Start the engine.

Observe the lab scope screen.

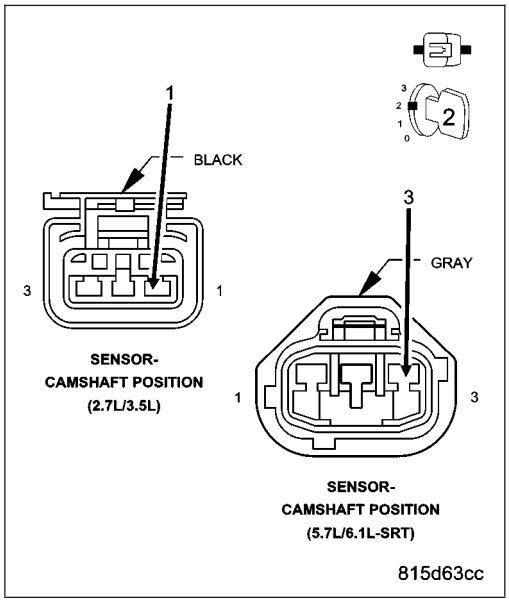

Are there any irregular or missing signals?

Yes >> Replace the Cam Position Sensor.
Perform the POWERTRAIN VERIFICATION TEST. (Refer to 9 - ENGINE - STANDARD PROCEDURE)

No >> Go To 7

7. CRANKSHAFT POSITION SENSOR

If there are no possible causes remaining, view repair.

Repair

Replace the Crankshaft Position Sensor.
Perform the POWERTRAIN VERIFICATION TEST. (Refer to 9 - ENGINE - STANDARD PROCEDURE)

8. (K24) CKP SIGNAL CIRCUIT SHORTED TO BATTERY VOLTAGE

Turn the ignition off.

Disconnect the PCM harness connectors.

Disconnect the CKP Sensor harness connector.

Ignition on, engine not running.

Measure the voltage on the (K24) CKP Signal circuit in the Sensor harness connector.

Wiggle the related wire harness while taking this measurement.

Is the voltage above 1 volt?

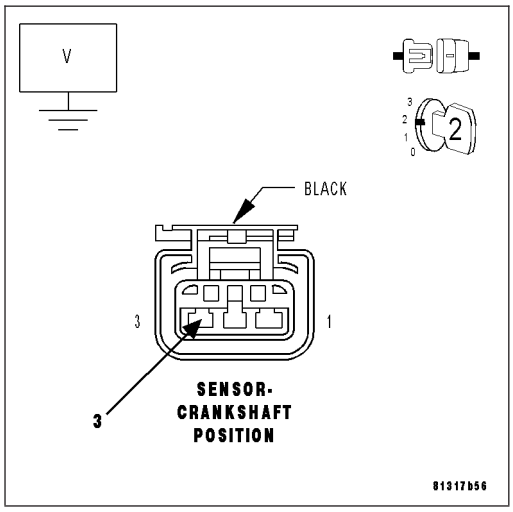

Yes >> Repair the short to battery voltage in the (K24) CKP Signal circuit.
Perform the POWERTRAIN VERIFICATION TEST. (Refer to 9 - ENGINE - STANDARD PROCEDURE)

No >> Go To 9

9. (K24) CKP SIGNAL CIRCUIT OPEN

Turn the ignition off.

CAUTION: Do not probe the PCM harness connectors. Probing the PCM harness connectors will damage the PCM terminals resulting in poor terminal to pin connection. Install Miller Special Tool #8815 to perform diagnosis.

Measure the resistance in the (K24) CKP Signal circuit from the CKP harness connector to the appropriate terminal of special tool #8815.

Wiggle the wire harness while taking this measurement.

Is the resistance below 1.0 ohm?

Yes >> Go To 10

No >> Repair the excessive resistance in the (K24) CKP Signal circuit.

Perform the POWERTRAIN VERIFICATION TEST. (Refer to 9 - ENGINE - STANDARD PROCEDURE)

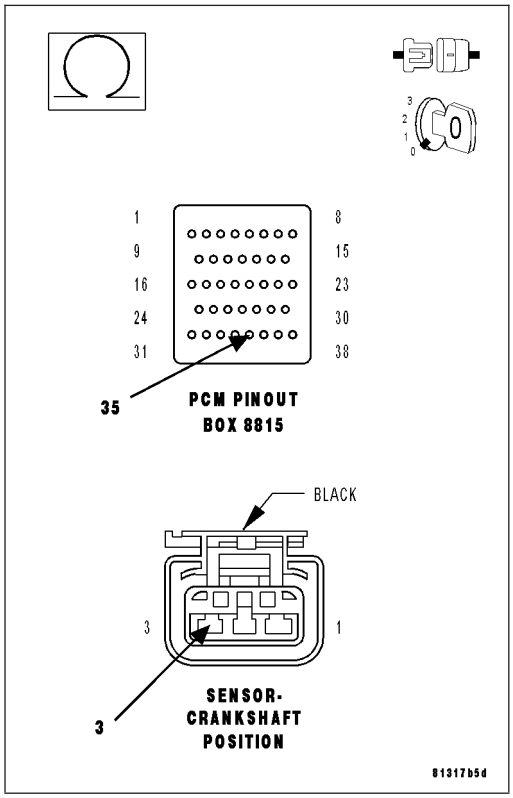

10. (K24) CKP SIGNAL CIRCUIT SHORTED TO GROUND

Measure the resistance between ground and the (K24) CKP Signal circuit in the CKP Sensor harness connector.

Wiggle the related wire harness while monitoring the resistance value.

Does the resistance ever go below 100 ohms?

Yes >> Repair the short to ground in the (K24) Signal circuit.

Perform the POWERTRAIN VERIFICATION TEST. (Refer to 9 - ENGINE - STANDARD PROCEDURE)

No >> Go To 11

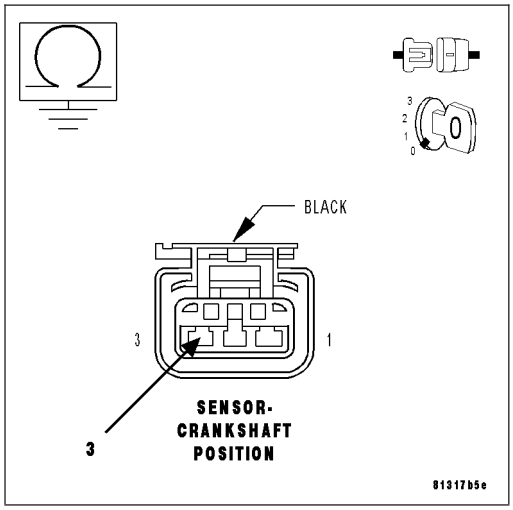

11. (K24) CKP SIGNAL CIRCUIT SHORTED TO THE (F855) 5-VOLT SUPPLY CIRCUIT

Measure the resistance between the (F855) 5-volt Supply circuit and the (K24) CKP Signal circuit in the CKP harness connector.

Wiggle the related wire harness while taking this measurement.

Is the resistance below 5.0 ohms?

Yes >> Repair the short between the (F855) 5-volt Supply circuit and the (K24) CKP Signal circuit.
Perform the POWERTRAIN VERIFICATION TEST. (Refer to 9 - ENGINE - STANDARD PROCEDURE)

No >> Go To 12

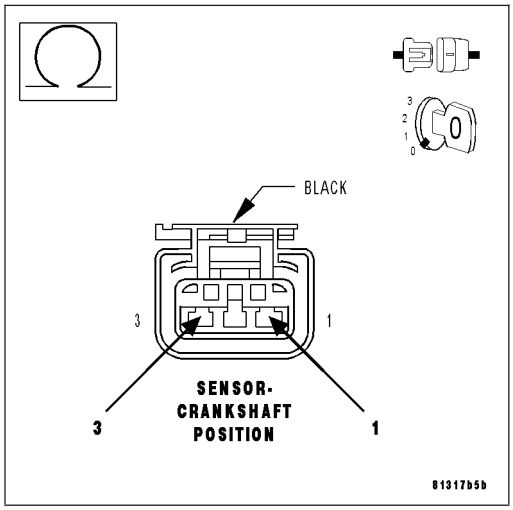

12. PCM

NOTE: Before continuing, check the PCM harness connector terminals for corrosion, damage, or terminal push out. Repair as necessary.

Using the schematics as a guide, inspect the wire harness and connectors. Pay particular attention to all Power and Ground circuits.

Were there any problems found?

Yes >> Repair as necessary.
Perform the POWERTRAIN VERIFICATION TEST. (Refer to 9 - ENGINE - STANDARD PROCEDURE)

No >> Replace and program the Powertrain Control Module per Service Information.
Perform the POWERTRAIN VERIFICATION TEST. (Refer to 9 - ENGINE - STANDARD PROCEDURE)

P0340-CAMSHAFT POSITION SENSOR CIRCUIT

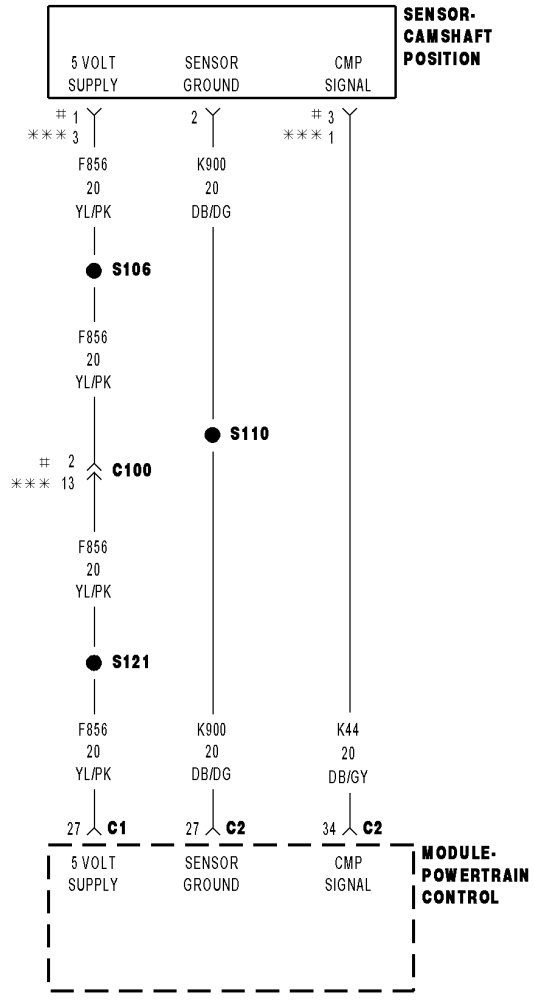

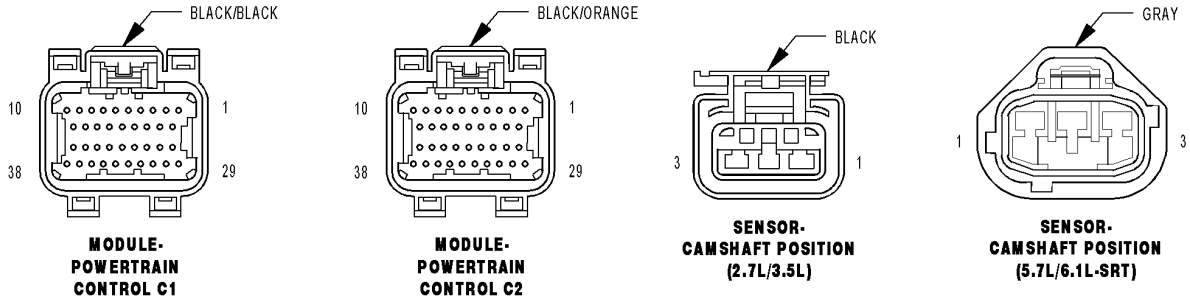

815463a7

For a complete wiring diagram **Refer to Section 8W**.

- **When Monitored:**
  During engine cranking and with the engine running. Battery voltage greater than 10 volts.
- **Set Condition:**
  At least 5 seconds or 2.5 engine revolutions have elapsed with crankshaft position sensor signals present but no camshaft position sensor signal. One Trip Fault. Three good trips to turn off the MIL.

Possible Causes
(F856) 5-VOLT SUPPLY CIRCUIT SHORTED TO BATTERY VOLTAGE
(F856) 5-VOLT SUPPLY CIRCUIT OPEN
(F856) 5-VOLT SUPPLY CIRCUIT SHORTED TO GROUND
(K44) CMP SIGNAL CIRCUIT SHORTED TO BATTERY VOLTAGE
(K44) CMP SIGNAL CIRCUIT OPEN
(K44) CMP SIGNAL CIRCUIT SHORTED GROUND
(K44) CMP SIGNAL SHORTED TO (F856) 5-VOLT SUPPLY CIRCUIT
(K900) SENSOR GROUND CIRCUIT OPEN
CAMSHAFT POSITION SENSOR
CRANKSHAFT POSITION SENSOR
PCM

Always perform the Pre-Diagnostic Troubleshooting procedure before proceeding. (Refer to 9 - ENGINE - DIAGNOSIS AND TESTING).

Diagnostic Test

1. ACTIVE DTC

Crank the engine.
Ignition on, engine not running.
With a scan tool read the DTCs.

Is the DTC active at this time?

Yes >> Go To 2
No >> Go To 14

2. (F856) 5-VOLT SUPPLY CIRCUIT

Turn the ignition off.
Disconnect the CMP Sensor harness connector.
Ignition on, engine not running.
Measure the voltage on the (F856) 5-volt Supply circuit in the CMP Sensor harness connector.

Is the voltage between 4.5 and 5.2 volts?

Yes >> Go To 3
No >> Go To 10

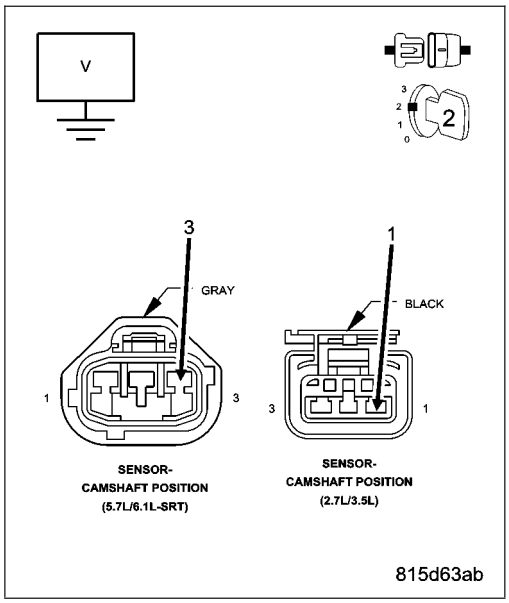

3. (K44) CMP SIGNAL CIRCUIT

Measure the voltage on the (K44) CMP Signal circuit in the CMP Sensor harness connector.

Is the voltage between 4.5 and 5.0 volts?

Yes >> Go To 4

No >> Go To 7

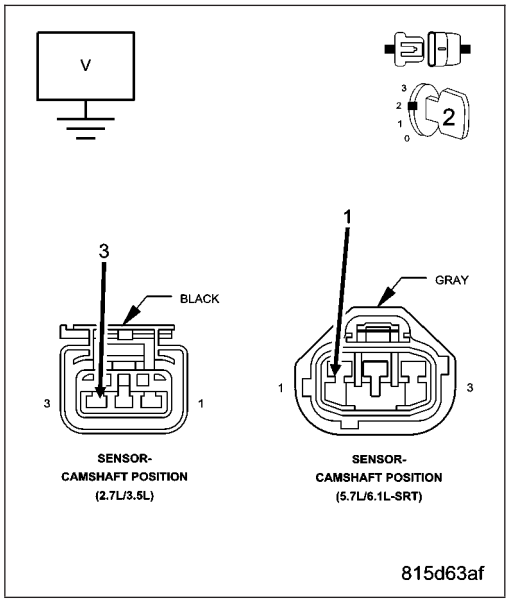

4. (K900) SENSOR GROUND CIRCUIT OPEN

Turn the ignition off.

Disconnect the PCM harness connectors.

CAUTION: Do not probe the PCM harness connectors. Probing the PCM harness connectors will damage the PCM terminals resulting in poor terminal to pin connection. Install Miller Special Tool #8815 to perform diagnosis.

Measure the resistance of the (K900) Sensor ground circuit from the CMP Sensor harness connector to the appropriate terminal of special tool #8815.

Is the resistance below 5.0 ohms?

Yes >> Go To 5

No >> Repair the open in the (K900) Sensor ground circuit. Perform the POWERTRAIN VERIFICATION TEST. (Refer to 9 - ENGINE - STANDARD PROCEDURE)

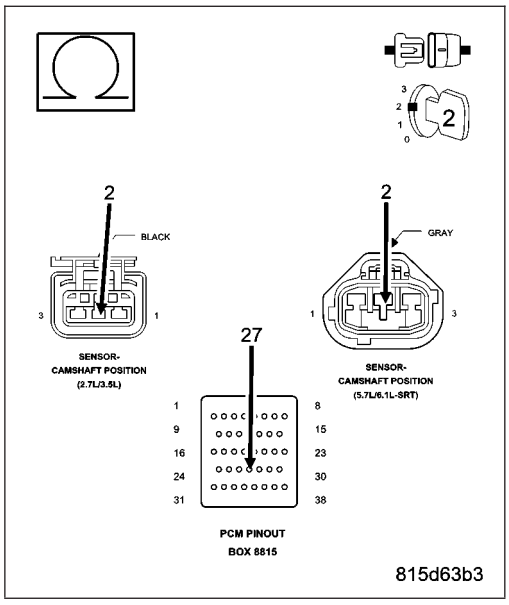

5. (K44) CMP SIGNAL SHORTED TO THE (F856) 5-VOLT SUPPLY CIRCUIT

Measure the resistance between the (K44) CMP Signal circuit and the (F856) 5-volt Supply circuit in the CMP Sensor harness connector.

Is the resistance below 5.0 ohms?

Yes >> Repair the short between the (K44) CMP Signal circuit and the (F856) 5-volt Supply circuit.
Perform the POWERTRAIN VERIFICATION TEST. (Refer to 9 - ENGINE - STANDARD PROCEDURE)

No >> Go To 6

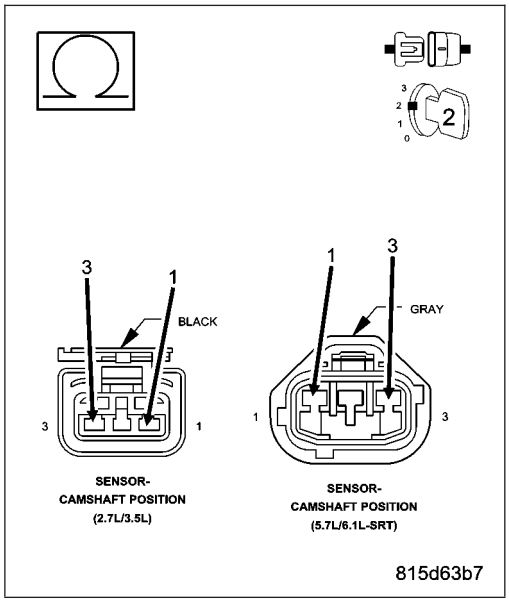

6. CAMSHAFT POSITION SENSOR

NOTE: Inspect the Camshaft sprocket for damage per the Service Information. If a problem is found repair as necessary.

If there are no possible causes remaining, view repair.

Repair

Replace the Camshaft Position Sensor.
Perform the POWERTRAIN VERIFICATION TEST. (Refer to 9 - ENGINE - STANDARD PROCEDURE)

7. (K44) CMP SIGNAL CIRCUIT SHORTED TO BATTERY VOLTAGE

Turn the ignition off.

Disconnect the PCM harness connectors.

Ignition on, engine not running.

Measure the voltage on the (K44) CMP Signal circuit in the CMP Sensor harness connector.

Is the voltage above 0 volts?

Yes >> Repair the short to battery voltage in the (K44) CMP Signal circuit.
Perform the POWERTRAIN VERIFICATION TEST. (Refer to 9 - ENGINE - STANDARD PROCEDURE)

No >> Go To 8

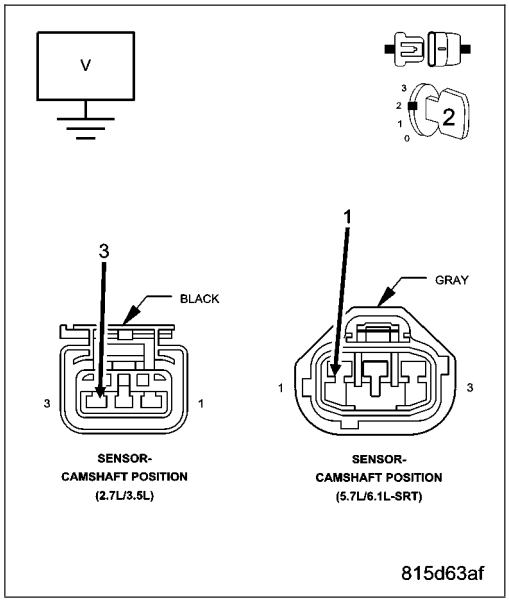

8. (K44) CMP SIGNAL CIRCUIT OPEN

Turn the ignition off.

CAUTION: Do not probe the PCM harness connectors. Probing the PCM harness connectors will damage the PCM terminals resulting in poor terminal to pin connection. Install Miller Special Tool #8815 to perform diagnosis.

Measure the resistance of the (K44) CMP Signal circuit from the CMP Sensor harness connector to the appropriate terminal of special tool #8815.

Is the resistance below 5.0 ohms?

Yes >> Go To 9

No >> Repair the open in the (K44) CMP Signal circuit.
Perform the POWERTRAIN VERIFICATION TEST. (Refer to 9 - ENGINE - STANDARD PROCEDURE)

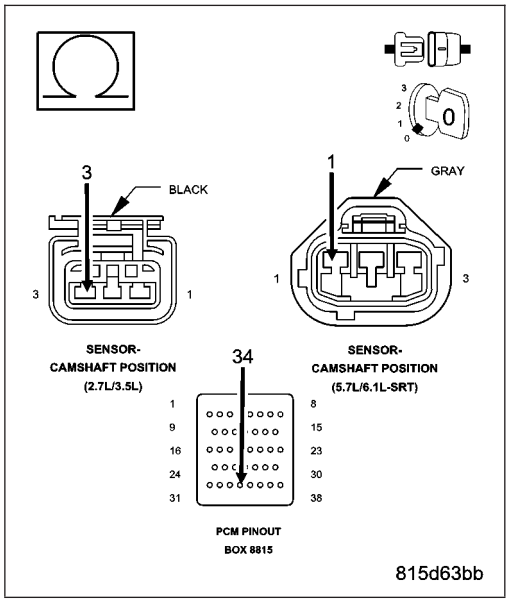

9. (K44) CMP SIGNAL CIRCUIT SHORTED TO GROUND

Measure the resistance between ground and the (K44) CMP Signal circuit in the CMP Sensor harness connector.

Is the resistance below 100 ohms?

Yes >> Repair the short to ground in the (K44) CMP Signal circuit
Perform the POWERTRAIN VERIFICATION TEST. (Refer to 9 - ENGINE - STANDARD PROCEDURE)

No >> Go To 10

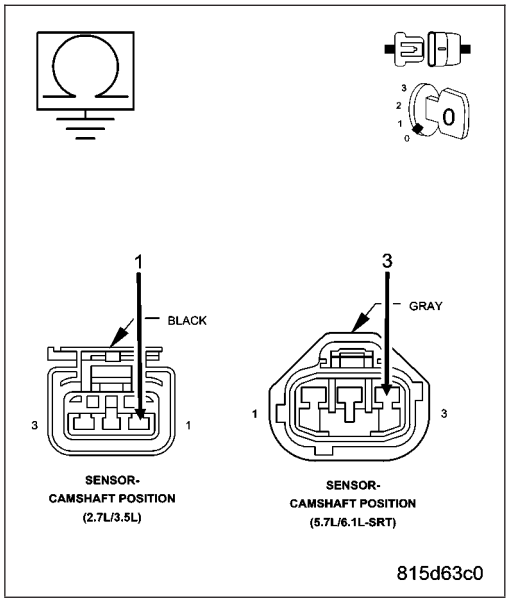

10. (F856) 5-VOLT SUPPLY CIRCUIT SHORTED TO BATTERY VOLTAGE

Turn the ignition off.

Disconnect the PCM harness connectors.

Ignition on, engine not running.

Measure the voltage on the (F856) 5-volt Supply circuit in the CMP Sensor harness connector.

Is the voltage above 0 volts?

Yes >> Repair the short to battery voltage in the (F856) 5-volt Supply circuit.
Perform the POWERTRAIN VERIFICATION TEST. (Refer to 9 - ENGINE - STANDARD PROCEDURE)

No >> Go To 11

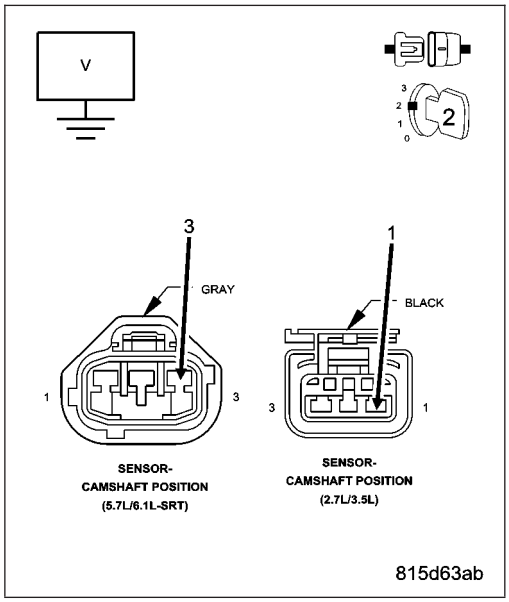

11. (F856) 5-VOLT SUPPLY CIRCUIT OPEN

Turn the ignition off.

CAUTION: Do not probe the PCM harness connectors. Probing the PCM harness connectors will damage the PCM terminals resulting in poor terminal to pin connection. Install Miller Special Tool #8815 to perform diagnosis.

Measure the resistance of the (F856) 5-volt Supply circuit between the CMP Sensor harness connector to the appropriate terminal of special tool #8815.

Is the resistance below 5.0 ohms?

Yes >> Go To 12

No >> Repair the open in the (F856) 5-volt Supply circuit.
Perform the POWERTRAIN VERIFICATION TEST. (Refer to 9 - ENGINE - STANDARD PROCEDURE)

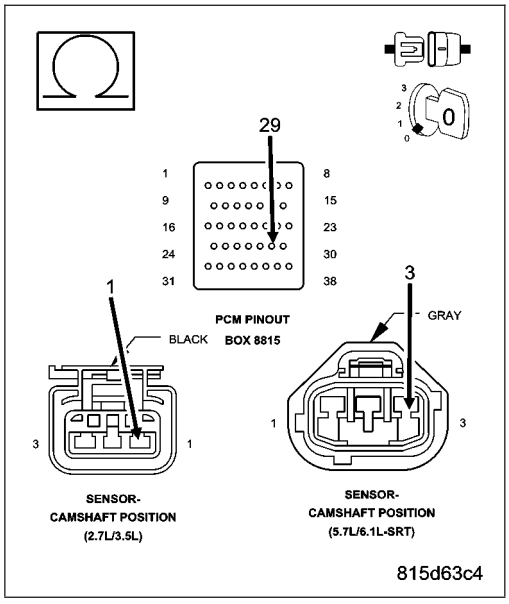

12. (F856) 5-VOLT SUPPLY CIRCUIT SHORTED TO GROUND

Measure the resistance between ground and the (F856) 5-volt Supply circuit in the CMP Sensor harness connector.

Is the resistance below 100 ohms?

Yes >> Repair the short to ground in the (F856) 5-volt Supply circuit.
Perform the POWERTRAIN VERIFICATION TEST. (Refer to 9 - ENGINE - STANDARD PROCEDURE)

No >> Go To 13

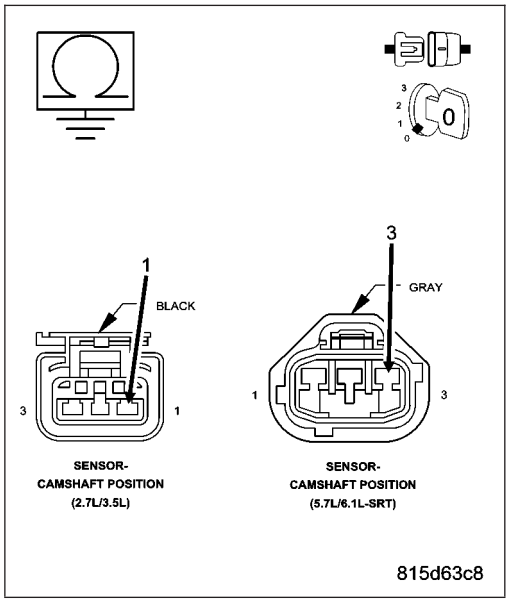

13. PCM

NOTE: Before continuing, check the PCM harness connector terminals for corrosion, damage, or terminal push out. Repair as necessary.
Using the schematics as a guide, inspect the wire harness and connectors. Pay particular attention to all Power and Ground circuits.

Were there any problems found?

Yes >> Repair as necessary.
Perform the POWERTRAIN VERIFICATION TEST. (Refer to 9 - ENGINE - STANDARD PROCEDURE)

No >> Replace and program the Powertrain Control Module per Service Information.
Perform (NGC) POWERTRAIN VERIFICATION TEST VER - 5. (Refer to 8 - ELECTRICAL/ELECTRONIC CONTROL MODULES/POWERTRAIN CONTROL MODULE -DIAGNOSIS AND TESTING)

14. ERRATIC CMP SIGNAL

With a lab scope probe and the Miller special tool #6801, back probe the (K44) CMP Signal circuit in the CMP harness connector.

WARNING: When the engine is operating, do not stand in direct line with the fan. Do not put your hands near the pulleys, belts, or fan. Do not wear loose clothing. Failure to follow these instructions can result in personal injury or death.
Ignition on, engine not running.

Wiggle the related wire harness and lightly tap the Camshaft Position Sensor.

Observe the lab scope screen.

Allow the engine to idle.

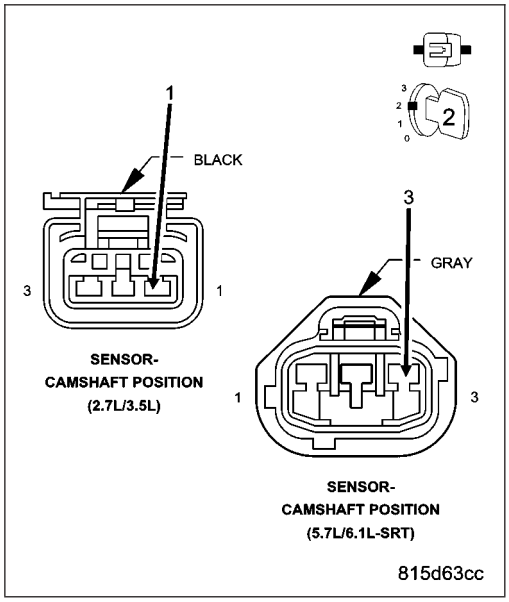

Observe the lab scope screen.

Did the CMP Sensor generate any erratic pulses?

Yes >> Replace the Camshaft Position Sensor.
Perform the POWERTRAIN VERIFICATION TEST. (Refer to 9 - ENGINE - STANDARD PROCEDURE)

No >> Go To 15

15. ERRATIC CKP SIGNAL

Turn the ignition off.

With a lab scope probe and the Miller special tool #6801, backprobe the (K24) CKP Signal circuit in the CKP harness connector.

WARNING: When the engine is operating, do not stand in direct line with the fan. Do not put your hands near the pulleys, belts, or fan. Do not wear loose clothing. Failure to follow these instructions can result in personal injury or death.

Ignition on, engine not running.

Wiggle the related wire harness and lightly tap on the Crankshaft Position Sensor.

Observe the lab scope screen.

Allow the engine to idle.

Observe the lab scope screen.

Did the CKP Sensor generate any erratic pulses?

Yes >> Replace the Crankshaft Position Sensor.
Perform the POWERTRAIN VERIFICATION TEST. (Refer to 9 - ENGINE - STANDARD PROCEDURE)

No >> Test Complete.

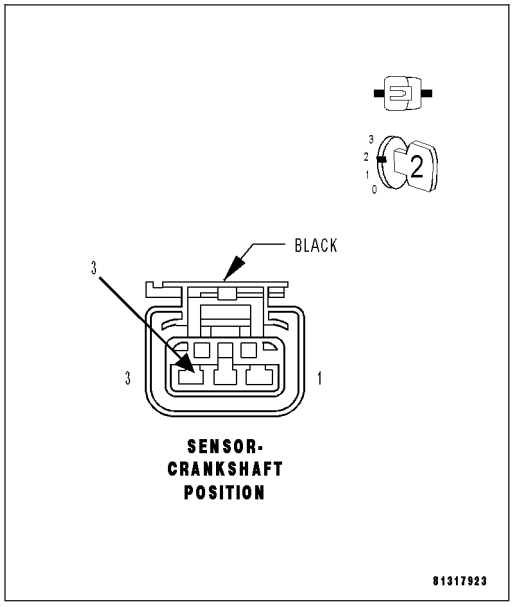

P0344-CAMSHAFT POSITION SENSOR INTERMITTENT

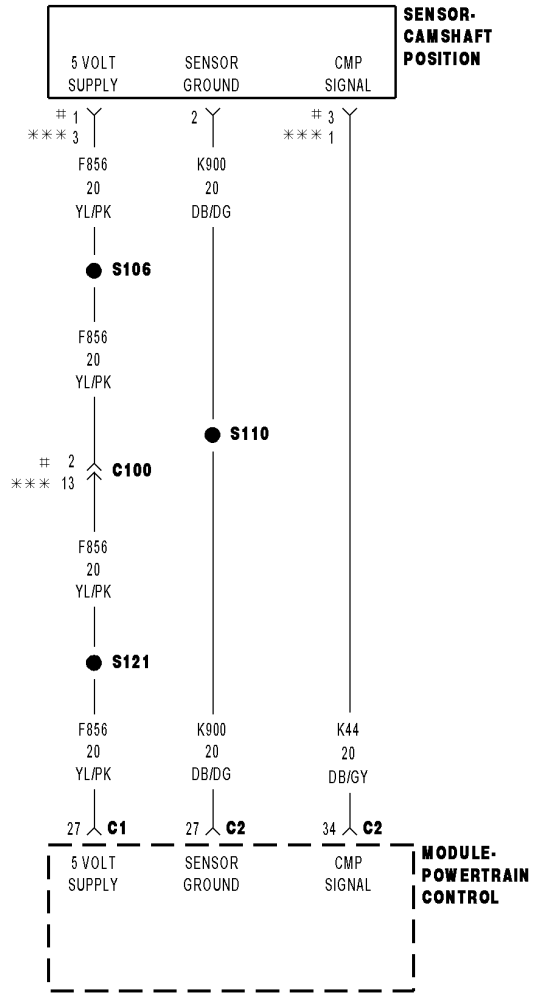

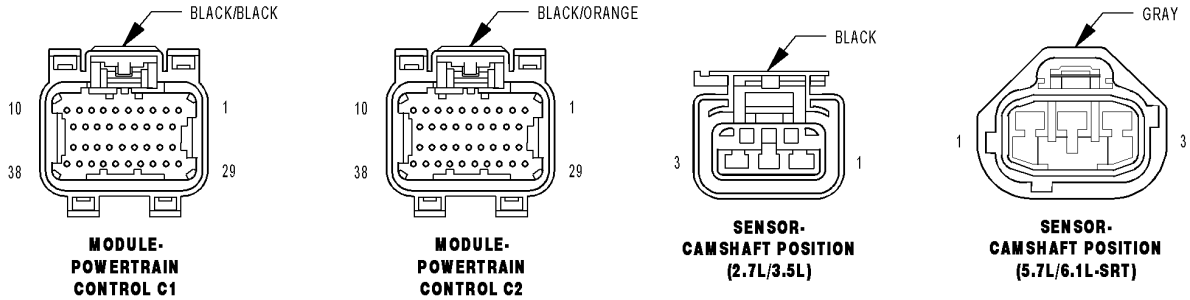

815463a7

For a complete wiring diagram **Refer to Section 8W**.

- **When Monitored:**
  While cranking the engine and engine running.
- **Set Condition:**
  When the failure counter reaches 20. One Trip Fault. Three good trips to turn off the MIL.

Possible Causes
(F856) 5-VOLT SUPPLY CIRCUIT OPEN
(F856) 5-VOLT SUPPLY CIRCUIT SHORTED TO GROUND
(K44) CMP SIGNAL CIRCUIT SHORTED TO BATTERY VOLTAGE
(K44) CMP SIGNAL CIRCUIT OPEN
(K44) CMP SIGNAL CIRCUIT SHORTED TO GROUND
(K44) CMP SIGNAL CIRCUIT SHORTED TO (F856) 5-VOLT SUPPLY
TONE WHEEL/PULSE RING
CAMSHAFT POSITION SENSOR
PCM

Always perform the Pre-Diagnostic Troubleshooting procedure before proceeding. (Refer to 9 - ENGINE - DIAGNOSIS AND TESTING).

Diagnostic Test

1. ACTIVE DTC

Ignition on, engine not running.
With a scan tool, read DTCs.

Is the DTC active at this time?

Yes >> Go To 2

No >> Refer to the INTERMITTENT CONDITION Diagnostic Procedure.
Perform the POWERTRAIN VERIFICATION TEST. (Refer to 9 - ENGINE - STANDARD PROCEDURE)

2. CHECKING CAMSHAFT POSITION SENSOR SIGNAL WITH A LAB SCOPE

Install Miller Special Tools #8815 and #8815-1 to perform diagnosis.
Using a lab scope, probe the (K44) CMP Signal circuit in the appropriate terminal of special tool #8815.

WARNING: When the engine is operating, do not stand in direct line with the fan. Do not put your hands near the pulleys, belts, or fan. Do not wear loose clothing. Failure to follow these instructions can result in personal injury or death.
Ignition on, engine not running.
Observe the lab scope screen.
Start the engine.
Observe the lab scope screen.

Are there any irregular or missing signals?

Yes >> Go To 3

No >> Go To 8

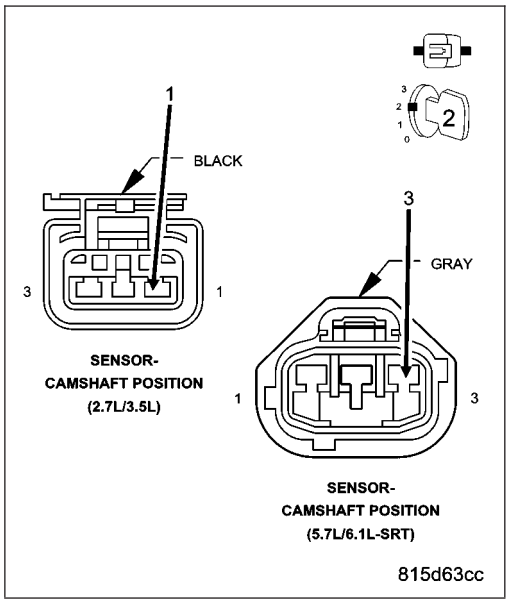

3. WIRE HARNESS INSPECTION

Turn the ignition off.

Visually inspect the related wire harness including the ground circuit. Look for any chafed, pierced, pinched, or partially broken wires.

Visually inspect the related wire harness connectors. Look for broken, bent, pushed out, or corroded terminals.

Make sure the Crankshaft Position Sensor and the Camshaft Position Sensor are properly installed and the mounting bolt(s) are torqued to the proper specification.

Refer to any TSBs that may apply.

Were any of the above conditions present?

Yes >> Repair as necessary.
Perform the POWERTRAIN VERIFICATION TEST. (Refer to 9 - ENGINE - STANDARD PROCEDURE)

No >> Go To 4

4. (F856) 5-VOLT SUPPLY CIRCUIT OPEN OR SHORTED TO GROUND

Disconnect the CMP Sensor connector.

Ignition on, engine not running.

Measure the voltage on the (F856) 5-volt Supply circuit in the CMP harness connector.

Is the voltage between 4.5 and 5.2 volts?

Yes >> Go To 5

No >> Repair the open or short to ground in the (F856) 5-volt Supply circuit. Use Miller special tool #8815 when checking for an open circuit to prevent PCM harness connector terminal damage.
Perform the POWERTRAIN VERIFICATION TEST. (Refer to 9 - ENGINE - STANDARD PROCEDURE)

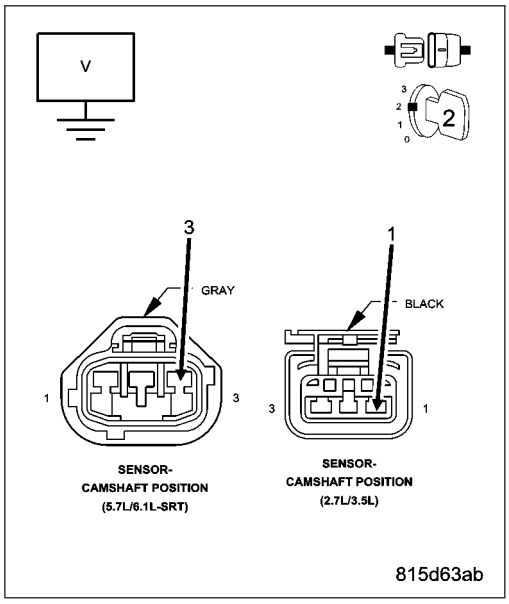

5. TONE WHEEL/PULSE RING INSPECTION

Turn the ignition off.

Carefully disconnect the Battery Ground cable.

Remove the Camshaft Position Sensor.

Inspect the Tone Wheel/Pulse Ring for damage, foreign material, or excessive movement.

Were any problems found?

Yes >> Repair or replace the Tone Wheel/Pulse Ring as necessary.
Perform the POWERTRAIN VERIFICATION TEST. (Refer to 9 - ENGINE - STANDARD PROCEDURE)

No >> Go To 6

6. CHECKING CRANKSHAFT POSITION SENSOR SIGNAL WITH A LAB SCOPE

NOTE: An intermittent condition in the Crank Position Sensor can cause the P0344 to set.

Install the CMP Sensor and connect the Battery cable.

Install Miller Special Tools #8815 and #8815-1 to perform diagnosis.

Using a lab scope, probe the (K24) CKP Signal circuit in the appropriate terminal of special tool #8815.

WARNING: When the engine is operating, do not stand in direct line with the fan. Do not put your hands near the pulleys, belts, or fan. Do not wear loose clothing. Failure to follow these instructions can result in personal injury or death.

Ignition on, engine not running.

Wiggle the related wire harness and lightly tap on the Crank Position Sensor.

Observe the lab scope screen.

Start the engine.

Observe the lab scope screen.

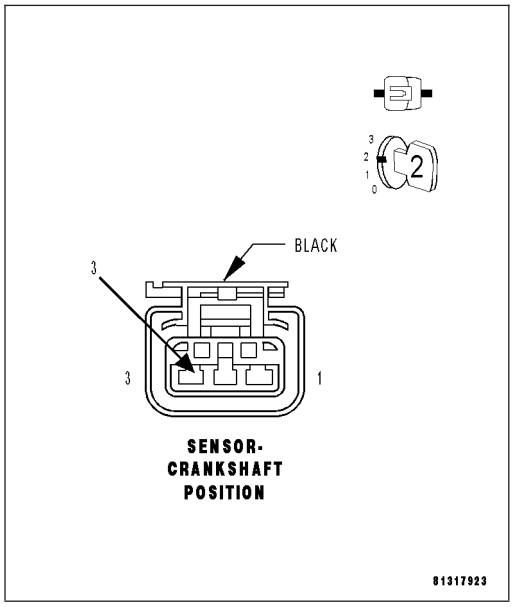

Are there any irregular or missing signals?

Yes >> Replace the Crank Position Sensor.
Perform the POWERTRAIN VERIFICATION TEST. (Refer to 9 - ENGINE - STANDARD PROCEDURE)

No >> Go To 7

7. CAMSHAFT POSITION SENSOR

If there are no possible causes remaining, view repair.

Repair

Replace the Camshaft Position Sensor.
Perform the POWERTRAIN VERIFICATION TEST. (Refer to 9 - ENGINE - STANDARD PROCEDURE)

8. (K44) CMP SIGNAL CIRCUIT SHORTED TO BATTERY VOLTAGE

Turn the ignition off.

Disconnect the CMP Sensor connector.

Disconnect the PCM harness connectors.

Ignition on, engine not running.

Measure the voltage on the (K44) CMP Signal circuit.

Wiggle the related wire harness while taking this measurement.

Does the voltage ever increase above 5.2 volts?

Yes >> Repair the short to battery voltage in the (K44) CMP Signal circuit.
Perform the POWERTRAIN VERIFICATION TEST. (Refer to 9 - ENGINE - STANDARD PROCEDURE)

No >> Go To 9

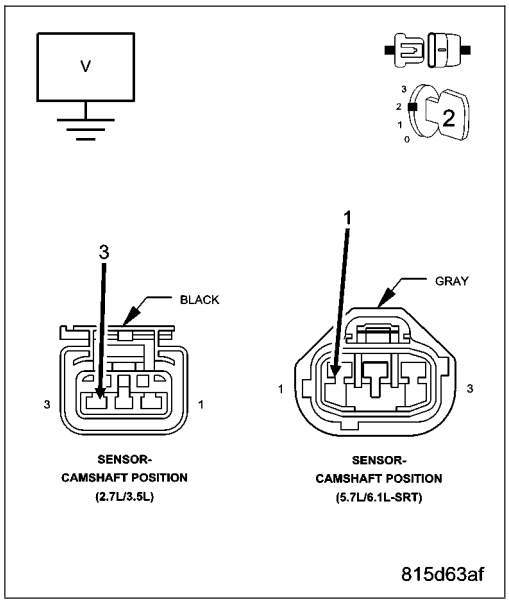

9. (K44) CMP SIGNAL CIRCUIT OPEN

Turn the ignition off.

CAUTION: Do not probe the PCM harness connectors. Probing the PCM harness connectors will damage the PCM terminals resulting in poor terminal to pin connection. Install Miller Special Tool #8815 to perform diagnosis.

Measure the resistance in the (K44) CMP Signal circuit from the CMP harness connector to the appropriate terminal of special tool #8815.

Wiggle the related wire harness while taking this measurement.

Is the resistance below 5.0 ohms?

Yes >> Go To 10

No >> Repair the excessive resistance in the (K44) CMP Signal circuit.

Perform the POWERTRAIN VERIFICATION TEST. (Refer to 9 - ENGINE - STANDARD PROCEDURE)

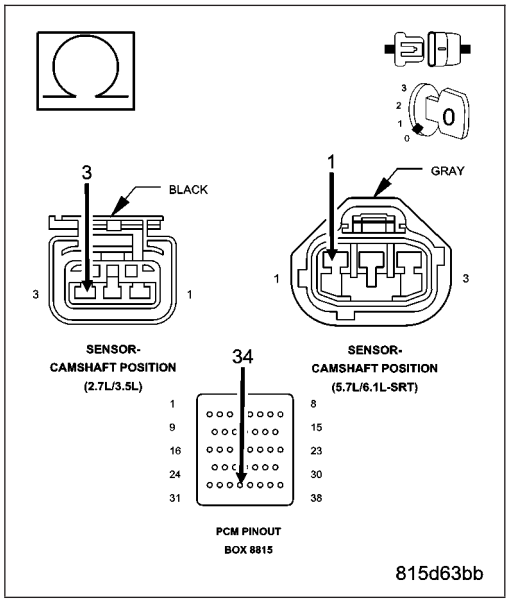

10. (K44) CMP SIGNAL CIRCUIT SHORTED TO GROUND

Measure the resistance between ground and the (K44) CMP Signal circuit in the CMP Sensor harness connector.

Wiggle the related wire harness while monitoring the resistance value.

Does the resistance ever go below 100 ohms?

Yes >> Repair the short to ground in the (K44) CMP Signal circuit.

Perform the POWERTRAIN VERIFICATION TEST. (Refer to 9 - ENGINE - STANDARD PROCEDURE)

No >> Go To 11

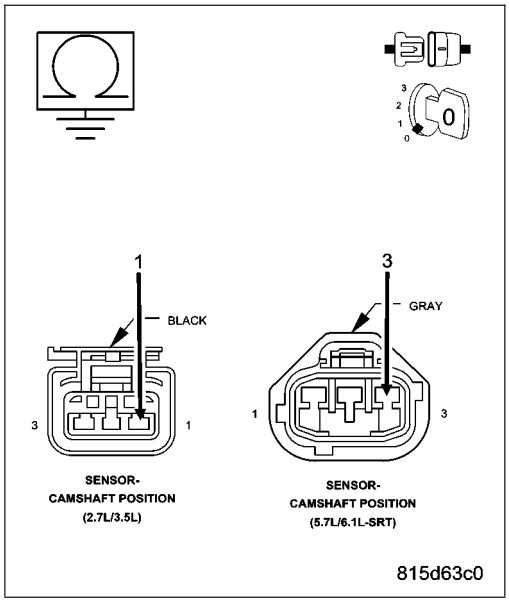

11. (K44) CMP SIGNAL CIRCUIT SHORTED TO THE (F856) 5-VOLT SUPPLY CIRCUIT

Measure the resistance between the (F856) 5-volt Supply circuit and the (K44) CMP Signal circuit in the CMP harness connector.

Wiggle the related wire harness while taking this measurement.

Is the resistance below 5.0 ohms?

Yes >> Repair the short between the (F856) 5-volt Supply circuit and the (K44) CMP Signal circuit.
Perform the POWERTRAIN VERIFICATION TEST. (Refer to 9 - ENGINE - STANDARD PROCEDURE)

No >> Go To 12

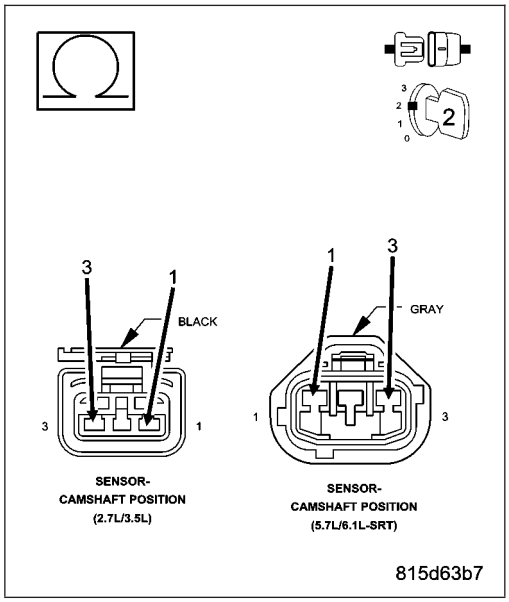

12. PCM

NOTE: Before continuing, check the PCM harness connector terminals for corrosion, damage, or terminal push out. Repair as necessary.

Using the schematics as a guide, inspect the wire harness and connectors. Pay particular attention to all Power and Ground circuits.

Were there any problems found?

Yes >> Repair as necessary.
Perform the POWERTRAIN VERIFICATION TEST. (Refer to 9 - ENGINE - STANDARD PROCEDURE)

No >> Replace and program the Powertrain Control Module per Service Information.
Perform the POWERTRAIN VERIFICATION TEST. (Refer to 9 - ENGINE - STANDARD PROCEDURE)

P0401-EGR SYSTEM PERFORMANCE

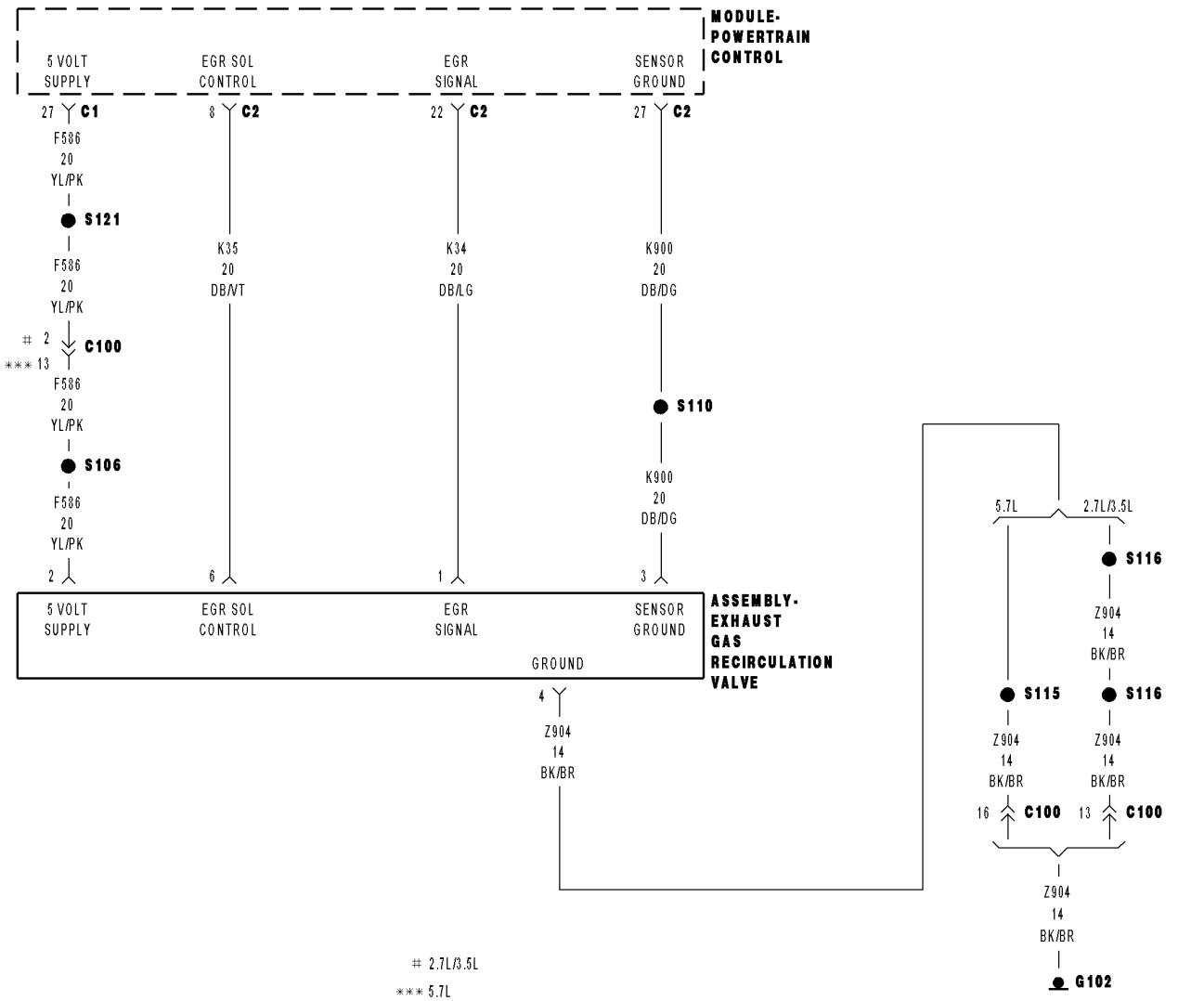

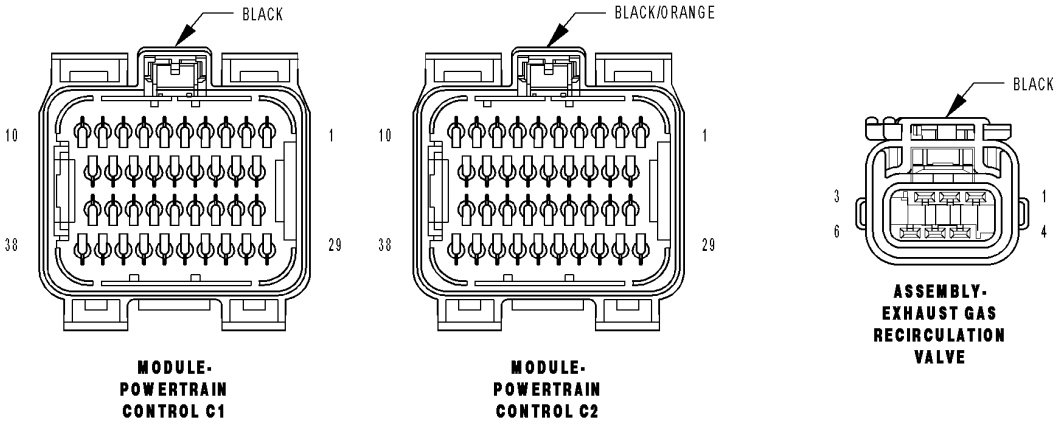

8131b09b

For a complete wiring diagram **Refer to Section 8W**.

- **When Monitored:**
  Engine running for greater than two minutes with the Engine Coolant Temp greater than 70°C (158°F). EGR active. Less than 8500 feet. Ambient temperature greater than -6°C (20°F).
- **Set Condition:**
  The PCM closes the EGR valve while monitoring the O2 Sensor signal. Once a closed EGR fueling sample has been established the PCM then ramps in EGR and additional fueling while monitoring the O2 sensor signal in the open state. A fueling sample is again established. The PCM then compares the different O2 Sensor signal readings (fueling samples). If a larger than expected variation is detected, a soft failure is recorded. Three soft failures set a one trip failure. After two failed trips, a DTC is set and the MIL is illuminated.

Possible Causes
(Z904) EGR SOLENOID GROUND CIRCUIT OPEN
(K35) EGR SOLENOID CONTROL CIRCUIT
EGR SOLENOID ASSEMBLY
PCM

Always perform the Pre-Diagnostic Troubleshooting procedure before proceeding. (Refer to 9 - ENGINE - DIAGNOSIS AND TESTING).

Diagnostic Test

1. ACTIVE DTC

Ignition on, engine not running.
With a scan tool, read DTCs.

Is the DTC active at this time?

Yes >> Go To 2

No >> Refer to the INTERMITTENT CONDITION Diagnostic Procedure.
Perform the POWERTRAIN VERIFICATION TEST. (Refer to 9 - ENGINE - STANDARD PROCEDURE)

2. EGR OPERATION

NOTE: If the vehicle is running rough at idle (scan tool not actuating) follow the yes path to continue.
Turn all accessories off.
Start the engine.
Allow the engine to reach normal operating temperature.
With the scan tool, enter Engine System Test, then EGR System Test.
Actuate the OPEN function in the EGR System Test.

Did the engine run rough or stall?

Yes >> Go To 3

No >> Go To 5

3. EGR VALVE OPEN AT IDLE

Turn the ignition off.
Disconnect the EGR Solenoid Assembly harness connector.
Start engine. Attempt to allow the engine to idle.

Does the engine run rough or stall?

Yes >> Inspect the EGR tube assembly. If OK, replace the EGR valve.
Perform the POWERTRAIN VERIFICATION TEST. (Refer to 9 - ENGINE - STANDARD PROCEDURE)

No >> Go To 4

4. EGR VALVE ASSEMBLY INSPECTION

Inspect the EGR Assembly for the following.

Gasket(s) for leaking

Damage and/or holes in the EGR tube(s)

Carbon build up on or near the EGR pintle and passage ways.

Obstruction in the EGR tubes.

Were any problem found?

Yes >> Repair or replace the EGR Assembly as necessary.
Perform the POWERTRAIN VERIFICATION TEST. (Refer to 9 - ENGINE - STANDARD PROCEDURE)

No >> Go To 5

5. EGR SOLENOID ASSEMBLY

Disconnect the EGR Solenoid harness connector.

Using a 12-volt test light, jump across the (K35) EGR Solenoid Control terminal and the (Z904) Ground terminal in the EGR Solenoid harness connector.

With the scan tool, actuate the EGR solenoid.

Does the 12-volt test light flash on and off?

Yes >> Inspect the tube(s) for obstructions and damage, repair as necessary. If OK, replace the EGR Solenoid Assembly.
Perform the POWERTRAIN VERIFICATION TEST. (Refer to 9 - ENGINE - STANDARD PROCEDURE)

No >> Go To 6

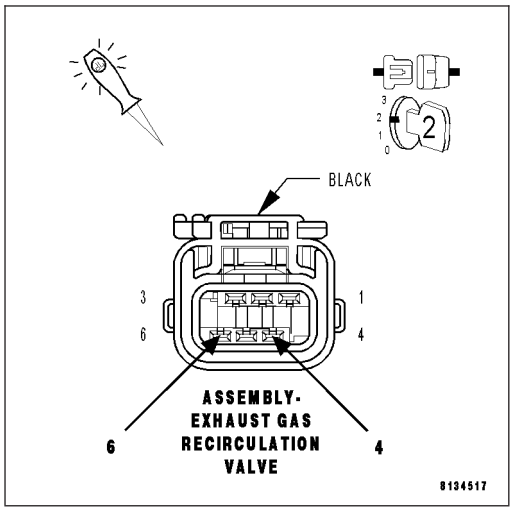

6. (Z904) EGR SOLENOID GROUND CIRCUIT OPEN

Turn the ignition off.

Using a 12-volt test light connected to the 12-volts, probe the (Z904) EGR Solenoid ground circuit in the EGR Solenoid harness connector.

NOTE: The test light should be illuminated and bright. Compare the brightness to that of a direct connection to the battery.

Does the test light illuminate brightly?

Yes >> Go To 7

No >> Repair the open in the (Z904) EGR Solenoid ground circuit.
Perform the POWERTRAIN VERIFICATION TEST. (Refer to 9 - ENGINE - STANDARD PROCEDURE)

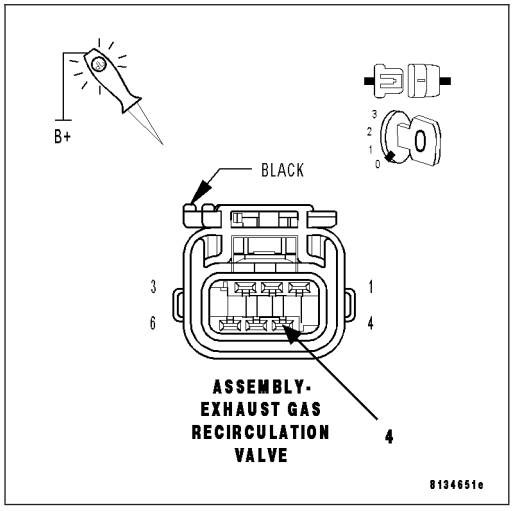

7. (K35) EGR SOLENOID CONTROL CIRCUIT HIGH RESISTANCE

Turn the ignition off.

Reconnect the EGR harness connector.

Disconnect the C2 PCM harness connector.

CAUTION: CAUTION: Do not probe the PCM harness connectors. Probing the PCM harness connectors will damage the PCM terminals resulting in poor terminal to pin connection. Install Miller Special Tool #8815 along with the #8815-1 to perform the diagnosis.

Using a voltmeter perform a voltage drop test. Backprobe the (K35) EGR Solenoid Control circuit at the EGR Solenoid harness connector to the appropriate terminal of the special tool #8815. Ensure the voltmeter leads are connected with the circuit's correct polarity.

WARNING: When the engine is operating, do not stand in direct line with the fan. Do not put your hands near the pulleys, belts, or fan. Do not wear loose clothing. Failure to follow these instructions can result in personal injury or death.

Start the engine and allow it to reach normal operating temperature.

Monitor the voltmeter.

Is the voltage below 0.5 volts?

Yes >> Go To 8

No >> Repair the high resistance in the ((K35) EGR Solenoid Control circuit.
Perform the POWERTRAIN VERIFICATION TEST. (Refer to 9 - ENGINE - STANDARD PROCEDURE)

8. PCM

NOTE: Before continuing, check the PCM harness connector terminals for corrosion, damage, or terminal push out. Repair as necessary.

Using the schematics as a guide, inspect the wire harness and connectors. Pay particular attention to all Power and Ground circuits.

Were there any problems found?

Yes >> Repair as necessary.
Perform the POWERTRAIN VERIFICATION TEST. (Refer to 9 - ENGINE - STANDARD PROCEDURE)

No >> Replace and program the Powertrain Control Module per Service Information.
Perform the POWERTRAIN VERIFICATION TEST. (Refer to 9 - ENGINE - STANDARD PROCEDURE)

P0403-EGR SOLENOID CIRCUIT

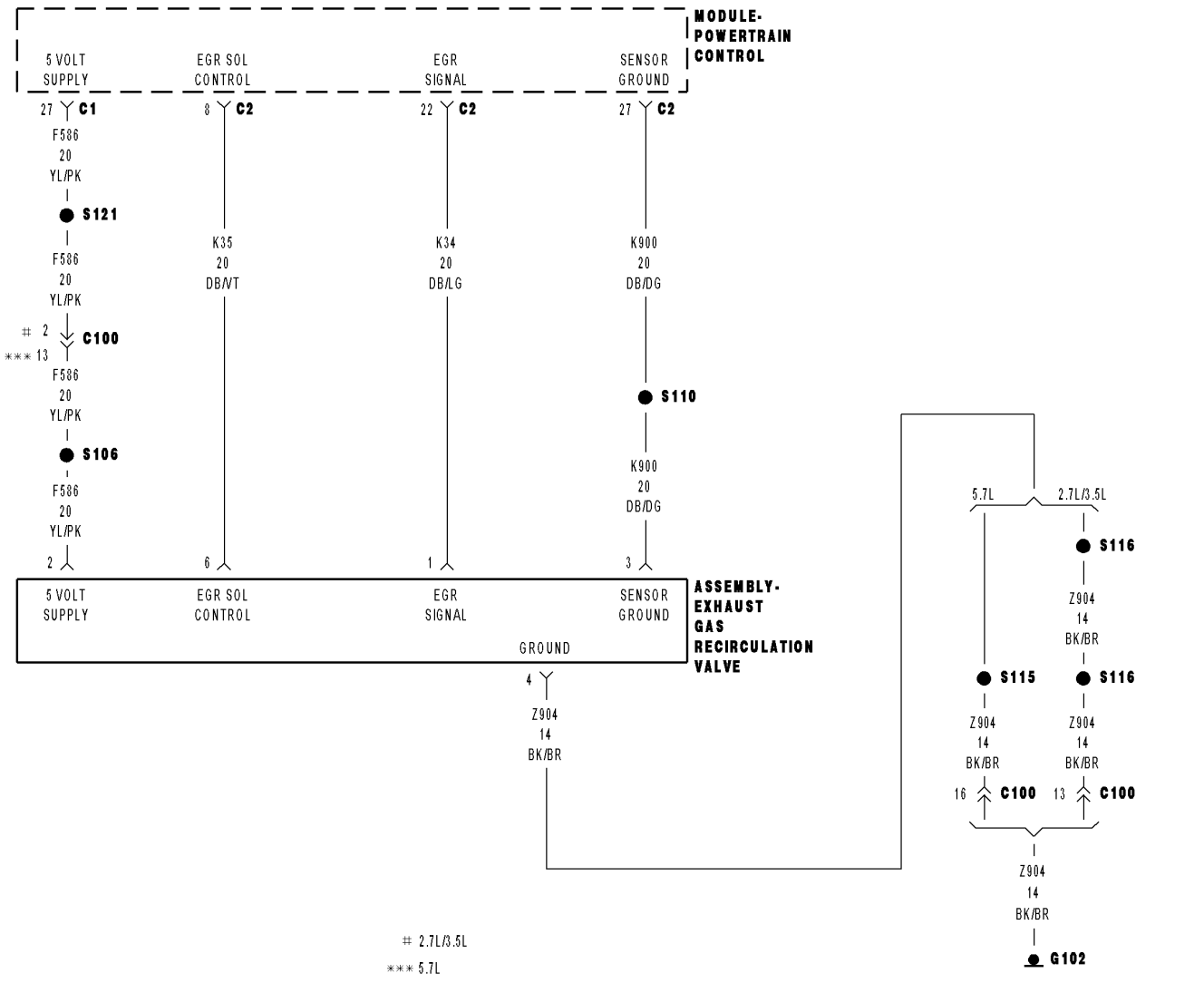

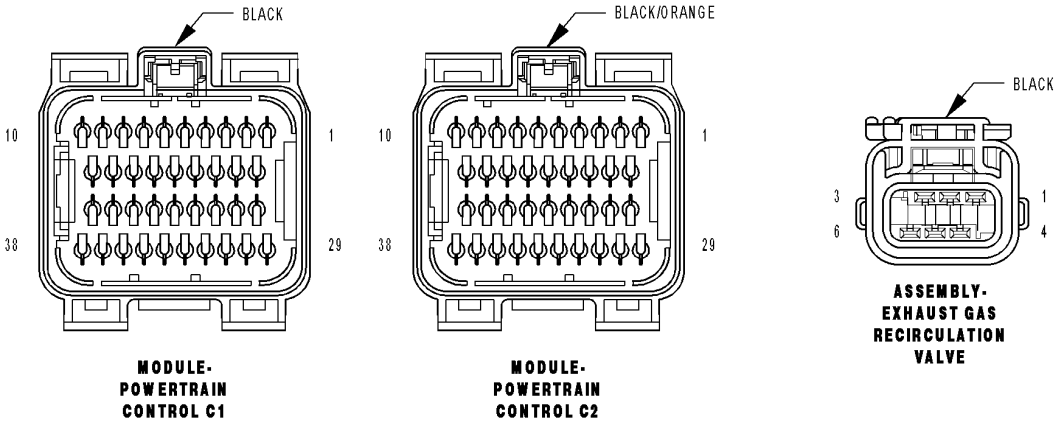

8131b09b

For a complete wiring diagram **Refer to Section 8W**.

- **When Monitored:**
  Engine running. Battery voltage greater than 10 volts.
- **Set Condition:**
  The EGR solenoid control circuit is not in the expected state when requested to operate by the PCM. One Trip Fault.

Possible Causes
(Z904) EGR SOLENOID GROUND CIRCUIT OPEN
(K35) EGR SOLENOID CONTROL CIRCUIT SHORTED TO BATTERY VOLTAGE
(K35) EGR SOLENOID CONTROL CIRCUIT SHORTED TO GROUND
(K35) EGR SOLENOID CONTROL CIRCUIT SHORTED TO THE (K900) SENSOR GROUND CIRCUIT
(K35) EGR SOLENOID CONTROL CIRCUIT OPEN
EGR SOLENOID ASSEMBLY
PCM

Always perform the Pre-Diagnostic Troubleshooting procedure before proceeding. (Refer to 9 - ENGINE - DIAGNOSIS AND TESTING).

Diagnostic Test

1. ACTIVE DTC

Ignition on, engine not running.
With a scan tool, read DTCs.

Is the DTC active at this time?

Yes >> Go To 2

No >> Refer to the INTERMITTENT CONDITION Diagnostic Procedure.
Perform the POWERTRAIN VERIFICATION TEST. (Refer to 9 - ENGINE - STANDARD PROCEDURE)

2. EGR SOLENOID ASSEMBLY

NOTE: The test light should not illuminate until it is commanded on using the scan tool.
Turn the ignition off.
Disconnect the EGR Solenoid harness connector.
Ignition on, engine not running.
Turn off all accessories.
Using a 12-volt test light connected to the (Z904) EGR Solenoid ground circuit, probe the (K34) EGR Solenoid Control circuit.
With a scan tool, actuate the EGR solenoid.

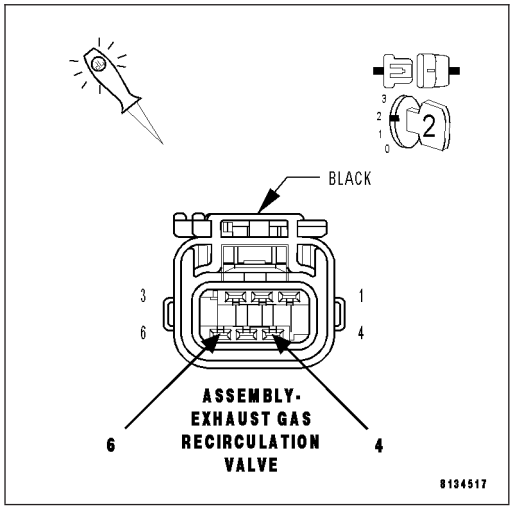

Does the 12-volt test light illuminate when the EGR solenoid is commanded on?

Yes >> Replace the EGR Solenoid Assembly.
Perform the POWERTRAIN VERIFICATION TEST. (Refer to 9 - ENGINE - STANDARD PROCEDURE)

No >> Go To 3

3. (Z904) EGR SOLENOID GROUND CIRCUIT OPEN

Turn the ignition off.

Disconnect the PCM harness connectors.

Using a 12-volt test light connected to the 12-volts, probe the (Z904) EGR Solenoid ground circuit in the EGR Solenoid harness connector.

Does the test light illuminate brightly?

Yes >> Go To 4

No >> Repair the open in the (Z904) EGR Solenoid ground circuit.
Perform the POWERTRAIN VERIFICATION TEST. (Refer to 9 - ENGINE - STANDARD PROCEDURE)

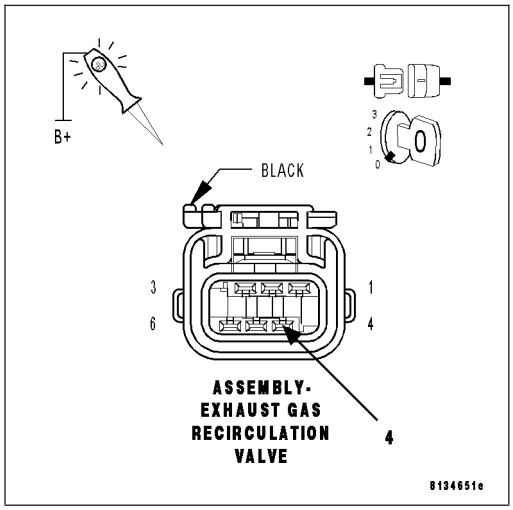

4. (K35) EGR SOLENOID CONTROL CIRCUIT SHORTED TO BATTERY VOLTAGE

Ignition on, engine not running.

Measure the voltage on the (K35) EGR Solenoid Control circuit in the EGR Solenoid connector.

Is the voltage above 1.0 volt?

Yes >> Repair the short to battery voltage in the (K35) EGR Solenoid Control circuit.
Perform the POWERTRAIN VERIFICATION TEST. (Refer to 9 - ENGINE - STANDARD PROCEDURE)

No >> Go To 5

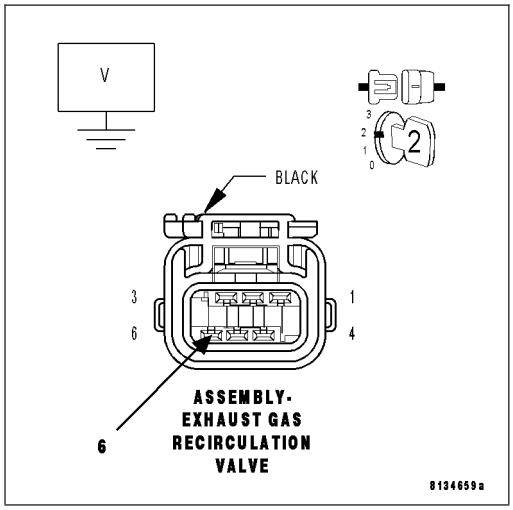

5. (K35) EGR SOLENOID CONTROL CIRCUIT SHORTED TO GROUND

Turn the ignition off.

Measure the resistance between ground and the (K35) EGR Solenoid Control circuit in the EGR Solenoid harness connector.

Is the resistance below 100 ohms?

Yes >> Repair the short to ground in the (K35) EGR Solenoid Control circuit.
Perform the POWERTRAIN VERIFICATION TEST. (Refer to 9 - ENGINE - STANDARD PROCEDURE)

No >> Go To 6

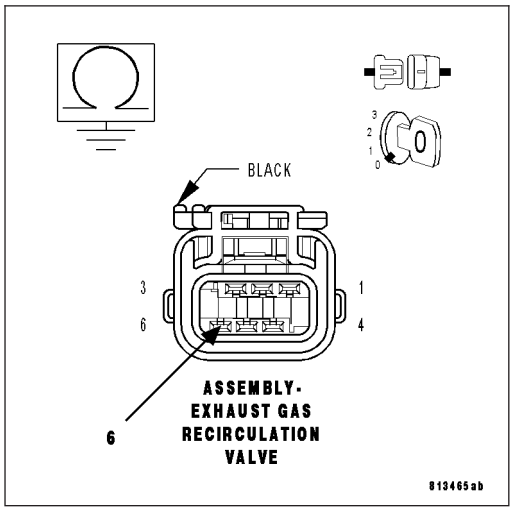

6. (K35) EGR SOLENOID CONTROL CIRCUIT SHORTED TO THE (K900) SENSOR GROUND CIRCUIT

Measure the resistance between the (K35) EGR Solenoid Control circuit and the (K900) Sensor ground circuit in the EGR Solenoid connector.

Is the resistance below 5.0 ohms?

Yes >> Repair the short between the (K900) Sensor ground circuit and the (K35) EGR Solenoid Control circuit. Perform the POWERTRAIN VERIFICATION TEST. (Refer to 9 - ENGINE - STANDARD PROCEDURE)

No >> Go To 7

7. (K35) EGR SOLENOID CONTROL CIRCUIT OPEN

CAUTION: Do not probe the PCM harness connectors. Probing the PCM harness connectors will damage the PCM terminals resulting in poor terminal to pin connection. Install Miller Special Tool #8815 to perform diagnosis.

Measure the resistance of the (K35) EGR Solenoid Control circuit from the EGR Solenoid harness connector to the appropriate terminal of special tool #8815.

Is the resistance below 5.0 ohms?

Yes >> Go To 8

No >> Repair the open in the (K35) EGR Solenoid Control circuit. Perform the POWERTRAIN VERIFICATION TEST. (Refer to 9 - ENGINE - STANDARD PROCEDURE)

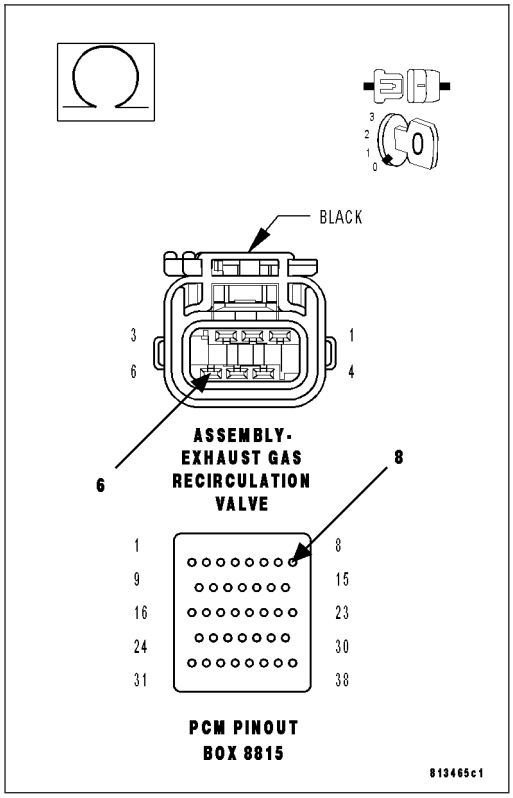

8. PCM

NOTE: Before continuing, check the PCM harness connector terminals for corrosion, damage, or terminal push out. Repair as necessary.

Using the schematics as a guide, inspect the wire harness and connectors. Pay particular attention to all Power and Ground circuits.

Were there any problems found?

Yes >> Repair as necessary.
Perform the POWERTRAIN VERIFICATION TEST. (Refer to 9 - ENGINE - STANDARD PROCEDURE)

No >> Replace and program the Powertrain Control Module per Service Information.
Perform the POWERTRAIN VERIFICATION TEST. (Refer to 9 - ENGINE - STANDARD PROCEDURE)

P0404-EGR POSITION SENSOR PERFORMANCE

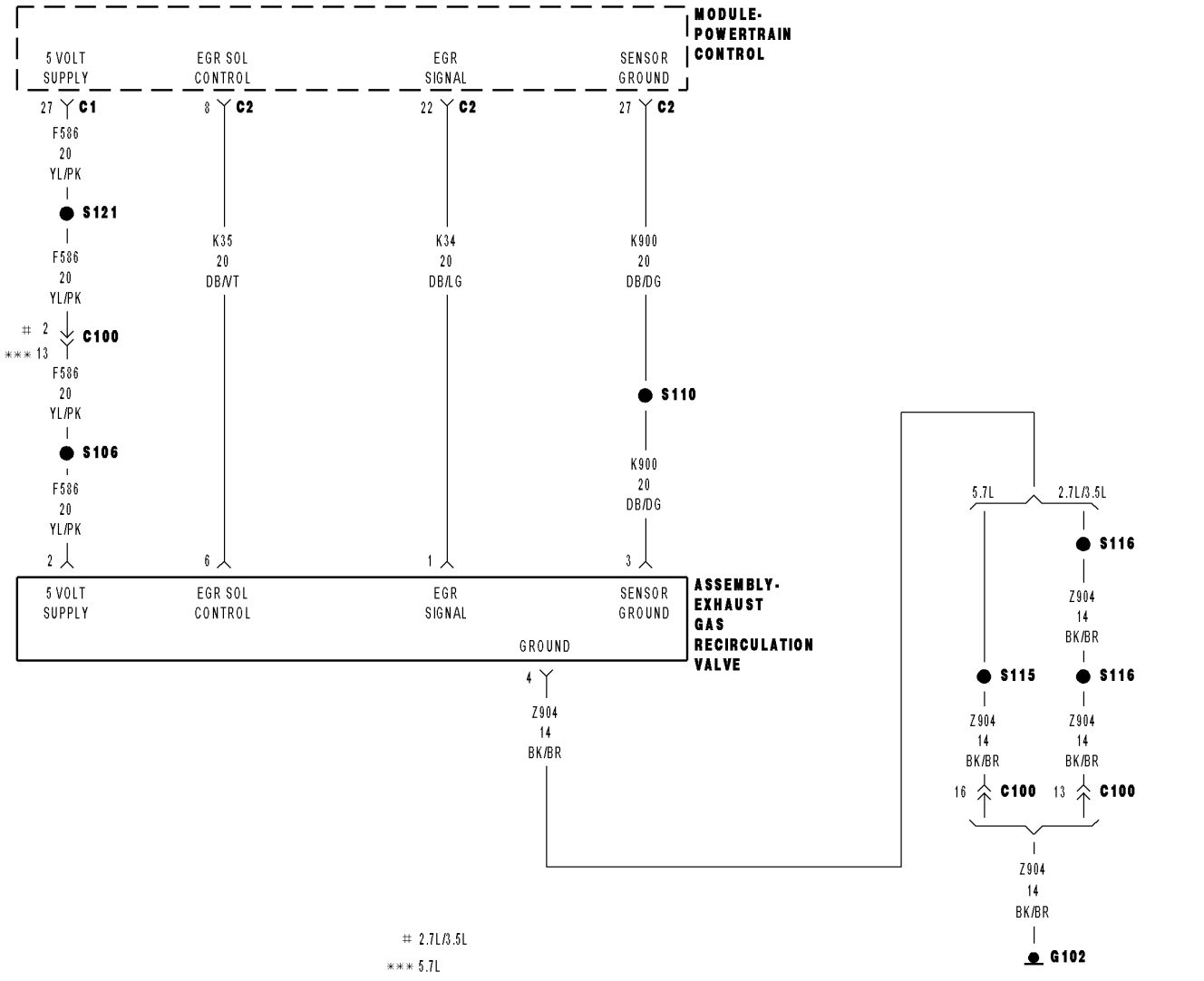

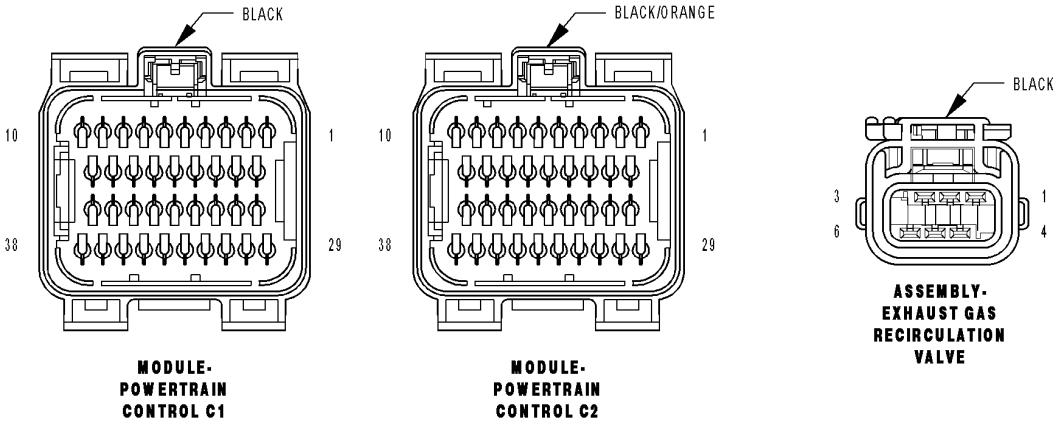

8131b09b

For a complete wiring diagram **Refer to Section 8W**.

- **When Monitored:**
  Engine running.
- **Set Condition:**
  The EGR flow or valve movement is not what is expected.

Possible Causes
(F856) 5-VOLT SUPPLY CIRCUIT
(K35) EGR SOLENOID CONTROL CIRCUIT
(K900) SENSOR GROUND CIRCUIT
EGR SOLENOID ASSEMBLY
PCM

Always perform the Pre-Diagnostic Troubleshooting procedure before proceeding. (Refer to 9 - ENGINE - DIAGNOSIS AND TESTING).

Diagnostic Test

1. ACTIVE DTC

Ignition on, engine not running.

With a scan tool, read DTCs.

Is the DTC active at this time?

Yes >> Go To 2

No >> Refer to the INTERMITTENT CONDITION Diagnostic Procedure.
Perform the POWERTRAIN VERIFICATION TEST. (Refer to 9 - ENGINE - STANDARD PROCEDURE)

2. EGR POSITION VOLTAGE HIGH

NOTE: Diagnose all other EGR DTC(s) before continuing.

Disconnect the EGR Solenoid harness connector.

Turn the ignition on.

With a scan tool, read the EGR Position Sensor voltage.

Is the voltage between 4.7 volts to 5.0 volts?

Yes >> Go To 3

No >> Go To 4

3. EGR POSITION VOLTAGE LOW

Turn the ignition off.

Using a jumper wire, jumper between (K34) EGR Sensor Signal circuit and (K900) Sensor Ground circuit in the EGR Solenoid Sensor harness connector

Turn the ignition on.

With a scan tool, read the EGR Position Sensor voltage.

Is the voltage below 0.5 volt?

Yes >> Replace EGR Valve Assembly in accordance with the Service Information.
Perform the POWERTRAIN VERIFICATION TEST. (Refer to 9 - ENGINE - STANDARD PROCEDURE)

No >> Go To 4

4. (F856) 5-VOLT SUPPLY CIRCUIT HIGH RESISTANCE

Turn the ignition off.

Reconnect the EGR harness connector.

Disconnect the C2 PCM harness connector.

CAUTION: CAUTION: Do not probe the PCM harness connectors. Probing the PCM harness connectors will damage the PCM terminals resulting in poor terminal to pin connection. Install Miller Special Tool #8815 along with the #8815-1 to perform the diagnosis.

Using a voltmeter perform a voltage drop test. Backprobe the (F856) 5-volt Supply circuit at the EGR Solenoid Sensor harness connector to the appropriate terminal of the special tool #8815. Ensure the voltmeter leads are connected with the circuit's correct polarity.

WARNING: When the engine is operating, do not stand in direct line with the fan. Do not put your hands near the pulleys, belts, or fan. Do not wear loose clothing. Failure to follow these instructions can result in personal injury or death.

Start the engine and allow it to reach normal operating temperature.

Monitor the voltmeter.

Is the voltage below 0.5 volts?

Yes >> Go To 5

No >> Repair the excessive resistance in the (F856) 5-volt Supply circuit.
Perform the POWERTRAIN VERIFICATION TEST. (Refer to 9 - ENGINE - STANDARD PROCEDURE)

5. (K34) EGR SENSOR SIGNAL CIRCUIT HIGH RESISTANCE

Turn the ignition off.

Disconnect the C2 PCM harness connector.

CAUTION: CAUTION: Do not probe the PCM harness connectors. Probing the PCM harness connectors will damage the PCM terminals resulting in poor terminal to pin connection. Install Miller Special Tool #8815 along with the 8815-1 to perform the diagnosis.

Using a voltmeter perform a voltage drop test. Backprobe the (K34) EGR Sensor Signal circuit at the EGR Solenoid Sensor harness connector to the appropriate terminal of the special tool #8815. Ensure the voltmeter leads are connected with the circuit's correct polarity.

WARNING: When the engine is operating, do not stand in direct line with the fan. Do not put your hands near the pulleys, belts, or fan. Do not wear loose clothing. Failure to follow these instructions can result in personal injury or death.

Start the engine and allow it to reach normal operating temperature.

Monitor the voltmeter.

Is the voltage below 0.5 volts?

Yes >> Repair the short to ground in the (K34) EGR Sensor Signal circuit.
Perform the POWERTRAIN VERIFICATION TEST. (Refer to 9 - ENGINE - STANDARD PROCEDURE)

No >> Go To 6

6. (K900) SENSOR GROUND CIRCUIT HIGH RESISTANCE

Turn the ignition off.

Disconnect the C2 PCM harness connector.

CAUTION: CAUTION: Do not probe the PCM harness connectors. Probing the PCM harness connectors will damage the PCM terminals resulting in poor terminal to pin connection. Install Miller Special Tool #8815 along with the 8815-1 to perform the diagnosis.

Using a voltmeter perform a voltage drop test. Backprobe the (K900) Sensor Ground circuit at the EGR Solenoid Sensor harness connector to the appropriate terminal of the special tool #8815. Ensure the voltmeter leads are connected with the circuit's correct polarity.

WARNING: When the engine is operating, do not stand in direct line with the fan. Do not put your hands near the pulleys, belts, or fan. Do not wear loose clothing. Failure to follow these instructions can result in personal injury or death.

Start the engine and allow it to reach normal operating temperature.

Monitor the voltmeter.

Is the voltage below 0.5 volts?

Yes >>

NOTE: Before continuing, check the PCM harness connector terminals for corrosion, damage, or terminal push out. Repair as necessary.

Replace and program the Powertrain Control Module per Service Information.

Perform the POWERTRAIN VERIFICATION TEST. (Refer to 9 - ENGINE - STANDARD PROCEDURE)

No >> Repair the open in the (K900) Sensor ground circuit.

Perform the POWERTRAIN VERIFICATION TEST. (Refer to 9 - ENGINE - STANDARD PROCEDURE)

P0405-EGR POSITION SENSOR CIRCUIT LOW

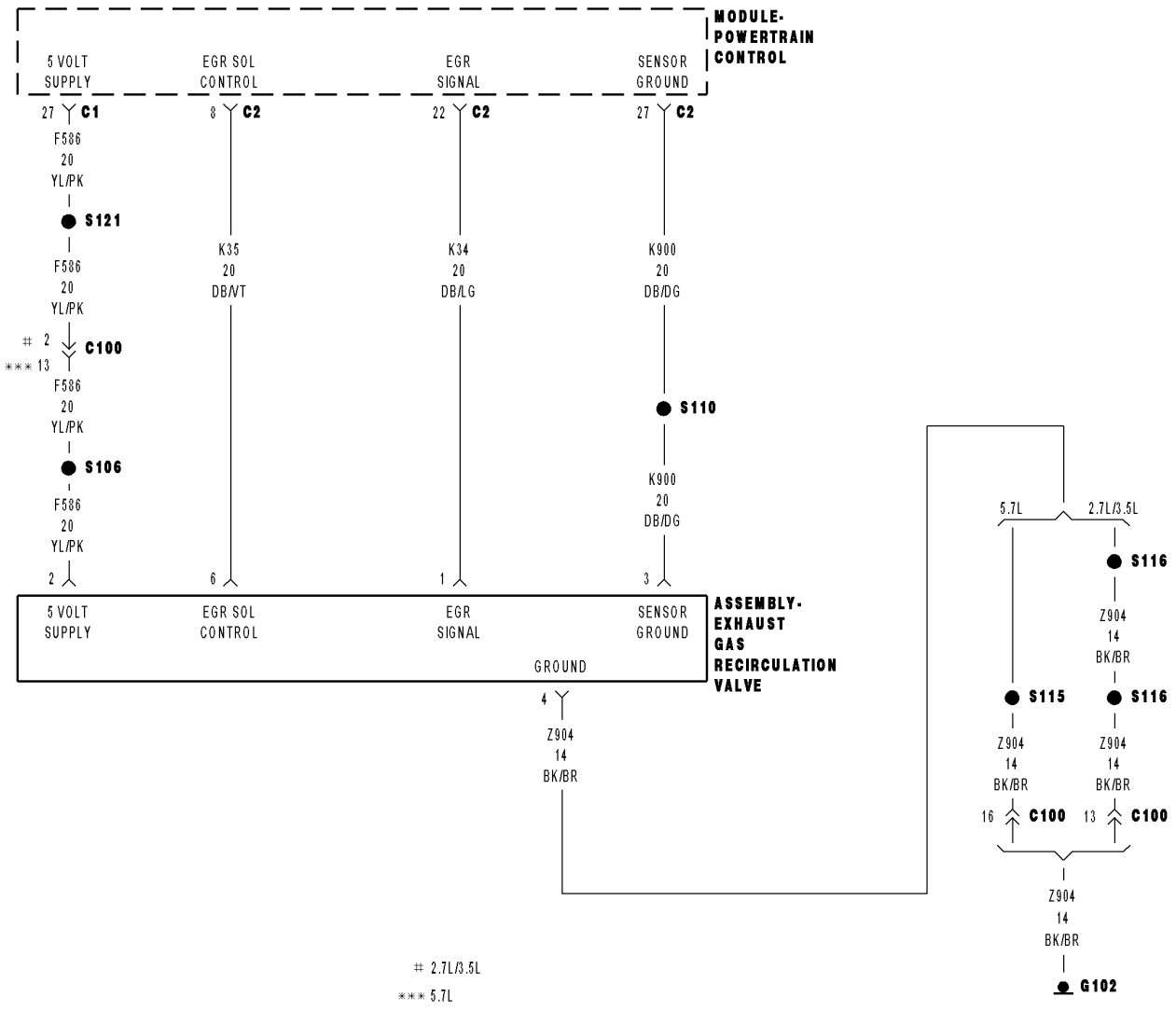

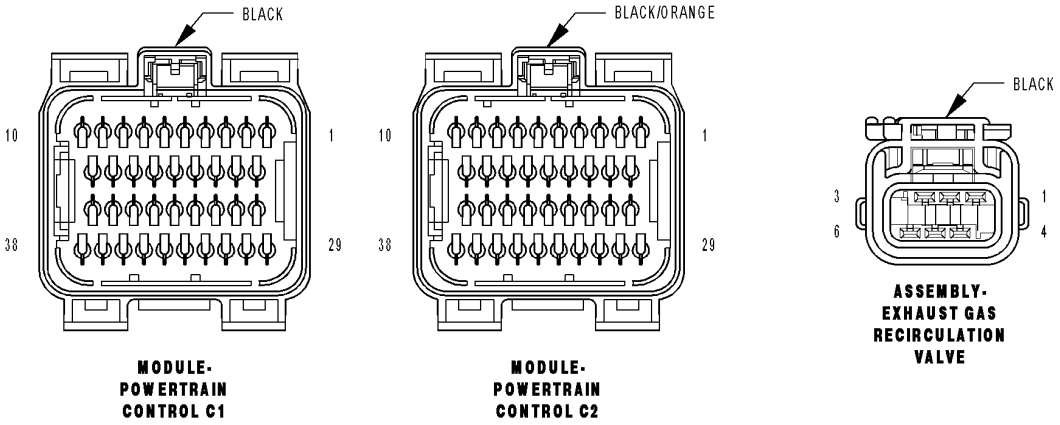

8131b09b

For a complete wiring diagram **Refer to Section 8W**.

- **When Monitored:**
  With the ignition on. Battery voltage above 10.0 volts.
- **Set Condition:**
  EGR Position Sensor Signal is less than 0.1 of a volt. One trip Fault.

Possible Causes
(F856) 5-VOLT SUPPLY CIRCUIT SHORTED TO GROUND
(F856) 5-VOLT SUPPLY CIRCUIT OPEN
(K34) EGR POSITION SENSOR SIGNAL CIRCUIT SHORTED TO GROUND
(K34) EGR POSITION SENSOR SIGNAL CIRCUIT SHORTED TO THE (K900) SENSOR GROUND CIRCUIT
EGR POSITION SENSOR
PCM

Always perform the Pre-Diagnostic Troubleshooting procedure before proceeding. (Refer to 9 - ENGINE - DIAGNOSIS AND TESTING).

Diagnostic Test

1. EGR POSITION SENSOR BELOW 0.2 OF A VOLT

Ignition on, engine not running.
With a scan tool, read the EGR Position Sensor voltage.

Is the voltage below 0.2 of a volt?

Yes >> Go To 2

No >> Refer to the INTERMITTENT CONDITION Diagnostic Procedure.
Perform the POWERTRAIN VERIFICATION TEST. (Refer to 9 - ENGINE - STANDARD PROCEDURE)

2. (F856) 5-VOLT SUPPLY CIRCUIT

Turn the ignition off.
Disconnect the EGR Solenoid harness connector.
Ignition on, engine not running.
Measure the voltage of the (F856) 5-volt Supply circuit in the EGR Solenoid harness connector.

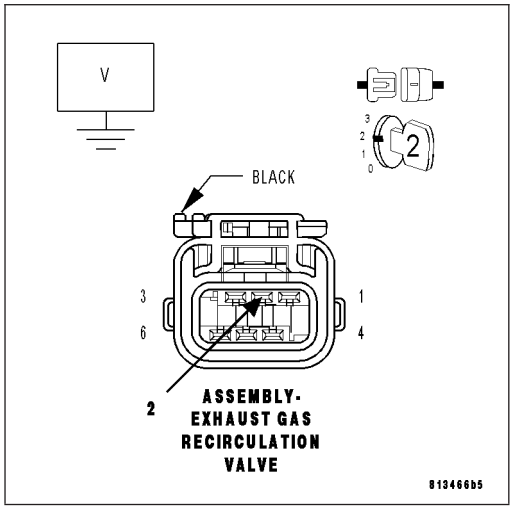

Is the voltage between 4.5 to 5.2 volts?

Yes >> Go To 3

No >> Go To 6

3. EGR POSITION

With the scan tool, monitor the EGR Position Sensor voltage.

Is the voltage above 4.5 volts?

Yes >> Replace the EGR Solenoid Assembly.
Perform the POWERTRAIN VERIFICATION TEST. (Refer to 9 - ENGINE - STANDARD PROCEDURE)

No >> Go To 4

4. (K34) EGR POSITION SENSOR SIGNAL CIRCUIT SHORTED TO GROUND

Turn the ignition off.

Disconnect the PCM harness connector.

Measure the resistance between ground and the (K34) EGR Position Sensor Signal circuit in the EGR Solenoid harness connector.

Is the resistance below 100 ohms?

Yes >> Repair the short to ground circuit in the (K34) EGR Position Sensor Signal circuit.
Perform the POWERTRAIN VERIFICATION TEST. (Refer to 9 - ENGINE - STANDARD PROCEDURE)

No >> Go To 5

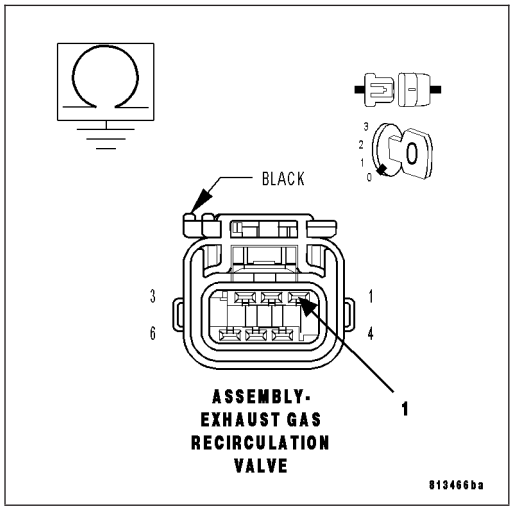

5. (K34) EGR SENSOR SIGNAL CIRCUIT SHORTED TO THE (K900) SENSOR GROUND CIRCUIT

Measure the resistance between the (K34) EGR Position Sensor Signal circuit and (K900) Sensor ground circuit in the EGR Solenoid harness connector.

Is the resistance below 100 ohms?

Yes >> Repair the short between the (K900) Sensor ground and the (K34) EGR Position Sensor Signal circuit.
Perform the POWERTRAIN VERIFICATION TEST. (Refer to 9 - ENGINE - STANDARD PROCEDURE)

No >> Go To 8

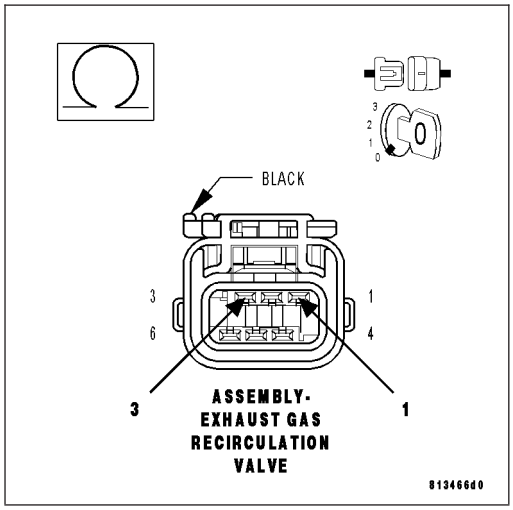

6. (F856) 5-VOLT SUPPLY CIRCUIT SHORTED TO GROUND

Turn the ignition off.

Disconnect the PCM harness connectors.

Measure the resistance between ground and the (F856) 5-volt Supply circuit in the EGR Solenoid harness connector.

Is the resistance below 100 ohms?

Yes >> Repair the short to ground in the (F856) 5-volt Supply circuit.
Perform the POWERTRAIN VERIFICATION TEST. (Refer to 9 - ENGINE - STANDARD PROCEDURE)

No >> Go To 7

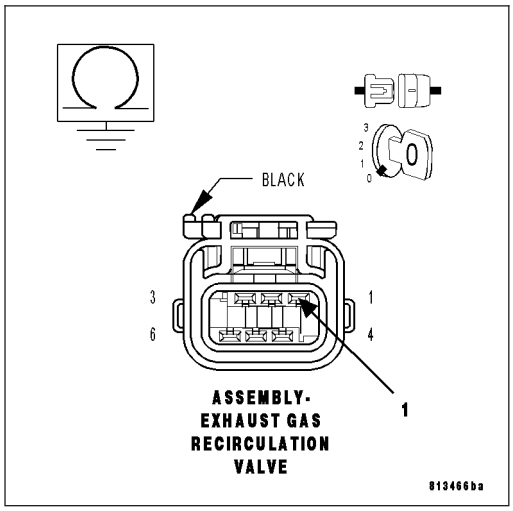

7. (F856) 5-VOLT SUPPLY CIRCUIT OPEN

CAUTION: Do not probe the PCM harness connectors. Probing the PCM harness connectors will damage the PCM terminals resulting in poor terminal to pin connection. Install Miller Special Tool #8815 to perform diagnosis.

Measure the resistance of the (F856) 5-volt Supply circuit from the EGR Solenoid harness connector to the appropriate terminal of special tool #8815.

Is the resistance below 5.0 ohms?

Yes >> Go To 8

No >> Repair the open in the (F856) 5-volt Supply circuit.
Perform the POWERTRAIN VERIFICATION TEST. (Refer to 9 - ENGINE - STANDARD PROCEDURE)

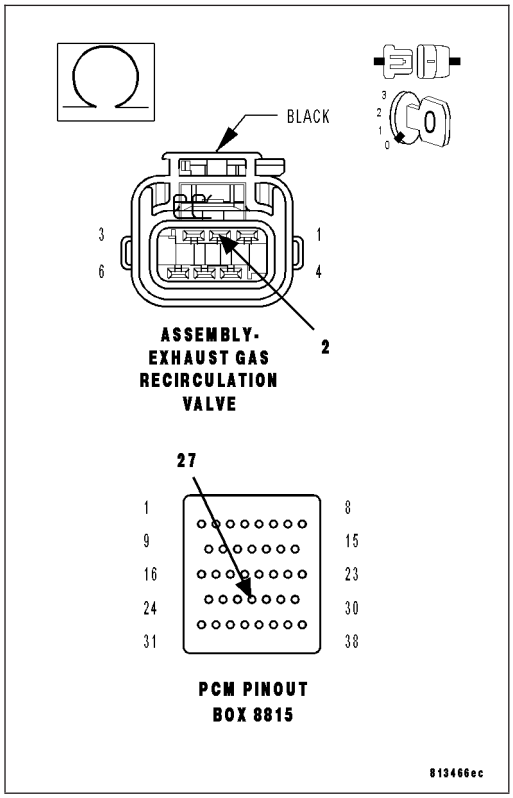

8. PCM

NOTE: Before continuing, check the PCM harness connector terminals for corrosion, damage, or terminal push out. Repair as necessary.

Using the schematics as a guide, inspect the wire harness and connectors. Pay particular attention to all Power and Ground circuits.

Were there any problems found?

Yes >> Repair as necessary.
Perform the POWERTRAIN VERIFICATION TEST. (Refer to 9 - ENGINE - STANDARD PROCEDURE)

No >> Replace and program the Powertrain Control Module per Service Information.
Perform the POWERTRAIN VERIFICATION TEST. (Refer to 9 - ENGINE - STANDARD PROCEDURE)

P0406-EGR POSITION SENSOR CIRCUIT HIGH

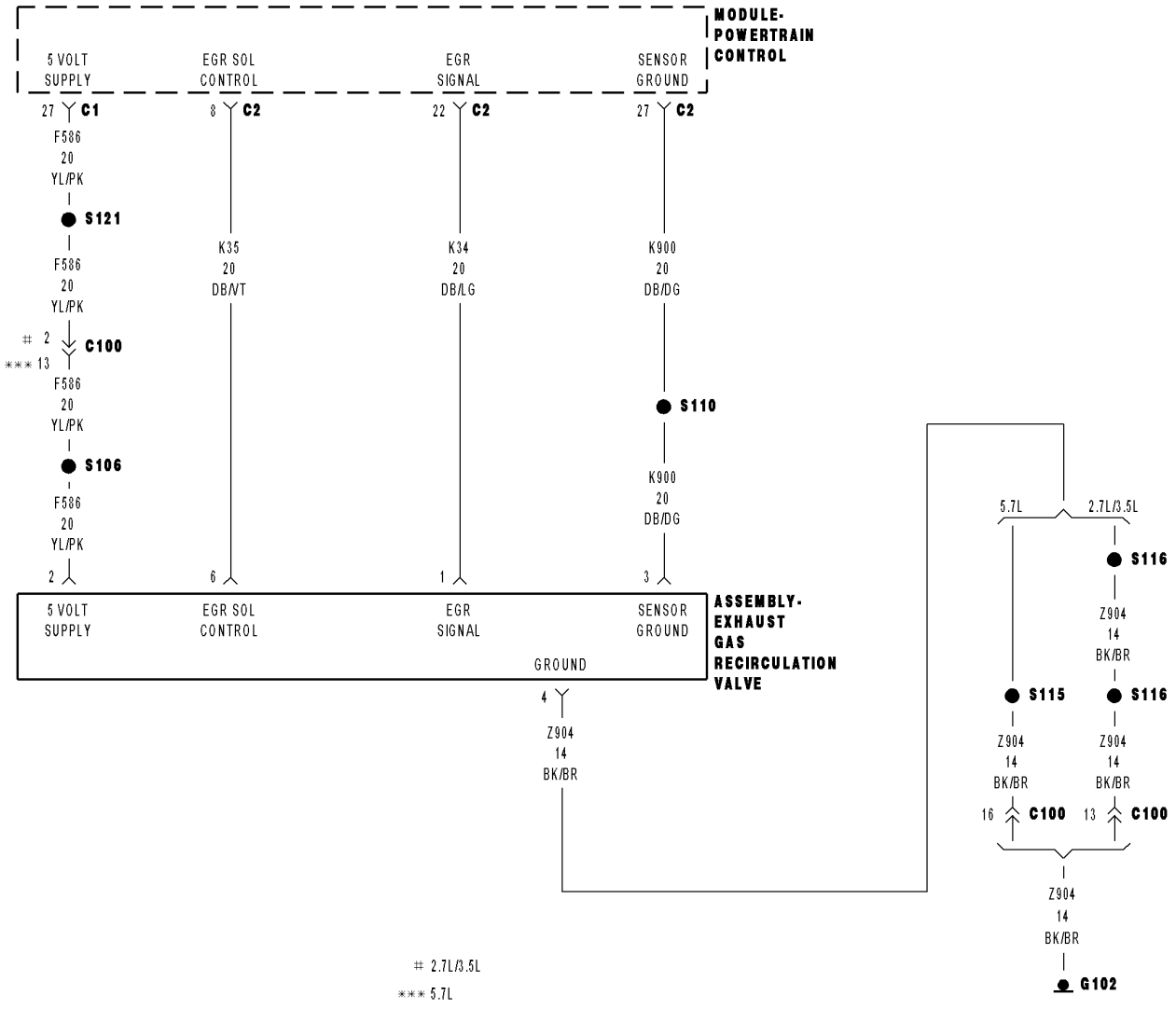

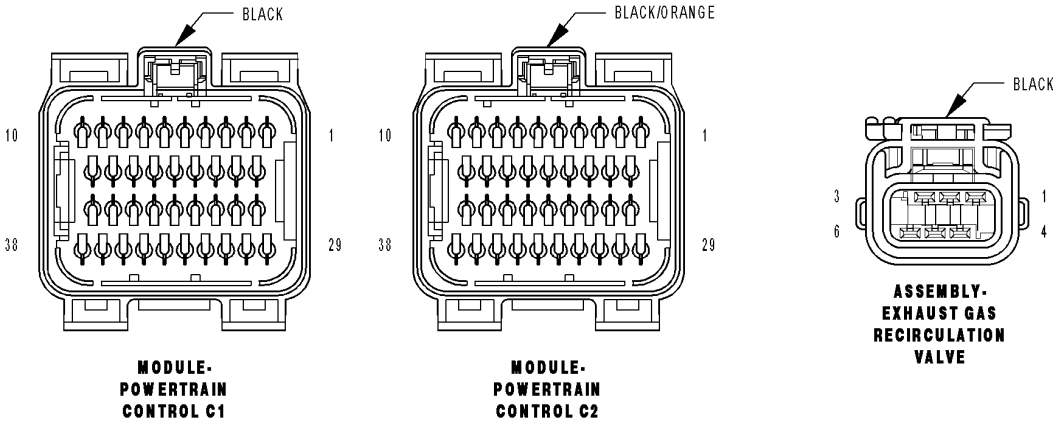

8131b09b

For a complete wiring diagram **Refer to Section 8W**.

- **When Monitored:**
  With the ignition on. Battery voltage greater than 10 volts.
- **Set Condition:**
  EGR position sensor signal is greater than 4.89. One trip Fault.

Possible Causes
(K34) EGR POSITION SENSOR SIGNAL CIRCUIT SHORTED TO (F856) 5-VOLT SUPPLY CIRCUIT
(K34) EGR POSITION SENSOR SIGNAL CIRCUIT SHORTED TO BATTERY VOLTAGE
(K34) EGR POSITION SENSOR SIGNAL CIRCUIT OPEN
(K900) SENSOR GROUND CIRCUIT OPEN
EGR SOLENOID ASSEMBLY
PCM

Always perform the Pre-Diagnostic Troubleshooting procedure before proceeding. (Refer to 9 - ENGINE - DIAGNOSIS AND TESTING).

Diagnostic Test

1. EGR POSITION SENSOR VOLTAGE ABOVE 4.5 VOLTS

Start the engine.

With the scan tool, read the EGR Position Sensor voltage.

Is the voltage above 4.5 volts?

Yes >> Go To 2

No >> Refer to the INTERMITTENT CONDITION Diagnostic Procedure.
Perform the POWERTRAIN VERIFICATION TEST. (Refer to 9 - ENGINE - STANDARD PROCEDURE)

2. (K34) EGR POSITION SENSOR SIGNAL CIRCUIT SHORTED TO THE (F856) 5-VOLT SUPPLY CIRCUIT

Turn the ignition off.

Disconnect the EGR Solenoid harness connector.

Disconnect the PCM harness connectors.

Measure the resistance between the (K34) EGR Position Sensor Signal circuit and the (F856) 5-volt Supply circuit in the EGR Solenoid harness connector.

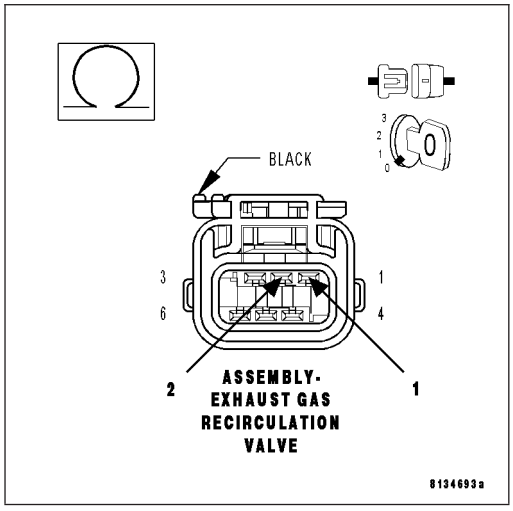

Is the resistance below 100 ohms?

Yes >> Repair the short between the (K34) EGR Position Sensor Signal circuit and the (F856) 5-volt Supply circuit.
Perform the POWERTRAIN VERIFICATION TEST. (Refer to 9 - ENGINE - STANDARD PROCEDURE)

No >> Go To 3

3. (K34) EGR POSITION SENSOR SIGNAL CIRCUIT SHORTED TO BATTERY VOLTAGE

Ignition on, engine not running.

Measure the voltage on the (K34) EGR Sensor Signal circuit in the EGR Solenoid harness connector.

Is the voltage above 0 volts?

Yes >> Repair the short to battery voltage in the (K34) EGR Position Sensor Signal circuit.
Perform the POWERTRAIN VERIFICATION TEST. (Refer to 9 - ENGINE - STANDARD PROCEDURE)

No >> Go To 4

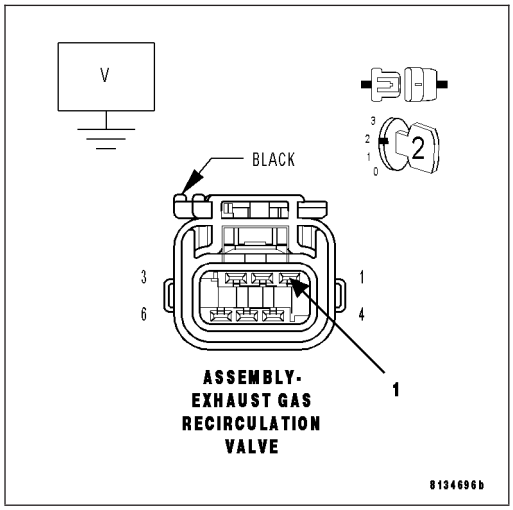

4. EGR SOLENOID ASSEMBLY

Turn the ignition off.

Connect the PCM harness connectors.

Connect a jumper wire between the (K34) EGR Position Sensor Signal circuit and the (K900) Sensor ground circuit.

With the scan tool, monitor the EGR Position Sensor voltage.

Ignition on, engine not running.

Is the voltage below 0.5 of a volt?

Yes >> Replace the EGR Solenoid Assembly.
Perform the POWERTRAIN VERIFICATION TEST. (Refer to 9 - ENGINE - STANDARD PROCEDURE)

No >> Go To 5

NOTE: Remove the jumper wire before continuing.

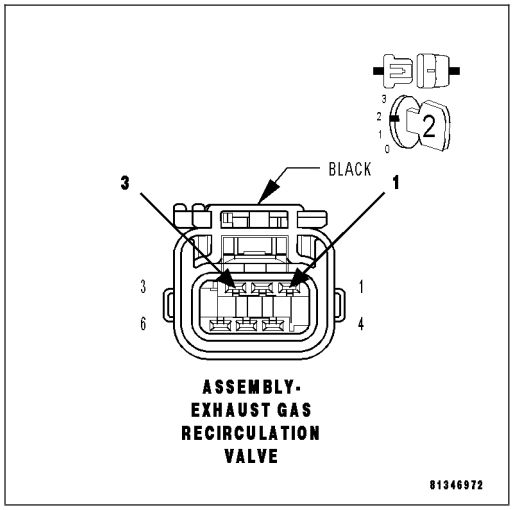

5. (K34) EGR POSITION SENSOR SIGNAL CIRCUIT OPEN

Turn the ignition off.

Disconnect the PCM harness connectors.

CAUTION: Do not probe the PCM harness connectors. Probing the PCM harness connectors will damage the PCM terminals resulting in poor terminal to pin connection. Install Miller Special Tool #8815 to perform diagnosis.

Measure the resistance of the (K34) EGR Position Sensor Signal circuit from the EGR Solenoid harness connector to the appropriate terminal of special tool #8815.

Is the resistance below 5.0 ohms?

Yes >> Go To 6

No >> Repair the open in the (K34) EGR Position Sensor Signal circuit.
Perform the POWERTRAIN VERIFICATION TEST. (Refer to 9 - ENGINE - STANDARD PROCEDURE)

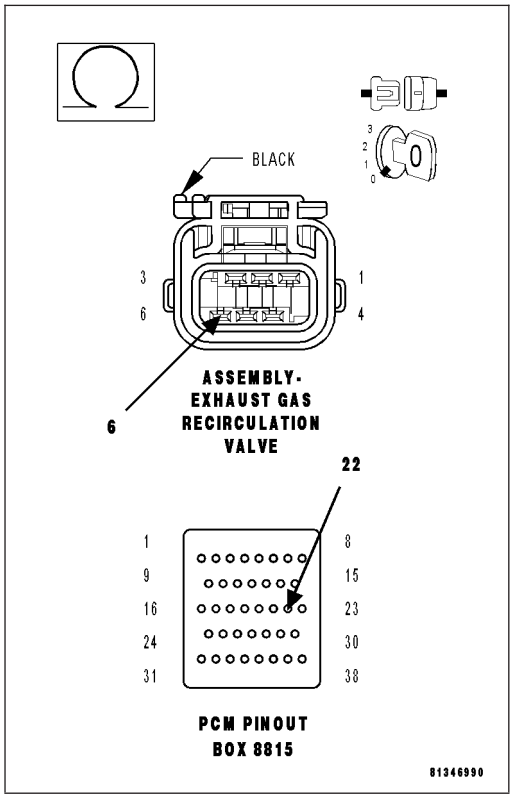

6. (K900) SENSOR GROUND CIRCUIT OPEN

Measure the resistance of the (K900) Sensor ground circuit from the EGR Solenoid harness connector to the appropriate terminal of special tool #8815.

Is the resistance below 30 ohms?

Yes >> Go To 7

No >> Repair the open in the (K900) Sensor ground circuit.
Perform the POWERTRAIN VERIFICATION TEST. (Refer to 9 - ENGINE - STANDARD PROCEDURE)

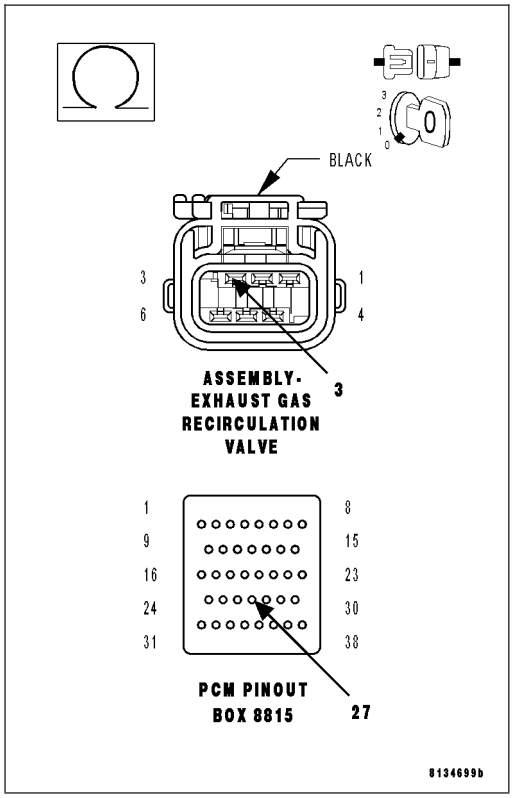

7. PCM

NOTE: Before continuing, check the PCM harness connector terminals for corrosion, damage, or terminal push out. Repair as necessary.
Using the schematics as a guide, inspect the wire harness and connectors. Pay particular attention to all Power and Ground circuits.

Were there any problems found?

Yes >> Repair as necessary.
Perform the POWERTRAIN VERIFICATION TEST. (Refer to 9 - ENGINE - STANDARD PROCEDURE)

No >> Replace and program the Powertrain Control Module per Service Information.
Perform the POWERTRAIN VERIFICATION TEST. (Refer to 9 - ENGINE - STANDARD PROCEDURE)

P0420-CATALYST 1/1 EFFICIENCY

For a complete wiring diagram **Refer to Section 8W**.

Theory of Operation

The State of Change (SOC) catalyst monitor uses the signals from both the upstream and downstream O2 sensors to detect aging of the catalyst. Based on the fact that when a catalyst ages, it loses some of its Oxygen Storage Capacity (OSC). As a result, part of the untreated exhaust gases can breakthrough the catalyst and causes the downstream O2 sensor to deviate from its neutral (Stoichiometric) position. By observing the activities in the downstream O2 signal, the degradation level of catalyst can be detected. In general, the higher the downstream O2 sensor SOC value, the more exhaust gas breakthrough and the lower the OSC of the catalytic converter.

- **When Monitored:**
  The monitor will run at between 1400 and 2300 RPM. It also runs between 40 and 70 KPA.
- **Set Condition:**
  If the final State of Change index is within the calibrated fail threshold. Two trip fault. Three good trips to turn off the MIL.

Possible Causes
EXHAUST LEAK
ENGINE MECHANICAL CONDITION
AGING O2 SENSOR
CATALYTIC CONVERTER

Always perform the Pre-Diagnostic Troubleshooting procedure before proceeding. (Refer to 9 - ENGINE - DIAGNOSIS AND TESTING).

Diagnostic Test

1. ACTIVE DTC

NOTE: A new rear O2 Sensor along with an aging front O2 Sensor may cause the DTC to set. Review the repair history of the vehicle before continuing.

NOTE: If an O2 Sensor DTC set along with the Catalytic Converter Efficiency DTC diagnose the O2 Sensor DTC(s) before continuing.

NOTE: Check for contaminants that may have damaged the O2 Sensor and Catalytic Converter: contaminated fuel, unapproved silicone, oil and coolant, repair necessary.

Ignition on, engine not running.

With a scan tool, read DTCs.

Is the DTC active at this time?

Yes >> Go To 2

No >> Refer to the INTERMITTENT CONDITION Diagnostic Procedure.
Perform the POWERTRAIN VERIFICATION TEST. (Refer to 9 - ENGINE - STANDARD PROCEDURE)

2. VISUALLY INSPECT CATALYTIC CONVERTER

NOTE: Ensure the top and bottom of the Catalytic Converter are thoroughly inspected.
Inspect the Catalytic Converter for the following damage.

Damage Catalytic Converter, dents or holes.

Severe discoloration caused by overheating the Catalytic Converter.

Catalytic Converter broke internally.

Leaking Catalytic Converter.

Were any problems found?

Yes >> Replace the Catalytic Converter. Repair the condition that may have caused the failure.
Perform the POWERTRAIN VERIFICATION TEST. (Refer to 9 - ENGINE - STANDARD PROCEDURE)

No >> Go To 3

3. EXHAUST LEAK

Start the engine.

Inspect the exhaust for leaks between the engine and the O2 Sensor.

Turn the ignition off.

If a leak is heard but unable to be located, it may be necessary to use special tool Miller Tool #8404A Evaporative Emissions Leak Detector (EELD) on the exhaust system to find leaks.

Connect the SMOKE supply tip (black hose) to the exhaust cone adapter (if equipped) and place it into the tail pipe.

Set the smoke/air control switch to SMOKE.

Press the remote smoke/air start button.

While still holding the remote smoke/air start button, use the white light (#8404-CLL) to follow the EVAP system path, and look for the source of the leak indicated by exiting smoke.

If a leak is concealed from view, release the remote smoke/air start button, and use the ultraviolet (UV) black light #8404-UVL and the yellow goggles 8404-20 to look for residual traces of dye that is left behind by the smoke.

The exiting smoke deposits a residual fluid that is either bright green or bright yellow in color when viewed with a UV light.

Be sure to check the exhaust manifold to cylinder head connection for leaks.

Are there any exhaust leaks?

Yes >> Repair or replace the leaking exhaust parts as necessary.
Perform the POWERTRAIN VERIFICATION TEST. (Refer to 9 - ENGINE - STANDARD PROCEDURE)

No >> Go To 4

4. ENGINE MECHANICAL CONDITION

Check the exhaust for excessive smoke caused by an internal problem in the engine.

Is an engine mechanical condition present?

Yes >> Repair the engine mechanical condition as necessary.
Perform the POWERTRAIN VERIFICATION TEST. (Refer to 9 - ENGINE - STANDARD PROCEDURE)

No >> Go To 5

5. AGING O2 SENSOR

A new rear O2 Sensor along with an aging front O2 Sensor may cause the DTC to set.
Review the vehicles repair history.

Has the rear O2 Sensor been replaced without replacing the front O2 Sensor?

Yes >> Replace the Front O2 Sensor as necessary.
Perform the POWERTRAIN VERIFICATION TEST. (Refer to 9 - ENGINE - STANDARD PROCEDURE)

No >> Go To 6

6. CATALYTIC CONVERTER

If there are no possible cause remaining, view repair.

Repair

Replace the Catalytic Converter.
Perform the POWERTRAIN VERIFICATION TEST. (Refer to 9 - ENGINE - STANDARD PROCEDURE)

P0430-CATALYST 2/1 EFFICIENCY

For a complete wiring diagram **Refer to Section 8W**.

Theory of Operation

The State of Change (SOC) catalyst monitor uses the signals from both the upstream and downstream O2 sensors to detect aging of the catalyst. Based on the fact that when a catalyst ages, it loses some of its Oxygen Storage Capacity (OSC). As a result, part of the untreated exhaust gases can breakthrough the catalyst and causes the downstream O2 sensor to deviate from its neutral (Stoichiometric) position. By observing the activities in the downstream O2 signal, the degradation level of catalyst can be detected. In general, the higher the downstream O2 sensor SOC value, the more exhaust gas breakthrough and the lower the OSC of the catalytic converter.

- **When Monitored:**
  The monitor will run at between 1400 and 2300 RPM. It also runs between 40 and 70 KPA.
- **Set Condition:**
  If the final State of Change index is within the calibrated fail threshold. Two trip fault. Three good trips to turn off the MIL.

Possible Causes
EXHAUST LEAK
ENGINE MECHANICAL CONDITION
AGING O2 SENSOR
CATALYTIC CONVERTER

Always perform the Pre-Diagnostic Troubleshooting procedure before proceeding. (Refer to 9 - ENGINE - DIAGNOSIS AND TESTING).

Diagnostic Test

1. ACTIVE DTC

NOTE: A new rear O2 Sensor along with an aging front O2 Sensor may cause the DTC to set. Review the repair history of the vehicle before continuing.

NOTE: If an O2 Sensor DTC set along with the Catalytic Converter Efficiency DTC diagnose the O2 Sensor DTC(s) before continuing.

NOTE: Check for contaminants that may have damaged the O2 Sensor and Catalytic Converter: contaminated fuel, unapproved silicone, oil and coolant, repair necessary.

Ignition on, engine not running.

With a scan tool, read DTCs.

Is the DTC active at this time?

Yes >> Go To 2

No >> Refer to the INTERMITTENT CONDITION Diagnostic Procedure.
Perform the POWERTRAIN VERIFICATION TEST. (Refer to 9 - ENGINE - STANDARD PROCEDURE)

2. VISUALLY INSPECT CATALYTIC CONVERTER

NOTE: Ensure the top and bottom of the Catalytic Converter are thoroughly inspected.
Inspect the Catalytic Converter for the following damage.

Damage Catalytic Converter, dents or holes.

Severe discoloration caused by overheating the Catalytic Converter.

Catalytic Converter broke internally.

Leaking Catalytic Converter.

Were any problems found?

Yes >> Replace the Catalytic Converter. Repair the condition that may have caused the failure.
Perform the POWERTRAIN VERIFICATION TEST. (Refer to 9 - ENGINE - STANDARD PROCEDURE)

No >> Go To 3

3. EXHAUST LEAK

Start the engine.

Inspect the exhaust for leaks between the engine and the O2 Sensor.

Turn the ignition off.

If a leak is heard but unable to be located, it may be necessary to use special tool Miller Tool #8404A Evaporative Emissions Leak Detector (EELD) on the exhaust system to find leaks.

Connect the SMOKE supply tip (black hose) to the exhaust cone adapter (if equipped) and place it into the tail pipe.

Set the smoke/air control switch to SMOKE.

Press the remote smoke/air start button.

While still holding the remote smoke/air start button, use the white light (#8404-CLL) to follow the EVAP system path, and look for the source of the leak indicated by exiting smoke.

If a leak is concealed from view, release the remote smoke/air start button, and use the ultraviolet (UV) black light #8404-UVL and the yellow goggles 8404-20 to look for residual traces of dye that is left behind by the smoke.

The exiting smoke deposits a residual fluid that is either bright green or bright yellow in color when viewed with a UV light.

Be sure to check the exhaust manifold to cylinder head connection for leaks.

Are there any exhaust leaks?

Yes >> Repair or replace the leaking exhaust parts as necessary.
Perform the POWERTRAIN VERIFICATION TEST. (Refer to 9 - ENGINE - STANDARD PROCEDURE)

No >> Go To 4

4. ENGINE MECHANICAL CONDITION

Check the exhaust for excessive smoke caused by an internal problem in the engine.

Is an engine mechanical condition present?

Yes >> Repair the engine mechanical condition as necessary.
Perform the POWERTRAIN VERIFICATION TEST. (Refer to 9 - ENGINE - STANDARD PROCEDURE)

No >> Go To 5

5. AGING O2 SENSOR

A new rear O2 Sensor along with an aging front O2 Sensor may cause the DTC to set.
Review the vehicles repair history.

Has the rear O2 Sensor been replaced without replacing the front O2 Sensor?

Yes >> Replace the 2/1 O2 Sensor as necessary.
Perform the POWERTRAIN VERIFICATION TEST. (Refer to 9 - ENGINE - STANDARD PROCEDURE)

No >> Go To 6

6. CATALYTIC CONVERTER

If there are no possible cause remaining, view repair.

Repair

Replace the Catalytic Converter.
Perform the POWERTRAIN VERIFICATION TEST. (Refer to 9 - ENGINE - STANDARD PROCEDURE)

P0440-GENERAL EVAP SYSTEM FAILURE

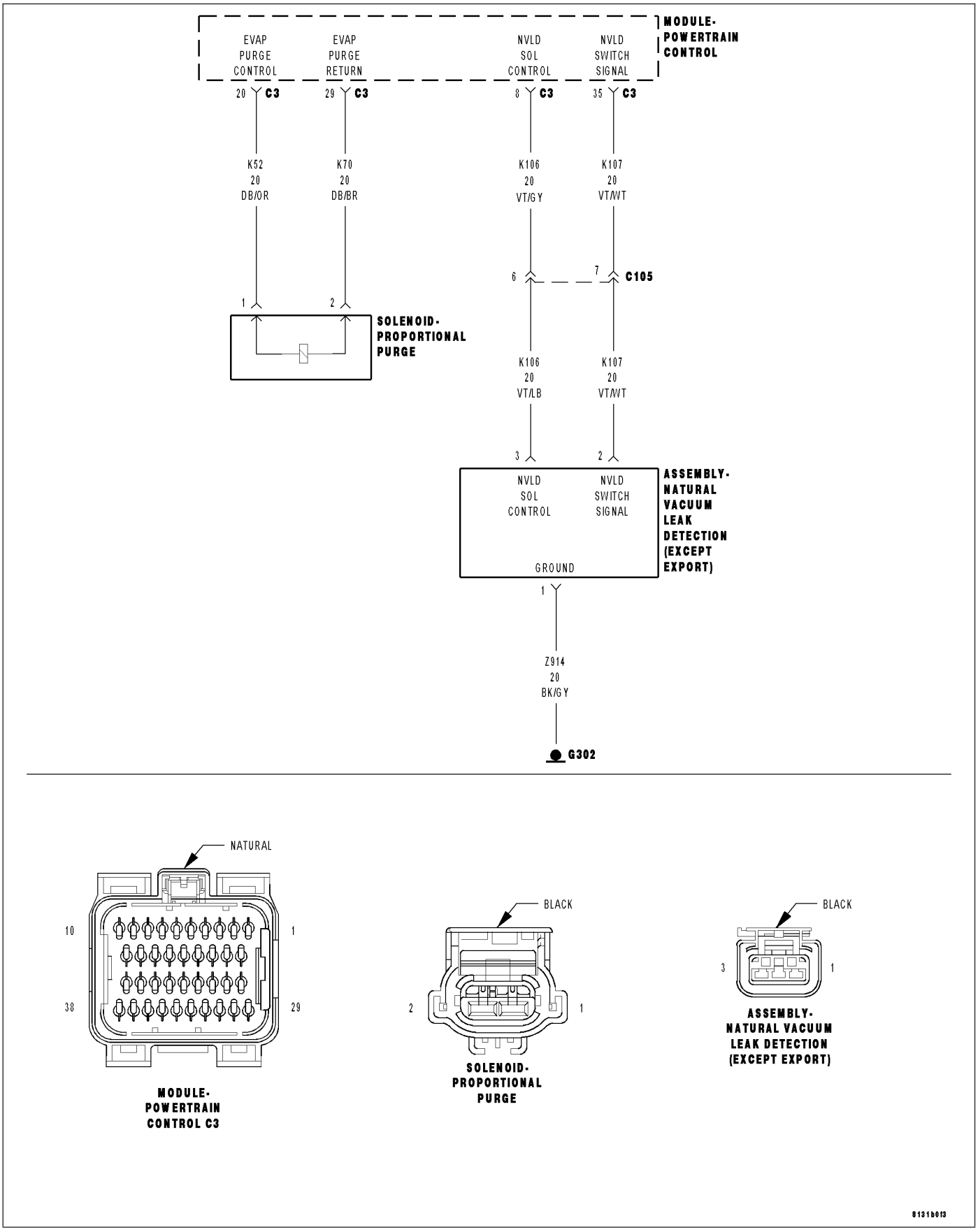

For a complete wiring diagram **Refer to Section 8W**.

Theory of Operation

The theory behind the Natural Vacuum Leak Detection (NVLD) is adherence to the Ideal Gas Law. Pressure in a sealed vessel will change linearly as a function of the temperature of the gas in the vessel. Even small leaks will allow the pressure in the vessel to come to equilibrium with the atmospheric pressure. The General Evap test runs by commanding purge flow during the leak size test and evaluates the NVLD vacuum switch.

- **When Monitored:**
  Engine running after a cold start. Fuel Level greater than 12%. Fuel level below 88%. No NVLD switch during previous eng off time. No NVLD switch close during leak size purge draw. Ambient Temperature between 4°C and 32°C (39°F and 89°F).
- **Set Condition:**
  The PCM does not see the NVLD switch close during the medium/large leak test. The PCM then will increase the vacuum supply to the EVAP system by increasing flow through the EVAP Purge valve. If the switch does not close with an increase in vacuum an error is detected. Two Trip Fault. Three good trips to turn off the MIL.

Possible Causes
EVAP PURGE SOLENOID VACUUM SUPPLY
(Z914) GROUND CIRCUIT OPEN
(K107) NVLD SWITCH SIGNAL CIRCUIT OPEN
EVAPORATIVE EMISSION LEAK DETECTION
NVLD ASSEMBLY
EVAP PURGE SOLENOID
PCM

Always perform the Pre-Diagnostic Troubleshooting procedure before proceeding. (Refer to 9 - ENGINE - DIAGNOSIS AND TESTING).

Diagnostic Test

1. VEHICLE HISTORY AND SERVICE BULLETIN INVESTIGATION

Ignition on, engine not running.

With a scan tool, read DTCs and record the related Freeze Frame data if any DTC(s) are present.

Whether or not any DTC(s) are present you will want to check the following items which may assist in repairing the customer's complaint successfully.

Check the vehicles repair history.

If the vehicle has a repair history that pertains to the customer's current complaint, review the repair.

Inspect the vehicle for any aftermarket accessories that may have been installed incorrectly.

Check for any service bulletin(s) related to the customer's complaint or DTC(s).

If a service bulletin applies, follow the instructions per the service bulletin.

Choose the following scenario that best applies.

The service bulletin repaired the customer's complaint.
Testing complete.

A DTC is present, no service bulletins apply, or the service bulletin didn't repair the customer's complaint.
Go To 2

2. ACTIVE DTC

NOTE: If any of the following DTCs are set (P0443, P0452, P0453, P0498, or P0499) diagnose them first before continuing with P0440.

NOTE: A loose gas cap could have caused this DTC to set. Make sure the gas cap is tight and in good condition.

Ignition on, engine not running.

With a scan tool, read DTCs.

Is the DTC active at this time?

Yes >> Go To 3

No >> Refer to the INTERMITTENT CONDITION Diagnostic Procedure.
Perform the POWERTRAIN VERIFICATION TEST. (Refer to 9 - ENGINE - STANDARD PROCEDURE)

3. VISUAL AND PHYSICAL INSPECTION

Turn the ignition off.

Perform a visual and physical inspection of the entire Evaporative Emission system.

Check for the following conditions:

- Hoses disconnected or left off
- Holes or cracks
- Loose seal points
- Evidence of damaged components
- Incorrect routing of hoses and tubes
- Fuel Cap left off or bad gasket seal

Were any of the above conditions found?

Yes >> Repair as necessary.
Perform the POWERTRAIN VERIFICATION TEST. (Refer to 9 - ENGINE - STANDARD PROCEDURE)

No >> Go To 4

4. EVAP VACUUM SUPPLY HOSE INSPECTION

Carefully inspect the Evap Purge Solenoid vacuum supply hose for proper routing.

Check for a pinched or plugged hose from the throttle body or intake manifold to the Purge Solenoid.

Make sure the vacuum port at the throttle body or intake manifold is free from any blockage.

Were any problems found?

Yes >> Repair the vacuum supply, hose/tube as necessary.
Perform the POWERTRAIN VERIFICATION TEST. (Refer to 9 - ENGINE - STANDARD PROCEDURE)

No >> Go To 5

5. CHECKING EVAP PURGE SOLENOID FUNCTIONALITY

NOTE: To continue testing you will need Miller Tool #8404 Evaporative Emission Leak Detector (EELD).

WARNING: Keep lit cigarettes, sparks, flames, and other ignition sources away from the test area to prevent the ignition of explosive gases, Keep the test area well ventilated.

Connect the red power lead of the EELD to the battery positive terminal and the black ground lead to battery negative terminal.

Disconnect the vacuum hoses at the Evap Purge Solenoid.

Connect the SMOKE supply tip (black hose) to the “CAN” port on the Evap Purge Solenoid.

Set the smoke/air control switch to SMOKE.

While still holding the remote smoke/air start button, check to see if smoke is exiting the purge valve. This indicates that there is a leak internal to the purge valve.

Is smoke visible from the EVAP Purge Solenoid?

Yes >> Replace the Evap Purge Solenoid.
Perform the POWERTRAIN VERIFICATION TEST. (Refer to 9 - ENGINE - STANDARD PROCEDURE)

No >> Go To 6

6. CHECKING EVAP PURGE SOLENOID FUNCTIONALITY

NOTE: This is an optional method of checking the purge valve for leaks if the EELD is unavailable.
Disconnect the Smoke supply tip from the vacuum supply hoses at the EVAP Purge Solenoid.
Using a hand vacuum pump, apply 10 in Hg to the ″CAN″ side of the EVAP Purge Solenoid.
Observe the vacuum gauge for at least 15 seconds.

Does the EVAP Purge Solenoid hold vacuum?

Yes >> Go To 7

No >> Replace the Evap Purge Solenoid.
Perform the POWERTRAIN VERIFICATION TEST. (Refer to 9 - ENGINE - STANDARD PROCEDURE)

7. NVLD SWITCH OPERATION

CAUTION: Do not attempt to probe the NVLD Terminals to diagnose the switch function. This may damage the switch and disable the NVLD component. Follow procedures outlined in the service manual for NVLD switch testing using a scan tool.
Connect the previously disconnected vacuum hose.
Start the engine.
Allow the engine to idle.
Using the scan tool, perform the NVLD FORCED MONITOR TEST.
Monitor the NVLD Switch state.

NOTE: As the test runs, the NVLD Switch should go from an OPEN state to a CLOSED state and then return to OPEN when the test is complete This may take up to 10 minutes.

Did the NVLD Switch operate as described above?

Yes >> Test complete.

No >> Go To 8

8. VERIFY NVLD SWITCH OPERATION

Start the engine.
Allow the engine to idle.
Using the scan tool, perform the NVLD FORCED MONITOR TEST for a second time.
While the NVLD FORCED MONITOR TEST is running, open/remove the gas cap.
Monitor the NVLD Switch state.

Did the NVLD Switch go from OPEN to CLOSED?

Yes >> Replace the NVLD Assembly.
Perform the POWERTRAIN VERIFICATION TEST. (Refer to 9 - ENGINE - STANDARD PROCEDURE)

No >> Go To 9

9. VERIFY EVAPORATIVE EMISSION LEAK

WARNING: Keep lit cigarettes, sparks, flames, and other ignition sources away from the test area to prevent the ignition of explosive gases. Keep the test area well ventilated.

Turn the ignition off.

To continue testing you will need Miller Tool #8404 Evaporative Emission Leak Detector (EELD).

NOTE: The fuel tank should have between 20% and 80% of fuel tank capacity to properly test the Evap system.

Connect the red power lead of EELD to the battery positive terminal and the black ground lead to battery negative terminal.

Block the vent hose of the EVAP Canister.

Connect shop air to the EELD.

Set the smoke/air control switch to AIR.

Insert the tester's AIR supply tip (clear hose) into the .040 orifice on the tester's control panel.

Press the remote smoke/air start button.

Position the red flag on the air flow meter so it is aligned with the indicator ball.

When the calibration is complete, release the remote button. The EELD flow meter is now calibrated in liters per minute.

Install the service port adapter #8404-14 on the vehicle's service port (if equipped) or install the #8404-ADP into the filter line.

Connect the Air supply hose from the EELD to the service port (if equipped) or to the #8404-ADP adapter.

Press the remote button to activate AIR flow.

Compare the flow meter indicator ball reading to the red flag.

ABOVE the red flag indicates a leak present.

BELOW the red flag indicates a sealed system.

Is the indicator ball above the red flag?

Yes >> Go To 10

No >> Go To 11

10. EVAPORATIVE EMISSION LEAK DETECTION

NOTE: A thorough visual inspection of the Evap system hoses, tubes, and connections may save time in your diagnosis. Look for any physical damage or signs of wetness at connections. The strong smell of fuel vapors may aid diagnosis also.

Remove the Air supply hose from the service port or the #8404-ADP adapter.

Connect the SMOKE supply tip (black hose) to the service port (if equipped) or to the #8404-ADP adapter.

Set the smoke/air control switch to SMOKE.

NOTE: The flow meter indicator ball will not move at this point.

Press the remote smoke/air start button.

NOTE: Make sure that smoke has filled the EVAP system by continuing to press the remote smoke/air start button, remove the vehicle fuel cap, and wait for the smoke to exit. Once smoke is indicated reinstall the fuel cap.

NOTE: For optimal performance, introduce smoke into the system for an additional 60 seconds; continue introducing smoke at 15 second intervals, as necessary.

While still holding the remote smoke/air start button, use the white light (#8404-CLL) to follow the EVAP system path, and look for the source of the leak indicated by exiting smoke.

If a leak is concealed from view (i.e., top of fuel tank), release the remote smoke/air start button, and use the ultra-violet (UV) black light #8404-UVL and the yellow goggles 8404-20 to look for residual traces of dye that are left behind by the smoke.

The exiting smoke deposits a residual fluid that is either bright green or bright yellow in color when viewed with a UV light.

NOTE: The EVAP System is divided into three zones. A leak from any of these zones can cause this DTC to set. The lists below specify the possible leak points in that specific zone. For further assistance see the Zone Identification Chart below.

- ZONE 1

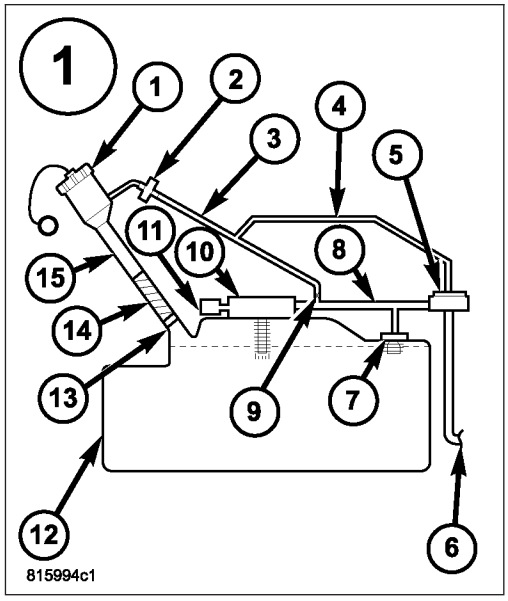

1 Fuel Cap
2 Recirculation Check Valve.
3 Vapor Recirculation Line.
4 Signal Vapor Line for FVM.
5 Flow Management Valve.
6 Fuel Tank to Canister Vapor Line connection.
7 Fuel Tank Vent (Check Valve).
8 Vapor Line to Canister.
9 Flow Control Orfice.
10 Control Valve.
11 Liquid Trap.
12 Fuel Tank.
13 Check valve.
14 Fuel Fill Tube to Tank connector.
15 Fuel Fill Tube
Damaged or disconnected EVAP system components.

- ZONE 2

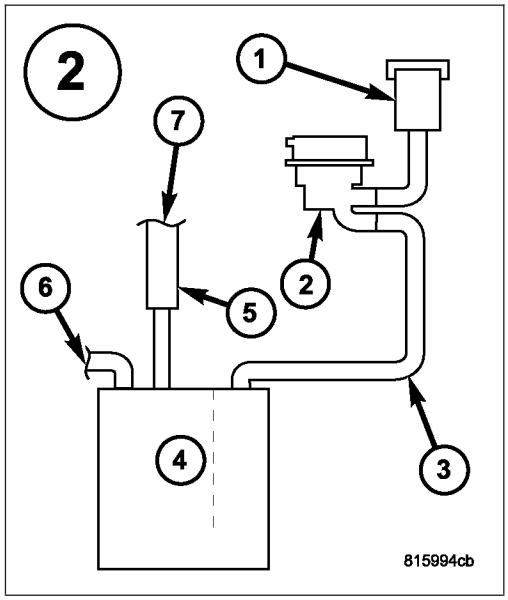

1 Filter.
2 NVLD.
3 Canister Vent Line.
4 Evap Canister.
5 Chassis Purge Valve.
6 Fuel Tank to Canister Vapor Line connection.
7 Evap Purge connection.

- ZONE 3

1 Evap Purge Vacuum Line.
2 Connection to Chassis Line.
3 Connection to Canister.
4 Chassis Purge Line.
5 Evap Purge Vacuum Line.
6 Connection to Evap Purge Harness.
7 Chassis Evap Purge Line connection to Engine Vacuum.
8 Evap Purge Valve.
9 Service Port.

NOTE: Carefully inspect the vent side of the EVAP Canister. Due to the filtering system in the canister the smoke or dye may or may not be visible. Introducing smoke into the filtered side of the canister may assist in locating the leak.

Was a leak found?

Yes >> Repair or replace the leaking component as necessary.
Perform the POWERTRAIN VERIFICATION TEST. (Refer to 9 - ENGINE - STANDARD PROCEDURE)

No >> Go To 11

11. NVLD ASSEMBLY

Turn the ignition off.

Disconnect the NVLD electrical harness connector.

Check connectors - Clean/repair as necessary.

Ignition on, engine not running.

Connect a jumper wire between the (K107) NVLD Switch Signal circuit and the (Z910) Ground circuit in the NVLD electrical harness connector.

Monitor the NVLD Switch state on the scan tool.

Does the Switch change from OPEN to CLOSED when the jumper wire is installed?

Yes >> Replace the NVLD Assembly.
Perform the POWERTRAIN VERIFICATION TEST. (Refer to 9 - ENGINE - STANDARD PROCEDURE)

No >> Go To 12

NOTE: Remove the jumper wire before continuing.

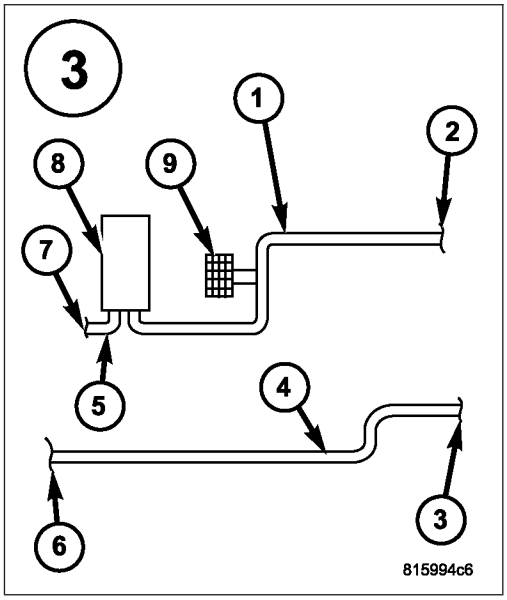

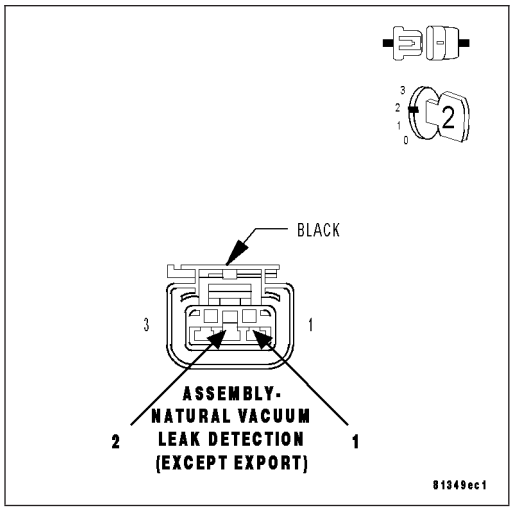

12. (Z910) GROUND CIRCUIT OPEN

Turn the ignition off.

Measure the resistance between the (Z910) Ground circuit and ground.

Is the resistance below 5.0 ohms?

Yes >> Go To 13

No >> Repair the open in the (Z910) Ground circuit.
Perform the POWERTRAIN VERIFICATION TEST. (Refer to 9 - ENGINE - STANDARD PROCEDURE).

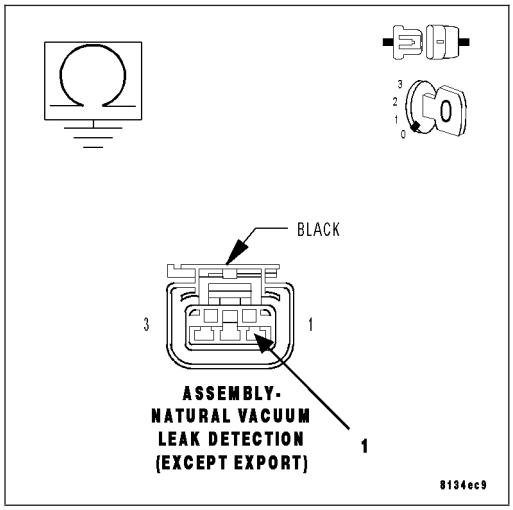

13. (K107) NVLD SWITCH SIGNAL CIRCUIT OPEN

Disconnect the PCM harness connectors.

CAUTION: Do not probe the PCM harness connectors. Probing the PCM harness connectors will damage the PCM terminals resulting in poor terminal to pin connection. Install Miller Special Tool #8815 to perform diagnosis.

Measure the resistance of the (K107) NVLD Switch Signal circuit from the NVLD electrical harness connector to the appropriate terminal of the special tool #8815.

Is the resistance below 5.0 ohms?

Yes >> Go To 14

No >> Repair the open in the (K107) Signal circuit.
Perform the POWERTRAIN VERIFICATION TEST. (Refer to 9 - ENGINE - STANDARD PROCEDURE)

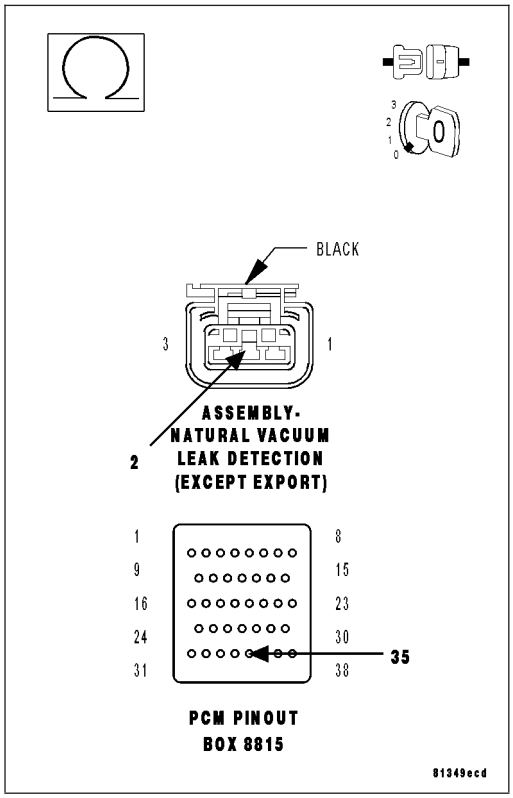

14. PCM

NOTE: Before continuing, check the PCM harness connector terminals for corrosion, damage, or terminal push out. Repair as necessary.

Using the schematics as a guide, inspect the wire harness and connectors. Pay particular attention to all Power and Ground circuits.

Were there any problems found?

Yes >> Repair as necessary.
Perform the POWERTRAIN VERIFICATION TEST. (Refer to 9 - ENGINE - STANDARD PROCEDURE)

No >> Replace and program the Powertrain Control Module per Service Information.
Perform the POWERTRAIN VERIFICATION TEST. (Refer to 9 - ENGINE - STANDARD PROCEDURE)

P0441-EVAP PURGE SYSTEM PERFORMANCE

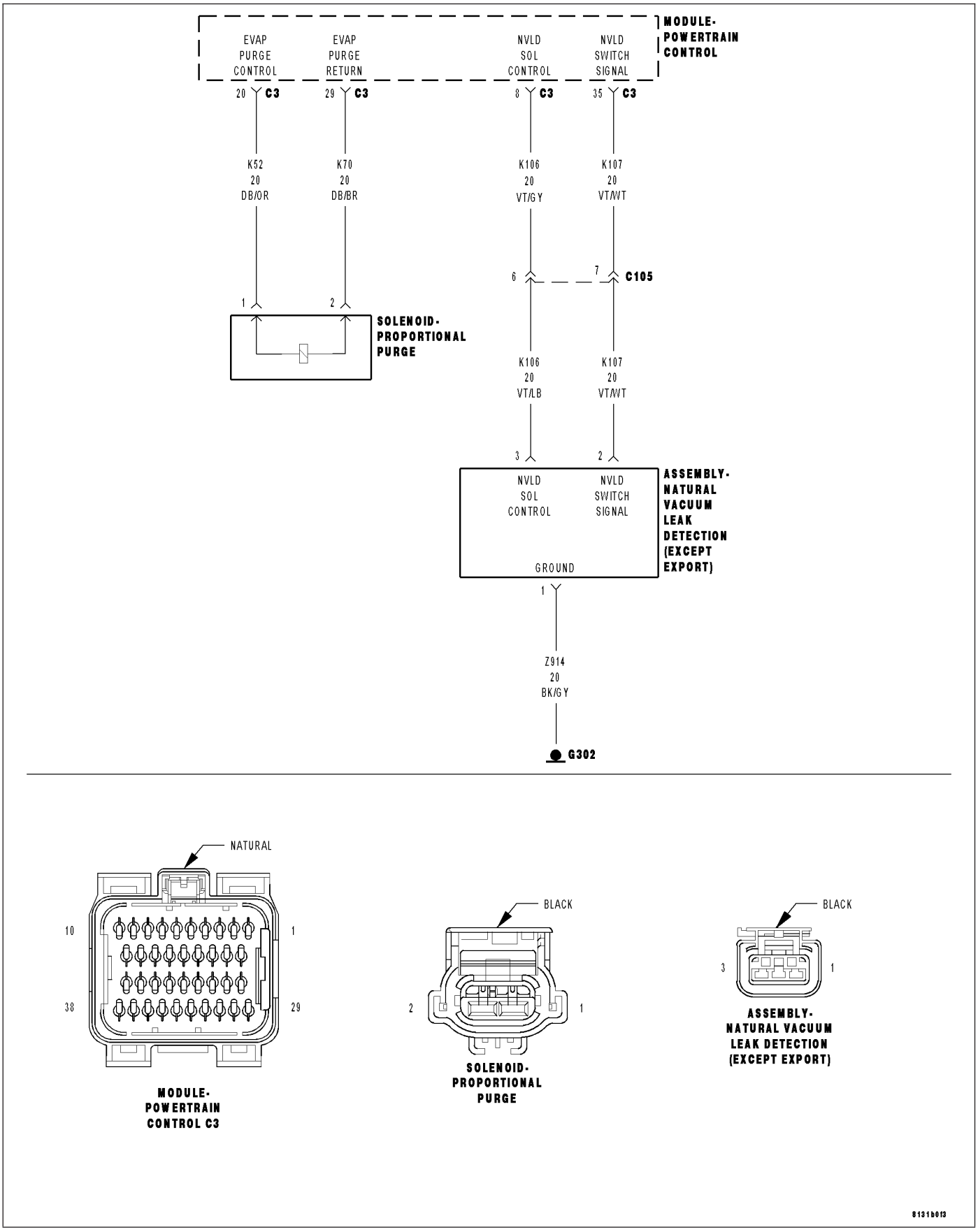

For a complete wiring diagram **Refer to Section 8W**.

- **When Monitored:**
  Cold start test. Engine Running. Small Leak Test Passed.
- **Set Condition:**
  The PCM activates the EVAP Purge solenoid gradually increases to maximum flow. During flow, the PCM looks for the NVLD switch to close. If the PCM does not see the NVLD switch close at maximum flow an error is detected. Two Trip Fault. Three good trips to turn off the MIL.

Possible Causes
EVAP PURGE SOLENOID VACUUM SUPPLY
EVAP PURGE SOLENOID

Always perform the Pre-Diagnostic Troubleshooting procedure before proceeding. (Refer to 9 - ENGINE - DIAGNOSIS AND TESTING).

Diagnostic Test

1. VEHICLE HISTORY AND SERVICE BULLETIN INVESTIGATION

Ignition on, engine not running.

With a scan tool, read DTCs and record the related Freeze Frame data if any DTC(s) are present.

Whether or not any DTC(s) are present you will want to check the following items which may assist in repairing the customer's complaint successfully.

Check the vehicles repair history.

If the vehicle has a repair history that pertains to the customer's current complaint, review the repair.

Inspect the vehicle for any aftermarket accessories that may have been installed incorrectly.

Check for any service bulletin(s) related to the customer's complaint or DTC(s).

If a service bulletin applies, follow the instructions per the service bulletin.

Choose the following scenario that best applies.

The service bulletin repaired the customer's complaint.
Testing complete.

A DTC is present, no service bulletins apply, or the service bulletin didn't repair the customer's complaint.
Go To 2

2. ACTIVE DTC

NOTE: If any of the following DTCs are set (P0443, P0452, P0453, P0498, or P0499) diagnose them first before continuing with P0441.

Ignition on, engine not running.

With a scan tool, read DTCs.

Is the DTC active at this time?

Yes >> Go To 3

No >> Refer to the INTERMITTENT CONDITION Diagnostic Procedure.
Perform the POWERTRAIN VERIFICATION TEST. (Refer to 9 - ENGINE - STANDARD PROCEDURE)

3. CHECKING EVAP PURGE SOLENOID FUNCTIONALITY

NOTE: After disconnecting the Evap Purge vacuum connections, inspect the lines and solenoid for any signs of contamination or foreign materials.

Using a hand vacuum pump, apply 10 in Hg to ″CAN″ side of the EVAP Purge Solenoid.

Ignition on, engine not running.

Observe the vacuum gauge.

With the scan tool, actuate the EVAP Purge Solenoid.

Does the vacuum drop when the solenoid is actuated?

Yes >> Go To 4

No >> Replace the Evap Purge Solenoid.
Perform the POWERTRAIN VERIFICATION TEST. (Refer to 9 - ENGINE - STANDARD PROCEDURE)

NOTE: Remove the vacuum pump before continuing.

4. EVAP VACUUM SUPPLY HOSE INSPECTION

Turn the ignition off.

Carefully inspect the Evap Purge Solenoid vacuum supply hose for proper routing.

Check for a pinched or plugged hose from the throttle body or intake manifold to the Purge Solenoid.

Inspect the vacuum port at the throttle body or intake manifold for any damage or plugging.

Were any problems found?

Yes >> Repair the vacuum supply hose/tube as necessary.
Perform the POWERTRAIN VERIFICATION TEST. (Refer to 9 - ENGINE - STANDARD PROCEDURE)

No >> Go to 5
Perform the POWERTRAIN VERIFICATION TEST.

5. NVLD SWITCH OPERATION

CAUTION: Do not attempt to probe the NVLD Terminals to diagnose the switch function. This may damage the switch and disable the NVLD component. Follow procedures outlined in the service manual for NVLD switch testing using a scan tool.

Connect the previously disconnected vacuum hose.

Start the engine.

Allow the engine to idle.

Using the scan tool, perform the NVLD FORCED MONITOR TEST.

Monitor the NVLD Switch state.

NOTE: As the test runs, the NVLD Switch should go from an OPEN state to a CLOSED state and then return to OPEN when the test is complete This may take up to 10 minutes.

Did the NVLD Switch operate as described above?

Yes >> Test complete.

No >> Go To 6

6. VERIFY NVLD SWITCH OPERATION

Start the engine.
Allow the engine to idle.
Using the scan tool, perform the NVLD FORCED MONITOR TEST for a second time.
While the NVLD FORCED MONITOR TEST is running, open/remove the gas cap.
Monitor the NVLD Switch state.

Did the NVLD Switch go from OPEN to CLOSED?

Yes >> Replace the NVLD Assembly.
Perform the POWERTRAIN VERIFICATION TEST. (Refer to 9 - ENGINE - STANDARD PROCEDURE)

No >> Test complete.

P0442-EVAP PURGE SYSTEM MEDIUM LEAK

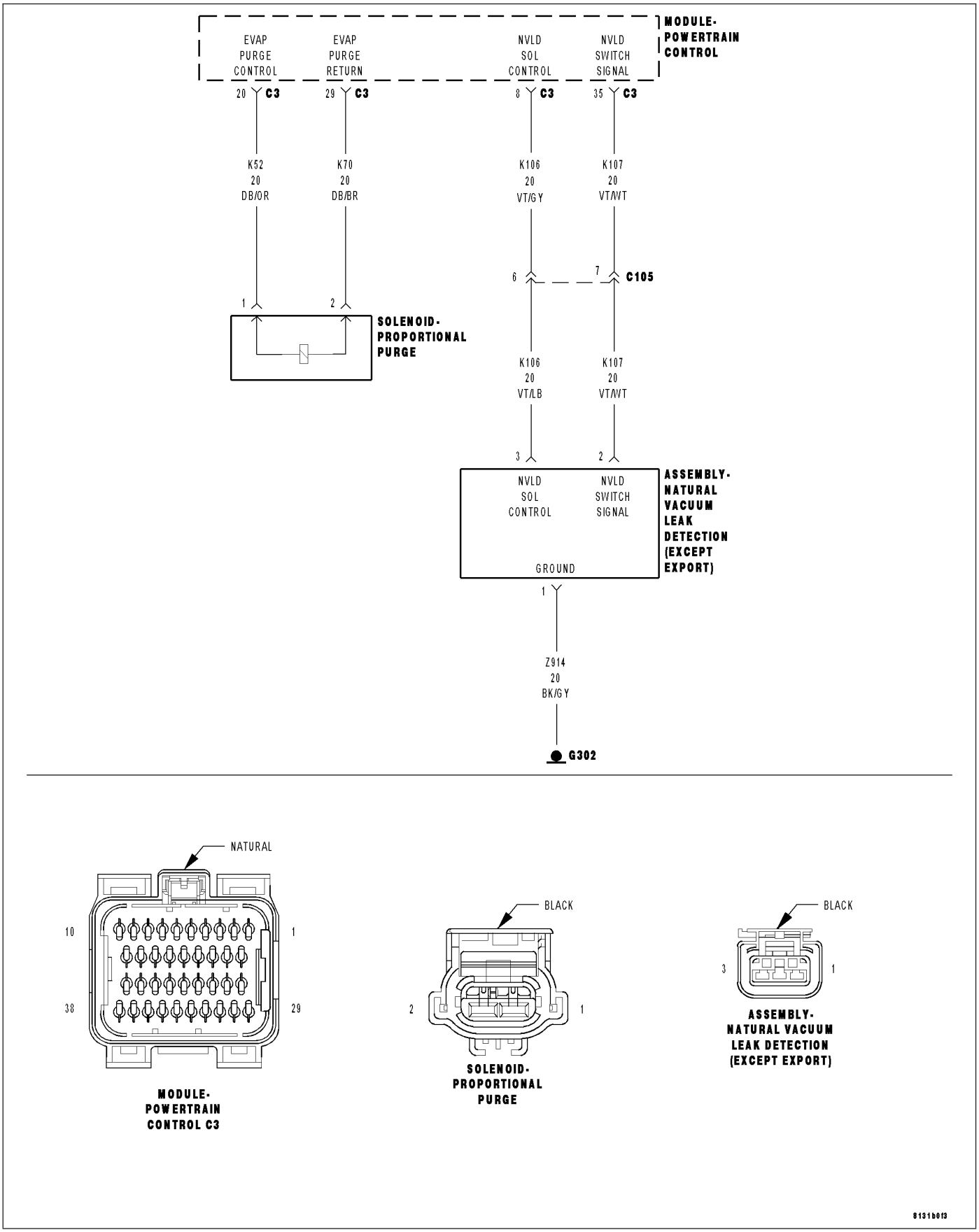

For a complete wiring diagram **Refer to Section 8W**.

Theory of Operation

The theory behind the Natural Vacuum Leak Detection (NVLD) is adherence to the Ideal Gas Law. Pressure in a sealed vessel will change linearly as a function of the temperature of the gas in the vessel. Even small leaks will allow the pressure in the vessel to come to equilibrium with the atmospheric pressure. After key-off and a calibrated amount of time, cool down from operating temperatures or diurnal ambient temperature the system pressure will force the system to go negative or draw a vacuum if there is no leak. When the vacuum level reaches 1" H2O (0.25 KPA) the NVLD vacuum switch closes. This sends a signal to the NGC freezing a timer and registering a pass. If a switch closure is not detected an assessment of leak size will be made.

- **When Monitored:**
  Engine Running. Cold start test. Fuel Level greater than 12%. Ambient Temperature between 4°C and 32°C (39°F and 89°F) Close Loop fuel system. Test runs when small leak test is maturing.
- **Set Condition:**
  The PCM activates the EVAP Purge Solenoid to pull the EVAP system into a vacuum to close the NVLD switch. Once the NVLD switch is closed, the PCM turns the EVAP Purge solenoid off to seal the EVAP system. If the NVLD switch reopens before the calibrated amount of time for a Medium leak an error is detected. Two Trip Fault. Three good trips to turn off the MIL.

Possible Causes
EVAP PURGE SYSTEM LEAK
EVAP PURGE SOLENOID
NVLD SWITCH

Always perform the Pre-Diagnostic Troubleshooting procedure before proceeding. (Refer to 9 - ENGINE - DIAGNOSIS AND TESTING).

Diagnostic Test

1. VEHICLE HISTORY AND SERVICE BULLETIN INVESTIGATION

Ignition on, engine not running.

With a scan tool, read DTCs and record the related Freeze Frame data if any DTC(s) are present.

Whether or not any DTC(s) are present you will want to check the following items which may assist in repairing the customer's complaint successfully.

Check the vehicles repair history.

If the vehicle has a repair history that pertains to the customer's current complaint, review the repair.

Inspect the vehicle for any aftermarket accessories that may have been installed incorrectly.

Check for any service bulletin(s) related to the customer's complaint or DTC(s).

If a service bulletin applies, follow the instructions per the service bulletin.

Choose the following scenario that best applies.

The service bulletin repaired the customer's complaint.
Testing complete.

A DTC is present, no service bulletins apply, or the service bulletin didn't repair the customer's complaint.
Go To 2

2. ACTIVE DTC

Ignition on, engine not running.
With a scan tool, read DTCs.

Is the DTC active at this time?

Yes >> Go To 3.

No >> Refer to the INTERMITTENT CONDITION Diagnostic Procedure.
Perform the POWERTRAIN VERIFICATION TEST. (Refer to 9 - ENGINE - STANDARD PROCEDURE)

3. LOOSE OR MISSING FUEL FILL CAP

Inspect the fuel fill cap.
Inspect the cap for any abnormal defects.

Was the cap off, missing, or broken?

Yes >> Properly install the fuel fill cap and proceed to step.
Perform the POWERTRAIN VERIFICATION TEST. (Refer to 9 - ENGINE - STANDARD PROCEDURE)

No >> Go To 4.

4. NVLD SERVICE TEST

With the scan tool perform the NVLD Service Test.

Does the NVLD Service Test pass?

Yes >> Test complete.
Perform the POWERTRAIN VERIFICATION TEST. (Refer to 9 - ENGINE - STANDARD PROCEDURE)

No >> Go To 5

5. VERIFY EVAPORATIVE EMISSION LEAK

To continue testing you will need Miller Tool #8404A Evaporative Emission Leak Detector (EELD).

WARNING: Keep lit cigarettes, sparks, flames, and other ignition sources away from the test area to prevent the ignition of explosive gases. Keep the test area well ventilated.

NOTE: The fuel tank should have between 20% and 80% of fuel tank capacity to properly test the Evap system.
Connect the red power lead of the EELD to the battery positive terminal and the black ground lead to battery negative terminal.

Block the vent hose of the canister if using the service port.

Connect shop air to the EELD.

Set the smoke/air control switch to AIR.

Insert the tester's AIR supply tip (clear hose) into the appropriate calibration orifice on the tester's control panel (based on DTC leak size).

Press the remote smoke/air start button.

Position the red flag on the air flow meter so it is aligned with the indicator ball.

When the calibration is complete, release the remote button. The EELD flow meter is now calibrated in liters per minute to the size leak indicated by the DTC set in the PCM.

Install the service port adapter #8404-14 on the vehicle's service port and block the vent hose of the EVAP Canister (if equipped) or install the #8404-ADP service adaptor into the filter line.

Connect the Air supply hose from the EELD to the service port (if equipped) or to the #8404-ADP adapter.

Press the remote button to activate AIR flow.

NOTE: Larger volume fuel tanks, lower fuel levels or if the vehicle is equipped with a Flow Management Valve may indicate high flow and will require 4 to 5 minutes to fill.
Compare the flow meter indicator ball reading to the red flag.

ABOVE the red flag indicates a leak present.
BELOW the red flag indicates a sealed system.

Is the indicator ball above the red flag?

Yes >> Go To 6

No >> Refer to the INTERMITTENT CONDITION Diagnostic Procedure.
Perform the POWERTRAIN VERIFICATION TEST. (Refer to 9 - ENGINE - STANDARD PROCEDURE)

6. EVAPORATIVE EMISSION LEAK DETECTION

NOTE: A thorough visual inspection of the Evap system hoses, tubes, and connections may save time in your diagnosis. Look for any physical damage or signs of wetness at connections. The strong smell of fuel vapors may also aid diagnosis.

To continue testing, you will need Miller Tool #8404A Evaporative Emissions Leak Detector (EELD).

Remove the Air supply hose from the service port (if equipped) or from the #8404-ADP adapter.

Connect the SMOKE supply tip (black hose) to the service port (if equipped) or to the #8404-ADP adapter.

Set the smoke/air control switch to SMOKE.

NOTE: The flow meter indicator ball will not move in the smoke mode.
Press the remote smoke/air start button.

NOTE: Make sure that smoke has filled the EVAP system by continuing to press the remote smoke/air start button, remove the vehicle fuel cap, and wait for the smoke to exit. Once smoke is indicated reinstall the fuel cap.

NOTE: For optimal performance, introduce smoke into the system for an additional 60 seconds; continue introducing smoke at 15 second intervals, as necessary.

While still holding the remote smoke/air start button, use the white light (#8404-CLL) to follow the EVAP system path, and look for the source of the leak indicated by exiting smoke.

If a leak is concealed from view (i.e., top of fuel tank), release the remote smoke/air start button, and use the ultra-violet (UV) black light #8404-UVL and the yellow goggles 8404-20 to look for residual traces of dye that is left behind by the smoke.

The exiting smoke deposits a residual fluid that is either bright green or bright yellow in color when viewed with a UV light.

NOTE: The EVAP System is divided into three zones. A leak from any of these zones can cause this DTC to set. The lists below specify the possible leak points in that specific zone. For further assistance see the Zone Identification Charts below.

- ZONE 1

1 Fuel Cap
2 Recirculation Check Valve.
3 Vapor Recirculation Line.
4 Signal Vapor Line for FVM.
5 Flow Management Valve.
6 Fuel Tank to Canister Vapor Line connection.
7 Fuel Tank Vent (Check Valve).
8 Vapor Line to Canister.
9 Flow Control Orfice.
10 Control Valve.
11 Liquid Trap.
12 Fuel Tank.
13 Check valve.
14 Fuel Fill Tube to Tank connector.
15 Fuel Fill Tube
Damaged or disconnected EVAP system components.

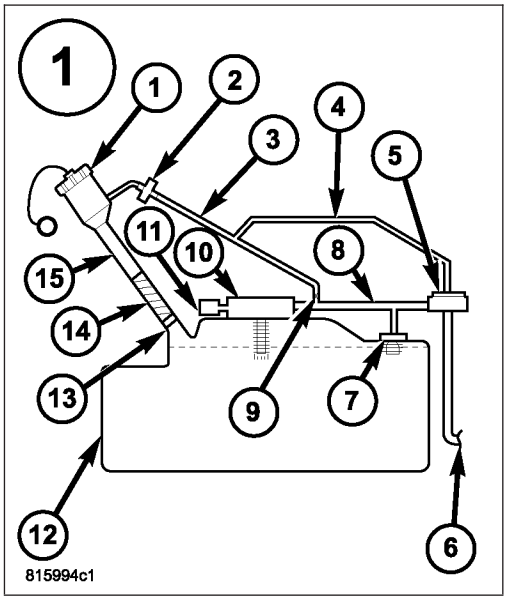

- ZONE 2

1 Filter.
2 NVLD.
3 Canister Vent Line.
4 Evap Canister.
5 Chassis Purge Valve.
6 Fuel Tank to Canister Vapor Line connection.
7 Evap Purge connection.

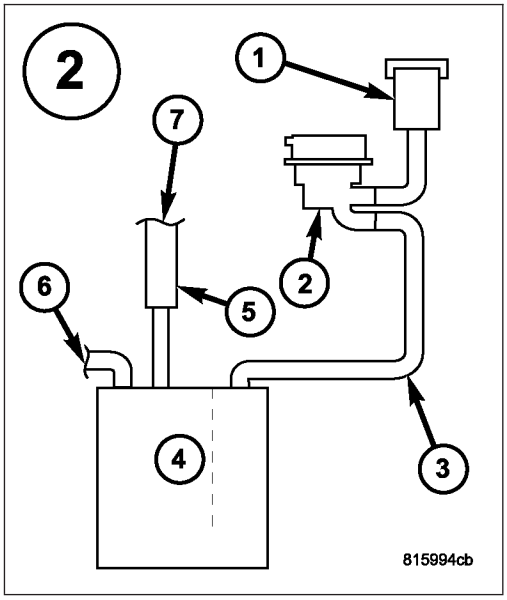

- ZONE 3

1 Evap Purge Vacuum Line.
2 Connection to Chassis Line.
3 Connection to Canister.
4 Chassis Purge Line.
5 Evap Purge Vacuum Line.
6 Connection to Evap Purge Harness.
7 Chassis Evap Purge Line connection to Engine Vacuum.
8 Evap Purge Valve.
9 Service Port.

NOTE: Carefully inspect the vent side of the EVAP Canister. Due to the filtering system in the canister the smoke may not be as thick. Introducing smoke into the filtered side of the canister may assist in locating the leak.

Was a leak found?

Yes >> Go To 7

No >> Go To 8

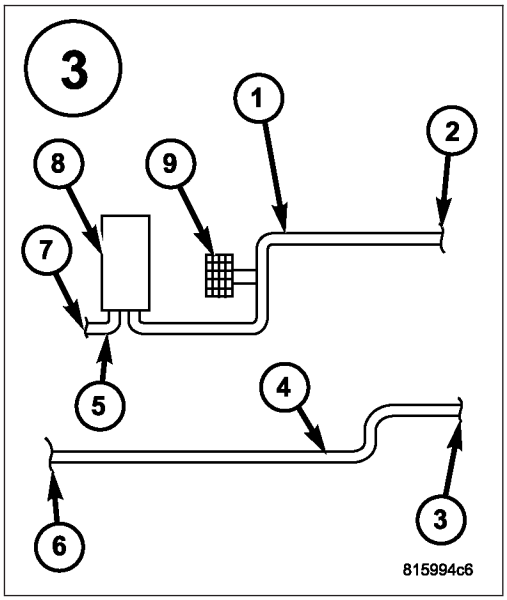

7. LEAK AT GAS CAP

Remove the SMOKE supply tip (black hose) from the service port (if equipped) or to the #8404–ADP adapter.

Install gas cap adapter, Miller Tool #8382 (1/4 turn cap) or #6922 (screw cap) and #8399* (secondary seal depressor) and repeat test 5.

Was a leak found at the gas cap adapter?

Yes >> Replace the Fuel Filler tube assembly.
Perform the POWERTRAIN VERIFICATION TEST. (Refer to 9 - ENGINE - STANDARD PROCEDURE)

No >> Replace the gas cap.
Perform the POWERTRAIN VERIFICATION TEST. (Refer to 9 - ENGINE - STANDARD PROCEDURE)

8. EVAP PURGE SOLENOID OPERATION

NOTE: After disconnecting the Evap Purge Solenoid vacuum connections, inspect the lines and solenoid for any signs of contamination from the EVAP Canister. This may indicate a faulty check valve. Replace/repair as necessary.

Turn the ignition off.

Disconnect the vacuum hoses at the Evap Purge Solenoid.

Press the remote smoke/air start button on the EELD.

While holding the remote smoke/air start button, check to see if smoke is exiting the purge valve. This indicates that there is a leak internal to the purge valve.

NOTE: Below is an optional method of checking the purge valve for leaks if the EELD is unavailable.

Turn the ignition off.

Disconnect the vacuum hoses at the Evap Purge Solenoid.

Using a hand vacuum pump, apply 10 in HG to the “CAN” of the Evap Purge Solenoid.

NOTE: Monitor the vacuum gauge for at least 15 seconds.

Is smoke visible from the EVAP Purge Solenoid if using the EELD, or not hold a vacuum?

Yes >> Go To 9

No >> Replace the Evap Purge Solenoid.
Perform the POWERTRAIN VERIFICATION TEST. (Refer to 9 - ENGINE - STANDARD PROCEDURE)

9. NVLD SWITCH OPERATION

Reconnect all vacuum hoses.

Start the engine.

Allow the engine to idle.

Using the scan tool, perform the NVLD FORCED MONITOR TEST.

Monitor the NVLD Switch.

NOTE: As the test runs, the NVLD Switch should go from an OPEN state to CLOSED. After the vacuum is released form the EVAP system the Switch state will return to OPEN.

Did the NVLD Switch operate as described above?

Yes >> Refer to the INTERMITTENT CONDITION Diagnostic Procedure. (Refer to 9 - ENGINE - DIAGNOSIS AND TESTING)

No >> Replace the NVLD Assembly.
Perform the POWERTRAIN VERIFICATION TEST. (Refer to 9 - ENGINE - STANDARD PROCEDURE)

P0443-EVAP PURGE SOLENOID CIRCUIT

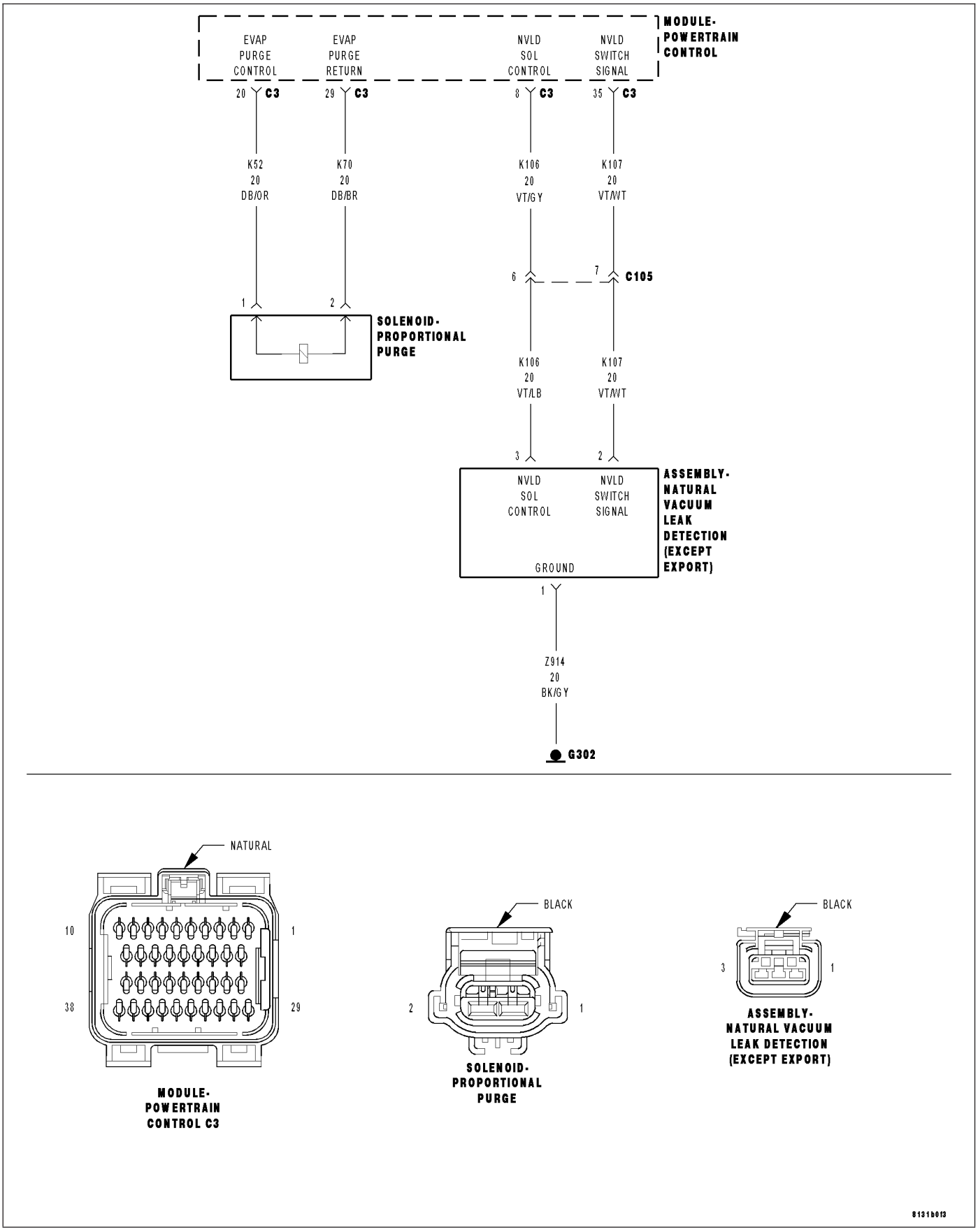

For a complete wiring diagram **Refer to Section 8W**.

- **When Monitored:**
  The ignition on or engine running. Battery voltage greater than 10 volts.
- **Set Condition:**
  The PCM will set a trouble code if the actual state of the solenoid does not match the intended state. One Trip Fault. Three good trips to turn off the MIL.

Possible Causes
(K52) EVAP PURGE CONTROL CIRCUIT OPEN
(K52) EVAP PURGE SOLENOID CONTROL CIRCUIT SHORTED TO GROUND
(K70) EVAP PURGE SOLENOID RETURN CIRCUIT OPEN
(K70) EVAP PURGE SOLENOID RETURN CIRCUIT SHORTED TO GROUND
EVAP PURGE SOLENOID
PCM

Always perform the Pre-Diagnostic Troubleshooting procedure before proceeding. (Refer to 9 - ENGINE - DIAGNOSIS AND TESTING).

Diagnostic Test

1. VEHICLE HISTORY AND SERVICE BULLETIN INVESTIGATION

Ignition on, engine not running.

With a scan tool, read DTCs and record the related Freeze Frame data if any DTC(s) are present.

Whether or not any DTC(s) are present you will want to check the following items which may assist in repairing the customer's complaint successfully.

Check the vehicles repair history.

If the vehicle has a repair history that pertains to the customer's current complaint, review the repair.

Inspect the vehicle for any aftermarket accessories that may have been installed incorrectly.

Check for any service bulletin(s) related to the customer's complaint or DTC(s).

If a service bulletin applies, follow the instructions per the service bulletin.

Choose the following scenario that best applies.

The service bulletin repaired the customer's complaint.
Testing complete.

A DTC is present, no service bulletins apply, or the service bulletin didn't repair the customer's complaint.
Go To 2

2. ACTIVE DTC

Ignition on, engine not running.

With the scan tool, read DTCs.

Is the DTC active at this time?

Yes >> Go To 3

No >> Refer to the INTERMITTENT CONDITION Diagnostic Procedure.
Perform the POWERTRAIN VERIFICATION TEST. (Refer to 9 - ENGINE - STANDARD PROCEDURE)

3. EVAP PURGE SOLENOID OPERATION

Turn the ignition off.

Disconnect the EVAP Purge Solenoid harness connector.

Ignition on, engine not running.

Using a 12-volt test light, jump across the (K52) Evap Purge Solenoid Control circuit and (K70) Evap Purge Solenoid Return circuit in the EVAP Purge Solenoid harness connector.

With a scan tool, actuate the EVAP Purge Solenoid.

Does the test light flash on and off?

Yes >> Replace the EVAP Purge Solenoid.
Perform the POWERTRAIN VERIFICATION TEST. (Refer to 9 - ENGINE - STANDARD PROCEDURE)

No >> Go To 4

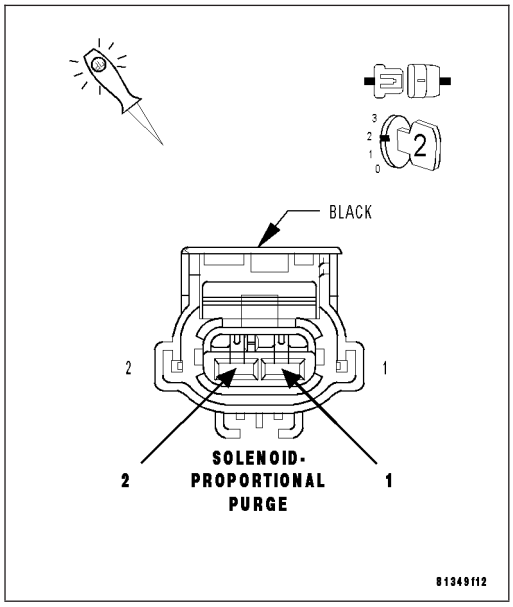

4. (K52) EVAP PURGE SOLENOID CONTROL CIRCUIT OPEN

Turn the ignition off.

Disconnect the C3 PCM harness connector.

CAUTION: Do not probe the PCM harness connectors. Probing the PCM harness connectors will damage the PCM terminals resulting in poor terminal to pin connection. Install Miller Special Tool #8815 to perform diagnosis.

Measure the resistance of the (K52) Evap Purge Solenoid Control circuit from the Evap Purge Solenoid harness connector to the appropriate terminal of special tool #8815.

Is the resistance below 5.0 ohms?

Yes >> Go To 5

No >> Repair the open in the (K52) EVAP Purge Solenoid Control circuit.
Perform the POWERTRAIN VERIFICATION TEST. (Refer to 9 - ENGINE - STANDARD PROCEDURE)

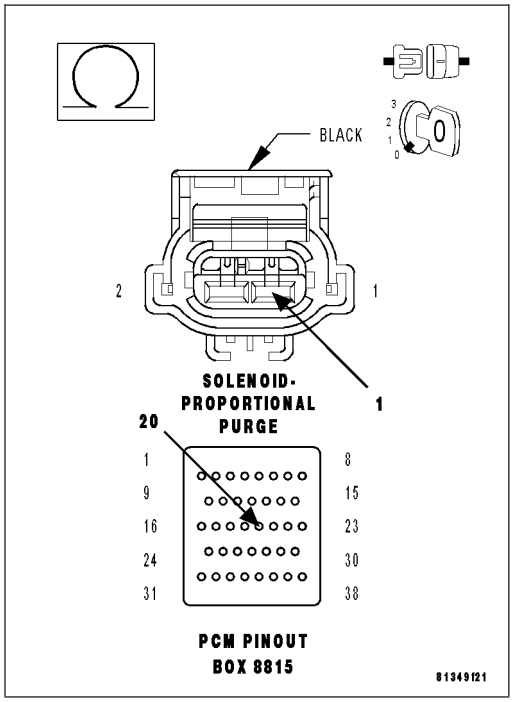

5. (K52) EVAP PURGE SOLENOID CONTROL CIRCUIT SHORTED TO GROUND

Measure the resistance between ground and the (K52) Evap Purge Solenoid Control circuit in the Evap Purge Solenoid harness connector.

Is the resistance below 100 ohms?

Yes >> Repair the short to ground in the (K52) EVAP Purge Solenoid Control circuit.

Perform the POWERTRAIN VERIFICATION TEST. (Refer to 9 - ENGINE - STANDARD PROCEDURE)

No >> Go To 6

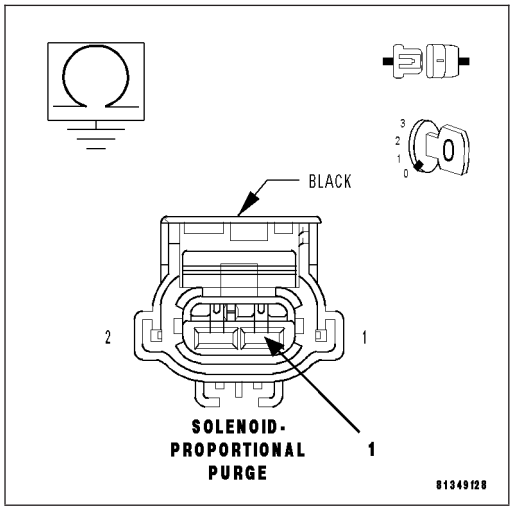

6. (K70) EVAP PURGE SOLENOID RETURN CIRCUIT OPEN

CAUTION: Do not probe the PCM harness connectors. Probing the PCM harness connectors will damage the PCM terminals resulting in poor terminal to pin connection. Install Miller Special Tool #8815 to perform diagnosis.

Measure the resistance of the (K70) Evap Purge Solenoid Return circuit from the EVAP Purge Solenoid harness connector to the appropriate terminal of special tool #8815.

Is the resistance below 5.0 ohms?

Yes >> Go To 7

No >> Repair the open in the (K70) Evap Purge Solenoid Return circuit.

Perform the POWERTRAIN VERIFICATION TEST. (Refer to 9 - ENGINE - STANDARD PROCEDURE)

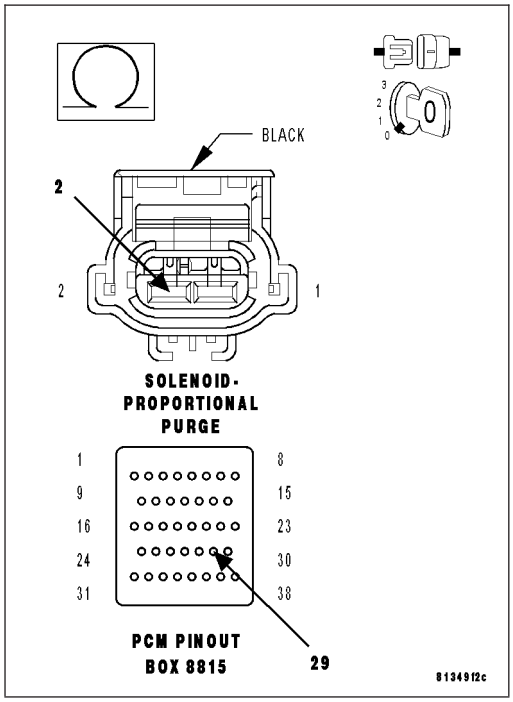

7. (K70) EVAP PURGE SOLENOID RETURN CIRCUIT SHORTED TO GROUND

Measure the resistance between ground and the (K70) Evap Purge Solenoid Return circuit in the Evap Purge Solenoid harness connector.

Is the resistance below 100 ohms?

Yes >> Repair the short to ground in the (K70) Evap Purge Solenoid Return circuit.
Perform the POWERTRAIN VERIFICATION TEST. (Refer to 9 - ENGINE - STANDARD PROCEDURE)

No >> Go To 8

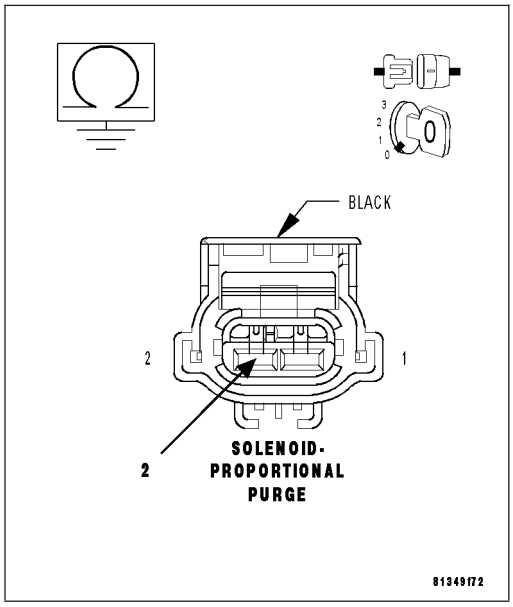

8. PCM

NOTE: Before continuing, check the PCM harness connector terminals for corrosion, damage, or terminal push out. Repair as necessary.
Using the schematics as a guide, inspect the wire harness and connectors. Pay particular attention to all Power and Ground circuits.

Were there any problems found?

Yes >> Repair as necessary.
Perform the POWERTRAIN VERIFICATION TEST. (Refer to 9 - ENGINE - STANDARD PROCEDURE)

No >> Replace and program the Powertrain Control Module per Service Information.
Perform the POWERTRAIN VERIFICATION TEST. (Refer to 9 - ENGINE - STANDARD PROCEDURE)

P0452-NVLD PRESSURE SWITCH STUCK CLOSED

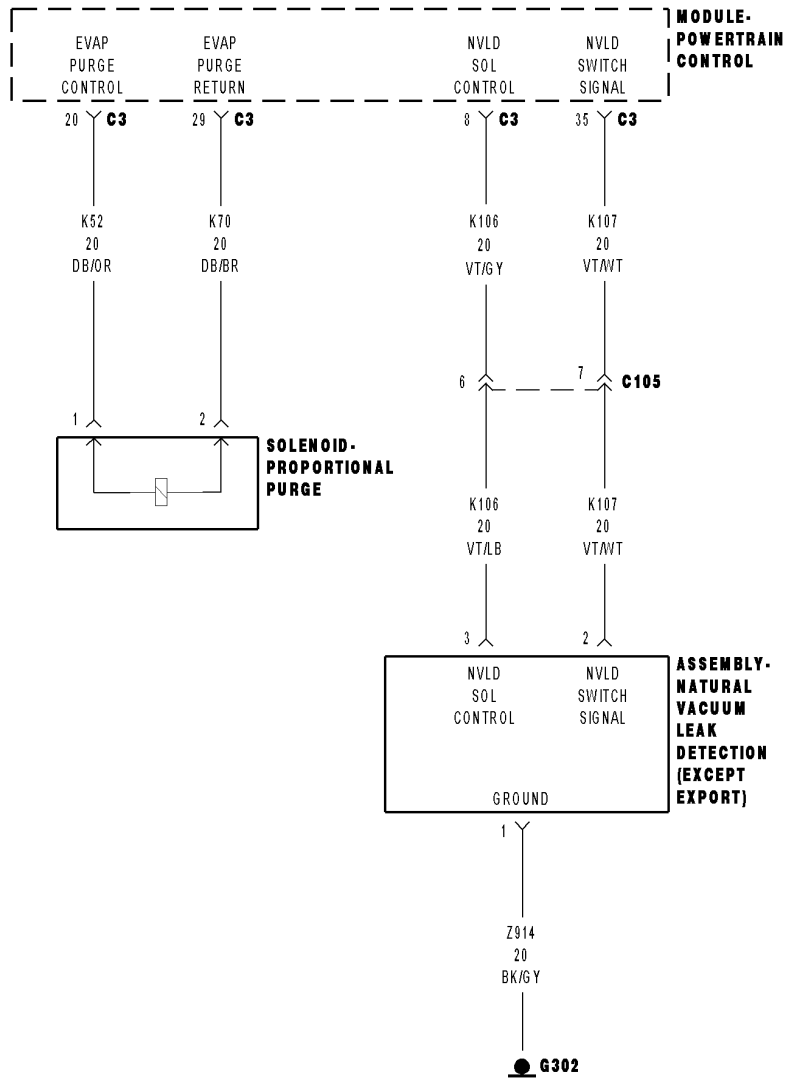

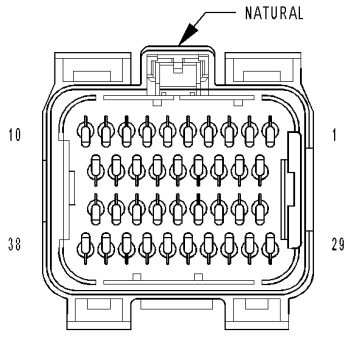

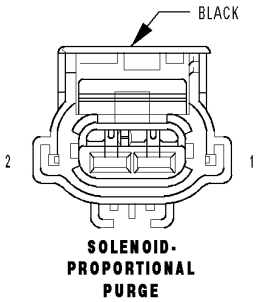

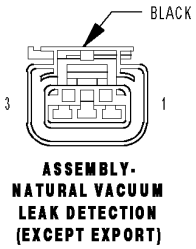

8131b013

For a complete wiring diagram **Refer to Section 8W**.

- **When Monitored:**
  Immediately after the engine has been started.
- **Set Condition:**
  The PCM activates the NLVD Solenoid. If PCM does not see NVLD switch open an error is detected. One Trip Fault. Three good trips to turn off the MIL.

Possible Causes
(K52) EVAP PURGE SOLENOID CONTROL CIRCUIT SHORTED TO GROUND
(K107) NVLD SWITCH SIGNAL CIRCUIT SHORTED TO GROUND
NVLD ASSEMBLY
EVAP PURGE SOLENOID
PCM

Always perform the Pre-Diagnostic Troubleshooting procedure before proceeding. (Refer to 9 - ENGINE - DIAGNOSIS AND TESTING).

Diagnostic Test

1. VEHICLE HISTORY AND SERVICE BULLETIN INVESTIGATION

Ignition on, engine not running.

With a scan tool, read DTCs and record the related Freeze Frame data if any DTC(s) are present.

Whether or not any DTC(s) are present you will want to check the following items which may assist in repairing the customer's complaint successfully.

Check the vehicles repair history.

If the vehicle has a repair history that pertains to the customer's current complaint, review the repair.

Inspect the vehicle for any aftermarket accessories that may have been installed incorrectly.

Check for any service bulletin(s) related to the customer's complaint or DTC(s).

If a service bulletin applies, follow the instructions per the service bulletin.

Choose the following scenario that best applies.

The service bulletin repaired the customer's complaint.
Testing complete.

A DTC is present, no service bulletins apply, or the service bulletin didn't repair the customer's complaint.
Go To 2

2. ACTIVE DTC

Ignition on, engine not running.

With a scan tool, read DTCs.

Is the DTC active at this time?

Yes >> Go To 3

No >> Refer to the INTERMITTENT CONDITION Diagnostic Procedure.
Perform the POWERTRAIN VERIFICATION TEST. (Refer to 9 - ENGINE - STANDARD PROCEDURE)

3. EVAP PURGE SOLENOID OPERATION

Turn the ignition off.

Disconnect the EVAP Purge Solenoid harness connector.

Ignition on, engine not running.

Using a 12-volt test light, jump across the Evap Purge Solenoid harness connector.

With the scan tool, actuate the EVAP Purge Solenoid.

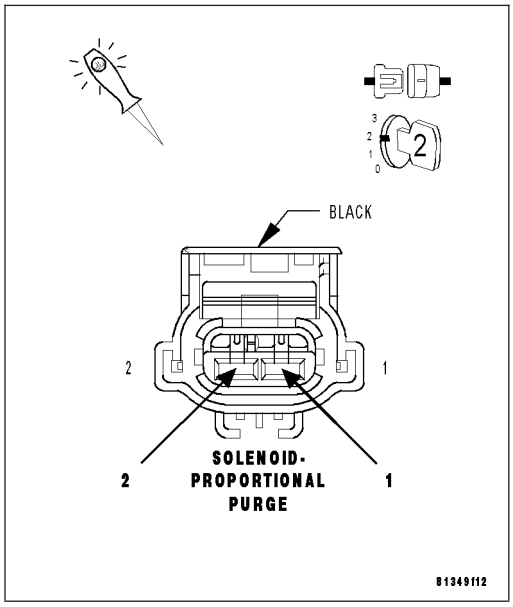

Does the test light flash on and off?

Yes >> Go To 4

No >> Go To 8

4. EVAP PURGE SOLENOID LEAKS/STUCK OPEN

Turn the ignition off.

Connect the Evap Purge Solenoid harness connector.

Disconnect the vacuum hoses at the Evap Purge Solenoid.

NOTE: After disconnecting the Evap Purge Solenoid vacuum connections, inspect the lines and solenoid for any signs of contamination from the EVAP Canister. This may indicate a faulty check valve. Replace/repair as necessary.

Using a hand vacuum pump, apply 10 in Hg to the ″CAN″ of the EVAP Purge Solenoid.

NOTE: Monitor the vacuum gauge for at least 15 seconds.

Does the EVAP Purge Solenoid hold vacuum?

Yes >> Go To 5

No >> Replace the Evap Purge Solenoid.
Perform the POWERTRAIN VERIFICATION TEST. (Refer to 9 - ENGINE - STANDARD PROCEDURE)

5. NVLD SWITCH OPERATION

Ignition on, engine not running.

Using the scan tool, monitor the NVLD Switch State with the vacuum pump still installed and holding vacuum.

Does the scan tool display the NVLD state OPEN?

Yes >> Refer to the INTERMITTENT CONDITION Diagnostic Procedure.
Perform the POWERTRAIN VERIFICATION TEST. (Refer to 9 - ENGINE - STANDARD PROCEDURE)

No >> Go To 6

NOTE: Remove the vacuum pump and connect the vacuum hose before continuing.

6. NVLD ASSEMBLY

Disconnect the NVLD electrical connector.

Does the Switch change from CLOSED to OPEN?

Yes >> Replace the NVLD Assembly.
Perform the POWERTRAIN VERIFICATION TEST. (Refer to 9 - ENGINE - STANDARD PROCEDURE)

No >> Go To 7

7. (K107) SIGNAL CIRCUIT SHORTED TO GROUND

Turn the ignition off.

Disconnect the C3 PCM harness connector.

Measure the resistance between ground and the (K107) NVLD Switch Signal circuit in the NVLD Assembly harness connector.

Is the resistance below 100 ohms?

Yes >> Repair the short to ground in the (K107) NVLD Switch Signal circuit.
Perform the POWERTRAIN VERIFICATION TEST. (Refer to 9 - ENGINE - STANDARD PROCEDURE)

No >> Go To 9

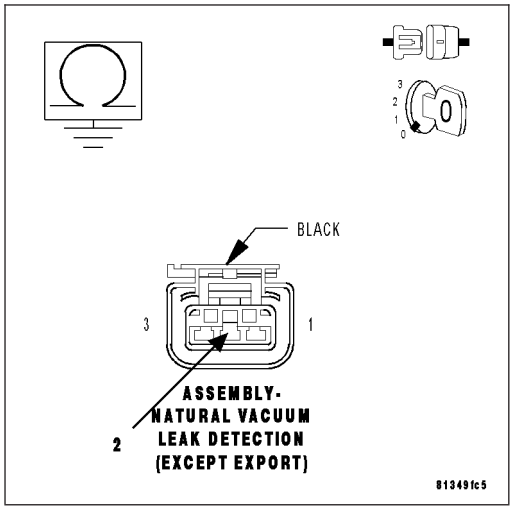

8. (K52) EVAP PURGE SOLENOID CONTROL CIRCUIT SHORTED TO GROUND

Turn the ignition off.

Disconnect the C3 PCM harness connector.

Measure the resistance between ground and the (K52) Evap Purge Solenoid Control circuit in the EVAP Purge Solenoid harness connector.

Is the resistance below 100 ohms?

Yes >> Repair the short to ground in the (K52) Evap Purge Sol Control circuit.
Perform the POWERTRAIN VERIFICATION TEST. (Refer to 9 - ENGINE - STANDARD PROCEDURE)

No >> Go To 9

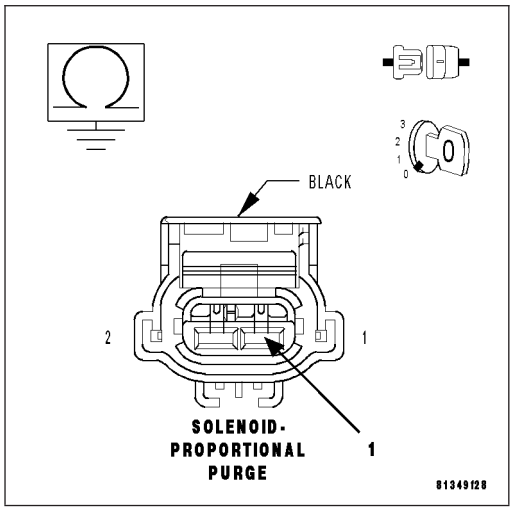

9. PCM

NOTE: Before continuing, check the PCM harness connector terminals for corrosion, damage, or terminal push out. Repair as necessary.
Using the schematics as a guide, inspect the wire harness and connectors. Pay particular attention to all Power and Ground circuits.

Were there any problems found?

Yes >> Repair as necessary.
Perform the POWERTRAIN VERIFICATION TEST. (Refer to 9 - ENGINE - STANDARD PROCEDURE)

No >> Replace and program the Powertrain Control Module per Service Information.
Perform the POWERTRAIN VERIFICATION TEST. (Refer to 9 - ENGINE - STANDARD PROCEDURE)

P0453-NVLD PRESSURE SWITCH STUCK OPEN

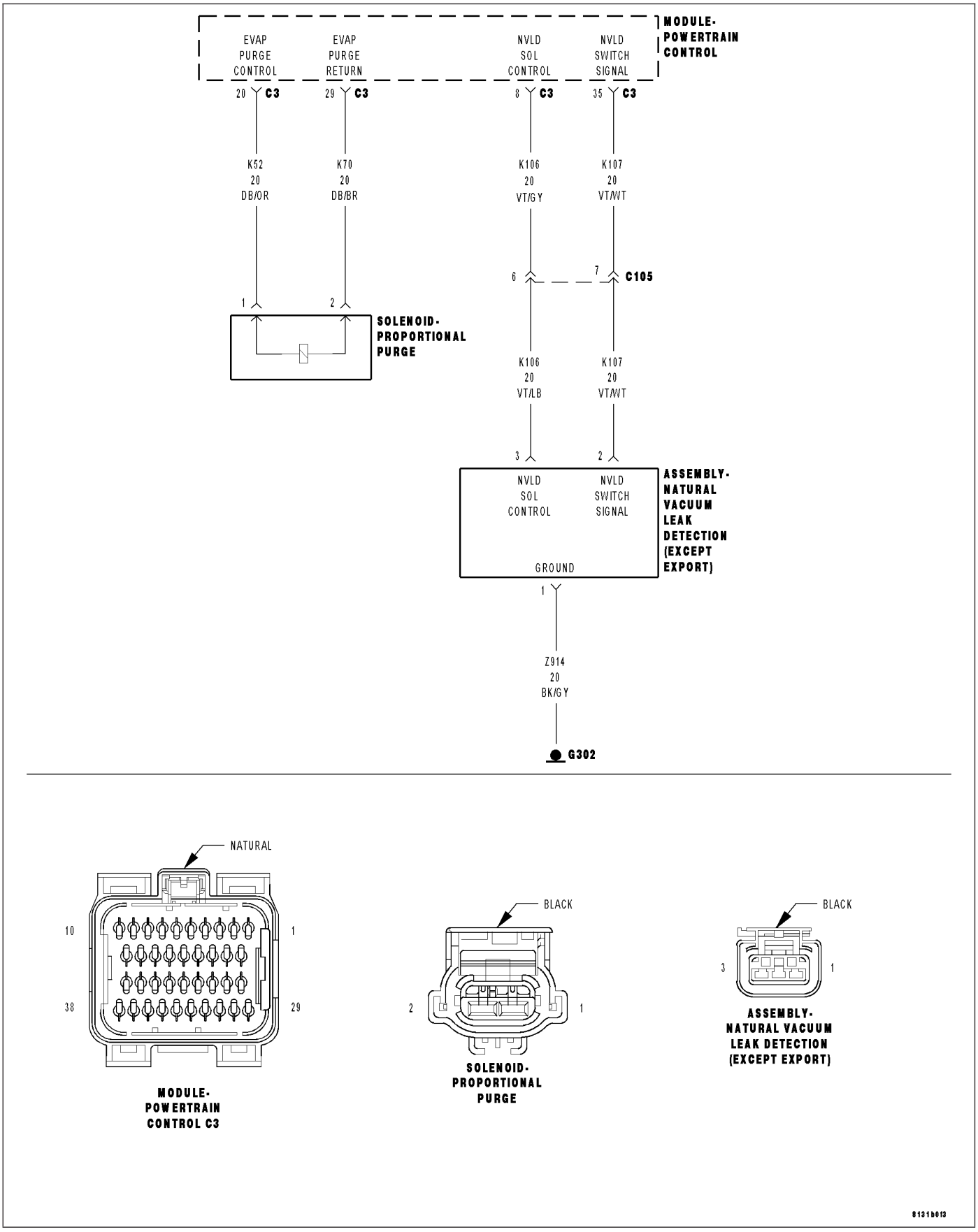

For a complete wiring diagram **Refer to Section 8W**.

- **When Monitored:**
  Engine running.
- **Set Condition:**
  If the PCM does not see the NVLD switch close during test an error is detected. One Trip Fault. Three good trips to turn off the MIL.

Possible Causes
(K107) NVLD SWITCH SIGNAL CIRCUIT SHORTED TO BATTERY VOLTAGE
(K107) NVLD SWITCH SIGNAL CIRCUIT OPEN
(K107) NVLD SWITCH SIGNAL CIRCUIT SHORTED TO (K106) NVLD SOLENOID CONTROL CIRCUIT
(Z914) GROUND CIRCUIT OPEN
NVLD ASSEMBLY
PCM

Always perform the Pre-Diagnostic Troubleshooting procedure before proceeding. (Refer to 9 - ENGINE - DIAGNOSIS AND TESTING).

Diagnostic Test

1. NVLD SWITCH OPERATION

Start the engine.

Allow the engine to idle.

Using a scan tool, perform the NVLD FORCED MONITOR TEST.

Monitor the NVLD Switch state.

NOTE: As the test runs, the NVLD Switch should go from an OPEN state to a CLOSED state and then return to OPEN when the test is complete.

Did the NVLD Switch operate as described above?

Yes >> Refer to the INTERMITTENT CONDITION Diagnostic Procedure.
Perform the POWERTRAIN VERIFICATION TEST. (Refer to 9 - ENGINE - STANDARD PROCEDURE)

No >> Go To 2

2. NVLD ASSEMBLY

Turn the ignition off.

Disconnect the NVLD electrical harness connector.

Ignition on, engine not running.

Monitor the NVLD Switch state on the scan tool.

Connect a jumper wire between the (K107) NVLD Switch Signal circuit and the (Z914) Ground circuit in the NVLD harness connector.

Does the Switch change from OPEN to CLOSED with the jumper wire installed?

Yes >> Replace the NVLD Assembly.
Perform the POWERTRAIN VERIFICATION TEST. (Refer to 9 - ENGINE - STANDARD PROCEDURE)

No >> Go To 3

NOTE: Remove the jumper wire before continuing.

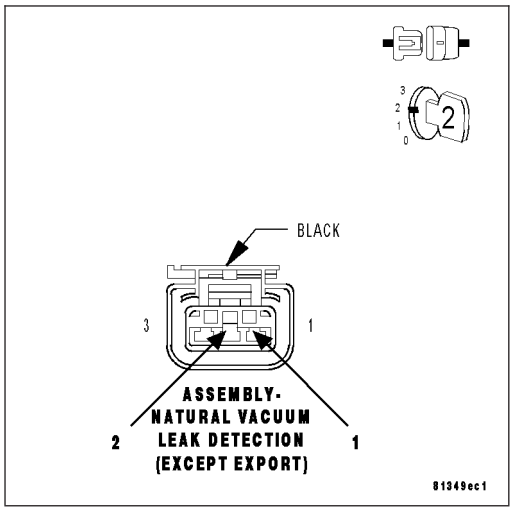

3. (K107) NVLD SWITCH SIGNAL CIRCUIT SHORTED TO BATTERY VOLTAGE

Turn the ignition off.

Disconnect the C3 PCM harness connector.

Ignition on, engine not running.

Measure the voltage on the (K107) NVLD Switch Signal circuit in the NVLD electrical harness connector.

Is the voltage above 0 volts?

Yes >> Repair the short to battery voltage in the (K107) NVLD Switch Signal circuit.
Perform the POWERTRAIN VERIFICATION TEST. (Refer to 9 - ENGINE - STANDARD PROCEDURE)

No >> Go To 4

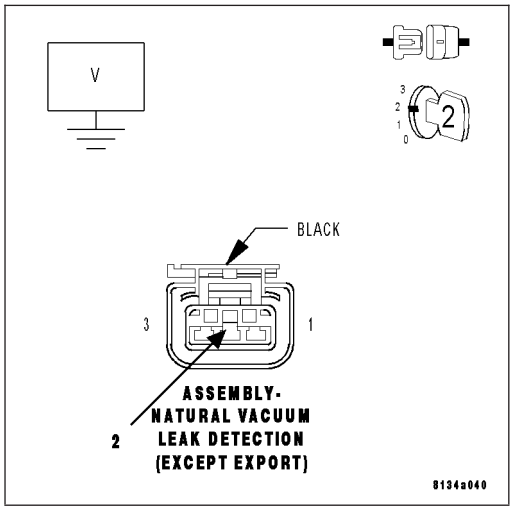

4. (K107) NVLD SWITCH SIGNAL CIRCUIT OPEN

Turn the ignition off.

CAUTION: Do not probe the PCM harness connectors. Probing the PCM harness connectors will damage the PCM terminals resulting in poor terminal to pin connection. Install Miller Special Tool #8815 to perform diagnosis.

Measure the resistance of the (K107) NVLD Switch Signal circuit from the NVLD electrical harness connector to the appropriate terminal of special tool #8815.

Is the resistance below 5.0 ohms?

Yes >> Go To 5

No >> Repair the open in the (K107) NVLD Switch Signal circuit.
Perform the POWERTRAIN VERIFICATION TEST. (Refer to 9 - ENGINE - STANDARD PROCEDURE)

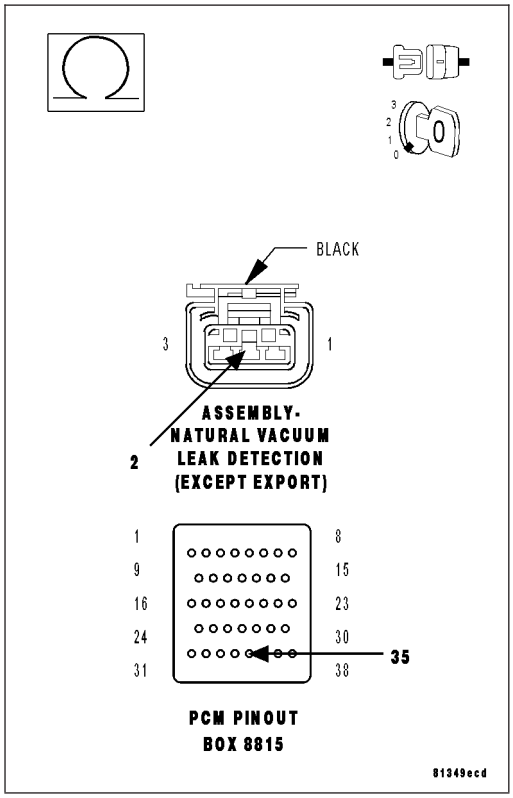

5. (K107) NVLD SWITCH SIGNAL CIRCUIT SHORTED TO THE (K106) NVLD SOLENOID CONTROL CIRCUIT

Measure the resistance between the (K107) NVLD Switch Signal circuit and the (K106) NVLD Solenoid Control circuit in the NVLD electrical harness connector.

Is the resistance below 5.0 ohms?

Yes >> Repair the short between the (K107) NVLD Switch Signal circuit and the (K106) NVLD Solenoid Control circuit.
Perform the POWERTRAIN VERIFICATION TEST. (Refer to 9 - ENGINE - STANDARD PROCEDURE)

No >> Go To 6

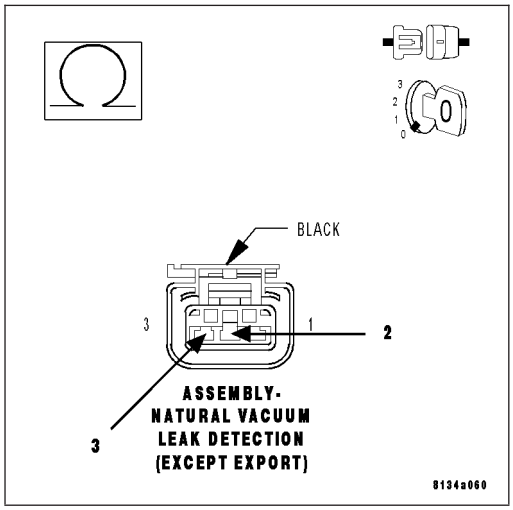

6. (Z914) GROUND CIRCUIT OPEN

Measure the resistance between the (Z914) Ground circuit and ground.

Is the resistance below 5.0 ohms?

Yes >> Go To 7

No >> Repair the open in the (Z914) Ground circuit.
Perform the POWERTRAIN VERIFICATION TEST. (Refer to 9 - ENGINE - STANDARD PROCEDURE))

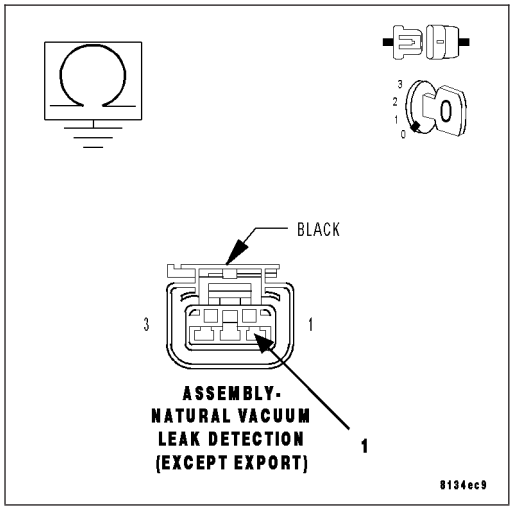

7. PCM

NOTE: Before continuing, check the PCM harness connector terminals for corrosion, damage, or terminal push out. Repair as necessary.
Using the schematics as a guide, inspect the wire harness and connectors. Pay particular attention to all Power and Ground circuits.

Were there any problems found?

Yes >> Repair as necessary.
Perform the POWERTRAIN VERIFICATION TEST. (Refer to 9 - ENGINE - STANDARD PROCEDURE)

No >> Replace and program the Powertrain Control Module per Service Information.
Perform the POWERTRAIN VERIFICATION TEST. (Refer to 9 - ENGINE - STANDARD PROCEDURE)

P0455-EVAP PURGE SYSTEM LARGE LEAK

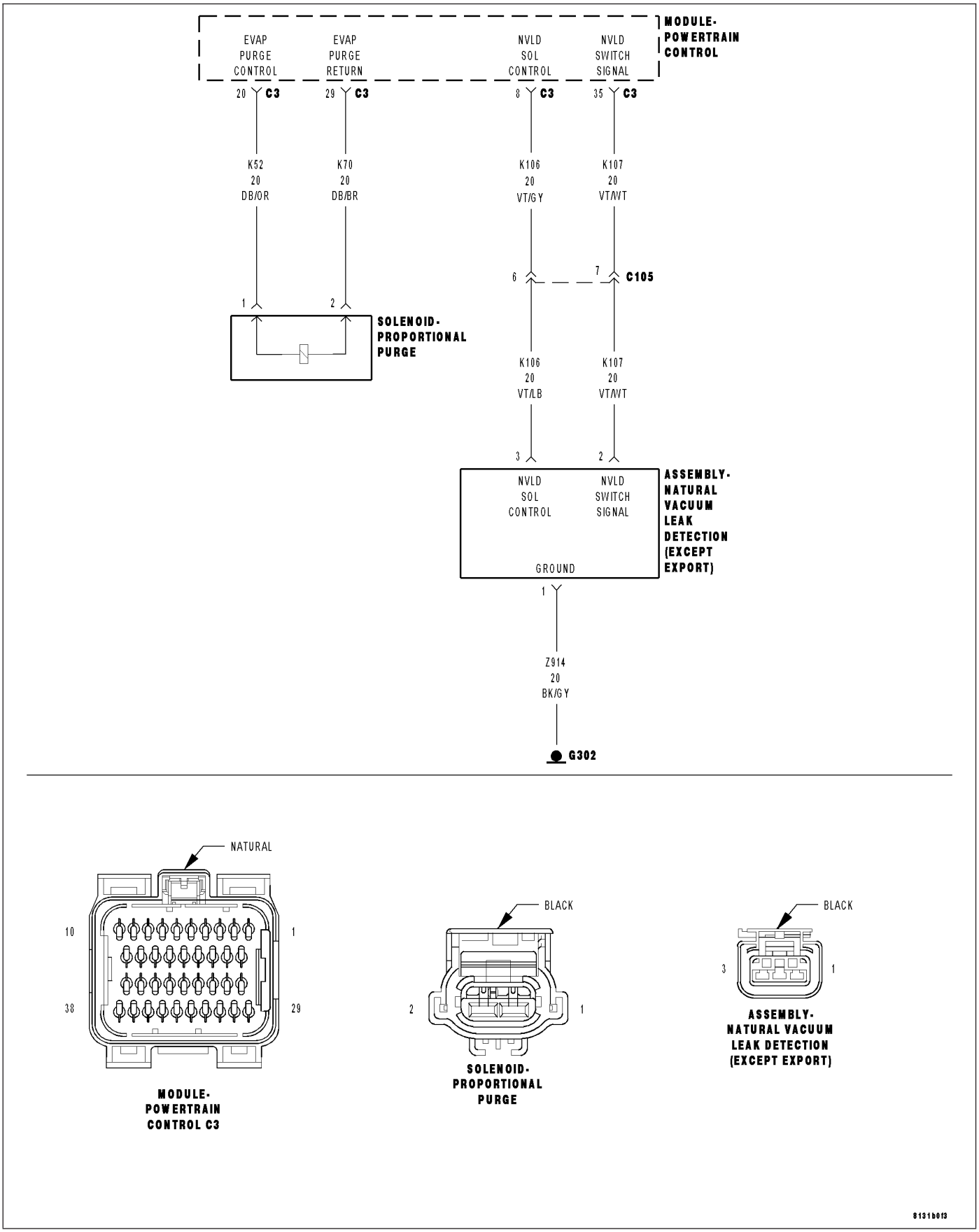

For a complete wiring diagram **Refer to Section 8W**.

Theory of Operation

The theory behind the Natural Vacuum Leak Detection (NVLD) is adherence to the Ideal Gas Law. Pressure in a sealed vessel will change linearly as a function of the temperature of the gas in the vessel. Even small leaks will allow the pressure in the vessel to come to equilibrium with the atmospheric pressure. After key-off and a calibrated amount of time, cool down from operating temperatures or diurnal ambient temperature the system pressure will force the system to go negative or draw a vacuum if there is no leak. When the vacuum level reaches 1" H2O (0.25 KPA) the NVLD vacuum switch closes. This sends a signal to the NGC freezing a timer and registering a pass. If a switch closure is not detected an assessment of leak size will be made.

- **When Monitored:**
  Engine Running. Cold start test. Fuel Level greater than 12%. Ambient Temperature between 4°C and 32°C (39°F and 89°F) Close Loop fuel system. Test runs when small leak test is maturing.
- **Set Condition:**
  The PCM activates the EVAP Purge Solenoid to pull the EVAP system into a vacuum to close the NVLD switch. Once the NVLD switch is closed, the PCM turns the EVAP Purge solenoid off to seal the EVAP system. If the NVLD switch reopens before the calibrated amount of time for a Large leak an error is detected. Two Trip Fault. Three good trips to turn off the MIL.

Possible Causes
EVAP PURGE SYSTEM LEAK
EVAP PURGE SOLENOID
NVLD SWITCH

Always perform the Pre-Diagnostic Troubleshooting procedure before proceeding. (Refer to 9 - ENGINE - DIAGNOSIS AND TESTING).

Diagnostic Test

1. VEHICLE HISTORY AND SERVICE BULLETIN INVESTIGATION

Ignition on, engine not running.

With a scan tool, read DTCs and record the related Freeze Frame data if any DTC(s) are present.

Whether or not any DTC(s) are present you will want to check the following items which may assist in repairing the customer's complaint successfully.

Check the vehicles repair history.

If the vehicle has a repair history that pertains to the customer's current complaint, review the repair.

Inspect the vehicle for any aftermarket accessories that may have been installed incorrectly.

Check for any service bulletin(s) related to the customer's complaint or DTC(s).

If a service bulletin applies, follow the instructions per the service bulletin.

Choose the following scenario that best applies.

The service bulletin repaired the customer's complaint.
Testing complete.

A DTC is present, no service bulletins apply, or the service bulletin didn't repair the customer's complaint.
Go To 2

2. ACTIVE DTC

Check for any related TSBs before continuing.

NOTE: Since a hot vehicle can conceal a leak, it is best to perform this test at room temperature.

NOTE: A loose gas cap could have caused this DTC to set. Make sure gas cap is tight and in good condition. Make sure the gas cap meets OEM specifications.

Ignition on, engine not running.

With a scan tool, read DTCs and record the related Freeze Frame data.

Is the DTC active at this time?

Yes >> Go To 3

No >> Refer to the INTERMITTENT CONDITION Diagnostic Procedure.
Perform the POWERTRAIN VERIFICATION TEST. (Refer to 9 - ENGINE - STANDARD PROCEDURE)

3. VISUAL AND PHYSICAL INSPECTION

Perform a visual and physical inspection of the entire Evaporative Emission system.

Check for the follow conditions:

- Holes or cracks
- Loose seal points
- Evidence of damaged components
- Incorrect routing of hoses and tubes
- Fuel Cap gasket seal

Were any of the above conditions found?

Yes >> Repair as necessary.
Perform the POWERTRAIN VERIFICATION TEST. (Refer to 9 - ENGINE - STANDARD PROCEDURE)

No >> Go To 4

4. VERIFY EVAPORATIVE EMISSION LEAK

To continue testing you will need Miller Tool #8404A Evaporative Emission Leak Detector (EELD).

WARNING: Keep lit cigarettes, sparks, flames, and other ignition sources away from the test area to prevent the ignition of explosive gases. Keep the test area well ventilated.

NOTE: The fuel tank should have between 20% and 80% of fuel tank capacity to properly test the Evap system.

Connect the red power lead of the EELD to the battery positive terminal and the black ground lead to battery negative terminal.

Block the vent hose of the canister if using the service port.

Connect shop air to the EELD.

Set the smoke/air control switch to AIR.

Insert the tester's AIR supply tip (clear hose) into the appropriate calibration orifice on the tester's control panel (based on DTC leak size).

Press the remote smoke/air start button.

Position the red flag on the air flow meter so it is aligned with the indicator ball.

When the calibration is complete, release the remote button. The EELD flow meter is now calibrated in liters per minute to the size leak indicated by the DTC set in the PCM.

Install the service port adapter #8404-14 on the vehicle's service port and block the vent hose of the EVAP Canister (if equipped) or install the #8404-ADP service adaptor into the filter line.

Connect the Air supply hose from the EELD to the service port (if equipped) or to the #8404-ADP adapter.

Press the remote button to activate AIR flow.

NOTE: Larger volume fuel tanks, lower fuel levels or if the vehicle is equipped with a Flow Management Valve may indicate high flow and will require 4 to 5 minutes to fill.

Compare the flow meter indicator ball reading to the red flag.

ABOVE the red flag indicates a leak present.

BELOW the red flag indicates a sealed system.

Is the indicator ball above the red flag?

Yes >> Go To 5

No >> Refer to the Freeze Frame data recorded in step 1. If the data indicates that the vehicle was in motion when the DTC was set, verify that all hoses are properly connected.

Perform the POWERTRAIN VERIFICATION TEST. (Refer to 9 - ENGINE - STANDARD PROCEDURE)

5. EVAPORATIVE EMISSION LEAK DETECTION

NOTE: A thorough visual inspection of the Evap system hoses, tubes, and connections may save time in your diagnosis. Look for any physical damage or signs of wetness at connections. The strong smell of fuel vapors may aid diagnosis also.

To continue testing, you will need Miller Tool #8404A Evaporative Emissions Leak Detector (EELD).

Remove the Air supply hose from the service port (if equipped) or from the #8404-ADP adapter.

Connect the SMOKE supply tip (black hose) to the service port (if equipped) or to the #8404-ADP adapter.

Set the smoke/air control switch to SMOKE.

NOTE: The flow meter indicator ball will not move in the smoke mode.

Press the remote smoke/air start button.

NOTE: Make sure that smoke has filled the EVAP system by continuing to press the remote smoke/air start button, remove the vehicle fuel cap, and wait for the smoke to exit. Once smoke is indicated reinstall the fuel cap.

NOTE: For optimal performance, introduce smoke into the system for an additional 60 seconds; continue introducing smoke at 15 second intervals, as necessary.

While still holding the remote smoke/air start button, use the white light (#8404-CLL) to follow the EVAP system path, and look for the source of the leak indicated by exiting smoke.

If a leak is concealed from view (i.e., top of fuel tank), release the remote smoke/air start button, and use the ultra-violet (UV) black light #8404-UVL and the yellow goggles 8404-20 to look for residual traces of dye that is left behind by the smoke.

The exiting smoke deposits a residual fluid that is either bright green or bright yellow in color when viewed with a UV light.

NOTE: The EVAP System is divided into three zones. A leak from any of these zones can cause this DTC to set. The lists below specify the possible leak points in that specific zone. For further assistance see the Zone Identification Charts below.

- ZONE 1

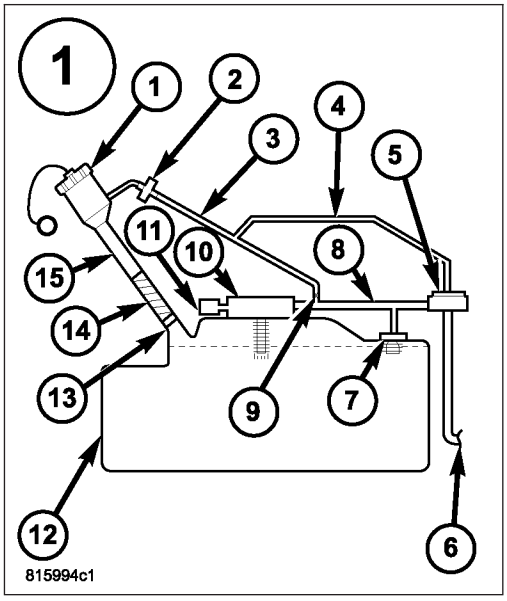

1 Fuel Cap
2 Recirculation Check Valve.
3 Vapor Recirculation Line.
4 Signal Vapor Line for FVM.
5 Flow Management Valve.
6 Fuel Tank to Canister Vapor Line connection.
7 Fuel Tank Vent (Check Valve).
8 Vapor Line to Canister.
9 Flow Control Orfice.
10 Control Valve.
11 Liquid Trap.
12 Fuel Tank.
13 Check valve.
14 Fuel Fill Tube to Tank connector.
15 Fuel Fill Tube
Damaged or disconnected EVAP system components.

- ZONE 2

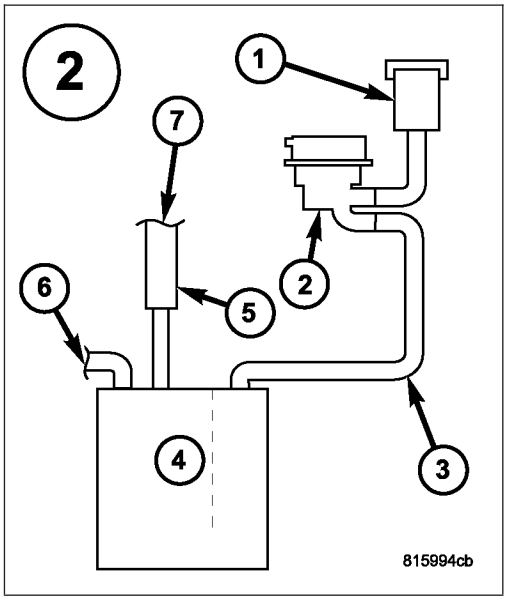

1 Filter.
2 NVLD.
3 Canister Vent Line.
4 Evap Canister.
5 Chassis Purge Valve.
6 Fuel Tank to Canister Vapor Line connection.
7 Evap Purge connection.

- ZONE 3

1 Evap Purge Vacuum Line.
2 Connection to Chassis Line.
3 Connection to Canister.
4 Chassis Purge Line.
5 Evap Purge Vacuum Line.
6 Connection to Evap Purge Harness.
7 Chassis Evap Purge Line connection to Engine Vacuum.
8 Evap Purge Valve.
9 Service Port.

NOTE: Carefully inspect the vent side of the EVAP Canister. Due to the filtering system in the canister the smoke may not be as thick. Introducing smoke into the filtered side of the canister may assist in locating the leak.

Was a leak found at the gas cap?

Yes >> Go To 6
Perform the POWERTRAIN VERIFICATION TEST. (Refer to 9 - ENGINE - STANDARD PROCEDURE)

No >> Go To 7

6. LEAK AT GAS CAP

Remove the SMOKE supply tip (black hose) from the service port (if equipped) or to the #8404–ADP adapter.

Install gas cap adapter, Miller Tool #8382 (1/4 turn cap) or #6922 (screw cap) and #8399* (secondary seal depressor) and repeat test 5.

Was a leak found at the gas cap adapter?

Yes >> Replace the Fuel Filler tube assembly.
Perform the POWERTRAIN VERIFICATION TEST. (Refer to 9 - ENGINE - STANDARD PROCEDURE)

No >> Replace the gas cap.
Perform the POWERTRAIN VERIFICATION TEST. (Refer to 9 - ENGINE - STANDARD PROCEDURE)

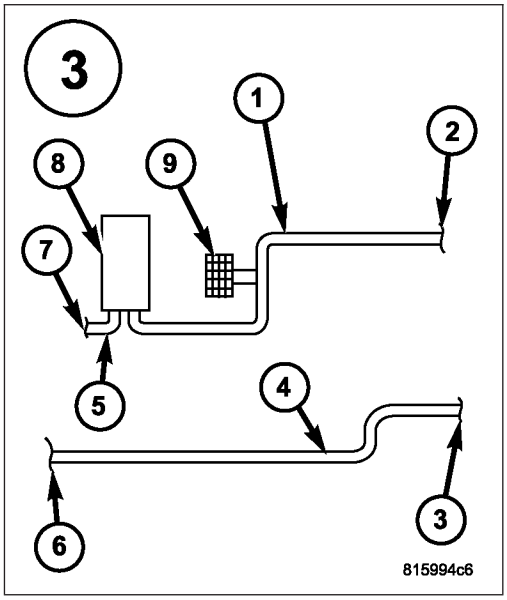

7. EVAP PURGE SOLENOID OPERATION

NOTE: After disconnecting the Evap Purge Solenoid vacuum connections, inspect the lines and solenoid for any signs of contamination from the EVAP Canister. This may indicate a faulty check valve. Replace/repair as necessary.

Turn the ignition off.

Disconnect the vacuum hoses at the Evap Purge Solenoid.

Press the remote smoke/air start button on the EELD.

While holding the remote smoke/air start button, check to see if smoke is exiting the purge valve. This indicates that there is a leak internal to the purge valve.

NOTE: Below is an optional method of checking the purge valve for leaks if the EELD is unavailable.
Turn the ignition off.

Disconnect the vacuum hoses at the Evap Purge Solenoid.

Using a hand vacuum pump, apply 10 in HG to the “CAN” of the Evap Purge Solenoid.

NOTE:
Monitor the vacuum gauge for at least 15 seconds.

Is smoke visible from the EVAP Purge Solenoid if using the EELD, or not hold a vacuum?

Yes >> Replace the NVLD.
Perform the POWERTRAIN VERIFICATION TEST. (Refer to 9 - ENGINE - STANDARD PROCEDURE)

No >> Replace the Evap Purge Solenoid.
Perform the POWERTRAIN VERIFICATION TEST. (Refer to 9 - ENGINE - STANDARD PROCEDURE)

P0456-EVAP PURGE SYSTEM SMALL LEAK

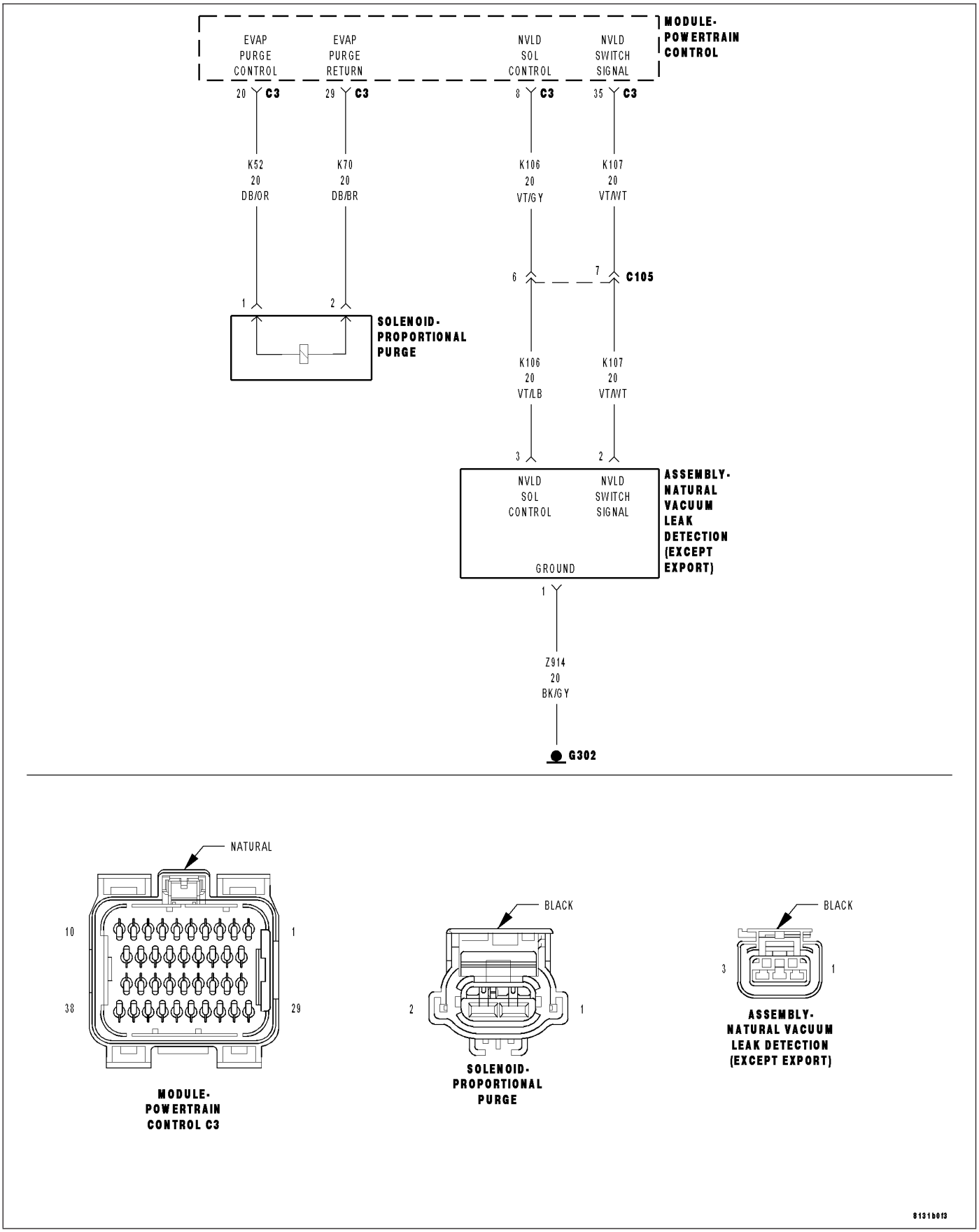

For a complete wiring diagram **Refer to Section 8W**.

Theory of Operation

The theory behind the Natural Vacuum Leak Detection (NVLD) is adherence to the Ideal Gas Law. Pressure in a sealed vessel will change linearly as a function of the temperature of the gas in the vessel. Even small leaks will allow the pressure in the vessel to come to equilibrium with the atmospheric pressure. After key-off and a calibrated amount of time, cool down from operating temperatures or diurnal ambient temperature the system pressure will force the system to go negative or draw a vacuum if there is no leak. When the vacuum level reaches 1" H2O (0.25 KPA) the NVLD vacuum switch closes. This sends a signal to the NGC freezing a timer and registering a pass. If a switch closure is not detected an assessment of leak size will be made.

- **When Monitored:**
  Ignition off. Fuel Level less than 88%. Ambient Temperature between 4°C and 43°C (39°F and 109°F) Close Loop fuel system.
- **Set Condition:**
  Due to temperature changes, a vacuum is created in the fuel tank and EVAP system. With the EVAP system sealed, the PCM monitors the NVLD switch. If the NVLD switch does not close within a calibrated time allowance, an error is detected by the PCM. One Trip Fault. Three good trips to turn off the MIL.

Possible Causes
EVAP PURGE SYSTEM LEAK
EVAP PURGE SOLENOID

Always perform the Pre-Diagnostic Troubleshooting procedure before proceeding. (Refer to 9 - ENGINE - DIAGNOSIS AND TESTING).

Diagnostic Test

1. VEHICLE HISTORY AND SERVICE BULLETIN INVESTIGATION

Ignition on, engine not running.

With a scan tool, read DTCs and record the related Freeze Frame data if any DTC(s) are present.

Whether or not any DTC(s) are present you will want to check the following items which may assist in repairing the customer's complaint successfully.

Check the vehicles repair history.

If the vehicle has a repair history that pertains to the customer's current complaint, review the repair.

Inspect the vehicle for any aftermarket accessories that may have been installed incorrectly.

Check for any service bulletin(s) related to the customer's complaint or DTC(s).

If a service bulletin applies, follow the instructions per the service bulletin.

Choose the following scenario that best applies.

The service bulletin repaired the customer's complaint.
Testing complete.

A DTC is present, no service bulletins apply, or the service bulletin didn't repair the customer's complaint.
Go To 2

2. ACTIVE DTC

NOTE: Since a hot vehicle can conceal a leak, it is best to perform this test at room temperature.

NOTE: A loose gas cap could have caused this DTC to set. Make sure gas cap is tight and in good condition. Make sure the gas cap meets OEM specifications.

Ignition on, engine not running.

With a scan tool, read DTCs.

Is the DTC active at this time?

Yes >> Go To 3

No >> Refer to the INTERMITTENT CONDITION Diagnostic Procedure.
Perform the POWERTRAIN VERIFICATION TEST. (Refer to 9 - ENGINE - STANDARD PROCEDURE)

3. VISUAL AND PHYSICAL INSPECTION

Perform a visual and physical inspection of the entire Evaporative Emission system.

Check for the follow conditions:

- Holes or cracks
- Loose seal points
- Evidence of damaged components
- Incorrect routing of hoses and tubes
- Fuel Cap gasket seal

Were any of the above conditions found?

Yes >> Repair as necessary.
Perform the POWERTRAIN VERIFICATION TEST. (Refer to 9 - ENGINE - STANDARD PROCEDURE)

No >> Go To 4

4. VERIFY EVAPORATIVE EMISSION LEAK

To continue testing you will need Miller Tool #8404A Evaporative Emission Leak Detector (EELD).

WARNING: Keep lit cigarettes, sparks, flames, and other ignition sources away from the test area to prevent the ignition of explosive gases. Keep the test area well ventilated.

NOTE: The fuel tank should have between 20% and 80% of fuel tank capacity to properly test the Evap system.

Connect the red power lead of the EELD to the battery positive terminal and the black ground lead to battery negative terminal.

Block the vent hose of the canister if using the service port.

Connect shop air to the EELD.

Set the smoke/air control switch to AIR.

Insert the tester's AIR supply tip (clear hose) into the appropriate calibration orifice on the tester's control panel (based on DTC leak size).

Press the remote smoke/air start button.

Position the red flag on the air flow meter so it is aligned with the indicator ball.

When the calibration is complete, release the remote button. The EELD flow meter is now calibrated in liters per minute to the size leak indicated by the DTC set in the PCM.

Install the service port adapter #8404-14 on the vehicle's service port and block the vent hose of the EVAP Canister (if equipped) or install the #8404-ADP service adaptor into the filter line.

Connect the Air supply hose from the EELD to the service port (if equipped) or to the #8404-ADP adapter.

Press the remote button to activate AIR flow.

NOTE: Larger volume fuel tanks, lower fuel levels or if the vehicle is equipped with a Flow Management Valve may indicate high flow and will require 4 to 5 minutes to fill.

Compare the flow meter indicator ball reading to the red flag.

ABOVE the red flag indicates a leak present.
BELOW the red flag indicates a sealed system.

Is the indicator ball above the red flag?

Yes >> Go To 5

No >> Refer to the INTERMITTENT CONDITION Diagnostic Procedure.
Perform the POWERTRAIN VERIFICATION TEST. (Refer to 9 - ENGINE - STANDARD PROCEDURE)

5. EVAPORATIVE EMISSION LEAK DETECTION

NOTE: A thorough visual inspection of the Evap system hoses, tubes, and connections may save time in your diagnosis. Look for any physical damage or signs of wetness at connections. The strong smell of fuel vapors may also aid diagnosis.

To continue testing, you will need Miller Tool #8404A Evaporative Emissions Leak Detector (EELD).

Remove the Air supply hose from the service port (if equipped) or from the #8404-ADP adapter.

Connect the SMOKE supply tip (black hose) to the service port (if equipped) or to the #8404-ADP adapter.

Set the smoke/air control switch to SMOKE.

NOTE: The flow meter indicator ball will not move in the smoke mode.
Press the remote smoke/air start button.

NOTE: Make sure that smoke has filled the EVAP system by continuing to press the remote smoke/air start button, remove the vehicle fuel cap, and wait for the smoke to exit. Once smoke is indicated reinstall the fuel cap.

NOTE: For optimal performance, introduce smoke into the system for an additional 60 seconds; continue introducing smoke at 15 second intervals, as necessary.

While still holding the remote smoke/air start button, use the white light (#8404-CLL) to follow the EVAP system path, and look for the source of the leak indicated by exiting smoke.

If a leak is concealed from view (i.e., top of fuel tank), release the remote smoke/air start button, and use the ultra-violet (UV) black light #8404-UVL and the yellow goggles 8404-20 to look for residual traces of dye that is left behind by the smoke.

The exiting smoke deposits a residual fluid that is either bright green or bright yellow in color when viewed with a UV light.

NOTE: The EVAP System is divided into three zones. A leak from any of these zones can cause this DTC to set. The lists below specify the possible leak points in that specific zone. For further assistance see the Zone Identification Chart at the beginning of this diagnostic procedure.

- ZONE 1

1 Fuel Cap
2 Recirculation Check Valve.
3 Vapor Recirculation Line.
4 Signal Vapor Line for FVM.
5 Flow Management Valve.
6 Fuel Tank to Canister Vapor Line connection.
7 Fuel Tank Vent (Check Valve).
8 Vapor Line to Canister.
9 Flow Control Orfice.
10 Control Valve.
11 Liquid Trap.
12 Fuel Tank.
13 Check valve.
14 Fuel Fill Tube to Tank connector.
15 Fuel Fill Tube
Damaged or disconnected EVAP system components.

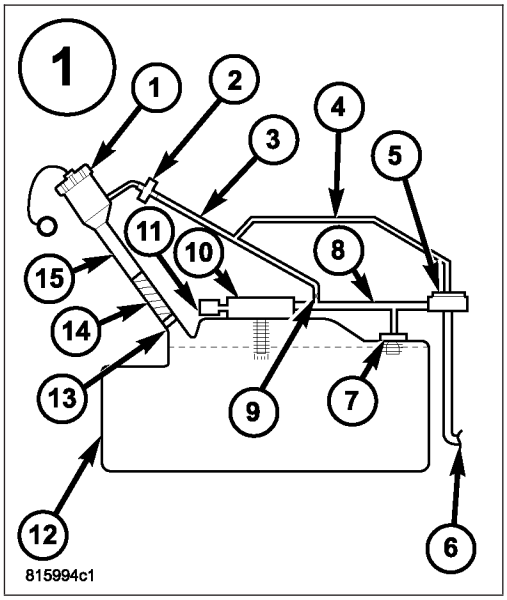

- ZONE 2

1 Filter.
2 NVLD.
3 Canister Vent Line.
4 Evap Canister.
5 Chassis Purge Valve.
6 Fuel Tank to Canister Vapor Line connection.
7 Evap Purge connection.

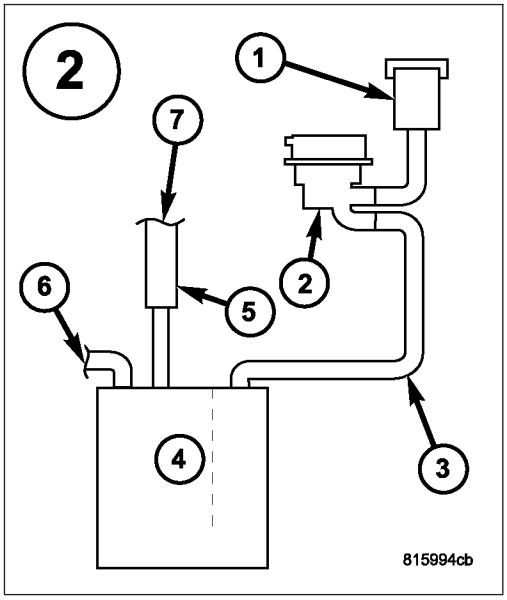

- ZONE 3

1 Evap Purge Vacuum Line.
2 Connection to Chassis Line.
3 Connection to Canister.
4 Chassis Purge Line.
5 Evap Purge Vacuum Line.
6 Connection to Evap Purge Harness.
7 Chassis Evap Purge Line connection to Engine Vacuum.
8 Evap Purge Valve.
9 Service Port.

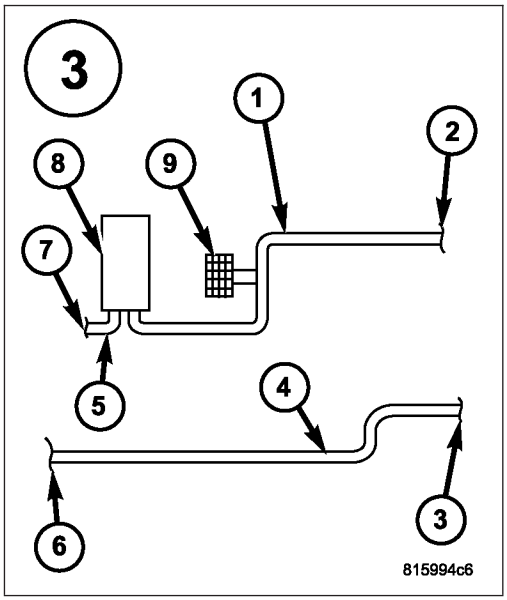

NOTE: Carefully inspect the vent side of the EVAP Canister. Due to the filtering system in the canister the smoke may not be as thick. Introducing smoke into the filtered side of the canister may assist in locating the leak.

Was a leak found?

Yes >> Go To 6
Perform the POWERTRAIN VERIFICATION TEST. (Refer to 9 - ENGINE - STANDARD PROCEDURE)

No >> Go To 7

6. LEAK AT GAS CAP

Remove the SMOKE supply tip (black hose) from the service port (if equipped) or to the #8404–ADP adapter.

Install gas cap adapter, Miller Tool #8382 (1/4 turn cap) or #6922 (screw cap) and #8399* (secondary seal depressor) and repeat test 5.

Was a leak found at the gas cap adapter?

Yes >> Replace the Fuel Filler tube assembly.
Perform the POWERTRAIN VERIFICATION TEST. (Refer to 9 - ENGINE - STANDARD PROCEDURE)

No >> Replace the gas cap.
Perform the POWERTRAIN VERIFICATION TEST. (Refer to 9 - ENGINE - STANDARD PROCEDURE)

7. EVAP PURGE SOLENOID OPERATION

NOTE: After disconnecting the Evap Purge Solenoid vacuum connections, inspect the lines and solenoid for any signs of contamination from the EVAP Canister. This may indicate a faulty check valve. Replace/repair as necessary.

Turn the ignition off.

Disconnect the vacuum hoses at the Evap Purge Solenoid.

Press the remote smoke/air start button on the EELD.

While holding the remote smoke/air start button, check to see if smoke is exiting the purge valve. This indicates that there is a leak internal to the purge valve.

NOTE: Below is an optional method of checking the purge valve for leaks if the EELD is unavailable.

Turn the ignition off.

Disconnect the vacuum hoses at the Evap Purge Solenoid.

Using a hand vacuum pump, apply 10 in HG to the “CAN” of the Evap Purge Solenoid.

NOTE: Monitor the vacuum gauge for at least 15 seconds.

Is smoke visible from the EVAP Purge Solenoid if using the EELD, or not hold a vacuum?

Yes >> Replace the NVLD.
Perform the POWERTRAIN VERIFICATION TEST. (Refer to 9 - ENGINE - STANDARD PROCEDURE)

No >> Replace the Evap Purge Solenoid.
Perform the POWERTRAIN VERIFICATION TEST. (Refer to 9 - ENGINE - STANDARD PROCEDURE)

P0457-LOOSE FUEL CAP

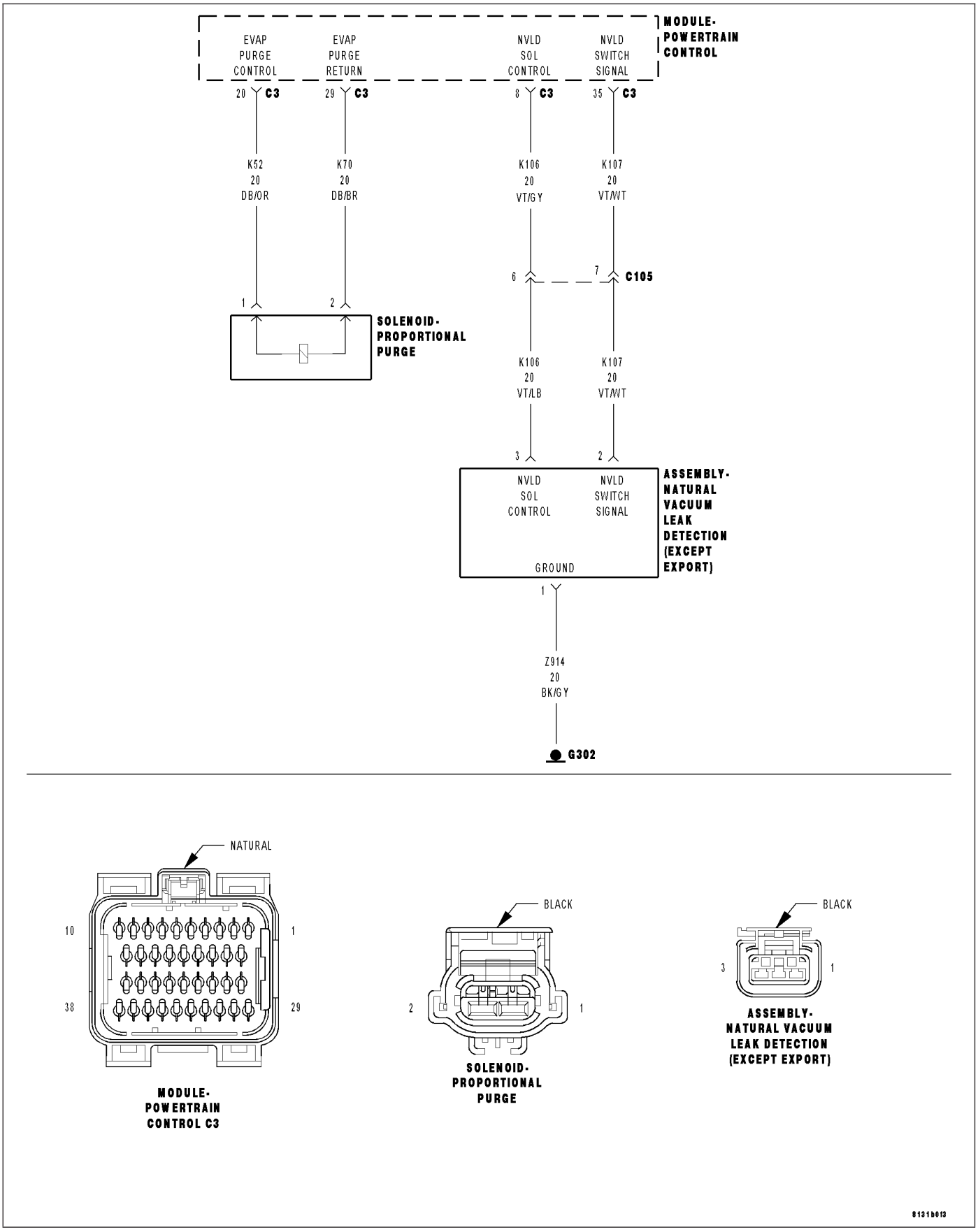

For a complete wiring diagram **Refer to Section 8W**.

Theory of Operation

The PCM records the fuel level when the ignition key is turned off and then again when the ignition key is turn back on. This is done to monitor for fuel level increase. If a fuel level increase is detected and the EVAP Leak monitor is run and fails, the Loose Gas Cap DTC will set and the GAS CAP indicator will displayed in odometer to inform the vehicle operator that the cap is off of loose.

- **When Monitored:**
  Ignition on. Ambient Temperature between 4°C and 32°C (39°F and 89°F) Close Loop fuel system. Test runs after the medium leak test is inconclusive and the PCM has senses a fuel increase.
- **Set Condition:**
  The PCM activates the EVAP Purge Solenoid to pull the EVAP system into a vacuum to close the NVLD switch. Once the NVLD switch is closed, the PCM turns the EVAP Purge Solenoid off to seal the EVAP system. If the NVLD switch reopens before the calibrated amount of time after a fuel tank fill, an error is detected. Two Trip Fault. Three good trips to turn off the MIL.

Possible Causes
LOOSE OR MISSING FUEL CAP
FUEL FILL CAP
EVAP PURGE SYSTEM MEDIUM LEAK

Always perform the Pre-Diagnostic Troubleshooting procedure before proceeding (Refer to 9 - ENGINE - DIAGNOSIS AND TESTING).

Diagnostic Test

1. VEHICLE HISTORY AND SERVICE BULLETIN INVESTIGATION

Ignition on, engine not running.

With a scan tool, read DTCs and record the related Freeze Frame data if any DTC(s) are present.

Whether or not any DTC(s) are present you will want to check the following items which may assist in repairing the customer's complaint successfully.

Check the vehicles repair history.

If the vehicle has a repair history that pertains to the customer's current complaint, review the repair.

Inspect the vehicle for any aftermarket accessories that may have been installed incorrectly.

Check for any service bulletin(s) related to the customer's complaint or DTC(s).

If a service bulletin applies, follow the instructions per the service bulletin.

Choose the following scenario that best applies.

The service bulletin repaired the customer's complaint.
Testing complete.

A DTC is present, no service bulletins apply, or the service bulletin didn't repair the customer's complaint.
Go To 2.

2. ACTIVE DTC

Ignition on, engine not running.

With a scan tool, read DTCs.

Is the DTC active at this time?

Yes >> Go To 3.

No >> Refer to the INTERMITTENT CONDITION Diagnostic Procedure.
Perform the POWERTRAIN VERIFICATION TEST. (Refer to 9 - ENGINE - STANDARD PROCEDURE)

3. LOOSE OR MISSING FUEL FILL CAP

Perform a visual and phyical inspection of the Fuel Fill Cap and the fill tube.

- Improper installation of the Fuel Fill Cap
- Loose or missing Fuel Filler Cap
- Holes or Cracks
- Damaged Locking tabs on Cap and/or fill tube
- Damaged seal points on Cap and/or fill tube
- Fuel Fill Cap gasket seal

Were any of the above conditions found?

Yes >> Repair or replace the fuel fill cap or fill tube as necessary. Ensure proper fuel fill cap installation. Once the repair is complete continue to step 4.
Perform the POWERTRAIN VERIFICATION TEST. (Refer to 9 - ENGINE - STANDARD PROCEDURE)

No >> Go To 4.

4. NVLD SERVICE TEST

With the scan tool perform the NVLD Service Test.

Does the NVLD Service Test pass?

Yes >> Test complete.
Perform the POWERTRAIN VERIFICATION TEST. (Refer to 9 - ENGINE - STANDARD PROCEDURE)

No >> Go To 5

5. VERIFY EVAPORATIVE EMISSION LEAK

To continue testing you will need Miller Tool #8404A Evaporative Emission Leak Detector (EELD).

WARNING: Keep lit cigarettes, sparks, flames, and other ignition sources away from the test area to prevent the ignition of explosive gases. Keep the test area well ventilated.

NOTE: The fuel tank should have between 20% and 80% of fuel tank capacity to properly test the Evap system.

Connect the red power lead of the EELD to the battery positive terminal and the black ground lead to battery negative terminal.

Block the vent hose of the canister if using the service port.

Connect shop air to the EELD.

Set the smoke/air control switch to AIR.

Insert the tester's AIR supply tip (clear hose) into the appropriate calibration orifice on the tester's control panel (based on DTC leak size).

Press the remote smoke/air start button.

Position the red flag on the air flow meter so it is aligned with the indicator ball.

When the calibration is complete, release the remote button. The EELD flow meter is now calibrated in liters per minute to the size leak indicated by the DTC set in the PCM.

Install the service port adapter #8404-14 on the vehicle's service port and block the vent hose of the EVAP Canister (if equipped) or install the #8404-ADP service adaptor into the filter line.

Connect the Air supply hose from the EELD to the service port (if equipped) or to the #8404-ADP adapter.

Press the remote button to activate AIR flow.

NOTE: Larger volume fuel tanks, lower fuel levels or if the vehicle is equipped with a Flow Management Valve may indicate high flow and will require 4 to 5 minutes to fill.

Compare the flow meter indicator ball reading to the red flag.

ABOVE the red flag indicates a leak present.

BELOW the red flag indicates a sealed system.

Is the indicator ball above the red flag?

Yes >> Go To 6.

No >> Refer to the INTERMITTENT CONDITION Diagnostic Procedure.
Perform the POWERTRAIN VERIFICATION TEST. (Refer to 9 - ENGINE - STANDARD PROCEDURE)

6. EVAPORATIVE EMISSION LEAK DETECTION

NOTE: A thorough visual inspection of the Evap system hoses, tubes, and connections may save time in your diagnosis. Look for any physical damage or signs of wetness at connections. The strong smell of fuel vapors may also aid diagnosis.

To continue testing, you will need Miller Tool #8404A Evaporative Emissions Leak Detector (EELD).

Remove the Air supply hose from the service port (if equipped) or from the #8404-ADP adapter.

Connect the SMOKE supply tip (black hose) to the service port (if equipped) or to the #8404-ADP adapter.

Set the smoke/air control switch to SMOKE.

NOTE: The flow meter indicator ball will not move in the smoke mode.

Press the remote smoke/air start button.

NOTE: Make sure that smoke has filled the EVAP system by continuing to press the remote smoke/air start button, remove the vehicle fuel cap, and wait for the smoke to exit. Once smoke is indicated reinstall the fuel cap.

NOTE: For optimal performance, introduce smoke into the system for an additional 60 seconds; continue introducing smoke at 15 second intervals, as necessary.

While still holding the remote smoke/air start button, use the white light (#8404-CLL) to follow the EVAP system path, and look for the source of the leak indicated by exiting smoke.

If a leak is concealed from view (i.e., top of fuel tank), release the remote smoke/air start button, and use the ultra-violet (UV) black light #8404-UVL and the yellow goggles 8404-20 to look for residual traces of dye that is left behind by the smoke.

The exiting smoke deposits a residual fluid that is either bright green or bright yellow in color when viewed with a UV light.

NOTE: The EVAP System is divided into three zones. A leak from any of these zones can cause this DTC to set. The lists below specify the possible leak points in that specific zone. For further assistance see the Zone Identification Chart below.

- ZONE 1

1 Fuel Cap
2 Recirculation Check Valve.
3 Vapor Recirculation Line.
4 Signal Vapor Line for FVM.
5 Flow Management Valve.
6 Fuel Tank to Canister Vapor Line connection.
7 Fuel Tank Vent (Check Valve).
8 Vapor Line to Canister.
9 Flow Control Orfice.
10 Control Valve.
11 Liquid Trap.
12 Fuel Tank.
13 Check valve.
14 Fuel Fill Tube to Tank connector.
15 Fuel Fill Tube

Damaged or disconnected EVAP system components.

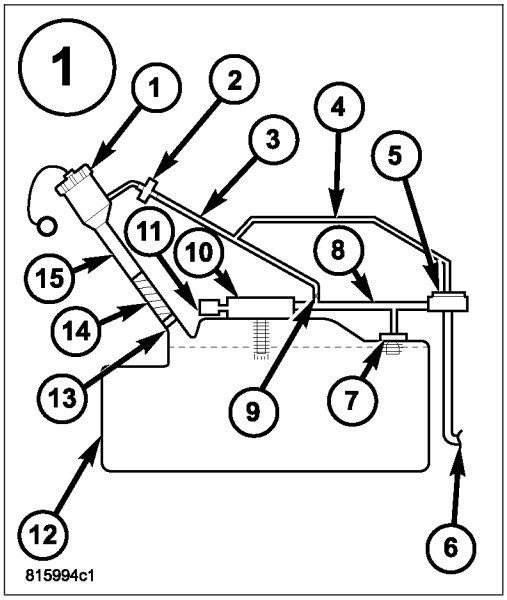

- ZONE 2

1 Filter.
2 NVLD.
3 Canister Vent Line.
4 Evap Canister.
5 Chassis Purge Valve.
6 Fuel Tank to Canister Vapor Line connection.
7 Evap Purge connection.

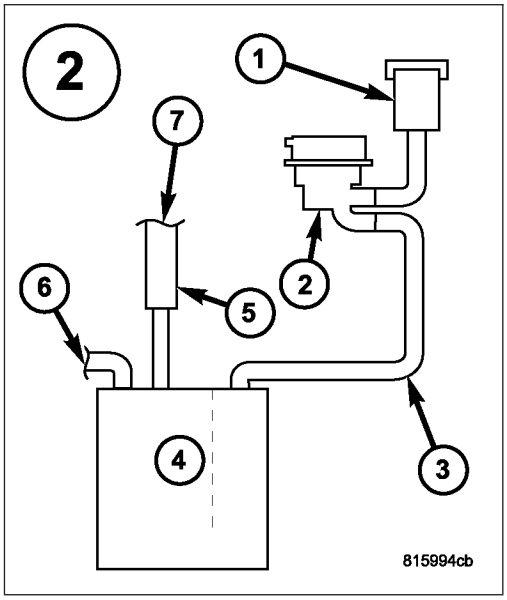

- ZONE 3

1 Evap Purge Vacuum Line.
2 Connection to Chassis Line.
3 Connection to Canister.
4 Chassis Purge Line.
5 Evap Purge Vacuum Line.
6 Connection to Evap Purge Harness.
7 Chassis Evap Purge Line connection to Engine Vacuum.
8 Evap Purge Valve.
9 Service Port.

NOTE: Carefully inspect the vent side of the EVAP Canister. Due to the filtering system in the canister the smoke may not be as thick. Introducing smoke into the filtered side of the canister may assist in locating the leak.

Was a leak found?

Yes >> Go To 7.

No >> Go To 8.

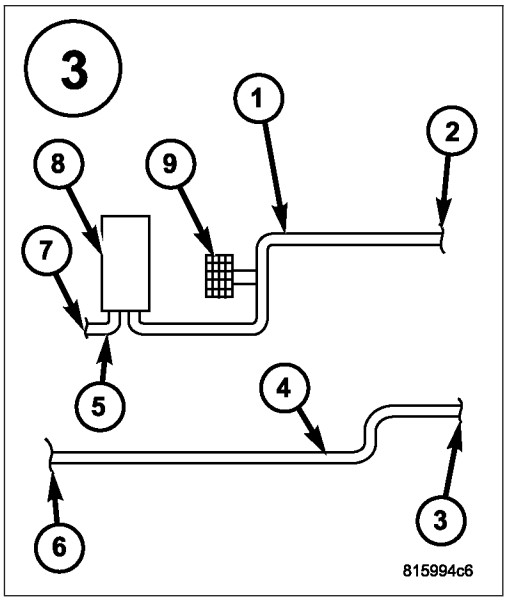

7. LEAK AT GAS CAP

Remove the SMOKE supply tip (black hose) from the service port (if equipped) or to the #8404–ADP adapter.

Install gas cap adapter, Miller Tool #8382 (1/4 turn cap) or #6922 (screw cap) and #8399* (secondary seal depressor) and repeat test 5.

Was a leak found at the gas cap adapter?

Yes >> Replace the Fuel Filler tube assembly.
Perform the POWERTRAIN VERIFICATION TEST. (Refer to 9 - ENGINE - STANDARD PROCEDURE)

No >> Replace the gas cap.
Perform the POWERTRAIN VERIFICATION TEST. (Refer to 9 - ENGINE - STANDARD PROCEDURE)

8. EVAP PURGE SOLENOID OPERATION

NOTE: After disconnecting the Evap Purge Solenoid vacuum connections, inspect the lines and solenoid for any signs of contamination from the EVAP Canister. This may indicate a faulty check valve. Replace/repair as necessary.

Turn the ignition off.

Disconnect the vacuum hoses at the Evap Purge Solenoid.

Press the remote smoke/air start button on the EELD.

While holding the remote smoke/air start button, check to see if smoke is exiting the purge valve. This indicates that there is a leak internal to the purge valve.

NOTE: Below is an optional method of checking the purge valve for leaks if the EELD is unavailable.

Turn the ignition off.

Disconnect the vacuum hoses at the Evap Purge Solenoid.

Using a hand vacuum pump, apply 10 in HG to the “CAN” of the Evap Purge Solenoid.

NOTE: Monitor the vacuum gauge for at least 15 seconds.

Is smoke visible from the EVAP Purge Solenoid if using the EELD, or not hold a vacuum?

Yes >> Go To 9.

No >> Replace the Evap Purge Solenoid.
Perform the POWERTRAIN VERIFICATION TEST. (Refer to 9 - ENGINE - STANDARD PROCEDURE)

9. NVLD SWITCH OPERATION

Reconnect all vacuum hoses.

Start the engine.

Allow the engine to idle.

Using the scan tool, perform the NVLD FORCED MONITOR TEST.

Monitor the NVLD Switch.

NOTE: As the test runs, the NVLD Switch should go from an OPEN state to CLOSED. After the vacuum is released form the EVAP system the Switch state will return to OPEN.

Did the NVLD Switch operate as described above?

Yes >> Refer to the INTERMITTENT CONDITION Diagnostic Procedure. (Refer to 9 - ENGINE - DIAGNOSIS AND TESTING)

No >> Replace the NVLD Assembly.
Perform the POWERTRAIN VERIFICATION TEST. (Refer to 9 - ENGINE - STANDARD PROCEDURE)

P0461-FUEL LEVEL SENSOR 1 PERFORMANCE

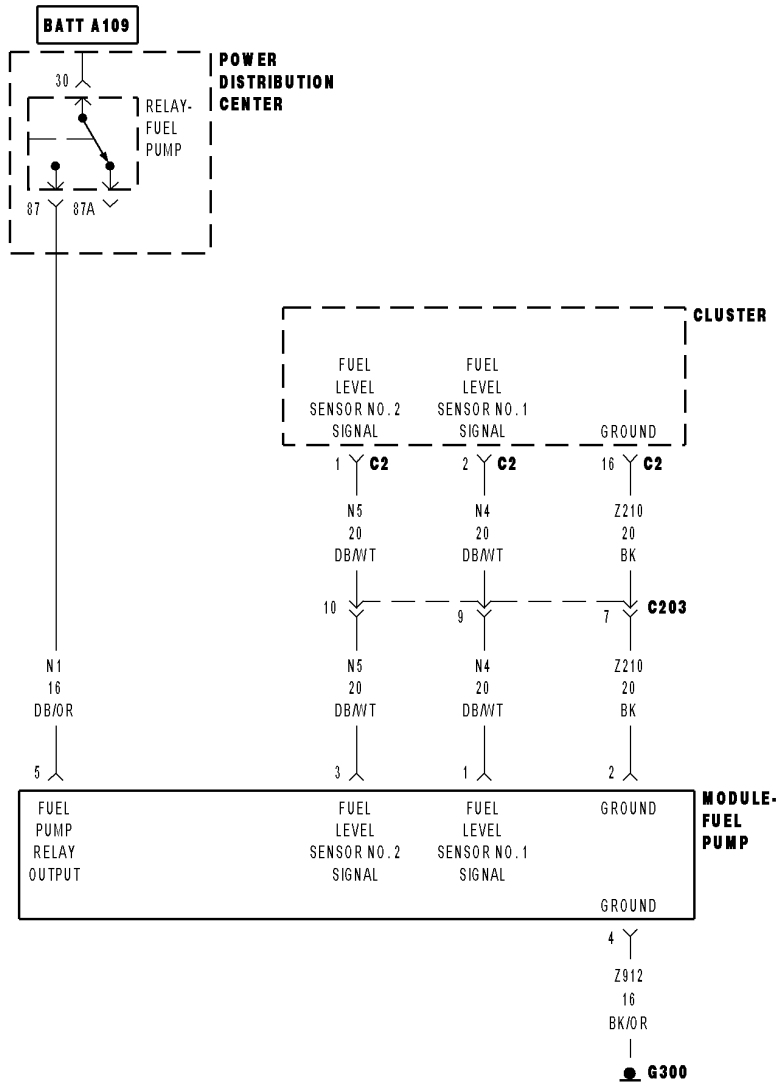

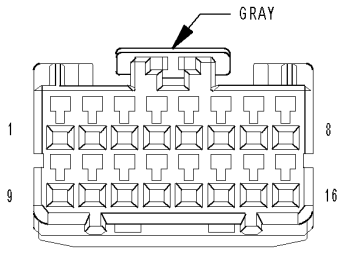

CLUSTER C2

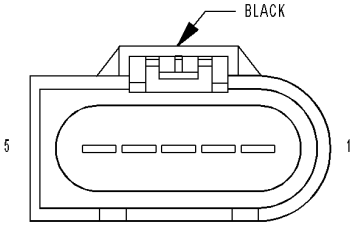

MODULE-
FUEL PUMP

8131b143

For a complete wiring diagram **Refer to Section 8W**.

- **When Monitored:**
  TEST No.1: With the ignition on, the fuel level is compared to the previous key down after a 20 second delay. TEST No.2: The PCM monitors the fuel level at ignition on.
- **Set Condition:**
  TEST No.1: If the PCM does not see a difference in fuel level of greater than 0.1 volt the test will fail. TEST No.2: If the PCM does not see a change in the fuel level of .1765 over a set amount of miles the test will fail. Three good trips to turn off the MIL.

Possible Causes
(N4) FUEL LEVEL SIGNAL CIRCUIT OPEN
(N4) FUEL LEVEL SIGNAL CIRCUIT SHORTED TO GROUND
(Z210) FUEL LEVEL SENSOR GROUND CIRCUIT OPEN
FUEL TANK
FUEL LEVEL SENSOR

Always perform the Pre-Diagnostic Troubleshooting procedure before proceeding. (Refer to 9 - ENGINE - DIAGNOSIS AND TESTING).

Diagnostic Test

1. ACTIVE DTC

NOTE: Diagnose any CAN - C or CAN - B Communication DTCs before continuing.

NOTE: Diagnose P0462 or P0463 first, if set along with P0461.

Ignition on, engine not running.

With a scan tool, read DTCs.

Is the DTC active at this time?

Yes >> Go To 2

No >> Refer to the INTERMITTENT CONDITION Diagnostic Procedure.
Perform the POWERTRAIN VERIFICATION TEST. (Refer to 9 - ENGINE - STANDARD PROCEDURE)

2. VISUALLY INSPECT FUEL TANK

Visually inspect the Fuel Tank for damage that may restrict the Fuel Sending Unit float from moving.

Is the Fuel Tank OK?

Yes >> Go To 3

No >> Replace the Fuel Tank as necessary.
Perform the POWERTRAIN VERIFICATION TEST. (Refer to 9 - ENGINE - STANDARD PROCEDURE)

3. (N4) FUEL LEVEL SIGNAL CIRCUIT OPEN

Turn the ignition off.

Disconnect the Fuel Pump Module harness connector.

Disconnect the C2 Cluster harness connectors.

Measure the resistance of the (N4) Fuel Level Signal circuit from the Fuel Pump Module harness connector to the C2 Cluster harness connector.

Is the resistance below 5.0 ohms?

Yes >> Go To 4

No >> Repair the open in the (N4) Fuel Level Signal circuit.
Perform BODY VERIFICATION TEST-VER 1. (Refer to 8 - ELECTRICAL/ELECTRONIC CONTROL MODULES/ FRONT CONTROL MODULE - DIAGNOSIS AND TESTING)

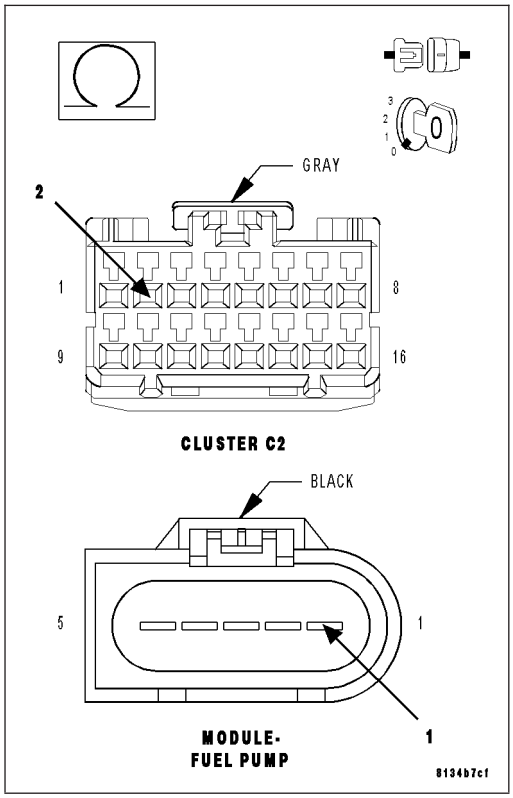

4. (N4) FUEL LEVEL SIGNAL CIRCUIT SHORTED TO GROUND

Measure the resistance between ground and the (N4) Fuel Level Signal circuit in the Fuel Pump Module harness connector.

Is the resistance below 100 ohms?

Yes >> Repair the short to ground in the (N4) Fuel Level Signal circuit.
Perform BODY VERIFICATION TEST-VER 1. (Refer to 8 - ELECTRICAL/ELECTRONIC CONTROL MODULES/ FRONT CONTROL MODULE - DIAGNOSIS AND TESTING)

No >> Go To 5

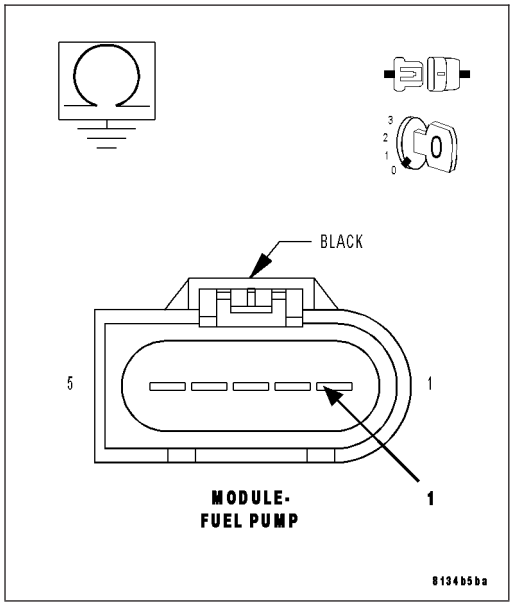

5. (Z210) FUEL LEVEL SENSOR GROUND CIRCUIT OPEN

Measure the resistance of the (Z210) Fuel Level Sensor Ground circuit from the Fuel Pump Module harness connector to the C2 Cluster harness connector.

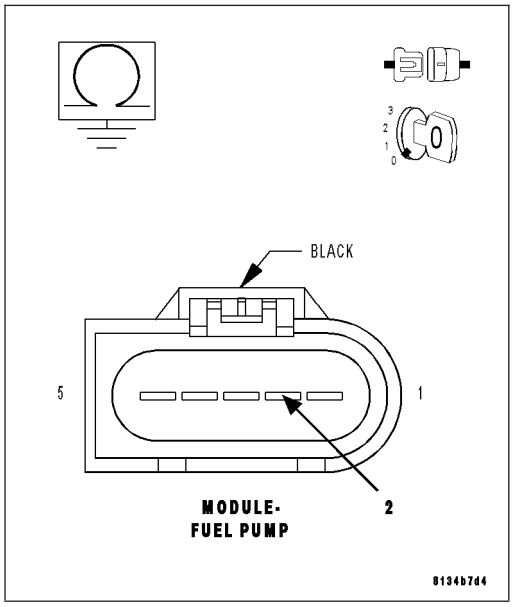

Is the resistance below 5.0 ohms?

Yes >> Go To 6

No >> Repair the open in the (Z210) Fuel Level Sensor Ground circuit.

Perform BODY VERIFICATION TEST-VER 1. (Refer to 8 - ELECTRICAL/ELECTRONIC CONTROL MODULES/ FRONT CONTROL MODULE - DIAGNOSIS AND TESTING)

6. INTERNAL INSPECTION OF THE FUEL TANK

WARNING: The fuel system is under a constant pressure (even with the engine off). Before testing or servicing any fuel system hose, fitting or line, the fuel system pressure must be released. Failure to follow these instructions can result in personal injury or death.

Remove the Fuel Tank per Service Information.

Remove the Fuel Pump Module.

Visually inspect the inside of the Fuel Tank for any obstructions or deformities.

Inspect the Fuel Pump Module Float arm for damage.

Were any problems found?

Yes >> Repair or replace as necessary.

Perform BODY VERIFICATION TEST-VER 1. (Refer to 8 - ELECTRICAL/ELECTRONIC CONTROL MODULES/FRONT CONTROL MODULE - DIAGNOSIS AND TESTING)

No >> Go To 7

7. FUEL LEVEL SENSOR

If there are no possible causes remaining, view repair.

Repair

Replace the Fuel Level Sensor.

Perform BODY VERIFICATION TEST-VER 1. (Refer to 8 - ELECTRICAL/ELECTRONIC CONTROL MODULES/FRONT CONTROL MODULE - DIAGNOSIS AND TESTING)

P0462-FUEL LEVEL SENSOR 1 CIRCUIT LOW

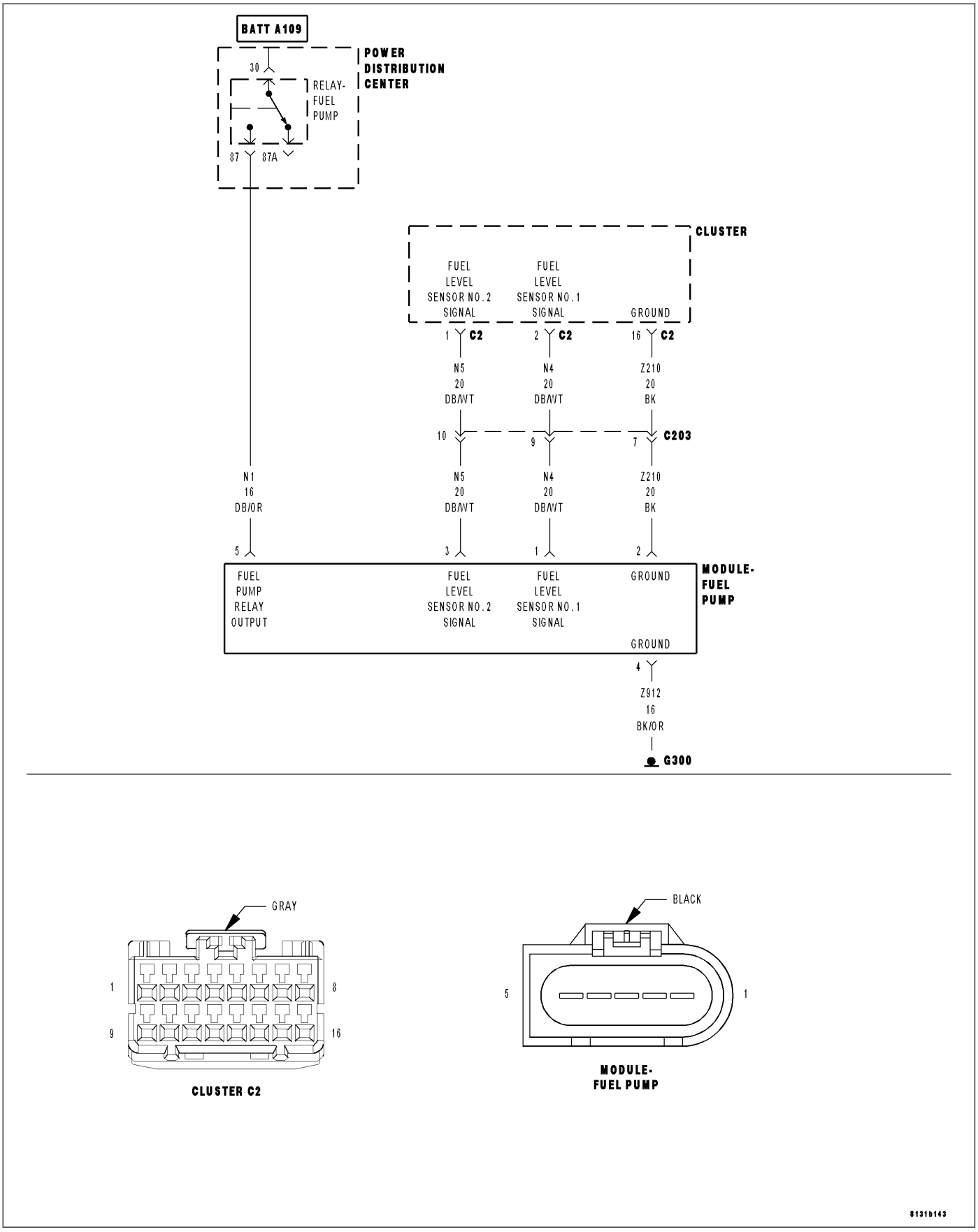

For a complete wiring diagram **Refer to Section 8W**.

- **When Monitored:**
  Ignition on and battery voltage above 10.4 volts.
- **Set Condition:**
  The fuel level sensor signal voltage goes below 0.4 of a volt for more than 90 seconds. One Trip Fault. Three good trips to turn off the MIL.

Possible Causes
(N4) FUEL LEVEL SIGNAL CIRCUIT SHORTED TO GROUND
(N4) FUEL LEVEL SIGNAL CIRCUIT SHORTED TO (Z210) FUEL LEVEL SENSOR RETURN CIRCUIT
FUEL LEVEL SENSOR
INSTRUMENT CLUSTER

Always perform the Pre-Diagnostic Troubleshooting procedure before proceeding. (Refer to 9 - ENGINE - SCHEMATICS AND DIAGRAMS).

Diagnostic Test

1. FUEL LEVEL SENSOR VOLTAGE BELOW 0.4 OF A VOLT

NOTE: Diagnose any CAN - B or CAN - C Communication DTCs before continuing.
Ignition on, engine not running.
With the scan tool, read the Fuel Level Sensor voltage.

Is the Fuel Level Sensor voltage below 0.4 of a volt?

Yes >> Go To 2

No >> Refer to the INTERMITTENT CONDITION Diagnostic Procedure.
Perform BODY VERIFICATION TEST-VER 1. (Refer to 8 - ELECTRICAL/ELECTRONIC CONTROL MODULES/FRONT CONTROL MODULE - DIAGNOSIS AND TESTING)

2. FUEL LEVEL SENSOR

Turn the ignition off.
Disconnect the Fuel Pump Module harness connector.
Ignition on, engine not running.
With the scan tool, read the Fuel Level Sensor voltage.

Did the Fuel Level Sensor voltage change from below 0.4 of a volt to above 4.0 volts?

Yes >> Replace the Fuel Level Sensor.
Perform BODY VERIFICATION TEST-VER 1. (Refer to 8 - ELECTRICAL/ELECTRONIC CONTROL MODULES/FRONT CONTROL MODULE - DIAGNOSIS AND TESTING)

No >> Go To 3

3. (N4) FUEL LEVEL SIGNAL CIRCUIT SHORTED TO GROUND

Turn the ignition off.

Disconnect the C2 Cluster harness connectors.

Measure the resistance between ground and the (N4) Fuel Level Signal circuit in the Fuel Pump Module harness connector.

Is the resistance below 100 ohms?

Yes >> Repair the short to ground in the (N4) Fuel Level Signal circuit.

Perform BODY VERIFICATION TEST-VER 1. (Refer to 8 - ELECTRICAL/ELECTRONIC CONTROL MODULES/ FRONT CONTROL MODULE - DIAGNOSIS AND TESTING)

No >> Go To 4

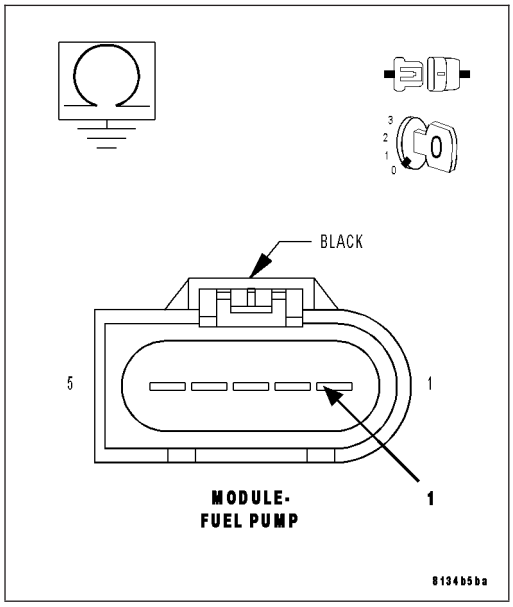

4. (N4) FUEL LEVEL SIGNAL CIRCUIT SHORTED TO THE (Z210) FUEL LEVEL SENSOR GROUND CIRCUIT

Measure the resistance between the (N4) Fuel Level Signal circuit and the (Z210) Fuel Level Sensor Ground circuit in the Fuel Pump Module harness connector.

Is the resistance below 5.0 ohms?

Yes >> Repair the short between the (Z210) Fuel Level Sensor Ground circuit and the (N4) Fuel Level Signal circuit.

Perform BODY VERIFICATION TEST-VER 1. (Refer to 8 - ELECTRICAL/ELECTRONIC CONTROL MODULES/ FRONT CONTROL MODULE - DIAGNOSIS AND TESTING)

No >> Go To 5

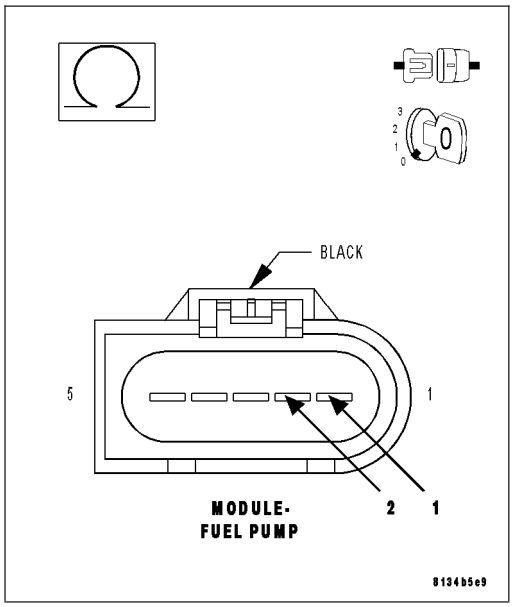

5. INSTRUMENT CLUSTER

NOTE: Before continuing, check the Instrument Cluster harness connector terminals for corrosion, damage, or terminal push out. Repair as necessary.
Using the schematics as a guide, inspect the wire harness and connectors. Pay particular attention to all Power and Ground circuits.

Were there any problems found?

Yes >> Repair as necessary.
Perform BODY VERIFICATION TEST-VER 1. (Refer to 8 - ELECTRICAL/ELECTRONIC CONTROL MODULES/FRONT CONTROL MODULE - DIAGNOSIS AND TESTING)

No >> Replace and program the Instrument Cluster per Service Information.
Perform BODY VERIFICATION TEST-VER 1. (Refer to 8 - ELECTRICAL/ELECTRONIC CONTROL MODULES/FRONT CONTROL MODULE - DIAGNOSIS AND TESTING)

P0463-FUEL LEVEL SENSOR 1 CIRCUIT HIGH

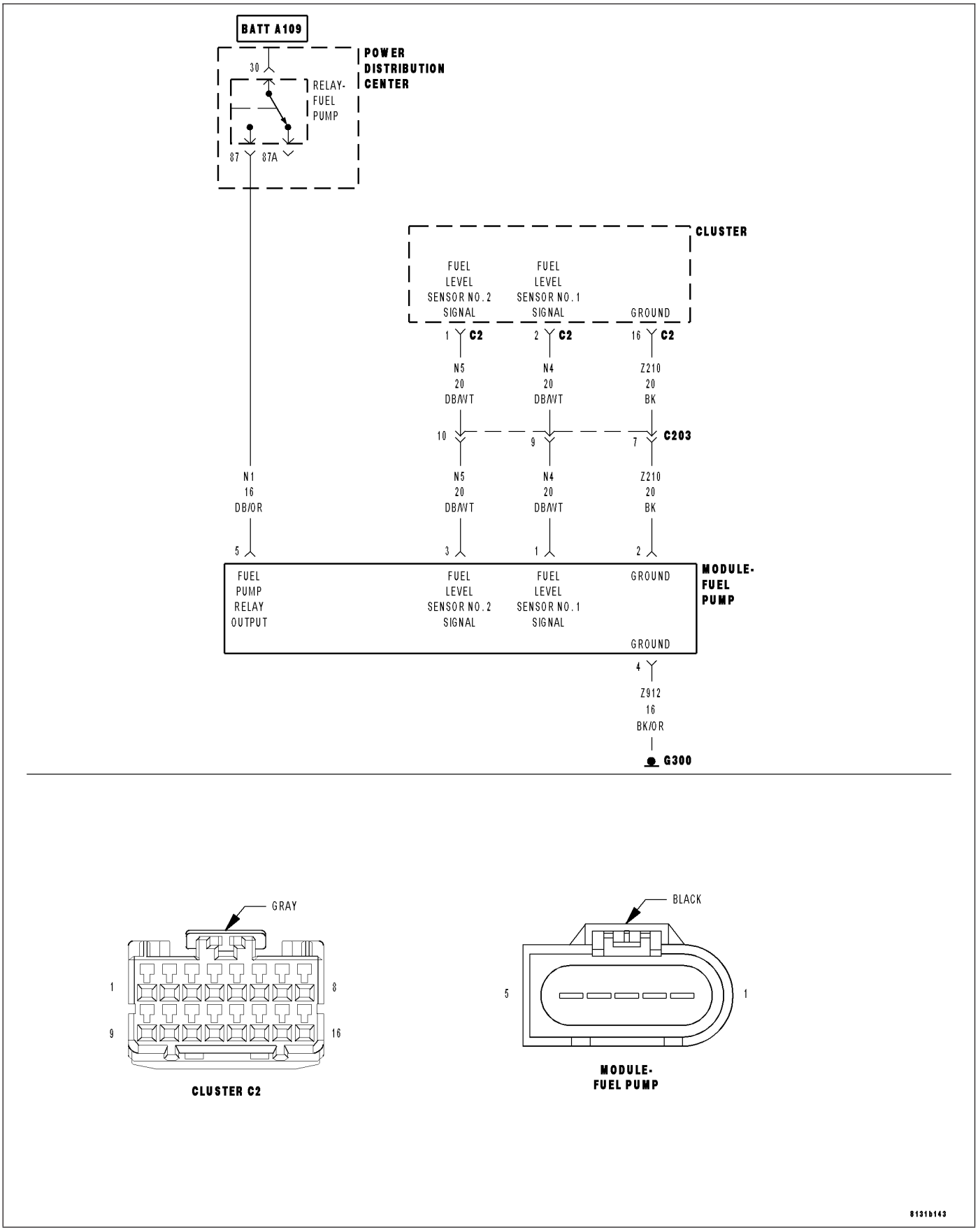

For a complete wiring diagram **Refer to Section 8W**.

- **When Monitored:**
  Ignition on and battery voltage above 10.4 volts.
- **Set Condition:**
  The fuel level sensor signal voltage at the PCM goes above 4.9 volts for more than 90 seconds. One Trip Fault. Three good trips to turn off the MIL.

Possible Causes
(N4) FUEL LEVEL SIGNAL CIRCUIT SHORTED TO BATTERY VOLTAGE
(N4) FUEL LEVEL SIGNAL CIRCUIT OPEN
(Z210) FUEL LEVEL SENSOR GROUND CIRCUIT OPEN
FUEL LEVEL SENSOR
INSTRUMENT CLUSTER

Always perform the Pre-Diagnostic Troubleshooting procedure before proceeding. (Refer to 9 - ENGINE - DIAGNOSIS AND TESTING).

Diagnostic Test

1. FUEL LEVEL SENSOR VOLTS ABOVE 4.9 VOLTS

NOTE: Diagnose any CAN - B and CAN - C Communication DTCs before continuing.
Ignition on, engine not running.
With a scan tool, read the Fuel Level Sensor voltage.

Is the Fuel Level Sensor voltage above 4.9 volts?

Yes >> Go To 2

No >> Refer to the INTERMITTENT CONDITION Diagnostic Procedure.
Perform BODY VERIFICATION TEST-VER 1. (Refer to 8 - ELECTRICAL/ELECTRONIC CONTROL MODULES/FRONT CONTROL MODULE - DIAGNOSIS AND TESTING)

2. FUEL LEVEL SENSOR

Turn the ignition off.
Disconnect the Fuel Pump Module electrical harness connector.
Ignition on, engine not running.
Connect a jumper wire between the (N4) Fuel Level Signal circuit and the (Z210) Fuel Level Sensor Ground circuit in the Fuel Pump Module harness connector.
With the scan tool, read the Fuel Level Sensor voltage.

Did the Fuel Level Sensor voltage change from above 4.8 volts to below 0.4 of a volt with the jumper wire installed?

Yes >> Replace the Fuel Level Sensor.
Perform BODY VERIFICATION TEST-VER 1. (Refer to 8 - ELECTRICAL/ELECTRONIC CONTROL MODULES/ FRONT CONTROL MODULE - DIAGNOSIS AND TESTING)

No >> Go To 3

NOTE: Remove the jumper wire before continuing.

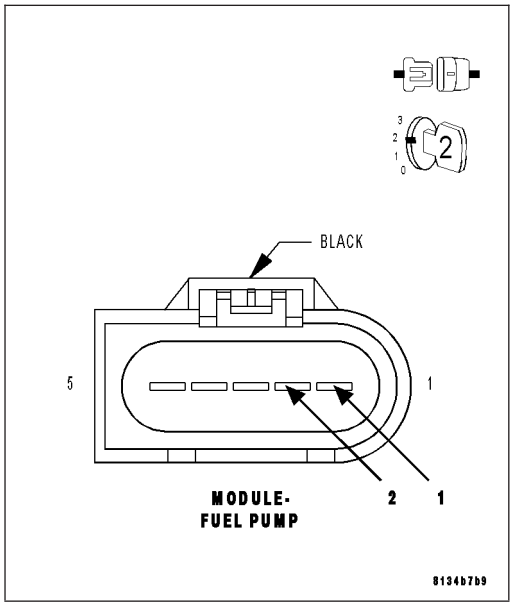

3. (N4) FUEL LEVEL SIGNAL CIRCUIT SHORTED TO BATTERY VOLTAGE

Turn the ignition off.

Disconnect the C2 Cluster harness connector.

Ignition on, engine not running.

Measure the voltage on the (N4) Fuel Level Signal circuit in the Fuel Pump Module harness connector.

Is the voltage above 5.2 volts?

Yes >> Repair the short to battery voltage in the (N4) Fuel Level Signal circuit.
Perform BODY VERIFICATION TEST-VER 1. (Refer to 8 - ELECTRICAL/ELECTRONIC CONTROL MODULES/ FRONT CONTROL MODULE - DIAGNOSIS AND TESTING)

No >> Go To 4

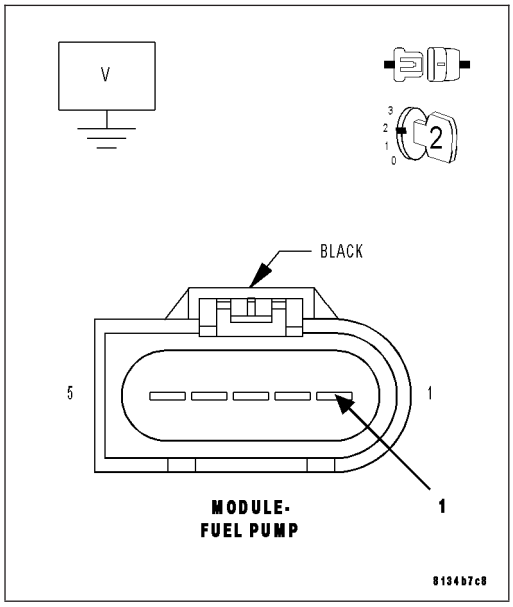

4. (N4) FUEL LEVEL SIGNAL CIRCUIT OPEN

Turn the ignition off.

Measure the resistance of the (N4) Fuel Level Signal circuit from the Fuel Pump Module harness connector to the C2 Cluster harness connector.

Is the resistance below 5.0 ohms?

Yes >> Go To 5

No >> Repair the open in the (N4) Fuel Level Signal circuit.
Perform BODY VERIFICATION TEST-VER 1. (Refer to 8 - ELECTRICAL/ELECTRONIC CONTROL MODULES/ FRONT CONTROL MODULE - DIAGNOSIS AND TESTING)

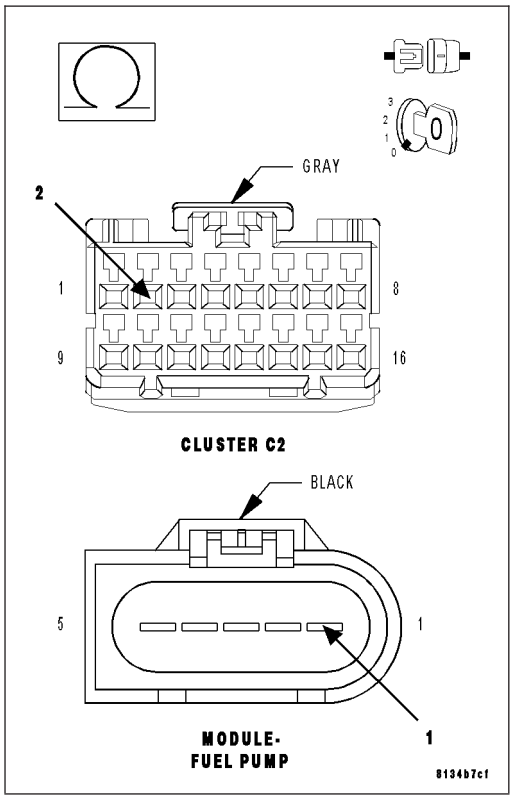

5. (Z210) FUEL LEVEL SENSOR GROUND CIRCUIT OPEN

Measure the resistance of the (Z210) Fuel Level Sensor Ground circuit from the Fuel Pump Module harness connector to the C2 Cluster harness connector.

Is the resistance below 5.0 ohms?

Yes >> Go To 6

No >> Repair the open in the (Z210) Fuel Level Sensor Ground circuit.

Perform BODY VERIFICATION TEST-VER 1. (Refer to 8 - ELECTRICAL/ELECTRONIC CONTROL MODULES/ FRONT CONTROL MODULE - DIAGNOSIS AND TESTING)

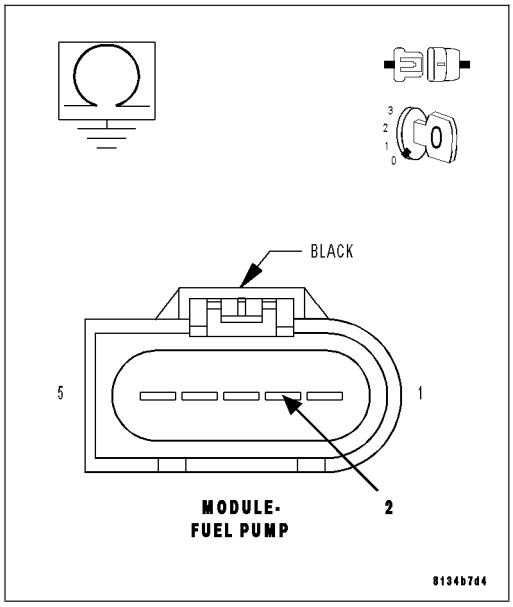

6. INSTRUMENT CLUSTER

NOTE: Before continuing, check the Instrument Cluster harness connector terminals for corrosion, damage, or terminal push out. Repair as necessary.

Using the schematics as a guide, inspect the wire harness and connectors. Pay particular attention to all Power and Ground circuits.

Were there any problems found?

Yes >> Repair as necessary.

Perform BODY VERIFICATION TEST-VER 1. (Refer to 8 - ELECTRICAL/ELECTRONIC CONTROL MODULES/FRONT CONTROL MODULE - DIAGNOSIS AND TESTING)

No >> Replace and program the Instrument Cluster per Service Information.

Perform BODY VERIFICATION TEST-VER 1. (Refer to 8 - ELECTRICAL/ELECTRONIC CONTROL MODULES/FRONT CONTROL MODULE - DIAGNOSIS AND TESTING)

P0480-COOLING FAN 1 CONTROL CIRCUIT

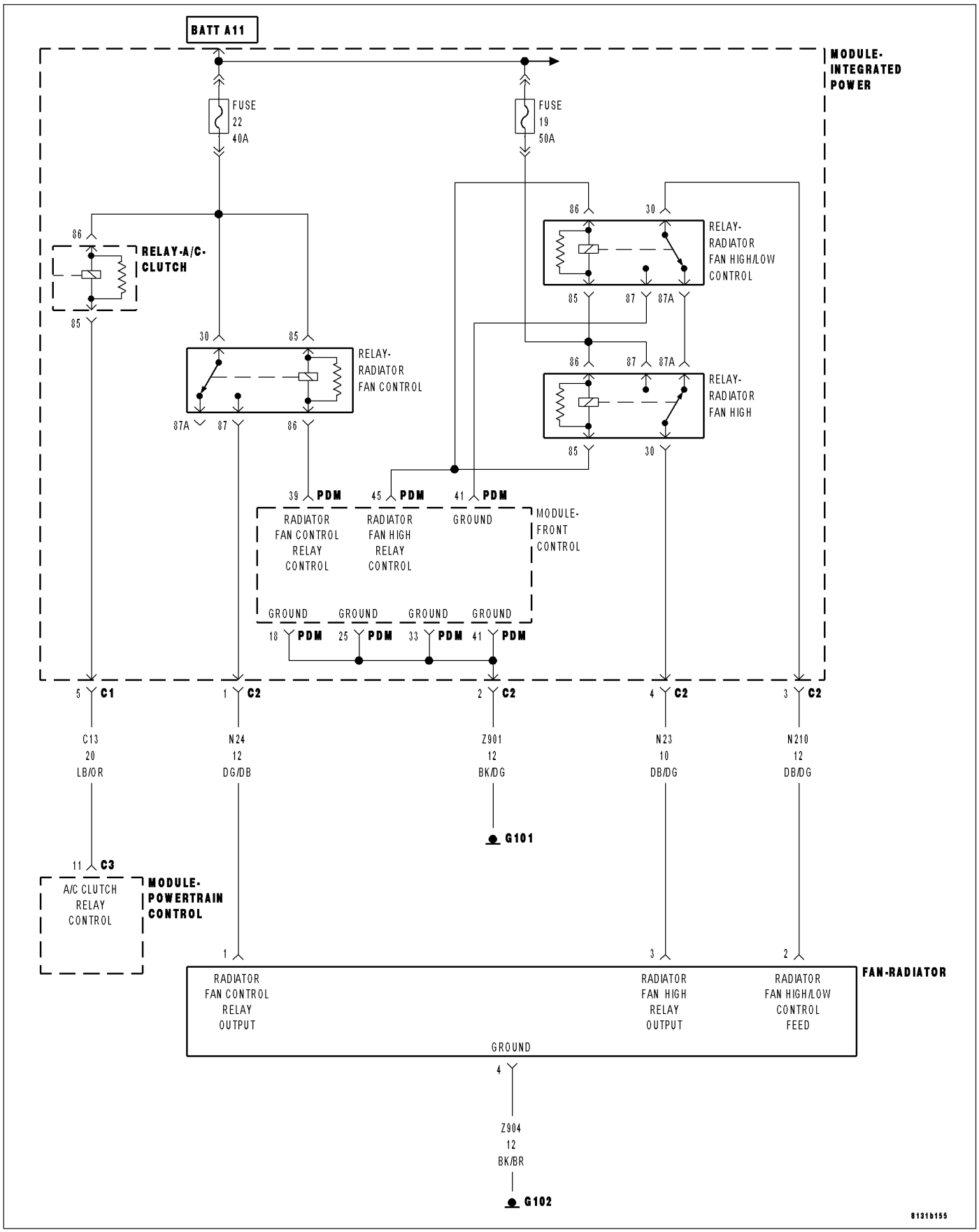

For a complete wiring diagram **Refer to Section 8W**.

- **When Monitored:**
  With the ignition on. Battery voltage greater than 10 volts.
- **Set Condition:**
  The ECM receives a CAN Bus message from the FCM indicating an open or shorted circuit on the Radiator Fan Relay Control circuit.

Possible Causes
FUSED (B+) FEED CIRCUITS
(N201) RADIATOR FAN CONTROL RELAY CONTROL CIRCUIT OPEN
(N201) RADIATOR FAN CONTROL RELAY CIRCUIT SHORT TO GROUND
RADIATOR FAN CONTROL RELAY
FRONT CONTROL MODULE

Always perform the Pre-Diagnostic Troubleshooting procedure before proceeding. (Refer to 9 - ENGINE - DIAGNOSIS AND TESTING).

Diagnostic Test

1. RADIATOR FAN CONTROL RELAY OPERATION

NOTE: When actuating the radiator fan relays, the Radiator Fan(s) may have a delay in operation and ramp up slowly.
Ignition on, engine not running.
With a scan tool, select Radiator Cooling Fan Relay #1 Control State to actuate the Radiator Fan Control Relay.

Is the Cooling Fan Relay operating?

Yes >> Refer to the *CHECKING FOR AN INTERMITTENT DTC Diagnostic Procedure. (Refer to 9 - ENGINE - DIAGNOSIS AND TESTING)
Perform the ECM Verification Test Ver. 1. (Refer to 9 - ENGINE - DIAGNOSIS AND TESTING)

No >> Go To 2

2. FUSED B+ CIRCUITS

Turn the ignition off.
Remove the Radiator Fan Control Relay.
Using a 12-volt test light connected to ground, probe the Fused B+ circuits.

Is the voltage above 11.0 volts?

Yes >> Go To 3

No >> Repair the open or short to ground in the Fused B+ circuits. Inspect the related fuse and repair as necessary.
Perform BODY VERIFICATION TEST – VER 1. (Refer to 8 - ELECTRICAL/ELECTRONIC CONTROL MODULES - STANDARD PROCEDURE)

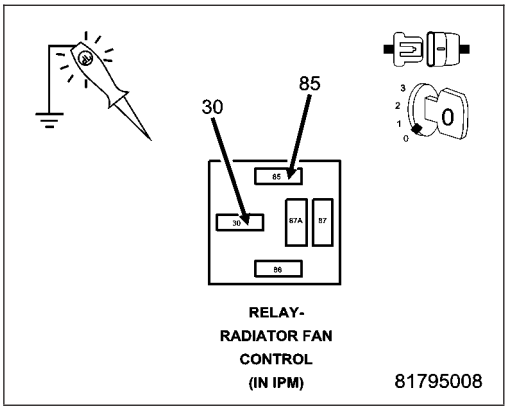

3. RADIATOR FAN CONTROL RELAY CONTROL CIRCUIT

Turn the ignition on, engine not running.

With a scan tool, select Radiator Cooling Fan Relay #1 Control State, Toggle, to actuate the Radiator Fan Control Relay.

Using a 12–volt test light connected to battery voltage, probe the Radiator Control Relay Control circuit in the PDM.

Does the test light illuminate and flash on and off?

Yes >> Replace the Radiator Fan Control Relay.
Perform BODY VERIFICATION TEST – VER 1. (Refer to 8 - ELECTRICAL/ELECTRONIC CONTROL MODULES - STANDARD PROCEDURE)

No >> Go To 4

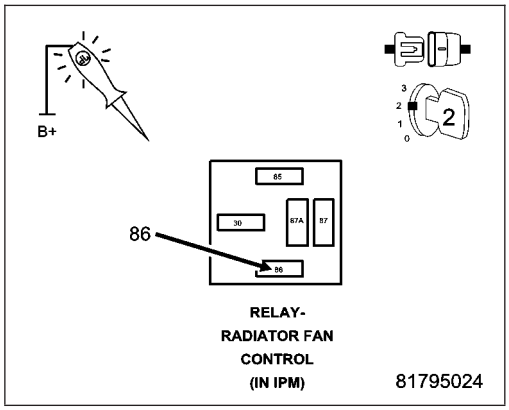

4. (N201) RADIATOR FAN CONTROL RELAY CONTROL CIRCUIT OPEN

Turn the ignition off.

Remove the FCM from the PDM.

Measure the resistance of the (N201) Radiator Fan Control Relay Control circuit from the Relay to the FCM PDM — 49 way connector.

Is the resistance below 5.0 ohms?

Yes >> Go To 5

No >> Replace the PDM in accordance with the Service information.
Perform BODY VERIFICATION TEST – VER 1. (Refer to 8 - ELECTRICAL/ELECTRONIC CONTROL MODULES - STANDARD PROCEDURE)

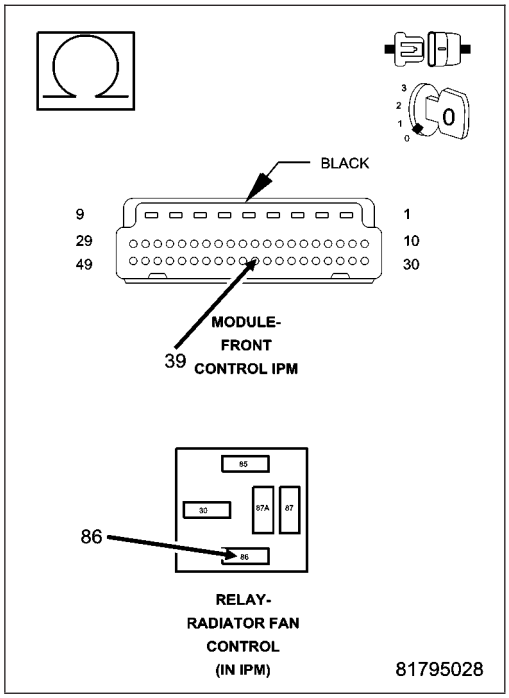

5. (N201) RADIATOR FAN CONTROL RELAY CONTROL CIRCUIT SHORTED TO GROUND

Measure the resistance between ground and the (N201) Radiator Fan Control Relay Control circuit at the Relay connection.

Is the resistance below 100 ohms?

Yes >> Replace the PDM in accordance with the Service information.
Perform BODY VERIFICATION TEST – VER 1. (Refer to 8 - ELECTRICAL/ELECTRONIC CONTROL MODULES - STANDARD PROCEDURE)

No >> Replace Front Control Module in accordance with the Service Information.
Perform BODY VERIFICATION TEST – VER 1. (Refer to 8 - ELECTRICAL/ELECTRONIC CONTROL MODULES - STANDARD PROCEDURE)

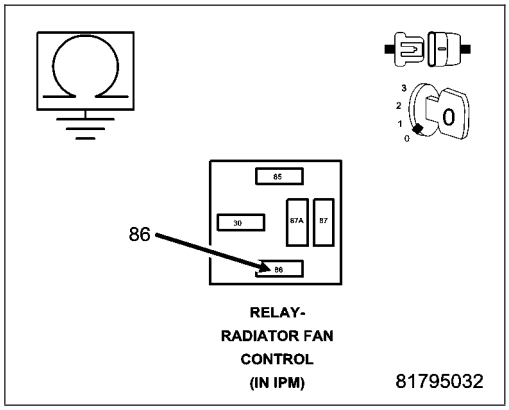

P0481-COOLING FAN 2 CONTROL CIRCUIT

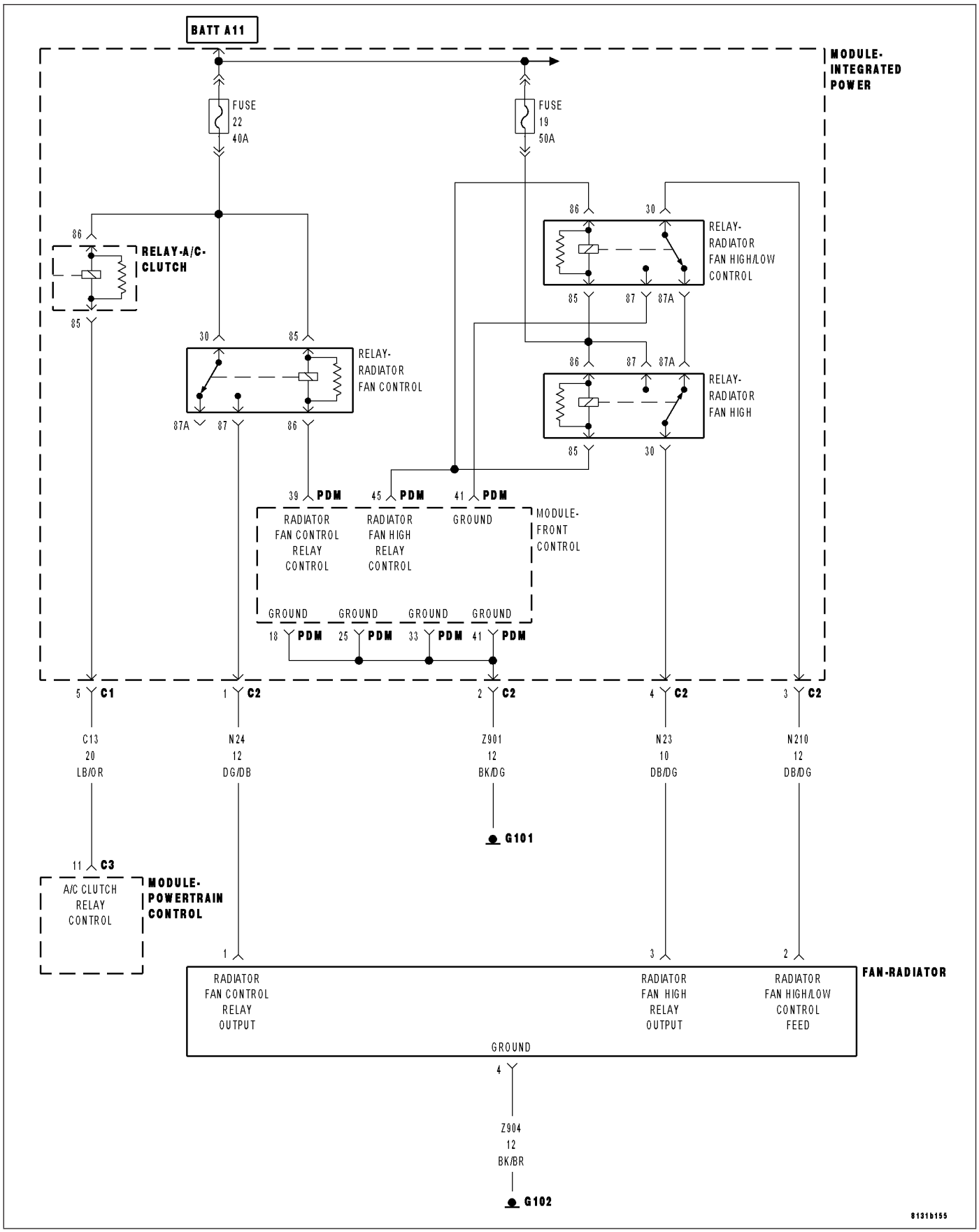

For a complete wiring diagram **Refer to Section 8W**.

- **When Monitored:**
  With the ignition on. Battery voltage greater than 10 volts.
- **Set Condition:**
  The ECM receives a CAN Bus message from the FCM indicating an open or shorted circuit on the Radiator Fan High Relay Control circuit.

Possible Causes
FUSED B+ CIRCUITS
(N112) RADIATOR FAN HIGH RELAY CONTROL CIRCUIT OPEN
(N112) RADIATOR FAN HIGH RELAY CONTROL CIRCUIT SHORTED TO GROUND
RADIATOR FAN HIGH RELAY
FRONT CONTROL MODULE

Always perform the Pre-Diagnostic Troubleshooting procedure before proceeding. (Refer to 9 - ENGINE - DIAGNOSIS AND TESTING).

Diagnostic Test

1. RADIATOR FAN HIGH RELAY OPERATION

Ignition on, engine not running.

With a scan tool, select Radiator Cooling Fan Relay #2 Control State, to actuate the Radiator Fan High Relay.

Is the Cooling Fan Relay operating?

Yes >> Refer to the *CHECKING FOR AN INTERMITTENT DTC Diagnostic Procedure. (Refer to 9 - ENGINE - DIAGNOSIS AND TESTING)
Perform the ECM Verification Test Ver. 1. (Refer to 9 - ENGINE - DIAGNOSIS AND TESTING)

No >> Go To 2

2. FUSED B+ CIRCUITS

Turn the ignition off.

Remove the Radiator High Fan Relay.

Using a 12-volt test light connected to ground, probe the Fused B+ circuits in the Relay connection.

Does the test light illuminate brightly?

Yes >> Go To 4

No >> Go To 3

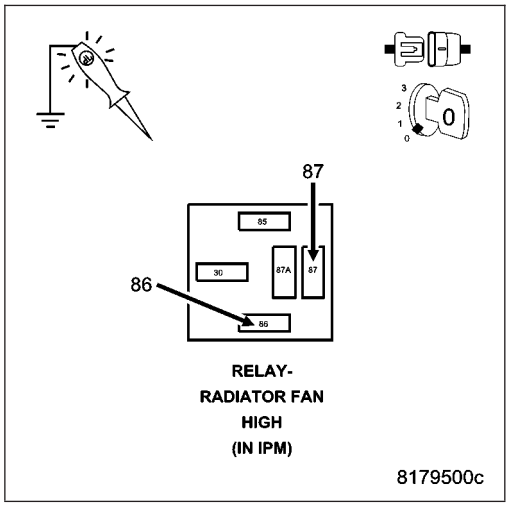

3. RADIATOR FAN HI/LO CONTROL RELAY SHORTED INTERNALLY

With the test light still at the Fused B+ circuit (Radiator High Fan Relay), remove the Radiator Fan HI/LO Control Relay.

When the relay is removed, does the test light illuminate brightly?

Yes >> Replace the Radiator Fan HI/LO Control Relay.
Perform BODY VERIFICATION TEST – VER 1. (Refer to 8 - ELECTRICAL/ELECTRONIC CONTROL MODULES - STANDARD PROCEDURE)

No >> Repair the open or short to ground in the Fused B+ circuits. Inspect the related fuse and repair as necessary.
Perform BODY VERIFICATION TEST – VER 1. (Refer to 8 - ELECTRICAL/ELECTRONIC CONTROL MODULES - STANDARD PROCEDURE)

4. RADIATOR FAN HIGH RELAY CONTROL CIRCUIT

Turn the ignition on, engine not running.

With a scan tool, select Radiator Cooling Fan Relay #2 Control State and then Toggle, to actuate the Radiator Fan High Relay.

Using a 12–volt test light connected to battery voltage, probe the Radiator Fan High Relay Control circuit in the PDM.

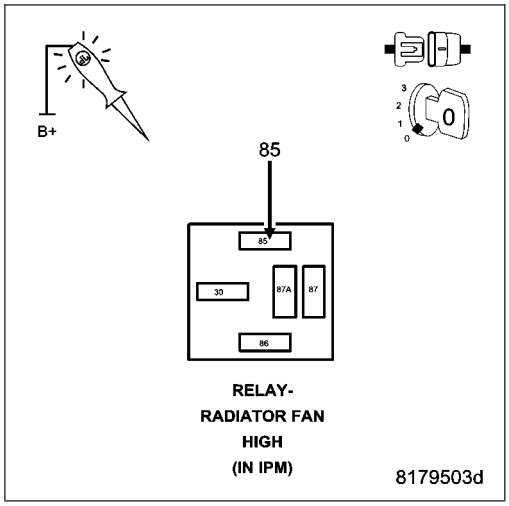

Does the test light illuminate and flash on and off?

Yes >> Replace the Radiator Fan High Relay.
Perform BODY VERIFICATION TEST – VER 1. (Refer to 8 - ELECTRICAL/ELECTRONIC CONTROL MODULES - STANDARD PROCEDURE)

No >> Go To 5

5. (N112) RADIATOR FAN HIGH RELAY CONTROL CIRCUIT OPEN

Remove the FCM from the PDM.

Measure the resistance of the (N112) Radiator Fan High Relay Control circuit from the Relay connection to the FCM PDM — 49 way connector.

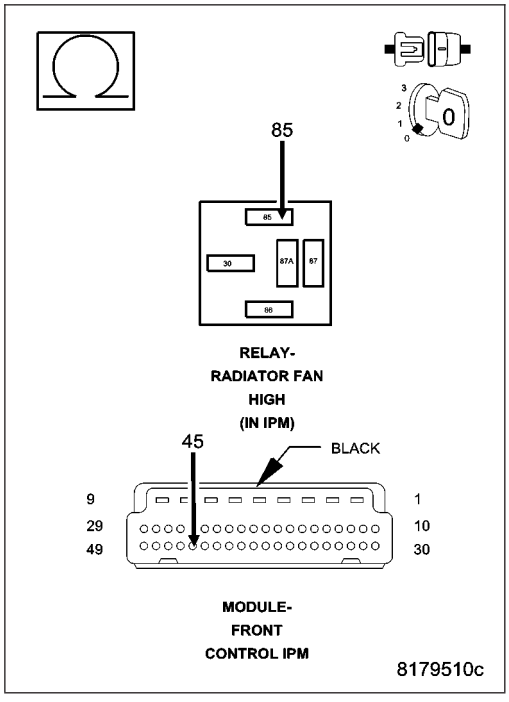

Is the resistance below 5.0 ohms?

Yes >> Go To 6

No >> Replace the PDM in accordance with the Service Information.
Perform BODY VERIFICATION TEST – VER 1. (Refer to 8 - ELECTRICAL/ELECTRONIC CONTROL MODULES - STANDARD PROCEDURE)

6. (N112) RADIATOR FAN HIGH RELAY CONTROL CIRCUIT SHORTED TO GROUND

Measure the resistance between ground and the (N112) Radiator Fan High Control circuit at the Relay connection.

Is the resistance below 100 ohms?

Yes >> Go To 7

No >> Replace the Front Control Module in accordance with the Service Information.
Perform BODY VERIFICATION TEST – VER 1. (Refer to 8 - ELECTRICAL/ELECTRONIC CONTROL MODULES - STANDARD PROCEDURE)

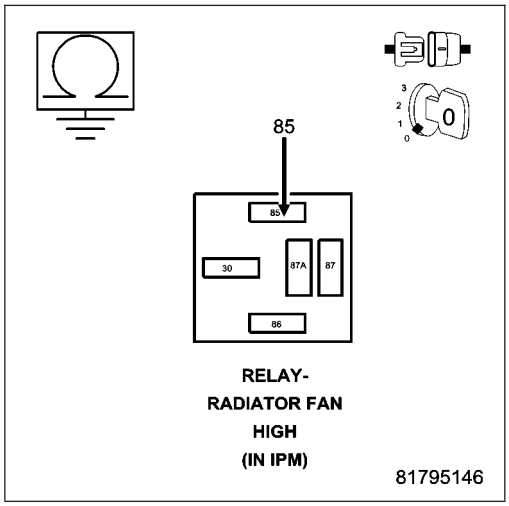

7. RADIATOR FAN HI/LO CONTROL RELAY SHORTED INTERNALLY

With the probe still at the (N112) Radiator Fan High Control circuit, remove the Radiator Fan HI/LO Control Relay.

Is the resistance still below 100 ohms?

Yes >> Repair the open or short to ground in the (N112) Radiator Fan High Control circuit.
Perform BODY VERIFICATION TEST – VER 1. (Refer to 8 - ELECTRICAL/ELECTRONIC CONTROL MODULES - STANDARD PROCEDURE)

No >> Replace the Radiator Fan HI/LO Control Relay.
Perform BODY VERIFICATION TEST – VER 1. (Refer to 8 - ELECTRICAL/ELECTRONIC CONTROL MODULES - STANDARD PROCEDURE)

P0498-NVLD CANISTER VENT VALVE SOLENOID CIRCUIT LOW

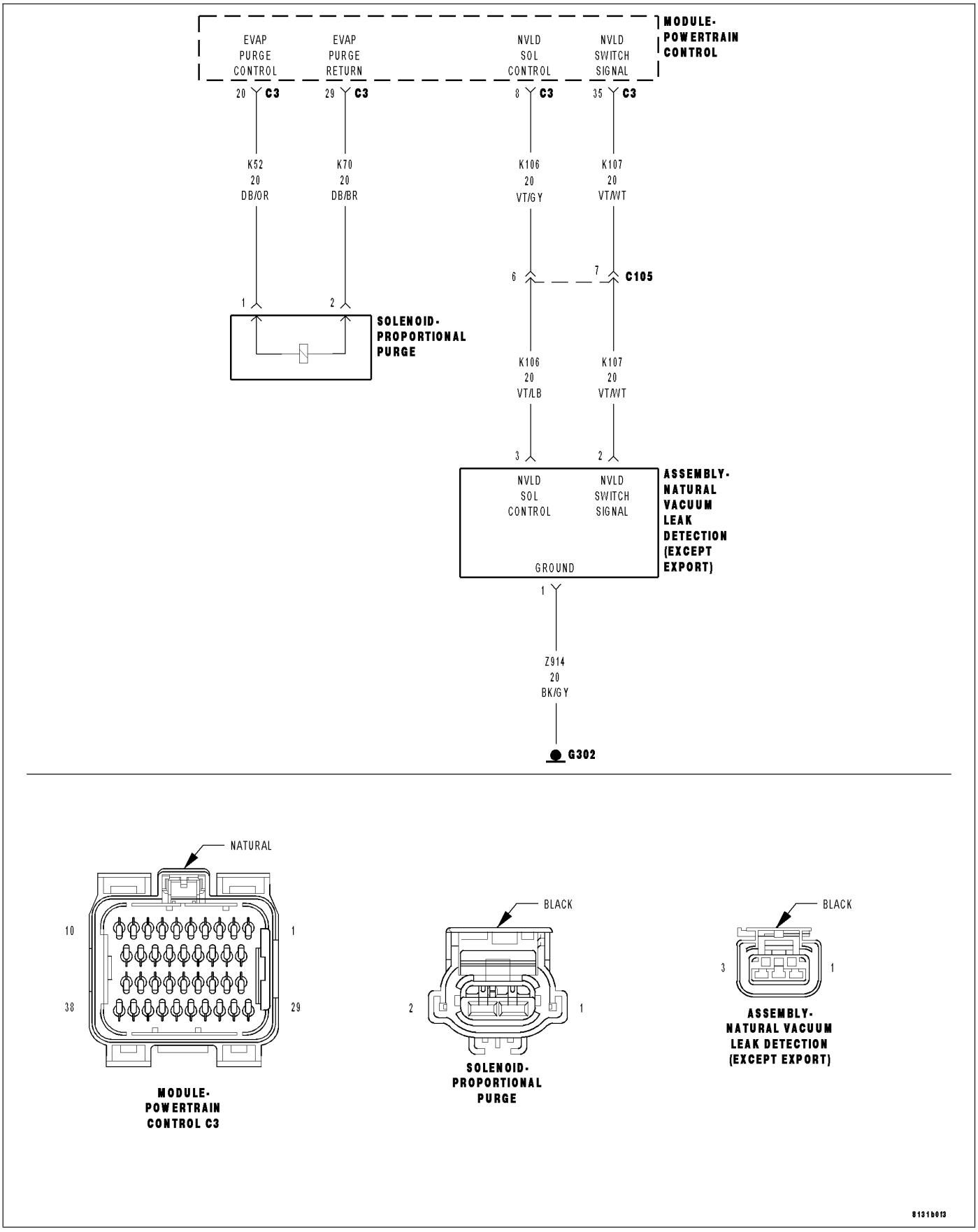

For a complete wiring diagram **Refer to Section 8W**.

- **When Monitored:**
  Engine running.
- **Set Condition:**
  The PCM detects a short in the NVLD Canister vent solenoid circuits. One Trip Fault. Three good trips to turn off the MIL.

Possible Causes
(K106) NVLD SOLENOID CONTROL CIRCUIT SHORTED TO GROUND
NVLD ASSEMBLY
PCM

Always perform the Pre-Diagnostic Troubleshooting procedure before proceeding. (Refer to 9 - ENGINE - DIAGNOSIS AND TESTING).

Diagnostic Test

1. VEHICLE HISTORY AND SERVICE BULLETIN INVESTIGATION

Ignition on, engine not running.

With a scan tool, read DTCs and record the related Freeze Frame data if any DTC(s) are present.

Whether or not any DTC(s) are present you will want to check the following items which may assist in repairing the customer's complaint successfully.

Check the vehicles repair history.

If the vehicle has a repair history that pertains to the customer's current complaint, review the repair.

Inspect the vehicle for any aftermarket accessories that may have been installed incorrectly.

Check for any service bulletin(s) related to the customer's complaint or DTC(s).

If a service bulletin applies, follow the instructions per the service bulletin.

Choose the following scenario that best applies.

The service bulletin repaired the customer's complaint.
Testing complete.

A DTC is present, no service bulletins apply, or the service bulletin didn't repair the customer's complaint.
Go To 2.

2. ACTIVE DTC

Ignition on, engine not running.

With a scan tool, read DTCs.

Is the DTC active at this time?

Yes >> Go To 3

No >> Refer to the INTERMITTENT CONDITION Diagnostic Procedure.
Perform the POWERTRAIN VERIFICATION TEST. (Refer to 9 - ENGINE - STANDARD PROCEDURE)

3. NVLD SOLENOID

Turn the ignition off.

Disconnect the NVLD electrical harness connector.

Measure the resistance of the NVLD Solenoid Coil.

Is the resistance between 7.5 to 8.5 ohms?

Yes >> Go To 4

No >> Replace the NVLD Assembly.
Perform the POWERTRAIN VERIFICATION TEST. (Refer to 9 - ENGINE - STANDARD PROCEDURE)

4. (K106) NVLD SOLENOID CONTROL CIRCUIT SHORTED TO GROUND

Disconnect the C3 PCM harness connector.

Measure the resistance between ground and the (K106) NVLD Solenoid Control circuit in the NVLD electrical harness connector.

Is the resistance below 100 ohms?

Yes >> Repair the short to ground in the (K106) NVLD Solenoid Control circuit.
Perform the POWERTRAIN VERIFICATION TEST. (Refer to 9 - ENGINE - STANDARD PROCEDURE)

No >> Go To 5

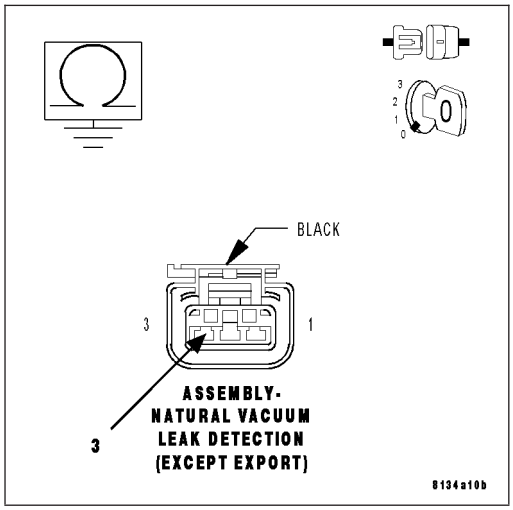

5. PCM

NOTE: Before continuing, check the PCM harness connector terminals for corrosion, damage, or terminal push out. Repair as necessary.

Using the schematics as a guide, inspect the wire harness and connectors. Pay particular attention to all Power and Ground circuits.

Were there any problems found?

Yes >> Repair as necessary.
Perform the POWERTRAIN VERIFICATION TEST. (Refer to 9 - ENGINE - STANDARD PROCEDURE)

No >> Replace and program the Powertrain Control Module per Service Information.
Perform the POWERTRAIN VERIFICATION TEST. (Refer to 9 - ENGINE - STANDARD PROCEDURE)

P0499-NVLD CANISTER VENT VALVE SOLENOID CIRCUIT HIGH

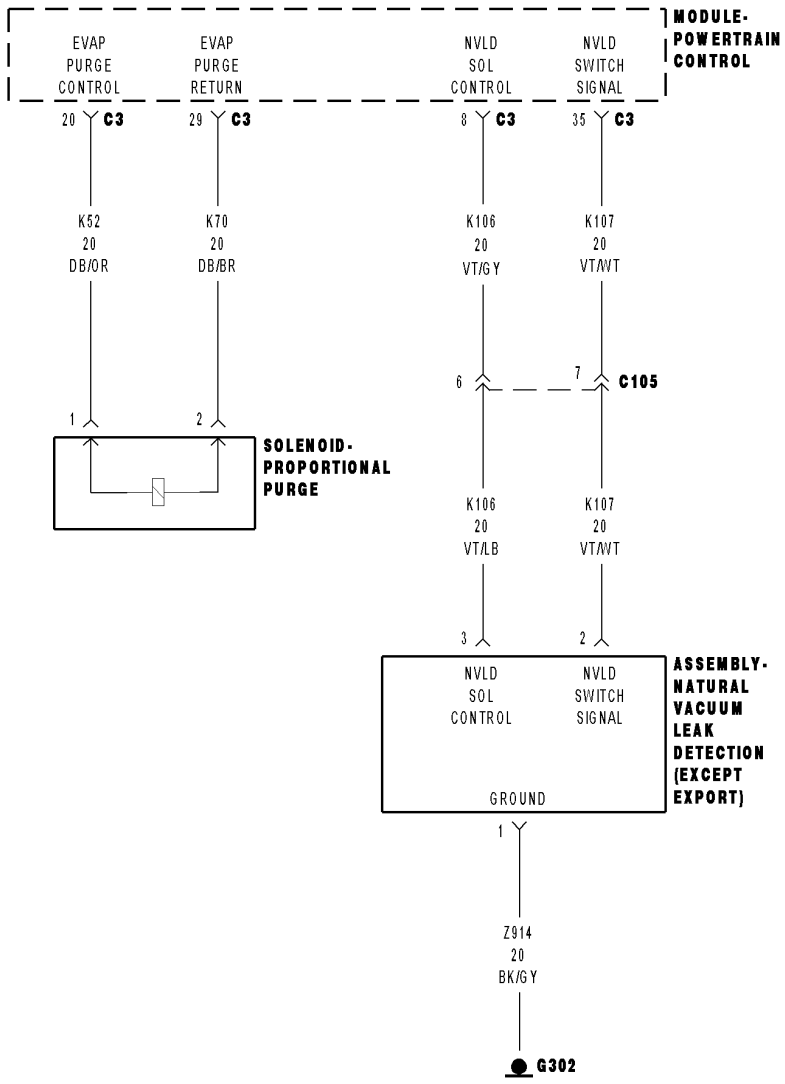

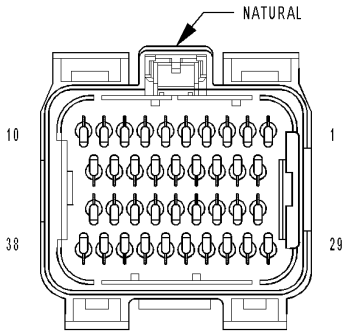

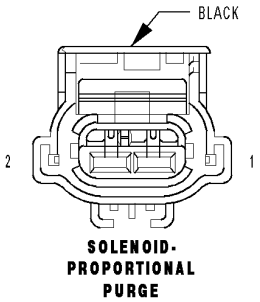

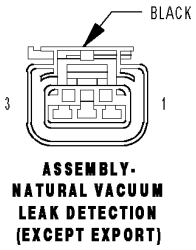

8131b013

For a complete wiring diagram **Refer to Section 8W**.

- **When Monitored:**
  Engine running.
- **Set Condition:**
  The PCM detects an open in the NVLD Canister vent solenoid circuits. One Trip Fault. Three good trips to turn off the MIL.

Possible Causes
(K106) NVLD SOLENOID CONTROL CIRCUIT SHORTED TO BATTERY VOLTAGE
(K106) NVLD SOLENOID CONTROL CIRCUIT OPEN
(Z914) GROUND CIRCUIT OPEN
NVLD SOLENOID
PCM

Always perform the Pre-Diagnostic Troubleshooting procedure before proceeding. (Refer to 9 - ENGINE - DIAGNOSIS AND TESTING).

Diagnostic Test

1. VEHICLE HISTORY AND SERVICE BULLETIN INVESTIGATION

Ignition on, engine not running.

With a scan tool, read DTCs and record the related Freeze Frame data if any DTC(s) are present.

Whether or not any DTC(s) are present you will want to check the following items which may assist in repairing the customer's complaint successfully.

Check the vehicles repair history.

If the vehicle has a repair history that pertains to the customer's current complaint, review the repair.

Inspect the vehicle for any aftermarket accessories that may have been installed incorrectly.

Check for any service bulletin(s) related to the customer's complaint or DTC(s).

If a service bulletin applies, follow the instructions per the service bulletin.

Choose the following scenario that best applies.

The service bulletin repaired the customer's complaint.
Testing complete.

A DTC is present, no service bulletins apply, or the service bulletin didn't repair the customer's complaint.
Go To 2.

2. ACTIVE DTC

Ignition on, engine not running.

With a scan tool, read DTCs.

Is the DTC active at this time?

Yes >> Go To 3

No >> Refer to the INTERMITTENT CONDITION Diagnostic Procedure.
Perform the POWERTRAIN VERIFICATION TEST. (Refer to 9 - ENGINE - STANDARD PROCEDURE)

3. NVLD SOLENOID

Turn the ignition off.

Disconnect the NVLD Assembly harness connector.

Measure the resistance of the NVLD Solenoid coil.

Is the resistance between 7.5 to 8.5 ohms?

Yes >> Go To 4

No >> Replace the NVLD Assembly.
Perform the POWERTRAIN VERIFICATION TEST. (Refer to 9 - ENGINE - STANDARD PROCEDURE)

4. (K106) NVLD SOLENOID CONTROL CIRCUIT SHORTED TO BATTERY VOLTAGE

Disconnect the C3 PCM harness connector.

Take this measurement with the Ignition in the off (lock) position and in the Ignition on, engine off position.

Measure the voltage on the (K106) NVLD Solenoid Control circuit in the NVLD Assembly harness connector.

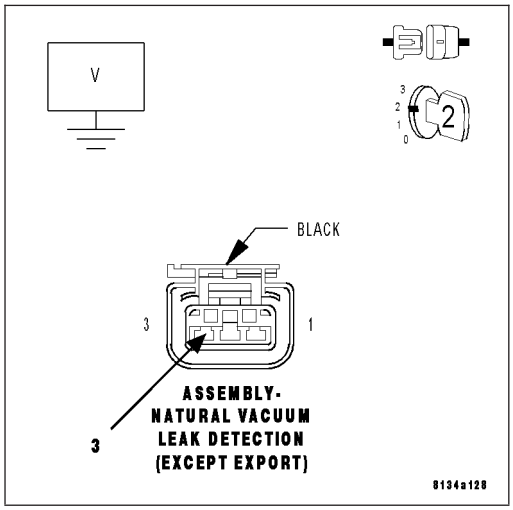

Is the voltage above 0 volts?

Yes >> Repair the short to battery voltage in the (K106) NVLD Solenoid Control circuit.
Perform the POWERTRAIN VERIFICATION TEST. (Refer to 9 - ENGINE - STANDARD PROCEDURE)

No >> Go To 5

5. (K106) NVLD SOLENOID CONTROL CIRCUIT OPEN

Turn the ignition off.

CAUTION: Do not probe the PCM harness connectors. Probing the PCM harness connectors will damage the PCM terminals resulting in poor terminal to pin connection. Install Miller Special Tool #8815 to perform diagnosis.

Measure the resistance of the (K106) NVLD Solenoid Control circuit from the NVLD Assembly harness connector to the appropriate terminal of special tool #8815.

Is the resistance below 5.0 ohms?

Yes >> Go To 6

No >> Repair the open in the (K106) NVLD Solenoid Control circuit.
Perform the POWERTRAIN VERIFICATION TEST. (Refer to 9 - ENGINE - STANDARD PROCEDURE)

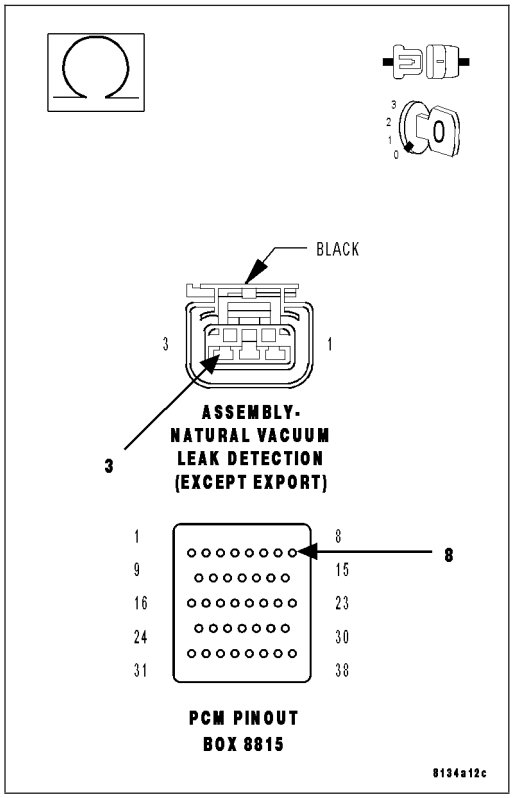

6. (Z910) GROUND CIRCUIT OPEN

Measure the resistance between the (Z910) Ground circuit and ground.

Is the resistance below 5.0 ohms?

Yes >> Go To 7

No >> Repair the open in the (Z910) Ground circuit.
Perform the POWERTRAIN VERIFICATION TEST. (Refer to 9 - ENGINE - STANDARD PROCEDURE)

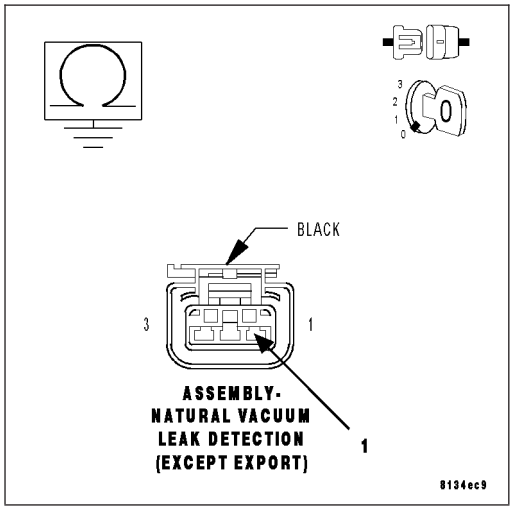

7. PCM

NOTE: Before continuing, check the PCM harness connector terminals for corrosion, damage, or terminal push out. Repair as necessary.
Using the schematics as a guide, inspect the wire harness and connectors. Pay particular attention to all Power and Ground circuits.

Were there any problems found?

Yes >> Repair as necessary.
Perform the POWERTRAIN VERIFICATION TEST. (Refer to 9 - ENGINE - STANDARD PROCEDURE)

No >> Replace and program the Powertrain Control Module per Service Information.
Perform the POWERTRAIN VERIFICATION TEST. (Refer to 9 - ENGINE - STANDARD PROCEDURE)

P0501-VEHICLE SPEED SENSOR 1 PERFORMANCE (Not Equipped with ABS)

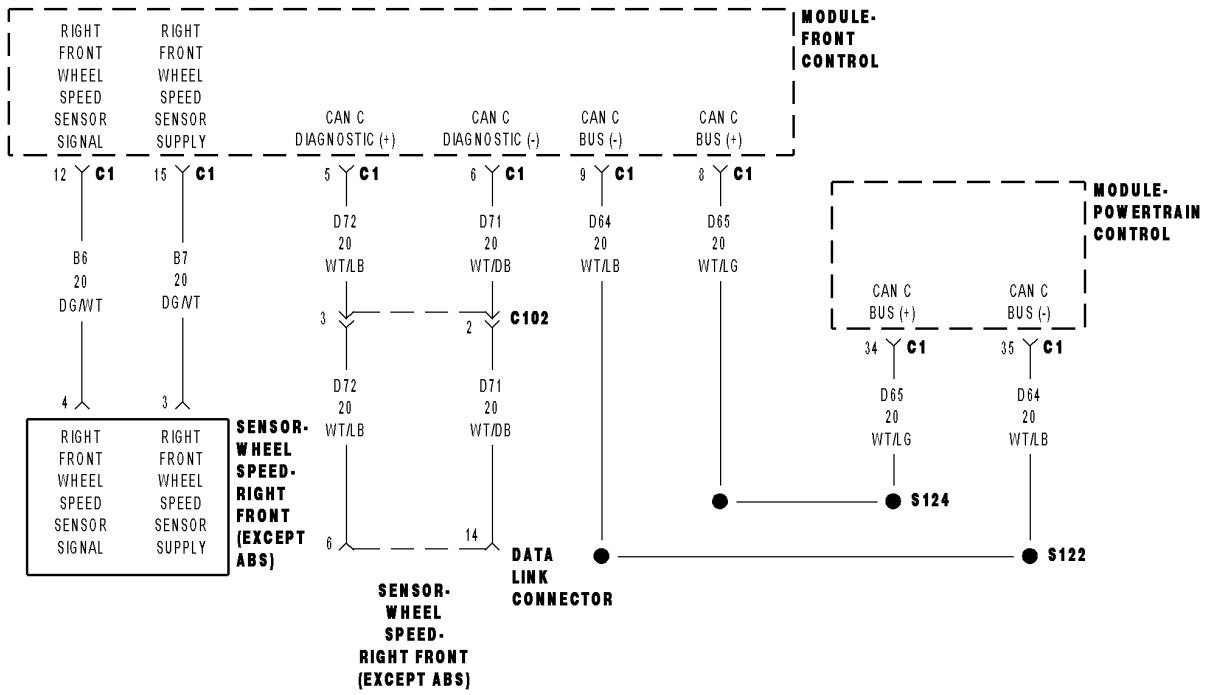

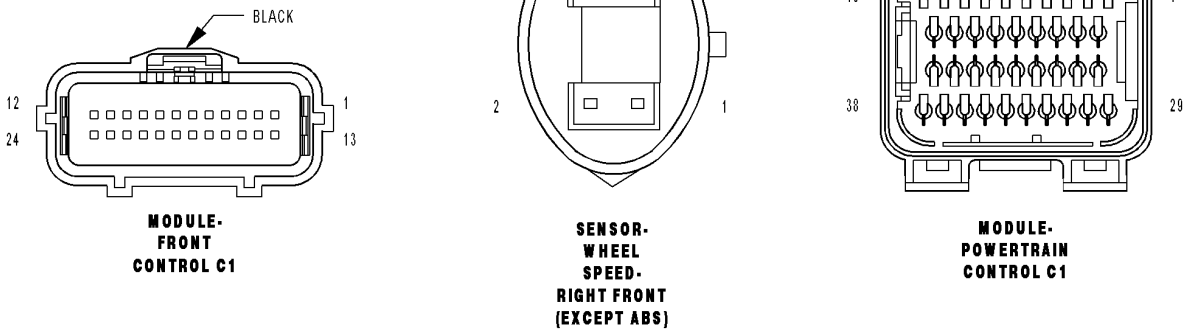

81367538

For a complete wiring diagram **Refer to Section 8W**.

- **When Monitored:**
  With the engine running, transmission not in park or neutral, brakes not applied, and engine rpm greater than 1500.
- **Set Condition:**
  This code will set if no vehicle speed signal is received from the TCM Module for more than 11 seconds for 2 consecutive trips. Two Trip Fault. Three good trips to turn off the MIL.

Possible Causes
ACTIVE BUS OR COMMUNICATION DTCS
TIRE CIRCUMFERENCE
PCM

Always perform the Pre-Diagnostic Troubleshooting procedure before proceeding. (Refer to 9 - ENGINE - DIAGNOSIS AND TESTING).

Diagnostic Test

1. ACTIVE DTC

NOTE: The following items must be check before continuing.
- **Pinion Factor and Tire Size MUST be programmed in the Front Control Module.**
- **All Bus Communication DTCs MUST be diagnosed.**
- **All Vehicle Speed DTCs that may be active in the Front Control Module or in the Transmission Control Module MUST be diagnosed.**

Ignition on, engine not running.

With a scan tool, read DTCs.

Is the DTC active at this time?

Yes >> Go To 2

No >> Refer to the INTERMITTENT CONDITION Diagnostic Procedure.
Perform the POWERTRAIN VERIFICATION TEST. (Refer to 9 - ENGINE - STANDARD PROCEDURE)

2. VISUAL INSPECTION

NOTE: This code can set due following conditions.
- **Unequal tire circumference between the tires on the vehicle.**
- **Front or Rear wheels moving while the opposite wheels are not. (i.e., wheels slipping on loose gravel, ice or hard acceleration)**

Check tire pressure of all the tires.

Check tire wear on all the tires.

Ask the customer what the road and driving conditions were like when the fault set.

Were any of the above conditions found?

Yes >> Repair as necessary. If the code set during a front OR rear wheel spin condition, no repair is necessary.
Perform the POWERTRAIN VERIFICATION TEST. (Refer to 9 - ENGINE - STANDARD PROCEDURE)

No >> Go To 3

3. PCM

NOTE: Before continuing, check the PCM harness connector terminals for corrosion, damage, or terminal push out. Repair as necessary. Using the schematics as a guide, inspect the wire harness and connectors. Pay particular attention to all Power and Ground circuits.

Were there any problems found?

Yes >> Repair as necessary.
Perform the POWERTRAIN VERIFICATION TEST. (Refer to 9 - ENGINE - STANDARD PROCEDURE)

No >> Replace and program the Powertrain Control Module per Service Information.
Perform the POWERTRAIN VERIFICATION TEST. (Refer to 9 - ENGINE - STANDARD PROCEDURE)

P0503-VEHICLE SPEED SENSOR 1 ERRATIC (Not Equipped with ABS)

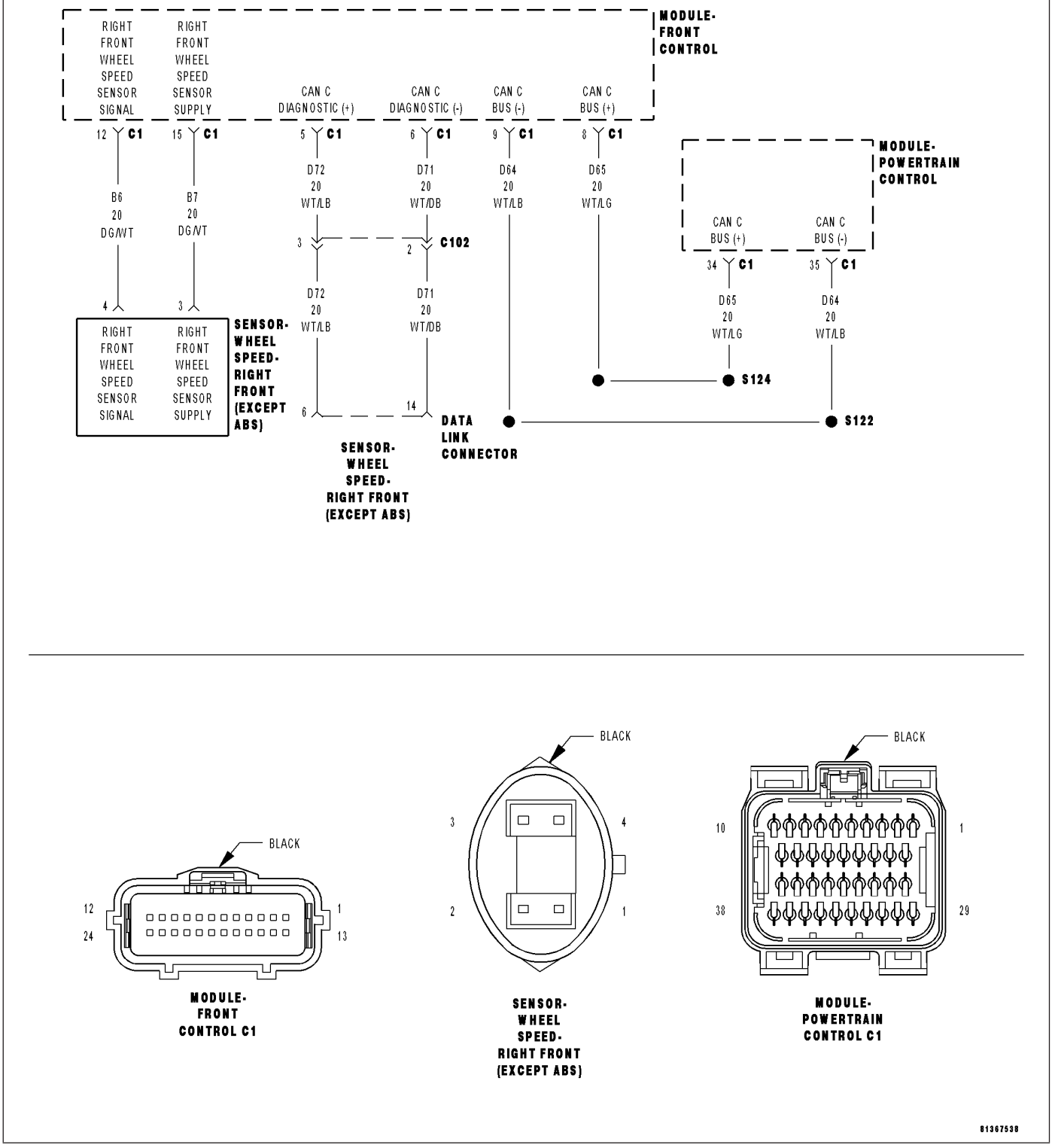

81367538

For a complete wiring diagram **Refer to Section 8W**.

- **When Monitored:**
  Ignition on and battery voltage greater than 10 volts. Transmission in Drive or Reverse.
- **Set Condition:**
  Vehicle speed signal is erratic during road load conditions. One Trip Fault. Three good trips to turn off the MIL.

Possible Causes
ACTIVE BUS OR COMMUNICATION DTCS
TIRE CIRCUMFERENCE
PCM

Always perform the Pre-Diagnostic Troubleshooting procedure before proceeding. (Refer to 9 - ENGINE - DIAGNOSIS AND TESTING).

Diagnostic Test

1. ACTIVE DTC

NOTE: The following items must be check before continuing.
- **Pinion Factor and Tire Size MUST be programmed in the Front Control Module.**
- **All Bus Communication DTCs MUST be diagnosed.**
- **All Vehicle Speed DTCs that may be active in the Front Control Module or in the Transmission Control Module MUST be diagnosed.**

Ignition on, engine not running.

With a scan tool, read DTCs.

Is the DTC active at this time?

Yes >> Go To 2

No >> Refer to the INTERMITTENT CONDITION Diagnostic Procedure.
Perform the POWERTRAIN VERIFICATION TEST. (Refer to 9 - ENGINE - STANDARD PROCEDURE)

2. VISUAL INSPECTION

NOTE: This code can set due following conditions.
- **Unequal tire circumference between the tires on the vehicle.**
- **Front or Rear wheels moving while the opposite wheels are not. (i.e., wheels slipping on loose gravel, ice or hard acceleration)**

Check tire pressure of all the tires.

Check tire wear on all the tires.

Ask the customer what the road and driving conditions were like when the fault set.

Were any of the above conditions found?

Yes >> Repair as necessary. If the code set during a front OR rear wheel spin condition, no repair is necessary.
Perform the POWERTRAIN VERIFICATION TEST. (Refer to 9 - ENGINE - STANDARD PROCEDURE)

No >> Go To 3

3. PCM

NOTE: Before continuing, check the PCM harness connector terminals for corrosion, damage, or terminal push out. Repair as necessary. Using the schematics as a guide, inspect the wire harness and connectors. Pay particular attention to all Power and Ground circuits.

Were there any problems found?

Yes >> Repair as necessary.
Perform the POWERTRAIN VERIFICATION TEST. (Refer to 9 - ENGINE - STANDARD PROCEDURE)

No >> Replace and program the Powertrain Control Module per Service Information.
Perform the POWERTRAIN VERIFICATION TEST. (Refer to 9 - ENGINE - STANDARD PROCEDURE)

P0501-VEHICLE SPEED SENSOR 1 PERFORMANCE (Equipped with ABS)

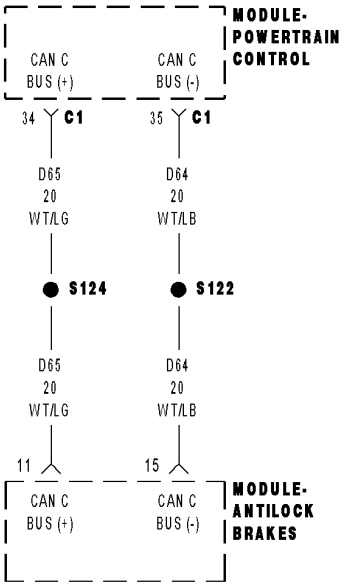

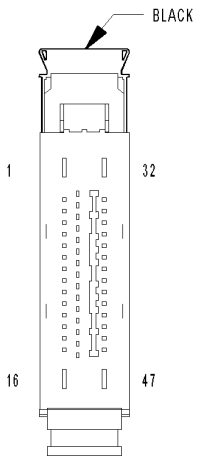

MODULE-
ANTILOCK BRAKES

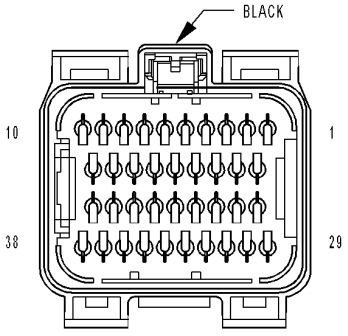

MODULE-
POWERTRAIN
CONTROL C1

8136947a

For a complete wiring diagram **Refer to Section 8W**.

- **When Monitored:**
  With the engine running, transmission not in park or neutral, brakes not applied, and engine rpm greater than 1500.
- **Set Condition:**
  This code will set if no vehicle speed signal is received from the ABS Module for more than 11 seconds for 2 consecutive trips. Two Trip Fault. Three good trips to turn off the MIL.

Possible Causes
ACTIVE BUS OR COMMUNICATION DTCS
TIRE CIRCUMFERENCE
PCM

Always perform the Pre-Diagnostic Troubleshooting procedure before proceeding. (Refer to 9 - ENGINE - DIAGNOSIS AND TESTING).

Diagnostic Test

1. ACTIVE DTC

NOTE: The following items must be performed before continuing.
- **Pinion Factor and Tire Size MUST be programmed in the ABS Module.**
- **All Bus Communication DTCs MUST be diagnosed.**
- **All related Vehicle Speed and Wheel Speed DTCs that may be active in the ABS Module MUST be diagnosed. Refer to the ABS diagnostic information for the correct procedure.**

Ignition on, engine not running.

With a scan tool, read DTCs.

Is the DTC active at this time?

Yes >> Go To 2

No >> Refer to the INTERMITTENT CONDITION Diagnostic Procedure.
Perform the POWERTRAIN VERIFICATION TEST. (Refer to 9 - ENGINE - STANDARD PROCEDURE)

2. VISUAL INSPECTION

NOTE: This code can set due following conditions.
- **Unequal tire circumference between the tires on the vehicle.**
- **Front or Rear wheels moving while the opposite wheels are not. (i.e., wheels slipping on loose gravel, ice or hard acceleration)**

Check tire pressure of all the tires.

Check tire wear on all the tires.

Ask the customer what the road and driving conditions were like when the fault set.

Were any of the above conditions found?

Yes >> Repair as necessary. If the code set during a front OR rear wheel spin condition, no repair is necessary.
Perform the POWERTRAIN VERIFICATION TEST. (Refer to 9 - ENGINE - STANDARD PROCEDURE)

No >> Go To 3

3. PCM

NOTE: Before continuing, check the PCM harness connector terminals for corrosion, damage, or terminal push out. Repair as necessary. Using the schematics as a guide, inspect the wire harness and connectors. Pay particular attention to all Power and Ground circuits.

Were there any problems found?

Yes >> Repair as necessary.
Perform the POWERTRAIN VERIFICATION TEST. (Refer to 9 - ENGINE - STANDARD PROCEDURE)

No >> Replace and program the Powertrain Control Module per Service Information.
Perform the POWERTRAIN VERIFICATION TEST. (Refer to 9 - ENGINE - STANDARD PROCEDURE)

P0503-VEHICLE SPEED SENSOR 1 ERRATIC (Equipped with ABS)

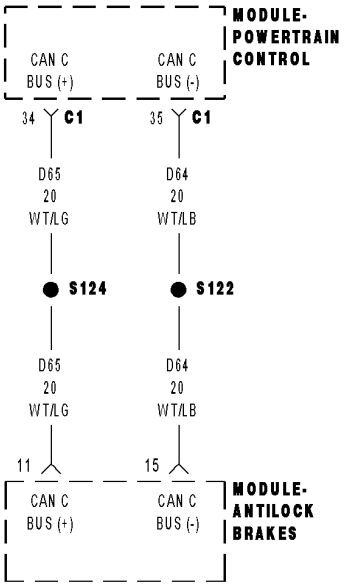

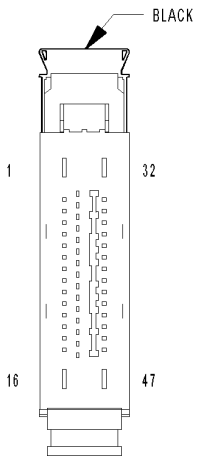

MODULE-
ANTILOCK BRAKES

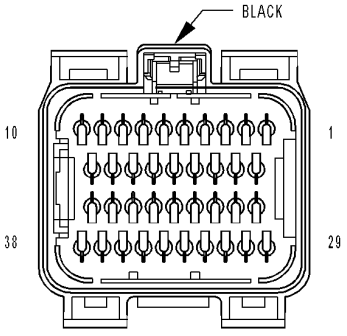

MODULE-
POWERTRAIN
CONTROL C1

8136947a

For a complete wiring diagram **Refer to Section 8W**.

- **When Monitored:**
  Ignition on and battery voltage greater than 10 volts. Transmission in Drive or Reverse.
- **Set Condition:**
  Vehicle speed signal is erratic during road load conditions. One Trip Fault. Three good trips to turn off the MIL.

Possible Causes
ACTIVE BUS OR COMMUNICATION DTCS
TIRE CIRCUMFERENCE
PCM

Always perform the Pre-Diagnostic Troubleshooting procedure before proceeding. (Refer to 9 - ENGINE - DIAGNOSIS AND TESTING).

Diagnostic Test

1. ACTIVE DTC

NOTE: The following items must be check before continuing.
- **Pinion Factor and Tire Size MUST be programmed in the ABS Module.**
- **All Bus Communication DTCs MUST be diagnosed.**
- **All related Vehicle Speed and Wheel Speed DTCs that may be active in the ABS Module MUST be diagnosed. Refer to the ABS diagnostic information for the correct procedure.**

Ignition on, engine not running.

With a scan tool, read DTCs.

Is the DTC active at this time?

Yes >> Go To 2

No >> Refer to the INTERMITTENT CONDITION Diagnostic Procedure.
Perform the POWERTRAIN VERIFICATION TEST. (Refer to 9 - ENGINE - STANDARD PROCEDURE)

2. VISUAL INSPECTION

NOTE: This code can set due following conditions.
- **Unequal tire circumference between the tires on the vehicle.**
- **Front or Rear wheels moving while the opposite wheels are not. (i.e., wheels slipping on loose gravel, ice or hard acceleration)**

Check tire pressure of all the tires.

Check tire wear on all the tires.

Ask the customer what the road and driving conditions were like when the fault set.

Were any of the above conditions found?

Yes >> Repair as necessary. If the code set during a front OR rear wheel spin condition, no repair is necessary.
Perform the POWERTRAIN VERIFICATION TEST. (Refer to 9 - ENGINE - STANDARD PROCEDURE)

No >> Go To 3

3. PCM

NOTE: Before continuing, check the PCM harness connector terminals for corrosion, damage, or terminal push out. Repair as necessary. Using the schematics as a guide, inspect the wire harness and connectors. Pay particular attention to all Power and Ground circuits.

Were there any problems found?

Yes >> Repair as necessary.
Perform the POWERTRAIN VERIFICATION TEST. (Refer to 9 - ENGINE - STANDARD PROCEDURE)

No >> Replace and program the Powertrain Control Module per Service Information.
Perform the POWERTRAIN VERIFICATION TEST. (Refer to 9 - ENGINE - STANDARD PROCEDURE)

P0506-IDLE SPEED PERFORMANCE LOWER THAN EXCEPTED

For a complete wiring diagram **Refer to Section 8W**.

- **When Monitored:**
  With the engine running at idle, MAF <250 mg/tdc, air temp >-17.8°C (0°F) and <-7°C (19.4°F) enable after coolant temp >70°C (158°F) or air temp >-7°C (19.4°F), coolant temp >-7°C (19.4°F) <130°C (266°F), canister purge <100% duty cycle, and no VSS, MAF/MAP, ECT, TPS, ETC, CRK Sensor DTCs nor any fuel system or injector DTCs.
- **Set Condition:**
  Engine speed is 100 RPM or more below idle speed for 7 seconds. Two Trip Fault. Three good trips to turn off the MIL.

Possible Causes
AIR INDUCTION SYSTEM
THROTTLE BODY
PCM

Always perform the Pre-Diagnostic Troubleshooting procedure before proceeding. (Refer to 9 - ENGINE - DIAGNOSIS AND TESTING).

Diagnostic Test

1. ACTIVE DTC

NOTE: If any other DTCs are present, they must be diagnosed and repaired before continuing this test.
Ignition on, engine not running.
With a scan tool, read DTCs.

Is the DTC active at this time?

Yes >> Go To 2

No >> Refer to the INTERMITTENT CONDITION Diagnostic Procedure.
Perform the POWERTRAIN VERIFICATION TEST. (Refer to 9 - ENGINE - STANDARD PROCEDURE)

2. AIR INDUCTION SYSTEM

Inspect the Air Induction System for the following problems.
Restrictions: Dirty Air Cleaner, Foreign material trapped in the air intake tube, etc.
Leaks: Air Intake tube connection, Air Cleaner housing, etc.

Were any problems found?

Yes >> Repair or replace as necessary.
Perform the POWERTRAIN VERIFICATION TEST. (Refer to 9 - ENGINE - STANDARD PROCEDURE)

No >> Go To 3

3. THROTTLE BODY OPERATION

Inspect the throttle body for carbon build up, other restrictions, and a bent throttle plate using a straight edge.
If the throttle plate does not close entirely it may be bent and needs to be replaced.

WARNING: When the engine is operating, do not stand in direct line with the fan. Do not put your hands near the pulleys, belts, or fan. Do not wear loose clothing. Failure to follow these instructions can result in personal injury or death.
While the vehicle is running, lightly tap on ETC Motor, with your hand, and listen for idle to raise.

Were any problems found?

Yes >> Repair or replace as necessary.
Perform the POWERTRAIN VERIFICATION TEST. (Refer to 9 - ENGINE - STANDARD PROCEDURE)

No >> Go To 4

4. PCM

NOTE: Before continuing, check the PCM harness connector terminals for corrosion, damage, or terminal push out. Repair as necessary.
Using the schematics as a guide, inspect the wire harness and connectors. Pay particular attention to all Power and Ground circuits.

Were there any problems found?

Yes >> Repair as necessary.
Perform the POWERTRAIN VERIFICATION TEST. (Refer to 9 - ENGINE - STANDARD PROCEDURE)

No >> Replace and program the Powertrain Control Module per Service Information.
Perform the POWERTRAIN VERIFICATION TEST. (Refer to 9 - ENGINE - STANDARD PROCEDURE)

P0507-IDLE SPEED PERFORMANCE HIGHER THAN EXCEPTED

For a complete wiring diagram **Refer to Section 8W**.

- **When Monitored:**
  With the engine running at idle, MAF <250 mg/tdc, air temp >-17.8°C (0°F) and <-7°C (19.4°F) enable after coolant temp >70°C (158°F) or air temp >-7°C (19.4°F), coolant temp >-7°C (19.4°F) <130°C (266°F), canister purge <100% duty cycle, and no VSS, MAF/MAP, ECT, TPS, ETC, CRK Sensor DTCs nor any fuel system or injector DTCs.
- **Set Condition:**
  Engine speed is 200 RPM or more above idle speed for 7 seconds. Two Trip Fault. Three good trips to turn off the MIL.

Possible Causes
AIR INDUCTION SYSTEM
VACUUM LEAKS
THROTTLE BODY
PCM

Always perform the Pre-Diagnostic Troubleshooting procedure before proceeding. (Refer to 9 - ENGINE - DIAGNOSIS AND TESTING).

Diagnostic Test

1. ACTIVE DTC

NOTE: If any other DTCs are present, they must be diagnosed and repaired before continuing this test.
Ignition on, engine not running.
With a scan tool, read DTCs.

Is the DTC active at this time?

Yes >> Go To 2

No >> Refer to the INTERMITTENT CONDITION Diagnostic Procedure.
Perform the POWERTRAIN VERIFICATION TEST. (Refer to 9 - ENGINE - STANDARD PROCEDURE)

2. AIR INDUCTION SYSTEM

Inspect the Air Induction System for the following problems.
Restrictions: Dirty Air Cleaner, Foreign material trapped in the air intake tube, etc.
Leaks: Air Intake tube connection, Air Cleaner housing, etc.

Were any problems found?

Yes >> Repair or replace as necessary.
Perform the POWERTRAIN VERIFICATION TEST. (Refer to 9 - ENGINE - STANDARD PROCEDURE)

No >> Go To 3

3. VACUUM LEAKS

Start the engine.
Inspect the vehicle for external vacuum leaks.
Inspect the engine for internal leaks.

Were any vacuum leaks found?

Yes >> Repair the vacuum leak as necessary.
Perform the POWERTRAIN VERIFICATION TEST. (Refer to 9 - ENGINE - STANDARD PROCEDURE)

No >> Go To 4

4. THROTTLE BODY OPERATION

Inspect the throttle body for carbon build up, other restrictions, and a bent throttle plate using a straight edge.
If the throttle plate does not close entirely it may be bent and needs to be replaced.

WARNING: When the engine is operating, do not stand in direct line with the fan. Do not put your hands near the pulleys, belts, or fan. Do not wear loose clothing. Failure to follow these instructions can result in personal injury or death.
While the vehicle is running, lightly tap on ETC Motor, with your hand, and listen for idle to raise.

Were any problems found?

Yes >> Repair or replace as necessary.
Perform the POWERTRAIN VERIFICATION TEST. (Refer to 9 - ENGINE - STANDARD PROCEDURE)

No >> Go To 5

5. PCM

NOTE: Before continuing, check the PCM harness connector terminals for corrosion, damage, or terminal push out. Repair as necessary.
Using the schematics as a guide, inspect the wire harness and connectors. Pay particular attention to all Power and Ground circuits.

Were there any problems found?

Yes >> Repair as necessary.
Perform the POWERTRAIN VERIFICATION TEST. (Refer to 9 - ENGINE - STANDARD PROCEDURE)

No >> Replace and program the Powertrain Control Module per Service Information.
Perform the POWERTRAIN VERIFICATION TEST. (Refer to 9 - ENGINE - STANDARD PROCEDURE)

P0513-INVALID SKIM KEY

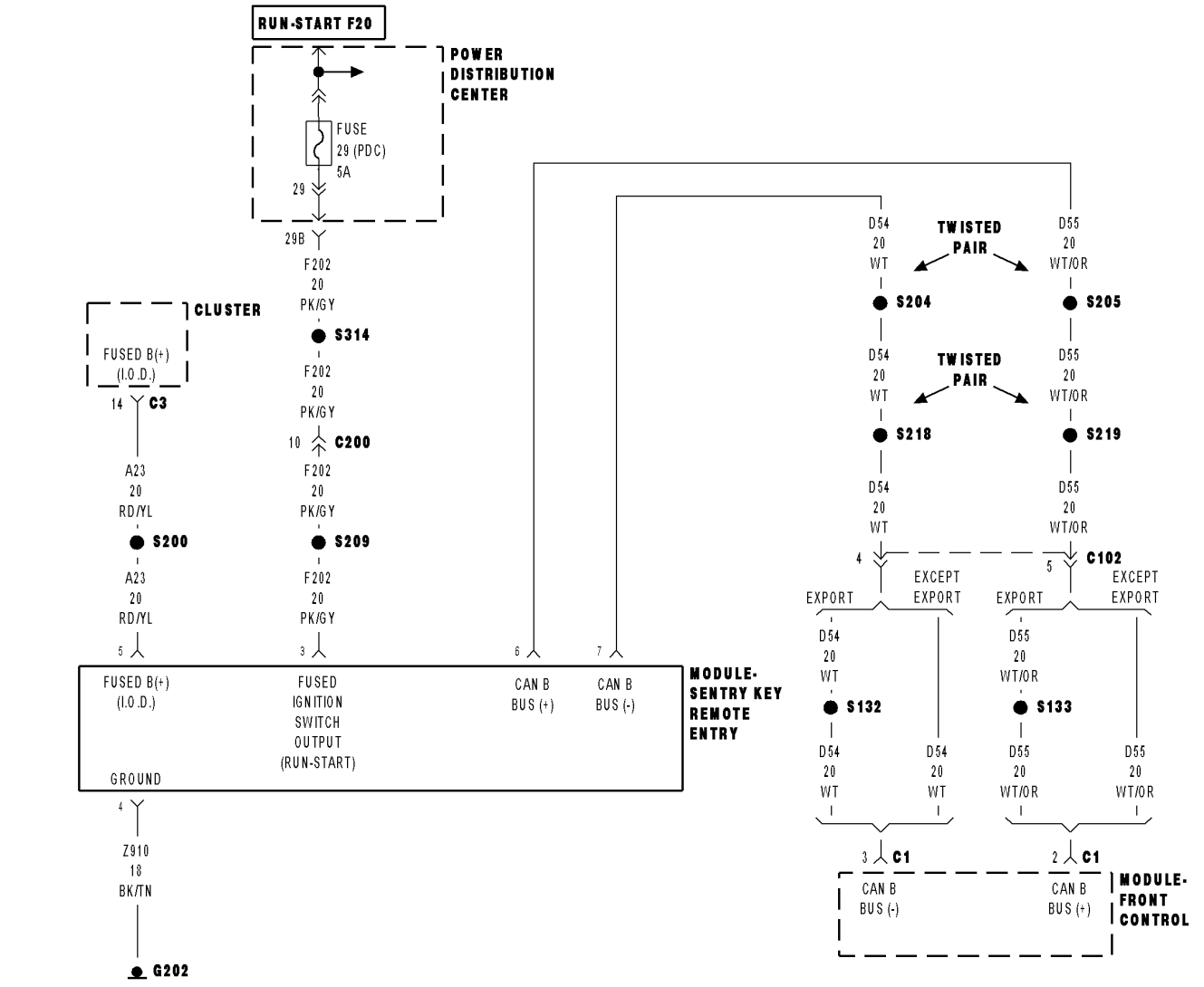

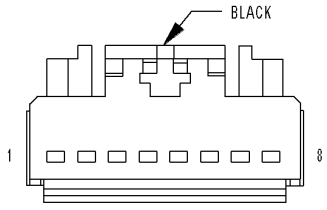

MODULE-SENTRY KEY REMOTE ENTRY

For a complete wiring diagram **Refer to Section 8W**.

- **When Monitored:**
  Ignition on.
- **Set Condition:**
  The PCM detects an invalid SKREEM key. One Trip Fault.

Possible Causes
INCORRECT VIN PROGRAMMED IN THE PCM
NO COMMUNICATION WITH SKREEM
NO VIN PROGRAMMED IN THE PCM
IGNITION KEY
PCM

Always perform the Pre-Diagnostic Troubleshooting procedure before proceeding. (Refer to 9 - ENGINE - DIAGNOSIS AND TESTING).

Diagnostic Test

1. ACTIVE DTC

Ignition on, engine not running.
With the scan tool, read the PCM DTCs.

Is the DTC active at this time?

Yes >> Go To 2

No >> Go To 6

2. NO COMMUNICATION WITH SKREEM

With the scan tool, attempt to communicate with the SKREEM.

Can the scan tool communicate with the SKREEM?

Yes >> Go To 3

No >> Refer to Section 8 - Electrical VEHICLE THEFT SECURITY - ELECTRICAL DIAGNOSTICS and perform the appropriate Diagnostic Procedure.
Perform VERIFICATION TEST. (Refer to 8 - ELECTRICAL/VEHICLE THEFT SECURITY - STANDARD PROCEDURE)

3. SKREEM TROUBLE CODES SET

With the scan tool, check for SKREEM DTCs.

Are any DTCs present in the SKREEM?

Yes >> Refer to Section 8 - Electrical VEHICLE THEFT SECURITY - ELECTRICAL DIAGNOSTICS and perform the appropriate Diagnostic Procedure.
Perform VERIFICATION TEST. (Refer to 8 - ELECTRICAL/VEHICLE THEFT SECURITY - STANDARD PROCEDURE)

No >> Go To 4

4. VIN PROGRAMMED INTO PCM

With the scan tool, display the VIN that is programmed in the PCM.

Has a VIN been programmed into the PCM?

Yes >> Go To 5

No >> Program the correct VIN into the PCM and retest.
Perform VERIFICATION TEST. (Refer to 8 - ELECTRICAL/VEHICLE THEFT SECURITY - STANDARD PROCEDURE)

5. PCM

Turn the ignition off.
Replace and program the SKREEM per Service Information.
Ignition on, engine not running.
With the scan tool, erase all SKREEM and PCM DTCs.
Attempt to start and idle the engine.
With the scan tool, read the PCM DTCs.

Does the scan tool display this code?

Yes >> NOTE: Before continuing, check the PCM harness connector terminals for corrosion, damage, or terminal push out. Repair as necessary. Replace and program the Powertrain Control Module per Service Information.
Perform VERIFICATION TEST. (Refer to 8 - ELECTRICAL/VEHICLE THEFT SECURITY - STANDARD PROCEDURE)

No >> Test Complete.

6. IGNITION KEY

NOTE: You must obtain the SKREEM pin number.

NOTE: This DTC could have been set if the SKREEM harness connector was disconnected, or if the SKREEM was replaced recently.

NOTE: All keys that the customer uses for this vehicle must be tested to verify they are operating properly.
Ignition on, engine not running.
Verify the correct VIN is programmed into the PCM and SKREEM.
Turn the ignition off.
With each customer key, turn the ignition on and crank the engine to start.
With the scan tool, read the PCM DTCs. Look for P0513.

NOTE: If this DTC cannot be reset, it could have been an actual theft attempt.

Is the Good Trip Counter for DTC P0513 displayed and equal to 0?

Yes >> Replace the Ignition Key.
Perform VERIFICATION TEST. (Refer to 8 - ELECTRICAL/VEHICLE THEFT SECURITY - STANDARD PROCEDURE)

No >> Test Complete.

P0520-ENGINE OIL PRESSURE SENSOR CIRCUIT

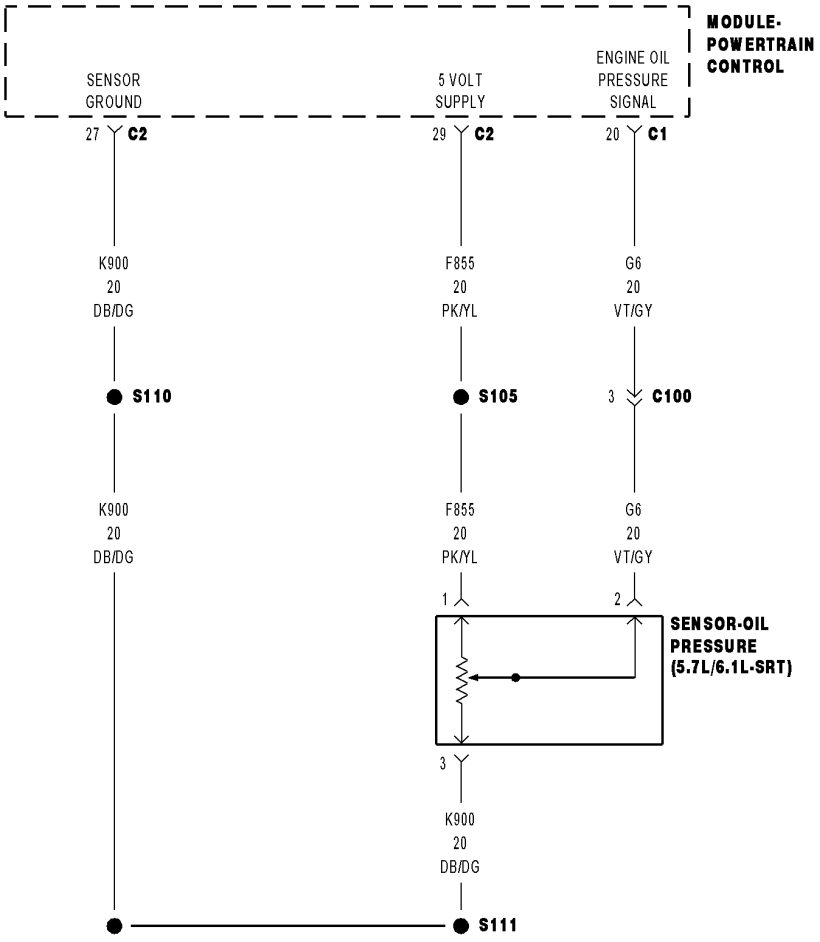

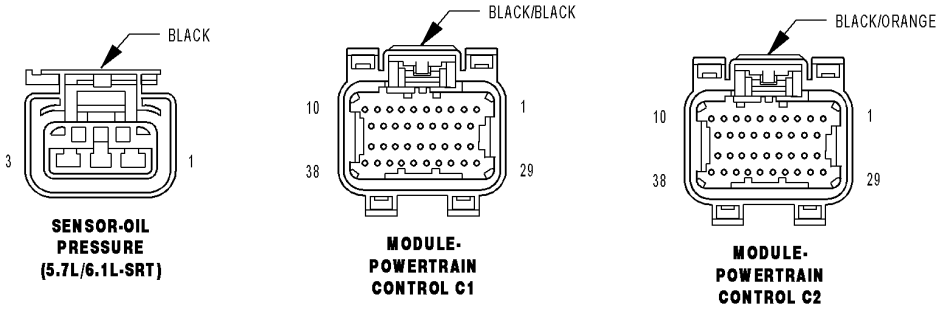

81547ea4

For a complete wiring diagram **Refer to Section 8W**.

- **When Monitored:**
  Ignition on, engine not running.
- **Set Condition:**
  The PCM senses the oil pressure is out of the calibrated range.

Possible Causes
(G6) ENGINE OIL PRESSURE SENSOR SIGNAL CIRCUIT SHORTED TO BATTERY VOLTAGE
RESISTANCE (G6) ENGINE OIL PRESSURE SENSOR SIGNAL CIRCUIT
(G6) ENGINE OIL PRESSURE SENSOR SIGNAL CIRCUIT SHORTED TO GROUND
RESISTANCE IN (F856) 5-VOLT SUPPLY CIRCUIT
(F856) 5-VOLT SUPPLY CIRCUIT SHORTED TO GROUND
RESISTANCE IN THE (K900) SENSOR GROUND CIRCUIT
ENGINE OIL PRESSURE SENSOR
PCM

Always perform the Pre-Diagnostic Troubleshooting procedure before proceeding. (Refer to 9 - ENGINE - DIAGNOSIS AND TESTING).

Diagnostic Test

1. ACTIVE DTC

NOTE: Ensure that the engine oil is at the proper level. Also, check the customers oil change history to ensure that the oil is being changed at the correct intervals and that the proper oil viscosity is being used.
Ignition on, engine not running.
With a scan tool, read DTCs.

Is the DTC active at this time?

Yes >> Go To 2

No >> Refer to the INTERMITTENT CONDITION Diagnostic Procedure.
Perform the POWERTRAIN VERIFICATION TEST. (Refer to 9 - ENGINE - STANDARD PROCEDURE)

2. ENGINE OIL PRESSURE SENSOR

Turn the ignition off.
Connect the PCM harness connectors.
Ignition on, engine not running.
With a scan tool, monitor the Engine Oil Pressure Sensor voltage.
Connect a jumper wire between the (K900) Sensor Ground circuit and the (G6) Engine Oil Pressure Signal circuit.

NOTE: Engine Oil Pressure voltage should change from approximately 4.5 volts to less than 0.5 of a volt.

Is the voltage reading within the listed specification when the jumper wire is installed?

Yes >> Replace the Engine Oil Pressure Sensor.
Perform the POWERTRAIN VERIFICATION TEST. (Refer to 9 - ENGINE - STANDARD PROCEDURE)

No >> Go To 3

NOTE: Remove the jumper wire before continuing.

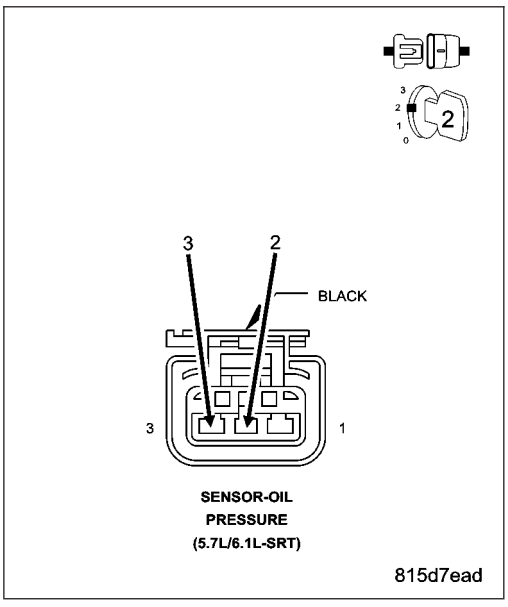

3. (G6) ENGINE OIL PRESSURE SENSOR SIGNAL CIRCUIT HIGH RESISTANCE

Turn the ignition off.

CAUTION: CAUTION: Do not probe the PCM harness connectors. Probing the PCM harness connectors will damage the PCM terminals resulting in poor terminal to pin connection. Install Miller Special Tool #8815 along with the 8815-1 to perform the diagnosis.

Using a voltmeter perform a voltage drop test. Backprobe the (G6) Engine Oil Pressure Signal circuit at the Engine Oil Pressure Sensor harness connector to the appropriate terminal of the special tool #8815. Ensure the voltmeter leads are connected with the circuit's correct polarity.

WARNING: When the engine is operating, do not stand in direct line with the fan. Do not put your hands near the pulleys, belts, or fan. Do not wear loose clothing. Failure to follow these instructions can result in personal injury or death.

Start the engine and allow it to reach normal operating temperature.

Monitor the voltmeter.

Is the voltage below 0.5 volts?

Yes >> Go To 4

No >> Repair the excessive resistance in the (G6) Engine Oil Pressure Signal circuit.
Perform the POWERTRAIN VERIFICATION TEST. (Refer to 9 - ENGINE - STANDARD PROCEDURE)

4. (F856) 5-VOLT SUPPLY CIRCUIT HIGH RESISTANCE

Turn the ignition off.

Perform a voltage drop test. Backprobe the (F856) 5-volt Supply circuit at the Engine Oil Pressure Sensor harness connector to the appropriate terminal of the special tool #8815. Ensure the voltmeter leads are connected with the circuit's correct polarity.

WARNING: When the engine is operating, do not stand in direct line with the fan. Do not put your hands near the pulleys, belts, or fan. Do not wear loose clothing. Failure to follow these instructions can result in personal injury or death.

Start the engine and allow it to reach normal operating temperature.

Monitor the voltmeter.

Is the voltage below 0.5 volts?

Yes >> Go To 5

No >> Repair the excessive resistance in the (F856) 5-volt Supply circuit.
Perform the POWERTRAIN VERIFICATION TEST. (Refer to 9 - ENGINE - STANDARD PROCEDURE)

5. (K900) SENSOR GROUND CIRCUIT HIGH RESISTANCE

Turn the ignition off.

Perform a voltage drop test. Backprobe the (K900) Sensor Return circuit at the Throttle Body harness connector to the appropriate terminal of the special tool #8815. Ensure the voltmeter leads are connected with the circuit's correct polarity.

WARNING: When the engine is operating, do not stand in direct line with the fan. Do not put your hands near the pulleys, belts, or fan. Do not wear loose clothing. Failure to follow these instructions can result in personal injury or death.

Start the engine and allow it to reach normal operating temperature.

Monitor the voltmeter.

Is the voltage below 0.5 volts?

Yes >> Go To 6

No >> Repair the excessive resistance in the (K900) Sensor Return circuit.
Perform the POWERTRAIN VERIFICATION TEST. (Refer to 9 - ENGINE - STANDARD PROCEDURE)

6. PCM

NOTE: Before continuing, check the PCM harness connector terminals for corrosion, damage, or terminal push out. Repair as necessary.
Using the schematics as a guide, inspect the wire harness and connectors. Pay particular attention to all Power and Ground circuits.

Were there any problems found?

Yes >> Repair as necessary.
Perform the POWERTRAIN VERIFICATION TEST. (Refer to 9 - ENGINE - STANDARD PROCEDURE)

No >> Replace and program the Powertrain Control Module per Service Information.
Perform the POWERTRAIN VERIFICATION TEST. (Refer to 9 - ENGINE - STANDARD PROCEDURE)

P0521-ENGINE OIL PRESSURE SENSOR PERFORMANCE

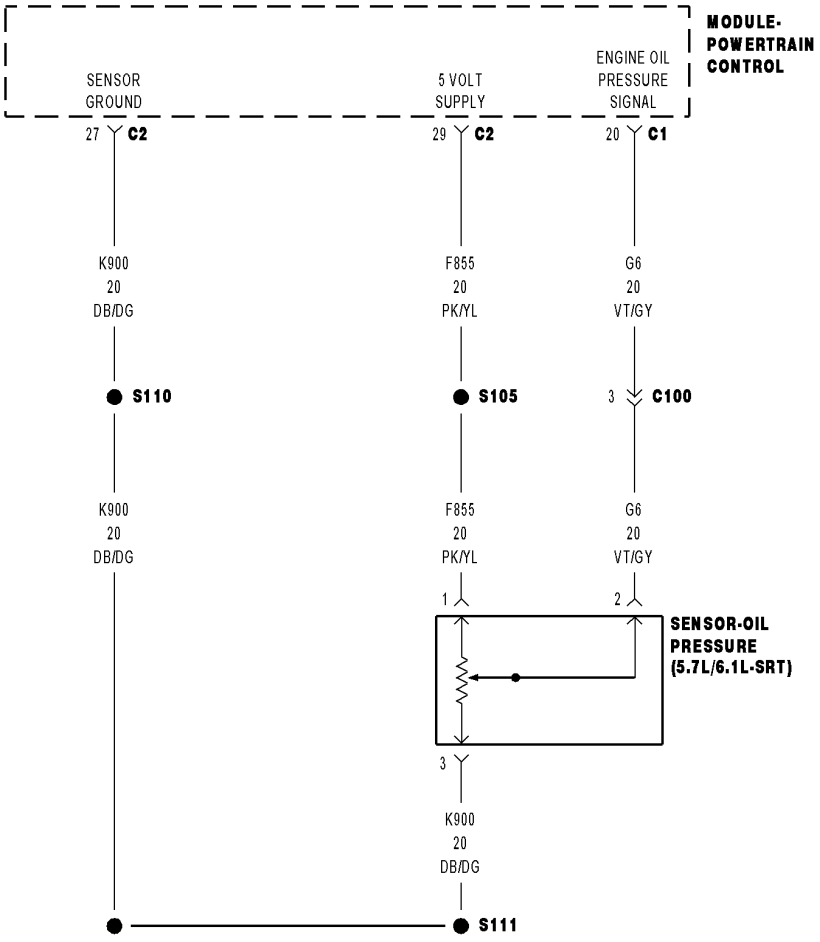

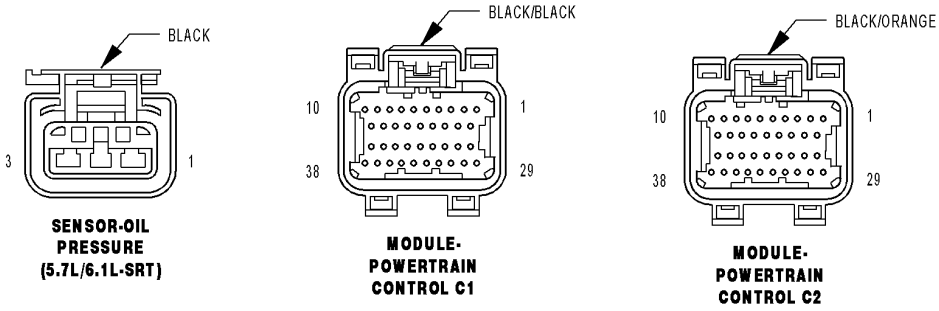

81547ea4

For a complete wiring diagram **Refer to Section 8W**.

- **When Monitored:**
  Engine running.
- **Set Condition:**
  The engine oil pressure never reaches the calibrated specification with the engine RPM at 1250.

Possible Causes
ENGINE OIL/ENGINE MECHANICAL
(G6) ENGINE OIL PRESSURE SENSOR SIGNAL CIRCUIT SHORTED TO BATTERY VOLTAGE
RESISTANCE (G6) ENGINE OIL PRESSURE SENSOR SIGNAL CIRCUIT
(G6) ENGINE OIL PRESSURE SENSOR SIGNAL CIRCUIT SHORTED TO GROUND
RESISTANCE IN (F856) 5-VOLT SUPPLY CIRCUIT
(F856) 5-VOLT SUPPLY CIRCUIT SHORTED TO GROUND
RESISTANCE IN THE (K900) SENSOR RETURN CIRCUIT
ENGINE OIL PRESSURE SENSOR
PCM

Always perform the Pre-Diagnostic Troubleshooting procedure before proceeding. (Refer to 9 - ENGINE - DIAGNOSIS AND TESTING).

Diagnostic Test

1. ACTIVE DTC

NOTE: Ensure that the engine oil is at the proper level. Also, check the customers oil change history to ensure that the oil is being changed at the correct intervals and that the proper oil viscosity is being used.
Ignition on, engine not running.
With a scan tool, read DTCs.

Is the DTC active at this time?

Yes >> Go To 2

No >> Refer to the INTERMITTENT CONDITION Diagnostic Procedure.
Perform the POWERTRAIN VERIFICATION TEST. (Refer to 9 - ENGINE - STANDARD PROCEDURE)

2. ENGINE OIL/ENGINE MECHANICAL

NOTE: The following items must be considered before determining the cause of this DTC. Failure to do so may lead to misdiagnosis.
- **ENGINE MECHANICAL TOLERANCES OUT OF SPECIFICATION**
- **ENGINE OIL PRESSURE OUT OF SPECIFICATION**
- **LOW ENGINE OIL**
- **OIL DIRTY OR DETERIORATED (Lack of scheduled oil changes)**
- **ENGINE OIL CONTAMINATED (i.e., coolant and/or fuel)**

If any of the above conditions are found, repair as necessary.

Were any of the above conditions present?

Yes >> Repair as necessary.
Perform the POWERTRAIN VERIFICATION TEST. (Refer to 9 - ENGINE - STANDARD PROCEDURE)

No >> Go To 3

3. (G6) ENGINE OIL PRESSURE SENSOR SIGNAL CIRCUIT SHORTED TO BATTERY VOLTAGE

Turn the ignition off.

Disconnect the PCM harness connectors.

Disconnect the Engine Oil Pressure Sensor harness connector.

Ignition on, engine not running.

Measure the voltage on the (G6) Engine Oil Pressure Signal circuit in the Engine Oil Pressure Sensor harness connector.

Is the voltage above 0 volts?

Yes >> Repair the short to battery voltage in the (G6) Engine Oil Pressure Signal circuit.

Perform the POWERTRAIN VERIFICATION TEST. (Refer to 9 - ENGINE - STANDARD PROCEDURE)

No >> Go To 4

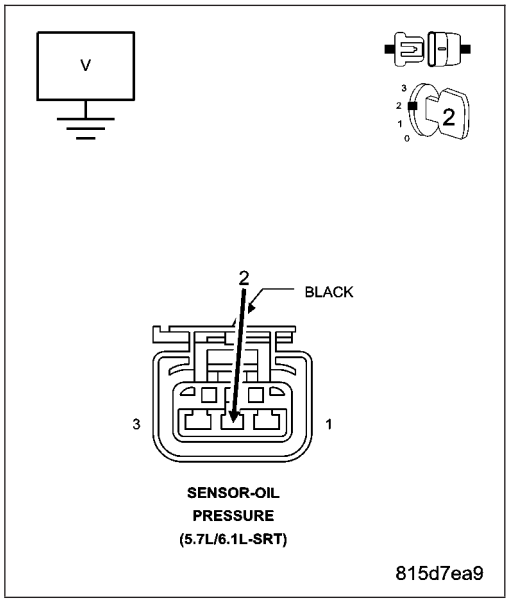

4. ENGINE OIL PRESSURE SENSOR

Turn the ignition off.

Connect the PCM harness connectors.

Ignition on, engine not running.

With a scan tool, monitor the Engine Oil Pressure Sensor voltage.

Connect a jumper wire between the (K900) Sensor Ground circuit and the (G6) Engine Oil Pressure Signal circuit.

NOTE: Engine Oil Pressure voltage should change from approximately 4.5 volts to less than 0.5 of a volt.

Is the voltage reading within the listed specification when the jumper wire is installed?

Yes >> Remove the Engine Oil Pressure sensor and ensure the oil passage/port is free from any blockage. If OK, replace the Engine Oil Pressure Sensor.

Perform the POWERTRAIN VERIFICATION TEST. (Refer to 9 - ENGINE - STANDARD PROCEDURE)

No >> Go To 5

NOTE: Remove the jumper wire before continuing.

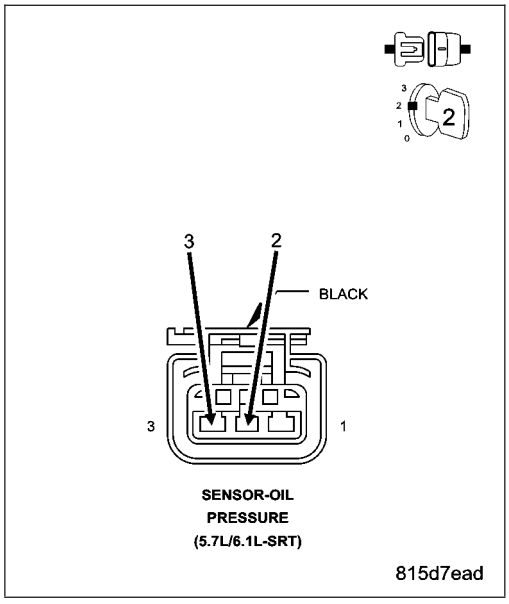

5. EXCESSIVE RESISTANCE IN THE (G6) ENGINE OIL PRESSURE SIGNAL CIRCUIT

Turn the ignition off.

Disconnect the PCM harness connectors.

CAUTION: Do not probe the PCM harness connectors. Probing the PCM harness connectors will damage the PCM terminals resulting in poor terminal to pin connection. Install Miller Special Tool #8815 to perform diagnosis.

Measure the resistance of the (G6) Engine Oil Pressure Signal circuit from the Engine Oil Pressure Sensor harness connector to the appropriate terminal of special tool #8815.

Is the resistance below 5.0 ohms?

Yes >> Go To 6

No >> Repair the excessive resistance in the (G6) Engine Oil Pressure Signal circuit.

Perform the POWERTRAIN VERIFICATION TEST. (Refer to 9 - ENGINE - STANDARD PROCEDURE)

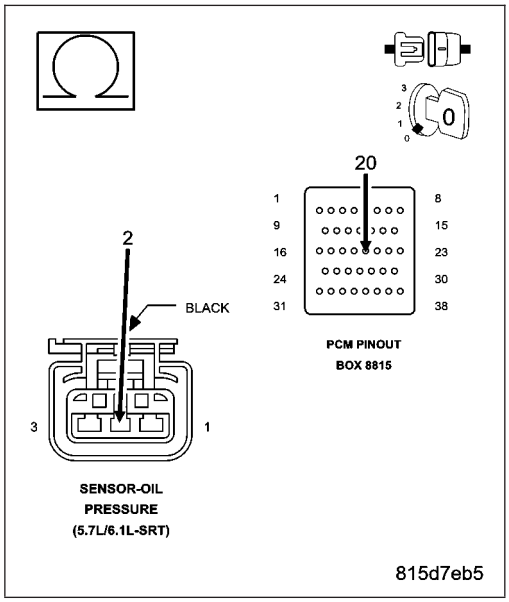

6. (G6) ENGINE OIL PRESSURE SIGNAL CIRCUIT SHORTED TO GROUND

Measure the resistance between ground and the (G6) Engine Oil Pressure Signal circuit Engine Oil Pressure Sensor harness connector.

Is the resistance below 100 ohms?

Yes >> Repair the short to ground in the (G6) Engine Oil Pressure Signal circuit.

Perform the POWERTRAIN VERIFICATION TEST. (Refer to 9 - ENGINE - STANDARD PROCEDURE)

No >> Go To 7

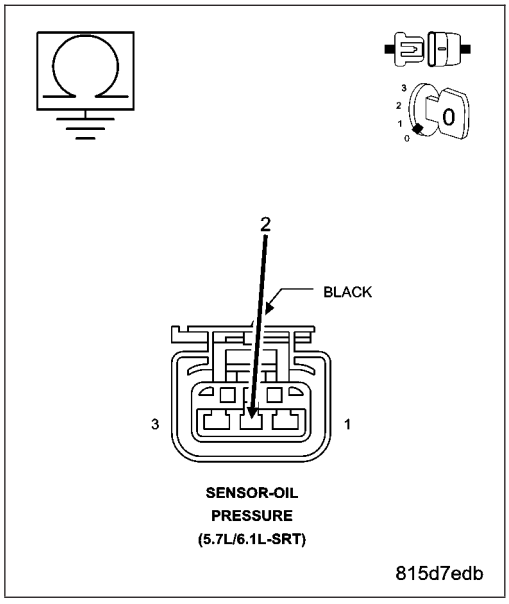

7. EXCESSIVE RESISTANCE IN THE (F856) 5–VOLT SUPPLY CIRCUIT

Measure the resistance of the (F856) 5-volt Supply circuit from the Engine Oil Pressure Sensor harness connector to the appropriate terminal of special tool #8815.

Is the resistance below 5.0 ohms?

Yes >> Go To 8

No >> Repair the excessive resistance in the (F856) 5-volt Supply circuit.

Perform the POWERTRAIN VERIFICATION TEST. (Refer to 9 - ENGINE - STANDARD PROCEDURE)

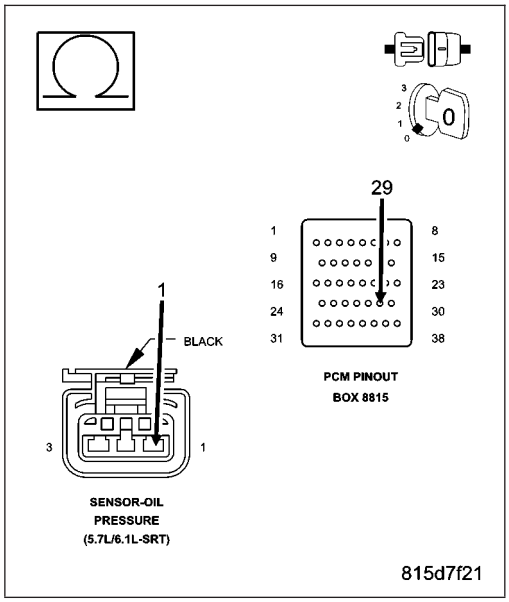

8. (F856) 5-VOLT SUPPLY SHORTED TO GROUND

Measure the resistance between ground and the (F856) 5-volt Supply circuit in the Engine Oil Pressure Sensor harness connector.

Is the resistance below 100 ohms?

Yes >> Repair the short to ground in the (F856) 5-volt Supply circuit.

Perform the POWERTRAIN VERIFICATION TEST. (Refer to 9 - ENGINE - STANDARD PROCEDURE)

No >> Go To 9

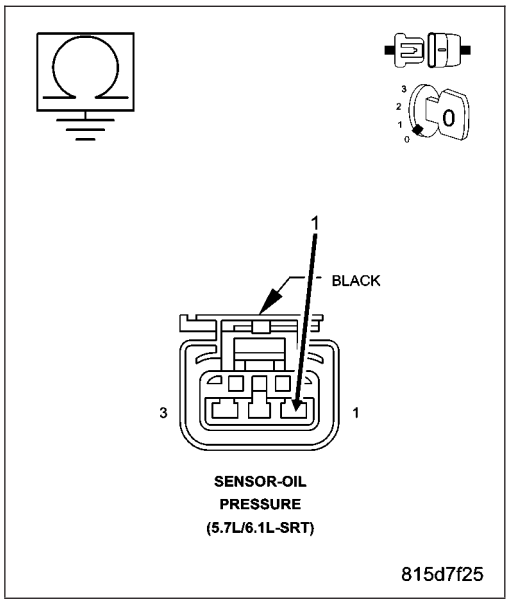

9. EXCESSIVE RESISTANCE IN THE (K900) SENSOR GROUND CIRCUIT

Measure the resistance of the (K900) Sensor Ground circuit from the Engine Oil Pressure Sensor harness connector to the appropriate terminal of special tool #8815.

Is the resistance below 5.0 ohms?

Yes >> Go To 10

No >> Repair the excessive resistance in the (K900) Sensor Ground circuit.
Perform the POWERTRAIN VERIFICATION TEST. (Refer to 9 - ENGINE - STANDARD PROCEDURE)

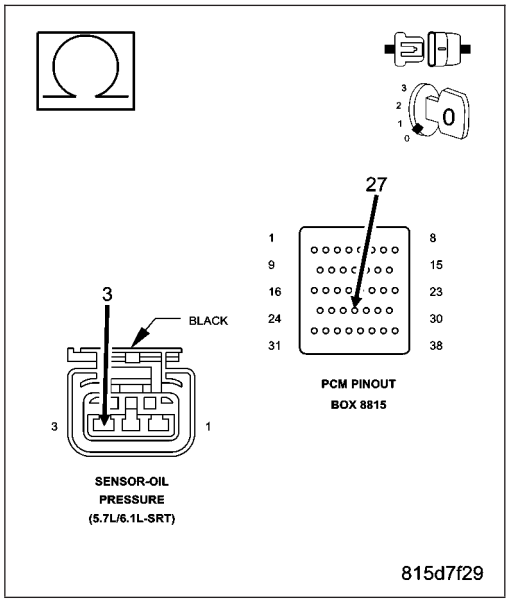

10. PCM

NOTE: Before continuing, check the PCM harness connector terminals for corrosion, damage, or terminal push out. Repair as necessary.
Using the schematics as a guide, inspect the wire harness and connectors. Pay particular attention to all Power and Ground circuits.

Were there any problems found?

Yes >> Repair as necessary.
Perform the POWERTRAIN VERIFICATION TEST. (Refer to 9 - ENGINE - STANDARD PROCEDURE)

No >> Replace and program the Powertrain Control Module per Service Information.
Perform the POWERTRAIN VERIFICATION TEST. (Refer to 9 - ENGINE - STANDARD PROCEDURE)

P0522-ENGINE OIL PRESSURE SENSOR CIRCUIT LOW

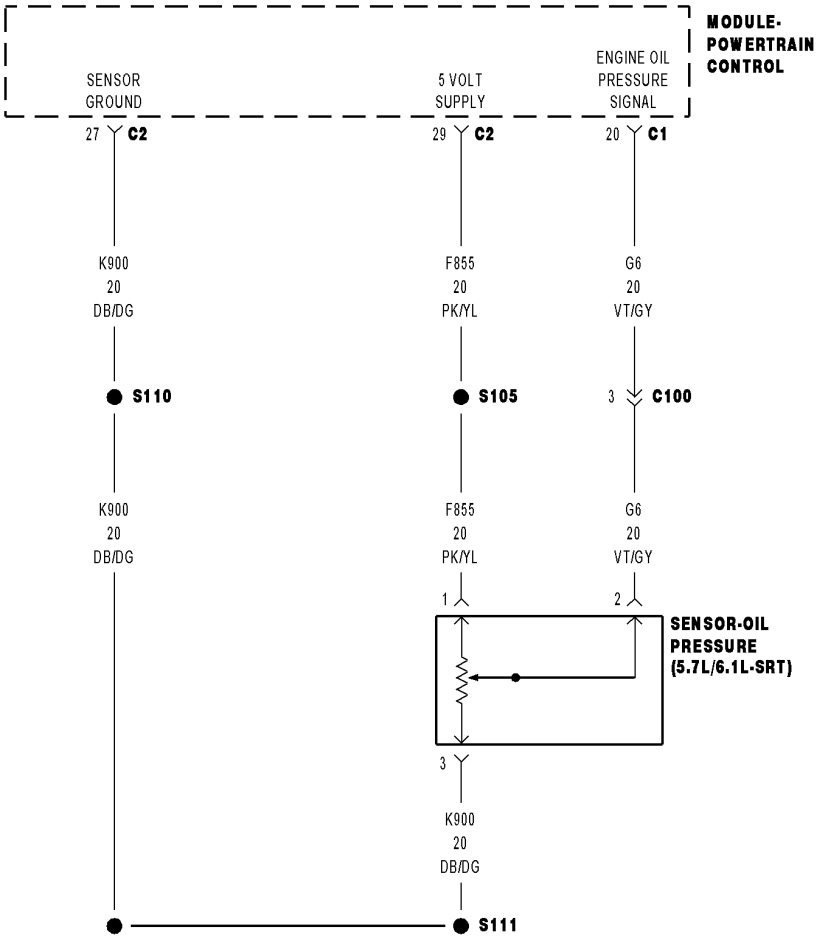

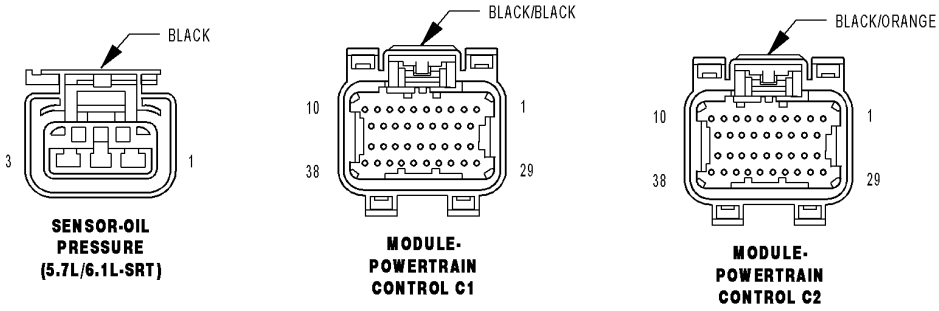

81547ea4

For a complete wiring diagram **Refer to Section 8W**.

- **When Monitored:**
  With the ignition on. Battery voltage greater than 10 volts.
- **Set Condition:**
  The Oil pressure signal is below the calibrated amount. One Trip Fault. Three good trips to turn off the MIL. ETC light will illuminate.

Possible Causes
(F856) 5-VOLT SUPPLY CIRCUIT OPEN
(F856) 5-VOLT SUPPLY CIRCUIT SHORTED TO GROUND
(G6) ENGINE OIL PRESSURE SIGNAL CIRCUIT SHORTED TO GROUND
(G6) ENGINE OIL PRESSURE SIGNAL CIRCUIT SHORTED TO THE (K900) SENSOR GROUND CIRCUIT
ENGINE OIL PRESSURE SENSOR
PCM

Always perform the Pre-Diagnostic Troubleshooting procedure before proceeding. (Refer to 9 - ENGINE - DIAGNOSIS AND TESTING).

Diagnostic Test

1. ACTIVE DTC

NOTE: Ensure that the engine oil is at the proper level. Also, check the customers oil change history to ensure that the oil is being changed at the correct intervals and that the proper oil viscosity is being used.
Ignition on, engine not running.
With a scan tool, read DTCs.

Is the DTC active at this time?

Yes >> Go To 2

No >> Refer to the INTERMITTENT CONDITION Diagnostic Procedure.
Perform the POWERTRAIN VERIFICATION TEST. (Refer to 9 - ENGINE - STANDARD PROCEDURE)

2. (F856) 5-VOLT SUPPLY CIRCUIT

Turn the ignition off.
Disconnect the Engine Oil Pressure Sensor harness connector.
Ignition on, engine not running.
Measure the voltage on the (F856) 5-volt Supply circuit in the Engine Oil Pressure Sensor harness connector.

Is the voltage between 4.8 to 5.2 volts?

Yes >> Go To 3

No >> Go To 6

3. ENGINE OIL PRESSURE SENSOR

With a scan tool, monitor the Engine Oil Pressure Sensor voltage with the Sensor harness connector disconnected.

Is the voltage above 4.5 volts?

Yes >> Replace the Engine Oil Pressure Sensor.
Perform the POWERTRAIN VERIFICATION TEST. (Refer to 9 - ENGINE - STANDARD PROCEDURE)

No >> Go To 4

4. (G6) ENGINE OIL PRESSURE SIGNAL CIRCUIT SHORTED TO GROUND

Turn the ignition off.

Disconnect the PCM harness connectors.

Measure the resistance between ground and the (G6) Engine Oil Pressure Signal circuit in the Engine Oil Pressure Sensor harness connector.

Is the resistance below 100 ohms?

Yes >> Repair the short to ground in the (G6) Engine Oil Pressure Signal circuit.
Perform the POWERTRAIN VERIFICATION TEST. (Refer to 9 - ENGINE - STANDARD PROCEDURE)

No >> Go To 5

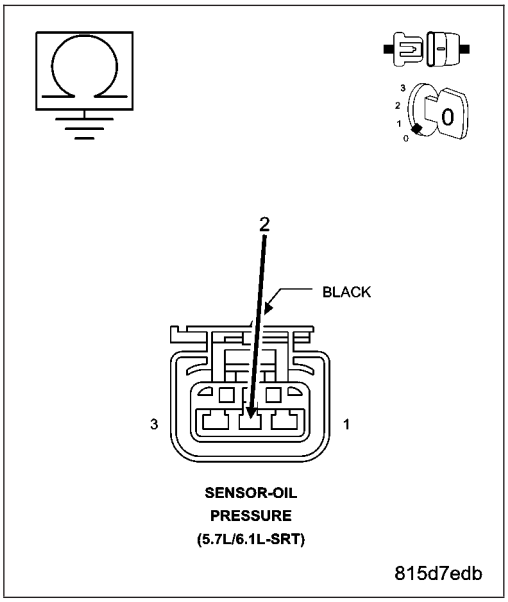

5. (G6) ENGINE OIL PRESSURE SIGNAL CIRCUIT SHORTED TO THE (K900) SENSOR GROUND CIRCUIT

Measure the resistance between the (G6) Engine Oil Pressure Sensor Signal circuit and the (K900) Sensor Ground circuit in the Engine Oil Pressure Sensor harness connector.

Is the resistance below 100 ohms?

Yes >> Repair the short between the (K900) Sensor Ground circuit and the (G6) Engine Oil Pressure Signal circuit.
Perform the POWERTRAIN VERIFICATION TEST. (Refer to 9 - ENGINE - STANDARD PROCEDURE)

No >> Go To 8

6. (F856) 5-VOLT SUPPLY CIRCUIT OPEN

Turn the ignition off.

Disconnect the PCM harness connectors.

CAUTION: Do not probe the PCM harness connectors. Probing the PCM harness connectors will damage the PCM terminals resulting in poor terminal to pin connection. Install Miller Special Tool #8815 to perform diagnostics.

Measure the resistance of the (F856) 5-volt Supply circuit from the Engine Oil Pressure Sensor harness connector to the appropriate terminal of special tool #8815.

Is the resistance below 5.0 ohms?

Yes >> Go To 7

No >> Repair the open in the (F856) 5-volt Supply circuit.
Perform the POWERTRAIN VERIFICATION TEST. (Refer to 9 - ENGINE - STANDARD PROCEDURE)

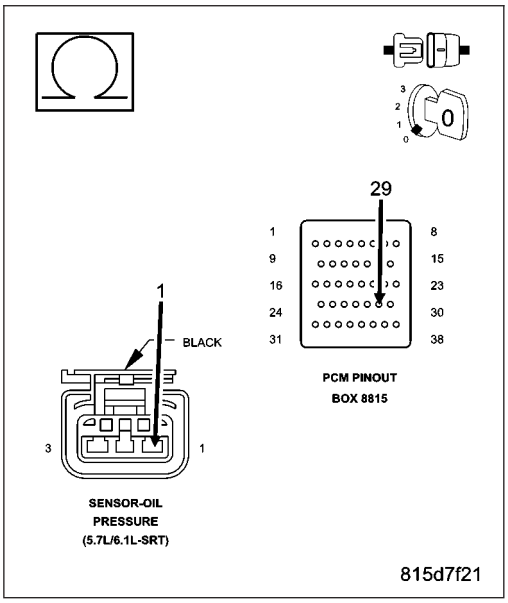

7. (F856) 5-VOLT SUPPLY CIRCUIT SHORTED TO GROUND

Measure the resistance between ground and the (F856) 5-volt Supply circuit in the Engine Oil Pressure Sensor harness connector.

Is the resistance below 100 ohms?

Yes >> Repair the short to ground in the (F856) 5-volt Supply circuit.
Perform the POWERTRAIN VERIFICATION TEST. (Refer to 9 - ENGINE - STANDARD PROCEDURE)

No >> Go To 8

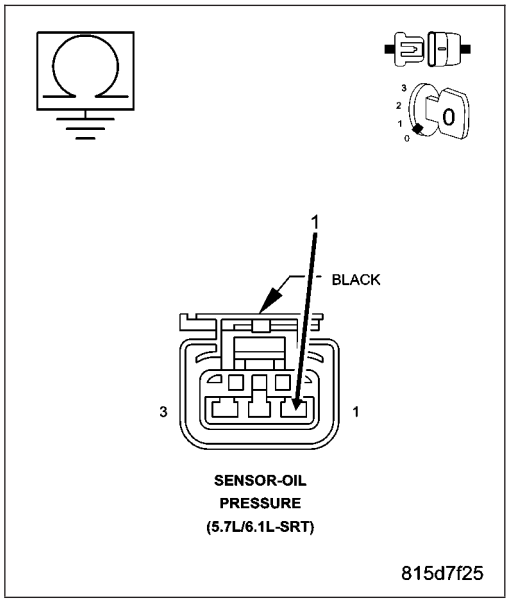

8. PCM

NOTE: Before continuing, check the PCM harness connector terminals for corrosion, damage, or terminal push out. Repair as necessary.
Using the schematics as a guide, inspect the wire harness and connectors. Pay particular attention to all Power and Ground circuits.

Were there any problems found?

Yes >> Repair as necessary.
Perform the POWERTRAIN VERIFICATION TEST. (Refer to 9 - ENGINE - STANDARD PROCEDURE)

No >> Replace and program the Powertrain Control Module per Service Information.
Perform the POWERTRAIN VERIFICATION TEST. (Refer to 9 - ENGINE - STANDARD PROCEDURE)

P0523-ENGINE OIL PRESSURE SENSOR CIRCUIT HIGH

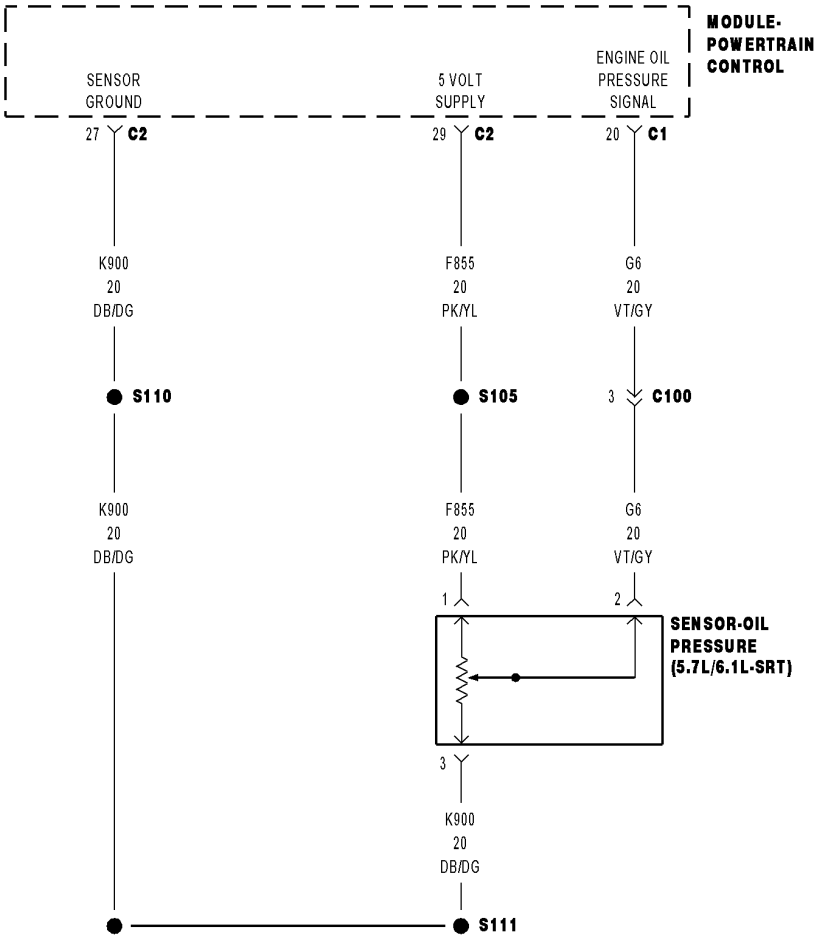

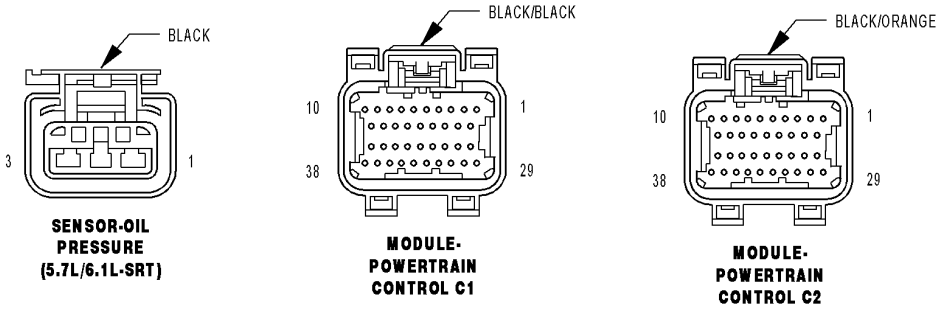

81547ea4

For a complete wiring diagram **Refer to Section 8W**.

- **When Monitored:**
  With the ignition on. Battery voltage greater than 10 volts.
- **Set Condition:**
  The Engine Oil pressure signal is greater than the calibrated amount. One Trip Fault.

Possible Causes
(G6) ENGINE OIL PRESSURE SIGNAL CIRCUIT SHORTED TO BATTERY VOLTAGE
(G6) ENGINE OIL PRESSURE SIGNAL CIRCUIT OPEN
(G6) ENGINE OIL PRESSURE SIGNAL CIRCUIT SHORTED TO THE (F856) 5-VOLT SUPPLY CIRCUIT
(K900) SENSOR GROUND CIRCUIT OPEN
ENGINE OIL PRESSURE SENSOR
PCM

Always perform the Pre-Diagnostic Troubleshooting procedure before proceeding. (Refer to 9 - ENGINE - DIAGNOSIS AND TESTING).

Diagnostic Test

1. ACTIVE DTC

NOTE: Ensure that the engine oil is at the proper level. Also, check the customers oil change history to ensure that the oil is being changed at the correct intervals and that the proper oil viscosity is being used.
Ignition on, engine not running.
With a scan tool, read DTCs.

Is the DTC active at this time?

Yes >> Go To 2

No >> Refer to the INTERMITTENT CONDITION Diagnostic Procedure.
Perform the POWERTRAIN VERIFICATION TEST. (Refer to 9 - ENGINE - STANDARD PROCEDURE)

2. ENGINE OIL PRESSURE SENSOR

Turn the ignition off.
Disconnect the Engine Oil Pressure Sensor harness connector.
Connect a jumper wire between the (G6) Engine Oil Pressure Signal circuit and the (K900) Sensor Ground circuit in the Engine Oil Pressure Sensor harness connector.
With a scan tool, monitor the Engine Oil Pressure Sensor voltage.
Ignition on, engine not running.

Is the voltage below 0.5 of a volt with the jumper wire installed?

Yes >> Replace the Engine Oil Pressure Sensor.
Perform the POWERTRAIN VERIFICATION TEST. (Refer to 9 - ENGINE - STANDARD PROCEDURE)

No >> Go To 3

NOTE: Remove the jumper wire before continuing.

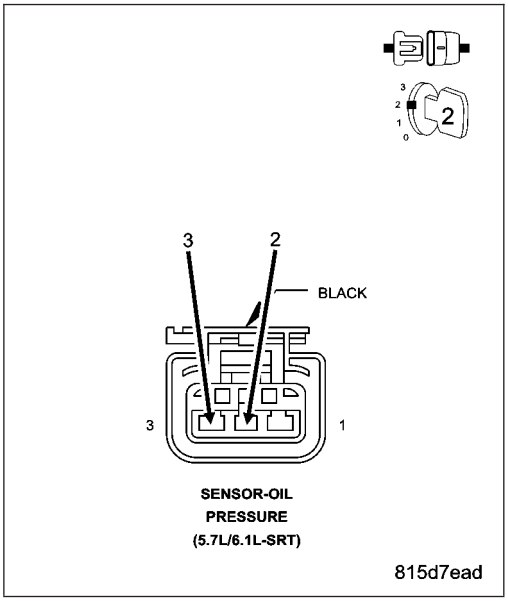

3. (G6) ENGINE OIL PRESSURE SIGNAL CIRCUIT SHORTED TO BATTERY VOLTAGE

Turn the ignition off.

Disconnect the PCM harness connectors.

Ignition on, engine not running.

Measure the voltage on the (G6) Engine Oil Pressure Signal circuit in the Engine Oil Pressure Sensor harness connector.

Is there any voltage present?

Yes >> Repair the short to battery voltage in the (G6) Engine Oil Pressure Signal circuit.
Perform the POWERTRAIN VERIFICATION TEST. (Refer to 9 - ENGINE - STANDARD PROCEDURE)

No >> Go To 4

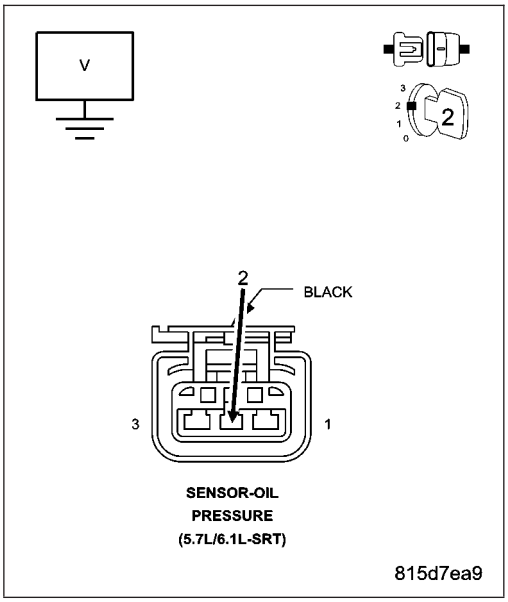

4. (G6) ENGINE OIL PRESSURE SIGNAL CIRCUIT OPEN

Turn the ignition off.

CAUTION: Do not probe the PCM harness connectors. Probing the PCM harness connectors will damage the PCM terminals resulting in poor terminal to pin connection. Install Miller Special Tool #8815 to perform diagnosis.

Measure the resistance of the (G6) Engine Oil Pressure Signal circuit from the Engine Oil Pressure Sensor harness connector to the appropriate terminal of special tool #8815.

Is the resistance below 5.0 ohms?

Yes >> Go To 5

No >> Repair the open in the (G6) Engine Oil Pressure Signal circuit.
Perform the POWERTRAIN VERIFICATION TEST. (Refer to 9 - ENGINE - STANDARD PROCEDURE)

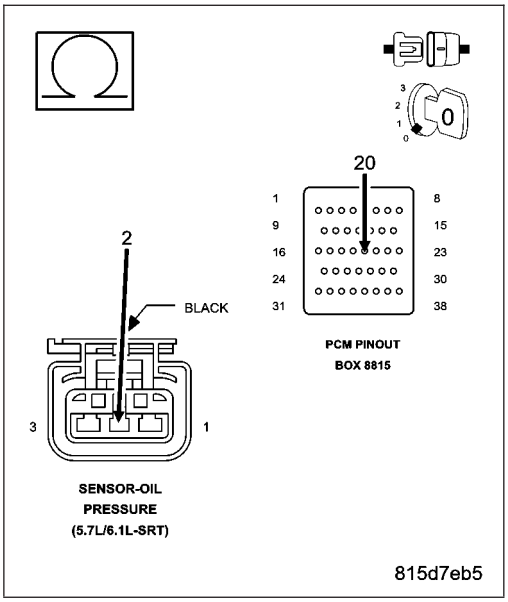

5. (G6) ENGINE OIL PRESSURE SIGNAL CIRCUIT SHORTED TO THE (F856) 5-VOLT SUPPLY CIRCUIT

Measure the resistance between the (G6) Engine Oil Pressure Signal circuit and the (F856) 5-volt Supply circuit in the Engine Oil Pressure Sensor harness connector.

Is the resistance below 100 ohms?

Yes >> Repair the short between the (F856) 5-volt Supply circuit and the (G6) Engine Oil Pressure Signal circuit.
Perform the POWERTRAIN VERIFICATION TEST. (Refer to 9 - ENGINE - STANDARD PROCEDURE)

No >> Go To 6

6. (K900) SENSOR GROUND CIRCUIT OPEN

Measure the resistance of the (K900) Sensor Ground circuit from the Engine Oil Pressure Sensor harness connector to the appropriate terminal of special tool #8815.

Is the resistance below 5.0 ohms?

Yes >> Go To 7

No >> Repair the open in the (K900) Sensor Ground circuit.
Perform the POWERTRAIN VERIFICATION TEST. (Refer to 9 - ENGINE - STANDARD PROCEDURE)

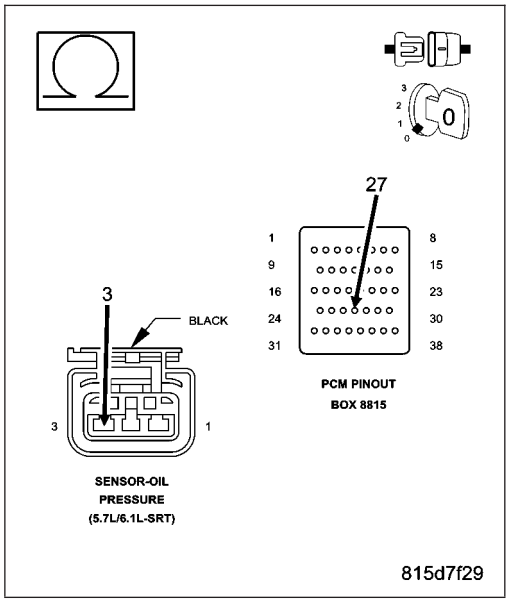

7. PCM

NOTE: Before continuing, check the PCM harness connector terminals for corrosion, damage, or terminal push out. Repair as necessary.
Using the schematics as a guide, inspect the wire harness and connectors. Pay particular attention to all Power and Ground circuits.

Were there any problems found?

Yes >> Repair as necessary.
Perform the POWERTRAIN VERIFICATION TEST. (Refer to 9 - ENGINE - STANDARD PROCEDURE)

No >> Replace and program the Powertrain Control Module per Service Information.
Perform the POWERTRAIN VERIFICATION TEST. (Refer to 9 - ENGINE - STANDARD PROCEDURE)

P0524-ENGINE OIL PRESSURE TOO LOW

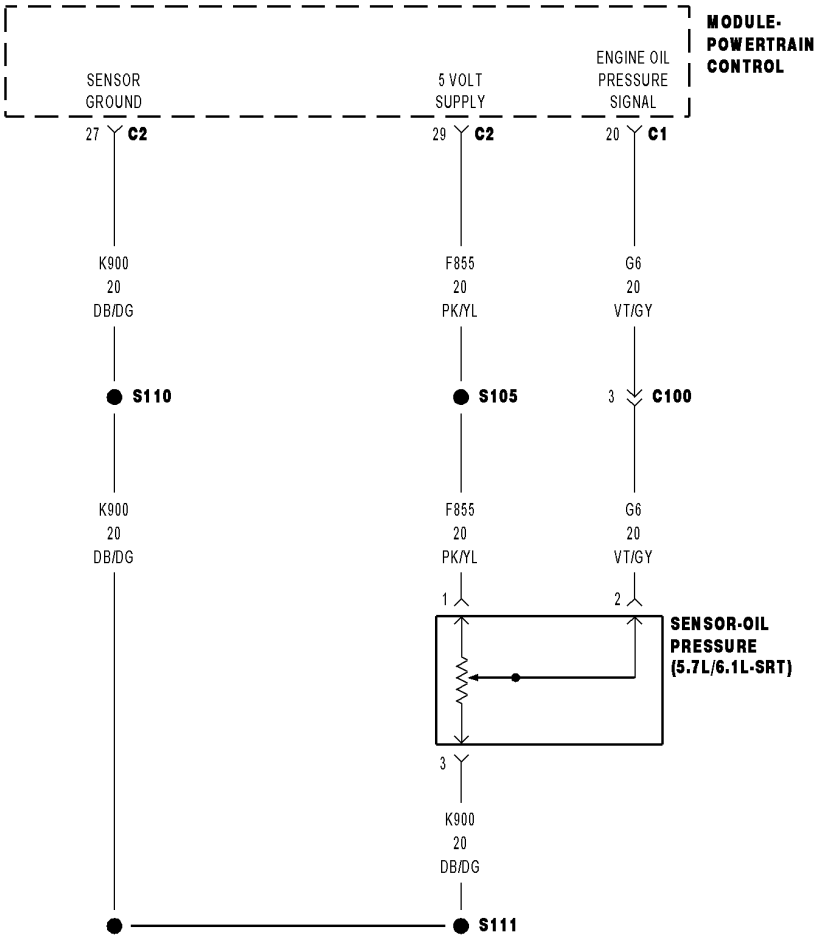

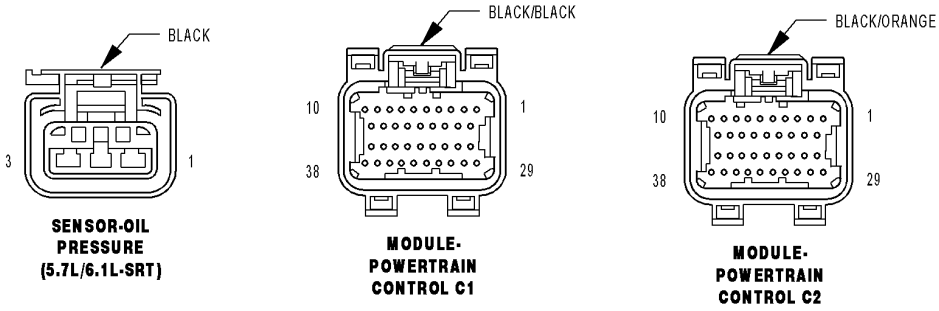

81547ea4

For a complete wiring diagram **Refer to Section 8W**.

- **When Monitored:**
  Engine running.
- **Set Condition:**
  The engine oil pressure never reaches the calibrated specification to allow the MDS activation.

Possible Causes
ENGINE OIL/ENGINE MECHANICAL
(G6) ENGINE OIL PRESSURE SENSOR SIGNAL CIRCUIT SHORTED TO BATTERY VOLTAGE
RESISTANCE (G6) ENGINE OIL PRESSURE SENSOR SIGNAL CIRCUIT
(G6) ENGINE OIL PRESSURE SENSOR SIGNAL CIRCUIT SHORTED TO GROUND
RESISTANCE IN (F856) 5-VOLT SUPPLY CIRCUIT
(F856) 5-VOLT SUPPLY CIRCUIT SHORTED TO GROUND
RESISTANCE IN THE (K900) SENSOR RETURN CIRCUIT
ENGINE OIL PRESSURE SENSOR
PCM

Always perform the Pre-Diagnostic Troubleshooting procedure before proceeding. (Refer to 9 - ENGINE - DIAGNOSIS AND TESTING).

Diagnostic Test

1. ACTIVE DTC

NOTE: Ensure that the engine oil is at the proper level. Also, check the customers oil change history to ensure that the oil is being changed at the correct intervals and that the proper oil viscosity is being used.
Ignition on, engine not running.
With a scan tool, read DTCs.

Is the DTC active at this time?

Yes >> Go To 2

No >> Refer to the INTERMITTENT CONDITION Diagnostic Procedure.
Perform the POWERTRAIN VERIFICATION TEST. (Refer to 9 - ENGINE - STANDARD PROCEDURE)

2. ENGINE OIL/ENGINE MECHANICAL

NOTE: The following items must be considered before determining the cause of this DTC. Failure to do so may lead to misdiagnosis.
- **ENGINE MECHANICAL TOLERANCES OUT OF SPECIFICATION**
- **ENGINE OIL PRESSURE OUT OF SPECIFICATION**
- **LOW ENGINE OIL**
- **OIL DIRTY OR DETERIORATED (Lack of scheduled oil changes)**
- **CORRECT VISCOSITY**
- **ENGINE OIL CONTAMINATED (i.e., coolant and/or fuel)**

If any of the above conditions are found, repair as necessary.

Were any of the above conditions present?

Yes >> Repair as necessary.
Perform the POWERTRAIN VERIFICATION TEST. (Refer to 9 - ENGINE - STANDARD PROCEDURE)

No >> Go To 3

3. ENGINE OIL PRESSURE SENSOR

Turn the ignition off.

Connect the PCM harness connectors.

Ignition on, engine not running.

With a scan tool, monitor the Engine Oil Pressure Sensor voltage.

Connect a jumper wire between the (K900) Sensor Ground circuit and the (G6) Engine Oil Pressure Signal circuit.

NOTE: Engine Oil Pressure voltage should change from approximately 4.5 volts to less than 0.5 of a volt.

Is the voltage reading within the listed specification when the jumper wire is installed?

Yes >> Remove the Engine Oil Pressure sensor and ensure the oil passage/port is free from any blockage. If OK, replace the Engine Oil Pressure Sensor.

Perform the POWERTRAIN VERIFICATION TEST. (Refer to 9 - ENGINE - STANDARD PROCEDURE)

No >> Go To 4

NOTE: Remove the jumper wire before continuing.

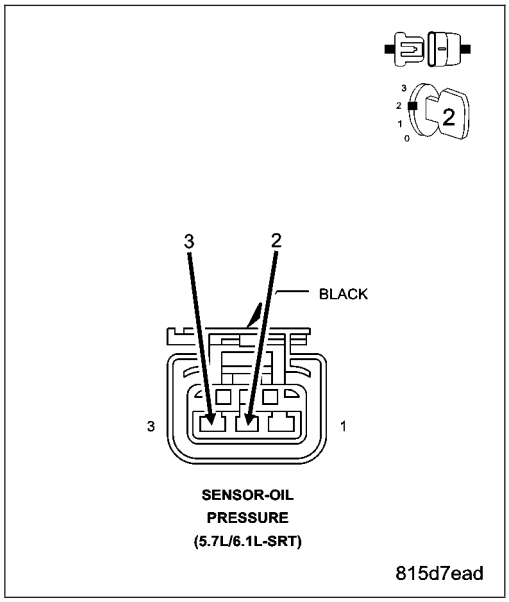

4. EXCESSIVE RESISTANCE IN THE (G6) ENGINE OIL PRESSURE SIGNAL CIRCUIT

Turn the ignition off.

Disconnect the PCM harness connectors.

CAUTION: Do not probe the PCM harness connectors. Probing the PCM harness connectors will damage the PCM terminals resulting in poor terminal to pin connection. Install Miller Special Tool #8815 to perform diagnosis.

Measure the resistance of the (G6) Engine Oil Pressure Signal circuit from the Engine Oil Pressure Sensor harness connector to the appropriate terminal of special tool #8815.

Is the resistance below 5.0 ohms?

Yes >> Go To 5

No >> Repair the excessive resistance in the (G6) Engine Oil Pressure Signal circuit.

Perform the POWERTRAIN VERIFICATION TEST. (Refer to 9 - ENGINE - STANDARD PROCEDURE)

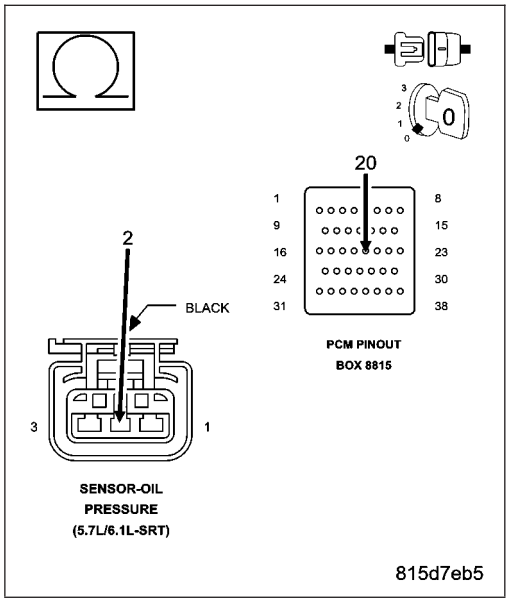

5. (G6) ENGINE OIL PRESSURE SIGNAL CIRCUIT SHORTED TO GROUND

Measure the resistance between ground and the (G6) Engine Oil Pressure Signal circuit in the Engine Oil Pressure Sensor harness connector.

Is the resistance below 100 ohms?

Yes >> Repair the short to ground in the (G6) Engine Oil Pressure Signal circuit.
Perform the POWERTRAIN VERIFICATION TEST. (Refer to 9 - ENGINE - STANDARD PROCEDURE)

No >> Go To 6

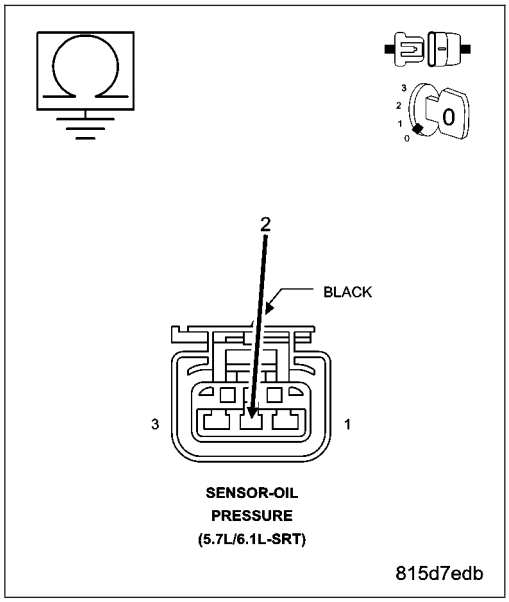

6. EXCESSIVE RESISTANCE IN THE (F856) 5–VOLT SUPPLY CIRCUIT

Measure the resistance of the (F856) 5-volt Supply circuit from the Engine Oil Pressure Sensor harness connector to the appropriate terminal of special tool #8815.

Is the resistance below 5.0 ohms?

Yes >> Go To 7

No >> Repair the excessive resistance in the (F856) 5-volt Supply circuit.
Perform the POWERTRAIN VERIFICATION TEST. (Refer to 9 - ENGINE - STANDARD PROCEDURE)

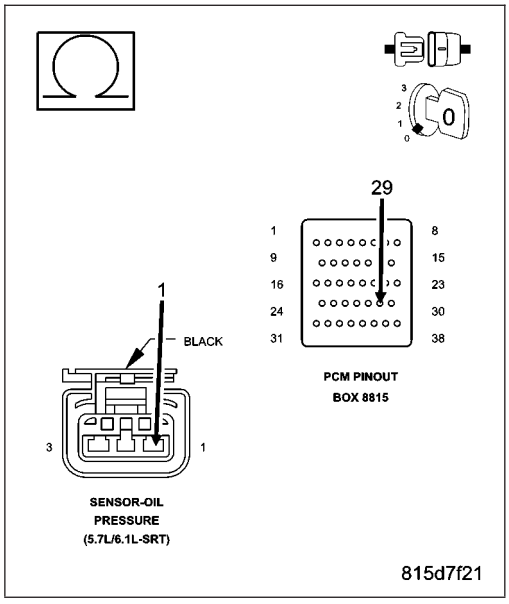

7. (F856) 5-VOLT SUPPLY SHORTED TO GROUND

Measure the resistance between ground and the (F856) 5-volt Supply circuit in the Engine Oil Pressure Sensor harness connector.

Is the resistance below 100 ohms?

Yes >> Repair the short to ground in the (F856) 5-volt Supply circuit.

Perform the POWERTRAIN VERIFICATION TEST. (Refer to 9 - ENGINE - STANDARD PROCEDURE)

No >> Go To 8

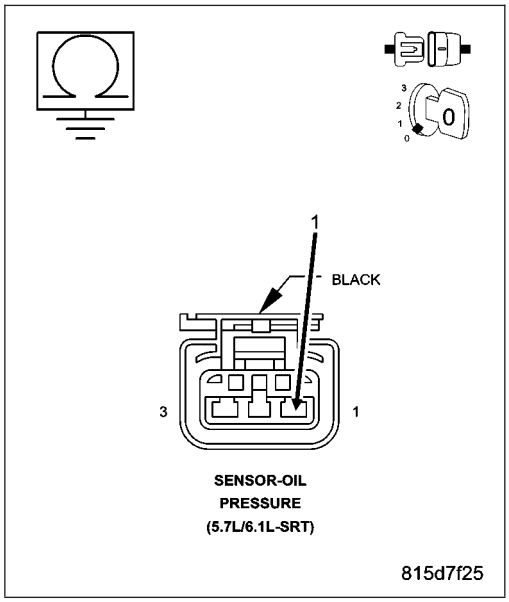

8. EXCESSIVE RESISTANCE IN THE (K900) SENSOR GROUND CIRCUIT

Measure the resistance of the (K900) Sensor Ground circuit from the Engine Oil Pressure Sensor harness connector to the appropriate terminal of special tool #8815.

Is the resistance below 5.0 ohms?

Yes >> Go To 9

No >> Repair the excessive resistance in the (K900) Sensor Ground circuit.

Perform the POWERTRAIN VERIFICATION TEST. (Refer to 9 - ENGINE - STANDARD PROCEDURE)

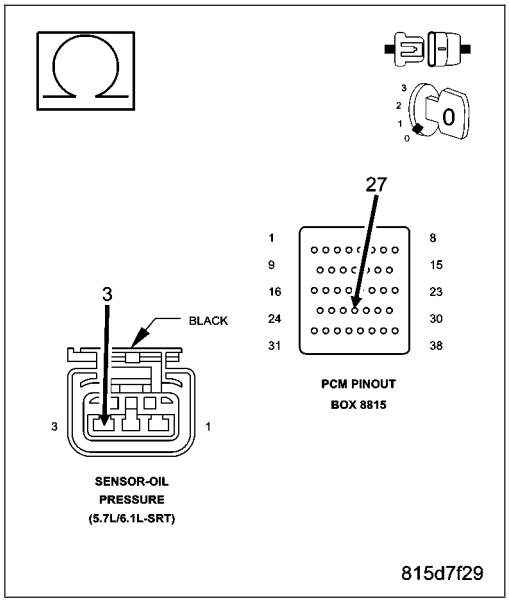

9. PCM

NOTE: Before continuing, check the PCM harness connector terminals for corrosion, damage, or terminal push out. Repair as necessary.
Using the schematics as a guide, inspect the wire harness and connectors. Pay particular attention to all Power and Ground circuits.

Were there any problems found?

Yes >> Repair as necessary.
Perform the POWERTRAIN VERIFICATION TEST. (Refer to 9 - ENGINE - STANDARD PROCEDURE)

No >> Replace and program the Powertrain Control Module per Service Information.
Perform the POWERTRAIN VERIFICATION TEST. (Refer to 9 - ENGINE - STANDARD PROCEDURE)

P0532-A/C PRESSURE SENSOR CIRCUIT LOW

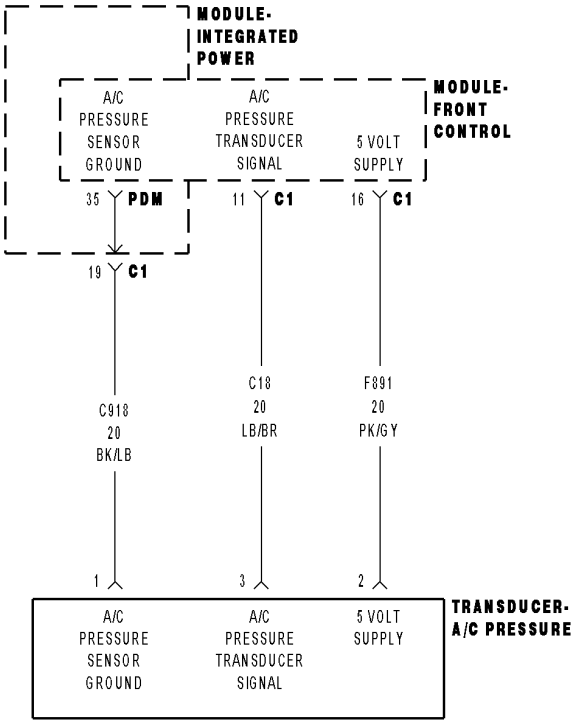

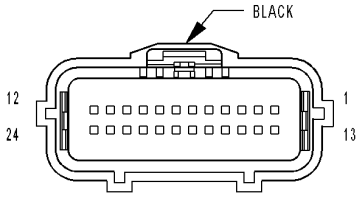

MODULE-
FRONT
CONTROL C1

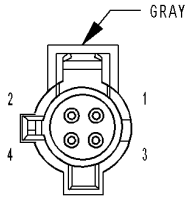

TRANSDUCER-A/C-
PRESSURE

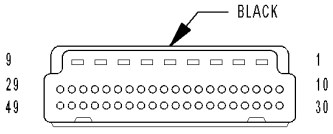

MODULE-
FRONT
CONTROL PDM

8131bd81

For a complete wiring diagram **Refer to Section 8W**.

- **When Monitored:**
  Engine running, A/C is learned, and AC Clutch Relay energized.
- **Set Condition:**
  The A/C pressure sensor signal voltage at the PCM goes below 0.58 of a volt for 2.6 seconds. One Trip Fault. Three good trips to turn off the MIL.

Possible Causes
(F891) 5-VOLT SUPPLY CIRCUIT OPEN
(F891) 5-VOLT SUPPLY CIRCUIT SHORTED TO GROUND
A/C PRESSURE TRANSDUCER
(C18) A/C PRESSURE SIGNAL CIRCUIT SHORTED TO GROUND
(C18) A/C PRESSURE SIGNAL CIRCUIT SHORTED TO (C918) SENSOR GROUND CIRCUIT
FRONT CONTROL MODULE

Always perform the Pre-Diagnostic Troubleshooting procedure before proceeding. (Refer to 9 - ENGINE - DIAGNOSIS AND TESTING).

Diagnostic Test

1. A/C PRESSURE TRANSDUCER VOLTAGE BELOW 0.6 OF A VOLT

NOTE: Make sure the A/C refrigerant System is properly charged per Service Information.
Start the engine.
With a scan tool, read the A/C Pressure Sensor voltage.

Is the voltage below 0.6 of a volt?

Yes >> Go To 2

No >> Refer to the INTERMITTENT CONDITION Diagnostic Procedure.
Perform the POWERTRAIN VERIFICATION TEST. (Refer to 9 - ENGINE - STANDARD PROCEDURE)

2. (F891) 5-VOLT SUPPLY CIRCUIT

Turn the ignition off.
Disconnect the A/C Pressure Transducer harness connector.
Ignition on, engine not running.
Measure the voltage on the (F891) 5-volt Supply circuit in the A/C Pressure Transducer harness connector.

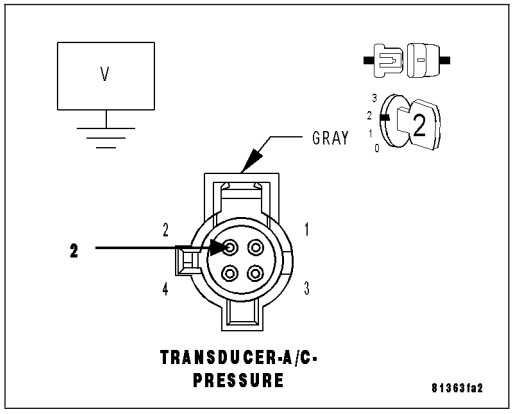

Is the voltage between 4.5 to 5.2 volts?

Yes >> Go To 3

No >> Go To 6

3. A/C PRESSURE TRANSDUCER

With the scan tool, monitor the A/C Pressure Transducer voltage.

Is the voltage above 0.6 of a volt?

Yes >> Replace the A/C Pressure Transducer.
Perform the POWERTRAIN VERIFICATION TEST. (Refer to 9 - ENGINE - STANDARD PROCEDURE)

No >> Go To 4

4. (C18) A/C PRESSURE SIGNAL CIRCUIT SHORTED TO GROUND

Turn the ignition off.

Disconnect the C1 FCM harness connector.

Measure the resistance between the (C18) A/C Pressure Signal circuit in the A/C Pressure Transducer harness connector and ground.

Is the resistance below 100 ohms?

Yes >> Repair the short to ground in the (C18) A/C Pressure Signal circuit.
Perform the POWERTRAIN VERIFICATION TEST. (Refer to 9 - ENGINE - STANDARD PROCEDURE)

No >> Go To 5

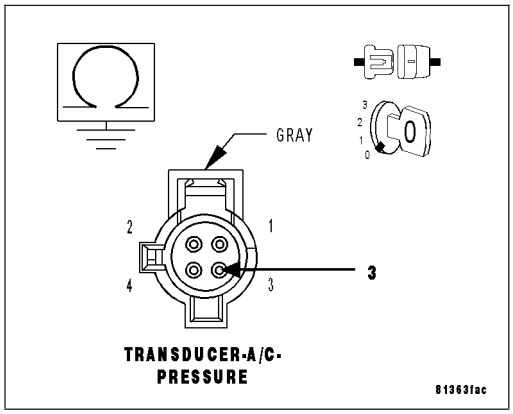

5. (C18) A/C PRESSURE SIGNAL CIRCUIT SHORTED TO THE (C918) SENSOR GROUND CIRCUIT

Disconnect the C3 FCM harness connector.

Measure the resistance between the (C18) A/C Pressure Signal circuit and the (C918) Sensor Ground circuit in the A/C Pressure Transducer harness connector.

Is the resistance below 100 ohms?

Yes >> Repair the short between the (C918) Sensor Ground circuit and the (C18) A/C Pressure Signal circuit.
Perform the POWERTRAIN VERIFICATION TEST. (Refer to 9 - ENGINE - STANDARD PROCEDURE)

No >> Go To 8

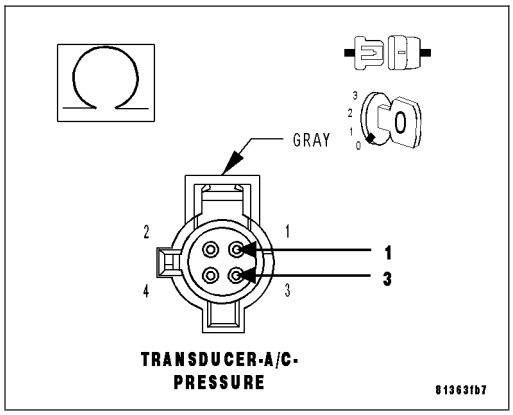

6. (F891) 5-VOLT SUPPLY CIRCUIT OPEN

Turn the ignition off.

Disconnect the C1 FCM harness connector.

Measure the resistance of the (F891) 5-volt Supply circuit from the A/C Pressure Transducer harness connector to the C1 FCM harness connector.

Is the resistance below 5.0 ohms?

Yes >> Go To 7

No >> Repair the open in the (F891) 5-volt Supply circuit.
Perform the POWERTRAIN VERIFICATION TEST. (Refer to 9 - ENGINE - STANDARD PROCEDURE)

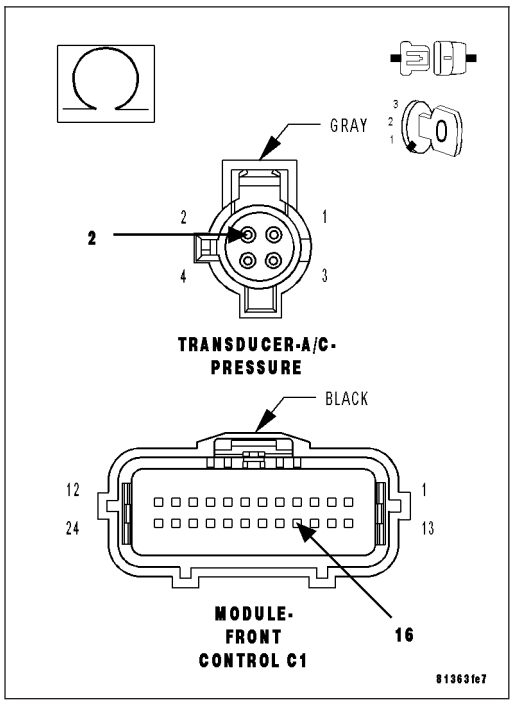

7. (F891) 5-VOLT SUPPLY CIRCUIT SHORTED TO GROUND

Measure the resistance between the (F891) 5-volt Supply circuit in the A/C Pressure Transducer harness connector and ground.

Is the resistance below 100 ohms?

Yes >> Repair the short to ground in the (F891) 5-volt Supply circuit.
Perform the POWERTRAIN VERIFICATION TEST. (Refer to 9 - ENGINE - STANDARD PROCEDURE)

No >> Go To 8

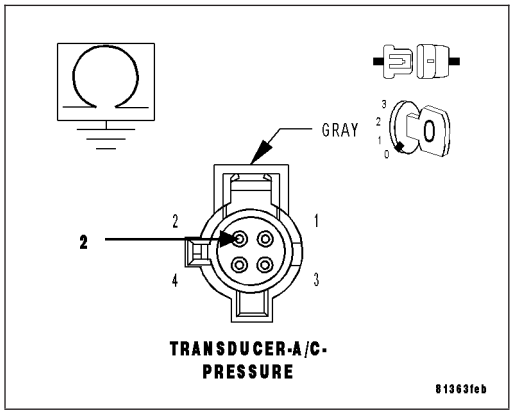

8. FRONT CONTROL MODULE

NOTE: Before continuing, check the FCM harness connector terminals for corrosion, damage, or terminal push out. Repair as necessary.
Using the schematics as a guide, inspect the wire harness and connectors. Pay particular attention to all Power and Ground circuits.

Were there any problems found?

Yes >> Repair as necessary.
Perform BODY VERIFICATION TEST-VER 1.

No >> Replace and program the Front Control Module per Service Information.
Perform BODY VERIFICATION TEST-VER 1.

P0533-A/C PRESSURE SENSOR CIRCUIT HIGH

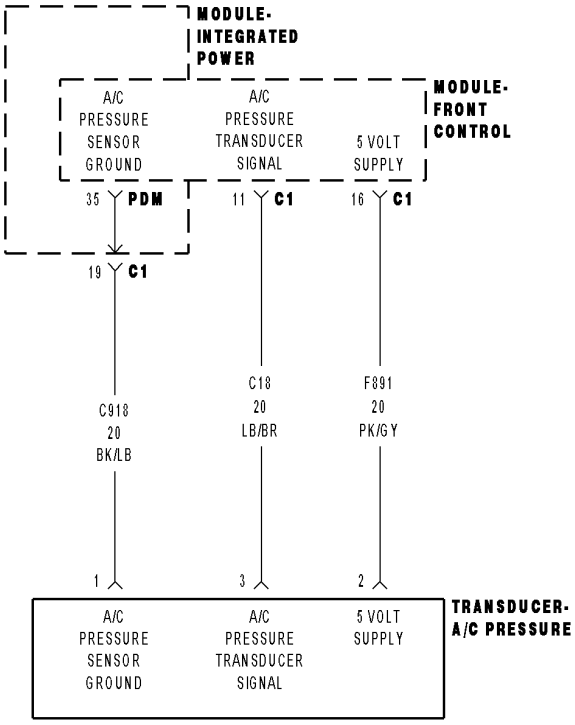

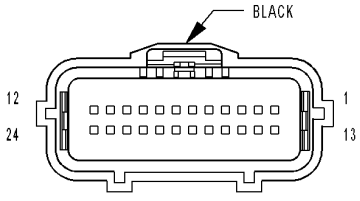

MODULE-
FRONT
CONTROL C1

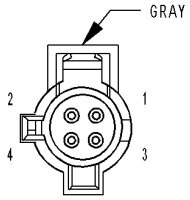

TRANSDUCER-A/C-
PRESSURE

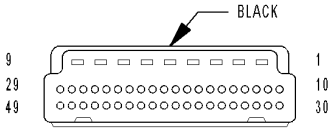

MODULE-
FRONT
CONTROL PDM

8131bd81

For a complete wiring diagram **Refer to Section 8W**.

- **When Monitored:**
  Engine running and the A/C Clutch Relay energized.
- **Set Condition:**
  The A/C pressure transducer signal at the PCM goes above 4.92 volts. One trip Fault. Three good trips to turn off the MIL.

Possible Causes
(C18) A/C PRESSURE SIGNAL CIRCUIT SHORTED TO BATTERY VOLTAGE
(C18) A/C PRESSURE SIGNAL CIRCUIT OPEN
(C18) A/C PRESSURE SIGNAL CIRCUIT SHORTED TO (F891) 5-VOLT SUPPLY CIRCUIT
(C918) SENSOR GROUND CIRCUIT OPEN
A/C PRESSURE TRANSDUCER
FRONT CONTROL MODULE

Always perform the Pre-Diagnostic Troubleshooting procedure before proceeding. (Refer to 9 - ENGINE - DIAGNOSIS AND TESTING).

Diagnostic Test

1. A/C PRESSURE TRANSDUCER VOLTAGE ABOVE 4.9 VOLTS

NOTE: Make sure the A/C refrigerant system is properly charged per Service Information.
Start the engine.

With a scan tool, read the A/C Pressure Sensor voltage.

Is the voltage above 4.9 volts?

Yes >> Go To 2

No >> Refer to the INTERMITTENT CONDITION Diagnostic Procedure.
Perform the POWERTRAIN VERIFICATION TEST. (Refer to 9 - ENGINE - STANDARD PROCEDURE)

2. A/C PRESSURE TRANSDUCER

Turn the ignition off.

Disconnect the A/C Pressure Transducer harness connector.

Connect a jumper wire between the (C18) A/C Pressure Signal circuit and the (C918) Sensor Ground circuit in the Transducer harness connector.

Ignition on, engine not running.

With the scan tool, monitor the A/C Pressure Transducer voltage.

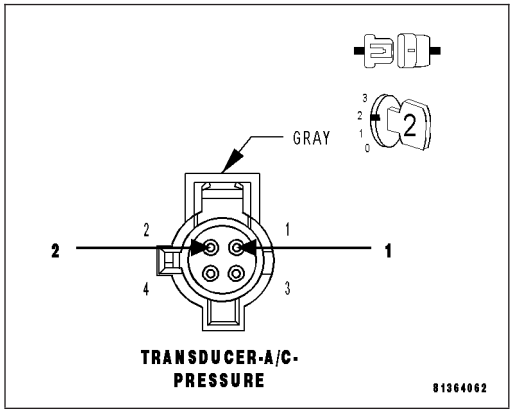

Is the voltage below 1.0 volt with the jumper wire installed?

Yes >> Replace the A/C Pressure Transducer.
Perform the POWERTRAIN VERIFICATION TEST. (Refer to 9 - ENGINE - STANDARD PROCEDURE)

No >> Go To 3

NOTE: Remove the jumper wire before continuing.

3. (C18) A/C PRESSURE SIGNAL CIRCUIT SHORTED TO BATTERY VOLTAGE

Turn the ignition off.

Disconnect the C1 FCM harness connector.

Ignition on, engine not running.

Measure the voltage on the (C18) A/C Pressure Signal circuit in the A/C Pressure Transducer harness connector.

Is there voltage present?

Yes >> Repair the short to battery voltage in the (C18) A/C Pressure Signal circuit.
Perform the POWERTRAIN VERIFICATION TEST. (Refer to 9 - ENGINE - STANDARD PROCEDURE)

No >> Go To 4

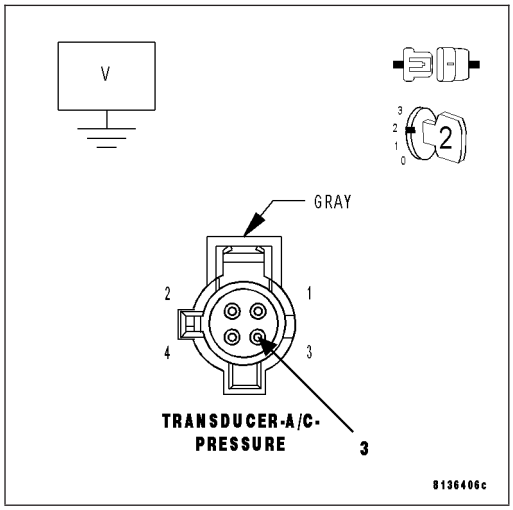

4. (C18) A/C PRESSURE SIGNAL CIRCUIT OPEN

Turn the ignition off.

Measure the resistance of the (C18) A/C Pressure Signal circuit from the A/C Pressure Transducer harness connector to the C1 FCM harness connector.

Is the resistance below 5.0 ohms?

Yes >> Go To 5

No >> Repair the open in the (C18) A/C Pressure Signal circuit.
Perform the POWERTRAIN VERIFICATION TEST. (Refer to 9 - ENGINE - STANDARD PROCEDURE)

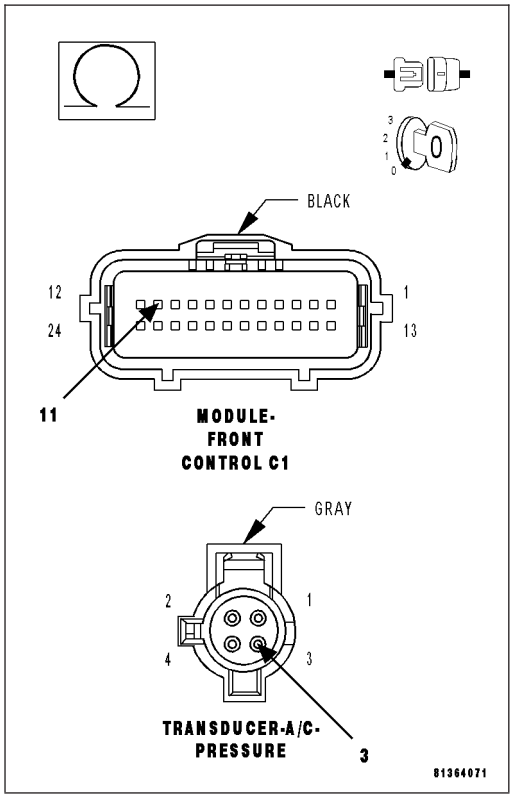

5. (C18) A/C PRESSURE SIGNAL CIRCUIT SHORTED TO THE (F891) 5-VOLT SUPPLY CIRCUIT

Measure the resistance between the (C18) A/C Pressure Signal circuit and the (F891) 5-volt Supply circuit in the A/C Pressure Transducer harness connector.

Is the resistance below 5.0 ohms?

Yes >> Repair the short between the (F891) 5-volt Supply circuit and the (C18) A/C Pressure Signal circuit.
Perform the POWERTRAIN VERIFICATION TEST. (Refer to 9 - ENGINE - STANDARD PROCEDURE)

No >> Go To 6

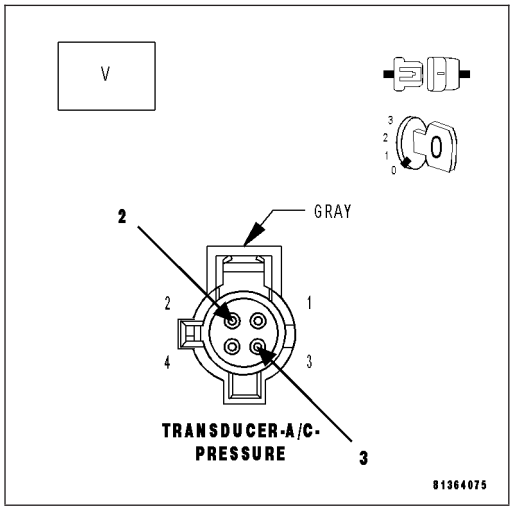

6. (C918) SENSOR GROUND CIRCUIT OPEN

Disconnect the C3 FCM harness connector.

Measure the resistance of the (C918) Sensor Ground circuit from the A/C Pressure Sensor harness connector to the C3 FCM harness connector.

Is the resistance below 5.0 ohms?

Yes >> Go To 7

No >> Repair the open in the (C918) Sensor Ground circuit
Perform the POWERTRAIN VERIFICATION TEST. (Refer to 9 - ENGINE - STANDARD PROCEDURE)

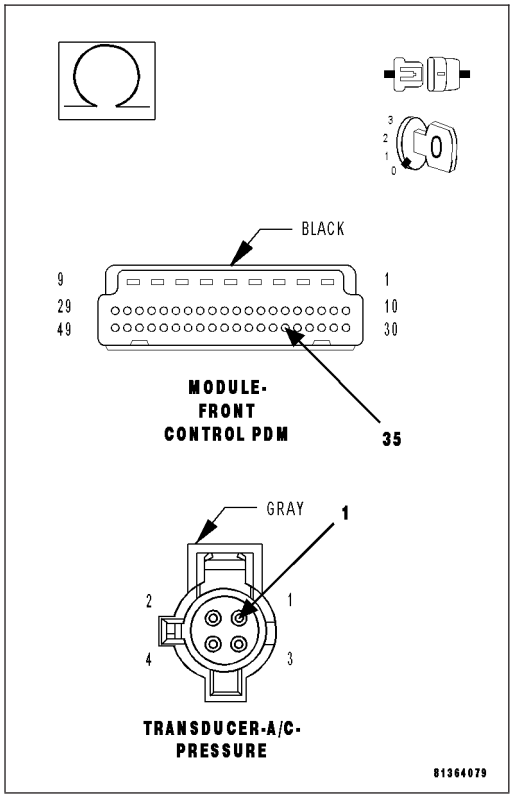

7. FRONT CONTROL MODULE

NOTE: Before continuing, check the PCM harness connector terminals for corrosion, damage, or terminal push out. Repair as necessary.
Using the schematics as a guide, inspect the wire harness and connectors. Pay particular attention to all Power and Ground circuits.

Were there any problems found?

Yes >> Repair as necessary.
Perform BODY VERIFICATION TEST-VER 1. (Refer to 8 - ELECTRICAL/ELECTRONIC CONTROL MODULES/FRONT CONTROL MODULE - DIAGNOSIS AND TESTING)

No >> Replace and program the Powertrain Control Module per Service Information.
Perform BODY VERIFICATION TEST - VER 1. (Refer to 8 - ELECTRICAL/ELECTRONIC CONTROL MODULES/FRONT CONTROL MODULE - DIAGNOSIS AND TESTING)

P0551-POWER STEERING PRESSURE SWITCH PERFORMANCE

For a complete wiring diagram **Refer to Section 8W**.

- **When Monitored:**
  With the ignition key on and engine running.
- **Set Condition:**
  With the vehicle above 40 m.p.h. for over 30 seconds, the power steering pressure switch remains open. Two Trip Fault. Three good trips to turn off the MIL.

Possible Causes
(K66) P/S SWITCH SIGNAL CIRCUIT OPEN
(K66) P/S SWITCH SIGNAL CIRCUIT SHORTED TO GROUND
(Z988) GROUND CIRCUIT OPEN
POWER STEERING PRESSURE SWITCH
PCM

Always perform the Pre-Diagnostic Troubleshooting procedure before proceeding. (Refer to 9 - ENGINE - DIAGNOSIS AND TESTING).

Diagnostic Test

1. ACTIVE DTC

Ignition on, engine not running.

With a scan tool, read DTCs.

Is the DTC active at this time?

Yes >> Go To 2

No >> Refer to the INTERMITTENT CONDITION Diagnostic Procedure.
Perform the POWERTRAIN VERIFICATION TEST. (Refer to 9 - ENGINE - STANDARD PROCEDURE)

2. POWER STEERING PRESSURE SWITCH

Turn the ignition off.

Disconnect the Power Steering Pressure Switch harness connector.

Ignition on, engine not running.

Connect a jumper wire to the (K66) P/S Switch Signal circuit at the Power Steering Pressure Switch harness connector.

Use the scan tool to monitor the Power Steering Pressure Switch status.

Touch the other end of the jumper wire to the (Z988) Ground circuit at the Power Steering Pressure Switch harness connector several times.

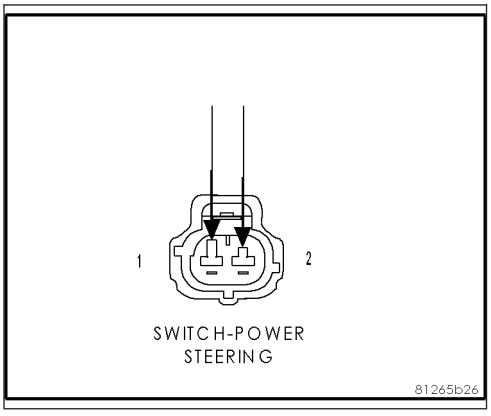

Did the Power Steering Pressure Switch status change from High to Low when connecting and disconnecting the jumper wire?

Yes >> Replace the Power Steering Pressure Switch.
Perform the POWERTRAIN VERIFICATION TEST. (Refer to 9 - ENGINE - STANDARD PROCEDURE)

No >> Go To 3

NOTE: Remove the jumper wire before continuing.

3. (K66) P/S SWITCH SIGNAL CIRCUIT HIGH RESISTANCE

Turn the ignition off.

Disconnect the PCM harness connector.

CAUTION: CAUTION: Do not probe the PCM harness connectors. Probing the PCM harness connectors will damage the PCM terminals resulting in poor terminal to pin connection. Install Miller Special Tool #8815 along with the 8815-1 to perform the diagnosis.

Using a voltmeter perform a voltage drop test. Backprobe the (K66) P/S Switch Signal circuit at the P/S Switch Sensor harness connector to the appropriate terminal of the special tool #8815. Ensure the voltmeter leads are connected with the circuit's correct polarity.

WARNING: When the engine is operating, do not stand in direct line with the fan. Do not put your hands near the pulleys, belts, or fan. Do not wear loose clothing. Failure to follow these instructions can result in personal injury or death.

Start the engine and allow it to reach normal operating temperature.

Monitor the voltmeter.

Is the voltage below 0.5 volts?

Yes >> Go To 4

No >> Repair the high resistance in the (K66) P/S Switch Signal circuit.
Perform the POWERTRAIN VERIFICATION TEST. (Refer to 9 - ENGINE - STANDARD PROCEDURE)

4. (Z988) GROUND CIRCUIT OPEN

Turn the ignition off.

Using a 12-volt test light connected to battery voltage, probe the (Z988) Ground circuit in the Power Steering Pressure Switch connector.

NOTE: The test light should be illuminated and bright. Compare the brightness to that of a direct connection to the battery.

Does the test light illuminate brightly?

Yes >> Go To 5

No >> Repair the (Z988) Ground circuit.
Perform the POWERTRAIN VERIFICATION TEST. (Refer to 9 - ENGINE - STANDARD PROCEDURE)

5. PCM

NOTE: Before continuing, check the PCM harness connector terminals for corrosion, damage, or terminal push out. Repair as necessary.

Using the schematics as a guide, inspect the wire harness and connectors. Pay particular attention to all Power and Ground circuits.

Were there any problems found?

Yes >> Repair as necessary.
Perform the POWERTRAIN VERIFICATION TEST. (Refer to 9 - ENGINE - STANDARD PROCEDURE)

No >> Replace and program the Powertrain Control Module per Service Information.
Perform the POWERTRAIN VERIFICATION TEST. (Refer to 9 - ENGINE - STANDARD PROCEDURE)

P0562-BATTERY VOLTAGE LOW

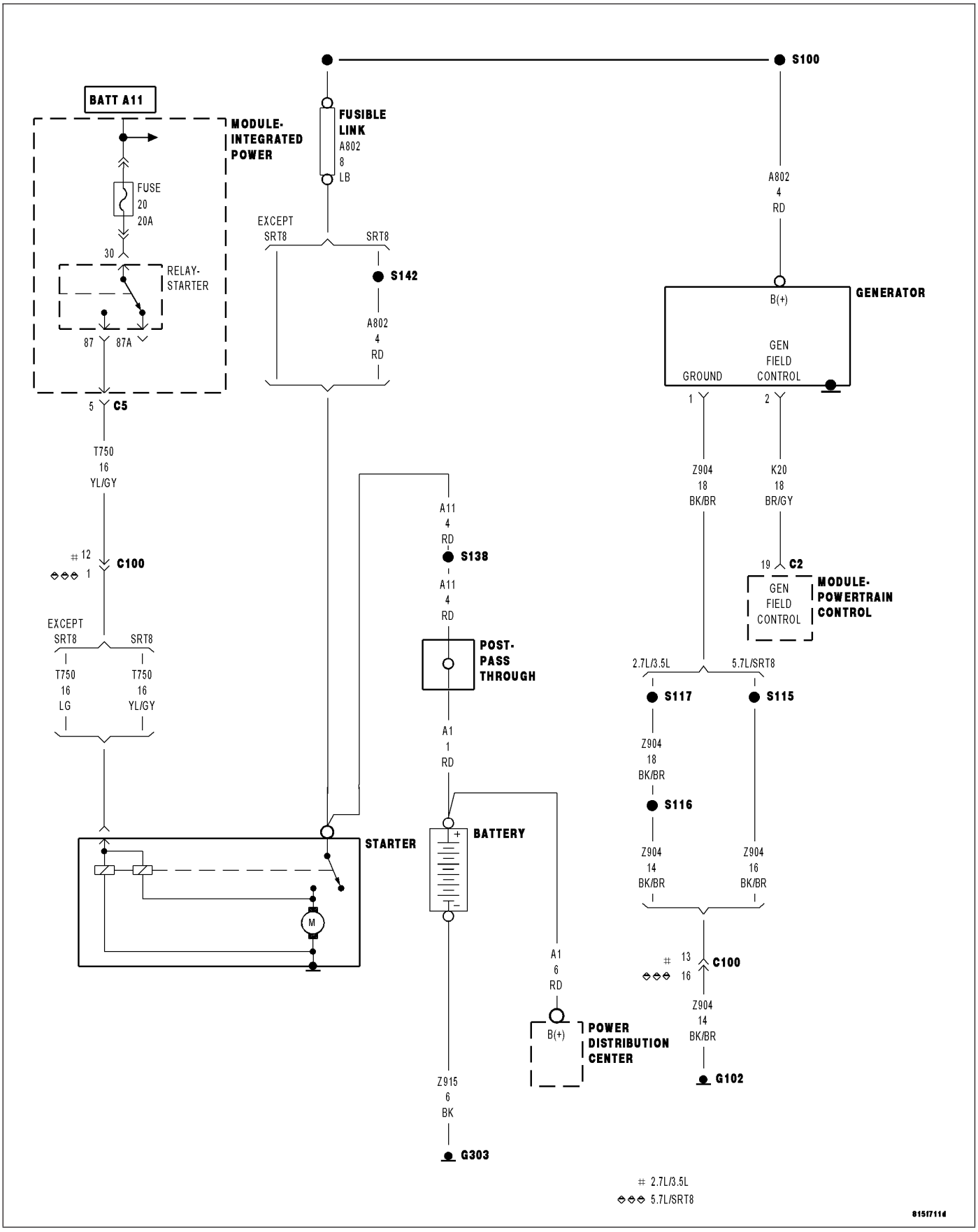

For a complete wiring diagram **Refer to Section 8W**.

- **When Monitored:**
  The engine running. The engine speed greater than 1000 RPM.
- **Set Condition:**
  Battery voltage is 1 volt less than desired voltage for a set period of time. One Trip Fault. ETC light is flashing.

Possible Causes
RESISTANCE IN THE (A1) BATTERY POSITIVE CIRCUIT (A802 FUSE LINK CIRCUIT)
RESISTANCE IN THE GENERATOR CASE GROUND
GENERATOR OPERATION
(K20) GENERATOR FIELD CONTROL CIRCUIT OPEN
(K20) GENERATOR FIELD CONTROL CIRCUIT SHORTED TO GROUND
(Z20) GROUND CIRCUIT OPEN
PCM

Always perform the Pre-Diagnostic Troubleshooting procedure before proceeding. (Refer to 9 - ENGINE - DIAGNOSIS AND TESTING).

Diagnostic Test

1. ACTIVE DTC

NOTE: Make sure the Battery is in good condition. Using the Midtronics Battery Tester, test the Battery before continuing.

NOTE: Inspect the vehicle for after market accessories that may exceed the Generator System output.
Turn the ignition off.

NOTE: Make sure the generator drive belt is in good operating condition.

NOTE: Inspect the fuses in the IPM. If an open fuse is found, use the wire diagram/schematic as a guide, inspect the wiring and connectors for damage.
Ignition on, engine not running.
With the scan tool, read DTCs.

Is the DTC active at this time?

Yes >> Go To 2

No >> Refer to the INTERMITTENT CONDITION Diagnostic Procedure.
Perform the POWERTRAIN VERIFICATION TEST. (Refer to 9 - ENGINE - STANDARD PROCEDURE)

2. (A1) B+ CIRCUIT HIGH RESISTANCE

WARNING: When the engine is operating, do not stand in direct line with the fan. Do not put your hands near the pulleys, belts, or fan. Do not wear loose clothing. Failure to follow these instructions can result in personal injury or death.

NOTE: Make sure all wires are clear of the engine's moving parts.
Measure the voltage between the (A802) B+ Terminal at the Generator and the (A1)Battery + Post.

Start the engine.

Is the voltage above 0.4 of a volt?

Yes >> Repair the excessive resistance in the (A802/A11/A1) B+ circuit between the Generator and Battery.

NOTE: Inspect the (A802) fuse link circuit and the Post Pass Through connection, ensure proper operation.

Perform the POWERTRAIN VERIFICATION TEST. (Refer to 9 - ENGINE - STANDARD PROCEDURE)

No >> Go To 3

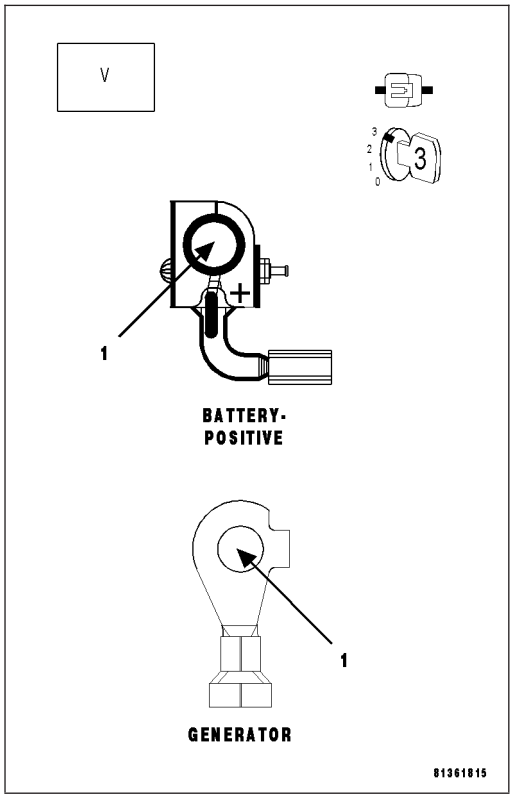

3. GENERATOR CASE GROUND HIGH RESISTANCE

Ignition on, engine not running.

Start the engine.

Allow the engine to reach normal operating temperature.

NOTE: Make sure all wires are clear of the engine's moving parts.
Measure the voltage between the Generator case and Battery ground post.

Is the voltage above 0.1 of a volt?

Yes >> Repair excessive resistance in the Generator Ground between the Generator Case and Battery ground side.

Perform the POWERTRAIN VERIFICATION TEST. (Refer to 9 - ENGINE - STANDARD PROCEDURE)

No >> Go To 4

4. GENERATOR OPERATION

Turn the ignition off.

Disconnect the Generator Field harness connector.

Using a 12-volt test light, jump it across the Generator Field harness connector.

Ignition on, engine not running.

With the scan tool, actuate the Gen Field Control circuit.

Does the test light illuminate brightly and flash on and off?

Yes >> Replace the Generator.
Perform the POWERTRAIN VERIFICATION TEST. (Refer to 9 - ENGINE - STANDARD PROCEDURE)

No >> Go To 5

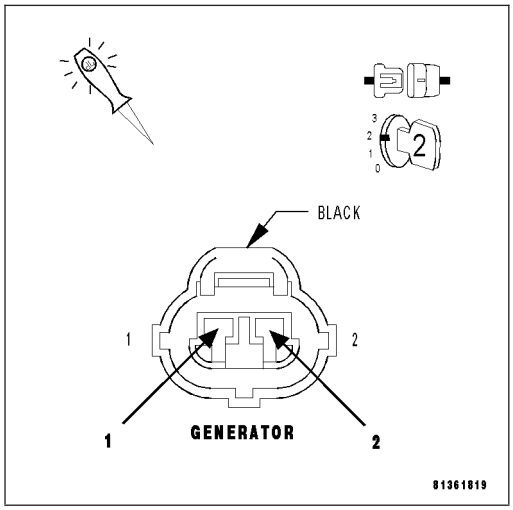

5. (K20) GENERATOR FIELD CONTROL CIRCUIT OPEN

Turn the ignition off.

Disconnect the PCM harness connectors.

CAUTION: Do not probe the PCM harness connectors. Probing the PCM harness connectors will damage the PCM terminals resulting in poor terminal to pin connection. Install Miller Special Tool #8815 to perform diagnosis.

Measure the resistance of the (K20) Gen Field Control circuit from the Generator harness connector to the appropriate terminal of the special tool #8815.

Is the resistance below 5.0 ohms?

Yes >> Go To 6

No >> Repair the open in the (K20) Gen Field Control circuit.
Perform the POWERTRAIN VERIFICATION TEST. (Refer to 9 - ENGINE - STANDARD PROCEDURE)

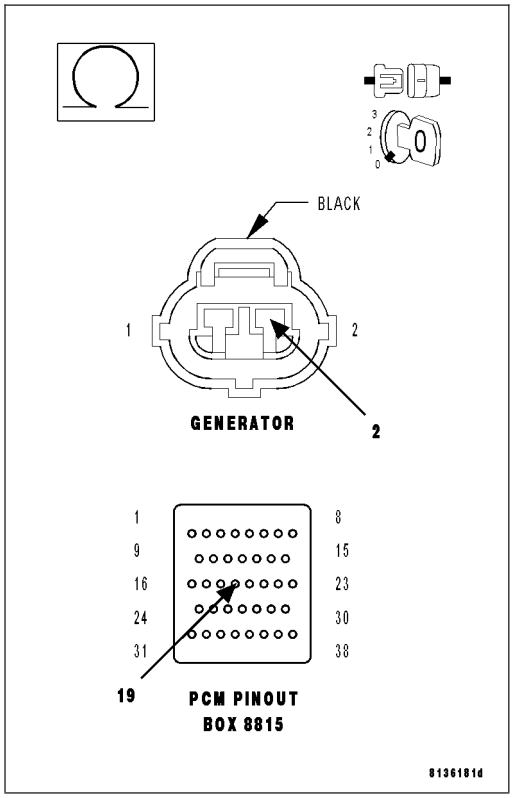

6. (K20) GENERATOR FIELD CONTROL CIRCUIT SHORTED TO GROUND

Measure the resistance between the (K20) Gen Field Control circuit in the Generator Field harness connector and ground.

Is the resistance below 100 ohms?

Yes >> Repair the short to ground in the (K20) Gen Field Control circuit.
Perform the POWERTRAIN VERIFICATION TEST. (Refer to 9 - ENGINE - STANDARD PROCEDURE)

No >> Go To 7

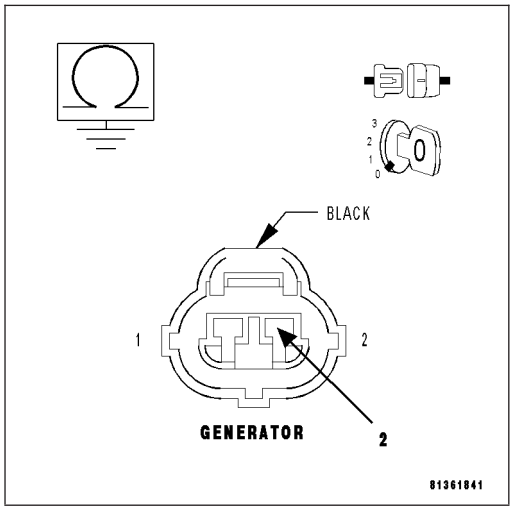

7. (Z20) GROUND CIRCUIT OPEN

Measure the resistance between the (Z20) Ground circuit in the Generator Field harness connector and ground.

Is the resistance below 5.0 ohms?

Yes >> Go To 8

No >> Repair the open in the (Z20) Ground circuit.
Perform the POWERTRAIN VERIFICATION TEST. (Refer to 9 - ENGINE - STANDARD PROCEDURE)

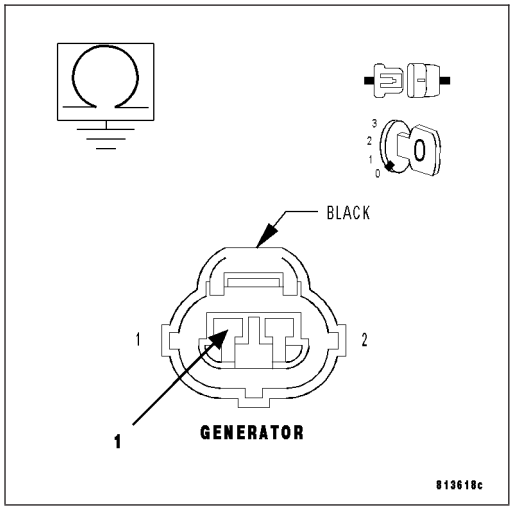

8. PCM

NOTE: Before continuing, check the PCM harness connector terminals for corrosion, damage, or terminal push out. Repair as necessary.
Using the schematics as a guide, inspect the wire harness and connectors. Pay particular attention to all Power and Ground circuits.

Were there any problems found?

Yes >> Repair as necessary.
Perform the POWERTRAIN VERIFICATION TEST. (Refer to 9 - ENGINE - STANDARD PROCEDURE)

No >> Replace and program the Powertrain Control Module per Service Information.
Perform the POWERTRAIN VERIFICATION TEST. (Refer to 9 - ENGINE - STANDARD PROCEDURE)

P0563-BATTERY VOLTAGE HIGH

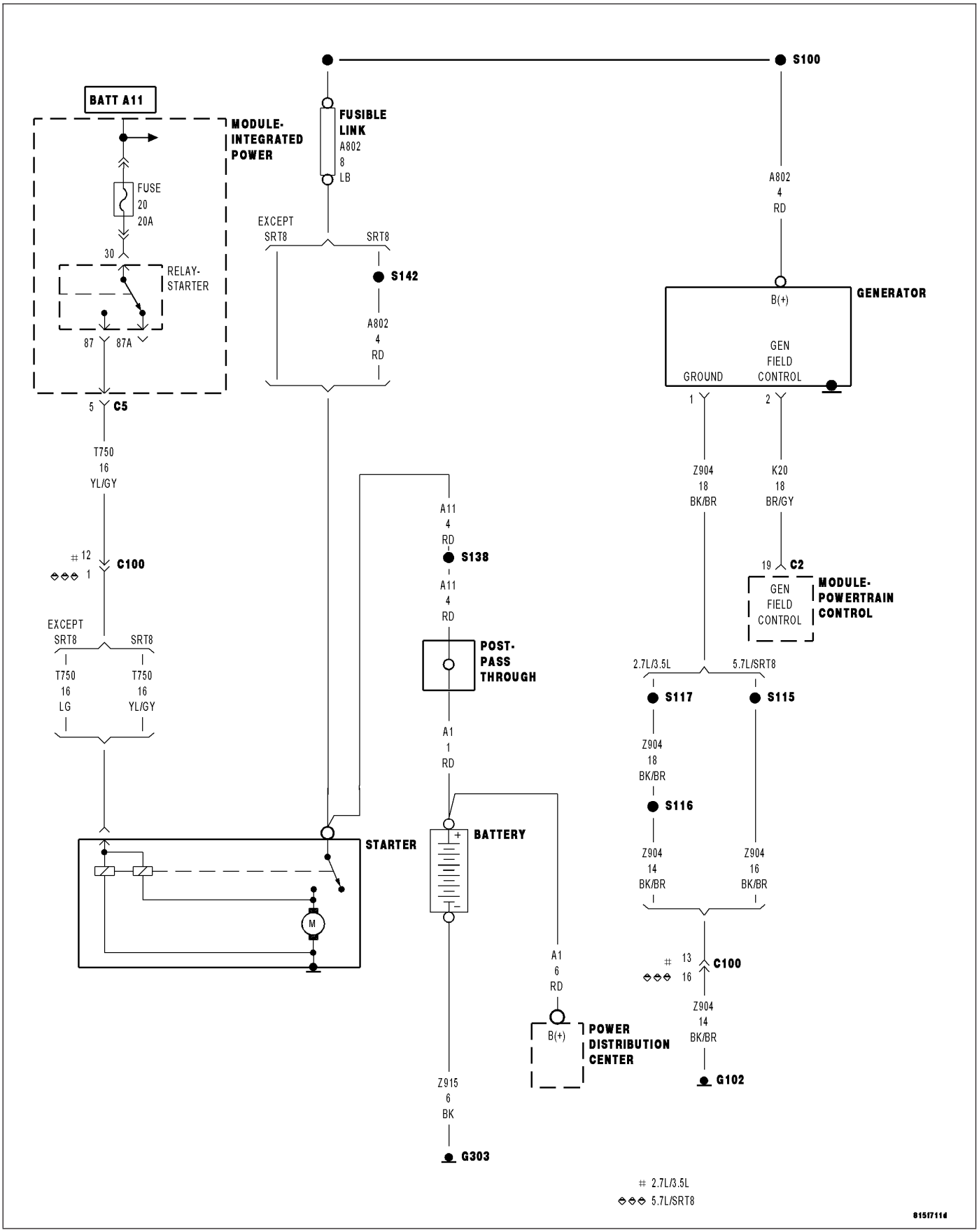

For a complete wiring diagram **Refer to Section 8W**.

- **When Monitored:**
  With the ignition on. Engine RPM greater than 1000 RPM. With no other charging system codes set.
- **Set Condition:**
  Battery voltage is 1 volt greater than desired voltage. Battery voltage greater than 15.75 volts. One Trip Fault. Three good trips to turn off the MIL.

Possible Causes
(K20) GENERATOR FIELD CONTROL CIRCUIT SHORTED TO BATTERY VOLTAGE
GENERATOR
PCM

Always perform the Pre-Diagnostic Troubleshooting procedure before proceeding. (Refer to 9 - ENGINE - DIAGNOSIS AND TESTING).

Diagnostic Test

1. ACTIVE DTC

NOTE: Make sure the Battery is in good condition. Using the Midtronics Battery Tester, test the Battery before continuing.

NOTE: Inspect the vehicle for after market accessories that may exceed the Generator System output.
Turn the ignition off.

NOTE: Make sure the generator drive belt is in good operating condition.

NOTE: Inspect the fuses in the IPM. If a fuse is open use the wire diagram/schematic as a guide, inspect the wiring and connectors for damage.
Ignition on, engine not running.
With a scan tool, read DTCs.

Is the DTC active at this time?

Yes >> Go To 2

No >> Refer to the INTERMITTENT CONDITION Diagnostic Procedure.
Perform the POWERTRAIN VERIFICATION TEST. (Refer to 9 - ENGINE - STANDARD PROCEDURE)

2. GENERATOR OPERATION

Turn the ignition off.
Disconnect the Generator Field harness connector.
Using a 12-volt test light, jump across the Generator Field harness connector.
Ignition on, engine not running.
With the scan tool, actuate the Generator Field Driver.

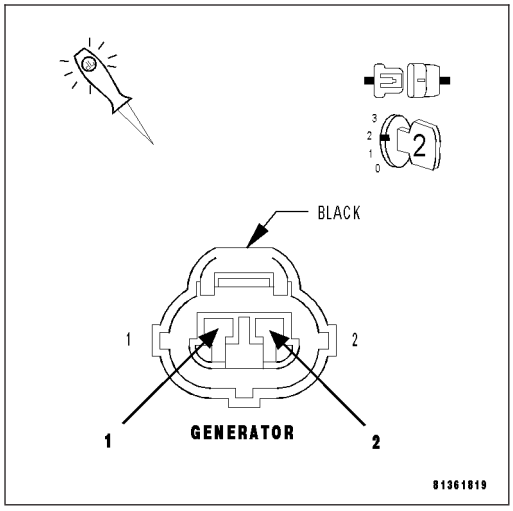

Does the test light illuminate brightly and flash on and off?

Yes >> Replace the Generator.
Perform the POWERTRAIN VERIFICATION TEST. (Refer to 9 - ENGINE - STANDARD PROCEDURE)

No >> Go To 3

3. (K20) FIELD CIRCUIT SHORTED BATTERY VOLTAGE

Turn the ignition off.

Disconnect the PCM harness connectors.

Ignition on, engine not running.

Measure the voltage on the (K20) Gen Field Control circuit at the Generator Field harness connector.

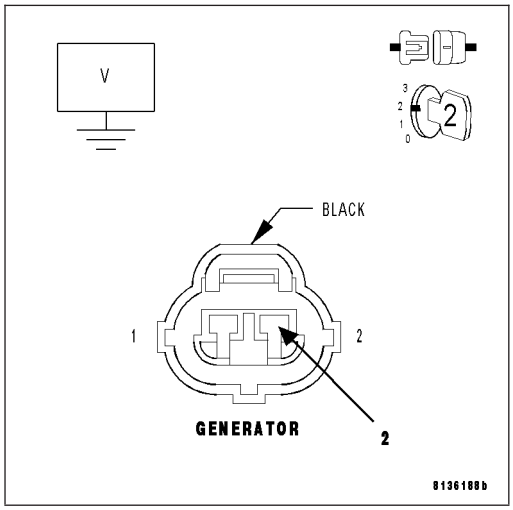

Is the voltage above 1.0 volt?

Yes >> Repair the short to battery voltage in the (K20) Gen Field Control circuit.
Perform the POWERTRAIN VERIFICATION TEST. (Refer to 9 - ENGINE - STANDARD PROCEDURE)

No >> Go To 4

4. PCM

NOTE: Before continuing, check the PCM harness connector terminals for corrosion, damage, or terminal push out. Repair as necessary.

Using the schematics as a guide, inspect the wire harness and connectors. Pay particular attention to all Power and Ground circuits.

Were there any problems found?

Yes >> Repair as necessary.
Perform the POWERTRAIN VERIFICATION TEST. (Refer to 9 - ENGINE - STANDARD PROCEDURE)

No >> Replace and program the Powertrain Control Module per Service Information.
Perform the POWERTRAIN VERIFICATION TEST. (Refer to 9 - ENGINE - STANDARD PROCEDURE)

P0571-BRAKE SWITCH 1 PERFORMANCE

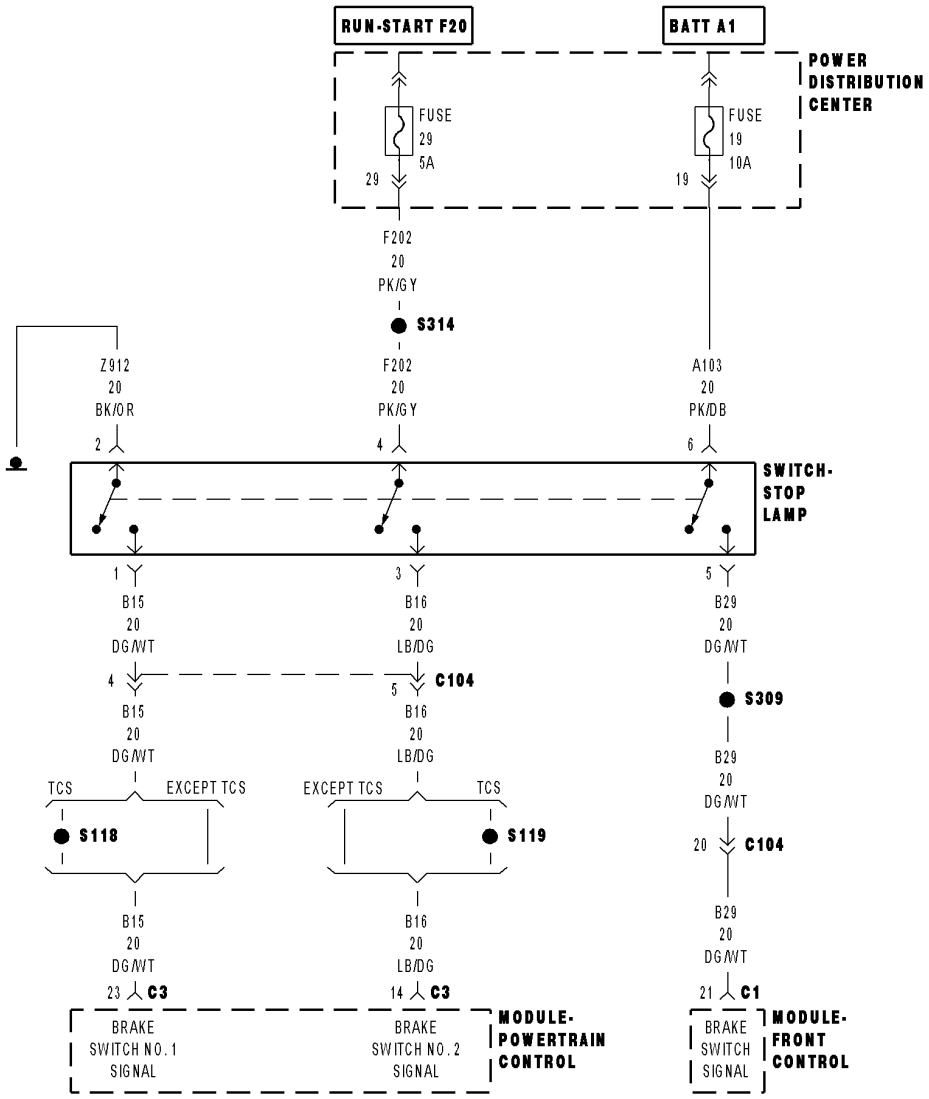

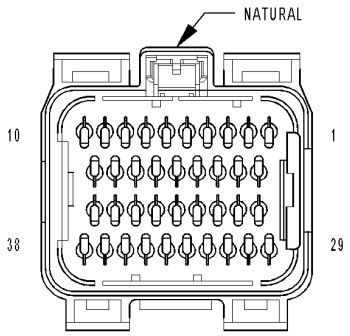

MODULE-POWERTRAIN CONTROL C3

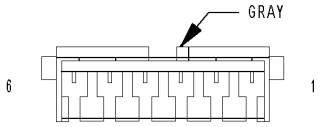

SWITCH-STOP LAMP

8131bdde

For a complete wiring diagram **Refer to Section 8W**.

- **When Monitored:**
  Ignition on.
- **Set Condition:**
  If the output of Brake Switch No.1 to the PCM looks like it is not applied, while Brake Switch No.2 circuit is applied the fault will mature in 60ms. One Trip Fault.

Possible Causes
(B15) BRAKE SWITCH NO.1 SIGNAL SHORTED TO GROUND
(B15) BRAKE SWITCH NO.1 SIGNAL OPEN
(B16) BRAKE SWITCH NO.2 SIGNAL SHORTED TO GROUND
(B16) BRAKE SWITCH NO.2 SIGNAL OPEN
(Z912) GROUND CIRCUIT OPEN
(F202) FUSED IGNITION SWITCH OUTPUT OPEN
STOP LAMP SWITCH
PCM

Always perform the Pre-Diagnostic Troubleshooting procedure before proceeding. (Refer to 9 - ENGINE - DIAGNOSIS AND TESTING).

Diagnostic Test

1. ACTIVE DTC

NOTE: Make sure the Stop Lamp Switch is properly adjusted before continuing.

NOTE: Make sure the Stop Lamp Switch is properly wired, such as (B15) Brake Switch No.1 and (B16) Brake Lamp Switch No.2 circuits are not switched at the harness connector.

Ignition on, engine not running.

With a scan tool, read DTCs.

Is the DTC active at this time?

Yes >> Go To 2

No >> Refer to the INTERMITTENT CONDITION Diagnostic Procedure.
Perform the POWERTRAIN VERIFICATION TEST. (Refer to 9 - ENGINE - STANDARD PROCEDURE)

2. (B15) BRAKE SWITCH NO.1 SIGNAL SHORTED TO GROUND

Turn the ignition off.

Disconnect the Stop Lamp Switch harness connector.

Disconnect the PCM harness connectors.

Measure the resistance between the (B15) Brake Switch No.1 Signal circuit in the Stop Lamp Switch harness connector and ground.

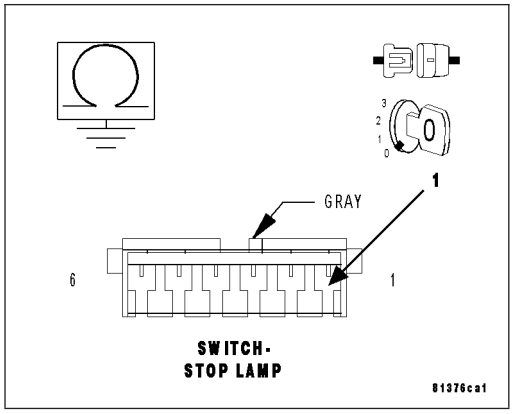

Is the resistance below 100 ohms?

Yes >> Repair the short to ground in the (B15) Brake Switch No.1 Signal circuit.
Perform the POWERTRAIN VERIFICATION TEST. (Refer to 9 - ENGINE - STANDARD PROCEDURE)

No >> Go To 3

3. (B15) BRAKE SWITCH NO.1 SIGNAL OPEN

CAUTION: Do not probe the PCM harness connectors. Probing the PCM harness connectors will damage the PCM terminals resulting in poor terminal to pin connection. Install Miller Special Tool #8815 to perform diagnosis.

Measure the resistance of the (B15) Brake Switch No.1 Signal circuit between the Stop Lamp Switch harness connector and the appropriate terminal of the special tool #8815.

Is the resistance below 5.0 ohms?

Yes >> Go To 4

No >> Repair the open in the (B15) Brake Switch No.1 Signal circuit.

Perform the POWERTRAIN VERIFICATION TEST. (Refer to 9 - ENGINE - STANDARD PROCEDURE)

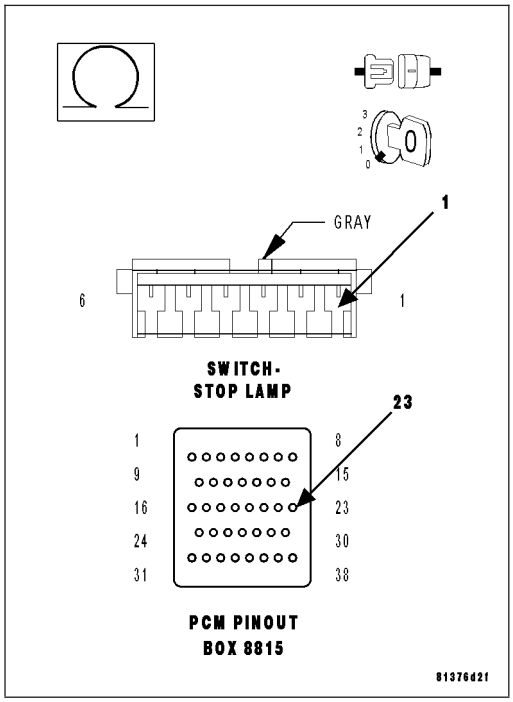

4. (B16) BRAKE SWITCH NO.2 SIGNAL SHORTED TO GROUND

Turn the ignition off.

Disconnect the Stop Lamp Switch harness connector.

Disconnect the PCM harness connectors.

Measure the resistance between the (B16) Brake Switch No.2 Signal circuit in the Stop Lamp Switch harness connector and ground.

Is the resistance below 100 ohms?

Yes >> Repair the short to ground in the (B16) Brake Switch No.2 Signal circuit.

Perform the POWERTRAIN VERIFICATION TEST. (Refer to 9 - ENGINE - STANDARD PROCEDURE)

No >> Go To 5

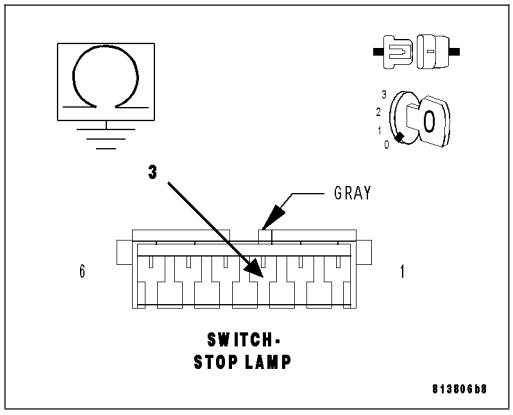

5. (B16) BRAKE SWITCH NO.2 SIGNAL OPEN

CAUTION: Do not probe the PCM harness connectors. Probing the PCM harness connectors will damage the PCM terminals resulting in poor terminal to pin connection. Install Miller Special Tool #8815 to perform diagnosis.

Measure the resistance of the (B16) Brake Switch No.2 Signal circuit between the Stop Lamp Switch harness connector and the appropriate terminal of the special tool #8815.

Is the resistance below 5.0 ohms?

Yes >> Go To 6

No >> Repair the open in the (B16) Brake Switch No.2 Signal circuit.

Perform the POWERTRAIN VERIFICATION TEST. (Refer to 9 - ENGINE - STANDARD PROCEDURE)

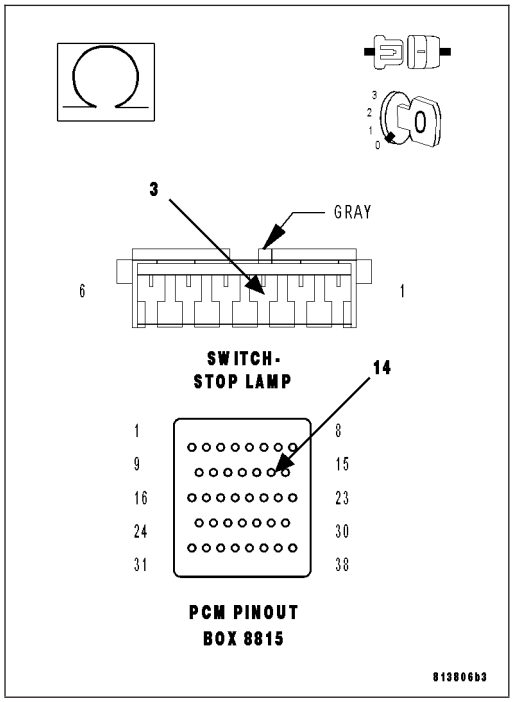

6. (F202) FUSED IGNITION SWITCH OUTPUT (RUN-START) OPEN

Reconnect the PCM harness connector.

Turn the ignition on.

Using a 12–volt test light connected to ground, probe the (F202) Fused Ignition Switch Output circuit in the Stop Lamp Switch harness connector.

Does the test light illuminate brightly?

Yes >> Go To 7

No >> Repair the open in the (F202) Fused Ignition Switch Output circuit.

Perform the POWERTRAIN VERIFICATION TEST. (Refer to 9 - ENGINE - STANDARD PROCEDURE)

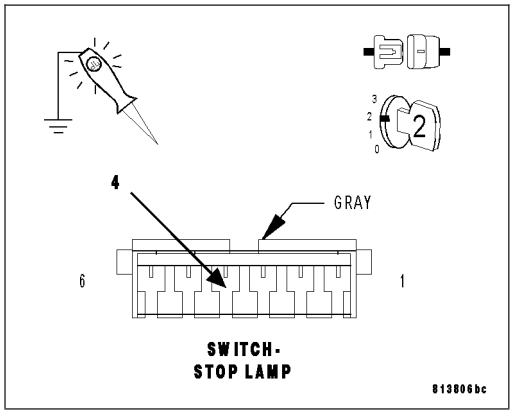

7. (Z912) GROUND CIRCUIT OPEN

Using the 12–Volt test light connected to battery voltage, probe the (Z912) Ground circuit in the Stop Lamp Switch harness connector.

Does the test light illuminate brightly?

Yes >> Go To 8

No >> Repair the open in the (Z912) Ground circuit.

Perform the POWERTRAIN VERIFICATION TEST. (Refer to 9 - ENGINE - STANDARD PROCEDURE)

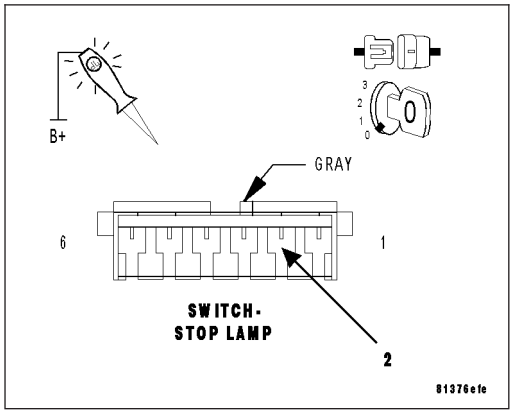

8. STOP LAMP SWITCH

Remove the Stop Lamp Switch.

Measure the resistance between terminals 1 and 2 of the Stop Lamp Switch.

Next, measure the resistance between terminals 3 and 4 of the Stop Lamp Switch.

Press and release the Stop Lamp Switch while monitoring the ohmmeter during both of the above steps.

Does the resistance change from below 5.0 ohms to an open circuit for one or both of the measurements taken?

Yes >> Go To 9

No >> Replace the Stop Lamp Switch.
Perform the POWERTRAIN VERIFICATION TEST. (Refer to 9 - ENGINE - STANDARD PROCEDURE)

9. PCM

NOTE: Before continuing, check the PCM harness connector terminals for corrosion, damage, or terminal push out. Repair as necessary.

Using the schematics as a guide, inspect the wire harness and connectors. Pay particular attention to all Power and Ground circuits.

Were there any problems found?

Yes >> Repair as necessary.
Perform the POWERTRAIN VERIFICATION TEST. (Refer to 9 - ENGINE - STANDARD PROCEDURE)

No >> Replace and program the Powertrain Control Module per Service Information.
Perform the POWERTRAIN VERIFICATION TEST. (Refer to 9 - ENGINE - STANDARD PROCEDURE)

P0572-BRAKE SWITCH 1 STUCK ON

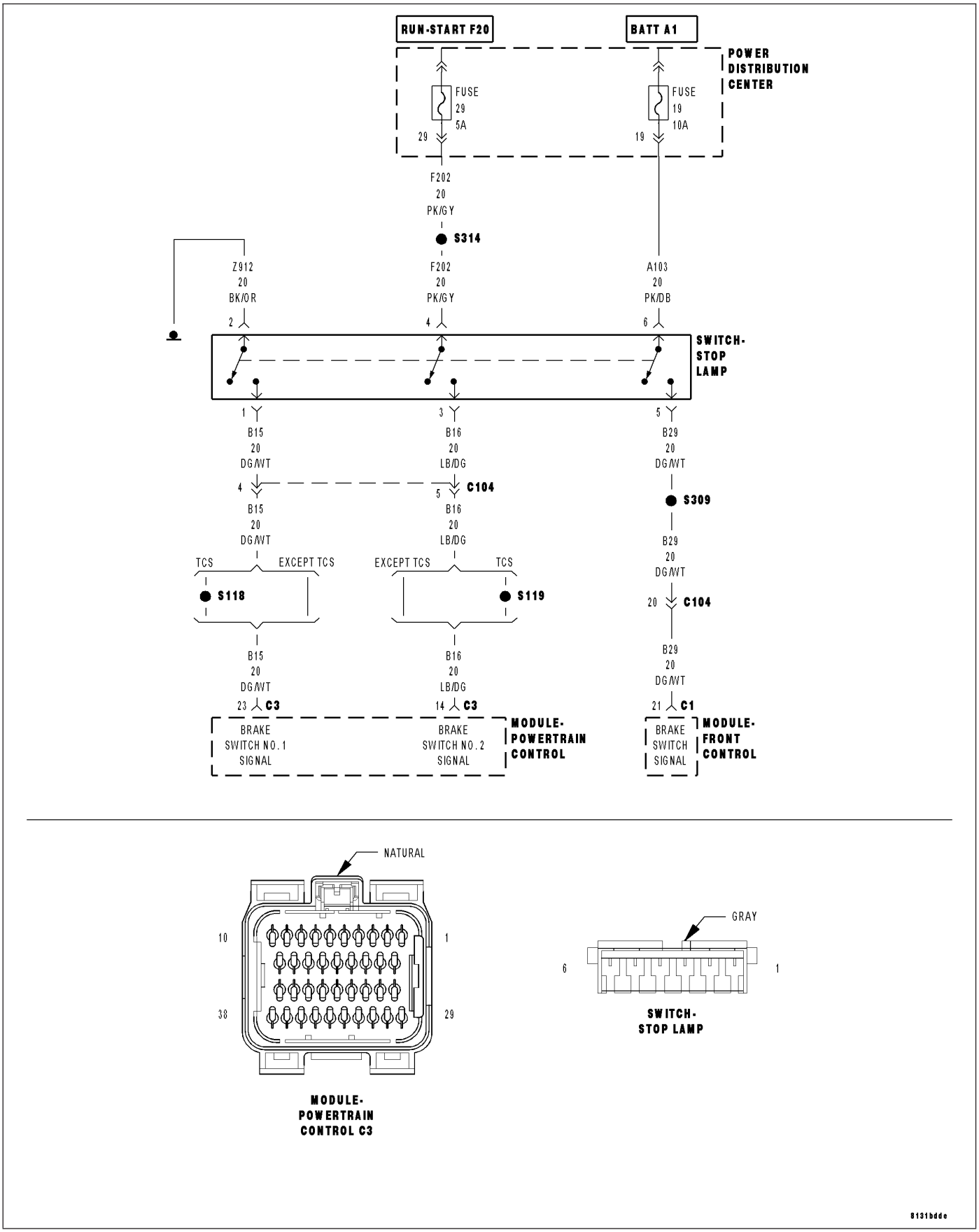

For a complete wiring diagram **Refer to Section 8W**.

- **When Monitored:**
  Ignition on.
- **Set Condition:**
  The PCM recognizes the Brake Switch #1 is mechanically stuck in the low/on position. One Trip Fault.

Possible Causes
(B15) BRAKE SWITCH NO.1 SIGNAL SHORTED TO GROUND
(B16) BRAKE SWITCH NO.2 SIGNAL OPEN
(F202) FUSED IGNITION SWITCH OUTPUT OPEN
STOP LAMP SWITCH
PCM

Always perform the Pre-Diagnostic Troubleshooting procedure before proceeding. (Refer to 9 - ENGINE - DIAGNOSIS AND TESTING).

Diagnostic Test

1. ACTIVE DTC

NOTE: Make sure the Stop Lamp Switch is properly adjusted before continuing.

NOTE: Make sure the Stop Lamp Switch is properly wired, such as (B15) Brake Switch No.1 and (B16) Brake Lamp Switch No.2 circuit are not switched at the harness connector.

Ignition on, engine not running.

With a scan tool, read DTCs.

Is the DTC active at this time?

Yes >> Go To 2

No >> Refer to the INTERMITTENT CONDITION Diagnostic Procedure.
Perform the POWERTRAIN VERIFICATION TEST. (Refer to 9 - ENGINE - STANDARD PROCEDURE)

2. (B15) BRAKE SWITCH NO.1 SIGNAL SHORTED TO GROUND

Turn the ignition off.

Disconnect the Stop Lamp Switch harness connector.

Disconnect the PCM harness connectors.

Measure the resistance between ground and the (B15) Brake Switch No.1 Signal circuit in the Stop Lamp Switch harness connector.

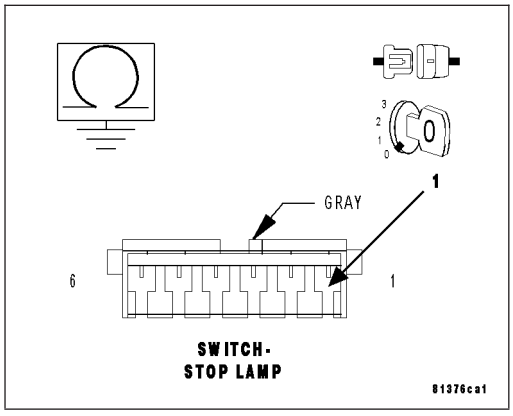

Is the resistance below 100 ohms?

Yes >> Repair the short to ground in the (B15) Brake Switch No.1 Signal circuit.
Perform the POWERTRAIN VERIFICATION TEST. (Refer to 9 - ENGINE - STANDARD PROCEDURE)

No >> Go To 3

3. (B16) BRAKE SWITCH NO.2 SIGNAL OPEN

CAUTION: Do not probe the PCM harness connectors. Probing the PCM harness connectors will damage the PCM terminals resulting in poor terminal to pin connection. Install Miller Special Tool #8815 to perform diagnosis.

Measure the resistance of the (B16) Brake Switch No.2 Signal circuit from the Stop Lamp Switch harness connector and the appropriate terminal of the special tool #8815.

Is the resistance below 5.0 ohms?

Yes >> Go To 4

No >> Repair the open in the (B16) Brake Switch No.2 Signal circuit.

Perform the POWERTRAIN VERIFICATION TEST. (Refer to 9 - ENGINE - STANDARD PROCEDURE)

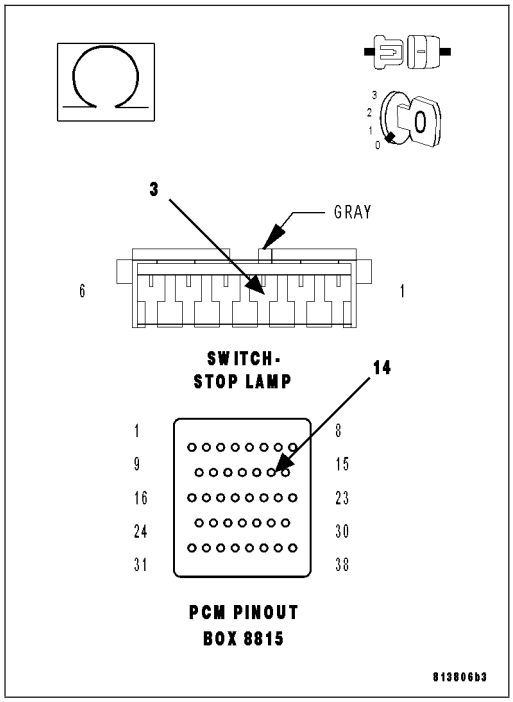

4. (B16) BRAKE SWITCH NO.2 SIGNAL SHORT TO VOLTAGE

Turn the ignition on.

Measure the voltage of the (B16) Brake Switch No.2 Signal circuit in the Stop Lamp Switch harness connector.

Does the voltmeter indicate voltage present?

Yes >> Repair the short to voltage in the (B16) Brake Switch No.2 circuit.

Perform the POWERTRAIN VERIFICATION TEST. (Refer to 9 - ENGINE - STANDARD PROCEDURE)

No >> Go To 5

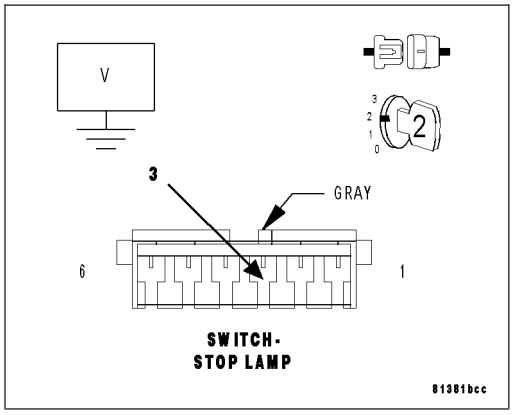

5. STOP LAMP SWITCH

Remove the Stop Lamp Switch.

Measure the resistance between terminals 1 and 2 of the Stop Lamp Switch.

Next, measure the resistance between terminals 3 and 4 of the Stop Lamp Switch.

Apply and release the brake pedal switch while monitoring the ohmmeter during both of the above steps.

Does the resistance change from below 5.0 ohms to an open circuit for one or both of the measurements taken?

Yes >> Go To 6

No >> Replace the Stop Lamp Switch.

Perform the POWERTRAIN VERIFICATION TEST. (Refer to 9 - ENGINE - STANDARD PROCEDURE)

6. PCM

NOTE: Before continuing, check the PCM harness connector terminals for corrosion, damage, or terminal push out. Repair as necessary.
Using the schematics as a guide, inspect the wire harness and connectors. Pay particular attention to all Power and Ground circuits.

Were there any problems found?

Yes >> Repair as necessary.
Perform the POWERTRAIN VERIFICATION TEST. (Refer to 9 - ENGINE - STANDARD PROCEDURE)

No >> Replace and program the Powertrain Control Module per Service Information.
Perform the POWERTRAIN VERIFICATION TEST. (Refer to 9 - ENGINE - STANDARD PROCEDURE)

P0573-BRAKE SWITCH 1 STUCK OFF

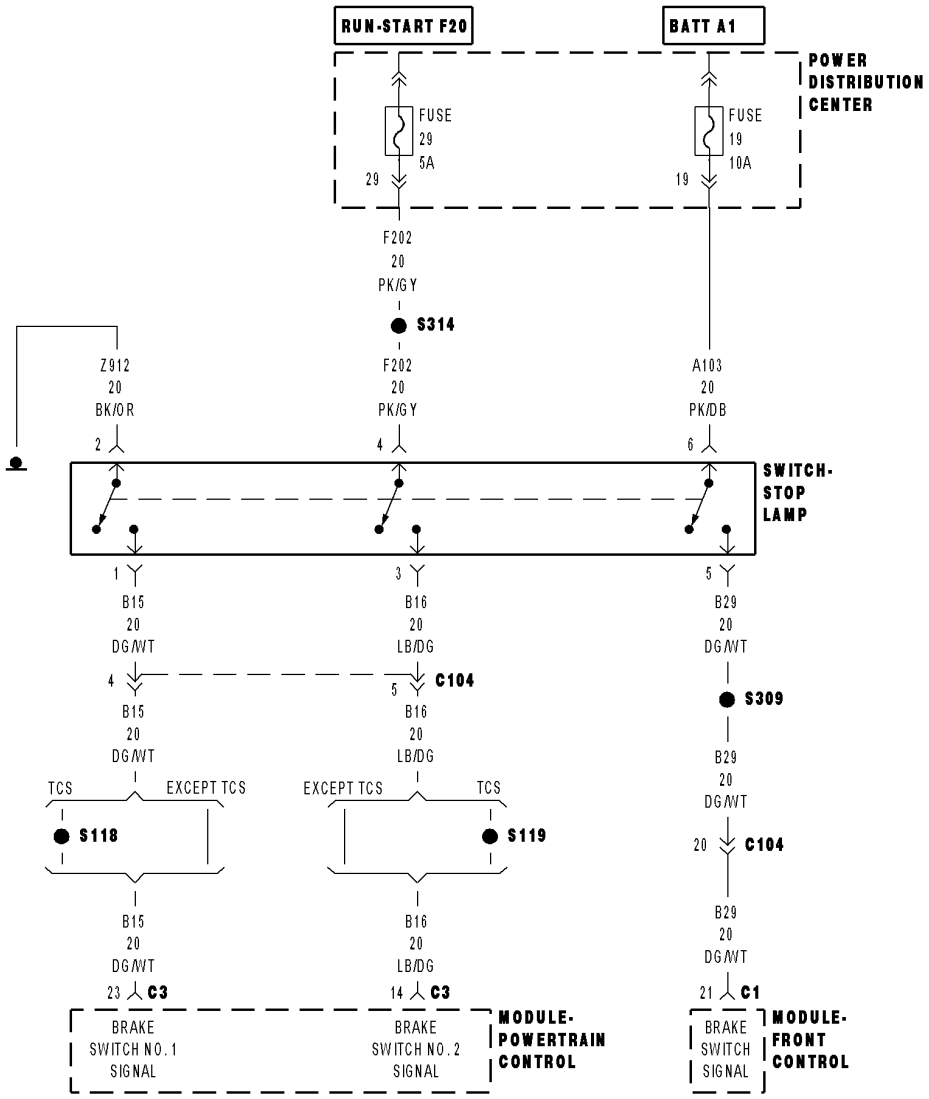

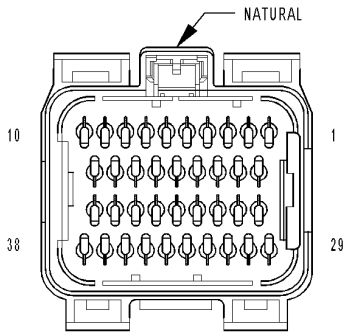

MODULE-POWERTRAIN CONTROL C3

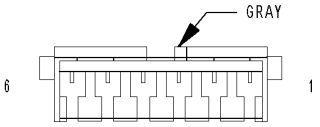

SWITCH-STOP LAMP

8131bdde

For a complete wiring diagram **Refer to Section 8W**.

- **When Monitored:**
  Ignition on.
- **Set Condition:**
  The PCM recognizes Brake Switch No.1 is stuck in the Off/high position. One Trip Fault.

Possible Causes
(B15) BRAKE SWITCH NO.1 SIGNAL SHORTED TO GROUND
(B15) BRAKE SWITCH NO.1 SIGNAL ShORT TO VOLTAGE
(B16) BRAKE SWITCH NO.2 SIGNAL SHORTED TO GROUND
(B16) BRAKE SWITCH NO.2 SIGNAL OPEN
(Z912) GROUND CIRCUIT OPEN
(F202) FUSED IGNITION SWITCH OUTPUT OPEN
STOP LAMP SWITCH
PCM

Always perform the Pre-Diagnostic Troubleshooting procedure before proceeding. (Refer to 9 - ENGINE - DIAGNOSIS AND TESTING).

Diagnostic Test

1. ACTIVE DTC

NOTE: Make sure the Stop Lamp Switch is properly adjusted before continuing.

NOTE: Make sure the Stop Lamp Switch is properly wired, such as (B15) Brake Switch No.1 and (B16) Brake Lamp Switch No.2 circuits are not switched at the harness connector.

Ignition on, engine not running.

With a scan tool, read DTCs.

Is the DTC active at this time?

Yes >> Go To 2

No >> Refer to the INTERMITTENT CONDITION Diagnostic Procedure.
Perform the POWERTRAIN VERIFICATION TEST. (Refer to 9 - ENGINE - STANDARD PROCEDURE)

2. (B15) BRAKE SWITCH NO.1 SIGNAL SHORTED TO GROUND

Turn the ignition off.

Disconnect the Stop Lamp Switch harness connector.

Disconnect the PCM harness connectors.

Measure the resistance between ground and the (B15) Brake Switch No.1 Signal circuit in the Stop Lamp Switch harness connector.

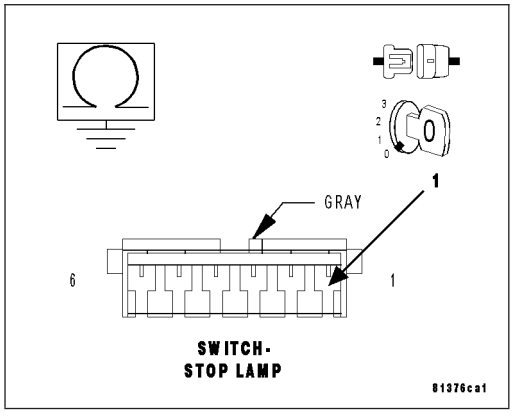

Is the resistance below 100 ohms?

Yes >> Repair the short to ground in the (B15) Brake Switch No.1 Signal circuit.
Perform the POWERTRAIN VERIFICATION TEST. (Refer to 9 - ENGINE - STANDARD PROCEDURE)

No >> Go To 3

3. (B15) BRAKE SWITCH NO.1 SIGNAL SHORT TO VOLTAGE

Turn the ignition on.

Measure the voltage of the (B15) Brake Switch No.1 Signal circuit in the Stop Lamp Switch harness connector.

Does the voltmeter indicate voltage present?

Yes >> Repair the short voltage in the (B15) Brake Switch No.1 Signal circuit.
Perform the POWERTRAIN VERIFICATION TEST. (Refer to 9 - ENGINE - STANDARD PROCEDURE)

No >> Go To 4

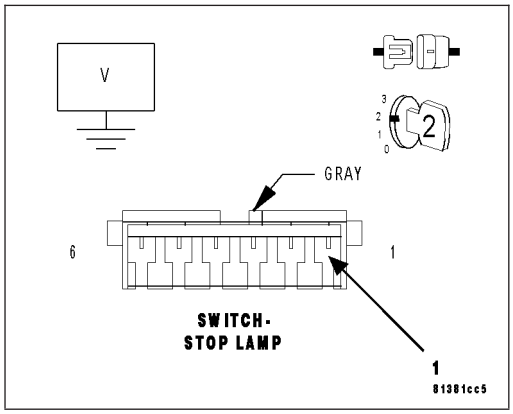

4. (B16) BRAKE SWITCH NO.2 SIGNAL SHORTED TO GROUND

Turn the ignition off.

Disconnect the Stop Lamp Switch harness connector.

Disconnect the PCM harness connectors.

Measure the resistance between ground and the (B16) Brake Switch No.2 Signal circuit in the Stop Lamp Switch harness connector.

Is the resistance below 100 ohms?

Yes >> Repair the short to ground in the (B16) Brake Switch No.2 Signal circuit.
Perform the POWERTRAIN VERIFICATION TEST. (Refer to 9 - ENGINE - STANDARD PROCEDURE)

No >> Go To 5

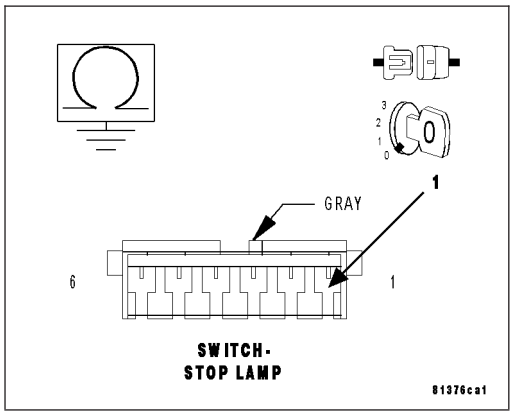

5. (B16) BRAKE SWITCH NO.2 SIGNAL OPEN

CAUTION: Do not probe the PCM harness connectors. Probing the PCM harness connectors will damage the PCM terminals resulting in poor terminal to pin connection. Install Miller Special Tool #8815 to perform diagnosis.

Measure the resistance of the (B16) Brake Switch No.2 Signal circuit from the Stop Lamp Switch harness connector and the appropriate terminal of the special tool #8815.

Is the resistance below 5.0 ohms?

Yes >> Go To 6

No >> Repair the open in the (B16) Brake Switch No.2 Signal circuit.
Perform the POWERTRAIN VERIFICATION TEST. (Refer to 9 - ENGINE - STANDARD PROCEDURE)

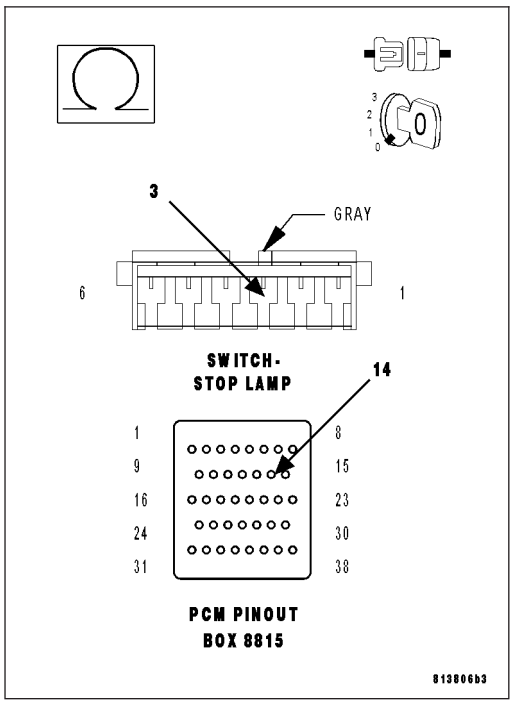

6. (F202) FUSED IGNITION SWITCH OUTPUT (RUN-START) OPEN

Reconnect the PCM harness connector.

Turn the ignition on.

Using a 12–volt test light connected to ground, probe the (F202) Fused Ignition Switch Output circuit in the Stop Lamp Switch harness connector.

Does the test light illuminate brightly?

Yes >> Go To 7

No >> Repair the open in the (F202) Fused Ignition Switch Output circuit.

Perform the POWERTRAIN VERIFICATION TEST. (Refer to 9 - ENGINE - STANDARD PROCEDURE)

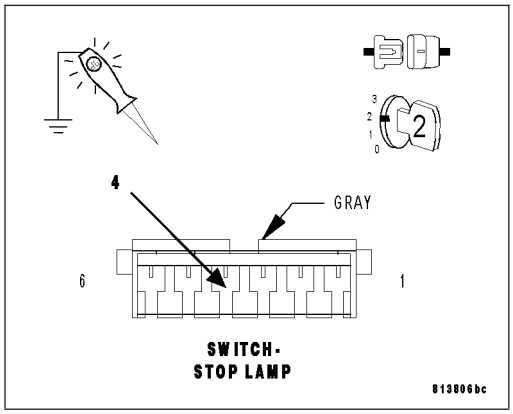

7. (Z912) GROUND CIRCUIT OPEN

Using the 12–Volt test light connect to battery voltage, probe the (Z912) Ground circuit in the Stop Lamp Switch harness connector.

Does the test light illuminate brightly?

Yes >> Go To 8

No >> Repair the open in the (Z912) Ground circuit.

Perform the POWERTRAIN VERIFICATION TEST. (Refer to 9 - ENGINE - STANDARD PROCEDURE)

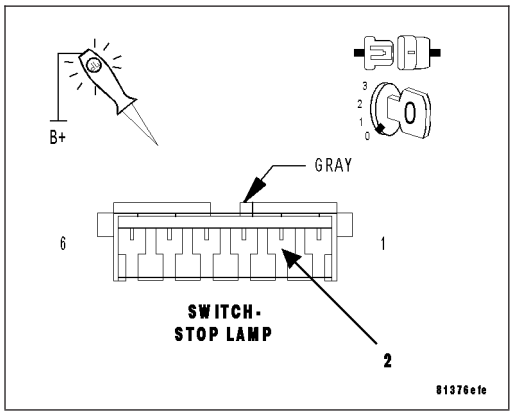

8. STOP LAMP SWITCH

Remove the Stop Lamp Switch.

Measure the resistance between terminals 1 and 2 of the Stop Lamp Switch.

Next, measure the resistance between terminals 3 and 4 of the Stop Lamp Switch.

Apply and release the brake pedal switch while monitoring the ohmmeter during both of the above steps.

Does the resistance change from below 5.0 ohms to an open circuit for one or both of the measurements taken?

Yes >> Go To 9

No >> Replace the Stop Lamp Switch.

Perform the POWERTRAIN VERIFICATION TEST. (Refer to 9 - ENGINE - STANDARD PROCEDURE)

9. PCM

NOTE: Before continuing, check the PCM harness connector terminals for corrosion, damage, or terminal push out. Repair as necessary.
Using the schematics as a guide, inspect the wire harness and connectors. Pay particular attention to all Power and Ground circuits.

Were there any problems found?

Yes >> Repair as necessary.
Perform the POWERTRAIN VERIFICATION TEST. (Refer to 9 - ENGINE - STANDARD PROCEDURE)

No >> Replace and program the Powertrain Control Module per Service Information.
Perform the POWERTRAIN VERIFICATION TEST. (Refer to 9 - ENGINE - STANDARD PROCEDURE)

P0579–SPEED CONTROL MULTIPLEXED SWITCH #1 PERFORMANCE

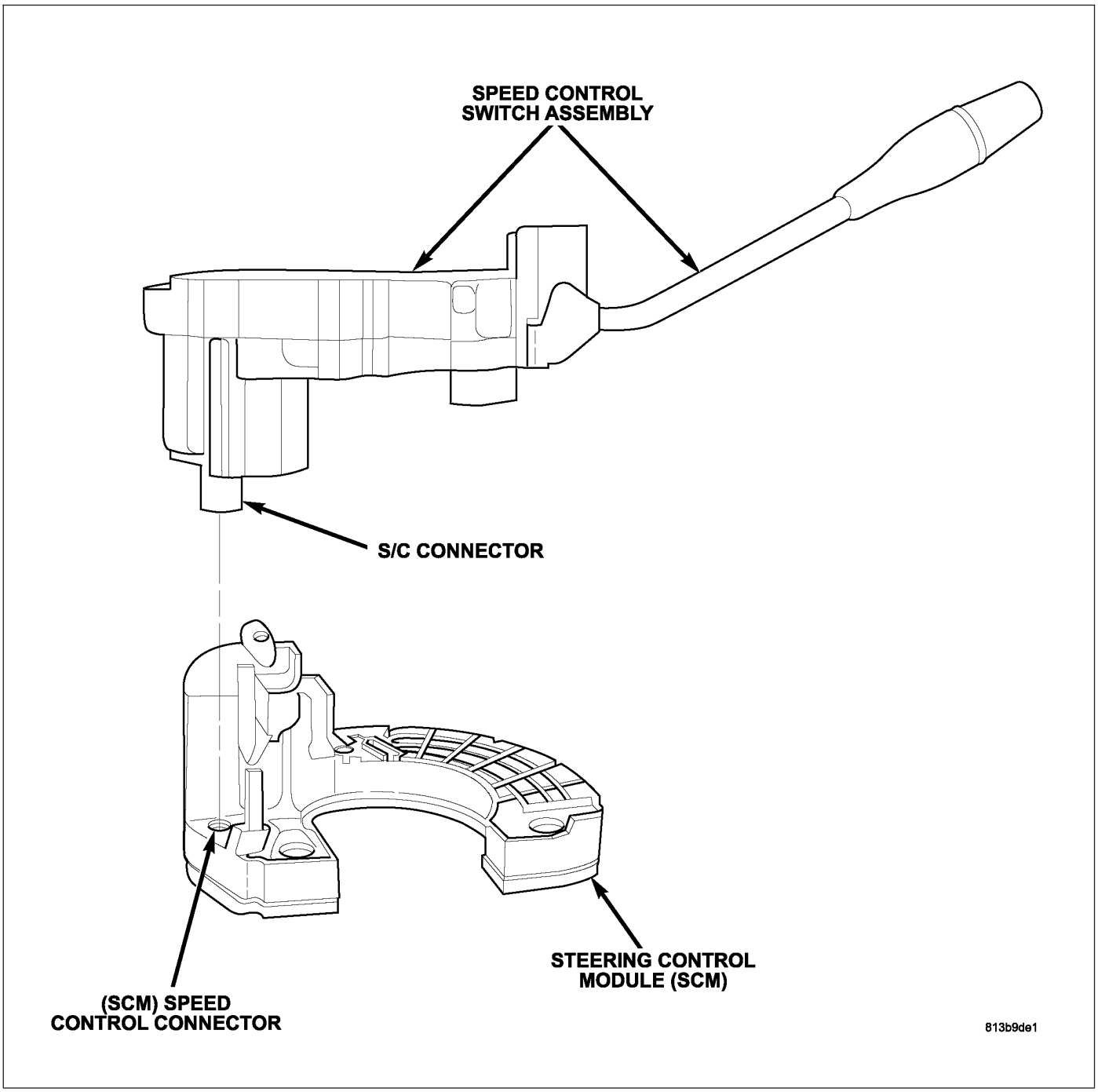

For a complete wiring diagram **Refer to Section 8W**.

- **When Monitored:**
  Continuously with the ignition on.
- **Set Condition:**
  The Steering Column Control Module (SCCM) has detected that the Speed Control Switch #1 is not operating properly.

Possible Causes
INTERMITTENT SPEED CONTROL SWITCH 1/2 STUCK DTC
SPEED CONTROL SWITCH
STEERING COLUMN CONTROL MODULE (SCCM)

Diagnostic Test

1. DTC IS ACTIVE

NOTE: If P0562–BATTERY VOLTAGE LOW or P0563–BATTERY VOLTAGE HIGH is set along with this DTC, diagnose the battery voltage DTC first.
Ignition on, engine not running.
With the Scan Tool, select View DTCs in the Steering Column Control Module.

Is the DTC status Active at this time?

Yes >> Go to 2

No >> Go to 4

2. SPEED CONTROL SWITCH

Turn the ignition off.
Replace the Speed Control Switch in accordance with the Service Information.
Turn the ignition on.
Move the Speed Control Switch to each position several times.
With the Scan Tool, Clear Stored DTCs in the Steering Column Control Module.
With the Scan Tool, select View DTCs in the Steering Column Control Module.
Move the Speed Control Switch to each position several times while monitoring the Scan Tool.

Does this DTC reset?

Yes >> Go To 3

No >> Test Complete.

3. STEERING COLUMN CONTROL MODULE (SCCM)

View repair.

Repair

Replace the Steering Column Control Module (SCCM) in accordance with the Service Information.

4. INTERMITTENT SPEED CONTROL SWITCH 1/2 STUCK DTC

The conditions necessary to set this DTC are not present at this time.

While monitoring the scan tool data relative to this circuit, move the Speed Control Switch to each position several times.

Look for the DTC to reset while the switch is being moved to each position.

Were any problems found?

Yes >> Repair as necessary.

No >> Test complete.

P0580–SPEED CONTROL MULTIPLEXED SWITCH #1 LOW

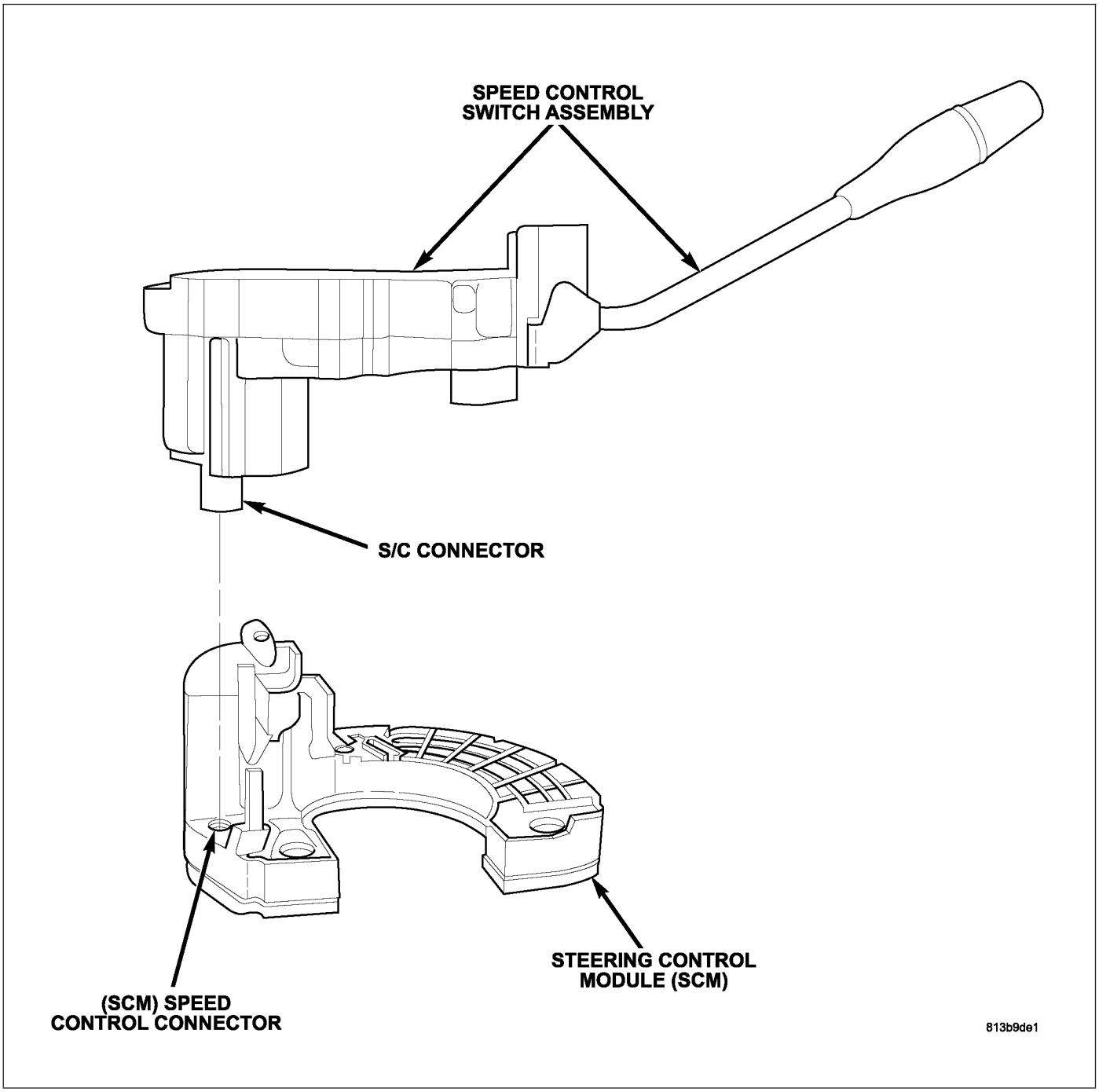

For a complete wiring diagram **Refer to Section 8W**.

- **When Monitored:**
  Continuously with the ignition on.
- **Set Condition:**
  The Steering Column Control Module (SCCM) has detected that the Speed Control Switch #1 is below the calibrated value.

Possible Causes
INTERMITTENT SPEED CONTROL SWITCH 1/2 STUCK DTC
SPEED CONTROL SWITCH
STEERING COLUMN CONTROL MODULE (SCCM)

Diagnostic Test

1. DTC IS ACTIVE

NOTE: If P0562–BATTERY VOLTAGE LOW or P0563–BATTERY VOLTAGE HIGH is set along with this DTC, diagnose the battery voltage DTC first.
Ignition on, engine not running.
With the Scan Tool, select View DTCs in the Steering Column Control Module.

Is the DTC status Active at this time?

Yes >> Go to 2
No >> Go to 4

2. SPEED CONTROL SWITCH

Turn the ignition off.
Replace the Speed Control Switch in accordance with the Service Information.
Turn the ignition on.
Move the Speed Control Switch to each position several times.
With the Scan Tool, Clear Stored DTCs in the Steering Column Control Module.
With the Scan Tool, select View DTCs in the Steering Column Control Module.
Move the Speed Control Switch to each position several times while monitoring the Scan Tool.

Does this DTC reset?

Yes >> Go To 3
No >> Test Complete.

3. STEERING COLUMN CONTROL MODULE (SCCM)

View repair.

Repair

Replace the Steering Column Control Module (SCCM) in accordance with the Service Information.

4. INTERMITTENT SPEED CONTROL SWITCH 1/2 STUCK DTC

The conditions necessary to set this DTC are not present at this time.

While monitoring the scan tool data relative to this circuit, move the Speed Control Switch to each position several times.

Look for the DTC to reset while the switch is being moved to each position.

Were any problems found?

Yes >> Repair as necessary.

No >> Test complete.

P0585-SPEED CONTROL MULTIPLEXED SWITCH 1/2 CORRELATION

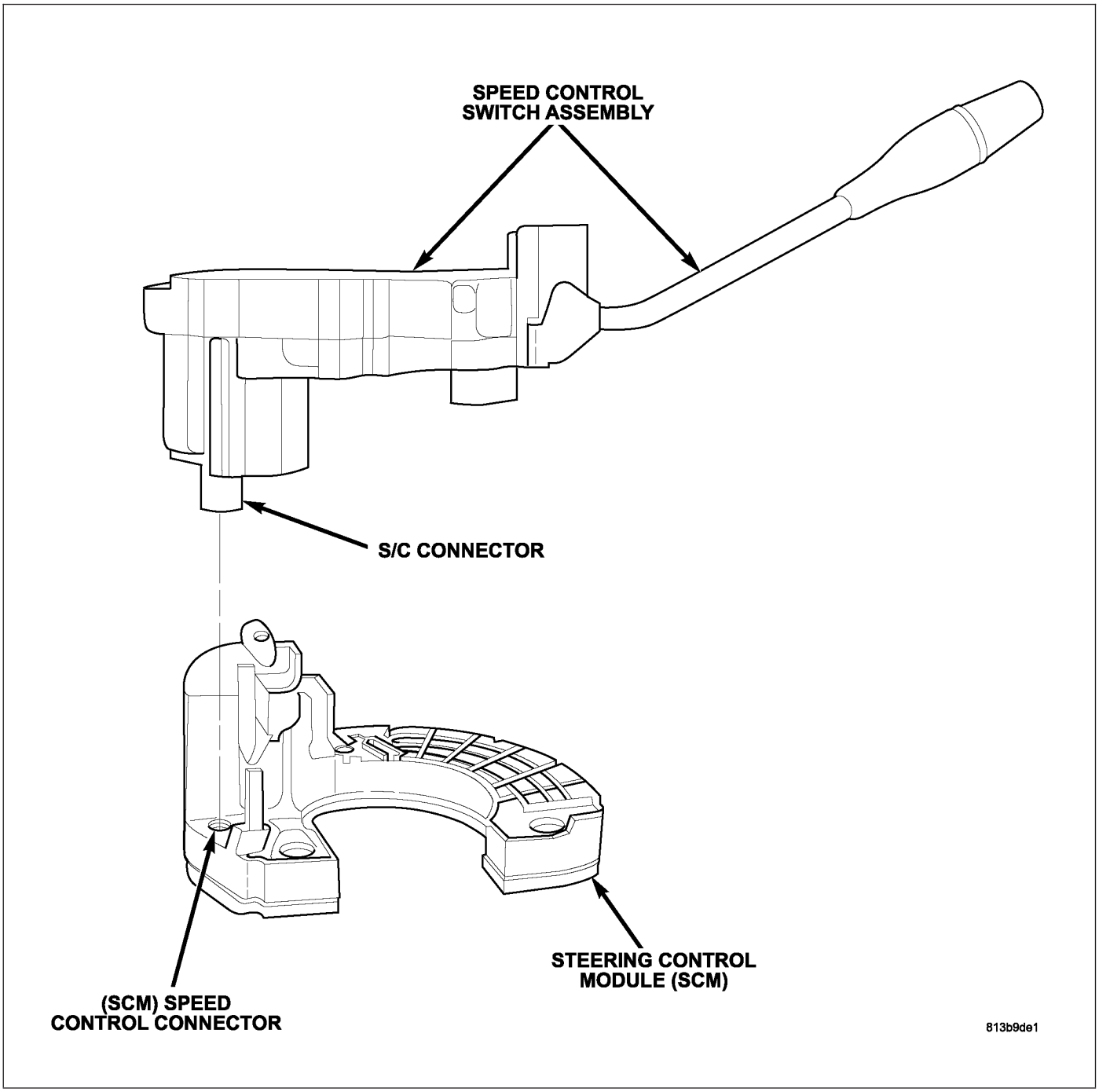

For a complete wiring diagram **Refer to Section 8W**.

- **When Monitored:**
  Continuously with the ignition on.
- **Set Condition:**
  The Steering Column Control Module (SCCM) has detected that a non-permissable combination has occurred in the Speed Control Switch. Two trip Fault.

Possible Causes
INTERMITTENT SPEED CONTROL MULTIPLEXED SWITCH 1/2 CORRELATION DTC
SPEED CONTROL SWITCH
STEERING COLUMN CONTROL MODULE (SCCM)

Diagnostic Test

1. DTC IS ACTIVE

NOTE: This DTC is a two trip fault. If the scan tool indicates a one trip failure, the possible cause may have been the customer pressing both switches simultaneously. Test drive the vehicle and activate the Speed Control system. If the DTC matures to an active fault a repair is necessary.

NOTE: If P0562–BATTERY VOLTAGE LOW or P0563–BATTERY VOLTAGE HIGH is set along with this DTC, diagnose the battery voltage DTC first.

Ignition on, engine not running.

With the Scan Tool, select View DTCs in the Steering Column Control Module.

Is the DTC status Active at this time?

Yes >> Go to 2

No >> Go to 4

2. SPEED CONTROL SWITCH

Turn the ignition off.

Replace the Speed Control Switch in accordance with the Service Information.

Turn the ignition on.

Move the Speed Control Switch to each position several times.

With the Scan Tool, Clear Stored DTCs in the Steering Column Control Module.

With the Scan Tool, select View DTCs in the Steering Column Control Module.

Move the Speed Control Switch to each position several times while monitoring the Scan Tool.

Does this DTC reset?

Yes >> Go To 3

No >> Test Complete.

3. STEERING COLUMN CONTROL MODULE (SCCM)

View repair.

Repair

Replace the Steering Column Control Module (SCCM) in accordance with the Service Information.

4. INTERMITTENT SPEED CONTROL MULTIPLEXED SWITCH 1/2 CORRELATION DTC

The conditions necessary to set this DTC are not present at this time.

While monitoring the scan tool data relative to this circuit, move the Speed Control Switch to each position several times.

Look for the DTC to reset while the switch is being moved to each position.

Were any problems found?

Yes >> Repair as necessary.

No >> Test complete.

P0591–SPEED CONTROL MULTIPLEXED SWITCH PERFORMANCE

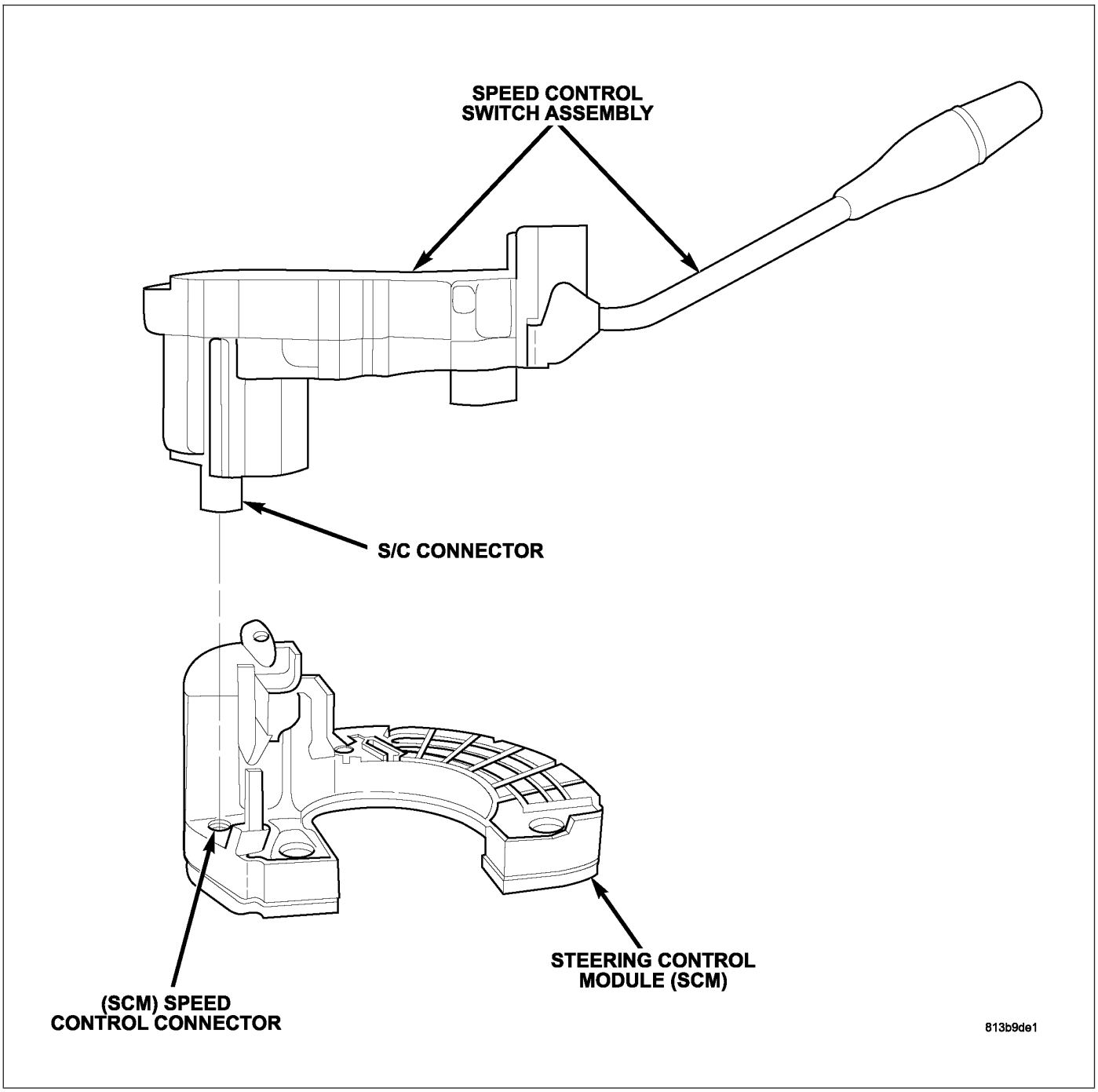

For a complete wiring diagram **Refer to Section 8W**.

- **When Monitored:**
  Continuously with the ignition on.
- **Set Condition:**
  The Steering Column Control Module (SCCM) has detected that the Speed Control Switch #2 is not operating properly.

Possible Causes
INTERMITTENT SPEED CONTROL SWITCH 1/2 STUCK DTC
SPEED CONTROL SWITCH
STEERING COLUMN CONTROL MODULE (SCCM)

Diagnostic Test

1. DTC IS ACTIVE

NOTE: If P0562–BATTERY VOLTAGE LOW or P0563–BATTERY VOLTAGE HIGH is set along with this DTC, diagnose the battery voltage DTC first.
Ignition on, engine not running.
With the Scan Tool, select View DTCs in the Steering Column Control Module.

Is the DTC status Active at this time?

Yes >> Go to 2
No >> Go to 4

2. SPEED CONTROL SWITCH

Turn the ignition off.
Replace the Speed Control Switch in accordance with the Service Information.
Turn the ignition on.
Move the Speed Control Switch to each position several times.
With the Scan Tool, Clear Stored DTCs in the Steering Column Control Module.
With the Scan Tool, select View DTCs in the Steering Column Control Module.
Move the Speed Control Switch to each position several times while monitoring the Scan Tool.

Does this DTC reset?

Yes >> Go To 3
No >> Test Complete.

3. STEERING COLUMN CONTROL MODULE (SCCM)

View repair.

Repair

Replace the Steering Column Control Module (SCCM) in accordance with the Service Information.

4. INTERMITTENT SPEED CONTROL SWITCH 1/2 STUCK DTC

The conditions necessary to set this DTC are not present at this time.

While monitoring the scan tool data relative to this circuit, move the Speed Control Switch to each position several times.

Look for the DTC to reset while the switch is being moved to each position.

Were any problems found?

Yes >> Repair as necessary.

No >> Test complete.

P0600-SERIAL COMMUNICATION LINK

For a complete wiring diagram **Refer to Section 8W**.

- **When Monitored:**
  With the ignition on.
- **Set Condition:**
  Internal Bus communication failure between processors. One Trip Fault. Three Global Good Trips to Clear.

Possible Causes
PCM

Always perform the Pre-Diagnostic Troubleshooting procedure before proceeding. (Refer to 9 - ENGINE - DIAGNOSIS AND TESTING).

Diagnostic Test

1. PCM

NOTE: Diagnose any CMP or CKP Sensor faults before continuing. Check for intermittent loose CMP or CKP connections.

The Powertrain Control Module is reporting internal errors, view repair to continue.

Repair

Replace and program the Powertrain Control Module per Service Information.
Perform the POWERTRAIN VERIFICATION TEST. (Refer to 9 - ENGINE - STANDARD PROCEDURE)

P0601-INTERNAL MEMORY CHECKSUM INVALID

For a complete wiring diagram **Refer to Section 8W**.

- **When Monitored:**
  With the ignition on.
- **Set Condition:**
  Internal checksum for software failed, does not match calculated value. One Trip Fault, Three Good Trips to clear.

Possible Causes
PCM

Always perform the Pre-Diagnostic Troubleshooting procedure before proceeding. (Refer to 9 - ENGINE - DIAGNOSIS AND TESTING).

Diagnostic Test

1. PCM

NOTE: Diagnose any CMP or CKP Sensor faults before continuing. Check for intermittent loose CMP or CKP connections.

The Powertrain Control Module is reporting internal errors, view repair to continue.

Repair

Replace and program the Powertrain Control Module per Service Information.

Perform the POWERTRAIN VERIFICATION TEST. (Refer to 9 - ENGINE - STANDARD PROCEDURE)

P0606-INTERNAL ECM PROCESSOR

For a complete wiring diagram **Refer to Section 8W**.

- **When Monitored:**
  Engine running.
- **Set Condition:**
  When the PCM recognizes an internal failure to communicate with the ECM or the CMP and CKP Sensor count periods are too short. One trip fault. ETC light is flashing.

Possible Causes
PCM

Always perform the Pre-Diagnostic Troubleshooting procedure before proceeding. (Refer to 9 - ENGINE - DIAGNOSIS AND TESTING).

Diagnostic Test

1. PCM

NOTE: Diagnose any CMP or CKP Sensor faults before continuing. Check for intermittent loose CMP or CKP connections.

The Powertrain Control Module is reporting internal errors, view repair to continue.

Repair

Replace and program the Powertrain Control Module per Service Information.

Perform the POWERTRAIN VERIFICATION TEST. (Refer to 9 - ENGINE - STANDARD PROCEDURE)

P060B-ETC A/D GROUND PERFORMANCE

For a complete wiring diagram **Refer to Section 8W**.

- **When Monitored:**
  When the Throttle Motor is powered.
- **Set Condition:**
  When A to D reading does not return to ground within a set period of time of test activation, this fault sets. The test typically runs a couple of times per second, and is the reason why APP2 signal spikes to ground a couple of times per second in normal running. Reprogramming the module may not always fix this fault. ETC lamp will flash.

Possible Causes
PCM NEEDS TO BE PROGRAMMED
PCM

Always perform the Pre-Diagnostic Troubleshooting procedure before proceeding. (Refer to 9 - ENGINE - DIAGNOSIS AND TESTING).

Diagnostic Test

1. PROGRAM THE POWERTRAIN CONTROL MODULE

Verify the PCM is at the latest calibration (flash level).

NOTE: An intermittent loss of power to the PCM without performing an ETC Relearn procedure may cause this DTC to set.

NOTE: Diagnose any other DTCs that may have set with the P060B.

Flash the Powertrain Control Module per Service Information if any updates are available.

Start the engine.

Allow the engine to reach normal operating temperature.

Operate the accelerator pedal. (do not exceed 3500 rpm)

With a scan tool, read DTCs.

Does this DTC reset by itself?

Yes >> Replace and reprogram the Powertrain Control Module per Service Information.
Perform the POWERTRAIN VERIFICATION TEST. (Refer to 9 - ENGINE - STANDARD PROCEDURE)

No >> Test Complete.

P060D-ETC LEVEL 2 APP PERFORMANCE

For a complete wiring diagram **Refer to Section 8W**.

- **When Monitored:**
  Throttle motor is powered and no matured faults related to APP Sensors.
- **Set Condition:**
  When secondary software determines that APPS 1 and APPS 2 signals do not match for a period of time. ETC lamp will flash

Possible Causes
PCM NEEDS TO BE PROGRAMMED
PCM

Always perform the Pre-Diagnostic Troubleshooting procedure before proceeding. (Refer to 9 - ENGINE - DIAGNOSIS AND TESTING).

Diagnostic Test

1. PROGRAM THE POWERTRAIN CONTROL MODULE

Verify the PCM is at the latest calibration (flash level).

NOTE: An intermittent loss of power to the PCM without performing an ETC Relearn procedure may cause this DTC to set.

Flash the Powertrain Control Module per Service Information if any updates are available.

Start the engine.

Allow the engine to reach normal operating temperature.

Operate the accelerator pedal. (do not exceed 3500 rpm)

With a scan tool, read DTCs.

NOTE: Diagnose any other DTCs that may have set with the P060D.

Does this DTC reset by itself?

Yes >> Replace and reprogram the Powertrain Control Module per Service Information.
Perform the POWERTRAIN VERIFICATION TEST. (Refer to 9 - ENGINE - STANDARD PROCEDURE)

No >> Test Complete.

P060E-ETC LEVEL 2 TPS PERFORMANCE

For a complete wiring diagram **Refer to Section 8W**.

- **When Monitored:**
  Throttle motor is powered and no matured faults related to TP Sensors.
- **Set Condition:**
  When secondary software determines that TPS 1 and TPS 2 signals do not match for a period of time. ETC lamp will flash.

Possible Causes
PCM NEEDS TO BE PROGRAMMED
PCM

Always perform the Pre-Diagnostic Troubleshooting procedure before proceeding. (Refer to 9 - ENGINE - DIAGNOSIS AND TESTING).

Diagnostic Test

1. PROGRAM THE POWERTRAIN CONTROL MODULE

Verify the PCM is at the latest calibration (flash level).

NOTE: An intermittent loss of power to the PCM without performing an ETC Relearn procedure may cause this DTC to set.

Flash the Powertrain Control Module per Service Information if any updates are available.

Start the engine.

Allow the engine to reach normal operating temperature.

Operate the accelerator pedal. (do not exceed 3500 rpm)

With a scan tool, read DTCs.

NOTE: Diagnose any other DTCs that may have set with the P060E.

Does this DTC reset by itself?

Yes >> Replace and reprogram the Powertrain Control Module per Service Information.
Perform the POWERTRAIN VERIFICATION TEST. (Refer to 9 - ENGINE - STANDARD PROCEDURE)

No >> Test Complete.

P060F-ETC LEVEL 2 ECT PERFORMANCE

For a complete wiring diagram **Refer to Section 8W**.

- **When Monitored:**
  Throttle motor is powered and no matured faults related to the Engine Coolant Temp Sensor.
- **Set Condition:**
  When secondary software determines that the Coolant Temperature is implausible for a period of time. ETC lamp will flash.

Possible Causes
PCM NEEDS TO BE PROGRAMMED
PCM

Always perform the Pre-Diagnostic Troubleshooting procedure before proceeding. (Refer to 9 - ENGINE - DIAGNOSIS AND TESTING).

Diagnostic Test

1. PROGRAM THE POWERTRAIN CONTROL MODULE

NOTE: Diagnose any Engine Coolant Temperature Sensor DTCs before continuing.
Verify the PCM is at the latest calibration (flash level).

NOTE: An intermittent loss of power to the PCM without performing an ETC Relearn procedure may cause this DTC to set.
Flash the Powertrain Control Module per Service Information if any updates are available.

Start the engine.

Allow the engine to reach normal operating temperature.

Operate the accelerator pedal. (do not exceed 3500 rpm)

With a scan tool, read DTCs.

NOTE: Diagnose any other DTCs that may have set with the P060F.

Does this DTC reset by itself?

Yes >> Replace and reprogram the Powertrain Control Module per Service Information.
Perform the POWERTRAIN VERIFICATION TEST. (Refer to 9 - ENGINE - STANDARD PROCEDURE)

No >> Test Complete.

P061A-ETC LEVEL 2 TORQUE PERFORMANCE

For a complete wiring diagram **Refer to Section 8W**.

- **When Monitored:**
  Throttle motor is powered.
- **Set Condition:**
  When secondary software determines that the customer requested output is not being achieved by the engine for a period of time. ETC lamp will flash

Possible Causes
PCM NEEDS TO BE PROGRAMMED
PCM

Always perform the Pre-Diagnostic Troubleshooting procedure before proceeding. (Refer to 9 - ENGINE - DIAGNOSIS AND TESTING).

Diagnostic Test

1. PROGRAM THE POWERTRAIN CONTROL MODULE

NOTE: Check the engine for air/vacuum leaks and diagnose any Fuel System Lean/Rich as well as MAP Sensor DTCs before continuing.
Verify the PCM is at the latest calibration (flash level).

NOTE: An intermittent loss of power to the PCM without performing an ETC Relearn procedure may cause this DTC to set.
Flash the Powertrain Control Module per Service Information if any updates are available.

Start the engine.

Allow the engine to reach normal operating temperature.

Operate the accelerator pedal. (do not exceed 3500 rpm)

With a scan tool, read DTCs.

NOTE: Diagnose any other DTCs that may have set with the P061A.

Does this DTC reset by itself?

Yes >> Replace and reprogram the Powertrain Control Module per Service Information.
Perform the POWERTRAIN VERIFICATION TEST. (Refer to 9 - ENGINE - STANDARD PROCEDURE)

No >> Test Complete.

P061C-ETC LEVEL 2 RPM PERFORMANCE

For a complete wiring diagram **Refer to Section 8W**.

- **When Monitored:**
  Throttle motor is powered and no camshaft or crankshaft electrical signal related DTCs are set.
- **Set Condition:**
  When secondary software determines that the engine speed is implausible for a period of time. ETC lamp will flash.

Possible Causes
PCM NEEDS TO BE PROGRAMMED
PCM

Always perform the Pre-Diagnostic Troubleshooting procedure before proceeding. (Refer to 9 - ENGINE - DIAGNOSIS AND TESTING).

Diagnostic Test

1. PROGRAM THE POWERTRAIN CONTROL MODULE

NOTE: Diagnose any Camshaft Position and Crankshaft Position Sensor DTCs before continuing.
Verify the PCM is at the latest calibration (flash level).

NOTE: An intermittent loss of power to the PCM without performing an ETC Relearn procedure may cause this DTC to set.
Flash the Powertrain Control Module per Service Information if any updates are available.

Start the engine.

Allow the engine to reach normal operating temperature.

Operate the accelerator pedal. (do not exceed 3500 rpm)

With a scan tool, read DTCs.

NOTE: Diagnose any other DTCs that may have set with the P061C.

Does this DTC reset by itself?

Yes >> Replace and reprogram the Powertrain Control Module per Service Information.
Perform the POWERTRAIN VERIFICATION TEST. (Refer to 9 - ENGINE - STANDARD PROCEDURE)

No >> Test Complete.

P0622-GENERATOR FIELD CONTROL CIRCUIT

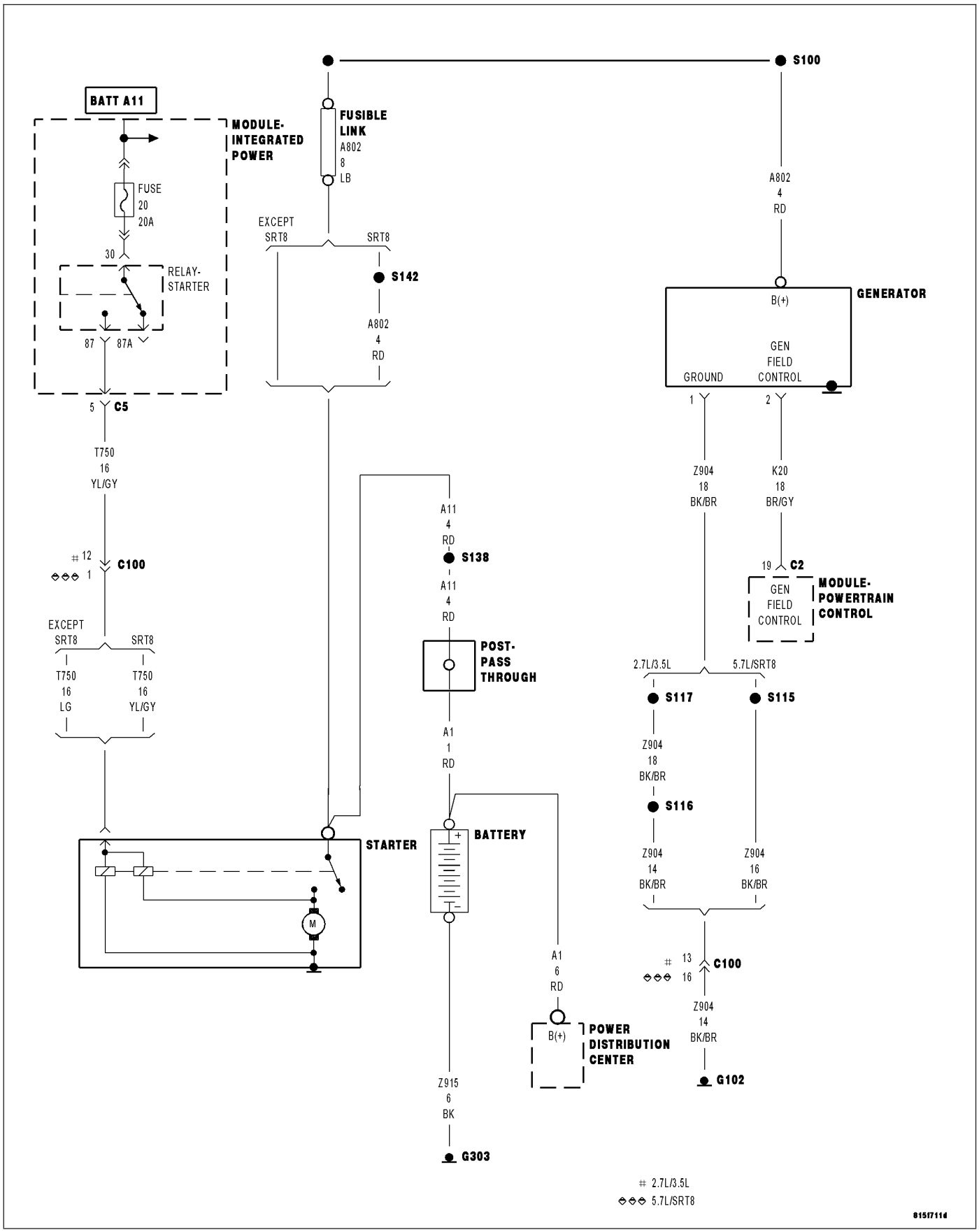

For a complete wiring diagram **Refer to Section 8W**.

- **When Monitored:**
  With the ignition on. Engine running.
- **Set Condition:**
  When the PCM tries to regulate the generator field with no result during monitoring. One Trip Fault. Three good trips to turn off the MIL.

Possible Causes
(K20) GEN FIELD CONTROL CIRCUIT SHORTED TO BATTERY VOLTAGE
(K20) GEN FIELD CONTROL CIRCUIT OPEN
(K20) GEN FIELD CONTROL CIRCUIT SHORTED TO GROUND
(Z20) GROUND CIRCUIT OPEN
GENERATOR
PCM

Always perform the Pre-Diagnostic Troubleshooting procedure before proceeding. (Refer to 9 - ENGINE - DIAGNOSIS AND TESTING).

Diagnostic Test

1. ACTIVE DTC

Ignition on, engine not running.

With a scan tool, read DTCs.

Is the DTC active at this time?

Yes >> Go To 2

No >> Refer to the INTERMITTENT CONDITION Diagnostic Procedure.
Perform the POWERTRAIN VERIFICATION TEST. (Refer to 9 - ENGINE - STANDARD PROCEDURE)

2. GENERATOR OPERATION

Turn the ignition off.

Disconnect the Generator Field harness connector.

Using a 12-volt test light, jump it across the Generator Field harness connector.

Ignition on, engine not running.

With the scan tool, actuate the Generator Field Control circuit.

Does the test light illuminate brightly and flash on and off?

Yes >> Replace the Generator.
Perform the POWERTRAIN VERIFICATION TEST. (Refer to 9 - ENGINE - STANDARD PROCEDURE)

No >> Go To 3

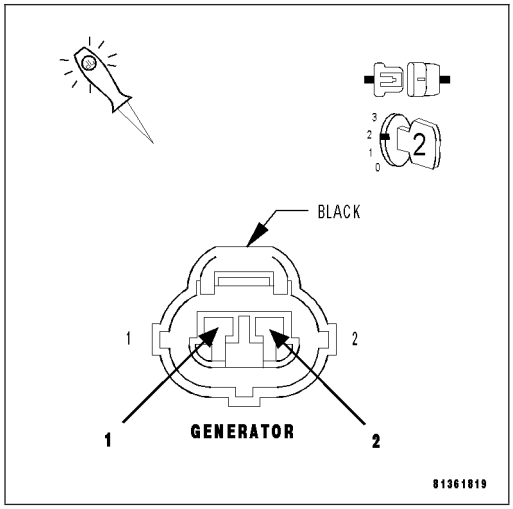

3. (K20) GEN FIELD CIRCUIT SHORTED BATTERY VOLTAGE

Turn the ignition off.

Disconnect the PCM harness connectors.

Ignition on, engine not running.

Measure the voltage on the (K20) Gen Field Control circuit in the Generator Field harness connector.

Is the voltage above 1.0 volt?

Yes >> Repair the short to battery voltage in the (K20) Gen Field Control circuit.
Perform the POWERTRAIN VERIFICATION TEST. (Refer to 9 - ENGINE - STANDARD PROCEDURE)

No >> Go To 4

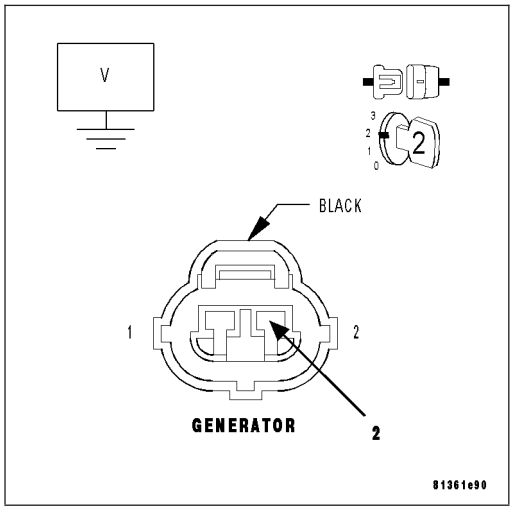

4. (K20) GEN FIELD CIRCUIT OPEN

Turn the ignition off.

CAUTION: Do not probe the PCM harness connectors. Probing the PCM harness connectors will damage the PCM terminals resulting in poor terminal to pin connection. Install Miller Special Tool #8815 to perform diagnosis.

Measure the resistance of the (K20) Gen Field Control circuit from the Generator Field harness connector to appropriate terminal of the special tool #8815.

Is the resistance below 5.0 ohms?

Yes >> Go To 5

No >> Repair the open in the (K20) Gen Field Control circuit.
Perform the POWERTRAIN VERIFICATION TEST. (Refer to 9 - ENGINE - STANDARD PROCEDURE)

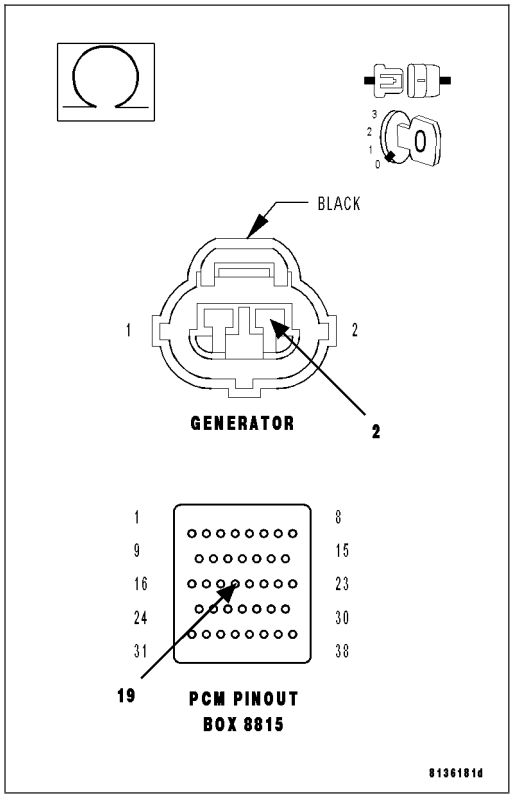

5. (K20) GEN FIELD CIRCUIT SHORTED TO GROUND

Measure the resistance between ground and the (K20) Gen Field Control circuit in the Generator Field harness connector.

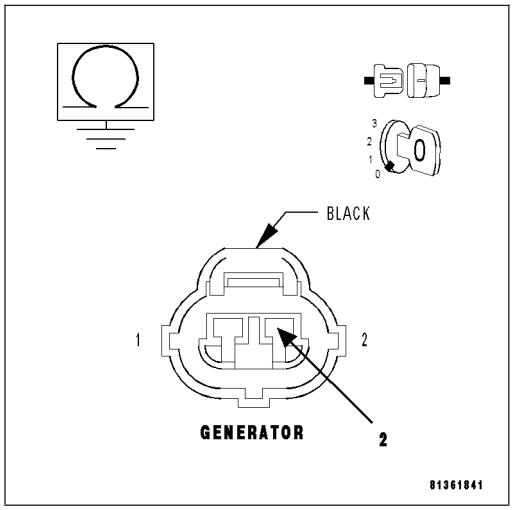

Is the resistance below 100 ohms?

Yes >> Repair the short to ground in the (K20) Gen Field Control circuit.
Perform the POWERTRAIN VERIFICATION TEST. (Refer to 9 - ENGINE - STANDARD PROCEDURE)

No >> Go To 6

6. (Z20) GROUND CIRCUIT OPEN

Measure the resistance between the (Z20) Ground circuit in the Gen Field harness connector and ground.

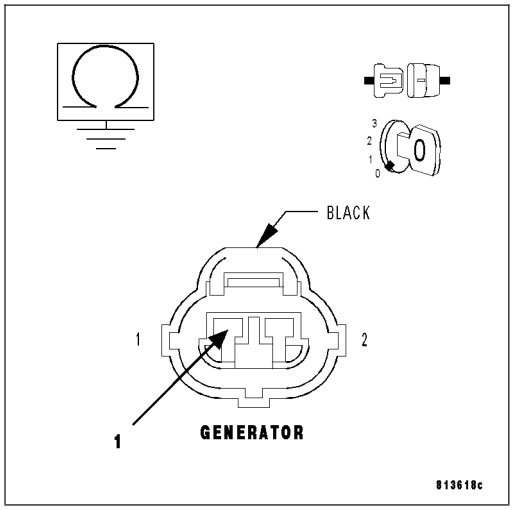

Does the test light illuminate brightly?

Yes >> Go To 7

No >> Repair the open in the (Z20) Ground circuit.
Perform the POWERTRAIN VERIFICATION TEST. (Refer to 9 - ENGINE - STANDARD PROCEDURE)

7. PCM

NOTE: Before continuing, check the PCM harness connector terminals for corrosion, damage, or terminal push out. Repair as necessary.
Using the schematics as a guide, inspect the wire harness and connectors. Pay particular attention to all Power and Ground circuits.

Were there any problems found?

Yes >> Repair as necessary.
Perform the POWERTRAIN VERIFICATION TEST. (Refer to 9 - ENGINE - STANDARD PROCEDURE)

No >> Replace and program the Powertrain Control Module per Service Information.
Perform the POWERTRAIN VERIFICATION TEST. (Refer to 9 - ENGINE - STANDARD PROCEDURE)

P0627-FUEL PUMP RELAY CIRCUIT

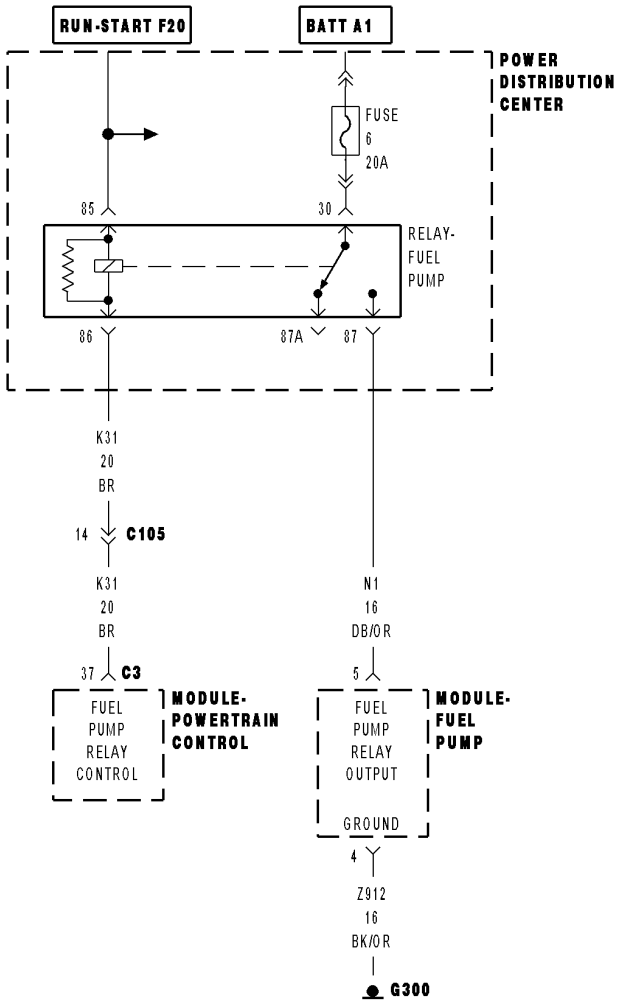

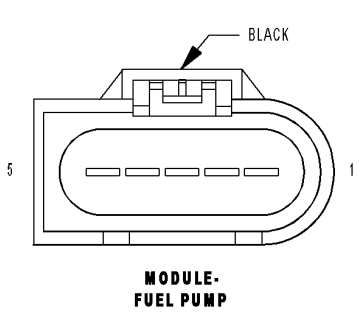

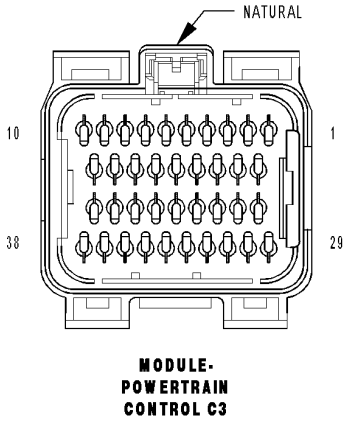

8131be37

For a complete wiring diagram **Refer to Section 8W**.

- **When Monitored:**
  With the ignition on. Battery voltage greater than 10.4 volts.
- **Set Condition:**
  An open or shorted condition is detected in the fuel pump relay control circuit. One Trip Fault. Three good trips to turn off the MIL.

Possible Causes
(F20) FUSED IGNITION SWITCH OUTPUT CIRCUIT
(A109) FUSED B+ CIRCUIT
(K31) FUEL PUMP RELAY CONTROL CIRCUIT
(K31) FUEL PUMP RELAY CONTROL CIRCUIT SHORTED TO GROUND
FUEL PUMP RELAY
PCM

Always perform the Pre-Diagnostic Troubleshooting procedure before proceeding. (Refer to 9 - ENGINE - DIAGNOSIS AND TESTING).

Diagnostic Test

1. FUEL PUMP RELAY OPERATION

Ignition on, engine not running.
With a scan tool, actuate the Fuel Pump Relay.

Is the Fuel Pump Relay operating?

Yes >> Refer to the INTERMITTENT CONDITION Diagnostic Procedure.
Perform the POWERTRAIN VERIFICATION TEST. (Refer to 9 - ENGINE - STANDARD PROCEDURE)

No >> Go To 2

2. FUEL PUMP RELAY

Turn the ignition off.
Remove the Fuel Pump Relay from the IPM.
Measure the resistance of the Fuel Pump Relay Coil.

Is the resistance between 70 to 90 ohms?

Yes >> Go To 3

No >> Replace the Fuel Pump Relay.
Perform the POWERTRAIN VERIFICATION TEST. (Refer to 9 - ENGINE - STANDARD PROCEDURE)

3. (F20) FUSED IGNITION SWITCH OUTPUT CIRCUIT

Ignition on, engine not running.

Using a 12-volt test light connected to ground, probe the (F20) Fused Ignition Switch Output circuit.

Does the test light illuminate brightly?

Yes >> Go To 5

No >> Repair the open or short to ground in the (F20) Fused Ignition Switch Output circuit. Inspect the related fuse and repair as necessary.

Perform the POWERTRAIN VERIFICATION TEST. (Refer to 9 - ENGINE - STANDARD PROCEDURE)

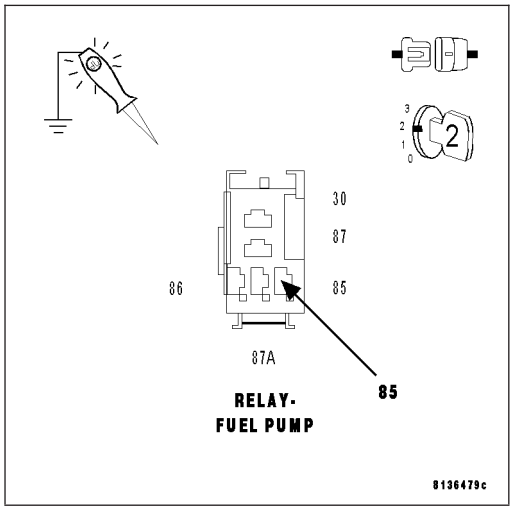

4. (A109) FUSED B+ CIRCUIT

Ignition on, engine not running.

Using a 12-volt test light connected to ground, probe the (A109) Fused B+ circuit.

Does the test light illuminate brightly?

Yes >> Go To 5

No >> Repair the open or short to ground in the (A109) Fused B+ circuit. Inspect the related fuse and repair as necessary.

Perform the POWERTRAIN VERIFICATION TEST. (Refer to 9 - ENGINE - STANDARD PROCEDURE)

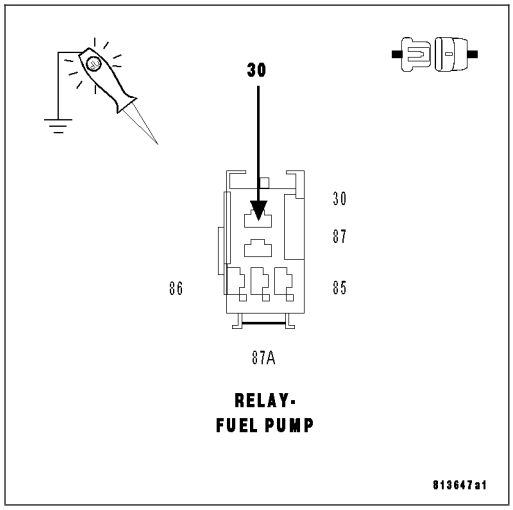

5. (K31) CONTROL CIRCUIT OPEN

Turn the ignition off.

Disconnect the PCM harness connectors.

CAUTION: Do not probe the PCM harness connectors. Probing the PCM harness connectors will damage the PCM terminals resulting in poor terminal to pin connection. Install Miller Special Tool #8815 to perform diagnosis.

Measure the resistance of the (K31) Fuel Pump Relay Control circuit from the IPM to the appropriate terminal of special tool #8815.

Is the resistance below 5.0 ohms?

Yes >> Go To 6

No >> Repair the open in the (K31) Fuel Pump Relay Control circuit.

Perform the POWERTRAIN VERIFICATION TEST. (Refer to 9 - ENGINE - STANDARD PROCEDURE)

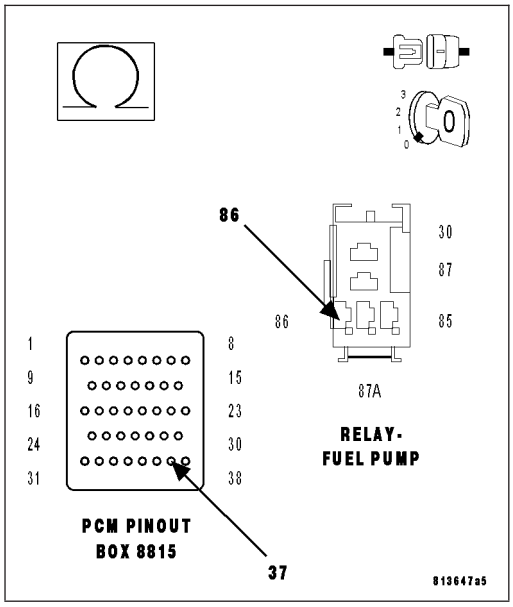

6. (K31) CONTROL CIRCUIT SHORTED TO GROUND

Measure the resistance between ground and the (K31) Fuel Pump Relay Control circuit in the IPM.

Is the resistance below 100 ohms?

Yes >> Repair the short to ground in the (K31) Fuel Pump Relay Control circuit.

Perform the POWERTRAIN VERIFICATION TEST. (Refer to 9 - ENGINE - STANDARD PROCEDURE)

No >> Go To 7

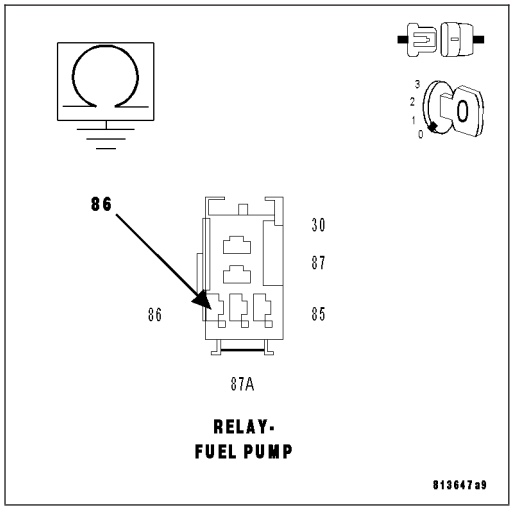

7. PCM

NOTE: Before continuing, check the PCM harness connector terminals for corrosion, damage, or terminal push out. Repair as necessary.

Using the schematics as a guide, inspect the wire harness and connectors. Pay particular attention to all Power and Ground circuits.

Were there any problems found?

Yes >> Repair as necessary.

Perform the POWERTRAIN VERIFICATION TEST. (Refer to 9 - ENGINE - STANDARD PROCEDURE)

No >> Replace and program the Powertrain Control Module per Service Information.

Perform the POWERTRAIN VERIFICATION TEST. (Refer to 9 - ENGINE - STANDARD PROCEDURE)

P062C-ETC LEVEL 2 MPH PERFORMANCE

For a complete wiring diagram **Refer to Section 8W**.

- **When Monitored:**
  Throttle motor is powered and no vehicle speed related DTCs have matured.
- **Set Condition:**
  When secondary software determines that the vehicle speed is implausible for a period of time. ETC lamp will flash

Possible Causes
PCM NEEDS TO BE PROGRAMMED
PCM

Always perform the Pre-Diagnostic Troubleshooting procedure before proceeding. (Refer to 9 - ENGINE - DIAGNOSIS AND TESTING).

Diagnostic Test

1. PROGRAM THE POWERTRAIN CONTROL MODULE

Verify the PCM is at the latest calibration (flash level).

NOTE: An intermittent loss of power to the PCM without performing an ETC Relearn procedure may cause this DTC to set.

Flash the Powertrain Control Module per Service Information if any updates are available.

Start the engine.

Allow the engine to reach normal operating temperature.

Operate the accelerator pedal. (do not exceed 3500 rpm)

With a scan tool, read DTCs.

NOTE: Diagnose any other DTCs that may have set with the P062C.

Does this DTC reset by itself?

Yes >> Replace and reprogram the Powertrain Control Module per Service Information.
Perform the POWERTRAIN VERIFICATION TEST. (Refer to 9 - ENGINE - STANDARD PROCEDURE)

No >> Test Complete.

P0630-VIN NOT PROGRAMMED IN PCM

For a complete wiring diagram **Refer to Section 8W**.

- **When Monitored:**
  Ignition on.
- **Set Condition:**
  The VIN has not been programmed into the PCM. One Trip Fault. Three good trips to turn off the MIL.

Possible Causes
PROGRAMMING VIN INTO PCM
PCM

Always perform the Pre-Diagnostic Troubleshooting procedure before proceeding. (Refer to 9 - ENGINE - DIAGNOSIS AND TESTING).

Diagnostic Test

1. PROGRAMMING VIN INTO THE PCM

Ignition on, engine not running.

Using the scan tool, program VIN into the PCM.

Start the engine.

NOTE: If the engine will not start, crank the engine over for 15 seconds. Crank at least 2 times with the ignition switch returning to the off position each time.

Allow the engine to reach normal operating temperature.

With the scan tool, read DTCs.

Does the DTC reset?

Yes >> Replace and program the Powertrain Control Module per Service Information.
Perform the POWERTRAIN VERIFICATION TEST. (Refer to 9 - ENGINE - STANDARD PROCEDURE)

No >> The VIN has been successfully programmed into the PCM. Test is complete.
Perform the POWERTRAIN VERIFICATION TEST. (Refer to 9 - ENGINE - STANDARD PROCEDURE)

P0632-ODOMETER NOT PROGRAMMED IN PCM

For a complete wiring diagram **Refer to Section 8W**.

- **When Monitored:**
  Ignition on.
- **Set Condition:**
  Odometer is not programed into the PCM. One Trip Fault. Three good trips to turn off the MIL.

Possible Causes
PROGRAMMING MILEAGE INTO THE PCM
PCM

Always perform the Pre-Diagnostic Troubleshooting procedure before proceeding. (Refer to 9 - ENGINE - DIAGNOSIS AND TESTING).

Diagnostic Test

1. PROGRAMMING MILEAGE INTO THE PCM

Ignition on, engine not running.
With the scan tool, erase DTCs.
Using a scan tool, program the mileage into the PCM.
Start the engine.
Allow the engine to reach normal operating temperature.
With a scan tool, read DTCs.

Does the DTC reset?

Yes >> Replace and program the Powertrain Control Module per Service Information.
Perform the POWERTRAIN VERIFICATION TEST. (Refer to 9 - ENGINE - STANDARD PROCEDURE)

No >> The mileage has been successfully programmed into the PCM. Test is complete.
Perform the POWERTRAIN VERIFICATION TEST. (Refer to 9 - ENGINE - STANDARD PROCEDURE)

P0633-SKIM KEY NOT PROGRAMMED IN PCM

For a complete wiring diagram **Refer to Section 8W**.

- **When Monitored:**
  Ignition on.
- **Set Condition:**
  The SKIM Key information has not been programmed into the PCM. One Trip Fault. Three good trips to turn off the MIL.

Possible Causes
PROGRAMMING SKIM KEY INTO THE PCM
PCM

Always perform the Pre-Diagnostic Troubleshooting procedure before proceeding. (Refer to 9 - ENGINE - DIAGNOSIS AND TESTING).

Diagnostic Test

1. PROGRAMMING SKIM KEY INTO THE PCM

Ignition on, engine not running.

With a scan tool, erase DTCs.

Using the scan tool, program the SKIM Key information into the PCM.

Start the engine.

NOTE: If the engine will not start, crank the engine over for 15 seconds. Crank at least 2 times with the ignition switch returning to the off position each time.

Allow the engine to reach normal operating temperature.

With the scan tool, read DTCs.

Does the DTC reset?

Yes >> Replace and program the Powertrain Control Module per Service Information.
Perform the POWERTRAIN VERIFICATION TEST. (Refer to 9 - ENGINE - STANDARD PROCEDURE)

No >> The SKIM KEY information has been successfully programmed into the PCM. Test is complete.
Perform the POWERTRAIN VERIFICATION TEST. (Refer to 9 - ENGINE - STANDARD PROCEDURE)

P0642-SENSOR REFERENCE VOLTAGE 1 CIRCUIT LOW

For a complete wiring diagram **Refer to Section 8W**.

- **When Monitored:**
  Ignition on.
- **Set Condition:**
  When the PCM recognizes the Primary 5-volt Supply circuit voltage is too low. One Trip Fault. ETC light is flashing.

Possible Causes
(F855) PRIMARY 5-VOLT SUPPLY SHORTED TO GROUND
SENSOR SHORTED TO GROUND
5-VOLT SENSOR
PCM

Always perform the Pre-Diagnostic Troubleshooting procedure before proceeding. (Refer to 9 - ENGINE - DIAGNOSIS AND TESTING).

Diagnostic Test

1. ACTIVE DTC

Ignition on, engine not running.

With a scan tool, read DTCs.

NOTE: Improperly installed aftermarket accessories can cause this DTC to set. Check for wiring added by customer.

Is the DTC active at this time?

Yes >> Go To 2

No >> Refer to the INTERMITTENT CONDITION Diagnostic Procedure.
Perform the POWERTRAIN VERIFICATION TEST. (Refer to 9 - ENGINE - STANDARD PROCEDURE)

2. (F855) PRIMARY 5-VOLT SUPPLY CIRCUIT SHORTED TO GROUND

Turn the ignition off.

Disconnect the PCM harness connectors.

Disconnect all the Sensors that share the (F855) Primary 5-volt Supply circuit.

Measure the resistance between ground and the (F855) Primary 5-volt Supply circuit in the CKP Sensor harness connector.

Is the resistance below 100 ohms?

Yes >> Repair the short to ground in the (F855) Primary 5-volt Supply circuit.
Perform the POWERTRAIN VERIFICATION TEST. (Refer to 9 - ENGINE - STANDARD PROCEDURE)

No >> Go To 3

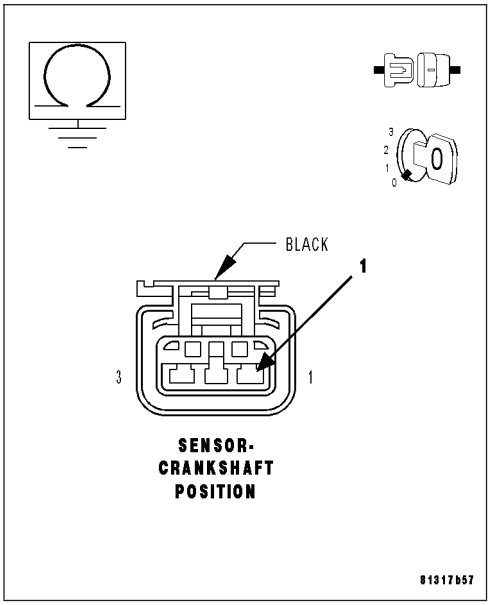

3. 5-VOLT SENSOR

Turn the ignition off.

Reconnect all the previously disconnected Sensors except for the CKP Sensor harness connector.

Ignition on, engine not running.

Measure the voltage on the (F855) Primary 5-volt Supply circuit in the CKP Sensor harness connector.

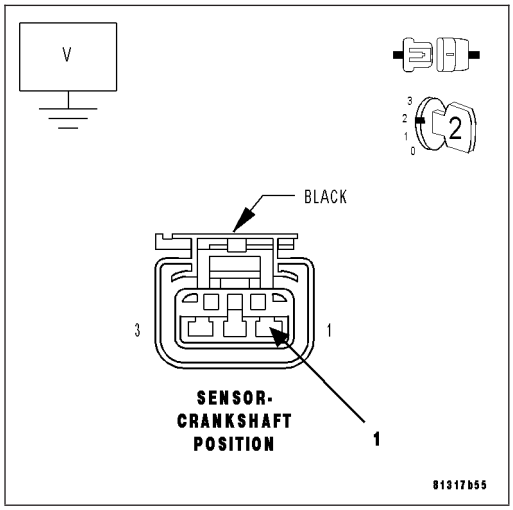

Is the voltage below 4.5 volts?

Yes >> Go To 4

No >> Replace the CKP Sensor.
Perform the POWERTRAIN VERIFICATION TEST. (Refer to 9 - ENGINE - STANDARD PROCEDURE)

4. 5-VOLT SENSOR SHORTED TO GROUND

Measure the voltage on the (F855) Primary 5-volt Supply circuit at the CKP Sensor harness connector.

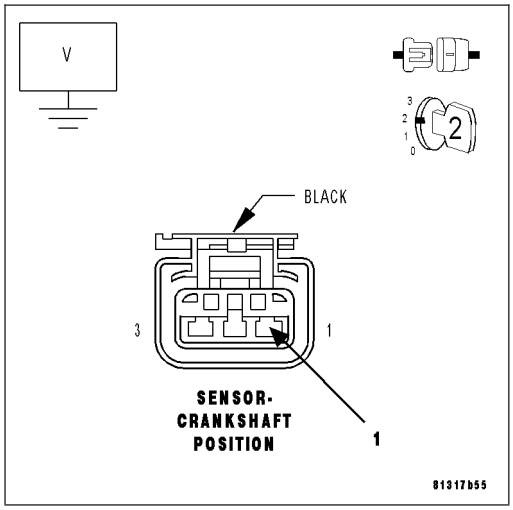

CAUTION: You must Turn the Ignition OFF when disconnecting any of the Sensor harness connectors and Turn the Ignition On to check the voltage readings.

While monitoring the voltage, disconnect each Sensor harness connector that shares the (F855) Primary 5-volt Supply circuit, one at a time.

NOTE: Reconnect all the Sensors and clear all trouble codes before continuing.

Does the voltage increase above 4.5 volts when disconnecting any of the remaining Sensors?

Yes >> Replace the Sensor that causes the (F855) Primary 5-volt Supply circuit voltage to increase when disconnected.
Perform the POWERTRAIN VERIFICATION TEST. (Refer to 9 - ENGINE - STANDARD PROCEDURE)

No >> Go To 5

5. PCM

NOTE: Before continuing, check the PCM harness connector terminals for corrosion, damage, or terminal push out. Repair as necessary.

Using the schematics as a guide, inspect the wire harness and connectors. Pay particular attention to all Power and Ground circuits.

Were there any problems found?

Yes >> Repair as necessary.
Perform the POWERTRAIN VERIFICATION TEST. (Refer to 9 - ENGINE - STANDARD PROCEDURE)

No >> Replace and program the Powertrain Control Module per Service Information.
Perform the POWERTRAIN VERIFICATION TEST. (Refer to 9 - ENGINE - STANDARD PROCEDURE)

P0643-PRIMARY 5-VOLT SUPPLY CIRCUIT HIGH

For a complete wiring diagram **Refer to Section 8W**.

- **When Monitored:**
  Ignition on.
- **Set Condition:**
  When the PCM recognizes the Primary 5-volt Supply circuit voltage is too high. One Trip Fault. ETC light is flashing.

Possible Causes
(F855) PRIMARY 5-VOLT SUPPLY SHORTED TO BATTERY VOLTAGE
PCM

Always perform the Pre-Diagnostic Troubleshooting procedure before proceeding. (Refer to 9 - ENGINE - DIAGNOSIS AND TESTING).

Diagnostic Test

1. ACTIVE DTC

Ignition on, engine not running.

With a scan tool, read DTCs.

Is the DTC active at this time?

Yes >> Go To 2

No >> Refer to the INTERMITTENT CONDITION Diagnostic Procedure.
Perform the POWERTRAIN VERIFICATION TEST. (Refer to 9 - ENGINE - STANDARD PROCEDURE)

2. (F855) PRIMARY 5-VOLT SUPPLY SHORTED TO BATTERY VOLTAGE

Turn the ignition off.

Disconnect the PCM harness connectors.

Disconnect all the Sensors that share the (F855) Primary 5-volt Supply circuit.

NOTE: Improperly installed aftermarket accessories can cause this DTC to set. Check for wiring added by customer.

Ignition on, engine not running.

Measure the voltage on the (F855) Primary 5-volt Supply circuit at the CKP Sensor harness connector.

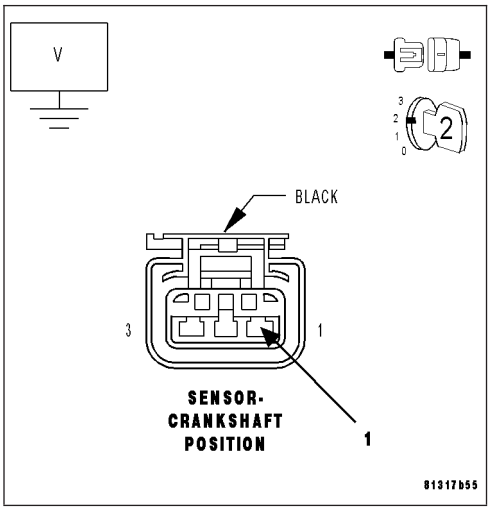

Is the voltage above 5.2 volts?

Yes >> Repair the short to battery voltage in the (F855) Primary 5-volt Supply circuit.
Perform the POWERTRAIN VERIFICATION TEST. (Refer to 9 - ENGINE - STANDARD PROCEDURE)

No >> Go To 3

3. PCM

NOTE: Before continuing, check the PCM harness connector terminals for corrosion, damage, or terminal push out. Repair as necessary.
Using the schematics as a guide, inspect the wire harness and connectors. Pay particular attention to all Power and Ground circuits.

Were there any problems found?

Yes >> Repair as necessary.
Perform the POWERTRAIN VERIFICATION TEST. (Refer to 9 - ENGINE - STANDARD PROCEDURE)

No >> Replace and program the Powertrain Control Module per Service Information.
Perform the POWERTRAIN VERIFICATION TEST. (Refer to 9 - ENGINE - STANDARD PROCEDURE)

P0645-A/C CLUTCH RELAY CIRCUIT

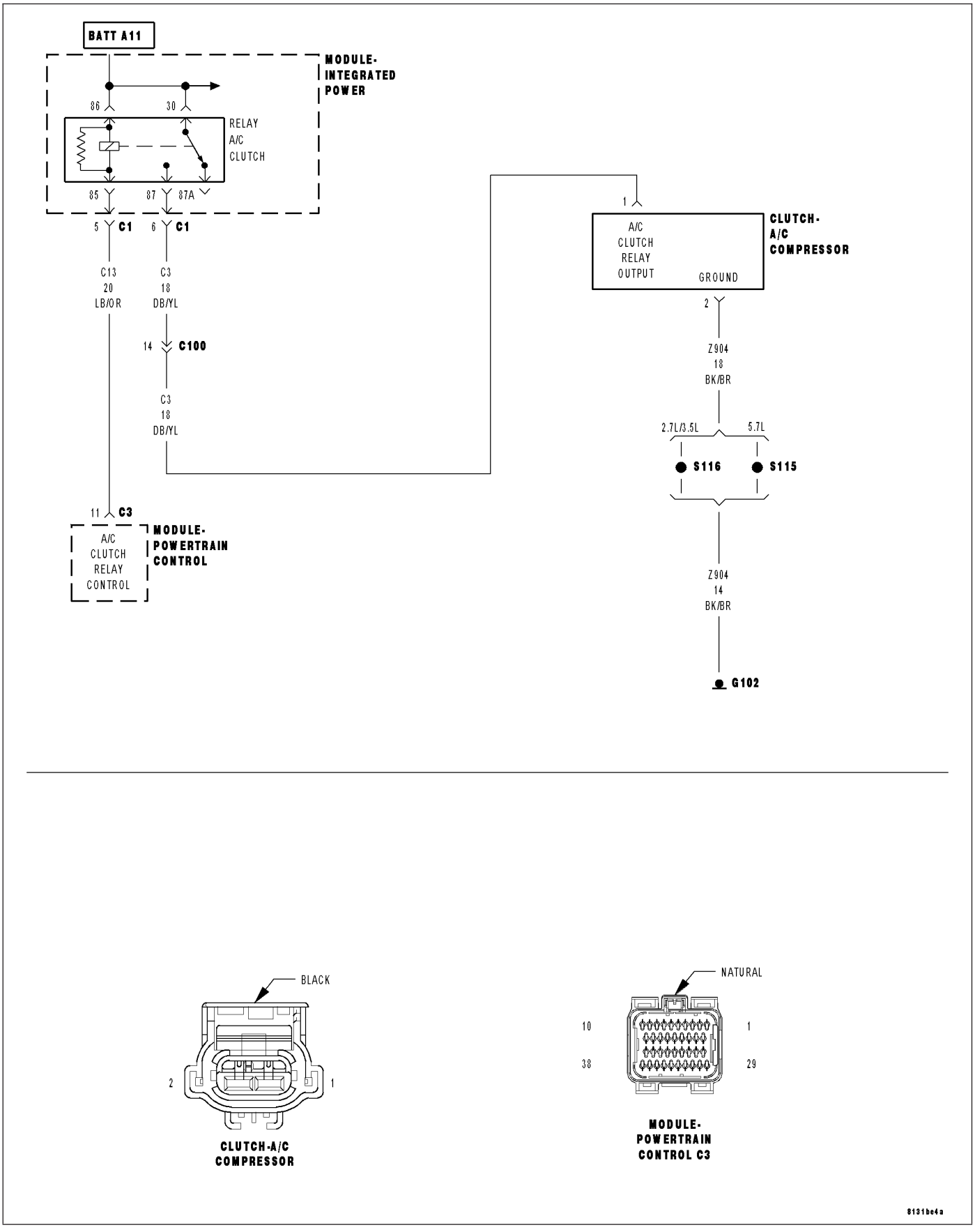

For a complete wiring diagram **Refer to Section 8W**.

- **When Monitored:**
  With the ignition on. Battery voltage greater than 10 volts. A/C Switch on.
- **Set Condition:**
  An open or shorted condition is detected in the A/C clutch relay control circuit. One Trip Fault. Three good trips to turn off the MIL.

Possible Causes
INTERNAL FUSED IGNITION SWITCH OUTPUT CIRCUIT
(C13) A/C CLUTCH RELAY CONTROL CIRCUIT OPEN
(C13) A/C CLUTCH RELAY CONTROL CIRCUIT SHORTED TO GROUND
A/C CLUTCH RELAY
PCM

Always perform the Pre-Diagnostic Troubleshooting procedure before proceeding. (Refer to 9 - ENGINE - DIAGNOSIS AND TESTING).

Diagnostic Test

1. A/C CLUTCH RELAY OPERATION

Ignition on, engine not running.
With a scan tool, actuate the A/C Clutch Relay.

Is the A/C Clutch Relay operating?

Yes >> Refer to the INTERMITTENT CONDITION Diagnostic Procedure.
Perform the POWERTRAIN VERIFICATION TEST. (Refer to 9 - ENGINE - STANDARD PROCEDURE)

No >> Go To 2

2. A/C CLUTCH RELAY RESISTANCE

Turn the ignition off.
Remove the A/C Clutch Relay from the IPM.
Measure the resistance of the A/C Clutch Relay Coil.

Is the resistance between 60 to 80 ohms?

Yes >> Go To 3

No >> Replace the A/C Clutch Relay.
Perform the POWERTRAIN VERIFICATION TEST. (Refer to 9 - ENGINE - STANDARD PROCEDURE)

3. INTERNAL FUSED B+ CIRCUIT

Ignition on, engine not running.
Using a 12-volt test light connected to ground, probe the Internal Fused B+ circuit in the connection.

Does the test light illuminate brightly?

Yes >> Go To 4

No >> Repair the open or short to ground in the Internal Fused B+ circuit. Check and replace any open fuses.
Perform the POWERTRAIN VERIFICATION TEST. (Refer to 9 - ENGINE - STANDARD PROCEDURE)

4. (C13) A/C CLUTCH RELAY CONTROL CIRCUIT OPEN

Turn the ignition off.

Disconnect the PCM harness connectors.

CAUTION: Do not probe the PCM harness connectors. Probing the PCM harness connectors will damage the PCM terminals resulting in poor terminal to pin connection. Install Miller Special Tool #8815 to perform diagnosis.

Measure the resistance of the (C13) A/C Clutch Relay Control circuit from the relay connection to the appropriate terminal of special tool #8815.

Is the resistance below 5.0 ohms?

Yes >> Go To 5

No >> Repair the open in the (C13) A/C Clutch Relay Control circuit.
Perform the POWERTRAIN VERIFICATION TEST. (Refer to 9 - ENGINE - STANDARD PROCEDURE)

5. (C13) A/C CLUTCH RELAY CONTROL CIRCUIT SHORTED TO GROUND

Measure the resistance between ground and the (C13) A/C Clutch Relay Control circuit at the IPM.

Is the resistance below 5.0 ohms?

Yes >> Repair the short to ground in the (C13) A/C Relay Clutch Control circuit.
Perform the POWERTRAIN VERIFICATION TEST. (Refer to 9 - ENGINE - STANDARD PROCEDURE)

No >> Go To 6

6. PCM

NOTE: Before continuing, check the PCM harness connector terminals for corrosion, damage, or terminal push out. Repair as necessary.

Using the schematics as a guide, inspect the wire harness and connectors. Pay particular attention to all Power and Ground circuits.

Were there any problems found?

Yes >> Repair as necessary.
Perform the POWERTRAIN VERIFICATION TEST. (Refer to 9 - ENGINE - STANDARD PROCEDURE)

No >> Replace and program the Powertrain Control Module per Service Information.
Perform the POWERTRAIN VERIFICATION TEST. (Refer to 9 - ENGINE - STANDARD PROCEDURE)

P0652-SENSOR REFERENCE VOLTAGE 2 CIRCUIT LOW

For a complete wiring diagram **Refer to Section 8W**.

- **When Monitored:**
  Ignition on.
- **Set Condition:**
  When the PCM recognizes the Auxiliary 5-volt Supply circuit voltage is too low One Trip Fault. ETC light is flashing.

Possible Causes
(F856) AUXILIARY 5-VOLT SUPPLY SHORTED TO GROUND
SENSOR SHORTED TO GROUND
CAM POSITION SENSOR
PCM

Always perform the Pre-Diagnostic Troubleshooting procedure before proceeding. (Refer to 9 - ENGINE - DIAGNOSIS AND TESTING).

Diagnostic Test

1. ACTIVE DTC

Ignition on, engine not running.

With a scan tool, read DTCs.

NOTE: Improperly installed aftermarket accessories can cause this DTC to set. Check for wiring added by customer.

Is the DTC active at this time?

Yes >> Go To 2

No >> Refer to the INTERMITTENT CONDITION Diagnostic Procedure.
Perform the POWERTRAIN VERIFICATION TEST. (Refer to 9 - ENGINE - STANDARD PROCEDURE)

2. (F856) AUXILIARY 5-VOLT SUPPLY SHORTED TO GROUND

Turn the ignition off.

Disconnect the PCM harness connectors.

Disconnect all the Sensors that share the (F856) Auxiliary 5-volt Supply circuit.

Measure the resistance between ground and the (F856) Auxiliary 5-volt Supply circuit in the CMP Sensor harness connector.

Is the resistance below 100 ohms?

Yes >> Repair the short to ground in the (F856) Auxiliary 5-volt Supply circuit.
Perform the POWERTRAIN VERIFICATION TEST. (Refer to 9 - ENGINE - STANDARD PROCEDURE)

No >> Go To 3

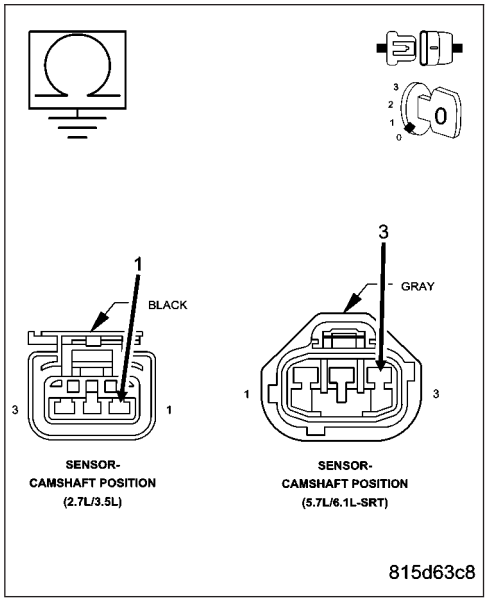

3. CMP SENSOR

Turn the ignition off.

Reconnect all the previously disconnected Sensors except for the CMP Sensor harness connector.

Ignition on, engine not running.

Measure the voltage on the (F856) Auxiliary 5-volt Supply circuit in the CMP Sensor harness connector.

Is the voltage below 4.5 volts?

Yes >> Go To 4

No >> Replace the Cam Position Sensor.
Perform the POWERTRAIN VERIFICATION TEST. (Refer to 9 - ENGINE - STANDARD PROCEDURE)

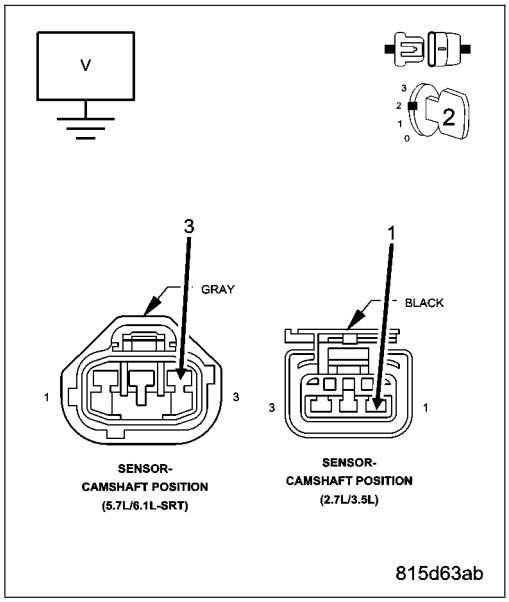

4. INTERNAL SENSOR SHORTED

Measure the voltage on the (F856) Auxiliary 5-volt Supply circuit at the CMP Sensor harness connector.

CAUTION: You must Turn the Ignition OFF when disconnecting any of the Sensor harness connectors and Turn the Ignition On to check the voltage readings.

While monitoring the voltage, disconnect each Sensor harness connector that shares the (F856) Auxiliary 5-volt Supply circuit, one at a time.

Does the voltage increase above 4.5 volts when disconnecting any of the Sensor harness connectors?

Yes >> Replace the Sensor that causes the (F856) Auxiliary 5-volt Supply circuit voltage to increase when disconnected.
Perform the POWERTRAIN VERIFICATION TEST. (Refer to 9 - ENGINE - STANDARD PROCEDURE)

No >> Go To 5

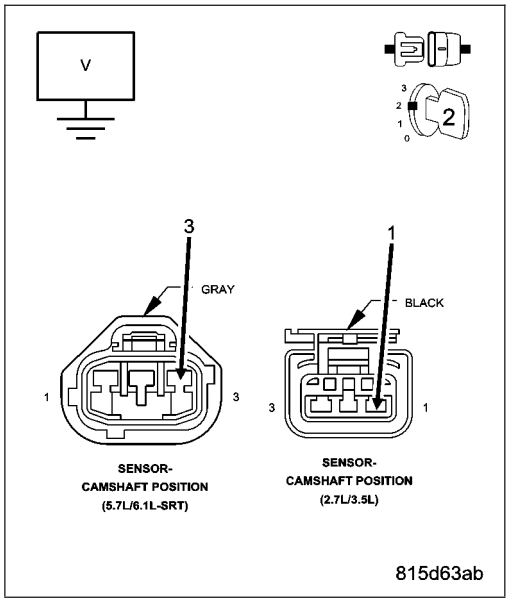

5. PCM

NOTE: Before continuing, check the PCM harness connector terminals for corrosion, damage, or terminal push out. Repair as necessary.
Using the schematics as a guide, inspect the wire harness and connectors. Pay particular attention to all Power and Ground circuits.

Were there any problems found?

Yes >> Repair as necessary.
Perform the POWERTRAIN VERIFICATION TEST. (Refer to 9 - ENGINE - STANDARD PROCEDURE)

No >> Replace and program the Powertrain Control Module per Service Information.
Perform the POWERTRAIN VERIFICATION TEST. (Refer to 9 - ENGINE - STANDARD PROCEDURE)

P0653-SENSOR REFERENCE VOLTAGE 2 CIRCUIT HIGH

For a complete wiring diagram **Refer to Section 8W**.

- **When Monitored:**
  Ignition on.
- **Set Condition:**
  When the PCM recognizes the Auxiliary 5-volt Supply circuit voltage is too high. One Trip Fault. ETC light is flashing.

Possible Causes
(F856) AUXILIARY 5-VOLT SUPPLY SHORTED TO BATTERY VOLTAGE
PCM

Always perform the Pre-Diagnostic Troubleshooting procedure before proceeding. (Refer to 9 - ENGINE - DIAGNOSIS AND TESTING).

Diagnostic Test

1. ACTIVE DTC

Ignition on, engine not running.

With a scan tool, read DTCs.

Is the DTC active at this time?

Yes >> Go To 2

No >> Refer to the INTERMITTENT CONDITION Diagnostic Procedure.
Perform the POWERTRAIN VERIFICATION TEST. (Refer to 9 - ENGINE - STANDARD PROCEDURE)

2. (F856) AUXILIARY 5-VOLT SUPPLY SHORTED TO BATTERY VOLTAGE

Turn the ignition off.

Disconnect the PCM harness connectors.

Disconnect all the Sensors that share the (F856) Auxiliary 5-volt Supply circuit.

NOTE: Improperly installed aftermarket accessories can cause this DTC to set. Check for wiring added by customer.

Ignition on, engine not running.

Measure the voltage on the (F856) Auxiliary 5-volt Supply circuit at the CMP Sensor harness connector.

Is the voltage present?

Yes >> Repair the short to battery voltage in the (F856) Auxiliary 5-volt Supply circuit.
Perform the POWERTRAIN VERIFICATION TEST. (Refer to 9 - ENGINE - STANDARD PROCEDURE)

No >> Go To 3

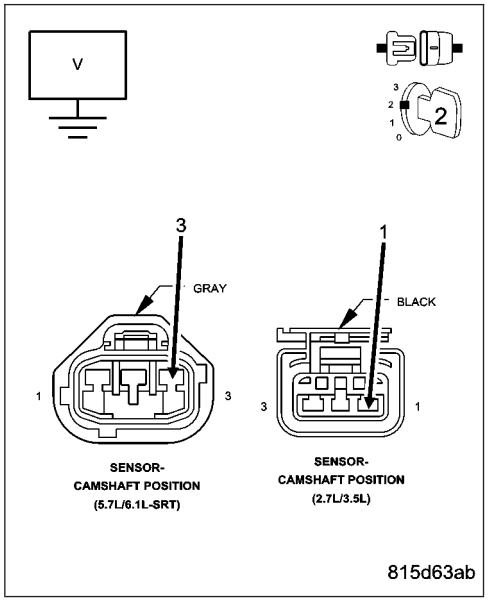

3. PCM

NOTE: Before continuing, check the PCM harness connector terminals for corrosion, damage, or terminal push out. Repair as necessary.
Using the schematics as a guide, inspect the wire harness and connectors. Pay particular attention to all Power and Ground circuits.

Were there any problems found?

Yes >> Repair as necessary.
Perform the POWERTRAIN VERIFICATION TEST. (Refer to 9 - ENGINE - STANDARD PROCEDURE)

No >> Replace and program the Powertrain Control Module per Service Information.
Perform the POWERTRAIN VERIFICATION TEST. (Refer to 9 - ENGINE - STANDARD PROCEDURE)

P0660–MANIFOLD TUNE VALVE SOLENOID CIRCUIT

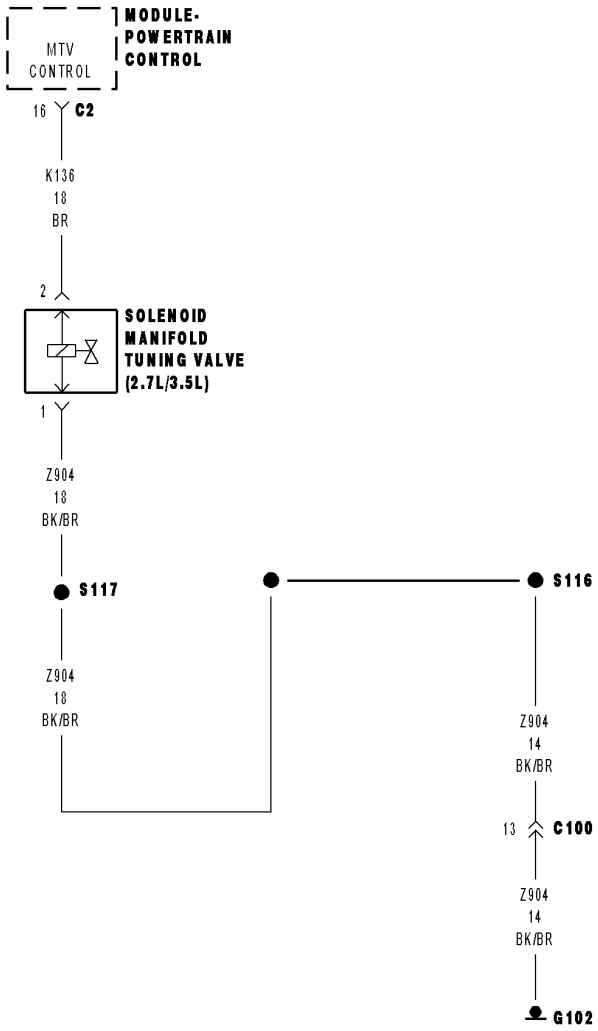

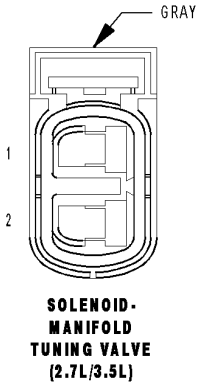

SOLENOID-
MANIFOLD
TUNING VALVE
(2.7L/3.5L)

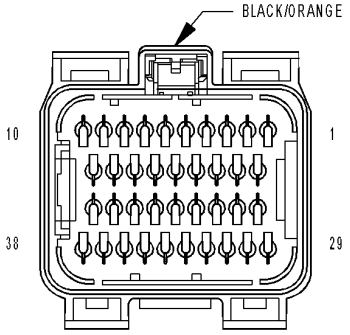

MODULE-
POWERTRAIN
CONTROL C2

81378eb5

For a complete wiring diagram **Refer to Section 8W**.

- **When Monitored:**
  With the ignition on. ASD Relay energized. Battery voltage greater than 10 volts.
- **Set Condition:**
  The PCM senses the MTV in not at the desired state. One Trip Fault.

Possible Causes
MTV (Z904) GROUND CIRCUIT OPEN
(K136) MTV CONTROL CIRCUIT SHORT TO BATTERY VOLTAGE
(K136) MTV CONTROL CIRCUIT SHORT TO GROUND
(K136) MTV CONTROL CIRCUIT OPEN
MANIFOLD TUNED VALVE SOLENOID
PCM

Always perform the Pre-Diagnostic Troubleshooting procedure before proceeding. (Refer to 9 - ENGINE - DIAGNOSIS AND TESTING).

Diagnostic Test

1. ACTIVE DTC

Ignition on, engine not running.
With a scan tool, read DTC.

Is the DTC active at this time?

Yes >> Go To 2

No >> Refer to the INTERMITTENT CONDITION Diagnostic Procedure.
Perform the POWERTRAIN VERIFICATION TEST. (Refer to 9 - ENGINE - STANDARD PROCEDURE)

2. MANIFOLD TUNE VALVE SOLENOID OPERATION

Turn the ignition off.
Disconnect the MTV Solenoid harness connector.
Ignition on, engine not running.
Using a 12–volt test light, connect one end to the (K136) MTV Control circuit and the other end the (Z904) Ground circuit in the MTV Solenoid harness connector.
With the scan tool, actuate (Toggle) the MTV Solenoid.

Does the test light illuminate brightly and flash on and off?

Yes >> Replace the Manifold Tune Valve Solenoid.
Perform the POWERTRAIN VERIFICATION TEST. (Refer to 9 - ENGINE - STANDARD PROCEDURE)

No >> Go To 3

3. MTV SOLENOID (Z904) GROUND CIRCUIT OPEN

Measure the resistance between the Ground circuit in the MTV Solenoid harness connector and ground.

Is the resistance below 5.0 ohms?

Yes >> Go To 4

No >> Repair the open in the MTV Solenoid Ground circuit.
Perform the POWERTRAIN VERIFICATION TEST. (Refer to 9 - ENGINE - STANDARD PROCEDURE)

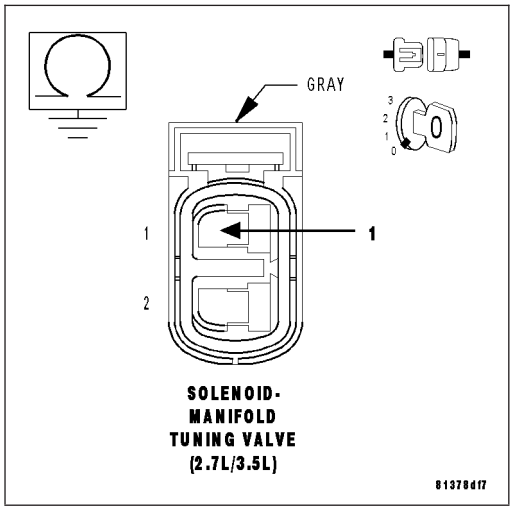

4. (K136) MTV CONTROL CIRCUIT SHORT TO BATTERY VOLTAGE

Turn the ignition off

Disconnect the PCM harness connectors.

Turn the ignition on.

Measure the voltage of the (K136) MTV Control circuit in the MTV Solenoid harness connector.

Does the voltage indicate voltage present?

Yes >> Repair the short to voltage in the (K136) MTV Control circuit.
Perform the POWERTRAIN VERIFICATION TEST. (Refer to 9 - ENGINE - STANDARD PROCEDURE)

No >> Go To 5

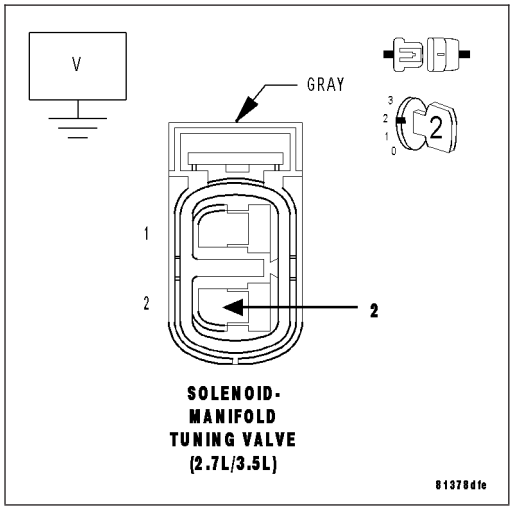

5. (K136) MTV CONTROL CIRCUIT SHORT TO GROUND

Turn the ignition off.

Measure the resistance between the (K136) MTV Control circuit in the MTV Solenoid harness connector and ground.

Is the resistance below 5.0 ohms?

Yes >> Repair the short to ground in the (K136) MTV Control circuit.
Perform the POWERTRAIN VERIFICATION TEST. (Refer to 9 - ENGINE - STANDARD PROCEDURE)

No >> Go To 6

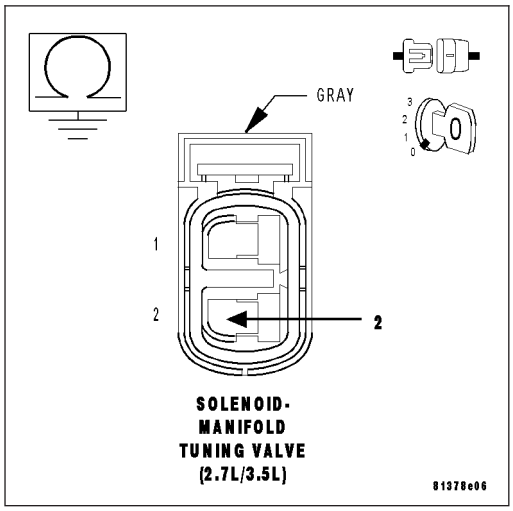

6. (K136) MTV CONTROL CIRCUIT OPEN

CAUTION: Do not probe the PCM harness connectors. Probing the PCM harness connectors will damage the PCM terminals resulting in poor terminal to pin connection. Install Miller Special Tool #8815 to perform diagnosis.

Measure the resistance of the (K136) MTV Control circuit between from the MTV Solenoid harness connector to the appropriate terminal of the special tool.

Is the resistance below 5.0 ohms?

Yes >> Go To 7

No >> Repair the open in the (K136) MTV Control circuit.
Perform the POWERTRAIN VERIFICATION TEST. (Refer to 9 - ENGINE - STANDARD PROCEDURE)
Go To 7

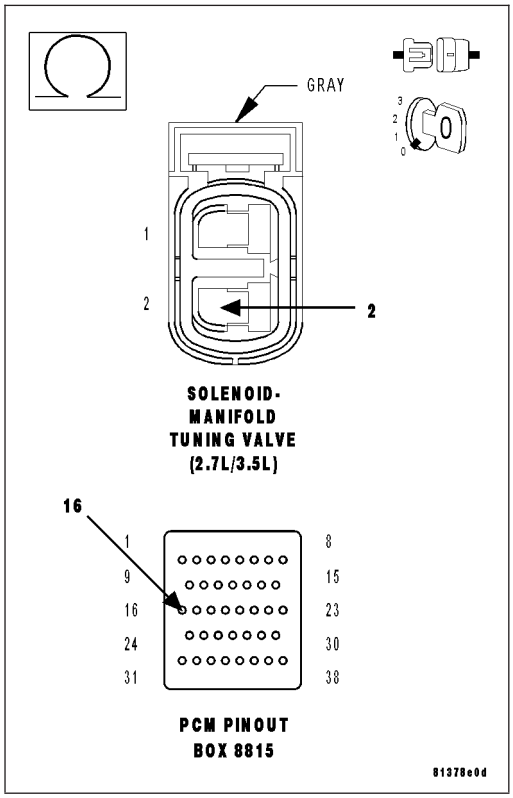

7. PCM

NOTE: Before continuing, check the PCM harness connector terminals for corrosion, damage, or terminal push out. Repair as necessary.

Using the schematics as a guide, inspect the wire harness and connectors. Pay particular attention to all Power and Ground circuits.

Were there any problems found?

Yes >> Repair as necessary.
Perform the POWERTRAIN VERIFICATION TEST. (Refer to 9 - ENGINE - STANDARD PROCEDURE)

No >> Replace and program the Powertrain Control Module per Service Information.
Perform the POWERTRAIN VERIFICATION TEST. (Refer to 9 - ENGINE - STANDARD PROCEDURE)

P0685-AUTO SHUTDOWN RELAY CONTROL CIRCUIT

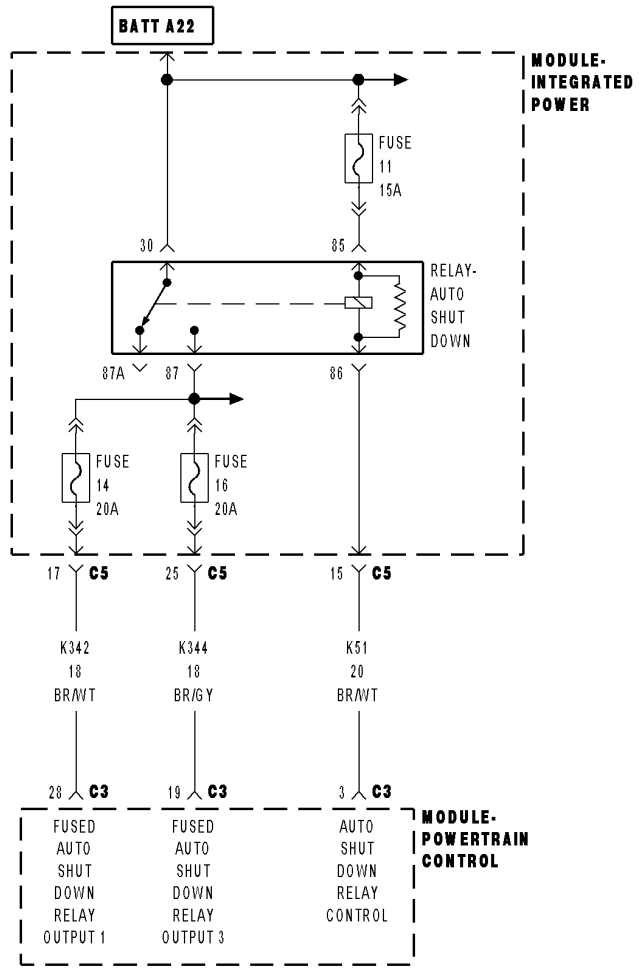

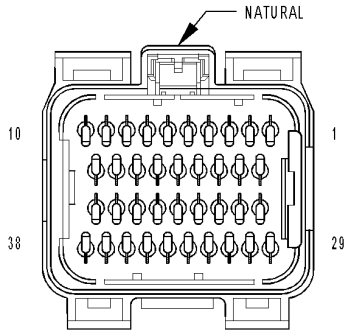

MODULE-
POWERTRAIN
CONTROL C3

8131c05a

For a complete wiring diagram **Refer to Section 8W**.

- **When Monitored:**
  With ignition on. Battery voltage above 10 volts.
- **Set Condition:**
  An open or shorted condition is detected in the ASD relay control circuit. One Trip Fault. Three good trips to turn off the MIL.

Possible Causes
(A922) FUSED B+ CIRCUITS
(K51) ASD RELAY CONTROL CIRCUIT OPEN
(K51) ASD RELAY CONTROL CIRCUIT SHORTED TO GROUND
ASD RELAY
PCM

Always perform the Pre-Diagnostic Troubleshooting procedure before proceeding. (Refer to 9 - ENGINE - DIAGNOSIS AND TESTING).

Diagnostic Test

1. ASD RELAY OPERATION

Ignition on, engine not running.

With a scan tool, actuate the ASD Relay.

Is the ASD Relay operating?

Yes >> Refer to the INTERMITTENT CONDITION Diagnostic Procedure.
Perform the POWERTRAIN VERIFICATION TEST. (Refer to 9 - ENGINE - STANDARD PROCEDURE)

No >> Go To 2

2. (A922) FUSED B+ CIRCUITS

Turn the ignition off.

Remove the ASD Relay from the IPM.

Using a 12-volt test light connected to ground, probe the (A922) Fused B+ circuits in the IPM.

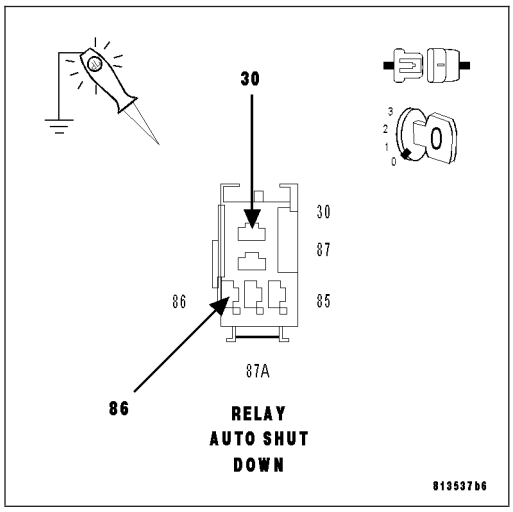

Does the test light illuminate brightly?

Yes >> Go To 3

No >> Repair the open or short to ground in the (A922) Fused B+ circuits. Inspect and replace any open fuses.
Perform the POWERTRAIN VERIFICATION TEST. (Refer to 9 - ENGINE - STANDARD PROCEDURE)

3. ASD RELAY

Measure the resistance of the ASD Relay Coil.

Is the resistance between 60 to 80 ohms?

Yes >> Go To 4

No >> Replace the ASD Relay.
Perform the POWERTRAIN VERIFICATION TEST. (Refer to 9 - ENGINE - STANDARD PROCEDURE)

4. (K51) ASD RELAY CONTROL CIRCUIT OPEN

Disconnect the PCM harness connectors.

CAUTION: Do not probe the PCM harness connectors. Probing the PCM harness connectors will damage the PCM terminals resulting in poor terminal to pin connection. Install Miller Special Tool #8815 to perform diagnosis.

Measure the resistance of the (K51) ASD Relay Control circuit from the IPM to the appropriate terminals of special tool #8815.

Is the resistance below 5.0 ohms?

Yes >> Go To 5

No >> Repair the open in the (K51) ASD Relay Control circuit.
Perform the POWERTRAIN VERIFICATION TEST. (Refer to 9 - ENGINE - STANDARD PROCEDURE)

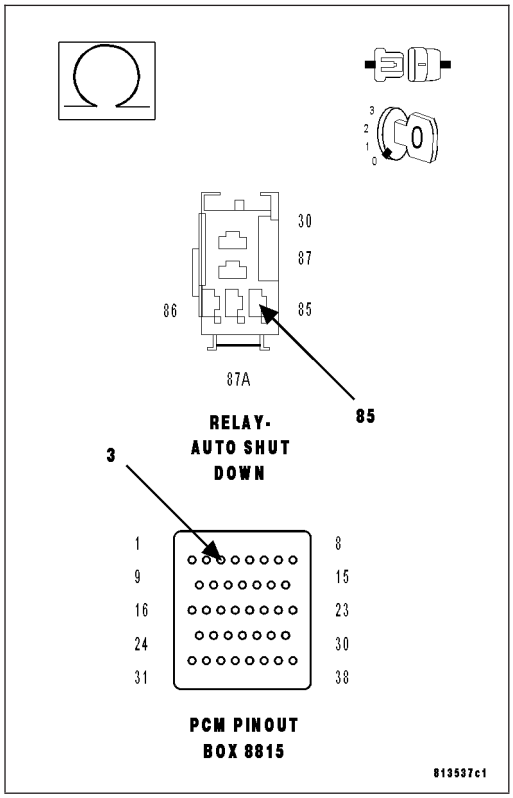

5. (K51) ASD RELAY CONTROL CIRCUIT SHORTED TO GROUND

Measure the resistance between ground and the (K51) ASD Relay Control circuit in the IPM.

Is the resistance below 100 ohms?

Yes >> Repair the short to ground in the (K51) ASD Relay Control circuit.
Perform the POWERTRAIN VERIFICATION TEST. (Refer to 9 - ENGINE - STANDARD PROCEDURE)

No >> Go To 6

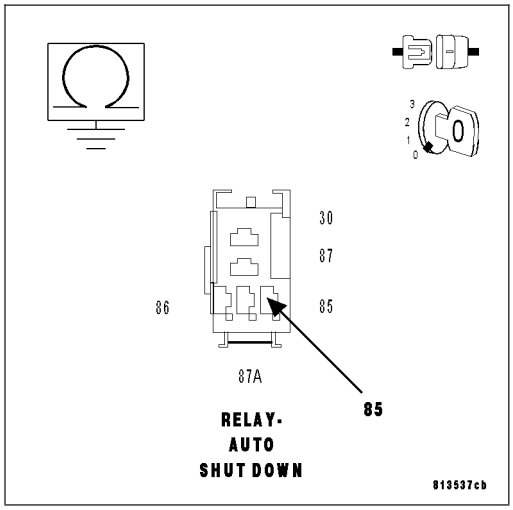

6. PCM

NOTE: Before continuing, check the PCM harness connector terminals for corrosion, damage, or terminal push out. Repair as necessary.
Using the schematics as a guide, inspect the wire harness and connectors. Pay particular attention to all Power and Ground circuits.

Were there any problems found?

Yes >> Repair as necessary.
Perform the POWERTRAIN VERIFICATION TEST. (Refer to 9 - ENGINE - STANDARD PROCEDURE)

No >> Replace and program the Powertrain Control Module per Service Information.
Perform the POWERTRAIN VERIFICATION TEST. (Refer to 9 - ENGINE - STANDARD PROCEDURE)

P0688-AUTO SHUTDOWN RELAY SENSE CIRCUIT LOW

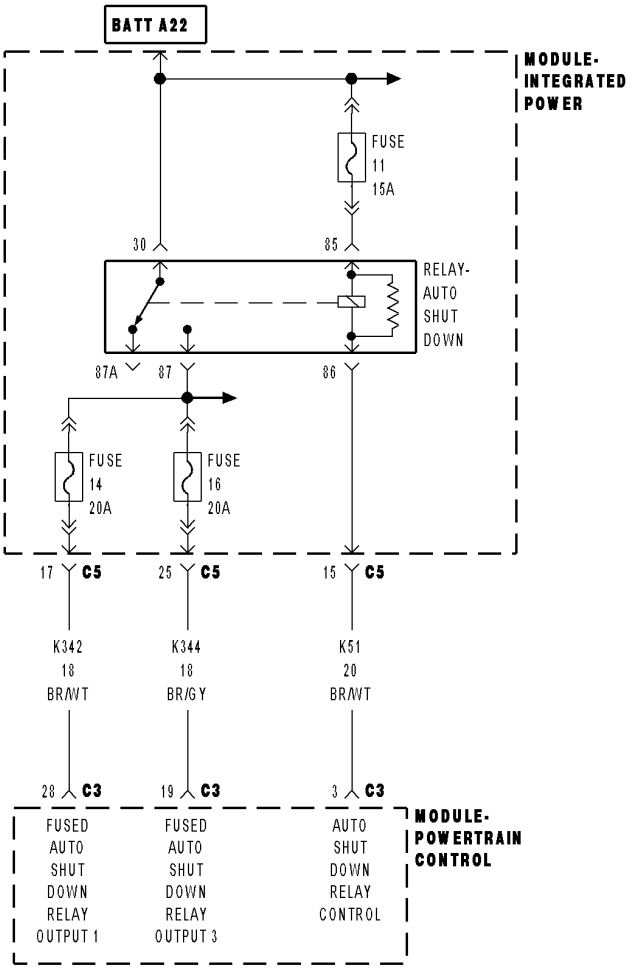

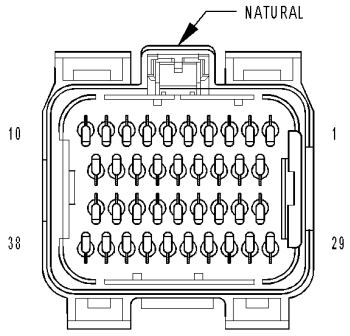

MODULE-
POWERTRAIN
CONTROL C3

8131c05a

For a complete wiring diagram **Refer to Section 8W**.

- **When Monitored:**
  With ignition key on. Battery voltage greater than 10 volts.
- **Set Condition:**
  No voltage sensed at the PCM when the ASD relay is energized. One Trip Fault. Three good trips to turn off the MIL.

Possible Causes
(A922) FUSED B+ CIRCUITS
ASD RELAY OUTPUT CIRCUIT OPEN
ASD RELAY
PCM

Always perform the Pre-Diagnostic Troubleshooting procedure before proceeding. (Refer to 9 - ENGINE - DIAGNOSIS AND TESTING).

Diagnostic Test

1. VERIFY ASD DTC

NOTE: Diagnose P0685 - Auto Shutdown Relay Control Circuit first if it set along with this DTC.
With a scan tool, erase the DTC.

Attempt to start the engine. If the engine will not start, crank the engine for at least 15 seconds. It may be necessary to repeat several times.

Does the DTC reset?

Yes >> Go To 2

No >> Refer to the INTERMITTENT CONDITION Diagnostic Procedure.
Perform the POWERTRAIN VERIFICATION TEST. (Refer to 9 - ENGINE - STANDARD PROCEDURE)

2. ENGINE OPERATION

Attempt to start the engine.

Does the engine start?

Yes >> Go To 3

No >> Go To 4

3. ASD RELAY OUTPUT CIRCUIT OPEN

Turn the ignition off.
Remove the ASD Relay.
Disconnect the PCM harness connectors.

CAUTION: Do not probe the PCM harness connectors. Probing the PCM harness connectors will damage the PCM terminals resulting in poor terminal to pin connection. Install Miller Special Tool #8815 to perform diagnosis.

Measure the resistance of the ASD Relay Output circuits from the Relay connection to the appropriate terminals of special tool #8815.

Is the resistance below 5.0 ohms?

Yes >> Go To 7

No >> Repair the open in the ASD Relay Output circuit (s).
Perform the POWERTRAIN VERIFICATION TEST. (Refer to 9 - ENGINE - STANDARD PROCEDURE)

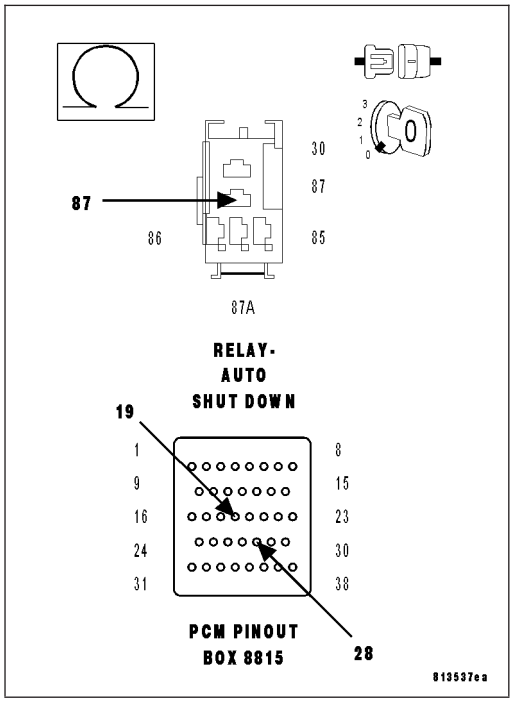

4. ASD RELAY

Turn the ignition off.
Install a substitute relay in place of the ASD Relay.
Ignition on, engine not running.
With a scan tool, erase DTCs.
Attempt to start the engine.
With a scan tool, read DTCs.

Does the DTC reset?

Yes >> Go To 5

No >> Replace the ASD Relay.
Perform the POWERTRAIN VERIFICATION TEST. (Refer to 9 - ENGINE - STANDARD PROCEDURE)

5. (A922) FUSED B+ CIRCUITS

Turn the ignition off.

Using a 12-volt test light connected to ground, probe the (A922) Fused B+ circuits at the Relay connection.

Does the test light illuminate brightly?

Yes >> Go To 6

No >> Repair the open or short to ground in the (A922) Fused B+ circuits. Inspect the related fuse and repair as necessary.
Perform the POWERTRAIN VERIFICATION TEST. (Refer to 9 - ENGINE - STANDARD PROCEDURE)

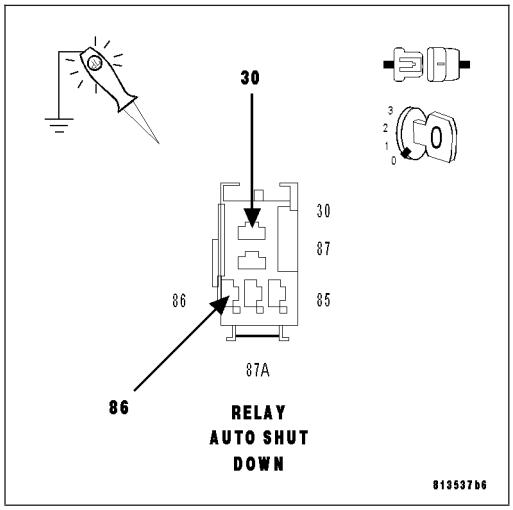

6. ASD RELAY OUTPUT CIRCUIT OPEN

Disconnect the PCM harness connectors.

CAUTION: Do not probe the PCM harness connectors. Probing the PCM harness connectors will damage the PCM terminals resulting in poor terminal to pin connection. Install Miller Special Tool #8815 to perform diagnosis.

Measure the resistance of the ASD Relay Output circuits from the Relay connection to the appropriate terminals of special tool #8815.

Is the resistance below 5.0 ohms?

Yes >> Go To 7

No >> Repair the open in the ASD Relay Output circuit(s).
Perform the POWERTRAIN VERIFICATION TEST. (Refer to 9 - ENGINE - STANDARD PROCEDURE)

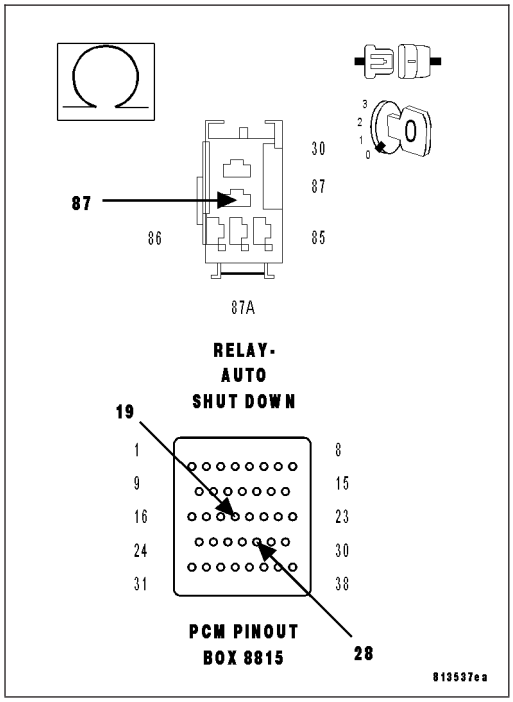

7. PCM

NOTE: Before continuing, check the PCM harness connector terminals for corrosion, damage, or terminal push out. Repair as necessary.
Using the schematics as a guide, inspect the wire harness and connectors. Pay particular attention to all Power and Ground circuits.

Were there any problems found?

Yes >> Repair as necessary.
Perform the POWERTRAIN VERIFICATION TEST. (Refer to 9 - ENGINE - STANDARD PROCEDURE)

No >> Replace and program the Powertrain Control Module per Service Information.
Perform the POWERTRAIN VERIFICATION TEST. (Refer to 9 - ENGINE - STANDARD PROCEDURE)

P0700-TRANSMISSION CONTROL SYSTEM (MIL REQUEST)

For a complete wiring diagram **Refer to Section 8W**.

- **When Monitored:**
  Ignition on and battery voltage greater than 10 volts.
- **Set Condition:**
  An active DTC is stored in the TCM. One Trip Fault. Three good trips to turn off the MIL.

Possible Causes
DTC PRESENT IN THE TRANSMISSION CONTROL MODULE

Always perform the Pre-Diagnostic Troubleshooting procedure before proceeding. (Refer to 9 - ENGINE - DIAGNOSIS AND TESTING).

Diagnostic Test

1. DTC PRESENT IN TRANSMISSION CONTROL MODULE

This is an informational DTC letting you know that a DTC(s) is stored in the Transmission Control Module.

Erase this DTC from the PCM after all Transmission DTC(s) have been repaired.

Using a scan tool, read the Transmission Controller DTC and refer to the Transmission Category and perform the appropriate symptom.

PCM Diagnostic Information complete.

Continue

Test Complete.

P0703-BRAKE SWITCH 2 PERFORMANCE

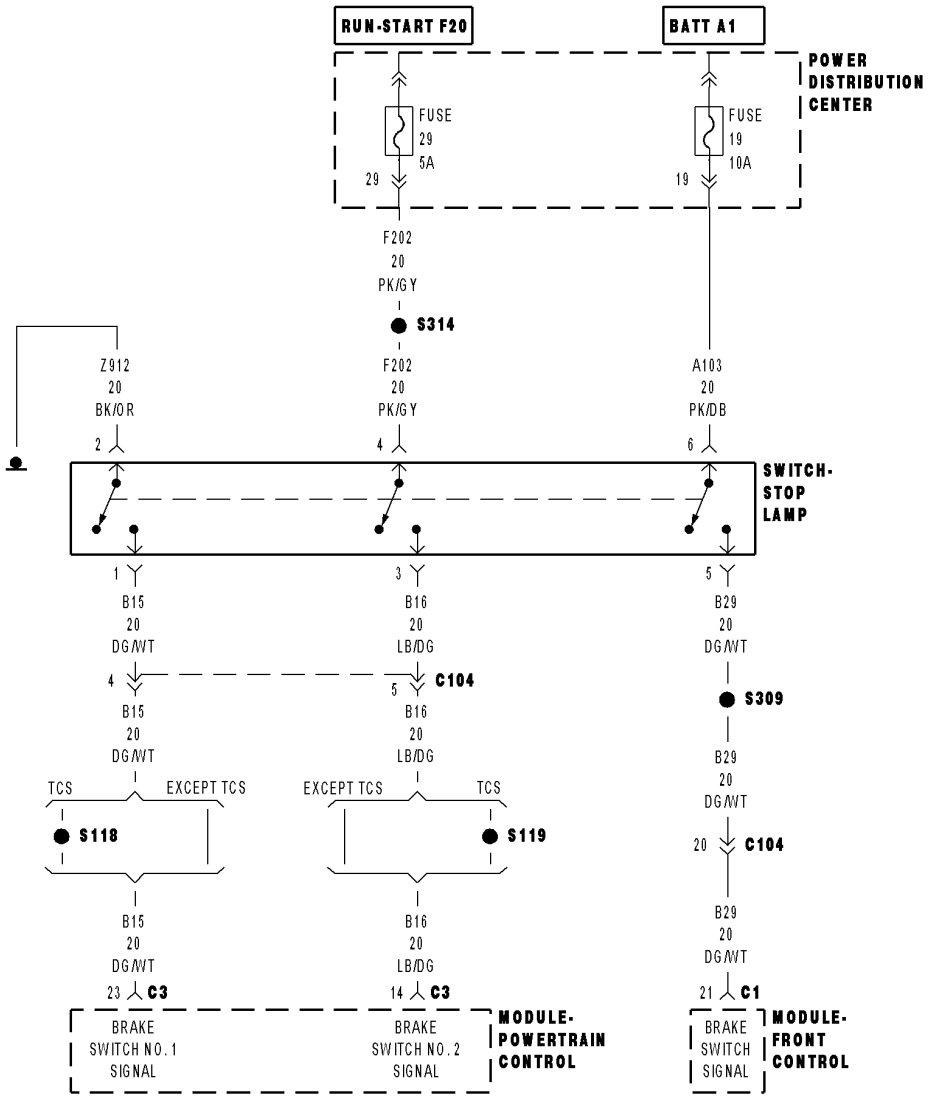

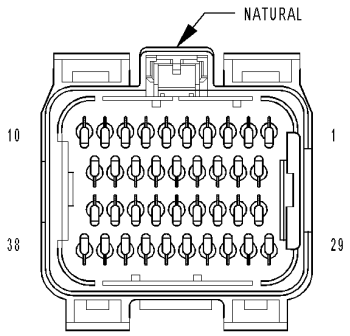

MODULE-POWERTRAIN CONTROL C3

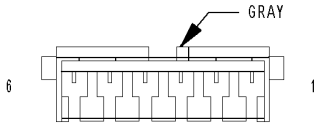

SWITCH-STOP LAMP

8131bdde

For a complete wiring diagram **Refer to Section 8W**.

- **When Monitored:**
  Ignition on.
- **Set Condition:**
  When the PCM recognizes Brake Switch No.2 voltage is not equal to the applied value at the PCM when Brake Switch No.1 is applied. This could be a normal condition. If this condition is seen repeatedly by the PCM the fault is set. Cruise will not work for the rest of the key cycle.

Possible Causes
(A103) FUSED B+ CIRCUIT
(L50) BRAKE LAMP SWITCH OUTPUT CIRCUIT OPEN
(L50) BRAKE LAMP SWITCH OUTPUT CIRCUIT SHORTED TO BATTERY VOLTAGE
(L50) BRAKE LAMP SWITCH OUTPUT CIRCUIT SHORTED TO GROUND
(B29) BRAKE SWITCH NO.1 SIGNAL CIRCUIT OPEN
STOP LAMP SWITCH
PCM

Always perform the Pre-Diagnostic Troubleshooting procedure before proceeding. (Refer to 9 - ENGINE - DIAGNOSIS AND TESTING).

Diagnostic Test

1. ACTIVE DTC

NOTE: Make sure the Stop Lamp Switch is adjusted properly before continuing.

NOTE: Make sure the Stop Lamp Switch is properly wired, such as (B29) Brake Switch No.1 and (L50) Brake Lamp Switch Output are not switched at the harness connector.

Ignition on, engine not running.

With a scan tool, read DTCs.

Is the DTC active at this time?

Yes >> Go To 2

No >> Refer to the INTERMITTENT CONDITION Diagnostic Procedure.
Perform the POWERTRAIN VERIFICATION TEST. (Refer to 9 - ENGINE - STANDARD PROCEDURE)

2. (A103) FUSED B+ CIRCUIT

Turn the ignition off.

Disconnect the Stop Lamp Switch harness connector.

Using a 12-volt test light connected to ground, probe the (A103) Fused B+ circuit in the Stop Lamp Switch harness connector.

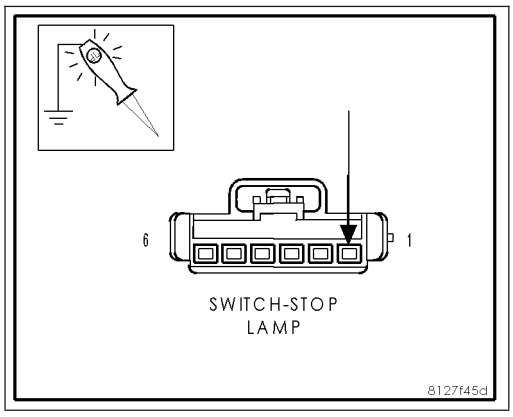

Does the test light illuminate brightly?

Yes >> Go To 3

No >> Repair the open or short to ground in the (A103) Fused B+ circuit. Inspect the related fuse and repair as necessary.
Perform the POWERTRAIN VERIFICATION TEST. (Refer to 9 - ENGINE - STANDARD PROCEDURE)

3. STOP LAMP SWITCH

Turn the ignition off.

Measure the resistance between the (A103) Fused B+ circuit terminal and the (L50) Brake Lamp Switch Output terminal in the Stop Lamp Switch.

Measure the resistance between the (Z429) Ground circuit terminal and the (K29) Brake Switch No.1 Signal terminal in the Stop Lamp Switch.

Apply and release the brake pedal while monitoring the ohmmeter.

Does the resistance change from below 5.0 ohms to open circuit for each circuit check?

Yes >> Go To 4

No >> Replace the Stop Lamp Switch.
Perform the POWERTRAIN VERIFICATION TEST. (Refer to 9 - ENGINE - STANDARD PROCEDURE)

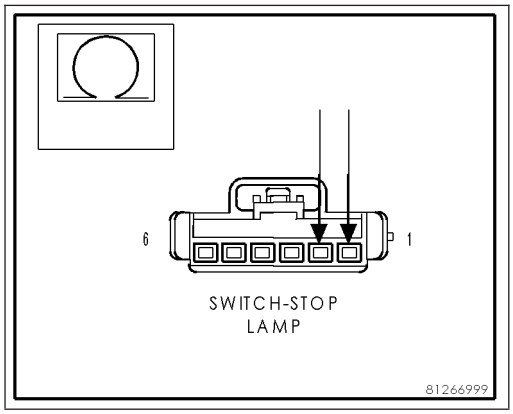

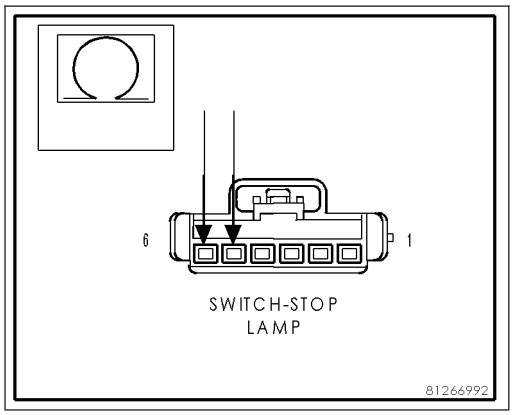

4. (L50) BRAKE LAMP SWITCH OUTPUT CIRCUIT SHORTED TO BATTERY VOLTAGE

Disconnect the PCM harness connectors.

Measure the voltage on the (L50) Brake Lamp Switch Output circuit in the Stop Lamp Switch harness connector.

Ignition on, engine not running.

Is the voltage above 1.0 volt?

Yes >> Repair the short to battery voltage in the (L50) Brake Lamp Switch Output circuit.
Perform the POWERTRAIN VERIFICATION TEST. (Refer to 9 - ENGINE - STANDARD PROCEDURE)

No >> Go To 5

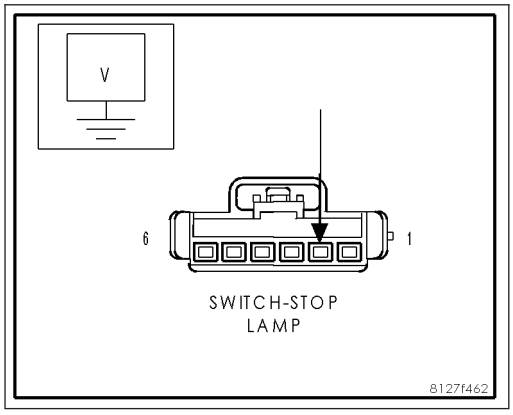

5. (L50) BRAKE LAMP SWITCH OUTPUT CIRCUIT OPEN

Turn the ignition off.

Measure the resistance of the (L50) Brake Lamp Switch Output circuit from the Stop Lamp Switch harness connector to the C1 FCM harness connector.

Is the resistance below 5.0 ohms?

Yes >> Go To 6

No >> Repair the open in the (L50) Brake Lamp Switch Output circuit.

Perform the POWERTRAIN VERIFICATION TEST. (Refer to 9 - ENGINE - STANDARD PROCEDURE)

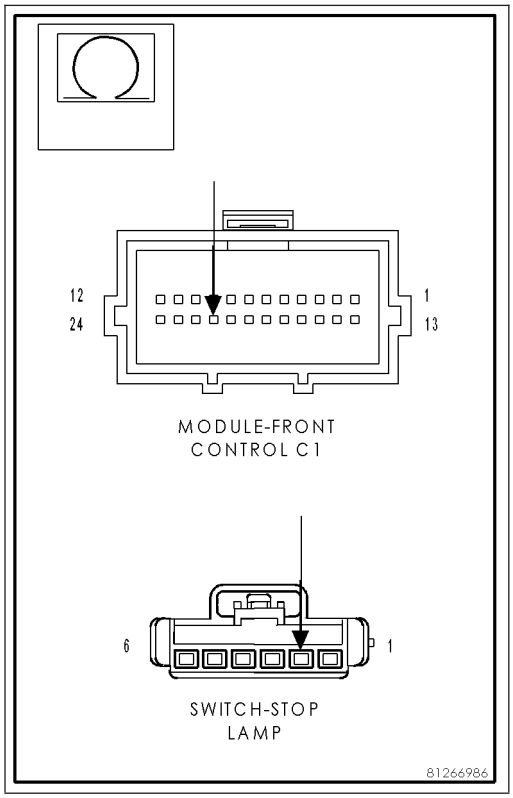

6. (L50) BRAKE LAMP SWITCH OUTPUT CIRCUIT SHORTED TO GROUND

Measure the resistance between ground and the (L50) Brake Lamp Switch Output circuit in the Stop Lamp Switch harness connector.

Is the resistance below 5.0 ohms?

Yes >> Repair the short to ground in the (L50) Brake Lamp Switch Output circuit.

Perform the POWERTRAIN VERIFICATION TEST. (Refer to 9 - ENGINE - STANDARD PROCEDURE)

No >> Go To 7

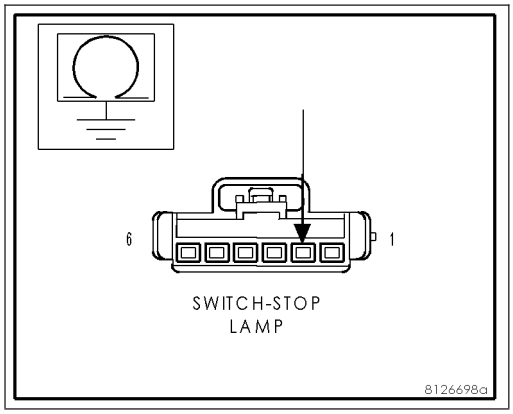

7. (B29) BRAKE SWITCH NO.1 SIGNAL CIRCUIT OPEN

Measure the resistance of the (B29) Brake Switch No.1 Signal circuit from the Stop Lamp Switch harness connector to the appropriate terminal of special tool #8815.

Is the resistance below 5.0 ohms?

Yes >> Go To 8

No >> Repair the open in the (B29) Brake Switch No.1 Signal circuit.
Perform the POWERTRAIN VERIFICATION TEST. (Refer to 9 - ENGINE - STANDARD PROCEDURE)

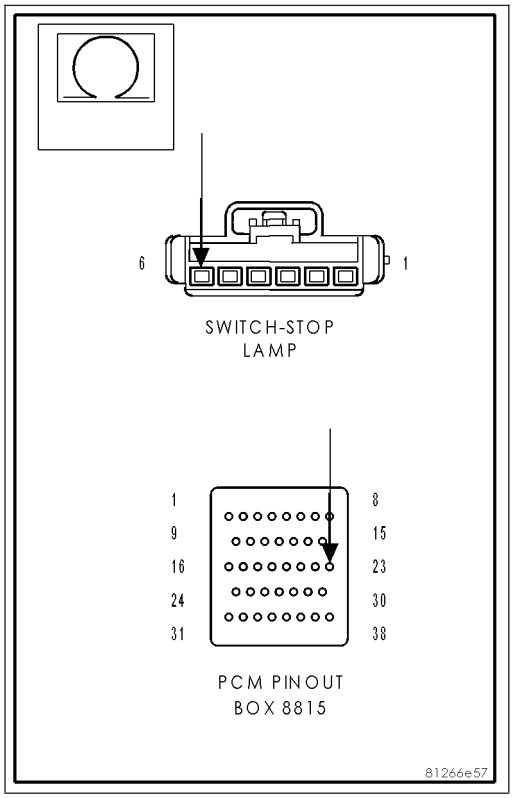

8. PCM

NOTE: Before continuing, check the PCM harness connector terminals for corrosion, damage, or terminal push out. Repair as necessary.
Using the schematics as a guide, inspect the wire harness and connectors. Pay particular attention to all Power and Ground circuits.

Were there any problems found?

Yes >> Repair as necessary.
Perform the POWERTRAIN VERIFICATION TEST. (Refer to 9 - ENGINE - STANDARD PROCEDURE)

No >> Replace and program the Powertrain Control Module per Service Information.
Perform the POWERTRAIN VERIFICATION TEST. (Refer to 9 - ENGINE - STANDARD PROCEDURE)

P0850-PARK/NEUTRAL SWITCH PERFORMANCE

For a complete wiring diagram **Refer to Section 8W**.

- **When Monitored:**
  Continuously with the transmission in Park, Neutral, or Drive and NOT in Limp-in mode.
- **Set Condition:**
  This code will set if the PCM detects an incorrect Park/Neutral switch state for a given mode of vehicle operation. One trip fault. Three good trips to turn off the MIL.

Possible Causes
TCM COMMUNICATION
PCM

Always perform the Pre-Diagnostic Troubleshooting procedure before proceeding. (Refer to 9 - ENGINE - DIAGNOSIS AND TESTING).

Diagnostic Test

1. P/N & D/R NOT IN CORRECT POSITION

NOTE: Before continuing, ensure communication can be established with the TCM. If the scan tool is unable to communicate with the TCM or if there are related communication DTCs present refer to the Communication Category and perform the appropriate symptom.

Ignition on, engine not running.

With the scan tool, read DTCs.

Is the DTC active at this time?

Yes >> Go To 2

No >> Refer to the INTERMITTENT CONDITION Diagnostic Procedure.
Perform the POWERTRAIN VERIFICATION TEST. (Refer to 9 - ENGINE - STANDARD PROCEDURE)

2. CHECKING TCM DTC(S)

Turn the ignition off.

With the scan tool, read TCM DTCs.

Is there any there Transmission DTC(s) present?

Yes >> Refer to the appropriate Transmission symptom in the Transmission category.

No >> Before continuing, check the PCM harness connector terminals for corrosion, damage, or terminal push out. Repair as necessary. Replace and program the Powertrain Module in accordance with the Service Information.
Perform the POWERTRAIN VERIFICATION TEST. (Refer to 9 - ENGINE - STANDARD PROCEDURE)

P1115-GENERAL TEMPERATURE RATIONALITY

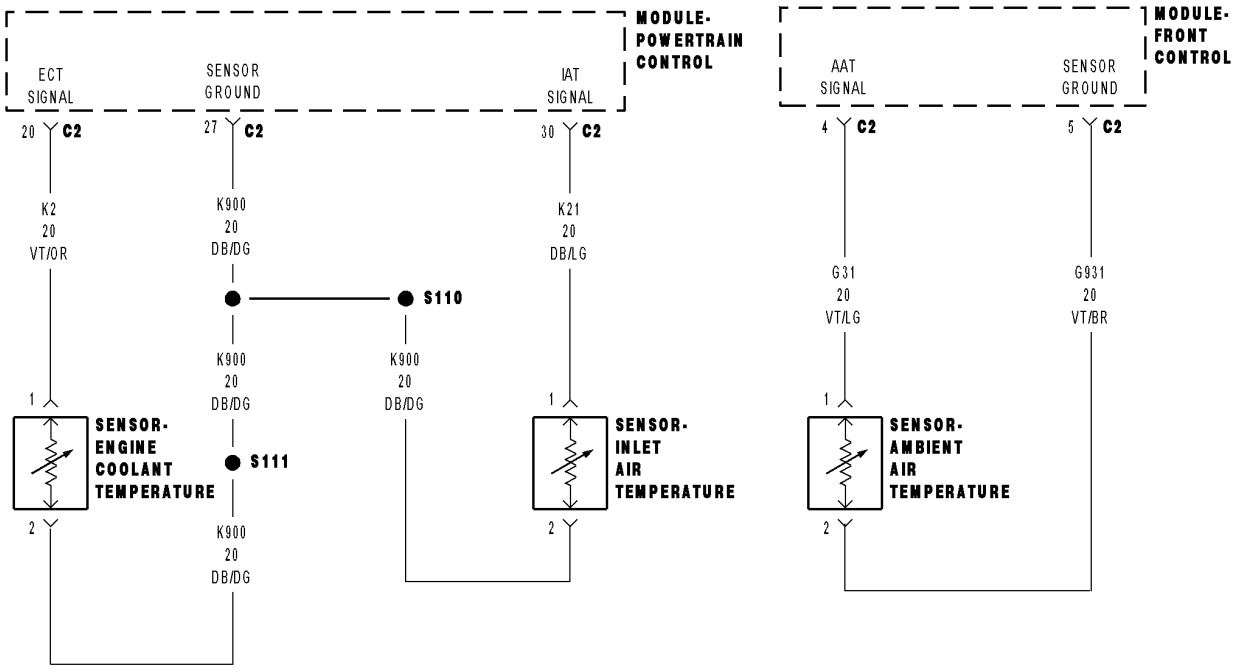

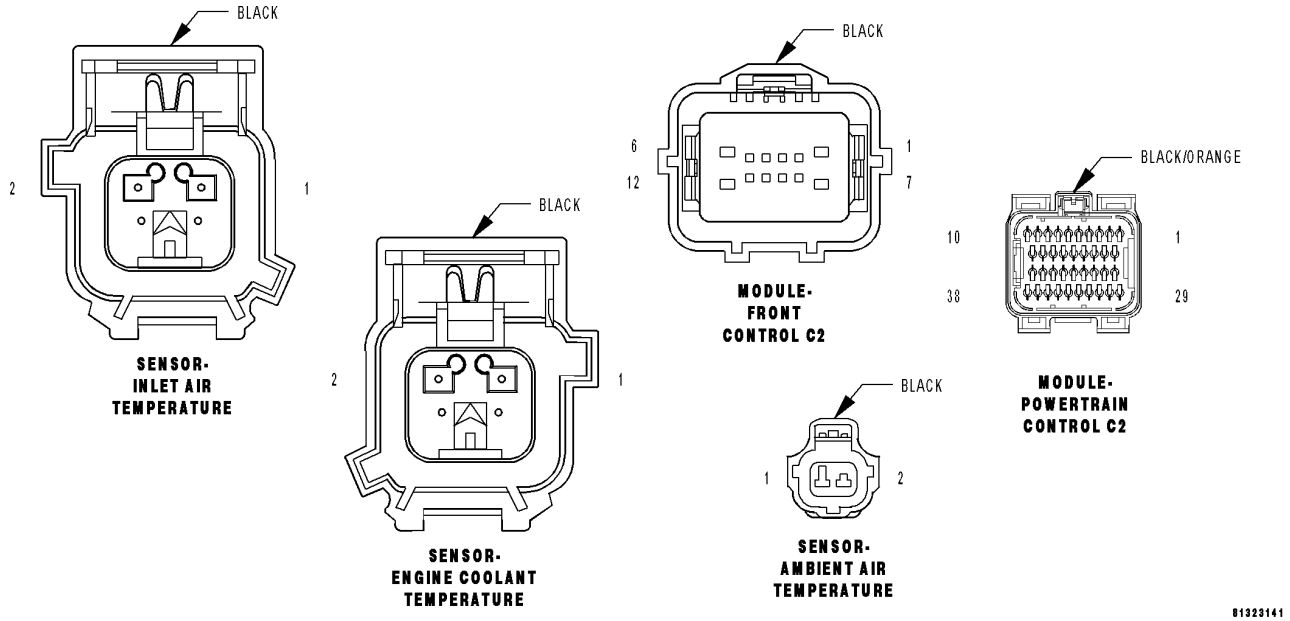

For a complete wiring diagram **Refer to Section 8W**.

- **When Monitored:**
  Ignition on and battery voltage greater than 10 volts.
- **Set Condition:**
  Ambient Air, Engine Coolant, and Intake Air Temp sensor inputs are compared under cold start conditions. After start up the temp readings are monitored. If two of the three readings agree and the third doesn't, a DTC is stored. Two Trip Fault. Three good trips to turn off the MIL.

Possible Causes
EXCESSIVE RESISTANCE IN THE SENSOR SIGNAL CIRCUIT
EXCESSIVE RESISTANCE IN THE (K900) SENSOR GROUND CIRCUIT
TEMPERATURE SENSOR
PCM

Always perform the Pre-Diagnostic Troubleshooting procedure before proceeding. (Refer to 9 - ENGINE - DIAGNOSIS AND TESTING).

Diagnostic Test

1. ACTIVE DTC

Ignition on, engine not running.
With a scan tool, read the DTCs.

NOTE: All ECT, Intake Air, and Ambient Air Temperature Sensor codes must be diagnosed and repaired before continuing.

NOTE: In cold weather, this DTC could be set by a non-OEM approved block heater and no repair would be required.

Is the DTC active at this time?

Yes >> Go To 2

No >> Refer to the INTERMITTENT CONDITION Diagnostic Procedure.
Perform the POWERTRAIN VERIFICATION TEST. (Refer to 9 - ENGINE - STANDARD PROCEDURE)

2. TEMPERATURE SENSOR CIRCUIT

With a scan tool, read the ECT, Ambient Air Temp, and Intake Air Temp Sensor temp values.
Start the engine.
Allow the engine to reach normal operating temperature while monitoring the three Sensor temperature values.

Is the temperature for each of the Sensors increasing properly?

Yes >> Refer to the INTERMITTENT CONDITION Diagnostic Procedure.
Perform the POWERTRAIN VERIFICATION TEST. (Refer to 9 - ENGINE - STANDARD PROCEDURE)

No >> Go To 3

3. TEMPERATURE SENSOR

Ignition on, engine not running.
Disconnect the suspected faulty sensor.
Connect a jumper wire between the Sensor Signal circuit and the (K900) Sensor ground circuit.
With the scan tool, read the voltage of the suspected Sensor.

NOTE: Remove the jumper wire before continuing.

Did the voltage reading start at 4.8 to 5.0 volts and decrease to 0 volts when the jumper wire was installed?

Yes >> Replace the faulty Sensor.
Perform the POWERTRAIN VERIFICATION TEST. (Refer to 9 - ENGINE - STANDARD PROCEDURE)

No >> Go To 4

4. EXCESSIVE RESISTANCE IN THE TEMPERATURE SENSOR SIGNAL CIRCUIT

Turn the ignition off.
Disconnect the PCM harness connectors.

CAUTION: Do not probe the PCM harness connectors. Probing the PCM harness connectors will damage the PCM terminals resulting in poor terminal to pin connection. Install Miller Special Tool #8815 to perform diagnosis.
Measure the resistance of the Sensor Signal circuit from the Sensor harness connector to the appropriate terminal of special tool #8815.

Is the resistance above 5.0 ohms?

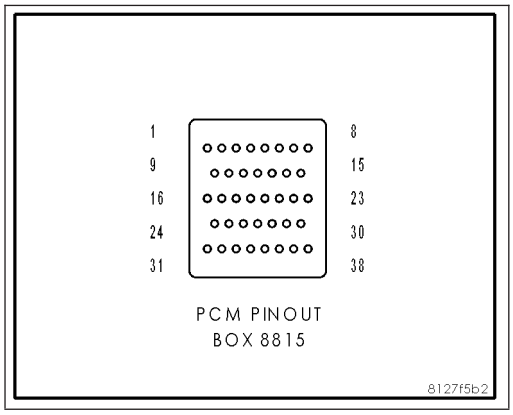

Yes >> Repair the excessive resistance in the Temperature Sensor Signal circuit.
Perform the POWERTRAIN VERIFICATION TEST. (Refer to 9 - ENGINE - STANDARD PROCEDURE)

No >> Go To 5

5. EXCESSIVE RESISTANCE IN THE (K900) SENSOR GROUND CIRCUIT

Measure the resistance of the (K900) Sensor ground circuit from the Sensor harness connector to the appropriate terminal of special tool #8815.

Is the resistance above 5.0 ohms?

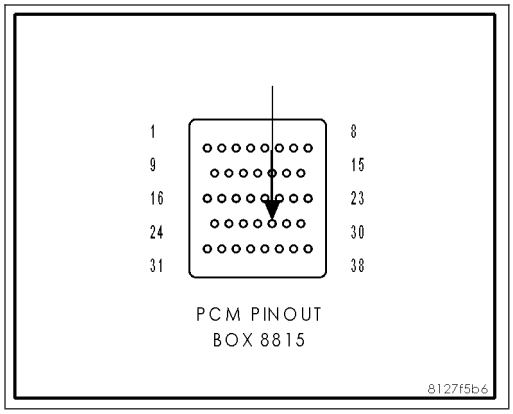

Yes >> Repair the excessive resistance in the (K900) Sensor ground circuit.
Perform the POWERTRAIN VERIFICATION TEST. (Refer to 9 - ENGINE - STANDARD PROCEDURE)

No >> Go To 6

6. PCM

NOTE: Before continuing, check the PCM harness connector terminals for corrosion, damage, or terminal push out. Repair as necessary.
Using the schematics as a guide, inspect the wire harness and connectors. Pay particular attention to all Power and Ground circuits.

Were there any problems found?

Yes >> Repair as necessary.
Perform the POWERTRAIN VERIFICATION TEST. (Refer to 9 - ENGINE - STANDARD PROCEDURE)

No >> Replace and program the Powertrain Control Module per Service Information.
Perform the POWERTRAIN VERIFICATION TEST. (Refer to 9 - ENGINE - STANDARD PROCEDURE)

P01404-EGR POSITION SENSOR RATIONALITY CLOSED

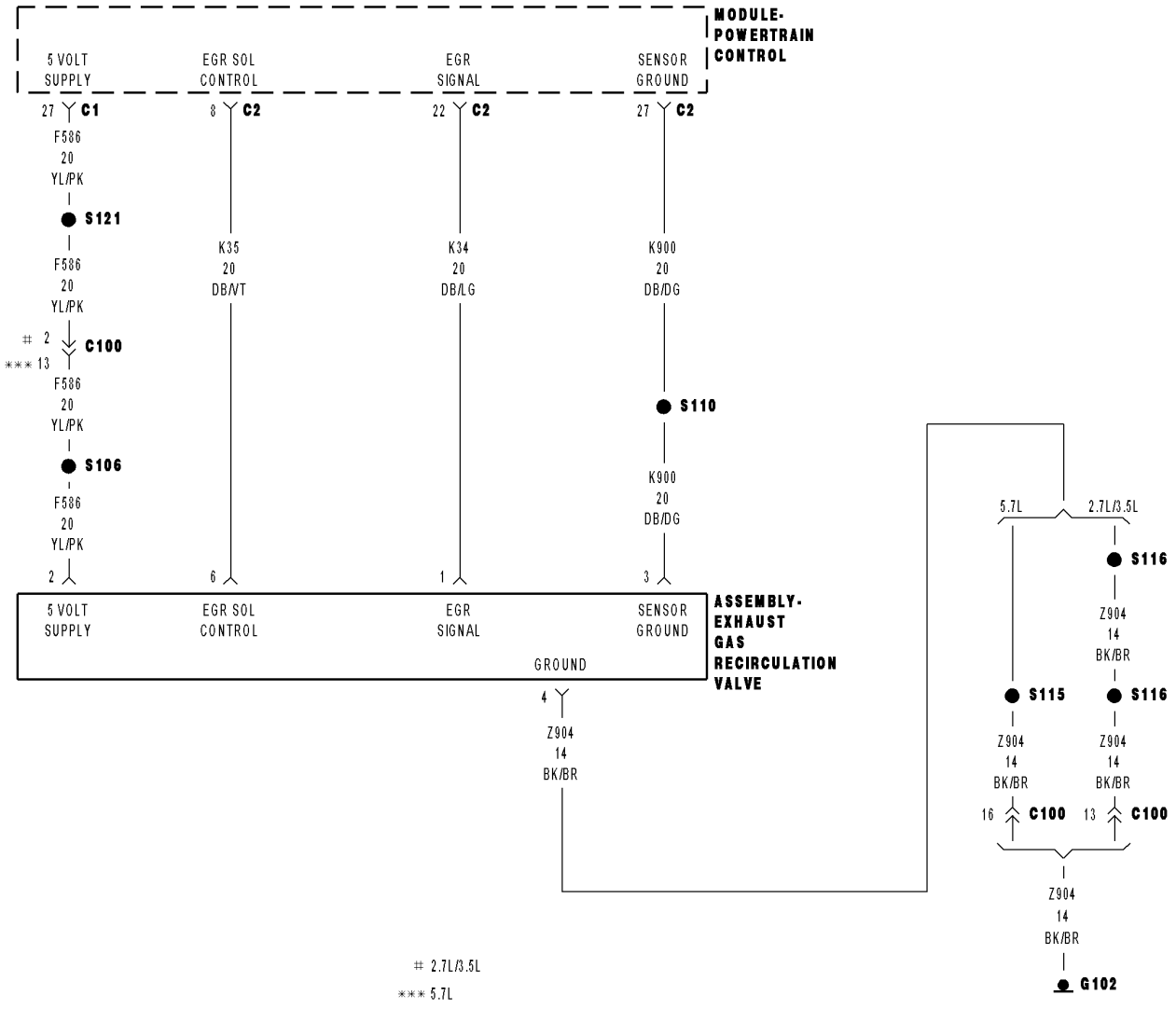

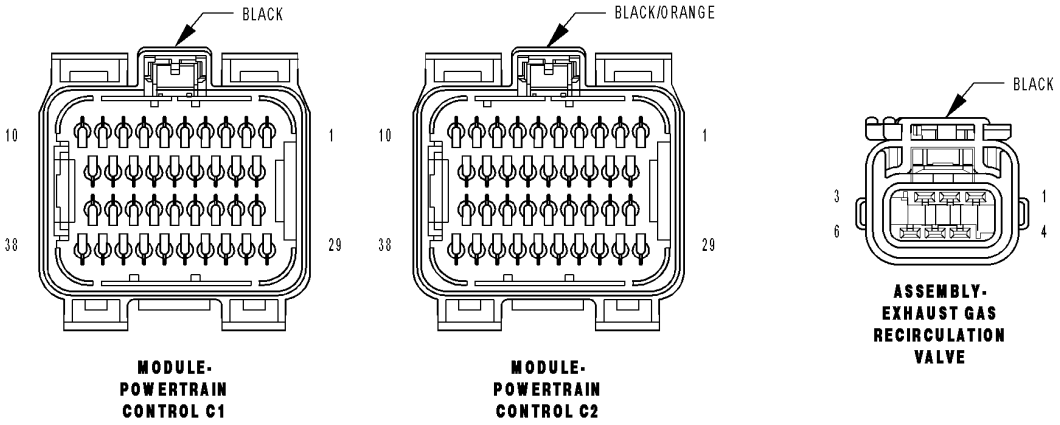

8131b09b

For a complete wiring diagram **Refer to Section 8W**.

Theory of Operation

The EGR valve has a position sensor and the EGR position rationality is designed to make sure that the valve moves freely within its operating range. Closed valve position reference check verifies that the valve is within its allowable upper and lower limits. The EGR position rationality test looks for a sustained error relative to commanded valve position.

- **When Monitored:**
  Engine running.
- **Set Condition:**
  The EGR flow or valve movement is not what is expected. A rationality error has been detected for the EGR Open Position Performance. Two trip fault.

Possible Causes
EXCESSIVE RESISTANCE IN THE (F856) 5-VOLT SUPPLY CIRCUIT
(K35) EGR SOLENOID CONTROL CIRCUIT OPEN
(K34) EGR SENSOR SIGNAL CIRCUIT SHORTED TO GROUND
EGR SOLENOID ASSEMBLY
PCM

Always perform the Pre-Diagnostic Troubleshooting procedure before proceeding. (Refer to 9 - ENGINE - DIAGNOSIS AND TESTING).

Diagnostic Test

1. ACTIVE DTC

Ignition on, engine not running.
With a scan tool, read DTCs.

Is the DTC active at this time?

Yes >> Go To 2

No >> Refer to the INTERMITTENT CONDITION Diagnostic Procedure.
Perform the POWERTRAIN VERIFICATION TEST. (Refer to 9 - ENGINE - STANDARD PROCEDURE)

2. EXCESSIVE RESISTANCE IN THE (F856) 5-VOLT SUPPLY CIRCUIT

Turn the ignition off.

Disconnect the EGR Solenoid harness connector.

Disconnect the C1 PCM harness connector.

CAUTION: Do not probe the PCM harness connectors. Probing the PCM harness connectors will damage the PCM terminals resulting in poor terminal to pin connection. Install Miller Special Tool #8815 to perform diagnosis.

Measure the resistance of the (F856) 5-volt Supply circuit from the EGR Solenoid harness connector to the appropriate terminal of special tool #8815.

Is the resistance below 5.0 ohms?

Yes >> Go To 3

No >> Repair the excessive resistance in the (F856) 5-volt Supply circuit.
Perform the POWERTRAIN VERIFICATION TEST. (Refer to 9 - ENGINE - STANDARD PROCEDURE)

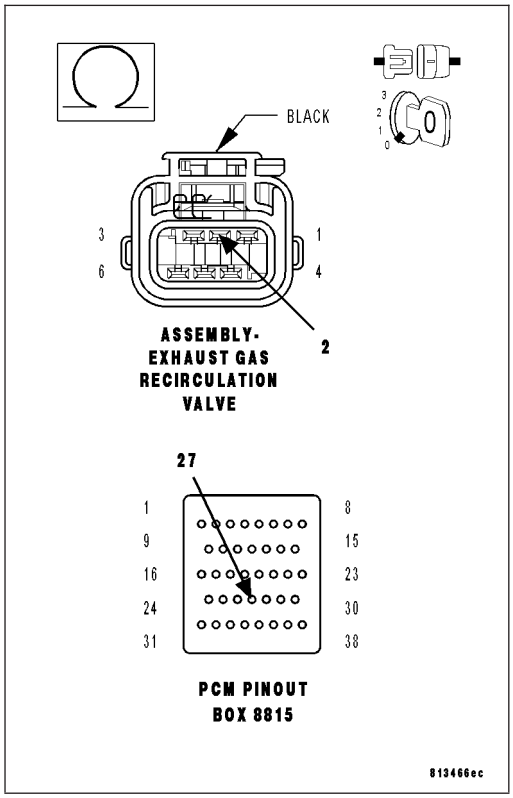

3. (K35) EGR SOLENOID CONTROL CIRCUIT OPEN

Measure the resistance of the (K35) EGR Solenoid Control circuit from the EGR Solenoid harness connector to the appropriate terminal of special tool #8815.

Is the resistance below 5.0 ohms?

Yes >> Go To 4

No >> Repair the open in the (K35) EGR Solenoid Control circuit.
Perform the POWERTRAIN VERIFICATION TEST. (Refer to 9 - ENGINE - STANDARD PROCEDURE)

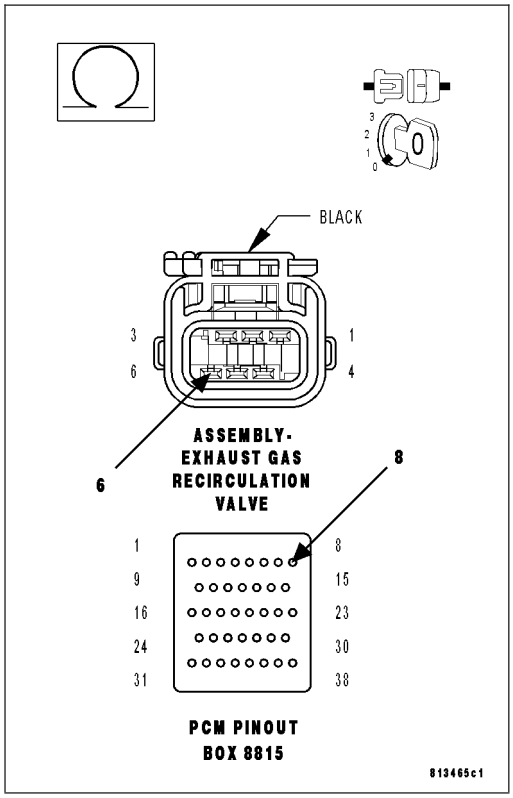

4. (K34) EGR SENSOR SIGNAL CIRCUIT SHORTED TO GROUND

Measure the resistance between ground and the (K34) EGR Sensor Signal circuit in the EGR Solenoid harness connector.

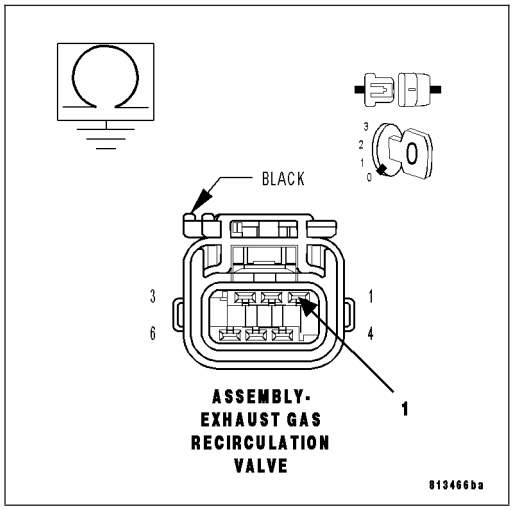

Is the resistance below 5.0 ohms?

Yes >> Repair the short to ground in the (K34) EGR Sensor Signal circuit.
Perform the POWERTRAIN VERIFICATION TEST. (Refer to 9 - ENGINE - STANDARD PROCEDURE)

No >> Go To 5

5. EGR SOLENOID ASSEMBLY

Reconnect the PCM harness connector.

Ignition on, engine not running.

Using a 12-volt test light, jumper cross the (K35) EGR Solenoid Control circuit and the (Z904) Ground circuit in the EGR Solenoid harness connector.

With the scan tool, actuate the EGR Solenoid. Allowing it to actuate for at least 15 seconds.

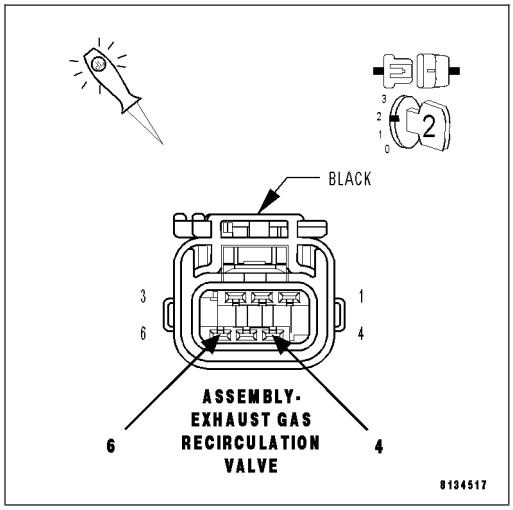

Does the test light illuminate brightly and flash on and off?

Yes >> Replace the EGR Solenoid Assembly per Service Information.
Perform the POWERTRAIN VERIFICATION TEST. (Refer to 9 - ENGINE - STANDARD PROCEDURE)

No >> Go To 6

6. PCM

NOTE: Before continuing, check the PCM harness connector terminals for corrosion, damage, or terminal push out. Repair as necessary.

Using the schematics as a guide, inspect the wire harness and connectors. Pay particular attention to all Power and Ground circuits.

Were there any problems found?

Yes >> Repair as necessary.
Perform the POWERTRAIN VERIFICATION TEST. (Refer to 9 - ENGINE - STANDARD PROCEDURE)

No >> Replace and program the Powertrain Control Module per Service Information.
Perform the POWERTRAIN VERIFICATION TEST. (Refer to 9 - ENGINE - STANDARD PROCEDURE)

P1411–CYLINDER 1 REACTIVATION CONTROL PERFORMANCE

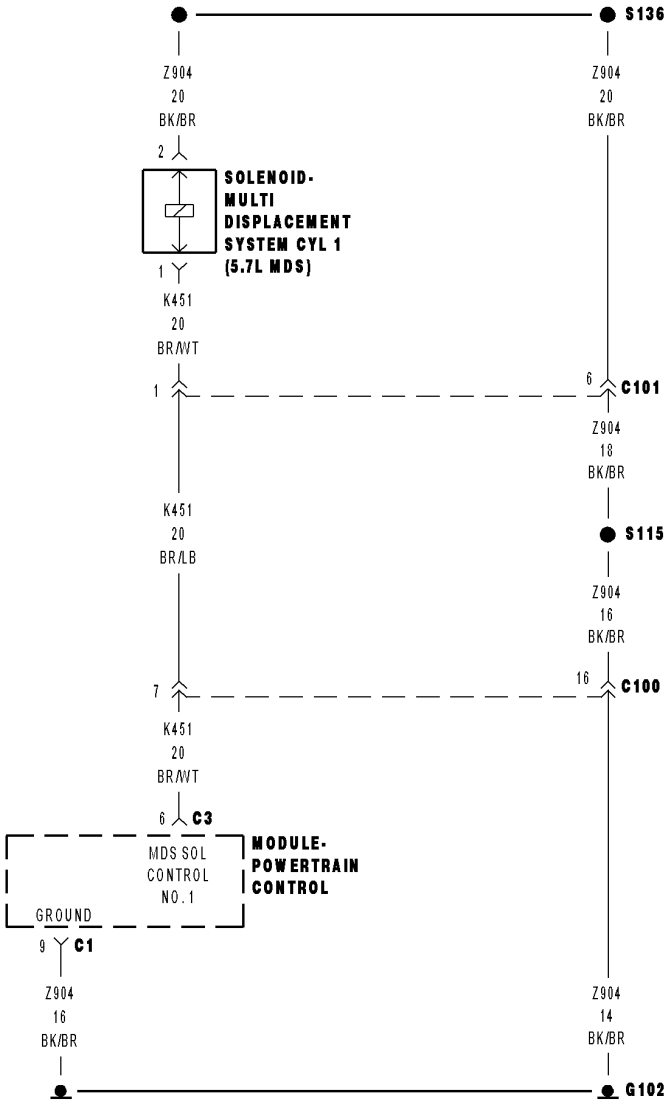

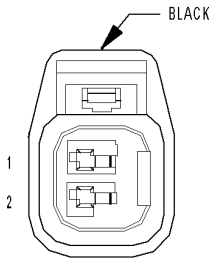

SOLENOID-
MULTI DISPLACEMENT
SYSTEM CYL 1
(5.7L MDS)

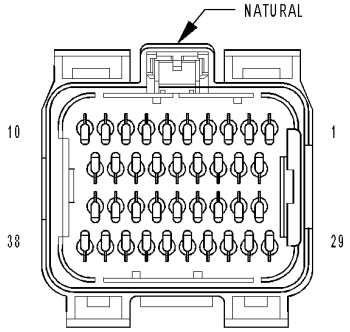

MODULE-
POWERTRAIN
CONTROL C3

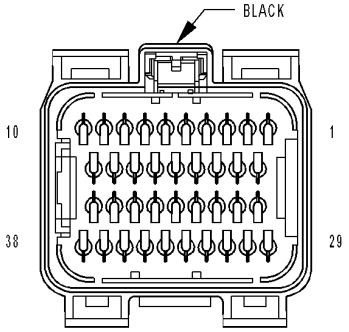

MODULE-
POWERTRAIN
CONTROL C1

81365ddb

Theory of Operation

When all criteria has been met, power is supplied to each MDS Solenoid when the engine is making a transition from 8 cylinder mode to 4 cylinder mode. By actuating the solenoid, oil pressure is raised to the pair of lifters that coincide with each particular solenoid. The oil pressure pushes in the locking pins that allows the lifter to collapse, decoupling the valves and camshaft.

- **When Monitored:**
  Transition from 4 to 8 cylinder mode.
- **Set Condition:**
  The MDS fails to disengage for cylinder 1.

Possible Causes
(K451) MDS SOLENOID NO.1 CONTROL SHORT TO VOLTAGE
OIL PASSAGES RESTRICTED
LIFTER
MDS SOLENOID NO.1
PCM

Always perform the Pre-Diagnostic Troubleshooting procedure before proceeding. (Refer to 9 - ENGINE - DIAGNOSIS AND TESTING).

Diagnostic Test

1. ACTIVE DTC

Ignition on, engine not running.
With a scan tool, read DTCs.

Is the DTC active at this time?

Yes >> Go To 2

No >> Refer to the INTERMITTENT CONDITION Diagnostic Procedure.
Perform the POWERTRAIN VERIFICATION TEST. (Refer to 9 - ENGINE - STANDARD PROCEDURE)

2. (K451) MDS SOLENOID NO.1 CONTROL CIRCUIT SHORTED TO VOLTAGE

Turn the ignition off.
Disconnect the PCM harness connector.
Disconnect the C101 harness connector.

CAUTION: Do not probe the PCM harness connectors. Probing the PCM harness connectors will damage the PCM terminals resulting in poor terminal to pin connection. Install Miller Special Tool #8815 to perform diagnosis.
Turn the ignition on.
Measure the voltage on (K451) MDS Solenoid No.1 Control circuit in the appropriate terminal of special tool #8815.

Is voltage present?

Yes >> Repair the short to voltage in the (K451) MDS Solenoid No.1 Control circuit.
Perform the POWERTRAIN VERIFICATION TEST. (Refer to 9 - ENGINE - STANDARD PROCEDURE)

No >> Go To 3

3. MDS SOLENOID RESISTANCE

Turn the ignition off.

Measure the resistance between the (Z904) Ground Circuit and the (K451) MDS Solenoid No.1 Control Circuit in the appropriate terminals of special tool #8815.

NOTE: It is important to follow the below temp/resistance values to ensure an accurate reading.

MDS SOLENOID RESISTANCE

TEMPERATURE VALUE ± 20° F	RESISTANCE (OHMS) ± .25 ohms
0° F	8.8 ohms
32° F	9.5 ohms
68° F	10.3 ohms
100° F	11 ohms
150° F	12.2 ohms
200° F	13.4 ohms
250° F	14.4 ohms
300° F	15.6 ohms

Is the resistance within an acceptable range?

Yes >> Go To 4

No >> Visually and Physically inspect the wiring harness between the C101 connector and the MDS Solenoid connector. Repair as necessary. If OK, replace the MDS Solenoid in accordance with the Service Information.

4. PCM CONTROL

Turn the ignition off.

Reconnect the PCM harness connector.

Disconnect the C100 harness connector.

Ignition on, engine not running.

Using a 12-volt test light connected to the (Z904) Ground circuit, probe the (K451) MDS Solenoid No.1 Control circuit in the C100 harness connector.

With a scan tool, actuate the MDS Solenoid.

Does the 12-volt test light flash on and off?

Yes >> Go To 5

No >> Replace and program the Powertrain Control Module in accordance with the Service Information.Perform the POWERTRAIN VERIFICATION TEST. (Refer to 9 - ENGINE - STANDARD PROCEDURE)

5. MDS SOLENOID 1

Turn the ignition off.

Remove the Intake Manifold per Service Information.

Turn the ignition on.

With the scan tool actuate the MDS Solenoid 1.

Can you feel and hear the Solenoid Actuating?

Yes >> Go To 6

No >> Remove the Solenoid (1) and check for any debris that may be blocking the oil passages (3) to the Solenoid. If the passages are clogged, clean the passages and replace the MDS Solenoid 1. If the passages are not clogged with debris, replace the MDS Solenoid 1.

Perform the POWERTRAIN VERIFICATION TEST. (Refer to 9 - ENGINE - STANDARD PROCEDURE)

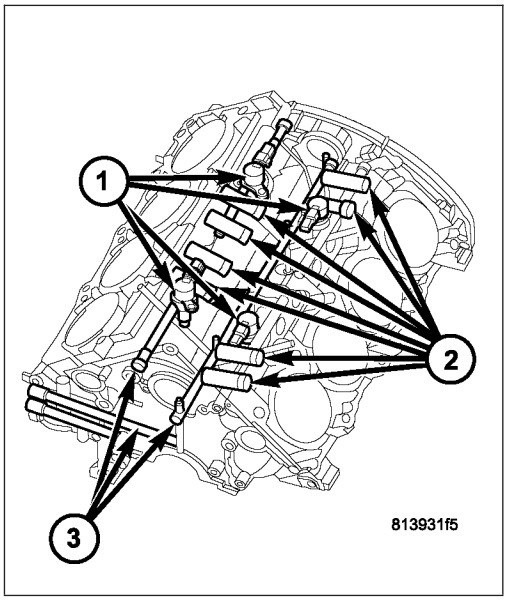

6. OIL PASSAGES RESTRICTED

Turn the ignition off.

Remove both Solenoids on Bank 1 of the engine block.

Remove the Bank 1 Cylinder Head per Service Information.

Remove the Lifters from the left engine bank.

Inspect the oil passages to the Solenoids and from the Solenoids to the lifters.

Are the passages blocked?

Yes >> Clean the oil passages as necessary. If the entire engine is restricted disassembly of the entire engine block may be necessary.

Perform the POWERTRAIN VERIFICATION TEST. (Refer to 9 - ENGINE - STANDARD PROCEDURE)

No >> Replace both sets of lifters if no other possible causes remain.

Perform the POWERTRAIN VERIFICATION TEST. (Refer to 9 - ENGINE - STANDARD PROCEDURE)

P1414–CYLINDER 4 REACTIVATION CONTROL PERFORMANCE

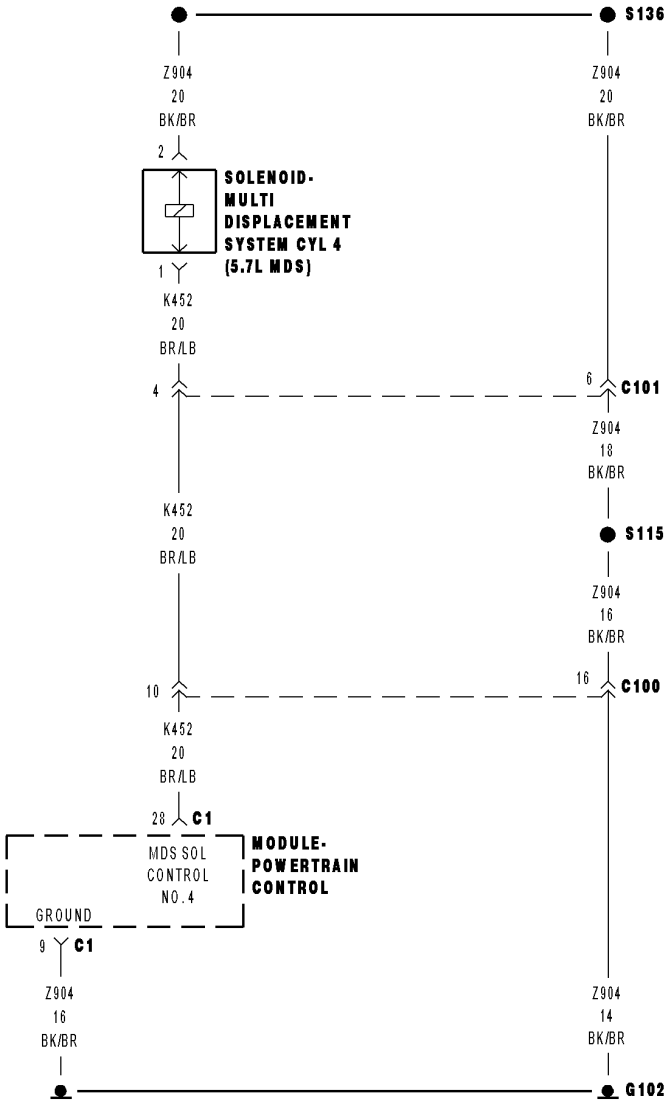

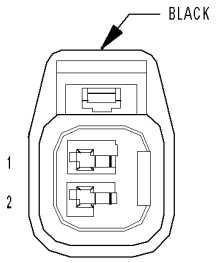

SOLENOID-
MULTI DISPLACEMENT
SYSTEM CYL 4
(5.7L MDS)

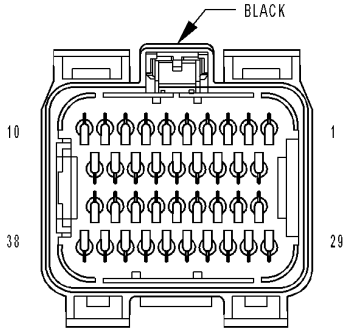

MODULE-
POWERTRAIN
CONTROL C1

B136e06

Theory of Operation

When all criteria has been met, power is supplied to each MDS Solenoid when the engine is making a transition from 8 cylinder mode to 4 cylinder mode. By actuating the solenoid, oil pressure is raised to the pair of lifters that coincide with each particular solenoid. The oil pressure pushes in the locking pins that allows the lifter to collapse, decoupling the valves and camshaft.

- **When Monitored:**
  Transition from 4 to 8 cylinder mode.
- **Set Condition:**
  The MDS fails to disengage for cylinder 4.

Possible Causes
(K452) MDS SOLENOID NO.4 CONTROL SHORT TO VOLTAGE
OIL PASSAGES RESTRICTED
LIFTER
MDS SOLENOID NO.4
PCM

Always perform the Pre-Diagnostic Troubleshooting procedure before proceeding. (Refer to 9 - ENGINE - DIAGNOSIS AND TESTING).

Diagnostic Test

1. ACTIVE DTC

Ignition on, engine not running.
With a scan tool, read DTCs.

Is the DTC active at this time?

Yes >> Go To 2

No >> Refer to the INTERMITTENT CONDITION Diagnostic Procedure.
Perform the POWERTRAIN VERIFICATION TEST. (Refer to 9 - ENGINE - STANDARD PROCEDURE)

2. (K452) MDS SOLENOID NO.4 CONTROL CIRCUIT SHORTED TO VOLTAGE

Turn the ignition off.
Disconnect the PCM harness connector.
Disconnect the C101 harness connector.

CAUTION: Do not probe the PCM harness connectors. Probing the PCM harness connectors will damage the PCM terminals resulting in poor terminal to pin connection. Install Miller Special Tool #8815 to perform diagnosis.
Turn the ignition on.
Measure the voltage on (K452) MDS Solenoid No.4 Control circuit in the appropriate terminal of special tool #8815.

Is voltage present?

Yes >> Repair the short to voltage in the (K452) MDS Solenoid No.4 Control circuit.
Perform the POWERTRAIN VERIFICATION TEST. (Refer to 9 - ENGINE - STANDARD PROCEDURE)

No >> Go To 3

3. MDS SOLENOID RESISTANCE

Turn the ignition off.

Measure the resistance between the (Z904) Ground Circuit and the (K452) MDS Solenoid No.4 Control Circuit in the appropriate terminals of special tool #8815.

NOTE: It is important to follow the below temp/resistance values to ensure an accurate reading.

MDS SOLENOID RESISTANCE

TEMPERATURE VALUE ± 20° F	RESISTANCE (OHMS) ± .25 ohms
0° F	8.8 ohms
32° F	9.5 ohms
68° F	10.3 ohms
100° F	11 ohms
150° F	12.2 ohms
200° F	13.4 ohms
250° F	14.4 ohms
300° F	15.6 ohms

Is the resistance within an acceptable range?

Yes >> Go To 4

No >> Visually and Physically inspect the wiring harness between the C101 connector and the MDS Solenoid connector. Repair as necessary. If OK, replace the MDS Solenoid in accordance with the Service Information.

4. PCM CONTROL

Turn the ignition off.

Reconnect the PCM harness connector.

Disconnect the C100 harness connector.

Ignition on, engine not running.

Using a 12-volt test light connected to the (Z904) Ground circuit, probe the (K452) MDS Solenoid No.4 Control circuit in the C100 harness connector.

With a scan tool, actuate the MDS Solenoid.

Does the 12-volt test light flash on and off?

Yes >> Go To 5

No >> Replace and program the Powertrain Control Module in accordance with the Service Information.Perform the POWERTRAIN VERIFICATION TEST. (Refer to 9 - ENGINE - STANDARD PROCEDURE)

5. MDS SOLENOID 4

Turn the ignition off.

Remove the Intake Manifold per Service Information.

Turn the ignition on.

With the scan tool actuate the MDS Solenoid 4.

Can you feel and hear the Solenoid Actuating?

Yes >> Go To 6

No >> Remove the Solenoid (1) and check for any debris that may be blocking the oil passages (3) to the Solenoid. If the passages are clogged, clean the passages and replace the MDS Solenoid 4. If the passages are not clogged with debris, replace the MDS Solenoid 4.

Perform the POWERTRAIN VERIFICATION TEST. (Refer to 9 - ENGINE - STANDARD PROCEDURE)

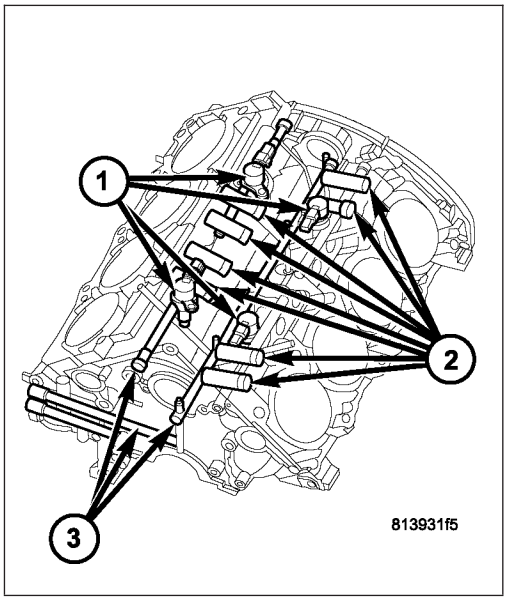

6. OIL PASSAGES RESTRICTED

Turn the ignition off.

Remove both Solenoids on Bank 1 of the engine block.

Remove the Bank 1 Cylinder Head per Service Information.

Remove the Lifters from the left engine bank.

Inspect the oil passages to the Solenoids and from the Solenoids to the lifters.

Are the passages blocked?

Yes >> Clean the oil passages as necessary. If the entire engine is restricted disassembly of the entire engine block may be necessary.

Perform the POWERTRAIN VERIFICATION TEST. (Refer to 9 - ENGINE - STANDARD PROCEDURE)

No >> Replace both sets of lifters if no other possible causes remain.

Perform the POWERTRAIN VERIFICATION TEST. (Refer to 9 - ENGINE - STANDARD PROCEDURE)

P1416–CYLINDER 6 REACTIVATION CONTROL PERFORMANCE

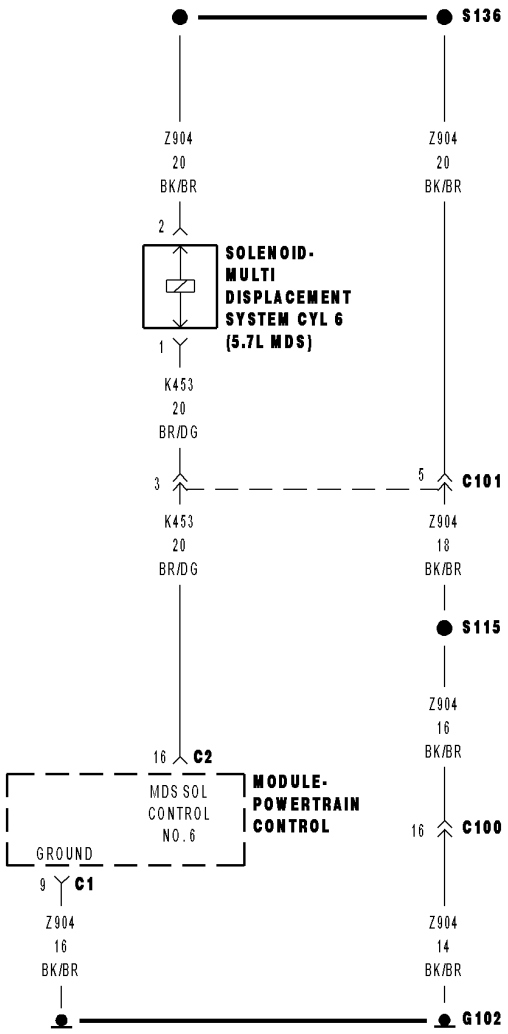

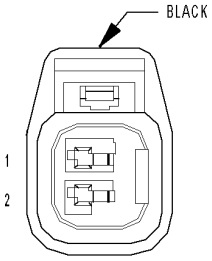

SOLENOID-
MULTI DISPLACEMENT
SYSTEM CYL 6
(5.7L MDS)

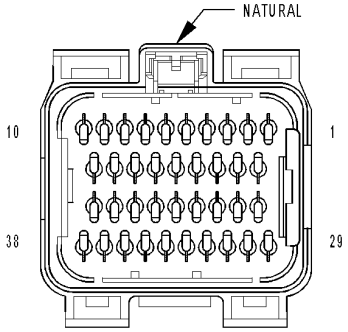

MODULE-
POWERTRAIN
CONTROL C2

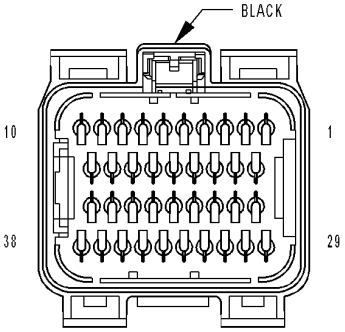

MODULE-
POWERTRAIN
CONTROL C1

81365e57

Theory of Operation

When all criteria has been met, power is supplied to each MDS Solenoid when the engine is making a transition from 8 cylinder mode to 4 cylinder mode. By actuating the solenoid, oil pressure is raised to the pair of lifters that coincide with each particular solenoid. The oil pressure pushes in the locking pins that allows the lifter to collapse, decoupling the valves and camshaft.

- **When Monitored:**
  Transition from 4 to 8 cylinder mode.
- **Set Condition:**
  The MDS fails to disengage for cylinder 6.

Possible Causes
(K453) MDS SOLENOID NO.6 CONTROL SHORT TO VOLTAGE
OIL PASSAGES RESTRICTED
LIFTER
MDS SOLENOID NO.6
PCM

Always perform the Pre-Diagnostic Troubleshooting procedure before proceeding. (Refer to 9 - ENGINE - DIAGNOSIS AND TESTING).

Diagnostic Test

1. ACTIVE DTC

Ignition on, engine not running.
With a scan tool, read DTCs.

Is the DTC active at this time?

Yes >> Go To 2

No >> Refer to the INTERMITTENT CONDITION Diagnostic Procedure.
Perform the POWERTRAIN VERIFICATION TEST. (Refer to 9 - ENGINE - STANDARD PROCEDURE)

2. (K453) MDS SOLENOID NO.6 CONTROL CIRCUIT SHORTED TO VOLTAGE

Turn the ignition off.
Disconnect the PCM harness connector.
Disconnec the C101 harness connector.

CAUTION: Do not probe the PCM harness connectors. Probing the PCM harness connectors will damage the PCM terminals resulting in poor terminal to pin connection. Install Miller Special Tool #8815 to perform diagnosis.
Turn the ignition on.
Measure the voltage on (K453) MDS Solenoid No.6 Control circuit in the appropriate terminal of special tool #8815.

Is voltage present?

Yes >> Repair the short to voltage in the (K453) MDS Solenoid No.6 Control circuit.
Perform the POWERTRAIN VERIFICATION TEST. (Refer to 9 - ENGINE - STANDARD PROCEDURE)

No >> Go To 3

3. MDS SOLENOID RESISTANCE

Turn the ignition off.

Measure the resistance between the (Z904) Ground Circuit and the (K453) MDS Solenoid No.6 Control Circuit in the appropriate terminals of special tool #8815.

NOTE: It is important to follow the below temp/resistance values to ensure an accurate reading.

MDS SOLENOID RESISTANCE

TEMPERATURE VALUE ± 20° F	RESISTANCE (OHMS) ± .25 ohms
0° F	8.8 ohms
32° F	9.5 ohms
68° F	10.3 ohms
100° F	11 ohms
150° F	12.2 ohms
200° F	13.4 ohms
250° F	14.4 ohms
300° F	15.6 ohms

Is the resistance within an acceptable range?

Yes >> Go To 4

No >> Visually and Physically inspect the wiring harness between the C101 connector and the MDS Solenoid connector. Repair as necessary. If OK, replace the MDS Solenoid in accordance with the Service Information.

4. PCM CONTROL

Turn the ignition off.

Reconnect the PCM harness connector.

Disconnect the C100 harness connector.

Ignition on, engine not running.

Using a 12-volt test light connected to the (Z904) Ground circuit, probe the (K453) MDS Solenoid No.6 Control circuit in the C100 harness connector.

With a scan tool, actuate the MDS Solenoid.

Does the 12-volt test light flash on and off?

Yes >> Go To 5

No >> Replace and program the Powertrain Control Module in accordance with the Service Information.Perform the POWERTRAIN VERIFICATION TEST. (Refer to 9 - ENGINE - STANDARD PROCEDURE)

5. MDS SOLENOID 6

Turn the ignition off.

Remove the Intake Manifold per Service Information.

Turn the ignition on.

With the scan tool actuate the MDS Solenoid 6.

Can you feel and hear the Solenoid Actuating?

Yes >> Go To 6

No >> Remove the Solenoid (1) and check for any debris that may be blocking the oil passages (3) to the Solenoid. If the passages are clogged, clean the passages and replace the MDS Solenoid 6. If the passages are not clogged with debris, replace the MDS Solenoid 6.

Perform the POWERTRAIN VERIFICATION TEST. (Refer to 9 - ENGINE - STANDARD PROCEDURE)

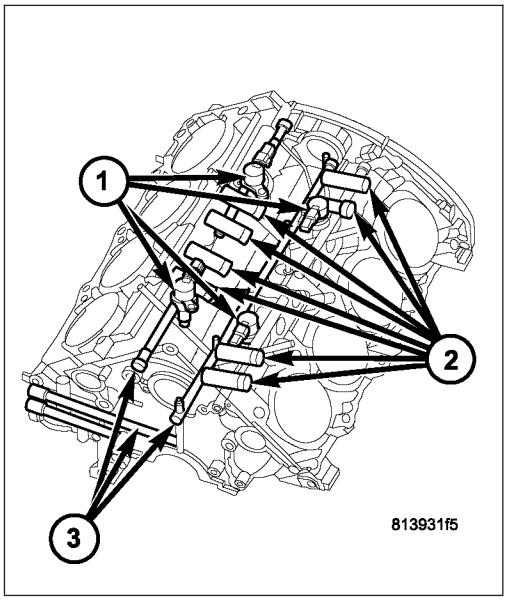

6. OIL PASSAGES RESTRICTED

Turn the ignition off.

Remove both Solenoids on Bank 2 of the engine block.

Remove the Bank 2 Cylinder Head per Service Information.

Remove the Lifters from the right engine bank.

Inspect the oil passages to the Solenoids and from the Solenoids to the lifters.

Are the passages blocked?

Yes >> Clean the oil passages as necessary. If the entire engine is restricted disassembly of the entire engine block may be necessary.

Perform the POWERTRAIN VERIFICATION TEST. (Refer to 9 - ENGINE - STANDARD PROCEDURE)

No >> Replace both sets of lifters if no other possible causes remain.

Perform the POWERTRAIN VERIFICATION TEST. (Refer to 9 - ENGINE - STANDARD PROCEDURE)

P1417–CYLINDER 7 REACTIVATION CONTROL PERFORMANCE

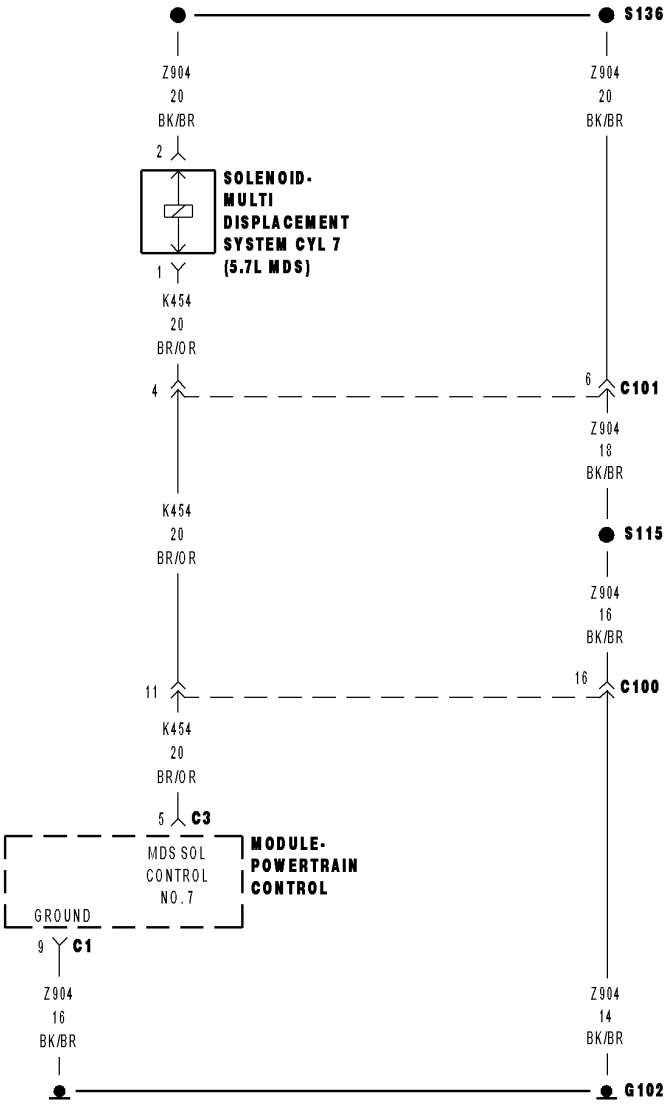

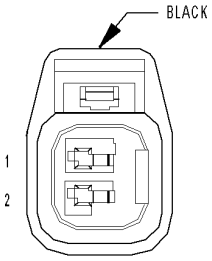

SOLENOID-
MULTI DISPLACEMENT
SYSTEM CYL 7
(5.7L MDS)

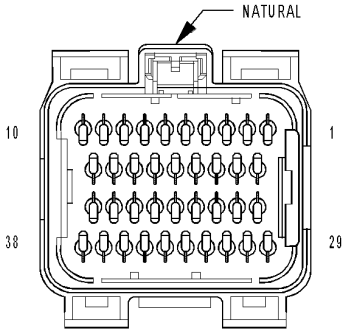

MODULE-
POWERTRAIN
CONTROL C3

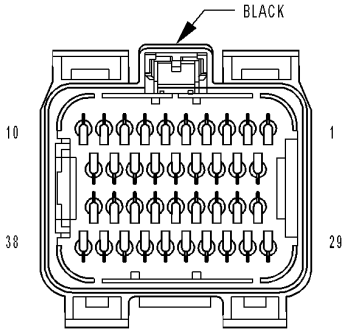

MODULE-
POWERTRAIN
CONTROL C1

81365fb8

Theory of Operation

When all criteria has been met, power is supplied to each MDS Solenoid when the engine is making a transition from 8 cylinder mode to 4 cylinder mode. By actuating the solenoid, oil pressure is raised to the pair of lifters that coincide with each particular solenoid. The oil pressure pushes in the locking pins that allows the lifter to collapse, decoupling the valves and camshaft.

- **When Monitored:**
  Transition from 4 to 8 cylinder mode.
- **Set Condition:**
  The MDS fails to disengage for cylinder 7.

Possible Causes
(K454) MDS SOLENOID NO.7 CONTROL SHORT TO VOLTAGE
OIL PASSAGES RESTRICTED
LIFTER
MDS SOLENOID NO.7
PCM

Always perform the Pre-Diagnostic Troubleshooting procedure before proceeding. (Refer to 9 - ENGINE - DIAGNOSIS AND TESTING).

Diagnostic Test

1. ACTIVE DTC

Ignition on, engine not running.
With a scan tool, read DTCs.

Is the DTC active at this time?

Yes >> Go To 2

No >> Refer to the INTERMITTENT CONDITION Diagnostic Procedure.
Perform the POWERTRAIN VERIFICATION TEST. (Refer to 9 - ENGINE - STANDARD PROCEDURE)

2. (K454) MDS SOLENOID NO.7 CONTROL CIRCUIT SHORTED TO VOLTAGE

Turn the ignition off.
Disconnect the PCM harness connector.
Disconnect the C101 harness connector.

CAUTION: Do not probe the PCM harness connectors. Probing the PCM harness connectors will damage the PCM terminals resulting in poor terminal to pin connection. Install Miller Special Tool #8815 to perform diagnosis.
Turn the ignition on.
Measure the voltage on (K454) MDS Solenoid No.7 Control circuit in the appropriate terminal of special tool #8815.

Is voltage present?

Yes >> Repair the short to voltage in the (K454) MDS Solenoid No.7 Control circuit.
Perform the POWERTRAIN VERIFICATION TEST. (Refer to 9 - ENGINE - STANDARD PROCEDURE)

No >> Go To 3

3. MDS SOLENOID RESISTANCE

Turn the ignition off.

Measure the resistance between the (Z904) Ground Circuit and the (K454) MDS Solenoid No.7 Control Circuit in the appropriate terminals of special tool #8815.

NOTE: It is important to follow the below temp/resistance values to ensure an accurate reading.

MDS SOLENOID RESISTANCE

TEMPERATURE VALUE ± 20° F	RESISTANCE (OHMS) ± .25 ohms
0° F	8.8 ohms
32° F	9.5 ohms
68° F	10.3 ohms
100° F	11 ohms
150° F	12.2 ohms
200° F	13.4 ohms
250° F	14.4 ohms
300° F	15.6 ohms

Is the resistance within an acceptable range?

Yes >> Go To 4

No >> Visually and Physically inspect the wiring harness between the C101 connector and the MDS Solenoid connector. Repair as necessary. If OK, replace the MDS Solenoid in accordance with the Service Information.

4. PCM CONTROL

Turn the ignition off.

Reconnect the PCM harness connector.

Disconnect the C100 harness connector.

Ignition on, engine not running.

Using a 12-volt test light connected to the (Z904) Ground circuit, probe the (K454) MDS Solenoid No.7 Control circuit in the C100 harness connector.

With a scan tool, actuate the MDS Solenoid.

Does the 12-volt test light flash on and off?

Yes >> Go To 5

No >> Replace and program the Powertrain Control Module in accordance with the Service Information.Perform the POWERTRAIN VERIFICATION TEST. (Refer to 9 - ENGINE - STANDARD PROCEDURE)

5. MDS SOLENOID 7

Turn the ignition off.

Remove the Intake Manifold per Service Information.

Turn the ignition on.

With the scan tool actuate the MDS Solenoid 1.

Can you feel and hear the Solenoid Actuating?

Yes >> Go To 6

No >> Remove the Solenoid (1) and check for any debris that may be blocking the oil passages (3) to the Solenoid. If the passages are clogged, clean the passages and replace the MDS Solenoid 7. If the passages are not clogged with debris, replace the MDS Solenoid 7.

Perform the POWERTRAIN VERIFICATION TEST. (Refer to 9 - ENGINE - STANDARD PROCEDURE)

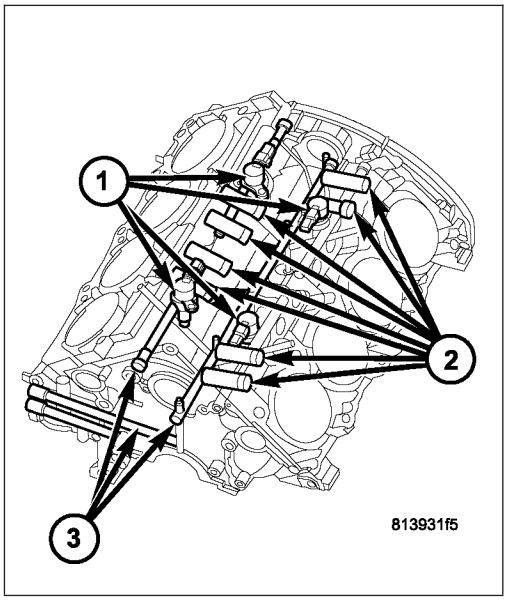

6. OIL PASSAGES RESTRICTED

Turn the ignition off.

Remove both Solenoids on Bank 1 of the engine block.

Remove the Bank 7 Cylinder Head per Service Information.

Remove the Lifters from the right engine bank.

Inspect the oil passages to the Solenoids and from the Solenoids to the lifters.

Are the passages blocked?

Yes >> Clean the oil passages as necessary. If the entire engine is restricted disassembly of the entire engine block may be necessary.

Perform the POWERTRAIN VERIFICATION TEST. (Refer to 9 - ENGINE - STANDARD PROCEDURE)

No >> Replace both sets of lifters if no other possible causes remain.

Perform the POWERTRAIN VERIFICATION TEST. (Refer to 9 - ENGINE - STANDARD PROCEDURE)

P1501–VEHICLE SPEED SENSOR 1/2 CORRELATION — DRIVE WHEELS (Not Equipped with ABS)

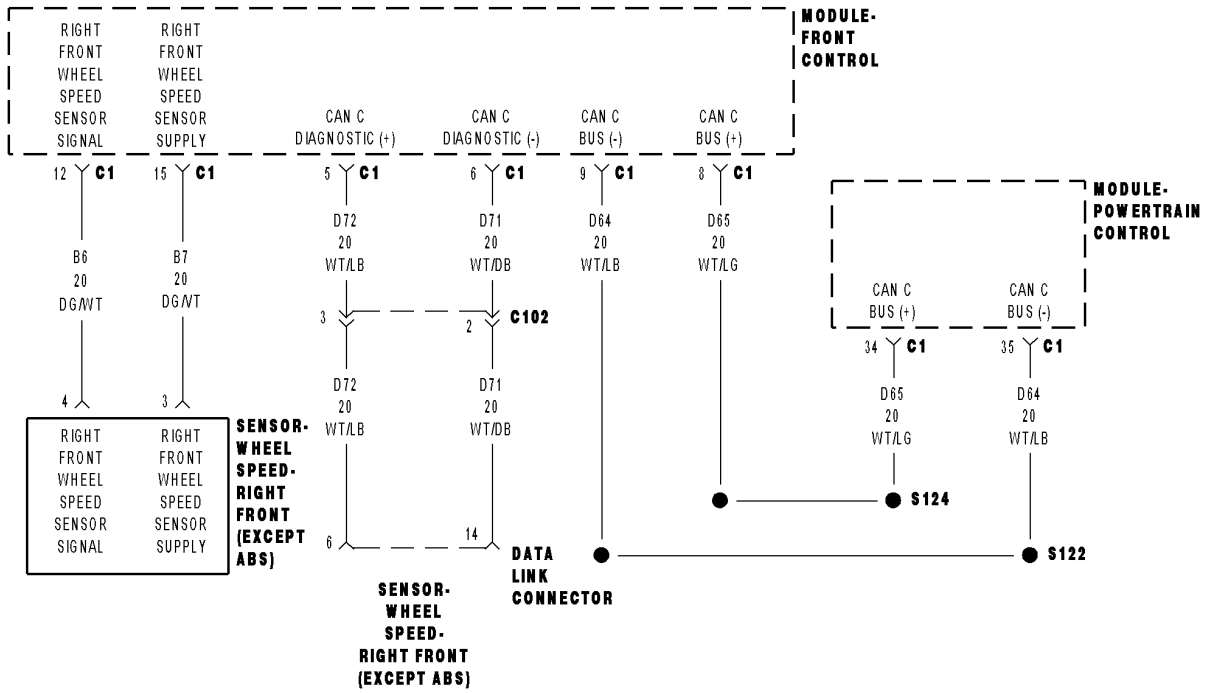

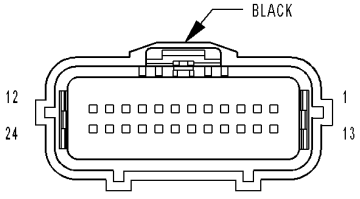

MODULE-
FRONT
CONTROL C1

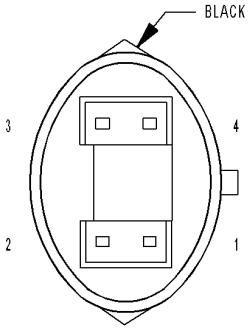

SENSOR-
WHEEL
SPEED-
RIGHT FRONT
(EXCEPT ABS)

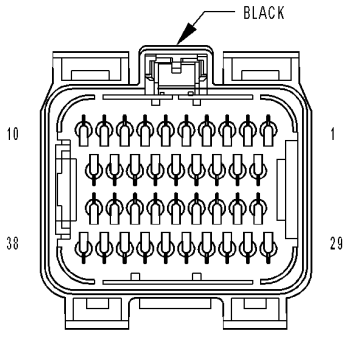

MODULE-
POWERTRAIN
CONTROL C1

81367538

For a complete wiring diagram **Refer to Section 8W**.

- **When Monitored:**
  Ignition on, vehicle moving. Speed control is learned and the speed control is trying to be activated.
- **Set Condition:**
  The PCM recognizes rear wheel speed is greater than the front wheel speed.

Possible Causes
ACTIVE BUS OR COMMUNICATION DTCS
TIRE CIRCUMFERENCE
PCM

Always perform the Pre-Diagnostic Troubleshooting procedure before proceeding. (Refer to 9 - ENGINE - DIAGNOSIS AND TESTING).

Diagnostic Test

1. ACTIVE DTC

NOTE: The following items must be checked before continuing.
- **Pinion Factor and Tire Size MUST be programmed in the Front Control Module.**
- **All Bus Communication DTCs MUST be diagnosed.**
- **All Vehicle Speed DTCs that may be active in the Front Control Module or in the Transmission Control Module MUST be diagnosed.**

Ignition on, engine not running.

With a scan tool, read DTCs.

Is the DTC active at this time?

Yes >> Go To 2

No >> Refer to the INTERMITTENT CONDITION Diagnostic Procedure.
Perform the POWERTRAIN VERIFICATION TEST. (Refer to 9 - ENGINE - STANDARD PROCEDURE)

2. VISUAL INSPECTION

NOTE: This code can set due to the following conditions.
- **Unequal tire circumference between the tires on the vehicle.**
- **Front or Rear wheels moving while the opposite wheels are not. (i.e., wheels slipping on loose gravel, ice or hard acceleration)**

Check tire pressure of all the tires.

Check tire wear on all the tires.

Ask the customer what the road and driving conditions were like when the fault set.

Were any of the above conditions found?

Yes >> Repair as necessary. If the code set during a front OR rear wheel spin condition, no repair is necessary.
Perform the POWERTRAIN VERIFICATION TEST. (Refer to 9 - ENGINE - STANDARD PROCEDURE)

No >> Go To 3

3. PCM

NOTE: Before continuing, check the PCM harness connector terminals for corrosion, damage, or terminal push out. Repair as necessary. Using the schematics as a guide, inspect the wire harness and connectors. Pay particular attention to all Power and Ground circuits.

Were there any problems found?

Yes >> Repair as necessary.
Perform the POWERTRAIN VERIFICATION TEST. (Refer to 9 - ENGINE - STANDARD PROCEDURE)

No >> Replace and program the Powertrain Control Module per Service Information.
Perform the POWERTRAIN VERIFICATION TEST. (Refer to 9 - ENGINE - STANDARD PROCEDURE)

P1502–VEHICLE SPEED SENSOR 1/2 CORRELATION — NON DRIVE WHEELS (Not Equipped with ABS)

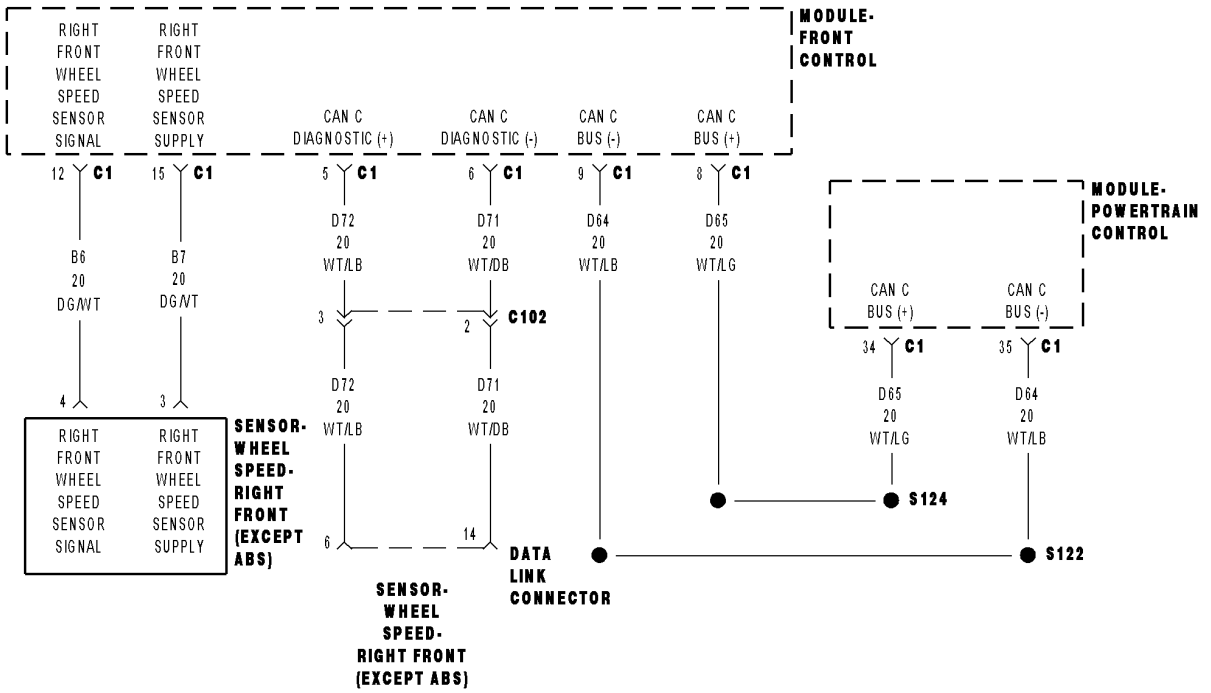

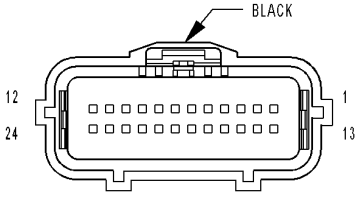

MODULE-
FRONT
CONTROL C1

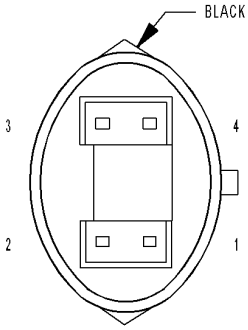

SENSOR-
WHEEL
SPEED-
RIGHT FRONT
(EXCEPT ABS)

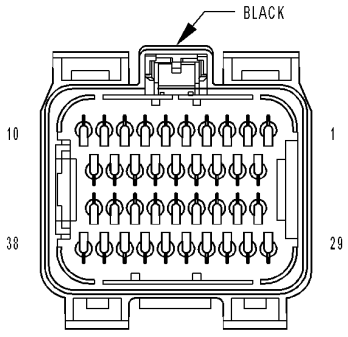

MODULE-
POWERTRAIN
CONTROL C1

81367538

For a complete wiring diagram **Refer to Section 8W**.

- **When Monitored:**
  Ignition on and vehicle moving. Brake pedal must not be applied.
- **Set Condition:**
  The PCM recognizes the front wheel speed is greater than the rear wheel speed.

Possible Causes
ACTIVE BUS OR COMMUNICATION DTCS
TIRE CIRCUMFERENCE
PCM

Always perform the Pre-Diagnostic Troubleshooting procedure before proceeding. (Refer to 9 - ENGINE - DIAGNOSIS AND TESTING).

Diagnostic Test

1. ACTIVE DTC

NOTE: The following items must be checked before continuing.
- **Pinion Factor and Tire Size MUST be programmed in the Front Control Module.**
- **All Bus Communication DTCs MUST be diagnosed.**
- **All Vehicle Speed DTCs that may be active in the Front Control Module or in the Transmission Control Module MUST be diagnosed.**

Ignition on, engine not running.

With a scan tool, read DTCs.

Is the DTC active at this time?

Yes >> Go To 2

No >> Refer to the INTERMITTENT CONDITION Diagnostic Procedure.
Perform the POWERTRAIN VERIFICATION TEST. (Refer to 9 - ENGINE - STANDARD PROCEDURE)

2. VISUAL INSPECTION

NOTE: This code can set due to the following conditions.
- **Unequal tire circumference between the tires on the vehicle.**
- **Front or Rear wheels moving while the opposite wheels are not. (i.e., wheels slipping on loose gravel, ice or hard acceleration)**

Check tire pressure of all the tires.

Check tire wear on all the tires.

Ask the customer what the road and driving conditions were like when the fault set.

Were any of the above conditions found?

Yes >> Repair as necessary. If the code set during a front OR rear wheel spin condition, no repair is necessary.
Perform the POWERTRAIN VERIFICATION TEST. (Refer to 9 - ENGINE - STANDARD PROCEDURE)

No >> Go To 3

3. PCM

NOTE: Before continuing, check the PCM harness connector terminals for corrosion, damage, or terminal push out. Repair as necessary. Using the schematics as a guide, inspect the wire harness and connectors. Pay particular attention to all Power and Ground circuits.

Were there any problems found?

Yes >> Repair as necessary.
Perform the POWERTRAIN VERIFICATION TEST. (Refer to 9 - ENGINE - STANDARD PROCEDURE)

No >> Replace and program the Powertrain Control Module per Service Information.
Perform the POWERTRAIN VERIFICATION TEST. (Refer to 9 - ENGINE - STANDARD PROCEDURE)

P1501–VEHICLE SPEED SENSOR 1/2 CORRELATION — DRIVE WHEELS (Equipped with ABS)

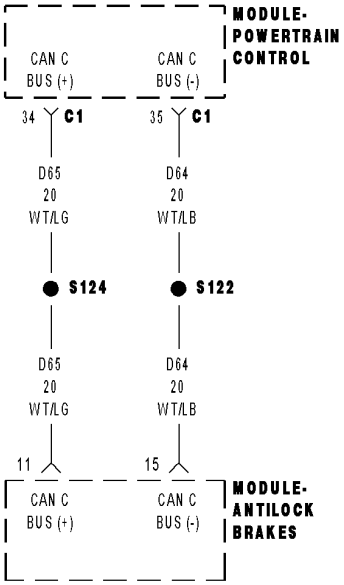

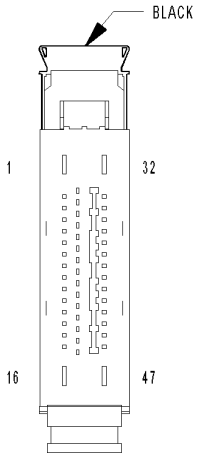

MODULE-
ANTILOCK BRAKES

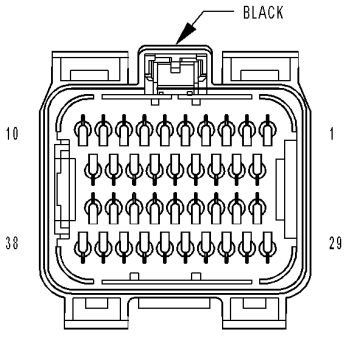

MODULE-
POWERTRAIN
CONTROL C1

8136947a

For a complete wiring diagram **Refer to Section 8W**.

- **When Monitored:**
  Ignition on and the vehicle moving. Speed control is learned and the speed control is trying to be activated.
- **Set Condition:**
  The PCM recognizes the rear wheel speed is greater than the front wheel speed.

Possible Causes
ACTIVE BUS OR COMMUNICATION DTCS
TIRE CIRCUMFERENCE
PCM

Always perform the Pre-Diagnostic Troubleshooting procedure before proceeding. (Refer to 9 - ENGINE - DIAGNOSIS AND TESTING).

Diagnostic Test

1. ACTIVE DTC

NOTE: The following items must be performed before continuing.
- **Pinion Factor and Tire Size MUST be programmed in the ABS Module.**
- **All Bus Communication DTCs MUST be diagnosed.**
- **All related Vehicle Speed and Wheel Speed DTCs that may be active in the ABS Module MUST be diagnosed. Refer to the ABS diagnostic information for the correct procedure.**

Ignition on, engine not running.

With a scan tool, read DTCs.

Is the DTC active at this time?

Yes >> Go To 2

No >> Refer to the INTERMITTENT CONDITION Diagnostic Procedure.
Perform the POWERTRAIN VERIFICATION TEST. (Refer to 9 - ENGINE - STANDARD PROCEDURE)

2. VISUAL INSPECTION

NOTE: This code can set due to the following conditions.
- **Unequal tire circumference between the tires on the vehicle.**
- **Front or Rear wheels moving while the opposite wheels are not. (i.e., wheels slipping on loose gravel, ice or hard acceleration)**

Check tire pressure of all the tires.

Check tire wear on all the tires.

Ask the customer what the road and driving conditions were like when the fault set.

Were any of the above conditions found?

Yes >> Repair as necessary. If the code set during a front OR rear wheel spin condition, no repair is necessary.
Perform the POWERTRAIN VERIFICATION TEST. (Refer to 9 - ENGINE - STANDARD PROCEDURE)

No >> Go To 3

3. PCM

NOTE: Before continuing, check the PCM harness connector terminals for corrosion, damage, or terminal push out. Repair as necessary. Using the schematics as a guide, inspect the wire harness and connectors. Pay particular attention to all Power and Ground circuits.

Were there any problems found?

Yes >> Repair as necessary.
Perform the POWERTRAIN VERIFICATION TEST. (Refer to 9 - ENGINE - STANDARD PROCEDURE)

No >> Replace and program the Powertrain Control Module per Service Information.
Perform the POWERTRAIN VERIFICATION TEST. (Refer to 9 - ENGINE - STANDARD PROCEDURE)

P1502–VEHICLE SPEED SENSOR 1/2 CORRELATION — NON DRIVE WHEELS (Equipped with ABS)

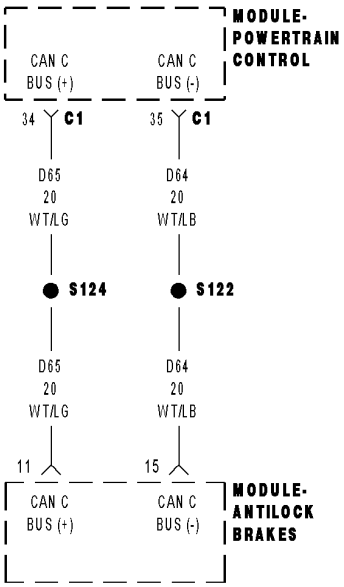

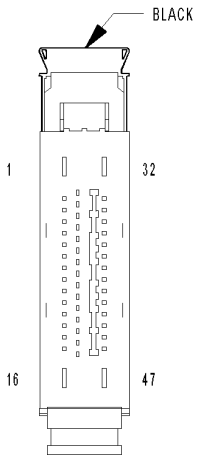

MODULE-
ANTILOCK BRAKES

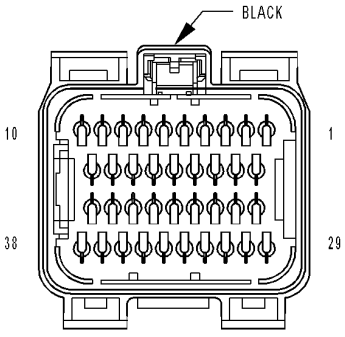

MODULE-
POWERTRAIN
CONTROL C1

8136947a

For a complete wiring diagram **Refer to Section 8W**.

- **When Monitored:**
  Ignition on and the vehicle moving. Brake pedal must not be applied
- **Set Condition:**
  The PCM recognizes the front axle speed is greater than the rear wheel speed.

Possible Causes
ACTIVE BUS OR COMMUNICATION DTCS
TIRE CIRCUMFERENCE
PCM

Always perform the Pre-Diagnostic Troubleshooting procedure before proceeding. (Refer to 9 - ENGINE - DIAGNOSIS AND TESTING).

Diagnostic Test

1. ACTIVE DTC

NOTE: The following items must be performed before continuing.
- **Pinion Factor and Tire Size MUST be programmed in the ABS Module.**
- **All Bus Communication DTCs MUST be diagnosed.**
- **All related Vehicle Speed and Wheel Speed DTCs that may be active in the ABS Module MUST be diagnosed. Refer to the ABS diagnostic information for the correct procedure.**

Ignition on, engine not running.

With a scan tool, read DTCs.

Is the DTC active at this time?

Yes >> Go To 2

No >> Refer to the INTERMITTENT CONDITION Diagnostic Procedure.
Perform the POWERTRAIN VERIFICATION TEST. (Refer to 9 - ENGINE - STANDARD PROCEDURE)

2. VISUAL INSPECTION

NOTE: This code can set due to the following conditions.
- **Unequal tire circumference between the tires on the vehicle.**
- **Front or Rear wheels moving while the opposite wheels are not. (i.e., wheels slipping on loose gravel, ice or hard acceleration)**

Check tire pressure of all the tires.

Check tire wear on all the tires.

Ask the customer what the road and driving conditions were like when the fault set.

Were any of the above conditions found?

Yes >> Repair as necessary. If the code set during a front OR rear wheel spin condition, no repair is necessary.
Perform the POWERTRAIN VERIFICATION TEST. (Refer to 9 - ENGINE - STANDARD PROCEDURE)

No >> Go To 3

3. PCM

NOTE: Before continuing, check the PCM harness connector terminals for corrosion, damage, or terminal push out. Repair as necessary. Using the schematics as a guide, inspect the wire harness and connectors. Pay particular attention to all Power and Ground circuits.

Were there any problems found?

Yes >> Repair as necessary.
Perform the POWERTRAIN VERIFICATION TEST. (Refer to 9 - ENGINE - STANDARD PROCEDURE)

No >> Replace and program the Powertrain Control Module per Service Information.
Perform the POWERTRAIN VERIFICATION TEST. (Refer to 9 - ENGINE - STANDARD PROCEDURE)

P1521–INCORRECT ENGINE OIL TYPE

- **When Monitored:**
  Engine Running.
- **Set Condition:**
  Using the oil pressure, oil temperature and other vital engine inputs the PCM can determine the engine oil viscosity. Incorrect viscosity will effect the operation of the MDS by delaying cylinder activation.

Possible Causes
INCORRECT ENGINE OIL TYPE
ENGINE OIL CONTAMINATION
ENGINE OIL

Always perform the Pre-Diagnostic Troubleshooting procedure before proceeding. (Refer to 9 - ENGINE - DIAGNOSIS AND TESTING).

Diagnostic Test

1. ACTIVE DTC

NOTE: Review the customers oil change history. Ensure the customers is using the correct engine oil viscosity. If the incorrect oil is being used, change the oil, using the correct engine oil viscosity.
Ignition on, engine off.
With the scan tool, read DTCs.

Is the DTC active at this time?

Yes >> Go to 2

No >> Test Complete.

2. ENGINE OIL

NOTE: If set along with P1521, repair any engine oil pressure or temperature DTCs first before continuing.
The following conditions must be checked.

- OEM recommended oil viscosity is being used.
- Customer is following the oil change schedule.
- Check the engine oil for contamination. (i.e., fuel and/or engine coolant)
- Internal engine condition that may effect oil pressure.

Were any of the above conditions found?

Yes >> Repair as necessary.
Perform the POWERTRAIN VERIFICATION TEST. (Refer to 9 - ENGINE - STANDARD PROCEDURE)

No >> Change the engine oil using the correct oil viscosity.
Perform the POWERTRAIN VERIFICATION TEST. (Refer to 9 - ENGINE - STANDARD PROCEDURE)

P1572-BRAKE SWITCH STUCK ON

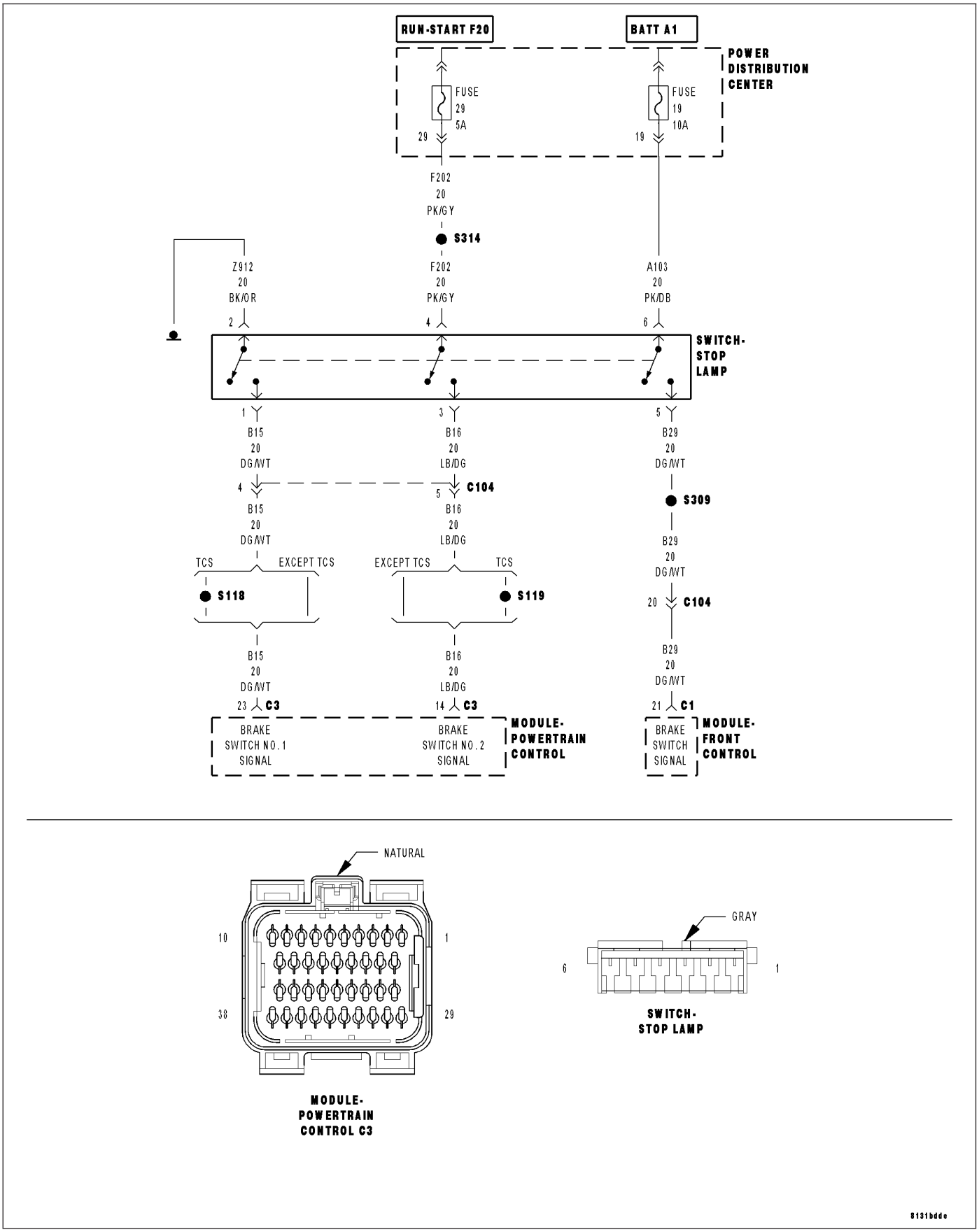

For a complete wiring diagram **Refer to Section 8W**.

- **When Monitored:**
  Ignition on.
- **Set Condition:**
  The PCM recognizes the Brake Switch #1 is mechanically stuck in the low/on position. One Trip Fault.

Possible Causes
(B15) BRAKE SWITCH NO.1 SIGNAL SHORTED TO GROUND
(B16) BRAKE SWITCH NO.2 SIGNAL OPEN
(F202) FUSED IGNITION SWITCH OUTPUT OPEN
STOP LAMP SWITCH
PCM

Always perform the Pre-Diagnostic Troubleshooting procedure before proceeding. (Refer to 9 - ENGINE - DIAGNOSIS AND TESTING).

Diagnostic Test

1. ACTIVE DTC

NOTE: Make sure the Stop Lamp Switch is properly adjusted before continuing.

NOTE: Make sure the Stop Lamp Switch is properly wired, such as (B15) Brake Switch No.1 and (B16) Brake Lamp Switch No.2 circuit are not switched at the harness connector.

Ignition on, engine not running.

With a scan tool, read DTCs.

Is the DTC active at this time?

Yes >> Go To 2

No >> Refer to the INTERMITTENT CONDITION Diagnostic Procedure.
Perform the POWERTRAIN VERIFICATION TEST. (Refer to 9 - ENGINE - STANDARD PROCEDURE)

2. (B15) BRAKE SWITCH NO.1 SIGNAL SHORTED TO GROUND

Turn the ignition off.

Disconnect the Stop Lamp Switch harness connector.

Disconnect the PCM harness connectors.

Measure the resistance between ground and the (B15) Brake Switch No.1 Signal circuit in the Stop Lamp Switch harness connector.

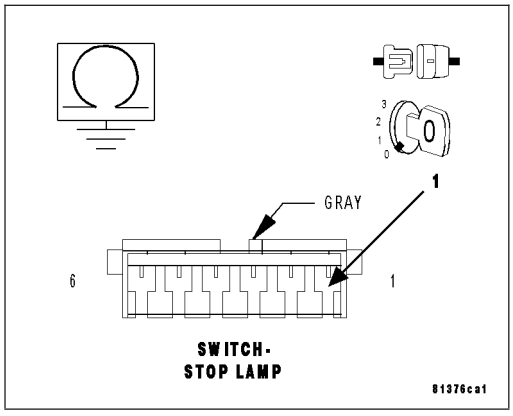

Is the resistance below 100 ohms?

Yes >> Repair the short to ground in the (B15) Brake Switch No.1 Signal circuit.
Perform the POWERTRAIN VERIFICATION TEST. (Refer to 9 - ENGINE - STANDARD PROCEDURE)

No >> Go To 3

3. (B16) BRAKE SWITCH NO.2 SIGNAL OPEN

CAUTION: Do not probe the PCM harness connectors. Probing the PCM harness connectors will damage the PCM terminals resulting in poor terminal to pin connection. Install Miller Special Tool #8815 to perform diagnosis.

Measure the resistance of the (B16) Brake Switch No.2 Signal circuit from the Stop Lamp Switch harness connector and the appropriate terminal of the special tool #8815.

Is the resistance below 5.0 ohms?

Yes >> Go To 4

No >> Repair the open in the (B16) Brake Switch No.2 Signal circuit.

Perform the POWERTRAIN VERIFICATION TEST. (Refer to 9 - ENGINE - STANDARD PROCEDURE)

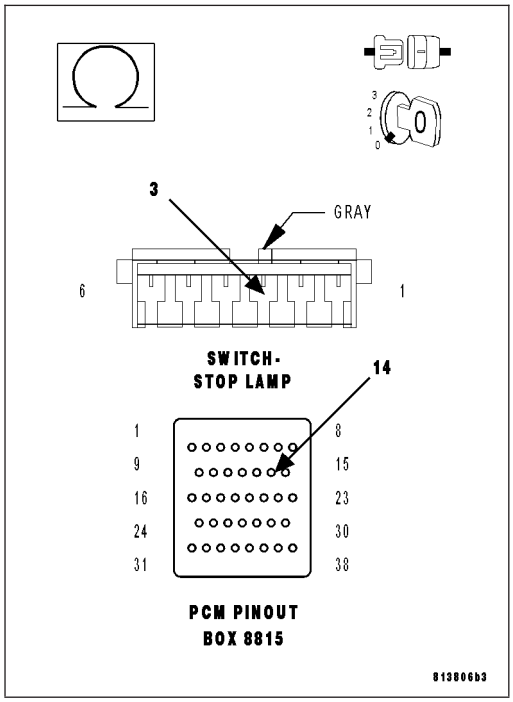

4. (B16) BRAKE SWITCH NO.2 SIGNAL SHORT TO VOLTAGE

Turn the ignition on.

Measure the voltage of the (B16) Brake Switch No.2 Signal circuit in the Stop Lamp Switch harness connector.

Does the voltmeter indicate voltage present?

Yes >> Repair the short to voltage in the (B16) Brake Switch No.2 circuit.

Perform the POWERTRAIN VERIFICATION TEST. (Refer to 9 - ENGINE - STANDARD PROCEDURE)

No >> Go To 5

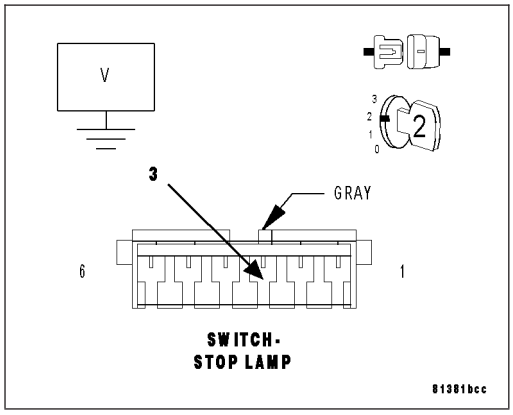

5. STOP LAMP SWITCH

Remove the Stop Lamp Switch.

Measure the resistance between terminals 1 and 2 of the Stop Lamp Switch.

Next, measure the resistance between terminals 3 and 4 of the Stop Lamp Switch.

Apply and release the brake pedal while monitoring the ohmmeter during both of the above steps.

Does the resistance change from below 5.0 ohms to an open circuit for one or both of the measurements taken?

Yes >> Go To 6

No >> Replace the Stop Lamp Switch.

Perform the POWERTRAIN VERIFICATION TEST. (Refer to 9 - ENGINE - STANDARD PROCEDURE)

6. PCM

NOTE: Before continuing, check the PCM harness connector terminals for corrosion, damage, or terminal push out. Repair as necessary.
Using the schematics as a guide, inspect the wire harness and connectors. Pay particular attention to all Power and Ground circuits.

Were there any problems found?

Yes >> Repair as necessary.
Perform (NGC) POWERTRAIN VERIFICATION TEST VER - 4.

No >> Replace and program the Powertrain Control Module per Service Information.
Perform the POWERTRAIN VERIFICATION TEST. (Refer to 9 - ENGINE - STANDARD PROCEDURE)

P1573-BRAKE SWITCH STUCK OFF

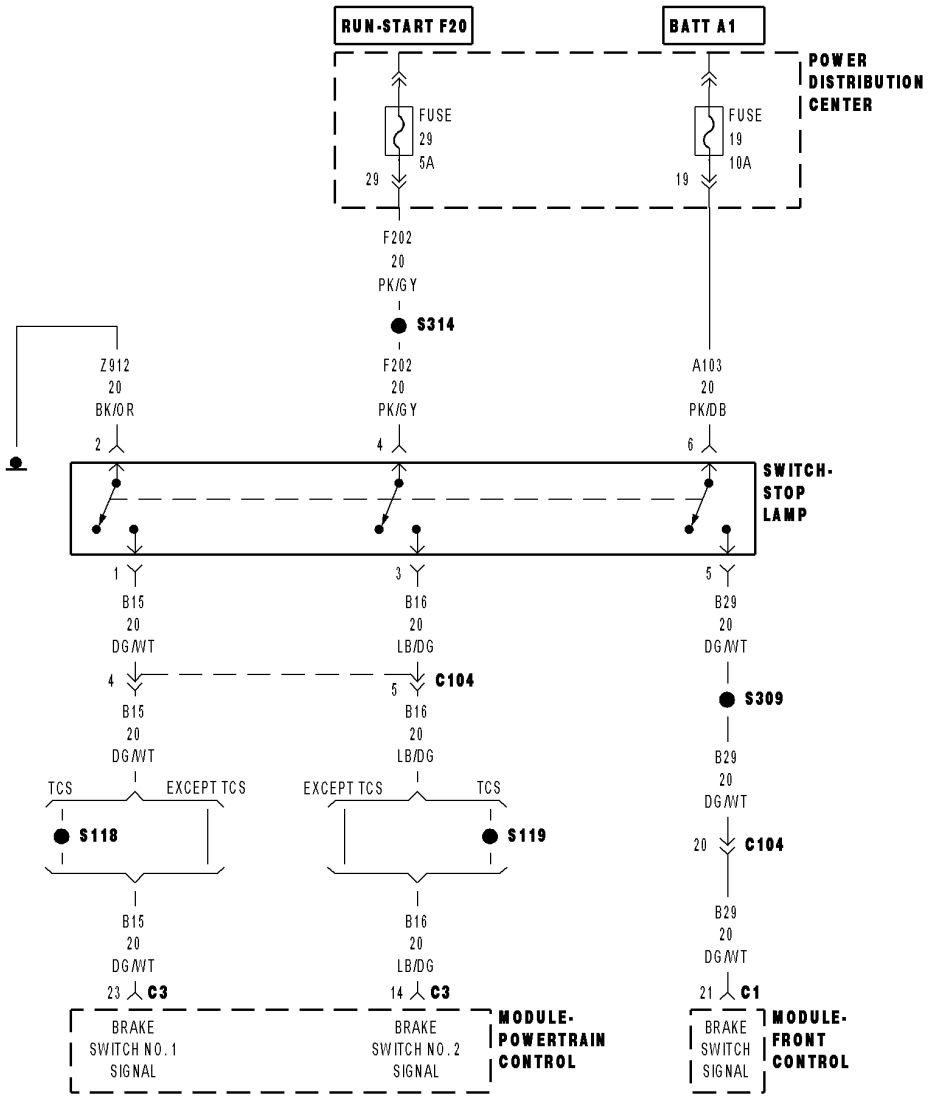

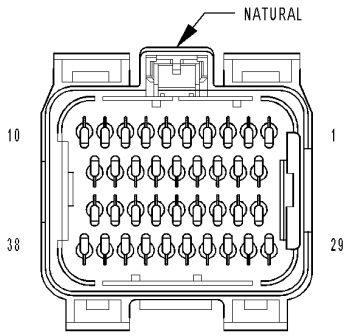

MODULE-POWERTRAIN CONTROL C3

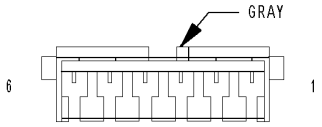

SWITCH-STOP LAMP

8131bdde

For a complete wiring diagram **Refer to Section 8W**.

- **When Monitored:**
  Ignition on.
- **Set Condition:**
  The PCM recognizes Brake Switch No.1 is stuck in the Off/high position. One Trip Fault.

Possible Causes
(B15) BRAKE SWITCH NO.1 SIGNAL SHORTED TO GROUND
(B15) BRAKE SWITCH NO.1 SIGNAL ShORT TO VOLTAGE
(B16) BRAKE SWITCH NO.2 SIGNAL SHORTED TO GROUND
(B16) BRAKE SWITCH NO.2 SIGNAL OPEN
(Z912) GROUND CIRCUIT OPEN
(F202) FUSED IGNITION SWITCH OUTPUT OPEN
STOP LAMP SWITCH
PCM

Always perform the Pre-Diagnostic Troubleshooting procedure before proceeding. (Refer to 9 - ENGINE - DIAGNOSIS AND TESTING).

Diagnostic Test

1. ACTIVE DTC

NOTE: Make sure the Stop Lamp Switch is properly adjusted before continuing.

NOTE: Make sure the Stop Lamp Switch is properly wired, such as (B15) Brake Switch No.1 and (B16) Brake Lamp Switch No.2 circuits are not switched at the harness connector.

Ignition on, engine not running.

With a scan tool, read DTCs.

Is the DTC active at this time?

Yes >> Go To 2

No >> Refer to the INTERMITTENT CONDITION Diagnostic Procedure.
Perform the POWERTRAIN VERIFICATION TEST. (Refer to 9 - ENGINE - STANDARD PROCEDURE)

2. (B15) BRAKE SWITCH NO.1 SIGNAL SHORTED TO GROUND

Turn the ignition off.

Disconnect the Stop Lamp Switch harness connector.

Disconnect the PCM harness connectors.

Measure the resistance between ground and the (B15) Brake Switch No.1 Signal circuit in the Stop Lamp Switch harness connector.

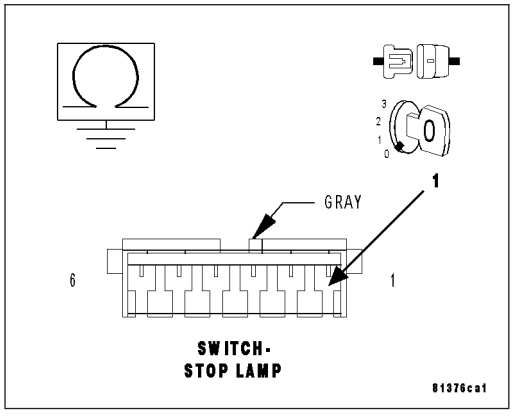

Is the resistance below 100 ohms?

Yes >> Repair the short to ground in the (B15) Brake Switch No.1 Signal circuit.
Perform the POWERTRAIN VERIFICATION TEST. (Refer to 9 - ENGINE - STANDARD PROCEDURE)

No >> Go To 3

3. (B15) BRAKE SWITCH NO.1 SIGNAL SHORT TO VOLTAGE

Turn the ignition on.

Measure the voltage of the (B15) Brake Switch No.1 Signal circuit in the Stop Lamp Switch harness connector.

Does the voltmeter indicate voltage present?

Yes >> Repair the short voltage in the (B15) Brake Switch No.1 Signal circuit.
Perform the POWERTRAIN VERIFICATION TEST. (Refer to 9 - ENGINE - STANDARD PROCEDURE)

No >> Go To 4

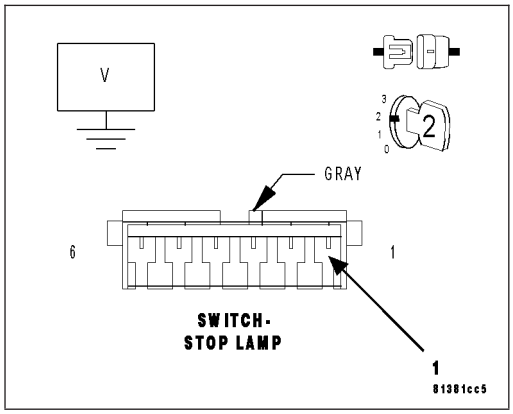

4. (B16) BRAKE SWITCH NO.2 SIGNAL SHORTED TO GROUND

Turn the ignition off.

Disconnect the Stop Lamp Switch harness connector.

Disconnect the PCM harness connectors.

Measure the resistance between ground and the (B16) Brake Switch No.2 Signal circuit in the Stop Lamp Switch harness connector.

Is the resistance below 100 ohms?

Yes >> Repair the short to ground in the (B16) Brake Switch No.2 Signal circuit.
Perform the POWERTRAIN VERIFICATION TEST. (Refer to 9 - ENGINE - STANDARD PROCEDURE)

No >> Go To 5

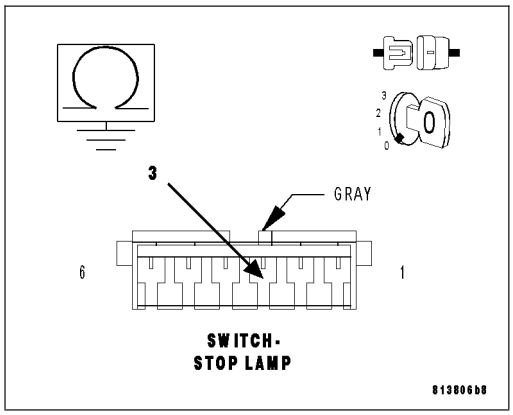

5. (B16) BRAKE SWITCH NO.2 SIGNAL OPEN

CAUTION: Do not probe the PCM harness connectors. Probing the PCM harness connectors will damage the PCM terminals resulting in poor terminal to pin connection. Install Miller Special Tool #8815 to perform diagnosis.

Measure the resistance of the (B16) Brake Switch No.2 Signal circuit from the Stop Lamp Switch harness connector and the appropriate terminal of the special tool #8815.

Is the resistance below 5.0 ohms?

Yes >> Go To 6

No >> Repair the open in the (B16) Brake Switch No.2 Signal circuit.
Perform the POWERTRAIN VERIFICATION TEST. (Refer to 9 - ENGINE - STANDARD PROCEDURE)

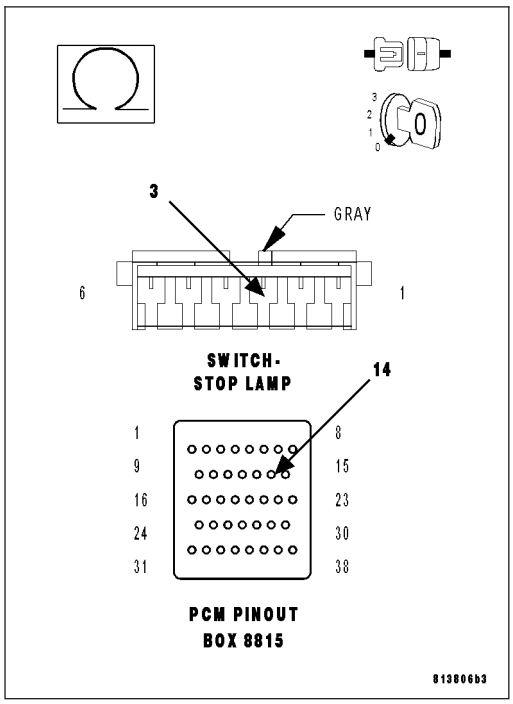

6. (F202) FUSED IGNITION SWITCH OUTPUT (RUN-START) OPEN

Reconnect the PCM harness connector.

Turn the ignition on.

Using a 12–volt test light connected to ground, probe the (F202) Fused Ignition Switch Output circuit in the Stop Lamp Switch harness connector.

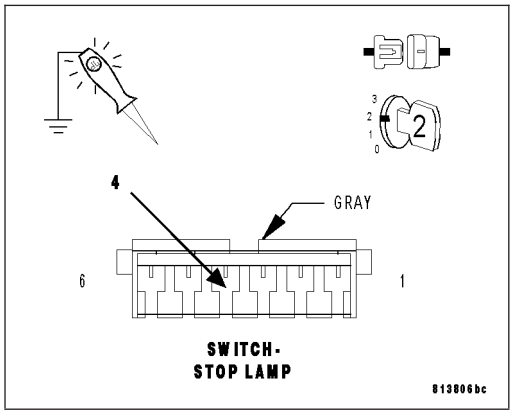

Does the test light illuminate brightly?

Yes >> Go To 7

No >> Repair the open in the (F202) Fused Ignition Switch Output circuit.

Perform the POWERTRAIN VERIFICATION TEST. (Refer to 9 - ENGINE - STANDARD PROCEDURE)

7. (Z912) GROUND CIRCUIT OPEN

Using the 12-volt test light connect to battery voltage, probe the (Z912) Ground circuit in the Stop Lamp Switch harness connector.

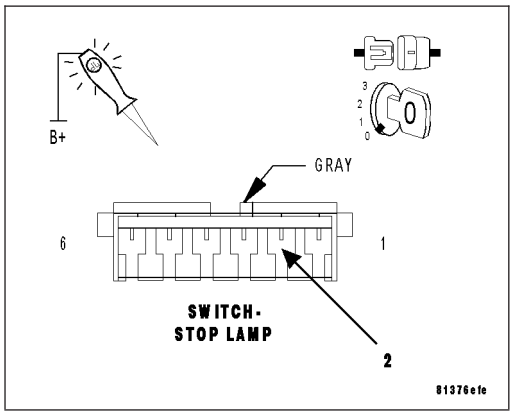

Does the test light illuminate brightly?

Yes >> Go To 8

No >> Repair the open in the (Z912) Ground circuit.

Perform the POWERTRAIN VERIFICATION TEST. (Refer to 9 - ENGINE - STANDARD PROCEDURE)

8. STOP LAMP SWITCH

Remove the Stop Lamp Switch.

Measure the resistance between terminals 1 and 2 of the Stop Lamp Switch.

Next, measure the resistance between terminals 3 and 4 of the Stop Lamp Switch.

Apply and release the brake pedal while monitoring the ohmmeter during both of the above steps.

Does the resistance change from below 5.0 ohms to an open circuit for one or both of the measurements taken?

Yes >> Go To 9

No >> Replace the Stop Lamp Switch.

Perform the POWERTRAIN VERIFICATION TEST. (Refer to 9 - ENGINE - STANDARD PROCEDURE)

9. PCM

NOTE: Before continuing, check the PCM harness connector terminals for corrosion, damage, or terminal push out. Repair as necessary.
Using the schematics as a guide, inspect the wire harness and connectors. Pay particular attention to all Power and Ground circuits.

Were there any problems found?

Yes >> Repair as necessary.
Perform the POWERTRAIN VERIFICATION TEST. (Refer to 9 - ENGINE - STANDARD PROCEDURE)

No >> Replace and program the Powertrain Control Module per Service Information.
Perform the POWERTRAIN VERIFICATION TEST. (Refer to 9 - ENGINE - STANDARD PROCEDURE)

P1593–SPEED CONTROL SWITCH 1/2 STUCK

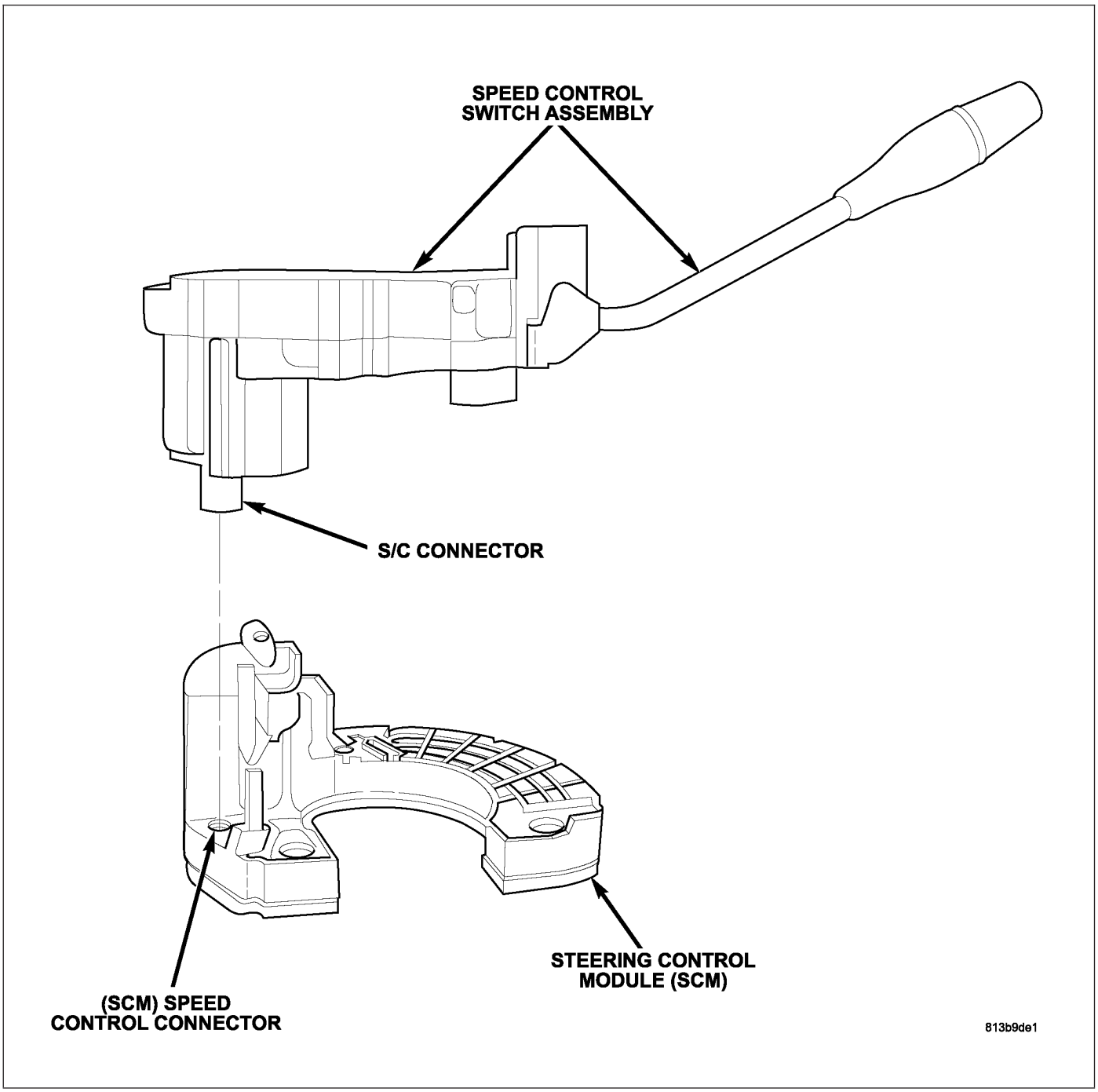

For a complete wiring diagram **Refer to Section 8W**.

- **When Monitored:**
  Continuously with the ignition on.
- **Set Condition:**
  The Steering Control Module (SCM) has detected that the Speed Control Switches are not operating properly.

Possible Causes
INTERMITTENT SPEED CONTROL SWITCH 1/2 STUCK DTC
SPEED CONTROL SWITCH
STEERING CONTROL MODULE (SCM)

Diagnostic Test

1. DTC IS ACTIVE

NOTE: If P0562–BATTERY VOLTAGE LOW or P0563–BATTERY VOLTAGE HIGH is set along with this DTC, diagnose the battery voltage DTC first.
Ignition on, engine not running.
With the Scan Tool, select View DTCs in the Steering Control Module.

Is the DTC status Active at this time?

Yes >> Go to 2

No >> Go to 4

2. SPEED CONTROL SWITCH

Turn the ignition off.
Replace the Speed Control Switch in accordance with the Service Information.
Turn the ignition on.
Move the Speed Control Switch to each position several times.
With the Scan Tool, Clear Stored DTCs in the Steering Control Module.
With the Scan Tool, select View DTCs in the Steering Control Module.
Move the Speed Control Switch to each position several times while monitoring the Scan Tool.

Does this DTC reset?

Yes >> Go To 3

No >> Test Complete.

3. STEERING CONTROL MODULE (SCM)

View repair.

Repair

Replace the Steering Control Module (SCM) in accordance with the Service Information.

4. INTERMITTENT SPEED CONTROL SWITCH 1/2 STUCK DTC

The conditions necessary to set this DTC are not present at this time.

While monitoring the scan tool data relative to this circuit, move the Speed Control Switch to each position several times.

Look for the DTC to reset while the switch is being moved to each position.

Were any problems found?

Yes >> Repair as necessary.

No >> Test complete.

P1603-PCM INTERNAL DUAL-PORT RAM COMMUNICATION FAILURE

For a complete wiring diagram **Refer to Section 8W**.

- **When Monitored:**
  Ignition on and battery voltage greater than 10 volts.
- **Set Condition:**
  Internal PCM failure detected. One Trip Fault. Three good trips to turn off the MIL.

Possible Causes
PCM FUSED IGNITION SWITCH CIRCUIT
PCM INTERNAL

Always perform the Pre-Diagnostic Troubleshooting procedure before proceeding. (Refer to 9 - ENGINE - DIAGNOSIS AND TESTING).

Diagnostic Test

1. PCM IGNITION CIRCUITS

Turn the ignition off.

Disconnect the PCM harness connectors.

Ignition on, engine not running.

CAUTION: Do not probe the PCM harness connectors. Probing the PCM harness connectors will damage the PCM terminals resulting in poor terminal to pin connection. Install Miller Special Tool #8815 to perform diagnosis.

With a 12-volt test light connected to ground and with special tool #8815 installed, probe the (F202) and (F924) Fused Ignition Switch circuits.

Perform the above check with the Ignition key in the off lock position, Ignition on, engine not running position, and during cranking.

Wiggle the related wire harness while probing the special tool with the test light to try to interrupt the circuit.

Does the test light illuminate brightly?

Yes >> Go To 2

No >> Repair the open or excessive resistance in the (F202) and (F924) Fused Ignition Switch (Off, Run, Start) circuits. Inspect the related fuse, if the fuse is open check the circuits for a short to ground.

Perform the POWERTRAIN VERIFICATION TEST. (Refer to 9 - ENGINE - STANDARD PROCEDURE)

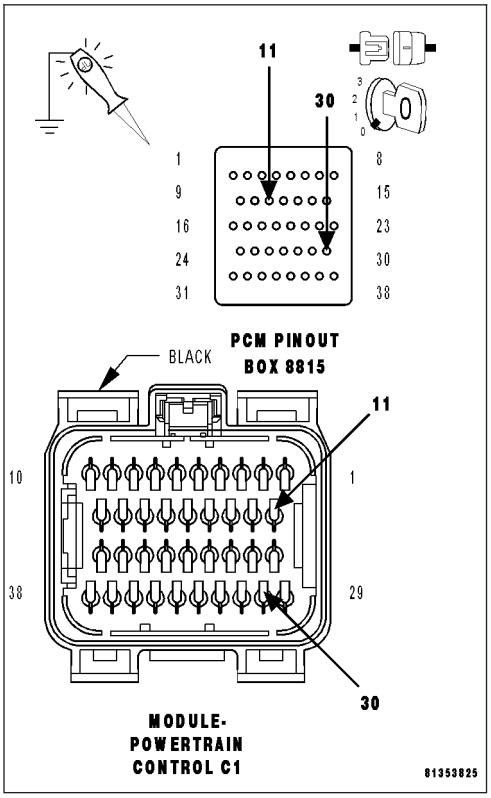

2. PCM

The Powertrain Control Module is reporting internal errors.

NOTE: Before continuing, check the PCM harness connector terminals for corrosion, damage, or terminal push out. Repair as necessary.
Using the schematics as a guide, inspect the wire harness and connectors. Pay particular attention to all Power and Ground circuits.

Were there any problems found?

Yes >> Repair as necessary.
Perform the POWERTRAIN VERIFICATION TEST. (Refer to 9 - ENGINE - STANDARD PROCEDURE)

No >> Replace and program the Powertrain Control Module per Service Information.
Perform the POWERTRAIN VERIFICATION TEST. (Refer to 9 - ENGINE - STANDARD PROCEDURE)

P1604-PCM INTERNAL DUAL-PORT RAM READ/WRITE INTEGRITY FAILURE

For a complete wiring diagram **Refer to Section 8W**.

- **When Monitored:**
  Ignition on and battery voltage greater than 10 volts.
- **Set Condition:**
  Internal PCM failure detected. One Trip Fault. Three good trips to turn off the MIL.

Possible Causes
PCM FUSED IGNITION SWITCH CIRCUIT
PCM INTERNAL

Always perform the Pre-Diagnostic Troubleshooting procedure before proceeding. (Refer to 9 - ENGINE - DIAGNOSIS AND TESTING).

Diagnostic Test

1. PCM IGNITION CIRCUITS

Turn the ignition off.

Disconnect the PCM harness connectors.

Ignition on, engine not running.

CAUTION: Do not probe the PCM harness connectors. Probing the PCM harness connectors will damage the PCM terminals resulting in poor terminal to pin connection. Install Miller Special Tool #8815 to perform diagnosis.

With a 12-volt test light connected to ground and with special tool #8815 installed, probe the (F202) and (F924) Fused Ignition Switch circuits.

Perform the above check with the Ignition key in the off lock position, Ignition on, engine not running position, and during cranking.

Wiggle the related wire harness while probing the special tool with the test light to try to interrupt the circuit.

Does the test light illuminate brightly?

Yes >> Go To 2

No >> Repair the open or excessive resistance in the (F202) and (F924) Fused Ignition Switch (Off, Run, Start) circuits. Inspect the related fuse, if the fuse is open check the circuits for a short to ground.

Perform the POWERTRAIN VERIFICATION TEST. (Refer to 9 - ENGINE - STANDARD PROCEDURE)

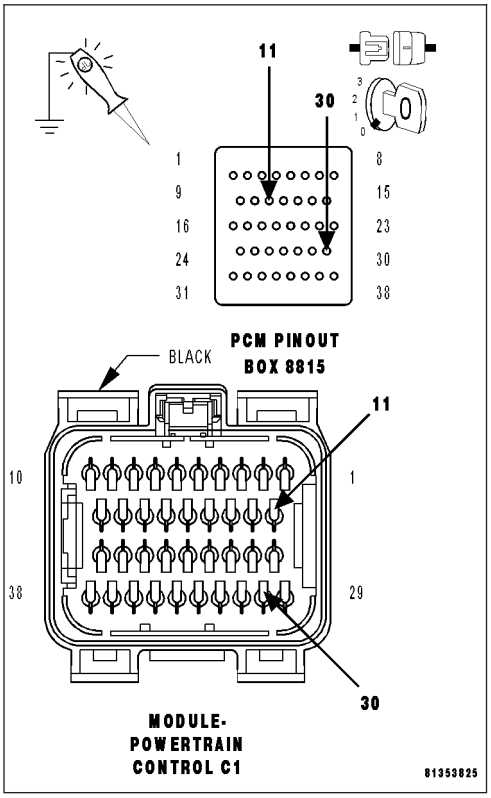

2. PCM

The Powertrain Control Module is reporting internal errors.

NOTE: Before continuing, check the PCM harness connector terminals for corrosion, damage, or terminal push out. Repair as necessary.
Using the schematics as a guide, inspect the wire harness and connectors. Pay particular attention to all Power and Ground circuits.

Were there any problems found?

Yes >> Repair as necessary.
Perform the POWERTRAIN VERIFICATION TEST. (Refer to 9 - ENGINE - STANDARD PROCEDURE)

No >> Replace and program the Powertrain Control Module per Service Information.
Perform the POWERTRAIN VERIFICATION TEST. (Refer to 9 - ENGINE - STANDARD PROCEDURE)

P1607-PCM INTERNAL SHUTDOWN TIMER RATIONALITY

For a complete wiring diagram **Refer to Section 8W**.

- **When Monitored:**
  Ignition on and battery voltage greater than 10 volts.
- **Set Condition:**
  Internal PCM failure detected. One Trip Fault. Three good trips to turn off the MIL.

Possible Causes
PCM FUSED IGNITION SWITCH CIRCUIT
PCM INTERNAL

Always perform the Pre-Diagnostic Troubleshooting procedure before proceeding. (Refer to 9 - ENGINE - DIAGNOSIS AND TESTING).

Diagnostic Test

1. PCM IGNITION CIRCUITS

Turn the ignition off.

Disconnect the PCM harness connectors.

CAUTION: Do not probe the PCM harness connectors. Probing the PCM harness connectors will damage the PCM terminals resulting in poor terminal to pin connection. Install Miller Special Tool #8815 to perform diagnosis.

With a 12-volt test light connected to ground and with special tool #8815 installed, probe the (F202) and (F924) Fused Ignition Switch circuits.

Perform the above check with the Ignition key in the off lock position, Ignition on, engine not running position, and during cranking.

Wiggle the related wire harness while probing the special tool with the test light to try to interrupt the circuit.

Does the test light illuminate brightly?

Yes >> Go To 2

No >> Repair the open or excessive resistance in the (F202) and (F924) Fused Ignition Switch (Off, Run, Start) circuits. Inspect the related fuse, if the fuse is open check the circuits for a short to ground.

Perform the POWERTRAIN VERIFICATION TEST. (Refer to 9 - ENGINE - STANDARD PROCEDURE)

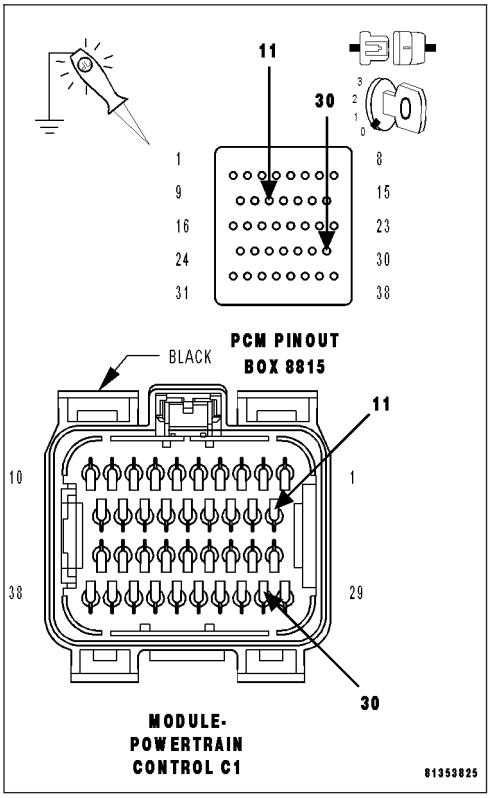

2. PCM

The Powertrain Control Module is reporting internal errors.

NOTE: Before continuing, check the PCM harness connector terminals for corrosion, damage, or terminal push out. Repair as necessary.
Using the schematics as a guide, inspect the wire harness and connectors. Pay particular attention to all Power and Ground circuits.

Were there any problems found?

Yes >> Repair as necessary.
Perform the POWERTRAIN VERIFICATION TEST. (Refer to 9 - ENGINE - STANDARD PROCEDURE)

No >> Replace and program the Powertrain Control Module per Service Information.
Perform the POWERTRAIN VERIFICATION TEST. (Refer to 9 - ENGINE - STANDARD PROCEDURE)

P1618-SENSOR REFERENCE VOLTAGE 1 CIRCUIT ERRATIC

For a complete wiring diagram **Refer to Section 8W**.

- **When Monitored:**
  Ignition on.
- **Set Condition:**
  When the PCM recognizes the Primary 5-volt Supply circuit voltage is varying too much to quickly. One Trip Fault. ETC light is flashing.

Possible Causes
(F855) PRIMARY 5-VOLT SUPPLY SHORTED TO GROUND
(F855) PRIMARY 5-VOLT SUPPLY SHORTED TO BATTERY VOLTAGE
(F855) PRIMARY 5-VOLT SUPPLY CIRCUIT OPEN
5-VOLT SENSOR
PCM

Always perform the Pre-Diagnostic Troubleshooting procedure before proceeding. (Refer to 9 - ENGINE - DIAGNOSIS AND TESTING).

Diagnostic Test

1. ACTIVE DTC

Ignition on, engine not running.
With a scan tool, read DTCs.

Is the DTC active at this time?

Yes >> Go To 2

No >> Refer to the INTERMITTENT CONDITION Diagnostic Procedure.
Perform the POWERTRAIN VERIFICATION TEST. (Refer to 9 - ENGINE - STANDARD PROCEDURE)

2. (F855) PRIMARY 5-VOLT SUPPLY CIRCUIT SHORTED TO GROUND

Turn the ignition off.
Disconnect the PCM harness connectors.
Disconnect all the Sensors that share the (F855) Primary 5-volt Supply circuit.

NOTE: This code can be caused by the improper installation of after market accessories that may be causing excessive noise on the (F855) 5-volt Supply circuit.
Measure the resistance between ground and the (F855) Primary 5-volt Supply circuit in the CKP Sensor harness connector.

Is the resistance below 100 ohms?

Yes >> Repair the short to ground in the (F855) Primary 5-volt Supply circuit.
Perform the POWERTRAIN VERIFICATION TEST. (Refer to 9 - ENGINE - STANDARD PROCEDURE)

No >> Go To 3

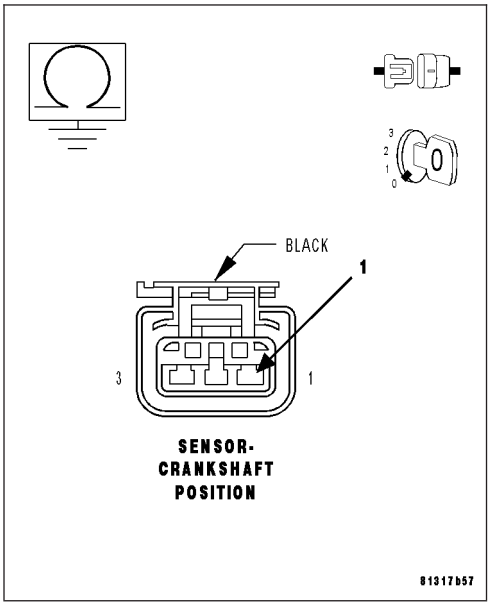

3. SENSOR SHORTED TO GROUND

Connect the PCM harness connectors and all the previously disconnected Sensor except for the CKP Sensor harness connector.

Ignition on, engine not running.

Measure the voltage on the (F855) Primary 5-volt Supply circuit at the Throttle Body harness connector.

CAUTION: You must Turn the Ignition Off when disconnecting any of the Sensor harness connectors and Turn the Ignition On to check the voltage readings.

While monitoring the voltage, disconnect each Sensor harness connector that shares the (F855) Primary 5-volt Supply circuit, one at a time.

Does the voltage increase above 4.5 volts when disconnecting any of the Sensor harness connectors?

Yes >> Replace the Sensor that causes the (F855) Primary 5-volt Supply circuit voltage to increase when disconnected.
Perform the POWERTRAIN VERIFICATION TEST. (Refer to 9 - ENGINE - STANDARD PROCEDURE)

No >> Go To 4

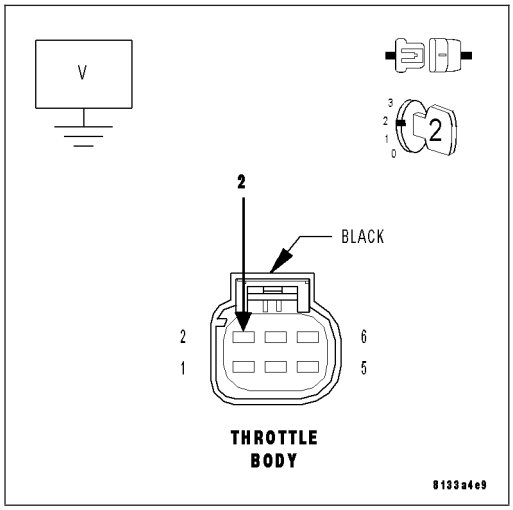

4. 5-VOLT SENSOR

Turn the ignition off.

Connect all the previously disconnected Sensors except for the CKP Sensor harness connector.

Ignition on, engine not running.

Measure the voltage on the (F855) Primary 5-volt Supply circuit at the CKP Sensor harness connector.

Is the voltage between 4.8 and 5.2 volts?

Yes >> Replace the Crank Position Sensor.
Perform the POWERTRAIN VERIFICATION TEST. (Refer to 9 - ENGINE - STANDARD PROCEDURE)

No >> Go To 5

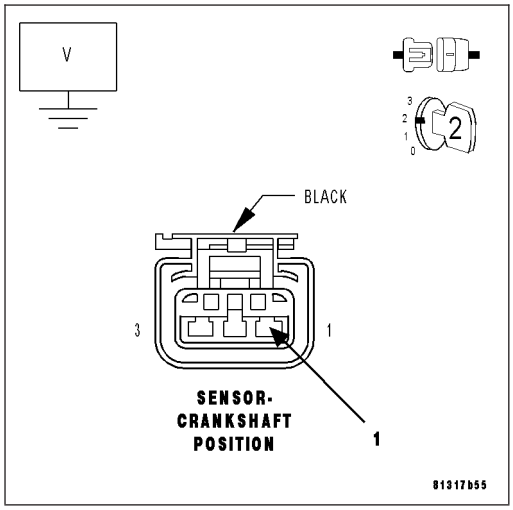

5. (F855) PRIMARY 5-VOLT SUPPLY SHORTED TO BATTERY VOLTAGE

Turn the ignition off.

Disconnect the PCM harness connectors.

Disconnect all the Sensors that share the (F855) Primary 5-volt Supply circuit.

Ignition on, engine not running.

Measure the voltage on the (F855) Primary 5-volt Supply circuit in the CKP Sensor harness connector.

Is the voltage present?

Yes >> Repair the short to battery voltage in the (F855) Primary 5-volt Supply circuit.
Perform the POWERTRAIN VERIFICATION TEST. (Refer to 9 - ENGINE - STANDARD PROCEDURE)

No >> Go To 6

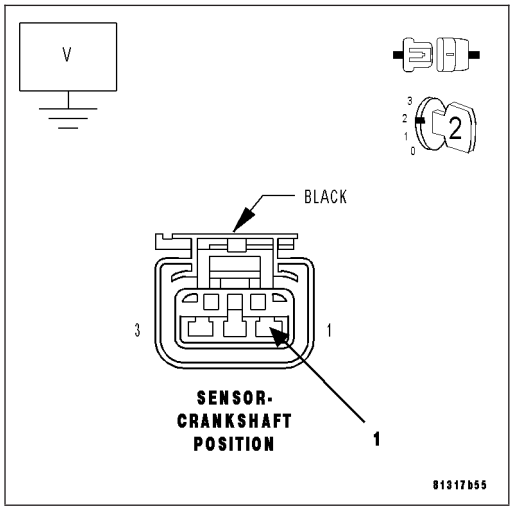

6. (F855) PRIMARY 5-VOLT SUPPLY CIRCUIT OPEN

Turn the ignition off.

Reconnect all the sensors that were disconnected in the previous step except for the CKP Sensor harness connector.

CAUTION: Do not probe the PCM harness connectors. Probing the PCM harness connectors will damage the PCM terminals resulting in poor terminal to pin connection. Install Miller Special Tool #8815 to perform diagnosis.

Measure the resistance in the (F855) Primary 5-volt Supply circuit from the Sensor harness connector to the appropriate terminal of special tool #8815.

It may be necessary to perform this test from every sensor that uses the (F855) Primary 5-volt Supply circuit.

Is the resistance below 5.0 ohms?

Yes >> Go To 7

No >> Repair the open in the (F855) Primary 5-volt Supply circuit.
Perform the POWERTRAIN VERIFICATION TEST. (Refer to 9 - ENGINE - STANDARD PROCEDURE)

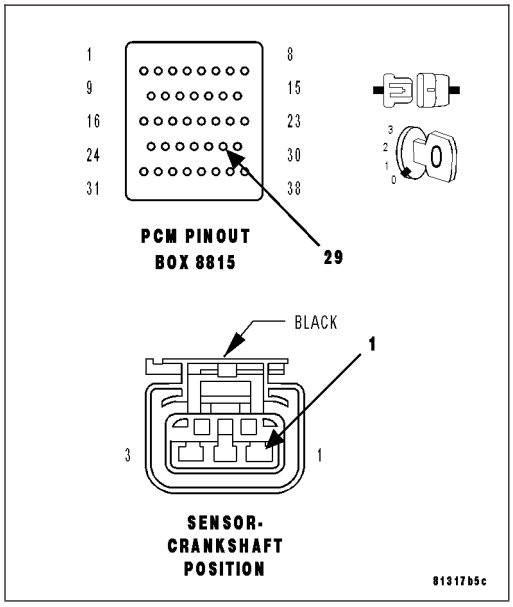

7. PCM

NOTE: Before continuing, check the PCM harness connector terminals for corrosion, damage, or terminal push out. Repair as necessary.

Using the schematics as a guide, inspect the wire harness and connectors. Pay particular attention to all Power and Ground circuits.

Were there any problems found?

Yes >> Repair as necessary.
Perform the POWERTRAIN VERIFICATION TEST. (Refer to 9 - ENGINE - STANDARD PROCEDURE)

No >> Replace and program the Powertrain Control Module per Service Information.
Perform the POWERTRAIN VERIFICATION TEST. (Refer to 9 - ENGINE - STANDARD PROCEDURE)

P1628-SENSOR REFERENCE VOLTAGE 2 CIRCUIT ERRATIC

For a complete wiring diagram **Refer to Section 8W**.

- **When Monitored:**
  Ignition on.
- **Set Condition:**
  When the PCM recognizes the Auxiliary 5-volt Supply circuit voltage is varying too much to quickly. One Trip Fault. ETC light is flashing.

Possible Causes
(F856) AUXILIARY 5-VOLT SUPPLY SHORTED TO GROUND
(F856) AUXILIARY 5-VOLT SUPPLY SHORTED TO BATTERY VOLTAGE
(F856) AUXILIARY 5-VOLT SUPPLY CIRCUIT OPEN
5-VOLT SENSOR
PCM

Always perform the Pre-Diagnostic Troubleshooting procedure before proceeding. (Refer to 9 - ENGINE - DIAGNOSIS AND TESTING).

Diagnostic Test

1. ACTIVE DTC

Ignition on, engine not running.
With a scan tool, read DTCs.

Is the DTC active at this time?

Yes >> Go To 2

No >> Refer to the INTERMITTENT CONDITION Diagnostic Procedure.
Perform the POWERTRAIN VERIFICATION TEST. (Refer to 9 - ENGINE - STANDARD PROCEDURE)

2. (F856) AUXILIARY 5-VOLT SUPPLY SHORTED TO GROUND

Turn the ignition off.
Disconnect the PCM harness connectors.
Disconnect all the Sensors that share the (F856) Auxiliary 5-volt Supply circuit.

NOTE: This code can be caused by the improper installation of after market accessories that may be causing excessive noise on the (F856) 5-volt Supply circuit.
Measure the resistance between ground and the (F856) Auxiliary 5-volt Supply circuit at the CMP Sensor harness connector.

Is the resistance below 100 ohms?

Yes >> Repair the short to ground in the (F856) Auxiliary 5-volt Supply circuit.
Perform the POWERTRAIN VERIFICATION TEST. (Refer to 9 - ENGINE - STANDARD PROCEDURE)

No >> Go To 3

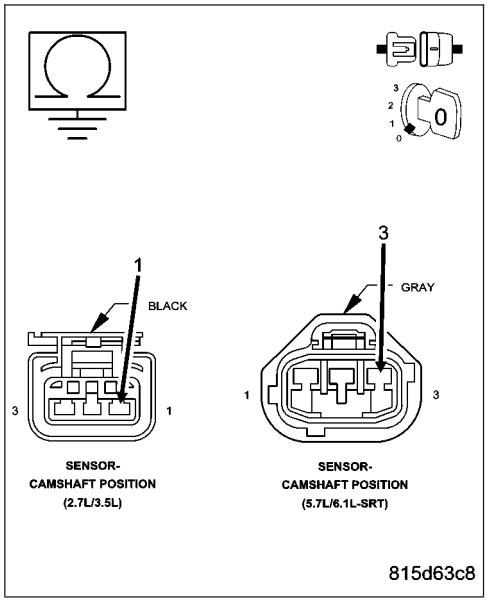

3. SENSOR SHORTED TO GROUND

Connect the PCM harness connectors and all the previously disconnected Sensor except for the CMP Sensor harness connector.

Ignition on, engine not running.

Measure the voltage on the (F856) Auxiliary 5-volt Supply circuit in the CMP Sensor harness connector.

CAUTION: You must Turn the Ignition OFF when disconnecting any of the Sensor harness connectors and Turn the Ignition On to check the voltage readings.

While monitoring the voltage, disconnect each Sensor harness connector that shares the (F856) Auxiliary 5-volt Supply circuit, one at a time.

Does the voltage increase above 4.5 volts when disconnecting any of the Sensor harness connectors?

Yes >> Replace the Sensor that causes the (F856) Auxiliary 5-volt Supply circuit voltage to increase when disconnected.
Perform the POWERTRAIN VERIFICATION TEST. (Refer to 9 - ENGINE - STANDARD PROCEDURE)

No >> Go To 4

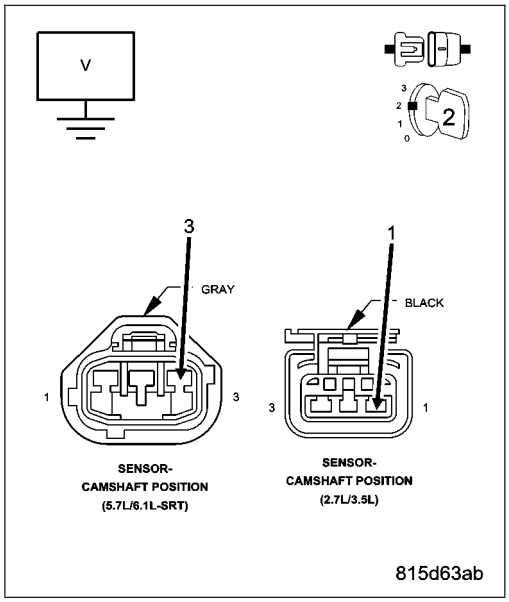

4. 5-VOLT SENSOR

Turn the ignition off.

Connect all the previously disconnected Sensors except for the CMP Sensor harness connector.

Ignition on, engine not running.

Measure the voltage on the (F856) Auxiliary 5-volt Supply circuit in the CMP Sensor harness connector.

Is the voltage below 4.5 volts?

Yes >> Go To 5

No >> Replace the Cam Position Sensor.
Perform the POWERTRAIN VERIFICATION TEST. (Refer to 9 - ENGINE - STANDARD PROCEDURE)

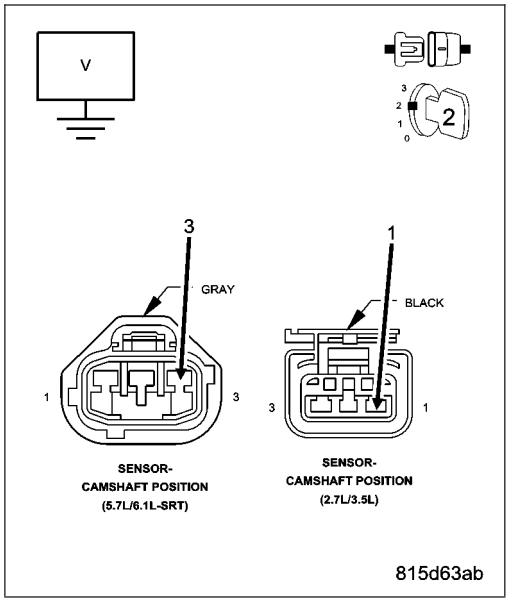

5. (F856) AUXILIARY 5-VOLT SUPPLY SHORTED TO BATTERY VOLTAGE

Turn the ignition off.

Disconnect the PCM harness connectors.

Disconnect all the Sensors that share the (F856) Auxiliary 5-volt Supply circuit.

Ignition on, engine not running.

Measure the voltage on the (F856) Auxiliary 5-volt Supply circuit at the CMP Sensor harness connector.

Is the voltage above 5.2 volts?

Yes >> Repair the short to battery voltage in the (F856) Auxiliary 5-volt Supply circuit.
Perform the POWERTRAIN VERIFICATION TEST. (Refer to 9 - ENGINE - STANDARD PROCEDURE)

No >> Go To 6

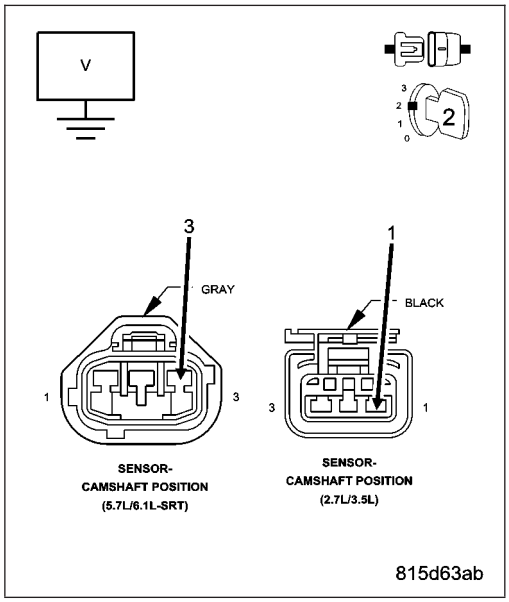

6. (F856) AUXILIARY 5-VOLT SUPPLY CIRCUIT OPEN

Turn the ignition off.

Reconnect all the sensors that were disconnected in the previous step except the CMP Sensor harness connector.

CAUTION: Do not probe the PCM harness connectors. Probing the PCM harness connectors will damage the PCM terminals resulting in poor terminal to pin connection. Install Miller Special Tool #8815 to perform diagnosis.

Measure the resistance in the (F856) Auxiliary 5-volt Supply circuit from the Sensor harness connector to the appropriate terminal of special tool #8815.

It may be necessary to perform this test from every sensor that uses the (F856) Auxiliary 5-volt Supply circuit.

Is the resistance below 5.0 ohms?

Yes >> Go To 7

No >> Repair the open in the (F856) Auxiliary 5-volt Supply circuit.
Perform the POWERTRAIN VERIFICATION TEST. (Refer to 9 - ENGINE - STANDARD PROCEDURE)

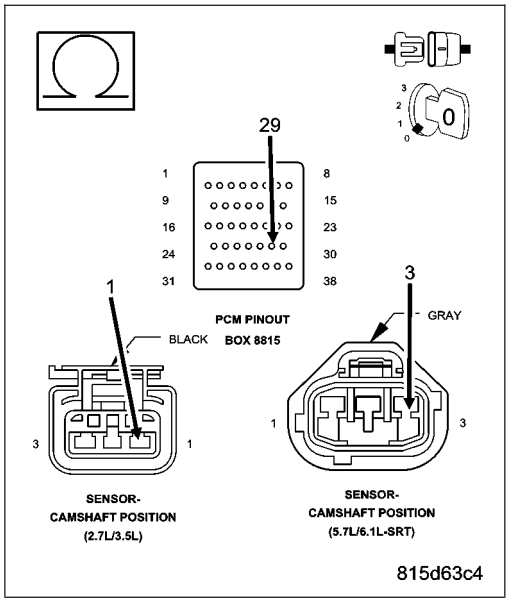

7. PCM

NOTE: Before continuing, check the PCM harness connector terminals for corrosion, damage, or terminal push out. Repair as necessary.
Using the schematics as a guide, inspect the wire harness and connectors. Pay particular attention to all Power and Ground circuits.

Were there any problems found?

Yes >> Repair as necessary.
Perform the POWERTRAIN VERIFICATION TEST. (Refer to 9 - ENGINE - STANDARD PROCEDURE)

No >> Replace and program the Powertrain Control Module per Service Information.
Perform the POWERTRAIN VERIFICATION TEST. (Refer to 9 - ENGINE - STANDARD PROCEDURE)

P1696-EEPROM MEMORY WRITE DENIED/INVALID

For a complete wiring diagram **Refer to Section 8W**.

- **When Monitored:**
  Continuously with the ignition on.
- **Set Condition:**
  An attempt to program/write to the internal EEPROM failed, Also checks at powerdown. One Trip Fault. Three good trips to turn off the MIL.

Possible Causes
PCM

Always perform the Pre-Diagnostic Troubleshooting procedure before proceeding. (Refer to 9 - ENGINE - DIAGNOSIS AND TESTING).

Diagnostic Test

1. SCAN TOOL DISPLAYS A WRITE FAILURE

With a scan tool, perform the SRI Memory Test.

Does scan tool display Write Failure?

Yes >> Replace and program the Powertrain Control Module per Service Information.
Perform the POWERTRAIN VERIFICATION TEST. (Refer to 9 - ENGINE - STANDARD PROCEDURE)

No >> Go To 2

2. SCAN TOOL DISPLAYS A WRITE REFUSED

With the a scan tool, perform the SRI Memory Test.

Does the scan tool display Write Refused?

Yes >> Go To 3

No >> Go To 4

3. PCM REFUSED 2ND TEST

With a scan tool, perform the SRI Memory Test a third time.

NOTE: Retest the SRI Memory two more times.

Does the scan tool display Write Refused again?

Yes >> Replace and program the Powertrain Control Module per Service Information.
Perform the POWERTRAIN VERIFICATION TEST. (Refer to 9 - ENGINE - STANDARD PROCEDURE)

No >> Test Complete.

4. SCAN TOOL DISPLAYS SRI MILEAGE INVALID

With a scan tool, perform the SRI Memory Test.

Does the scan tool display SRI Mileage Invalid?

Yes >> Update the mileage and retest the SRI Memory.
Perform the POWERTRAIN VERIFICATION TEST. (Refer to 9 - ENGINE - STANDARD PROCEDURE)

No >> Go To 5

5. COMPARE SRI MILEAGE WITH ODOMETER

Compare the SRI Mileage stored with the Instrument Panel Odometer.

Is the mileage within the specified range displayed on the scan tool?

Yes >> Test Complete.

No >> Update the mileage and retest the SRI Memory.
Perform the POWERTRAIN VERIFICATION TEST. (Refer to 9 - ENGINE - STANDARD PROCEDURE)

P1697-EMR (SRI) MILEAGE NOT STORED

For a complete wiring diagram **Refer to Section 8W**.

- **When Monitored:**
  Continuously with the ignition on.
- **Set Condition:**
  An attempt to program/write to the internal EEPROM failed, Also checks at powerdown. One Trip Fault. Three good trips to turn off the MIL.

Possible Causes
PCM

Always perform the Pre-Diagnostic Troubleshooting procedure before proceeding. (Refer to 9 - ENGINE - DIAGNOSIS AND TESTING).

Diagnostic Test

1. SCAN TOOL DISPLAYS A WRITE FAILURE

With a scan tool, perform the SRI Memory Test.

Does scan tool display Write Failure?

Yes >> Replace and program the Powertrain Control Module per Service Information.
Perform the POWERTRAIN VERIFICATION TEST. (Refer to 9 - ENGINE - STANDARD PROCEDURE)

No >> Go To 2

2. SCAN TOOL DISPLAYS A WRITE REFUSED

With the a scan tool, perform the SRI Memory Test.

Does the scan tool display Write Refused?

Yes >> Go To 3

No >> Go To 4

3. PCM REFUSED 2ND TEST

With a scan tool, perform the SRI Memory Test a third time.

NOTE: Retest the SRI Memory two more times.

Does the scan tool display Write Refused again?

Yes >> Replace and program the Powertrain Control Module per Service Information.
Perform the POWERTRAIN VERIFICATION TEST. (Refer to 9 - ENGINE - STANDARD PROCEDURE)

No >> Test Complete.

4. SCAN TOOL DISPLAYS SRI MILEAGE INVALID

With a scan tool, perform the SRI Memory Test.

Does the scan tool display SRI Mileage Invalid?

Yes >> Update the mileage and retest the SRI Memory.
Perform the POWERTRAIN VERIFICATION TEST. (Refer to 9 - ENGINE - STANDARD PROCEDURE)

No >> Go To 5

5. COMPARE SRI MILEAGE WITH ODOMETER

Compare the SRI Mileage stored with the Instrument Panel Odometer.

Is the mileage within the specified range displayed on the scan tool?

Yes >> Test Complete.

No >> Update the mileage and retest the SRI Memory.
Perform the POWERTRAIN VERIFICATION TEST. (Refer to 9 - ENGINE - STANDARD PROCEDURE)

P1897–PCM PROCESSOR

For a complete wiring diagram **Refer to Section 8W**.

- **When Monitored:**
  With the ignition on.
- **Set Condition:**
  Internal controller failure. One Trip Fault. Three Global Good Trips to Clear.

Possible Causes
PCM

Always perform the Pre-Diagnostic Troubleshooting procedure before proceeding. (Refer to 9 - ENGINE - DIAGNOSIS AND TESTING).

Diagnostic Test

1. PCM

The Powertrain Control Module is reporting an internal error, view repair to continue.

Repair

Replace and program the Powertrain Control Module per Service Information.
Perform the POWERTRAIN VERIFICATION TEST. (Refer to 9 - ENGINE - STANDARD PROCEDURE)

P2008–SHORT RUNNER VALVE SOLENOID CIRCUIT

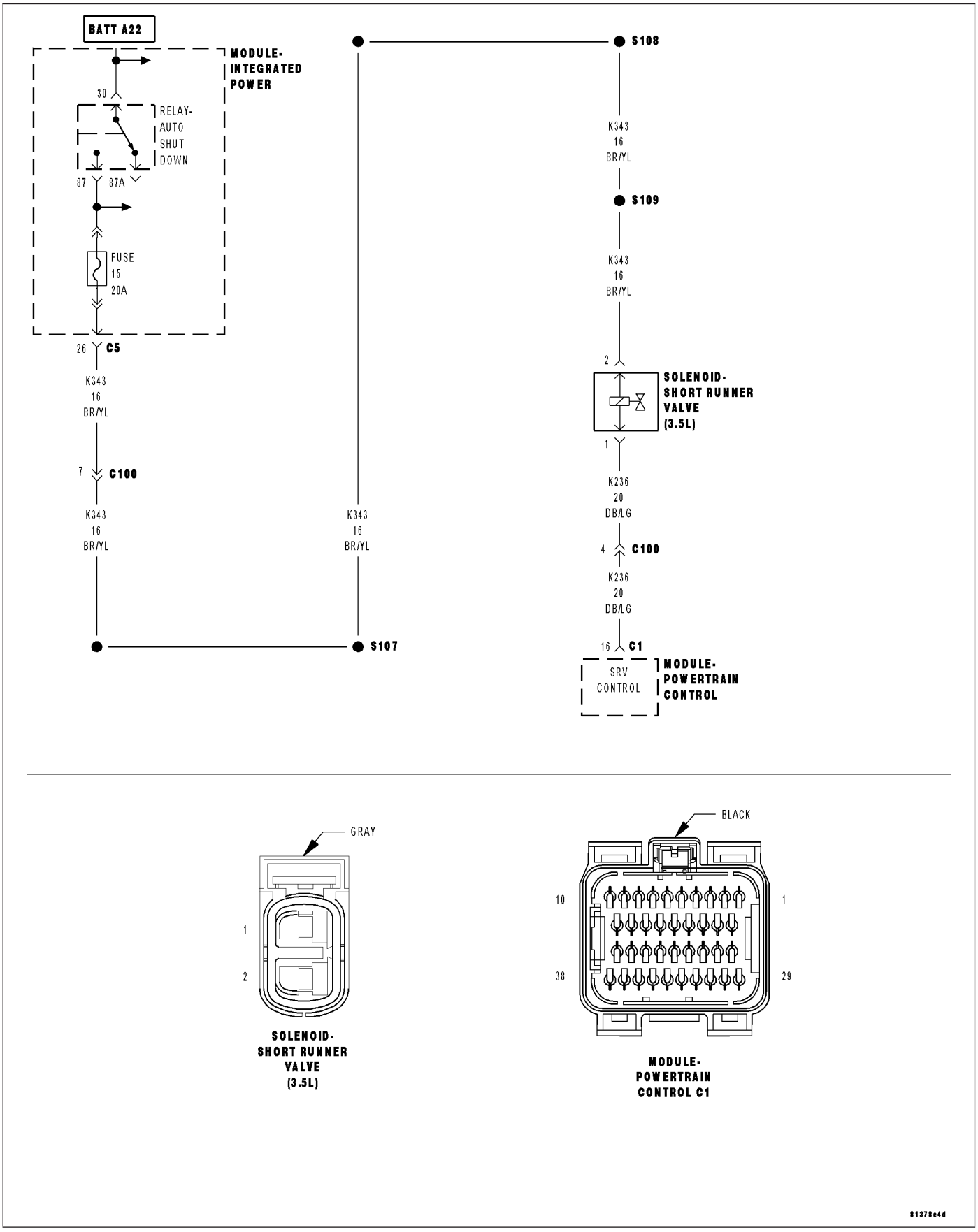

For a complete wiring diagram **Refer to Section 8W**.

- **When Monitored:**
  With the ignition on. ASD Relay energized. Battery voltage greater than 10 volts.
- **Set Condition:**
  The PCM senses the SRV is not at the desired state. One Trip Fault.

Possible Causes
(K343) FUSED AUTO SHUT DOWN RELAY OUTPUT OPEN
(K236) SRV CONTROL CIRCUIT SHORT TO BATTERY VOLTAGE
(K236) SRV CONTROL CIRCUIT SHORT TO GROUND
(K236) SRV CONTROL CIRCUIT OPEN
SHORT RUNNER VALVE SOLENOID
PCM

Always perform the Pre-Diagnostic Troubleshooting procedure before proceeding. (Refer to 9 - ENGINE - DIAGNOSIS AND TESTING).

Diagnostic Test

1. ACTIVE DTC

Ignition on, engine not running.
With a scan tool, read DTC.

Is the DTC active at this time?

Yes >> Go To 2

No >> Refer to the INTERMITTENT CONDITION Diagnostic Procedure.
Perform the POWERTRAIN VERIFICATION TEST. (Refer to 9 - ENGINE - STANDARD PROCEDURE)

2. SHORT RUNNER VALVE SOLENOID OPERATION

Turn the ignition off.
Disconnect the SRV Solenoid harness connector.
Ignition on, engine not running.
Using a 12–volt test light, connect one end to the (K236) SRV Control circuit and the other end the (Z904) Ground circuit in the SRV Solenoid harness connector.
With the scan tool, actuate (Toggle) the SRV Solenoid.

Does the test light illuminate brightly and flash on and off?

Yes >> Replace the Short Runner Valve Solenoid.
Perform the POWERTRAIN VERIFICATION TEST. (Refer to 9 - ENGINE - STANDARD PROCEDURE)

No >> Go To 3

3. (K343) FUSED AUTO SHUT DOWN RELAY OUTPUT2 CIRCUIT OPEN

Turn the ignition off.

Disconnect the Short Runner Valve Solenoid harness connector.

Turn the ignition on.

Using the scan tool, actuate (Toggle) the ASD Relay.

Using a 12-volt test light connected ground, probe the Fused ASD Relay Output circuit in the SRV Solenoid harness connector.

Does the test light illuminate brightly and flash on and off?

Yes >> Go To 4

No >> Repair the (K343) Fused ASD Relay Output circuit.
Perform the POWERTRAIN VERIFICATION TEST. (Refer to 9 - ENGINE - STANDARD PROCEDURE)

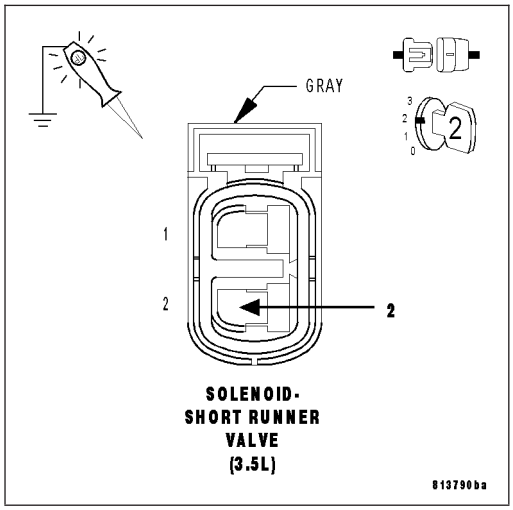

4. (K236) SRV CONTROL CIRCUIT SHORT TO BATTERY VOLTAGE

Turn the ignition off

Disconnect the PCM harness connectors.

Turn the ignition on.

Measure the voltage of the (K236) SRV Control circuit in the SRV Solenoid harness connector.

Does the voltage indicate voltage present?

Yes >> Repair the short to voltage in the SRV Control circuit.
Perform the POWERTRAIN VERIFICATION TEST. (Refer to 9 - ENGINE - STANDARD PROCEDURE)

No >> Go To 5

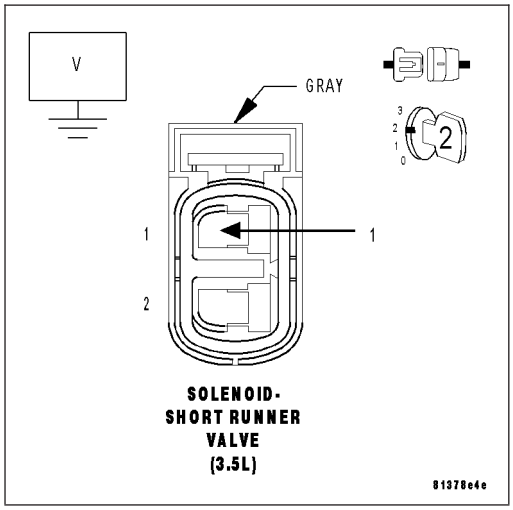

5. (K236) SRV CONTROL CIRCUIT SHORT TO GROUND

Turn the ignition off.

Measure the resistance between the (K236) SRV Control circuit in the SRV Solenoid harness connector and ground.

Is the resistance below 100 ohms?

Yes >> Repair the short to ground in the (K236) SRV Control circuit.
Perform the POWERTRAIN VERIFICATION TEST. (Refer to 9 - ENGINE - STANDARD PROCEDURE)

No >> Go To 6

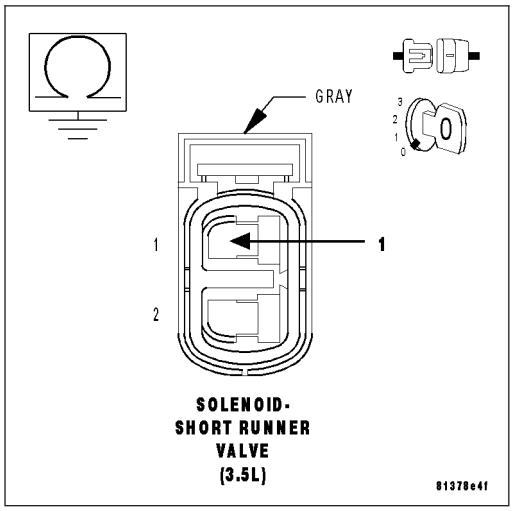

6. (K236) SRV CONTROL CIRCUIT OPEN

CAUTION: Do not probe the PCM harness connectors. Probing the PCM harness connectors will damage the PCM terminals resulting in poor terminal to pin connection. Install Miller Special Tool #8815 to perform diagnosis.

Measure the resistance of the (K236) SRV Control circuit between from the SRV Solenoid harness connector to the appropriate terminal of the special tool.

Is the resistance below 5.0 ohms?

Yes >> Go To 7

No >> Repair the open in the (K236) SRV Control circuit.
Perform the POWERTRAIN VERIFICATION TEST. (Refer to 9 - ENGINE - STANDARD PROCEDURE)

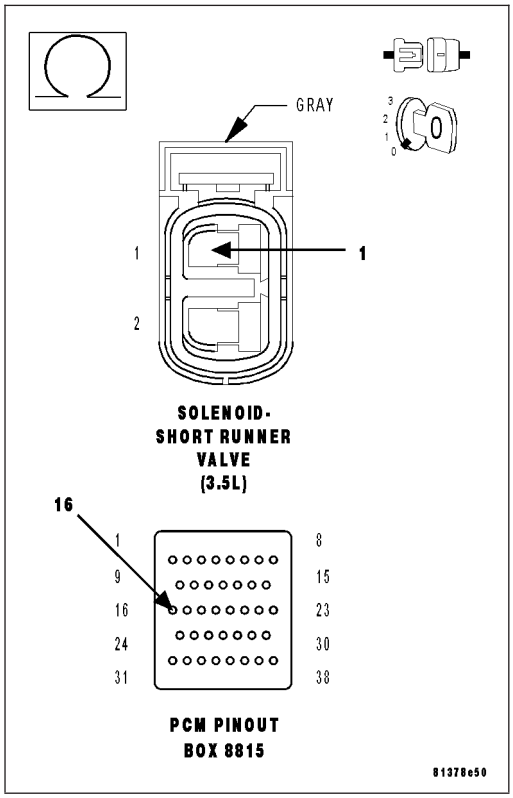

7. PCM

NOTE: Before continuing, check the PCM harness connector terminals for corrosion, damage, or terminal push out. Repair as necessary.

Using the schematics as a guide, inspect the wire harness and connectors. Pay particular attention to all Power and Ground circuits.

Were there any problems found?

Yes >> Repair as necessary.
Perform the POWERTRAIN VERIFICATION TEST. (Refer to 9 - ENGINE - STANDARD PROCEDURE)

No >> Replace and program the Powertrain Control Module per Service Information.
Perform the POWERTRAIN VERIFICATION TEST. (Refer to 9 - ENGINE - STANDARD PROCEDURE)

P2066-FUEL LEVEL SENSOR 2 PERFORMANCE

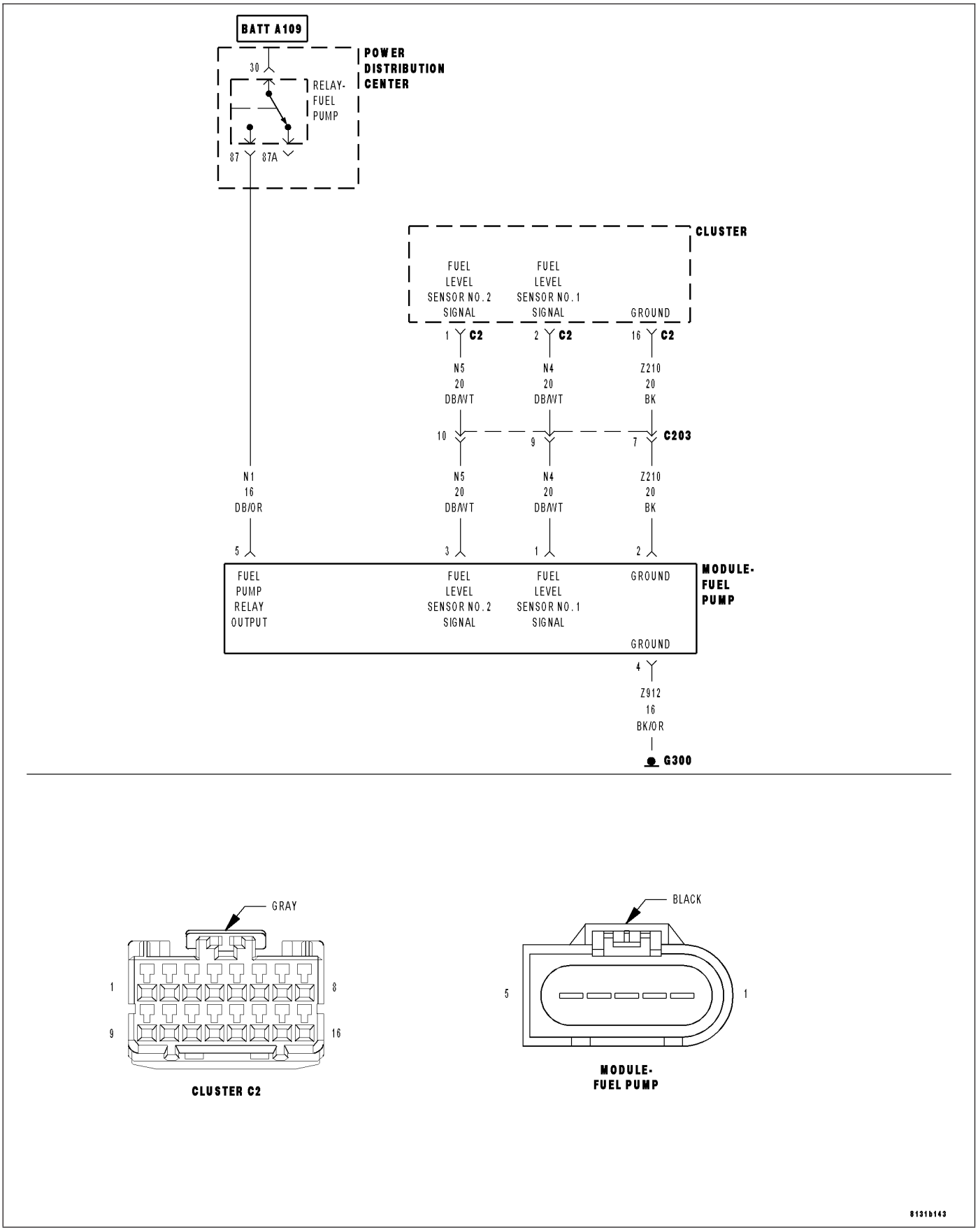

For a complete wiring diagram **Refer to Section 8W**.

- **When Monitored:**
  TEST No.1: With the ignition on, the fuel level is compared to the previous key down after a 20 second delay. TEST No.2: The PCM monitors the fuel level at ignition on.
- **Set Condition:**
  TEST No.1: If the PCM does not see a difference in fuel level of greater than 0.1 volt the test will fail. TEST No.2: If the PCM does not see a change in the fuel level of .1765 over a set amount of miles the test will fail. Three good trips to turn off the MIL.

Possible Causes
(N5) FUEL LEVEL SIGNAL CIRCUIT OPEN
(N5) FUEL LEVEL SIGNAL CIRCUIT SHORTED TO GROUND
(Z210) FUEL LEVEL SENSOR GROUND CIRCUIT OPEN
FUEL TANK
FUEL LEVEL SENSOR

Always perform the Pre-Diagnostic Troubleshooting procedure before proceeding. (Refer to 9 - ENGINE - DIAGNOSIS AND TESTING).

Diagnostic Test

1. ACTIVE DTC

NOTE: Diagnose any CAN - C or CAN - B Communication DTCs before continuing.

NOTE: Diagnose P2067 or P2068 first, if set along with P2066.

Ignition on, engine not running.

With a scan tool, read DTCs.

Is the DTC active at this time?

Yes >> Go To 2

No >> Refer to the INTERMITTENT CONDITION Diagnostic Procedure.
Perform (NGC) POWERTRAIN VERIFICATION TEST VER - 5. (Refer to 8 - ELECTRICAL/ELECTRONIC CONTROL MODULES/POWERTRAIN CONTROL MODULE - DIAGNOSIS AND TESTING)

2. VISUALLY INSPECT FUEL TANK

Visually inspect the Fuel Tank for damage that may restrict the Fuel Sending Unit float from moving.

Is the Fuel Tank OK?

Yes >> Go To 3

No >> Replace the Fuel Tank as necessary.
Perform (NGC) POWERTRAIN VERIFICATION TEST VER - 5. (Refer to 8 - ELECTRICAL/ELECTRONIC CONTROL MODULES/POWERTRAIN CONTROL MODULE - DIAGNOSIS AND TESTING)

3. (N5) FUEL LEVEL SIGNAL CIRCUIT OPEN

Turn the ignition off.

Disconnect the Fuel Pump Module harness connector.

Disconnect the C2 Cluster harness connectors.

Measure the resistance of the (N5) Fuel Level Signal circuit from the Fuel Pump Module harness connector to the C2 Cluster harness connector.

Is the resistance below 5.0 ohms?

Yes >> Go To 4

No >> Repair the open in the (N5) Fuel Level Signal circuit.
Perform BODY VERIFICATION TEST-VER 1. (Refer to 8 - ELECTRICAL/ELECTRONIC CONTROL MODULES/ FRONT CONTROL MODULE - DIAGNOSIS AND TESTING)

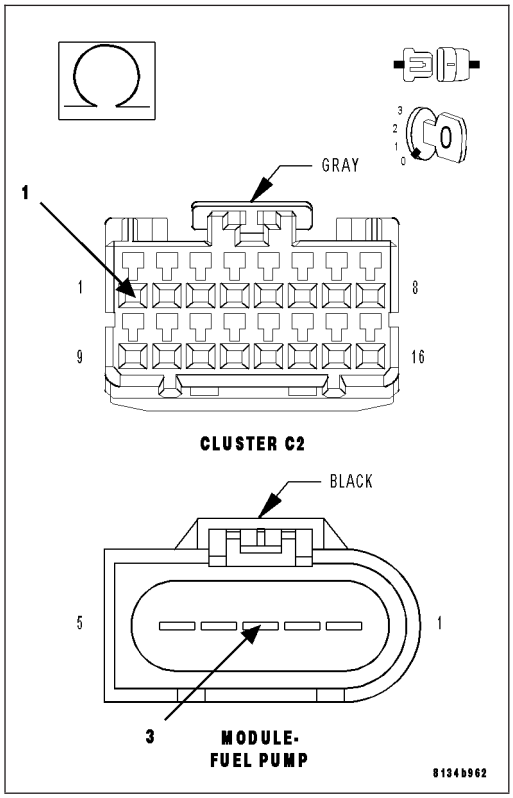

4. (N5) FUEL LEVEL SIGNAL CIRCUIT SHORTED TO GROUND

Measure the resistance between ground and the (N5) Fuel Level Signal circuit in the Fuel Pump Module harness connector.

Is the resistance below 100 ohms?

Yes >> Repair the short to ground in the (N5) Fuel Level Signal circuit.
Perform BODY VERIFICATION TEST-VER 1. (Refer to 8 - ELECTRICAL/ELECTRONIC CONTROL MODULES/ FRONT CONTROL MODULE - DIAGNOSIS AND TESTING)

No >> Go To 5

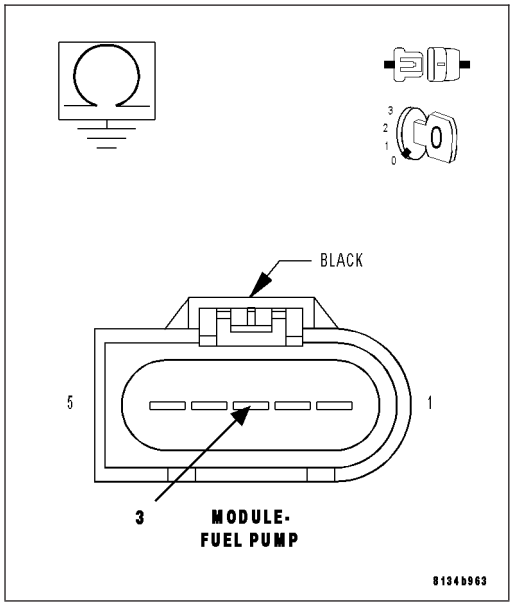

5. (Z210) FUEL LEVEL SENSOR GROUND CIRCUIT OPEN

Measure the resistance of the (Z210) Fuel Level Sensor Ground circuit from the Fuel Pump Module harness connector to the C2 Cluster harness connector.

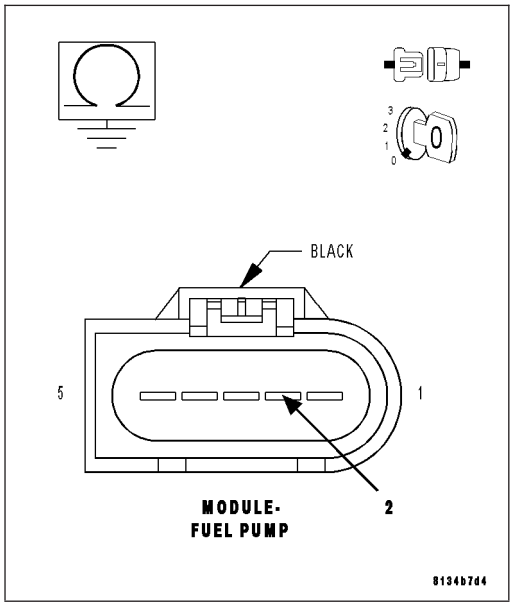

Is the resistance below 5.0 ohms?

Yes >> Go To 6

No >> Repair the open in the (Z210) Fuel Level Sensor Ground circuit.

Perform BODY VERIFICATION TEST-VER 1. (Refer to 8 - ELECTRICAL/ELECTRONIC CONTROL MODULES/ FRONT CONTROL MODULE - DIAGNOSIS AND TESTING)

6. INTERNAL INSPECTION OF THE FUEL TANK

WARNING: The fuel system is under a constant pressure (even with the engine off). Before testing or servicing any fuel system hose, fitting or line, the fuel system pressure must be released. Failure to follow these instructions can result in personal injury or death.

Remove the Fuel Tank per Service Information.

Remove the Fuel Pump Module.

Visually inspect the inside of the Fuel Tank for any obstructions or deformities.

Inspect the Fuel Pump Module Float arm for damage.

Were any problems found?

Yes >> Repair or replace as necessary.

Perform (NGC) POWERTRAIN VERIFICATION TEST VER - 5. (Refer to 8 - ELECTRICAL/ELECTRONIC CONTROL MODULES/POWERTRAIN CONTROL MODULE - DIAGNOSIS AND TESTING)

No >> Go To 7

7. FUEL LEVEL SENSOR

If there are no possible causes remaining, view repair.

Repair

Replace the Fuel Level Sensor.

Perform BODY VERIFICATION TEST-VER 1. (Refer to 8 - ELECTRICAL/ELECTRONIC CONTROL MODULES/FRONT CONTROL MODULE - DIAGNOSIS AND TESTING)

P2067-FUEL LEVEL SENSOR 2 CIRCUIT LOW

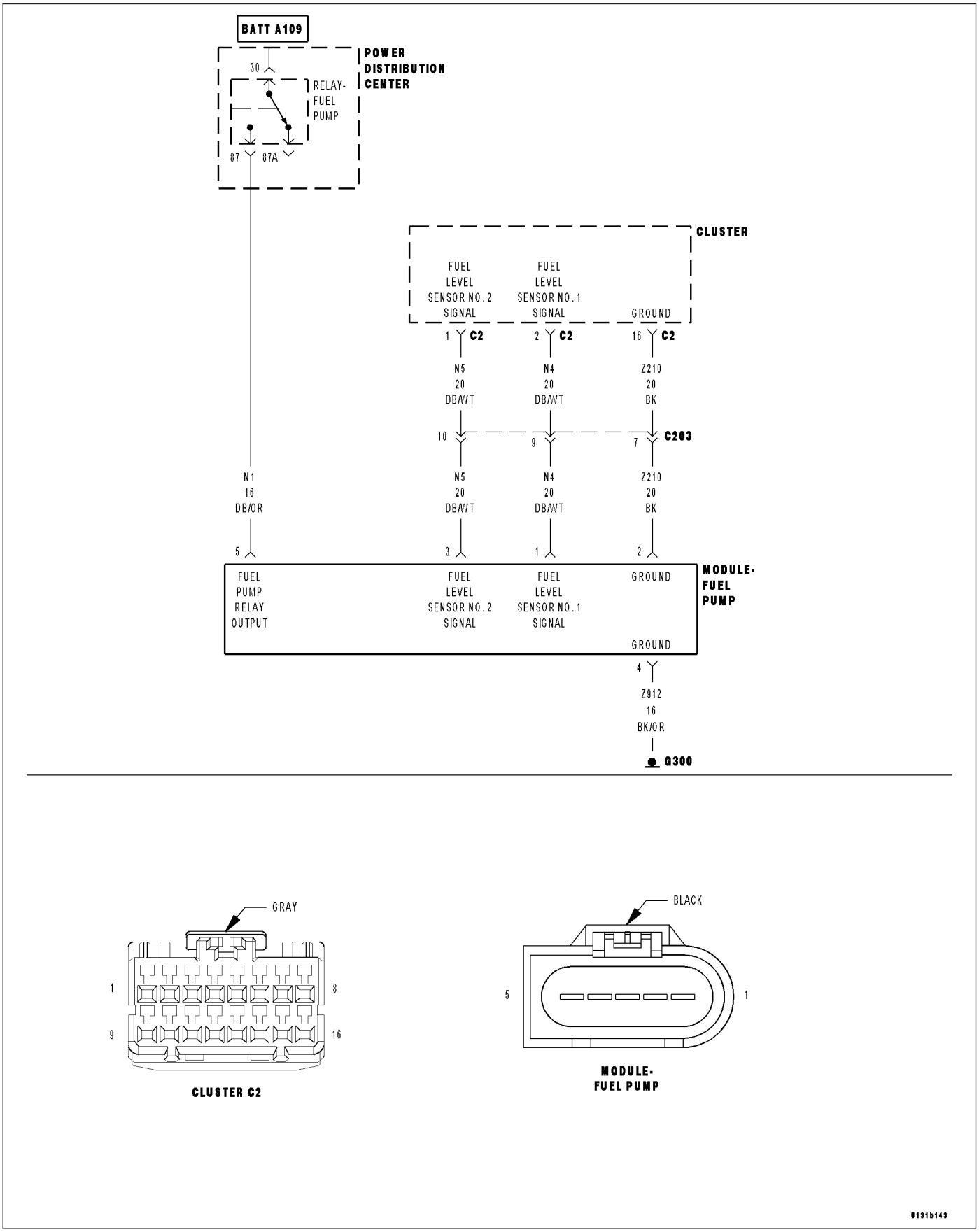

For a complete wiring diagram **Refer to Section 8W**.

- **When Monitored:**
  Ignition on and battery voltage above 10.4 volts.
- **Set Condition:**
  The fuel level sensor signal voltage goes below 0.4 of a volt for more than 90 seconds. One Trip Fault. Three good trips to turn off the MIL.

Possible Causes
(N5) FUEL LEVEL SIGNAL CIRCUIT SHORTED TO GROUND
(N5) FUEL LEVEL SIGNAL CIRCUIT SHORTED TO (Z210) FUEL LEVEL SENSOR RETURN CIRCUIT
FUEL LEVEL SENSOR
INSTRUMENT CLUSTER

Always perform the Pre-Diagnostic Troubleshooting procedure before proceeding. (Refer to 9 - ENGINE - SCHEMATICS AND DIAGRAMS).

Diagnostic Test

1. FUEL LEVEL SENSOR VOLTAGE BELOW 0.4 OF A VOLT

NOTE: Diagnose any CAN - B or CAN -C Communication DTCs before continuing.
Ignition on, engine not running.
With the scan tool, read the Fuel Level Sensor voltage.

Is the Fuel Level Sensor voltage below 0.4 of a volt?

Yes >> Go To 2

No >> Refer to the INTERMITTENT CONDITION Diagnostic Procedure.
Perform BODY VERIFICATION TEST-VER 1. (Refer to 8 - ELECTRICAL/ELECTRONIC CONTROL MODULES/FRONT CONTROL MODULE - DIAGNOSIS AND TESTING)

2. FUEL LEVEL SENSOR

Turn the ignition off.
Disconnect the Fuel Pump Module harness connector.
Ignition on, engine not running.
With the scan tool, read the Fuel Level Sensor voltage.

Did the Fuel Level Sensor voltage change from below 0.4 of a volt to above 4.0 volts?

Yes >> Replace the Fuel Level Sensor.
Perform BODY VERIFICATION TEST-VER 1. (Refer to 8 - ELECTRICAL/ELECTRONIC CONTROL MODULES/FRONT CONTROL MODULE - DIAGNOSIS AND TESTING)

No >> Go To 3

3. (N5) FUEL LEVEL SIGNAL CIRCUIT SHORTED TO GROUND

Turn the ignition off.

Disconnect the C2 Cluster harness connectors.

Measure the resistance between ground and the (N5) Fuel Level Signal circuit in the Fuel Pump Module harness connector.

Is the resistance below 100 ohms?

Yes >> Repair the short to ground in the (N5) Fuel Level Signal circuit.

Perform BODY VERIFICATION TEST-VER 1. (Refer to 8 - ELECTRICAL/ELECTRONIC CONTROL MODULES/ FRONT CONTROL MODULE - DIAGNOSIS AND TESTING)

No >> Go To 4

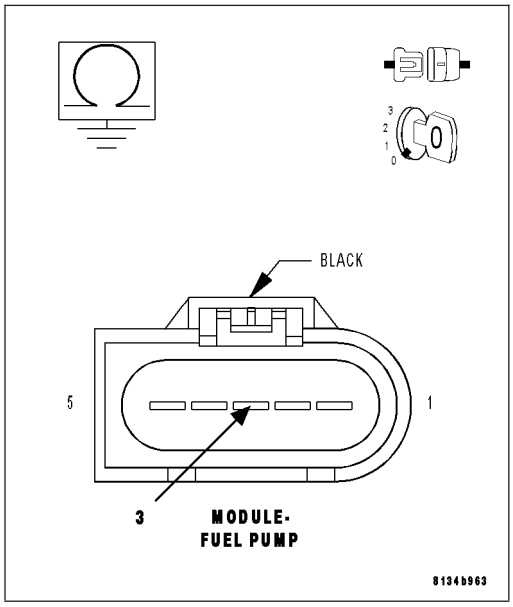

4. (N5) FUEL LEVEL SIGNAL CIRCUIT SHORTED TO THE (Z210) FUEL LEVEL SENSOR GROUND CIRCUIT

Measure the resistance between the (N5) Fuel Level Signal circuit and the (Z210) Fuel Level Sensor Ground circuit in the Fuel Pump Module harness connector.

Is the resistance below 5.0 ohms?

Yes >> Repair the short between the (Z210) Fuel Level Sensor Ground circuit and the (N5) Fuel Level Signal circuit.

Perform BODY VERIFICATION TEST-VER 1. (Refer to 8 - ELECTRICAL/ELECTRONIC CONTROL MODULES/ FRONT CONTROL MODULE - DIAGNOSIS AND TESTING)

No >> Go To 5

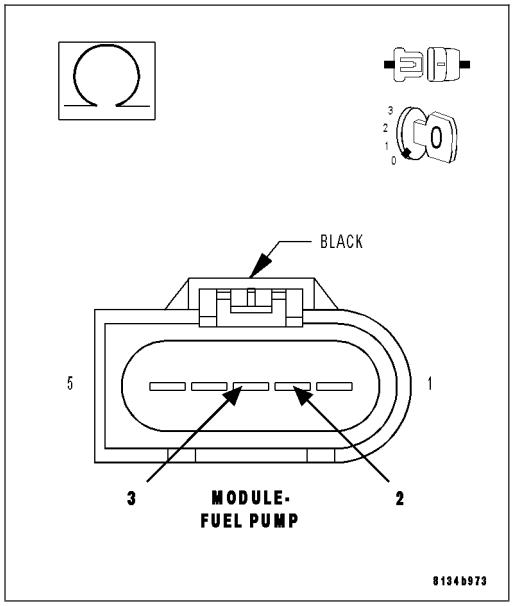

5. INSTRUMENT CLUSTER

NOTE: Before continuing, check the Instrument Cluster harness connector terminals for corrosion, damage, or terminal push out. Repair as necessary.
Using the schematics as a guide, inspect the wire harness and connectors. Pay particular attention to all Power and Ground circuits.

Were there any problems found?

Yes >> Repair as necessary.
Perform BODY VERIFICATION TEST-VER 1. (Refer to 8 - ELECTRICAL/ELECTRONIC CONTROL MODULES/FRONT CONTROL MODULE - DIAGNOSIS AND TESTING)

No >> Replace and program the Instrument Cluster per Service Information.
Perform BODY VERIFICATION TEST-VER 1. (Refer to 8 - ELECTRICAL/ELECTRONIC CONTROL MODULES/FRONT CONTROL MODULE - DIAGNOSIS AND TESTING)

P2068-FUEL LEVEL SENSOR 2 CIRCUIT HIGH

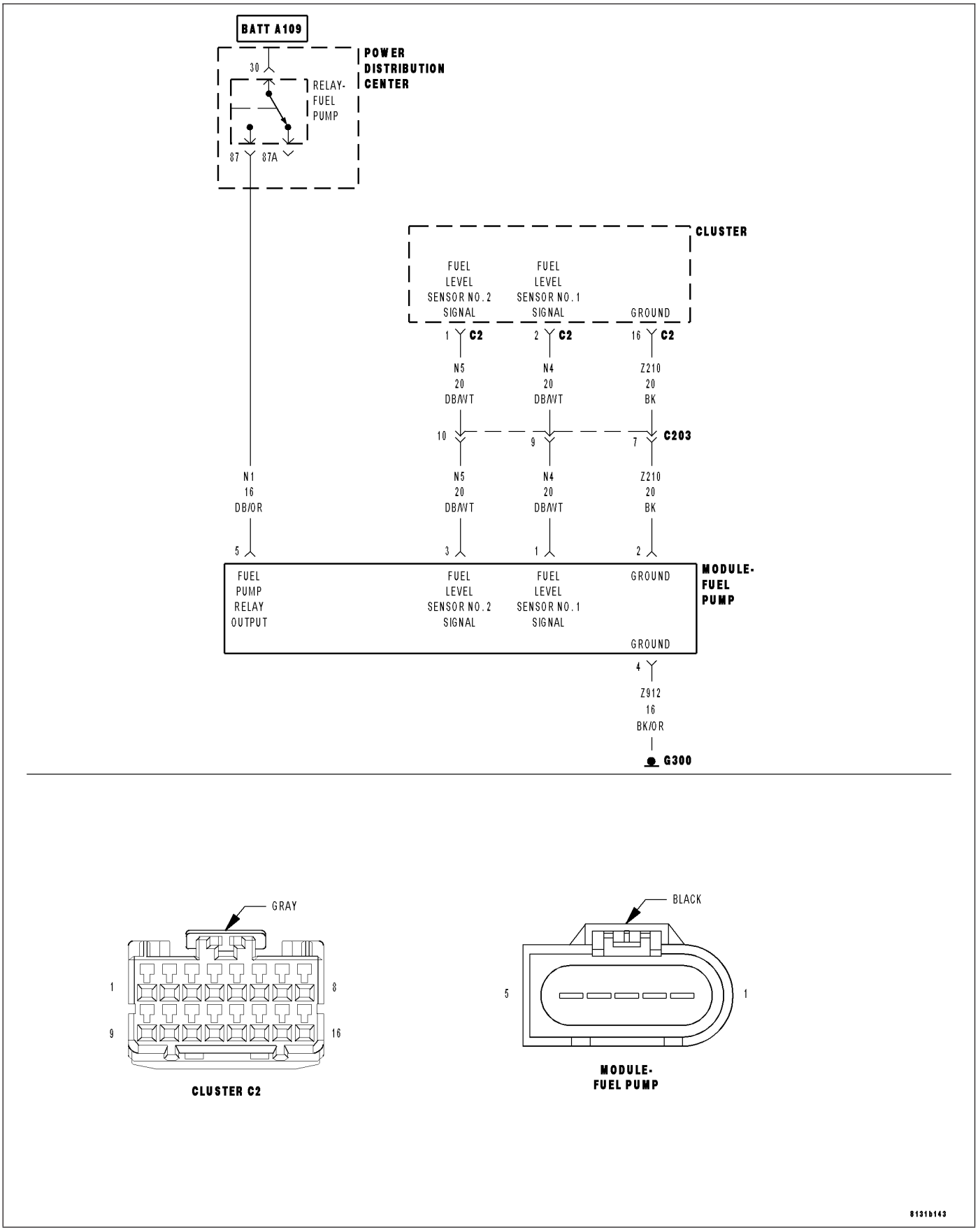

For a complete wiring diagram **Refer to Section 8W**.

- **When Monitored:**
  Ignition on and battery voltage above 10.4 volts.
- **Set Condition:**
  The fuel level sensor signal voltage at the PCM goes above 4.9 volts for more than 90 seconds. One Trip Fault. Three good trips to turn off the MIL.

Possible Causes
(N5) FUEL LEVEL SIGNAL CIRCUIT SHORTED TO BATTERY VOLTAGE
(N5) FUEL LEVEL SIGNAL CIRCUIT OPEN
(Z210) FUEL LEVEL SENSOR GROUND CIRCUIT OPEN
FUEL LEVEL SENSOR
INSTRUMENT CLUSTER

Always perform the Pre-Diagnostic Troubleshooting procedure before proceeding. (Refer to 9 - ENGINE - DIAGNOSIS AND TESTING).

Diagnostic Test

1. FUEL LEVEL SENSOR VOLTS ABOVE 4.9 VOLTS

NOTE: Diagnose any CAN - B and CAN - C Communication DTCs before continuing.
Ignition on, engine not running.
With a scan tool, read the Fuel Level Sensor voltage.

Is the Fuel Level Sensor voltage above 4.9 volts?

Yes >> Go To 2

No >> Refer to the INTERMITTENT CONDITION Diagnostic Procedure.
Perform BODY VERIFICATION TEST-VER 1. (Refer to 8 - ELECTRICAL/ELECTRONIC CONTROL MODULES/FRONT CONTROL MODULE - DIAGNOSIS AND TESTING)

2. FUEL LEVEL SENSOR

Turn the ignition off.
Disconnect the Fuel Pump Module electrical harness connector.
Ignition on, engine not running.
Connect a jumper wire between the (N5) Fuel Level Signal circuit and the (Z210) Fuel Level Sensor Ground circuit in the Fuel Pump Module harness connector.
With the scan tool, read the Fuel Level Sensor voltage.

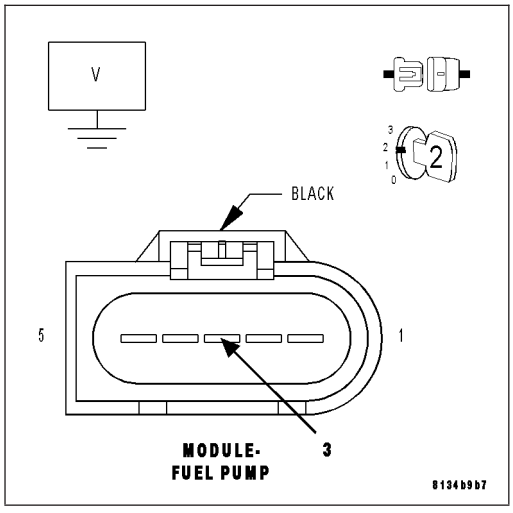

Did the Fuel Level Sensor voltage change from above 4.8 volts to below 0.4 of a volt with the jumper wire installed?

Yes >> Replace the Fuel Level Sensor.
Perform BODY VERIFICATION TEST-VER 1. (Refer to 8 - ELECTRICAL/ELECTRONIC CONTROL MODULES/ FRONT CONTROL MODULE - DIAGNOSIS AND TESTING)

No >> Go To 3

NOTE: Remove the jumper wire before continuing.

3. (N5) FUEL LEVEL SIGNAL CIRCUIT SHORTED TO BATTERY VOLTAGE

Turn the ignition off.

Disconnect the C2 Cluster harness connector.

Ignition on, engine not running.

Measure the voltage on the (N5) Fuel Level Signal circuit in the Fuel Pump Module harness connector.

Is the voltage above 5.2 volts?

Yes >> Repair the short to battery voltage in the (N5) Fuel Level Signal circuit.
Perform BODY VERIFICATION TEST-VER 1. (Refer to 8 - ELECTRICAL/ELECTRONIC CONTROL MODULES/ FRONT CONTROL MODULE - DIAGNOSIS AND TESTING)

No >> Go To 4

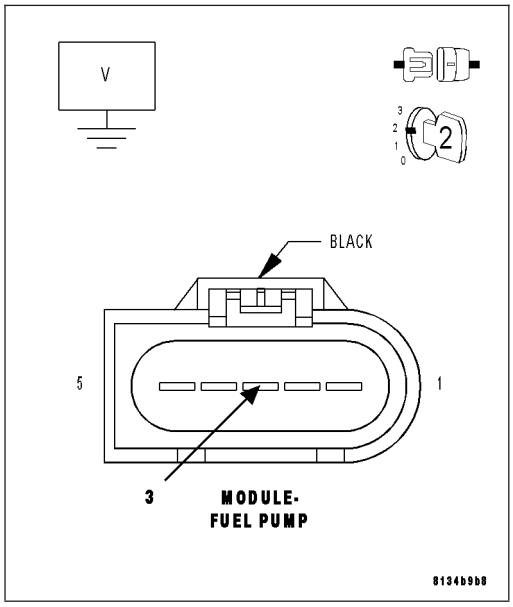

4. (N5) FUEL LEVEL SIGNAL CIRCUIT OPEN

Turn the ignition off.

Measure the resistance of the (N5) Fuel Level Signal circuit from the Fuel Pump Module harness connector to the C2 Cluster harness connector.

Is the resistance below 5.0 ohms?

Yes >> Go To 5

No >> Repair the open in the (N5) Fuel Level Signal circuit.
Perform BODY VERIFICATION TEST-VER 1. (Refer to 8 - ELECTRICAL/ELECTRONIC CONTROL MODULES/ FRONT CONTROL MODULE - DIAGNOSIS AND TESTING)

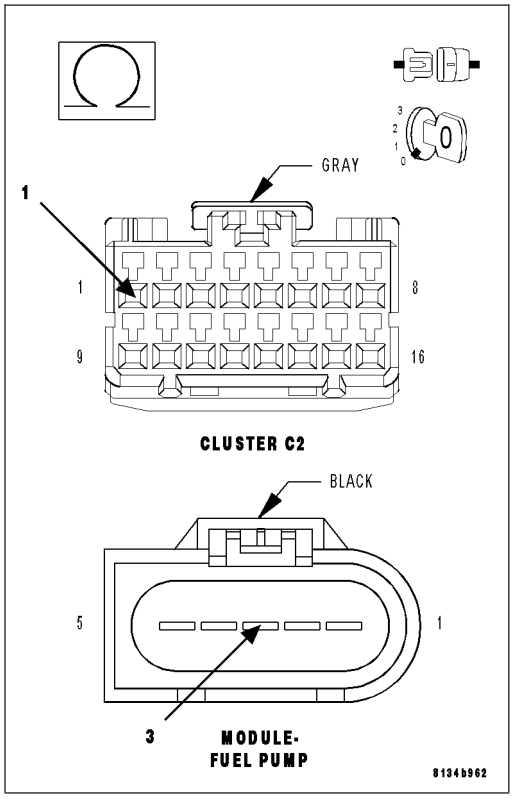

5. (Z210) FUEL LEVEL SENSOR GROUND CIRCUIT OPEN

Measure the resistance of the (Z210) Fuel Level Sensor Ground circuit from the Fuel Pump Module harness connector to the C2 Cluster harness connector.

Is the resistance below 5.0 ohms?

Yes >> Go To 6

No >> Repair the open in the (Z210) Fuel Level Sensor Ground circuit.

Perform BODY VERIFICATION TEST-VER 1. (Refer to 8 - ELECTRICAL/ELECTRONIC CONTROL MODULES/ FRONT CONTROL MODULE - DIAGNOSIS AND TESTING)

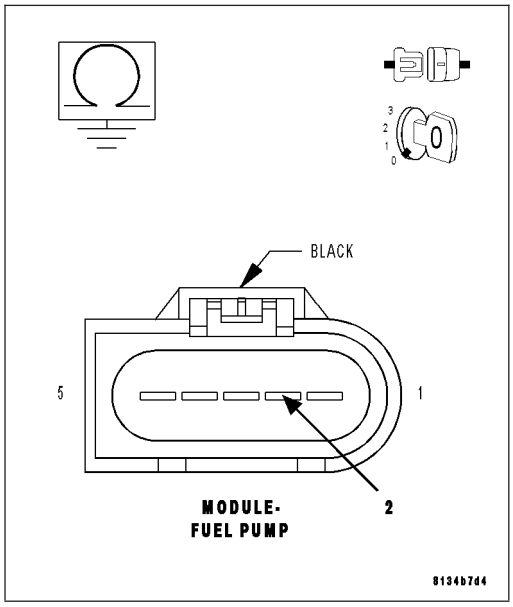

6. INSTRUMENT CLUSTER

NOTE: Before continuing, check the Instrument Cluster harness connector terminals for corrosion, damage, or terminal push out. Repair as necessary.

Using the schematics as a guide, inspect the wire harness and connectors. Pay particular attention to all Power and Ground circuits.

Were there any problems found?

Yes >> Repair as necessary.

Perform BODY VERIFICATION TEST-VER 1. (Refer to 8 - ELECTRICAL/ELECTRONIC CONTROL MODULES/FRONT CONTROL MODULE - DIAGNOSIS AND TESTING)

No >> Replace and program the Instrument Cluster per Service Information.

Perform BODY VERIFICATION TEST-VER 1. (Refer to 8 - ELECTRICAL/ELECTRONIC CONTROL MODULES/FRONT CONTROL MODULE - DIAGNOSIS AND TESTING)

P2072-ELECTRONIC THROTTLE CONTROL SYSTEM - ICE BLOCKAGE

For a complete wiring diagram **Refer to Section 8W**.

- **When Monitored:**
  Ignition on.
- **Set Condition:**
  The PCM recognizes the Throttle plate is stuck during extremely cold Ambient Temperature operation. The throttle plate goes through a de-icing procedure. If the throttle blade still doesn't move this fault sets. The MIL will not illuminate. The vehicle will be in Limp home condition, limiting rpm and vehicle speed.

Possible Causes
THROTTLE PLATE FROZEN

Diagnostic Test

1. THROTTLE BODY INSPECTION

Ignition on, engine not running.

With a scan tool, read DTCs and record the related Freeze Frame data.

NOTE: This DTC sets in extreme cold Ambient Temperatures with the throttle plate stuck. By the time the vehicle gets to the dealership the condition may be corrected.

NOTE: Diagnose any other DTCs that may also be set before continuing.
Turn the ignition off.

Remove the Air Cleaner Assembly from the Throttle Body.

Check for any signs of a foreign material (ice or dirt) on the Throttle Plate or in the bore causing the Throttle Plate to stick.

Is the throttle blade still stuck because it is frozen?

Yes >> Allow the Throttle Body to thaw naturally in a room temperature climate.
Perform the POWERTRAIN VERIFICATION TEST. (Refer to 9 - ENGINE - STANDARD PROCEDURE)

No >> Test Complete.

P2097-DOWNSTREAM FUEL TRIM SYSTEM 1 LEAN

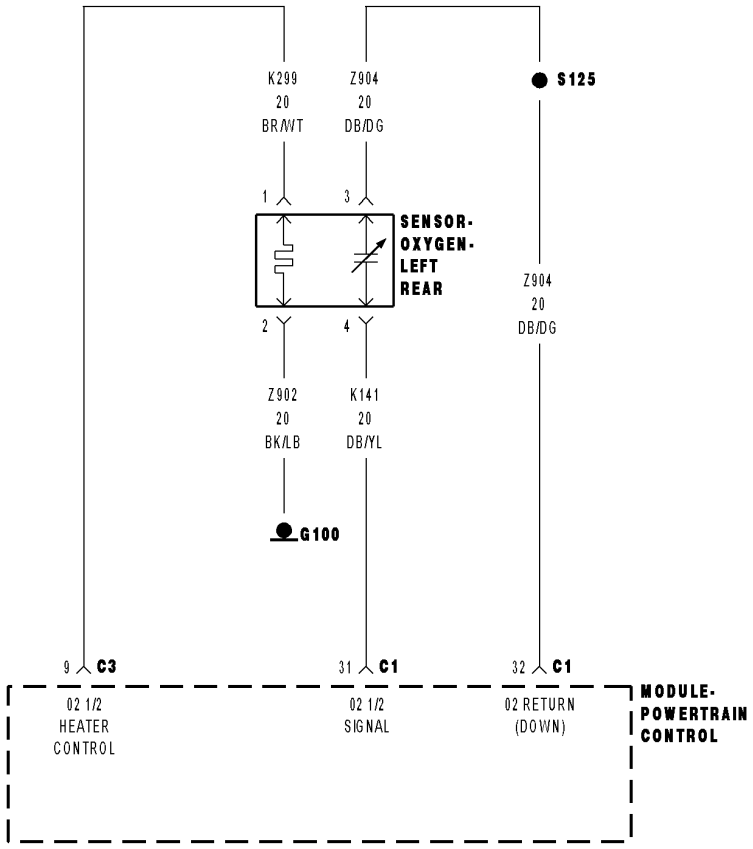

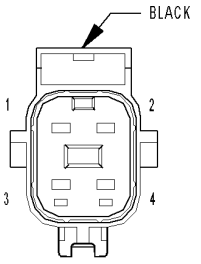

SENSOR-
OXYGEN-
LEFT REAR

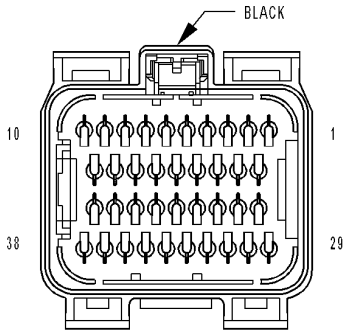

MODULE-
POWERTRAIN
CONTROL C1

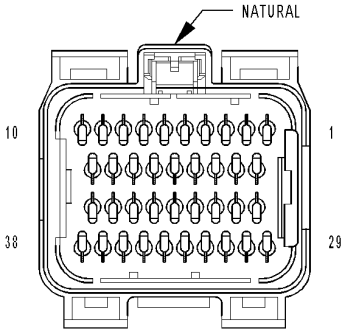

MODULE-
POWERTRAIN
CONTROL C3

8131a0c6

For a complete wiring diagram **Refer to Section 8W**.

- **When Monitored:**
  With the engine running in closed loop mode, the ambient/battery temperature above (-7°C) 20°F, altitude below 8500 ft.
- **Set Condition:**
  If the PCM multiplies short term compensation by long term adaptive as well as a purge fuel multiplier and the result is below a certain value for 30 seconds over two trips, a freeze frame is stored, the MIL illuminates and a trouble code is stored. Two Trip Fault. Three good trips to turn off the MIL.

Possible Causes
EXHAUST LEAK
ENGINE MECHANICAL PROBLEM
1/2 O2 SENSOR
(K141) O2 SENSOR 1/2 SIGNAL CIRCUIT
(K299) O2 1/2 HEATER CONTROL CIRCUIT
(K904) O2 DOWNSTREAM RETURN CIRCUIT
FUEL CONTAMINATION

Always perform the Pre-Diagnostic Troubleshooting procedure before proceeding. (Refer to 9 - ENGINE - DIAGNOSIS AND TESTING).

Diagnostic Test

1. ACTIVE DTC

NOTE: Check the vehicle repair history. If the 1/2 O2 has been replace make sure that the O2 sensor was properly installed and meets OEM specification.

NOTE: Check for contaminants that may have damaged the O2 Sensor: contaminated fuel, unapproved silicone, oil and coolant.

Ignition on, engine not running.

With a scan tool, read DTCs.

Is the DTC active at this time?

Yes >> Go To 2

No >> Refer to the INTERMITTENT CONDITION Diagnostic Procedure.
Perform the POWERTRAIN VERIFICATION TEST. (Refer to 9 - ENGINE - STANDARD PROCEDURE)

2. EXHAUST LEAK

Turn the ignition off.

WARNING: To avoid personal injury from the exhaust system being hot, allow the exhaust to cool down to a safe temperature before performing a physical inspection. Failure to follow these instructions can result in personal injury or death.

Visually and Physically inspect for holes, cracks and blockage in the exhaust system.

Is the exhaust system is good condition?

Yes >> Go To 3

No >> Repair or Replace as necessary.
Perform the POWERTRAIN VERIFICATION TEST. (Refer to 9 - ENGINE - STANDARD PROCEDURE)

3. ENGINE MECHANICAL PROBLEM

Check for any of the following conditions/mechanical problems.
AIR INDUCTION SYSTEM - must be free from leaks
ENGINE VACUUM - must be at least 13 inches in neutral
ENGINE VALVE TIMING - must be within specifications
ENGINE COMPRESSION - must be within specifications
ENGINE EXHAUST SYSTEM - must be free of any restrictions or leaks
ENGINE PCV SYSTEM - must flow freely
TORQUE CONVERTER STALL SPEED - must be within specifications
POWER BRAKE BOOSTER - no internal vacuum leaks
FUEL - must be free of contamination
FUEL INJECTOR - plugged or restricted injector; control wire not connected to correct injector

Are there any engine mechanical problems?

Yes >> Repair as necessary.
Perform the POWERTRAIN VERIFICATION TEST. (Refer to 9 - ENGINE - STANDARD PROCEDURE)

No >> Go To 4

4. O2 SENSOR

Ignition on, engine not running.
Disconnect the 1/2 O2 Sensor harness connector.
With the scan tool, monitor the 1/2 O2 Sensor voltage.
The O2 Sensor voltage should read 5.0 volts on the scan tool with the connector disconnected.
Using a jumper wire, jump the (K141) O2 Sensor 1/2 Signal circuit to the (K904) O2 Downstream Return circuit in the O2 Sensor harness connector.

NOTE: The voltage should drop from 5.0 volts to 2.5 volts with the jumper wire in place.

Did the O2 Sensor volts change from 5.0 volts to 2.5 volts?

Yes >> Replace the O2 Sensor
Perform the POWERTRAIN VERIFICATION TEST. (Refer to 9 - ENGINE - STANDARD PROCEDURE)

No >> Go To 5

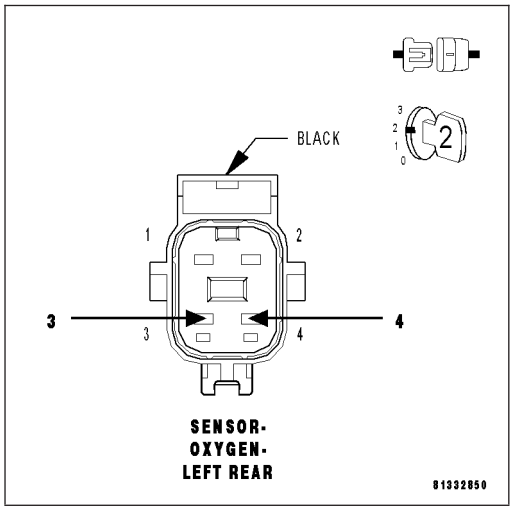

5. (K141) O2 SENSOR 1/2 SIGNAL CIRCUIT

Remove the jump wire.

Ignition on, engine not running.

With the scan tool, monitor the 1/2 O2 Sensor voltage.

Is the voltage above 4.8 volts?

Yes >> Go To 6

No >> Check the (K141) O2 Sensor 1/2 Signal circuit for an open or short to voltage. Inspect the O2 Sensor connector and the PCM harness connector. If OK, replace and program the Powertrain Control Module per Service Information.

Perform the POWERTRAIN VERIFICATION TEST. (Refer to 9 - ENGINE - STANDARD PROCEDURE)

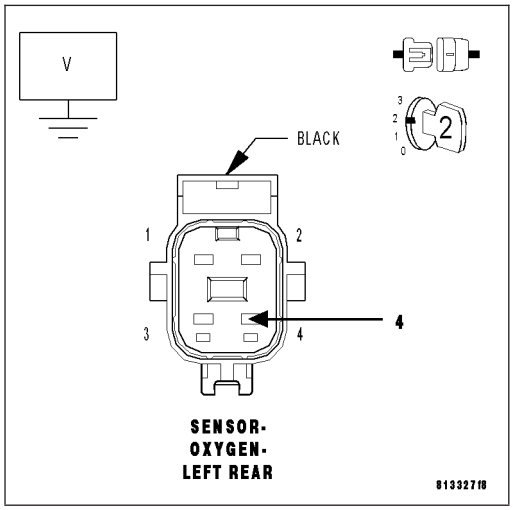

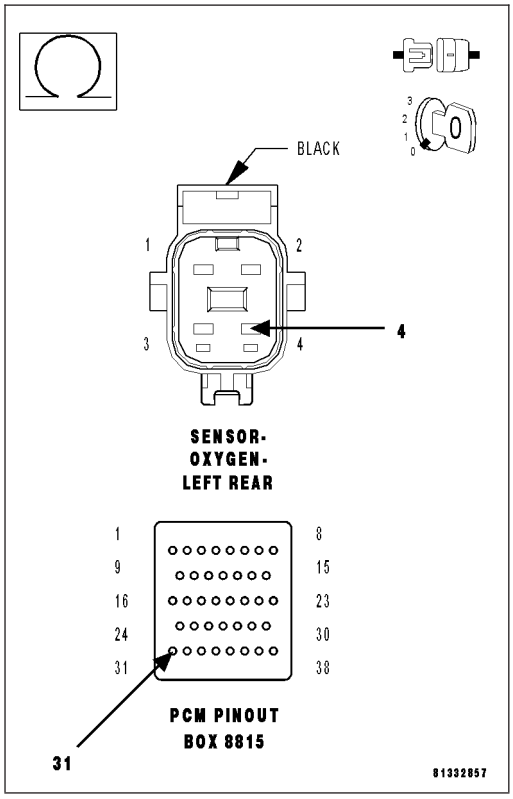

6. (K299) O2 SENSOR 1/2 HEATER CONTROL CIRCUIT

Turn the ignition off.

Measure the resistance between ground and the (K299) O2 Sensor 1/2 Heater Control circuit in the O2 Sensor harness connector.

Is the resistance below 5.0 ohms?

Yes >> Repair the short to ground in the (K299) O2 Sensor 1/2 Heater Control circuit.

Perform the POWERTRAIN VERIFICATION TEST. (Refer to 9 - ENGINE - STANDARD PROCEDURE)

No >> Go To 7

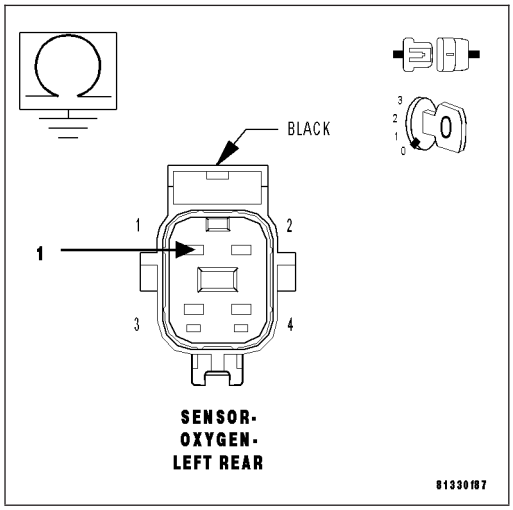

7. (K904) O2 DOWNSTREAM RETURN CIRCUIT

Measure the voltage on the (K904) O2 Downstream Return circuit in the O2 Sensor harness connector.

Is the voltage at 2.5 volts?

Yes >> Check the fuel system for contaminants.

Perform the POWERTRAIN VERIFICATION TEST. (Refer to 9 - ENGINE - STANDARD PROCEDURE)

No >> Check the (K904) O2 Downstream Return circuit for a short to ground, open, or short to voltage. Inspect the O2 Sensor connector and the PCM harness connector. If OK, replace and program the Powertrain Control Module per Service Information.

Perform the POWERTRAIN VERIFICATION TEST. (Refer to 9 - ENGINE - STANDARD PROCEDURE)

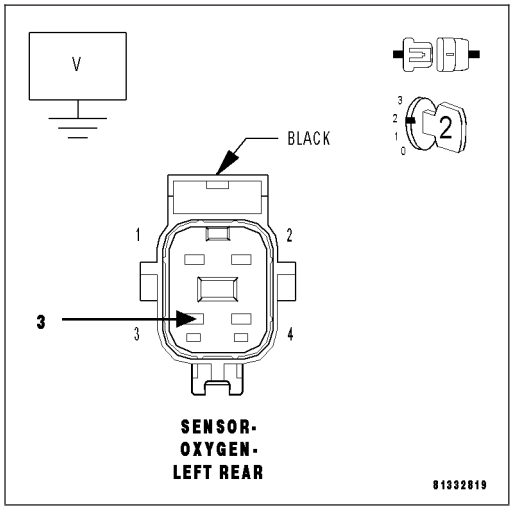

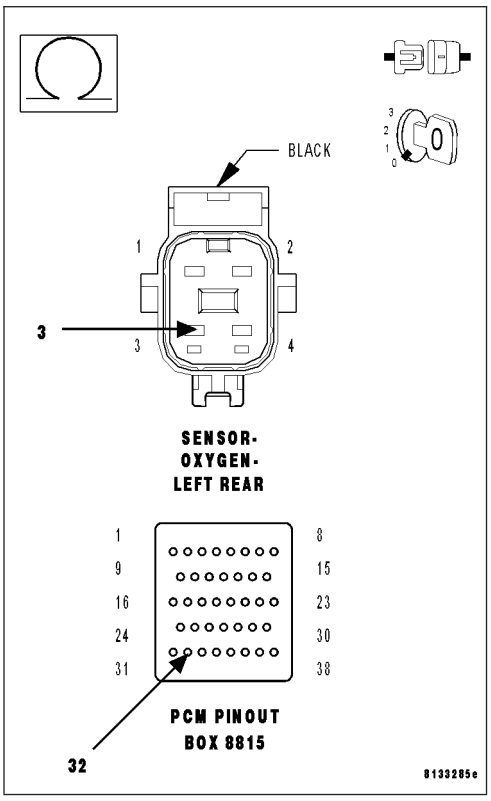
BLACK
1
2
3
4
3
SENSOR-
OXYGEN-
LEFT REAR
1
8
9
15
16
23
24
30
31
38
PCM PINOUT
BOX 8815
32
8133285e

P2097-DOWNSTREAM FUEL TRIM SYSTEM 1 RICH

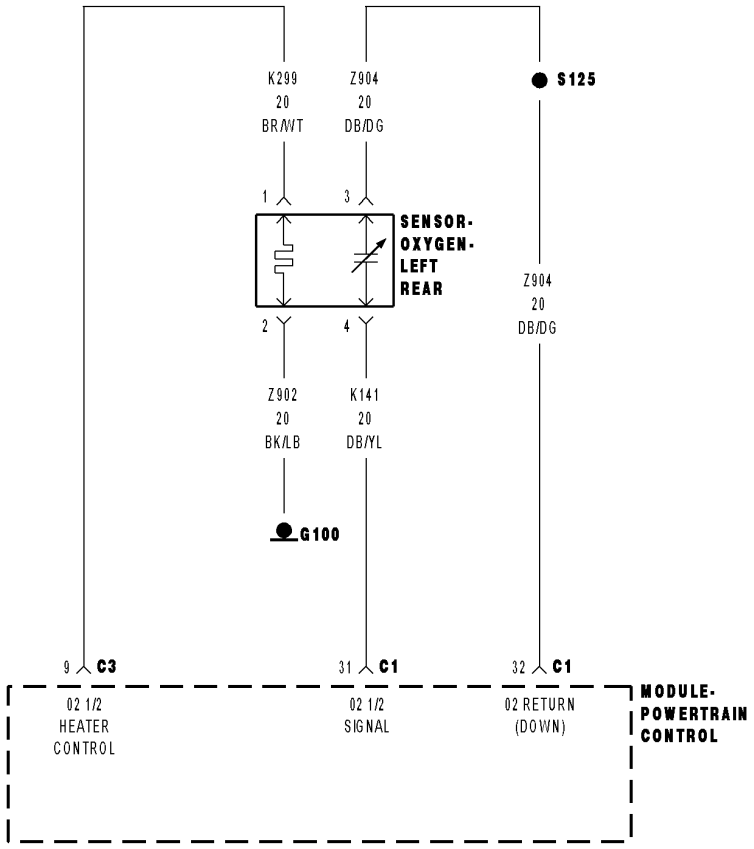

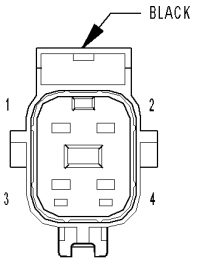

SENSOR-
OXYGEN-
LEFT REAR

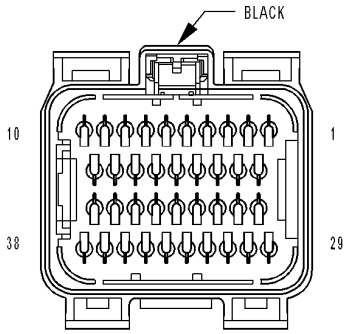

MODULE-
POWERTRAIN
CONTROL C1

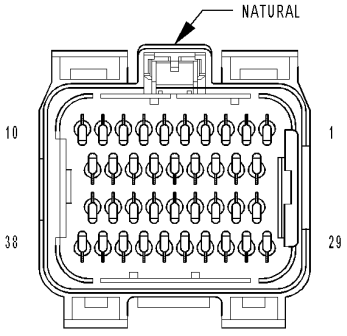

MODULE-
POWERTRAIN
CONTROL C3

8131a0c6

For a complete wiring diagram **Refer to Section 8W**.

- **When Monitored:**
  With the engine running in closed loop mode, the ambient/battery temperature above (-7°C) 20°F, altitude below 8500 ft.
- **Set Condition:**
  If the PCM multiplies short term compensation by long term adaptive as well as a purge fuel multiplier and the result is below a certain value for 30 seconds over two trips, a freeze frame is stored, the MIL illuminates and a trouble code is stored. Two Trip Fault. Three good trips to turn off the MIL.

Possible Causes
EXHAUST LEAK
ENGINE MECHANICAL PROBLEM
1/2 O2 SENSOR
(K141) O2 SENSOR 1/2 SIGNAL CIRCUIT
(K299) O2 HEATER 1/2 CONTROL CIRCUIT
(K904) O2 DOWNSTREAM RETURN CIRCUIT
FUEL CONTAMINATION

Always perform the Pre-Diagnostic Troubleshooting procedure before proceeding. (Refer to 9 - ENGINE - DIAGNOSIS AND TESTING).

Diagnostic Test

1. ACTIVE DTC

NOTE: Check the vehicle repair history. If the 1/2 O2 has been replaced make sure that the O2 sensor was properly installed and meets OEM specification.

NOTE: Check for contaminants that may have damaged the O2 Sensor: contaminated fuel, unapproved silicone, oil and coolant.

Ignition on, engine not running.

With a scan tool, read DTCs.

Is the DTC active at this time?

Yes >> Go To 2

No >> Refer to the INTERMITTENT CONDITION Diagnostic Procedure.
Perform the POWERTRAIN VERIFICATION TEST. (Refer to 9 - ENGINE - STANDARD PROCEDURE)

2. EXHAUST LEAK

Turn the ignition off.

WARNING: To avoid personal injury from the exhaust system being hot, allow the exhaust to cool down to a safe temperature before performing a physical inspection. Failure to follow these instructions can result in personal injury or death.

Visually and Physically inspect for holes, cracks and blockage in the exhaust system.

Is the exhaust system is good condition?

Yes >> Go To 3

No >> Repair or Replace as necessary.
Perform the POWERTRAIN VERIFICATION TEST. (Refer to 9 - ENGINE - STANDARD PROCEDURE)

3. ENGINE MECHANICAL PROBLEM

Check for any of the following conditions/mechanical problems
AIR INDUCTION SYSTEM - must be free from leaks.
ENGINE VACUUM - must be at least 13 inches in neutral
ENGINE VALVE TIMING - must be within specifications
ENGINE COMPRESSION - must be within specifications
ENGINE EXHAUST SYSTEM - must be free of any restrictions or leaks
ENGINE PCV SYSTEM - must flow freely
TORQUE CONVERTER STALL SPEED - must be within specifications
POWER BRAKE BOOSTER - no internal vacuum leaks
FUEL - must be free of contamination
FUEL INJECTOR - plugged or restricted injector; control wire not connected to correct injector

Are there any engine mechanical problems?

Yes >> Repair as necessary.
Perform the POWERTRAIN VERIFICATION TEST. (Refer to 9 - ENGINE - STANDARD PROCEDURE)

No >> Go To 4

4. O2 SENSOR

Ignition on, engine not running.
Disconnect the 1/2 O2 Sensor harness connector.
With the scan tool, monitor the 1/2 O2 Sensor voltage.
The O2 Sensor voltage should read 5.0 volts on the scan tool with the connector disconnected.
Using a jumper wire, jump the (K141) O2 Sensor 1/2 Signal circuit to the (K904) O2 Downstream Return circuit in the O2 Sensor harness connector.

NOTE: The voltage should drop from 5.0 volts to 2.5 volts with the jumper wire in place.

Did the O2 Sensor volts change from 5.0 volts to 2.5 volts?

Yes >> Replace the O2 Sensor
Perform the POWERTRAIN VERIFICATION TEST. (Refer to 9 - ENGINE - STANDARD PROCEDURE)

No >> Go To 5

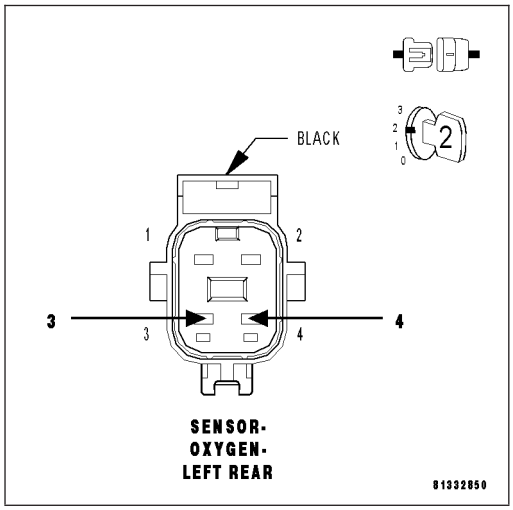

5. (K141) O2 SENSOR 1/2 SIGNAL CIRCUIT

Remove the jump wire.

Ignition on, engine not running.

With the scan tool, monitor the 1/2 O2 Sensor voltage.

Is the voltage above 4.8 volts?

Yes >> Go To 6

No >> Check the (K141) O2 Sensor 1/2 Signal circuit for an open or short to voltage. Inspect the O2 Sensor connector and the PCM harness connector. If OK, replace and program the Powertrain Control Module per Service Information.

Perform the POWERTRAIN VERIFICATION TEST. (Refer to 9 - ENGINE - STANDARD PROCEDURE)

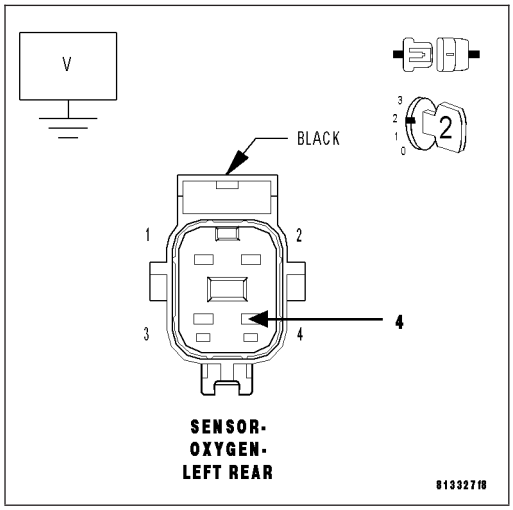

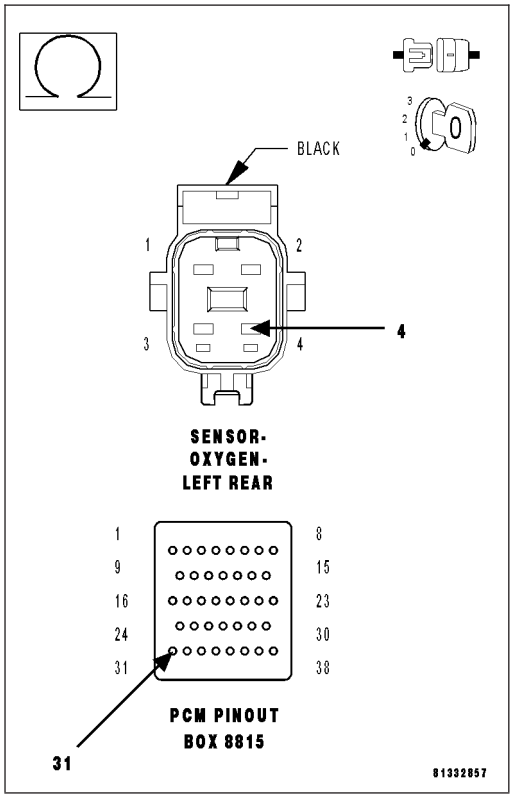

6. (K299) O2 SENSOR 1/2 HEATER CONTROL CIRCUIT

Turn the ignition off.

Measure the resistance between ground and the (K299) O2 Sensor 1/2 Heater Control circuit in the O2 Sensor harness connector.

Is the resistance below 5.0 ohms?

Yes >> Repair the short to ground in the (K299) O2 Sensor 1/2 Heater Control circuit.

Perform the POWERTRAIN VERIFICATION TEST. (Refer to 9 - ENGINE - STANDARD PROCEDURE)

No >> Go To 7

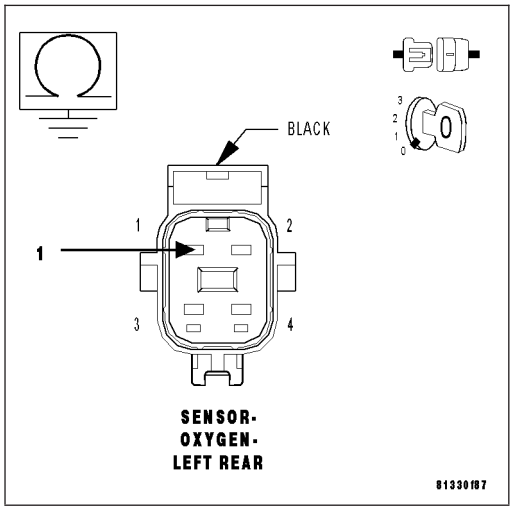

7. (K904) O2 DOWNSTREAM RETURN CIRCUIT

Measure the voltage on the (K904) O2 Downstream Return circuit in the O2 Sensor harness connector.

Is the voltage at 2.5 volts?

Yes >> Check the fuel system for contaminants.

Perform the POWERTRAIN VERIFICATION TEST. (Refer to 9 - ENGINE - STANDARD PROCEDURE)

No >> Check the (K904) O2 Downstream Return circuit for a short to ground, open, or short to voltage. Inspect the O2 Sensor connector and the PCM harness connector. If OK, replace and program the Powertrain Control Module per Service Information.

Perform the POWERTRAIN VERIFICATION TEST. (Refer to 9 - ENGINE - STANDARD PROCEDURE)

Perform (NGC) POWERTRAIN VERIFICATION TEST VER - 5. (Refer to 8 - ELECTRICAL/ELECTRONIC CONTROL MODULES/POWERTRAIN CONTROL MODULE - DIAGNOSIS AND TESTING)

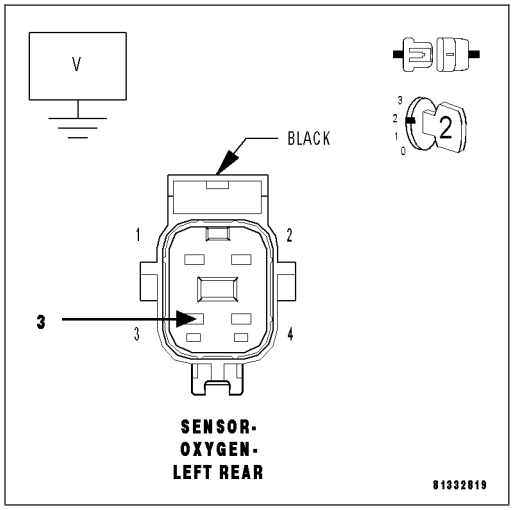

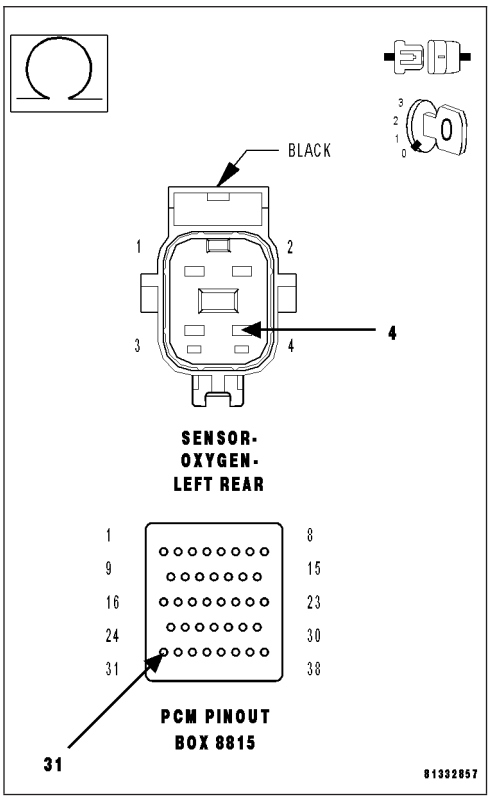
BLACK
1
2
3
4
SENSOR-
OXYGEN-
LEFT REAR
1
8
9
15
16
23
24
30
31
38
PCM PINOUT
BOX 8815
31
81332857

P2098-DOWNSTREAM FUEL TRIM SYSTEM 2 LEAN

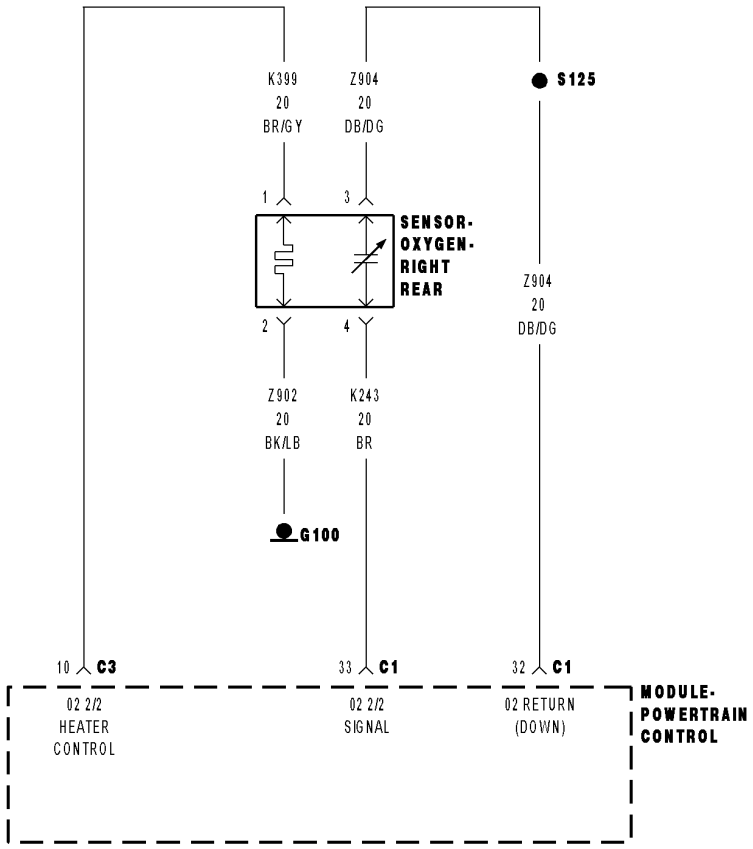

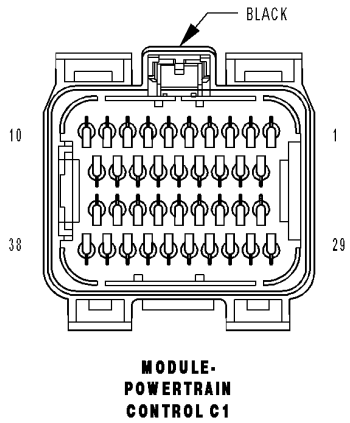

MODULE-
POWERTRAIN
CONTROL C1

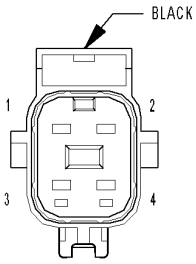

SENSOR-
OXYGEN-
RIGHT REAR

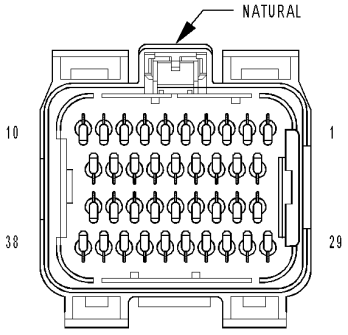

MODULE-
POWERTRAIN
CONTROL C3

8131a0ef

For a complete wiring diagram **Refer to Section 8W**.

- **When Monitored:**
  With the engine running in closed loop mode, the ambient/battery temperature above (-7°C) 20°F, altitude below 8500 ft and fuel level greater than 15%.
- **Set Condition:**
  If the PCM multiplies short term compensation by long term adaptive and a certain percentage is exceeded for two trips, a freeze frame is stored, the MIL illuminates and a trouble code is stored. Two Trip Fault. Three good trips to turn off the MIL.

Possible Causes
EXHAUST LEAK
ENGINE MECHANICAL PROBLEM
2/2 O2 SENSOR
(K243) O2 2/2 SIGNAL CIRCUIT
(K399) O2 HEATER 2/2 CONTROL CIRCUIT
(K904) O2 DOWNSTREAM RETURN CIRCUIT
FUEL CONTAMINATION

Always perform the Pre-Diagnostic Troubleshooting procedure before proceeding. (Refer to 9 - ENGINE - DIAGNOSIS AND TESTING).

Diagnostic Test

1. ACTIVE DTC

NOTE: Check the vehicle repair history. If the 2/2 O2 has been replace make sure that the O2 sensor was properly installed and meets OEM specification.

NOTE: Check for contaminants that may have damaged the O2 Sensor: contaminated fuel, unapproved silicone, oil and coolant.

Ignition on, engine not running.

With a scan tool, read DTCs.

Is the DTC active at this time?

Yes >> Go To 2

No >> Refer to the INTERMITTENT CONDITION Diagnostic Procedure.
Perform the POWERTRAIN VERIFICATION TEST. (Refer to 9 - ENGINE - STANDARD PROCEDURE)

2. EXHAUST LEAK

Turn the ignition off.

WARNING: To avoid personal injury from the exhaust system being hot, allow the exhaust to cool down to a safe temperature before performing a physical inspection. Failure to follow these instructions can result in personal injury or death.

Visually and Physically inspect for holes, cracks and blockage in the exhaust system.

Is the exhaust system is good condition?

Yes >> Go To 3

No >> Repair or Replace as necessary.
Perform the POWERTRAIN VERIFICATION TEST. (Refer to 9 - ENGINE - STANDARD PROCEDURE)

3. ENGINE MECHANICAL PROBLEM

Check for any of the following conditions/mechanical problems.
AIR INDUCTION SYSTEM - must be free from leaks
ENGINE VACUUM - must be at least 13 inches in neutral
ENGINE VALVE TIMING - must be within specifications
ENGINE COMPRESSION - must be within specifications
ENGINE EXHAUST SYSTEM - must be free of any restrictions or leaks
ENGINE PCV SYSTEM - must flow freely
TORQUE CONVERTER STALL SPEED - must be within specifications
POWER BRAKE BOOSTER - no internal vacuum leaks
FUEL - must be free of contamination
FUEL INJECTOR - plugged or restricted injector; control wire not connected to correct injector

Are there any engine mechanical problems?

Yes >> Repair as necessary.
Perform the POWERTRAIN VERIFICATION TEST. (Refer to 9 - ENGINE - STANDARD PROCEDURE)

No >> Go To 4

4. O2 SENSOR

Ignition on, engine not running.
Disconnect the 2/2 O2 Sensor harness connector.
With the scan tool, monitor the 2/2 O2 Sensor voltage.
The O2 Sensor voltage should read 5.0 volts on the scan tool with the connector disconnected.
Using a jumper wire, jump the (K243) O2 Sensor 2/2 Signal circuit to the (K904) O2 Downstream Return circuit in the O2 Sensor harness connector.

NOTE: The voltage should drop from 5.0 volts to 2.5 volts with the jumper wire in place.

Did the O2 Sensor volts change from 5.0 volts to 2.5 volts?

Yes >> Replace the O2 Sensor
Perform the POWERTRAIN VERIFICATION TEST. (Refer to 9 - ENGINE - STANDARD PROCEDURE)

No >> Go To 5

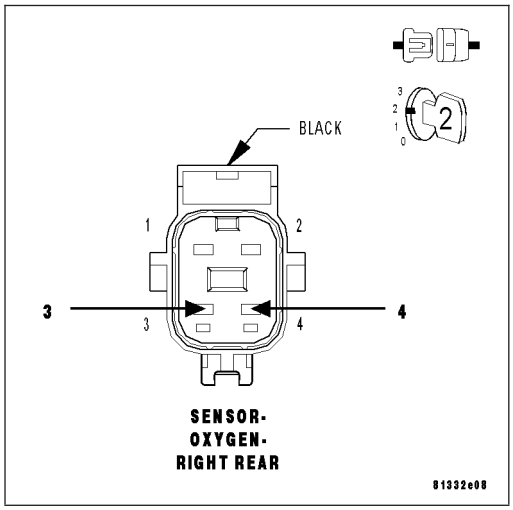

5. (K243) O2 SENSOR 2/2 SIGNAL CIRCUIT

Remove the jump wire.

Ignition on, engine not running.

With the scan tool, monitor the O2 Sensor voltage.

Is the voltage above 4.8 volts?

Yes >> Go To 6

No >> Check the (K243) O2 Sensor 2/2 Signal circuit for a open or short to voltage. Inspect the O2 Sensor connector and the PCM harness connector. If OK, replace and program the Powertrain Control Module per Service Information.

Perform the POWERTRAIN VERIFICATION TEST. (Refer to 9 - ENGINE - STANDARD PROCEDURE)

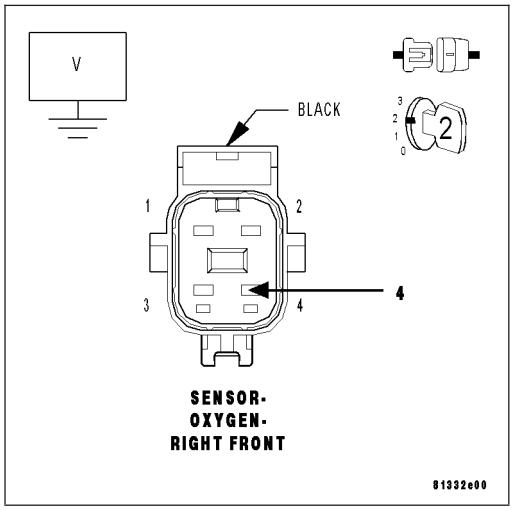

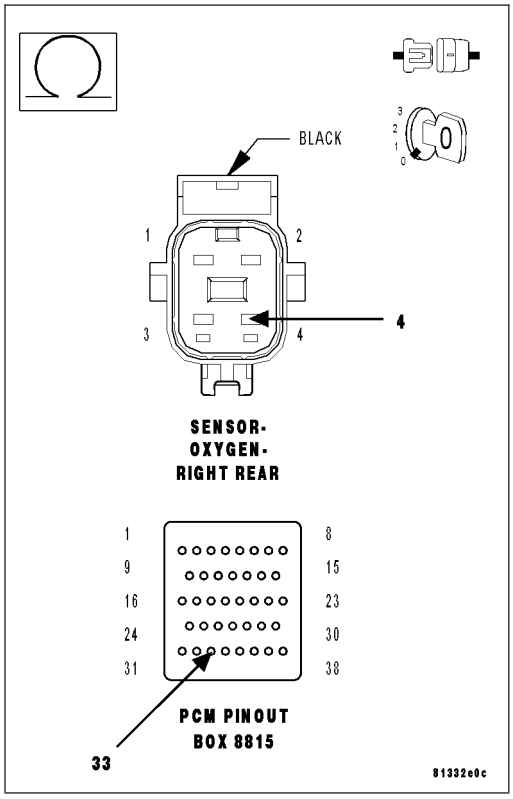

6. (K399) O2 SENSOR 2/2 HEATER CONTROL CIRCUIT

Turn the ignition off.

Measure the resistance between ground and the (K399) O2 Sensor 2/2 Heater Control circuit in the O2 Sensor harness connector.

Is the resistance below 5.0 ohms?

Yes >> Repair the short to ground in the (K399) O2 Sensor 2/2 Heater Control circuit.

Perform the POWERTRAIN VERIFICATION TEST. (Refer to 9 - ENGINE - STANDARD PROCEDURE)

No >> Go To 7

Perform the POWERTRAIN VERIFICATION TEST. (Refer to 9 - ENGINE - STANDARD PROCEDURE)

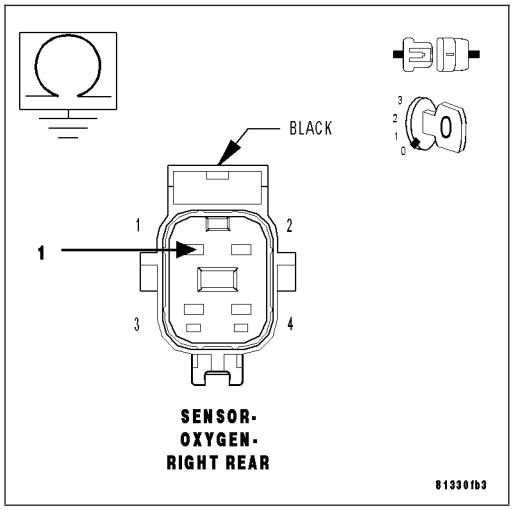

7. (K904) O2 DOWNSTREAM RETURN CIRCUIT

Measure the voltage on the (K904) O2 Downstream Return circuit in the O2 Sensor harness connector.

Is the voltage at 2.5 volts?

Yes >> Check the fuel system for contaminants.

Perform the POWERTRAIN VERIFICATION TEST. (Refer to 9 - ENGINE - STANDARD PROCEDURE)

No >> Check the (K904) O2 Downstream Return circuit for a short to ground, open, or short to voltage. Inspect the O2 Sensor connector and the PCM harness connector. If OK, replace and program the Powertrain Control Module per Service Information.

Perform the POWERTRAIN VERIFICATION TEST. (Refer to 9 - ENGINE - STANDARD PROCEDURE)

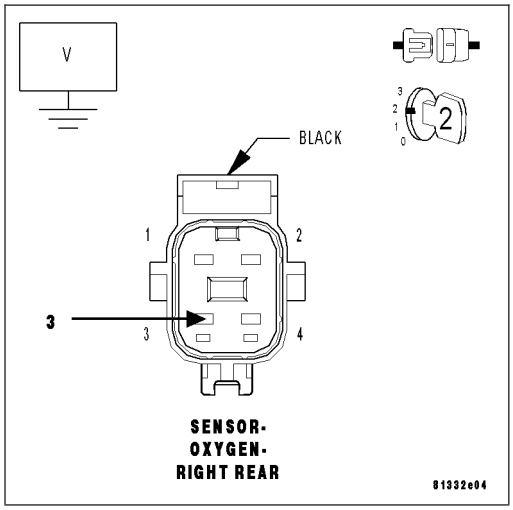

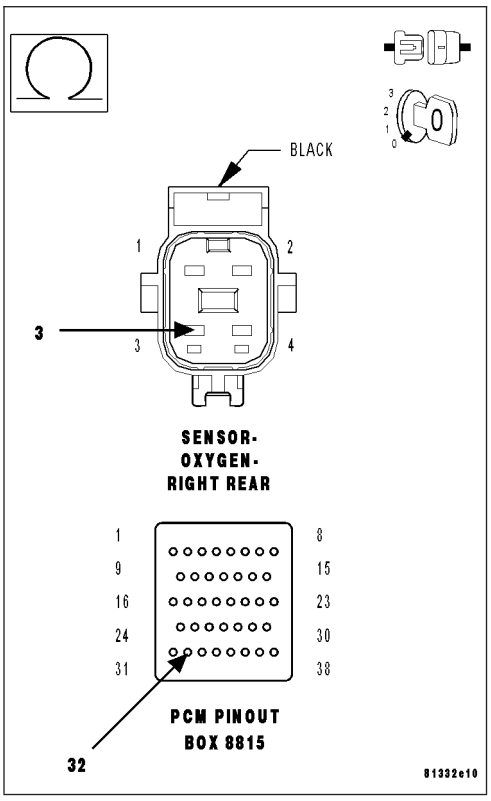
BLACK
1
2
3
3
4
SENSOR-
OXYGEN-
RIGHT REAR
1
8
9
15
16
23
24
30
31
38
PCM PINOUT
BOX 8815
32
81332e10

P2099-DOWNSTREAM FUEL TRIM SYSTEM 2 RICH

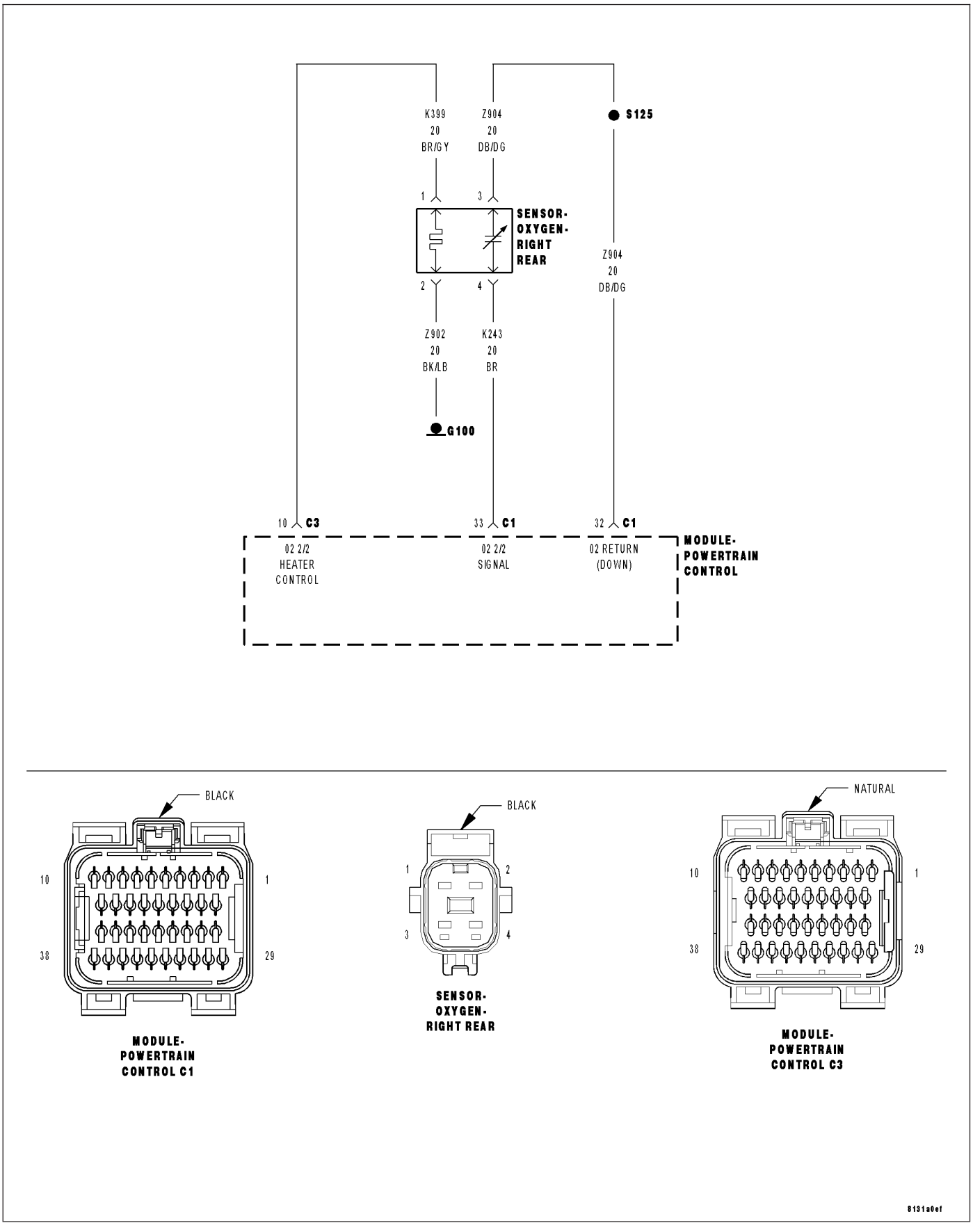

For a complete wiring diagram **Refer to Section 8W**.

- **When Monitored:**
  With the engine running in closed loop mode, the ambient/battery temperature above (-7°C) 20°F, altitude below 8500 ft.
- **Set Condition:**
  If the PCM multiplies short term compensation by long term adaptive as well as a purge fuel multiplier and the result is below a certain value for 30 seconds over two trips, a freeze frame is stored, the MIL illuminates and a trouble code is stored. Two Trip Fault. Three good trips to turn off the MIL.

Possible Causes
EXHAUST LEAK
ENGINE MECHANICAL PROBLEM
2/2 O2 SENSOR
(K342) O2 SENSOR 2/2 SIGNAL CIRCUIT
(K399) O2 SENSOR 2/2 HEATER CONTROL CIRCUIT
(K904) O2 DOWNSTREAM RETURN CIRCUIT
FUEL CONTAMINATION

Always perform the Pre-Diagnostic Troubleshooting procedure before proceeding. (Refer to 9 - ENGINE - DIAGNOSIS AND TESTING).

Diagnostic Test

1. ACTIVE DTC

NOTE: Check the vehicle repair history. If the 2/2 O2 has been replace make sure that the O2 sensor was properly installed and meets OEM specification.

NOTE: Check for contaminants that may have damaged the O2 Sensor: contaminated fuel, unapproved silicone, oil and coolant.

Ignition on, engine not running.

With a scan tool, read DTCs.

Is the DTC active at this time?

Yes >> Go To 2

No >> Refer to the INTERMITTENT CONDITION Diagnostic Procedure.
Perform the POWERTRAIN VERIFICATION TEST. (Refer to 9 - ENGINE - STANDARD PROCEDURE)

2. EXHAUST LEAK

Turn the ignition off.

WARNING: To avoid personal injury from the exhaust system being hot, allow the exhaust to cool down to a safe temperature before performing a physical inspection. Failure to follow these instructions can result in personal injury or death.

Visually and Physically inspect for holes, cracks and blockage in the exhaust system.

Is the exhaust system is good condition?

Yes >> Go To 3

No >> Repair or Replace as necessary.
Perform the POWERTRAIN VERIFICATION TEST. (Refer to 9 - ENGINE - STANDARD PROCEDURE)

3. ENGINE MECHANICAL PROBLEM

Check for any of the following conditions/mechanical problems.
AIR INDUCTION SYSTEM - must be free from leaks
ENGINE VACUUM - must be at least 13 inches in neutral
ENGINE VALVE TIMING - must be within specifications
ENGINE COMPRESSION - must be within specifications
ENGINE EXHAUST SYSTEM - must be free of any restrictions or leaks
ENGINE PCV SYSTEM - must flow freely
TORQUE CONVERTER STALL SPEED - must be within specifications
POWER BRAKE BOOSTER - no internal vacuum leaks
FUEL - must be free of contamination
FUEL INJECTOR - plugged or restricted injector; control wire not connected to correct injector

Are there any engine mechanical problems?

Yes >> Repair as necessary.
Perform the POWERTRAIN VERIFICATION TEST. (Refer to 9 - ENGINE - STANDARD PROCEDURE)

No >> Go To 4

4. O2 SENSOR

Ignition on, engine not running.
Disconnect the 2/2 O2 Sensor harness connector.
With the scan tool, monitor the 2/2 O2 Sensor voltage.
The O2 Sensor voltage should read 5.0 volts on the scan tool with the connector disconnected.
Using a jumper wire, jump the (K243) O2 Signal 2/2 circuit to the (K904) O2 Downstream Return circuit in the O2 Sensor harness connector.

NOTE: The voltage should drop from 5.0 volts to 2.5 volts with the jumper wire in place.

Did the O2 Sensor volts change from 5.0 volts to 2.5 volts?

Yes >> Replace the O2 Sensor
Perform the POWERTRAIN VERIFICATION TEST. (Refer to 9 - ENGINE - STANDARD PROCEDURE)

No >> Go To 5

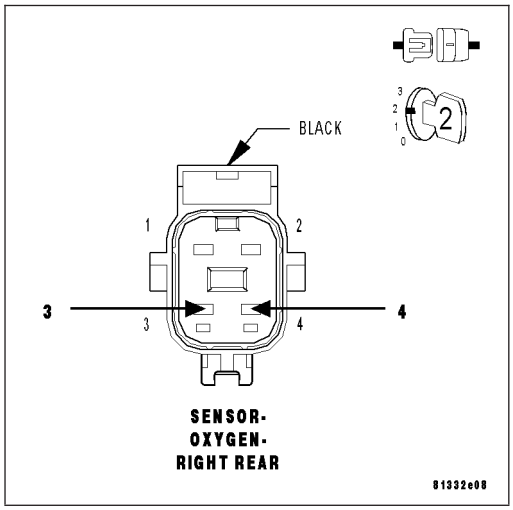

5. (K243) O2 SENSOR 2/2 SIGNAL CIRCUIT

Remove the jump wire.

Ignition on, engine not running.

With the scan tool, monitor the 2/2 O2 Sensor voltage.

Is the voltage above 4.8 volts?

Yes >> Check the (K243) O2 Sensor 2/2 Signal circuit for an open or short to battery voltage. Inspect the O2 Sensor connector and the PCM harness connector. If OK, replace and program the Powertrain Control Module per Service Information.

No >> Go To 6

Perform the POWERTRAIN VERIFICATION TEST. (Refer to 9 - ENGINE - STANDARD PROCEDURE)

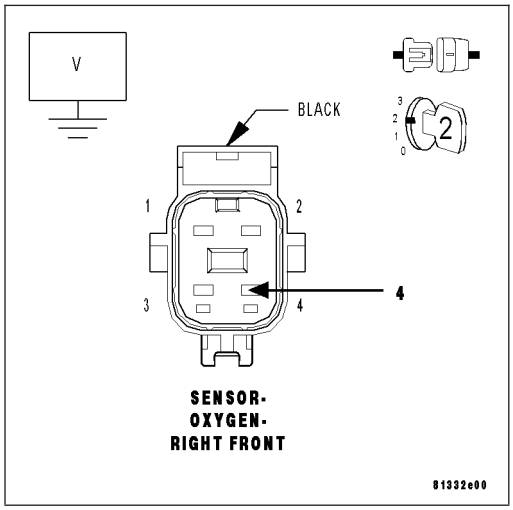

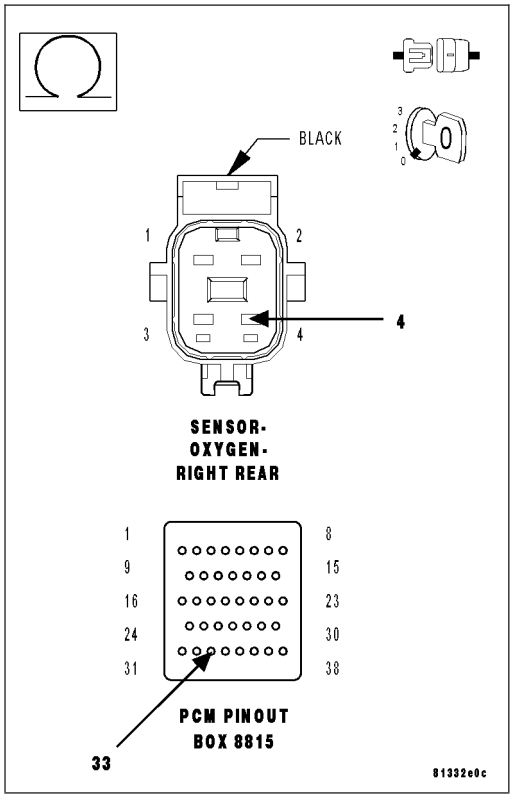

6. (K399) O2 SENSOR 2/2 HEATER CONTROL CIRCUIT OPEN

Turn the ignition off.

Measure the resistance between ground and the (K399) O2 Sensor 2/2 Heater Control circuit in the O2 Sensor harness connector.

Is the resistance below 5.0 ohms?

Yes >> Repair the short to ground in the (K399) O2 Sensor 2/2 Heater Control circuit.

Perform the POWERTRAIN VERIFICATION TEST. (Refer to 9 - ENGINE - STANDARD PROCEDURE)

No >> Go To 7

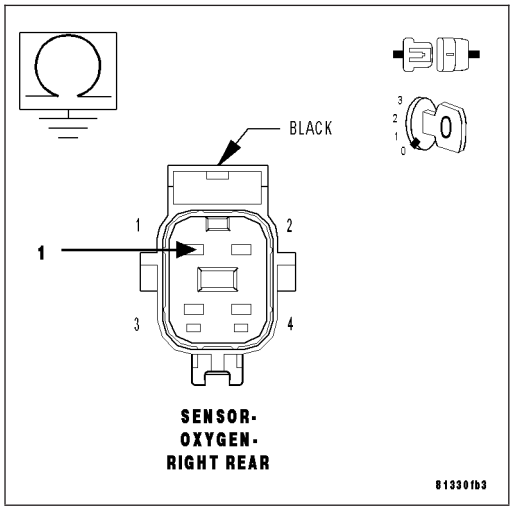

7. (K904) O2 DOWNSTREAM RETURN CIRCUIT

Measure the voltage on the (K904) O2 Downstream Return circuit in the O2 Sensor harness connector.

Is the voltage at 2.5 volts?

Yes >> Check the fuel system for contaminants.

Perform (NGC) POWERTRAIN VERIFICATION TEST VER - 5. (Refer to 8 - ELECTRICAL/ELECTRONIC CONTROL MODULES/POWERTRAIN CONTROL MODULE - DIAGNOSIS AND TESTING)

No >> Check the (K904) O2 Downstream Return circuit for a short to ground, open, or short to voltage. Inspect the O2 Sensor connector and the PCM harness connector. If OK, replace and program the Powertrain Control Module per Service Information.

Perform the POWERTRAIN VERIFICATION TEST. (Refer to 9 - ENGINE - STANDARD PROCEDURE)

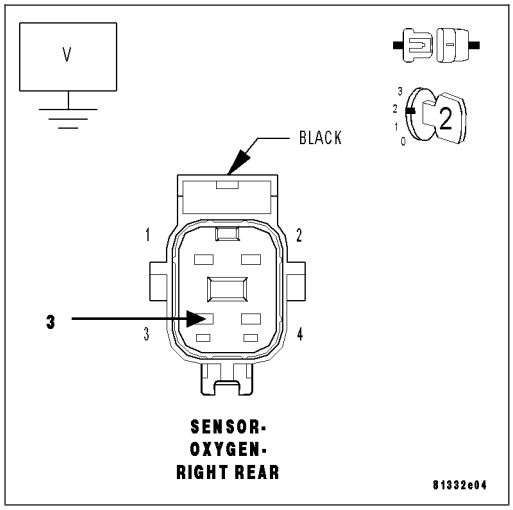

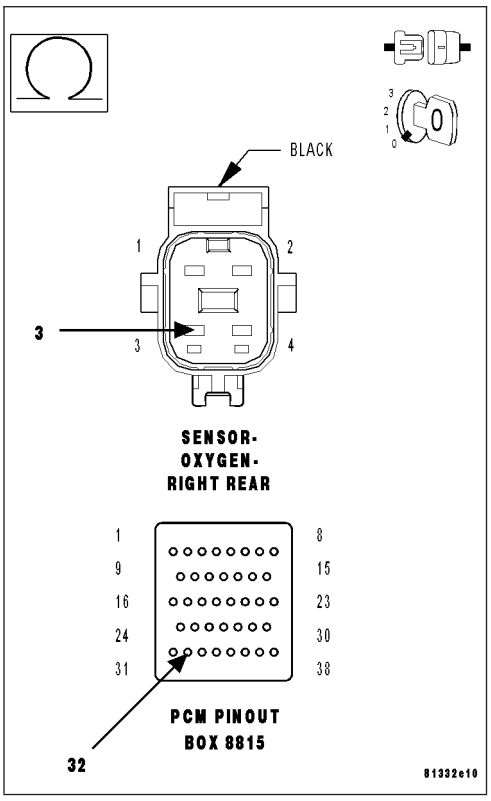
BLACK
1
2
3
4
3
SENSOR-
OXYGEN-
RIGHT REAR
1
8
9
15
16
23
24
30
31
38
PCM PINOUT
BOX 8815
32
81332e10

P2100-ELECTRONIC THROTTLE CONTROL MOTOR CIRCUIT

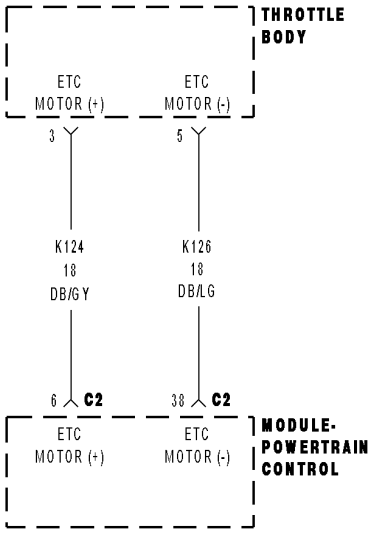

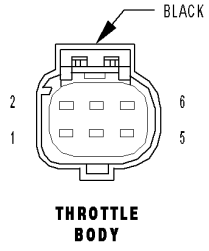

THROTTLE BODY

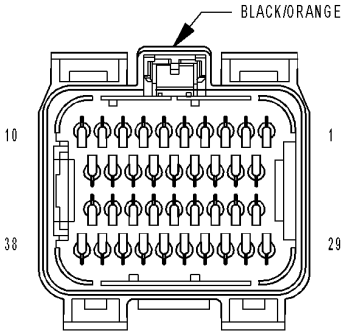

MODULE-POWERTRAIN CONTROL C2

813234c1

For a complete wiring diagram **Refer to Section 8W**.

- **When Monitored:**
  With the ignition on and the ETC Motor is not in Limp Home mode.
- **Set Condition:**
  When the PCM detects an internal error or a short between the ETC Motor- and ETC Motor + circuits in the ETC Motor Driver. One trip fault. ETC light is flashing.

Possible Causes
THROTTLE PLATE / BORE INSPECTION
(K124) ETC POSITIVE CIRCUIT SHORTED TO BATTERY VOLTAGE
(K126) ETC NEGATIVE CIRCUIT SHORTED TO BATTERY VOLTAGE
(K124) ETC POSITIVE CIRCUIT SHORTED TO (K126) ETC NEGATIVE CIRCUIT
(K124) ETC POSITIVE CIRCUIT OPEN
(K124) ETC POSITIVE CIRCUIT SHORTED TO GROUND
(K126) ETC NEGATIVE CIRCUIT OPEN
(K126) ETC NEGATIVE CIRCUIT SHORTED TO GROUND
LOW BATTERY VOLTAGE
ETC MOTOR/THROTTLE BODY
PCM

Always perform the Pre-Diagnostic Troubleshooting procedure before proceeding. (Refer to 9 - ENGINE - DIAGNOSIS AND TESTING).

Diagnostic Test

1. ACTIVE DTC

Ignition on, engine not running.

NOTE: If the P2100 is intermittent, it is possible that the controller is overheating in extreme hot temperatures, and this is considered a normal protection operation. No repair is necessary.

NOTE: Low battery voltage can also cause excessive current draw, in very hot and very cold ambient temperatures. Make sure the battery can pass a Load test before continuing.
With a scan tool, read DTCs.
Look closely at the temperatures at which this DTC set.

Is the DTC active at this time?

Yes >> Go To 2

No >> Refer to the INTERMITTENT CONDITION Diagnostic Procedure.
Perform the POWERTRAIN VERIFICATION TEST. (Refer to 9 - ENGINE - STANDARD PROCEDURE)

2. THROTTLE PLATE INSPECTION

Turn the ignition off.
Remove the Air Cleaner Assembly from the Throttle Body.
Check for any signs of a foreign material (ice or dirt) on the Throttle Plate or in the bore causing the Throttle Plate to stick.

Were any signs of foreign material or scoring of the throttle plate or bore found?

Yes >> Remove the debris if possible or replace the Throttle Body Assembly. Disconnect the Battery when replacing the Throttle Body Assembly. After installation is complete, use a scan tool and select the ETC RELEARN function.
Perform the POWERTRAIN VERIFICATION TEST. (Refer to 9 - ENGINE - STANDARD PROCEDURE)

No >> Go To 3

3. (K124) ETC POSITIVE CIRCUIT SHORTED TO BATTERY VOLTAGE

Turn the ignition off.

Disconnect the Throttle Body harness connector.

Disconnect the PCM harness connectors.

Ignition on, engine not running.

With a 12-volt test light connected to ground, probe the (K124) ETC Positive circuit at the appropriate terminal of the special tool #8815.

Does the test light illuminate brightly?

Yes >> Repair the short to battery voltage on the (K124) ETC Positive circuit.

Perform the POWERTRAIN VERIFICATION TEST. (Refer to 9 - ENGINE - STANDARD PROCEDURE)

No >> Go To 4

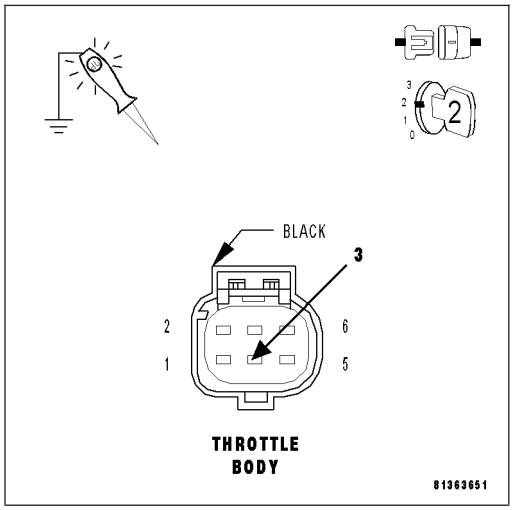

4. (K126) ETC NEGATIVE CIRCUIT SHORTED TO BATTERY VOLTAGE

Using a 12-volt test light connected to ground, probe the (K126) ETC Negative circuit at the appropriate terminal of the special tool #8815.

Does the test light illuminate brightly?

Yes >> Repair the short to battery voltage in the (K126) ETC Negative circuit.

Perform the POWERTRAIN VERIFICATION TEST. (Refer to 9 - ENGINE - STANDARD PROCEDURE)

No >> Go To 5

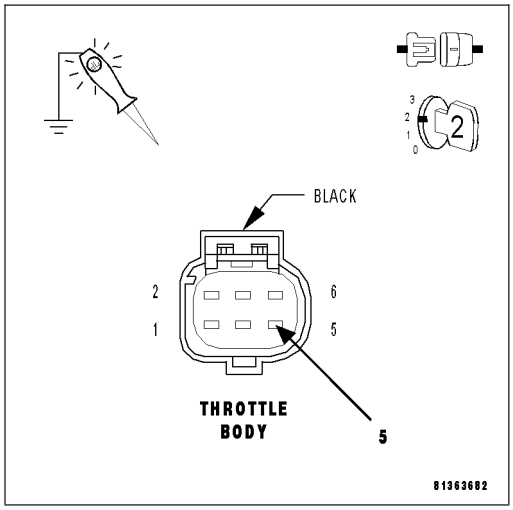

5. (K124) ETC POSITIVE CIRCUIT SHORTED TO THE (K126) ETC NEGATIVE CIRCUIT

Measure the resistance between the (K124) ETC Positive circuit and the (K126) ETC Negative circuit at the appropriate terminal of the special tool #8815.

Is the resistance below 100 ohms?

Yes >> Repair the short to between the (K124) ETC Positive circuit and the (K126) ETC Negative circuit.

Perform the POWERTRAIN VERIFICATION TEST. (Refer to 9 - ENGINE - STANDARD PROCEDURE)

No >> Go To 6

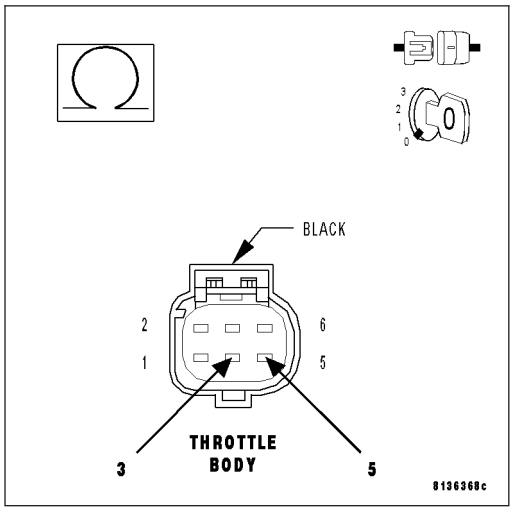

6. (K124) ETC POSITIVE CIRCUIT OPEN

Turn the ignition off.

Measure the resistance of the (K124) ETC Positive circuit from the Throttle Body harness connector to the appropriate terminal of special tool #8815.

Is the resistance below 5.0 ohms?

Yes >> Go To 7

No >> Repair the open in the (K124) ETC Positive circuit.
Perform the POWERTRAIN VERIFICATION TEST. (Refer to 9 - ENGINE - STANDARD PROCEDURE)

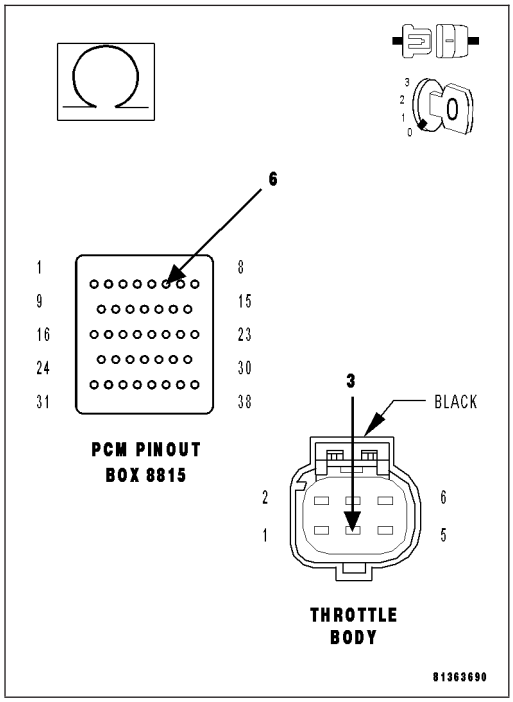

7. (K124) ETC POSITIVE CIRCUIT SHORTED TO GROUND

Measure the resistance between ground and the (K124) ETC Positive circuit at the appropriate terminal of the special tool #8815.

Is the resistance below 100 ohms?

Yes >> Repair the short to ground in the (K124) ETC Positive circuit.
Perform the POWERTRAIN VERIFICATION TEST. (Refer to 9 - ENGINE - STANDARD PROCEDURE)

No >> Go To 8

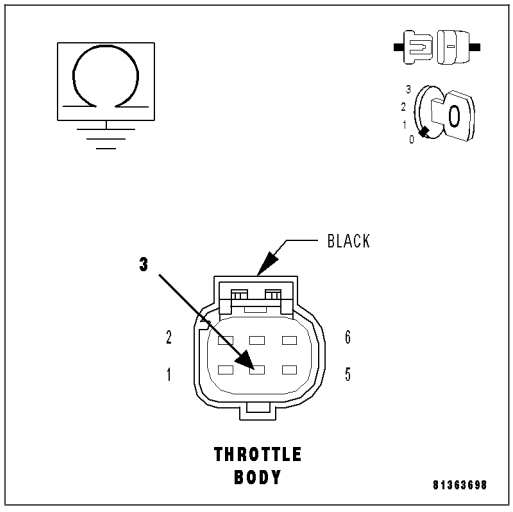

8. (K126) ETC NEGATIVE CIRCUIT OPEN

Measure the resistance of the (K126) ETC Negative circuit between the Throttle Body harness connector and the appropriate terminal of special tool #8815.

Is the resistance below 5.0 ohms?

Yes >> Go To 9

No >> Repair the open in the (K126) ETC Negative circuit.
Perform the POWERTRAIN VERIFICATION TEST. (Refer to 9 - ENGINE - STANDARD PROCEDURE)

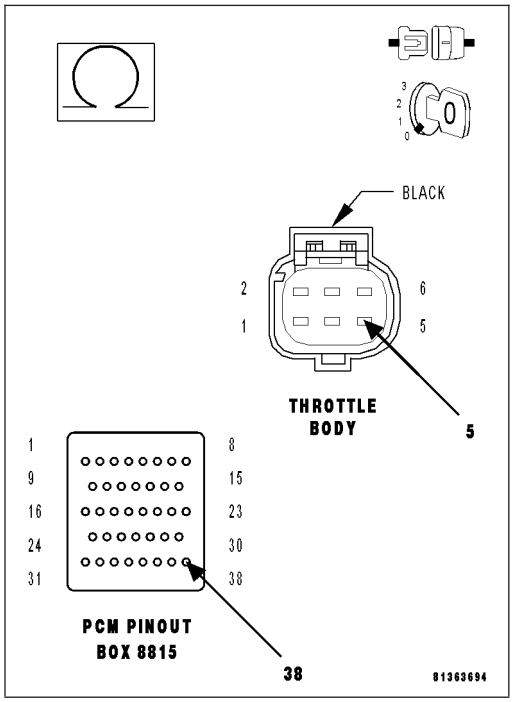

9. (K126) ETC NEGATIVE CIRCUIT SHORTED TO GROUND

Measure the resistance between ground and the (K126) ETC Negative circuit at the appropriate terminal of the special tool #8815.

Is the resistance below 100 ohms?

Yes >> Repair the short to ground in the (K126) ETC Negative circuit.
Perform the POWERTRAIN VERIFICATION TEST. (Refer to 9 - ENGINE - STANDARD PROCEDURE)

No >> Go To 10

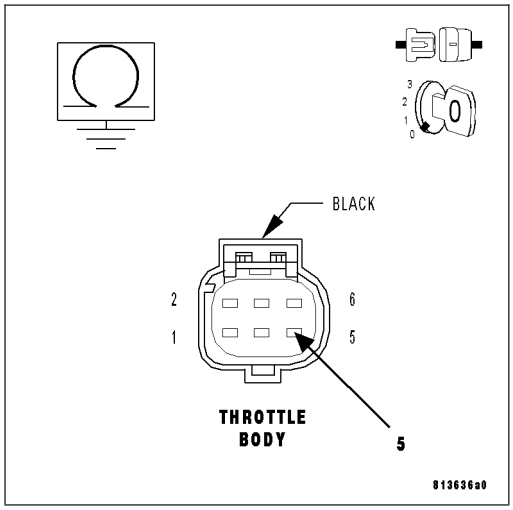

10. ETC MOTOR

Reconnect the Throttle Body harness connector.

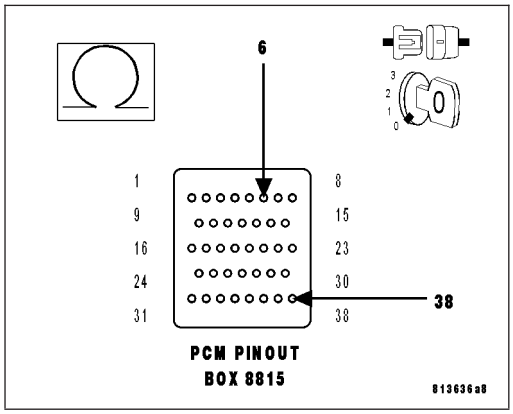

NOTE: Take the following measurement using special tool #8815 to avoid possible damage to the Throttle Body harness connector.
Measure the resistance of the ETC Motor between the (K447) ETC Positive circuit and the (K448) ETC Negative circuit at the appropriate terminals of special tool #8815.

Is the resistance between 2.5 and 25 ohms at closed throttle?

Yes >> Go To 11

No >> Replace the Throttle Body Assembly. Disconnect the Battery when replacing the Throttle Body Assembly. After installation is complete, use a scan tool and select the ETC RELEARN function.
Perform the POWERTRAIN VERIFICATION TEST. (Refer to 9 - ENGINE - STANDARD PROCEDURE)

11. PCM

NOTE: Before continuing, check the PCM harness connector terminals for corrosion, damage, or terminal push out. Repair as necessary.
Using the schematics as a guide, inspect the wire harness and connectors. Pay particular attention to all Power and Ground circuits.

Were there any problems found?

Yes >> Repair as necessary.
Perform the POWERTRAIN VERIFICATION TEST. (Refer to 9 - ENGINE - STANDARD PROCEDURE)

No >> Replace and program the Powertrain Control Module per Service Information.
Perform the POWERTRAIN VERIFICATION TEST. (Refer to 9 - ENGINE - STANDARD PROCEDURE)

P2101-ELECTRONIC THROTTLE CONTROL MOTOR PERFORMANCE

For a complete wiring diagram **Refer to Section 8W**.

- **When Monitored:**
  With the vehicle running, ETC Motor not in Limp Home mode, and the TPS adaptation is complete.
- **Set Condition:**
  The PCM recognizes too large of an error between the actual position of the Throttle Plate and the Set Point position. One trip fault and the code will set within 5 seconds. Three good trips to turn off the MIL ETC light is flashing.

Possible Causes
THROTTLE BODY ASSEMBLY
LOW BATTERY VOLTAGE
PCM

Always perform the Pre-Diagnostic Troubleshooting procedure before proceeding. (Refer to 9 - ENGINE - DIAGNOSIS AND TESTING).

Diagnostic Test

1. ACTIVE DTC

NOTE: Before continuing visually inspect the throttle blade and bore for any obstructions. Icing of the throttle body may have caused this code to set.

NOTE: Low battery voltage can also cause excessive current draw, in very hot and very cold ambient temperatures. Make sure the battery can pass a Load test before continuing.

NOTE: Diagnose any 5-Volt Supply, Battery, and TP Sensor DTCs before continuing.

Ignition on, engine not running.

With a scan tool, read DTCs.

Is the DTC active at this time?

Yes >> Go To 2

No >> Refer to the INTERMITTENT CONDITION Diagnostic Procedure.
Perform the POWERTRAIN VERIFICATION TEST. (Refer to 9 - ENGINE - STANDARD PROCEDURE)

2. THROTTLE PLATE INSPECTION

Turn the ignition off.

Remove the Air Cleaner Assembly from the Throttle Body.

Check for any signs of a foreign material (ice or dirt) on the Throttle Plate or in the bore causing the Throttle Plate to stick.

Manually open and close the throttle plate using your hands.

Does the Throttle Plate move?

Yes >> Go To 3

No >> Remove the debris if possible or replace the Throttle Body Assembly. Disconnect the Battery when replacing the Throttle Body Assembly. After installation is complete, use a scan tool and select the ETC RELEARN function.
Perform the POWERTRAIN VERIFICATION TEST. (Refer to 9 - ENGINE - STANDARD PROCEDURE)

3. THROTTLE POSITION WITHIN 2° DEGREES OF DESIRED THROTTLE POSITION

Start the engine.

Allow the engine to reach normal operating temperature.

With a scan tool, monitor the Actual Throttle Position and Desired Throttle Position.

Compare the Actual Throttle Position and the Set Point Throttle Position.

Is the Actual Throttle Position within 2° degrees of the Desired Throttle Position?

Yes >> Go To 4

No >> Replace the Throttle Body Assembly. Disconnect the Battery when replacing the Throttle Body Assembly. After installation is complete, use a scan tool and select the ETC RELEARN function.
Perform the POWERTRAIN VERIFICATION TEST. (Refer to 9 - ENGINE - STANDARD PROCEDURE)

4. ETC OPERATION

Ignition on, engine not running.

With a scan tool, actuate the Electronic Throttle Control Motor.

NOTE: It may be necessary to use a mirror to see the throttle blade.
Observe the throttle blade.

NOTE: Make sure the motion of the throttle blade is smooth and that it opens and closes.

Did the ETC motor operate properly?

Yes >> Refer to the INTERMITTENT CONDITION Diagnostic Procedure.
Perform the POWERTRAIN VERIFICATION TEST. (Refer to 9 - ENGINE - STANDARD PROCEDURE)

No >> Replace the Throttle Body Assembly. Disconnect the Battery when replacing the Throttle Body Assembly. After installation is complete, use a scan tool and select the ETC RELEARN function.
Perform the POWERTRAIN VERIFICATION TEST. (Refer to 9 - ENGINE - STANDARD PROCEDURE)

P2107-ELECTRONIC THROTTLE CONTROL MODULE PROCESSOR

For a complete wiring diagram **Refer to Section 8W**.

- **When Monitored:**
  Ignition on.
- **Set Condition:**
  Internal PCM failure. Module will attempt to reset, so you will be able to hear the throttle relearning. If the condition is continuous, the vehicle may not be driveable. One trip fault. ETC light is flashing.

Possible Causes
POWERTRAIN CONTROL MODULE NEEDS TO BE REPROGRAMMED

Always perform the Pre-Diagnostic Troubleshooting procedure before proceeding. (Refer to 9 - ENGINE - DIAGNOSIS AND TESTING).

Diagnostic Test

1. REPROGRAM THE POWERTRAIN CONTROL MODULE

Check for any related TSBs.

Verify the PCM is at the latest calibration (flash level).

NOTE: An intermittent loss of power to the PCM without performing an ETC Relearn procedure may cause this DTC to set.

Flash the Powertrain Control Module per Service Information if any updates are available.

Start the engine.

Allow the engine to reach normal operating temperature.

Operate the accelerator pedal. (do not exceed 3500 rpm)

Test drive the vehicle for 10 miles on a flat road surface.

Does this DTC reset?

Yes >> Replace and reprogram the Powertrain Control Module per Service Information.
Perform the POWERTRAIN VERIFICATION TEST. (Refer to 9 - ENGINE - STANDARD PROCEDURE)

No >> Test Complete.

P2108-ELECTRONIC THROTTLE CONTROL MODULE PERFORMANCE

For a complete wiring diagram **Refer to Section 8W**.

- **When Monitored:**
  Ignition on.
- **Set Condition:**
  Internal PCM failure. Customer may experience an extended cranking condition with limited driving and a rough idle. One trip fault and the code will set within 5 seconds. ETC light is flashing.

Possible Causes
POWERTRAIN CONTROL MODULE NEEDS TO BE REPROGRAMMED

Always perform the Pre-Diagnostic Troubleshooting procedure before proceeding. (Refer to 9 - ENGINE - DIAGNOSIS AND TESTING).

Diagnostic Test

1. REPROGRAM THE POWERTRAIN CONTROL MODULE

Check for any related TSBs.

Verify the PCM is at the latest calibration (flash level).

NOTE: Inspect the Intake Manifold components for vacuum leaks, repair as necessary

NOTE: An intermittent loss of power to the PCM without performing an ETC Relearn procedure may cause this DTC to set.

NOTE: Diagnose any other DTCs that may have set with the P2108.

Flash the Powertrain Control Module per Service Information if any updates are available.

Start the engine.

Allow the engine to reach normal operating temperature.

Operate the accelerator pedal. (do not exceed 3500 rpm)

Test drive the vehicle for 10 miles on a flat road surface.

Does this DTC reset by itself?

Yes >> Replace and reprogram the Powertrain Control Module per Service Information.
Perform the POWERTRAIN VERIFICATION TEST. (Refer to 9 - ENGINE - STANDARD PROCEDURE)

No >> Test Complete.

P2110-ELECTRONIC THROTTLE CONTROL - FORCED LIMITED RPM

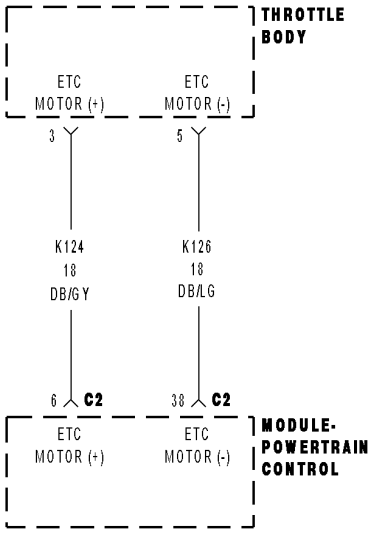

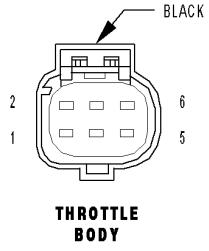

THROTTLE BODY

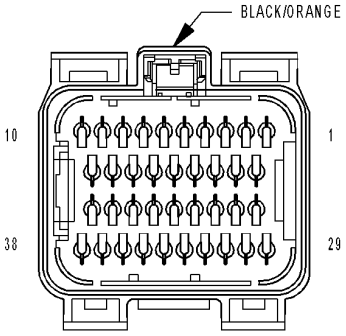

MODULE-POWERTRAIN CONTROL C2

813234c1

For a complete wiring diagram **Refer to Section 8W**.

- **When Monitored:**
  Ignition on and ETC motor is working.
- **Set Condition:**
  When the PCM requests to limit engine speed if PWM is too high for 20.5 seconds and before P2118 sets. One trip fault and the code will set within 5 seconds. ETC light is illuminated.

Possible Causes
THROTTLE PLATE STUCK
(K124) ETC POSITIVE CIRCUIT OPEN
(K126) ETC NEGATIVE CIRCUIT OPEN
(K124) ETC POSITIVE CIRCUIT SHORTED TO GROUND
(K126) ETC NEGATIVE CIRCUIT SHORTED TO GROUND
ETC MOTOR
PCM

Always perform the Pre-Diagnostic Troubleshooting procedure before proceeding. (Refer to 9 - ENGINE - DIAGNOSIS AND TESTING).

Diagnostic Test

1. ACTIVE DTC

Ignition on, engine not running.

With a scan tool read DTCs.

In the Freeze Frame data, look at the temperature at which the fault occurred. If it occurred in extreme cold temperatures, Icing of the throttle body may have caused this code to set.

NOTE: Diagnose any TP Sensor faults, 5-Volt Supply faults, and Battery Voltage High or Low DTCs before continuing.

Is the DTC active at this time?

Yes >> Go To 2

No >> Refer to the INTERMITTENT CONDITION Diagnostic Procedure.
Perform the POWERTRAIN VERIFICATION TEST. (Refer to 9 - ENGINE - STANDARD PROCEDURE)

2. THROTTLE PLATE STUCK

Turn the ignition off.

Remove the Air Cleaner Assembly from the Throttle Body.

Check for any signs of a foreign material (ice or dirt) causing the Throttle to stick.

Manually open and close the throttle plate using your hands.

Does the Throttle Plate move?

Yes >> Go To 3

No >> Remove the debris if possible or replace the Throttle Body Assembly if signs of physical damage are present. Disconnect the Battery when replacing the Throttle Body Assembly. After installation is complete, use a scan tool and select the ETC RELEARN function.
Perform the POWERTRAIN VERIFICATION TEST. (Refer to 9 - ENGINE - STANDARD PROCEDURE)

3. (K124) ETC POSITIVE CIRCUIT OPEN

Turn the ignition off.

Disconnect the Throttle Body harness connector.

Disconnect the C3 PCM harness connector.

CAUTION: Do not probe the PCM harness connectors. Probing the PCM harness connectors will damage the PCM terminals resulting in poor terminal to pin connection. Install Miller Special Tool #8815 to perform diagnosis.

Measure the resistance of the (K124) ETC Positive circuit from the Throttle Body harness connector to the appropriate terminal of special tool #8815.

Is the resistance below 5.0 ohms?

Yes >> Go To 4

No >> Repair the open in the (K124) ETC Positive circuit.
Perform the POWERTRAIN VERIFICATION TEST. (Refer to 9 - ENGINE - STANDARD PROCEDURE)

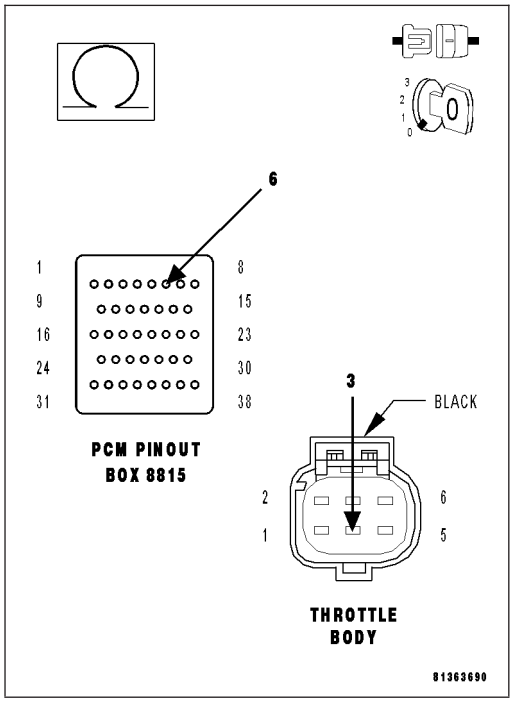

4. (K126) ETC NEGATIVE CIRCUIT OPEN

Measure the resistance of the (K126) ETC Negative circuit between the Throttle Body harness connector and the appropriate terminal of special tool #8815.

Is the resistance below 5.0 ohms?

Yes >> Go To 5

No >> Repair the open in the (K126) ETC Negative circuit.
Perform the POWERTRAIN VERIFICATION TEST. (Refer to 9 - ENGINE - STANDARD PROCEDURE)

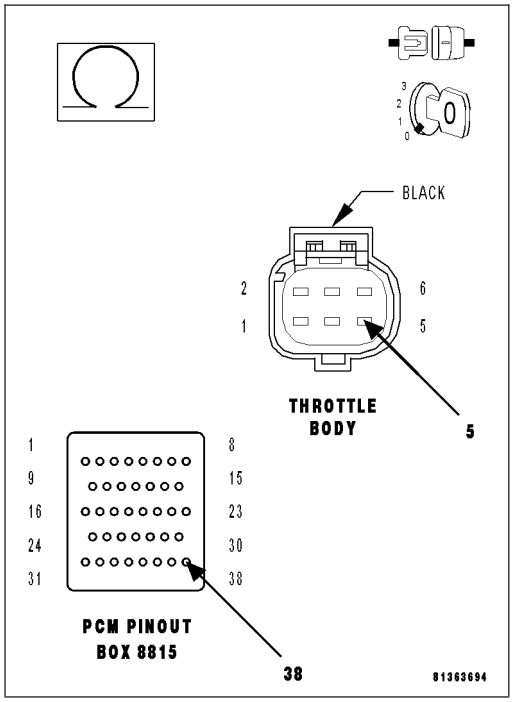

5. (K124) ETC POSITIVE CIRCUIT SHORTED TO GROUND

Measure the resistance between a known good ground and the (K124) ETC Positive circuit at the appropriate terminal of the special tool #8815.

Is the resistance below 100 ohms?

Yes >> Repair the short to ground in the (K124) ETC Positive circuit.

Perform the POWERTRAIN VERIFICATION TEST. (Refer to 9 - ENGINE - STANDARD PROCEDURE)

No >> Go To 6

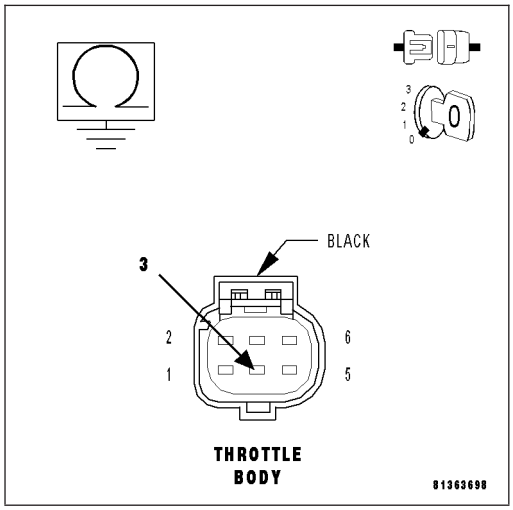

6. (K126) ETC NEGATIVE CIRCUIT SHORTED TO GROUND

Measure the resistance between a known good ground and the (K126) ETC Negative circuit at the appropriate terminal of the special tool #8815.

Is the resistance below 100 ohms?

Yes >> Repair the short to ground in the (K126) ETC Negative circuit.

Perform the POWERTRAIN VERIFICATION TEST. (Refer to 9 - ENGINE - STANDARD PROCEDURE)

No >> Go To 7

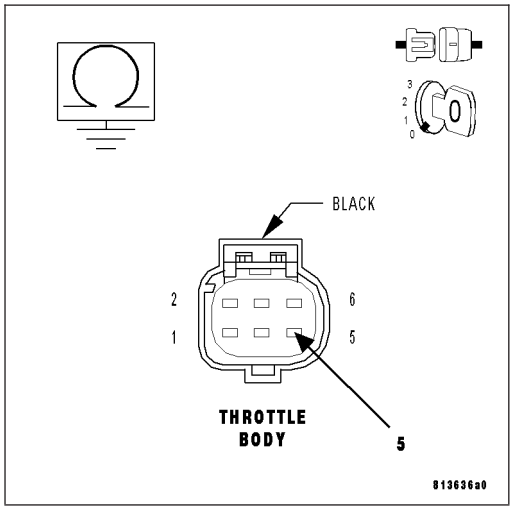

7. ETC MOTOR

NOTE: Take the following measurement using special tool #8815 to avoid possible damage to the Throttle Body harness connector.
Measure the resistance of the ETC Motor between the (K124) ETC Positive circuit and the (K126) ETC Negative circuit at the appropriate terminals of special tool #8815.

Is the resistance between 2.5 and 25 ohms at closed throttle?

Yes >> Go To 8

No >> Replace the Throttle Body Assembly. Disconnect the Battery when replacing the Throttle Body Assembly. After installation is complete, use a scan tool and select the ETC RELEARN function.

Perform the POWERTRAIN VERIFICATION TEST. (Refer to 9 - ENGINE - STANDARD PROCEDURE)

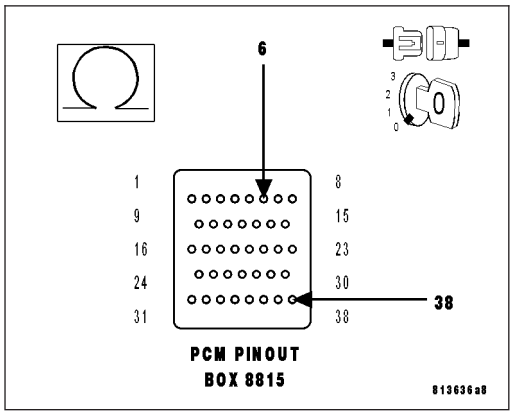

8. PCM

NOTE: Before continuing, check the PCM harness connector terminals for corrosion, damage, or terminal push out. Repair as necessary.
Using the schematics as a guide, inspect the wire harness and connectors. Pay particular attention to all Power and Ground circuits.

Were there any problems found?

Yes >> Repair as necessary.
Perform the POWERTRAIN VERIFICATION TEST. (Refer to 9 - ENGINE - STANDARD PROCEDURE)

No >> Replace and program the Powertrain Control Module per Service Information.
Perform the POWERTRAIN VERIFICATION TEST. (Refer to 9 - ENGINE - STANDARD PROCEDURE)

P2111-ELECTRONIC THROTTLE CONTROL - UNABLE TO CLOSE

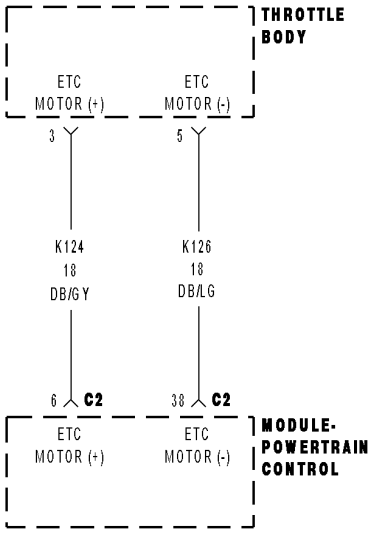

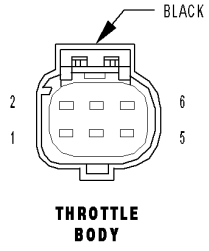

THROTTLE BODY

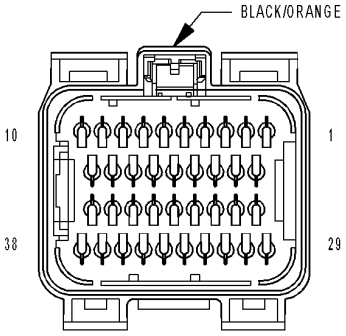

MODULE-POWERTRAIN CONTROL C2

813234c1

For a complete wiring diagram **Refer to Section 8W**.

- **When Monitored:**
  Ignition on and battery voltage greater than 10 volts.
- **Set Condition:**
  Just after key on, the throttle is opened and closed to test the system. If the TP Sensor does not return to Limp Home Position at the end of this test, this DTC will set. One trip fault and the code will set within 5 seconds. ETC light is flashing.

Possible Causes
THROTTLE PLATE STUCK ABOVE LIMP HOME POSITION
TP SENSOR NO.1 AND TP SENSOR NO.2 BOTH READ 2.5 VOLTS
(K124) ETC POSITIVE CIRCUIT SHORTED TO BATTERY VOLTAGE
(K124) ETC POSITIVE CIRCUIT OPEN
(K126) ETC NEGATIVE CIRCUIT OPEN
(K124) ETC POSITIVE CIRCUIT SHORTED TO GROUND
(K126) ETC NEGATIVE CIRCUIT SHORTED TO GROUND
PCM

Always perform the Pre-Diagnostic Troubleshooting procedure before proceeding. (Refer to 9 - ENGINE - DIAGNOSIS AND TESTING).

Diagnostic Test

1. ACTIVE DTC

NOTE: Maximum engine speed could be reduced while this fault is active, it just depends where the throttle gets stuck.
Ignition on, engine not running.

NOTE: The PCM tests the ETC Motor by opening and closing the Throttle Plate before starting the engine. If during this test the Throttle plate does not return to the closed position this DTC sets.
With a scan tool read DTCs.

NOTE: Diagnose any TP Sensor or 5-Volt Supply DTCs before continuing.

Is the DTC active at this time?

Yes >> Go To 2

No >> Refer to the INTERMITTENT CONDITION Diagnostic Procedure.
Perform the POWERTRAIN VERIFICATION TEST. (Refer to 9 - ENGINE - STANDARD PROCEDURE)

2. THROTTLE PLATE STUCK OPEN

Turn the ignition off.

NOTE: The PCM tests the ETC Motor by opening and closing the Throttle Plate before starting the engine. If during this test the Throttle plate does not return to the closed position this DTC sets.
Remove the Air Cleaner Assembly from the Throttle Body.

Check for any signs of a foreign material causing the Throttle to remain open.

Using a scan tool actuate the ETC Motor.

Does the Throttle Plate move?

Yes >> Go To 3

No >> Remove the debris if possible or replace the Throttle Body Assembly if signs of physical damage are present. Disconnect the Battery when replacing the Throttle Body Assembly. After installation is complete, use a scan tool and perform the ETC RELEARN function.
Perform the POWERTRAIN VERIFICATION TEST. (Refer to 9 - ENGINE - STANDARD PROCEDURE)

3. TP SENSOR NO.1 AND TP SENSOR NO.2 BOTH EQUAL 2.5 VOLTS

With a scan tool, perform the Throttle Follower test while reading both TP Sensor voltage readings.

Are both TP Sensor readings stuck at 2.5 volts?

Yes >> Check the TP Sensor Signal circuits for excessive resistance, being shorted to each other, or shorted to the Sensor Return circuit.
Perform the POWERTRAIN VERIFICATION TEST. (Refer to 9 - ENGINE - STANDARD PROCEDURE)

No >> Go To 4

4. (K124) ETC POSITIVE CIRCUIT SHORTED TO BATTERY VOLTAGE

Turn the ignition off.

Disconnect the Throttle Body harness connector.

Disconnect the C3/C PCM harness connector.

CAUTION: Do not probe the PCM harness connectors. Probing the PCM harness connectors will damage the PCM terminals resulting in poor terminal to pin connection. Install Miller Special Tool #8815 to perform the diagnostics.

Ignition on, engine not running.

With a 12-volt test light connected to ground, probe the (K124) ETC Positive circuit at the appropriate terminal of the special tool #8815..

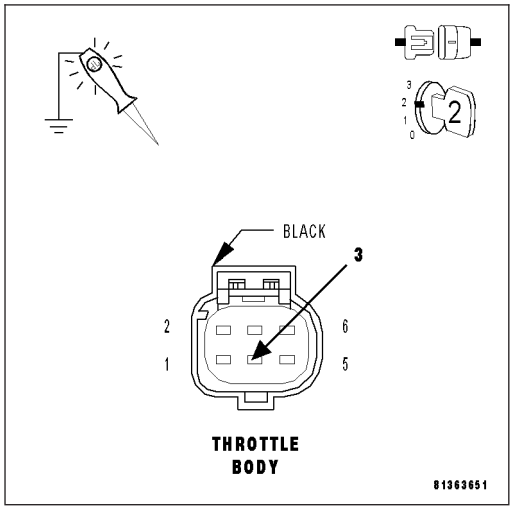

Does the test light illuminate brightly?

Yes >> Repair the short to battery voltage on the (K124) ETC Positive circuit.
Perform the POWERTRAIN VERIFICATION TEST. (Refer to 9 - ENGINE - STANDARD PROCEDURE)

No >> Go To 5

5. (K124) ETC POSITIVE CIRCUIT OPEN

Turn the ignition off.

Measure the resistance of the (K124) ETC Positive circuit from the Throttle Body harness connector to the appropriate terminal of special tool #8815.

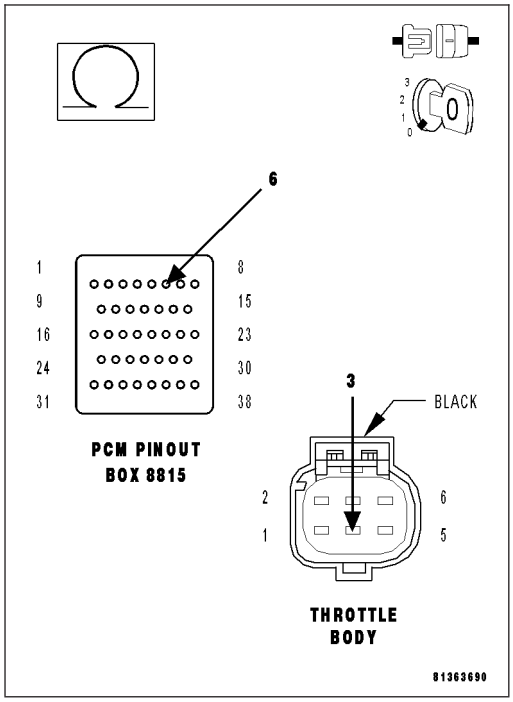

Is the resistance below 5.0 ohms?

Yes >> Go To 6

No >> Repair the open in the (K124) ETC Positive circuit.
Perform the POWERTRAIN VERIFICATION TEST. (Refer to 9 - ENGINE - STANDARD PROCEDURE)

6. (K126) ETC NEGATIVE CIRCUIT OPEN

Measure the resistance of the (K126) ETC Negative circuit between the Throttle Body harness connector and the appropriate terminal of special tool #8815.

Is the resistance below 5.0 ohms?

Yes >> Go To 7

No >> Repair the open in the (K126) ETC Negative circuit.
Perform the POWERTRAIN VERIFICATION TEST. (Refer to 9 - ENGINE - STANDARD PROCEDURE)

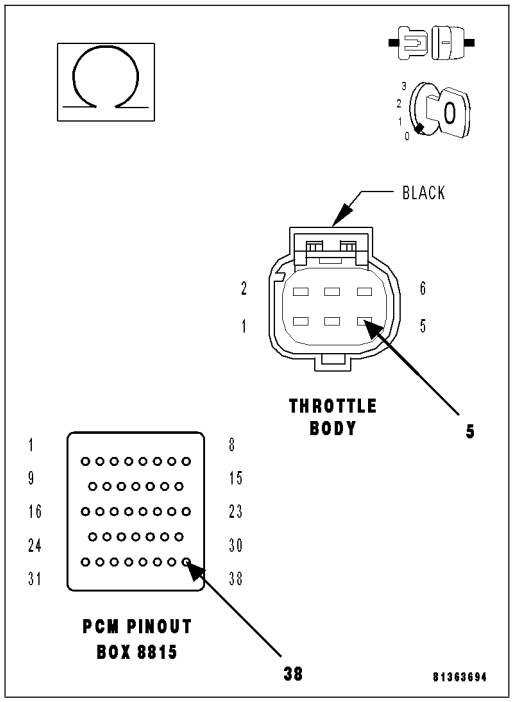

7. (K124) ETC POSITIVE CIRCUIT SHORTED TO GROUND

Measure the resistance between a known good ground and the (K124) ETC Positive circuit at the appropriate terminal of special tool #8815.

Is the resistance below 100 ohms?

Yes >> Repair the short to ground in the (K124) ETC Positive circuit.
Perform the POWERTRAIN VERIFICATION TEST. (Refer to 9 - ENGINE - STANDARD PROCEDURE)

No >> Go To 8

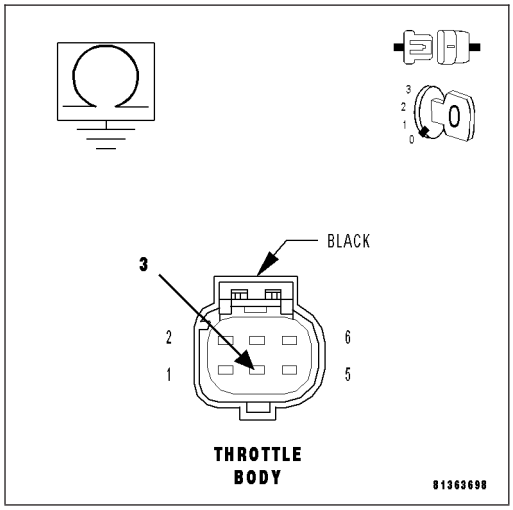

8. (K126) ETC NEGATIVE CIRCUIT SHORTED TO GROUND

Measure the resistance between a known good ground and the (K126) ETC Negative circuit at the appropriate terminal of the special tool #8815.

Is the resistance below 100 ohms?

Yes >> Repair the short to ground in the (K126) ETC Negative circuit.
Perform the POWERTRAIN VERIFICATION TEST. (Refer to 9 - ENGINE - STANDARD PROCEDURE)

No >> Go To 9

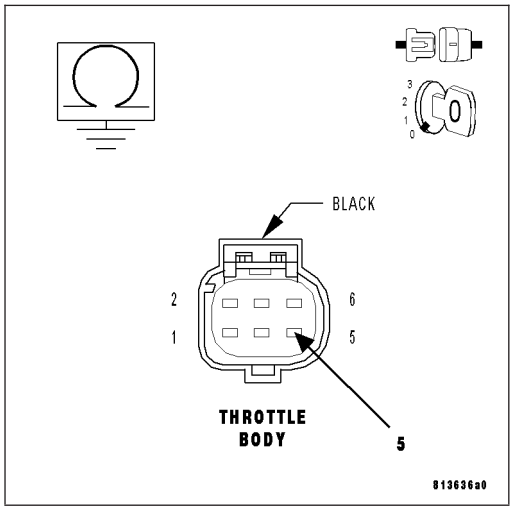

9. PCM

NOTE: Before continuing, check the PCM harness connector terminals for corrosion, damage, or terminal push out. Repair as necessary.
Using the schematics as a guide, inspect the wire harness and connectors. Pay particular attention to all Power and Ground circuits.

Were there any problems found?

Yes >> Repair as necessary.
Perform the POWERTRAIN VERIFICATION TEST. (Refer to 9 - ENGINE - STANDARD PROCEDURE)

No >> Replace and program the Powertrain Control Module per Service Information.
Perform the POWERTRAIN VERIFICATION TEST. (Refer to 9 - ENGINE - STANDARD PROCEDURE)

P2112-ELECTRONIC THROTTLE CONTROL - UNABLE TO OPEN

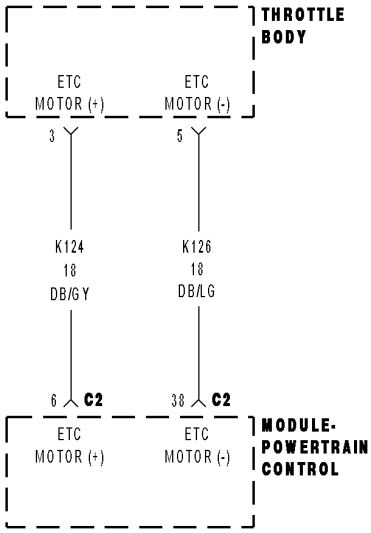

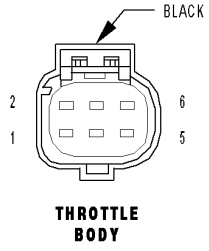

THROTTLE BODY

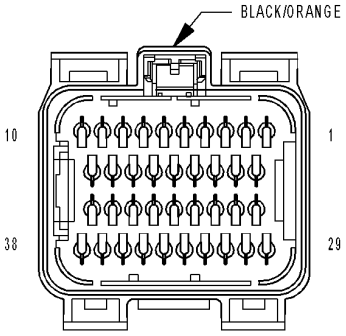

MODULE-POWERTRAIN CONTROL C2

813234c1

For a complete wiring diagram **Refer to Section 8W**.

- **When Monitored:**
  Ignition on and battery voltage greater than 10 volts.
- **Set Condition:**
  Just after key on, the throttle is opened and closed to test the system. If the TP Sensor does not return to Limp Home Position at the end of this test, this DTC will set. One trip fault and the code will set within 5 seconds. ETC light is flashing.

Possible Causes
THROTTLE PLATE STUCK AT OR BELOW LIMP HOME POSITION
(K126) ETC NEGATIVE CIRCUIT SHORTED TO BATTERY VOLTAGE
(K124) ETC POSITIVE CIRCUIT OPEN
(K126) ETC NEGATIVE CIRCUIT OPEN
(K124) ETC POSITIVE CIRCUIT SHORTED TO GROUND
(K126) ETC NEGATIVE CIRCUIT SHORTED TO GROUND
PCM

Always perform the Pre-Diagnostic Troubleshooting procedure before proceeding. (Refer to 9 - ENGINE - DIAGNOSIS AND TESTING).

Diagnostic Test

1. ACTIVE DTC

Ignition on, engine not running.

NOTE: The PCM tests the ETC Motor by opening and closing the Throttle Plate before starting the engine. If during this test the Throttle plate does not return to the closed position this DTC sets.
With a scan tool read DTCs.

NOTE: Diagnose any TP Sensor, Battery Voltage, and 5-Volt Supply DTCs before continuing.

Is the DTC active at this time?

Yes >> Go To 2

No >> Refer to the INTERMITTENT CONDITION Diagnostic Procedure.
Perform the POWERTRAIN VERIFICATION TEST. (Refer to 9 - ENGINE - STANDARD PROCEDURE)

2. THROTTLE PLATE STUCK OPEN

Turn the ignition off.

NOTE: The PCM tests the ETC Motor by opening and closing the Throttle Plate before starting the engine. If during this test the Throttle plate does not open this DTC sets.
Remove the Air Cleaner Assembly from the Throttle Body.
Check for any signs of a foreign material causing the Throttle to remain open.
Using a scan tool actuate the ETC Motor.

Does the Throttle Plate move?

Yes >> Go To 3

No >> Remove the debris if possible or replace the Throttle Body Assembly. Disconnect the Battery when replacing the Throttle Body Assembly. After installation is complete, use a scan tool and select the ETC RELEARN function.
Perform the POWERTRAIN VERIFICATION TEST. (Refer to 9 - ENGINE - STANDARD PROCEDURE)

3. (K126) ETC NEGATIVE CIRCUIT SHORTED TO BATTERY VOLTAGE

Turn the ignition off.

Disconnect the Throttle Body harness connector.

Disconnect the C3 PCM harness connector.

CAUTION: Do not probe the PCM harness connectors. Probing the PCM harness connectors will damage the PCM terminals resulting in poor terminal to pin connection. Install Miller Special Tool #8815 to perform diagnosis.

Ignition on, engine not running.

With a 12-volt test light connected to ground, probe the (K126) ETC Negative circuit at the appropriate terminal of the special tool #8815.

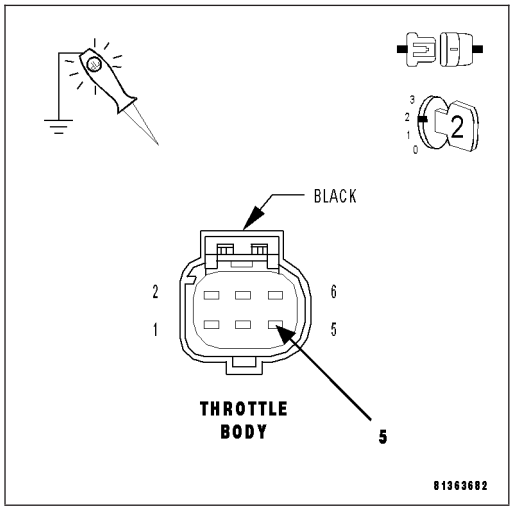

Does the test light illuminate brightly?

Yes >> Repair the short to battery voltage on the (K126) ETC Negative circuit.
Perform the POWERTRAIN VERIFICATION TEST. (Refer to 9 - ENGINE - STANDARD PROCEDURE)

No >> Go To 4

4. (K124) ETC POSITIVE CIRCUIT OPEN

Turn the ignition off.

Measure the resistance of the (K124) ETC Positive circuit from the Throttle Body harness connector to the appropriate terminal of special tool #8815.

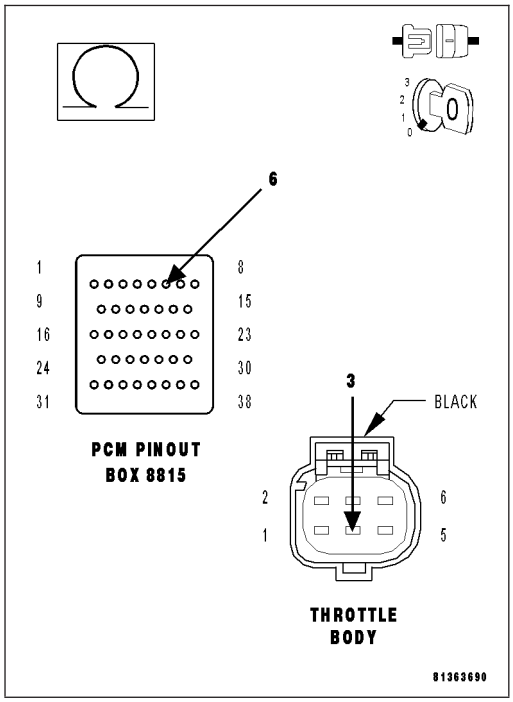

Is the resistance below 5.0 ohms?

Yes >> Go To 5

No >> Repair the open in the (K124) ETC Positive circuit.
Perform the POWERTRAIN VERIFICATION TEST. (Refer to 9 - ENGINE - STANDARD PROCEDURE)

5. (K126) ETC NEGATIVE CIRCUIT OPEN

Measure the resistance of the (K126) ETC Negative circuit between the Throttle Body harness connector and the appropriate terminal of special tool #8815.

Is the resistance below 5.0 ohms?

Yes >> Go To 6

No >> Repair the open in the (K126) ETC Negative circuit.
Perform the POWERTRAIN VERIFICATION TEST. (Refer to 9 - ENGINE - STANDARD PROCEDURE)

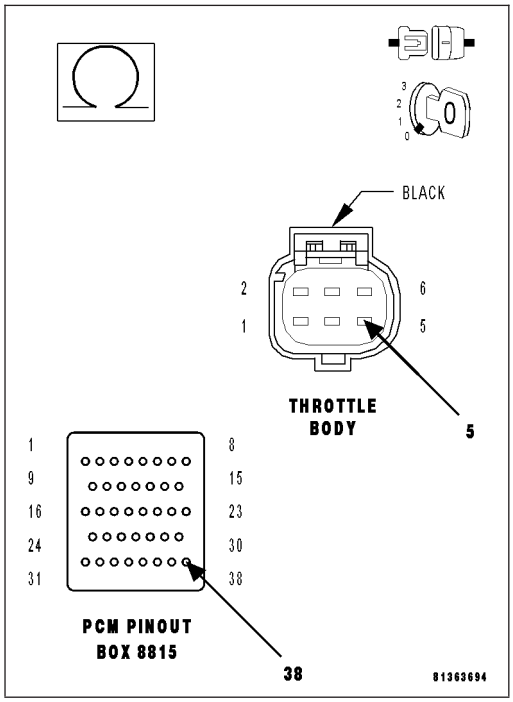

6. (K124) ETC POSITIVE CIRCUIT SHORTED TO GROUND

Measure the resistance between a known good ground and the (K124) ETC Positive circuit at the appropriate terminal of the special tool #8815.

Is the resistance below 100 ohms?

Yes >> Repair the short to ground in the (K124) ETC Positive circuit.
Perform the POWERTRAIN VERIFICATION TEST. (Refer to 9 - ENGINE - STANDARD PROCEDURE)

No >> Go To 7

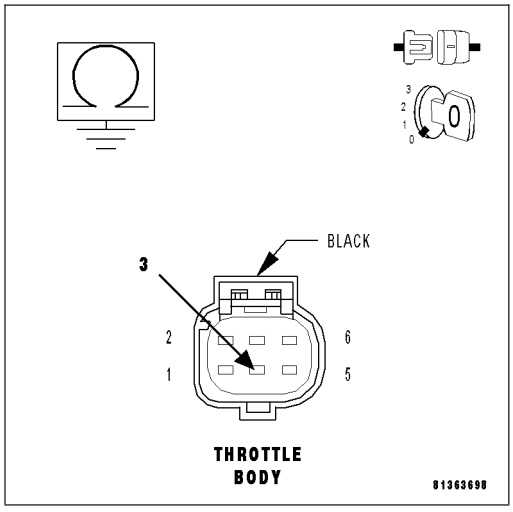

7. (K126) ETC NEGATIVE CIRCUIT SHORTED TO GROUND

Measure the resistance between a known good ground and the (K126) ETC Negative circuit at the appropriate terminal of the special tool #8815.

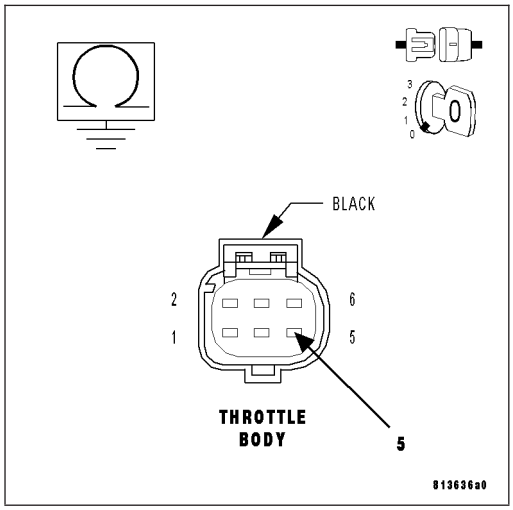

Is the resistance below 100 ohms?

Yes >> Repair the short to ground in the (K126) ETC Negative circuit.
Perform the POWERTRAIN VERIFICATION TEST. (Refer to 9 - ENGINE - STANDARD PROCEDURE)

No >> Go To 8

8. PCM

NOTE: Before continuing, check the PCM harness connector terminals for corrosion, damage, or terminal push out. Repair as necessary.
Using the schematics as a guide, inspect the wire harness and connectors. Pay particular attention to all Power and Ground circuits.

Were there any problems found?

Yes >> Repair as necessary.
Perform the POWERTRAIN VERIFICATION TEST. (Refer to 9 - ENGINE - STANDARD PROCEDURE)

No >> Replace and program the Powertrain Control Module per Service Information.
Perform the POWERTRAIN VERIFICATION TEST. (Refer to 9 - ENGINE - STANDARD PROCEDURE)

P2115-ACCELERATOR PEDAL POSITION SENSOR 1 MINIMUM STOP PERFORMANCE

For a complete wiring diagram **Refer to Section 8W**.

- **When Monitored:**
  Igniting on. During in plant mode the APP Sensors need to be checked to make sure that idle and full pedal travel can be reached on both sensors. The test for P2115 is only enabled once test for P2166 has passed.
- **Set Condition:**
  APPS No.1 has failed to achieve the required minimum value during In Plant testing. One trip fault and the code will set within 5 seconds. Engine will only idle.

Possible Causes
IN PLANT TEST FAILURE
APPS RELEARN

Always perform the Pre-Diagnostic Troubleshooting procedure before proceeding. (Refer to 9 - ENGINE - DIAGNOSIS AND TESTING).

Diagnostic Test

1. IN PLANT TEST FAILURE

Ignition on, engine not running.

NOTE: This DTC is set when the APP Sensors are learned in plant but do not reach the Minimum or Maximum voltage range.

With a scan tool read DTCs.

With the scan tool, erase DTCs.

Start the engine.

With the scan tool, read DTCs.

NOTE: Diagnose any APPS out of Range and 5-Volt Supply DTCs before continuing.

Is the DTC active at this time?

Yes >> Go To 2

No >> Refer to the INTERMITTENT CONDITION Diagnostic Procedure.
Perform the POWERTRAIN VERIFICATION TEST. (Refer to 9 - ENGINE - STANDARD PROCEDURE)

2. APPS RELEARN

With a scan tool select the ETC RELEARN function.

Next, erase DTCs.

Start the engine.

Does the DTC return?

Yes >> Replace the APPS Assembly per Service Information. After installation is complete, use a scan tool and select the ETC RELEARN function.
Perform the POWERTRAIN VERIFICATION TEST. (Refer to 9 - ENGINE - STANDARD PROCEDURE)

No >> Test Complete.

P2116-ACCELERATOR PEDAL POSITION SENSOR 2 MINIMUM STOP PERFORMANCE

For a complete wiring diagram **Refer to Section 8W**.

- **When Monitored:**
  Igniting on. During in plant mode the APP Sensors need to be checked to make sure that idle and full pedal travel can be reached on both sensors. The test for P2116 is only enabled once test for P2167 has passed.
- **Set Condition:**
  APPS No.2 has failed to achieve the required minimum value during In Plant testing. One trip fault and the code will be stored within 5 seconds. Engine will only idle.

Possible Causes
IN PLANT TEST FAILURE
APPS RELEARN

Always perform the Pre-Diagnostic Troubleshooting procedure before proceeding. (Refer to 9 - ENGINE - DIAGNOSIS AND TESTING).

Diagnostic Test

1. IN PLANT TEST FAILURE

Ignition on, engine not running.

NOTE: This DTC is set when the APP Sensors are learned in plant but do not reach the Minimum or Maximum voltage range.

With a scan tool read DTCs and record the related Freeze Frame data.

With a scan tool, erase DTCs.

Start the engine.

With a scan tool, read DTCs.

Is the DTC active at this time?

Yes >> Go To 2

No >> Refer to the INTERMITTENT CONDITION Diagnostic Procedure.
Perform the POWERTRAIN VERIFICATION TEST. (Refer to 9 - ENGINE - STANDARD PROCEDURE)

2. APPS RELEARN

With a scan tool select the ETC RELEARN function.

Next, erase DTCs.

Start the engine.

Does the DTC return?

Yes >> Replace the APPS Assembly per Service Information. After installation is complete, use a scan tool and select the ETC RELEARN function.
Perform the POWERTRAIN VERIFICATION TEST. (Refer to 9 - ENGINE - STANDARD PROCEDURE)

No >> Test Complete.

P2118-ELECTRONIC THROTTLE CONTROL MOTOR CIRCUIT

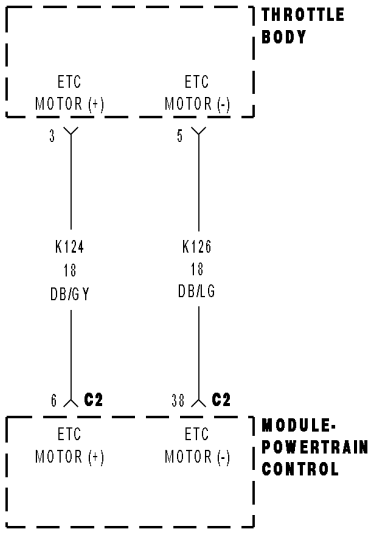

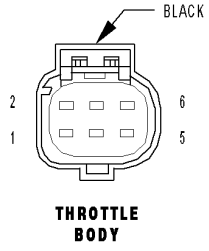

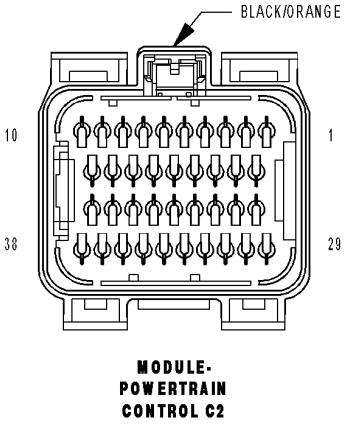

813234c1

For a complete wiring diagram **Refer to Section 8W**.

- **When Monitored:**
  With the ignition on and the ETC Motor is not in Limp Home mode.
- **Set Condition:**
  When the PCM detects an internal error or a short between the ETC Motor- and ETC Motor + circuits in the ETC Motor Driver. One trip fault. ETC light is flashing.

Possible Causes
THROTTLE PLATE / BORE INSPECTION
(K124) ETC POSITIVE CIRCUIT SHORTED TO BATTERY VOLTAGE
(K126) ETC NEGATIVE CIRCUIT SHORTED TO BATTERY VOLTAGE
(K124) ETC POSITIVE CIRCUIT SHORTED TO (K126) ETC NEGATIVE CIRCUIT
(K124) ETC POSITIVE CIRCUIT OPEN
(K124) ETC POSITIVE CIRCUIT SHORTED TO GROUND
(K126) ETC NEGATIVE CIRCUIT OPEN
(K126) ETC NEGATIVE CIRCUIT SHORTED TO GROUND
ETC MOTOR
PCM

Always perform the Pre-Diagnostic Troubleshooting procedure before proceeding. (Refer to 9 - ENGINE - DIAGNOSIS AND TESTING).

Diagnostic Test

1. ACTIVE DTC

Ignition on, engine not running.

NOTE: If the P2118 is intermittent, it is possible that the controller is overheating in extreme hot temperatures, and this is considered a normal protection operation. No repair is necessary.
With a scan tool, read DTCs.
Look closely at the temperatures at which this DTC set.

Is the DTC active at this time?

Yes >> Go To 2

No >> Refer to the INTERMITTENT CONDITION Diagnostic Procedure.
Perform the POWERTRAIN VERIFICATION TEST. (Refer to 9 - ENGINE - STANDARD PROCEDURE)

2. THROTTLE PLATE INSPECTION

Turn the ignition off.
Remove the Air Cleaner Assembly from the Throttle Body.
Check for any signs of a foreign material (ice or dirt) on the Throttle Plate or in the bore causing the Throttle Plate to stick.

Were any signs of foreign material or scoring of the throttle plate or bore found?

Yes >> Remove the debris if possible or replace the Throttle Body Assembly. Disconnect the Battery when replacing the Throttle Body Assembly. After installation is complete, use a scan tool and select the ETC RELEARN function.
Perform the POWERTRAIN VERIFICATION TEST. (Refer to 9 - ENGINE - STANDARD PROCEDURE)

No >> Go To 3

3. (K124) ETC POSITIVE CIRCUIT SHORTED TO BATTERY VOLTAGE

Turn the ignition off.

Disconnect the Throttle Body harness connector.

Disconnect the C3/C PCM harness connector.

Ignition on, engine not running.

CAUTION: Do not probe the PCM harness connectors. Probing the PCM harness connectors will damage the PCM terminals resulting in poor terminal to pin connection. Install Miller Special Tool #8815 to perform diagnosis.

With a 12-volt test light connected to ground, probe the (K124) ETC Positive circuit at the appropriate terminal of the special tool #8815.

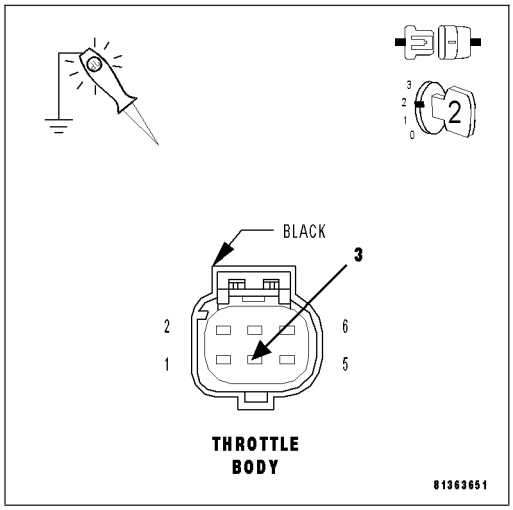

Does the test light illuminate brightly?

Yes >> Repair the short to battery voltage on the (K124) ETC Positive circuit.

Perform the POWERTRAIN VERIFICATION TEST. (Refer to 9 - ENGINE - STANDARD PROCEDURE)

No >> Go To 4

4. (K126) ETC NEGATIVE CIRCUIT SHORTED TO BATTERY VOLTAGE

Using a 12-volt test light connected to ground, probe the (K126) ETC Negative circuit at the appropriate terminal of the special tool #8815.

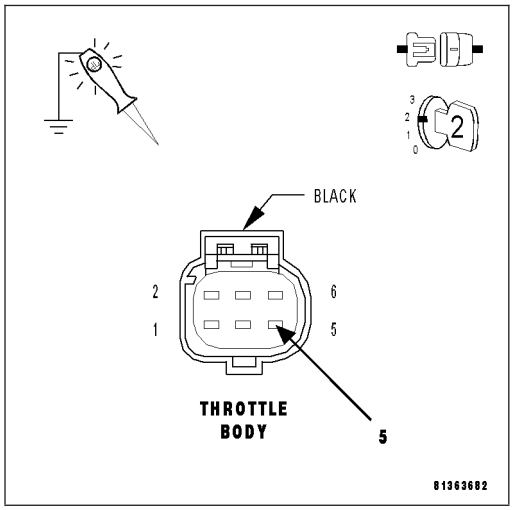

Does the test light illuminate brightly?

Yes >> Repair the short to battery voltage in the (K126) ETC Negative circuit.

Perform the POWERTRAIN VERIFICATION TEST. (Refer to 9 - ENGINE - STANDARD PROCEDURE)

No >> Go To 5

5. (K124) ETC POSITIVE CIRCUIT SHORTED TO THE (K126) ETC NEGATIVE CIRCUIT

Measure the resistance between the (K124) ETC Positive circuit and the (K126) ETC Negative circuit at the appropriate terminal of the special tool #8815.

Is the resistance below 100 ohms?

Yes >> Repair the short to between the (K124) ETC Positive circuit and the (K126) ETC Negative circuit.
Perform the POWERTRAIN VERIFICATION TEST. (Refer to 9 - ENGINE - STANDARD PROCEDURE)

No >> Go To 6

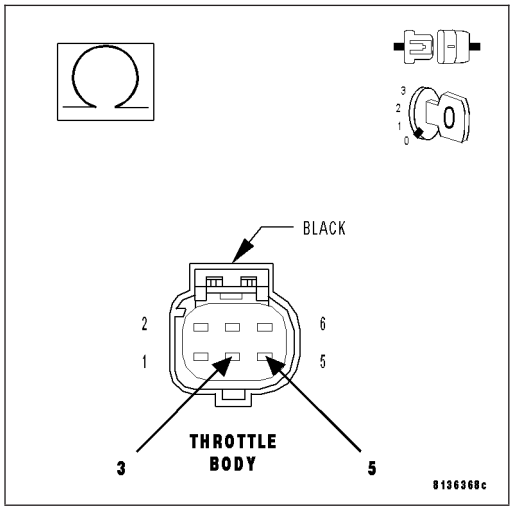

6. (K124) ETC POSITIVE CIRCUIT OPEN

Turn the ignition off.

Measure the resistance of the (K124) ETC Positive circuit from the Throttle Body harness connector to the appropriate terminal of special tool #8815.

Is the resistance below 5.0 ohms?

Yes >> Go To 7

No >> Repair the open in the (K124) ETC Positive circuit.
Perform the POWERTRAIN VERIFICATION TEST. (Refer to 9 - ENGINE - STANDARD PROCEDURE)

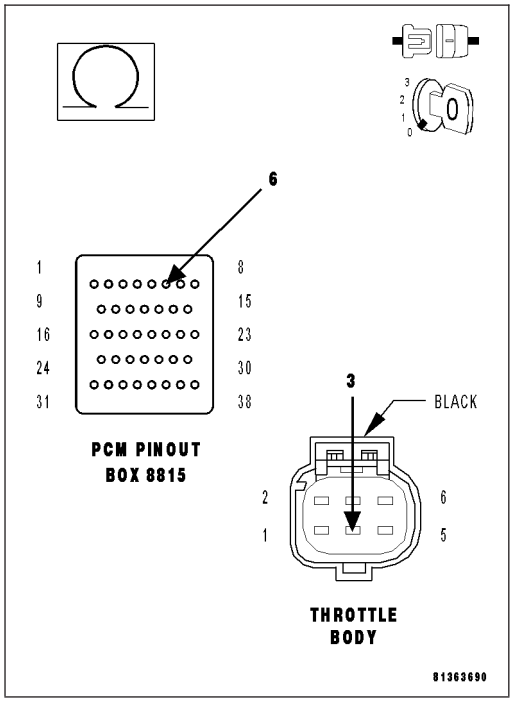

7. (K124) ETC POSITIVE CIRCUIT SHORTED TO GROUND

Measure the resistance between ground and the (K124) ETC Positive circuit at the appropriate terminal of the special tool #8815.

Is the resistance below 100 ohms?

Yes >> Repair the short to ground in the (K124) ETC Positive circuit.
Perform the POWERTRAIN VERIFICATION TEST. (Refer to 9 - ENGINE - STANDARD PROCEDURE)

No >> Go To 8

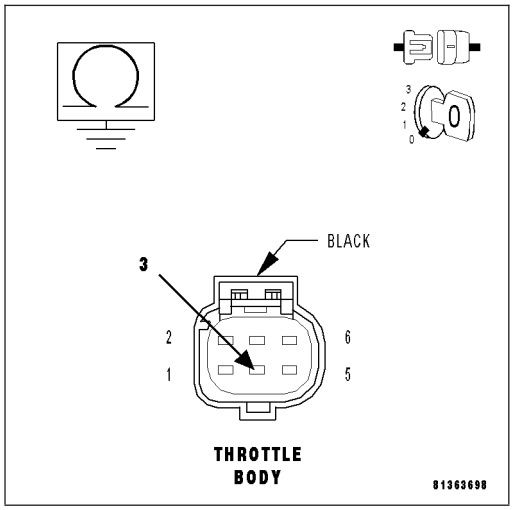

8. (K126) ETC NEGATIVE CIRCUIT OPEN

Measure the resistance of the (K126) ETC Negative circuit between the Throttle Body harness connector and the appropriate terminal of special tool #8815.

Is the resistance below 5.0 ohms?

Yes >> Go To 9

No >> Repair the open in the (K126) ETC Negative circuit.
Perform the POWERTRAIN VERIFICATION TEST. (Refer to 9 - ENGINE - STANDARD PROCEDURE)

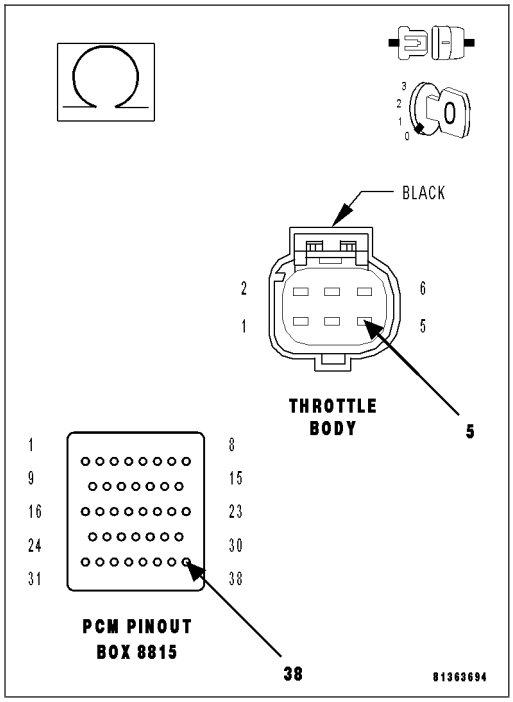

9. (K126) ETC NEGATIVE CIRCUIT SHORTED TO GROUND

Measure the resistance between ground and the (K126) ETC Negative circuit at the appropriate terminal of the special tool #8815.

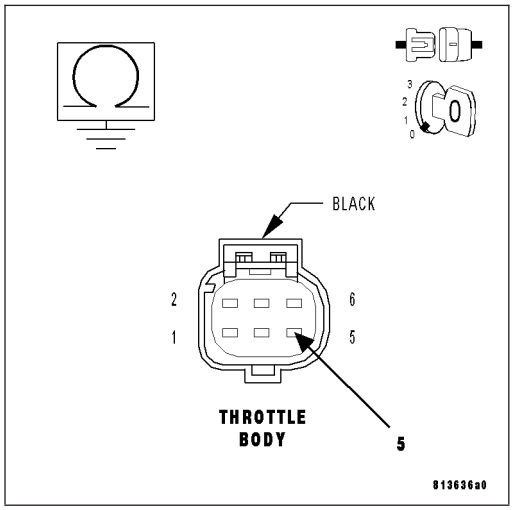

Is the resistance below 100 ohms?

Yes >> Repair the short to ground in the (K126) ETC Negative circuit.

Perform the POWERTRAIN VERIFICATION TEST. (Refer to 9 - ENGINE - STANDARD PROCEDURE)

No >> Go To 10

10. ETC MOTOR

NOTE: Take the following measurement using special tool #8815 to avoid possible damage to the Throttle Body harness connector.
Measure the resistance of the ETC Motor between the (K124) ETC Positive circuit and the (K126) ETC Negative circuit at the appropriate terminals of special tool #8815.

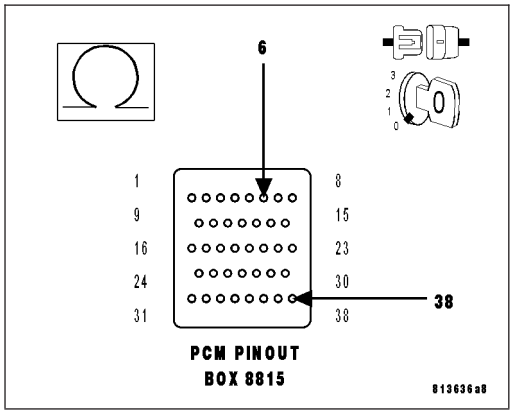

Is the resistance between 2.5 and 25 ohms at closed throttle?

Yes >> Go To 11

No >> Replace the Throttle Body Assembly. Disconnect the Battery when replacing the Throttle Body Assembly. After installation is complete, use a scan tool and select the ETC RELEARN function.

Perform the POWERTRAIN VERIFICATION TEST. (Refer to 9 - ENGINE - STANDARD PROCEDURE)

11. PCM

NOTE: Before continuing, check the PCM harness connector terminals for corrosion, damage, or terminal push out. Repair as necessary.
Using the schematics as a guide, inspect the wire harness and connectors. Pay particular attention to all Power and Ground circuits.

Were there any problems found?

Yes >> Repair as necessary.

Perform the POWERTRAIN VERIFICATION TEST. (Refer to 9 - ENGINE - STANDARD PROCEDURE)

No >> Replace and program the Powertrain Control Module per Service Information.

Perform the POWERTRAIN VERIFICATION TEST. (Refer to 9 - ENGINE - STANDARD PROCEDURE)

P2122-ACCELERATOR PEDAL POSITION SENSOR 1 CIRCUIT LOW

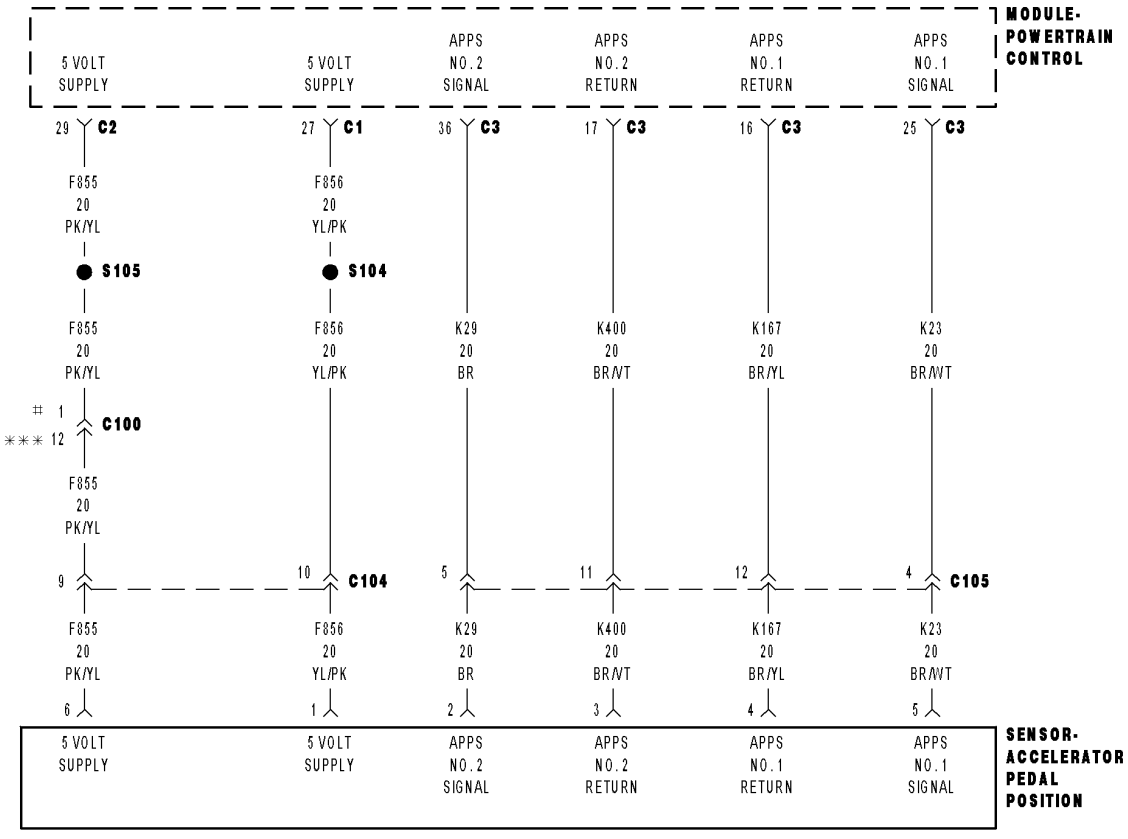

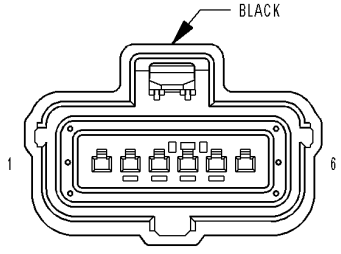

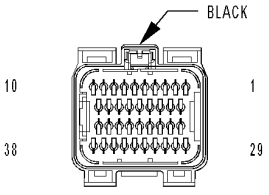

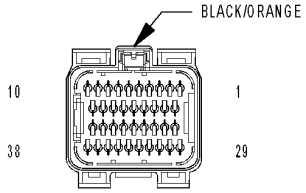

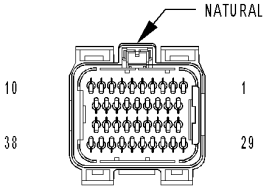

81323466

For a complete wiring diagram **Refer to Section 8W**.

- **When Monitored:**
  With the ignition on and no other APPS No.1 DTCs present.
- **Set Condition:**
  When the APP Sensor No.1 voltage is too low. Engine will additionally idle if the brake pedal is pressed or has failed. Acceleration rate and Engine output are limited. One trip fault and the code will set within 5 seconds. ETC light is flashing.

Possible Causes
(F855) 5-VOLT SUPPLY CIRCUIT OPEN
(F855) 5-VOLT SUPPLY CIRCUIT SHORTED TO GROUND
(K23) APP SENSOR NO.1 SIGNAL CIRCUIT OPEN
(K23) APP SENSOR NO.1 SIGNAL CIRCUIT SHORTED TO GROUND
(K23) APP SENSOR NO.1 SIGNAL CIRCUIT SHORTED TO THE (K167) APP SENSOR NO.1 RETURN CIRCUIT
(K23) APP SENSOR NO.1 SIGNAL CIRCUIT SHORTED TO THE (K400) APP SENSOR NO.2 RETURN CIRCUIT
APP SENSOR
PCM

Always perform the Pre-Diagnostic Troubleshooting procedure before proceeding. (Refer to 9 - ENGINE - DIAGNOSIS AND TESTING).

Diagnostic Test

1. APP SENSOR BELOW 0.25 OF A VOLT

Ignition on, engine not running.

With a scan tool, read the APP Sensor No.1 voltage.

Is the voltage below 0.25 of a volt?

Yes >> Go To 2

No >> Go To 11

2. (F855) 5-VOLT SUPPLY CIRCUIT

Turn the ignition off.

Disconnect the APP Sensor harness connector.

Ignition on, engine not running.

Measure the voltage on the (F855) 5-volt Supply circuit in the APP Sensor harness connector.

Is the voltage between 4.5 and 5.2 volts?

Yes >> Go To 3

No >> Go To 8

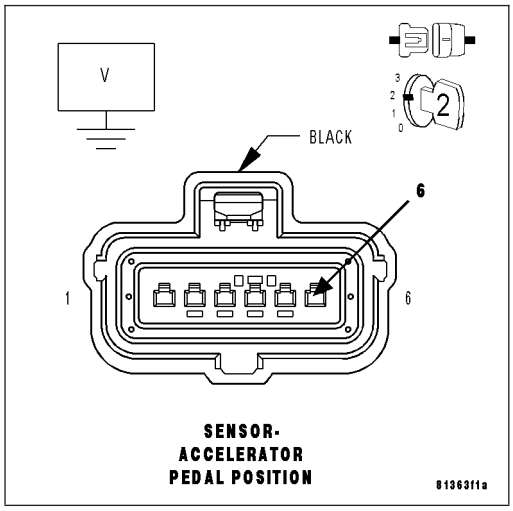

3. ACCELERATOR PEDAL POSITION SENSOR

Connect a jumper wire between the (F855) 5-volt Supply circuit and the (K23) APP Sensor No.1 Signal circuit in the Sensor harness connector. With a scan tool, monitor the APP Sensor No.1 voltage.

Is the voltage above 4.5 volts?

Yes >> Replace the APP Sensor Assembly per Service Information. After installation is complete, use a scan tool and select the ETC RELEARN function to relearn the APPS values.

Perform the POWERTRAIN VERIFICATION TEST. (Refer to 9 - ENGINE - STANDARD PROCEDURE)

No >> Go To 4

NOTE: Remove the jumper wire before continuing.

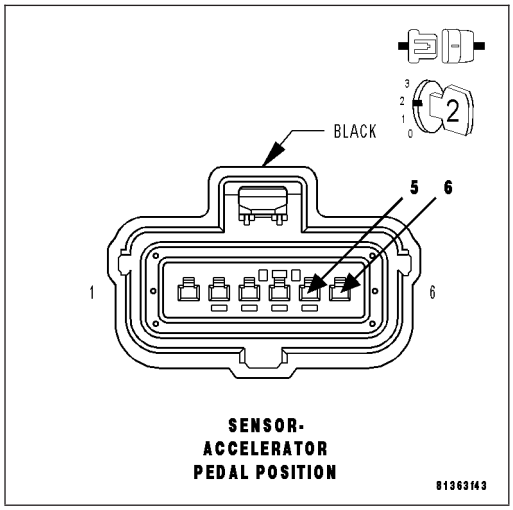

4. (K23) APP SENSOR NO.1 SIGNAL CIRCUIT OPEN

Turn the ignition off.

Disconnect the PCM harness connector.

CAUTION: Do not probe the PCM harness connectors. Probing the PCM harness connectors will damage the PCM terminals resulting in poor terminal to pin connection. Install Miller Special Tool #8815 to perform diagnosis.

Measure the resistance of the (K23) APP Sensor No.1 Signal circuit from the APP Sensor harness connector to the appropriate terminal of special tool #8815.

Is the resistance below 5.0 ohms?

Yes >> Go To 5

No >> Repair the open in the (K23) APP Sensor No.1 Signal circuit.

Perform the POWERTRAIN VERIFICATION TEST. (Refer to 9 - ENGINE - STANDARD PROCEDURE)

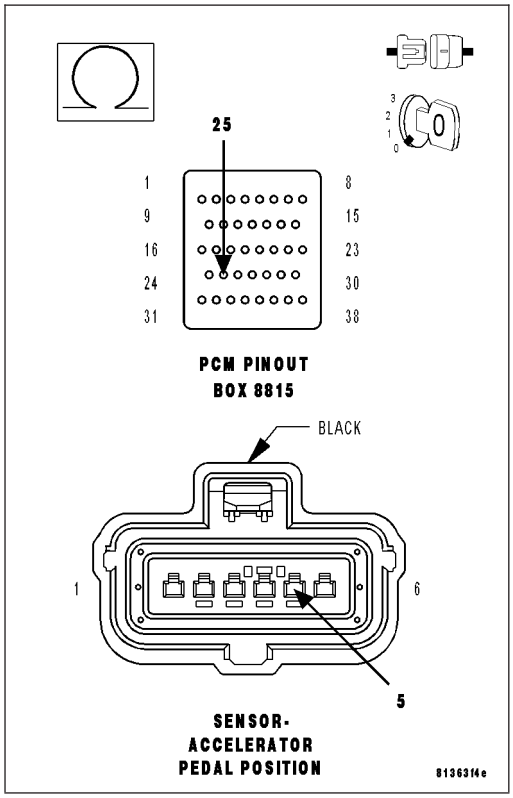

5. (K23) APP SENSOR NO.1 SIGNAL CIRCUIT SHORTED TO GROUND

Measure the resistance between ground and the (K23) APP Sensor No.1 Signal circuit in the APP Sensor harness connector.

Is the resistance below 100 ohms?

Yes >> Repair the short to ground in the (K23) APP Sensor No.1 Signal circuit.

Perform the POWERTRAIN VERIFICATION TEST. (Refer to 9 - ENGINE - STANDARD PROCEDURE)

No >> Go To 6

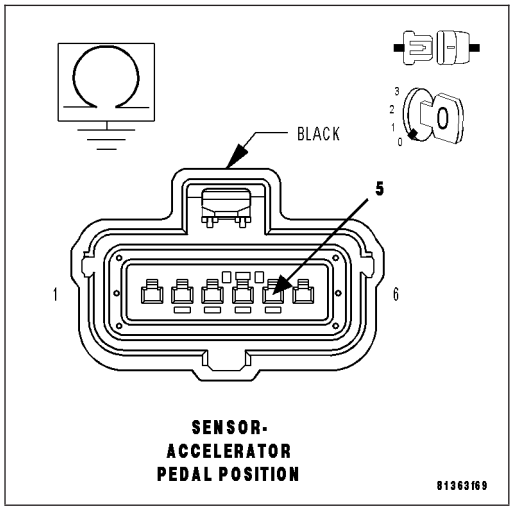

6. (K23) APP SENSOR NO.1 SIGNAL CIRCUIT SHORTED TO THE (K167) APP SENSOR NO.1 RETURN CIRCUIT

Measure the resistance between the (K23) APP Sensor No.1 Signal circuit and the (K167) Sensor No.1 Return circuit at the APP Sensor harness connector.

Is the resistance below 100 ohms?

Yes >> Repair the short between the (K167) APP Sensor No.1 Return circuit and the (K23) APP Sensor No.1 Signal circuit.

Perform the POWERTRAIN VERIFICATION TEST. (Refer to 9 - ENGINE - STANDARD PROCEDURE)

No >> Go To 7

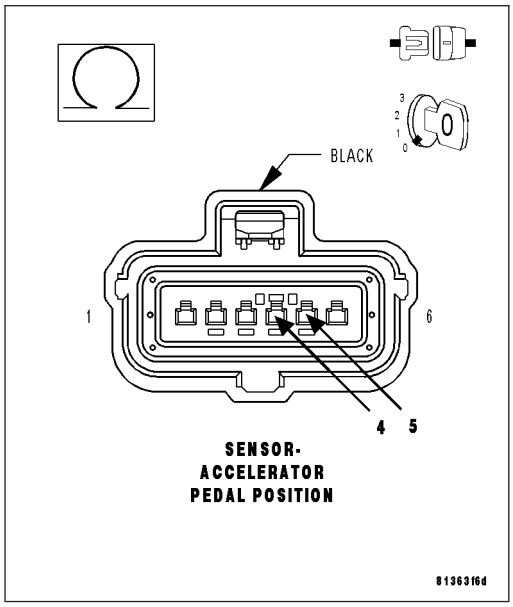

7. (K23) APP SENSOR NO.1 SIGNAL CIRCUIT SHORTED TO THE (K400) APP SENSOR NO.2 RETURN CIRCUIT

Measure the resistance between the (K23) APP Sensor No.1 Signal circuit and the (K400) Sensor No.2 Return circuit in the APP Sensor harness connector.

Is the resistance below 100 ohms?

Yes >> Repair the short between the (K400) APP Sensor No.2 Return circuit and the (K23) APP Sensor No.1 Signal circuit.
Perform the POWERTRAIN VERIFICATION TEST. (Refer to 9 - ENGINE - STANDARD PROCEDURE)

No >> Go To 10

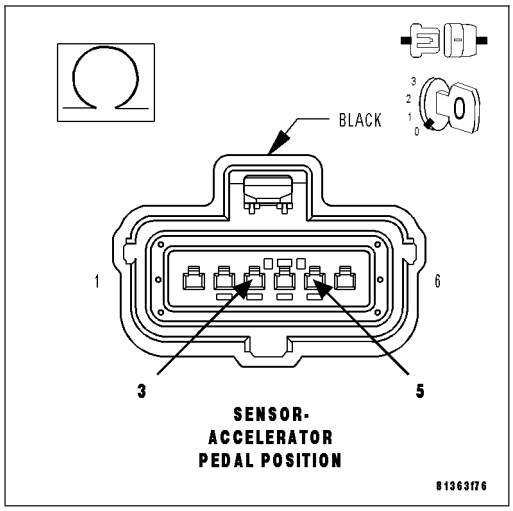

8. (F855) 5-VOLT SUPPLY CIRCUIT OPEN

Turn the ignition off.

Disconnect the PCM harness connector.

CAUTION: Do not probe the PCM harness connectors. Probing the PCM harness connectors will damage the PCM terminals resulting in poor terminal to pin connection. Install Miller Special Tool #8815 to perform diagnosis.

Measure the resistance of the (F855) 5-volt Supply circuit from the Sensor harness connector to the appropriate terminal of special tool #8815.

Is the resistance below 5.0 ohms?

Yes >> Go To 9

No >> Repair the open in the (F855) 5-volt Supply circuit.
Perform the POWERTRAIN VERIFICATION TEST. (Refer to 9 - ENGINE - STANDARD PROCEDURE)

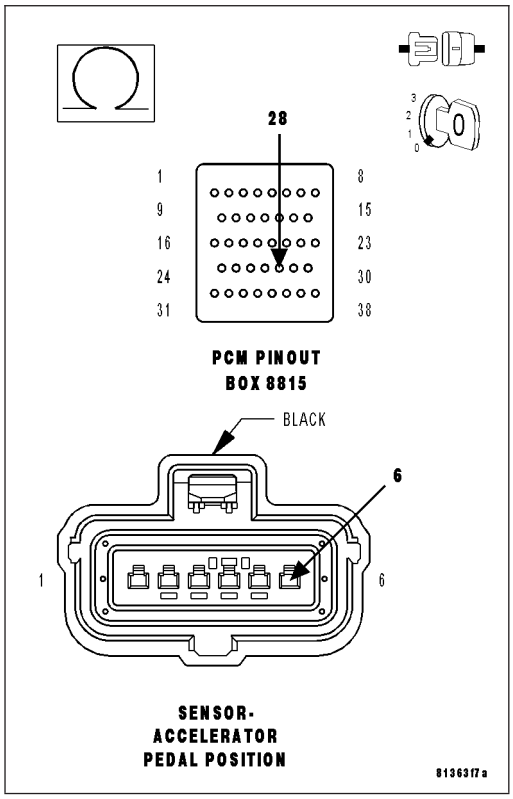

9. (F855) 5-VOLT SUPPLY CIRCUIT SHORTED TO GROUND

Measure the resistance between ground and the (F855) 5-volt Supply circuit in the APP Sensor harness connector.

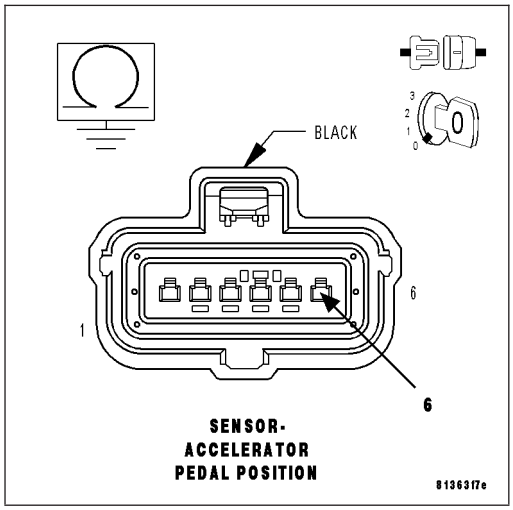

Is the resistance below 100 ohms?

Yes >> Repair the short to ground in the (F855) 5-volt Supply circuit.
Perform the POWERTRAIN VERIFICATION TEST. (Refer to 9 - ENGINE - STANDARD PROCEDURE)

No >> Go To 10

10. PCM

NOTE: Before continuing, check the PCM harness connector terminals for corrosion, damage, or terminal push out. Repair as necessary.
Using the schematics as a guide, inspect the wire harness and connectors. Pay particular attention to all Power and Ground circuits.

Were there any problems found?

Yes >> Repair as necessary.
Perform the POWERTRAIN VERIFICATION TEST. (Refer to 9 - ENGINE - STANDARD PROCEDURE)

No >> Replace and program the Powertrain Control Module per Service Information.
Perform the POWERTRAIN VERIFICATION TEST. (Refer to 9 - ENGINE - STANDARD PROCEDURE)

11. APP SENSOR SWEEP

Ignition on, engine not running.
With a scan tool, monitor the APP Sensor No.1 voltage.
Slowly press the Accelerator pedal down.

Does voltage start at approximately 0.45 of a volt and go above 4.6 volts with a smooth transition?

Yes >> Refer to the INTERMITTENT CONDITION Diagnostic Procedure.
Perform the POWERTRAIN VERIFICATION TEST. (Refer to 9 - ENGINE - STANDARD PROCEDURE)

No >> Replace the APP Sensor Assembly per Service Information. After installation is complete, use a scan tool and select the ETC RELEARN function to relearn the APPS values.
Perform the POWERTRAIN VERIFICATION TEST. (Refer to 9 - ENGINE - STANDARD PROCEDURE)

P2123-ACCELERATOR PEDAL POSITION SENSOR 1 CIRCUIT HIGH

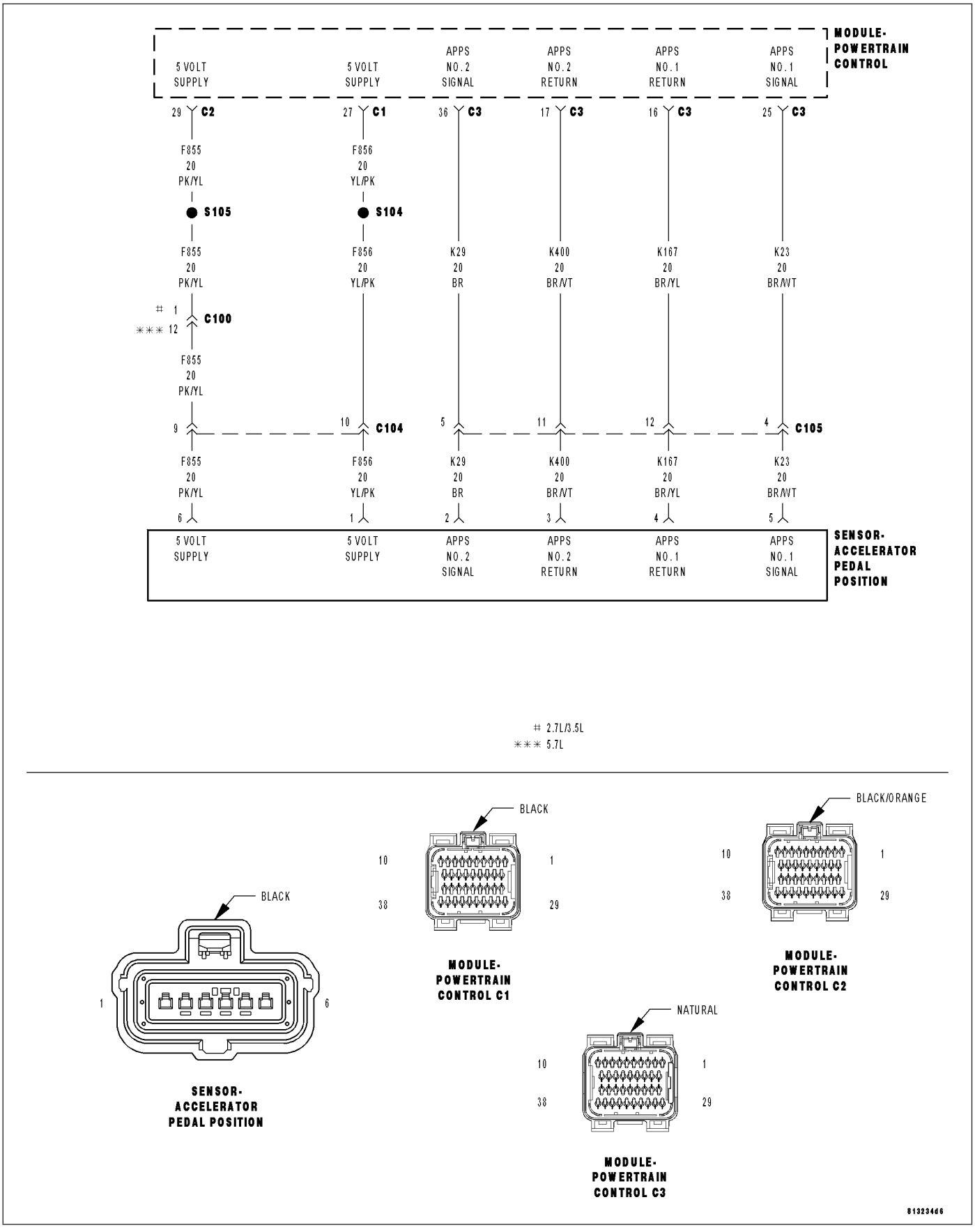

For a complete wiring diagram **Refer to Section 8W**.

- **When Monitored:**
  With the ignition on and no other APPS No.1 DTCs present.
- **Set Condition:**
  When APP Sensor No.1 voltage is too high. Engine will additionally idle if the brake pedal is pressed or has failed. Acceleration rate and Engine output are limited. One trip fault and the code will set within 5 seconds. ETC light is flashing.

Possible Causes
(K23) APP SENSOR NO.1 SIGNAL CIRCUIT SHORTED TO BATTERY VOLTAGE
(K23) APP SENSOR NO.1 SIGNAL SHORTED TO THE (F855) 5-VOLT SUPPLY CIRCUIT
(K23) APP SENSOR NO.1 SIGNAL SHORTED TO THE (F856) 5-VOLT SUPPLY CIRCUIT
(K167) APP SENSOR NO.1 RETURN CIRCUIT OPEN
APP SENSOR
PCM

Always perform the Pre-Diagnostic Troubleshooting procedure before proceeding. (Refer to 9 - ENGINE - DIAGNOSIS AND TESTING).

Diagnostic Test

1. APPS NO.1 VOLTAGE ABOVE 4.8 VOLTS

Ignition on, engine not running.

With a scan tool, read the APP Sensor No.1 voltage.

Is the voltage above 4.8 volts?

Yes >> Go To 2

No >> Go To 8

2. ACCELERATOR PEDAL POSITION SENSOR

Turn the ignition off.

Disconnect the APP Sensor harness connector.

Using a jumper wire, connect it from the (K23) APP Sensor Signal circuit and the Sensor ground circuit.

Turn the ignition on.

With a scan tool, monitor the Accelerator Pedal Position Sensor voltage.

Is the voltage reading 0 volt?

Yes >> Replace the APP Sensor Assembly per Service Information. After installation is complete, use a scan tool and select the ETC RELEARN function to relearn the APPS values.
Perform the POWERTRAIN VERIFICATION TEST. (Refer to 9 - ENGINE - STANDARD PROCEDURE)

No >> Go To 3

3. (K23) APP SENSOR NO.1 SIGNAL CIRCUIT SHORTED TO BATTERY VOLTAGE

Turn the ignition off.

Disconnect the PCM harness connector.

Ignition on, engine not running.

Measure the voltage on the (K23) APP Sensor No.1 Signal circuit in the APP Sensor harness connector.

Is the voltage above 5.2 volts?

Yes >> Repair the short to battery voltage in the (K23) APP Sensor No.1 Signal circuit.
Perform the POWERTRAIN VERIFICATION TEST. (Refer to 9 - ENGINE - STANDARD PROCEDURE)

No >> Go To 4

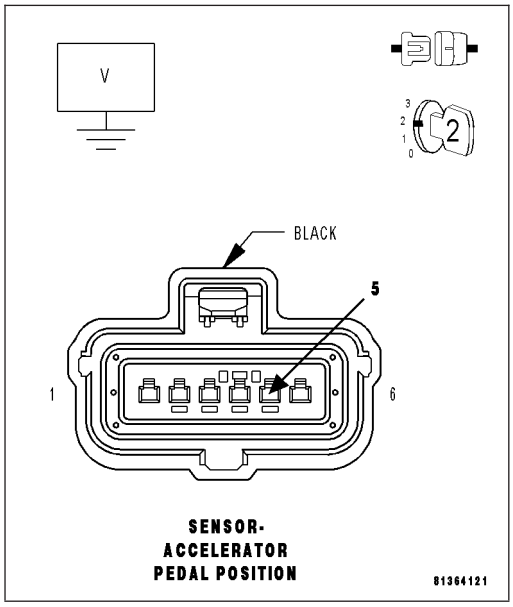

4. (K23) APPS NO.1 SIGNAL CIRCUIT SHORTED TO THE (F855) 5-VOLT SUPPLY CIRCUIT

Turn the ignition off.

Measure the resistance between the (K23) APP Sensor No.1 Signal circuit and the (F855) 5-volt Supply circuit in the APP Sensor harness connector.

Is the resistance below 100 ohms?

Yes >> Repair the short between the (K23) APP Sensor No.1 Signal circuit and the (F855) 5-volt Supply circuit.
Perform the POWERTRAIN VERIFICATION TEST. (Refer to 9 - ENGINE - STANDARD PROCEDURE)

No >> Go To 5

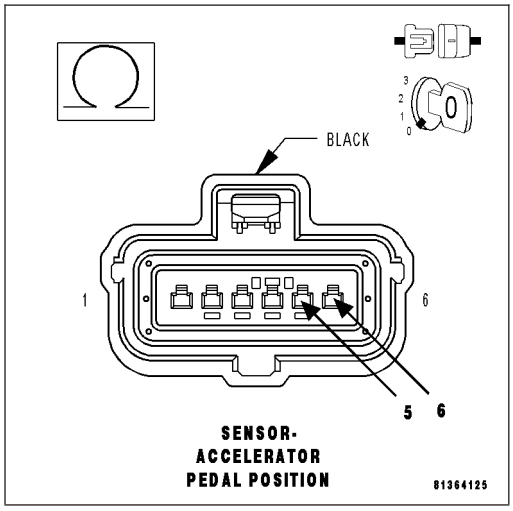

5. (K23) APPS NO.1 SIGNAL CIRCUIT SHORTED TO THE (F856) 5-VOLT SUPPLY CIRCUIT

Measure the resistance between the (K23) APP Sensor No.1 Signal circuit and the (F856) 5-volt Supply circuit in the APP Sensor harness connector.

Is the resistance below 100 ohms?

Yes >> Repair the short between the (K23) APP Sensor No.1 Signal circuit and the (F856) 5-volt Supply circuit.
Perform the POWERTRAIN VERIFICATION TEST. (Refer to 9 - ENGINE - STANDARD PROCEDURE)

No >> Go To 6

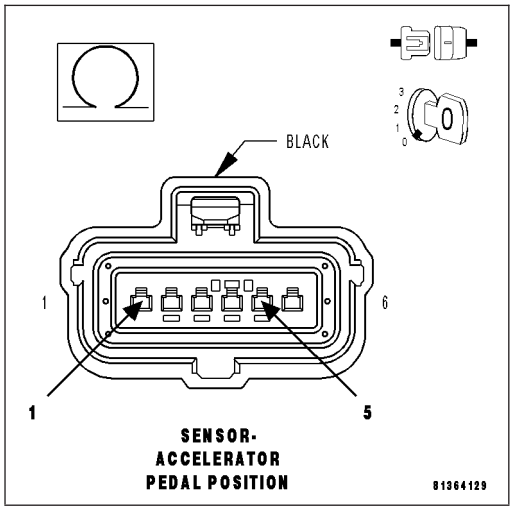

6. (K167) APP SENSOR NO.1 RETURN CIRCUIT OPEN

CAUTION: Do not probe the PCM harness connectors. Probing the PCM harness connectors will damage the PCM terminals resulting in poor terminal to pin connection. Install Miller Special Tool #8815 to perform diagnosis.

Measure the resistance of the (K167) APP Sensor No.1 Return circuit from the APP Sensor harness connector to the appropriate terminal of special tool #8815.

Is the resistance below 5.0 ohms?

Yes >> Go To 7

No >> Repair the open in the (K167) APP Sensor No.1 Return circuit.
Perform the POWERTRAIN VERIFICATION TEST. (Refer to 9 - ENGINE - STANDARD PROCEDURE)

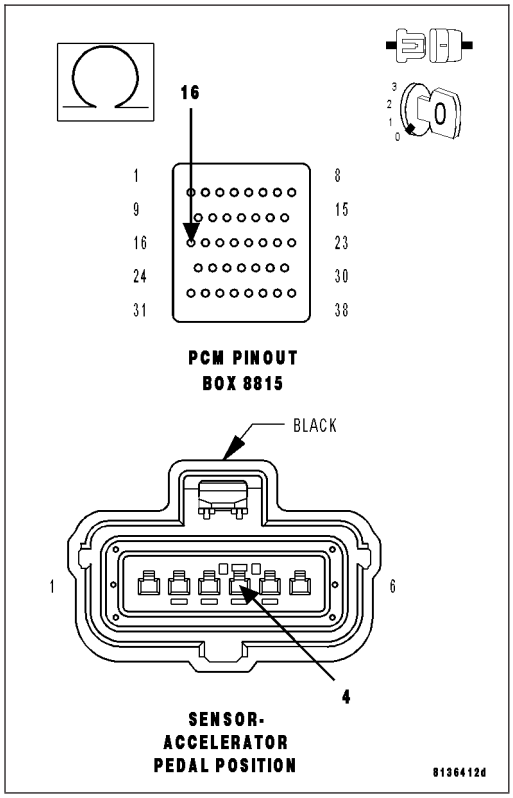

7. PCM

NOTE: Before continuing, check the PCM harness connector terminals for corrosion, damage, or terminal push out. Repair as necessary.
Using the schematics as a guide, inspect the wire harness and connectors. Pay particular attention to all Power and Ground circuits.

Were there any problems found?

Yes >> Repair as necessary.
Perform the POWERTRAIN VERIFICATION TEST. (Refer to 9 - ENGINE - STANDARD PROCEDURE)

No >> Replace and program the Powertrain Control Module per Service Information.
Perform the POWERTRAIN VERIFICATION TEST. (Refer to 9 - ENGINE - STANDARD PROCEDURE)

8. APP SENSOR NO.1 SWEEP

Ignition on, engine not running.
With a scan tool, monitor the Accelerator Pedal Position Sensor voltage.
Slowly press the Accelerator Pedal down.

Does voltage start at approximately 0.45 of a volt and go above 4.6 volts with a smooth transition?

Yes >> Refer to the INTERMITTENT CONDITION Diagnostic Procedure.
Perform the POWERTRAIN VERIFICATION TEST. (Refer to 9 - ENGINE - STANDARD PROCEDURE)

No >> Replace the APP Sensor Assembly per Service Information. After installation is complete, use a scan tool and select the ETC RELEARN function to relearn the APPS values.
Perform the POWERTRAIN VERIFICATION TEST. (Refer to 9 - ENGINE - STANDARD PROCEDURE)

P2127-ACCELERATOR PEDAL POSITION SENSOR 2 CIRCUIT LOW

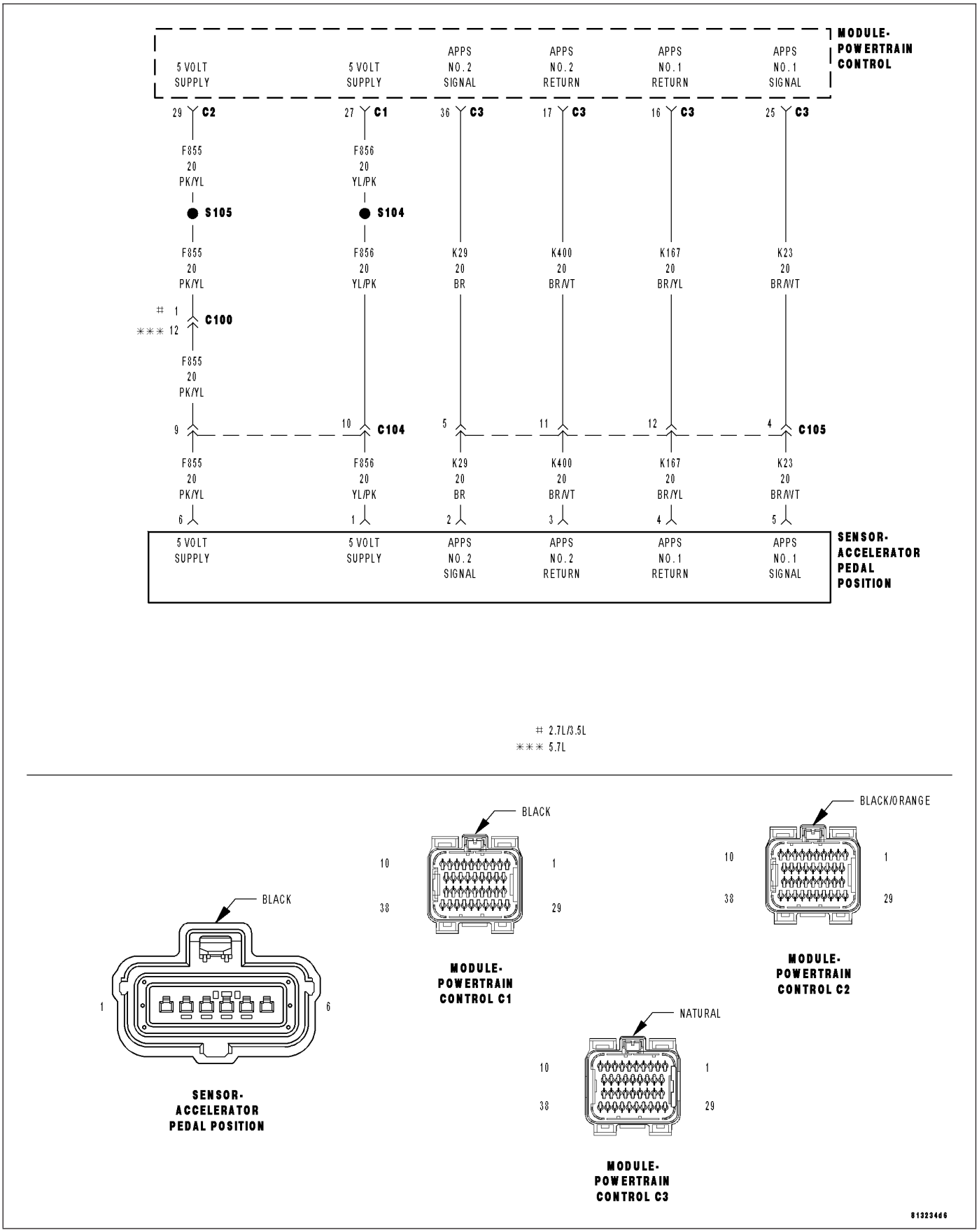

For a complete wiring diagram **Refer to Section 8W**.

- **When Monitored:**
  With the ignition on and no other APPS No.2 DTCs present.
- **Set Condition:**
  When the APP Sensor No.2 voltage is too low. Engine will only idle if the Brake pedal is Pressed or has failed. Acceleration rate and Engine output are limited. One trip fault and the code will set within 5 seconds. ETC light is flashing.

Possible Causes
(F856) 5-VOLT SUPPLY CIRCUIT OPEN
(F856) 5-VOLT SUPPLY CIRCUIT SHORTED TO GROUND
(K29) APP SENSOR NO.2 SIGNAL CIRCUIT OPEN
(K29) APP SENSOR NO.2 SIGNAL CIRCUIT SHORTED TO GROUND
(K29) APP SENSOR NO.2 SIGNAL CIRCUIT SHORTED TO THE (K167) APP SENSOR NO.1 RETURN CIRCUIT
(K29) APP SENSOR NO.2 SIGNAL CIRCUIT SHORTED TO THE (K400) APP SENSOR NO.2 RETURN CIRCUIT
APP SENSOR
PCM

Always perform the Pre-Diagnostic Troubleshooting procedure before proceeding. (Refer to 9 - ENGINE - DIAGNOSIS AND TESTING).

Diagnostic Test

1. APP SENSOR BELOW 0.25 OF A VOLT

Ignition on, engine not running.

With a scan tool, read the APP Sensor No.1 voltage.

NOTE: Sensor No. 2 is pulled low by the PCM as part of its system testing. This test happens a couple of times a second. So you can expect to see voltages close to zero occasionally with a normal sensor.

Is the voltage consistently below 0.25 of a volt?

Yes >> Go To 2

No >> Go To 11

2. (F856) 5-VOLT SUPPLY CIRCUIT

Turn the ignition off.

Disconnect the APP Sensor harness connector.

Ignition on, engine not running.

Measure the voltage on the (F856) 5-volt Supply circuit in the APP Sensor harness connector.

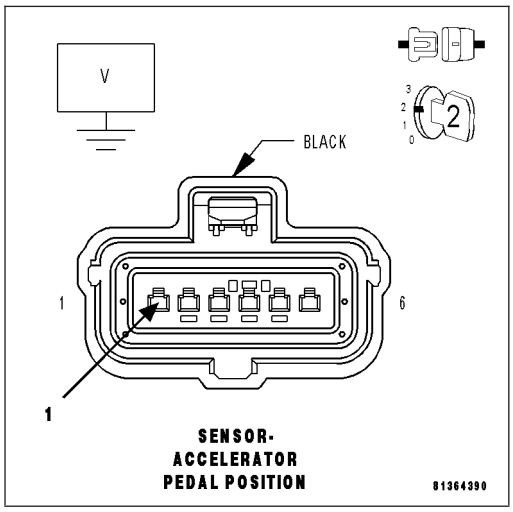

Is the voltage between 4.5 and 5.2 volts?

Yes >> Go To 3

No >> Go To 8

3. ACCELERATOR PEDAL POSITION SENSOR

Connect a jumper wire between the (F856) 5-volt Supply circuit and the (K29) APP Sensor No.2 Signal circuit in the Sensor harness connector.

With a scan tool, monitor the APP Sensor No.2 voltage.

Is the voltage above 4.5 volts with the jumper wire installed?

Yes >> Replace the APP Sensor Assembly per Service Information. After installation is complete, use a scan tool and select the ETC RELEARN function to relearn the APPS values.

Perform the POWERTRAIN VERIFICATION TEST. (Refer to 9 - ENGINE - STANDARD PROCEDURE)

No >> Go To 4

NOTE: Remove the jumper wire before continuing.

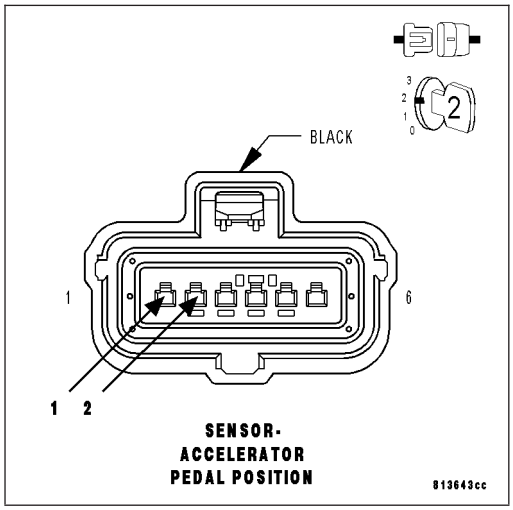

4. (K29) APP SENSOR NO.2 SIGNAL CIRCUIT OPEN

Turn the ignition off.

Disconnect the PCM harness connectors.

CAUTION: Do not probe the PCM harness connectors. Probing the PCM harness connectors will damage the PCM terminals resulting in poor terminal to pin connection. Install Miller Special Tool #8815 to perform diagnosis.

Measure the resistance of the (K29) APP Sensor No.2 Signal circuit from the APP Sensor harness connector to the appropriate terminal of special tool #8815.

Is the resistance below 5.0 ohms?

Yes >> Go To 5

No >> Repair the open in the (K29) APP Sensor No.2 Signal circuit.

Perform the POWERTRAIN VERIFICATION TEST. (Refer to 9 - ENGINE - STANDARD PROCEDURE)

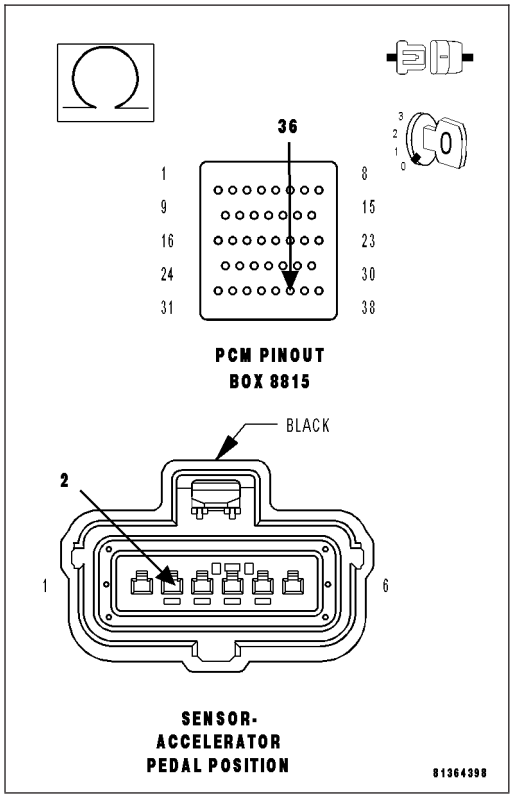

5. (K29) APP SENSOR NO.2 SIGNAL CIRCUIT SHORTED TO GROUND

Measure the resistance between ground and the (K29) APP Sensor No.2 Signal circuit in the APP Sensor harness connector.

Is the resistance below 100 ohms?

Yes >> Repair the short to ground in the (K29) APP Sensor No.2 Signal circuit.

Perform the POWERTRAIN VERIFICATION TEST. (Refer to 9 - ENGINE - STANDARD PROCEDURE)

No >> Go To 6

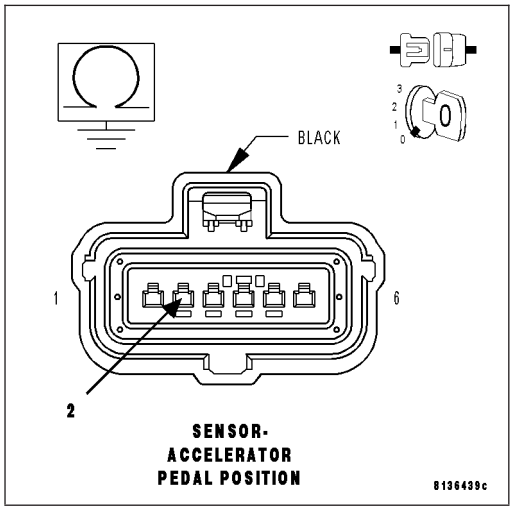

6. (K29) APP SENSOR NO.2 SIGNAL CIRCUIT SHORTED TO THE (K400) APP SENSOR NO.2 RETURN CIRCUIT

Measure the resistance between the (K29) APP Sensor No.2 Signal circuit and the (K400) Sensor No.2 Return circuit in the APP Sensor harness connector.

Is the resistance below 100 ohms?

Yes >> Repair the short between the (K400) APP Sensor No.2 Return circuit and the (K29) APP Sensor No.2 Signal circuit.

Perform the POWERTRAIN VERIFICATION TEST. (Refer to 9 - ENGINE - STANDARD PROCEDURE)

No >> Go To 7

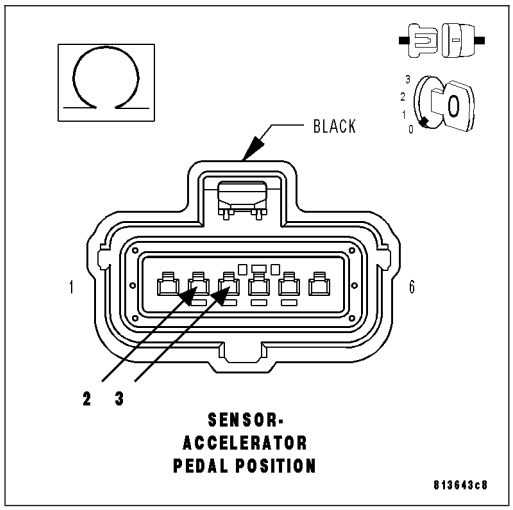

7. (K29) APP SENSOR NO.2 SIGNAL CIRCUIT SHORTED TO THE (K167) APP SENSOR NO.1 RETURN CIRCUIT

Measure the resistance between the (K29) APP Sensor No.2 Signal circuit and the (K167) Sensor No.1 Return circuit in the APP Sensor harness connector.

Is the resistance below 100 ohms?

Yes >> Repair the short between the (K167) APP Sensor No.1 Return circuit and the (K29) APP Sensor No.2 Signal circuit.
Perform the POWERTRAIN VERIFICATION TEST. (Refer to 9 - ENGINE - STANDARD PROCEDURE)

No >> Go To 10

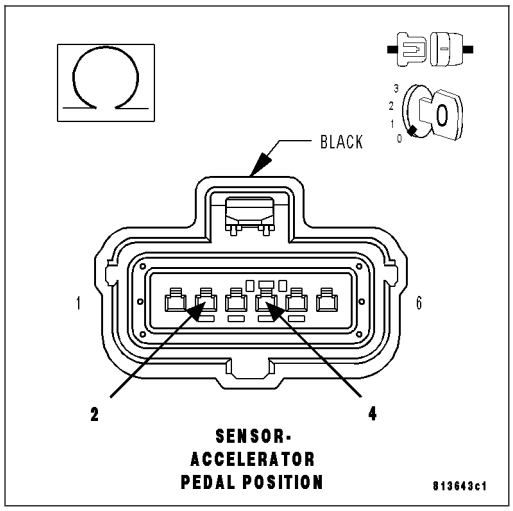

8. (F856) 5-VOLT SUPPLY CIRCUIT OPEN

Turn the ignition off.

Disconnect the PCM harness connectors.

CAUTION: Do not probe the PCM harness connectors. Probing the PCM harness connectors will damage the PCM terminals resulting in poor terminal to pin connection. Install Miller Special Tool #8815 to perform diagnosis.

Measure the resistance of the (F856) 5-volt Supply circuit from the Sensor harness connector to the appropriate terminal of special tool #8815.

Is the resistance below 5.0 ohms?

Yes >> Go To 9

No >> Repair the open in the (F856) 5-volt Supply circuit.
Perform the POWERTRAIN VERIFICATION TEST. (Refer to 9 - ENGINE - STANDARD PROCEDURE)

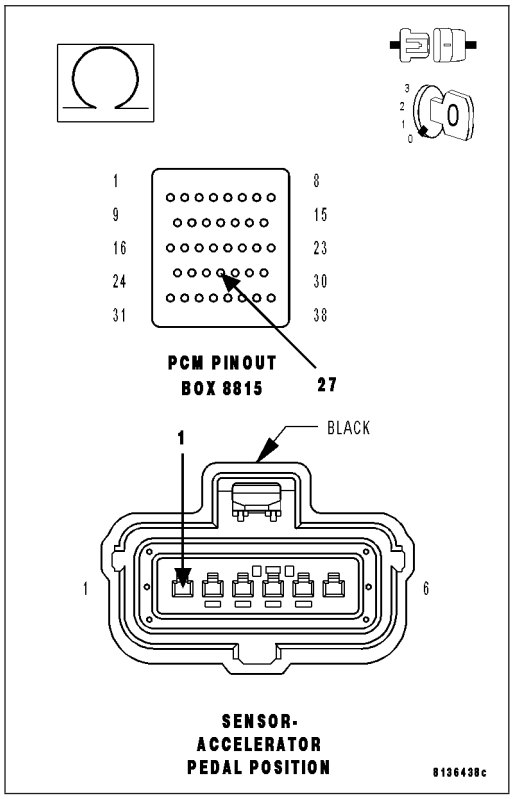

9. (F856) 5-VOLT SUPPLY CIRCUIT SHORTED TO GROUND

Measure the resistance between ground and the (F856) 5-volt Supply circuit in the APP Sensor harness connector.

Is the resistance below 100 ohms?

Yes >> Repair the short to ground in the (F856) 5-volt Supply circuit.
Perform the POWERTRAIN VERIFICATION TEST. (Refer to 9 - ENGINE - STANDARD PROCEDURE)

No >> Go To 10

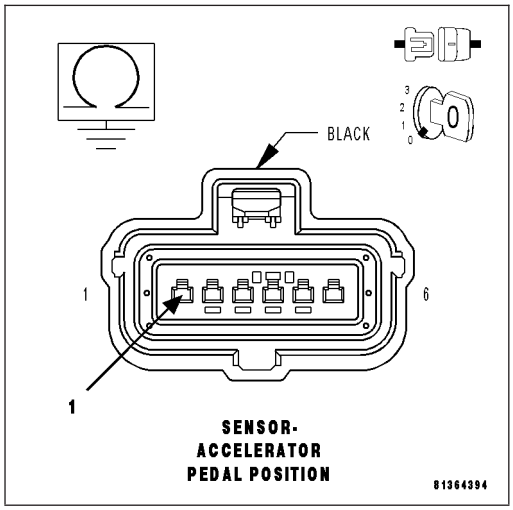

10. PCM

NOTE: Before continuing, check the PCM harness connector terminals for corrosion, damage, or terminal push out. Repair as necessary.
Using the schematics as a guide, inspect the wire harness and connectors. Pay particular attention to all Power and Ground circuits.

Were there any problems found?

Yes >> Repair as necessary.
Perform the POWERTRAIN VERIFICATION TEST. (Refer to 9 - ENGINE - STANDARD PROCEDURE)

No >> Replace and program the Powertrain Control Module per Service Information.
Perform the POWERTRAIN VERIFICATION TEST. (Refer to 9 - ENGINE - STANDARD PROCEDURE)

11. APP SENSOR SWEEP

Ignition on, engine not running.
With a scan tool, monitor the APP Sensor No.2 voltage.
Slowly press the Accelerator pedal down.

Does voltage start at approximately 0.22 of a volt and go above 2.31 volts with a smooth transition?

Yes >> Refer to the INTERMITTENT CONDITION Diagnostic Procedure.
Perform the POWERTRAIN VERIFICATION TEST. (Refer to 9 - ENGINE - STANDARD PROCEDURE)

No >> Replace the APP Sensor Assembly per Service Information. After installation is complete, use a scan tool and select the ETC RELEARN function to relearn the APPS values.
Perform the POWERTRAIN VERIFICATION TEST. (Refer to 9 - ENGINE - STANDARD PROCEDURE)

P2128-ACCELERATOR PEDAL POSITION SENSOR 2 CIRCUIT HIGH

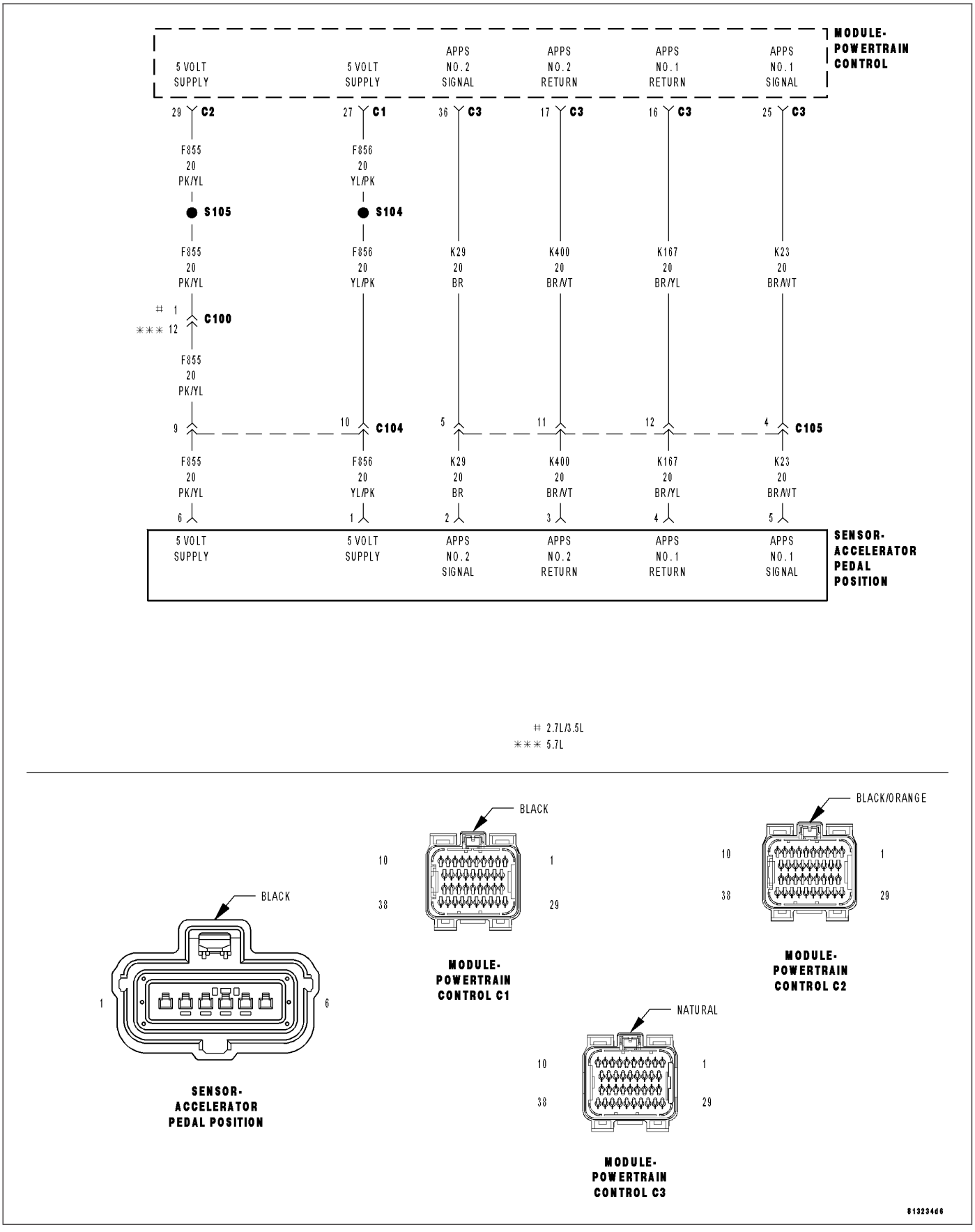

For a complete wiring diagram **Refer to Section 8W**.

- **When Monitored:**
  With the ignition on and no other APPS No.2 DTCs present.
- **Set Condition:**
  When APP Sensor No.2 voltage is too high. Idle is additionally forced any time the brake is applied or failed. Acceleration rate and Engine output are limited. One trip fault and the code will set within 5 seconds. ETC light is flashing.

Possible Causes
(K29) APP SENSOR NO.2 SIGNAL CIRCUIT SHORTED TO BATTERY VOLTAGE
(K29) APP SENSOR NO.2 SIGNAL SHORTED TO THE (F856) 5-VOLT SUPPLY CIRCUIT
(K29) APP SENSOR NO.2 SIGNAL SHORTED TO THE (F855) 5-VOLT SUPPLY CIRCUIT
(K400) APP SENSOR NO.2 RETURN CIRCUIT OPEN
APP SENSOR
PCM

Always perform the Pre-Diagnostic Troubleshooting procedure before proceeding. (Refer to 9 - ENGINE - DIAGNOSIS AND TESTING).

Diagnostic Test

1. APPS NO.2 VOLTAGE ABOVE 3.0 VOLTS

Ignition on, engine not running.

With a scan tool, read the APP Sensor No.2 voltage.

NOTE: Diagnose any 5-Volt Supply DTCs before continuing.

Is the voltage above 3.0 volts?

Yes >> Go To 2

No >> Go To 8

2. ACCELERATOR PEDAL POSITION SENSOR

Turn the ignition off.

Disconnect the APP Sensor harness connector

Using a jumper wire, connect it from the (K29) APP Sensor Signal circuit and the Sensor ground circuit.

Turn the ignition on.

With a scan tool, monitor the Accelerator Pedal Position Sensor voltage.

Is the voltage at 0 volt?

Yes >> Replace the APP Sensor Assembly per Service Information. After installation is complete, use a scan tool and select the ETC RELEARN function to relearn the APPS values.
Perform the POWERTRAIN VERIFICATION TEST. (Refer to 9 - ENGINE - STANDARD PROCEDURE)

No >> Go To 3

3. (K29) APP SENSOR NO.2 SIGNAL CIRCUIT SHORTED TO BATTERY VOLTAGE

Turn the ignition off.

Disconnect the PCM harness connector.

Ignition on, engine not running.

Measure the voltage on the (K29) APP Sensor No.2 Signal circuit in the APP Sensor harness connector.

Is the voltage above 5.2 volts?

Yes >> Repair the short to battery voltage in the (K29) APP Sensor No.2 Signal circuit.
Perform the POWERTRAIN VERIFICATION TEST. (Refer to 9 - ENGINE - STANDARD PROCEDURE)

No >> Go To 4

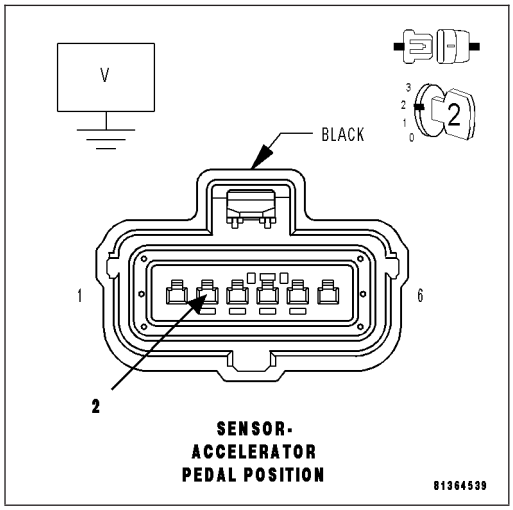

4. (K29) APPS NO.2 SIGNAL CIRCUIT SHORTED TO THE (F856) 5-VOLT SUPPLY CIRCUIT

Turn the ignition off.

Measure the resistance between the (K29) APP Sensor No.2 Signal circuit and the (F856) 5-volt Supply circuit in the APP Sensor harness connector.

Is the resistance below 10 ohms?

Yes >> Repair the short between the (K29) APP Sensor No.2 Signal circuit and the (F856) 5-volt Supply circuit.
Perform the POWERTRAIN VERIFICATION TEST. (Refer to 9 - ENGINE - STANDARD PROCEDURE)

No >> Go To 5

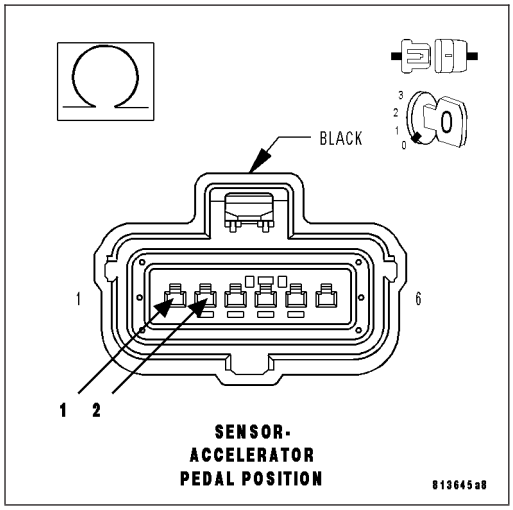

5. (K29) APPS NO.2 SIGNAL CIRCUIT SHORTED TO THE (F855) 5-VOLT SUPPLY CIRCUIT

Measure the resistance between the (K29) APP Sensor No.2 Signal circuit and the (F855) 5-volt Supply circuit in the APP Sensor harness connector.

Is the resistance below 10 ohms?

Yes >> Repair the short between the (K29) APP Sensor No.2 Signal circuit and the (F855) 5-volt Supply circuit.
Perform the POWERTRAIN VERIFICATION TEST. (Refer to 9 - ENGINE - STANDARD PROCEDURE)

No >> Go To 6

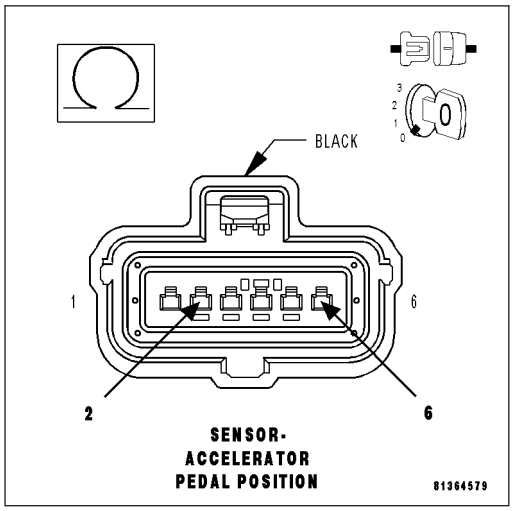

6. (K400) APP SENSOR NO.2 RETURN CIRCUIT OPEN

CAUTION: Do not probe the PCM harness connectors. Probing the PCM harness connectors will damage the PCM terminals resulting in poor terminal to pin connection. Install Miller Special Tool #8815 to perform diagnosis.

Measure the resistance of the (K400) APP Sensor No.2 Return circuit from the APP Sensor harness connector to the appropriate terminal of special tool #8815.

Is the resistance below 5.0 ohms?

Yes >> Go To 7

No >> Repair the open in the (K400) APP Sensor No.2 Return circuit.
Perform the POWERTRAIN VERIFICATION TEST. (Refer to 9 - ENGINE - STANDARD PROCEDURE)

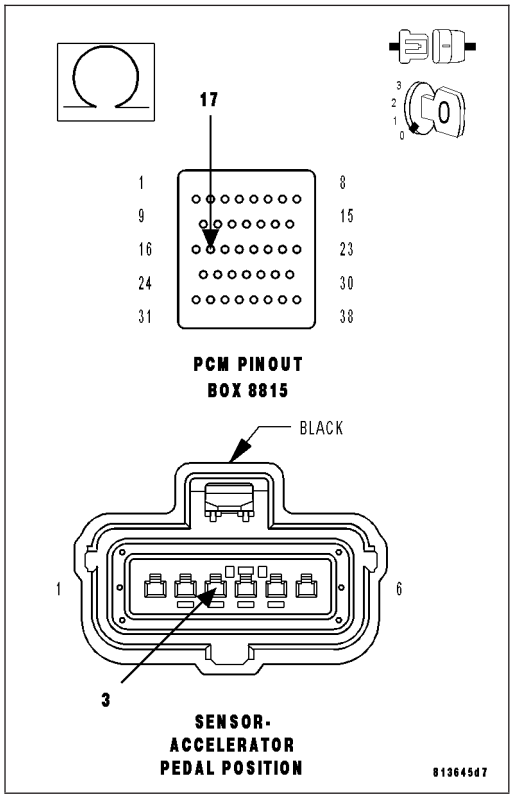

7. PCM

NOTE: Before continuing, check the PCM harness connector terminals for corrosion, damage, or terminal push out. Repair as necessary.

Using the schematics as a guide, inspect the wire harness and connectors. Pay particular attention to all Power and Ground circuits.

Were there any problems found?

Yes >> Repair as necessary.
Perform the POWERTRAIN VERIFICATION TEST. (Refer to 9 - ENGINE - STANDARD PROCEDURE)

No >> Replace and program the Powertrain Control Module per Service Information.
Perform the POWERTRAIN VERIFICATION TEST. (Refer to 9 - ENGINE - STANDARD PROCEDURE)

8. APP SENSOR NO.2 SWEEP

Ignition on, engine not running.

With a scan tool, monitor the Accelerator Pedal Position Sensor voltage.

Slowly press the Accelerator Pedal down.

Does voltage start at approximately 0.22 of a volt and go above 2.31 volts with a smooth transition?

Yes >> Refer to the INTERMITTENT CONDITION Diagnostic Procedure.
Perform the POWERTRAIN VERIFICATION TEST. (Refer to 9 - ENGINE - STANDARD PROCEDURE)

No >> Replace the APP Sensor Assembly per Service Information. After installation is complete, use a scan tool and select the ETC RELEARN function to relearn the APPS values.
Perform the POWERTRAIN VERIFICATION TEST. (Refer to 9 - ENGINE - STANDARD PROCEDURE)

P2135-THROTTLE POSITION SENSOR 1/2 CORRELATION

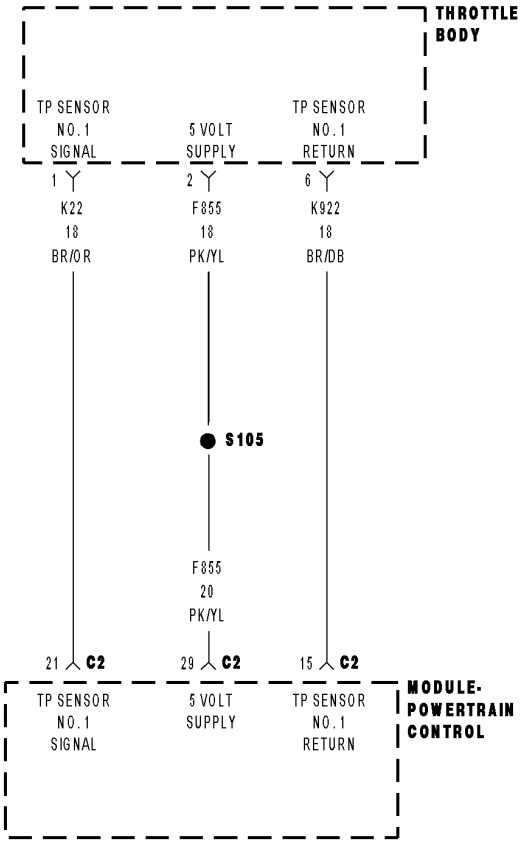

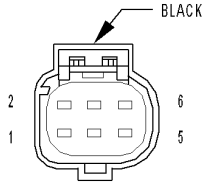

THROTTLE BODY

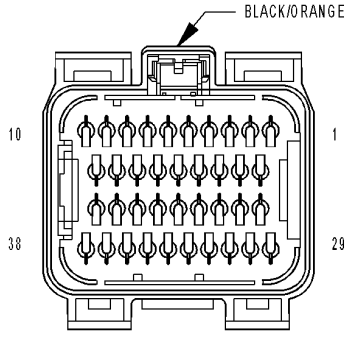

MODULE-POWERTRAIN CONTROL C2

8131a2a0

For a complete wiring diagram **Refer to Section 8W**.

- **When Monitored:**
  With the ignition on and no other DTCs present for TP Sensor No.1 or No.2.
- **Set Condition:**
  PCM recognizes TP Sensors No.1 and No.2 are not coherent. One trip fault and the code will set within 5 seconds. ETC light is illuminated.

Possible Causes
(K22) TP SENSOR NO.1 OR (K122) TP SENSOR NO.2 SIGNAL CIRCUIT SHORTED TO BATTERY VOLTAGE
RESISTANCE IN THE (K22) TP SENSOR NO.1 OR (K122) TP SENSOR NO.2 SIGNAL CIRCUIT
(K22) TP SENSOR NO.1 OR (K122) TP SENSOR NO.2 SIGNAL CIRCUIT SHORTED TO GROUND
RESISTANCE IN (F855) 5-VOLT SUPPLY CIRCUIT
(F855) 5-VOLT SUPPLY CIRCUIT SHORTED TO GROUND
RESISTANCE IN THE (K922) SENSOR GROUND CIRCUIT
(K22) TP SENSOR NO.1 SIGNAL CIRCUIT SHORTED TO (K122) TP SENSOR NO.2 SIGNAL CIRCUIT
THROTTLE POSITION SENSOR
PCM

Always perform the Pre-Diagnostic Troubleshooting procedure before proceeding. (Refer to 9 - ENGINE - DIAGNOSIS AND TESTING).

Diagnostic Test

1. ACTIVE DTC

NOTE: The throttle plate and linkage should be free from binding and carbon build up.

NOTE: Make sure the throttle plate is at the idle position.
Ignition on, engine not running.

NOTE: Inspect the engine for vacuum leaks.
With a scan tool, read DTCs.

Is the DTC active at this time?

Yes >> Go To 2

No >> Go To 11

2. (K22) TP SENSOR NO.1 OR (K122) TP SENSOR NO.2 SIGNAL CIRCUIT SHORTED TO BATTERY VOLTAGE

Turn the ignition off.
Disconnect the PCM harness connector.
Disconnect the Throttle Body harness connector.
Ignition on, engine not running.
Measure the voltage on the (K22) TP No.1 Signal and the (K122) TP No.2 Signal circuits in the Throttle Body harness connector.

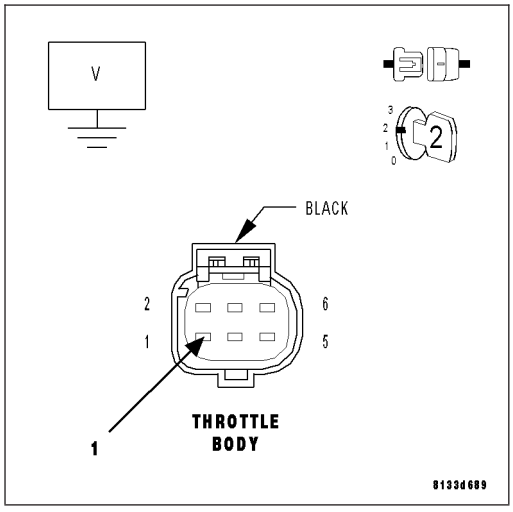

Is the voltage above 5.2 volts?

Yes >> Repair the short to battery voltage in the (K22) TP Sensor No.1 or (K122) TP Sensor No.2 Signal circuit.
Perform the POWERTRAIN VERIFICATION TEST. (Refer to 9 - ENGINE - STANDARD PROCEDURE)

No >> Go To 3

3. THROTTLE POSITION SENSOR

Turn the ignition off.

Connect the PCM harness connector.

Ignition on, engine not running.

With a scan tool, monitor the TP Sensor No.1 and No.2 voltage.

Connect a jumper wire between the (K922) Sensor Return circuit and the (K22) TP Sensor No.1 Signal circuit.

TP Sensor No.1 voltage should change from approximately 4.5 volts to 0.5 of a volt?

For TP Sensor No.2, connect a jumper wire between (F855) 5-volt supply circuit and the (K122) TP Sensor No.2 signal circuit.

TP Sensor No.2 voltage should change from approximately 0 volts to 5.0 volts?

Is the voltage reading within the listed specification with the jumper wire installed?

Yes >> Replace the Throttle Body Assembly.
Perform the POWERTRAIN VERIFICATION TEST. (Refer to 9 - ENGINE - STANDARD PROCEDURE)

No >> Go To 4

NOTE: Remove the jumper wire before continuing.

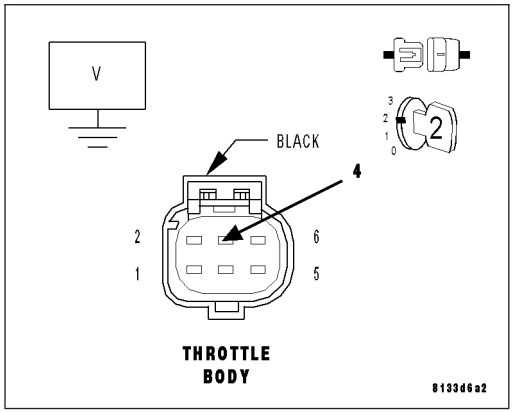

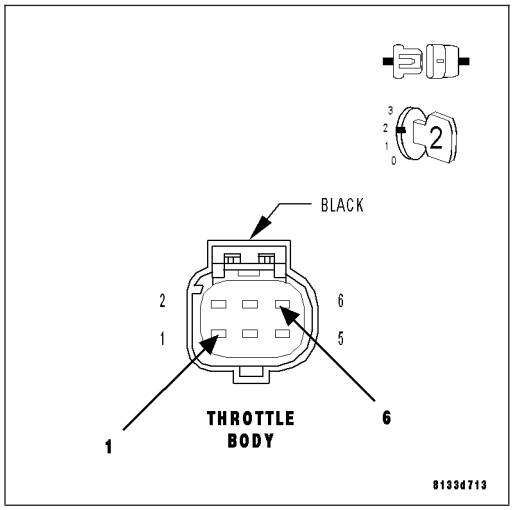

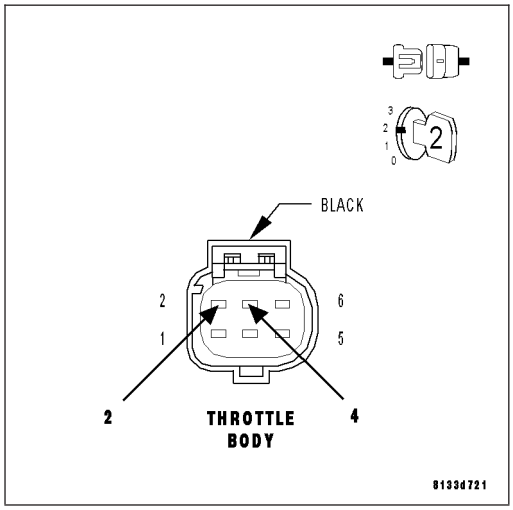

4. EXCESSIVE RESISTANCE IN THE (K22) TP SENSOR NO.1 OR (K122) TP SENSOR NO.2 SIGNAL CIRCUIT

Turn the ignition off.

Disconnect the PCM harness connector.

CAUTION: Do not probe the PCM harness connectors. Probing the PCM harness connectors will damage the PCM terminals resulting in poor terminal to pin connection. Install Miller Special Tool #8815 to perform diagnosis.

Measure the resistance of the (K22) TP Sensor No.1 Signal circuit from the Throttle Body harness connector to the appropriate terminal of special tool #8815.Measure the resistance of the (K122) TP Sensor No.2 Signal circuit from the Throttle Body harness connector to the appropriate terminal of special tool #8815.

Is the resistance below 5.0 ohms for each circuit?

Yes >> Go To 5

No >> Repair the excessive resistance in the (K22) TP Sensor No.1 or (K122) TP Sensor No.2 Signal circuit.
Perform the POWERTRAIN VERIFICATION TEST. (Refer to 9 - ENGINE - STANDARD PROCEDURE)

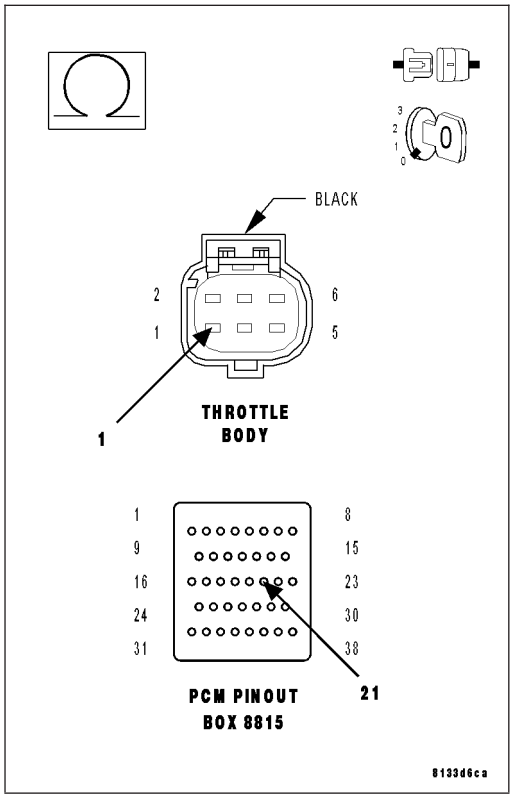

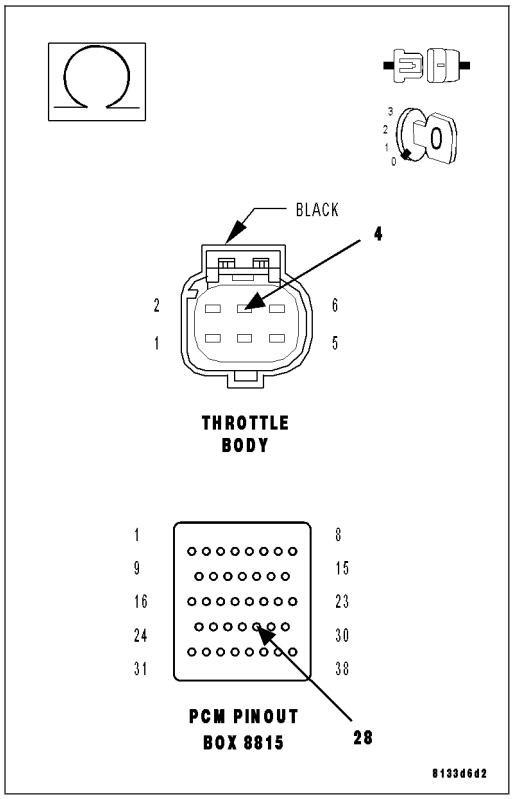

5. (K22) TP SENSOR NO.1 OR (K122) TP SENSOR NO.1 SIGNAL CIRCUIT SHORTED TO GROUND

Measure the resistance between ground and the (K22) TP Sensor No.1 Signal circuit and the (K122) TP Sensor No.2 Signal circuit at the appropriate terminal of the special tool #8815.

Is the resistance below 100 ohms for either circuit?

Yes >> Repair the short to ground in the (K22) TP No.1 Signal or (K122) TP No.2 Signal circuit.

Perform the POWERTRAIN VERIFICATION TEST. (Refer to 9 - ENGINE - STANDARD PROCEDURE)

No >> Go To 6

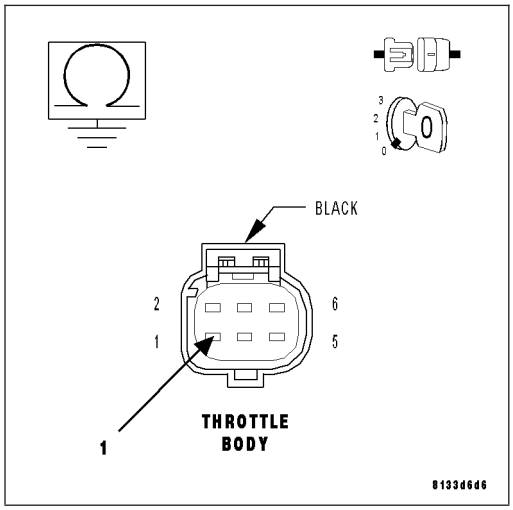

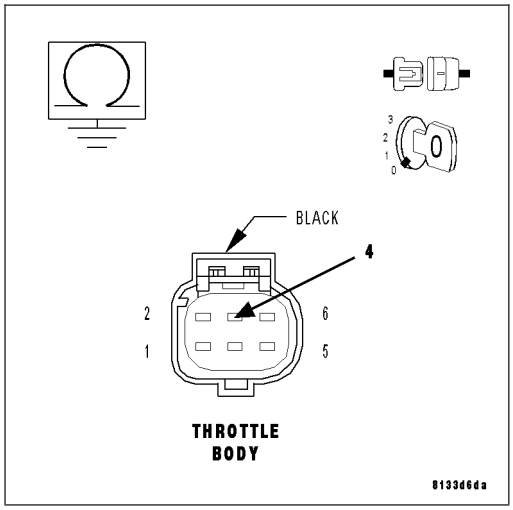

6. EXCESSIVE RESISTANCE IN THE (F855) 5-VOLT SUPPLY CIRCUIT

CAUTION: Do not probe the PCM harness connectors. Probing the PCM harness connectors will damage the PCM terminals resulting in poor terminal to pin connection. Install Miller Special Tool #8815 to perform diagnosis.

Measure the resistance of the (F855) 5-volt Supply circuit from the Throttle Body harness connector to the appropriate terminal of special tool #8815.

Is the resistance below 5.0 ohms?

Yes >> Go To 7

No >> Repair the excessive resistance in the (F855) 5-volt Supply circuit.

Perform the POWERTRAIN VERIFICATION TEST. (Refer to 9 - ENGINE - STANDARD PROCEDURE)

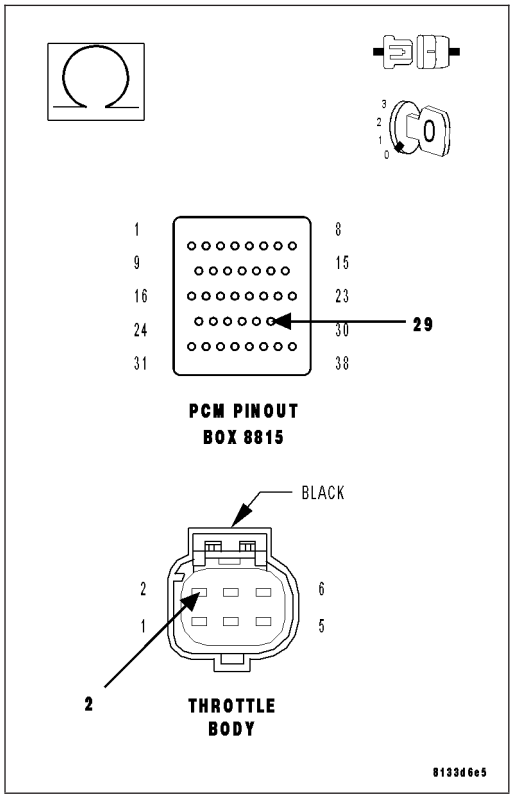

7. (F855) 5-VOLT SUPPLY SHORTED TO GROUND

Measure the resistance between ground and the (F855) 5-volt Supply circuit at the appropriate terminal of the special tool #8815.

Is the resistance below 100 ohms?

Yes >> Repair the short to ground in the (F855) 5-volt Supply circuit.

Perform the POWERTRAIN VERIFICATION TEST. (Refer to 9 - ENGINE - STANDARD PROCEDURE)

No >> Go To 8

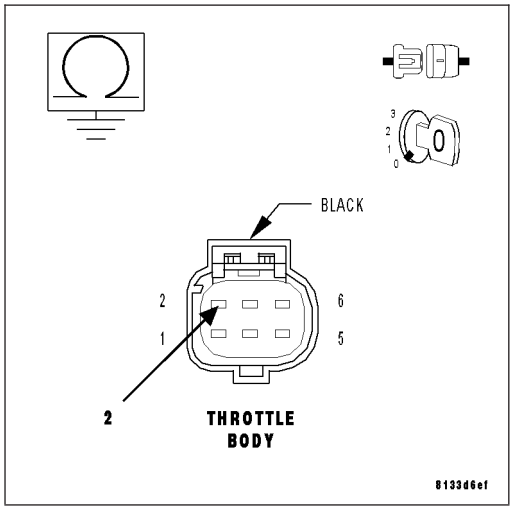

8. EXCESSIVE RESISTANCE IN THE (K922) SENSOR RETURN CIRCUIT

CAUTION: Do not probe the PCM harness connectors. Probing the PCM harness connectors will damage the PCM terminals resulting in poor terminal to pin connection. Install Miller Special Tool #8815 to perform diagnosis.

Measure the resistance of the (K922) Sensor Return circuit from the Throttle Body harness connector to the appropriate terminal of special tool #8815.

Is the resistance below 5.0 ohms?

Yes >> Go To 9

No >> Repair the excessive resistance in the (K922) Sensor Return circuit.

Perform the POWERTRAIN VERIFICATION TEST. (Refer to 9 - ENGINE - STANDARD PROCEDURE)

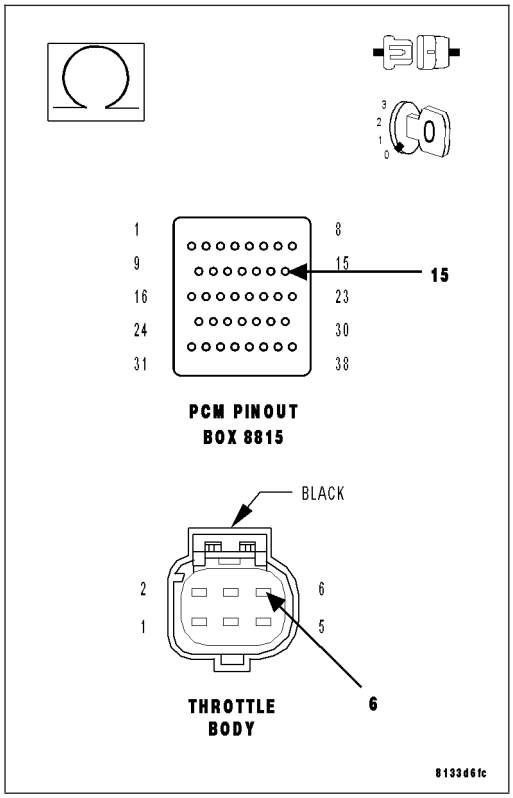

9. (K22) TP SENSOR NO.1 SIGNAL SHORTED TO (K122) TP SENSOR NO.2 SIGNAL

Measure the resistance between the (K22) TP Sensor No.1 Signal circuit and the (K122) TP Sensor No.2 Signal circuit at the appropriate terminal of the special tool #8815.

Is the resistance below 5.0 ohms?

Yes >> Repair the short between the (K122) TP Sensor No.2 Signal circuit and the (K22) TP Sensor No.1 Signal circuit.

Perform the POWERTRAIN VERIFICATION TEST. (Refer to 9 - ENGINE - STANDARD PROCEDURE)

No >> Go To 10

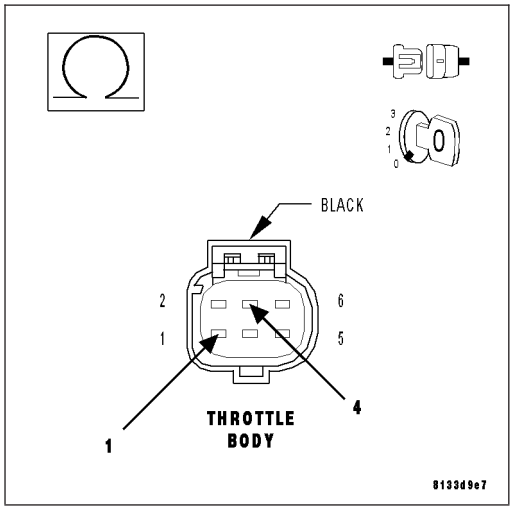

10. PCM

NOTE: Before continuing, check the PCM harness connector terminals for corrosion, damage, or terminal push out. Repair as necessary.

Using the schematics as a guide, inspect the wire harness and connectors. Pay particular attention to all Power and Ground circuits.

If there are no possible causes remaining, review repair.

Repair

Replace and program the Powertrain Control Module per Service Information.
Perform the POWERTRAIN VERIFICATION TEST. (Refer to 9 - ENGINE - STANDARD PROCEDURE)

11. THROTTLE FOLLOWER TEST

Ignition on, engine not running.
With a scan tool, perform the Throttle Follower Test and monitor the TP Sensor No.1 or No.2 voltage.
Slowly press the throttle pedal down.
The voltage for TP Sensor No.1 should start at approximately 0.8 of a volt and increase to above 4.2 volts.
The voltage for TP Sensor No.2 should start at approximately 4.2 volts and decrease to approximately 0.8 of a volt.

Is the voltage within the range of the listed specification for the appropriate Sensor?

Yes >> Refer to the INTERMITTENT CONDITION Diagnostic Procedure.
Perform the POWERTRAIN VERIFICATION TEST. (Refer to 9 - ENGINE - STANDARD PROCEDURE)

No >> Disconnect the Battery when replacing the Throttle Body Assembly. Replace the Throttle Body Assembly. After installation is complete, use a scan tool and select the ETC RELEARN function.
Perform the POWERTRAIN VERIFICATION TEST. (Refer to 9 - ENGINE - STANDARD PROCEDURE)

P2138-ACCELERATOR PEDAL POSITION SENSOR 1/2 CORRELATION

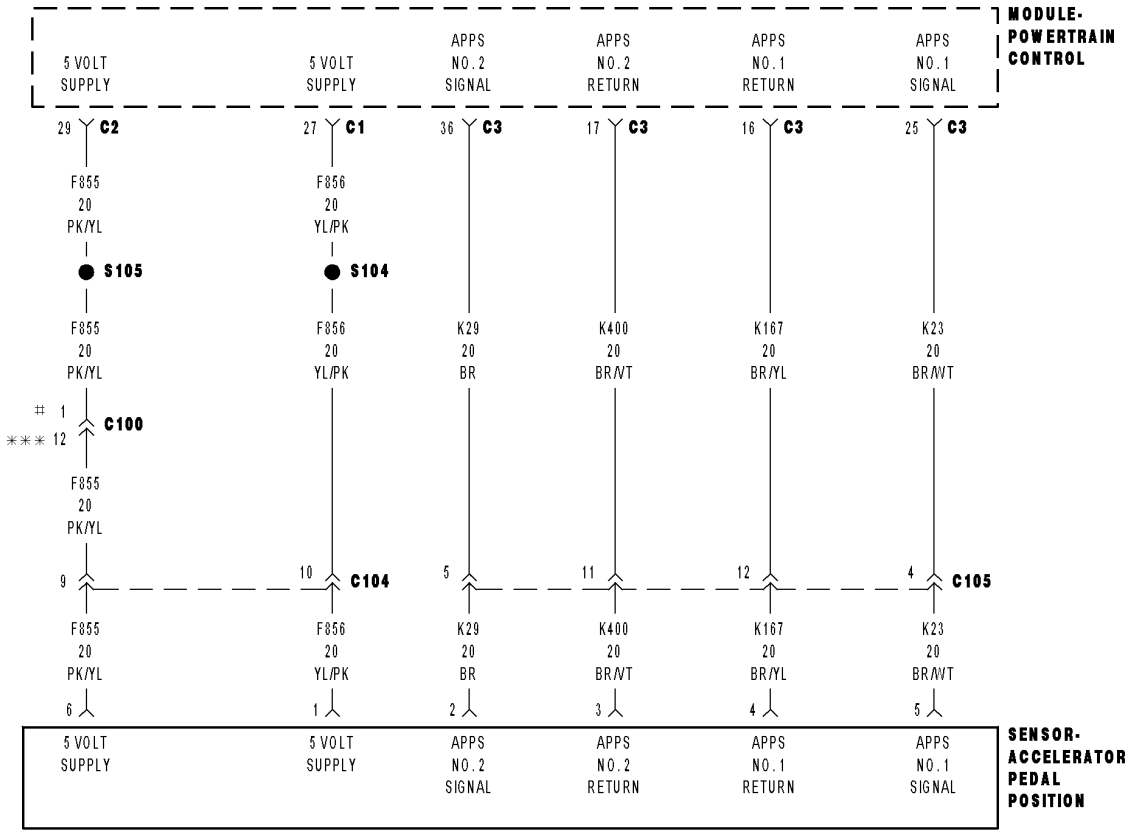

\# 2.7L/3.5L
*** 5.7L

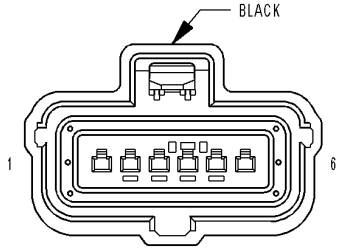

SENSOR-
ACCELERATOR
PEDAL POSITION

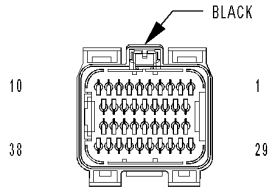

MODULE-
POWERTRAIN
CONTROL C1

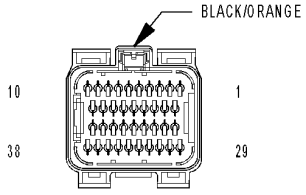

MODULE-
POWERTRAIN
CONTROL C2

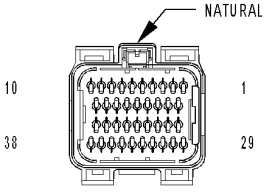

MODULE-
POWERTRAIN
CONTROL C3

81323466

For a complete wiring diagram **Refer to Section 8W**.

- **When Monitored:**
  With the ignition on and no APPS No.1 and APPS No.2 DTC present.
- **Set Condition:**
  APPS values No.1 and No.2 are not coherent. Idle is additionally forced when the brake pedal is pressed or failed. Acceleration rate and Engine output are limited. One trip fault and the code will set within 5 seconds. ETC light is flashing.

Possible Causes
EXCESSIVE RESISTANCE IN THE (F855) 5-VOLT SUPPLY CIRCUIT
EXCESSIVE RESISTANCE IN THE (F856) 5-VOLT SUPPLY CIRCUIT
EXCESSIVE RESISTANCE IN THE (K167) SENSOR NO.1 RETURN CIRCUIT
EXCESSIVE RESISTANCE IN THE (K400) SENSOR NO.2 RETURN CIRCUIT
EXCESSIVE RESISTANCE IN THE (K23) APP SENSOR NO.1 SIGNAL CIRCUIT
EXCESSIVE RESISTANCE IN THE (K29) APP SENSOR NO.2 SIGNAL CIRCUIT
APP SENSOR
PCM

Always perform the Pre-Diagnostic Troubleshooting procedure before proceeding. (Refer to 9 - ENGINE - DIAGNOSIS AND TESTING).

Diagnostic Test

1. ACTIVE DTC

Ignition on, engine not running.
With a scan tool, read DTCs.

NOTE: Repair any other 5-Volt Supply or APPS High and Low DTCs before diagnosing P2138.

Is the DTC active at this time?

Yes >> Go To 2

No >> Refer to the INTERMITTENT CONDITION Diagnostic Procedure.
Perform the POWERTRAIN VERIFICATION TEST. (Refer to 9 - ENGINE - STANDARD PROCEDURE)

2. EXCESSIVE RESISTANCE IN THE (K23) APPS NO.1 SIGNAL CIRCUIT

CAUTION: Do not probe the PCM harness connectors. Probing the PCM harness connectors will damage the PCM terminals resulting in poor terminal to pin connection. Install Miller Special Tool #8815 to perform diagnosis.

Turn the ignition off.

Disconnect the APP Sensor harness connector.

Disconnect the PCM harness connector.

Measure the resistance of (K23) APP Sensor No.1 Signal circuit from the APP Sensor harness connector to the appropriate terminals of special tool #8815.

Is the resistance below 5.0 ohms?

Yes >> Go To 3

No >> Repair the excessive resistance in the (K23) APP Sensor No.1 Signal circuit.
Perform the POWERTRAIN VERIFICATION TEST. (Refer to 9 - ENGINE - STANDARD PROCEDURE)

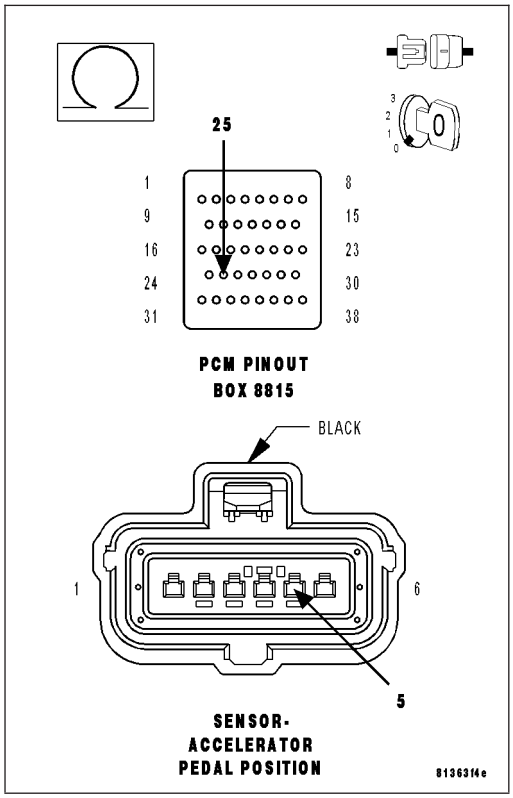

3. EXCESSIVE RESISTANCE IN THE (K29) APPS NO.2 SIGNAL CIRCUIT

Measure the resistance of (K29) APPS No.2 Signal circuit from the APP Sensor harness connector to the appropriate terminals of special tool #8815.

Is the resistance below 5.0 ohms?

Yes >> Go To 4

No >> Repair the excessive resistance in the (K29) APP Sensor No.2 Signal circuit.
Perform the POWERTRAIN VERIFICATION TEST. (Refer to 9 - ENGINE - STANDARD PROCEDURE)

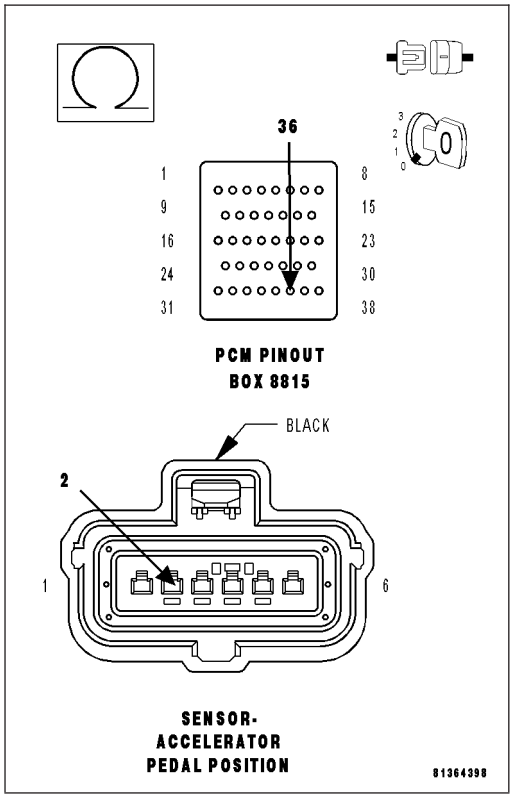

4. EXCESSIVE RESISTANCE IN THE (F855) 5-VOLT SUPPLY CIRCUIT

Measure the resistance of the (F855) 5-volt Supply circuit from the APP Sensor harness connector to the appropriate terminal of special tool #8815.

Is the resistance above 5.0 ohms?

Yes >> Repair the excessive resistance in the (F855) 5-volt Supply circuit.
Perform the POWERTRAIN VERIFICATION TEST. (Refer to 9 - ENGINE - STANDARD PROCEDURE)

No >> Go To 5

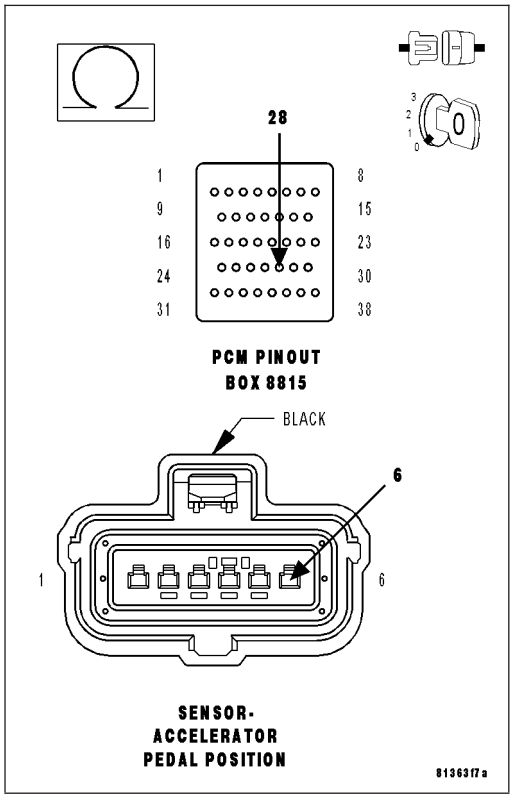

5. EXCESSIVE RESISTANCE IN THE (F856) 5-VOLT SUPPLY CIRCUIT

Disconnect the C1 PCM harness connector.

Measure the resistance of the (F856) 5-volt Supply circuit from the APP Sensor harness connector to the appropriate terminal of special tool #8815.

Is the resistance above 5.0 ohms?

Yes >> Repair the excessive resistance in the (F856) 5-volt Supply circuit.
Perform the POWERTRAIN VERIFICATION TEST. (Refer to 9 - ENGINE - STANDARD PROCEDURE)

No >> Go To 6

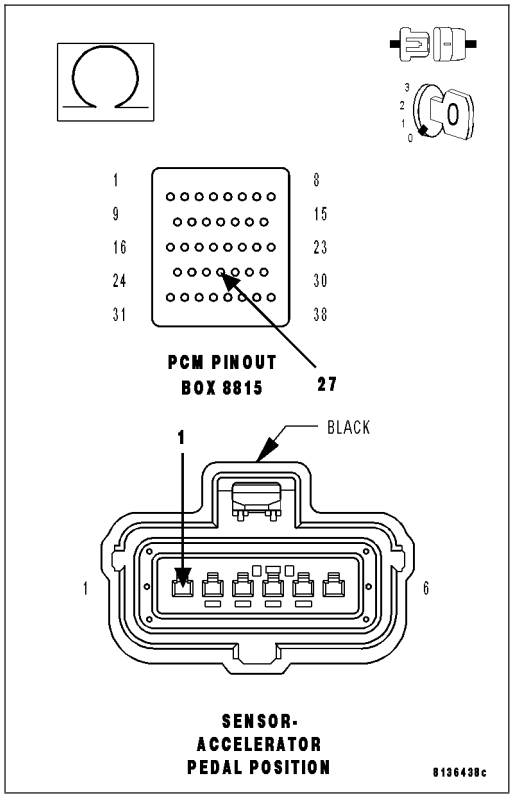

6. EXCESSIVE RESISTANCE IN THE (K167) SENSOR NO.1 RETURN CIRCUIT

Measure the resistance of the (K167) APP Sensor No.1 Return circuit from the APP Sensor harness connector to the appropriate terminal of special tool #8815.

Is the resistance above 5.0 ohms?

Yes >> Repair the excessive resistance in the (K167) Sensor No.1 Return circuit.
Perform the POWERTRAIN VERIFICATION TEST. (Refer to 9 - ENGINE - STANDARD PROCEDURE)

No >> Go To 7

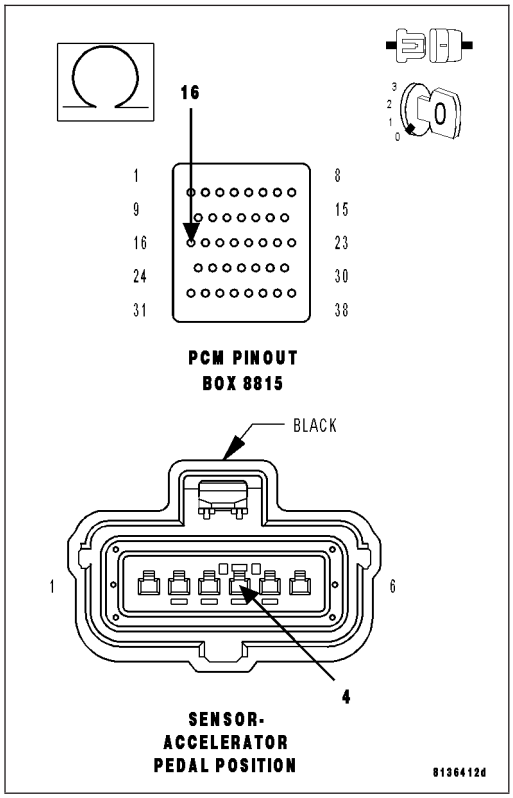

7. EXCESSIVE RESISTANCE IN THE (K400) SENSOR NO.2 RETURN CIRCUIT

Measure the resistance of the (K400) APP Sensor No.2 Return circuit from the APP Sensor harness connector to the appropriate terminal special tool #8815.

Is the resistance above 5.0 ohms?

Yes >> Repair the excessive resistance in the (K400) Sensor No.2 Return circuit.
Perform the POWERTRAIN VERIFICATION TEST. (Refer to 9 - ENGINE - STANDARD PROCEDURE)

No >> Go To 8

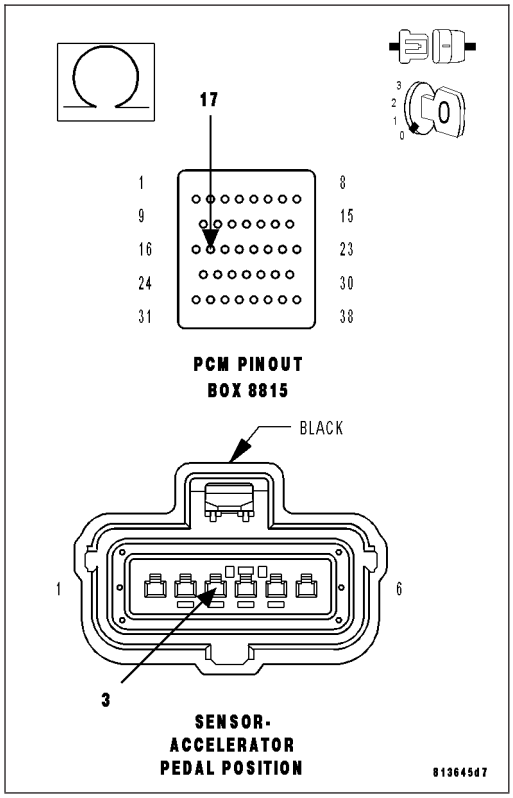

8. CHECKING APPS NO.1 AND NO.2 WITH A LAB SCOPE

Ignition on, engine not running.

Set up a lab scope in a way that you can view two graphs simultaneously.

Backprobe (K23) APP Sensor No.1 Signal circuit using Channel 1 at the APP Sensor harness connector.

Backprobe (K29) APP Sensor No.2 Signal circuit using Channel 2 at the APP Sensor harness connector.

Slowly press and release the Accelerator Pedal while monitoring the lab scope screen.

Does the scope pattern show any missing or erratic signals?

Yes >> Replace the APP Sensor Assembly per Service Information. After installation is complete, use a scan tool and select the ETC RELEARN function to relearn the APPS values.

No >> Go To 9

9. PCM

NOTE: Before continuing, check the PCM harness connector terminals for corrosion, damage, or terminal push out. Repair as necessary.

Using the schematics as a guide, inspect the wire harness and connectors. Pay particular attention to all Power and Ground circuits.

Were there any problems found?

Yes >> Repair as necessary.
Perform the POWERTRAIN VERIFICATION TEST. (Refer to 9 - ENGINE - STANDARD PROCEDURE)

No >> Replace and program the Powertrain Control Module per Service Information.
Perform the POWERTRAIN VERIFICATION TEST. (Refer to 9 - ENGINE - STANDARD PROCEDURE)

P2161-VEHICLE SPEED SENSOR 2 ERRATIC (Not Equipped with ABS)

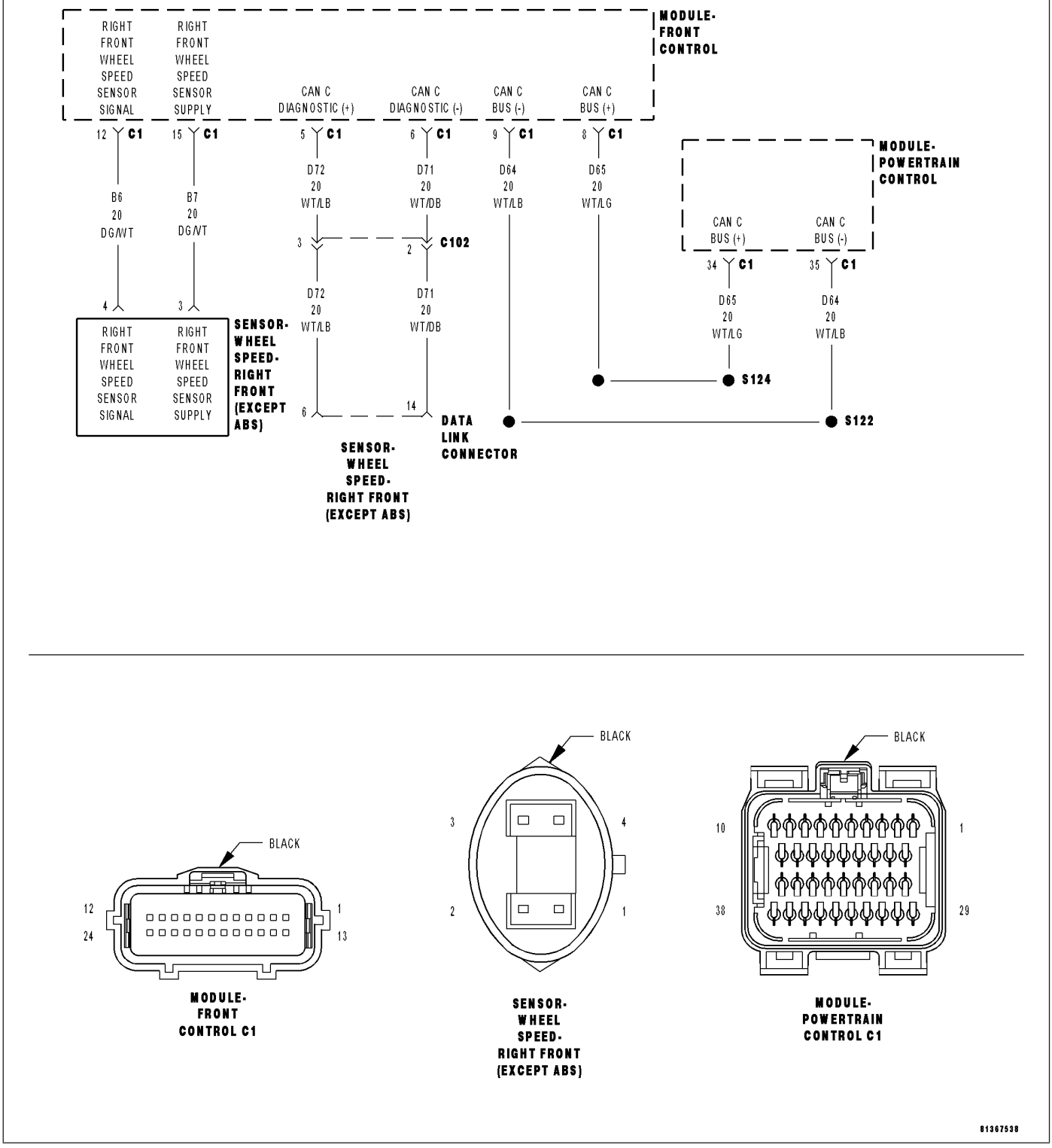

81367538

For a complete wiring diagram **Refer to Section 8W**.

- **When Monitored:**
  Ignition on and battery voltage greater than 10 volts. Transmission in Drive or Reverse.
- **Set Condition:**
  The PCM recognizes the vehicle speed in No. 2 is erratic or high. No MIL and no ETC light. Cruise Control is disabled.

Possible Causes
ACTIVE BUS OR COMMUNICATION DTCS
TIRE CIRCUMFERENCE
PCM

Always perform the Pre-Diagnostic Troubleshooting procedure before proceeding. (Refer to 9 - ENGINE - DIAGNOSIS AND TESTING).

Diagnostic Test

1. ACTIVE DTC

NOTE: The following items must be checked before continuing.
- **Pinion Factor and Tire Size MUST be programmed in the Front Control Module.**
- **All Bus Communication DTCs MUST be diagnosed.**
- **All Vehicle Speed DTCs that may be active in the Front Control Module or in the Transmission Control Module MUST be diagnosed.**

Ignition on, engine not running.

With a scan tool, read DTCs.

Is the DTC active at this time?

Yes >> Go To 2

No >> Refer to the INTERMITTENT CONDITION Diagnostic Procedure.
Perform the POWERTRAIN VERIFICATION TEST. (Refer to 9 - ENGINE - STANDARD PROCEDURE)

2. VISUAL INSPECTION

NOTE: This code can set due following conditions.
- **Unequal tire circumference between the tires on the vehicle.**
- **Front or Rear wheels moving while the opposite wheels are not. (i.e., wheels slipping on loose gravel, ice or hard acceleration)**

Check tire pressure of all the tires.

Check tire wear on all the tires.

Ask the customer what the road and driving conditions were like when the fault set.

Were any of the above conditions found?

Yes >> Repair as necessary. If the code set during a front OR rear wheel spin condition, no repair is necessary.
Perform the POWERTRAIN VERIFICATION TEST. (Refer to 9 - ENGINE - STANDARD PROCEDURE)

No >> Go To 3

3. PCM

NOTE: Before continuing, check the PCM harness connector terminals for corrosion, damage, or terminal push out. Repair as necessary. Using the schematics as a guide, inspect the wire harness and connectors. Pay particular attention to all Power and Ground circuits.

Were there any problems found?

Yes >> Repair as necessary.
Perform the POWERTRAIN VERIFICATION TEST. (Refer to 9 - ENGINE - STANDARD PROCEDURE)

No >> Replace and program the Powertrain Control Module per Service Information.
Perform the POWERTRAIN VERIFICATION TEST. (Refer to 9 - ENGINE - STANDARD PROCEDURE)

P2161-VEHICLE SPEED SENSOR 2 ERRATIC (Equipped with ABS)

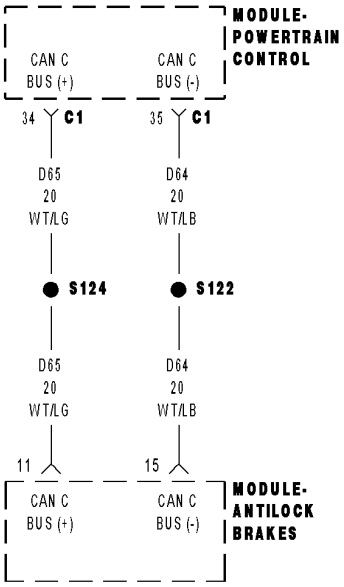

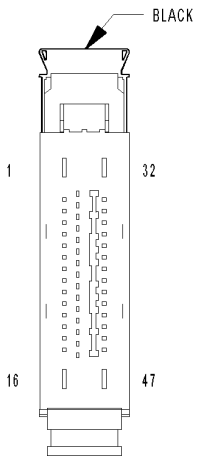

MODULE-
ANTILOCK BRAKES

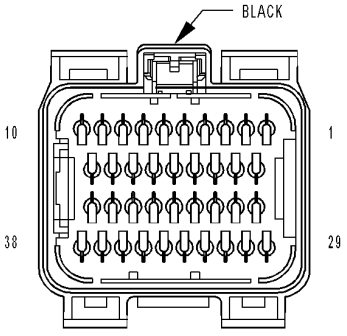

MODULE-
POWERTRAIN
CONTROL C1

8136947a

For a complete wiring diagram **Refer to Section 8W**.

- **When Monitored:**
  Ignition on and battery voltage greater than 10 volts. Transmission in Drive or Reverse.
- **Set Condition:**
  The PCM recognizes the vehicle speed signal No. 2 is erratic or high. No MIL and no ETC light. Cruise Control is disabled.

Possible Causes
ACTIVE BUS OR COMMUNICATION DTCS
TIRE CIRCUMFERENCE
PCM

Always perform the Pre-Diagnostic Troubleshooting procedure before proceeding. (Refer to 9 - ENGINE - DIAGNOSIS AND TESTING).

Diagnostic Test

1. ACTIVE DTC

NOTE: The following items must be checked before continuing.
- **Pinion Factor and Tire Size MUST be programmed in the ABS Module.**
- **All Bus Communication DTCs MUST be diagnosed.**
- **All related Vehicle Speed and Wheel Speed DTCs that may be active in the ABS Module MUST be diagnosed. Refer to the ABS diagnostic information for the correct procedure.**

Ignition on, engine not running.

With a scan tool, read DTCs.

Is the DTC active at this time?

Yes >> Go To 2

No >> Refer to the INTERMITTENT CONDITION Diagnostic Procedure.
Perform the POWERTRAIN VERIFICATION TEST. (Refer to 9 - ENGINE - STANDARD PROCEDURE)

2. VISUAL INSPECTION

NOTE: This code can set due following conditions.
- **Unequal tire circumference between the tires on the vehicle.**
- **Front or Rear wheels moving while the opposite wheels are not. (i.e., wheels slipping on loose gravel, ice or hard acceleration)**

Check tire pressure of all the tires.

Check tire wear on all the tires.

Ask the customer what the road and driving conditions were like when the fault set.

Were any of the above conditions found?

Yes >> Repair as necessary. If the code set during a front OR rear wheel spin condition, no repair is necessary.
Perform the POWERTRAIN VERIFICATION TEST. (Refer to 9 - ENGINE - STANDARD PROCEDURE)

No >> Go To 3

3. PCM

NOTE: Before continuing, check the PCM harness connector terminals for corrosion, damage, or terminal push out. Repair as necessary. Using the schematics as a guide, inspect the wire harness and connectors. Pay particular attention to all Power and Ground circuits.

Were there any problems found?

Yes >> Repair as necessary.
Perform the POWERTRAIN VERIFICATION TEST. (Refer to 9 - ENGINE - STANDARD PROCEDURE)

No >> Replace and program the Powertrain Control Module per Service Information.
Perform the POWERTRAIN VERIFICATION TEST. (Refer to 9 - ENGINE - STANDARD PROCEDURE)

P2166-ACCELERATOR PEDAL POSITION SENSOR 1 MAXIMUM STOP PERFORMANCE

For a complete wiring diagram **Refer to Section 8W**.

- **When Monitored:**
  Ignition on. During in plant mode the APP Sensors need to be checked to make sure that idle and full pedal travel can be reached on both sensors.
- **Set Condition:**
  APPS No.1 has failed to achieve the required maximum value during In Plant testing. One trip fault and the code will set within 5 seconds. Engine will only idle.

Possible Causes
IN PLANT TEST FAILURE
APPS RELEARN

Always perform the Pre-Diagnostic Troubleshooting procedure before proceeding. (Refer to 9 - ENGINE - DIAGNOSIS AND TESTING).

Diagnostic Test

1. IN PLANT TEST FAILURE

Ignition on, engine not running.

NOTE: This DTC is set when the APP Sensors are learned in plant but do not reach the Minimum or Maximum voltage range.

With a scan tool read DTCs.

With the scan tool, erase DTCs.

Start the engine.

With the scan tool, read DTCs.

Is the DTC active at this time?

Yes >> Go To 2

No >> Refer to the INTERMITTENT CONDITION Diagnostic Procedure.
Perform the POWERTRAIN VERIFICATION TEST. (Refer to 9 - ENGINE - STANDARD PROCEDURE)

2. APPS RELEARN

With a scan tool select the ETC RELEARN function.

Next, erase DTCs.

Start the engine.

Does the DTC return?

Yes >> Replace the APPS Assembly per Service Information. After installation is complete, use a scan tool and select the ETC RELEARN function.
Perform the POWERTRAIN VERIFICATION TEST. (Refer to 9 - ENGINE - STANDARD PROCEDURE)

No >> Test Complete.

P2167-ACCELERATOR PEDAL POSITION SENSOR 2 MAXIMUM STOP PERFORMANCE

For a complete wiring diagram **Refer to Section 8W**.

- **When Monitored:**
  Ignition on. During in plant mode the APP Sensors need to be checked to make sure that idle and full pedal travel can be reached on both sensors.
- **Set Condition:**
  APPS No.2 has failed to achieve the required maximum value during In Plant testing. One trip fault and the code will set within 5 seconds. Engine will only idle.

Possible Causes
IN PLANT TEST FAILURE
APPS RELEARN

Diagnostic Test

1. IN PLANT TEST FAILURE

Ignition on, engine not running.

NOTE: This DTC is set when the APP Sensors are learned in plant but do not reach the Minimum or Maximum voltage range.

With a scan tool read DTCs.

With the scan tool, erase DTCs.

Start the engine.

With the scan tool, read DTCs.

Is the DTC active at this time?

Yes >> Go To 2

No >> Refer to the INTERMITTENT CONDITION Diagnostic Procedure.
Perform the POWERTRAIN VERIFICATION TEST. (Refer to 9 - ENGINE - STANDARD PROCEDURE)

2. APPS RELEARN

With a scan tool select the ETC RELEARN function.

Next, erase DTCs.

Start the engine.

Does the DTC return?

Yes >> Replace the APPS Assembly per Service Information. After installation is complete, use a scan tool and select the ETC RELEARN function.
Perform the POWERTRAIN VERIFICATION TEST. (Refer to 9 - ENGINE - STANDARD PROCEDURE)

No >> Test Complete.

P2172-HIGH AIRFLOW/VACUUM LEAK DETECTED (INSTANTANEOUS ACCUMULATION)

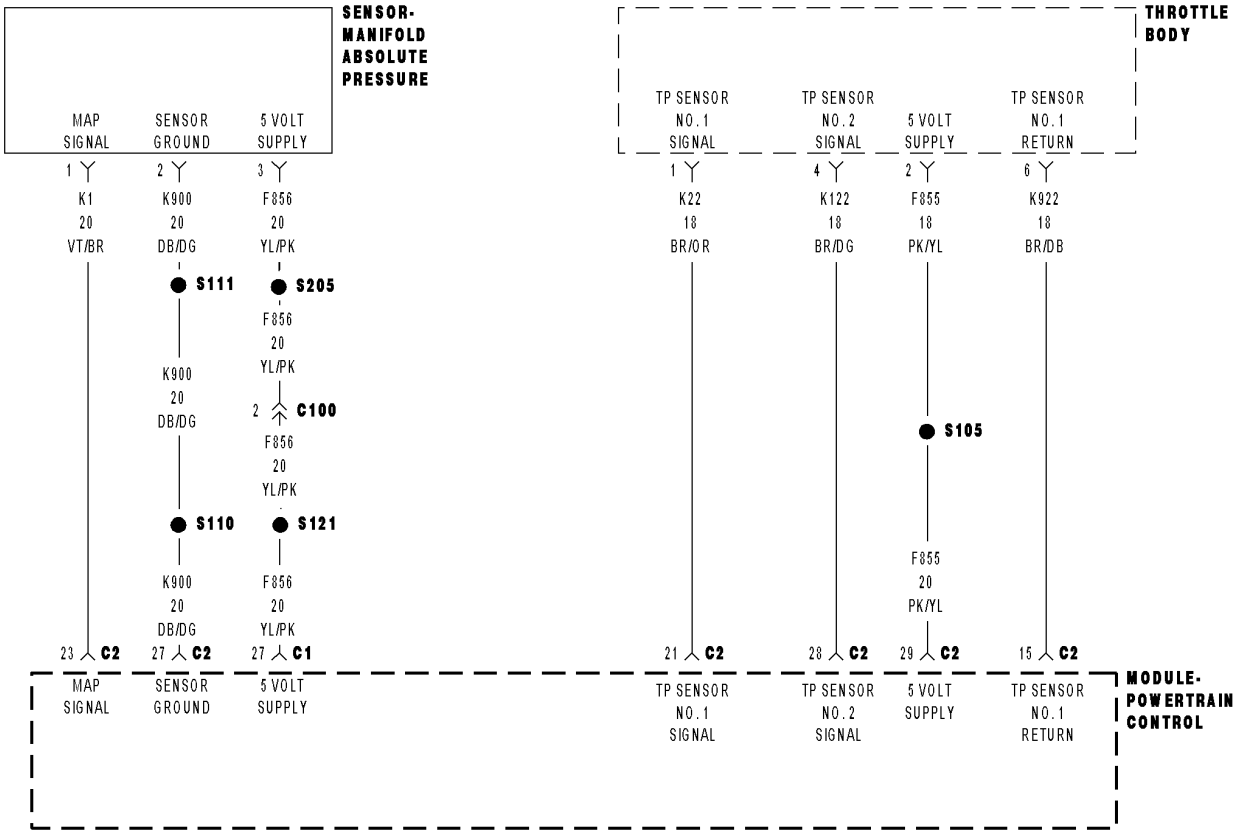

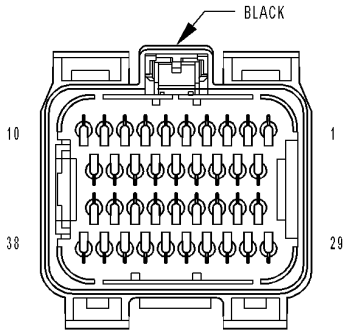

MODULE-
POWERTRAIN
CONTROL C1

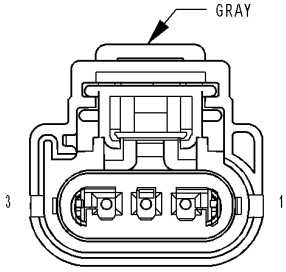

SENSOR-
MANIFOLD ABSOLUTE
PRESSURE

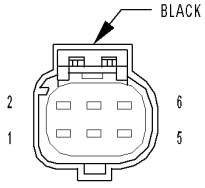

THROTTLE
BODY

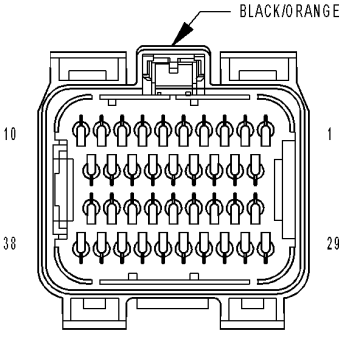

MODULE-
POWERTRAIN
CONTROL C2

8131a01b

For a complete wiring diagram **Refer to Section 8W**.

- **When Monitored:**
  Ignition on and engine running with no MAP Sensor DTCs.
- **Set Condition:**
  A large vacuum leak has been detected or both of the TP Sensors have failed based on their position being 2.5 volts and the calculated MAP value is less than the actual MAP minus an Offset value. One trip fault and the code will set within 5 seconds. ETC light will flash.

Possible Causes
VACUUM LEAK
RESISTANCE IN THE (F856) 5-VOLT SUPPLY CIRCUIT
(F856) 5-VOLT SUPPLY CIRCUIT SHORTED TO GROUND
RESISTANCE IN THE (K1) MAP SIGNAL CIRCUIT
(K1) MAP SIGNAL CIRCUIT SHORTED TO GROUND
RESISTANCE IN (K900) SENSOR GROUND CIRCUIT
RESISTANCE IN THE (F855) 5-VOLT SUPPLY CIRCUIT
(F855) 5-VOLT SUPPLY CIRCUIT SHORTED TO GROUND
RESISTANCE IN THE TP SENSOR SIGNAL CIRCUIT
TP SENSOR SIGNAL CIRCUIT SHORTED TO GROUND
RESISTANCE IN THE (K922) TP SENSOR RETURN CIRCUIT
MAP SENSOR
TP SENSOR
PCM

Always perform the Pre-Diagnostic Troubleshooting procedure before proceeding. (Refer to 9 - ENGINE - DIAGNOSIS AND TESTING).

Diagnostic Test

1. ACTIVE DTC

NOTE: The most likely cause of this DTC is a vacuum leak.

NOTE: Diagnose any 5-Volt Supply, TP Sensor, Fuel System Lean or Rich, or MAP Sensor DTCs before continuing.

NOTE: The throttle plate should be free from binding and carbon build up.

Ignition on, engine not running.

With a scan tool, read DTCs.

Is the DTC active at this time?

Yes >> Go To 2

No >> Refer to the INTERMITTENT CONDITION Diagnostic Procedure.
Perform the POWERTRAIN VERIFICATION TEST. (Refer to 9 - ENGINE - STANDARD PROCEDURE)

2. VACUUM LEAK

NOTE: This code is enabled on engines with a plastic intake manifold and is intended to limit the maximum engine speed if a large crack occurs.

NOTE: A large vacuum leak is most likely the cause of this DTC.

Inspect the Intake Manifold and Throttle body for leaks and cracks.

Inspect the Power Brake Booster for any vacuum leaks.

Inspect the PCV system for proper operation or any vacuum leaks.

Inspect the MAP Sensor for proper installation.

Were any vacuum leaks found?

Yes >> Repair the vacuum leak as necessary.
Perform the POWERTRAIN VERIFICATION TEST. (Refer to 9 - ENGINE - STANDARD PROCEDURE)

No >> Go To 3

3. MAP SENSOR OPERATION

Start the engine.

With a scan tool, monitor the MAP Sensor voltage.

Snap the Accelerator pedal.

Does the MAP Sensor voltage vary from below 2.0 volts at idle to above 3.5 volts at Wide Open Throttle?

Yes >> Go To 4

No >> Go To 11

4. TP SENSOR OPERATION

Ignition on, engine not running.

With a scan tool, perform the Throttle Follower Test.

TP Sensor No.1 should start at approximately 0.8 of a volt and increase to 4.2 volts.

TP Sensor No.2 should start at approximately 4.2 volts and decrease to 0.8 of a volt.

Is the voltage transition smooth between the appropriate values?

Yes >> Refer to the INTERMITTENT CONDITION Diagnostic Procedure.
Perform the POWERTRAIN VERIFICATION TEST. (Refer to 9 - ENGINE - STANDARD PROCEDURE)

No >> Go To 5

5. RESISTANCE IN (F855) 5-VOLT SUPPLY CIRCUIT

Turn the ignition off.

Disconnect the Throttle Body harness connector.

Disconnect the PCM harness connector.

CAUTION: Do not probe the PCM harness connectors. Probing the PCM harness connectors will damage the PCM terminals resulting in poor terminal to pin connection. Install Miller Special Tool #8815 to perform diagnosis.

Measure the resistance of the (F855) 5-volt Supply circuit from the Throttle Body harness connector to the appropriate terminal of special tool #8815.

Is the resistance above 100 ohms?

Yes >> Go To 6

No >> Repair the excessive resistance in the (F855) 5-volt Supply circuit.

Perform the POWERTRAIN VERIFICATION TEST. (Refer to 9 - ENGINE - STANDARD PROCEDURE)

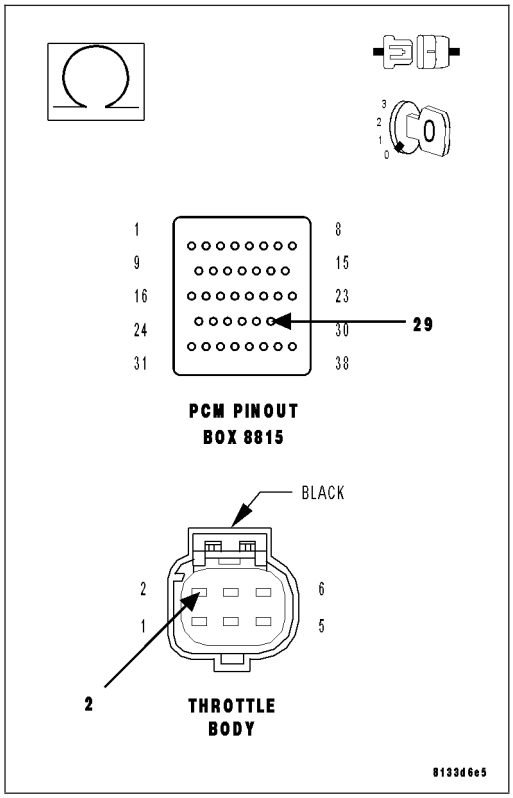

6. (F855) 5-VOLT SUPPLY CIRCUIT SHORTED TO GROUND

Measure the resistance between ground and (F855) 5-volt Supply circuit at the appropriate terminal of the special tool #8815.

Is the resistance above 100 ohms?

Yes >> Go To 7

No >> Repair the short to ground in the (F855) 5-volt Supply circuit.

Perform the POWERTRAIN VERIFICATION TEST. (Refer to 9 - ENGINE - STANDARD PROCEDURE)

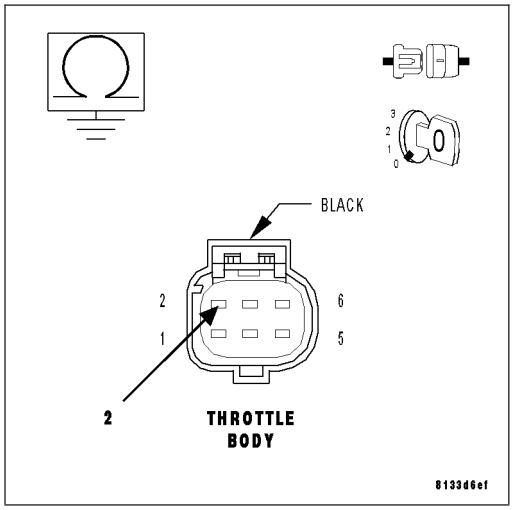

7. TP SENSOR

Connect the PCM harness connector.

Ignition on, engine not running.

With a scan tool, monitor the TP Sensor voltage.

Connect a jumper wire between the (K22) TP Sensor No.1 Signal circuit and the (K922) Sensor Return circuit in the Throttle Body harness connector.

TP Sensor No.1 voltage should start at approximately 4.8 volts and decrease to 0.2 of a volt.

Connect a jumper wire between the (K122) TP Sensor No.2 Signal circuit and the (F855) 5-volt Supply circuit in the Throttle Body harness connector.

TP Sensor No.2 voltage should start at approximately 0 volts and increase to 4.8 to 5.2 volts.

Does the TP Sensor voltage change to the appropriate voltage with the jumper wire installed?

Yes >> Disconnect the Battery before replacing the Throttle Body Assembly. Replace the Throttle Body Assembly. After installation is complete, use a scan tool and select the ETC RELEARN function

Perform the POWERTRAIN VERIFICATION TEST. (Refer to 9 - ENGINE - STANDARD PROCEDURE)

No >> Go To 8

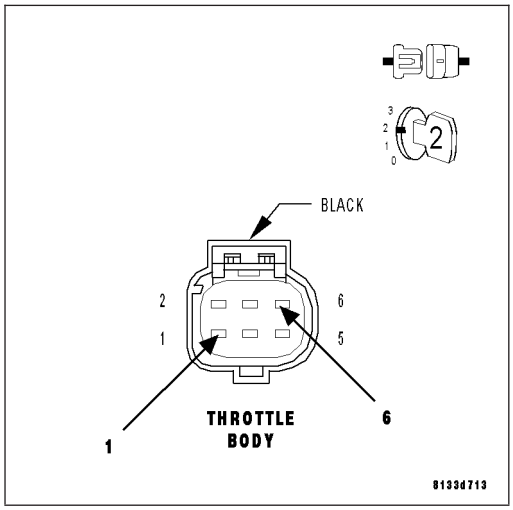

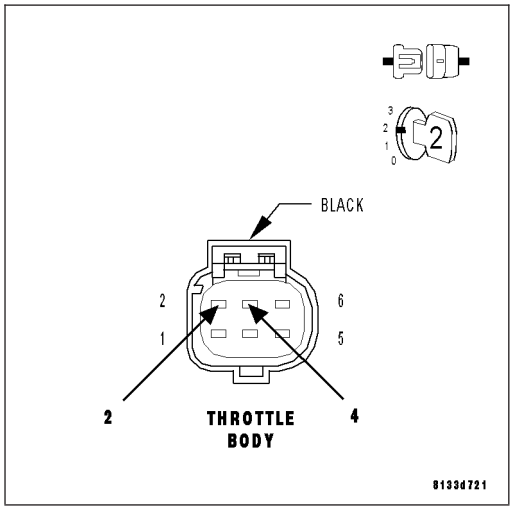

8. RESISTANCE IN THE TP SENSOR SIGNAL CIRCUIT

Turn the ignition off.

Disconnect the PCM harness connector.

Measure the resistance of the (K22) and (K122) TP Signal circuits from the Throttle Body harness connector to the appropriate terminals of special tool #8815.

Is the resistance below 5.0 ohms for each circuit?

Yes >> Go To 9

No >> Repair the excessive resistance in the (K22) or (K122) TP Sensor Signal circuit.

Perform the POWERTRAIN VERIFICATION TEST. (Refer to 9 - ENGINE - STANDARD PROCEDURE)

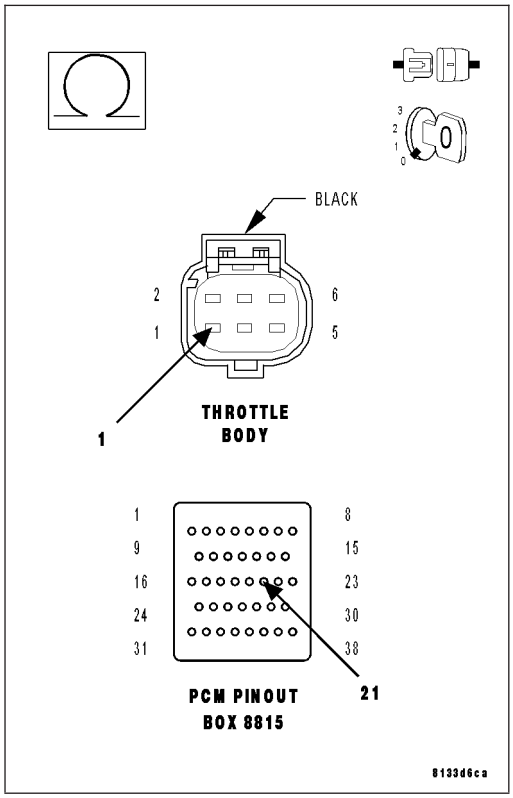

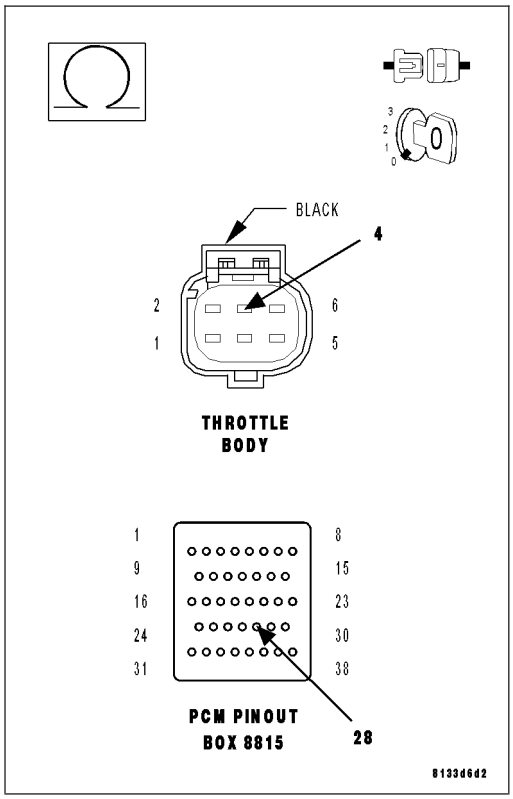

9. TP SENSOR SIGNAL CIRCUIT SHORTED TO GROUND

Measure the resistance between ground and the (K22) and (K122) TP Signal circuits at the appropriate terminal of the special tool #8815.

Is the resistance above 100 ohms for each circuit?

Yes >> Go To 10

No >> Repair the short to ground in the (K22) or (K122) TP Sensor Signal circuit.

Perform the POWERTRAIN VERIFICATION TEST. (Refer to 9 - ENGINE - STANDARD PROCEDURE)

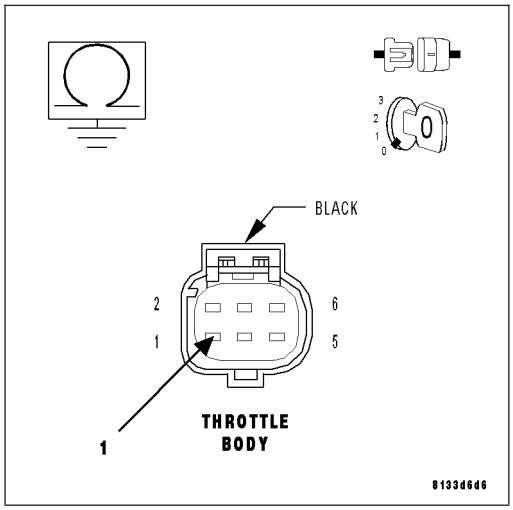

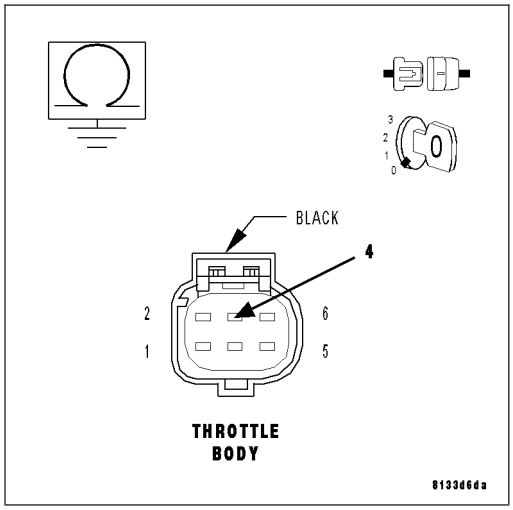

10. RESISTANCE IN THE (K922) SENSOR RETURN CIRCUIT

Measure the resistance of the (K922) Sensor Return circuit from the Throttle Body harness connector to the appropriate terminal of special tool #8815.

Is the resistance below 5.0 ohms?

Yes >> Go To 17

No >> Repair the excessive resistance in the (K922) Sensor Return circuit.

Perform the POWERTRAIN VERIFICATION TEST. (Refer to 9 - ENGINE - STANDARD PROCEDURE)

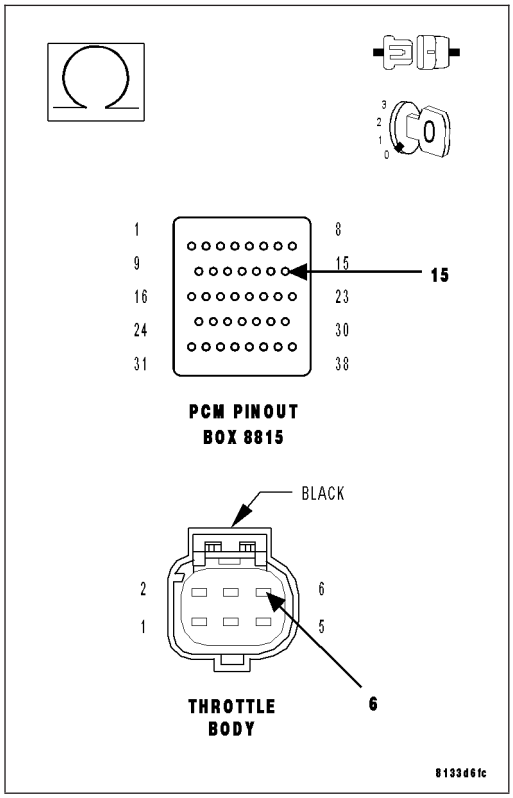

11. RESISTANCE IN THE (F856) 5-VOLT SUPPLY CIRCUIT

Turn the ignition off.

Disconnect the MAP Sensor harness connector.

Disconnect the C1/A PCM harness connector.

CAUTION: Do not probe the PCM harness connectors. Probing the PCM harness connectors will damage the PCM terminals resulting in poor terminal to pin connection. Install Miller Special Tool #8815 to perform diagnosis.

Measure the resistance of the (F856) 5-volt Supply circuit from the MAP Sensor harness connector to the appropriate terminal of special tool #8815.

Is the resistance below 5.0 ohms?

Yes >> Go To 12

No >> Repair the excessive resistance in the (F856) 5-volt Supply circuit.

Perform the POWERTRAIN VERIFICATION TEST. (Refer to 9 - ENGINE - STANDARD PROCEDURE)

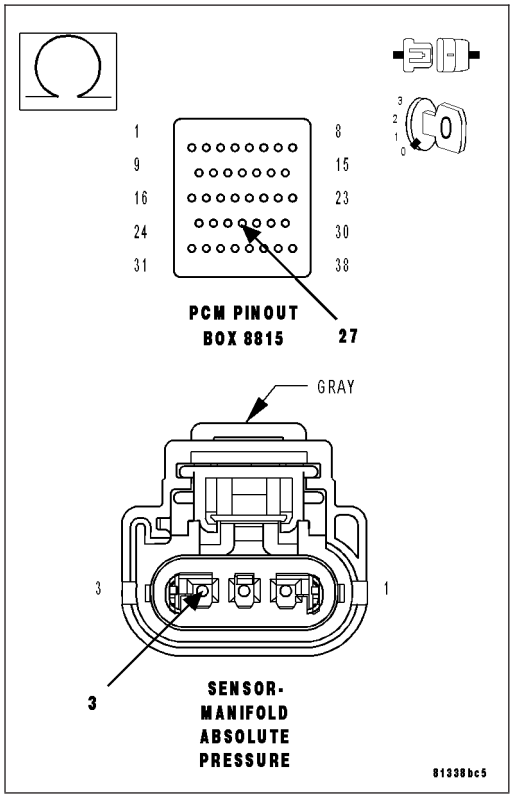

12. (F856) 5-VOLT SUPPLY CIRCUIT SHORTED TO GROUND

Measure the resistance between ground and the (F856) 5-volt Supply circuit in the MAP Sensor harness connector.

Is the resistance above 100k ohms?

Yes >> Go To 13

No >> Repair the short to ground in the (F856) 5-volt Supply circuit.

Perform the POWERTRAIN VERIFICATION TEST. (Refer to 9 - ENGINE - STANDARD PROCEDURE)

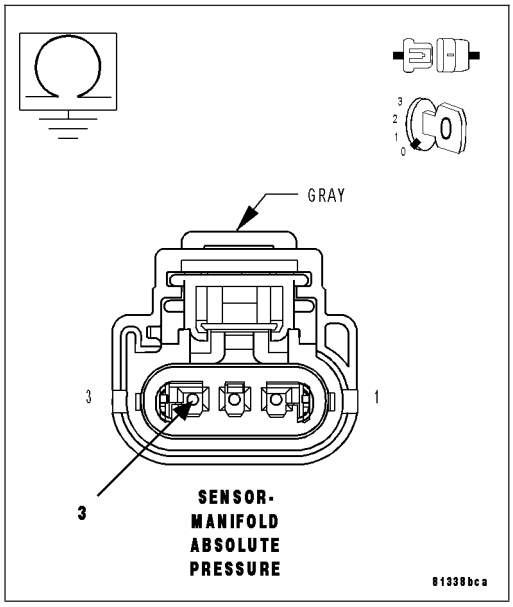

13. MAP SENSOR

Connect the PCM harness connectors.

Ignition on, engine not running.

With a scan tool, monitor the MAP Sensor voltage.

Connect a jumper wire between the (K1) MAP Signal circuit and the (K900) Sensor ground circuit in the MAP Sensor harness connector.

Cycle the ignition switch from off to on.

With a scan tool, monitor the MAP Sensor voltage.

Does the scan tool display MAP voltage from approximately 4.9 volts to below 0.5 volt with the jumper wire installed?

Yes >> Replace the MAP Sensor.

Perform the POWERTRAIN VERIFICATION TEST. (Refer to 9 - ENGINE - STANDARD PROCEDURE)

No >> Go To 14

NOTE: Remove the jumper wire before continuing.

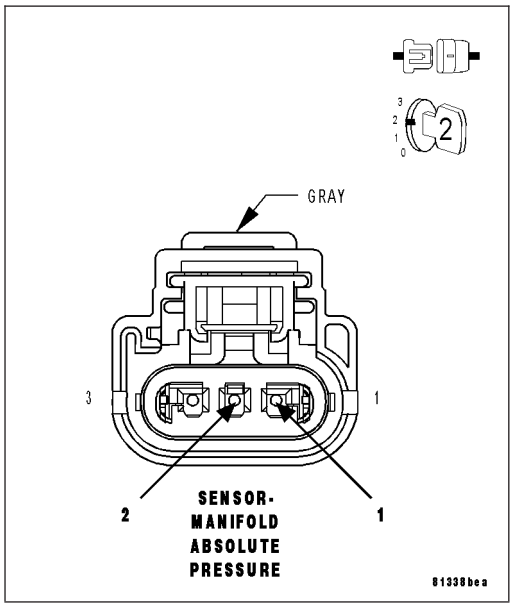

14. RESISTANCE IN THE (K1) MAP SIGNAL CIRCUIT

Turn the ignition off.

Disconnect the PCM harness connector.

Measure the resistance of the (K1) MAP Signal circuit from the MAP Sensor harness connector to the appropriate terminal of special tool #8815.

Is the resistance below 5.0 ohms?

Yes >> Go To 15

No >> Repair the excessive resistance in the (K1) MAP Signal circuit

Perform the POWERTRAIN VERIFICATION TEST. (Refer to 9 - ENGINE - STANDARD PROCEDURE)

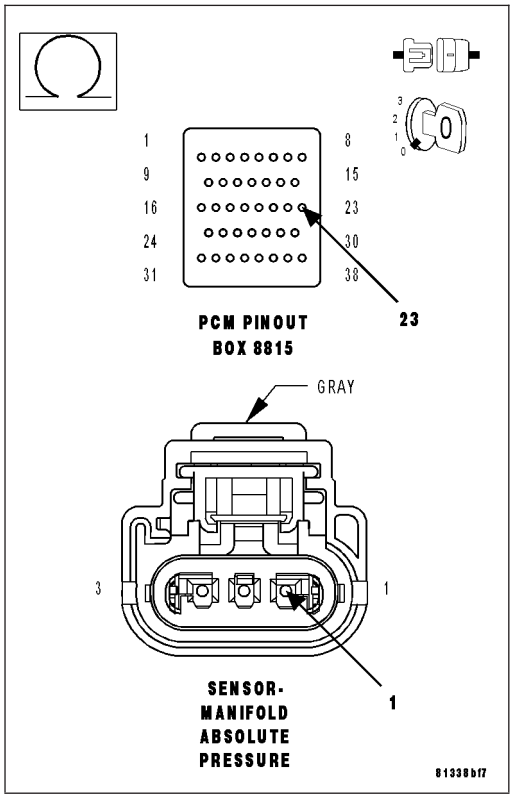

15. (K1) MAP SIGNAL CIRCUIT SHORTED TO GROUND

Measure the resistance between ground and the (K1) MAP Signal circuit in the MAP Sensor harness connector.

Is the resistance above 100k ohms?

Yes >> Go To 16

No >> Repair the short to ground in the (K1) MAP Signal circuit.

Perform the POWERTRAIN VERIFICATION TEST. (Refer to 9 - ENGINE - STANDARD PROCEDURE)

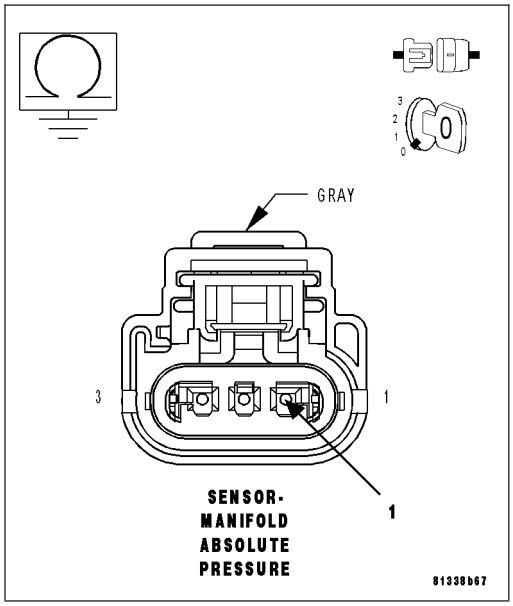

16. RESISTANCE IN THE (K900) SENSOR GROUND CIRCUIT

Measure the resistance of the (K900) Sensor ground circuit from the MAP Sensor harness connector to the appropriate terminal of special tool #8815.

Is the resistance below 5.0 ohms?

Yes >> Go To 17

No >> Repair the excessive resistance in the (K900) Sensor ground circuit.
Perform the POWERTRAIN VERIFICATION TEST. (Refer to 9 - ENGINE - STANDARD PROCEDURE)

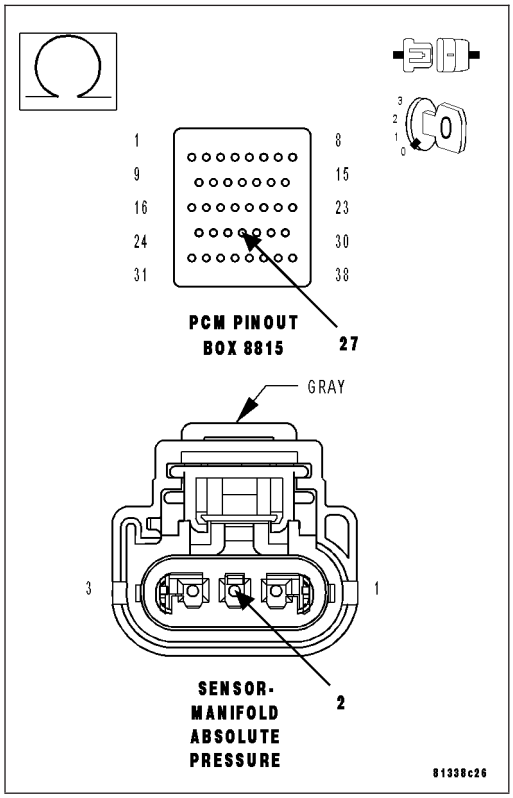

17. PCM

NOTE: Before continuing, check the PCM harness connector terminals for corrosion, damage, or terminal push out. Repair as necessary.
Using the schematics as a guide, inspect the wire harness and connectors. Pay particular attention to all Power and Ground circuits.

Were there any problems found?

Yes >> Repair as necessary.
Perform the POWERTRAIN VERIFICATION TEST. (Refer to 9 - ENGINE - STANDARD PROCEDURE)

No >> Replace and program the Powertrain Control Module per Service Information.
Perform the POWERTRAIN VERIFICATION TEST. (Refer to 9 - ENGINE - STANDARD PROCEDURE)

P2173-HIGH AIRFLOW/VACUUM LEAK DETECTED (SLOW ACCUMULATION)

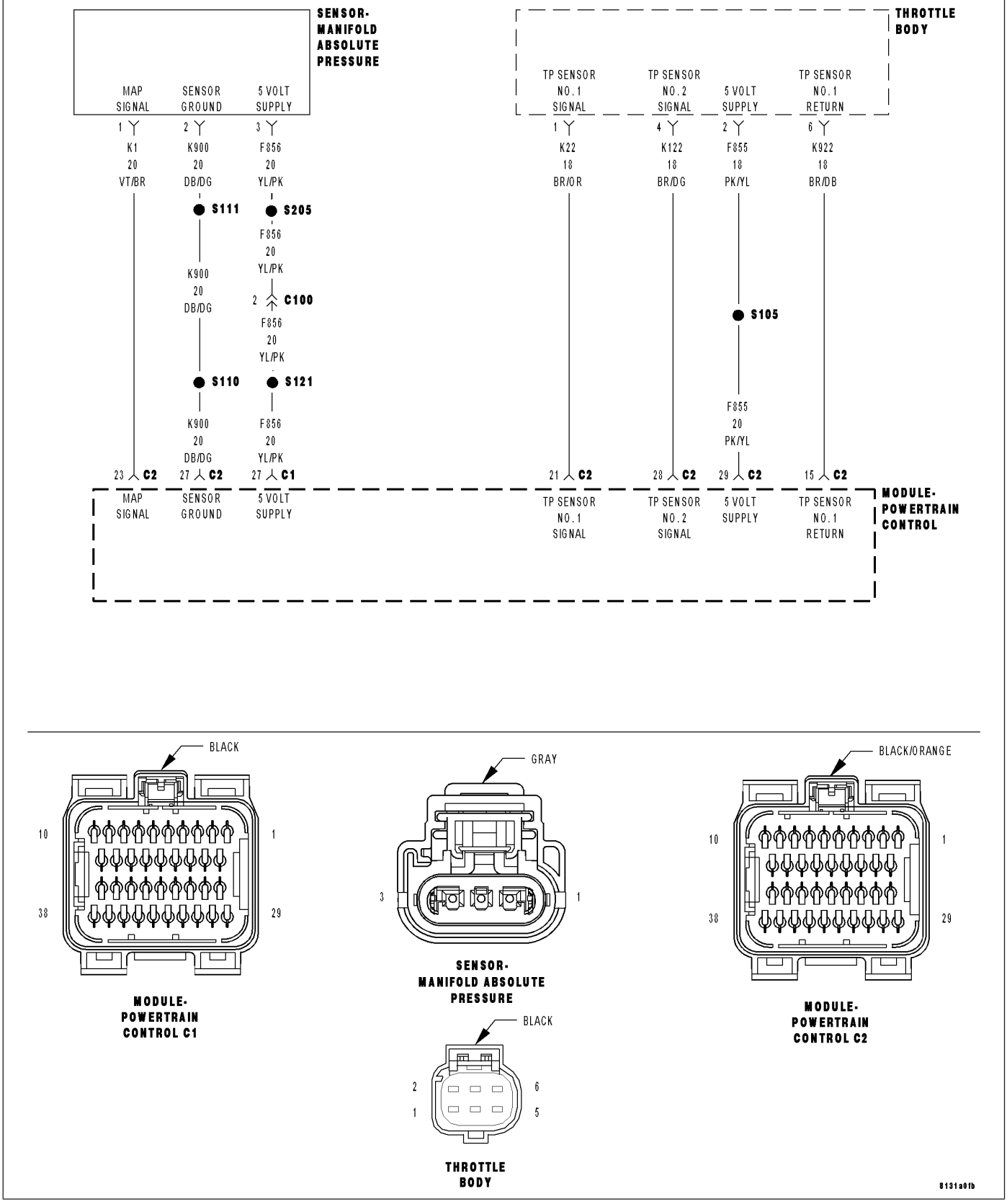

For a complete wiring diagram **Refer to Section 8W**.

- **When Monitored:**
  Ignition on and engine running with no MAP Sensor DTCs.
- **Set Condition:**
  A large vacuum leak has been detected or both of the TP Sensors have failed based on their position being 2.5 volts and the calculated MAP value is less than the Gas Flow Adaptation value is too high. One trip fault the code will set within 5 seconds. ETC light will flash.

Possible Causes
VACUUM LEAK
RESISTANCE IN THE (F856) 5-VOLT SUPPLY CIRCUIT
(F856) 5-VOLT SUPPLY CIRCUIT SHORTED TO GROUND
RESISTANCE IN THE (K1) MAP SIGNAL CIRCUIT
(K1) MAP SIGNAL CIRCUIT SHORTED TO GROUND
RESISTANCE IN (K900) SENSOR GROUND CIRCUIT
RESISTANCE IN THE (F855) 5-VOLT SUPPLY CIRCUIT
(F855) 5-VOLT SUPPLY CIRCUIT SHORTED TO GROUND
RESISTANCE IN THE TP SENSOR SIGNAL CIRCUIT
TP SENSOR SIGNAL CIRCUIT SHORTED TO GROUND
RESISTANCE IN THE (K922) TP SENSOR RETURN CIRCUIT
MAP SENSOR
TP SENSOR
PCM

Always perform the Pre-Diagnostic Troubleshooting procedure before proceeding. (Refer to 9 - ENGINE - DIAGNOSIS AND TESTING).

Diagnostic Test

1. ACTIVE DTC

NOTE: The most likely cause of this DTC is a vacuum leak.

NOTE: Diagnose any 5-Volt Supply, TP Sensor, Oxygen Sensor, Fuel related, or MAP Sensor DTCs before continuing.

NOTE: The throttle plate should be free from binding and carbon build up.
Ignition on, engine not running.
With a scan tool, read DTCs.

Is the DTC active at this time?

Yes >> Go To 2

No >> Refer to the INTERMITTENT CONDITION Diagnostic Procedure.
Perform the POWERTRAIN VERIFICATION TEST. (Refer to 9 - ENGINE - STANDARD PROCEDURE)

2. VACUUM LEAK

NOTE: This code is enabled on engines with a plastic intake manifold and is intended to limit the maximum engine speed if a large crack occurs.

NOTE: A large vacuum leak is most likely the cause of this DTC.

Inspect the Intake Manifold and Throttle body for leaks and cracks.

Inspect the Power Brake Booster for any vacuum leaks.

Inspect the PCV system for proper operation or any vacuum leaks.

Inspect the MAP Sensor for proper installation.

Were any vacuum leaks found?

Yes >> Repair the vacuum leak as necessary.
Perform the POWERTRAIN VERIFICATION TEST. (Refer to 9 - ENGINE - STANDARD PROCEDURE)

No >> Go To 3

3. MAP SENSOR OPERATION

Start the engine.

With a scan tool, monitor the MAP Sensor voltage.

Snap the Accelerator pedal.

Does the MAP Sensor voltage vary from below 2.0 volts at idle to above 3.5 volts at Wide Open Throttle?

Yes >> Go To 4

No >> Go To 11

4. TP SENSOR OPERATION

Ignition on, engine not running.

With a scan tool, perform the Throttle Follower Test.

TP Sensor No.1 should start at approximately 0.8 of a volt and increase to 4.2 volts.

TP Sensor No.2 should start at approximately 4.2 volts and decrease to 0.8 of a volt.

Is the voltage transition smooth between the appropriate values?

Yes >> Refer to the INTERMITTENT CONDITION Diagnostic Procedure.
Perform the POWERTRAIN VERIFICATION TEST. (Refer to 9 - ENGINE - STANDARD PROCEDURE)

No >> Go To 5

5. RESISTANCE IN (F855) 5-VOLT SUPPLY CIRCUIT

Turn the ignition off.

Disconnect the Throttle Body harness connector.

Disconnect the PCM harness connector.

CAUTION: Do not probe the PCM harness connectors. Probing the PCM harness connectors will damage the PCM terminals resulting in poor terminal to pin connection. Install Miller Special Tool #8815 to perform diagnosis.

Measure the resistance of the (F855) 5-volt Supply circuit from the Throttle Body harness connector to the appropriate terminal of special tool #8815.

Is the resistance below 100 ohms?

Yes >> Go To 6

No >> Repair the excessive resistance in the (F855) 5-volt Supply circuit.

Perform the POWERTRAIN VERIFICATION TEST. (Refer to 9 - ENGINE - STANDARD PROCEDURE)

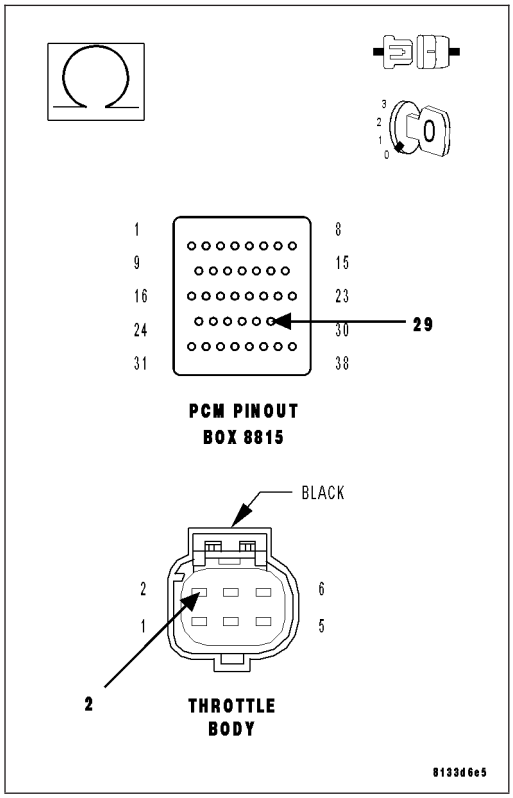

6. (F855) 5-VOLT SUPPLY CIRCUIT SHORTED TO GROUND

Measure the resistance between ground and (F855) 5-volt Supply circuit between the appropriate terminals of special tool #8815.

Is the resistance above 100 ohms?

Yes >> Go To 7

No >> Repair the short to ground in the (F855) 5-volt Supply circuit.

Perform the POWERTRAIN VERIFICATION TEST. (Refer to 9 - ENGINE - STANDARD PROCEDURE)

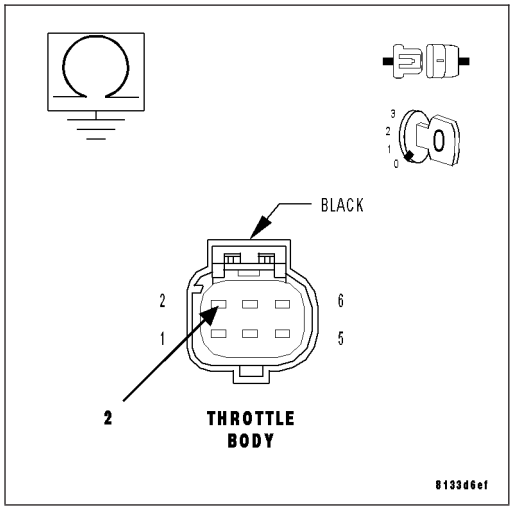

7. TP SENSOR

Connect the PCM harness connector.

Ignition on, engine not running.

With a scan tool, monitor the TP Sensor voltage.

Connect a jumper wire between the (K22) TP Sensor No.1 Signal circuit and the (K922) Sensor Return circuit in the Throttle Body harness connector.

TP Sensor No.1 voltage should start at approximately 4.8 volts and decrease to 0.2 of a volt.

Connect a jumper wire between the (K122) TP Sensor No.2 Signal circuit and the (F855) 5-volt Supply circuit in the Throttle Body harness connector.

TP Sensor No.2 voltage should start at approximately 0 volts and increase to 4.8 to 5.2 volts.

Does the TP Sensor voltage change to the appropriate voltage with the jumper wire installed?

Yes >> Disconnect the Battery before replacing the Throttle Body Assembly. Replace the Throttle Body Assembly. After installation is complete, use a scan tool and select the ETC RELEARN function

Perform the POWERTRAIN VERIFICATION TEST. (Refer to 9 - ENGINE - STANDARD PROCEDURE)

No >> Go To 8

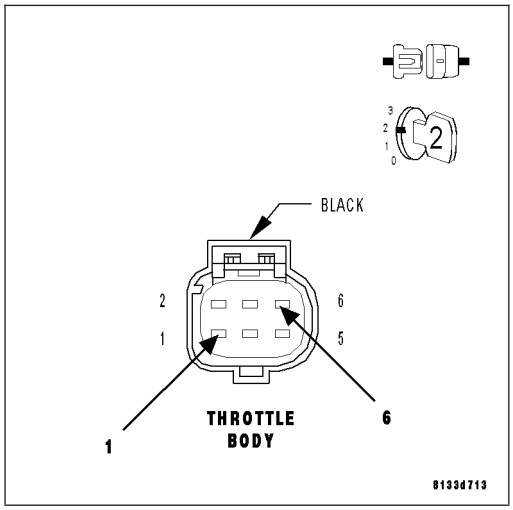

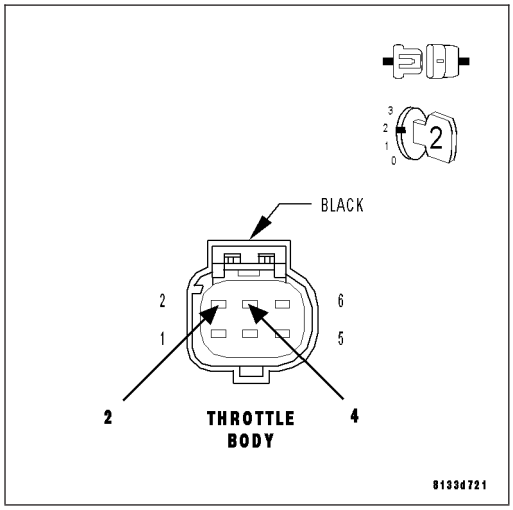

8. RESISTANCE IN THE TP SENSOR SIGNAL CIRCUIT

Turn the ignition off.

Disconnect the PCM harness connector.

Measure the resistance of the (K22) and (K122) TP Signal circuits from the Throttle Body harness connector to the appropriate terminals of special tool #8815.

Is the resistance below 5.0 ohms for each circuit?

Yes >> Go To 9

No >> Repair the excessive resistance in the (K22) or (K122) TP Sensor Signal circuit.

Perform the POWERTRAIN VERIFICATION TEST. (Refer to 9 - ENGINE - STANDARD PROCEDURE)

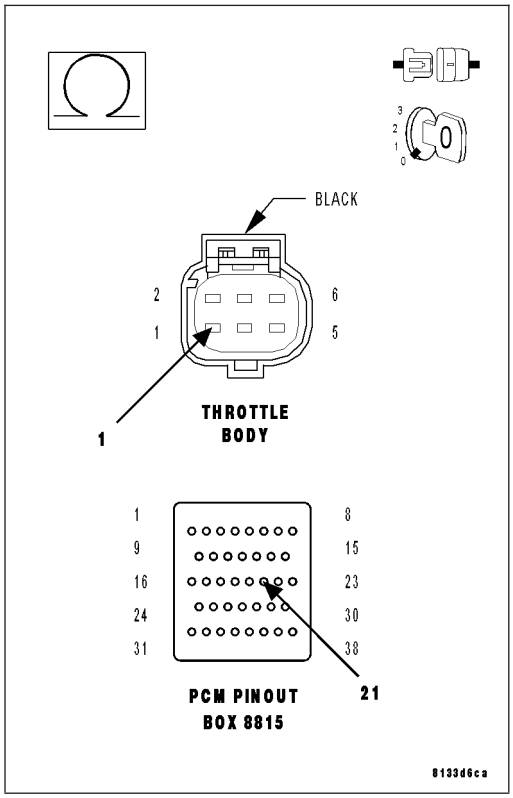

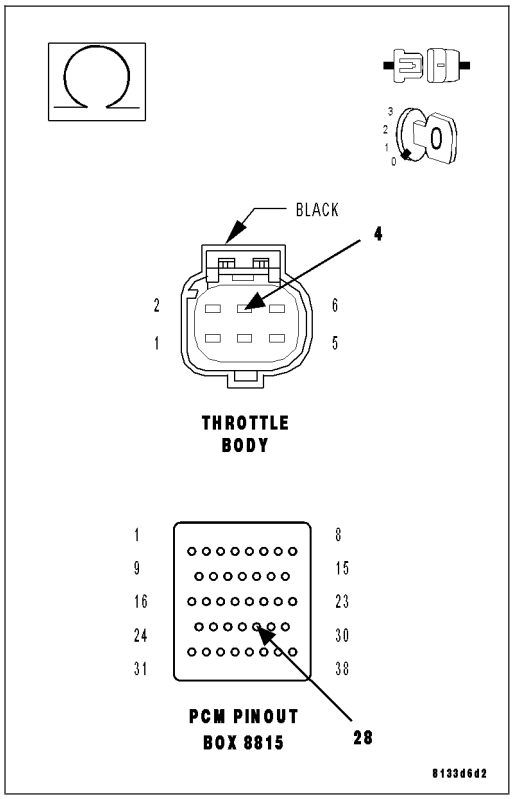

9. TP SENSOR SIGNAL CIRCUIT SHORTED TO GROUND

Measure the resistance between ground and the (K22) and (K122) TP Signal circuits at the appropriate terminals of special tool #8815.

Is the resistance above 100k ohms for each circuit?

Yes >> Go To 10

No >> Repair the short to ground in the (K22) or (K122) TP Sensor Signal circuit.

Perform the POWERTRAIN VERIFICATION TEST. (Refer to 9 - ENGINE - STANDARD PROCEDURE)

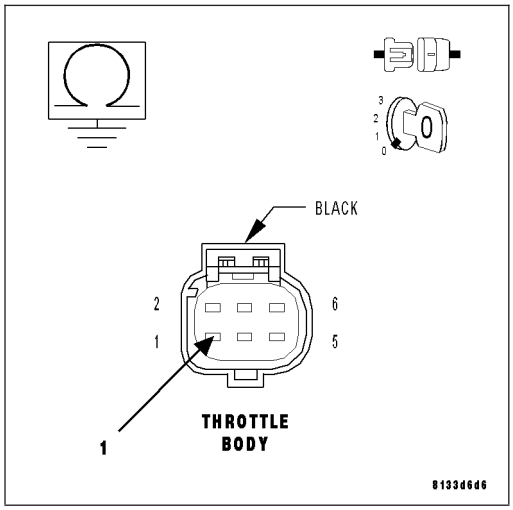

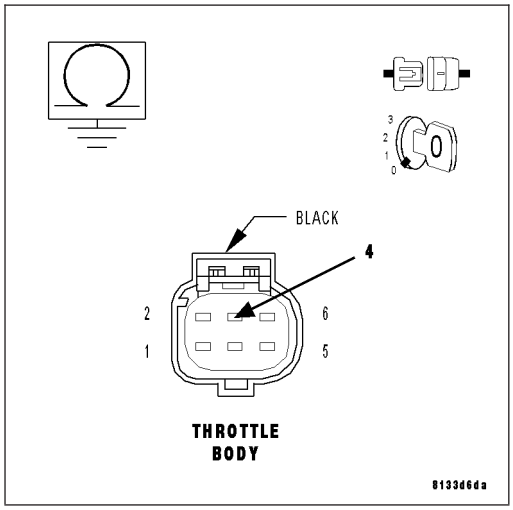

10. RESISTANCE IN THE (K922) SENSOR RETURN CIRCUIT

Measure the resistance of the (K922) Sensor Return circuit from the Throttle Body harness connector to the appropriate terminal of special tool #8815.

Is the resistance below 5.0 ohms?

Yes >> Go To 17

No >> Repair the excessive resistance in the (K922) Sensor Return circuit.

Perform the POWERTRAIN VERIFICATION TEST. (Refer to 9 - ENGINE - STANDARD PROCEDURE)

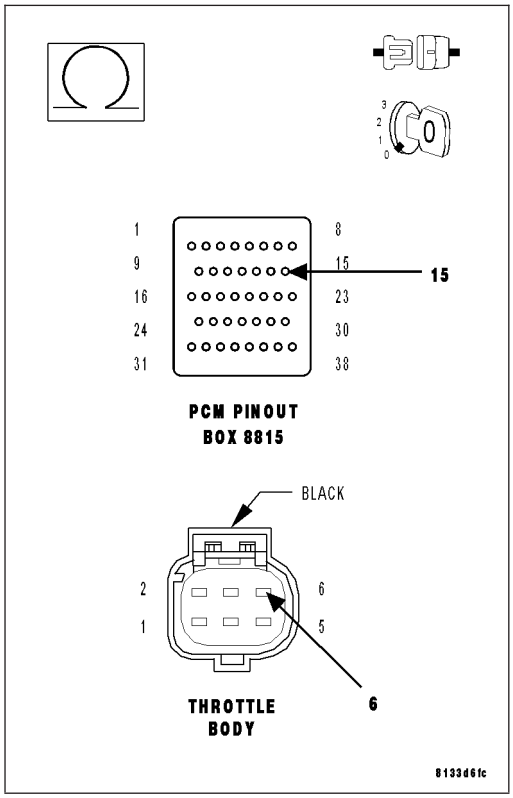

11. RESISTANCE IN THE (F856) 5-VOLT SUPPLY CIRCUIT

Turn the ignition off.

Disconnect the MAP Sensor harness connector.

Disconnect the C1 PCM harness connector.

CAUTION: Do not probe the PCM harness connectors. Probing the PCM harness connectors will damage the PCM terminals resulting in poor terminal to pin connection. Install Miller Special Tool #8815 to perform diagnosis.

Measure the resistance of the (F856) 5-volt Supply circuit from the MAP Sensor harness connector to the appropriate terminal of special tool #8815.

Is the resistance below 5.0 ohms?

Yes >> Go To 12

No >> Repair the excessive resistance in the (F856) 5-volt Supply circuit.

Perform the POWERTRAIN VERIFICATION TEST. (Refer to 9 - ENGINE - STANDARD PROCEDURE)

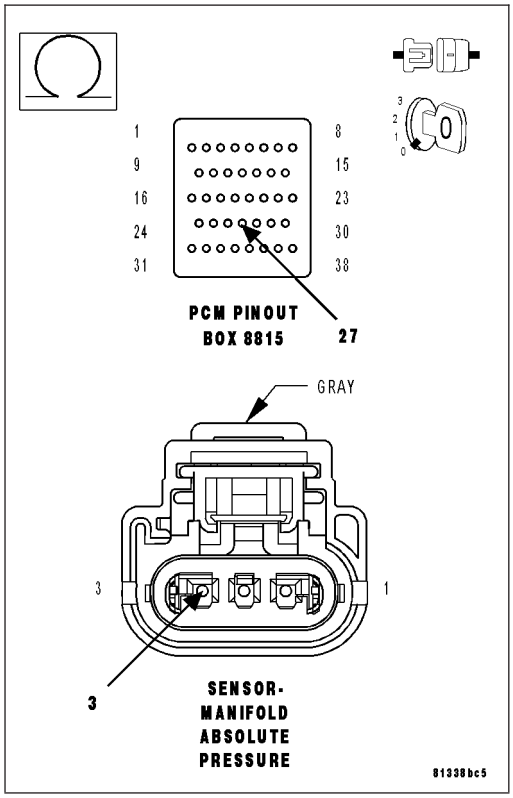

12. (F856) 5-VOLT SUPPLY CIRCUIT SHORTED TO GROUND

Measure the resistance between ground and the (F856) 5-volt Supply circuit in the MAP Sensor harness connector.

Is the resistance above 100k ohms?

Yes >> Go To 13

No >> Repair the short to ground in the (F856) 5-volt Supply circuit.

Perform the POWERTRAIN VERIFICATION TEST. (Refer to 9 - ENGINE - STANDARD PROCEDURE)

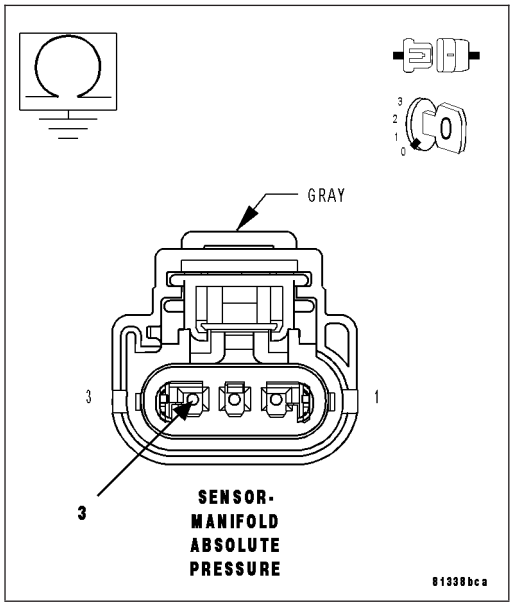

13. MAP SENSOR

Connect the C1 PCM harness connector.

Ignition on, engine not running.

With a scan tool, monitor the MAP Sensor voltage.

Connect a jumper wire between the (K1) MAP Signal circuit and the (K900) Sensor ground circuit in the MAP Sensor harness connector.

Cycle the ignition switch from off to on.

With a scan tool, monitor the MAP Sensor voltage.

Does the scan tool display MAP voltage from approximately 4.9 volts to below 0.5 volt with the jumper wire installed?

Yes >> Replace the MAP Sensor.

Perform the POWERTRAIN VERIFICATION TEST. (Refer to 9 - ENGINE - STANDARD PROCEDURE)

No >> Go To 14

NOTE: Remove the jumper wire before continuing.

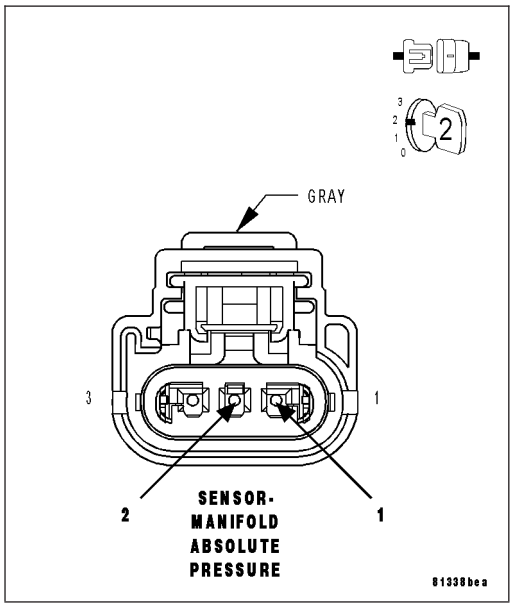

14. RESISTANCE IN THE (K1) MAP SIGNAL CIRCUIT

Turn the ignition off.

Disconnect the PCM harness connector.

Measure the resistance of the (K1) MAP Signal circuit from the MAP Sensor harness connector to the appropriate terminal of special tool #8815.

Is the resistance below 5.0 ohms?

Yes >> Go To 15

No >> Repair the excessive resistance in the (K1) MAP Signal circuit.

Perform the POWERTRAIN VERIFICATION TEST. (Refer to 9 - ENGINE - STANDARD PROCEDURE)

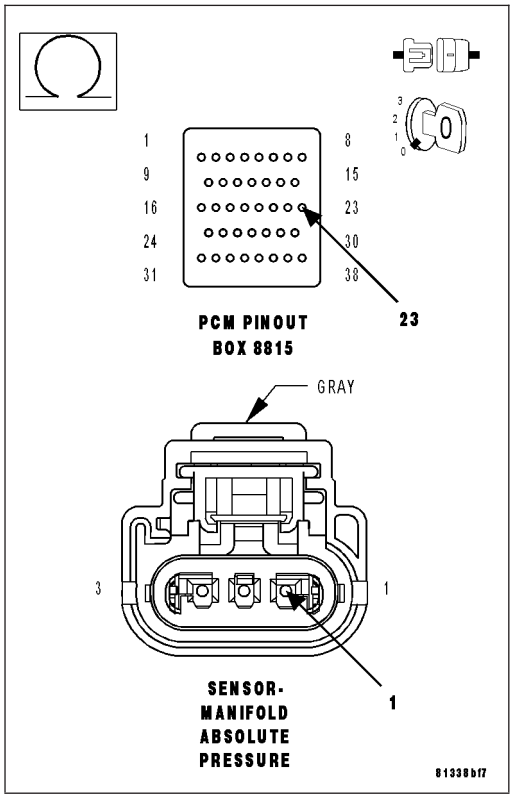

15. (K1) MAP SIGNAL CIRCUIT SHORTED TO GROUND

Measure the resistance between ground and the (K1) MAP Signal circuit at the MAP Sensor harness connector.

Is the resistance above 100k ohms?

Yes >> Go To 16

No >> Repair the short to ground in the (K1) MAP Signal circuit.

Perform the POWERTRAIN VERIFICATION TEST. (Refer to 9 - ENGINE - STANDARD PROCEDURE)

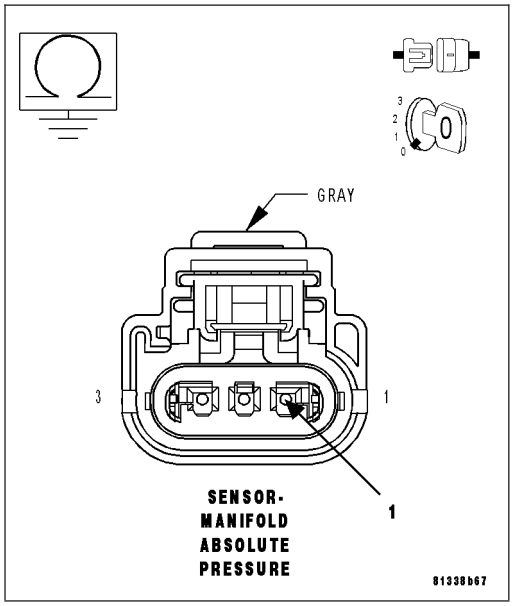

16. RESISTANCE IN THE (K900) SENSOR GROUND CIRCUIT

Measure the resistance of the (K900) Sensor ground circuit from the MAP Sensor harness connector to the appropriate terminal of special tool #8815.

Is the resistance below 5.0 ohms?

Yes >> Go To 17

No >> Repair the excessive resistance in the (K900) Sensor ground circuit.
Perform the POWERTRAIN VERIFICATION TEST. (Refer to 9 - ENGINE - STANDARD PROCEDURE)

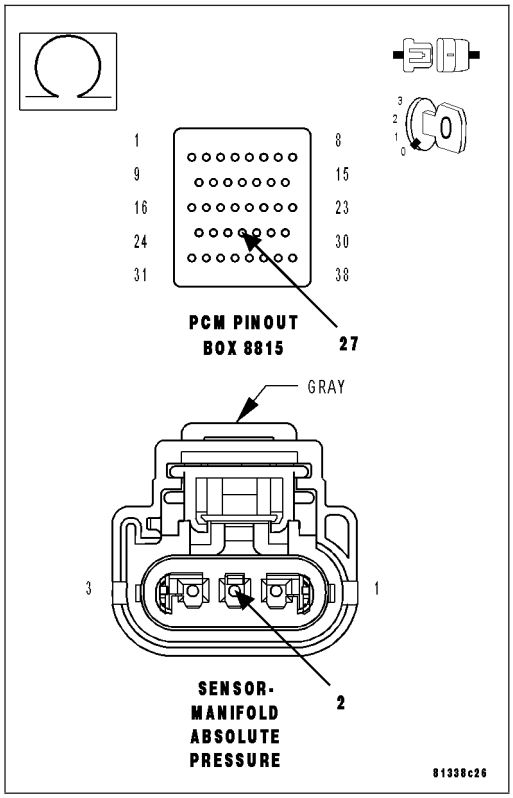

17. PCM

NOTE: Before continuing, check the PCM harness connector terminals for corrosion, damage, or terminal push out. Repair as necessary.
Using the schematics as a guide, inspect the wire harness and connectors. Pay particular attention to all Power and Ground circuits.

Were there any problems found?

Yes >> Repair as necessary.
Perform the POWERTRAIN VERIFICATION TEST. (Refer to 9 - ENGINE - STANDARD PROCEDURE)

No >> Replace and program the Powertrain Control Module per Service Information.
Perform the POWERTRAIN VERIFICATION TEST. (Refer to 9 - ENGINE - STANDARD PROCEDURE)

P2174-LOW AIRFLOW/RESTRICTION DETECTED (INSTANTANEOUS ACCUMULATION)

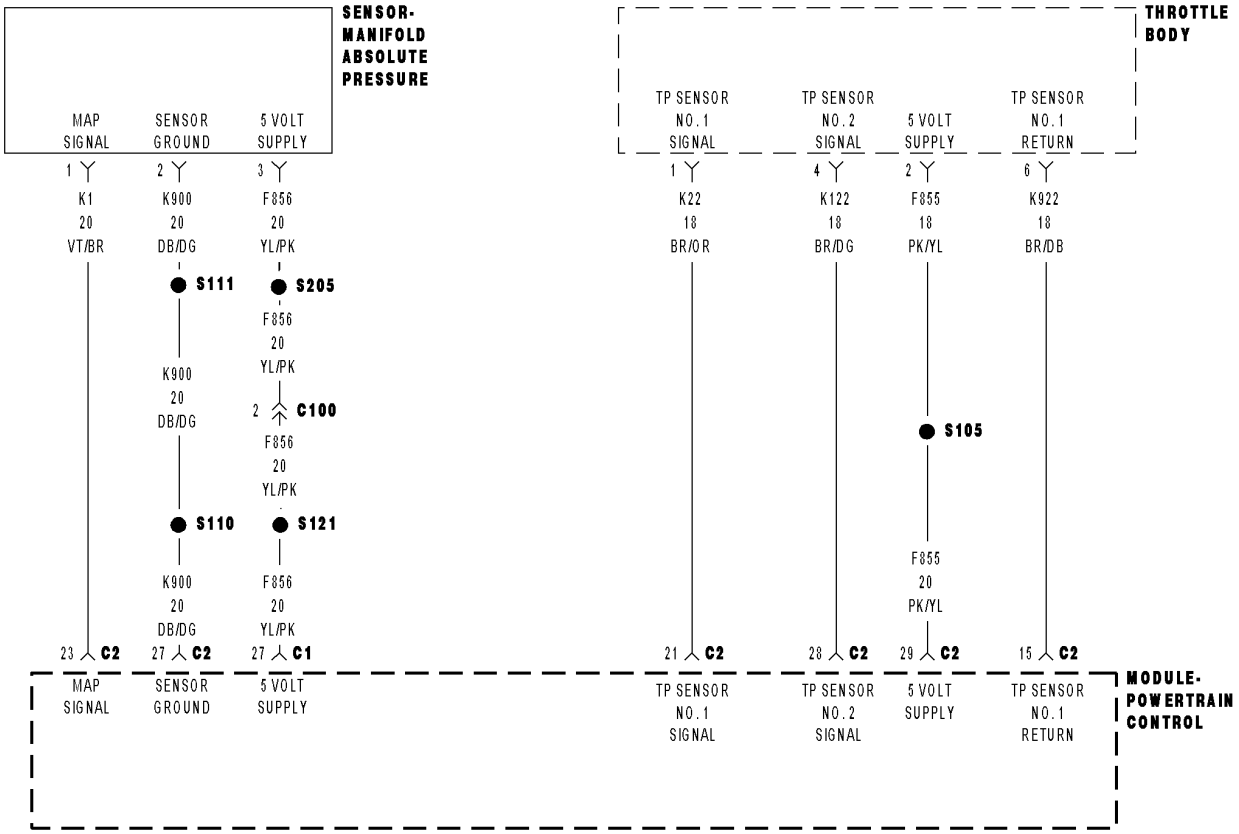

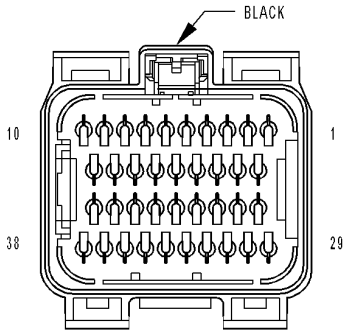

MODULE-
POWERTRAIN
CONTROL C1

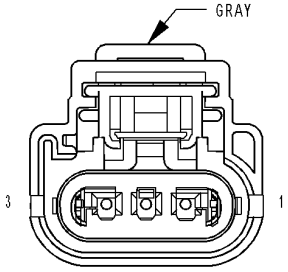

SENSOR-
MANIFOLD ABSOLUTE
PRESSURE

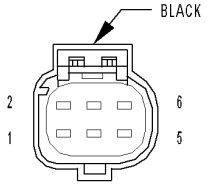

THROTTLE
BODY

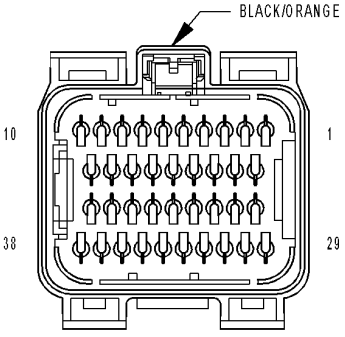

MODULE-
POWERTRAIN
CONTROL C2

8131a01b

For a complete wiring diagram **Refer to Section 8W**.

- **When Monitored:**
  Ignition on and engine running with no MAP Sensor DTCs.
- **Set Condition:**
  PCM calculated MAP value is greater than actual MAP value plus an offset value. One trip fault and the code will set within 5 seconds. Three good trips to turn of the MIL. ETC light will flash.

Possible Causes
RESTRICTED AIR INLET SYSTEM
RESISTANCE IN THE (F856) 5-VOLT SUPPLY CIRCUIT
(F856) 5-VOLT SUPPLY CIRCUIT SHORTED TO GROUND
RESISTANCE IN THE (K1) MAP SIGNAL CIRCUIT
(K1) MAP SIGNAL CIRCUIT SHORTED TO GROUND
RESISTANCE IN (K900) SENSOR GROUND CIRCUIT
RESISTANCE IN THE (F855) 5-VOLT SUPPLY CIRCUIT
(F855) 5-VOLT SUPPLY CIRCUIT SHORTED TO GROUND
RESISTANCE IN THE TP SENSOR SIGNAL CIRCUIT
TP SENSOR SIGNAL CIRCUIT SHORTED TO GROUND
RESISTANCE IN THE (K922) TP SENSOR RETURN CIRCUIT
MAP SENSOR
TP SENSOR
PCM

Always perform the Pre-Diagnostic Troubleshooting procedure before proceeding. (Refer to 9 - ENGINE - DIAGNOSIS AND TESTING).

Diagnostic Test

1. ACTIVE DTC

NOTE: The most likely cause of this DTC is a vacuum leak.

NOTE: Diagnose any 5-Volt Supply, TP Sensor, Fuel System Lean or Rich, or MAP Sensor DTCs before continuing.

NOTE: The throttle plate should be free from binding and carbon build up.

NOTE: Question the customer about weather conditions, as ICE build up on the blade can cause this fault when ambient is around +4 to -10 Celsius range.

Ignition on, engine not running.

With a scan tool, read DTCs.

Is the DTC active at this time?

Yes >> Go To 2

No >> Refer to the INTERMITTENT CONDITION Diagnostic Procedure.
Perform the POWERTRAIN VERIFICATION TEST. (Refer to 9 - ENGINE - STANDARD PROCEDURE)

2. RESTRICTED AIR INLET SYSTEM

Turn the ignition off.
Remove the Air Cleaner Assembly.
Remove the Air Filter.
Inspect the Throttle Body opening for signs of any foreign materials.
Check the intake tube/ air cleaner for obstructions.

Were any restrictions found?

Yes >> Repair the restriction as necessary.
Perform the POWERTRAIN VERIFICATION TEST. (Refer to 9 - ENGINE - STANDARD PROCEDURE)

No >> Go To 3

3. MAP SENSOR OPERATION

Start the engine.
With a scan tool, monitor the MAP Sensor voltage.
Snap the Accelerator pedal.

Does the MAP Sensor voltage vary from below 2.0 volts at idle to above 3.5 volts at Wide Open Throttle?

Yes >> Go To 4

No >> Go To 11

4. TP SENSOR OPERATION

Ignition on, engine not running.
With a scan tool, perform the Throttle Follower Test.
TP Sensor No.1 should start at approximately 0.8 of a volt and increase to 4.2 volts.
TP Sensor No.2 should start at approximately 4.2 volts and decrease to 0.8 of a volt.

Is the voltage transition smooth between the appropriate values?

Yes >> Refer to the INTERMITTENT CONDITION Diagnostic Procedure.
Perform the POWERTRAIN VERIFICATION TEST. (Refer to 9 - ENGINE - STANDARD PROCEDURE)

No >> Go To 5

5. RESISTANCE IN (F855) 5-VOLT SUPPLY CIRCUIT

Turn the ignition off.

Disconnect the Throttle Body harness connector.

Disconnect the PCM harness connector.

CAUTION: Do not probe the PCM harness connectors. Probing the PCM harness connectors will damage the PCM terminals resulting in poor terminal to pin connection. Install Miller Special Tool #8815 to perform diagnosis.

Measure the resistance of the (F855) 5-volt Supply circuit from the Throttle Body harness connector to the appropriate terminal of special tool #8815.

Is the resistance below 100 ohms?

Yes >> Go To 6

No >> Repair the excessive resistance in the (F855) 5-volt Supply circuit.

Perform the POWERTRAIN VERIFICATION TEST. (Refer to 9 - ENGINE - STANDARD PROCEDURE)

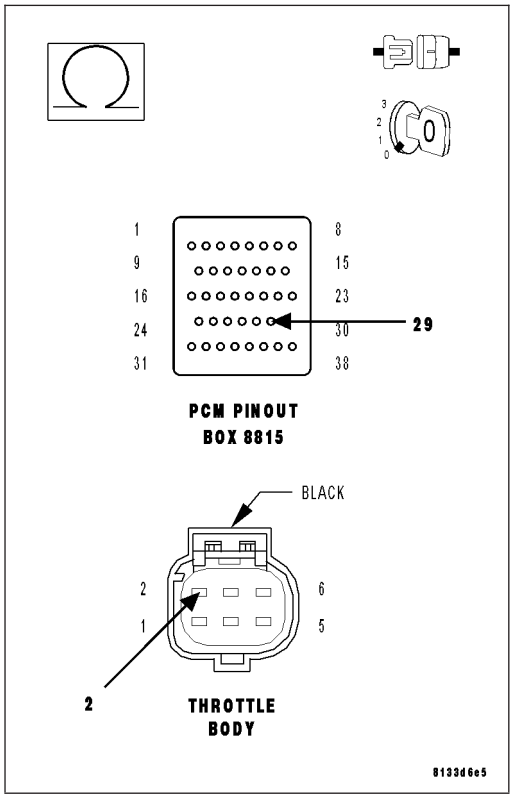

6. (F855) 5-VOLT SUPPLY CIRCUIT SHORTED TO GROUND

Measure the resistance between ground and (F855) 5-volt Supply circuit between the appropriate terminals of special tool #8815.

Is the resistance above 100k ohms?

Yes >> Go To 7

No >> Repair the short to ground in the (F855) 5-volt Supply circuit.

Perform the POWERTRAIN VERIFICATION TEST. (Refer to 9 - ENGINE - STANDARD PROCEDURE)

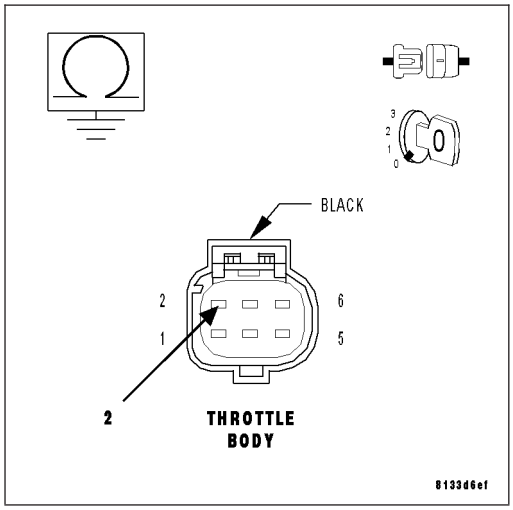

7. TP SENSOR

Connect the PCM harness connector.

Ignition on, engine not running.

With a scan tool, monitor the TP Sensor voltage.

Connect a jumper wire between the (K22) TP Sensor No.1 Signal circuit and the (K922) Sensor Return circuit in the Throttle Body harness connector.

TP Sensor No.1 voltage should start at approximately 4.8 volts and decrease to 0.2 of a volt.

Connect a jumper wire between the (K122) TP Sensor No.2 Signal circuit and the (F855) 5-volt Supply circuit in the Throttle Body harness connector.

TP Sensor No.2 voltage should start at approximately 0 volts and increase to 4.8 to 5.2 volts.

Does the TP Sensor voltage change to the appropriate voltage with the jumper wire installed?

Yes >> Disconnect the Battery before replacing the Throttle Body Assembly. Replace the Throttle Body Assembly. After installation is complete, use a scan tool and select the ETC RELEARN function

Perform the POWERTRAIN VERIFICATION TEST. (Refer to 9 - ENGINE - STANDARD PROCEDURE)

No >> Go To 8

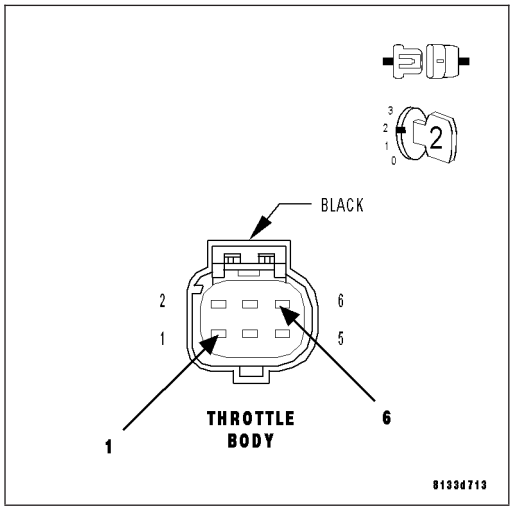

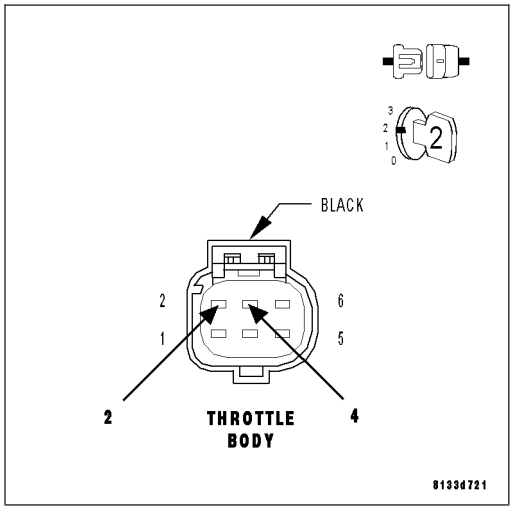

8. RESISTANCE IN THE TP SENSOR SIGNAL CIRCUIT

Turn the ignition off.

Disconnect the PCM harness connector.

Measure the resistance of the (K22) and (K122) TP Signal circuits from the Throttle Body harness connector to the appropriate terminals of special tool #8815.

Is the resistance below 5.0 ohms for each circuit?

Yes >> Go To 9

No >> Repair the excessive resistance in the (K22) or (K122) TP Sensor Signal circuit.

Perform the POWERTRAIN VERIFICATION TEST. (Refer to 9 - ENGINE - STANDARD PROCEDURE)

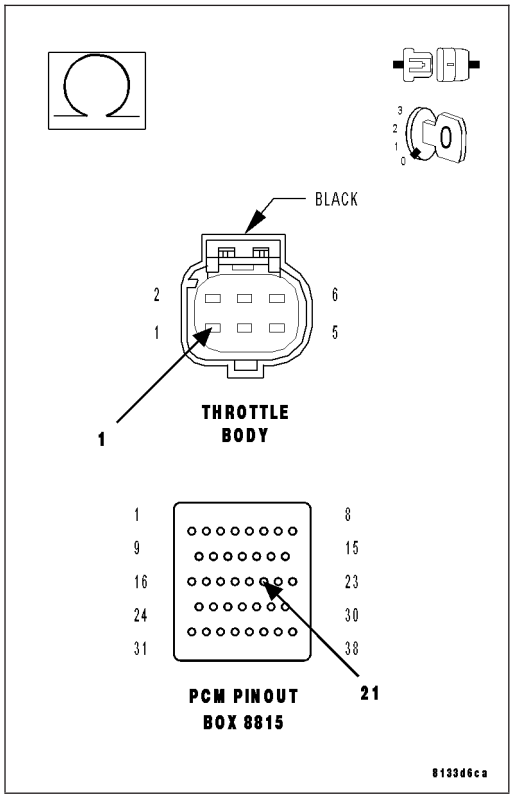

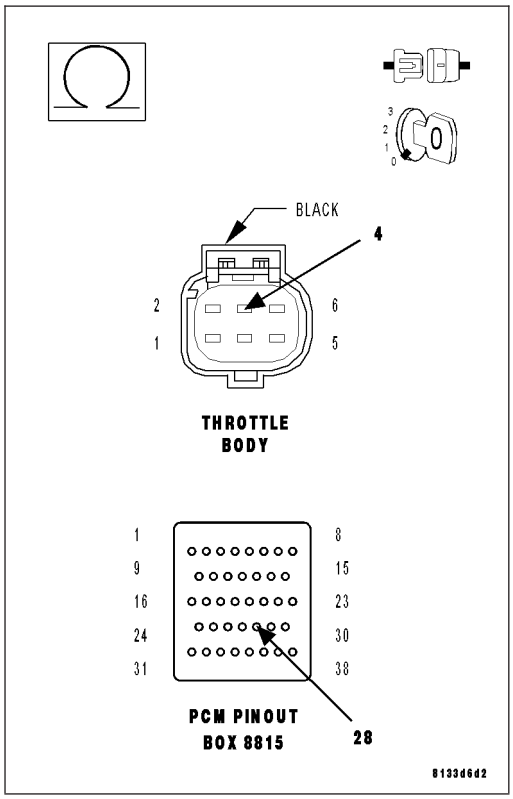

9. TP SENSOR SIGNAL CIRCUIT SHORTED TO GROUND

Measure the resistance between ground and the (K22) and (K122) TP Signal circuits at the appropriate terminals of special tool #8815.

Is the resistance above 100 ohms for each circuit?

Yes >> Go To 10

No >> Repair the short to ground in the (K22) or (K122) TP Sensor Signal circuit.

Perform the POWERTRAIN VERIFICATION TEST. (Refer to 9 - ENGINE - STANDARD PROCEDURE)

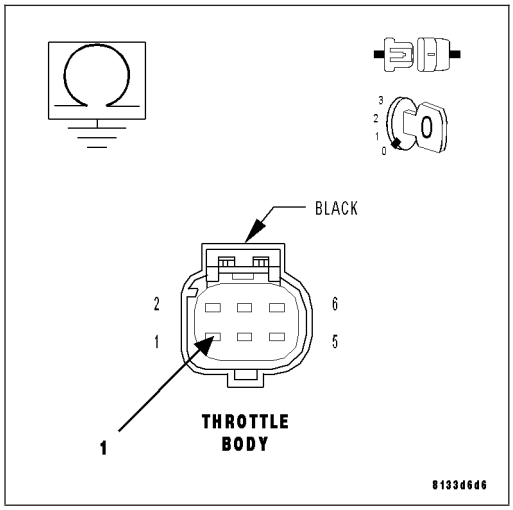

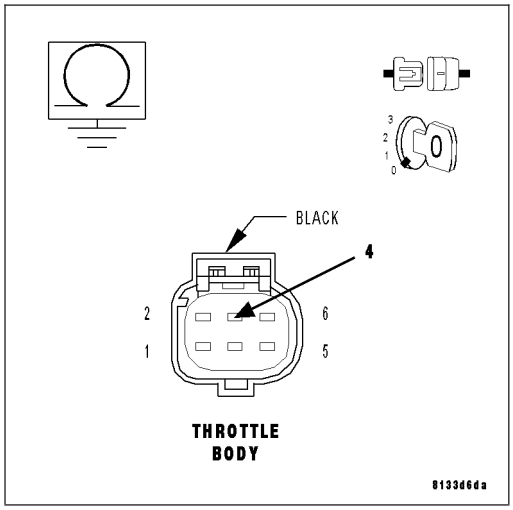

10. RESISTANCE IN THE (K922) SENSOR RETURN CIRCUIT

Measure the resistance of the (K922) Sensor Return circuit from the Throttle Body harness connector to the appropriate terminal of special tool #8815.

Is the resistance below 5.0 ohms?

Yes >> Go To 17

No >> Repair the excessive resistance in the (K922) Sensor Return circuit.

Perform the POWERTRAIN VERIFICATION TEST. (Refer to 9 - ENGINE - STANDARD PROCEDURE)

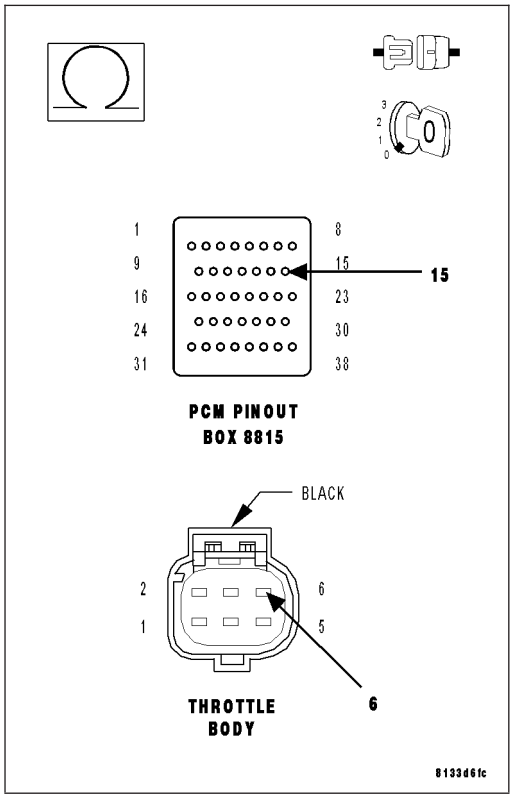

11. RESISTANCE IN THE (F856) 5-VOLT SUPPLY CIRCUIT

Turn the ignition off.

Disconnect the MAP Sensor harness connector.

Disconnect the C1/A PCM harness connector.

CAUTION: Do not probe the PCM harness connectors. Probing the PCM harness connectors will damage the PCM terminals resulting in poor terminal to pin connection. Install Miller Special Tool #8815 to perform diagnosis.

Measure the resistance of the (F856) 5-volt Supply circuit from the MAP Sensor harness connector to the appropriate terminal of special tool #8815.

Is the resistance below 5.0 ohms?

Yes >> Go To 12

No >> Repair the excessive resistance in the (F856) 5-volt Supply circuit.

Perform the POWERTRAIN VERIFICATION TEST. (Refer to 9 - ENGINE - STANDARD PROCEDURE)

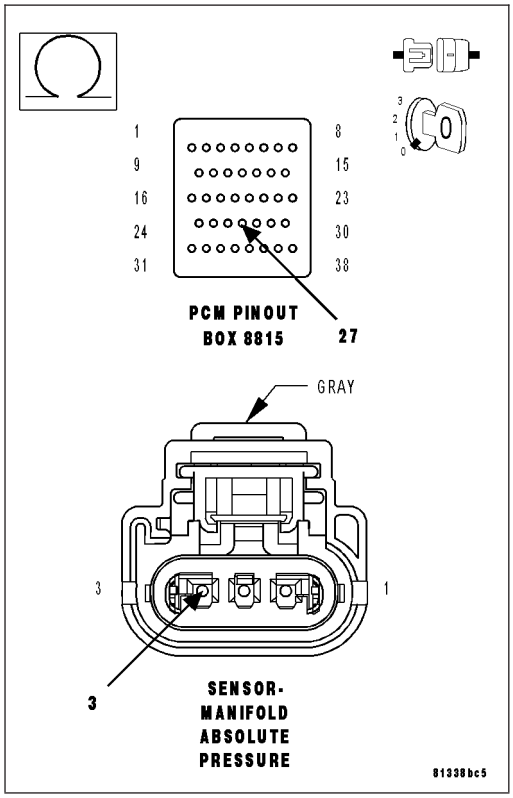

12. (F856) 5-VOLT SUPPLY CIRCUIT SHORTED TO GROUND

Measure the resistance between ground and the (F856) 5-volt Supply circuit in the MAP Sensor harness connector.

Is the resistance above 100k ohms?

Yes >> Go To 13

No >> Repair the short to ground in the (F856) 5-volt Supply circuit.

Perform the POWERTRAIN VERIFICATION TEST. (Refer to 9 - ENGINE - STANDARD PROCEDURE)

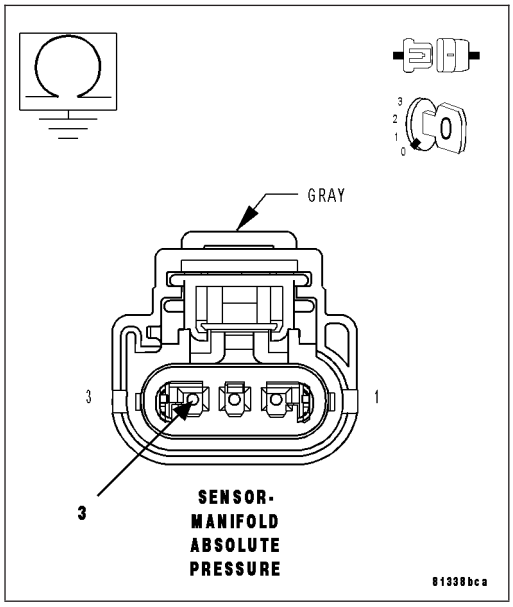

13. MAP SENSOR

Connect the C1/A PCM harness connector.

Ignition on, engine not running.

With a scan tool, monitor the MAP Sensor voltage.

Connect a jumper wire between the (K1) MAP Signal circuit and the (K900) Sensor ground circuit in the MAP Sensor harness connector.

Cycle the ignition switch from off to on.

With a scan tool, monitor the MAP Sensor voltage.

Does the scan tool display MAP voltage from approximately 4.9 volts to below 0.5 volt with the jumper wire installed?

Yes >> Replace the MAP Sensor.

Perform the POWERTRAIN VERIFICATION TEST. (Refer to 9 - ENGINE - STANDARD PROCEDURE)

No >> Go To 14

NOTE: Remove the jumper wire before continuing.

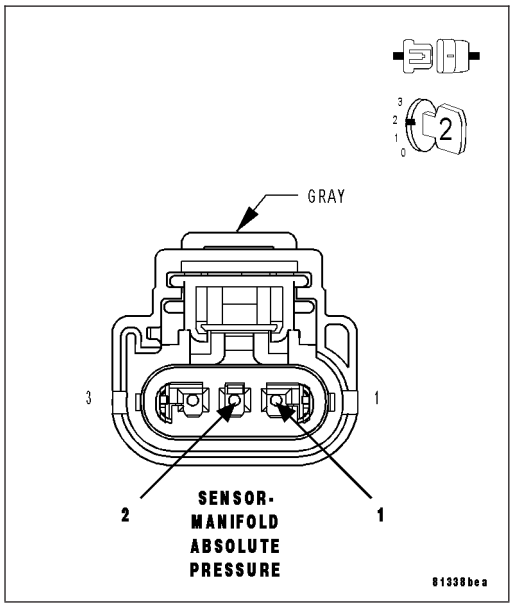

14. RESISTANCE IN THE (K1) MAP SIGNAL CIRCUIT

Turn the ignition off.

Disconnect the PCM harness connector.

Measure the resistance of the (K1) MAP Signal circuit from the MAP Sensor harness connector to the appropriate terminal of special tool #8815.

Is the resistance below 5.0 ohms?

Yes >> Go To 15

No >> Repair the excessive resistance in the (K1) MAP Signal circuit

Perform the POWERTRAIN VERIFICATION TEST. (Refer to 9 - ENGINE - STANDARD PROCEDURE)

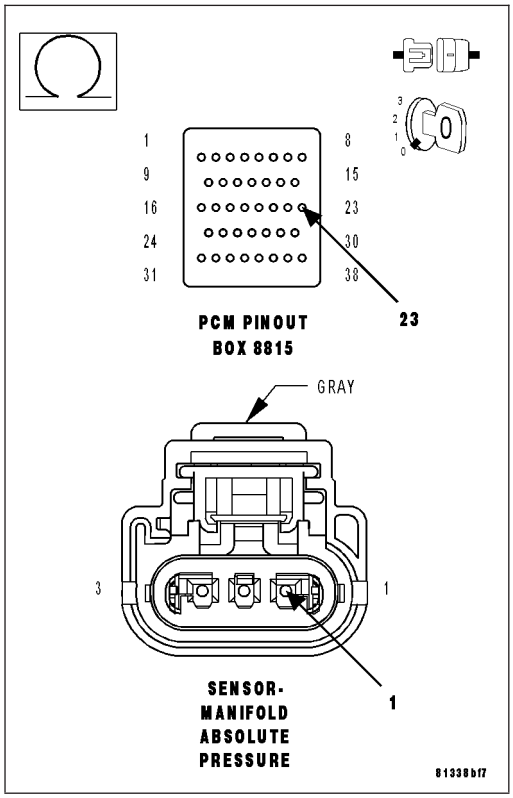

15. (K1) MAP SIGNAL CIRCUIT SHORTED TO GROUND

Measure the resistance between ground and the (K1) MAP Signal circuit in the MAP Sensor harness connector.

Is the resistance above 100k ohms?

Yes >> Go To 16

No >> Repair the short to ground in the (K1) MAP Signal circuit.

Perform the POWERTRAIN VERIFICATION TEST. (Refer to 9 - ENGINE - STANDARD PROCEDURE)

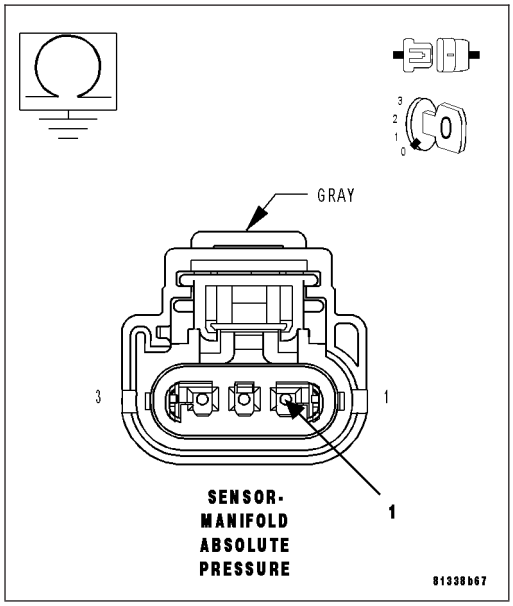

16. RESISTANCE IN THE (K900) SENSOR GROUND CIRCUIT

Measure the resistance of the (K900) Sensor ground circuit from the MAP Sensor harness connector to the appropriate terminal of special tool #8815.

Is the resistance below 5.0 ohms?

Yes >> Go To 17

No >> Repair the excessive resistance in the (K900) Sensor ground circuit.
Perform the POWERTRAIN VERIFICATION TEST. (Refer to 9 - ENGINE - STANDARD PROCEDURE)

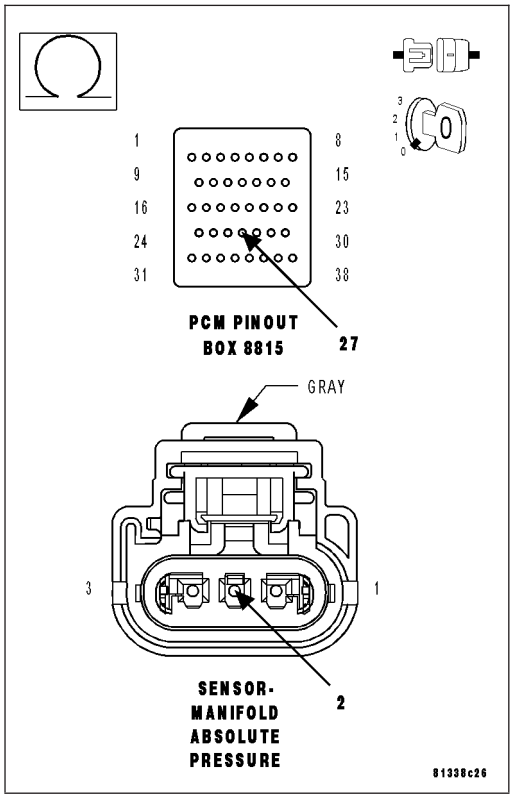

17. PCM

NOTE: Before continuing, check the PCM harness connector terminals for corrosion, damage, or terminal push out. Repair as necessary.
Using the schematics as a guide, inspect the wire harness and connectors. Pay particular attention to all Power and Ground circuits.

Were there any problems found?

Yes >> Repair as necessary.
Perform the POWERTRAIN VERIFICATION TEST. (Refer to 9 - ENGINE - STANDARD PROCEDURE)

No >> Replace and program the Powertrain Control Module per Service Information.
Perform the POWERTRAIN VERIFICATION TEST. (Refer to 9 - ENGINE - STANDARD PROCEDURE)

P2175-LOW AIRFLOW/RESTRICTION DETECTED (SLOW ACCUMULATION)

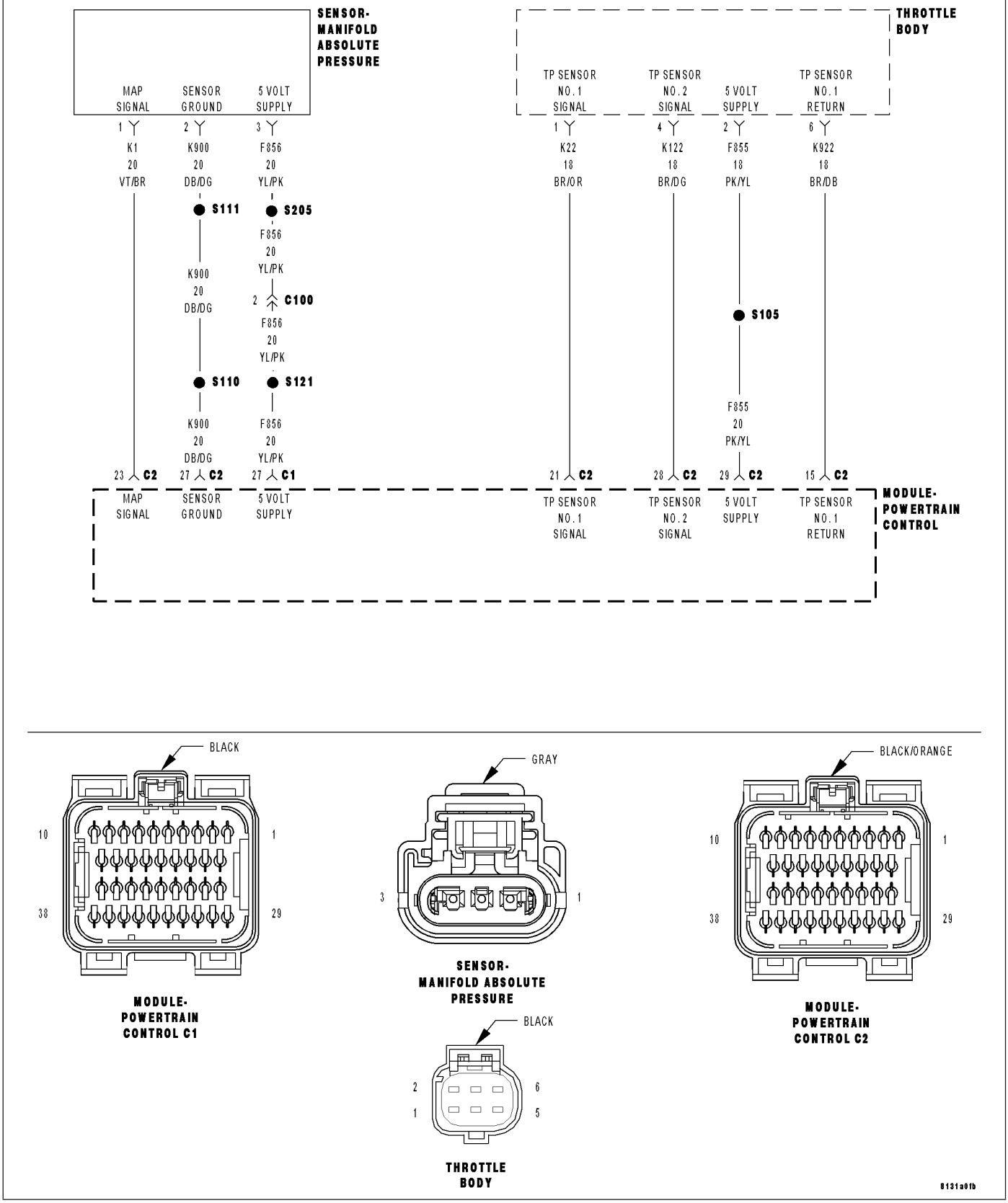

For a complete wiring diagram **Refer to Section 8W**.

- **When Monitored:**
  Ignition on and engine running with no MAP Sensor DTCs.
- **Set Condition:**
  PCM calculated MAP value is greater than actual MAP value plus an offset value. One trip fault and the code will set within 5 seconds. Three good trips to turn off the MIL. ETC light will flash.

Possible Causes
RESTRICTED AIR INLET SYSTEM
RESISTANCE IN THE (F856) 5-VOLT SUPPLY CIRCUIT
(F856) 5-VOLT SUPPLY CIRCUIT SHORTED TO GROUND
RESISTANCE IN THE (K1) MAP SIGNAL CIRCUIT
(K1) MAP SIGNAL CIRCUIT SHORTED TO GROUND
RESISTANCE IN (K900) SENSOR GROUND CIRCUIT
RESISTANCE IN THE (F855) 5-VOLT SUPPLY CIRCUIT
(F855) 5-VOLT SUPPLY CIRCUIT SHORTED TO GROUND
RESISTANCE IN THE TP SENSOR SIGNAL CIRCUIT
TP SENSOR SIGNAL CIRCUIT SHORTED TO GROUND
RESISTANCE IN THE (K922) TP SENSOR RETURN CIRCUIT
MAP SENSOR
TP SENSOR
PCM

Always perform the Pre-Diagnostic Troubleshooting procedure before proceeding. (Refer to 9 - ENGINE - DIAGNOSIS AND TESTING).

Diagnostic Test

1. ACTIVE DTC

NOTE: The most likely cause of this DTC is a vacuum leak.

NOTE: Diagnose any 5-Volt Supply, TP Sensor, Oxygen Sensor, Fuel related or MAP Sensor DTCs before continuing.

NOTE: The throttle plate should be free from binding and carbon build up.

NOTE: Question the customer about weather conditions, as ICE build up on the blade can cause this fault when ambient is around +4 to -10 Celsius range.

Ignition on, engine not running.

With a scan tool, read DTCs.

Is the DTC active at this time?

Yes >> Go To 2

No >> Refer to the INTERMITTENT CONDITION Diagnostic Procedure.
Perform the POWERTRAIN VERIFICATION TEST. (Refer to 9 - ENGINE - STANDARD PROCEDURE)

2. RESTRICTED AIR INLET SYSTEM

Turn the ignition off.
Remove the Air Cleaner Assembly.
Remove the Air Filter.
Inspect the Throttle Body opening for signs of any foreign materials.
Check the intake tube/ air cleaner for obstructions - include snow packing questions to customer.

Were any restrictions found?

Yes >> Repair the restriction as necessary.
Perform the POWERTRAIN VERIFICATION TEST. (Refer to 9 - ENGINE - STANDARD PROCEDURE)

No >> Go To 3

3. MAP SENSOR OPERATION

Start the engine.
With a scan tool, monitor the MAP Sensor voltage.
Snap the Accelerator pedal.

Does the MAP Sensor voltage vary from below 2.0 volts at idle to above 3.5 volts at Wide Open Throttle?

Yes >> Go To 4

No >> Go To 11

4. TP SENSOR OPERATION

Ignition on, engine not running.
With a scan tool, perform the Throttle Follower Test.
TP Sensor No.1 should start at approximately 0.8 of a volt and increase to 4.2 volts.
TP Sensor No.2 should start at approximately 4.2 volts and decrease to 0.8 of a volt.

Is the voltage transition smooth between the appropriate values?

Yes >> Refer to the INTERMITTENT CONDITION Diagnostic Procedure.
Perform the POWERTRAIN VERIFICATION TEST. (Refer to 9 - ENGINE - STANDARD PROCEDURE)

No >> Go To 5

5. RESISTANCE IN (F855) 5-VOLT SUPPLY CIRCUIT

Turn the ignition off.

Disconnect the Throttle Body harness connector.

Disconnect the PCM harness connector.

CAUTION: Do not probe the PCM harness connectors. Probing the PCM harness connectors will damage the PCM terminals resulting in poor terminal to pin connection. Install Miller Special Tool #8815 to perform diagnosis.

Measure the resistance of the (F855) 5-volt Supply circuit from the Throttle Body harness connector to the appropriate terminal of special tool #8815.

Is the resistance below 100 ohms?

Yes >> Go To 6

No >> Repair the excessive resistance in the (F855) 5-volt Supply circuit.

Perform the POWERTRAIN VERIFICATION TEST. (Refer to 9 - ENGINE - STANDARD PROCEDURE)

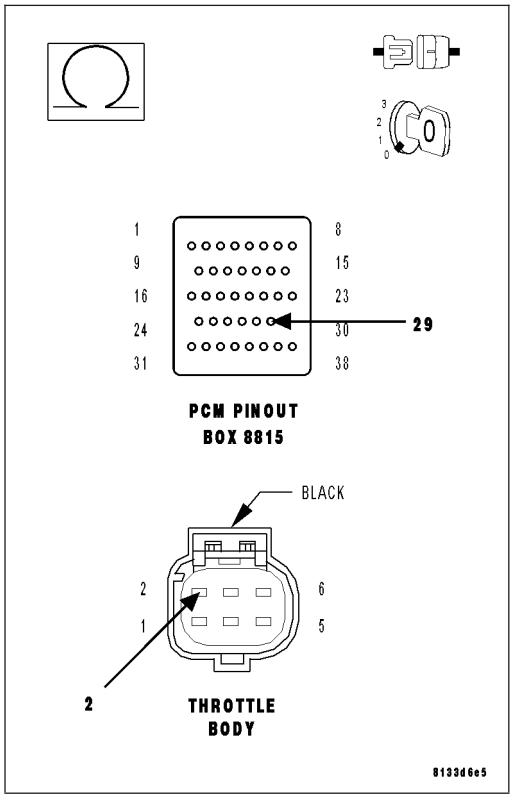

6. (F855) 5-VOLT SUPPLY CIRCUIT SHORTED TO GROUND

Measure the resistance between ground and (F855) 5-volt Supply circuit between the appropriate terminals of special tool #8815.

Is the resistance above 100k ohms?

Yes >> Go To 7

No >> Repair the short to ground in the (F855) 5-volt Supply circuit.

Perform the POWERTRAIN VERIFICATION TEST. (Refer to 9 - ENGINE - STANDARD PROCEDURE)

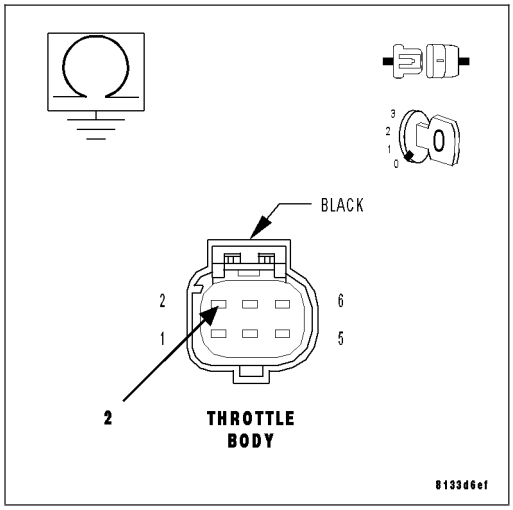

7. TP SENSOR

Connect the PCM harness connectors.

Ignition on, engine not running.

With a scan tool, monitor the TP Sensor voltage.

Connect a jumper wire between the (K22) TP Sensor No.1 Signal circuit and the (K922) Sensor Return circuit in the Throttle Body harness connector.

TP Sensor No.1 voltage should start at approximately 4.8 volts and decrease to 0.2 of a volt.

Connect a jumper wire between the (K122) TP Sensor No.2 Signal circuit and the (F855) 5-volt Supply circuit in the Throttle Body harness connector.

TP Sensor No.2 voltage should start at approximately 0 volts and increase to 4.8 to 5.2 volts.

Does the TP Sensor voltage change to the appropriate voltage with the jumper wire installed?

Yes >> Disconnect the Battery before replacing the Throttle Body Assembly. Replace the Throttle Body Assembly. After installation is complete, use a scan tool and select the ETC RELEARN function

Perform the POWERTRAIN VERIFICATION TEST. (Refer to 9 - ENGINE - STANDARD PROCEDURE)

No >> Go To 8

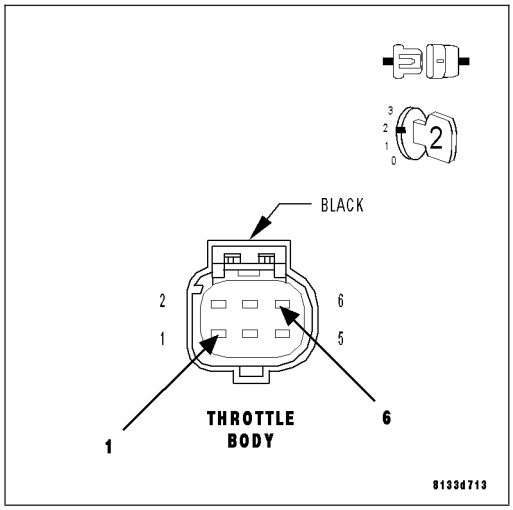

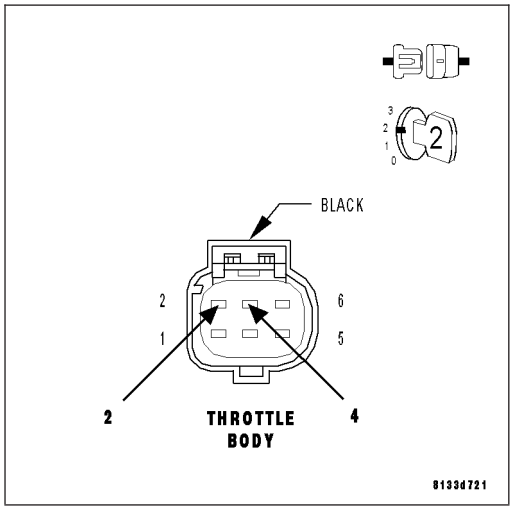

8. RESISTANCE IN THE TP SENSOR SIGNAL CIRCUIT

Turn the ignition off.

Disconnect the PCM harness connector.

Measure the resistance of the (K22) and (K122) TP Signal circuits from the Throttle Body harness connector to the appropriate terminals of special tool #8815.

Is the resistance below 5.0 ohms for each circuit?

Yes >> Go To 9

No >> Repair the excessive resistance in the (K22) or (K122) TP Sensor Signal circuit.

Perform the POWERTRAIN VERIFICATION TEST. (Refer to 9 - ENGINE - STANDARD PROCEDURE)

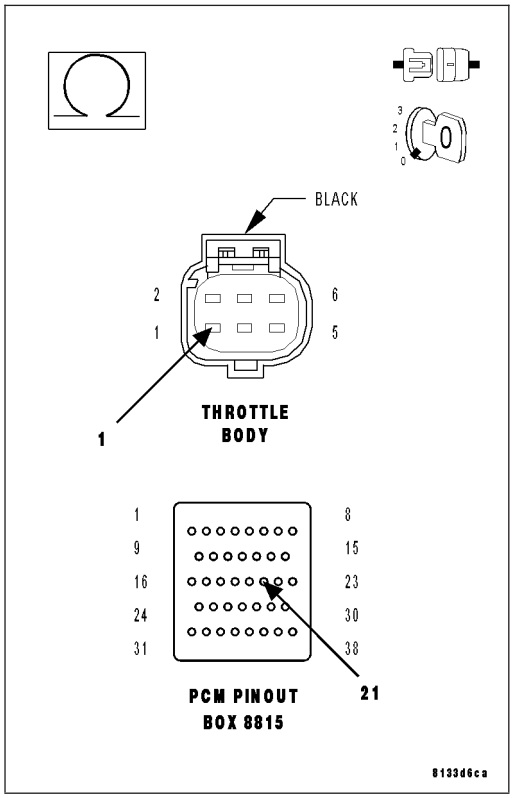

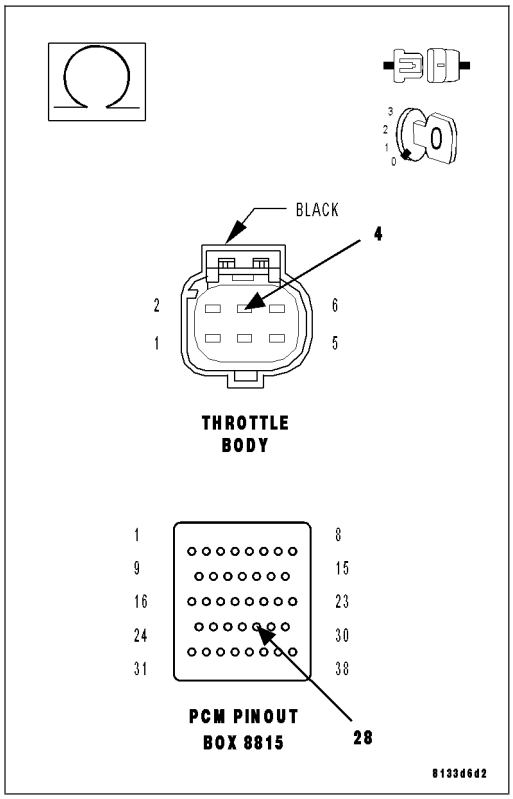

9. TP SENSOR SIGNAL CIRCUIT SHORTED TO GROUND

Measure the resistance between ground and the (K22) and (K122) TP Signal circuits at the appropriate terminals of special tool #8815.

Is the resistance above 100k ohms for each circuit?

Yes >> Go To 10

No >> Repair the short to ground in the (K22) or (K122) TP Sensor Signal circuit.

Perform the POWERTRAIN VERIFICATION TEST. (Refer to 9 - ENGINE - STANDARD PROCEDURE)

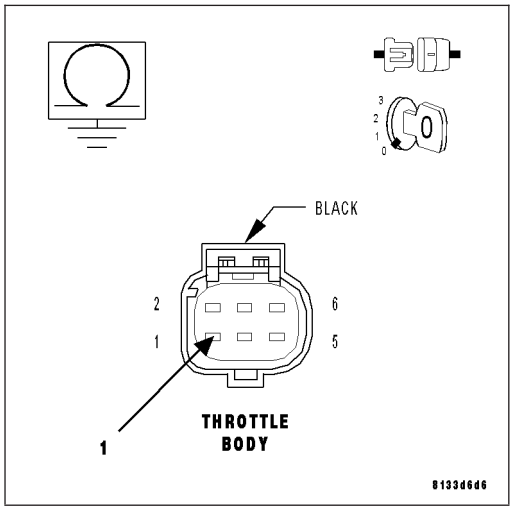

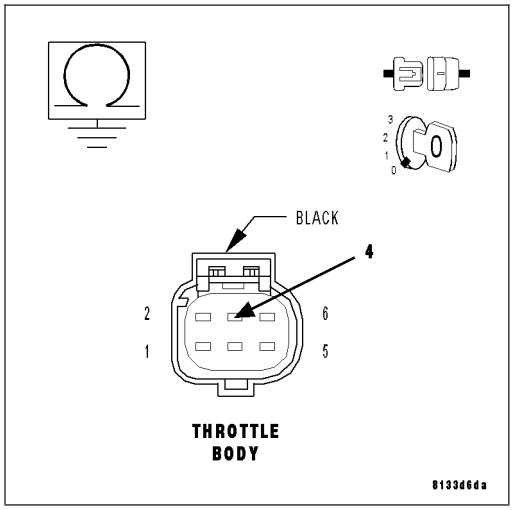

10. RESISTANCE IN THE (K922) SENSOR RETURN CIRCUIT

Measure the resistance of the (K922) Sensor Return circuit from the Throttle Body harness connector to the appropriate terminal of special tool #8815.

Is the resistance below 5.0 ohms?

Yes >> Go To 17

No >> Repair the excessive resistance in the (K922) Sensor Return circuit.

Perform the POWERTRAIN VERIFICATION TEST. (Refer to 9 - ENGINE - STANDARD PROCEDURE)

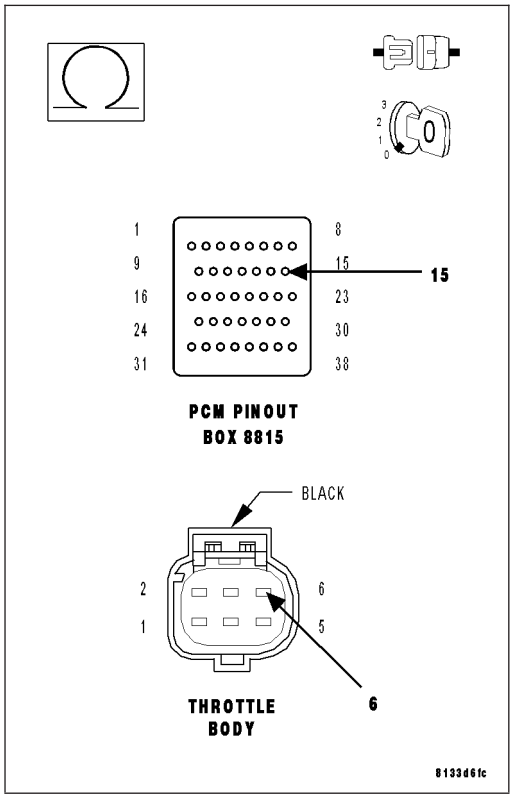

11. RESISTANCE IN THE (F856) 5-VOLT SUPPLY CIRCUIT

Turn the ignition off.

Disconnect the MAP Sensor harness connector.

Disconnect the C1/A PCM harness connector.

CAUTION: Do not probe the PCM harness connectors. Probing the PCM harness connectors will damage the PCM terminals resulting in poor terminal to pin connection. Install Miller Special Tool #8815 to perform diagnosis.

Measure the resistance of the (F856) 5-volt Supply circuit from the MAP Sensor harness connector to the appropriate terminal of special tool #8815.

Is the resistance below 5.0 ohms?

Yes >> Go To 12

No >> Repair the excessive resistance in the (F856) 5-volt Supply circuit.

Perform the POWERTRAIN VERIFICATION TEST. (Refer to 9 - ENGINE - STANDARD PROCEDURE)

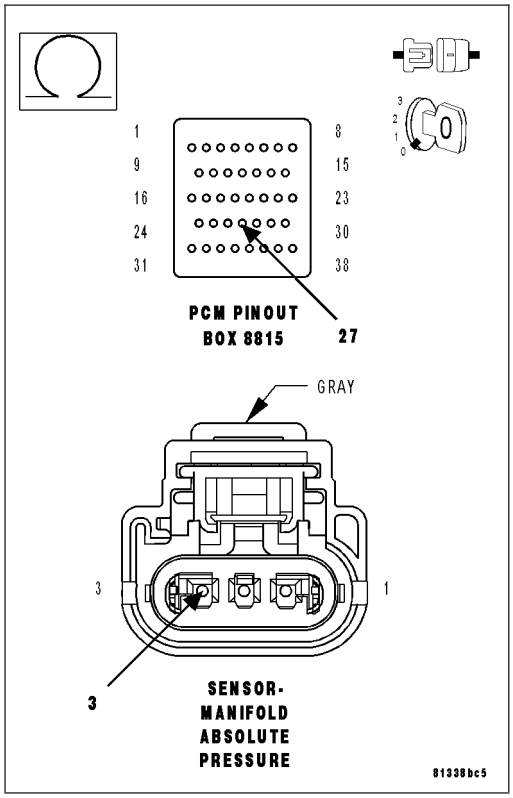

12. (F856) 5-VOLT SUPPLY CIRCUIT SHORTED TO GROUND

Measure the resistance between ground and the (F856) 5-volt Supply circuit in the MAP Sensor harness connector.

Is the resistance above 100k ohms?

Yes >> Go To 13

No >> Repair the short to ground in the (F856) 5-volt Supply circuit.

Perform the POWERTRAIN VERIFICATION TEST. (Refer to 9 - ENGINE - STANDARD PROCEDURE)

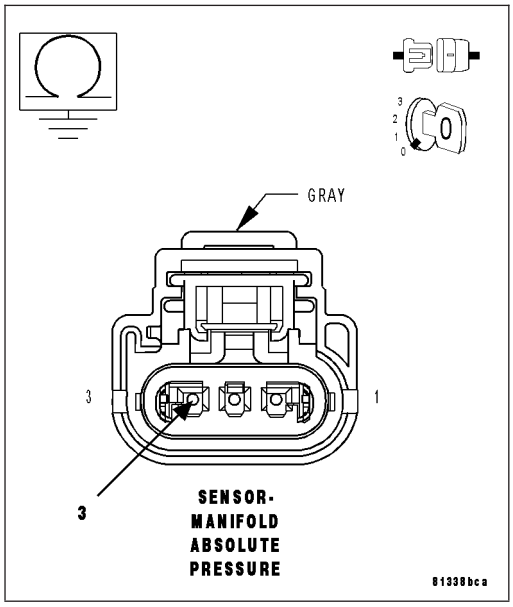

13. MAP SENSOR

Connect the C1/A PCM harness connector.

Ignition on, engine not running.

With a scan tool, monitor the MAP Sensor voltage.

Connect a jumper wire between the (K1) MAP Signal circuit and the (K900) Sensor ground circuit.

Cycle the ignition switch from off to on.

With a scan tool, monitor the MAP Sensor voltage.

Does the scan tool display MAP voltage from approximately 4.9 volts to below 0.5 volt with the jumper wire installed?

Yes >> Replace the MAP Sensor.

Perform the POWERTRAIN VERIFICATION TEST. (Refer to 9 - ENGINE - STANDARD PROCEDURE)

No >> Go To 14

NOTE: Remove the jumper wire before continuing.

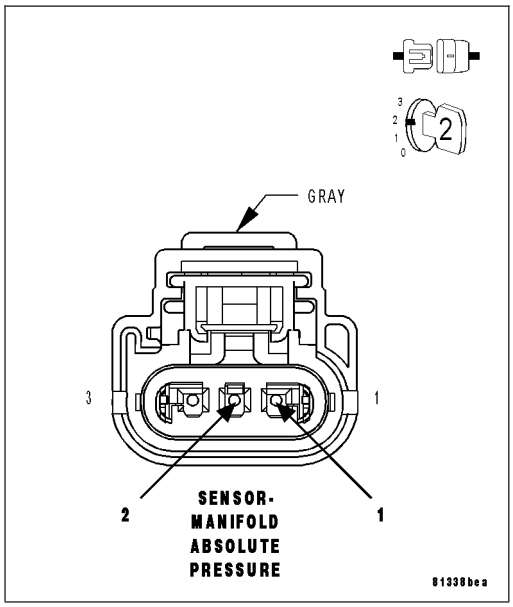

14. RESISTANCE IN THE (K1) MAP SIGNAL CIRCUIT

Turn the ignition off.

Disconnect the PCM harness connector.

Measure the resistance of the (K1) MAP Signal circuit from the MAP Sensor harness connector to the appropriate terminal of special tool #8815.

Is the resistance below 5.0 ohms?

Yes >> Go To 15

No >> Repair the excessive resistance in the (K1) MAP Signal circuit

Perform the POWERTRAIN VERIFICATION TEST. (Refer to 9 - ENGINE - STANDARD PROCEDURE)

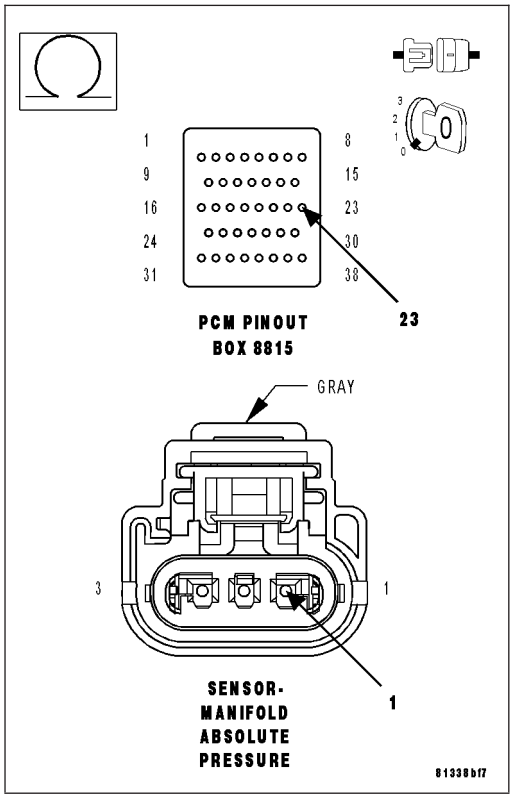

15. (K1) MAP SIGNAL CIRCUIT SHORTED TO GROUND

Measure the resistance between ground and the (K1) MAP Signal circuit in the MAP Sensor harness connector.

Is the resistance above 100k ohms?

Yes >> Go To 16

No >> Repair the short to ground in the (K1) MAP Signal circuit.

Perform the POWERTRAIN VERIFICATION TEST. (Refer to 9 - ENGINE - STANDARD PROCEDURE)

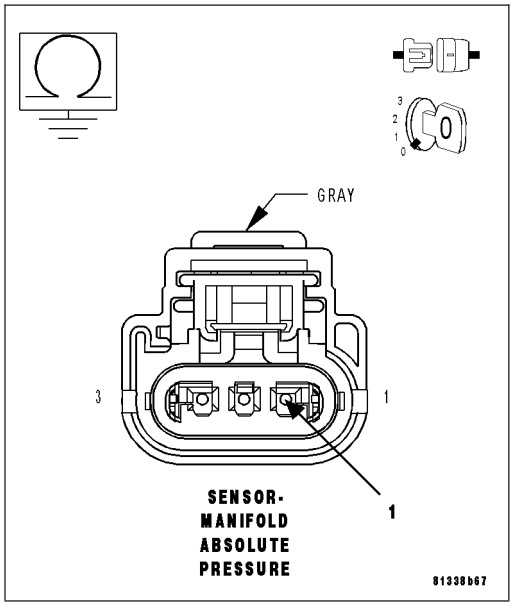

16. RESISTANCE IN THE (K900) SENSOR GROUND CIRCUIT

Measure the resistance of the (K900) Sensor ground circuit from the MAP Sensor harness connector to the appropriate terminal of special tool #8815.

Is the resistance below 5.0 ohms?

Yes >> Go To 17

No >> Repair the excessive resistance in the (K900) Sensor ground circuit.
Perform the POWERTRAIN VERIFICATION TEST. (Refer to 9 - ENGINE - STANDARD PROCEDURE)

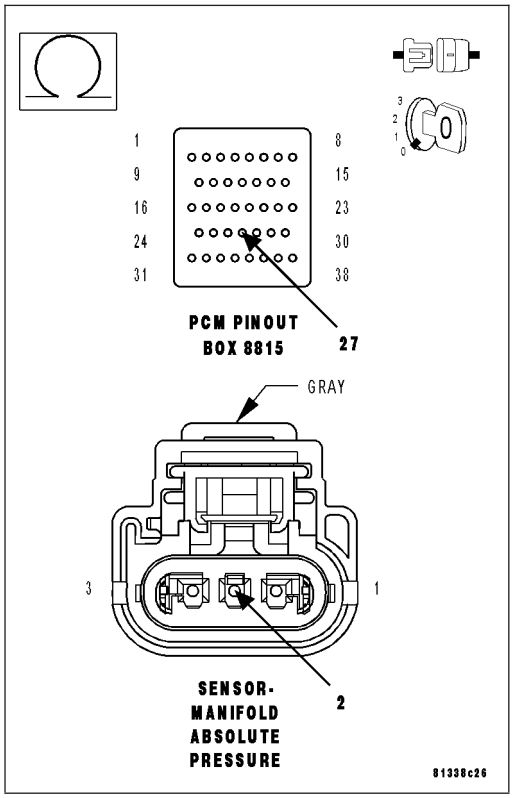

17. PCM

NOTE: Before continuing, check the PCM harness connector terminals for corrosion, damage, or terminal push out. Repair as necessary.
Using the schematics as a guide, inspect the wire harness and connectors. Pay particular attention to all Power and Ground circuits.

Were there any problems found?

Yes >> Repair as necessary.
Perform the POWERTRAIN VERIFICATION TEST. (Refer to 9 - ENGINE - STANDARD PROCEDURE)

No >> Replace and program the Powertrain Control Module per Service Information.
Perform the POWERTRAIN VERIFICATION TEST. (Refer to 9 - ENGINE - STANDARD PROCEDURE)

P2181-COOLING SYSTEM PERFORMANCE

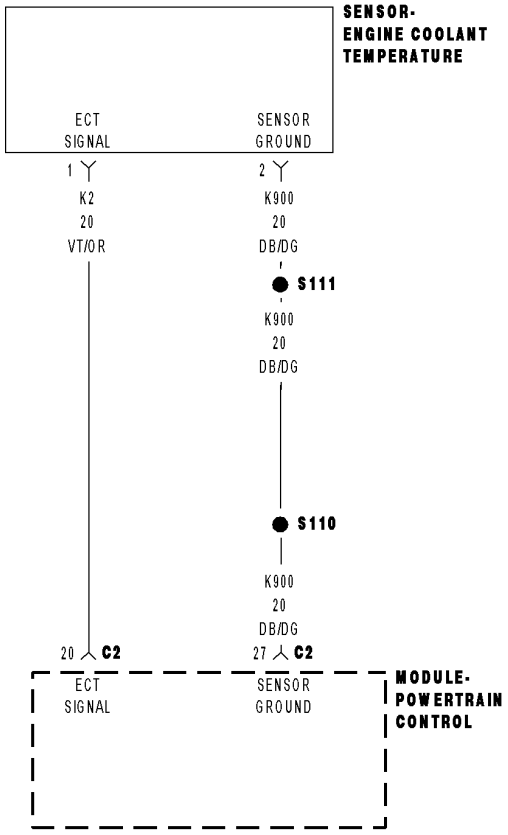

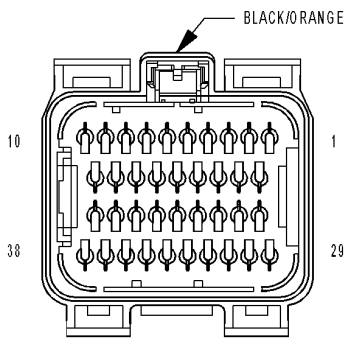

MODULE-
POWERTRAIN
CONTROL C2

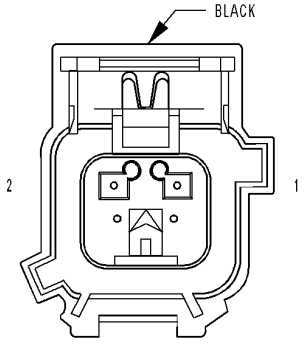

SENSOR-
ENGINE COOLANT
TEMPERATURE

8131a28f

For a complete wiring diagram **Refer to Section 8W**.

- **When Monitored:**
  Ignition on, Engine running, and no ECT DTCs present.
- **Set Condition:**
  PCM recognizes that the ECT has failed its self coherence test. The coolant temp should only change at a certain rate, if this rate is too slow or too fast this fault will set. Two trip fault. Three good trips to clear MIL. ETC light will illuminate on first trip failure.

Possible Causes
LOW COOLANT LEVEL
(K2) ECT SIGNAL CIRCUIT SHORTED TO BATTERY VOLTAGE
(K2) ECT SIGNAL CIRCUIT OPEN
(K900) SENSOR GROUND CIRCUIT OPEN
(K2) ECT SIGNAL CIRCUIT SHORTED TO GROUND
(K2) ECT SIGNAL CIRCUIT SHORTED TO THE (K900) SENSOR GROUND
THERMOSTAT
ECT SENSOR
PCM

Always perform the Pre-Diagnostic Troubleshooting procedure before proceeding. (Refer to 9 - ENGINE - DIAGNOSIS AND TESTING).

Diagnostic Test

1. ACTIVE DTC

Ignition on, engine not running.

NOTE: If this code sets during extreme ambient temperatures, improper installation of a block heater could be the cause of this DTC.
With a scan tool, read DTCs.
Diagnose all other ECT and Cooling System codes before continuing.

Is the DTC active at this time?

Yes >> Go To 2

No >> Refer to the INTERMITTENT CONDITION Diagnostic Procedure.
Perform the POWERTRAIN VERIFICATION TEST. (Refer to 9 - ENGINE - STANDARD PROCEDURE)

2. LOW COOLANT LEVEL

NOTE: If a Engine Coolant Temperature (ECT) DTC is set along with this code, diagnose the ECT DTC first.

NOTE: Inspect the ECT terminals and related PCM terminals. Ensure the terminals are free from corrosion and damage.

NOTE: The best way to diagnose this DTC is to allow the vehicle to sit overnight outside in order to have a totally cold soaked engine.

NOTE: Extremely cold outside ambient temperatures may have caused this DTC to set.

NOTE: Need to make sure that no Cooling System DTCs are set or changes that would make the warm up much slower or much faster: broken water pump can set this, addition of aftermarket auxiliary cooler can set this DTC.

WARNING: Never open the cooling system when the engine is hot. The system is under pressure. Failure to follow these instructions can result in personal injury or death. Allow the engine to cool before opening the cooling system.

Inspect the coolant system for proper level and condition.

Is the coolant level and condition OK?

Yes >> Go To 3

No >> Inspect the vehicle for a coolant leak and add the necessary amount of coolant.
Perform the POWERTRAIN VERIFICATION TEST. (Refer to 9 - ENGINE - STANDARD PROCEDURE)

3. THERMOSTAT

NOTE: This test works best if performed on a cold engine (cold soak).
Ignition on, engine not running.

With a scan tool, read the Eng Coolant Tmp Deg value. If the engine was allowed to sit overnight (cold soak), the temperature value should be a sensible value that is somewhere close to the ambient temperature.

NOTE: If engine coolant temperature is above 82°C (180°F), allow the engine to cool until 65°C (150°F) is reached.
Start the Engine.

During engine warm-up monitor the Eng Coolant Tmp Deg value. The temp deg value change should be a smooth transition from start up to normal operating temp 82°C (180°F). Also monitor the actual coolant temperature with a thermometer.

NOTE: As the engine warms up to operating temperature, the actual coolant temperature (thermometer reading) and the Eng Coolant Tmp Deg on the scan tool should stay relatively close to each other.
Using the appropriate service information, determine the proper opening temperature of the thermostat.

Did the thermostat open at the proper temperature?

Yes >> Go To 4

No >> Replace the thermostat.
Perform the POWERTRAIN VERIFICATION TEST. (Refer to 9 - ENGINE - STANDARD PROCEDURE)

4. ECT SENSOR

Connect a jumper between the (K2) ECT Signal circuit and the (K900) Sensor ground circuit in the ECT Sensor harness connector.

Turn the ignition off.

Disconnect the ECT Sensor harness connector.

With a scan tool, read the ECT voltage.

Is the voltage below 1.0 volt?

Yes >> Replace the ECT Sensor.
Perform the POWERTRAIN VERIFICATION TEST. (Refer to 9 - ENGINE - STANDARD PROCEDURE)

No >> Go To 5

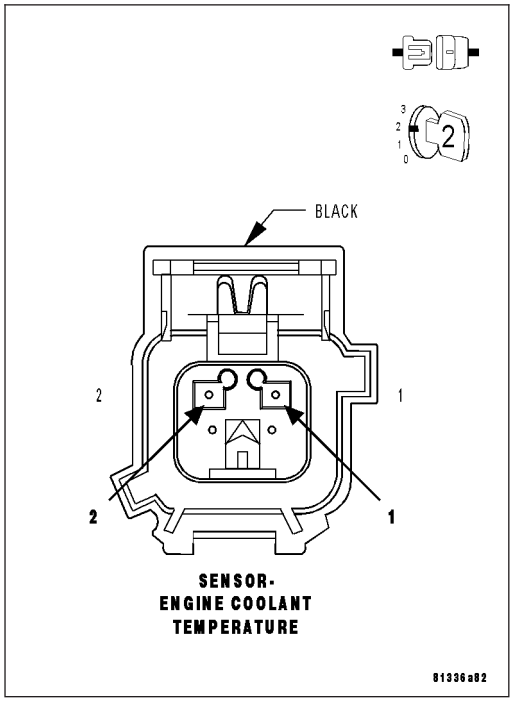

5. (K2) ECT SIGNAL CIRCUIT SHORTED TO BATTERY VOLTAGE

Turn the ignition off.

Disconnect the PCM harness connectors.

Ignition on, engine not running.

Measure the voltage on the (K2) ECT Signal circuit in the ECT Sensor harness connector.

Is the voltage above 5.2 volts?

Yes >> Repair the short to battery voltage in the (K2) ECT Signal circuit.
Perform the POWERTRAIN VERIFICATION TEST. (Refer to 9 - ENGINE - STANDARD PROCEDURE)

No >> Go To 6

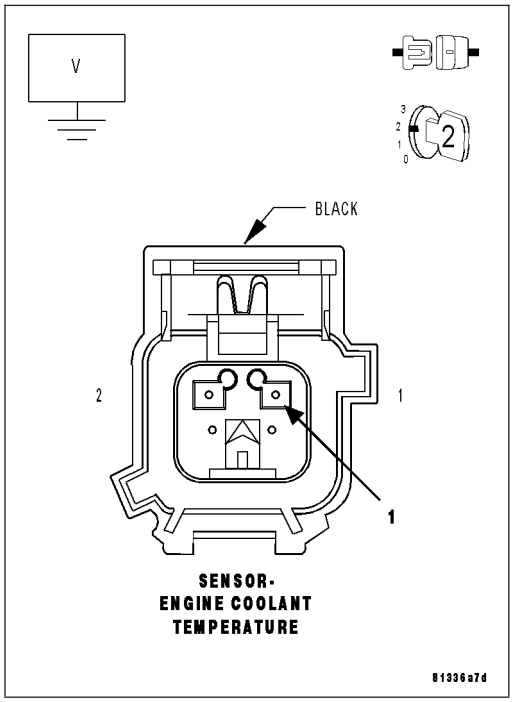

6. (K2) ECT SIGNAL CIRCUIT OPEN

Turn the ignition off.

CAUTION: Do not probe the PCM harness connectors. Probing the PCM harness connectors will damage the PCM terminals resulting in poor terminal to pin connection. Install Miller Special Tool #8815 to perform diagnosis.

Measure the resistance of the (K2) ECT Signal circuit from the ECT Sensor harness connector to the appropriate terminal of special tool #8815.

Is the resistance below 5.0 ohms?

Yes >> Go To 7

No >> Repair the open in the (K2) ECT Signal circuit.
Perform the POWERTRAIN VERIFICATION TEST. (Refer to 9 - ENGINE - STANDARD PROCEDURE)

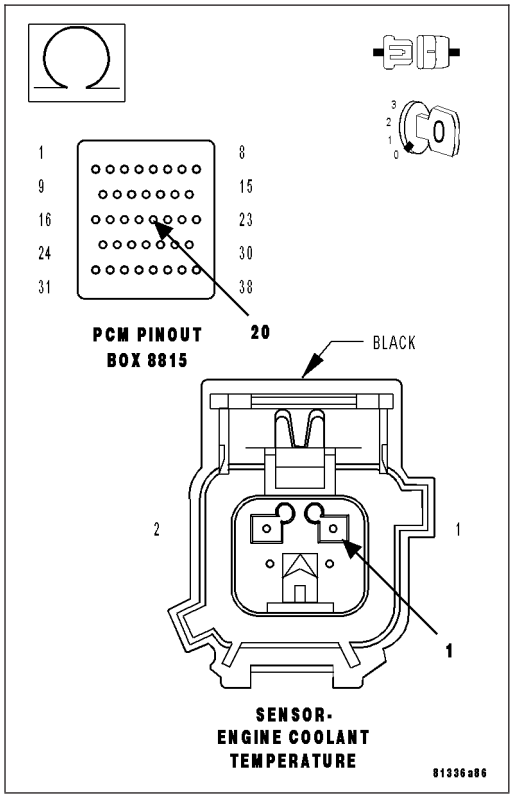

7. (K900) SENSOR GROUND CIRCUIT OPEN

Measure the resistance of the (K900) Sensor ground circuit from the ECT Sensor harness connector to the appropriate terminal of special tool #8815.

Is the resistance below 5.0 ohms?

Yes >> Go To 8

No >> Repair the open in the (K900) Sensor ground circuit. Perform the POWERTRAIN VERIFICATION TEST. (Refer to 9 - ENGINE - STANDARD PROCEDURE)

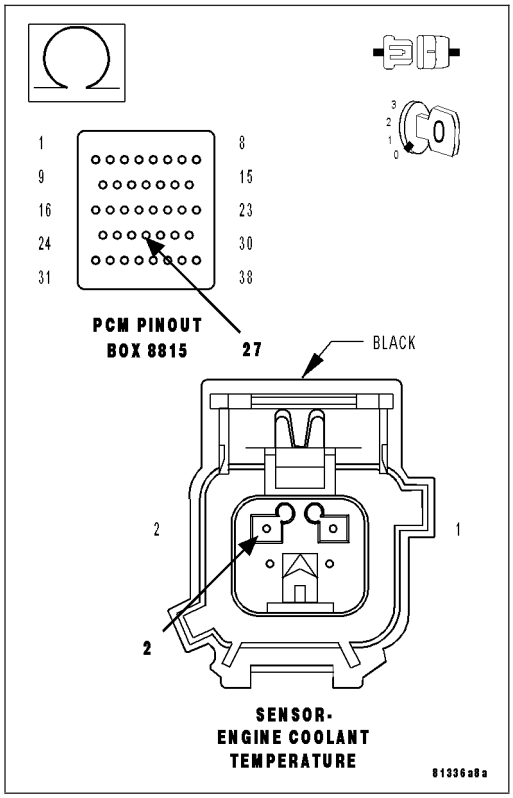

8. (K2) ECT SIGNAL CIRCUIT SHORTED TO GROUND

Measure the resistance between ground and the (K2) ECT Signal circuit in the ECT Sensor harness connector.

Is the resistance below 100 ohms?

Yes >> Repair the short to ground in the (K2) ECT Signal circuit. Perform the POWERTRAIN VERIFICATION TEST. (Refer to 9 - ENGINE - STANDARD PROCEDURE)

No >> Go To 9

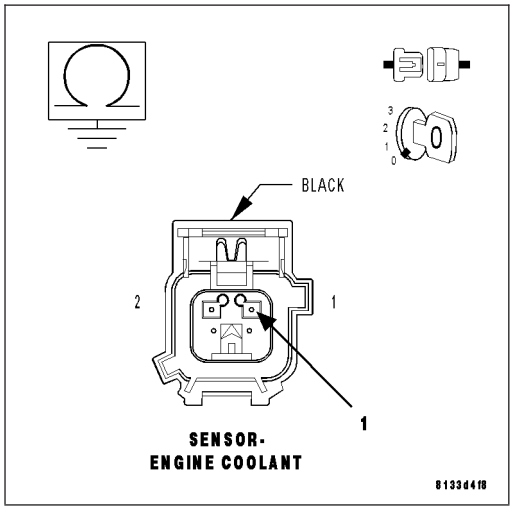

9. (K2) ECT SIGNAL CIRCUIT SHORTED TO THE (K900) SENSOR GROUND CIRCUIT

Measure the resistance between the (K2) ECT Signal circuit and the (K900) Sensor ground circuit in the ECT Sensor harness connector.

Is the resistance below 5.0 ohms?

Yes >> Repair the short between the (K900) Sensor ground and the (K2) ECT Signal circuit.
Perform the POWERTRAIN VERIFICATION TEST. (Refer to 9 - ENGINE - STANDARD PROCEDURE)

No >> Go To 10

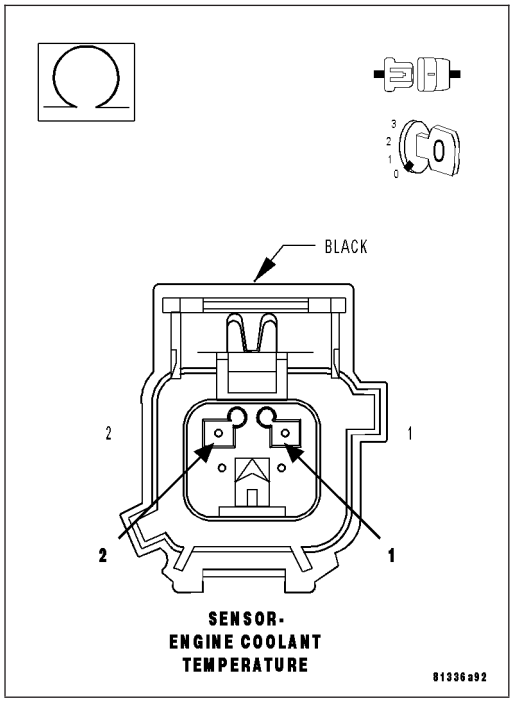

10. PCM

NOTE: Before continuing, check the PCM harness connector terminals for corrosion, damage, or terminal push out. Repair as necessary.
Using the schematics as a guide, inspect the wire harness and connectors. Pay particular attention to all Power and Ground circuits.

Were there any problems found?

Yes >> Repair as necessary.
Perform the POWERTRAIN VERIFICATION TEST. (Refer to 9 - ENGINE - STANDARD PROCEDURE)

No >> Replace and program the Powertrain Control Module per Service Information.
Perform the POWERTRAIN VERIFICATION TEST. (Refer to 9 - ENGINE - STANDARD PROCEDURE)

P2299-BRAKE PEDAL POSITION / ACCELERATOR PEDAL POSITION INCOMPATIBLE

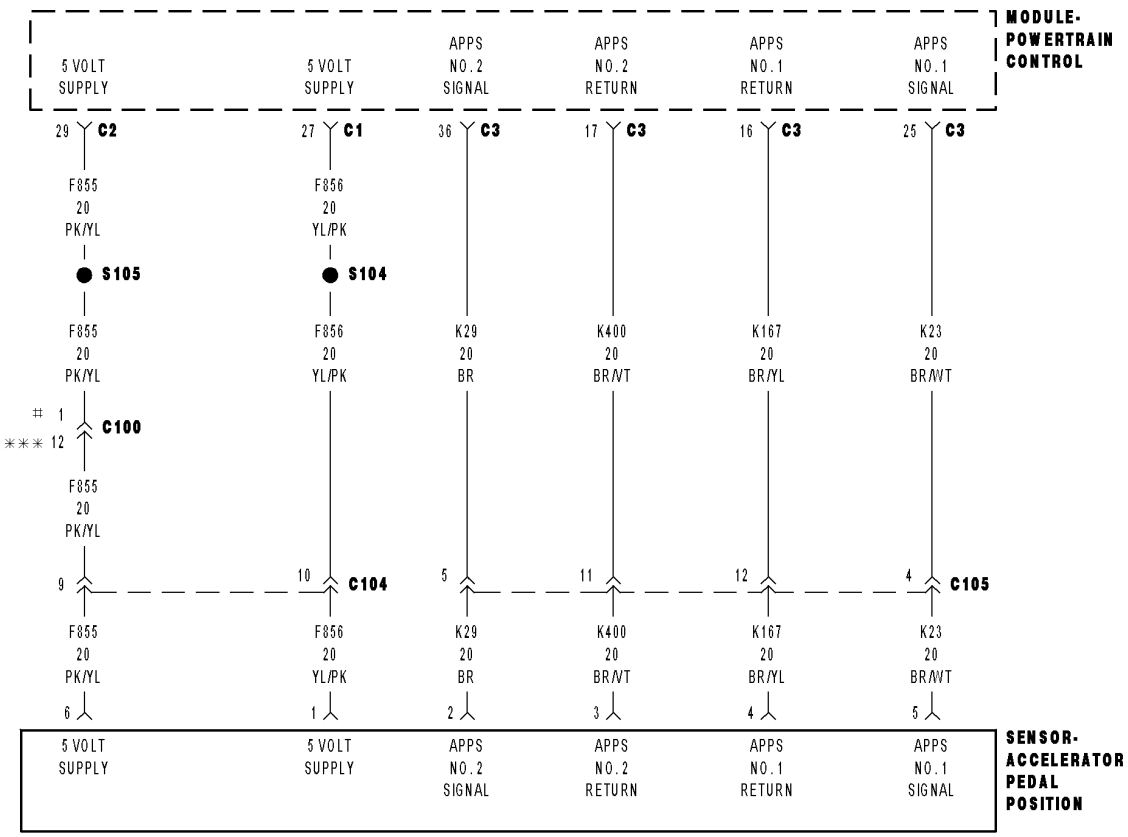

\# 2.7L/3.5L
*** 5.7L

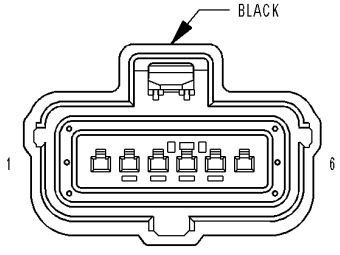

SENSOR-
ACCELERATOR
PEDAL POSITION

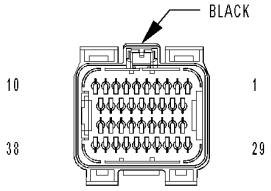

MODULE-
POWERTRAIN
CONTROL C1

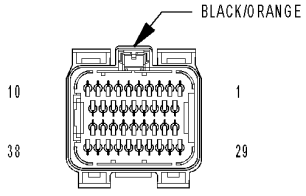

MODULE-
POWERTRAIN
CONTROL C2

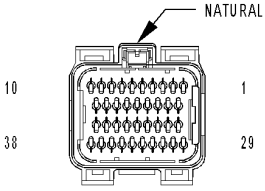

MODULE-
POWERTRAIN
CONTROL C3

81323466

For a complete wiring diagram **Refer to Section 8W**.

- **When Monitored:**
  Ignition on. No Break or APPS faults present.
- **Set Condition:**
  The PCM recognizes a brake application following the APPS showing a fixed pedal opening. Temporary or permanent. Internally the PCM will reduce throttle opening below driver demand. One trip fault and the code will be set within 5 seconds. ETC light will illuminate, the light will only stay illuminated while DTC is active.

Possible Causes
CUSTOMER PRESSING ACCELERATOR PEDAL, THEN PRESSING BRAKE PEDAL, AND CONTINUES HOLDING THEM DOWN SIMULTANEOUSLY
STOP LAMP SWITCH
APP SENSOR

Always perform the Pre-Diagnostic Troubleshooting procedure before proceeding. (Refer to 9 - ENGINE - DIAGNOSIS AND TESTING).

Diagnostic Test

1. DTC INFORMATION

NOTE: If a pedal assembly becomes mechanically stuck the voltage output will stay fixed, if this is also Followed by a long application of the brakes this code will set.

NOTE: When this code sets the pedal position in the PCM software will ramp to idle. If the Pedal voltage changes OR the brake pedal is released, the pedal position in the PCM software will ramp up to the pedal position and the ETC light will go out.

With a scan tool, read DTCs and record the related Freeze Frame data.

Diagnose all other Stop Lamp Switch and APP Sensor codes before continuing.

This code can be set by a driver who uses both feet while driving, one for the Accelerator Pedal and the other for the Brake Pedal.

NOTE: The most likely cause of this DTC is caused by the customer Brake Torquing the engine by pressing the Accelerator pedal and the pressing the Brake Pedal.

Ask the driver of the vehicle if these conditions apply to their driving habits.

Are the listed conditions part of the customers driving habits?

Yes >> Advise the customer of what caused the DTC. This is normal operation of a ETC equipped vehicle because of safety issues.
Perform the POWERTRAIN VERIFICATION TEST. (Refer to 9 - ENGINE - STANDARD PROCEDURE)

No >> Go To 2

2. STOP LAMP SWITCH OPERATION

With a scan tool, read both Stop Lamp Switch statuses while pressing and releasing the Brake Pedal.

Does the scan tool display the Pressed and Released while pressing and releasing the Pedal?

Yes >> Go To 3

No >> Check the Stop Lamp Switch for proper installation and check the related circuits for opens and shorts using the appropriate wiring diagram. If OK, replace the Stop Lamp Switch assembly.
Perform the POWERTRAIN VERIFICATION TEST. (Refer to 9 - ENGINE - STANDARD PROCEDURE)

3. APP SENSOR SWEEP

Ignition on, engine not running.

With a scan tool, monitor both APP Sensor voltage readings.

Slowly press the accelerator pedal from idle until it reaches the end stop near the floor.

APPS No.1 voltage should start at approximately 0.45 of a volt and increase to approximately 4.6 volts with a smooth transition.

APPS No.2 voltage should start at approximately 0.22 of a volt and increase to approximately 2.31 volts with a smooth transition.

Does the voltage for the appropriate sensor follow the list specification?

Yes >> Refer to the INTERMITTENT CONDITION Diagnostic Procedure.
Perform the POWERTRAIN VERIFICATION TEST. (Refer to 9 - ENGINE - STANDARD PROCEDURE)

No >> Check the Signal and Return circuits for opens and shorts. If OK, Replace the APP Sensor Assembly per Service Information. After installation is complete, with a scan tool select the ETC RELEARN function to relearn the APPS values.
Perform the POWERTRAIN VERIFICATION TEST. (Refer to 9 - ENGINE - STANDARD PROCEDURE)

P2302-IGNITION COIL 1 SECONDARY CIRCUIT- INSUFFICIENT IONIZATION

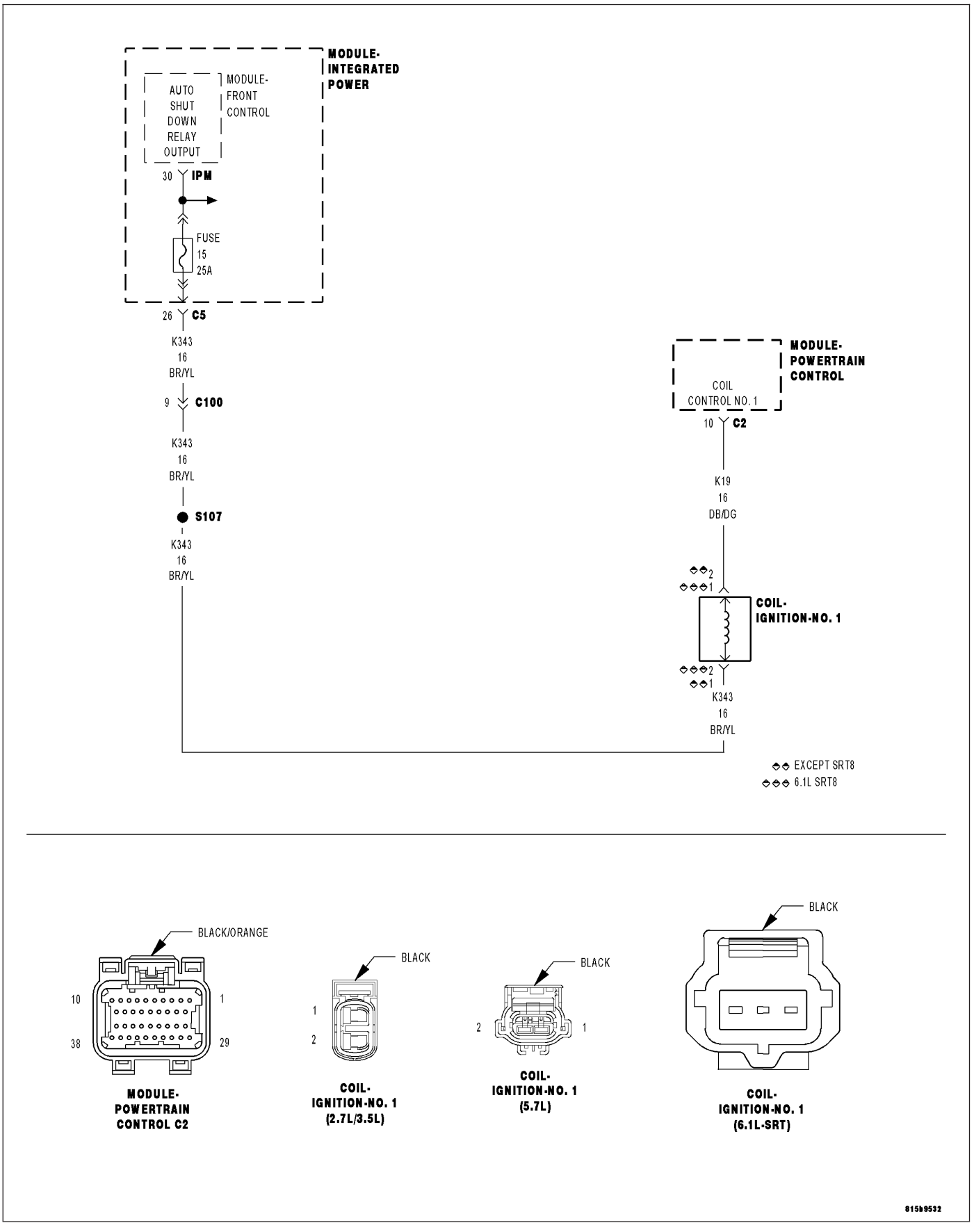

For a complete wiring diagram **Refer to Section 8W**.

- **When Monitored:**
  Engine running and battery voltage greater than 10 volts.
- **Set Condition:**
  If PCM detects that the secondary ignition burn time is incorrect, too short, or not present, an error is detected. One Trip Fault. Three good trips to turn off the MIL.

Possible Causes
(K343) ASD RELAY OUTPUT 2 CIRCUIT
(K19) COIL CONTROL NO.1 CIRCUIT OPEN
(K19) COIL CONTROL NO.1 CIRCUIT SHORTED TO GROUND
SPARK PLUG
COIL ON PLUG
PCM

Always perform the Pre-Diagnostic Troubleshooting procedure before proceeding. (Refer to 9 - ENGINE - DIAGNOSIS AND TESTING).

Diagnostic Test

1. ACTIVE DTC

Ignition on, engine not running.

With a scan tool, read DTCs.

Is the DTC active at this time?

Yes >> Go To 2

No >> Go To 9
Perform the POWERTRAIN VERIFICATION TEST. (Refer to 9 - ENGINE - STANDARD PROCEDURE)

2. SECONDARY SPARK

NOTE: Inspect the ignition coil for damage, carbon tracking on the coil or a damaged spark plug insulator boot. If a problem is found, replace the ignition coil.

Turn the ignition off.

Remove the ignition coil.

NOTE: 6.1L coils must have a spark tester installed on both sides of the coil during the following test. During the test, each side of the coil should output a crisp blue spark that is able to jump the gap of the spark tester.

Install a spark tester(s) to the ignition coil.

NOTE: On the 2.7 and 3.5L engines, cylinders 1, 3 and 5, it is necessary to remove the upper intake to access the ignition coils. Once the ignition coil has been removed from the cylinder head, the intake must be reinstalled to be able to crank the engine. Move the ignition coil harness connector through the slots in the upper intake and then connect the coil to the harness connector. Secure the upper intake to the lower intake in accordance with the service information.

While cranking the engine observe the spark coming from the spark tester.

NOTE: A crisp blue spark that is able to jump the gap of the spark tester should be generated.

Is good spark generated?

Yes >> Ensure the cylinder is operating properly. If OK, replace the Spark Plug(s).
Perform the POWERTRAIN VERIFICATION TEST. (Refer to 9 - ENGINE - STANDARD PROCEDURE)

No >> Go To 3

3. (K343) ASD RELAY OUTPUT 2 CIRCUIT

Turn the ignition off.

Disconnect the Ignition Coil harness connector.

Ignition on, engine not running.

With a scan tool, actuate the ASD Relay.

Using a 12-volt test light connected to ground, probe the (K343) ASD Relay Output 2 circuit in the Coil on Plug harness connector.

Does the test light illuminate brightly?

Yes >> Go To 4

No >> Repair the open or short to ground in the (K343) ASD Relay Output 2 circuit between the IPM and Coil harness connector.

Perform the POWERTRAIN VERIFICATION TEST. (Refer to 9 - ENGINE - STANDARD PROCEDURE)

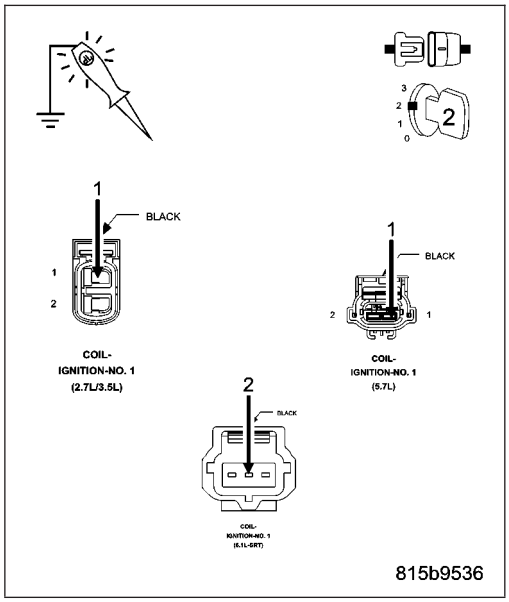

4. IGNITION COIL RESISTANCE

Turn the ignition off.

NOTE: The following resistance measurement should be taken at 70°-80° F.

Measure the resistance of the Ignition Coil.

Is the resistance between 0.53 to 0.65 ohms at 77°F (25°C) for the Ignition Coil being tested?

Yes >> Go To 5

No >> Replace the Ignition Coil.

Perform the POWERTRAIN VERIFICATION TEST. (Refer to 9 - ENGINE - STANDARD PROCEDURE)

5. IGNITION COIL

Using a 12-volt test light connected to a 12-volt source, probe the (K19) Coil Control No.1 circuit.

Crank the engine for 5 seconds while observing the test light.

What is the condition of the test light while cranking the engine?

Brightly blinking.

Replace the Ignition Coil.

Perform the POWERTRAIN VERIFICATION TEST. (Refer to 9 - ENGINE - STANDARD PROCEDURE)

ON constantly.

Go To 6

OFF constantly.

Go To 7

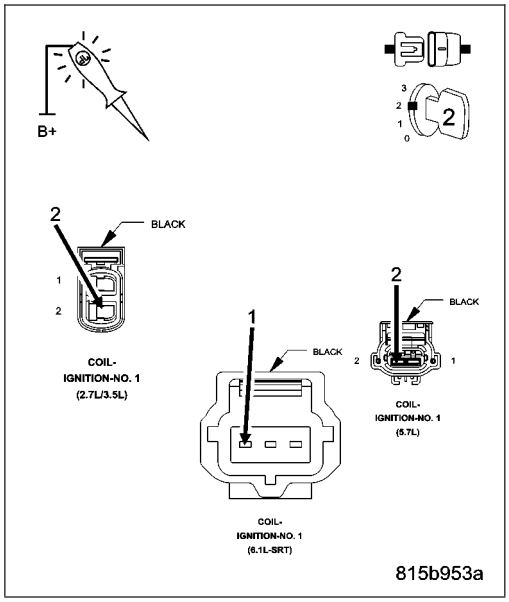

6. (K19) COIL CONTROL NO.1 CIRCUIT SHORTED TO GROUND

Turn the ignition off.

Disconnect the C2 PCM harness connector.

Measure the resistance between ground and the (K19) Coil Control No.1 circuit in the Ignition Coil harness connector.

Is the resistance below 100 ohms?

Yes >> Repair the short to ground in the (K19) Coil Control No.1 circuit.
Perform the POWERTRAIN VERIFICATION TEST. (Refer to 9 - ENGINE - STANDARD PROCEDURE)

No >> Go To 8

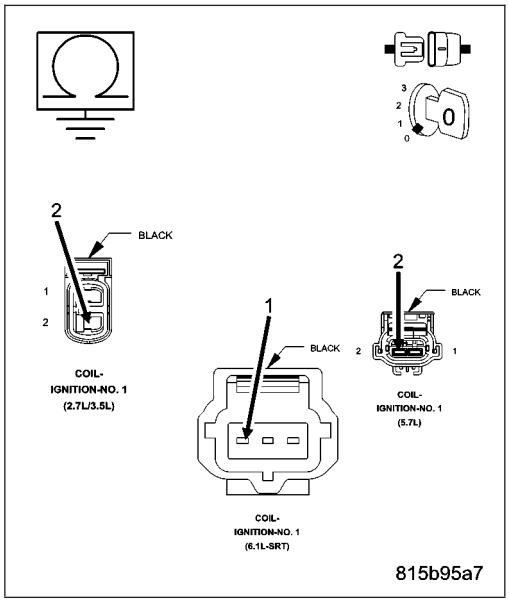

7. (K19) COIL CONTROL NO.1 CIRCUIT OPEN

Turn the ignition off.

Disconnect the C2 PCM harness connector.

CAUTION: Do not probe the PCM harness connectors. Probing the PCM harness connectors will damage the PCM terminals resulting in poor terminal to pin connection. Install Miller Special Tool #8815 to perform diagnosis.

Measure the resistance of the (K19) Coil Control No.1 circuit from the Ignition Coil harness connector to the appropriate terminal of special tool #8815.

Is the resistance below 5.0 ohms?

Yes >> Go To 8

No >> Repair the open in the (K19) Coil Control No.1 circuit.
Perform the POWERTRAIN VERIFICATION TEST. (Refer to 9 - ENGINE - STANDARD PROCEDURE)

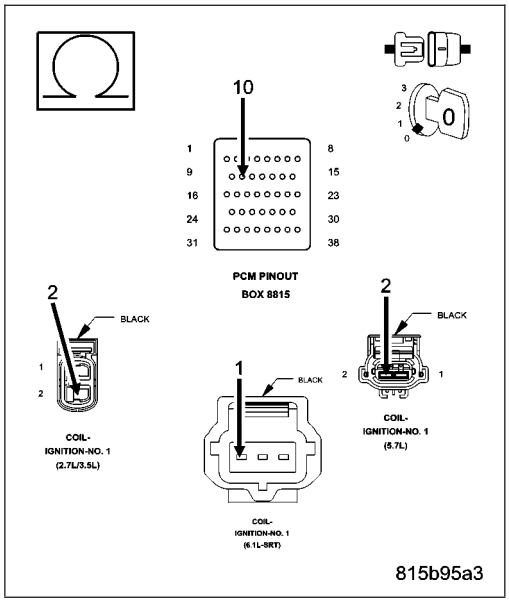

8. PCM

NOTE: Before continuing, check the PCM harness connector terminals for corrosion, damage, or terminal push out. Repair as necessary.
Using the schematics as a guide, inspect the wire harness and connectors. Pay particular attention to all Power and Ground circuits.

Were there any problems found?

Yes >> Repair as necessary.
Perform the POWERTRAIN VERIFICATION TEST. (Refer to 9 - ENGINE - STANDARD PROCEDURE)

No >> Replace and program the Powertrain Control Module per Service Information.
Perform the POWERTRAIN VERIFICATION TEST. (Refer to 9 - ENGINE - STANDARD PROCEDURE)

9. VISUAL AND PHYSICAL INSPECTION

Turn the ignition off.
Remove the Spark Plug.

NOTE: Vehicles that are equipped with the 5.7L or 6.1L engines must have both spark plugs (per cylinder) removed and inspected to ensure proper operation.
Inspect the Spark Plug for the following conditions.

- Cracks
- Carbon Tracking
- Foreign Material
- Gap size out of specifications
- Loose or broken electrode

NOTE: Lightly tap the bottom of the spark plug on a solid surface. The electrode in the spark plug should not move.

Were any of the above conditions present?

Yes >> Replace the Spark Plug.
Perform the POWERTRAIN VERIFICATION TEST. (Refer to 9 - ENGINE - STANDARD PROCEDURE)

No >> Refer to the INTERMITTENT CONDITION symptom in the Driveability category.

P2305-IGNITION COIL 2 SECONDARY CIRCUIT- INSUFFICIENT IONIZATION

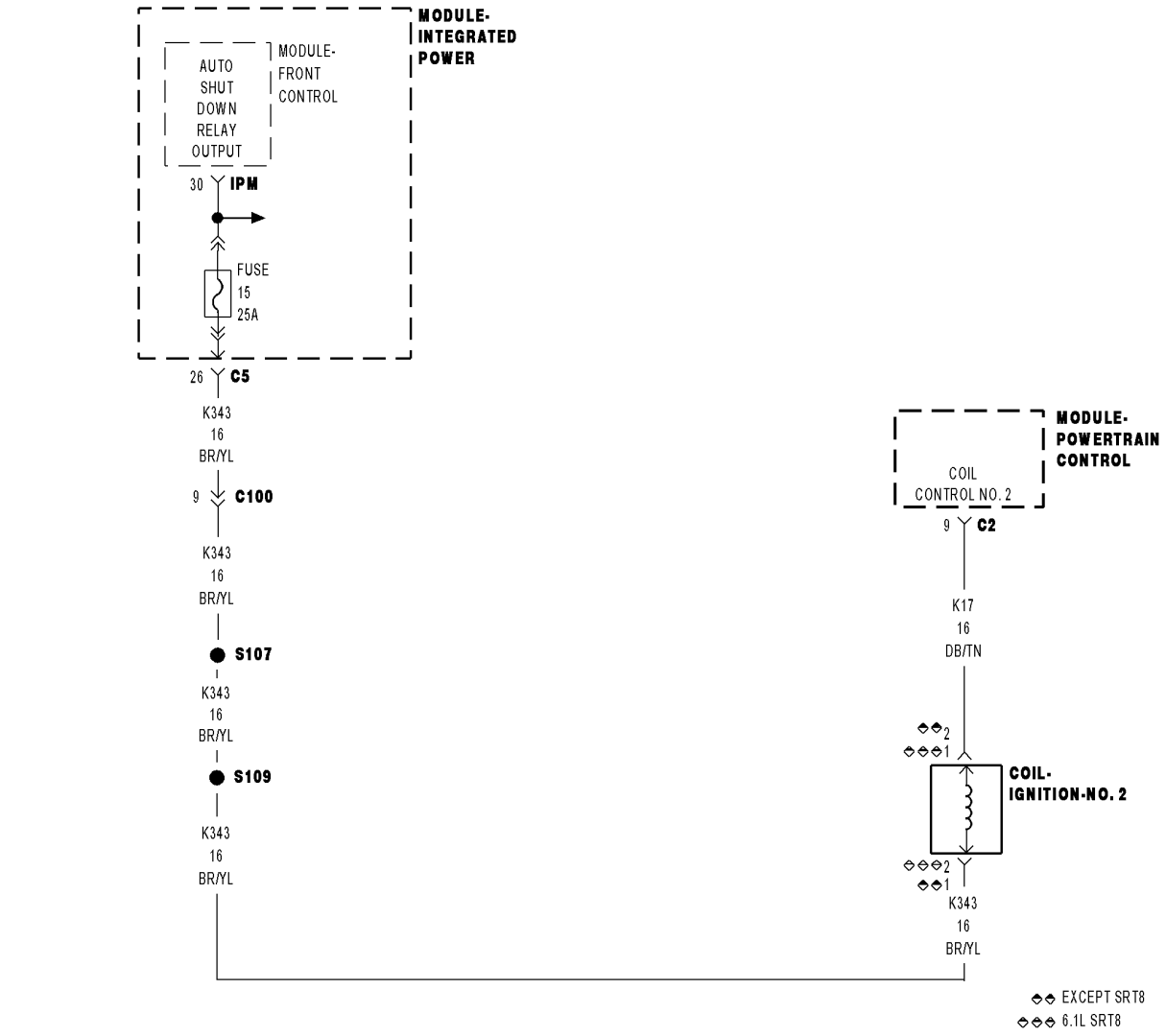

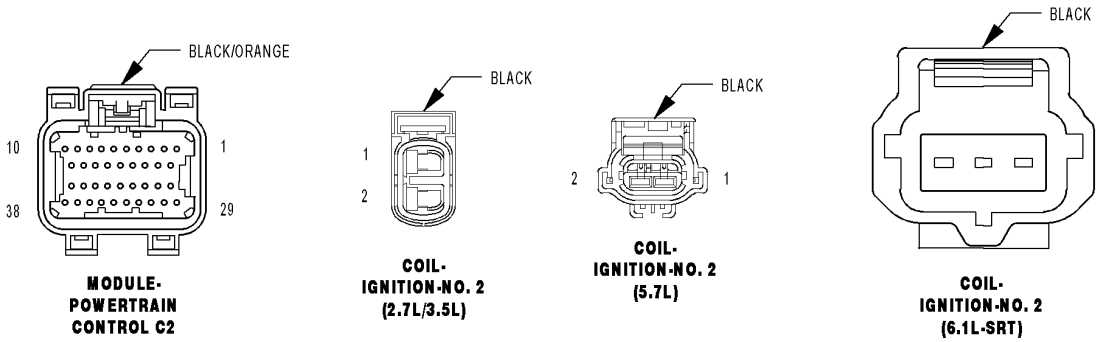

815b95ab

For a complete wiring diagram **Refer to Section 8W**.

- **When Monitored:**
  Engine running and battery voltage greater than 10 volts.
- **Set Condition:**
  If PCM detects that the secondary ignition burn time is incorrect, too short, or not present, an error is detected. One Trip Fault. Three good trips to turn off the MIL.

Possible Causes
(K343) ASD RELAY OUTPUT 2 CIRCUIT
(K17) COIL CONTROL NO.2 CIRCUIT OPEN
(K17) COIL CONTROL NO.2 CIRCUIT SHORTED TO GROUND
SPARK PLUG
COIL ON PLUG
PCM

Always perform the Pre-Diagnostic Troubleshooting procedure before proceeding. (Refer to 9 - ENGINE - DIAGNOSIS AND TESTING).

Diagnostic Test

1. ACTIVE DTC

Ignition on, engine not running.

With a scan tool, read DTCs.

Is the DTC active at this time?

Yes >> Go To 2

No >> Go To 9
Perform the POWERTRAIN VERIFICATION TEST. (Refer to 9 - ENGINE - STANDARD PROCEDURE)

2. SECONDARY SPARK

NOTE: Inspect the ignition coil for damage, carbon tracking on the coil or a damaged spark plug insulator boot. If a problem is found, replace the ignition coil.

Turn the ignition off.

Remove the ignition coil.

NOTE: 6.1L coils must have a spark tester installed on both sides of the coil during the following test. During the test, each side of the coil should output a crisp blue spark that is able to jump the gap of the spark tester.

Install a spark tester(s) to the ignition coil.

NOTE: On the 2.7 and 3.5L engines, cylinders 1, 3 and 5, it is necessary to remove the upper intake to access the ignition coils. Once the ignition coil has been removed from the cylinder head, the intake must be reinstalled to be able to crank the engine. Move the ignition coil harness connector through the slots in the upper intake and then connect the coil to the harness connector. Secure the upper intake to the lower intake in accordance with the service information.

While cranking the engine observe the spark coming from the spark tester.

NOTE: A crisp blue spark that is able to jump the gap of the spark tester should be generated.

Is good spark generated?

Yes >> Ensure the cylinder is operating properly. If OK, replace the Spark Plug.
Perform the POWERTRAIN VERIFICATION TEST. (Refer to 9 - ENGINE - STANDARD PROCEDURE)

No >> Go To 3

3. (K343) ASD RELAY OUTPUT2 CIRCUIT

Turn the ignition off.

Disconnect the Ignition Coil harness connector.

Ignition on, engine not running.

With a scan tool, actuate the ASD Relay.

Using a 12-volt test light connected to ground, probe the (K343) ASD Relay Output 2 circuit in the Coil on Plug harness connector.

Does the test light illuminate brightly?

Yes >> Go To 4

No >> Repair the open or short to ground in the (K343) ASD Relay Output 2 circuit between the IPM and Coil harness connector.

Perform the POWERTRAIN VERIFICATION TEST. (Refer to 9 - ENGINE - STANDARD PROCEDURE)

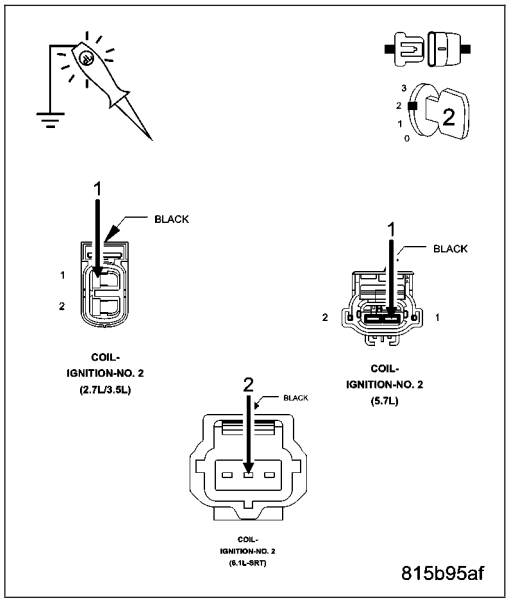

4. IGNITION COIL RESISTANCE

Turn the ignition off.

NOTE: The following resistance measurement should be taken at 70°-80° F.

Measure the resistance of the Ignition Coil.

Is the resistance between 0.53 to 0.65 ohms at 77°F (25°C) for the Ignition Coil being tested?

Yes >> Go To 5

No >> Replace the Ignition Coil.

Perform the POWERTRAIN VERIFICATION TEST. (Refer to 9 - ENGINE - STANDARD PROCEDURE)

5. IGNITION COIL

Using a 12-volt test light connected to a 12-volt source, probe the (K17) Coil Control No.2 circuit.

Crank the engine for 5 seconds while observing the test light.

What is the condition of the test light while cranking the engine?

Brightly blinking.

Replace the Ignition Coil.

Perform the POWERTRAIN VERIFICATION TEST. (Refer to 9 - ENGINE - STANDARD PROCEDURE)

ON constantly.

Go To 6

OFF constantly.

Go To 7

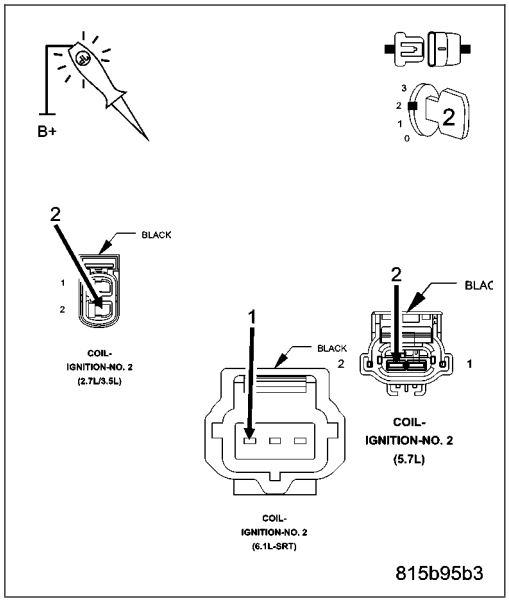

6. (K17) COIL CONTROL NO.2 CIRCUIT SHORTED TO GROUND

Turn the ignition off.

Disconnect the C2 PCM harness connector.

Measure the resistance between ground and the (K17) Coil Control No.2 circuit in the Ignition Coil harness connector.

Is the resistance below 100 ohms?

Yes >> Repair the short to ground in the (K17) Coil Control No.2 circuit.
Perform the POWERTRAIN VERIFICATION TEST. (Refer to 9 - ENGINE - STANDARD PROCEDURE)

No >> Go To 8

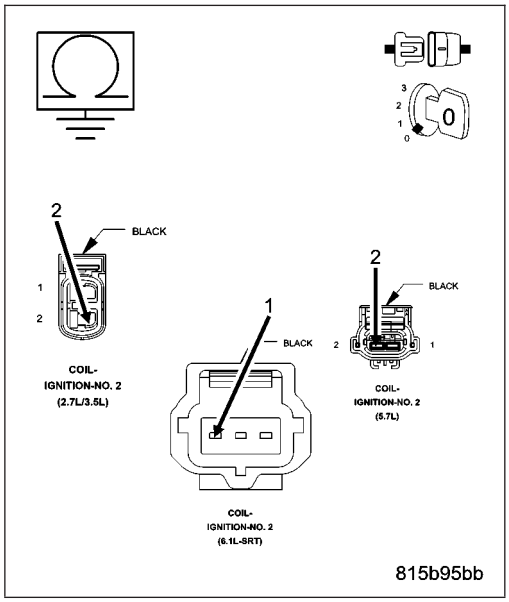

7. (K17) COIL CONTROL NO.2 CIRCUIT OPEN

Turn the ignition off.

Disconnect the C2 PCM harness connector.

CAUTION: Do not probe the PCM harness connectors. Probing the PCM harness connectors will damage the PCM terminals resulting in poor terminal to pin connection. Install Miller Special Tool #8815 to perform diagnosis.

Measure the resistance of the (K17) Coil Control No.2 circuit from the Ignition Coil harness connector to the appropriate terminal of special tool #8815.

Is the resistance below 5.0 ohms?

Yes >> Go To 8

No >> Repair the open in the (K17) Coil Control No.2 circuit.
Perform the POWERTRAIN VERIFICATION TEST. (Refer to 9 - ENGINE - STANDARD PROCEDURE)

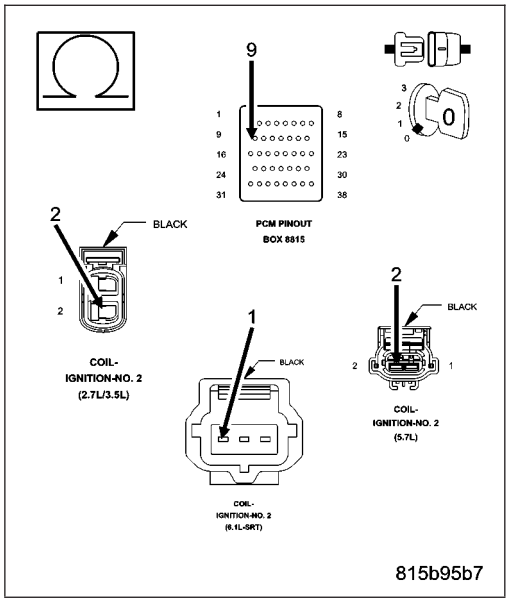

8. PCM

NOTE: Before continuing, check the PCM harness connector terminals for corrosion, damage, or terminal push out. Repair as necessary.
Using the schematics as a guide, inspect the wire harness and connectors. Pay particular attention to all Power and Ground circuits.

Were there any problems found?

Yes >> Repair as necessary.
Perform the POWERTRAIN VERIFICATION TEST. (Refer to 9 - ENGINE - STANDARD PROCEDURE)

No >> Replace and program the Powertrain Control Module per Service Information.
Perform the POWERTRAIN VERIFICATION TEST. (Refer to 9 - ENGINE - STANDARD PROCEDURE)

9. Visual and Physical Inspection

Turn the ignition off.
Remove the Spark Plug.

NOTE: Vehicles that are equipped with the 5.7L or 6.1L engines must have both spark plugs (per cylinder) removed and inspected to ensure proper operation.
Inspect the Spark Plug for the following conditions.

- Cracks
- Carbon Tracking
- Foreign Material
- Gap size out of specifications
- Loose or broken electrode

NOTE: Lightly tap the bottom of the spark plug on a solid surface. The electrode in the spark plug should not move.

Were any of the above conditions present?

Yes >> Replace the Spark Plug.
Perform the POWERTRAIN VERIFICATION TEST. (Refer to 9 - ENGINE - STANDARD PROCEDURE)

No >> Refer to the INTERMITTENT CONDITION symptom in the Driveability category.

P2308-IGNITION COIL 3 SECONDARY CIRCUIT- INSUFFICIENT IONIZATION

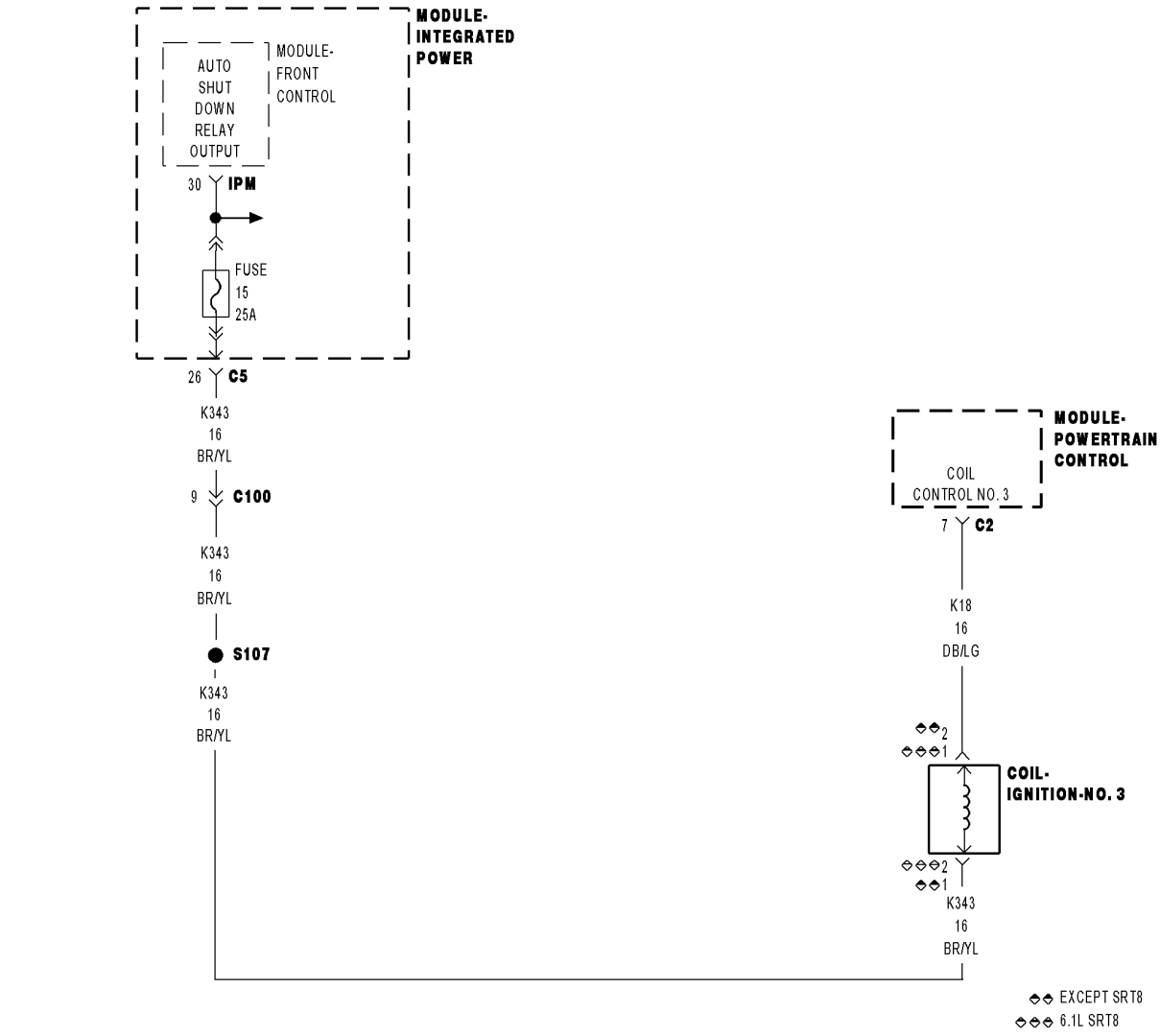

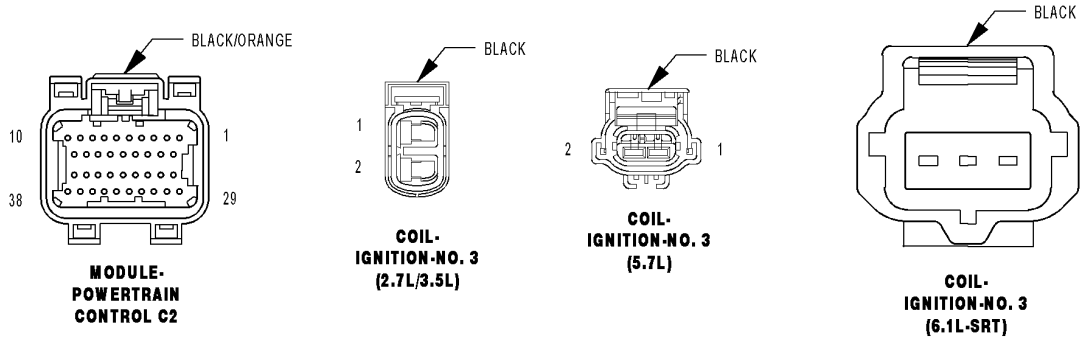

815b95c1

For a complete wiring diagram **Refer to Section 8W**.

- **When Monitored:**
  Engine running and battery voltage greater than 10 volts.
- **Set Condition:**
  If PCM detects that the secondary ignition burn time is incorrect, too short, or not present, an error is detected. One Trip Fault. Three good trips to turn off the MIL.

Possible Causes
(K343) ASD RELAY OUTPUT 2 CIRCUIT
(K18) COIL CONTROL NO.3 CIRCUIT OPEN
(K18) COIL CONTROL NO.3 CIRCUIT SHORTED TO GROUND
SPARK PLUG
COIL ON PLUG
PCM

Always perform the Pre-Diagnostic Troubleshooting procedure before proceeding. (Refer to 9 - ENGINE - DIAGNOSIS AND TESTING).

Diagnostic Test

1. ACTIVE DTC

Ignition on, engine not running.

With a scan tool, read DTCs.

Is the DTC active at this time?

Yes >> Go To 2

No >> Go To 9
Perform the POWERTRAIN VERIFICATION TEST. (Refer to 9 - ENGINE - STANDARD PROCEDURE)

2. Secondary Spark

NOTE: Inspect the ignition coil for damaged, carbon tracking on the coil or a damaged spark plug insulator boot. If a problem is found, replace the ignition coil.

Turn the ignition off.

Remove the ignition coil.

NOTE: 6.1L coils must have a spark tester installed on both sides of the coil during the following test. During the test, each side of the coil should output a crisp blue spark that is able to jump the gap of the spark tester.

Install a spark tester(s) to the ignition coil.

NOTE: On the 2.7 and 3.5L engines, cylinders 1, 3 and 5, it is necessary to remove the upper intake to access the ignition coils. Once the ignition coil has been removed from the cylinder head, the intake must be reinstalled to be able to crank the engine. Move the ignition coil harness connector through the slots in the upper intake and then connect the coil to the harness connector. Secure the upper intake to the lower intake in accordance with the service information.

While cranking the engine observe the spark coming from the spark tester.

NOTE: A crisp blue spark that is able to jump the gap of the spark tester should be generated.

Is good spark generated?

Yes >> Ensure the cylinder is operating properly. If OK, replace the Spark Plug.
Perform the POWERTRAIN VERIFICATION TEST. (Refer to 9 - ENGINE - STANDARD PROCEDURE)

No >> Go To 3

3. (K343) ASD RELAY OUTPUT2 CIRCUIT

Turn the ignition off.

Disconnect the Ignition Coil harness connector.

Ignition on, engine not running.

With a scan tool, actuate the ASD Relay.

Using a 12-volt test light connected to ground, probe the (K343) ASD Relay Output 2 circuit in the Coil on Plug harness connector.

Does the test light illuminate brightly?

Yes >> Go To 4

No >> Repair the open or short to ground in the (K343) ASD Relay Output 2 circuit between the IPM and Coil harness connector.

Perform the POWERTRAIN VERIFICATION TEST. (Refer to 9 - ENGINE - STANDARD PROCEDURE)

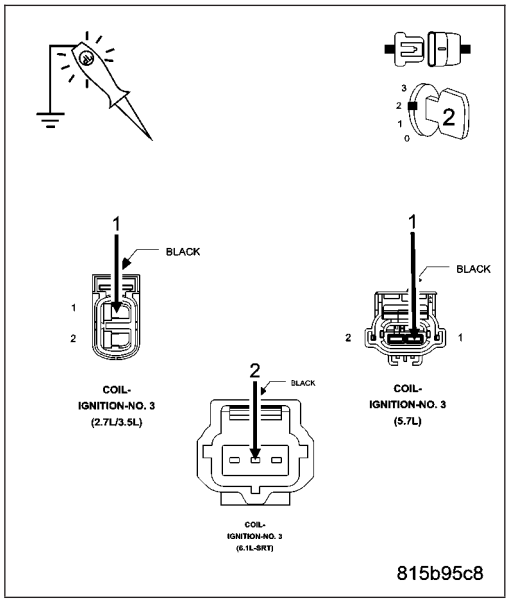

4. IGNITION COIL RESISTANCE

Turn the ignition off.

NOTE: The following resistance measurement should be taken at 70°-80° F.

Measure the resistance of the Ignition Coil.

Is the resistance between 0.53 to 0.65 ohms at 77°F (25°C) for the Ignition Coil being tested?

Yes >> Go To 5

No >> Replace the Ignition Coil.

Perform the POWERTRAIN VERIFICATION TEST. (Refer to 9 - ENGINE - STANDARD PROCEDURE)

5. IGNITION COIL

Using a 12-volt test light connected to a 12-volt source, probe the (K18) Coil Control No.3 circuit.

Crank the engine for 5 seconds while observing the test light.

What is the condition of the test light while cranking the engine?

Brightly blinking.

Replace the Ignition Coil.

Perform the POWERTRAIN VERIFICATION TEST. (Refer to 9 - ENGINE - STANDARD PROCEDURE)

ON constantly.

Go To 6

OFF constantly.

Go To 7

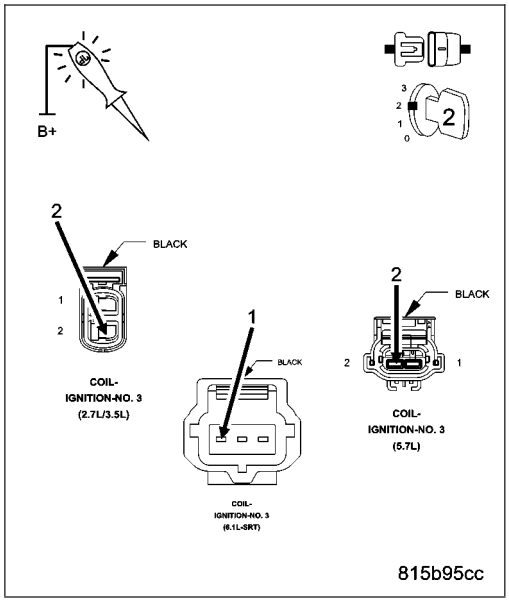

6. (K18) COIL CONTROL NO.3 CIRCUIT SHORTED TO GROUND

Turn the ignition off.

Disconnect the C2 PCM harness connector.

Measure the resistance between ground and the (K18) Coil Control No.3 circuit in the Ignition Coil harness connector.

Is the resistance below 100 ohms?

Yes >> Repair the short to ground in the (K18) Coil Control No.3 circuit.
Perform the POWERTRAIN VERIFICATION TEST. (Refer to 9 - ENGINE - STANDARD PROCEDURE)

No >> Go To 8

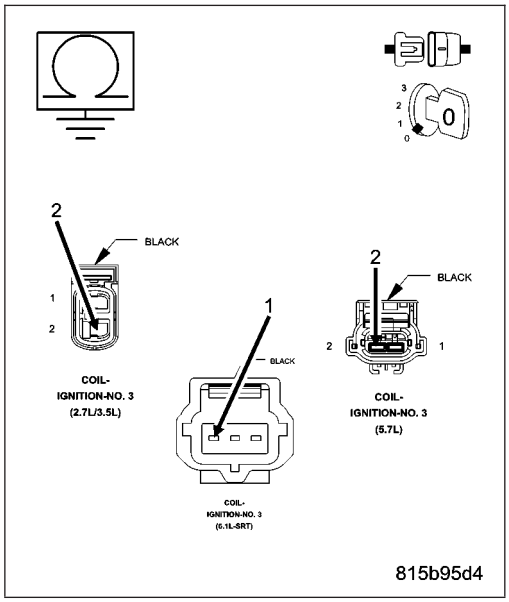

7. (K18) COIL CONTROL NO.3 CIRCUIT OPEN

Turn the ignition off.

Disconnect the C2 PCM harness connector.

CAUTION: Do not probe the PCM harness connectors. Probing the PCM harness connectors will damage the PCM terminals resulting in poor terminal to pin connection. Install Miller Special Tool #8815 to perform diagnosis.

Measure the resistance of the (K18) Coil Control No.3 circuit from the Ignition Coil harness connector to the appropriate terminal of special tool #8815.

Is the resistance below 5.0 ohms?

Yes >> Go To 8

No >> Repair the open in the (K18) Coil Control No.3 circuit.
Perform the POWERTRAIN VERIFICATION TEST. (Refer to 9 - ENGINE - STANDARD PROCEDURE)

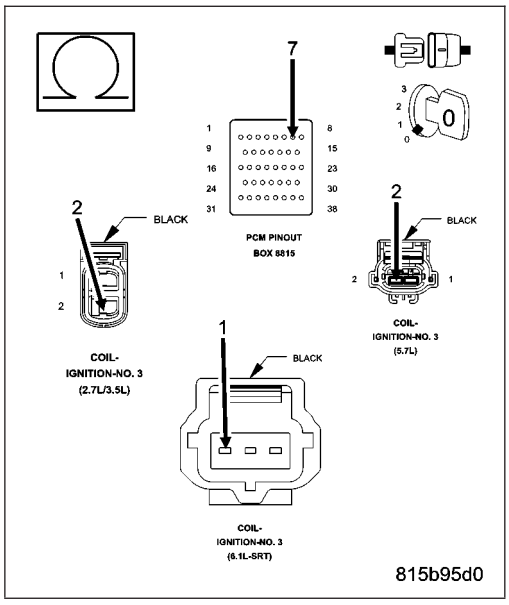

8. PCM

NOTE: Before continuing, check the PCM harness connector terminals for corrosion, damage, or terminal push out. Repair as necessary.
Using the schematics as a guide, inspect the wire harness and connectors. Pay particular attention to all Power and Ground circuits.

Were there any problems found?

Yes >> Repair as necessary.
Perform the POWERTRAIN VERIFICATION TEST. (Refer to 9 - ENGINE - STANDARD PROCEDURE)

No >> Replace and program the Powertrain Control Module per Service Information.
Perform the POWERTRAIN VERIFICATION TEST. (Refer to 9 - ENGINE - STANDARD PROCEDURE)

9. Visual and Physical Inspection

Turn the ignition off.
Remove the Spark Plug.

NOTE: Vehicles that are equipped with the 5.7L or 6.1L engines must have both spark plugs (per cylinder) removed and inspected to ensure proper operation.
Inspect the Spark Plug for the following conditions.

- Cracks
- Carbon Tracking
- Foreign Material
- Gap size out of specifications
- Loose or broken electrode

NOTE: Lightly tap the bottom of the spark plug on a solid surface. The electrode in the spark plug should not move.

Were any of the above conditions present?

Yes >> Replace the Spark Plug.
Perform the POWERTRAIN VERIFICATION TEST. (Refer to 9 - ENGINE - STANDARD PROCEDURE)

No >> Refer to the INTERMITTENT CONDITION symptom in the Driveability category.

P2311-IGNITION COIL 4 SECONDARY CIRCUIT- INSUFFICIENT IONIZATION

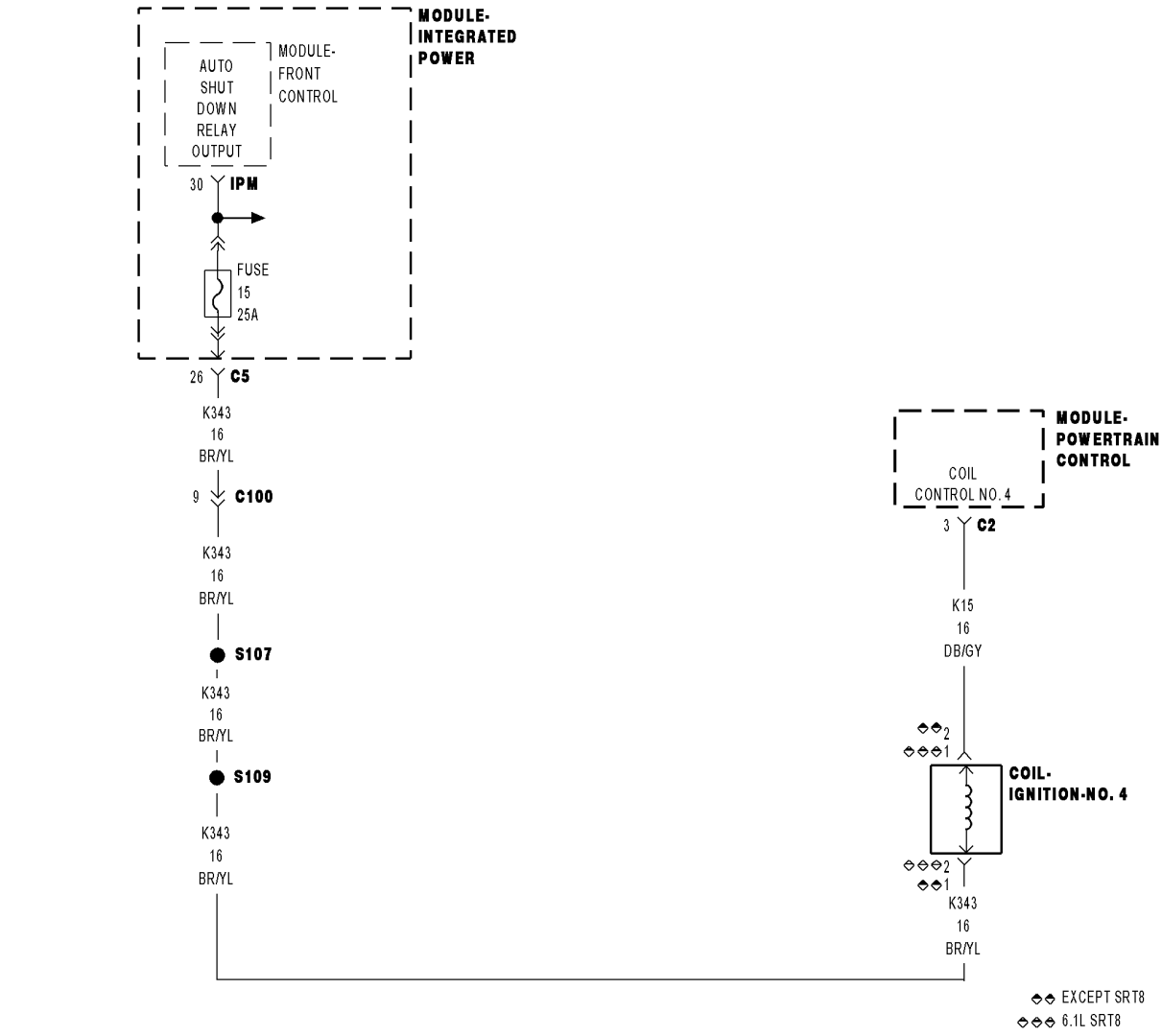

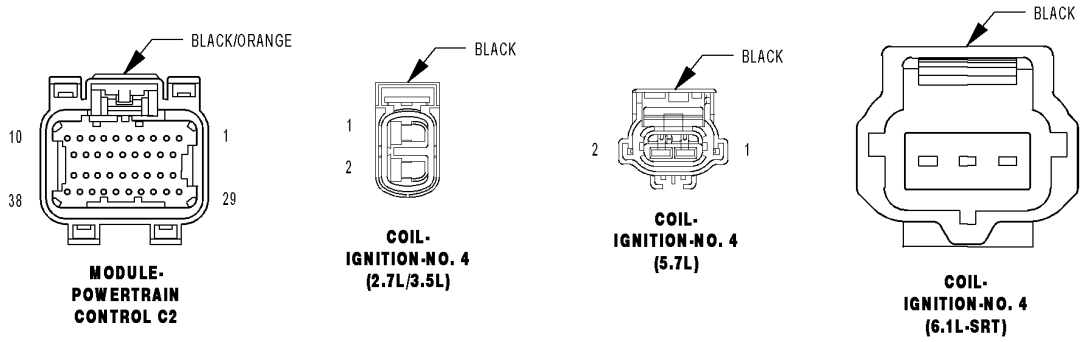

815b9548

For a complete wiring diagram **Refer to Section 8W**.

- **When Monitored:**
  Engine running and battery voltage greater than 10 volts.
- **Set Condition:**
  If PCM detects that the secondary ignition burn time is incorrect, too short, or not present, an error is detected. One Trip Fault. Three good trips to turn off the MIL.

Possible Causes
(K343) ASD RELAY OUTPUT 2 CIRCUIT
(K15) COIL CONTROL NO.4 CIRCUIT OPEN
(K15) COIL CONTROL NO.4 CIRCUIT SHORTED TO GROUND
SPARK PLUG
COIL ON PLUG
PCM

Always perform the Pre-Diagnostic Troubleshooting procedure before proceeding. (Refer to 9 - ENGINE - DIAGNOSIS AND TESTING).

Diagnostic Test

1. ACTIVE DTC

Ignition on, engine not running.

With a scan tool, read DTCs.

Is the DTC active at this time?

Yes >> Go To 2

No >> Go To 9
Perform the POWERTRAIN VERIFICATION TEST. (Refer to 9 - ENGINE - STANDARD PROCEDURE)

2. Secondary Spark

NOTE: Inspect the ignition coil for damage, carbon tracking on the coil or a damaged spark plug insulator boot. If a problem is found, replace the ignition coil.

Turn the ignition off.

Remove the ignition coil.

NOTE: 6.1L coils must have a spark tester installed on both sides of the coil during the following test. During the test, each side of the coil should output a crisp blue spark that is able to jump the gap of the spark tester.

Install a spark tester(s) to the ignition coil.

NOTE: On the 2.7 and 3.5L engines, cylinders 1, 3 and 5, it is necessary to remove the upper intake to access the ignition coils. Once the ignition coil has been removed from the cylinder head, the intake must be reinstalled to be able to crank the engine. Move the ignition coil harness connector through the slots in the upper intake and then connect the coil to the harness connector. Secure the upper intake to the lower intake in accordance with the service information.

While cranking the engine observe the spark coming from the spark tester.

NOTE: A crisp blue spark that is able to jump the gap of the spark tester should be generated.

Is good spark generated?

Yes >> Ensure the cylinder is operating properly. If OK, replace the Spark Plug.
Perform the POWERTRAIN VERIFICATION TEST. (Refer to 9 - ENGINE - STANDARD PROCEDURE)

No >> Go To 3

3. (K343) ASD RELAY OUTPUT2 CIRCUIT

Turn the ignition off.

Disconnect the Ignition Coil harness connector.

Ignition on, engine not running.

With a scan tool, actuate the ASD Relay.

Using a 12-volt test light connected to ground, probe the (K343) ASD Relay Output 2 circuit in the Coil on Plug harness connector.

Does the test light illuminate brightly?

Yes >> Go To 4

No >> Repair the open or short to ground in the (K343) ASD Relay Output 2 circuit between the IPM and Coil harness connector.

Perform the POWERTRAIN VERIFICATION TEST. (Refer to 9 - ENGINE - STANDARD PROCEDURE)

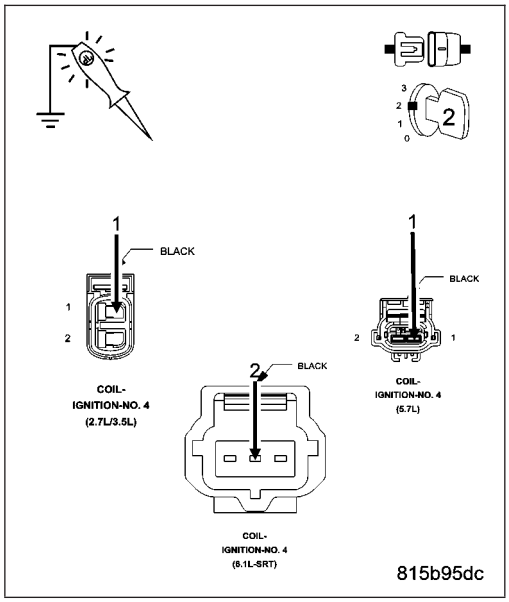

4. IGNITION COIL RESISTANCE

Turn the ignition off.

NOTE: The following resistance measurement should be taken at 70°-80° F.

Measure the resistance of the Ignition Coil.

Is the resistance between 0.53 to 0.65 ohms at 77°F (25°C) for the Ignition Coil being tested?

Yes >> Go To 5

No >> Replace the Ignition Coil.

Perform the POWERTRAIN VERIFICATION TEST. (Refer to 9 - ENGINE - STANDARD PROCEDURE)

5. IGNITION COIL

Using a 12-volt test light connected to a 12-volt source, probe the (K15) Coil Control No.4 circuit.

Crank the engine for 5 seconds while observing the test light.

What is the condition of the test light while cranking the engine?

Brightly blinking.

Replace the Ignition Coil.

Perform the POWERTRAIN VERIFICATION TEST. (Refer to 9 - ENGINE - STANDARD PROCEDURE)

ON constantly.

Go To 6

OFF constantly.

Go To 7

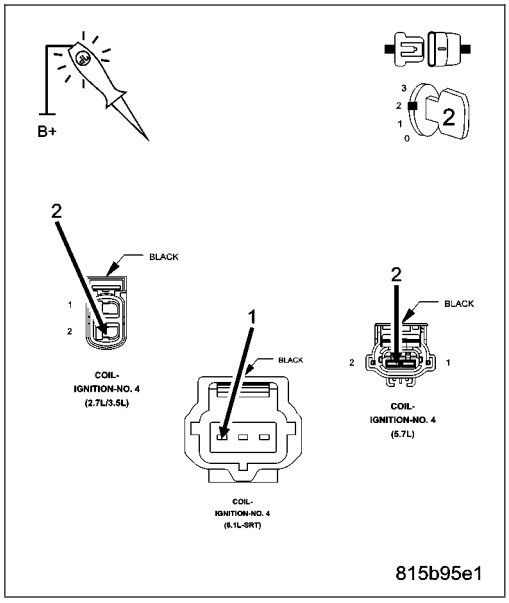

6. (K15) COIL CONTROL NO.4 CIRCUIT SHORTED TO GROUND

Turn the ignition off.

Disconnect the C2 PCM harness connector.

Measure the resistance between ground and the (K15) Coil Control No.4 circuit in the Ignition Coil harness connector.

Is the resistance below 100 ohms?

Yes >> Repair the short to ground in the (K15) Coil Control No.4 circuit.
Perform the POWERTRAIN VERIFICATION TEST. (Refer to 9 - ENGINE - STANDARD PROCEDURE)

No >> Go To 8

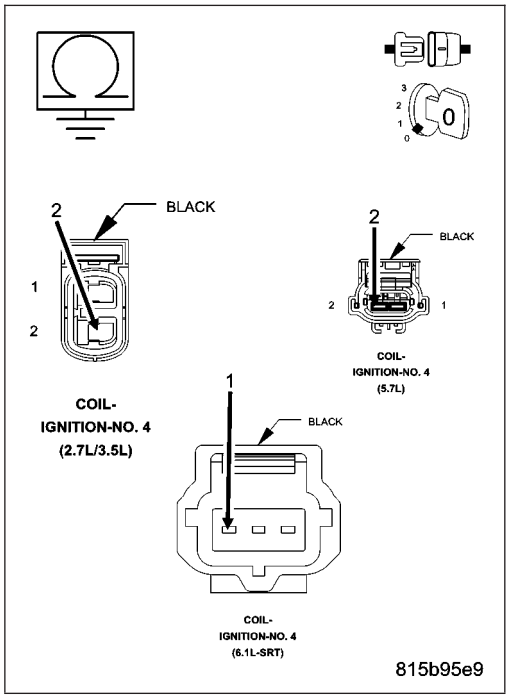

7. (K15) COIL CONTROL NO.4 CIRCUIT OPEN

Turn the ignition off.

Disconnect the C2 PCM harness connector.

CAUTION: Do not probe the PCM harness connectors. Probing the PCM harness connectors will damage the PCM terminals resulting in poor terminal to pin connection. Install Miller Special Tool #8815 to perform diagnosis.

Measure the resistance of the (K15) Coil Control No.4 circuit from the Ignition Coil harness connector to the appropriate terminal of special tool #8815.

Is the resistance below 5.0 ohms?

Yes >> Go To 8

No >> Repair the open in the (K15) Coil Control No.4 circuit.
Perform the POWERTRAIN VERIFICATION TEST. (Refer to 9 - ENGINE - STANDARD PROCEDURE)

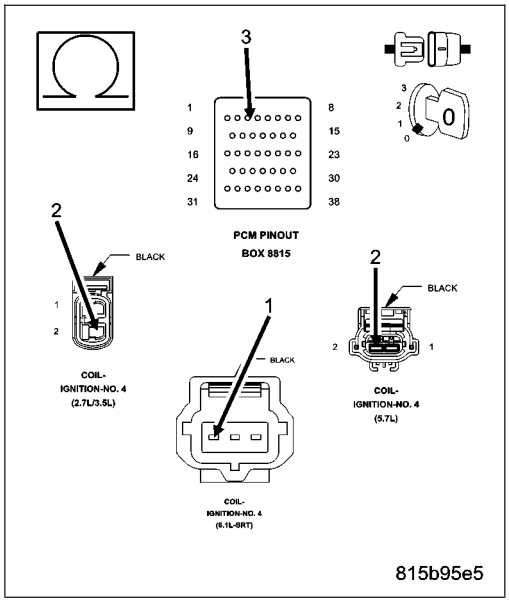

8. PCM

NOTE: Before continuing, check the PCM harness connector terminals for corrosion, damage, or terminal push out. Repair as necessary.
Using the schematics as a guide, inspect the wire harness and connectors. Pay particular attention to all Power and Ground circuits.

Were there any problems found?

Yes >> Repair as necessary.
Perform the POWERTRAIN VERIFICATION TEST. (Refer to 9 - ENGINE - STANDARD PROCEDURE)

No >> Replace and program the Powertrain Control Module per Service Information.
Perform the POWERTRAIN VERIFICATION TEST. (Refer to 9 - ENGINE - STANDARD PROCEDURE)

9. Visual and Physical Inspection

Turn the ignition off.
Remove the Spark Plug.

NOTE: Vehicles that are equipped with the 5.7L or 6.1L engines must have both spark plugs (per cylinder) removed and inspected to ensure proper operation.
Inspect the Spark Plug for the following conditions.

- Cracks
- Carbon Tracking
- Foreign Material
- Gap size out of specifications
- Loose or broken electrode

NOTE: Lightly tap the bottom of the spark plug on a solid surface. The electrode in the spark plug should not move.

Were any of the above conditions present?

Yes >> Replace the Spark Plug.
Perform the POWERTRAIN VERIFICATION TEST. (Refer to 9 - ENGINE - STANDARD PROCEDURE)

No >> Refer to the INTERMITTENT CONDITION symptom in the Driveability category.

P2314-IGNITION COIL 5 SECONDARY CIRCUIT- INSUFFICIENT IONIZATION

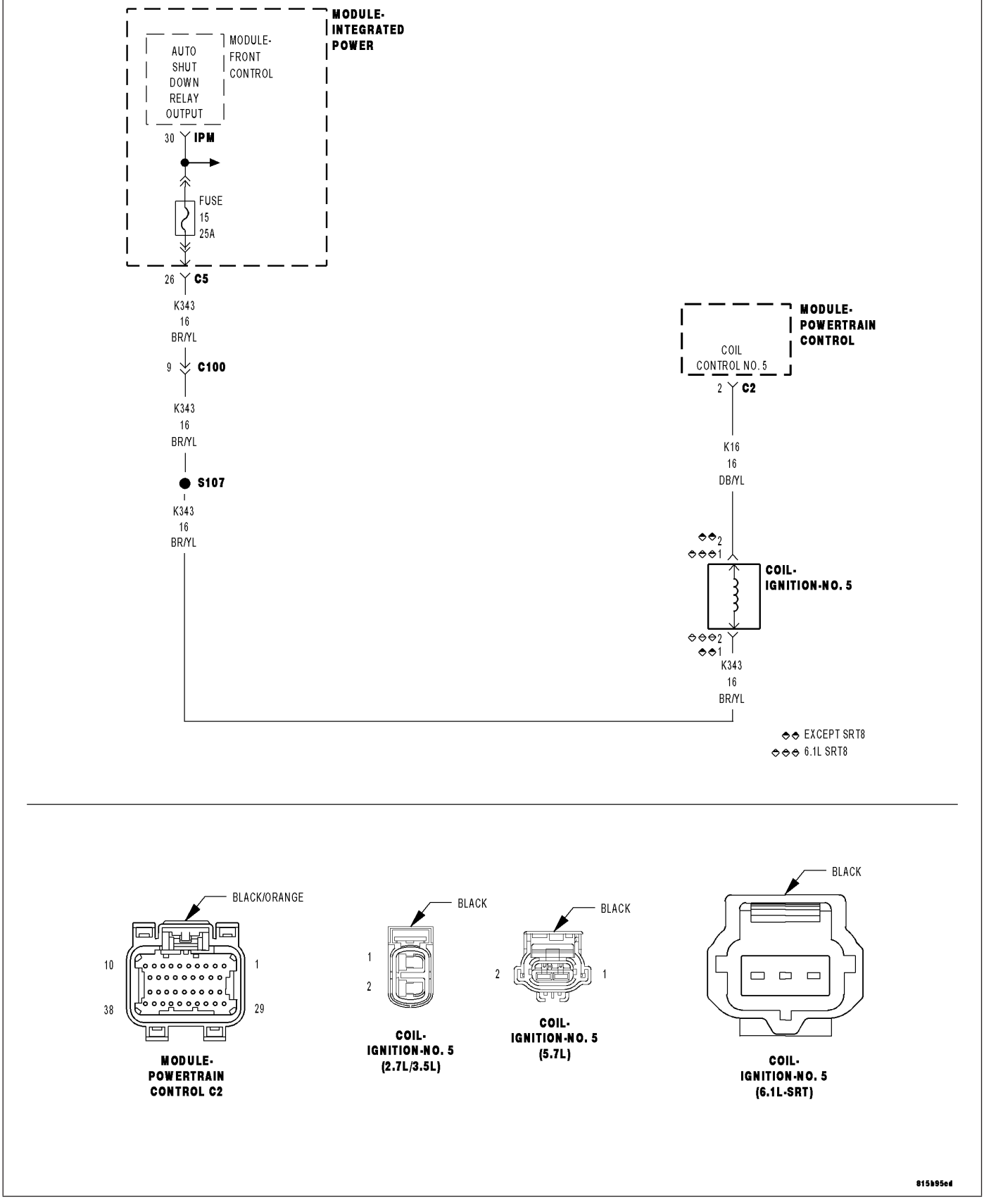

For a complete wiring diagram **Refer to Section 8W**.

- **When Monitored:**
  Engine running and battery voltage greater than 10 volts.
- **Set Condition:**
  If PCM detects that the secondary ignition burn time is incorrect, too short, or not present, an error is detected. One Trip Fault. Three good trips to turn off the MIL.

Possible Causes
(K343) ASD RELAY OUTPUT 2 CIRCUIT
(K16) COIL CONTROL NO.5 CIRCUIT OPEN
(K16) COIL CONTROL NO.5 CIRCUIT SHORTED TO GROUND
SPARK PLUG
COIL ON PLUG
PCM

Always perform the Pre-Diagnostic Troubleshooting procedure before proceeding. (Refer to 9 - ENGINE - DIAGNOSIS AND TESTING).

Diagnostic Test

1. ACTIVE DTC

Ignition on, engine not running.

With a scan tool, read DTCs.

Is the DTC active at this time?

Yes >> Go To 2

No >> Go To 9
Perform the POWERTRAIN VERIFICATION TEST. (Refer to 9 - ENGINE - STANDARD PROCEDURE)

2. Secondary Spark

NOTE: Inspect the ignition coil for damaged, carbon tracking on the coil or a damage spark plug insulator boot. If a problem is found, replace the ignition coil.

Turn the ignition off.

Remove the ignition coil.

NOTE: 6.1L coils must have a spark tester installed on both sides of the coil during the following test. During the test, each side of the coil should output a crisp blue spark that is able to jump the gap of the spark tester.

Install a spark tester to the ignition coil.

NOTE: On the 2.7 and 3.5L engines, cylinders 1, 3 and 5, it is necessary to remove the upper intake to access the ignition coils. Once the ignition coil has been removed from the cylinder head, the intake must be reinstalled to be able to crank the engine. Move the ignition coil harness connector through the slots in the upper intake and then connect the coil to the harness connector. Secure the upper intake to the lower intake in accordance with the service information.

While cranking the engine observe the spark coming from the spark tester.

NOTE: A crisp blue spark that is able to jump the gap of the spark tester should be generated.

Is good spark generated?

Yes >> Ensure the cylinder is operating properly. If OK, replace the Spark Plug.
Perform the POWERTRAIN VERIFICATION TEST. (Refer to 9 - ENGINE - STANDARD PROCEDURE)

No >> Go To 3

3. (K343) ASD RELAY OUTPUT2 CIRCUIT

Turn the ignition off.

Disconnect the Ignition Coil harness connector.

Ignition on, engine not running.

With a scan tool, actuate the ASD Relay.

Using a 12-volt test light connected to ground, probe the (K343) ASD Relay Output 2 circuit in the Coil on Plug harness connector.

Does the test light illuminate brightly?

Yes >> Go To 4

No >> Repair the open or short to ground in the (K343) ASD Relay Output 2 circuit between the IPM and Coil harness connector.

Perform the POWERTRAIN VERIFICATION TEST. (Refer to 9 - ENGINE - STANDARD PROCEDURE)

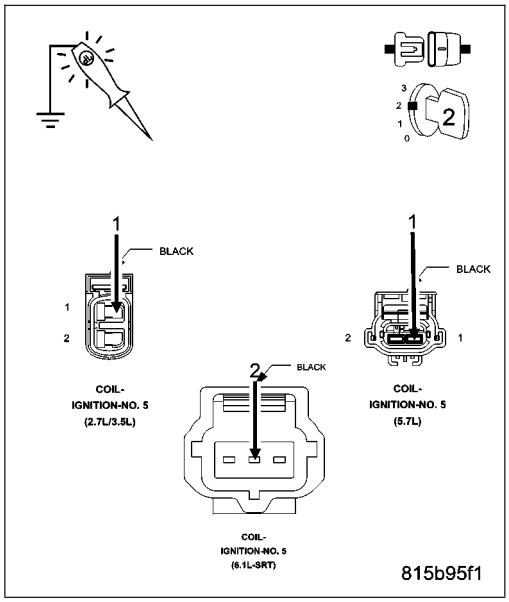

4. IGNITION COIL RESISTANCE

Turn the ignition off.

NOTE: The following resistance measurement should be taken at 70°-80° F.

Measure the resistance of the Ignition Coil.

Is the resistance between 0.53 to 0.65 ohms at 77°F (25°C) for the Ignition Coil being tested?

Yes >> Go To 5

No >> Replace the Ignition Coil.

Perform the POWERTRAIN VERIFICATION TEST. (Refer to 9 - ENGINE - STANDARD PROCEDURE)

5. IGNITION COIL

Using a 12-volt test light connected to a 12-volt source, probe the (K16) Coil Control No.5 circuit.

Crank the engine for 5 seconds while observing the test light.

What is the condition of the test light while cranking the engine?

Brightly blinking.

Replace the Ignition Coil.

Perform the POWERTRAIN VERIFICATION TEST. (Refer to 9 - ENGINE - STANDARD PROCEDURE)

ON constantly.

Go To 6

OFF constantly.

Go To 7

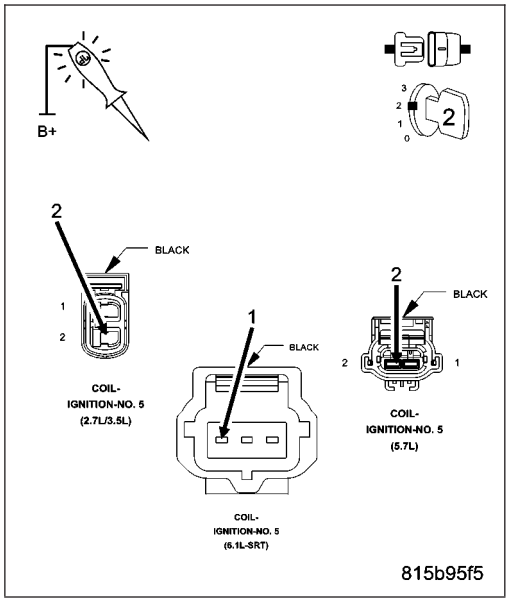

6. (K16) COIL CONTROL NO.5 CIRCUIT SHORTED TO GROUND

Turn the ignition off.

Disconnect the C2 PCM harness connector.

Measure the resistance between ground and the (K16) Coil Control No.5 circuit in the Ignition Coil harness connector.

Is the resistance below 100 ohms?

Yes >> Repair the short to ground in the (K16) Coil Control No.5 circuit.
Perform the POWERTRAIN VERIFICATION TEST. (Refer to 9 - ENGINE - STANDARD PROCEDURE)

No >> Go To 8

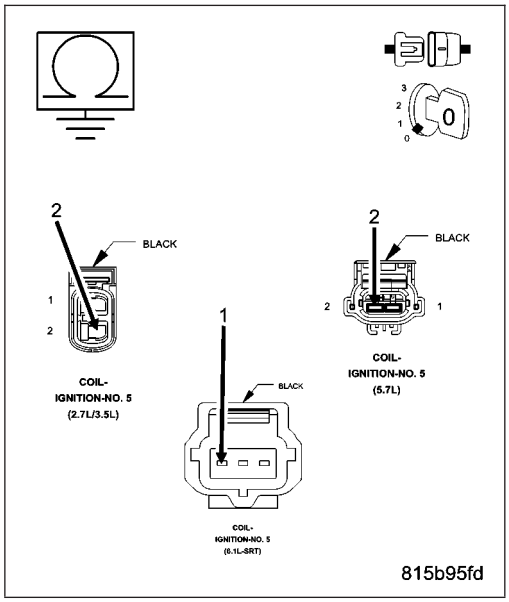

7. (K16) COIL CONTROL NO.5 CIRCUIT OPEN

Turn the ignition off.

Disconnect the C2 PCM harness connector.

CAUTION: Do not probe the PCM harness connectors. Probing the PCM harness connectors will damage the PCM terminals resulting in poor terminal to pin connection. Install Miller Special Tool #8815 to perform diagnosis.

Measure the resistance of the (K16) Coil Control No.5 circuit from the Ignition Coil harness connector to the appropriate terminal of special tool #8815.

Is the resistance below 5.0 ohms?

Yes >> Go To 8

No >> Repair the open in the (K16) Coil Control No.5 circuit.
Perform the POWERTRAIN VERIFICATION TEST. (Refer to 9 - ENGINE - STANDARD PROCEDURE)

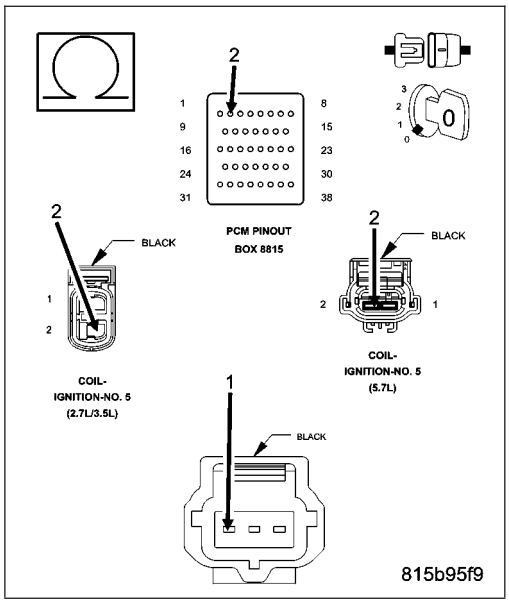

8. PCM

NOTE: Before continuing, check the PCM harness connector terminals for corrosion, damage, or terminal push out. Repair as necessary.
Using the schematics as a guide, inspect the wire harness and connectors. Pay particular attention to all Power and Ground circuits.

Were there any problems found?

Yes >> Repair as necessary.
Perform the POWERTRAIN VERIFICATION TEST. (Refer to 9 - ENGINE - STANDARD PROCEDURE)

No >> Replace and program the Powertrain Control Module per Service Information.
Perform the POWERTRAIN VERIFICATION TEST. (Refer to 9 - ENGINE - STANDARD PROCEDURE)

9. Visual and Physical Inspection

Turn the ignition off.
Remove the Spark Plug.

NOTE: Vehicles that are equipped with the 5.7L or 6.1L engines must have both spark plugs (per cylinder) removed and inspected to ensure proper operation.
Inspect the Spark Plug for the following conditions.

- Cracks
- Carbon Tracking
- Foreign Material
- Gap size out of specifications
- Loose or broken electrode

NOTE: Lightly tap the bottom of the spark plug on a solid surface. The electrode in the spark plug should not move.

Were any of the above conditions present?

Yes >> Replace the Spark Plug.
Perform the POWERTRAIN VERIFICATION TEST. (Refer to 9 - ENGINE - STANDARD PROCEDURE)

No >> Refer to the INTERMITTENT CONDITION symptom in the Driveability category.

P2317-IGNITION COIL 6 SECONDARY CIRCUIT- INSUFFICIENT IONIZATION

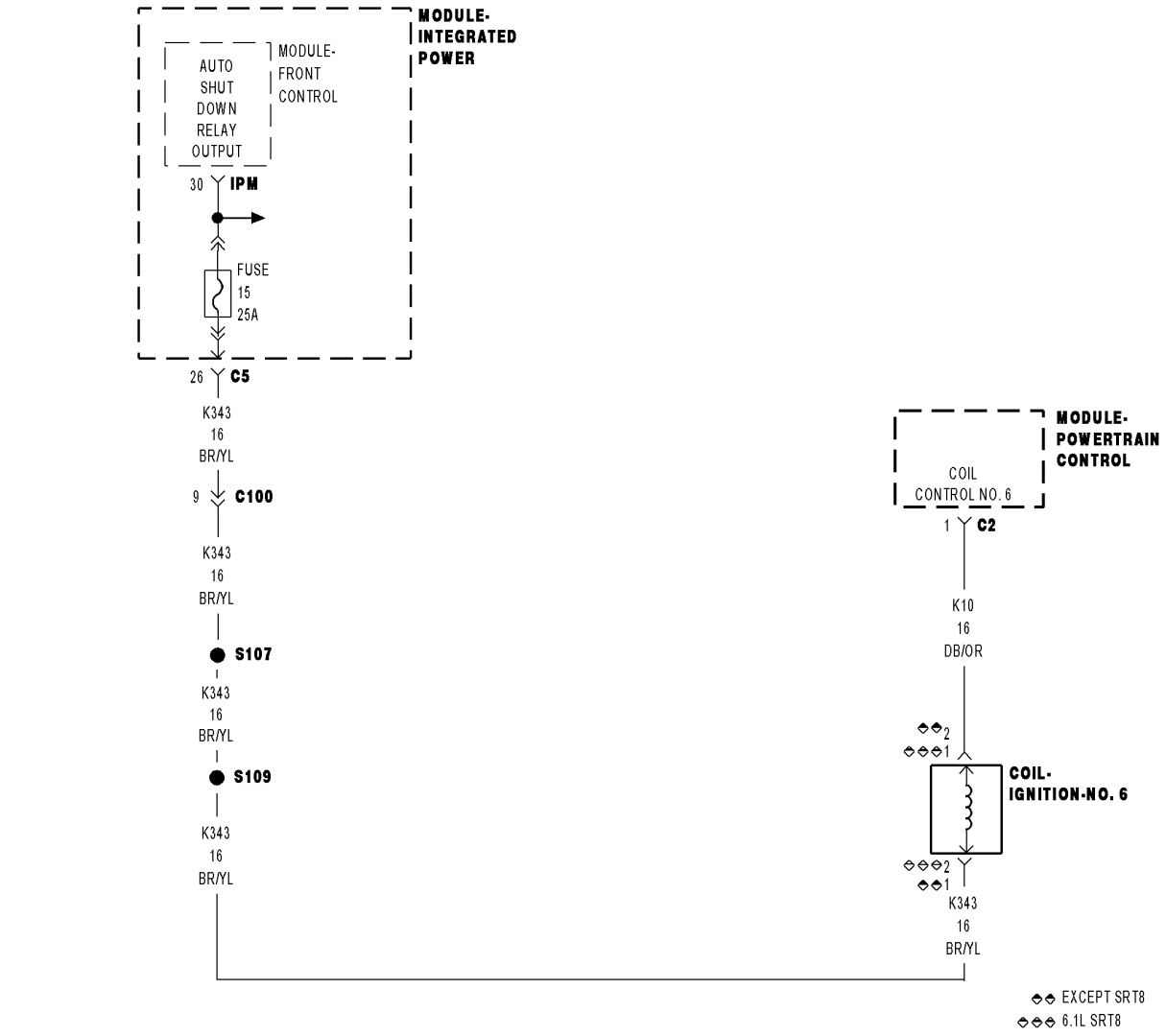

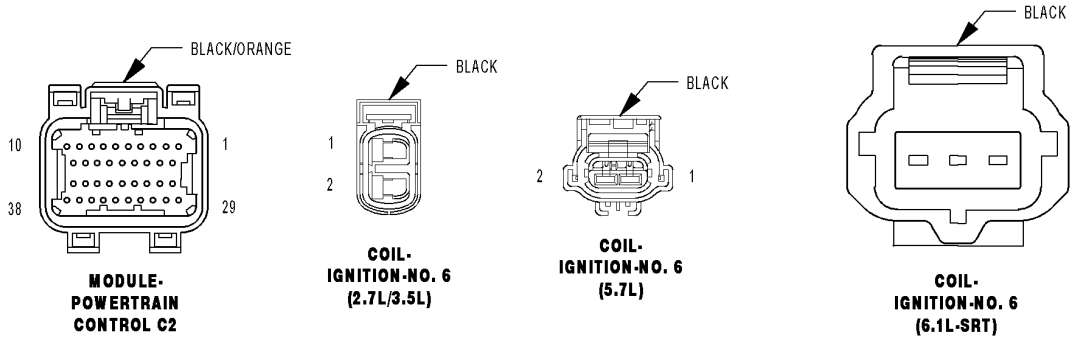

81bb9602

For a complete wiring diagram **Refer to Section 8W**.

- **When Monitored:**
  Engine running and battery voltage greater than 10 volts.
- **Set Condition:**
  If PCM detects that the secondary ignition burn time is incorrect, too short, or not present, an error is detected. One Trip Fault. Three good trips to turn off the MIL.

Possible Causes
(K343) ASD RELAY OUTPUT 2 CIRCUIT
(K10) COIL CONTROL NO.6 CIRCUIT OPEN
(K10) COIL CONTROL NO.6 CIRCUIT SHORTED TO GROUND
SPARK PLUG
COIL ON PLUG
PCM

Always perform the Pre-Diagnostic Troubleshooting procedure before proceeding. (Refer to 9 - ENGINE - DIAGNOSIS AND TESTING).

Diagnostic Test

1. ACTIVE DTC

Ignition on, engine not running.

With a scan tool, read DTCs.

Is the DTC active at this time?

Yes >> Go To 2

No >> Go To 9
Perform the POWERTRAIN VERIFICATION TEST. (Refer to 9 - ENGINE - STANDARD PROCEDURE)

2. Secondary Spark

NOTE: Inspect the ignition coil for damage, carbon tracking on the coil or a damaged spark plug insulator boot. If a problem is found, replace the ignition coil.

Turn the ignition off.

Remove the ignition coil.

NOTE: 6.1L coils must have a spark tester installed on both sides of the coil during the following test. During the test, each side of the coil should output a crisp blue spark that is able to jump the gap of the spark tester.

Install a spark tester(s) to the ignition coil.

NOTE: On the 2.7 and 3.5L engines, cylinders 1, 3 and 5, it is necessary to remove the upper intake to access the ignition coils. Once the ignition coil has been removed from the cylinder head, the intake must be reinstalled to be able to crank the engine. Move the ignition coil harness connector through the slots in the upper intake and then connect the coil to the harness connector. Secure the upper intake to the lower intake in accordance with the service information.

While cranking the engine observe the spark coming from the spark tester.

NOTE: A crisp blue spark that is able to jump the gap of the spark tester should be generated.

Is good spark generated?

Yes >> Ensure the cylinder is operating properly. If OK, replace the Spark Plug.
Perform the POWERTRAIN VERIFICATION TEST. (Refer to 9 - ENGINE - STANDARD PROCEDURE)

No >> Go To 3

3. (K343) ASD RELAY OUTPUT2 CIRCUIT

Turn the ignition off.

Disconnect the Ignition Coil harness connector.

Ignition on, engine not running.

With a scan tool, actuate the ASD Relay.

Using a 12-volt test light connected to ground, probe the (K343) ASD Relay Output 2 circuit in the Coil on Plug harness connector.

Does the test light illuminate brightly?

Yes >> Go To 4

No >> Repair the open or short to ground in the (K343) ASD Relay Output 2 circuit between the IPM and Coil harness connector.

Perform the POWERTRAIN VERIFICATION TEST. (Refer to 9 - ENGINE - STANDARD PROCEDURE)

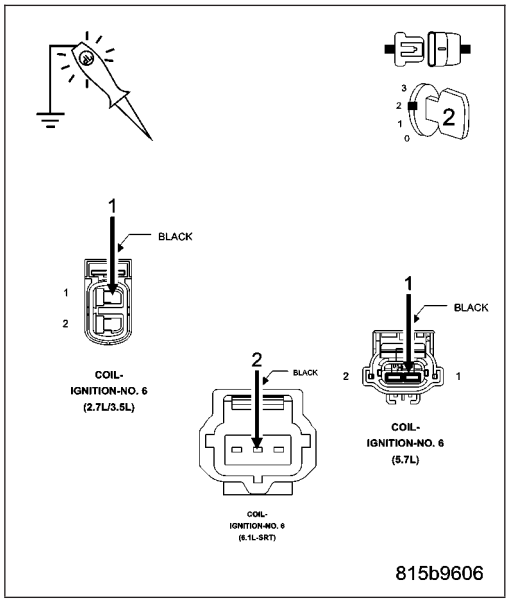

4. IGNITION COIL RESISTANCE

Turn the ignition off.

NOTE: The following resistance measurement should be taken at 70°-80° F.

Measure the resistance of the Ignition Coil.

Is the resistance between 0.53 to 0.65 ohms at 77°F (25°C) for the Ignition Coil being tested?

Yes >> Go To 5

No >> Replace the Ignition Coil.

Perform (NGC) POWERTRAIN VERIFICATION TEST VER - 5. (Refer to 8 - ELECTRICAL/ELECTRONIC CONTROL MODULES/POWERTRAIN CONTROL MODULE - DIAGNOSIS AND TESTING)

5. IGNITION COIL

Using a 12-volt test light connected to a 12-volt source, probe the (K10) Coil Control No.6 circuit.

Crank the engine for 5 seconds while observing the test light.

What is the condition of the test light while cranking the engine?

Brightly blinking.

Replace the Ignition Coil.

Perform the POWERTRAIN VERIFICATION TEST. (Refer to 9 - ENGINE - STANDARD PROCEDURE)

ON constantly.

Go To 6

OFF constantly.

Go To 7

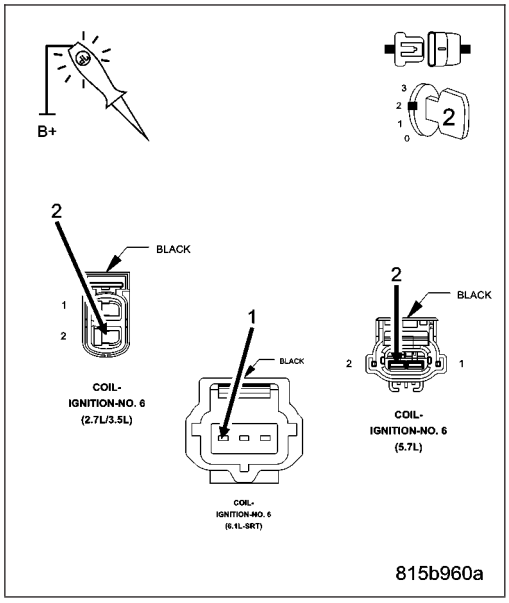

6. (K10) COIL CONTROL NO.6 CIRCUIT SHORTED TO GROUND

Turn the ignition off.

Disconnect the C2 PCM harness connector.

Measure the resistance between ground and the (K10) Coil Control No.6 circuit in the Ignition Coil harness connector.

Is the resistance below 100 ohms?

Yes >> Repair the short to ground in the (K10) Coil Control No.6 circuit.
Perform the POWERTRAIN VERIFICATION TEST. (Refer to 9 - ENGINE - STANDARD PROCEDURE)

No >> Go To 8

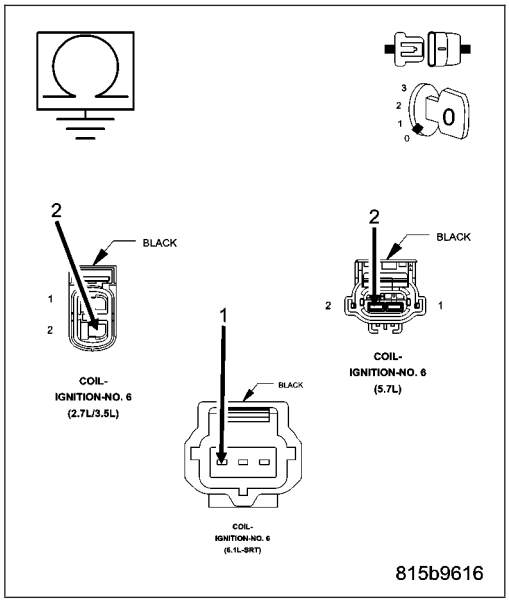

7. (K10) COIL CONTROL NO.6 CIRCUIT OPEN

Turn the ignition off.

Disconnect the C2 PCM harness connector.

CAUTION: Do not probe the PCM harness connectors. Probing the PCM harness connectors will damage the PCM terminals resulting in poor terminal to pin connection. Install Miller Special Tool #8815 to perform diagnosis.

Measure the resistance of the (K10) Coil Control No.6 circuit from the Ignition Coil harness connector to the appropriate terminal of special tool #8815.

Is the resistance below 5.0 ohms?

Yes >> Go To 8

No >> Repair the open in the (K10) Coil Control No.6 circuit.
Perform the POWERTRAIN VERIFICATION TEST. (Refer to 9 - ENGINE - STANDARD PROCEDURE)

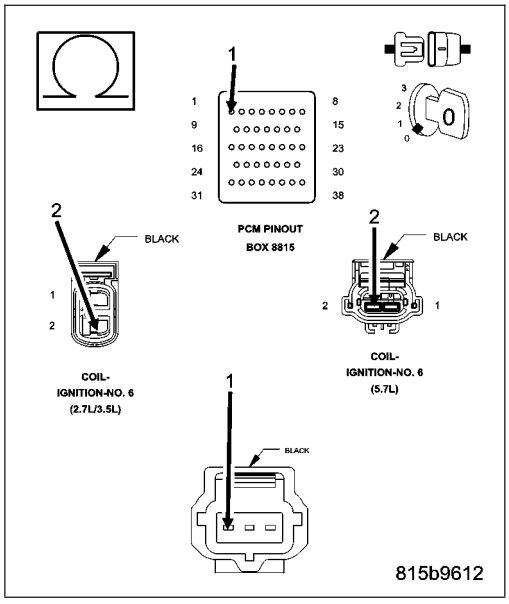

8. PCM

NOTE: Before continuing, check the PCM harness connector terminals for corrosion, damage, or terminal push out. Repair as necessary.
Using the schematics as a guide, inspect the wire harness and connectors. Pay particular attention to all Power and Ground circuits.

Were there any problems found?

Yes >> Repair as necessary.
Perform the POWERTRAIN VERIFICATION TEST. (Refer to 9 - ENGINE - STANDARD PROCEDURE)

No >> Replace and program the Powertrain Control Module per Service Information.
Perform the POWERTRAIN VERIFICATION TEST. (Refer to 9 - ENGINE - STANDARD PROCEDURE)

9. Visual and Physical Inspection

Turn the ignition off.
Remove the Spark Plug.

NOTE: Vehicles that are equipped with the 5.7L or 6.1L engines must have both spark plugs (per cylinder) removed and inspected to ensure proper operation.
Inspect the Spark Plug for the following conditions.

- Cracks
- Carbon Tracking
- Foreign Material
- Gap size out of specifications
- Loose or broken electrode

NOTE: Lightly tap the bottom of the spark plug on a solid surface. The electrode in the spark plug should not move.

Were any of the above conditions present?

Yes >> Replace the Spark Plug.
Perform the POWERTRAIN VERIFICATION TEST. (Refer to 9 - ENGINE - STANDARD PROCEDURE)

No >> Refer to the INTERMITTENT CONDITION symptom in the Driveability category.

P2320-IGNITION COIL 7 SECONDARY CIRCUIT- INSUFFICIENT IONIZATION

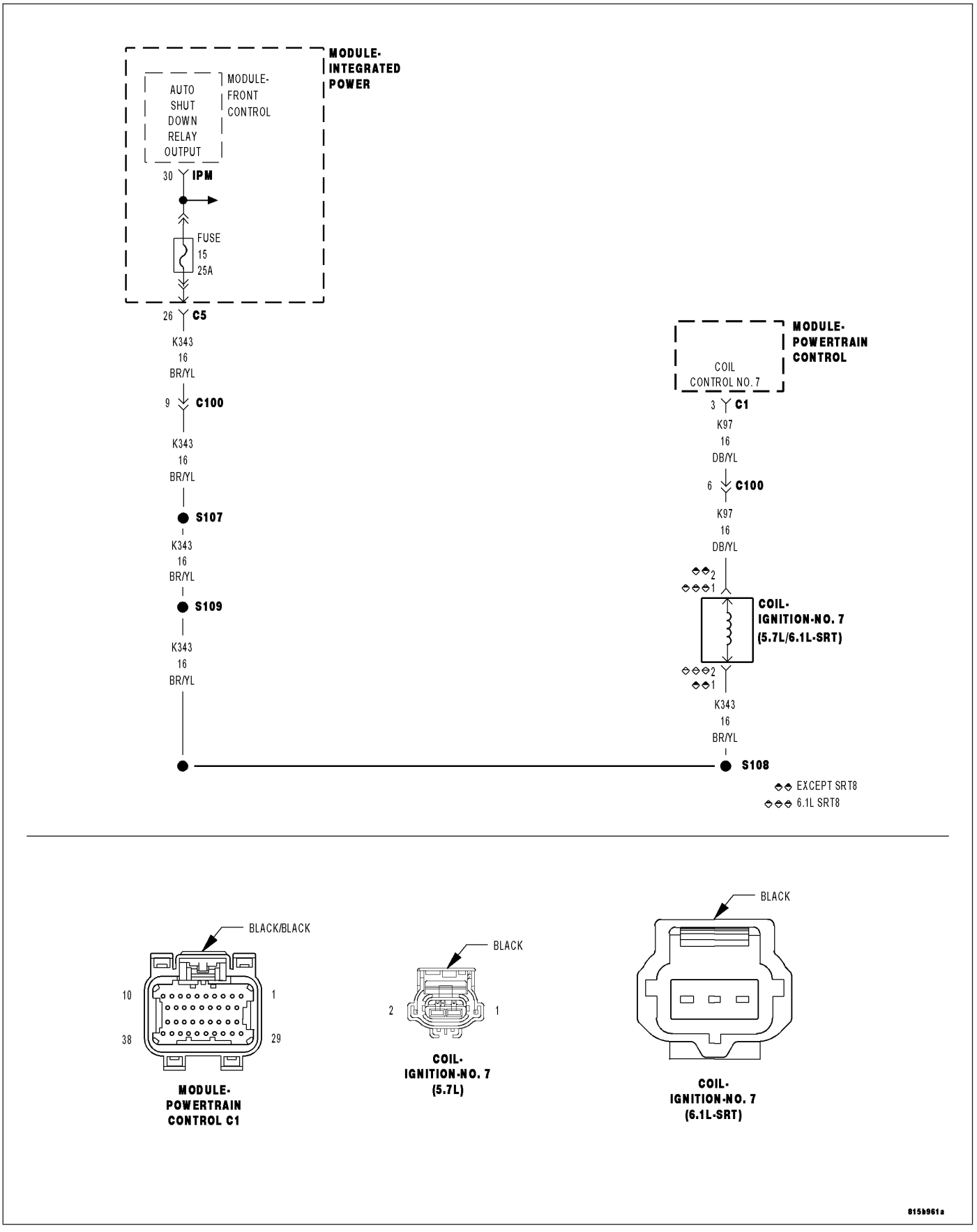

For a complete wiring diagram **Refer to Section 8W**.

- **When Monitored:**
  Engine running and battery voltage greater than 10 volts.
- **Set Condition:**
  If PCM detects that the secondary ignition burn time is incorrect, too short, or not present, an error is detected. One Trip Fault. Three good trips to turn off the MIL.

Possible Causes
(K343) ASD RELAY OUTPUT 2 CIRCUIT
(K97) COIL CONTROL NO.7 CIRCUIT OPEN
(K97) COIL CONTROL NO.7 CIRCUIT SHORTED TO GROUND
SPARK PLUG
COIL ON PLUG
PCM

Always perform the Pre-Diagnostic Troubleshooting procedure before proceeding. (Refer to 9 - ENGINE - DIAGNOSIS AND TESTING).

Diagnostic Test

1. ACTIVE DTC

Ignition on, engine not running.

With a scan tool, read DTCs.

Is the DTC active at this time?

Yes >> Go To 2

No >> Go To 9
Perform the POWERTRAIN VERIFICATION TEST. (Refer to 9 - ENGINE - STANDARD PROCEDURE)

2. Secondary Spark

NOTE: Inspect the ignition coil for damage, carbon tracking on the coil or a damaged spark plug insulator boot. If a problem is found, replace the ignition coil.

Turn the ignition off.

Remove the ignition coil.

NOTE: 6.1L coils must have a spark tester installed on both sides of the coil during the following test. During the test, each side of the coil should output a crisp blue spark that is able to jump the gap of the spark tester.

Install a spark tester(s) to the ignition coil.

While cranking the engine observe the spark coming from the spark tester.

NOTE: A crisp blue spark that is able to jump the gap of the spark tester should be generated.

Is good spark generated?

Yes >> Ensure the cylinder is operating properly. If OK, replace the Spark Plug.
Perform the POWERTRAIN VERIFICATION TEST. (Refer to 9 - ENGINE - STANDARD PROCEDURE)

No >> Go To 3

3. (K343) ASD RELAY OUTPUT2 CIRCUIT

Turn the ignition off.

Disconnect the Ignition Coil harness connector.

Ignition on, engine not running.

With a scan tool, actuate the ASD Relay.

Using a 12-volt test light connected to ground, probe the (K343) ASD Relay Output 2 circuit in the Coil on Plug harness connector.

Does the test light illuminate brightly?

Yes >> Go To 4

No >> Repair the open or short to ground in the (K343) ASD Relay Output 2 circuit between the IPM and Coil harness connector.

Perform the POWERTRAIN VERIFICATION TEST. (Refer to 9 - ENGINE - STANDARD PROCEDURE)

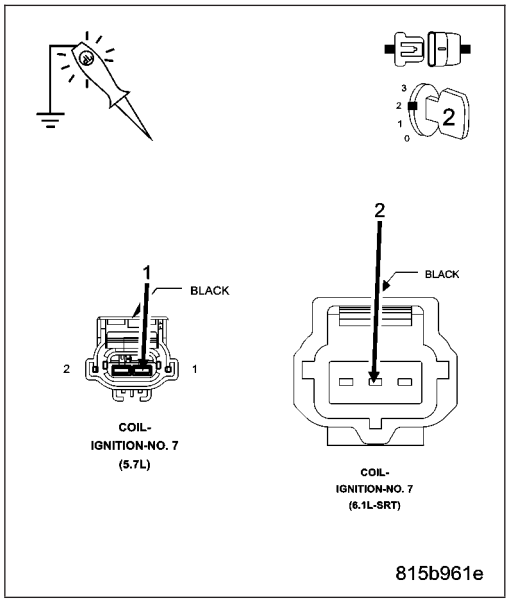

4. IGNITION COIL RESISTANCE

Turn the ignition off.

NOTE: The following resistance measurement should be taken at 70°-80° F.

Measure the resistance of the Ignition Coil.

Is the resistance between 0.53 to 0.65 ohms at 77°F (25°C) for the Ignition Coil being tested?

Yes >> Go To 5

No >> Replace the Ignition Coil.

Perform the POWERTRAIN VERIFICATION TEST. (Refer to 9 - ENGINE - STANDARD PROCEDURE)

5. IGNITION COIL

Using a 12-volt test light connected to a 12-volt source, probe the (K97) Coil Control No.7 circuit.

Crank the engine for 5 seconds while observing the test light.

What is the condition of the test light while cranking the engine?

Brightly blinking.

Replace the Ignition Coil.

Perform the POWERTRAIN VERIFICATION TEST. (Refer to 9 - ENGINE - STANDARD PROCEDURE)

ON constantly.

Go To 6

OFF constantly.

Go To 7

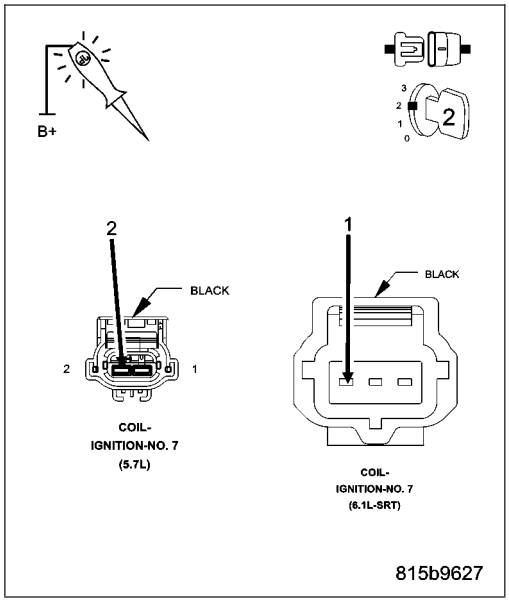

6. (K97) COIL CONTROL NO.7 CIRCUIT SHORTED TO GROUND

Turn the ignition off.

Disconnect the C2 PCM harness connector.

Measure the resistance between ground and the (K97) Coil Control No.7 circuit in the Ignition Coil harness connector.

Is the resistance below 100 ohms?

Yes >> Repair the short to ground in the (K97) Coil Control No.7 circuit.
Perform the POWERTRAIN VERIFICATION TEST. (Refer to 9 - ENGINE - STANDARD PROCEDURE)

No >> Go To 8

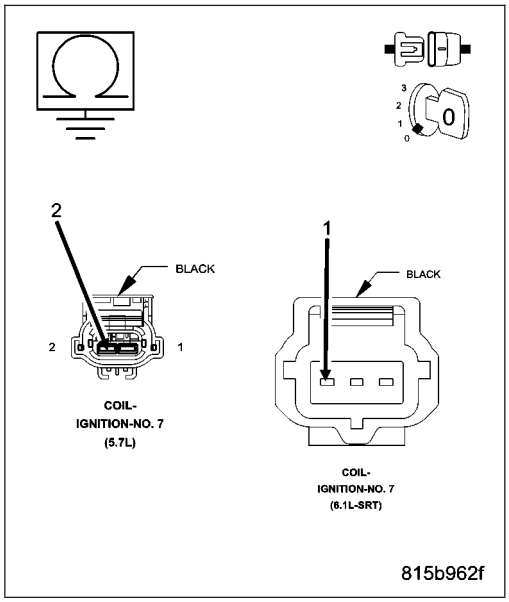

7. (K97) COIL CONTROL NO.7 CIRCUIT OPEN

Turn the ignition off.

Disconnect the C2 PCM harness connector.

CAUTION: Do not probe the PCM harness connectors. Probing the PCM harness connectors will damage the PCM terminals resulting in poor terminal to pin connection. Install Miller Special Tool #8815 to perform diagnosis.

Measure the resistance of the (K97) Coil Control No.7 circuit from the Ignition Coil harness connector to the appropriate terminal of special tool #8815.

Is the resistance below 5.0 ohms?

Yes >> Go To 8

No >> Repair the open in the (K97) Coil Control No.7 circuit.
Perform the POWERTRAIN VERIFICATION TEST. (Refer to 9 - ENGINE - STANDARD PROCEDURE)

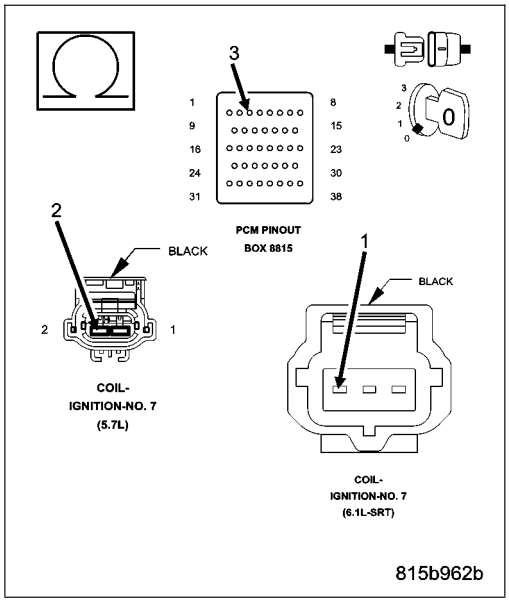

8. PCM

NOTE: Before continuing, check the PCM harness connector terminals for corrosion, damage, or terminal push out. Repair as necessary.
Using the schematics as a guide, inspect the wire harness and connectors. Pay particular attention to all Power and Ground circuits.

Were there any problems found?

Yes >> Repair as necessary.
Perform the POWERTRAIN VERIFICATION TEST. (Refer to 9 - ENGINE - STANDARD PROCEDURE)

No >> Replace and program the Powertrain Control Module per Service Information.
Perform the POWERTRAIN VERIFICATION TEST. (Refer to 9 - ENGINE - STANDARD PROCEDURE)

9. Visual and Physical Inspection

Turn the ignition off.
Remove the Spark Plug.

NOTE: Vehicles that are equipped with the 5.7L or 6.1L engines must have both spark plugs (per cylinder) removed and inspected to ensure proper operation.
Inspect the Spark Plug for the following conditions.

- Cracks
- Carbon Tracking
- Foreign Material
- Gap size out of specifications
- Loose or broken electrode

NOTE: Lightly tap the bottom of the spark plug on a solid surface. The electrode in the spark plug should not move.

Were any of the above conditions present?

Yes >> Replace the Spark Plug.
Perform the POWERTRAIN VERIFICATION TEST. (Refer to 9 - ENGINE - STANDARD PROCEDURE)

No >> Refer to the INTERMITTENT CONDITION symptom in the Driveability category.

P2323-IGNITION COIL 8 SECONDARY CIRCUIT- INSUFFICIENT IONIZATION

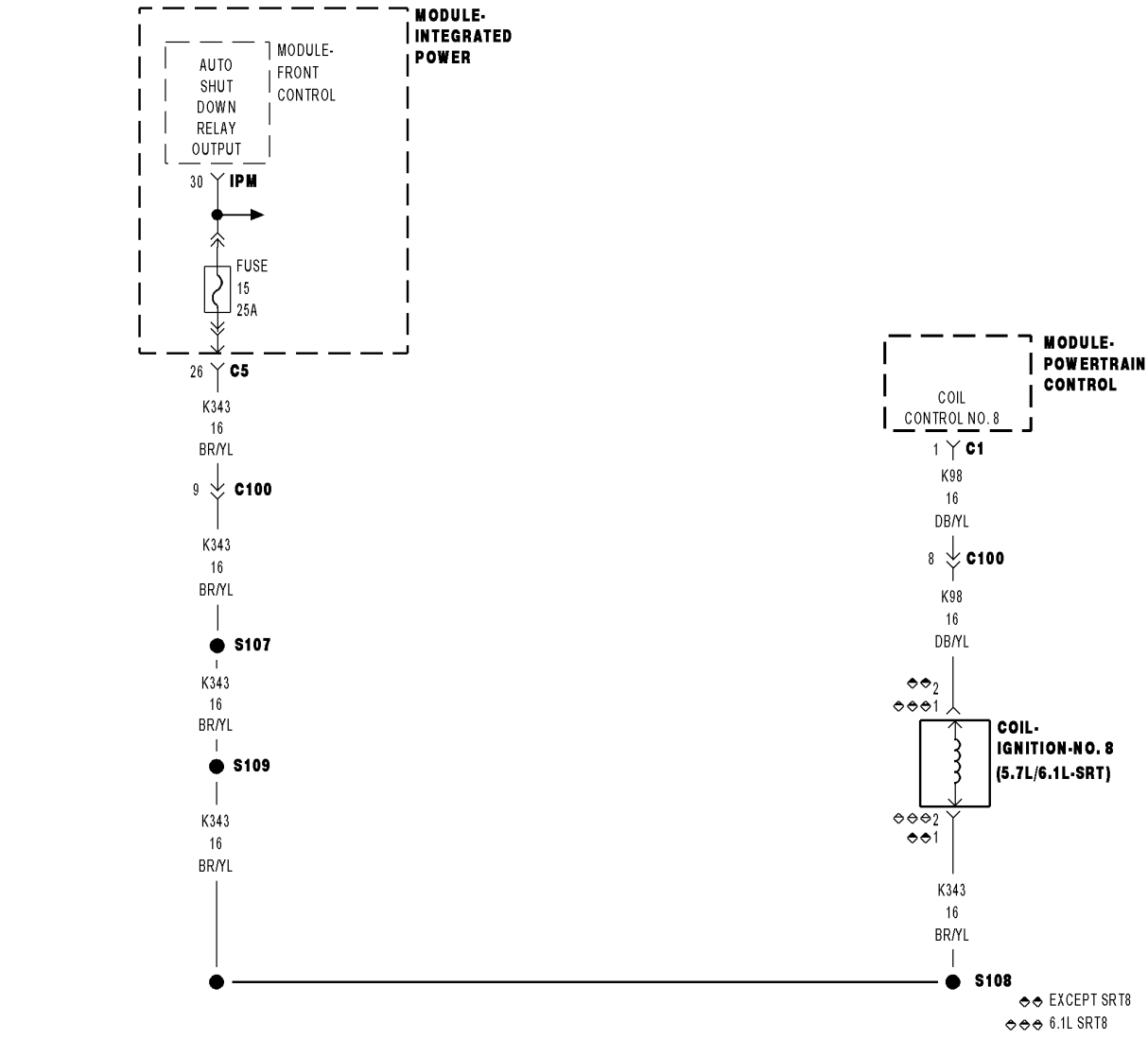

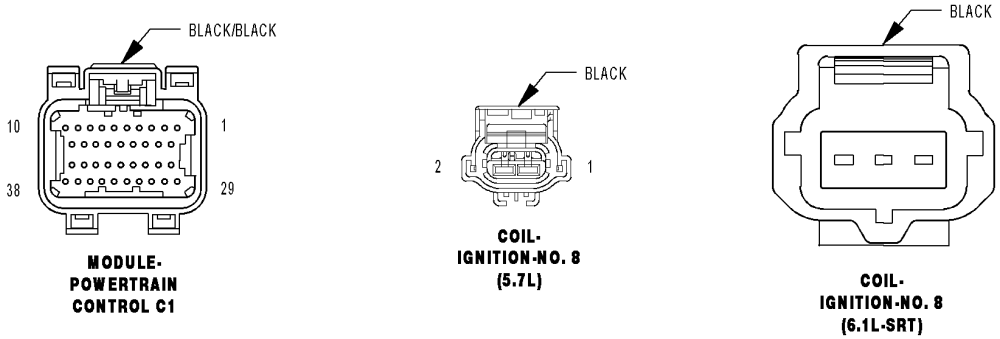

815b9633

For a complete wiring diagram **Refer to Section 8W**.

- **When Monitored:**
  Engine running and battery voltage greater than 10 volts.
- **Set Condition:**
  If PCM detects that the secondary ignition burn time is incorrect, too short, or not present, an error is detected. One Trip Fault. Three good trips to turn off the MIL.

Possible Causes
(K343) ASD RELAY OUTPUT 2 CIRCUIT
(K98) COIL CONTROL NO.8 CIRCUIT OPEN
(K98) COIL CONTROL NO.8 CIRCUIT SHORTED TO GROUND
SPARK PLUG
COIL ON PLUG
PCM

Always perform the Pre-Diagnostic Troubleshooting procedure before proceeding. (Refer to 9 - ENGINE - DIAGNOSIS AND TESTING).

Diagnostic Test

1. ACTIVE DTC

Ignition on, engine not running.

With a scan tool, read DTCs.

Is the DTC active at this time?

Yes >> Go To 2

No >> Go To 9
Perform the POWERTRAIN VERIFICATION TEST. (Refer to 9 - ENGINE - STANDARD PROCEDURE)

2. Secondary Spark

NOTE: Inspect the ignition coil for damage, carbon tracking on the coil or a damaged spark plug insulator boot. If a problem is found, replace the ignition coil.

Turn the ignition off.

Remove the ignition coil.

NOTE: 6.1L coils must have a spark tester installed on both sides of the coil during the following test. During the test, each side of the coil should output a crisp blue spark that is able to jump the gap of the spark tester.

Install a spark tester to the ignition coil.

While cranking the engine observe the spark coming from the spark tester.

NOTE: A crisp blue spark that is able to jump the gap of the spark tester should be generated.

Is good spark generated?

Yes >> Ensure the cylinder is operating properly. If OK, replace the Spark Plug.
Perform the POWERTRAIN VERIFICATION TEST. (Refer to 9 - ENGINE - STANDARD PROCEDURE)

No >> Go To 3

3. (K343) ASD RELAY OUTPUT2 CIRCUIT

Turn the ignition off.

Disconnect the Ignition Coil harness connector.

Ignition on, engine not running.

With a scan tool, actuate the ASD Relay.

Using a 12-volt test light connected to ground, probe the (K343) ASD Relay Output 2 circuit in the Coil on Plug harness connector.

Does the test light illuminate brightly?

Yes >> Go To 4

No >> Repair the open or short to ground in the (K343) ASD Relay Output 2 circuit between the IPM and Coil harness connector.

Perform the POWERTRAIN VERIFICATION TEST. (Refer to 9 - ENGINE - STANDARD PROCEDURE)

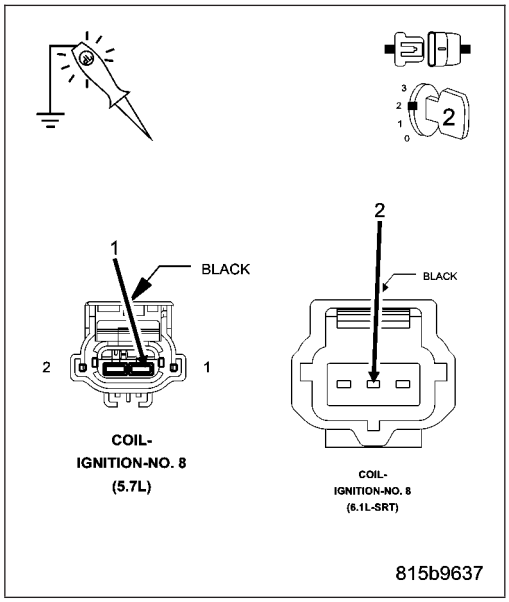

4. IGNITION COIL RESISTANCE

Turn the ignition off.

NOTE: The following resistance measurement should be taken at 70°-80° F.

Measure the resistance of the Ignition Coil.

Is the resistance between 0.53 to 0.65 ohms at 77°F (25°C) for the Ignition Coil being tested?

Yes >> Go To 5

No >> Replace the Ignition Coil.

Perform the POWERTRAIN VERIFICATION TEST. (Refer to 9 - ENGINE - STANDARD PROCEDURE)

5. IGNITION COIL

Using a 12-volt test light connected to a 12-volt source, probe the (K98) Coil Control No.8 circuit.

Crank the engine for 5 seconds while observing the test light.

What is the condition of the test light while cranking the engine?

Brightly blinking.

Replace the Ignition Coil.

Perform the POWERTRAIN VERIFICATION TEST. (Refer to 9 - ENGINE - STANDARD PROCEDURE)

ON constantly.

Go To 6

OFF constantly.

Go To 7

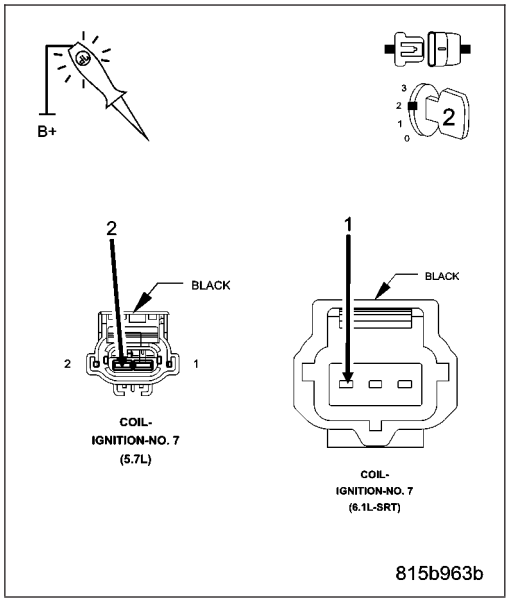

6. (K98) COIL CONTROL NO.8 CIRCUIT SHORTED TO GROUND

Turn the ignition off.

Disconnect the C2 PCM harness connector.

Measure the resistance between ground and the (K98) Coil Control No.8 circuit in the Ignition Coil harness connector.

Is the resistance below 100 ohms?

Yes >> Repair the short to ground in the (K98) Coil Control No.8 circuit.
Perform the POWERTRAIN VERIFICATION TEST. (Refer to 9 - ENGINE - STANDARD PROCEDURE)

No >> Go To 8

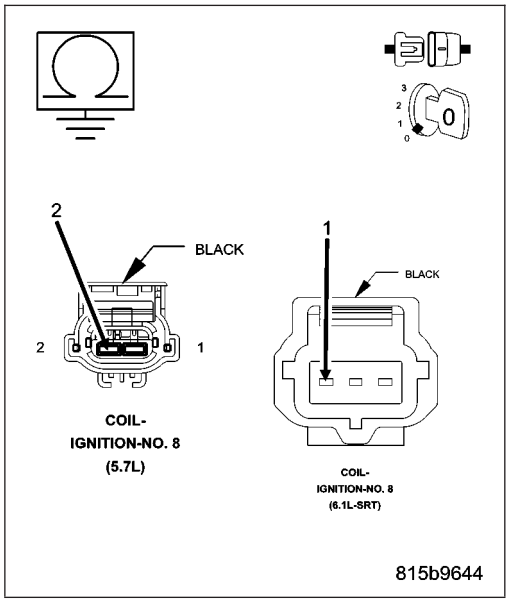

7. (K98) COIL CONTROL NO.8 CIRCUIT OPEN

Turn the ignition off.

Disconnect the C2 PCM harness connector.

CAUTION: Do not probe the PCM harness connectors. Probing the PCM harness connectors will damage the PCM terminals resulting in poor terminal to pin connection. Install Miller Special Tool #8815 to perform diagnosis.

Measure the resistance of the (K98) Coil Control No.8 circuit from the Ignition Coil harness connector to the appropriate terminal of special tool #8815.

Is the resistance below 5.0 ohms?

Yes >> Go To 8

No >> Repair the open in the (K98) Coil Control No.8 circuit.
Perform the POWERTRAIN VERIFICATION TEST. (Refer to 9 - ENGINE - STANDARD PROCEDURE)

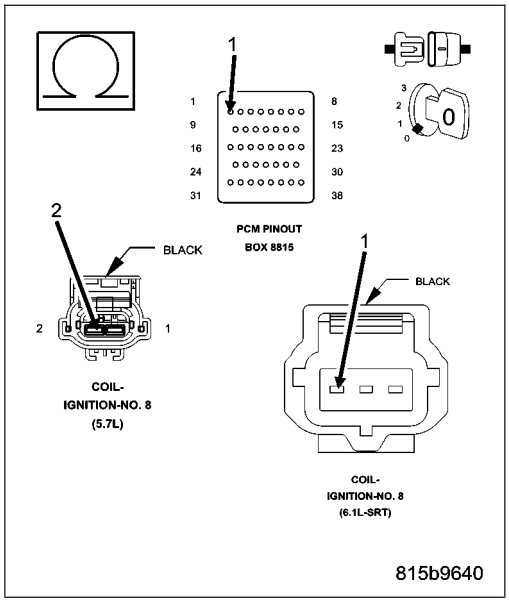

8. PCM

NOTE: Before continuing, check the PCM harness connector terminals for corrosion, damage, or terminal push out. Repair as necessary.
Using the schematics as a guide, inspect the wire harness and connectors. Pay particular attention to all Power and Ground circuits.

Were there any problems found?

Yes >> Repair as necessary.
Perform the POWERTRAIN VERIFICATION TEST. (Refer to 9 - ENGINE - STANDARD PROCEDURE)

No >> Replace and program the Powertrain Control Module per Service Information.
Perform the POWERTRAIN VERIFICATION TEST. (Refer to 9 - ENGINE - STANDARD PROCEDURE)

9. Visual and Physical Inspection

Turn the ignition off.
Remove the Spark Plug.

NOTE: Vehicles that are equipped with the 5.7L or 6.1L engines must have both spark plugs (per cylinder) removed and inspected to ensure proper operation.
Inspect the Spark Plug for the following conditions.

- Cracks
- Carbon Tracking
- Foreign Material
- Gap size out of specifications
- Loose or broken electrode

NOTE: Lightly tap the bottom of the spark plug on a solid surface. The electrode in the spark plug should not move.

Were any of the above conditions present?

Yes >> Replace the Spark Plug.
Perform the POWERTRAIN VERIFICATION TEST. (Refer to 9 - ENGINE - STANDARD PROCEDURE)

No >> Refer to the INTERMITTENT CONDITION symptom in the Driveability category.

P2503-CHARGING SYSTEM OUTPUT LOW

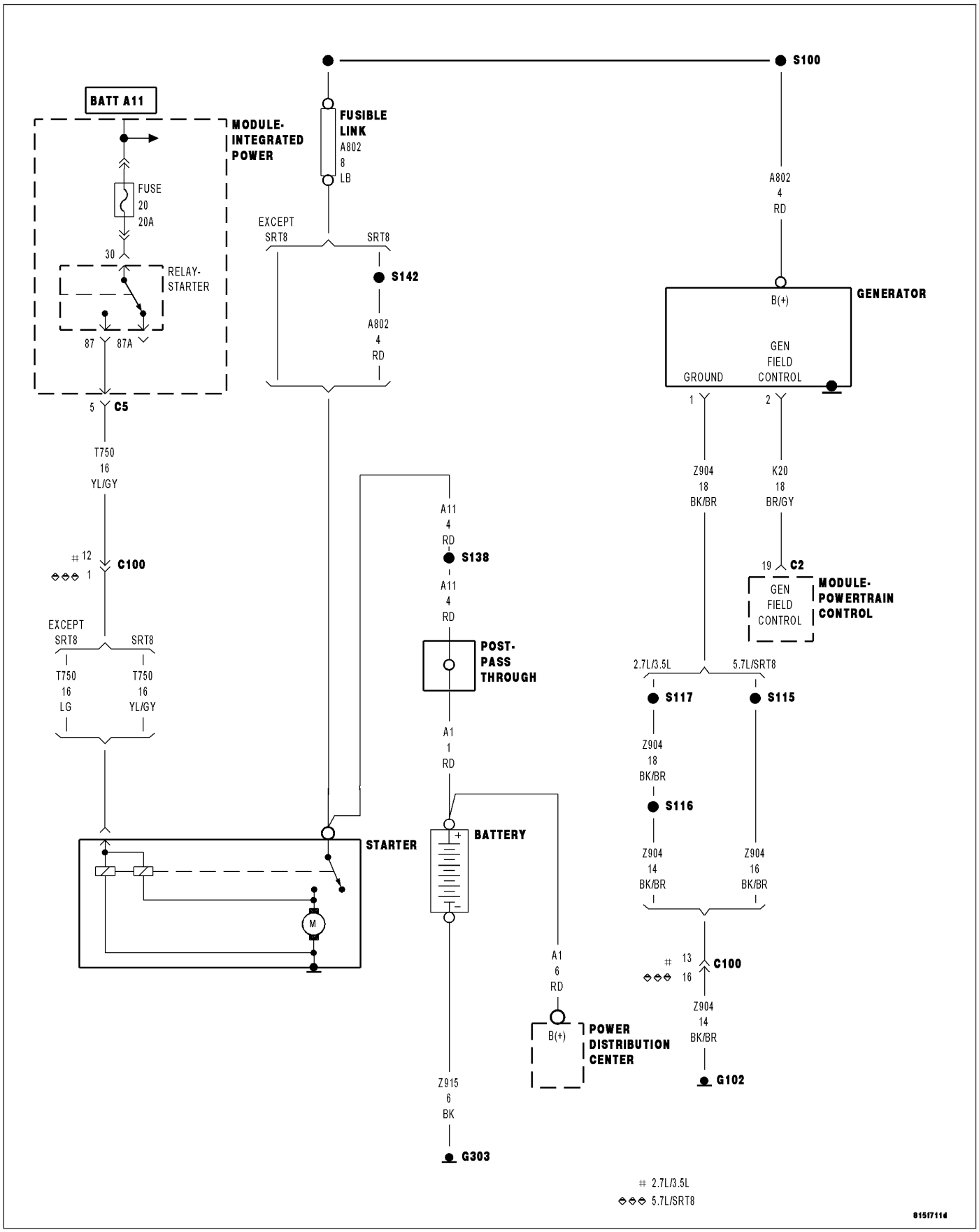

For a complete wiring diagram **Refer to Section 8W**.

- **When Monitored:**
  The engine running. The engine speed greater than 1157 RPM.
- **Set Condition:**
  The battery sensed voltage is 1 volt below the charging goal for 13.47 seconds. The PCM senses the battery voltage turns off the field driver and senses the battery voltage again. If the voltages are the same, the code is set. One Trip Fault. Three good trips to turn off the MIL.

Possible Causes
EXCESSIVE RESISTANCE IN THE BATTERY POSITIVE CIRCUIT
EXCESSIVE RESISTANCE IN THE CASE GROUND
(K20) GEN FIELD CONTROL CIRCUIT SHORTED TO VOLTAGE
(K20) GEN FIELD CONTROL CIRCUIT OPEN
(K20) GEN FIELD CONTROL CIRCUIT SHORTED TO GROUND
(Z904) GEN GROUND CIRCUIT OPEN
GENERATOR
PCM

Always perform the Pre-Diagnostic Troubleshooting procedure before proceeding. (Refer to 9 - ENGINE - DIAGNOSIS AND TESTING).

Diagnostic Test

1. ACTIVE DTC

NOTE: Inspect the vehicle for aftermarket accessories that may exceed the Generator System output.
Ignition on, engine not running.

NOTE: The battery must be fully charged.

NOTE: The Generator belt tension and condition must be checked before continuing.
With a scan tool, read DTCs.
With a scan tool, erase DTCs.
Start the engine.
Allow the idle to stabilize.
With the scan tool, read DTCs.

Is the DTC active at this time?

Yes >> Go To 2

No >> Refer to the INTERMITTENT CONDITION Diagnostic Procedure.
Perform the POWERTRAIN VERIFICATION TEST. (Refer to 9 - ENGINE - STANDARD PROCEDURE)

2. FUSED B+ CIRCUIT HIGH RESISTANCE

WARNING: When the engine is operating, do not stand in direct line with the fan. Do not put your hands near the pulleys, belts, or fan. Do not wear loose clothing. Failure to follow these instructions can result in personal injury or death.
Ignition on, engine not running.

NOTE: Make sure all wires are clear of the engine's moving parts.
Measure the voltage between the Generator B+ Output Terminal and the Battery+ Post.
Start the engine.

Is the voltage above 0.4 of a volt?

Yes >> Repair the excessive resistance in the battery positive circuit between the Generator and Battery.
Perform the POWERTRAIN VERIFICATION TEST. (Refer to 9 - ENGINE - STANDARD PROCEDURE)

No >> Go To 3

3. EXCESSIVE RESISTANCE IN THE CASE GROUND

WARNING: When the engine is operating, do not stand in direct line with the fan. Do not put your hands near the pulleys, belts, or fan. Do not wear loose clothing. Failure to follow these instructions can result in personal injury or death.

Start the engine.

Warm the engine to operating temperature.

NOTE: Make sure all wires are clear of the engine's moving parts.

Measure the voltage between the Generator Case and Battery ground post.

Is the voltage above 0.1 of a volt?

Yes >> Repair the excessive resistance in the Generator Case Ground.
Perform the POWERTRAIN VERIFICATION TEST. (Refer to 9 - ENGINE - STANDARD PROCEDURE)

No >> Go To 4

4. GENERATOR OPERATION

Turn the ignition off.

Disconnect the Generator Field harness connector.

Using a 12-volt test light, jump across the Generator Field harness connector.

Ignition on, engine not running.

With a scan tool, actuate the Generator Field Driver.

Does the test light illuminate brightly and flash on and off?

Yes >> Replace the Generator.
Perform the POWERTRAIN VERIFICATION TEST. (Refer to 9 - ENGINE - STANDARD PROCEDURE)

No >> Go To 5

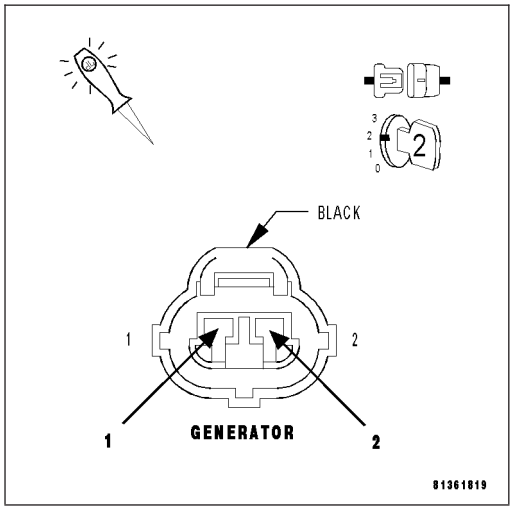

5. (K20) GEN FIELD CONTROL CIRCUIT SHORTED TO BATTERY VOLTAGE

Turn the ignition off.

Disconnect the PCM harness connectors.

Ignition on, engine not running.

Measure the voltage on the (K20) Gen Field Control circuit in the Generator Field harness connector.

Is the voltage above 1.0 volt?

Yes >> Repair the short to battery voltage in the (K20) Gen Field Control circuit.
Perform the POWERTRAIN VERIFICATION TEST. (Refer to 9 - ENGINE - STANDARD PROCEDURE)

No >> Go To 6

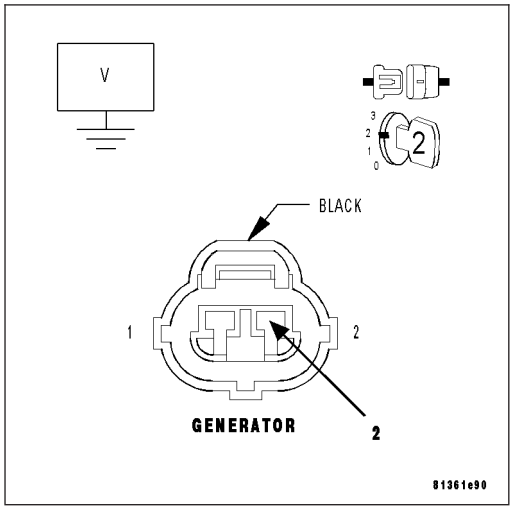

6. (K20) FIELD CONTROL CIRCUIT OPEN

Turn the ignition off.

CAUTION: Do not probe the PCM harness connectors. Probing the PCM harness connectors will damage the PCM terminals resulting in poor terminal to pin connection. Install Miller Special Tool #8815 to perform diagnosis.

Measure the resistance of the (K20) Gen Field Control circuit from the Generator Field harness connector to the appropriate terminal of special tool #8815.

Is the resistance below 5.0 ohms?

Yes >> Go To 7

No >> Repair the open in the (K20) Gen Field Control circuit.
Perform the POWERTRAIN VERIFICATION TEST. (Refer to 9 - ENGINE - STANDARD PROCEDURE)

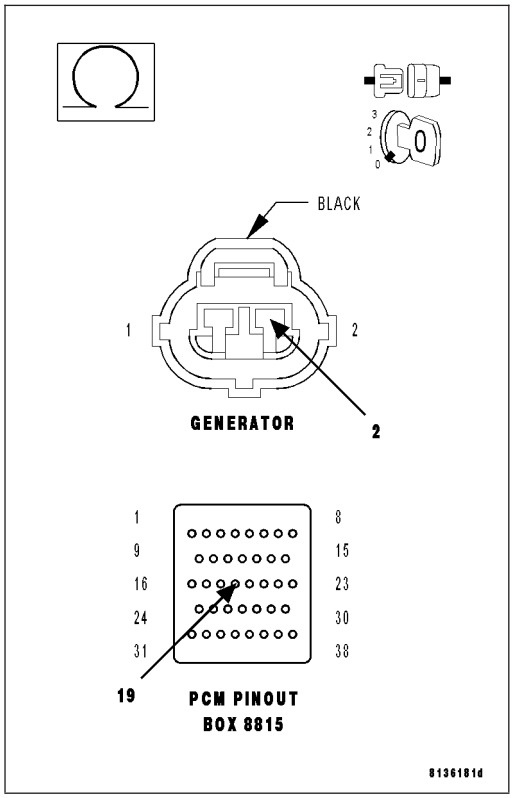

7. (K20) GEN FIELD CONTROL CIRCUIT SHORTED TO GROUND

Measure the resistance between ground and the (K20) Gen Field Control circuit in the Generator Field harness connector.

Is the resistance below 100 ohms?

Yes >> Repair the short to ground in the (K20) Gen Field Control circuit.
Perform the POWERTRAIN VERIFICATION TEST. (Refer to 9 - ENGINE - STANDARD PROCEDURE)

No >> Go To 8

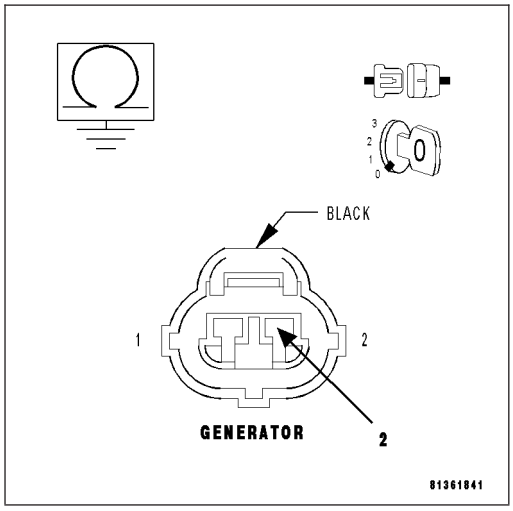

8. (Z904) GROUND CIRCUIT OPEN

Using a 12-volt test light connected to battery voltage, probe the (Z904) Ground circuit in the Generator Field harness connector.

Does the test light illuminate brightly?

Yes >> Go To 9

No >> Repair the open in the (Z904) Generator Ground circuit.
Perform the POWERTRAIN VERIFICATION TEST. (Refer to 9 - ENGINE - STANDARD PROCEDURE)

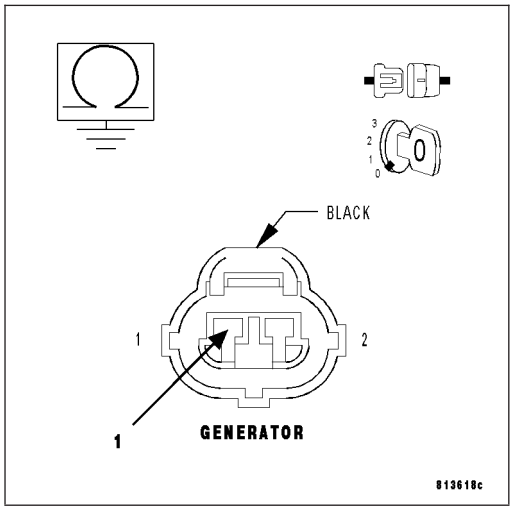

9. PCM

NOTE: Before continuing, check the PCM harness connector terminals for corrosion, damage, or terminal push out. Repair as necessary.
Using the schematics as a guide, inspect the wire harness and connectors. Pay particular attention to all Power and Ground circuits.

Were there any problems found?

Yes >> Repair as necessary.
Perform the POWERTRAIN VERIFICATION TEST. (Refer to 9 - ENGINE - STANDARD PROCEDURE)

No >> Replace and program the Powertrain Control Module per Service Information.
Perform the POWERTRAIN VERIFICATION TEST. (Refer to 9 - ENGINE - STANDARD PROCEDURE)

P3400-MDS RATIONALITY BANK 1

For a complete wiring diagram **Refer to Section 8W**.

Theory of Operation

When all criteria has been met, power is supplied to each MDS Solenoid when the engine is making a transition from 8 cylinder mode to 4 cylinder mode. By actuating the solenoid, oil pressure is raised to the pair of lifters that coincide with each particular solenoid. The oil pressure pushes in the locking pins that allows the lifter to collapse, decoupling the valves and camshaft.

- **When Monitored:**
  Transition from 4 to 8cylinder mode.
- **Set Condition:**
  O2 sensor readings on Bank 1 side indicate a lean condition while in 4 cylinder mode.

Possible Causes
INSUFFICIENT OIL PRESSURE ACTING ON THE LIFTER LOCKING PINS
OIL PASSAGES RESTRICTED
LIFTER
MDS SOLENOID

Always perform the Pre-Diagnostic Troubleshooting procedure before proceeding (Refer to 9 - ENGINE - DIAGNOSIS AND TESTING).

Diagnostic Test

1. ACTIVE DTC

NOTE: Diagnose any Deactivation or Oil Pressure DTCs before continuing with this test.
Ignition on, engine not running.
With a scan tool, read DTCs.

Is the DTC active at this time?

Yes >> Go To 2

No >> Refer to the INTERMITTENT CONDITION Diagnostic Procedure.
Perform the POWERTRAIN VERIFICATION TEST. (Refer to 9 - ENGINE - STANDARD PROCEDURE)

2. MDS SOLENOID 1

Turn the ignition off.
Remove the Intake Manifold per Service Information.
Turn the ignition on.
With the scan tool actuate the MDS Solenoid 1.

Can you feel and hear the Solenoid Actuating?

Yes >> Go To 3

No >> Remove the Solenoid and check for any debris that may be blocking the oil passages to the Solenoid. If the passages are clogged, clean the passages and replace the MDS Solenoid 1. If the passages are not clogged with debris, replace the MDS Solenoid 1.
Perform the POWERTRAIN VERIFICATION TEST. (Refer to 9 - ENGINE - STANDARD PROCEDURE)

3. MDS SOLENOID 7

With the scan tool actuate the MDS Solenoid 7.

Can you feel and hear the Solenoid Actuating?

Yes >> Go To 4

No >> Remove the Solenoid and check for any debris that may be blocking the oil passages to the Solenoid. If the passages are restricted, clean the passages and replace the MDS Solenoid 7. If the passages are not clogged with debris, replace the MDS Solenoid 7.
Perform the POWERTRAIN VERIFICATION TEST. (Refer to 9 - ENGINE - STANDARD PROCEDURE)

4. OIL PASSAGES RESTRICTED

Turn the ignition off.

Remove both Solenoids on Bank 1 of the engine block.

Remove the Bank 1 Cylinder Head per Service Information.

Remove the Lifters from the left engine bank.

Inspect the oil passages to the Solenoids and from the Solenoids to the lifters.

Are the passages blocked?

Yes >> Clean the oil passages as necessary. If the entire engine is restricted disassembly of the entire engine block may be necessary.
Perform the POWERTRAIN VERIFICATION TEST. (Refer to 9 - ENGINE - STANDARD PROCEDURE)

No >> Replace both sets of lifters if no other possible causes remain.
Perform the POWERTRAIN VERIFICATION TEST. (Refer to 9 - ENGINE - STANDARD PROCEDURE)

P3402-CYLINDER 1 DEACTIVATION CONTROL PERFORMANCE

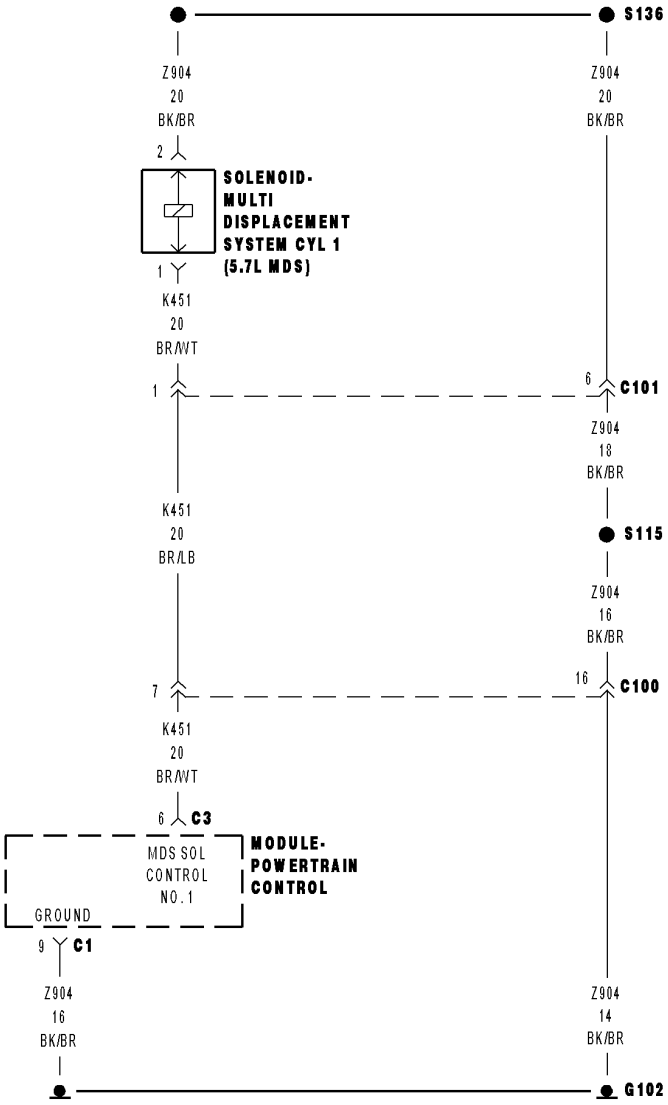

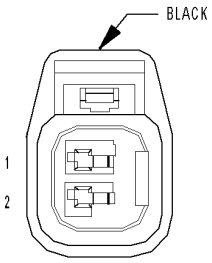

SOLENOID-
MULTI DISPLACEMENT
SYSTEM CYL 1
(5.7L MDS)

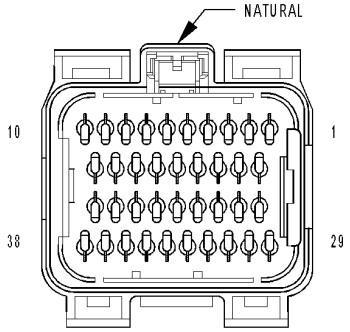

MODULE-
POWERTRAIN
CONTROL C3

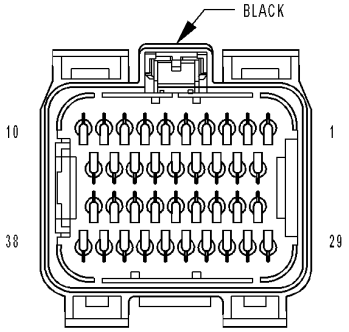

MODULE-
POWERTRAIN
CONTROL C1

81365ddb

For a complete wiring diagram **Refer to Section 8W**.

Theory of Operation

When all criteria has been met, power is supplied to each MDS Solenoid when the engine is making a transition from 8 cylinder mode to 4 cylinder mode. By actuating the solenoid, oil pressure is raised to the pair of lifters that coincide with each particular solenoid. The oil pressure pushes in the locking pins that allows the lifter to collapse, decoupling the valves and camshaft.

- **When Monitored:**
  Transition from 8 to 4 cylinder mode.
- **Set Condition:**
  The MDS fails to engage for cylinder 1.

Possible Causes
(K451) MDS SOLENOID NO.1 CONTROL SHORT TO GROUND
(K451) MDS SOLENOID NO.1 CONTROL OPEN
(Z904) GROUND CIRCUIT OPEN
INSUFFICIENT OIL PRESSURE ACTING ON THE LIFTER LOCKING PINS
OIL PASSAGES RESTRICTED
LIFTER
MDS SOLENOID
PCM

Always perform the Pre-Diagnostic Troubleshooting procedure before proceeding. (Refer to 9 - ENGINE - DIAGNOSIS AND TESTING).

Diagnostic Test

1. ACTIVE DTC

Ignition on, engine not running.
With a scan tool, read DTCs.

Is the DTC active at this time?

Yes >> Go To 2

No >> Refer to the INTERMITTENT CONDITION Diagnostic Procedure.
Perform the POWERTRAIN VERIFICATION TEST. (Refer to 9 - ENGINE - STANDARD PROCEDURE)

2. CHECKING PCM CONTROL SIDE FOR THE MDS SOLENOID (C100)

Turn the ignition off.

Disconnect the C100 harness connector.

Using a 12-volt test light, jumper from the (Z904) Ground Circuit and the (K451) MDS Solenoid No.1 Control Circuit in the C100 harness connector (PCM side).

Turn the ignition on.

With the scan tool, actuate the MDS Solenoid No.1.

Does the 12-volt test light flash on and off?

Yes >> Go To 3

No >> Go To 6

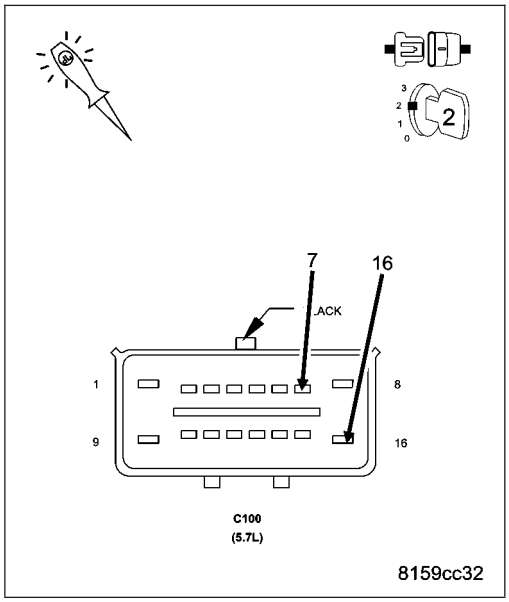

3. MDS SOLENOID RESISTANCE

Turn the ignition off.

Measure the resistance between the (Z904) Ground Circuit and the (K451) MDS SolenoidNo.1 Control Circuit in the C100 harness connector (MDS side).

NOTE: It is important to follow the below temp/resistance values to ensure an accurate reading.

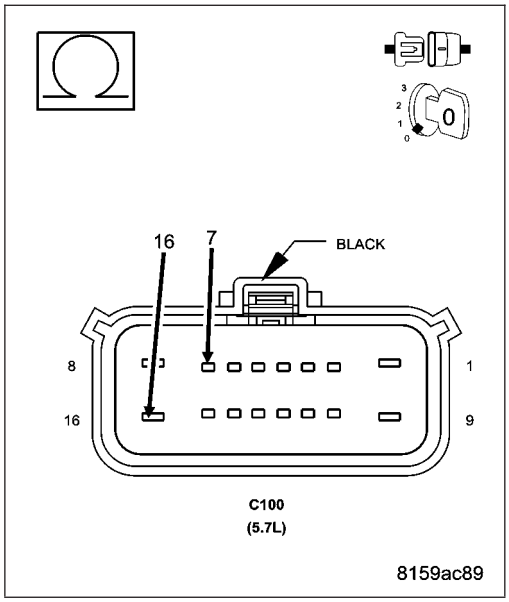

MDS SOLENOID RESISTANCE

TEMPERATURE VALUE ± 20° F	RESISTANCE (OHMS) ± .25 ohms
0° F	8.8 ohms
32° F	9.5 ohms
68° F	10.3 ohms
100° F	11 ohms
150° F	12.2 ohms
200° F	13.4 ohms
250° F	14.4 ohms
300° F	15.6 ohms

Is the resistance within an acceptable range?

Yes >> Go To 9

No >> Go To 2

4. CHECKING PCM CONTROL SIDE FOR THE MDS SOLENOID BETWEEN C100 and C101

Turn the ignition off.

Reconnect the C100 harness connector.

Disconnect the C101 harness connector.

Using a 12-volt test light, jumper from the (Z904) Ground Circuit and the (K451) MDS Solenoid No.1 Control Circuit in the C101 harness connector (PCM side).

Turn the ignition on.

With the scan tool, actuate the MDS Solenoid No.1.

Does the 12-volt test light flash on and off?

Yes >> Visually and Physically inspect the wiring harness between the C101 connector and the MDS Solenoid connector. Repair as necessary. If OK, replace the MDS Solenoid in accordance with the Service Information.

Perform the POWERTRAIN VERIFICATION TEST. (Refer to 9 - ENGINE - STANDARD PROCEDURE)

No >> Go To 5

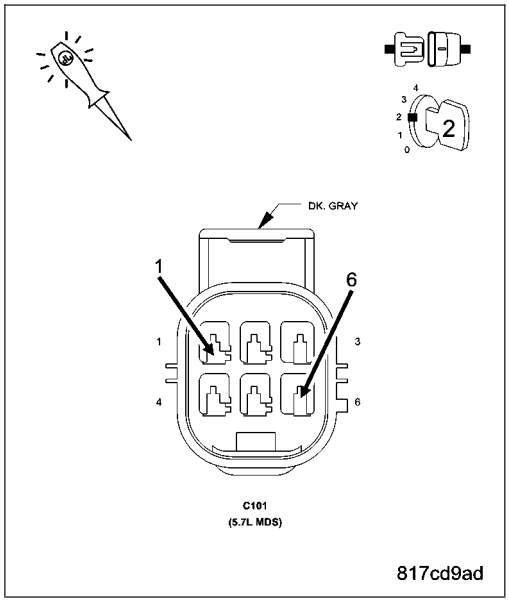

5. (Z904) GROUND CIRCUIT OPEN BETWEEN C100 and C101

Turn the ignition off.

Using a 12-volt test light connected to the 12-volts, probe the (Z904) Ground circuit in the C101 harness connector (PCM side).

Does the test light illuminate brightly?

Yes >> Repair the (K451) MDS Solenoid No.1 Control circuit between C100 and C101 connectors.

Perform the POWERTRAIN VERIFICATION TEST. (Refer to 9 - ENGINE - STANDARD PROCEDURE)

No >> Repair the (Z904) Ground circuit between C100 and C101 connectors.

Perform the POWERTRAIN VERIFICATION TEST. (Refer to 9 - ENGINE - STANDARD PROCEDURE)

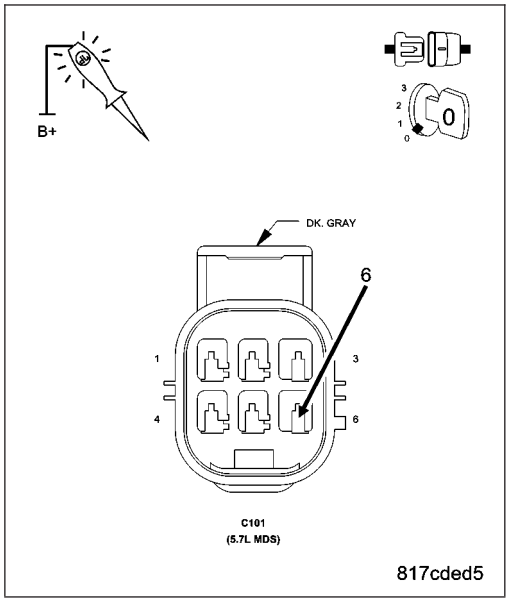

6. (Z904) GROUND CIRCUIT OPEN (PCM SIDE)

Turn the ignition off.

Using a 12-volt test light connected to the 12-volts, probe the (Z904) Ground circuit in the C100 harness connector (PCM side).

Does the test light illuminate brightly?

Yes >> Go To 7

No >> Repair the open in the (Z904) Ground circuit.
Perform the POWERTRAIN VERIFICATION TEST. (Refer to 9 - ENGINE - STANDARD PROCEDURE)

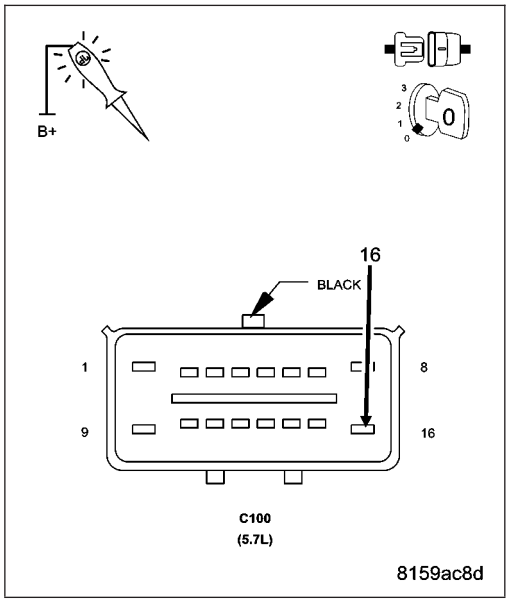

7. (K451) MDS SOLENOID NO.1 CONTROL CIRCUIT SHORTED TO GROUND (PCM SIDE)

Turn the ignition off.

Measure the resistance between ground and the (K451) MDS Solenoid No.1 Control circuit in the C100 harness connector.

Is the resistance below 100 ohms?

Yes >> Repair the short to ground in the (K451) MDS Solenoid No.1 Control circuit between the PCM harness connector and the C100 harness connector.
Perform the POWERTRAIN VERIFICATION TEST. (Refer to 9 - ENGINE - STANDARD PROCEDURE)

No >> Go To 8

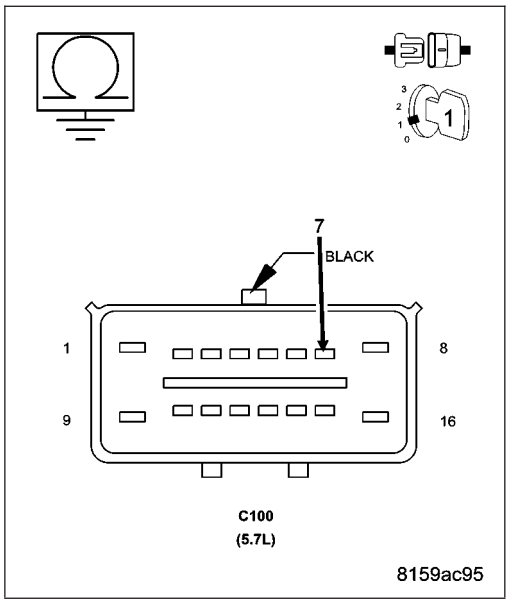

8. (K451) MDS SOLENOID NO.1 CONTROL CIRCUIT OPEN (PCM SIDE)

CAUTION: Do not probe the PCM harness connectors. Probing the PCM harness connectors will damage the PCM terminals resulting in poor terminal to pin connection. Install Miller Special Tool #8815 to perform diagnosis.

Measure the resistance of the (K451) MDS Solenoid No.1 Control circuit from the C100 harness connector to the appropriate terminal of special tool #8815.

Is the resistance below 5.0 ohms?

Yes >> Replace and program the Powertrain Control Module in accordance with the service information.
Perform the POWERTRAIN VERIFICATION TEST. (Refer to 9 - ENGINE - STANDARD PROCEDURE)

No >> Repair the open in the (K451) MDS Solenoid No.1 Control circuit between the C100 harness connector and the PCM harness connector.
Perform the POWERTRAIN VERIFICATION TEST. (Refer to 9 - ENGINE - STANDARD PROCEDURE)

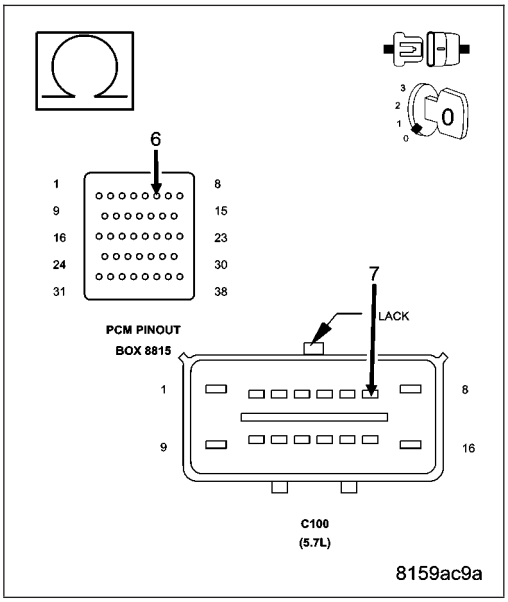

9. MDS SOLENOID 1

Turn the ignition off.

Remove the Intake Manifold per Service Information.

Reconnect the PCM harness connector.

Turn the ignition on.

With the scan tool actuate the MDS Solenoid 1.

Can you feel and hear the Solenoid Actuating?

Yes >> Go To 10

No >> Remove the Solenoid (1) and check for any debris that may be blocking the oil passages (3) to the Solenoid. If the passages are clogged, clean the passages and replace the MDS Solenoid 1. If the passages are not clogged with debris, replace the MDS Solenoid 1.

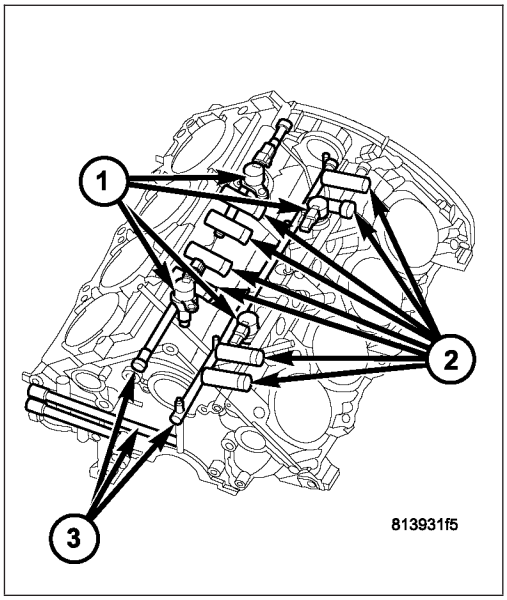

10. OIL PASSAGES RESTRICTED

Turn the ignition off.

Remove both Solenoids on Bank 1 of the engine block.

Remove the Bank 1 Cylinder Head per Service Information.

Remove the Lifters from the left engine bank.

Inspect the oil passages to the Solenoids and from the Solenoids to the lifters.

Are the passages blocked?

Yes >> Clean the oil passages as necessary. If the entire engine is restricted disassembly of the entire engine block may be necessary.

No >> Replace both sets of lifters if no other possible causes remain.

P3426-CYLINDER 4 DEACTIVATION CONTROL PERFORMANCE

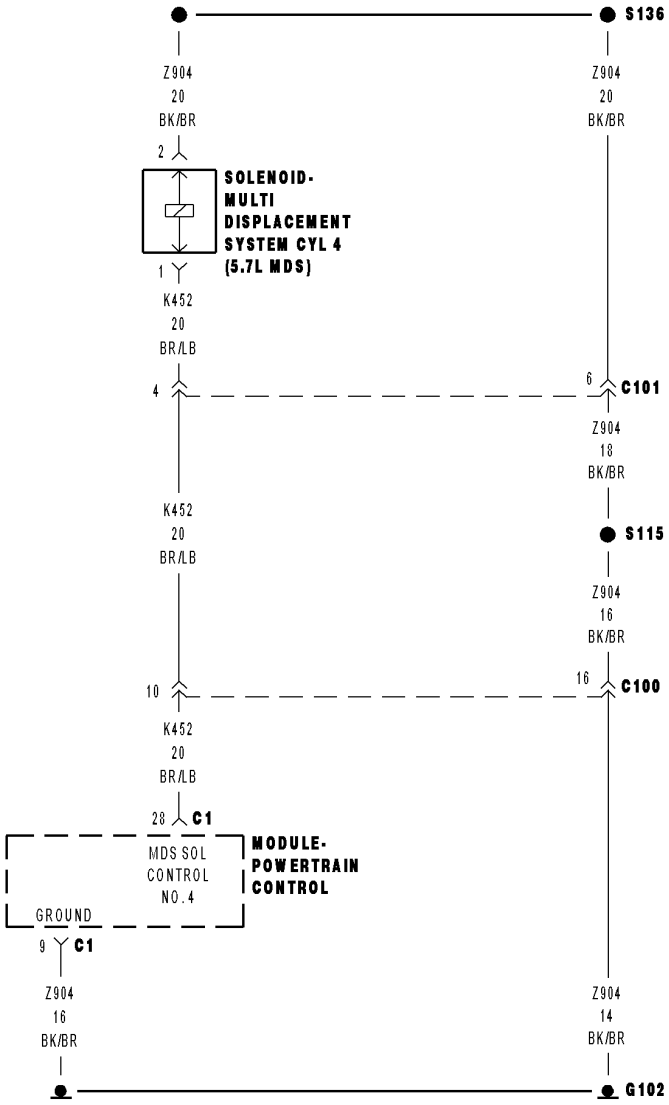

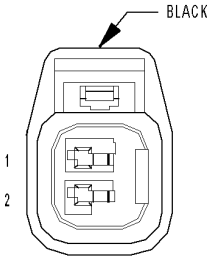

SOLENOID-
MULTI DISPLACEMENT
SYSTEM CYL 4
(5.7L MDS)

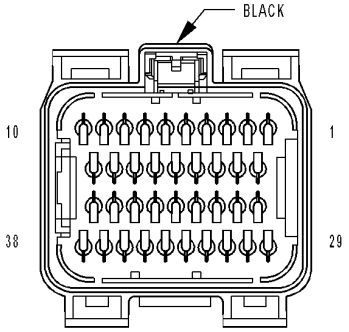

MODULE-
POWERTRAIN
CONTROL C1

8136e06

For a complete wiring diagram **Refer to Section 8W**.

Theory of Operation

When all criteria has been met, power is supplied to each MDS Solenoid when the engine is making a transition from 8 cylinder mode to 4 cylinder mode. By actuating the solenoid, oil pressure is raised to the pair of lifters that coincide with each particular solenoid. The oil pressure pushes in the locking pins that allows the lifter to collapse, decoupling the valves and camshaft.

- **When Monitored:**
  Transition from 8 to 4 cylinder mode.
- **Set Condition:**
  The MDS fails to engage for cylinder 4.

Possible Causes
(K452) MDS SOLENOID NO.4 CONTROL SHORT TO GROUND
(K452) MDS SOLENOID NO.4 CONTROL OPEN
(Z904) GROUND CIRCUIT OPEN
INSUFFICIENT OIL PRESSURE ACTING ON THE LIFTER LOCKING PINS
OIL PASSAGES RESTRICTED
LIFTER
MDS SOLENOID
PCM

Always perform the Pre-Diagnostic Troubleshooting procedure before proceeding. (Refer to 9 - ENGINE - DIAGNOSIS AND TESTING).

Diagnostic Test

1. ACTIVE DTC

Ignition on, engine not running.
With a scan tool, read DTCs.

Is the DTC active at this time?

Yes >> Go To 2

No >> Refer to the INTERMITTENT CONDITION Diagnostic Procedure.
Perform the POWERTRAIN VERIFICATION TEST. (Refer to 9 - ENGINE - STANDARD PROCEDURE)

2. CHECKING PCM CONTROL SIDE FOR THE MDS SOLENOID (C100)

Turn the ignition off.

Disconnect the C100 harness connector.

Using a 12-volt test light, jumper from the (Z904) Ground Circuit and the (K452) MDS Solenoid No.4 Control Circuit in the C100 harness connector (PCM side).

Turn the ignition on.

With the scan tool, actuate the MDS Solenoid No.4.

Does the 12-volt test light flash on and off?

Yes >> Go To 3

No >> Go To 6

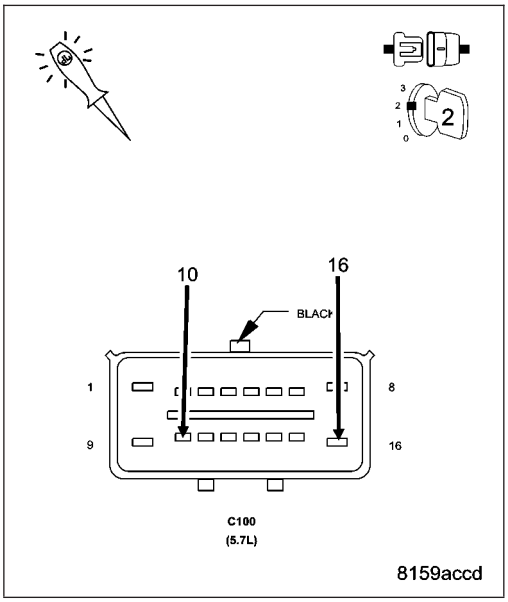

3. MDS SOLENOID RESISTANCE

Turn the ignition off.

Measure the resistance between the (Z904) Ground Circuit and the (K452) MDS Solenoid No.4 Control Circuit in the C100 harness connector (MDS side).

NOTE: It is important to follow the below temp/resistance values to ensure an accurate reading.

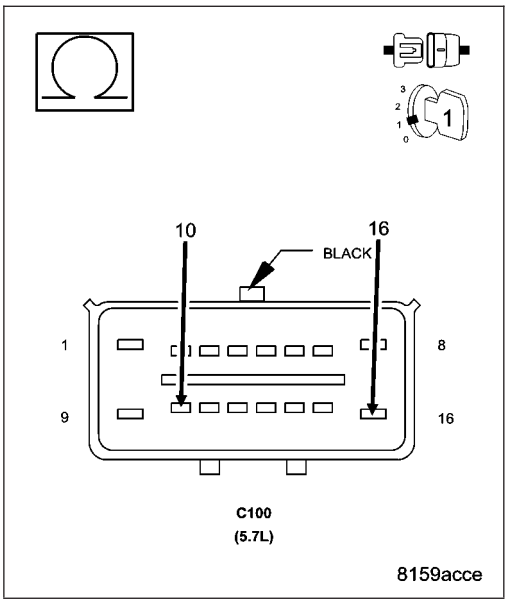

MDS SOLENOID RESISTANCE

TEMPERATURE VALUE ± 20° F	RESISTANCE (OHMS) ± .25 ohms
0° F	8.8 ohms
32° F	9.5 ohms
68° F	10.3 ohms
100° F	11 ohms
150° F	12.2 ohms
200° F	13.4 ohms
250° F	14.4 ohms
300° F	15.6 ohms

Is the resistance within an acceptable range?

Yes >> Go To 9

No >> Go To 2

4. CHECKING PCM CONTROL SIDE FOR THE MDS SOLENOID BETWEEN C100 and C101

Turn the ignition off.

Reconnect the C100 harness connector.

Disconnect the C101 harness connector.

Using a 12-volt test light, jumper from the (Z904) Ground Circuit and the (K452) MDS Solenoid No.4 Control Circuit in the C101 harness connector (PCM side).

Turn the ignition on.

With the scan tool, actuate the MDS Solenoid No.4.

Does the 12-volt test light flash on and off?

Yes >> Visually and Physically inspect the wiring harness between the C101 connector and the MDS Solenoid connector. Repair as necessary. If OK, replace the MDS Solenoid in accordance with the Service Information.

Perform the POWERTRAIN VERIFICATION TEST. (Refer to 9 - ENGINE - STANDARD PROCEDURE)

No >> Go To 5

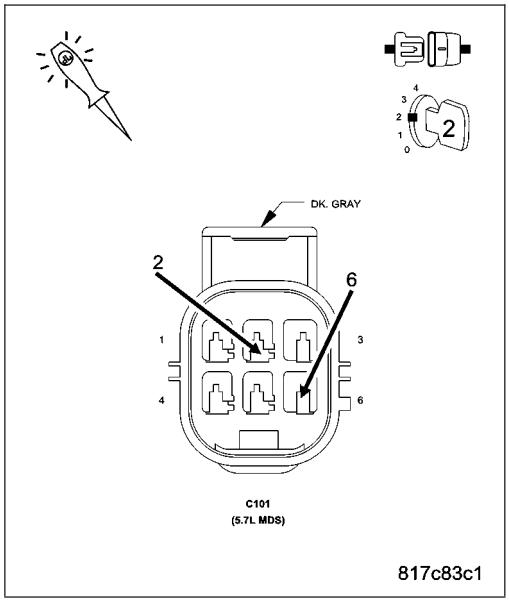

5. (Z904) GROUND CIRCUIT OPEN BETWEEN C100 and C101

Turn the ignition off.

Using a 12-volt test light connected to the 12-volts, probe the (Z904) Ground circuit in the C101 harness connector (PCM side).

Does the test light illuminate brightly?

Yes >> Repair the (K452) MDS Solenoid No.4 Control circuit between C100 and C101 connectors.

Perform the POWERTRAIN VERIFICATION TEST. (Refer to 9 - ENGINE - STANDARD PROCEDURE)

No >> Repair the (Z904) Ground circuit between C100 and C101 connectors.

Perform the POWERTRAIN VERIFICATION TEST. (Refer to 9 - ENGINE - STANDARD PROCEDURE)

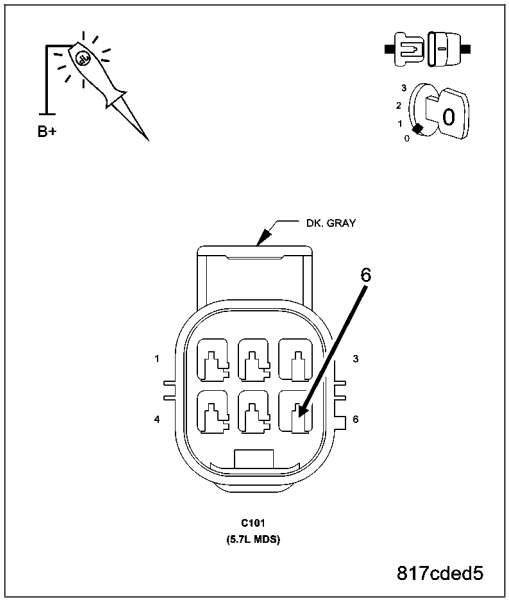

6. (Z904) GROUND CIRCUIT OPEN (PCM SIDE)

Turn the ignition off.

Using a 12-volt test light connected to the 12-volts, probe the (Z904) Ground circuit in the C100 harness connector (PCM side).

Does the test light illuminate brightly?

Yes >> Go To 7

No >> Repair the open in the (Z904) Ground circuit.
Perform the POWERTRAIN VERIFICATION TEST. (Refer to 9 - ENGINE - STANDARD PROCEDURE)

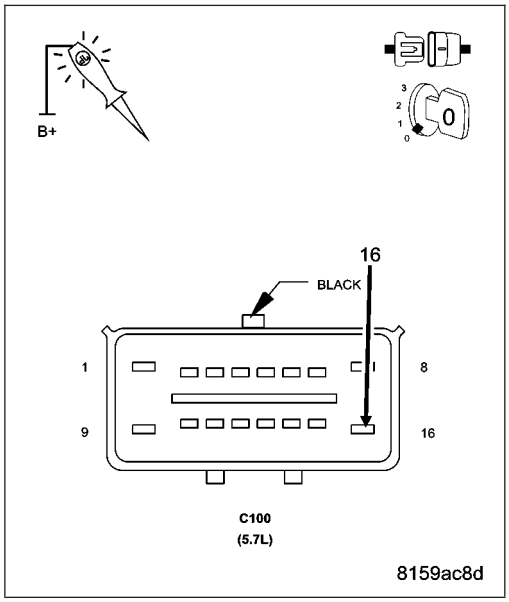

7. (K452) MDS SOLENOID NO.4 CONTROL CIRCUIT SHORTED TO GROUND (PCM SIDE)

Turn the ignition off.

Measure the resistance between ground and the (K452) MDS Solenoid No.4 Control circuit in the C100 harness connector.

Is the resistance below 100 ohms?

Yes >> Repair the short to ground in the (K452) MDS Solenoid No.4 Control circuit between the PCM harness connector and the C100 harness connector.
Perform the POWERTRAIN VERIFICATION TEST. (Refer to 9 - ENGINE - STANDARD PROCEDURE)

No >> Go To 8

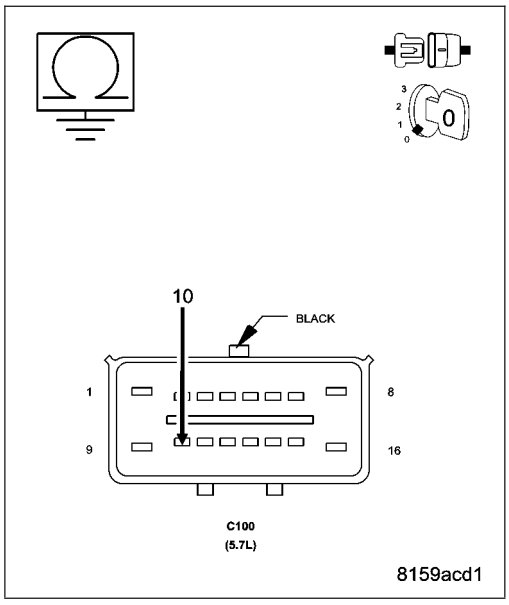

8. (K452) MDS SOLENOID NO.4 CONTROL CIRCUIT OPEN (PCM SIDE)

CAUTION: Do not probe the PCM harness connectors. Probing the PCM harness connectors will damage the PCM terminals resulting in poor terminal to pin connection. Install Miller Special Tool #8815 to perform diagnosis.

Measure the resistance of the (K452) MDS Solenoid No.4 Control circuit from the C100 harness connector to the appropriate terminal of special tool #8815.

Is the resistance below 5.0 ohms?

Yes >> Replace and program the Powertrain Control Module in accordance with the service information.
Perform the POWERTRAIN VERIFICATION TEST. (Refer to 9 - ENGINE - STANDARD PROCEDURE)

No >> Repair the open in the (K452) MDS Solenoid No.4 Control circuit between the C100 harness connector and the PCM harness connector.
Perform the POWERTRAIN VERIFICATION TEST. (Refer to 9 - ENGINE - STANDARD PROCEDURE)

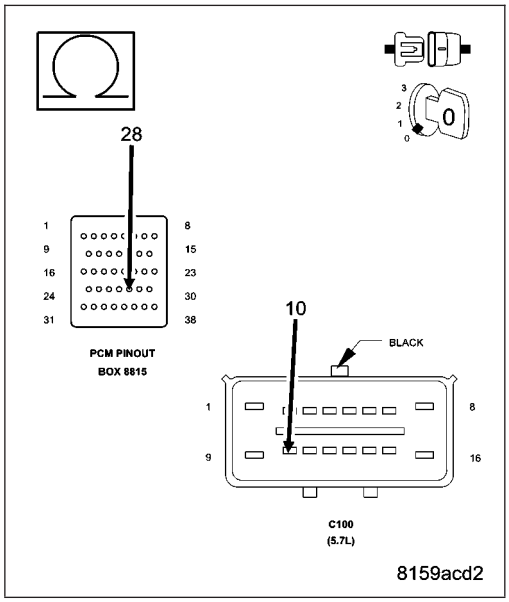

9. MDS SOLENOID 4

Turn the ignition off.

Remove the Intake Manifold per Service Information.

Reconnect the PCM harness connector.

Turn the ignition on.

With the scan tool actuate the MDS Solenoid 4.

Can you feel and hear the Solenoid Actuating?

Yes >> Go To 10

No >> Remove the Solenoid (1) and check for any debris that may be blocking the oil passages (3) to the Solenoid. If the passages are clogged, clean the passages and replace the MDS Solenoid 4. If the passages are not clogged with debris, replace the MDS Solenoid 4.

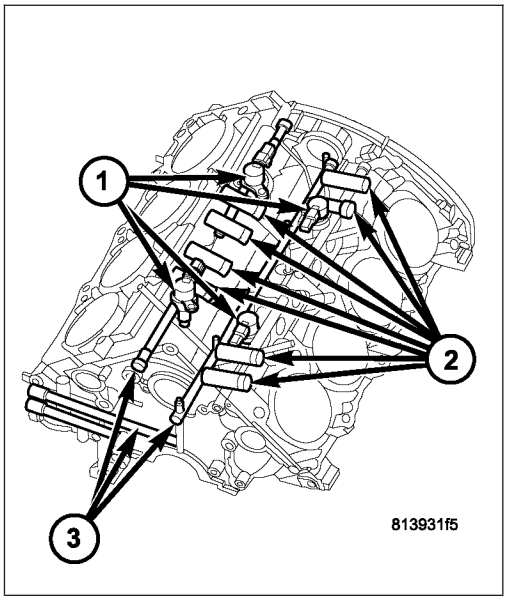

10. OIL PASSAGES RESTRICTED

Turn the ignition off.

Remove both Solenoids on Bank 1 of the engine block.

Remove the Bank 1 Cylinder Head per Service Information.

Remove the Lifters from the left engine bank.

Inspect the oil passages to the Solenoids and from the Solenoids to the lifters.

Are the passages blocked?

Yes >> Clean the oil passages as necessary. If the entire engine is restricted disassembly of the entire engine block may be necessary.

No >> Replace both sets of lifters if no other possible causes remain.

P3442-CYLINDER 6 DEACTIVATION CONTROL PERFORMANCE

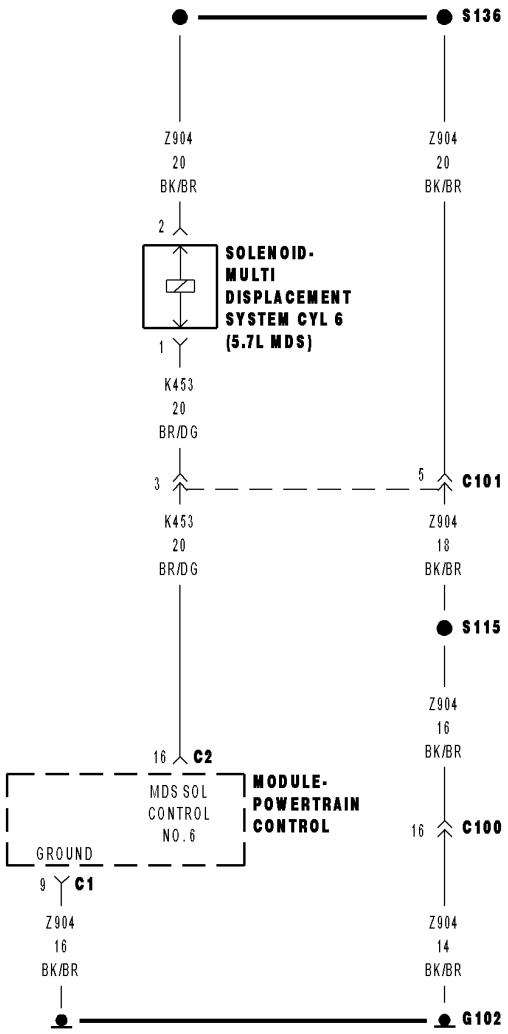

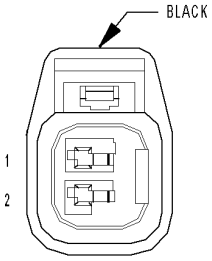

SOLENOID-
MULTI DISPLACEMENT
SYSTEM CYL 6
(5.7L MDS)

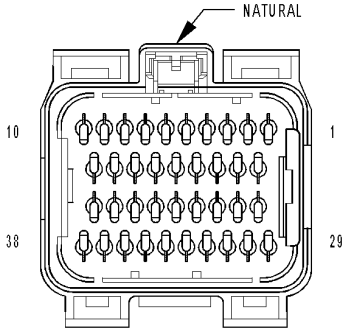

MODULE-
POWERTRAIN
CONTROL C2

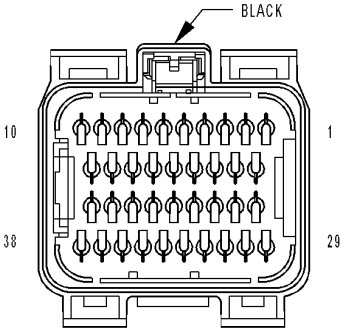

MODULE-
POWERTRAIN
CONTROL C1

81365e57

For a complete wiring diagram **Refer to Section 8W**.

Theory of Operation

When all criteria has been met, power is supplied to each MDS Solenoid when the engine is making a transition from 8 cylinder mode to 4 cylinder mode. By actuating the solenoid, oil pressure is raised to the pair of lifters that coincide with each particular solenoid. The oil pressure pushes in the locking pins that allows the lifter to collapse, decoupling the valves and camshaft.

- **When Monitored:**
  Transition from 8 to 4 cylinder mode.
- **Set Condition:**
  The MDS fails to engage for cylinder 6.

Possible Causes
(K453) MDS SOLENOID NO.6 CONTROL SHORT TO GROUND
(K453) MDS SOLENOID NO.6 CONTROL OPEN
(Z904) GROUND CIRCUIT OPEN
INSUFFICIENT OIL PRESSURE ACTING ON THE LIFTER LOCKING PINS
OIL PASSAGES RESTRICTED
LIFTER
MDS SOLENOID
PCM

Always perform the Pre-Diagnostic Troubleshooting procedure before proceeding. (Refer to 9 - ENGINE - DIAGNOSIS AND TESTING).

Diagnostic Test

1. ACTIVE DTC

Ignition on, engine not running.
With a scan tool, read DTCs.

Is the DTC active at this time?

Yes >> Go To 2

No >> Refer to the INTERMITTENT CONDITION Diagnostic Procedure.
Perform the POWERTRAIN VERIFICATION TEST. (Refer to 9 - ENGINE - STANDARD PROCEDURE)

2. CHECKING PCM CONTROL SIDE FOR THE MDS SOLENOID (C101)

Turn the ignition off.

Disconnect the C101 harness connector.

Using a 12-volt test light, jumper from the (Z904) Ground Circuit and the (K453) MDS Solenoid No.6 Control Circuit in the C101 harness connector (PCM side).

Turn the ignition on.

With the scan tool, actuate the MDS Solenoid No.6.

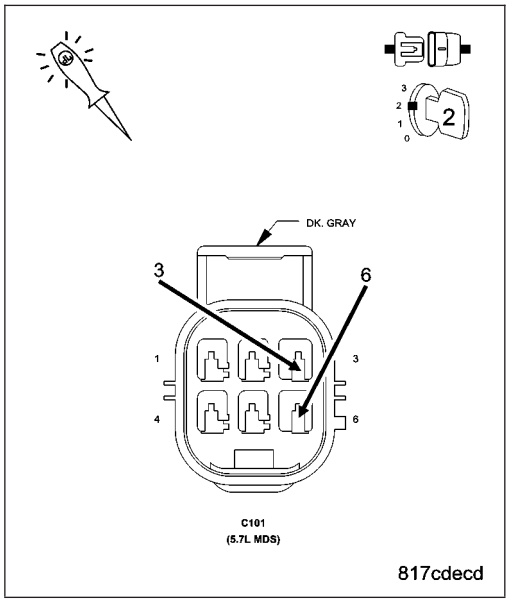

Does the 12-volt test light flash on and off?

Yes >> Go To 3

No >> Go To 4

3. MDS SOLENOID RESISTANCE

Turn the ignition off.

Measure the resistance between the (Z904) Ground Circuit and the (K453) MDS Solenoid No.6 Control Circuit in the C100 harness connector (MDS side).

NOTE: It is important to follow the below temp/resistance values to ensure an accurate reading.

MDS SOLENOID RESISTANCE

TEMPERATURE VALUE ± 20° F	RESISTANCE (OHMS) ± .25 ohms
0° F	8.8 ohms
32° F	9.5 ohms
68° F	10.3 ohms
100° F	11 ohms
150° F	12.2 ohms
200° F	13.4 ohms
250° F	14.4 ohms
300° F	15.6 ohms

Is the resistance within an acceptable range?

Yes >> Go To 7

No >> Visually and Physically inspect the wiring harness between the C101 connector and the MDS Solenoid connector. Repair as necessary. If OK, replace the MDS Solenoid in accordance with the Service Information.

4. (Z904) GROUND CIRCUIT OPEN (PCM SIDE)

Turn the ignition off.

Using a 12-volt test light connected to the 12-volts, probe the (Z904) Ground circuit in the C101 harness connector (PCM side).

Does the test light illuminate brightly?

Yes >> Go To 5

No >> Repair the open in the (Z904) Ground circuit.
Perform the POWERTRAIN VERIFICATION TEST. (Refer to 9 - ENGINE - STANDARD PROCEDURE)

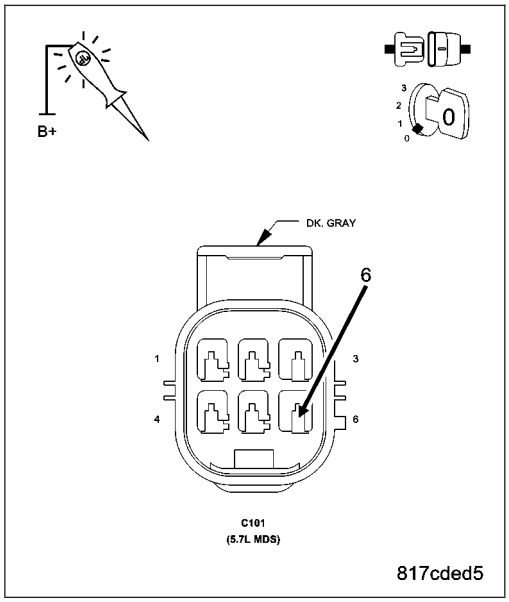

5. (K453) MDS SOLENOID NO.6 CONTROL CIRCUIT SHORTED TO GROUND (PCM SIDE)

Turn the ignition off.

Measure the resistance between ground and the (K453) MDS Solenoid No.6 Control circuit in the C101 harness connector.

Is the resistance below 100 ohms?

Yes >> Repair the short to ground in the (K453) MDS Solenoid No.6 Control circuit between the PCM harness connector and the C101 harness connector.
Perform the POWERTRAIN VERIFICATION TEST. (Refer to 9 - ENGINE - STANDARD PROCEDURE)

No >> Go To 6

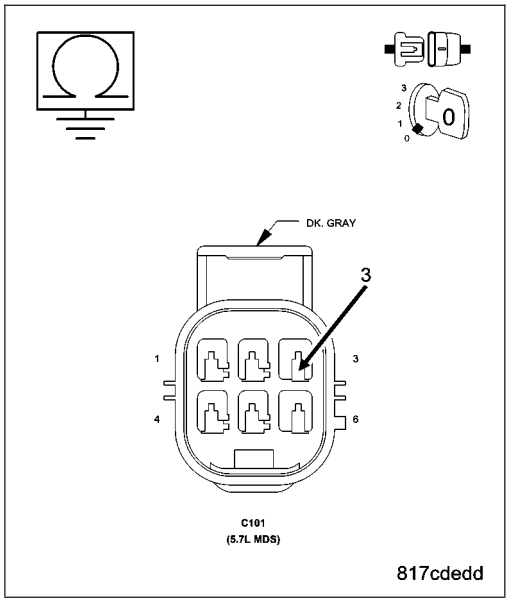

6. (K453) MDS SOLENOID NO.6 CONTROL CIRCUIT OPEN (PCM SIDE)

CAUTION: Do not probe the PCM harness connectors. Probing the PCM harness connectors will damage the PCM terminals resulting in poor terminal to pin connection. Install Miller Special Tool #8815 to perform diagnosis.

Measure the resistance of the (K453) MDS Solenoid No.6 Control circuit from the C101 harness connector to the appropriate terminal of special tool #8815.

Is the resistance below 5.0 ohms?

Yes >> Replace and program the Powertrain Control Module in accordance with the service information.

Perform the POWERTRAIN VERIFICATION TEST. (Refer to 9 - ENGINE - STANDARD PROCEDURE)

No >> Repair the open in the (K453) MDS Solenoid No.6 Control circuit between the C101 harness connector and the PCM harness connector.

Perform the POWERTRAIN VERIFICATION TEST. (Refer to 9 - ENGINE - STANDARD PROCEDURE)

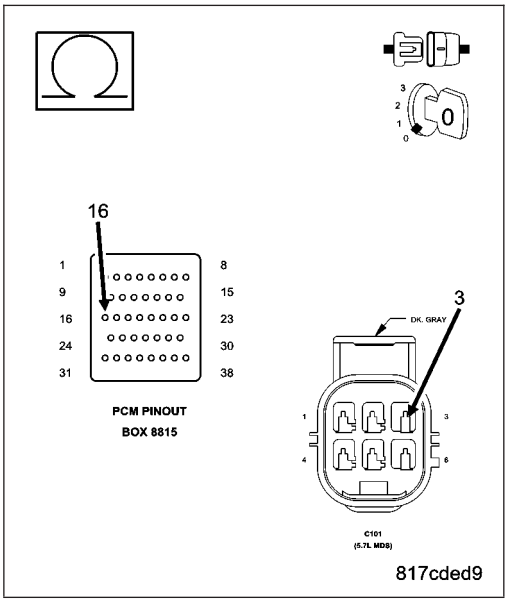

7. MDS SOLENOID 6

Turn the ignition off.

Remove the Intake Manifold per Service Information.

Reconnect the PCM harness connector.

Turn the ignition on.

With the scan tool actuate the MDS Solenoid 6.

Can you feel and hear the Solenoid Actuating?

Yes >> Go To 8

No >> Remove the Solenoid (1) and check for any debris that may be blocking the oil passages (3) to the Solenoid. If the passages are clogged, clean the passages and replace the MDS Solenoid 6. If the passages are not clogged with debris, replace the MDS Solenoid 6.

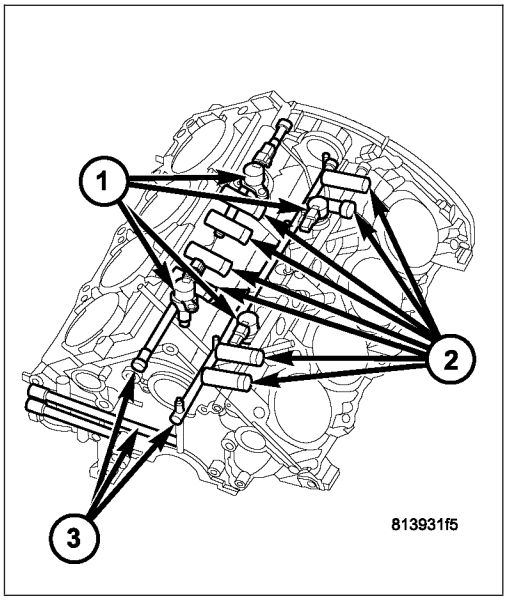

8. OIL PASSAGES RESTRICTED

Turn the ignition off.

Remove both Solenoids on Bank 2 of the engine block.

Remove the Bank 2 Cylinder Head per Service Information.

Remove the Lifters from the right engine bank.

Inspect the oil passages to the Solenoids and from the Solenoids to the lifters.

Are the passages blocked?

Yes >> Clean the oil passages as necessary. If the entire engine is restricted disassembly of the entire engine block may be necessary.

No >> Replace both sets of lifters if no other possible causes remain.

P3450-CYLINDER 7 DEACTIVATION CONTROL PERFORMANCE

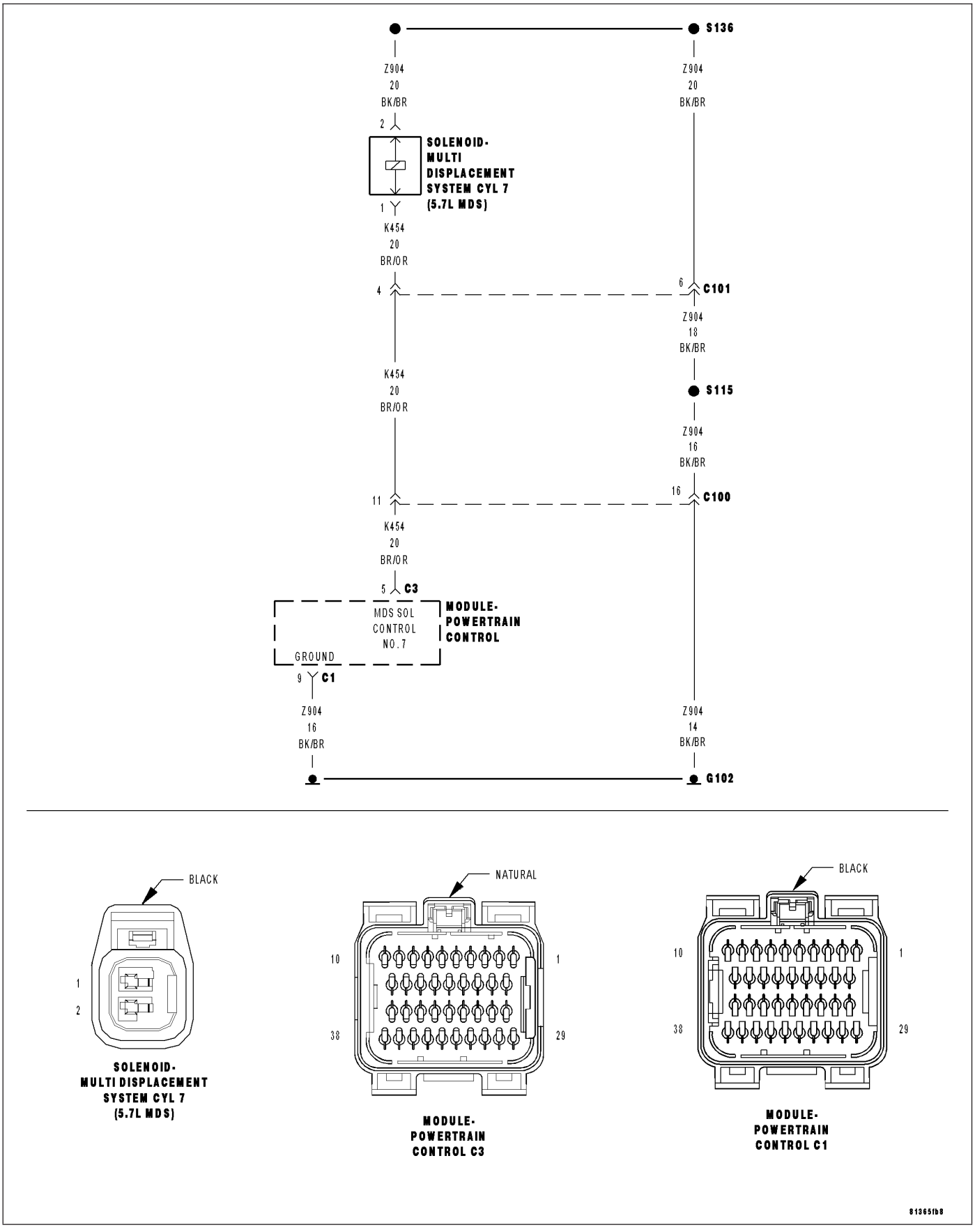

For a complete wiring diagram **Refer to Section 8W**.

Theory of Operation

When all criteria has been met, power is supplied to each MDS Solenoid when the engine is making a transition from 8 cylinder mode to 4 cylinder mode. By actuating the solenoid, oil pressure is raised to the pair of lifters that coincide with each particular solenoid. The oil pressure pushes in the locking pins that allows the lifter to collapse, decoupling the valves and camshaft.

- **When Monitored:**
  Transition from 8 to 4 cylinder mode.
- **Set Condition:**
  The MDS fails to engage for cylinder 7.

Possible Causes
(K454) MDS SOLENOID NO.7 CONTROL SHORT TO GROUND
(K454) MDS SOLENOID NO.7 CONTROL OPEN
(Z904) GROUND CIRCUIT OPEN
INSUFFICIENT OIL PRESSURE ACTING ON THE LIFTER LOCKING PINS
OIL PASSAGES RESTRICTED
LIFTER
MDS SOLENOID
PCM

Always perform the Pre-Diagnostic Troubleshooting procedure before proceeding. (Refer to 9 - ENGINE - DIAGNOSIS AND TESTING).

Diagnostic Test

1. ACTIVE DTC

Ignition on, engine not running.
With a scan tool, read DTCs.

Is the DTC active at this time?

Yes >> Go To 2

No >> Refer to the INTERMITTENT CONDITION Diagnostic Procedure.
Perform the POWERTRAIN VERIFICATION TEST. (Refer to 9 - ENGINE - STANDARD PROCEDURE)

2. CHECKING PCM CONTROL SIDE FOR THE MDS SOLENOID (C100)

Turn the ignition off.

Disconnect the C100 harness connector.

Using a 12-volt test light, jumper from the (Z904) Ground Circuit and the (K454) MDS Solenoid No.7 Control Circuit in the C100 harness connector (PCM side).

Turn the ignition on.

With the scan tool, actuate the MDS Solenoid No.7.

Does the 12-volt test light flash on and off?

Yes >> Go To 3

No >> Go To 6

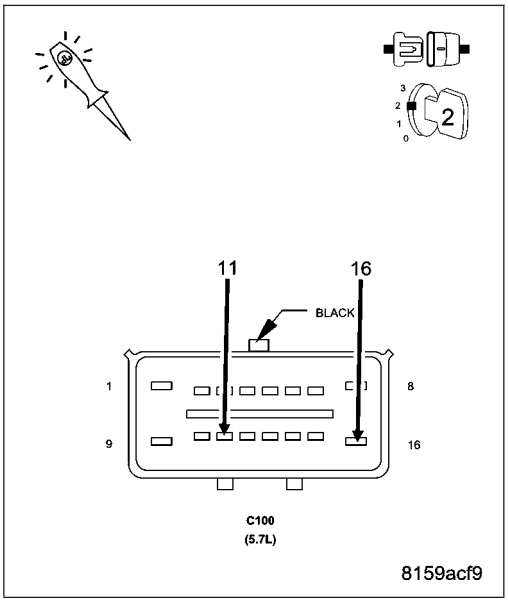

3. MDS SOLENOID RESISTANCE

Turn the ignition off.

Measure the resistance between the (Z904) Ground Circuit and the (K454) MDS Solenoid No.7 Control Circuit in the C100 harness connector (MDS side).

NOTE: It is important to follow the below temp/resistance values to ensure an accurate reading.

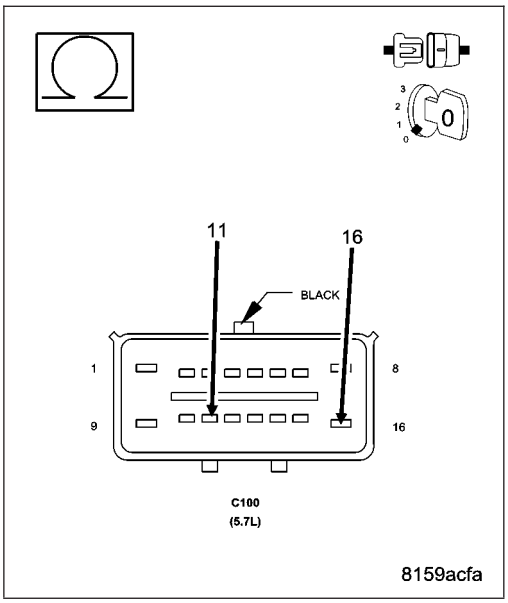

MDS SOLENOID RESISTANCE

TEMPERATURE VALUE ± 20° F	RESISTANCE (OHMS) ± .25 ohms
0° F	8.8 ohms
32° F	9.5 ohms
68° F	10.3 ohms
100° F	11 ohms
150° F	12.2 ohms
200° F	13.4 ohms
250° F	14.4 ohms
300° F	15.6 ohms

Is the resistance within an acceptable range?

Yes >> Go To 9

No >> Go To 2

4. CHECKING PCM CONTROL SIDE FOR THE MDS SOLENOID BETWEEN C100 and C101

Turn the ignition off.

Reconnect the C100 harness connector.

Disconnect the C101 harness connector.

Using a 12-volt test light, jumper from the (Z904) Ground Circuit and the (K454) MDS Solenoid No.7 Control Circuit in the C101 harness connector (PCM side).

Turn the ignition on.

With the scan tool, actuate the MDS Solenoid No.7.

Does the 12-volt test light flash on and off?

Yes >> Visually and Physically inspect the wiring harness between the C101 connector and the MDS Solenoid connector. Repair as necessary. If OK, replace the MDS Solenoid in accordance with the Service Information.

Perform the POWERTRAIN VERIFICATION TEST. (Refer to 9 - ENGINE - STANDARD PROCEDURE)

No >> Go To 5

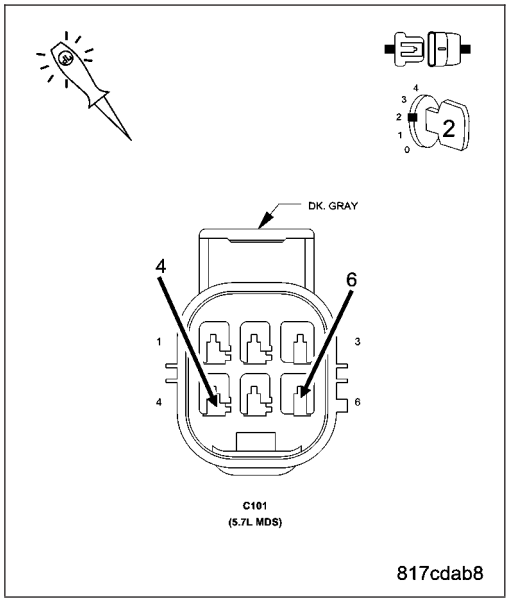

5. (Z904) GROUND CIRCUIT OPEN BETWEEN C100 and C101

Turn the ignition off.

Using a 12-volt test light connected to the 12-volts, probe the (Z904) Ground circuit in the C101 harness connector (PCM side).

Does the test light illuminate brightly?

Yes >> Repair the (K454) MDS Solenoid No.7 Control circuit between C100 and C101 connectors.

Perform the POWERTRAIN VERIFICATION TEST. (Refer to 9 - ENGINE - STANDARD PROCEDURE)

No >> Repair the (Z904) Ground circuit between C100 and C101 connectors.

Perform the POWERTRAIN VERIFICATION TEST. (Refer to 9 - ENGINE - STANDARD PROCEDURE)

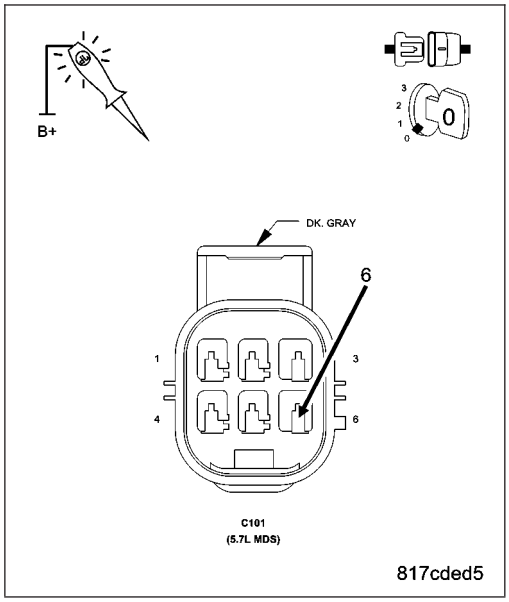

6. (Z904) GROUND CIRCUIT OPEN (PCM SIDE)

Turn the ignition off.

Using a 12-volt test light connected to the 12-volts, probe the (Z904) Ground circuit in the C100 harness connector (PCM side).

Does the test light illuminate brightly?

Yes >> Go To 7

No >> Repair the open in the (Z904) Ground circuit.
Perform the POWERTRAIN VERIFICATION TEST. (Refer to 9 - ENGINE - STANDARD PROCEDURE)

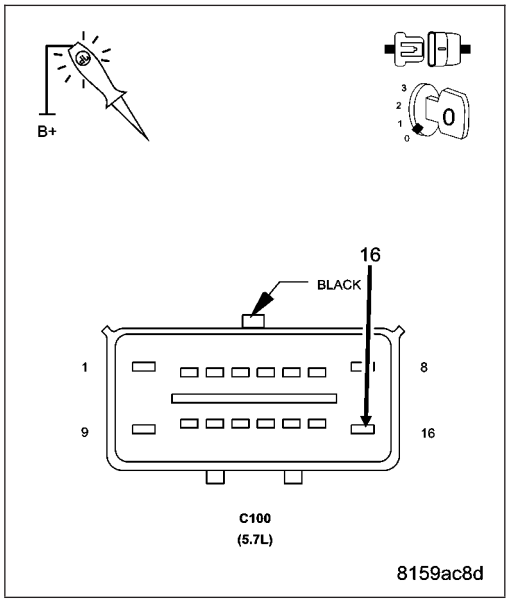

7. (K454) MDS SOLENOID NO.7 CONTROL CIRCUIT SHORTED TO GROUND (PCM SIDE)

Turn the ignition off.

Measure the resistance between ground and the (K454) MDS Solenoid No.7 Control circuit in the C100 harness connector.

Is the resistance below 100 ohms?

Yes >> Repair the short to ground in the (K454) MDS Solenoid No.7 Control circuit between the PCM harness connector and the C100 harness connector.
Perform the POWERTRAIN VERIFICATION TEST. (Refer to 9 - ENGINE - STANDARD PROCEDURE)

No >> Go To 8

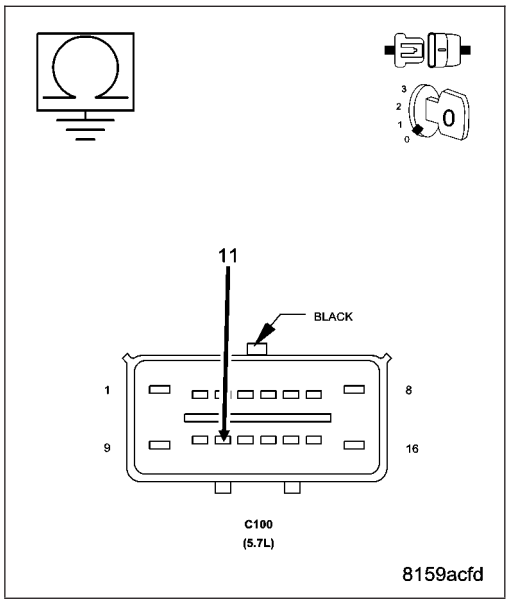

8. (K454) MDS SOLENOID NO.7 CONTROL CIRCUIT OPEN (PCM SIDE)

CAUTION: Do not probe the PCM harness connectors. Probing the PCM harness connectors will damage the PCM terminals resulting in poor terminal to pin connection. Install Miller Special Tool #8815 to perform diagnosis.

Measure the resistance of the (K454) MDS Solenoid No.7 Control circuit from the C100 harness connector to the appropriate terminal of special tool #8815.

Is the resistance below 5.0 ohms?

Yes >> Replace and program the Powertrain Control Module in accordance with the service information.

Perform the POWERTRAIN VERIFICATION TEST. (Refer to 9 - ENGINE - STANDARD PROCEDURE)

No >> Repair the open in the (K454) MDS Solenoid No.7 Control circuit between the C100 harness connector and the PCM harness connector.

Perform the POWERTRAIN VERIFICATION TEST. (Refer to 9 - ENGINE - STANDARD PROCEDURE)

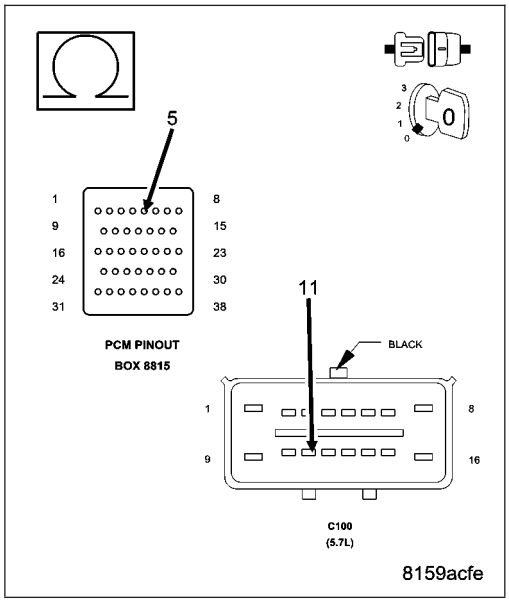

9. MDS SOLENOID 7

Turn the ignition off.

Remove the Intake Manifold per Service Information.

Reconnect the PCM harness connector.

Turn the ignition on.

With the scan tool actuate the MDS Solenoid 7.

Can you feel and hear the Solenoid Actuating?

Yes >> Go To 10

No >> Remove the Solenoid (1) and check for any debris that may be blocking the oil passages (3) to the Solenoid. If the passages are clogged, clean the passages and replace the MDS Solenoid 7. If the passages are not clogged with debris, replace the MDS Solenoid 7.

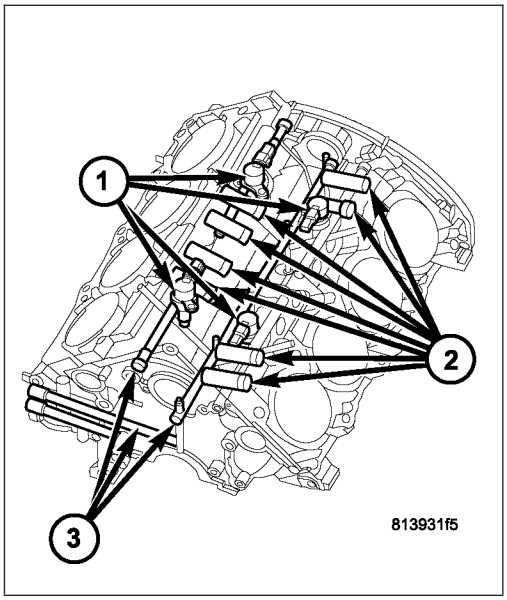

10. OIL PASSAGES RESTRICTED

Turn the ignition off.

Remove both Solenoids on Bank 2 of the engine block.

Remove the Bank 2 Cylinder Head per Service Information.

Remove the Lifters from the right engine bank.

Inspect the oil passages to the Solenoids and from the Solenoids to the lifters.

Are the passages blocked?

Yes >> Clean the oil passages as necessary. If the entire engine is restricted disassembly of the entire engine block may be necessary.

No >> Replace both sets of lifters if no other possible causes remain.

P3401-MDS SOLENOID 1 CIRCUIT

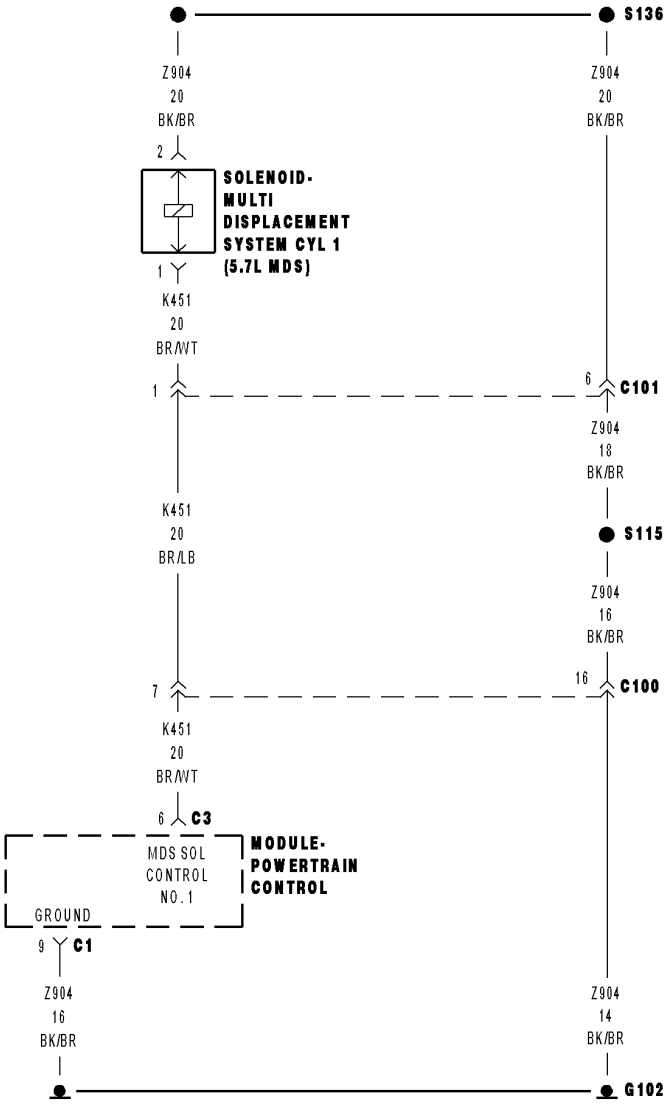

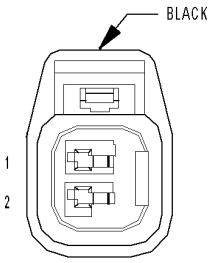

SOLENOID-
MULTI DISPLACEMENT
SYSTEM CYL 1
(5.7L MDS)

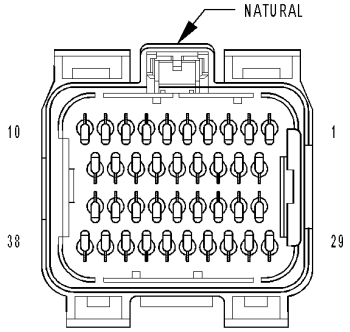

MODULE-
POWERTRAIN
CONTROL C3

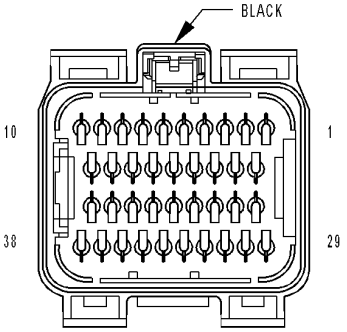

MODULE-
POWERTRAIN
CONTROL C1

81365ddb

For a complete wiring diagram **Refer to Section 8W**.

Theory of Operation

When all criteria has been met, power is supplied to each MDS Solenoid when the engine is making a transition from 8 cylinder mode to 4 cylinder mode. By actuating the solenoid, oil pressure is raised to the pair of lifters that coincide with each particular solenoid. The oil pressure pushes in the locking pins that allows the lifter to collapse, decoupling the valves and camshaft.

- **When Monitored:**
  Transition from 8 to 4 cylinder mode.
- **Set Condition:**
  When the PCM recognizes a problem with the Solenoid Control circuit.

Possible Causes
(K451) MDS SOLENOID NO.1 CONTROL SHORT TO BATTERY VOLTAGE
(K451) MDS SOLENOID NO.1 CONTROL SHORT TO GROUND
(K451) MDS SOLENOID NO.1 CONTROL OPEN
(Z904) GROUND CIRCUIT OPEN
MDS SOLENOID NO.1
PCM

Always perform the Pre-Diagnostic Troubleshooting procedure before proceeding. (Refer to 9 - ENGINE - DIAGNOSIS AND TESTING).

Diagnostic Test

1. ACTIVE DTC

Ignition on, engine not running.
With a scan tool, read DTCs.

Is the DTC active at this time?

Yes >> Go To 2

No >> Refer to the INTERMITTENT CONDITION Diagnostic Procedure.
Perform the POWERTRAIN VERIFICATION TEST. (Refer to 9 - ENGINE - STANDARD PROCEDURE)

2. CHECKING PCM CONTROL SIDE FOR THE MDS SOLENOID

Turn the ignition off.
Disconnect the C100 harness connector.
Using a 12-volt test light, jumper from the (Z904) Ground Circuit and the (K451) MDS Solenoid No.1 Control Circuit in the C100 harness connector (PCM side).
Turn the ignition on.
With the scan tool, actuate the MDS Solenoid No.1.

Does the 12-volt test light flash on and off?

Yes >> Go To 3

No >> Go To 4

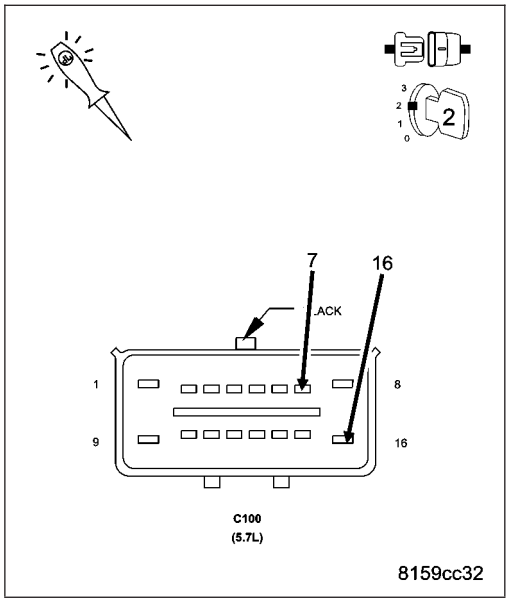

3. MDS SOLENOID RESISTANCE

Turn the ignition off.

Measure the resistance between the (Z904) Ground Circuit and the (K451) MDS SolenoidNo.1 Control Circuit in the C100 harness connector (MDS side).

NOTE: It is important to follow the below temp/resistance values to ensure an accurate reading.

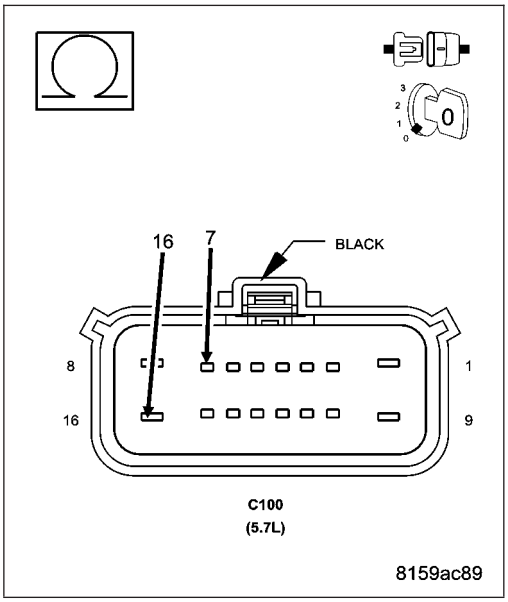

MDS SOLENOID RESISTANCE

TEMPERATURE VALUE ± 20° F	RESISTANCE (OHMS) ± .25 ohms
0° F	8.8 ohms
32° F	9.5 ohms
68° F	10.3 ohms
100° F	11 ohms
150° F	12.2 ohms
200° F	13.4 ohms
250° F	14.4 ohms
300° F	15.6 ohms

Is the resistance within an acceptable range?

Yes >> Go To 12

No >> Go To 8

4. (Z904) GROUND CIRCUIT OPEN (PCM SIDE)

Turn the ignition off.

Using a 12-volt test light connected to the 12-volts, probe the (Z904) Ground circuit in the C100 harness connector (PCM side).

Does the test light illuminate brightly?

Yes >> Go To 5

No >> Repair the open in the (Z904) Ground circuit.
Perform the POWERTRAIN VERIFICATION TEST. (Refer to 9 - ENGINE - STANDARD PROCEDURE)

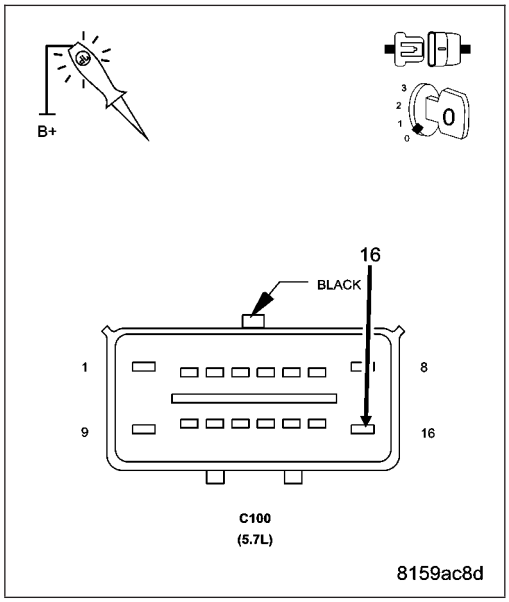

5. (K451) MDS SOLENOID NO.1 CONTROL CIRCUIT SHORTED TO BATTERY VOLTAGE (PCM SIDE)

Disconnect the PCM harness connector.

Ignition on, engine not running.

Measure the voltage on the (K451) MDS Solenoid No.1 Control circuit in the C100 harness connector.

Does the voltmeter indicate voltage present?

Yes >> Repair the short to battery voltage in the (K451) MDS Solenoid No.1 Control circuit between the PCM harness connector and C100 harness connector.
Perform the POWERTRAIN VERIFICATION TEST. (Refer to 9 - ENGINE - STANDARD PROCEDURE)

No >> Go To 10

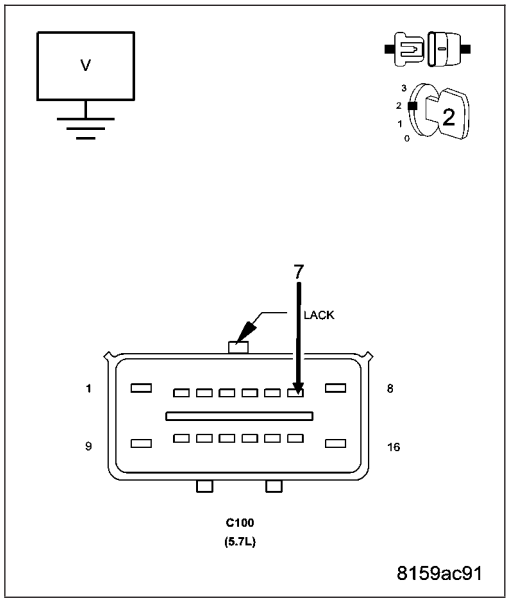

6. (K451) MDS SOLENOID NO.1 CONTROL CIRCUIT SHORTED TO GROUND (PCM SIDE)

Turn the ignition off.

Measure the resistance between ground and the (K451) MDS Solenoid No.1 Control circuit in the C100 harness connector.

Is the resistance below 100 ohms?

Yes >> Repair the short to ground in the (K451) MDS Solenoid No.1 Control circuit between the PCM harness connector and the C100 harness connector.

Perform the POWERTRAIN VERIFICATION TEST. (Refer to 9 - ENGINE - STANDARD PROCEDURE)

No >> Go To 7

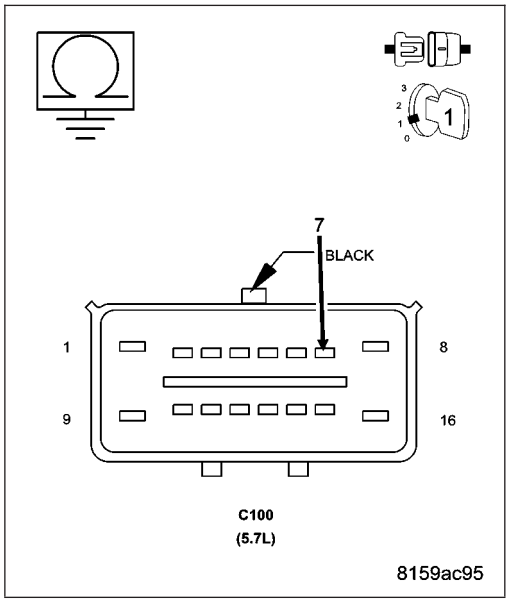

7. (K451) MDS SOLENOID NO.1 CONTROL CIRCUIT OPEN (PCM SIDE)

CAUTION: Do not probe the PCM harness connectors. Probing the PCM harness connectors will damage the PCM terminals resulting in poor terminal to pin connection. Install Miller Special Tool #8815 to perform diagnosis.

Measure the resistance of the (K451) MDS Solenoid No.1 Control circuit from the C100 harness connector to the appropriate terminal of special tool #8815.

Is the resistance below 5.0 ohms?

Yes >> Replace and program the Powertrain Control Module in accordance with the service information.

Perform the POWERTRAIN VERIFICATION TEST. (Refer to 9 - ENGINE - STANDARD PROCEDURE)

No >> Repair the open in the (K451) MDS Solenoid No.1 Control circuit between the C100 harness connector and the PCM harness connector.

Perform the POWERTRAIN VERIFICATION TEST. (Refer to 9 - ENGINE - STANDARD PROCEDURE)

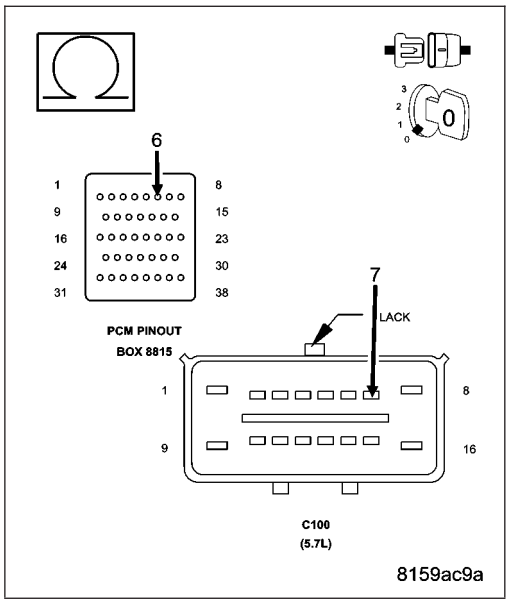

8. (Z904) GROUND CIRCUIT OPEN (MDS SIDE)

Turn the ignition off.

Gain access to the MDS Solenoid.

Disconnect the MDS harness connector.

Measure the resistance of the (Z904) Ground Circuit between the C100 harness connector and the MDS harness connector.

Is the resistance below 5.0 ohms?

Yes >> Go To 9

No >> Repair the open in the (Z904) Ground circuit.
Perform the POWERTRAIN VERIFICATION TEST. (Refer to 9 - ENGINE - STANDARD PROCEDURE)

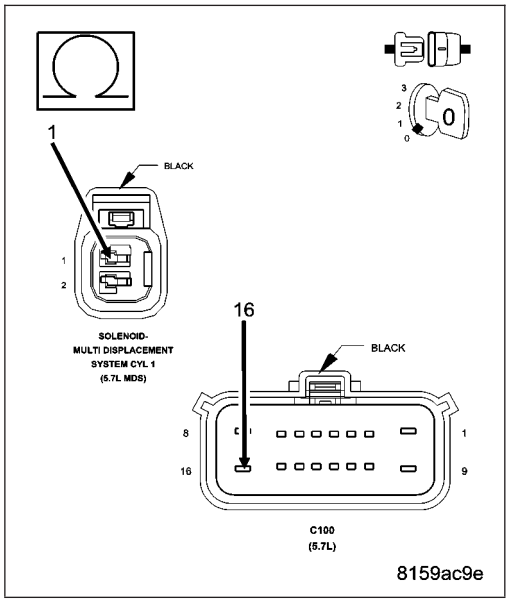

9. (K451) MDS SOLENOID NO.1 CONTROL CIRCUIT SHORTED TO BATTERY VOLTAGE (MDS SIDE)

Ignition on, engine not running.

Measure the voltage on the (K451) MDS Solenoid No.1 Control circuit in the MDS Solenoid No.1 connector.

Does the voltmeter indicate voltage present?

Yes >> Repair the short to battery voltage in the (K451) MDS Solenoid No.1 Control circuit between the C100 harness connector and the MDS connector.
Perform the POWERTRAIN VERIFICATION TEST. (Refer to 9 - ENGINE - STANDARD PROCEDURE)

No >> Go To 10

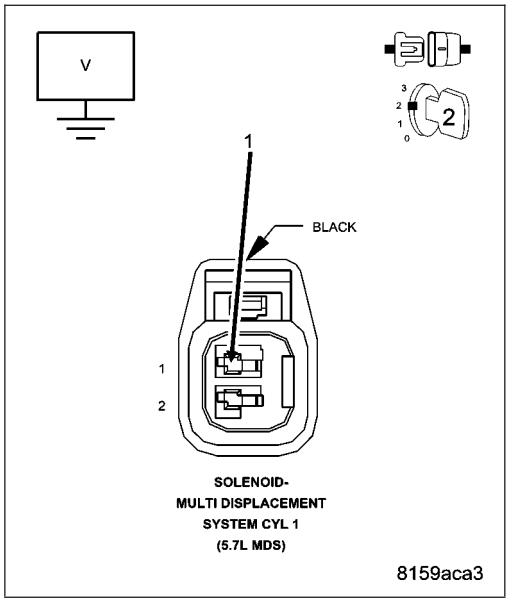

10. (K451) MDS SOLENOID NO.1 CONTROL CIRCUIT SHORTED TO GROUND (MDS SIDE)

Turn the ignition off.

Measure the resistance between ground and the (K451) MDS Solenoid No.1 Control circuit in the MDS Solenoid No.1 harness connector.

Is the resistance below 100 ohms?

Yes >> Repair the short to ground in the (K451) MDS Solenoid No.1 Control circuit between the C100 harness connector and the MDS harness connector.

Perform the POWERTRAIN VERIFICATION TEST. (Refer to 9 - ENGINE - STANDARD PROCEDURE)

No >> Go To 11

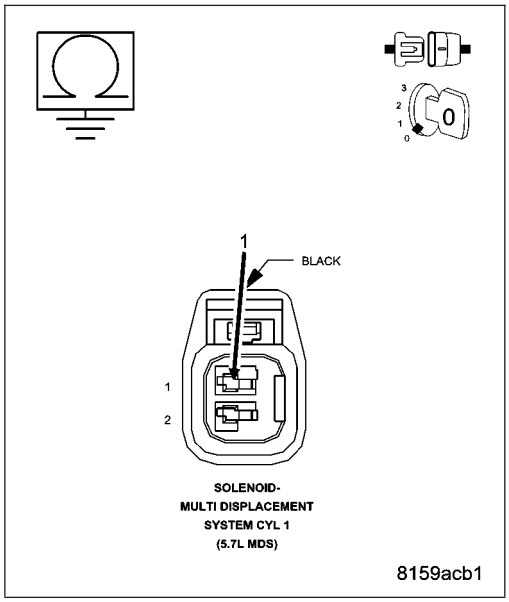

11. (K451) MDS SOLENOID NO.1 CONTROL CIRCUIT OPEN (MDS SIDE)

Measure the resistance of the (K451) MDS Solenoid No.1 Control circuit from the MDS Solenoid No.1 harness connector to C100 harness connector.

Is the resistance below 5.0 ohms?

Yes >> Replace the MDS Solenoid in accordance with the Service Information.

Perform the POWERTRAIN VERIFICATION TEST. (Refer to 9 - ENGINE - STANDARD PROCEDURE)

No >> Repair the open in the (K451) MDS Solenoid No.1 Control circuit between the C100 harness connector and the MDS harness connector.

Perform the POWERTRAIN VERIFICATION TEST. (Refer to 9 - ENGINE - STANDARD PROCEDURE)

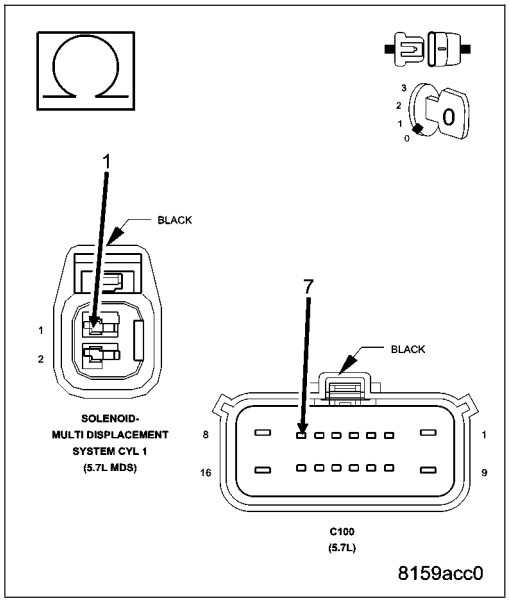

12. CHECKING HARNESS CONNECTOR C101 AND GROUND CONNECTION G102

Inspect the C101 harness connector.

Ensure the Ground terminal and Control terminal are fastened securely into the connector and there are no signs of corrosion or damage.

Check wiring to terminal connection. Look for an internal broken wire under the insulation.

Inspect the G102 Ground for a tight, clean connection.

Were any problems found?

Yes >> Repair as necessary.
Perform the POWERTRAIN VERIFICATION TEST. (Refer to 9 - ENGINE - STANDARD PROCEDURE)

No >> Refer to the INTERMITTENT CONDITION Diagnostic Procedure.
Perform the POWERTRAIN VERIFICATION TEST. (Refer to 9 - ENGINE - STANDARD PROCEDURE)

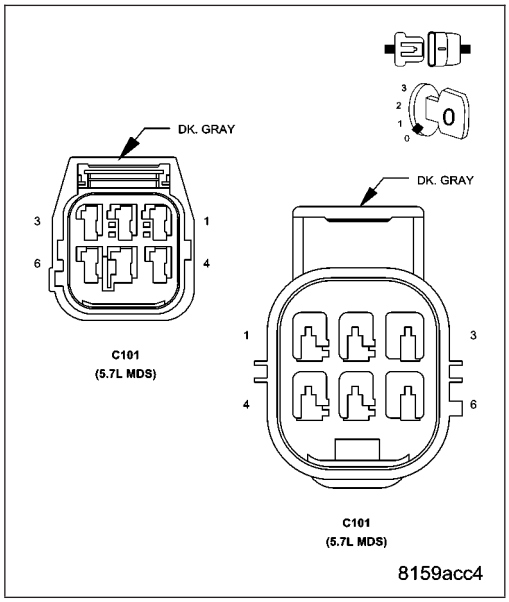

P3425-MDS SOLENOID 4 CIRCUIT

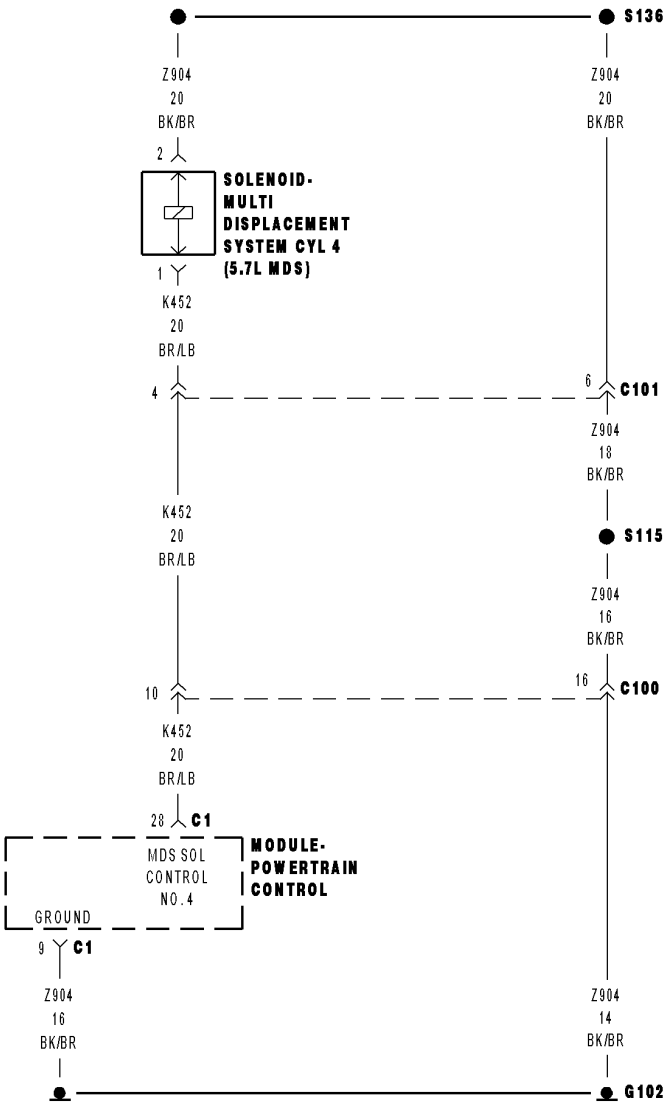

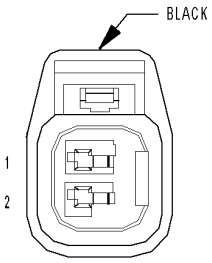

SOLENOID-
MULTI DISPLACEMENT
SYSTEM CYL 4
(5.7L MDS)

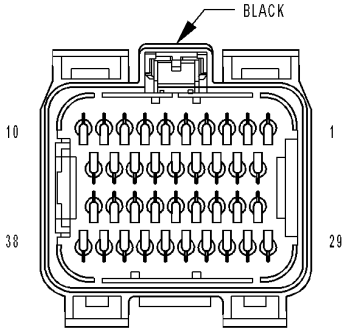

MODULE-
POWERTRAIN
CONTROL C1

8136e06

For a complete wiring diagram **Refer to Section 8W**.

Theory of Operation

When all criteria has been met, power is supplied to each MDS Solenoid when the engine is making a transition from 8 cylinder mode to 4 cylinder mode. By actuating the solenoid, oil pressure is raised to the pair of lifters that coincide with each particular solenoid. The oil pressure pushes in the locking pins that allows the lifter to collapse, decoupling the valves and camshaft.

- **When Monitored:**
  Transition from 8 to 4 cylinder mode.
- **Set Condition:**
  When the PCM recognizes a problem with the Solenoid Control circuit.

Possible Causes
(K452) MDS SOLENOID NO.4 CONTROL SHORT TO BATTERY VOLTAGE
(K452) MDS SOLENOID NO.4 CONTROL SHORT TO GROUND
(K452) MDS SOLENOID NO.4 CONTROL OPEN
(Z904) GROUND CIRCUIT OPEN
MDS SOLENOID NO.4
PCM

Always perform the Pre-Diagnostic Troubleshooting procedure before proceeding. (Refer to 9 - ENGINE - DIAGNOSIS AND TESTING).

Diagnostic Test

1. ACTIVE DTC

Ignition on, engine not running.
With a scan tool, read DTCs.

Is the DTC active at this time?

Yes >> Go To 2

No >> Refer to the INTERMITTENT CONDITION Diagnostic Procedure.
Perform the POWERTRAIN VERIFICATION TEST. (Refer to 9 - ENGINE - STANDARD PROCEDURE)

2. CHECKING PCM CONTROL SIDE FOR THE MDS SOLENOID

Turn the ignition off.
Disconnect the C100 harness connector.
Using a 12-volt test light, jumper from the (Z904) Ground Circuit and the (K452) MDS Solenoid No.4 Control Circuit in the C100 harness connector (PCM side).
Turn the ignition on.
With the scan tool, actuate the MDS Solenoid No.4.

Does the 12-volt test light flash on and off?

Yes >> Go To 3

No >> Go To 4

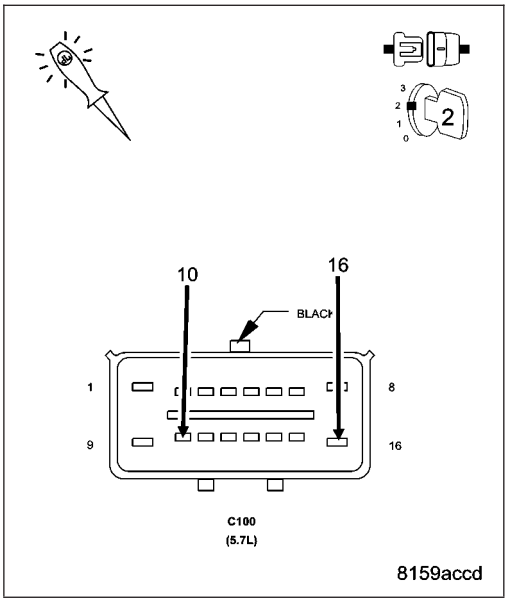

3. MDS SOLENOID RESISTANCE

Turn the ignition off.

Measure the resistance between the (Z904) Ground Circuit and the (K452) MDS Solenoid No.4 Control Circuit in the C100 harness connector (MDS side).

NOTE: It is important to follow the below temp/resistance values to ensure an accurate reading.

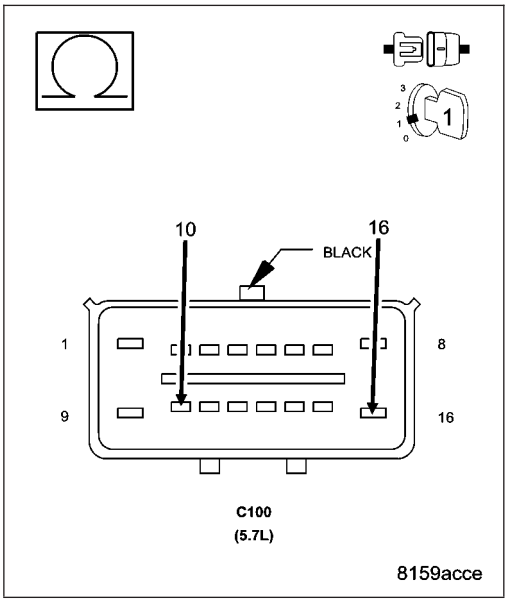

MDS SOLENOID RESISTANCE

TEMPERATURE VALUE ± 20° F	RESISTANCE (OHMS) ±.25 ohms
0° F	8.8 ohms
32° F	9.5 ohms
68° F	10.3 ohms
100° F	11 ohms
150° F	12.2 ohms
200° F	13.4 ohms
250° F	14.4 ohms
300° F	15.6 ohms

Is the resistance within an acceptable range?

Yes >> Go To 12

No >> Go To 8

4. (Z904) GROUND CIRCUIT OPEN (PCM SIDE)

Turn the ignition off.

Using a 12-volt test light connected to the 12-volts, probe the (Z904) Ground circuit in the C100 harness connector (PCM side).

Does the test light illuminate brightly?

Yes >> Go To 5

No >> Repair the open in the (Z904) Ground circuit.
Perform the POWERTRAIN VERIFICATION TEST. (Refer to 9 - ENGINE - STANDARD PROCEDURE)

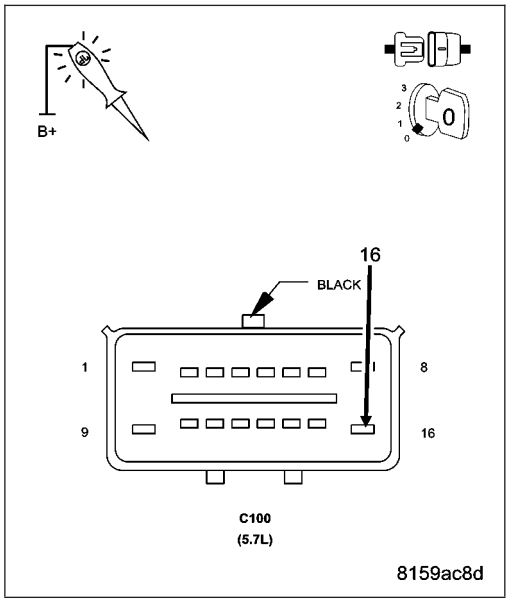

5. (K452) MDS SOLENOID NO.4 CONTROL CIRCUIT SHORTED TO BATTERY VOLTAGE (PCM SIDE)

Disconnect the PCM harness connector.

Ignition on, engine not running.

Measure the voltage on the (K452) MDS Solenoid No.4 Control circuit in the C100 harness connector.

Does the voltmeter indicate voltage present?

Yes >> Repair the short to battery voltage in the (K452) MDS Solenoid No.4 Control circuit between the PCM harness connector and C100 harness connector.
Perform the POWERTRAIN VERIFICATION TEST. (Refer to 9 - ENGINE - STANDARD PROCEDURE)

No >> Go To 10

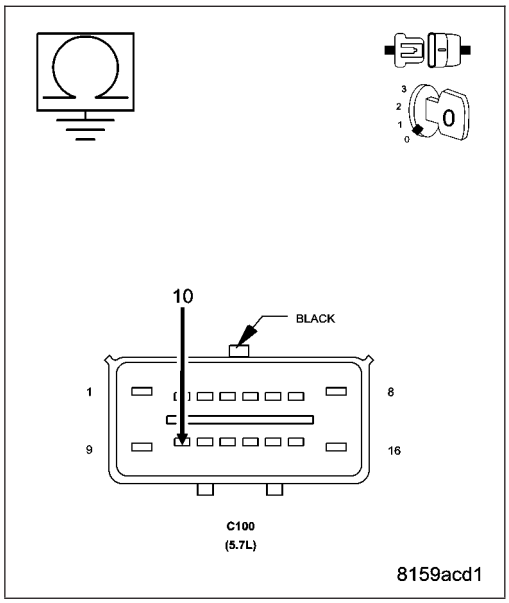

6. (K452) MDS SOLENOID NO.4 CONTROL CIRCUIT SHORTED TO GROUND (PCM SIDE)

Turn the ignition off.

Measure the resistance between ground and the (K452) MDS Solenoid No.4 Control circuit in the C100 harness connector.

Is the resistance below 100 ohms?

Yes >> Repair the short to ground in the (K452) MDS Solenoid No.4 Control circuit between the PCM harness connector and the C100 harness connector.

Perform the POWERTRAIN VERIFICATION TEST. (Refer to 9 - ENGINE - STANDARD PROCEDURE)

No >> Go To 7

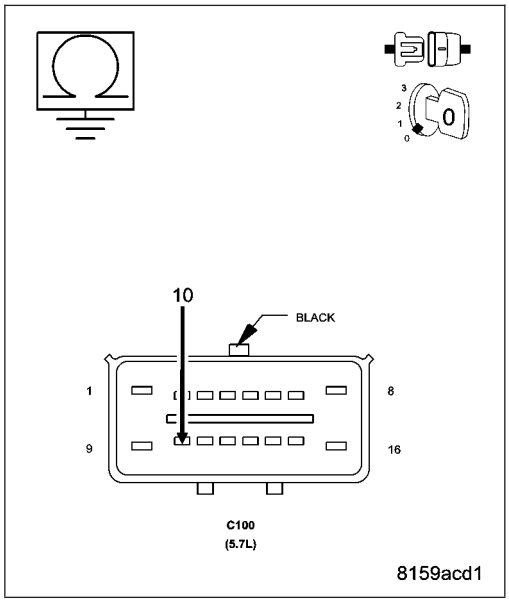

7. (K452) MDS SOLENOID NO.4 CONTROL CIRCUIT OPEN (PCM SIDE)

CAUTION: Do not probe the PCM harness connectors. Probing the PCM harness connectors will damage the PCM terminals resulting in poor terminal to pin connection. Install Miller Special Tool #8815 to perform diagnosis.

Measure the resistance of the (K452) MDS Solenoid No.4 Control circuit from the C100 harness connector to the appropriate terminal of special tool #8815.

Is the resistance below 5.0 ohms?

Yes >> Replace and program the Powertrain Control Module in accordance with the service information.

Perform the POWERTRAIN VERIFICATION TEST. (Refer to 9 - ENGINE - STANDARD PROCEDURE)

No >> Repair the open in the (K452) MDS Solenoid No.4 Control circuit between the C100 harness connector and the PCM harness connector.

Perform the POWERTRAIN VERIFICATION TEST. (Refer to 9 - ENGINE - STANDARD PROCEDURE)

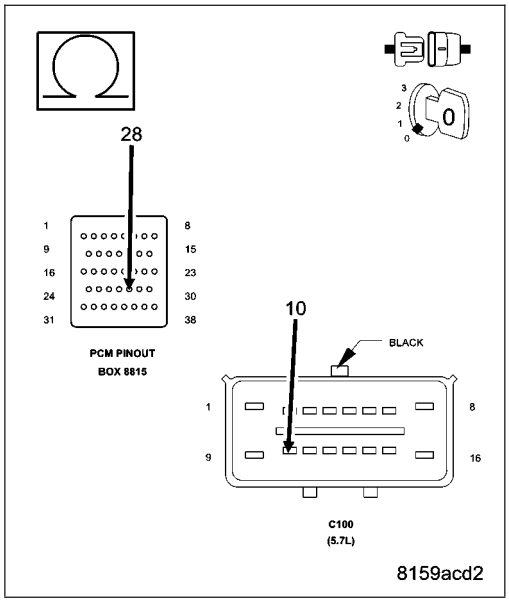

8. (Z904) GROUND CIRCUIT OPEN (MDS SIDE)

Turn the ignition off.

Gain access to the MDS Solenoid.

Disconnect the MDS harness connector.

Measure the resistance of the (Z904) Ground Circuit between the C100 harness connector and the MDS harness connector.

Is the resistance below 5.0 ohms?

Yes >> Go To 9

No >> Repair the open in the (Z904) Ground circuit.
Perform the POWERTRAIN VERIFICATION TEST. (Refer to 9 - ENGINE - STANDARD PROCEDURE)

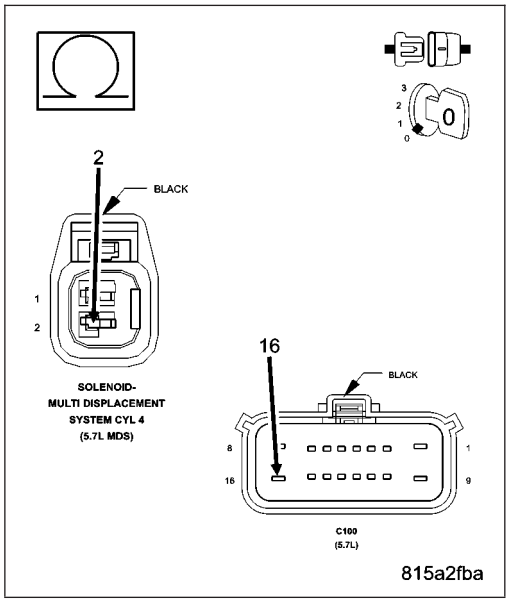

9. (K452) MDS SOLENOID NO.4 CONTROL CIRCUIT SHORTED TO BATTERY VOLTAGE (MDS SIDE)

Ignition on, engine not running.

Measure the voltage on the (K452) MDS Solenoid No.4 Control circuit in the MDS Solenoid No.4 connector.

Does the voltmeter indicate voltage present?

Yes >> Repair the short to battery voltage in the (K452) MDS Solenoid No.4 Control circuit between the C100 harness connector and the MDS connector.
Perform the POWERTRAIN VERIFICATION TEST. (Refer to 9 - ENGINE - STANDARD PROCEDURE)

No >> Go To 10

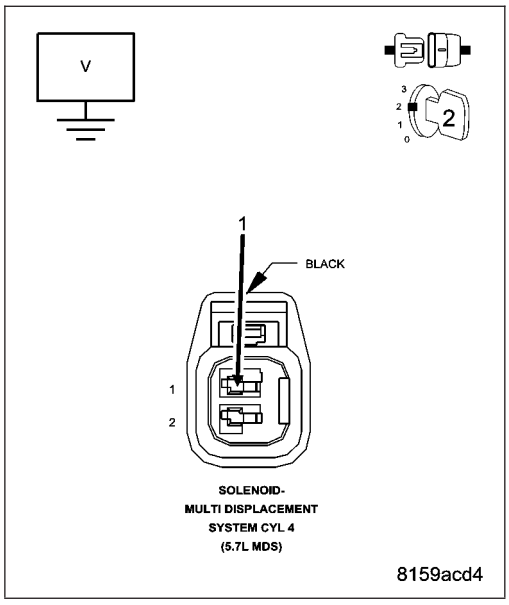

10. (K452) MDS SOLENOID NO.4 CONTROL CIRCUIT SHORTED TO GROUND (MDS SIDE)

Turn the ignition off.

Measure the resistance between ground and the (K452) MDS Solenoid No.4 Control circuit in the MDS Solenoid No.4 harness connector.

Is the resistance below 100 ohms?

Yes >> Repair the short to ground in the (K452) MDS Solenoid No.4 Control circuit between the C100 harness connector and the MDS harness connector.

Perform the POWERTRAIN VERIFICATION TEST. (Refer to 9 - ENGINE - STANDARD PROCEDURE)

No >> Go To 11

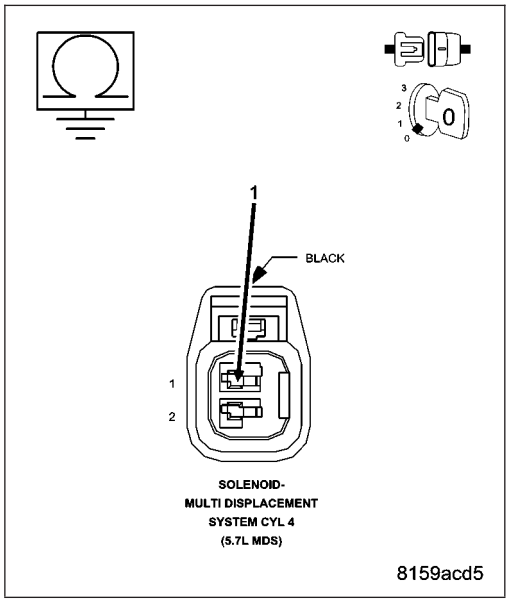

11. (K452) MDS SOLENOID NO.4 CONTROL CIRCUIT OPEN (MDS SIDE)

Measure the resistance of the (K452) MDS Solenoid No.4 Control circuit from the MDS Solenoid No.4 harness connector to C100 harness connector.

Is the resistance below 5.0 ohms?

Yes >> Replace the MDS Solenoid in accordance with the Service Information.

Perform the POWERTRAIN VERIFICATION TEST. (Refer to 9 - ENGINE - STANDARD PROCEDURE)

No >> Repair the open in the (K452) MDS Solenoid No.4 Control circuit between the C100 harness connector and the MDS harness connector.

Perform the POWERTRAIN VERIFICATION TEST. (Refer to 9 - ENGINE - STANDARD PROCEDURE)

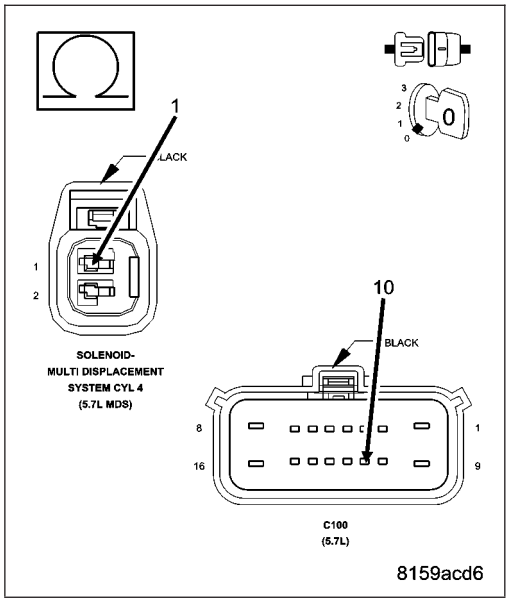

12. CHECKING HARNESS CONNECTOR C101 AND GROUND CONNECTION G102

Inspect the C101 harness connector.

Ensure the Ground terminal and Control terminal are fastened securely into the connector and there are no signs of corrosion or damage.

Check wiring to terminal connection. Look for an internal broken wire under the insulation.

Inspect the G102 Ground for a tight, clean connection.

Were any problems found?

Yes >> Repair as necessary.
Perform the POWERTRAIN VERIFICATION TEST. (Refer to 9 - ENGINE - STANDARD PROCEDURE)

No >> Refer to the INTERMITTENT CONDITION Diagnostic Procedure.
Perform the POWERTRAIN VERIFICATION TEST. (Refer to 9 - ENGINE - STANDARD PROCEDURE)

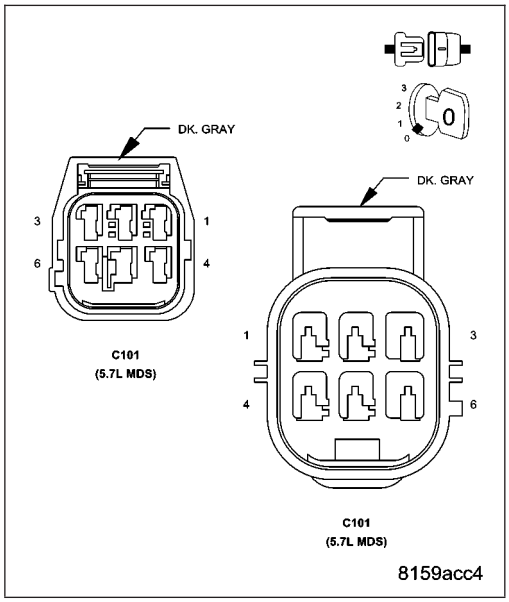

P3441-MDS SOLENOID 6 CIRCUIT

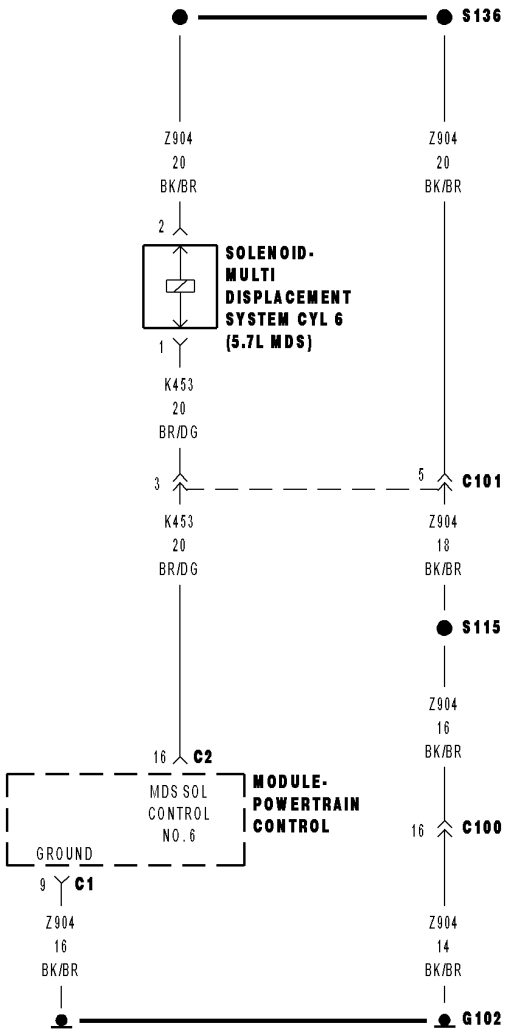

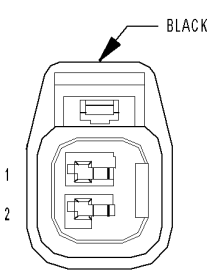

SOLENOID-
MULTI DISPLACEMENT
SYSTEM CYL 6
(5.7L MDS)

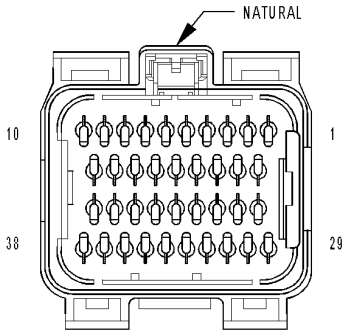

MODULE-
POWERTRAIN
CONTROL C2

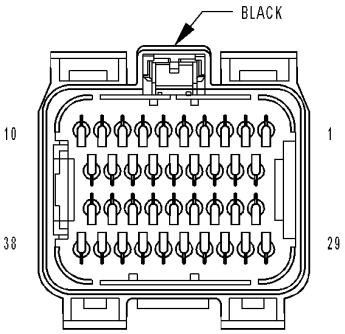

MODULE-
POWERTRAIN
CONTROL C1

81365e57

For a complete wiring diagram **Refer to Section 8W**.

Theory of Operation

When all criteria has been met, power is supplied to each MDS Solenoid when the engine is making a transition from 8 cylinder mode to 4 cylinder mode. By actuating the solenoid, oil pressure is raised to the pair of lifters that coincide with each particular solenoid. The oil pressure pushes in the locking pins that allows the lifter to collapse, decoupling the valves and camshaft.

- **When Monitored:**
  Transition from 8 to 4 cylinder mode.
- **Set Condition:**
  When the PCM recognizes a problem with the Solenoid Control circuit.

Possible Causes
(K453) MDS SOLENOID NO.6 CONTROL SHORT TO BATTERY VOLTAGE
(K453) MDS SOLENOID NO.6 CONTROL SHORT TO GROUND
(K453) MDS SOLENOID NO.6 CONTROL OPEN
(Z904) GROUND CIRCUIT OPEN
MDS SOLENOID NO.6
PCM

Always perform the Pre-Diagnostic Troubleshooting procedure before proceeding. (Refer to 9 - ENGINE - DIAGNOSIS AND TESTING).

Diagnostic Test

1. ACTIVE DTC

Ignition on, engine not running.
With a scan tool, read DTCs.

Is the DTC active at this time?

Yes >> Go To 2

No >> Refer to the INTERMITTENT CONDITION Diagnostic Procedure.
Perform the POWERTRAIN VERIFICATION TEST. (Refer to 9 - ENGINE - STANDARD PROCEDURE)

2. CHECKING PCM CONTROL SIDE FOR THE MDS SOLENOID

Turn the ignition off.
Disconnect the C101 harness connector.
Using a 12-volt test light, jumper from the (Z904) Ground Circuit and the (K453) MDS Solenoid No.6 Control Circuit in the C100 harness connector (PCM side).
Turn the ignition on.
With the scan tool, actuate the MDS Solenoid No.6.

Does the 12-volt test light flash on and off?

Yes >> Go To 3

No >> Go To 4

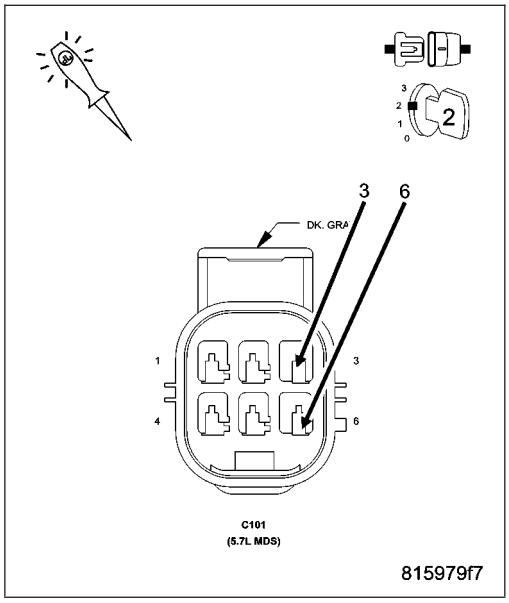

3. MDS SOLENOID RESISTANCE

Turn the ignition off.

Measure the resistance between the (Z904) Ground Circuit and the (K453) MDS Solenoid No.6 Control Circuit in the C101 harness connector (MDS side).

NOTE: It is important to follow the below temp/resistance values to ensure an accurate reading.

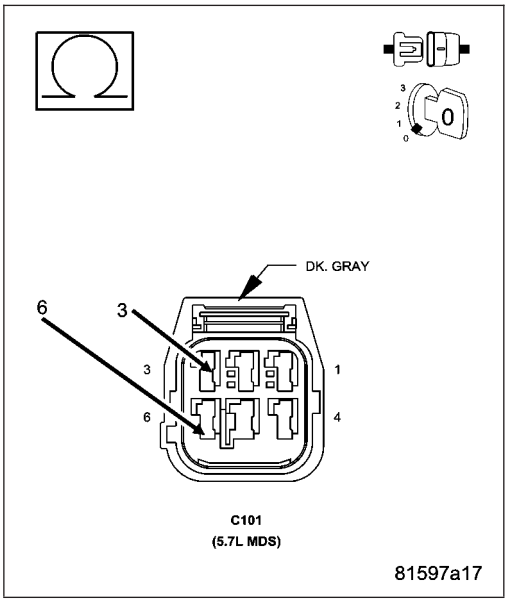

MDS SOLENOID RESISTANCE

TEMPERATURE VALUE ± 20° F	RESISTANCE (OHMS) ±.25 ohms
0° F	8.8 ohms
32° F	9.5 ohms
68° F	10.3 ohms
100° F	11 ohms
150° F	12.2 ohms
200° F	13.4 ohms
250° F	14.4 ohms
300° F	15.6 ohms

Is the resistance within an acceptable range?

Yes >> Go To 12

No >> Go To 8

4. (Z904) GROUND CIRCUIT OPEN (PCM SIDE)

Turn the ignition off.

Using a 12-volt test light connected to the 12-volts, probe the (Z904) Ground circuit in the C101 harness connector (PCM side).

Does the test light illuminate brightly?

Yes >> Go To 5

No >> Repair the open in the (Z904) Ground circuit.
Perform the POWERTRAIN VERIFICATION TEST. (Refer to 9 - ENGINE - STANDARD PROCEDURE)

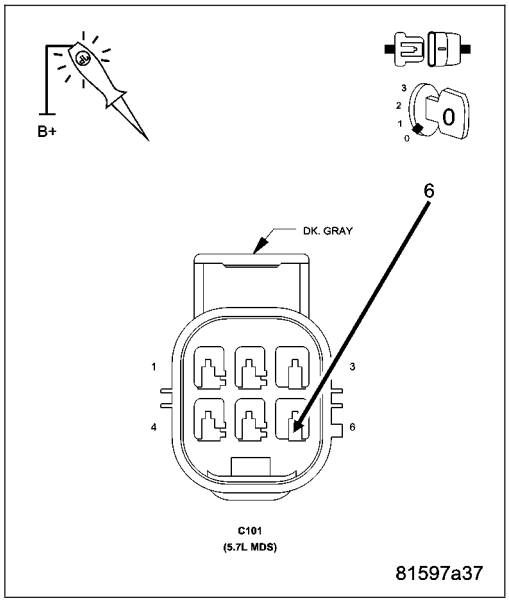

5. (K453) MDS SOLENOID NO.6 CONTROL CIRCUIT SHORTED TO BATTERY VOLTAGE (PCM SIDE)

Disconnect the PCM harness connector.

Ignition on, engine not running.

Measure the voltage on the (K453) MDS Solenoid No.6 Control circuit in the C101 harness connector.

Does the voltmeter indicate voltage present?

Yes >> Repair the short to battery voltage in the (K453) MDS Solenoid No.6 Control circuit between the PCM harness connector and C100 harness connector.
Perform the POWERTRAIN VERIFICATION TEST. (Refer to 9 - ENGINE - STANDARD PROCEDURE)

No >> Go To 10

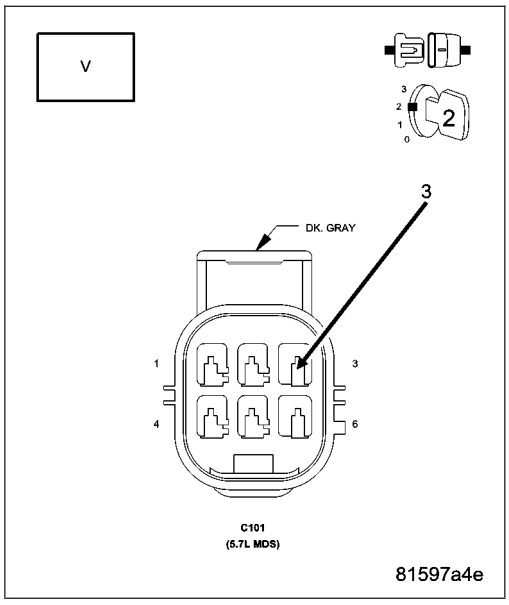

6. (K453) MDS SOLENOID NO.6 CONTROL CIRCUIT SHORTED TO GROUND (PCM SIDE)

Turn the ignition off.

Measure the resistance between ground and the (K453) MDS Solenoid No.6 Control circuit in the C101 harness connector.

Is the resistance below 100 ohms?

Yes >> Repair the short to ground in the (K453) MDS Solenoid No.6 Control circuit between the PCM harness connector and the C101 harness connector.

Perform the POWERTRAIN VERIFICATION TEST. (Refer to 9 - ENGINE - STANDARD PROCEDURE)

No >> Go To 7

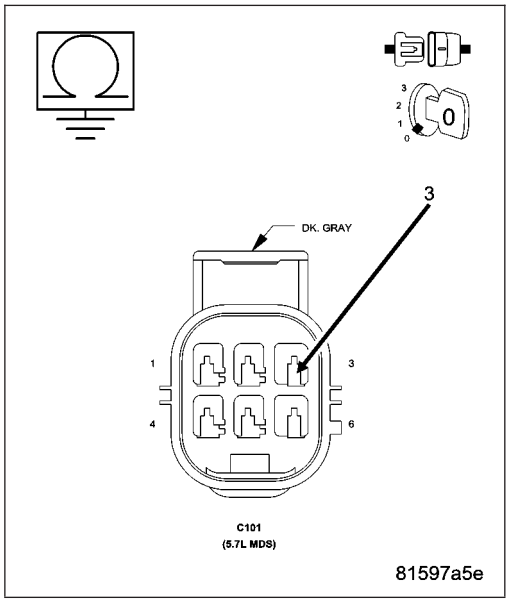

7. (K453) MDS SOLENOID NO.6 CONTROL CIRCUIT OPEN (PCM SIDE)

CAUTION: Do not probe the PCM harness connectors. Probing the PCM harness connectors will damage the PCM terminals resulting in poor terminal to pin connection. Install Miller Special Tool #8815 to perform diagnosis.

Measure the resistance of the (K453) MDS Solenoid No.6 Control circuit from the C101 harness connector to the appropriate terminal of special tool #8815.

Is the resistance below 5.0 ohms?

Yes >> Replace and program the Powertrain Control Module in accordance with the service information.

Perform the POWERTRAIN VERIFICATION TEST. (Refer to 9 - ENGINE - STANDARD PROCEDURE)

No >> Repair the open in the (K453) MDS Solenoid No.6 Control circuit between the C101 harness connector and the PCM harness connector.

Perform the POWERTRAIN VERIFICATION TEST. (Refer to 9 - ENGINE - STANDARD PROCEDURE)

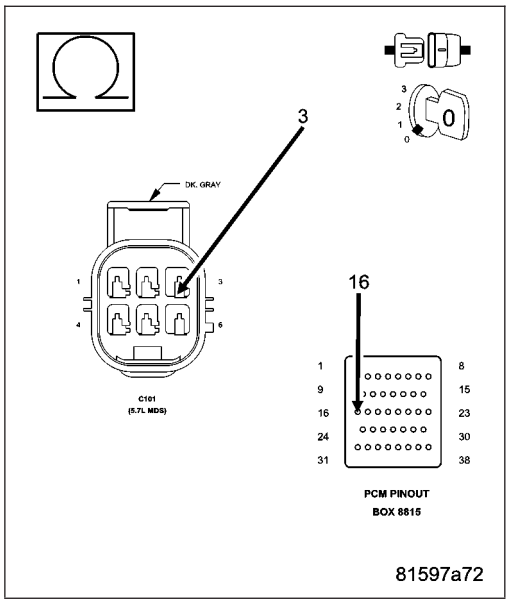

8. (Z904) GROUND CIRCUIT OPEN (MDS SIDE)

Turn the ignition off.

Gain access to the MDS Solenoid.

Disconnect the MDS harness connector.

Measure the resistance of the (Z904) Ground Circuit between the C101 harness connector and the MDS harness connector.

Is the resistance below 5.0 ohms?

Yes >> Go To 9

No >> Repair the open in the (Z904) Ground circuit.
Perform the POWERTRAIN VERIFICATION TEST. (Refer to 9 - ENGINE - STANDARD PROCEDURE)

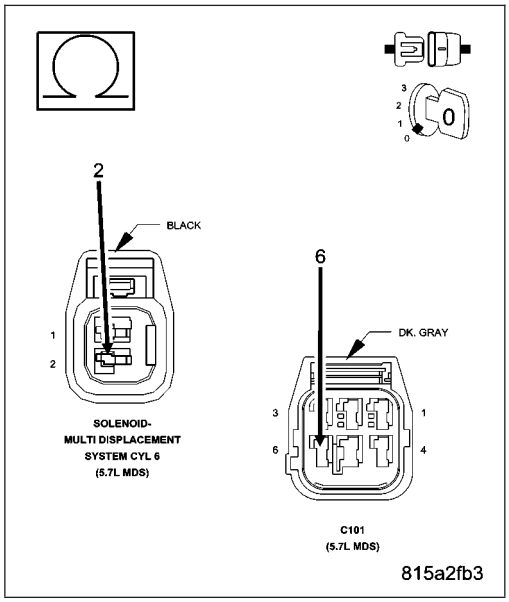

9. (K453) MDS SOLENOID NO.6 CONTROLCIRCUIT SHORTED TO BATTERY VOLTAGE (MDS SIDE)

Ignition on, engine not running.

Measure the voltage on the (K453) MDS Solenoid No.6 Control circuit in the MDS Solenoid No.6 connector.

Does the voltmeter indicate voltage present?

Yes >> Repair the short to battery voltage in the (K453) MDS Solenoid No.6 Control circuit between the C101 harness connector and the MDS connector.
Perform the POWERTRAIN VERIFICATION TEST. (Refer to 9 - ENGINE - STANDARD PROCEDURE)

No >> Go To 10

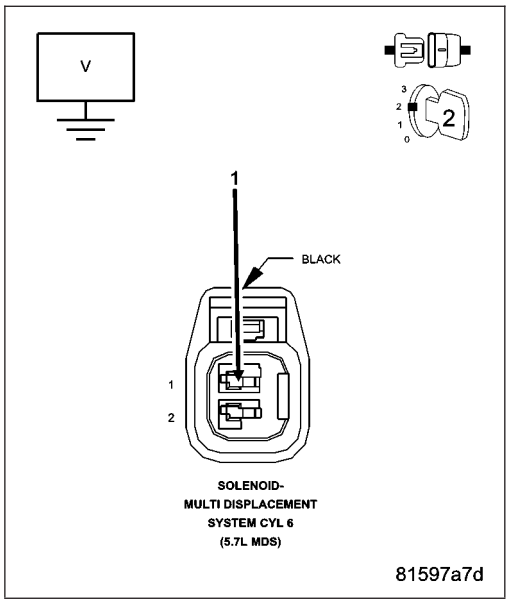

10. (K453) MDS SOLENOID NO.6 CONTROL CIRCUIT SHORTED TO GROUND (MDS SIDE)

Turn the ignition off.

Measure the resistance between ground and the (K453) MDS Solenoid No.6 Control circuit in the MDS Solenoid No.6 harness connector.

Is the resistance below 100 ohms?

Yes >> Repair the short to ground in the (K453) MDS Solenoid No.6 Control circuit between the C101 harness connector and the MDS harness connector.

Perform the POWERTRAIN VERIFICATION TEST. (Refer to 9 - ENGINE - STANDARD PROCEDURE)

No >> Go To 11

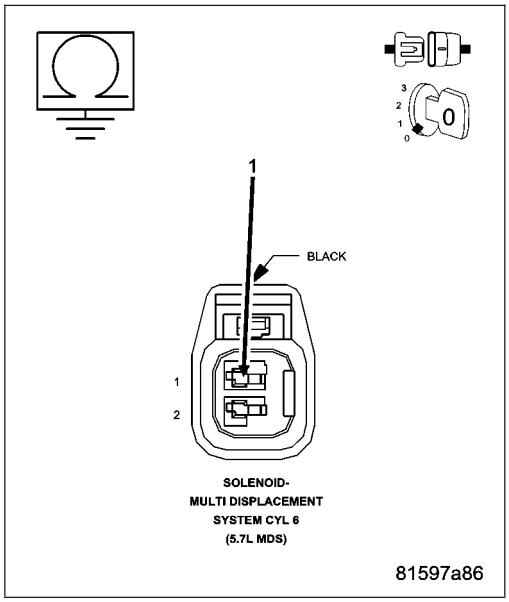

11. (K453) MDS SOLENOID NO.6 CONTROL CIRCUIT OPEN (MDS SIDE)

Measure the resistance of the (K453) MDS Solenoid No.6 Control circuit from the MDS Solenoid No.6 harness connector to C101 harness connector.

Is the resistance below 5.0 ohms?

Yes >> Replace the MDS Solenoid in accordance with the Service Information.

Perform the POWERTRAIN VERIFICATION TEST. (Refer to 9 - ENGINE - STANDARD PROCEDURE)

No >> Repair the open in the (K453) MDS Solenoid No.6 Control circuit between the C101 harness connector and the MDS harness connector.

Perform the POWERTRAIN VERIFICATION TEST. (Refer to 9 - ENGINE - STANDARD PROCEDURE)

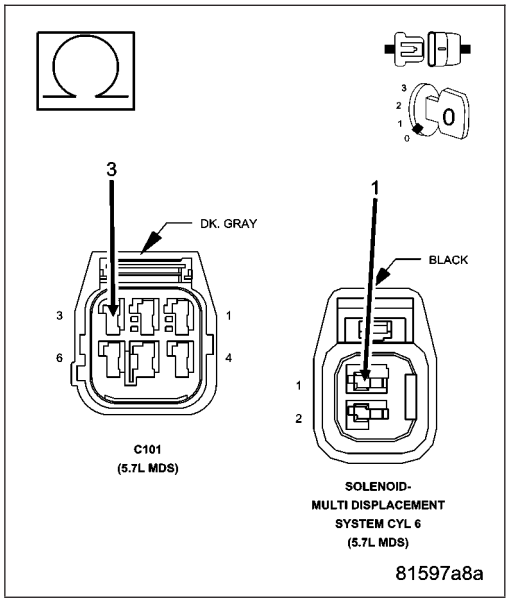

12. CHECKING HARNESS CONNECTOR C100 AND GROUND CONNECTION G102

Inspect the C100 harness connector.

Ensure the Ground terminal is fastened securely into the connector and there are no signs of corrosion or damage.

Check wiring to terminal connection. Look for an internal broken wire under the insulation.

Inspect the G102 Ground for a tight, clean connection.

Were any problems found?

Yes >> Repair as necessary.
Perform the POWERTRAIN VERIFICATION TEST. (Refer to 9 - ENGINE - STANDARD PROCEDURE)

No >> Refer to the INTERMITTENT CONDITION Diagnostic Procedure.
Perform the POWERTRAIN VERIFICATION TEST. (Refer to 9 - ENGINE - STANDARD PROCEDURE)

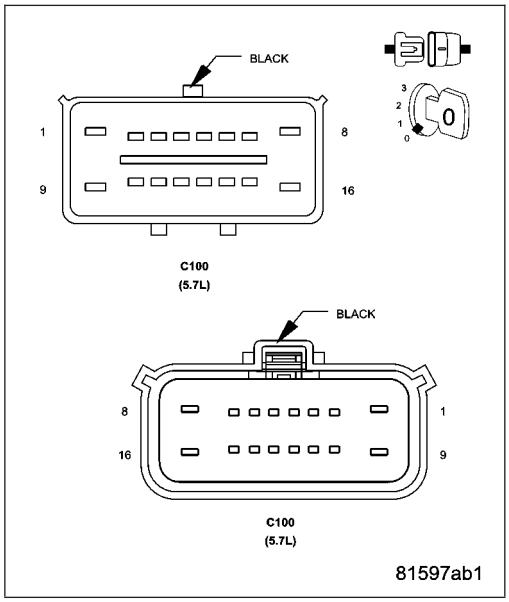

P3449-MDS SOLENOID 7 CIRCUIT

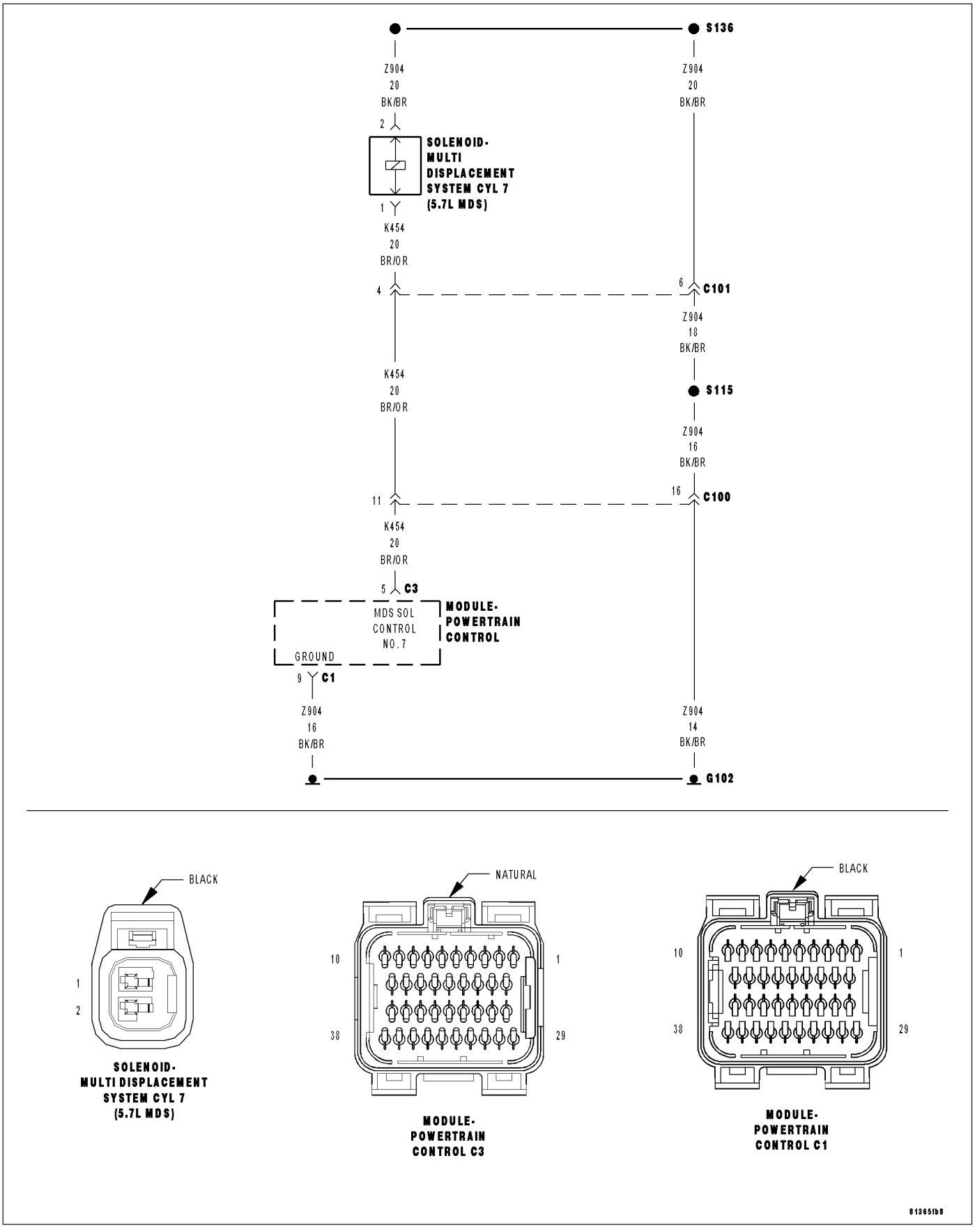

For a complete wiring diagram **Refer to Section 8W**.

Theory of Operation

When all criteria has been met, power is supplied to each MDS Solenoid when the engine is making a transition from 8 cylinder mode to 4 cylinder mode. By actuating the solenoid, oil pressure is raised to the pair of lifters that coincide with each particular solenoid. The oil pressure pushes in the locking pins that allows the lifter to collapse, decoupling the valves and camshaft.

- **When Monitored:**
  Transition from 8 to 4 cylinder mode.
- **Set Condition:**
  When the PCM recognizes a problem with the Solenoid Control circuit.

Possible Causes
(K454) MDS SOLENOID NO.7 CONTROL SHORT TO BATTERY VOLTAGE
(K454) MDS SOLENOID NO.7 CONTROL SHORT TO GROUND
(K454) MDS SOLENOID NO.7 CONTROL OPEN
(Z904) GROUND CIRCUIT OPEN
MDS SOLENOID NO.7
PCM

Always perform the Pre-Diagnostic Troubleshooting procedure before proceeding. (Refer to 9 - ENGINE - DIAGNOSIS AND TESTING).

Diagnostic Test

1. ACTIVE DTC

Ignition on, engine not running.
With a scan tool, read DTCs.

Is the DTC active at this time?

Yes >> Go To 2

No >> Refer to the INTERMITTENT CONDITION Diagnostic Procedure.
Perform the POWERTRAIN VERIFICATION TEST. (Refer to 9 - ENGINE - STANDARD PROCEDURE)

2. CHECKING PCM CONTROL SIDE FOR THE MDS SOLENOID

Turn the ignition off.
Disconnect the C100 harness connector.
Using a 12-volt test light, jumper from the (Z904) Ground Circuit and the (K454) MDS Solenoid No.7 Control Circuit in the C100 harness connector (PCM side).
Turn the ignition on.
With the scan tool, actuate the MDS Solenoid No.7.

Does the 12-volt test light flash on and off?

Yes >> Go To 3

No >> Go To 4

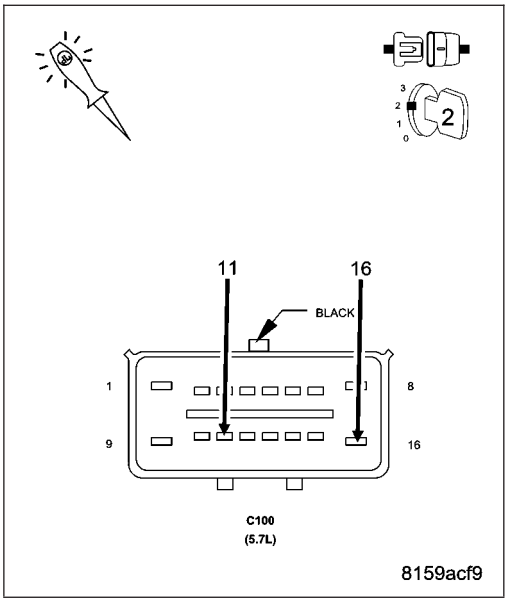

3. MDS SOLENOID RESISTANCE

Turn the ignition off.

Measure the resistance between the (Z904) Ground Circuit and the (K454) MDS Solenoid No.7 Control Circuit in the C100 harness connector (MDS side).

NOTE: It is important to follow the below temp/resistance values to ensure an accurate reading.

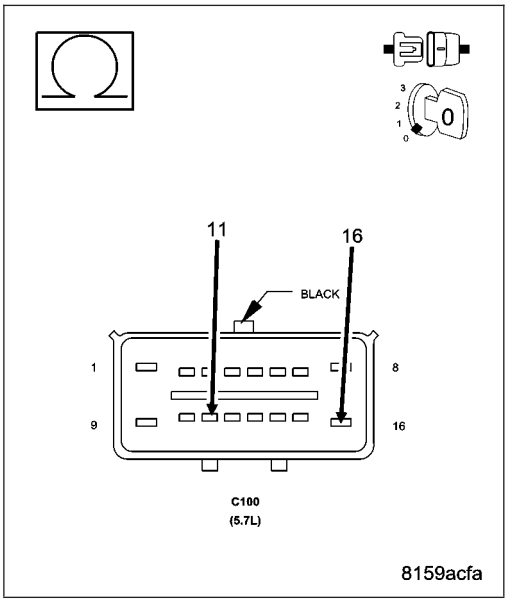

MDS SOLENOID RESISTANCE

TEMPERATURE VALUE ± 20° F	RESISTANCE (OHMS) ±.25 ohms
0° F	8.8 ohms
32° F	9.5 ohms
68° F	10.3 ohms
100° F	11 ohms
150° F	12.2 ohms
200° F	13.4 ohms
250° F	14.4 ohms
300° F	15.6 ohms

Is the resistance within an acceptable range?

Yes >> Go To 12

No >> Go To 8

4. (Z904) GROUND CIRCUIT OPEN (PCM SIDE)

Turn the ignition off.

Using a 12-volt test light connected to the 12-volts, probe the (Z904) Ground circuit in the C100 harness connector (PCM side).

Does the test light illuminate brightly?

Yes >> Go To 5

No >> Repair the open in the (Z904) Ground circuit.
Perform the POWERTRAIN VERIFICATION TEST. (Refer to 9 - ENGINE - STANDARD PROCEDURE)

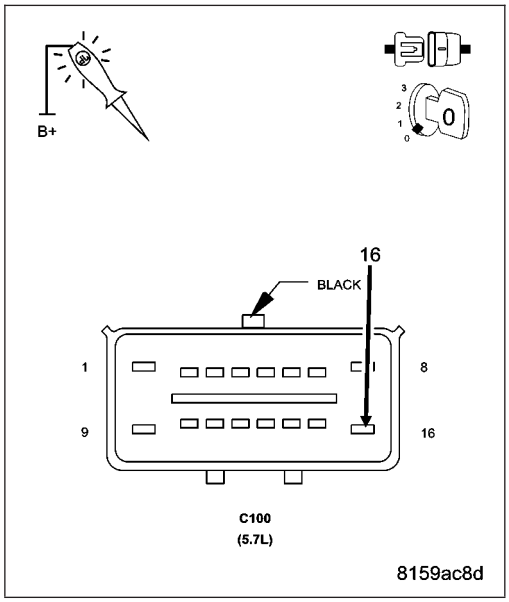

5. (K454) MDS SOLENOID NO.7 CONTROL CIRCUIT SHORTED TO BATTERY VOLTAGE (PCM SIDE)

Disconnect the PCM harness connector.

Ignition on, engine not running.

Measure the voltage on the (K454) MDS Solenoid No.7 Control circuit in the C100 harness connector.

Does the voltmeter indicate voltage present?

Yes >> Repair the short to battery voltage in the (K454) MDS Solenoid No.7 Control circuit between the PCM harness connector and C100 harness connector.
Perform the POWERTRAIN VERIFICATION TEST. (Refer to 9 - ENGINE - STANDARD PROCEDURE)

No >> Go To 10

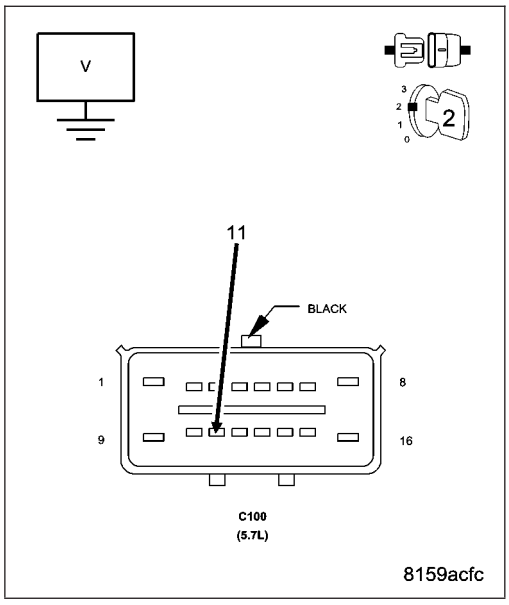

6. (K454) MDS SOLENOID NO.7 CONTROL CIRCUIT SHORTED TO GROUND (PCM SIDE)

Turn the ignition off.

Measure the resistance between ground and the (K454) MDS Solenoid No.7 Control circuit in the C100 harness connector.

Is the resistance below 100 ohms?

Yes >> Repair the short to ground in the (K454) MDS Solenoid No.7 Control circuit between the PCM harness connector and the C100 harness connector.

Perform the POWERTRAIN VERIFICATION TEST. (Refer to 9 - ENGINE - STANDARD PROCEDURE)

No >> Go To 7

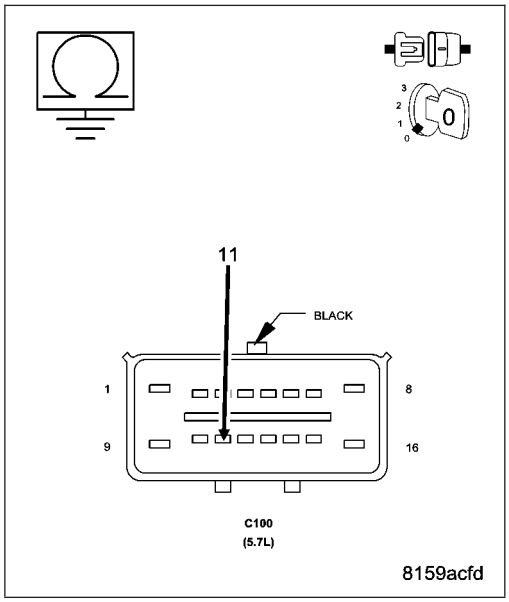

7. (K454) MDS SOLENOID NO.7 CONTROL CIRCUIT OPEN (PCM SIDE)

CAUTION: Do not probe the PCM harness connectors. Probing the PCM harness connectors will damage the PCM terminals resulting in poor terminal to pin connection. Install Miller Special Tool #8815 to perform diagnosis.

Measure the resistance of the (K454) MDS Solenoid No.7 Control circuit from the C100 harness connector to the appropriate terminal of special tool #8815.

Is the resistance below 5.0 ohms?

Yes >> Replace and program the Powertrain Control Module in accordance with the service information.

Perform the POWERTRAIN VERIFICATION TEST. (Refer to 9 - ENGINE - STANDARD PROCEDURE)

No >> Repair the open in the (K454) MDS Solenoid No.7 Control circuit between the C100 harness connector and the PCM harness connector.

Perform the POWERTRAIN VERIFICATION TEST. (Refer to 9 - ENGINE - STANDARD PROCEDURE)

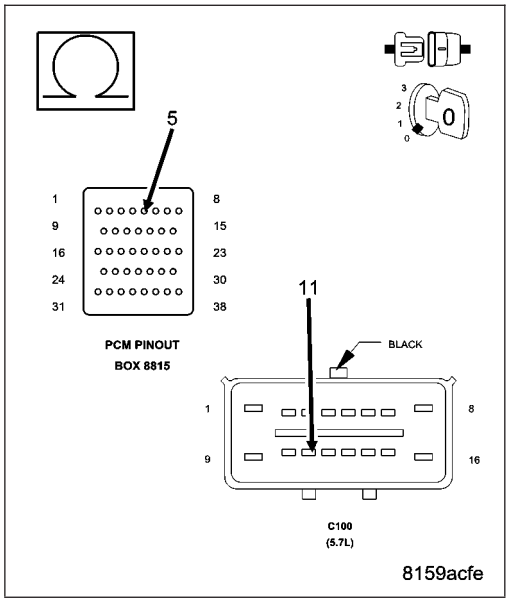

8. (Z904) GROUND CIRCUIT OPEN (MDS SIDE)

Turn the ignition off.

Gain access to the MDS Solenoid.

Disconnect the MDS harness connector.

Measure the resistance of the (Z904) Ground Circuit between the C100 harness connector and the MDS harness connector.

Is the resistance below 5.0 ohms?

Yes >> Go To 9

No >> Repair the open in the (Z904) Ground circuit.
Perform the POWERTRAIN VERIFICATION TEST. (Refer to 9 - ENGINE - STANDARD PROCEDURE)

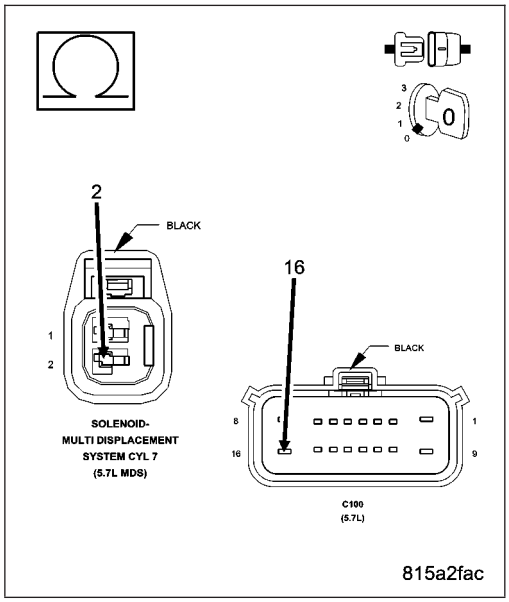

9. (K454) MDS SOLENOID NO.7 CONTROL CIRCUIT SHORTED TO BATTERY VOLTAGE (MDS SIDE)

Ignition on, engine not running.

Measure the voltage on the (K454) MDS Solenoid No.7 Control circuit in the MDS Solenoid No.7 connector.

Does the voltmeter indicate voltage present?

Yes >> Repair the short to battery voltage in the (K454) MDS Solenoid No.7 Control circuit between the C100 harness connector and the MDS connector.
Perform the POWERTRAIN VERIFICATION TEST. (Refer to 9 - ENGINE - STANDARD PROCEDURE)

No >> Go To 10

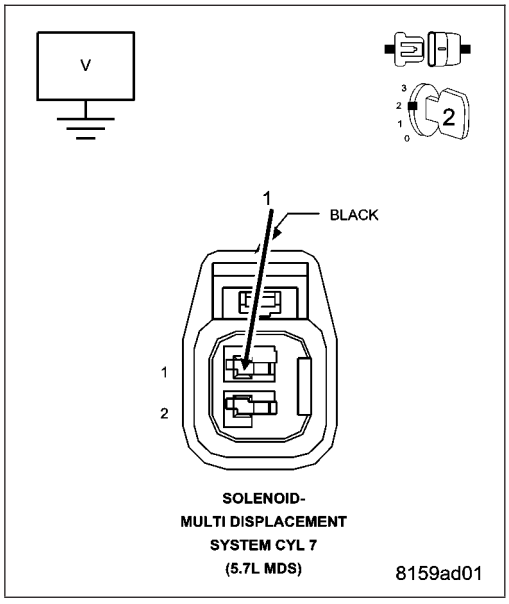

10. (K454) MDS SOLENOID NO.7 CONTROL CIRCUIT SHORTED TO GROUND (MDS SIDE)

Turn the ignition off.

Measure the resistance between ground and the (K454) MDS Solenoid No.7 Control circuit in the MDS Solenoid No.7 harness connector.

Is the resistance below 100 ohms?

Yes >> Repair the short to ground in the (K454) MDS Solenoid No.7 Control circuit between the C100 harness connector and the MDS harness connector.

Perform the POWERTRAIN VERIFICATION TEST. (Refer to 9 - ENGINE - STANDARD PROCEDURE)

No >> Go To 11

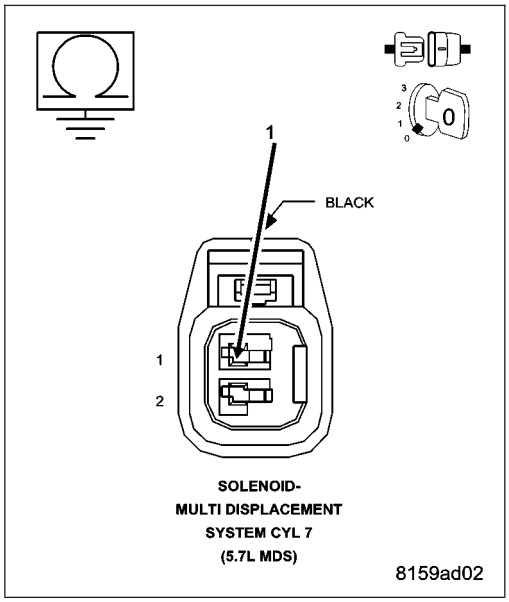

11. (K454) MDS SOLENOID NO.7 CONTROL CIRCUIT OPEN (MDS SIDE)

Measure the resistance of the (K454) MDS Solenoid No.7 Control circuit from the MDS Solenoid No.7 harness connector to C100 harness connector.

Is the resistance below 5.0 ohms?

Yes >> Replace the MDS Solenoid in accordance with the Service Information.

Perform the POWERTRAIN VERIFICATION TEST. (Refer to 9 - ENGINE - STANDARD PROCEDURE)

No >> Repair the open in the (K454) MDS Solenoid No.7 Control circuit between the C100 harness connector and the MDS harness connector.

Perform the POWERTRAIN VERIFICATION TEST. (Refer to 9 - ENGINE - STANDARD PROCEDURE)

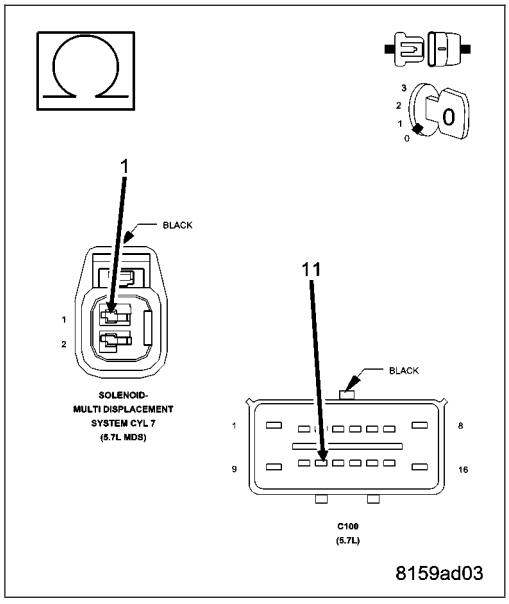

12. CHECKING HARNESS CONNECTOR C101 AND GROUND CONNECTION G102

Inspect the C101 harness connector.

Ensure the Ground terminal and Control terminal are fastened securely into the connector and there are no signs of corrosion or damage.

Check wiring to terminal connection. Look for an internal broken wire under the insulation.

Inspect the G102 Ground for a tight, clean connection.

Were any problems found?

Yes >> Repair as necessary.
Perform the POWERTRAIN VERIFICATION TEST. (Refer to 9 - ENGINE - STANDARD PROCEDURE)

No >> Refer to the INTERMITTENT CONDITION Diagnostic Procedure.
Perform the POWERTRAIN VERIFICATION TEST. (Refer to 9 - ENGINE - STANDARD PROCEDURE)

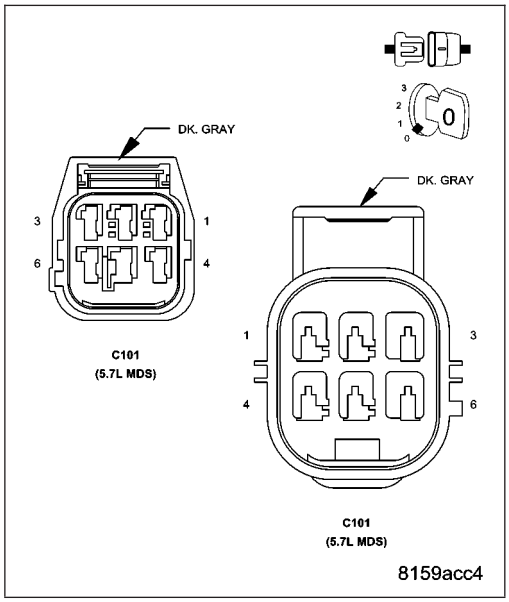

P3497-MDS RATIONALITY BANK 2

For a complete wiring diagram **Refer to Section 8W**.

Theory of Operation

When all criteria has been met, power is supplied to each MDS Solenoid when the engine is making a transition from 8 cylinder mode to 4 cylinder mode. By actuating the solenoid, oil pressure is raised to the pair of lifters that coincide with each particular solenoid. The oil pressure pushes in the locking pins that allows the lifter to collapse, decoupling the valves and camshaft.

- **When Monitored:**
  Transition from 4 to 8 cylinder mode.
- **Set Condition:**
  O2 sensor readings on Bank 2 side indicate a lean condition while in 4 cylinder mode.

Possible Causes
INSUFFICIENT OIL PRESSURE ACTING ON THE LIFTER LOCKING PINS
OIL PASSAGES RESTRICTED
LIFTER
MDS SOLENOID

Always perform the Pre-Diagnostic Troubleshooting procedure before proceeding (Refer to 9 - ENGINE - DIAGNOSIS AND TESTING).

Diagnostic Test

1. ACTIVE DTC

Ignition on, engine not running.

With a scan tool, read DTCs.

NOTE: Diagnose any Deactivation or Oil Pressure DTCs before continuing with this test.

Is the DTC active at this time?

Yes >> Go To 2

No >> Refer to the INTERMITTENT CONDITION Diagnostic Procedure.
Perform the POWERTRAIN VERIFICATION TEST. (Refer to 9 - ENGINE - STANDARD PROCEDURE)

2. MDS SOLENOID 4

Turn the ignition off.

Remove the Intake Manifold per Service Information.

Turn the ignition on.

With the scan tool actuate the MDS Solenoid 4.

Can you feel and hear the Solenoid Actuating?

Yes >> Go To 3

No >> Remove the Solenoid and check for any debris that may be blocking the oil passages to the Solenoid. If the passages are clogged, clean the passages and replace the MDS Solenoid 4. If the passages are not clogged with debris, replace the MDS Solenoid 4.
Perform the POWERTRAIN VERIFICATION TEST. (Refer to 9 - ENGINE - STANDARD PROCEDURE)

3. MDS SOLENOID 6

With the scan tool actuate the MDS Solenoid 6.

Can you feel and hear the Solenoid Actuating?

Yes >> Go To 4

No >> Remove the Solenoid and check for any debris that may be blocking the oil passages to the Solenoid. If the passages are restricted, clean the passages and replace the MDS Solenoid 6. If the passages are unable to be cleaned out, replacing the engine block may be necessary. If the passages are not clogged with debris, replace the MDS Solenoid 6.

Perform the POWERTRAIN VERIFICATION TEST. (Refer to 9 - ENGINE - STANDARD PROCEDURE)

4. OIL PASSAGES RESTRICTED

Turn the ignition off.

Remove both Solenoids on Bank 2 of the engine block.

Remove the Bank 2 Cylinder Head per Service Information.

Remove the each pair of lifters for Cylinders 4 and 6.

Inspect the oil passages to the Solenoids and from the Solenoids to the lifters.

Are the passages blocked?

Yes >> Clean the oil passages as necessary. If the entire engine is restricted disassembly of the entire engine block may be necessary.

Perform the POWERTRAIN VERIFICATION TEST. (Refer to 9 - ENGINE - STANDARD PROCEDURE)

No >> Replace both sets of lifters if no other possible causes remain.

Perform the POWERTRAIN VERIFICATION TEST. (Refer to 9 - ENGINE - STANDARD PROCEDURE)

U0001-CAN C BUS

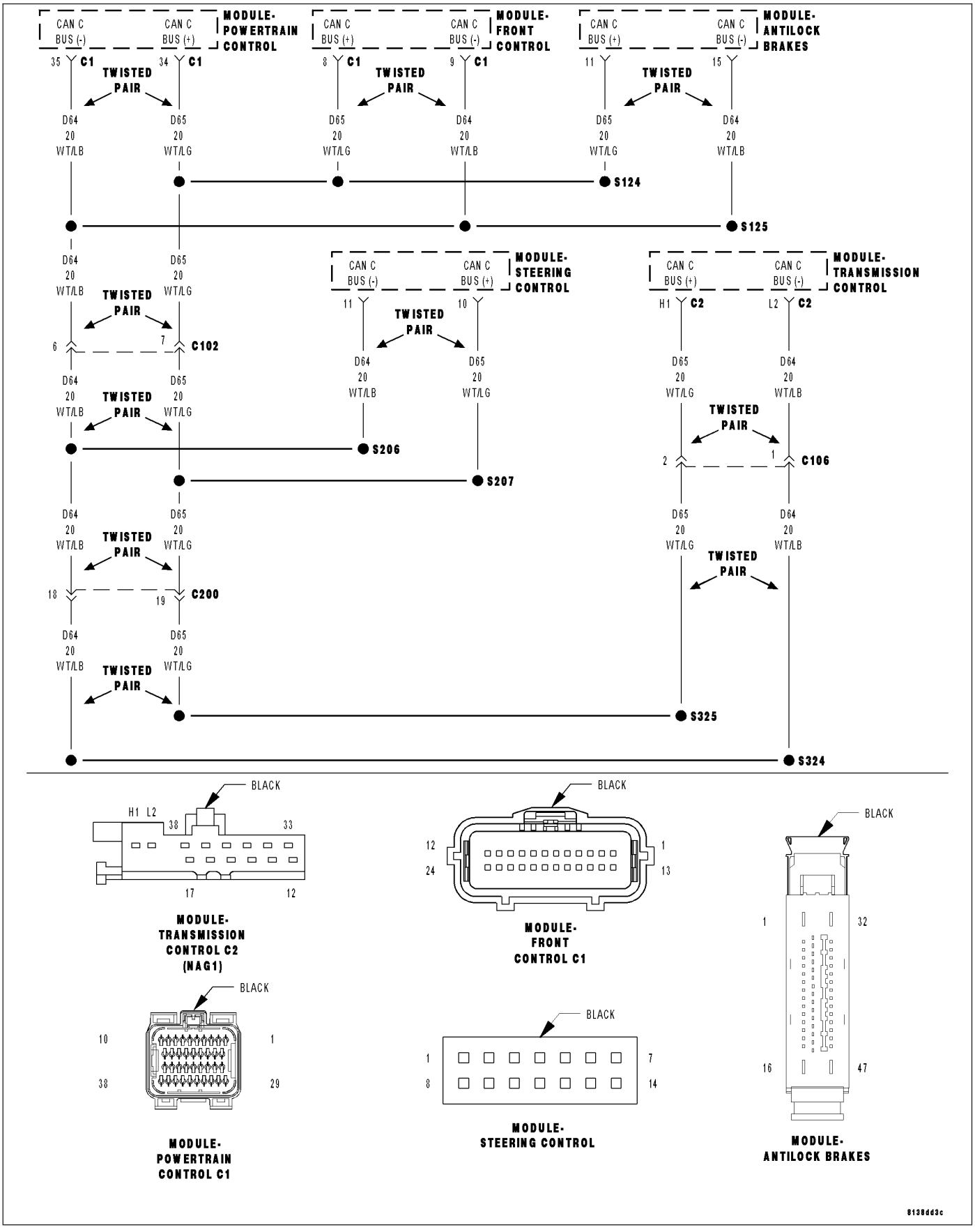

For a complete wiring diagram **Refer to Section 8W**.

- **When Monitored:**
  Ignition run time is greater than 1 second. Battery voltage between 9 and 16 volts. Engine run time greater than 3 seconds.
- **Set Condition:**
  The PCM loses communication over the CAN C Bus circuit. The circuit is continuously monitored.

Possible Causes
CAN C BUS FAILURE OPEN OR SHORTED CONDITION
PCM

Always perform the Pre-Diagnostic Troubleshooting procedure before proceeding. (Refer to 9 - ENGINE - DIAGNOSIS AND TESTING).

Refer to 8 - ELECTRICAL/ELECTRONIC CONTROL MODULES - DIAGNOSIS AND TESTING for diagnostic procedures and for further possible causes.

Diagnostic Test

1. ACTIVE DTC

Ignition on, engine not running.

With a scan tool, read FCM DTCs.

Is the DTC active at this time?

Yes >> Refer to 8 - ELECTRICAL/ELECTRONIC CONTROL MODULES - DIAGNOSIS AND TESTING for diagnostic procedures and for further possible causes.

No >> Refer to the INTERMITTENT CONDITION Diagnostic Procedure.
Perform the POWERTRAIN VERIFICATION TEST. (Refer to 9 - ENGINE - STANDARD PROCEDURE)

U0101-LOST COMMUNICATION WITH TCM

For a complete wiring diagram **Refer to Section 8W**.

- **When Monitored:**
  Ignition run time is greater than 1 second. Battery voltage between 9 and 16 volts. Engine run time greater than 3 seconds.
- **Set Condition:**
  The PCM doesn't receive a Bus Message from the Transmission Control Module for 7 consecutive seconds. The circuit is continuously monitored.

Possible Causes
CAN C BUS FAILURE OPEN OR SHORTED CONDITION
PCM

Refer to 8 - ELECTRICAL/ELECTRONIC CONTROL MODULES - DIAGNOSIS AND TESTING for diagnostic procedures and for further possible causes.

Diagnostic Test

1. ACTIVE DTC

Ignition on, engine not running.

With a scan tool, read PCM DTCs.

Is the DTC active at this time?

Yes >> Refer to 8 - ELECTRICAL/ELECTRONIC CONTROL MODULES - DIAGNOSIS AND TESTING for diagnostic procedures and for further possible causes.

No >> Refer to the INTERMITTENT CONDITION Diagnostic Procedure.
Perform the POWERTRAIN VERIFICATION TEST. (Refer to 9 - ENGINE - STANDARD PROCEDURE)

U0103-LOST COMMUNICATION WITH ELECTRIC GEAR SHIFT MODULE

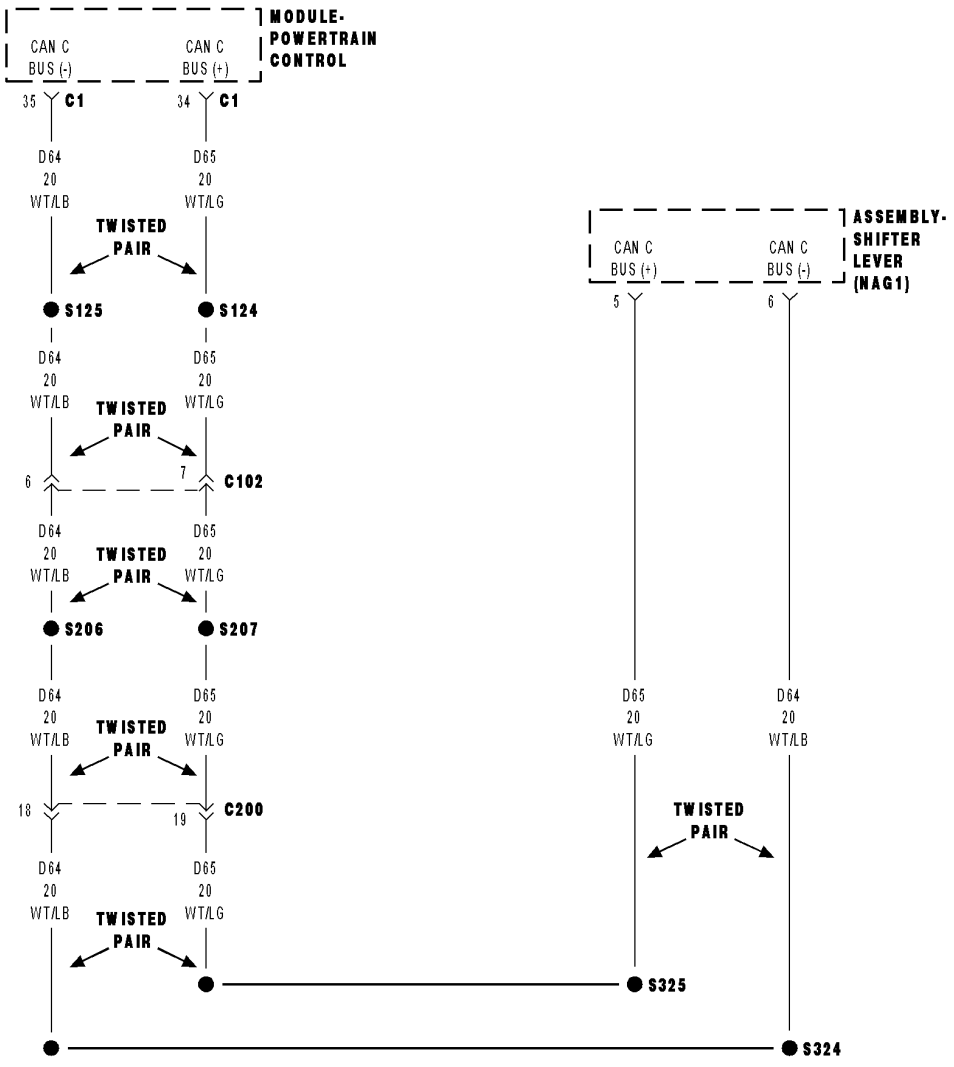

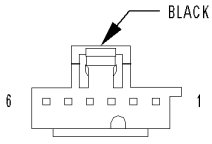

ASSEMBLY-
SHIFTER LEVER
(NAG1)

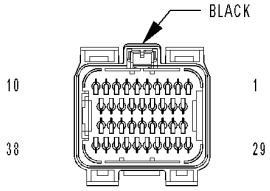

MODULE-
POWERTRAIN
CONTROL C1

813902e7

For a complete wiring diagram**Refer to Section 8W**.

- **When Monitored:**
  Ignition run time is greater than 1 second. Battery voltage between 9 and 16 volts. Engine run time greater than 3 seconds.
- **Set Condition:**
  The PCM doesn't receive a Electric Gear Shift Module message over the CAN C circuit. The circuit is continuously monitored.

Possible Causes
CAN C BUS FAILURE OPEN OR SHORTED CONDITION
ELECTRIC GEAR SHIFT MODULE
PCM

Refer to 8 - ELECTRICAL/ELECTRONIC CONTROL MODULES - DIAGNOSIS AND TESTING for diagnostic procedures and for further possible causes.

Diagnostic Test

1. ACTIVE DTC

Ignition on, engine not running.
With a scan tool, read PCM DTCs.

Is the DTC active at this time?

Yes >> Refer to 8 - ELECTRICAL/ELECTRONIC CONTROL MODULES - DIAGNOSIS AND TESTING for diagnostic procedures and for further possible causes.

No >> Refer to the INTERMITTENT CONDITION Diagnostic Procedure.
Perform the POWERTRAIN VERIFICATION TEST. (Refer to 9 - ENGINE - STANDARD PROCEDURE)

U0121-LOST COMMUNICATION WITH ANTI-LOCK BRAKE MODULE

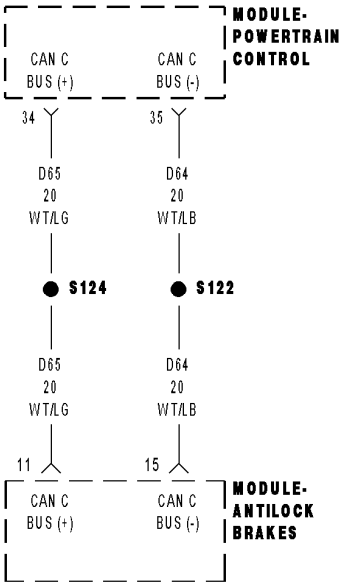

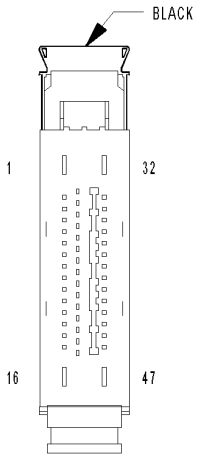

MODULE-
ANTILOCK BRAKES

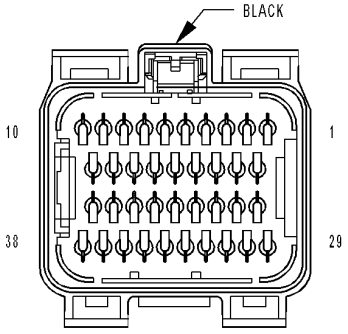

MODULE-
POWERTRAIN
CONTROL C1

8138dd6c

For a complete wiring diagram**Refer to Section 8W**.

- **When Monitored:**
  Ignition run time is greater than 1 second. Battery voltage between 9 and 16 volts. Engine run time greater than 3 seconds.
- **Set Condition:**
  The PCM doesn't receive an ABS message over the CAN C circuit for 7 consecutive seconds. The circuit is continuously monitored.

Possible Causes
CAN C BUS FAILURE OPEN OR SHORTED CONDITION
ABS MODULE
PCM

Refer to 8 - ELECTRICAL/ELECTRONIC CONTROL MODULES - DIAGNOSIS AND TESTING for diagnostic procedures and for further possible causes.

Diagnostic Test

1. ACTIVE DTC

Ignition on, engine not running.
With a scan tool, read PCM DTCs.

Is the DTC active at this time?

Yes >> Refer to 8 - ELECTRICAL/ELECTRONIC CONTROL MODULES - DIAGNOSIS AND TESTING for diagnostic procedures and for further possible causes.

No >> Refer to the INTERMITTENT CONDITION Diagnostic Procedure.
Perform the POWERTRAIN VERIFICATION TEST. (Refer to 9 - ENGINE - STANDARD PROCEDURE)

U0141-LOST COMMUNICATION WITH FRONT CONTROL MODULE

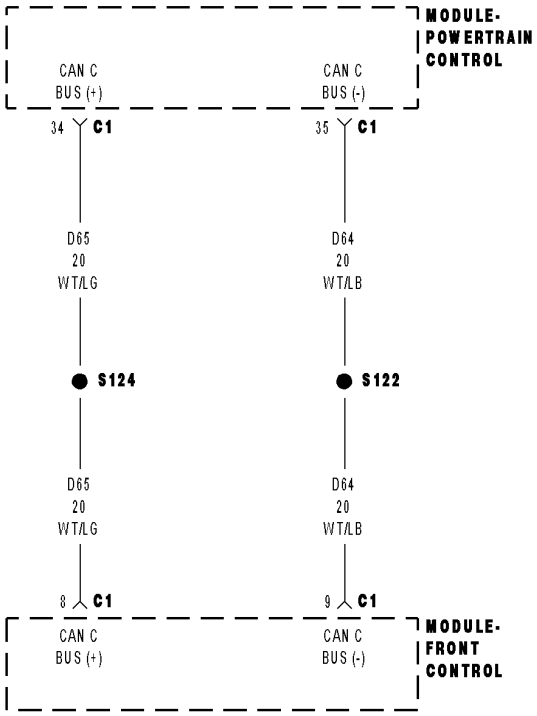

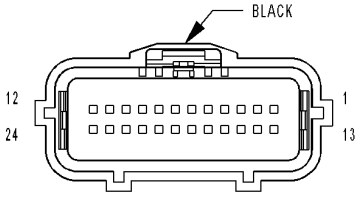

MODULE-
FRONT
CONTROL C1

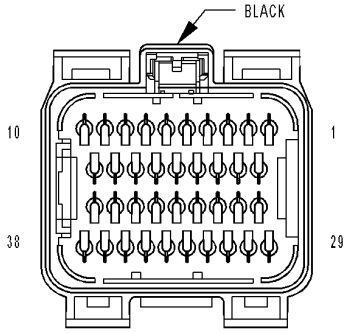

MODULE-
POWERTRAIN
CONTROL C1

8138dd8a

For a complete wiring diagram **Refer to Section 8W**.

- **When Monitored:**
  Ignition run time is greater than 1 second. Battery voltage between 9 and 16 volts.
- **Set Condition:**
  The PCM doesn't receive a FCM message over the CAN C circuit for 7 consecutive seconds. The circuit is continuously monitored.

Possible Causes
CAN C BUS FAILURE OPEN OR SHORTED CONDITION
FRONT CONTROL MODULE
PCM

Refer to 8 - ELECTRICAL/ELECTRONIC CONTROL MODULES - DIAGNOSIS AND TESTING for diagnostic procedures and for further possible causes.

Diagnostic Test

1. ACTIVE DTC

Ignition on, engine not running.
With a scan tool, read PCM DTCs.

Is the DTC active at this time?

Yes >> Refer to 8 - ELECTRICAL/ELECTRONIC CONTROL MODULES - DIAGNOSIS AND TESTING for diagnostic procedures and for further possible causes.

No >> Refer to the INTERMITTENT CONDITION Diagnostic Procedure.
Perform the POWERTRAIN VERIFICATION TEST. (Refer to 9 - ENGINE - STANDARD PROCEDURE)

U0155-LOST COMMUNICATION WITH CLUSTER/CCN

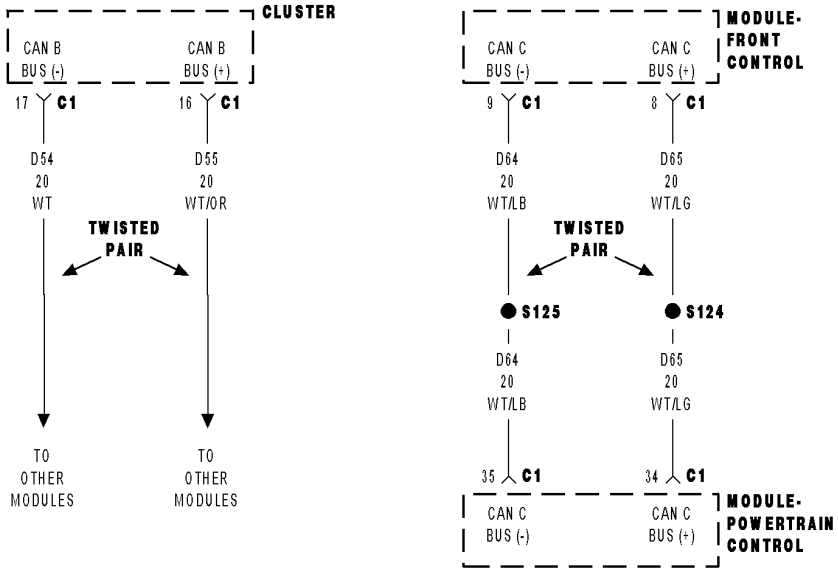

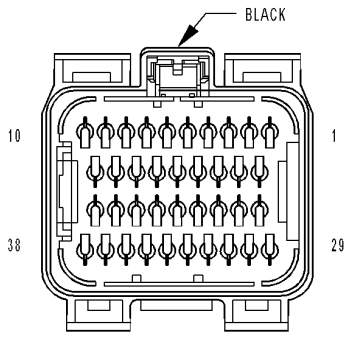

MODULE-POWERTRAIN CONTROL C1

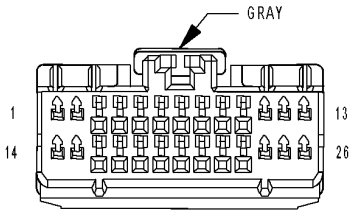

CLUSTER C1

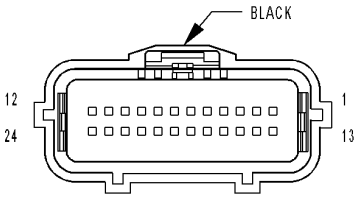

MODULE-FRONT CONTROL C1

81390372

For a complete wiring diagram**Refer to Section 8W**.

- **When Monitored:**
  Ignition run time is greater than 1 second. Battery voltage between 9 and 16 volts. Engine run time greater than 3 seconds.
- **Set Condition:**
  The PCM doesn't receive a Cluster message over the CAN C circuit. The circuit is continuously monitored.

Possible Causes
CAN C BUS FAILURE OPEN OR SHORTED CONDITION
CLUSTER/CCN
PCM

Refer to 8 - ELECTRICAL/ELECTRONIC CONTROL MODULES - DIAGNOSIS AND TESTING for diagnostic procedures and for further possible causes.

Diagnostic Test

1. ACTIVE DTC

Ignition on, engine not running.
With a scan tool, read PCM DTCs.

Is the DTC active at this time?

Yes >> Refer to 8 - ELECTRICAL/ELECTRONIC CONTROL MODULES - DIAGNOSIS AND TESTING for diagnostic procedures and for further possible causes.

No >> Refer to the INTERMITTENT CONDITION Diagnostic Procedure.
Perform the POWERTRAIN VERIFICATION TEST. (Refer to 9 - ENGINE - STANDARD PROCEDURE)

U0168-LOST COMMUNICATION WITH VEHICLE SECURITY CONTROL MODULE (SKREEM/WCM)

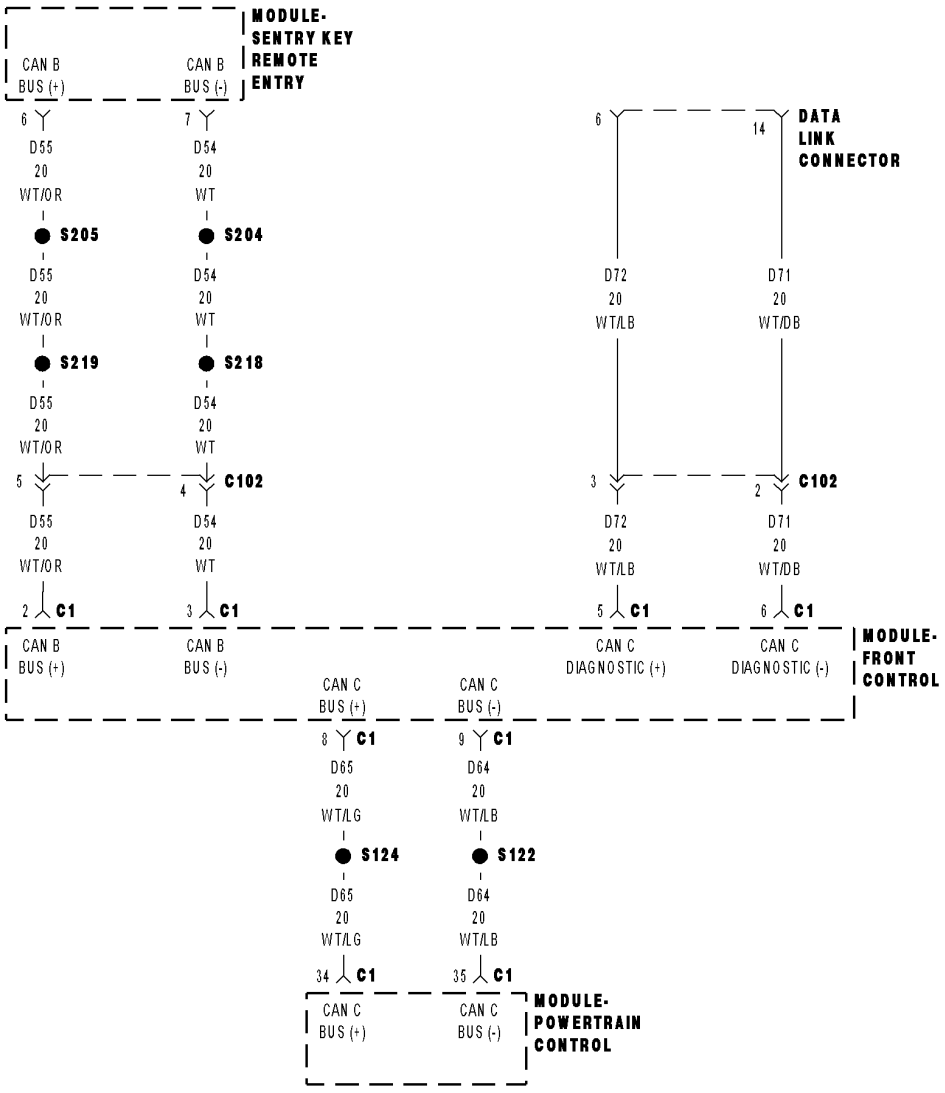

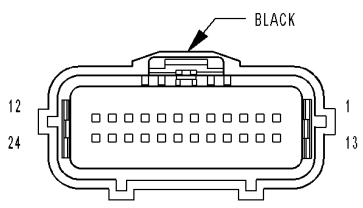

MODULE-
FRONT
CONTROL C1

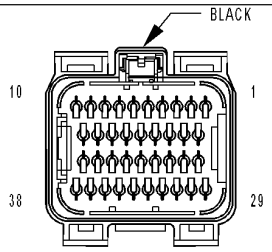

MODULE-
POWERTRAIN
CONTROL C1

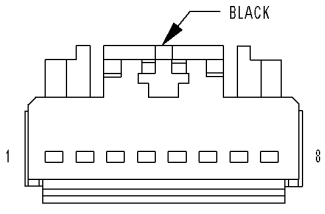

MODULE-
SENTRY KEY
REMOTE ENTRY

8139037c

For a complete wiring diagram**Refer to Section 8W**.

- **When Monitored:**
  Ignition run time is greater than 1 second. Battery voltage between 9 and 16 volts. Engine run time greater than 3 seconds.
- **Set Condition:**
  Bus messages not received from the Sentry Key Remote Entry Module (WCM) for approximately 2 to 5 seconds.

Possible Causes
CAN C BUS FAILURE OPEN OR SHORTED CONDITION
SKREEM (WCW)
PCM

Refer to 8 - ELECTRICAL/ELECTRONIC CONTROL MODULES - DIAGNOSIS AND TESTING for diagnostic procedures and for further possible causes.

Diagnostic Test

1. ACTIVE DTC

Ignition on, engine not running.

With a scan tool, read PCM DTCs.

Is the DTC active at this time?

Yes >> Refer to 8 - ELECTRICAL/ELECTRONIC CONTROL MODULES - DIAGNOSIS AND TESTING for diagnostic procedures and for further possible causes.

No >> Refer to the INTERMITTENT CONDITION Diagnostic Procedure.
Perform the POWERTRAIN VERIFICATION TEST. (Refer to 9 - ENGINE - STANDARD PROCEDURE)

U110A-LOST COMMUNICATION WITH SCCM - CAN - C

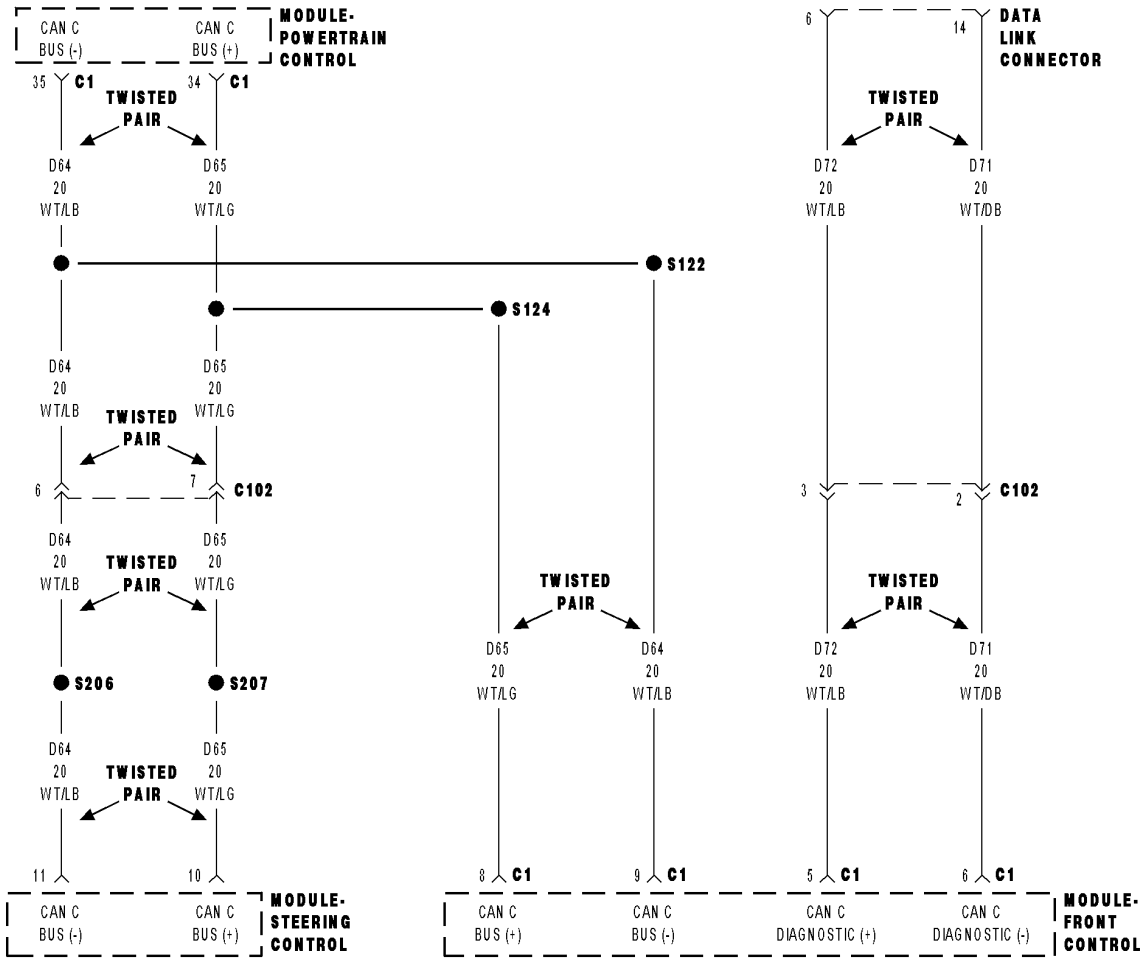

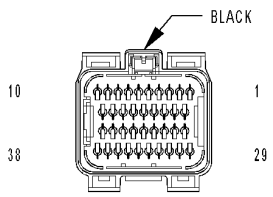

MODULE-
POWERTRAIN
CONTROL C1

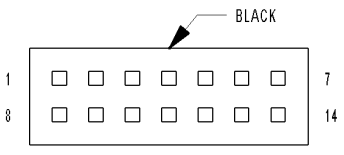

MODULE-
STEERING CONTROL

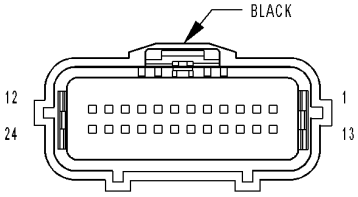

MODULE-
FRONT
CONTROL C1

81390446

For a complete wiring diagram**Refer to Section 8W**.

- **When Monitored:**
  Ignition run time is greater than 1 second. Battery voltage between 9 and 16 volts. Engine run time greater than 3 seconds.
- **Set Condition:**
  Bus messages not received from the SCCM for approximately 2 to 5 seconds.

Possible Causes
CAN C BUS FAILURE OPEN OR SHORTED CONDITION
SCCM
PCM

Refer to 8 - ELECTRICAL/ELECTRONIC CONTROL MODULES - DIAGNOSIS AND TESTING for diagnostic procedures and for further possible causes.

Diagnostic Test

1. ACTIVE DTC

Ignition on, engine not running.
With a scan tool, read PCM DTCs.

Is the DTC active at this time?

Yes >> Refer to 8 - ELECTRICAL/ELECTRONIC CONTROL MODULES - DIAGNOSIS AND TESTING for diagnostic procedures and for further possible causes.

No >> Refer to the INTERMITTENT CONDITION Diagnostic Procedure.
Perform the POWERTRAIN VERIFICATION TEST. (Refer to 9 - ENGINE - STANDARD PROCEDURE)

U110C-NO FUEL LEVEL BUS MESSAGE RECEIVED

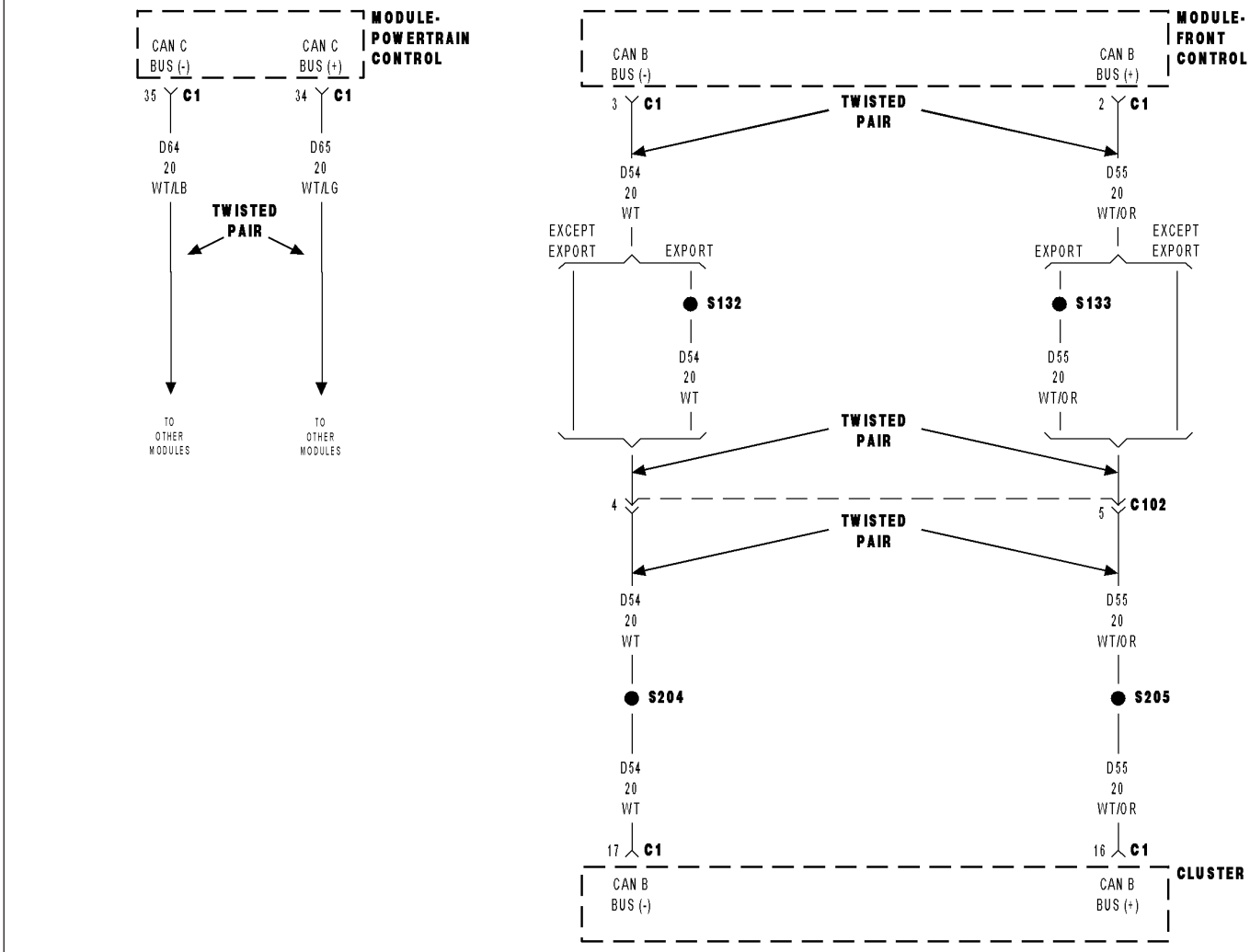

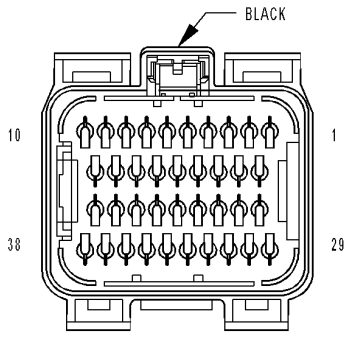

MODULE-
POWERTRAIN
CONTROL C1

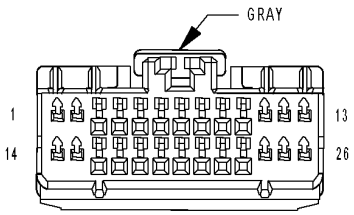

CLUSTER C1

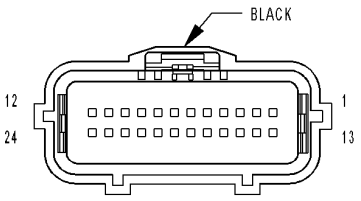

MODULE-
FRONT
CONTROL C1

8138dd91

For a complete wiring diagram **Refer to Section 8W**.

- **When Monitored:**
  Ignition on.
- **Set Condition:**
  When the PCM does not receive a fuel level signal from the FCM over the CAN C circuit. The circuit is constantly monitored.

Possible Causes
CAN C BUS CIRCUIT OPEN OR SHORTED
FRONT CONTROL MODULE
PCM

Always perform the Pre-Diagnostic Troubleshooting procedure before proceeding. (Refer to 9 - ENGINE - DIAGNOSIS AND TESTING).

Theory of Operation

The fuel level signal is a direct input to the Cluster. The fuel level signal is sent to the FCM over the CAN B bus circuit. The NGC receives the fuel level signal from the FCM over the CAN C bus circuit.

Diagnostic Test

1. ACTIVE DTC

Ignition on, engine not running.

With the scan tool read Powertrain DTCs.

Is the DTC active at this time?

Yes >> Go To 2

No >> Refer to the INTERMITTENT CONDITION Diagnostic Procedure.
Perform the POWERTRAIN VERIFICATION TEST. (Refer to 9 - ENGINE - STANDARD PROCEDURE)

2. U0141-LOST COMMUNICATION WITH FRONT CONTROL MODULE ALSO ACTIVE

With the scan tool read DTCs.

Is the U0141-LOST COMMUNICATION WITH FRONT CONTROL MODULE also set?

Yes >> Follow the diagnostics for U0141-LOST COMMUNICATION WITH FRONT CONTROL MODULE
Perform the POWERTRAIN VERIFICATION TEST. (Refer to 9 - ENGINE - STANDARD PROCEDURE)

No >> Replace and program the Powertrain Control Module per Service Information.
Perform the POWERTRAIN VERIFICATION TEST. (Refer to 9 - ENGINE - STANDARD PROCEDURE)

U110E-LOST AMBIENT TEMPERATURE MESSAGE

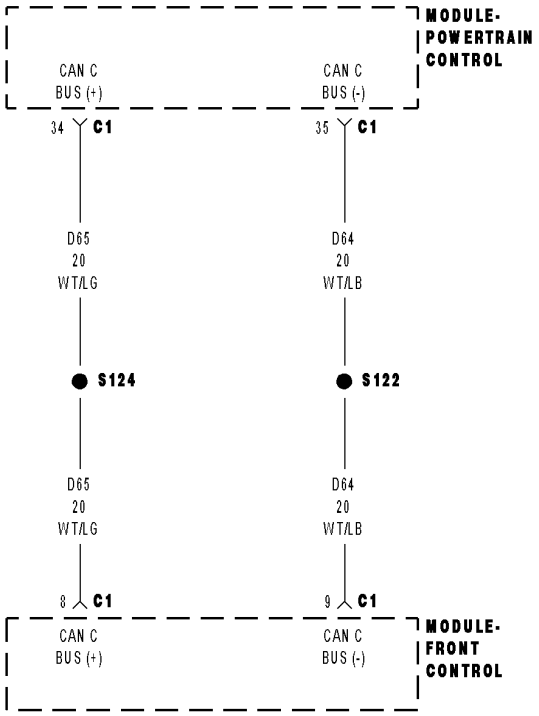

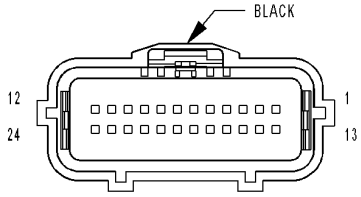

MODULE-
FRONT
CONTROL C1

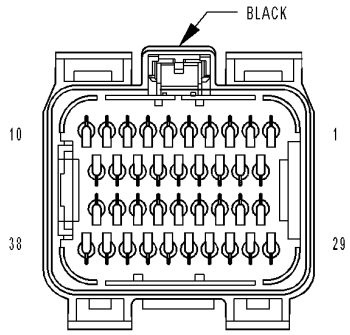

MODULE-
POWERTRAIN
CONTROL C1

8138dd8a

For a complete wiring diagram **Refer to Section 8W**.

- **When Monitored:**
  Ignition on.
- **Set Condition:**
  The PCM doesn't receive the ambient temperature signal over the CAN C bus from the FCM. The circuit is continuously monitored.

Possible Causes
CAN C BUS CIRCUIT OPEN OR SHORTED
FRONT CONTROL MODULE
PCM

Always perform the Pre-Diagnostic Troubleshooting procedure before proceeding. (Refer to 9 - ENGINE - DIAGNOSIS AND TESTING).

Theory of Operation

The ambient temperature sensor signal is a direct input to the FCM. The FCM sends the PCM the ambient temperature signal over the CAN C bus.

Diagnostic Test

1. ACTIVE DTC

Ignition on, engine not running.

With the scan tool read Powertrain DTCs.

Is the DTC active at this time?

Yes >> Go To 2

No >> Refer to the INTERMITTENT CONDITION Diagnostic Procedure.
Perform the POWERTRAIN VERIFICATION TEST. (Refer to 9 - ENGINE - STANDARD PROCEDURE)

2. U0141-LOST COMMUNICATION WITH FRONT CONTROL MODULE ALSO ACTIVE

With the scan tool read DTCs.

Is the U0141-NO BUS MESSAGE RECEIVED FROM THE FCM also set?

Yes >> Follow the diagnostics for U0141-LOST COMMUNICATION WITH FRONT CONTROL MODULE
Perform the POWERTRAIN VERIFICATION TEST. (Refer to 9 - ENGINE - STANDARD PROCEDURE)

No >> Replace and program the Powertrain Control Module per Service Information.
Perform the POWERTRAIN VERIFICATION TEST. (Refer to 9 - ENGINE - STANDARD PROCEDURE)

U110F-LOST FUEL VOLUME MESSAGE

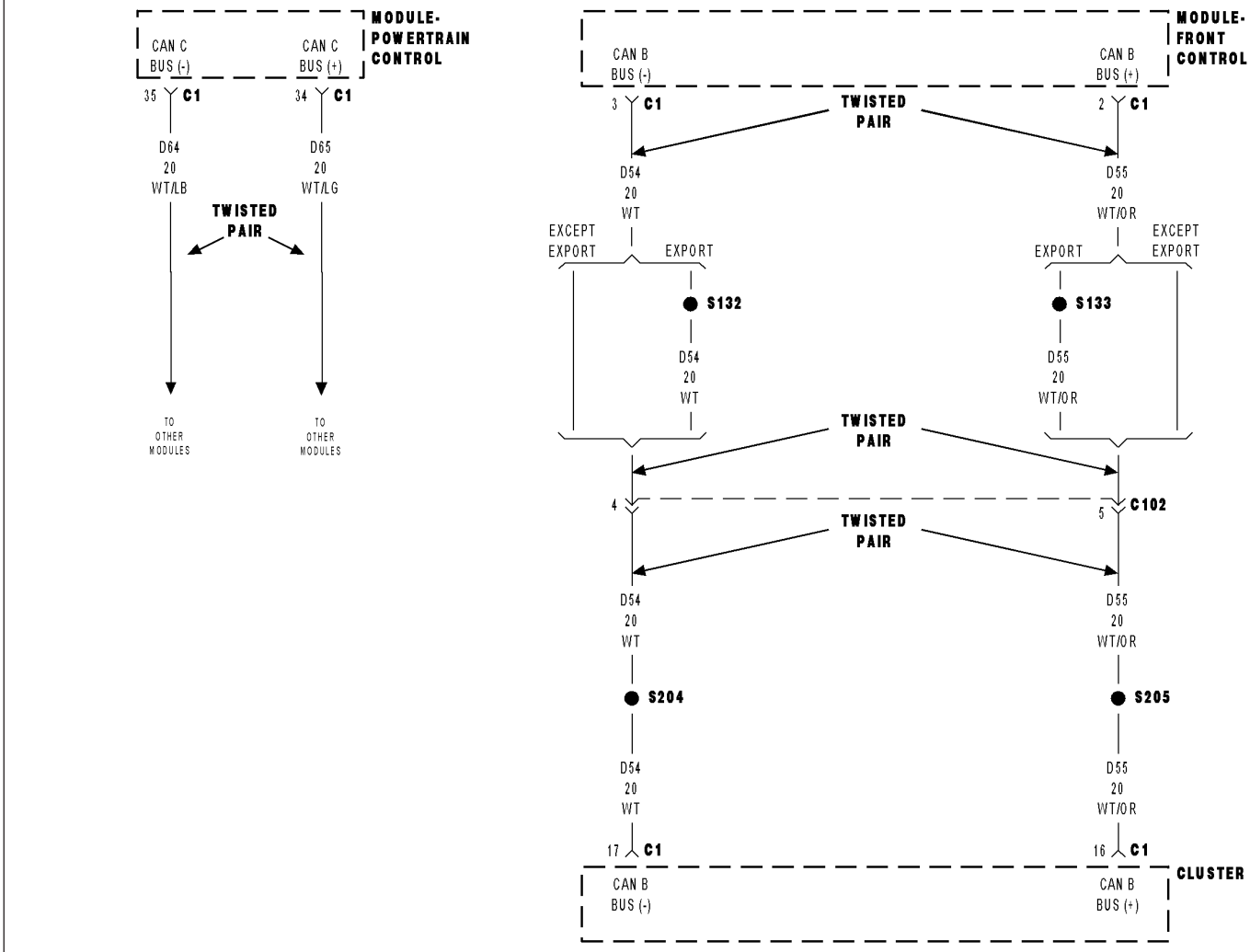

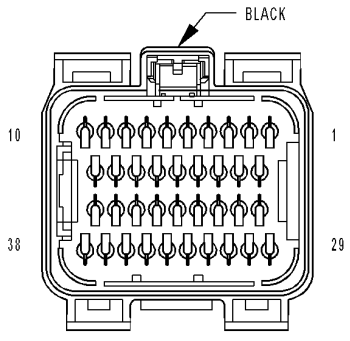

MODULE-
POWERTRAIN
CONTROL C1

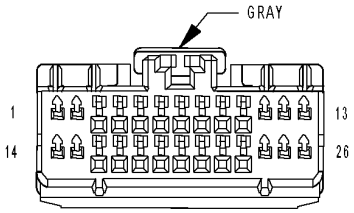

CLUSTER C1

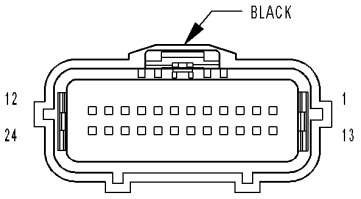

MODULE-
FRONT
CONTROL C1

8138dd91

For a complete wiring diagram **Refer to Section 8W**.

- **When Monitored:**
  Ignition on.
- **Set Condition:**
  When the PCM does not receive a fuel volume signal from the FCM over the CAN C circuit. The circuit is constantly monitored.

Possible Causes
CAN C BUS CIRCUIT OPEN OR SHORTED
FRONT CONTROL MODULE
PCM

Always perform the Pre-Diagnostic Troubleshooting procedure before proceeding. (Refer to 9 - ENGINE - DIAGNOSIS AND TESTING).

Theory of Operation

The fuel level signal is a direct input to the Cluster. The fuel level signal is sent to the FCM over the CAN B bus circuit. The NGC receives the fuel level signal from the FCM over the CAN C bus circuit.

Diagnostic Test

1. ACTIVE DTC

Ignition on, engine not running.

With the scan tool read Powertrain DTCs.

Is the DTC active at this time?

Yes >> Go To 2

No >> Refer to the INTERMITTENT CONDITION Diagnostic Procedure.
Perform the POWERTRAIN VERIFICATION TEST. (Refer to 9 - ENGINE - STANDARD PROCEDURE)

2. U0141-LOST COMMUNICATION WITH FRONT CONTROL MODULE ALSO ACTIVE

With the scan tool read DTCs.

Is the U0141-NO BUS MESSAGE RECEIVED FROM THE FCM also set?

Yes >> Follow the diagnostics for U0141-LOST COMMUNICATION WITH FRONT CONTROL MODULE
Perform (NGC) POWERTRAIN VERIFICATION TEST VER - 5.

No >> Replace and program the Powertrain Control Module per Service Information.
Perform the POWERTRAIN VERIFICATION TEST. (Refer to 9 - ENGINE - STANDARD PROCEDURE)

U1110-LOST VEHICLE SPEED MESSAGE

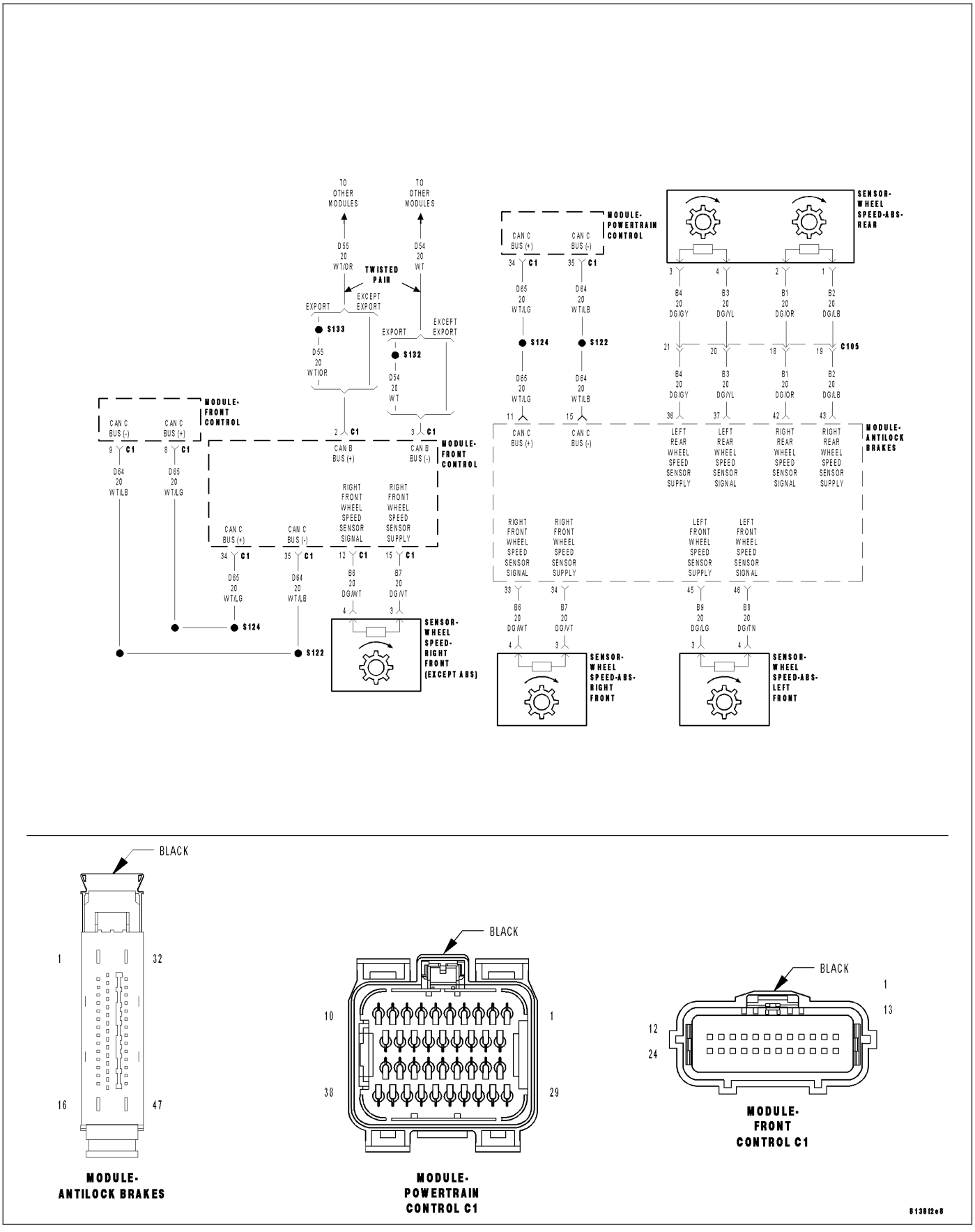

For a complete wiring diagram **Refer to Section 8W**.

- **When Monitored:**
  Ignition on.
- **Set Condition:**
  The PCM doesn't receive a vehicle speed signal from the Anti-lock brake Module or FCM (NON-ABS) over the CAN C bus.

Possible Causes
CAN C BUS CIRCUIT OPEN OR SHORTED
ANTI-LOCK BRAKE MODULE
PCM

Always perform the Pre-Diagnostic Troubleshooting procedure before proceeding. (Refer to 9 - ENGINE - DIAGNOSIS AND TESTING).

Theory of Operation

The PCM receives the vehicle speed signal over the CAN C bus from the Anti-lock Brake Module or FCM (NON-ABS).

Diagnostic Test

1. ACTIVE DTC

Ignition on, engine not running.
With the scan tool read Powertrain DTCs.

Is the DTC active at this time?

Yes >> Go To 2

No >> Refer to the INTERMITTENT CONDITION Diagnostic Procedure.
Perform the POWERTRAIN VERIFICATION TEST. (Refer to 9 - ENGINE - STANDARD PROCEDURE)

2. U0121-LOST COMMUNICATION WITH ABS MODULE/P0141–LOST COMMUNICATION WITH FCM ALSO SET

NOTE: If the vehicle is not equipped with ABS the VSS signal will come from the FCM.
With the scan tool, read the appropriate module for DTCs.

Is the U0121-LOST COMMUNICATION WITH ABS MODULE/PO141–Lost Communicate With FCM also set?

Yes >> Perform the appropriate diagnostic test.
Perform (NGC) POWERTRAIN VERIFICATION TEST VER - 5.

No >> Replace and program the Powertrain Control Module per Service Information.
Perform the POWERTRAIN VERIFICATION TEST. (Refer to 9 - ENGINE - STANDARD PROCEDURE)

U1120-LOST WHEEL DISTANCE MESSAGE

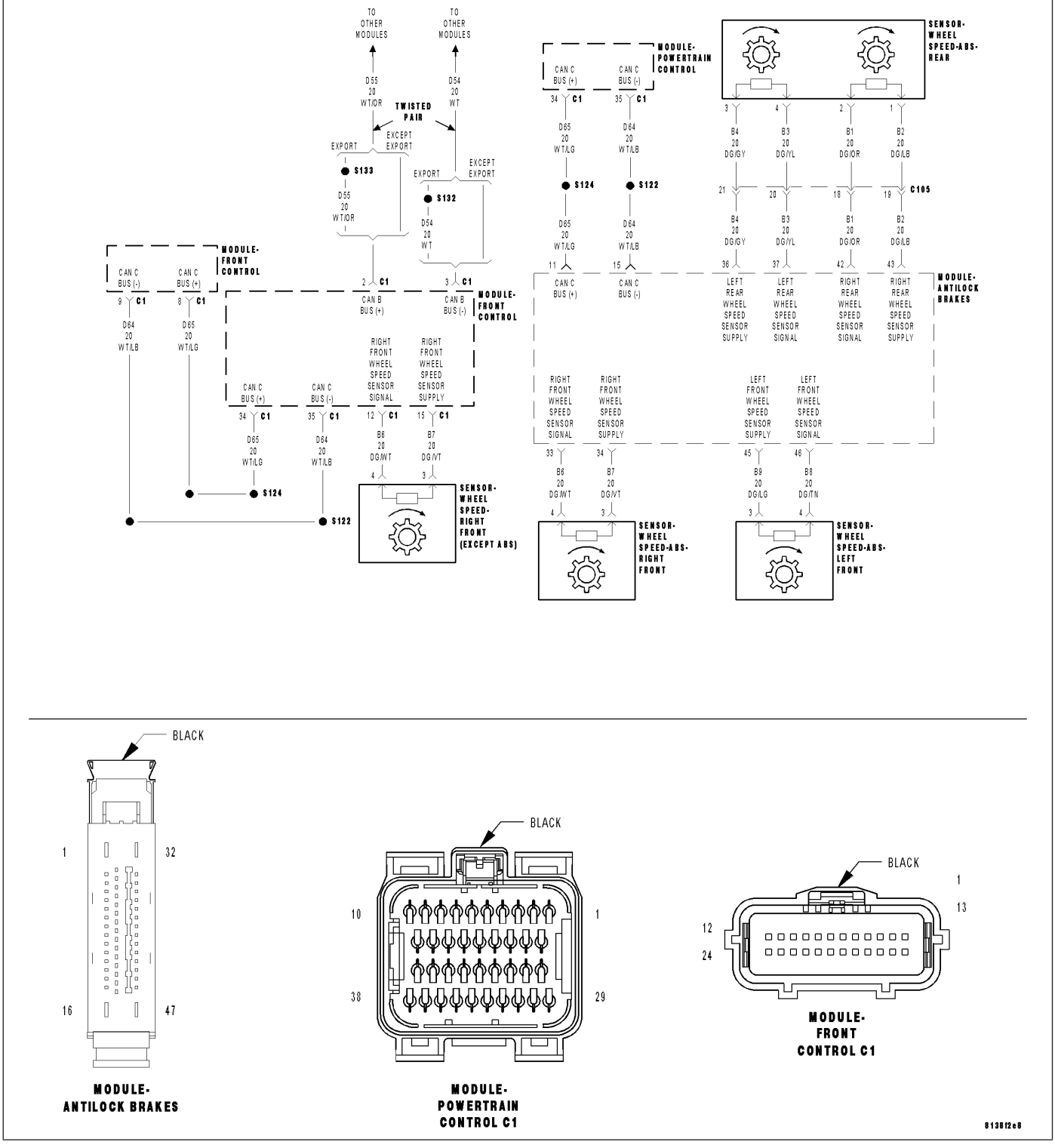

MODULE- ANTILOCK BRAKES

MODULE- POWERTRAIN CONTROL C1

MODULE- FRONT CONTROL C1

8138f2e8

For a complete wiring diagram **Refer to Section 8W**.

- **When Monitored:**
  Ignition on.
- **Set Condition:**
  The PCM doesn't receive a wheel distance message from the Anti-lock brake Module or FCM (NON-ABS) over the CAN C bus.

Possible Causes
CAN C BUS CIRCUIT OPEN OR SHORTED
ANTI-LOCK BRAKE MODULE
PCM

Always perform the Pre-Diagnostic Troubleshooting procedure before proceeding. (Refer to 9 - ENGINE - DIAGNOSIS AND TESTING).

Theory of Operation

The PCM receives the vehicle speed signal over the CAN C bus from the Anti-lock Brake Module or FCM (NON-ABS).

Diagnostic Test

1. ACTIVE DTC

Ignition on, engine not running.

With the scan tool read Powertrain DTCs.

Is the DTC active at this time?

Yes >> Go To 2

No >> Refer to the INTERMITTENT CONDITION Diagnostic Procedure.
Perform the POWERTRAIN VERIFICATION TEST. (Refer to 9 - ENGINE - STANDARD PROCEDURE)

2. U0121-LOST COMMUNICATION WITH ABS MODULE/P0141–LOST COMMUNICATION WITH FCM ALSO SET

NOTE: If the vehicle is not equipped with ABS the VSS signal will come from the FCM.

With the scan tool, read the appropriate module for DTCs.

Is the U0121-LOST COMMUNICATION WITH ABS MODULE/PO141–Lost Communicate With FCM also set?

Yes >> Perform the appropriate diagnostic test.Perform the POWERTRAIN VERIFICATION TEST. (Refer to 9 - ENGINE - STANDARD PROCEDURE)

No >> Replace and program the Powertrain Control Module per Service Information.
Perform the POWERTRAIN VERIFICATION TEST. (Refer to 9 - ENGINE - STANDARD PROCEDURE)

U1403-IMPLAUSIBLE FUEL LEVEL SIGNAL

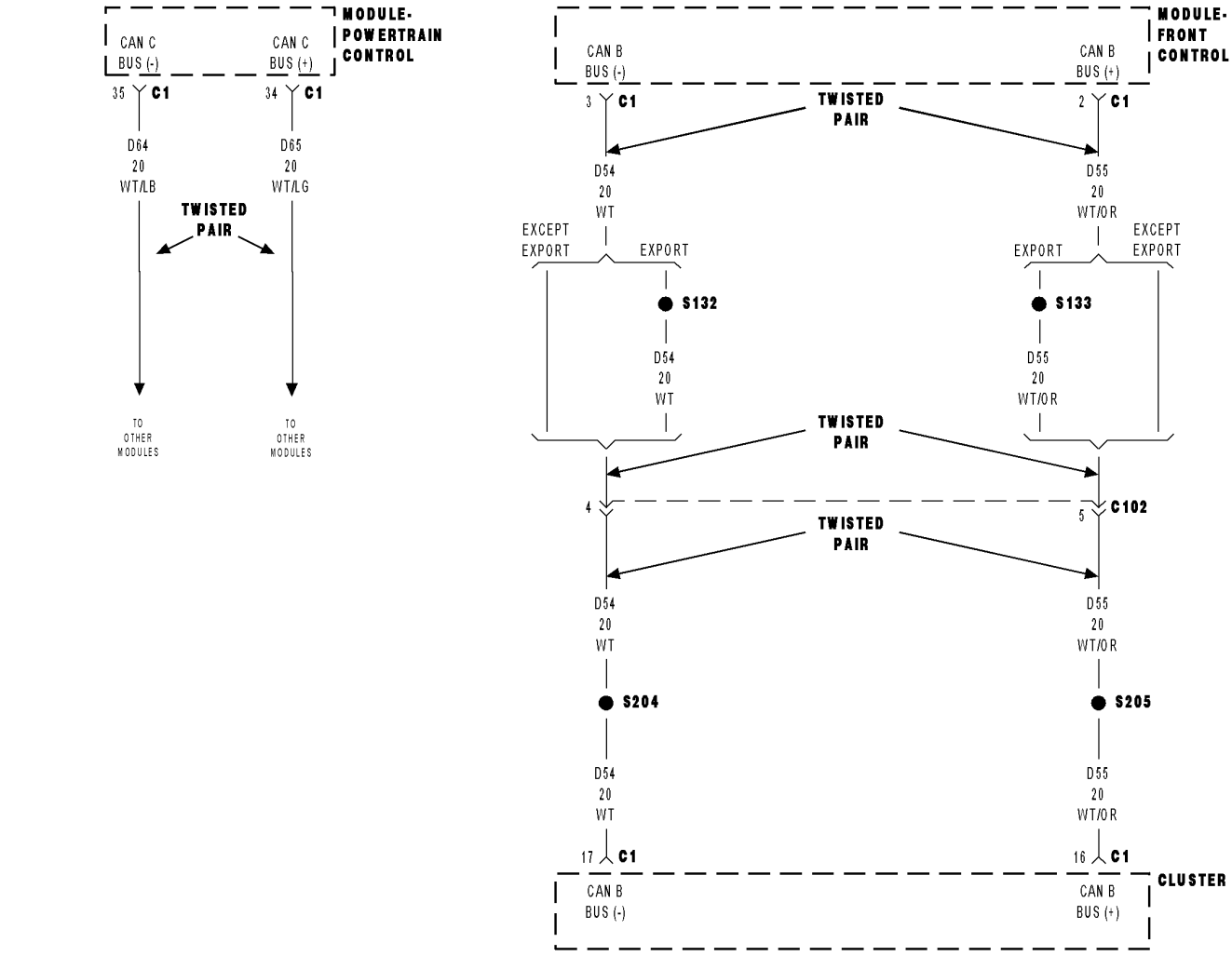

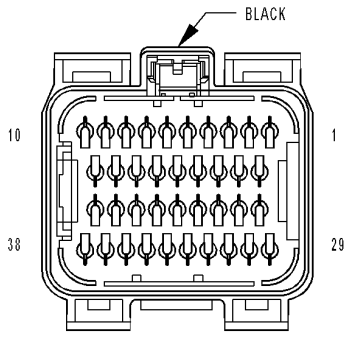

MODULE-
POWERTRAIN
CONTROL C1

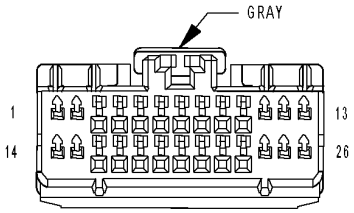

CLUSTER C1

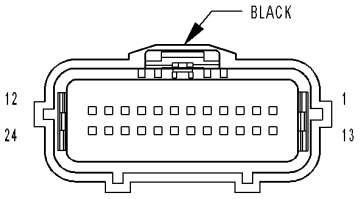

MODULE-
FRONT
CONTROL C1

8138dd91

For a complete wiring diagram **Refer to Section 8W**.

- **When Monitored:**
  Ignition on.
- **Set Condition:**
  The fuel level message that the PCM is receiving is implausible. The circuit is continuously monitored.

Possible Causes
CAN B OPEN OR SHORTED
CLUSTER MODULE
FRONT CONTROL MODULE
PCM

Always perform the Pre-Diagnostic Troubleshooting procedure before proceeding. (Refer to 9 - ENGINE - DIAGNOSIS AND TESTING).

Theory of Operation

The Front Control Module receives a fuel level signal over CAN B from the Cluster Module. Once the message is received from the FCM, it passages the fuel level message via CAN C to the PCM.

Diagnostic Test

1. ACTIVE DTC

NOTE: Diagnose all CAN B and C communication failures before continuing.
Ignition on, engine not running.
With a scan tool read DTCs.

Is the DTC active at this time?

Yes >> Go To 2

No >> Refer to the INTERMITTENT CONDITION Diagnostic Procedure.
Perform the POWERTRAIN VERIFICATION TEST. (Refer to 9 - ENGINE - STANDARD PROCEDURE)

2. U0019-NO COMMUNICATION ON THE CAN B BUS CIRCUIT ALSO ACTIVE

With a scan tool check for DTCs in the FCM.

Is the U0019-NO COMMUNICATION ON THE CAN B BUS CIRCUIT active at this time?

Yes >> Refer to 8 - ELECTRICAL/ELECTRONIC CONTROL MODULES - DIAGNOSIS AND TESTING for the U0019-NO COMMUNICATION ON THE CAN B BUS CIRCUIT diagnostic procedures.
Perform BODY VERIFICATION TEST – VER 1.

No >> Replace and program the Powertrain Control Module per Service Information.
Perform the POWERTRAIN VERIFICATION TEST. (Refer to 9 - ENGINE - STANDARD PROCEDURE)

U1411-IMPLAUSIBLE FUEL VOLUME SIGNAL RECEIVED

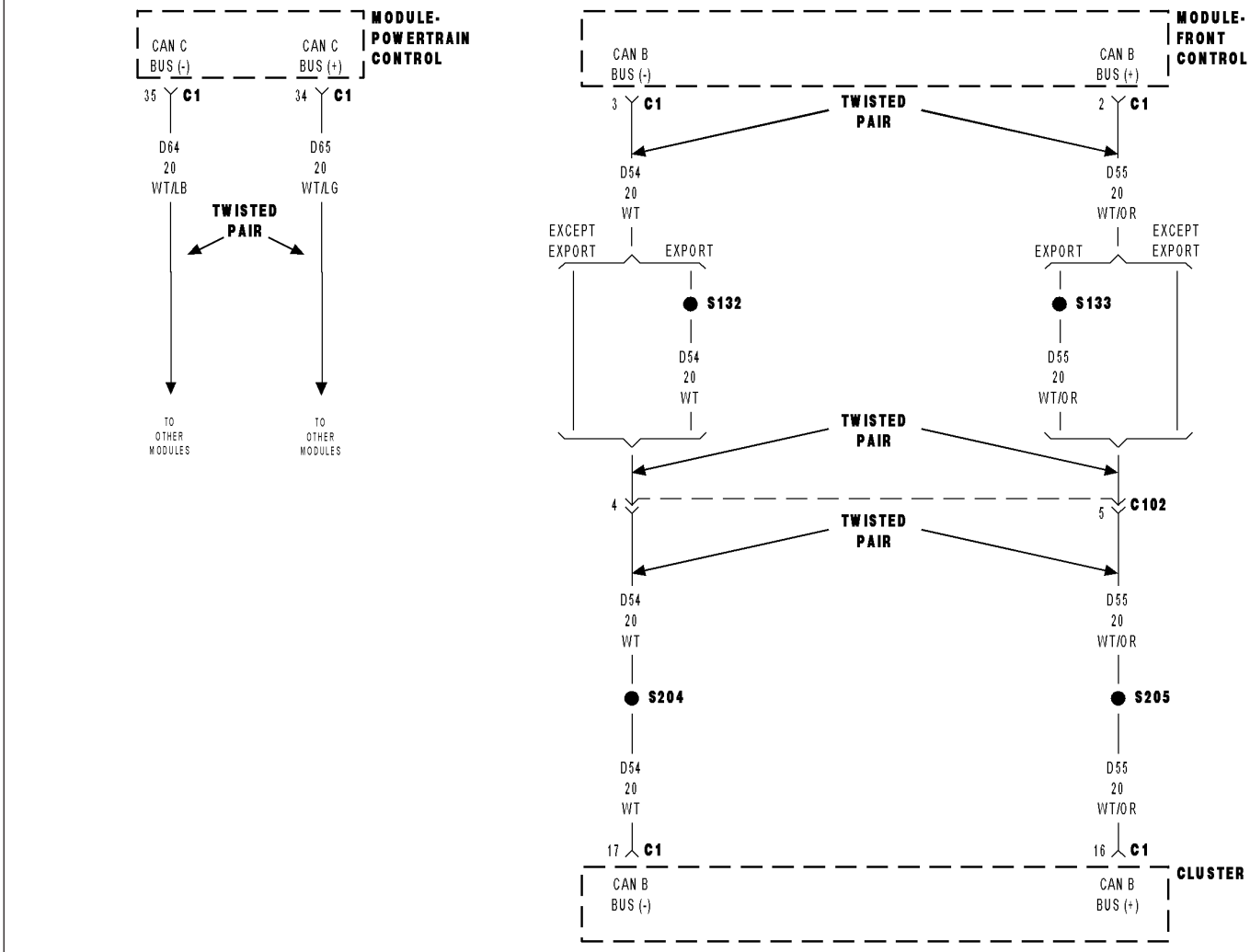

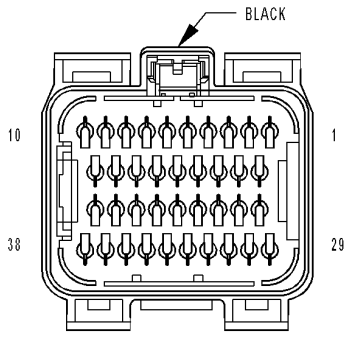

MODULE-
POWERTRAIN
CONTROL C1

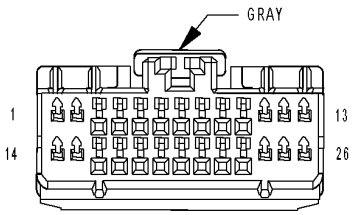

CLUSTER C1

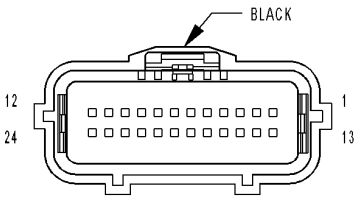

MODULE-
FRONT
CONTROL C1

8138dd91

For a complete wiring diagram **Refer to Section 8W**.

- **When Monitored:**
  Ignition on.
- **Set Condition:**
  The fuel volume message that the PCM is receiving is implausible. The circuit is continuously monitored.

Possible Causes
CAN B OPEN OR SHORTED
CLUSTER MODULE
FRONT CONTROL MODULE
PCM

Always perform the Pre-Diagnostic Troubleshooting procedure before proceeding. (Refer to 9 - ENGINE - DIAGNOSIS AND TESTING).

Theory of Operation

The Front Control Module receives a fuel volume signal over CAN B from the Cluster Module. Once the message is received from the FCM, it passages the fuel level message via CAN C to the PCM.

Diagnostic Test

1. ACTIVE DTC

NOTE: Diagnose all CAN B and C communication failures before continuing.
Ignition on, engine not running.
With a scan tool read DTCs.

Is the DTC active at this time?

Yes >> Go To 2

No >> Refer to the INTERMITTENT CONDITION Diagnostic Procedure.
Perform the POWERTRAIN VERIFICATION TEST. (Refer to 9 - ENGINE - STANDARD PROCEDURE)

2. U0019-NO COMMUNICATION ON THE CAN B BUS CIRCUIT ALSO ACTIVE

With a scan tool check for DTCs in the FCM.

Is the U0019-NO COMMUNICATION ON THE CAN B BUS CIRCUIT active at this time?

Yes >> (Refer to 8 - ELECTRICAL/ELECTRONIC CONTROL MODULES - DIAGNOSIS AND TESTING) for the U0019-NO COMMUNICATION ON THE CAN B BUS CIRCUIT diagnostic procedures.
Perform BODY VERIFICATION TEST – VER 1.

No >> Replace and program the Powertrain Control Module per Service Information.
Perform the POWERTRAIN VERIFICATION TEST. (Refer to 9 - ENGINE - STANDARD PROCEDURE)

U1412-IMPLAUSIBLE VEHICLE SPEED SIGNAL RECEIVED

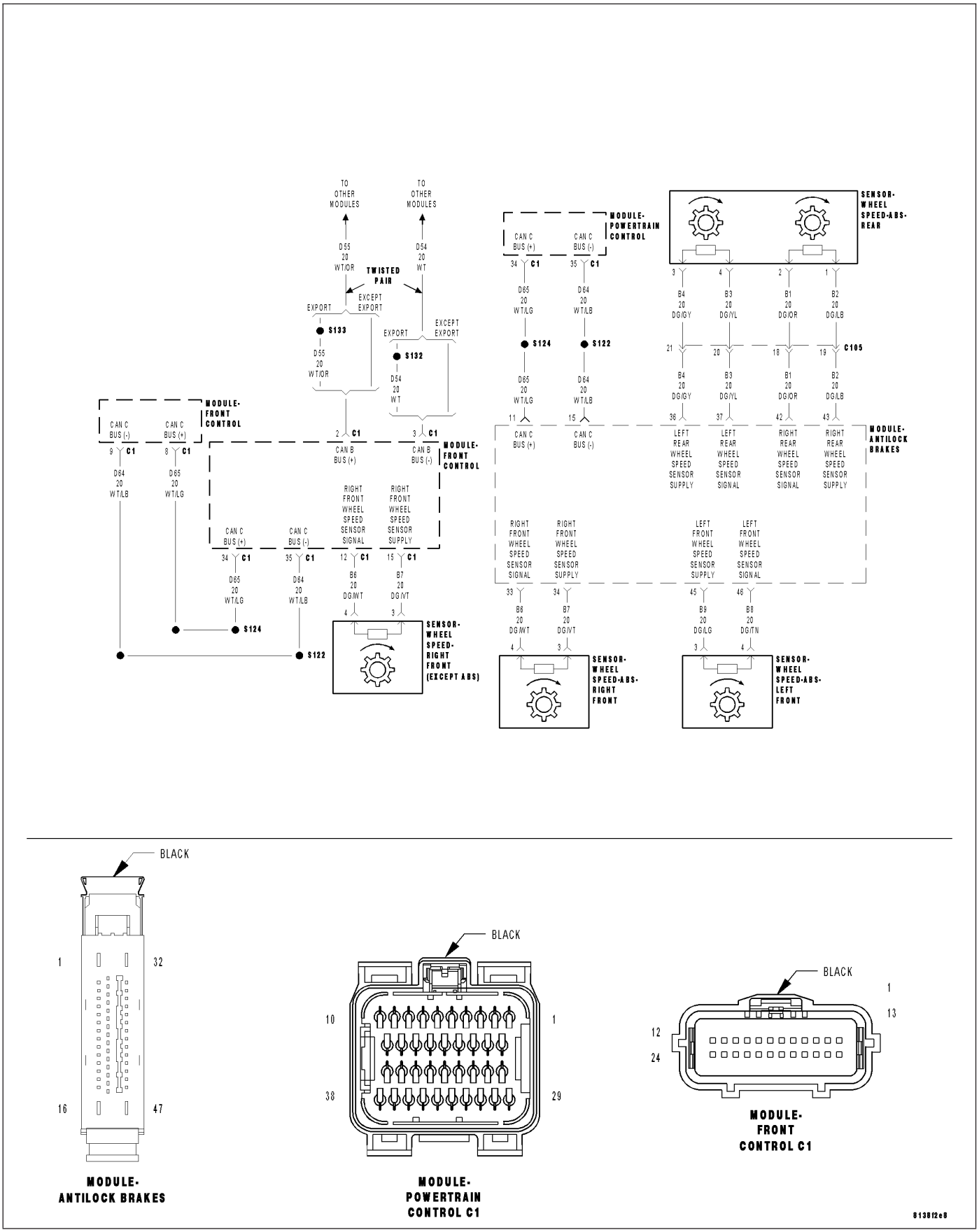

For a complete wiring diagram **Refer to Section 8W**.

- **When Monitored:**
  Ignition on.
- **Set Condition:**
  The PCM gets an implausible signal over the CAN C circuit from the ABS Module or FCM (NON-ABS). The circuit is continuously monitored.

Possible Causes
CAN C BUS CIRCUIT SHORTED
CAN C BUS CIRCUIT OPEN
ABS MODULE
PCM

Always perform the Pre-Diagnostic Troubleshooting procedure before proceeding. (Refer to 9 - ENGINE - DIAGNOSIS AND TESTING).

Theory of Operation

The ABS Module or FCM (NON-ABS) sends vehicle speed information over the CAN C Bus circuit to the PCM.

Diagnostic Test

1. ACTIVE DTC

NOTE: Diagnose all CAN B and C communication failures before continuing.
Ignition on, engine not running.
With a scan tool, read DTCs.

Is the U1412-IMPLAUSIBLE VEHICLE SPEED SIGNAL RECEIVED active at this time?

Yes >> Go To 2

No >> Refer to the INTERMITTENT CONDITION Diagnostic Procedure.
Perform the POWERTRAIN VERIFICATION TEST. (Refer to 9 - ENGINE - STANDARD PROCEDURE)

2. U0001-NO COMMUNICATION ON THE CAN C BUS CIRCUIT IS ACTIVE

Continue reading DTCs.

Is the U0001-NO COMMUNICATION ON THE CAN C BUS CIRCUIT ACTIVE at this time?

Yes >> Refer to the Diagnostic Procedure for the U0001-NO COMMUNICATION ON THE CAN C BUS CIRCUIT.

No >> Go To 3

3. ABS MODULE IS ACTIVE ON THE CAN C BUS

With the scan tool, select ECU View.
Verify that the ABS Module is active on the bus.

Is the ABS Module active on the bus?

Yes >> Go To 4

No >> (Refer to 8 - ELECTRICAL/ELECTRONIC CONTROL MODULES - DIAGNOSIS AND TESTING) for No Response diagnostic procedures.
Perform BODY VERIFICATION TEST – VER 1.

4. ACTIVE DTCS IN THE FCM

With the scan tool, select ECU View and select FCM.
With the scan tool, read active DTCs.

Is the U0001-NO COMMUNICATION ON THE CAN C BUS CIRCUIT ACTIVE in the FCM at this time?

Yes >> (Refer to 8 - ELECTRICAL/ELECTRONIC CONTROL MODULES - DIAGNOSIS AND TESTING) for U0001 diagnostic procedures.
Perform BODY VERIFICATION TEST – VER 1.

No >> Replace and program the Powertrain Control Module per Service Information.
Perform the POWERTRAIN VERIFICATION TEST. (Refer to 9 - ENGINE - STANDARD PROCEDURE)

U1417-IMPLAUSIBLE LEFT WHEEL DISTANCE SIGNAL RECEIVED

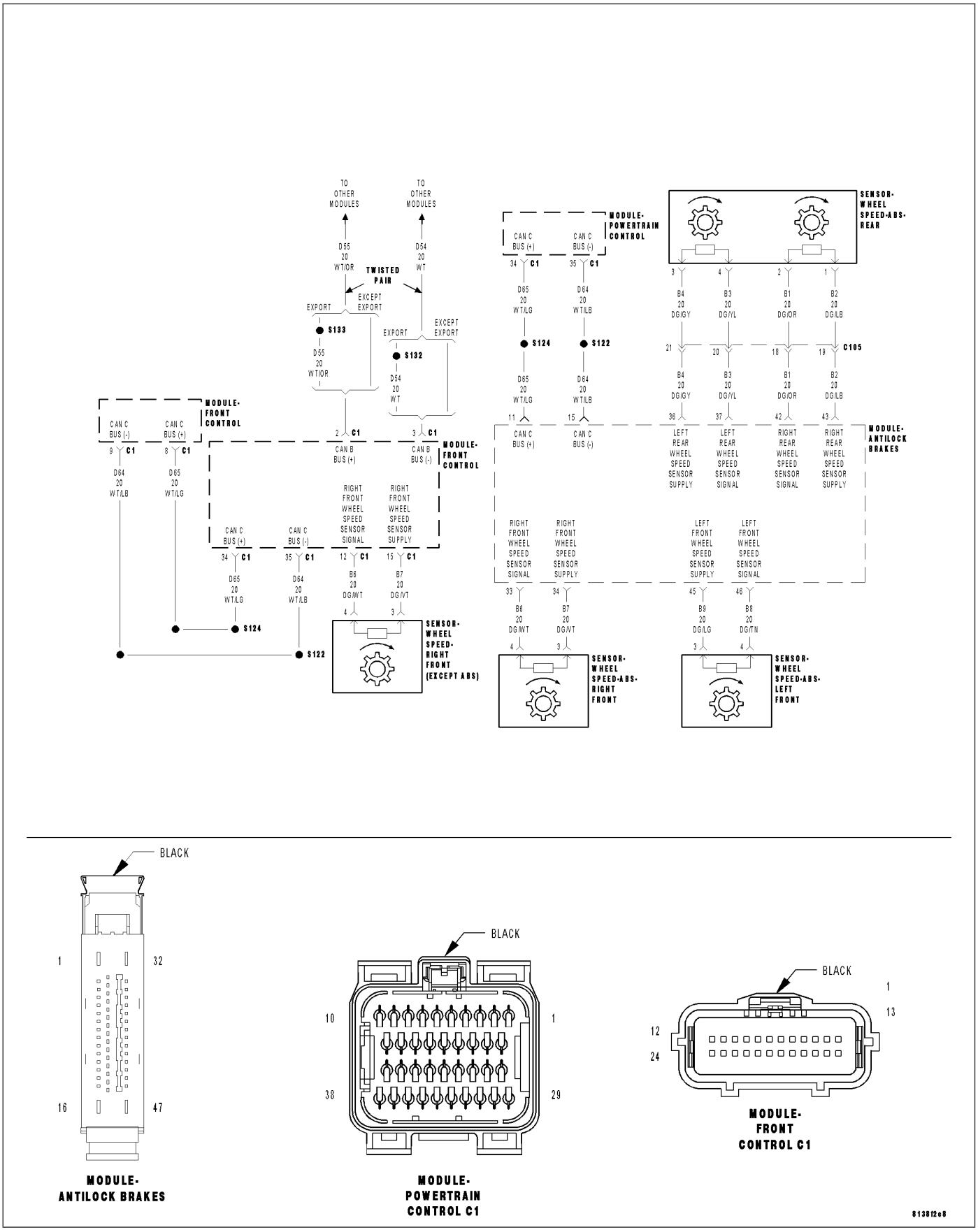

For a complete wiring diagram **Refer to Section 8W**.

- **When Monitored:**
  Ignition on.
- **Set Condition:**
  The PCM gets an implausible signal over the CAN C circuit from the ABS Module or FCM (NON-ABS). The circuit is continuously monitored.

Possible Causes
VEHICLE SPEED SENSOR FAULT ACTIVE IN ANTI-LOCK BRAKE MODULE
CAN C BUS CIRCUIT SHORTED
CAN C BUS CIRCUIT OPEN
ABS MODULE
PCM

Always perform the Pre-Diagnostic Troubleshooting procedure before proceeding. (Refer to 9 - ENGINE - DIAGNOSIS AND TESTING).

Theory of Operation

The ABS Module or FCM (NON-ABS) sends an implausible distance signal over the CAN C Bus circuit to the PCM.

Diagnostic Test

1. ACTIVE DTC

NOTE: Diagnose all CAN B and C communication failures before continuing.
Ignition on, engine not running.
With a scan tool, read DTCs.

Is the U1417-IMPLAUSIBLE LEFT WHEEL DISTANCE SIGNAL RECEIVED active at this time?

Yes >> Go To 2

No >> Refer to the INTERMITTENT CONDITION Diagnostic Procedure.
Perform the POWERTRAIN VERIFICATION TEST. (Refer to 9 - ENGINE - STANDARD PROCEDURE)

2. ABS MODULE IS ACTIVE ON THE CAN C BUS

With the scan tool, select ECU View.
Verify that the ABS Module active on the bus.

Is the ABS Module active on the bus?

Yes >> Go To 3

No >> (Refer to 8 - ELECTRICAL/ELECTRONIC CONTROL MODULES - DIAGNOSIS AND TESTING) for No Response diagnostic procedures.
Perform BODY VERIFICATION TEST – VER 1.

3. DTCS STORED OR ACTIVE IN THE ABS MODULE

Check for wheel speed DTCs in the ABS Module or FCM (NON-ABS).

Are any DTCs active or stored in the ABS Module/FCM?

Yes >> Refer to the appropriate section and perform the diagnostics for the DTCs.
Perform ABS VERIFICATION TEST – VER

No >> Go to 4

4. ACTIVE DTCS IN THE FCM

With the scan tool, select ECU View and select FCM.
With the scan tool, read active DTCs.

Are any Communication DTCs active in the FCM relating to the ABS System?

Yes >> (Refer to 8 - ELECTRICAL/ELECTRONIC CONTROL MODULES - DIAGNOSIS AND TESTING) for the diagnostic procedures.
Perform BODY VERIFICATION TEST – VER 1.

No >> Replace and program the Powertrain Control Module per Service Information.
Perform the POWERTRAIN VERIFICATION TEST. (Refer to 9 - ENGINE - STANDARD PROCEDURE)

U1418-IMPLAUSIBLE RIGHT WHEEL DISTANCE SIGNAL RECEIVED

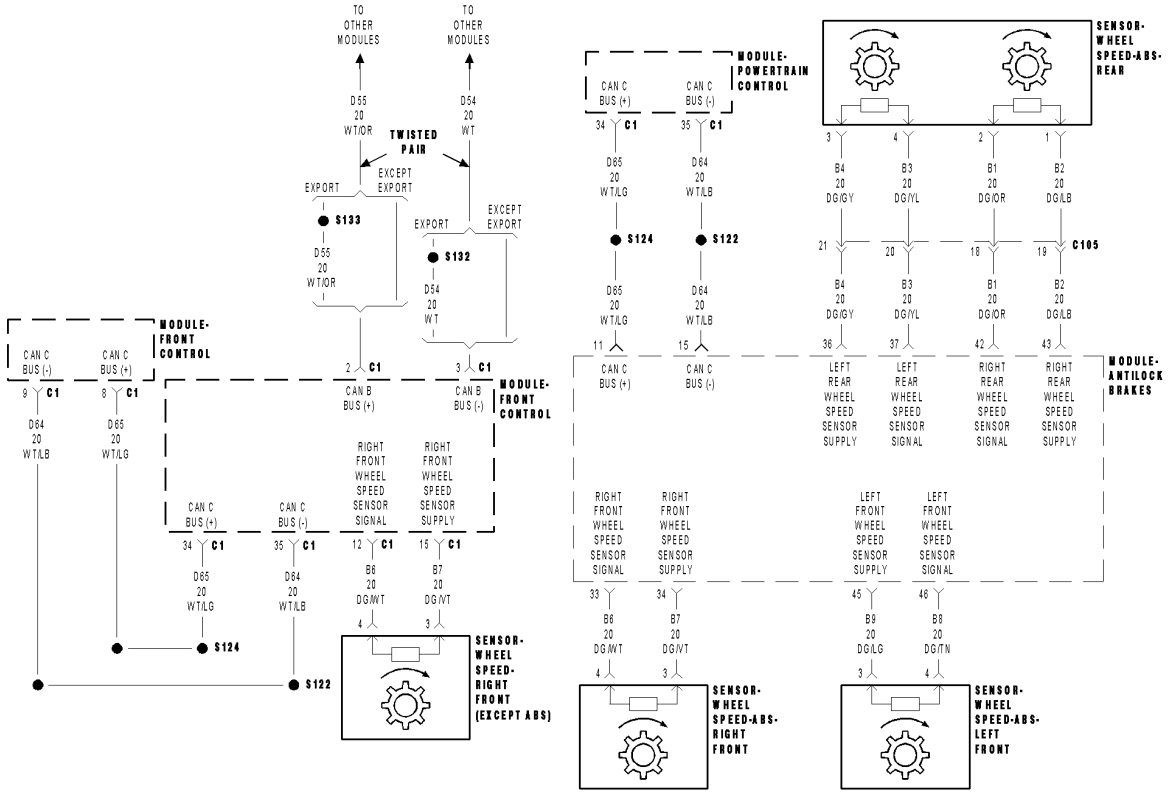

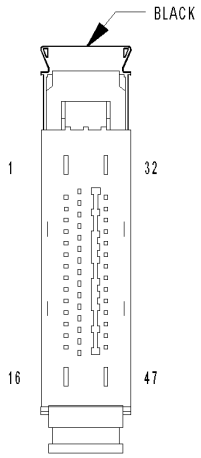

MODULE- ANTILOCK BRAKES

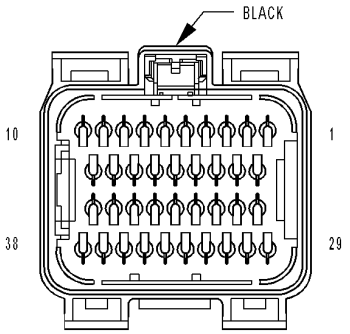

MODULE- POWERTRAIN CONTROL C1

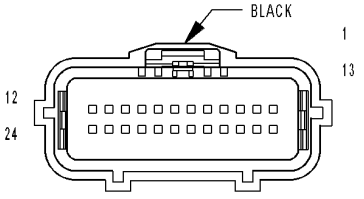

MODULE- FRONT CONTROL C1

8138f2e8

For a complete wiring diagram **Refer to Section 8W**.

- **When Monitored:**
  Ignition on.
- **Set Condition:**
  The PCM gets an implausible signal over the CAN C circuit from the ABS Module or FCM (NON-ABS). The circuit is continuously monitored.

Possible Causes
VEHICLE SPEED SENSOR FAULT ACTIVE IN ANTI-LOCK BRAKE MODULE
CAN C BUS CIRCUIT SHORTED
CAN C BUS CIRCUIT OPEN
ABS MODULE
PCM

Always perform the Pre-Diagnostic Troubleshooting procedure before proceeding. (Refer to 9 - ENGINE - DIAGNOSIS AND TESTING).

Theory of Operation

The ABS Module or FCM (NON-ABS) sends an implausible distance signal over the CAN C Bus circuit to the PCM.

Diagnostic Test

1. ACTIVE DTC

NOTE: Diagnose all CAN B and C communication failures before continuing.
Ignition on, engine not running.
With a scan tool, read DTCs.

Is the U1418-IMPLAUSIBLE RIGHT WHEEL DISTANCE SIGNAL RECEIVED active at this time?

Yes >> Go To 2

No >> Refer to the INTERMITTENT CONDITION Diagnostic Procedure.
Perform the POWERTRAIN VERIFICATION TEST. (Refer to 9 - ENGINE - STANDARD PROCEDURE)

2. ABS MODULE IS ACTIVE ON THE CAN C BUS

With the scan tool, select ECU View.
Verify that the ABS Module active on the bus.

Is the ABS Module active on the bus?

Yes >> Go To 3

No >> (Refer to 8 - ELECTRICAL/ELECTRONIC CONTROL MODULES - DIAGNOSIS AND TESTING) for No Response diagnostic procedures.
Perform BODY VERIFICATION TEST – VER 1.

3. DTCS STORED OR ACTIVE IN THE ABS MODULE/FCM (NON-ABS)

Check for wheel speed DTCs in the ABS Module or FCM (NON-ABS).

Are any DTCs active or stored in the ABS Module/FCM?

Yes >> Refer to the appropriate section and perform the diagnostics for the DTCs.
Perform ABS VERIFICATION TEST – VER

No >> Go to 4

4. ACTIVE DTCS IN THE FCM

With the scan tool, select ECU View and select FCM.
With the scan tool, read active DTCs.

Are any Communication DTCs active in the FCM relating to the ABS System?

Yes >> (Refer to 8 - ELECTRICAL/ELECTRONIC CONTROL MODULES - DIAGNOSIS AND TESTING) for the diagnostic procedures.
Perform BODY VERIFICATION TEST – VER 1.

No >> Replace and program the Powertrain Control Module per Service Information.
Perform POWERTRAIN VERIFICATION TEST – VER 5.

*5.7L INTERMITTENT NO CRANK CONDITION

For a complete wiring diagram **Refer to Section 8W**.

Possible Causes
ETC STARTER INHIBIT

Diagnostic Test

1. ETC STARTER INHIBIT

NOTE: ETC equipped engines will try to relearn ETC position when the key is left in the on position for an extended period of time and will not allow the starter to crank during this procedure. This procedure can take up to 2.5 seconds.

To verify the cause of the no crank condition or delayed crank use the scan tool, and read the ETC Starter Inhibit mileage.

The controller will store the mileage at which the no start condition occurred because of the ETC testing procedure.

This is considered normal operation for a vehicle equipped with an Electronic Throttle Control System and no repairs are necessary.

Is a mileage stored under the ETC Starter Inhibit?

Yes >> Test Complete.

No >> Refer to the diagnostic procedure for *No Crank Condition for further assistance.
Perform the POWERTRAIN VERIFICATION TEST. (Refer to 9 - ENGINE - STANDARD PROCEDURE)

*CHECKING THE FUEL DELIVERY SYSTEM

For a complete wiring diagram **Refer to Section 8W**.

Possible Causes
RESTRICTED FUEL SUPPLY LINE
FUEL PUMP INLET STRAINER PLUGGED
(N1) FUEL PUMP RELAY OUTPUT CIRCUIT OPEN
FUEL PUMP RELAY
FUEL PUMP

Diagnostic Test

1. FUEL PUMP OPERATION

Ignition on, engine not running.

With a scan tool, actuate the Fuel System test.

NOTE: It may be necessary to use a mechanics stethoscope in the next step.
Listen for fuel pump operation at the fuel tank.

CAUTION: Stop All Actuations.

Does the Fuel Pump operate?

Yes >> Go To 2

No >> Go To 6

2. FUEL PRESSURE

Turn the ignition off.

WARNING: The fuel system is under a constant pressure (even with the engine off). Before testing or servicing any fuel system hose, fitting or line, the fuel system pressure must be released. Failure to follow these instructions can result in personal injury or death.

Install a fuel pressure gauge at the engine.

Ignition on, engine not running.

With the scan tool, actuate the ASD Fuel System test and observe the fuel pressure gauge.

NOTE: Fuel pressure specification is 407 KPa +/- 34 KPa (59 psi +/- 5 psi).

CAUTION: Stop All Actuations.

Choose a conclusion that best matches your fuel pressure reading.

Below Specification
Go To 3

Within Specification
Test Complete.

Above Specification
Replace the fuel filter/fuel pressure regulator.
Perform the POWERTRAIN VERIFICATION TEST. (Refer to 9 - ENGINE - STANDARD PROCEDURE)

3. RESTRICTED FUEL SUPPLY LINE

Turn the ignition off.

WARNING: The fuel system is under a constant pressure even with the engine off. Before testing or servicing any fuel system hose, fitting or line, the fuel system pressure must be released.
Raise vehicle on hoist, and disconnect the fuel pressure line at the fuel pump module.

Install special tool #6539 (5/16″) or #6631(3/8″) fuel line adapter and the fuel pressure gauge between the fuel supply line and the fuel pump module.

Ignition on, engine not running.

With the scan tool, actuate the ASD Fuel System test and observe the fuel pressure gauge.

NOTE: Fuel pressure specification is 407 KPa +/- 34 KPa (59 psi +/- 5 psi).

CAUTION: Stop All Actuations.

Is the fuel pressure within specification now?

Yes >> Repair/replace fuel supply line as necessary.
Perform the POWERTRAIN VERIFICATION TEST. (Refer to 9 - ENGINE - STANDARD PROCEDURE)

No >> Go To 4

4. CHECKING FUEL TANK SIPHON HOSE AND FUEL LINE

Turn the ignition off.

WARNING: The fuel system is under a constant pressure (even with the engine off). Before testing or servicing any fuel system hose, fitting or line, the fuel system pressure must be released. Failure to follow these instructions can result in personal injury or death.
Gain access to the Fuel Pump Module and the Fuel Tank Module.

Inspect the following fuel components:

- Fuel line and siphon hose between the Fuel Pump Module and the Fuel Tank Module. Look for disconnected and/or damaged lines or hoses
- Fuel Pressure Regulator not properly seated in the module.
- Debris near or in the modules fuel pick up.

Were the above items in good working condition?

Yes >> Go To 5

No >> Repair or replace as necessary.
Perform the POWERTRAIN VERIFICATION TEST. (Refer to 9 - ENGINE - STANDARD PROCEDURE)

5. FUEL PRESSURE REGULATOR

WARNING: The fuel system is under a constant pressure (even with the engine off). Before testing or servicing any fuel system hose, fitting or line, the fuel system pressure must be released. Failure to follow these instructions can result in personal injury or death.
Remove the Fuel Tank Module.

Replace the Fuel Pressure Regulator.

Install the Fuel Pump Module and the Fuel Tank Module in accordance with the service information.

Retest the fuel pressure.

Is the fuel pressure within specification?

Yes >> Test complete.
Perform the POWERTRAIN VERIFICATION TEST. (Refer to 9 - ENGINE - STANDARD PROCEDURE)

No >> Replace the Fuel Pump Module.
Perform the POWERTRAIN VERIFICATION TEST. (Refer to 9 - ENGINE - STANDARD PROCEDURE)

6. FUEL PUMP RELAY FUSED B+ CIRCUIT OPEN

Turn the ignition off.

Remove the Fuel Pump Relay from the IPM.

Using a 12 volt test light connected to ground, probe the (A35) Fused B+ circuit at the relay connector.

Does the test illuminate brightly?

Yes >> Go To 7

No >> Repair the open in the (A35) Fused B+ circuit.
Perform the POWERTRAIN VERIFICATION TEST. (Refer to 9 - ENGINE - STANDARD PROCEDURE)

7. (N1) FUEL PUMP RELAY OUTPUT CIRCUIT OPEN

Turn the ignition off.

Disconnect the Fuel Pump Module harness connector.

Measure the resistance of the (N1) Fuel Pump Relay Output circuit from the relay connector to the fuel pump module connector.

Is the resistance below 5.0 ohms?

Yes >> Replace the Fuel Pump Relay.
Perform the POWERTRAIN VERIFICATION TEST. (Refer to 9 - ENGINE - STANDARD PROCEDURE)

No >> Repair the open in the (N1) Fuel Pump Relay Output circuit.
Perform the POWERTRAIN VERIFICATION TEST. (Refer to 9 - ENGINE - STANDARD PROCEDURE)

*HARD START FUEL SYSTEM

For the Engine circuit diagram (Refer to 9 - ENGINE - SCHEMATICS AND DIAGRAMS).

For a complete wiring diagram **Refer to Section 8W**.

Possible Causes
FUEL CONTAMINATION
RESTRICTED FUEL SUPPLY LINE
FUEL PUMP INLET STRAINER PLUGGED
FUEL PUMP MODULE
FAULTY FUEL PUMP MODULE
FUEL INJECTOR(S)

Diagnostic Test

1. CHECKING FUEL PRESSURE

Turn the ignition off.

WARNING: The fuel system is under a constant pressure (even with the engine off). Before testing or servicing any fuel system hose, fitting or line, the fuel system pressure must be released. Failure to follow these instructions can result in personal injury or death.

Install a fuel pressure gauge at the engine.

Ignition on, engine not running.

With a scan tool, actuate the ASD Fuel System test and observe the fuel pressure gauge.

NOTE: Fuel pressure specification is 407 KPa +/- 34 KPa (59 psi +/- 5 psi).

Choose a conclusion that best matches your fuel pressure reading.

Below Specification
Go To 2

Within Specification
Go To 4

2. RESTRICTED FUEL SUPPLY LINE

Turn the ignition off.

WARNING: The fuel system is under a constant pressure (even with the engine off). Before testing or servicing any fuel system hose, fitting or line, the fuel system pressure must be released. Failure to follow these instructions can result in personal injury or death.

Raise vehicle on hoist, and disconnect the fuel supply line at the fuel pump module.

Install special tool #6539 (5/16″) #6631(3/8″) fuel line adapter and the fuel pressure gauge between the fuel supply line and the fuel pump module.

Ignition on, engine not running.

With the scan tool, actuate the ASD Fuel System test and observe the fuel pressure gauge.

NOTE: Fuel pressure specification is 407 KPa +/- 34 KPa (59 psi +/- 5 psi).

Is the fuel pressure within specification?

Yes >> Visually and physically inspect the fuel supply lines between the fuel tank and the fuel rail. Repair/replace as necessary.
Perform the POWERTRAIN VERIFICATION TEST. (Refer to 9 - ENGINE - STANDARD PROCEDURE)

No >> Go To 3

3. CHECKING THE FUEL INLET STRAINER

Turn the ignition off.

WARNING: The fuel system is under a constant pressure (even with the engine off). Before testing or servicing any fuel system hose, fitting or line, the fuel system pressure must be released. Failure to follow these instructions can result in personal injury or death.
Remove the Fuel Pump Module and inspect the Fuel Inlet Strainer.

Is the Fuel Inlet Strainer plugged?

Yes >> Replace the Fuel Pump Inlet Strainer.
Perform the POWERTRAIN VERIFICATION TEST. (Refer to 9 - ENGINE - STANDARD PROCEDURE)

No >> Replace the Fuel Pump Module.
Perform the POWERTRAIN VERIFICATION TEST. (Refer to 9 - ENGINE - STANDARD PROCEDURE)

4. FUEL PUMP MODULE

NOTE: Before continuing visually and physically inspect the fuel delivery system for external leaks or damage. Repair / replace as necessary.
Turn the ignition off.

WARNING: The fuel system is under a constant pressure (even with the engine off). Before testing or servicing any fuel system hose, fitting or line, the fuel system pressure must be released. Failure to follow these instructions can result in personal injury or death.
Install special tool #6539 (5/16″) or #6631 (3/8″) fuel line adapter.

Install the fuel pressure gauge.

Start the engine and allow the fuel system to reach maximum pressure.

Turn the ignition off.

NOTE: Fuel specification is 407 KPa +/- 34 KPa (59 psi +/- 5 psi).
Using special tool #C4390, Hose Clamp Pliers, pinch the rubber fuel line between the fuel pressure gauge and the engine.

Monitor the fuel pressure gauge for a minimum of 5 minutes.

NOTE: The pressure should not fall below 241 KPa (35 psi)

Does the fuel pressure drop?

Yes >> Replace Fuel Pump Module.
Perform the POWERTRAIN VERIFICATION TEST. (Refer to 9 - ENGINE - STANDARD PROCEDURE)

No >> Go To 5

5. FUEL INJECTOR(S)

WARNING: The fuel system is under a constant pressure (even with the engine off). Before testing or servicing any fuel system hose, fitting or line, the fuel system pressure must be released. Failure to follow these instructions can result in personal injury or death.
Remove special tool #C4390.

Start the engine and allow the fuel system to reach maximum pressure.

Turn the ignition off.

NOTE: Fuel specification is 407 KPa +/- 34 KPa (59 psi +/- 5 psi).
Using special tool #C4390, Hose Clamp Pliers, pinch the rubber fuel line between the fuel pressure gauge and fuel pump module.

Monitor the fuel pressure gauge for a minimum of 5 minutes.

NOTE: The pressure should not fall below 241 KPa (35 psi)

Does the fuel pressure drop?

Yes >> Replace the leaking fuel injectors.
Perform the POWERTRAIN VERIFICATION TEST. (Refer to 9 - ENGINE - STANDARD PROCEDURE)

No >> Check the fuel for contaminants.
Perform the POWERTRAIN VERIFICATION TEST. (Refer to 9 - ENGINE - STANDARD PROCEDURE)

*ENGINE CRANKS BUT DOES NOT START

For a complete wiring diagram **Refer to Section 8W**.

Possible Causes
NO START PRE-TEST
POWERTRAIN FUSES OPEN
SECONDARY INDICATORS PRESENT
ENGINE MECHANICAL PROBLEM
ASD RELAY OUTPUT CIRCUIT OPEN
FUEL CONTAMINATION

Diagnostic Test

1. NO START PRE-TEST

NOTE: The following list of items must be checked before continuing with any no start tests.
The battery must be fully charged and in good condition. A low charged battery may produce invalid test results. If the battery is low, charge the battery and then attempt to start the vehicle by cranking the engine for 15 seconds, 3 consecutive times.

This will allow any DTCs to set that may have been erased due to a dead battery.

Try to communicate with PCM if not able to communicate check fuses.

Make sure the Powers and Ground to the PCM are OK.

Make sure the PCM communicates with the scan tool and that there are no DTCs stored in the PCM memory. If the PCM reports a No Response condition, refer to section 8 Electrical Electronic Control Module Electrical Diagnostics for the proper tests.

Read the PCM DTCs with the scan tool. If any DTCs are present, they must be repaired before continuing with any other No Start diagnostic tests. Refer to the Table of Contents for the related P-code that is reported by the PCM.

Make sure that the Bus is functional. Attempt to communicate with the Instrument Cluster and VTSS, If you are unable to establish communications refer to 8 Electrical Electronic Control Module Electrical Diagnostics for the proper Diagnostic procedures.

The Sentry Key Immobilizer System must be operating properly. Check for proper communication with the scan tool and check for DTCs that may be stored in the Sentry Key Immobilizer Module (SCREEM). Repair the DTC(s) before continuing.

If no DTCs are found, using the scan tool, select Clear PCM (BATT Disconnect).

Crank the engine several times. Using the scan tool, read DTCs. If a DTC is present perform the DTC diagnostics before continuing.

Were any problems found?

Yes >> Repair as necessary.
Perform the POWERTRAIN VERIFICATION TEST. (Refer to 9 - ENGINE - STANDARD PROCEDURE)

No >> Go To 2

2. OPEN FUSE

Check for any open fuses in both IPM (PDC) or Junction Block that may be related to the No Start condition.

Are any of the fuses open?

Yes >> Replace the open fuse and check the related circuit(s) for a short to ground.
Perform the POWERTRAIN VERIFICATION TEST. (Refer to 9 - ENGINE - STANDARD PROCEDURE)

No >> Go To 3

3. SECONDARY INDICATORS PRESENT

Ignition on, engine not running.

With the scan tool, under DTCs & Related Functions, read the Secondary Indicators while cranking the engine.

Are there any Secondary Indicators present while cranking the engine?

Yes >> Refer to the Engine Electrical Diagnostics group and perform the tests related to the secondary indicator that is reported by the scan tool.
Perform the POWERTRAIN VERIFICATION TEST. (Refer to 9 - ENGINE - STANDARD PROCEDURE)

No >> Go To 4

4. POSSIBLE MECHANICAL PROBLEMS

Check for any of the following conditions/mechanical problems.

ENGINE VALVE TIMING - must be within specifications, check for broken timing components.

ENGINE COMPRESSION - must be within specifications.

ENGINE EXHAUST SYSTEM - must be free of any restrictions or leaks.

Are there any engine mechanical problems?

Yes >> Repair as necessary.
Perform the POWERTRAIN VERIFICATION TEST. (Refer to 9 - ENGINE - STANDARD PROCEDURE)

No >> Go To 5

5. (K542) ASD RELAY OUTPUT CIRCUIT OPEN

Turn the ignition off.

Remove the ASD relay from the IPM.

Disconnect the PCM harness connectors.

Verify the ASD Relay is getting voltage on the Fused B+ circuits before continuing.

CAUTION: Do not probe the PCM harness connectors. Probing the PCM harness connectors will damage the PCM terminals resulting in poor terminal to pin connection. Install Miller Special Tool #8815 to perform diagnosis.

Measure the resistance of the ASD Relay Output circuit from the ASD Relay connector to the appropriate terminals of special tool #8815, Ignition coil, and the fuel injectors.

Is the resistance below 5.0 ohms?

Yes >> Go To 6

No >> Repair the open in the (K542) ASD Relay Output circuit.
Perform the POWERTRAIN VERIFICATION TEST. (Refer to 9 - ENGINE - STANDARD PROCEDURE)

6. FUEL PUMP DELIVERY

Verify that the Fuel tank is not empty before continuing.

Follow the diagnostics for Checking Fuel Delivery in the Driveability section of this manual.

Was the No Start condition solved after following the above diagnostic test?

Yes >> Test Complete.

No >> Check for contamination/water in the fuel. Make sure the fuel being used in this vehicle meets manufactures Fuel Requirement, refer to the service manual.

Perform the POWERTRAIN VERIFICATION TEST. (Refer to 9 - ENGINE - STANDARD PROCEDURE)

*FUEL PRESSURE LEAK DOWN

For a complete wiring diagram **Refer to Section 8W**.

Possible Causes
FUEL PUMP MODULE
FUEL INJECTOR(S)

Diagnostic Test

1. FUEL PUMP MODULE

NOTE: Before continuing visually and physically inspect the fuel delivery system for external leaks or damage. Repair / replace as necessary.
Turn the ignition off.

WARNING: The fuel system is under a constant pressure (even with the engine off). Before testing or servicing any fuel system hose, fitting or line, the fuel system pressure must be released. Failure to follow these instructions can result in personal injury or death.
Install special tool #6539 (5/16″) or #6631 (3/8″) fuel line adapter.

Install the fuel pressure gauge.

Start the engine and allow the fuel system to reach maximum pressure.

Turn the ignition off.

NOTE: Fuel specification is 407 KPa +/- 34 KPa (59 psi +/- 5 psi).
Using special tool #C4390, Hose Clamp Pliers, pinch the rubber fuel line between the fuel pressure gauge and the engine.

Monitor the fuel pressure gauge for a minimum of 5 minutes.

NOTE: The pressure should not fall below 241 KPa (35 psi)

Does the fuel pressure drop?

Yes >> Replace Fuel Pump Module.
Perform the POWERTRAIN VERIFICATION TEST. (Refer to 9 - ENGINE - STANDARD PROCEDURE)

No >> Go To 2

2. FUEL INJECTOR(S)

WARNING: The fuel system is under a constant pressure (even with the engine off). Before testing or servicing any fuel system hose, fitting or line, the fuel system pressure must be released. Failure to follow these instructions can result in personal injury or death.
Remove special tool #C4390.

Start the engine and allow the fuel system to reach maximum pressure.

Turn the ignition off.

NOTE: Fuel specification is 407 KPa +/- 34 KPa (59 psi +/- 5 psi).
Using special tool #C4390, Hose Clamp Pliers, pinch the rubber fuel line between the fuel pressure gauge and fuel pump module.

Monitor the fuel pressure gauge for a minimum of 5 minutes.

NOTE: The pressure should not fall below 241 KPa (35 psi)

Does the fuel pressure drop?

Yes >> Replace the leaking fuel injectors.
Perform the POWERTRAIN VERIFICATION TEST. (Refer to 9 - ENGINE - STANDARD PROCEDURE)

No >> Test Complete.

*NO CRANK CONDITION

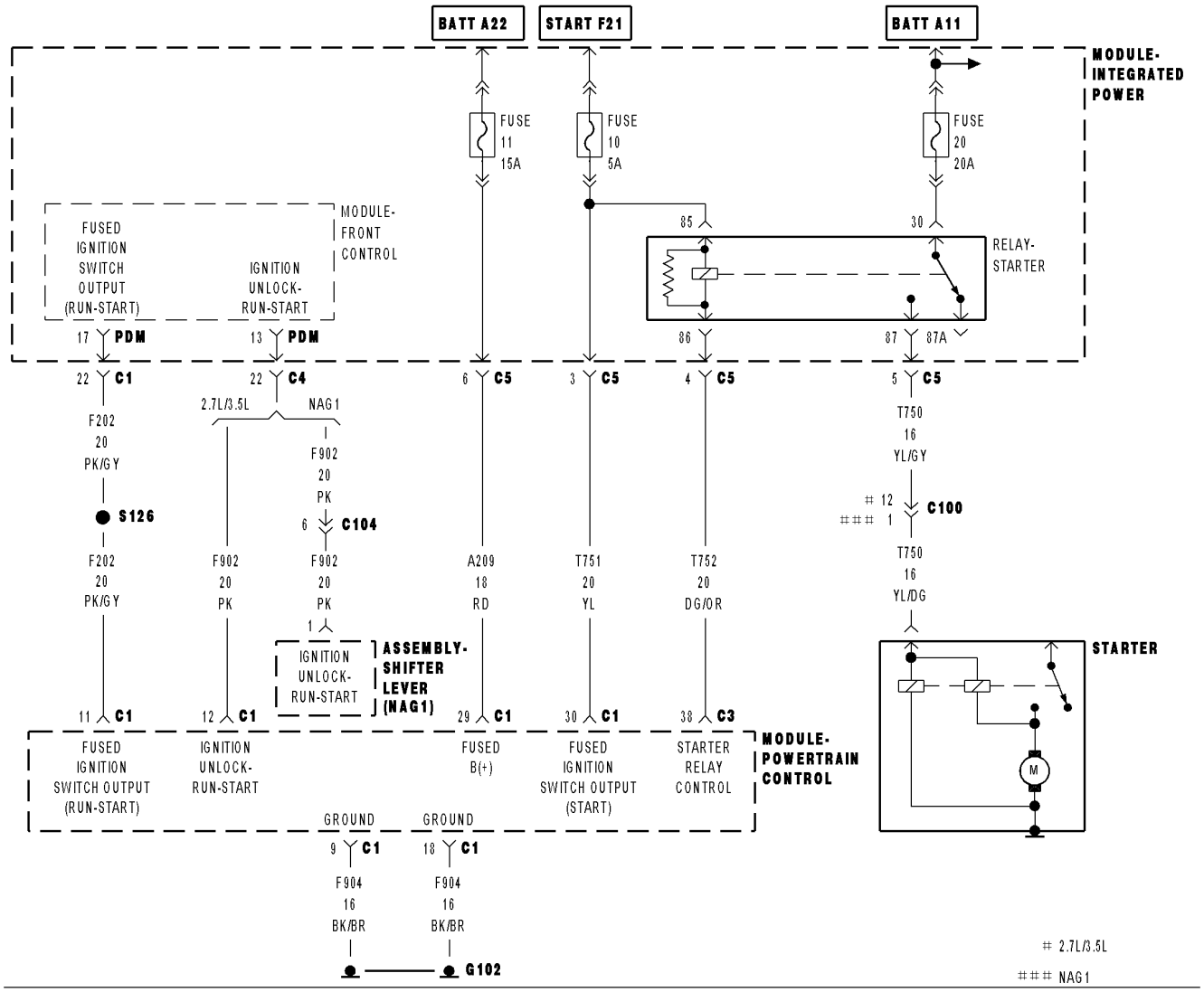

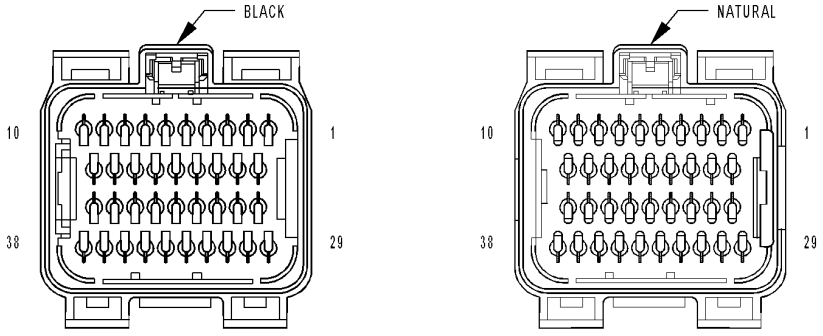

MODULE-
POWERTRAIN
CONTROL C1

MODULE-
POWERTRAIN
CONTROL C3

8133a634

For a complete wiring diagram **Refer to Section 8W**.

Possible Causes
MECHANICAL CONDITION
BATTERY CIRCUIT RESISTANCE TOO HIGH
FUSED IGNITION SWITCH OUTPUT CIRCUITS
FUSED B+ CIRCUIT OPEN
(T752) STARTER RELAY CONTROL CIRCUIT OPEN
(T750) STARTER RELAY OUTPUT CIRCUIT OPEN
TRANSMISSION RANGE SENSOR
STARTER RELAY
STARTER

Diagnostic Test

1. MECHANICAL CONDITION

NOTE: Verify the battery is fully charged and capable of passing a load test before continuing.

WARNING: Make sure the battery is disconnected, then wait two minutes before proceeding. Failure to do so may result in personal injury or possible death.

Turn the engine over by hand to make sure the engine is not seized.

Is the engine able to turn over?

Yes >> Go To 2

No >> Repair the mechanical condition preventing the starter motor from cranking.
Perform the POWERTRAIN VERIFICATION TEST. (Refer to 9 - ENGINE - STANDARD PROCEDURE)

2. EXCESSIVE RESISTANCE IN THE BATTERY CIRCUIT

Turn the ignition off.

Check the Battery Cables for excessive resistance using the service information procedure.

Did either Battery Cable have a voltage drop greater than 0.2 of a volt?

Yes >> Repair the excessive resistance in the Battery circuit.
Perform the POWERTRAIN VERIFICATION TEST. (Refer to 9 - ENGINE - STANDARD PROCEDURE)

No >> Go To 3

3. STARTER RELAY

Turn ignition off.

Remove the Starter Relay from IPM.

CAUTION: The Parking Brake must be on and the Transmission must be in park for a vehicle equipped with an automatic transmission.

WARNING: When the engine is operating, do not stand in direct line with the fan. Do not put your hands near the pulleys, belts, or fan. Do not wear loose clothing. Failure to follow these instructions can result in personal injury or death.

Briefly connect a jumper wire between Fused B+ circuit and the (T750) Starter Relay Output circuit.

Did the Starter Motor crank the engine?

Yes >> Go To 4

No >> Go To 6

4. (T751) FUSED IGNITION SWITCH OUTPUT CIRCUIT

Ignition on, engine not running.

Using a 12-volt test light, probe the (T751) Fused Ignition Switch Output circuit in the Starter Relay connector.

While observing 12-volt test light, hold ignition key in the start position.

Does the test light illuminate brightly?

Yes >> Go To 5

No >> Repair the excessive resistance in the (T751) Fused Ignition Switch Output circuit. Inspect related fuses and repair as necessary.
Perform the POWERTRAIN VERIFICATION TEST. (Refer to 9 - ENGINE - STANDARD PROCEDURE)

5. (T752) STARTER RELAY CONTROL CIRCUIT OPEN

Turn the ignition off.

Disconnect the PCM harness connectors.

Measure the resistance in the (T752) Starter Relay Control circuit from the Relay terminal to the appropriate terminals of special tool #8815.

Is the resistance below 5.0 ohms?

Yes >> Replace the Starter Motor Relay.
Perform the POWERTRAIN VERIFICATION TEST. (Refer to 9 - ENGINE - STANDARD PROCEDURE)

No >> Repair the open in the (T752) Starter Relay Control circuit.
Perform the POWERTRAIN VERIFICATION TEST. (Refer to 9 - ENGINE - STANDARD PROCEDURE)

6. FUSED B+ CIRCUIT OPEN

Turn the ignition off.

Using a 12-volt test light connected to ground, probe the Fused B+ circuit at the Starter Relay terminal.

Does the test light illuminate brightly?

Yes >> Go To 7

No >> Repair the excessive resistance in the Fused B+ circuit. Inspect related fuses and repair as necessary.
Perform the POWERTRAIN VERIFICATION TEST. (Refer to 9 - ENGINE - STANDARD PROCEDURE)

7. (T750) STARTER RELAY OUTPUT CIRCUIT OPEN

Disconnect the Starter Relay Output connector from the Starter Solenoid.

Measure the resistance of the (T750) Starter Relay Output circuit between the Relay and the Solenoid harness connector.

Is the resistance below 5.0 ohms?

Yes >> Go To 8

No >> Repair the open in the (T750) Starter Relay Output circuit.
Perform the POWERTRAIN VERIFICATION TEST. (Refer to 9 - ENGINE - STANDARD PROCEDURE)

8. STARTER

If there are no other possible causes remaining, review repair.

Repair

Replace the Starter.

Perform the POWERTRAIN VERIFICATION TEST. (Refer to 9 - ENGINE - STANDARD PROCEDURE)

*NO RESPONSE WITH A NO START CONDITION

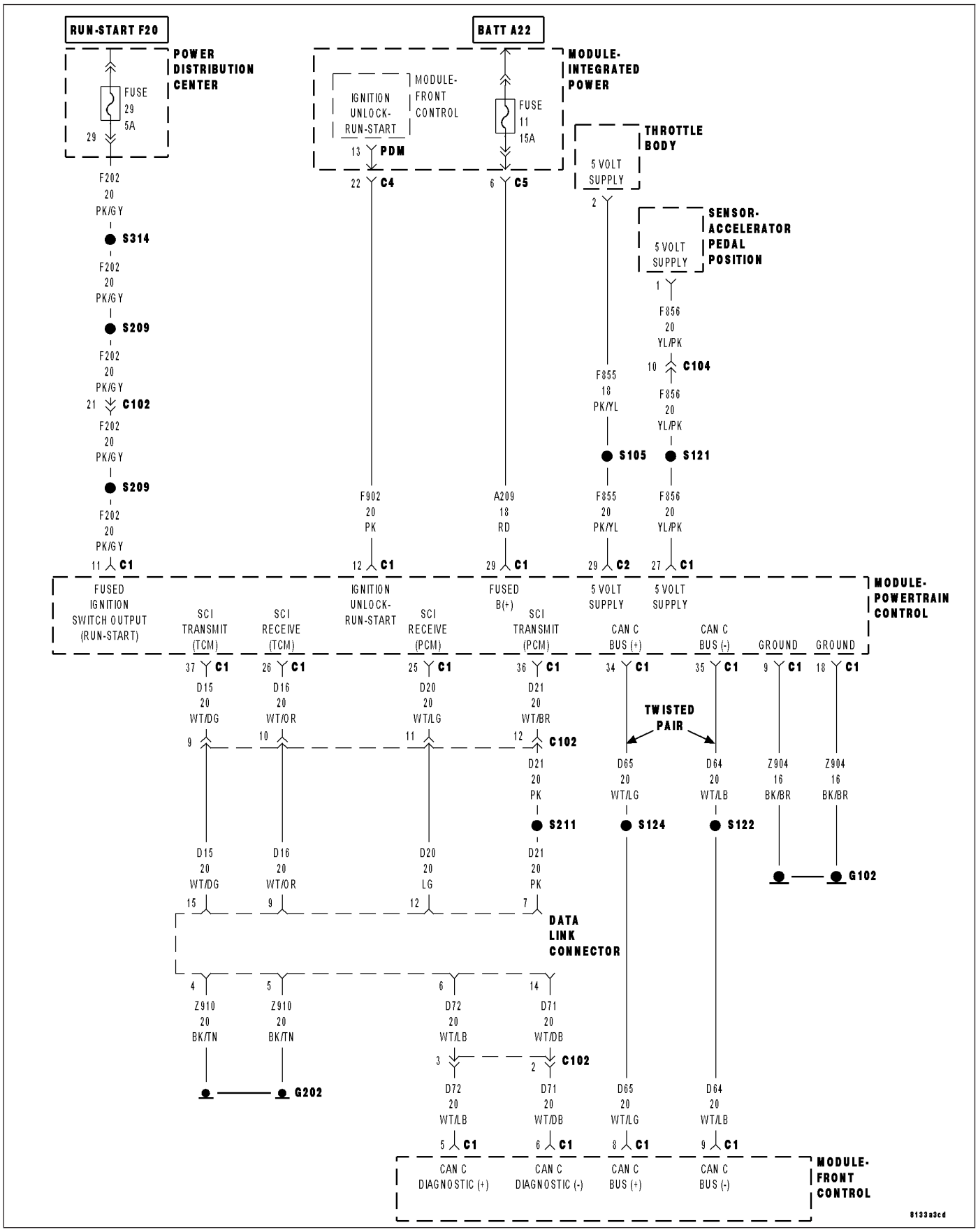

For a complete wiring diagram **Refer to Section 8W**.

Possible Causes
(K51) ASD CONTROL CIRCUIT SHORTED TO BATTERY VOLTAGE
(K51) ASD CONTROL CIRCUIT OPEN
(K51) ASD CONTROL CIRCUIT SHORTED TO GROUND
(A209) PCM FUSED B+ CIRCUIT
(F202) (F902) PCM FUSED IGNITION SWITCH OUTPUT CIRCUITS
(Z904) PCM GROUND CIRCUITS
(D65) CAN C BUS (+) CIRCUIT OPEN
(D64) CAN C BUS (-) CIRCUIT OPEN
PCM

Diagnostic Test

1. TEST FOR INTERMITTENT CONDITION

Turn the ignition on.

NOTE: Ensure the IOD fuse is installed and battery voltage is between 10.0 and 16.0 volts.

NOTE: The scan tool and cable must be operating properly for the results of this test to be valid.
With the scan tool, select ECU view.

NOTE: A red X will be next to the module that is not communicating, indicating that the module is not active on the Bus network. A green check indicates that the module is active on the Bus network.

NOTE: Check the FCM for any active CAN C hardware DTCs, perform DTC before proceeding.

Does the scan tool display a red X next to the module?

Yes >> Go To 2

No >> The no response condition is not present at this time. Using the wiring diagram/schematic as a guide, inspect the wiring for chafed, pierced, pinched, and partially broken wires and the wiring harness connectors for broken, bent , pushed out, and corroded terminals.

2. ASD CONTROL CIRCUIT OPERATION

NOTE: Before continuing check the following for proper operation, repair as necessary.
Battery voltage above 11 volts.
Battery cable terminals are clean and fastened properly.
Chassis ground circuit is clean and fastened properly.
Turn the ignition off.

Remove the ASD Relay from the IPM.

Using a 12-volt test light connected to battery voltage, probe the (K51) ASD Control circuit in the IPM.

Monitor the test light.

Turn the ignition on.

NOTE: The test light will illuminate for approximately 3 seconds and then turn off, this is considered normal operation.

Does the test light illuminate brightly?

Yes >> Go To 9

No >> Go To 3

3. (K51) ASD CONTROL CIRCUIT SHORT TO BATTERY VOLTAGE

Turn the ignition off.

Disconnect the PCM harness connectors.

Turn the ignition on.

Measure the voltage on the (K51) ASD Control circuit in the IPM.

Does the voltmeter indicate voltage present?

Yes >> Repair the short to voltage in the (K51) ASD Control circuit.
Perform the POWERTRAIN VERIFICATION TEST. (Refer to 9 - ENGINE - STANDARD PROCEDURE)

No >> Go To 4

4. (K51) ASD RELAY CONTROL CIRCUIT OPEN

Turn the ignition off.

CAUTION: Do not probe the PCM harness connectors. Probing the PCM harness connectors will damage the PCM terminals resulting in poor terminal to pin connection. Install Miller Special Tool #8815 to perform diagnosis.

Measure the resistance of the (K51) ASD Relay Control circuit from the IPM to the appropriate terminals of special tool #8815.

Is the resistance below 5.0 ohms?

Yes >> Go To 5

No >> Repair the open in the (K51) ASD Relay Control circuit.
Perform the POWERTRAIN VERIFICATION TEST. (Refer to 9 - ENGINE - STANDARD PROCEDURE)

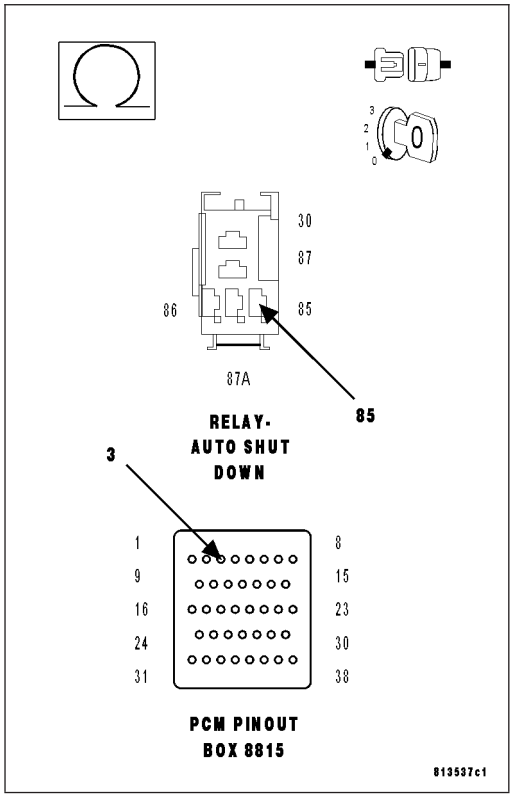

5. (K51) ASD RELAY CONTROL CIRCUIT SHORTED TO GROUND

Measure the resistance between ground and the (K51) ASD Relay Control circuit in the IPM.

Is the resistance below 100 ohms?

Yes >> Repair the short to ground in the (K51) ASD Relay Control circuit.

Perform the POWERTRAIN VERIFICATION TEST. (Refer to 9 - ENGINE - STANDARD PROCEDURE)

No >> Go To 6

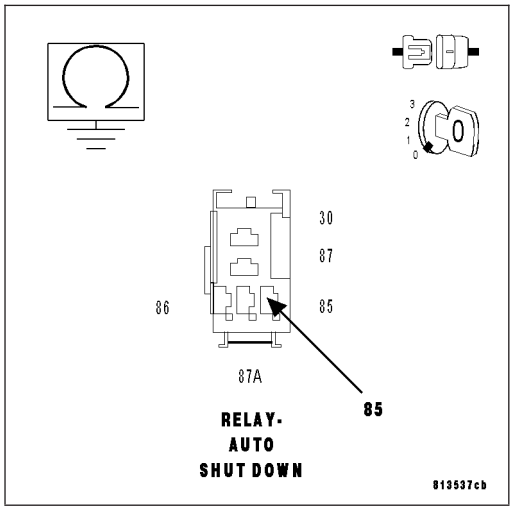

6. (A209) PCM FUSED B+ CIRCUIT

CAUTION: Do not probe the PCM harness connectors. Probing the PCM harness connectors will damage the PCM terminals resulting in poor terminal to pin connection. Install Miller Special Tool #8815 to perform diagnosis.

Using a 12-volt test light connected to ground probe the (A209) Fused B+ circuit at the appropriate terminal of special tool #8815.

NOTE: The test light should be illuminated and bright. Compared the brightness to that of a direct connection to the battery.

Does the test light illuminate brightly?

Yes >> Go To 7

No >> Repair the open or short to ground in the (A209) Fused B+ circuit. Inspect and replace fuses as necessary.

Perform the POWERTRAIN VERIFICATION TEST. (Refer to 9 - ENGINE - STANDARD PROCEDURE)

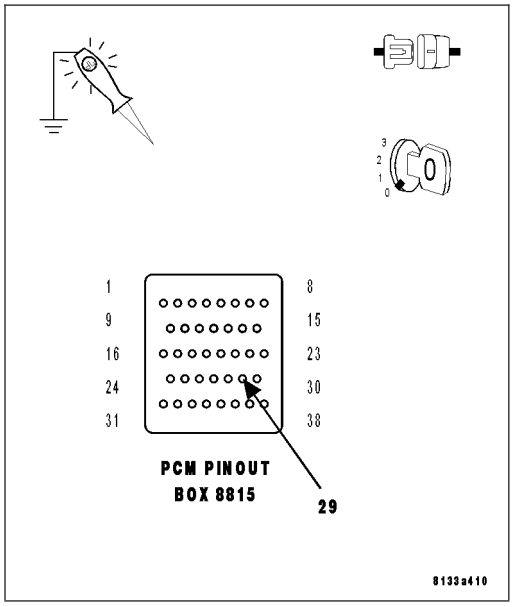

7. (F202)/(F902) PCM FUSED IGNITION SWITCH CIRCUITS

Turn the ignition on.

Using a 12-volt test light connected to ground, probe both the PCM (F202) and (F902) Fused Ignition Switch Output circuist in the appropriate terminals of special tool #8815.

NOTE: The test light should be illuminated and bright at both terminals. Compared the brightness to that of a direct connection to the battery.

Does the test light illuminate brightly?

Yes >> Go To 8

No >> Repair the (F202)/(F902) Ignition Switch Output circuits as necessary. Inspect and replace fuses as necessary.
Perform the POWERTRAIN VERIFICATION TEST. (Refer to 9 - ENGINE - STANDARD PROCEDURE)

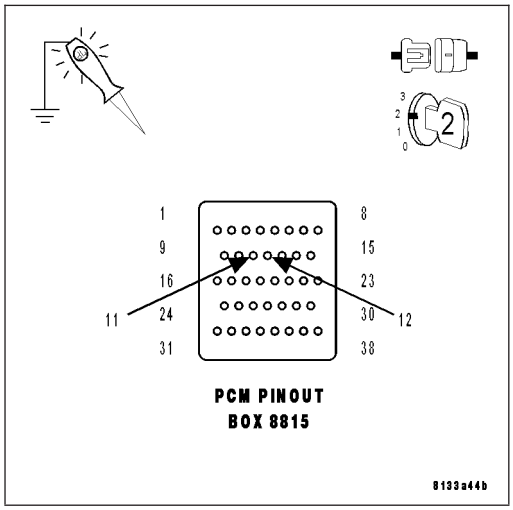

8. (Z904) PCM GROUND CIRCUITS

Turn the ignition off.

Using a 12-volt test light connected to battery voltage, probe the both (Z904) PCM ground circuits in the appropriate terminals of special tool #8815.

NOTE: The test light should be illuminated and bright. Compared the brightness to that of a direct connection to the battery.

Does the test light illuminate brightly?

Yes >> Replace and program the Powertrain Control Module in accordance with the service information.

No >> Repair the PCM ground circuit(s) as necessary.
Perform the POWERTRAIN VERIFICATION TEST. (Refer to 9 - ENGINE - STANDARD PROCEDURE)

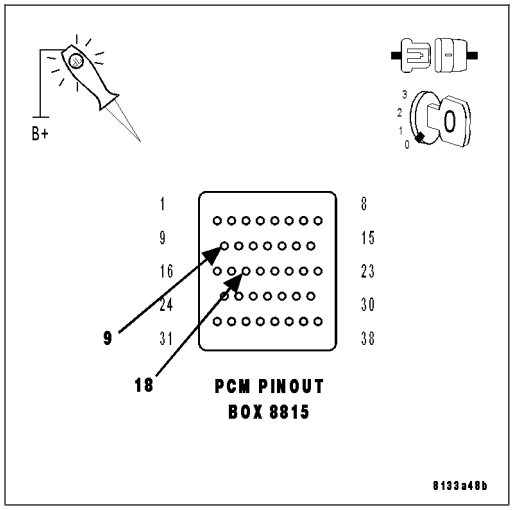

9. (D65) CAN C BUS (+) CIRCUIT OPEN

Turn the ignition off.

Disconnect the FCM C1 harness connector.

Measure the resistance of the (D65) CAN C Bus (+) circuit between the FCM connector and the appropriate terminal of the special tool #8815.

Is resistance below 5.0 ohms?

Yes >> Go To 10

No >> Repair the (D65) CAN C Bus (+) circuit for an open.
Perform the POWERTRAIN VERIFICATION TEST. (Refer to 9 - ENGINE - STANDARD PROCEDURE)

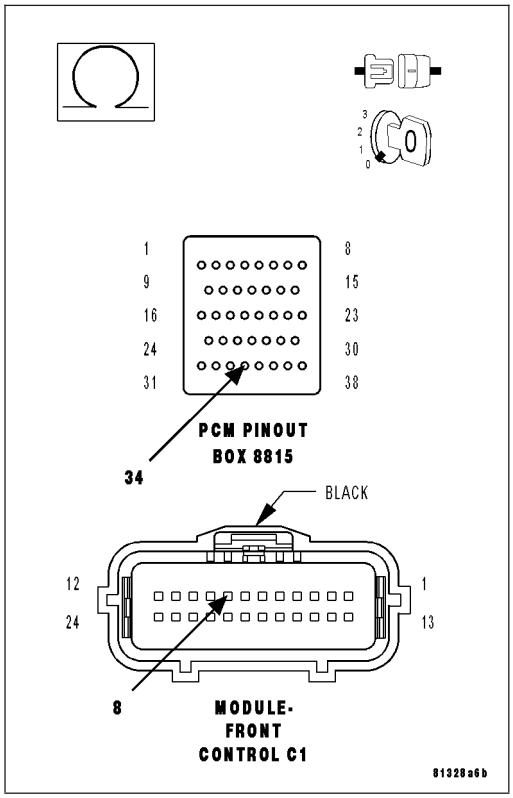

10. (D64) CAN C BUS (-) CIRCUIT OPEN

Measure the resistance of the (D64) CAN C Bus (-) circuit between the FCM connector and the appropriate terminal of the special tool #8815.

Is resistance below 5.0 ohms?

Yes >> Replace and program the Powertrain Control Module in accordance with the service information.
Perform the POWERTRAIN VERIFICATION TEST. (Refer to 9 - ENGINE - STANDARD PROCEDURE)

No >> Repair the (D64) CAN C Bus (-) circuit for an open.
Perform the POWERTRAIN VERIFICATION TEST. (Refer to 9 - ENGINE - STANDARD PROCEDURE)

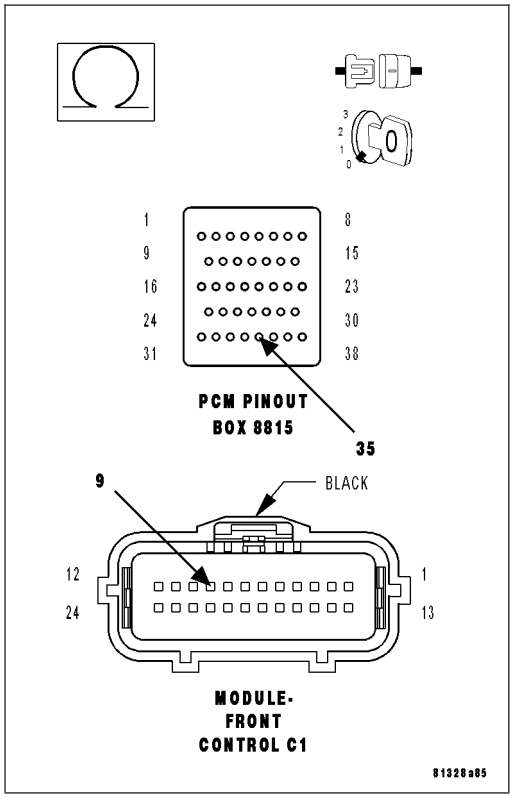

*START AND STALL CONDITION

For the Engine circuit diagram (Refer to 9 - ENGINE - SCHEMATICS AND DIAGRAMS).

For a complete wiring diagram **Refer to Section 8W**.

Possible Causes
CURRENT PCM DTCS
CURRENT SKIM DTCS
THROTTLE POSITION SENSOR SWEEP
TP SENSOR NO.1 VOLTAGE GREATER THAN 0.92 VOLTS WITH THROTTLE CLOSED
ECT SENSOR
OTHER POSSIBLE CAUSES FOR START AND STALL CONDITION
FUEL CONTAMINATION

Diagnostic Test

1. CHECKING DTCS

Ignition on, engine not running.
With a scan tool, read DTCs.

Are any DTCs present?

Yes >> Refer to the appropriate Diagnostic Procedure.
Perform the POWERTRAIN VERIFICATION TEST. (Refer to 9 - ENGINE - STANDARD PROCEDURE)

No >> Go To 2

2. CHECKING SKIM DTCS

NOTE: If you are unable to communicate with the SKIM/SKREEM, refer to the VEHICLE THEFT AND SECURITY ELECTRICAL DIAGNOSTICS in Section 8 and perform the appropriate diagnostics.
With the scan tool, read the SKIM codes.

Are there any SKIM DTCs?

Yes >> Refer to the Sentry Key Vehicle Theft Security Electrical Diagnostics in Section 8.
Perform the POWERTRAIN VERIFICATION TEST. (Refer to 9 - ENGINE - STANDARD PROCEDURE)

No >> Go To 3

3. TP SENSOR SWEEP

Ignition on, engine not running.
Using a scan tool, perform the pedal follower test and monitor both TP Sensor voltage readings.

Was the voltage change smooth for both sensors?

Yes >> Go To 4

No >> Replace the Throttle Body Assembly.
Perform the POWERTRAIN VERIFICATION TEST. (Refer to 9 - ENGINE - STANDARD PROCEDURE)

4. TP SENSOR NO.1 VOLTAGE GREATER THAN 0.92 VOLTS WITH THROTTLE CLOSED

With the scan tool, read Throttle Position Sensor No.1 voltage.
Throttle must be against its stop.

Is the voltage 0.92 or less with the Throttle closed?

Yes >> Go To 5

No >> Check for a binding throttle condition. If OK, replace the Throttle Body Assembly.
Perform the POWERTRAIN VERIFICATION TEST. (Refer to 9 - ENGINE - STANDARD PROCEDURE)

5. ECT SENSOR OPERATION

NOTE: For this test to be valid, the thermostat must be operating correctly.

NOTE: This test works best if performed on a cold engine (cold soaked).

NOTE: If the vehicle was allowed to sit over night with no engine start, coolant temperature should be near ambient temperatures.
Ignition on, engine not running.
With the scan tool, read the ECT value.

NOTE: If engine coolant temperature is above 82° C (180° F), allow the engine to cool until 65° C (150° F) is reached.
Start the engine.
During engine warm-up, monitor the Engine Coolant Temperature value. The temperature value change should be a smooth transition from start up to normal operating temp 82° C (180° F). The value should reach at least 82° C (180° F).

Did the Engine Temperature value increase smoothly and did it reach at least 82° C (180° F)?

Yes >> Go To 6

No >> Replace the Engine Coolant Temperature Sensor.
Perform the POWERTRAIN VERIFICATION TEST. (Refer to 9 - ENGINE - STANDARD PROCEDURE)

6. OTHER POSSIBLE CAUSES OF START AND STALL CONDITION

The following additional items should be checked as a possible cause for a start and stall condition.
Refer to any Technical Service Bulletins (TSBs) that may apply to the symptom.
The exhaust system must be free of any restrictions.
The engine compression must be within specifications.
The engine valve timing must be within specifications.
The engine must be free from vacuum leaks.
The throttle body must be free of carbon buildup and dirt.

Do any of the above conditions exist?

Yes >> Repair as necessary.
Perform the POWERTRAIN VERIFICATION TEST. (Refer to 9 - ENGINE - STANDARD PROCEDURE)

No >> Go To 7

7. FUEL PUMP DELIVERY

Verify that the Fuel tank is not empty before continuing.
Follow the diagnostics for Checking Fuel Delivery in this manual.

Was the No Start condition solved after following the above diagnostic test?

Yes >> Test Complete.

No >> Check for contamination/water in the fuel. Ensure the fuel being used in this vehicle meets OEM Fuel Requirement, refer to the service manual.
Perform the POWERTRAIN VERIFICATION TEST. (Refer to 9 - ENGINE - STANDARD PROCEDURE)

STANDARD PROCEDURE

POWERTRAIN VERIFICATION TEST

For the Engine circuit diagram (Refer to 9 - ENGINE - SCHEMATICS AND DIAGRAMS)

For a complete wiring diagram **Refer to Section 8W**.

Diagnostic Test

1. SELECTING THE PROPER VERIFICATION TEST

The following verification test are for different repairs. Select the appropriate Verification test for the repair that has been completed.

Speed Control repair
Go To 2

Charging System repair
Go To 3

NVLD System repair
Go To 4

All other repairs
Go To 5

2. POWERTRAIN VERIFICATION TEST 1

NOTE: If this vehicle is equipped with an Electronic Throttle Control system, and the APP Sensors, PCM, or Throttle Body Assembly have been replaced, use the scan tool to perform the ETC RELEARN function.

NOTE: 2. After completing the Powertrain Verification Test the Transmission Verification Test must be performed.

NOTE: 3. If the PCM has been replaced and the correct VIN and mileage have not been programmed, a DTC will set in the ABS Module, Airbag Module and the SKIM/SKREEM.

NOTE: 4. If the vehicle is equipped with a Sentry Key Remote Entry, Secret Key data must be updated. Refer to the Service Information for the PCM, SKIM/SKREEM and the Transponder (ignition key) for programming information. Using the scan tool, program the Secret Key information into the PCM using the PCM replaced function under the WCM menu.

5. Inspect the vehicle to make sure that all engine components are properly installed and connected.
6. Connect the scan tool to the data link connector and erase all codes.
7. Turn the speed control ON (if equipped, cruise light will be on).
8. Depress and release the SET Switch when the vehicle speed is greater than 35 MPH. The speed control should engage and hold the selected speed.
9. Press and hold the RESUME/ACCEL Switch. The vehicle speed should increase by at least 2 MPH.
10. Press and hold the COAST switch. The vehicle speed should decrease.
11. Using caution, press and release the brake pedal. The speed control should disengage.
12. Bring the vehicle speed back up to 35 MPH.
13. Press the RESUME/ACCEL switch. The speed control should resume the previously set speed.
14. Hold down the SET switch. The vehicle should decelerate.
15. Make sure vehicle speed is greater than 35 mph and release the SET Switch. The vehicle should adjust and set a new vehicle speed.
16. Press and release the CANCEL switch. The speed control should disengage.
17. Bring the vehicle speed back up above 35 mph and engage speed control.
18. Turn the Speed Control Off. (Cruise light will be off). The speed control should disengage.

NOTE: OVERSHOOT/UNDERSHOOT FOLLOWING SPEED CONTROL SET.

20. If the vehicle operator repeatedly presses and releases the SET button with their foot off of the accelerator (referred to as ″lift foot set″), the vehicle may accelerate and exceed the desired set speed by up to 5 mph (8 km/h).
21. It may also decelerate to less than the desired set speed, before finally achieving the desired set speed.
22. The Speed Control System has an adaptive strategy that compensates for vehicle-to-vehicle variations in speed control cable lengths.

23. When the speed control is set with the vehicles operators foot off of the accelerator pedal, the speed control thinks there is excessive speed control cable slack and adapts accordingly.

24. If the ″lift foot sets″ are continually used, a speed control overshoot/undershoot condition will develop.

25. To ″unlearn″ the overshoot/undershoot condition, the vehicle operator has to press and release the set button while maintaining the desired set speed using the accelerator pedal (not decelerating or accelerating).

26. Then turn the cruise control switch to the OFF position (or press the CANCEL button if equipped) after waiting 10 seconds.

27. This procedure must be performed approximately 10-15 times to completely unlearn the overshoot/undershoot condition.

Did the Speed Control pass the above test?

Yes >> Repair is complete.

No >> Check for any related Technical Service Bulletins and/or refer to the appropriate Diagnostic Procedure.

3. POWERTRAIN VERIFICATION TEST 2

1. If this vehicle is equipped with an Electronic Throttle Control system, and the APP Sensors, PCM, or Throttle Body Assembly has been replaced use a scan tool to perform the ETC RELEARN function.

NOTE: 2. After completing the Powertrain Verification Test the Transmission Verification Test must be performed.

NOTE: 3. If the PCM has been replaced and the correct VIN and mileage have not been programmed, a DTC will set in the ABS Module, Airbag Module and the SKIM/SKREEM.

NOTE: 4. If the vehicle is equipped with a Sentry Key Remote Entry, Secret Key data must be updated. Refer to the Service Information for the PCM, SKIM/SKREEM and the Transponder (ignition key) for programming information. Using the scan tool, program the Secret Key information into the PCM using the PCM replaced function under the WCM menu.

5. Inspect the vehicle to make sure that all components related to the repair are properly installed and connected.

6. With the scan tool, clear DTCs.

7. Perform generator output test. Refer to the appropriate service information as necessary.

8. Start the engine and set engine speed to 2000 RPM for at least thirty seconds.

9. Cycle the ignition key off and on.

10. With the scan tool, read the DTCs.

Are any DTCs or symptoms remaining?

Yes >> Check for any Technical Service Bulletins and/or refer to the appropriate Diagnostic Procedure.

No >> Repair is complete.

4. POWERTRAIN VERIFICATION TEST 3

NOTE: Before continuing, ensure that the EELD has been updated with all current parts.

NOTE: A leak may be difficult to detect on a hot vehicle, it is best to perform the test at room temperature.

1. Install the Miller Tool #8404 Evaporative Emission Leak Detector (EELD) according to the instructions in the previous DTC table.

2. Set the smoke/air control switch to AIR.

3. Insert the tester's AIR supply tip (clear hose) into the appropriate calibration orifice on the tester's control panel (based on DTC leak size).

4. Press the remote smoke/air start button.

5. Position the red flag on the air flow meter so it is aligned with the indicator ball.

6. When the calibration is complete, release the remote button. The EELD flow meter is now calibrated in liters per minute to the size of leak indicated by the DTC set in the PCM.

7. Install the service port adapter #8404-14 on the vehicle's service port.

8. Connect the Air supply hose from the EELD to the vehicle.

9. Press the remote button to activate AIR flow.

NOTE: 10. Larger volume fuel tanks, lower fuel levels or if the vehicle is equipped with a Flow Management Valve may indicate high flow and will require 4 to 5 minutes to fill.

11. Compare the flow meter indicator ball reading to the red flag.

12. ABOVE the red flag indicates a leak present.

13. BELOW the red flag indicates a sealed system.

NOTE: If this vehicle is equipped with an Electronic Throttle Control system, and the APP Sensors, PCM, or Throttle Body Assembly have been replaced, use the scan tool to perform the ETC RELEARN function.

14. If the indicator ball shows a leak present, perform the smoke test indicated in the previous test and identify the leak and repair. Perform this verification test when the repair is complete.

Did the indicator ball indicate the a leak is present?

Yes >> Repeat the DTC test to identify the leak and repair.

No >> Repair is complete.

5. POWERTRAIN VERIFICATION TEST 4

NOTE: 1. After completing the Powertrain Verification Test the Transmission Verification Test must be performed.

NOTE: 2. If the PCM has been replaced and the correct VIN and mileage have not been programmed, a DTC will set in the ABS Module, Airbag Module and the SKIM/SKREEM.

NOTE: 3. If the vehicle is equipped with a Sentry Key Remote Entry, Secret Key data must be updated. Refer to the Service Information for the PCM, SKIM/SKREEM and the Transponder (ignition key) for programming information. Using the scan tool, program the Secret Key information into the PCM using the PCM replaced function under the WCM menu.

NOTE: 4. If this vehicle is equipped with an Electronic Throttle Control system, and the APP Sensors, PCM, or Throttle Body Assembly have been replaced, use the scan tool to perform the ETC RELEARN function.

NOTE: 5. When replacing an O2 Sensor, the PCM RAM memory must be cleared, either by disconnecting the PCM C1 connector or momentarily disconnecting the Battery negative terminal.

6. The NGC learns the characteristics of each O2 heater element and these old values should be cleared when installing a new O2 sensor. The customer may experience driveability issues if this is not performed.

7. Inspect the vehicle to make sure that all engine components are properly installed and connected. Reassemble and reconnect components as necessary.

8. Connect the scan tool to the data link connector.

9. Make sure the fuel tank has at least a quarter tank of fuel. Turn off all accessories.

10. If the Catalyst was replaced, with the scan tool go to the Miscellaneous Menu Option ″Catalyst Replaced″ and press enter.

11. If a Comprehensive Component DTC was repaired, perform steps 12 - 14. If a Major OBDII Monitor DTC was repaired skip those steps and continue verification.

12. After the ignition has been off for at least 10 seconds, restart the vehicle and run 2 minutes.

13. With the scan tool, monitor the appropriate pre-test enabling conditions until all conditions have been met. Once the conditions have been met, switch screen to the appropriate OBDII monitor, (Audible beeps when the monitor is running).

14. If the repaired OBDII trouble code has reset or was seen in the monitor while on the road test, the repair is not complete. Check for any related technical service bulletins or flash updates and return to Engine Electrical Diagnostic List.

15. If the conditions cannot be duplicated, erase all DTCs with the Scan tool.

16. If another DTC has set, return to the Engine Electrical Diagnostic List and follow the path specified for that DTC.

Did the OBDII Monitor run successfully and has the Good Trip Counter changed to one or more?

Yes >> Repair is complete.

No >> Check for any related Technical Service Bulletins and/or refer to the appropriate Diagnostic Procedure.

ENGINE ELECTRICAL DIAGNOSTICS - DIESEL

TABLE OF CONTENTS

page

ENGINE ELECTRICAL DIAGNOSTICS - DIESEL
DIAGNOSIS AND TESTING
P0001 - FUEL QUANTITY CONTROL CIRCUIT/OPEN 1044
P0003 - FUEL QUANTITY CONTROL CIRCUIT LOW 1049
P0004 - FUEL QUANTITY CONTROL CIRCUIT HIGH 1054
P0030 - O2 SENSOR 1/1 HEATER CIRCUIT . 1058
P0031 - O2 SENSOR 1/1 HEATER CIRCUIT LOW. 1062
P0032 - O2 SENSOR 1/1 HEATER CIRCUIT HIGH 1065
P0045 - TURBOCHARGER BOOST CONTROL CIRCUIT/OPEN 1069
P0046 - TURBOCHARGER BOOST CONTROL CIRCUIT PERFORMANCE 1073
P0047 - TURBOCHARGER BOOST CONTROL CIRCUIT LOW 1078
P0048 - TURBOCHARGER BOOST CONTROL CIRCUIT HIGH 1082
P0069–MANIFOLD PRESSURE/ BAROMETRIC PRESSURE CORRELATION. 1086
P006D-BAROMETRIC PRESSURE — INLET AIR PRESSURE CORRELATION 1088
P0070 - AMBIENT AIR TEMPERATURE SENSOR STUCK 1092
P0087-FUEL RAIL PRESSURE TOO LOW . . . 1093
P0088-FUEL RAIL PRESSURE TOO HIGH . . 1097
P0089 - FUEL PRESSURE 1 CONTROL PERFORMANCE. 1101
P0090 - FUEL PRESSURE 1 CONTROL CIRCUIT/OPEN 1106
P0091 - FUEL PRESSURE 1 CONTROL CIRCUIT LOW 1110
P0092 - FUEL PRESSURE 1 CONTROL CIRCUIT HIGH. 1115
P0100-MASS AIR FLOW SENSOR 1119
P0102-MASS AIR FLOW SENSOR CIRCUIT LOW. 1127
P0103-MASS AIR FLOW SENSOR CIRCUIT HIGH 1132
P0112-INTAKE AIR TEMPERATURE SENSOR CIRCUIT LOW. 1137
P0113-INTAKE AIR TEMPERATURE SENSOR CIRCUIT HIGH 1141
P0116-ENGINE COOLANT TEMPERATURE SENSOR PERFORMANCE. 1146
P0117-ENGINE COOLANT TEMPERATURE SENSOR CIRCUIT LOW 1152

page

P0118-ENGINE COOLANT TEMPERATURE SENSOR CIRCUIT HIGH 1156
P012C-TURBO INLET AIR PRESSURE SENSOR CIRCUIT LOW 1161
P012D-TURBO INLET AIR PRESSURE SENSOR CIRCUIT HIGH 1167
P0130-O2 SENSOR 1/1 CIRCUIT OPEN 1172
P0131-O2 SENSOR 1/1 CIRCUIT LOW 1176
P0132-O2 SENSOR 1/1 CIRCUIT HIGH 1180
P0134-O2 SENSOR 1/1 SIGNAL INACTIVE . . 1184
P0135-O2 SENSOR 1/1 HEATER PERFORMANCE. 1189
P0182-FUEL TEMPERATURE SENSOR CIRCUIT LOW 1193
P0183-FUEL TEMPERATURE SENSOR CIRCUIT HIGH 1197
P0192-FUEL RAIL PRESSURE SENSOR LOW. 1202
P0193-FUEL RAIL PRESSURE SENSOR HIGH 1208
P0197-ENGINE OIL TEMPERATURE SENSOR CIRCUIT LOW. 1213
P0198-ENGINE OIL TEMPERATURE SENSOR CIRCUIT HIGH 1217
P0201-FUEL INJECTOR 1 CIRCUIT / OPEN . 1222
P0202-FUEL INJECTOR 2 CIRCUIT / OPEN . 1228
P0203-FUEL INJECTOR 3 CIRCUIT / OPEN . 1234
P0204-FUEL INJECTOR 4 CIRCUIT / OPEN . 1240
P0205-FUEL INJECTOR 5 CIRCUIT / OPEN . 1246
P0206-FUEL INJECTOR 6 CIRCUIT / OPEN . 1252
P0234-TURBOCHARGER OVERBOOST CONDITION 1258
P0237-TURBO BOOST PRESSURE SENSOR CIRCUIT LOW 1261
P0238-TURBO BOOST PRESSURE SENSOR CIRCUIT HIGH 1267
P0261-FUEL INJECTOR 1 CIRCUIT LOW . . . 1272
P0262-FUEL INJECTOR 1 CIRCUIT HIGH . . . 1277
P0263-CYLINDER 1 CONTRIBUTION/ BALANCE. 1282
P0264-FUEL INJECTOR 2 CIRCUIT LOW . . . 1284
P0265-FUEL INJECTOR 2 CIRCUIT HIGH . . . 1289
P0266-CYLINDER 2 CONTRIBUTION/ BALANCE. 1294
P0267-FUEL INJECTOR 3 CIRCUIT LOW . . . 1296
P0268-FUEL INJECTOR 3 CIRCUIT HIGH . . . 1301
P0269-CYLINDER 3 CONTRIBUTION/ BALANCE. 1306
P0270-FUEL INJECTOR 4 CIRCUIT LOW . . . 1308
P0271-FUEL INJECTOR 4 CIRCUIT HIGH . . . 1313

P0272-CYLINDER 4 CONTRIBUTION/ BALANCE 1318
P0273-FUEL INJECTOR 5 CIRCUIT LOW . . . 1320
P0274-FUEL INJECTOR 5 CIRCUIT HIGH . . . 1325
P0275-CYLINDER 5 CONTRIBUTION/ BALANCE 1330
P0276-FUEL INJECTOR 6 CIRCUIT LOW . . . 1332
P0277-FUEL INJECTOR 6 CIRCUIT HIGH . . . 1337
P0278-CYLINDER 6 CONTRIBUTION/ BALANCE 1342
P0299-TURBOCHARGER UNDERBOOST CONDITION 1344
P0335-CRANKSHAFT POSITION SENSOR CIRCUIT 1346
P0336-CRANKSHAFT POSITION SENSOR PERFORMANCE. 1354
P0340-CAMSHAFT POSITION SENSOR CIRCUIT 1362
P0341-CAMSHAFT POSITION SENSOR PERFORMANCE. 1370
P0401- EGR SYSTEM PERFORMANCE 1378
P0402- EGR EXCESSIVE FLOW DETECTED . . 1379
P0403-EGR SOLENOID CIRCUIT OPEN 1380
P0407-EGR AIRFLOW THROTTLE POSITION SENSOR CIRCUIT LOW. 1384
P0408-EGR AIRFLOW THROTTLE POSITION SENSOR CIRCUIT HIGH 1390
P0460-FUEL LEVEL SENSOR 1 CIRCUIT . . . 1395
P0462-FUEL LEVEL SENSOR 1 LOW CIRCUIT 1400
P0463-FUEL LEVEL SENSOR 1 HIGH CIRCUIT 1404
P0471-EXHAUST PRESSURE SENSOR 1 PERFORMANCE. 1408
P0472-EXHAUST PRESSURE SENSOR 1 LOW. 1413
P0473-EXHAUST PRESSURE SENSOR 1 HIGH 1419
P0480-COOLING FAN 1 CONTROL CIRCUIT . . 1424
P0481-COOLING FAN 2 CONTROL CIRCUIT . . 1427
P0487-EGR AIRFLOW THROTTLE CONTROL CIRCUIT A OPEN. 1431
P0488-EGR AIRFLOW THROTTLE CONTROL CIRCUIT PERFORMANCE 1435
P0489-EGR CONTROL CIRCUIT LOW 1440
P0490-EGR CONTROL CIRCUIT HIGH 1444
P0504-BRAKE SWITCH SIGNAL CIRCUITS PLAUSIBILITY WITH REDUNDANT CONTACT. 1448
P0513-INVALID SKIM KEY 1454
P0522-ENGINE OIL PRESSURE SENSOR CIRCUIT LOW. 1456
P0523-ENGINE OIL PRESSURE SENSOR CIRCUIT HIGH 1462
P0524- ENGINE OIL PRESSURE IS TOO LOW. 1467
P053A-CRANKCASE VENT HEATER CONTROL CIRCUIT OPEN 1469
P053B-CRANKCASE VENT HEATER CONTROL CIRCUIT LOW 1473
P053C-CRANKCASE VENT HEATER CONTROL CIRCUIT HIGH 1477
P0545-EXHAUST GAS TEMPERATURE SENSOR CIRCUIT LOW - BANK 1 SENSOR 1 1481
P0546-EXHAUST GAS TEMPERATURE SENSOR CIRCUIT HIGH - BANK 1 SENSOR 1 1485
P0562-ECM VOLTAGE TOO LOW 1490
P0563-ECM VOLTAGE TOO HIGH 1492
P0578-SPEED CONTROL SWITCH 1 STUCK . . 1494
P0579-SPEED CONTROL SWITCH 1 PERFORMANCE. 1497
P0580-SPEED CONTROL SWITCH 1 CIRCUIT LOW. 1500
P0581-SPEED CONTROL SWITCH 1 CIRCUIT HIGH 1503
P0585-SPEED CONTROL SWITCH 1/2 CORRELATION. 1506
P0590-SPEED CONTROL SWITCH 2 STUCK . . 1509
P0578-SPEED CONTROL SWITCH 1 STUCK . . 1512
P0578-SPEED CONTROL SWITCH 1 STUCK . . 1515
P0593-SPEED CONTROL SWITCH 2 CIRCUIT HIGH 1518
P0607-ECU INTERNAL PERFORMANCE 1521
P0610-ECU VEHICLE OPTIONS MISMATCH . 1522
P0613-INTERNAL TRANSMISSION PROCESSOR 1523
P0615-STARTER CONTROL CIRCUIT/OPEN . . 1524
P0616-STARTER CONTROL CIRCUIT LOW . 1528
P0617-STARTER CONTROL CIRCUIT HIGH . 1531
P0627-FUEL PUMP CONTROL CIRCUIT OPEN 1535
P0628-FUEL PUMP CONTROL CIRCUIT LOW. 1539
P0629-FUEL PUMP CONTROL CIRCUIT HIGH 1542
P0642-SENSOR REFERENCE VOLTAGE 1 CIRCUIT LOW. 1546
P0643-SENSOR REFERENCE VOLTAGE 1 TOO HIGH 1550
P0645-A/C CLUTCH CONTROL CIRCUIT OPEN 1553
P0646-A/C CLUTCH CONTROL CIRCUIT LOW. 1557
P0647-A/C CLUTCH CONTROL CIRCUIT HIGH 1560
P0652-SENSOR REFERENCE VOLTAGE 2 TOO LOW. 1564
P0653-SENSOR REFERENCE VOLTAGE 2 TOO HIGH 1569
P0657–SOLENOID SUPPLY VOLTAGE CIRCUIT 1574
P065A- GENERATOR PERFORMANCE 1575
P0671-CYLINDER 1 GLOW PLUG CIRCUIT . 1577
P0672-CYLINDER 2 GLOW PLUG CIRCUIT . 1580
P0673-CYLINDER 3 GLOW PLUG CIRCUIT . 1583

P0674-CYLINDER 4 GLOW PLUG CIRCUIT . 1586
P0675-CYLINDER 5 GLOW PLUG CIRCUIT . 1589
P0676-CYLINDER 6 GLOW PLUG CIRCUIT . 1592
P068A-ECM RELAY OFF TOO EARLY 1595
P068B-ECM RELAY OFF TOO LATE 1598
P0698-SENSOR REFERENCE VOLTAGE 3 CIRCUIT LOW 1601
P0699-SENSOR REFERENCE VOLTAGE 3 CIRCUIT HIGH 1604
P0700-TRANSMISSION CONTROL SYSTEM (MIL REQUEST) 1607
P0706-TRANSMISSION RANGE SENSOR RATIONALITY 1608
P0730-INCORRECT GEAR RATIO 1609
P0740–TCC OUT OF RANGE 1610
P0743–TCC SOLENOID CIRCUIT 1611
P0748–MODULATOR PRESSURE SOLENOID CIRCUIT 1612
P0753 1–2 / 4–5 SOLENOID CIRCUIT 1613
P0758 2–3 SOLENOID CIRCUIT 1614
P0763 3–4 SOLENOID CIRCUIT 1615
P0778–SHIFT PRESSURE SOLENOID CIRCUIT 1616
P1451–DIESEL PARTICULATE FILTER SYSTEM PERFORMANCE 1617
P1452–DIFFERENTIAL PRESSURE SENSOR HOSE PERFORMANCE 1620
P1453–DIFFERENTIAL PRESSURE SENSOR HOSE BLOCKED 1623
P1454–DIFFERENTIAL PRESSURE SENSOR FLOW TOO HIGH 1626
P1648-GLOW PLUG MODULE INTERNAL . . . 1629
P1649-GLOW PLUG MODULE POWER SUPPLY CIRCUIT 1631
P1685-SKIM SYSTEM 1634
P2002–DIESEL PARTICULATE FILTER EFFICIENCY BELOW THRESHOLD 1635
P2008-INTAKE MANIFOLD RUNNER (SWIRL) CONTROL CIRCUIT OPEN 1638
P2009-INTAKE MANIFOLD RUNNER (SWIRL) CONTROL CIRCUIT LOW 1642
P2010-INTAKE MANIFOLD RUNNER (SWIRL) CONTROL CIRCUIT HIGH 1646
P2032-EXHAUST GAS TEMPERATURE SENSOR CIRCUIT LOW - BANK 1 SENSOR 2 1650
P2033-EXHAUST GAS TEMPERATURE SENSOR CIRCUIT HIGH - BANK 1 SENSOR 2 1654
P2080-EXHAUST GAS TEMPERATURE SENSOR CIRCUIT PERFORMANCE - BANK 1 SENSOR 1 1659
P2084-EXHAUST GAS TEMPERATURE SENSOR CIRCUIT PERFORMANCE - BANK 1 SENSOR 2 1665
P2121-ACCELERATOR PEDAL POSITION SENSOR 1 PERFORMANCE 1671
P2122-ACCELERATOR PEDAL POSITION SENSOR 1 CIRCUIT LOW 1677
P2123-ACCELERATOR PEDAL POSITION SENSOR 1 CIRCUIT HIGH 1682
P2127-ACCELERATOR PEDAL POSITION SENSOR 2 CIRCUIT LOW 1687
P2128-ACCELERATOR PEDAL POSITION SENSOR 2 CIRCUIT HIGH 1692
P2138-ACCELERATOR PEDAL POSITION SENSOR 1 / 2 CORRELATION 1697
P213A-EGR AIRFLOW THROTTLE CONTROL CIRCUIT B OPEN 1700
P213C-EGR AIRFLOW THROTTLE CONTROL CIRCUIT B LOW 1704
P213D-EGR AIRFLOW THROTTLE CONTROL CIRCUIT B HIGH 1708
P2141-EGR AIRFLOW THROTTLE CONTROL CIRCUIT A LOW 1713
P2142-EGR AIRFLOW THROTTLE CONTROL CIRCUIT A HIGH 1717
P2146-FUEL INJECTOR GROUP 1 SUPPLY VOLTAGE CIRCUIT OPEN 1722
P2147-FUEL INJECTOR GROUP 1 SUPPLY VOLTAGE CIRCUIT LOW 1725
P2148-FUEL INJECTOR GROUP 1 SUPPLY VOLTAGE CIRCUIT HIGH 1729
P2149-FUEL INJECTOR GROUP 2 SUPPLY VOLTAGE CIRCUIT OPEN 1732
P2150-FUEL INJECTOR GROUP 2 SUPPLY VOLTAGE CIRCUIT LOW 1735
P2151-FUEL INJECTOR GROUP 2 SUPPLY VOLTAGE CIRCUIT HIGH 1739
P2231-O2 SENSOR 1/1 SIGNAL CIRCUIT SHORTED TO HEATER CIRCUIT 1742
P2237-O2 SENSOR 1/1 PUMP CELL CURRENT CIRCUIT OPEN 1747
P2238-O2 SENSOR 1/1 PUMP CELL CURRENT CIRCUIT LOW 1752
P2239-O2 SENSOR 1/1 PUMP CELL CURRENT CIRCUIT HIGH 1756
P2243-O2 SENSOR 1/1 REFERENCE VOLTAGE CIRCUIT OPEN 1760
P2244-O2 SENSOR 1/1 REFERENCE VOLTAGE PERFORMANCE 1765
P2245-O2 SENSOR 1/1 REFERENCE VOLTAGE CIRCUIT LOW 1770
P2246-O2 SENSOR 1/1 REFERENCE VOLTAGE CIRCUIT HIGH 1774
P2280 - AIR FILTER RESTRICTION 1778
P2299- BRAKE PEDAL POSITION/ ACCELERATOR PEDAL POSITION INCOMPATIBLE 1779
P242F–DIESEL PARTICULATE FILTER RESTRICTION — ASH ACCUMULATION . . . 1781
P244B–DIESEL PARTICULATE FILTER DIFFERENTIAL PRESSURE TOO HIGH 1784
P2453-DIESEL PARTICULATE FILTER DIFFERENTIAL PRESSURE SENSOR CIRCUIT PERFORMANCE 1787

P2454-DIESEL PARTICULATE FILTER DIFFERENTIAL PRESSURE SENSOR CIRCUIT LOW 1793
P2455-DIESEL PARTICULATE FILTER DIFFERENTIAL PRESSURE SENSOR CIRCUIT HIGH 1799
P2627-O2 SENSOR 1/1 PUMP CELL CURRENT TRIM CIRCUIT LOW 1804
P2628-O2 SENSOR 1/1 PUMP CELL CURRENT TRIM CIRCUIT HIGH 1808
P0706-INPUT SPEED SENSOR 1/2 CORRELATION 1812
P2A00-O2 SENSOR 1/1 CIRCUIT PERFORMANCE 1813
B10B3 - CABIN HEATER 1 CONTROL CIRCUIT 1818
B10B7 - CABIN HEATER 2 CONTROL CIRCUIT 1820
B1138 - CABIN HEATER 3 CONTROL CIRCUIT LOW 1822
B1139 - CABIN HEATER 3 CONTROL CIRCUIT HIGH 1826
B113A - CABIN HEATER 3 CONTROL CIRCUIT OPEN 1830
B1C32- AIRBAG DEPLOYMENT DETECTED . 1834
U0101-LOST COMMUNICATION WITH TRANSMISSION CONTROL MODULE 1835
U0103-LOST COMMUNICATION WITH ELECTRIC GEAR SHIFT MODULE 1836
U1132-GENERATOR COMMUNICATION 1837
U0114-LOST COMMUNICATION WITH FINAL DRIVE CONTROL MODULE 1841
U0121-LOST COMMUNICATION WITH ANTI-LOCK BRAKE MODULE 1842
U0141-LOST COMMUNICATION WITH FRONT CONTROL MODULE 1843
U0402-IMPLAUSIBLE DATA RECEIVED FROM TCM 1844
U0415-IMPLAUSIBLE DATA RECEIVED FROM ABS 1845
U0429-IMPLAUSIBLE DATA RECEIVED FROM SCM 1846
U1004-CAN C BUS TRANSMIT PERFORMANCE 1847
U1008-LIN 1 BUS 1848
U110A-LOST COMMUNICATION WITH SCM - CAN-C 1852
U1113-LOST AC PRESSURE MESSAGE 1853
U1132-GENERATOR COMMUNICATION 1854
*ENGINE CRANKS BUT WILL NOT START . . 1858
*ENGINE WILL NOT CRANK 1861
*LACK OF ENGINE POWER 1866
*CHECKING THE ACCELERATOR PEDAL POSITION SENSOR CALIBRATION 1871
*CHECKING THE BOOST PRESSURE SENSOR CALIBRATION 1874
*CHECKING THE BOOST PRESSURE SERVO MOTOR 1876
*CHECKING THE ENGINE COOLANT TEMPERATURE SENSOR CALIBRATION . . 1879
*CHECKING THE EGR SYSTEM 1881
*CHECKING THE EGR THROTTLE VALVE . . 1884
*CHECKING THE ENGINE MECHANICAL SYSTEMS 1886
CHECKING THE HIGH-SIDE FUEL SYSTEM . 1887
*CHECKING THE ECM POWER AND GROUND CIRCUITS 1889
*INTERMITTENT DTC 1893
PRE-DIAGNOSTIC TROUBLESHOOTING PROCEDURE 1894
STANDARD PROCEDURE
VERIFICATION TEST 1896

ENGINE ELECTRICAL DIAGNOSTICS - DIESEL

DIAGNOSIS AND TESTING

P0001 - FUEL QUANTITY CONTROL CIRCUIT/OPEN

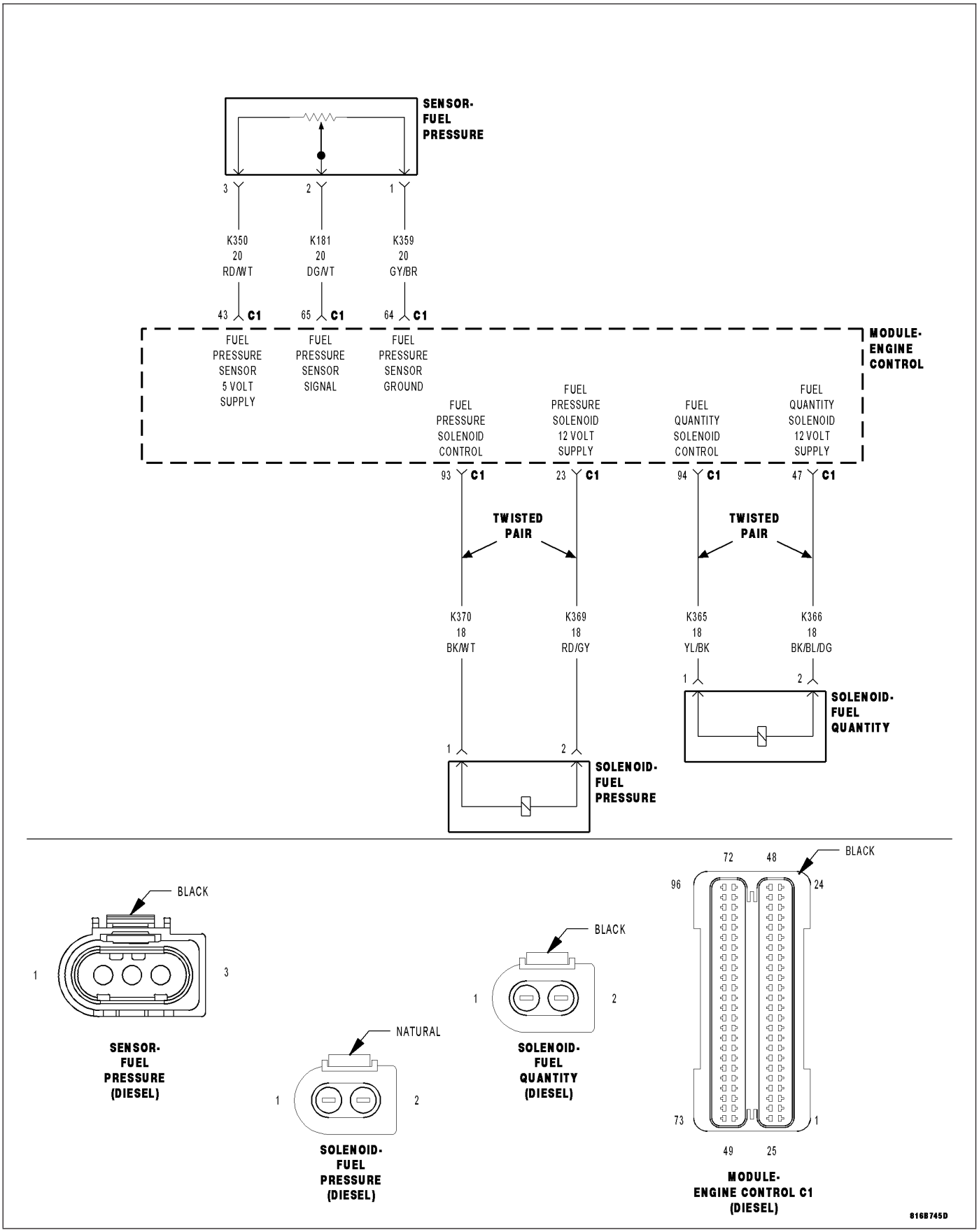

For a complete wiring diagram **Refer to Section 8W**

- **When Monitored:**
  With the ignition on and the ECM command of the Fuel Quantity Solenoid off.
- **Set Condition:**
  The ECM does not detect voltage on the (K365) Fuel Quantity Solenoid Control circuit for 0.2 seconds.

Possible Causes
INTERMITTENT DTC
(K365) FUEL QUANTITY SOLENOID CONTROL CIRCUIT SHORTED TO VOLTAGE
(K365) FUEL QUANTITY SOLENOID CONTROL CIRCUIT SHORTED TO GROUND
(K365) FUEL QUANTITY SOLENOID CONTROL CIRCUIT SHORTED TO (K366) FUEL QUANTITY SOLENOID 12 VOLT SUPPLY CIRCUIT
(K365) FUEL QUANTITY SOLENOID CONTROL CIRCUIT OPEN OR HIGH RESISTANCE
(K366) FUEL QUANTITY SOLENOID 12 VOLT SUPPLY CIRCUIT OPEN OR HIGH RESISTANCE
FUEL QUANTITY SOLENOID
ENGINE CONTROL MODULE (ECM)

Always perform the Pre-Diagnostic Troubleshooting procedure before proceeding. (Refer to 9 - ENGINE - DIAGNOSIS AND TESTING)

Diagnostic Test

1. DTC IS ACTIVE

Ignition on, engine not running.
With the scan tool, Clear DTCs in the Engine Control Module (ECM).
With the scan tool, actuate the Fuel Quantity Solenoid at 100%.
Monitor the scan tool for at least two minutes.
With the scan tool, select View DTCs.

Is the status Active for this DTC?

Yes >> Go To 2

No >> Refer to the *CHECKING FOR AN INTERMITTENT DTC Diagnostic Procedure. (Refer to 9 - ENGINE - DIAGNOSIS AND TESTING)

2. (K365) FUEL QUANTITY SOLENOID CONTROL CIRCUIT SHORTED TO VOLTAGE

Turn the ignition off.
Disconnect the Fuel Quantity Solenoid connector.
Disconnect the Engine Control Module (ECM) connector.
Remove the ASD Relay from the IPM.
Connect a jumper wire between cavity 30 and cavity 87 of the ASD Relay Connector.
Turn the ignition on.
Measure the voltage of the (K365) Fuel Quantity Solenoid Control circuit in the Fuel Quantity Solenoid connector.

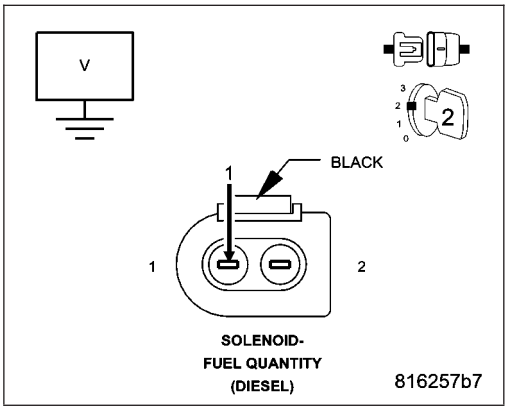

Is there any voltage present?

Yes >> Repair the (K365) Fuel Quantity Solenoid Control circuit for a short to voltage.
Perform the ECM Verification Test Ver. 1. (Refer to 9 - ENGINE - DIAGNOSIS AND TESTING)

No >> Go to 3

3. (K365) FUEL QUANTITY SOLENOID CONTROL CIRCUIT SHORTED TO GROUND

Turn the ignition off.

Measure the resistance between ground and the (K365) Fuel Quantity Solenoid Control circuit in the Fuel Quantity Solenoid connector.

Is the resistance above 10.0 ohms?

Yes >> Go to 4

No >> Repair the (K365) Fuel Quantity Solenoid Control circuit for a short to ground.

Perform the ECM Verification Test Ver. 1. (Refer to 9 - ENGINE - DIAGNOSIS AND TESTING)

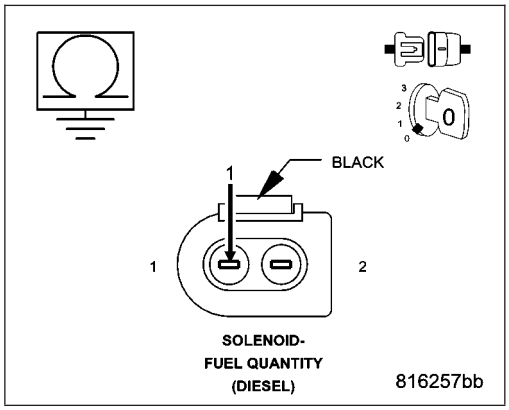

4. (K365) FUEL QUANTITY SOLENOID CONTROL CIRCUIT SHORTED TO (K366) FUEL QUANTITY SOLENOID 12 VOLT SUPPLY CIRCUIT

Measure the resistance between the (K365) Fuel Quantity Solenoid Control circuit and the (K366) Fuel Quantity Solenoid 12 Volt Supply circuit in the Fuel Quantity Solenoid connector.

Is the resistance above 10.0 ohms?

Yes >> Go to 5

No >> Repair the (K365) Fuel Quantity Solenoid Control circuit for a short to the (K366) Fuel Quantity Solenoid 12 Volt Supply circuit.

Perform the ECM Verification Test Ver. 1. (Refer to 9 - ENGINE - DIAGNOSIS AND TESTING)

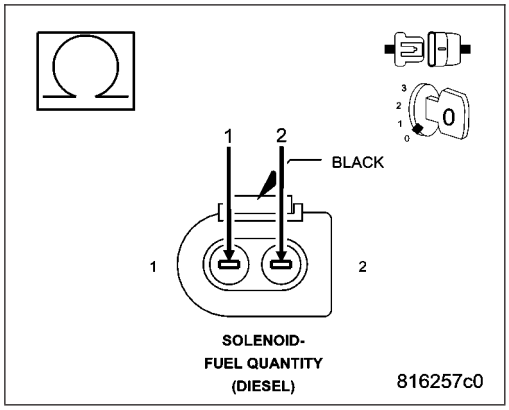

5. (K365) FUEL QUANTITY SOLENOID CONTROL CIRCUIT OPEN OR HIGH RESISTANCE

Measure the resistance of the (K365) Fuel Quantity Solenoid Control circuit between the Fuel Quantity Solenoid connector and the Engine Control Module (ECM) connector.

Is the resistance below 10.0 ohms?

Yes >> Go to 6

No >> Repair the (K365) Fuel Quantity Solenoid Control circuit for an open circuit or high resistance.

Perform the ECM Verification Test Ver. 1. (Refer to 9 - ENGINE - DIAGNOSIS AND TESTING)

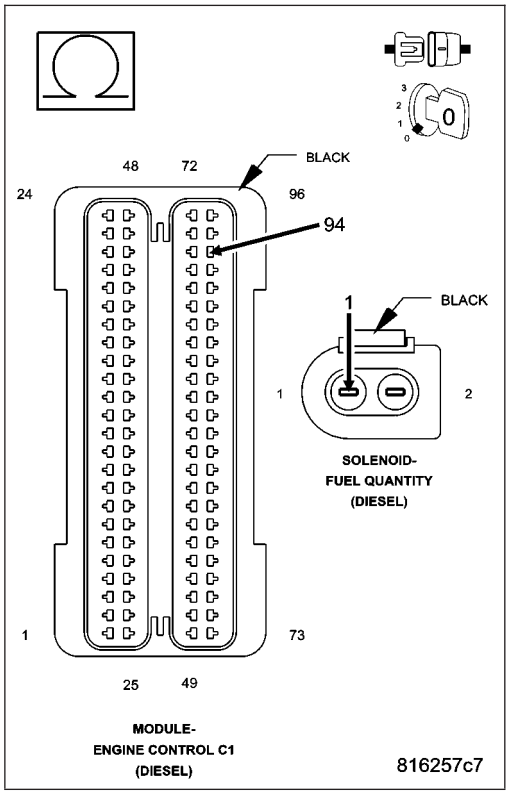

6. (K366) FUEL QUANTITY SOLENOID 12 VOLT SUPPLY CIRCUIT OPEN OR HIGH RESISTANCE

Measure the resistance of the (K366) Fuel Quantity Solenoid 12 Volt Supply circuit between the Fuel Quantity Solenoid connector and the Engine Control Module (ECM) connector.

Is the resistance below 10.0 ohms?

Yes >> Go to 7

No >> Repair the (K366) Fuel Quantity Solenoid 12 Volt Supply circuit for an open circuit or high resistance.

Perform the ECM Verification Test Ver. 1. (Refer to 9 - ENGINE - DIAGNOSIS AND TESTING)

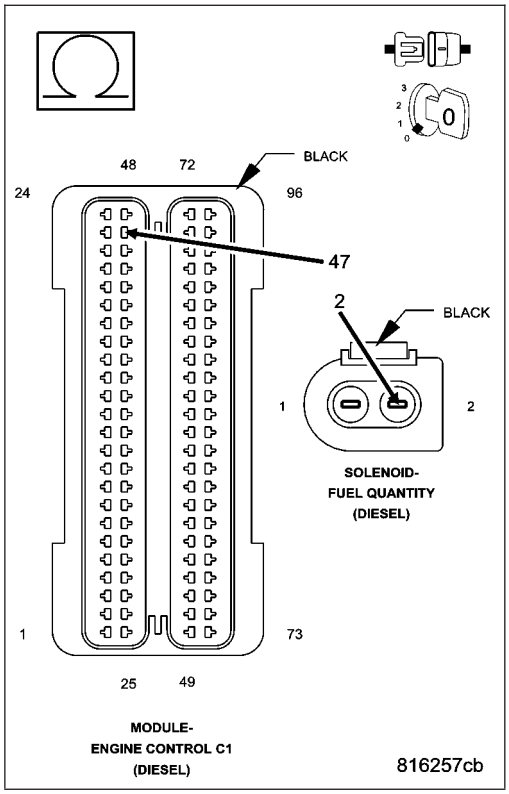

7. FUEL QUANTITY SOLENOID

Connect the Engine Control Module (ECM) connector.

Turn the ignition on.

With the scan tool, actuate the Fuel Quantity Solenoid (CP3 Metering Pump) to 100%.

Using a 12 volt test light connected to 12 volts, check the (K365) Fuel Quantity Solenoid Control circuit in the Fuel Quantity Solenoid harness connector.

NOTE: The test light should be illuminated and bright. Compare the brightness to that of a direct connection to the battery.

NOTE: The circuit will remain actuated by the controller for 30 seconds. Be certain the actuation is active when checking the circuit.

Is the test light illuminated and bright with the actuation at 100%?

Yes >> Replace the Fuel Quantity Solenoid in accordance with the Service Information.
Perform the ECM Verification Test Ver. 1. (Refer to 9 - ENGINE - DIAGNOSIS AND TESTING)

No >> Go to 8

8. ENGINE CONTROL MODULE (ECM)

Using the wiring diagram/schematic as a guide, inspect the wiring and connectors between the Fuel Quantity Solenoid and the Engine Control Module (ECM).

Look for any chafed, pierced, pinched, or partially broken wires.

Look for broken, bent, pushed out or corroded terminals.

Monitor the scan tool data relative to this circuit and wiggle test the wiring and connectors.

Look for the data to change or for the DTC to reset during the wiggle test.

Refer to any Technical Service Bulletins that may apply.

Were any problems found?

Yes >> Repair as necessary.
Perform the ECM Verification Test Ver. 1. (Refer to 9 - ENGINE - DIAGNOSIS AND TESTING)

No >> Replace the Engine Control Module (ECM) in accordance with the Service Information.
Perform the ECM Verification Test Ver. 1. (Refer to 9 - ENGINE - DIAGNOSIS AND TESTING)

P0003 - FUEL QUANTITY CONTROL CIRCUIT LOW

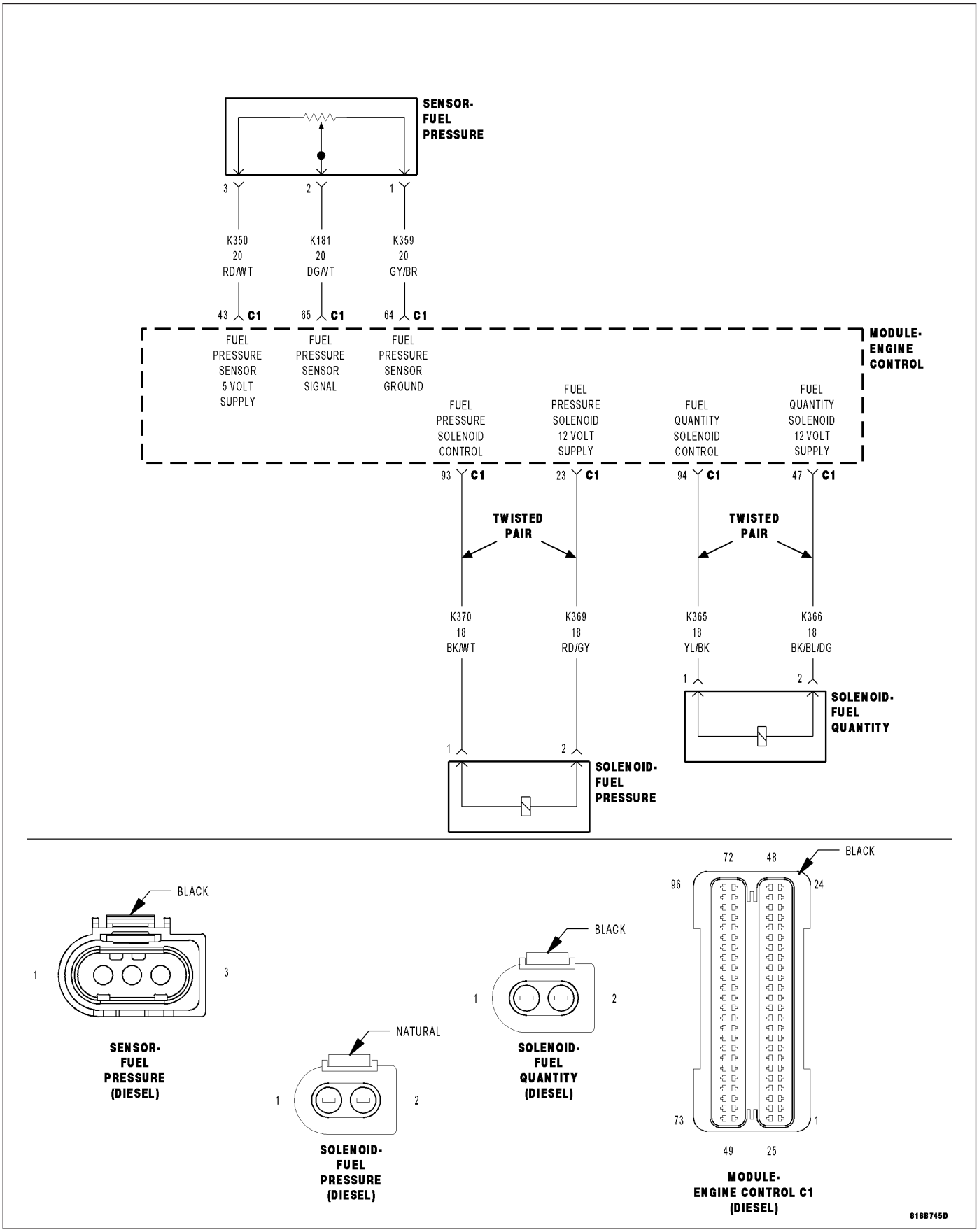

For a complete wiring diagram **Refer to Section 8W**

- **When Monitored:**
  With the ignition on and the ECM command of the Fuel Quantity Solenoid off.
- **Set Condition:**
  The ECM detects that the (K365) Fuel Quantity Solenoid Control circuit voltage is shorted to ground for 0.2 seconds.

Possible Causes
INTERMITTENT DTC
(K365) FUEL QUANTITY SOLENOID CONTROL CIRCUIT SHORTED TO GROUND
(K365) FUEL QUANTITY SOLENOID CONTROL CIRCUIT OPEN OR HIGH RESISTANCE
(K366) FUEL QUANTITY SOLENOID 12 VOLT SUPPLY CIRCUIT OPEN OR HIGH RESISTANCE
ASD RELAY OUTPUT CIRCUIT OPEN OR HIGH RESISTANCE
FUEL QUANTITY SOLENOID
ENGINE CONTROL MODULE (ECM)

Always perform the Pre-Diagnostic Troubleshooting procedure before proceeding. (Refer to 9 - ENGINE - DIAGNOSIS AND TESTING)

Diagnostic Test

1. DTC IS ACTIVE

Ignition on, engine not running.

With the scan tool, Clear DTCs in the Engine Control Module (ECM).

With the scan tool, actuate the Fuel Quantity Solenoid at 100%.

Monitor the scan tool for at least two minutes.

With the scan tool, select View DTCs.

Is the status Active for this DTC?

Yes >> Go To 2

No >> Refer to the *CHECKING FOR AN INTERMITTENT DTC Diagnostic Procedure. (Refer to 9 - ENGINE - DIAGNOSIS AND TESTING)

2. (K365) FUEL QUANTITY SOLENOID CONTROL CIRCUIT SHORTED TO GROUND

Turn the ignition off.

Disconnect the Fuel Quantity Solenoid connector.

Disconnect the Engine Control Module (ECM) connector.

Measure the resistance between ground and the (K365) Fuel Quantity Solenoid Control circuit in the Fuel Quantity Solenoid connector.

Is the resistance above 1000.0 ohms?

Yes >> Go to 3

No >> Repair the (K365) Fuel Quantity Solenoid Control circuit for a short to ground.

Perform the ECM Verification Test Ver. 1. (Refer to 9 - ENGINE - DIAGNOSIS AND TESTING)

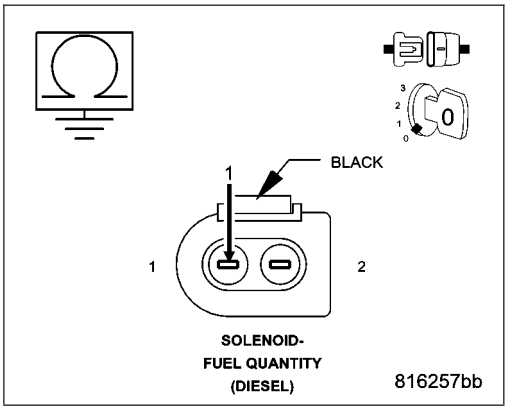

3. (K365) FUEL QUANTITY SOLENOID CONTROL CIRCUIT OPEN OR HIGH RESISTANCE

Measure the resistance of the (K365) Fuel Quantity Solenoid Control circuit between the Fuel Quantity Solenoid connector and the Engine Control Module (ECM) connector.

Is the resistance below 10.0 ohms?

Yes >> Go to 4

No >> Repair the (K365) Fuel Quantity Solenoid Control circuit for an open circuit or high resistance.

Perform the ECM Verification Test Ver. 1. (Refer to 9 - ENGINE - DIAGNOSIS AND TESTING)

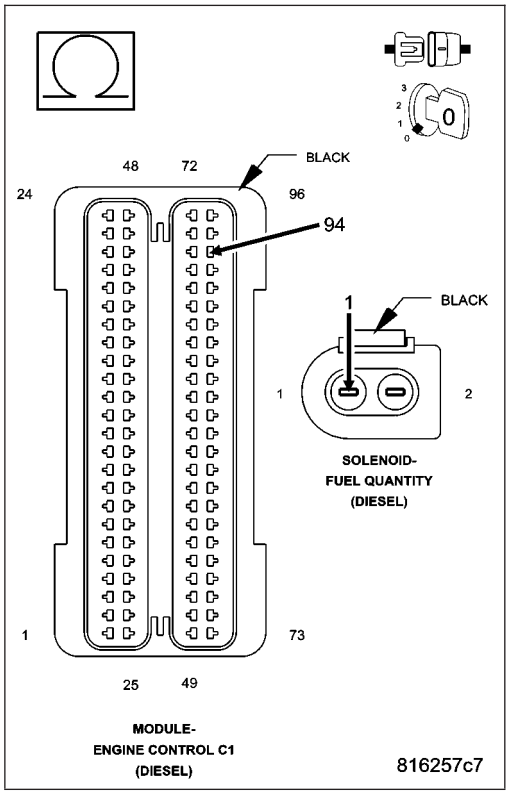

4. (K366) FUEL QUANTITY SOLENOID 12 VOLT SUPPLY CIRCUIT OPEN OR HIGH RESISTANCE

Measure the resistance of the (K366) Fuel Quantity Solenoid 12 Volt Supply circuit between the Fuel Quantity Solenoid connector and the Engine Control Module (ECM) connector.

Is the resistance below 10.0 ohms?

Yes >> Go to 5

No >> Repair the (K366) Fuel Quantity Solenoid 12 Volt Supply circuit for an open circuit or high resistance.

Perform the ECM Verification Test Ver. 1. (Refer to 9 - ENGINE - DIAGNOSIS AND TESTING)

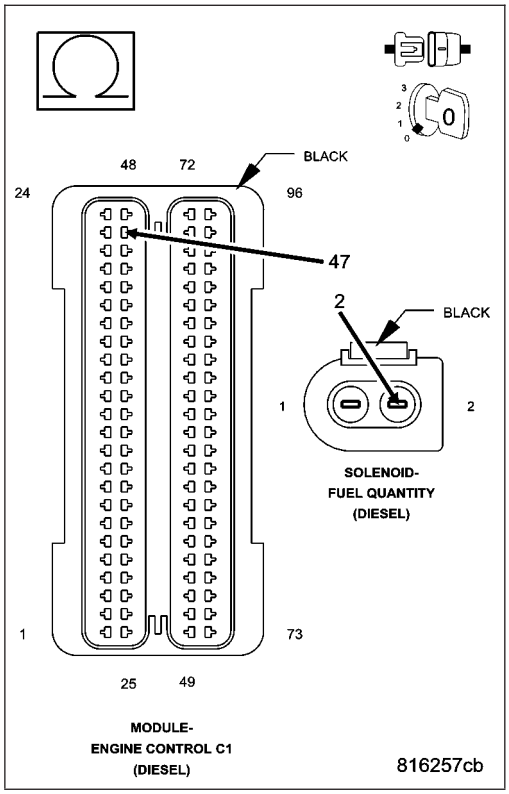

5. ASD RELAY OUTPUT CIRCUIT OPEN OR HIGH RESISTANCE

Remove the ASD Relay.

Connect a jumper wire between cavity 30 and cavity 87 in the ASD Relay connector.

Using a 12-volt test light connected to ground, check the ASD Relay Output circuit in ECM harness connector C2 cavities 1, 3 and 5.

Did the test light illuminate for each circuit?

Yes >> Go To 6

No >> Repair the ASD Relay Output circuit(s) for an open.
Perform the ECM Verification Test Ver. 1. (Refer to 9 - ENGINE - DIAGNOSIS AND TESTING)

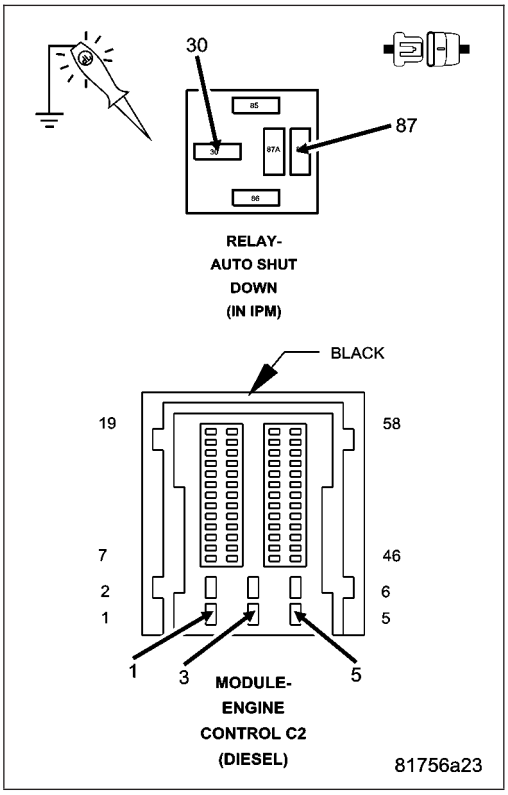

6. FUEL QUANTITY SOLENOID

Connect the Engine Control Module (ECM) connector.

Turn the ignition on.

With the scan tool, actuate the Fuel Quantity Solenoid (CP3 Metering Pump) to 100%.

Using a 12 volt test light connected to 12 volts, check the (K365) Fuel Quantity Solenoid Control circuit in the Fuel Quantity Solenoid harness connector.

NOTE: The test light should be illuminated and bright. Compare the brightness to that of a direct connection to the battery.

NOTE: The circuit will remain actuated by the controller for 30 seconds. Be certain the actuation is active when checking the circuit.

With the scan tool, actuate the Fuel Quantity Solenoid (CP3 Metering Pump) to 0%.

Using a 12 volt test light connected to 12 volts, check the (K365) Fuel Quantity Solenoid Control circuit in the Fuel Quantity Solenoid harness connector.

NOTE: The test light should not be illuminated.

NOTE: The circuit will remain actuated by the controller for 30 seconds. Be certain the actuation is active when checking the circuit.

Is the test light illuminated and bright with the actuation at 100% and not illuminated with the actuation at 0%?

Yes >> Replace the Fuel Quantity Solenoid in accordance with the Service Information.
Perform the ECM Verification Test Ver. 1. (Refer to 9 - ENGINE - DIAGNOSIS AND TESTING)

No >> Go to 7

7. ENGINE CONTROL MODULE (ECM)

Using the wiring diagram/schematic as a guide, inspect the wiring and connectors between the Fuel Quantity Solenoid and the Engine Control Module (ECM).

Look for any chafed, pierced, pinched, or partially broken wires.

Look for broken, bent, pushed out or corroded terminals.

Refer to any Technical Service Bulletins that may apply.

Were any problems found?

Yes >> Repair as necessary.
Perform the ECM Verification Test Ver. 1. (Refer to 9 - ENGINE - DIAGNOSIS AND TESTING)

No >> Replace the Engine Control Module (ECM) in accordance with the Service Information.
Perform the ECM Verification Test Ver. 1. (Refer to 9 - ENGINE - DIAGNOSIS AND TESTING)

P0004 - FUEL QUANTITY CONTROL CIRCUIT HIGH

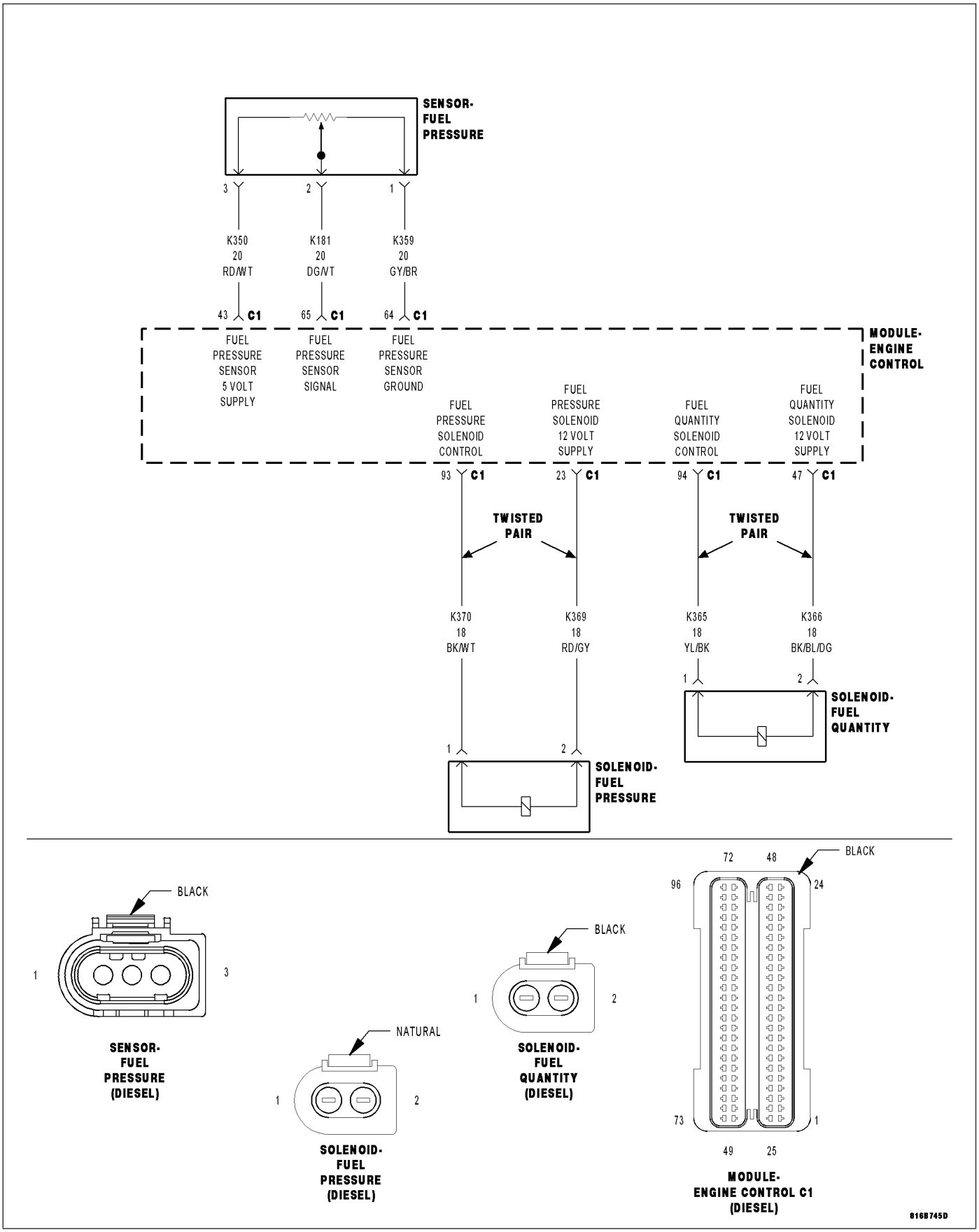

For a complete wiring diagram **Refer to Section 8W**

- **When Monitored:**
  With the ignition on and the ECM command of the Fuel Quantity Solenoid on.
- **Set Condition:**
  The ECM detects excessive current on the (K365) Fuel Quantity Solenoid Control circuit for 0.2 second.

Possible Causes
INTERMITTENT DTC
(K365) FUEL QUANTITY SOLENOID CONTROL CIRCUIT SHORTED TO VOLTAGE
(K365) FUEL QUANTITY SOLENOID CONTROL CIRCUIT OPEN OR HIGH RESISTANCE
FUEL QUANTITY SOLENOID
ENGINE CONTROL MODULE (ECM)

Always perform the Pre-Diagnostic Troubleshooting procedure before proceeding. (Refer to 9 - ENGINE - DIAGNOSIS AND TESTING)

Diagnostic Test

1. DTC IS ACTIVE

Ignition on, engine not running.
With the scan tool, Clear DTCs in the Engine Control Module (ECM).
With the scan tool, actuate the Fuel Quantity Solenoid at 100%.
Monitor the scan tool for at least two minutes.
With the scan tool, select View DTCs.

Is the status Active for this DTC?

Yes >> Go To 2

No >> Refer to the *CHECKING FOR AN INTERMITTENT DTC Diagnostic Procedure. (Refer to 9 - ENGINE - DIAGNOSIS AND TESTING)

2. (K365) FUEL QUANTITY SOLENOID CONTROL CIRCUIT SHORTED TO VOLTAGE

Turn the ignition off.
Disconnect the Fuel Quantity Solenoid connector.
Disconnect the Engine Control Module (ECM) connector.
Remove the ASD Relay from the IPM.
Connect a jumper wire between cavity 30 and cavity 87 of the ASD Relay Connector.
Turn the ignition on.
Measure the voltage of the (K365) Fuel Quantity Solenoid Control circuit in the Fuel Quantity Solenoid connector.

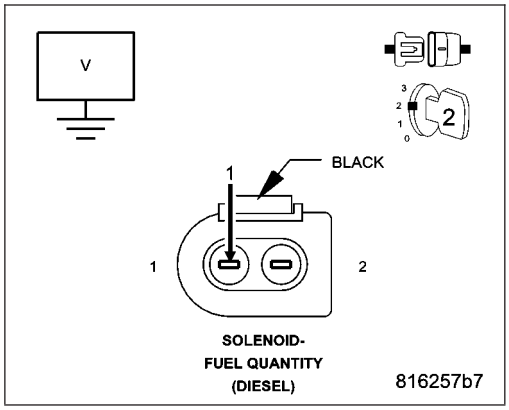

Is there any voltage present?

Yes >> Repair the (K365) Fuel Quantity Solenoid Control circuit for a short to voltage.
Perform the ECM Verification Test Ver. 1. (Refer to 9 - ENGINE - DIAGNOSIS AND TESTING)

No >> Go to 3

3. (K365) FUEL QUANTITY SOLENOID CONTROL CIRCUIT SHORTED TO (K366) FUEL QUANTITY SOLENOID 12 VOLT SUPPLY CIRCUIT

Measure the resistance between the (K365) Fuel Quantity Solenoid Control circuit and the (K366) Fuel Quantity Solenoid 12 Volt Supply circuit in the Fuel Quantity Solenoid connector.

Is the resistance above 10.0 ohms?

Yes >> Go to 4

No >> Repair the (K365) Fuel Quantity Solenoid Control circuit for a short to the (K366) Fuel Quantity Solenoid 12 Volt Supply circuit.

Perform the ECM Verification Test Ver. 1. (Refer to 9 - ENGINE - DIAGNOSIS AND TESTING)

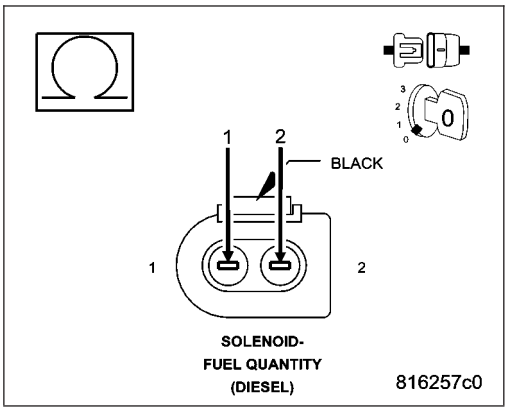

4. (K365) FUEL QUANTITY SOLENOID CONTROL OPEN OR HIGH RESISTANCE

Measure the resistance of the (K365) Fuel Quantity Solenoid Control circuit between the Fuel Quantity Solenoid connector and the Engine Control Module (ECM) connector.

Is the resistance below 10.0 ohms?

Yes >> Go to 5

No >> Repair the (K365) Fuel Quantity Solenoid Control circuit for an open circuit or high resistance.

Perform the ECM Verification Test Ver. 1. (Refer to 9 - ENGINE - DIAGNOSIS AND TESTING)

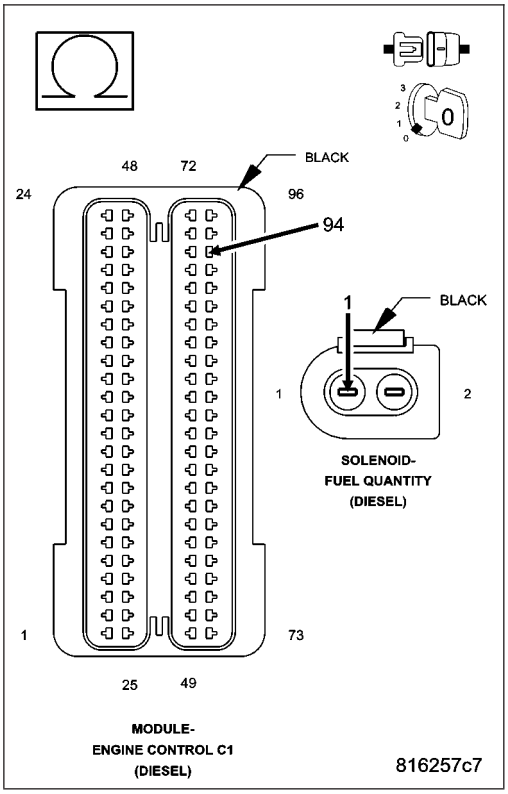

5. FUEL QUANTITY SOLENOID

Connect the Engine Control Module (ECM) connector.

Turn the ignition on.

With the scan tool, actuate the Fuel Quantity Solenoid (CP3 Metering Pump) to 100%.

Using a 12 volt test light connected to 12 volts, check the (K365) Fuel Quantity Solenoid Control circuit in the Fuel Quantity Solenoid harness connector.

NOTE: The test light should be illuminated and bright. Compare the brightness to that of a direct connection to the battery.

NOTE: The circuit will remain actuated by the controller for 30 seconds. Be certain the actuation is active when checking the circuit.

Is the test light illuminated and bright with the actuation at 100%?

Yes >> Replace the Fuel Quantity Solenoid in accordance with the Service Information.
Perform the ECM Verification Test Ver. 1. (Refer to 9 - ENGINE - DIAGNOSIS AND TESTING)

No >> Go to 6

6. ENGINE CONTROL MODULE (ECM)

Using the wiring diagram/schematic as a guide, inspect the wiring and connectors between the Fuel Quantity Solenoid and the Engine Control Module (ECM).

Look for any chafed, pierced, pinched, or partially broken wires.

Look for broken, bent, pushed out or corroded terminals.

Refer to any Technical Service Bulletins that may apply.

Were any problems found?

Yes >> Repair as necessary.
Perform the ECM Verification Test Ver. 1. (Refer to 9 - ENGINE - DIAGNOSIS AND TESTING)

No >> Replace the Engine Control Module (ECM) in accordance with the Service Information.
Perform the ECM Verification Test Ver. 1. (Refer to 9 - ENGINE - DIAGNOSIS AND TESTING)

P0030 - O2 SENSOR 1/1 HEATER CIRCUIT

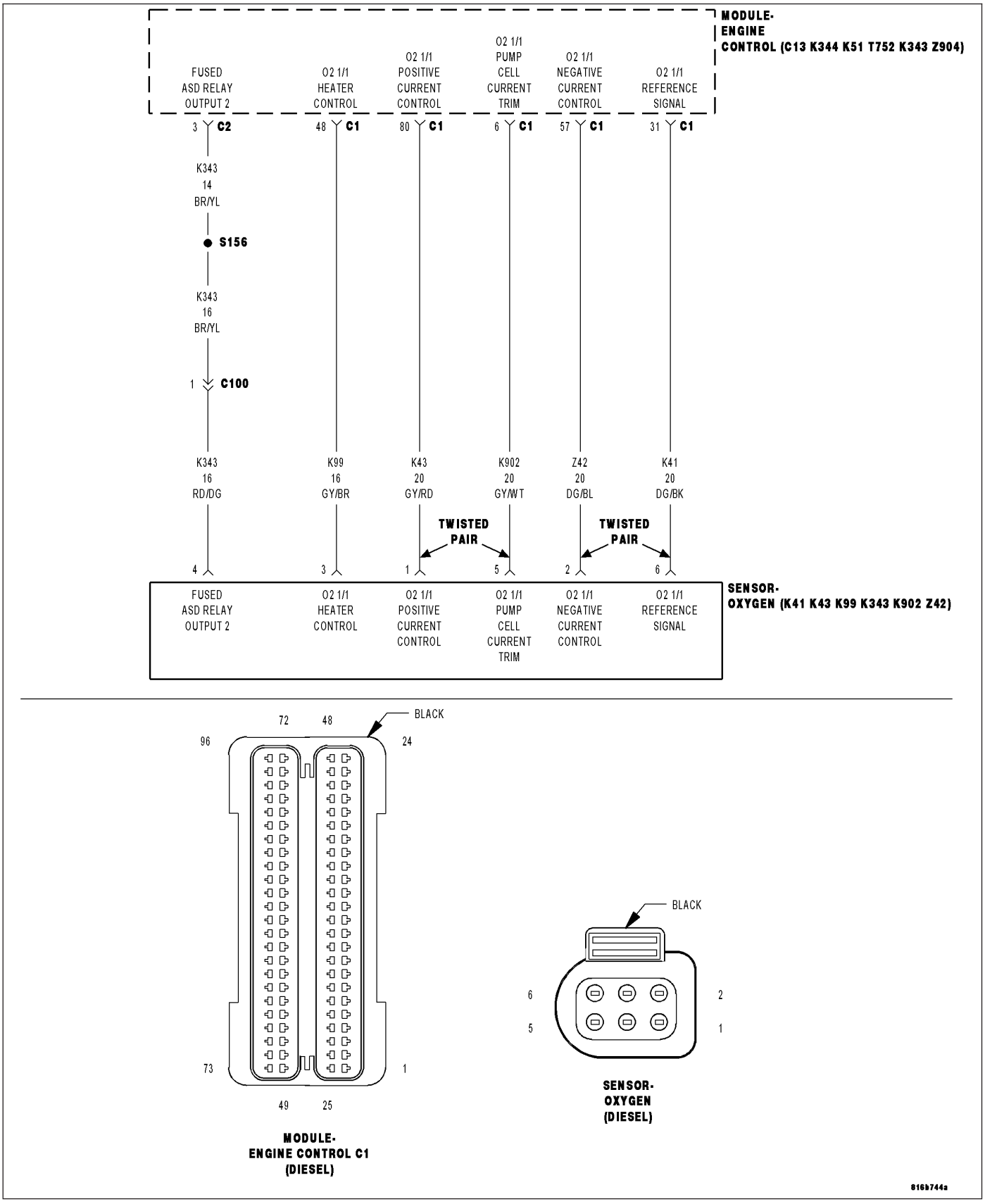

For a complete wiring diagram **Refer to Section 8W**

- **When Monitored:**
  With the ignition on and the Oxygen Sensor Heater command on.
- **Set Condition:**
  The ECM detects an implausible voltage on the (K99) O2 1/1 Heater Control circuit for 2.0 seconds.

Possible Causes
INTERMITTENT DTC
(K99) O2 1/1 HEATER CONTROL CIRCUIT SHORTED TO VOLTAGE
(K99) O2 1/1 HEATER CONTROL CIRCUIT SHORTED TO GROUND
(K99) O2 1/1 HEATER CONTROL CIRCUIT OPEN OR HIGH RESISTANCE
(K343) FUSED ASD RELAY OUTPUT 2 CIRCUIT OPEN OR HIGH RESISTANCE
OXYGEN SENSOR
ENGINE CONTROL MODULE (ECM)

Always perform the Pre-Diagnostic Troubleshooting procedure before proceeding. (Refer to 9 - ENGINE - DIAGNOSIS AND TESTING)

Diagnostic Test

1. DTC IS ACTIVE

Ignition on, engine not running.
With the scan tool, Clear DTCs in the Engine Control Module (ECM).
Start the engine and allow it to reach normal operating temperature.
With the scan tool, select View DTCs.

Is the status Active for this DTC?

Yes >> Go To 2

No >> Refer to the *CHECKING FOR AN INTERMITTENT DTC Diagnostic Procedure. (Refer to 9 - ENGINE - DIAGNOSIS AND TESTING)

2. (K99) O2 1/1 HEATER CONTROL CIRCUIT SHORTED TO VOLTAGE

Turn the ignition off.
Disconnect the Oxygen Sensor connector.
Disconnect the Engine Control Module (ECM) connector.
Remove the ASD Relay from the IPM.
Connect a jumper wire between cavity 30 and cavity 87 of the ASD Relay Connector.
Turn the ignition on.
Measure the voltage of the (K99) O2 1/1 Heater Control circuit in the Oxygen Sensor connector.

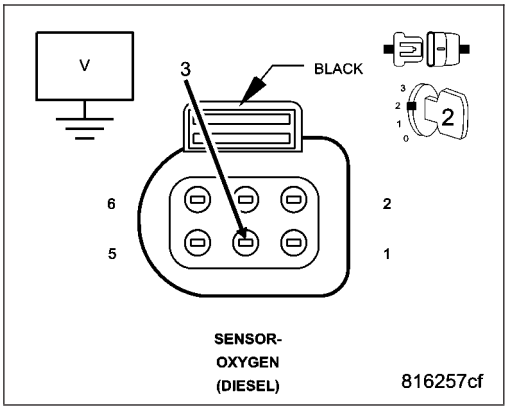

Is there any voltage present?

Yes >> Repair the (K99) O2 1/1 Heater Control circuit for a short to voltage.
Perform the ECM Verification Test Ver. 1. (Refer to 9 - ENGINE - DIAGNOSIS AND TESTING)

No >> Go to 3

3. (K99) O2 1/1 HEATER CONTROL CIRCUIT SHORTED TO GROUND

Turn the ignition off.

Measure the resistance between ground and the (K99) O2 1/1 Heater Control circuit in the Oxygen Sensor connector.

Is the resistance above 10.0 ohms?

Yes >> Go to 4

No >> Repair the (K99) O2 1/1 Heater Control circuit for a short to ground.

Perform the ECM Verification Test Ver. 1. (Refer to 9 - ENGINE - DIAGNOSIS AND TESTING)

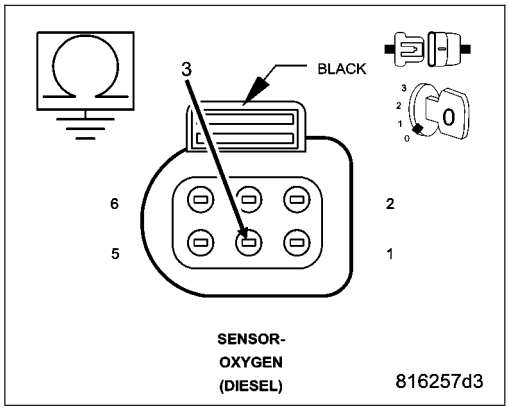

4. (K99) O2 1/1 HEATER CONTROL CIRCUIT OPEN OR HIGH RESISTANCE

Measure the resistance of the (K99) O2 1/1 Heater Control circuit between the Oxygen Sensor connector and the Engine Control Module (ECM) connector.

Is the resistance below 10.0 ohms?

Yes >> Go to 5

No >> Repair the (K99) O2 1/1 Heater Control circuit for an open circuit or high resistance.

Perform the ECM Verification Test Ver. 1. (Refer to 9 - ENGINE - DIAGNOSIS AND TESTING)

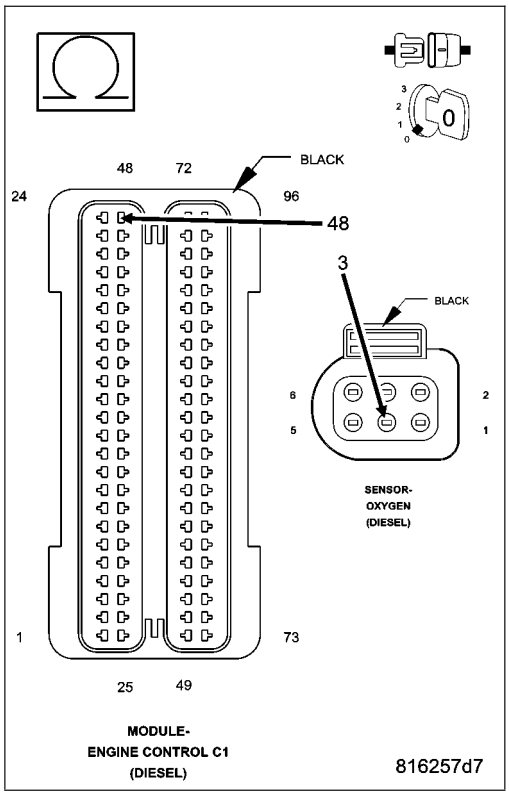

5. (K343) FUSED ASD RELAY OUTPUT 2 CIRCUIT OPEN OR HIGH RESISTANCE

Turn the ignition on.

Measure the resistance of the (K343) Fused ASD Relay Output 2 circuit between the Oxygen Sensor connector and the ASD Relay connector.

Is the resistance below 10.0 ohms?

Yes >> Go to 6

No >> Repair the (K343) Fused ASD Relay Output 2 circuit for an open circuit or high resistance.
Perform the ECM Verification Test Ver. 1. (Refer to 9 - ENGINE - DIAGNOSIS AND TESTING)

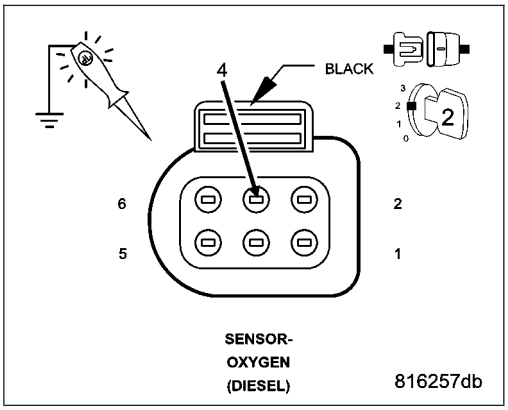

6. OXYGEN SENSOR

Turn the ignition off.

Connect the Engine Control Module (ECM) connector.

Replace the Oxygen Sensor in accordance with the Service Information.

Turn the ignition on.

With the scan tool, Clear DTCs.

Start the engine and allow it to reach normal operating temperature.

With the scan tool, select View DTCs.

Is the status Active for this DTC?

Yes >> Go to 7

No >> Test Complete.
Perform the ECM Verification Test Ver. 1. (Refer to 9 - ENGINE - DIAGNOSIS AND TESTING)

7. ENGINE CONTROL MODULE (ECM)

Using the wiring diagram/schematic as a guide, inspect the wiring and connectors between the Oxygen Sensor and the Engine Control Module (ECM).

Look for any chafed, pierced, pinched, or partially broken wires.

Look for broken, bent, pushed out or corroded terminals.

Refer to any Technical Service Bulletins that may apply.

Were any problems found?

Yes >> Repair as necessary.
Perform the ECM Verification Test Ver. 1. (Refer to 9 - ENGINE - DIAGNOSIS AND TESTING)

No >> Replace the Engine Control Module (ECM) in accordance with the Service Information.
Perform the ECM Verification Test Ver. 1. (Refer to 9 - ENGINE - DIAGNOSIS AND TESTING)

P0031 - O2 SENSOR 1/1 HEATER CIRCUIT LOW

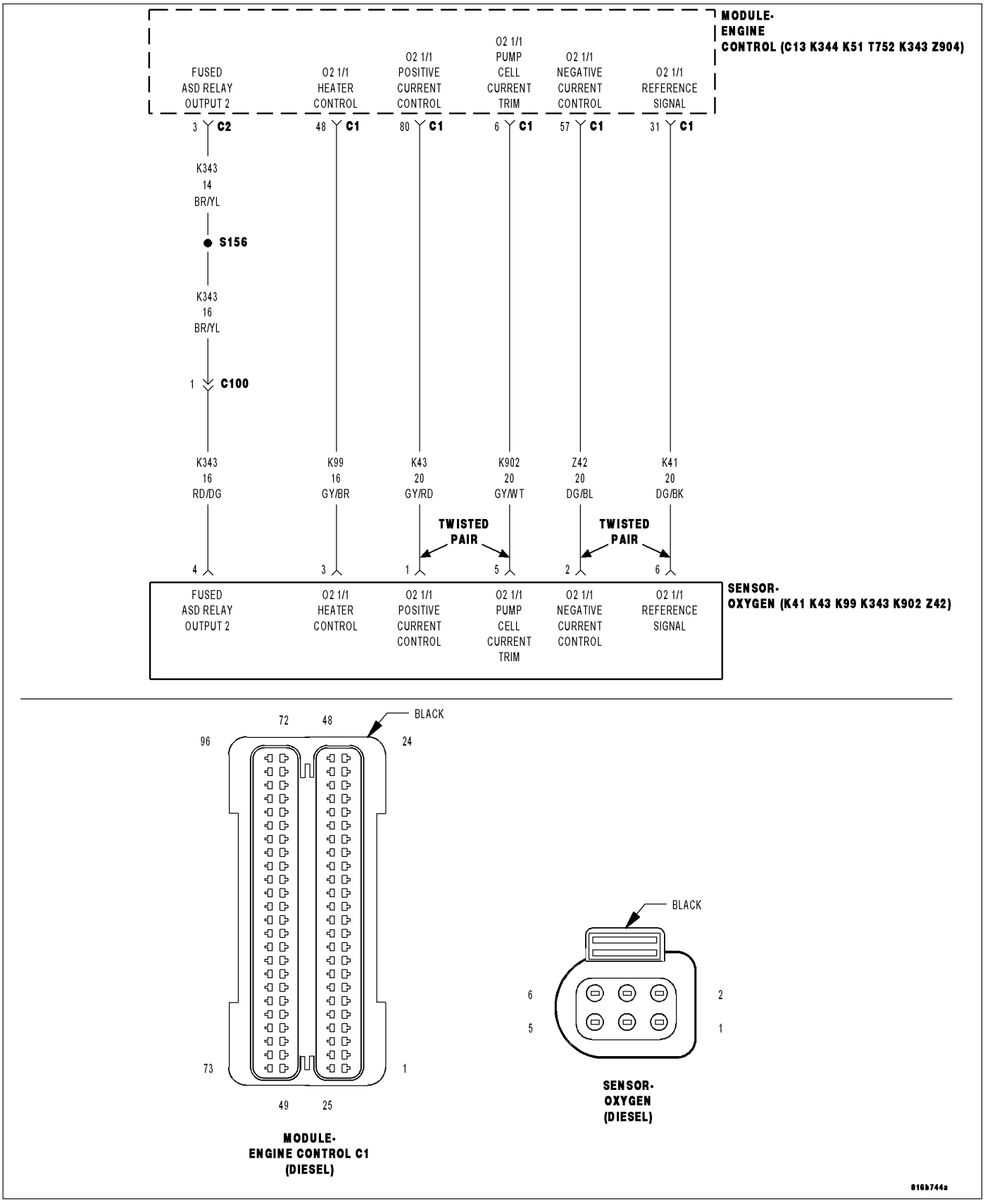

For a complete wiring diagram **Refer to Section 8W**

- **When Monitored:**
  With the ignition on and the Oxygen Sensor Heater command on.
- **Set Condition:**
  The ECM detects that the (K99) O2 1/1 Heater Control circuit is shorted to ground for 2.0 seconds.

Possible Causes
INTERMITTENT DTC
(K99) O2 1/1 HEATER CONTROL CIRCUIT SHORTED TO GROUND
(K99) O2 1/1 HEATER CONTROL CIRCUIT OPEN OR HIGH RESISTANCE
OXYGEN SENSOR
ENGINE CONTROL MODULE (ECM)

Always perform the Pre-Diagnostic Troubleshooting procedure before proceeding. (Refer to 9 - ENGINE - DIAGNOSIS AND TESTING)

Diagnostic Test

1. DTC IS ACTIVE

Ignition on, engine not running.
With the scan tool, Clear DTCs in the Engine Control Module (ECM).
Start the engine and allow it to reach normal operating temperature.
With the scan tool, select View DTCs.

Is the status Active for this DTC?

Yes >> Go To 2

No >> Refer to the *CHECKING FOR AN INTERMITTENT DTC Diagnostic Procedure. (Refer to 9 - ENGINE - DIAGNOSIS AND TESTING)

2. (K99) O2 1/1 HEATER CONTROL CIRCUIT SHORTED TO GROUND

Turn the ignition off.
Disconnect the Oxygen Sensor connector.
Disconnect the Engine Control Module (ECM) connector.
Measure the resistance between ground and the (K99) O2 1/1 Heater Control circuit in the Oxygen Sensor connector.

Is the resistance below 1000.0 ohms?

Yes >> Repair the (K99) O2 1/1 Heater Control circuit for a short to ground.
Perform the ECM Verification Test Ver. 1. (Refer to 9 - ENGINE - DIAGNOSIS AND TESTING)

No >> Go to 3

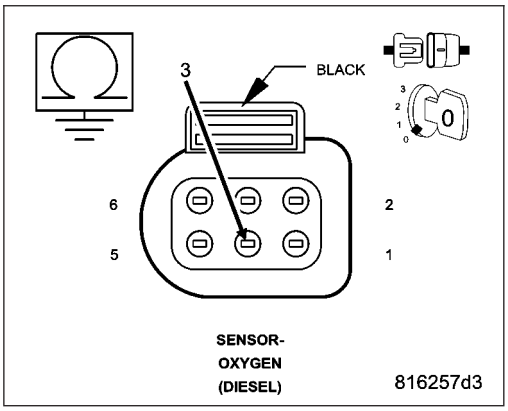

3. (K99) O2 1/1 HEATER CONTROL CIRCUIT OPEN OR HIGH RESISTANCE

Measure the resistance of the (K99) O2 1/1 Heater Control circuit between the Oxygen Sensor connector and the Engine Control Module (ECM) connector.

Is the resistance below 10.0 ohms?

Yes >> Go to 4

No >> Repair the (K99) O2 1/1 Heater Control circuit for an open circuit or high resistance.
Perform the ECM Verification Test Ver. 1. (Refer to 9 - ENGINE - DIAGNOSIS AND TESTING)

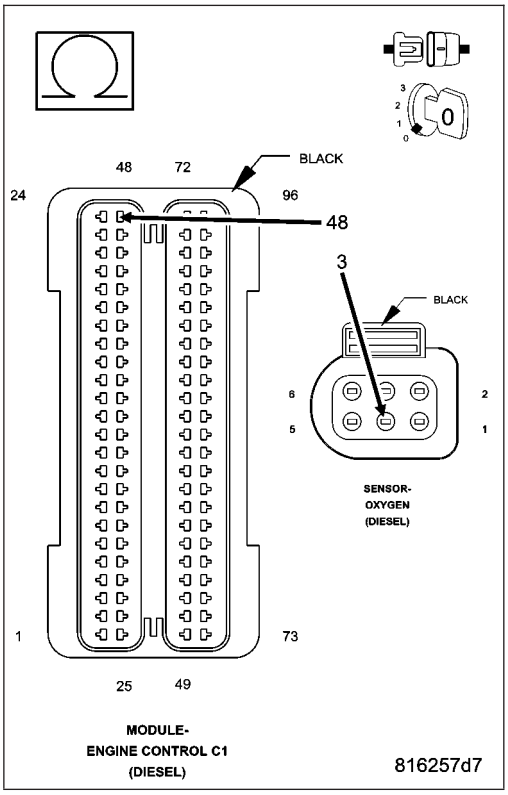

4. OXYGEN SENSOR

Connect the Engine Control Module (ECM) connector.
Replace the Oxygen Sensor in accordance with the Service Information.
Turn the ignition on.
With the scan tool, Clear DTCs.
Start the engine and allow it to reach normal operating temperature.
With the scan tool, select View DTCs.

Is the status Active for this DTC?

Yes >> Go to 5

No >> Test Complete.
Perform the ECM Verification Test Ver. 1. (Refer to 9 - ENGINE - DIAGNOSIS AND TESTING)

5. ENGINE CONTROL MODULE (ECM)

Using the wiring diagram/schematic as a guide, inspect the wiring and connectors between the Oxygen Sensor and the Engine Control Module (ECM).
Look for any chafed, pierced, pinched, or partially broken wires.
Look for broken, bent, pushed out or corroded terminals.
Refer to any Technical Service Bulletins that may apply.

Were any problems found?

Yes >> Repair as necessary.
Perform the ECM Verification Test Ver. 1. (Refer to 9 - ENGINE - DIAGNOSIS AND TESTING)

No >> Replace the Engine Control Module (ECM) in accordance with the Service Information.
Perform the ECM Verification Test Ver. 1. (Refer to 9 - ENGINE - DIAGNOSIS AND TESTING)

P0032 - O2 SENSOR 1/1 HEATER CIRCUIT HIGH

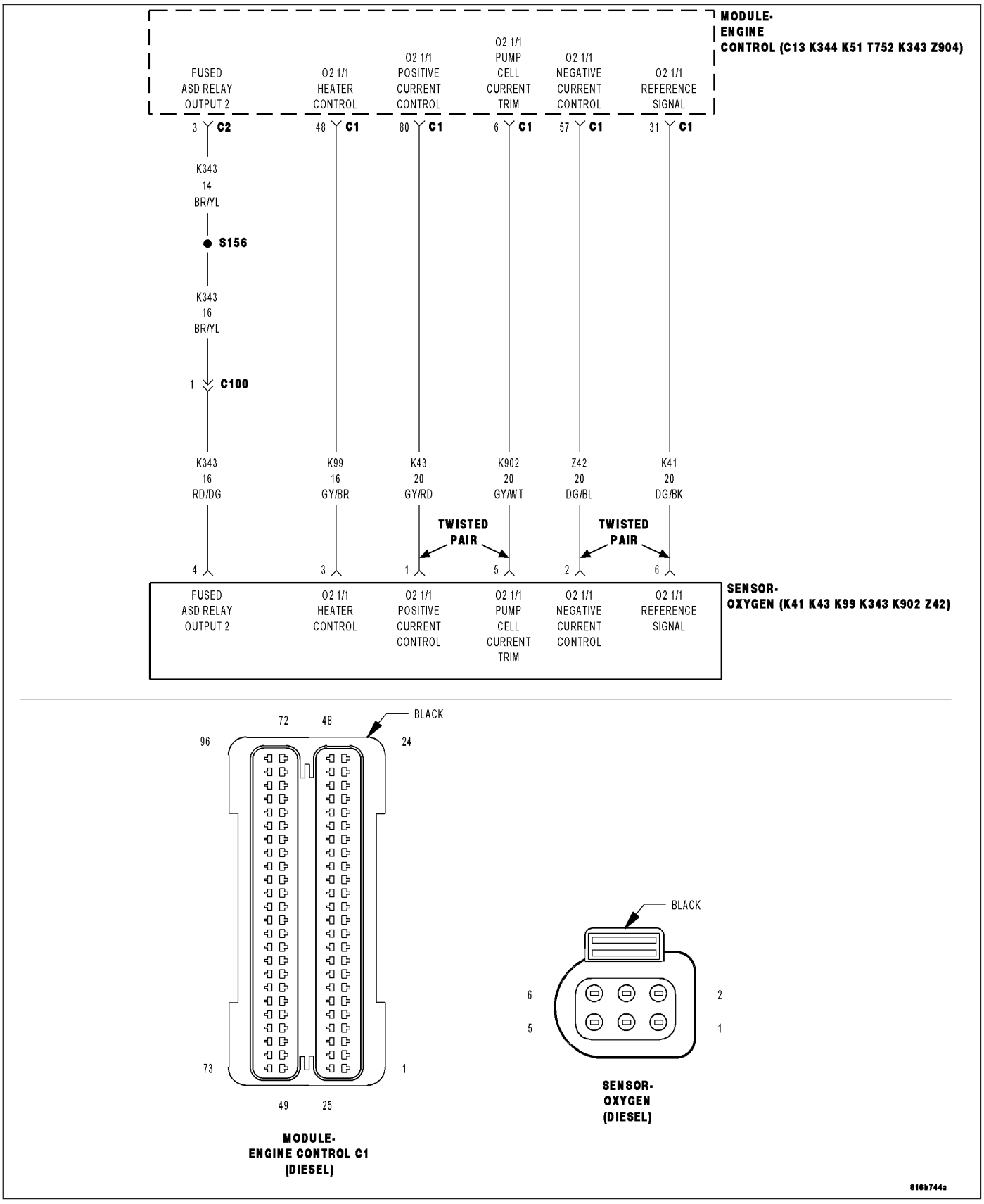

For a complete wiring diagram **Refer to Section 8W**

- **When Monitored:**
  With the ignition on and the Oxygen Sensor Heater command on.
- **Set Condition:**
  The ECM detects that the (K99) O2 1/1 Heater Control circuit is shorted to voltage for 2.0 seconds.

Possible Causes
INTERMITTENT DTC
(K99) O2 1/1 HEATER CONTROL CIRCUIT SHORTED TO VOLTAGE
(K99) O2 1/1 HEATER CONTROL CIRCUIT SHORTED TO THE (K343) FUSED ASD RELAY OUTPUT 2 CIRCUIT
(K99) O2 1/1 HEATER CONTROL CIRCUIT OPEN OR HIGH RESISTANCE
OXYGEN SENSOR
ENGINE CONTROL MODULE (ECM)

Always perform the Pre-Diagnostic Troubleshooting procedure before proceeding. (Refer to 9 - ENGINE - DIAGNOSIS AND TESTING)

Diagnostic Test

1. DTC IS ACTIVE

Ignition on, engine not running.

With the scan tool, Clear DTCs in the Engine Control Module (ECM).

Start the engine and allow it to reach normal operating temperature.

With the scan tool, select View DTCs.

Is the status Active for this DTC?

Yes >> Go To 2

No >> Refer to the *CHECKING FOR AN INTERMITTENT DTC Diagnostic Procedure. (Refer to 9 - ENGINE - DIAGNOSIS AND TESTING)

2. (K99) O2 1/1 HEATER CONTROL CIRCUIT SHORTED TO VOLTAGE

Turn the ignition off.

Disconnect the Oxygen Sensor connector.

Disconnect the Engine Control Module (ECM) connector.

Remove the ASD Relay from the IPM.

Connect a jumper wire between cavity 30 and cavity 87 of the ASD Relay Connector.

Turn the ignition on.

Measure the voltage of the (K99) O2 1/1 Heater Control circuit in the Oxygen Sensor connector.

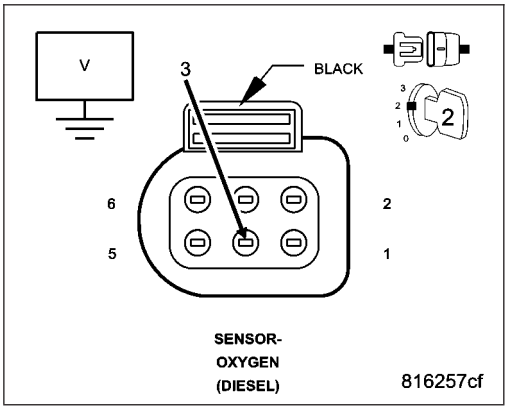

Is there any voltage present?

Yes >> Repair the (K99) O2 1/1 Heater Control circuit for a short to voltage.
Perform the ECM Verification Test Ver. 1. (Refer to 9 - ENGINE - DIAGNOSIS AND TESTING)

No >> Go to 3

3. (K99) O2 1/1 HEATER CONTROL CIRCUIT SHORTED TO THE (K343) FUSED ASD RELAY OUTPUT 2 CIRCUIT

Turn the ignition off.

Measure the resistance between the (K99) O2 1/1 Heater Control circuit and the (K343) Fused ASD Relay Output 2 circuit in the Oxygen Sensor connector.

Is the resistance above 10.0 ohms?

Yes >> Go to 4

No >> Repair the (K99) O2 1/1 Heater Control circuit for a short to the (K343) Fused ASD Relay Output 2 circuit.

Perform the ECM Verification Test Ver. 1. (Refer to 9 - ENGINE - DIAGNOSIS AND TESTING)

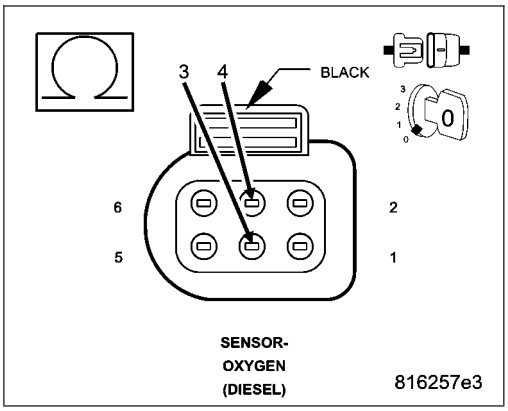

4. (K99) O2 1/1 HEATER CONTROL CIRCUIT OPEN OR HIGH RESISTANCE

Measure the resistance of the (K99) O2 1/1 Heater Control circuit between the Oxygen Sensor connector and the Engine Control Module (ECM) connector.

Is the resistance below 10.0 ohms?

Yes >> Go to 5

No >> Repair the (K99) O2 1/1 Heater Control circuit for an open circuit or high resistance.

Perform the ECM Verification Test Ver. 1. (Refer to 9 - ENGINE - DIAGNOSIS AND TESTING)

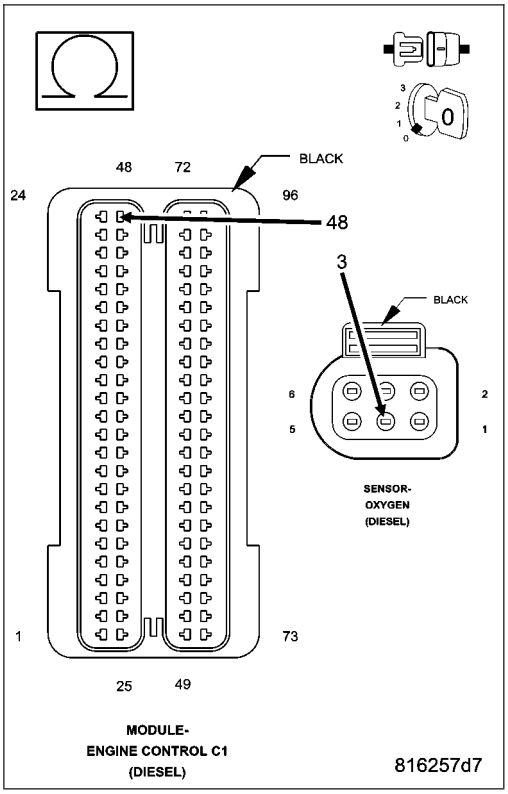

5. OXYGEN SENSOR

Connect the Engine Control Module (ECM) connector.
Replace the Oxygen Sensor in accordance with the Service Information.
Turn the ignition on.
With the scan tool, Clear DTCs.
Start the engine and allow it to reach normal operating temperature.
With the scan tool, select View DTCs.

Is the status Active for this DTC?

Yes >> Go to 6

No >> Test Complete.
Perform the ECM Verification Test Ver. 1. (Refer to 9 - ENGINE - DIAGNOSIS AND TESTING)

6. ENGINE CONTROL MODULE (ECM)

Using the wiring diagram/schematic as a guide, inspect the wiring and connectors between the Oxygen Sensor and the Engine Control Module (ECM).
Look for any chafed, pierced, pinched, or partially broken wires.
Look for broken, bent, pushed out or corroded terminals.
Refer to any Technical Service Bulletins that may apply.

Were any problems found?

Yes >> Repair as necessary.
Perform the ECM Verification Test Ver. 1. (Refer to 9 - ENGINE - DIAGNOSIS AND TESTING)

No >> Replace the Engine Control Module (ECM) in accordance with the Service Information.
Perform the ECM Verification Test Ver. 1. (Refer to 9 - ENGINE - DIAGNOSIS AND TESTING)

P0045 - TURBOCHARGER BOOST CONTROL CIRCUIT/OPEN

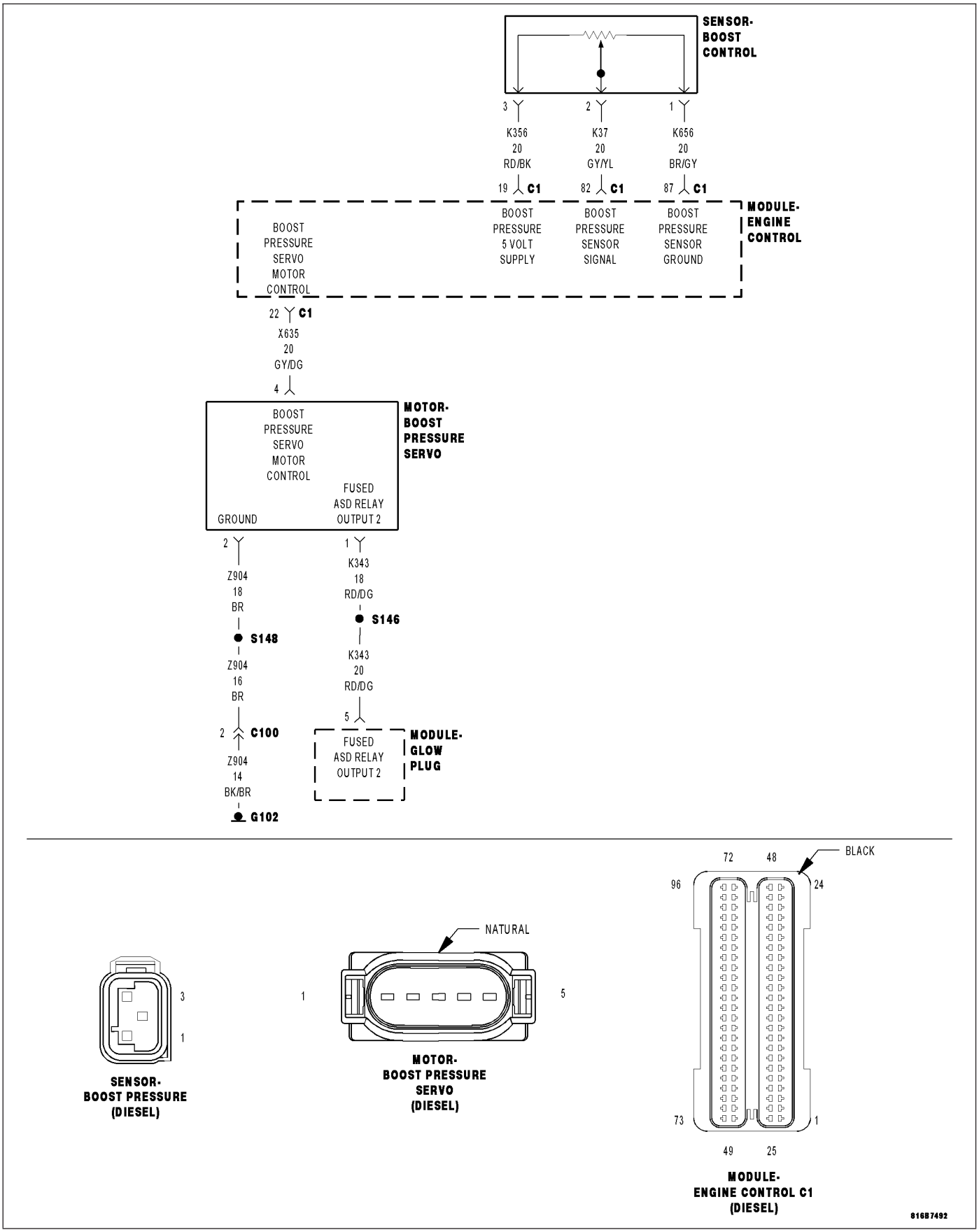

For a complete wiring diagram **Refer to Section 8W**

- **When Monitored:**
  With the ignition on and the Boost Pressure Servo Motor command off.
- **Set Condition:**
  The ECM detects that the (X635) Boost Pressure Servo Motor Control circuit is open for 2.0 seconds.

Possible Causes
INTERMITTENT DTC
(K343) FUSED ASD RELAY OUTPUT 2 CIRCUIT OPEN OR HIGH RESISTANCE
(X635) BOOST PRESSURE SERVO MOTOR CONTROL CIRCUIT SHORTED TO GROUND
(X635) BOOST PRESSURE SERVO MOTOR CONTROL CIRCUIT OPEN OR HIGH RESISTANCE
BOOST PRESSURE SERVO MOTOR
ENGINE CONTROL MODULE (ECM)

Always perform the Pre-Diagnostic Troubleshooting procedure before proceeding. (Refer to 9 - ENGINE - DIAGNOSIS AND TESTING)

Diagnostic Test

1. DTC IS ACTIVE

Ignition on, engine not running.
With the scan tool, Clear DTCs in the Engine Control Module (ECM).
With the scan tool, actuate the Boost Pressure Servo Motor at 100%.
Monitor the scan tool for at least two minutes.
With the scan tool, select View DTCs.

Is the status Active for this DTC?

Yes >> Go To 2

No >> Refer to the *CHECKING FOR AN INTERMITTENT DTC Diagnostic Procedure. (Refer to 9 - ENGINE - DIAGNOSIS AND TESTING)

2. (K343) FUSED ASD RELAY OUTPUT 2 CIRCUIT OPEN OR HIGH RESISTANCE

Turn the ignition off.
Disconnect the Boost Pressure Servo Motor harness connector.
Turn the ignition on.
Using a 12 volt test light connected to ground, check the (K343) Fused ASD Relay Output 2 circuit in the Boost Pressure Servo Motor harness connector.

NOTE: The test light should be illuminated and bright. Compare the brightness to that of a direct connection to the battery.

Is the test light illuminated and bright?

Yes >> Go to 3

No >> Repair the (K343) Fused ASD Relay Output 2 circuit for an open circuit or high resistance.
Perform the ECM Verification Test Ver. 1. (Refer to 9 - ENGINE - DIAGNOSIS AND TESTING)

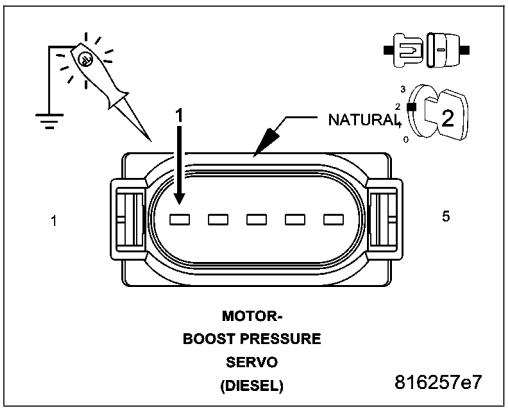

3. (X635) BOOST PRESSURE SERVO MOTOR CONTROL CIRCUIT SHORTED TO GROUND

Turn the ignition off.

Disconnect the Engine Control Module (ECM) harness connector.

Measure the resistance between ground and the (X635) Boost Pressure Servo Motor Control circuit in the Boost Pressure Servo Motor harness connector.

Is the resistance above 10.0 ohms?

Yes >> Go to 4

No >> Repair the (X635) Boost Pressure Servo Motor Control circuit for a short to ground.

Perform the ECM Verification Test Ver. 1. (Refer to 9 - ENGINE - DIAGNOSIS AND TESTING)

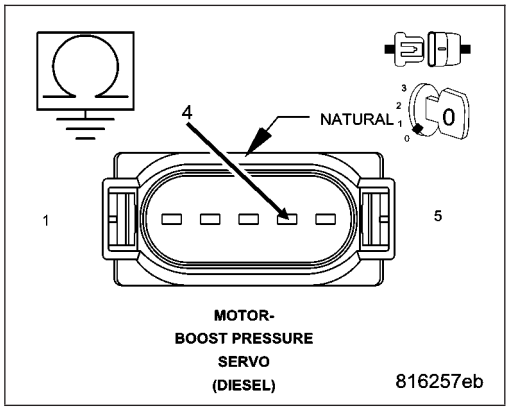

4. (X635) BOOST PRESSURE SERVO MOTOR CONTROL CIRCUIT OPEN OR HIGH RESISTANCE

Measure the resistance of the (X635) Boost Pressure Servo Motor Control circuit between the Boost Pressure Servo Motor harness connector and the Engine Control Module (ECM) harness connector.

Is the resistance below 10.0 ohms?

Yes >> Go to 5

No >> Repair the (X635) Boost Pressure Servo Motor Control circuit for an open circuit or high resistance.

Perform the ECM Verification Test Ver. 1. (Refer to 9 - ENGINE - DIAGNOSIS AND TESTING)

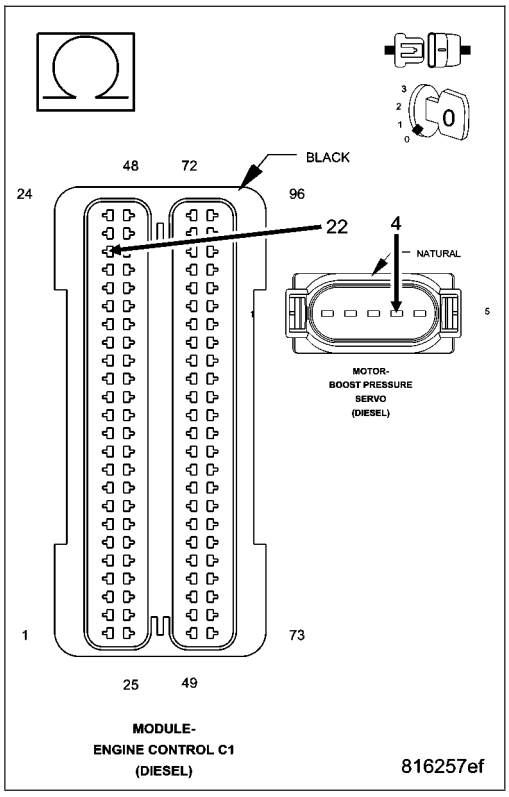

5. BOOST PRESSURE SERVO MOTOR

Turn the ignition off.

Connect the Engine Control Module (ECM) harness connector.

Turn the ignition on.

With the scan tool, actuate the Boost Pressure Servo Motor (Boost Pressure Actuator) to 100%.

Using a 12 volt test light connected to 12 volts, check the (X635) Boost Pressure Servo Motor Control circuit in the Boost Pressure Servo Motor harness connector.

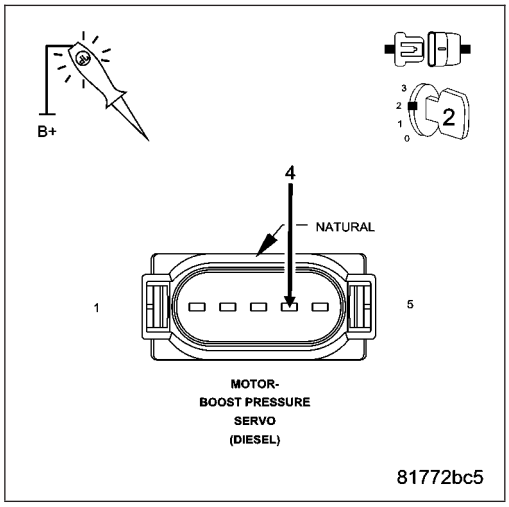

NOTE: The test light should be illuminated and bright. Compare the brightness to that of a direct connection to the battery.

NOTE: The circuit will remain actuated by the controller for 30 seconds. Be certain the actuation is active when checking the circuit.

With the scan tool, actuate the Boost Pressure Servo Motor (Boost Pressure Actuator) to 0%.

Using a 12 volt test light connected to 12 volts, check the (X635) Boost Pressure Servo Motor Control circuit in the Boost Pressure Servo Motor harness connector.

NOTE: The test light should not be illuminated.

NOTE: The circuit will remain actuated by the controller for 30 seconds. Be certain the actuation is active when checking the circuit.

Is the test light illuminated and bright with the actuation at 100% and not illuminated with the actuation at 0%?

Yes >> Replace the Boost Pressure Servo Motor in accordance with the Service Information.
Perform the ECM Verification Test Ver. 1. (Refer to 9 - ENGINE - DIAGNOSIS AND TESTING)

No >> Go to 6

6. ENGINE CONTROL MODULE (ECM)

Using the wiring diagram/schematic as a guide, inspect the wiring and connectors between the Boost Pressure Servo Motor and the Engine Control Module (ECM).

Look for any chafed, pierced, pinched, or partially broken wires.

Look for broken, bent, pushed out or corroded terminals.

Refer to any Technical Service Bulletins that may apply.

Were any problems found?

Yes >> Repair as necessary.
Perform the ECM Verification Test Ver. 1. (Refer to 9 - ENGINE - DIAGNOSIS AND TESTING)

No >> Replace the Engine Control Module (ECM) in accordance with the Service Information.
Perform the ECM Verification Test Ver. 1. (Refer to 9 - ENGINE - DIAGNOSIS AND TESTING)

P0046 - TURBOCHARGER BOOST CONTROL CIRCUIT PERFORMANCE

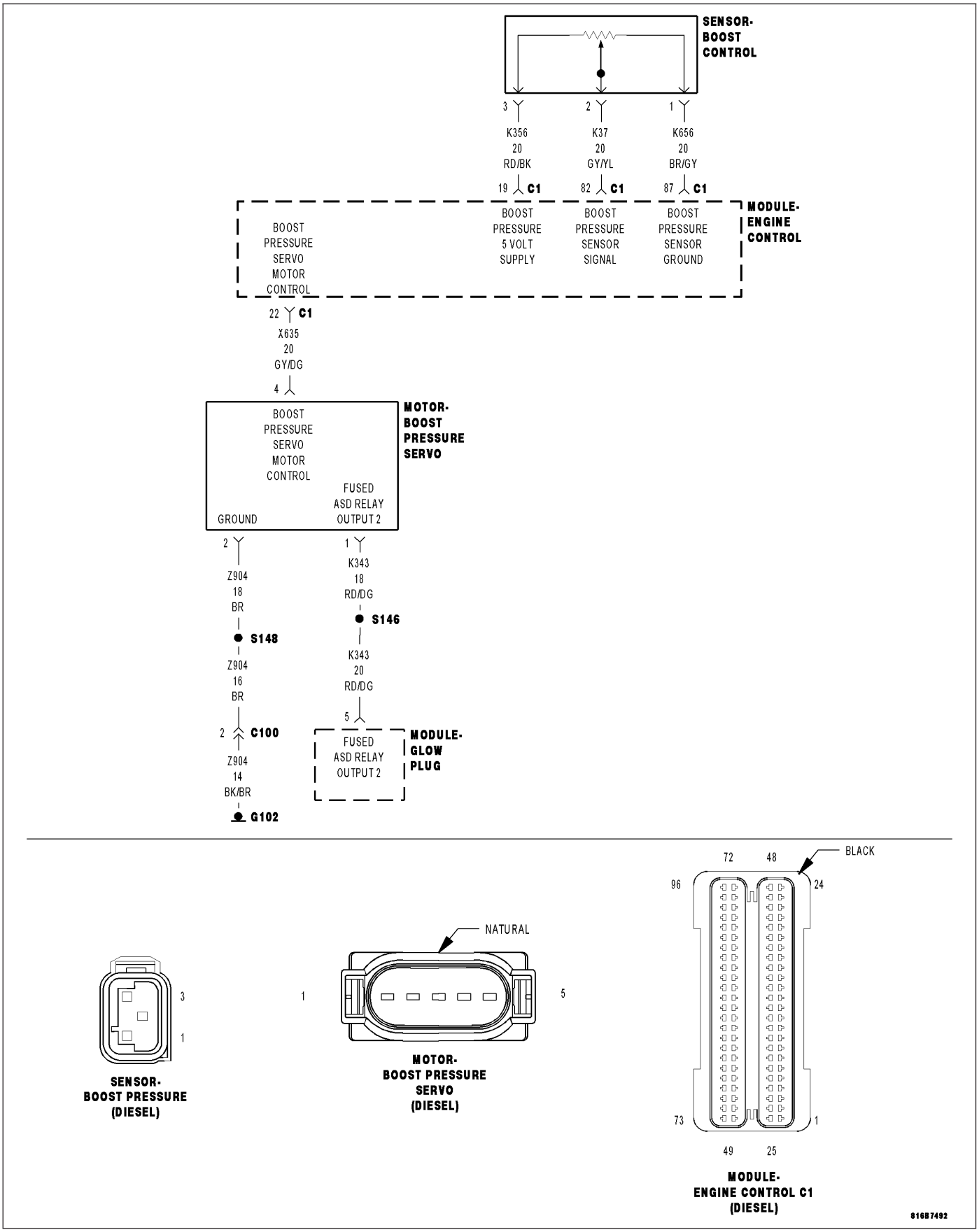

For a complete wiring diagram **Refer to Section 8W**

- **When Monitored:**
  With the ignition on and the Boost Pressure Servo Motor command on.
- **Set Condition:**
  The ECM detects that the (X635) Boost Pressure Servo Motor Control circuit voltage is implausible.

Possible Causes
INTERMITTENT DTC
(K343) FUSED ASD RELAY OUTPUT 2 CIRCUIT OPEN OR HIGH RESISTANCE
(X635) BOOST PRESSURE SERVO MOTOR CONTROL CIRCUIT SHORTED TO VOLTAGE
(X635) BOOST PRESSURE SERVO MOTOR CONTROL CIRCUIT SHORTED TO GROUND
(X635) BOOST PRESSURE SERVO MOTOR CONTROL CIRCUIT OPEN OR HIGH RESISTANCE
BOOST PRESSURE SERVO MOTOR
ENGINE CONTROL MODULE (ECM)

Always perform the Pre-Diagnostic Troubleshooting procedure before proceeding. (Refer to 9 - ENGINE - DIAGNOSIS AND TESTING)

Diagnostic Test

1. DTC IS ACTIVE

Ignition on, engine not running.
With the scan tool, Clear DTCs in the Engine Control Module (ECM).
With the scan tool, actuate the Boost Pressure Servo Motor at 100%.
Monitor the scan tool for at least two minutes.
With the scan tool, select View DTCs.

Is the status Active for this DTC?

Yes >> Go To 2

No >> Refer to the *CHECKING FOR AN INTERMITTENT DTC Diagnostic Procedure. (Refer to 9 - ENGINE - DIAGNOSIS AND TESTING)

2. (K343) FUSED ASD RELAY OUTPUT 2 CIRCUIT OPEN OR HIGH RESISTANCE

Turn the ignition off.
Disconnect the Boost Pressure Servo Motor harness connector.
Turn the ignition on.
Using a 12 volt test light connected to ground, check the (K343) Fused ASD Relay Output 2 circuit in the Boost Pressure Servo Motor harness connector.

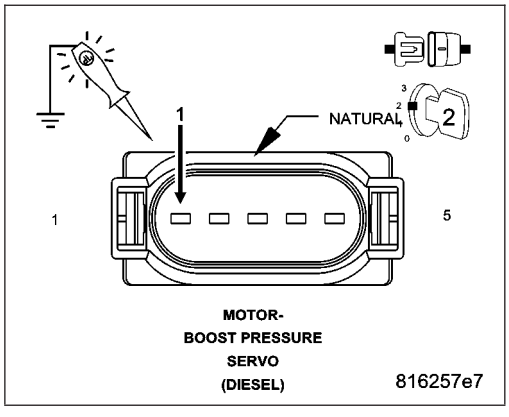

NOTE: The test light should be illuminated and bright. Compare the brightness to that of a direct connection to the battery.

Is the test light illuminated and bright?

Yes >> Go to 3

No >> Repair the (K343) Fused ASD Relay Output 2 circuit for an open circuit or high resistance.
Perform the ECM Verification Test Ver. 1. (Refer to 9 - ENGINE - DIAGNOSIS AND TESTING)

3. (X635) BOOST PRESSURE SERVO MOTOR CONTROL CIRCUIT SHORTED TO VOLTAGE

Turn the ignition off.

Disconnect the Engine Control Module (ECM) harness connector.

Remove the ASD Relay from the IPM.

Connect a jumper wire between cavity 30 and cavity 87 of the ASD Relay Connector.

Turn the ignition on.

Measure the voltage of the (X635) Boost Pressure Servo Motor Control circuit in the Boost Pressure Servo Motor harness connector.

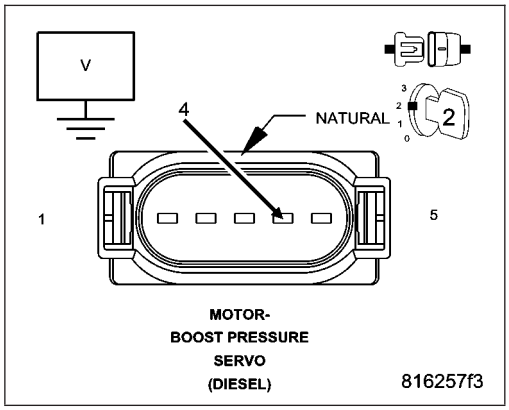

Is there any voltage present?

Yes >> Repair the (X635) Boost Pressure Servo Motor Control circuit for a short to voltage.
Perform the ECM Verification Test Ver. 1. (Refer to 9 - ENGINE - DIAGNOSIS AND TESTING)

No >> Go to 4

4. (X635) BOOST PRESSURE SERVO MOTOR CONTROL CIRCUIT SHORTED TO GROUND

Turn the ignition off.

Measure the resistance between ground and the (X635) Boost Pressure Servo Motor Control circuit in the Boost Pressure Servo Motor harness connector.

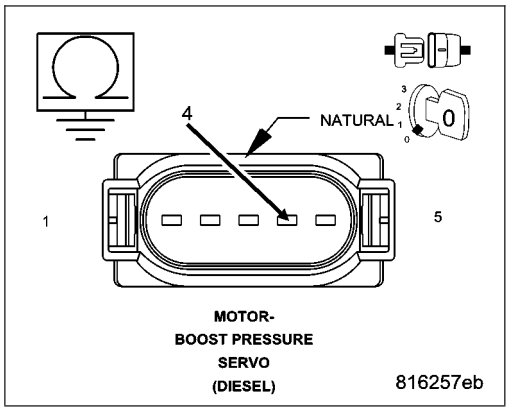

Is the resistance above 10.0 ohms?

Yes >> Go to 5

No >> Repair the (X635) Boost Pressure Servo Motor Control circuit for a short to ground.
Perform the ECM Verification Test Ver. 1. (Refer to 9 - ENGINE - DIAGNOSIS AND TESTING)

5. (X635) BOOST PRESSURE SERVO MOTOR CONTROL CIRCUIT OPEN OR HIGH RESISTANCE

Measure the resistance of the (X635) Boost Pressure Servo Motor Control circuit between the Boost Pressure Servo Motor harness connector and the Engine Control Module (ECM) harness connector.

Is the resistance below 10.0 ohms?

Yes >> Go to 6

No >> Repair the (X635) Boost Pressure Servo Motor Control circuit for an open circuit or high resistance.
Perform the ECM Verification Test Ver. 1. (Refer to 9 - ENGINE - DIAGNOSIS AND TESTING)

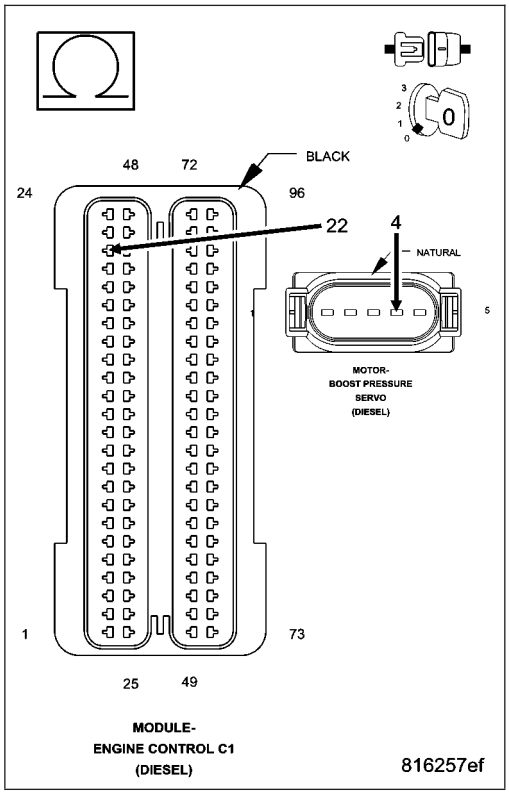

6. BOOST PRESSURE SERVO MOTOR

Turn the ignition off.

Connect the Engine Control Module (ECM) harness connector.

Turn the ignition on.

With the scan tool, actuate the Boost Pressure Servo Motor (Boost Pressure Actuator) to 100%.

Using a 12 volt test light connected to 12 volts, check the (X635) Boost Pressure Servo Motor Control circuit in the Boost Pressure Servo Motor harness connector.

NOTE: The test light should be illuminated and bright. Compare the brightness to that of a direct connection to the battery.

NOTE: The circuit will remain actuated by the controller for 30 seconds. Be certain the actuation is active when checking the circuit.
With the scan tool, actuate the Boost Pressure Servo Motor (Boost Pressure Actuator) to 0%.

Using a 12 volt test light connected to 12 volts, check the (X635) Boost Pressure Servo Motor Control circuit in the Boost Pressure Servo Motor harness connector.

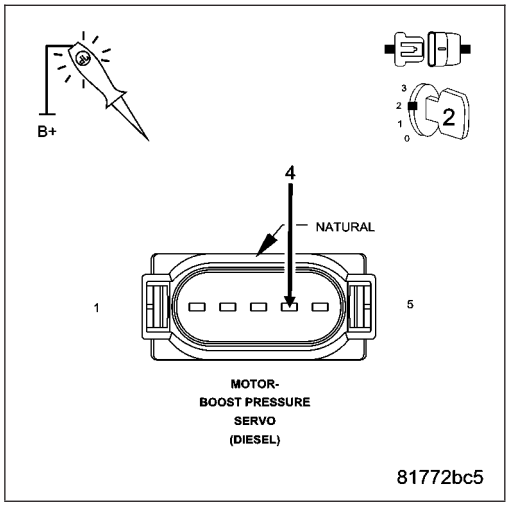

NOTE: The test light should not be illuminated.

NOTE: The circuit will remain actuated by the controller for 30 seconds. Be certain the actuation is active when checking the circuit.

Is the test light illuminated and bright with the actuation at 100% and not illuminated with the actuation

at 0%?

Yes >> Replace the Boost Pressure Servo Motor in accordance with the Service Information.
Perform the ECM Verification Test Ver. 1. (Refer to 9 - ENGINE - DIAGNOSIS AND TESTING)

No >> Go to 7

7. ENGINE CONTROL MODULE (ECM)

Using the wiring diagram/schematic as a guide, inspect the wiring and connectors between the Boost Pressure Servo Motor and the Engine Control Module (ECM).

Look for any chafed, pierced, pinched, or partially broken wires.

Look for broken, bent, pushed out or corroded terminals.

Refer to any Technical Service Bulletins that may apply.

Were any problems found?

Yes >> Repair as necessary.
Perform the ECM Verification Test Ver. 1. (Refer to 9 - ENGINE - DIAGNOSIS AND TESTING)

No >> Replace the Engine Control Module (ECM) in accordance with the Service Information.
Perform the ECM Verification Test Ver. 1. (Refer to 9 - ENGINE - DIAGNOSIS AND TESTING)

P0047 - TURBOCHARGER BOOST CONTROL CIRCUIT LOW

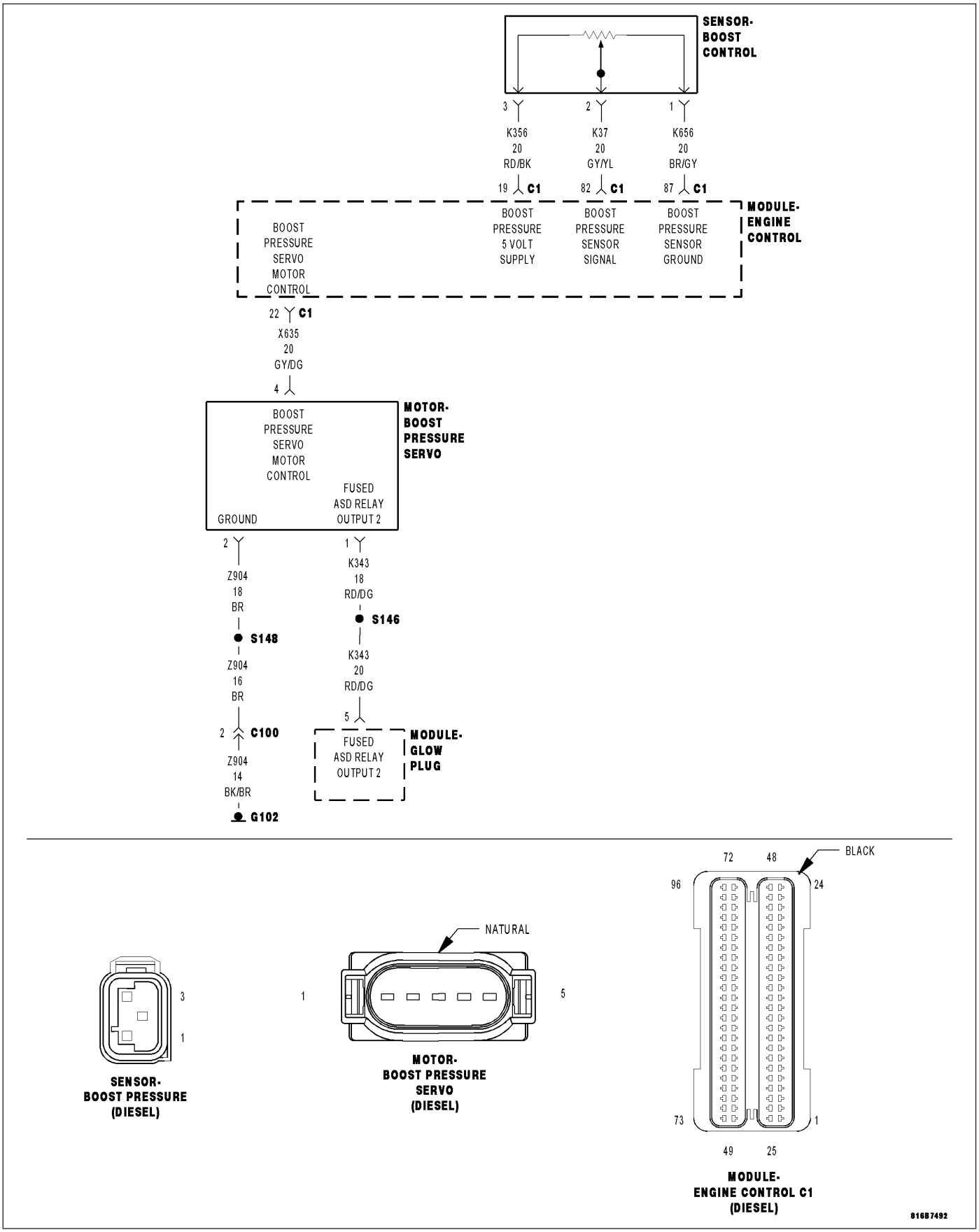

For a complete wiring diagram **Refer to Section 8W**

- **When Monitored:**
  With the ignition on and the Boost Pressure Servo Motor command off.
- **Set Condition:**
  The ECM detects that the (X635) Boost Pressure Servo Motor Control circuit is shorted to ground for 5.3 seconds.

Possible Causes
INTERMITTENT DTC
(K343) FUSED ASD RELAY OUTPUT 2 CIRCUIT OPEN OR HIGH RESISTANCE
(X635) BOOST PRESSURE SERVO MOTOR CONTROL CIRCUIT SHORTED TO GROUND
(X635) BOOST PRESSURE SERVO MOTOR CONTROL CIRCUIT OPEN OR HIGH RESISTANCE
BOOST PRESSURE SERVO MOTOR
ENGINE CONTROL MODULE (ECM)

Always perform the Pre-Diagnostic Troubleshooting procedure before proceeding. (Refer to 9 - ENGINE - DIAGNOSIS AND TESTING)

Diagnostic Test

1. DTC IS ACTIVE

Ignition on, engine not running.
With the scan tool, Clear DTCs in the Engine Control Module (ECM).
With the scan tool, actuate the Boost Pressure Servo Motor at 100%.
Monitor the scan tool for at least two minutes.
With the scan tool, select View DTCs.

Is the status Active for this DTC?

Yes >> Go To 2

No >> Refer to the *CHECKING FOR AN INTERMITTENT DTC Diagnostic Procedure. (Refer to 9 - ENGINE - DIAGNOSIS AND TESTING)

2. (K343) FUSED ASD RELAY OUTPUT 2 CIRCUIT OPEN OR HIGH RESISTANCE

Turn the ignition off.
Disconnect the Boost Pressure Servo Motor harness connector.
Turn the ignition on.
Using a 12 volt test light connected to ground, check the (K343) Fused ASD Relay Output 2 circuit in the Boost Pressure Servo Motor harness connector.

NOTE: The test light should be illuminated and bright. Compare the brightness to that of a direct connection to the battery.

Is the test light illuminated and bright?

Yes >> Go to 3

No >> Repair the (K343) Fused ASD Relay Output 2 circuit for an open circuit or high resistance.
Perform the ECM Verification Test Ver. 1. (Refer to 9 - ENGINE - DIAGNOSIS AND TESTING)

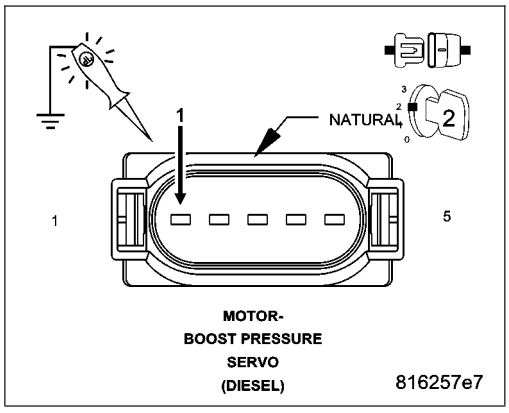

3. (X635) BOOST PRESSURE SERVO MOTOR CONTROL CIRCUIT SHORTED TO GROUND

Turn the ignition off.

Disconnect the Engine Control Module (ECM) harness connector.

Measure the resistance between ground and the (X635) Boost Pressure Servo Motor Control circuit in the Boost Pressure Servo Motor harness connector.

Is the resistance above 1000.0 ohms?

Yes >> Go to 4

No >> Repair the (X635) Boost Pressure Servo Motor Control circuit for a short to ground.

Perform the ECM Verification Test Ver. 1. (Refer to 9 - ENGINE - DIAGNOSIS AND TESTING)

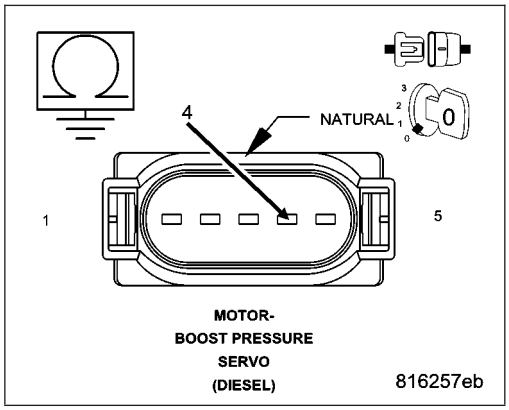

4. (X635) BOOST PRESSURE SERVO MOTOR CONTROL CIRCUIT OPEN OR HIGH RESISTANCE

Measure the resistance of the (X635) Boost Pressure Servo Motor Control circuit between the Boost Pressure Servo Motor harness connector and the Engine Control Module (ECM) harness connector.

Is the resistance below 10.0 ohms?

Yes >> Go to 5

No >> Repair the (X635) Boost Pressure Servo Motor Control circuit for an open circuit or high resistance.

Perform the ECM Verification Test Ver. 1. (Refer to 9 - ENGINE - DIAGNOSIS AND TESTING)

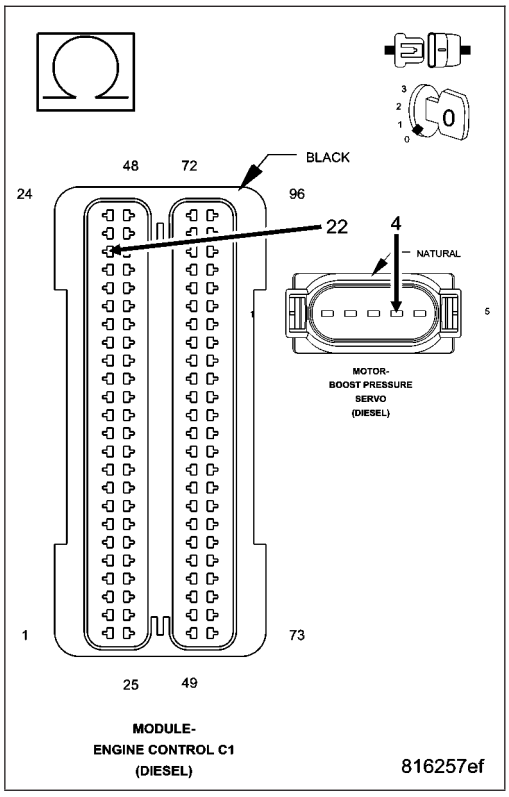

5. BOOST PRESSURE SERVO MOTOR

Turn the ignition off.

Connect the Engine Control Module (ECM) harness connector.

Turn the ignition on.

With the scan tool, actuate the Boost Pressure Servo Motor (Boost Pressure Actuator) to 100%.

Using a 12 volt test light connected to 12 volts, check the (X635) Boost Pressure Servo Motor Control circuit in the Boost Pressure Servo Motor harness connector.

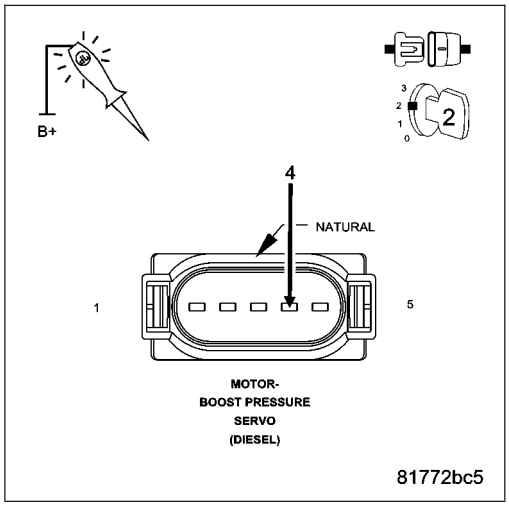

NOTE: The test light should be illuminated and bright. Compare the brightness to that of a direct connection to the battery.

NOTE: The circuit will remain actuated by the controller for 30 seconds. Be certain the actuation is active when checking the circuit.

With the scan tool, actuate the Boost Pressure Servo Motor (Boost Pressure Actuator) to 0%.

Using a 12 volt test light connected to 12 volts, check the (X635) Boost Pressure Servo Motor Control circuit in the Boost Pressure Servo Motor harness connector.

NOTE: The test light should not be illuminated.

NOTE: The circuit will remain actuated by the controller for 30 seconds. Be certain the actuation is active when checking the circuit.

Is the test light illuminated and bright with the actuation at 100% and not illuminated with the actuation at 0%?

Yes >> Replace the Boost Pressure Servo Motor in accordance with the Service Information.
Perform the ECM Verification Test Ver. 1. (Refer to 9 - ENGINE - DIAGNOSIS AND TESTING)

No >> Go to 6

6. ENGINE CONTROL MODULE (ECM)

Using the wiring diagram/schematic as a guide, inspect the wiring and connectors between the Boost Pressure Servo Motor and the Engine Control Module (ECM).

Look for any chafed, pierced, pinched, or partially broken wires.

Look for broken, bent, pushed out or corroded terminals.

Refer to any Technical Service Bulletins that may apply.

Were any problems found?

Yes >> Repair as necessary.
Perform the ECM Verification Test Ver. 1. (Refer to 9 - ENGINE - DIAGNOSIS AND TESTING)

No >> Replace the Engine Control Module (ECM) in accordance with the Service Information.
Perform the ECM Verification Test Ver. 1. (Refer to 9 - ENGINE - DIAGNOSIS AND TESTING)

P0048 - TURBOCHARGER BOOST CONTROL CIRCUIT HIGH

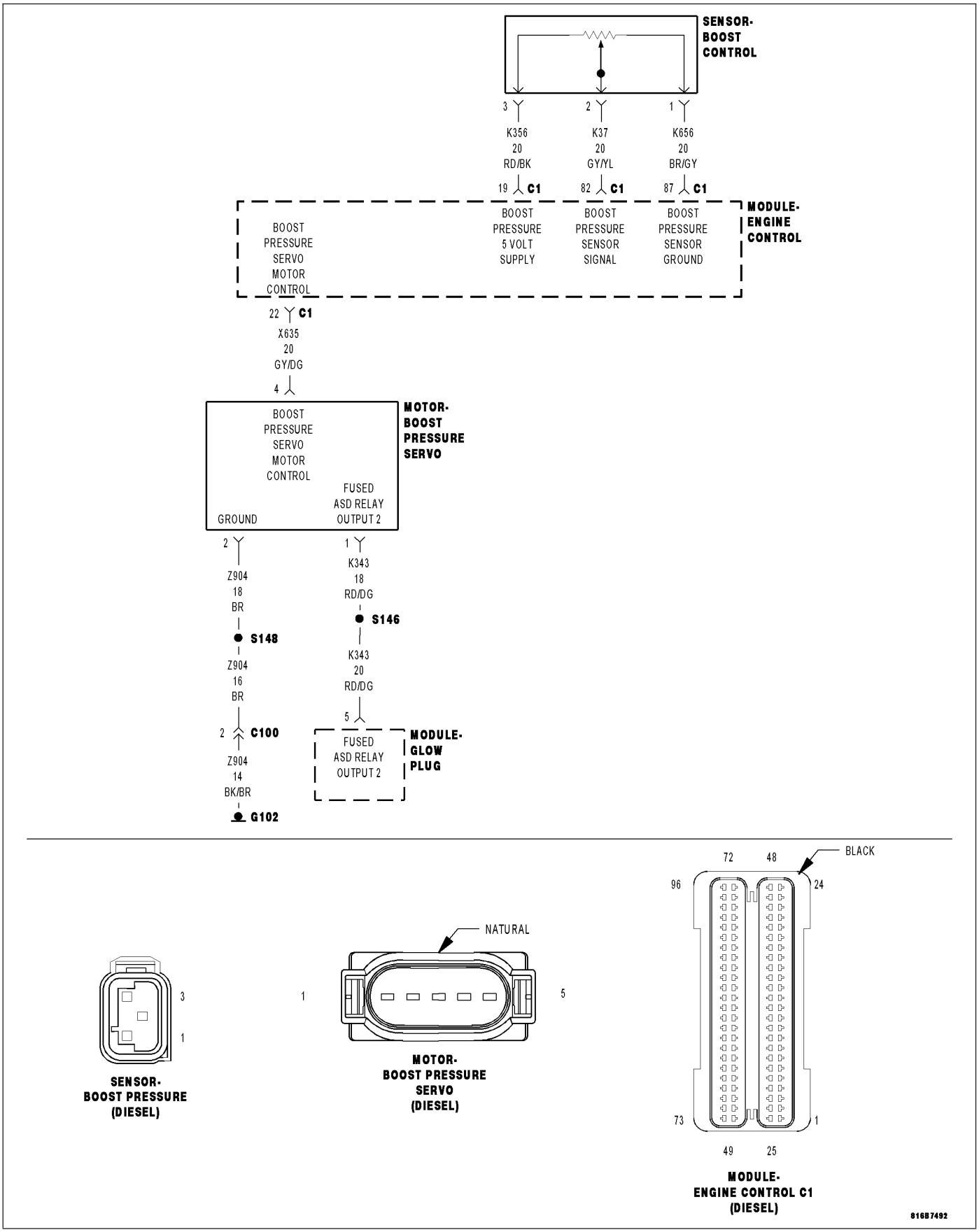

For a complete wiring diagram **Refer to Section 8W**

- **When Monitored:**
  With the ignition on and the Boost Pressure Servo Motor command on.
- **Set Condition:**
  The ECM detects that the (X635) Boost Pressure Servo Motor Control circuit is shorted to voltage for 2.0 seconds.

Possible Causes
INTERMITTENT DTC
(X635) BOOST PRESSURE SERVO MOTOR CONTROL CIRCUIT SHORTED TO VOLTAGE
(X635) BOOST PRESSURE SERVO MOTOR CONTROL CIRCUIT OPEN OR HIGH RESISTANCE
BOOST PRESSURE SERVO MOTOR
ENGINE CONTROL MODULE (ECM)

Always perform the Pre-Diagnostic Troubleshooting procedure before proceeding. (Refer to 9 - ENGINE - DIAGNOSIS AND TESTING)

Diagnostic Test

1. DTC IS ACTIVE

Ignition on, engine not running.
With the scan tool, Clear DTCs in the Engine Control Module (ECM).
With the scan tool, actuate the Boost Pressure Servo Motor at 100%.
Monitor the scan tool for at least two minutes.
With the scan tool, select View DTCs.

Is the status Active for this DTC?

Yes >> Go To 2

No >> Refer to the *CHECKING FOR AN INTERMITTENT DTC Diagnostic Procedure. (Refer to 9 - ENGINE - DIAGNOSIS AND TESTING)

2. (X635) BOOST PRESSURE SERVO MOTOR CONTROL CIRCUIT SHORTED TO VOLTAGE

Turn the ignition off.
Disconnect the Boost Pressure Servo Motor harness connector.
Disconnect the Engine Control Module (ECM) harness connector.
Remove the ASD Relay from the IPM.
Connect a jumper wire between cavity 30 and cavity 87 of the ASD Relay Connector.
Turn the ignition on.
Measure the voltage of the (X635) Boost Pressure Servo Motor Control circuit in the Boost Pressure Servo Motor harness connector.

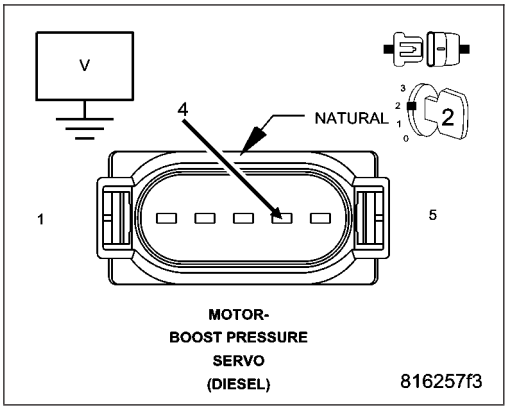

Is there any voltage present?

Yes >> Repair the (X635) Boost Pressure Servo Motor Control circuit for a short to voltage.
Perform the ECM Verification Test Ver. 1. (Refer to 9 - ENGINE - DIAGNOSIS AND TESTING)

No >> Go to 3

3. (X635) BOOST PRESSURE SERVO MOTOR CONTROL OPEN OR HIGH RESISTANCE

Turn the ignition off.

Measure the resistance of the (X635) Boost Pressure Servo Motor Control circuit between the Boost Pressure Servo Motor harness connector and the Engine Control Module (ECM) harness connector.

Is the resistance below 10.0 ohms?

Yes >> Go to 4

No >> Repair the (X635) Boost Pressure Servo Motor Control circuit for an open circuit or high resistance.

Perform the ECM Verification Test Ver. 1. (Refer to 9 - ENGINE - DIAGNOSIS AND TESTING)

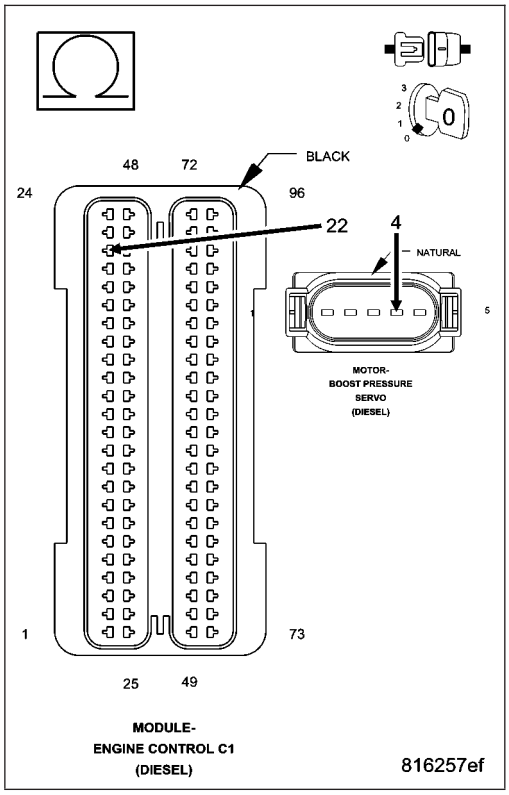

4. BOOST PRESSURE SERVO MOTOR

Turn the ignition off.

Connect the Engine Control Module (ECM) harness connector.

Turn the ignition on.

With the scan tool, actuate the Boost Pressure Servo Motor (Boost Pressure Actuator) to 100%.

Using a 12 volt test light connected to 12 volts, check the (X635) Boost Pressure Servo Motor Control circuit in the Boost Pressure Servo Motor harness connector.

NOTE: The test light should be illuminated and bright. Compare the brightness to that of a direct connection to the battery.

NOTE: The circuit will remain actuated by the controller for 30 seconds. Be certain the actuation is active when checking the circuit.

Is the test light illuminated and bright with the actuation at 100%?

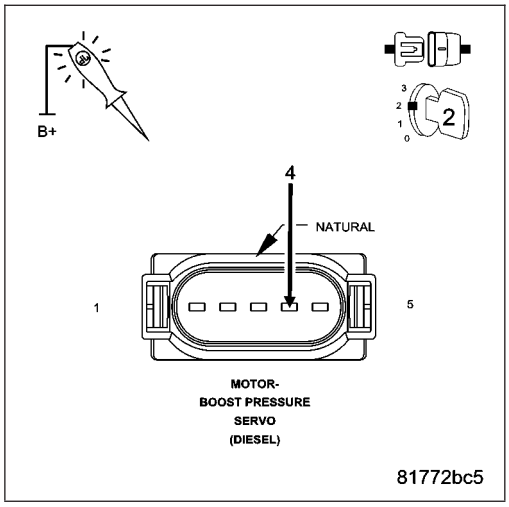

Yes >> Replace the Boost Pressure Servo Motor in accordance with the Service Information.

Perform the ECM Verification Test Ver. 1. (Refer to 9 - ENGINE - DIAGNOSIS AND TESTING)

No >> Go to 5

5. ENGINE CONTROL MODULE (ECM)

Using the wiring diagram/schematic as a guide, inspect the wiring and connectors between the Boost Pressure Servo Motor and the Engine Control Module (ECM).

Look for any chafed, pierced, pinched, or partially broken wires.

Look for broken, bent, pushed out or corroded terminals.

Refer to any Technical Service Bulletins that may apply.

Were any problems found?

Yes >> Repair as necessary.
Perform the ECM Verification Test Ver. 1. (Refer to 9 - ENGINE - DIAGNOSIS AND TESTING)

No >> Replace the Engine Control Module (ECM) in accordance with the Service Information.
Perform the ECM Verification Test Ver. 1. (Refer to 9 - ENGINE - DIAGNOSIS AND TESTING)

P0069–MANIFOLD PRESSURE/BAROMETRIC PRESSURE CORRELATION

For a complete wiring diagram **Refer to Section 8W**.

Theory of Operation

The Barometric/Atmospheric Pressure Sensor is calculated from the Inlet Pressure Sensor Signal. The ECM compares the signal of the Inlet Pressure Sensor to the signal of the Boost Pressure Sensor during low engine rpm (non-turbocharger boost conditions) to determine the plausibility of these sensors.

- **When Monitored:**
  Engine speed is below 720 RPM. Intake Air Temperature is between 9.96°C and 84.9°C. There are no Sensor Reference Voltage DTC's. There are no other Boost Pressure related DTC's. There are no Inlet Pressure Sensor DTC's.
- **Set Condition:**
  The difference between the Boost Pressure Sensor Signal and the Atmospheric/Barometric Pressure Sensor Signal is greater than 150 hpa (2.175 psi.) for at least 6.0 seconds.

Possible Causes
BOOST PRESSURE SENSOR RELATED WIRING & CONNECTORS
BOOST PRESSURE SENSOR
INLET PRESSURE SENSOR RELATED WIRING & CONNECTORS
INLET PRESSURE SENSOR
ENGINE CONTROL MODULE

Always perform the Pre-Diagnostic Troubleshooting procedure before proceeding. (Refer to 9 - ENGINE - DIAGNOSIS AND TESTING).

Diagnostic Test

1. CHECK FOR ACTIVE DTCS IN THE ECM

NOTE: Verify and note actual Atmospheric/Barometric pressure.
Ignition on, engine not running.
With the scan tool, Clear DTCs in the Engine Control Module (ECM).
Monitor the scan tool for at least two minutes.
Cycle the ignition key off and on several times, leaving the ignition on for at least 10 seconds at a time.
Turn the ignition on.
With the scan tool, select View DTCs.

Is the status Active for this DTC?

Yes >> Go To 2

No >> Refer to the *CHECKING FOR AN INTERMITTENT DTC Diagnostic Procedure.

2. ECM

With the scan tool, view the ECM Data and read the Atmospheric Pressure.
Compare ECM Atmospheric Pressure reading to the actual atmospheric pressure.

Does the scan tool display Atmospheric Pressure that is within 150 hpa (2.175 psi.) of actual atmospheric pressure?

Yes >> Go To 3

No >> Check the wiring connectors between the Inlet Pressure Sensor and the ECM for poor terminal contact, corrosion or other problems. If Inlet Pressure Sensor wiring and connectors check out good, replace the Inlet Pressure Sensor.
Perform the ECM Verification Test Ver. 1. (Refer to 9 - ENGINE - DIAGNOSIS AND TESTING)

3. BOOST PRESSURE SENSOR WIRING INSPECTION

Turn the ignition off.

Using the wiring schematics as a guide, inspect the wiring and connectors associated with the Boost Pressure Sensor circuits between the Boost Pressure Sensor and the ECM.

Were any problems found?

Yes >> Repair or replace wiring/connectors as necessary.
Perform the ECM Verification Test Ver. 1. (Refer to 9 - ENGINE - DIAGNOSIS AND TESTING)

No >> Replace the Boost Pressure Sensor.
Perform the ECM Verification Test Ver. 1. (Refer to 9 - ENGINE - DIAGNOSIS AND TESTING)

P006D-BAROMETRIC PRESSURE — INLET AIR PRESSURE CORRELATION

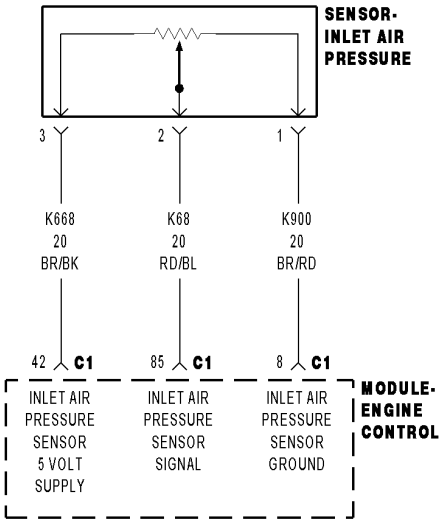

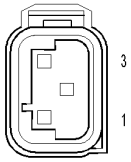

SENSOR-
INLET AIR
PRESSURE
(DIESEL)

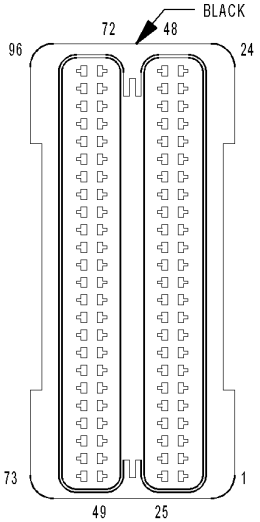

MODULE-
ENGINE CONTROL C1
(DIESEL)

816B74AF

For a complete wiring diagram **Refer to Section 8W**

- **When Monitored:**
  With the ignition on. No other IAT DTC's present in the ECM. Engine speed below 800 rpm.
- **Set Condition:**
  The difference between the Inlet Pressure Sensor signal and the Atmospheric Pressure Sensor signal is 45 hpa (0.65 psi) for 5.0 seconds.

Possible Causes
AIR FILTER
AIR RESTRICTION
INTERMITTENT CONDITION
HIGH RESISTANCE IN THE (K68) INLET PRESSURE SENSOR SIGNAL CIRCUIT
HIGH RESISTANCE IN THE (K900) INLET PRESSURE SENSOR GROUND CIRCUIT
HIGH RESISTANCE IN THE (K668) INLET PRESSURE SENSOR 5-VOLT SUPPLY CIRCUIT
INLET PRESSURE SENSOR

Always perform the Pre-Diagnostic Troubleshooting procedure before proceeding.

Diagnostic Test

1. CHECK FOR ACTIVE DTCS IN THE ECM

Turn the ignition on.
With the scan tool, Clear DTCs in the Engine Control Module (ECM).
Turn the ignition off, wait 30 seconds.
Test drive the vehicle.
With the scan tool, select view DTCs.

Is the status Active for this DTC?

Yes >> Go To 2

No >> Refer to the *CHECKING FOR AN INTERMITTENT DTC Diagnostic Procedure.

2. AIR FILTER

Turn the ignition off.
Remove and inspect the Air Filter for soiling or excessive dirt and debris which may cause air flow restriction.

Were any of these problems found?

Yes >> Replace the Air Filter element.
Perform the ECM Verification Test Ver. 1. (Refer to 9 - ENGINE - DIAGNOSIS AND TESTING)

No >> Go To 3

3. AIR RESTRICTION

NOTE: Inspect all air intake and turbocharger related tubes for damage, restriction or poor connection. Any of these conditions can cause this DTC to set.
Inspect all air intake and turbocharger related tubes and connections.

Were any problems found?

Yes >> Repair or replace as necessary.
Perform the ECM Verification Test Ver. 1. (Refer to 9 - ENGINE - DIAGNOSIS AND TESTING)

No >> Go To 4

4. HIGH RESISTANCE IN THE (K68) INLET PRESSURE SENSOR SIGNAL CIRCUIT

Disconnect the Inlet Pressure Sensor harness connector.

Disconnect the ECM harness connectors.

Measure the resistance of the (K68) Inlet Pressure Sensor Signal circuit.

Is the resistance below 10.0 ohms?

Yes >> Go To 5

No >> Repair the (K68) Inlet Pressure Sensor Signal circuit for high resistance.

Perform the ECM Verification Test Ver. 1. (Refer to 9 - ENGINE - DIAGNOSIS AND TESTING)

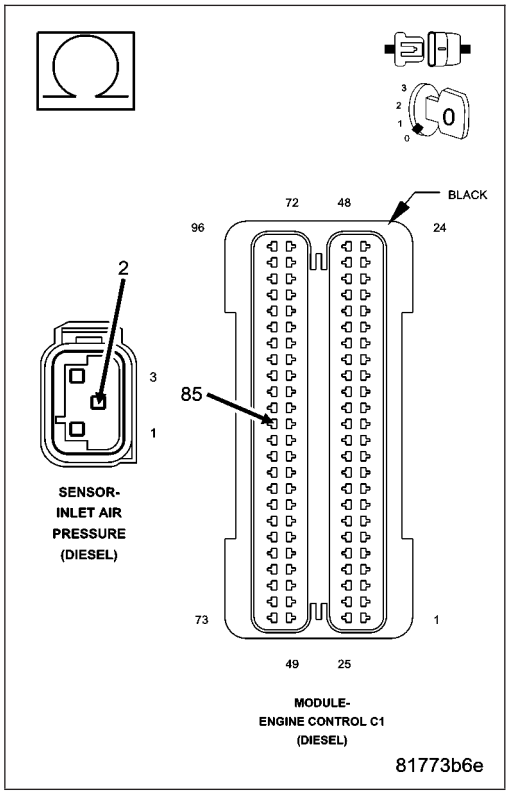

5. HIGH RESISTANCE IN THE (K900) INLET PRESSURE SENSOR GROUND CIRCUIT

Measure the resistance of the (K900) Inlet Pressure Sensor Ground circuit.

Is the resistance below 10.0 ohms?

Yes >> Go To 6

No >> Repair the (K900) Inlet Pressure Sensor Ground circuit for high resistance.

Perform the ECM Verification Test Ver. 1. (Refer to 9 - ENGINE - DIAGNOSIS AND TESTING)

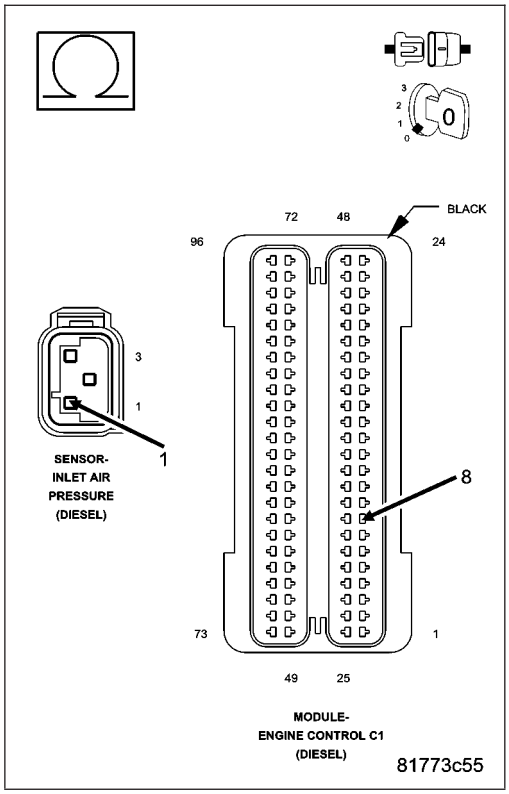

6. HIGH RESISTANCE IN THE (K668) INLET PRESSURE SENSOR 5-VOLT SUPPLY CIRCUIT

Measure the resistance of the (K668) Inlet Pressure Sensor 5-volt Supply circuit.

Is the resistance below 10.0 ohms?

Yes >> Replace the Inlet Pressure Sensor.
Perform the ECM Verification Test Ver. 1. (Refer to 9 - ENGINE - DIAGNOSIS AND TESTING)

No >> Repair the (K668) Inlet Pressure Sensor 5 Volt Supply circuit for high resistance.
Perform the ECM Verification Test Ver. 1. (Refer to 9 - ENGINE - DIAGNOSIS AND TESTING)

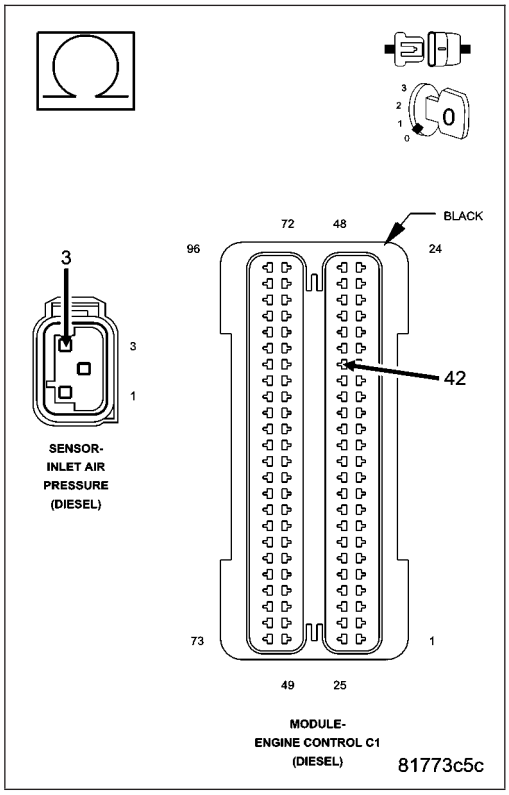

P0070 - AMBIENT AIR TEMPERATURE SENSOR STUCK

For a complete wiring diagram **Refer to Section 8W**

- **When Monitored:**
  With the ignition on.
- **Set Condition:**
  The Ambient Air Temperature Sensor signal over CAN Bus from the FCM is implausible.

Possible Causes
INTERMITTENT DTC
FRONT CONTROL MODULE
AMBIENT TEMPERATURE SENSOR

Always perform the Pre-Diagnostic Troubleshooting procedure before proceeding.

Diagnostic Test

1. DTC IS ACTIVE

NOTE: The Ambient Air Temperature Sensor is hardwired to the FCM.
Ignition on, engine not running.
With the scan tool, Clear DTCs in the Engine Control Module (ECM).
Monitor the scan tool for at least two minutes.
Cycle the ignition key off and on several times, leaving the ignition on for at least 10 seconds at a time.
With the scan tool, select View DTCs.

Is the status Active for this DTC?

Yes >> Refer to the Service Information to diagnose problem with Ambient Air Temperature Sensor or associated wiring and connectors.

No >> Test Complete.

P0087-FUEL RAIL PRESSURE TOO LOW

For a complete wiring diagram **Refer to Section 8W**

- **When Monitored:**
  With the engine running.
- **Set Condition:**
  The ECM determines that the fuel rail pressure is too low for a given engine speed and load.

Possible Causes
AIR IN FUEL SYSTEM
FUEL DELIVERY SYSTEM
FUEL PRESSURE SENSOR
FUEL INJECTOR(S)
FUEL PRESSURE SOLENOID
FUEL PUMP
FUEL SYSTEM CONTAMINATION
FUEL SYSTEM LEAK
INTERMITTENT DTC

Always perform the Pre-Diagnostic Troubleshooting procedure before proceeding. (Refer to 9 - ENGINE - DIAGNOSIS AND TESTING)

Diagnostic Test

1. CHECKING FOR OTHER ECM DTCS

WARNING: HIGH-PRESSURE FUEL LINES DELIVER DIESEL FUEL UNDER EXTREME PRESSURE FROM THE INJECTION PUMP TO THE FUEL INJECTORS. THIS MAY BE AS HIGH AS 23,200 PSI (1600 BAR). USE EXTREME CAUTION WHEN INSPECTING FOR HIGH-PRESSURE FUEL LEAKS.

WARNING: FUEL UNDER THIS AMOUNT OF PRESSURE CAN PENETRATE SKIN CAUSING PERSONAL INJURY OR DEATH. INSPECT FOR HIGH-PRESSURE FUEL LEAKS WITH A SHEET OF CARDBOARD. WEAR SAFETY GOGGLES AND ADEQUATE PROTECTIVE CLOTHING WHEN SERVICING FUEL SYSTEM.

Turn the ignition on.

With the scan tool, read the ECM DTCs.

Are there any other DTCs present?

Yes >> Refer to symptom list for problems related to the DTC other than this DTC.
Perform the ECM VERIFICATION TEST.

No >> Go To 2

2. CURRENT DTC

NOTE: Refer to the Service Information and perform the Air Bleed Procedure before continuing diagnosis.

Turn the ignition on.

With the scan tool, erase the ECM DTCs.

NOTE: Driving the vehicle up and down steep hills or rapid cornering with a low fuel level can cause this DTC to set. Verify with customer if Low Fuel Light was illuminated when fault occurred.

Test drive the vehicle under various load and speed conditions to attempt to duplicate the fault.

With the scan tool, read the ECM DTCs.

Does the scan tool display this DTC?

Yes >> Go To 3

No >> Refer to the *CHECKING FOR AN INTERMITTENT DTC Diagnostic Procedure. (Refer to 9 - ENGINE - DIAGNOSIS AND TESTING)

3. FUEL SYSTEM LEAK

Turn the ignition off.

WARNING: HIGH-PRESSURE FUEL LINES DELIVER DIESEL FUEL UNDER EXTREME PRESSURE FROM THE INJECTION PUMP TO THE FUEL INJECTORS. THIS MAY BE AS HIGH AS 23,200 PSI (1600 BAR). USE EXTREME CAUTION WHEN INSPECTING FOR HIGH-PRESSURE FUEL LEAKS.

WARNING: FUEL UNDER THIS AMOUNT OF PRESSURE CAN PENETRATE SKIN CAUSING PERSONAL INJURY OR DEATH. INSPECT FOR HIGH-PRESSURE FUEL LEAKS WITH A SHEET OF CARDBOARD. WEAR SAFETY GOGGLES AND ADEQUATE PROTECTIVE CLOTHING WHEN SERVICING FUEL SYSTEM.

Inspect the entire fuel system for leakage.

Is there any evidence of leakage?

Yes >> Repair as necessary in accordance with the Service Information.
Perform the ECM Verification Test Ver. 1. (Refer to 9 - ENGINE - DIAGNOSIS AND TESTING)

No >> Go To 4

4. FUEL SYSTEM CONTAMINATION

NOTE: Mixing any other fuels such as gasoline or kerosine can cause this DTC to set.

WARNING: HIGH-PRESSURE FUEL LINES DELIVER DIESEL FUEL UNDER EXTREME PRESSURE FROM THE INJECTION PUMP TO THE FUEL INJECTORS. THIS MAY BE AS HIGH AS 23,200 PSI (1600 BAR). USE EXTREME CAUTION WHEN INSPECTING FOR HIGH-PRESSURE FUEL LEAKS.

WARNING: FUEL UNDER THIS AMOUNT OF PRESSURE CAN PENETRATE SKIN CAUSING PERSONAL INJURY OR DEATH. INSPECT FOR HIGH-PRESSURE FUEL LEAKS WITH A SHEET OF CARDBOARD. WEAR SAFETY GOGGLES AND ADEQUATE PROTECTIVE CLOTHING WHEN SERVICING FUEL SYSTEM.

Inspect the fuel system for contamination.

Is the fuel contaminated?

Yes >> Repair as necessary in accordance with the Service Information.
Perform the ECM Verification Test Ver. 1. (Refer to 9 - ENGINE - DIAGNOSIS AND TESTING)

No >> Go To 5

5. FUEL PRESSURE SENSOR CALIBRATION

Turn the ignition on.

With the scan tool, read the Fuel Pressure Sensor volts.

Does the scan tool display between 0.45 and 0.60 volts for the Fuel Pressure Sensor?

Yes >> Go To 6

No >> Check the Fuel Pressure Sensor wiring and connectors for corrosion or poor terminal contact that could cause high resistance. Repair as necessary. If wiring and connectors are o.k., replace the Fuel Pressure Sensor.
Perform the ECM Verification Test Ver. 1. (Refer to 9 - ENGINE - DIAGNOSIS AND TESTING)

6. ATTEMPT TO START ENGINE

With the scan tool, erase the ECM DTCs.

Attempt to start the engine.

Does the engine start and idle?

Yes >> Go To 7

No >> Go To 12

7. CHECKING FOR AIR IN FUEL SYSTEM

With the scan tool in Sensors, compare the Fuel Pressure Setpoint with the Actual Fuel Pressure readings.

NOTE: If there is air in the fuel system, the Actual Fuel Pressure will oscillate more than 100 psi above and/or below the Fuel Pressure Setpoint.

Does Actual Fuel Pressure oscillate more than 100 psi above and/or below the Fuel Pressure Setpoint?

Yes >> Refer to the Service Information to purge air from the fuel system.
Perform the ECM Verification Test Ver. 1. (Refer to 9 - ENGINE - DIAGNOSIS AND TESTING)

No >> Go To 8

8. FUEL PRESSURE SOLENOID

With the scan tool, compare the Fuel Pressure Setpoint with the Actual Fuel Pressure.

NOTE: A sticking Fuel Pressure Solenoid is indicated by the Actual Fuel Pressure gradually dropping below the Fuel Pressure Setpoint then suddenly increasing (spiking) above the Fuel Pressure Setpoint.

Does the Actual Fuel Pressure gradually decrease then suddenly increase (spike) above the Fuel Pressure Setpoint?

Yes >> Replace the Fuel Pressure Solenoid in accordance with the Service Information.
Perform the ECM Verification Test Ver. 1. (Refer to 9 - ENGINE - DIAGNOSIS AND TESTING)

No >> Go To 9

9. CHECKING FUEL DELIVERY SYSTEM

Refer to the appropriate Service Information and refer to Diagnosis and Testing Fuel Delivery System table.

NOTE: The following is a list of problems that can cause fuel pressure to deviate from specification: restricted fuel filter or fuel lines, failed fuel pressure solenoid, air in fuel system, failed fuel sending unit, contaminated fuel, faulty injector.

Were there any problems with the Fuel Delivery System?

Yes >> Repair as necessary in accordance with the Service Information.
Perform the ECM Verification Test Ver. 1. (Refer to 9 - ENGINE - DIAGNOSIS AND TESTING)

No >> Go To 10

10. FUEL INJECTOR(S)

NOTE: An injector that sticks open can cause this DTC. A sticking injector will cause the engine to misfire and emit excessive black smoke from the exhaust system.

Does the engine exhibit the symptoms described in the above note?

Yes >> Using the Service Information, remove and inspect the Fuel Injectors for signs of damage or debris that may cause the injector to stick. Sticking injectors may cause the combustion chamber to become black and oil soaked. Replace Injector(s) as necessary.
Perform the ECM Verification Test Ver. 1. (Refer to 9 - ENGINE - DIAGNOSIS AND TESTING)

No >> Go To 11

11. FUEL PRESSURE SOLENOID

Turn the ignition off.
Replace the Fuel Pressure Solenoid in accordance with the Service Information.
Turn the ignition on.
With the scan tool, erase the ECM DTCs.
Attempt to start and test drive the vehicle.
With the scan tool, read the ECM DTCs.

Does the ECM display this DTC?

Yes >> Replace the Fuel Pump in accordance with the Service Information.
Perform the ECM Verification Test Ver. 1. (Refer to 9 - ENGINE - DIAGNOSIS AND TESTING)

No >> Test Complete.

12. CHECKING FUEL DELIVERY SYSTEM

Refer to the appropriate Service Information and refer to Diagnosis and Testing Fuel Delivery System table.

NOTE: The following is a list of problems that can cause fuel pressure to deviate from specification: restricted fuel filter or fuel lines, failed fuel pressure solenoid, air in fuel system, failed fuel sending unit, contaminated fuel, faulty injector.

Were there any problems with the Fuel Delivery System?

Yes >> Repair as necessary in accordance with the Service Information.
Perform the ECM Verification Test Ver. 1. (Refer to 9 - ENGINE - DIAGNOSIS AND TESTING)

No >> Go To 13

13. FUEL PRESSURE SOLENOID

Turn the ignition off.
Replace the Fuel Pressure Solenoid in accordance with the Service Information.
Turn the ignition on.
With the scan tool, erase the ECM DTCs.
Attempt to start and test drive the vehicle.
With the scan tool, read the ECM DTCs.

Does the ECM display this DTC?

Yes >> Replace the Fuel Pump in accordance with the Service Information.
Perform the ECM Verification Test Ver. 1. (Refer to 9 - ENGINE - DIAGNOSIS AND TESTING)

No >> Test Complete.
Perform the ECM Verification Test Ver. 1. (Refer to 9 - ENGINE - DIAGNOSIS AND TESTING)

P0088-FUEL RAIL PRESSURE TOO HIGH

For a complete wiring diagram **Refer to Section 8W**

- **When Monitored:**
  With the engine running.
- **Set Condition:**
  The ECM determines that the fuel rail pressure is too high for a given engine speed and load.

Possible Causes
AIR IN FUEL SYSTEM
FUEL DELIVERY SYSTEM
FUEL PRESSURE SENSOR
FUEL INJECTOR(S)
FUEL PRESSURE SOLENOID
FUEL PUMP
FUEL SYSTEM CONTAMINATION
FUEL SYSTEM LEAK
INTERMITTENT DTC

Always perform the Pre-Diagnostic Troubleshooting procedure before proceeding. (Refer to 9 - ENGINE - DIAGNOSIS AND TESTING)

Diagnostic Test

1. CHECKING FOR OTHER ECM DTCS

WARNING: HIGH-PRESSURE FUEL LINES DELIVER DIESEL FUEL UNDER EXTREME PRESSURE FROM THE INJECTION PUMP TO THE FUEL INJECTORS. THIS MAY BE AS HIGH AS 23,200 PSI (1600 BAR). USE EXTREME CAUTION WHEN INSPECTING FOR HIGH-PRESSURE FUEL LEAKS.

WARNING: FUEL UNDER THIS AMOUNT OF PRESSURE CAN PENETRATE SKIN CAUSING PERSONAL INJURY OR DEATH. INSPECT FOR HIGH-PRESSURE FUEL LEAKS WITH A SHEET OF CARDBOARD. WEAR SAFETY GOGGLES AND ADEQUATE PROTECTIVE CLOTHING WHEN SERVICING FUEL SYSTEM.

Turn the ignition on.

With the scan tool, read the ECM DTCs.

Are there any other DTCs present?

Yes >> Refer to symptom list for problems related to the DTC other than this DTC.
Perform the ECM VERIFICATION TEST.

No >> Go To 2

2. CURRENT DTC

NOTE: Refer to the Service Information and perform the Air Bleed Procedure before continuing diagnosis.

Turn the ignition on.

With the scan tool, erase the ECM DTCs.

NOTE: Driving the vehicle up and down steep hills or rapid cornering with a low fuel level can cause this DTC to set. Verify with customer if Low Fuel Light was illuminated when fault occurred.

Test drive the vehicle under various load and speed conditions to attempt to duplicate the fault.

With the scan tool, read the ECM DTCs.

Does the scan tool display this DTC?

Yes >> Go To 3

No >> Refer to the *CHECKING FOR AN INTERMITTENT DTC Diagnostic Procedure. (Refer to 9 - ENGINE - DIAGNOSIS AND TESTING)

3. FUEL SYSTEM LEAK

Turn the ignition off.

WARNING: HIGH-PRESSURE FUEL LINES DELIVER DIESEL FUEL UNDER EXTREME PRESSURE FROM THE INJECTION PUMP TO THE FUEL INJECTORS. THIS MAY BE AS HIGH AS 23,200 PSI (1600 BAR). USE EXTREME CAUTION WHEN INSPECTING FOR HIGH-PRESSURE FUEL LEAKS.

WARNING: FUEL UNDER THIS AMOUNT OF PRESSURE CAN PENETRATE SKIN CAUSING PERSONAL INJURY OR DEATH. INSPECT FOR HIGH-PRESSURE FUEL LEAKS WITH A SHEET OF CARDBOARD. WEAR SAFETY GOGGLES AND ADEQUATE PROTECTIVE CLOTHING WHEN SERVICING FUEL SYSTEM.

Inspect the entire fuel system for leakage.

Is there any evidence of leakage?

Yes >> Repair as necessary in accordance with the Service Information.
Perform the ECM Verification Test Ver. 1. (Refer to 9 - ENGINE - DIAGNOSIS AND TESTING)

No >> Go To 4

4. FUEL SYSTEM CONTAMINATION

NOTE: Mixing any other fuels such as gasoline or kerosine can cause this DTC to set.

WARNING: HIGH-PRESSURE FUEL LINES DELIVER DIESEL FUEL UNDER EXTREME PRESSURE FROM THE INJECTION PUMP TO THE FUEL INJECTORS. THIS MAY BE AS HIGH AS 23,200 PSI (1600 BAR). USE EXTREME CAUTION WHEN INSPECTING FOR HIGH-PRESSURE FUEL LEAKS.

WARNING: FUEL UNDER THIS AMOUNT OF PRESSURE CAN PENETRATE SKIN CAUSING PERSONAL INJURY OR DEATH. INSPECT FOR HIGH-PRESSURE FUEL LEAKS WITH A SHEET OF CARDBOARD. WEAR SAFETY GOGGLES AND ADEQUATE PROTECTIVE CLOTHING WHEN SERVICING FUEL SYSTEM.

Inspect the fuel system for contamination.

Is the fuel contaminated?

Yes >> Repair as necessary in accordance with the Service Information.
Perform the ECM Verification Test Ver. 1. (Refer to 9 - ENGINE - DIAGNOSIS AND TESTING)

No >> Go To 5

5. FUEL PRESSURE SENSOR CALIBRATION

Turn the ignition on.

With the scan tool, read the Fuel Pressure Sensor volts.

Does the scan tool display between 0.45 and 0.60 volts for the Fuel Pressure Sensor?

Yes >> Go To 6

No >> Check the Fuel Pressure Sensor wiring and connectors for corrosion or poor terminal contact that could cause high resistance. Repair as necessary. If wiring and connectors are o.k., replace the Fuel Pressure Sensor.
Perform the ECM Verification Test Ver. 1. (Refer to 9 - ENGINE - DIAGNOSIS AND TESTING)

6. ATTEMPT TO START ENGINE

With the scan tool, erase the ECM DTCs.

Attempt to start the engine.

Does the engine start and idle?

Yes >> Go To 7

No >> Go To 12

7. CHECKING FOR AIR IN FUEL SYSTEM

With the scan tool in Sensors, compare the Fuel Pressure Setpoint with the Actual Fuel Pressure readings.

NOTE: If there is air in the fuel system, the Actual Fuel Pressure will oscillate more than 100 psi above and/or below the Fuel Pressure Setpoint.

Does Actual Fuel Pressure oscillate more than 100 psi above and/or below the Fuel Pressure Setpoint?

Yes >> Refer to the Service Information to purge air from the fuel system.
Perform the ECM Verification Test Ver. 1. (Refer to 9 - ENGINE - DIAGNOSIS AND TESTING)

No >> Go To 8

8. FUEL PRESSURE SOLENOID

With the scan tool, compare the Fuel Pressure Setpoint with the Actual Fuel Pressure.

NOTE: A sticking Fuel Pressure Solenoid is indicated by the Actual Fuel Pressure gradually dropping below the Fuel Pressure Setpoint then suddenly increasing (spiking) above the Fuel Pressure Setpoint.

Does the Actual Fuel Pressure gradually decrease then suddenly increase (spike) above the Fuel Pressure Setpoint?

Yes >> Replace the Fuel Pressure Solenoid in accordance with the Service Information.
Perform the ECM Verification Test Ver. 1. (Refer to 9 - ENGINE - DIAGNOSIS AND TESTING)

No >> Go To 9

9. CHECKING FUEL DELIVERY SYSTEM

Refer to the appropriate Service Information and refer to Diagnosis and Testing Fuel Delivery System table.

NOTE: The following is a list of problems that can cause fuel pressure to deviate from specification: restricted fuel filter or fuel lines, failed fuel pressure solenoid, air in fuel system, failed fuel sending unit, contaminated fuel, faulty injector.

Were there any problems with the Fuel Delivery System?

Yes >> Repair as necessary in accordance with the Service Information.
Perform the ECM Verification Test Ver. 1. (Refer to 9 - ENGINE - DIAGNOSIS AND TESTING)

No >> Go To 10

10. FUEL INJECTOR(S)

NOTE: An injector that sticks open can cause this DTC. A sticking injector will cause the engine to misfire and emit excessive black smoke from the exhaust system.

Does the engine exhibit the symptoms described in the above note?

Yes >> Using the Service Information, remove and inspect the Fuel Injectors for signs of damage or debris that may cause the injector to stick. Sticking injectors may cause the combustion chamber to become black and oil soaked. Replace Injector(s) as necessary.
Perform the ECM Verification Test Ver. 1. (Refer to 9 - ENGINE - DIAGNOSIS AND TESTING)

No >> Go To 11

11. FUEL PRESSURE SOLENOID

Turn the ignition off.
Replace the Fuel Pressure Solenoid in accordance with the Service Information.
Turn the ignition on.
With the scan tool, erase the ECM DTCs.
Attempt to start and test drive the vehicle.
With the scan tool, read the ECM DTCs.

Does the ECM display this DTC?

Yes >> Replace the Fuel Pump in accordance with the Service Information.
Perform the ECM Verification Test Ver. 1. (Refer to 9 - ENGINE - DIAGNOSIS AND TESTING)

No >> Test Complete.

12. CHECKING FUEL DELIVERY SYSTEM

Refer to the appropriate Service Information and refer to Diagnosis and Testing Fuel Delivery System table.

NOTE: The following is a list of problems that can cause fuel pressure to deviate from specification: restricted fuel filter or fuel lines, failed fuel pressure solenoid, air in fuel system, failed fuel sending unit, contaminated fuel, faulty injector.

Were there any problems with the Fuel Delivery System?

Yes >> Repair as necessary in accordance with the Service Information.
Perform the ECM Verification Test Ver. 1. (Refer to 9 - ENGINE - DIAGNOSIS AND TESTING)

No >> Go To 13

13. FUEL PRESSURE SOLENOID

Turn the ignition off.
Replace the Fuel Pressure Solenoid in accordance with the Service Information.
Turn the ignition on.
With the scan tool, erase the ECM DTCs.
Attempt to start and test drive the vehicle.
With the scan tool, read the ECM DTCs.

Does the ECM display this DTC?

Yes >> Go To 14

No >> Test Complete.
Perform the ECM Verification Test Ver. 1. (Refer to 9 - ENGINE - DIAGNOSIS AND TESTING)

14. FUEL QUANTITY SOLENOID

Turn the ignition off.
Replace the Fuel Quantity Solenoid in accordance with the Service Information.
Turn the ignition on.
With the scan tool, erase the ECM DTCs.
Attempt to start and test drive the vehicle.
With the scan tool, read the ECM DTCs.

Did this DTC set again?

Yes >> Replace the Fuel Pump in accordance with the Service Information.
Perform the ECM Verification Test Ver. 1. (Refer to 9 - ENGINE - DIAGNOSIS AND TESTING)

No >> Test Complete.
Perform the ECM Verification Test Ver. 1. (Refer to 9 - ENGINE - DIAGNOSIS AND TESTING)

P0089 - FUEL PRESSURE 1 CONTROL PERFORMANCE

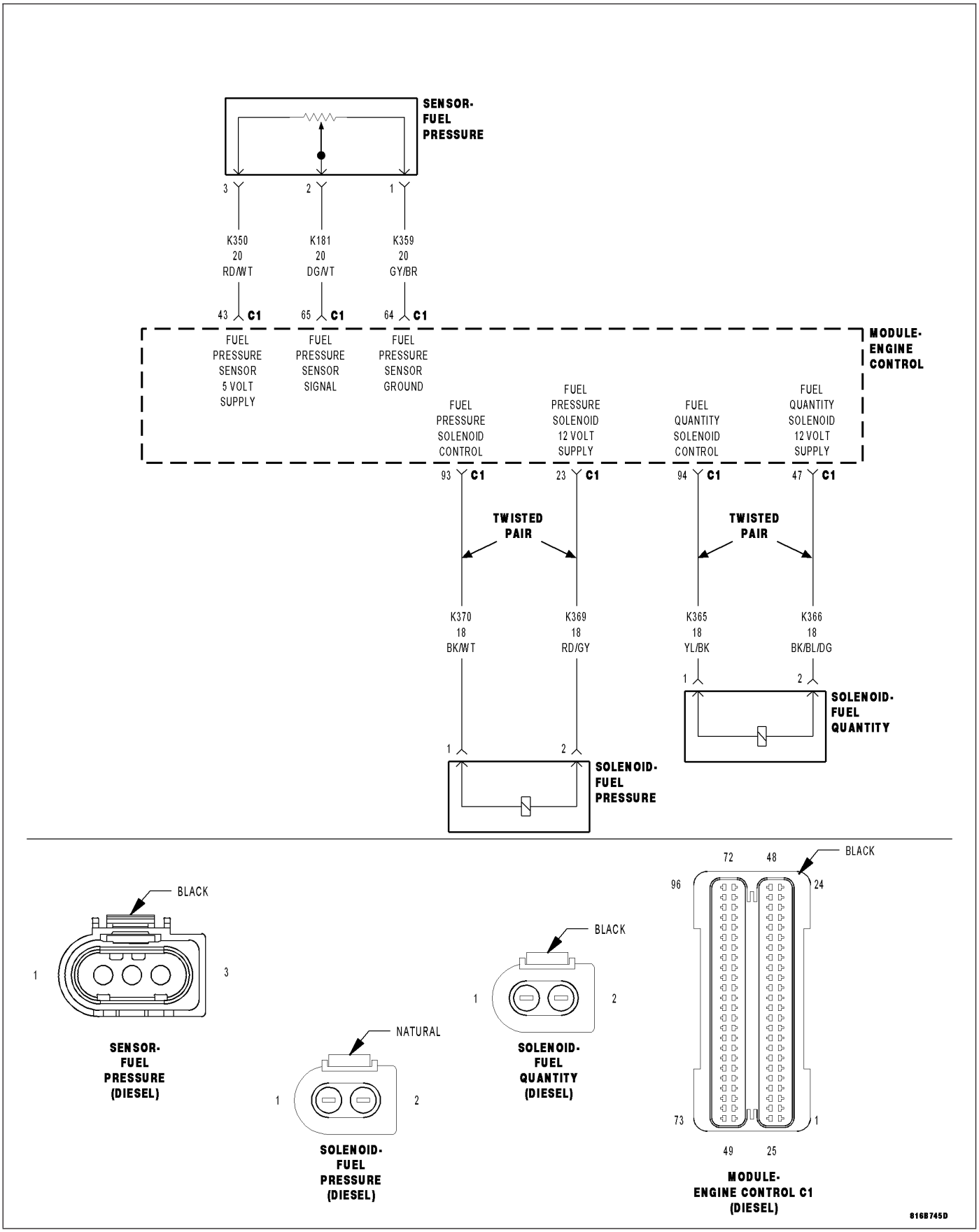

For a complete wiring diagram **Refer to Section 8W**

- **When Monitored:**
  With the ignition on and the Fuel Pressure Solenoid command on.
- **Set Condition:**
  The ECM detects a fault on the (K370) Fuel Pressure Solenoid Control circuit for 0.28 second.

Possible Causes
INTERMITTENT DTC
(K370) FUEL PRESSURE SOLENOID CONTROL CIRCUIT SHORTED TO VOLTAGE
(K370) FUEL PRESSURE SOLENOID CONTROL CIRCUIT SHORTED TO THE (K369) FUEL PRESSURE SOLENOID 12 VOLT SUPPLY CIRCUIT
(K370) FUEL PRESSURE SOLENOID CONTROL CIRCUIT SHORTED TO GROUND
(K370) FUEL PRESSURE SOLENOID CONTROL CIRCUIT OPEN OR HIGH RESISTANCE
FUEL PRESSURE SOLENOID
ENGINE CONTROL MODULE (ECM)

Always perform the Pre-Diagnostic Troubleshooting procedure before proceeding. (Refer to 9 - ENGINE - DIAGNOSIS AND TESTING)

Diagnostic Test

1. DTC IS ACTIVE

Ignition on, engine not running.

With the scan tool, Clear DTCs in the Engine Control Module (ECM).

With the scan tool, actuate the Fuel Pressure Solenoid at 100%.

Monitor the scan tool for at least two minutes.

With the scan tool, select View DTCs.

Is the status Active for this DTC?

Yes >> Go To 2

No >> Refer to the *CHECKING FOR AN INTERMITTENT DTC Diagnostic Procedure. (Refer to 9 - ENGINE - DIAGNOSIS AND TESTING)

2. (K370) FUEL PRESSURE SOLENOID CONTROL CIRCUIT SHORTED TO VOLTAGE

Turn the ignition off.

Disconnect the Fuel Pressure Solenoid connector.

Disconnect the Engine Control Module (ECM) connector.

Remove the ASD Relay from the IPM.

Connect a jumper wire between cavity 30 and cavity 87 of the ASD Relay Connector.

Turn the ignition on.

Measure the voltage of the (K370) Fuel Pressure Solenoid Control circuit in the Fuel Pressure Solenoid connector.

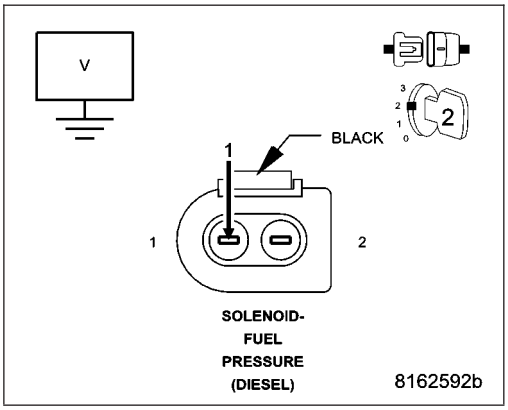

Is there any voltage present?

Yes >> Repair the (K370) Fuel Pressure Solenoid Control circuit for a short to voltage.
Perform the ECM Verification Test Ver. 1. (Refer to 9 - ENGINE - DIAGNOSIS AND TESTING)

No >> Go to 3

3. (K370) FUEL PRESSURE SOLENOID CONTROL CIRCUIT SHORTED TO THE (K369) FUEL PRESSURE SOLENOID 12 VOLT SUPPLY CIRCUIT

Turn the ignition off.

Measure the resistance between the (K370) Fuel Pressure Solenoid Control circuit and the (K369) Fuel Pressure Solenoid 12 Volt Supply in the Fuel Pressure Solenoid connector.

Is the resistance above 1000.0 ohms?

Yes >> Go to 4

No >> Repair the (K370) Fuel Pressure Solenoid Control circuit for a short to the (K369) Fuel Pressure Solenoid 12 Volt Supply circuit.

Perform the ECM Verification Test Ver. 1. (Refer to 9 - ENGINE - DIAGNOSIS AND TESTING)

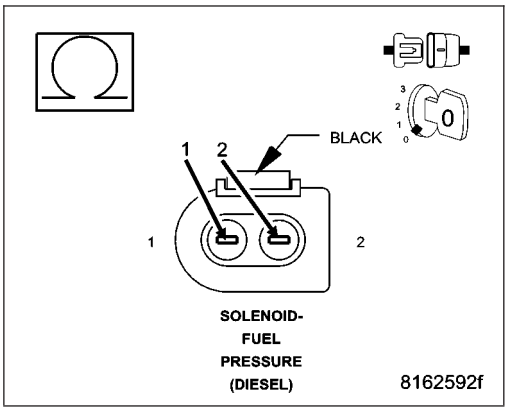

4. (K370) FUEL PRESSURE SOLENOID CONTROL CIRCUIT SHORTED TO GROUND

Turn the ignition off.

Disconnect the Fuel Pressure Solenoid connector.

Disconnect the Engine Control Module (ECM) connector.

Measure the resistance between ground and the (K370) Fuel Pressure Solenoid Control circuit in the Fuel Pressure Solenoid connector.

Is the resistance below 10.0 ohms?

Yes >> Repair the (K370) Fuel Pressure Solenoid Control circuit for a short to ground.

Perform the ECM Verification Test Ver. 1. (Refer to 9 - ENGINE - DIAGNOSIS AND TESTING)

No >> Go to 5

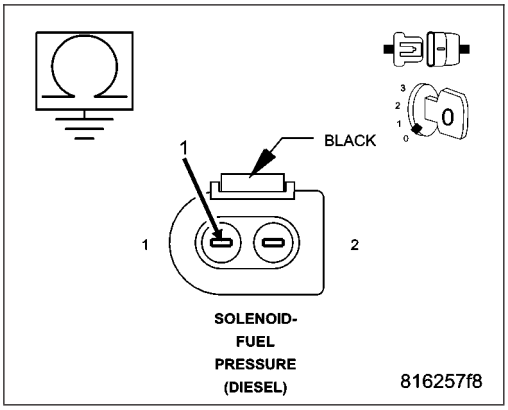

5. (K370) FUEL PRESSURE SOLENOID CONTROL CIRCUIT OPEN OR HIGH RESISTANCE

Measure the resistance of the (K370) Fuel Pressure Solenoid Control circuit between the Fuel Pressure Solenoid connector and the Engine Control Module (ECM) connector.

Is the resistance below 10.0 ohms?

Yes >> Go to 6

No >> Repair the (K370) Fuel Pressure Solenoid Control circuit for an open circuit or high resistance.
Perform the ECM Verification Test Ver. 1. (Refer to 9 - ENGINE - DIAGNOSIS AND TESTING)

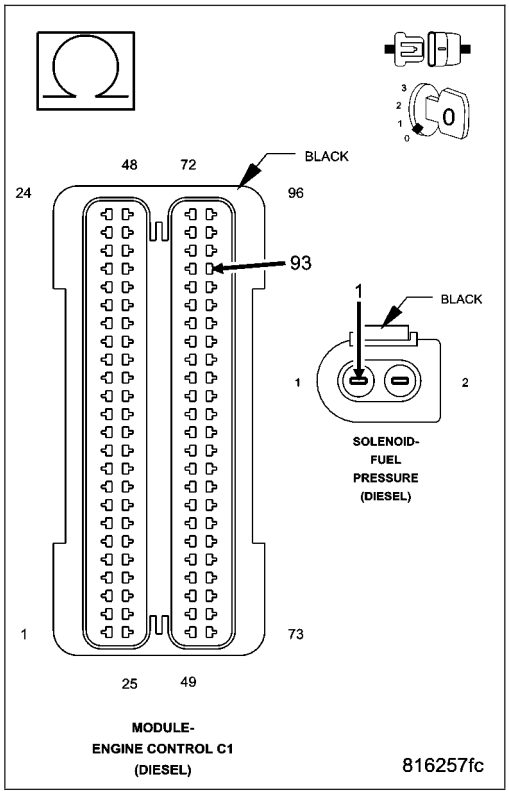

6. FUEL PRESSURE SOLENOID

Connect the Engine Control Module (ECM) connector.

Turn the ignition on.

With the scan tool, actuate the Fuel Pressure Solenoid (Rail Pressure Actuator) to 100%.

Using a 12 volt test light connected to 12 volts, check the (K370) Fuel Pressure Solenoid Control circuit in the Fuel Pressure Solenoid harness connector.

NOTE: The test light should be illuminated and bright. Compare the brightness to that of a direct connection to the battery.

NOTE: The circuit will remain actuated by the controller for 30 seconds. Be certain the actuation is active when checking the circuit.

With the scan tool, actuate the Fuel Pressure Solenoid (Rail Pressure Actuator) to 0%.

Using a 12 volt test light connected to 12 volts, check the (K370) Fuel Pressure Solenoid Control circuit in the Fuel Pressure Solenoid harness connector.

NOTE: The test light should not be illuminated.

NOTE: The circuit will remain actuated by the controller for 30 seconds. Be certain the actuation is active when checking the circuit.

Is the test light illuminated and bright with the actuation at 100% and not illuminated with the actuation at 0%?

Yes >> Replace the Fuel Pressure Solenoid in accordance with the Service Information.
Perform the ECM Verification Test Ver. 1. (Refer to 9 - ENGINE - DIAGNOSIS AND TESTING)

No >> Go to 7

7. ENGINE CONTROL MODULE (ECM)

Using the wiring diagram/schematic as a guide, inspect the wiring and connectors between the Fuel Pressure Solenoid and the Engine Control Module (ECM).

Look for any chafed, pierced, pinched, or partially broken wires.

Look for broken, bent, pushed out or corroded terminals.

Refer to any Technical Service Bulletins that may apply.

Were any problems found?

Yes >> Repair as necessary.
Perform the ECM Verification Test Ver. 1. (Refer to 9 - ENGINE - DIAGNOSIS AND TESTING)

No >> Replace the Engine Control Module (ECM) in accordance with the Service Information.
Perform the ECM Verification Test Ver. 1. (Refer to 9 - ENGINE - DIAGNOSIS AND TESTING)

P0090 - FUEL PRESSURE 1 CONTROL CIRCUIT/OPEN

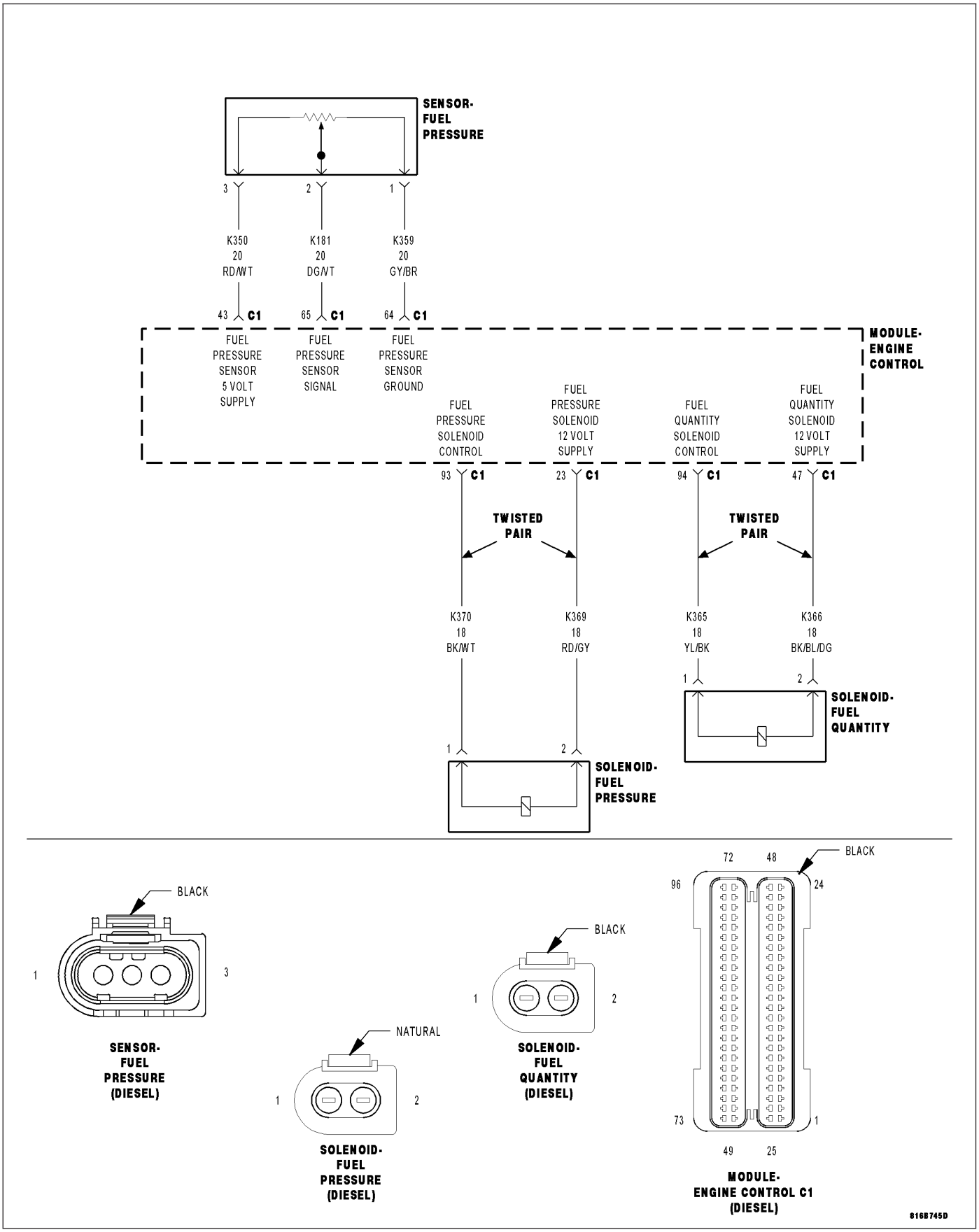

For a complete wiring diagram **Refer to Section 8W**

- **When Monitored:**
  With the ignition on and the Fuel Pressure Solenoid command off.
- **Set Condition:**
  The ECM detects that the (K370) Fuel Pressure Solenoid Control circuit is open for 0.28 second.

Possible Causes
INTERMITTENT DTC
(K370) FUEL PRESSURE SOLENOID CONTROL CIRCUIT SHORTED TO GROUND
(K370) FUEL PRESSURE SOLENOID CONTROL CIRCUIT OPEN OR HIGH RESISTANCE
(K369) FUEL PRESSURE SOLENOID 12 VOLT SUPPLY CIRCUIT OPEN OR HIGH RESISTANCE
FUEL PRESSURE SOLENOID
ENGINE CONTROL MODULE (ECM)

Always perform the Pre-Diagnostic Troubleshooting procedure before proceeding. (Refer to 9 - ENGINE - DIAGNOSIS AND TESTING)

Diagnostic Test

1. DTC IS ACTIVE

Ignition on, engine not running.
With the scan tool, Clear DTCs in the Engine Control Module (ECM).
With the scan tool, actuate the Fuel Pressure Solenoid at 100%.
Monitor the scan tool for at least two minutes.
With the scan tool, select View DTCs.

Is the status Active for this DTC?

Yes >> Go To 2

No >> Refer to the *CHECKING FOR AN INTERMITTENT DTC Diagnostic Procedure. (Refer to 9 - ENGINE - DIAGNOSIS AND TESTING)

2. (K370) FUEL PRESSURE SOLENOID CONTROL CIRCUIT SHORTED TO GROUND

Turn the ignition off.
Disconnect the Fuel Pressure Solenoid connector.
Disconnect the Engine Control Module (ECM) connector.
Measure the resistance between ground and the (K370) Fuel Pressure Solenoid Control circuit in the Fuel Pressure Solenoid connector.

Is the resistance above 10.0 ohms?

Yes >> Go to 3

No >> Repair the (K370) Fuel Pressure Solenoid Control circuit for a short to ground.
Perform the ECM Verification Test Ver. 1. (Refer to 9 - ENGINE - DIAGNOSIS AND TESTING)

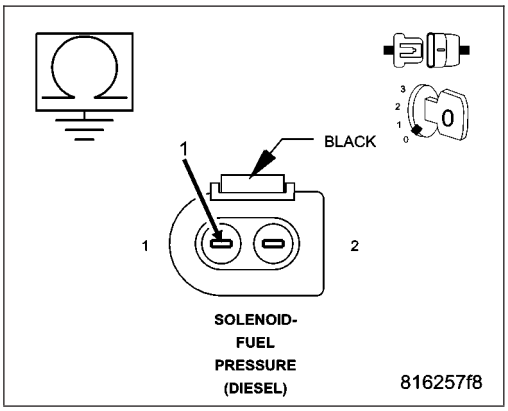

3. (K370) FUEL PRESSURE SOLENOID CONTROL CIRCUIT OPEN OR HIGH RESISTANCE

Measure the resistance of the (K370) Fuel Pressure Solenoid Control circuit between the Fuel Pressure Solenoid connector and the Engine Control Module (ECM) connector.

Is the resistance below 10.0 ohms?

Yes >> Go to 4

No >> Repair the (K370) Fuel Pressure Solenoid Control circuit for an open circuit or high resistance.
Perform the ECM Verification Test Ver. 1. (Refer to 9 - ENGINE - DIAGNOSIS AND TESTING)

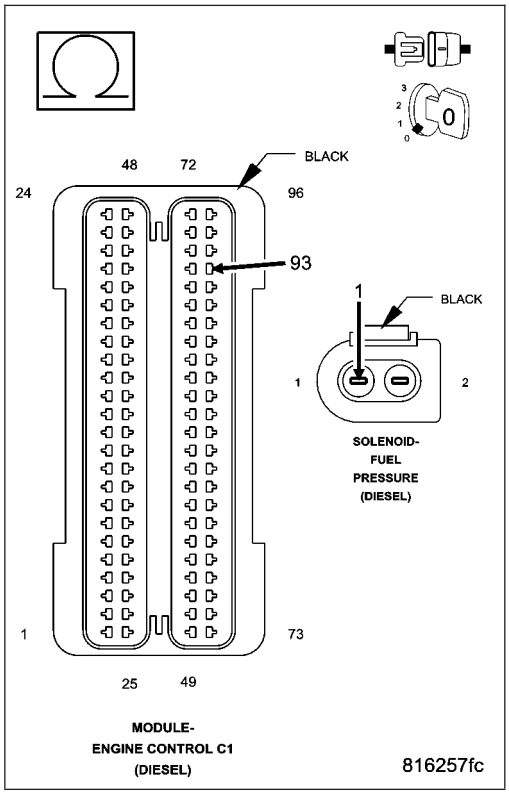

4. (K369) FUEL PRESSURE SOLENOID 12 VOLT SUPPLY CIRCUIT OPEN OR HIGH RESISTANCE

Measure the resistance of the (K369) Fuel Pressure Solenoid 12 Volt Supply circuit between the Fuel Pressure Solenoid connector and the Engine Control Module (ECM) connector.

Is the resistance below 10.0 ohms?

Yes >> Go to 5

No >> Repair the (K369) Fuel Pressure Solenoid 12 Volt Supply circuit for an open circuit or high resistance.
Perform the ECM Verification Test Ver. 1. (Refer to 9 - ENGINE - DIAGNOSIS AND TESTING)

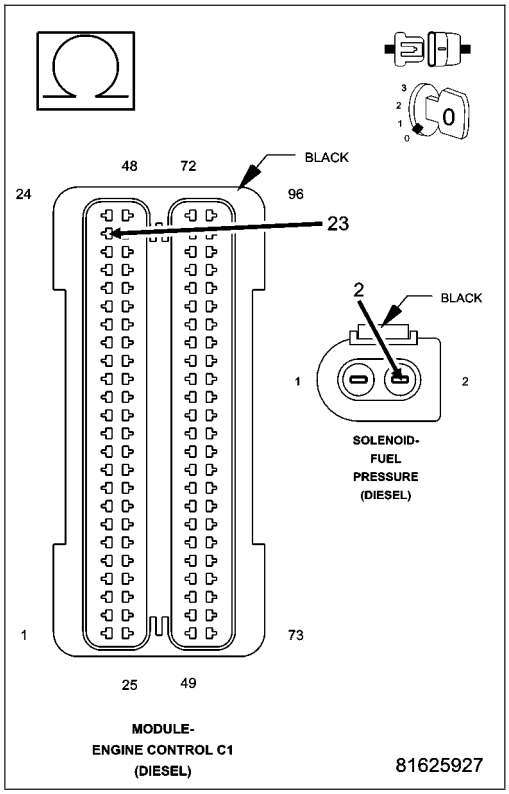

5. FUEL PRESSURE SOLENOID

Connect the Engine Control Module (ECM) connector.

Turn the ignition on.

With the scan tool, actuate the Fuel Pressure Solenoid (Rail Pressure Actuator) to 100%.

Using a 12 volt test light connected to 12 volts, check the (K370) Fuel Pressure Solenoid Control circuit in the Fuel Pressure Solenoid harness connector.

NOTE: The test light should be illuminated and bright. Compare the brightness to that of a direct connection to the battery.

NOTE: The circuit will remain actuated by the controller for 30 seconds. Be certain the actuation is active when checking the circuit.

Is the test light illuminated and bright with the actuation at 100%?

Yes >> Replace the Fuel Pressure Solenoid in accordance with the Service Information.
Perform the ECM Verification Test Ver. 1. (Refer to 9 - ENGINE - DIAGNOSIS AND TESTING)

No >> Go to 6

6. ENGINE CONTROL MODULE (ECM)

Using the wiring diagram/schematic as a guide, inspect the wiring and connectors between the Fuel Pressure Solenoid and the Engine Control Module (ECM).

Look for any chafed, pierced, pinched, or partially broken wires.

Look for broken, bent, pushed out or corroded terminals.

Refer to any Technical Service Bulletins that may apply.

Were any problems found?

Yes >> Repair as necessary.
Perform the ECM Verification Test Ver. 1. (Refer to 9 - ENGINE - DIAGNOSIS AND TESTING)

No >> Replace the Engine Control Module (ECM) in accordance with the Service Information.
Perform the ECM Verification Test Ver. 1. (Refer to 9 - ENGINE - DIAGNOSIS AND TESTING)

P0091 - FUEL PRESSURE 1 CONTROL CIRCUIT LOW

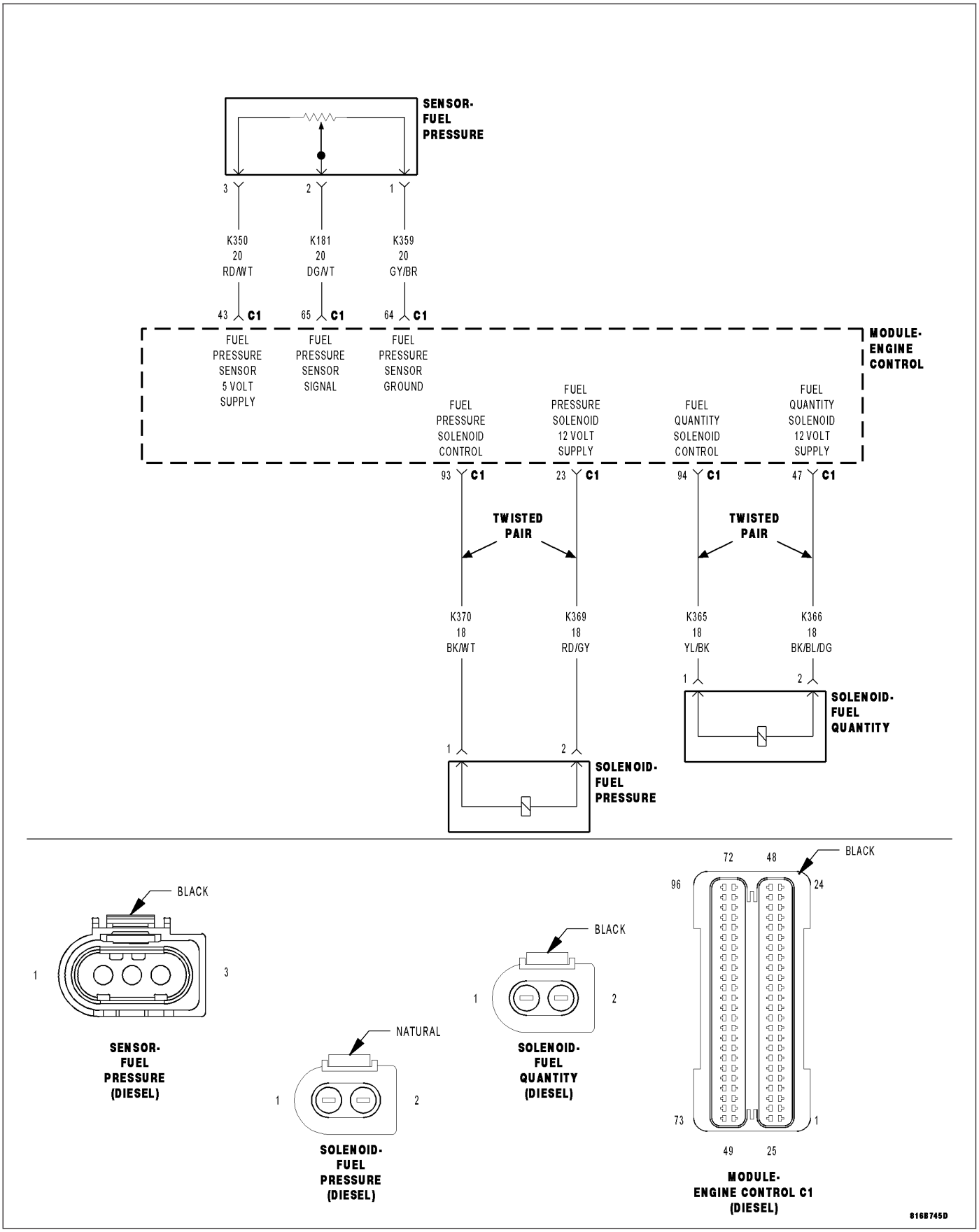

For a complete wiring diagram **Refer to Section 8W**

- **When Monitored:**
  With the ignition on and the Fuel Pressure Solenoid command off.
- **Set Condition:**
  The ECM detects that the (K370) Fuel Pressure Solenoid Control circuit is shorted to ground for 0.22 second.

Possible Causes
INTERMITTENT DTC
(K370) FUEL PRESSURE SOLENOID CONTROL CIRCUIT SHORTED TO GROUND
(K370) FUEL PRESSURE SOLENOID CONTROL CIRCUIT OPEN OR HIGH RESISTANCE
(K369) FUEL PRESSURE SOLENOID 12 VOLT SUPPLY CIRCUIT OPEN OR HIGH RESISTANCE
FUEL PRESSURE SOLENOID
ENGINE CONTROL MODULE (ECM)

Always perform the Pre-Diagnostic Troubleshooting procedure before proceeding. (Refer to 9 - ENGINE - DIAGNOSIS AND TESTING)

Diagnostic Test

1. DTC IS ACTIVE

Ignition on, engine not running.
With the scan tool, Clear DTCs in the Engine Control Module (ECM).
With the scan tool, actuate the Fuel Pressure Solenoid at 100%.
Monitor the scan tool for at least two minutes.
With the scan tool, select View DTCs.

Is the status Active for this DTC?

Yes >> Go To 2

No >> Refer to the *CHECKING FOR AN INTERMITTENT DTC Diagnostic Procedure. (Refer to 9 - ENGINE - DIAGNOSIS AND TESTING)

2. (K370) FUEL PRESSURE SOLENOID CONTROL CIRCUIT SHORTED TO GROUND

Turn the ignition off.
Disconnect the Fuel Pressure Solenoid connector.
Disconnect the Engine Control Module (ECM) connector.
Measure the resistance between ground and the (K370) Fuel Pressure Solenoid Control circuit in the Fuel Pressure Solenoid connector.

Is the resistance above 1000.0 ohms?

Yes >> Go to 3

No >> Repair the (K370) Fuel Pressure Solenoid Control circuit for a short to ground.
Perform the ECM Verification Test Ver. 1. (Refer to 9 - ENGINE - DIAGNOSIS AND TESTING)

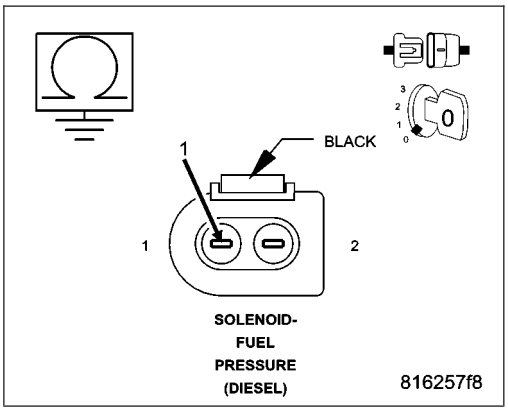

3. (K370) FUEL PRESSURE SOLENOID CONTROL CIRCUIT OPEN OR HIGH RESISTANCE

Measure the resistance of the (K370) Fuel Pressure Solenoid Control circuit between the Fuel Pressure Solenoid connector and the Engine Control Module (ECM) connector.

Is the resistance below 10.0 ohms?

Yes >> Go to 4

No >> Repair the (K370) Fuel Pressure Solenoid Control circuit for an open circuit or high resistance.

Perform the ECM Verification Test Ver. 1. (Refer to 9 - ENGINE - DIAGNOSIS AND TESTING)

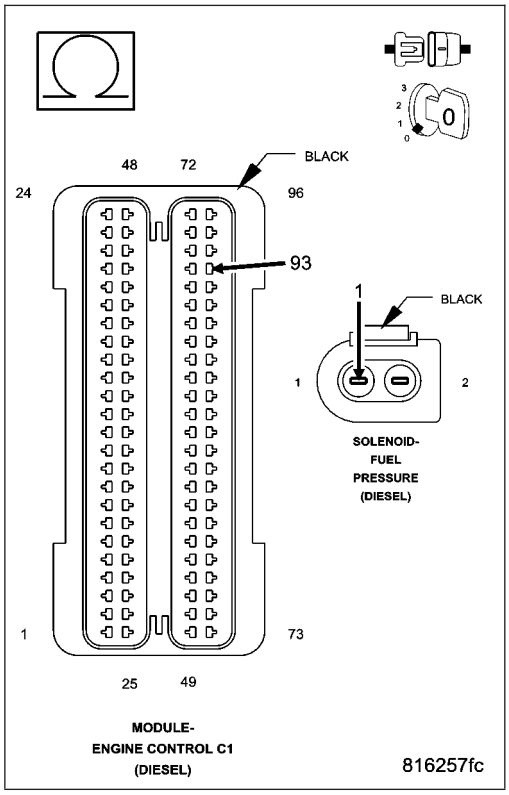

4. (K369) FUEL PRESSURE SOLENOID 12 VOLT SUPPLY CIRCUIT OPEN OR HIGH RESISTANCE

Measure the resistance of the (K369) Fuel Pressure Solenoid 12 Volt Supply circuit between the Fuel Pressure Solenoid connector and the Engine Control Module (ECM) connector.

Is the resistance below 10.0 ohms?

Yes >> Go to 5

No >> Repair the (K369) Fuel Pressure Solenoid 12 Volt Supply circuit for an open circuit or high resistance.

Perform the ECM Verification Test Ver. 1. (Refer to 9 - ENGINE - DIAGNOSIS AND TESTING)

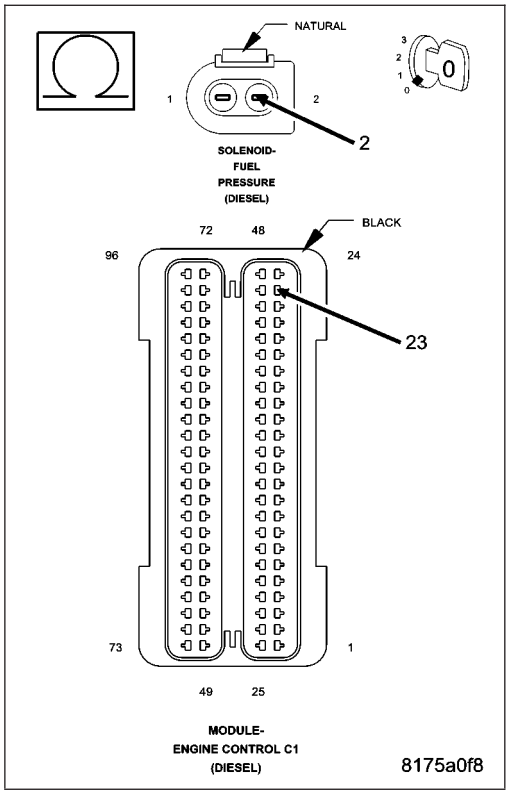

5. ASD RELAY OUTPUT CIRCUIT OPEN OR HIGH RESISTANCE

Remove the ASD Relay.

Connect a jumper wire between cavity 30 and cavity 87 in the ASD Relay connector.

Using a 12-volt test light connected to ground, check the ASD Relay Output circuit in ECM harness connector C2 cavities 1, 3 and 5.

Did the test light illuminate for each circuit?

Yes >> Go To 6

No >> Repair the ASD Relay Output circuit(s) for an open.
Perform the ECM Verification Test Ver. 1. (Refer to 9 - ENGINE - DIAGNOSIS AND TESTING)

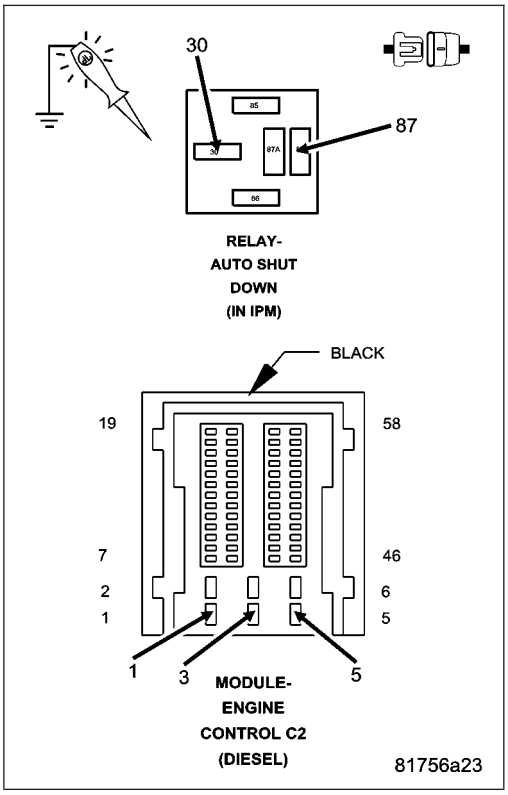

6. FUEL PRESSURE SOLENOID

Connect the Engine Control Module (ECM) connector.

Turn the ignition on.

With the scan tool, actuate the Fuel Pressure Solenoid to 100%.

Using a 12 volt test light connected to 12 volts, check the (K370) Fuel Pressure Solenoid Control circuit in the Fuel Pressure Solenoid harness connector.

NOTE: The test light should be illuminated and bright. Compare the brightness to that of a direct connection to the battery.

NOTE: The circuit will remain actuated by the controller for 30 seconds. Be certain the actuation is active when checking the circuit.

With the scan tool, actuate the Fuel Pressure Solenoid to 0%.

Using a 12 volt test light connected to 12 volts, check the (K370) Fuel Pressure Solenoid Control circuit in the Fuel Pressure Solenoid harness connector.

NOTE: The test light should not be illuminated.

NOTE: The circuit will remain actuated by the controller for 30 seconds. Be certain the actuation is active when checking the circuit.

Is the test light illuminated and bright with the actuation at 100% and not illuminated with the actuation at 0%?

Yes >> Replace the Fuel Pressure Solenoid in accordance with the Service Information.
Perform the ECM Verification Test Ver. 1. (Refer to 9 - ENGINE - DIAGNOSIS AND TESTING)

No >> Go to 7

7. ENGINE CONTROL MODULE (ECM)

Using the wiring diagram/schematic as a guide, inspect the wiring and connectors between the Fuel Pressure Solenoid and the Engine Control Module (ECM).

Look for any chafed, pierced, pinched, or partially broken wires.

Look for broken, bent, pushed out or corroded terminals.

Refer to any Technical Service Bulletins that may apply.

Were any problems found?

Yes >> Repair as necessary.
Perform the ECM Verification Test Ver. 1. (Refer to 9 - ENGINE - DIAGNOSIS AND TESTING)

No >> Replace the Engine Control Module (ECM) in accordance with the Service Information.
Perform the ECM Verification Test Ver. 1. (Refer to 9 - ENGINE - DIAGNOSIS AND TESTING)

P0092 - FUEL PRESSURE 1 CONTROL CIRCUIT HIGH

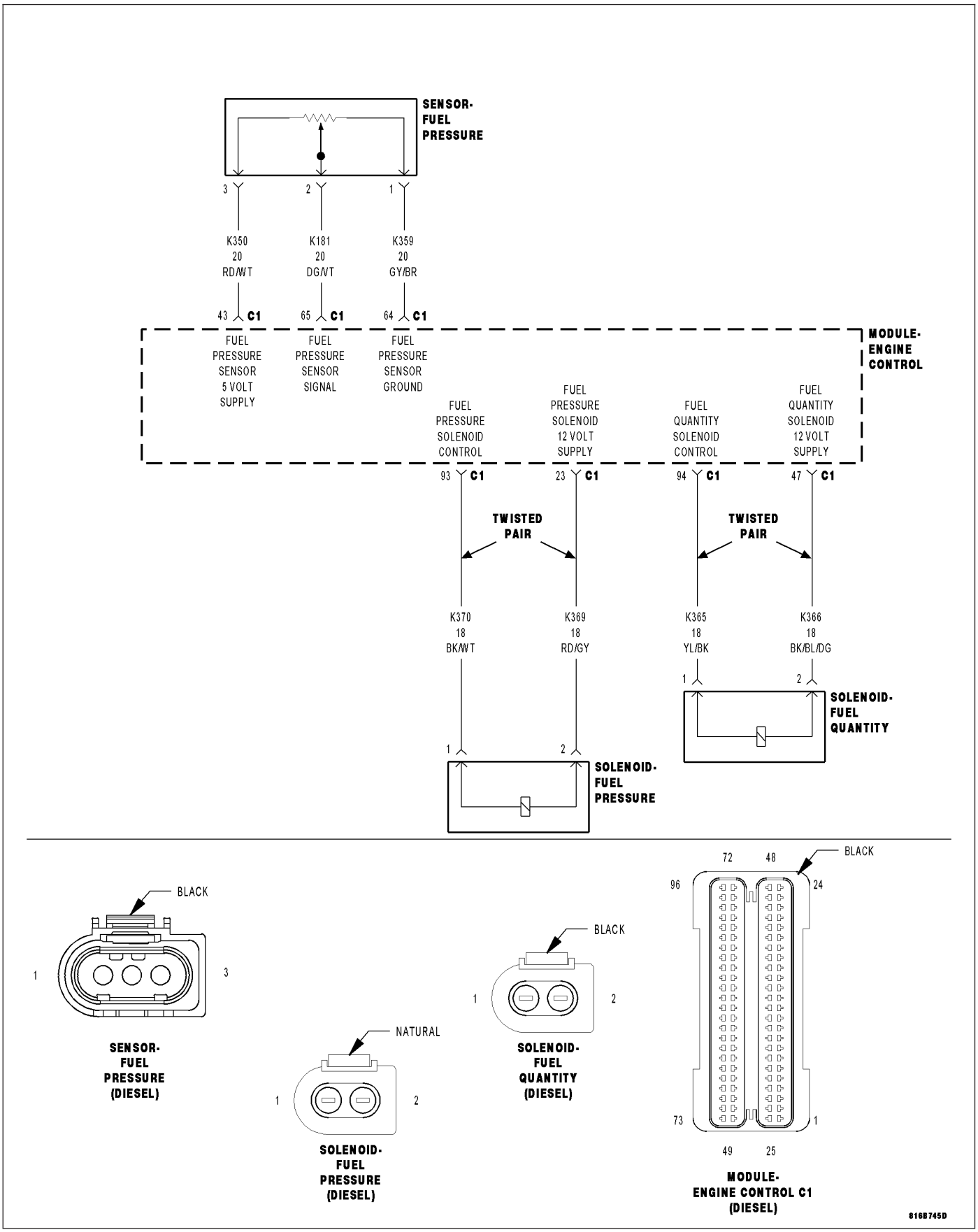

For a complete wiring diagram **Refer to Section 8W**

- **When Monitored:**
  With the ignition on and the Fuel Pressure Solenoid command on.
- **Set Condition:**
  The ECM detects excessive current on the (K370) Fuel Pressure Solenoid Control circuit for 0.28 second.

Possible Causes
INTERMITTENT DTC
(K370) FUEL PRESSURE SOLENOID CONTROL CIRCUIT SHORTED TO VOLTAGE
(K370) FUEL PRESSURE SOLENOID CONTROL CIRCUIT SHORTED TO THE (K369) FUEL PRESSURE SOLENOID 12 VOLT SUPPLY CIRCUIT
(K370) FUEL PRESSURE SOLENOID CONTROL CIRCUIT OPEN OR HIGH RESISTANCE
FUEL PRESSURE SOLENOID
ENGINE CONTROL MODULE (ECM)

Always perform the Pre-Diagnostic Troubleshooting procedure before proceeding. (Refer to 9 - ENGINE - DIAGNOSIS AND TESTING)

Diagnostic Test

1. DTC IS ACTIVE

Ignition on, engine not running.

With the scan tool, Clear DTCs in the Engine Control Module (ECM).

With the scan tool, actuate the Fuel Pressure Solenoid at 100%.

Monitor the scan tool for at least two minutes.

With the scan tool, select View DTCs.

Is the status Active for this DTC?

Yes >> Go To 2

No >> Refer to the *CHECKING FOR AN INTERMITTENT DTC Diagnostic Procedure. (Refer to 9 - ENGINE - DIAGNOSIS AND TESTING)

2. (K370) FUEL PRESSURE SOLENOID CONTROL CIRCUIT SHORTED TO VOLTAGE

Turn the ignition off.

Disconnect the Fuel Pressure Solenoid connector.

Disconnect the Engine Control Module (ECM) connector.

Remove the ASD Relay from the IPM.

Connect a jumper wire between cavity 30 and cavity 87 of the ASD Relay Connector.

Turn the ignition on.

Measure the voltage of the (K370) Fuel Pressure Solenoid Control circuit in the Fuel Pressure Solenoid connector.

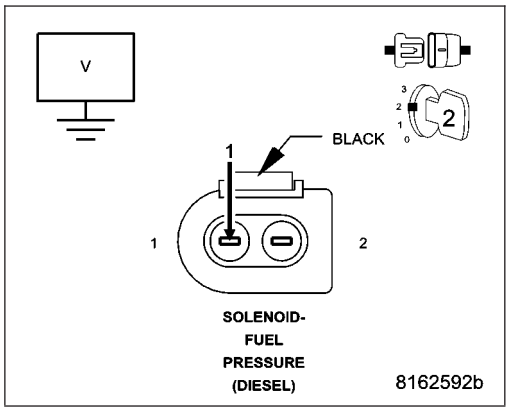

Is there any voltage present?

Yes >> Repair the (K370) Fuel Pressure Solenoid Control circuit for a short to voltage.
Perform the ECM Verification Test Ver. 1. (Refer to 9 - ENGINE - DIAGNOSIS AND TESTING)

No >> Go to 3

3. (K370) FUEL PRESSURE SOLENOID CONTROL CIRCUIT SHORTED TO THE (K369) FUEL PRESSURE SOLENOID 12 VOLT SUPPLY CIRCUIT

Turn the ignition off.

Measure the resistance between the (K370) Fuel Pressure Solenoid Control circuit and the (K369) Fuel Pressure Solenoid 12 Volt Supply in the Fuel Pressure Solenoid connector.

Is the resistance above 1000.0 ohms?

Yes >> Go to 4

No >> Repair the (K370) Fuel Pressure Solenoid Control circuit for a short to the (K369) Fuel Pressure Solenoid 12 Volt Supply circuit.

Perform the ECM Verification Test Ver. 1. (Refer to 9 - ENGINE - DIAGNOSIS AND TESTING)

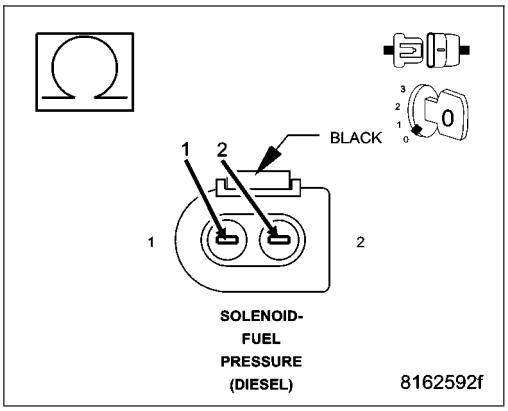

4. (K370) FUEL PRESSURE SOLENOID CONTROL CIRCUIT OPEN OR HIGH RESISTANCE

Measure the resistance of the (K370) Fuel Pressure Solenoid Control circuit between the Fuel Pressure Solenoid connector and the Engine Control Module (ECM) connector.

Is the resistance below 10.0 ohms?

Yes >> Go to 5

No >> Repair the (K370) Fuel Pressure Solenoid Control circuit for an open circuit or high resistance.

Perform the ECM Verification Test Ver. 1. (Refer to 9 - ENGINE - DIAGNOSIS AND TESTING)

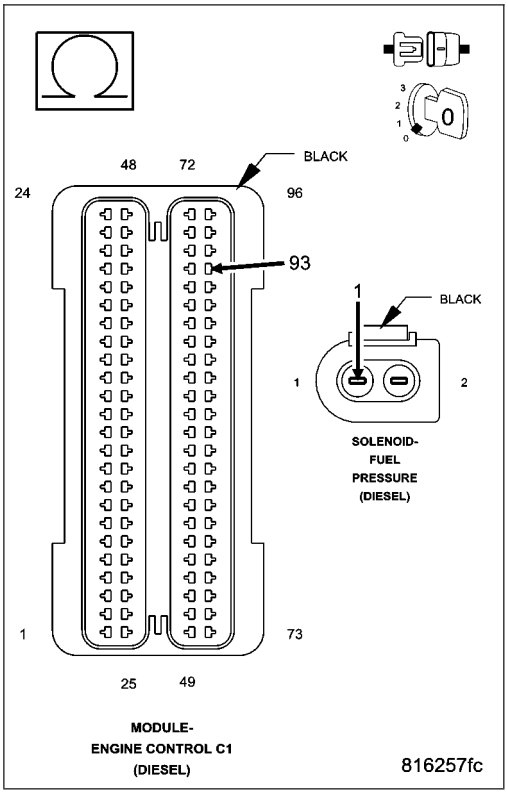

5. FUEL PRESSURE SOLENOID

Connect the Engine Control Module (ECM) connector.

Turn the ignition on.

With the scan tool, actuate the Fuel Pressure Solenoid (Rail Pressure Actuator) to 100%.

Using a 12 volt test light connected to 12 volts, check the (K370) Fuel Pressure Solenoid Control circuit in the Fuel Pressure Solenoid harness connector.

NOTE: The test light should be illuminated and bright. Compare the brightness to that of a direct connection to the battery.

NOTE: The circuit will remain actuated by the controller for 30 seconds. Be certain the actuation is active when checking the circuit.

Is the test light illuminated and bright with the actuation at 100%?

Yes >> Replace the Fuel Pressure Solenoid in accordance with the Service Information.
Perform the ECM Verification Test Ver. 1. (Refer to 9 - ENGINE - DIAGNOSIS AND TESTING)

No >> Go to 6

6. ENGINE CONTROL MODULE (ECM)

Using the wiring diagram/schematic as a guide, inspect the wiring and connectors between the Fuel Pressure Solenoid and the Engine Control Module (ECM).

Look for any chafed, pierced, pinched, or partially broken wires.

Look for broken, bent, pushed out or corroded terminals.

Refer to any Technical Service Bulletins that may apply.

Were any problems found?

Yes >> Repair as necessary.
Perform the ECM Verification Test Ver. 1. (Refer to 9 - ENGINE - DIAGNOSIS AND TESTING)

No >> Replace the Engine Control Module (ECM) in accordance with the Service Information.
Perform the ECM Verification Test Ver. 1. (Refer to 9 - ENGINE - DIAGNOSIS AND TESTING)

P0100-MASS AIR FLOW SENSOR

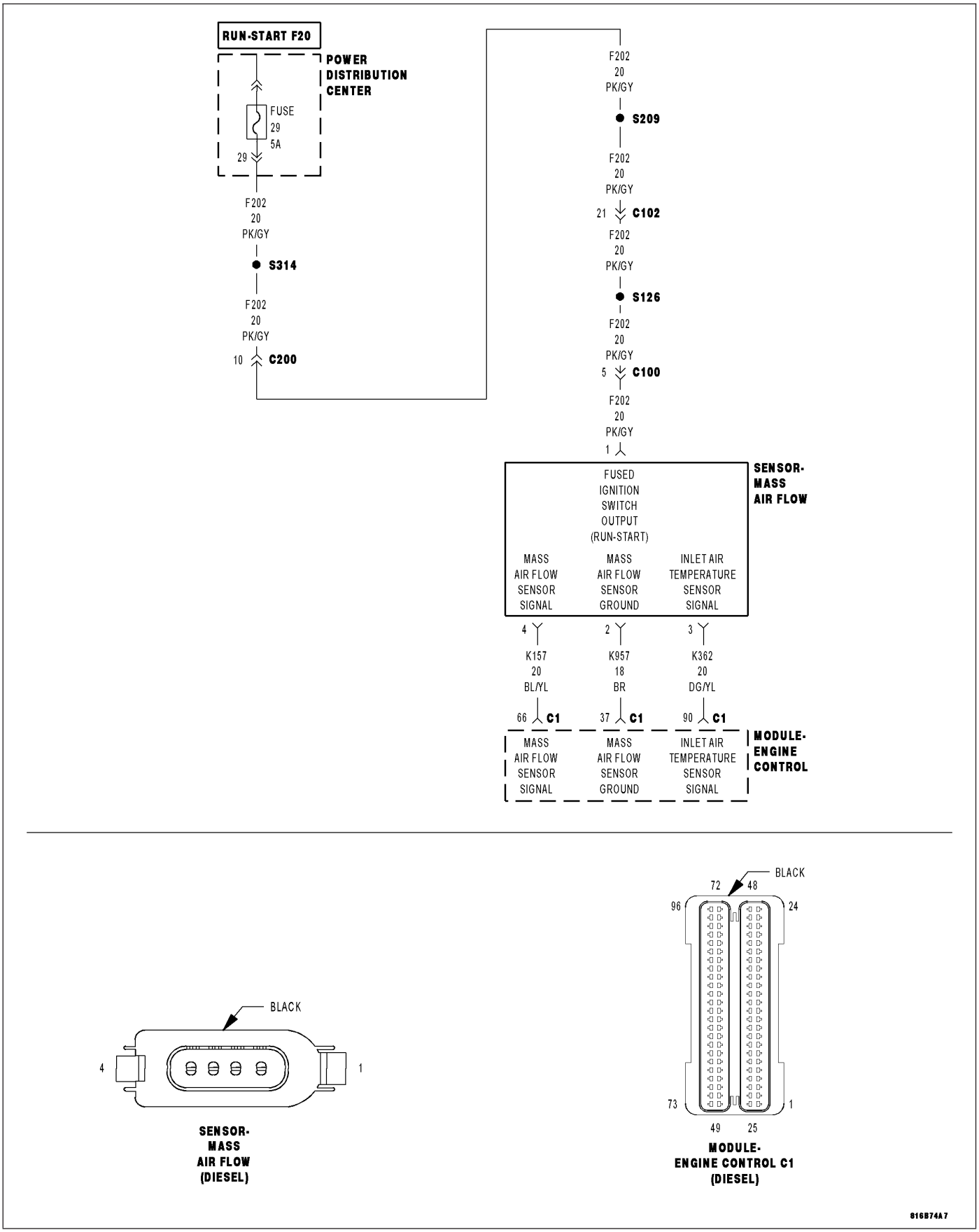

For a complete wiring diagram **Refer to Section 8W**

- **When Monitored:**
  With the ignition on.
- **Set Condition:**
  The ECM detects that the (K157) Mass Air Flow Sensor Signal circuit or the (K362) Inlet Air Temperature Sensor Signal circuit voltage is not within a valid range.

Possible Causes
INTERMITTENT DTC
(K362) INLET AIR TEMPERATURE SENSOR SIGNAL CIRCUIT SHORTED TO VOLTAGE
(K157) MASS AIR FLOW SENSOR SIGNAL CIRCUIT SHORTED TO VOLTAGE
(K957) MASS AIR FLOW SENSOR GROUND CIRCUIT SHORTED TO VOLTAGE
(F202) FUSED IGNITION SWITCH OUTPUT (RUN-START) CIRCUIT OPEN OR HIGH RESISTANCE
(K157) MASS AIR FLOW SENSOR SIGNAL CIRCUIT SHORTED TO THE (K362) INLET AIR TEMPERATURE SENSOR SIGNAL CIRCUIT
(K362) INLET AIR TEMPERATURE SENSOR SIGNAL CIRCUIT OPEN OR HIGH RESISTANCE
(K157) MASS AIR FLOW SENSOR SIGNAL CIRCUIT OPEN OR HIGH RESISTANCE
(K957) MASS AIR FLOW SENSOR GROUND CIRCUIT OPEN OR HIGH RESISTANCE
(K362) INLET AIR TEMPERATURE SENSOR SIGNAL CIRCUIT SHORTED TO GROUND
(K157) MASS AIR FLOW SENSOR SIGNAL CIRCUIT SHORTED TO GROUND
(K157) MASS AIR FLOW SENSOR SIGNAL CIRCUIT SHORTED TO THE (K957) MASS AIR FLOW SENSOR GROUND CIRCUIT
(K362) INLET AIR TEMPERATURE SENSOR SIGNAL CIRCUIT SHORTED TO THE (K957) MASS AIR FLOW SENSOR GROUND CIRCUIT
MASS AIR FLOW SENSOR
ENGINE CONTROL MODULE (ECM)

Always perform the Pre-Diagnostic Troubleshooting procedure before proceeding. (Refer to 9 - ENGINE - DIAGNOSIS AND TESTING)

Diagnostic Test

1. DTC IS ACTIVE

Ignition on, engine not running.

With the scan tool, Clear DTCs in the Engine Control Module (ECM).

Start the engine and allow it to reach normal operating temperature.

With the scan tool, select View DTCs.

Is the status Active for this DTC?

Yes >> Go To 2

No >> Refer to the *CHECKING FOR AN INTERMITTENT DTC Diagnostic Procedure. (Refer to 9 - ENGINE - DIAGNOSIS AND TESTING)

2. (K362) INLET AIR TEMPERATURE SENSOR SIGNAL CIRCUIT SHORTED TO VOLTAGE

Turn the ignition off.

Disconnect the Mass Air Flow Sensor connector.

Disconnect the Engine Control Module (ECM) connector.

Remove the ASD Relay.

Connect a jumper wire between cavity 30 and cavity 87 of the ASD Relay Connector.

Turn the ignition on.

Measure the voltage of the (K362) Inlet Air Temperature Sensor Signal circuit in the Mass Air Flow Sensor connector.

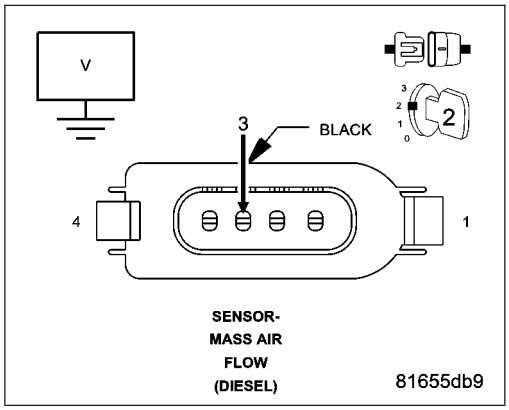

Is there any voltage present?

Yes >> Repair the (K362) Inlet Air Temperature Sensor Signal circuit for a short to voltage.
Perform the ECM Verification Test Ver. 1. (Refer to 9 - ENGINE - DIAGNOSIS AND TESTING)

No >> Go to 3

3. (K157) MASS AIR FLOW SENSOR SIGNAL CIRCUIT SHORTED TO VOLTAGE

Measure the voltage of the (K157) Mass Air Flow Sensor Signal circuit in the Mass Air Flow Sensor connector.

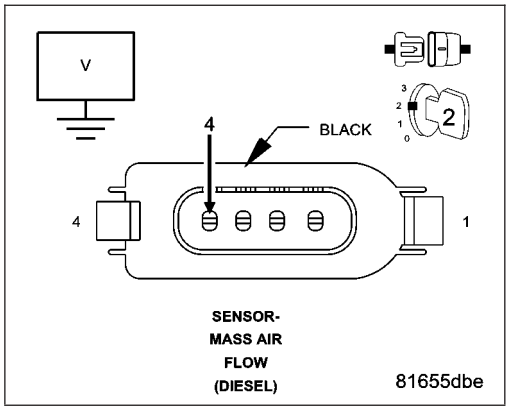

Is there any voltage present?

Yes >> Repair the (K157) Mass Air Flow Sensor Signal circuit for a short to voltage.
Perform the ECM Verification Test Ver. 1. (Refer to 9 - ENGINE - DIAGNOSIS AND TESTING)

No >> Go to 4

4. (K957) MASS AIR FLOW SENSOR GROUND CIRCUIT SHORTED TO VOLTAGE

Measure the voltage of the (K957) Mass Air Flow Sensor Ground circuit in the Mass Air Flow Sensor connector.

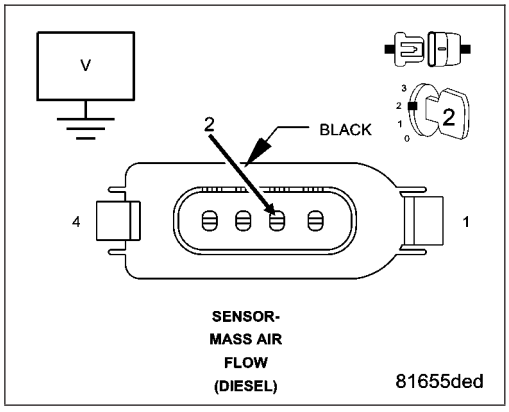

Is there any voltage present?

Yes >> Repair the (K957) Mass Air Flow Sensor Ground circuit for a short to voltage.
Perform the ECM Verification Test Ver. 1. (Refer to 9 - ENGINE - DIAGNOSIS AND TESTING)

No >> Go to 5

5. (F202) FUSED IGNITION SWITCH OUTPUT (RUN-START) CIRCUIT OPEN OR HIGH RESISTANCE

Using a 12 volt test light connected to ground, check the (F202) Fused Ignition Switch Output (Run-Start) circuit in the Mass Air Flow Sensor connector.

NOTE: The test light should be illuminated and bright. Compare the brightness to that of a direct connection to the battery.

Is the test light illuminated and bright?

Yes >> Go to 6

No >> Repair the (F202) Fused Ignition Switch Output (Run-Start) circuit for an open circuit or high resistance.
Perform the ECM Verification Test Ver. 1. (Refer to 9 - ENGINE - DIAGNOSIS AND TESTING)

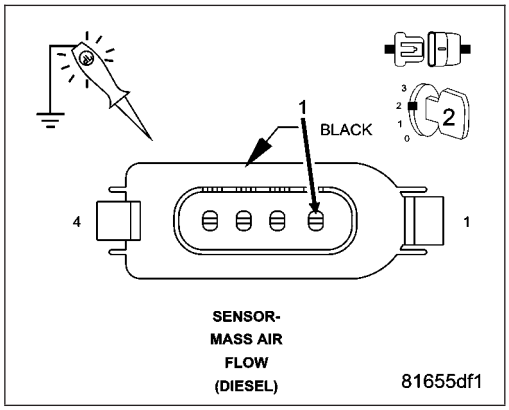

6. (K157) MASS AIR FLOW SENSOR SIGNAL CIRCUIT SHORTED TO THE (K362) INLET AIR TEMPERATURE SENSOR SIGNAL CIRCUIT

Turn the ignition off.

Remove the jumper wire between cavity 30 and cavity 87 of the ASD Relay Connector.

Measure the resistance between the (K157) Mass Air Flow Sensor Signal circuit and the (K362) Inlet Air Temperature Sensor Signal circuit in the Mass Air Flow Sensor connector.

Is the resistance above 10.0 ohms?

Yes >> Go to 7

No >> Repair the (K157) Mass Air Flow Sensor Signal circuit for a short to the (K362) Inlet Air Temperature Sensor Signal circuit.
Perform the ECM Verification Test Ver. 1. (Refer to 9 - ENGINE - DIAGNOSIS AND TESTING)

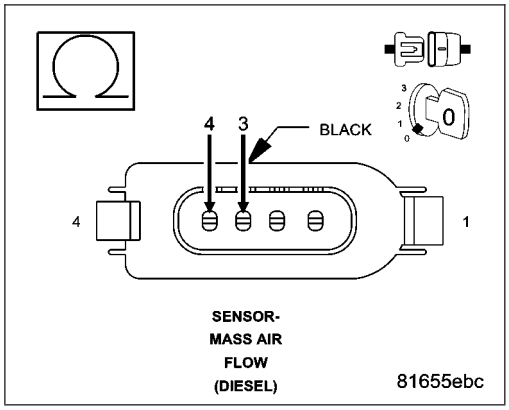

7. (K362) INLET AIR TEMPERATURE SENSOR SIGNAL CIRCUIT OPEN OR HIGH RESISTANCE

Measure the resistance of the (K362) Inlet Air Temperature Sensor Signal circuit between the Mass Air Flow Sensor connector and the Engine Control Module (ECM) connector.

Is the resistance below 10.0 ohms?

Yes >> Go to 8

No >> Repair the (K362) Inlet Air Temperature Sensor Signal circuit for an open circuit or high resistance.
Perform the ECM Verification Test Ver. 1. (Refer to 9 - ENGINE - DIAGNOSIS AND TESTING)

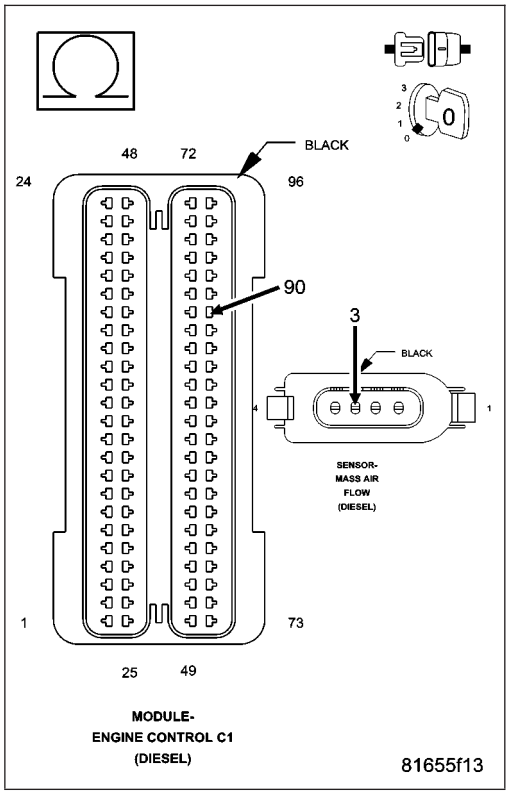

8. (K157) MASS AIR FLOW SENSOR SIGNAL CIRCUIT OPEN OR HIGH RESISTANCE

Measure the resistance of the (K157) Mass Air Flow Sensor Signal circuit between the Mass Air Flow Sensor connector and the Engine Control Module (ECM) connector.

Is the resistance below 10.0 ohms?

Yes >> Go to 9

No >> Repair the (K157) Mass Air Flow Sensor Signal circuit for an open circuit or high resistance.
Perform the ECM Verification Test Ver. 1. (Refer to 9 - ENGINE - DIAGNOSIS AND TESTING)

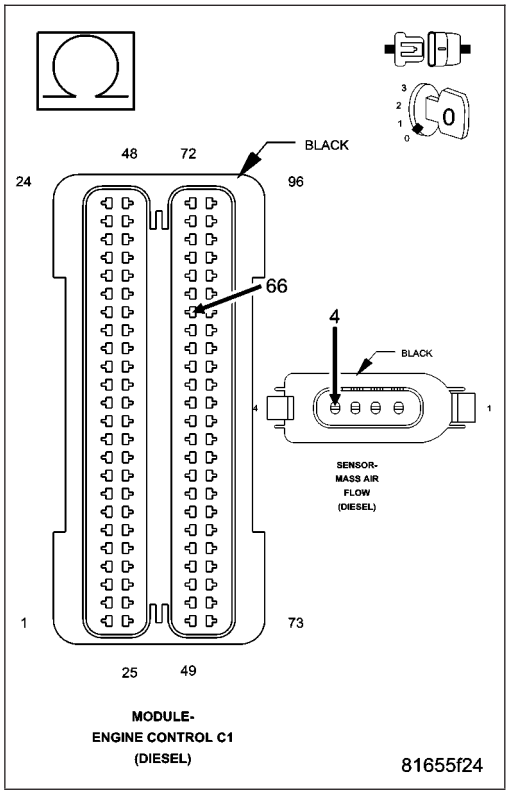

9. (K957) MASS AIR FLOW SENSOR GROUND CIRCUIT OPEN OR HIGH RESISTANCE

Measure the resistance of the (K957) Mass Air Flow Sensor Ground circuit between the Mass Air Flow Sensor connector and the Engine Control Module (ECM) connector.

Is the resistance below 10.0 ohms?

Yes >> Go to 10

No >> Repair the (K957) Mass Air Flow Sensor Ground circuit for an open circuit or high resistance.
Perform the ECM Verification Test Ver. 1. (Refer to 9 - ENGINE - DIAGNOSIS AND TESTING)

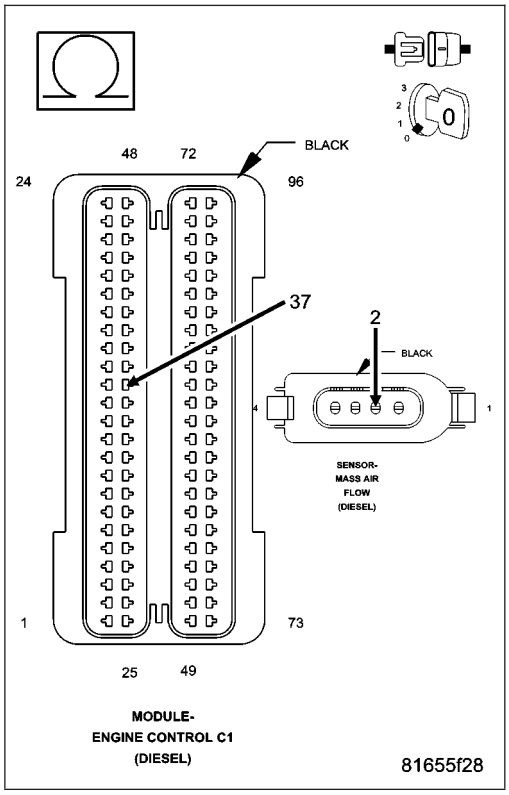

10. (K362) INLET AIR TEMPERATURE SENSOR SIGNAL CIRCUIT SHORTED TO GROUND

Measure the resistance between ground and the (K362) Inlet Air Temperature Sensor Signal circuit in the Mass Air Flow Sensor connector.

Is the resistance above 10.0 ohms?

Yes >> Go to 11

No >> Repair the (K362) Inlet Air Temperature Sensor Signal circuit for a short to ground.
Perform the ECM Verification Test Ver. 1. (Refer to 9 - ENGINE - DIAGNOSIS AND TESTING)

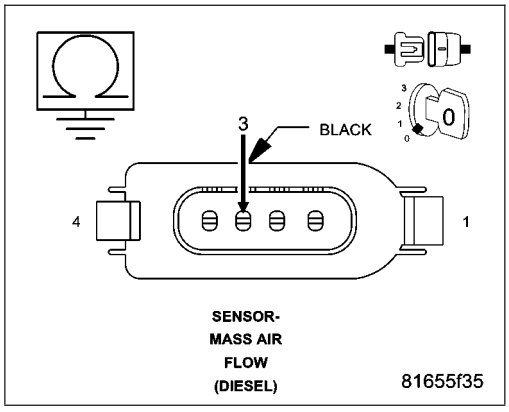

11. (K157) MASS AIR FLOW SENSOR SIGNAL CIRCUIT SHORTED TO GROUND

Measure the resistance between ground and the (K157) Mass Air Flow Sensor Signal circuit in the Mass Air Flow Sensor connector.

Is the resistance above 10.0 ohms?

Yes >> Go to 12

No >> Repair the (K157) Mass Air Flow Sensor Signal circuit for a short to ground.

Perform the ECM Verification Test Ver. 1. (Refer to 9 - ENGINE - DIAGNOSIS AND TESTING)

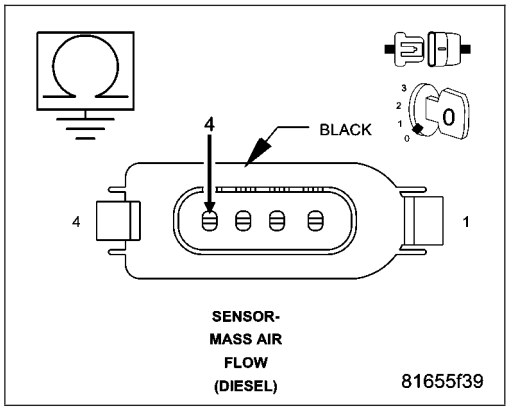

12. (K157) MASS AIR FLOW SENSOR SIGNAL CIRCUIT SHORTED TO THE (K957) MASS AIR FLOW SENSOR GROUND CIRCUIT

Measure the resistance between the (K157) Mass Air Flow Sensor Signal circuit and the (K957) Mass Air Flow Sensor Ground circuit in the Mass Air Flow Sensor connector.

Is the resistance above 10.0 ohms?

Yes >> Go to 13

No >> Repair the (K157) Mass Air Flow Sensor Signal circuit for a short to the (K957) Mass Air Flow Sensor Ground circuit.

Perform the ECM Verification Test Ver. 1. (Refer to 9 - ENGINE - DIAGNOSIS AND TESTING)

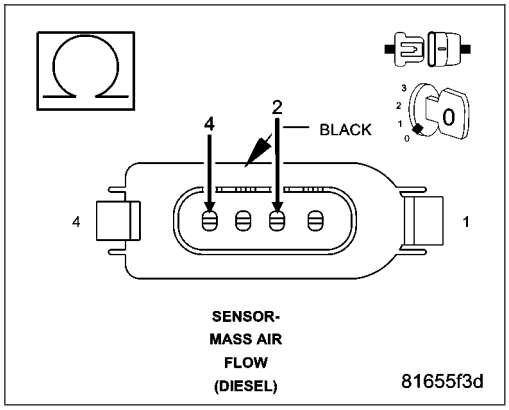

13. (K362) INLET AIR TEMPERATURE SENSOR SIGNAL CIRCUIT SHORTED TO THE (K957) MASS AIR FLOW SENSOR GROUND CIRCUIT

Measure the resistance between the (K362) Inlet Air Temperature Sensor Signal circuit and the (K957) Mass Air Flow Sensor Ground circuit in the Mass Air Flow Sensor connector.

Is the resistance above 10.0 ohms?

Yes >> Go to 14

No >> Repair the (K362) Inlet Air Temperature Sensor Signal circuit for a short to the (K957) Mass Air Flow Sensor Ground circuit.

Perform the ECM Verification Test Ver. 1. (Refer to 9 - ENGINE - DIAGNOSIS AND TESTING)

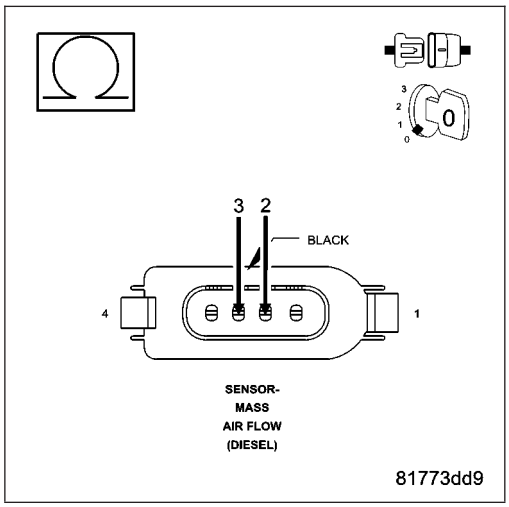

14. MASS AIR FLOW SENSOR

Turn the ignition off.
Install the ASD Relay.
Connect the Engine Control Module (ECM) connector.
Replace the Mass Air Flow Sensor in accordance with the Service Information.
Turn the ignition on.
With the scan tool, Clear DTCs.
Start the engine and allow it to reach normal operating temperature.
With the scan tool, select View DTCs.

Is the status Active for this DTC?

Yes >> Go to 15

No >> Test Complete.
Perform the ECM Verification Test Ver. 1. (Refer to 9 - ENGINE - DIAGNOSIS AND TESTING)

15. ENGINE CONTROL MODULE (ECM)

Using the wiring diagram/schematic as a guide, inspect the wiring and connectors between the Mass Air Flow Sensor and the Engine Control Module (ECM).
Look for any chafed, pierced, pinched, or partially broken wires.
Look for broken, bent, pushed out or corroded terminals.
Monitor the scan tool data relative to this circuit and wiggle test the wiring and connectors.
Look for the data to change or for the DTC to reset during the wiggle test.
Refer to any Technical Service Bulletins that may apply.

Were any problems found?

Yes >> Repair as necessary.
Perform the ECM Verification Test Ver. 1. (Refer to 9 - ENGINE - DIAGNOSIS AND TESTING)

No >> Replace the Engine Control Module (ECM) in accordance with the Service Information.
Perform the ECM Verification Test Ver. 1. (Refer to 9 - ENGINE - DIAGNOSIS AND TESTING)

P0102-MASS AIR FLOW SENSOR CIRCUIT LOW

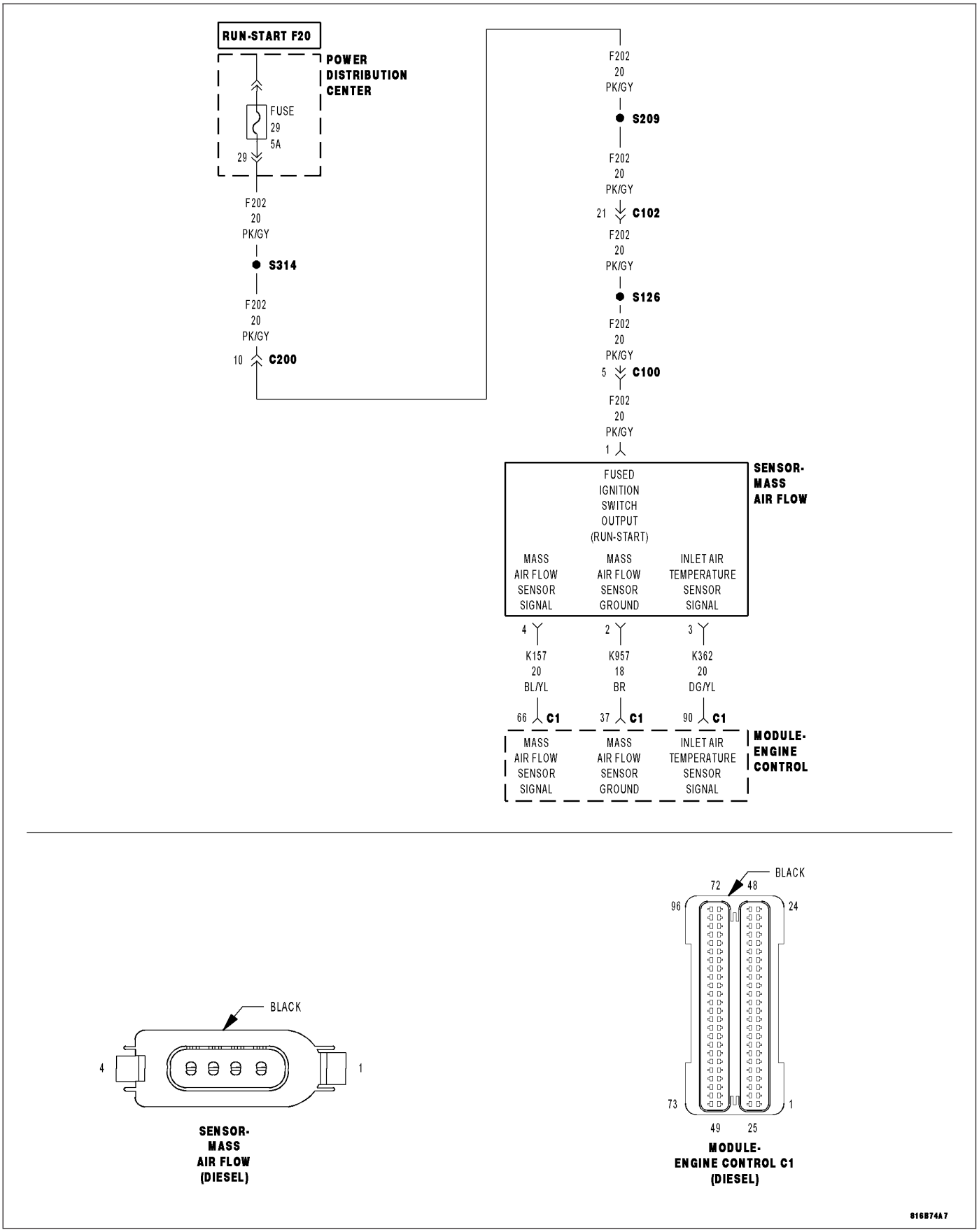

For a complete wiring diagram **Refer to Section 8W**

- **When Monitored:**
  With the ignition on.
- **Set Condition:**
  The Mass Air Flow Sensor Signal is below the valid operating range.

Possible Causes
INTERMITTENT DTC
(K157) MASS AIR FLOW SENSOR SIGNAL CIRCUIT OPEN OR HIGH RESISTANCE
(K957) MASS AIR FLOW SENSOR GROUND CIRCUIT OPEN OR HIGH RESISTANCE
(K157) MASS AIR FLOW SENSOR SIGNAL CIRCUIT SHORTED TO GROUND
(K157) MASS AIR FLOW SENSOR SIGNAL CIRCUIT SHORTED TO THE (K957) MASS AIR FLOW SENSOR GROUND CIRCUIT
MASS AIR FLOW SENSOR
ENGINE CONTROL MODULE (ECM)

Always perform the Pre-Diagnostic Troubleshooting procedure before proceeding. (Refer to 9 - ENGINE - DIAGNOSIS AND TESTING)

Diagnostic Test

1. DTC IS ACTIVE

Ignition on, engine not running.
With the scan tool, Clear DTCs in the Engine Control Module (ECM).
Start the engine and allow it to reach normal operating temperature.
With the scan tool, select View DTCs.

Is the status Active for this DTC?

Yes >> Go To 2

No >> Refer to the *CHECKING FOR AN INTERMITTENT DTC Diagnostic Procedure.

2. (K157) MASS AIR FLOW SENSOR SIGNAL CIRCUIT OPEN OR HIGH RESISTANCE

Measure the resistance of the (K157) Mass Air Flow Sensor Signal circuit between the Mass Air Flow Sensor connector and the Engine Control Module (ECM) connector.

Is the resistance below 10.0 ohms?

Yes >> Go to 3

No >> Repair the (K157) Mass Air Flow Sensor Signal circuit for an open circuit or high resistance.
Perform the ECM Verification Test Ver. 1. (Refer to 9 - ENGINE - DIAGNOSIS AND TESTING)

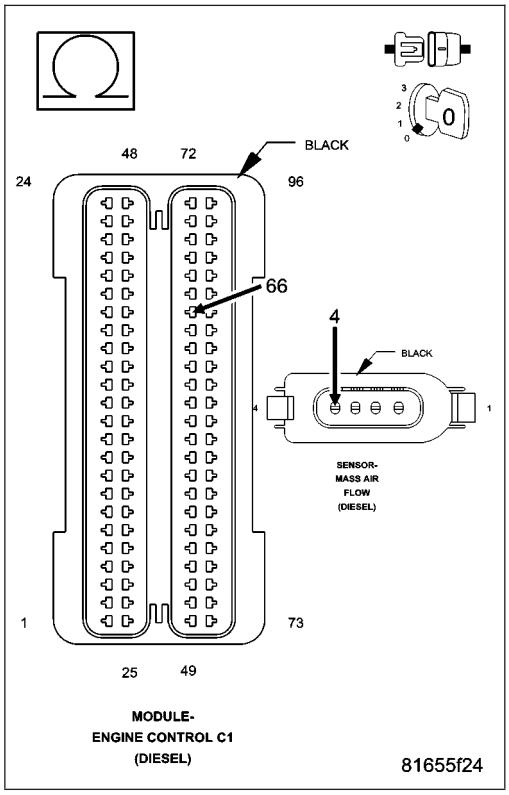

3. (K957) MASS AIR FLOW SENSOR GROUND CIRCUIT OPEN OR HIGH RESISTANCE

Measure the resistance of the (K957) Mass Air Flow Sensor Ground circuit between the Mass Air Flow Sensor connector and the Engine Control Module (ECM) connector.

Is the resistance below 10.0 ohms?

Yes >> Go to 4

No >> Repair the (K957) Mass Air Flow Sensor Ground circuit for an open circuit or high resistance.
Perform the ECM Verification Test Ver. 1. (Refer to 9 - ENGINE - DIAGNOSIS AND TESTING)

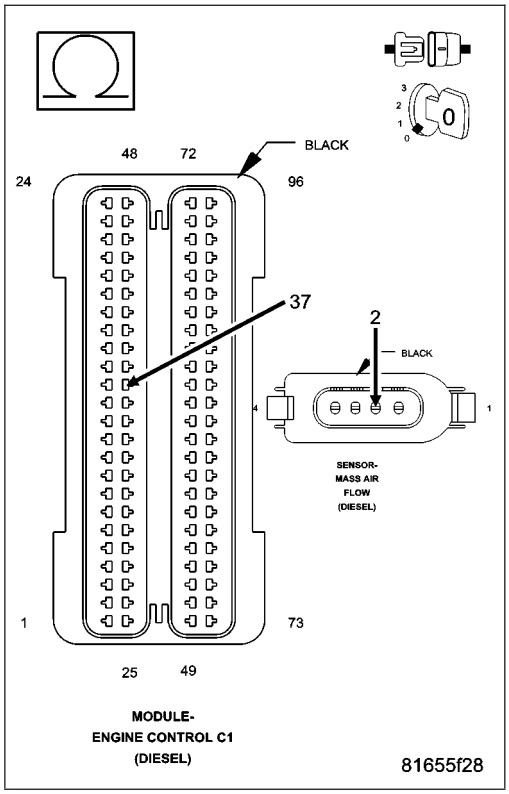

4. (K157) MASS AIR FLOW SENSOR SIGNAL CIRCUIT SHORTED TO GROUND

Measure the resistance between ground and the (K157) Mass Air Flow Sensor Signal circuit in the Mass Air Flow Sensor connector.

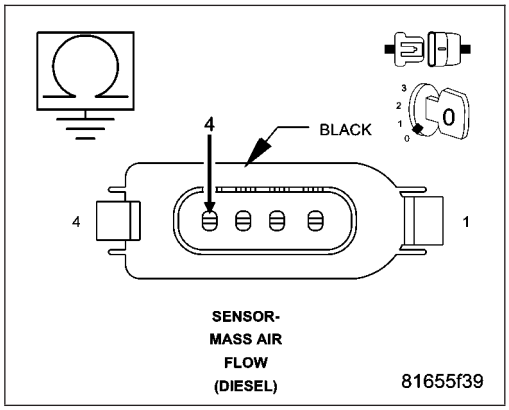

Is the resistance above 1000.0 ohms?

Yes >> Go to 5

No >> Repair the (K157) Mass Air Flow Sensor Signal circuit for a short to ground.
Perform the ECM Verification Test Ver. 1. (Refer to 9 - ENGINE - DIAGNOSIS AND TESTING)

5. (K157) MASS AIR FLOW SENSOR SIGNAL CIRCUIT SHORTED TO THE (K957) MASS AIR FLOW SENSOR GROUND CIRCUIT

Measure the resistance between the (K157) Mass Air Flow Sensor Signal circuit and the (K957) Mass Air Flow Sensor Ground circuit in the Mass Air Flow Sensor connector.

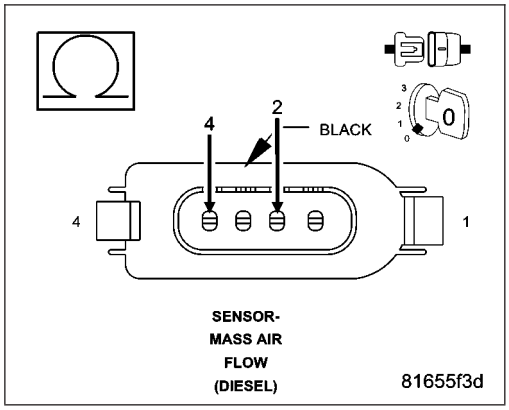

Is the resistance above 1000.0 ohms?

Yes >> Go to 6

No >> Repair the (K157) Mass Air Flow Sensor Signal circuit for a short to the (K957) Mass Air Flow Sensor Ground circuit.
Perform the ECM Verification Test Ver. 1. (Refer to 9 - ENGINE - DIAGNOSIS AND TESTING)

6. MASS AIR FLOW SENSOR

Turn the ignition off.
Install the ASD Relay.
Connect the Engine Control Module (ECM) connector.
Replace the Mass Air Flow Sensor in accordance with the Service Information.
Turn the ignition on.
With the scan tool, Clear DTCs.
Start the engine and allow it to reach normal operating temperature.
With the scan tool, select View DTCs.

Is the status Active for this DTC?

Yes >> Go to 7

No >> Test Complete.
Perform the ECM Verification Test Ver. 1. (Refer to 9 - ENGINE - DIAGNOSIS AND TESTING)

7. ENGINE CONTROL MODULE (ECM)

Using the wiring diagram/schematic as a guide, inspect the wiring and connectors between the Mass Air Flow Sensor and the Engine Control Module (ECM).

Look for any chafed, pierced, pinched, or partially broken wires.

Look for broken, bent, pushed out or corroded terminals.

Monitor the scan tool data relative to this circuit and wiggle test the wiring and connectors.

Look for the data to change or for the DTC to reset during the wiggle test.

Refer to any Technical Service Bulletins that may apply.

Were any problems found?

Yes >> Repair as necessary.
Perform the ECM Verification Test Ver. 1. (Refer to 9 - ENGINE - DIAGNOSIS AND TESTING)

No >> Replace the Engine Control Module (ECM) in accordance with the Service Information.
Perform the ECM Verification Test Ver. 1. (Refer to 9 - ENGINE - DIAGNOSIS AND TESTING)

P0103-MASS AIR FLOW SENSOR CIRCUIT HIGH

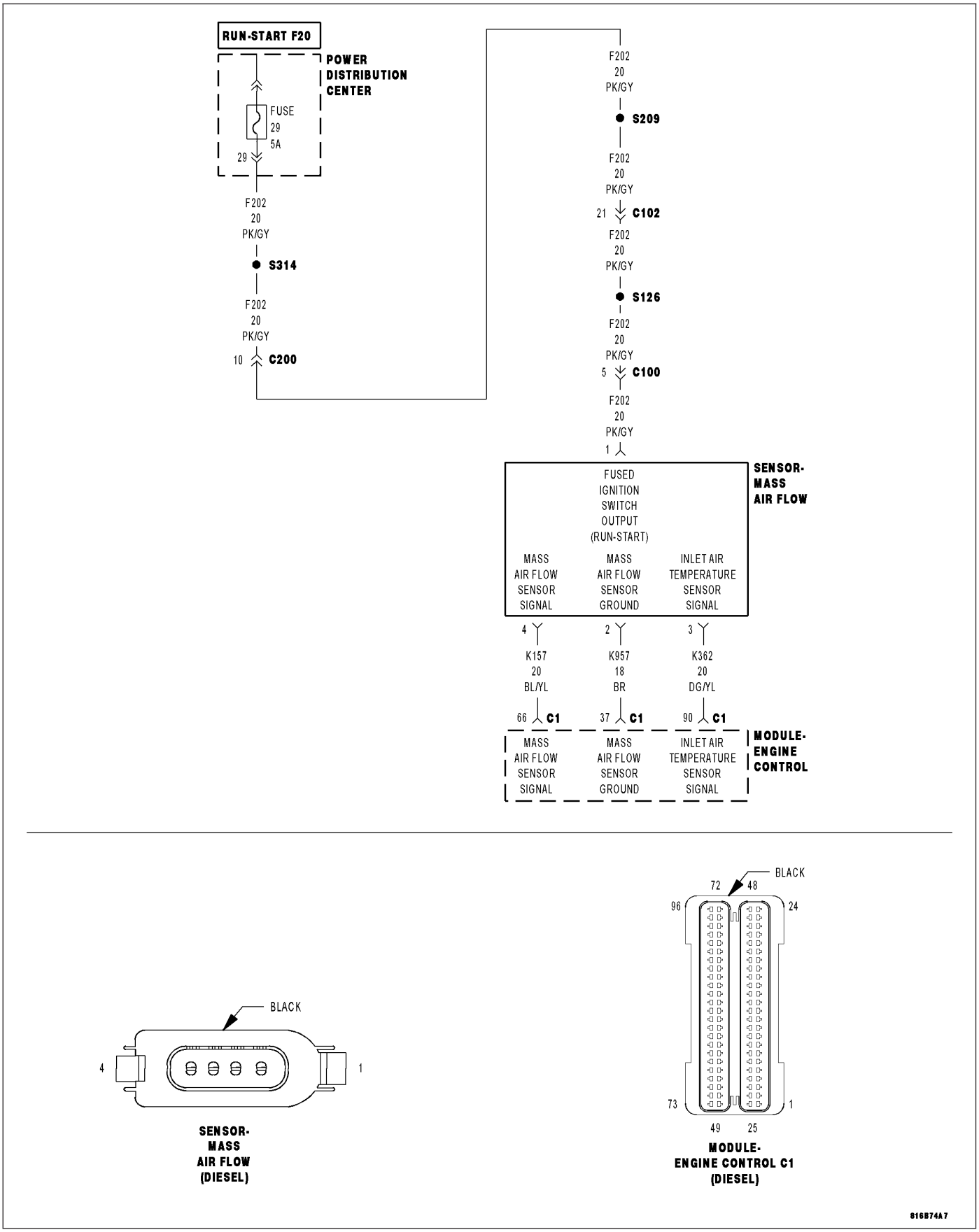

For a complete wiring diagram **Refer to Section 8W**

- **When Monitored:**
  With the ignition on.
- **Set Condition:**
  The Mass Air Flow Sensor Signal is above the valid operating range.

Possible Causes
INTERMITTENT DTC
(K157) MASS AIR FLOW SENSOR SIGNAL CIRCUIT SHORTED TO VOLTAGE
(K957) MASS AIR FLOW SENSOR GROUND CIRCUIT SHORTED TO VOLTAGE
(K157) MASS AIR FLOW SENSOR SIGNAL CIRCUIT SHORTED TO THE (K362) INLET AIR TEMPERATURE SENSOR SIGNAL CIRCUIT
(K157) MASS AIR FLOW SENSOR SIGNAL CIRCUIT OPEN OR HIGH RESISTANCE
(K957) MASS AIR FLOW SENSOR GROUND CIRCUIT OPEN OR HIGH RESISTANCE
MASS AIR FLOW SENSOR
ENGINE CONTROL MODULE (ECM)

Always perform the Pre-Diagnostic Troubleshooting procedure before proceeding. (Refer to 9 - ENGINE - DIAGNOSIS AND TESTING)

Diagnostic Test

1. DTC IS ACTIVE

Ignition on, engine not running.
With the scan tool, Clear DTCs in the Engine Control Module (ECM).
Start the engine and allow it to reach normal operating temperature.
With the scan tool, select View DTCs.

Is the status Active for this DTC?

Yes >> Go To 2

No >> Refer to the *CHECKING FOR AN INTERMITTENT DTC Diagnostic Procedure.

2. (K157) MASS AIR FLOW SENSOR SIGNAL CIRCUIT SHORTED TO VOLTAGE

Measure the voltage of the (K157) Mass Air Flow Sensor Signal circuit in the Mass Air Flow Sensor connector.

Is there any voltage present?

Yes >> Repair the (K157) Mass Air Flow Sensor Signal circuit for a short to voltage.
Perform the ECM Verification Test Ver. 1. (Refer to 9 - ENGINE - DIAGNOSIS AND TESTING)

No >> Go to 3

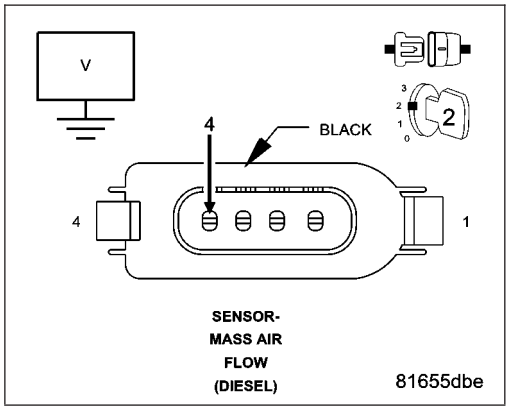

3. (K957) MASS AIR FLOW SENSOR GROUND CIRCUIT SHORTED TO VOLTAGE

Measure the voltage of the (K957) Mass Air Flow Sensor Ground circuit in the Mass Air Flow Sensor connector.

Is there any voltage present?

Yes >> Repair the (K957) Mass Air Flow Sensor Ground circuit for a short to voltage.

Perform the ECM Verification Test Ver. 1. (Refer to 9 - ENGINE - DIAGNOSIS AND TESTING)

No >> Go to 4

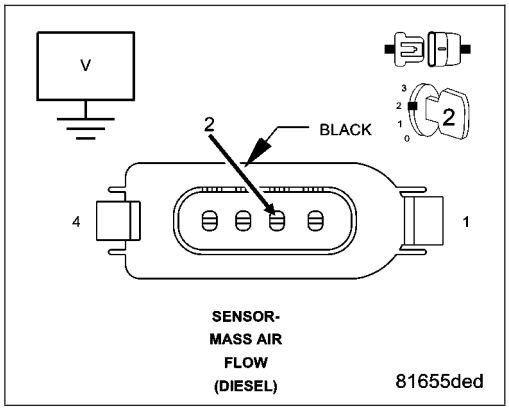

4. (K157) MASS AIR FLOW SENSOR SIGNAL CIRCUIT SHORTED TO THE (K362) INLET AIR TEMPERATURE SENSOR SIGNAL CIRCUIT

Turn the ignition off.

Remove the jumper wire between cavity 30 and cavity 87 of the ASD Relay Connector.

Measure the resistance between the (K157) Mass Air Flow Sensor Signal circuit and the (K362) Inlet Air Temperature Sensor Signal circuit in the Mass Air Flow Sensor connector.

Is the resistance above 10.0 ohms?

Yes >> Go to 5

No >> Repair the (K157) Mass Air Flow Sensor Signal circuit for a short to the (K362) Inlet Air Temperature Sensor Signal circuit.

Perform the ECM Verification Test Ver. 1. (Refer to 9 - ENGINE - DIAGNOSIS AND TESTING)

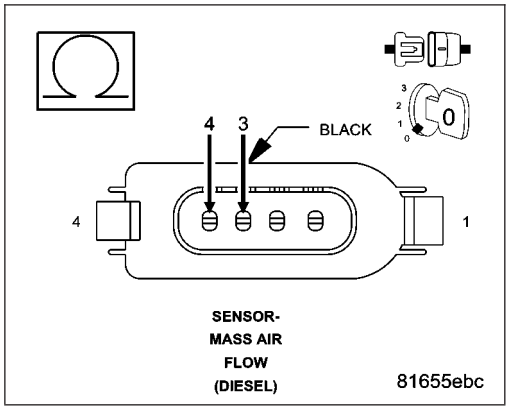

5. (K157) MASS AIR FLOW SENSOR SIGNAL CIRCUIT OPEN OR HIGH RESISTANCE

Measure the resistance of the (K157) Mass Air Flow Sensor Signal circuit between the Mass Air Flow Sensor connector and the Engine Control Module (ECM) connector.

Is the resistance below 10.0 ohms?

Yes >> Go to 6

No >> Repair the (K157) Mass Air Flow Sensor Signal circuit for an open circuit or high resistance.
Perform the ECM Verification Test Ver. 1. (Refer to 9 - ENGINE - DIAGNOSIS AND TESTING)

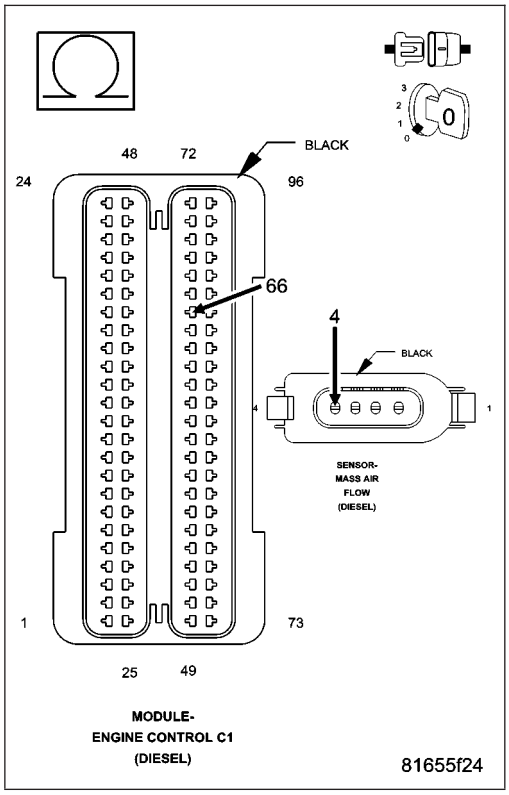

6. (K957) MASS AIR FLOW SENSOR GROUND CIRCUIT OPEN OR HIGH RESISTANCE

Measure the resistance of the (K957) Mass Air Flow Sensor Ground circuit between the Mass Air Flow Sensor connector and the Engine Control Module (ECM) connector.

Is the resistance below 10.0 ohms?

Yes >> Go to 7

No >> Repair the (K957) Mass Air Flow Sensor Ground circuit for an open circuit or high resistance.
Perform the ECM Verification Test Ver. 1. (Refer to 9 - ENGINE - DIAGNOSIS AND TESTING)

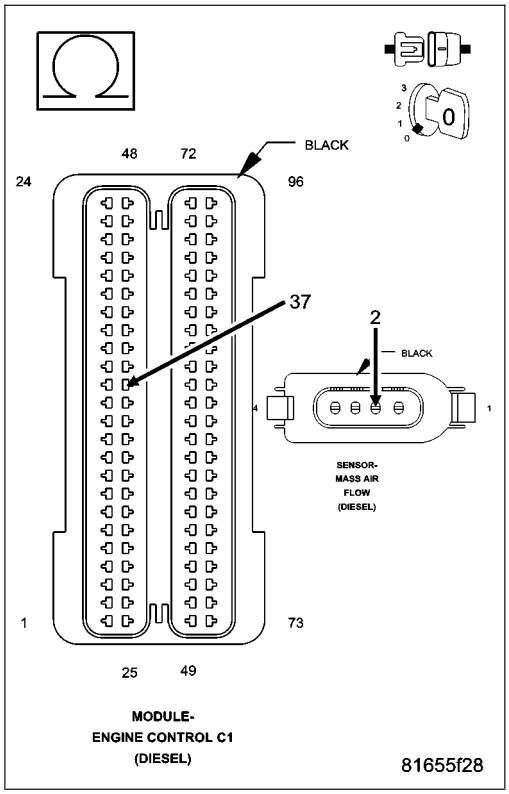

7. MASS AIR FLOW SENSOR

Turn the ignition off.
Install the ASD Relay.
Connect the Engine Control Module (ECM) connector.
Replace the Mass Air Flow Sensor in accordance with the Service Information.
Turn the ignition on.
With the scan tool, Clear DTCs.
Start the engine and allow it to reach normal operating temperature.
With the scan tool, select View DTCs.

Is the status Active for this DTC?

Yes >> Go to 8

No >> Test Complete.
Perform the ECM Verification Test Ver. 1. (Refer to 9 - ENGINE - DIAGNOSIS AND TESTING)

8. ENGINE CONTROL MODULE (ECM)

Using the wiring diagram/schematic as a guide, inspect the wiring and connectors between the Mass Air Flow Sensor and the Engine Control Module (ECM).
Look for any chafed, pierced, pinched, or partially broken wires.
Look for broken, bent, pushed out or corroded terminals.
Monitor the scan tool data relative to this circuit and wiggle test the wiring and connectors.
Look for the data to change or for the DTC to reset during the wiggle test.
Refer to any Technical Service Bulletins that may apply.

Were any problems found?

Yes >> Repair as necessary.
Perform the ECM Verification Test Ver. 1. (Refer to 9 - ENGINE - DIAGNOSIS AND TESTING)

No >> Replace the Engine Control Module (ECM) in accordance with the Service Information.
Perform the ECM Verification Test Ver. 1. (Refer to 9 - ENGINE - DIAGNOSIS AND TESTING)

P0112-INTAKE AIR TEMPERATURE SENSOR CIRCUIT LOW

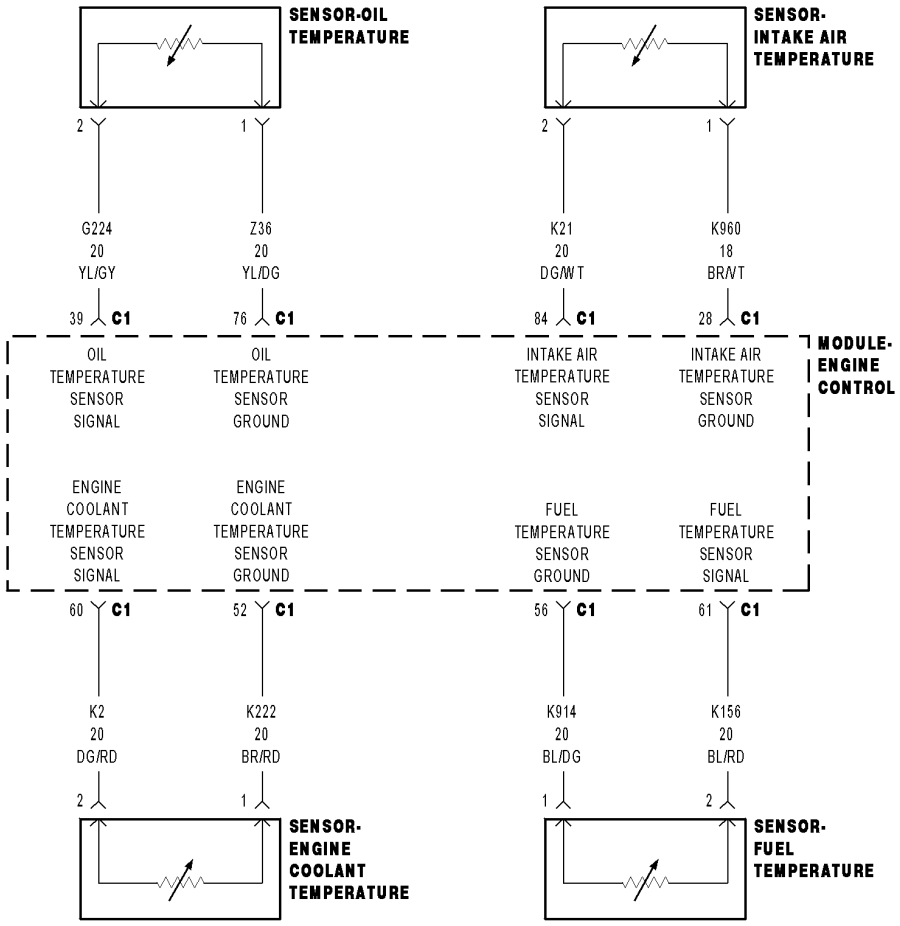

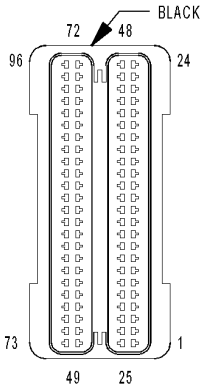

MODULE-ENGINE CONTROL C1 (DIESEL)

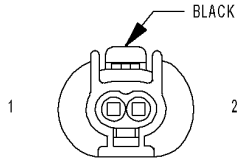

SENSOR-INTAKE AIR TEMPERATURE (DIESEL)

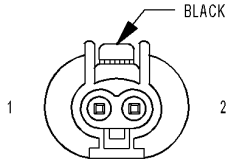

SENSOR-OIL TEMPERATURE (DIESEL)

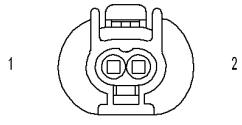

SENSOR-FUEL TEMPERATURE (DIESEL)

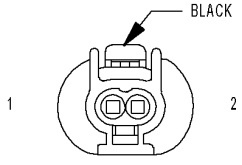

SENSOR-ENGINE COOLANT TEMPERATURE (DIESEL)

816B7486

For a complete wiring diagram **Refer to Section 8W**

- **When Monitored:**
  With the ignition on.
- **Set Condition:**
  The (K21) Intake Air Temperature Sensor Signal circuit voltage is below 0.12 volt for 2.0 seconds.

Possible Causes
INTERMITTENT DTC
(K21) INTAKE AIR TEMPERATURE SENSOR SIGNAL CIRCUIT SHORTED TO GROUND
(K21) INTAKE AIR TEMPERATURE SENSOR SIGNAL CIRCUIT SHORTED TO (K960) INTAKE AIR TEMPERATURE SENSOR GROUND
(K21) INTAKE AIR TEMPERATURE SENSOR SIGNAL CIRCUIT OPEN OR HIGH RESISTANCE
INTAKE AIR TEMPERATURE SENSOR
ENGINE CONTROL MODULE (ECM)

Always perform the Pre-Diagnostic Troubleshooting procedure before proceeding. (Refer to 9 - ENGINE - DIAGNOSIS AND TESTING)

Diagnostic Test

1. DTC IS ACTIVE

Ignition on, engine not running.

With the scan tool, Clear DTCs in the Engine Control Module (ECM).

Monitor the scan tool for at least two minutes.

Cycle the ignition key off and on several times, leaving the ignition on for at least 10 seconds at a time.

Start the engine.

Allow the engine to reach normal operating temperature.

With the scan tool, select View DTCs.

Is the status Active for this DTC?

Yes >> Go To 2

No >> Refer to the *CHECKING FOR AN INTERMITTENT DTC Diagnostic Procedure. (Refer to 9 - ENGINE - DIAGNOSIS AND TESTING)

2. (K21) INTAKE AIR TEMPERATURE SENSOR SIGNAL CIRCUIT SHORTED TO GROUND

Turn the ignition off.

Disconnect the Intake Air Temperature Sensor connector.

Disconnect the Engine Control Module (ECM) connector.

Measure the resistance between ground and the (K21) Intake Air Temperature Sensor Signal circuit in the Intake Air Temperature Sensor connector.

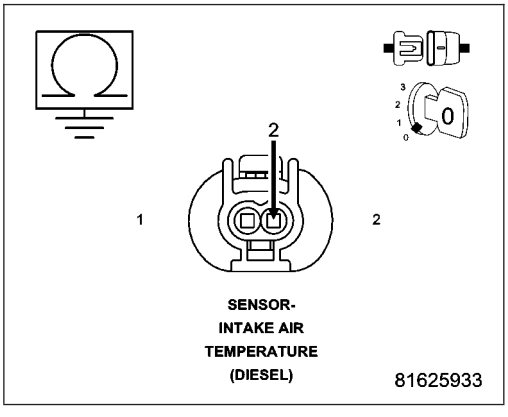

Is the resistance above 1000.0 ohms?

Yes >> Go to 3

No >> Repair the (K21) Intake Air Temperature Sensor Signal circuit for a short to ground.
Perform the ECM Verification Test Ver. 1. (Refer to 9 - ENGINE - DIAGNOSIS AND TESTING)

3. (K21) INTAKE AIR TEMPERATURE SENSOR SIGNAL CIRCUIT SHORTED TO (K960) INTAKE AIR TEMPERATURE SENSOR GROUND CIRCUIT

Measure the resistance between the (K21) Intake Air Temperature Sensor Signal circuit and the (K960) Intake Air Temperature Sensor Ground circuit in the Intake Air Temperature Sensor connector.

Is the resistance above 1000.0 ohms?

Yes >> Go to 4

No >> Repair the (K21) Intake Air Temperature Sensor Signal circuit for a short to the (K960) Intake Air Temperature Sensor Ground circuit.

Perform the ECM Verification Test Ver. 1. (Refer to 9 - ENGINE - DIAGNOSIS AND TESTING)

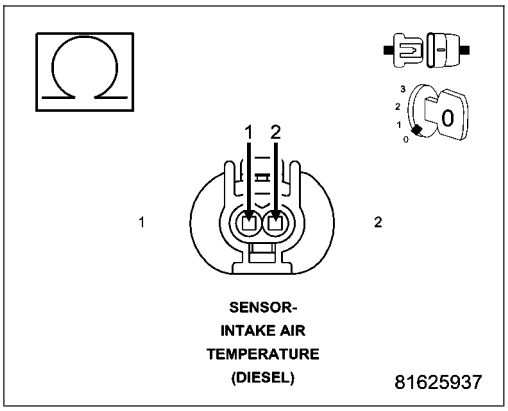

4. (K21) INTAKE AIR TEMPERATURE SENSOR SIGNAL CIRCUIT OPEN CIRCUIT OR HIGH RESISTANCE

Measure the resistance of the (K21) Intake Air Temperature Sensor Signal circuit between the Intake Air Temperature Sensor connector and the Engine Control Module (ECM) connector.

Is the resistance below 10.0 ohms?

Yes >> Go to 5

No >> Repair the (K21) Intake Air Temperature Sensor Signal circuit for an open circuit or high resistance.

Perform the ECM Verification Test Ver. 1. (Refer to 9 - ENGINE - DIAGNOSIS AND TESTING)

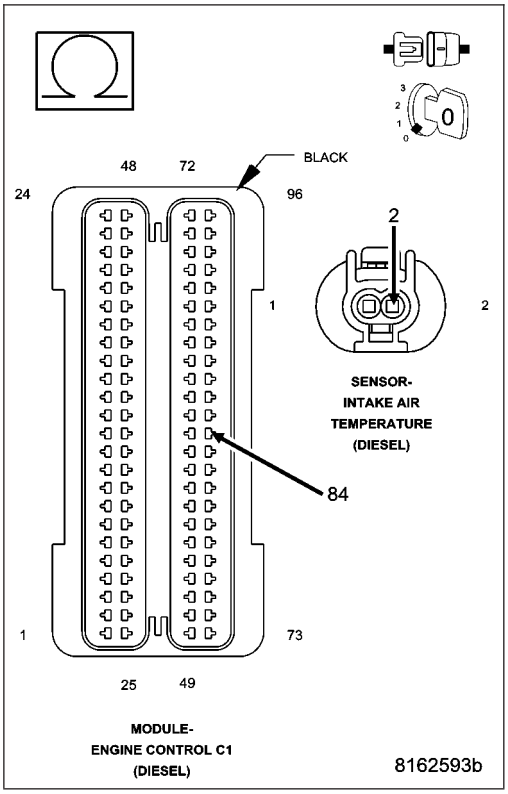

5. INTAKE AIR TEMPERATURE SENSOR

Turn the ignition off.

Connect the Engine Control Module (ECM) connector.

Turn the ignition on.

With the scan tool, clear DTCs.

With the scan tool, select View DTCs.

NOTE: The scan tool should display an Intake Air Temperature Sensor high voltage or open circuit DTC with the Intake Air Temperature Sensor connector disconnected.

Does the scan tool display the DTC(s) as described above?

Yes >> Replace the Intake Air Temperature Sensor in accordance with the service information.
Perform the ECM Verification Test Ver. 1. (Refer to 9 - ENGINE - DIAGNOSIS AND TESTING)

No >> Go to 6

6. ENGINE CONTROL MODULE (ECM)

Using the wiring diagram/schematic as a guide, inspect the wiring and connectors between the Intake Air Temperature Sensor and the Engine Control Module (ECM).

Look for any chafed, pierced, pinched, or partially broken wires.

Look for broken, bent, pushed out or corroded terminals.

Monitor the scan tool data relative to this circuit and wiggle test the wiring and connectors.

Look for the data to change or for the DTC to reset during the wiggle test.

Refer to any Technical Service Bulletins that may apply.

Were any problems found?

Yes >> Repair as necessary.
Perform the ECM Verification Test Ver. 1. (Refer to 9 - ENGINE - DIAGNOSIS AND TESTING)

No >> Replace the Engine Control Module (ECM) in accordance with the Service Information.
Perform the ECM Verification Test Ver. 1. (Refer to 9 - ENGINE - DIAGNOSIS AND TESTING)

P0113-INTAKE AIR TEMPERATURE SENSOR CIRCUIT HIGH

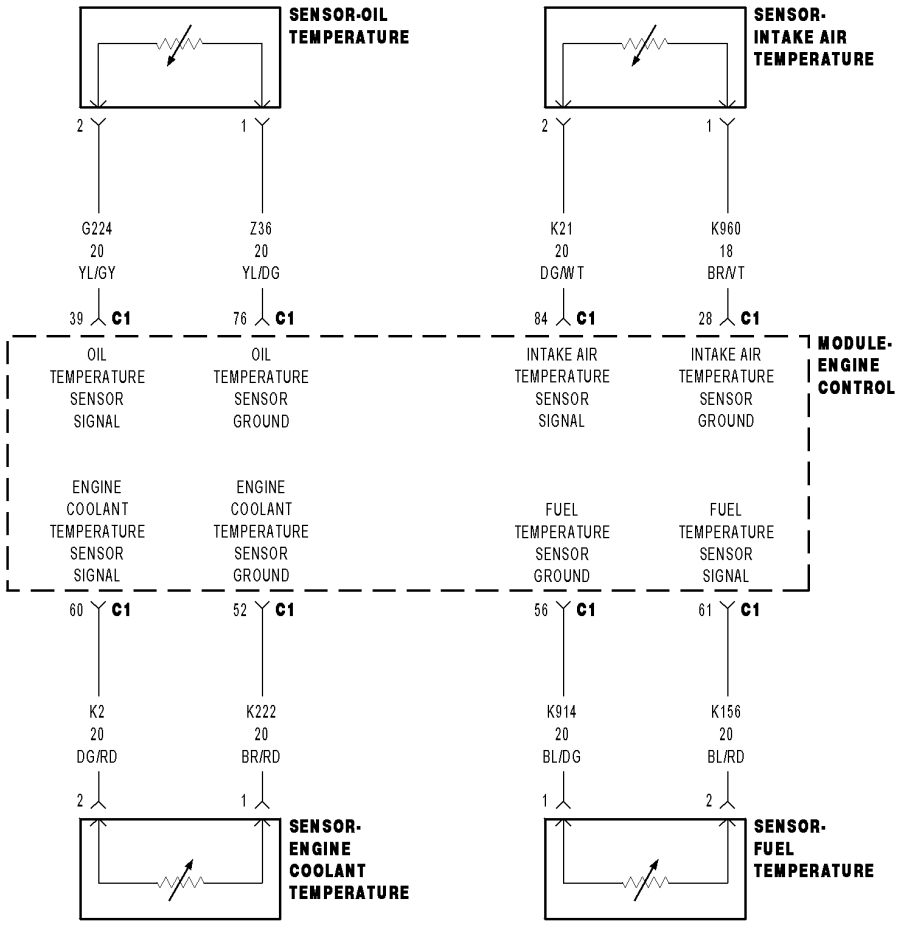

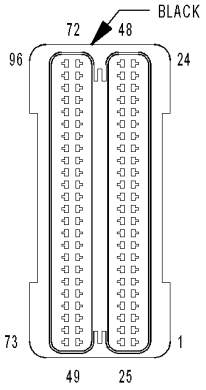

MODULE-ENGINE CONTROL C1 (DIESEL)

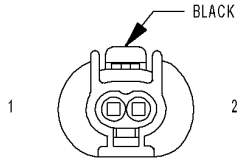

SENSOR-INTAKE AIR TEMPERATURE (DIESEL)

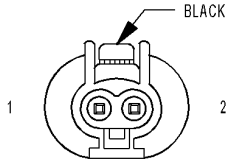

SENSOR-OIL TEMPERATURE (DIESEL)

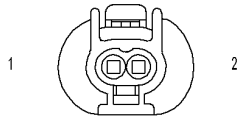

SENSOR-FUEL TEMPERATURE (DIESEL)

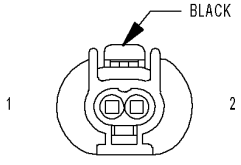

SENSOR-ENGINE COOLANT TEMPERATURE (DIESEL)

816B7486

For a complete wiring diagram **Refer to Section 8W**

- **When Monitored:**
  With the ignition on.
- **Set Condition:**
  The (K21) Intake Air Temperature Sensor Signal circuit voltage is above 4.96 volts for 2.0 seconds.

Possible Causes
INTERMITTENT DTC
(K21) INTAKE AIR TEMPERATURE SENSOR SIGNAL CIRCUIT SHORTED TO VOLTAGE
(K960) INTAKE AIR TEMPERATURE SENSOR GROUND CIRCUIT SHORTED TO VOLTAGE
(K21) INTAKE AIR TEMPERATURE SENSOR SIGNAL CIRCUIT OPEN OR HIGH RESISTANCE
(K960) INTAKE AIR TEMPERATURE SENSOR GROUND CIRCUIT OPEN OR HIGH RESISTANCE
INTAKE AIR TEMPERATURE SENSOR
ENGINE CONTROL MODULE (ECM)

Always perform the Pre-Diagnostic Troubleshooting procedure before proceeding. (Refer to 9 - ENGINE - DIAGNOSIS AND TESTING)

Diagnostic Test

1. DTC IS ACTIVE

Ignition on, engine not running.
With the scan tool, Clear DTCs in the Engine Control Module (ECM).
Monitor the scan tool for at least two minutes.
Cycle the ignition key off and on several times, leaving the ignition on for at least 10 seconds at a time.
Start the engine.
Allow the engine to reach normal operating temperature.
With the scan tool, select View DTCs.

Is the status Active for this DTC?

Yes >> Go To 2

No >> Refer to the *CHECKING FOR AN INTERMITTENT DTC Diagnostic Procedure. (Refer to 9 - ENGINE - DIAGNOSIS AND TESTING)

2. (K21) INTAKE AIR TEMPERATURE SENSOR SIGNAL CIRCUIT SHORTED TO VOLTAGE

Turn the ignition off.
Disconnect the Intake Air Temperature Sensor connector.
Disconnect the Engine Control Module (ECM) connector.
Remove the ASD Relay from the IPM.
Connect a jumper wire between cavity 30 and cavity 87 of the ASD Relay Connector.
Turn the ignition on.
Measure the voltage of the (K21) Intake Air Temperature Sensor Signal circuit in the Intake Air Temperature Sensor connector.

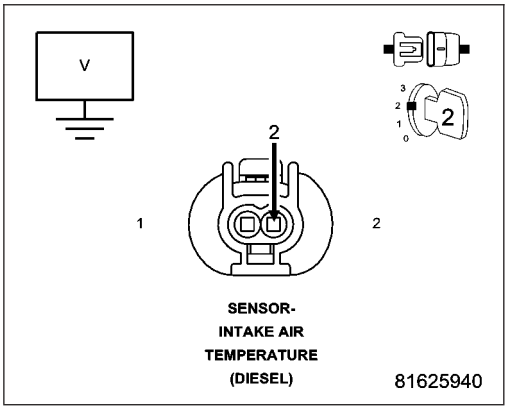

Is there any voltage present?

Yes >> Repair the (K21) Intake Air Temperature Sensor Signal circuit for a short to voltage.
Perform the ECM Verification Test Ver. 1. (Refer to 9 - ENGINE - DIAGNOSIS AND TESTING)

No >> Go to 3

3. (K960) INTAKE AIR TEMPERATURE SENSOR GROUND CIRCUIT SHORTED TO VOLTAGE

NOTE: The jumper wire should still be in place.
Measure the voltage of the (K960) Intake Air Temperature Sensor Ground circuit in the Intake Air Temperature Sensor connector.

Is there any voltage present?

Yes >> Repair the (K960) Intake Air Temperature Sensor Ground circuit for a short to voltage.
Perform the ECM Verification Test Ver. 1. (Refer to 9 - ENGINE - DIAGNOSIS AND TESTING)

No >> Go to 4

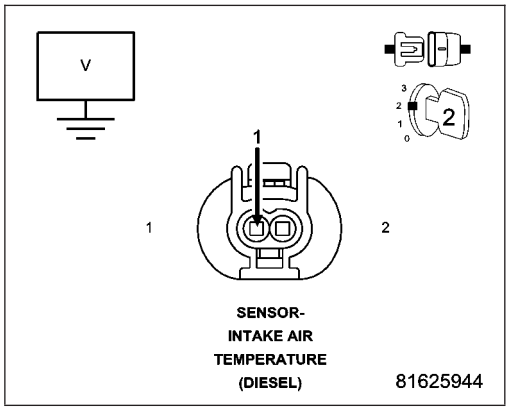

4. INTAKE AIR TEMPERATURE SENSOR

Turn the ignition off.

Connect the Engine Control Module (ECM) connector.

Connect a jumper wire between the (K960) Intake Air Temperature Sensor Ground circuit and the (K21) Intake Air Temperature Sensor Signal circuit in the Intake Air Temperature Sensor connector.

Turn the ignition on.

With the scan tool, Clear DTCs.

With the scan tool, select View DTCs.

NOTE: The scan tool should display an Intake Air Temperature Sensor low voltage or short to ground DTC with the jumper wire in place.

Does the scan tool display the DTC(s) as described above?

Yes >> Replace the Intake Air Temperature Sensor in accordance with the Service Information.
Perform the ECM Verification Test Ver. 1. (Refer to 9 - ENGINE - DIAGNOSIS AND TESTING)

No >> Go to 5

5. (K21) INTAKE AIR TEMPERATURE SENSOR SIGNAL OPEN OR HIGH RESISTANCE

Turn the ignition off.

Disconnect the Engine Control Module (ECM) connector.

Measure the resistance of the (K21) Intake Air Temperature Sensor Signal circuit between the Intake Air Temperature Sensor connector and the Engine Control Module (ECM) connector.

Is the resistance below 10.0 ohms?

Yes >> Go to 6

No >> Repair the (K21) Intake Air Temperature Sensor Signal circuit for an open circuit or high resistance.

Perform the ECM Verification Test Ver. 1. (Refer to 9 - ENGINE - DIAGNOSIS AND TESTING)

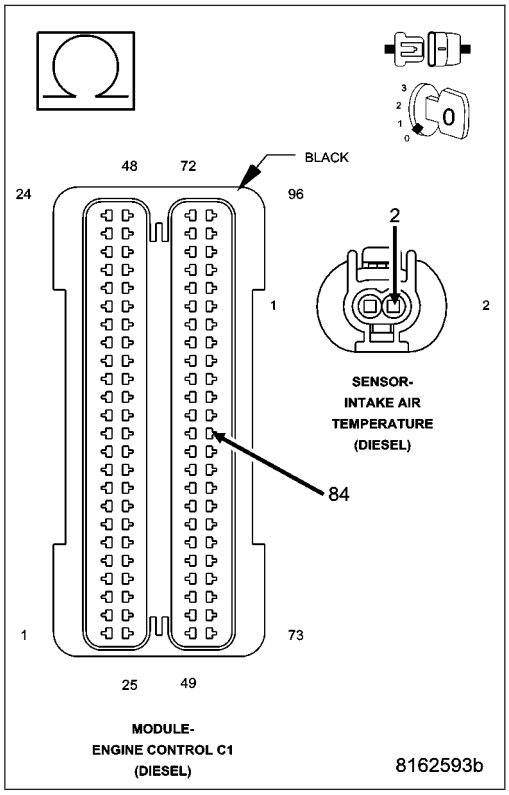

6. (K960) INTAKE AIR TEMPERATURE SENSOR GROUND CIRCUIT OPEN OR HIGH RESISTANCE

Measure the resistance of the (K960) Intake Air Temperature Sensor Ground circuit between the Intake Air Temperature Sensor connector and the Engine Control Module (ECM) connector.

Is the resistance below 10.0 ohms?

Yes >> Go to 7

No >> Repair the (K960) Intake Air Temperature Sensor Ground circuit for an open circuit or high resistance.

Perform the ECM Verification Test Ver. 1. (Refer to 9 - ENGINE - DIAGNOSIS AND TESTING)

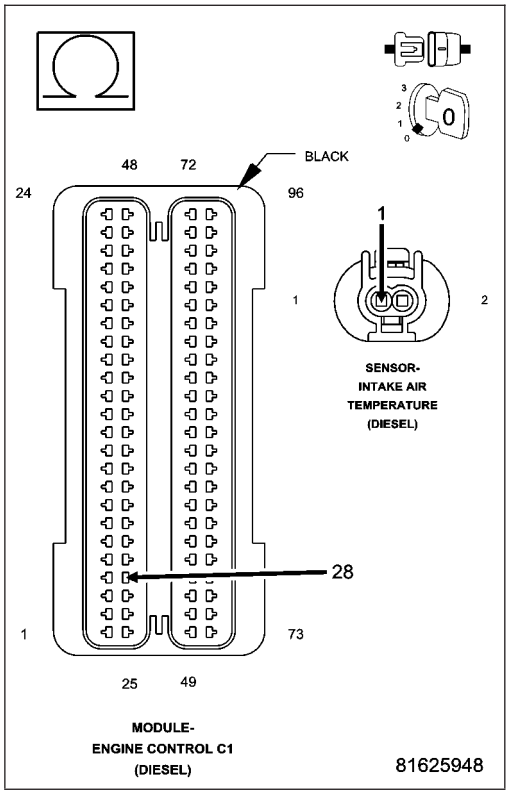

7. ENGINE CONTROL MODULE (ECM)

Using the wiring diagram/schematic as a guide, inspect the wiring and connectors between the Intake Air Temperature Sensor and the Engine Control Module (ECM).

Look for any chafed, pierced, pinched, or partially broken wires.

Look for broken, bent, pushed out or corroded terminals.

Monitor the scan tool data relative to this circuit and wiggle test the wiring and connectors.

Look for the data to change or for the DTC to reset during the wiggle test.

Refer to any Technical Service Bulletins that may apply.

Were any problems found?

Yes >> Repair as necessary.
Perform the ECM Verification Test Ver. 1. (Refer to 9 - ENGINE - DIAGNOSIS AND TESTING)

No >> Replace the Engine Control Module (ECM) in accordance with the Service Information.
Perform the ECM Verification Test Ver. 1. (Refer to 9 - ENGINE - DIAGNOSIS AND TESTING)

P0116-ENGINE COOLANT TEMPERATURE SENSOR PERFORMANCE

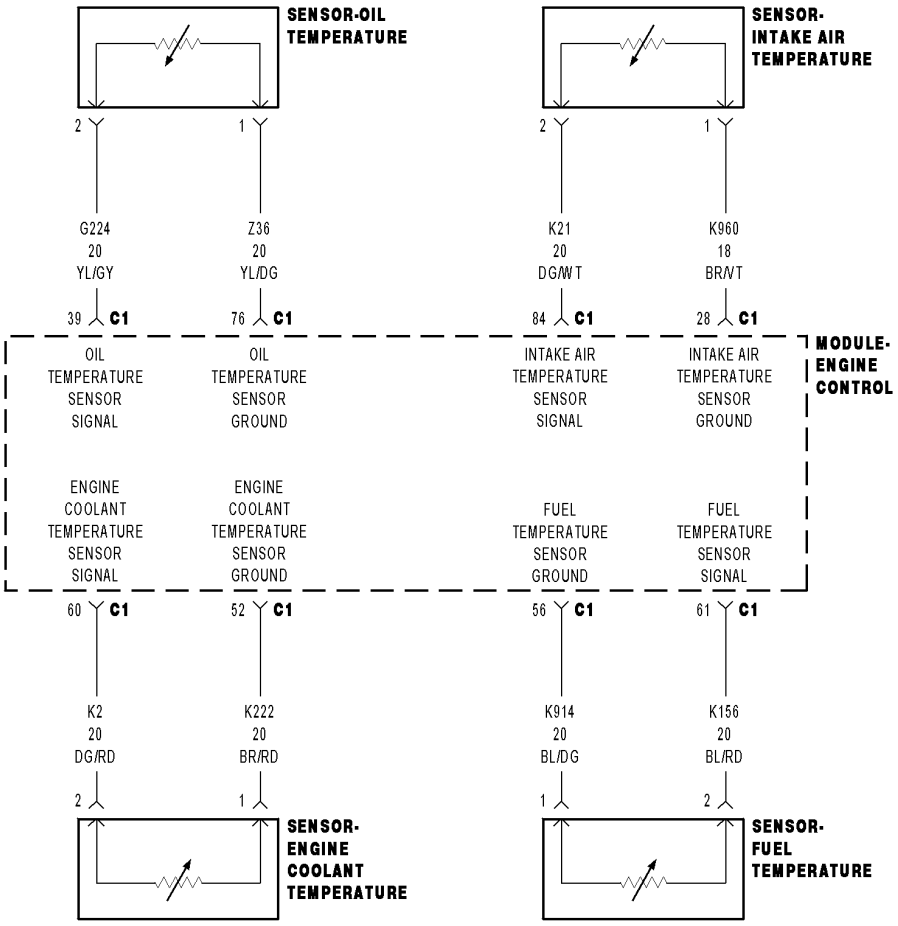

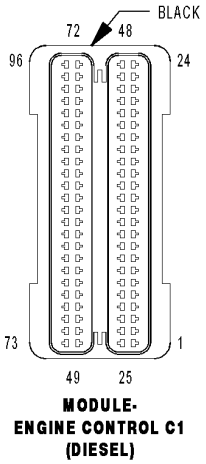

MODULE-ENGINE CONTROL C1 (DIESEL)

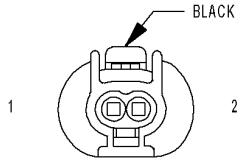

SENSOR-INTAKE AIR TEMPERATURE (DIESEL)

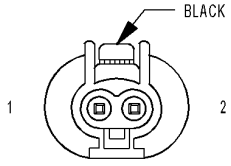

SENSOR-OIL TEMPERATURE (DIESEL)

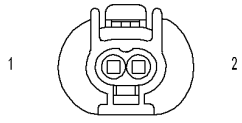

SENSOR-FUEL TEMPERATURE (DIESEL)

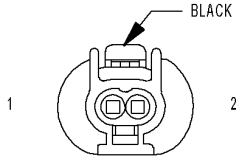

SENSOR-ENGINE COOLANT TEMPERATURE (DIESEL)

816B7486

For a complete wiring diagram **Refer to Section 8W**

- **When Monitored:**
  With the ignition on.
- **Set Condition:**
  The Engine Control Module (ECM) detects an implausible voltage on the (K2) Engine Coolant Temperature Sensor Signal circuit.

Possible Causes
INTERMITTENT DTC
(K2) ENGINE COOLANT TEMPERATURE SENSOR SIGNAL CIRCUIT SHORTED TO VOLTAGE
(K222) ENGINE COOLANT TEMPERATURE SENSOR GROUND CIRCUIT SHORTED TO VOLTAGE
(K2) ENGINE COOLANT TEMPERATURE SENSOR SIGNAL CIRCUIT SHORTED TO GROUND
(K2) ENGINE COOLANT TEMPERATURE SENSOR SIGNAL CIRCUIT SHORTED TO (K222) ENGINE COOLANT TEMPERATURE SENSOR GROUND CIRCUIT
(K2) ENGINE COOLANT TEMPERATURE SENSOR SIGNAL CIRCUIT OPEN OR HIGH RESISTANCE
(K222) ENGINE COOLANT TEMPERATURE SENSOR GROUND CIRCUIT OPEN OR HIGH RESISTANCE
ENGINE COOLANT TEMPERATURE SENSOR
ENGINE CONTROL MODULE (ECM)

Always perform the Pre-Diagnostic Troubleshooting procedure before proceeding. (Refer to 9 - ENGINE - DIAGNOSIS AND TESTING)

Diagnostic Test

1. DTC IS ACTIVE

Ignition on, engine not running.
With the scan tool, Clear DTCs in the Engine Control Module (ECM).
Monitor the scan tool for at least two minutes.
Cycle the ignition key off and on several times, leaving the ignition on for at least 10 seconds at a time.
Start the engine.
Allow the engine to reach normal operating temperature.
With the scan tool, select View DTCs.

Is the status Active for this DTC?

Yes >> Go To 2

No >> Refer to the *CHECKING FOR AN INTERMITTENT DTC Diagnostic Procedure. (Refer to 9 - ENGINE - DIAGNOSIS AND TESTING)

2. (K2) ENGINE COOLANT TEMPERATURE SENSOR SIGNAL CIRCUIT SHORTED TO VOLTAGE

Turn the ignition off.

Disconnect the Engine Coolant Temperature Sensor connector.

Disconnect the Engine Control Module (ECM) connector.

Remove the ASD Relay from the IPM.

Connect a jumper wire between cavity 30 and cavity 87 of the ASD Relay Connector.

Turn the ignition on.

Measure the voltage of the (K2) Engine Coolant Temperature Sensor Signal circuit in the Engine Coolant Temperature Sensor connector.

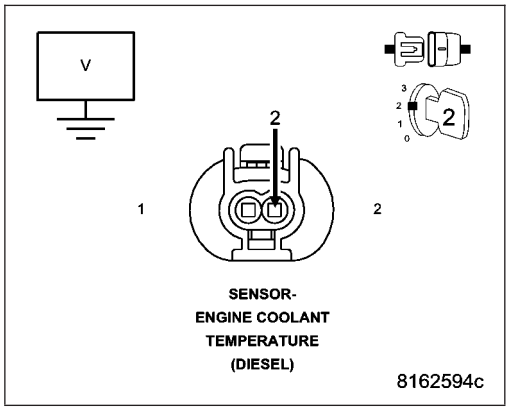

Is there any voltage present?

Yes >> Repair the (K2) Engine Coolant Temperature Sensor Signal circuit for a short to voltage.
Perform the ECM Verification Test Ver. 1. (Refer to 9 - ENGINE - DIAGNOSIS AND TESTING)

No >> Go to 3

3. (K222) ENGINE COOLANT TEMPERATURE SENSOR GROUND CIRCUIT SHORTED TO VOLTAGE

NOTE: The jumper wire should still be in place.

Measure the voltage of the (K222) Engine Coolant Temperature Sensor Ground circuit.

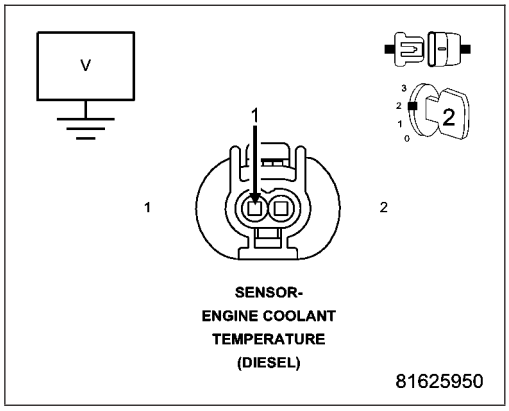

Is there any voltage present?

Yes >> Repair the (K222) Engine Coolant Temperature Sensor Ground circuit for a short to voltage.
Perform the ECM Verification Test Ver. 1. (Refer to 9 - ENGINE - DIAGNOSIS AND TESTING)

No >> Go to 4

4. (K2) ENGINE COOLANT TEMPERATURE SENSOR SIGNAL CIRCUIT SHORTED TO GROUND

Turn the ignition off.

Measure the resistance between ground and the (K2) Engine Coolant Temperature Sensor Signal circuit in the Engine Coolant Temperature Sensor connector.

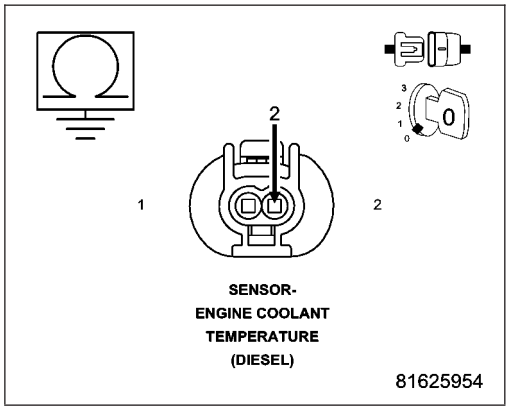

Is the resistance above 10.0 ohms?

Yes >> Go to 5

No >> Repair the (K2) Engine Coolant Temperature Sensor Signal circuit for a short to ground.
Perform the ECM Verification Test Ver. 1. (Refer to 9 - ENGINE - DIAGNOSIS AND TESTING)

5. (K2) ENGINE COOLANT TEMPERATURE SENSOR SIGNAL CIRCUIT SHORTED TO (K222) ENGINE COOLANT TEMPERATURE SENSOR GROUND CIRCUIT

Measure the resistance between the (K2) Engine Coolant Temperature Sensor Signal circuit and the (K222) Engine Coolant Temperature Sensor Ground circuit in the Engine Coolant Temperature Sensor connector.

Is the resistance above 10.0 ohms?

Yes >> Go to 6

No >> Repair the (K2) Engine Coolant Temperature Sensor Signal circuit for a short to the (K222) Engine Coolant Temperature Sensor Ground circuit.

Perform the ECM Verification Test Ver. 1. (Refer to 9 - ENGINE - DIAGNOSIS AND TESTING)

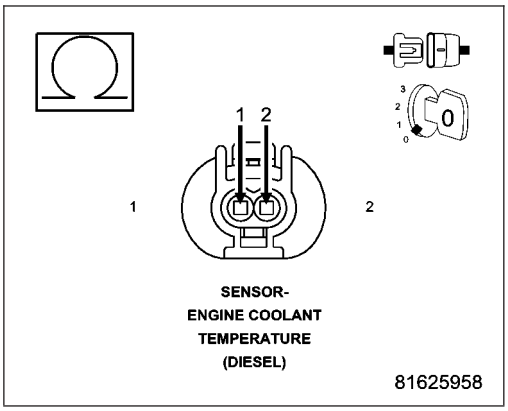

6. (K2) ENGINE COOLANT TEMPERATURE SENSOR SIGNAL CIRCUIT OPEN OR HIGH RESISTANCE

Measure the resistance of the (K2) Engine Coolant Temperature Sensor Signal circuit between the Engine Coolant Temperature Sensor connector and the Engine Control Module (ECM) connector.

Is the resistance below 10.0 ohms?

Yes >> Go to 7

No >> Repair the (K2) Engine Coolant Temperature Sensor Signal circuit for an open circuit or high resistance.

Perform the ECM Verification Test Ver. 1. (Refer to 9 - ENGINE - DIAGNOSIS AND TESTING)

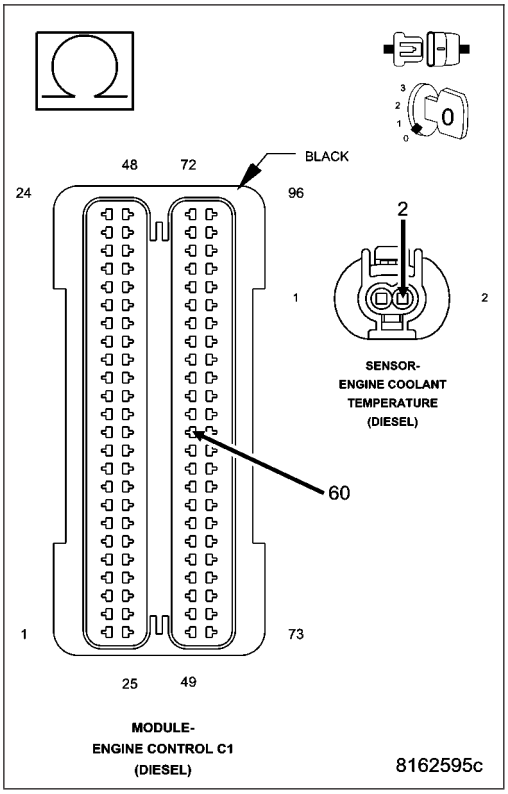

7. (K222) ENGINE COOLANT TEMPERATURE SENSOR GROUND CIRCUIT OPEN OR HIGH RESISTANCE

Measure the resistance of the (K222) Engine Coolant Temperature Sensor Ground circuit between the Engine Coolant Temperature Sensor connector and the Engine Control Module (ECM) connector.

Is the resistance below 10.0 ohms?

Yes >> Go to 8

No >> Repair the (K222) Engine Coolant Temperature Sensor Ground circuit for an open circuit or high resistance.
Perform the ECM Verification Test Ver. 1. (Refer to 9 - ENGINE - DIAGNOSIS AND TESTING)

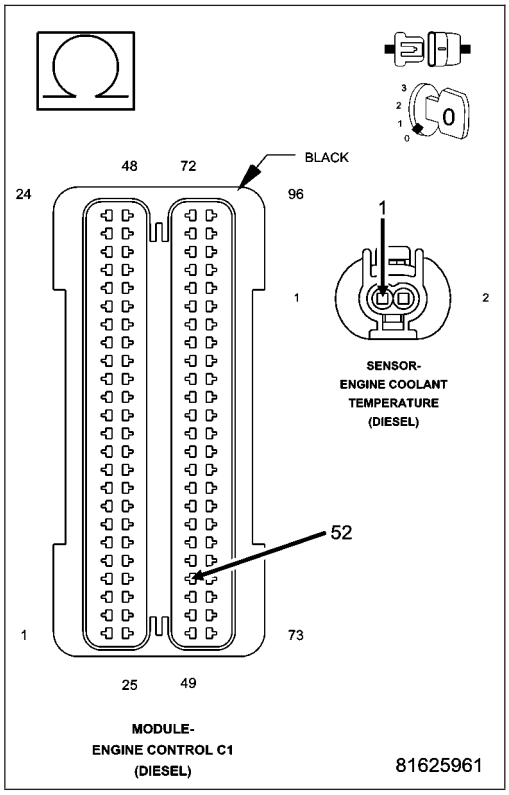

8. ENGINE COOLANT TEMPERATURE SENSOR

Turn the ignition off.

Connect the Engine Control Module (ECM) connector.

Connect a jumper wire between the (K222) Engine Coolant Temperature Sensor Ground circuit and the (K2) Engine Coolant Temperature Sensor Signal circuit in the Engine Coolant Temperature Sensor connector.

Turn the ignition on.

With the scan tool, Clear DTCs.

With the scan tool, select View DTCs.

NOTE: The scan tool should display an Engine Coolant Temperature Sensor low voltage or short to ground DTC with the jumper wire in place.

Turn the ignition off.

Remove the jumper wire.

Turn the ignition on.

With the scan tool, Clear DTCs.

With the scan tool, select View DTCs.

NOTE: The scan tool should display an Engine Coolant Temperature Sensor high voltage or open circuit DTC with the Engine Coolant Temperature Sensor connector disconnected.

Does the scan tool display the DTC(s) as described above?

Yes >> Replace the Engine Coolant Temperature Sensor.
Perform the ECM Verification Test Ver. 1. (Refer to 9 - ENGINE - DIAGNOSIS AND TESTING)

No >> Go to 9

9. ENGINE CONTROL MODULE (ECM)

Using the wiring diagram/schematic as a guide, inspect the wiring and connectors between the Engine Coolant Temperature Sensor and the Engine Control Module (ECM).

Look for any chafed, pierced, pinched, or partially broken wires.

Look for broken, bent, pushed out or corroded terminals.

Monitor the scan tool data relative to this circuit and wiggle test the wiring and connectors.

Look for the data to change or for the DTC to reset during the wiggle test.

Refer to any Technical Service Bulletins that may apply.

Were any problems found?

Yes >> Repair as necessary.
Perform the ECM Verification Test Ver. 1. (Refer to 9 - ENGINE - DIAGNOSIS AND TESTING)

No >> Replace the Engine Control Module (ECM) in accordance with the Service Information.
Perform the ECM Verification Test Ver. 1. (Refer to 9 - ENGINE - DIAGNOSIS AND TESTING)

P0117-ENGINE COOLANT TEMPERATURE SENSOR CIRCUIT LOW

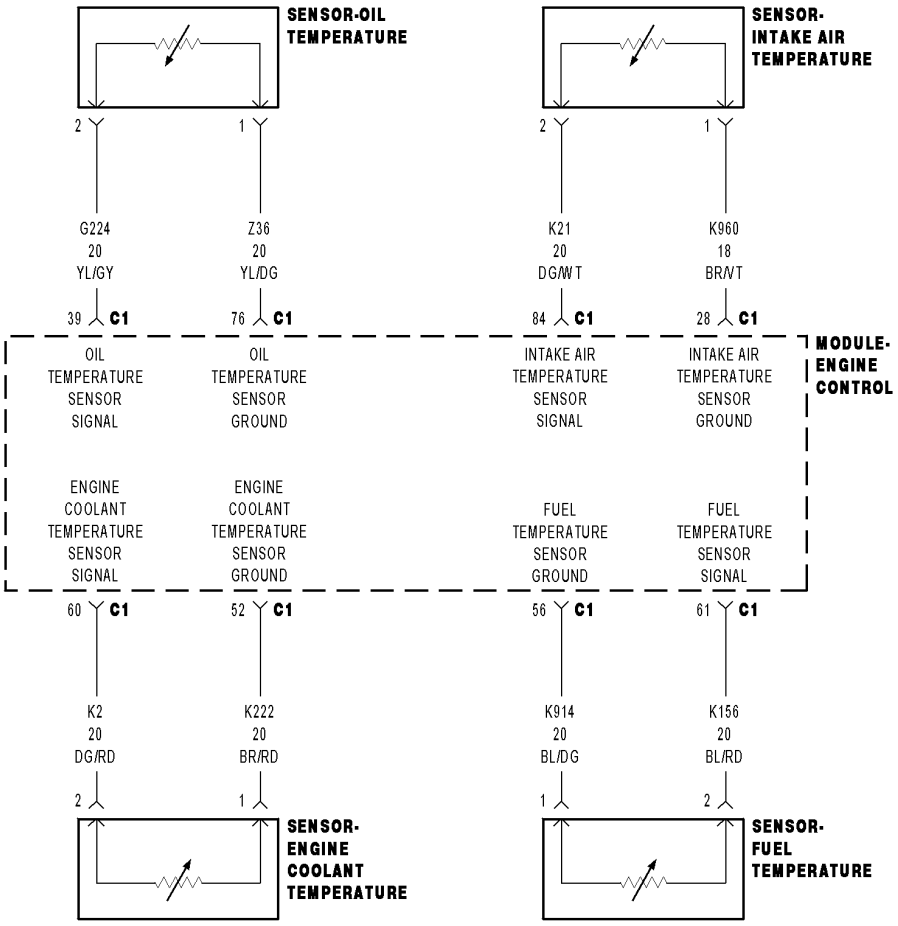

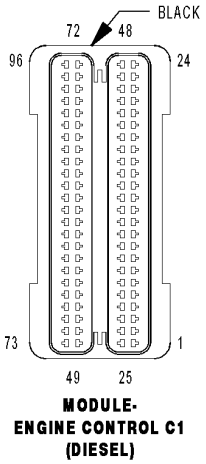

MODULE-ENGINE CONTROL C1 (DIESEL)

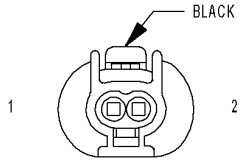

SENSOR-INTAKE AIR TEMPERATURE (DIESEL)

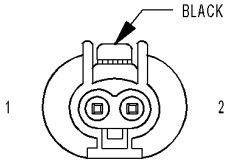

SENSOR-OIL TEMPERATURE (DIESEL)

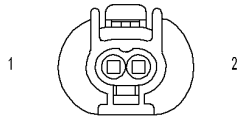

SENSOR-FUEL TEMPERATURE (DIESEL)

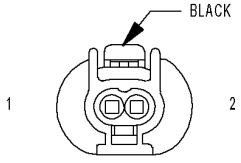

SENSOR-ENGINE COOLANT TEMPERATURE (DIESEL)

816B7486

For a complete wiring diagram **Refer to Section 8W**

- **When Monitored:**
  With the ignition on.
- **Set Condition:**
  The (K2) Engine Coolant Temperature Sensor Signal circuit voltage is below 0.18 volt for 0.5 second.

Possible Causes
INTERMITTENT DTC
(K2) ENGINE COOLANT TEMPERATURE SENSOR SIGNAL CIRCUIT SHORTED TO GROUND
(K2) ENGINE COOLANT TEMPERATURE SENSOR SIGNAL CIRCUIT OPEN OR HIGH RESISTANCE
(K222) ENGINE COOLANT TEMPERATURE SENSOR GROUND CIRCUIT OPEN OR HIGH RESISTANCE
ENGINE COOLANT TEMPERATURE SENSOR
ENGINE CONTROL MODULE (ECM)

Always perform the Pre-Diagnostic Troubleshooting procedure before proceeding. (Refer to 9 - ENGINE - DIAGNOSIS AND TESTING)

Diagnostic Test

1. DTC IS ACTIVE

Ignition on, engine not running.
With the scan tool, Clear DTCs in the Engine Control Module (ECM).
Monitor the scan tool for at least two minutes.
Cycle the ignition key off and on several times, leaving the ignition on for at least 10 seconds at a time.
Start the engine.
Allow the engine to reach normal operating temperature.
With the scan tool, select View DTCs.

Is the status Active for this DTC?

Yes >> Go To 2

No >> Refer to the *CHECKING FOR AN INTERMITTENT DTC Diagnostic Procedure. (Refer to 9 - ENGINE - DIAGNOSIS AND TESTING)

2. (K2) ENGINE COOLANT TEMPERATURE SENSOR SIGNAL CIRCUIT SHORTED TO GROUND

Turn the ignition off.
Disconnect the Engine Coolant Temperature Sensor connector.
Disconnect the Engine Control Module (ECM) connector.
Measure the resistance between ground and the (K2) Engine Coolant Temperature Sensor Signal circuit in the Engine Coolant Temperature Sensor connector.

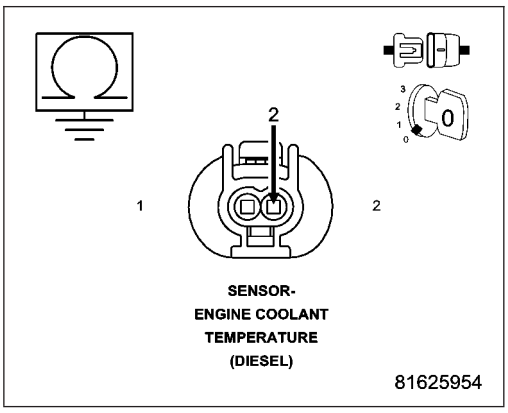

Is the resistance above 1000.0 ohms?

Yes >> Go to 3

No >> Repair the (K2) Engine Coolant Temperature Sensor Signal circuit for a short to ground.
Perform the ECM Verification Test Ver. 1. (Refer to 9 - ENGINE - DIAGNOSIS AND TESTING)

3. (K2) ENGINE COOLANT TEMPERATURE SENSOR SIGNAL CIRCUIT SHORTED TO (K222) ENGINE COOLANT TEMPERATURE SENSOR GROUND CIRCUIT

Measure the resistance between the (K2) Engine Coolant Temperature Sensor Signal circuit and the (K222) Engine Coolant Temperature Sensor Ground circuit in the Engine Coolant Temperature Sensor connector.

Is the resistance above 1000.0 ohms?

Yes >> Go to 4

No >> Repair the (K2) Engine Coolant Temperature Sensor Signal circuit for a short to the (K222) Engine Coolant Temperature Sensor Ground circuit.

Perform the ECM Verification Test Ver. 1. (Refer to 9 - ENGINE - DIAGNOSIS AND TESTING)

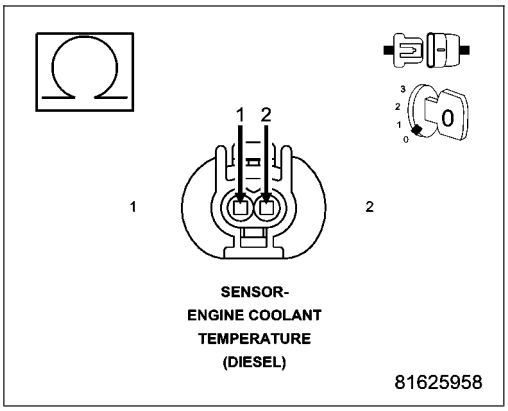

4. (K2) ENGINE COOLANT TEMPERATURE SENSOR SIGNAL OPEN OR HIGH RESISTANCE

Measure the resistance of the (K2) Engine Coolant Temperature Sensor Signal circuit between the Engine Coolant Temperature Sensor connector and the Engine Control Module (ECM) connector.

Is the resistance below 10.0 ohms?

Yes >> Go to 5

No >> Repair the (K2) Engine Coolant Temperature Sensor Signal circuit for an open circuit or high resistance.

Perform the ECM Verification Test Ver. 1. (Refer to 9 - ENGINE - DIAGNOSIS AND TESTING)

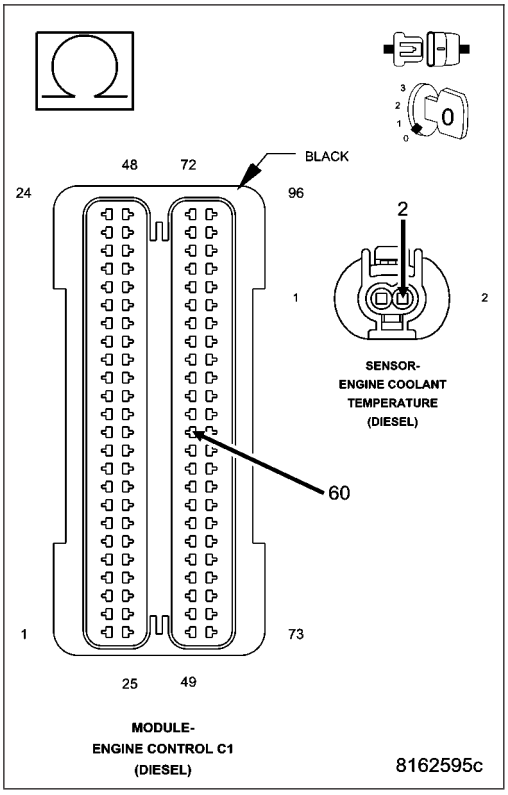

5. ENGINE COOLANT TEMPERATURE SENSOR

Turn the ignition off.

Connect the Engine Control Module (ECM) connector.

Turn the ignition on.

With the scan tool, Clear DTCs.

With the scan tool, select View DTCs.

NOTE: The scan tool should display an Engine Coolant Temperature Sensor high voltage or open circuit DTC with the connector disconnected.

Does the scan tool display the DTC(s) as described above?

Yes >> Replace the Engine Coolant Temperature Sensor in accordance with the Service Information.
Perform the ECM Verification Test Ver. 1. (Refer to 9 - ENGINE - DIAGNOSIS AND TESTING)

No >> Go to 6

6. ENGINE CONTROL MODULE (ECM)

Using the wiring diagram/schematic as a guide, inspect the wiring and connectors between the Engine Coolant Temperature Sensor and the Engine Control Module (ECM).

Look for any chafed, pierced, pinched, or partially broken wires.

Look for broken, bent, pushed out or corroded terminals.

Monitor the scan tool data relative to this circuit and wiggle test the wiring and connectors.

Look for the data to change or for the DTC to reset during the wiggle test.

Refer to any Technical Service Bulletins that may apply.

Were any problems found?

Yes >> Repair as necessary.
Perform the ECM Verification Test Ver. 1. (Refer to 9 - ENGINE - DIAGNOSIS AND TESTING)

No >> Replace the Engine Control Module (ECM) in accordance with the Service Information.
Perform the ECM Verification Test Ver. 1. (Refer to 9 - ENGINE - DIAGNOSIS AND TESTING)

P0118-ENGINE COOLANT TEMPERATURE SENSOR CIRCUIT HIGH

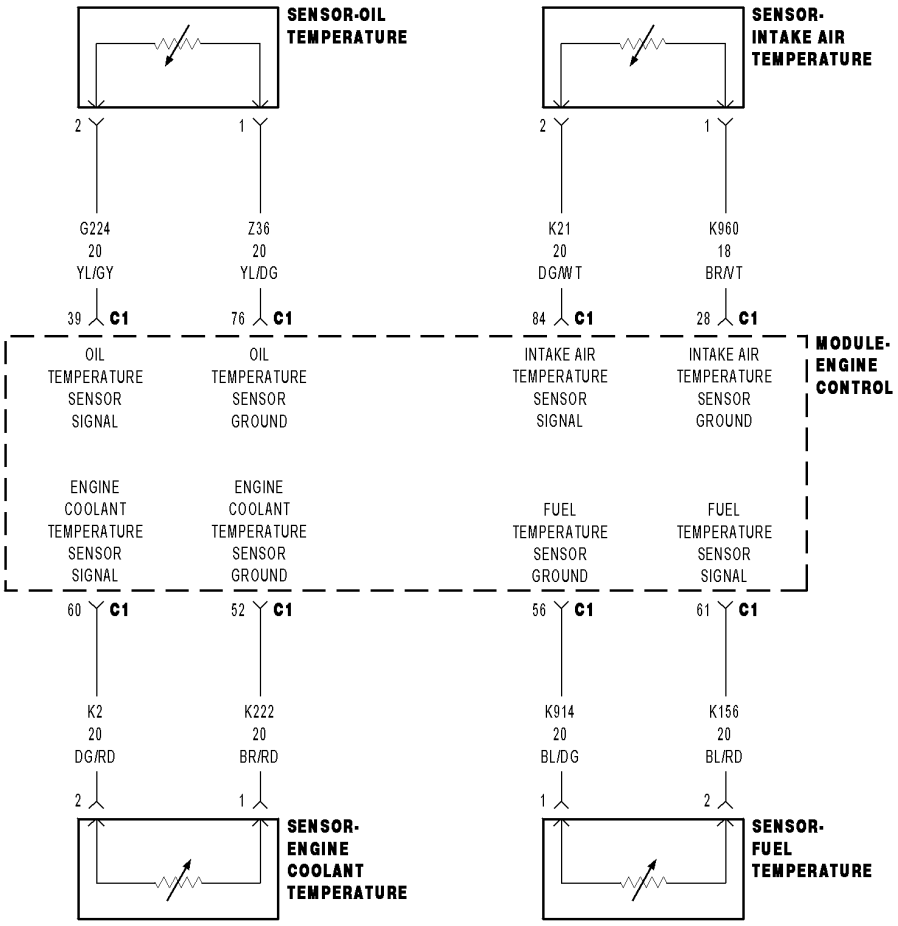

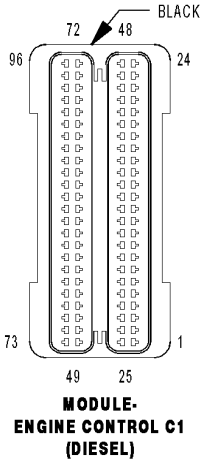

MODULE-ENGINE CONTROL C1 (DIESEL)

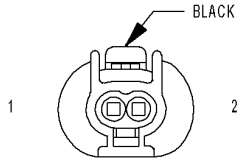

SENSOR-INTAKE AIR TEMPERATURE (DIESEL)

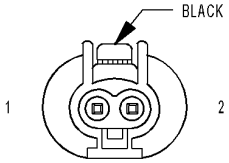

SENSOR-OIL TEMPERATURE (DIESEL)

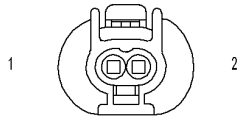

SENSOR-FUEL TEMPERATURE (DIESEL)

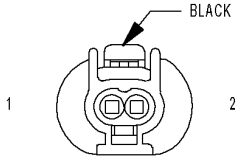

SENSOR-ENGINE COOLANT TEMPERATURE (DIESEL)

816B7486

For a complete wiring diagram **Refer to Section 8W**

- **When Monitored:**
  With the ignition on.
- **Set Condition:**
  The (K2) Engine Coolant Temperature Sensor Signal circuit voltage is above 4.97 volts for 0.5 second.

Possible Causes
INTERMITTENT DTC
(K2) ENGINE COOLANT TEMPERATURE SENSOR SIGNAL CIRCUIT SHORTED TO VOLTAGE
(K222) ENGINE COOLANT TEMPERATURE SENSOR GROUND CIRCUIT SHORTED TO VOLTAGE
(K2) ENGINE COOLANT TEMPERATURE SENSOR SIGNAL CIRCUIT OPEN OR HIGH RESISTANCE
(K222) ENGINE COOLANT TEMPERATURE SENSOR GROUND CIRCUIT OPEN OR HIGH RESISTANCE
ENGINE COOLANT TEMPERATURE SENSOR
ENGINE CONTROL MODULE (ECM)

Always perform the Pre-Diagnostic Troubleshooting procedure before proceeding. (Refer to 9 - ENGINE - DIAGNOSIS AND TESTING)

Diagnostic Test

1. DTC IS ACTIVE

Ignition on, engine not running.
With the scan tool, Clear DTCs in the Engine Control Module (ECM).
Monitor the scan tool for at least two minutes.
Cycle the ignition key off and on several times, leaving the ignition on for at least 10 seconds at a time.
Start the engine.
Allow the engine to reach normal operating temperature.
With the scan tool, select View DTCs.

Is the status Active for this DTC?

Yes >> Go To 2

No >> Refer to the *CHECKING FOR AN INTERMITTENT DTC Diagnostic Procedure. (Refer to 9 - ENGINE - DIAGNOSIS AND TESTING)

2. (K2) ENGINE COOLANT TEMPERATURE SENSOR SIGNAL CIRCUIT SHORTED TO VOLTAGE

Turn the ignition off.
Disconnect the Engine Coolant Temperature Sensor connector.
Disconnect the Engine Control Module (ECM) connector.
Remove the ASD Relay from the IPM.
Connect a jumper wire between cavity 30 and cavity 87 of the ASD Relay Connector.
Turn the ignition on.
Measure the voltage of the (K2) Engine Coolant Temperature Sensor Signal circuit in the Engine Coolant Temperature Sensor connector.

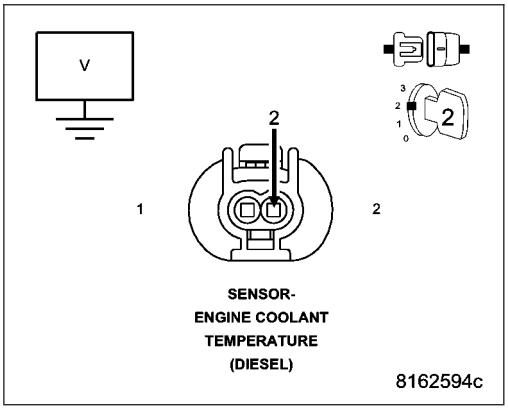

Is there any voltage present?

Yes >> Repair the (K2) Engine Coolant Temperature Sensor Signal circuit for a short to voltage.
Perform the ECM Verification Test Ver. 1. (Refer to 9 - ENGINE - DIAGNOSIS AND TESTING)

No >> Go to 3

3. (K222) ENGINE COOLANT TEMPERATURE SENSOR GROUND CIRCUIT SHORTED TO VOLTAGE

NOTE: The jumper wire should still be in place.
Measure the voltage of the (K222) Engine Coolant Temperature Sensor Ground circuit in the Engine Coolant Temperature Sensor connector.

Is there any voltage present?

Yes >> Repair the (K222) Engine Coolant Temperature Sensor Ground circuit for a short to voltage.
Perform the ECM Verification Test Ver. 1. (Refer to 9 - ENGINE - DIAGNOSIS AND TESTING)

No >> Go to 4

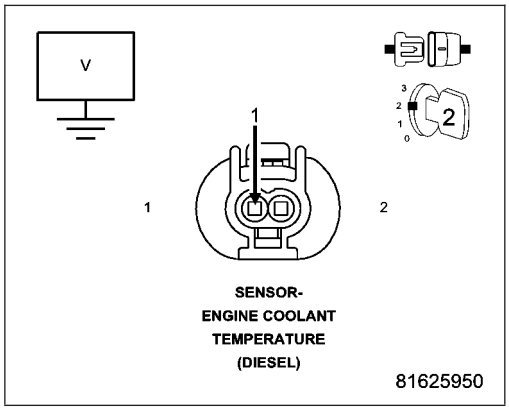

4. ENGINE COOLANT TEMPERATURE SENSOR

Turn the ignition off.
Connect the Engine Control Module (ECM) connector.
Connect a jumper wire between the (K222) Engine Coolant Temperature Sensor Ground circuit and the (K2) Engine Coolant Temperature Sensor Signal circuit in the Engine Coolant Temperature Sensor connector.
Turn the ignition on.
With the scan tool, Clear DTCs.
With the scan tool, select View DTCs.

NOTE: The scan tool should display an Engine Coolant Temperature Sensor low voltage or short to ground DTC with the jumper wire in place.

Does the scan tool display the DTC(s) as described above?

Yes >> Replace the Engine Coolant Temperature Sensor in accordance with the Service Information.
Perform the ECM Verification Test Ver. 1. (Refer to 9 - ENGINE - DIAGNOSIS AND TESTING)

No >> Go to 5

5. (K2) ENGINE COOLANT TEMPERATURE SENSOR SIGNAL OPEN OR HIGH RESISTANCE

Turn the ignition off.

Disconnect the Engine Control Module (ECM) connector.

Measure the resistance of the (K2) Engine Coolant Temperature Sensor Signal circuit between the Engine Coolant Temperature Sensor connector and the Engine Control Module (ECM) connector.

Is the resistance below 10.0 ohms?

Yes >> Go to 6

No >> Repair the (K2) Engine Coolant Temperature Sensor Signal circuit for an open circuit or high resistance.

Perform the ECM Verification Test Ver. 1. (Refer to 9 - ENGINE - DIAGNOSIS AND TESTING)

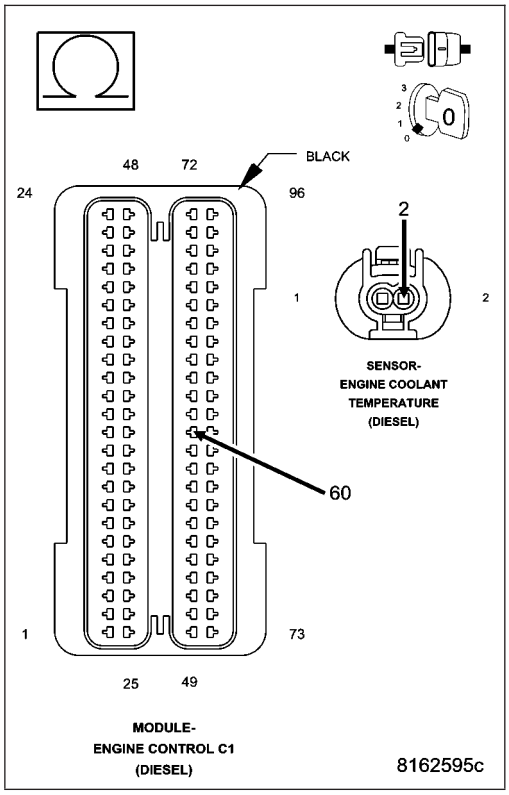

6. (K222) ENGINE COOLANT TEMPERATURE SENSOR GROUND CIRCUIT OPEN OR HIGH RESISTANCE

Measure the resistance of the (K222) Engine Coolant Temperature Sensor Ground circuit between the Engine Coolant Temperature Sensor connector and the Engine Control Module (ECM) connector.

Is the resistance below 10.0 ohms?

Yes >> Go to 7

No >> Repair the (K222) Engine Coolant Temperature Sensor Ground circuit for an open circuit or high resistance.

Perform the ECM Verification Test Ver. 1. (Refer to 9 - ENGINE - DIAGNOSIS AND TESTING)

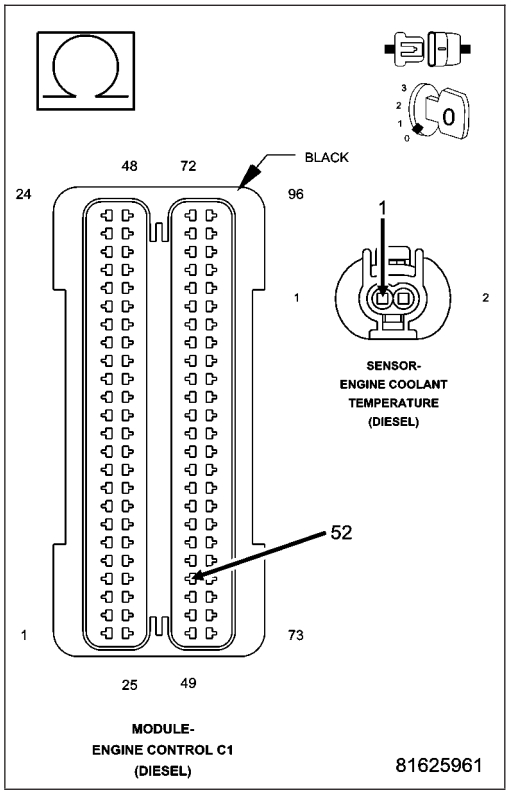

7. ENGINE CONTROL MODULE (ECM)

Using the wiring diagram/schematic as a guide, inspect the wiring and connectors between the Engine Coolant Temperature Sensor and the Engine Control Module (ECM).

Look for any chafed, pierced, pinched, or partially broken wires.

Look for broken, bent, pushed out or corroded terminals.

Monitor the scan tool data relative to this circuit and wiggle test the wiring and connectors.

Look for the data to change or for the DTC to reset during the wiggle test.

Refer to any Technical Service Bulletins that may apply.

Were any problems found?

Yes >> Repair as necessary.
Perform the ECM Verification Test Ver. 1. (Refer to 9 - ENGINE - DIAGNOSIS AND TESTING)

No >> Replace the Engine Control Module (ECM) in accordance with the Service Information.
Perform the ECM Verification Test Ver. 1. (Refer to 9 - ENGINE - DIAGNOSIS AND TESTING)

P012C-TURBO INLET AIR PRESSURE SENSOR CIRCUIT LOW

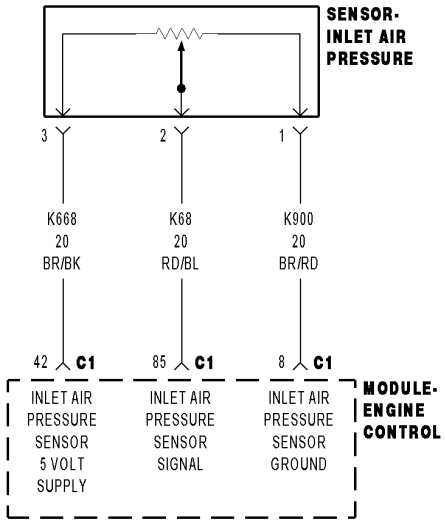

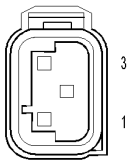

SENSOR-
INLET AIR
PRESSURE
(DIESEL)

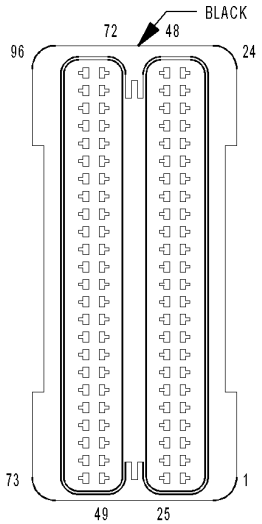

MODULE-
ENGINE CONTROL C1
(DIESEL)

816B74AF

For a complete wiring diagram **Refer to Section 8W**

- **When Monitored:**
  With the ignition on.
- **Set Condition:**
  The (K68) Inlet Air Pressure Sensor Signal circuit voltage is below 0.35 volt for 2.0 seconds.

Possible Causes
INTERMITTENT DTC
(K668) INLET AIR PRESSURE SENSOR 5 VOLT SUPPLY CIRCUIT SHORTED TO GROUND
(K68) INLET AIR PRESSURE SENSOR SIGNAL CIRCUIT SHORTED TO GROUND
(K668) INLET AIR PRESSURE SENSOR 5 VOLT SUPPLY CIRCUIT SHORTED TO (K900) INLET AIR PRESSURE SENSOR GROUND
(K68) INLET AIR PRESSURE SENSOR SIGNAL CIRCUIT SHORTED TO (K900) INLET AIR PRESSURE SENSOR GROUND
(K668) INLET AIR PRESSURE SENSOR 5 VOLT SUPPLY CIRCUIT OPEN OR HIGH RESISTANCE
(K68) INLET AIR PRESSURE SENSOR SIGNAL CIRCUIT OPEN OR HIGH RESISTANCE
INLET AIR PRESSURE SENSOR
ENGINE CONTROL MODULE (ECM)

Always perform the Pre-Diagnostic Troubleshooting procedure before proceeding. (Refer to 9 - ENGINE - DIAGNOSIS AND TESTING)

Diagnostic Test

1. DTC IS ACTIVE

Ignition on, engine not running.
With the scan tool, Clear DTCs in the Engine Control Module (ECM).
Monitor the scan tool for at least two minutes.
Cycle the ignition key off and on several times, leaving the ignition on for at least 10 seconds at a time.
Start the engine.
Allow the engine to reach normal operating temperature.
With the scan tool, select View DTCs.

Is the status Active for this DTC?

Yes >> Go To 2

No >> Refer to the *CHECKING FOR AN INTERMITTENT DTC Diagnostic Procedure. (Refer to 9 - ENGINE - DIAGNOSIS AND TESTING)

2. (K668) INLET AIR PRESSURE SENSOR 5 VOLT SUPPLY CIRCUIT VOLTAGE

Turn the ignition off.
Disconnect the Inlet Air Pressure Sensor connector.
Turn the ignition on.
Measure the voltage of the (K668) Inlet Air Pressure Sensor 5 Volt Supply circuit in the Inlet Air Pressure Sensor connector.

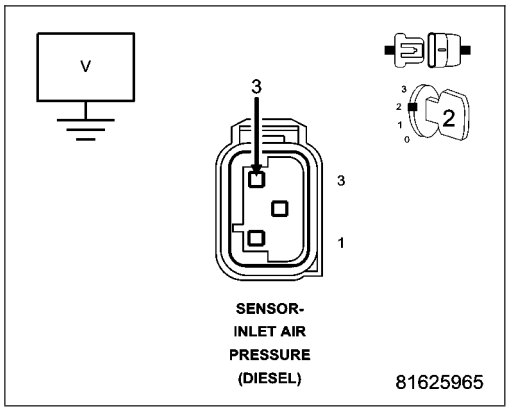

Is the voltage above 4.5 volts?

Yes >> Go to 6

No >> Go to 3

3. (K668) INLET AIR PRESSURE SENSOR 5 VOLT SUPPLY CIRCUIT SHORTED TO GROUND

Turn the ignition on.

Disconnect the Engine Control Module (ECM) connector.

Measure the resistance between ground and the (K668) Inlet Air Pressure Sensor 5 Volt Supply circuit in the Inlet Air Pressure Sensor connector.

Is the resistance above 1000.0 ohms?

Yes >> Go to 4

No >> Repair the (K668) Inlet Air Pressure Sensor 5 Volt Supply circuit for a short to ground.

Perform the ECM Verification Test Ver. 1. (Refer to 9 - ENGINE - DIAGNOSIS AND TESTING)

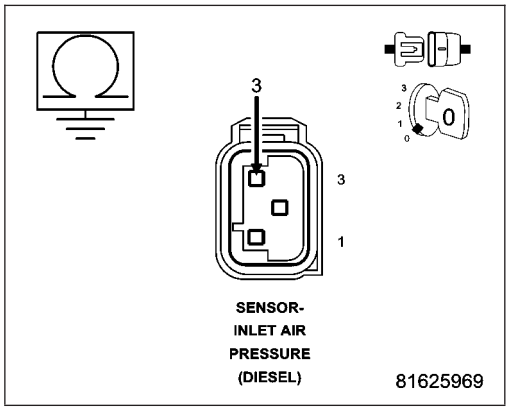

4. (K668) INLET AIR PRESSURE SENSOR 5 VOLT SUPPLY CIRCUIT SHORTED TO (K900) INLET AIR PRESSURE SENSOR GROUND CIRCUIT

Measure the resistance between the (K668) Inlet Air Pressure Sensor 5 Volt Supply circuit and the (K900) Inlet Air Pressure Sensor Ground circuit in the Inlet Air Pressure Sensor connector.

Is the resistance above 1000.0 ohms?

Yes >> Go to 5

No >> Repair the (K668) Inlet Air Pressure Sensor 5 Volt Supply circuit for a short to the (K900) Inlet Air Pressure Sensor Ground circuit.

Perform the ECM Verification Test Ver. 1. (Refer to 9 - ENGINE - DIAGNOSIS AND TESTING)

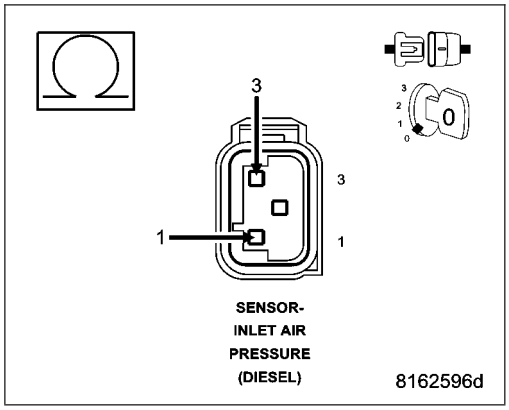

5. (K668) INLET AIR PRESSURE SENSOR 5 VOLT SUPPLY CIRCUIT OPEN OR HIGH RESISTANCE

Measure the resistance of the (K668) Inlet Air Pressure Sensor 5 Volt Supply circuit between the Inlet Air Pressure Sensor connector and the Engine Control Module (ECM) connector.

Is the resistance below 10.0 ohms?

Yes >> Go to 10

No >> Repair the (K668) Inlet Air Pressure Sensor 5 Volt Supply circuit for an open circuit or high resistance.
Perform the ECM Verification Test Ver. 1. (Refer to 9 - ENGINE - DIAGNOSIS AND TESTING)

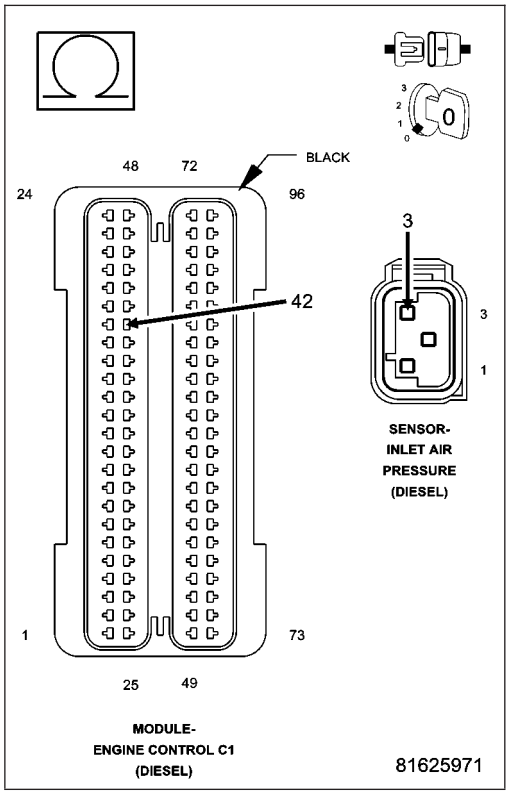

6. INLET AIR PRESSURE SENSOR

Turn the ignition on.

With the scan tool, Clear DTCs.

With the scan tool, select View DTCs.

NOTE: The scan tool should display an Inlet Air Pressure Sensor high voltage or open DTC with the Inlet Air Pressure Sensor connector disconnected.

Does the scan tool display the DTC(s) as described above?

Yes >> Replace the Inlet Air Pressure Sensor in accordance with the Service Information.
Perform the ECM Verification Test Ver. 1. (Refer to 9 - ENGINE - DIAGNOSIS AND TESTING)

No >> Go to 7

7. (K68) INLET AIR PRESSURE SENSOR SIGNAL CIRCUIT SHORTED TO GROUND

Turn the ignition off.

Disconnect the Engine Control Module (ECM) connector.

Measure the resistance between ground and the (K68) Inlet Air Pressure Sensor Signal circuit in the Inlet Air Pressure Sensor connector.

Is the resistance above 1000.0 ohms?

Yes >> Go to 8

No >> Repair the (K68) Inlet Air Pressure Sensor Signal circuit for a short to ground.
Perform the ECM Verification Test Ver. 1. (Refer to 9 - ENGINE - DIAGNOSIS AND TESTING)

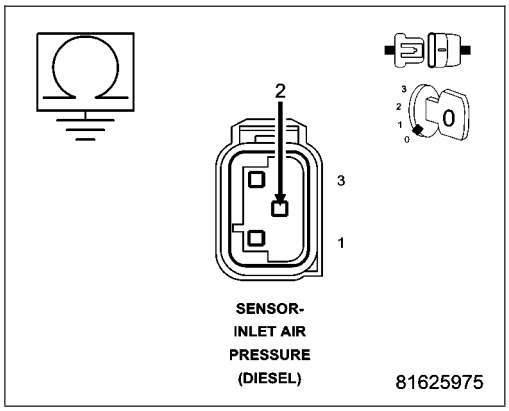

8. (K68) INLET AIR PRESSURE SENSOR SIGNAL CIRCUIT SHORTED TO (K900) INLET AIR PRESSURE SENSOR GROUND CIRCUIT

Measure the resistance between the (K68) Inlet Air Pressure Sensor Signal circuit and the (K900) Inlet Air Pressure Sensor Ground circuit in the Inlet Air Pressure Sensor connector.

Is the resistance above 1000.0 ohms?

Yes >> Go to 9

No >> Repair the (K68) Inlet Air Pressure Sensor Signal circuit for a short to the (K900) Inlet Air Pressure Sensor Ground circuit.

Perform the ECM Verification Test Ver. 1. (Refer to 9 - ENGINE - DIAGNOSIS AND TESTING)

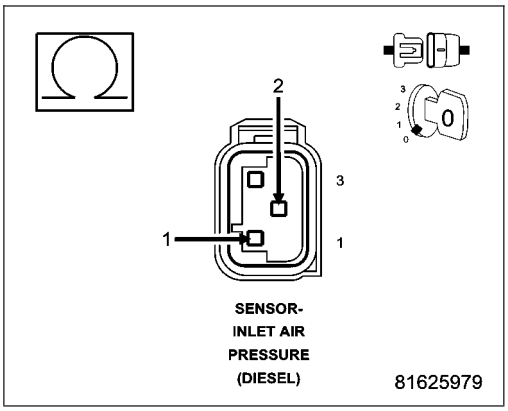

9. (K68) INLET AIR PRESSURE SENSOR SIGNAL CIRCUIT OPEN OR HIGH RESISTANCE

Measure the resistance of the (K68) Inlet Air Pressure Sensor Signal circuit between the Inlet Air Pressure Sensor connector and the Engine Control Module (ECM) connector.

Is the resistance below 5.0 ohms?

Yes >> Go to 10

No >> Repair the (K68) Inlet Air Pressure Sensor Signal circuit for an open circuit or high resistance.

Perform the ECM Verification Test Ver. 1. (Refer to 9 - ENGINE - DIAGNOSIS AND TESTING)

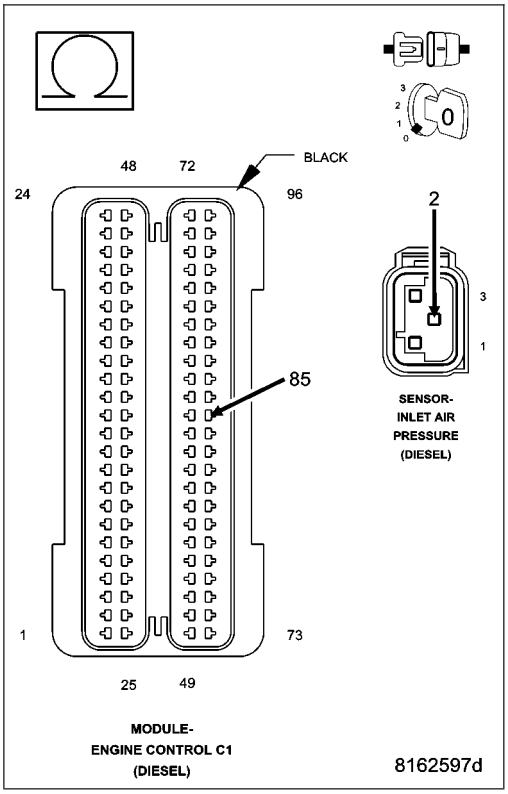

10. ENGINE CONTROL MODULE (ECM)

Using the wiring diagram/schematic as a guide, inspect the wiring and connectors between the Inlet Air Pressure Sensor and the Engine Control Module (ECM).

Look for any chafed, pierced, pinched, or partially broken wires.

Look for broken, bent, pushed out or corroded terminals.

Monitor the scan tool data relative to this circuit and wiggle test the wiring and connectors.

Look for the data to change or for the DTC to reset during the wiggle test.

Refer to any Technical Service Bulletins that may apply.

Were any problems found?

Yes >> Repair as necessary.
Perform the ECM Verification Test Ver. 1. (Refer to 9 - ENGINE - DIAGNOSIS AND TESTING)

No >> Replace the Engine Control Module (ECM) in accordance with the Service Information.
Perform the ECM Verification Test Ver. 1. (Refer to 9 - ENGINE - DIAGNOSIS AND TESTING)

P012D-TURBO INLET AIR PRESSURE SENSOR CIRCUIT HIGH

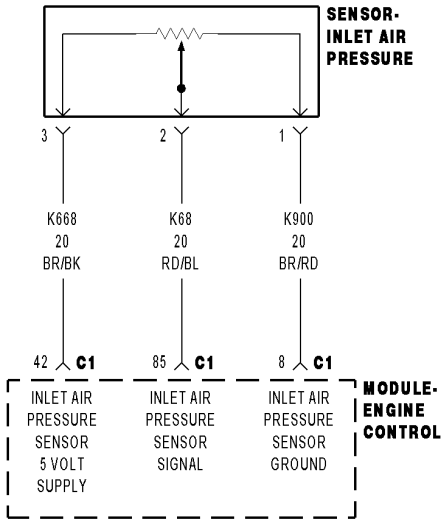

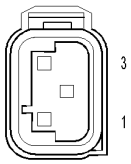

SENSOR-
INLET AIR
PRESSURE
(DIESEL)

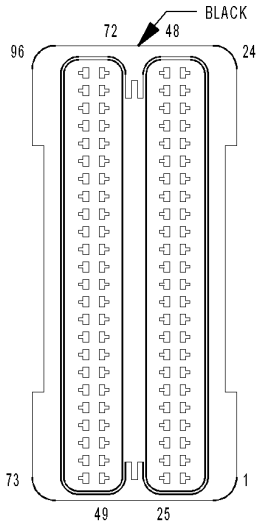

MODULE-
ENGINE CONTROL C1
(DIESEL)

816B74AF

For a complete wiring diagram **Refer to Section 8W**

- **When Monitored:**
  With the ignition on.
- **Set Condition:**
  The (K68) Inlet Air Pressure Sensor Signal circuit voltage is above 4.41 volts for 2.0 seconds.

Possible Causes
INTERMITTENT DTC
(K668) INLET AIR PRESSURE SENSOR 5 VOLT SUPPLY CIRCUIT SHORTED TO VOLTAGE
(K68) INLET AIR PRESSURE SENSOR SIGNAL CIRCUIT SHORTED TO VOLTAGE
(K900) INLET AIR PRESSURE SENSOR GROUND CIRCUIT SHORTED TO VOLTAGE
(K68) INLET AIR PRESSURE SENSOR SIGNAL CIRCUIT OPEN OR HIGH RESISTANCE
(K900) INLET AIR PRESSURE SENSOR GROUND CIRCUIT OPEN OR HIGH RESISTANCE
INLET AIR PRESSURE SENSOR
ENGINE CONTROL MODULE (ECM)

Always perform the Pre-Diagnostic Troubleshooting procedure before proceeding. (Refer to 9 - ENGINE - DIAGNOSIS AND TESTING)

Diagnostic Test

1. DTC IS ACTIVE

Ignition on, engine not running.
With the scan tool, Clear DTCs in the Engine Control Module (ECM).
Monitor the scan tool for at least two minutes.
Cycle the ignition key off and on several times, leaving the ignition on for at least 10 seconds at a time.
Start the engine.
Allow the engine to reach normal operating temperature.
With the scan tool, select View DTCs.

Is the status Active for this DTC?

Yes >> Go To 2

No >> Refer to the *CHECKING FOR AN INTERMITTENT DTC Diagnostic Procedure. (Refer to 9 - ENGINE - DIAGNOSIS AND TESTING)

2. (K668) INLET AIR PRESSURE SENSOR 5 VOLT SUPPLY CIRCUIT SHORTED TO VOLTAGE

Turn the ignition off.
Disconnect the Inlet Air Pressure Sensor connector.
Disconnect the Engine Control Module (ECM) connector.
Remove the ASD Relay from the IPM.
Connect a jumper wire between cavity 30 and cavity 87 of the ASD Relay Connector.
Turn the ignition on.
Measure the voltage of the (K668) Inlet Air Pressure Sensor 5 Volt Supply circuit in the Inlet Air Pressure Sensor connector.

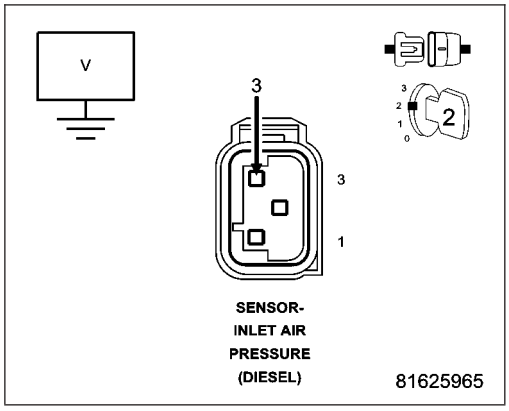

Is there any voltage present?

Yes >> Repair the (K668) Inlet Air Pressure Sensor 5 Volt Supply circuit for a short to voltage.
Perform the ECM Verification Test Ver. 1. (Refer to 9 - ENGINE - DIAGNOSIS AND TESTING)

No >> Go to 3

3. (K68) INLET AIR PRESSURE SENSOR SIGNAL CIRCUIT SHORTED TO VOLTAGE

NOTE: The jumper wire should still be in place.
Measure the voltage of the (K68) Inlet Air Pressure Sensor Signal circuit in the Inlet Air Pressure Sensor connector.

Is there any voltage present?

Yes >> Repair the (K68) Inlet Air Pressure Sensor Signal circuit for a short to voltage.
Perform the ECM Verification Test Ver. 1. (Refer to 9 - ENGINE - DIAGNOSIS AND TESTING)

No >> Go to 4

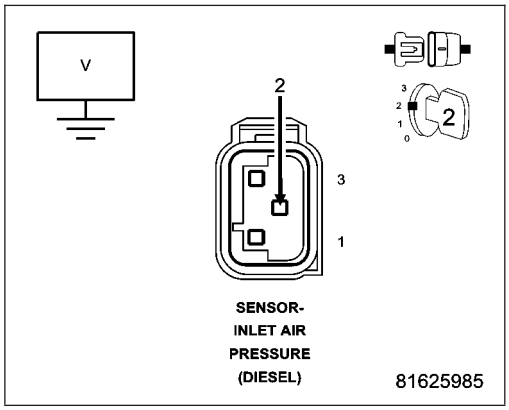

4. (K900) INLET AIR PRESSURE SENSOR GROUND CIRCUIT SHORTED TO VOLTAGE

NOTE: The jumper wire should still be in place.
Measure the voltage of the (K900) Inlet Air Pressure Sensor Ground circuit in the Inlet Air Pressure Sensor connector.

Is there any voltage present?

Yes >> Repair the (K900) Inlet Air Pressure Sensor Ground circuit for a short to voltage.
Perform the ECM Verification Test Ver. 1. (Refer to 9 - ENGINE - DIAGNOSIS AND TESTING)

No >> Go to 5

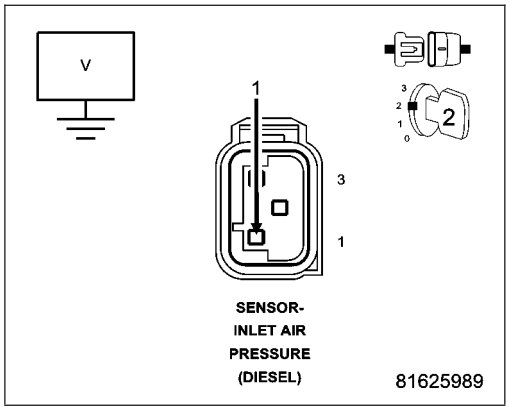

5. INLET AIR PRESSURE SENSOR

Turn the ignition off.
Remove the jumper wire and install the ASD Relay.
Connect the Engine Control Module (ECM) connector.
Connect a jumper wire between the (K900) Inlet Air Pressure Sensor Ground circuit and the (K68) Inlet Air Pressure Sensor Signal circuit in the Inlet Air Pressure Sensor connector.
Turn the ignition on.
With the scan tool, Clear DTCs.
With the scan tool, select View DTCs.

NOTE: The scan tool should display an Inlet Air Pressure Sensor low voltage or short to ground DTC with the jumper wire in place.

Does the scan tool display the DTC(s) as described above?

Yes >> Replace the Inlet Air Pressure Sensor in accordance with the Service Information.
Perform the ECM Verification Test Ver. 1. (Refer to 9 - ENGINE - DIAGNOSIS AND TESTING)

No >> Go to 6

6. (K68) INLET AIR PRESSURE SENSOR SIGNAL OPEN OR HIGH RESISTANCE

Turn the ignition off.

Disconnect the Engine Control Module (ECM) connector.

Measure the resistance of the (K68) Inlet Air Pressure Sensor Signal between the Inlet Air Pressure Sensor connector and the Engine Control Module (ECM) connector.

Is the resistance below 10.0 ohms?

Yes >> Go to 7

No >> Repair the (K68) Inlet Air Pressure Sensor Signal for an open circuit or high resistance.

Perform the ECM Verification Test Ver. 1. (Refer to 9 - ENGINE - DIAGNOSIS AND TESTING)

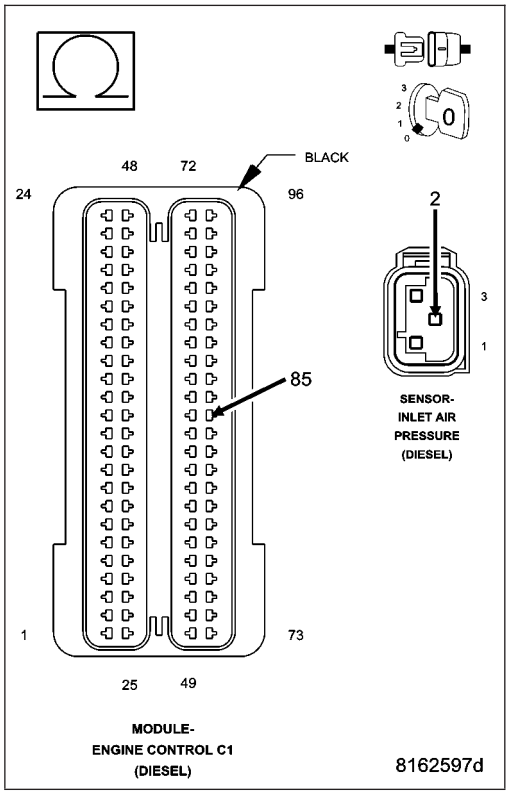

7. (K900) INLET AIR PRESSURE SENSOR GROUND CIRCUIT OPEN OR HIGH RESISTANCE

Measure the resistance of the (K900) Inlet Air Pressure Sensor Ground circuit between the Inlet Air Pressure Sensor connector and the Engine Control Module (ECM) connector.

Is the resistance below 10.0 ohms?

Yes >> Go to 8

No >> Repair the (K900) Inlet Air Pressure Sensor Ground circuit for an open circuit or high resistance.

Perform the ECM Verification Test Ver. 1. (Refer to 9 - ENGINE - DIAGNOSIS AND TESTING)

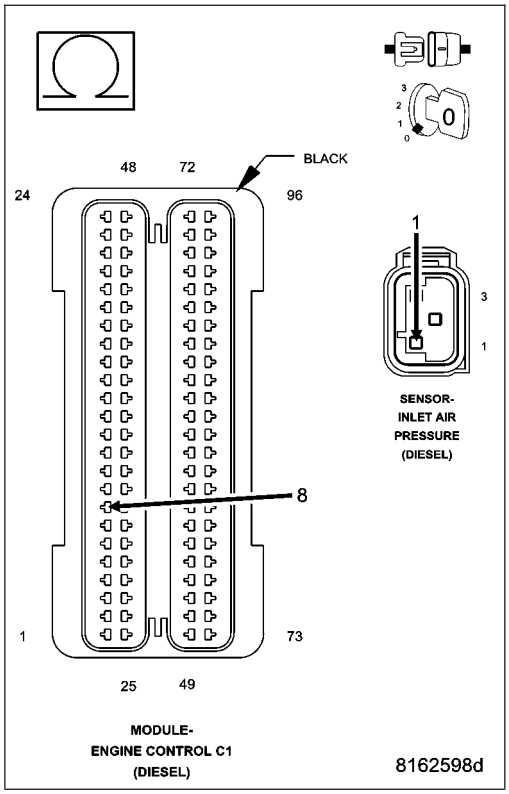

8. ENGINE CONTROL MODULE (ECM)

Using the wiring diagram/schematic as a guide, inspect the wiring and connectors between the Inlet Air Pressure Sensor and the Engine Control Module (ECM).

Look for any chafed, pierced, pinched, or partially broken wires.

Look for broken, bent, pushed out or corroded terminals.

Monitor the scan tool data relative to this circuit and wiggle test the wiring and connectors.

Look for the data to change or for the DTC to reset during the wiggle test.

Refer to any Technical Service Bulletins that may apply.

Were any problems found?

Yes >> Repair as necessary.
Perform the ECM Verification Test Ver. 1. (Refer to 9 - ENGINE - DIAGNOSIS AND TESTING)

No >> Replace the Engine Control Module (ECM) in accordance with the Service Information.
Perform the ECM Verification Test Ver. 1. (Refer to 9 - ENGINE - DIAGNOSIS AND TESTING)

P0130-O2 SENSOR 1/1 CIRCUIT OPEN

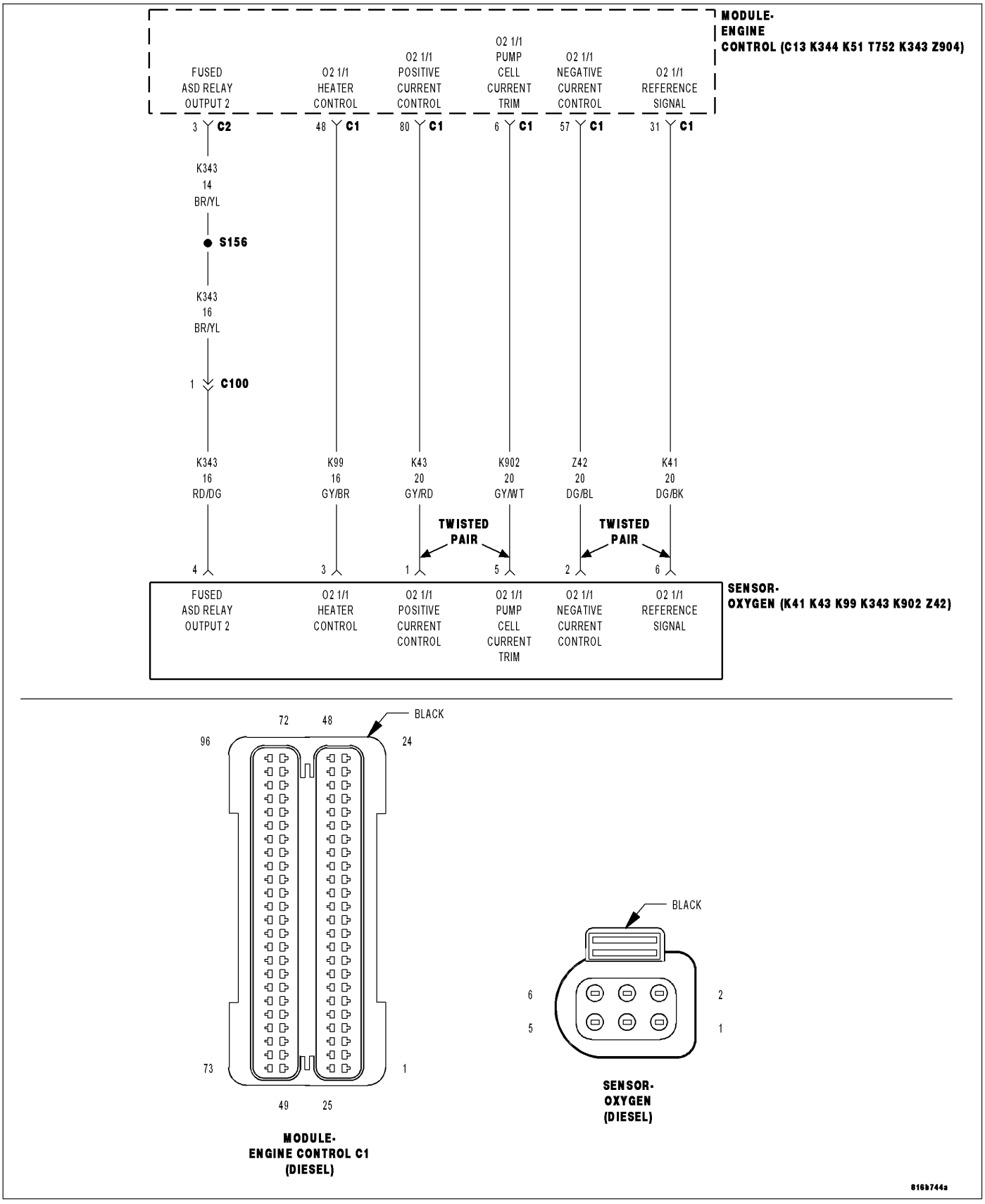

For a complete wiring diagram **Refer to Section 8W**

- **When Monitored:**
  With the ignition on and the O2 1/1 Sensor at operating temperature.
- **Set Condition:**
  The ECM detects an open on the (Z43) O2 1/1 Negative Current Control circuit for 2.0 seconds.

Possible Causes
INTERMITTENT DTC
(Z43) O2 1/1 NEGATIVE CURRENT CONTROL CIRCUIT SHORTED TO VOLTAGE
(Z43) O2 1/1 NEGATIVE CURRENT CONTROL CIRCUIT SHORTED TO THE (K343) FUSED ASD RELAY OUTPUT 2 CIRCUIT
(Z43) O2 1/1 NEGATIVE CURRENT CONTROL CIRCUIT OPEN OR HIGH RESISTANCE
OXYGEN SENSOR
ENGINE CONTROL MODULE (ECM)

Always perform the Pre-Diagnostic Troubleshooting procedure before proceeding. (Refer to 9 - ENGINE - DIAGNOSIS AND TESTING)

Diagnostic Test

1. DTC IS ACTIVE

Ignition on, engine not running.

With the scan tool, Clear DTCs in the Engine Control Module (ECM).

Start the engine.

Allow the engine to reach normal operating temperature.

Monitor the scan tool for at least two minutes.

With the scan tool, select View DTCs.

Is the status Active for this DTC?

Yes >> Go To 2

No >> Refer to the *CHECKING FOR AN INTERMITTENT DTC Diagnostic Procedure. (Refer to 9 - ENGINE - DIAGNOSIS AND TESTING)

2. (Z43) O2 1/1 NEGATIVE CURRENT CONTROL CIRCUIT SHORTED TO VOLTAGE

Turn the ignition off.

Disconnect the Oxygen Sensor connector.

Disconnect the Engine Control Module (ECM) connector.

Remove the ASD Relay from the IPM.

Connect a jumper wire between cavity 30 and cavity 87 of the ASD Relay Connector.

Turn the ignition on.

Measure the voltage of the (Z43) O2 1/1 Negative Current Control circuit in the Oxygen Sensor connector.

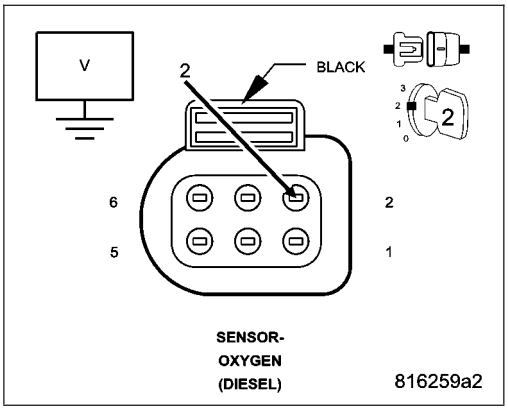

Is there any voltage present?

Yes >> Repair the (Z43) O2 1/1 Negative Current Control circuit for a short to voltage.
Perform the ECM Verification Test Ver. 1. (Refer to 9 - ENGINE - DIAGNOSIS AND TESTING)

No >> Go to 3

3. (Z43) O2 1/1 NEGATIVE CURRENT CONTROL CIRCUIT SHORTED TO THE (K343) FUSED ASD RELAY OUTPUT 2 CIRCUIT

Turn the ignition off.

Measure the resistance between the (Z43) O2 1/1 Negative Current Control circuit and the (K343) Fused ASD Relay Output 2 circuit in the Oxygen Sensor connector.

Is the resistance above 10.0 ohms?

Yes >> Go to 4

No >> Repair the (Z43) O2 1/1 Negative Current Control circuit for a short to the (K343) Fused ASD Relay Output 2 circuit.
Perform the ECM Verification Test Ver. 1. (Refer to 9 - ENGINE - DIAGNOSIS AND TESTING)

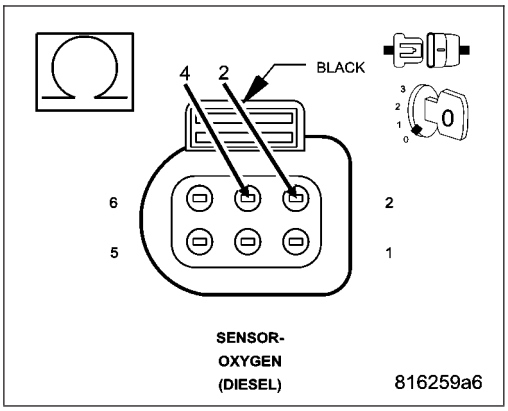

4. (Z43) O2 1/1 NEGATIVE CURRENT CONTROL CIRCUIT OPEN OR HIGH RESISTANCE

Measure the resistance of the (Z43) O2 1/1 Negative Current Control circuit between the Oxygen Sensor connector and the Engine Control Module (ECM) connector.

Is the resistance below 10.0 ohms?

Yes >> Go to 5

No >> Repair the circuit for an open circuit or high resistance.
Perform the ECM Verification Test Ver. 1. (Refer to 9 - ENGINE - DIAGNOSIS AND TESTING)

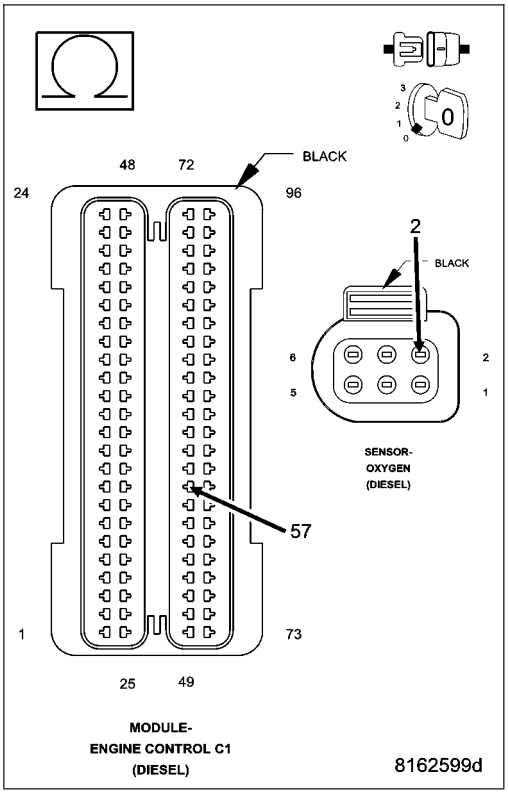

5. OXYGEN SENSOR

Turn the ignition off.
Connect the Engine Control Module (ECM) connector.
Replace the Oxygen Sensor in accordance with the Service Information.
Start the engine.
Allow the engine to reach normal operating temperature.
Monitor the scan tool for at least two minutes.
With the scan tool, select View DTCs.

Is the status Active for this DTC?

Yes >> Go to 6

No >> Test Complete.
Perform the ECM Verification Test Ver. 1. (Refer to 9 - ENGINE - DIAGNOSIS AND TESTING)

6. ENGINE CONTROL MODULE (ECM)

Using the wiring diagram/schematic as a guide, inspect the wiring and connectors between the Oxygen Sensor and the Engine Control Module (ECM).
Look for any chafed, pierced, pinched, or partially broken wires.
Look for broken, bent, pushed out or corroded terminals.
Monitor the scan tool data relative to this circuit and wiggle test the wiring and connectors.
Look for the data to change or for the DTC to reset during the wiggle test.
Refer to any Technical Service Bulletins that may apply.

Were any problems found?

Yes >> Repair as necessary.
Perform the ECM Verification Test Ver. 1. (Refer to 9 - ENGINE - DIAGNOSIS AND TESTING)

No >> Replace the Engine Control Module (ECM) in accordance with the Service Information.
Perform the ECM Verification Test Ver. 1. (Refer to 9 - ENGINE - DIAGNOSIS AND TESTING)

P0131-O2 SENSOR 1/1 CIRCUIT LOW

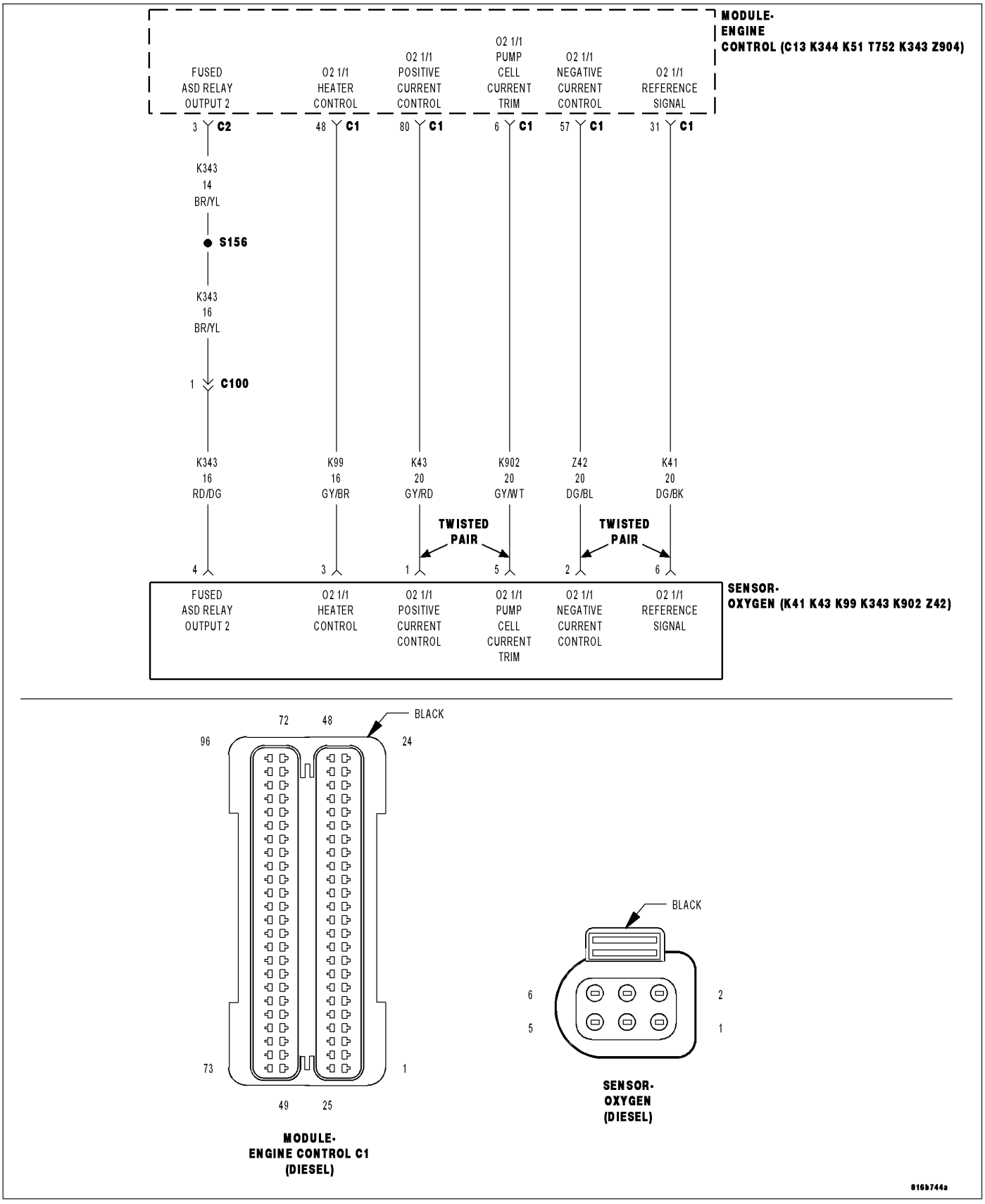

For a complete wiring diagram **Refer to Section 8W**

- **When Monitored:**
  With the ignition on and the O2 1/1 Sensor at operating temperature.
- **Set Condition:**
  The ECM detects a short to ground on the (Z43) O2 1/1 Negative Current Control circuit for 2.0 seconds.

Possible Causes
INTERMITTENT DTC
(Z43) O2 1/1 NEGATIVE CURRENT CONTROL CIRCUIT SHORTED TO GROUND
(Z43) O2 1/1 NEGATIVE CURRENT CONTROL CIRCUIT SHORTED TO THE (K99) O2 1/1 HEATER CONTROL CIRCUIT
(Z43) O2 1/1 NEGATIVE CURRENT CONTROL CIRCUIT OPEN OR HIGH RESISTANCE
OXYGEN SENSOR
ENGINE CONTROL MODULE (ECM)

Always perform the Pre-Diagnostic Troubleshooting procedure before proceeding. (Refer to 9 - ENGINE - DIAGNOSIS AND TESTING)

Diagnostic Test

1. DTC IS ACTIVE

Ignition on, engine not running.

With the scan tool, Clear DTCs in the Engine Control Module (ECM).

Start the engine.

Allow the engine to reach normal operating temperature.

Monitor the scan tool for at least two minutes.

With the scan tool, select View DTCs.

Is the status Active for this DTC?

Yes >> Go To 2

No >> Refer to the *CHECKING FOR AN INTERMITTENT DTC Diagnostic Procedure. (Refer to 9 - ENGINE - DIAGNOSIS AND TESTING)

2. (Z43) O2 1/1 NEGATIVE CURRENT CONTROL CIRCUIT SHORTED TO GROUND

Turn the ignition off.

Disconnect the Oxygen Sensor connector.

Disconnect the Engine Control Module (ECM) connector.

Measure the resistance between ground and the (Z43) O2 1/1 Negative Current Control circuit in the Oxygen Sensor connector.

Is the resistance above 1000.0 ohms?

Yes >> Go to 3

No >> Repair the (Z43) O2 1/1 Negative Current Control circuit for a short to ground.
Perform the ECM Verification Test Ver. 1. (Refer to 9 - ENGINE - DIAGNOSIS AND TESTING)

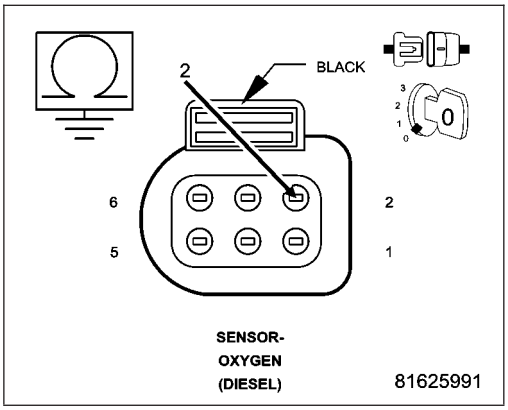

3. (Z43) O2 1/1 NEGATIVE CURRENT CONTROL CIRCUIT SHORTED TO THE (K99) O2 1/1 HEATER CONTROL CIRCUIT

Measure the resistance between the (Z43) O2 1/1 Negative Current Control circuit and the (K99) O2 1/1 Heater Control circuit in the Oxygen Sensor connector.

Is the resistance above 1000.0 ohms?

Yes >> Go to 4

No >> Repair the (Z43) O2 1/1 Negative Current Control circuit for a short to the (K99) O2 1/1 Heater Control circuit.

Perform the ECM Verification Test Ver. 1. (Refer to 9 - ENGINE - DIAGNOSIS AND TESTING)

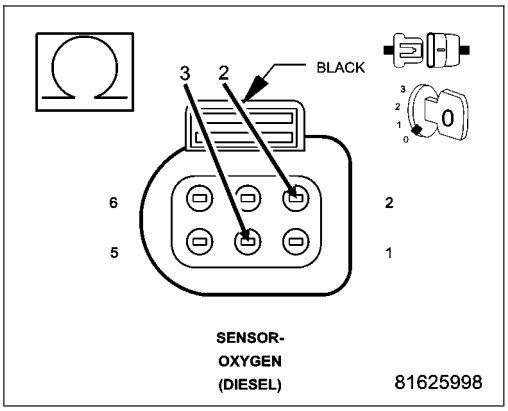

4. (Z43) O2 1/1 NEGATIVE CURRENT CONTROL CIRCUIT OPEN OR HIGH RESISTANCE

Measure the resistance of the (Z43) O2 1/1 Negative Current Control circuit between the Oxygen Sensor connector and the Engine Control Module (ECM) connector.

Is the resistance below 10.0 ohms?

Yes >> Go to 5

No >> Repair the (Z43) O2 1/1 Negative Current Control circuit for an open circuit or high resistance.

Perform the ECM Verification Test Ver. 1. (Refer to 9 - ENGINE - DIAGNOSIS AND TESTING)

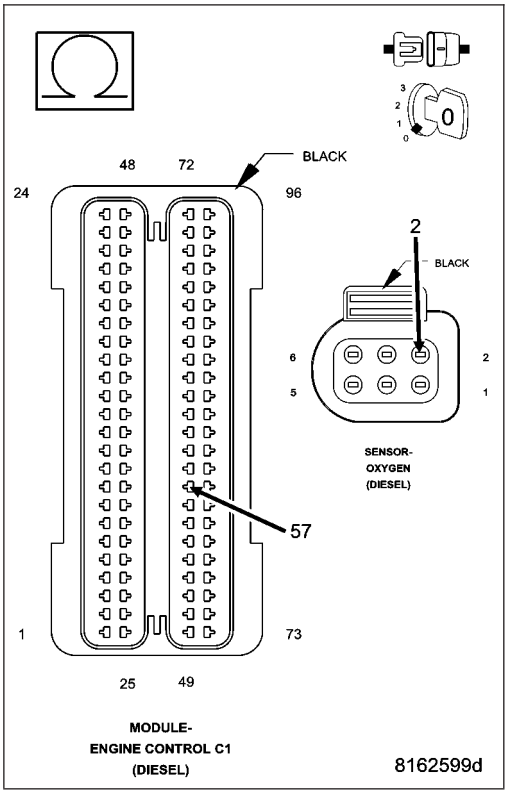

5. OXYGEN SENSOR

Turn the ignition off.
Connect the Engine Control Module (ECM) connector.
Replace the Oxygen Sensor in accordance with the Service Information.
Start the engine.
Allow the engine to reach normal operating temperature.
Monitor the scan tool for at least two minutes.
With the scan tool, select View DTCs.

Is the status Active for this DTC?

Yes >> Go to 6

No >> Test Complete.
Perform the ECM Verification Test Ver. 1. (Refer to 9 - ENGINE - DIAGNOSIS AND TESTING)

6. ENGINE CONTROL MODULE (ECM)

Using the wiring diagram/schematic as a guide, inspect the wiring and connectors between the Oxygen Sensor and the Engine Control Module (ECM).
Look for any chafed, pierced, pinched, or partially broken wires.
Look for broken, bent, pushed out or corroded terminals.
Monitor the scan tool data relative to this circuit and wiggle test the wiring and connectors.
Look for the data to change or for the DTC to reset during the wiggle test.
Refer to any Technical Service Bulletins that may apply.

Were any problems found?

Yes >> Repair as necessary.
Perform the ECM Verification Test Ver. 1. (Refer to 9 - ENGINE - DIAGNOSIS AND TESTING)

No >> Replace the Engine Control Module (ECM) in accordance with the Service Information.
Perform the ECM Verification Test Ver. 1. (Refer to 9 - ENGINE - DIAGNOSIS AND TESTING)

P0132-O2 SENSOR 1/1 CIRCUIT HIGH

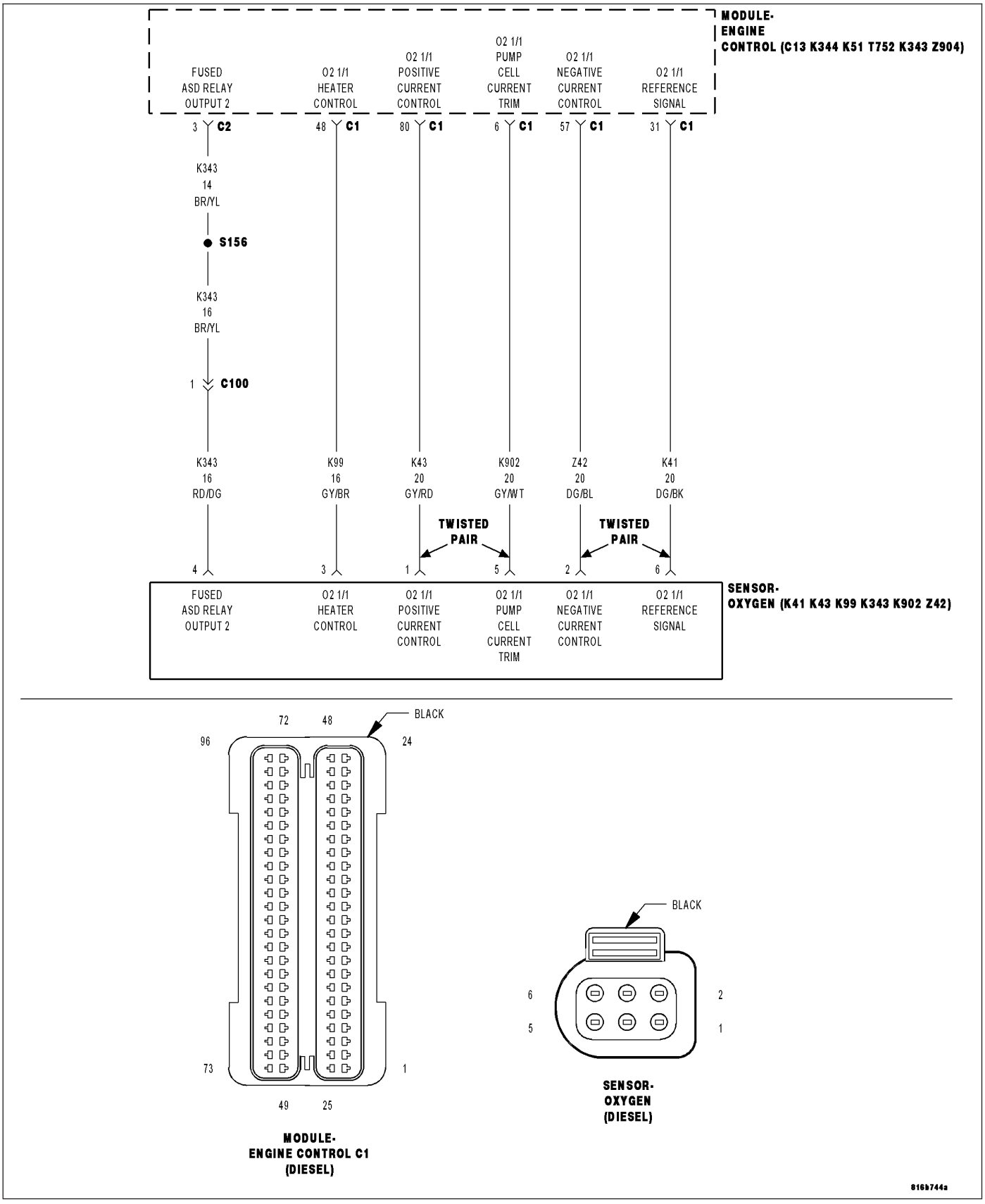

For a complete wiring diagram **Refer to Section 8W**

- **When Monitored:**
  With the ignition on and the O2 1/1 Sensor at operating temperature.
- **Set Condition:**
  The ECM detects a short to voltage on the (Z43) O2 1/1 Negative Current Control circuit for 2.0 seconds.

Possible Causes
INTERMITTENT DTC
(Z43) O2 1/1 NEGATIVE CURRENT CONTROL CIRCUIT SHORTED TO VOLTAGE
(Z43) O2 1/1 NEGATIVE CURRENT CONTROL CIRCUIT SHORTED TO THE (K343) FUSED ASD RELAY OUTPUT 2 CIRCUIT
(Z43) O2 1/1 NEGATIVE CURRENT CONTROL CIRCUIT OPEN OR HIGH RESISTANCE
OXYGEN SENSOR
ENGINE CONTROL MODULE (ECM)

Always perform the Pre-Diagnostic Troubleshooting procedure before proceeding. (Refer to 9 - ENGINE - DIAGNOSIS AND TESTING)

Diagnostic Test

1. DTC IS ACTIVE

Ignition on, engine not running.

With the scan tool, Clear DTCs in the Engine Control Module (ECM).

Start the engine.

Allow the engine to reach normal operating temperature.

Monitor the scan tool for at least two minutes.

With the scan tool, select View DTCs.

Is the status Active for this DTC?

Yes >> Go To 2

No >> Refer to the *CHECKING FOR AN INTERMITTENT DTC Diagnostic Procedure. (Refer to 9 - ENGINE - DIAGNOSIS AND TESTING)

2. (Z43) O2 1/1 NEGATIVE CURRENT CONTROL CIRCUIT SHORTED TO VOLTAGE

Turn the ignition off.

Disconnect the Oxygen Sensor connector.

Disconnect the Engine Control Module (ECM) connector.

Remove the ASD Relay from the IPM.

Connect a jumper wire between cavity 30 and cavity 87 of the ASD Relay Connector.

Turn the ignition on.

Measure the voltage of the (Z43) O2 1/1 Negative Current Control circuit in the Oxygen Sensor connector.

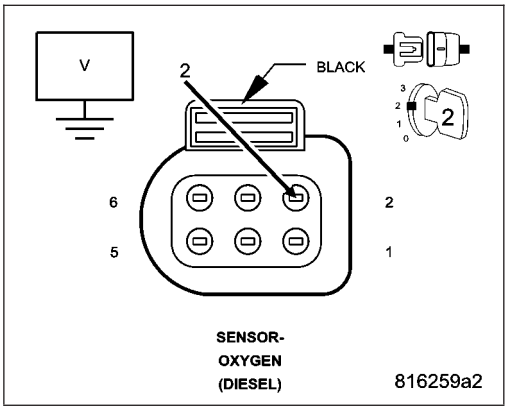

Is there any voltage present?

Yes >> Repair the (Z43) O2 1/1 Negative Current Control circuit for a short to voltage.
Perform the ECM Verification Test Ver. 1. (Refer to 9 - ENGINE - DIAGNOSIS AND TESTING)

No >> Go to 3

3. (Z43) O2 1/1 NEGATIVE CURRENT CONTROL CIRCUIT SHORTED TO THE (K343) FUSED ASD RELAY OUTPUT 2 CIRCUIT

Turn the ignition off.

Measure the resistance between the (Z43) O2 1/1 Negative Current Control circuit and the (K343) Fused ASD Relay Output 2 circuit in the Oxygen Sensor connector.

Is the resistance above 10.0 ohms?

Yes >> Go to 4

No >> Repair the (Z43) O2 1/1 Negative Current Control circuit for a short to the (K343) Fused ASD Relay Output 2 circuit.
Perform the ECM Verification Test Ver. 1. (Refer to 9 - ENGINE - DIAGNOSIS AND TESTING)

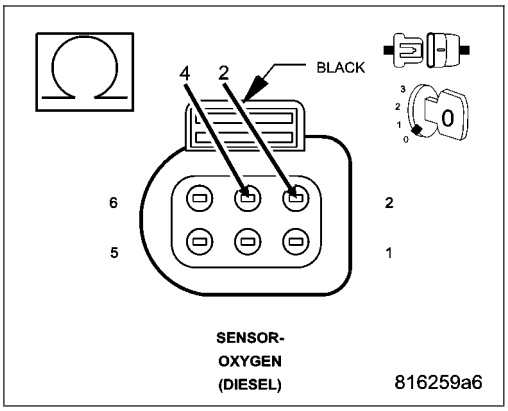

4. (Z43) O2 1/1 NEGATIVE CURRENT CONTROL CIRCUIT OPEN OR HIGH RESISTANCE

Measure the resistance of the (Z43) O2 1/1 Negative Current Control circuit between the Oxygen Sensor connector and the Engine Control Module (ECM) connector.

Is the resistance below 10.0 ohms?

Yes >> Go to 5

No >> Repair the circuit for an open circuit or high resistance.
Perform the ECM Verification Test Ver. 1. (Refer to 9 - ENGINE - DIAGNOSIS AND TESTING)

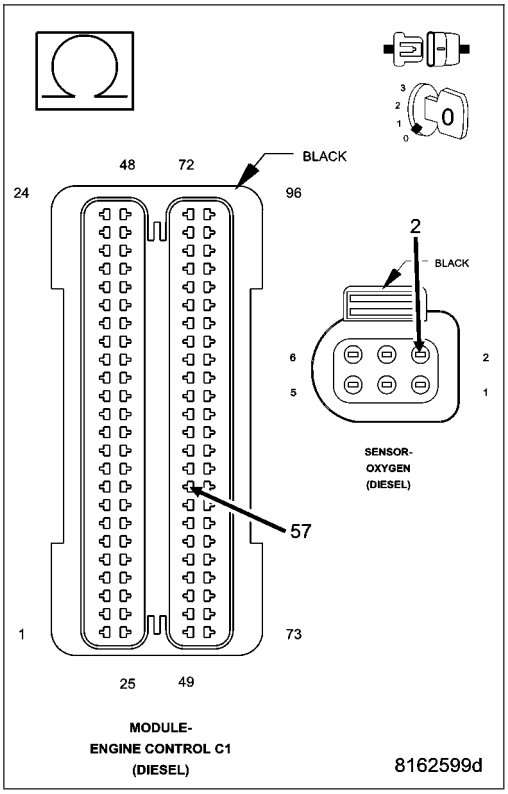

5. OXYGEN SENSOR

Turn the ignition off.
Connect the Engine Control Module (ECM) connector.
Replace the Oxygen Sensor in accordance with the Service Information.
Start the engine.
Allow the engine to reach normal operating temperature.
Monitor the scan tool for at least two minutes.
With the scan tool, select View DTCs.

Is the status Active for this DTC?

Yes >> Go to 6

No >> Test Complete.
Perform the ECM Verification Test Ver. 1. (Refer to 9 - ENGINE - DIAGNOSIS AND TESTING)

6. ENGINE CONTROL MODULE (ECM)

Using the wiring diagram/schematic as a guide, inspect the wiring and connectors between the Oxygen Sensor and the Engine Control Module (ECM).
Look for any chafed, pierced, pinched, or partially broken wires.
Look for broken, bent, pushed out or corroded terminals.
Monitor the scan tool data relative to this circuit and wiggle test the wiring and connectors.
Look for the data to change or for the DTC to reset during the wiggle test.
Refer to any Technical Service Bulletins that may apply.

Were any problems found?

Yes >> Repair as necessary.
Perform the ECM Verification Test Ver. 1. (Refer to 9 - ENGINE - DIAGNOSIS AND TESTING)

No >> Replace the Engine Control Module (ECM) in accordance with the Service Information.
Perform the ECM Verification Test Ver. 1. (Refer to 9 - ENGINE - DIAGNOSIS AND TESTING)

P0134-O2 SENSOR 1/1 SIGNAL INACTIVE

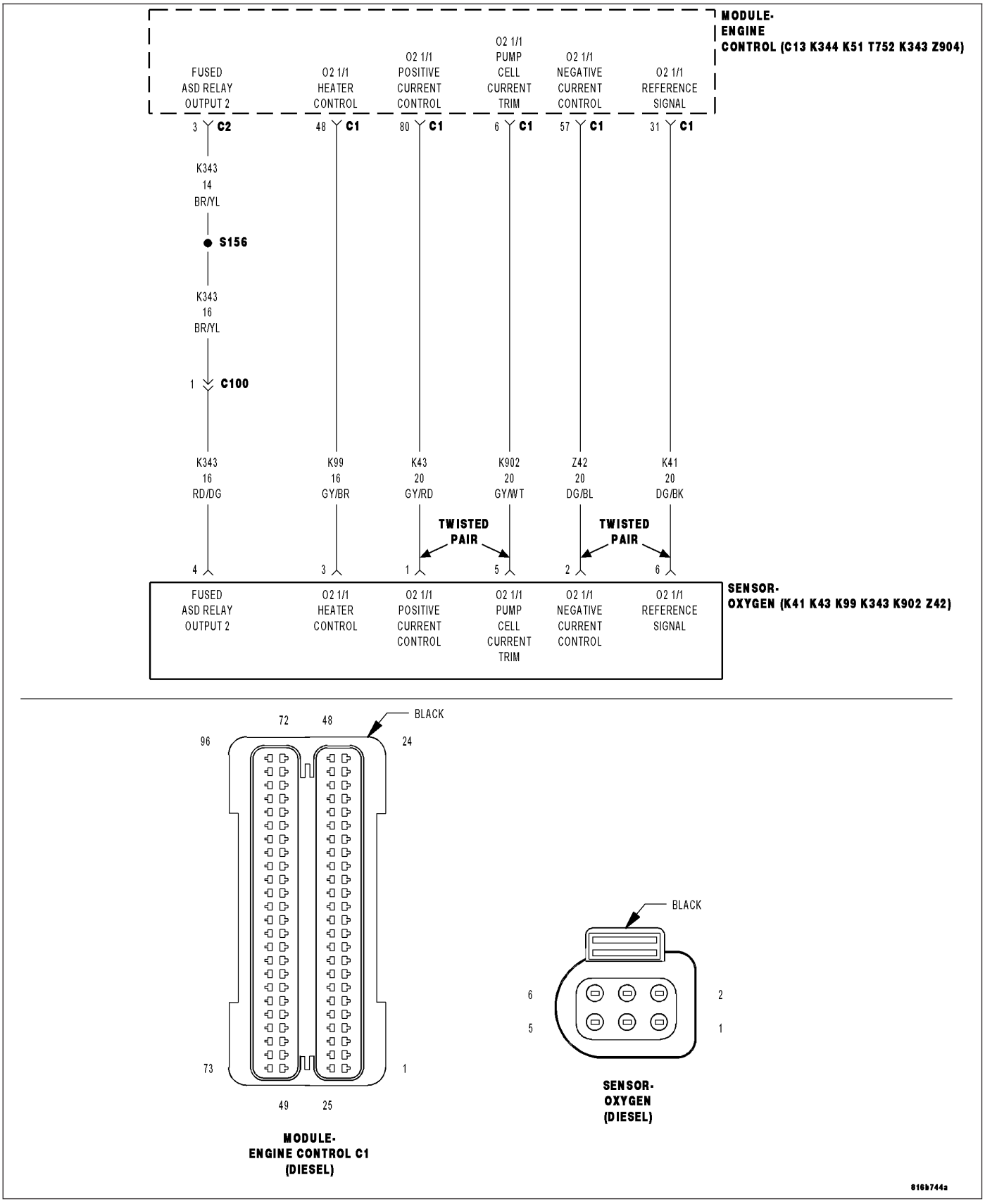

For a complete wiring diagram **Refer to Section 8W**

- **When Monitored:**
  With the ignition on and the O2 1/1 Sensor at operating temperature.
- **Set Condition:**
  The ECM detects an implausible voltage on the (Z43) O2 1/1 Negative Current Control circuit for 2.0 seconds.

Possible Causes
INTERMITTENT DTC
(Z43) O2 1/1 NEGATIVE CURRENT CONTROL CIRCUIT SHORTED TO VOLTAGE
(Z43) O2 1/1 NEGATIVE CURRENT CONTROL CIRCUIT SHORTED TO GROUND
(Z43) O2 1/1 NEGATIVE CURRENT CONTROL CIRCUIT SHORTED TO THE (K343) FUSED ASD RELAY OUTPUT 2 CIRCUIT
(Z43) O2 1/1 NEGATIVE CURRENT CONTROL CIRCUIT SHORTED TO THE (K99) O2 1/1 HEATER CONTROL CIRCUIT
(Z43) O2 1/1 NEGATIVE CURRENT CONTROL CIRCUIT OPEN OR HIGH RESISTANCE
OXYGEN SENSOR
ENGINE CONTROL MODULE (ECM)

Always perform the Pre-Diagnostic Troubleshooting procedure before proceeding. (Refer to 9 - ENGINE - DIAGNOSIS AND TESTING)

Diagnostic Test

1. DTC IS ACTIVE

Ignition on, engine not running.
With the scan tool, Clear DTCs in the Engine Control Module (ECM).
Start the engine.
Allow the engine to reach normal operating temperature.
Monitor the scan tool for at least two minutes.
With the scan tool, select View DTCs.

Is the status Active for this DTC?

Yes >> Go To 2

No >> Refer to the *CHECKING FOR AN INTERMITTENT DTC Diagnostic Procedure. (Refer to 9 - ENGINE - DIAGNOSIS AND TESTING)

2. (Z43) O2 1/1 NEGATIVE CURRENT CONTROL CIRCUIT SHORTED TO VOLTAGE

Turn the ignition off.
Disconnect the Oxygen Sensor connector.
Disconnect the Engine Control Module (ECM) connector.
Remove the ASD Relay from the IPM.
Connect a jumper wire between cavity 30 and cavity 87 of the ASD Relay Connector.
Turn the ignition on.
Measure the voltage of the (Z43) O2 1/1 Negative Current Control circuit in the Oxygen Sensor connector.

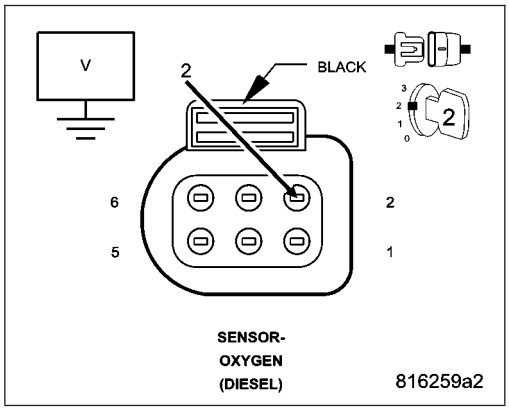

Is there any voltage present?

Yes >> Repair the (Z43) O2 1/1 Negative Current Control circuit for a short to voltage.
Perform the ECM Verification Test Ver. 1. (Refer to 9 - ENGINE - DIAGNOSIS AND TESTING)

No >> Go to 3

3. (Z43) O2 1/1 NEGATIVE CURRENT CONTROL CIRCUIT SHORTED TO GROUND

Turn the ignition off.

Measure the resistance between ground and the (Z43) O2 1/1 Negative Current Control circuit in the Oxygen Sensor connector.

Is the resistance above 1000.0 ohms?

Yes >> Go to 4

No >> Repair the (Z43) O2 1/1 Negative Current Control circuit for a short to ground.

Perform the ECM Verification Test Ver. 1. (Refer to 9 - ENGINE - DIAGNOSIS AND TESTING)

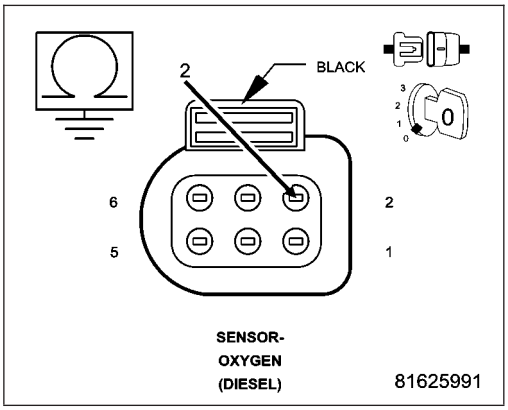

4. (Z43) O2 1/1 NEGATIVE CURRENT CONTROL CIRCUIT SHORTED TO THE (K343) FUSED ASD RELAY OUTPUT 2 CIRCUIT

Measure the resistance between the (Z43) O2 1/1 Negative Current Control circuit and the (K343) Fused ASD Relay Output 2 circuit in the Oxygen Sensor connector.

Is the resistance above 10.0 ohms?

Yes >> Go to 5

No >> Repair the (Z43) O2 1/1 Negative Current Control circuit for a short to the (K343) Fused ASD Relay Output 2 circuit.

Perform the ECM Verification Test Ver. 1. (Refer to 9 - ENGINE - DIAGNOSIS AND TESTING)

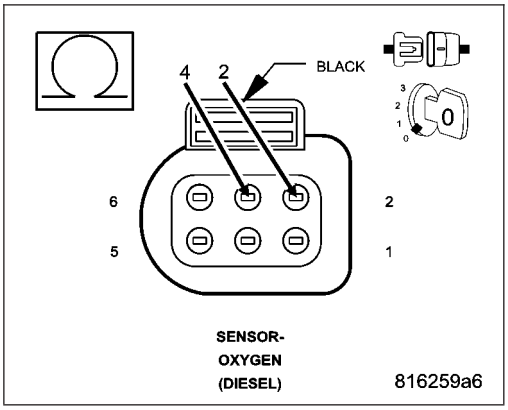

5. (Z43) O2 1/1 NEGATIVE CURRENT CONTROL CIRCUIT SHORTED TO THE (K99) O2 1/1 HEATER CONTROL CIRCUIT

Measure the resistance between the (Z43) O2 1/1 Negative Current Control circuit and the (K99) O2 1/1 Heater Control circuit in the Oxygen Sensor connector.

Is the resistance above 1000.0 ohms?

Yes >> Go to 6

No >> Repair the (Z43) O2 1/1 Negative Current Control circuit for a short to the (K99) O2 1/1 Heater Control circuit.

Perform the ECM Verification Test Ver. 1. (Refer to 9 - ENGINE - DIAGNOSIS AND TESTING)

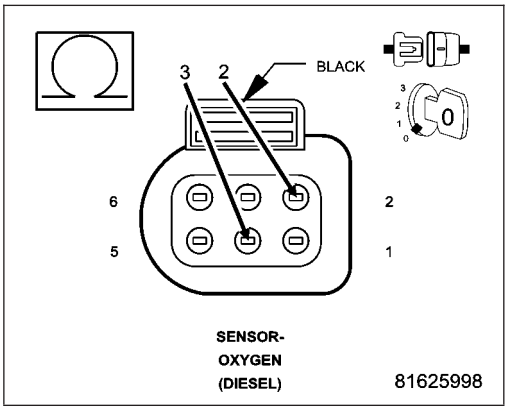

6. (Z43) O2 1/1 NEGATIVE CURRENT CONTROL CIRCUIT OPEN OR HIGH RESISTANCE

Measure the resistance of the (Z43) O2 1/1 Negative Current Control circuit between the Oxygen Sensor connector and the Engine Control Module (ECM) connector.

Is the resistance below 10.0 ohms?

Yes >> Go to 7

No >> Repair the (Z43) O2 1/1 Negative Current Control circuit for an open circuit or high resistance.
Perform the ECM Verification Test Ver. 1. (Refer to 9 - ENGINE - DIAGNOSIS AND TESTING)

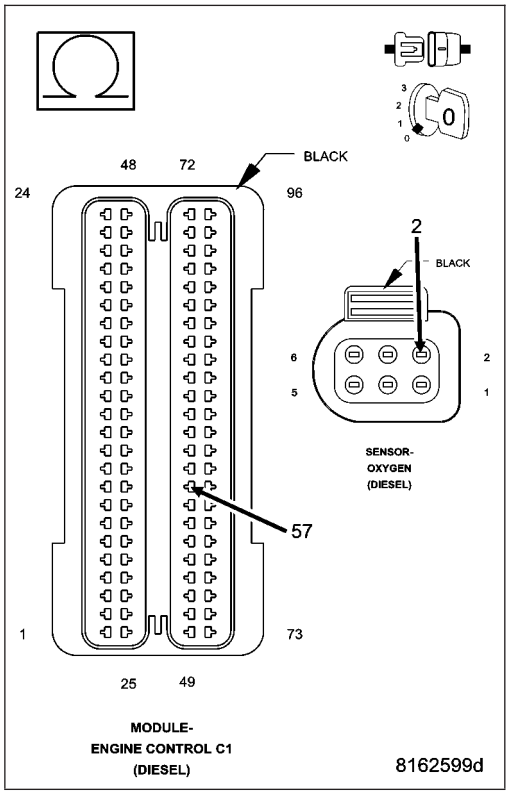

7. OXYGEN SENSOR

Turn the ignition off.
Connect the Engine Control Module (ECM) connector.
Replace the Oxygen Sensor in accordance with the Service Information.
Start the engine.
Allow the engine to reach normal operating temperature.
Monitor the scan tool for at least two minutes.
With the scan tool, select View DTCs.

Is the status Active for this DTC?

Yes >> Go to 8

No >> Test Complete.
Perform the ECM Verification Test Ver. 1. (Refer to 9 - ENGINE - DIAGNOSIS AND TESTING)

8. ENGINE CONTROL MODULE (ECM)

Using the wiring diagram/schematic as a guide, inspect the wiring and connectors between the Oxygen Sensor and the Engine Control Module (ECM).

Look for any chafed, pierced, pinched, or partially broken wires.

Look for broken, bent, pushed out or corroded terminals.

Monitor the scan tool data relative to this circuit and wiggle test the wiring and connectors.

Look for the data to change or for the DTC to reset during the wiggle test.

Refer to any Technical Service Bulletins that may apply.

Were any problems found?

Yes >> Repair as necessary.
Perform the ECM Verification Test Ver. 1. (Refer to 9 - ENGINE - DIAGNOSIS AND TESTING)

No >> Replace the Engine Control Module (ECM) in accordance with the Service Information.
Perform the ECM Verification Test Ver. 1. (Refer to 9 - ENGINE - DIAGNOSIS AND TESTING)

P0135-O2 SENSOR 1/1 HEATER PERFORMANCE

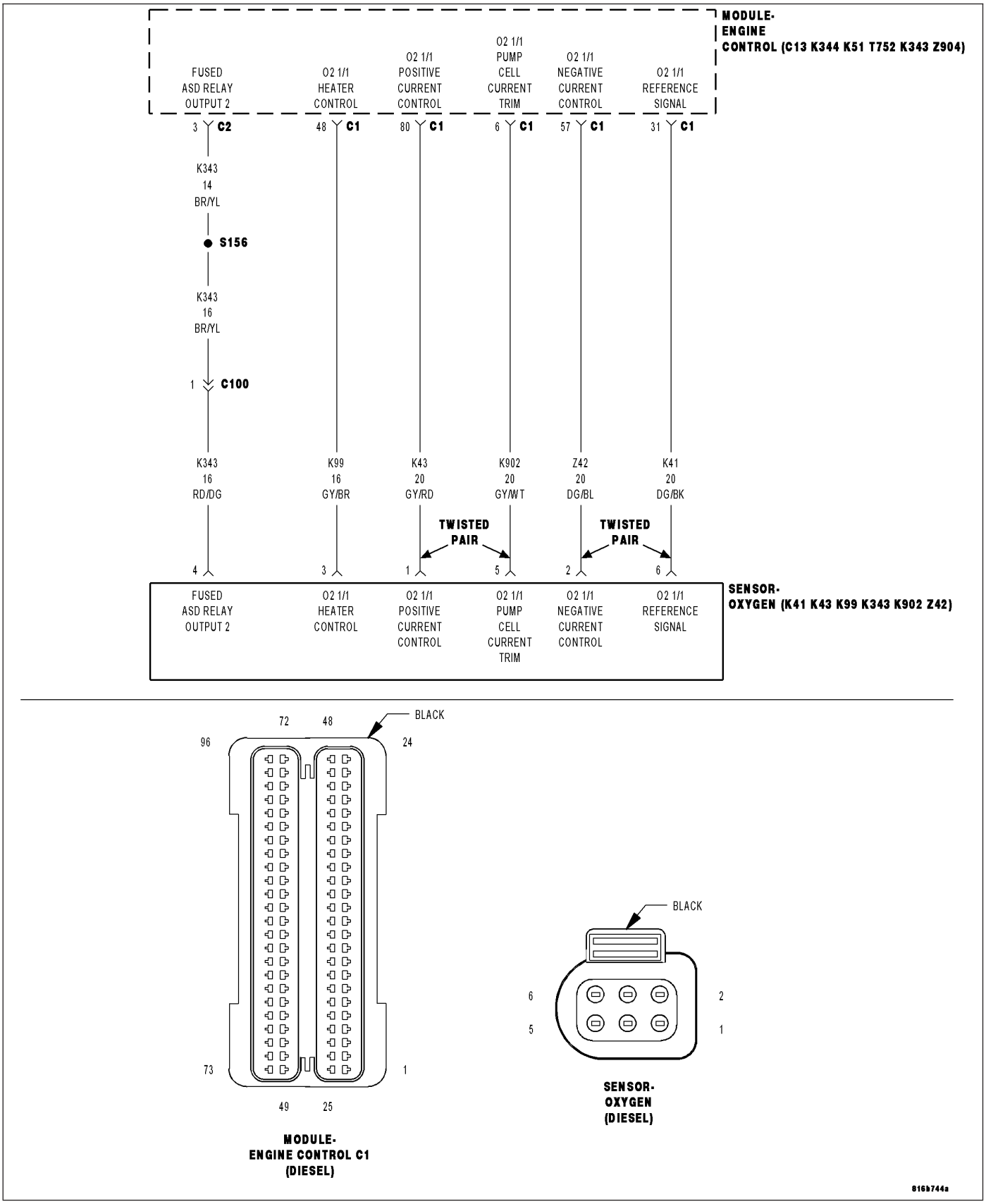

For a complete wiring diagram **Refer to Section 8W**

- **When Monitored:**
  With the ignition on and the Oxygen Sensor Heater command on.
- **Set Condition:**
  The ECM detects an implausible voltage on the (K99) O2 1/1 Heater Control circuit for 2.0 seconds.

Possible Causes
INTERMITTENT DTC
(K99) O2 1/1 HEATER CONTROL CIRCUIT SHORTED TO VOLTAGE
(K99) O2 1/1 HEATER CONTROL CIRCUIT SHORTED TO GROUND
(K99) O2 1/1 HEATER CONTROL CIRCUIT OPEN OR HIGH RESISTANCE
(K343) FUSED ASD RELAY OUTPUT 2 CIRCUIT OPEN OR HIGH RESISTANCE
OXYGEN SENSOR
ENGINE CONTROL MODULE (ECM)

Always perform the Pre-Diagnostic Troubleshooting procedure before proceeding. (Refer to 9 - ENGINE - DIAGNOSIS AND TESTING)

Diagnostic Test

1. DTC IS ACTIVE

Ignition on, engine not running.
With the scan tool, Clear DTCs in the Engine Control Module (ECM).
With the scan tool, actuate the Oxygen Sensor Heater.
Monitor the scan tool for at least two minutes.
With the scan tool, select View DTCs.

Is the status Active for this DTC?

Yes >> Go To 2

No >> Refer to the *CHECKING FOR AN INTERMITTENT DTC Diagnostic Procedure. (Refer to 9 - ENGINE - DIAGNOSIS AND TESTING)

2. (K99) O2 1/1 HEATER CONTROL CIRCUIT SHORTED TO VOLTAGE

Turn the ignition off.
Disconnect the Oxygen Sensor connector.
Disconnect the Engine Control Module (ECM) connector.
Remove the ASD Relay from the IPM.
Connect a jumper wire between cavity 30 and cavity 87 of the ASD Relay Connector.
Turn the ignition on.
Measure the voltage of the (K99) O2 1/1 Heater Control circuit in the Oxygen Sensor connector.

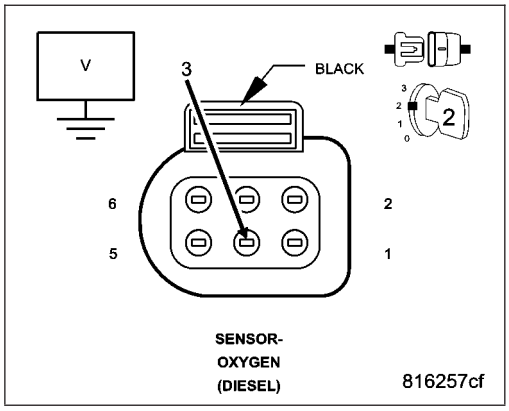

Is there any voltage present?

Yes >> Repair the (K99) O2 1/1 Heater Control circuit for a short to voltage.
Perform the ECM Verification Test Ver. 1. (Refer to 9 - ENGINE - DIAGNOSIS AND TESTING)

No >> Go to 3

3. (K99) O2 1/1 HEATER CONTROL CIRCUIT SHORTED TO GROUND

Turn the ignition off.

Measure the resistance between ground and the (K99) O2 1/1 Heater Control circuit in the Oxygen Sensor connector.

Is the resistance above 10.0 ohms?

Yes >> Go to 4

No >> Repair the (K99) O2 1/1 Heater Control circuit for a short to ground.

Perform the ECM Verification Test Ver. 1. (Refer to 9 - ENGINE - DIAGNOSIS AND TESTING)

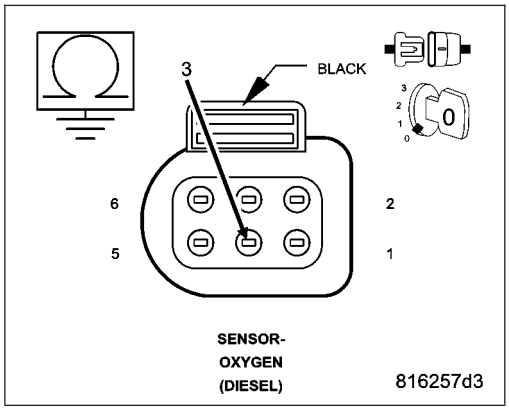

4. (K99) O2 1/1 HEATER CONTROL CIRCUIT OPEN OR HIGH RESISTANCE

Measure the resistance of the (K99) O2 1/1 Heater Control circuit between the Oxygen Sensor connector and the Engine Control Module (ECM) connector.

Is the resistance below 10.0 ohms?

Yes >> Go to 5

No >> Repair the (K99) O2 1/1 Heater Control circuit for an open circuit or high resistance.

Perform the ECM Verification Test Ver. 1. (Refer to 9 - ENGINE - DIAGNOSIS AND TESTING)

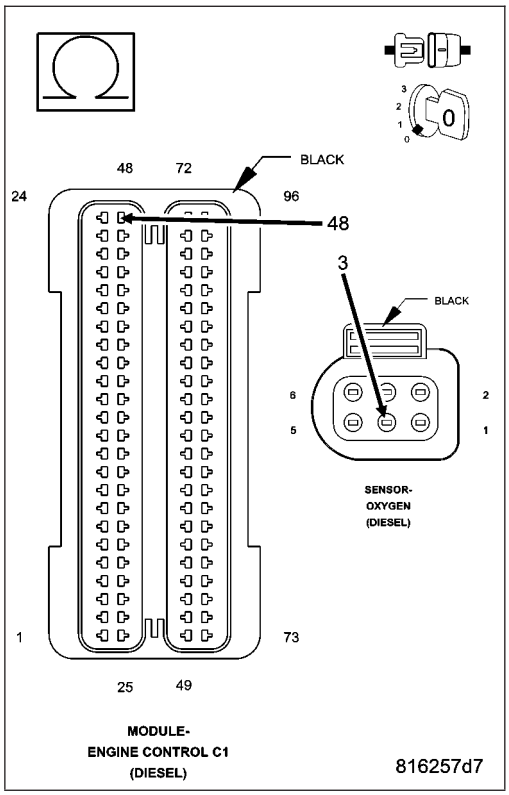

5. (K343) FUSED ASD RELAY OUTPUT 2 CIRCUIT OPEN OR HIGH RESISTANCE

Measure the resistance of the (K343) Fused ASD Relay Output 2 circuit between the Oxygen Sensor connector and the ASD Relay connector.

Is the resistance below 10.0 ohms?

Yes >> Go to 6

No >> Repair the (K343) Fused ASD Relay Output 2 circuit for an open circuit or high resistance.
Perform the ECM Verification Test Ver. 1. (Refer to 9 - ENGINE - DIAGNOSIS AND TESTING)

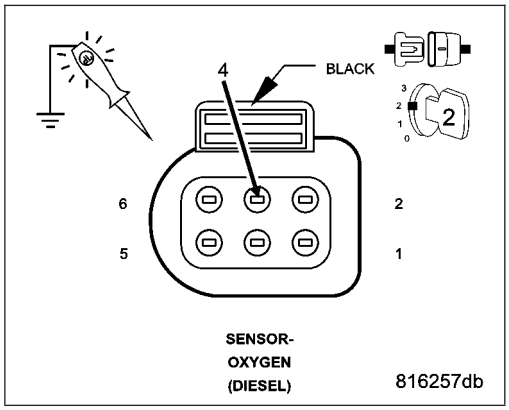

6. OXYGEN SENSOR

Turn the ignition off.
Connect the Engine Control Module (ECM) connector.
Replace the Oxygen Sensor in accordance with the Service Information.
Start the engine.
Allow the engine to reach normal operating temperature.
Monitor the scan tool for at least two minutes.
With the scan tool, select View DTCs.

Is the status Active for this DTC?

Yes >> Go to 7

No >> Test Complete.
Perform the ECM Verification Test Ver. 1. (Refer to 9 - ENGINE - DIAGNOSIS AND TESTING)

7. ENGINE CONTROL MODULE (ECM)

Using the wiring diagram/schematic as a guide, inspect the wiring and connectors between the Oxygen Sensor and the Engine Control Module (ECM).
Look for any chafed, pierced, pinched, or partially broken wires.
Look for broken, bent, pushed out or corroded terminals.
Refer to any Technical Service Bulletins that may apply.

Were any problems found?

Yes >> Repair as necessary.
Perform the ECM Verification Test Ver. 1. (Refer to 9 - ENGINE - DIAGNOSIS AND TESTING)

No >> Replace the Engine Control Module (ECM) in accordance with the Service Information.
Perform the ECM Verification Test Ver. 1. (Refer to 9 - ENGINE - DIAGNOSIS AND TESTING)

P0182-FUEL TEMPERATURE SENSOR CIRCUIT LOW

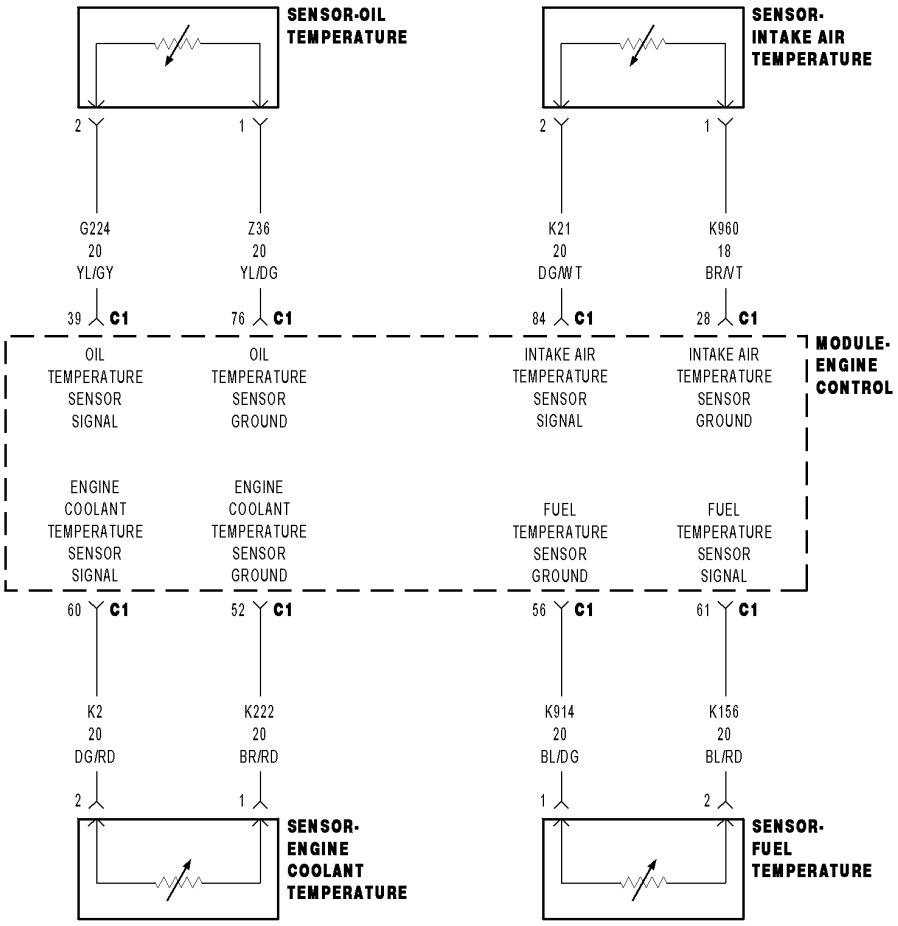

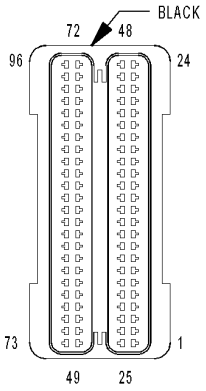

MODULE-ENGINE CONTROL C1 (DIESEL)

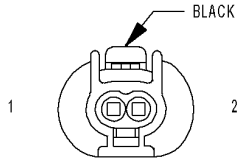

SENSOR-INTAKE AIR TEMPERATURE (DIESEL)

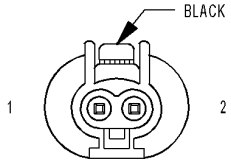

SENSOR-OIL TEMPERATURE (DIESEL)

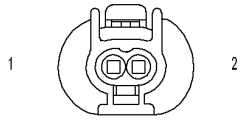

SENSOR-FUEL TEMPERATURE (DIESEL)

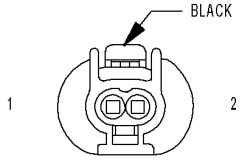

SENSOR-ENGINE COOLANT TEMPERATURE (DIESEL)

816B7486

For a complete wiring diagram **Refer to Section 8W**

- **When Monitored:**
  With the ignition on.
- **Set Condition:**
  The (K156) Fuel Temperature Sensor Signal circuit voltage is below 0.12 volt for 0.6 second.

Possible Causes
INTERMITTENT DTC
(K156) FUEL TEMPERATURE SENSOR SIGNAL CIRCUIT SHORTED TO GROUND
(K156) FUEL TEMPERATURE SENSOR SIGNAL CIRCUIT SHORTED TO (K914) FUEL TEMPERATURE SENSOR GROUND
(K156) FUEL TEMPERATURE SENSOR SIGNAL CIRCUIT OPEN OR HIGH RESISTANCE
FUEL TEMPERATURE SENSOR
ENGINE CONTROL MODULE (ECM)

Always perform the Pre-Diagnostic Troubleshooting procedure before proceeding. (Refer to 9 - ENGINE - DIAGNOSIS AND TESTING)

Diagnostic Test

1. DTC IS ACTIVE

Ignition on, engine not running.
With the scan tool, Clear DTCs in the Engine Control Module (ECM).
Monitor the scan tool for at least two minutes.
Cycle the ignition key off and on several times, leaving the ignition on for at least 10 seconds at a time.
Start the engine.
Allow the engine to reach normal operating temperature.
With the scan tool, select View DTCs.

Is the status Active for this DTC?

Yes >> Go To 2

No >> Refer to the *CHECKING FOR AN INTERMITTENT DTC Diagnostic Procedure. (Refer to 9 - ENGINE - DIAGNOSIS AND TESTING)

2. FUEL TEMPERATURE SENSOR

Turn the ignition off.
Disconnect the Fuel Temperature Sensor connector.
Turn the ignition on.
With the scan tool, clear DTCs.
With the scan tool, select View DTCs.

NOTE: The scan tool should display a Fuel Temperature Sensor high voltage or open circuit DTC with the Fuel Temperature Sensor connector disconnected.

Does the scan tool display the DTC(s) as described above?

Yes >> Replace the Fuel Temperature Sensor in accordance with the service information.
Perform the ECM Verification Test Ver. 1. (Refer to 9 - ENGINE - DIAGNOSIS AND TESTING)

No >> Go to 3

3. (K156) FUEL TEMPERATURE SENSOR SIGNAL CIRCUIT SHORTED TO GROUND

Turn the ignition off.

Disconnect the Engine Control Module (ECM) connector.

Measure the resistance between ground and the (K156) Fuel Temperature Sensor Signal circuit in the Fuel Temperature Sensor connector.

Is the resistance above 1000.0 ohms?

Yes >> Go to 4

No >> Repair the (K156) Fuel Temperature Sensor Signal circuit for a short to ground.

Perform the ECM Verification Test Ver. 1. (Refer to 9 - ENGINE - DIAGNOSIS AND TESTING)

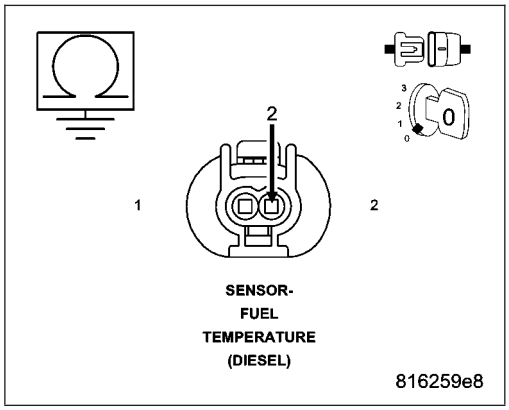

4. (K156) FUEL TEMPERATURE SENSOR SIGNAL CIRCUIT SHORTED TO (K914) FUEL TEMPERATURE SENSOR GROUND CIRCUIT

Measure the resistance between the (K156) Fuel Temperature Sensor Signal circuit and the (K914) Fuel Temperature Sensor Ground circuit in the Fuel Temperature Sensor connector.

Is the resistance above 1000.0 ohms?

Yes >> Go to 5

No >> Repair the (K156) Fuel Temperature Sensor Signal circuit for a short to the (K914) Fuel Temperature Sensor Ground circuit.

Perform the ECM Verification Test Ver. 1. (Refer to 9 - ENGINE - DIAGNOSIS AND TESTING)

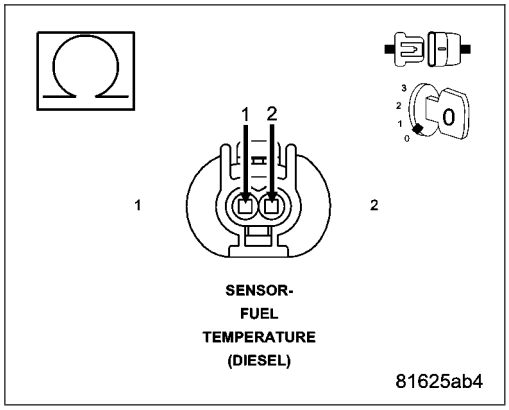

5. (K156) FUEL TEMPERATURE SENSOR SIGNAL CIRCUIT OPEN CIRCUIT OR HIGH RESISTANCE

Measure the resistance of the (K156) Fuel Temperature Sensor Signal circuit between the Fuel Temperature Sensor connector and the Engine Control Module (ECM) connector.

Is the resistance below 10.0 ohms?

Yes >> Go to 6

No >> Repair the (K156) Fuel Temperature Sensor Signal circuit for an open circuit or high resistance.
Perform the ECM Verification Test Ver. 1. (Refer to 9 - ENGINE - DIAGNOSIS AND TESTING)

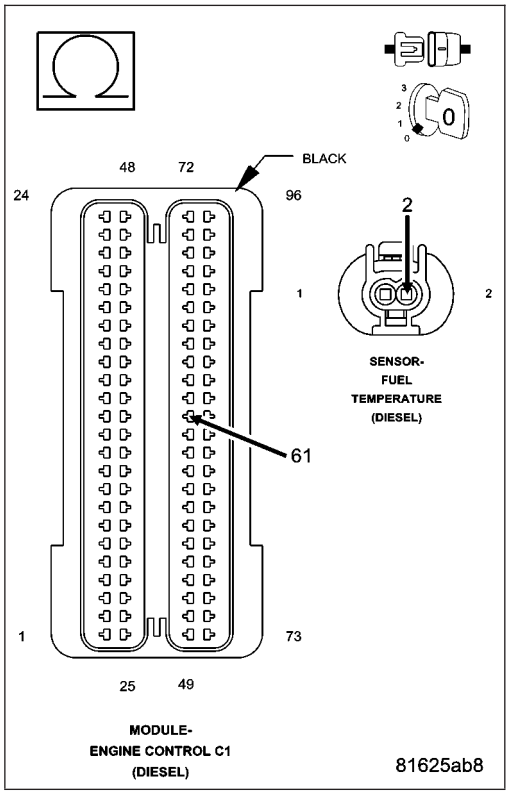

6. ENGINE CONTROL MODULE (ECM)

Using the wiring diagram/schematic as a guide, inspect the wiring and connectors between the Fuel Temperature Sensor and the Engine Control Module (ECM).

Look for any chafed, pierced, pinched, or partially broken wires.

Look for broken, bent, pushed out or corroded terminals.

Monitor the scan tool data relative to this circuit and wiggle test the wiring and connectors.

Look for the data to change or for the DTC to reset during the wiggle test.

Refer to any Technical Service Bulletins that may apply.

Were any problems found?

Yes >> Repair as necessary.
Perform the ECM Verification Test Ver. 1. (Refer to 9 - ENGINE - DIAGNOSIS AND TESTING)

No >> Replace the Engine Control Module (ECM) in accordance with the Service Information.
Perform the ECM Verification Test Ver. 1. (Refer to 9 - ENGINE - DIAGNOSIS AND TESTING)

P0183-FUEL TEMPERATURE SENSOR CIRCUIT HIGH

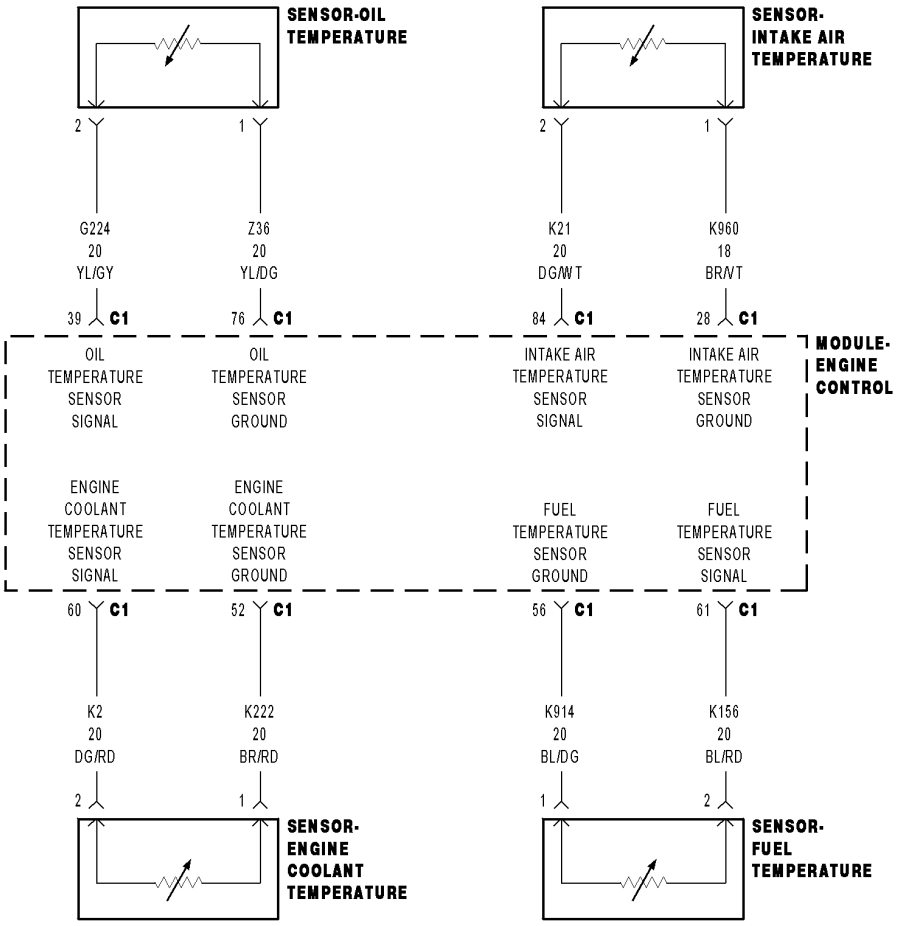

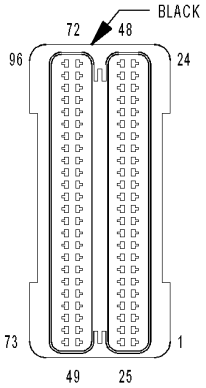

MODULE-ENGINE CONTROL C1 (DIESEL)

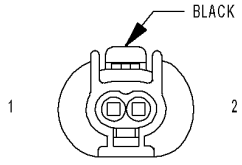

SENSOR-INTAKE AIR TEMPERATURE (DIESEL)

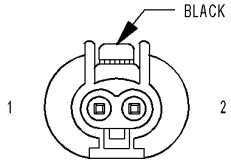

SENSOR-OIL TEMPERATURE (DIESEL)

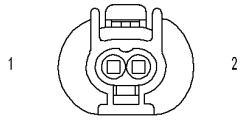

SENSOR-FUEL TEMPERATURE (DIESEL)

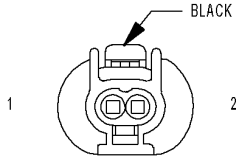

SENSOR-ENGINE COOLANT TEMPERATURE (DIESEL)

816B7486

For a complete wiring diagram **Refer to Section 8W**

- **When Monitored:**
  With the ignition on.
- **Set Condition:**
  The (K156) Fuel Temperature Sensor Signal circuit voltage is above 4.96 volts for 0.6 second.

Possible Causes
INTERMITTENT DTC
(K156) FUEL TEMPERATURE SENSOR SIGNAL CIRCUIT SHORTED TO VOLTAGE
(K914) FUEL TEMPERATURE SENSOR GROUND CIRCUIT SHORTED TO VOLTAGE
(K156) FUEL TEMPERATURE SENSOR SIGNAL CIRCUIT OPEN OR HIGH RESISTANCE
(K914) FUEL TEMPERATURE SENSOR GROUND CIRCUIT OPEN OR HIGH RESISTANCE
FUEL TEMPERATURE SENSOR
ENGINE CONTROL MODULE (ECM)

Always perform the Pre-Diagnostic Troubleshooting procedure before proceeding. (Refer to 9 - ENGINE - DIAGNOSIS AND TESTING)

Diagnostic Test

1. DTC IS ACTIVE

Ignition on, engine not running.
With the scan tool, Clear DTCs in the Engine Control Module (ECM).
Monitor the scan tool for at least two minutes.
Cycle the ignition key off and on several times, leaving the ignition on for at least 10 seconds at a time.
Start the engine.
Allow the engine to reach normal operating temperature.
With the scan tool, select View DTCs.

Is the status Active for this DTC?

Yes >> Go To 2

No >> Refer to the *CHECKING FOR AN INTERMITTENT DTC Diagnostic Procedure. (Refer to 9 - ENGINE - DIAGNOSIS AND TESTING)

2. (K156) FUEL TEMPERATURE SENSOR SIGNAL CIRCUIT SHORTED TO VOLTAGE

Turn the ignition off.
Disconnect the Fuel Temperature Sensor connector.
Disconnect the Engine Control Module (ECM) connector.
Remove the ASD Relay from the IPM.
Connect a jumper wire between cavity 30 and cavity 87 of the ASD Relay Connector.
Turn the ignition on.
Measure the voltage of the (K156) Fuel Temperature Sensor Signal circuit in the Fuel Temperature Sensor connector.

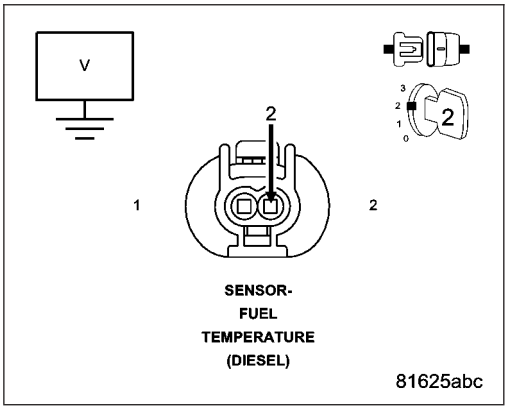

Is there any voltage present?

Yes >> Repair the (K156) Fuel Temperature Sensor Signal circuit for a short to voltage.
Perform the ECM Verification Test Ver. 1. (Refer to 9 - ENGINE - DIAGNOSIS AND TESTING)

No >> Go to 3

3. (K914) FUEL TEMPERATURE SENSOR GROUND CIRCUIT SHORTED TO VOLTAGE

NOTE: The jumper wire should still be in place.
Measure the voltage of the (K914) Fuel Temperature Sensor Ground circuit in the Fuel Temperature Sensor connector.

Is there any voltage present?

Yes >> Repair the (K914) Fuel Temperature Sensor Ground circuit for a short to voltage.
Perform the ECM Verification Test Ver. 1. (Refer to 9 - ENGINE - DIAGNOSIS AND TESTING)

No >> Go to 4

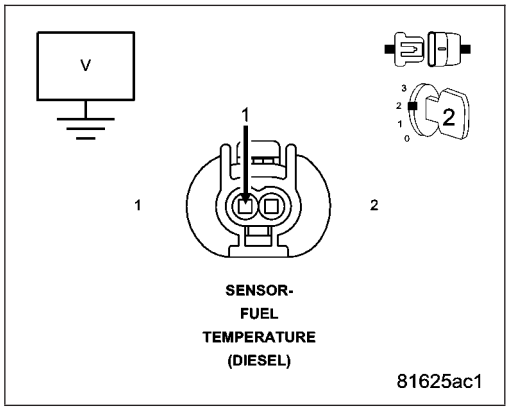

4. FUEL TEMPERATURE SENSOR

Turn the ignition off.

Connect the Engine Control Module (ECM) connector.

Connect a jumper wire between the (K914) Fuel Temperature Sensor Ground circuit and the (K156) Fuel Temperature Sensor Signal circuit in the Fuel Temperature Sensor connector.

Turn the ignition on.

With the scan tool, Clear DTCs.

With the scan tool, select View DTCs.

NOTE: The scan tool should display a Fuel Temperature Sensor low voltage or short to ground DTC with the jumper wire in place.

Does the scan tool display the DTC(s) as described above?

Yes >> Replace the Fuel Temperature Sensor in accordance with the Service Information.
Perform the ECM Verification Test Ver. 1. (Refer to 9 - ENGINE - DIAGNOSIS AND TESTING)

No >> Go to 5

5. (K156) FUEL TEMPERATURE SENSOR SIGNAL OPEN OR HIGH RESISTANCE

Turn the ignition off.

Disconnect the Engine Control Module (ECM) connector.

Measure the resistance of the (K156) Fuel Temperature Sensor Signal circuit between the Fuel Temperature Sensor connector and the Engine Control Module (ECM) connector.

Is the resistance below 10.0 ohms?

Yes >> Go to 6

No >> Repair the (K156) Fuel Temperature Sensor Signal circuit for an open circuit or high resistance.

Perform the ECM Verification Test Ver. 1. (Refer to 9 - ENGINE - DIAGNOSIS AND TESTING)

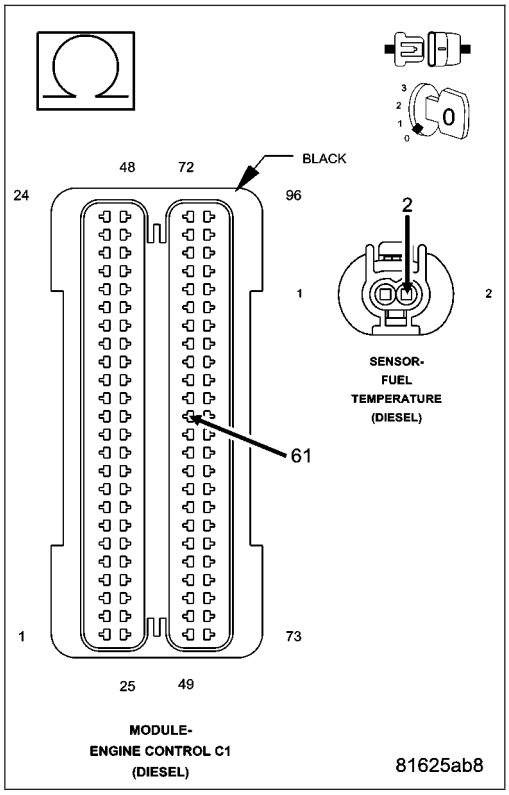

6. (K914) FUEL TEMPERATURE SENSOR GROUND CIRCUIT OPEN OR HIGH RESISTANCE

Measure the resistance of the (K914) Fuel Temperature Sensor Ground circuit between the Fuel Temperature Sensor connector and the Engine Control Module (ECM) connector.

Is the resistance below 10.0 ohms?

Yes >> Go to 7

No >> Repair the (K914) Fuel Temperature Sensor Ground circuit for an open circuit or high resistance.

Perform the ECM Verification Test Ver. 1. (Refer to 9 - ENGINE - DIAGNOSIS AND TESTING)

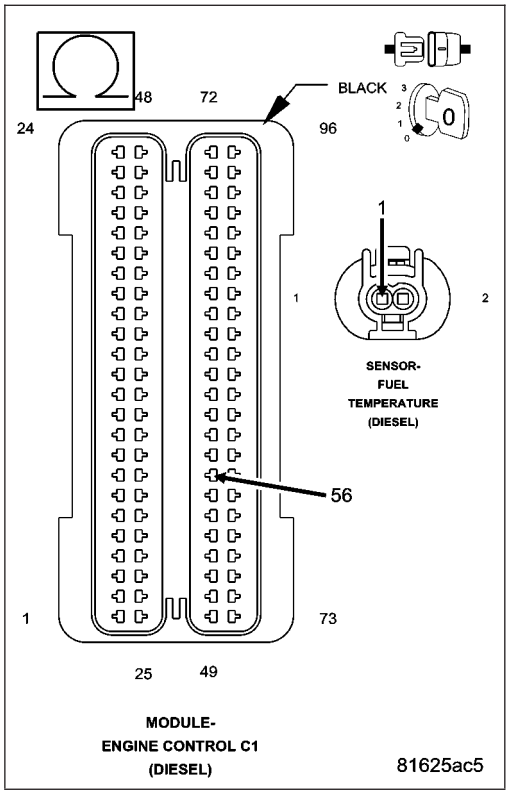

7. ENGINE CONTROL MODULE (ECM)

Using the wiring diagram/schematic as a guide, inspect the wiring and connectors between the Fuel Temperature Sensor and the Engine Control Module (ECM).

Look for any chafed, pierced, pinched, or partially broken wires.

Look for broken, bent, pushed out or corroded terminals.

Monitor the scan tool data relative to this circuit and wiggle test the wiring and connectors.

Look for the data to change or for the DTC to reset during the wiggle test.

Refer to any Technical Service Bulletins that may apply.

Were any problems found?

Yes >> Repair as necessary.
Perform the ECM Verification Test Ver. 1. (Refer to 9 - ENGINE - DIAGNOSIS AND TESTING)

No >> Replace the Engine Control Module (ECM) in accordance with the Service Information.
Perform the ECM Verification Test Ver. 1. (Refer to 9 - ENGINE - DIAGNOSIS AND TESTING)

P0192-FUEL RAIL PRESSURE SENSOR LOW

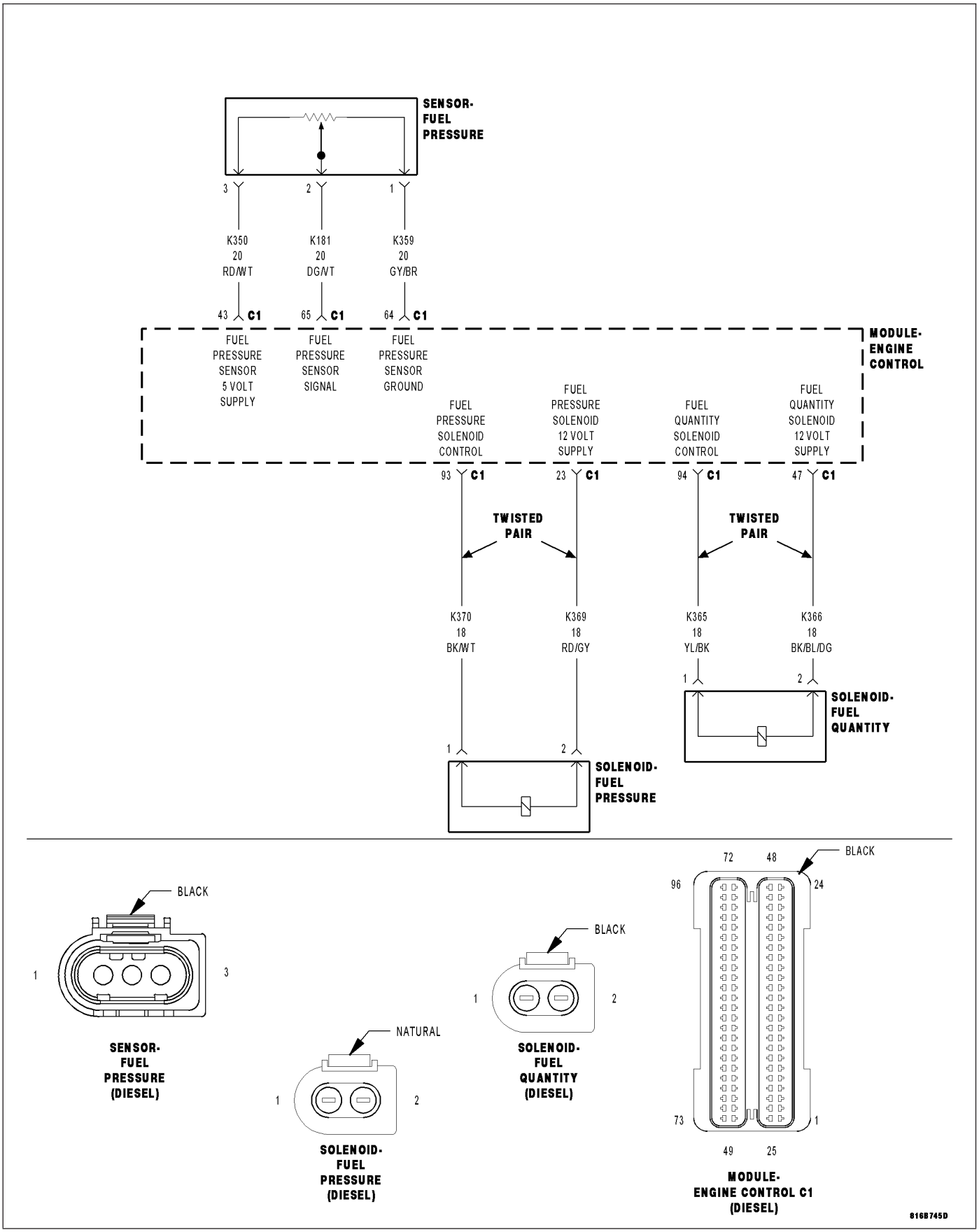

For a complete wiring diagram **Refer to Section 8W**

- **When Monitored:**
  With the ignition on.
- **Set Condition:**
  The (K181) Fuel Pressure Sensor Signal circuit voltage is below 0.25 volt for 0.14 second.

Possible Causes
INTERMITTENT DTC
(K350) FUEL PRESSURE SENSOR 5 VOLT SUPPLY CIRCUIT SHORTED TO GROUND
(K181) FUEL PRESSURE SENSOR SIGNAL CIRCUIT SHORTED TO GROUND
(K350) FUEL PRESSURE SENSOR 5 VOLT SUPPLY CIRCUIT SHORTED TO (K359) FUEL PRESSURE SENSOR GROUND
(K181) FUEL PRESSURE SENSOR SIGNAL CIRCUIT SHORTED TO (K359) FUEL PRESSURE SENSOR GROUND
(K350) FUEL PRESSURE SENSOR 5 VOLT SUPPLY CIRCUIT OPEN OR HIGH RESISTANCE
(K181) FUEL PRESSURE SENSOR SIGNAL CIRCUIT OPEN OR HIGH RESISTANCE
FUEL PRESSURE SENSOR
ENGINE CONTROL MODULE (ECM)

Always perform the Pre-Diagnostic Troubleshooting procedure before proceeding. (Refer to 9 - ENGINE - DIAGNOSIS AND TESTING)

Diagnostic Test

1. DTC IS ACTIVE

Ignition on, engine not running.
With the scan tool, Clear DTCs in the Engine Control Module (ECM).
Monitor the scan tool for at least two minutes.
Cycle the ignition key off and on several times, leaving the ignition on for at least 10 seconds at a time.
Start the engine.
Allow the engine to reach normal operating temperature.
With the scan tool, select View DTCs.

Is the status Active for this DTC?

Yes >> Go To 2

No >> Refer to the *CHECKING FOR AN INTERMITTENT DTC Diagnostic Procedure. (Refer to 9 - ENGINE - DIAGNOSIS AND TESTING)

2. (K350) FUEL PRESSURE SENSOR 5 VOLT SUPPLY CIRCUIT VOLTAGE

Turn the ignition off.
Disconnect the Fuel Pressure Sensor connector.
Turn the ignition on.
Measure the voltage of the (K350) Fuel Pressure Sensor 5 Volt Supply circuit in the Fuel Pressure Sensor connector.

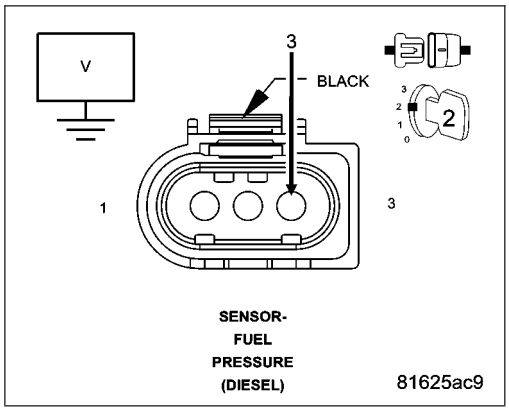

Is the voltage above 4.5 volts?

Yes >> Go to 6

No >> Go to 3

3. (K350) FUEL PRESSURE SENSOR 5 VOLT SUPPLY CIRCUIT SHORTED TO GROUND

Turn the ignition off.

Disconnect the Engine Control Module (ECM) connector.

Measure the resistance between ground and the (K350) Fuel Pressure Sensor 5 Volt Supply circuit in the Fuel Pressure Sensor connector.

Is the resistance above 1000.0 ohms?

Yes >> Go to 4

No >> Repair the (K350) Fuel Pressure Sensor 5 Volt Supply circuit for a short to ground.

Perform the ECM Verification Test Ver. 1. (Refer to 9 - ENGINE - DIAGNOSIS AND TESTING)

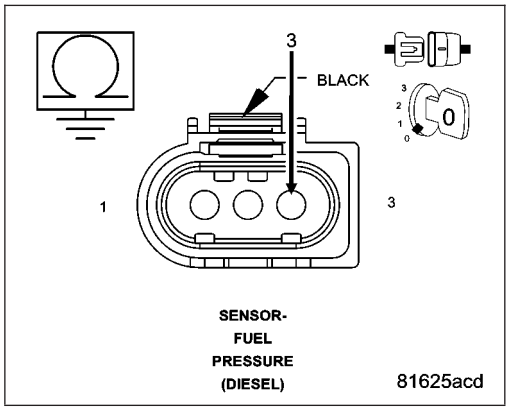

4. (K350) FUEL PRESSURE SENSOR 5 VOLT SUPPLY CIRCUIT SHORTED TO (K359) FUEL PRESSURE SENSOR GROUND CIRCUIT

Measure the resistance between the (K350) Fuel Pressure Sensor 5 Volt Supply circuit and the (K359) Fuel Pressure Sensor Ground circuit in the Fuel Pressure Sensor connector.

Is the resistance above 1000.0 ohms?

Yes >> Go to 5

No >> Repair the (K350) Fuel Pressure Sensor 5 Volt Supply circuit for a short to the (K359) Fuel Pressure Sensor Ground circuit.

Perform the ECM Verification Test Ver. 1. (Refer to 9 - ENGINE - DIAGNOSIS AND TESTING)

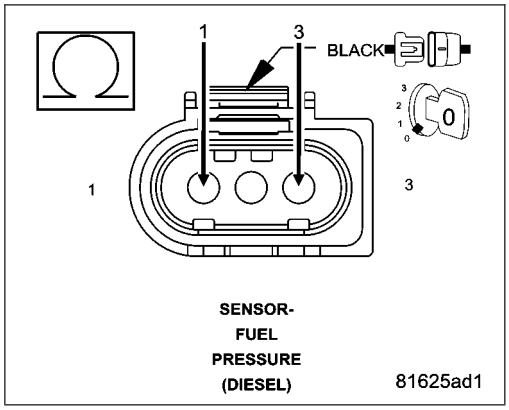

5. (K350) FUEL PRESSURE SENSOR 5 VOLT SUPPLY CIRCUIT OPEN OR HIGH RESISTANCE

Measure the resistance of the (K350) Fuel Pressure Sensor 5 Volt Supply circuit between the Fuel Pressure Sensor connector and the Engine Control Module (ECM) connector.

Is the resistance below 10.0 ohms?

Yes >> Go to 10

No >> Repair the (K350) Fuel Pressure Sensor 5 Volt Supply circuit for an open circuit or high resistance.
Perform the ECM Verification Test Ver. 1. (Refer to 9 - ENGINE - DIAGNOSIS AND TESTING)

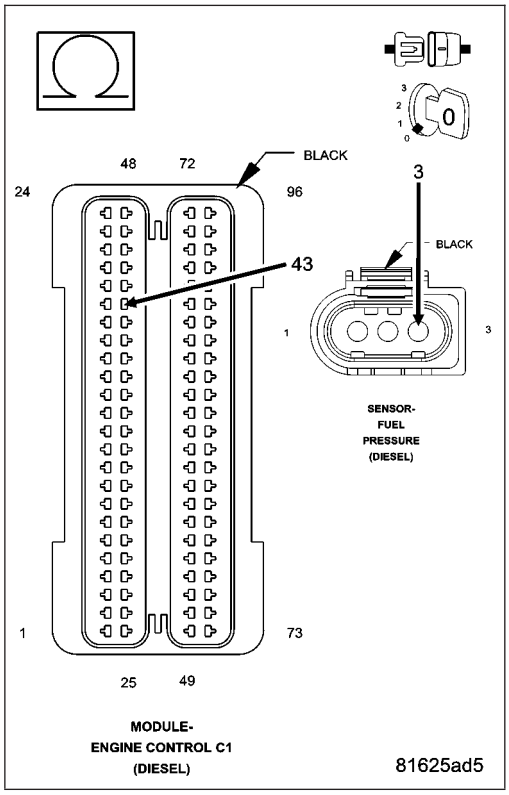

6. FUEL PRESSURE SENSOR

Turn the ignition on.

With the scan tool, Clear DTCs.

With the scan tool, select View DTCs.

NOTE: The scan tool should display a Fuel Pressure Sensor high voltage or open DTC with the Fuel Pressure Sensor connector disconnected.

Does the scan tool display the DTC(s) as described above?

Yes >> Replace the Fuel Pressure Sensor in accordance with the Service Information.
Perform the ECM Verification Test Ver. 1. (Refer to 9 - ENGINE - DIAGNOSIS AND TESTING)

No >> Go to 7

7. (K181) FUEL PRESSURE SENSOR SIGNAL CIRCUIT SHORTED TO GROUND

Turn the ignition off.

Disconnect the Engine Control Module (ECM) connector.

Measure the resistance between ground and the (K181) Fuel Pressure Sensor Signal circuit in the Fuel Pressure Sensor connector.

Is the resistance above 1000.0 ohms?

Yes >> Go to 8

No >> Repair the (K181) Fuel Pressure Sensor Signal circuit for a short to ground.
Perform the ECM Verification Test Ver. 1. (Refer to 9 - ENGINE - DIAGNOSIS AND TESTING)

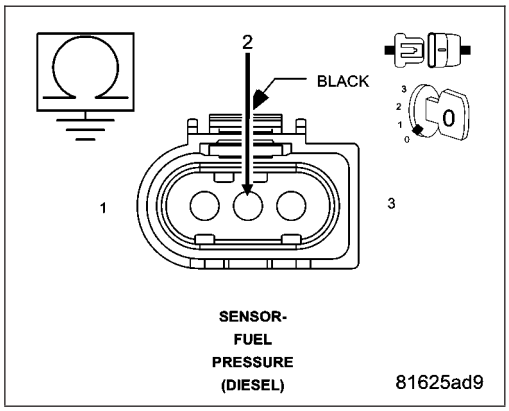

8. (K181) FUEL PRESSURE SENSOR SIGNAL CIRCUIT SHORTED TO (K359) FUEL PRESSURE SENSOR GROUND CIRCUIT

Measure the resistance between the (K181) Fuel Pressure Sensor Signal circuit and the (K359) Fuel Pressure Sensor Ground circuit in the Fuel Pressure Sensor connector.

Is the resistance above 1000 ohms?

Yes >> Go to 9

No >> Repair the (K181) Fuel Pressure Sensor Signal circuit for a short to the (K359) Fuel Pressure Sensor Ground circuit.

Perform the ECM Verification Test Ver. 1. (Refer to 9 - ENGINE - DIAGNOSIS AND TESTING)

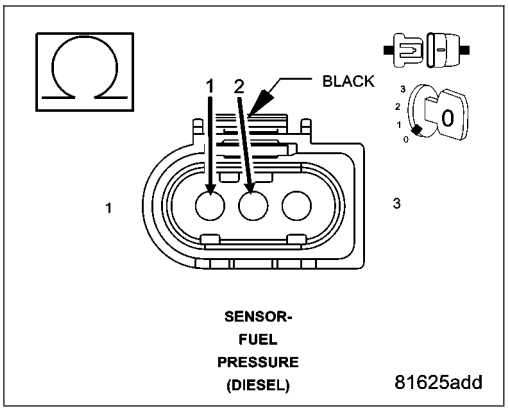

9. (K181) FUEL PRESSURE SENSOR SIGNAL CIRCUIT OPEN OR HIGH RESISTANCE

Measure the resistance of the (K181) Fuel Pressure Sensor Signal circuit between the Fuel Pressure Sensor connector and the Engine Control Module (ECM) connector.

Is the resistance below 10.0 ohms?

Yes >> Go to 10

No >> Repair the (K181) Fuel Pressure Sensor Signal circuit for an open circuit or high resistance.

Perform the ECM Verification Test Ver. 1. (Refer to 9 - ENGINE - DIAGNOSIS AND TESTING)

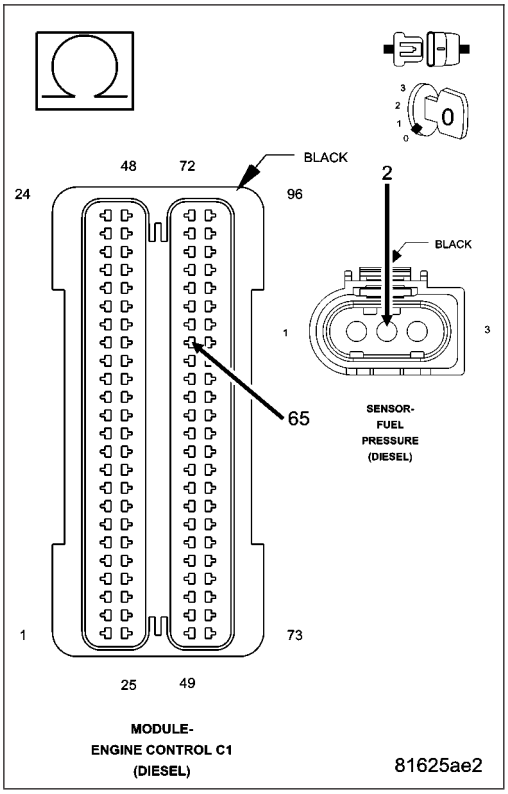

10. ENGINE CONTROL MODULE (ECM)

Using the wiring diagram/schematic as a guide, inspect the wiring and connectors between the Fuel Pressure Sensor and the Engine Control Module (ECM).

Look for any chafed, pierced, pinched, or partially broken wires.

Look for broken, bent, pushed out or corroded terminals.

Monitor the scan tool data relative to this circuit and wiggle test the wiring and connectors.

Look for the data to change or for the DTC to reset during the wiggle test.

Refer to any Technical Service Bulletins that may apply.

Were any problems found?

Yes >> Repair as necessary.
Perform the ECM Verification Test Ver. 1. (Refer to 9 - ENGINE - DIAGNOSIS AND TESTING)

No >> Replace the Engine Control Module (ECM) in accordance with the Service Information.
Perform the ECM Verification Test Ver. 1. (Refer to 9 - ENGINE - DIAGNOSIS AND TESTING)

P0193-FUEL RAIL PRESSURE SENSOR HIGH

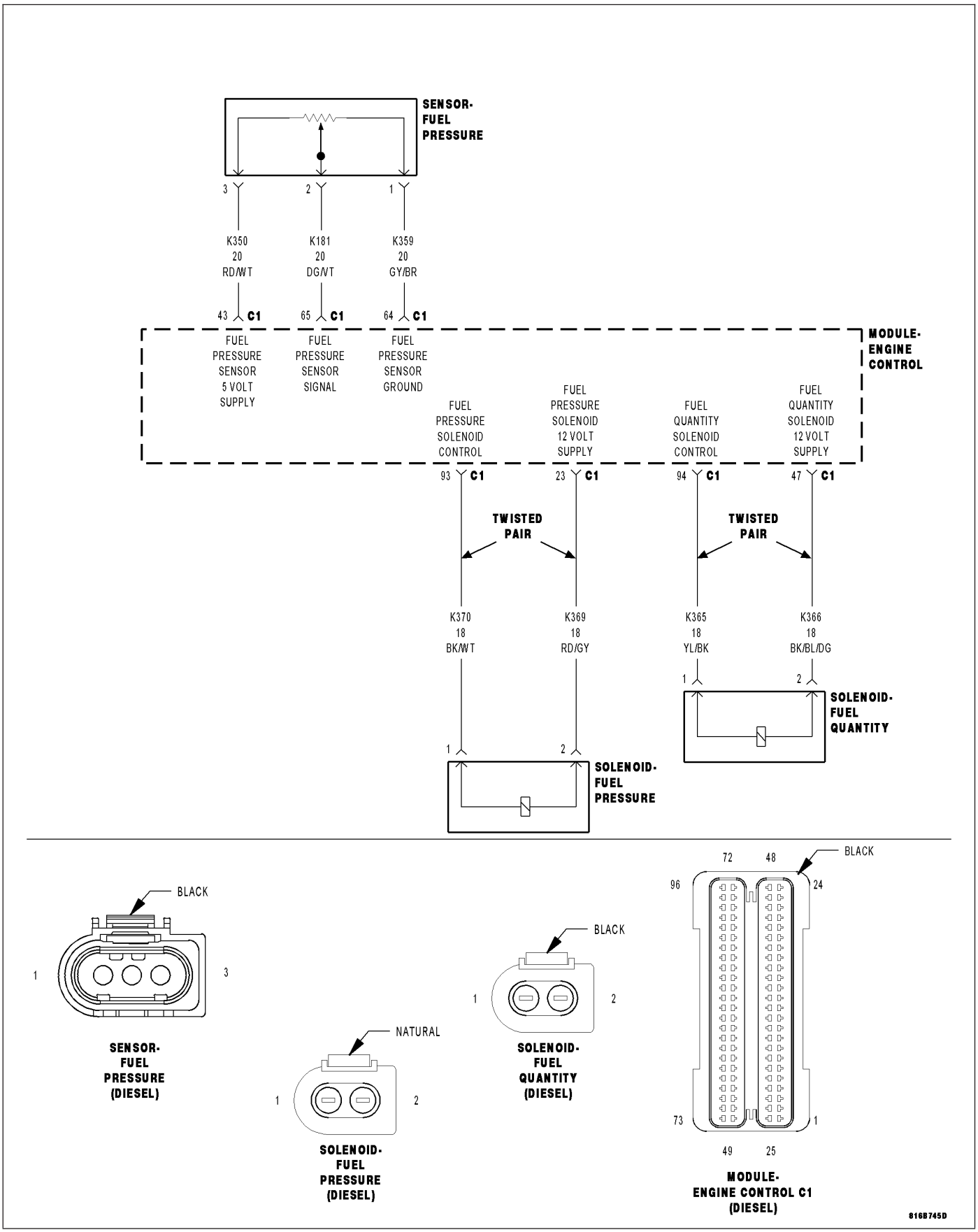

For a complete wiring diagram **Refer to Section 8W**

- **When Monitored:**
  With the ignition on.
- **Set Condition:**
  The (K181) Fuel Pressure Sensor Signal circuit voltage is above 4.75 volts for 0.14 second.

Possible Causes
INTERMITTENT DTC
(K350) FUEL PRESSURE SENSOR 5 VOLT SUPPLY CIRCUIT SHORTED TO VOLTAGE
(K181) FUEL PRESSURE SENSOR SIGNAL CIRCUIT SHORTED TO VOLTAGE
(K359) FUEL PRESSURE SENSOR GROUND CIRCUIT SHORTED TO VOLTAGE
(K181) FUEL PRESSURE SENSOR SIGNAL CIRCUIT OPEN OR HIGH RESISTANCE
(K359) FUEL PRESSURE SENSOR GROUND CIRCUIT OPEN OR HIGH RESISTANCE
FUEL PRESSURE SENSOR
ENGINE CONTROL MODULE (ECM)

Always perform the Pre-Diagnostic Troubleshooting procedure before proceeding. (Refer to 9 - ENGINE - DIAGNOSIS AND TESTING)

Diagnostic Test

1. DTC IS ACTIVE

Ignition on, engine not running.
With the scan tool, Clear DTCs in the Engine Control Module (ECM).
Monitor the scan tool for at least two minutes.
Cycle the ignition key off and on several times, leaving the ignition on for at least 10 seconds at a time.
Start the engine.
Allow the engine to reach normal operating temperature.
With the scan tool, select View DTCs.

Is the status Active for this DTC?

Yes >> Go To 2

No >> Refer to the *CHECKING FOR AN INTERMITTENT DTC Diagnostic Procedure. (Refer to 9 - ENGINE - DIAGNOSIS AND TESTING)

2. (K350) FUEL PRESSURE SENSOR 5 VOLT SUPPLY CIRCUIT SHORTED TO VOLTAGE

Turn the ignition off.
Disconnect the Fuel Pressure Sensor connector.
Disconnect the Engine Control Module (ECM) connector.
Remove the ASD Relay from the IPM.
Connect a jumper wire between cavity 30 and cavity 87 of the ASD Relay Connector.
Turn the ignition on.
Measure the voltage of the (K350) Fuel Pressure Sensor 5 Volt Supply circuit in the Fuel Pressure Sensor connector.

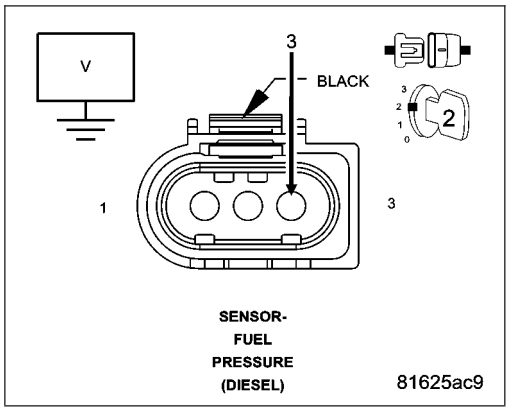

Is there any voltage present?

Yes >> Repair the (K350) Fuel Pressure Sensor 5 Volt Supply circuit for a short to voltage.
Perform the ECM Verification Test Ver. 1. (Refer to 9 - ENGINE - DIAGNOSIS AND TESTING)

No >> Go to 3

3. (K181) FUEL PRESSURE SENSOR SIGNAL CIRCUIT SHORTED TO VOLTAGE

NOTE: The jumper wire should still be in place.
Measure the voltage of the (K181) Fuel Pressure Sensor Signal circuit in the Fuel Pressure Sensor connector.

Is there any voltage present?

Yes >> Repair the (K181) Fuel Pressure Sensor Signal circuit for a short to voltage.
Perform the ECM Verification Test Ver. 1. (Refer to 9 - ENGINE - DIAGNOSIS AND TESTING)

No >> Go to 4

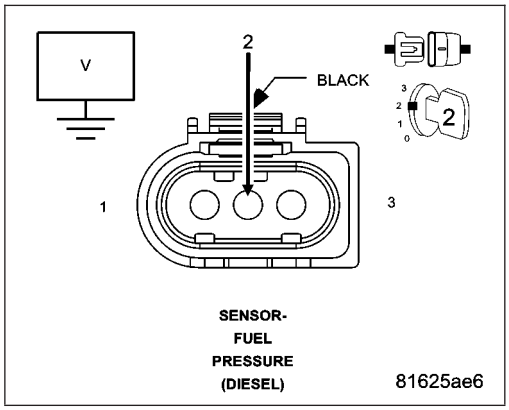

4. (K359) FUEL PRESSURE SENSOR GROUND CIRCUIT SHORTED TO VOLTAGE

NOTE: The jumper wire should still be in place.
Measure the voltage of the (K359) Fuel Pressure Sensor Ground circuit in the Fuel Pressure Sensor connector.

Is there any voltage present?

Yes >> Repair the (K359) Fuel Pressure Sensor Ground circuit for a short to voltage.
Perform the ECM Verification Test Ver. 1. (Refer to 9 - ENGINE - DIAGNOSIS AND TESTING)

No >> Go to 5

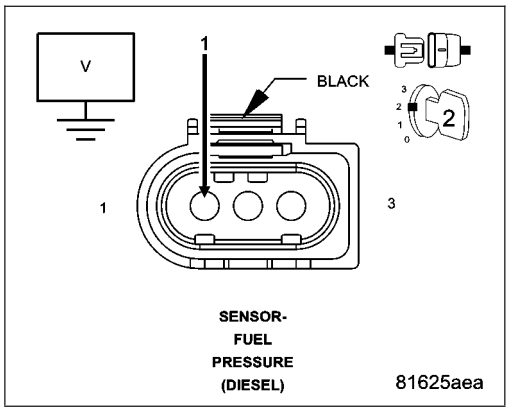

5. FUEL PRESSURE SENSOR

Turn the ignition off.

Remove the jumper wire and install the ASD Relay.

Connect the Engine Control Module (ECM) connector.

Connect a jumper wire between the (K359) Fuel Pressure Sensor Ground circuit and the (K181) Fuel Pressure Sensor Signal circuit in the Fuel Pressure Sensor connector.

Turn the ignition on.

With the scan tool, Clear DTCs.

With the scan tool, select View DTCs.

NOTE: The scan tool should display a Fuel Pressure Sensor low voltage or short to ground DTC with the jumper wire in place.

Does the scan tool display the DTC(s) as described above?

Yes >> Replace the Fuel Pressure Sensor in accordance with the Service Information.
Perform the ECM Verification Test Ver. 1. (Refer to 9 - ENGINE - DIAGNOSIS AND TESTING)

No >> Go to 6

6. (K181) FUEL PRESSURE SENSOR SIGNAL OPEN OR HIGH RESISTANCE

Turn the ignition off.

Disconnect the Engine Control Module (ECM) connector.

Measure the resistance of the (K181) Fuel Pressure Sensor Signal between the Fuel Pressure Sensor connector and the Engine Control Module (ECM) connector.

Is the resistance below 10.0 ohms?

Yes >> Go to 7

No >> Repair the (K181) Fuel Pressure Sensor Signal for an open circuit or high resistance.

Perform the ECM Verification Test Ver. 1. (Refer to 9 - ENGINE - DIAGNOSIS AND TESTING)

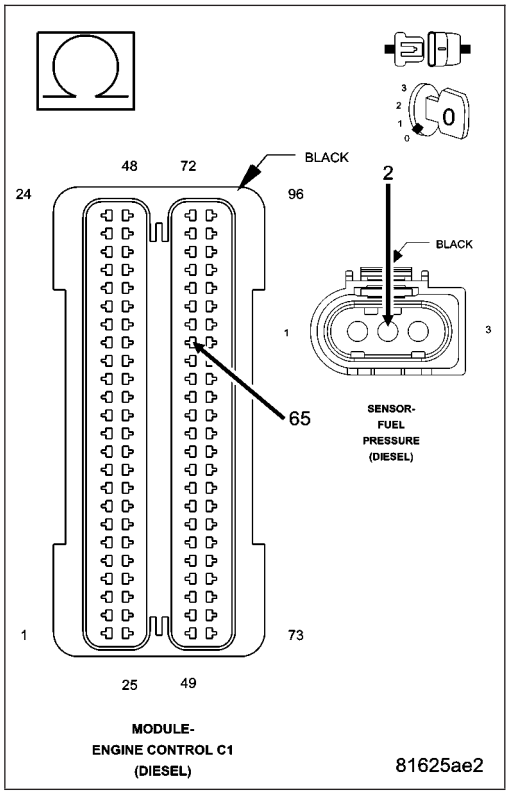

7. (K359) FUEL PRESSURE SENSOR GROUND CIRCUIT OPEN OR HIGH RESISTANCE

Measure the resistance of the (K359) Fuel Pressure Sensor Ground circuit between the Fuel Pressure Sensor connector and the Engine Control Module (ECM) connector.

Is the resistance below 10.0 ohms?

Yes >> Go to 8

No >> Repair the (K359) Fuel Pressure Sensor Ground circuit for an open circuit or high resistance.

Perform the ECM Verification Test Ver. 1. (Refer to 9 - ENGINE - DIAGNOSIS AND TESTING)

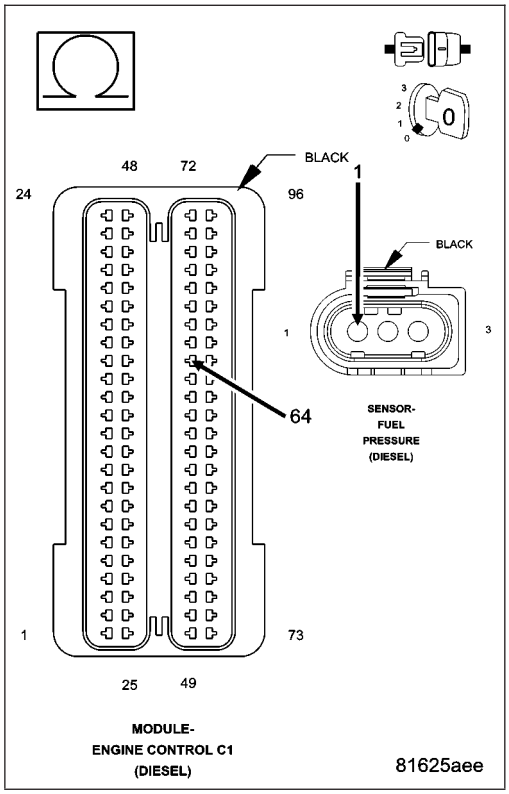

8. ENGINE CONTROL MODULE (ECM)

Using the wiring diagram/schematic as a guide, inspect the wiring and connectors between the Fuel Pressure Sensor and the Engine Control Module (ECM).

Look for any chafed, pierced, pinched, or partially broken wires.

Look for broken, bent, pushed out or corroded terminals.

Monitor the scan tool data relative to this circuit and wiggle test the wiring and connectors.

Look for the data to change or for the DTC to reset during the wiggle test.

Refer to any Technical Service Bulletins that may apply.

Were any problems found?

Yes >> Repair as necessary.
Perform the ECM Verification Test Ver. 1. (Refer to 9 - ENGINE - DIAGNOSIS AND TESTING)

No >> Replace the Engine Control Module (ECM) in accordance with the Service Information.
Perform the ECM Verification Test Ver. 1. (Refer to 9 - ENGINE - DIAGNOSIS AND TESTING)

P0197-ENGINE OIL TEMPERATURE SENSOR CIRCUIT LOW

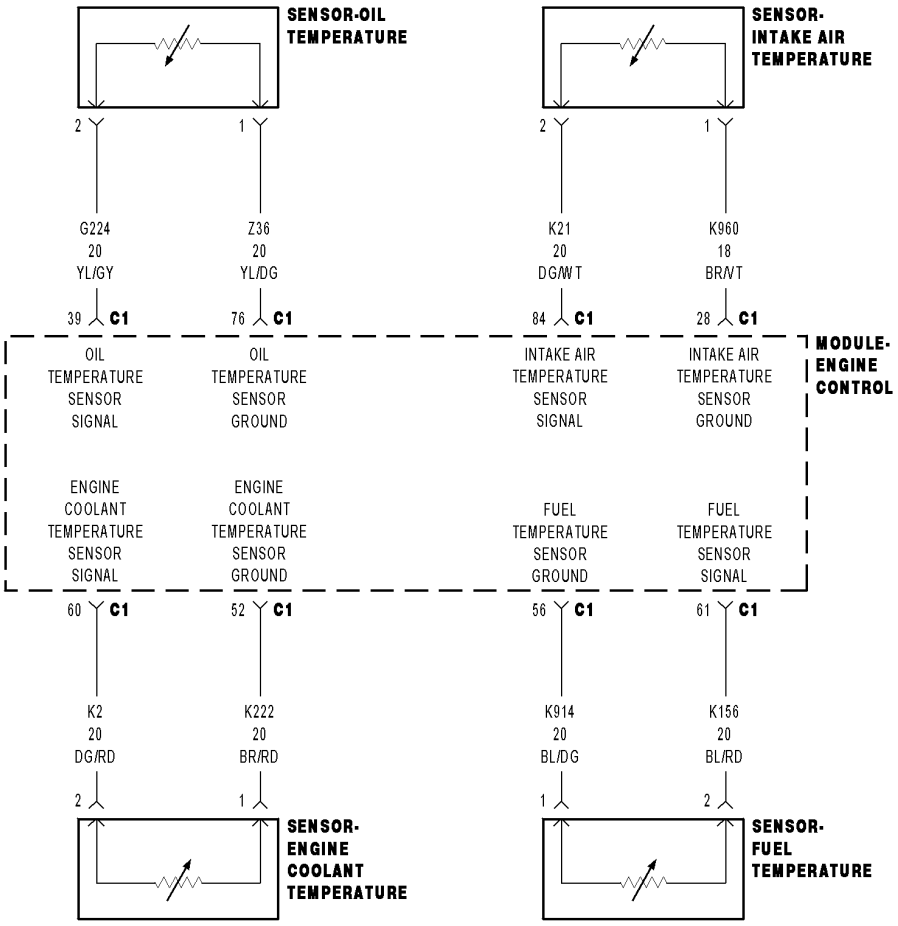

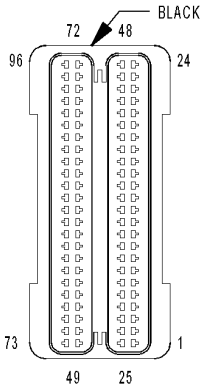

MODULE-ENGINE CONTROL C1 (DIESEL)

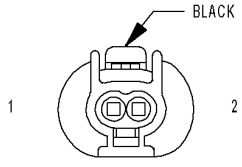

SENSOR-INTAKE AIR TEMPERATURE (DIESEL)

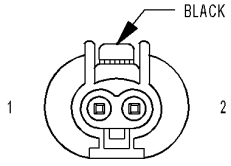

SENSOR-OIL TEMPERATURE (DIESEL)

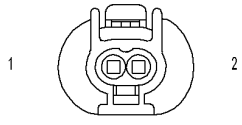

SENSOR-FUEL TEMPERATURE (DIESEL)

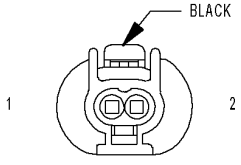

SENSOR-ENGINE COOLANT TEMPERATURE (DIESEL)

816B7486

For a complete wiring diagram **REFER TO SECTION 8W**

- **WHEN MONITORED:**
  With the ignition on.
- **SET CONDITION:**
  The (G224) Oil Temperature Sensor Signal circuit voltage is below 0.18 volt for 0.5 second.

POSSIBLE CAUSES
INTERMITTENT DTC
(G224) OIL TEMPERATURE SENSOR SIGNAL CIRCUIT SHORTED TO GROUND
(G224) OIL TEMPERATURE SENSOR SIGNAL CIRCUIT SHORTED TO (Z36) OIL TEMPERATURE SENSOR GROUND
(G224) OIL TEMPERATURE SENSOR SIGNAL CIRCUIT OPEN OR HIGH RESISTANCE
OIL TEMPERATURE SENSOR
ENGINE CONTROL MODULE (ECM)

ALWAYS PERFORM THE PRE-DIAGNOSTIC TROUBLESHOOTING PROCEDURE BEFORE PROCEEDING. (REFER TO 9 - ENGINE - DIAGNOSIS AND TESTING)

DIAGNOSTIC TEST

1. DTC IS ACTIVE

Ignition on, engine not running.
With the scan tool, clear DTCs in the Engine Control Module (ECM).
Monitor the scan tool for at least two minutes.
Cycle the ignition key off and on several times, leaving the ignition on for at least 10 seconds at a time.
Start the engine.
Allow the engine to reach normal operating temperature.
With the scan tool, select View DTCs.

Is the status active for this DTC?

Yes >> Go To 2

No >> Perform the ECM Verification Test Ver. 1. (Refer to 9 - ENGINE - DIAGNOSIS AND TESTING)

2. OIL TEMPERATURE SENSOR

Turn the ignition off.
Disconnect the Oil Temperature Sensor harness connector.
Turn the ignition on.
With the scan tool, clear DTCs.
With the scan tool, select view DTCs.

NOTE: The scan tool should display an Oil Temperature Sensor High Voltage or Open Circuit DTC with the Oil Temperature Sensor harness connector disconnected.

Does the scan tool display the DTC(s) as described above?

Yes >> Replace the Oil Temperature Sensor in accordance with the Service Information.
Perform the ECM Verification Test Ver. 1. (Refer to 9 - ENGINE - DIAGNOSIS AND TESTING)

No >> Go To 3

3. (G224) OIL TEMPERATURE SENSOR SIGNAL CIRCUIT SHORTED TO GROUND

Turn the ignition off.

Disconnect the Engine Control Module (ECM) harness connector.

Measure the resistance between ground and the (G224) Oil Temperature Sensor Signal circuit in the Oil Temperature Sensor harness connector.

Is the resistance above 1000.0 ohms?

Yes >> Go To 4

No >> Repair the (G224) Oil Temperature Sensor Signal circuit for a short to ground.

Perform the ECM Verification Test Ver. 1. (Refer to 9 - ENGINE - DIAGNOSIS AND TESTING)

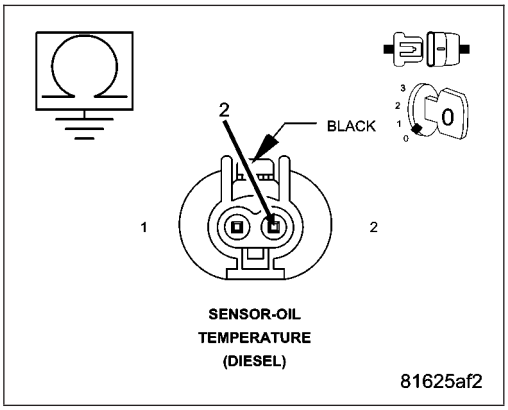

4. (G224) OIL TEMPERATURE SENSOR SIGNAL CIRCUIT SHORTED TO (Z36) OIL TEMPERATURE SENSOR GROUND CIRCUIT

Measure the resistance between the (G224) Oil Temperature Sensor signal circuit and the (Z36) Oil Temperature Sensor ground circuit in the Oil Temperature Sensor connector.

Is the resistance above 10.0 ohms?

Yes >> Go To 5

No >> Repair the (G224) Oil Temperature Sensor Signal circuit for a short to the (Z36) Oil Temperature Sensor Ground circuit.

Perform the ECM Verification Test Ver. 1. (Refer to 9 - ENGINE - DIAGNOSIS AND TESTING)

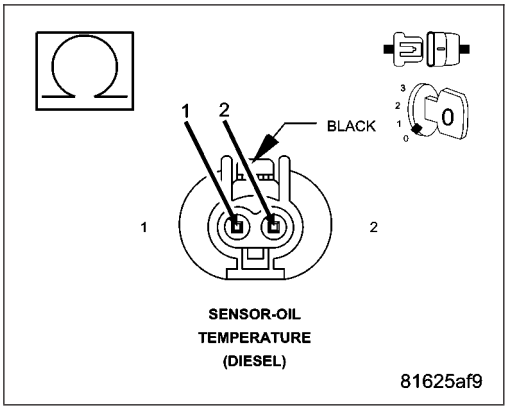

5. (G224) OIL TEMPERATURE SENSOR SIGNAL CIRCUIT OPEN CIRCUIT OR HIGH RESISTANCE

Measure the resistance of the (G224) Oil Temperature Sensor Signal circuit between the Oil Temperature Sensor harness connector and the Engine Control Module (ECM) harness connector.

Is the resistance below 10.0 ohms?

Yes >> GO TO 6

No >> Repair the (G224) Oil Temperature Sensor Signal circuit for an open circuit or high resistance.
Perform the ECM Verification Test Ver. 1. (Refer to 9 - ENGINE - DIAGNOSIS AND TESTING)

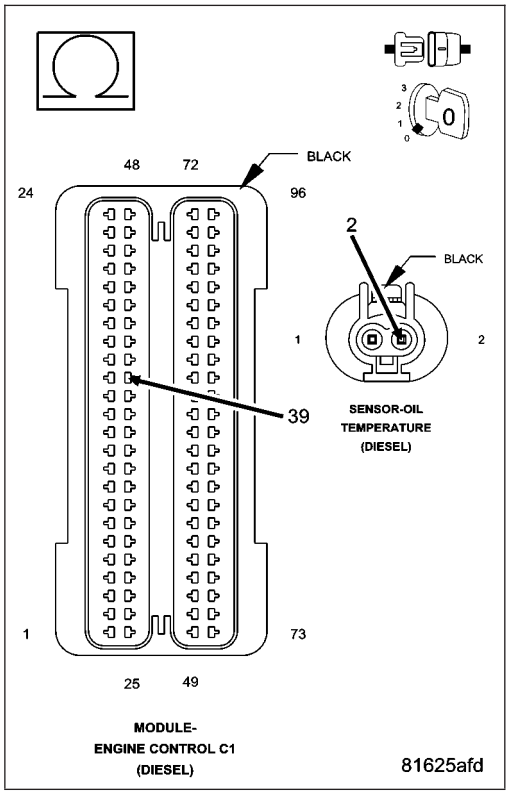

6. ENGINE CONTROL MODULE (ECM)

Using the wiring diagram/schematic as a guide, inspect the wiring and connectors between the Oil Temperature Sensor and the Engine Control Module (ECM).

Look for any chafed, pierced, pinched, or partially broken wires.

Look for broken, bent, pushed out or corroded terminals.

Monitor the scan tool data relative to this circuit and wiggle test the wiring and connectors.

Look for the data to change or for the DTC to reset during the wiggle test.

Refer to any technical service bulletins that may apply.

Were any problems found?

Yes >> Repair as necessary.
Perform the ECM Verification Test Ver. 1. (Refer to 9 - ENGINE - DIAGNOSIS AND TESTING)

No >> Replace the Engine Control Module (ECM) in accordance with the service information.
Perform the ECM Verification Test Ver. 1. (Refer to 9 - ENGINE - DIAGNOSIS AND TESTING)

P0198-ENGINE OIL TEMPERATURE SENSOR CIRCUIT HIGH

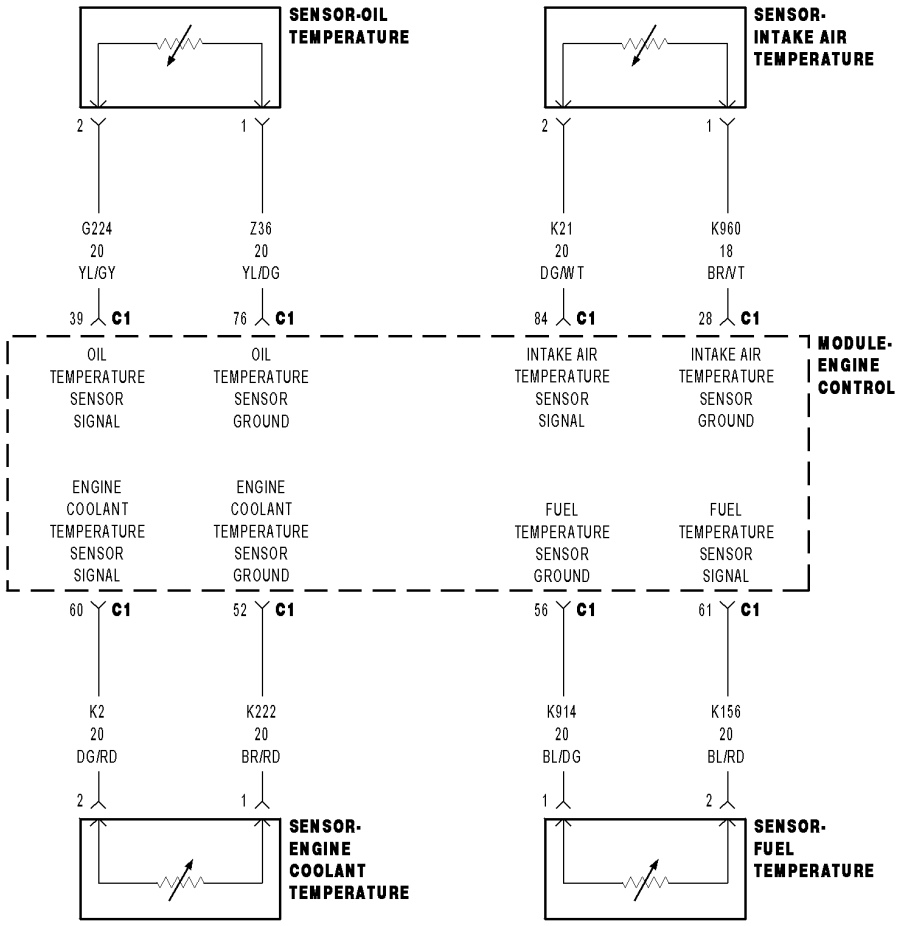

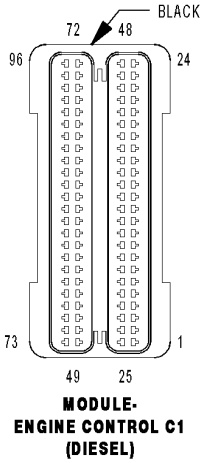

MODULE-ENGINE CONTROL C1 (DIESEL)

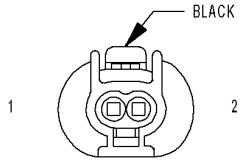

SENSOR-INTAKE AIR TEMPERATURE (DIESEL)

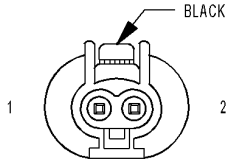

SENSOR-OIL TEMPERATURE (DIESEL)

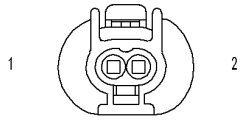

SENSOR-FUEL TEMPERATURE (DIESEL)

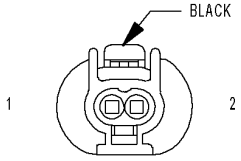

SENSOR-ENGINE COOLANT TEMPERATURE (DIESEL)

816B7486

FOR A COMPLETE WIRING DIAGRAM **REFER TO SECTION 8W**

- **WHEN MONITORED:**
  With the ignition on.
- **SET CONDITION:**
  The (G224) Oil Temperature Sensor Signal circuit voltage is above 4.95 volts for 0.5 second.

POSSIBLE CAUSES
INTERMITTENT DTC
(G224) OIL TEMPERATURE SENSOR SIGNAL CIRCUIT SHORTED TO VOLTAGE
(Z36) OIL TEMPERATURE SENSOR GROUND CIRCUIT SHORTED TO VOLTAGE
(G224) OIL TEMPERATURE SENSOR SIGNAL CIRCUIT OPEN OR HIGH RESISTANCE
(Z36) OIL TEMPERATURE SENSOR GROUND CIRCUIT OPEN OR HIGH RESISTANCE
OIL TEMPERATURE SENSOR
ENGINE CONTROL MODULE (ECM)

ALWAYS PERFORM THE PRE-DIAGNOSTIC TROUBLESHOOTING PROCEDURE BEFORE PROCEEDING. (REFER TO 9 - ENGINE - DIAGNOSIS AND TESTING)

DIAGNOSTIC TEST

1. DTC IS ACTIVE

Ignition on, engine not running.
With the scan tool, clear DTCs in the Engine Control Module (ECM).
Monitor the scan tool for at least two minutes.
Cycle the ignition key off and on several times, leaving the ignition on for at least 10 seconds at a time.
Start the engine.
Allow the engine to reach normal operating temperature.
With the scan tool, select view DTCs.

Is the status active for this DTC?

Yes >> Go To 2

No >> REFER TO THE *CHECKING FOR AN INTERMITTENT DTC DIAGNOSTIC PROCEDURE. (REFER TO 9 - ENGINE - DIAGNOSIS AND TESTING)

2. (G224) OIL TEMPERATURE SENSOR SIGNAL CIRCUIT SHORTED TO VOLTAGE

Turn the ignition off.
Disconnect the Oil Temperature Sensor connector.
Disconnect the Engine Control Module (ECM) connector.
Remove the ASD relay from the IPM.
Connect a jumper wire between cavity 30 and cavity 87 of the ASD relay connector.
Turn the ignition on.
Measure the voltage of the (G224) Oil Temperature Sensor Signal circuit in the Oil Temperature Sensor connector.

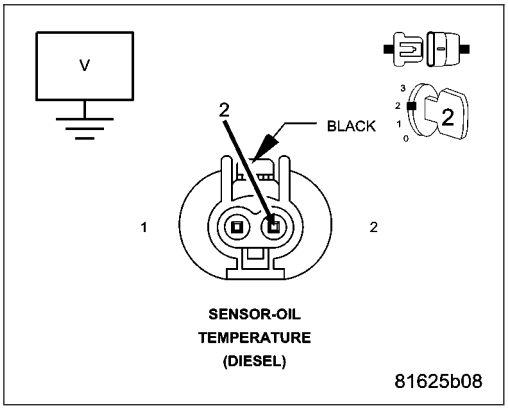

Is there any voltage present?

Yes >> Repair the (G224) Oil Temperature Sensor Signal circuit for a short to voltage.
Perform the ECM Verification Test Ver. 1. (Refer to 9 - ENGINE - DIAGNOSIS AND TESTING)

No >> Go To 3

3. (Z36) OIL TEMPERATURE SENSOR GROUND CIRCUIT SHORTED TO VOLTAGE

NOTE: THE JUMPER WIRE SHOULD STILL BE IN PLACE.
Measure the voltage of the (Z36) Oil Temperature Sensor Ground circuit in the Oil Temperature Sensor harness connector.

Is there any voltage present?

Yes >> Repair the (Z36) Oil Temperature Sensor Ground circuit for a short to voltage.
Perform the ECM Verification Test Ver. 1. (Refer to 9 - ENGINE - DIAGNOSIS AND TESTING)

No >> Go To 4

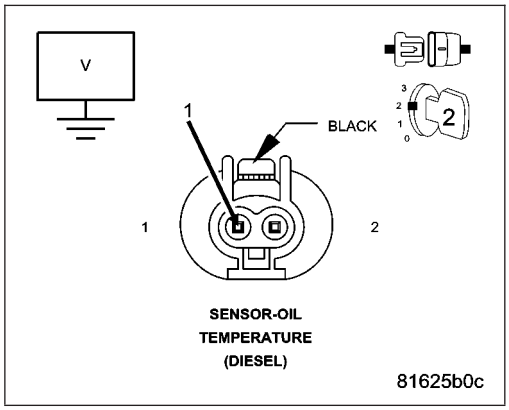

4. OIL TEMPERATURE SENSOR

Turn the ignition off.

Connect the Engine Control Module (ECM) harness connector.

Connect a jumper wire between the (Z36) Oil Temperature Sensor Ground circuit and the (G224) Oil Temperature Sensor Signal circuit in the Oil Temperature Sensor harness connector.

Turn the ignition on.

With the scan tool, clear DTCs.

With the scan tool, select view DTCs.

NOTE: The scan tool should display an Oil Temperature Sensor Low Voltage or Short To Ground DTC with the jumper wire in place.

Does the scan tool display the DTC(s) as described above?

Yes >> Replace the Oil Temperature Sensor in accordance with the Service Information.
Perform the ECM Verification Test Ver. 1. (Refer to 9 - ENGINE - DIAGNOSIS AND TESTING)

No >> Go To 5

5. (G224) OIL TEMPERATURE SENSOR SIGNAL CIRCUIT OPEN OR HIGH RESISTANCE

Turn the ignition off.

Disconnect the Engine Control Module (ECM) connector.

Measure the resistance of the (G224) Oil Temperature Sensor Signal circuit between the Oil Temperature Sensor harness connector and the Engine Control Module (ECM) harness connector.

Is the resistance below 10.0 ohms?

Yes >> Go To 6

No >> Repair the (G224) Oil Temperature Sensor Signal circuit for an open circuit or high resistance.

Perform the ECM Verification Test Ver. 1. (Refer to 9 - ENGINE - DIAGNOSIS AND TESTING)

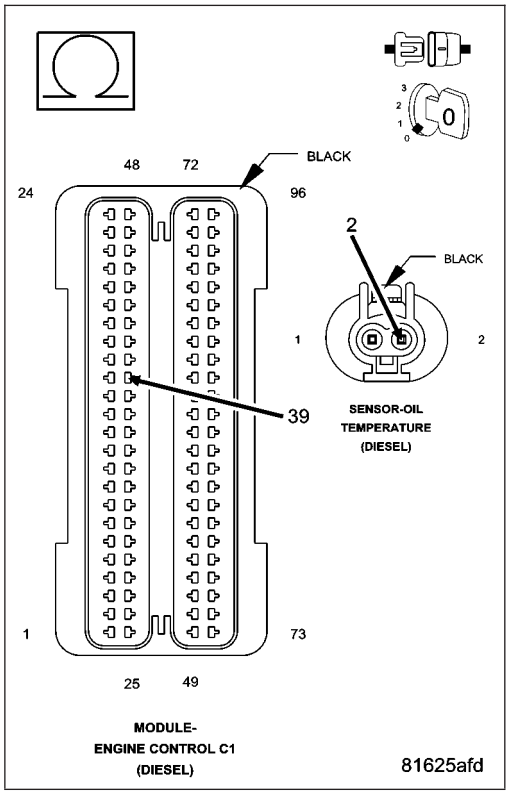

6. (Z36) OIL TEMPERATURE SENSOR GROUND CIRCUIT OPEN OR HIGH RESISTANCE

Measure the resistance of the (Z36) Oil Temperature Sensor Ground circuit between the Oil Temperature Sensor harness connector and the Engine Control Module (ECM) harness connector.

Is the resistance below 10.0 ohms?

Yes >> Go To 7

No >> Repair the (Z36) Oil Temperature Sensor Ground circuit for an open circuit or high resistance.

Perform the ECM Verification Test Ver. 1. (Refer to 9 - ENGINE - DIAGNOSIS AND TESTING)

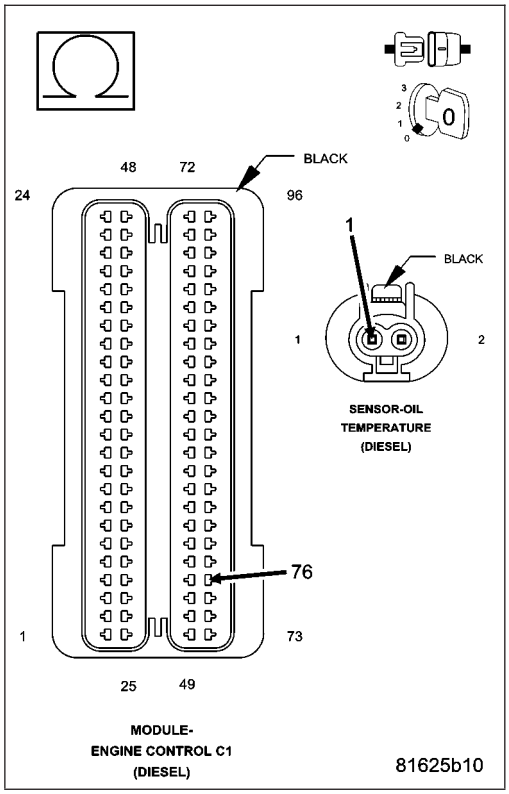

7. ENGINE CONTROL MODULE (ECM)

Using the wiring diagram/schematic as a guide, inspect the wiring and connectors between the Oil Temperature Sensor and the Engine Control Module (ECM).

Look for any chafed, pierced, pinched, or partially broken wires.

Look for broken, bent, pushed out or corroded terminals.

Monitor the scan tool data relative to this circuit and wiggle test the wiring and connectors.

Look for the data to change or for the DTC to reset during the wiggle test.

Refer to any technical service bulletins that may apply.

Were any problems found?

Yes >> Repair as necessary.
Perform the ECM Verification Test Ver. 1. (Refer to 9 - ENGINE - DIAGNOSIS AND TESTING)

No >> Replace the Engine Control Module (ECM) in accordance with the Service Information.
Perform the ECM Verification Test Ver. 1. (Refer to 9 - ENGINE - DIAGNOSIS AND TESTING)

P0201-FUEL INJECTOR 1 CIRCUIT / OPEN

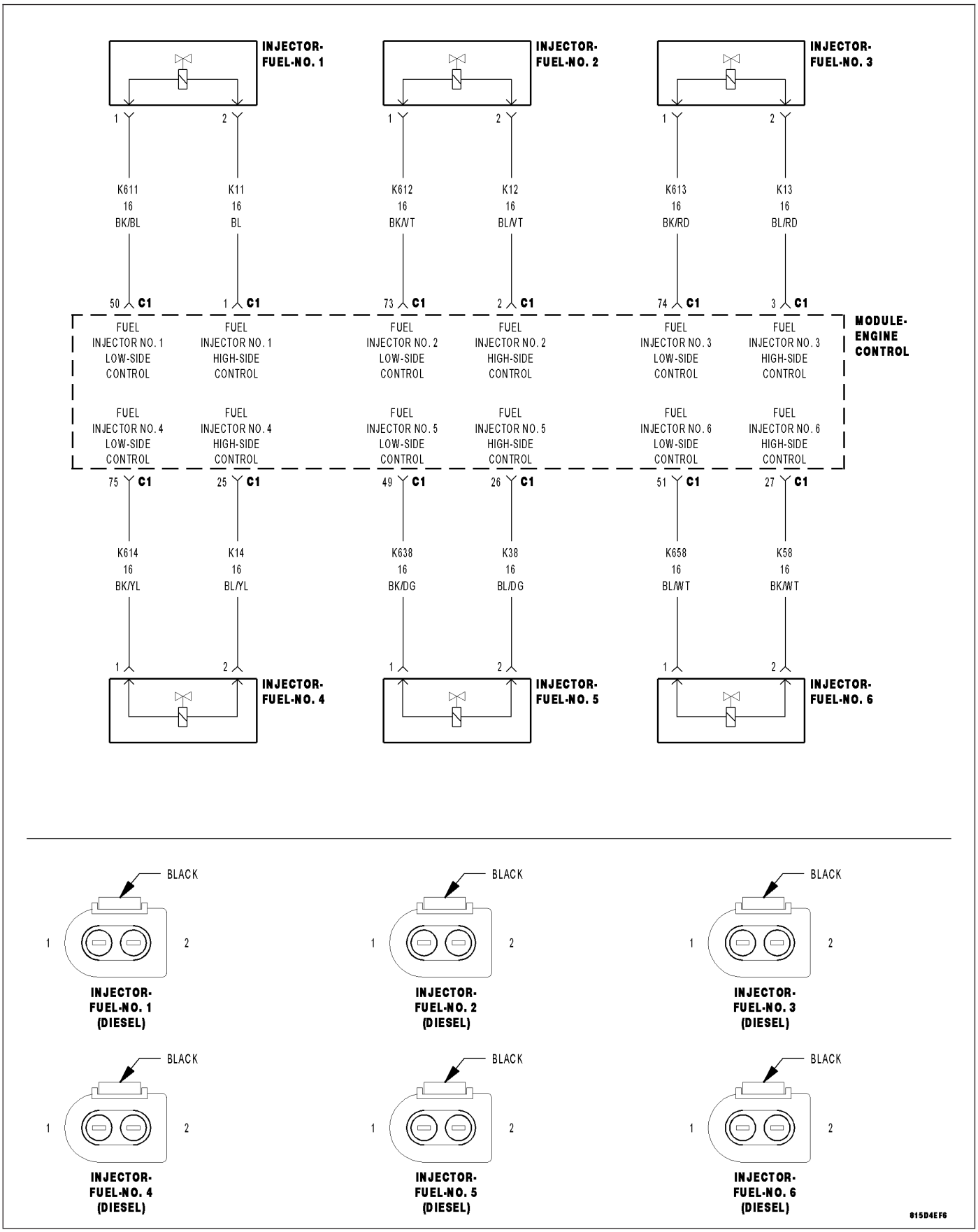

For a complete wiring diagram **Refer to Section 8W**

- **When Monitored:**
  With the engine running.
- **Set Condition:**
  The ECM detects an open in the Fuel Injector 1 circuit.

Possible Causes
INTERMITTENT DTC
(K11) FUEL INJECTOR NO. 1 HIGH-SIDE CONTROL CIRCUIT SHORTED TO VOLTAGE
(K611) FUEL INJECTOR NO. 1 LOW-SIDE CONTROL CIRCUIT SHORTED TO VOLTAGE
(K11) FUEL INJECTOR NO. 1 HIGH-SIDE CONTROL CIRCUIT SHORTED TO GROUND
(K611) FUEL INJECTOR NO. 1 LOW-SIDE CONTROL CIRCUIT SHORTED TO GROUND
(K11) FUEL INJECTOR NO. 1 HIGH-SIDE CONTROL CIRCUIT SHORTED TO (K611) FUEL INJECTOR NO. 1 LOW-SIDE CONTROL CIRCUIT
(K11) FUEL INJECTOR NO. 1 HIGH-SIDE CONTROL CIRCUIT OPEN OR HIGH RESISTANCE
(K611) FUEL INJECTOR NO. 1 LOW-SIDE CONTROL CIRCUIT OPEN OR HIGH RESISTANCE
FUEL INJECTOR NO. 1
ENGINE CONTROL MODULE (ECM)

Always perform the Pre-Diagnostic Troubleshooting procedure before proceeding. (Refer to 9 - ENGINE - DIAGNOSIS AND TESTING)

Diagnostic Test

1. DTC IS ACTIVE

NOTE: This DTC can set as a result of a fault in any of the injector circuits. Be sure to check all injector circuits before replacing an injector and all injectors before replacing a module.

Ignition on, engine not running.

With the scan tool, Clear DTCs in the Engine Control Module (ECM).

Attempt to start the engine and test drive the vehicle.

With the scan tool, select View DTCs.

Is the status Active for this DTC?

Yes >> Go To 2

No >> Refer to the *CHECKING FOR AN INTERMITTENT DTC Diagnostic Procedure. (Refer to 9 - ENGINE - DIAGNOSIS AND TESTING)

2. (K11) FUEL INJECTOR NO. 1 HIGH-SIDE CONTROL CIRCUIT SHORTED TO VOLTAGE

Turn the ignition off.

Disconnect the Fuel Injector No. 1 connector.

Disconnect the Engine Control Module (ECM) connector.

Remove the ASD Relay from the IPM.

Connect a jumper wire between cavity 30 and cavity 87 of the ASD Relay Connector.

Turn the ignition on.

Measure the voltage of the (K11) Fuel Injector No. 1 High-Side Control circuit in the Fuel Injector No. 1 connector.

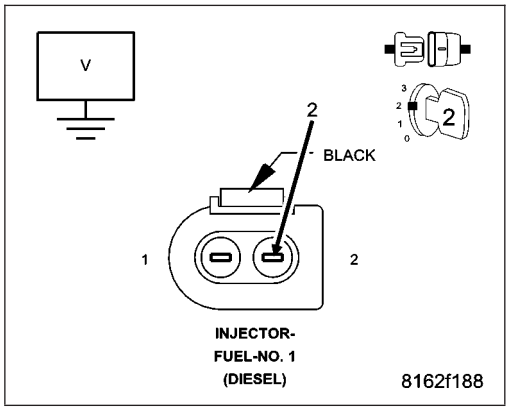

Is there any voltage present?

Yes >> Repair the (K11) Fuel Injector No. 1 High-Side Control circuit for a short to voltage.
Perform the ECM Verification Test Ver. 1. (Refer to 9 - ENGINE - DIAGNOSIS AND TESTING)

No >> Go to 3

3. (K611) FUEL INJECTOR NO. 1 LOW-SIDE CONTROL CIRCUIT SHORTED TO VOLTAGE

NOTE: The jumper wire should still be in place.

Measure the voltage of the (K611) Fuel Injector No. 1 Low-Side Control circuit.

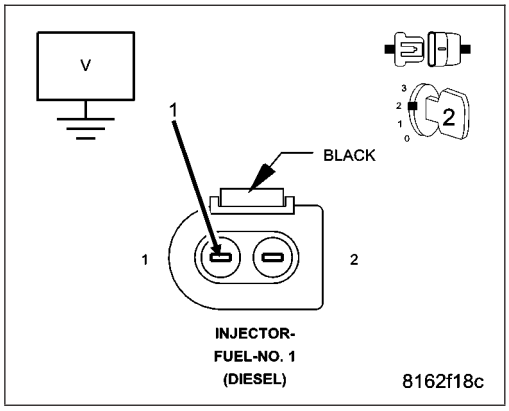

Is there any voltage present?

Yes >> Repair the (K611) Fuel Injector No. 1 Low-Side Control circuit for a short to voltage.
Perform the ECM Verification Test Ver. 1. (Refer to 9 - ENGINE - DIAGNOSIS AND TESTING)

No >> Go to 4

4. (K11) FUEL INJECTOR NO. 1 HIGH-SIDE CONTROL CIRCUIT SHORTED TO GROUND

Turn the ignition off.

Measure the resistance between ground and the (K11) Fuel Injector No. 1 High-Side Control circuit in the Fuel Injector No. 1 connector.

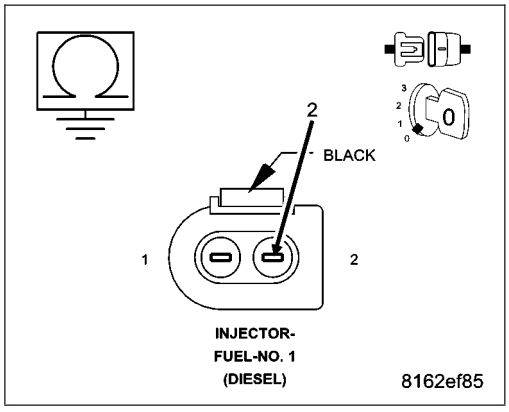

Is the resistance above 1000.0 ohms?

Yes >> Go to 5

No >> Repair the (K11) Fuel Injector No. 1 High-Side Control circuit for a short to ground.
Perform the ECM Verification Test Ver. 1. (Refer to 9 - ENGINE - DIAGNOSIS AND TESTING)

5. (K611) FUEL INJECTOR NO. 1 LOW-SIDE CONTROL CIRCUIT SHORTED TO GROUND

Measure the resistance between ground and the (K611) Fuel Injector No. 1 Low-Side Control circuit in the Fuel Injector No. 1 connector.

Is the resistance above 1000.0 ohms?

Yes >> Go to 6

No >> Repair the (K611) Fuel Injector No. 1 Low-Side Control circuit for a short to ground.

Perform the ECM Verification Test Ver. 1. (Refer to 9 - ENGINE - DIAGNOSIS AND TESTING)

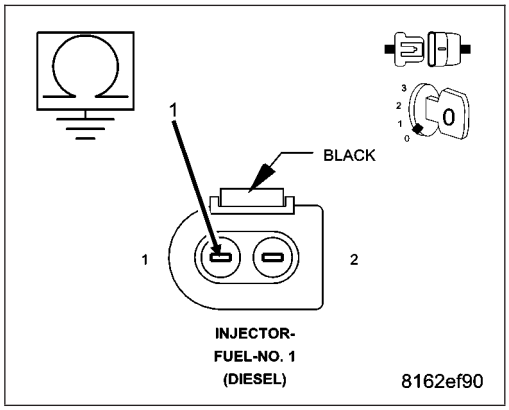

6. (K11) FUEL INJECTOR NO. 1 HIGH-SIDE CONTROL CIRCUIT SHORTED TO (K611) FUEL INJECTOR NO. 1 LOW-SIDE CONTROL CIRCUIT

Measure the resistance between the (K11) Fuel Injector No. 1 High-Side Control circuit and the (K611) Fuel Injector No. 1 Low-Side Control circuit in the Fuel Injector No. 1 connector.

Is the resistance above 1000.0 ohms?

Yes >> Go to 7

No >> Repair the (K11) Fuel Injector No. 1 High-Side Control circuit for a short to the (K611) Fuel Injector No. 1 Low-Side Control circuit.

Perform the ECM Verification Test Ver. 1. (Refer to 9 - ENGINE - DIAGNOSIS AND TESTING)

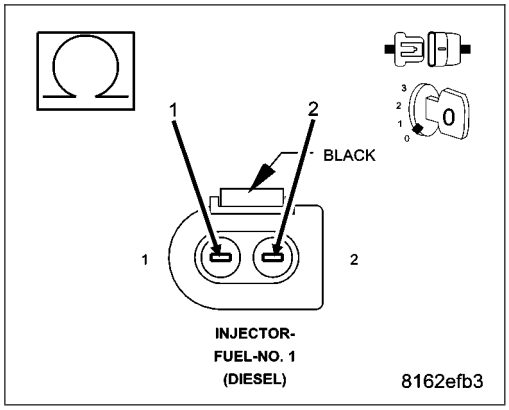

7. (K11) FUEL INJECTOR NO. 1 HIGH-SIDE CONTROL CIRCUIT OPEN OR HIGH RESISTANCE

Measure the resistance of the (K11) Fuel Injector No. 1 High-Side Control circuit between the Fuel Injector No. 1 connector and the Engine Control Module (ECM) connector.

Is the resistance below 10.0 ohms?

Yes >> Go to 8

No >> Repair the (K11) Fuel Injector No. 1 High-Side Control circuit for an open circuit or high resistance.
Perform the ECM Verification Test Ver. 1. (Refer to 9 - ENGINE - DIAGNOSIS AND TESTING)

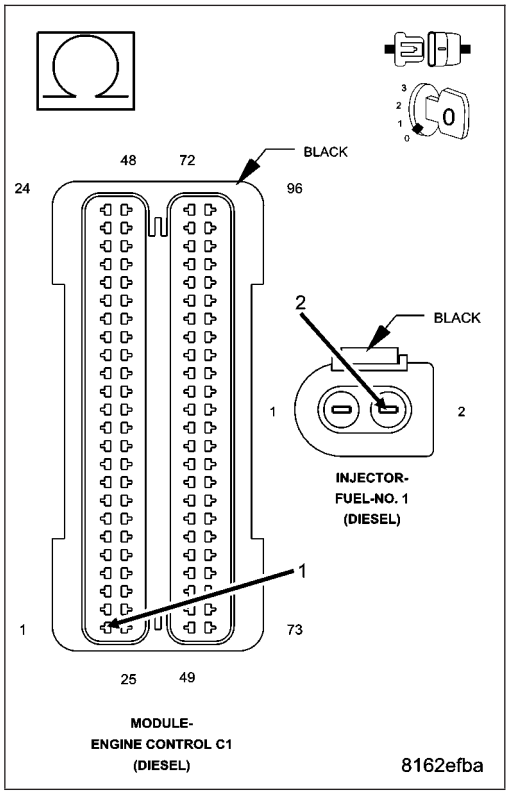

8. (K611) FUEL INJECTOR NO. 1 LOW-SIDE CONTROL CIRCUIT OPEN OR HIGH RESISTANCE

Measure the resistance of the (K611) Fuel Injector No. 1 Low-Side Control circuit between the Fuel Injector No. 1 connector and the Engine Control Module (ECM) connector.

Is the resistance below 10.0 ohms?

Yes >> Go to 9

No >> Repair the (K611) Fuel Injector No. 1 Low-Side Control circuit for an open circuit or high resistance.
Perform the ECM Verification Test Ver. 1. (Refer to 9 - ENGINE - DIAGNOSIS AND TESTING)

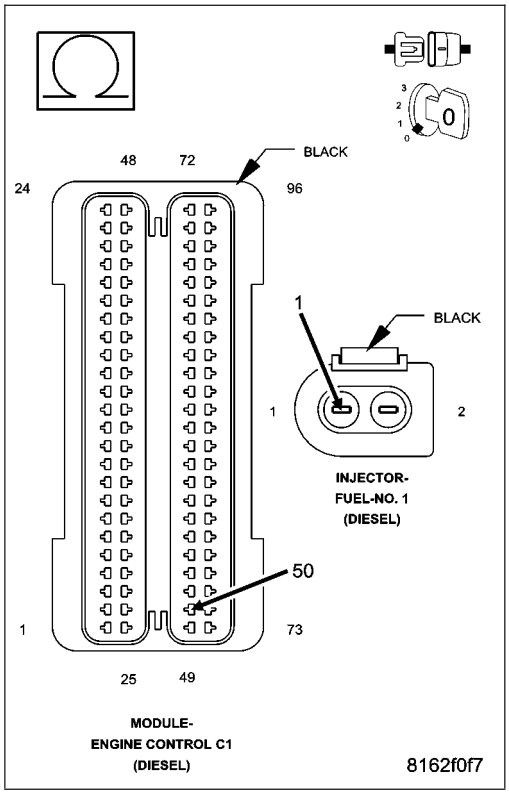

9. FUEL INJECTOR NO. 1

Measure the resistance between the terminals of Fuel Injector No. 1.

Is the resistance approximately 185k ohms (+/- 10%)?

Yes >> Go to 10

No >> Replace the Fuel Injector in accordance with the Service Information.
Perform the ECM Verification Test Ver. 1. (Refer to 9 - ENGINE - DIAGNOSIS AND TESTING)

10. ENGINE CONTROL MODULE (ECM)

Using the wiring diagram/schematic as a guide, inspect the wiring and connectors between the Fuel Injector No. 1 and the Engine Control Module (ECM).

Look for any chafed, pierced, pinched, or partially broken wires.

Look for broken, bent, pushed out or corroded terminals.

Monitor the scan tool data relative to this circuit and wiggle test the wiring and connectors.

Look for the data to change or for the DTC to reset during the wiggle test.

Refer to any Technical Service Bulletins that may apply.

Were any problems found?

Yes >> Repair as necessary.
Perform the ECM Verification Test Ver. 1. (Refer to 9 - ENGINE - DIAGNOSIS AND TESTING)

No >> Replace the Engine Control Module (ECM) in accordance with the Service Information.
Perform the ECM Verification Test Ver. 1. (Refer to 9 - ENGINE - DIAGNOSIS AND TESTING)

P0202-FUEL INJECTOR 2 CIRCUIT / OPEN

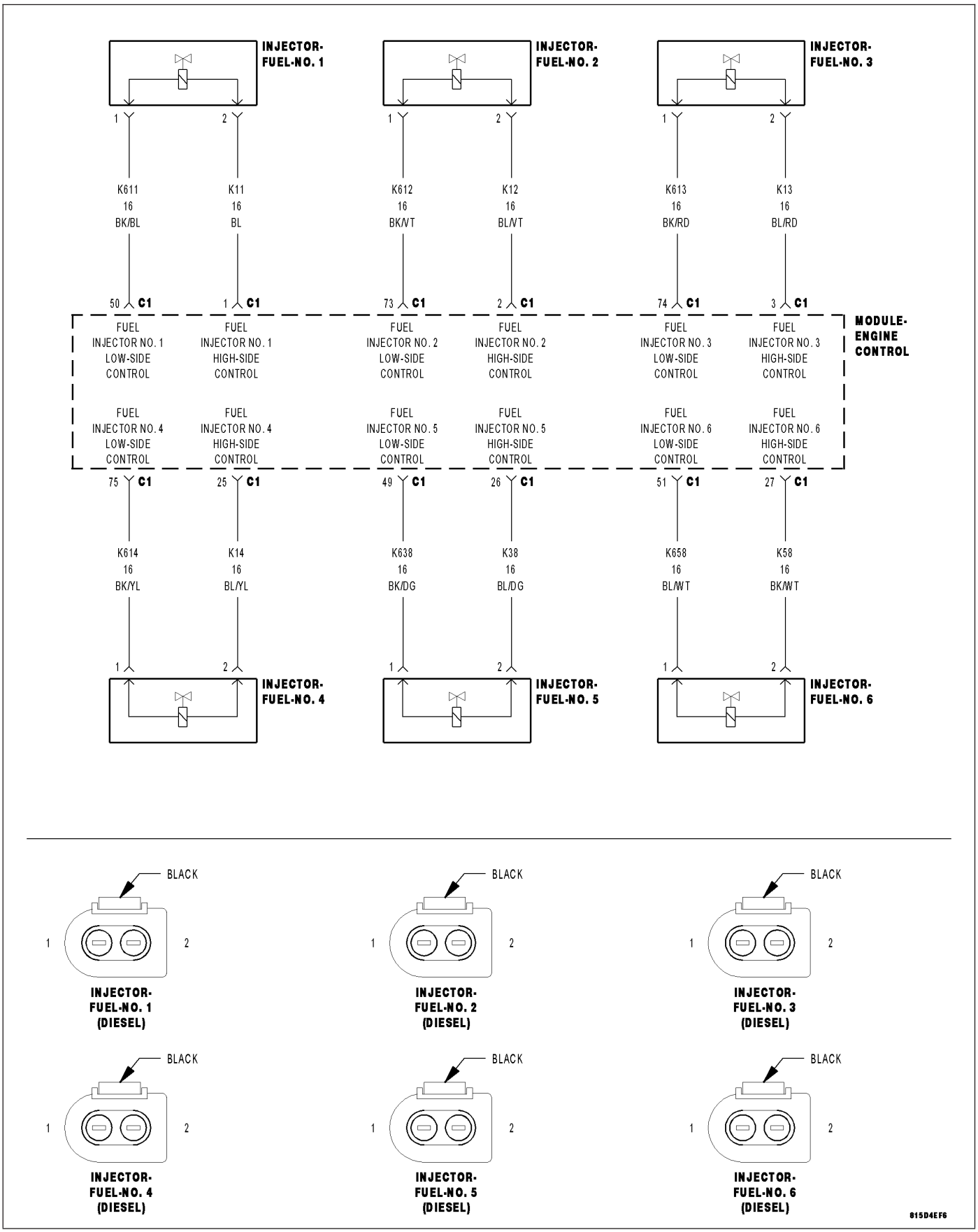

For a complete wiring diagram **Refer to Section 8W**

- **When Monitored:**
  With the engine running.
- **Set Condition:**
  The ECM detects an open in the Fuel Injector 2 circuit.

Possible Causes
INTERMITTENT DTC
(K12) FUEL INJECTOR NO. 2 HIGH-SIDE CONTROL CIRCUIT SHORTED TO VOLTAGE
(K612) FUEL INJECTOR NO. 2 LOW-SIDE CONTROL CIRCUIT SHORTED TO VOLTAGE
(K12) FUEL INJECTOR NO. 2 HIGH-SIDE CONTROL CIRCUIT SHORTED TO GROUND
(K612) FUEL INJECTOR NO. 2 LOW-SIDE CONTROL CIRCUIT SHORTED TO GROUND
(K12) FUEL INJECTOR NO. 2 HIGH-SIDE CONTROL CIRCUIT SHORTED TO (K612) FUEL INJECTOR NO. 2 LOW-SIDE CONTROL CIRCUIT
(K12) FUEL INJECTOR NO. 2 HIGH-SIDE CONTROL CIRCUIT OPEN OR HIGH RESISTANCE
(K612) FUEL INJECTOR NO. 2 LOW-SIDE CONTROL CIRCUIT OPEN OR HIGH RESISTANCE
FUEL INJECTOR NO. 2
ENGINE CONTROL MODULE (ECM)

Always perform the Pre-Diagnostic Troubleshooting procedure before proceeding. (Refer to 9 - ENGINE - DIAGNOSIS AND TESTING)

Diagnostic Test

1. DTC IS ACTIVE

NOTE: This DTC can set as a result of a fault in any of the injector circuits. Be sure to check all injector circuits before replacing an injector and all injectors before replacing a module.

Ignition on, engine not running.

With the scan tool, Clear DTCs in the Engine Control Module (ECM).

Attempt to start the engine and test drive the vehicle.

With the scan tool, select View DTCs.

Is the status Active for this DTC?

Yes >> Go To 2

No >> Refer to the *CHECKING FOR AN INTERMITTENT DTC Diagnostic Procedure. (Refer to 9 - ENGINE - DIAGNOSIS AND TESTING)

2. (K12) FUEL INJECTOR NO. 2 HIGH-SIDE CONTROL CIRCUIT SHORTED TO VOLTAGE

Turn the ignition off.

Disconnect the Fuel Injector No. 2 connector.

Disconnect the Engine Control Module (ECM) connector.

Remove the ASD Relay from the IPM.

Connect a jumper wire between cavity 30 and cavity 87 of the ASD Relay Connector.

Turn the ignition on.

Measure the voltage of the (K12) Fuel Injector No. 2 High-Side Control circuit in the Fuel Injector No. 2 connector.

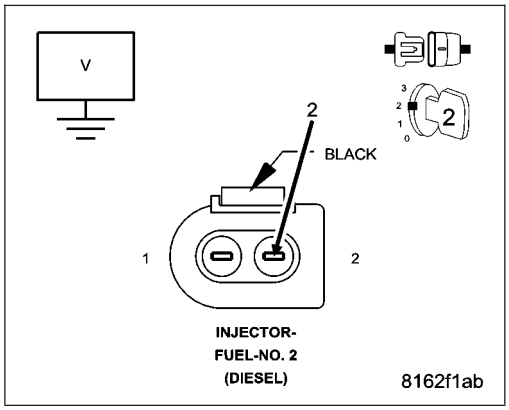

Is there any voltage present?

Yes >> Repair the (K12) Fuel Injector No. 2 High-Side Control circuit for a short to voltage.
Perform the ECM Verification Test Ver. 1. (Refer to 9 - ENGINE - DIAGNOSIS AND TESTING)

No >> Go to 3

3. (K612) FUEL INJECTOR NO. 2 LOW-SIDE CONTROL CIRCUIT SHORTED TO VOLTAGE

NOTE: The jumper wire should still be in place.

Measure the voltage of the (K612) Fuel Injector No. 2 Low-Side Control circuit.

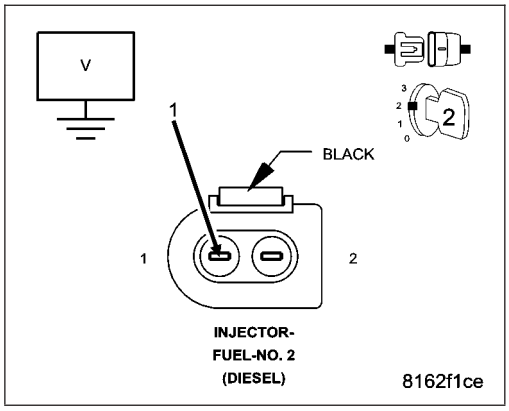

Is there any voltage present?

Yes >> Repair the (K612) Fuel Injector No. 2 Low-Side Control circuit for a short to voltage.
Perform the ECM Verification Test Ver. 1. (Refer to 9 - ENGINE - DIAGNOSIS AND TESTING)

No >> Go to 4

4. (K12) FUEL INJECTOR NO. 2 HIGH-SIDE CONTROL CIRCUIT SHORTED TO GROUND

Turn the ignition off.

Measure the resistance between ground and the (K12) Fuel Injector No. 2 High-Side Control circuit in the Fuel Injector No. 2 connector.

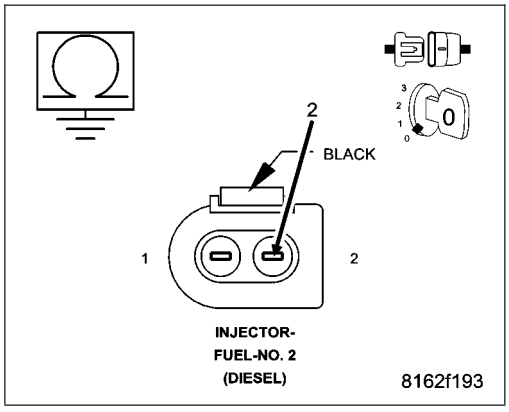

Is the resistance above 1000.0 ohms?

Yes >> Go to 5

No >> Repair the (K12) Fuel Injector No. 2 High-Side Control circuit for a short to ground.
Perform the ECM Verification Test Ver. 1. (Refer to 9 - ENGINE - DIAGNOSIS AND TESTING)

5. (K612) FUEL INJECTOR NO. 2 LOW-SIDE CONTROL CIRCUIT SHORTED TO GROUND

Measure the resistance between ground and the (K612) Fuel Injector No. 2 Low-Side Control circuit in the Fuel Injector No. 2 connector.

Is the resistance above 1000.0 ohms?

Yes >> Go to 6

No >> Repair the (K612) Fuel Injector No. 2 Low-Side Control circuit for a short to ground.

Perform the ECM Verification Test Ver. 1. (Refer to 9 - ENGINE - DIAGNOSIS AND TESTING)

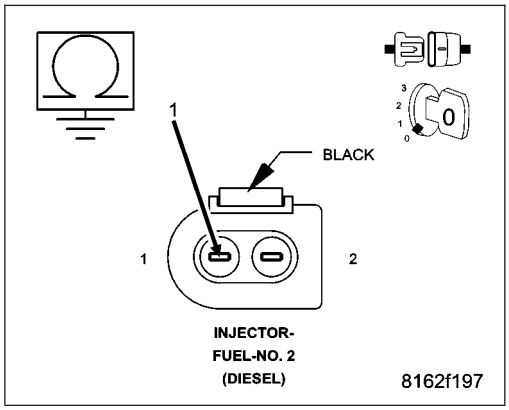

6. (K12) FUEL INJECTOR NO. 2 HIGH-SIDE CONTROL CIRCUIT SHORTED TO (K612) FUEL INJECTOR NO. 2 LOW-SIDE CONTROL CIRCUIT

Measure the resistance between the (K12) Fuel Injector No. 2 High-Side Control circuit and the (K612) Fuel Injector No. 2 Low-Side Control circuit in the Fuel Injector No. 2 connector.

Is the resistance above 1000.0 ohms?

Yes >> Go to 7

No >> Repair the (K12) Fuel Injector No. 2 High-Side Control circuit for a short to the (K612) Fuel Injector No. 2 Low-Side Control circuit.

Perform the ECM Verification Test Ver. 1. (Refer to 9 - ENGINE - DIAGNOSIS AND TESTING)

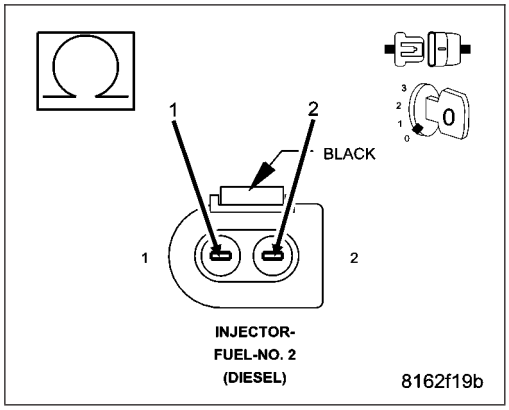

7. (K12) FUEL INJECTOR NO. 2 HIGH-SIDE CONTROL CIRCUIT OPEN OR HIGH RESISTANCE

Measure the resistance of the (K12) Fuel Injector No. 2 High-Side Control circuit between the Fuel Injector No. 2 connector and the Engine Control Module (ECM) connector.

Is the resistance below 10.0 ohms?

Yes >> Go to 8

No >> Repair the (K12) Fuel Injector No. 2 High-Side Control circuit for an open circuit or high resistance.
Perform the ECM Verification Test Ver. 1. (Refer to 9 - ENGINE - DIAGNOSIS AND TESTING)

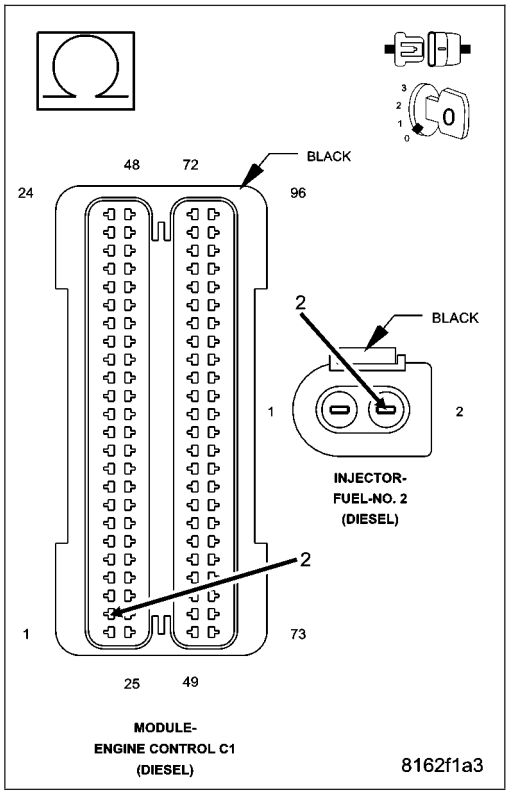

8. (K612) FUEL INJECTOR NO. 2 LOW-SIDE CONTROL CIRCUIT OPEN OR HIGH RESISTANCE

Measure the resistance of the (K612) Fuel Injector No. 2 Low-Side Control circuit between the Fuel Injector No. 2 connector and the Engine Control Module (ECM) connector.

Is the resistance below 10.0 ohms?

Yes >> Go to 9

No >> Repair the (K612) Fuel Injector No. 2 Low-Side Control circuit for an open circuit or high resistance.
Perform the ECM Verification Test Ver. 1. (Refer to 9 - ENGINE - DIAGNOSIS AND TESTING)

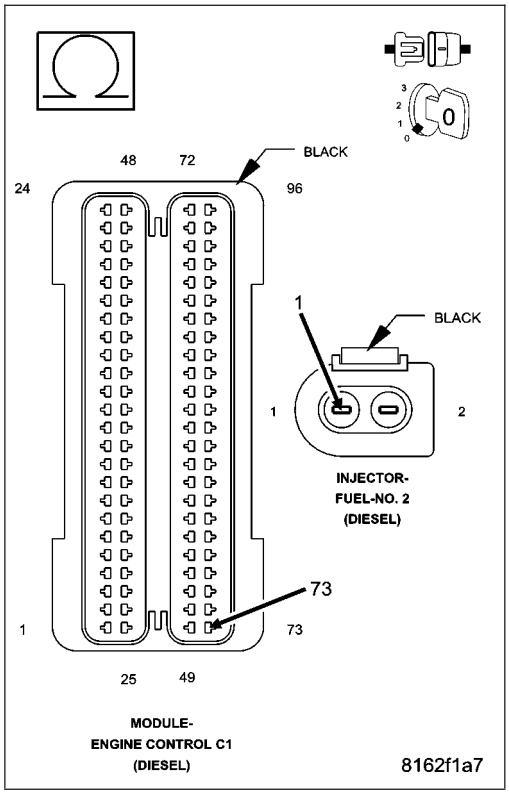

9. FUEL INJECTOR NO. 2

Measure the resistance between the terminals of Fuel Injector No. 2.

Is the resistance approximately 185k ohms (+/- 10%)?

Yes >> Go to 10

No >> Replace the Fuel Injector in accordance with the Service Information.
Perform the ECM Verification Test Ver. 1. (Refer to 9 - ENGINE - DIAGNOSIS AND TESTING)

10. ENGINE CONTROL MODULE (ECM)

Using the wiring diagram/schematic as a guide, inspect the wiring and connectors between the Fuel Injector No. 2 and the Engine Control Module (ECM).

Look for any chafed, pierced, pinched, or partially broken wires.

Look for broken, bent, pushed out or corroded terminals.

Monitor the scan tool data relative to this circuit and wiggle test the wiring and connectors.

Look for the data to change or for the DTC to reset during the wiggle test.

Refer to any Technical Service Bulletins that may apply.

Were any problems found?

Yes >> Repair as necessary.
Perform the ECM Verification Test Ver. 1. (Refer to 9 - ENGINE - DIAGNOSIS AND TESTING)

No >> Replace the Engine Control Module (ECM) in accordance with the Service Information.
Perform the ECM Verification Test Ver. 1. (Refer to 9 - ENGINE - DIAGNOSIS AND TESTING)

P0203-FUEL INJECTOR 3 CIRCUIT / OPEN

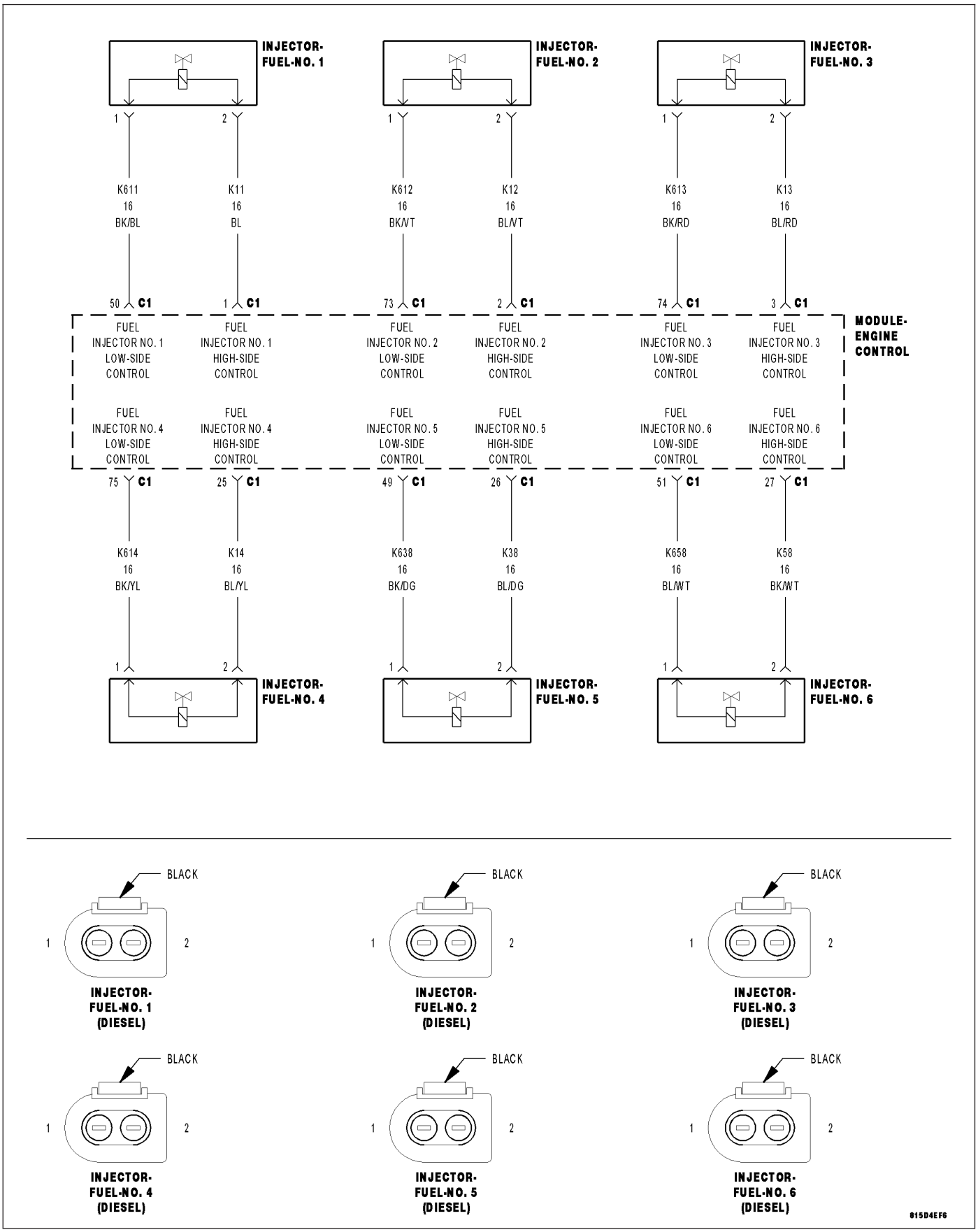

For a complete wiring diagram **Refer to Section 8W**

- **When Monitored:**
  With the engine running.
- **Set Condition:**
  The ECM detects an open in the Fuel Injector 3 circuit.

POSSIBLE CAUSES
INTERMITTENT DTC
(K13) FUEL INJECTOR NO. 3 HIGH-SIDE CONTROL CIRCUIT SHORTED TO VOLTAGE
(K613) FUEL INJECTOR NO. 3 LOW-SIDE CONTROL CIRCUIT SHORTED TO VOLTAGE
(K13) FUEL INJECTOR NO. 3 HIGH-SIDE CONTROL CIRCUIT SHORTED TO GROUND
(K613) FUEL INJECTOR NO. 3 LOW-SIDE CONTROL CIRCUIT SHORTED TO GROUND
(K13) FUEL INJECTOR NO. 3 HIGH-SIDE CONTROL CIRCUIT SHORTED TO (K613) FUEL INJECTOR NO. 3 LOW-SIDE CONTROL CIRCUIT
(K13) FUEL INJECTOR NO. 3 HIGH-SIDE CONTROL CIRCUIT OPEN OR HIGH RESISTANCE
(K613) FUEL INJECTOR NO. 3 LOW-SIDE CONTROL CIRCUIT OPEN OR HIGH RESISTANCE
FUEL INJECTOR NO. 3
ENGINE CONTROL MODULE (ECM)

Always perform the Pre-Diagnostic Troubleshooting Procedure before proceeding. (Refer to 9 - ENGINE - DIAGNOSIS AND TESTING)

DIAGNOSTIC TEST

1. DTC IS ACTIVE

NOTE: This DTC can set as a result of a fault in any of the injector circuits. Be sure to check all injector circuits before replacing an injector and all injectors before replacing a module.

Ignition on, engine not running.

With the scan tool, clear DTCs in the Engine Control Module (ECM).

Attempt to start the engine and test drive the vehicle.

With the scan tool, select view DTCs.

Is the status active for this DTC?

YES >> GO TO 2

NO >> Refer to the *checking for an intermittent DTC diagnostic procedure. (Refer to 9 - ENGINE - DIAGNOSIS AND TESTING)

2. (K13) FUEL INJECTOR NO. 3 HIGH-SIDE CONTROL CIRCUIT SHORTED TO VOLTAGE

Turn the ignition off.

Disconnect the Fuel Injector No. 3 connector.

Disconnect the Engine Control Module (ECM) connector.

Remove the ASD relay from the IPM.

Connect a jumper wire between cavity 30 and cavity 87 of the ASD relay connector.

Turn the ignition on.

Measure the voltage of the (K13) Fuel Injector No. 3 High-Side Control circuit in the Fuel Injector No. 3 connector.

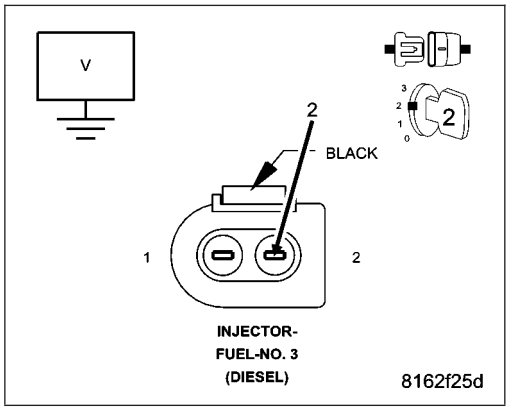

Is there any voltage present?

Yes >> Repair the (K13) Fuel Injector No. 3 High-Side Control circuit for a short to voltage.
Perform the ECM Verification Test VER. 1. (Refer to 9 - ENGINE - DIAGNOSIS AND TESTING)

No >> Go To 3

3. (K613) FUEL INJECTOR NO. 3 LOW-SIDE CONTROL CIRCUIT SHORTED TO VOLTAGE

NOTE: The jumper wire should still be in place.

Measure the voltage of the (K613) Fuel Injector No. 3 Low-Side Control circuit.

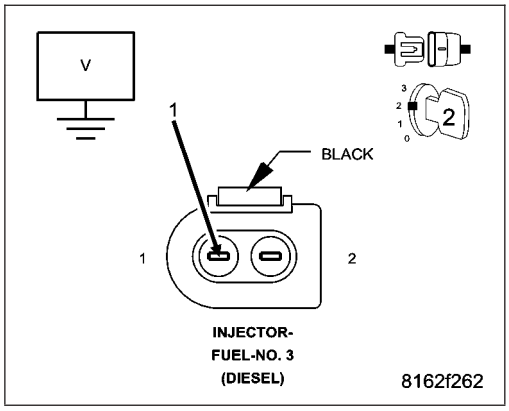

Is there any voltage present?

Yes >> Repair the (K613) Fuel Injector No. 3 Low-Side Control circuit for a short to voltage.
Perform the ECM Verification Test VER. 1. (Refer to 9 - ENGINE - DIAGNOSIS AND TESTING)

No >> Go to 4

4. (K13) FUEL INJECTOR NO. 3 HIGH-SIDE CONTROL CIRCUIT SHORTED TO GROUND

Turn the ignition off.

Measure the resistance between ground and the (K13) Fuel Injector No. 3 High-Side Control circuit in the Fuel Injector No. 3 connector.

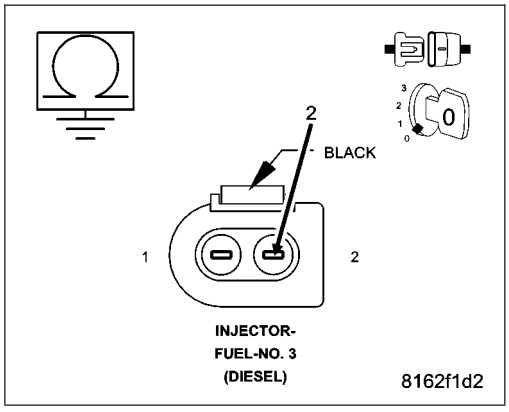

Is the resistance above 1000.0 ohms?

Yes >> Go to 5

No >> Repair the (K13) Fuel Injector No. 3 High-Side Control circuit for a short to ground.
Perform the ECM Verification Test VER. 1. (Refer to 9 - ENGINE - DIAGNOSIS AND TESTING)

5. (K613) FUEL INJECTOR NO. 3 LOW-SIDE CONTROL CIRCUIT SHORTED TO GROUND

Measure the resistance between ground and the (K613) Fuel Injector No. 3 Low-Side Control circuit in the Fuel Injector No. 3 connector.

Is the resistance above 1000.0 ohms?

Yes >> Go to 6

No >> Repair the (K613) Fuel Injector No. 3 Low-Side Control circuit for a short to ground.

Perform the ECM Verification Test VER. 1. (Refer to 9 - ENGINE - DIAGNOSIS AND TESTING)

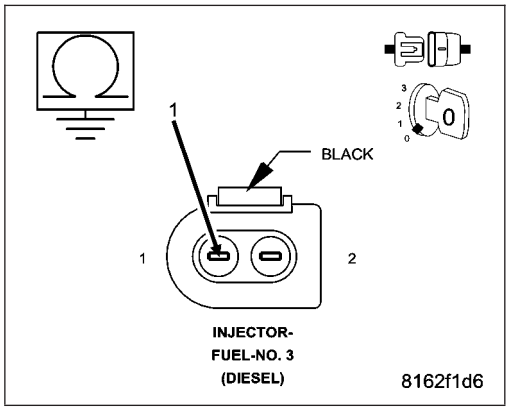

6. (K13) FUEL INJECTOR NO. 3 HIGH-SIDE CONTROL CIRCUIT SHORTED TO (K613) FUEL INJECTOR NO. 3 LOW-SIDE CONTROL CIRCUIT

Measure the resistance between the (K13) Fuel Injector No. 3 High-Side Control circuit and the (K613) Fuel Injector No. 3 Low-Side Control circuit in the Fuel Injector No. 3 connector.

Is the resistance above 1000.0 ohms?

Yes >> Go to 7

No >> Repair the (K13) Fuel Injector No. 3 High-Side Control circuit for a short to the (K613) Fuel Injector No. 3 Low-Side Control circuit.

Perform the ECM Verification Test VER. 1. (Refer to 9 - ENGINE - DIAGNOSIS AND TESTING)

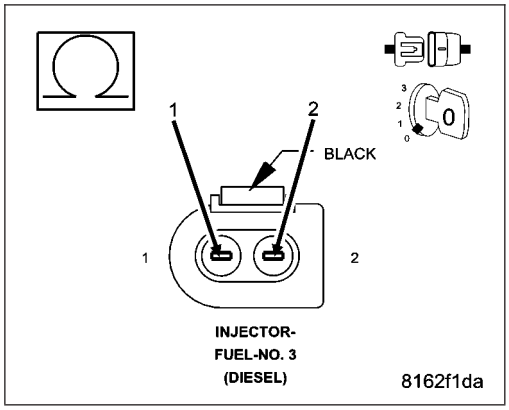

7. (K13) FUEL INJECTOR NO. 3 HIGH-SIDE CONTROL CIRCUIT OPEN OR HIGH RESISTANCE

Measure the resistance of the (K13) Fuel Injector No. 3 High-Side Control circuit between the Fuel Injector No. 3 connector and the Engine Control Module (ECM) connector.

Is the resistance below 10.0 ohms?

Yes >> Go to 8

No >> Repair the (K13) Fuel Injector No. 3 High-Side Control circuit for an open circuit or high resistance.
Perform the ECM Verification Test VER. 1. (Refer to 9 - ENGINE - DIAGNOSIS AND TESTING)

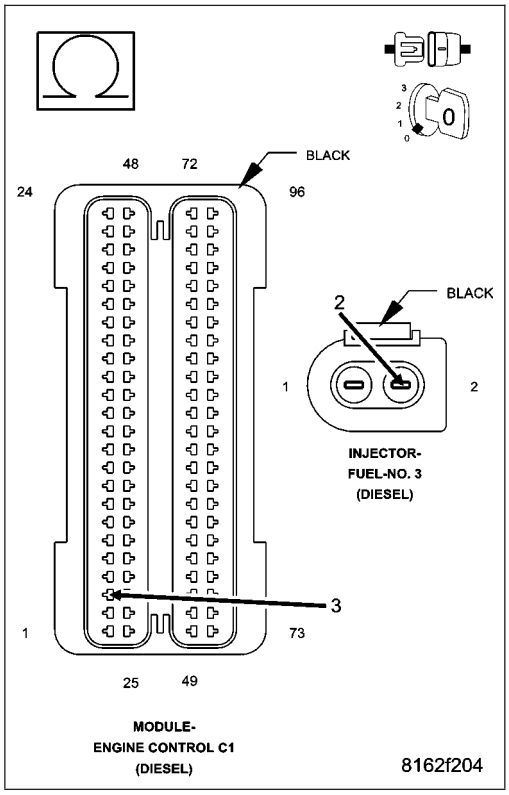

8. (K613) FUEL INJECTOR NO. 3 LOW-SIDE CONTROL CIRCUIT OPEN OR HIGH RESISTANCE

Measure the resistance of the (K613) Fuel Injector No. 3 Low-Side Control circuit between the Fuel Injector No. 3 connector and the Engine Control Module (ECM) connector.

Is the resistance below 10.0 ohms?

Yes >> Go to 9

No >> Repair the (K613) Fuel Injector No. 3 Low-Side Control circuit for an open circuit or high resistance.
Perform the ECM Verification Test VER. 1. (Refer to 9 - ENGINE - DIAGNOSIS AND TESTING)

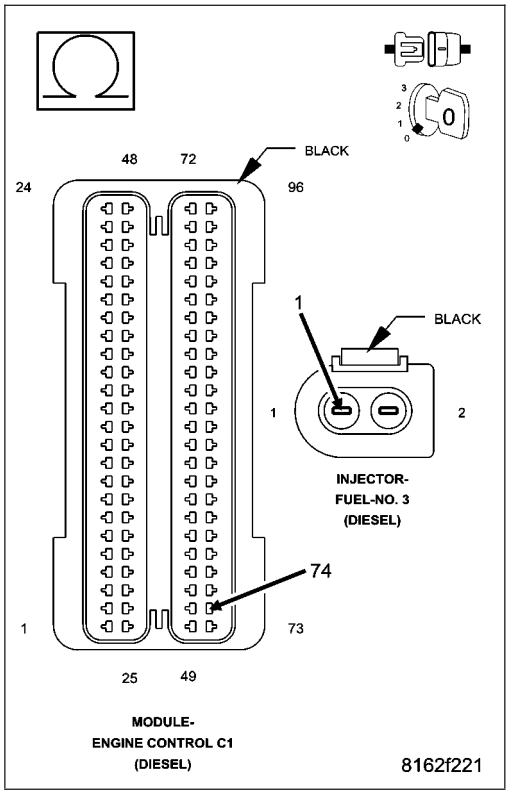

9. FUEL INJECTOR NO. 3

Measure the resistance between the terminals of Fuel Injector No. 3.

Is the resistance approximately 185k ohms (+/- 10%)?

Yes >> Go to 10

No >> Replace the fuel injector in accordance with the service information.
Perform the ECM Verification Test VER. 1. (Refer to 9 - ENGINE - DIAGNOSIS AND TESTING)

10. ENGINE CONTROL MODULE (ECM)

Using the wiring diagram/schematic as a guide, inspect the wiring and connectors between the Fuel Injector No. 3 and the Engine Control Module (ECM).

Look for any chafed, pierced, pinched, or partially broken wires.

Look for broken, bent, pushed out or corroded terminals.

Monitor the scan tool data relative to this circuit and wiggle test the wiring and connectors.

Look for the data to change or for the DTC to reset during the wiggle test.

Refer to any technical service bulletins that may apply.

Were any problems found?

Yes >> Repair as necessary.
Perform the ECM Verification Test VER. 1. (Refer to 9 - ENGINE - DIAGNOSIS AND TESTING)

No >> Replace the Engine Control Module (ECM) in accordance with the service information.
Perform the ECM Verification Test VER. 1. (Refer to 9 - ENGINE - DIAGNOSIS AND TESTING)

P0204-FUEL INJECTOR 4 CIRCUIT / OPEN

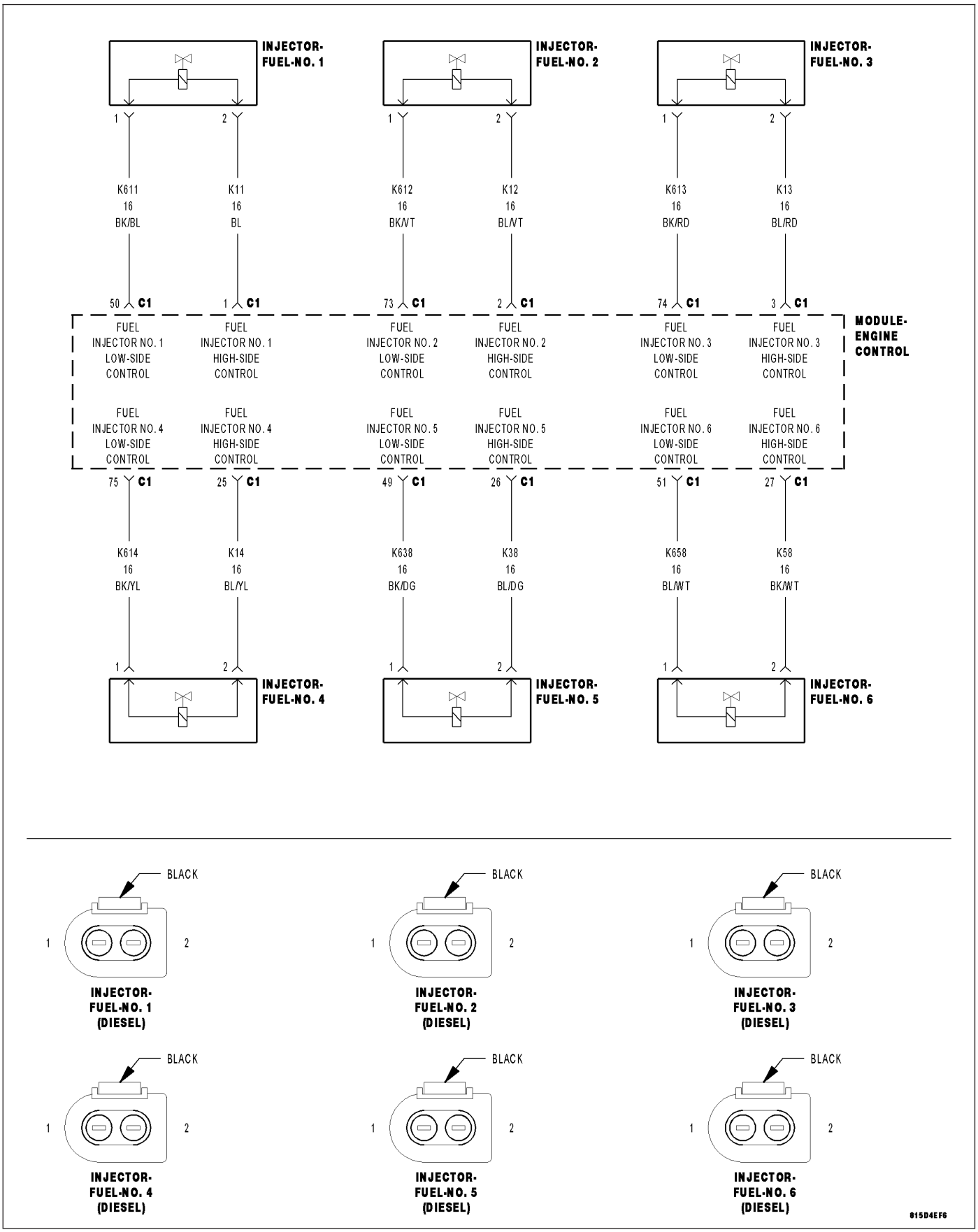

For a complete wiring diagram **Refer to Section 8W**

- **When Monitored:**
  With the engine running.
- **Set Condition:**
  The ECM detects an open in the Fuel Injector 4 circuit.

Possible Causes
INTERMITTENT DTC
(K14) FUEL INJECTOR NO. 4 HIGH-SIDE CONTROL CIRCUIT SHORTED TO VOLTAGE
(K614) FUEL INJECTOR NO. 4 LOW-SIDE CONTROL CIRCUIT SHORTED TO VOLTAGE
(K14) FUEL INJECTOR NO. 4 HIGH-SIDE CONTROL CIRCUIT SHORTED TO GROUND
(K614) FUEL INJECTOR NO. 4 LOW-SIDE CONTROL CIRCUIT SHORTED TO GROUND
(K14) FUEL INJECTOR NO. 4 HIGH-SIDE CONTROL CIRCUIT SHORTED TO (K614) FUEL INJECTOR NO. 4 LOW-SIDE CONTROL CIRCUIT
(K14) FUEL INJECTOR NO. 4 HIGH-SIDE CONTROL CIRCUIT OPEN OR HIGH RESISTANCE
(K614) FUEL INJECTOR NO. 4 LOW-SIDE CONTROL CIRCUIT OPEN OR HIGH RESISTANCE
FUEL INJECTOR NO. 4
ENGINE CONTROL MODULE (ECM)

Always perform the Pre-Diagnostic Troubleshooting procedure before proceeding. (Refer to 9 - ENGINE - DIAGNOSIS AND TESTING)

Diagnostic Test

1. DTC IS ACTIVE

NOTE: This DTC can set as a result of a fault in any of the injector circuits. Be sure to check all injector circuits before replacing an injector and all injectors before replacing a module.

Ignition on, engine not running.

With the scan tool, Clear DTCs in the Engine Control Module (ECM).

Attempt to start the engine and test drive the vehicle.

With the scan tool, select View DTCs.

Is the status Active for this DTC?

Yes >> Go To 2

No >> Refer to the *CHECKING FOR AN INTERMITTENT DTC Diagnostic Procedure. (Refer to 9 - ENGINE - DIAGNOSIS AND TESTING)

2. (K14) FUEL INJECTOR NO. 4 HIGH-SIDE CONTROL CIRCUIT SHORTED TO VOLTAGE

Turn the ignition off.

Disconnect the Fuel Injector No. 4 connector.

Disconnect the Engine Control Module (ECM) connector.

Remove the ASD Relay from the IPM.

Connect a jumper wire between cavity 30 and cavity 87 of the ASD Relay Connector.

Turn the ignition on.

Measure the voltage of the (K14) Fuel Injector No. 4 High-Side Control circuit in the Fuel Injector No. 4 connector.

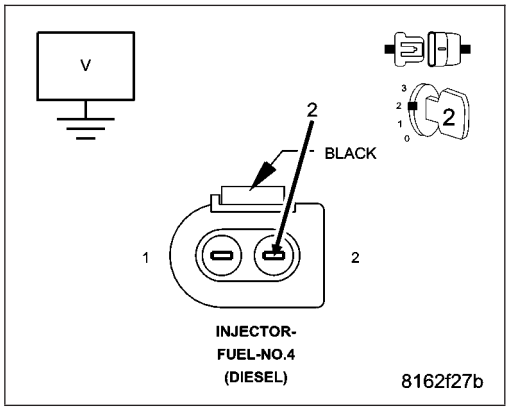

Is there any voltage present?

Yes >> Repair the (K14) Fuel Injector No. 4 High-Side Control circuit for a short to voltage.
Perform the ECM Verification Test Ver. 1. (Refer to 9 - ENGINE - DIAGNOSIS AND TESTING)

No >> Go to 3

3. (K614) FUEL INJECTOR NO. 4 LOW-SIDE CONTROL CIRCUIT SHORTED TO VOLTAGE

NOTE: The jumper wire should still be in place.

Measure the voltage of the (K614) Fuel Injector No. 4 Low-Side Control circuit.

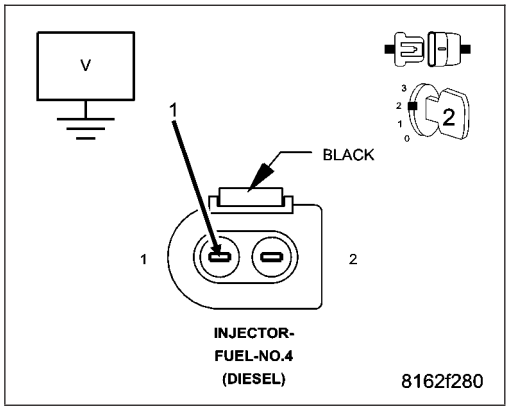

Is there any voltage present?

Yes >> Repair the (K614) Fuel Injector No. 4 Low-Side Control circuit for a short to voltage.
Perform the ECM Verification Test Ver. 1. (Refer to 9 - ENGINE - DIAGNOSIS AND TESTING)

No >> Go to 4

4. (K14) FUEL INJECTOR NO. 4 HIGH-SIDE CONTROL CIRCUIT SHORTED TO GROUND

Turn the ignition off.

Measure the resistance between ground and the (K14) Fuel Injector No. 4 High-Side Control circuit in the Fuel Injector No. 4 connector.

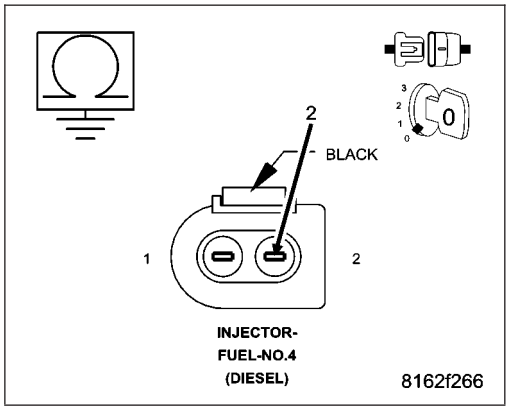

Is the resistance above 1000.0 ohms?

Yes >> Go to 5

No >> Repair the (K14) Fuel Injector No. 4 High-Side Control circuit for a short to ground.
Perform the ECM Verification Test Ver. 1. (Refer to 9 - ENGINE - DIAGNOSIS AND TESTING)

5. (K614) FUEL INJECTOR NO. 4 LOW-SIDE CONTROL CIRCUIT SHORTED TO GROUND

Measure the resistance between ground and the (K614) Fuel Injector No. 4 Low-Side Control circuit in the Fuel Injector No. 4 connector.

Is the resistance above 1000.0 ohms?

Yes >> Go to 6

No >> Repair the (K614) Fuel Injector No. 4 Low-Side Control circuit for a short to ground.

Perform the ECM Verification Test Ver. 1. (Refer to 9 - ENGINE - DIAGNOSIS AND TESTING)

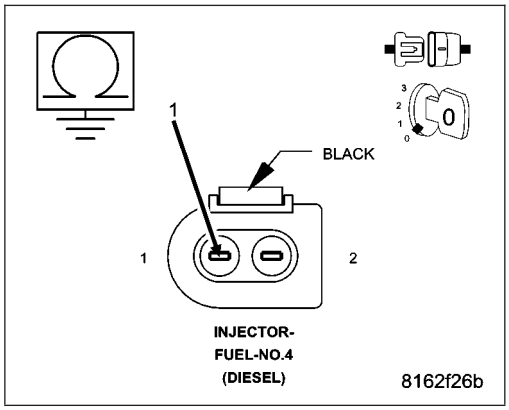

6. (K14) FUEL INJECTOR NO. 4 HIGH-SIDE CONTROL CIRCUIT SHORTED TO (K614) FUEL INJECTOR NO. 4 LOW-SIDE CONTROL CIRCUIT

Measure the resistance between the (K14) Fuel Injector No. 4 High-Side Control circuit and the (K614) Fuel Injector No. 4 Low-Side Control circuit in the Fuel Injector No. 4 connector.

Is the resistance above 1000.0 ohms?

Yes >> Go to 7

No >> Repair the (K14) Fuel Injector No. 4 High-Side Control circuit for a short to the (K614) Fuel Injector No. 4 Low-Side Control circuit.

Perform the ECM Verification Test Ver. 1. (Refer to 9 - ENGINE - DIAGNOSIS AND TESTING)

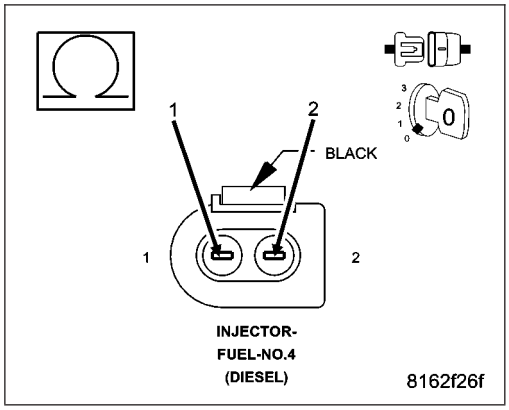

7. (K14) FUEL INJECTOR NO. 4 HIGH-SIDE CONTROL CIRCUIT OPEN OR HIGH RESISTANCE

Measure the resistance of the (K14) Fuel Injector No. 4 High-Side Control circuit between the Fuel Injector No. 4 connector and the Engine Control Module (ECM) connector.

Is the resistance below 10.0 ohms?

Yes >> Go to 8

No >> Repair the (K14) Fuel Injector No. 4 High-Side Control circuit for an open circuit or high resistance.
Perform the ECM Verification Test Ver. 1. (Refer to 9 - ENGINE - DIAGNOSIS AND TESTING)

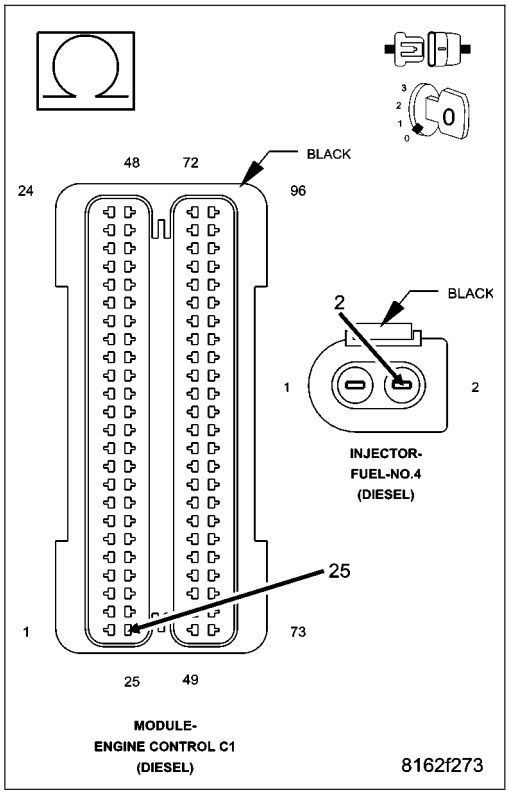

8. (K614) FUEL INJECTOR NO. 4 LOW-SIDE CONTROL CIRCUIT OPEN OR HIGH RESISTANCE

Measure the resistance of the (K614) Fuel Injector No. 4 Low-Side Control circuit between the Fuel Injector No. 4 connector and the Engine Control Module (ECM) connector.

Is the resistance below 10.0 ohms?

Yes >> Go to 9

No >> Repair the (K614) Fuel Injector No. 4 Low-Side Control circuit for an open circuit or high resistance.
Perform the ECM Verification Test Ver. 1. (Refer to 9 - ENGINE - DIAGNOSIS AND TESTING)

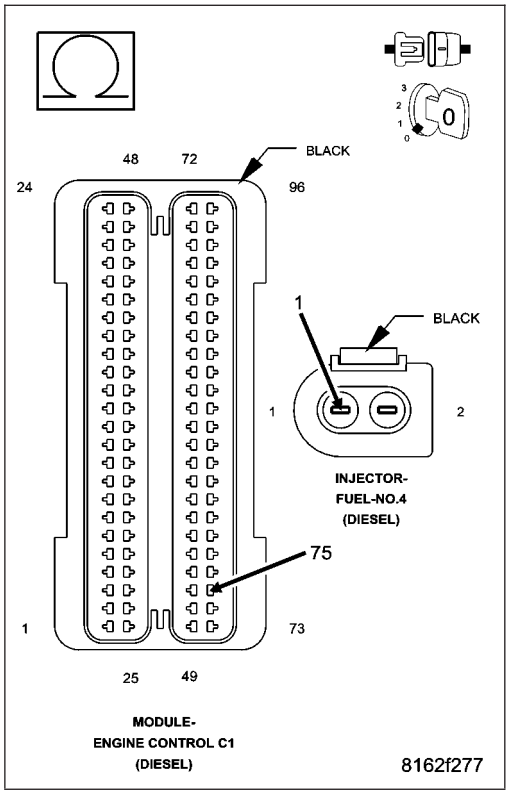

9. FUEL INJECTOR NO. 4

Measure the resistance between the terminals of Fuel Injector No. 4.

Is the resistance approximately 185k ohms (+/- 10%)?

Yes >> Go to 10

No >> Replace the Fuel Injector in accordance with the Service Information.
Perform the ECM Verification Test Ver. 1. (Refer to 9 - ENGINE - DIAGNOSIS AND TESTING)

10. ENGINE CONTROL MODULE (ECM)

Using the wiring diagram/schematic as a guide, inspect the wiring and connectors between the Fuel Injector No. 4 and the Engine Control Module (ECM).

Look for any chafed, pierced, pinched, or partially broken wires.

Look for broken, bent, pushed out or corroded terminals.

Monitor the scan tool data relative to this circuit and wiggle test the wiring and connectors.

Look for the data to change or for the DTC to reset during the wiggle test.

Refer to any Technical Service Bulletins that may apply.

Were any problems found?

Yes >> Repair as necessary.
Perform the ECM Verification Test Ver. 1. (Refer to 9 - ENGINE - DIAGNOSIS AND TESTING)

No >> Replace the Engine Control Module (ECM) in accordance with the Service Information.
Perform the ECM Verification Test Ver. 1. (Refer to 9 - ENGINE - DIAGNOSIS AND TESTING)

P0205-FUEL INJECTOR 5 CIRCUIT / OPEN

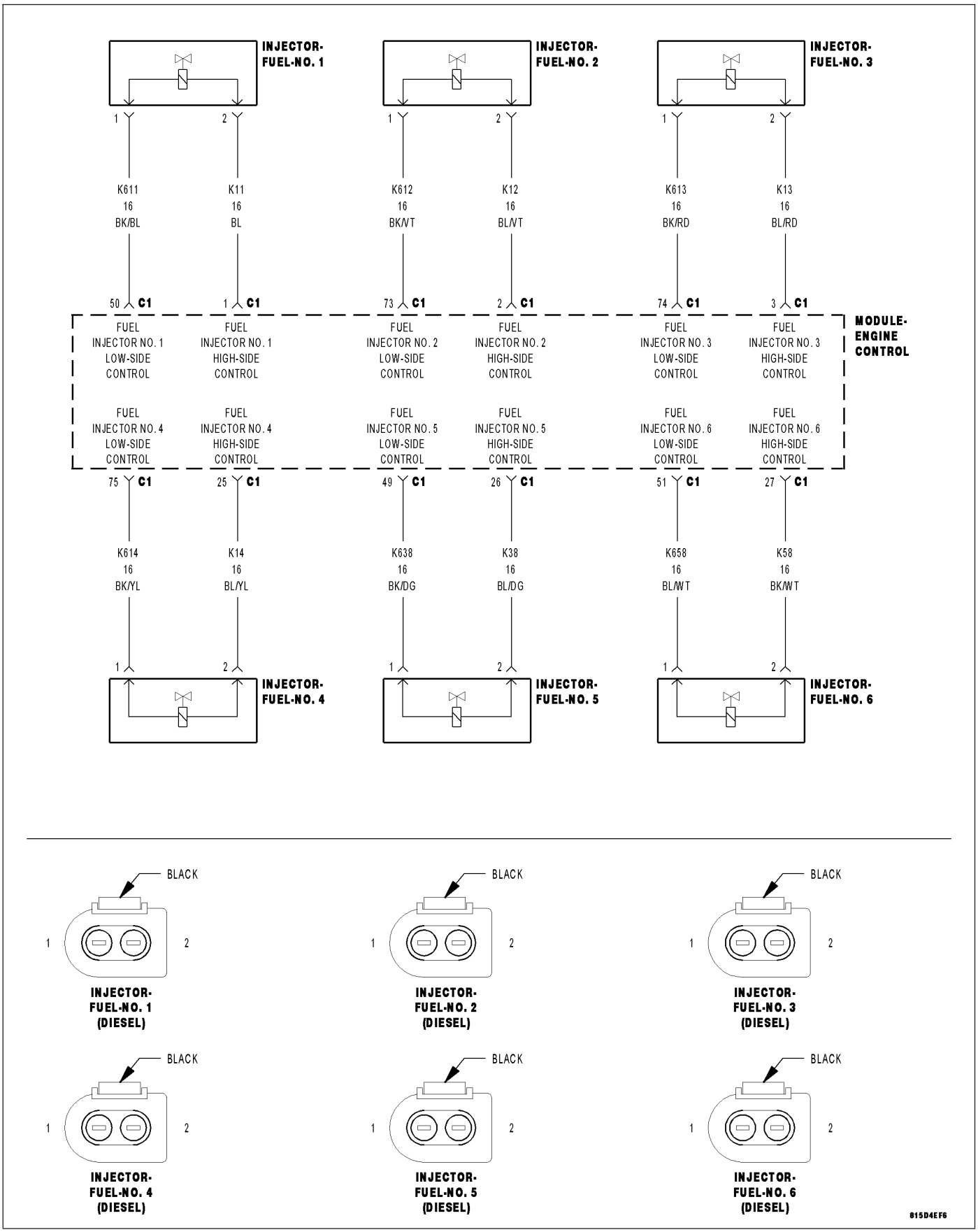

For a complete wiring diagram **Refer to Section 8W**

- **When Monitored:**
  With the engine running.
- **Set Condition:**
  The ECM detects an open in the Fuel Injector 5 circuit.

Possible Causes
INTERMITTENT DTC
(K38) FUEL INJECTOR NO. 5 HIGH-SIDE CONTROL CIRCUIT SHORTED TO VOLTAGE
(K638) FUEL INJECTOR NO. 5 LOW-SIDE CONTROL CIRCUIT SHORTED TO VOLTAGE
(K38) FUEL INJECTOR NO. 5 HIGH-SIDE CONTROL CIRCUIT SHORTED TO GROUND
(K638) FUEL INJECTOR NO. 5 LOW-SIDE CONTROL CIRCUIT SHORTED TO GROUND
(K38) FUEL INJECTOR NO. 5 HIGH-SIDE CONTROL CIRCUIT SHORTED TO (K638) FUEL INJECTOR NO. 5 LOW-SIDE CONTROL CIRCUIT
(K38) FUEL INJECTOR NO. 5 HIGH-SIDE CONTROL CIRCUIT OPEN OR HIGH RESISTANCE
(K638) FUEL INJECTOR NO. 5 LOW-SIDE CONTROL CIRCUIT OPEN OR HIGH RESISTANCE
FUEL INJECTOR NO. 5
ENGINE CONTROL MODULE (ECM)

Always perform the Pre-Diagnostic Troubleshooting procedure before proceeding. (Refer to 9 - ENGINE - DIAGNOSIS AND TESTING)

Diagnostic Test

1. DTC IS ACTIVE

NOTE: This DTC can set as a result of a fault in any of the injector circuits. Be sure to check all injector circuits before replacing an injector and all injectors before replacing a module.

Ignition on, engine not running.

With the scan tool, Clear DTCs in the Engine Control Module (ECM).

Attempt to start the engine and test drive the vehicle.

With the scan tool, select View DTCs.

Is the status Active for this DTC?

Yes >> Go To 2

No >> Refer to the *CHECKING FOR AN INTERMITTENT DTC Diagnostic Procedure. (Refer to 9 - ENGINE - DIAGNOSIS AND TESTING)

2. (K38) FUEL INJECTOR NO. 5 HIGH-SIDE CONTROL CIRCUIT SHORTED TO VOLTAGE

Turn the ignition off.

Disconnect the Fuel Injector No. 5 connector.

Disconnect the Engine Control Module (ECM) connector.

Remove the ASD Relay from the IPM.

Connect a jumper wire between cavity 30 and cavity 87 of the ASD Relay Connector.

Turn the ignition on.

Measure the voltage of the (K38) Fuel Injector No. 5 High-Side Control circuit in the Fuel Injector No. 5 connector.

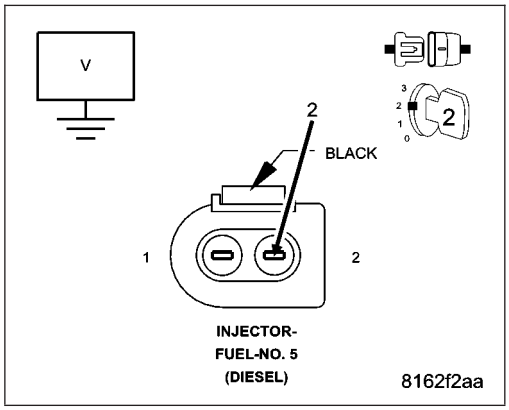

Is there any voltage present?

Yes >> Repair the (K38) Fuel Injector No. 5 High-Side Control circuit for a short to voltage.
Perform the ECM Verification Test Ver. 1. (Refer to 9 - ENGINE - DIAGNOSIS AND TESTING)

No >> Go to 3

3. (K638) FUEL INJECTOR NO. 5 LOW-SIDE CONTROL CIRCUIT SHORTED TO VOLTAGE

NOTE: The jumper wire should still be in place.

Measure the voltage of the (K638) Fuel Injector No. 5 Low-Side Control circuit.

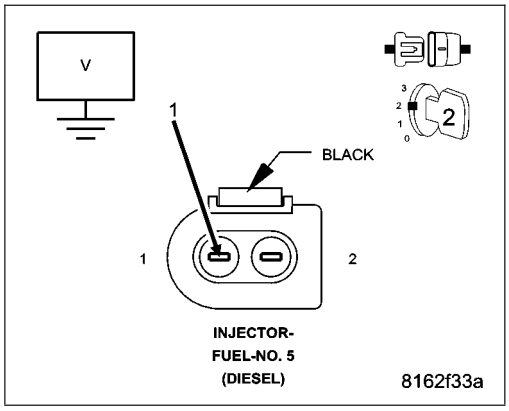

Is there any voltage present?

Yes >> Repair the (K638) Fuel Injector No. 5 Low-Side Control circuit for a short to voltage.
Perform the ECM Verification Test Ver. 1. (Refer to 9 - ENGINE - DIAGNOSIS AND TESTING)

No >> Go to 4

4. (K38) FUEL INJECTOR NO. 5 HIGH-SIDE CONTROL CIRCUIT SHORTED TO GROUND

Turn the ignition off.

Measure the resistance between ground and the (K38) Fuel Injector No. 5 High-Side Control circuit in the Fuel Injector No. 5 connector.

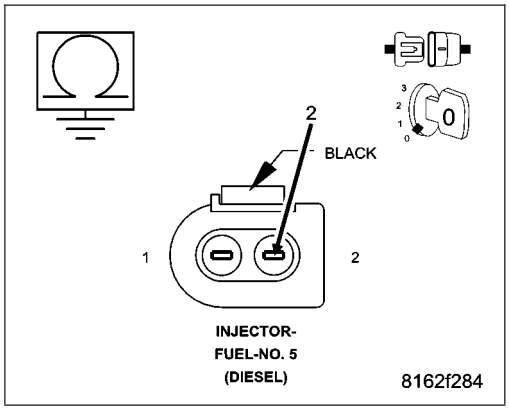

Is the resistance above 1000.0 ohms?

Yes >> Go to 5

No >> Repair the (K38) Fuel Injector No. 5 High-Side Control circuit for a short to ground.
Perform the ECM Verification Test Ver. 1. (Refer to 9 - ENGINE - DIAGNOSIS AND TESTING)

5. (K638) FUEL INJECTOR NO. 5 LOW-SIDE CONTROL CIRCUIT SHORTED TO GROUND

Measure the resistance between ground and the (K638) Fuel Injector No. 5 Low-Side Control circuit in the Fuel Injector No. 5 connector.

Is the resistance above 1000.0 ohms?

Yes >> Go to 6

No >> Repair the (K638) Fuel Injector No. 5 Low-Side Control circuit for a short to ground.

Perform the ECM Verification Test Ver. 1. (Refer to 9 - ENGINE - DIAGNOSIS AND TESTING)

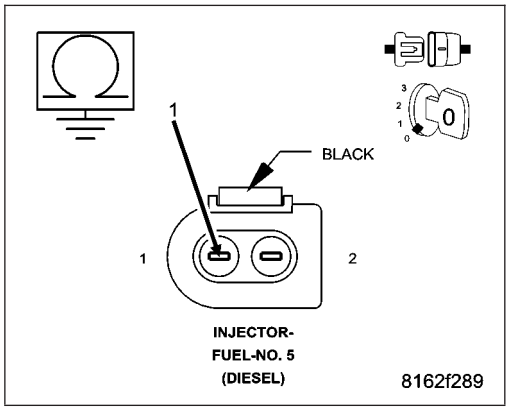

6. (K38) FUEL INJECTOR NO. 5 HIGH-SIDE CONTROL CIRCUIT SHORTED TO (K638) FUEL INJECTOR NO. 5 LOW-SIDE CONTROL CIRCUIT

Measure the resistance between the (K38) Fuel Injector No. 5 High-Side Control circuit and the (K638) Fuel Injector No. 5 Low-Side Control circuit in the Fuel Injector No. 5 connector.

Is the resistance above 1000.0 ohms?

Yes >> Go to 7

No >> Repair the (K38) Fuel Injector No. 5 High-Side Control circuit for a short to the (K638) Fuel Injector No. 5 Low-Side Control circuit.

Perform the ECM Verification Test Ver. 1. (Refer to 9 - ENGINE - DIAGNOSIS AND TESTING)

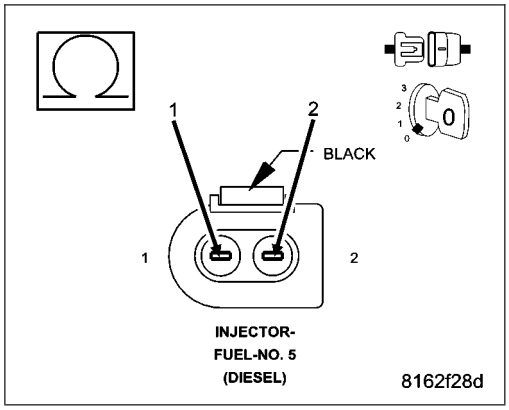

7. (K38) FUEL INJECTOR NO. 5 HIGH-SIDE CONTROL CIRCUIT OPEN OR HIGH RESISTANCE

Measure the resistance of the (K38) Fuel Injector No. 5 High-Side Control circuit between the Fuel Injector No. 5 connector and the Engine Control Module (ECM) connector.

Is the resistance below 10.0 ohms?

Yes >> Go to 8

No >> Repair the (K38) Fuel Injector No. 5 High-Side Control circuit for an open circuit or high resistance.
Perform the ECM Verification Test Ver. 1. (Refer to 9 - ENGINE - DIAGNOSIS AND TESTING)

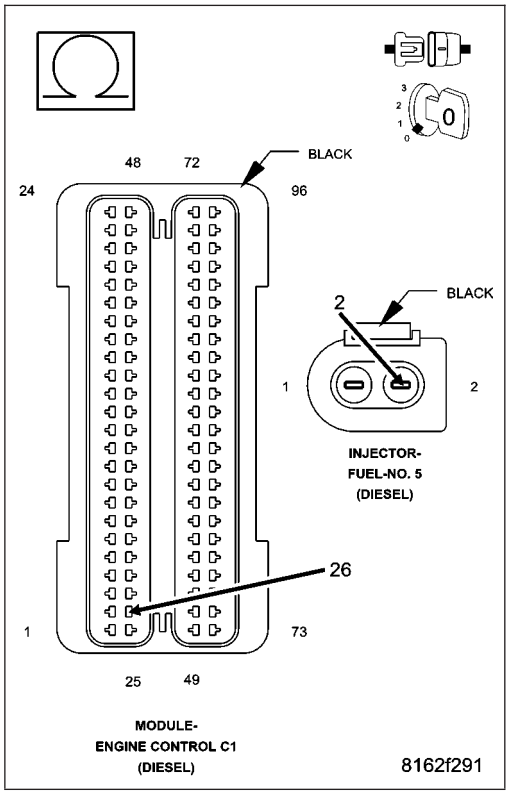

8. (K638) FUEL INJECTOR NO. 5 LOW-SIDE CONTROL CIRCUIT OPEN OR HIGH RESISTANCE

Measure the resistance of the (K638) Fuel Injector No. 5 Low-Side Control circuit between the Fuel Injector No. 5 connector and the Engine Control Module (ECM) connector.

Is the resistance below 10.0 ohms?

Yes >> Go to 9

No >> Repair the (K638) Fuel Injector No. 5 Low-Side Control circuit for an open circuit or high resistance.
Perform the ECM Verification Test Ver. 1. (Refer to 9 - ENGINE - DIAGNOSIS AND TESTING)

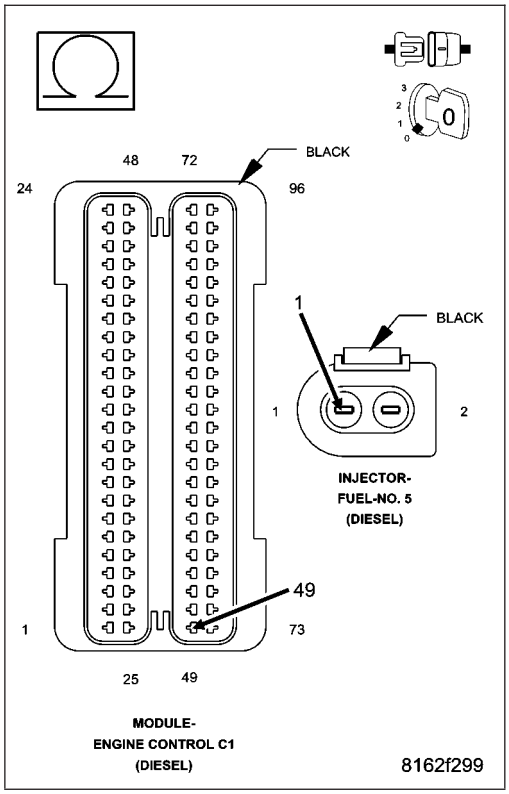

9. FUEL INJECTOR NO. 5

Measure the resistance between the terminals of Fuel Injector No. 5.

Is the resistance approximately 185k ohms (+/- 10%)?

Yes >> Go to 10

No >> Replace the Fuel Injector in accordance with the Service Information.
Perform the ECM Verification Test Ver. 1. (Refer to 9 - ENGINE - DIAGNOSIS AND TESTING)

10. ENGINE CONTROL MODULE (ECM)

Using the wiring diagram/schematic as a guide, inspect the wiring and connectors between the Fuel Injector No. 5 and the Engine Control Module (ECM).

Look for any chafed, pierced, pinched, or partially broken wires.

Look for broken, bent, pushed out or corroded terminals.

Monitor the scan tool data relative to this circuit and wiggle test the wiring and connectors.

Look for the data to change or for the DTC to reset during the wiggle test.

Refer to any Technical Service Bulletins that may apply.

Were any problems found?

Yes >> Repair as necessary.
Perform the ECM Verification Test Ver. 1. (Refer to 9 - ENGINE - DIAGNOSIS AND TESTING)

No >> Replace the Engine Control Module (ECM) in accordance with the Service Information.
Perform the ECM Verification Test Ver. 1. (Refer to 9 - ENGINE - DIAGNOSIS AND TESTING)

P0206-FUEL INJECTOR 6 CIRCUIT / OPEN

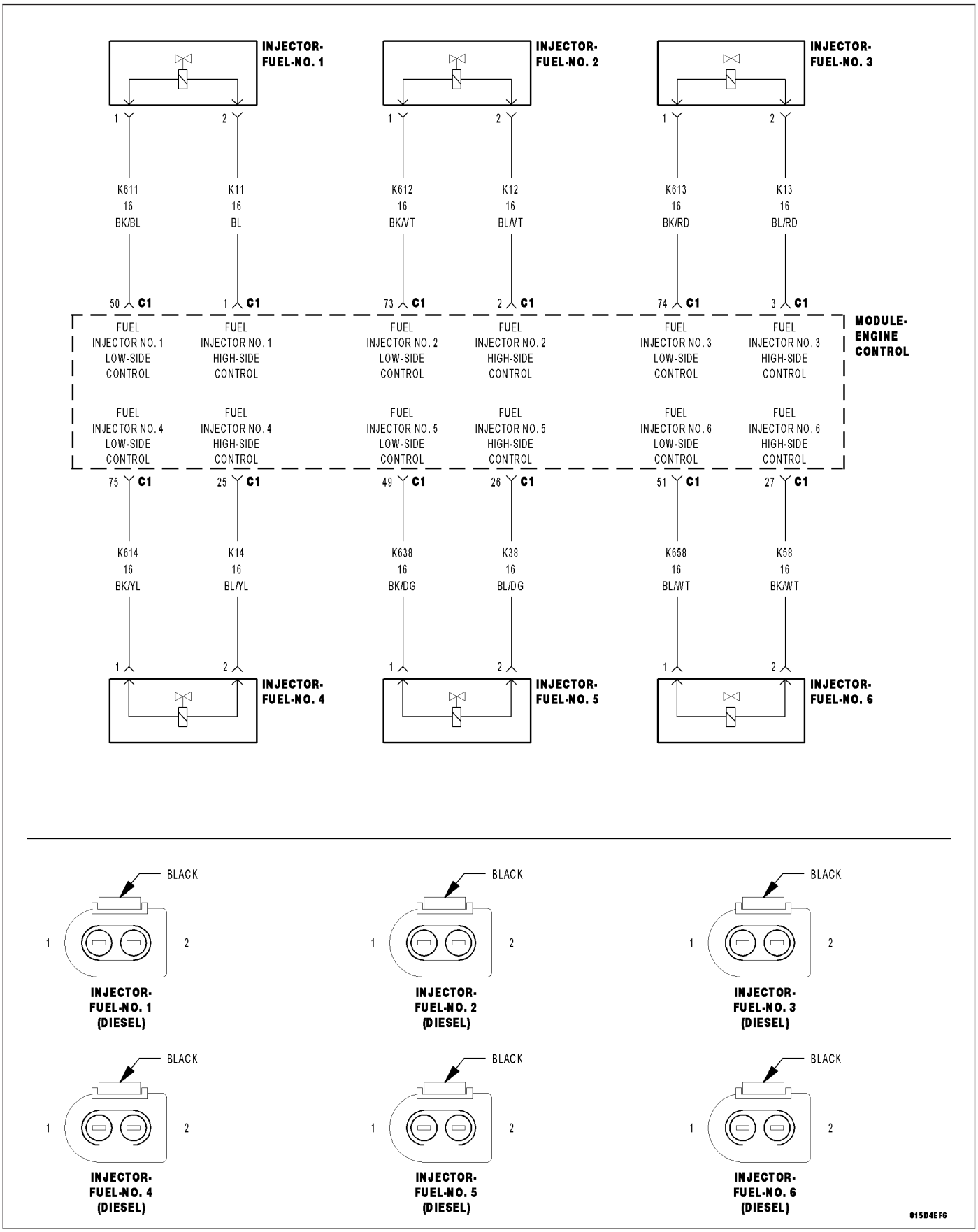

For a complete wiring diagram **Refer to Section 8W**

- **When Monitored:**
  With the engine running.
- **Set Condition:**
  The ECM detects an open in the Fuel Injector 6 circuit.

Possible Causes
INTERMITTENT DTC
(K58) FUEL INJECTOR NO. 6 HIGH-SIDE CONTROL CIRCUIT SHORTED TO VOLTAGE
(K658) FUEL INJECTOR NO. 6 LOW-SIDE CONTROL CIRCUIT SHORTED TO VOLTAGE
(K58) FUEL INJECTOR NO. 6 HIGH-SIDE CONTROL CIRCUIT SHORTED TO GROUND
(K658) FUEL INJECTOR NO. 6 LOW-SIDE CONTROL CIRCUIT SHORTED TO GROUND
(K58) FUEL INJECTOR NO. 6 HIGH-SIDE CONTROL CIRCUIT SHORTED TO (K658) FUEL INJECTOR NO. 6 LOW-SIDE CONTROL CIRCUIT
(K58) FUEL INJECTOR NO. 6 HIGH-SIDE CONTROL CIRCUIT OPEN OR HIGH RESISTANCE
(K658) FUEL INJECTOR NO. 6 LOW-SIDE CONTROL CIRCUIT OPEN OR HIGH RESISTANCE
FUEL INJECTOR NO. 6
ENGINE CONTROL MODULE (ECM)

Always perform the Pre-Diagnostic Troubleshooting procedure before proceeding. (Refer to 9 - ENGINE - DIAGNOSIS AND TESTING)

Diagnostic Test

1. DTC IS ACTIVE

NOTE: This DTC can set as a result of a fault in any of the injector circuits. Be sure to check all injector circuits before replacing an injector and all injectors before replacing a module.

Ignition on, engine not running.

With the scan tool, Clear DTCs in the Engine Control Module (ECM).

Attempt to start the engine and test drive the vehicle.

With the scan tool, select View DTCs.

Is the status Active for this DTC?

Yes >> Go To 2

No >> Refer to the *CHECKING FOR AN INTERMITTENT DTC Diagnostic Procedure. (Refer to 9 - ENGINE - DIAGNOSIS AND TESTING)

2. (K58) FUEL INJECTOR NO. 6 HIGH-SIDE CONTROL CIRCUIT SHORTED TO VOLTAGE

Turn the ignition off.

Disconnect the Fuel Injector No. 6 connector.

Disconnect the Engine Control Module (ECM) connector.

Remove the ASD Relay from the IPM.

Connect a jumper wire between cavity 30 and cavity 87 of the ASD Relay Connector.

Turn the ignition on.

Measure the voltage of the (K58) Fuel Injector No. 6 High-Side Control circuit in the Fuel Injector No. 6 connector.

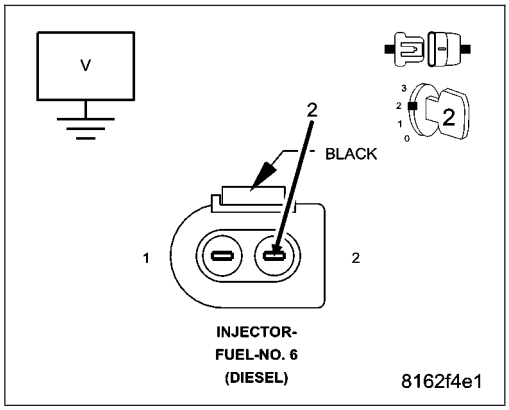

Is there any voltage present?

Yes >> Repair the (K58) Fuel Injector No. 6 High-Side Control circuit for a short to voltage.
Perform the ECM Verification Test Ver. 1. (Refer to 9 - ENGINE - DIAGNOSIS AND TESTING)

No >> Go to 3

3. (K658) FUEL INJECTOR NO. 6 LOW-SIDE CONTROL CIRCUIT SHORTED TO VOLTAGE

NOTE: The jumper wire should still be in place.

Measure the voltage of the (K658) Fuel Injector No. 6 Low-Side Control circuit.

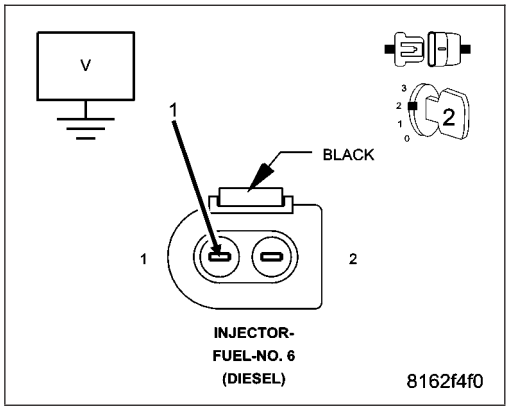

Is there any voltage present?

Yes >> Repair the (K658) Fuel Injector No. 6 Low-Side Control circuit for a short to voltage.
Perform the ECM Verification Test Ver. 1. (Refer to 9 - ENGINE - DIAGNOSIS AND TESTING)

No >> Go to 4

4. (K58) FUEL INJECTOR NO. 6 HIGH-SIDE CONTROL CIRCUIT SHORTED TO GROUND

Turn the ignition off.

Measure the resistance between ground and the (K58) Fuel Injector No. 6 High-Side Control circuit in the Fuel Injector No. 6 connector.

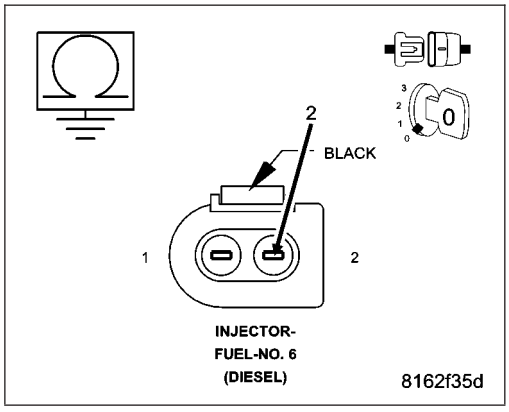

Is the resistance above 1000.0 ohms?

Yes >> Go to 5

No >> Repair the (K58) Fuel Injector No. 6 High-Side Control circuit for a short to ground.
Perform the ECM Verification Test Ver. 1. (Refer to 9 - ENGINE - DIAGNOSIS AND TESTING)

5. (K658) FUEL INJECTOR NO. 6 LOW-SIDE CONTROL CIRCUIT SHORTED TO GROUND

Measure the resistance between ground and the (K658) Fuel Injector No. 6 Low-Side Control circuit in the Fuel Injector No. 6 connector.

Is the resistance above 1000.0 ohms?

Yes >> Go to 6

No >> Repair the (K658) Fuel Injector No. 6 Low-Side Control circuit for a short to ground.

Perform the ECM Verification Test Ver. 1. (Refer to 9 - ENGINE - DIAGNOSIS AND TESTING)

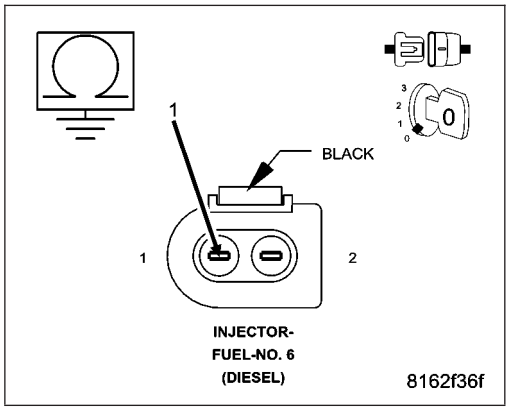

6. (K58) FUEL INJECTOR NO. 6 HIGH-SIDE CONTROL CIRCUIT SHORTED TO (K658) FUEL INJECTOR NO. 6 LOW-SIDE CONTROL CIRCUIT

Measure the resistance between the (K58) Fuel Injector No. 6 High-Side Control circuit and the (K658) Fuel Injector No. 6 Low-Side Control circuit in the Fuel Injector No. 6 connector.

Is the resistance above 1000.0 ohms?

Yes >> Go to 7

No >> Repair the (K58) Fuel Injector No. 6 High-Side Control circuit for a short to the (K658) Fuel Injector No. 6 Low-Side Control circuit.

Perform the ECM Verification Test Ver. 1. (Refer to 9 - ENGINE - DIAGNOSIS AND TESTING)

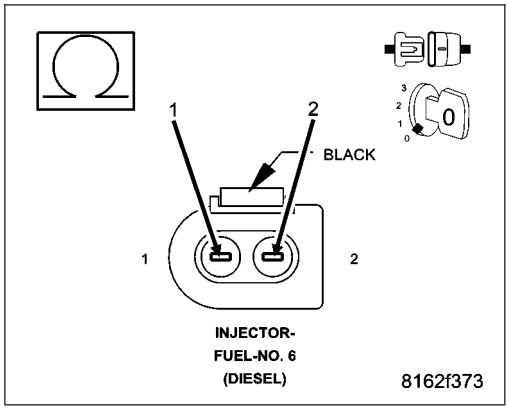

7. (K58) FUEL INJECTOR NO. 6 HIGH-SIDE CONTROL CIRCUIT OPEN OR HIGH RESISTANCE

Measure the resistance of the (K58) Fuel Injector No. 6 High-Side Control circuit between the Fuel Injector No. 6 connector and the Engine Control Module (ECM) connector.

Is the resistance below 10.0 ohms?

Yes >> Go to 8

No >> Repair the (K58) Fuel Injector No. 6 High-Side Control circuit for an open circuit or high resistance.
Perform the ECM Verification Test Ver. 1. (Refer to 9 - ENGINE - DIAGNOSIS AND TESTING)

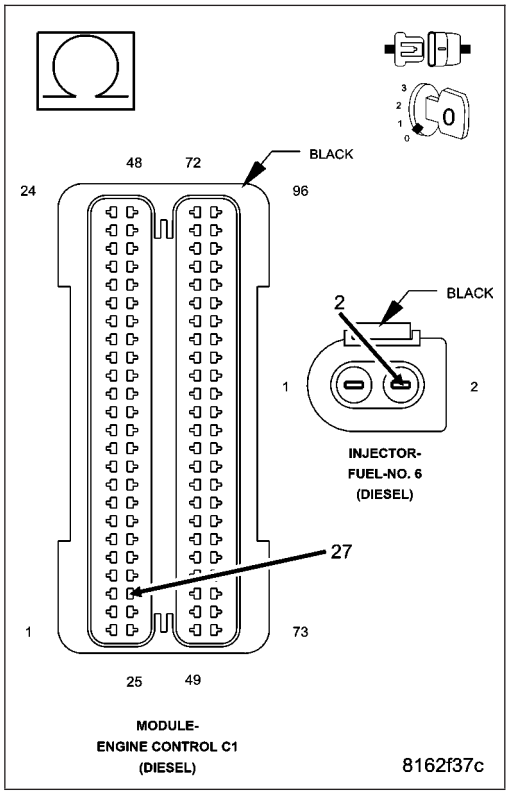

8. (K658) FUEL INJECTOR NO. 6 LOW-SIDE CONTROL CIRCUIT OPEN OR HIGH RESISTANCE

Measure the resistance of the (K658) Fuel Injector No. 6 Low-Side Control circuit between the Fuel Injector No. 6 connector and the Engine Control Module (ECM) connector.

Is the resistance below 10.0 ohms?

Yes >> Go to 9

No >> Repair the (K658) Fuel Injector No. 6 Low-Side Control circuit for an open circuit or high resistance.
Perform the ECM Verification Test Ver. 1. (Refer to 9 - ENGINE - DIAGNOSIS AND TESTING)

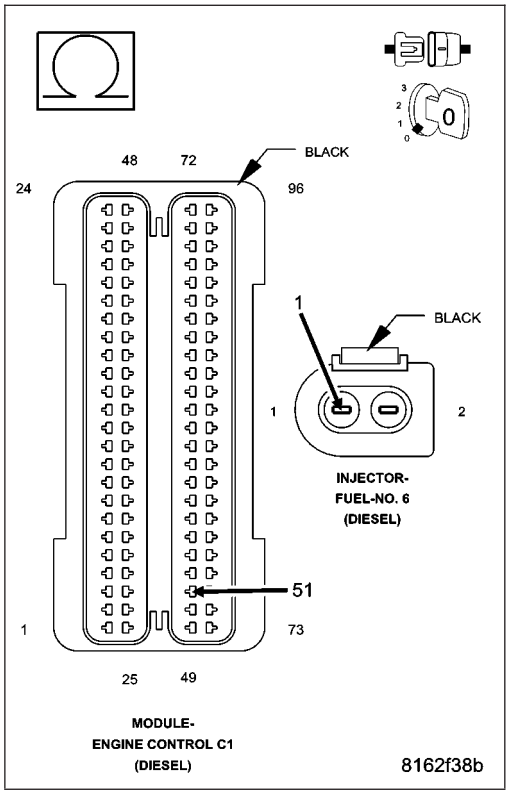

9. FUEL INJECTOR NO. 6

Measure the resistance between the terminals of Fuel Injector No. 6.

Is the resistance approximately 185k ohms (+/- 10%)?

Yes >> Go to 10

No >> Replace the Fuel Injector in accordance with the Service Information.
Perform the ECM Verification Test Ver. 1. (Refer to 9 - ENGINE - DIAGNOSIS AND TESTING)

10. ENGINE CONTROL MODULE (ECM)

Using the wiring diagram/schematic as a guide, inspect the wiring and connectors between the Fuel Injector No. 6 and the Engine Control Module (ECM).

Look for any chafed, pierced, pinched, or partially broken wires.

Look for broken, bent, pushed out or corroded terminals.

Monitor the scan tool data relative to this circuit and wiggle test the wiring and connectors.

Look for the data to change or for the DTC to reset during the wiggle test.

Refer to any Technical Service Bulletins that may apply.

Were any problems found?

Yes >> Repair as necessary.
Perform the ECM Verification Test Ver. 1. (Refer to 9 - ENGINE - DIAGNOSIS AND TESTING)

No >> Replace the Engine Control Module (ECM) in accordance with the Service Information.
Perform the ECM Verification Test Ver. 1. (Refer to 9 - ENGINE - DIAGNOSIS AND TESTING)

P0234-TURBOCHARGER OVERBOOST CONDITION

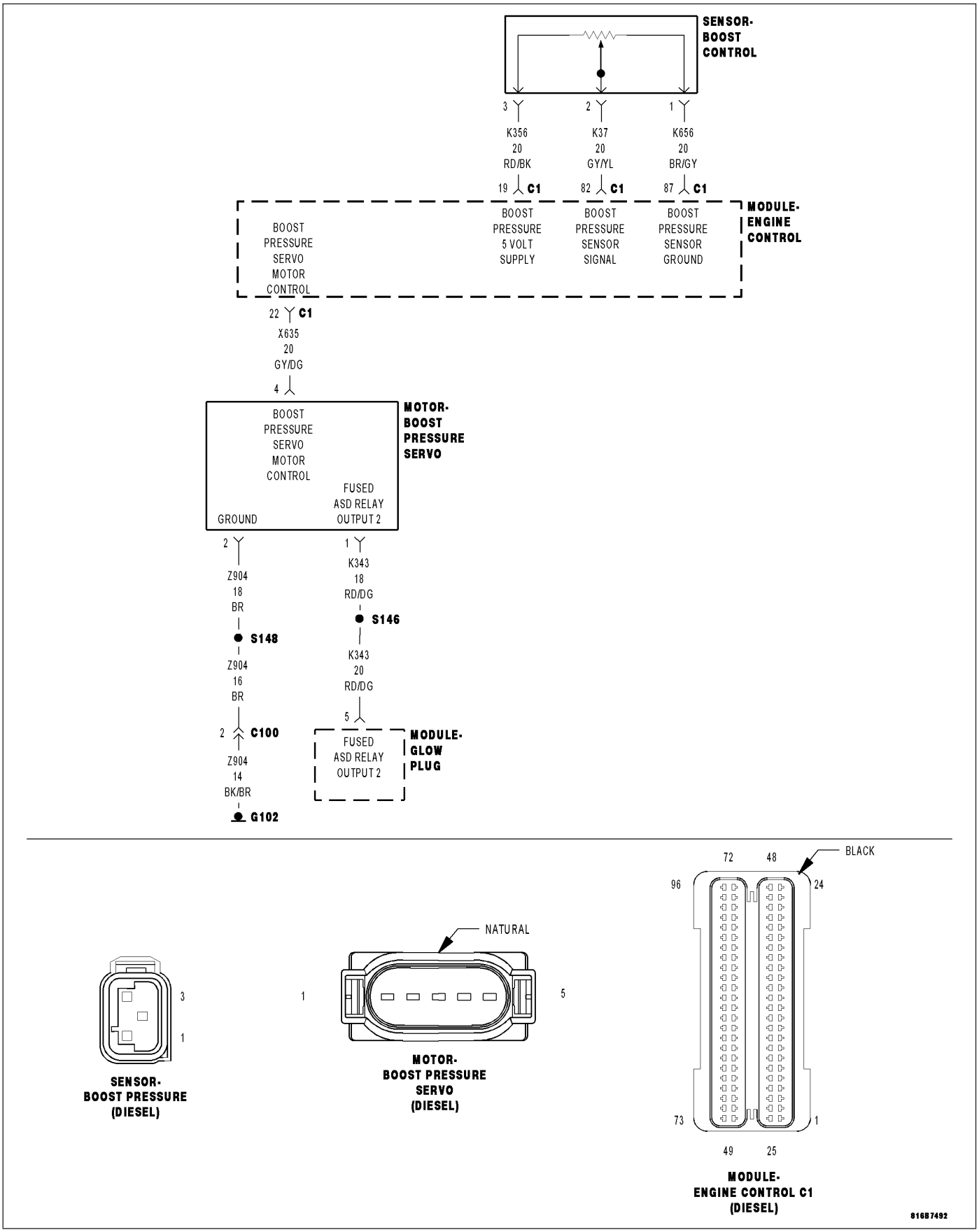

For a complete wiring diagram **Refer to Section 8W**

- **When Monitored:**
  With the engine running and the ECM attempting to govern turbocharger boost pressure.
- **Set Condition:**
  The Boost Pressure Sensor indicates actual turbocharger boost is greater than the ECM setpoint for engine boost.

Possible Causes
INTERMITTENT DTC
CLOGGED AIR FILTER
INTAKE AIR RESTRICTION
INTAKE AIR LEAK
BOOST PRESSURE SERVO MOTOR
TURBOCHARGER

Always perform the Pre-Diagnostic Troubleshooting procedure before proceeding. (Refer to 9 - ENGINE - DIAGNOSIS AND TESTING)

Diagnostic Test

1. CHECK FOR ACTIVE DTC

Turn the ignition on.
With the scan tool, Clear DTCs in the Engine Control Module (ECM).
Test drive the vehicle.
With the scan tool, select View DTCs.

Is the status Active for this DTC?

Yes >> Go To 2

No >> Refer to the *CHECKING FOR AN INTERMITTENT DTC Diagnostic Procedure. (Refer to 9 - ENGINE - DIAGNOSIS AND TESTING)

2. CHECK THE AIR FILTER

Turn the ignition off.
Remove and inspect the Air Filter for soiling or excessive dirt and debris which may cause air flow restriction.

Were any of these problems found?

Yes >> Replace the Air Filter element
Perform the ECM Verification Test Ver. 1. (Refer to 9 - ENGINE - DIAGNOSIS AND TESTING)

No >> Go to 3

3. CHECK FOR INTAKE SYSTEM RESTRICTIONS

NOTE: Damaged, restricted or poorly connected intake and turbocharger related tubes can cause this DTC to set.
Inspect all air intake, crankcase vent and turbocharger related hoses/tubes and connections.

Were any problems found?

Yes >> Repair or replace as necessary.
Perform the ECM Verification Test Ver. 1. (Refer to 9 - ENGINE - DIAGNOSIS AND TESTING)

No >> Go to 4

4. CHECK FOR INTAKE SYSTEM AIR LEAKS

Remove the Crankcase Vent Heater.

Remove the Mass Air Flow Sensor from the turbocharger inlet tube.

Seal off and/or plug the turbocharger inlet tube where the MAF sensor was removed.

Connect smoke machine 84–04 to the Crankcase Vent Heater port in the intake duct and begin injecting smoke into the intake system.

Observe all intake system components for evidence of smoke leakage.

Is there evidence of smoke leakage?

Yes >> Repair or replace as necessary.
Perform the ECM Verification Test Ver. 1. (Refer to 9 - ENGINE - DIAGNOSIS AND TESTING)

No >> Go to 5

5. REPLACE THE BOOST PRESSURE SERVO MOTOR

Replace the Boost Pressure Servo Motor in accordance with the Service Information.

NOTE: Ensure the Boost Pressure Servo Motor and ECM harness connectors are connected.
Test drive the vehicle.

With the scan tool, select View DTCs.

Is the status Active for this DTC?

Yes >> Replace the Turbocharger assembly in accordance with the Service Information.
Perform the ECM Verification Test Ver. 1. (Refer to 9 - ENGINE - DIAGNOSIS AND TESTING)

No >> Test complete.
Perform the ECM Verification Test Ver. 1. (Refer to 9 - ENGINE - DIAGNOSIS AND TESTING)

P0237-TURBO BOOST PRESSURE SENSOR CIRCUIT LOW

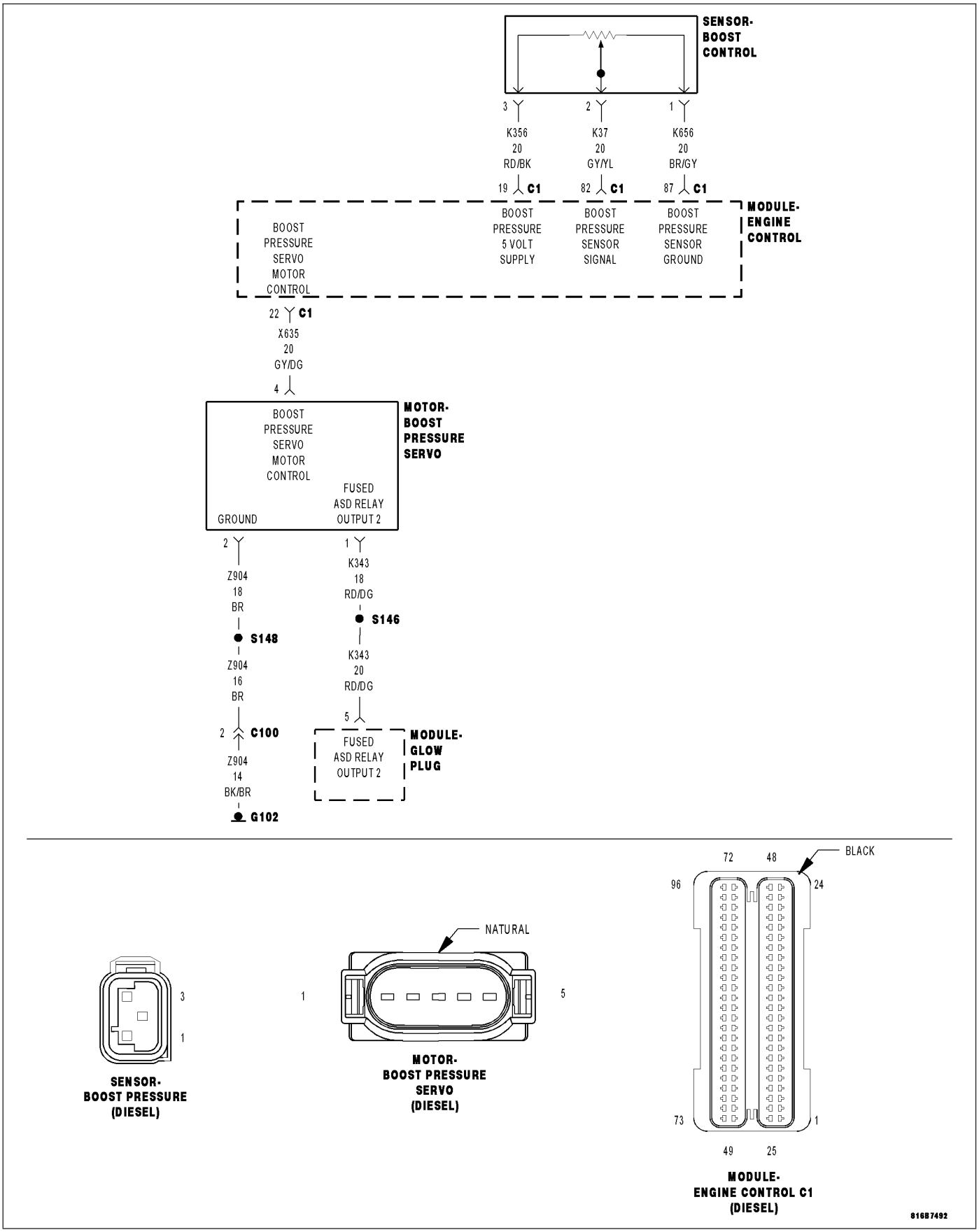

For a complete wiring diagram **Refer to Section 8W**

- **When Monitored:**
  With the ignition on.
- **Set Condition:**
  The (K37) Boost Pressure Sensor Signal circuit voltage is below 0.29 volt for 0.5 second.

Possible Causes
INTERMITTENT DTC
(K356) BOOST PRESSURE SENSOR 5 VOLT SUPPLY CIRCUIT SHORTED TO GROUND
(K37) BOOST PRESSURE SENSOR SIGNAL CIRCUIT SHORTED TO GROUND
(K356) BOOST PRESSURE SENSOR 5 VOLT SUPPLY CIRCUIT SHORTED TO (K656) BOOST PRESSURE SENSOR GROUND
(K37) BOOST PRESSURE SENSOR SIGNAL CIRCUIT SHORTED TO (K656) BOOST PRESSURE SENSOR GROUND
(K356) BOOST PRESSURE SENSOR 5 VOLT SUPPLY CIRCUIT OPEN OR HIGH RESISTANCE
(K37) BOOST PRESSURE SENSOR SIGNAL CIRCUIT OPEN OR HIGH RESISTANCE
BOOST PRESSURE SENSOR
ENGINE CONTROL MODULE (ECM)

Always perform the Pre-Diagnostic Troubleshooting procedure before proceeding. (Refer to 9 - ENGINE - DIAGNOSIS AND TESTING)

Diagnostic Test

1. DTC IS ACTIVE

Ignition on, engine not running.
With the scan tool, Clear DTCs in the Engine Control Module (ECM).
Monitor the scan tool for at least two minutes.
Cycle the ignition key off and on several times, leaving the ignition on for at least 10 seconds at a time.
Start the engine.
Allow the engine to reach normal operating temperature.
With the scan tool, select View DTCs.

Is the status Active for this DTC?

Yes >> Go To 2

No >> Refer to the *CHECKING FOR AN INTERMITTENT DTC Diagnostic Procedure. (Refer to 9 - ENGINE - DIAGNOSIS AND TESTING)

2. (K356) BOOST PRESSURE SENSOR 5 VOLT SUPPLY CIRCUIT VOLTAGE

Turn the ignition off.
Disconnect the Boost Pressure Sensor connector.
Turn the ignition on.
Measure the voltage of the (K356) Boost Pressure Sensor 5 Volt Supply circuit in the Boost Pressure Sensor connector.

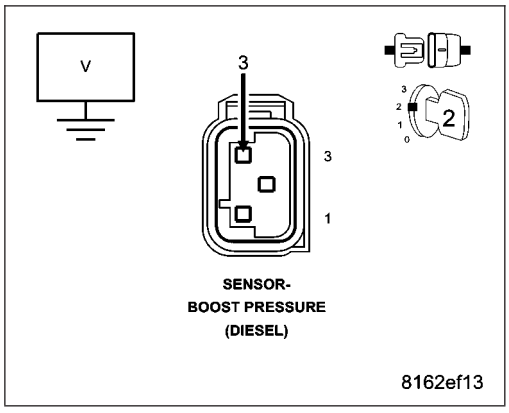

Is the voltage above 4.5 volts?

Yes >> Go to 6

No >> Go to 3

3. (K356) BOOST PRESSURE SENSOR 5 VOLT SUPPLY CIRCUIT SHORTED TO GROUND

Turn the ignition off.

Disconnect the Engine Control Module (ECM) connector.

Measure the resistance between ground and the (K356) Boost Pressure Sensor 5 Volt Supply circuit in the Boost Pressure Sensor connector.

Is the resistance above 1000.0 ohms?

Yes >> Go to 4

No >> Repair the (K356) Boost Pressure Sensor 5 Volt Supply circuit for a short to ground.

Perform the ECM Verification Test Ver. 1. (Refer to 9 - ENGINE - DIAGNOSIS AND TESTING)

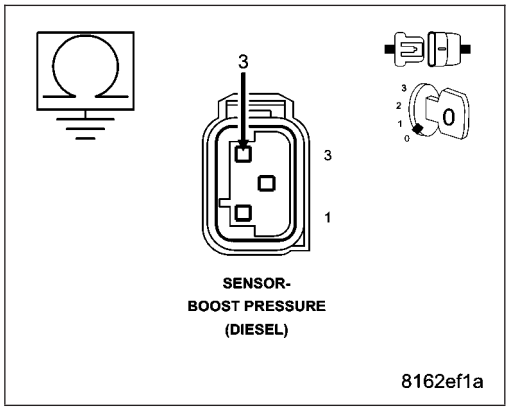

4. (K356) BOOST PRESSURE SENSOR 5 VOLT SUPPLY CIRCUIT SHORTED TO (K656) BOOST PRESSURE SENSOR GROUND CIRCUIT

Measure the resistance between the (K356) Boost Pressure Sensor 5 Volt Supply circuit and the (K656) Boost Pressure Sensor Ground circuit in the Boost Pressure Sensor connector.

Is the resistance above 1000.0 ohms?

Yes >> Go to 5

No >> Repair the (K356) Boost Pressure Sensor 5 Volt Supply circuit for a short to the (K656) Boost Pressure Sensor Ground circuit.

Perform the ECM Verification Test Ver. 1. (Refer to 9 - ENGINE - DIAGNOSIS AND TESTING)

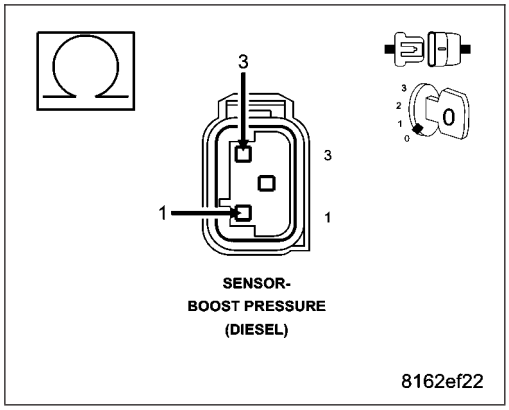

5. (K356) BOOST PRESSURE SENSOR 5 VOLT SUPPLY CIRCUIT OPEN OR HIGH RESISTANCE

Measure the resistance of the (K356) Boost Pressure Sensor 5 Volt Supply circuit between the Boost Pressure Sensor connector and the Engine Control Module (ECM) connector.

Is the resistance below 10.0 ohms?

Yes >> Go to 10

No >> Repair the (K356) Boost Pressure Sensor 5 Volt Supply circuit for an open circuit or high resistance.
Perform the ECM Verification Test Ver. 1. (Refer to 9 - ENGINE - DIAGNOSIS AND TESTING)

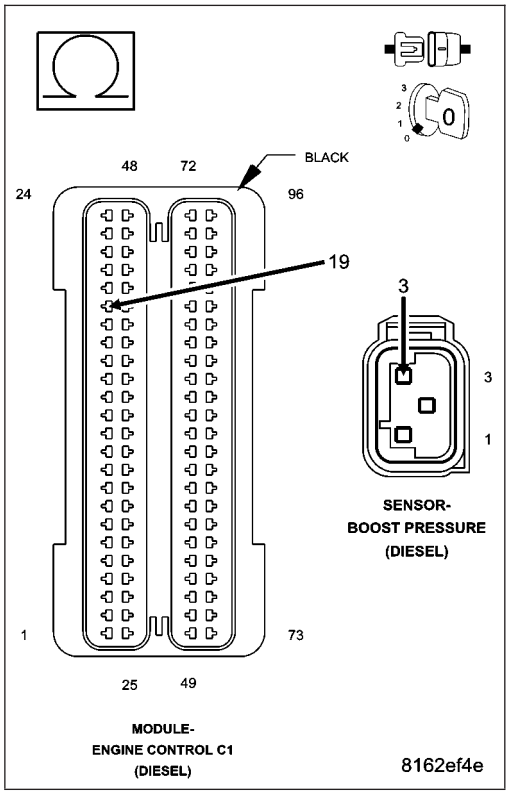

6. BOOST PRESSURE SENSOR

With the scan tool, Clear DTCs.

With the scan tool, select View DTCs.

NOTE: The scan tool should display a Boost Pressure Sensor high voltage or open DTC with the Boost Pressure Sensor connector disconnected.

Does the scan tool display the DTC(s) as described above?

Yes >> Replace the Boost Pressure Sensor in accordance with the Service Information.
Perform the ECM Verification Test Ver. 1. (Refer to 9 - ENGINE - DIAGNOSIS AND TESTING)

No >> Go to 7

7. (K37) BOOST PRESSURE SENSOR SIGNAL CIRCUIT SHORTED TO GROUND

Turn the ignition off.

Disconnect the Engine Control Module (ECM) connector.

Measure the resistance between ground and the (K37) Boost Pressure Sensor Signal circuit in the Boost Pressure Sensor connector.

Is the resistance above 1000.0 ohms?

Yes >> Go to 8

No >> Repair the (K37) Boost Pressure Sensor Signal circuit for a short to ground.
Perform the ECM Verification Test Ver. 1. (Refer to 9 - ENGINE - DIAGNOSIS AND TESTING)

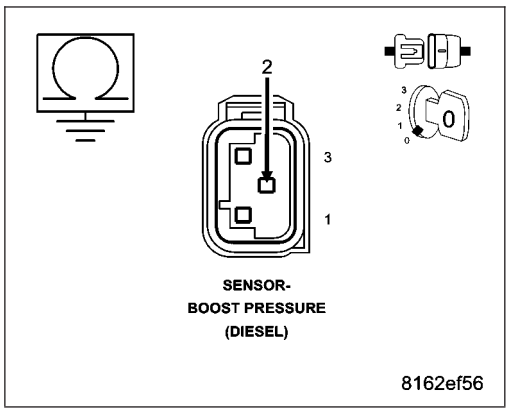

8. (K37) BOOST PRESSURE SENSOR SIGNAL CIRCUIT SHORTED TO (K656) BOOST PRESSURE SENSOR GROUND CIRCUIT

Measure the resistance between the (K37) Boost Pressure Sensor Signal circuit and the (K656) Boost Pressure Sensor Ground circuit in the Boost Pressure Sensor connector.

Is the resistance above 1000.0 ohms?

Yes >> Go to 9

No >> Repair the (K37) Boost Pressure Sensor Signal circuit for a short to the (K656) Boost Pressure Sensor Ground circuit.

Perform the ECM Verification Test Ver. 1. (Refer to 9 - ENGINE - DIAGNOSIS AND TESTING)

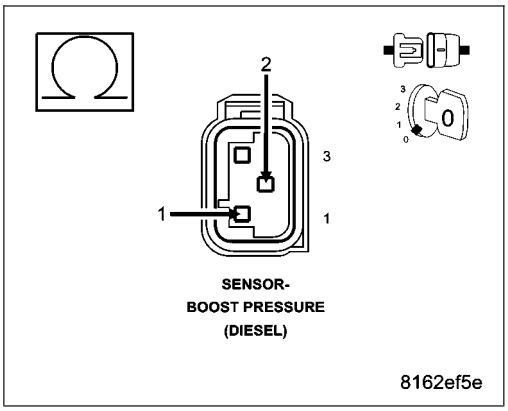

9. (K37) BOOST PRESSURE SENSOR SIGNAL CIRCUIT OPEN OR HIGH RESISTANCE

Measure the resistance of the (K37) Boost Pressure Sensor Signal circuit between the Boost Pressure Sensor connector and the Engine Control Module (ECM) connector.

Is the resistance below 5.0 ohms?

Yes >> Go to 10

No >> Repair the (K37) Boost Pressure Sensor Signal circuit for an open circuit or high resistance.

Perform the ECM Verification Test Ver. 1. (Refer to 9 - ENGINE - DIAGNOSIS AND TESTING)

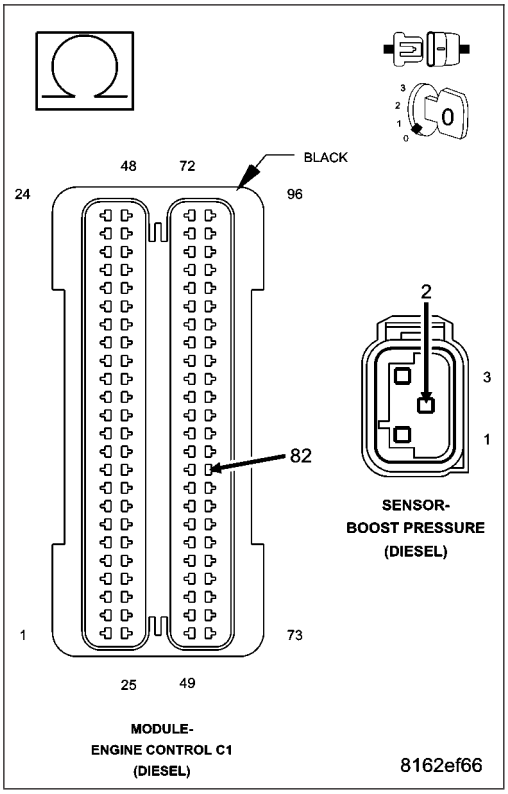

10. ENGINE CONTROL MODULE (ECM)

Using the wiring diagram/schematic as a guide, inspect the wiring and connectors between the Boost Pressure Sensor and the Engine Control Module (ECM).

Look for any chafed, pierced, pinched, or partially broken wires.

Look for broken, bent, pushed out or corroded terminals.

Monitor the scan tool data relative to this circuit and wiggle test the wiring and connectors.

Look for the data to change or for the DTC to reset during the wiggle test.

Refer to any Technical Service Bulletins that may apply.

Were any problems found?

Yes >> Repair as necessary.
Perform the ECM Verification Test Ver. 1. (Refer to 9 - ENGINE - DIAGNOSIS AND TESTING)

No >> Replace the Engine Control Module (ECM) in accordance with the Service Information.
Perform the ECM Verification Test Ver. 1. (Refer to 9 - ENGINE - DIAGNOSIS AND TESTING)

P0238-TURBO BOOST PRESSURE SENSOR CIRCUIT HIGH

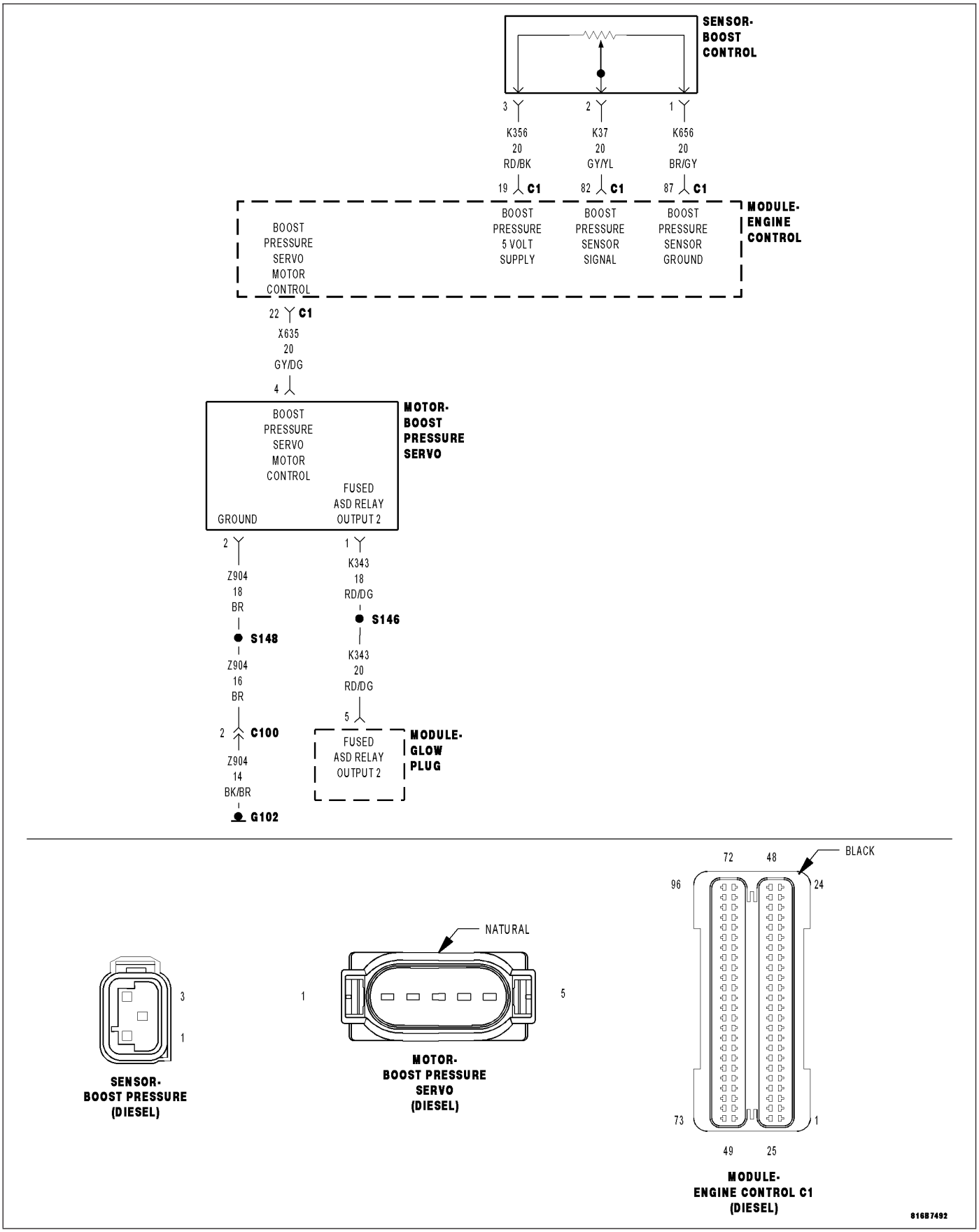

For a complete wiring diagram **Refer to Section 8W**

- **When Monitored:**
  With the ignition on.
- **Set Condition:**
  The (K37) Boost Pressure Sensor Signal circuit voltage is above 4.70 volts for 2.0 seconds.

Possible Causes
INTERMITTENT DTC
(K356) BOOST PRESSURE SENSOR 5 VOLT SUPPLY CIRCUIT SHORTED TO VOLTAGE
(K37) BOOST PRESSURE SENSOR SIGNAL CIRCUIT SHORTED TO VOLTAGE
(K656) BOOST PRESSURE SENSOR GROUND CIRCUIT SHORTED TO VOLTAGE
(K37) BOOST PRESSURE SENSOR SIGNAL CIRCUIT OPEN OR HIGH RESISTANCE
(K656) BOOST PRESSURE SENSOR GROUND CIRCUIT OPEN OR HIGH RESISTANCE
BOOST PRESSURE SENSOR
ENGINE CONTROL MODULE (ECM)

Always perform the Pre-Diagnostic Troubleshooting procedure before proceeding. (Refer to 9 - ENGINE - DIAGNOSIS AND TESTING)

Diagnostic Test

1. DTC IS ACTIVE

Ignition on, engine not running.
With the scan tool, Clear DTCs in the Engine Control Module (ECM).
Monitor the scan tool for at least two minutes.
Cycle the ignition key off and on several times, leaving the ignition on for at least 10 seconds at a time.
Start the engine.
Allow the engine to reach normal operating temperature.
With the scan tool, select View DTCs.

Is the status Active for this DTC?

Yes >> Go To 2

No >> Refer to the *CHECKING FOR AN INTERMITTENT DTC Diagnostic Procedure. (Refer to 9 - ENGINE - DIAGNOSIS AND TESTING)

2. (K356) BOOST PRESSURE SENSOR 5 VOLT SUPPLY CIRCUIT SHORTED TO VOLTAGE

Turn the ignition off.
Disconnect the Boost Pressure Sensor connector.
Disconnect the Engine Control Module (ECM) connector.
Remove the ASD Relay from the IPM.
Connect a jumper wire between cavity 30 and cavity 87 of the ASD Relay Connector.
Turn the ignition on.
Measure the voltage of the (K356) Boost Pressure Sensor 5 Volt Supply circuit in the Boost Pressure Sensor connector.

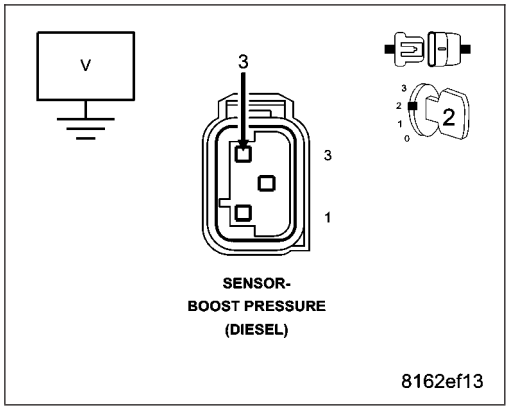

Is there any voltage present?

Yes >> Repair the (K356) Boost Pressure Sensor 5 Volt Supply circuit for a short to voltage.
Perform the ECM Verification Test Ver. 1. (Refer to 9 - ENGINE - DIAGNOSIS AND TESTING)

No >> Go to 3

3. (K37) BOOST PRESSURE SENSOR SIGNAL CIRCUIT SHORTED TO VOLTAGE

NOTE: The jumper wire should still be in place.
Measure the voltage of the (K37) Boost Pressure Sensor Signal circuit in the Boost Pressure Sensor connector.

Is there any voltage present?

Yes >> Repair the (K37) Boost Pressure Sensor Signal circuit for a short to voltage.
Perform the ECM Verification Test Ver. 1. (Refer to 9 - ENGINE - DIAGNOSIS AND TESTING)

No >> Go to 4

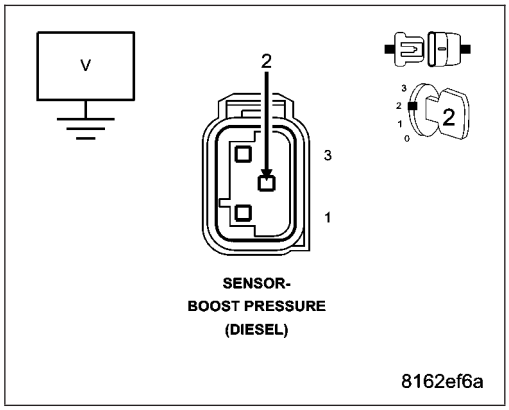

4. (K656) BOOST PRESSURE SENSOR GROUND CIRCUIT SHORTED TO VOLTAGE

NOTE: The jumper wire should still be in place.
Measure the voltage of the (K656) Boost Pressure Sensor Ground circuit in the Boost Pressure Sensor connector.

Is there any voltage present?

Yes >> Repair the (K656) Boost Pressure Sensor Ground circuit for a short to voltage.
Perform the ECM Verification Test Ver. 1. (Refer to 9 - ENGINE - DIAGNOSIS AND TESTING)

No >> Go to 5

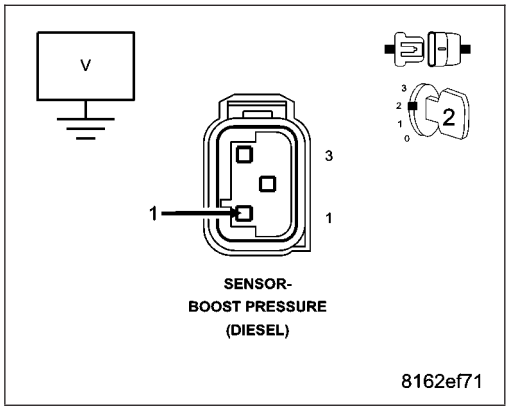

5. BOOST PRESSURE SENSOR

Turn the ignition off.

Remove the jumper wire and install the ASD Relay.

Connect the Engine Control Module (ECM) connector.

Connect a jumper wire between the (K656) Boost Pressure Sensor Ground circuit and the (K37) Boost Pressure Sensor Signal circuit in the Boost Pressure Sensor connector.

Turn the ignition on.

With the scan tool, Clear DTCs.

With the scan tool, select View DTCs.

NOTE: The scan tool should display a Boost Pressure Sensor low voltage or short to ground DTC with the jumper wire in place.

Does the scan tool display the DTC(s) as described above?

Yes >> Replace the Boost Pressure Sensor in accordance with the Service Information.
Perform the ECM Verification Test Ver. 1. (Refer to 9 - ENGINE - DIAGNOSIS AND TESTING)

No >> Go to 6

6. (K37) BOOST PRESSURE SENSOR SIGNAL CIRCUIT OPEN OR HIGH RESISTANCE

Turn the ignition off.

Disconnect the Engine Control Module (ECM) connector.

Measure the resistance of the (K37) Boost Pressure Sensor Signal circuit between the Boost Pressure Sensor connector and the Engine Control Module (ECM) connector.

Is the resistance below 10.0 ohms?

Yes >> Go to 7

No >> Repair the (K37) Boost Pressure Sensor Signal circuit for an open circuit or high resistance.

Perform the ECM Verification Test Ver. 1. (Refer to 9 - ENGINE - DIAGNOSIS AND TESTING)

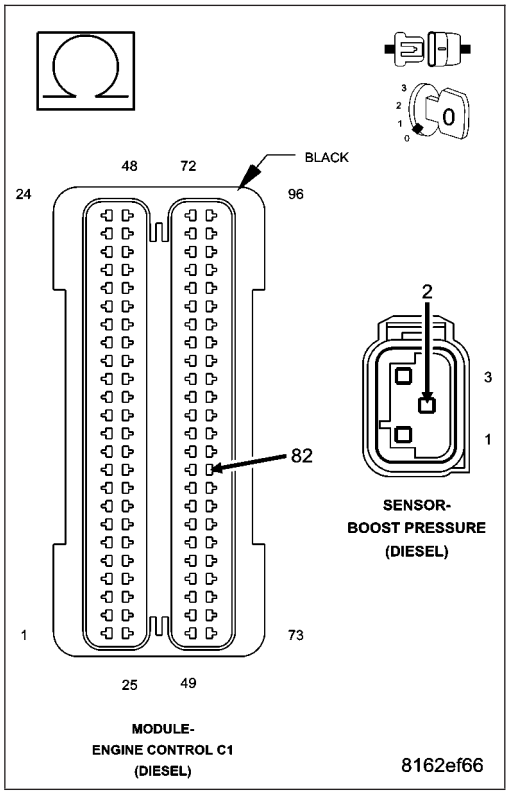

7. (K656) BOOST PRESSURE SENSOR GROUND CIRCUIT OPEN OR HIGH RESISTANCE

Measure the resistance of the (K656) Boost Pressure Sensor Ground circuit between the Boost Pressure Sensor connector and the Engine Control Module (ECM) connector.

Is the resistance below 10.0 ohms?

Yes >> Go to 8

No >> Repair the (K656) Boost Pressure Sensor Ground circuit for an open circuit or high resistance.

Perform the ECM Verification Test Ver. 1. (Refer to 9 - ENGINE - DIAGNOSIS AND TESTING)

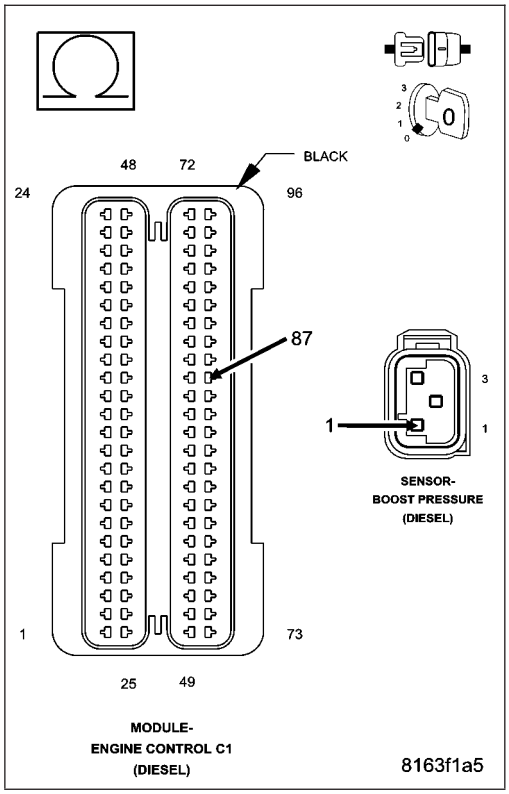

8. ENGINE CONTROL MODULE (ECM)

Using the wiring diagram/schematic as a guide, inspect the wiring and connectors between the Boost Pressure Sensor and the Engine Control Module (ECM).

Look for any chafed, pierced, pinched, or partially broken wires.

Look for broken, bent, pushed out or corroded terminals.

Monitor the scan tool data relative to this circuit and wiggle test the wiring and connectors.

Look for the data to change or for the DTC to reset during the wiggle test.

Refer to any Technical Service Bulletins that may apply.

Were any problems found?

Yes >> Repair as necessary.
Perform the ECM Verification Test Ver. 1. (Refer to 9 - ENGINE - DIAGNOSIS AND TESTING)

No >> Replace the Engine Control Module (ECM) in accordance with the Service Information.
Perform the ECM Verification Test Ver. 1. (Refer to 9 - ENGINE - DIAGNOSIS AND TESTING)

P0261-FUEL INJECTOR 1 CIRCUIT LOW

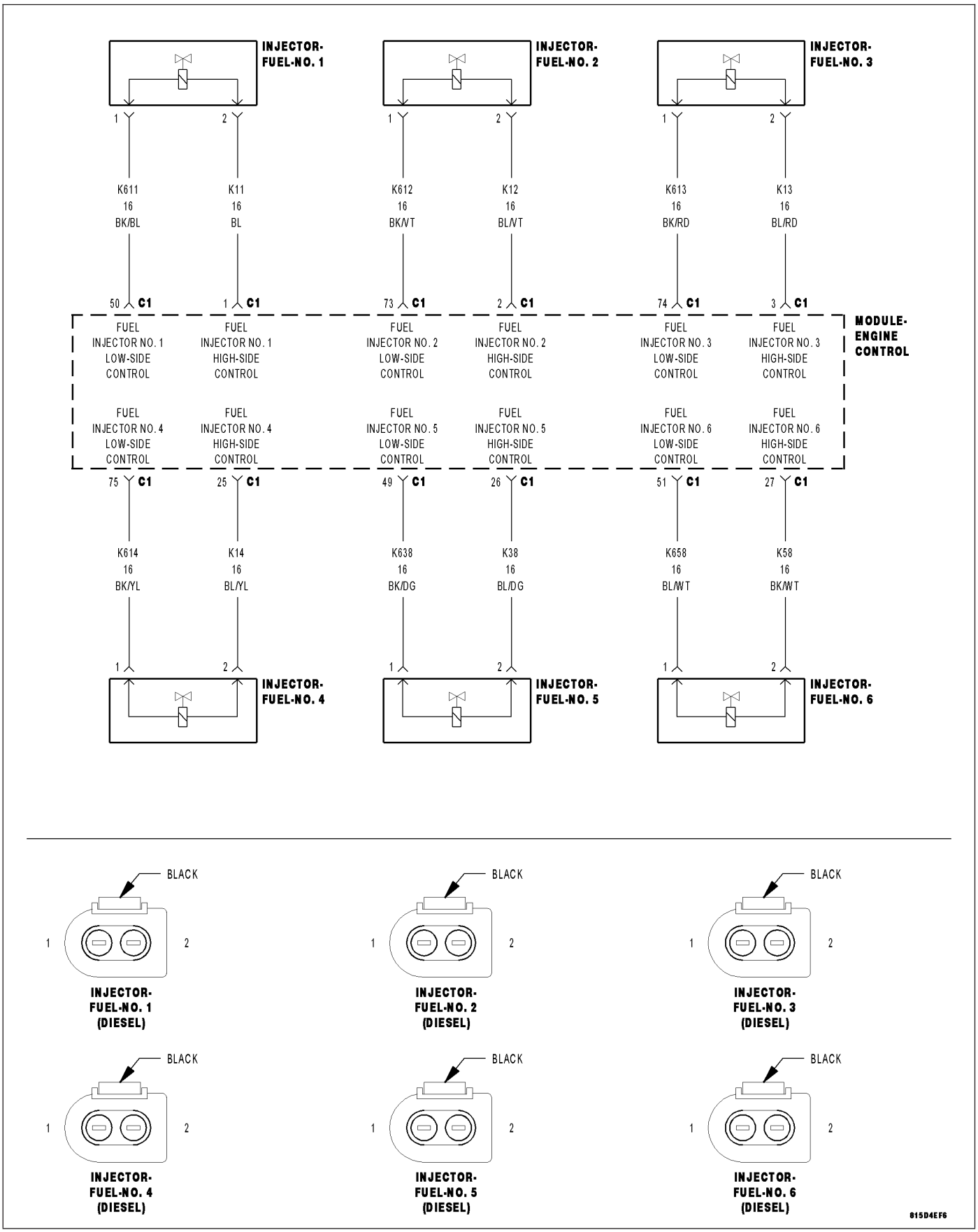

For a complete wiring diagram **Refer to Section 8W**

- **When Monitored:**
  With the engine running.
- **Set Condition:**
  The ECM detects a short to ground on the Fuel Injector 1 circuit.

Possible Causes
INTERMITTENT DTC
(K11) FUEL INJECTOR NO. 1 HIGH-SIDE CONTROL CIRCUIT SHORTED TO GROUND
(K611) FUEL INJECTOR NO. 1 LOW-SIDE CONTROL CIRCUIT SHORTED TO GROUND
(K11) FUEL INJECTOR NO. 1 HIGH-SIDE CONTROL CIRCUIT SHORTED TO (K611) FUEL INJECTOR NO. 1 LOW-SIDE CONTROL CIRCUIT
(K11) FUEL INJECTOR NO. 1 HIGH-SIDE CONTROL CIRCUIT OPEN OR HIGH RESISTANCE
(K611) FUEL INJECTOR NO. 1 LOW-SIDE CONTROL CIRCUIT OPEN OR HIGH RESISTANCE
FUEL INJECTOR NO. 1
ENGINE CONTROL MODULE (ECM)

Always perform the Pre-Diagnostic Troubleshooting procedure before proceeding. (Refer to 9 - ENGINE - DIAGNOSIS AND TESTING)

Diagnostic Test

1. DTC IS ACTIVE

NOTE: This DTC can set as a result of a fault in any of the injector circuits. Be sure to check all injector circuits before replacing an injector and all injectors before replacing a module.
Ignition on, engine not running.
With the scan tool, Clear DTCs in the Engine Control Module (ECM).
Attempt to start the engine and test drive the vehicle.
With the scan tool, select View DTCs.

Is the status Active for this DTC?

Yes >> Go To 2

No >> Refer to the *CHECKING FOR AN INTERMITTENT DTC Diagnostic Procedure. (Refer to 9 - ENGINE - DIAGNOSIS AND TESTING)

2. (K11) FUEL INJECTOR NO. 1 HIGH-SIDE CONTROL CIRCUIT SHORTED TO GROUND

Turn the ignition off.
Disconnect the Fuel Injector No. 1 connector.
Disconnect the Engine Control Module (ECM) connector.
Measure the resistance between ground and the (K11) Fuel Injector No. 1 High-Side Control circuit in the Fuel Injector No. 1 connector.

Is the resistance above 1000.0 ohms?

Yes >> Go to 3

No >> Repair the (K11) Fuel Injector No. 1 High-Side Control circuit for a short to ground.
Perform the ECM Verification Test Ver. 1. (Refer to 9 - ENGINE - DIAGNOSIS AND TESTING)

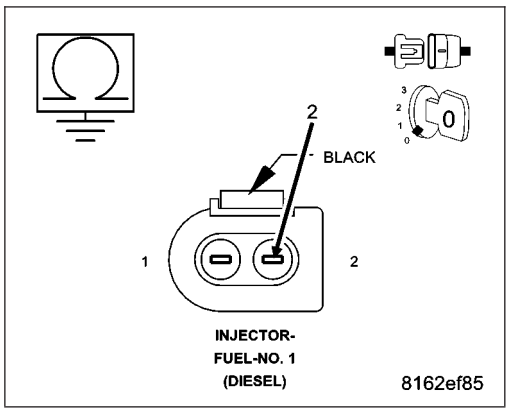

3. (K611) FUEL INJECTOR NO. 1 LOW-SIDE CONTROL CIRCUIT SHORTED TO GROUND

Measure the resistance between ground and the (K611) Fuel Injector No. 1 Low-Side Control circuit in the Fuel Injector No. 1 connector.

Is the resistance above 1000.0 ohms?

Yes >> Go to 4

No >> Repair the (K611) Fuel Injector No. 1 Low-Side Control circuit for a short to ground.

Perform the ECM Verification Test Ver. 1. (Refer to 9 - ENGINE - DIAGNOSIS AND TESTING)

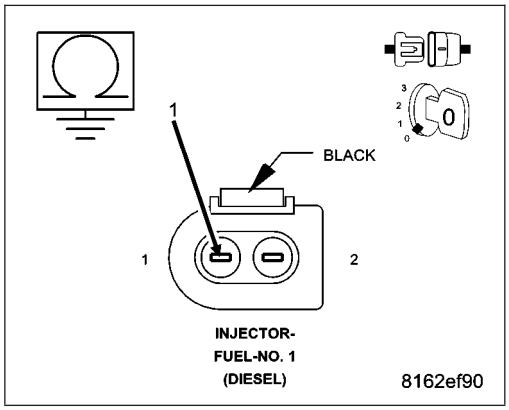

4. (K11) FUEL INJECTOR NO. 1 HIGH-SIDE CONTROL CIRCUIT SHORTED TO (K611) FUEL INJECTOR NO. 1 LOW-SIDE CONTROL CIRCUIT

Measure the resistance between the (K11) Fuel Injector No. 1 High-Side Control circuit and the (K611) Fuel Injector No. 1 Low-Side Control circuit in the Fuel Injector No. 1 connector.

Is the resistance above 1000.0 ohms?

Yes >> Go to 5

No >> Repair the (K11) Fuel Injector No. 1 High-Side Control circuit for a short to the (K611) Fuel Injector No. 1 Low-Side Control circuit.

Perform the ECM Verification Test Ver. 1. (Refer to 9 - ENGINE - DIAGNOSIS AND TESTING)

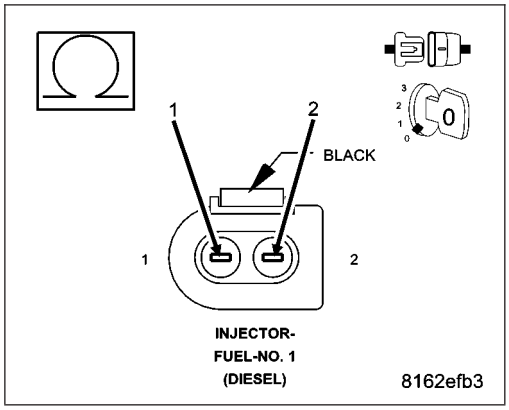

5. (K11) FUEL INJECTOR NO. 1 HIGH-SIDE CONTROL CIRCUIT OPEN OR HIGH RESISTANCE

Measure the resistance of the (K11) Fuel Injector No. 1 High-Side Control circuit between the Fuel Injector No. 1 connector and the Engine Control Module (ECM) connector.

Is the resistance below 10.0 ohms?

Yes >> Go to 6

No >> Repair the (K11) Fuel Injector No. 1 High-Side Control circuit for an open circuit or high resistance.
Perform the ECM Verification Test Ver. 1. (Refer to 9 - ENGINE - DIAGNOSIS AND TESTING)

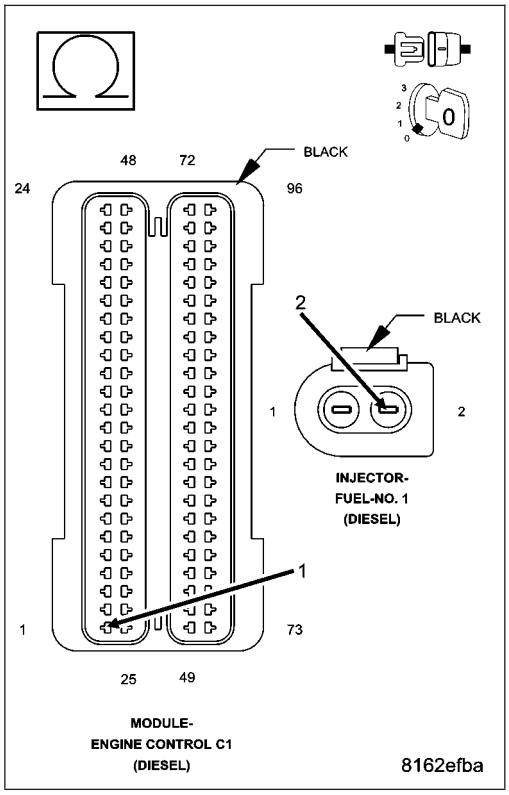

6. (K611) FUEL INJECTOR NO. 1 LOW-SIDE CONTROL CIRCUIT OPEN OR HIGH RESISTANCE

Measure the resistance of the (K611) Fuel Injector No. 1 Low-Side Control circuit between the Fuel Injector No. 1 connector and the Engine Control Module (ECM) connector.

Is the resistance below 10.0 ohms?

Yes >> Go to 7

No >> Repair the (K611) Fuel Injector No. 1 Low-Side Control circuit for an open circuit or high resistance.
Perform the ECM Verification Test Ver. 1. (Refer to 9 - ENGINE - DIAGNOSIS AND TESTING)

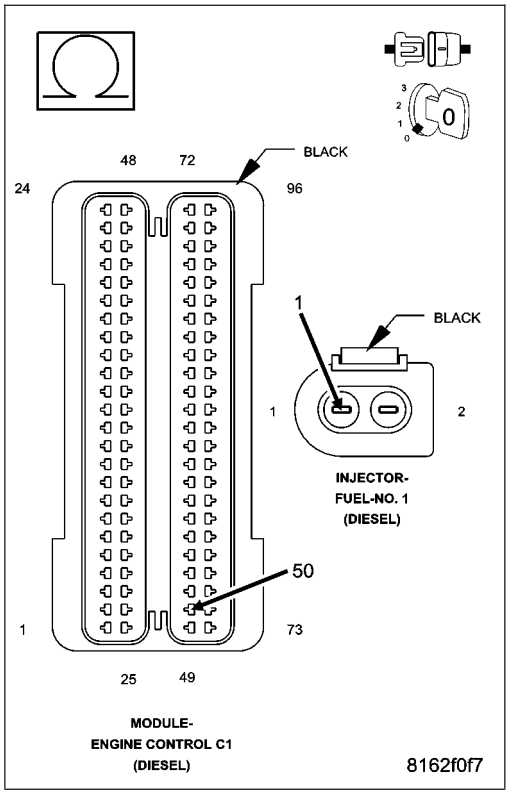

7. FUEL INJECTOR NO. 1

Measure the resistance between the terminals of Fuel Injector No. 1.

Is the resistance approximately 185k ohms (+/- 10%)?

Yes >> Go to 8

No >> Replace Fuel Injector No. 1 in accordance with the Service Information.
Perform the ECM Verification Test Ver. 1. (Refer to 9 - ENGINE - DIAGNOSIS AND TESTING)

8. ENGINE CONTROL MODULE (ECM)

Using the wiring diagram/schematic as a guide, inspect the wiring and connectors between the Fuel Injector No. 1 and the Engine Control Module (ECM).

Look for any chafed, pierced, pinched, or partially broken wires.

Look for broken, bent, pushed out or corroded terminals.

Monitor the scan tool data relative to this circuit and wiggle test the wiring and connectors.

Look for the data to change or for the DTC to reset during the wiggle test.

Refer to any Technical Service Bulletins that may apply.

Were any problems found?

Yes >> Repair as necessary.
Perform the ECM Verification Test Ver. 1. (Refer to 9 - ENGINE - DIAGNOSIS AND TESTING)

No >> Replace the Engine Control Module (ECM) in accordance with the Service Information.
Perform the ECM Verification Test Ver. 1. (Refer to 9 - ENGINE - DIAGNOSIS AND TESTING)

P0262-FUEL INJECTOR 1 CIRCUIT HIGH

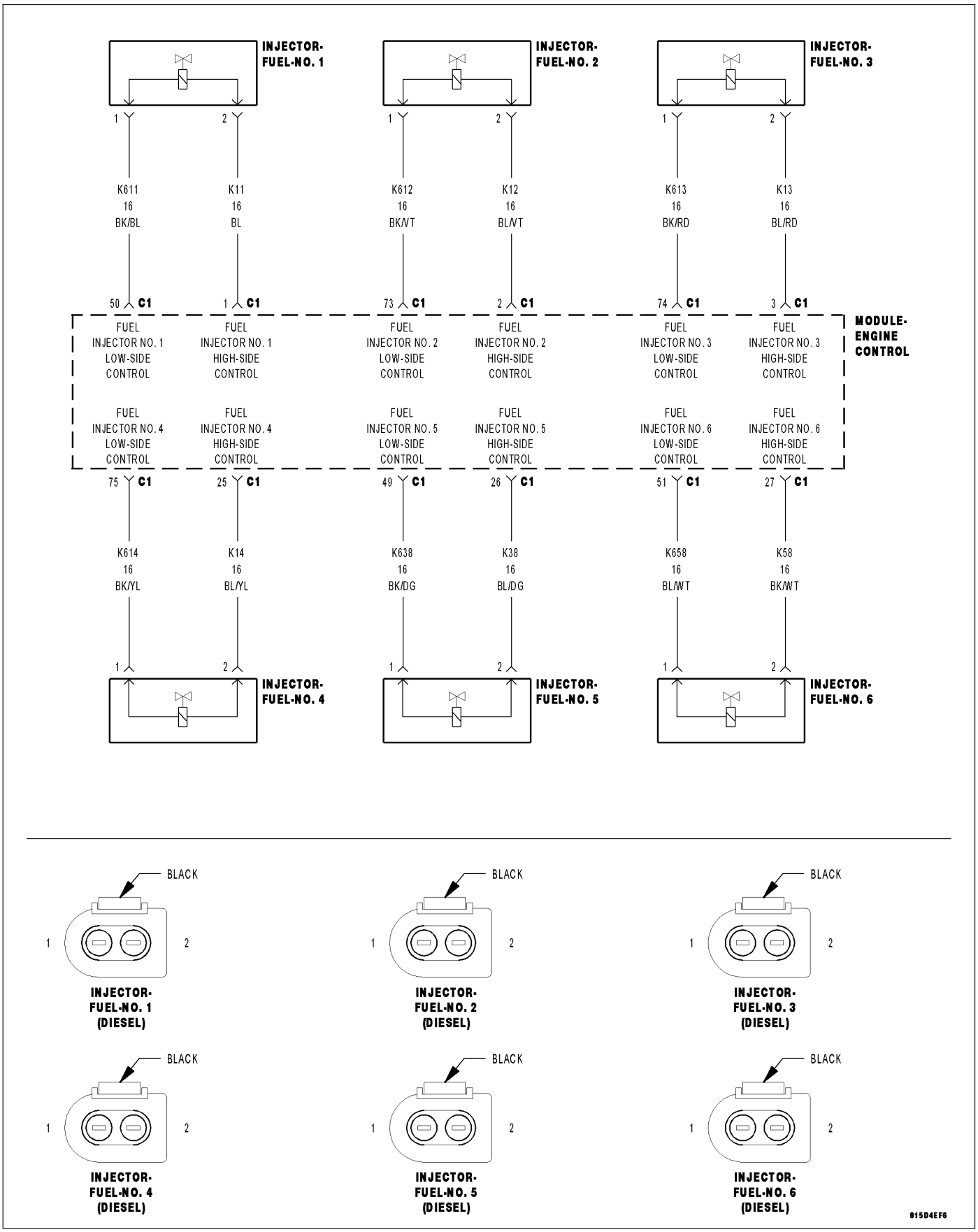

For a complete wiring diagram **Refer to Section 8W**

- **When Monitored:**
  With the engine running.
- **Set Condition:**
  The ECM detects a short to voltage on the Fuel Injector 1 circuit.

Possible Causes
INTERMITTENT DTC
(K11) FUEL INJECTOR NO. 1 HIGH-SIDE CONTROL CIRCUIT SHORTED TO VOLTAGE
(K611) FUEL INJECTOR NO. 1 LOW-SIDE CONTROL CIRCUIT SHORTED TO VOLTAGE
(K11) FUEL INJECTOR NO. 1 HIGH-SIDE CONTROL CIRCUIT SHORTED TO (K611) FUEL INJECTOR NO. 1 LOW-SIDE CONTROL CIRCUIT
(K11) FUEL INJECTOR NO. 1 HIGH-SIDE CONTROL CIRCUIT OPEN OR HIGH RESISTANCE
(K611) FUEL INJECTOR NO. 1 LOW-SIDE CONTROL CIRCUIT OPEN OR HIGH RESISTANCE
FUEL INJECTOR NO. 1
ENGINE CONTROL MODULE (ECM)

Always perform the Pre-Diagnostic Troubleshooting procedure before proceeding. (Refer to 9 - ENGINE - DIAGNOSIS AND TESTING)

Diagnostic Test

1. DTC IS ACTIVE

NOTE: This DTC can set as a result of a fault in any of the injector circuits. Be sure to check all injector circuits before replacing an injector and all injectors before replacing a module.

Ignition on, engine not running.

With the scan tool, Clear DTCs in the Engine Control Module (ECM).

Attempt to start the engine and test drive the vehicle.

With the scan tool, select View DTCs.

Is the status Active for this DTC?

Yes >> Go To 2

No >> Refer to the *CHECKING FOR AN INTERMITTENT DTC Diagnostic Procedure. (Refer to 9 - ENGINE - DIAGNOSIS AND TESTING)

2. (K11) FUEL INJECTOR NO. 1 HIGH-SIDE CONTROL CIRCUIT SHORTED TO VOLTAGE

Turn the ignition off.

Disconnect the Fuel Injector No. 1 connector.

Disconnect the Engine Control Module (ECM) connector.

Remove the ASD Relay from the IPM.

Connect a jumper wire between cavity 30 and cavity 87 of the ASD Relay Connector.

Turn the ignition on.

Measure the voltage of the (K11) Fuel Injector No. 1 High-Side Control circuit in the Fuel Injector No. 1 connector.

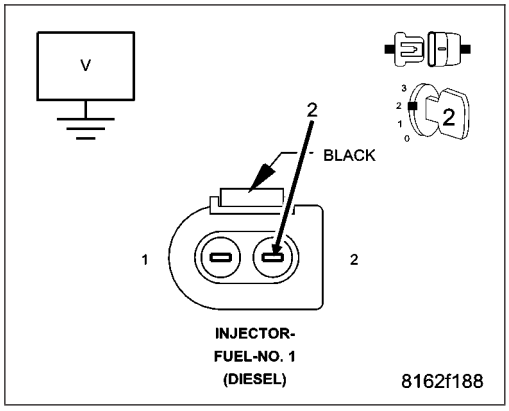

Is there any voltage present?

Yes >> Repair the (K11) Fuel Injector No. 1 High-Side Control circuit for a short to voltage.
Perform the ECM Verification Test Ver. 1. (Refer to 9 - ENGINE - DIAGNOSIS AND TESTING)

No >> Go to 3

3. (K611) FUEL INJECTOR NO. 1 LOW-SIDE CONTROL CIRCUIT SHORTED TO VOLTAGE

NOTE: The jumper wire should still be in place.
Measure the voltage of the (K611) Fuel Injector No. 1 Low-Side Control circuit.

Is there any voltage present?

Yes >> Repair the (K611) Fuel Injector No. 1 Low-Side Control circuit for a short to voltage.
Perform the ECM Verification Test Ver. 1. (Refer to 9 - ENGINE - DIAGNOSIS AND TESTING)

No >> Go to 4

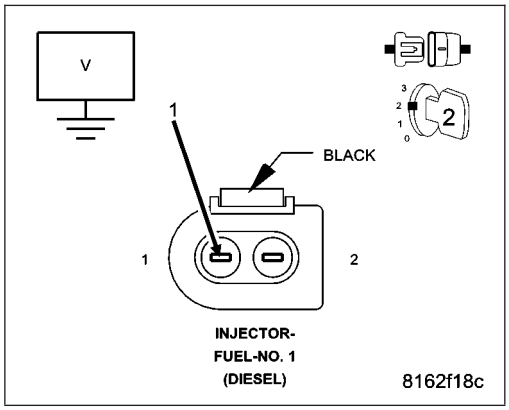

4. (K11) FUEL INJECTOR NO. 1 HIGH-SIDE CONTROL CIRCUIT SHORTED TO (K611) FUEL INJECTOR NO. 1 LOW-SIDE CONTROL CIRCUIT

Turn the ignition off.
Measure the resistance between the (K11) Fuel Injector No. 1 High-Side Control circuit and the (K611) Fuel Injector No. 1 Low-Side Control circuit in the Fuel Injector No. 1 connector.

Is the resistance above 1000.0 ohms?

Yes >> Go to 5

No >> Repair the (K11) Fuel Injector No. 1 High-Side Control circuit for a short to the (K611) Fuel Injector No. 1 Low-Side Control circuit.
Perform the ECM Verification Test Ver. 1. (Refer to 9 - ENGINE - DIAGNOSIS AND TESTING)

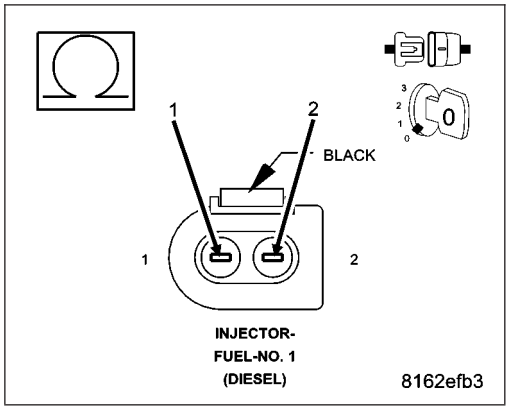

5. (K11) FUEL INJECTOR NO. 1 HIGH-SIDE CONTROL CIRCUIT OPEN OR HIGH RESISTANCE

Measure the resistance of the (K11) Fuel Injector No. 1 High-Side Control circuit between the Fuel Injector No. 1 connector and the Engine Control Module (ECM) connector.

Is the resistance below 10.0 ohms?

Yes >> Go to 6

No >> Repair the (K11) Fuel Injector No. 1 High-Side Control circuit for an open circuit or high resistance.
Perform the ECM Verification Test Ver. 1. (Refer to 9 - ENGINE - DIAGNOSIS AND TESTING)

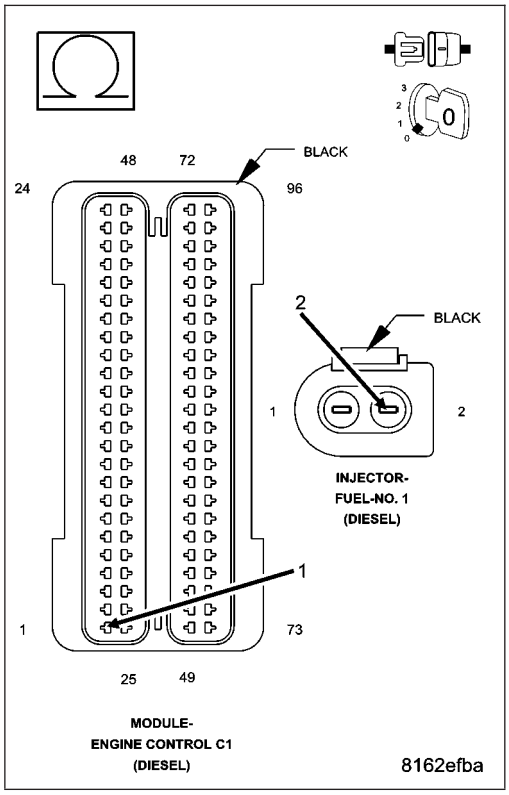

6. (K611) FUEL INJECTOR NO. 1 LOW-SIDE CONTROL CIRCUIT OPEN OR HIGH RESISTANCE

Measure the resistance of the (K611) Fuel Injector No. 1 Low-Side Control circuit between the Fuel Injector No. 1 connector and the Engine Control Module (ECM) connector.

Is the resistance below 10.0 ohms?

Yes >> Go to 7

No >> Repair the (K611) Fuel Injector No. 1 Low-Side Control circuit for an open circuit or high resistance.
Perform the ECM Verification Test Ver. 1. (Refer to 9 - ENGINE - DIAGNOSIS AND TESTING)

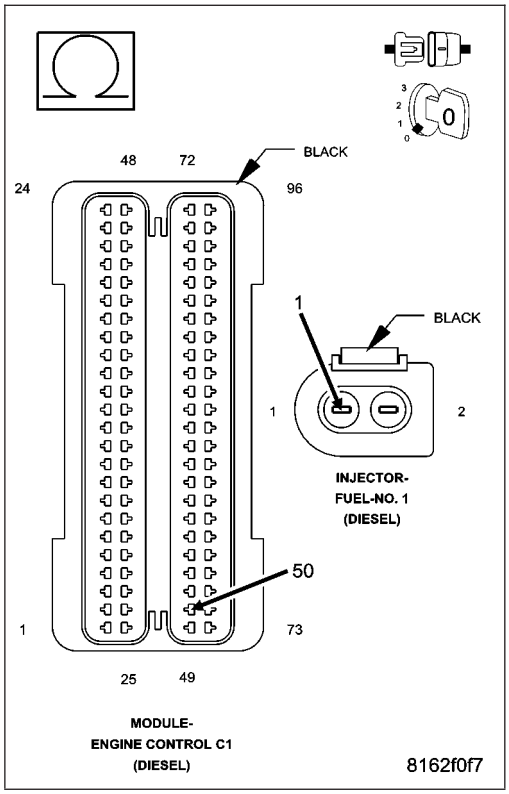

7. FUEL INJECTOR NO. 1

Measure the resistance between the terminals of Fuel Injector No. 1.

Is the resistance approximately 185k ohms (+/- 10%)?

Yes >> Go to 8

No >> Replace Fuel Injector No. 1 in accordance with the Service Information.
Perform the ECM Verification Test Ver. 1. (Refer to 9 - ENGINE - DIAGNOSIS AND TESTING)

8. ENGINE CONTROL MODULE (ECM)

Using the wiring diagram/schematic as a guide, inspect the wiring and connectors between the Fuel Injector No. 1 and the Engine Control Module (ECM).

Look for any chafed, pierced, pinched, or partially broken wires.

Look for broken, bent, pushed out or corroded terminals.

Monitor the scan tool data relative to this circuit and wiggle test the wiring and connectors.

Look for the data to change or for the DTC to reset during the wiggle test.

Refer to any Technical Service Bulletins that may apply.

Were any problems found?

Yes >> Repair as necessary.
Perform the ECM Verification Test Ver. 1. (Refer to 9 - ENGINE - DIAGNOSIS AND TESTING)

No >> Replace the Engine Control Module (ECM) in accordance with the Service Information.
Perform the ECM Verification Test Ver. 1. (Refer to 9 - ENGINE - DIAGNOSIS AND TESTING)

P0263-CYLINDER 1 CONTRIBUTION/BALANCE

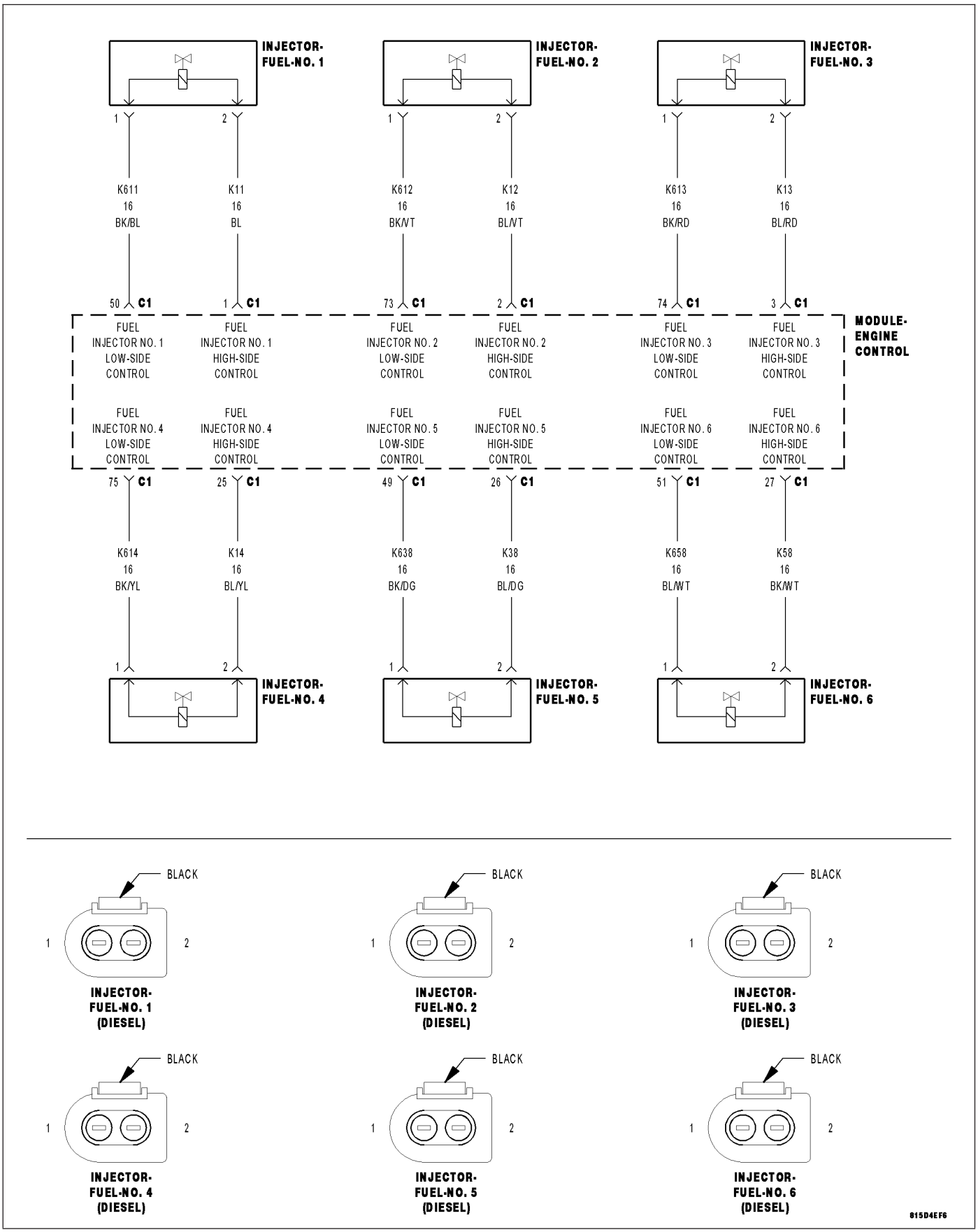

For a complete wiring diagram **Refer to Section 8W**

- **When Monitored:**
  With the ignition on.
- **Set Condition:**
  The Engine Control Module (ECM) detects an internal failure.

Possible Causes
INTERMITTENT DTC
ENGINE CONTROL MODULE (ECM)

Always perform the Pre-Diagnostic Troubleshooting procedure before proceeding. (Refer to 9 - ENGINE - DIAGNOSIS AND TESTING)

Diagnostic Test

1. DTC IS ACTIVE

Ignition on, engine not running.
With the scan tool, Clear DTCs in the Engine Control Module (ECM).
Monitor the scan tool for at least two minutes.
Cycle the ignition key off and on several times, leaving the ignition on for at least 10 seconds at a time.
Start the engine.
Allow the engine to reach normal operating temperature.
With the scan tool, select View DTCs.

Is the status Active for this DTC?

Yes >> Go To 2

No >> Refer to the *CHECKING FOR AN INTERMITTENT DTC Diagnostic Procedure. (Refer to 9 - ENGINE - DIAGNOSIS AND TESTING)

2. ENGINE CONTROL MODULE (ECM)

Using the wiring diagram/schematic as a guide, inspect the Engine Control Module (ECM) wiring and connectors.
Look for any chafed, pierced, pinched, or partially broken wires.
Look for broken, bent, pushed out or corroded terminals.
Monitor the scan tool data relative to this circuit and wiggle test the wiring and connectors.
Look for the data to change or for the DTC to reset during the wiggle test.
Refer to any Technical Service Bulletins that may apply.

Were any problems found?

Yes >> Repair as necessary.
Perform the ECM Verification Test Ver. 1. (Refer to 9 - ENGINE - DIAGNOSIS AND TESTING)

No >> Replace the Engine Control Module (ECM) in accordance with the Service Information.
Perform the ECM Verification Test Ver. 1. (Refer to 9 - ENGINE - DIAGNOSIS AND TESTING)

P0264-FUEL INJECTOR 2 CIRCUIT LOW

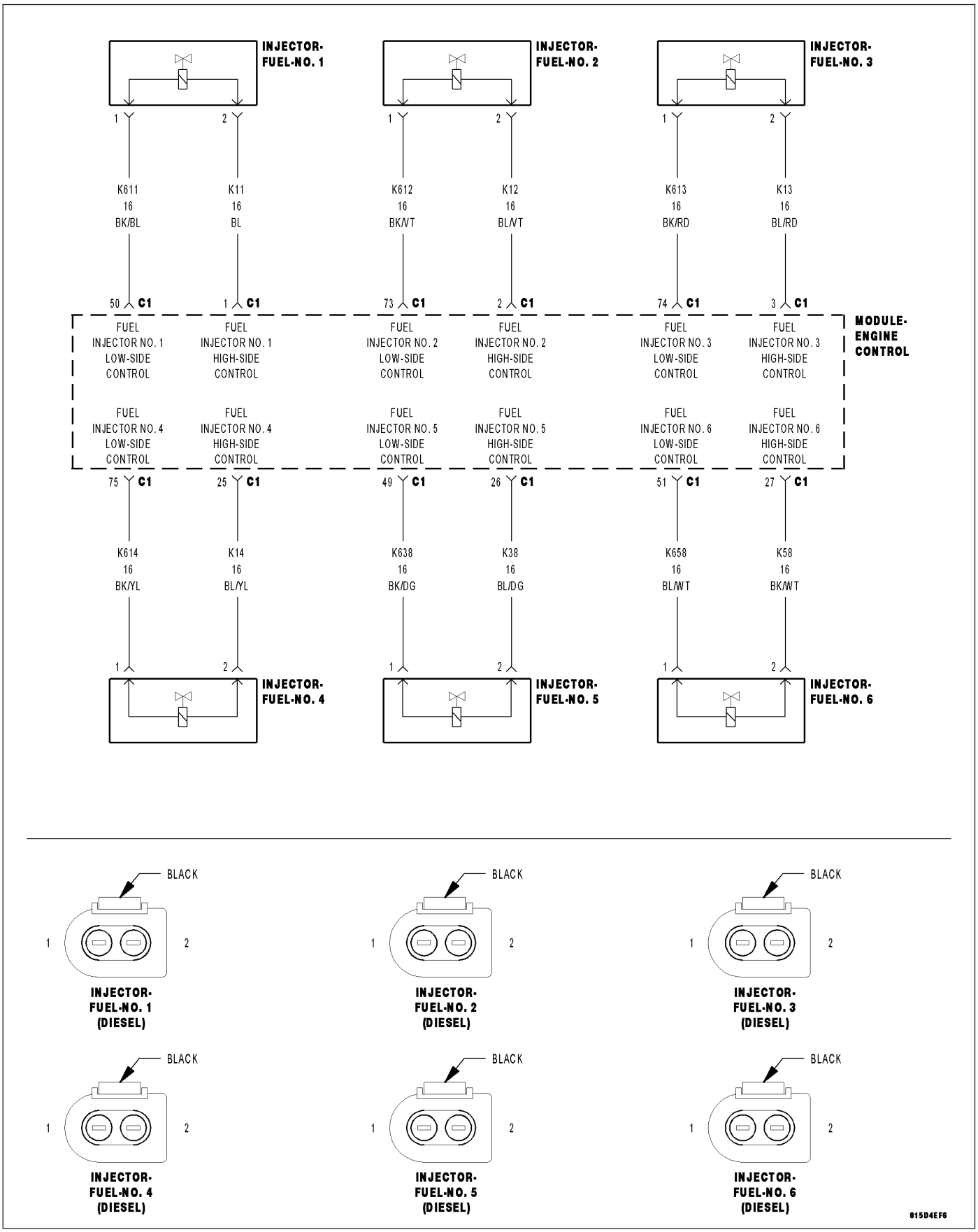

For a complete wiring diagram **Refer to Section 8W**

- **When Monitored:**
  With the engine running.
- **Set Condition:**
  The ECM detects a short to ground on the Fuel Injector 2 circuit.

Possible Causes
INTERMITTENT DTC
(K12) FUEL INJECTOR NO. 2 HIGH-SIDE CONTROL CIRCUIT SHORTED TO GROUND
(K612) FUEL INJECTOR NO. 2 LOW-SIDE CONTROL CIRCUIT SHORTED TO GROUND
(K12) FUEL INJECTOR NO. 2 HIGH-SIDE CONTROL CIRCUIT SHORTED TO (K612) FUEL INJECTOR NO. 2 LOW-SIDE CONTROL CIRCUIT
(K12) FUEL INJECTOR NO. 2 HIGH-SIDE CONTROL CIRCUIT OPEN OR HIGH RESISTANCE
(K612) FUEL INJECTOR NO. 2 LOW-SIDE CONTROL CIRCUIT OPEN OR HIGH RESISTANCE
FUEL INJECTOR NO. 2
ENGINE CONTROL MODULE (ECM)

Always perform the Pre-Diagnostic Troubleshooting procedure before proceeding. (Refer to 9 - ENGINE - DIAGNOSIS AND TESTING)

Diagnostic Test

1. DTC IS ACTIVE

NOTE: This DTC can set as a result of a fault in any of the injector circuits. Be sure to check all injector circuits before replacing an injector and all injectors before replacing a module.
Ignition on, engine not running.
With the scan tool, Clear DTCs in the Engine Control Module (ECM).
Attempt to start the engine and test drive the vehicle.
With the scan tool, select View DTCs.

Is the status Active for this DTC?

Yes >> Go To 2

No >> Refer to the *CHECKING FOR AN INTERMITTENT DTC Diagnostic Procedure. (Refer to 9 - ENGINE - DIAGNOSIS AND TESTING)

2. (K12) FUEL INJECTOR NO. 2 HIGH-SIDE CONTROL CIRCUIT SHORTED TO GROUND

Turn the ignition off.
Disconnect the Fuel Injector No. 2 connector.
Disconnect the Engine Control Module (ECM) connector.
Measure the resistance between ground and the (K12) Fuel Injector No. 2 High-Side Control circuit in the Fuel Injector No. 2 connector.

Is the resistance above 1000.0 ohms?

Yes >> Go to 3

No >> Repair the (K12) Fuel Injector No. 2 High-Side Control circuit for a short to ground.
Perform the ECM Verification Test Ver. 1. (Refer to 9 - ENGINE - DIAGNOSIS AND TESTING)

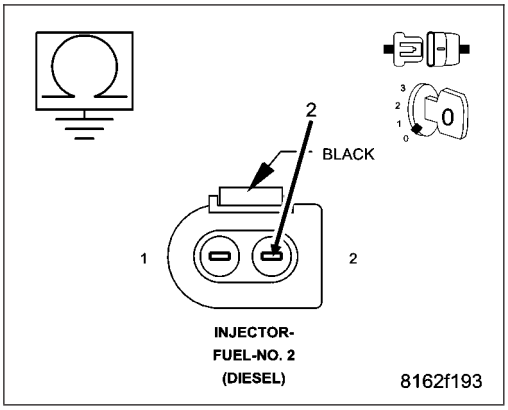

3. (K612) FUEL INJECTOR NO. 2 LOW-SIDE CONTROL CIRCUIT SHORTED TO GROUND

Measure the resistance between ground and the (K612) Fuel Injector No. 2 Low-Side Control circuit in the Fuel Injector No. 2 connector.

Is the resistance above 1000.0 ohms?

Yes >> Go to 4

No >> Repair the (K612) Fuel Injector No. 2 Low-Side Control circuit for a short to ground.

Perform the ECM Verification Test Ver. 1. (Refer to 9 - ENGINE - DIAGNOSIS AND TESTING)

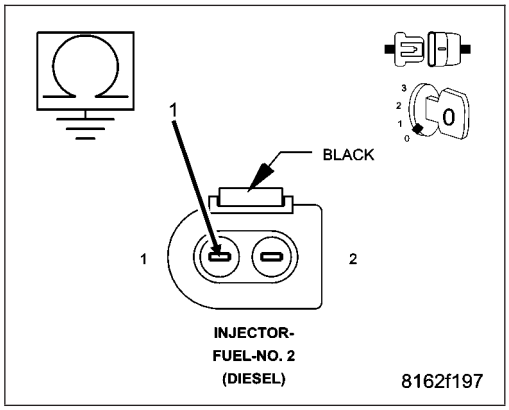

4. (K12) FUEL INJECTOR NO. 2 HIGH-SIDE CONTROL CIRCUIT SHORTED TO (K612) FUEL INJECTOR NO. 2 LOW-SIDE CONTROL CIRCUIT

Measure the resistance between the (K12) Fuel Injector No. 2 High-Side Control circuit and the (K612) Fuel Injector No. 2 Low-Side Control circuit in the Fuel Injector No. 2 connector.

Is the resistance above 1000.0 ohms?

Yes >> Go to 5

No >> Repair the (K12) Fuel Injector No. 2 High-Side Control circuit for a short to the (K612) Fuel Injector No. 2 Low-Side Control circuit.

Perform the ECM Verification Test Ver. 1. (Refer to 9 - ENGINE - DIAGNOSIS AND TESTING)

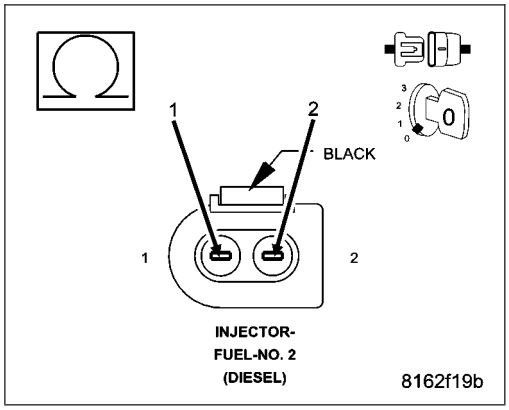

5. (K12) FUEL INJECTOR NO. 2 HIGH-SIDE CONTROL CIRCUIT OPEN OR HIGH RESISTANCE

Measure the resistance of the (K12) Fuel Injector No. 2 High-Side Control circuit between the Fuel Injector No. 2 connector and the Engine Control Module (ECM) connector.

Is the resistance below 10.0 ohms?

Yes >> Go to 6

No >> Repair the (K12) Fuel Injector No. 2 High-Side Control circuit for an open circuit or high resistance.
Perform the ECM Verification Test Ver. 1. (Refer to 9 - ENGINE - DIAGNOSIS AND TESTING)

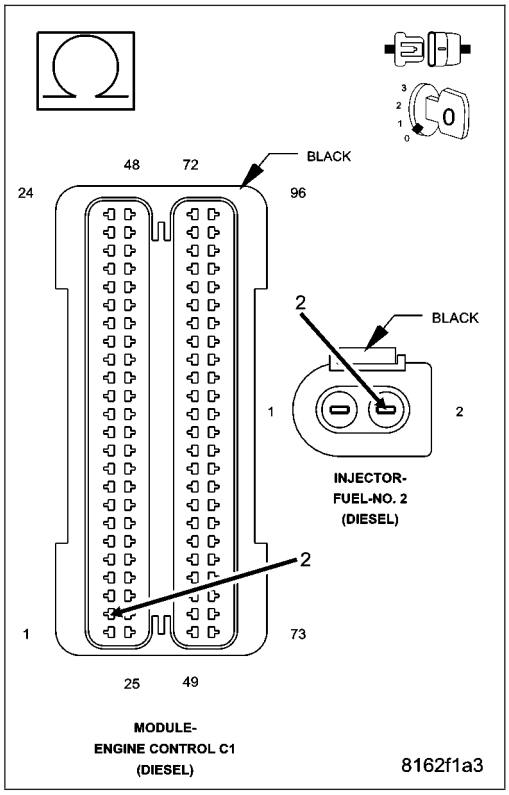

6. (K612) FUEL INJECTOR NO. 2 LOW-SIDE CONTROL CIRCUIT OPEN OR HIGH RESISTANCE

Measure the resistance of the (K612) Fuel Injector No. 2 Low-Side Control circuit between the Fuel Injector No. 2 connector and the Engine Control Module (ECM) connector.

Is the resistance below 10.0 ohms?

Yes >> Go to 7

No >> Repair the (K612) Fuel Injector No. 2 Low-Side Control circuit for an open circuit or high resistance.
Perform the ECM Verification Test Ver. 1. (Refer to 9 - ENGINE - DIAGNOSIS AND TESTING)

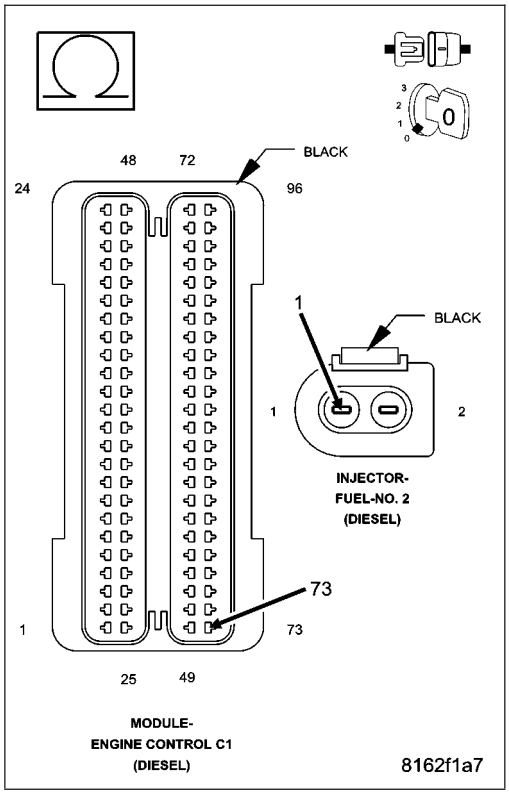

7. FUEL INJECTOR NO. 2

Measure the resistance between the terminals of Fuel Injector No. 2.

Is the resistance approximately 185k ohms (+/- 10%)?

Yes >> Go to 8

No >> Replace Fuel Injector No. 2 in accordance with the Service Information.
Perform the ECM Verification Test Ver. 1. (Refer to 9 - ENGINE - DIAGNOSIS AND TESTING)

8. ENGINE CONTROL MODULE (ECM)

Using the wiring diagram/schematic as a guide, inspect the wiring and connectors between the Fuel Injector No. 2 and the Engine Control Module (ECM).

Look for any chafed, pierced, pinched, or partially broken wires.

Look for broken, bent, pushed out or corroded terminals.

Monitor the scan tool data relative to this circuit and wiggle test the wiring and connectors.

Look for the data to change or for the DTC to reset during the wiggle test.

Refer to any Technical Service Bulletins that may apply.

Were any problems found?

Yes >> Repair as necessary.
Perform the ECM Verification Test Ver. 1. (Refer to 9 - ENGINE - DIAGNOSIS AND TESTING)

No >> Replace the Engine Control Module (ECM) in accordance with the Service Information.
Perform the ECM Verification Test Ver. 1. (Refer to 9 - ENGINE - DIAGNOSIS AND TESTING)

P0265-FUEL INJECTOR 2 CIRCUIT HIGH

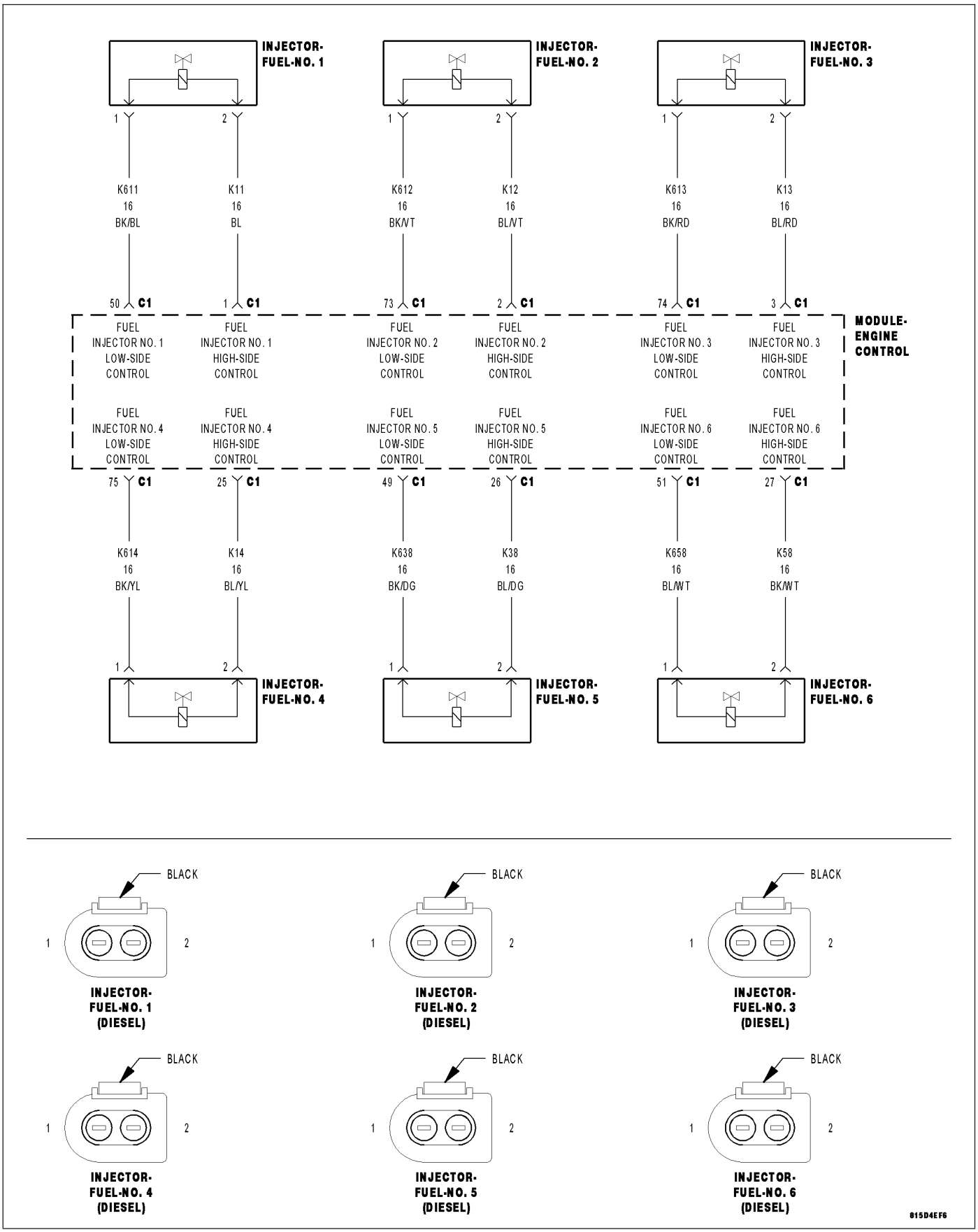

For a complete wiring diagram **Refer to Section 8W**

- **When Monitored:**
  With the engine running.
- **Set Condition:**
  The ECM detects a short to voltage on the Fuel Injector 2 circuit.

Possible Causes
INTERMITTENT DTC
(K12) FUEL INJECTOR NO. 2 HIGH-SIDE CONTROL CIRCUIT SHORTED TO VOLTAGE
(K612) FUEL INJECTOR NO. 2 LOW-SIDE CONTROL CIRCUIT SHORTED TO VOLTAGE
(K12) FUEL INJECTOR NO. 2 HIGH-SIDE CONTROL CIRCUIT SHORTED TO (K612) FUEL INJECTOR NO. 2 LOW-SIDE CONTROL CIRCUIT
(K12) FUEL INJECTOR NO. 2 HIGH-SIDE CONTROL CIRCUIT OPEN OR HIGH RESISTANCE
(K612) FUEL INJECTOR NO. 2 LOW-SIDE CONTROL CIRCUIT OPEN OR HIGH RESISTANCE
FUEL INJECTOR NO. 2
ENGINE CONTROL MODULE (ECM)

Always perform the Pre-Diagnostic Troubleshooting procedure before proceeding. (Refer to 9 - ENGINE - DIAGNOSIS AND TESTING)

Diagnostic Test

1. DTC IS ACTIVE

NOTE: This DTC can set as a result of a fault in any of the injector circuits. Be sure to check all injector circuits before replacing an injector and all injectors before replacing a module.

Ignition on, engine not running.

With the scan tool, Clear DTCs in the Engine Control Module (ECM).

Attempt to start the engine and test drive the vehicle.

With the scan tool, select View DTCs.

Is the status Active for this DTC?

Yes >> Go To 2

No >> Refer to the *CHECKING FOR AN INTERMITTENT DTC Diagnostic Procedure. (Refer to 9 - ENGINE - DIAGNOSIS AND TESTING)

2. (K12) FUEL INJECTOR NO. 2 HIGH-SIDE CONTROL CIRCUIT SHORTED TO VOLTAGE

Turn the ignition off.

Disconnect the Fuel Injector No. 2 connector.

Disconnect the Engine Control Module (ECM) connector.

Remove the ASD Relay from the IPM.

Connect a jumper wire between cavity 30 and cavity 87 of the ASD Relay Connector.

Turn the ignition on.

Measure the voltage of the (K12) Fuel Injector No. 2 High-Side Control circuit in the Fuel Injector No. 2 connector.

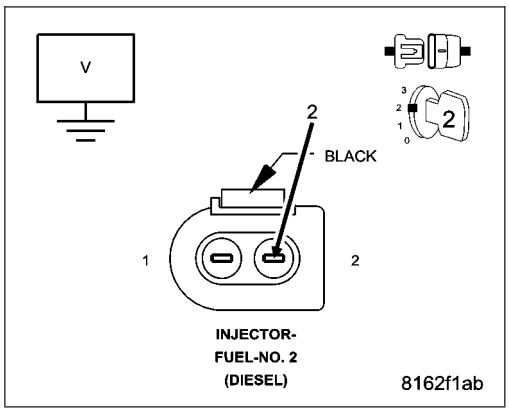

Is there any voltage present?

Yes >> Repair the (K12) Fuel Injector No. 2 High-Side Control circuit for a short to voltage.
Perform the ECM Verification Test Ver. 1. (Refer to 9 - ENGINE - DIAGNOSIS AND TESTING)

No >> Go to 3

3. (K612) FUEL INJECTOR NO. 2 LOW-SIDE CONTROL CIRCUIT SHORTED TO VOLTAGE

NOTE: The jumper wire should still be in place.
Measure the voltage of the (K612) Fuel Injector No. 2 Low-Side Control circuit.

Is there any voltage present?

Yes >> Repair the (K612) Fuel Injector No. 2 Low-Side Control circuit for a short to voltage.
Perform the ECM Verification Test Ver. 1. (Refer to 9 - ENGINE - DIAGNOSIS AND TESTING)

No >> Go to 4

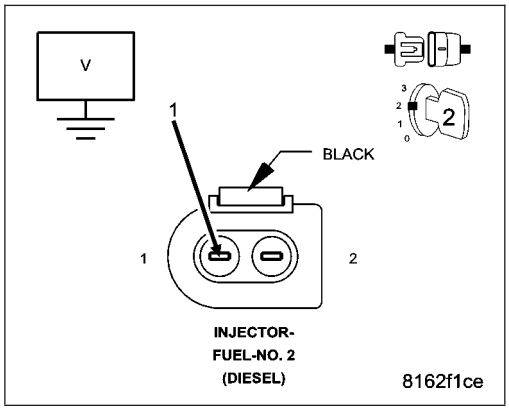

4. (K12) FUEL INJECTOR NO. 2 HIGH-SIDE CONTROL CIRCUIT SHORTED TO (K612) FUEL INJECTOR NO. 2 LOW-SIDE CONTROL CIRCUIT

Turn the ignition off.
Measure the resistance between the (K12) Fuel Injector No. 2 High-Side Control circuit and the (K612) Fuel Injector No. 2 Low-Side Control circuit in the Fuel Injector No. 2 connector.

Is the resistance above 10.0 ohms?

Yes >> Go to 5

No >> Repair the (K12) Fuel Injector No. 2 High-Side Control circuit for a short to the (K612) Fuel Injector No. 2 Low-Side Control circuit.
Perform the ECM Verification Test Ver. 1. (Refer to 9 - ENGINE - DIAGNOSIS AND TESTING)

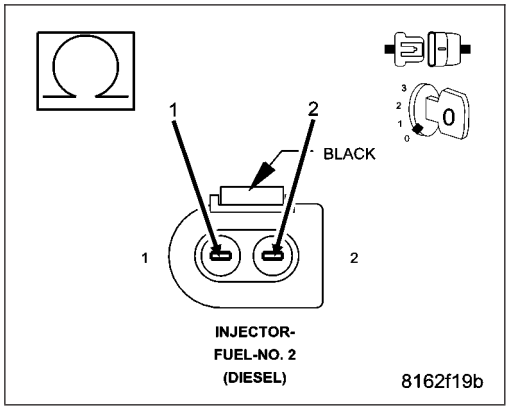

5. (K12) FUEL INJECTOR NO. 2 HIGH-SIDE CONTROL CIRCUIT OPEN OR HIGH RESISTANCE

Measure the resistance of the (K12) Fuel Injector No. 2 High-Side Control circuit between the Fuel Injector No. 2 connector and the Engine Control Module (ECM) connector.

Is the resistance below 10.0 ohms?

Yes >> Go to 6

No >> Repair the (K12) Fuel Injector No. 2 High-Side Control circuit for an open circuit or high resistance.
Perform the ECM Verification Test Ver. 1. (Refer to 9 - ENGINE - DIAGNOSIS AND TESTING)

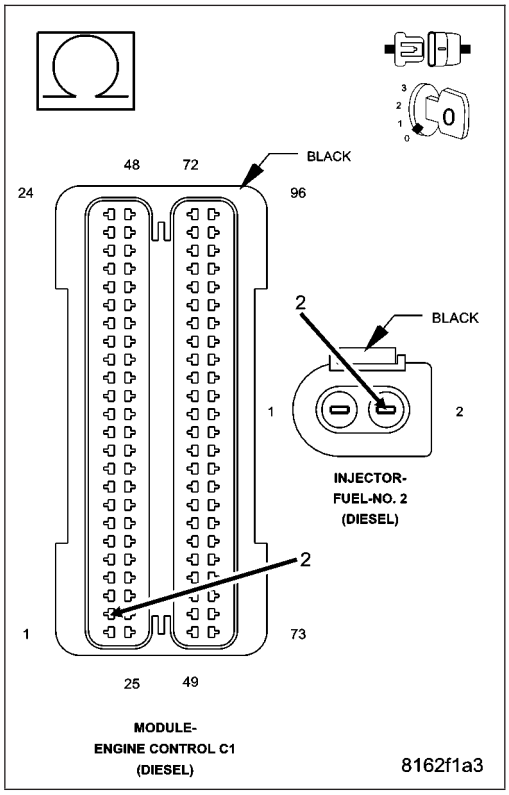

6. (K612) FUEL INJECTOR NO. 2 LOW-SIDE CONTROL CIRCUIT OPEN OR HIGH RESISTANCE

Measure the resistance of the (K612) Fuel Injector No. 2 Low-Side Control circuit between the Fuel Injector No. 2 connector and the Engine Control Module (ECM) connector.

Is the resistance below 10.0 ohms?

Yes >> Go to 7

No >> Repair the (K612) Fuel Injector No. 2 Low-Side Control circuit for an open circuit or high resistance.
Perform the ECM Verification Test Ver. 1. (Refer to 9 - ENGINE - DIAGNOSIS AND TESTING)

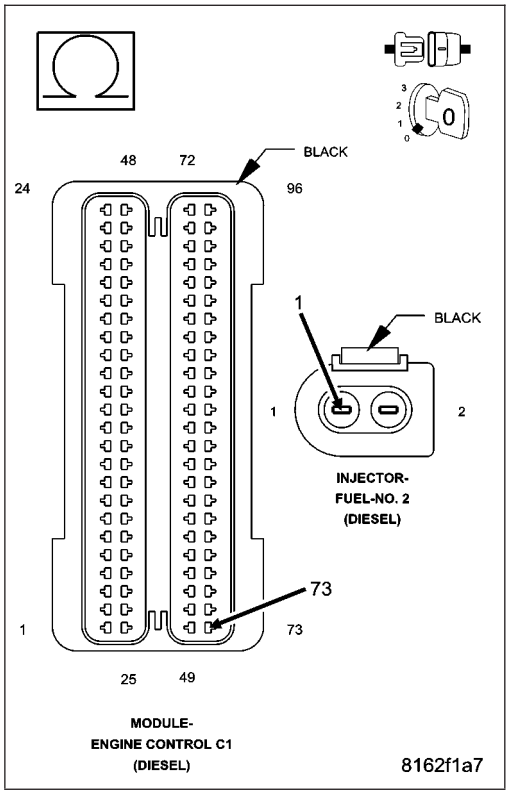

7. FUEL INJECTOR NO. 2

Measure the resistance between the terminals of Fuel Injector No. 2.

Is the resistance approximately 185k ohms (+/- 10%)?

Yes >> Go to 8

No >> Replace Fuel Injector No. 2 in accordance with the Service Information.
Perform the ECM Verification Test Ver. 1. (Refer to 9 - ENGINE - DIAGNOSIS AND TESTING)

8. ENGINE CONTROL MODULE (ECM)

Using the wiring diagram/schematic as a guide, inspect the wiring and connectors between the Fuel Injector No. 2 and the Engine Control Module (ECM).

Look for any chafed, pierced, pinched, or partially broken wires.

Look for broken, bent, pushed out or corroded terminals.

Monitor the scan tool data relative to this circuit and wiggle test the wiring and connectors.

Look for the data to change or for the DTC to reset during the wiggle test.

Refer to any Technical Service Bulletins that may apply.

Were any problems found?

Yes >> Repair as necessary.
Perform the ECM Verification Test Ver. 1. (Refer to 9 - ENGINE - DIAGNOSIS AND TESTING)

No >> Replace the Engine Control Module (ECM) in accordance with the Service Information.
Perform the ECM Verification Test Ver. 1. (Refer to 9 - ENGINE - DIAGNOSIS AND TESTING)

P0266-CYLINDER 2 CONTRIBUTION/BALANCE

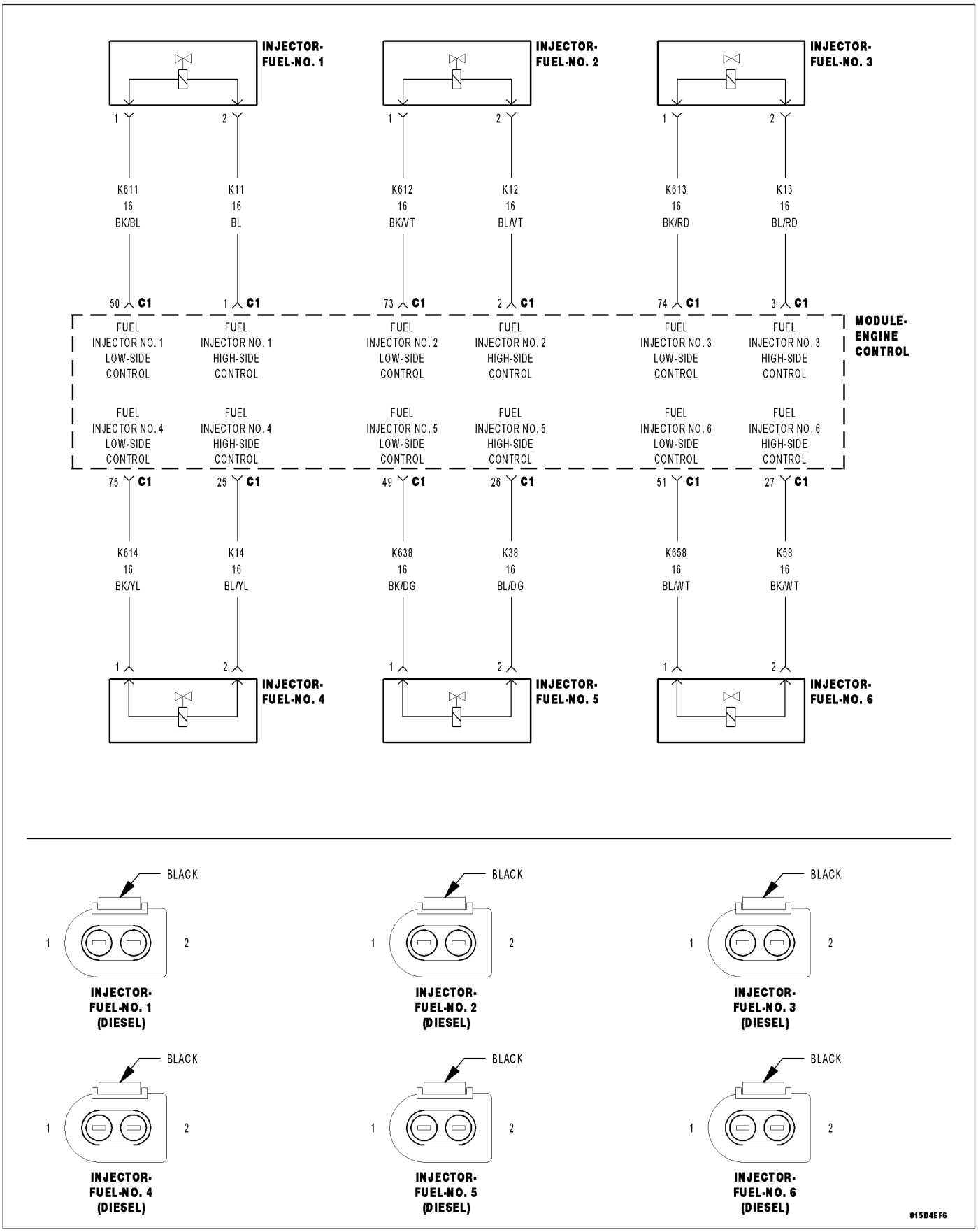

For a complete wiring diagram **Refer to Section 8W**

- **When Monitored:**
  With the ignition on.
- **Set Condition:**
  The Engine Control Module (ECM) detects an internal failure.

Possible Causes
INTERMITTENT DTC
ENGINE CONTROL MODULE (ECM)

Always perform the Pre-Diagnostic Troubleshooting procedure before proceeding. (Refer to 9 - ENGINE - DIAGNOSIS AND TESTING)

Diagnostic Test

1. DTC IS ACTIVE

Ignition on, engine not running.
With the scan tool, Clear DTCs in the Engine Control Module (ECM).
Monitor the scan tool for at least two minutes.
Cycle the ignition key off and on several times, leaving the ignition on for at least 10 seconds at a time.
Start the engine.
Allow the engine to reach normal operating temperature.
With the scan tool, select View DTCs.

Is the status Active for this DTC?

Yes >> Go To 2

No >> Refer to the *CHECKING FOR AN INTERMITTENT DTC Diagnostic Procedure. (Refer to 9 - ENGINE - DIAGNOSIS AND TESTING)

2. ENGINE CONTROL MODULE (ECM)

Using the wiring diagram/schematic as a guide, inspect the Engine Control Module (ECM) wiring and connectors.
Look for any chafed, pierced, pinched, or partially broken wires.
Look for broken, bent, pushed out or corroded terminals.
Monitor the scan tool data relative to this circuit and wiggle test the wiring and connectors.
Look for the data to change or for the DTC to reset during the wiggle test.
Refer to any Technical Service Bulletins that may apply.

Were any problems found?

Yes >> Repair as necessary.
Perform the ECM Verification Test Ver. 1. (Refer to 9 - ENGINE - DIAGNOSIS AND TESTING)

No >> Replace the Engine Control Module (ECM) in accordance with the Service Information.
Perform the ECM Verification Test Ver. 1. (Refer to 9 - ENGINE - DIAGNOSIS AND TESTING)

P0267-FUEL INJECTOR 3 CIRCUIT LOW

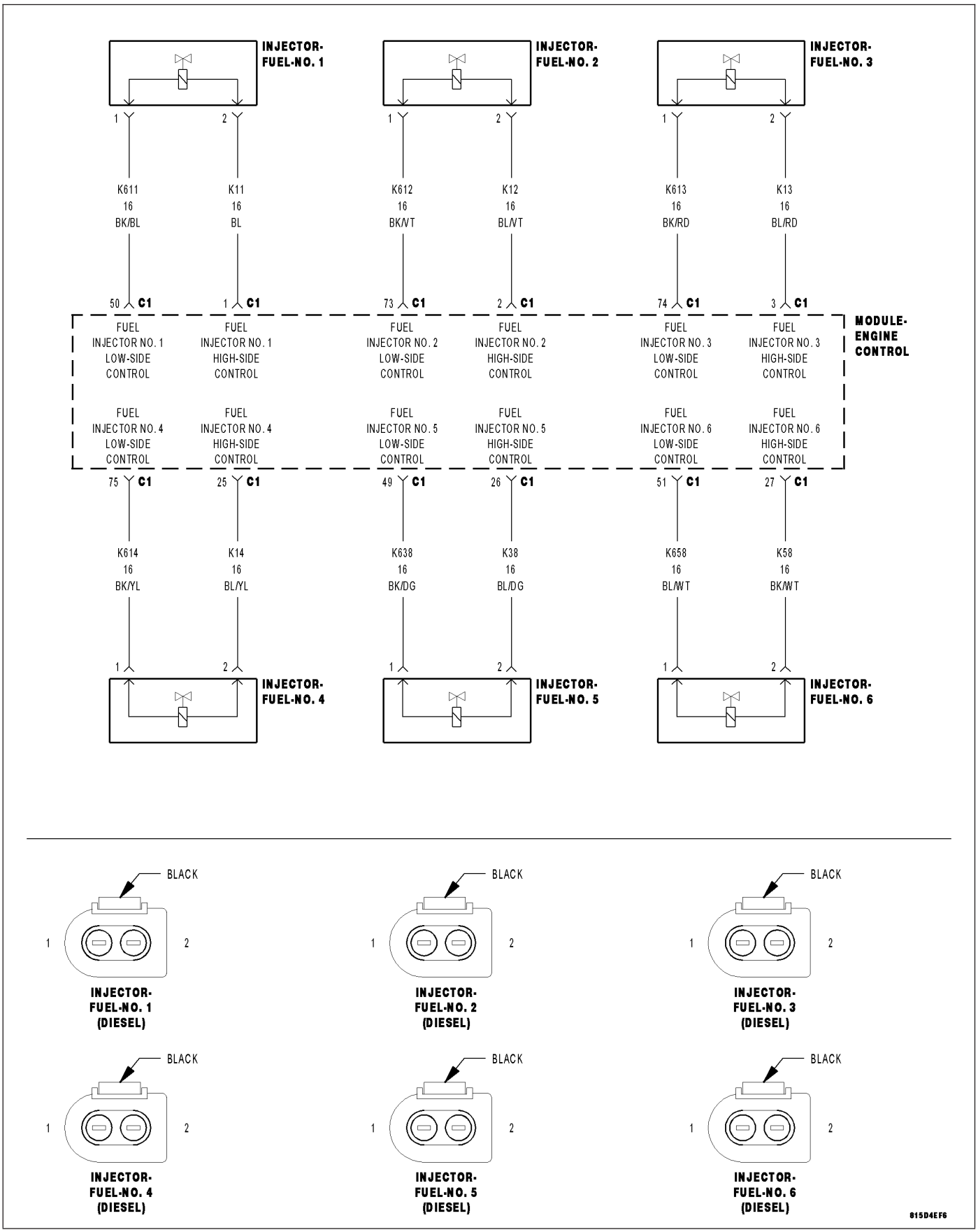

For a complete wiring diagram **Refer to Section 8W**

- **When Monitored:**
  With the engine running.
- **Set Condition:**
  The ECM detects a short to ground on the Fuel Injector 3 circuit.

Possible Causes
INTERMITTENT DTC
(K13) FUEL INJECTOR NO. 3 HIGH-SIDE CONTROL CIRCUIT SHORTED TO GROUND
(K613) FUEL INJECTOR NO. 3 LOW-SIDE CONTROL CIRCUIT SHORTED TO GROUND
(K13) FUEL INJECTOR NO. 3 HIGH-SIDE CONTROL CIRCUIT SHORTED TO (K613) FUEL INJECTOR NO. 3 LOW-SIDE CONTROL CIRCUIT
(K13) FUEL INJECTOR NO. 3 HIGH-SIDE CONTROL CIRCUIT OPEN OR HIGH RESISTANCE
(K613) FUEL INJECTOR NO. 3 LOW-SIDE CONTROL CIRCUIT OPEN OR HIGH RESISTANCE
FUEL INJECTOR NO. 3
ENGINE CONTROL MODULE (ECM)

Always perform the Pre-Diagnostic Troubleshooting procedure before proceeding. (Refer to 9 - ENGINE - DIAGNOSIS AND TESTING)

Diagnostic Test

1. DTC IS ACTIVE

NOTE: This DTC can set as a result of a fault in any of the injector circuits. Be sure to check all injector circuits before replacing an injector and all injectors before replacing a module.
Ignition on, engine not running.
With the scan tool, Clear DTCs in the Engine Control Module (ECM).
Attempt to start the engine and test drive the vehicle.
With the scan tool, select View DTCs.

Is the status Active for this DTC?

Yes >> Go To 2

No >> Refer to the *CHECKING FOR AN INTERMITTENT DTC Diagnostic Procedure. (Refer to 9 - ENGINE - DIAGNOSIS AND TESTING)

2. (K13) FUEL INJECTOR NO. 3 HIGH-SIDE CONTROL CIRCUIT SHORTED TO GROUND

Turn the ignition off.
Disconnect the Fuel Injector No. 3 connector.
Disconnect the Engine Control Module (ECM) connector.
Measure the resistance between ground and the (K13) Fuel Injector No. 3 High-Side Control circuit in the Fuel Injector No. 3 connector.

Is the resistance above 1000.0 ohms?

Yes >> Go to 3

No >> Repair the (K13) Fuel Injector No. 3 High-Side Control circuit for a short to ground.
Perform the ECM Verification Test Ver. 1. (Refer to 9 - ENGINE - DIAGNOSIS AND TESTING)

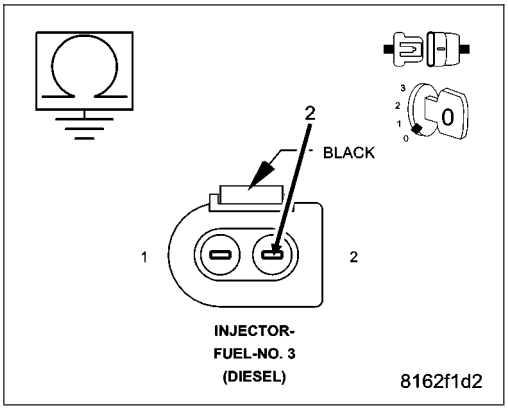

3. (K613) FUEL INJECTOR NO. 3 LOW-SIDE CONTROL CIRCUIT SHORTED TO GROUND

Measure the resistance between ground and the (K613) Fuel Injector No. 3 Low-Side Control circuit in the Fuel Injector No. 3 connector.

Is the resistance above 1000.0 ohms?

Yes >> Go to 4

No >> Repair the (K613) Fuel Injector No. 3 Low-Side Control circuit for a short to ground.

Perform the ECM Verification Test Ver. 1. (Refer to 9 - ENGINE - DIAGNOSIS AND TESTING)

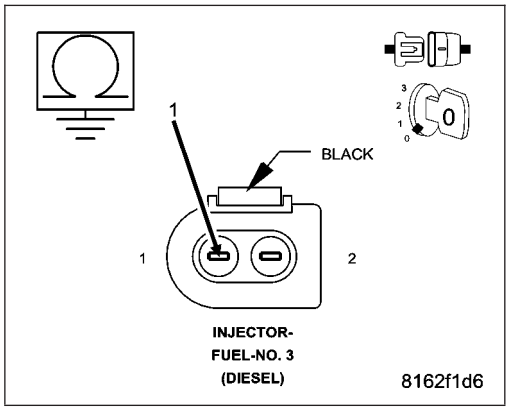

4. (K13) FUEL INJECTOR NO. 3 HIGH-SIDE CONTROL CIRCUIT SHORTED TO (K613) FUEL INJECTOR NO. 3 LOW-SIDE CONTROL CIRCUIT

Measure the resistance between the (K13) Fuel Injector No. 3 High-Side Control circuit and the (K613) Fuel Injector No. 3 Low-Side Control circuit in the Fuel Injector No. 3 connector.

Is the resistance above 1000.0 ohms?

Yes >> Go to 5

No >> Repair the (K13) Fuel Injector No. 3 High-Side Control circuit for a short to the (K613) Fuel Injector No. 3 Low-Side Control circuit.

Perform the ECM Verification Test Ver. 1. (Refer to 9 - ENGINE - DIAGNOSIS AND TESTING)

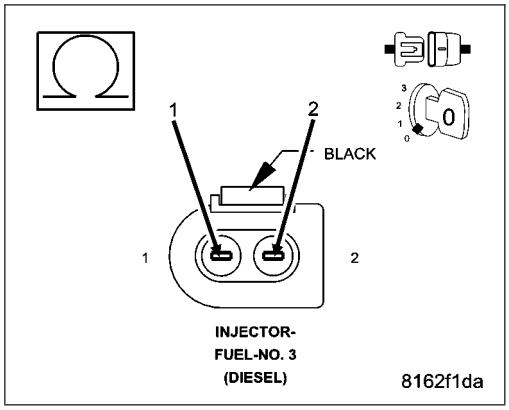

5. (K13) FUEL INJECTOR NO. 3 HIGH-SIDE CONTROL CIRCUIT OPEN OR HIGH RESISTANCE

Measure the resistance of the (K13) Fuel Injector No. 3 High-Side Control circuit between the Fuel Injector No. 3 connector and the Engine Control Module (ECM) connector.

Is the resistance below 10.0 ohms?

Yes >> Go to 6

No >> Repair the (K13) Fuel Injector No. 3 High-Side Control circuit for an open circuit or high resistance.
Perform the ECM Verification Test Ver. 1. (Refer to 9 - ENGINE - DIAGNOSIS AND TESTING)

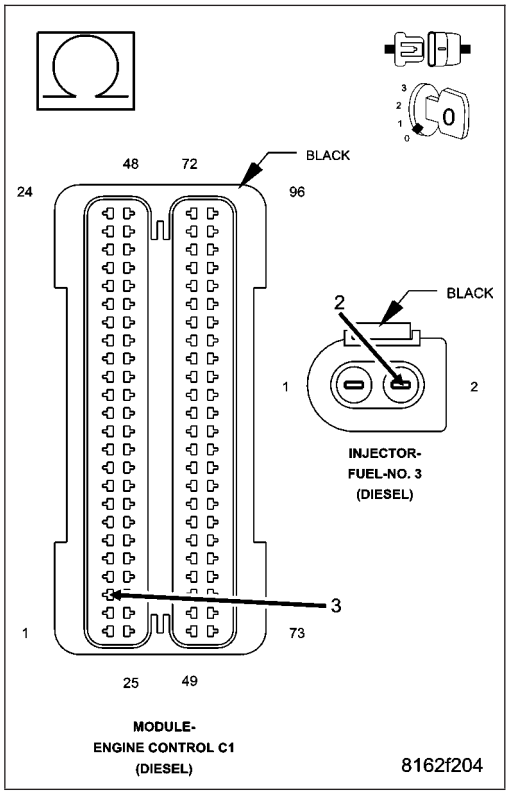

6. (K613) FUEL INJECTOR NO. 3 LOW-SIDE CONTROL CIRCUIT OPEN OR HIGH RESISTANCE

Measure the resistance of the (K613) Fuel Injector No. 3 Low-Side Control circuit between the Fuel Injector No. 3 connector and the Engine Control Module (ECM) connector.

Is the resistance below 10.0 ohms?

Yes >> Go to 7

No >> Repair the (K613) Fuel Injector No. 3 Low-Side Control circuit for an open circuit or high resistance.
Perform the ECM Verification Test Ver. 1. (Refer to 9 - ENGINE - DIAGNOSIS AND TESTING)

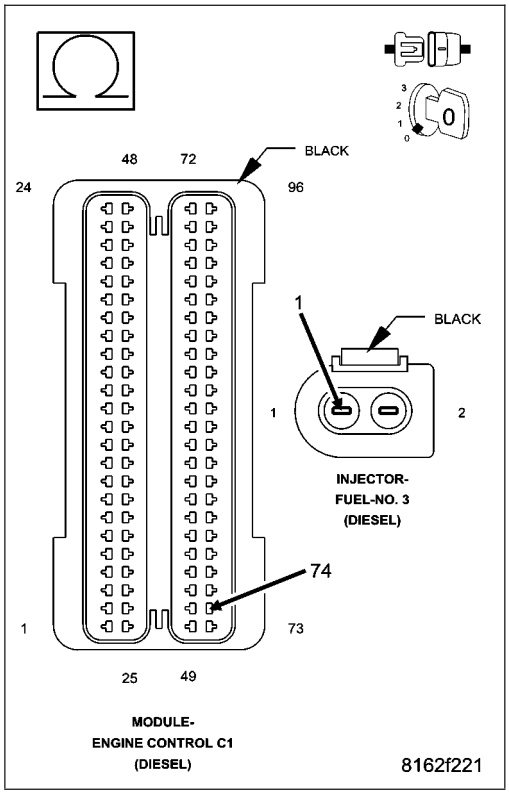

7. FUEL INJECTOR NO. 3

Measure the resistance between the terminals of Fuel Injector No. 3.

Is the resistance approximately 185k ohms (+/- 10%)?

Yes >> Go to 8

No >> Replace Fuel Injector No. 3 in accordance with the Service Information.
Perform the ECM Verification Test Ver. 1. (Refer to 9 - ENGINE - DIAGNOSIS AND TESTING)

8. ENGINE CONTROL MODULE (ECM)

Using the wiring diagram/schematic as a guide, inspect the wiring and connectors between the Fuel Injector No. 3 and the Engine Control Module (ECM).

Look for any chafed, pierced, pinched, or partially broken wires.

Look for broken, bent, pushed out or corroded terminals.

Monitor the scan tool data relative to this circuit and wiggle test the wiring and connectors.

Look for the data to change or for the DTC to reset during the wiggle test.

Refer to any Technical Service Bulletins that may apply.

Were any problems found?

Yes >> Repair as necessary.
Perform the ECM Verification Test Ver. 1. (Refer to 9 - ENGINE - DIAGNOSIS AND TESTING)

No >> Replace the Engine Control Module (ECM) in accordance with the Service Information.
Perform the ECM Verification Test Ver. 1. (Refer to 9 - ENGINE - DIAGNOSIS AND TESTING)

P0268-FUEL INJECTOR 3 CIRCUIT HIGH

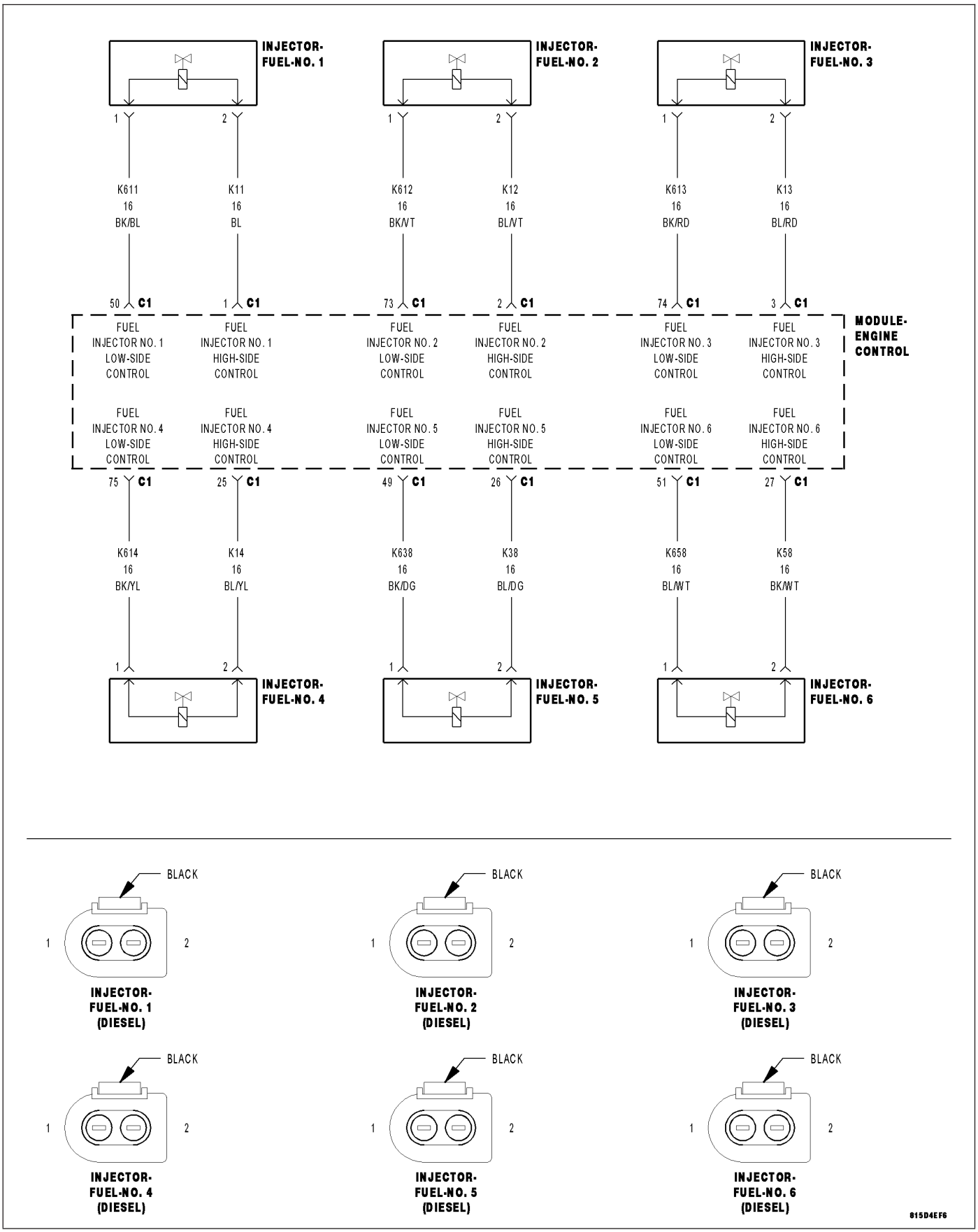

For a complete wiring diagram **Refer to Section 8W**

- **When Monitored:**
  With the engine running.
- **Set Condition:**
  The ECM detects a short to voltage on the Fuel Injector 3 circuit.

Possible Causes
INTERMITTENT DTC
(K13) FUEL INJECTOR NO. 3 HIGH-SIDE CONTROL CIRCUIT SHORTED TO VOLTAGE
(K613) FUEL INJECTOR NO. 3 LOW-SIDE CONTROL CIRCUIT SHORTED TO VOLTAGE
(K13) FUEL INJECTOR NO. 3 HIGH-SIDE CONTROL CIRCUIT SHORTED TO (K613) FUEL INJECTOR NO. 3 LOW-SIDE CONTROL CIRCUIT
(K13) FUEL INJECTOR NO. 3 HIGH-SIDE CONTROL CIRCUIT OPEN OR HIGH RESISTANCE
(K613) FUEL INJECTOR NO. 3 LOW-SIDE CONTROL CIRCUIT OPEN OR HIGH RESISTANCE
FUEL INJECTOR NO. 3
ENGINE CONTROL MODULE (ECM)

Always perform the Pre-Diagnostic Troubleshooting procedure before proceeding. (Refer to 9 - ENGINE - DIAGNOSIS AND TESTING)

Diagnostic Test

1. DTC IS ACTIVE

NOTE: This DTC can set as a result of a fault in any of the injector circuits. Be sure to check all injector circuits before replacing an injector and all injectors before replacing a module.

Ignition on, engine not running.

With the scan tool, Clear DTCs in the Engine Control Module (ECM).

Attempt to start the engine and test drive the vehicle.

With the scan tool, select View DTCs.

Is the status Active for this DTC?

Yes >> Go To 2

No >> Refer to the *CHECKING FOR AN INTERMITTENT DTC Diagnostic Procedure. (Refer to 9 - ENGINE - DIAGNOSIS AND TESTING)

2. (K13) FUEL INJECTOR NO. 3 HIGH-SIDE CONTROL CIRCUIT SHORTED TO VOLTAGE

Turn the ignition off.

Disconnect the Fuel Injector No. 3 connector.

Disconnect the Engine Control Module (ECM) connector.

Remove the ASD Relay from the IPM.

Connect a jumper wire between cavity 30 and cavity 87 of the ASD Relay Connector.

Turn the ignition on.

Measure the voltage of the (K13) Fuel Injector No. 3 High-Side Control circuit in the Fuel Injector No. 3 connector.

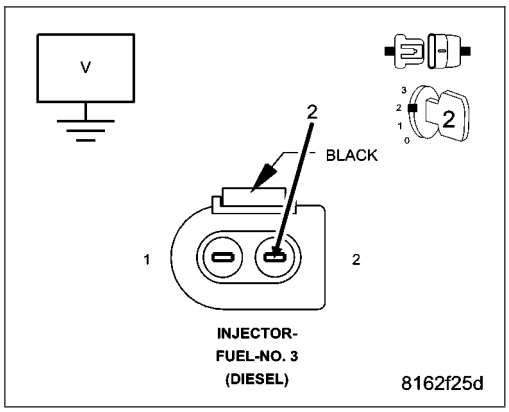

Is there any voltage present?

Yes >> Repair the (K13) Fuel Injector No. 3 High-Side Control circuit for a short to voltage.
Perform the ECM Verification Test Ver. 1. (Refer to 9 - ENGINE - DIAGNOSIS AND TESTING)

No >> Go to 3

3. (K613) FUEL INJECTOR NO. 3 LOW-SIDE CONTROL CIRCUIT SHORTED TO VOLTAGE

NOTE: The jumper wire should still be in place.
Measure the voltage of the (K613) Fuel Injector No. 3 Low-Side Control circuit.

Is there any voltage present?

Yes >> Repair the (K613) Fuel Injector No. 3 Low-Side Control circuit for a short to voltage.
Perform the ECM Verification Test Ver. 1. (Refer to 9 - ENGINE - DIAGNOSIS AND TESTING)

No >> Go to 4

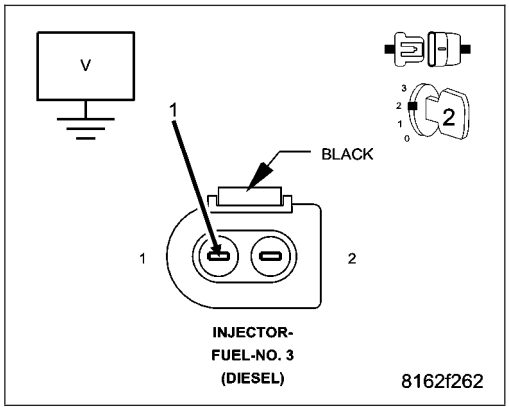

4. (K13) FUEL INJECTOR NO. 3 HIGH-SIDE CONTROL CIRCUIT SHORTED TO (K613) FUEL INJECTOR NO. 3 LOW-SIDE CONTROL CIRCUIT

Turn the ignition off.
Measure the resistance between the (K13) Fuel Injector No. 3 High-Side Control circuit and the (K613) Fuel Injector No. 3 Low-Side Control circuit in the Fuel Injector No. 3 connector.

Is the resistance above 10.0 ohms?

Yes >> Go to 5

No >> Repair the (K13) Fuel Injector No. 3 High-Side Control circuit for a short to the (K613) Fuel Injector No. 3 Low-Side Control circuit.
Perform the ECM Verification Test Ver. 1. (Refer to 9 - ENGINE - DIAGNOSIS AND TESTING)

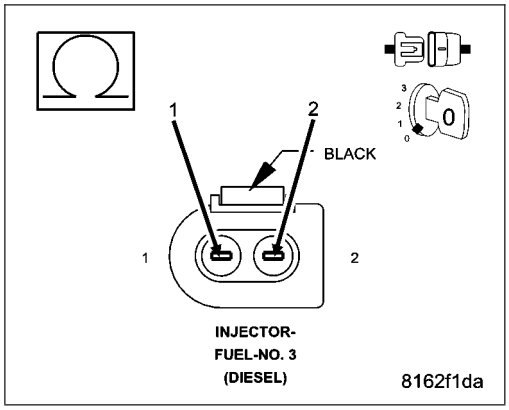

5. (K13) FUEL INJECTOR NO. 3 HIGH-SIDE CONTROL CIRCUIT OPEN OR HIGH RESISTANCE

Measure the resistance of the (K13) Fuel Injector No. 3 High-Side Control circuit between the Fuel Injector No. 3 connector and the Engine Control Module (ECM) connector.

Is the resistance below 10.0 ohms?

Yes >> Go to 6

No >> Repair the (K13) Fuel Injector No. 3 High-Side Control circuit for an open circuit or high resistance.
Perform the ECM Verification Test Ver. 1. (Refer to 9 - ENGINE - DIAGNOSIS AND TESTING)

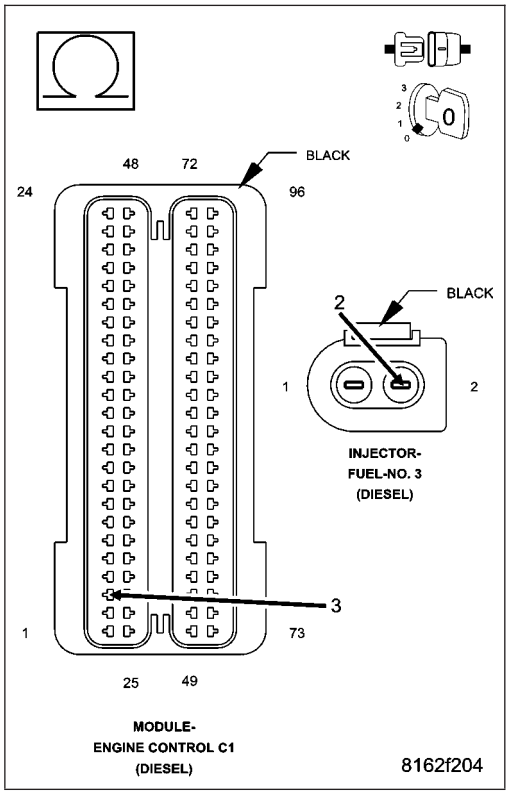

6. (K613) FUEL INJECTOR NO. 3 LOW-SIDE CONTROL CIRCUIT OPEN OR HIGH RESISTANCE

Measure the resistance of the (K613) Fuel Injector No. 3 Low-Side Control circuit between the Fuel Injector No. 3 connector and the Engine Control Module (ECM) connector.

Is the resistance below 10.0 ohms?

Yes >> Go to 7

No >> Repair the (K613) Fuel Injector No. 3 Low-Side Control circuit for an open circuit or high resistance.
Perform the ECM Verification Test Ver. 1. (Refer to 9 - ENGINE - DIAGNOSIS AND TESTING)

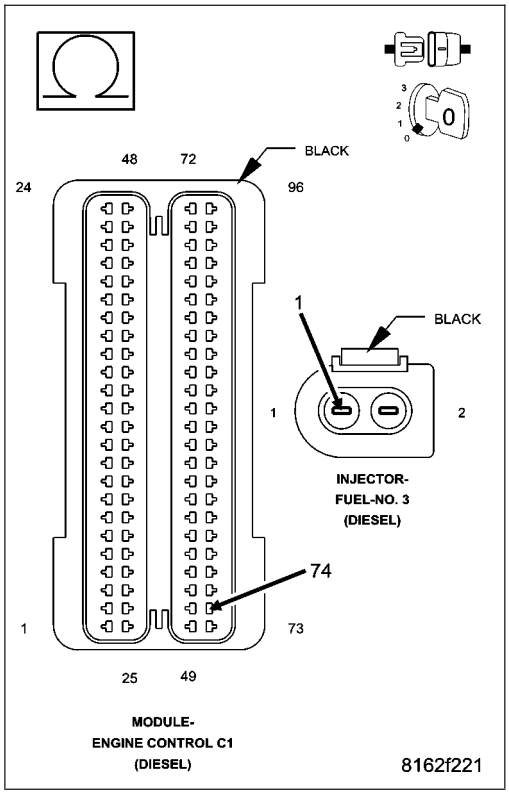

7. FUEL INJECTOR NO. 3

Measure the resistance between the terminals of Fuel Injector No. 3.

Is the resistance approximately 185k ohms (+/- 10%)?

Yes >> Go to 8

No >> Replace Fuel Injector No. 3 in accordance with the Service Information.
Perform the ECM Verification Test Ver. 1. (Refer to 9 - ENGINE - DIAGNOSIS AND TESTING)

8. ENGINE CONTROL MODULE (ECM)

Using the wiring diagram/schematic as a guide, inspect the wiring and connectors between the Fuel Injector No. 3 and the Engine Control Module (ECM).

Look for any chafed, pierced, pinched, or partially broken wires.

Look for broken, bent, pushed out or corroded terminals.

Monitor the scan tool data relative to this circuit and wiggle test the wiring and connectors.

Look for the data to change or for the DTC to reset during the wiggle test.

Refer to any Technical Service Bulletins that may apply.

Were any problems found?

Yes >> Repair as necessary.
Perform the ECM Verification Test Ver. 1. (Refer to 9 - ENGINE - DIAGNOSIS AND TESTING)

No >> Replace the Engine Control Module (ECM) in accordance with the Service Information.
Perform the ECM Verification Test Ver. 1. (Refer to 9 - ENGINE - DIAGNOSIS AND TESTING)

P0269-CYLINDER 3 CONTRIBUTION/BALANCE

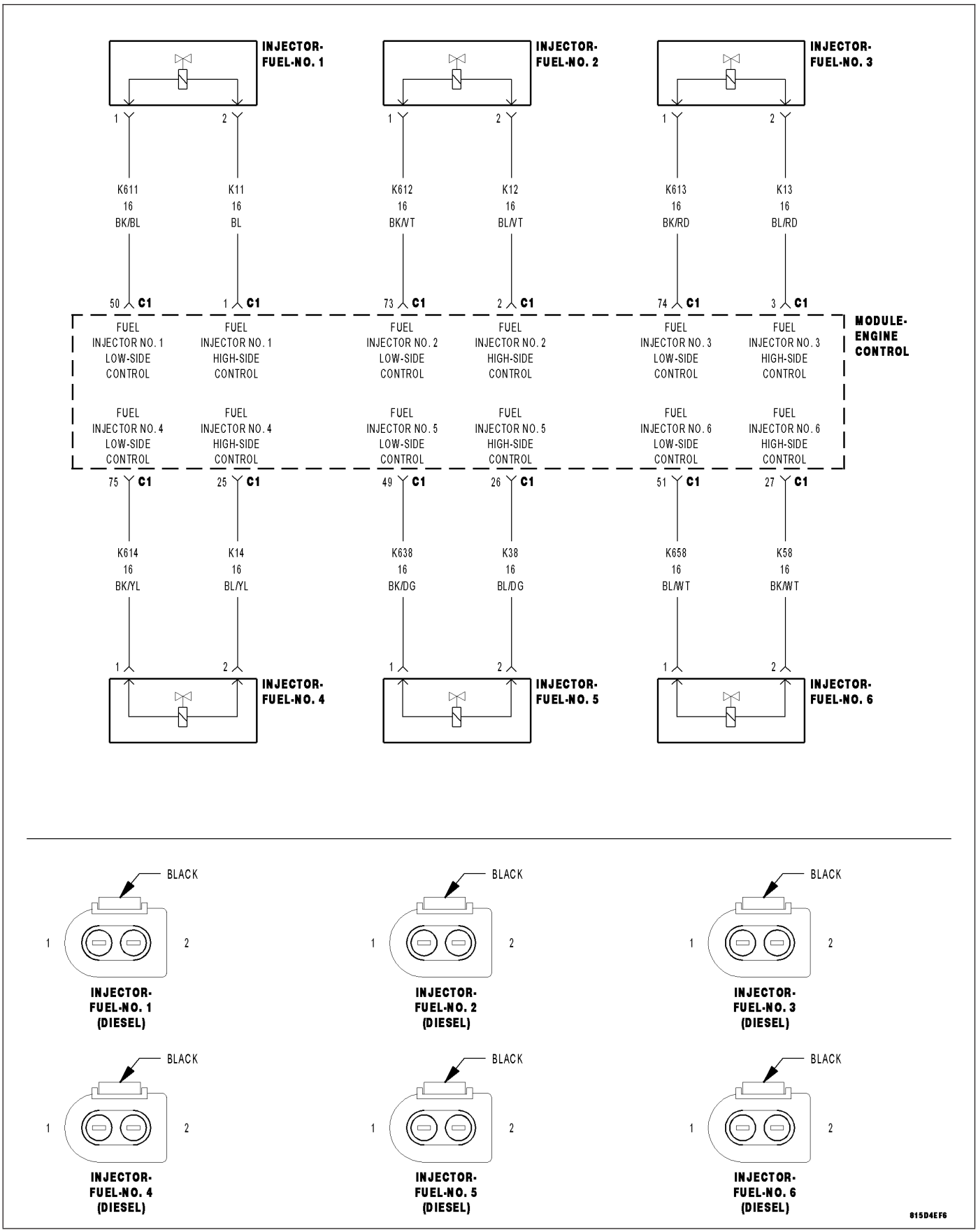

For a complete wiring diagram **Refer to Section 8W**

- **When Monitored:**
  With the ignition on.
- **Set Condition:**
  The Engine Control Module (ECM) detects an internal failure.

Possible Causes
INTERMITTENT DTC
ENGINE CONTROL MODULE (ECM)

Always perform the Pre-Diagnostic Troubleshooting procedure before proceeding. (Refer to 9 - ENGINE - DIAGNOSIS AND TESTING)

Diagnostic Test

1. DTC IS ACTIVE

Ignition on, engine not running.
With the scan tool, Clear DTCs in the Engine Control Module (ECM).
Monitor the scan tool for at least two minutes.
Cycle the ignition key off and on several times, leaving the ignition on for at least 10 seconds at a time.
Start the engine.
Allow the engine to reach normal operating temperature.
With the scan tool, select View DTCs.

Is the status Active for this DTC?

Yes >> Go To 2

No >> Refer to the *CHECKING FOR AN INTERMITTENT DTC Diagnostic Procedure. (Refer to 9 - ENGINE - DIAGNOSIS AND TESTING)

2. ENGINE CONTROL MODULE (ECM)

Using the wiring diagram/schematic as a guide, inspect the Engine Control Module (ECM) wiring and connectors.
Look for any chafed, pierced, pinched, or partially broken wires.
Look for broken, bent, pushed out or corroded terminals.
Monitor the scan tool data relative to this circuit and wiggle test the wiring and connectors.
Look for the data to change or for the DTC to reset during the wiggle test.
Refer to any Technical Service Bulletins that may apply.

Were any problems found?

Yes >> Repair as necessary.
Perform the ECM Verification Test Ver. 1. (Refer to 9 - ENGINE - DIAGNOSIS AND TESTING)

No >> Replace the Engine Control Module (ECM) in accordance with the Service Information.
Perform the ECM Verification Test Ver. 1. (Refer to 9 - ENGINE - DIAGNOSIS AND TESTING)

P0270-FUEL INJECTOR 4 CIRCUIT LOW

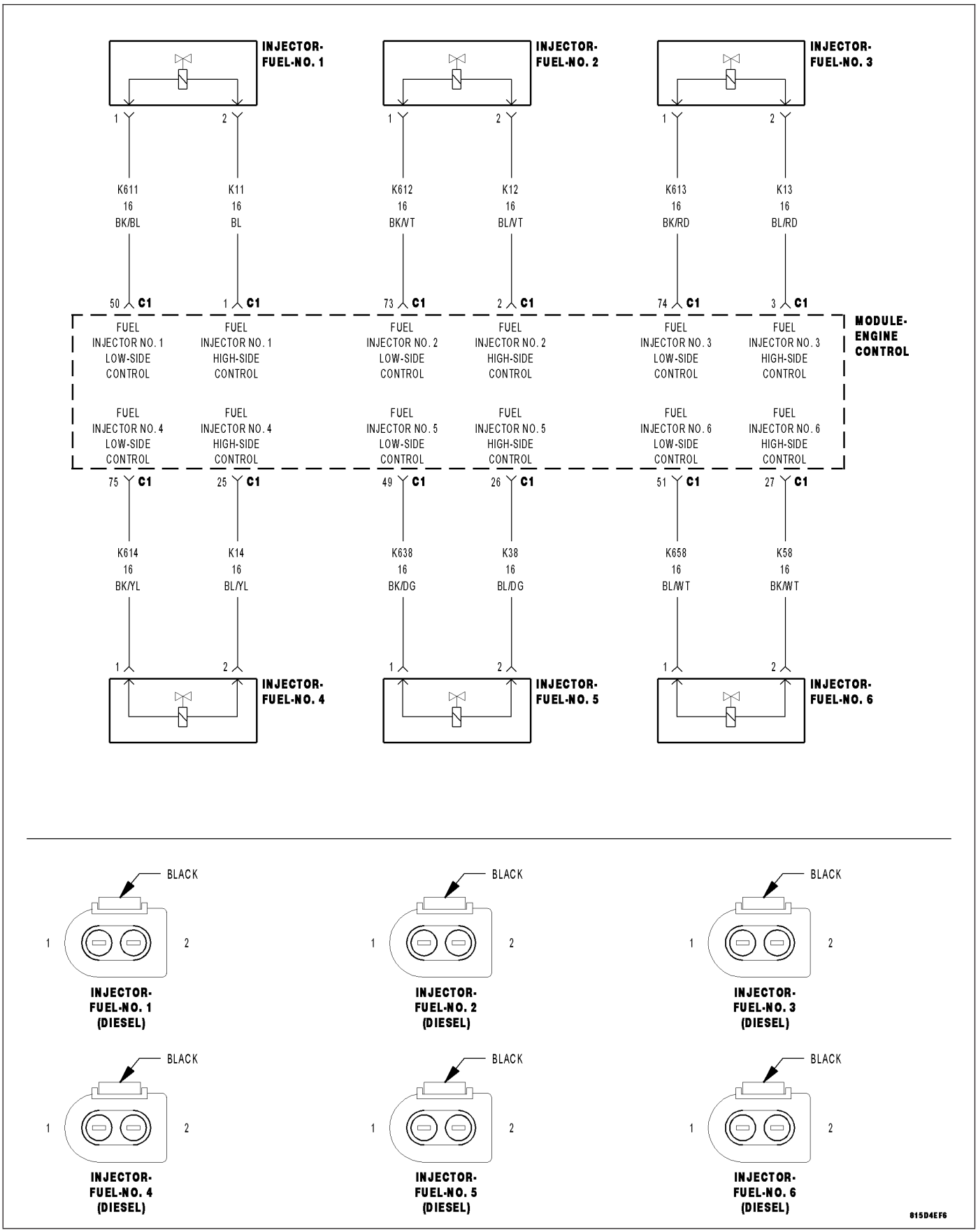

For a complete wiring diagram **Refer to Section 8W**

- **When Monitored:**
  With the engine running.
- **Set Condition:**
  The ECM detects a short to ground on the Fuel Injector 4 circuit.

Possible Causes
INTERMITTENT DTC
(K14) FUEL INJECTOR NO. 4 HIGH-SIDE CONTROL CIRCUIT SHORTED TO GROUND
(K614) FUEL INJECTOR NO. 4 LOW-SIDE CONTROL CIRCUIT SHORTED TO GROUND
(K14) FUEL INJECTOR NO. 4 HIGH-SIDE CONTROL CIRCUIT SHORTED TO (K614) FUEL INJECTOR NO. 4 LOW-SIDE CONTROL CIRCUIT
(K14) FUEL INJECTOR NO. 4 HIGH-SIDE CONTROL CIRCUIT OPEN OR HIGH RESISTANCE
(K614) FUEL INJECTOR NO. 4 LOW-SIDE CONTROL CIRCUIT OPEN OR HIGH RESISTANCE
FUEL INJECTOR NO. 4
ENGINE CONTROL MODULE (ECM)

Always perform the Pre-Diagnostic Troubleshooting procedure before proceeding. (Refer to 9 - ENGINE - DIAGNOSIS AND TESTING)

Diagnostic Test

1. DTC IS ACTIVE

NOTE: This DTC can set as a result of a fault in any of the injector circuits. Be sure to check all injector circuits before replacing an injector and all injectors before replacing a module.
Ignition on, engine not running.
With the scan tool, Clear DTCs in the Engine Control Module (ECM).
Attempt to start the engine and test drive the vehicle.
With the scan tool, select View DTCs.

Is the status Active for this DTC?

Yes >> Go To 2

No >> Refer to the *CHECKING FOR AN INTERMITTENT DTC Diagnostic Procedure. (Refer to 9 - ENGINE - DIAGNOSIS AND TESTING)

2. (K14) FUEL INJECTOR NO. 4 HIGH-SIDE CONTROL CIRCUIT SHORTED TO GROUND

Turn the ignition off.
Disconnect the Fuel Injector No. 4 connector.
Disconnect the Engine Control Module (ECM) connector.
Measure the resistance between ground and the (K14) Fuel Injector No. 4 High-Side Control circuit in the Fuel Injector No. 4 connector.

Is the resistance above 1000.0 ohms?

Yes >> Go to 3

No >> Repair the (K14) Fuel Injector No. 4 High-Side Control circuit for a short to ground.
Perform the ECM Verification Test Ver. 1. (Refer to 9 - ENGINE - DIAGNOSIS AND TESTING)

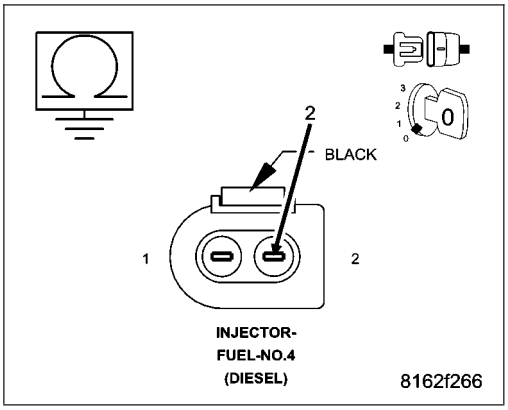

3. (K614) FUEL INJECTOR NO. 4 LOW-SIDE CONTROL CIRCUIT SHORTED TO GROUND

Measure the resistance between ground and the (K614) Fuel Injector No. 4 Low-Side Control circuit in the Fuel Injector No. 4 connector.

Is the resistance above 1000.0 ohms?

Yes >> Go to 4

No >> Repair the (K614) Fuel Injector No. 4 Low-Side Control circuit for a short to ground.

Perform the ECM Verification Test Ver. 1. (Refer to 9 - ENGINE - DIAGNOSIS AND TESTING)

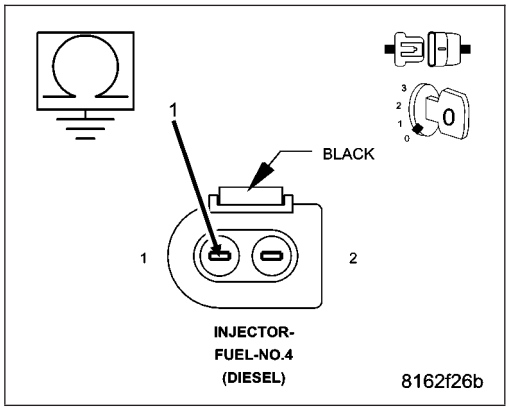

4. (K14) FUEL INJECTOR NO. 4 HIGH-SIDE CONTROL CIRCUIT SHORTED TO (K614) FUEL INJECTOR NO. 4 LOW-SIDE CONTROL CIRCUIT

Measure the resistance between the (K14) Fuel Injector No. 4 High-Side Control circuit and the (K614) Fuel Injector No. 4 Low-Side Control circuit in the Fuel Injector No. 4 connector.

Is the resistance above 1000.0 ohms?

Yes >> Go to 5

No >> Repair the (K14) Fuel Injector No. 4 High-Side Control circuit for a short to the (K614) Fuel Injector No. 4 Low-Side Control circuit.

Perform the ECM Verification Test Ver. 1. (Refer to 9 - ENGINE - DIAGNOSIS AND TESTING)

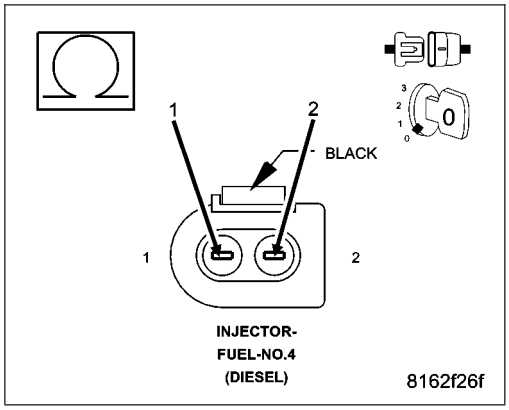

5. (K14) FUEL INJECTOR NO. 4 HIGH-SIDE CONTROL CIRCUIT OPEN OR HIGH RESISTANCE

Measure the resistance of the (K14) Fuel Injector No. 4 High-Side Control circuit between the Fuel Injector No. 4 connector and the Engine Control Module (ECM) connector.

Is the resistance below 10.0 ohms?

Yes >> Go to 6

No >> Repair the (K14) Fuel Injector No. 4 High-Side Control circuit for an open circuit or high resistance.
Perform the ECM Verification Test Ver. 1. (Refer to 9 - ENGINE - DIAGNOSIS AND TESTING)

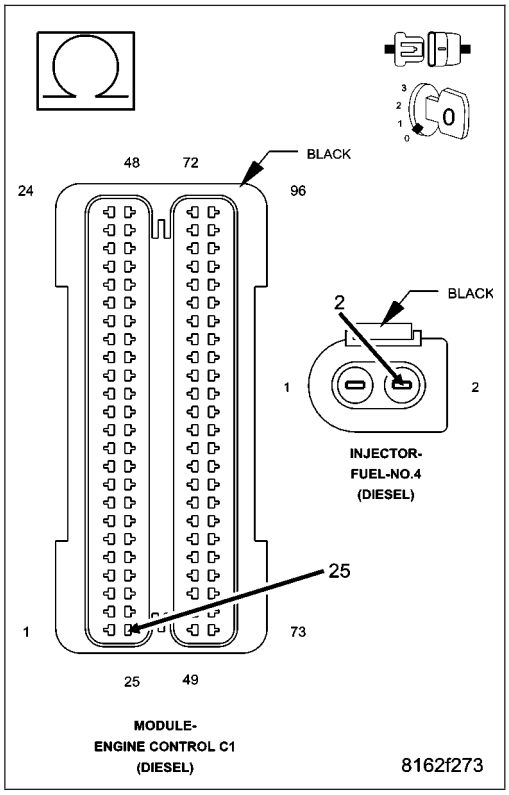

6. (K614) FUEL INJECTOR NO. 4 LOW-SIDE CONTROL CIRCUIT OPEN OR HIGH RESISTANCE

Measure the resistance of the (K614) Fuel Injector No. 4 Low-Side Control circuit between the Fuel Injector No. 4 connector and the Engine Control Module (ECM) connector.

Is the resistance below 10.0 ohms?

Yes >> Go to 7

No >> Repair the (K614) Fuel Injector No. 4 Low-Side Control circuit for an open circuit or high resistance.
Perform the ECM Verification Test Ver. 1. (Refer to 9 - ENGINE - DIAGNOSIS AND TESTING)

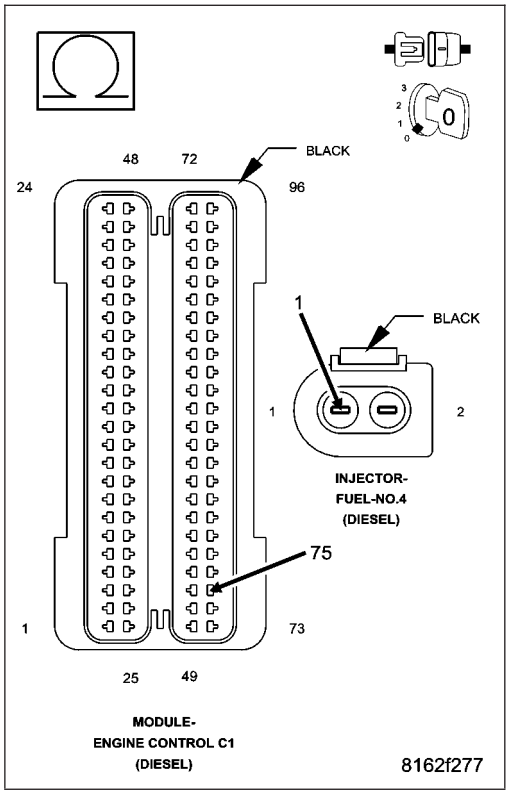

7. FUEL INJECTOR NO. 4

Measure the resistance between the terminals of Fuel Injector No. 4.

Is the resistance approximately 185k ohms (+/- 10%)?

Yes >> Go to 8

No >> Replace Fuel Injector No. 4 in accordance with the Service Information.
Perform the ECM Verification Test Ver. 1. (Refer to 9 - ENGINE - DIAGNOSIS AND TESTING)

8. ENGINE CONTROL MODULE (ECM)

Using the wiring diagram/schematic as a guide, inspect the wiring and connectors between the Fuel Injector No. 4 and the Engine Control Module (ECM).

Look for any chafed, pierced, pinched, or partially broken wires.

Look for broken, bent, pushed out or corroded terminals.

Monitor the scan tool data relative to this circuit and wiggle test the wiring and connectors.

Look for the data to change or for the DTC to reset during the wiggle test.

Refer to any Technical Service Bulletins that may apply.

Were any problems found?

Yes >> Repair as necessary.
Perform the ECM Verification Test Ver. 1. (Refer to 9 - ENGINE - DIAGNOSIS AND TESTING)

No >> Replace the Engine Control Module (ECM) in accordance with the Service Information.
Perform the ECM Verification Test Ver. 1. (Refer to 9 - ENGINE - DIAGNOSIS AND TESTING)

P0271-FUEL INJECTOR 4 CIRCUIT HIGH

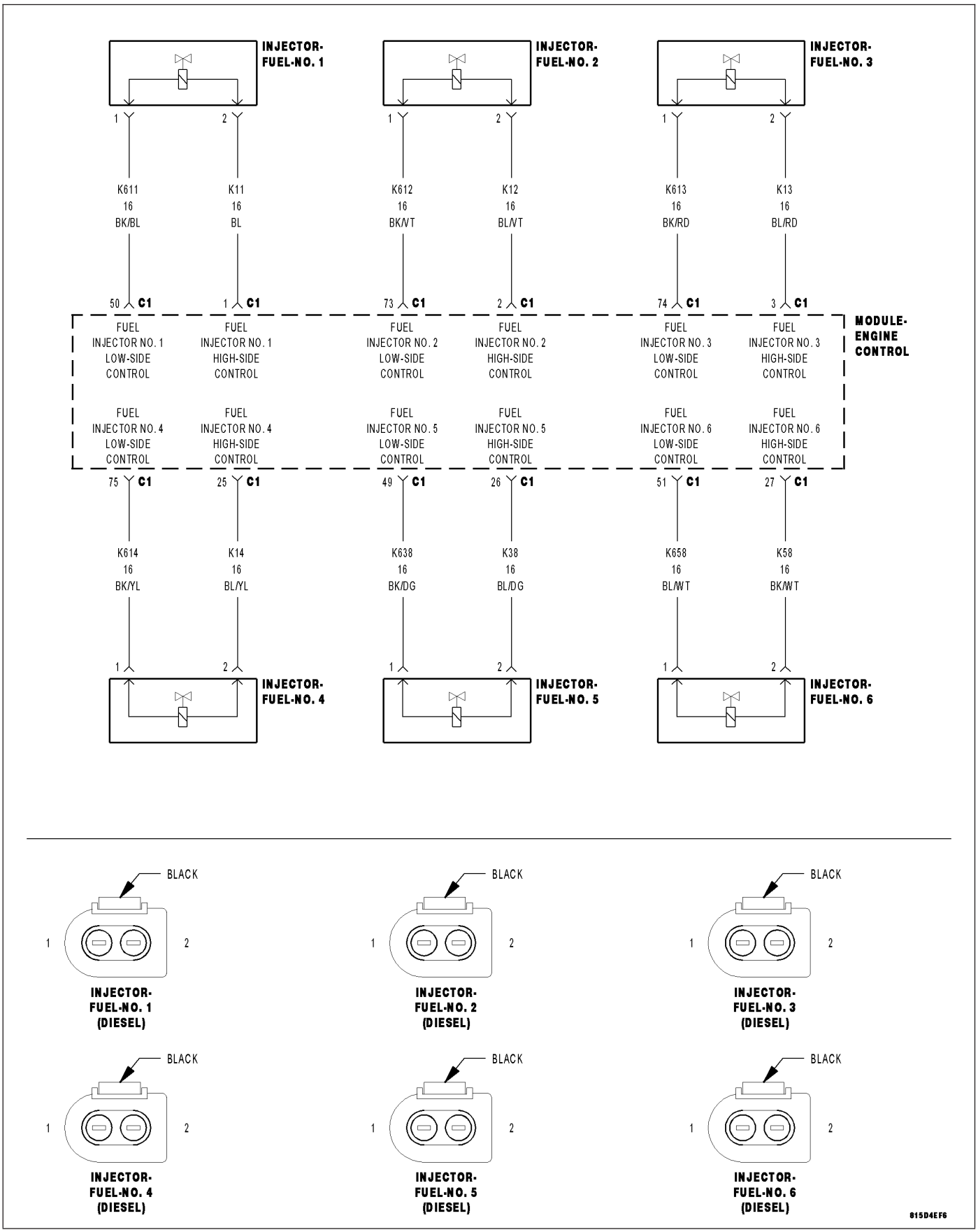

For a complete wiring diagram**Refer to Section 8W**

- **When Monitored:**
  With the engine running.
- **Set Condition:**
  The ECM detects a short to voltage on the Fuel Injector 4 circuit.

Possible Causes
INTERMITTENT DTC
(K14) FUEL INJECTOR NO. 4 HIGH-SIDE CONTROL CIRCUIT SHORTED TO VOLTAGE
(K614) FUEL INJECTOR NO. 4 LOW-SIDE CONTROL CIRCUIT SHORTED TO VOLTAGE
(K14) FUEL INJECTOR NO. 4 HIGH-SIDE CONTROL CIRCUIT SHORTED TO (K614) FUEL INJECTOR NO. 4 LOW-SIDE CONTROL CIRCUIT
(K14) FUEL INJECTOR NO. 4 HIGH-SIDE CONTROL CIRCUIT OPEN OR HIGH RESISTANCE
(K614) FUEL INJECTOR NO. 4 LOW-SIDE CONTROL CIRCUIT OPEN OR HIGH RESISTANCE
FUEL INJECTOR NO. 4
ENGINE CONTROL MODULE (ECM)

Always perform the Pre-Diagnostic Troubleshooting procedure before proceeding. (REFER TO 9 - ENGINE - DIAGNOSIS AND TESTING)

Diagnostic Test

1. DTC IS ACTIVE

NOTE: This DTC can set as a result of a fault in any of the injector circuits. Be sure to check all injector circuits before replacing an injector and all injectors before replacing a module.
Ignition on, engine not running.
With the scan tool, Clear DTCs in the Engine Control Module (ECM).
Attempt to start the engine and test drive the vehicle.
With the scan tool, select View DTCs.

Is the status Active for this DTC?

Yes >> Go To 2

No >> Refer to the *CHECKING FOR AN INTERMITTENT DTC Diagnostic Procedure. (Refer to 9 - ENGINE - DIAGNOSIS AND TESTING)

2. (K14) FUEL INJECTOR NO. 4 HIGH-SIDE CONTROL CIRCUIT SHORTED TO VOLTAGE

Turn the ignition off.
Disconnect the Fuel Injector No. 4 connector.
Disconnect the Engine Control Module (ECM) connector.
Remove the ASD Relay from the IPM.
Connect a jumper wire between cavity 30 and cavity 87 of the ASD Relay Connector.
Turn the ignition on.
Measure the voltage of the (K14) Fuel Injector No.4 high-side control circuit in the Fuel Injector No. 4 connector.

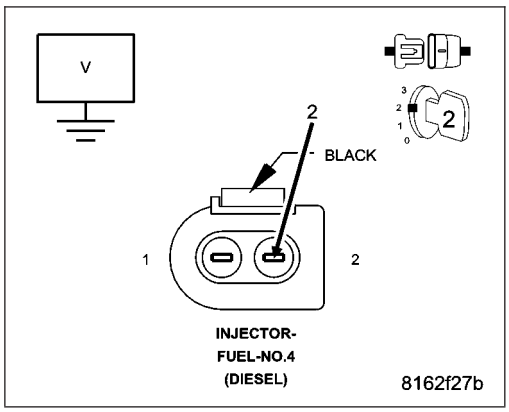

Is there any voltage present?

YES >> Repair the (K14) Fuel Injector No. 4 High-Side Control circuit for a short to voltage.
Perform the ECM Verification Test Ver. 1. (Refer to 9 - ENGINE - DIAGNOSIS AND TESTING)

NO >> Go to 3

3. (K614) FUEL INJECTOR NO. 4 LOW-SIDE CONTROL CIRCUIT SHORTED TO VOLTAGE

NOTE: The jumper wire should still be in place.
Measure the voltage of the (K614) Fuel Injector No. 4 Low-Side Control circuit.

Is there any voltage present?

YES >> Repair the (K614) Fuel Injector No. 4 Low-Side Control circuit for a short to voltage.
Perform the ECM Verification Test Ver. 1. (Refer to 9 - ENGINE - DIAGNOSIS AND TESTING)

NO >> Go to 4

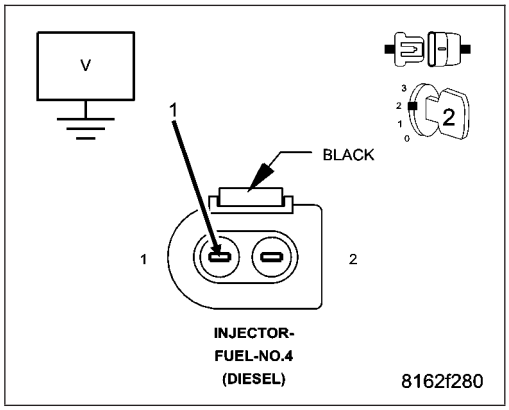

4. (K14) FUEL INJECTOR NO. 4 HIGH-SIDE CONTROL CIRCUIT SHORTED TO (K614) FUEL INJECTOR NO. 4 LOW-SIDE CONTROL CIRCUIT

Turn the ignition off.
Measure the resistance between the (K14) Fuel Injector No. 4 High-Side Control circuit and the (K614) Fuel Injector No. 4 Low-Side Control circuit in the Fuel Injector No. 4 connector.

Is the resistance above 10.0 ohms?

YES >> Go to 5

NO >> Repair the (K14) Fuel Injector No. 4 High-Side Control circuit for a short to the (K614) Fuel Injector No. 4 Low-Side Control circuit.
Perform the ECM Verification Test Ver. 1. (Refer to 9 - ENGINE - DIAGNOSIS AND TESTING)

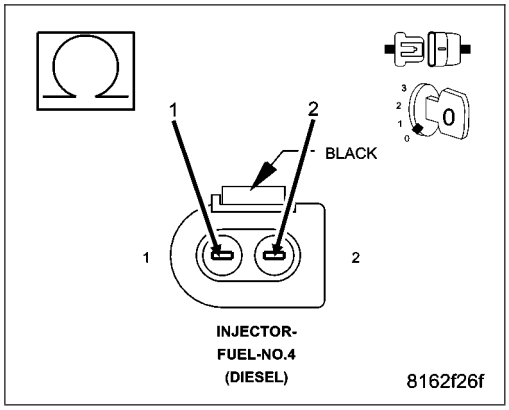

5. (K14) FUEL INJECTOR NO. 4 HIGH-SIDE CONTROL CIRCUIT OPEN OR HIGH RESISTANCE

Measure the resistance of the (K14) Fuel Injector No. 4 High-Side Control circuit between the Fuel Injector No. 4 connector and the Engine Control Module (ECM) connector.

Is the resistance below 10.0 ohms?

YES >> Go to 6

NO >> Repair the (K14) Fuel Injector No. 4 High-Side Control circuit for an open circuit or high resistance.
Perform the ECM Verification Test Ver. 1. (Refer to 9 - ENGINE - DIAGNOSIS AND TESTING)

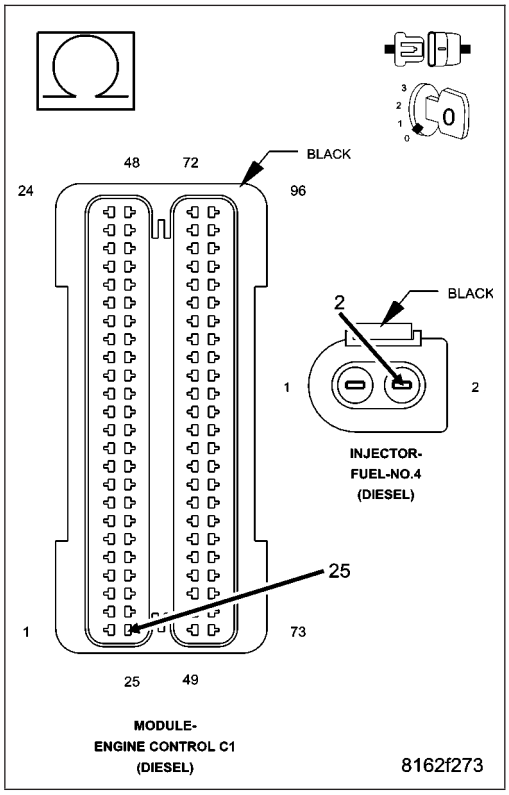

6. (K614) FUEL INJECTOR NO. 4 LOW-SIDE CONTROL CIRCUIT OPEN OR HIGH RESISTANCE

Measure the resistance of the (K614) Fuel Injector No. 4 Low-Side Control circuit between the Fuel Injector No. 4 connector and the Engine Control Module (ECM) connector.

Is the resistance below 10.0 ohms?

YES >> Go to 7

NO >> Repair the (K614) Fuel Injector No. 4 Low-Side Control circuit for an open circuit or high resistance.
Perform the ECM Verification Test Ver. 1. (Refer to 9 - ENGINE - DIAGNOSIS AND TESTING)

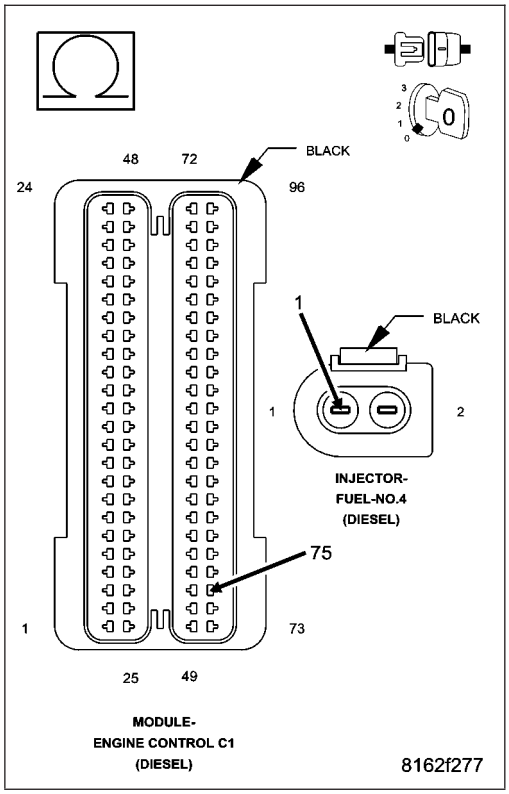

7. FUEL INJECTOR NO. 4

Measure the resistance between the terminals of Fuel Injector No. 4.

Is the resistance approximately 185k ohms (+/- 10%)?

YES >> Go to 8

NO >> Replace Fuel Injector No. 5 in accordance with the Service Information.
Perform the ECM Verification Test Ver. 1. (Refer to 9 - ENGINE - DIAGNOSIS AND TESTING)

8. ENGINE CONTROL MODULE (ECM)

Using the wiring diagram/schematic as a guide, inspect the wiring and connectors between the Fuel Injector No. 4 and the Engine Control Module (ECM).

Look for any chafed, pierced, pinched, or partially broken wires.

Look for broken, bent, pushed out or corroded terminals.

Monitor the scan tool data relative to this circuit and wiggle test the wiring and connectors.

Look for the data to change or for the DTC to reset during the wiggle test.

Refer to any Technical Service Bulletins that may apply.

Were any problems found?

Yes >> Repair as necessary.
Perform the ECM Verification Test Ver. 1. (Refer to 9 - ENGINE - DIAGNOSIS AND TESTING)

No >> Replace the Engine Control Module (ECM) in accordance with the Service Information.
Perform the ECM Verification Test Ver. 1. (Refer to 9 - ENGINE - DIAGNOSIS AND TESTING)

P0272-CYLINDER 4 CONTRIBUTION/BALANCE

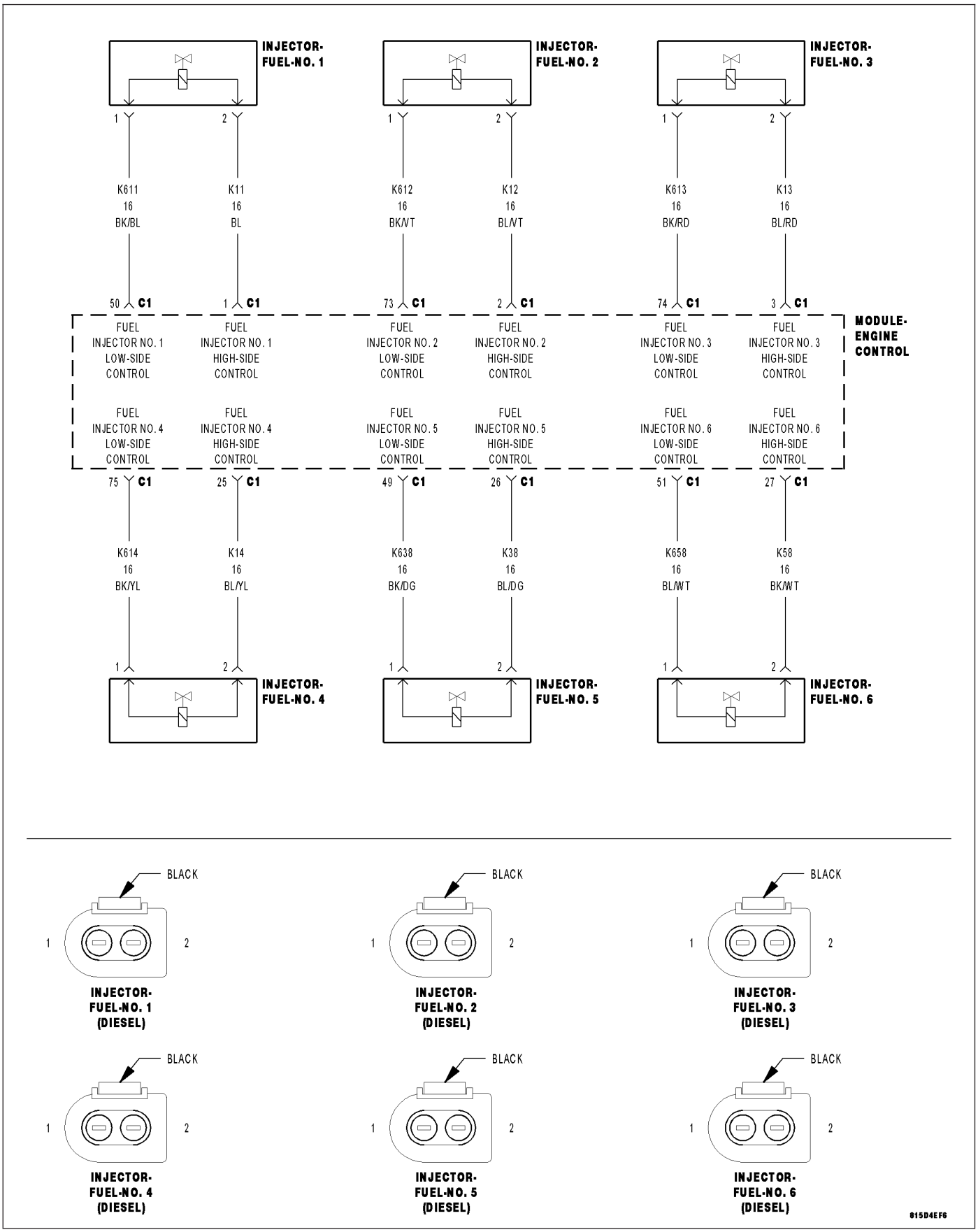

For a complete wiring diagram **Refer to Section 8W**

- **When Monitored:**
  With the ignition on.
- **Set Condition:**
  The Engine Control Module (ECM) detects an internal failure.

Possible Causes
INTERMITTENT DTC
ENGINE CONTROL MODULE (ECM)

Always perform the Pre-Diagnostic Troubleshooting procedure before proceeding. (Refer to 9 - ENGINE - DIAGNOSIS AND TESTING)

Diagnostic Test

1. DTC IS ACTIVE

Ignition on, engine not running.
With the scan tool, Clear DTCs in the Engine Control Module (ECM).
Monitor the scan tool for at least two minutes.
Cycle the ignition key off and on several times, leaving the ignition on for at least 10 seconds at a time.
Start the engine.
Allow the engine to reach normal operating temperature.
With the scan tool, select View DTCs.

Is the status Active for this DTC?

Yes >> Go To 2

No >> Refer to the *CHECKING FOR AN INTERMITTENT DTC Diagnostic Procedure. (Refer to 9 - ENGINE - DIAGNOSIS AND TESTING)

2. ENGINE CONTROL MODULE (ECM)

Using the wiring diagram/schematic as a guide, inspect the Engine Control Module (ECM) wiring and connectors.
Look for any chafed, pierced, pinched, or partially broken wires.
Look for broken, bent, pushed out or corroded terminals.
Monitor the scan tool data relative to this circuit and wiggle test the wiring and connectors.
Look for the data to change or for the DTC to reset during the wiggle test.
Refer to any Technical Service Bulletins that may apply.

Were any problems found?

Yes >> Repair as necessary.
Perform the ECM Verification Test Ver. 1. (Refer to 9 - ENGINE - DIAGNOSIS AND TESTING)

No >> Replace the Engine Control Module (ECM) in accordance with the Service Information.
Perform the ECM Verification Test Ver. 1. (Refer to 9 - ENGINE - DIAGNOSIS AND TESTING)

P0273-FUEL INJECTOR 5 CIRCUIT LOW

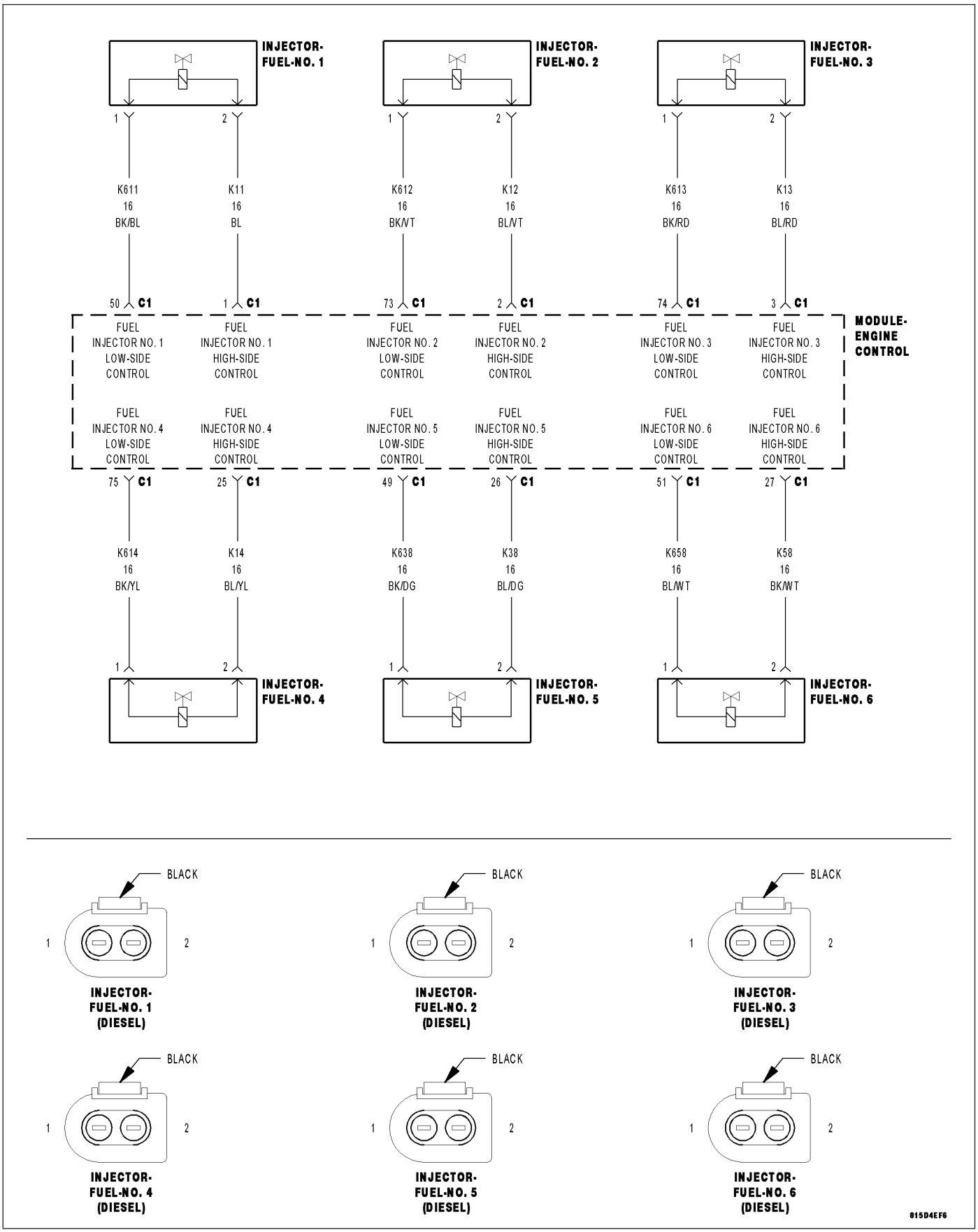

For a complete wiring diagram **Refer to Section 8W**

- **When Monitored:**
  With the engine running.
- **Set Condition:**
  The ECM detects a short to ground on the Fuel Injector 5 circuit.

Possible Causes
INTERMITTENT DTC
(K38) FUEL INJECTOR NO. 5 HIGH-SIDE CONTROL CIRCUIT SHORTED TO GROUND
(K638) FUEL INJECTOR NO. 5 LOW-SIDE CONTROL CIRCUIT SHORTED TO GROUND
(K38) FUEL INJECTOR NO. 5 HIGH-SIDE CONTROL CIRCUIT SHORTED TO (K638) FUEL INJECTOR NO. 5 LOW-SIDE CONTROL CIRCUIT
(K38) FUEL INJECTOR NO. 5 HIGH-SIDE CONTROL CIRCUIT OPEN OR HIGH RESISTANCE
(K638) FUEL INJECTOR NO. 5 LOW-SIDE CONTROL CIRCUIT OPEN OR HIGH RESISTANCE
FUEL INJECTOR NO. 5
ENGINE CONTROL MODULE (ECM)

Always perform the Pre-Diagnostic Troubleshooting procedure before proceeding. (Refer to 9 - ENGINE - DIAGNOSIS AND TESTING)

Diagnostic Test

1. DTC IS ACTIVE

NOTE: This DTC can set as a result of a fault in any of the injector circuits. Be sure to check all injector circuits before replacing an injector and all injectors before replacing a module.
Ignition on, engine not running.
With the scan tool, Clear DTCs in the Engine Control Module (ECM).
Attempt to start the engine and test drive the vehicle.
With the scan tool, select View DTCs.

Is the status Active for this DTC?

Yes >> Go To 2

No >> Refer to the *CHECKING FOR AN INTERMITTENT DTC Diagnostic Procedure. (Refer to 9 - ENGINE - DIAGNOSIS AND TESTING)

2. (K38) FUEL INJECTOR NO. 5 HIGH-SIDE CONTROL CIRCUIT SHORTED TO GROUND

Turn the ignition off.
Disconnect the Fuel Injector No. 5 connector.
Disconnect the Engine Control Module (ECM) connector.
Measure the resistance between ground and the (K38) Fuel Injector No. 5 High-Side Control circuit in the Fuel Injector No. 5 connector.

Is the resistance above 1000.0 ohms?

Yes >> Go to 3

No >> Repair the (K38) Fuel Injector No. 5 High-Side Control circuit for a short to ground.
Perform the ECM Verification Test Ver. 1. (Refer to 9 - ENGINE - DIAGNOSIS AND TESTING)

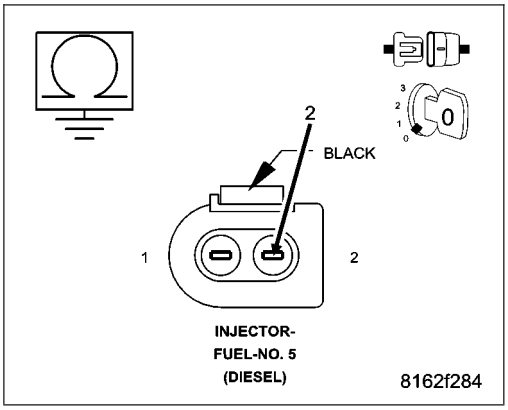

3. (K638) FUEL INJECTOR NO. 5 LOW-SIDE CONTROL CIRCUIT SHORTED TO GROUND

Measure the resistance between ground and the (K638) Fuel Injector No. 5 Low-Side Control circuit in the Fuel Injector No. 5 connector.

Is the resistance above 1000.0 ohms?

Yes >> Go to 4

No >> Repair the (K638) Fuel Injector No. 5 Low-Side Control circuit for a short to ground.

Perform the ECM Verification Test Ver. 1. (Refer to 9 - ENGINE - DIAGNOSIS AND TESTING)

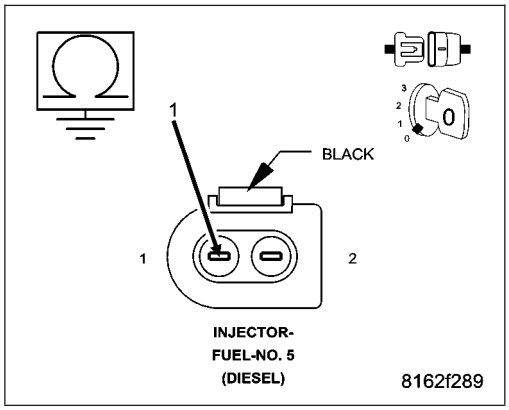

4. (K38) FUEL INJECTOR NO. 5 HIGH-SIDE CONTROL CIRCUIT SHORTED TO (K638) FUEL INJECTOR NO. 5 LOW-SIDE CONTROL CIRCUIT

Measure the resistance between the (K38) Fuel Injector No. 5 High-Side Control circuit and the (K638) Fuel Injector No. 5 Low-Side Control circuit in the Fuel Injector No. 5 connector.

Is the resistance above 1000.0 ohms?

Yes >> Go to 5

No >> Repair the (K38) Fuel Injector No. 5 High-Side Control circuit for a short to the (K638) Fuel Injector No. 5 Low-Side Control circuit.

Perform the ECM Verification Test Ver. 1. (Refer to 9 - ENGINE - DIAGNOSIS AND TESTING)

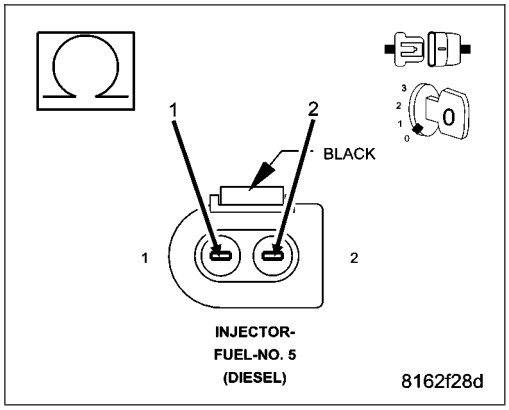

5. (K38) FUEL INJECTOR NO. 5 HIGH-SIDE CONTROL CIRCUIT OPEN OR HIGH RESISTANCE

Measure the resistance of the (K38) Fuel Injector No. 5 High-Side Control circuit between the Fuel Injector No. 5 connector and the Engine Control Module (ECM) connector.

Is the resistance below 10.0 ohms?

Yes >> Go to 6

No >> Repair the (K38) Fuel Injector No. 5 High-Side Control circuit for an open circuit or high resistance.
Perform the ECM Verification Test Ver. 1. (Refer to 9 - ENGINE - DIAGNOSIS AND TESTING)

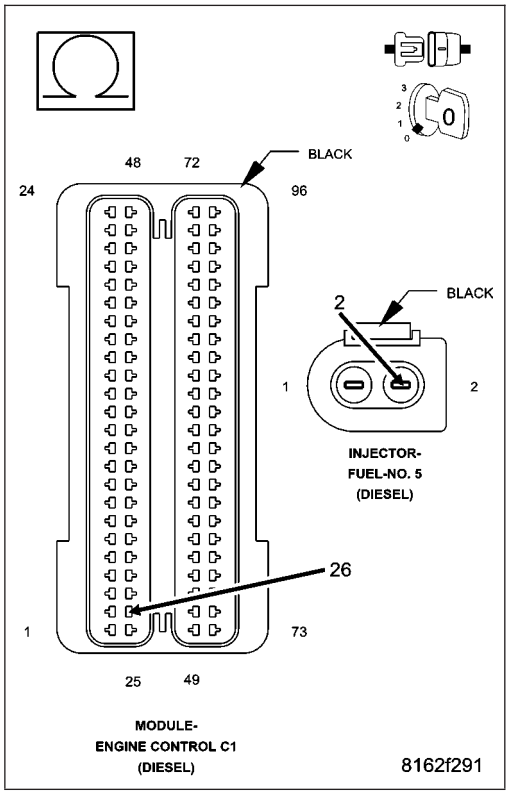

6. (K638) FUEL INJECTOR NO. 5 LOW-SIDE CONTROL CIRCUIT OPEN OR HIGH RESISTANCE

Measure the resistance of the (K638) Fuel Injector No. 5 Low-Side Control circuit between the Fuel Injector No. 5 connector and the Engine Control Module (ECM) connector.

Is the resistance below 10.0 ohms?

Yes >> Go to 7

No >> Repair the (K638) Fuel Injector No. 5 Low-Side Control circuit for an open circuit or high resistance.
Perform the ECM Verification Test Ver. 1. (Refer to 9 - ENGINE - DIAGNOSIS AND TESTING)

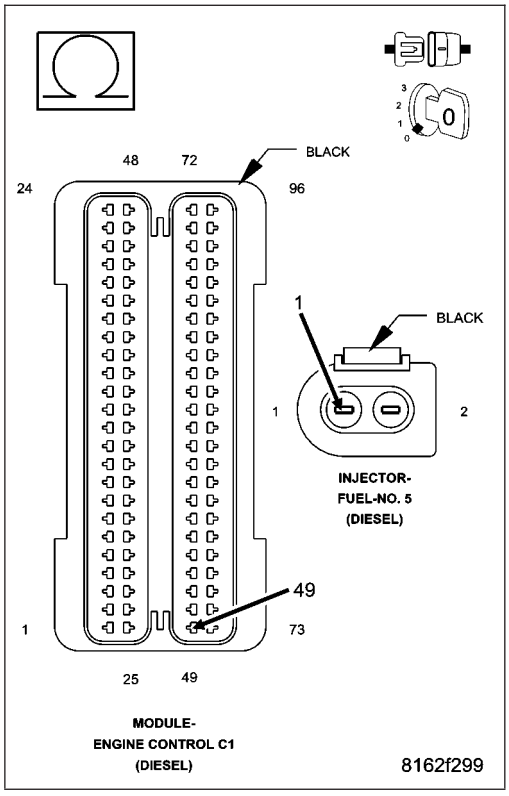

7. FUEL INJECTOR NO. 5

Measure the resistance between the terminals of Fuel Injector No. 5.

Is the resistance approximately 185k ohms (+/- 10%)?

Yes >> Go to 8

No >> Replace Fuel Injector No. 5 in accordance with the Service Information.
Perform the ECM Verification Test Ver. 1. (Refer to 9 - ENGINE - DIAGNOSIS AND TESTING)

8. ENGINE CONTROL MODULE (ECM)

Using the wiring diagram/schematic as a guide, inspect the wiring and connectors between the Fuel Injector No. 5 and the Engine Control Module (ECM).

Look for any chafed, pierced, pinched, or partially broken wires.

Look for broken, bent, pushed out or corroded terminals.

Monitor the scan tool data relative to this circuit and wiggle test the wiring and connectors.

Look for the data to change or for the DTC to reset during the wiggle test.

Refer to any Technical Service Bulletins that may apply.

Were any problems found?

Yes >> Repair as necessary.
Perform the ECM Verification Test Ver. 1. (Refer to 9 - ENGINE - DIAGNOSIS AND TESTING)

No >> Replace the Engine Control Module (ECM) in accordance with the Service Information.
Perform the ECM Verification Test Ver. 1. (Refer to 9 - ENGINE - DIAGNOSIS AND TESTING)

P0274-FUEL INJECTOR 5 CIRCUIT HIGH

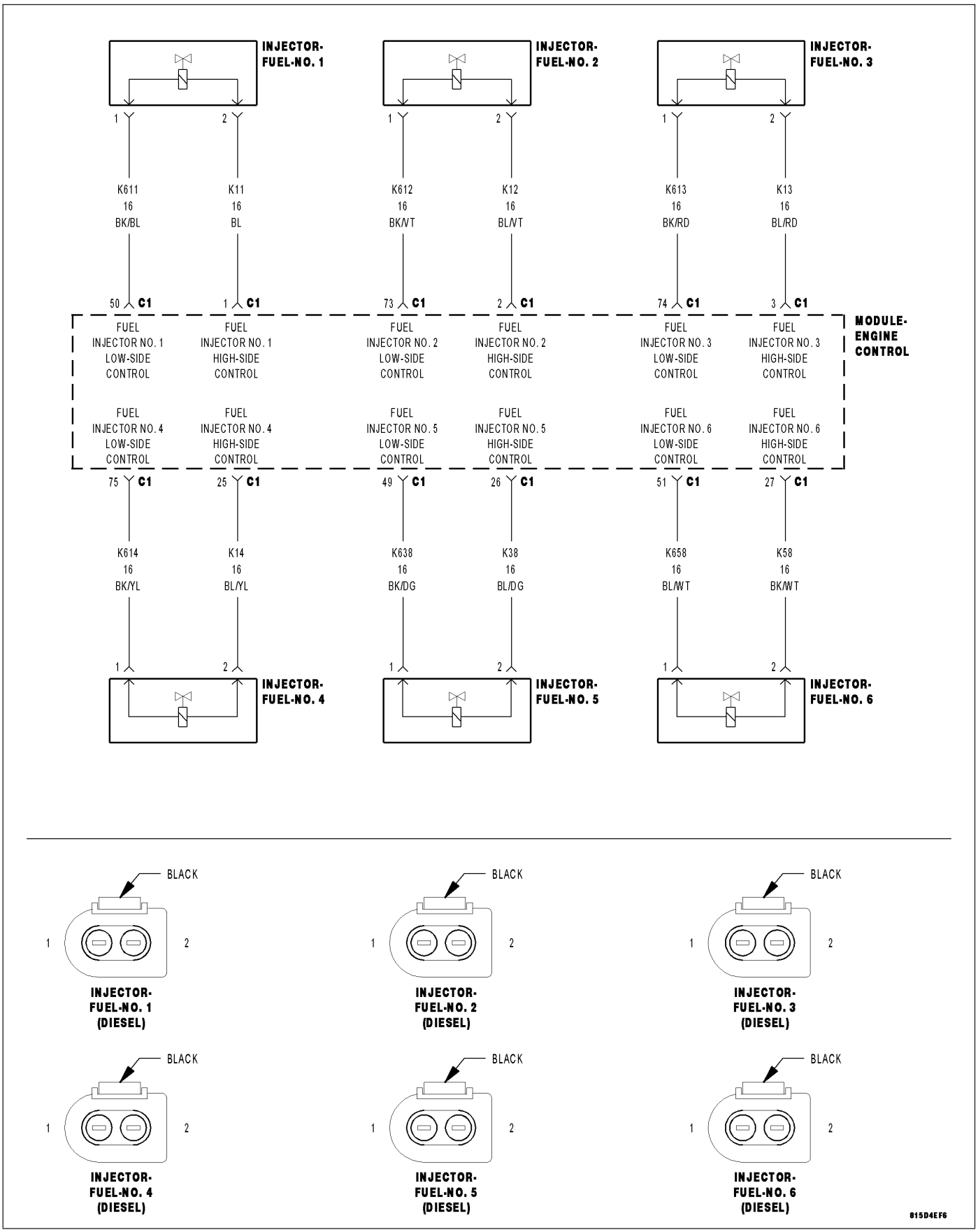

For a complete wiring diagram **Refer to Section 8W**

- **When Monitored:**
  With the engine running.
- **Set Condition:**
  The ECM detects a short to voltage on the Fuel Injector 5 circuit.

Possible Causes
INTERMITTENT DTC
(K38) FUEL INJECTOR NO. 5 HIGH-SIDE CONTROL CIRCUIT SHORTED TO VOLTAGE
(K638) FUEL INJECTOR NO. 5 LOW-SIDE CONTROL CIRCUIT SHORTED TO VOLTAGE
(K38) FUEL INJECTOR NO. 5 HIGH-SIDE CONTROL CIRCUIT SHORTED TO (K638) FUEL INJECTOR NO. 5 LOW-SIDE CONTROL CIRCUIT
(K38) FUEL INJECTOR NO. 5 HIGH-SIDE CONTROL CIRCUIT OPEN OR HIGH RESISTANCE
(K638) FUEL INJECTOR NO. 5 LOW-SIDE CONTROL CIRCUIT OPEN OR HIGH RESISTANCE
FUEL INJECTOR NO. 5
ENGINE CONTROL MODULE (ECM)

Always perform the Pre-Diagnostic Troubleshooting procedure before proceeding. (Refer to 9 - ENGINE - DIAGNOSIS AND TESTING)

Diagnostic Test

1. DTC IS ACTIVE

NOTE: This DTC can set as a result of a fault in any of the injector circuits. Be sure to check all injector circuits before replacing an injector and all injectors before replacing a module.
Ignition on, engine not running.
With the scan tool, Clear DTCs in the Engine Control Module (ECM).
Attempt to start the engine and test drive the vehicle.
With the scan tool, select View DTCs.

Is the status Active for this DTC?

Yes >> Go To 2

No >> Refer to the *CHECKING FOR AN INTERMITTENT DTC Diagnostic Procedure. (Refer to 9 - ENGINE - DIAGNOSIS AND TESTING)

2. (K38) FUEL INJECTOR NO. 5 HIGH-SIDE CONTROL CIRCUIT SHORTED TO VOLTAGE

Turn the ignition off.
Disconnect the Fuel Injector No. 5 connector.
Disconnect the Engine Control Module (ECM) connector.
Remove the ASD Relay from the IPM.
Connect a jumper wire between cavity 30 and cavity 87 of the ASD Relay Connector.
Turn the ignition on.
Measure the voltage of the (K38) Fuel Injector No. 5 High-Side Control circuit in the Fuel Injector No. 5 connector.

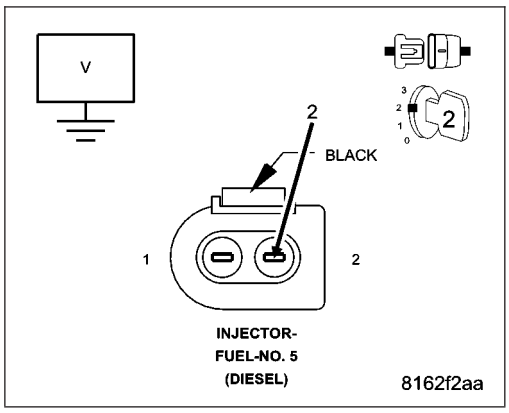

Is there any voltage present?

Yes >> Repair the (K38) Fuel Injector No. 5 High-Side Control circuit for a short to voltage.
Perform the ECM Verification Test Ver. 1. (Refer to 9 - ENGINE - DIAGNOSIS AND TESTING)

No >> Go to 3

3. (K638) FUEL INJECTOR NO. 5 LOW-SIDE CONTROL CIRCUIT SHORTED TO VOLTAGE

NOTE: The jumper wire should still be in place.
Measure the voltage of the (K638) Fuel Injector No. 5 Low-Side Control circuit.

Is there any voltage present?

Yes >> Repair the (K638) Fuel Injector No. 5 Low-Side Control circuit for a short to voltage.
Perform the ECM Verification Test Ver. 1. (Refer to 9 - ENGINE - DIAGNOSIS AND TESTING)

No >> Go to 4

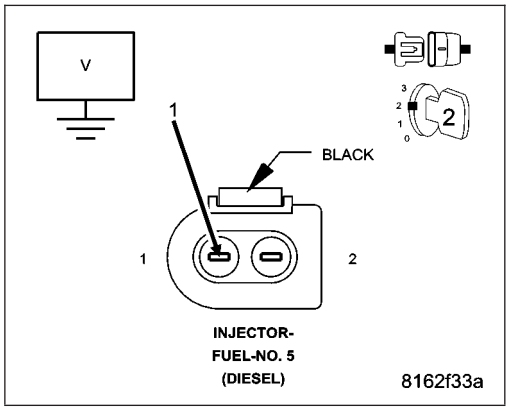

4. (K38) FUEL INJECTOR NO. 5 HIGH-SIDE CONTROL CIRCUIT SHORTED TO (K638) FUEL INJECTOR NO. 5 LOW-SIDE CONTROL CIRCUIT

Turn the ignition off.
Measure the resistance between the (K38) Fuel Injector No. 5 High-Side Control circuit and the (K638) Fuel Injector No. 5 Low-Side Control circuit in the Fuel Injector No. 5 connector.

Is the resistance above 10.0 ohms?

Yes >> Go to 5

No >> Repair the (K38) Fuel Injector No. 5 High-Side Control circuit for a short to the (K638) Fuel Injector No. 5 Low-Side Control circuit.
Perform the ECM Verification Test Ver. 1. (Refer to 9 - ENGINE - DIAGNOSIS AND TESTING)

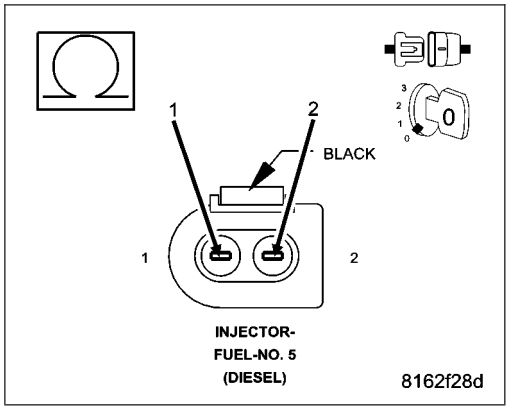

5. (K38) FUEL INJECTOR NO. 5 HIGH-SIDE CONTROL CIRCUIT OPEN OR HIGH RESISTANCE

Measure the resistance of the (K38) Fuel Injector No. 5 High-Side Control circuit between the Fuel Injector No. 5 connector and the Engine Control Module (ECM) connector.

Is the resistance below 10.0 ohms?

Yes >> Go to 6

No >> Repair the (K38) Fuel Injector No. 5 High-Side Control circuit for an open circuit or high resistance.
Perform the ECM Verification Test Ver. 1. (Refer to 9 - ENGINE - DIAGNOSIS AND TESTING)

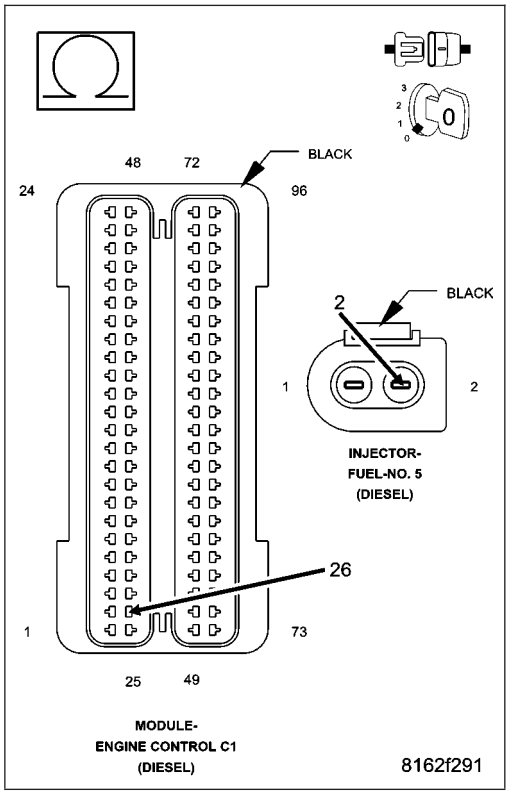

6. (K638) FUEL INJECTOR NO. 5 LOW-SIDE CONTROL CIRCUIT OPEN OR HIGH RESISTANCE

Measure the resistance of the (K638) Fuel Injector No. 5 Low-Side Control circuit between the Fuel Injector No. 5 connector and the Engine Control Module (ECM) connector.

Is the resistance below 10.0 ohms?

Yes >> Go to 7

No >> Repair the (K638) Fuel Injector No. 5 Low-Side Control circuit for an open circuit or high resistance.
Perform the ECM Verification Test Ver. 1. (Refer to 9 - ENGINE - DIAGNOSIS AND TESTING)

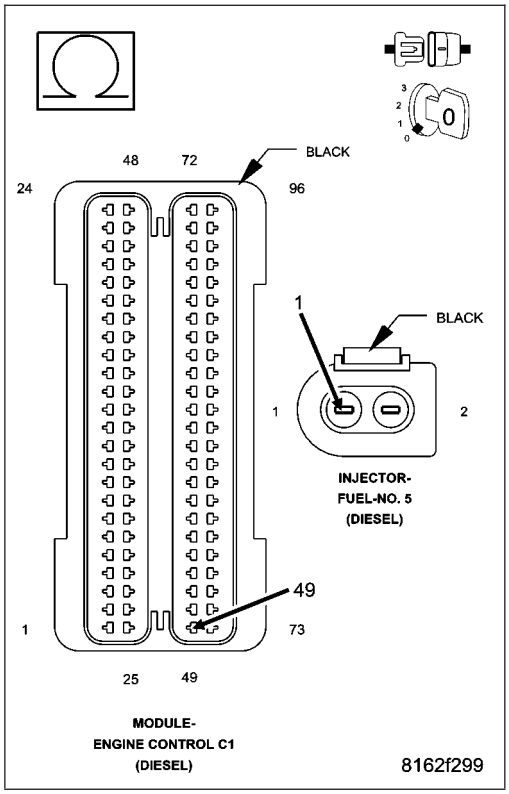

7. FUEL INJECTOR NO. 5

Measure the resistance between the terminals of Fuel Injector No. 5.

Is the resistance approximately 185k ohms (+/- 10%)?

Yes >> Go to 8

No >> Replace Fuel Injector No. 5 in accordance with the Service Information.
Perform the ECM Verification Test Ver. 1. (Refer to 9 - ENGINE - DIAGNOSIS AND TESTING)

8. ENGINE CONTROL MODULE (ECM)

Using the wiring diagram/schematic as a guide, inspect the wiring and connectors between the Fuel Injector No. 5 and the Engine Control Module (ECM).

Look for any chafed, pierced, pinched, or partially broken wires.

Look for broken, bent, pushed out or corroded terminals.

Monitor the scan tool data relative to this circuit and wiggle test the wiring and connectors.

Look for the data to change or for the DTC to reset during the wiggle test.

Refer to any Technical Service Bulletins that may apply.

Were any problems found?

Yes >> Repair as necessary.
Perform the ECM Verification Test Ver. 1. (Refer to 9 - ENGINE - DIAGNOSIS AND TESTING)

No >> Replace the Engine Control Module (ECM) in accordance with the Service Information.
Perform the ECM Verification Test Ver. 1. (Refer to 9 - ENGINE - DIAGNOSIS AND TESTING)

P0275-CYLINDER 5 CONTRIBUTION/BALANCE

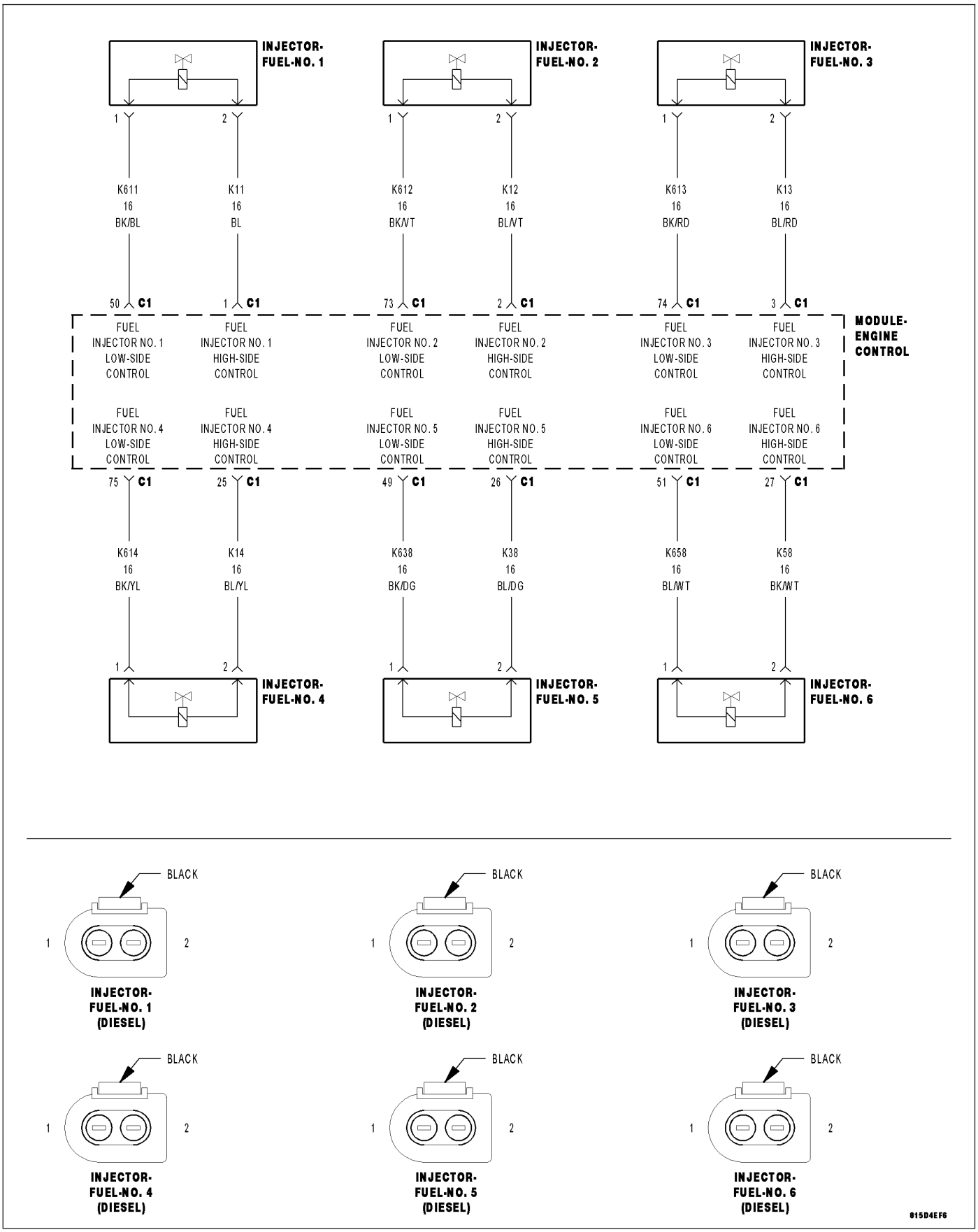

For a complete wiring diagram **Refer to Section 8W**

- **When Monitored:**
  With the ignition on.
- **Set Condition:**
  The Engine Control Module (ECM) detects an internal failure.

Possible Causes
INTERMITTENT DTC
ENGINE CONTROL MODULE (ECM)

Always perform the Pre-Diagnostic Troubleshooting procedure before proceeding. (Refer to 9 - ENGINE - DIAGNOSIS AND TESTING)

Diagnostic Test

1. DTC IS ACTIVE

Ignition on, engine not running.
With the scan tool, Clear DTCs in the Engine Control Module (ECM).
Monitor the scan tool for at least two minutes.
Cycle the ignition key off and on several times, leaving the ignition on for at least 10 seconds at a time.
Start the engine.
Allow the engine to reach normal operating temperature.
With the scan tool, select View DTCs.

Is the status Active for this DTC?

Yes >> Go To 2

No >> Refer to the *CHECKING FOR AN INTERMITTENT DTC Diagnostic Procedure. (Refer to 9 - ENGINE - DIAGNOSIS AND TESTING)

2. ENGINE CONTROL MODULE (ECM)

Using the wiring diagram/schematic as a guide, inspect the Engine Control Module (ECM) wiring and connectors.
Look for any chafed, pierced, pinched, or partially broken wires.
Look for broken, bent, pushed out or corroded terminals.
Monitor the scan tool data relative to this circuit and wiggle test the wiring and connectors.
Look for the data to change or for the DTC to reset during the wiggle test.
Refer to any Technical Service Bulletins that may apply.

Were any problems found?

Yes >> Repair as necessary.
Perform the ECM Verification Test Ver. 1. (Refer to 9 - ENGINE - DIAGNOSIS AND TESTING)

No >> Replace the Engine Control Module (ECM) in accordance with the Service Information.
Perform the ECM Verification Test Ver. 1. (Refer to 9 - ENGINE - DIAGNOSIS AND TESTING)

P0276-FUEL INJECTOR 6 CIRCUIT LOW

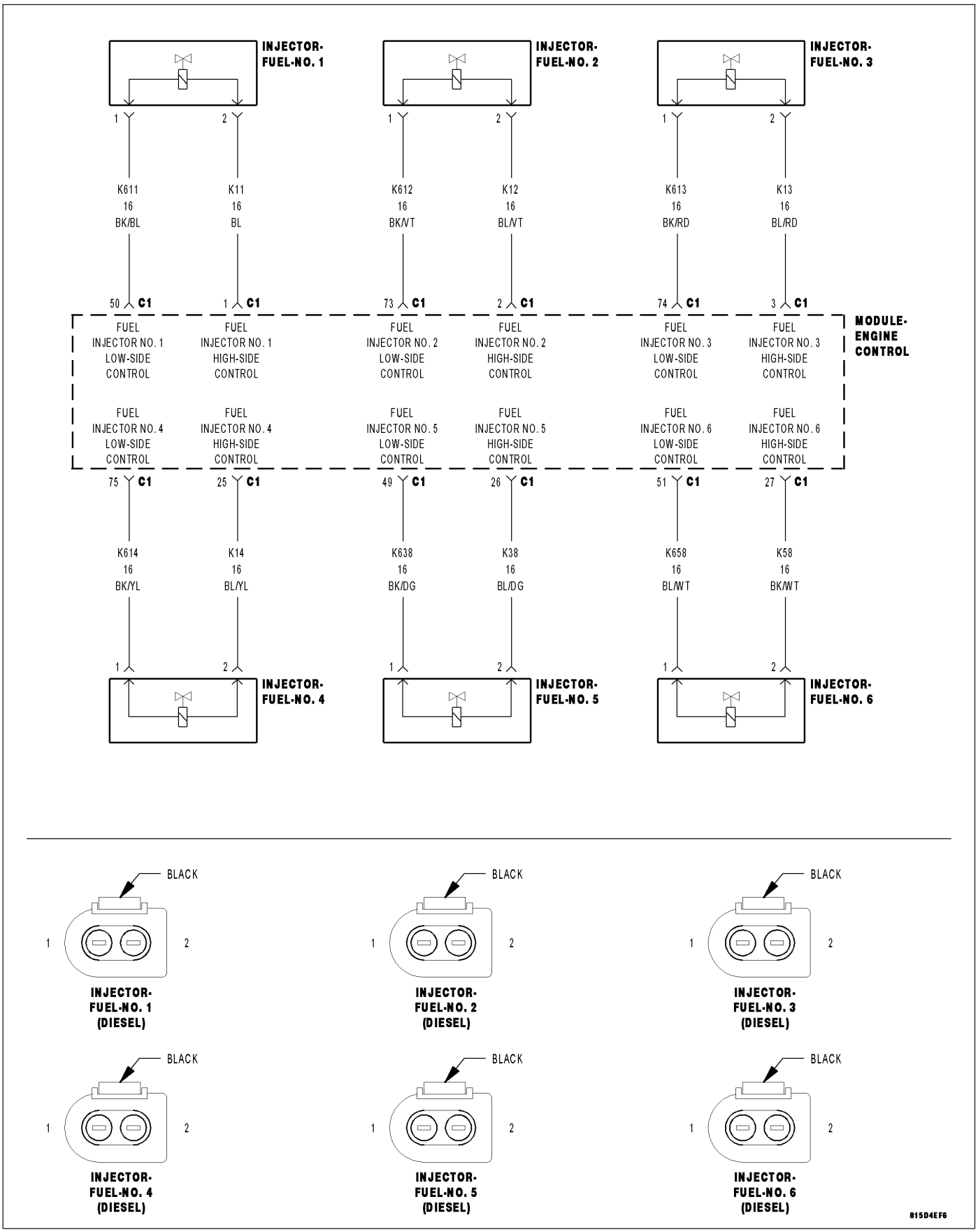

For a complete wiring diagram **Refer to Section 8W**

- **When Monitored:**
  With the engine running.
- **Set Condition:**
  The ECM detects a short to ground on the Fuel Injector 6 circuit.

Possible Causes
INTERMITTENT DTC
(K58) FUEL INJECTOR NO. 6 HIGH-SIDE CONTROL CIRCUIT SHORTED TO GROUND
(K658) FUEL INJECTOR NO. 6 LOW-SIDE CONTROL CIRCUIT SHORTED TO GROUND
(K58) FUEL INJECTOR NO. 6 HIGH-SIDE CONTROL CIRCUIT SHORTED TO (K658) FUEL INJECTOR NO. 6 LOW-SIDE CONTROL CIRCUIT
(K58) FUEL INJECTOR NO. 6 HIGH-SIDE CONTROL CIRCUIT OPEN OR HIGH RESISTANCE
(K658) FUEL INJECTOR NO. 6 LOW-SIDE CONTROL CIRCUIT OPEN OR HIGH RESISTANCE
FUEL INJECTOR NO. 6
ENGINE CONTROL MODULE (ECM)

Always perform the Pre-Diagnostic Troubleshooting procedure before proceeding. (Refer to 9 - ENGINE - DIAGNOSIS AND TESTING)

Diagnostic Test

1. DTC IS ACTIVE

NOTE: This DTC can set as a result of a fault in any of the injector circuits. Be sure to check all injector circuits before replacing an injector and all injectors before replacing a module.
Ignition on, engine not running.
With the scan tool, Clear DTCs in the Engine Control Module (ECM).
Attempt to start the engine and test drive the vehicle.
With the scan tool, select View DTCs.

Is the status Active for this DTC?

Yes >> Go To 2

No >> Refer to the *CHECKING FOR AN INTERMITTENT DTC Diagnostic Procedure. (Refer to 9 - ENGINE - DIAGNOSIS AND TESTING)

2. (K58) FUEL INJECTOR NO. 6 HIGH-SIDE CONTROL CIRCUIT SHORTED TO GROUND

Turn the ignition off.
Disconnect the Fuel Injector No. 6 connector.
Disconnect the Engine Control Module (ECM) connector.
Measure the resistance between ground and the (K58) Fuel Injector No. 6 High-Side Control circuit in the Fuel Injector No. 6 connector.

Is the resistance above 1000.0 ohms?

Yes >> Go to 3

No >> Repair the (K58) Fuel Injector No. 6 High-Side Control circuit for a short to ground.
Perform the ECM Verification Test Ver. 1. (Refer to 9 - ENGINE - DIAGNOSIS AND TESTING)

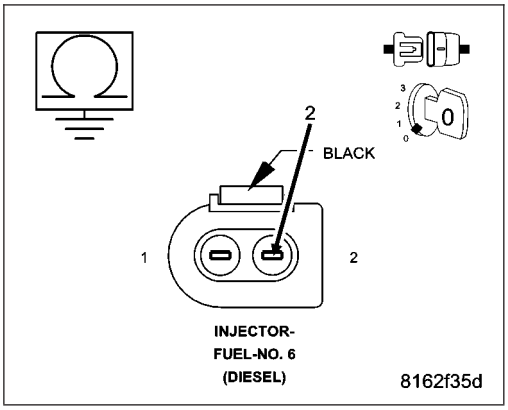

3. (K658) FUEL INJECTOR NO. 6 LOW-SIDE CONTROL CIRCUIT SHORTED TO GROUND

Measure the resistance between ground and the (K658) Fuel Injector No. 6 Low-Side Control circuit in the Fuel Injector No. 6 connector.

Is the resistance above 1000.0 ohms?

Yes >> Go to 4

No >> Repair the (K658) Fuel Injector No. 6 Low-Side Control circuit for a short to ground.

Perform the ECM Verification Test Ver. 1. (Refer to 9 - ENGINE - DIAGNOSIS AND TESTING)

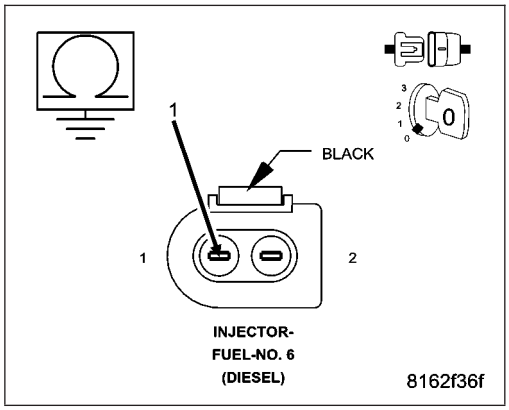

4. (K58) FUEL INJECTOR NO. 6 HIGH-SIDE CONTROL CIRCUIT SHORTED TO (K658) FUEL INJECTOR NO. 6 LOW-SIDE CONTROL CIRCUIT

Measure the resistance between the (K58) Fuel Injector No. 6 High-Side Control circuit and the (K658) Fuel Injector No. 6 Low-Side Control circuit in the Fuel Injector No. 6 connector.

Is the resistance above 1000.0 ohms?

Yes >> Go to 5

No >> Repair the (K58) Fuel Injector No. 6 High-Side Control circuit for a short to the (K658) Fuel Injector No. 6 Low-Side Control circuit.

Perform the ECM Verification Test Ver. 1. (Refer to 9 - ENGINE - DIAGNOSIS AND TESTING)

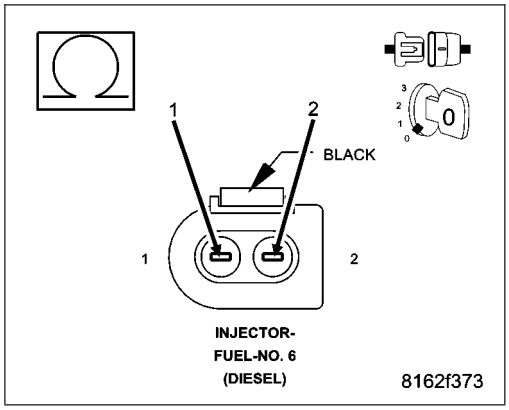

5. (K58) FUEL INJECTOR NO. 6 HIGH-SIDE CONTROL CIRCUIT OPEN OR HIGH RESISTANCE

Measure the resistance of the (K58) Fuel Injector No. 6 High-Side Control circuit between the Fuel Injector No. 6 connector and the Engine Control Module (ECM) connector.

Is the resistance below 10.0 ohms?

Yes >> Go to 6

No >> Repair the (K58) Fuel Injector No. 6 High-Side Control circuit for an open circuit or high resistance.
Perform the ECM Verification Test Ver. 1. (Refer to 9 - ENGINE - DIAGNOSIS AND TESTING)

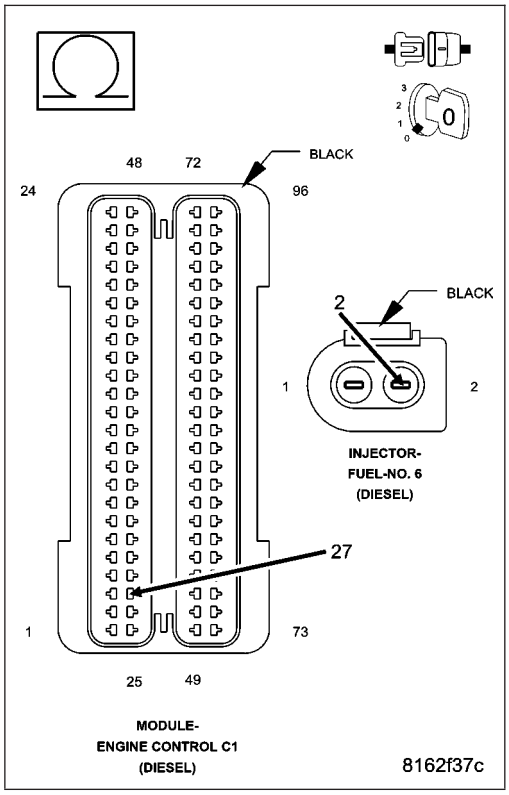

6. (K658) FUEL INJECTOR NO. 6 LOW-SIDE CONTROL CIRCUIT OPEN OR HIGH RESISTANCE

Measure the resistance of the (K658) Fuel Injector No. 6 Low-Side Control circuit between the Fuel Injector No. 6 connector and the Engine Control Module (ECM) connector.

Is the resistance below 10.0 ohms?

Yes >> Go to 7

No >> Repair the (K658) Fuel Injector No. 6 Low-Side Control circuit for an open circuit or high resistance.
Perform the ECM Verification Test Ver. 1. (Refer to 9 - ENGINE - DIAGNOSIS AND TESTING)

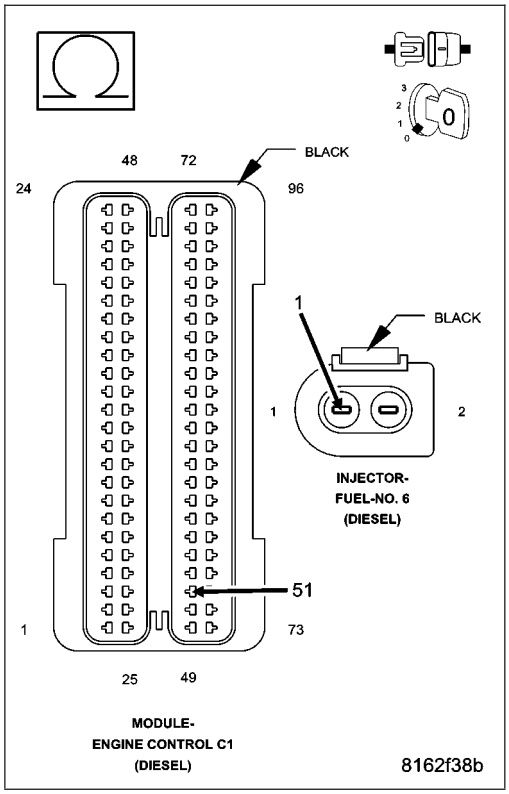

7. FUEL INJECTOR NO. 6

Measure the resistance between the terminals of Fuel Injector No. 6.

Is the resistance approximately 185k ohms (+/- 10%)?

Yes >> Go to 8

No >> Replace Fuel Injector No. 6 in accordance with the Service Information.
Perform the ECM Verification Test Ver. 1. (Refer to 9 - ENGINE - DIAGNOSIS AND TESTING)

8. ENGINE CONTROL MODULE (ECM)

Using the wiring diagram/schematic as a guide, inspect the wiring and connectors between the Fuel Injector No. 6 and the Engine Control Module (ECM).

Look for any chafed, pierced, pinched, or partially broken wires.

Look for broken, bent, pushed out or corroded terminals.

Monitor the scan tool data relative to this circuit and wiggle test the wiring and connectors.

Look for the data to change or for the DTC to reset during the wiggle test.

Refer to any Technical Service Bulletins that may apply.

Were any problems found?

Yes >> Repair as necessary.
Perform the ECM Verification Test Ver. 1. (Refer to 9 - ENGINE - DIAGNOSIS AND TESTING)

No >> Replace the Engine Control Module (ECM) in accordance with the Service Information.
Perform the ECM Verification Test Ver. 1. (Refer to 9 - ENGINE - DIAGNOSIS AND TESTING)

P0277-FUEL INJECTOR 6 CIRCUIT HIGH

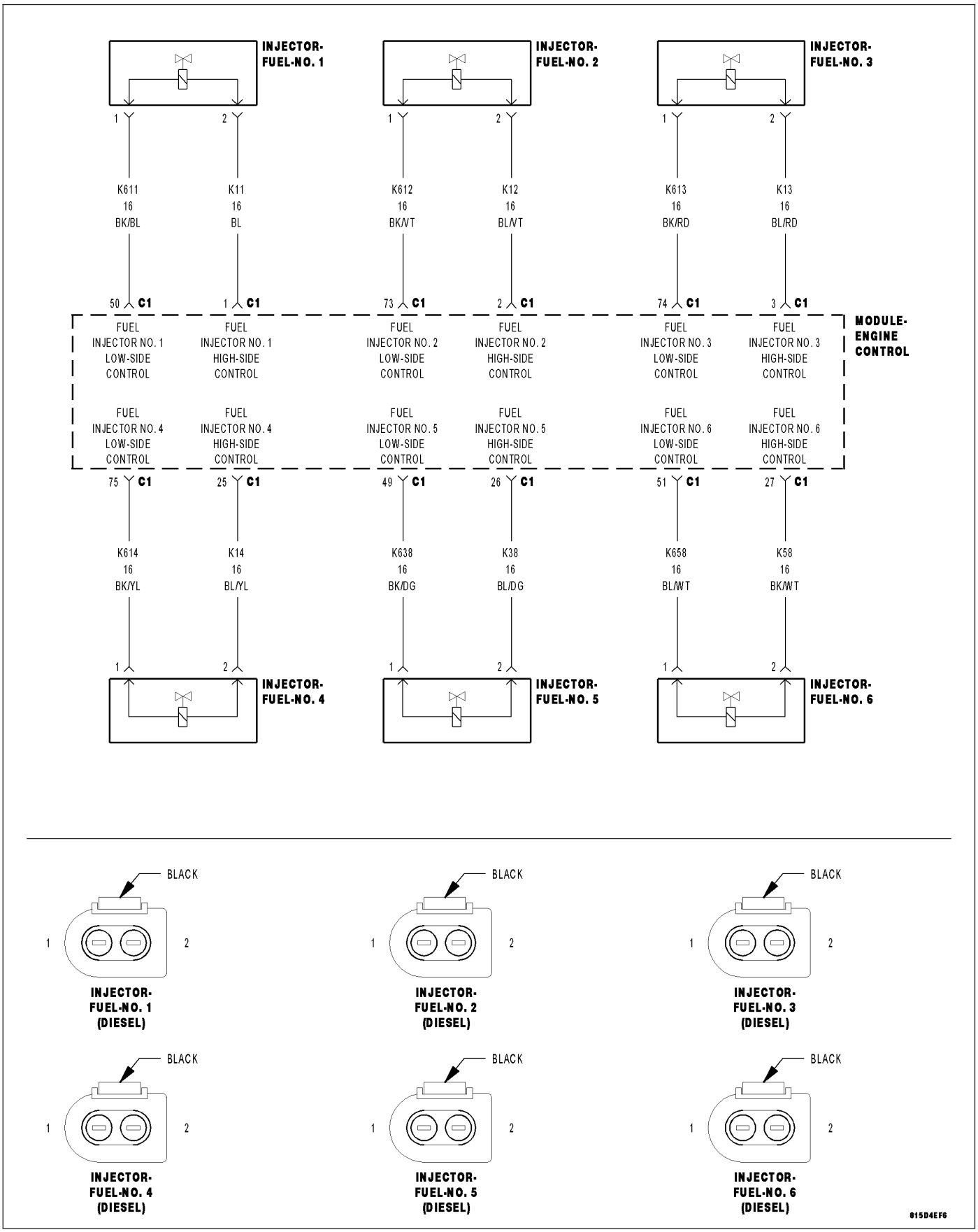

For a complete wiring diagram **Refer to Section 8W**

- **When Monitored:**
  With the engine running.
- **Set Condition:**
  The ECM detects a short to voltage on the Fuel Injector 6 circuit.

Possible Causes
INTERMITTENT DTC
(K58) FUEL INJECTOR NO. 6 HIGH-SIDE CONTROL CIRCUIT SHORTED TO VOLTAGE
(K658) FUEL INJECTOR NO. 6 LOW-SIDE CONTROL CIRCUIT SHORTED TO VOLTAGE
(K58) FUEL INJECTOR NO. 6 HIGH-SIDE CONTROL CIRCUIT SHORTED TO (K658) FUEL INJECTOR NO. 6 LOW-SIDE CONTROL CIRCUIT
(K58) FUEL INJECTOR NO. 6 HIGH-SIDE CONTROL CIRCUIT OPEN OR HIGH RESISTANCE
(K658) FUEL INJECTOR NO. 6 LOW-SIDE CONTROL CIRCUIT OPEN OR HIGH RESISTANCE
FUEL INJECTOR NO. 6
ENGINE CONTROL MODULE (ECM)

Always perform the Pre-Diagnostic Troubleshooting procedure before proceeding. (Refer to 9 - ENGINE - DIAGNOSIS AND TESTING)

Diagnostic Test

1. DTC IS ACTIVE

NOTE: This DTC can set as a result of a fault in any of the injector circuits. Be sure to check all injector circuits before replacing an injector and all injectors before replacing a module.

Ignition on, engine not running.

With the scan tool, Clear DTCs in the Engine Control Module (ECM).

Attempt to start the engine and test drive the vehicle.

With the scan tool, select View DTCs.

Is the status Active for this DTC?

Yes >> Go To 2

No >> Refer to the *CHECKING FOR AN INTERMITTENT DTC Diagnostic Procedure. (Refer to 9 - ENGINE - DIAGNOSIS AND TESTING)

2. (K58) FUEL INJECTOR NO. 6 HIGH-SIDE CONTROL CIRCUIT SHORTED TO VOLTAGE

Turn the ignition off.

Disconnect the Fuel Injector No. 6 connector.

Disconnect the Engine Control Module (ECM) connector.

Remove the ASD Relay from the IPM.

Connect a jumper wire between cavity 30 and cavity 87 of the ASD Relay Connector.

Turn the ignition on.

Measure the voltage of the (K58) Fuel Injector No. 6 High-Side Control circuit in the Fuel Injector No. 6 connector.

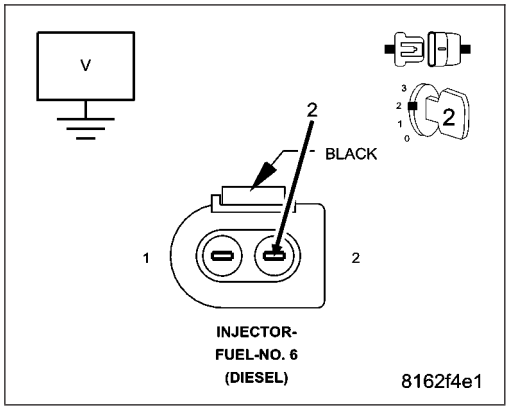

Is there any voltage present?

Yes >> Repair the (K58) Fuel Injector No. 6 High-Side Control circuit for a short to voltage.
Perform the ECM Verification Test Ver. 1. (Refer to 9 - ENGINE - DIAGNOSIS AND TESTING)

No >> Go to 3

3. (K658) FUEL INJECTOR NO. 6 LOW-SIDE CONTROL CIRCUIT SHORTED TO VOLTAGE

NOTE: The jumper wire should still be in place.
Measure the voltage of the (K658) Fuel Injector No. 6 Low-Side Control circuit.

Is there any voltage present?

Yes >> Repair the (K658) Fuel Injector No. 6 Low-Side Control circuit for a short to voltage.
Perform the ECM Verification Test Ver. 1. (Refer to 9 - ENGINE - DIAGNOSIS AND TESTING)

No >> Go to 4

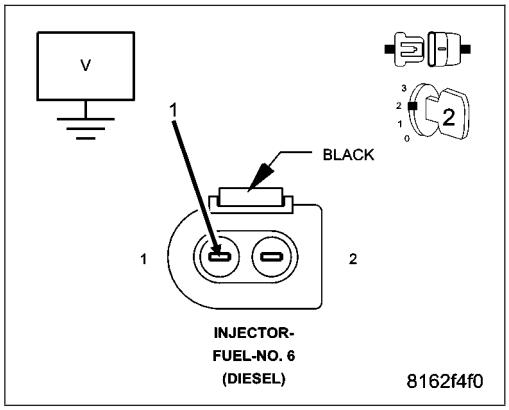

4. (K58) FUEL INJECTOR NO. 6 HIGH-SIDE CONTROL CIRCUIT SHORTED TO (K658) FUEL INJECTOR NO. 6 LOW-SIDE CONTROL CIRCUIT

Turn the ignition off.
Measure the resistance between the (K58) Fuel Injector No. 6 High-Side Control circuit and the (K658) Fuel Injector No. 6 Low-Side Control circuit in the Fuel Injector No. 6 connector.

Is the resistance above 10.0 ohms?

Yes >> Go to 5

No >> Repair the (K58) Fuel Injector No. 6 High-Side Control circuit for a short to the (K658) Fuel Injector No. 6 Low-Side Control circuit.
Perform the ECM Verification Test Ver. 1. (Refer to 9 - ENGINE - DIAGNOSIS AND TESTING)

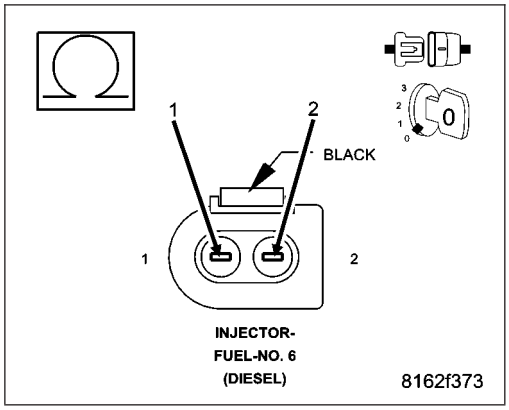

5. (K58) FUEL INJECTOR NO. 6 HIGH-SIDE CONTROL CIRCUIT OPEN OR HIGH RESISTANCE

Measure the resistance of the (K58) Fuel Injector No. 6 High-Side Control circuit between the Fuel Injector No. 6 connector and the Engine Control Module (ECM) connector.

Is the resistance below 10.0 ohms?

Yes >> Go to 6

No >> Repair the (K58) Fuel Injector No. 6 High-Side Control circuit for an open circuit or high resistance.
Perform the ECM Verification Test Ver. 1. (Refer to 9 - ENGINE - DIAGNOSIS AND TESTING)

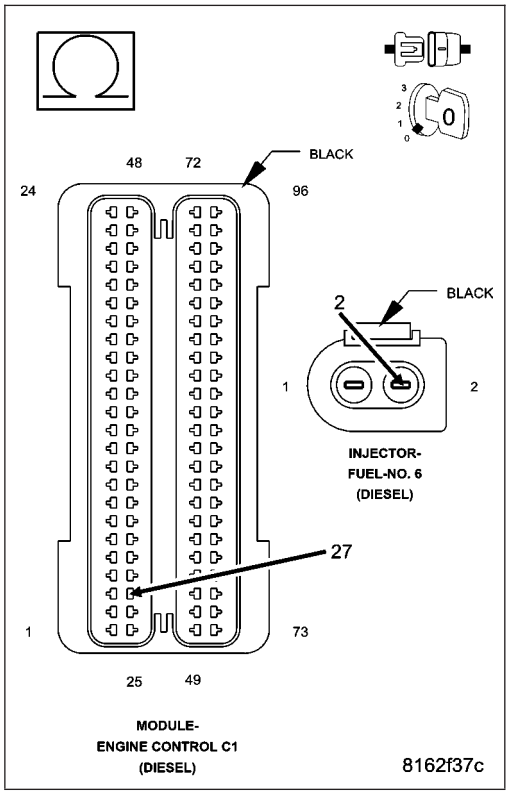

6. (K658) FUEL INJECTOR NO. 6 LOW-SIDE CONTROL CIRCUIT OPEN OR HIGH RESISTANCE

Measure the resistance of the (K658) Fuel Injector No. 6 Low-Side Control circuit between the Fuel Injector No. 6 connector and the Engine Control Module (ECM) connector.

Is the resistance below 10.0 ohms?

Yes >> Go to 7

No >> Repair the (K658) Fuel Injector No. 6 Low-Side Control circuit for an open circuit or high resistance.
Perform the ECM Verification Test Ver. 1. (Refer to 9 - ENGINE - DIAGNOSIS AND TESTING)

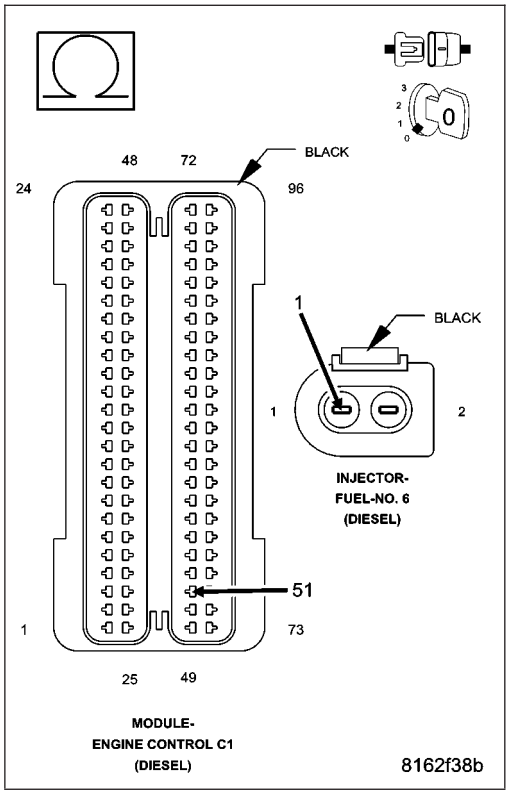

7. FUEL INJECTOR NO. 6

Measure the resistance between the terminals of Fuel Injector No. 6.

Is the resistance approximately 185k ohms (+/- 10%)?

Yes >> Go to 8

No >> Replace Fuel Injector No. 6 in accordance with the Service Information.
Perform the ECM Verification Test Ver. 1. (Refer to 9 - ENGINE - DIAGNOSIS AND TESTING)

8. ENGINE CONTROL MODULE (ECM)

Using the wiring diagram/schematic as a guide, inspect the wiring and connectors between the Fuel Injector No. 6 and the Engine Control Module (ECM).

Look for any chafed, pierced, pinched, or partially broken wires.

Look for broken, bent, pushed out or corroded terminals.

Monitor the scan tool data relative to this circuit and wiggle test the wiring and connectors.

Look for the data to change or for the DTC to reset during the wiggle test.

Refer to any Technical Service Bulletins that may apply.

Were any problems found?

Yes >> Repair as necessary.
Perform the ECM Verification Test Ver. 1. (Refer to 9 - ENGINE - DIAGNOSIS AND TESTING)

No >> Replace the Engine Control Module (ECM) in accordance with the Service Information.
Perform the ECM Verification Test Ver. 1. (Refer to 9 - ENGINE - DIAGNOSIS AND TESTING)

P0278-CYLINDER 6 CONTRIBUTION/BALANCE

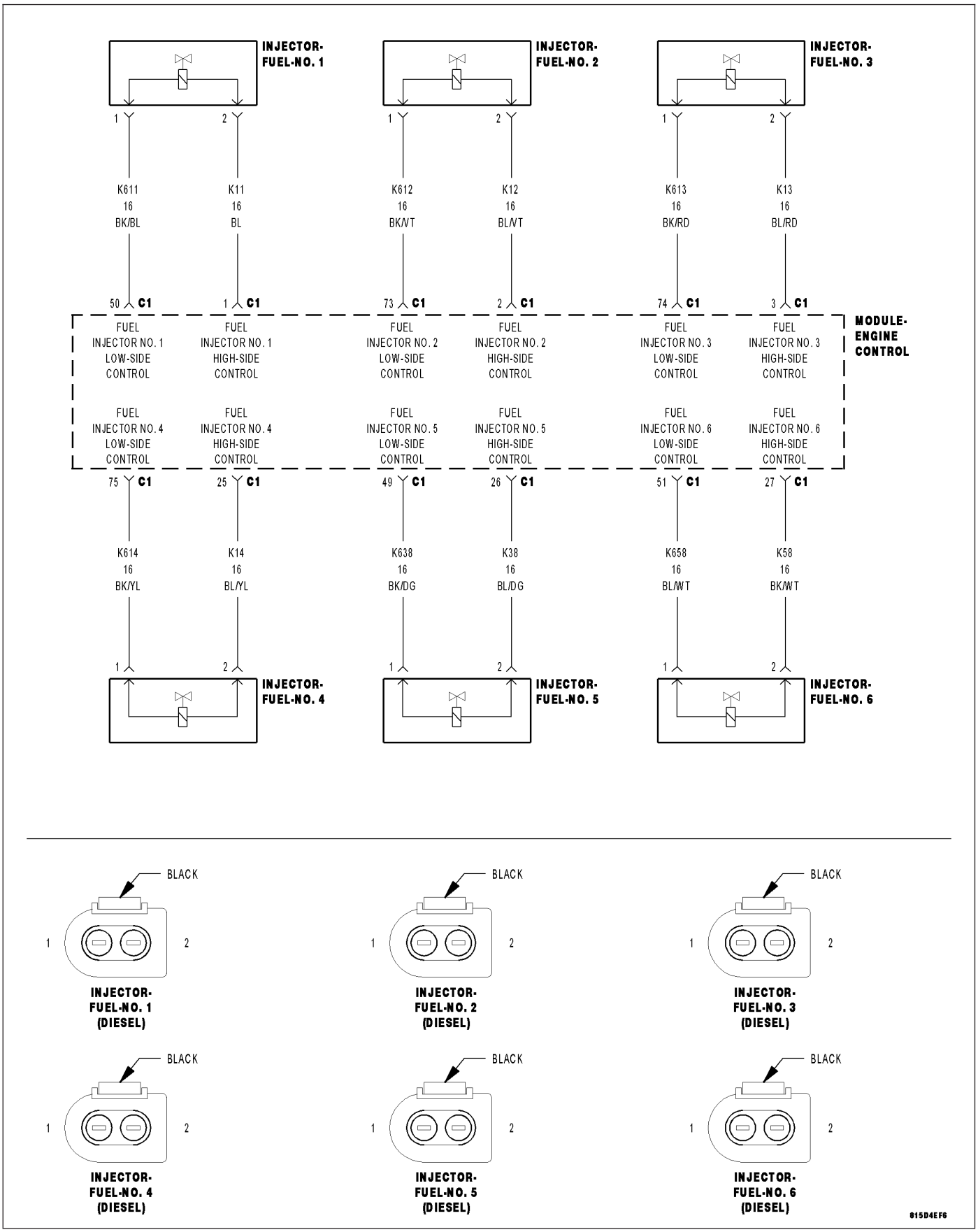

For a complete wiring diagram **Refer to Section 8W**

- **When Monitored:**
  With the ignition on.
- **Set Condition:**
  The Engine Control Module (ECM) detects an internal failure.

Possible Causes
INTERMITTENT DTC
ENGINE CONTROL MODULE (ECM)

Always perform the Pre-Diagnostic Troubleshooting procedure before proceeding. (Refer to 9 - ENGINE - DIAGNOSIS AND TESTING)

Diagnostic Test

1. DTC IS ACTIVE

Ignition on, engine not running.
With the scan tool, Clear DTCs in the Engine Control Module (ECM).
Monitor the scan tool for at least two minutes.
Cycle the ignition key off and on several times, leaving the ignition on for at least 10 seconds at a time.
Start the engine.
Allow the engine to reach normal operating temperature.
With the scan tool, select View DTCs.

Is the status Active for this DTC?

Yes >> Go To 2

No >> Refer to the *CHECKING FOR AN INTERMITTENT DTC Diagnostic Procedure. (Refer to 9 - ENGINE - DIAGNOSIS AND TESTING)

2. ENGINE CONTROL MODULE (ECM)

Using the wiring diagram/schematic as a guide, inspect the Engine Control Module (ECM) wiring and connectors.
Look for any chafed, pierced, pinched, or partially broken wires.
Look for broken, bent, pushed out or corroded terminals.
Monitor the scan tool data relative to this circuit and wiggle test the wiring and connectors.
Look for the data to change or for the DTC to reset during the wiggle test.
Refer to any Technical Service Bulletins that may apply.

Were any problems found?

Yes >> Repair as necessary.
Perform the ECM Verification Test Ver. 1. (Refer to 9 - ENGINE - DIAGNOSIS AND TESTING)

No >> Replace the Engine Control Module (ECM) in accordance with the Service Information.
Perform the ECM Verification Test Ver. 1. (Refer to 9 - ENGINE - DIAGNOSIS AND TESTING)

P0299-TURBOCHARGER UNDERBOOST CONDITION

For a complete wiring diagram **Refer to Section 8W**

- **When Monitored:**
  With the engine running and the ECM attempting to govern turbocharger boost pressure.
- **Set Condition:**
  The Boost Pressure Sensor indicates actual turbocharger boost is less than the ECM setpoint for engine boost.

Possible Causes
INTERMITTENT DTC
CLOGGED AIR FILTER
INTAKE AIR RESTRICTION
INTAKE AIR LEAK
BOOST PRESSURE SERVO MOTOR
TURBOCHARGER

Always perform the Pre-Diagnostic Troubleshooting procedure before proceeding. (Refer to 9 - ENGINE - DIAGNOSIS AND TESTING)

Diagnostic Test

1. CHECK FOR ACTIVE DTC

Turn the ignition on.
With the scan tool, Clear DTCs in the Engine Control Module (ECM).
Test drive the vehicle.
With the scan tool, select View DTCs.

Is the status Active for this DTC?

Yes >> Go To 2

No >> Refer to the *CHECKING FOR AN INTERMITTENT DTC Diagnostic Procedure. (Refer to 9 - ENGINE - DIAGNOSIS AND TESTING)

2. CHECK THE AIR FILTER

Turn the ignition off.
Remove and inspect the Air Filter for soiling or excessive dirt and debris which may cause air flow restriction.

Were any of these problems found?

Yes >> Replace the Air Filter element
Perform the ECM Verification Test Ver. 1. (Refer to 9 - ENGINE - DIAGNOSIS AND TESTING)

No >> Go to 3

3. CHECK FOR INTAKE SYSTEM RESTRICTIONS

NOTE: Damaged, restricted or poorly connected intake and turbocharger related tubes can cause this DTC to set.
Turn the ignition off.
Inspect all air intake, crankcase vent and turbocharger related hoses/tubes and connections.

Were any problems found?

Yes >> Repair or replace as necessary.
Perform the ECM Verification Test Ver. 1. (Refer to 9 - ENGINE - DIAGNOSIS AND TESTING)

No >> Go to 4

4. CHECK FOR INTAKE SYSTEM AIR LEAKS

Remove the Crankcase Vent Heater.

Remove the Mass Air Flow Sensor from the turbocharger inlet tube.

Seal off and/or plug the turbocharger inlet tube where the MAF sensor was removed.

Connect smoke machine 84–04 to the Crankcase Vent Heater port in the intake duct and begin injecting smoke into the intake system.

Observe all intake system components for evidence of smoke leakage.

Is there evidence of smoke leakage?

Yes >> Repair or replace as necessary.
Perform the ECM Verification Test Ver. 1. (Refer to 9 - ENGINE - DIAGNOSIS AND TESTING)

No >> Go to 5

5. REPLACE THE BOOST PRESSURE SERVO MOTOR

Replace the Boost Pressure Servo Motor in accordance with the Service Information.

NOTE: Ensure the Boost Pressure Servo Motor and ECM harness connectors are connected.
Test drive the vehicle.

With the scan tool, select View DTCs.

Is the status Active for this DTC?

Yes >> Replace the Turbocharger assembly in accordance with the Service Information.
Perform the ECM Verification Test Ver. 1. (Refer to 9 - ENGINE - DIAGNOSIS AND TESTING)

No >> Test complete.
Perform the ECM Verification Test Ver. 1. (Refer to 9 - ENGINE - DIAGNOSIS AND TESTING)

P0335-CRANKSHAFT POSITION SENSOR CIRCUIT

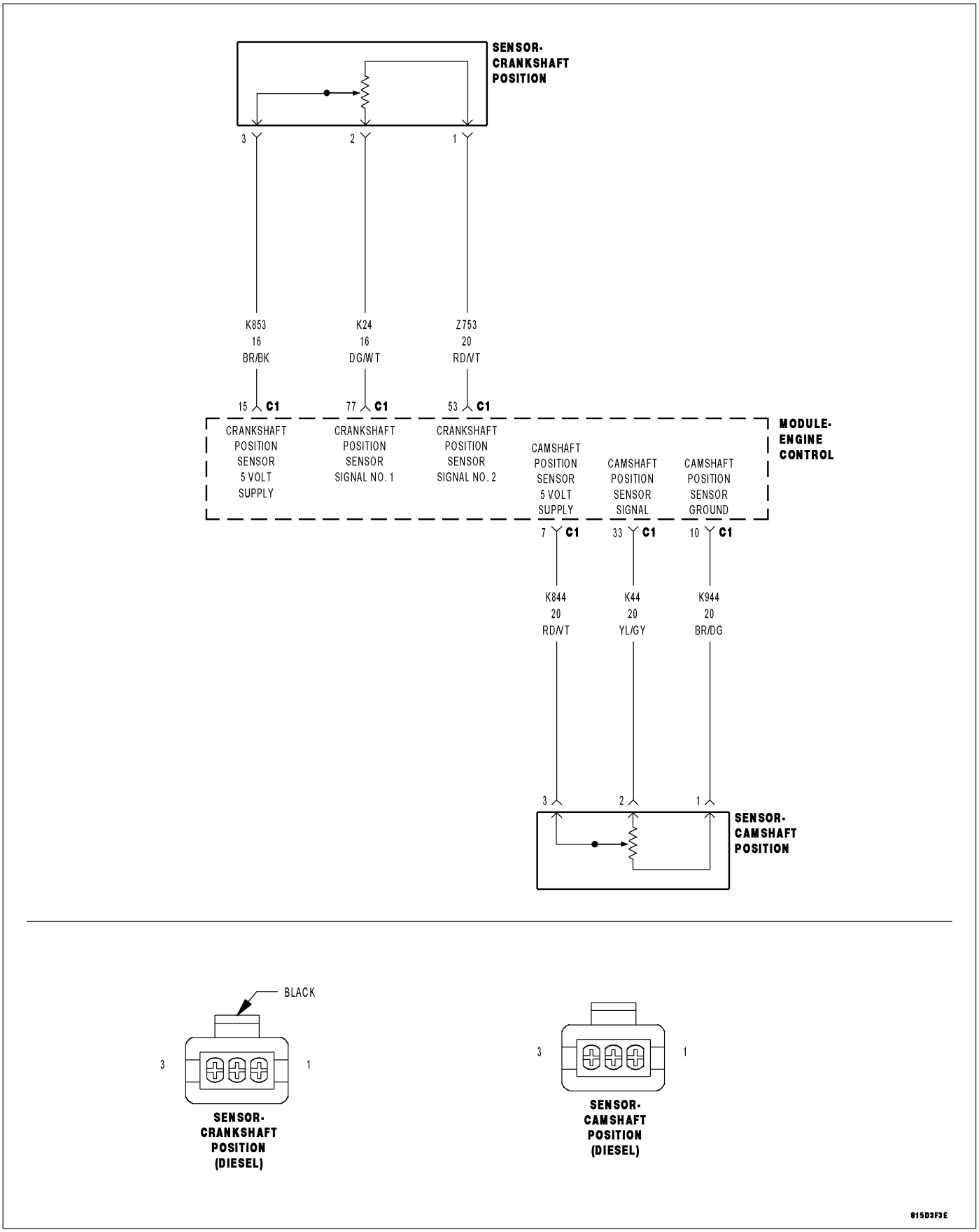

For a complete wiring diagram **Refer to Section 8W**

- **When Monitored:**
  With the engine cranking or running
- **Set Condition:**
  The Engine Control Module (ECM) does not receive a signal from the Crankshaft Position Sensor when the Camshaft Position Sensor indicates engine rpm.

Possible Causes
(K853) CKP SENSOR 5-VOLT SUPPLY CIRCUIT OPEN
(K24) CRANKSHAFT POSITION SENSOR SIGNAL CIRCUIT SHORTED TO VOLTAGE
CHECKING (K853) CKP SENSOR 5-VOLT SUPPLY CIRCUIT
DAMAGED CKP SENSOR OR CRANKSHAFT
ECM
(Z753) CKP SENSOR GROUND CIRCUIT OPEN
INTERMITTENT CONDITION
(K24) CKP SENSOR SIGNAL CIRCUIT OPEN
(K853) CKP SENSOR 5-VOLT SUPPLY CIRCUIT SHORTED TO GROUND
(K24) CKP SENSOR SIGNAL CIRCUIT SHORTED TO GROUND
CRANKSHAFT POSITION SENSOR
(Z753) CKP SENSOR GROUND CIRCUIT OPEN
(K853) CKP SENSOR 5-VOLT SUPPLY CIRCUIT SHORTED TO THE (Z753) CKP SENSOR GROUND CIRCUIT
(K24) CKP SENSOR SIGNAL CIRCUIT SHORTED TO THE (Z753) CKP SENSOR GROUND CIRCUIT

Always perform the Pre-Diagnostic Troubleshooting procedure before proceeding. (Refer to 9 - ENGINE - DIAGNOSIS AND TESTING)

Diagnostic Test

1. VERIFY ACTIVE DTC

NOTE: If DTC P0652 or P0653 is present with this DTC, diagnose DTCs P0652 or P0653 before diagnosing this DTC.

NOTE: The Timing Belt/Chain must be correctly installed and operational before diagnosis can be made. Refer to the Service Information to ensure the timing belt is properly installed.

NOTE: If the ECM detects and stores a DTC, the ECM also stores the engine/vehicle operating conditions under which the DTC was set. Some of these conditions are displayed on the scan tool at the same time the DTC is displayed.

NOTE: Before erasing stored DTCs, record these conditions. Attempting to duplicate these conditions may assist when checking for an active DTC.

Turn the ignition on.

With the scan tool, erase the ECM DTCs.

Attempt to start the engine cranking the engine for at least 7 seconds.

With the scan tool, read the ECM DTCs.

Does the scan tool display this DTC?

Yes >> Go To 3

No >> Go To 2

2. TEST DRIVE

Turn the ignition on.

With the scan tool, erase the ECM DTCs.

Test drive the vehicle.

With the scan tool, read the ECM DTCs.

Does the scan tool display this DTC?

Yes >> Go To 3

No >> Refer to the *CHECKING FOR AN INTERMITTENT DTC Diagnostic Procedure. (Refer to 9 - ENGINE - DIAGNOSIS AND TESTING)

3. CHECKING (K24) CRANKSHAFT POSITION SENSOR SIGNAL CIRCUIT

Turn the ignition off.

Disconnect the Crankshaft Position Sensor harness connector.

Turn the ignition on.

Measure the voltage of the (K24) CKP Sensor Signal circuit at the CKP Sensor harness connector.

Select the appropriate voltage reading.

Voltage is above 5.4 volts.
Go To 4

Voltage is between 4.7 and 5.4 volts.
Go To 5

Voltage is below 4.7 volts.
Go To 12

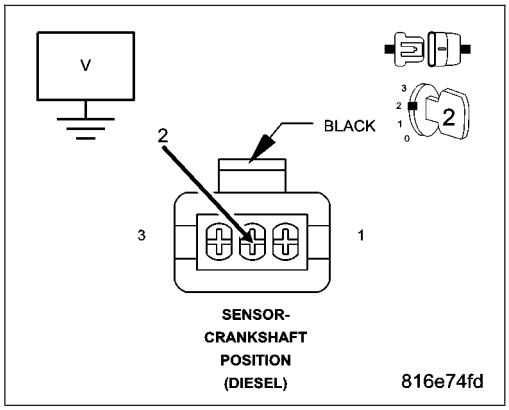

4. (K24) CRANKSHAFT POSITION SENSOR SIGNAL CIRCUIT SHORT TO VOLTAGE

Turn the ignition off.

Disconnect the ECM harness connectors.

Remove the ASD Relay.

Connect a jumper wire between cavity 30 and cavity 87 of the ASD Relay connector.

Turn the ignition on.

Measure the voltage of the (K24) CKP Sensor Signal circuit at the CKP Sensor harness connector.

Is the voltage below 1.0 volt?

Yes >> Replace and program the Engine Control Module in accordance with the Service Information.
Perform the ECM Verification Test Ver. 1. (Refer to 9 - ENGINE - DIAGNOSIS AND TESTING)

No >> Repair the (K24) Crankshaft Position Sensor Signal circuit for a short to voltage.
Perform the ECM Verification Test Ver. 1. (Refer to 9 - ENGINE - DIAGNOSIS AND TESTING)

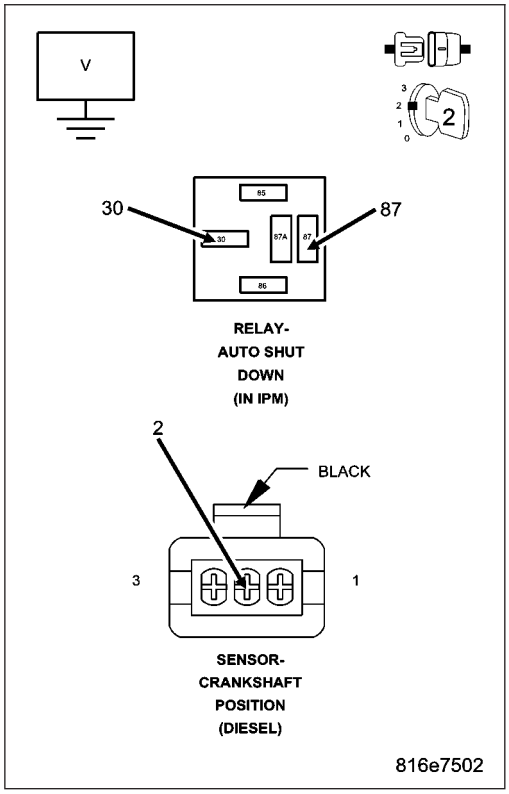

5. CHECKING (K853) CRANKSHAFT POSITION SENSOR 5-VOLT SUPPLY CIRCUIT

Turn the ignition on.

Measure the voltage of the (K853) CKP Sensor 5-Volt Supply circuit at the CKP Sensor harness connector.

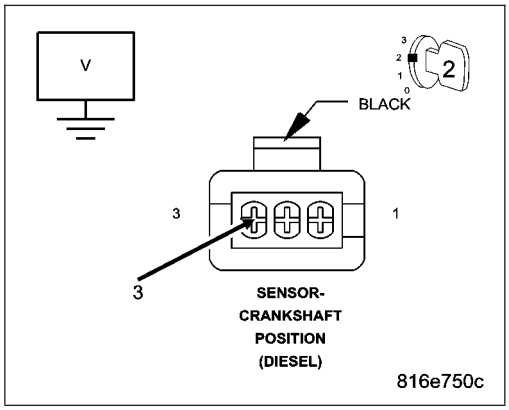

Select the appropriate voltage reading.

Voltage is above 5.4 volts.

Repair the (K853) CKP 5-Volt Supply circuit for a short to voltage.

Perform the ECM Verification Test Ver. 1. (Refer to 9 - ENGINE - DIAGNOSIS AND TESTING)

Voltage is between 4.7 and 5.4 volts.

Go To 6

Voltage is below 4.7 volts.

Go To 9

6. (Z753) CRANKSHAFT POSITION SENSOR GROUND CIRCUIT OPEN

Turn the ignition off.

Disconnect the ECT Sensor harness connector.

Connect one end of a jumper wire to the ECT Sensor signal circuit in the ECT Sensor harness connector.

Connect the other end of the jumper wire to the (Z753) CKP Sensor Ground circuit in the Crankshaft Position Sensor harness connector.

Turn the ignition on.

With the scan tool in Engine, Sensors, read the Engine Coolant Temp volts.

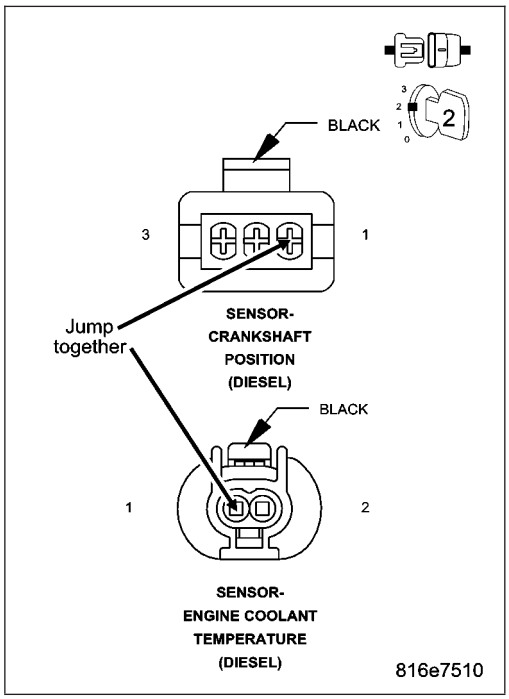

Is the voltage below 0.5 volt?

Yes >> Go To 8

No >> Go To 7

7. (Z753) CRANKSHAFT POSITION SENSOR GROUND CIRCUIT OPEN

Turn the ignition off.

Disconnect the CKP Sensor harness connector.

Disconnect the ECM harness connectors.

Measure the resistance of the (Z753) CKP Sensor Ground circuit between the CKP Sensor harness connector and the ECM harness connector.

Is the resistance below 10.0 ohms?

Yes >> Replace and program the ECM in accordance with the Service Information.
Perform the ECM Verification Test Ver. 1. (Refer to 9 - ENGINE - DIAGNOSIS AND TESTING)

No >> Repair the (Z753) CKP Sensor Ground circuit for an open.
Perform the ECM Verification Test Ver. 1. (Refer to 9 - ENGINE - DIAGNOSIS AND TESTING)

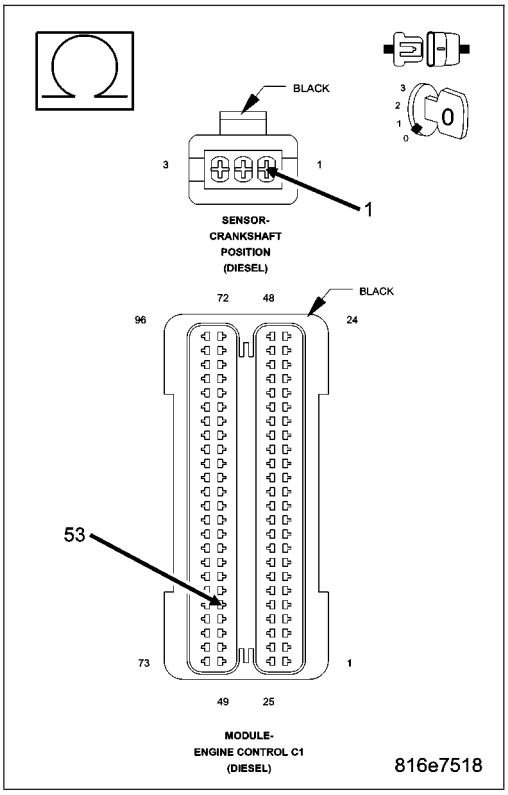

8. DAMAGED CRANKSHAFT POSITION SENSOR OR CRANKSHAFT

Remove the CKP Sensor.

Inspect the CKP Sensor for conditions such as loose mounting screws, damage, or cracks.

Inspect the Crankshaft for conditions such as damage, debris or cracked teeth.

Is there any evidence of these conditions?

Yes >> Repair as necessary.
Perform the ECM Verification Test Ver. 1. (Refer to 9 - ENGINE - DIAGNOSIS AND TESTING)

No >> Replace the Crankshaft Position Sensor in accordance with the Service Information.
Perform the ECM Verification Test Ver. 1. (Refer to 9 - ENGINE - DIAGNOSIS AND TESTING)

9. (K853) CRANKSHAFT POSITION SENSOR 5-VOLT SUPPLY CIRCUIT OPEN

Disconnect the ECM harness connectors.

Measure the resistance of the (K853) CKP Sensor 5-Volt Supply circuit between the ECM harness connector and the CKP Sensor harness connector.

Is the resistance below 10.0 ohms?

Yes >> Go To 10

No >> Repair the (K853) CKP Sensor 5-Volt Supply circuit for an open.

Perform the ECM Verification Test Ver. 1. (Refer to 9 - ENGINE - DIAGNOSIS AND TESTING)

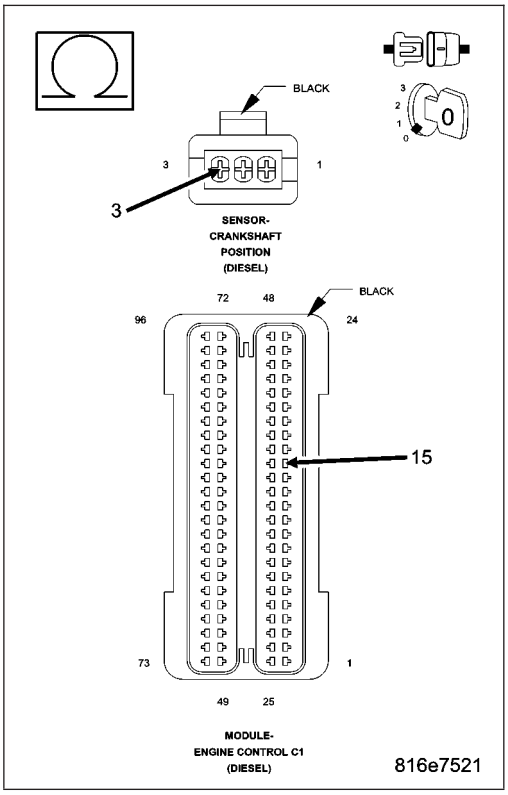

10. (K853) CRANKSHAFT POSITION SENSOR 5-VOLT SUPPLY CIRCUIT SHORTED TO GROUND

Measure the resistance between ground and the (K853) CKP Sensor 5-Volt Supply circuit at the CKP Sensor harness connector.

Is the resistance above 1000 ohms?

Yes >> Go To 11

No >> Repair the (K853) CKP Sensor 5-Volt Supply circuit for a short to ground.

Perform the ECM Verification Test Ver. 1. (Refer to 9 - ENGINE - DIAGNOSIS AND TESTING)

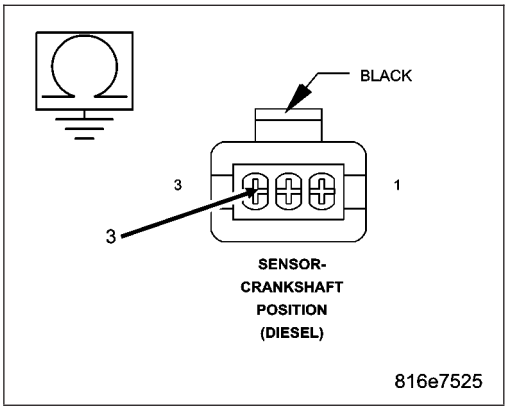

11. (K853) CRANKSHAFT POSITION SENSOR 5-VOLT SUPPLY CIRCUIT SHORTED TO THE (Z753) CKP SENSOR GROUND CIRCUIT

Measure the resistance between the (K853) CKP Sensor 5-Volt Supply circuit and the (Z753) CKP Sensor Ground circuit at the CKP Sensor harness connector.

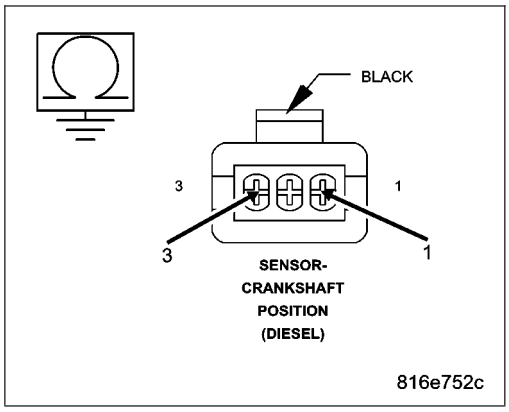

Is the resistance above 1000 ohms?

Yes >> Replace and program the Engine Control Module in accordance with the Service Information.
Perform the ECM Verification Test Ver. 1. (Refer to 9 - ENGINE - DIAGNOSIS AND TESTING)

No >> Repair the (K853) CKP Sensor 5-Volt Supply circuit and (Z753) CKP Sensor Ground circuits for a short together.
Perform the ECM Verification Test Ver. 1. (Refer to 9 - ENGINE - DIAGNOSIS AND TESTING)

12. (K24) CRANKSHAFT POSITION SENSOR SIGNAL CIRCUIT OPEN

Disconnect the CKP Sensor harness connector.

Disconnect the ECM harness connectors.

Measure the resistance of the (K24) CKP Sensor Signal circuit between the ECM harness connector and the CKP Sensor harness connector.

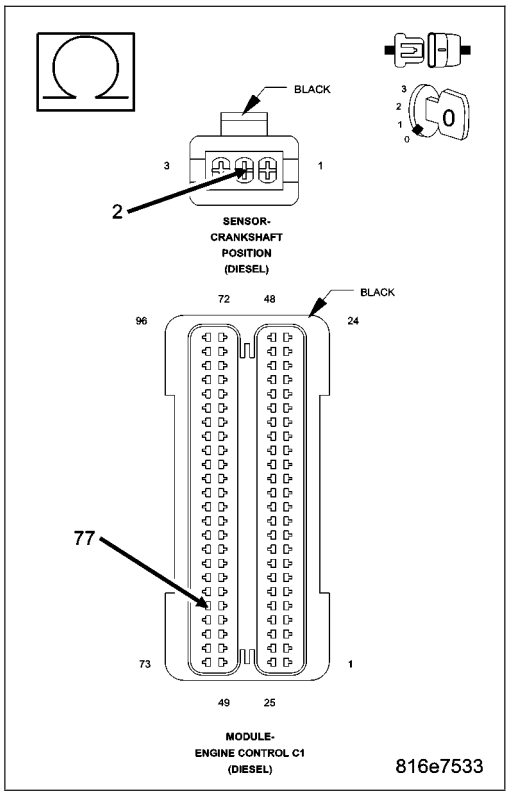

Is the resistance below 10.0 ohms?

Yes >> Go To 13

No >> Repair the (K24) CKP Sensor Signal circuit for an open
Perform the ECM Verification Test Ver. 1. (Refer to 9 - ENGINE - DIAGNOSIS AND TESTING)

13. (K24) CRANKSHAFT POSITION SENSOR SIGNAL CIRCUIT SHORTED TO GROUND

Measure the resistance between ground and the (K24) CKP Sensor Signal circuit at the CKP Sensor harness connector.

Is the resistance above 1000 ohms?

Yes >> Go To 14

No >> Repair the (K24) CKP Sensor Signal circuit for a short to ground.

Perform the ECM Verification Test Ver. 1. (Refer to 9 - ENGINE - DIAGNOSIS AND TESTING)

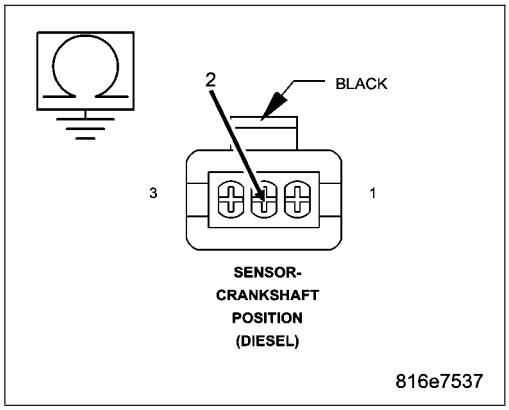

14. (K24) CRANKSHAFT POSITION SENSOR SIGNAL CIRCUIT SHORTED TO THE (Z753) CKP SENSOR GROUND CIRCUIT

Measure the resistance between the (K24) CKP Sensor Signal circuit and the (Z753) CKP Sensor Ground circuit at the CKP Sensor harness connector.

Is the resistance above 1000 ohms?

Yes >> Replace and program the Engine Control Module in accordance with the Service Information.

Perform the ECM Verification Test Ver. 1. (Refer to 9 - ENGINE - DIAGNOSIS AND TESTING)

No >> Repair the (K24) CKP Sensor Signal circuit and the (Z753) CKP Sensor Ground circuit for a short together.

Perform the ECM Verification Test Ver. 1. (Refer to 9 - ENGINE - DIAGNOSIS AND TESTING)

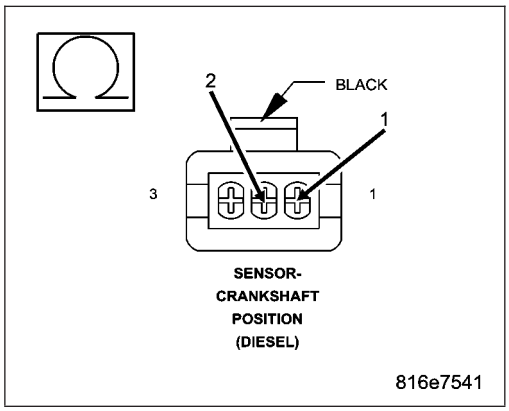

P0336-CRANKSHAFT POSITION SENSOR PERFORMANCE

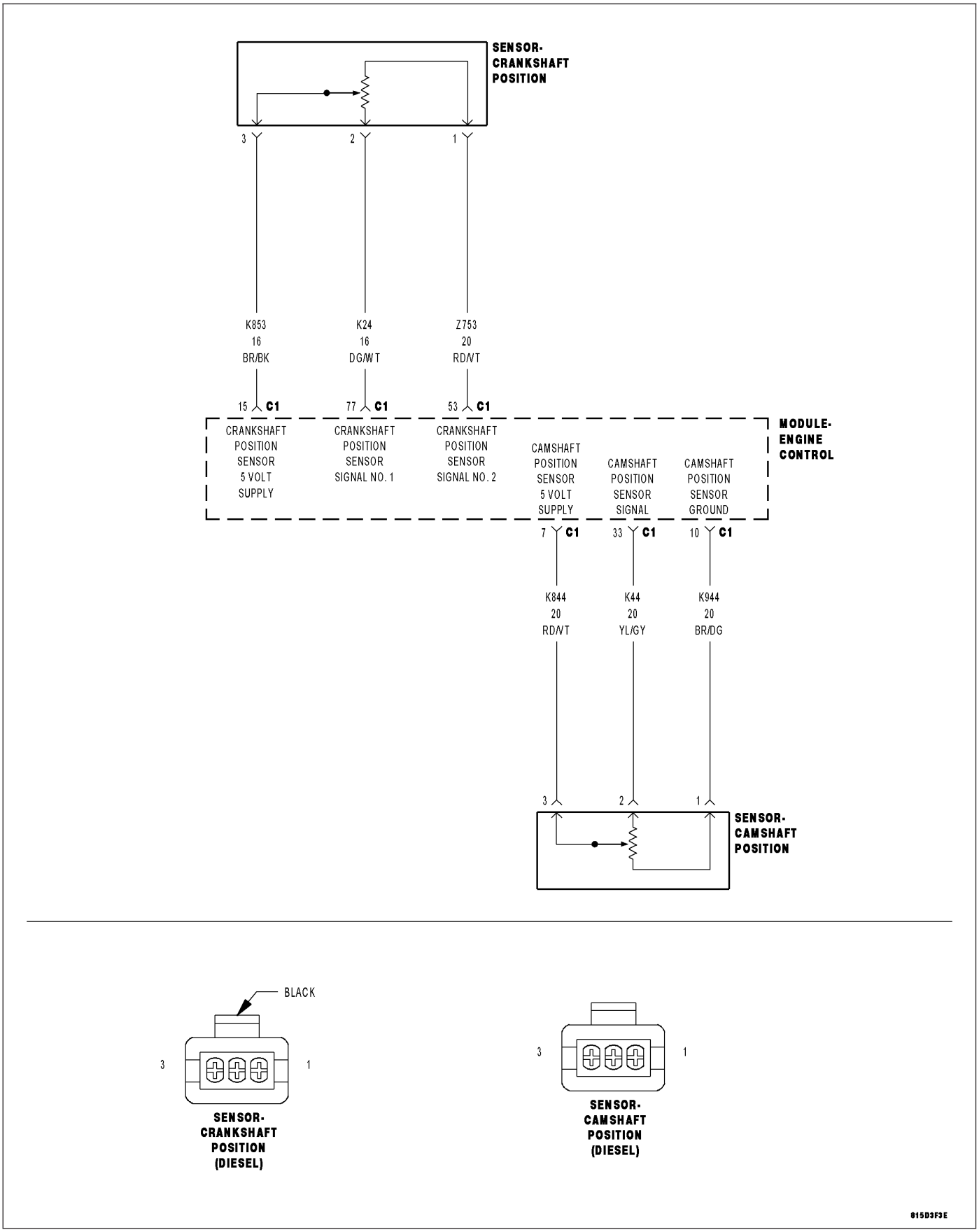

For a complete wiring diagram **Refer to Section 8W**

- **When Monitored:**
  With the engine cranking or running
- **Set Condition:**
  The Engine Control Module (ECM) does not receive a signal from the Crankshaft Position Sensor when the Camshaft Position Sensor indicates engine rpm.

Possible Causes
(K853) CKP SENSOR 5-VOLT SUPPLY CIRCUIT OPEN
(K24) CRANKSHAFT POSITION SENSOR SIGNAL CIRCUIT SHORTED TO VOLTAGE
CHECKING (K853) CKP SENSOR 5-VOLT SUPPLY CIRCUIT
DAMAGED CKP SENSOR OR CRANKSHAFT
ECM
(Z753) CKP SENSOR GROUND CIRCUIT OPEN
INTERMITTENT CONDITION
(K24) CKP SENSOR SIGNAL CIRCUIT OPEN
(K853) CKP SENSOR 5-VOLT SUPPLY CIRCUIT SHORTED TO GROUND
(K24) CKP SENSOR SIGNAL CIRCUIT SHORTED TO GROUND
CRANKSHAFT POSITION SENSOR
(Z753) CKP SENSOR GROUND CIRCUIT OPEN
(K853) CKP SENSOR 5-VOLT SUPPLY CIRCUIT SHORTED TO THE (Z753) CKP SENSOR GROUND CIRCUIT
(K24) CKP SENSOR SIGNAL CIRCUIT SHORTED TO THE (Z753) CKP SENSOR GROUND CIRCUIT

Always perform the Pre-Diagnostic Troubleshooting procedure before proceeding. (Refer to 9 - ENGINE - DIAGNOSIS AND TESTING)

Diagnostic Test

1. VERIFY ACTIVE DTC

NOTE: If DTC P0652 or P0653 is present with this DTC, diagnose DTCs P0652 or P0653 before diagnosing this DTC.

NOTE: The Timing Belt/Chain must be correctly installed and operational before diagnosis can be made. Refer to the Service Information to ensure the timing belt is properly installed.

NOTE: If the ECM detects and stores a DTC, the ECM also stores the engine/vehicle operating conditions under which the DTC was set. Some of these conditions are displayed on the scan tool at the same time the DTC is displayed.

NOTE: Before erasing stored DTCs, record these conditions. Attempting to duplicate these conditions may assist when checking for an active DTC.

Turn the ignition on.

With the scan tool, erase the ECM DTCs.

Attempt to start the engine cranking the engine for at least 7 seconds.

With the scan tool, read the ECM DTCs.

Does the scan tool display this DTC?

Yes >> Go To 3

No >> Go To 2

2. TEST DRIVE

Turn the ignition on.

With the scan tool, erase the ECM DTCs.

Test drive the vehicle.

With the scan tool, read the ECM DTCs.

Does the scan tool display this DTC?

Yes >> Go To 3

No >> Refer to the *CHECKING FOR AN INTERMITTENT DTC Diagnostic Procedure. (Refer to 9 - ENGINE - DIAGNOSIS AND TESTING)

3. CHECKING (K24) CRANKSHAFT POSITION SENSOR SIGNAL CIRCUIT

Turn the ignition off.

Disconnect the Crankshaft Position Sensor harness connector.

Turn the ignition on.

Measure the voltage of the (K24) CKP Sensor Signal circuit at the CKP Sensor harness connector.

Select the appropriate voltage reading.

Voltage is above 5.4 volts.
Go To 4

Voltage is between 4.7 and 5.4 volts.
Go To 5

Voltage is below 4.7 volts.
Go To 12

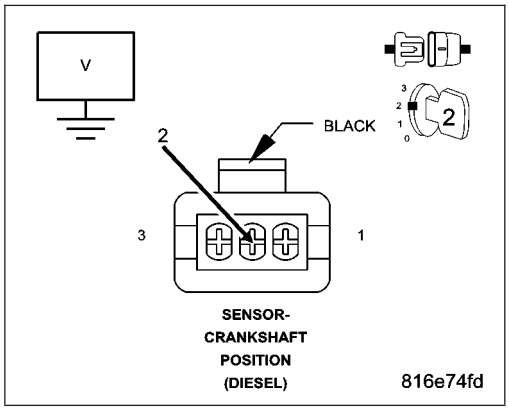

4. (K24) CRANKSHAFT POSITION SENSOR SIGNAL CIRCUIT SHORT TO VOLTAGE

Turn the ignition off.

Disconnect the ECM harness connectors.

Remove the ASD Relay.

Connect a jumper wire between cavity 30 and cavity 87 of the ASD Relay connector.

Turn the ignition on.

Measure the voltage of the (K24) CKP Position Sensor Signal circuit at the CKP Sensor harness connector.

Is the voltage below 1.0 volt?

Yes >> Replace and program the Engine Control Module in accordance with the Service Information.
Perform the ECM Verification Test Ver. 1. (Refer to 9 - ENGINE - DIAGNOSIS AND TESTING)

No >> Repair the (K24) Crankshaft Position Sensor Signal circuit for a short to voltage.
Perform the ECM Verification Test Ver. 1. (Refer to 9 - ENGINE - DIAGNOSIS AND TESTING)

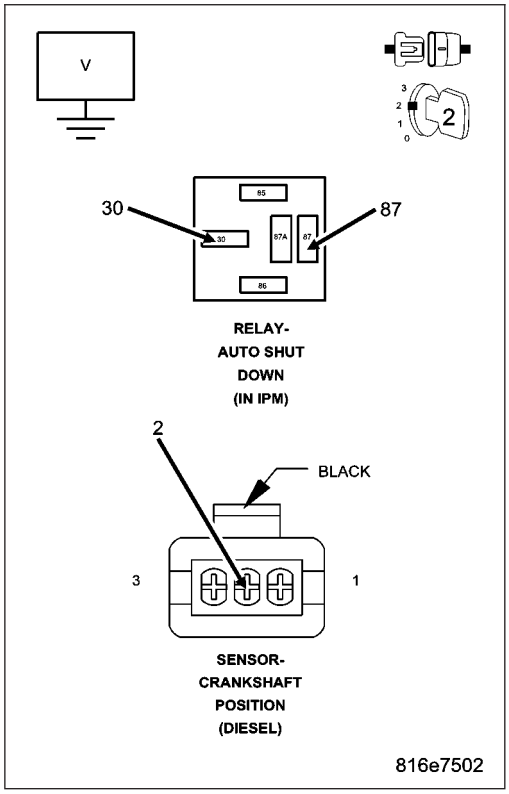

5. CHECKING (K853) CRANKSHAFT POSITION SENSOR 5-VOLT SUPPLY CIRCUIT

Measure the voltage of the (K853) CKP Sensor 5-Volt Supply circuit at the CKP Sensor harness connector.

Select the appropriate voltage reading.

Voltage is above 5.4 volts.
Repair the (K853) CKP 5-Volt Supply circuit for a short to voltage.
Perform the ECM Verification Test Ver. 1. (Refer to 9 - ENGINE - DIAGNOSIS AND TESTING)

Voltage is between 4.7 and 5.4 volts.
Go To 6

Voltage is below 4.7 volts.
Go To 9

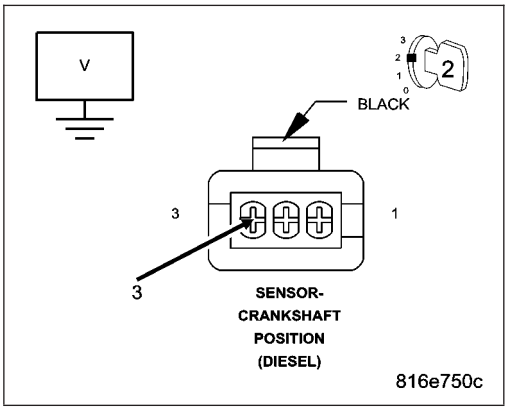

6. (Z753) CRANKSHAFT POSITION SENSOR GROUND CIRCUIT OPEN

Disconnect the ECT Sensor harness connector.

Connect one end of a jumper wire to the ECT Sensor signal circuit in the ECT Sensor harness connector.

Connect the other end of the jumper wire to the (Z753) CKP Sensor Ground circuit in the Crankshaft Position Sensor harness connector.

With the scan tool in Engine, Sensors, read the Engine Coolant Temp volts.

Is the voltage below 0.5 volt?

Yes >> Go To 8

No >> Go To 7

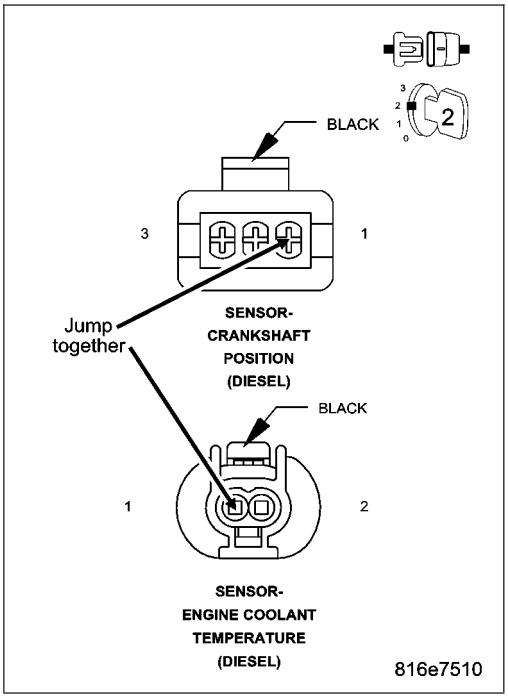

7. (Z753) CRANKSHAFT POSITION SENSOR GROUND CIRCUIT OPEN

Turn the ignition off.

Disconnect the CKP Sensor harness connector.

Disconnect the ECM harness connectors.

Measure the resistance of the (Z753) CKP Sensor Ground circuit between the CKP Sensor harness connector and the ECM harness connector.

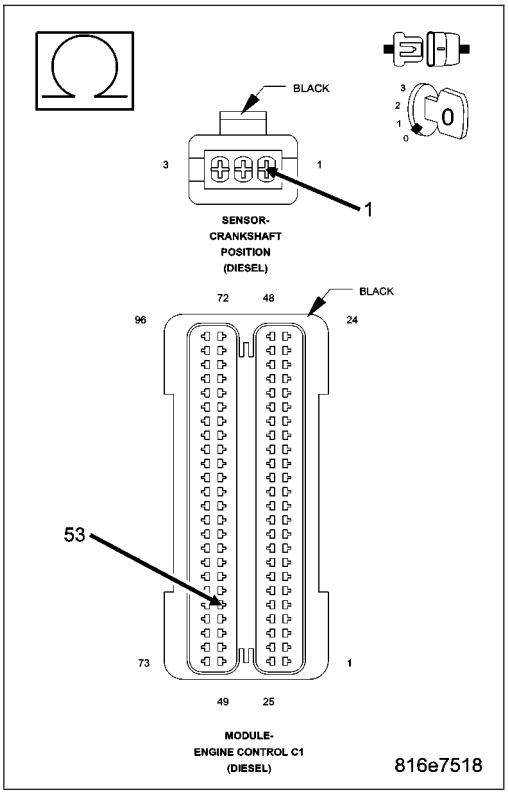

Is the resistance below 10.0 ohms?

Yes >> Replace and program the ECM in accordance with the Service Information.
Perform the ECM Verification Test Ver. 1. (Refer to 9 - ENGINE - DIAGNOSIS AND TESTING)

No >> Repair the (Z753) CKP Sensor Ground circuit for an open.
Perform the ECM Verification Test Ver. 1. (Refer to 9 - ENGINE - DIAGNOSIS AND TESTING)

8. DAMAGED CRANKSHAFT POSITION SENSOR OR CRANKSHAFT

Remove the CKP Sensor.

Inspect the CKP Sensor for conditions such as loose mounting screws, damage, or cracks.

Inspect the Crankshaft for conditions such as damage, debris or cracked teeth.

Is there any evidence of these conditions?

Yes >> Repair as necessary.
Perform the ECM Verification Test Ver. 1. (Refer to 9 - ENGINE - DIAGNOSIS AND TESTING)

No >> Replace the Crankshaft Position Sensor in accordance with the Service Information.
Perform the ECM Verification Test Ver. 1. (Refer to 9 - ENGINE - DIAGNOSIS AND TESTING)

9. (K853) CRANKSHAFT POSITION SENSOR 5-VOLT SUPPLY CIRCUIT OPEN

Disconnect the ECM harness connectors.

Measure the resistance of the (K853) CKP Sensor 5-Volt Supply circuit between the ECM harness connector and the CKP Sensor harness connector.

Is the resistance below 10.0 ohms?

Yes >> Go To 10

No >> Repair the (K853) CKP Sensor 5-Volt Supply circuit for an open.

Perform the ECM Verification Test Ver. 1. (Refer to 9 - ENGINE - DIAGNOSIS AND TESTING)

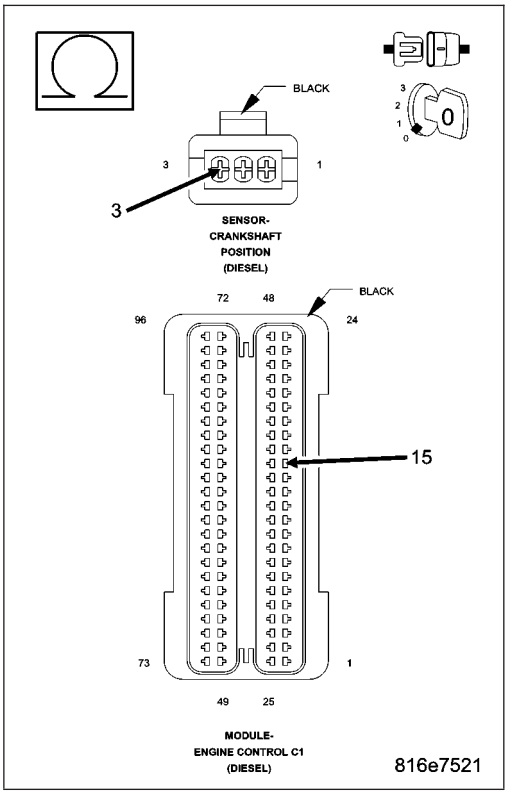

10. (K853) CRANKSHAFT POSITION SENSOR 5-VOLT SUPPLY CIRCUIT SHORTED TO GROUND

Measure the resistance between ground and the (K853) CKP Sensor 5-Volt Supply circuit at the CKP Sensor harness connector.

Is the resistance above 1000 ohms?

Yes >> Go To 11

No >> Repair the (K853) CKP Sensor 5-Volt Supply circuit for a short to ground.

Perform the ECM Verification Test Ver. 1. (Refer to 9 - ENGINE - DIAGNOSIS AND TESTING)

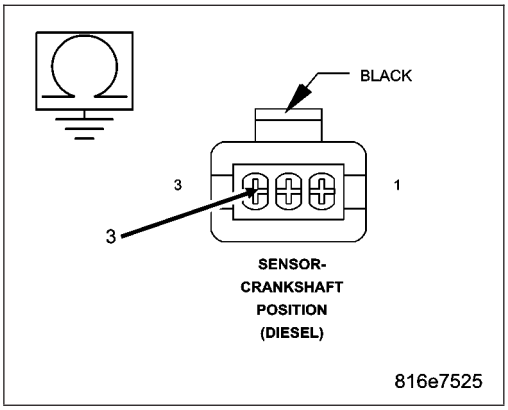

11. (K853) CRANKSHAFT POSITION SENSOR 5-VOLT SUPPLY CIRCUIT SHORTED TO THE (Z753) CKP SENSOR GROUND CIRCUIT

Measure the resistance between the (K853) CKP Sensor 5-Volt Supply circuit and the (Z753) CKP Sensor Ground circuit at the CKP Sensor harness connector.

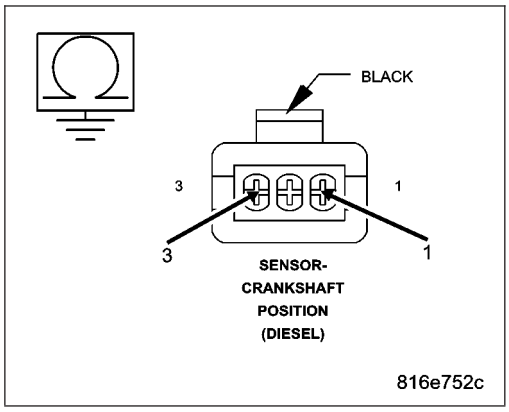

Is the resistance above 1000 ohms?

Yes >> Replace and program the Engine Control Module in accordance with the Service Information.
Perform the ECM Verification Test Ver. 1. (Refer to 9 - ENGINE - DIAGNOSIS AND TESTING)

No >> Repair the (K853) CKP Sensor 5-Volt Supply circuit and (Z753) CKP Sensor Ground circuits for a short together.
Perform the ECM Verification Test Ver. 1. (Refer to 9 - ENGINE - DIAGNOSIS AND TESTING)

12. (K24) CRANKSHAFT POSITION SENSOR SIGNAL CIRCUIT OPEN

Turn the ignition off.

Disconnect the CKP Sensor harness connector.

Disconnect the ECM harness connectors.

Measure the resistance of the (K24) CKP Sensor Signal circuit between the ECM harness connector and the CKP Sensor harness connector.

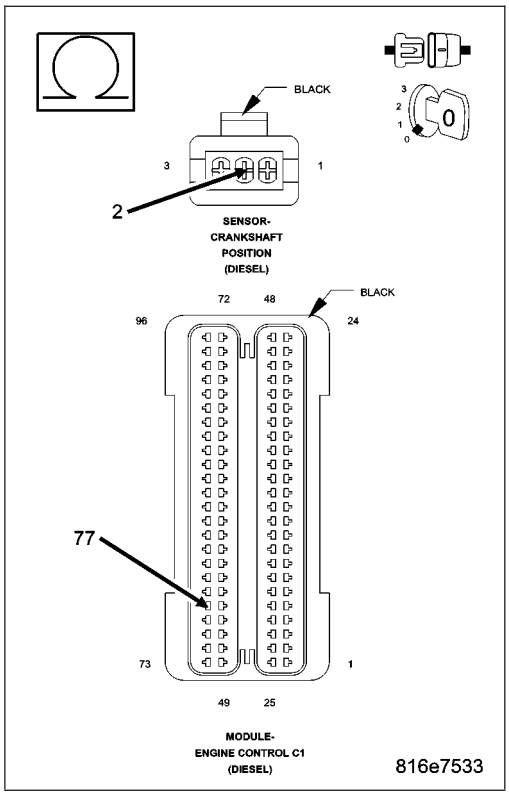

Is the resistance below 10.0 ohms?

Yes >> Go To 13

No >> Repair the (K24) CKP Sensor Signal circuit for an open
Perform the ECM Verification Test Ver. 1. (Refer to 9 - ENGINE - DIAGNOSIS AND TESTING)

13. (K24) CRANKSHAFT POSITION SENSOR SIGNAL CIRCUIT SHORTED TO GROUND

Measure the resistance between ground and the (K24) CKP Sensor Signal circuit at the CKP Sensor harness connector.

Is the resistance above 1000 ohms?

Yes >> Go To 14

No >> Repair the (K24) CKP Sensor Signal circuit for a short to ground.

Perform the ECM Verification Test Ver. 1. (Refer to 9 - ENGINE - DIAGNOSIS AND TESTING)

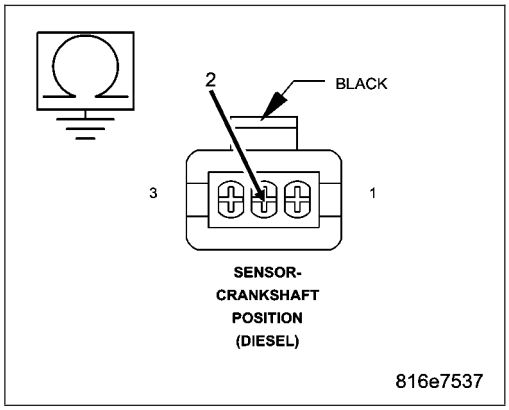

14. (K24) CRANKSHAFT POSITION SENSOR SIGNAL CIRCUIT SHORTED TO THE (Z753) CKP SENSOR GROUND CIRCUIT

Measure the resistance between the (K24) CKP Sensor Signal circuit and the (Z753) CKP Sensor Ground circuit at the CKP Sensor harness connector.

Is the resistance above 1000 ohms?

Yes >> Replace and program the Engine Control Module in accordance with the Service Information.

Perform the ECM Verification Test Ver. 1. (Refer to 9 - ENGINE - DIAGNOSIS AND TESTING)

No >> Repair the (K24) CKP Sensor Signal circuit and the (Z753) CKP Sensor Ground circuit for a short together.

Perform the ECM Verification Test Ver. 1. (Refer to 9 - ENGINE - DIAGNOSIS AND TESTING)

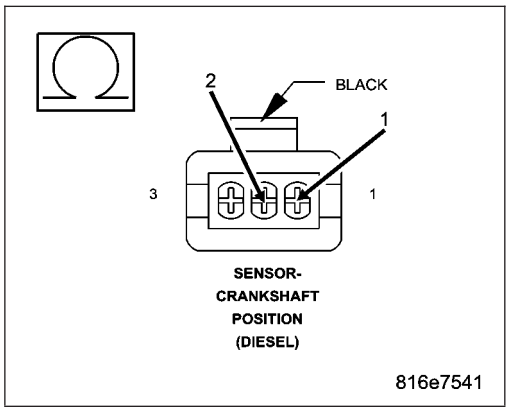

P0340-CAMSHAFT POSITION SENSOR CIRCUIT

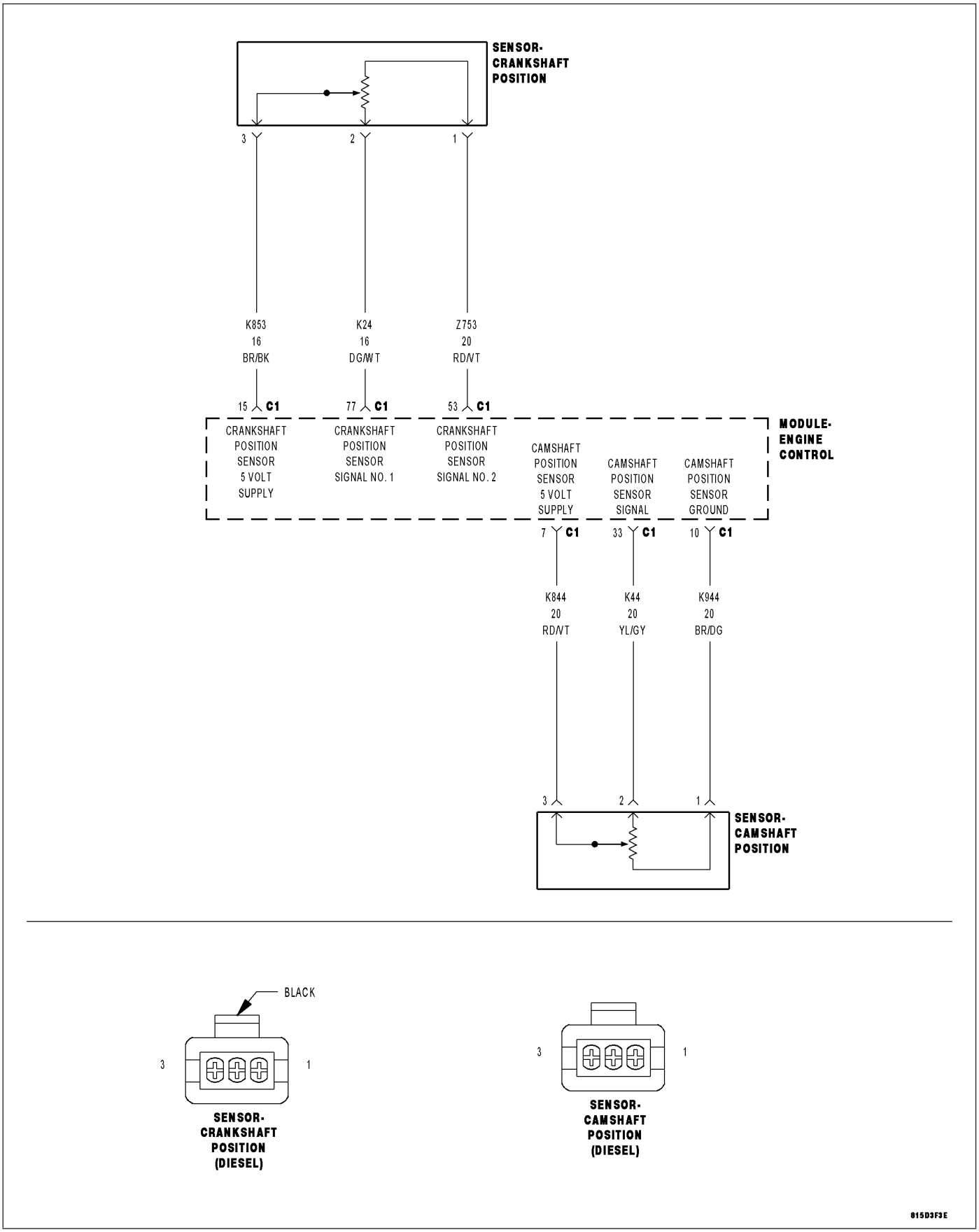

For a complete wiring diagram **Refer to Section 8W**

- **When Monitored:**
  With the engine cranking or running
- **Set Condition:**
  The Engine Control Module (ECM) does not receive a signal from the Camshaft Position Sensor when the Crankshaft Position Sensor indicates engine rpm.

Possible Causes
(K844) CMP 5-VOLT SUPPLY CIRCUIT OPEN
(K44) CAMSHAFT POSITION SENSOR SIGNAL CIRCUIT SHORTED TO VOLTAGE
CHECKING (K844) CMP 5-VOLT SUPPLY CIRCUIT
DAMAGED CMP SENSOR OR CAMSHAFT
ECM
(K944) CMP SENSOR GROUND CIRCUIT OPEN
INTERMITTENT CONDITION
(K44) CMP SENSOR SIGNAL CIRCUIT OPEN
(K844) CMP 5-VOLT SUPPLY CIRCUIT SHORTED TO GROUND
(K44) CMP SENSOR SIGNAL CIRCUIT SHORTED TO GROUND
CAMSHAFT POSITION SENSOR
(K844) CMP 5-VOLT SUPPLY CIRCUIT SHORTED TO THE (K944) CMP SENSOR GROUND CIRCUIT
(K44) CMP SENSOR SIGNAL CIRCUIT SHORTED TO THE (K944) CMP SENSOR GROUND CIRCUIT

Always perform the Pre-Diagnostic Troubleshooting procedure before proceeding. (Refer to 9 - ENGINE - DIAGNOSIS AND TESTING)

Diagnostic Test

1. VERIFY ACTIVE DTC

NOTE: If DTC P0642 or P0643 is present with this DTC, diagnose DTCs P0642 or P0643 before diagnosing this DTC.

NOTE: The Timing Belt/Chain must be correctly installed and operational before diagnosis can be made. Refer to the Service Information to ensure the timing belt is properly installed.

NOTE: If the ECM detects and stores a DTC, the ECM also stores the engine/vehicle operating conditions under which the DTC was set. Some of these conditions are displayed on the scan tool at the same time the DTC is displayed.

NOTE: Before erasing stored DTCs, record these conditions. Attempting to duplicate these conditions may assist when checking for an active DTC.

Turn the ignition on.

With the scan tool, erase the ECM DTCs.

Attempt to start the engine cranking the engine for at least 7 seconds.

With the scan tool, read the ECM DTCs.

Does the scan tool display this DTC?

Yes >> Go To 3

No >> Go To 2

2. TEST DRIVE

Turn the ignition on.

With the scan tool, erase the ECM DTCs.

Test drive the vehicle.

With the scan tool, read the ECM DTCs.

Does the scan tool display this DTC?

Yes >> Go To 3

No >> Refer to the *CHECKING FOR AN INTERMITTENT DTC Diagnostic Procedure. (Refer to 9 - ENGINE - DIAGNOSIS AND TESTING)

3. CHECKING (K44) CAMSHAFT POSITION SENSOR SIGNAL CIRCUIT

Turn the ignition off.

Disconnect the Camshaft Position Sensor harness connector.

Turn the ignition on.

Measure the voltage of the (K44) CMP Sensor Signal circuit at the CMP Sensor harness connector.

Select the appropriate voltage reading.

Voltage is above 5.4 volts.
Go To 4

Voltage is between 4.7 and 5.4 volts.
Go To 5

Voltage is below 4.7 volts.
Go To 12

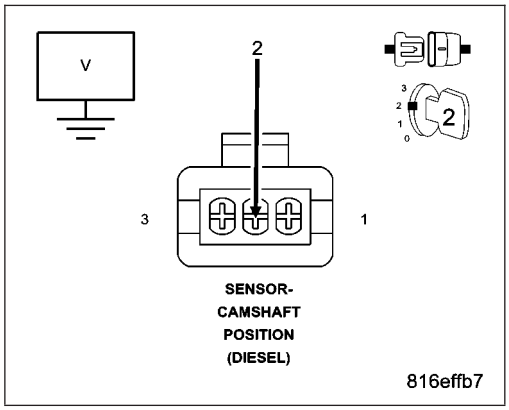

4. (K44) CAMSHAFT POSITION SENSOR SIGNAL CIRCUIT SHORT TO VOLTAGE

Turn the ignition off.

Disconnect the ECM harness connectors.

Remove the ASD Relay.

Connect a jumper wire between cavity 30 and cavity 87 of the ASD Relay connector.

Turn the ignition on.

Measure the voltage of the (K44) CMP Position Sensor Signal circuit at the CMP Sensor harness connector.

Is the voltage below 1.0 volt?

Yes >> Replace and program the Engine Control Module in accordance with the Service Information.
Perform the ECM Verification Test Ver. 1. (Refer to 9 - ENGINE - DIAGNOSIS AND TESTING)

No >> Repair the (K44) Camshaft Position Sensor Signal circuit for a short to voltage.
Perform the ECM Verification Test Ver. 1. (Refer to 9 - ENGINE - DIAGNOSIS AND TESTING)

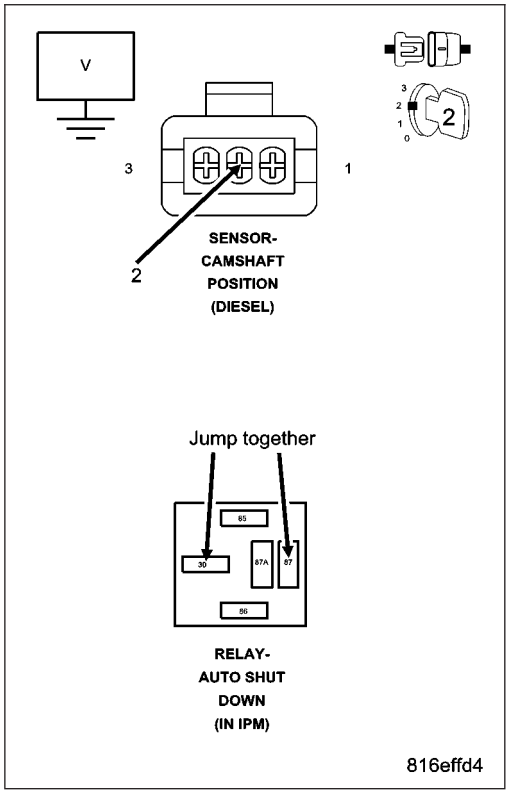

5. CHECKING (K844) CAMSHAFT POSITION SENSOR 5-VOLT SUPPLY CIRCUIT

Measure the voltage of the (K844) CMP Sensor 5-Volt Supply circuit at the CMP Sensor harness connector.

Select the appropriate voltage reading.

Voltage is above 5.4 volts.
Repair the (K844) CMP 5-Volt Supply circuit for a short to voltage.
Perform the ECM Verification Test Ver. 1. (Refer to 9 - ENGINE - DIAGNOSIS AND TESTING)

Voltage is between 4.7 and 5.4 volts.
Go To 6

Voltage is below 4.7 volts.
Go To 9

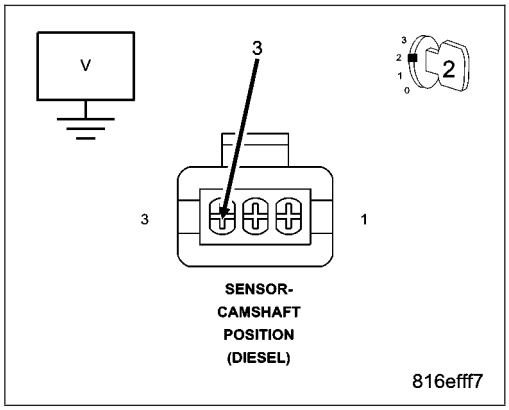

6. (K944) CAMSHAFT POSITION SENSOR GROUND CIRCUIT OPEN

Turn the ignition on.

Disconnect the ECT Sensor harness connector.

Connect one end of a jumper wire to the ECT Sensor signal circuit in the ECT Sensor harness connector.

Connect the other end of the jumper wire to the (K944) CMP Sensor Ground circuit in the Camshaft Position Sensor harness connector.

With the scan tool in Engine, Sensors, read the Engine Coolant Temp volts.

Is the voltage below 0.5 volt?

Yes >> Go To 8

No >> Go To 7

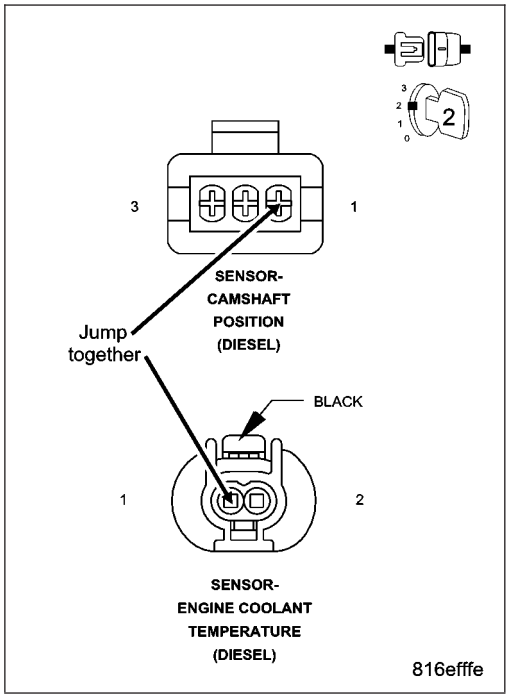

7. (K944) CAMSHAFT POSITION SENSOR GROUND CIRCUIT OPEN

Turn the ignition off.

Disconnect the CMP Sensor harness connector.

Disconnect the ECM harness connectors.

Measure the resistance of the (K944) CMP Sensor Ground circuit between the CMP Sensor harness connector and the ECM harness connector.

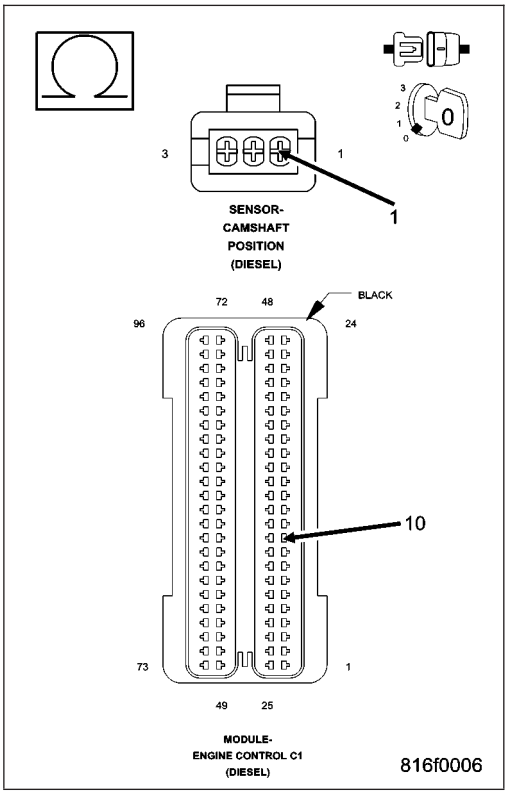

Is the resistance below 10.0 ohms?

Yes >> Replace and program the ECM in accordance with the Service Information.
Perform the ECM Verification Test Ver. 1. (Refer to 9 - ENGINE - DIAGNOSIS AND TESTING)

No >> Repair the (K944) CMP Sensor Ground circuit for an open.
Perform the ECM Verification Test Ver. 1. (Refer to 9 - ENGINE - DIAGNOSIS AND TESTING)

8. DAMAGED CAMSHAFT POSITION SENSOR OR CAMSHAFT

Turn the ignition off.

Remove the CMP Sensor.

Inspect the CMP Sensor for conditions such as loose mounting screws, damage, or cracks.

Inspect the camshaft for conditions such as damage, debris or cracked teeth.

Is there any evidence of these conditions?

Yes >> Repair as necessary.
Perform the ECM Verification Test Ver. 1. (Refer to 9 - ENGINE - DIAGNOSIS AND TESTING)

No >> Replace the Camshaft Position Sensor in accordance with the Service Information.
Perform the ECM Verification Test Ver. 1. (Refer to 9 - ENGINE - DIAGNOSIS AND TESTING)

9. (K844) CAMSHAFT POSITION SENSOR 5-VOLT SUPPLY CIRCUIT OPEN

Turn the ignition off.

Disconnect the ECM harness connectors.

Measure the resistance of the (K844) CMP 5-Volt Supply circuit between the ECM harness connector and the CMP Sensor harness connector.

Is the resistance below 10.0 ohms?

Yes >> Go To 10

No >> Repair the (K844) CMP 5-Volt Supply circuit for an open.
Perform the ECM Verification Test Ver. 1. (Refer to 9 - ENGINE - DIAGNOSIS AND TESTING)

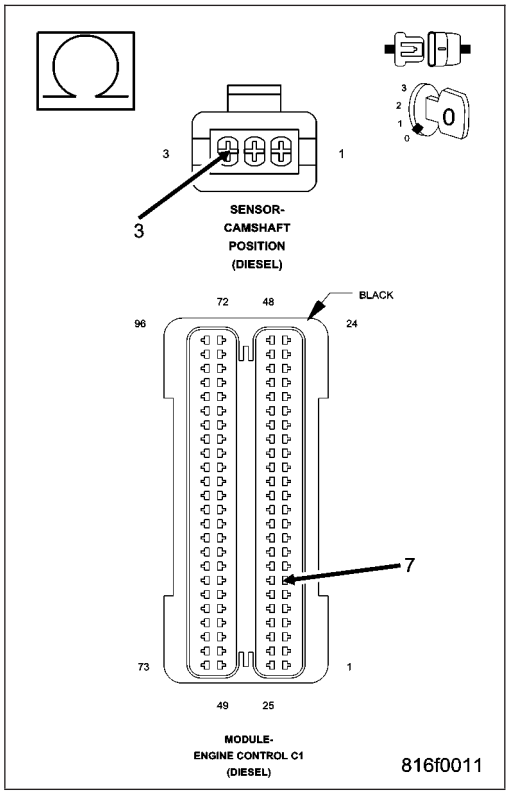

10. (K844) CAMSHAFT POSITION SENSOR 5-VOLT SUPPLY CIRCUIT SHORTED TO GROUND

Measure the resistance between ground and the (K844) CMP Sensor 5-Volt Supply circuit at the CMP Sensor harness connector.

Is the resistance above 1000 ohms?

Yes >> Go To 11

No >> Repair the (K844) CMP Sensor 5-Volt Supply circuit for a short to ground.
Perform the ECM Verification Test Ver. 1. (Refer to 9 - ENGINE - DIAGNOSIS AND TESTING)

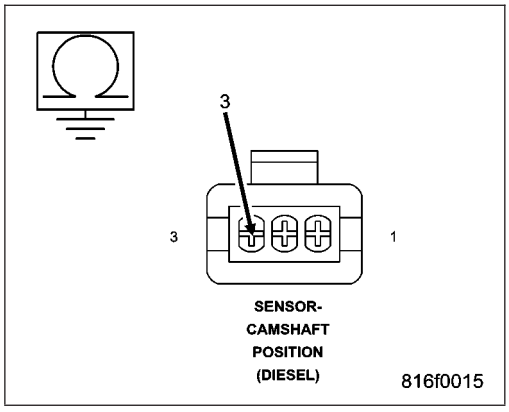

11. (K844) CAMSHAFT POSITION SENSOR 5-VOLT SUPPLY CIRCUIT SHORTED TO THE (K944) CMP SENSOR GROUND CIRCUIT

Measure the resistance between the (K844) CMP Sensor 5-Volt Supply circuit and the (K944) CMP Sensor Ground circuit at the CMP Sensor harness connector.

Is the resistance above 1000 ohms?

Yes >> Replace and program the Engine Control Module in accordance with the Service Information.
Perform the ECM Verification Test Ver. 1. (Refer to 9 - ENGINE - DIAGNOSIS AND TESTING)

No >> Repair the (K844) CMP Sensor 5-Volt Supply circuit and (K944) CMP Sensor Ground circuits for a short together.
Perform the ECM Verification Test Ver. 1. (Refer to 9 - ENGINE - DIAGNOSIS AND TESTING)

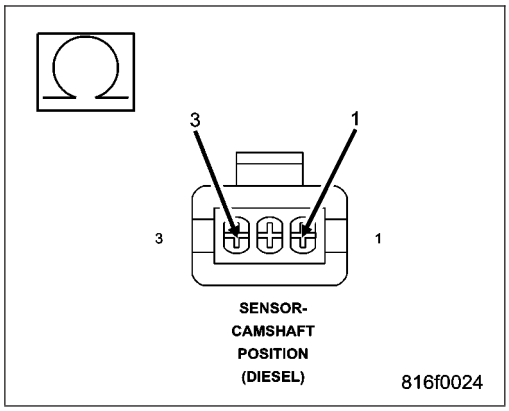

12. (K44) CAMSHAFT POSITION SENSOR SIGNAL CIRCUIT OPEN

Turn the ignition off.

Disconnect the CMP Sensor harness connector.

Disconnect the ECM harness connectors.

Measure the resistance of the (K44) CMP Sensor Signal circuit between the ECM harness connector and the CMP Sensor harness connector.

Is the resistance below 10.0 ohms?

Yes >> Go To 13

No >> Repair the (K44) CMP Sensor Signal circuit for an open
Perform the ECM Verification Test Ver. 1. (Refer to 9 - ENGINE - DIAGNOSIS AND TESTING)

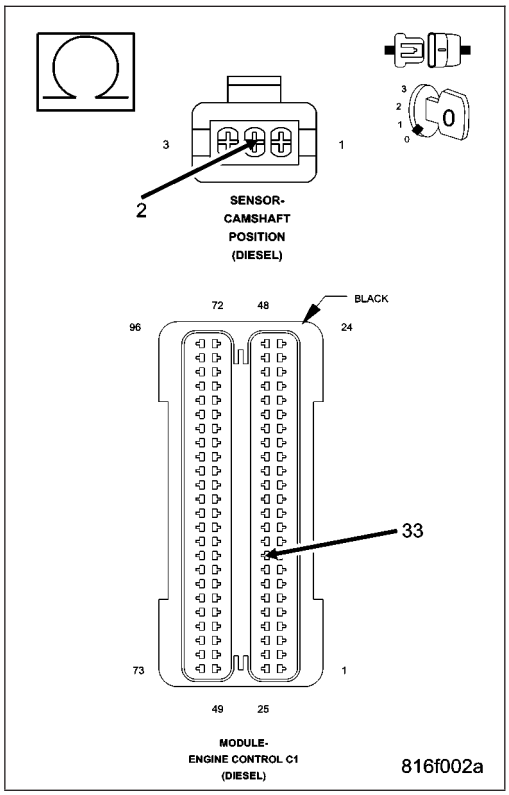

13. (K44) CAMSHAFT POSITION SENSOR SIGNAL CIRCUIT SHORTED TO GROUND

Measure the resistance between ground and the (K44) CMP Sensor Signal circuit at the CMP Sensor harness connector.

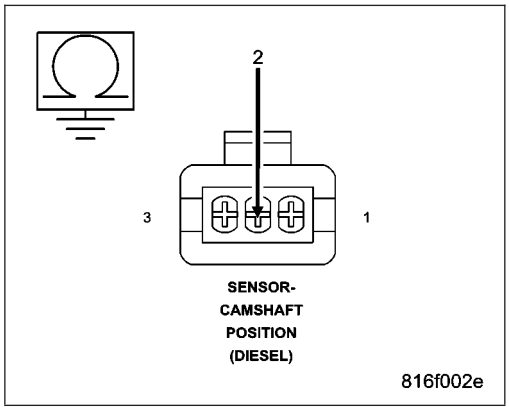

Is the resistance above 1000 ohms?

Yes >> Go To 14

No >> Repair the (K44) CMP Sensor Signal circuit for a short to ground.

Perform the ECM Verification Test Ver. 1. (Refer to 9 - ENGINE - DIAGNOSIS AND TESTING)

14. (K44) CAMSHAFT POSITION SENSOR SIGNAL CIRCUIT SHORTED TO THE (K944) CAMSHAFT POSITION SENSOR GROUND CIRCUIT

Measure the resistance between the (K44) CMP Sensor Signal circuit and the (K944) CMP Sensor Ground circuit at the CMP Sensor harness connector.

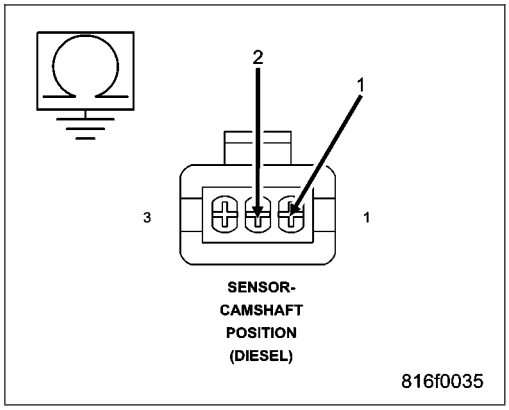

Is the resistance above 1000 ohms?

Yes >> Replace and program the Engine Control Module in accordance with the Service Information.

Perform the ECM Verification Test Ver. 1. (Refer to 9 - ENGINE - DIAGNOSIS AND TESTING)

No >> Repair the (K44) CMP Sensor Signal circuit and the (K944) CMP Sensor Ground circuit for a short together.

Perform the ECM Verification Test Ver. 1. (Refer to 9 - ENGINE - DIAGNOSIS AND TESTING)

P0341-CAMSHAFT POSITION SENSOR PERFORMANCE

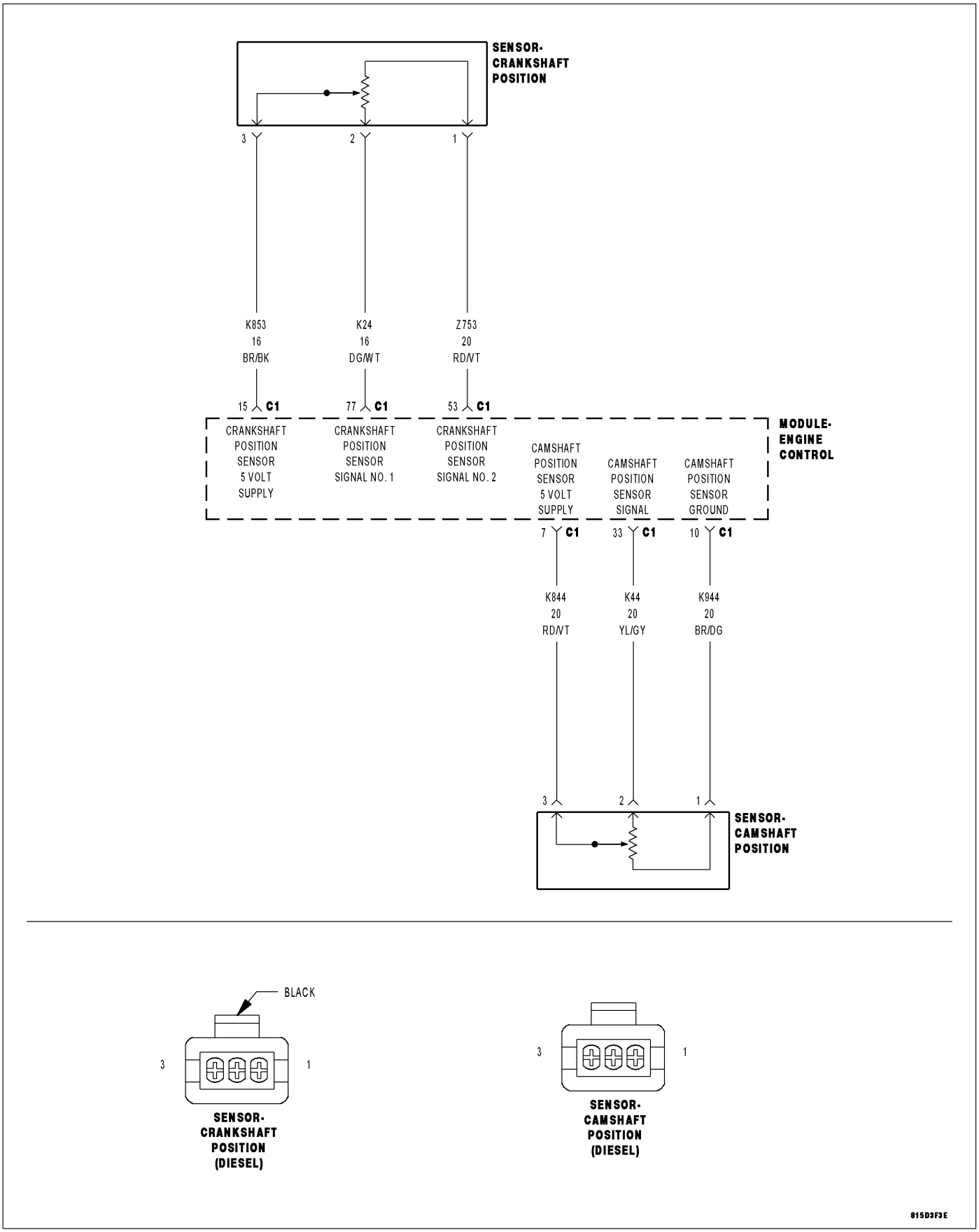

For a complete wiring diagram **Refer to Section 8W**

- **When Monitored:**
  With the engine cranking or running
- **Set Condition:**
  The Engine Control Module (ECM) does not receive a signal from the Camshaft Position Sensor when the Crankshaft Position Sensor indicates engine rpm.

Possible Causes
(K844) CMP 5-VOLT SUPPLY CIRCUIT OPEN
(K44) CAMSHAFT POSITION SENSOR SIGNAL CIRCUIT SHORTED TO VOLTAGE
CHECKING (K844) CMP 5-VOLT SUPPLY CIRCUIT
DAMAGED CMP SENSOR OR CAMSHAFT
ECM
(K944) CMP SENSOR GROUND CIRCUIT OPEN
INTERMITTENT CONDITION
(K44) CMP SENSOR SIGNAL CIRCUIT OPEN
(K844) CMP 5-VOLT SUPPLY CIRCUIT SHORTED TO GROUND
(K44) CMP SENSOR SIGNAL CIRCUIT SHORTED TO GROUND
CAMSHAFT POSITION SENSOR
(K844) CMP 5-VOLT SUPPLY CIRCUIT SHORTED TO THE (K944) CMP SENSOR GROUND CIRCUIT
(K44) CMP SENSOR SIGNAL CIRCUIT SHORTED TO THE (K944) CMP SENSOR GROUND CIRCUIT

Always perform the Pre-Diagnostic Troubleshooting procedure before proceeding. (Refer to 9 - ENGINE - DIAGNOSIS AND TESTING)

Diagnostic Test

1. VERIFY ACTIVE DTC

NOTE: If DTC P0642 or P0643 is present with this DTC, diagnose DTCs P0642 or P0643 before diagnosing this DTC.

NOTE: The Timing Belt/Chain must be correctly installed and operational before diagnosis can be made. Refer to the Service Information to ensure the timing belt is properly installed.

NOTE: If the ECM detects and stores a DTC, the ECM also stores the engine/vehicle operating conditions under which the DTC was set. Some of these conditions are displayed on the scan tool at the same time the DTC is displayed.

NOTE: Before erasing stored DTCs, record these conditions. Attempting to duplicate these conditions may assist when checking for an active DTC.

Turn the ignition on.

With the scan tool, erase the ECM DTCs.

Attempt to start the engine cranking the engine for at least 7 seconds.

With the scan tool, read the ECM DTCs.

Does the scan tool display this DTC?

Yes >> Go To 3

No >> Go To 2

2. TEST DRIVE

Turn the ignition on.

With the scan tool, erase the ECM DTCs.

Test drive the vehicle.

With the scan tool, read the ECM DTCs.

Does the scan tool display this DTC?

Yes >> Go To 3

No >> Refer to the *CHECKING FOR AN INTERMITTENT DTC Diagnostic Procedure. (Refer to 9 - ENGINE - DIAGNOSIS AND TESTING)

3. CHECKING (K44) CAMSHAFT POSITION SENSOR SIGNAL CIRCUIT

Turn the ignition off.

Disconnect the Camshaft Position Sensor harness connector.

Turn the ignition on.

Measure the voltage of the (K44) CMP Sensor Signal circuit at the CMP Sensor harness connector.

Select the appropriate voltage reading.

Voltage is above 5.4 volts.
Go To 4

Voltage is between 4.7 and 5.4 volts.
Go To 5

Voltage is below 4.7 volts.
Go To 12

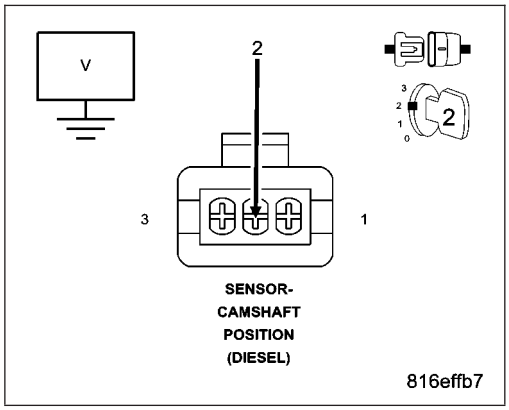

4. (K44) CAMSHAFT POSITION SENSOR SIGNAL CIRCUIT SHORT TO VOLTAGE

Turn the ignition off.

Disconnect the ECM harness connectors.

Remove the ASD Relay.

Connect a jumper wire between cavity 30 and cavity 87 of the ASD Relay connector.

Turn the ignition on.

Measure the voltage of the (K44) CMP Position Sensor Signal circuit at the CMP Sensor harness connector.

Is the voltage below 1.0 volt?

Yes >> Replace and program the Engine Control Module in accordance with the Service Information.
Perform the ECM Verification Test Ver. 1. (Refer to 9 - ENGINE - DIAGNOSIS AND TESTING)

No >> Repair the (K44) Camshaft Position Sensor Signal circuit for a short to voltage.
Perform the ECM Verification Test Ver. 1. (Refer to 9 - ENGINE - DIAGNOSIS AND TESTING)

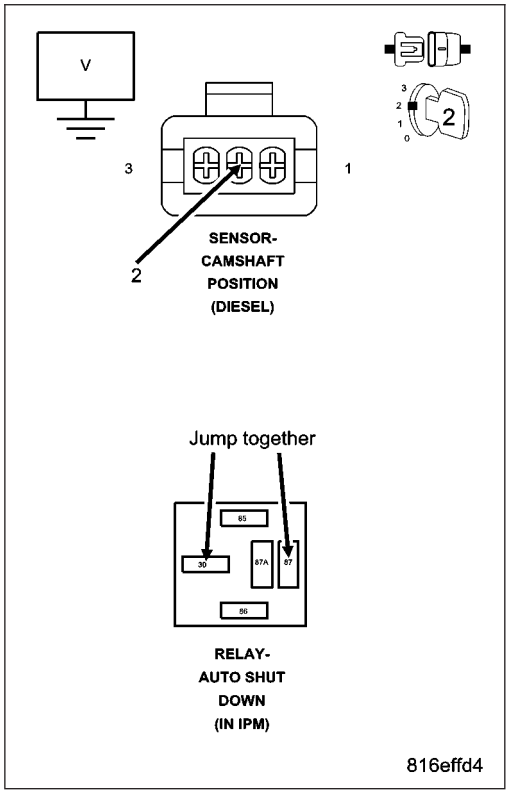

5. CHECKING (K844) CAMSHAFT POSITION SENSOR 5-VOLT SUPPLY CIRCUIT

Measure the voltage of the (K844) CMP Sensor 5-Volt Supply circuit at the CMP Sensor harness connector.

Select the appropriate voltage reading.

Voltage is above 5.4 volts.
Repair the (K844) CMP 5-Volt Supply circuit for a short to voltage.
Perform the ECM Verification Test Ver. 1. (Refer to 9 - ENGINE - DIAGNOSIS AND TESTING)

Voltage is between 4.7 and 5.4 volts.
Go To 6

Voltage is below 4.7 volts.
Go To 9

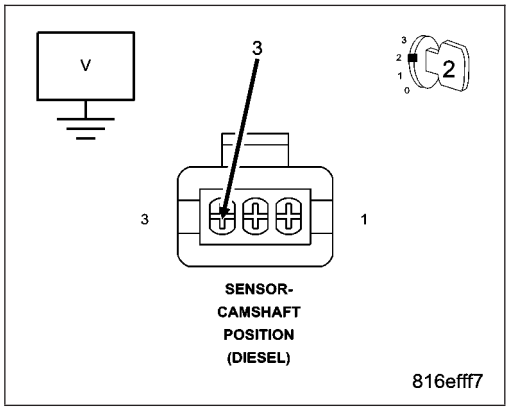

6. (K944) CAMSHAFT POSITION SENSOR GROUND CIRCUIT OPEN

Turn the ignition off.

Disconnect the ECT Sensor harness connector.

Connect one end of a jumper wire to the ECT Sensor signal circuit in the ECT Sensor harness connector.

Connect the other end of the jumper wire to the (K944) CMP Sensor Ground circuit in the Camshaft Position Sensor harness connector.

Turn the ignition on.

With the scan tool in Engine, Sensors, read the Engine Coolant Temp volts.

Is the voltage below 0.5 volt?

Yes >> Go To 8

No >> Go To 7

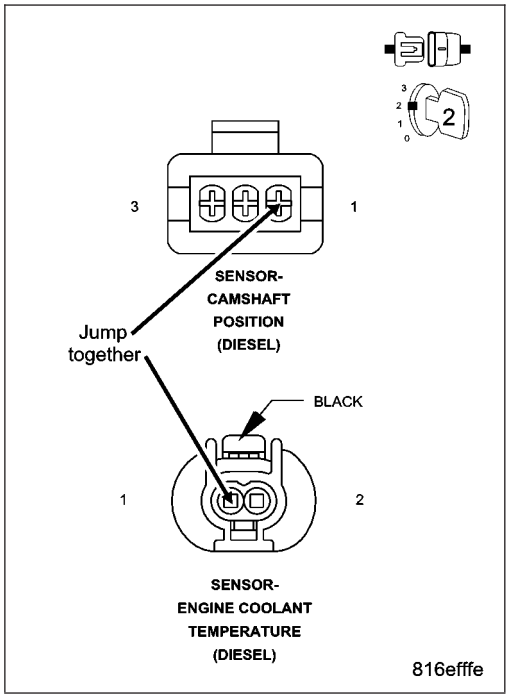

7. (K944) CAMSHAFT POSITION SENSOR GROUND CIRCUIT OPEN

Turn the ignition off.

Disconnect the CMP Sensor harness connector.

Disconnect the ECM harness connectors.

Measure the resistance of the (K944) CMP Sensor Ground circuit between the CMP Sensor harness connector and the ECM harness connector.

Is the resistance below 10.0 ohms?

Yes >> Replace and program the ECM in accordance with the Service Information.
Perform the ECM Verification Test Ver. 1. (Refer to 9 - ENGINE - DIAGNOSIS AND TESTING)

No >> Repair the (K944) CMP Sensor Ground circuit for an open.
Perform the ECM Verification Test Ver. 1. (Refer to 9 - ENGINE - DIAGNOSIS AND TESTING)

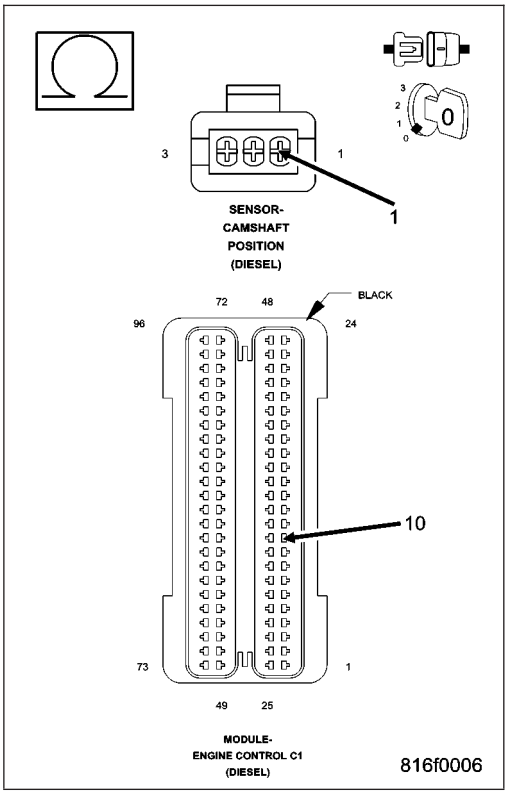

8. DAMAGED CAMSHAFT POSITION SENSOR OR CAMSHAFT

Turn the ignition off.

Remove the CMP Sensor.

Inspect the CMP Sensor for conditions such as loose mounting screws, damage, or cracks.

Inspect the camshaft for conditions such as damage, debris or cracked teeth.

Is there any evidence of these conditions?

Yes >> Repair as necessary.
Perform the ECM Verification Test Ver. 1. (Refer to 9 - ENGINE - DIAGNOSIS AND TESTING)

No >> Replace the Camshaft Position Sensor in accordance with the Service Information.
Perform the ECM Verification Test Ver. 1. (Refer to 9 - ENGINE - DIAGNOSIS AND TESTING)

9. (K844) CAMSHAFT POSITION SENSOR 5-VOLT SUPPLY CIRCUIT OPEN

Turn the ignition off.

Disconnect the ECM harness connectors.

Measure the resistance of the (K844) CMP 5-Volt Supply circuit between the ECM harness connector and the CMP Sensor harness connector.

Is the resistance below 10.0 ohms?

Yes >> Go To 10

No >> Repair the (K844) CMP 5-Volt Supply circuit for an open.
Perform the ECM Verification Test Ver. 1. (Refer to 9 - ENGINE - DIAGNOSIS AND TESTING)

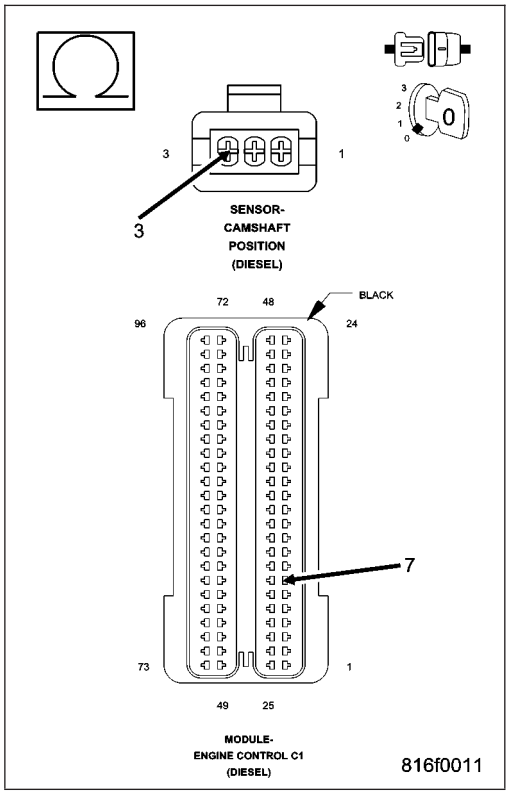

10. (K844) CAMSHAFT POSITION SENSOR 5-VOLT SUPPLY CIRCUIT SHORTED TO GROUND

Measure the resistance between ground and the (K844) CMP Sensor 5-Volt Supply circuit at the CMP Sensor harness connector.

Is the resistance above 1000 ohms?

Yes >> Go To 11

No >> Repair the (K844) CMP Sensor 5-Volt Supply circuit for a short to ground.
Perform the ECM Verification Test Ver. 1. (Refer to 9 - ENGINE - DIAGNOSIS AND TESTING)

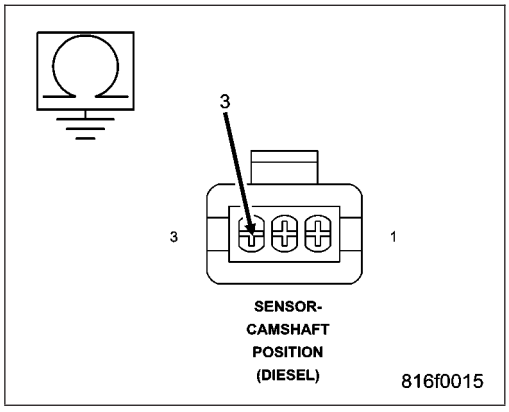

11. (K844) CAMSHAFT POSITION SENSOR 5-VOLT SUPPLY CIRCUIT SHORTED TO THE (K944) CAMSHAFT POSITION SENSOR GROUND CIRCUIT

Measure the resistance between the (K844) CMP Sensor 5-Volt Supply circuit and the (K944) CMP Sensor Ground circuit at the CMP Sensor harness connector.

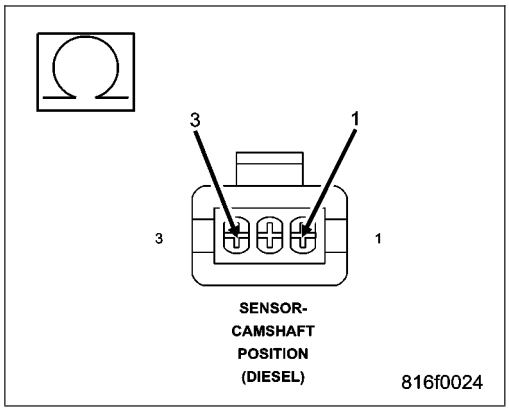

Is the resistance above 1000 ohms?

Yes >> Replace and program the Engine Control Module in accordance with the Service Information.
Perform the ECM Verification Test Ver. 1. (Refer to 9 - ENGINE - DIAGNOSIS AND TESTING)

No >> Repair the (K844) CMP Sensor 5-Volt Supply Circuit and (K944) CMP Sensor Ground circuits for a short together.
Perform the ECM Verification Test Ver. 1. (Refer to 9 - ENGINE - DIAGNOSIS AND TESTING)

12. (K44) CAMSHAFT POSITION SENSOR SIGNAL CIRCUIT OPEN

Turn the ignition off.

Disconnect the CMP Sensor harness connector.

Disconnect the ECM harness connectors.

Measure the resistance of the (K44) CMP Sensor Signal circuit between the ECM harness connector and the CMP Sensor harness connector.

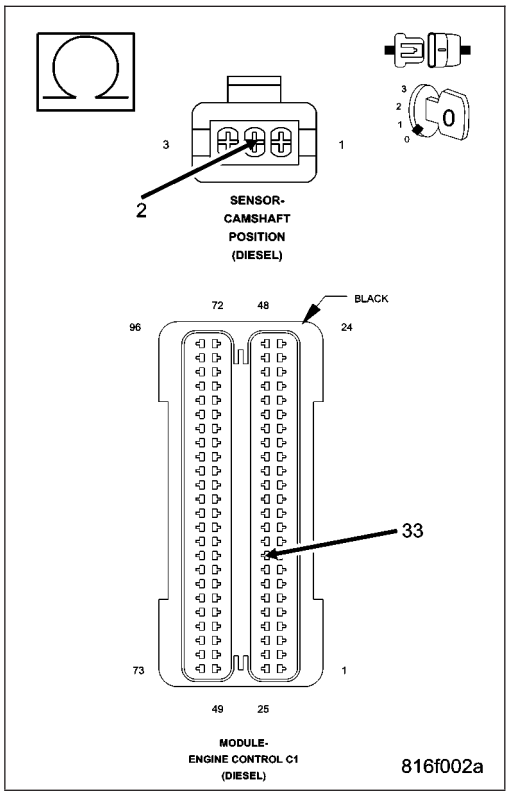

Is the resistance below 10.0 ohms?

Yes >> Go To 13

No >> Repair the (K44) CMP Sensor Signal circuit for an open
Perform the ECM Verification Test Ver. 1. (Refer to 9 - ENGINE - DIAGNOSIS AND TESTING)

13. (K44) CAMSHAFT POSITION SENSOR SIGNAL CIRCUIT SHORTED TO GROUND

Measure the resistance between ground and the (K44) CMP Sensor Signal circuit at the CMP Sensor harness connector.

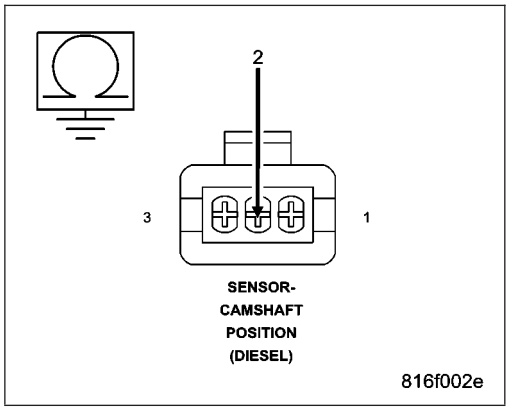

Is the resistance above 1000 ohms?

Yes >> Go To 14

No >> Repair the (K44) CMP Sensor Signal circuit for a short to ground.

Perform the ECM Verification Test Ver. 1. (Refer to 9 - ENGINE - DIAGNOSIS AND TESTING)

14. (K44) CAMSHAFT POSITION SENSOR SIGNAL CIRCUIT SHORTED TO THE (K944) CAMSHAFT POSITION SENSOR GROUND CIRCUIT

Measure the resistance between the (K44) CMP Sensor Signal circuit and the (K944) CMP Sensor Ground circuit at the CMP Sensor harness connector.

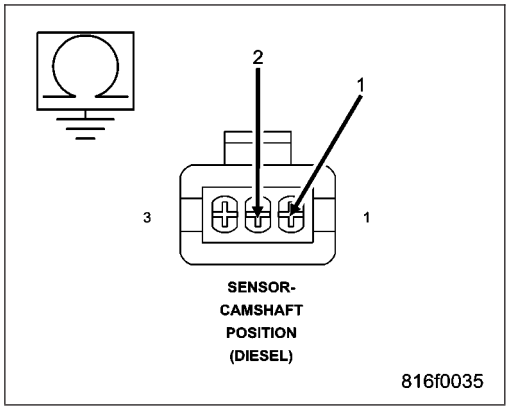

Is the resistance above 1000 ohms?

Yes >> Replace and program the Engine Control Module in accordance with the Service Information.

Perform the ECM Verification Test Ver. 1. (Refer to 9 - ENGINE - DIAGNOSIS AND TESTING)

No >> Repair the (K44) CMP Sensor Signal circuit and the (K944) CMP Sensor Ground circuit for a short together.

Perform the ECM Verification Test Ver. 1. (Refer to 9 - ENGINE - DIAGNOSIS AND TESTING)

P0401- EGR SYSTEM PERFORMANCE

For a complete wiring diagram **Refer to Section 8W**.

- **When Monitored:**
  With the engine running.
- **Set Condition:**
  The ECM detects and EGR flow problem for 8.0 seconds

Possible Causes
INTERMITTENT CONDITION
EGR VALVE
INTAKE OR EXHAUST SYSTEM PROBLEM

Always perform the Pre-Diagnostic Troubleshooting procedure before proceeding. (Refer to 9 - ENGINE - DIAGNOSIS AND TESTING)

Diagnostic Test

1. VERIFY ACTIVE DTC

With the scan tool, erase ECM DTC's
Test drive the vehicle.
With the scan tool, read ECM DTC's

Did this DTC set again?

Yes >> Refer to symptom CHECKING THE EGR SYSTEM for further diagnosis.

No >> Refer to the *CHECKING FOR AN INTERMITTENT DTC Diagnostic Procedure. (Refer to 9 - ENGINE - DIAGNOSIS AND TESTING)

P0402- EGR EXCESSIVE FLOW DETECTED

For a complete wiring diagram **Refer to Section 8W**.

- **When Monitored:**
  With the engine running.
- **Set Condition:**
  The ECM detects and EGR flow problem for 8.0 seconds

Possible Causes
INTERMITTENT CONDITION
EGR VALVE
INTAKE OR EXHAUST SYSTEM PROBLEM

Always perform the Pre-Diagnostic Troubleshooting procedure before proceeding. (Refer to 9 - ENGINE - DIAGNOSIS AND TESTING)

Diagnostic Test

1. VERIFY ACTIVE DTC

With the scan tool, erase ECM DTC's
Test drive the vehicle.
With the scan tool, read ECM DTC's

Did this DTC set again?

Yes >> Refer to symptom CHECKING THE EGR SYSTEM for further diagnosis.

No >> Refer to the *CHECKING FOR AN INTERMITTENT DTC Diagnostic Procedure. (Refer to 9 - ENGINE - DIAGNOSIS AND TESTING)

P0403-EGR SOLENOID CIRCUIT OPEN

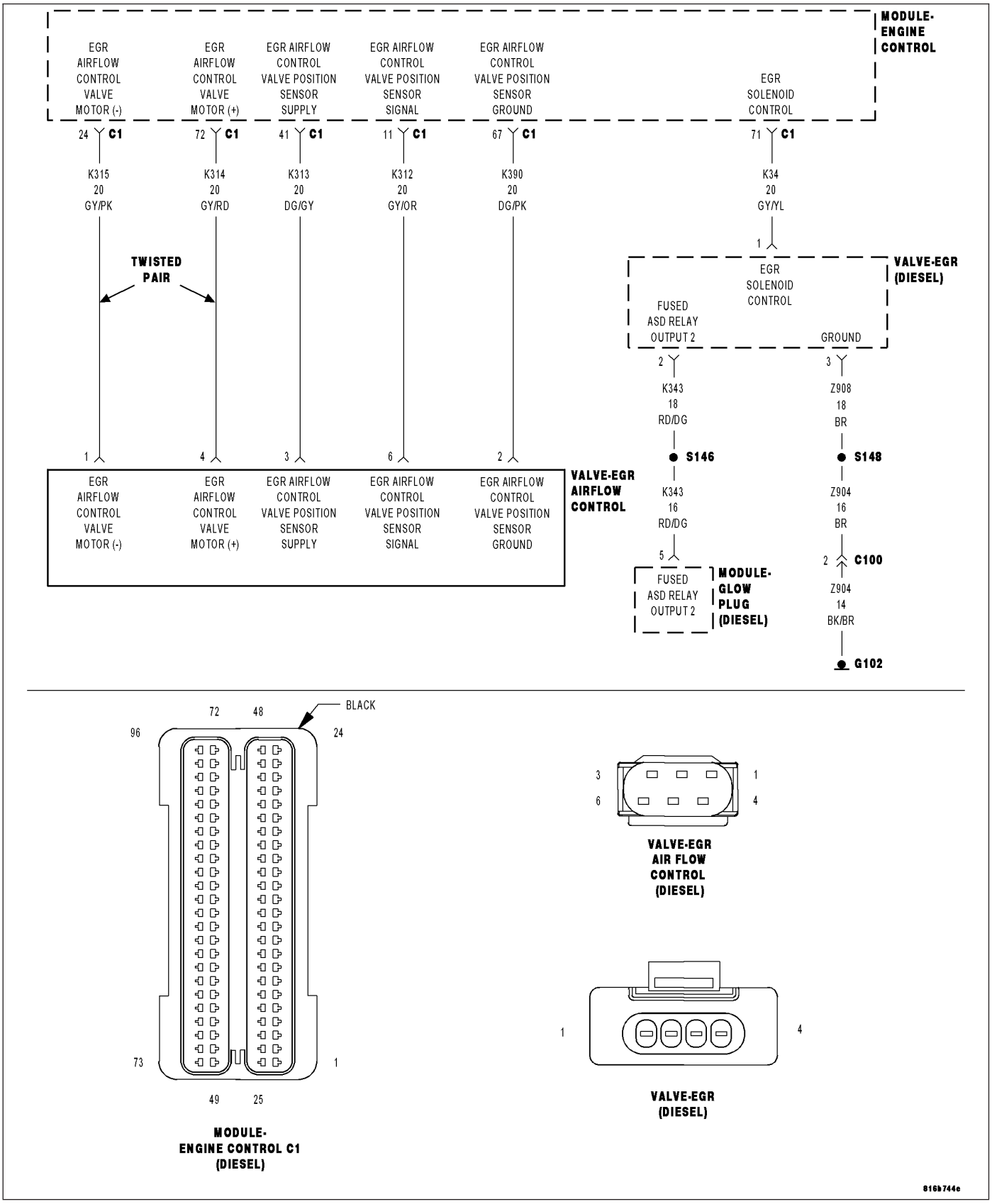

For a complete wiring diagram **Refer to Section 8W**

- **When Monitored:**
  With the ignition on and the EGR Solenoid command off.
- **Set Condition:**
  The ECM does not detect voltage on the (K34) EGR Solenoid Control circuit for 2.0 seconds.

Possible Causes
INTERMITTENT DTC
(K34) EGR SOLENOID CONTROL CIRCUIT SHORTED TO GROUND
(K34) EGR SOLENOID CONTROL CIRCUIT OPEN OR HIGH RESISTANCE
(K343) FUSED ASD RELAY OUTPUT CIRCUIT 2 OPEN OR HIGH RESISTANCE
EGR VALVE
ENGINE CONTROL MODULE (ECM)

Always perform the Pre-Diagnostic Troubleshooting procedure before proceeding. (Refer to 9 - ENGINE - DIAGNOSIS AND TESTING)

Diagnostic Test

1. DTC IS ACTIVE

Ignition on, engine not running.
With the scan tool, Clear DTCs in the Engine Control Module (ECM).
With the scan tool, actuate the Exhaust Gas Recirc Positioner.
Monitor the scan tool for at least two minutes.
With the scan tool, select View DTCs.

Is the status Active for this DTC?

Yes >> Go To 2

No >> Refer to the *CHECKING FOR AN INTERMITTENT DTC Diagnostic Procedure. (Refer to 9 - ENGINE - DIAGNOSIS AND TESTING)

2. (K34) EGR SOLENOID CONTROL CIRCUIT SHORTED TO GROUND

Turn the ignition off.
Disconnect the EGR Valve connector.
Disconnect the Engine Control Module (ECM) connector.
Measure the resistance between ground and the (K34) EGR Solenoid Control circuit in the EGR Valve connector.

Is the resistance above 10.0 ohms?

Yes >> Go to 3

No >> Repair the (K34) EGR Solenoid Control circuit for a short to ground.
Perform the ECM Verification Test Ver. 1. (Refer to 9 - ENGINE - DIAGNOSIS AND TESTING)

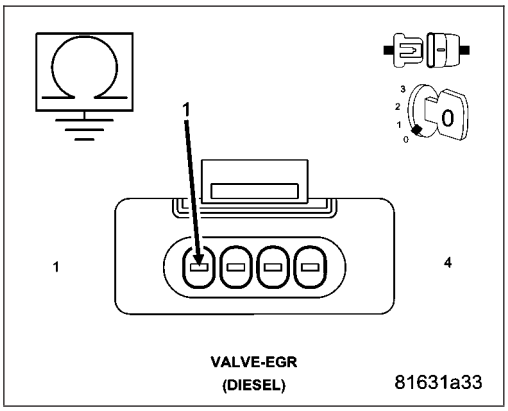

3. (K34) EGR SOLENOID CONTROL CIRCUIT OPEN OR HIGH RESISTANCE

Measure the resistance of the (K34) EGR Solenoid Control circuit between the EGR Valve connector and the Engine Control Module (ECM) connector.

Is the resistance below 10.0 ohms?

Yes >> Go to 4

No >> Repair the (K34) EGR Solenoid Control circuit for an open circuit or high resistance.

Perform the ECM Verification Test Ver. 1. (Refer to 9 - ENGINE - DIAGNOSIS AND TESTING)

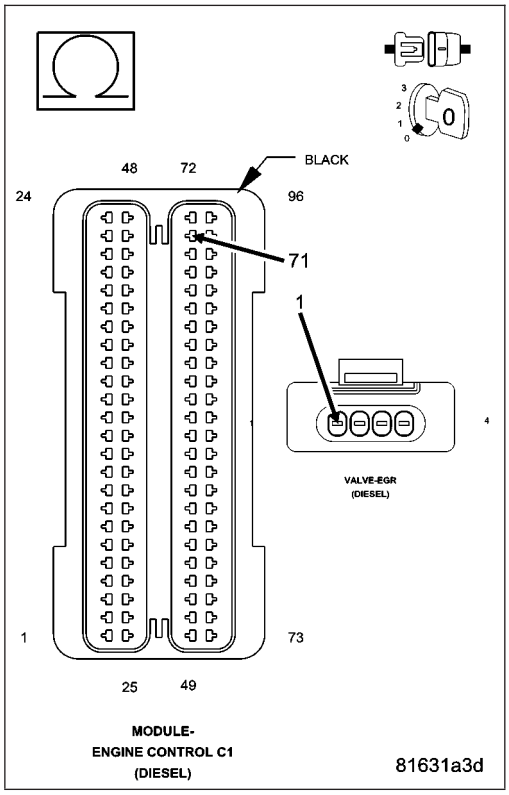

4. (K343) FUSED ASD RELAY OUTPUT 2 CIRCUIT OPEN OR HIGH RESISTANCE

Connect the Engine Control Module (ECM) connector.

Turn the ignition on.

Using a 12 volt test light connected to ground, check the (K343) Fused ASD Relay Output 2 circuit at the EGR Valve connector.

NOTE: The test light should be illuminated and bright. Compare the brightness to that of a direct connection to the battery.

Is the test light illuminated and bright?

Yes >> Go to 5

No >> Repair the (K343) Fused ASD Relay Output 2 circuit for an open circuit or high resistance.

Perform the ECM Verification Test Ver. 1. (Refer to 9 - ENGINE - DIAGNOSIS AND TESTING)

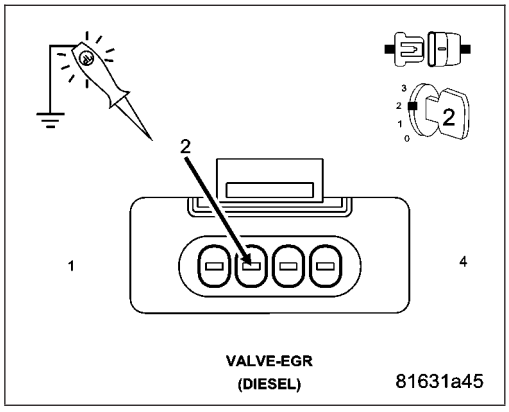

5. EGR VALVE

Connect the Engine Control Module (ECM) connector.

Turn the ignition on.

With the scan tool, actuate the Exhaust Gas Recirc Positioner to 100%.

Using a 12 volt test light connected to 12 volts, check the (K34) EGR Solenoid Control circuit in the EGR Valve harness connector.

NOTE: The test light should be illuminated and bright. Compare the brightness to that of a direct connection to the battery.

NOTE: The circuit will remain actuated by the controller for 30 seconds. Be certain the actuation is active when checking the circuit.

Is the test light illuminated and bright?

Yes >> Replace the EGR Valve in accordance with the Service Information.
Perform the ECM Verification Test Ver. 1 (Refer to 9 - ENGINE - DIAGNOSIS AND TESTING).

No >> Go to 6

6. ENGINE CONTROL MODULE (ECM)

Using the wiring diagram/schematic as a guide, inspect the wiring and connectors between the EGR Valve and the Engine Control Module (ECM).

Look for any chafed, pierced, pinched, or partially broken wires.

Look for broken, bent, pushed out or corroded terminals.

Refer to any Technical Service Bulletins that may apply.

Were any problems found?

Yes >> Repair as necessary.
Perform the ECM Verification Test Ver. 1. (Refer to 9 - ENGINE - DIAGNOSIS AND TESTING)

No >> Replace the Engine Control Module (ECM) in accordance with the Service Information.
Perform the ECM Verification Test Ver. 1. (Refer to 9 - ENGINE - DIAGNOSIS AND TESTING)

P0407-EGR AIRFLOW THROTTLE POSITION SENSOR CIRCUIT LOW

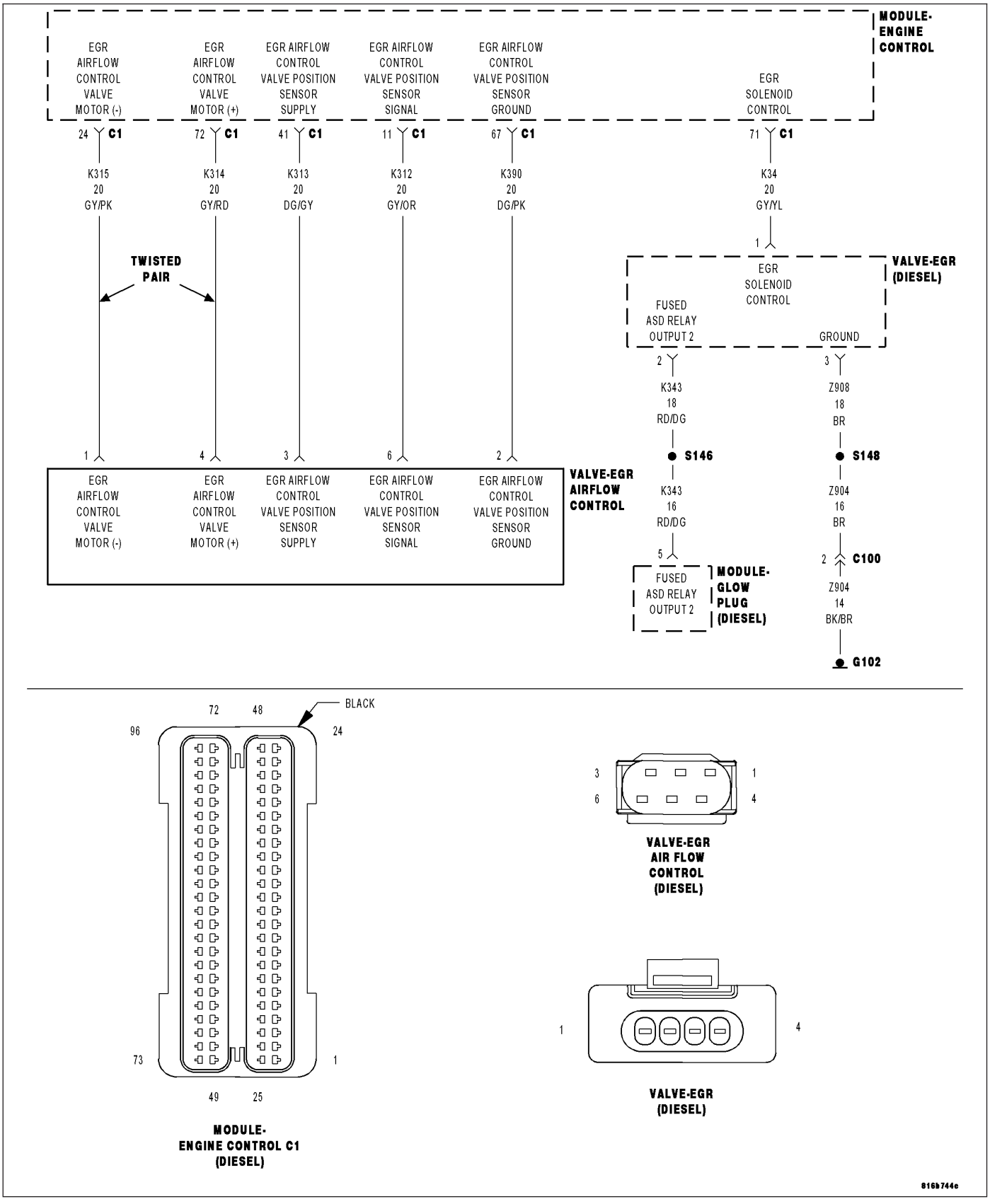

For a complete wiring diagram **Refer to Section 8W**

- **When Monitored:**
  With the ignition on.
- **Set Condition:**
  The (K312) EGR Airflow Control Valve Position Sensor Signal circuit voltage is below 0.07 volt for 0.30 second.

Possible Causes
INTERMITTENT DTC
(K313) EGR AIRFLOW CONTROL VALVE SUPPLY CIRCUIT SHORTED TO GROUND
(K312) EGR AIRFLOW CONTROL VALVE POSITION SENSOR SIGNAL CIRCUIT SHORTED TO GROUND
(K313) EGR AIRFLOW CONTROL VALVE SUPPLY CIRCUIT SHORTED TO (K390) EGR AIRFLOW CONTROL VALVE RETURN CIRCUIT
(K312) EGR AIRFLOW CONTROL VALVE POSITION SENSOR SIGNAL CIRCUIT SHORTED TO (K390) EGR AIRFLOW CONTROL VALVE RETURN CIRCUIT
(K313) EGR AIRFLOW CONTROL VALVE SUPPLY CIRCUIT OPEN OR HIGH RESISTANCE
(K312) EGR AIRFLOW CONTROL VALVE POSITION SENSOR SIGNAL CIRCUIT OPEN OR HIGH RESISTANCE
EGR AIRFLOW CONTROL VALVE
ENGINE CONTROL MODULE (ECM)

Always perform the Pre-Diagnostic Troubleshooting procedure before proceeding. (Refer to 9 - ENGINE - DIAGNOSIS AND TESTING)

Diagnostic Test

1. DTC IS ACTIVE

Ignition on, engine not running.
With the scan tool, Clear DTCs in the Engine Control Module (ECM).
Monitor the scan tool for at least two minutes.
Cycle the ignition key off and on several times, leaving the ignition on for at least 10 seconds at a time.
Start the engine.
Allow the engine to reach normal operating temperature.
With the scan tool, select View DTCs.

Is the status Active for this DTC?

Yes >> Go To 2

No >> Refer to the *CHECKING FOR AN INTERMITTENT DTC Diagnostic Procedure. (Refer to 9 - ENGINE - DIAGNOSIS AND TESTING)

2. (K313) EGR AIRFLOW CONTROL VALVE SUPPLY CIRCUIT VOLTAGE

Turn the ignition off.
Disconnect the EGR Airflow Control Valve connector.
Turn the ignition on.
Measure the voltage of the (K313) EGR Airflow Control Valve Supply circuit in the EGR Airflow Control Valve connector.

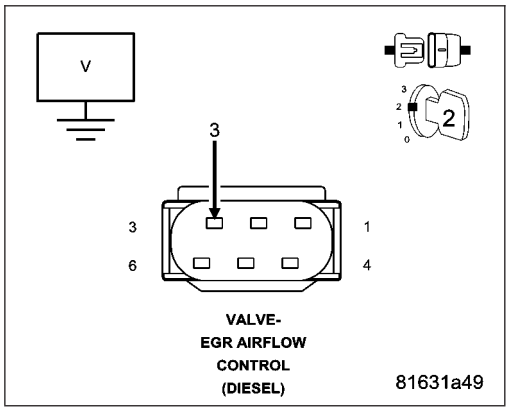

Is the voltage above 4.5 volts?

Yes >> Go to 6

No >> Go to 3

3. (K313) EGR AIRFLOW CONTROL VALVE SUPPLY CIRCUIT SHORTED TO GROUND

Turn the ignition off.

Disconnect the Engine Control Module (ECM) connector.

Measure the resistance between ground and the (K313) EGR Airflow Control Valve Supply circuit in the EGR Airflow Control Valve connector.

Is the resistance above 10.0 ohms?

Yes >> Go to 4

No >> Repair the (K313) EGR Airflow Control Valve Supply circuit for a short to ground.

Perform the ECM Verification Test Ver. 1. (Refer to 9 - ENGINE - DIAGNOSIS AND TESTING)

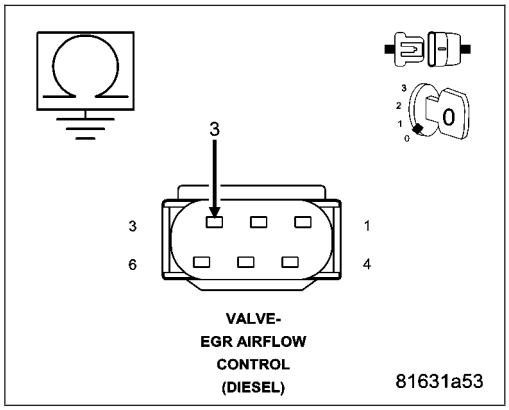

4. (K313) EGR AIRFLOW CONTROL VALVE SUPPLY CIRCUIT SHORTED TO (K390) EGR AIRFLOW CONTROL VALVE RETURN CIRCUIT

Measure the resistance between the (K313) EGR Airflow Control Valve Supply circuit and the (K390) EGR Airflow Control Valve Return circuit in the EGR Airflow Control Valve connector.

Is the resistance above 10.0 ohms?

Yes >> Go to 5

No >> Repair the (K313) EGR Airflow Control Valve Supply circuit for a short to the (K390) EGR Airflow Control Valve Return circuit.

Perform the ECM Verification Test Ver. 1. (Refer to 9 - ENGINE - DIAGNOSIS AND TESTING)

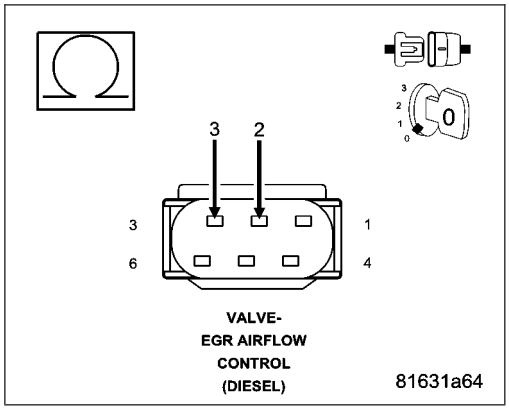

5. (K313) EGR AIRFLOW CONTROL VALVE SUPPLY CIRCUIT OPEN OR HIGH RESISTANCE

Measure the resistance of the (K313) EGR Airflow Control Valve Supply circuit between the EGR Airflow Control Valve connector and the Engine Control Module (ECM) connector.

Is the resistance below 10.0 ohms?

Yes >> Go to 10

No >> Repair the (K313) EGR Airflow Control Valve Supply circuit for an open circuit or high resistance.
Perform the ECM Verification Test Ver. 1. (Refer to 9 - ENGINE - DIAGNOSIS AND TESTING)

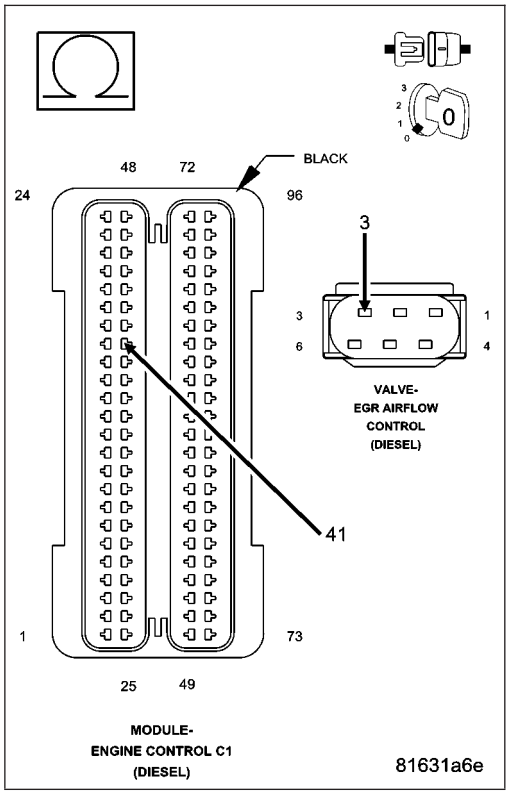

6. EGR AIRFLOW CONTROL VALVE

Turn the ignition on.

With the scan tool, Clear DTCs.

With the scan tool, select View DTCs.

NOTE: The scan tool should display an EGR Airflow Throttle Position Sensor high voltage or open DTC with the EGR Airflow Control Valve connector disconnected.

Does the scan tool display the Sensor DTC(s) as described above?

Yes >> Replace the EGR Airflow Control Valve in accordance with the Service Information.
Perform the ECM Verification Test Ver. 1. (Refer to 9 - ENGINE - DIAGNOSIS AND TESTING)

No >> Go to 7

7. (K312) EGR AIRFLOW CONTROL VALVE POSITION SENSOR SIGNAL CIRCUIT SHORTED TO GROUND

Turn the ignition off.

Disconnect the Engine Control Module (ECM) connector.

Measure the resistance between ground and the (K312) EGR Airflow Control Valve Position Sensor Signal circuit in the EGR Airflow Control Valve connector.

Is the resistance above 10.0 ohms?

Yes >> Go to 8

No >> Repair the (K312) EGR Airflow Control Valve Position Sensor Signal circuit for a short to ground.
Perform the ECM Verification Test Ver. 1. (Refer to 9 - ENGINE - DIAGNOSIS AND TESTING)

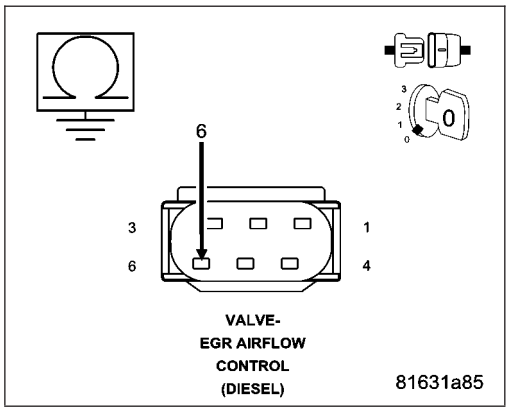

8. (K312) EGR AIRFLOW CONTROL VALVE POSITION SENSOR SIGNAL CIRCUIT SHORTED TO (K390) EGR AIRFLOW CONTROL VALVE RETURN CIRCUIT

Measure the resistance between the (K312) EGR Airflow Control Valve Position Sensor Signal circuit and the (K390) EGR Airflow Control Valve Return circuit in the EGR Airflow Control Valve connector.

Is the resistance above 5.0 ohms?

Yes >> Go to 9

No >> Repair the (K312) EGR Airflow Control Valve Position Sensor Signal circuit for a short to the (K390) EGR Airflow Control Valve Return circuit.

Perform the ECM Verification Test Ver. 1. (Refer to 9 - ENGINE - DIAGNOSIS AND TESTING)

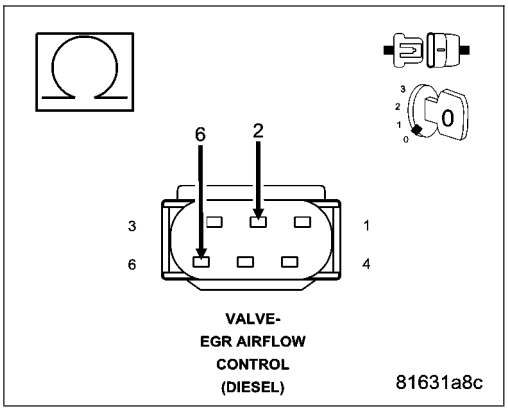

9. (K312) EGR AIRFLOW CONTROL VALVE POSITION SENSOR SIGNAL CIRCUIT OPEN OR HIGH RESISTANCE

Measure the resistance of the (K312) EGR Airflow Control Valve Position Sensor Signal circuit between the EGR Airflow Control Valve connector and the Engine Control Module (ECM) connector.

Is the resistance below 5.0 ohms?

Yes >> Go to 10

No >> Repair the (K312) EGR Airflow Control Valve Position Sensor Signal circuit for an open circuit or high resistance.

Perform the ECM Verification Test Ver. 1. (Refer to 9 - ENGINE - DIAGNOSIS AND TESTING)

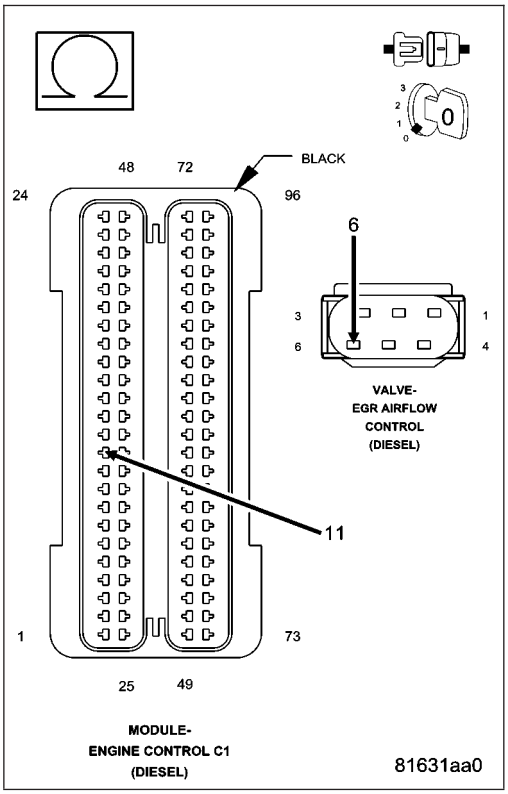

10. ENGINE CONTROL MODULE (ECM)

Using the wiring diagram/schematic as a guide, inspect the wiring and connectors between the EGR Airflow Control Valve and the Engine Control Module (ECM).

Look for any chafed, pierced, pinched, or partially broken wires.

Look for broken, bent, pushed out or corroded terminals.

Monitor the scan tool data relative to this circuit and wiggle test the wiring and connectors.

Look for the data to change or for the DTC to reset during the wiggle test.

Refer to any Technical Service Bulletins that may apply.

Were any problems found?

Yes >> Repair as necessary.
Perform the ECM Verification Test Ver. 1. (Refer to 9 - ENGINE - DIAGNOSIS AND TESTING)

No >> Replace the Engine Control Module (ECM) in accordance with the Service Information.
Perform the ECM Verification Test Ver. 1. (Refer to 9 - ENGINE - DIAGNOSIS AND TESTING)

P0408-EGR AIRFLOW THROTTLE POSITION SENSOR CIRCUIT HIGH

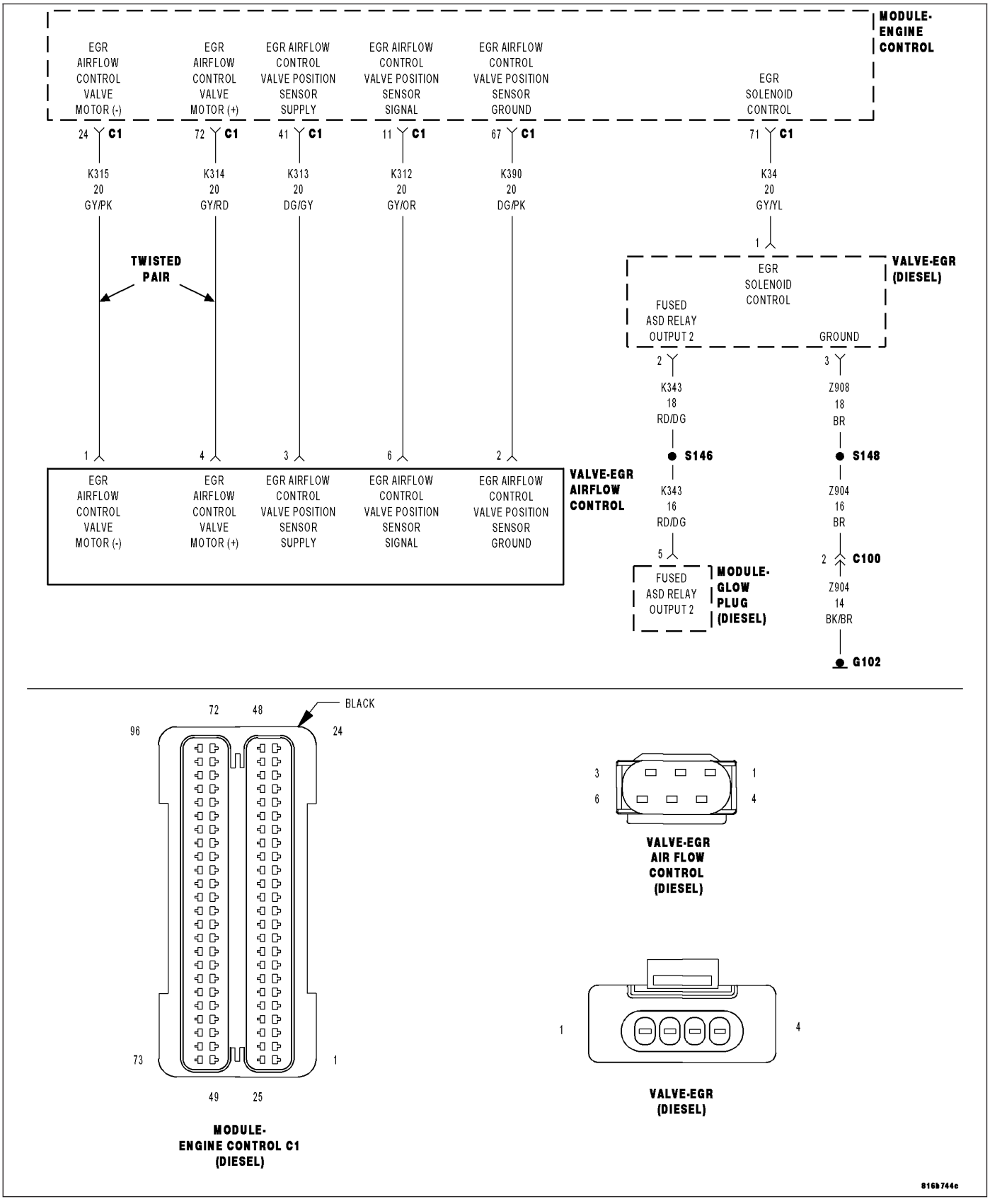

For a complete wiring diagram **Refer to Section 8W**

- **When Monitored:**
  With the ignition on.
- **Set Condition:**
  The (K312) EGR Airflow Control Valve Position Sensor Signal circuit voltage is above 4.7 volts for 0.30 seconds.

Possible Causes
INTERMITTENT DTC
(K313) EGR AIRFLOW CONTROL VALVE SUPPLY CIRCUIT SHORTED TO VOLTAGE
(K312) EGR AIRFLOW CONTROL VALVE POSITION SENSOR SIGNAL CIRCUIT SHORTED TO VOLTAGE
(K390) EGR AIRFLOW CONTROL VALVE RETURN CIRCUIT SHORTED TO VOLTAGE
(K312) EGR AIRFLOW CONTROL VALVE POSITION SENSOR SIGNAL CIRCUIT OPEN OR HIGH RESISTANCE
(K390) EGR AIRFLOW CONTROL VALVE RETURN CIRCUIT OPEN OR HIGH RESISTANCE
EGR AIRFLOW CONTROL VALVE
ENGINE CONTROL MODULE (ECM)

Always perform the Pre-Diagnostic Troubleshooting procedure before proceeding. (Refer to 9 - ENGINE - DIAGNOSIS AND TESTING)

Diagnostic Test

1. DTC IS ACTIVE

Ignition on, engine not running.
With the scan tool, Clear DTCs in the Engine Control Module (ECM).
Monitor the scan tool for at least two minutes.
Cycle the ignition key off and on several times, leaving the ignition on for at least 10 seconds at a time.
Start the engine.
Allow the engine to reach normal operating temperature.
With the scan tool, select View DTCs.

Is the status Active for this DTC?

Yes >> Go To 2

No >> Refer to the *CHECKING FOR AN INTERMITTENT DTC Diagnostic Procedure. (Refer to 9 - ENGINE - DIAGNOSIS AND TESTING)

2. (K313) EGR AIRFLOW CONTROL VALVE SUPPLY CIRCUIT SHORTED TO VOLTAGE

Turn the ignition off.
Disconnect the EGR Airflow Control Valve connector.
Disconnect the Engine Control Module (ECM) connector.
Remove the ASD Relay from the IPM.
Connect a jumper wire between cavity 30 and cavity 87 of the ASD Relay Connector.
Turn the ignition on.
Measure the voltage of the (K313) EGR Airflow Control Valve Supply circuit in the EGR Airflow Control Valve connector.

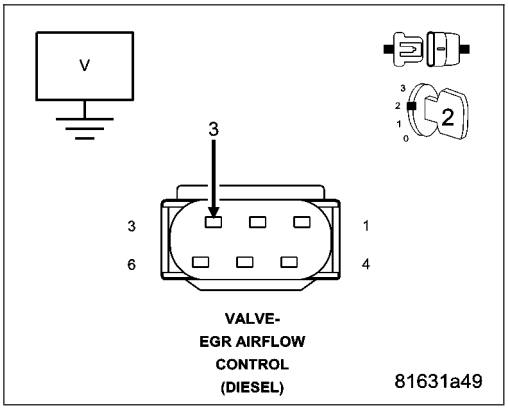

Is there any voltage present?

Yes >> Repair the (K313) EGR Airflow Control Valve Supply circuit for a short to voltage.
Perform the ECM Verification Test Ver. 1. (Refer to 9 - ENGINE - DIAGNOSIS AND TESTING)

No >> Go to 3

3. (K312) EGR AIRFLOW CONTROL VALVE POSITION SENSOR SIGNAL CIRCUIT SHORTED TO VOLTAGE

NOTE: The jumper wire should still be in place.
Measure the voltage of the (K312) EGR Airflow Control Valve Position Sensor Signal circuit in the EGR Airflow Control Valve connector.

Is there any voltage present?

Yes >> Repair the (K312) EGR Airflow Control Valve Position Sensor Signal circuit for a short to voltage.
Perform the ECM Verification Test Ver. 1. (Refer to 9 - ENGINE - DIAGNOSIS AND TESTING)

No >> Go to 4

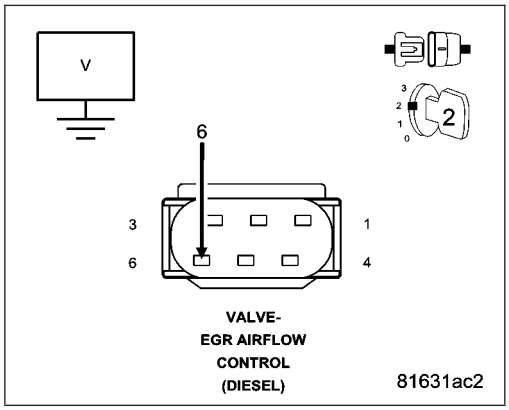

4. (K390) EGR AIRFLOW CONTROL VALVE RETURN CIRCUIT SHORTED TO VOLTAGE

NOTE: The jumper wire should still be in place.
Measure the voltage of the (K390) EGR Airflow Control Valve Return circuit in the EGR Airflow Control Valve connector.

Is there any voltage present?

Yes >> Repair the (K390) EGR Airflow Control Valve Return circuit for a short to voltage.
Perform the ECM Verification Test Ver. 1. (Refer to 9 - ENGINE - DIAGNOSIS AND TESTING)

No >> Go to 5

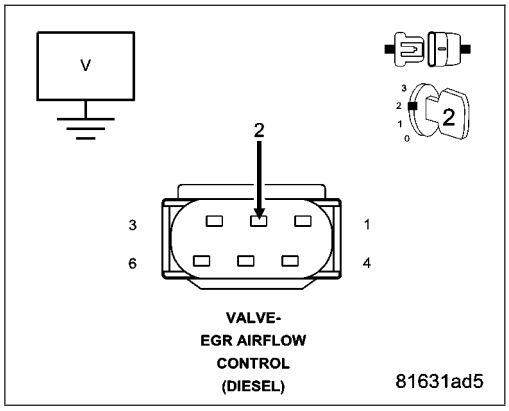

5. EGR AIRFLOW CONTROL VALVE

Turn the ignition off.

Remove the jumper wire and install the ASD Relay.

Connect the Engine Control Module (ECM) connector.

Connect a jumper wire between the (K390) EGR Airflow Control Valve Return circuit and the (K312) EGR Airflow Control Valve Position Sensor Signal circuit in the EGR Airflow Control Valve connector.

Turn the ignition on.

With the scan tool, Clear DTCs.

With the scan tool, select View DTCs.

NOTE: The scan tool should display an EGR Airflow Throttle Position Sensor low voltage or short to ground DTC with the jumper wire in place.

Does the scan tool display the Sensor DTC(s) as described above?

Yes >> Replace the EGR Airflow Control Valve in accordance with the Service Information.
Perform the ECM Verification Test Ver. 1. (Refer to 9 - ENGINE - DIAGNOSIS AND TESTING)

No >> Go to 6

6. (K312) EGR AIRFLOW CONTROL VALVE POSITION SENSOR SIGNAL OPEN OR HIGH RESISTANCE

Turn the ignition off.

Disconnect the Engine Control Module (ECM) connector.

Measure the resistance of the (K312) EGR Airflow Control Valve Position Sensor Signal between the EGR Airflow Control Valve connector and the Engine Control Module (ECM) connector.

Is the resistance below 10.0 ohms?

Yes >> Go to 7

No >> Repair the (K312) EGR Airflow Control Valve Position Sensor Signal for an open circuit or high resistance.

Perform the ECM Verification Test Ver. 1. (Refer to 9 - ENGINE - DIAGNOSIS AND TESTING)

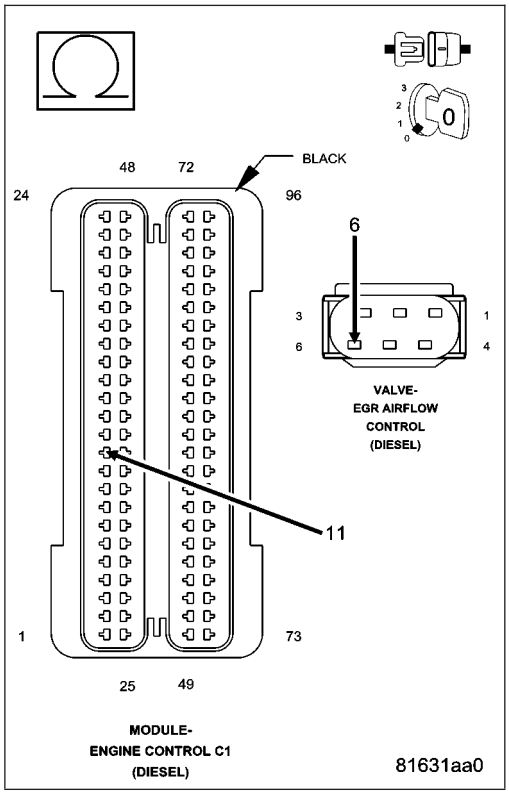

7. (K390) EGR AIRFLOW CONTROL VALVE RETURN CIRCUIT OPEN OR HIGH RESISTANCE

Measure the resistance of the (K390) EGR Airflow Control Valve Return circuit between the EGR Airflow Control Valve connector and the Engine Control Module (ECM) connector.

Is the resistance below 10.0 ohms?

Yes >> Go to 8

No >> Repair the (K390) EGR Airflow Control Valve Return circuit for an open circuit or high resistance.

Perform the ECM Verification Test Ver. 1. (Refer to 9 - ENGINE - DIAGNOSIS AND TESTING)

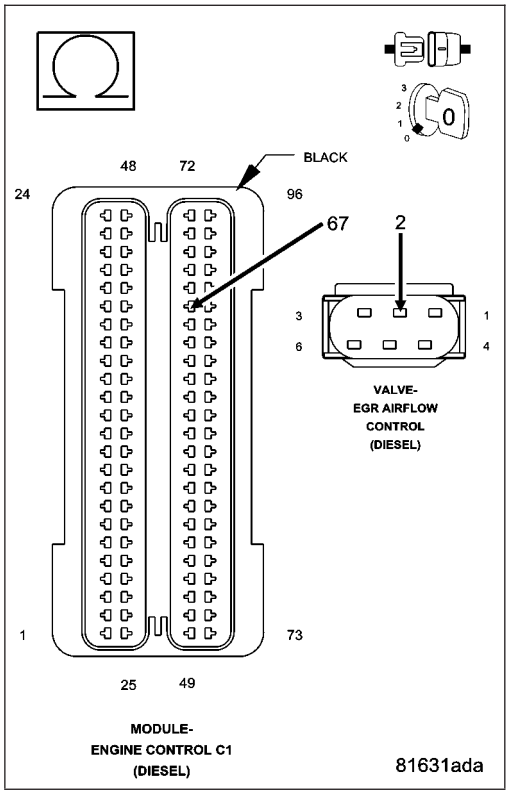

8. ENGINE CONTROL MODULE (ECM)

Using the wiring diagram/schematic as a guide, inspect the wiring and connectors between the EGR Airflow Control Valve and the Engine Control Module (ECM).

Look for any chafed, pierced, pinched, or partially broken wires.

Look for broken, bent, pushed out or corroded terminals.

Monitor the scan tool data relative to this circuit and wiggle test the wiring and connectors.

Look for the data to change or for the DTC to reset during the wiggle test.

Refer to any Technical Service Bulletins that may apply.

Were any problems found?

Yes >> Repair as necessary.
Perform the ECM Verification Test Ver. 1. (Refer to 9 - ENGINE - DIAGNOSIS AND TESTING)

No >> Replace the Engine Control Module (ECM) in accordance with the Service Information.
Perform the ECM Verification Test Ver. 1. (Refer to 9 - ENGINE - DIAGNOSIS AND TESTING)

P0460-FUEL LEVEL SENSOR 1 CIRCUIT

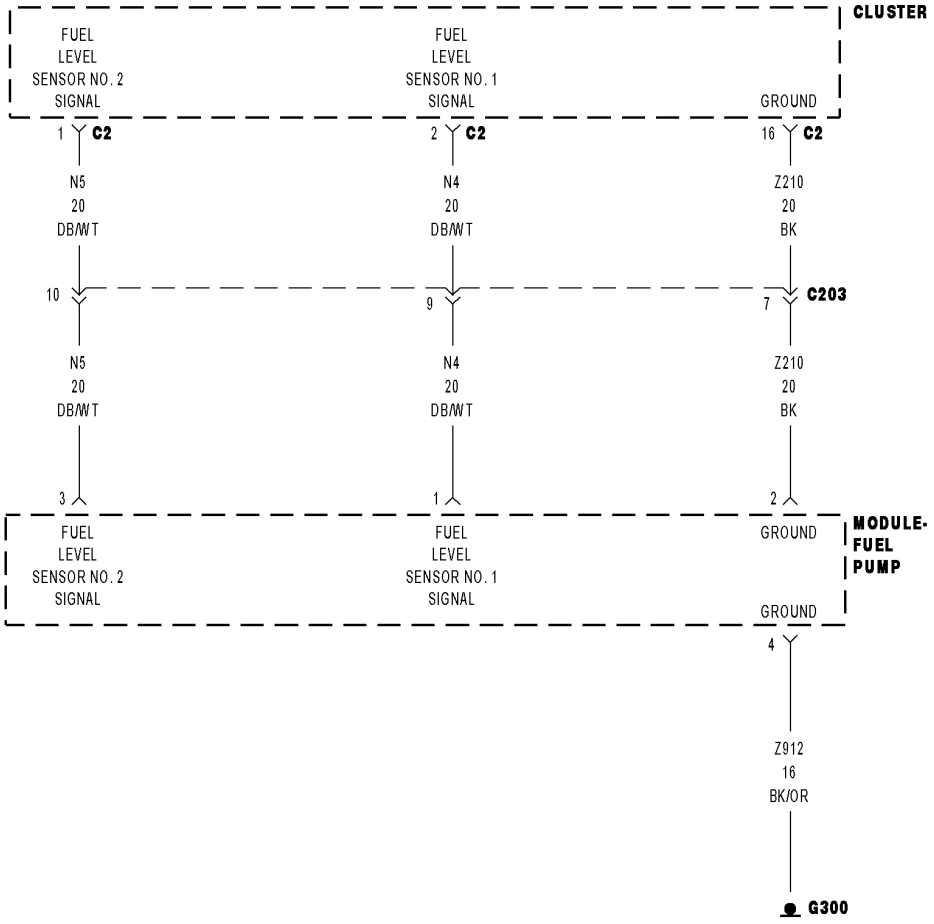

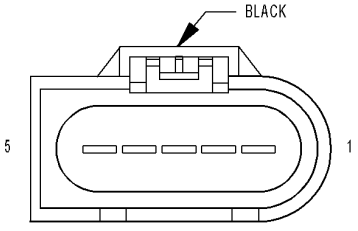

MODULE-
FUEL PUMP

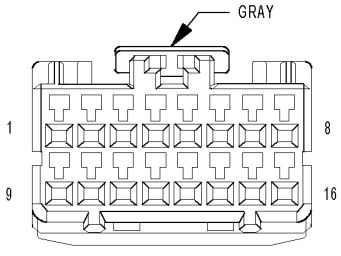

CLUSTER C2

816B87D6

For a complete wiring diagram **Refer to Section 8W**

- **When Monitored:**
  With the ignition on.
- **Set Condition:**
  The ECM does not receive a valid fuel level signal message from the Instrument Cluster (CCN) for 2.0 seconds.

Possible Causes
INTERMITTENT DTC
(N4) FUEL LEVEL SENSOR NO. 1 SIGNAL CIRCUIT SHORTED TO VOLTAGE
(Z210) GROUND CIRCUIT SHORTED TO VOLTAGE
(N4) FUEL LEVEL SENSOR NO. 1 SIGNAL CIRCUIT SHORTED TO GROUND
(N4) FUEL LEVEL SENSOR NO. 1 SIGNAL CIRCUIT SHORTED TO (Z210) GROUND CIRCUIT
(N4) FUEL LEVEL SENSOR NO. 1 SIGNAL CIRCUIT OPEN OR HIGH RESISTANCE
(Z210) GROUND CIRCUIT OPEN OR HIGH RESISTANCE
FUEL LEVEL SENSOR
INSTRUMENT CLUSTER (CCN)

Always perform the Pre-Diagnostic Troubleshooting procedure before proceeding. (Refer to 9 - ENGINE - DIAGNOSIS AND TESTING)

Diagnostic Test

1. DTC IS ACTIVE

Ignition on, engine not running.
With the scan tool, Clear DTCs in the Instrument Cluster (CCN).
Monitor the scan tool for at least two minutes.
Cycle the ignition key off and on several times, leaving the ignition on for at least 10 seconds at a time.
Start the engine.
Allow the engine to reach normal operating temperature.
With the scan tool, select View DTCs.

Is the status Active for this DTC?

Yes >> Go To 2

No >> Refer to the *CHECKING FOR AN INTERMITTENT DTC Diagnostic Procedure. (Refer to 9 - ENGINE - DIAGNOSIS AND TESTING)

2. (N4) FUEL LEVEL SENSOR NO. 1 SIGNAL CIRCUIT SHORTED TO VOLTAGE

Turn the ignition off.
Disconnect the Fuel Pump connector.
Disconnect the Instrument Cluster (CCN) connector.
Turn the ignition on.
Measure the voltage of the (N4) Fuel Level Sensor No. 1 Signal circuit in the Fuel Pump connector.

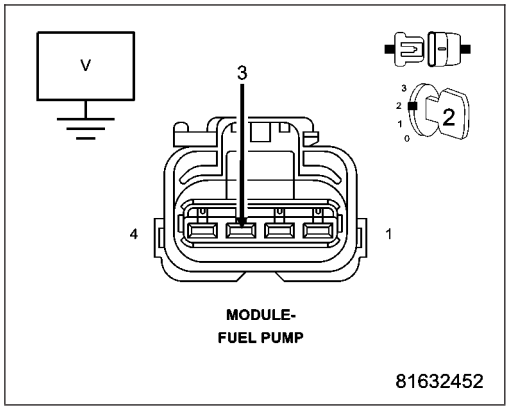

Is there any voltage present?

Yes >> Repair the (N4) Fuel Level Sensor No. 1 Signal circuit for a short to voltage.
Perform the BODY VERIFICATION TEST VER 1. (Refer to 8 - ELECTRICAL/ELECTRONIC CONTROL MODULES - STANDARD PROCEDURE)

No >> Go to 3

3. (Z210) GROUND CIRCUIT SHORTED TO VOLTAGE

Measure the voltage of the (Z210) Ground circuit.

Is there any voltage present?

Yes >> Repair the (Z210) Ground circuit for a short to voltage.
Perform the BODY VERIFICATION TEST VER 1. (Refer to 8 - ELECTRICAL/ELECTRONIC CONTROL MODULES - STANDARD PROCEDURE)

No >> Go to 4

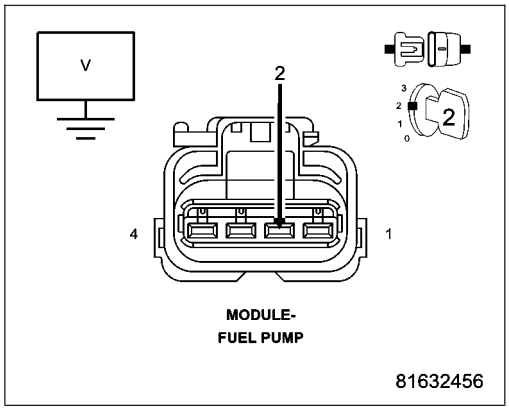

4. (N4) FUEL LEVEL SENSOR NO. 1 SIGNAL CIRCUIT SHORTED TO GROUND

Turn the ignition off.

Measure the resistance between ground and the (N4) Fuel Level Sensor No. 1 Signal circuit in the Fuel Pump connector.

Is the resistance above 1000.0 ohms?

Yes >> Go to 5

No >> Repair the (N4) Fuel Level Sensor No. 1 Signal circuit for a short to ground.
Perform the BODY VERIFICATION TEST VER 1. (Refer to 8 - ELECTRICAL/ELECTRONIC CONTROL MODULES - STANDARD PROCEDURE)

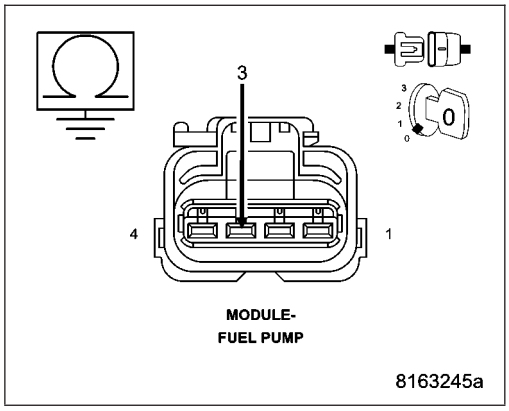

5. (N4) FUEL LEVEL SENSOR NO. 1 SIGNAL CIRCUIT SHORTED TO (Z210) GROUND CIRCUIT

Measure the resistance between the (N4) Fuel Level Sensor No. 1 Signal circuit and the (Z210) Ground circuit in the Fuel Pump connector.

Is the resistance above 1000.0 ohms?

Yes >> Go to 6

No >> Repair the (N4) Fuel Level Sensor No. 1 Signal circuit for a short to the (Z210) Ground circuit.
Perform the BODY VERIFICATION TEST VER 1. (Refer to 8 - ELECTRICAL/ELECTRONIC CONTROL MODULES - STANDARD PROCEDURE)

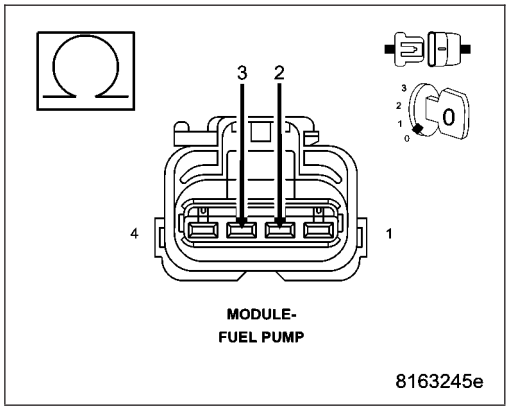

6. (N4) FUEL LEVEL SENSOR NO. 1 SIGNAL CIRCUIT OPEN OR HIGH RESISTANCE

Measure the resistance of the (N4) Fuel Level Sensor No. 1 Signal circuit between the Fuel Pump connector and the Instrument Cluster (CCN) connector.

Is the resistance below 10.0 ohms?

Yes >> Go to 7

No >> Repair the (N4) Fuel Level Sensor No. 1 Signal circuit for an open circuit or high resistance.

Perform the BODY VERIFICATION TEST VER 1. (Refer to 8 - ELECTRICAL/ELECTRONIC CONTROL MODULES - STANDARD PROCEDURE)

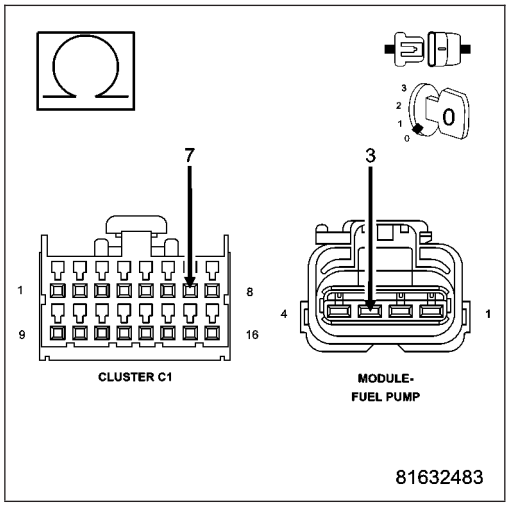

7. (Z210) GROUND CIRCUIT OPEN OR HIGH RESISTANCE

Measure the resistance of the (Z210) Ground circuit between the Fuel Pump connector and the Instrument Cluster (CCN) connector.

Is the resistance below 10.0 ohms?

Yes >> Go to 8

No >> Repair the (Z210) Ground circuit for an open circuit or high resistance.

Perform the BODY VERIFICATION TEST VER 1. (Refer to 8 - ELECTRICAL/ELECTRONIC CONTROL MODULES - STANDARD PROCEDURE)

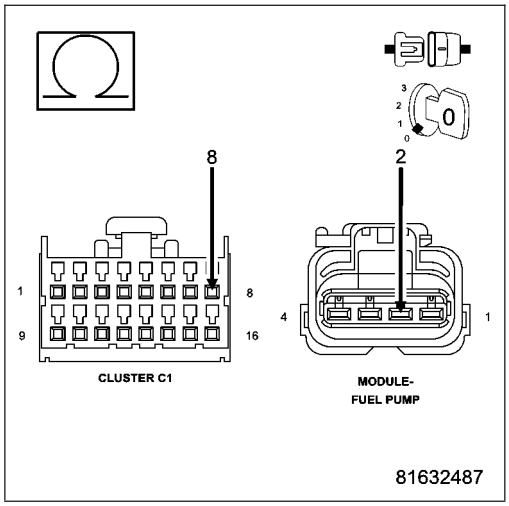

8. FUEL LEVEL SENSOR

Turn the ignition off.

Connect the Instrument Cluster (CCN) connector.

Connect a jumper wire between the (Z210) Ground circuit and the (N4) Fuel Level Sensor No. 1 Signal circuit in the Fuel Pump connector.

Turn the ignition on.

With the scan tool, Clear DTCs.

With the scan tool, select View DTCs.

NOTE: The scan tool should display a Fuel Level Sensor low voltage or short to ground DTC with the jumper wire in place.

Turn the ignition off.

Remove the jumper wire.

Turn the ignition on.

With the scan tool, Clear DTCs.

With the scan tool, select View DTCs.

NOTE: The scan tool should display a Fuel Level Sensor high voltage or open circuit DTC with the Fuel Pump connector disconnected.

Does the scan tool display the DTC(s) as described above?

Yes >> Replace the Fuel Level Sensor in accordance with the Service Information.
Perform the BODY VERIFICATION TEST VER 1. (Refer to 8 - ELECTRICAL/ELECTRONIC CONTROL MODULES - STANDARD PROCEDURE)

No >> Go to 9

9. INSTRUMENT CLUSTER (CCN)

Using the wiring diagram/schematic as a guide, inspect the wiring and connectors between the Fuel Pump and the Instrument Cluster (CCN).

Look for any chafed, pierced, pinched, or partially broken wires.

Look for broken, bent, pushed out or corroded terminals.

Monitor the scan tool data relative to this circuit and wiggle test the wiring and connectors.

Look for the data to change or for the DTC to reset during the wiggle test.

Refer to any Technical Service Bulletins that may apply.

Were any problems found?

Yes >> Repair as necessary.
Perform the BODY VERIFICATION TEST VER 1. (Refer to 8 - ELECTRICAL/ELECTRONIC CONTROL MODULES - STANDARD PROCEDURE)

No >> Replace the Instrument Cluster (CCN) in accordance with the Service Information.
Perform the BODY VERIFICATION TEST VER 1. (Refer to 8 - ELECTRICAL/ELECTRONIC CONTROL MODULES - STANDARD PROCEDURE)

P0462-FUEL LEVEL SENSOR 1 LOW CIRCUIT

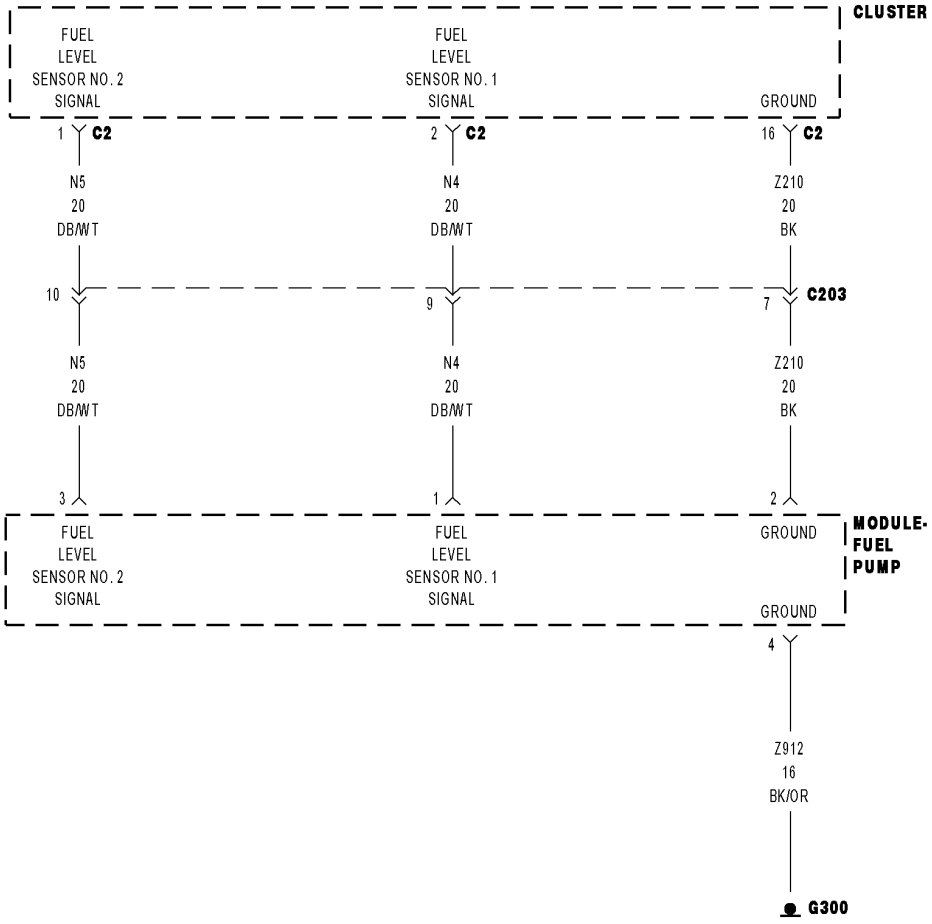

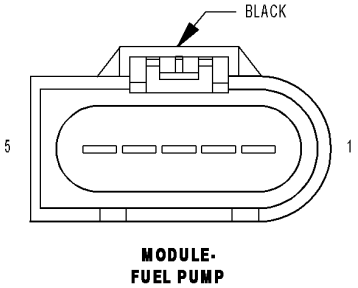

MODULE-FUEL PUMP

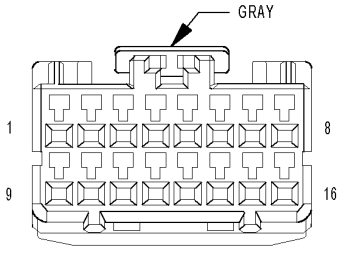

CLUSTER C2

816B87D6

For a complete wiring diagram **Refer to Section 8W**

The Fuel Level Sensor is hard wired to the Instrument Cluster (CCN). The Instrument Cluster provides Fuel Level Sensor input to the ECM over the CAN Bus.

- **When Monitored:**
  With the ignition on.
- **Set Condition:**
  The CAN Bus message from the Instrument Cluster indicates Fuel Level Sensor 1 voltage is below 0.078 volt

Possible Causes
INTERMITTENT DTC
(N4) FUEL LEVEL SENSOR NO. 1 SIGNAL CIRCUIT SHORTED TO GROUND
(N4) FUEL LEVEL SENSOR NO. 1 SIGNAL CIRCUIT SHORTED TO (Z210) GROUND
(N4) FUEL LEVEL SENSOR NO. 1 SIGNAL CIRCUIT OPEN OR HIGH RESISTANCE
FUEL PUMP
INSTRUMENT CLUSTER (CCN)

Always perform the Pre-Diagnostic Troubleshooting procedure before proceeding. (Refer to 9 - ENGINE - DIAGNOSIS AND TESTING)

Diagnostic Test

1. DTC IS ACTIVE

Ignition on, engine not running.
With the scan tool, Clear DTCs in the Instrument Cluster (CCN).
Monitor the scan tool for at least two minutes.
Cycle the ignition key off and on several times, leaving the ignition on for at least 10 seconds at a time.
Start the engine.
Allow the engine to reach normal operating temperature.
With the scan tool, select View DTCs.

Is the status Active for this DTC?

Yes >> Go To 2

No >> Refer to the *CHECKING FOR AN INTERMITTENT DTC Diagnostic Procedure. (Refer to 9 - ENGINE - DIAGNOSIS AND TESTING)

2. (N4) FUEL LEVEL SENSOR NO. 1 SIGNAL CIRCUIT SHORTED TO GROUND

Turn the ignition off.
Disconnect the Fuel Pump connector.
Disconnect the Instrument Cluster (CCN) connector.
Measure the resistance between ground and the (N4) Fuel Level Sensor No. 1 Signal circuit in the Fuel Pump connector.

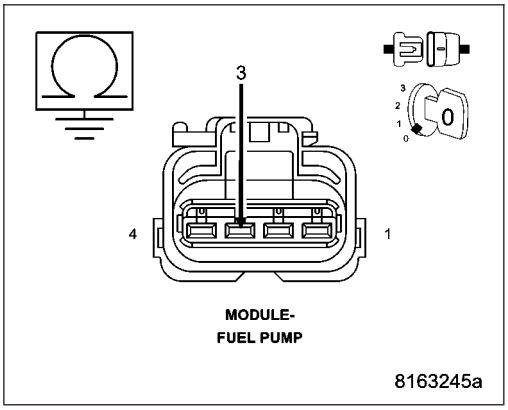

Is the resistance above 1000.0 ohms?

Yes >> Go to 3

No >> Repair the (N4) Fuel Level Sensor No. 1 Signal circuit for a short to ground.
Perform the BODY VERIFICATION TEST VER 1. (Refer to 8 - ELECTRICAL/ELECTRONIC CONTROL MODULES - STANDARD PROCEDURE)

3. (N4) FUEL LEVEL SENSOR NO. 1 SIGNAL CIRCUIT SHORTED TO (Z210) GROUND CIRCUIT

Measure the resistance between the (N4) Fuel Level Sensor No. 1 Signal circuit and the (Z210) Ground circuit in the Fuel Pump connector.

Is the resistance above 1000.0 ohms?

Yes >> Go to 4

No >> Repair the (N4) Fuel Level Sensor No. 1 Signal circuit for a short to the (Z210) Ground circuit.
Perform the BODY VERIFICATION TEST VER 1. (Refer to 8 - ELECTRICAL/ELECTRONIC CONTROL MODULES - STANDARD PROCEDURE)

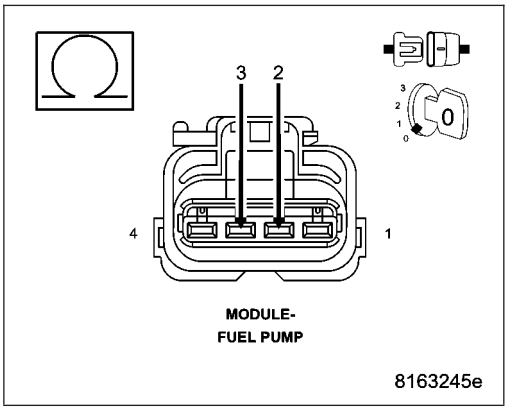

4. (N4) FUEL LEVEL SENSOR NO. 1 SIGNAL CIRCUIT OPEN CIRCUIT OR HIGH RESISTANCE

Measure the resistance of the (N4) Fuel Level Sensor No. 1 Signal circuit between the Fuel Pump connector and the Instrument Cluster (CCN) connector.

Is the resistance below 10.0 ohms?

Yes >> Go to 5

No >> Repair the (N4) Fuel Level Sensor No. 1 Signal circuit for an open circuit or high resistance.
Perform the BODY VERIFICATION TEST VER 1. (Refer to 8 - ELECTRICAL/ELECTRONIC CONTROL MODULES - STANDARD PROCEDURE)

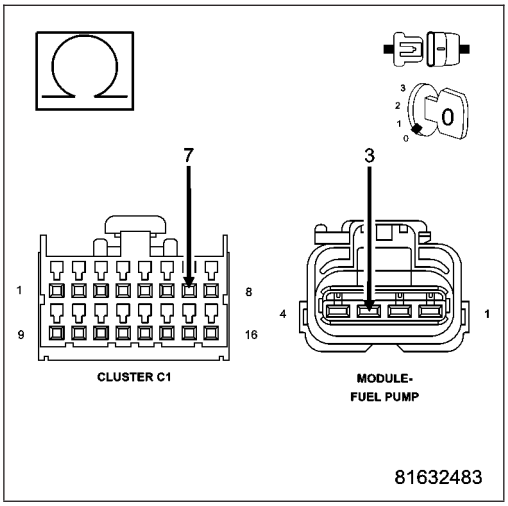

5. FUEL LEVEL SENSOR

Turn the ignition off.

Connect the Instrument Cluster (CCN) connector.

Turn the ignition on.

With the scan tool, clear DTCs.

With the scan tool, select View DTCs.

NOTE: The scan tool should display a Fuel Level Sensor high voltage or open circuit DTC with the Fuel Pump connector disconnected.

Does the scan tool display the DTC(s) as described above?

Yes >> Replace the Fuel Level Sensor in accordance with the service information.
Perform the BODY VERIFICATION TEST VER 1. (Refer to 8 - ELECTRICAL/ELECTRONIC CONTROL MODULES - STANDARD PROCEDURE)

No >> Go to 6

6. INSTRUMENT CLUSTER (CCN)

Using the wiring diagram/schematic as a guide, inspect the wiring and connectors between the Fuel Pump and the Instrument Cluster (CCN).

Look for any chafed, pierced, pinched, or partially broken wires.

Look for broken, bent, pushed out or corroded terminals.

Monitor the scan tool data relative to this circuit and wiggle test the wiring and connectors.

Look for the data to change or for the DTC to reset during the wiggle test.

Refer to any Technical Service Bulletins that may apply.

Were any problems found?

Yes >> Repair as necessary.
Perform the BODY VERIFICATION TEST VER 1. (Refer to 8 - ELECTRICAL/ELECTRONIC CONTROL MODULES - STANDARD PROCEDURE)

No >> Replace the Instrument Cluster (CCN) in accordance with the Service Information.
Perform the BODY VERIFICATION TEST VER 1. (Refer to 8 - ELECTRICAL/ELECTRONIC CONTROL MODULES - STANDARD PROCEDURE)

P0463-FUEL LEVEL SENSOR 1 HIGH CIRCUIT

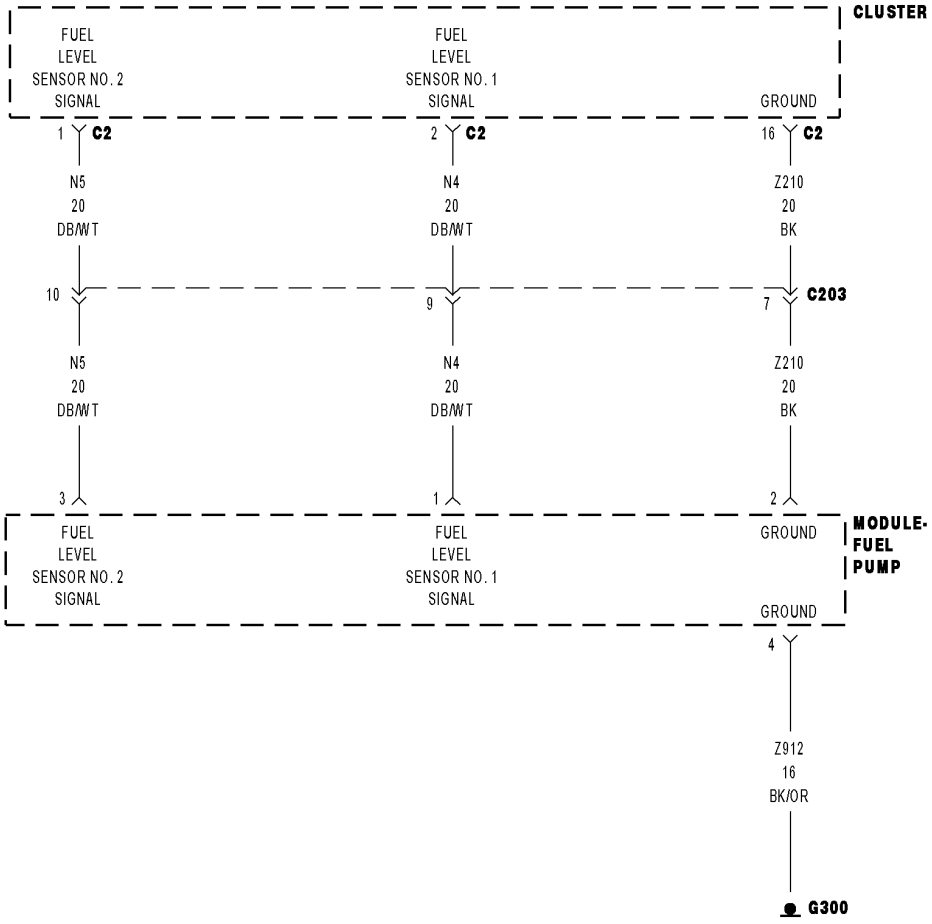

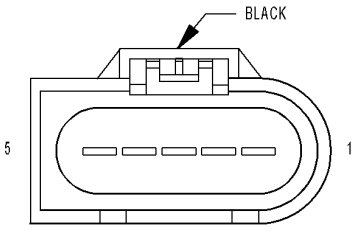

MODULE-FUEL PUMP

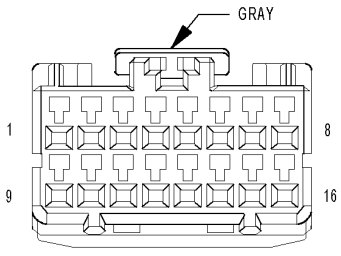

CLUSTER C2

816B87D6

For a complete wiring diagram **Refer to Section 8W**

The Fuel Level Sensor is hard wired to the Instrument Cluster (CCN). The Instrument Cluster provides Fuel Level Sensor input to the ECM over the CAN Bus.

- **When Monitored:**
  With the ignition on.
- **Set Condition:**
  The CAN Bus message from the Instrument Cluster indicates Fuel Level Sensor 1 voltage is above 2.51 volts.

Possible Causes
INTERMITTENT DTC
(N4) FUEL LEVEL SENSOR NO. 1 SIGNAL CIRCUIT SHORTED TO VOLTAGE
(Z210) GROUND CIRCUIT SHORTED TO VOLTAGE
(N4) FUEL LEVEL SENSOR NO. 1 SIGNAL CIRCUIT OPEN OR HIGH RESISTANCE
(Z210) GROUND CIRCUIT OPEN OR HIGH RESISTANCE
FUEL PUMP
INSTRUMENT CLUSTER (CCN)

Always perform the Pre-Diagnostic Troubleshooting procedure before proceeding. (Refer to 9 - ENGINE - DIAGNOSIS AND TESTING)

Diagnostic Test

1. DTC IS ACTIVE

Ignition on, engine not running.
With the scan tool, Clear DTCs in the Instrument Cluster (CCN).
Monitor the scan tool for at least two minutes.
Cycle the ignition key off and on several times, leaving the ignition on for at least 10 seconds at a time.
Start the engine.
Allow the engine to reach normal operating temperature.
With the scan tool, select View DTCs.

Is the status Active for this DTC?

Yes >> Go To 2

No >> Refer to the *CHECKING FOR AN INTERMITTENT DTC Diagnostic Procedure. (Refer to 9 - ENGINE - DIAGNOSIS AND TESTING)

2. (N4) FUEL LEVEL SENSOR NO. 1 SIGNAL CIRCUIT SHORTED TO VOLTAGE

Turn the ignition off.
Disconnect the Fuel Pump connector.
Disconnect the Instrument Cluster (CCN) connector.
Turn the ignition on.
Measure the voltage of the (N4) Fuel Level Sensor No. 1 Signal circuit in the Fuel Pump connector.

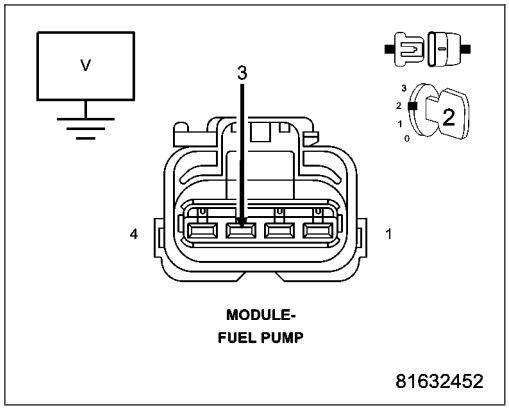

Is there any voltage present?

Yes >> Repair the (N4) Fuel Level Sensor No. 1 Signal circuit for a short to voltage.
Perform the BODY VERIFICATION TEST VER 1. (Refer to 8 - ELECTRICAL/ELECTRONIC CONTROL MODULES - STANDARD PROCEDURE)

No >> Go to 3

3. (Z210) GROUND CIRCUIT SHORTED TO VOLTAGE

Measure the voltage of the (Z210) Ground circuit in the Fuel Pump connector.

Is there any voltage present?

Yes >> Repair the (Z210) Ground circuit for a short to voltage.
Perform the BODY VERIFICATION TEST VER 1. (Refer to 8 - ELECTRICAL/ELECTRONIC CONTROL MODULES - STANDARD PROCEDURE)

No >> Go to 4

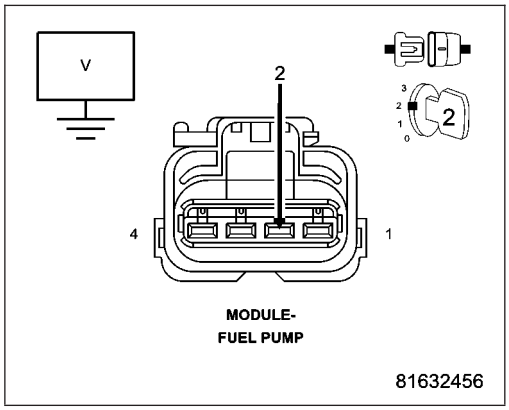

4. (N4) FUEL LEVEL SENSOR NO. 1 SIGNAL OPEN OR HIGH RESISTANCE

Turn the ignition off.

Disconnect the Instrument Cluster (CCN) connector.

Measure the resistance of the (N4) Fuel Level Sensor No. 1 Signal circuit between the Fuel Pump connector and the Instrument Cluster (CCN) connector.

Is the resistance below 10.0 ohms?

Yes >> Go to 5

No >> Repair the (N4) Fuel Level Sensor No. 1 Signal circuit for an open circuit or high resistance.
Perform the BODY VERIFICATION TEST VER 1. (Refer to 8 - ELECTRICAL/ELECTRONIC CONTROL MODULES - STANDARD PROCEDURE)

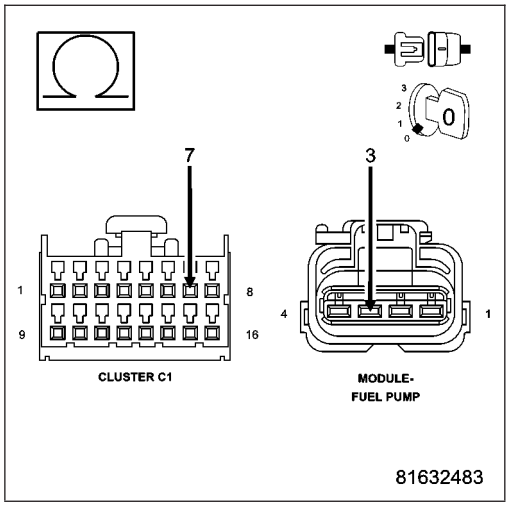

5. (Z210) GROUND CIRCUIT OPEN OR HIGH RESISTANCE

Measure the resistance of the (Z210) Ground circuit between the Fuel Pump connector and the Instrument Cluster (CCN) connector.

Is the resistance below 10.0 ohms?

Yes >> Go to 6

No >> Repair the (Z210) Ground circuit for an open circuit or high resistance.
Perform the BODY VERIFICATION TEST VER 1. (Refer to 8 - ELECTRICAL/ELECTRONIC CONTROL MODULES - STANDARD PROCEDURE)

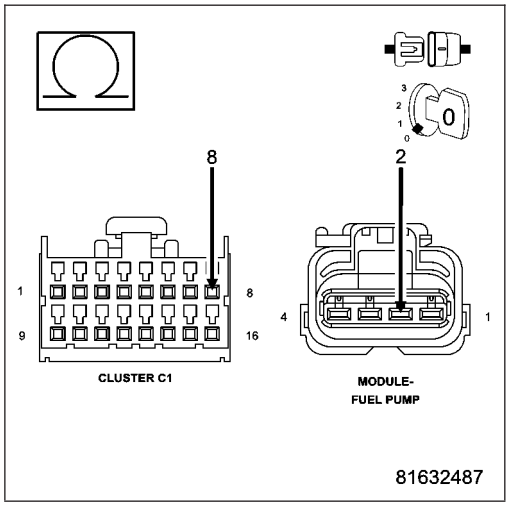

6. FUEL LEVEL SENSOR

Turn the ignition off.

Connect the Instrument Cluster (CCN) connector.

Connect a jumper wire between the (Z210) Ground circuit and the (N4) Fuel Level Sensor No. 1 Signal circuit in the Fuel Pump connector.

Turn the ignition on.

With the scan tool, Clear DTCs.

With the scan tool, select View DTCs.

NOTE: The scan tool should display a Fuel Level Sensor low voltage or short to ground DTC with the jumper wire in place.

Does the scan tool display the DTC(s) as described above?

Yes >> Replace the Fuel Level Sensor in accordance with the Service Information.
Perform the BODY VERIFICATION TEST VER 1. (Refer to 8 - ELECTRICAL/ELECTRONIC CONTROL MODULES - STANDARD PROCEDURE)

No >> Go to 7

7. INSTRUMENT CLUSTER (CCN)

Using the wiring diagram/schematic as a guide, inspect the wiring and connectors between the Fuel Pump and the Instrument Cluster (CCN).

Look for any chafed, pierced, pinched, or partially broken wires.

Look for broken, bent, pushed out or corroded terminals.

Monitor the scan tool data relative to this circuit and wiggle test the wiring and connectors.

Look for the data to change or for the DTC to reset during the wiggle test.

Refer to any Technical Service Bulletins that may apply.

Were any problems found?

Yes >> Repair as necessary.
Perform the BODY VERIFICATION TEST VER 1. (Refer to 8 - ELECTRICAL/ELECTRONIC CONTROL MODULES - STANDARD PROCEDURE)

No >> Replace the Instrument Cluster (CCN) in accordance with the Service Information.
Perform the BODY VERIFICATION TEST VER 1. (Refer to 8 - ELECTRICAL/ELECTRONIC CONTROL MODULES - STANDARD PROCEDURE)

P0471-EXHAUST PRESSURE SENSOR 1 PERFORMANCE

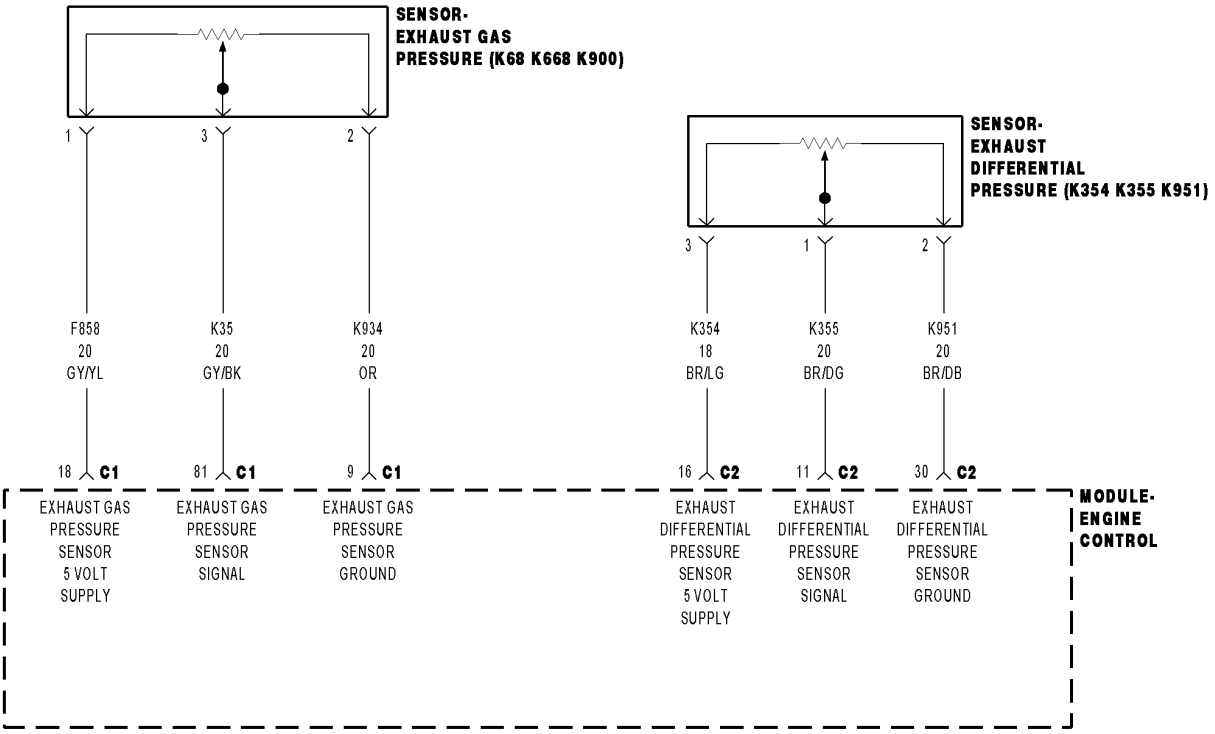

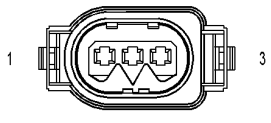

SENSOR-
EXHAUST
DIFFERENTIAL
PRESSURE
(DIESEL)

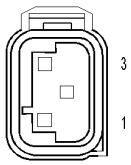

SENSOR-
EXHAUST GAS
PRESSURE
(DIESEL)

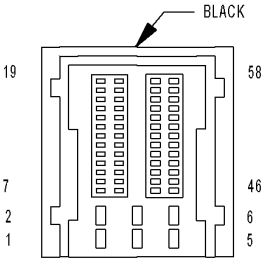

MODULE-
ENGINE
CONTROL C2
(DIESEL)

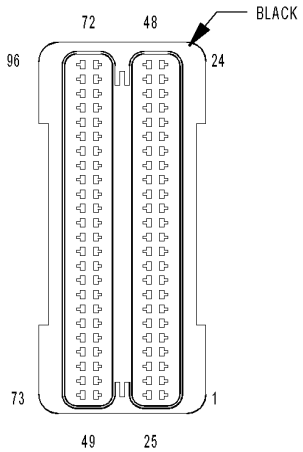

MODULE-
ENGINE CONTROL C1
(DIESEL)

816B74AB

For a complete wiring diagram **Refer to Section 8W**

The Inlet Pressure Sensor provides the ECM with the Barometric/Atmospheric Pressure signal. The ECM compares the Atmospheric/Barometric signal to the signal of the Exhaust Pressure Sensor during low engine rpm (non-turbo-charger boost conditions) to determine the plausibility of these sensors.

- **When Monitored:**
  Engine speed is below 670 rpm. There are no other Exhaust Pressure Sensor DTC's. There are no Atmospheric/Barometric Pressure Sensor DTC's..
- **Set Condition:**
  The difference between the Exhaust Pressure Sensor Signal and the Atmospheric/Barometric Pressure Signal is greater than 400 hpa (5.8 psi.) for at least 3.0 seconds.

Possible Causes
INTERMITTENT DTC
(F858) EXHAUST GAS PRESSURE SENSOR 5 VOLT SUPPLY CIRCUIT SHORTED TO VOLTAGE
(K35) EXHAUST GAS PRESSURE SENSOR SIGNAL CIRCUIT SHORTED TO VOLTAGE
(K934) EXHAUST GAS PRESSURE SENSOR GROUND CIRCUIT SHORTED TO VOLTAGE
(F858) EXHAUST GAS PRESSURE SENSOR 5 VOLT SUPPLY CIRCUIT SHORTED TO GROUND
(K35) EXHAUST GAS PRESSURE SENSOR SIGNAL CIRCUIT SHORTED TO GROUND
(F858) EXHAUST GAS PRESSURE SENSOR 5 VOLT SUPPLY CIRCUIT OPEN OR HIGH RESISTANCE
(K35) EXHAUST GAS PRESSURE SENSOR SIGNAL CIRCUIT OPEN OR HIGH RESISTANCE
(K934) EXHAUST GAS PRESSURE SENSOR GROUND CIRCUIT OPEN OR HIGH RESISTANCE
EXHAUST GAS PRESSURE SENSOR
ENGINE CONTROL MODULE (ECM)

Always perform the Pre-Diagnostic Troubleshooting procedure before proceeding. (Refer to 9 - ENGINE - DIAGNOSIS AND TESTING)

Diagnostic Test

1. DTC IS ACTIVE

Ignition on, engine not running.
With the scan tool, Clear DTCs in the Engine Control Module (ECM).
Monitor the scan tool for at least two minutes.
Cycle the ignition key off and on several times, leaving the ignition on for at least 10 seconds at a time.
Start the engine.
Allow the engine to reach normal operating temperature.
With the scan tool, select View DTCs.

Is the status Active for this DTC?

Yes >> Go To 2

No >> Refer to the *CHECKING FOR AN INTERMITTENT DTC Diagnostic Procedure. (Refer to 9 - ENGINE - DIAGNOSIS AND TESTING)

2. EXHAUST GAS PRESSURE SENSOR CIRCUIT SHORTED TO VOLTAGE

Turn the ignition off.

Disconnect the Exhaust Gas Pressure Sensor connector.

Disconnect the Engine Control Module (ECM) connector.

Remove the ASD Relay from the IPM.

Connect a jumper wire between cavity 30 and cavity 87 of the ASD Relay Connector.

Turn the ignition on.

Measure the voltage of the (F858) Exhaust Gas Pressure Sensor 5 Volt Supply circuit in the Exhaust Gas Pressure Sensor connector.

Measure the voltage of the (K35) Exhaust Gas Pressure Sensor Signal circuit in the Exhaust Gas Pressure Sensor connector.

Measure the voltage of the (K934) Exhaust Gas Pressure Sensor Ground circuit in the Exhaust Gas Pressure Sensor connector.

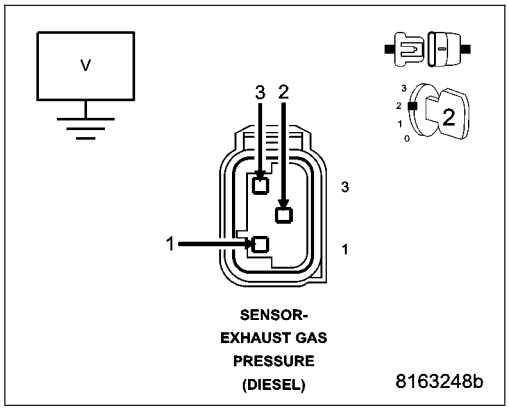

Is there voltage present on any of the circuits?

Yes >> Repair the circuit that had voltage present on it for a short to voltage.
Perform the ECM Verification Test Ver. 1. (Refer to 9 - ENGINE - DIAGNOSIS AND TESTING)

No >> Go to 3

3. EXHAUST GAS PRESSURE SENSOR CIRCUIT OPEN OR HIGH RESISTANCE

Turn the ignition off.

Disconnect the Engine Control Module (ECM) connector.

Measure the resistance of the (F858) Exhaust Gas Pressure Sensor 5 Volt Supply circuit between the Exhaust Gas Pressure Sensor connector and the Engine Control Module (ECM) connector.

Measure the resistance of the (K35) Exhaust Gas Pressure Sensor Signal circuit between the Exhaust Gas Pressure Sensor connector and the Engine Control Module (ECM) connector.

Measure the resistance of the (K934) Exhaust Gas Pressure Sensor Ground circuit between the Exhaust Gas Pressure Sensor connector and the Engine Control Module (ECM) connector.

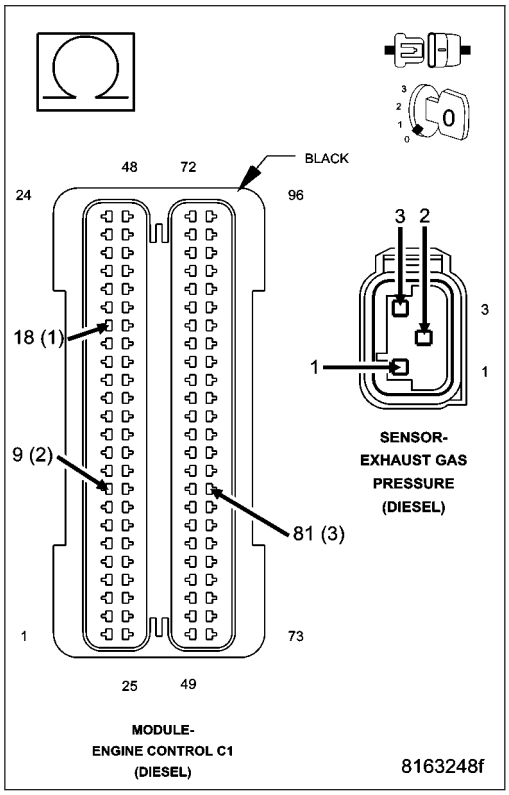

Is the resistance below 10.0 ohms for each of the circuits?

Yes >> Go to 4

No >> Repair the circuit that measure above 10.0 ohms for an open circuit or high resistance.
Perform the ECM Verification Test Ver. 1. (Refer to 9 - ENGINE - DIAGNOSIS AND TESTING)

4. EXHAUST GAS PRESSURE SENSOR CIRCUIT SHORTED TO GROUND

Measure the resistance between ground and the (F858) Exhaust Gas Pressure Sensor 5 Volt Supply circuit in the Exhaust Gas Pressure Sensor connector.

Measure the resistance between ground and the (K35) Exhaust Gas Pressure Sensor Signal circuit in the Exhaust Gas Pressure Sensor connector.

Is the resistance between ground and each circuit above 1000 ohms?

Yes >> Go to 5

No >> Repair the circuit that measured below 1000 ohms for a short to ground.
Perform the ECM Verification Test Ver. 1. (Refer to 9 - ENGINE - DIAGNOSIS AND TESTING)

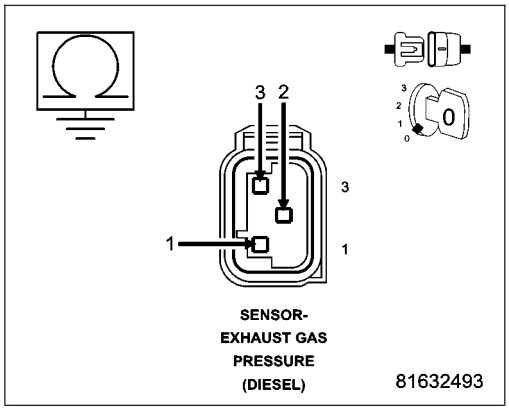

5. EXHAUST GAS PRESSURE SENSOR

Turn the ignition off.

Remove the jumper wire and install the ASD Relay.

Connect the Engine Control Module (ECM) connector.

Connect a jumper wire between the (K934) Exhaust Gas Pressure Sensor Ground circuit and the (K35) Exhaust Gas Pressure Sensor Signal circuit in the Exhaust Gas Pressure Sensor connector.

Turn the ignition on.

With the scan tool, Clear DTCs.

With the scan tool, select View DTCs.

NOTE: The scan tool should display an Exhaust Gas Pressure Sensor low voltage or short to ground DTC with the jumper wire in place.

Turn the ignition off.

Remove the jumper wire.

Turn the ignition on.

With the scan tool, Clear DTCs.

With the scan tool, select View DTCs.

NOTE: The scan tool should display an Exhaust Gas Pressure Sensor high voltage or open DTC with the Exhaust Gas Pressure Sensor connector disconnected.

Does the scan tool display the DTC(s) as described above?

Yes >> Replace the Exhaust Gas Pressure Sensor.
Perform the ECM Verification Test Ver. 1. (Refer to 9 - ENGINE - DIAGNOSIS AND TESTING)

No >> Go to 6

6. ENGINE CONTROL MODULE (ECM)

Using the wiring diagram/schematic as a guide, inspect the wiring and connectors between the Exhaust Gas Pressure Sensor and the Engine Control Module (ECM).

Look for any chafed, pierced, pinched, or partially broken wires.

Look for broken, bent, pushed out or corroded terminals.

Monitor the scan tool data relative to this circuit and wiggle test the wiring and connectors.

Look for the data to change or for the DTC to reset during the wiggle test.

Refer to any Technical Service Bulletins that may apply.

Were any problems found?

Yes >> Repair as necessary.
Perform the ECM Verification Test Ver. 1. (Refer to 9 - ENGINE - DIAGNOSIS AND TESTING)

No >> Replace the Engine Control Module (ECM) in accordance with the Service Information.
Perform the ECM Verification Test Ver. 1. (Refer to 9 - ENGINE - DIAGNOSIS AND TESTING)

P0472-EXHAUST PRESSURE SENSOR 1 LOW

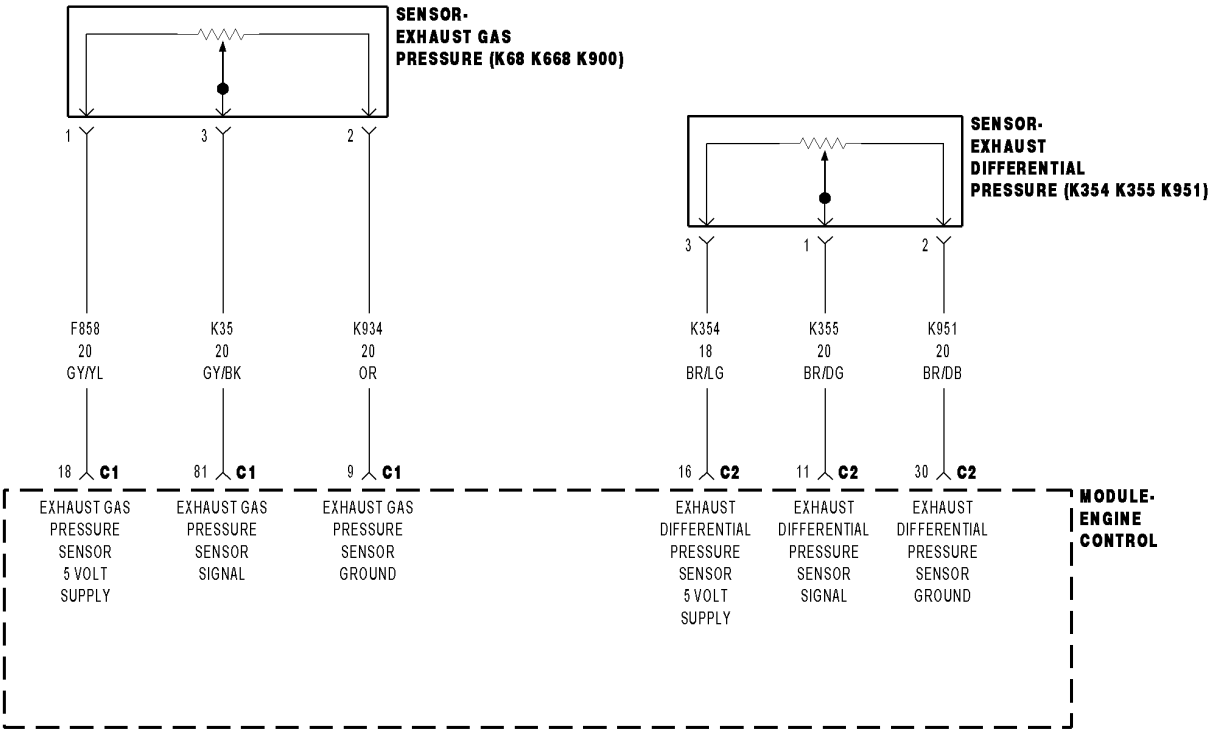

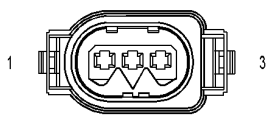

SENSOR-
EXHAUST
DIFFERENTIAL
PRESSURE
(DIESEL)

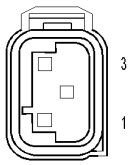

SENSOR-
EXHAUST GAS
PRESSURE
(DIESEL)

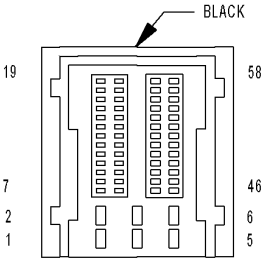

MODULE-
ENGINE
CONTROL C2
(DIESEL)

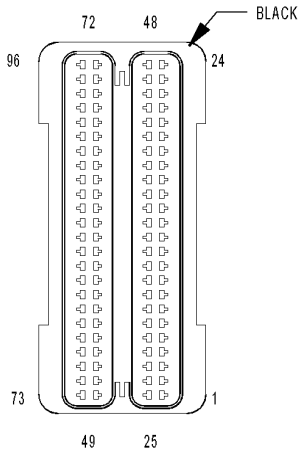

MODULE-
ENGINE CONTROL C1
(DIESEL)

816B74AB

For a complete wiring diagram **Refer to Section 8W**

- **When Monitored:**
  With the ignition on.
- **Set Condition:**
  The Exhaust Gas Pressure Sensor Signal circuit voltage is below 4.58 volts for 2.0 seconds.

Possible Causes
INTERMITTENT DTC
(F858) EXHAUST GAS PRESSURE SENSOR 5 VOLT SUPPLY CIRCUIT SHORTED TO GROUND
(K35) EXHAUST GAS PRESSURE SENSOR SIGNAL CIRCUIT SHORTED TO GROUND
(F858) EXHAUST GAS PRESSURE SENSOR 5 VOLT SUPPLY CIRCUIT SHORTED TO (K934) EXHAUST GAS PRESSURE SENSOR GROUND CIRCUIT
(K35) EXHAUST GAS PRESSURE SENSOR SIGNAL CIRCUIT SHORTED TO (K934) EXHAUST GAS PRESSURE SENSOR GROUND CIRCUIT
(F858) EXHAUST GAS PRESSURE SENSOR 5 VOLT SUPPLY CIRCUIT OPEN OR HIGH RESISTANCE
(K35) EXHAUST GAS PRESSURE SENSOR SIGNAL CIRCUIT OPEN OR HIGH RESISTANCE
EXHAUST GAS PRESSURE SENSOR
ENGINE CONTROL MODULE (ECM)

Always perform the Pre-Diagnostic Troubleshooting procedure before proceeding. (Refer to 9 - ENGINE - DIAGNOSIS AND TESTING)

Diagnostic Test

1. DTC IS ACTIVE

Ignition on, engine not running.
With the scan tool, Clear DTCs in the Engine Control Module (ECM).
Monitor the scan tool for at least two minutes.
Cycle the ignition key off and on several times, leaving the ignition on for at least 10 seconds at a time.
Start the engine.
Allow the engine to reach normal operating temperature.
With the scan tool, select View DTCs.

Is the status Active for this DTC?

Yes >> Go To 2

No >> Refer to the *CHECKING FOR AN INTERMITTENT DTC Diagnostic Procedure. (Refer to 9 - ENGINE - DIAGNOSIS AND TESTING)

2. (F858) EXHAUST GAS PRESSURE SENSOR 5 VOLT SUPPLY CIRCUIT VOLTAGE

Turn the ignition off.
Disconnect the Exhaust Gas Pressure Sensor connector.
Turn the ignition on.
Measure the voltage of the (F858) Exhaust Gas Pressure Sensor 5 Volt Supply circuit in the Exhaust Gas Pressure Sensor connector.

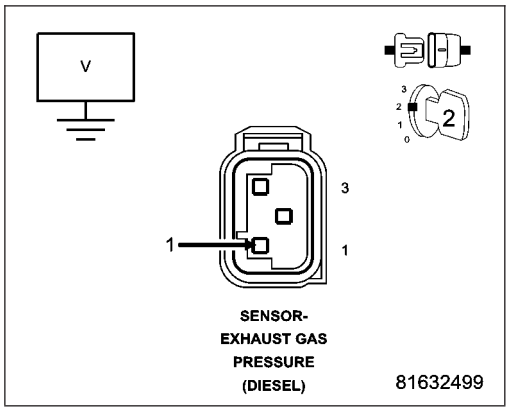

Is the voltage above 4.5 volts?

Yes >> Go to 6

No >> Go to 3

3. (F858) EXHAUST GAS PRESSURE SENSOR 5 VOLT SUPPLY CIRCUIT SHORTED TO GROUND

Turn the ignition off.

Disconnect the Engine Control Module (ECM) connector.

Measure the resistance between ground and the (F858) Exhaust Gas Pressure Sensor 5 Volt Supply circuit in the Exhaust Gas Pressure Sensor connector.

Is the resistance above 1000.0 ohms?

Yes >> Go to 4

No >> Repair the (F858) Exhaust Gas Pressure Sensor 5 Volt Supply circuit for a short to ground.

Perform the ECM Verification Test Ver. 1. (Refer to 9 - ENGINE - DIAGNOSIS AND TESTING)

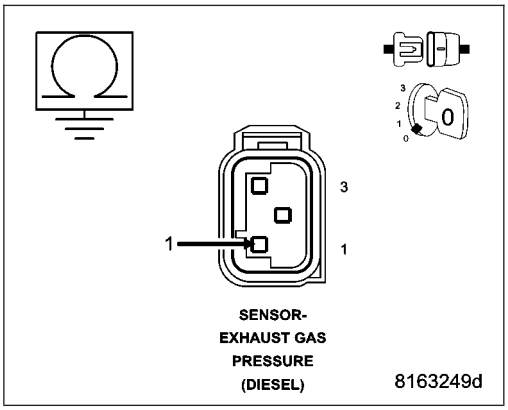

4. (F858) EXHAUST GAS PRESSURE SENSOR 5 VOLT SUPPLY CIRCUIT SHORTED TO (K934) EXHAUST GAS PRESSURE SENSOR GROUND CIRCUIT

Measure the resistance between the (F858) Exhaust Gas Pressure Sensor 5 Volt Supply circuit and the (K934) Exhaust Gas Pressure Sensor Ground circuit in the Exhaust Gas Pressure Sensor connector.

Is the resistance above 1000.0 ohms?

Yes >> Go to 5

No >> Repair the (F858) Exhaust Gas Pressure Sensor 5 Volt Supply circuit for a short to the (K934) Exhaust Gas Pressure Sensor Ground circuit.

Perform the ECM Verification Test Ver. 1. (Refer to 9 - ENGINE - DIAGNOSIS AND TESTING)

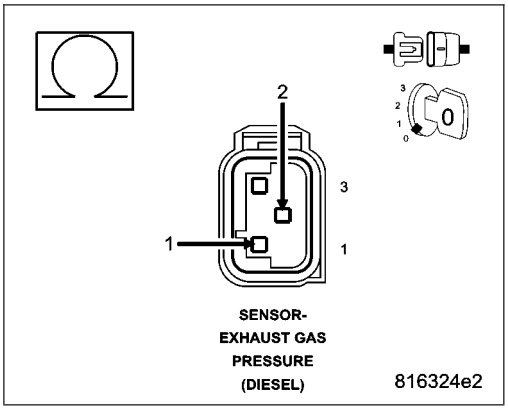

5. (F858) EXHAUST GAS PRESSURE SENSOR 5 VOLT SUPPLY CIRCUIT OPEN OR HIGH RESISTANCE

Measure the resistance of the (F858) Exhaust Gas Pressure Sensor 5 Volt Supply circuit between the Exhaust Gas Pressure Sensor connector and the Engine Control Module (ECM) connector.

Is the resistance below 10.0 ohms?

Yes >> Go to 10

No >> Repair the (F858) Exhaust Gas Pressure Sensor 5 Volt Supply circuit for an open circuit or high resistance.
Perform the ECM Verification Test Ver. 1. (Refer to 9 - ENGINE - DIAGNOSIS AND TESTING)

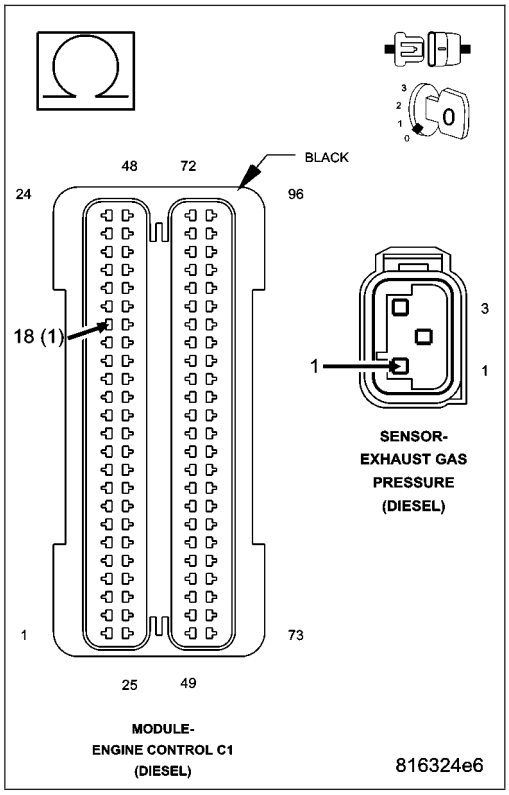

6. EXHAUST GAS PRESSURE SENSOR

Turn the ignition on.

With the scan tool, Clear DTCs.

With the scan tool, select View DTCs.

NOTE: The scan tool should display an Exhaust Gas Pressure Sensor high voltage or open DTC with the Exhaust Gas Pressure Sensor connector disconnected.

Does the scan tool display the DTC(s) as described above?

Yes >> Replace the Exhaust Gas Pressure Sensor in accordance with the Service Information.
Perform the ECM Verification Test Ver. 1. (Refer to 9 - ENGINE - DIAGNOSIS AND TESTING)

No >> Go to 7

7. (K35) EXHAUST GAS PRESSURE SENSOR SIGNAL CIRCUIT SHORTED TO GROUND

Turn the ignition off.

Disconnect the Engine Control Module (ECM) connector.

Measure the resistance between ground and the (K35) Exhaust Gas Pressure Sensor Signal circuit in the Exhaust Gas Pressure Sensor connector.

Is the resistance above 10.0 ohms?

Yes >> Go to 8

No >> Repair the (K35) Exhaust Gas Pressure Sensor Signal circuit for a short to ground.
Perform the ECM Verification Test Ver. 1. (Refer to 9 - ENGINE - DIAGNOSIS AND TESTING)

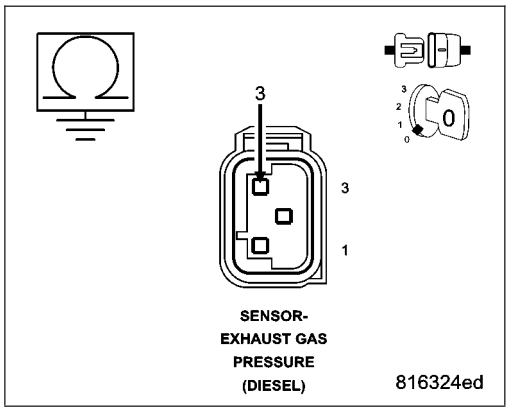

8. (K35) EXHAUST GAS PRESSURE SENSOR SIGNAL CIRCUIT SHORTED TO (K934) EXHAUST GAS PRESSURE SENSOR GROUND CIRCUIT

Measure the resistance between the (K35) Exhaust Gas Pressure Sensor Signal circuit and the (K934) Exhaust Gas Pressure Sensor Ground circuit in the Exhaust Gas Pressure Sensor connector.

Is the resistance above 5.0 ohms?

Yes >> Go to 9

No >> Repair the (K35) Exhaust Gas Pressure Sensor Signal circuit for a short to the (K934) Exhaust Gas Pressure Sensor Ground circuit.

Perform the ECM Verification Test Ver. 1. (Refer to 9 - ENGINE - DIAGNOSIS AND TESTING)

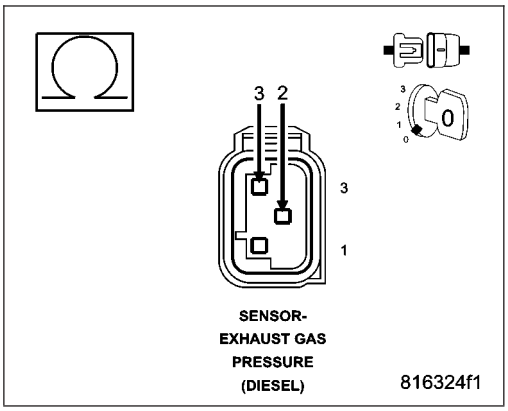

9. (K35) EXHAUST GAS PRESSURE SENSOR SIGNAL CIRCUIT OPEN OR HIGH RESISTANCE

Measure the resistance of the (K35) Exhaust Gas Pressure Sensor Signal circuit between the Exhaust Gas Pressure Sensor connector and the Engine Control Module (ECM) connector.

Is the resistance below 5.0 ohms?

Yes >> Go to 10

No >> Repair the (K35) Exhaust Gas Pressure Sensor Signal circuit for an open circuit or high resistance.

Perform the ECM Verification Test Ver. 1. (Refer to 9 - ENGINE - DIAGNOSIS AND TESTING)

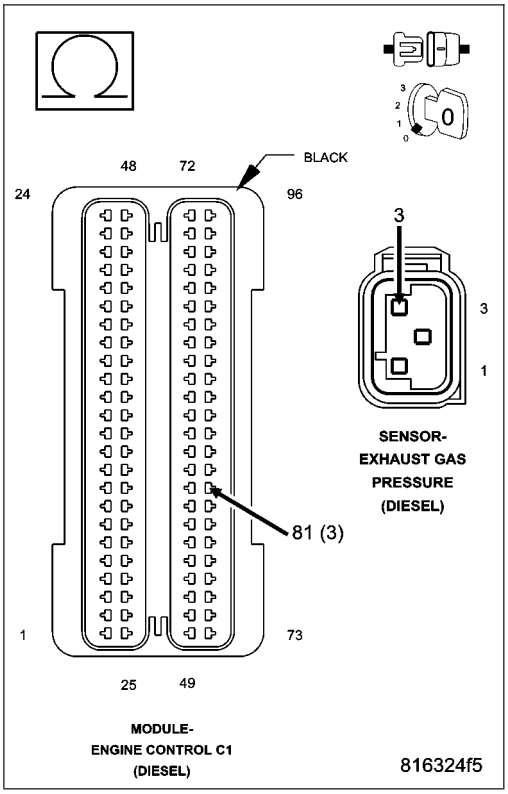

10. ENGINE CONTROL MODULE (ECM)

Using the wiring diagram/schematic as a guide, inspect the wiring and connectors between the Exhaust Gas Pressure Sensor and the Engine Control Module (ECM).

Look for any chafed, pierced, pinched, or partially broken wires.

Look for broken, bent, pushed out or corroded terminals.

Monitor the scan tool data relative to this circuit and wiggle test the wiring and connectors.

Look for the data to change or for the DTC to reset during the wiggle test.

Refer to any Technical Service Bulletins that may apply.

Were any problems found?

Yes >> Repair as necessary.
Perform the ECM Verification Test Ver. 1. (Refer to 9 - ENGINE - DIAGNOSIS AND TESTING)

No >> Replace the Engine Control Module (ECM) in accordance with the Service Information.
Perform the ECM Verification Test Ver. 1. (Refer to 9 - ENGINE - DIAGNOSIS AND TESTING)

P0473-EXHAUST PRESSURE SENSOR 1 HIGH

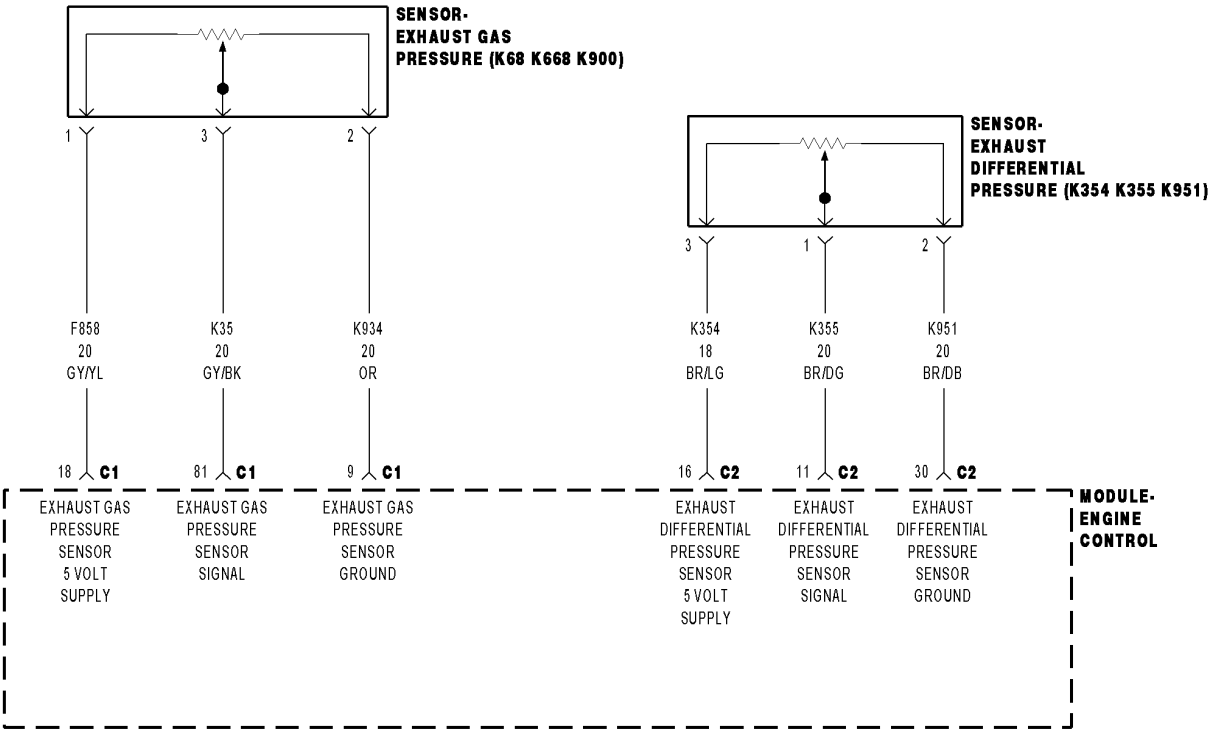

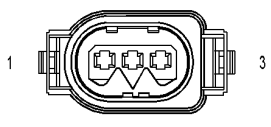

SENSOR-
EXHAUST
DIFFERENTIAL
PRESSURE
(DIESEL)

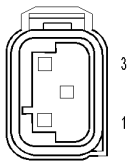

SENSOR-
EXHAUST GAS
PRESSURE
(DIESEL)

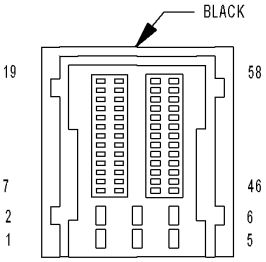

MODULE-
ENGINE
CONTROL C2
(DIESEL)

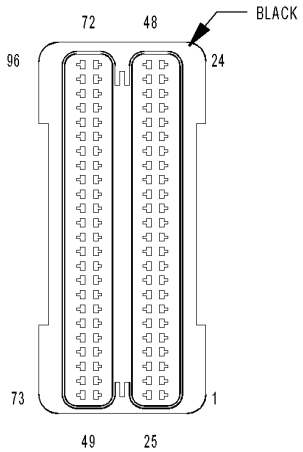

MODULE-
ENGINE CONTROL C1
(DIESEL)

816B74AB

For a complete wiring diagram **Refer to Section 8W**

- **When Monitored:**
  With the ignition on.
- **Set Condition:**
  The Exhaust Gas Pressure Sensor Signal circuit voltage is below 0.25 volt for 2.0 seconds.

Possible Causes
INTERMITTENT DTC
(F858) EXHAUST GAS PRESSURE SENSOR 5 VOLT SUPPLY CIRCUIT SHORTED TO VOLTAGE
(K35) EXHAUST GAS PRESSURE SENSOR SIGNAL CIRCUIT SHORTED TO VOLTAGE
(K934) EXHAUST GAS PRESSURE SENSOR GROUND CIRCUIT SHORTED TO VOLTAGE
(K35) EXHAUST GAS PRESSURE SENSOR SIGNAL CIRCUIT OPEN OR HIGH RESISTANCE
(K934) EXHAUST GAS PRESSURE SENSOR GROUND CIRCUIT OPEN OR HIGH RESISTANCE
EXHAUST GAS PRESSURE SENSOR
ENGINE CONTROL MODULE (ECM)

Always perform the Pre-Diagnostic Troubleshooting procedure before proceeding. (Refer to 9 - ENGINE - DIAGNOSIS AND TESTING)

Diagnostic Test

1. DTC IS ACTIVE

Ignition on, engine not running.
With the scan tool, Clear DTCs in the Engine Control Module (ECM).
Monitor the scan tool for at least two minutes.
Cycle the ignition key off and on several times, leaving the ignition on for at least 10 seconds at a time.
Start the engine.
Allow the engine to reach normal operating temperature.
With the scan tool, select View DTCs.

Is the status Active for this DTC?

Yes >> Go To 2

No >> Refer to the *CHECKING FOR AN INTERMITTENT DTC Diagnostic Procedure. (Refer to 9 - ENGINE - DIAGNOSIS AND TESTING)

2. (F858) EXHAUST GAS PRESSURE SENSOR 5 VOLT SUPPLY CIRCUIT SHORTED TO VOLTAGE

Turn the ignition off.
Disconnect the Exhaust Gas Pressure Sensor connector.
Disconnect the Engine Control Module (ECM) connector.
Remove the ASD Relay from the IPM.
Connect a jumper wire between cavity 30 and cavity 87 of the ASD Relay Connector.
Turn the ignition on.
Measure the voltage of the (F858) Exhaust Gas Pressure Sensor 5 Volt Supply circuit in the Exhaust Gas Pressure Sensor connector.

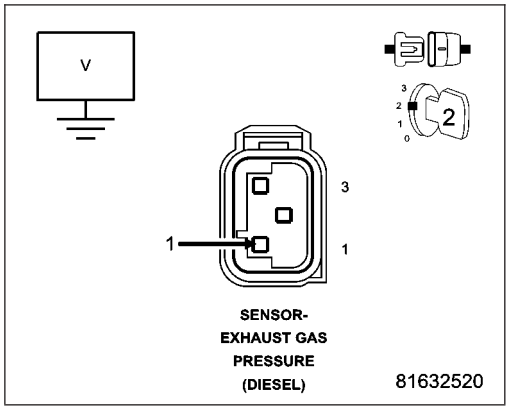

Is there any voltage present?

Yes >> Repair the (F858) Exhaust Gas Pressure Sensor 5 Volt Supply circuit for a short to voltage.
Perform the ECM Verification Test Ver. 1. (Refer to 9 - ENGINE - DIAGNOSIS AND TESTING)

No >> Go to 3

3. (K35) EXHAUST GAS PRESSURE SENSOR SIGNAL CIRCUIT SHORTED TO VOLTAGE

NOTE: The jumper wire should still be in place.
Measure the voltage of the (K35) Exhaust Gas Pressure Sensor Signal circuit in the Exhaust Gas Pressure Sensor connector.

Is there any voltage present?

Yes >> Repair the (K35) Exhaust Gas Pressure Sensor Signal circuit for a short to voltage.
Perform the ECM Verification Test Ver. 1. (Refer to 9 - ENGINE - DIAGNOSIS AND TESTING)

No >> Go to 4

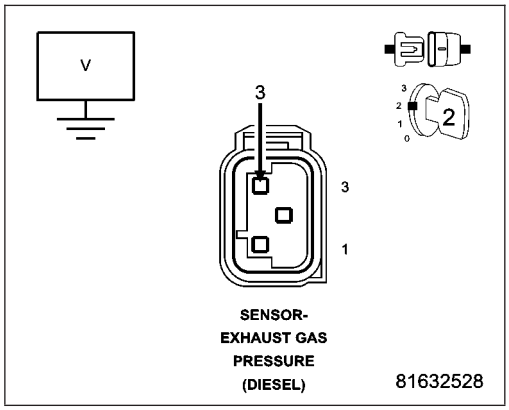

4. (K934) EXHAUST GAS PRESSURE SENSOR GROUND CIRCUIT SHORTED TO VOLTAGE

NOTE: The jumper wire should still be in place.
Measure the voltage of the (K934) Exhaust Gas Pressure Sensor Ground circuit in the Exhaust Gas Pressure Sensor connector.

Is there any voltage present?

Yes >> Repair the (K934) Exhaust Gas Pressure Sensor Ground circuit for a short to voltage.
Perform the ECM Verification Test Ver. 1. (Refer to 9 - ENGINE - DIAGNOSIS AND TESTING)

No >> Go to 5

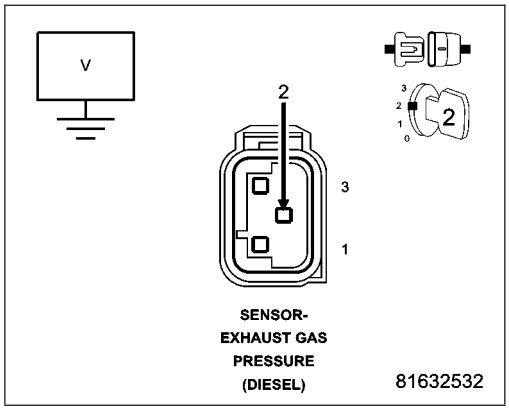

5. EXHAUST GAS PRESSURE SENSOR

Turn the ignition off.

Remove the jumper wire and install the ASD Relay.

Connect the Engine Control Module (ECM) connector.

Connect a jumper wire between the (K934) Exhaust Gas Pressure Sensor Ground circuit and the (K35) Exhaust Gas Pressure Sensor Signal circuit in the Exhaust Gas Pressure Sensor connector.

Turn the ignition on.

With the scan tool, Clear DTCs.

With the scan tool, select View DTCs.

NOTE: The scan tool should display an Exhaust Gas Pressure Sensor low voltage or short to ground DTC with the jumper wire in place.

Does the scan tool display the DTC(s) as described above?

Yes >> Replace the Exhaust Gas Pressure Sensor in accordance with the Service Information.
Perform the ECM Verification Test Ver. 1. (Refer to 9 - ENGINE - DIAGNOSIS AND TESTING)

No >> Go to 6

6. (K35) EXHAUST GAS PRESSURE SENSOR SIGNAL OPEN OR HIGH RESISTANCE

Turn the ignition off.

Disconnect the Engine Control Module (ECM) connector.

Measure the resistance of the (K35) Exhaust Gas Pressure Sensor Signal between the Exhaust Gas Pressure Sensor connector and the Engine Control Module (ECM) connector.

Is the resistance below 10.0 ohms?

Yes >> Go to 7

No >> Repair the (K35) Exhaust Gas Pressure Sensor Signal for an open circuit or high resistance.

Perform the ECM Verification Test Ver. 1. (Refer to 9 - ENGINE - DIAGNOSIS AND TESTING)

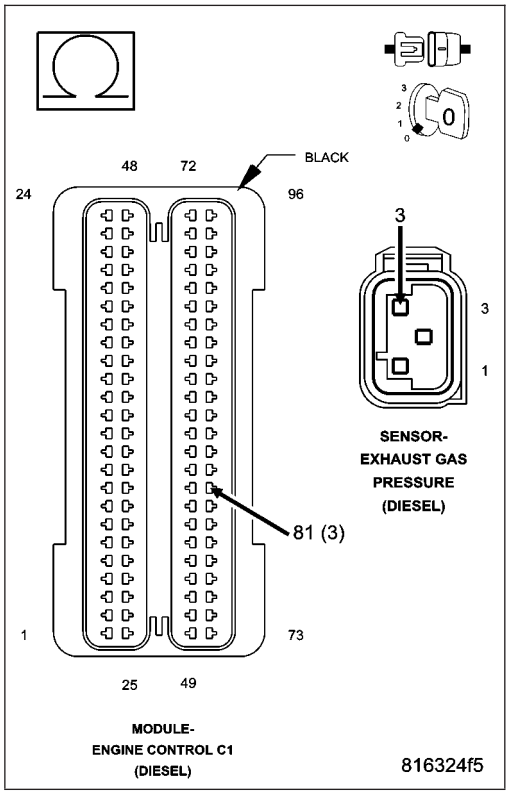

7. (K934) EXHAUST GAS PRESSURE SENSOR GROUND CIRCUIT OPEN OR HIGH RESISTANCE

Measure the resistance of the (K934) Exhaust Gas Pressure Sensor Ground circuit between the Exhaust Gas Pressure Sensor connector and the Engine Control Module (ECM) connector.

Is the resistance below 10.0 ohms?

Yes >> Go to 8

No >> Repair the (K934) Exhaust Gas Pressure Sensor Ground circuit for an open circuit or high resistance.

Perform the ECM Verification Test Ver. 1. (Refer to 9 - ENGINE - DIAGNOSIS AND TESTING)

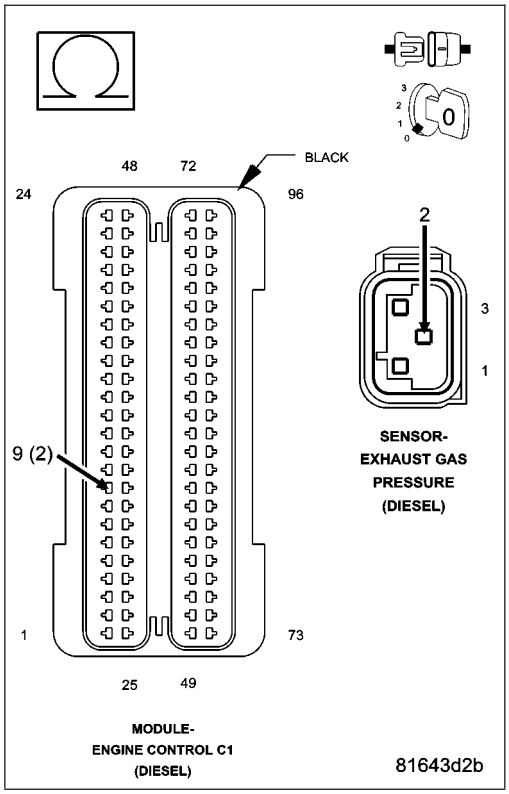

8. ENGINE CONTROL MODULE (ECM)

Using the wiring diagram/schematic as a guide, inspect the wiring and connectors between the Exhaust Gas Pressure Sensor and the Engine Control Module (ECM).

Look for any chafed, pierced, pinched, or partially broken wires.

Look for broken, bent, pushed out or corroded terminals.

Monitor the scan tool data relative to this circuit and wiggle test the wiring and connectors.

Look for the data to change or for the DTC to reset during the wiggle test.

Refer to any Technical Service Bulletins that may apply.

Were any problems found?

Yes >> Repair as necessary.
Perform the ECM Verification Test Ver. 1. (Refer to 9 - ENGINE - DIAGNOSIS AND TESTING)

No >> Replace the Engine Control Module (ECM) in accordance with the Service Information.
Perform the ECM Verification Test Ver. 1. (Refer to 9 - ENGINE - DIAGNOSIS AND TESTING)

P0480-COOLING FAN 1 CONTROL CIRCUIT

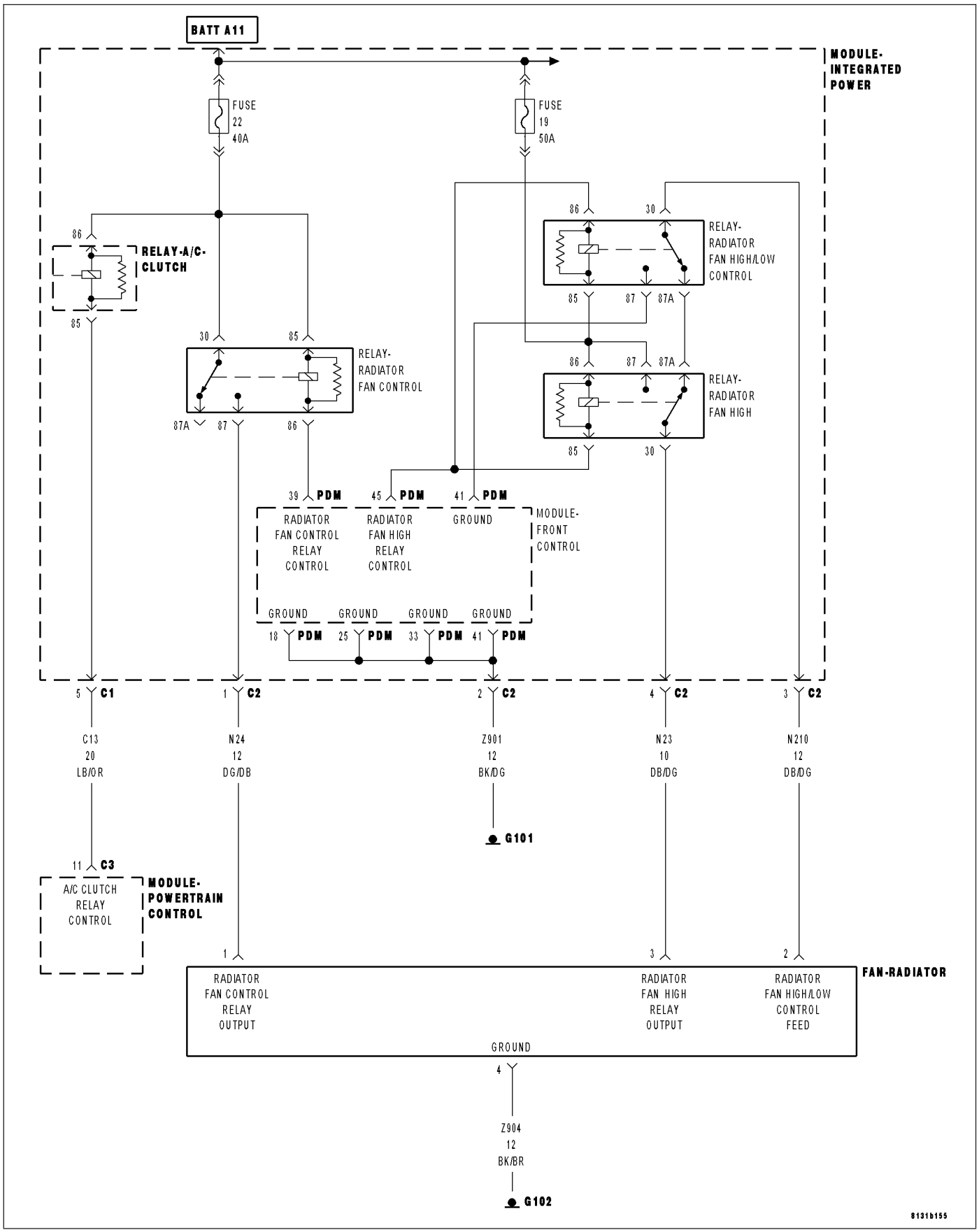

For a complete wiring diagram **Refer to Section 8W**.

- **When Monitored:**
  With the ignition on. Battery voltage greater than 10 volts.
- **Set Condition:**
  The ECM receives a CAN Bus message from the FCM indicating an open or shorted circuit on the Radiator Fan Relay Control circuit.

Possible Causes
FUSED (B+) FEED CIRCUITS
(N201) RADIATOR FAN CONTROL RELAY CONTROL CIRCUIT OPEN
(N201) RADIATOR FAN CONTROL RELAY CIRCUIT SHORT TO GROUND
RADIATOR FAN CONTROL RELAY
FRONT CONTROL MODULE

Always perform the Pre-Diagnostic Troubleshooting procedure before proceeding. (Refer to 9 - ENGINE - DIAGNOSIS AND TESTING).

Diagnostic Test

1. RADIATOR FAN CONTROL RELAY OPERATION

NOTE: When actuating the radiator fan relays, the Radiator Fan(s) may have a delay in operation and ramp up slowly.
Ignition on, engine not running.
With a scan tool, select Radiator Cooling Fan Relay #1 Control State to actuate the Radiator Fan Control Relay.

Is the Cooling Fan Relay operating?

Yes >> Refer to the *CHECKING FOR AN INTERMITTENT DTC Diagnostic Procedure. (Refer to 9 - ENGINE - DIAGNOSIS AND TESTING)
Perform the ECM Verification Test Ver. 1. (Refer to 9 - ENGINE - DIAGNOSIS AND TESTING)

No >> Go To 2

2. FUSED B+ CIRCUITS

Turn the ignition off.
Remove the Radiator Fan Control Relay.
Using a 12-volt test light connected to ground, probe the Fused B+ circuits.

Is the voltage above 11.0 volts?

Yes >> Go To 3

No >> Repair the open or short to ground in the Fused B+ circuits. Inspect the related fuse and repair as necessary.
Perform BODY VERIFICATION TEST – VER 1. (Refer to 8 - ELECTRICAL/ELECTRONIC CONTROL MODULES - STANDARD PROCEDURE)

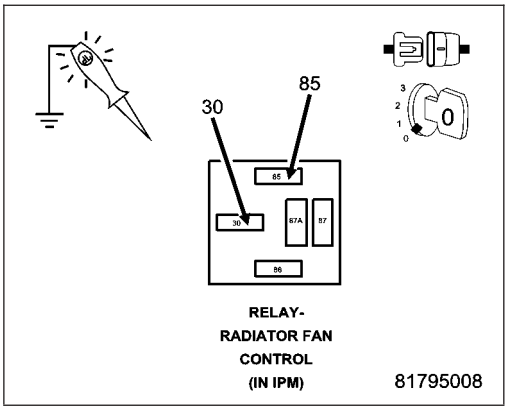

3. RADIATOR FAN CONTROL RELAY CONTROL CIRCUIT

Turn the ignition on, engine not running.

With a scan tool, select Radiator Cooling Fan Relay #1 Control State, Toggle, to actuate the Radiator Fan Control Relay.

Using a 12–volt test light connected to battery voltage, probe the Radiator Control Relay Control circuit in the PDM.

Does the test light illuminate and flash on and off?

Yes >> Replace the Radiator Fan Control Relay.
Perform BODY VERIFICATION TEST – VER 1. (Refer to 8 - ELECTRICAL/ELECTRONIC CONTROL MODULES - STANDARD PROCEDURE)

No >> Go To 4

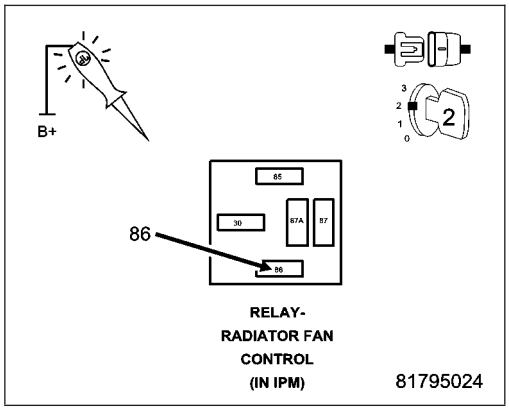

4. (N201) RADIATOR FAN CONTROL RELAY CONTROL CIRCUIT OPEN

Turn the ignition off.

Remove the FCM from the PDM.

Measure the resistance of the (N201) Radiator Fan Control Relay Control circuit from the Relay to the FCM PDM — 49 way connector.

Is the resistance below 5.0 ohms?

Yes >> Go To 5

No >> Replace the PDM in accordance with the Service information.
Perform BODY VERIFICATION TEST – VER 1. (Refer to 8 - ELECTRICAL/ELECTRONIC CONTROL MODULES - STANDARD PROCEDURE)

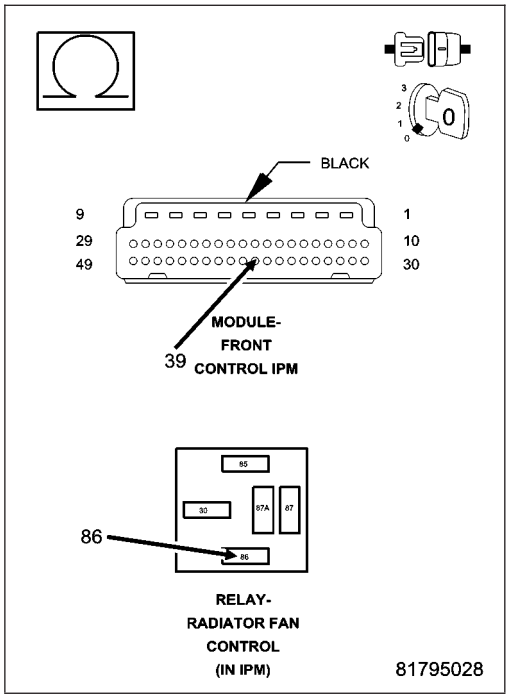

5. (N201) RADIATOR FAN CONTROL RELAY CONTROL CIRCUIT SHORTED TO GROUND

Measure the resistance between ground and the (N201) Radiator Fan Control Relay Control circuit at the Relay connection.

Is the resistance below 100 ohms?

Yes >> Replace the PDM in accordance with the Service information.
Perform BODY VERIFICATION TEST – VER 1. (Refer to 8 - ELECTRICAL/ELECTRONIC CONTROL MODULES - STANDARD PROCEDURE)

No >> Replace Front Control Module in accordance with the Service Information.
Perform BODY VERIFICATION TEST – VER 1. (Refer to 8 - ELECTRICAL/ELECTRONIC CONTROL MODULES - STANDARD PROCEDURE)

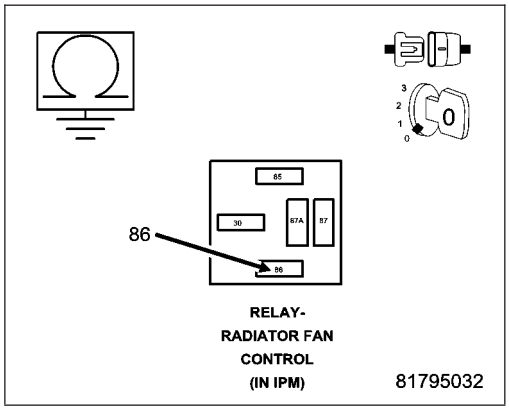

P0481-COOLING FAN 2 CONTROL CIRCUIT

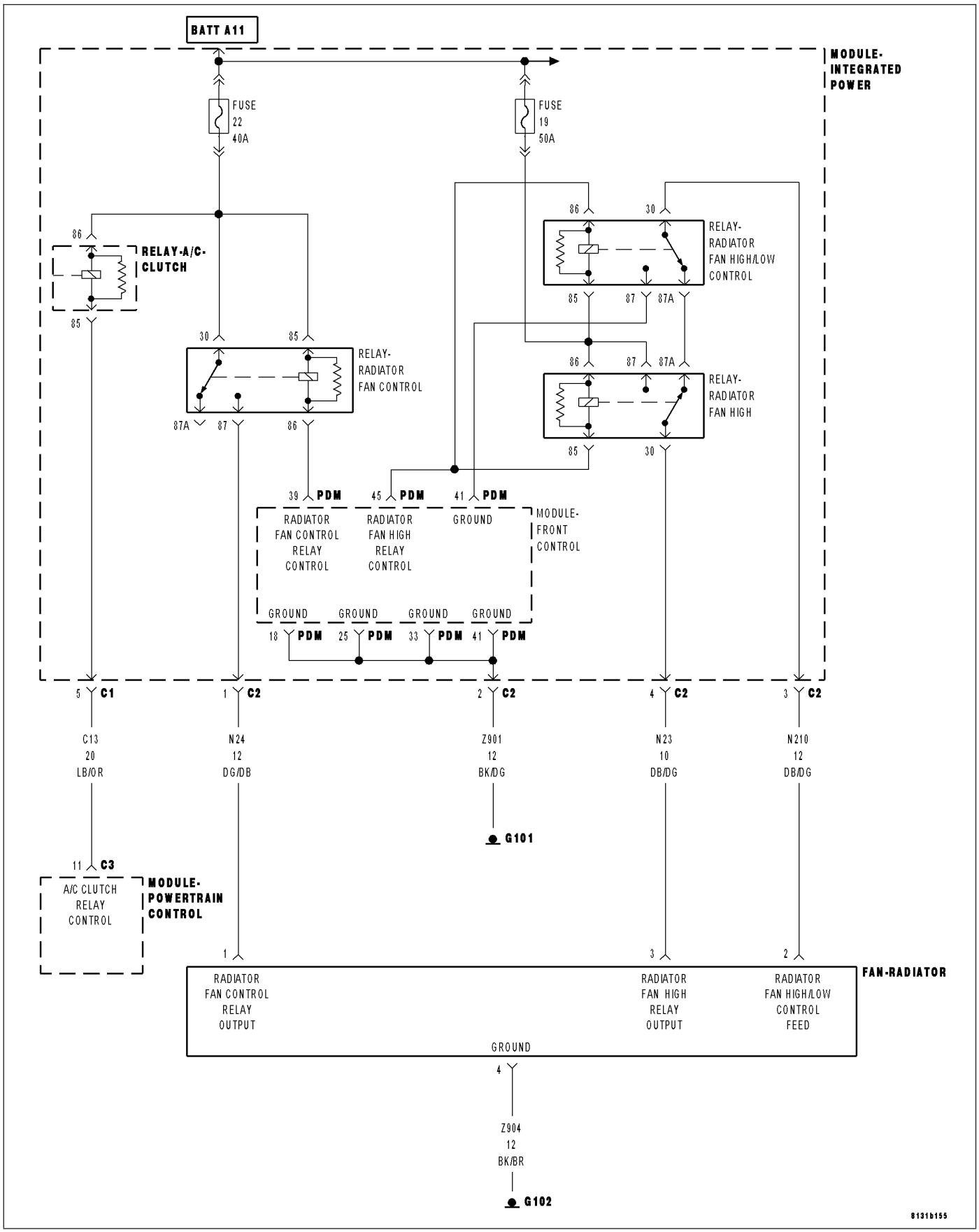

For a complete wiring diagram **Refer to Section 8W**.

- **When Monitored:**
  With the ignition on. Battery voltage greater than 10 volts.
- **Set Condition:**
  The ECM receives a CAN Bus message from the FCM indicating an open or shorted circuit on the Radiator Fan High Relay Control circuit.

Possible Causes
FUSED B+ CIRCUITS
(N112) RADIATOR FAN HIGH RELAY CONTROL CIRCUIT OPEN
(N112) RADIATOR FAN HIGH RELAY CONTROL CIRCUIT SHORTED TO GROUND
RADIATOR FAN HIGH RELAY
FRONT CONTROL MODULE

Always perform the Pre-Diagnostic Troubleshooting procedure before proceeding. (Refer to 9 - ENGINE - DIAGNOSIS AND TESTING).

Diagnostic Test

1. RADIATOR FAN HIGH RELAY OPERATION

Ignition on, engine not running.

With a scan tool, select Radiator Cooling Fan Relay #2 Control State, to actuate the Radiator Fan High Relay.

Is the Cooling Fan Relay operating?

Yes >> Refer to the *CHECKING FOR AN INTERMITTENT DTC Diagnostic Procedure. (Refer to 9 - ENGINE - DIAGNOSIS AND TESTING)
Perform the ECM Verification Test Ver. 1. (Refer to 9 - ENGINE - DIAGNOSIS AND TESTING)

No >> Go To 2

2. FUSED B+ CIRCUITS

Turn the ignition off.

Remove the Radiator High Fan Relay.

Using a 12-volt test light connected to ground, probe the Fused B+ circuits in the Relay connection.

Does the test light illuminate brightly?

Yes >> Go To 4

No >> Go To 3

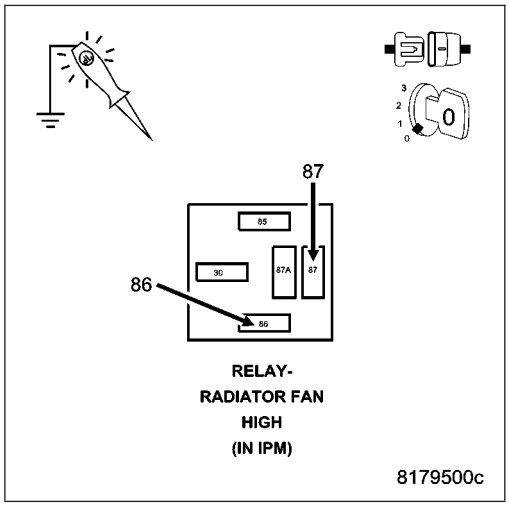

3. RADIATOR FAN HI/LO CONTROL RELAY SHORTED INTERNALLY

With the test light still at the Fused B+ circuit (Radiator High Fan Relay), remove the Radiator Fan HI/LO Control Relay.

When the relay is removed, does the test light illuminate brightly?

Yes >> Replace the Radiator Fan HI/LO Control Relay.
Perform BODY VERIFICATION TEST – VER 1. (Refer to 8 - ELECTRICAL/ELECTRONIC CONTROL MODULES - STANDARD PROCEDURE)

No >> Repair the open or short to ground in the Fused B+ circuits. Inspect the related fuse and repair as necessary.
Perform BODY VERIFICATION TEST – VER 1. (Refer to 8 - ELECTRICAL/ELECTRONIC CONTROL MODULES - STANDARD PROCEDURE)

4. RADIATOR FAN HIGH RELAY CONTROL CIRCUIT

Turn the ignition on, engine not running.

With a scan tool, select Radiator Cooling Fan Relay #2 Control State and then Toggle, to actuate the Radiator Fan High Relay.

Using a 12–volt test light connected to battery voltage, probe the Radiator Fan High Relay Control circuit in the PDM.

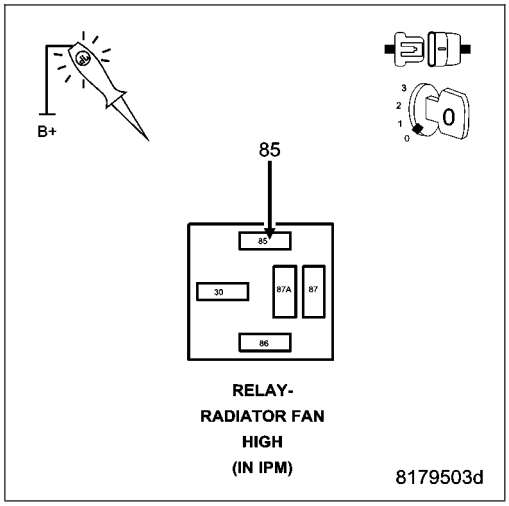

Does the test light illuminate and flash on and off?

Yes >> Replace the Radiator Fan High Relay.
Perform BODY VERIFICATION TEST – VER 1. (Refer to 8 - ELECTRICAL/ELECTRONIC CONTROL MODULES - STANDARD PROCEDURE)

No >> Go To 5

5. (N112) RADIATOR FAN HIGH RELAY CONTROL CIRCUIT OPEN

Remove the FCM from the PDM.

Measure the resistance of the (N112) Radiator Fan High Relay Control circuit from the Relay connection to the FCM PDM — 49 way connector.

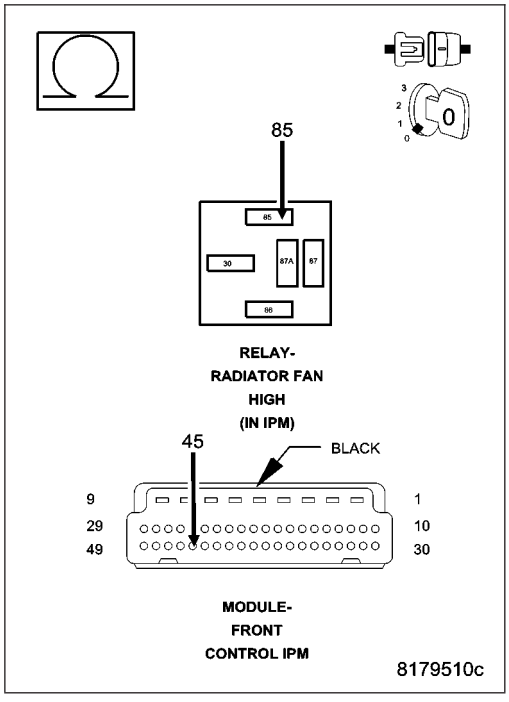

Is the resistance below 5.0 ohms?

Yes >> Go To 6

No >> Replace the PDM in accordance with the Service Information.
Perform BODY VERIFICATION TEST – VER 1. (Refer to 8 - ELECTRICAL/ELECTRONIC CONTROL MODULES - STANDARD PROCEDURE)

6. (N112) RADIATOR FAN HIGH RELAY CONTROL CIRCUIT SHORTED TO GROUND

Measure the resistance between ground and the (N112) Radiator Fan High Control circuit at the Relay connection.

Is the resistance below 100 ohms?

Yes >> Go To 7

No >> Replace the Front Control Module in accordance with the Service Information.
Perform BODY VERIFICATION TEST – VER 1. (Refer to 8 - ELECTRICAL/ELECTRONIC CONTROL MODULES - STANDARD PROCEDURE)

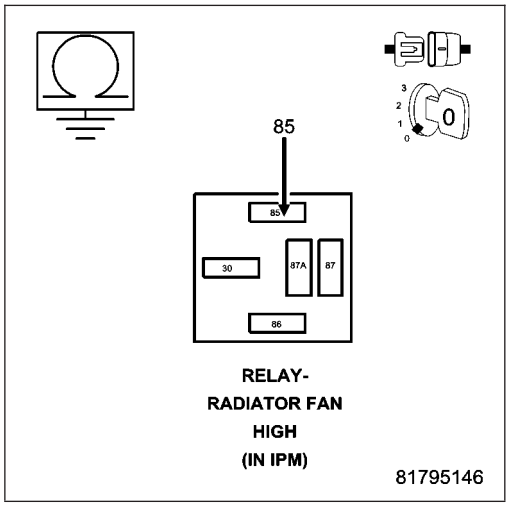

7. RADIATOR FAN HI/LO CONTROL RELAY SHORTED INTERNALLY

With the probe still at the (N112) Radiator Fan High Control circuit, remove the Radiator Fan HI/LO Control Relay.

Is the resistance still below 100 ohms?

Yes >> Repair the open or short to ground in the (N112) Radiator Fan High Control circuit.
Perform BODY VERIFICATION TEST – VER 1. (Refer to 8 - ELECTRICAL/ELECTRONIC CONTROL MODULES - STANDARD PROCEDURE)

No >> Replace the Radiator Fan HI/LO Control Relay.
Perform BODY VERIFICATION TEST – VER 1. (Refer to 8 - ELECTRICAL/ELECTRONIC CONTROL MODULES - STANDARD PROCEDURE)

P0487-EGR AIRFLOW THROTTLE CONTROL CIRCUIT A OPEN

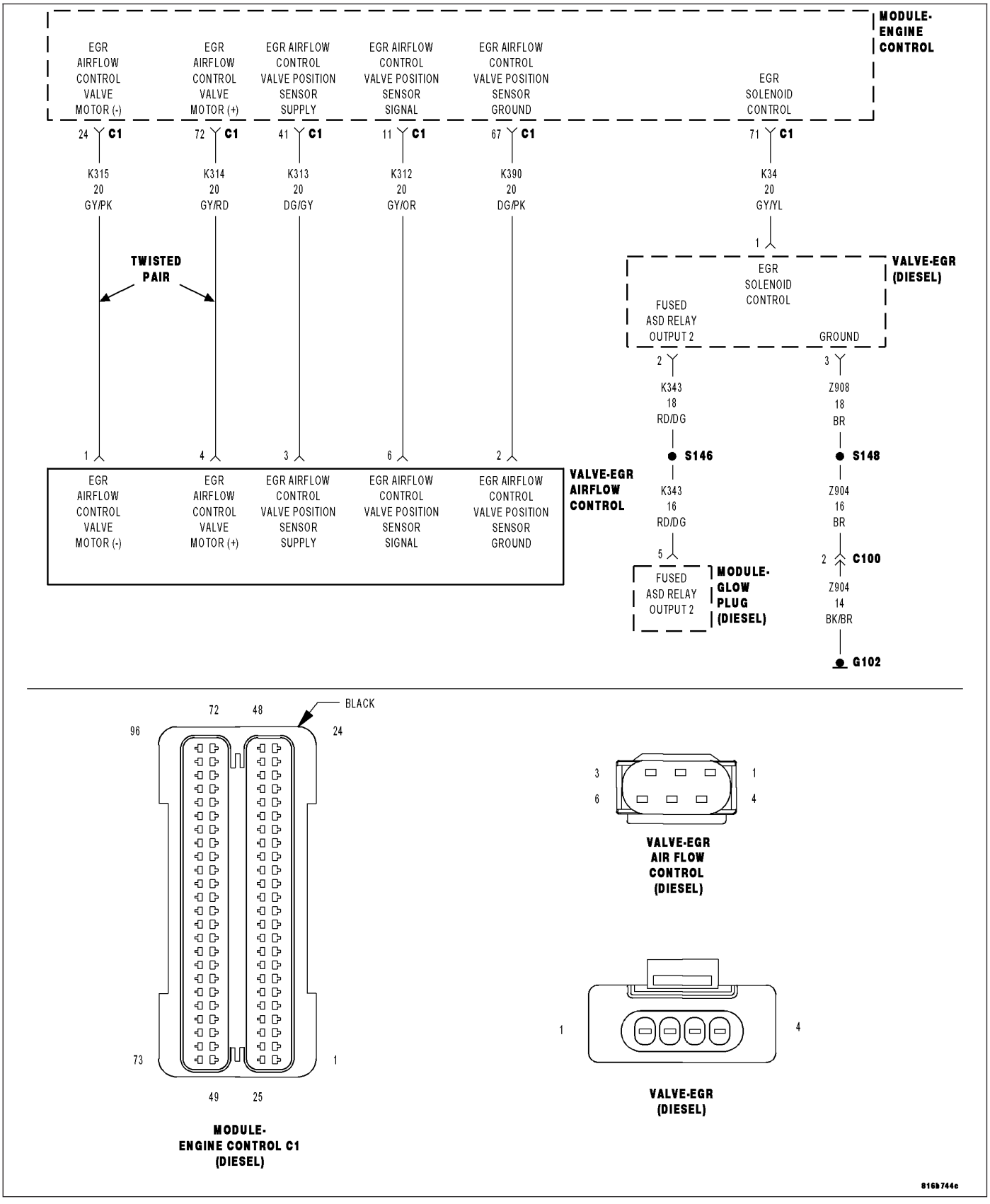

For a complete wiring diagram **Refer to Section 8W**

- **When Monitored:**
  With the engine running and the EGR Airflow Control Valve Motor command off.
- **Set Condition:**
  The Engine Control Module (ECM) detects an open (K314) EGR Airflow Control Valve Motor (+) circuit for 0.5 second.

Possible Causes
INTERMITTENT DTC
(K314) EGR AIRFLOW CONTROL VALVE MOTOR (+) CIRCUIT OPEN OR HIGH RESISTANCE
(K315) EGR AIRFLOW CONTROL VALVE MOTOR (-) CIRCUIT OPEN OR HIGH RESISTANCE
EGR AIRFLOW CONTROL VALVE
ENGINE CONTROL MODULE (ECM)

Always perform the Pre-Diagnostic Troubleshooting procedure before proceeding. (Refer to 9 - ENGINE - DIAGNOSIS AND TESTING)

Diagnostic Test

1. DTC IS ACTIVE

Ignition on, engine not running.
With the scan tool, Clear DTCs in the Engine Control Module (ECM).
With the scan tool, actuate the EGR Airflow Control Valve at 100%.
Monitor the scan tool for at least two minutes.
With the scan tool, select View DTCs.

Is the status Active for this DTC?

Yes >> Go To 2

No >> Refer to the *CHECKING FOR AN INTERMITTENT DTC Diagnostic Procedure. (Refer to 9 - ENGINE - DIAGNOSIS AND TESTING)

2. (K314) EGR AIRFLOW CONTROL VALVE MOTOR (+) CIRCUIT OPEN OR HIGH RESISTANCE

Turn the ignition off.

Disconnect the EGR Airflow Control Valve connector.

Disconnect the Engine Control Module (ECM) connector.

Measure the resistance of the (K314) EGR Airflow Control Valve Motor (+) circuit between the EGR Airflow Control Valve connector and the Engine Control Module (ECM) connector.

Is the resistance below 10.0 ohms?

Yes >> Go to 3

No >> Repair the (K314) EGR Airflow Control Valve Motor (+) circuit for an open circuit or high resistance.

Perform the ECM Verification Test Ver. 1. (Refer to 9 - ENGINE - DIAGNOSIS AND TESTING)

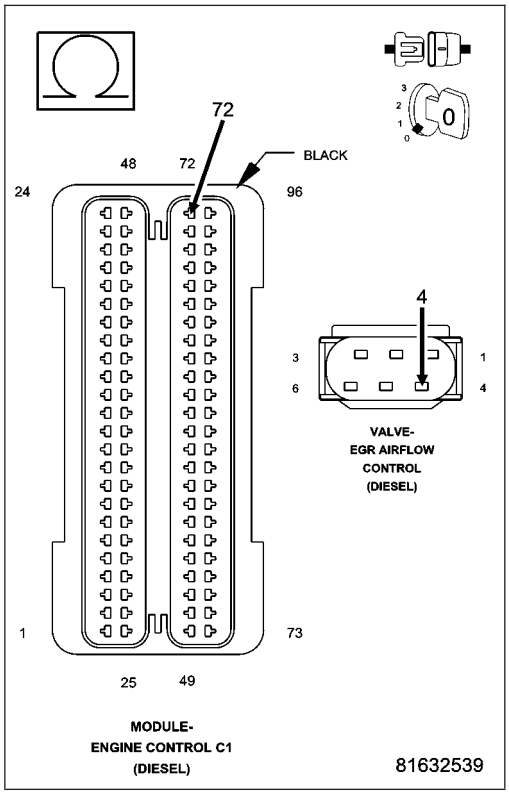

3. (K315) EGR AIRFLOW CONTROL VALVE MOTOR (-) CIRCUIT OPEN OR HIGH RESISTANCE

Measure the resistance of the (K315) EGR Airflow Control Valve Motor (-) circuit between the EGR Airflow Control Valve connector and the Engine Control Module (ECM) connector.

Is the resistance below 10.0 ohms?

Yes >> Go to 4

No >> Repair the (K315) EGR Airflow Control Valve Motor (-) for an open circuit or high resistance.

Perform the ECM Verification Test Ver. 1. (Refer to 9 - ENGINE - DIAGNOSIS AND TESTING)

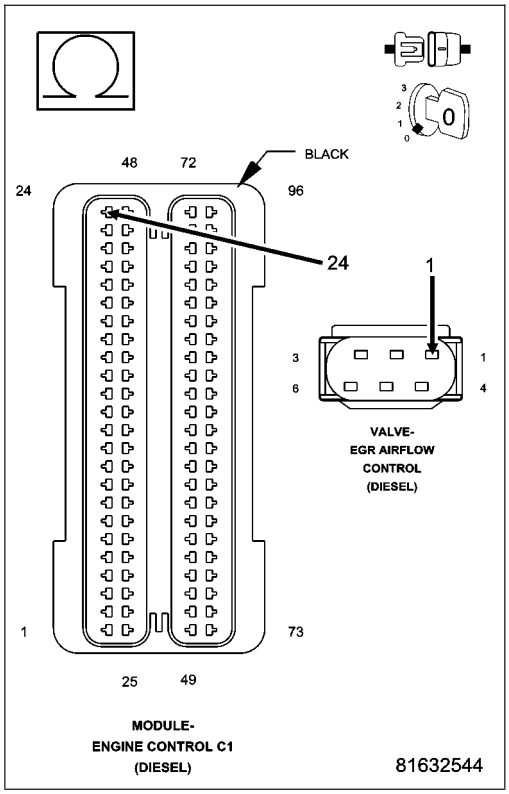

4. EGR AIRFLOW CONTROL VALVE

Turn the ignition off.
Connect the Engine Control Module (ECM) connector.
Replace the EGR Airflow Control Valve in accordance with the Service Information.
Turn the ignition on.
With the scan tool, Clear DTCs in the Engine Control Module (ECM).
With the scan tool, actuate the EGR Airflow Control Valve.
Monitor the scan tool for at least two minutes.
With the scan tool, select View DTCs.

Is the status Active for this DTC?

Yes >> Go to 5

No >> Test complete.
Perform the ECM Verification Test Ver. 1. (Refer to 9 - ENGINE - DIAGNOSIS AND TESTING)

5. ENGINE CONTROL MODULE (ECM)

Using the wiring diagram/schematic as a guide, inspect the wiring and connectors between the EGR Airflow Control Valve and the Engine Control Module (ECM).
Look for any chafed, pierced, pinched, or partially broken wires.
Look for broken, bent, pushed out or corroded terminals.
Monitor the scan tool data relative to this circuit and wiggle test the wiring and connectors.
Look for the data to change or for the DTC to reset during the wiggle test.
Refer to any Technical Service Bulletins that may apply.

Were any problems found?

Yes >> Repair as necessary.
Perform the ECM Verification Test Ver. 1. (Refer to 9 - ENGINE - DIAGNOSIS AND TESTING)

No >> Replace the Engine Control Module (ECM) in accordance with the Service Information.
Perform the ECM Verification Test Ver. 1. (Refer to 9 - ENGINE - DIAGNOSIS AND TESTING)

P0488-EGR AIRFLOW THROTTLE CONTROL CIRCUIT PERFORMANCE

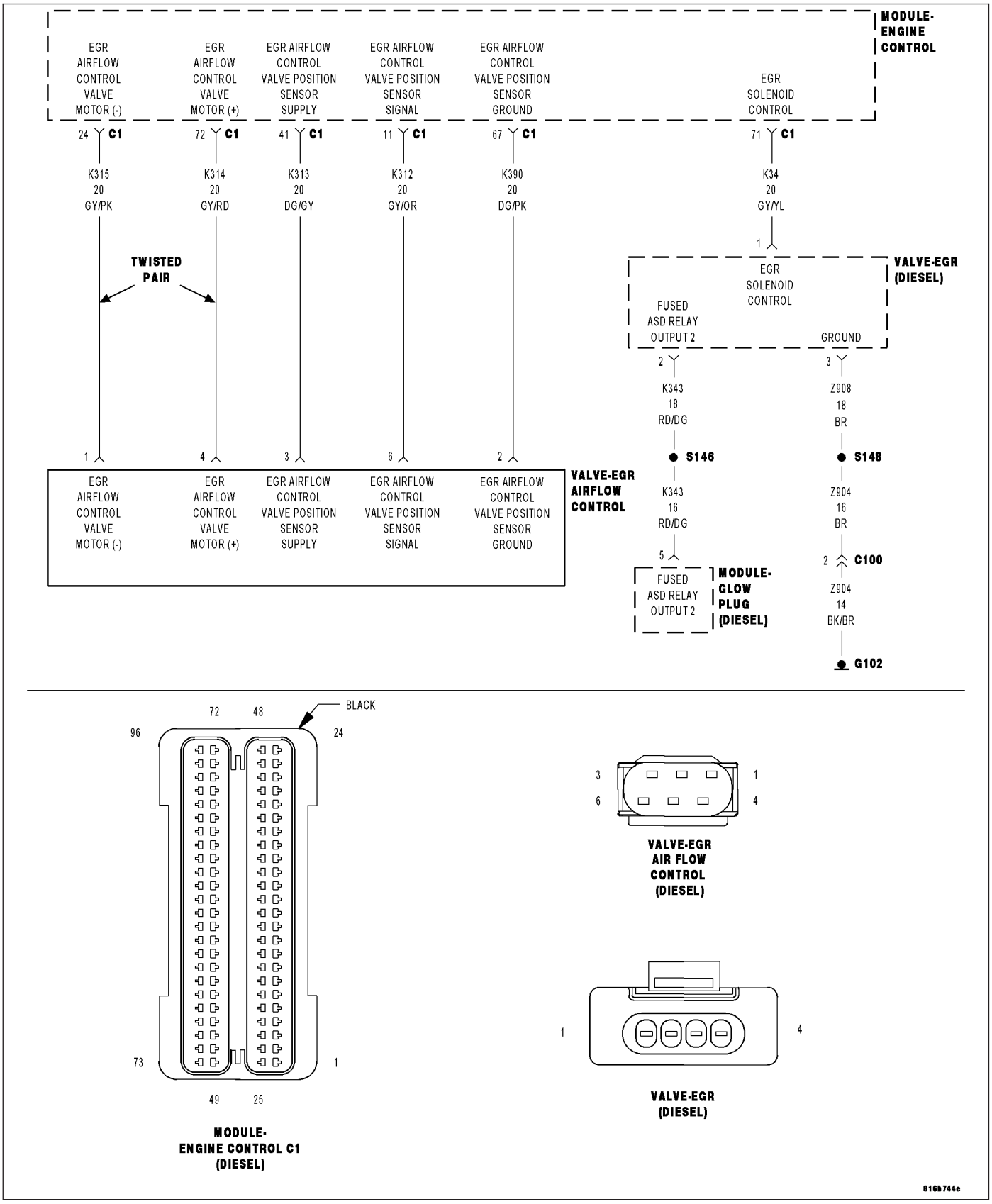

For a complete wiring diagram **Refer to Section 8W**

- **When Monitored:**
  With the engine running and the EGR Airflow Control Valve Motor command on.
- **Set Condition:**
  The Engine Control Module (ECM) detects an implausible voltage on the (K314) EGR Airflow Control Valve Motor (+) circuit.

Possible Causes
INTERMITTENT DTC
(K314) EGR AIRFLOW CONTROL VALVE MOTOR (+) CIRCUIT SHORTED TO VOLTAGE
(K315) EGR AIRFLOW CONTROL VALVE MOTOR (-) CIRCUIT SHORTED TO VOLTAGE
(K314) EGR AIRFLOW CONTROL VALVE MOTOR (+) CIRCUIT SHORTED TO GROUND
(K314) EGR AIRFLOW CONTROL VALVE MOTOR (+) CIRCUIT SHORTED TO (K315) EGR AIRFLOW CONTROL VALVE MOTOR (-) CIRCUIT
(K314) EGR AIRFLOW CONTROL VALVE MOTOR (+) CIRCUIT OPEN OR HIGH RESISTANCE
(K315) EGR AIRFLOW CONTROL VALVE MOTOR (-) CIRCUIT OPEN OR HIGH RESISTANCE
EGR AIRFLOW CONTROL VALVE
ENGINE CONTROL MODULE (ECM)

Always perform the Pre-Diagnostic Troubleshooting procedure before proceeding. (Refer to 9 - ENGINE - DIAGNOSIS AND TESTING)

Diagnostic Test

1. DTC IS ACTIVE

Ignition on, engine not running.
With the scan tool, Clear DTCs in the Engine Control Module (ECM).
With the scan tool, actuate the EGR Airflow Control Valve at 100%.
Monitor the scan tool for at least two minutes.
With the scan tool, select View DTCs.

Is the status Active for this DTC?

Yes >> Go To 2

No >> Refer to the *CHECKING FOR AN INTERMITTENT DTC Diagnostic Procedure. (Refer to 9 - ENGINE - DIAGNOSIS AND TESTING)

2. (K314) EGR AIRFLOW CONTROL VALVE MOTOR (+) CIRCUIT SHORTED TO VOLTAGE

Turn the ignition off.
Disconnect the EGR Airflow Control Valve connector.
Disconnect the Engine Control Module (ECM) connector.
Remove the ASD Relay from the IPM.
Connect a jumper wire between cavity 30 and cavity 87 of the ASD Relay Connector.
Turn the ignition on.
Measure the voltage of the (K314) EGR Airflow Control Valve Motor (+) circuit in the EGR Airflow Control Valve connector.

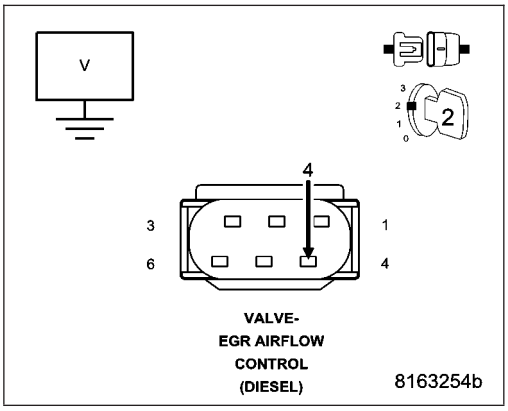

Is there any voltage present?

Yes >> Repair the (K314) EGR Airflow Control Valve Motor (+) circuit for a short to voltage.
Perform the ECM Verification Test Ver. 1. (Refer to 9 - ENGINE - DIAGNOSIS AND TESTING)

No >> Go to 3

3. (K315) EGR AIRFLOW CONTROL VALVE MOTOR (-) CIRCUIT SHORTED TO VOLTAGE

Measure the voltage of the (K315) EGR Airflow Control Valve Motor (-) circuit.

Is there any voltage present?

Yes >> Repair the (K315) EGR Airflow Control Valve Motor (-) circuit for a short to voltage.
Perform the ECM Verification Test Ver. 1. (Refer to 9 - ENGINE - DIAGNOSIS AND TESTING)

No >> Go to 4

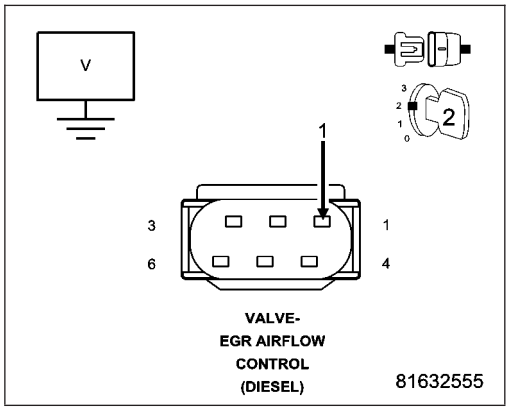

4. (K314) EGR AIRFLOW CONTROL VALVE MOTOR (+) CIRCUIT SHORTED TO GROUND

Turn the ignition off.

Measure the resistance between ground and the (K314) EGR Airflow Control Valve Motor (+) circuit in the EGR Airflow Control Valve connector.

Is the resistance above 1000.0 ohms?

Yes >> Go to 5

No >> Repair the (K314) EGR Airflow Control Valve Motor (+) circuit for a short to ground.
Perform the ECM Verification Test Ver. 1. (Refer to 9 - ENGINE - DIAGNOSIS AND TESTING)

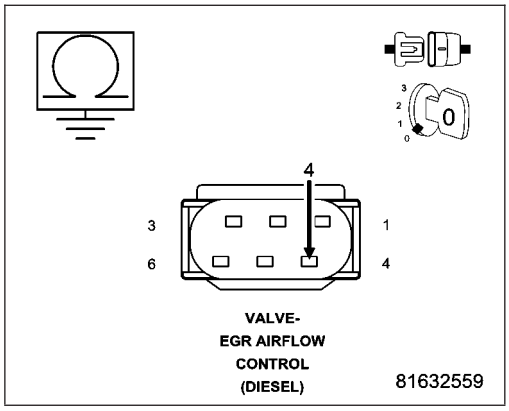

5. (K314) EGR AIRFLOW CONTROL VALVE MOTOR (+) CIRCUIT SHORTED TO (K315) EGR AIRFLOW CONTROL VALVE MOTOR (-) CIRCUIT

Measure the resistance between the (K314) EGR Airflow Control Valve Motor (+) circuit and the (K315) EGR Airflow Control Valve Motor (-) circuit in the EGR Airflow Control Valve connector.

Is the resistance above 1000.0 ohms?

Yes >> Go to 6

No >> Repair the (K314) EGR Airflow Control Valve Motor (+) circuit for a short to the (K315) EGR Airflow Control Valve Motor (-) circuit.
Perform the ECM Verification Test Ver. 1. (Refer to 9 - ENGINE - DIAGNOSIS AND TESTING)

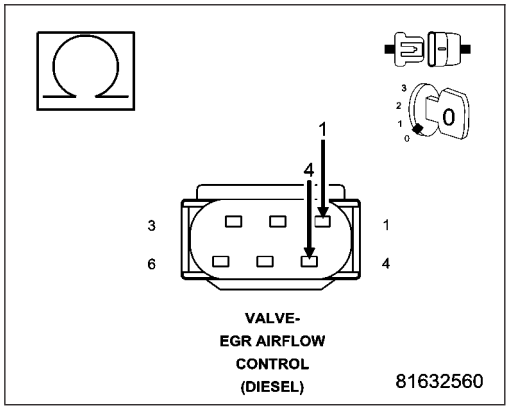

6. (K314) EGR AIRFLOW CONTROL VALVE MOTOR (+) CIRCUIT OPEN OR HIGH RESISTANCE

Measure the resistance of the (K314) EGR Airflow Control Valve Motor (+) circuit between the EGR Airflow Control Valve connector and the Engine Control Module (ECM) connector.

Is the resistance below 10.0 ohms?

Yes >> Go to 7

No >> Repair the (K314) EGR Airflow Control Valve Motor (+) circuit for an open circuit or high resistance.
Perform the ECM Verification Test Ver. 1. (Refer to 9 - ENGINE - DIAGNOSIS AND TESTING)

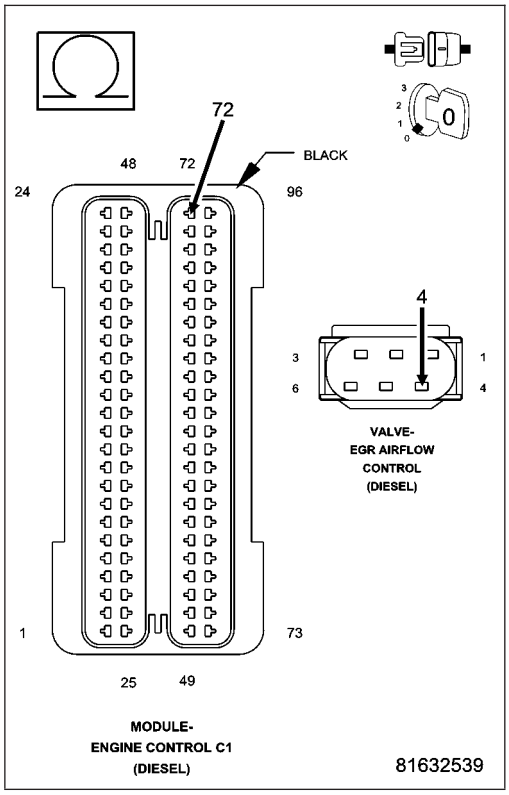

7. (K315) EGR AIRFLOW CONTROL VALVE MOTOR (-) CIRCUIT OPEN OR HIGH RESISTANCE

Measure the resistance of the (K315) EGR Airflow Control Valve Motor (-) circuit between the EGR Airflow Control Valve connector and the Engine Control Module (ECM) connector.

Is the resistance below 10.0 ohms?

Yes >> Go to 8

No >> Repair the (K315) EGR Airflow Control Valve Motor (-) circuit for an open circuit or high resistance.
Perform the ECM Verification Test Ver. 1. (Refer to 9 - ENGINE - DIAGNOSIS AND TESTING)

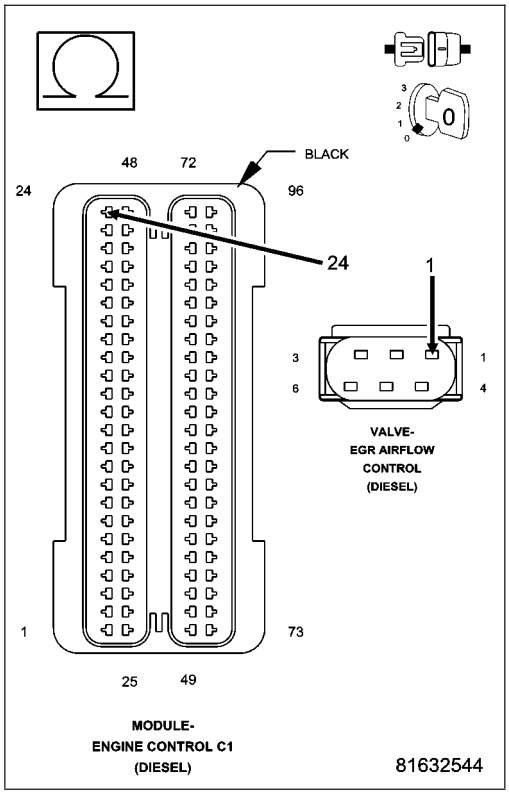

8. EGR AIRFLOW CONTROL VALVE

Turn the ignition off.
Connect the Engine Control Module (ECM) connector.
Replace the EGR Airflow Control Valve in accordance with the Service Information.
Ignition on, engine not running.
With the scan tool, Clear DTCs in the Engine Control Module (ECM).
With the scan tool, actuate the EGR Airflow Control Valve.
Monitor the scan tool for at least two minutes.
With the scan tool, select View DTCs.

Is the status Active for this DTC?

Yes >> Go to 9

No >> Test complete.
Perform the ECM Verification Test Ver. 1. (Refer to 9 - ENGINE - DIAGNOSIS AND TESTING)

9. ENGINE CONTROL MODULE (ECM)

Using the wiring diagram/schematic as a guide, inspect the wiring and connectors between the EGR Airflow Control Valve and the Engine Control Module (ECM).
Look for any chafed, pierced, pinched, or partially broken wires.
Look for broken, bent, pushed out or corroded terminals.
Monitor the scan tool data relative to this circuit and wiggle test the wiring and connectors.
Look for the data to change or for the DTC to reset during the wiggle test.
Refer to any Technical Service Bulletins that may apply.

Were any problems found?

Yes >> Repair as necessary.
Perform the ECM Verification Test Ver. 1. (Refer to 9 - ENGINE - DIAGNOSIS AND TESTING)

No >> Replace the Engine Control Module (ECM) in accordance with the Service Information.
Perform the ECM Verification Test Ver. 1. (Refer to 9 - ENGINE - DIAGNOSIS AND TESTING)

P0489-EGR CONTROL CIRCUIT LOW

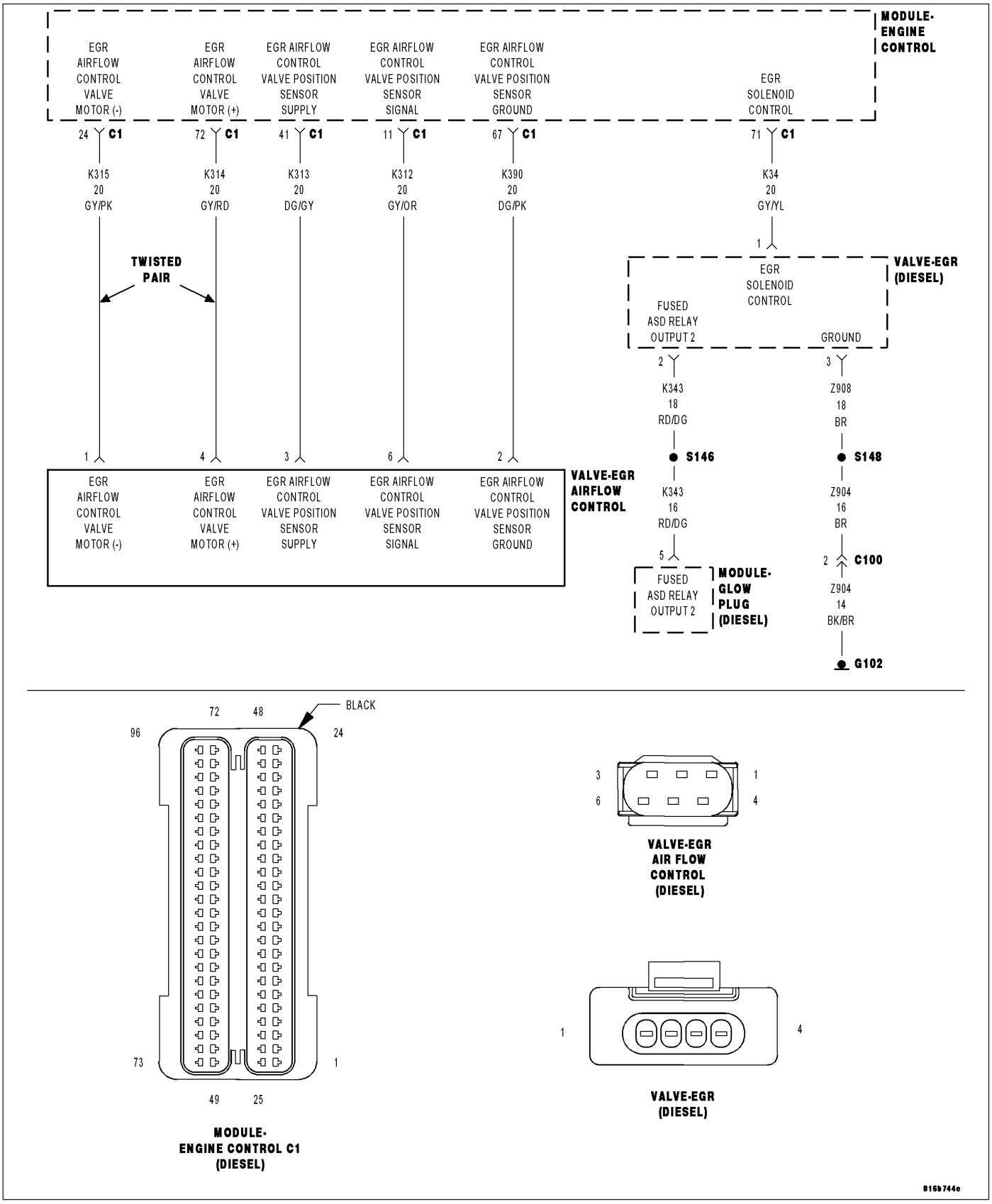

For a complete wiring diagram **Refer to Section 8W**

- **When Monitored:**
  With the ignition on and the EGR Solenoid command off.
- **Set Condition:**
  The ECM detects a short to ground on the (K34) EGR Solenoid Control circuit for 2.3 seconds.

Possible Causes
INTERMITTENT DTC
(K34) EGR SOLENOID CONTROL CIRCUIT SHORTED TO GROUND
(K34) EGR SOLENOID CONTROL CIRCUIT OPEN OR HIGH RESISTANCE
EGR VALVE
ENGINE CONTROL MODULE (ECM)

Always perform the Pre-Diagnostic Troubleshooting procedure before proceeding. (Refer to 9 - ENGINE - DIAGNOSIS AND TESTING)

Diagnostic Test

1. DTC IS ACTIVE

Ignition on, engine not running.
With the scan tool, Clear DTCs in the Engine Control Module (ECM).
With the scan tool, actuate the EGR Solenoid at 100%.
Monitor the scan tool for at least two minutes.
With the scan tool, select View DTCs.

Is the status Active for this DTC?

Yes >> Go To 2

No >> Refer to the *CHECKING FOR AN INTERMITTENT DTC Diagnostic Procedure. (Refer to 9 - ENGINE - DIAGNOSIS AND TESTING)

2. (K34) EGR SOLENOID CONTROL CIRCUIT SHORTED TO GROUND

Turn the ignition off.
Disconnect the EGR Solenoid connector.
Disconnect the Engine Control Module (ECM) connector.
Measure the resistance between ground and the (K34) EGR Solenoid Control circuit in the EGR Solenoid connector.

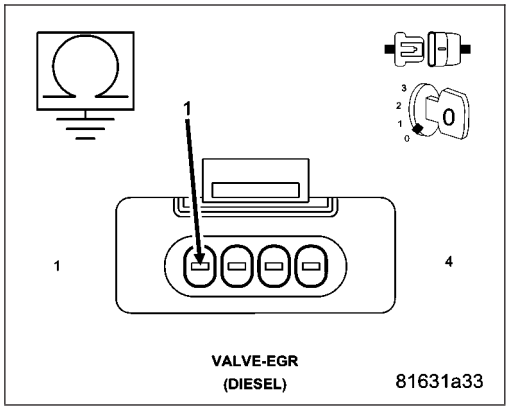

Is the resistance below 1000.0 ohms?

Yes >> Repair the (K34) EGR Solenoid Control circuit for a short to ground.
Perform the ECM Verification Test Ver. 1. (Refer to 9 - ENGINE - DIAGNOSIS AND TESTING)

No >> Go to 3

3. (K34) EGR SOLENOID CONTROL CIRCUIT OPEN OR HIGH RESISTANCE

Measure the resistance of the (K34) EGR Solenoid Control circuit between the EGR Solenoid connector and the Engine Control Module (ECM) connector.

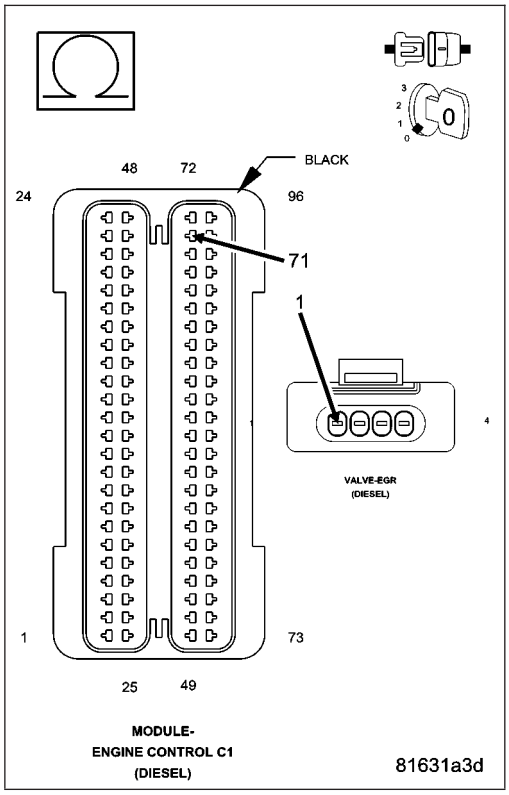

Is the resistance below 10.0 ohms?

Yes >> Go to 4

No >> Repair the (K34) EGR Solenoid Control circuit for an open circuit or high resistance.

Perform the ECM Verification Test Ver. 1. (Refer to 9 - ENGINE - DIAGNOSIS AND TESTING)

4. EGR VALVE

Connect the Engine Control Module (ECM) connector.

Turn the ignition on.

With the scan tool, actuate the Exhaust Gas Recirc Positioner to 100%.

Using a 12 volt test light connected to 12 volts, check the (K34) EGR Solenoid Control circuit in the EGR Valve harness connector.

NOTE: The test light should be illuminated and bright. Compare the brightness to that of a direct connection to the battery.

NOTE: The circuit will remain actuated by the controller for 30 seconds. Be certain the actuation is active when checking the circuit.

With the scan tool, actuate the Exhaust Gas Recirc Positioner to 0%.

Using a 12 volt test light connected to 12 volts, check the (K34) EGR Solenoid Control circuit in the EGR Valve harness connector.

NOTE: The test light should not be illuminated.

NOTE: The circuit will remain actuated by the controller for 30 seconds. Be certain the actuation is active when checking the circuit.

Is the test light illuminated and bright with the actuation at 100% and not illuminated with the actuation at 0%?

Yes >> Replace the EGR Valve in accordance with the Service Information.

Perform the ECM Verification Test Ver. 1 (Refer to 9 - ENGINE - DIAGNOSIS AND TESTING).

No >> Go to 5

5. ENGINE CONTROL MODULE (ECM)

Using the wiring diagram/schematic as a guide, inspect the wiring and connectors between the EGR Valve and the Engine Control Module (ECM).

Look for any chafed, pierced, pinched, or partially broken wires.

Look for broken, bent, pushed out or corroded terminals.

Refer to any Technical Service Bulletins that may apply.

Were any problems found?

Yes >> Repair as necessary.
Perform the ECM Verification Test Ver. 1. (Refer to 9 - ENGINE - DIAGNOSIS AND TESTING)

No >> Replace the Engine Control Module (ECM) in accordance with the Service Information.
Perform the ECM Verification Test Ver. 1. (Refer to 9 - ENGINE - DIAGNOSIS AND TESTING)

P0490-EGR CONTROL CIRCUIT HIGH

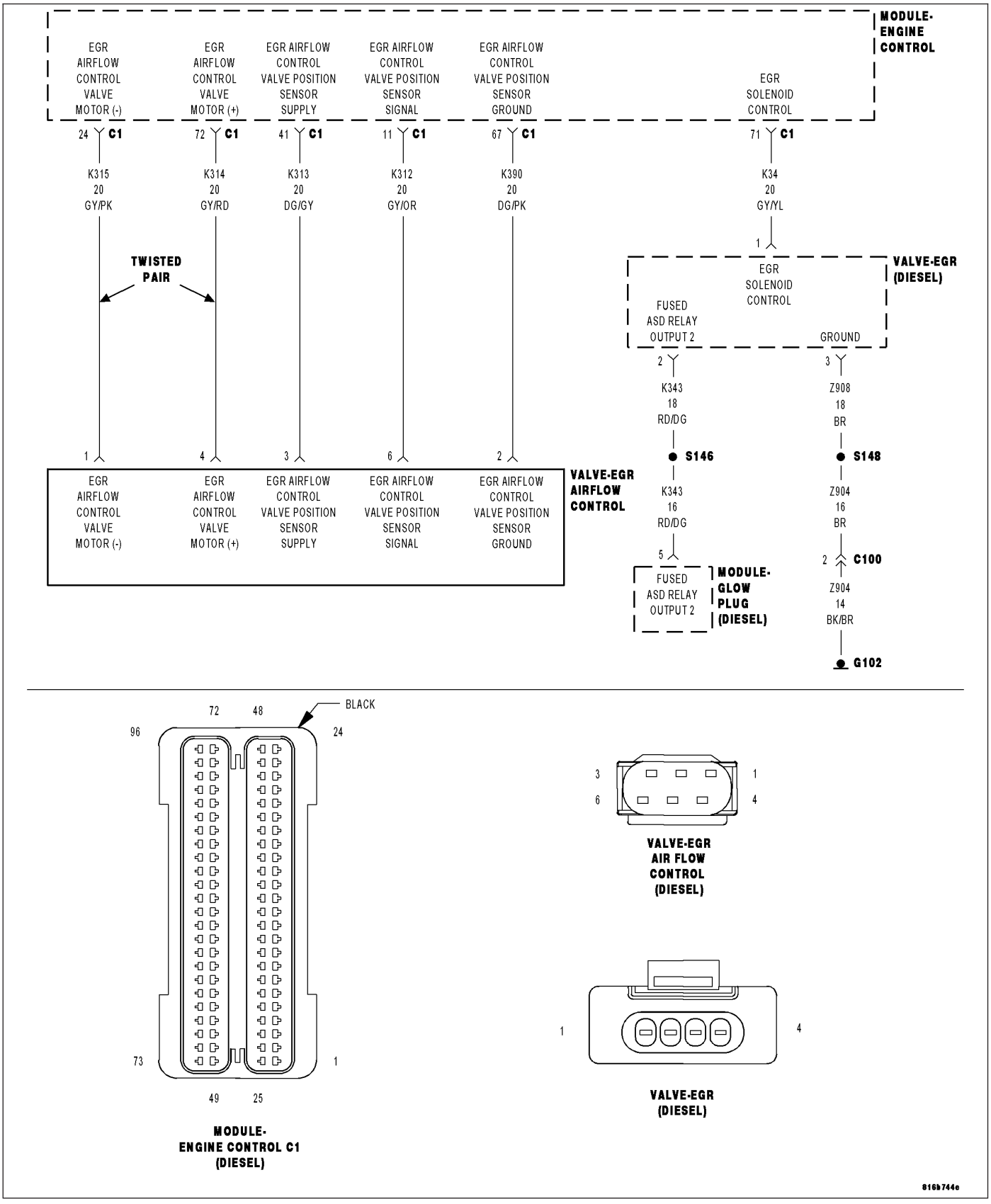

For a complete wiring diagram **Refer to Section 8W**

- **When Monitored:**
  With the ignition on and the EGR Solenoid command on.
- **Set Condition:**
  The ECM detects excessive current on the (K34) EGR Solenoid Control circuit for 2.0 seconds.

Possible Causes
INTERMITTENT DTC
(K34) EGR SOLENOID CONTROL CIRCUIT SHORTED TO VOLTAGE
(K34) EGR SOLENOID CONTROL CIRCUIT SHORTED TO THE (K343) FUSED ASD RELAY OUTPUT 2 CIRCUIT
(K34) EGR SOLENOID CONTROL CIRCUIT OPEN OR HIGH RESISTANCE
EGR VALVE
ENGINE CONTROL MODULE (ECM)

Always perform the Pre-Diagnostic Troubleshooting procedure before proceeding. (Refer to 9 - ENGINE - DIAGNOSIS AND TESTING)

Diagnostic Test

1. DTC IS ACTIVE

Ignition on, engine not running.
With the scan tool, Clear DTCs in the Engine Control Module (ECM).
With the scan tool, actuate the EGR Solenoid at 100%.
Monitor the scan tool for at least two minutes.
Start the engine.
With the scan tool, select View DTCs.

Is the status Active for this DTC?

Yes >> Go To 2

No >> Refer to the *CHECKING FOR AN INTERMITTENT DTC Diagnostic Procedure. (Refer to 9 - ENGINE - DIAGNOSIS AND TESTING)

2. (K34) EGR SOLENOID CONTROL CIRCUIT SHORTED TO VOLTAGE

Turn the ignition off.
Disconnect the EGR Solenoid connector.
Disconnect the Engine Control Module connector.
Remove the ASD Relay from the IPM.
Connect a jumper wire between cavity 30 and cavity 87 of the ASD Relay Connector.
Turn the ignition on.
Measure the voltage of the (K34) EGR Solenoid Control circuit in the EGR Solenoid connector.

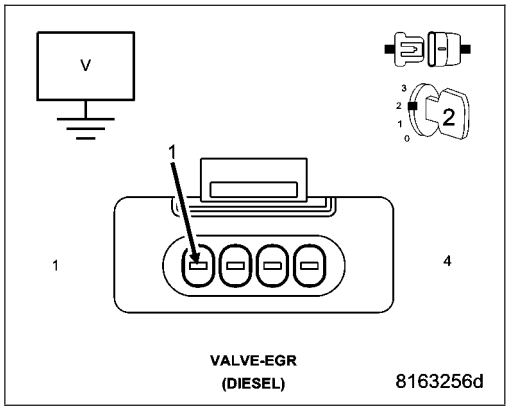

Is there any voltage present?

Yes >> Repair the (K34) EGR Solenoid Control circuit for a short to voltage.
Perform the ECM Verification Test Ver. 1. (Refer to 9 - ENGINE - DIAGNOSIS AND TESTING)

No >> Go to 3

3. (K34) EGR SOLENOID CONTROL CIRCUIT SHORTED TO THE (K343) FUSED ASD RELAY OUTPUT 2 CIRCUIT

Turn the ignition off.

Measure the resistance between the (K34) EGR Solenoid Control circuit and the (K343) Fused ASD Relay Output 2 circuit in the EGR Solenoid connector.

Is the resistance above 1000.0 ohms?

Yes >> Go to 4

No >> Repair the (K34) EGR Solenoid Control circuit for a short to the (K343) Fused ASD Relay Output 2 circuit.

Perform the ECM Verification Test Ver. 1. (Refer to 9 - ENGINE - DIAGNOSIS AND TESTING)

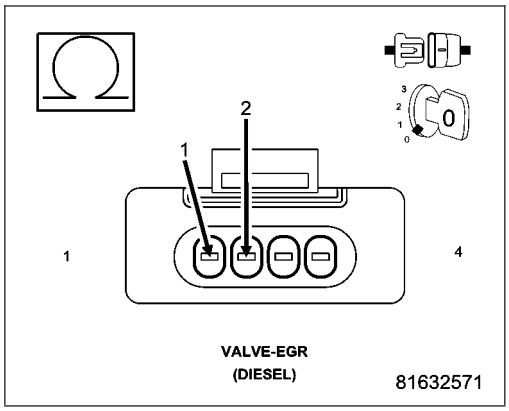

4. (K34) EGR SOLENOID CONTROL CIRCUIT OPEN OR HIGH RESISTANCE

Measure the resistance of the (K34) EGR Solenoid Control circuit between the EGR Solenoid connector and the Engine Control Module (ECM) connector.

Is the resistance below 10.0 ohms?

Yes >> Go to 5

No >> Repair the (K34) EGR Solenoid Control circuit for an open circuit or high resistance.

Perform the ECM Verification Test Ver. 1. (Refer to 9 - ENGINE - DIAGNOSIS AND TESTING)

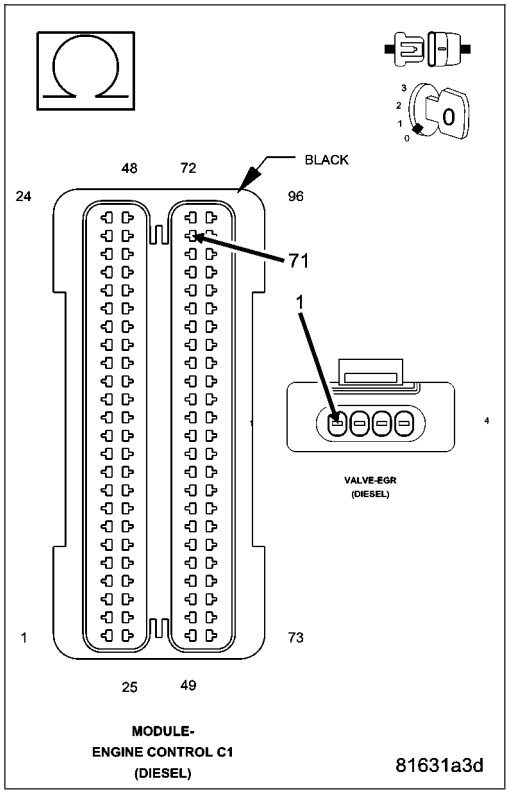

5. EGR VALVE

Connect the Engine Control Module (ECM) connector.

Turn the ignition on.

With the scan tool, actuate the Exhaust Gas Recirc Positioner to 100%.

Using a 12 volt test light connected to 12 volts, check the (K34) EGR Solenoid Control circuit in the EGR Valve harness connector.

NOTE: The test light should be illuminated and bright. Compare the brightness to that of a direct connection to the battery.

NOTE: The circuit will remain actuated by the controller for 30 seconds. Be certain the actuation is active when checking the circuit.

Is the test light illuminated and bright?

Yes >> Replace the EGR Valve in accordance with the Service Information.
Perform the ECM Verification Test Ver. 1 (Refer to 9 - ENGINE - DIAGNOSIS AND TESTING).

No >> Go to 6

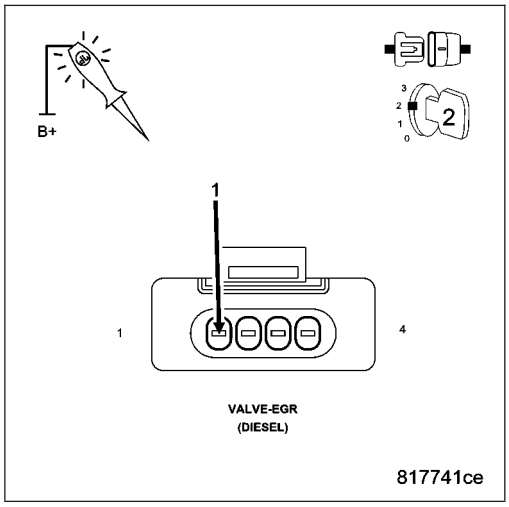

6. ENGINE CONTROL MODULE (ECM)

Using the wiring diagram/schematic as a guide, inspect the wiring and connectors between the EGR Solenoid and the Engine Control Module (ECM).

Look for any chafed, pierced, pinched, or partially broken wires.

Look for broken, bent, pushed out or corroded terminals.

Refer to any Technical Service Bulletins that may apply.

Were any problems found?

Yes >> Repair as necessary.
Perform the ECM Verification Test Ver. 1. (Refer to 9 - ENGINE - DIAGNOSIS AND TESTING)

No >> Replace the Engine Control Module (ECM) in accordance with the Service Information.
Perform the ECM Verification Test Ver. 1. (Refer to 9 - ENGINE - DIAGNOSIS AND TESTING)

P0504-BRAKE SWITCH SIGNAL CIRCUITS PLAUSIBILITY WITH REDUNDANT CONTACT

For a complete wiring diagram **Refer to Section 8W**

- **When Monitored:**
  With the ignition on.
- **Set Condition:**
  The Primary Brake Switch Signal and Secondary Brake Switch Signal inputs to the ECM do not agree for 2 minutes.

Possible Causes
INTERMITTENT CONDITION
SECONDARY BRAKE SWITCH - SECONDARY SWITCH CKT OPEN
(A103) FUSED B+ CIRCUIT OPEN
(B16) SECONDARY BRAKE SWITCH SENSE CIRCUIT SHORTED TO GROUND
PRIMARY BRAKE SWITCH - PRIMARY SWITCH CKT OPEN
(B16) SECONDARY BRAKE SWITCH SENSE CIRCUIT OPEN
GROUND CIRCUIT OPEN
(L950) PRIMARY BRAKE SWITCH OUTPUT CIRCUIT SHORTED TO VOLTAGE
(L950) PRIMARY BRAKE SWITCH OUTPUT CIRCUIT OPEN
ENGINE CONTROL MODULE - SECONDARY SWITCH SIGNAL
ENGINE CONTROL MODULE - INTERNAL
ENGINE CONTROL MODULE - PRIMARY BRAKE SIGNAL

Always perform the Pre-Diagnostic Troubleshooting procedure before proceeding. (Refer to 9 - ENGINE - DIAGNOSIS AND TESTING)

Diagnostic Test

1. CHECK THE PRIMARY BRAKE SWITCH STATUS

Turn the ignition on.

While observing the PRIMARY BRAKE SWITCH status on the scan tool display, press and release the brake pedal several times.

Does the scan tool display PRIMARY BRAKE SWITCH: PRESSED and RELEASED for the appropriate pedal position?

Yes >> Go To 2

No >> Go To 11

2. CHECK THE SECONDARY BRAKE SWITCH STATUS

While observing the SECONDARY BRAKE SWITCH status on the scan tool display, press and release the brake pedal several times.

Does the scan tool display SECONDARY BRAKE SWITCH: PRESSED and RELEASED for the appropriate pedal position

Yes >> Go To 3

No >> Go To 4

3. INTERMITTENT CONDITION

WARNING: WHEN THE ENGINE IS OPERATING, DO NOT STAND IN A DIRECT LINE WITH THE FAN. DO NOT PUT YOUR HANDS NEAR THE PULLEYS, BELTS OR FAN. DO NOT WEAR LOOSE CLOTHING.

NOTE: The conditions that set the DTC are not present at this time. The following list may help in identifying the intermittent condition.

With the engine running at normal operating temperature, monitor the scan tool parameters related to the DTC while wiggling the wiring harness. Look for parameter values to change and/or a DTC to set.

Review the DTC When Monitored and Set Conditions. If possible, try to duplicate the conditions under which the DTC was set.

Refer to any Technical Service Bulletins (TSB) that may apply.

Visually inspect the related wiring harness. Look for any chafed, pierced, pinched, or partially broken wires.

Visually inspect the related wiring harness connectors. Look for broken, bent, pushed out, or corroded terminals.

Were any of the above conditions present?

Yes >> Repair as necessary.
Perform the ECM Verification Test Ver. 1. (Refer to 9 - ENGINE - DIAGNOSIS AND TESTING)

No >> Test Complete.

4. (B16) SECONDARY BRAKE SWITCH SIGNAL CIRCUIT VOLTAGE

Turn the ignition off.

Disconnect the Brake Lamp Switch harness connector.

Turn the ignition on.

Measure the voltage between the (B16) Secondary Brake Switch Signal circuit and ground.

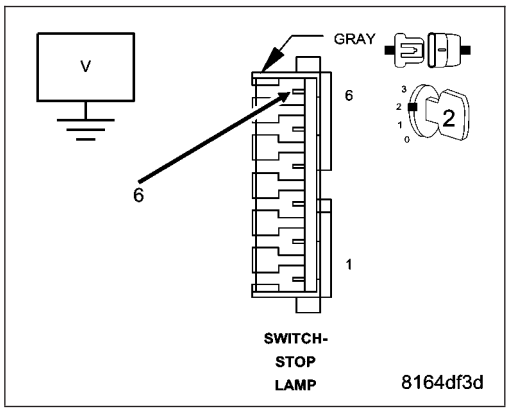

Is the voltage above 9.0 volts?

Yes >> Go To 5

No >> Go To 8

5. BRAKE SWITCH - SECONDARY SIGNAL CKT OPEN

While monitoring the SECONDARY BRAKE SWITCH status with the scan tool, connect a jumper wire between ground and the Secondary Brake Switch Signal circuit.

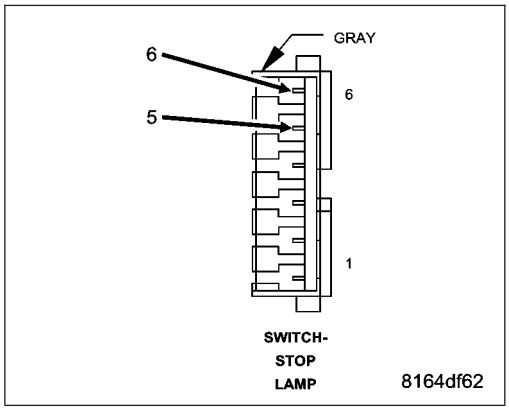

Does the scan tool display change from PRESSED to RELEASED?

Yes >> Adjust or replace the Brake Lamp Switch in accordance with the Service Information.
Perform the ECM Verification Test Ver. 1. (Refer to 9 - ENGINE - DIAGNOSIS AND TESTING)

No >> Go To 6

6. (Z904) GROUND CIRCUIT OPEN

Turn the ignition off.

Disconnect the Brake Lamp Switch harness connector.

Measure the resistance between ground and the (Z904) Ground circuit.

Is the resistance below 10.0 ohms?

Yes >> Go To 7

No >> Repair the (Z904) Ground circuit for an open.
Perform the ECM Verification Test Ver. 1. (Refer to 9 - ENGINE - DIAGNOSIS AND TESTING)

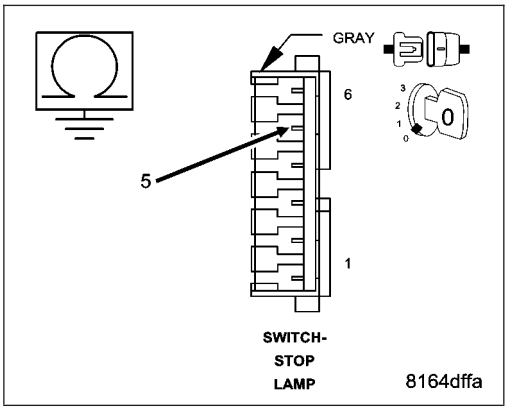

7. ENGINE CONTROL MODULE - INTERNAL

If there are no possible causes remaining, view repair.

Repair

Replace and program the Engine Control Module in accordance with the Service Information.
Perform the ECM VERIFICATION TEST. (Refer to 9 - ENGINE - DIAGNOSIS AND TESTING)

8. (B16) SECONDARY BRAKE SWITCH SIGNAL CIRCUIT SHORTED TO GROUND

Turn the ignition off.

Disconnect the ECM harness connectors.

Measure the resistance between ground and the (B16) Secondary Brake Switch Signal circuit.

Is the resistance above 1000 ohms?

Yes >> Go To 9

No >> Repair the (B16) Secondary Brake Switch Signal circuit for a short to ground.
Perform the ECM Verification Test Ver. 1. (Refer to 9 - ENGINE - DIAGNOSIS AND TESTING)

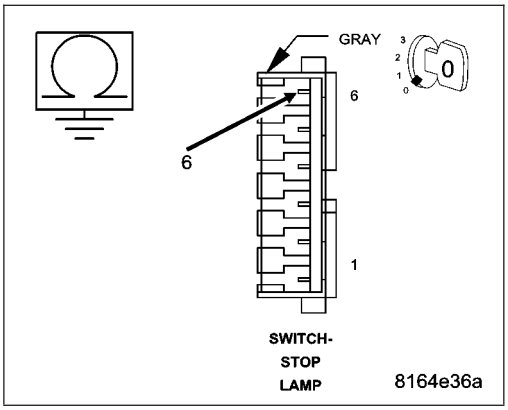

9. (B16) SECONDARY BRAKE SWITCH SIGNAL CIRCUIT OPEN

Measure the resistance of the (B16) Secondary Brake Switch Signal circuit.

Is the resistance below 10.0 ohms?

Yes >> Go To 10

No >> Repair the (B16) Secondary Brake Switch Signal circuit for an open.
Perform the ECM Verification Test Ver. 1. (Refer to 9 - ENGINE - DIAGNOSIS AND TESTING)

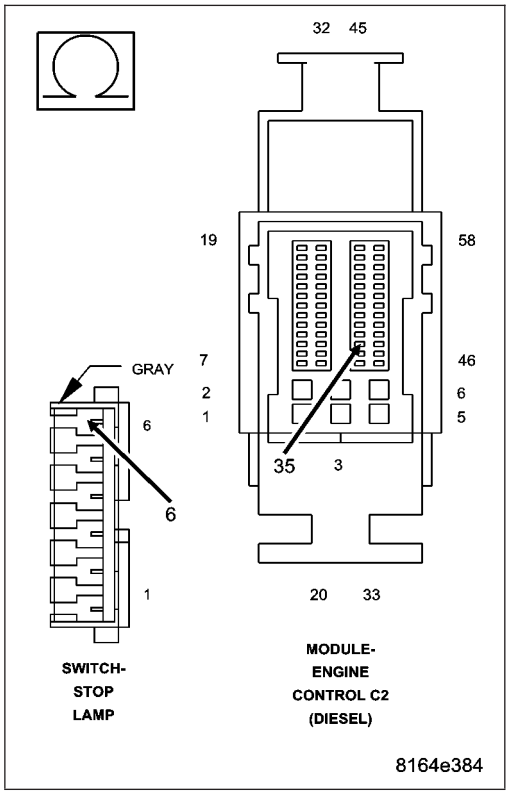

10. ENGINE CONTROL MODULE - SECONDARY BRAKE SIGNAL

If there are no possible causes remaining, view repair.

Repair

Replace and program the Engine Control Module in accordance with the Service Information.
Perform the ECM Verification Test Ver. 1. (Refer to 9 - ENGINE - DIAGNOSIS AND TESTING)

11. (A103) FUSED B+ CIRCUIT OPEN

Turn the ignition off.

Disconnect the Brake Lamp Switch harness connector.

Using a 12-volt test light connected to ground, check the (A103) Fused B+ circuit.

Does the test light illuminate brightly?

Yes >> Go To 12

No >> Repair the (A103) Fused B+ circuit for an open.
Perform the ECM Verification Test Ver. 1. (Refer to 9 - ENGINE - DIAGNOSIS AND TESTING)

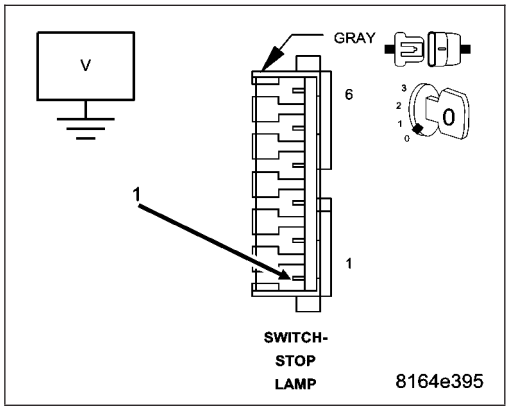

12. BRAKE LAMP SWITCH - PRIMARY SIGNAL OPEN

Turn the ignition on.

While monitoring the PRIM BRAKE SWITCH status with the scan tool, connect a jumper wire between the Primary Brake Switch Signal circuit and the Fused B(+) circuit.

Does the scan tool display change from RELEASED to PRESSED?

Yes >> Adjust or replace the Brake Lamp Switch in accordance with the Service Information.

Perform the ECM Verification Test Ver. 1. (Refer to 9 - ENGINE - DIAGNOSIS AND TESTING)

No >> Go To 13

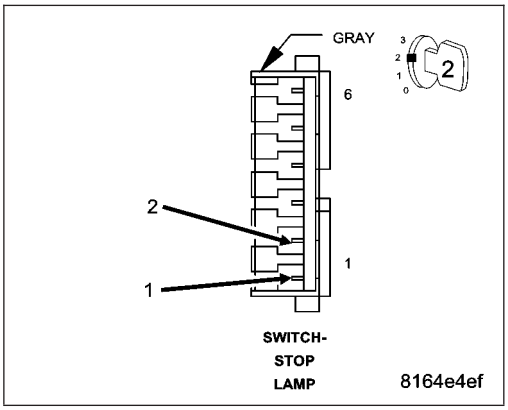

13. (L950) PRIMARY BRAKE SWITCH SIGNAL CIRCUIT SHORTED TO VOLTAGE

Turn the ignition off.

Disconnect the ECM harness connectors.

Remove the ASD Relay from the IPM.

Connect a jumper wire between cavity 30 and cavity 87 of the ASD Relay connector.

Turn the ignition on.

Measure the voltage between the (L950) Primary Brake Switch Signal circuit and ground.

Is the voltage above 1.0 volt?

Yes >> Repair the (L950) Primary Brake Switch Signal circuit for a short to voltage.

Perform the ECM Verification Test Ver. 1. (Refer to 9 - ENGINE - DIAGNOSIS AND TESTING)

No >> Go To 14

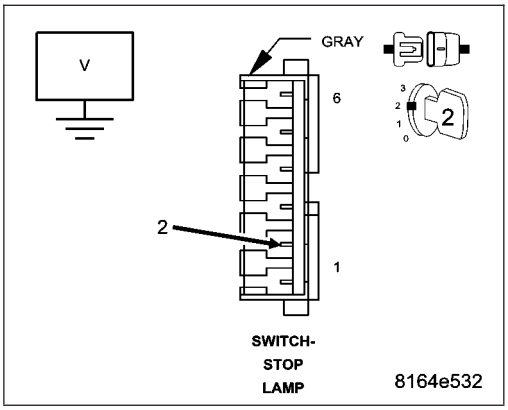

14. (L950) PRIMARY BRAKE SWITCH SIGNAL CIRCUIT OPEN

Turn the ignition off.

Measure the resistance of the (L950) Primary Brake Switch Signal circuit.

Is the resistance below 10.0 ohms?

Yes >> Replace and program the Engine Control Module in accordance with the Service Information.

Perform the ECM Verification Test Ver. 1. (Refer to 9 - ENGINE - DIAGNOSIS AND TESTING)

No >> Repair the (L950) Primary Brake Switch Signal circuit for an open.

Perform the ECM Verification Test Ver. 1. (Refer to 9 - ENGINE - DIAGNOSIS AND TESTING)

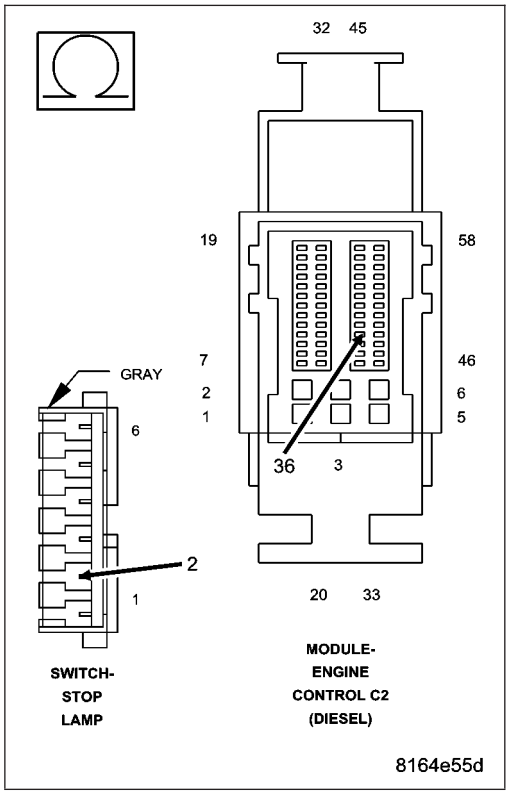

P0513-INVALID SKIM KEY

For a complete wiring diagram **Refer to Section 8W**

- **When Monitored:**
  With the ignition on.
- **Set Condition:**
  The ECM receives and invalid SKIM Key message from the SKREEM.

Possible Causes
INTERMITTENT DTC
UNPROGRAMMED IGNITION KEYS
SKREEM
ENGINE CONTROL MODULE (ECM)

Always perform the Pre-Diagnostic Troubleshooting procedure before proceeding. (Refer to 9 - ENGINE - DIAGNOSIS AND TESTING)

Diagnostic Test

1. CHECK FOR SKREEM COMMUNICATION AND DTCS

Ignition on, engine not running.
With the scan tool, check for proper communication and active DTCs in the SKREEM.

Are any SKREEM communication problems or DTCs present?

Yes >> Refer to the symptom list for problems related to SKREEM Communication and DTCs before continuing.

No >> Go To 2

2. CHECK FOR ACTIVE DTC

Turn the ignition on.
With the scan tool, clear all ECM DTCs.
Turn the ignition on and off several times pausing 10 seconds between key cycles.
With the scan tool, select View DTCs in the ECM.

Is the status Active for this DTC?

Yes >> Go to 3

No >> Refer to *CHECKING FOR INTERMITTENT DTC in the symptom list. (Refer to 9 - ENGINE - DIAGNOSIS AND TESTING)

3. REPROGRAM IGNITION KEYS AND RETEST

Turn the ignition on.
With the scan tool, clear all ignition keys out of SKREEM memory.
With the scan tool, reprogram all ignition keys to the SKREEM.
Turn the ignition on and off several times pausing 10 seconds between key cycles.
With the scan tool, select View DTCs in the ECM.

Is the status Active for this DTC?

Yes >> 4

No >> Test complete.

4. REPLACE THE SKREEM AND RETEST

Replace and program the SKREEM in accordance with the Service Information.
Turn the ignition on.
With the scan tool, clear all ECM DTCs.
Turn the ignition on and off several times pausing 10 seconds between key cycles.
With the scan tool, select View DTCs in the ECM.

Is the status Active for this DTC?

Yes >> Replace and program the Engine Control Module in accordance the Service Information.
Perform the ECM Verification Test Ver. 1. (Refer to 9 - ENGINE - DIAGNOSIS AND TESTING)

No >> Test complete.

P0522-ENGINE OIL PRESSURE SENSOR CIRCUIT LOW

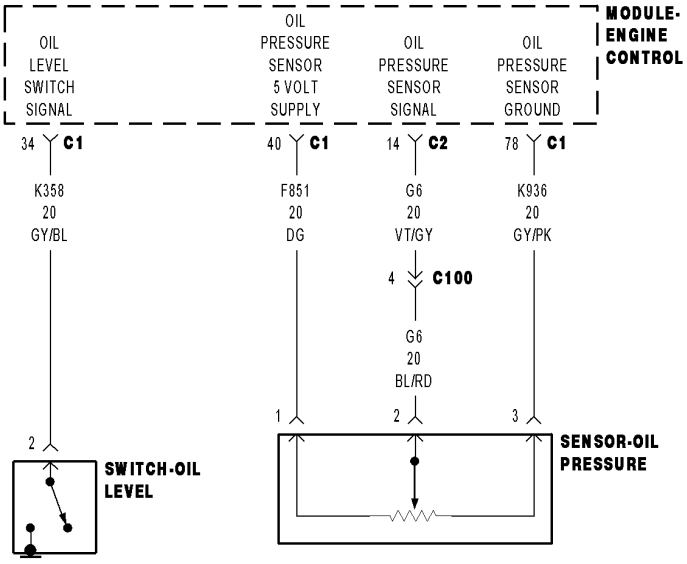

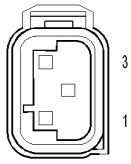

SENSOR-OIL
PRESSURE
(DIESEL)

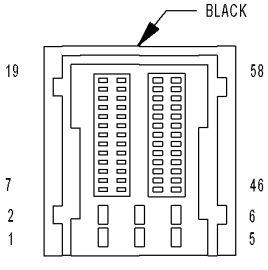

MODULE-
ENGINE
CONTROL C2
(DIESEL)

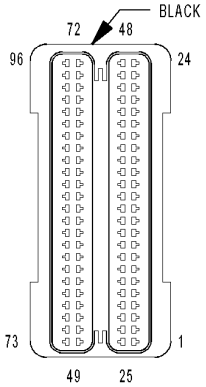

MODULE-
ENGINE CONTROL C1
(DIESEL)

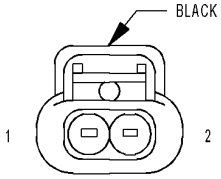

SWITCH-OIL
LEVEL
(DIESEL)

816B748E

For a complete wiring diagram **Refer to Section 8W**

- **When Monitored:**
  At engine start-up.
- **Set Condition:**
  The ECM detects that the (G6) Oil Pressure Sensor Signal circuit is below 0.2 volt for 0.5 second.

Possible Causes
INTERMITTENT DTC
(F851) OIL PRESSURE SENSOR 5 VOLT SUPPLY CIRCUIT SHORTED TO GROUND
(G6) OIL PRESSURE SENSOR SIGNAL CIRCUIT SHORTED TO GROUND
(F851) OIL PRESSURE SENSOR 5 VOLT SUPPLY CIRCUIT SHORTED TO (K936) OIL PRESSURE SENSOR GROUND CIRCUIT
(G6) OIL PRESSURE SENSOR SIGNAL CIRCUIT SHORTED TO (K936) OIL PRESSURE SENSOR GROUND CIRCUIT
(F851) OIL PRESSURE SENSOR 5 VOLT SUPPLY CIRCUIT OPEN OR HIGH RESISTANCE
(G6) OIL PRESSURE SENSOR SIGNAL CIRCUIT OPEN OR HIGH RESISTANCE
OIL PRESSURE SENSOR
ENGINE CONTROL MODULE (ECM)

Always perform the Pre-Diagnostic Troubleshooting procedure before proceeding. (Refer to 9 - ENGINE - DIAGNOSIS AND TESTING)

Diagnostic Test

1. DTC IS ACTIVE

Ignition on, engine not running.
With the scan tool, Clear DTCs in the Engine Control Module (ECM).
Monitor the scan tool for at least two minutes.
Cycle the ignition key off and on several times, leaving the ignition on for at least 10 seconds at a time.
Start the engine.
Allow the engine to reach normal operating temperature.
With the scan tool, select View DTCs.

Is the status Active for this DTC?

Yes >> Go To 2

No >> Refer to the *CHECKING FOR AN INTERMITTENT DTC Diagnostic Procedure. (Refer to 9 - ENGINE - DIAGNOSIS AND TESTING)

2. (F851) OIL PRESSURE SENSOR 5 VOLT SUPPLY CIRCUIT VOLTAGE

Turn the ignition off.
Disconnect the Oil Pressure Sensor connector.
Turn the ignition on.
Measure the voltage of the (F851) Oil Pressure Sensor 5 Volt Supply circuit in the Oil Pressure Sensor connector.

Is the voltage above 4.5 volts?

Yes >> Go to 6

No >> Go to 3

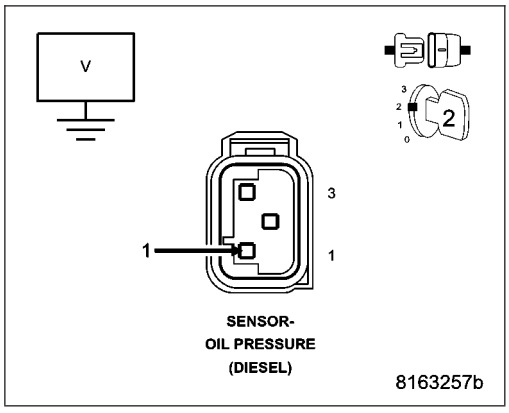

3. (F851) OIL PRESSURE SENSOR 5 VOLT SUPPLY CIRCUIT SHORTED TO GROUND

Turn the ignition off.

Disconnect the Engine Control Module (ECM) connector.

Measure the resistance between ground and the (F851) Oil Pressure Sensor 5 Volt Supply circuit in the Oil Pressure Sensor connector.

Is the resistance above 1000.0 ohms?

Yes >> Go to 4

No >> Repair the (F851) Oil Pressure Sensor 5 Volt Supply circuit for a short to ground.

Perform the ECM Verification Test Ver. 1. (Refer to 9 - ENGINE - DIAGNOSIS AND TESTING)

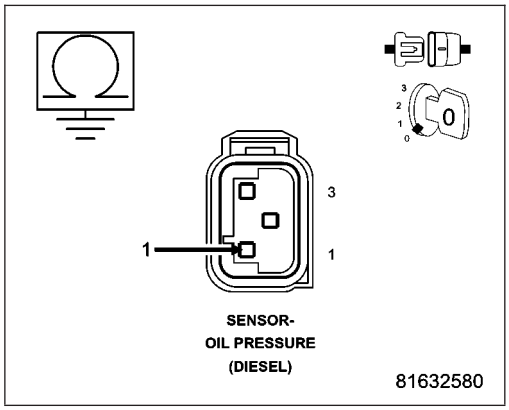

4. (F851) OIL PRESSURE SENSOR 5 VOLT SUPPLY CIRCUIT SHORTED TO (K936) OIL PRESSURE SENSOR GROUND CIRCUIT

Measure the resistance between the (F851) Oil Pressure Sensor 5 Volt Supply circuit and the (K936) Oil Pressure Sensor Ground circuit in the Oil Pressure Sensor connector.

Is the resistance above 1000.0 ohms?

Yes >> Go to 5

No >> Repair the (F851) Oil Pressure Sensor 5 Volt Supply circuit for a short to the (K936) Oil Pressure Sensor Ground circuit.

Perform the ECM Verification Test Ver. 1. (Refer to 9 - ENGINE - DIAGNOSIS AND TESTING)

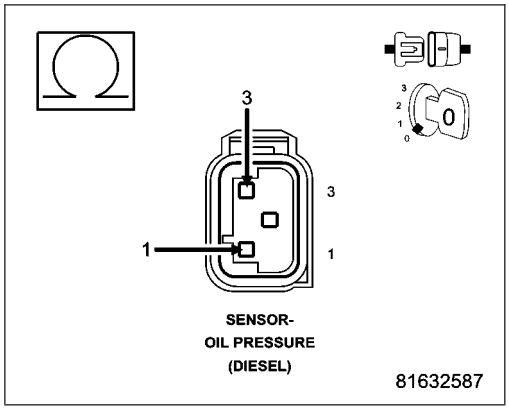

5. (F851) OIL PRESSURE SENSOR 5 VOLT SUPPLY CIRCUIT OPEN OR HIGH RESISTANCE

Measure the resistance of the (F851) Oil Pressure Sensor 5 Volt Supply circuit between the Oil Pressure Sensor connector and the Engine Control Module (ECM) connector.

Is the resistance below 10.0 ohms?

Yes >> Go to 10

No >> Repair the (F851) Oil Pressure Sensor 5 Volt Supply circuit for an open circuit or high resistance.
Perform the ECM Verification Test Ver. 1. (Refer to 9 - ENGINE - DIAGNOSIS AND TESTING)

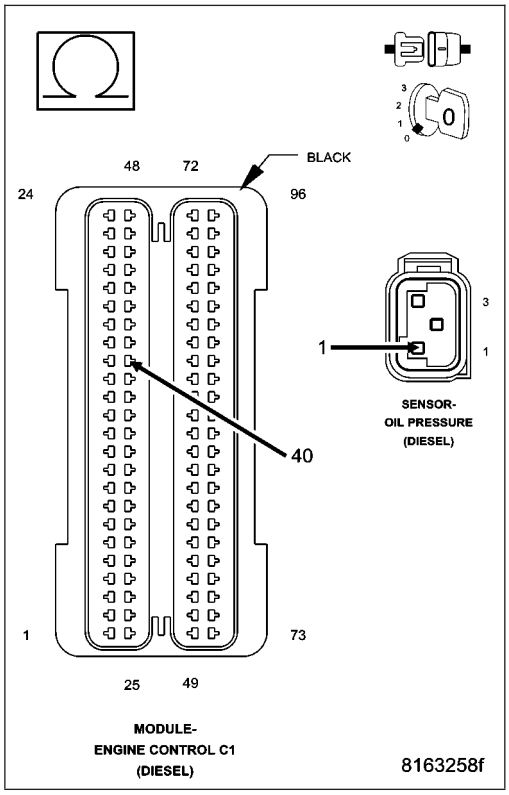

6. (G6) OIL PRESSURE SENSOR SIGNAL CIRCUIT SHORTED TO GROUND

Turn the ignition off.

Disconnect the Engine Control Module (ECM) connector.

Measure the resistance between ground and the (G6) Oil Pressure Sensor Signal circuit in the Oil Pressure Sensor connector.

Is the resistance above 1000.0 ohms?

Yes >> Go to 7

No >> Repair the (G6) Oil Pressure Sensor Signal circuit for a short to ground.
Perform the ECM Verification Test Ver. 1. (Refer to 9 - ENGINE - DIAGNOSIS AND TESTING)

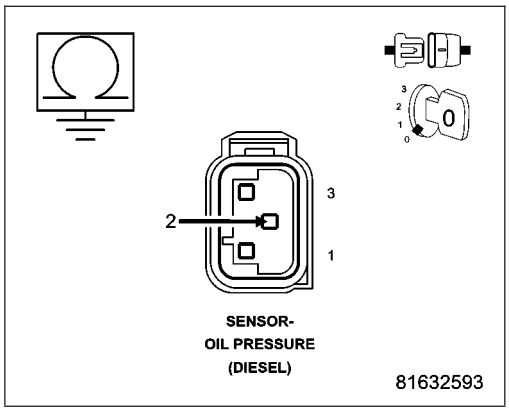

7. (G6) OIL PRESSURE SENSOR SIGNAL CIRCUIT SHORTED TO (K936) OIL PRESSURE SENSOR GROUND CIRCUIT

Measure the resistance between the (G6) Oil Pressure Sensor Signal circuit and the (K936) Oil Pressure Sensor Ground circuit in the Oil Pressure Sensor connector.

Is the resistance above 1000.0 ohms?

Yes >> Go to 8

No >> Repair the (G6) Oil Pressure Sensor Signal circuit for a short to the (K936) Oil Pressure Sensor Ground circuit.
Perform the ECM Verification Test Ver. 1. (Refer to 9 - ENGINE - DIAGNOSIS AND TESTING)

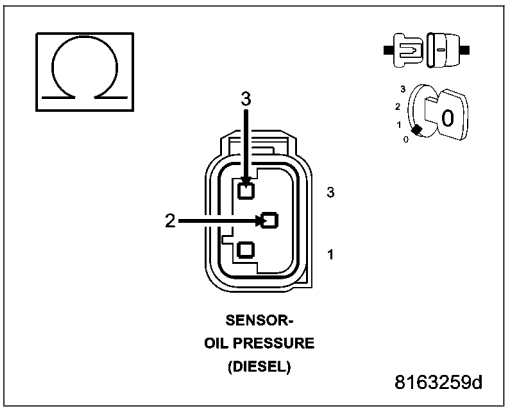

8. (G6) OIL PRESSURE SENSOR SIGNAL CIRCUIT OPEN OR HIGH RESISTANCE

Measure the resistance of the (G6) Oil Pressure Sensor Signal circuit between the Oil Pressure Sensor connector and the Engine Control Module (ECM) connector.

Is the resistance below 10.0 ohms?

Yes >> Go to 9

No >> Repair the (G6) Oil Pressure Sensor Signal circuit for an open circuit or high resistance.
Perform the ECM Verification Test Ver. 1. (Refer to 9 - ENGINE - DIAGNOSIS AND TESTING)

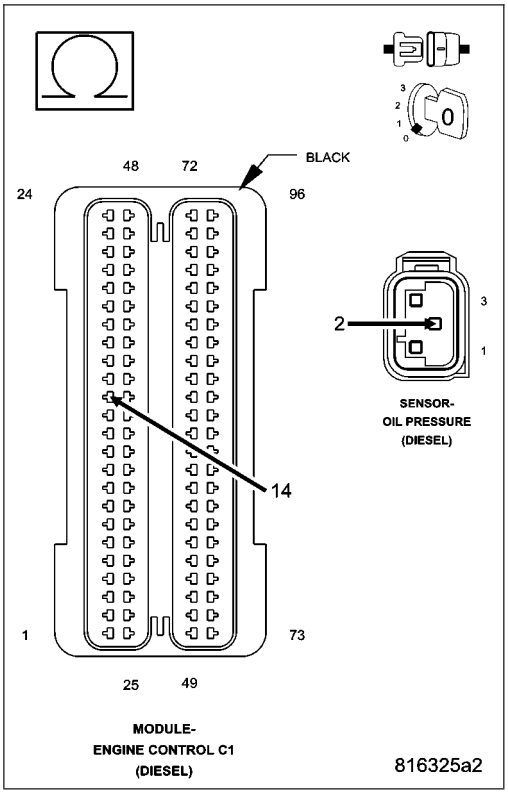

9. OIL PRESSURE SENSOR

Turn the ignition off.
Connect the Engine Control Module (ECM) connector.
Turn the ignition on.
With the scan tool, Clear DTCs.
With the scan tool, select View DTCs.

NOTE: The scan tool should display an Oil Pressure Sensor high voltage or open DTC with the Oil Pressure Sensor connector disconnected.

Does the scan tool display the DTC(s) as described above?

Yes >> Replace the Oil Pressure Sensor in accordance with the Service Information.
Perform the ECM Verification Test Ver. 1. (Refer to 9 - ENGINE - DIAGNOSIS AND TESTING)

No >> Go to 10

10. ENGINE CONTROL MODULE (ECM)

Using the wiring diagram/schematic as a guide, inspect the wiring and connectors between the Oil Pressure Sensor and the Engine Control Module (ECM).

Look for any chafed, pierced, pinched, or partially broken wires.

Look for broken, bent, pushed out or corroded terminals.

Monitor the scan tool data relative to this circuit and wiggle test the wiring and connectors.

Look for the data to change or for the DTC to reset during the wiggle test.

Refer to any Technical Service Bulletins that may apply.

Were any problems found?

Yes >> Repair as necessary.
Perform the ECM Verification Test Ver. 1. (Refer to 9 - ENGINE - DIAGNOSIS AND TESTING)

No >> Replace the Engine Control Module (ECM) in accordance with the Service Information.
Perform the ECM Verification Test Ver. 1. (Refer to 9 - ENGINE - DIAGNOSIS AND TESTING)

P0523-ENGINE OIL PRESSURE SENSOR CIRCUIT HIGH

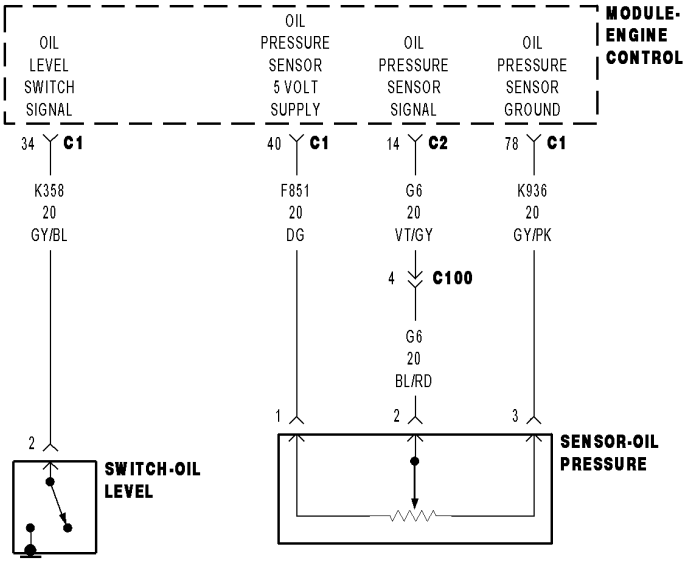

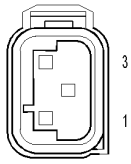

SENSOR-OIL
PRESSURE
(DIESEL)

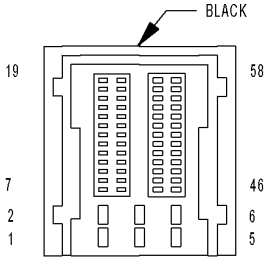

MODULE-
ENGINE
CONTROL C2
(DIESEL)

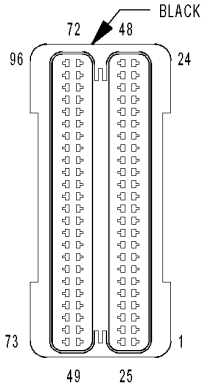

MODULE-
ENGINE CONTROL C1
(DIESEL)

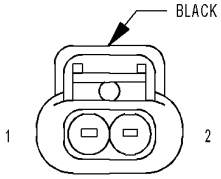

SWITCH-OIL
LEVEL
(DIESEL)

816B748E

For a complete wiring diagram **Refer to Section 8W**

- **When Monitored:**
  At engine start-up.
- **Set Condition:**
  The ECM detects that the (G6) Oil Pressure Sensor Signal circuit is above 4.88 volts for 0.5 second.

Possible Causes
INTERMITTENT DTC
(F851) OIL PRESSURE SENSOR 5 VOLT SUPPLY CIRCUIT SHORTED TO VOLTAGE
(G6) OIL PRESSURE SENSOR SIGNAL CIRCUIT SHORTED TO VOLTAGE
(K936) OIL PRESSURE SENSOR GROUND CIRCUIT SHORTED TO VOLTAGE
(G6) OIL PRESSURE SENSOR SIGNAL CIRCUIT OPEN OR HIGH RESISTANCE
(K936) OIL PRESSURE SENSOR GROUND CIRCUIT OPEN OR HIGH RESISTANCE
OIL PRESSURE SENSOR
ENGINE CONTROL MODULE (ECM)

Always perform the Pre-Diagnostic Troubleshooting procedure before proceeding. (Refer to 9 - ENGINE - DIAGNOSIS AND TESTING)

Diagnostic Test

1. DTC IS ACTIVE

Ignition on, engine not running.
With the scan tool, Clear DTCs in the Engine Control Module (ECM).
Monitor the scan tool for at least two minutes.
Cycle the ignition key off and on several times, leaving the ignition on for at least 10 seconds at a time.
Start the engine.
Allow the engine to reach normal operating temperature.
With the scan tool, select View DTCs.

Is the status Active for this DTC?

Yes >> Go To 2

No >> Refer to the *CHECKING FOR AN INTERMITTENT DTC Diagnostic Procedure. (Refer to 9 - ENGINE - DIAGNOSIS AND TESTING)

2. (F851) OIL PRESSURE SENSOR 5 VOLT SUPPLY CIRCUIT SHORTED TO VOLTAGE

Turn the ignition off.
Disconnect the Oil Pressure Sensor connector.
Disconnect the Engine Control Module (ECM) connector.
Remove the ASD Relay from the IPM.
Connect a jumper wire between cavity 30 and cavity 87 of the ASD Relay Connector.
Turn the ignition on.
Measure the voltage of the (F851) Oil Pressure Sensor 5 Volt Supply circuit in the Oil Pressure Sensor connector.

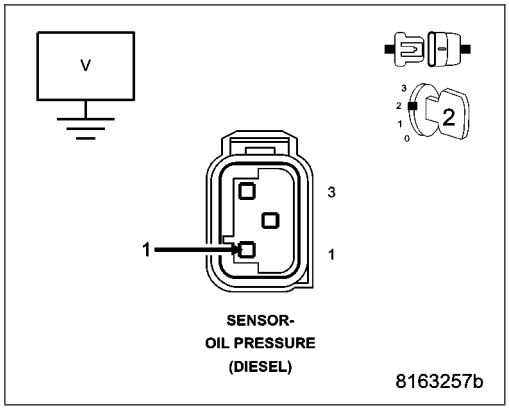

Is there any voltage present?

Yes >> Repair the (F851) Oil Pressure Sensor 5 Volt Supply circuit for a short to voltage.
Perform the ECM Verification Test Ver. 1. (Refer to 9 - ENGINE - DIAGNOSIS AND TESTING)

No >> Go to 3

3. (G6) OIL PRESSURE SENSOR SIGNAL CIRCUIT SHORTED TO VOLTAGE

NOTE: The jumper wire should still be in place.
Measure the voltage of the (G6) Oil Pressure Sensor Signal circuit in the Oil Pressure Sensor connector.

Is there any voltage present?

Yes >> Repair the (G6) Oil Pressure Sensor Signal circuit for a short to voltage.
Perform the ECM Verification Test Ver. 1. (Refer to 9 - ENGINE - DIAGNOSIS AND TESTING)

No >> Go to 4

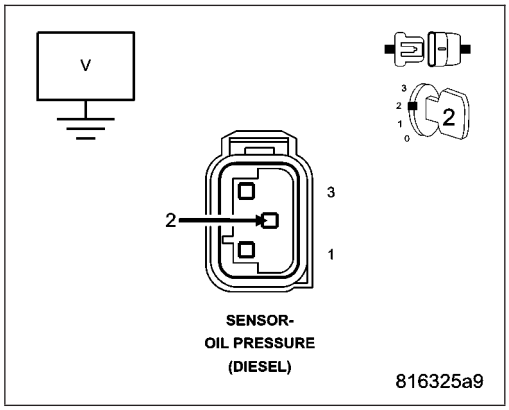

4. (K936) OIL PRESSURE SENSOR GROUND CIRCUIT SHORTED TO VOLTAGE

NOTE: The jumper wire should still be in place.
Measure the voltage of the (K936) Oil Pressure Sensor Ground circuit in the Oil Pressure Sensor connector.

Is there any voltage present?

Yes >> Repair the (K936) Oil Pressure Sensor Ground circuit for a short to voltage.
Perform the ECM Verification Test Ver. 1. (Refer to 9 - ENGINE - DIAGNOSIS AND TESTING)

No >> Go to 5

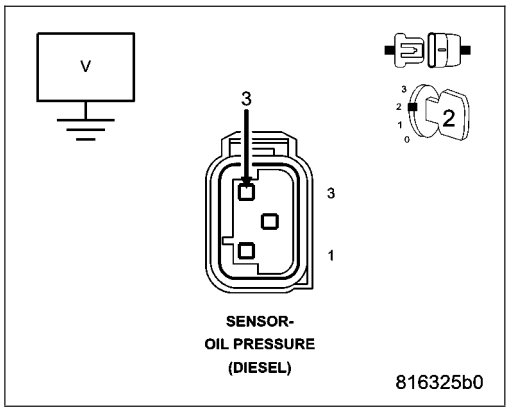

5. OIL PRESSURE SENSOR

Turn the ignition off.

Remove the jumper wire and install the ASD Relay.

Connect the Engine Control Module (ECM) connector.

Connect a jumper wire between the (K936) Oil Pressure Sensor Ground circuit and the (G6) Oil Pressure Sensor Signal circuit in the Oil Pressure Sensor connector.

Turn the ignition on.

With the scan tool, Clear DTCs.

With the scan tool, select View DTCs.

NOTE: The scan tool should display an Oil Pressure Sensor low voltage or short to ground DTC with the jumper wire in place.

Does the scan tool display the DTC(s) as described above?

Yes >> Replace the Oil Pressure Sensor in accordance with the Service Information.
Perform the ECM Verification Test Ver. 1. (Refer to 9 - ENGINE - DIAGNOSIS AND TESTING)

No >> Go to 6

6. (G6) OIL PRESSURE SENSOR SIGNAL OPEN OR HIGH RESISTANCE

Turn the ignition off.

Disconnect the Engine Control Module (ECM) connector.

Measure the resistance of the (G6) Oil Pressure Sensor Signal between the Oil Pressure Sensor connector and the Engine Control Module (ECM) connector.

Is the resistance below 10.0 ohms?

Yes >> Go to 7

No >> Repair the (G6) Oil Pressure Sensor Signal for an open circuit or high resistance.

Perform the ECM Verification Test Ver. 1. (Refer to 9 - ENGINE - DIAGNOSIS AND TESTING)

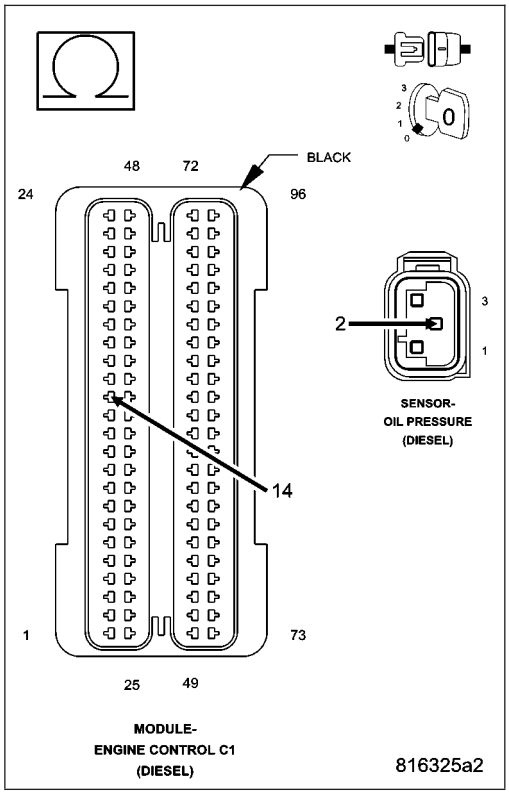

7. (K936) OIL PRESSURE SENSOR GROUND CIRCUIT OPEN OR HIGH RESISTANCE

Measure the resistance of the (K936) Oil Pressure Sensor Ground circuit between the Oil Pressure Sensor connector and the Engine Control Module (ECM) connector.

Is the resistance below 10.0 ohms?

Yes >> Go to 8

No >> Repair the (K936) Oil Pressure Sensor Ground circuit for an open circuit or high resistance.

Perform the ECM Verification Test Ver. 1. (Refer to 9 - ENGINE - DIAGNOSIS AND TESTING)

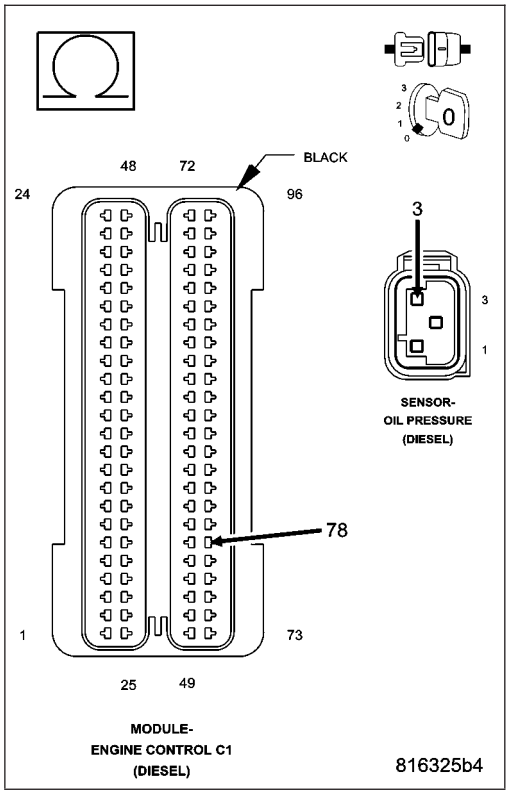

8. ENGINE CONTROL MODULE (ECM)

Using the wiring diagram/schematic as a guide, inspect the wiring and connectors between the Oil Pressure Sensor and the Engine Control Module (ECM).

Look for any chafed, pierced, pinched, or partially broken wires.

Look for broken, bent, pushed out or corroded terminals.

Monitor the scan tool data relative to this circuit and wiggle test the wiring and connectors.

Look for the data to change or for the DTC to reset during the wiggle test.

Refer to any Technical Service Bulletins that may apply.

Were any problems found?

Yes >> Repair as necessary.
Perform the ECM Verification Test Ver. 1. (Refer to 9 - ENGINE - DIAGNOSIS AND TESTING)

No >> Replace the Engine Control Module (ECM) in accordance with the Service Information.
Perform the ECM Verification Test Ver. 1. (Refer to 9 - ENGINE - DIAGNOSIS AND TESTING)

P0524- ENGINE OIL PRESSURE IS TOO LOW

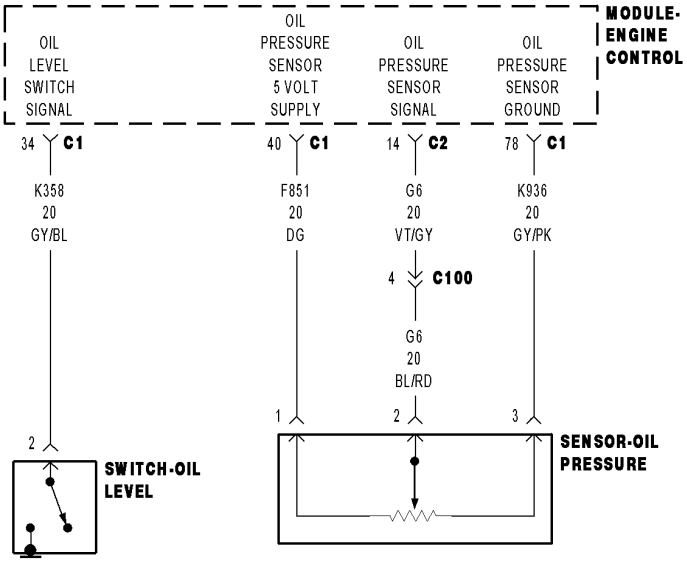

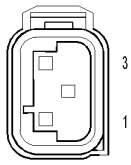

SENSOR-OIL PRESSURE (DIESEL)

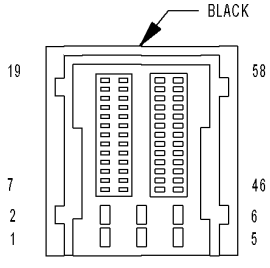

MODULE-ENGINE CONTROL C2 (DIESEL)

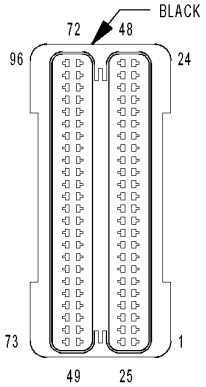

MODULE-ENGINE CONTROL C1 (DIESEL)

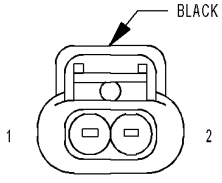

SWITCH-OIL LEVEL (DIESEL)

816B748E

For a complete wiring diagram **Refer to Section 8W**

- **When Monitored:**
  With the engine running.
- **Set Condition:**
  The Oil Pressure Sensor indicates low oil pressure for 5 seconds.

Possible Causes
MECHANICAL PROBLEM
OIL PRESSURE SENSOR FAILURE
OIL PRESSURE SENSOR CIRCUIT(S) OPEN OR HIGH RESISTANCE
INTERMITTENT CONDITION

Diagnostic Test

1. CHECKING FOR CURRENT DTC

NOTE: Perform Pre-diagnostic test before continuing

NOTE: Ensure the engine oil level is at the specified level and the engine oil filter is the specified filter for this specific engine application.

NOTE: The engine must be at operating temperature for this test.

Turn the ignition on.

With the scan tool, erase ECM DTCs.

Start the engine several times, letting the engine run for at least 30 seconds at a time.

With the scan tool, read ECM DTCs.

Did this DTC set again?

Yes >> Go To 2

No >> Refer to the *CHECKING FOR AN INTERMITTENT DTC Diagnostic Procedure.

2. MECHANICAL PROBLEM

Refer to the Service Information and perform the Engine Oil Pressure Test.

Is the oil pressure within specification?

Yes >> Go To 3

No >> Repair as necessary.
Perform the ECM VERIFICATION TEST.

3. CHECKING OP SENSOR CIRCUITS

Turn the ignition off.

Disconnect the Oil Pressure Sensor harness connector.

Disconnect the ECM harness connectors.

Measure the resistance of the each of the Oil Pressure Sensor circuits (3) between the Oil Pressure Sensor and the ECM harness connectors.

Is the resistance below 10.0 ohms for each of the measurements?

Yes >> Replace the Oil Pressure Sensor.

No >> Repair the Oil Pressure Sensor circuit(s) that measured above 10.0 ohms for an open.

P053A-CRANKCASE VENT HEATER CONTROL CIRCUIT OPEN

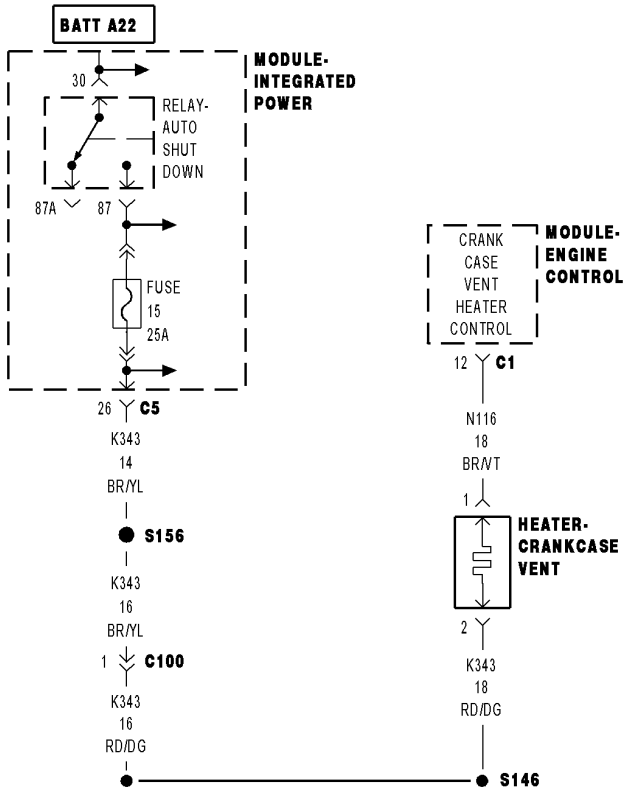

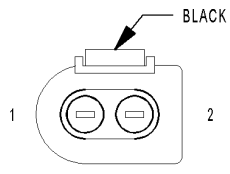

HEATER-
CRANKCASE VENT
(DIESEL)

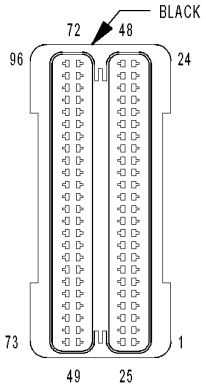

MODULE-
ENGINE CONTROL C1
(DIESEL)

816B74B8

For a complete wiring diagram **Refer to Section 8W**

- **When Monitored:**
  With the ignition on and the Crankcase Vent Heater command off.
- **Set Condition:**
  The ECM does not detect voltage on the (N116) Crankcase Vent Heater Control circuit for 2.0 seconds.

Possible Causes
INTERMITTENT DTC
(N116) CRANKCASE VENT HEATER CONTROL CIRCUIT SHORTED TO GROUND
(N116) CRANKCASE VENT HEATER CONTROL CIRCUIT OPEN OR HIGH RESISTANCE
(K343) FUSED ASD RELAY OUTPUT CIRCUIT 2 OPEN OR HIGH RESISTANCE
CRANKCASE VENT HEATER
ENGINE CONTROL MODULE (ECM)

Always perform the Pre-Diagnostic Troubleshooting procedure before proceeding. (Refer to 9 - ENGINE - DIAGNOSIS AND TESTING)

Diagnostic Test

1. DTC IS ACTIVE

Ignition on, engine not running.

With the scan tool, Clear DTCs in the Engine Control Module (ECM).

With the scan tool, actuate the Crankcase Vent Heater.

Monitor the scan tool for at least two minutes.

With the scan tool, select View DTCs.

Is the status Active for this DTC?

Yes >> Go To 2

No >> Refer to the *CHECKING FOR AN INTERMITTENT DTC Diagnostic Procedure. (Refer to 9 - ENGINE - DIAGNOSIS AND TESTING)

2. (N116) CRANKCASE VENT HEATER CONTROL CIRCUIT SHORTED TO GROUND

Turn the ignition off.

Disconnect the Crankcase Vent Heater connector.

Disconnect the Engine Control Module (ECM) connector.

Measure the resistance between ground and the (N116) Crankcase Vent Heater Control circuit in the Crankcase Vent Heater connector.

Is the resistance above 10.0 ohms?

Yes >> Go to 3

No >> Repair the (N116) Crankcase Vent Heater Control circuit for a short to ground.
Perform the ECM Verification Test Ver. 1. (Refer to 9 - ENGINE - DIAGNOSIS AND TESTING)

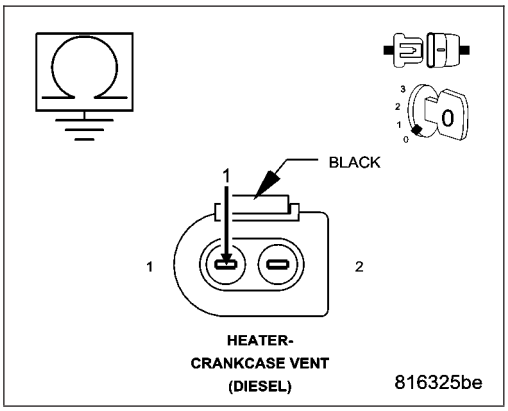

3. (N116) CRANKCASE VENT HEATER CONTROL CIRCUIT OPEN OR HIGH RESISTANCE

Measure the resistance of the (N116) Crankcase Vent Heater Control circuit between the Crankcase Vent Heater connector and the Engine Control Module (ECM) connector.

Is the resistance below 10.0 ohms?

Yes >> Go to 4

No >> Repair the (N116) Crankcase Vent Heater Control circuit for an open circuit or high resistance.

Perform the ECM Verification Test Ver. 1. (Refer to 9 - ENGINE - DIAGNOSIS AND TESTING)

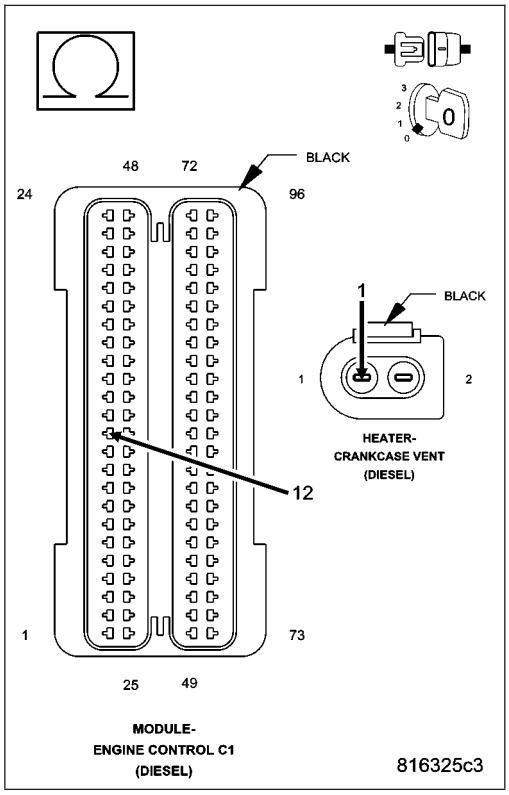

4. (K343) FUSED ASD RELAY OUTPUT 2 CIRCUIT OPEN OR HIGH RESISTANCE

Connect the Engine Control Module (ECM) connector.

Turn the ignition on.

Using a 12 volt test light connected to ground, check the (K343) Fused ASD Relay Output 2 circuit in the Crankcase Vent Heater connector.

NOTE: The test light should be illuminated and bright. Compare the brightness to that of a direct connection to the battery.

Is the test light illuminated and bright?

Yes >> Go to 5

No >> Repair the (K343) Fused ASD Relay Output 2 circuit for an open circuit or high resistance.

Perform the ECM Verification Test Ver. 1. (Refer to 9 - ENGINE - DIAGNOSIS AND TESTING)

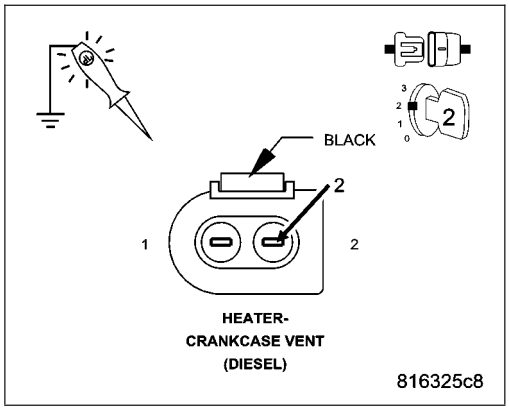

5. CRANKCASE VENT HEATER

Turn the ignition off.

Connect the Engine Control Module (ECM) connector.

Remove the jumper wire and install the ASD Relay.

Turn the ignition on.

With the scan tool, actuate the Crankcase Vent Heater to On.

Using a 12 volt test light connected to 12 volts, check the (N116) Crankcase Vent Heater Control circuit in the Crankcase Vent Heater harness connector.

NOTE: The test light should be illuminated and bright. Compare the brightness to that of a direct connection to the battery.

NOTE: The circuit will remain actuated by the controller for 30 seconds. Be certain the actuation is active when checking the circuit.

Is the test light illuminated and bright while the actuator is active?

Yes >> Replace the Crankcase Vent Heater in accordance with the Service Information.
Perform the ECM Verification Test Ver. 1 (Refer to 9 - ENGINE - DIAGNOSIS AND TESTING).

No >> Go to 6

6. ENGINE CONTROL MODULE (ECM)

Using the wiring diagram/schematic as a guide, inspect the wiring and connectors between the Crankcase Vent Heater and the Engine Control Module (ECM).

Look for any chafed, pierced, pinched, or partially broken wires.

Look for broken, bent, pushed out or corroded terminals.

Refer to any Technical Service Bulletins that may apply.

Were any problems found?

Yes >> Repair as necessary.
Perform the ECM Verification Test Ver. 1. (Refer to 9 - ENGINE - DIAGNOSIS AND TESTING)

No >> Replace the Engine Control Module (ECM) in accordance with the Service Information.
Perform the ECM Verification Test Ver. 1. (Refer to 9 - ENGINE - DIAGNOSIS AND TESTING)

P053B-CRANKCASE VENT HEATER CONTROL CIRCUIT LOW

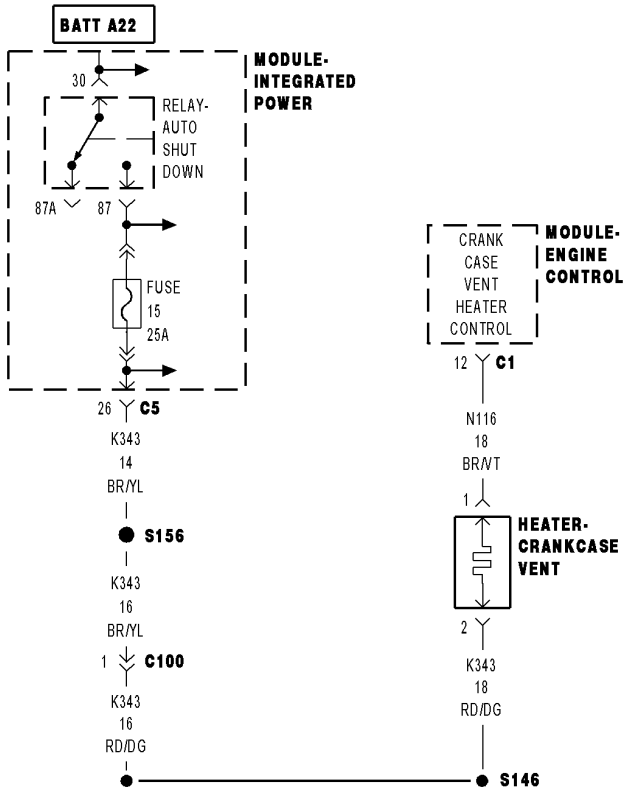

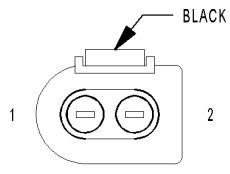

HEATER-
CRANKCASE VENT
(DIESEL)

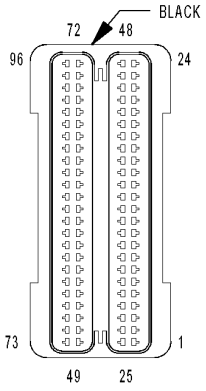

MODULE-
ENGINE CONTROL C1
(DIESEL)

816B74B8

For a complete wiring diagram **Refer to Section 8W**

- **When Monitored:**
  With the ignition on and the Crankcase Vent Heater command off.
- **Set Condition:**
  The ECM detects a short to ground on the (N116) Crankcase Vent Heater Control circuit for 2.0 seconds.

Possible Causes
INTERMITTENT DTC
(N116) CRANKCASE VENT HEATER CONTROL CIRCUIT SHORTED TO GROUND
(N116) CRANKCASE VENT HEATER CONTROL CIRCUIT OPEN OR HIGH RESISTANCE
CRANKCASE VENT HEATER
ENGINE CONTROL MODULE (ECM)

Always perform the Pre-Diagnostic Troubleshooting procedure before proceeding.

Diagnostic Test

1. DTC IS ACTIVE

Ignition on, engine not running.
With the scan tool, Clear DTCs in the Engine Control Module (ECM).
With the scan tool, actuate the Crankcase Vent Heater.
Monitor the scan tool for at least two minutes.
With the scan tool, select View DTCs.

Is the status Active for this DTC?

Yes >> Go To 2

No >> Refer to the *CHECKING FOR AN INTERMITTENT DTC Diagnostic Procedure. (Refer to 9 - ENGINE - DIAGNOSIS AND TESTING)

2. (N116) CRANKCASE VENT HEATER CONTROL CIRCUIT SHORTED TO GROUND

Turn the ignition off.
Disconnect the Crankcase Vent Heater connector.
Disconnect the Engine Control Module (ECM) connector.
Measure the resistance between ground and the (N116) Crankcase Vent Heater Control circuit in the Crankcase Vent Heater connector.

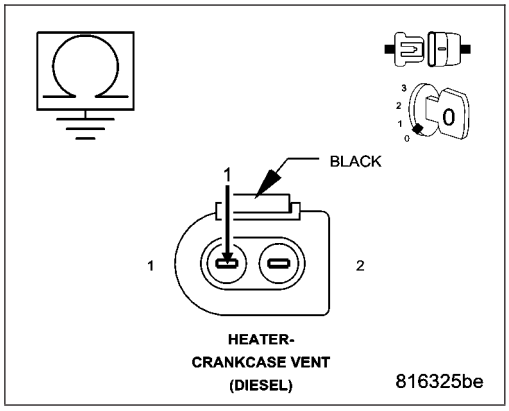

Is the resistance below 1000.0 ohms?

Yes >> Repair the (N116) Crankcase Vent Heater Control circuit for a short to ground.
Perform the ECM Verification Test Ver. 1. (Refer to 9 - ENGINE - DIAGNOSIS AND TESTING)

No >> Go to 3

3. (N116) CRANKCASE VENT HEATER CONTROL CIRCUIT OPEN OR HIGH RESISTANCE

Measure the resistance of the (N116) Crankcase Vent Heater Control circuit between the Crankcase Vent Heater connector and the Engine Control Module (ECM) connector.

Is the resistance below 10.0 ohms?

Yes >> Go to 4

No >> Repair the (N116) Crankcase Vent Heater Control circuit for an open circuit or high resistance.
Perform the ECM Verification Test Ver. 1. (Refer to 9 - ENGINE - DIAGNOSIS AND TESTING)

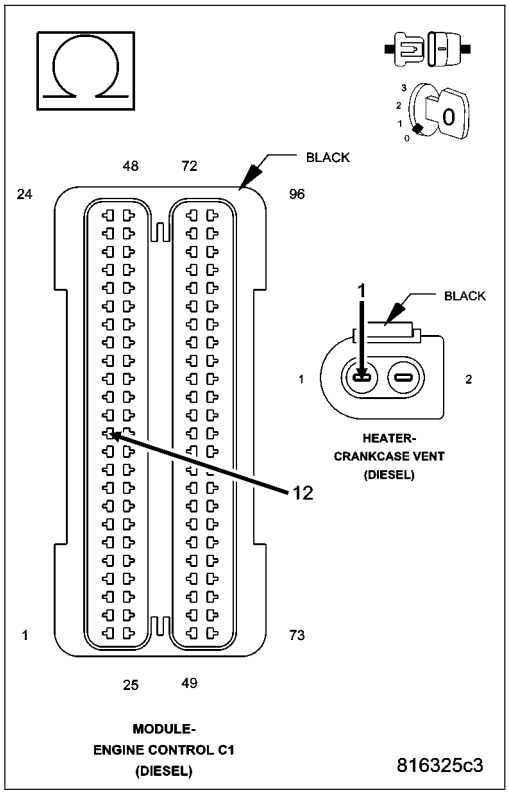

4. CRANKCASE VENT HEATER

Turn the ignition off.

Connect the Engine Control Module (ECM) connector.

Remove the jumper wire and install the ASD Relay.

Turn the ignition on.

With the scan tool, actuate the Crankcase Vent Heater to On.

Using a 12 volt test light connected to 12 volts, check the (N116) Crankcase Vent Heater Control circuit in the Crankcase Vent Heater harness connector.

NOTE: The test light should be illuminated and bright. Compare the brightness to that of a direct connection to the battery.

NOTE: The circuit will remain actuated by the controller for 30 seconds. Be certain the actuation is active when checking the circuit.

With the scan tool, actuate the Crankcase Vent Heater to Off.

Using a 12 volt test light connected to 12 volts, check the (N116) Crankcase Vent Heater Control circuit in the Crankcase Vent Heater harness connector.

NOTE: The test light should not be illuminated.

NOTE: The circuit will remain actuated by the controller for 30 seconds. Be certain the actuation is active when checking the circuit.

Is the test light illuminated and bright while the actuation is On and not illuminated when the actuation is Off?

Yes >> Replace the Crankcase Vent Heater in accordance with the Service Information.
Perform the ECM Verification Test Ver. 1 (Refer to 9 - ENGINE - DIAGNOSIS AND TESTING).

No >> Go to 5

5. ENGINE CONTROL MODULE (ECM)

Using the wiring diagram/schematic as a guide, inspect the wiring and connectors between the Crankcase Vent Heater and the Engine Control Module (ECM).

Look for any chafed, pierced, pinched, or partially broken wires.

Look for broken, bent, pushed out or corroded terminals.

Refer to any Technical Service Bulletins that may apply.

Were any problems found?

Yes >> Repair as necessary.
Perform the ECM Verification Test Ver. 1. (Refer to 9 - ENGINE - DIAGNOSIS AND TESTING)

No >> Replace the Engine Control Module (ECM) in accordance with the Service Information.
Perform the ECM Verification Test Ver. 1. (Refer to 9 - ENGINE - DIAGNOSIS AND TESTING)

P053C-CRANKCASE VENT HEATER CONTROL CIRCUIT HIGH

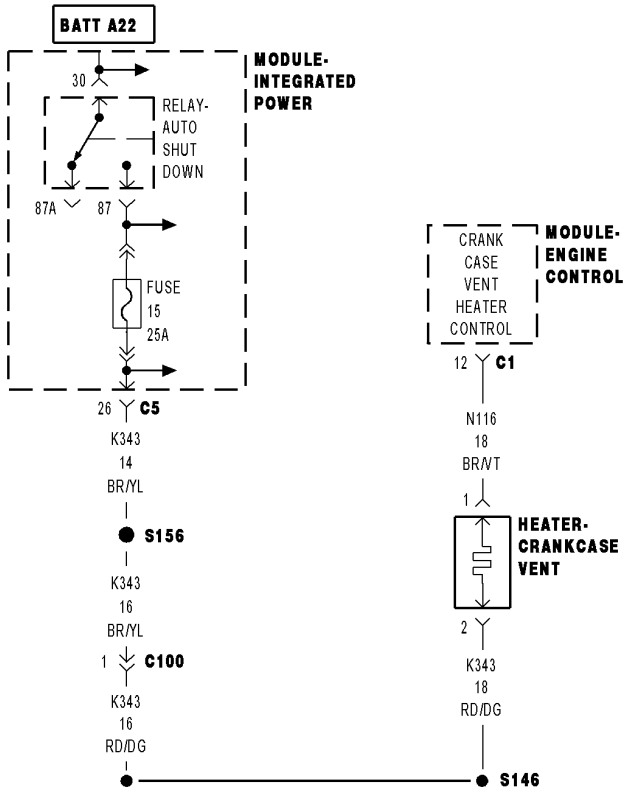

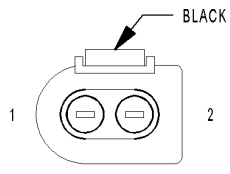

HEATER-
CRANKCASE VENT
(DIESEL)

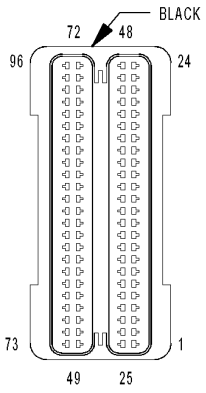

MODULE-
ENGINE CONTROL C1
(DIESEL)

816B74B8

For a complete wiring diagram **Refer to Section 8W**

- **When Monitored:**
  With the ignition on and the Crankcase Vent Heater command on.
- **Set Condition:**
  The ECM detects excessive current on the (N116) Crankcase Vent Heater Control circuit for 2.0 seconds.

Possible Causes
INTERMITTENT DTC
(N116) CRANKCASE VENT HEATER CONTROL CIRCUIT SHORTED TO VOLTAGE
(N116) CRANKCASE VENT HEATER CONTROL CIRCUIT SHORTED TO THE (K343) FUSED ASD RELAY OUTPUT 2 CIRCUIT
(N116) CRANKCASE VENT HEATER CONTROL CIRCUIT OPEN OR HIGH RESISTANCE
CRANKCASE VENT HEATER
ENGINE CONTROL MODULE (ECM)

Always perform the Pre-Diagnostic Troubleshooting procedure before proceeding. (Refer to 9 - ENGINE - DIAGNOSIS AND TESTING)

Diagnostic Test

1. DTC IS ACTIVE

Ignition on, engine not running.

With the scan tool, Clear DTCs in the Engine Control Module (ECM).

With the scan tool, actuate the Crankcase Vent Heater.

Monitor the scan tool for at least two minutes.

With the scan tool, select View DTCs.

Is the status Active for this DTC?

Yes >> Go To 2

No >> Refer to the *CHECKING FOR AN INTERMITTENT DTC Diagnostic Procedure. (Refer to 9 - ENGINE - DIAGNOSIS AND TESTING)

2. (N116) CRANKCASE VENT HEATER CONTROL CIRCUIT SHORTED TO VOLTAGE

Turn the ignition off.

Disconnect the Crankcase Vent Heater connector.

Disconnect the Engine Control Module (ECM) connector.

Remove the ASD Relay from the IPM.

Connect a jumper wire between cavity 30 and cavity 87 of the ASD Relay Connector.

Turn the ignition on.

Measure the voltage of the (N116) Crankcase Vent Heater Control circuit in the Crankcase Vent Heater connector.

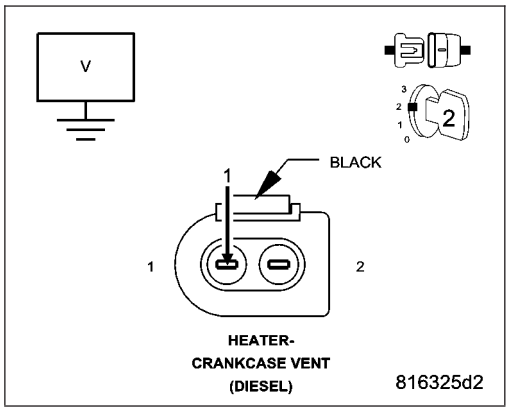

Is there any voltage present?

Yes >> Repair the (N116) Crankcase Vent Heater Control circuit for a short to voltage.
Perform the ECM Verification Test Ver. 1. (Refer to 9 - ENGINE - DIAGNOSIS AND TESTING)

No >> Go to 3

3. (N116) CRANKCASE VENT HEATER CONTROL CIRCUIT SHORTED TO THE (K343) FUSED ASD RELAY OUTPUT 2 CIRCUIT

Turn the ignition off.

Measure the resistance between the (N116) Crankcase Vent Heater Control circuit and the (K343) Fused ASD Relay Output 2 circuit in the Crankcase Vent Heater connector.

Is the resistance above 10.0 ohms?

Yes >> Go to 4

No >> Repair the (N116) Crankcase Vent Heater Control circuit for a short to the (K343) Fused ASD Relay Output 2 circuit.
Perform the ECM Verification Test Ver. 1. (Refer to 9 - ENGINE - DIAGNOSIS AND TESTING)

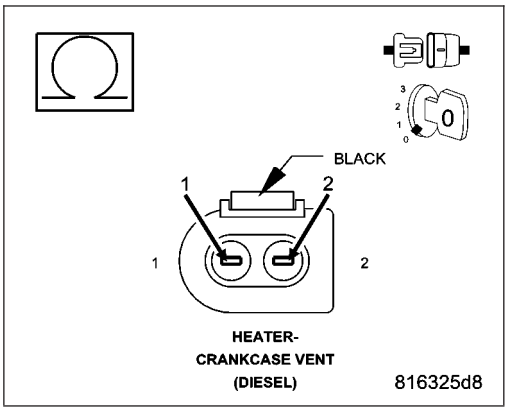

4. (N116) CRANKCASE VENT HEATER CONTROL CIRCUIT OPEN OR HIGH RESISTANCE

Measure the resistance of the (N116) Crankcase Vent Heater Control circuit between the Crankcase Vent Heater connector and the Engine Control Module (ECM) connector.

Is the resistance below 10.0 ohms?

Yes >> Go to 5

No >> Repair the (N116) Crankcase Vent Heater Control circuit for an open circuit or high resistance.
Perform the ECM Verification Test Ver. 1. (Refer to 9 - ENGINE - DIAGNOSIS AND TESTING)

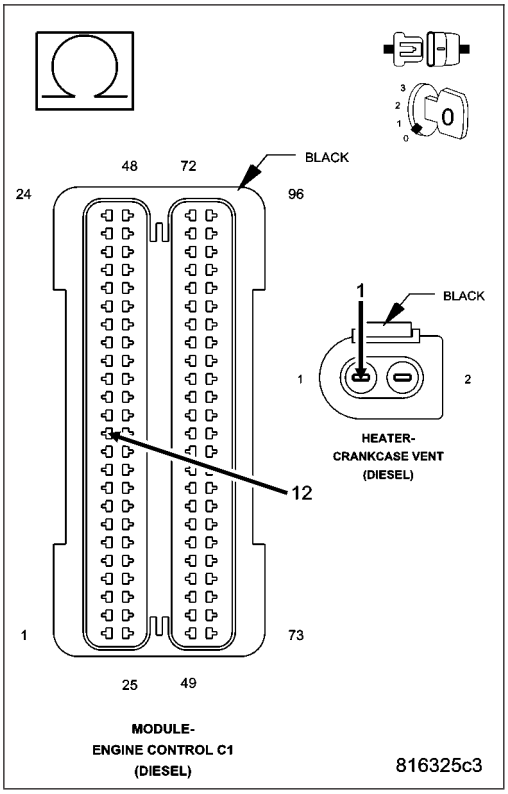

5. CRANKCASE VENT HEATER

Turn the ignition off.

Connect the Engine Control Module (ECM) connector.

Remove the jumper wire and install the ASD Relay.

Turn the ignition on.

With the scan tool, actuate the Crankcase Vent Heater to On.

Using a 12 volt test light connected to 12 volts, check the (N116) Crankcase Vent Heater Control circuit in the Crankcase Vent Heater harness connector.

NOTE: The test light should be illuminated and bright. Compare the brightness to that of a direct connection to the battery.

NOTE: The circuit will remain actuated by the controller for 30 seconds. Be certain the actuation is active when checking the circuit.

Is the test light illuminated and bright while the actuation is On?

Yes >> Replace the Crankcase Vent Heater in accordance with the Service Information.
Perform the ECM Verification Test Ver. 1 (Refer to 9 - ENGINE - DIAGNOSIS AND TESTING).

No >> Go to 6

6. ENGINE CONTROL MODULE (ECM)

Using the wiring diagram/schematic as a guide, inspect the wiring and connectors between the Crankcase Vent Heater and the Engine Control Module (ECM).

Look for any chafed, pierced, pinched, or partially broken wires.

Look for broken, bent, pushed out or corroded terminals.

Refer to any Technical Service Bulletins that may apply.

Were any problems found?

Yes >> Repair as necessary.
Perform the ECM Verification Test Ver. 1. (Refer to 9 - ENGINE - DIAGNOSIS AND TESTING)

No >> Replace the Engine Control Module (ECM) in accordance with the Service Information.
Perform the ECM Verification Test Ver. 1. (Refer to 9 - ENGINE - DIAGNOSIS AND TESTING)

P0545-EXHAUST GAS TEMPERATURE SENSOR CIRCUIT LOW - BANK 1 SENSOR 1

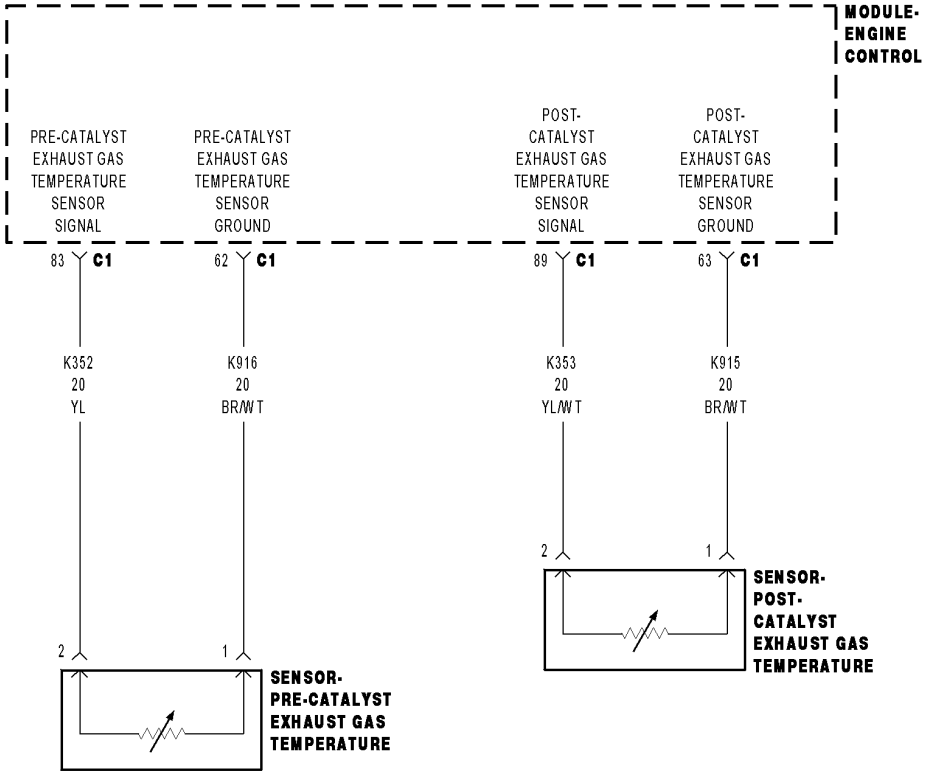

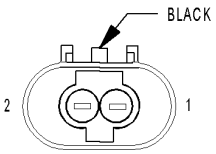

SENSOR-
PRE-CATALYST
EXHAUST GAS
TEMPERATURE
(DIESEL)

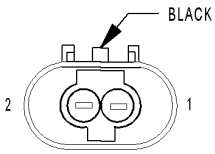

SENSOR-
POST-
CATALYST
EXHAUST GAS
TEMPERATURE
(DIESEL)

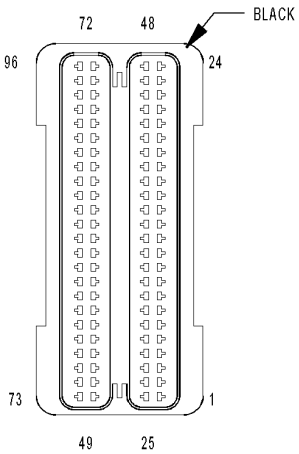

MODULE-
ENGINE CONTROL C1
(DIESEL)

816B748A

For a complete wiring diagram **Refer to Section 8W**

- **When Monitored:**
  With the ignition on.
- **Set Condition:**
  The ECM detects that the (K352) Pre-Catalyst Exhaust Temperature Sensor Signal circuit is shorted to ground.

Possible Causes
INTERMITTENT DTC
(K352) PRE-CATALYST EXHAUST TEMPERATURE SENSOR SIGNAL CIRCUIT SHORTED TO GROUND
(K352) PRE-CATALYST EXHAUST TEMPERATURE SENSOR SIGNAL CIRCUIT SHORTED TO (K916) PRE-CATALYST EXHAUST TEMPERATURE SENSOR GROUND
(K352) PRE-CATALYST EXHAUST TEMPERATURE SENSOR SIGNAL CIRCUIT OPEN OR HIGH RESISTANCE
PRE-CATALYST EXHAUST TEMPERATURE SENSOR
ENGINE CONTROL MODULE (ECM)

Always perform the Pre-Diagnostic Troubleshooting procedure before proceeding. (Refer to 9 - ENGINE - DIAGNOSIS AND TESTING)

Diagnostic Test

1. DTC IS ACTIVE

Ignition on, engine not running.
With the scan tool, Clear DTCs in the Engine Control Module (ECM).
Monitor the scan tool for at least two minutes.
Cycle the ignition key off and on several times, leaving the ignition on for at least 10 seconds at a time.
Start the engine.
Allow the engine to reach normal operating temperature.
With the scan tool, select View DTCs.

Is the status Active for this DTC?

Yes >> Go To 2

No >> Refer to the *CHECKING FOR AN INTERMITTENT DTC Diagnostic Procedure. (Refer to 9 - ENGINE - DIAGNOSIS AND TESTING)

2. (K352) PRE-CATALYST EXHAUST TEMPERATURE SENSOR SIGNAL CIRCUIT SHORTED TO GROUND

Turn the ignition off.
Disconnect the Pre-Catalyst Exhaust Temperature Sensor connector.
Disconnect the Engine Control Module (ECM) connector.
Measure the resistance between ground and the (K352) Pre-Catalyst Exhaust Temperature Sensor Signal circuit in the Pre-Catalyst Exhaust Temperature Sensor harness connector.

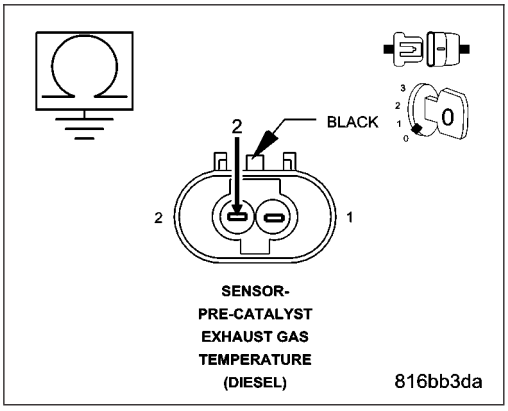

Is the resistance above 1000 ohms?

Yes >> Go to 3

No >> Repair the (K352) Pre-Catalyst Exhaust Temperature Sensor Signal circuit for a short to ground.
Perform the ECM Verification Test Ver. 1 (Refer to 9 - ENGINE - DIAGNOSIS AND TESTING).

3. (K352) PRE-CATALYST EXHAUST TEMPERATURE SENSOR SIGNAL CIRCUIT SHORTED TO (K916) PRE-CATALYST EXHAUST TEMPERATURE SENSOR GROUND CIRCUIT

Measure the resistance between the (K352) Pre-Catalyst Exhaust Temperature Sensor Signal circuit and the (K916) Pre-Catalyst Exhaust Temperature Sensor Ground circuit in the Pre-Catalyst Exhaust Temperature Sensor harness connector.

Is the resistance above 1000 ohms?

Yes >> Go to 4

No >> Repair the (K352) Pre-Catalyst Exhaust Temperature Sensor Signal circuit for a short to the (K916) Pre-Catalyst Exhaust Temperature Sensor Ground circuit.
Perform the ECM Verification Test Ver. 1 (Refer to 9 - ENGINE - DIAGNOSIS AND TESTING).

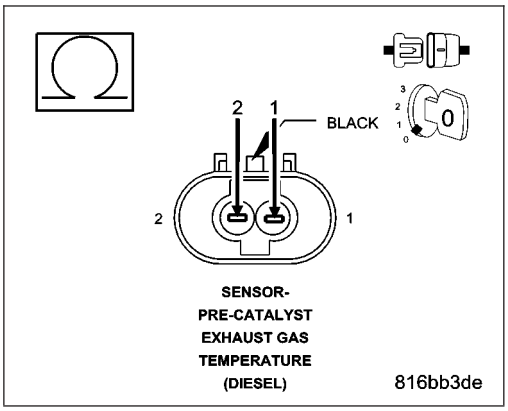

4. (K352) PRE-CATALYST EXHAUST TEMPERATURE SENSOR SIGNAL CIRCUIT OPEN CIRCUIT OR HIGH RESISTANCE

Measure the resistance of the (K352) Pre-Catalyst Exhaust Temperature Sensor Signal circuit between the Pre-Catalyst Exhaust Temperature Sensor harness connector and the Engine Control Module (ECM) harness connector.

Is the resistance below 10.0 ohms?

Yes >> Go to 5

No >> Repair the (K352) Pre-Catalyst Exhaust Temperature Sensor Signal circuit for an open circuit or high resistance.
Perform the ECM Verification Test Ver. 1 (Refer to 9 - ENGINE - DIAGNOSIS AND TESTING).

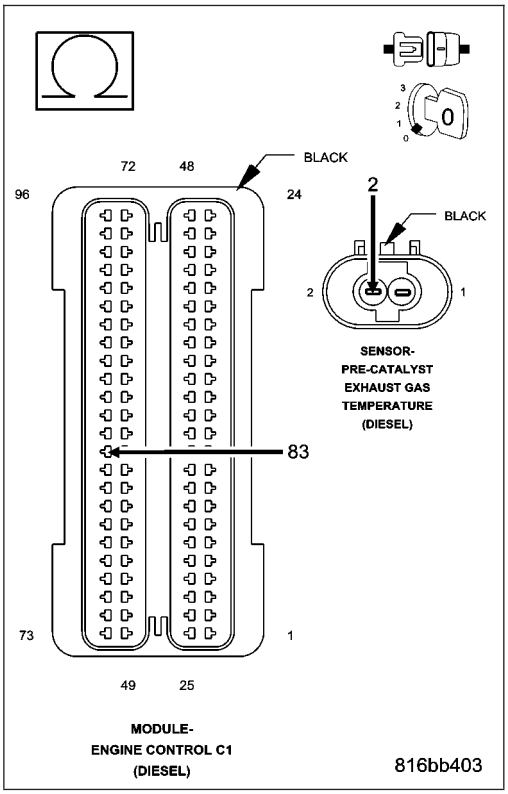

5. PRE-CATALYST EXHAUST TEMPERATURE SENSOR

Turn the ignition off.
Connect the Engine Control Module (ECM) connector.
Turn the ignition on.
With the scan tool, clear DTCs.
With the scan tool, select View DTCs.
Monitor the scan tool for at least two minutes.

NOTE: The scan tool should display a Pre-Catalyst Exhaust Temperature Sensor high voltage or open circuit DTC with the Pre-Catalyst Exhaust Temperature Sensor connector disconnected.

Does the scan tool display the DTC as described above?

Yes >> Replace the Pre-Catalyst Exhaust Temperature Sensor in accordance with the service information.
Perform the ECM Verification Test Ver. 1 (Refer to 9 - ENGINE - DIAGNOSIS AND TESTING).

No >> Go to 6

6. ENGINE CONTROL MODULE (ECM)

Using the wiring diagram/schematic as a guide, inspect the wiring and connectors between the Pre-Catalyst Exhaust Temperature Sensor and the Engine Control Module (ECM).

Look for any chafed, pierced, pinched, or partially broken wires.

Look for broken, bent, pushed out or corroded terminals.

Monitor the scan tool data relative to this circuit and wiggle test the wiring and connectors.

Look for the data to change or for the DTC to reset during the wiggle test.

Refer to any Technical Service Bulletins that may apply.

Were any problems found?

Yes >> Repair as necessary.
Perform the ECM Verification Test Ver. 1 (Refer to 9 - ENGINE - DIAGNOSIS AND TESTING).

No >> Replace the Engine Control Module (ECM) in accordance with the Service Information.
Perform the ECM Verification Test Ver. 1 (Refer to 9 - ENGINE - DIAGNOSIS AND TESTING).

P0546-EXHAUST GAS TEMPERATURE SENSOR CIRCUIT HIGH - BANK 1 SENSOR 1

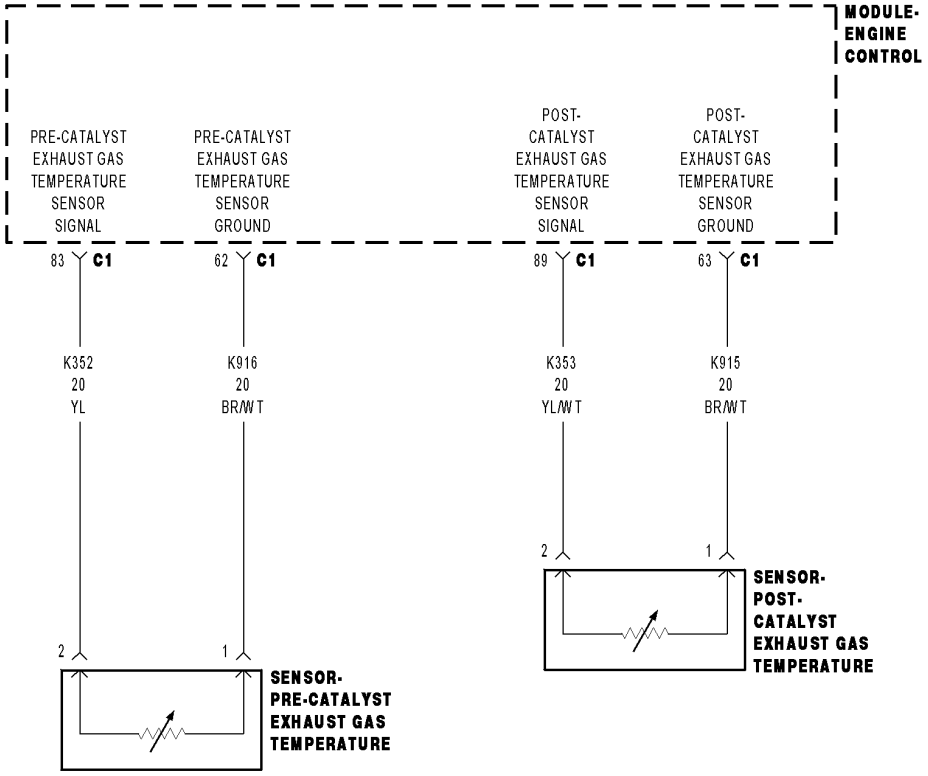

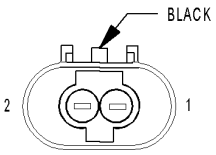

SENSOR-
PRE-CATALYST
EXHAUST GAS
TEMPERATURE
(DIESEL)

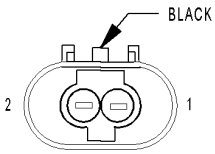

SENSOR-
POST-
CATALYST
EXHAUST GAS
TEMPERATURE
(DIESEL)

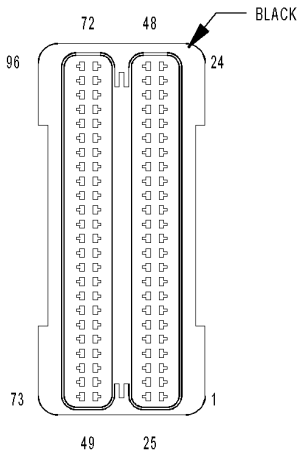

MODULE-
ENGINE CONTROL C1
(DIESEL)

816B748A

For a complete wiring diagram **Refer to Section 8W**

- **When Monitored:**
  With the ignition on.
- **Set Condition:**
  The ECM detects that the (K352) Pre-Catalyst Exhaust Temperature Sensor Signal circuit is open shorted to voltage.

Possible Causes
INTERMITTENT DTC
(K352) PRE-CATALYST EXHAUST TEMPERATURE SENSOR SIGNAL CIRCUIT SHORTED TO VOLTAGE
(K916) PRE-CATALYST EXHAUST TEMPERATURE SENSOR GROUND CIRCUIT SHORTED TO VOLTAGE
(K352) PRE-CATALYST EXHAUST TEMPERATURE SENSOR SIGNAL CIRCUIT OPEN OR HIGH RESISTANCE
(K916) PRE-CATALYST EXHAUST TEMPERATURE SENSOR GROUND CIRCUIT OPEN OR HIGH RESISTANCE
PRE-CATALYST EXHAUST TEMPERATURE SENSOR
ENGINE CONTROL MODULE (ECM)

Always perform the Pre-Diagnostic Troubleshooting procedure before proceeding. (Refer to 9 - ENGINE - DIAGNOSIS AND TESTING)

Diagnostic Test

1. DTC IS ACTIVE

Ignition on, engine not running.

With the scan tool, Clear DTCs in the Engine Control Module (ECM).

Monitor the scan tool for at least two minutes.

Cycle the ignition key off and on several times, leaving the ignition on for at least 10 seconds at a time.

Start the engine.

Allow the engine to reach normal operating temperature.

With the scan tool, select View DTCs.

Is the status Active for this DTC?

Yes >> Go To 2

No >> Refer to the *CHECKING FOR AN INTERMITTENT DTC Diagnostic Procedure. (Refer to 9 - ENGINE - DIAGNOSIS AND TESTING)

2. (K352) PRE-CATALYST EXHAUST TEMPERATURE SENSOR SIGNAL CIRCUIT SHORTED TO VOLTAGE

Turn the ignition off.

Disconnect the Pre-Catalyst Exhaust Temperature Sensor connector.

Disconnect the Engine Control Module (ECM) connector.

Remove the ASD Relay.

Connect a jumper wire between cavity 30 and cavity 87 of the ASD Relay Connector.

Turn the ignition on.

Measure the voltage of the (K352) Pre-Catalyst Exhaust Temperature Sensor Signal circuit in the Pre-Catalyst Exhaust Temperature Sensor harness connector.

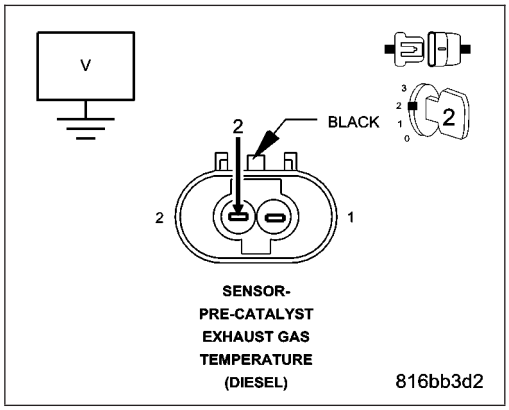

Is there any voltage present?

Yes >> Repair the (K352) Pre-Catalyst Exhaust Temperature Sensor Signal circuit for a short to voltage.

Perform the ECM Verification Test Ver. 1 (Refer to 9 - ENGINE - DIAGNOSIS AND TESTING).

No >> Go to 3

3. (K916) PRE-CATALYST EXHAUST TEMPERATURE SENSOR GROUND CIRCUIT SHORTED TO VOLTAGE

Measure the voltage of the (K916) Pre-Catalyst Exhaust Temperature Sensor Ground circuit in the Pre-Catalyst Exhaust Temperature Sensor harness connector.

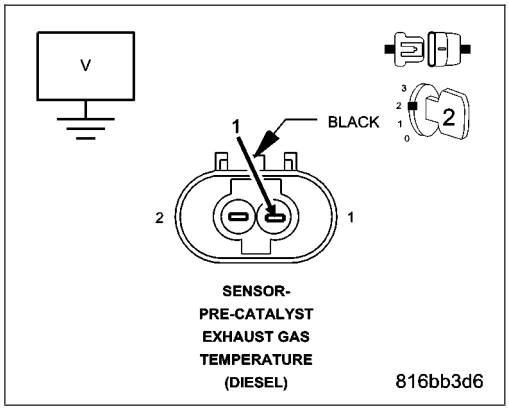

Is there any voltage present?

Yes >> Repair the (K916) Pre-Catalyst Exhaust Temperature Sensor Ground circuit for a short to voltage.

Perform the ECM Verification Test Ver. 1 (Refer to 9 - ENGINE - DIAGNOSIS AND TESTING).

No >> Go to 4

4. (K352) PRE-CATALYST EXHAUST TEMPERATURE SENSOR SIGNAL OPEN OR HIGH RESISTANCE

Turn the ignition off.

Measure the resistance of the (K352) Pre-Catalyst Exhaust Temperature Sensor Signal circuit between the Pre-Catalyst Exhaust Temperature Sensor harness connector and the Engine Control Module (ECM) harness connector.

Is the resistance below 10.0 ohms?

Yes >> Go to 5

No >> Repair the (K352) Pre-Catalyst Exhaust Temperature Sensor Signal circuit for an open circuit or high resistance.
Perform the ECM Verification Test Ver. 1 (Refer to 9 - ENGINE - DIAGNOSIS AND TESTING).

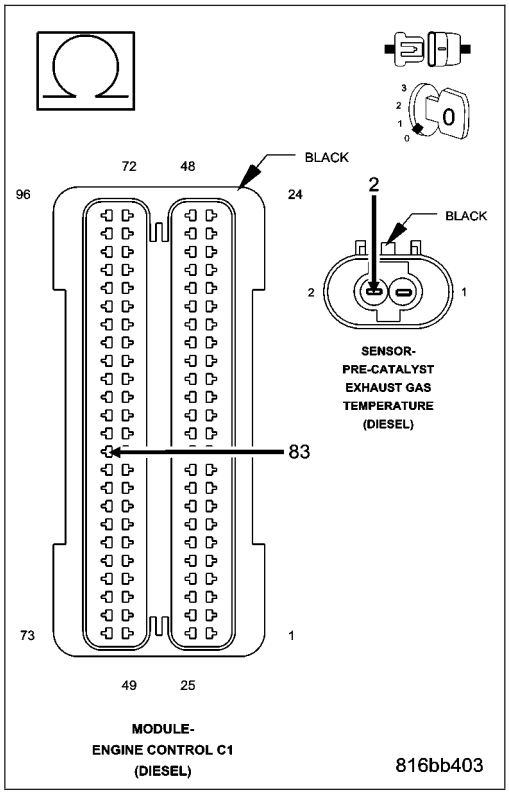

5. (K916) PRE-CATALYST EXHAUST TEMPERATURE SENSOR GROUND CIRCUIT OPEN OR HIGH RESISTANCE

Measure the resistance of the (K916) Pre-Catalyst Exhaust Temperature Sensor Ground circuit between the Pre-Catalyst Exhaust Temperature Sensor harness connector and the Engine Control Module (ECM) harness connector.

Is the resistance below 10.0 ohms?

Yes >> Go to 6

No >> Repair the (K916) Pre-Catalyst Exhaust Temperature Sensor Ground circuit for an open circuit or high resistance.
Perform the ECM Verification Test Ver. 1 (Refer to 9 - ENGINE - DIAGNOSIS AND TESTING).

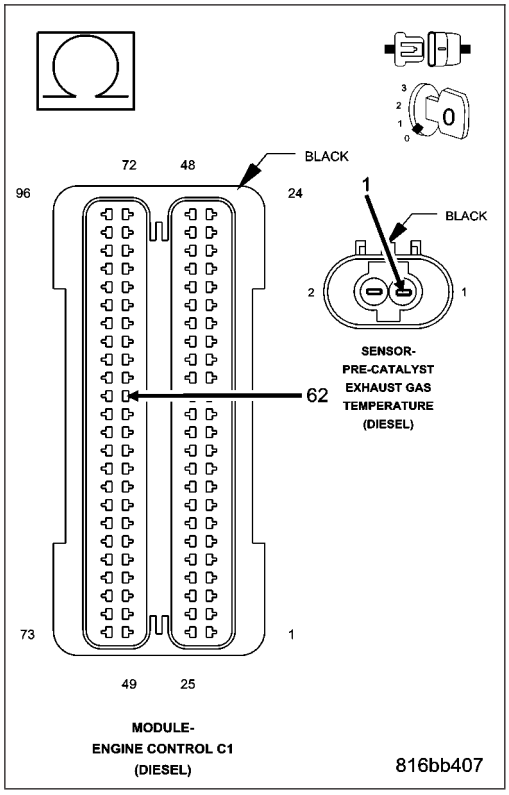

6. PRE-CATALYST EXHAUST TEMPERATURE SENSOR

Turn the ignition off.

Connect the Engine Control Module (ECM) connector.

Remove the jumper wire from between cavity 30 and cavity 87 of the ASD Relay Connector.

Install the ASD Relay.

Connect a jumper wire between the (K352) Pre-Catalyst Exhaust Temperature Sensor Signal circuit and the (K916) Pre-Catalyst Exhaust Temperature Sensor Ground circuit in the Pre-Catalyst Exhaust Temperature Sensor harness connector.

Turn the ignition on.

With the scan tool, Clear DTCs.

With the scan tool, select View DTCs.

NOTE: The scan tool should display a Pre-Catalyst Exhaust Temperature Sensor low voltage or short to ground DTC with the jumper wire in place.

Does the scan tool display the DTC as described above?

Yes >> Replace the Pre-Catalyst Exhaust Temperature Sensor in accordance with the Service Information.
Perform the ECM Verification Test Ver. 1 (Refer to 9 - ENGINE - DIAGNOSIS AND TESTING).

No >> Go to 7

7. ENGINE CONTROL MODULE (ECM)

Using the wiring diagram/schematic as a guide, inspect the wiring and connectors between the Pre-Catalyst Exhaust Temperature Sensor and the Engine Control Module (ECM).

Look for any chafed, pierced, pinched, or partially broken wires.

Look for broken, bent, pushed out or corroded terminals.

Monitor the scan tool data relative to this circuit and wiggle test the wiring and connectors.

Look for the data to change or for the DTC to reset during the wiggle test.

Refer to any Technical Service Bulletins that may apply.

Were any problems found?

Yes >> Repair as necessary.
Perform the ECM Verification Test Ver. 1 (Refer to 9 - ENGINE - DIAGNOSIS AND TESTING).

No >> Replace the Engine Control Module (ECM) in accordance with the Service Information.
Perform the ECM Verification Test Ver. 1 (Refer to 9 - ENGINE - DIAGNOSIS AND TESTING).

P0562-ECM VOLTAGE TOO LOW

For a complete wiring diagram **Refer to Section 8W**

- **When Monitored:**
  With the ignition on or the engine running.
- **Set Condition:**
  The ECM detects battery voltage of 8.0 volts or less for 5.0 seconds.

Possible Causes
CHECKING ECM POWER AND GROUNDS
ECM
INTERMITTENT CONDITION

Always perform the Pre-Diagnostic Troubleshooting procedure before proceeding. (Refer to 9 - ENGINE - DIAGNOSIS AND TESTING)

Diagnostic Test

1. CHECK FOR ACTIVE DTC

Turn the ignition on.

With the scan tool, erase ECM DTCs.

NOTE: This DTC may be caused by a charging system problem. Refer to the Service Information and verify proper charging system operation before continuing.

Test drive the vehicle.

Turn the ignition on.

With the scan tool, read ECM DTCs.

Did this DTC set again?

Yes >> Go To 2

No >> Go To 3

2. CHECK POWER AND GROUNDS

Refer to the symptom list and perform the Checking the ECM Power and Ground test.

Were any problem found with the ECM powers and grounds?

Yes >> Repair as necessary.
Perform the ECM Verification Test Ver. 1. (Refer to 9 - ENGINE - DIAGNOSIS AND TESTING)

No >> Replace and program the Engine Control Module in accordance with the Service Information.
Perform the ECM Verification Test Ver. 1. (Refer to 9 - ENGINE - DIAGNOSIS AND TESTING)

3. INTERMITTENT CONDITION

WARNING: WHEN THE ENGINE IS OPERATING, DO NOT STAND IN A DIRECT LINE WITH THE FAN. DO NOT PUT YOUR HANDS NEAR THE PULLEYS, BELTS OR FAN. DO NOT WEAR LOOSE CLOTHING.

NOTE: The conditions that set the DTC are not present at this time. The following list may help in identifying the intermittent condition.

With the engine running at normal operating temperature, monitor the scan tool parameters related to the DTC while wiggling the wiring harness. Look for parameter values to change and/or a DTC to set.

Review the DTC When Monitored and Set Conditions. If possible, try to duplicate the conditions under which the DTC was set.

Refer to any Technical Service Bulletins (TSB) that may apply.

Visually inspect the related wiring harness. Look for any chafed, pierced, pinched, or partially broken wires.

Visually inspect the related wiring harness connectors. Look for broken, bent, pushed out, or corroded terminals.

Were any of the above conditions present?

Yes >> Repair as necessary.
Perform the ECM Verification Test Ver. 1. (Refer to 9 - ENGINE - DIAGNOSIS AND TESTING)

No >> Test Complete.

P0563-ECM VOLTAGE TOO HIGH

For a complete wiring diagram **Refer to Section 8W**

- **When Monitored:**
  With the ignition on or the engine running.
- **Set Condition:**
  The ECM detects battery voltage of 16.0 volts or greater for 5.0 seconds

Possible Causes
CHECKING ECM POWER AND GROUNDS
ECM
INTERMITTENT CONDITION

Always perform the Pre-Diagnostic Troubleshooting procedure before proceeding. (Refer to 9 - ENGINE - DIAGNOSIS AND TESTING)

Diagnostic Test

1. CHECK FOR ACTIVE DTC

Turn the ignition on.

With the scan tool, erase ECM DTCs.

NOTE: This DTC may be caused by a charging system problem. Refer to the Service Information and verify proper charging system operation before continuing.

Test drive the vehicle.

Turn the ignition on.

With the scan tool, read ECM DTCs.

Did this DTC set again?

Yes >> Go To 2

No >> Go To 3

2. CHECK POWER AND GROUNDS

Refer to the symptom list and perform the Checking the ECM Power and Ground test.

Were any problem found with the ECM powers and grounds?

Yes >> Repair as necessary.
Perform the ECM Verification Test Ver. 1. (Refer to 9 - ENGINE - DIAGNOSIS AND TESTING)

No >> Replace and program the Engine Control Module in accordance with the Service Information.
Perform the ECM Verification Test Ver. 1. (Refer to 9 - ENGINE - DIAGNOSIS AND TESTING)

3. INTERMITTENT CONDITION

WARNING: WHEN THE ENGINE IS OPERATING, DO NOT STAND IN A DIRECT LINE WITH THE FAN. DO NOT PUT YOUR HANDS NEAR THE PULLEYS, BELTS OR FAN. DO NOT WEAR LOOSE CLOTHING.

NOTE: The conditions that set the DTC are not present at this time. The following list may help in identifying the intermittent condition.

With the engine running at normal operating temperature, monitor the scan tool parameters related to the DTC while wiggling the wiring harness. Look for parameter values to change and/or a DTC to set.

Review the DTC When Monitored and Set Conditions. If possible, try to duplicate the conditions under which the DTC was set.

Refer to any Technical Service Bulletins (TSB) that may apply.

Visually inspect the related wiring harness. Look for any chafed, pierced, pinched, or partially broken wires.

Visually inspect the related wiring harness connectors. Look for broken, bent, pushed out, or corroded terminals.

Were any of the above conditions present?

Yes >> Repair as necessary.
Perform the ECM Verification Test Ver. 1. (Refer to 9 - ENGINE - DIAGNOSIS AND TESTING)

No >> Test Complete.

P0578-SPEED CONTROL SWITCH 1 STUCK

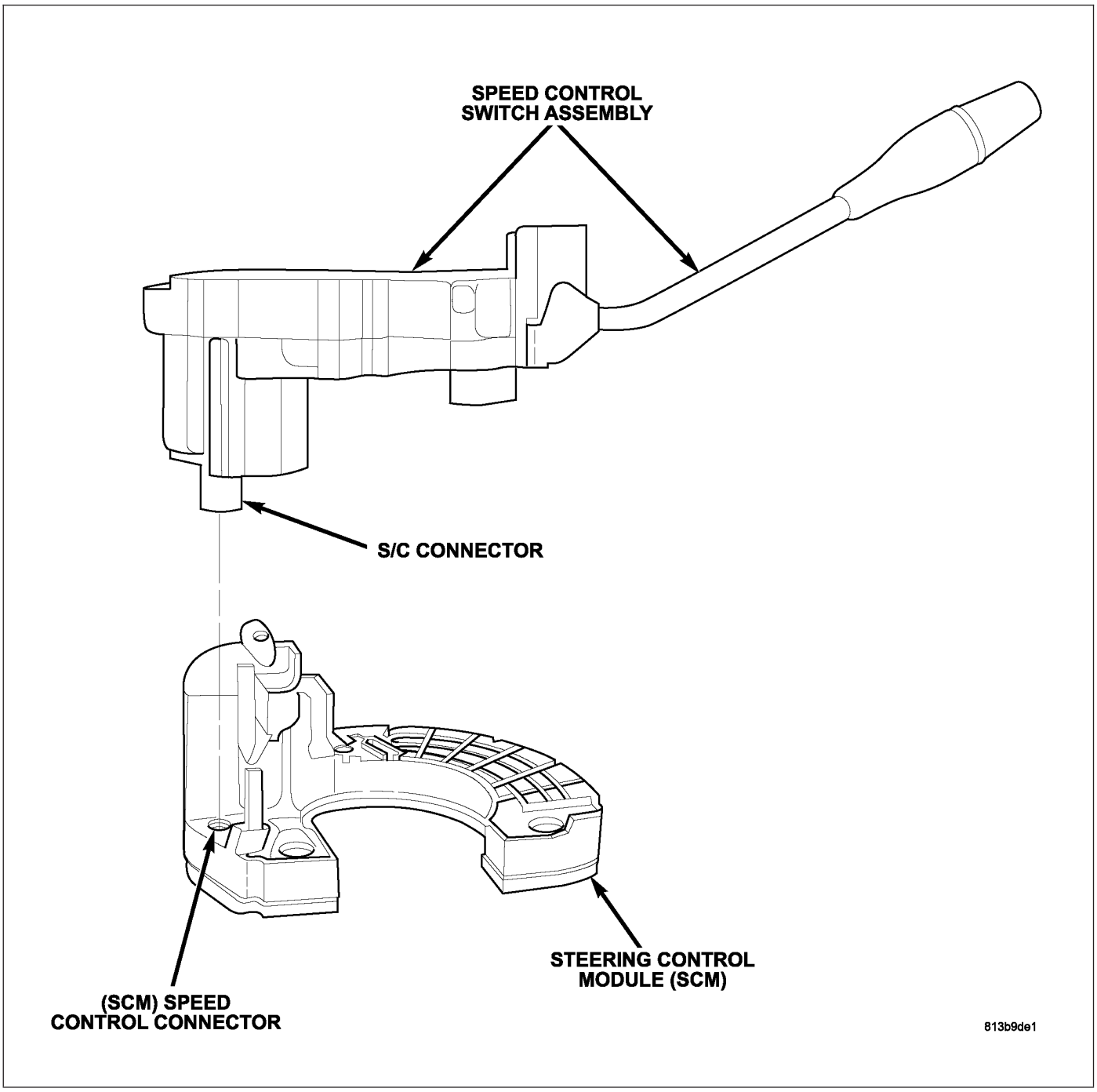

For a complete wiring diagram **Refer to Section 8W**.

- **When Monitored:**
  Continuously with the ignition on.
- **Set Condition:**
  The Steering Control Module (SCM) has detected that the Speed Control Switch voltage is not within a calibrated range.

Possible Causes
INTERMITTENT SPEED CONTROL DTC
SPEED CONTROL SWITCH
STEERING CONTROL MODULE (SCM)

Diagnostic Test

1. DTC IS ACTIVE

NOTE: If P0562–BATTERY VOLTAGE LOW or P0563–BATTERY VOLTAGE HIGH is set along with this DTC, diagnose the battery voltage DTC first.
Ignition on, engine not running.
With the Scan Tool, select View DTCs.

Is the DTC status Active at this time?

Yes >> Go to 2
No >> Go to 4

2. SPEED CONTROL SWITCH

Turn the ignition off.
Replace the Speed Control Switch in accordance with the Service Information.
Turn the ignition on.
Move the Speed Control Switch to each position several times.
With the Scan Tool, Clear Stored DTCs.
With the Scan Tool, select View DTCs.
Move the Speed Control Switch to each position several times while monitoring the Scan Tool.

Does this DTC reset?

Yes >> Go To 3
No >> Test Complete.

3. STEERING CONTROL MODULE (SCM)

View repair.

Repair

Replace the Steering Control Module (SCM) in accordance with the Service Information.

4. INTERMITTENT SPEED CONTROL DTC

The conditions necessary to set this DTC are not present at this time.

While monitoring the scan tool data relative to this circuit, move the Speed Control Switch to each position several times.

Look for the DTC to reset while the switch is being moved to each position.

Were any problems found?

Yes >> Repair as necessary.

No >> Test complete.

P0579-SPEED CONTROL SWITCH 1 PERFORMANCE

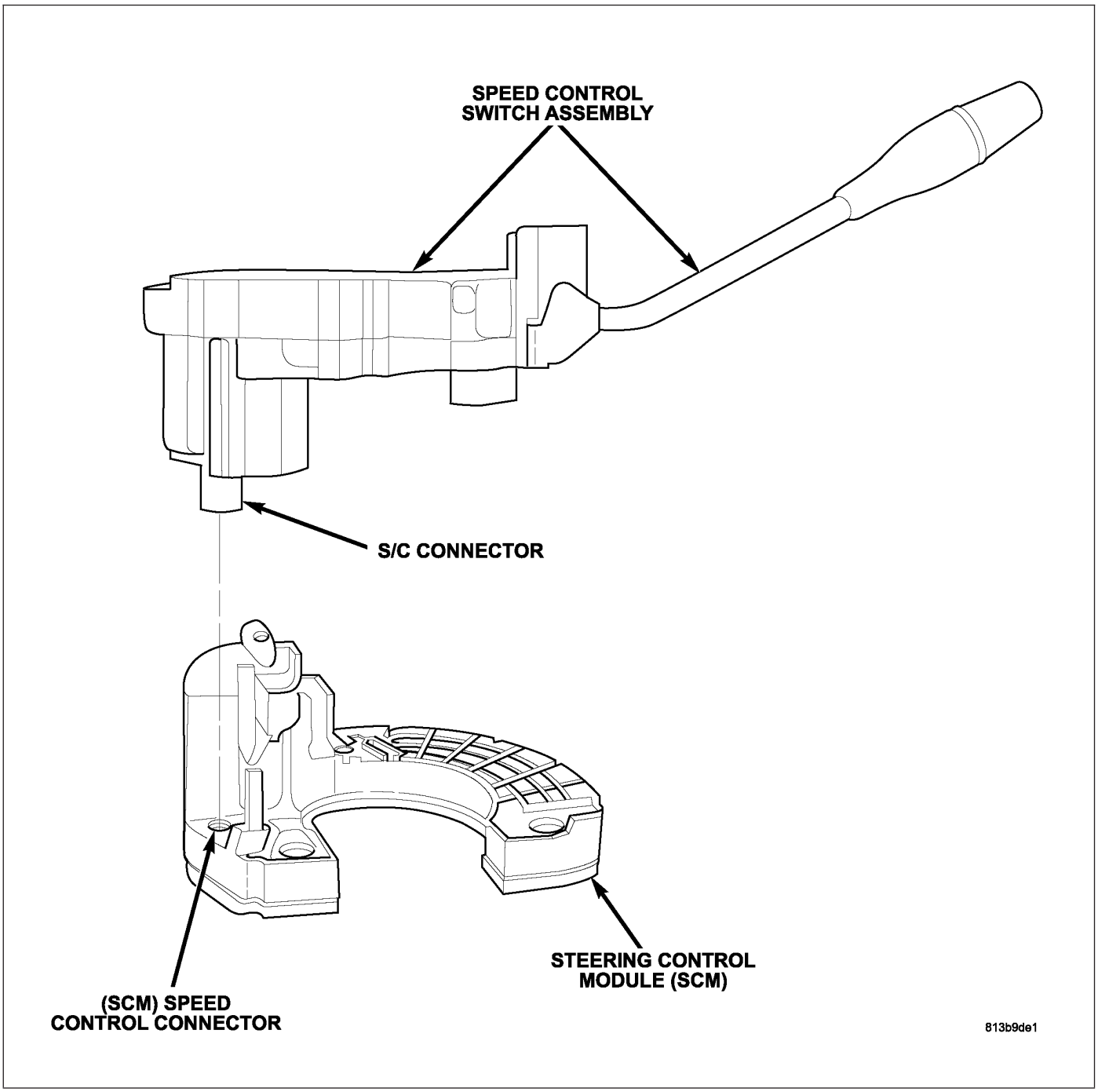

For a complete wiring diagram **Refer to Section 8W**.

- **When Monitored:**
  Continuously with the ignition on.
- **Set Condition:**
  The Steering Control Module (SCM) has detected that the Speed Control Switch #1 voltage is not within a calibrated range.

Possible Causes
INTERMITTENT SPEED CONTROL DTC
SPEED CONTROL SWITCH
STEERING CONTROL MODULE (SCM)

Diagnostic Test

1. DTC IS ACTIVE

NOTE: If P0562–BATTERY VOLTAGE LOW or P0563–BATTERY VOLTAGE HIGH is set along with this DTC, diagnose the battery voltage DTC first.
Ignition on, engine not running.
With the Scan Tool, select View DTCs.

Is the DTC status Active at this time?

Yes >> Go to 2
No >> Go to 4

2. SPEED CONTROL SWITCH

Turn the ignition off.
Replace the Speed Control Switch in accordance with the Service Information.
Turn the ignition on.
Move the Speed Control Switch to each position several times.
With the Scan Tool, Clear Stored DTCs.
With the Scan Tool, select View DTCs.
Move the Speed Control Switch to each position several times while monitoring the Scan Tool.

Does this DTC reset?

Yes >> Go To 3
No >> Test Complete.

3. STEERING CONTROL MODULE (SCM)

View repair.

Repair

Replace the Steering Control Module (SCM) in accordance with the Service Information.

4. INTERMITTENT SPEED CONTROL DTC

The conditions necessary to set this DTC are not present at this time.

While monitoring the scan tool data relative to this circuit, move the Speed Control Switch to each position several times.

Look for the DTC to reset while the switch is being moved to each position.

Were any problems found?

Yes >> Repair as necessary.

No >> Test complete.

P0580-SPEED CONTROL SWITCH 1 CIRCUIT LOW

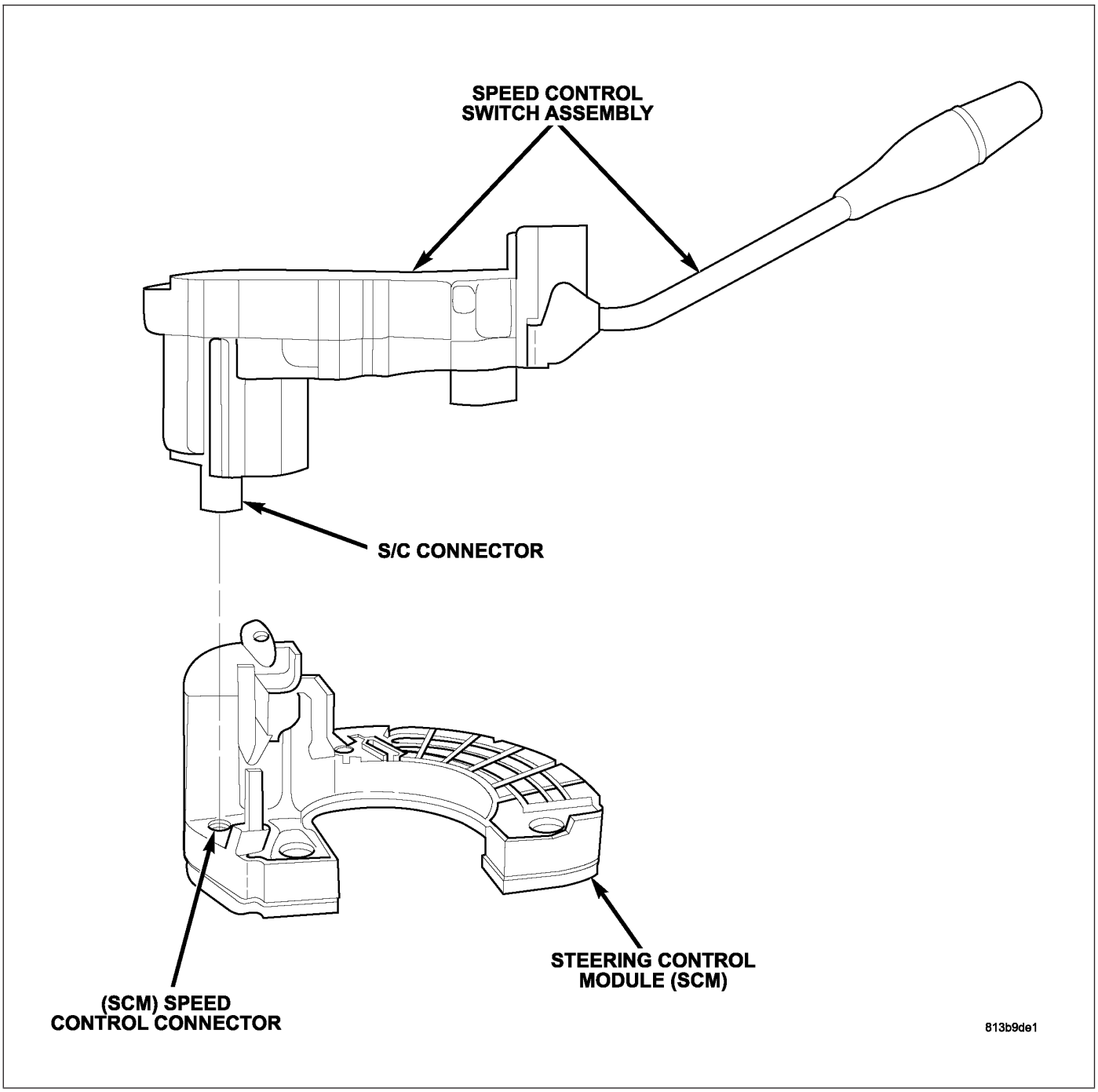

For a complete wiring diagram **Refer to Section 8W**.

- **When Monitored:**
  Continuously with the ignition on.
- **Set Condition:**
  The Steering Control Module (SCM) has detected that the Speed Control Switch voltage is not within a calibrated range.

Possible Causes
INTERMITTENT SPEED CONTROL DTC
SPEED CONTROL SWITCH
STEERING CONTROL MODULE (SCM)

Diagnostic Test

1. DTC IS ACTIVE

NOTE: If P0562–BATTERY VOLTAGE LOW or P0563–BATTERY VOLTAGE HIGH is set along with this DTC, diagnose the battery voltage DTC first.
Ignition on, engine not running.
With the Scan Tool, select View DTCs.

Is the DTC status Active at this time?

Yes >> Go to 2
No >> Go to 4

2. SPEED CONTROL SWITCH

Turn the ignition off.
Replace the Speed Control Switch in accordance with the Service Information.
Turn the ignition on.
Move the Speed Control Switch to each position several times.
With the Scan Tool, Clear Stored DTCs.
With the Scan Tool, select View DTCs.
Move the Speed Control Switch to each position several times while monitoring the Scan Tool.

Does this DTC reset?

Yes >> Go To 3
No >> Test Complete.

3. STEERING CONTROL MODULE (SCM)

View repair.

Repair

Replace the Steering Control Module (SCM) in accordance with the Service Information.

4. INTERMITTENT SPEED CONTROL DTC

The conditions necessary to set this DTC are not present at this time.

While monitoring the scan tool data relative to this circuit, move the Speed Control Switch to each position several times.

Look for the DTC to reset while the switch is being moved to each position.

Were any problems found?

Yes >> Repair as necessary.

No >> Test complete.

P0581-SPEED CONTROL SWITCH 1 CIRCUIT HIGH

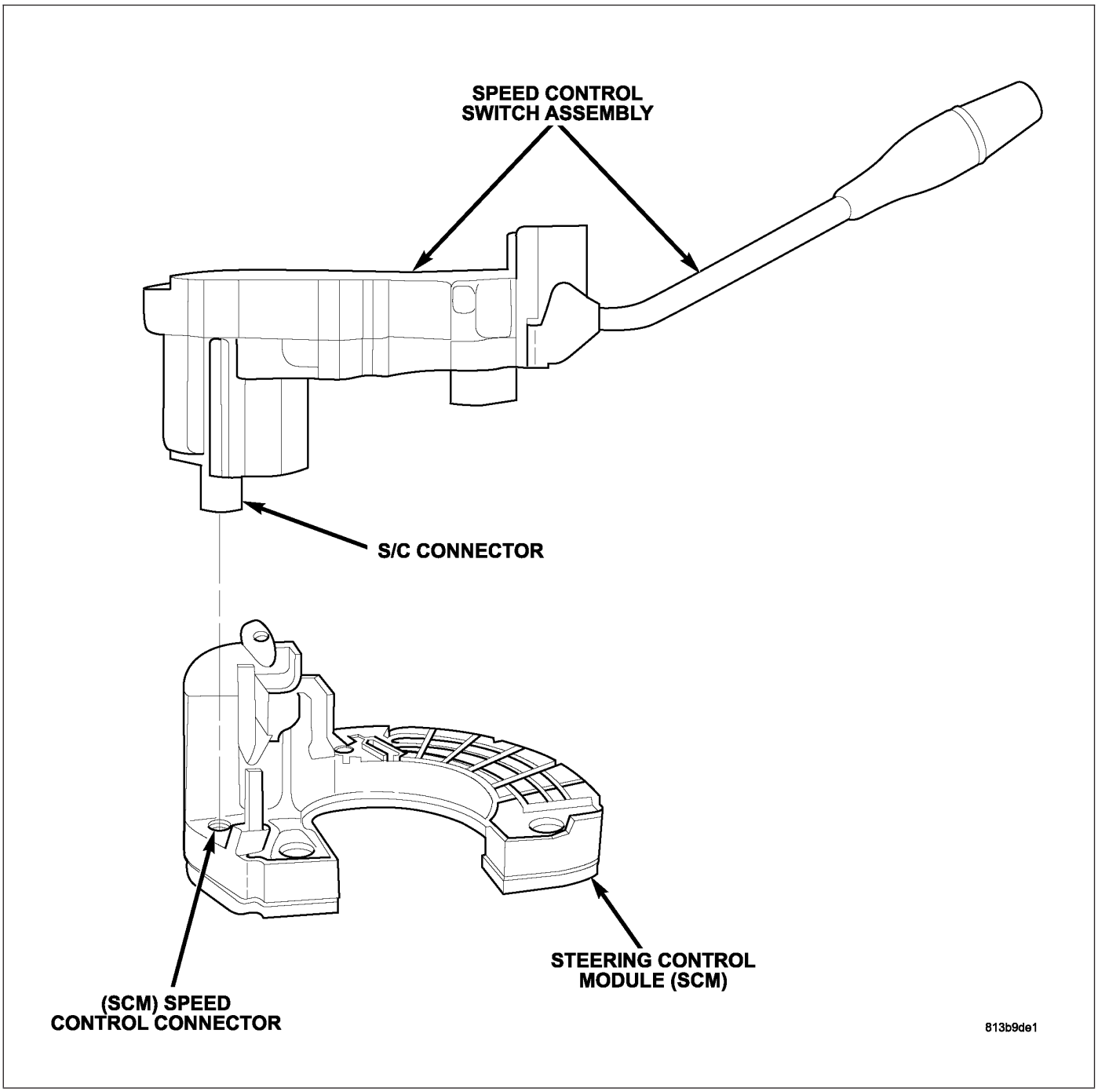

For a complete wiring diagram **Refer to Section 8W**.

- **When Monitored:**
  Continuously with the ignition on.
- **Set Condition:**
  The Steering Control Module (SCM) has detected that the Speed Control Switch voltage is not within a calibrated range.

Possible Causes
INTERMITTENT SPEED CONTROL DTC
SPEED CONTROL SWITCH
STEERING CONTROL MODULE (SCM)

Diagnostic Test

1. DTC IS ACTIVE

NOTE: If P0562–BATTERY VOLTAGE LOW or P0563–BATTERY VOLTAGE HIGH is set along with this DTC, diagnose the battery voltage DTC first.
Ignition on, engine not running.
With the Scan Tool, select View DTCs.

Is the DTC status Active at this time?

Yes >> Go to 2
No >> Go to 4

2. SPEED CONTROL SWITCH

Turn the ignition off.
Replace the Speed Control Switch in accordance with the Service Information.
Turn the ignition on.
Move the Speed Control Switch to each position several times.
With the Scan Tool, Clear Stored DTCs.
With the Scan Tool, select View DTCs.
Move the Speed Control Switch to each position several times while monitoring the Scan Tool.

Does this DTC reset?

Yes >> Go To 3
No >> Test Complete.

3. STEERING CONTROL MODULE (SCM)

View repair.

Repair

Replace the Steering Control Module (SCM) in accordance with the Service Information.

4. INTERMITTENT SPEED CONTROL DTC

The conditions necessary to set this DTC are not present at this time.

While monitoring the scan tool data relative to this circuit, move the Speed Control Switch to each position several times.

Look for the DTC to reset while the switch is being moved to each position.

Were any problems found?

Yes >> Repair as necessary.

No >> Test complete.

P0585-SPEED CONTROL SWITCH 1/2 CORRELATION

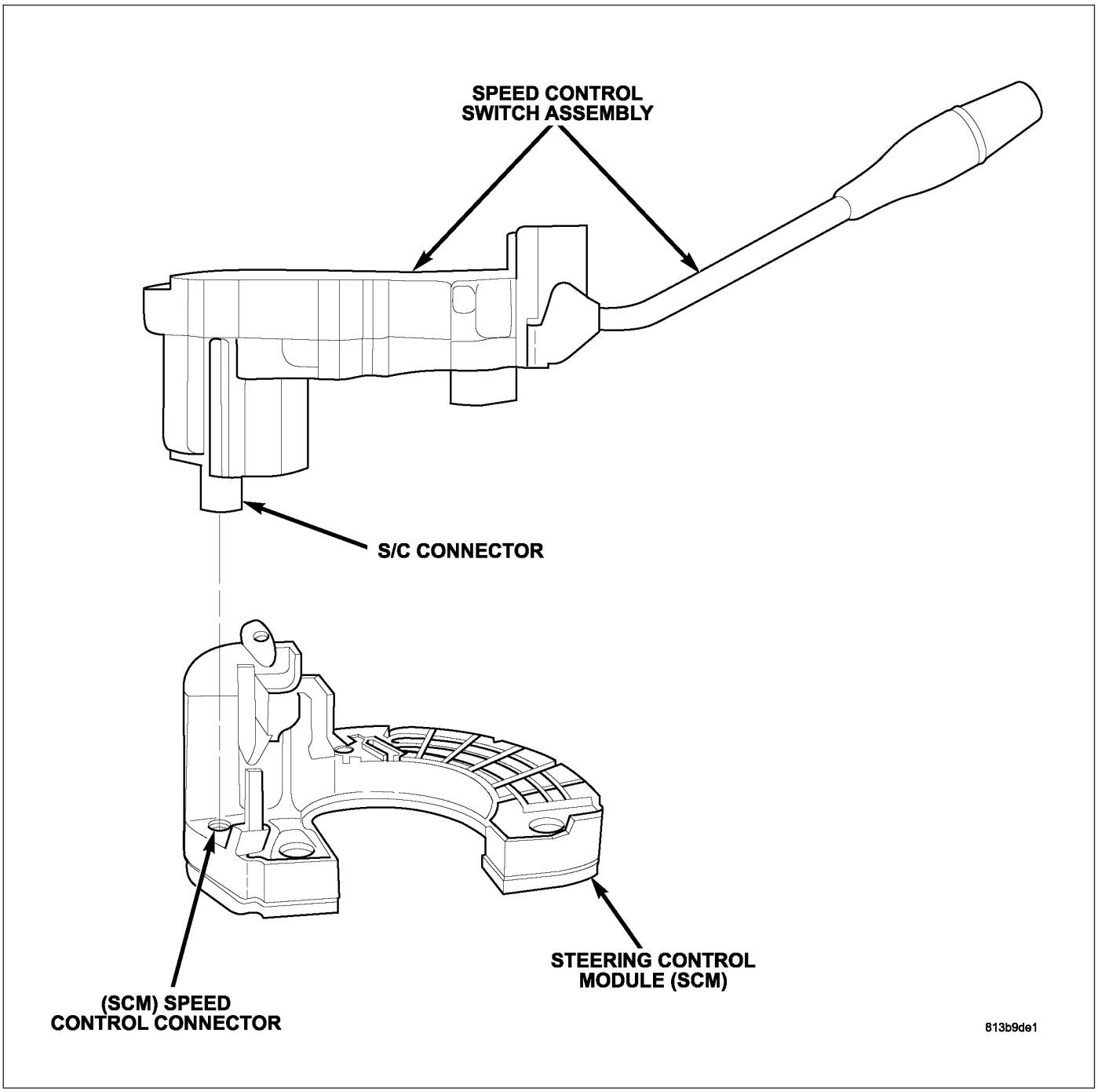

For a complete wiring diagram **Refer to Section 8W**.

- **When Monitored:**
  Continuously with the ignition on.
- **Set Condition:**
  The Steering Control Module (SCM) has detected that the Speed Control Switch voltage is not within a calibrated range.

Possible Causes
INTERMITTENT SPEED CONTROL DTC
SPEED CONTROL SWITCH
STEERING CONTROL MODULE (SCM)

Diagnostic Test

1. DTC IS ACTIVE

NOTE: If P0562–BATTERY VOLTAGE LOW or P0563–BATTERY VOLTAGE HIGH is set along with this DTC, diagnose the battery voltage DTC first.
Ignition on, engine not running.
With the Scan Tool, select View DTCs.

Is the DTC status Active at this time?

Yes >> Go to 2
No >> Go to 4

2. SPEED CONTROL SWITCH

Turn the ignition off.
Replace the Speed Control Switch in accordance with the Service Information.
Turn the ignition on.
Move the Speed Control Switch to each position several times.
With the Scan Tool, Clear Stored DTCs.
With the Scan Tool, select View DTCs.
Move the Speed Control Switch to each position several times while monitoring the Scan Tool.

Does this DTC reset?

Yes >> Go To 3
No >> Test Complete.

3. STEERING CONTROL MODULE (SCM)

View repair.

Repair

Replace the Steering Control Module (SCM) in accordance with the Service Information.

4. INTERMITTENT SPEED CONTROL DTC

The conditions necessary to set this DTC are not present at this time.

While monitoring the scan tool data relative to this circuit, move the Speed Control Switch to each position several times.

Look for the DTC to reset while the switch is being moved to each position.

Were any problems found?

Yes >> Repair as necessary.

No >> Test complete.

P0590-SPEED CONTROL SWITCH 2 STUCK

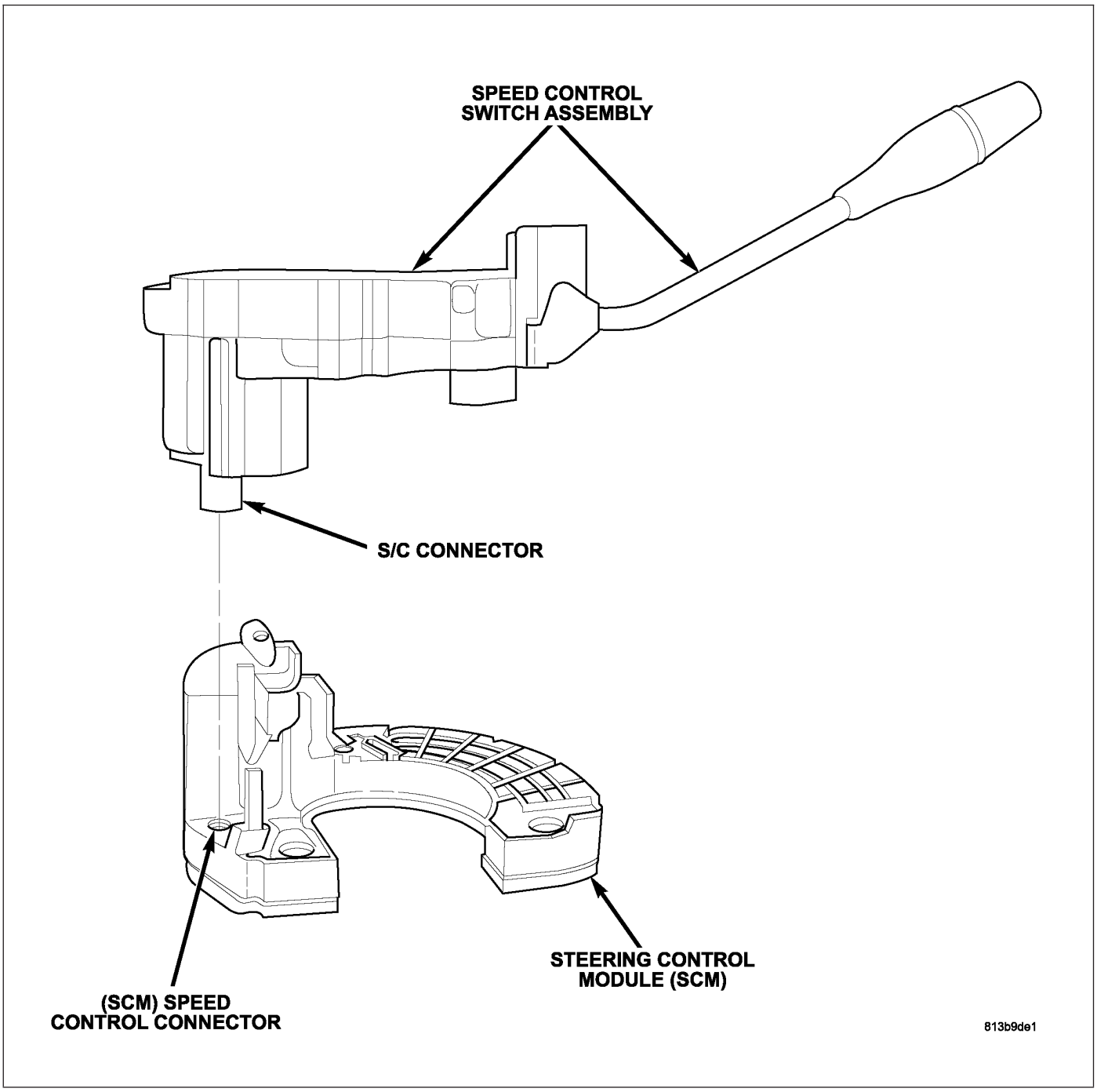

For a complete wiring diagram **Refer to Section 8W**.

- **When Monitored:**
  Continuously with the ignition on.
- **Set Condition:**
  The Steering Control Module (SCM) has detected that the Speed Control Switch voltage is not within a calibrated range.

Possible Causes
INTERMITTENT SPEED CONTROL DTC
SPEED CONTROL SWITCH
STEERING CONTROL MODULE (SCM)

Diagnostic Test

1. DTC IS ACTIVE

NOTE: If P0562–BATTERY VOLTAGE LOW or P0563–BATTERY VOLTAGE HIGH is set along with this DTC, diagnose the battery voltage DTC first.
Ignition on, engine not running.
With the Scan Tool, select View DTCs.

Is the DTC status Active at this time?

Yes >> Go to 2
No >> Go to 4

2. SPEED CONTROL SWITCH

Turn the ignition off.
Replace the Speed Control Switch in accordance with the Service Information.
Turn the ignition on.
Move the Speed Control Switch to each position several times.
With the Scan Tool, Clear Stored DTCs.
With the Scan Tool, select View DTCs.
Move the Speed Control Switch to each position several times while monitoring the Scan Tool.

Does this DTC reset?

Yes >> Go To 3
No >> Test Complete.

3. STEERING CONTROL MODULE (SCM)

View repair.

Repair

Replace the Steering Control Module (SCM) in accordance with the Service Information.

4. INTERMITTENT SPEED CONTROL DTC

The conditions necessary to set this DTC are not present at this time.

While monitoring the scan tool data relative to this circuit, move the Speed Control Switch to each position several times.

Look for the DTC to reset while the switch is being moved to each position.

Were any problems found?

Yes >> Repair as necessary.

No >> Test complete.

P0578-SPEED CONTROL SWITCH 1 STUCK

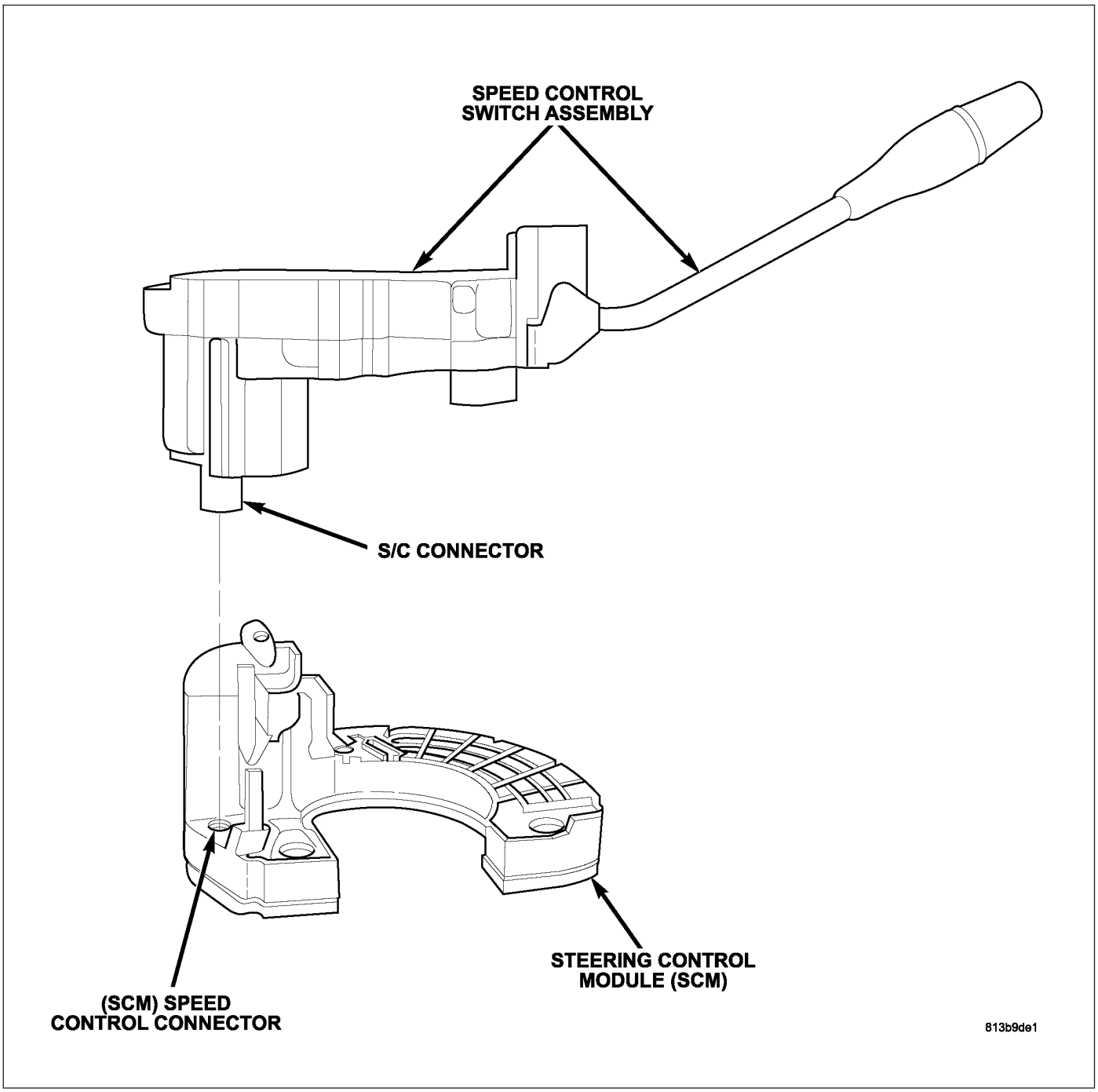

For a complete wiring diagram **Refer to Section 8W**.

- **When Monitored:**
  Continuously with the ignition on.
- **Set Condition:**
  The Steering Control Module (SCM) has detected that the Speed Control Switch voltage is not within a calibrated range.

Possible Causes
INTERMITTENT SPEED CONTROL DTC
SPEED CONTROL SWITCH
STEERING CONTROL MODULE (SCM)

Diagnostic Test

1. DTC IS ACTIVE

NOTE: If P0562–BATTERY VOLTAGE LOW or P0563–BATTERY VOLTAGE HIGH is set along with this DTC, diagnose the battery voltage DTC first.
Ignition on, engine not running.
With the Scan Tool, select View DTCs.

Is the DTC status Active at this time?

Yes >> Go to 2
No >> Go to 4

2. SPEED CONTROL SWITCH

Turn the ignition off.
Replace the Speed Control Switch in accordance with the Service Information.
Turn the ignition on.
Move the Speed Control Switch to each position several times.
With the Scan Tool, Clear Stored DTCs.
With the Scan Tool, select View DTCs.
Move the Speed Control Switch to each position several times while monitoring the Scan Tool.

Does this DTC reset?

Yes >> Go To 3
No >> Test Complete.

3. STEERING CONTROL MODULE (SCM)

View repair.

Repair

Replace the Steering Control Module (SCM) in accordance with the Service Information.

4. INTERMITTENT SPEED CONTROL DTC

The conditions necessary to set this DTC are not present at this time.

While monitoring the scan tool data relative to this circuit, move the Speed Control Switch to each position several times.

Look for the DTC to reset while the switch is being moved to each position.

Were any problems found?

Yes >> Repair as necessary.

No >> Test complete.

P0578-SPEED CONTROL SWITCH 1 STUCK

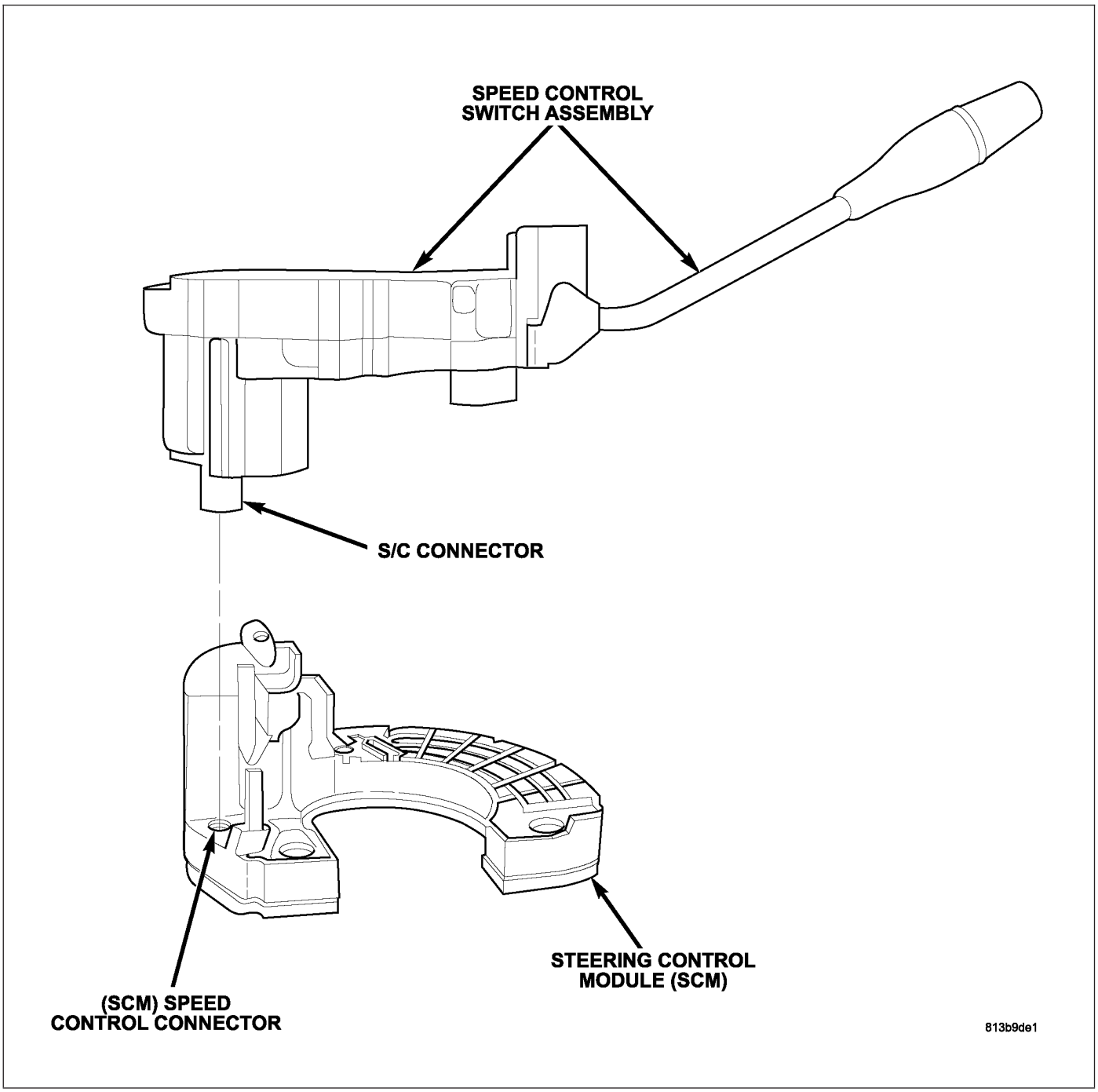

For a complete wiring diagram **Refer to Section 8W**.

- **When Monitored:**
  Continuously with the ignition on.
- **Set Condition:**
  The Steering Control Module (SCM) has detected that the Speed Control Switch voltage is not within a calibrated range.

Possible Causes
INTERMITTENT SPEED CONTROL DTC
SPEED CONTROL SWITCH
STEERING CONTROL MODULE (SCM)

Diagnostic Test

1. DTC IS ACTIVE

NOTE: If P0562–BATTERY VOLTAGE LOW or P0563–BATTERY VOLTAGE HIGH is set along with this DTC, diagnose the battery voltage DTC first.
Ignition on, engine not running.
With the Scan Tool, select View DTCs.

Is the DTC status Active at this time?

Yes >> Go to 2
No >> Go to 4

2. SPEED CONTROL SWITCH

Turn the ignition off.
Replace the Speed Control Switch in accordance with the Service Information.
Turn the ignition on.
Move the Speed Control Switch to each position several times.
With the Scan Tool, Clear Stored DTCs.
With the Scan Tool, select View DTCs.
Move the Speed Control Switch to each position several times while monitoring the Scan Tool.

Does this DTC reset?

Yes >> Go To 3
No >> Test Complete.

3. STEERING CONTROL MODULE (SCM)

View repair.

Repair

Replace the Steering Control Module (SCM) in accordance with the Service Information.

4. INTERMITTENT SPEED CONTROL DTC

The conditions necessary to set this DTC are not present at this time.

While monitoring the scan tool data relative to this circuit, move the Speed Control Switch to each position several times.

Look for the DTC to reset while the switch is being moved to each position.

Were any problems found?

Yes >> Repair as necessary.

No >> Test complete.

P0593-SPEED CONTROL SWITCH 2 CIRCUIT HIGH

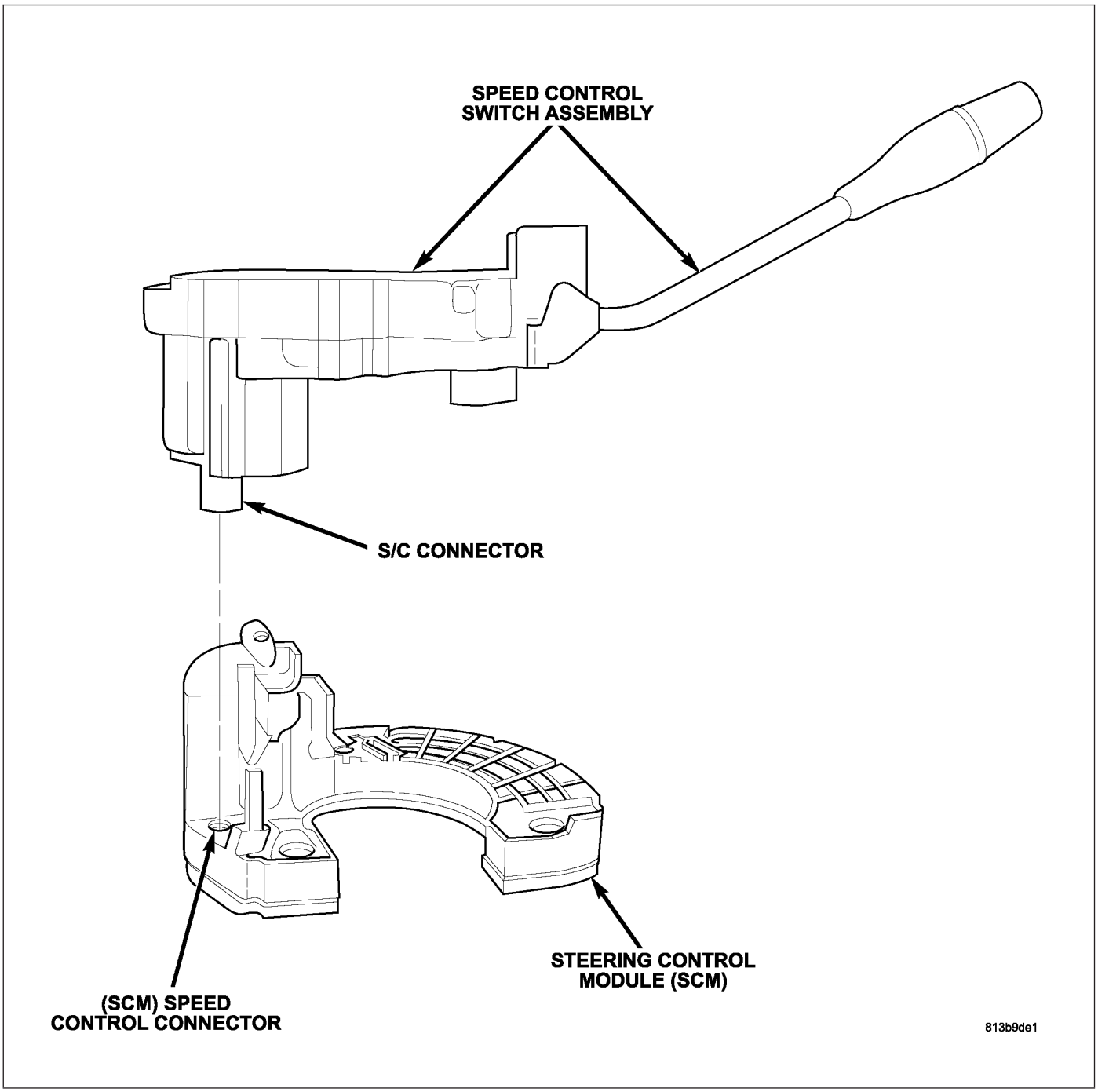

For a complete wiring diagram **Refer to Section 8W**.

- **When Monitored:**
  Continuously with the ignition on.
- **Set Condition:**
  The Steering Control Module (SCM) has detected that the Speed Control Switch voltage is not within a calibrated range.

Possible Causes
INTERMITTENT SPEED CONTROL DTC
SPEED CONTROL SWITCH
STEERING CONTROL MODULE (SCM)

Diagnostic Test

1. DTC IS ACTIVE

NOTE: If P0562–BATTERY VOLTAGE LOW or P0563–BATTERY VOLTAGE HIGH is set along with this DTC, diagnose the battery voltage DTC first.
Ignition on, engine not running.
With the Scan Tool, select View DTCs.

Is the DTC status Active at this time?

Yes >> Go to 2
No >> Go to 4

2. SPEED CONTROL SWITCH

Turn the ignition off.
Replace the Speed Control Switch in accordance with the Service Information.
Turn the ignition on.
Move the Speed Control Switch to each position several times.
With the Scan Tool, Clear Stored DTCs.
With the Scan Tool, select View DTCs.
Move the Speed Control Switch to each position several times while monitoring the Scan Tool.

Does this DTC reset?

Yes >> Go To 3
No >> Test Complete.

3. STEERING CONTROL MODULE (SCM)

View repair.

Repair

Replace the Steering Control Module (SCM) in accordance with the Service Information.

4. INTERMITTENT SPEED CONTROL DTC

The conditions necessary to set this DTC are not present at this time.

While monitoring the scan tool data relative to this circuit, move the Speed Control Switch to each position several times.

Look for the DTC to reset while the switch is being moved to each position.

Were any problems found?

Yes >> Repair as necessary.

No >> Test complete.

P0607-ECU INTERNAL PERFORMANCE

For a complete wiring diagram **Refer to Section 8W**

- **When Monitored:**
  With the ignition on.
- **Set Condition:**
  The Engine Control Module (ECM) detects an internal failure.

Possible Causes
INTERMITTENT DTC
ENGINE CONTROL MODULE (ECM)

Always perform the Pre-Diagnostic Troubleshooting procedure before proceeding. (Refer to 9 - ENGINE - DIAGNOSIS AND TESTING)

Diagnostic Test

1. DTC IS ACTIVE

Ignition on, engine not running.
With the scan tool, Clear DTCs in the Engine Control Module (ECM).
Monitor the scan tool for at least two minutes.
Cycle the ignition key off and on several times, leaving the ignition on for at least 10 seconds at a time.
Start the engine.
Perform several engine run cycles, turning the ignition off for at least 20 seconds between each engine run cycle.
With the scan tool, select View DTCs.

Is the status Active for this DTC?

Yes >> Go To 2

No >> Refer to the *CHECKING FOR AN INTERMITTENT DTC Diagnostic Procedure. (Refer to 9 - ENGINE - DIAGNOSIS AND TESTING)

2. ENGINE CONTROL MODULE (ECM)

Using the wiring diagram/schematic as a guide, inspect the Engine Control Module (ECM) wiring and connectors.
Look for any chafed, pierced, pinched, or partially broken wires.
Look for broken, bent, pushed out or corroded terminals.
Monitor the scan tool data relative to this circuit and wiggle test the wiring and connectors.
Look for the data to change or for the DTC to reset during the wiggle test.
Check for proper ECM power supply from the ignition switch and the ASD relay. Check the ECM for proper ground supply.
Refer to any Technical Service Bulletins that may apply.

Were any problems found?

Yes >> Repair as necessary.
Perform the ECM Verification Test Ver. 1. (Refer to 9 - ENGINE - DIAGNOSIS AND TESTING)

No >> Replace the Engine Control Module (ECM) in accordance with the Service Information.
Perform the ECM Verification Test Ver. 1. (Refer to 9 - ENGINE - DIAGNOSIS AND TESTING)

P0610-ECU VEHICLE OPTIONS MISMATCH

For a complete wiring diagram **Refer to Section 8W**

- **When Monitored:**
  With the ignition on.
- **Set Condition:**
  The Engine Control Module (ECM) detects an internal failure.

Possible Causes
INTERMITTENT DTC
ENGINE CONTROL MODULE (ECM)

Always perform the Pre-Diagnostic Troubleshooting procedure before proceeding. (Refer to 9 - ENGINE - DIAGNOSIS AND TESTING)

Diagnostic Test

1. DTC IS ACTIVE

Ignition on, engine not running.
With the scan tool, Clear DTCs in the Engine Control Module (ECM).
Monitor the scan tool for at least two minutes.
Cycle the ignition key off and on several times, leaving the ignition on for at least 10 seconds at a time.
Start the engine.
Perform several engine run cycles, turning the ignition off for at least 20 seconds between each engine run cycle.
With the scan tool, select View DTCs.

Is the status Active for this DTC?

Yes >> Go To 2

No >> Refer to the *CHECKING FOR AN INTERMITTENT DTC Diagnostic Procedure. (Refer to 9 - ENGINE - DIAGNOSIS AND TESTING)

2. ENGINE CONTROL MODULE (ECM)

Using the wiring diagram/schematic as a guide, inspect the Engine Control Module (ECM) wiring and connectors.
Look for any chafed, pierced, pinched, or partially broken wires.
Look for broken, bent, pushed out or corroded terminals.
Monitor the scan tool data relative to this circuit and wiggle test the wiring and connectors.
Look for the data to change or for the DTC to reset during the wiggle test.
Refer to any Technical Service Bulletins that may apply.

Were any problems found?

Yes >> Repair as necessary.
Perform the ECM Verification Test Ver. 1. (Refer to 9 - ENGINE - DIAGNOSIS AND TESTING)

No >> Replace the Engine Control Module (ECM) in accordance with the Service Information.
Perform the ECM Verification Test Ver. 1. (Refer to 9 - ENGINE - DIAGNOSIS AND TESTING)

P0613-INTERNAL TRANSMISSION PROCESSOR

For a complete wiring diagram **Refer to Section 8W**

- **When Monitored:**
  With the ignition on.
- **Set Condition:**
  The ECM receives a CAN Bus message indicating the presence of a DTC in the TCM.

Possible Causes
VERIFY CURRENT DTC

Always perform the Pre-Diagnostic Troubleshooting procedure before proceeding. (Refer to 9 - ENGINE - DIAGNOSIS AND TESTING)

Diagnostic Test

1. VERIFY CURRENT DTC

NOTE: Diagnose and repair all ECM DTCs prior diagnosing any DTCs set in the TCM.

NOTE: This code was set in the ECM by the Transmission Control Module to indicate a transmission fault. Diagnosis of transmission faults should be done using the Transmission Diagnostic Information.

NOTE: When repairs have been completed, DTCs in the ECM and TCM must be cleared.

Turn the ignition on.

With the scan tool, erase ECM DTCs only.

With the scan tool, read ECM DTCs.

Does this DTC reset?

Yes >> Refer to Transmission Diagnostic Information for the related symptom(s).

No >> Test Complete.

P0615-STARTER CONTROL CIRCUIT/OPEN

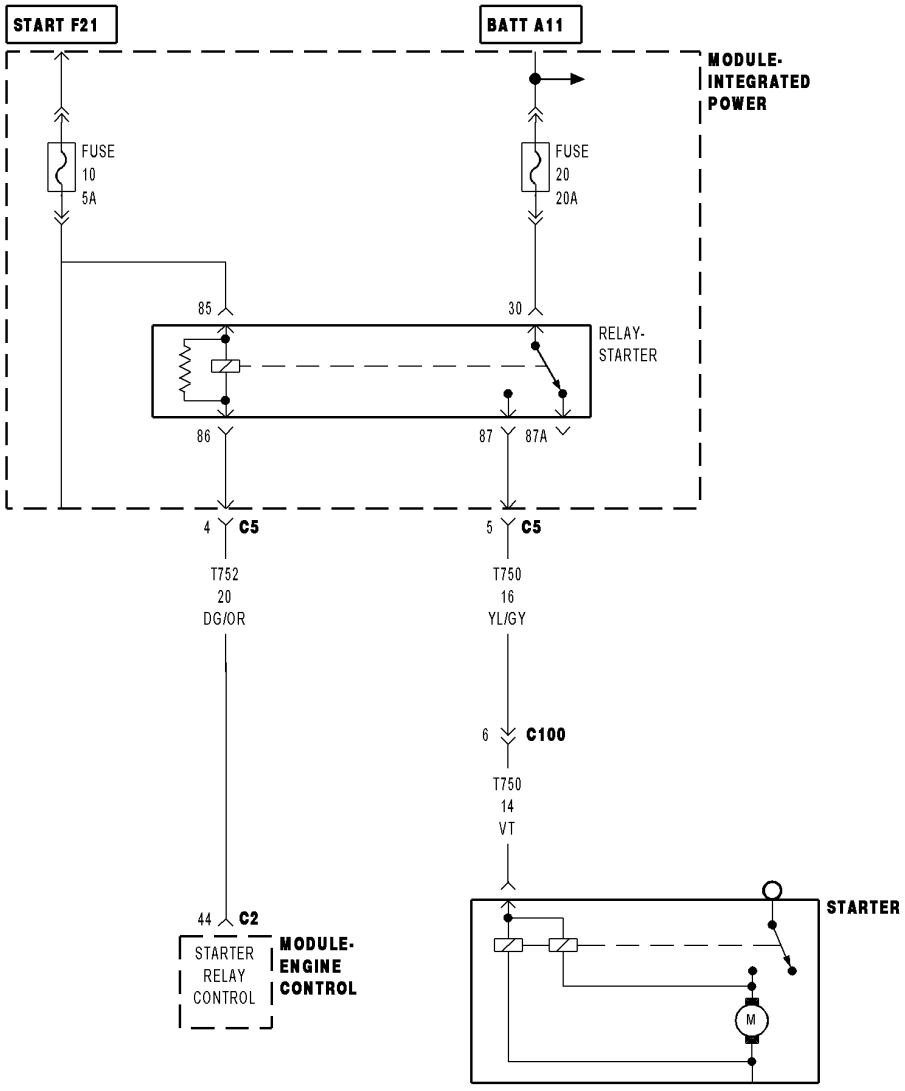

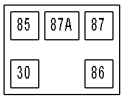

RELAY-
STARTER
(IN IPM)

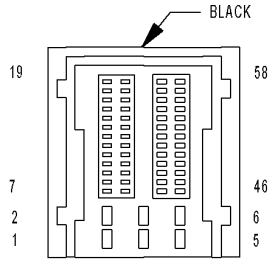

MODULE-
ENGINE
CONTROL C2
(DIESEL)

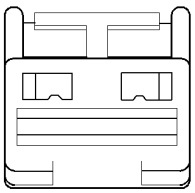

STARTER
(DIESEL)

816B74BC

For a complete wiring diagram **Refer to Section 8W**

- **When Monitored:**
  With the ignition on and the Starter Relay command off.
- **Set Condition:**
  The ECM does not detect voltage on the (T752) Engine Starter Motor Relay Control circuit for 1.0 second.

Possible Causes
INTERMITTENT DTC
(T752) ENGINE STARTER MOTOR RELAY CONTROL CIRCUIT SHORTED TO GROUND
(T752) ENGINE STARTER MOTOR RELAY CONTROL CIRCUIT OPEN OR HIGH RESISTANCE
(T751) FUSED IGNITION SWITCH OUTPUT (START) CIRCUIT OPEN OR HIGH RESISTANCE
STARTER RELAY
ENGINE CONTROL MODULE (ECM)

Always perform the Pre-Diagnostic Troubleshooting procedure before proceeding. (Refer to 9 - ENGINE - DIAGNOSIS AND TESTING)

Diagnostic Test

1. DTC IS ACTIVE

Ignition on, engine not running.

With the scan tool, Clear DTCs in the Engine Control Module (ECM).

Crank the engine for five seconds.

With the scan tool, select View DTCs.

Is the status Active for this DTC?

Yes >> Go To 2

No >> Refer to the *CHECKING FOR AN INTERMITTENT DTC Diagnostic Procedure. (Refer to 9 - ENGINE - DIAGNOSIS AND TESTING)

2. (T752) ENGINE STARTER MOTOR RELAY CONTROL CIRCUIT SHORTED TO GROUND

Turn the ignition off.

Remove the Starter Relay.

Disconnect the Engine Control Module (ECM) connector.

Measure the resistance between ground and the (T752) Engine Starter Motor Relay Control circuit in the Starter Relay connector.

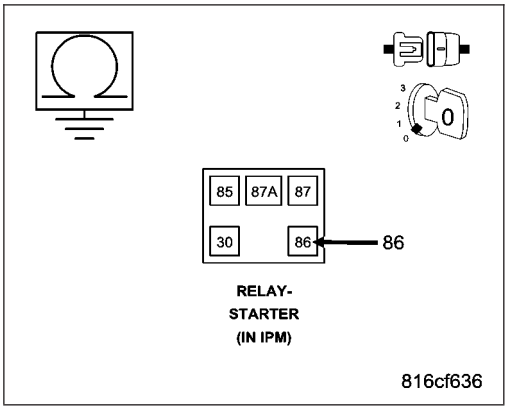

Is the resistance above 10.0 ohms?

Yes >> Go to 3

No >> Repair the (T752) Engine Starter Motor Relay Control circuit for a short to ground.
Perform the ECM Verification Test Ver. 1. (Refer to 9 - ENGINE - DIAGNOSIS AND TESTING)

3. (T752) ENGINE STARTER MOTOR RELAY CONTROL CIRCUIT OPEN OR HIGH RESISTANCE

Measure the resistance of the (T752) Engine Starter Motor Relay Control circuit between the Starter Relay connector and the Engine Control Module (ECM) connector.

Is the resistance below 10.0 ohms?

Yes >> Go to 4

No >> Repair the (T752) Engine Starter Motor Relay Control circuit for an open circuit or high resistance.
Perform the ECM Verification Test Ver. 1. (Refer to 9 - ENGINE - DIAGNOSIS AND TESTING)

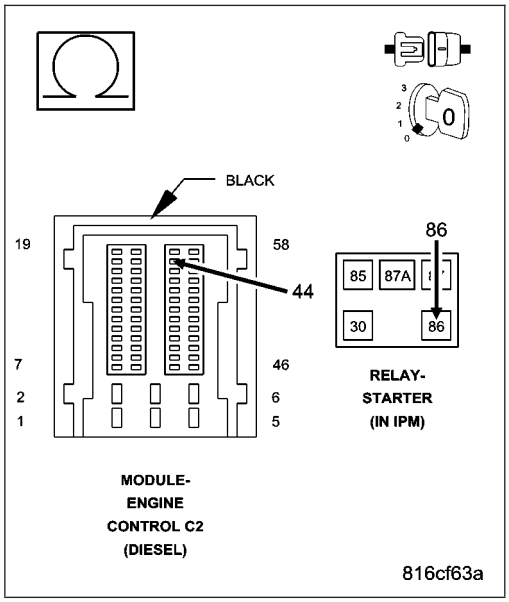

4. (T751) FUSED IGNITION SWITCH OUTPUT (START) CIRCUIT OPEN OR HIGH RESISTANCE

Turn the Ignition Switch to the Start position.

Using a 12-volt test light connected to ground, check the Fused Ignition Switch Output (START) circuit at the Starter Relay connector in the IPM.

Using a 12-volt test light connected to ground, check the Ignition Switch Start Output circuit at the ECM harness connector.

NOTE: The test light should be illuminated and bright. Compare the brightness to that of a direct connection to the battery.

Is the test light illuminated and bright for each circuit?

Yes >> Go to 5

No >> Repair the (T751) Fused Ignition Switch Output (START) circuit for an open circuit or high resistance.
Perform the ECM Verification Test Ver. 1. (Refer to 9 - ENGINE - DIAGNOSIS AND TESTING)

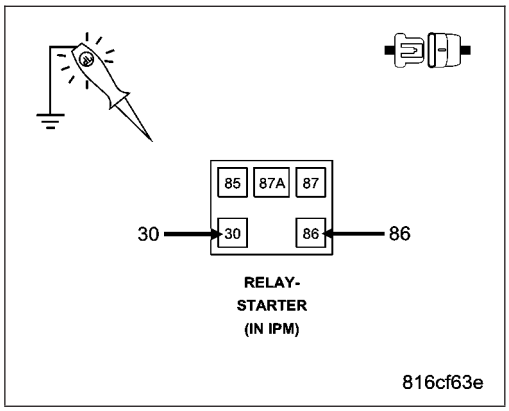

5. STARTER RELAY

Turn the ignition off.

Connect the Engine Control Module (ECM) connector.

Install a known good relay in place of the vehicle's Starter Relay.

Turn the ignition on.

With the scan tool, Clear DTCs.

With the scan tool, actuate the Starter Relay.

Monitor the scan tool for at least two minutes.

With the scan tool, select View DTCs.

Is the status Active for this DTC?

Yes >> Go to 6

No >> Replace the Starter Relay in accordance with the Service Information.
Perform the ECM Verification Test Ver. 1. (Refer to 9 - ENGINE - DIAGNOSIS AND TESTING)

6. ENGINE CONTROL MODULE (ECM)

Using the wiring diagram/schematic as a guide, inspect the wiring and connectors between the Starter Relay and the Engine Control Module (ECM).

Look for any chafed, pierced, pinched, or partially broken wires.

Look for broken, bent, pushed out or corroded terminals.

Refer to any Technical Service Bulletins that may apply.

Were any problems found?

Yes >> Repair as necessary.
Perform the ECM Verification Test Ver. 1. (Refer to 9 - ENGINE - DIAGNOSIS AND TESTING)

No >> Replace the Engine Control Module (ECM) in accordance with the Service Information.
Perform the ECM Verification Test Ver. 1. (Refer to 9 - ENGINE - DIAGNOSIS AND TESTING)

P0616-STARTER CONTROL CIRCUIT LOW

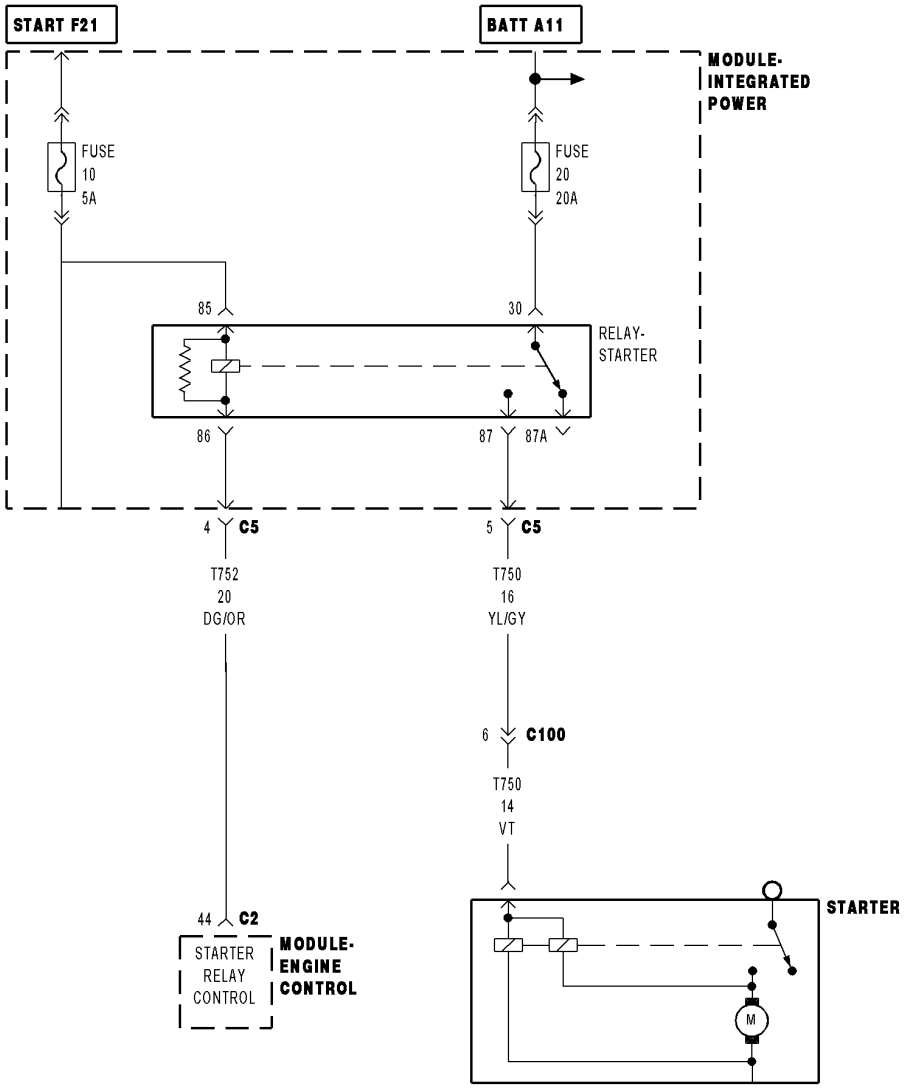

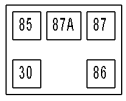

RELAY-
STARTER
(IN IPM)

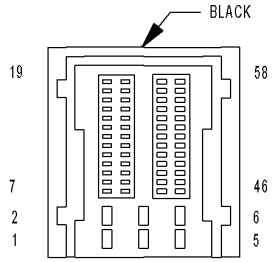

MODULE-
ENGINE
CONTROL C2
(DIESEL)

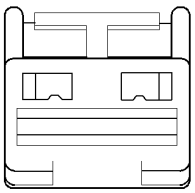

STARTER
(DIESEL)

816B74BC

For a complete wiring diagram **Refer to Section 8W**

- **When Monitored:**
  With the ignition on and the Starter Relay command off.
- **Set Condition:**
  The ECM detects a short to ground on the (T752) Engine Starter Motor Relay Control circuit for 1.0 second.

Possible Causes
INTERMITTENT DTC
(T752) ENGINE STARTER MOTOR RELAY CONTROL CIRCUIT SHORTED TO GROUND
(T752) ENGINE STARTER MOTOR RELAY CONTROL CIRCUIT OPEN OR HIGH RESISTANCE
STARTER RELAY
ENGINE CONTROL MODULE (ECM)

Always perform the Pre-Diagnostic Troubleshooting procedure before proceeding.

Diagnostic Test

1. DTC IS ACTIVE

Ignition on, engine not running.

With the scan tool, Clear DTCs in the Engine Control Module (ECM).

Crank the engine for five seconds.

With the scan tool, select View DTCs.

Is the status Active for this DTC?

Yes >> Go To 2

No >> Refer to the *CHECKING FOR AN INTERMITTENT DTC Diagnostic Procedure. (Refer to 9 - ENGINE - DIAGNOSIS AND TESTING)

2. (T752) ENGINE STARTER MOTOR RELAY CONTROL CIRCUIT SHORTED TO GROUND

Turn the ignition off.

Disconnect the Starter Relay connector.

Disconnect the Engine Control Module (ECM) connector.

Measure the resistance between ground and the (T752) Engine Starter Motor Relay Control circuit in the Starter Relay connector.

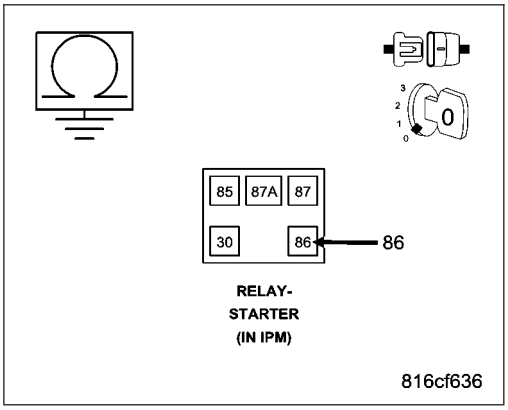

Is the resistance below 1000.0 ohms?

Yes >> Repair the (T752) Engine Starter Motor Relay Control circuit for a short to ground.

Perform the ECM Verification Test Ver. 1. (Refer to 9 - ENGINE - DIAGNOSIS AND TESTING)

No >> Go to 3

3. (T752) ENGINE STARTER MOTOR RELAY CONTROL CIRCUIT OPEN OR HIGH RESISTANCE

Measure the resistance of the (T752) Engine Starter Motor Relay Control circuit between the Starter Relay connector and the Engine Control Module (ECM) connector.

Is the resistance below 10.0 ohms?

Yes >> Go to 4

No >> Repair the (T752) Engine Starter Motor Relay Control circuit for an open circuit or high resistance.
Perform the ECM Verification Test Ver. 1. (Refer to 9 - ENGINE - DIAGNOSIS AND TESTING)

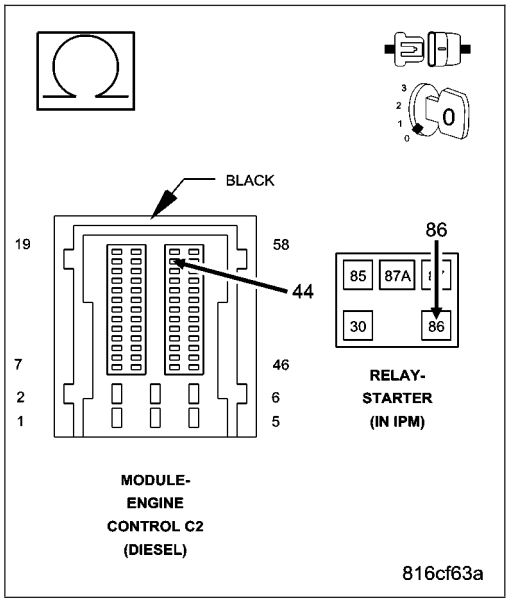

4. STARTER RELAY

Connect the Engine Control Module (ECM) connector.
Install a known good relay in place of the vehicle's Starter Relay.
Turn the ignition on.
With the scan tool, Clear DTCs.
Crank the engine for five seconds.
With the scan tool, select View DTCs.

Is the status Active for this DTC?

Yes >> Go to 5

No >> Replace the Starter Relay in accordance with the Service Information.
Perform the ECM Verification Test Ver. 1. (Refer to 9 - ENGINE - DIAGNOSIS AND TESTING)

5. ENGINE CONTROL MODULE (ECM)

Using the wiring diagram/schematic as a guide, inspect the wiring and connectors between the Starter Relay and the Engine Control Module (ECM).
Look for any chafed, pierced, pinched, or partially broken wires.
Look for broken, bent, pushed out or corroded terminals.
Refer to any Technical Service Bulletins that may apply.

Were any problems found?

Yes >> Repair as necessary.
Perform the ECM Verification Test Ver. 1. (Refer to 9 - ENGINE - DIAGNOSIS AND TESTING)

No >> Replace the Engine Control Module (ECM) in accordance with the Service Information.
Perform the ECM Verification Test Ver. 1. (Refer to 9 - ENGINE - DIAGNOSIS AND TESTING)

P0617-STARTER CONTROL CIRCUIT HIGH

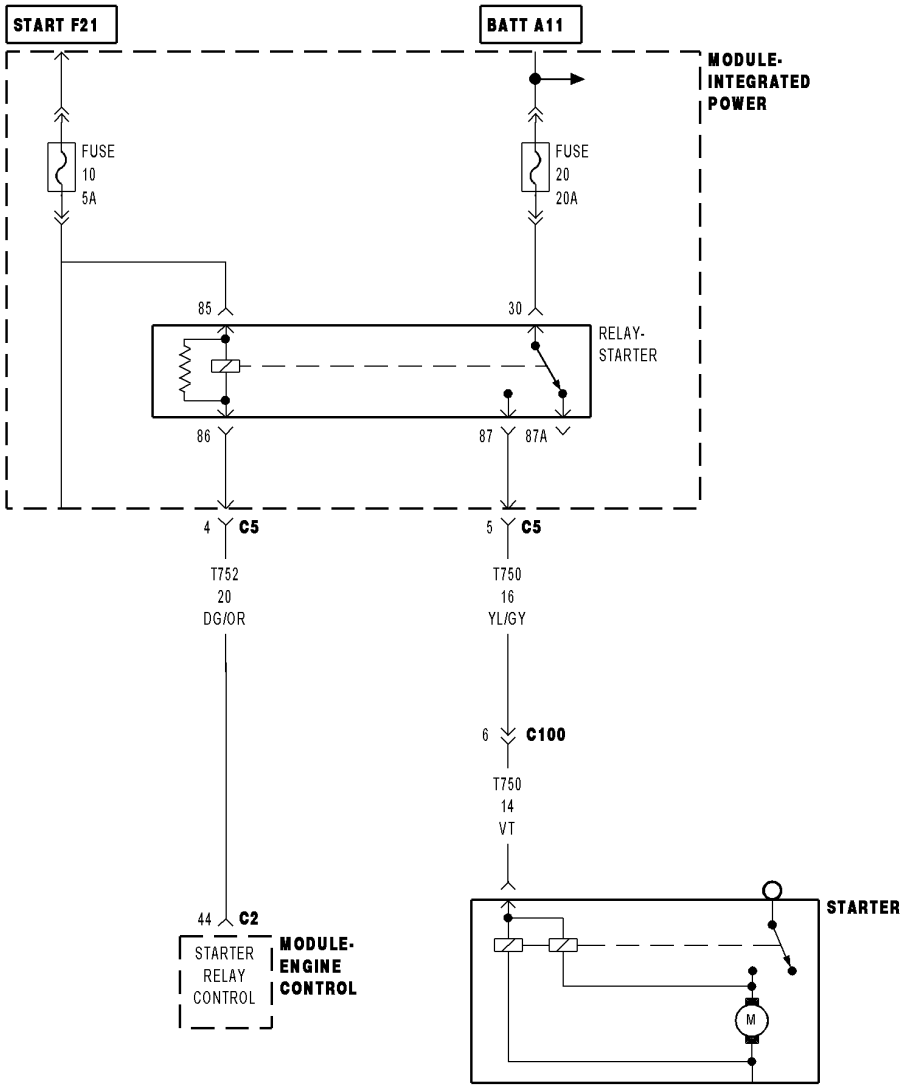

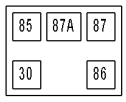

RELAY-
STARTER
(IN IPM)

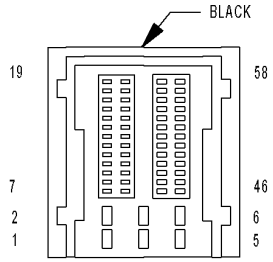

MODULE-
ENGINE
CONTROL C2
(DIESEL)

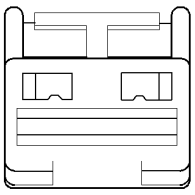

STARTER
(DIESEL)

816B74BC

For a complete wiring diagram **Refer to Section 8W**

- **When Monitored:**
  With the ignition on and the Starter Relay command on.
- **Set Condition:**
  The ECM detects a short circuit on the (T752) Engine Starter Motor Relay Control circuit for at 1.0 second.

Possible Causes
INTERMITTENT DTC
(T752) ENGINE STARTER MOTOR RELAY CONTROL CIRCUIT SHORTED TO VOLTAGE
(T752) ENGINE STARTER MOTOR RELAY CONTROL CIRCUIT SHORTED TO THE (T751) FUSED IGNITION SWITCH OUTPUT (START) CIRCUIT
(T752) ENGINE STARTER MOTOR RELAY CONTROL CIRCUIT OPEN OR HIGH RESISTANCE
STARTER RELAY
ENGINE CONTROL MODULE (ECM)

Always perform the Pre-Diagnostic Troubleshooting procedure before proceeding. (Refer to 9 - ENGINE - DIAGNOSIS AND TESTING)

Diagnostic Test

1. DTC IS ACTIVE

Ignition on, engine not running.

With the scan tool, Clear DTCs in the Engine Control Module (ECM).

Crank the engine for five seconds.

With the scan tool, select View DTCs.

Is the status Active for this DTC?

Yes >> Go To 2

No >> Refer to the *CHECKING FOR AN INTERMITTENT DTC Diagnostic Procedure. (Refer to 9 - ENGINE - DIAGNOSIS AND TESTING)

2. (T752) ENGINE STARTER MOTOR RELAY CONTROL CIRCUIT SHORTED TO VOLTAGE

Turn the ignition off.

Remove the Starter Relay.

Disconnect the Engine Control Module connector.

Remove the ASD Relay from the IPM.

Connect a jumper wire between cavity 30 and cavity 87 of the ASD Relay Connector.

Turn the ignition on.

Measure the voltage of the (T752) Engine Starter Motor Relay Control circuit in the Starter Relay connector.

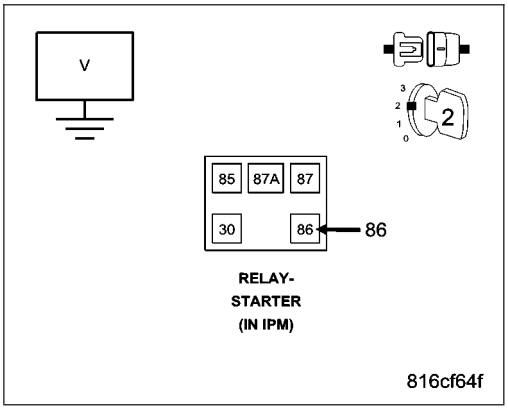

Is there any voltage present?

Yes >> Repair the (T752) Engine Starter Motor Relay Control circuit for a short to voltage.
Perform the ECM Verification Test Ver. 1. (Refer to 9 - ENGINE - DIAGNOSIS AND TESTING)

No >> Go to 3

3. (T752) ENGINE STARTER MOTOR RELAY CONTROL CIRCUIT SHORTED TO THE (T751) FUSED IGNITION SWITCH OUTPUT (START) CIRCUIT

Turn the ignition off.

Measure the resistance between the (T752) Engine Starter Motor Relay Control circuit and the (T751) Fused Ignition Switch Output (START) circuit in the Starter Relay connector.

Is the resistance above 10.0 ohms?

Yes >> Go to 4

No >> Repair the (T752) Engine Starter Motor Relay Control circuit for a short to the (T751) Fused Ignition Switch Output (START) circuit.

Perform the ECM Verification Test Ver. 1. (Refer to 9 - ENGINE - DIAGNOSIS AND TESTING)

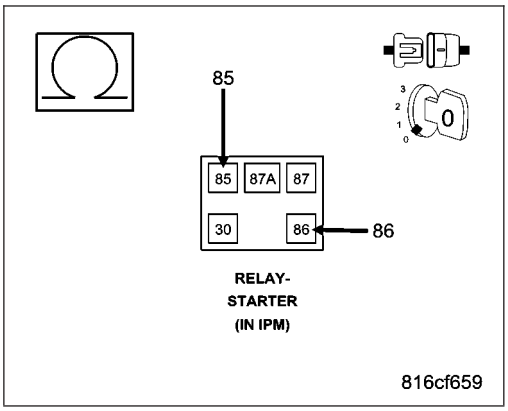

4. (T752) ENGINE STARTER MOTOR RELAY CONTROL CIRCUIT OPEN OR HIGH RESISTANCE

Measure the resistance of the (T752) Engine Starter Motor Relay Control circuit between the Starter Relay connector and the Engine Control Module (ECM) connector.

Is the resistance below 10.0 ohms?

Yes >> Go to 5

No >> Repair the (T752) Engine Starter Motor Relay Control circuit for an open circuit or high resistance.

Perform the ECM Verification Test Ver. 1. (Refer to 9 - ENGINE - DIAGNOSIS AND TESTING)

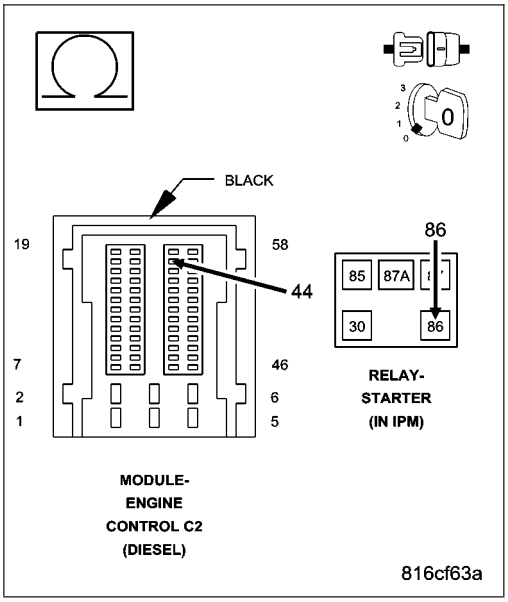

5. STARTER RELAY

Connect the Engine Control Module (ECM) connector.

Install a known good relay in place of the vehicle's Starter Relay.

Turn the ignition on.

With the scan tool, Clear DTCs.

Crank the engine for five seconds.

With the scan tool, select View DTCs.

Is the status active for this DTC?

Yes >> Go to 6

No >> Replace the Starter Relay in accordance with the Service Information.

Perform the ECM Verification Test Ver. 1. (Refer to 9 - ENGINE - DIAGNOSIS AND TESTING)

6. ENGINE CONTROL MODULE (ECM)

Using the wiring diagram/schematic as a guide, inspect the wiring and connectors between the Starter Relay and the Engine Control Module (ECM).

Look for any chafed, pierced, pinched, or partially broken wires.

Look for broken, bent, pushed out or corroded terminals.

Refer to any Technical Service Bulletins that may apply.

Were any problems found?

Yes >> Repair as necessary.
Perform the ECM Verification Test Ver. 1. (Refer to 9 - ENGINE - DIAGNOSIS AND TESTING)

No >> Replace the Engine Control Module (ECM) in accordance with the Service Information.
Perform the ECM Verification Test Ver. 1. (Refer to 9 - ENGINE - DIAGNOSIS AND TESTING)

P0627-FUEL PUMP CONTROL CIRCUIT OPEN

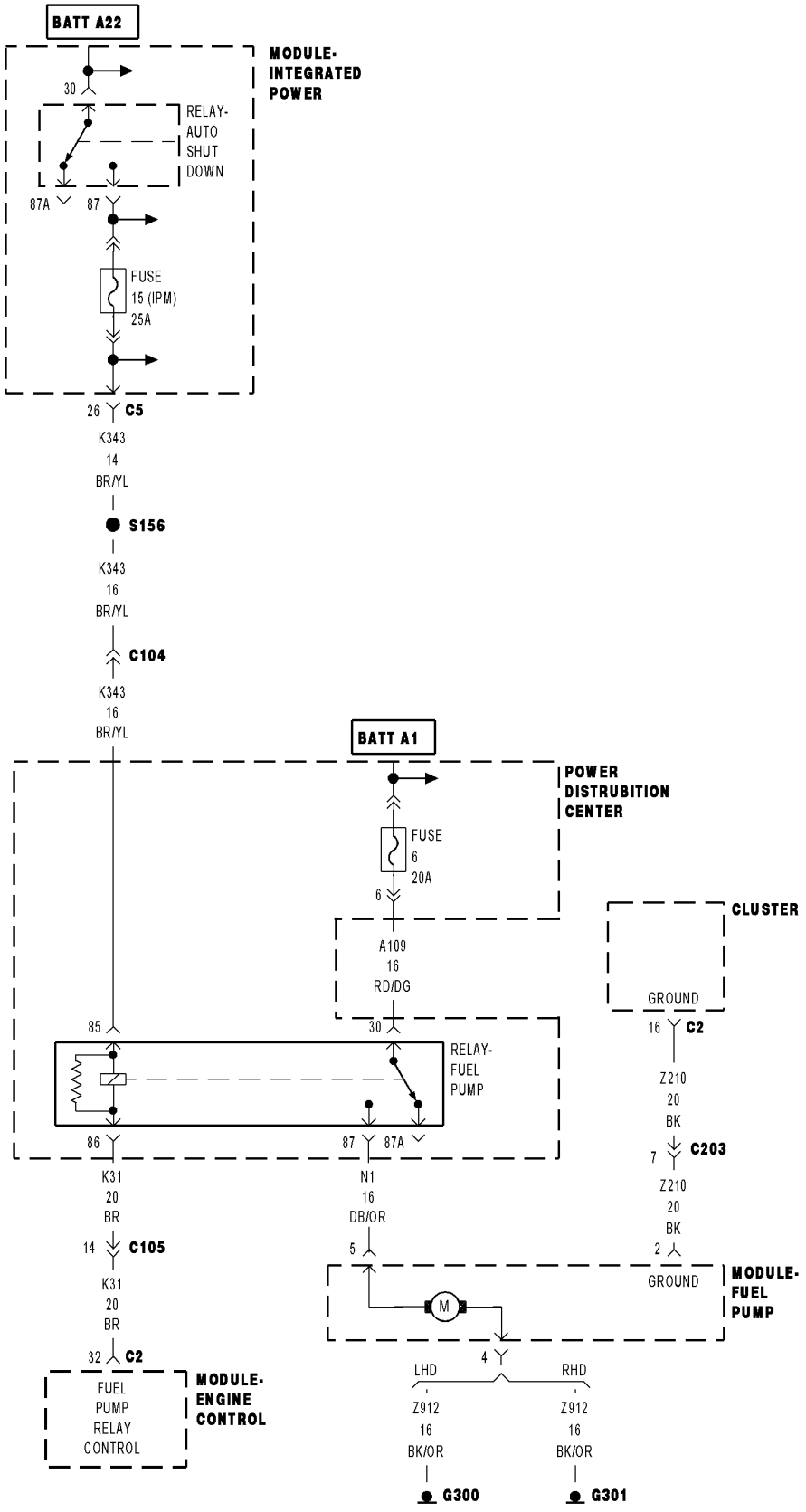

For a complete wiring diagram **Refer to Section 8W**

- **When Monitored:**
  With the ignition on and the Fuel Pump Relay command off.
- **Set Condition:**
  The ECM does not detect voltage on the (K31) Fuel Pump Relay Control circuit for 2.0 seconds.

Possible Causes
INTERMITTENT DTC
(K31) FUEL PUMP RELAY CONTROL CIRCUIT SHORTED TO GROUND
(K31) FUEL PUMP RELAY CONTROL CIRCUIT OPEN OR HIGH RESISTANCE
(K343) FUSED ASD RELAY OUTPUT 2 CIRCUIT OPEN OR HIGH RESISTANCE
FUEL PUMP RELAY
ENGINE CONTROL MODULE (ECM)

Always perform the Pre-Diagnostic Troubleshooting procedure before proceeding. (Refer to 9 - ENGINE - DIAGNOSIS AND TESTING)

Diagnostic Test

1. DTC IS ACTIVE

Ignition on, engine not running.
With the scan tool, Clear DTCs in the Engine Control Module (ECM).
With the scan tool, actuate the Fuel Pump Relay.
Monitor the scan tool for at least two minutes.
With the scan tool, select View DTCs.

Is the status Active for this DTC?

Yes >> Go To 2

No >> Refer to the *CHECKING FOR AN INTERMITTENT DTC Diagnostic Procedure. (Refer to 9 - ENGINE - DIAGNOSIS AND TESTING)

2. (K31) FUEL PUMP RELAY CONTROL CIRCUIT SHORTED TO GROUND

Turn the ignition off.
Remove the Fuel Pump Relay.
Disconnect the Engine Control Module (ECM) connector.
Measure the resistance between ground and the (K31) Fuel Pump Relay Control circuit in the Fuel Pump Relay connector.

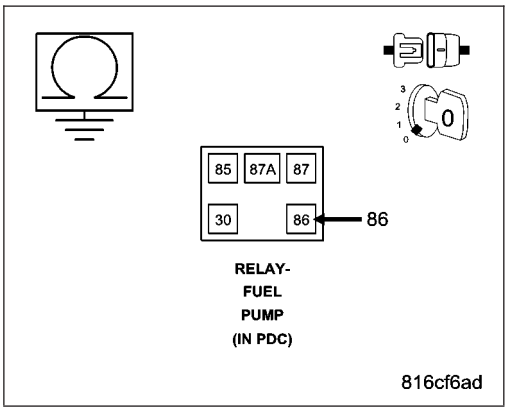

Is the resistance above 10.0 ohms?

Yes >> Go to 3

No >> Repair the (K31) Fuel Pump Relay Control circuit for a short to ground.
Perform the ECM Verification Test Ver. 1. (Refer to 9 - ENGINE - DIAGNOSIS AND TESTING)

3. (K31) FUEL PUMP RELAY CONTROL CIRCUIT OPEN OR HIGH RESISTANCE

Measure the resistance of the (K31) Fuel Pump Relay Control circuit between the Fuel Pump Relay connector and the Engine Control Module (ECM) connector.

Is the resistance below 10.0 ohms?

Yes >> Go to 4

No >> Repair the (K31) Fuel Pump Relay Control circuit for an open circuit or high resistance.
Perform the ECM Verification Test Ver. 1. (Refer to 9 - ENGINE - DIAGNOSIS AND TESTING)

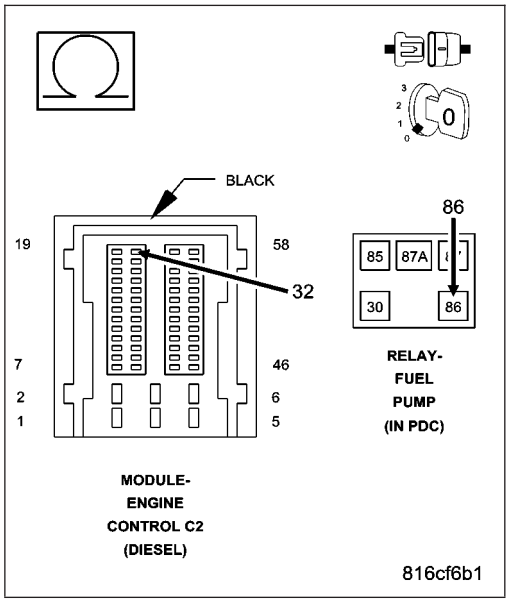

4. (K343) FUSED ASD RELAY OUTPUT 2 CIRCUIT OPEN OR HIGH RESISTANCE

Connect the Engine Control Module (ECM) connector.

Turn the ignition on.

Using a 12 volt test light connected to ground, check the (K343) Fused ASD Relay Output 2 circuit in the Fuel Pump Relay connector.

NOTE: The test light should be illuminated and bright. Compare the brightness to that of a direct connection to the battery.

Is the test light illuminated and bright?

Yes >> Go to 5

No >> Repair the (K343) Fused ASD Relay Output 2 circuit for an open circuit or high resistance.
Perform the ECM Verification Test Ver. 1. (Refer to 9 - ENGINE - DIAGNOSIS AND TESTING)

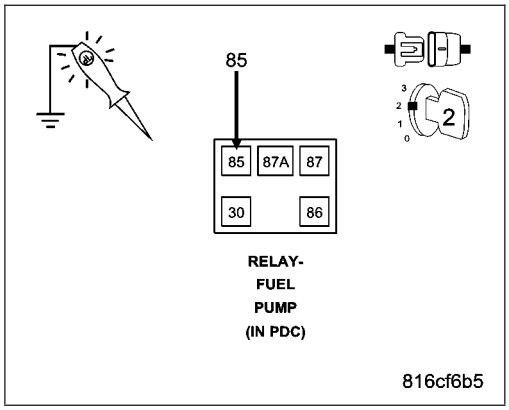

5. FUEL PUMP RELAY

Connect the Engine Control Module (ECM) connector.

Install a known good relay in place of the vehicle's Fuel Pump Relay.

Turn the ignition on.

With the scan tool, Clear DTCs.

With the scan tool, actuate the Fuel Pump Relay.

Monitor the scan tool for at least two minutes.

With the scan tool, select View DTCs.

Is the status Active for this DTC?

Yes >> Go to 6

No >> Replace the Fuel Pump Relay in accordance with the Service Information.
Perform the ECM Verification Test Ver. 1. (Refer to 9 - ENGINE - DIAGNOSIS AND TESTING)

6. ENGINE CONTROL MODULE (ECM)

Using the wiring diagram/schematic as a guide, inspect the wiring and connectors between the Fuel Pump Relay and the Engine Control Module (ECM).

Look for any chafed, pierced, pinched, or partially broken wires.

Look for broken, bent, pushed out or corroded terminals.

Refer to any Technical Service Bulletins that may apply.

Were any problems found?

Yes >> Repair as necessary.
Perform the ECM Verification Test Ver. 1. (Refer to 9 - ENGINE - DIAGNOSIS AND TESTING)

No >> Replace the Engine Control Module (ECM) in accordance with the Service Information.
Perform the ECM Verification Test Ver. 1. (Refer to 9 - ENGINE - DIAGNOSIS AND TESTING)

P0628-FUEL PUMP CONTROL CIRCUIT LOW

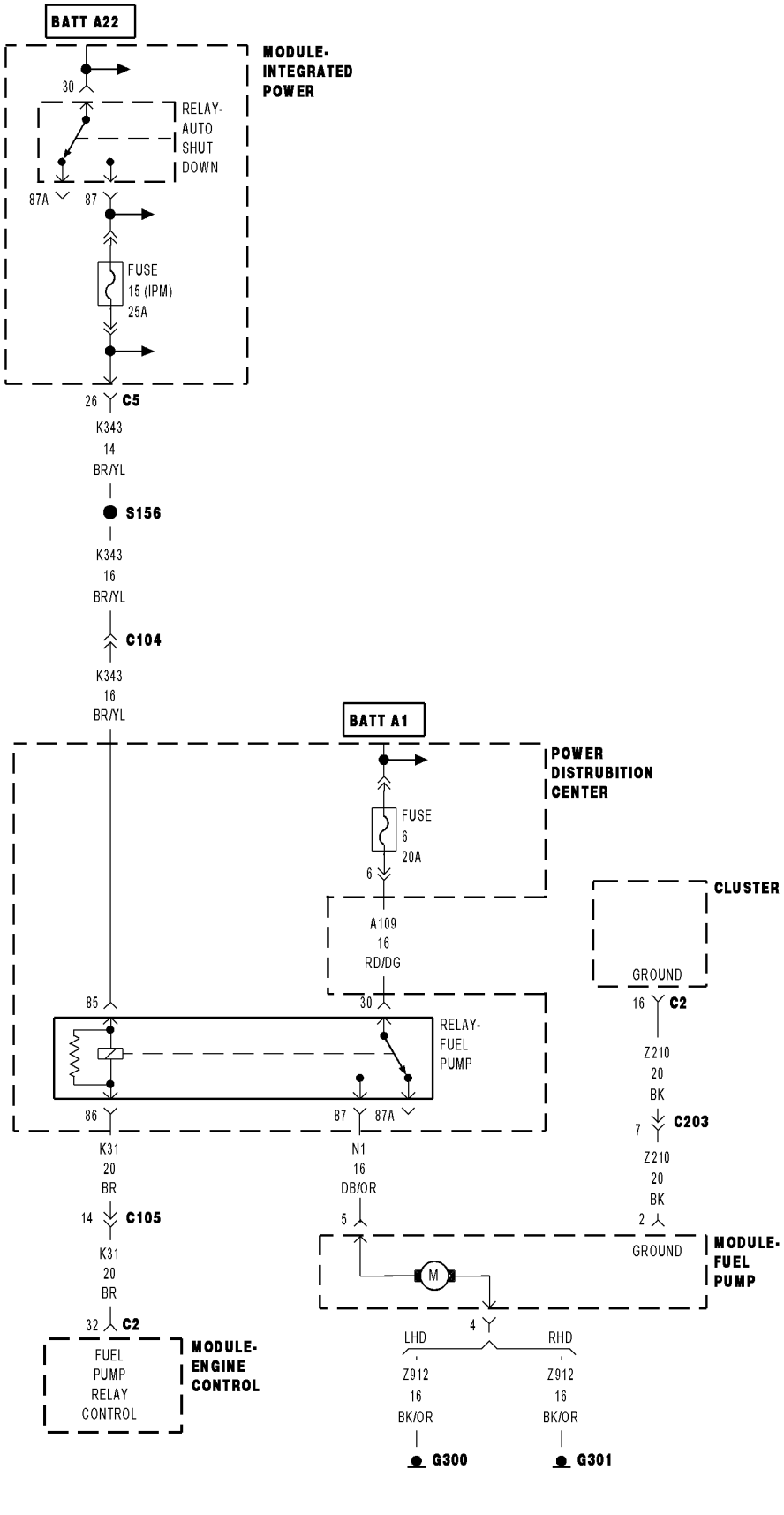

For a complete wiring diagram **Refer to Section 8W**

- **When Monitored:**
  With the ignition on and the Fuel Pump Relay command off.
- **Set Condition:**
  The ECM detects a short to ground on the (K31) Fuel Pump Relay Control circuit for 2.0 seconds.

Possible Causes
INTERMITTENT DTC
(K31) FUEL PUMP RELAY CONTROL CIRCUIT SHORTED TO GROUND
(K31) FUEL PUMP RELAY CONTROL CIRCUIT OPEN OR HIGH RESISTANCE
FUEL PUMP RELAY
ENGINE CONTROL MODULE (ECM)

Always perform the Pre-Diagnostic Troubleshooting procedure before proceeding. (Refer to 9 - ENGINE - DIAGNOSIS AND TESTING)

Diagnostic Test

1. DTC IS ACTIVE

Ignition on, engine not running.
With the scan tool, Clear DTCs in the Engine Control Module (ECM).
With the scan tool, actuate the Fuel Pump Relay.
Monitor the scan tool for at least two minutes.
Cycle the ignition key off and on several times, leaving the ignition on for at least 10 seconds at a time.
Start the engine.
Allow the engine to reach normal operating temperature.
Test drive the vehicle.
With the scan tool, select View DTCs.

Is the status Active for this DTC?

Yes >> Go To 2

No >> Refer to the *CHECKING FOR AN INTERMITTENT DTC Diagnostic Procedure. (Refer to 9 - ENGINE - DIAGNOSIS AND TESTING)

2. (K31) FUEL PUMP RELAY CONTROL CIRCUIT SHORTED TO GROUND

Turn the ignition off.
Remove the Fuel Pump Relay.
Disconnect the Engine Control Module (ECM) connector.
Measure the resistance between ground and the (K31) Fuel Pump Relay Control circuit in the Fuel Pump Relay connector.

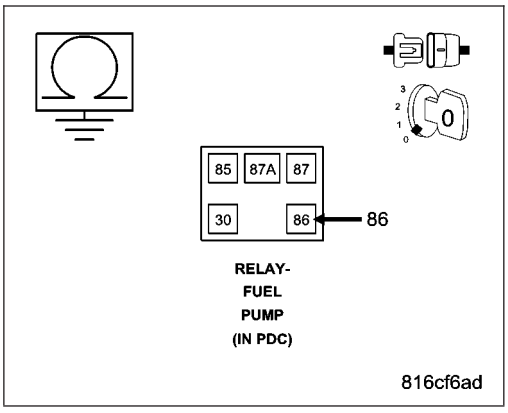

Is the resistance below 1000.0 ohms?

Yes >> Repair the (K31) Fuel Pump Relay Control circuit for a short to ground.
Perform the ECM Verification Test Ver. 1. (Refer to 9 - ENGINE - DIAGNOSIS AND TESTING)

No >> Go to 3

3. (K31) FUEL PUMP RELAY CONTROL CIRCUIT OPEN OR HIGH RESISTANCE

Measure the resistance of the (K31) Fuel Pump Relay Control circuit between the Fuel Pump Relay connector and the Engine Control Module (ECM) connector.

Is the resistance below 10.0 ohms?

Yes >> Go to 4

No >> Repair the (K31) Fuel Pump Relay Control circuit for an open circuit or high resistance.
Perform the ECM Verification Test Ver. 1. (Refer to 9 - ENGINE - DIAGNOSIS AND TESTING)

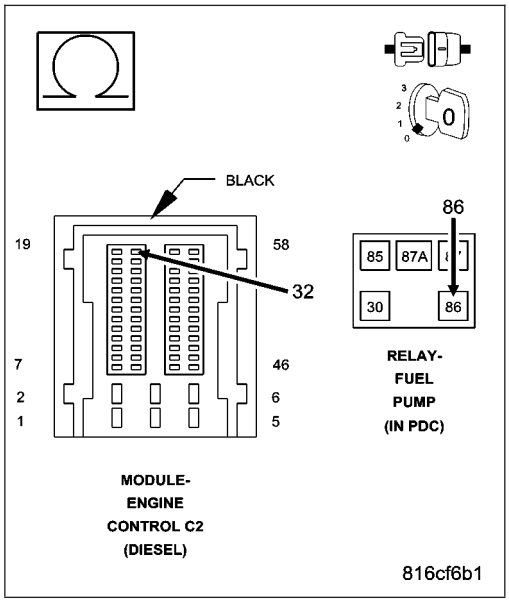

4. FUEL PUMP RELAY

Connect the Engine Control Module (ECM) connector.
Install a known good relay in place of the vehicle's Fuel Pump Relay.
Turn the ignition on.
With the scan tool, Clear DTCs.
With the scan tool, actuate the Fuel Pump Relay.
Monitor the scan tool for at least two minutes.
With the scan tool, select View DTCs.

Is the status Active for this DTC?

Yes >> Go to 5

No >> Replace the Fuel Pump Relay in accordance with the Service Information.
Perform the ECM Verification Test Ver. 1. (Refer to 9 - ENGINE - DIAGNOSIS AND TESTING)

5. ENGINE CONTROL MODULE (ECM)

Using the wiring diagram/schematic as a guide, inspect the wiring and connectors between the Fuel Pump Relay and the Engine Control Module (ECM).
Look for any chafed, pierced, pinched, or partially broken wires.
Look for broken, bent, pushed out or corroded terminals.
Refer to any Technical Service Bulletins that may apply.

Were any problems found?

Yes >> Repair as necessary.
Perform the ECM Verification Test Ver. 1. (Refer to 9 - ENGINE - DIAGNOSIS AND TESTING)

No >> Replace the Engine Control Module (ECM) in accordance with the Service Information.
Perform the ECM Verification Test Ver. 1. (Refer to 9 - ENGINE - DIAGNOSIS AND TESTING)

P0629-FUEL PUMP CONTROL CIRCUIT HIGH

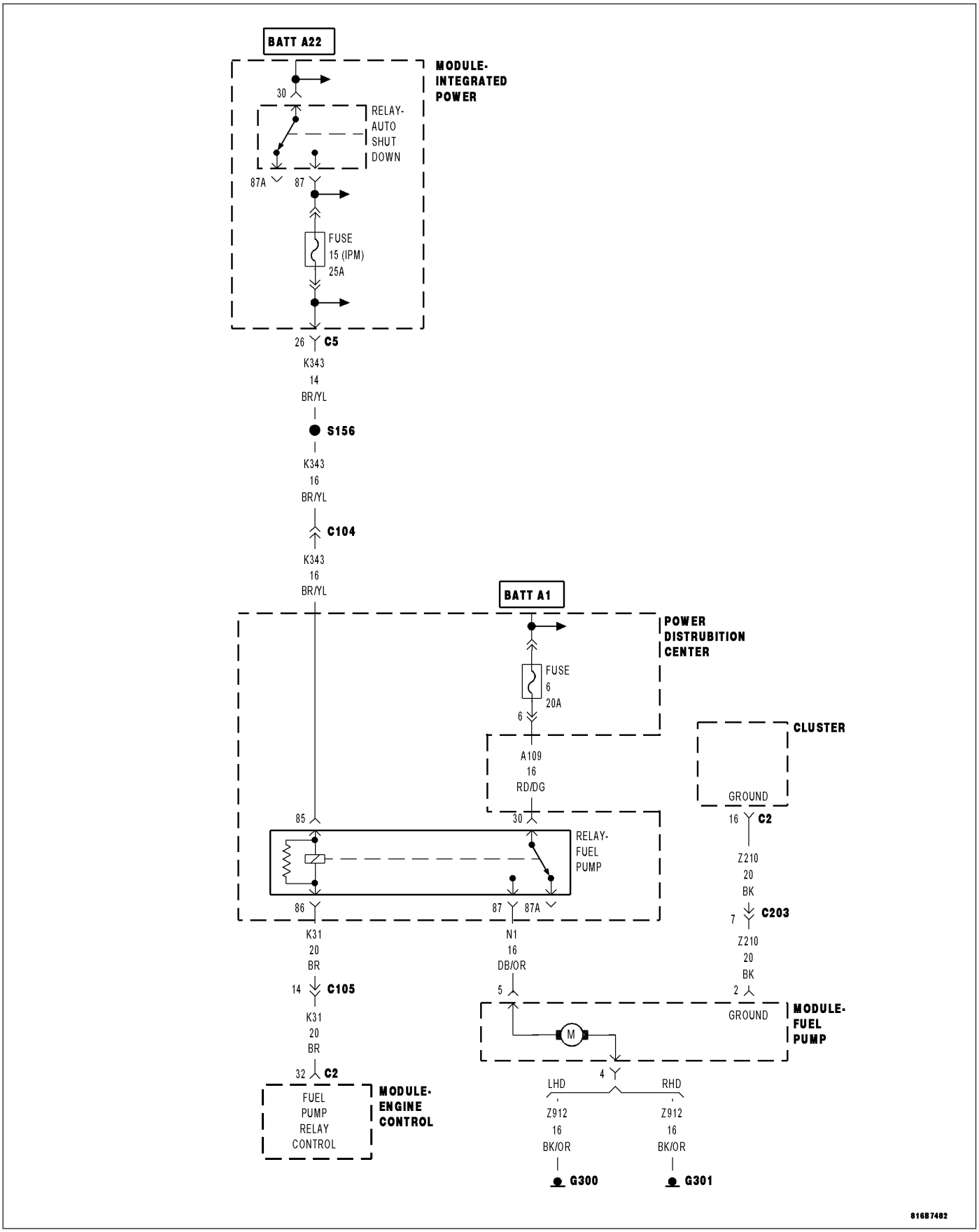

For a complete wiring diagram **Refer to Section 8W**

- **When Monitored:**
  With the ignition on and the Fuel Pump Relay command on.
- **Set Condition:**
  The ECM detects a short circuit on the (K31) Fuel Pump Relay Control circuit for 2.0 seconds.

Possible Causes
INTERMITTENT DTC
(K31) FUEL PUMP RELAY CONTROL CIRCUIT SHORTED TO VOLTAGE
(K31) FUEL PUMP RELAY CONTROL CIRCUIT SHORTED TO THE (K343) FUSED ASD RELAY OUTPUT 2 CIRCUIT
(K31) FUEL PUMP RELAY CONTROL CIRCUIT OPEN OR HIGH RESISTANCE
FUEL PUMP RELAY
ENGINE CONTROL MODULE (ECM)

Always perform the Pre-Diagnostic Troubleshooting procedure before proceeding. (Refer to 9 - ENGINE - DIAGNOSIS AND TESTING)

Diagnostic Test

1. DTC IS ACTIVE

Ignition on, engine not running.

With the scan tool, Clear DTCs in the Engine Control Module (ECM).

Monitor the scan tool for at least two minutes.

With the scan tool, select View DTCs.

Is the status Active for this DTC?

Yes >> Go To 2

No >> Refer to the *CHECKING FOR AN INTERMITTENT DTC Diagnostic Procedure. (Refer to 9 - ENGINE - DIAGNOSIS AND TESTING)

2. (K31) FUEL PUMP RELAY CONTROL CIRCUIT SHORTED TO VOLTAGE

Turn the ignition off.

Remove the Fuel Pump Relay.

Disconnect the MODID connector.

Remove the ASD Relay from the IPM.

Connect a jumper wire between cavity 30 and cavity 87 of the ASD Relay Connector.

Turn the ignition on.

Measure the voltage of the (K31) Fuel Pump Relay Control circuit in the Fuel Pump Relay connector.

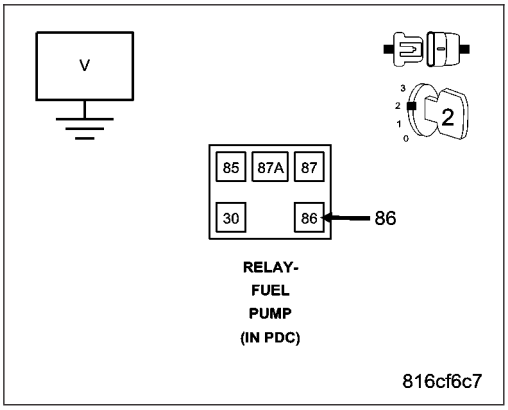

Is there any voltage present?

Yes >> Repair the (K31) Fuel Pump Relay Control circuit for a short to voltage.
Perform the ECM Verification Test Ver. 1. (Refer to 9 - ENGINE - DIAGNOSIS AND TESTING)

No >> Go to 3

3. (K31) FUEL PUMP RELAY CONTROL CIRCUIT SHORTED TO THE (K343) FUSED ASD RELAY OUTPUT 2 CIRCUIT

Turn the ignition off.

Measure the resistance between the (K31) Fuel Pump Relay Control circuit and the (K343) Fused ASD Relay Output 2 circuit in the Fuel Pump Relay connector.

Is the resistance above 10.0 ohms?

Yes >> Go to 4

No >> Repair the (K31) Fuel Pump Relay Control circuit for a short to the (K343) Fused ASD Relay Output 2 circuit.
Perform the ECM Verification Test Ver. 1. (Refer to 9 - ENGINE - DIAGNOSIS AND TESTING)

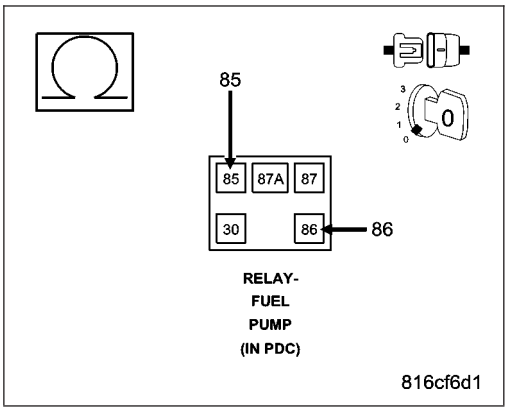

4. (K31) FUEL PUMP RELAY CONTROL CIRCUIT OPEN OR HIGH RESISTANCE

Measure the resistance of the (K31) Fuel Pump Relay Control circuit between the Fuel Pump Relay connector and the Engine Control Module (ECM) connector.

Is the resistance below 10.0 ohms?

Yes >> Go to 5

No >> Repair the (K31) Fuel Pump Relay Control circuit for an open circuit or high resistance.
Perform the ECM Verification Test Ver. 1. (Refer to 9 - ENGINE - DIAGNOSIS AND TESTING)

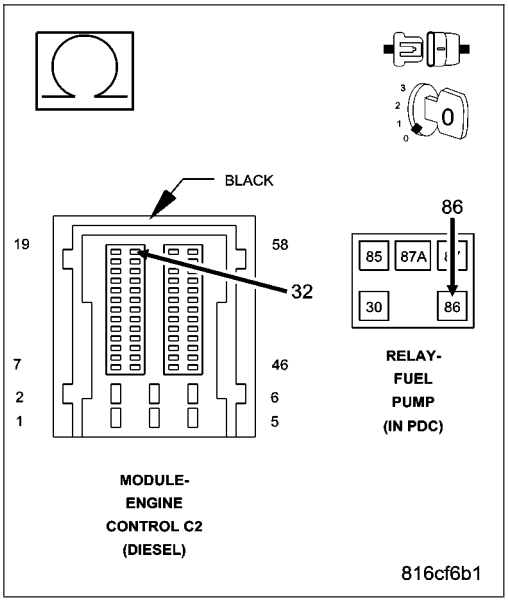

5. FUEL PUMP RELAY

Connect the Engine Control Module (ECM) connector.

Install a known good relay in place of the vehicle's Fuel Pump Relay.

Turn the ignition on.

With the scan tool, Clear DTCs.

Monitor the scan tool for at least two minutes.

With the scan tool, select View DTCs.

Is the status Active for this DTC?

Yes >> Go to 6

No >> Replace the Fuel Pump Relay in accordance with the Service Information.
Perform the ECM Verification Test Ver. 1. (Refer to 9 - ENGINE - DIAGNOSIS AND TESTING)

6. ENGINE CONTROL MODULE (ECM)

Using the wiring diagram/schematic as a guide, inspect the wiring and connectors between the Fuel Pump Relay and the Engine Control Module (ECM).

Look for any chafed, pierced, pinched, or partially broken wires.

Look for broken, bent, pushed out or corroded terminals.

Refer to any Technical Service Bulletins that may apply.

Were any problems found?

Yes >> Repair as necessary.
Perform the ECM Verification Test Ver. 1. (Refer to 9 - ENGINE - DIAGNOSIS AND TESTING)

No >> Replace the Engine Control Module (ECM) in accordance with the Service Information.
Perform the ECM Verification Test Ver. 1. (Refer to 9 - ENGINE - DIAGNOSIS AND TESTING)

P0642-SENSOR REFERENCE VOLTAGE 1 CIRCUIT LOW

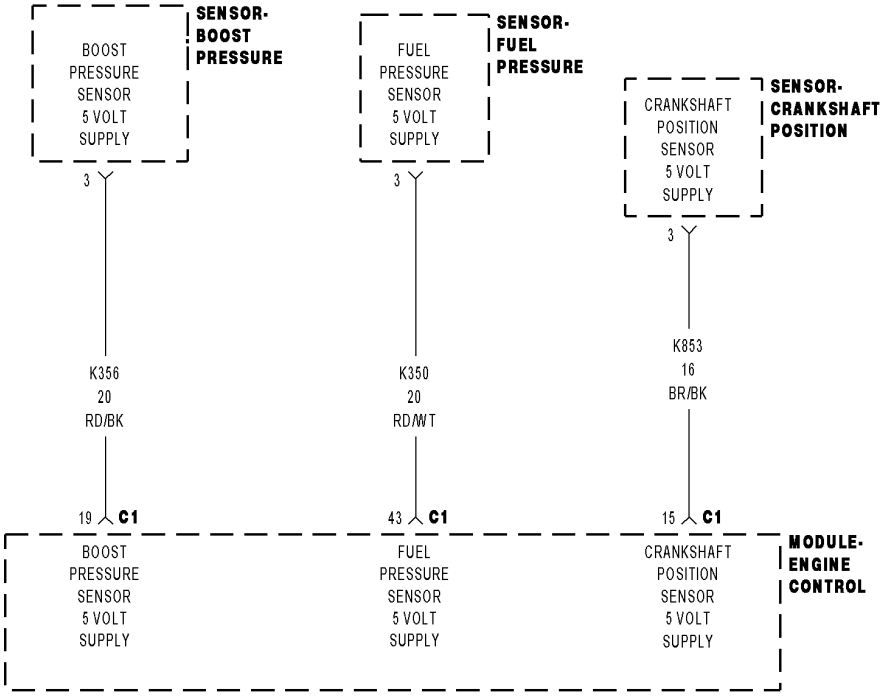

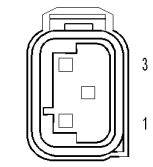

SENSOR-
BOOST PRESSURE
(DIESEL)

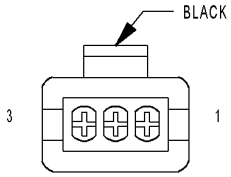

SENSOR-
CRANKSHAFT
POSITION
(DIESEL)

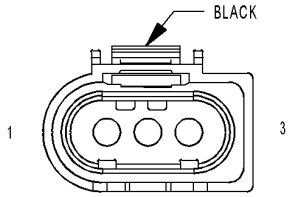

SENSOR-
FUEL
PRESSURE
(DIESEL)

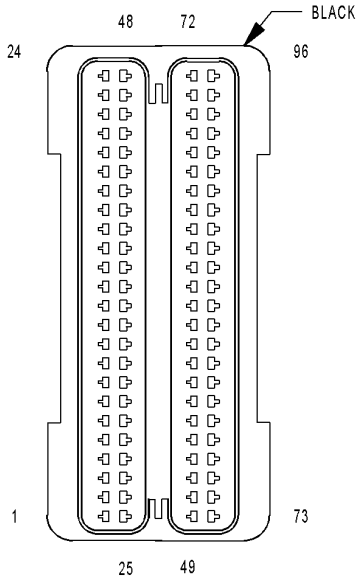

MODULE-
ENGINE CONTROL C1
(DIESEL)

815D4FCF

For a complete wiring diagram **Refer to Section 8W**

- **When Monitored:**
  With the ignition on.
- **Set Condition:**
  The ECM detects a low voltage on the Sensor Supply #1 circuit for 0.10 second

Possible Causes
INTERMITTENT DTC
5-VOLT SUPPLY CIRCUIT SHORTED TO GROUND
CRANKSHAFT POSITION SENSOR
BOOST PRESSURE SENSOR
FUEL PRESSURE SENSOR
ENGINE CONTROL MODULE

Always perform the Pre-Diagnostic Troubleshooting procedure before proceeding. (Refer to 9 - ENGINE - DIAGNOSIS AND TESTING)

Theory of Operation

The ECM contains 3 internal 5–Volt Sensor Supply sources. Each 5–Volt Supply source is split into parallel circuits to provide 5 volts to multiple sensors. Sensor Supply 2 provides 5 volts to the Crankshaft Position Sensor, the Fuel Pressure Sensor, and the Boost Pressure Sensor.

Diagnostic Test

1. CHECK FOR ACTIVE DTC

Turn the ignition on.
With the scan tool, erase ECM DTCs.
Turn the ignition off for 10 seconds.
Turn the ignition on.
With the scan tool, View DTCs.

Is the status Active for this DTC?

Yes >> Go To 2

No >> Refer to the *CHECKING FOR AN INTERMITTENT DTC Diagnostic Procedure. (Refer to 9 - ENGINE - DIAGNOSIS AND TESTING)

2. CRANKSHAFT POSITION SENSOR SHORTED TO GROUND

Turn the ignition off.
Disconnect the Crankshaft Position Sensor harness connector.
Turn the ignition on.
Measure the voltage of the (K853) Crankshaft Position Sensor 5 Volt Supply circuit.

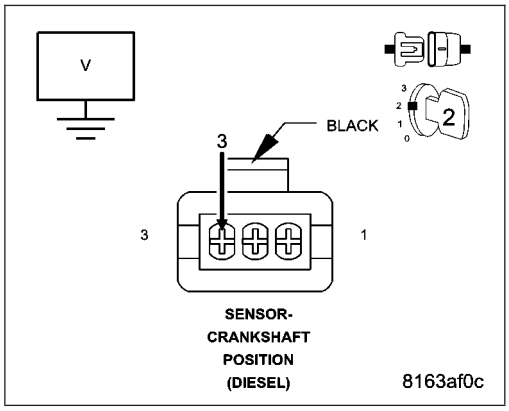

Is the voltage above 4.6 volts?

Yes >> Replace the Crankshaft Position Sensor.
Perform the ECM VERIFICATION TEST. (Refer to 9 - ENGINE - DIAGNOSIS AND TESTING)

No >> Go To 3

3. FUEL PRESSURE SENSOR SHORTED TO GROUND

Turn the ignition off.
Disconnect the Fuel Pressure Sensor harness connector.
Turn the ignition on.
Measure the voltage of the (K350) Fuel Pressure Sensor 5 Volt Supply circuit.

Is the voltage above 4.6 volts?

Yes >> Replace the Fuel Pressure Sensor.
Perform the ECM VERIFICATION TEST. (Refer to 9 - ENGINE - DIAGNOSIS AND TESTING)

No >> Go To 4

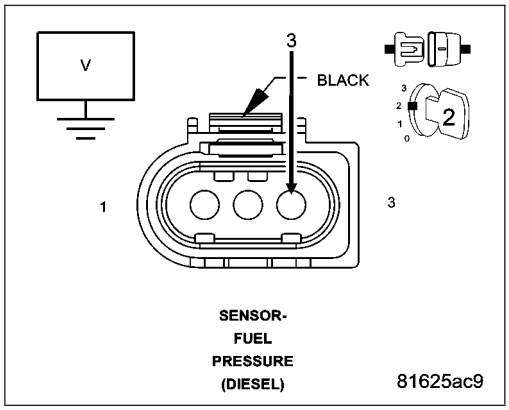

4. BOOST PRESSURE SENSOR SHORTED TO GROUND

Turn the ignition off.
Disconnect the Boost Pressure Sensor harness connector.
Turn the ignition on.
Measure the voltage of the (K356) Boost Pressure Sensor 5 Volt Supply circuit.

Is the voltage above 4.6 volts?

Yes >> Replace the Boost Pressure Sensor.
Perform the ECM VERIFICATION TEST. (Refer to 9 - ENGINE - DIAGNOSIS AND TESTING)

No >> Go To 5

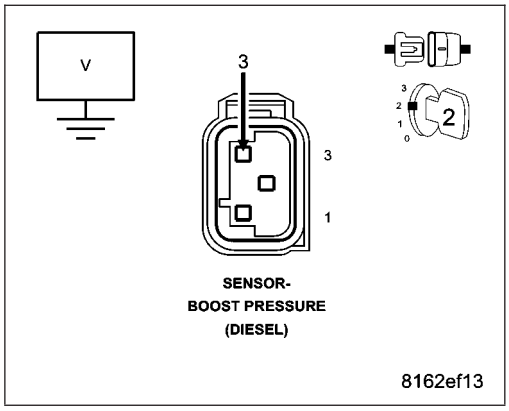

5. 5-VOLT SUPPLY CIRCUIT SHORTED TO GROUND

Turn the ignition off.
Disconnect the ECM harness connectors.
Measure the resistance between ground and the (K853) Crankshaft Position Sensor 5 Volt Supply circuit.
Measure the resistance between ground and the (K350) Fuel Pressure Sensor 5 Volt Supply circuit.
Measure the resistance between ground and the (K356) Boost Pressure Sensor 5 Volt Supply circuit.

Is the resistance above 1000 ohms for each circuit?

Yes >> Go To 6

No >> Repair the 5-Volt Supply circuit for a short to ground.
Perform the ECM VERIFICATION TEST. (Refer to 9 - ENGINE - DIAGNOSIS AND TESTING)

6. ENGINE CONTROL MODULE (ECM)

Turn the ignition off.

Inspect the (K853) Crankshaft Position Sensor 5 Volt Supply circuit between the Crankshaft Position Sensor and the ECM.

Inspect the (K350) Fuel Pressure Sensor 5 Volt Supply circuit between the Fuel Pressure Sensor and the ECM.

Inspect the (K356) Boost Pressure Sensor 5 Volt Supply circuit between the Boost Pressure Sensor and the ECM.

Look for any chafed, pierced, pinched, or partially broken wires.

Look for broken, bent, pushed out or corroded terminals.

Refer to any Technical Service Bulletins that may apply.

Were any problems found?

Yes >> Repair as necessary.
Perform the ECM VERIFICATION TEST. (Refer to 9 - ENGINE - DIAGNOSIS AND TESTING)

No >> Replace and program the Engine Control Module in accordance with the Service Information.
Perform the ECM VERIFICATION TEST. (Refer to 9 - ENGINE - DIAGNOSIS AND TESTING)

P0643-SENSOR REFERENCE VOLTAGE 1 TOO HIGH

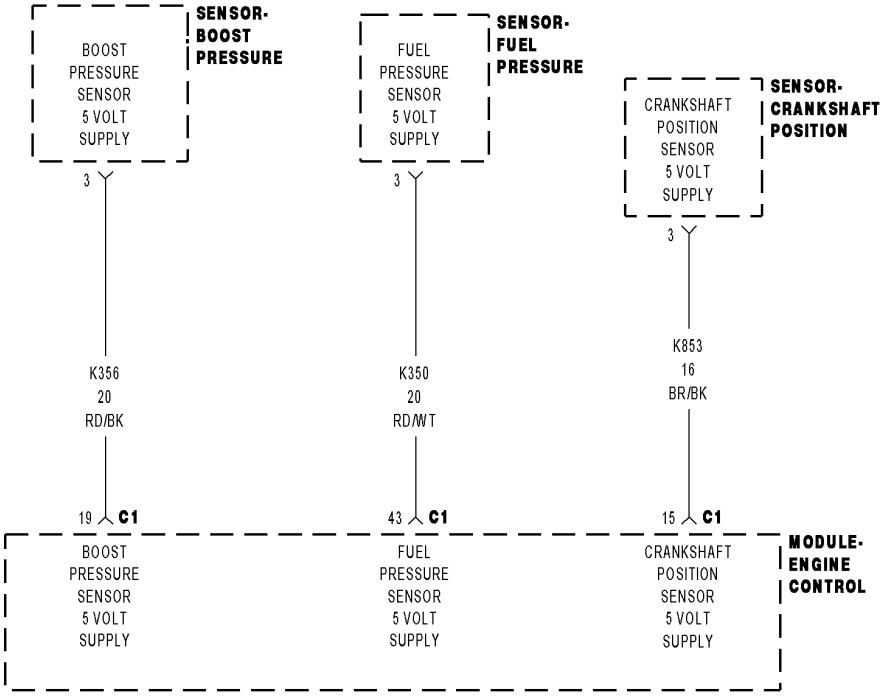

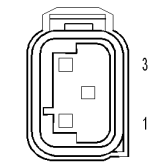

SENSOR-
BOOST PRESSURE
(DIESEL)

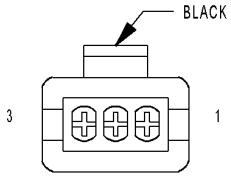

SENSOR-
CRANKSHAFT
POSITION
(DIESEL)

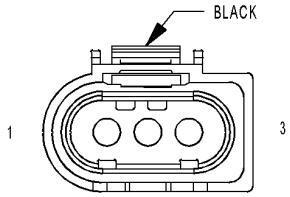

SENSOR-
FUEL
PRESSURE
(DIESEL)

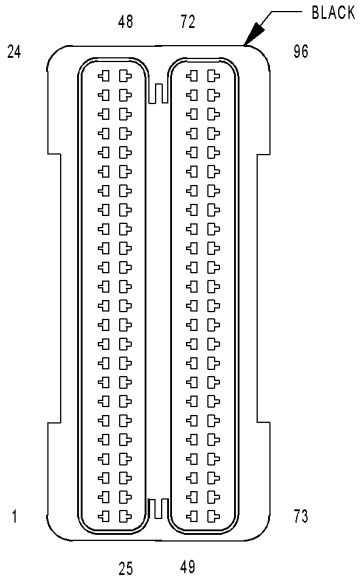

MODULE-
ENGINE CONTROL C1
(DIESEL)

815D4FCF

For a complete wiring diagram **Refer to Section 8W**

- **When Monitored:**
  With the ignition on.
- **Set Condition:**
  The ECM detects a short to voltage on the Sensor Supply #1 circuit for 0.10 second.

Possible Causes
INTERMITTENT DTC
(K350) FUEL PRESSURE SENSOR 5 VOLT SUPPLY CIRCUIT SHORTED TO VOLTAGE
(K356) BOOST PRESSURE SENSOR 5 VOLT SUPPLY CIRCUIT SHORTED TO VOLTAGE
(K853) CRANKSHAFT POSITION SENSOR 5 VOLT SUPPLY CIRCUIT SHORTED TO VOLTAGE
ENGINE CONTROL MODULE (ECM)

Always perform the Pre-Diagnostic Troubleshooting procedure before proceeding. (Refer to 9 - ENGINE - DIAGNOSIS AND TESTING)

Theory of Operation

The ECM contains 3 internal 5–Volt Sensor Supply sources. Each 5–Volt Supply source is split into parallel circuits to provide 5 volts to multiple sensors. Sensor Supply 2 provides 5 volts to the Crankshaft Position Sensor, the Fuel Pressure Sensor, and the Boost Pressure Sensor.

Diagnostic Test

1. CHECK FOR ACTIVE DTC

Turn the ignition on.
With the scan tool, erase ECM DTCs.
Turn the ignition off for 10 seconds.
Turn the ignition on.
With the scan tool, select View DTCs.

Is the status Active for this DTC?

Yes >> Go To 2

No >> Refer to the *CHECKING FOR AN INTERMITTENT DTC Diagnostic Procedure. (Refer to 9 - ENGINE - DIAGNOSIS AND TESTING)

2. (K350) FUEL PRESSURE SENSOR 5-VOLT SUPPLY CIRCUIT SHORTED TO VOLTAGE

Turn the ignition off.
Disconnect the Fuel Pressure Sensor harness connector.
Disconnect the ECM harness connectors.
Remove the ASD Relay from the IPM.
Connect a jumper wire between cavity 30 and cavity 87 of the ASD Relay connector.
Turn the ignition on.
Measure the voltage on the (K350) Fuel Pressure Sensor 5-Volt Supply circuit.

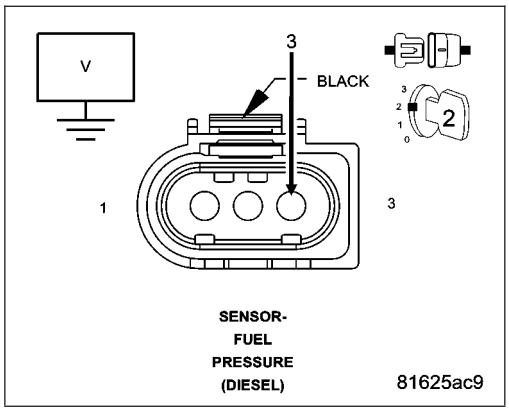

Is the voltage below 1.0 volt?

Yes >> Go To 3

No >> Repair the (K350) Fuel Pressure Sensor 5 Volt Supply circuit for a short to voltage.
Perform the ECM VERIFICATION TEST. (Refer to 9 - ENGINE - DIAGNOSIS AND TESTING)

3. (K356) BOOST PRESSURE SENSOR 5-VOLT SUPPLY CIRCUIT SHORTED TO VOLTAGE

Turn the ignition off.

Disconnect the Boost Pressure Sensor harness connector.

Turn the ignition on.

Measure the voltage on the (K356) Boost Pressure Sensor 5 Volt Supply circuit.

Is the voltage below 1.0 volt?

Yes >> Go To 4

No >> Repair the (K356) Boost Pressure Sensor 5 Volt Supply circuit for a short to voltage.
Perform the ECM VERIFICATION TEST. (Refer to 9 - ENGINE - DIAGNOSIS AND TESTING)

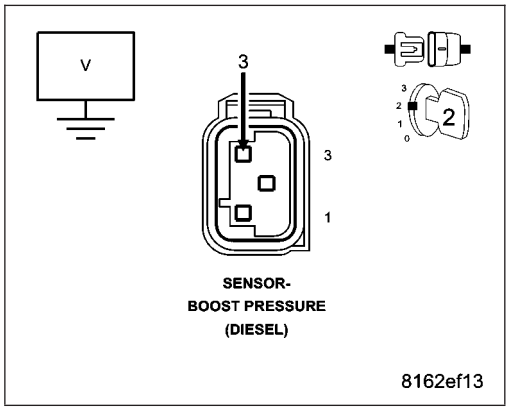

4. (K853) CRANKSHAFT POSITION SENSOR 5-VOLT SUPPLY CIRCUIT SHORTED TO VOLTAGE

Turn the ignition off.

Disconnect the Crankshaft Position Sensor harness connector.

Turn the ignition on.

Measure the voltage of the (K853) Crankshaft Position Sensor 5 Volt Supply circuit.

Is the voltage below 1.0 volt?

Yes >> Go To 5

No >> Repair the (K853) Crankshaft Position Sensor 5 Volt Supply circuit for a short to voltage.
Perform the ECM VERIFICATION TEST. (Refer to 9 - ENGINE - DIAGNOSIS AND TESTING)

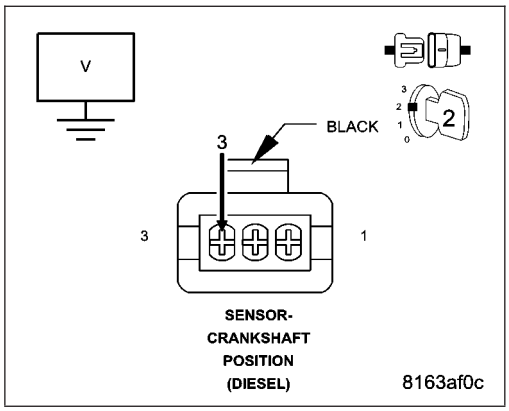

5. ENGINE CONTROL MODULE (ECM)

Turn the ignition off.

Inspect the (K853) Crankshaft Position Sensor 5 Volt Supply circuit between the Crankshaft Position Sensor and the ECM.

Inspect the (K350) Fuel Pressure Sensor 5 Volt Supply circuit between the Fuel Pressure Sensor and the ECM.

Inspect the (K356) Boost Pressure Sensor 5 Volt Supply circuit between the Boost Pressure Sensor and the ECM.

Look for any chafed, pierced, pinched, or partially broken wires.

Look for broken, bent, pushed out or corroded terminals.

Refer to any Technical Service Bulletins that may apply.

Were any problems found?

Yes >> Repair as necessary.
Perform the ECM VERIFICATION TEST. (Refer to 9 - ENGINE - DIAGNOSIS AND TESTING)

No >> Replace and program the Engine Control Module in accordance with the Service Information.
Perform the ECM VERIFICATION TEST. (Refer to 9 - ENGINE - DIAGNOSIS AND TESTING)

P0645-A/C CLUTCH CONTROL CIRCUIT OPEN

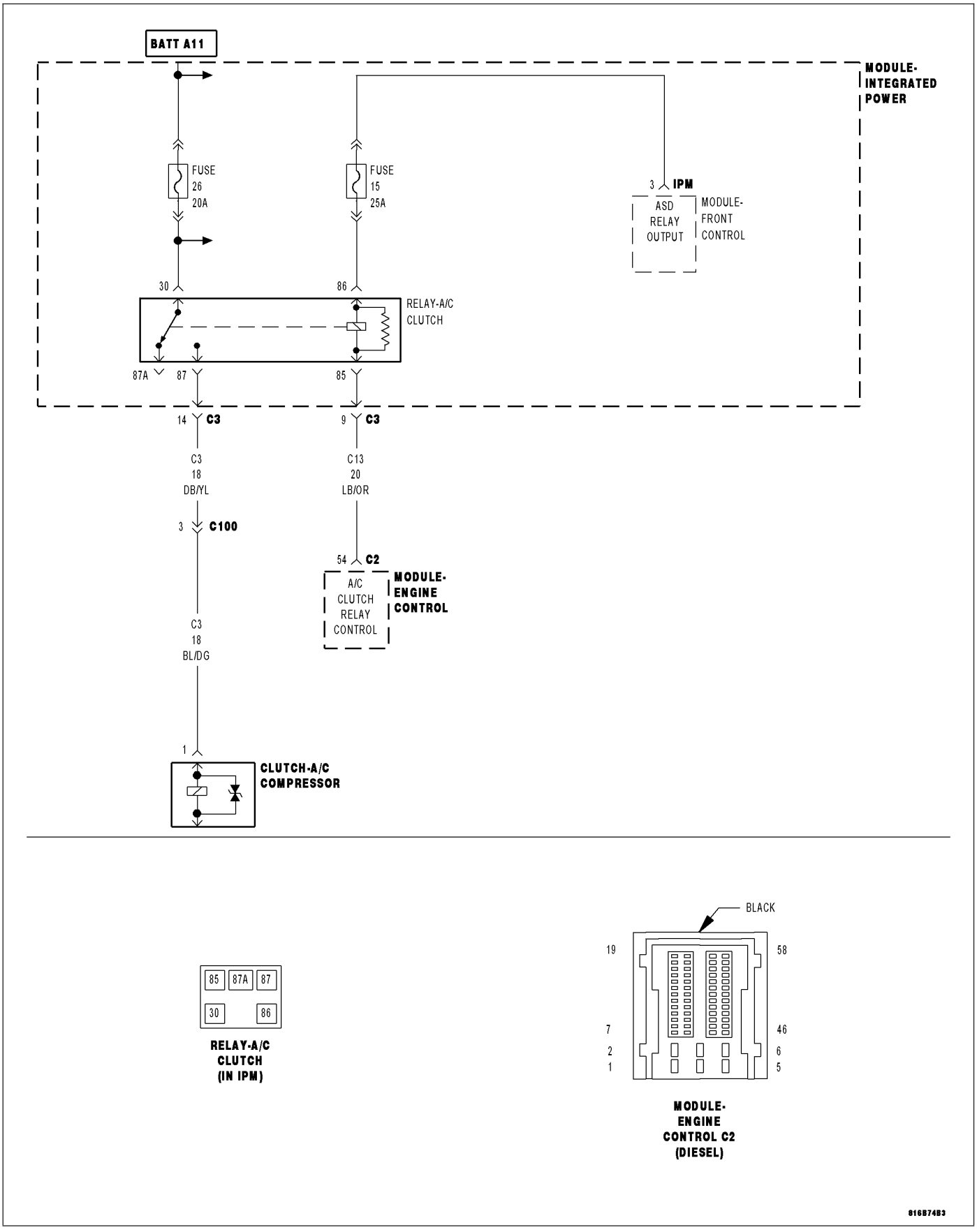

For a complete wiring diagram **Refer to Section 8W**

- **When Monitored:**
  With the ignition on and the A/C Clutch Relay command off.
- **Set Condition:**
  The ECM does not detect voltage on the (C13) A/C Clutch Relay Control circuit for 1.0 second.

Possible Causes
INTERMITTENT DTC
(C13) A/C CLUTCH RELAY CONTROL CIRCUIT SHORTED TO GROUND
(C13) A/C CLUTCH RELAY CONTROL CIRCUIT OPEN OR HIGH RESISTANCE
(K343) FUSED ASD RELAY OUTPUT CIRCUIT 2 OPEN OR HIGH RESISTANCE
A/C CLUTCH RELAY
ENGINE CONTROL MODULE (ECM)

Always perform the Pre-Diagnostic Troubleshooting procedure before proceeding. (Refer to 9 - ENGINE - DIAGNOSIS AND TESTING)

Diagnostic Test

1. DTC IS ACTIVE

Ignition on, engine not running.
With the scan tool, Clear DTCs in the Engine Control Module (ECM).
With the scan tool, actuate the A/C Clutch Relay.
Monitor the scan tool for at least two minutes.
With the scan tool, select View DTCs.

Is the status Active for this DTC?

Yes >> Go To 2

No >> Refer to the *CHECKING FOR AN INTERMITTENT DTC Diagnostic Procedure. (Refer to 9 - ENGINE - DIAGNOSIS AND TESTING)

2. (C13) A/C CLUTCH RELAY CONTROL CIRCUIT SHORTED TO GROUND

Turn the ignition off.
Remove the A/C Clutch Relay.
Disconnect the Engine Control Module (ECM) connector.
Measure the resistance between ground and the (C13) A/C Clutch Relay Control circuit in the A/C Clutch Relay connector.

Is the resistance above 10.0 ohms?

Yes >> Go to 3

No >> Repair the (C13) A/C Clutch Relay Control circuit for a short to ground.
Perform the ECM Verification Test Ver. 1. (Refer to 9 - ENGINE - DIAGNOSIS AND TESTING)

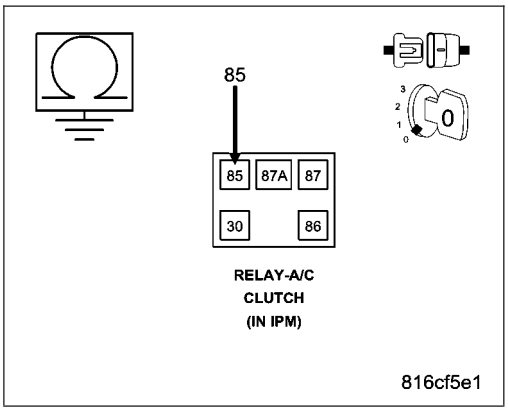

3. (C13) A/C CLUTCH RELAY CONTROL CIRCUIT OPEN OR HIGH RESISTANCE

Measure the resistance of the (C13) A/C Clutch Relay Control circuit between the A/C Clutch Relay connector and the Engine Control Module (ECM) connector.

Is the resistance below 10.0 ohms?

Yes >> Go to 4

No >> Repair the (C13) A/C Clutch Relay Control circuit for an open circuit or high resistance.
Perform the ECM Verification Test Ver. 1. (Refer to 9 - ENGINE - DIAGNOSIS AND TESTING)

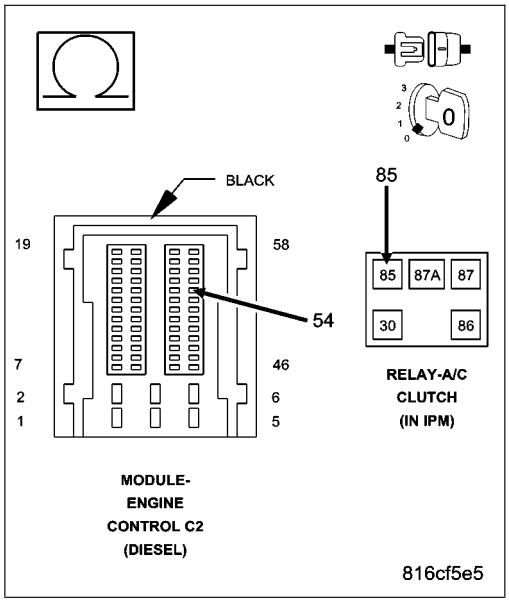

4. (K343) FUSED ASD RELAY OUTPUT 2 CIRCUIT OPEN OR HIGH RESISTANCE

Connect the Engine Control Module (ECM) connector.

Turn the ignition on.

Using a 12 volt test light connected to ground, check the (K343) Fused ASD Relay Output 2 circuit in the Fuel Pump Relay connector.

NOTE: The test light should be illuminated and bright. Compare the brightness to that of a direct connection to the battery.

Is the test light illuminated and bright?

Yes >> Go to 5

No >> Repair the (K343) Fused ASD Relay Output 2 circuit for an open circuit or high resistance.
Perform the ECM Verification Test Ver. 1. (Refer to 9 - ENGINE - DIAGNOSIS AND TESTING)

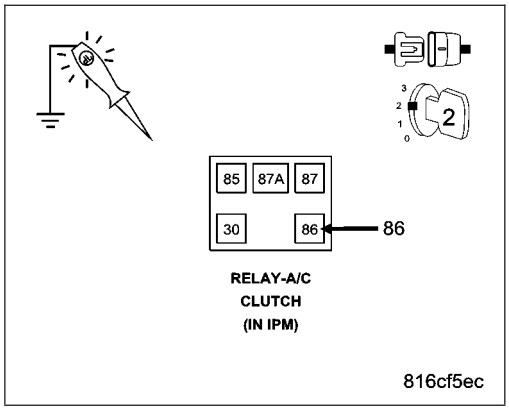

5. A/C CLUTCH RELAY

Connect the Engine Control Module (ECM) connector.

Install a known good relay in place of the vehicle's A/C Clutch Relay.

Turn the ignition on.

With the scan tool, Clear DTCs.

With the scan tool, actuate the A/C Clutch Relay.

Monitor the scan tool for at least two minutes.

With the scan tool, select View DTCs.

Is the status Active for this DTC?

Yes >> Go to 6

No >> Replace the A/C Clutch Relay in accordance with the Service Information.
Perform the ECM Verification Test Ver. 1. (Refer to 9 - ENGINE - DIAGNOSIS AND TESTING)

6. ENGINE CONTROL MODULE (ECM)

Using the wiring diagram/schematic as a guide, inspect the wiring and connectors between the A/C Clutch Relay and the Engine Control Module (ECM).

Look for any chafed, pierced, pinched, or partially broken wires.

Look for broken, bent, pushed out or corroded terminals.

Refer to any Technical Service Bulletins that may apply.

Were any problems found?

Yes >> Repair as necessary.
Perform the ECM Verification Test Ver. 1. (Refer to 9 - ENGINE - DIAGNOSIS AND TESTING)

No >> Replace the Engine Control Module (ECM) in accordance with the Service Information.
Perform the ECM Verification Test Ver. 1. (Refer to 9 - ENGINE - DIAGNOSIS AND TESTING)

P0646-A/C CLUTCH CONTROL CIRCUIT LOW

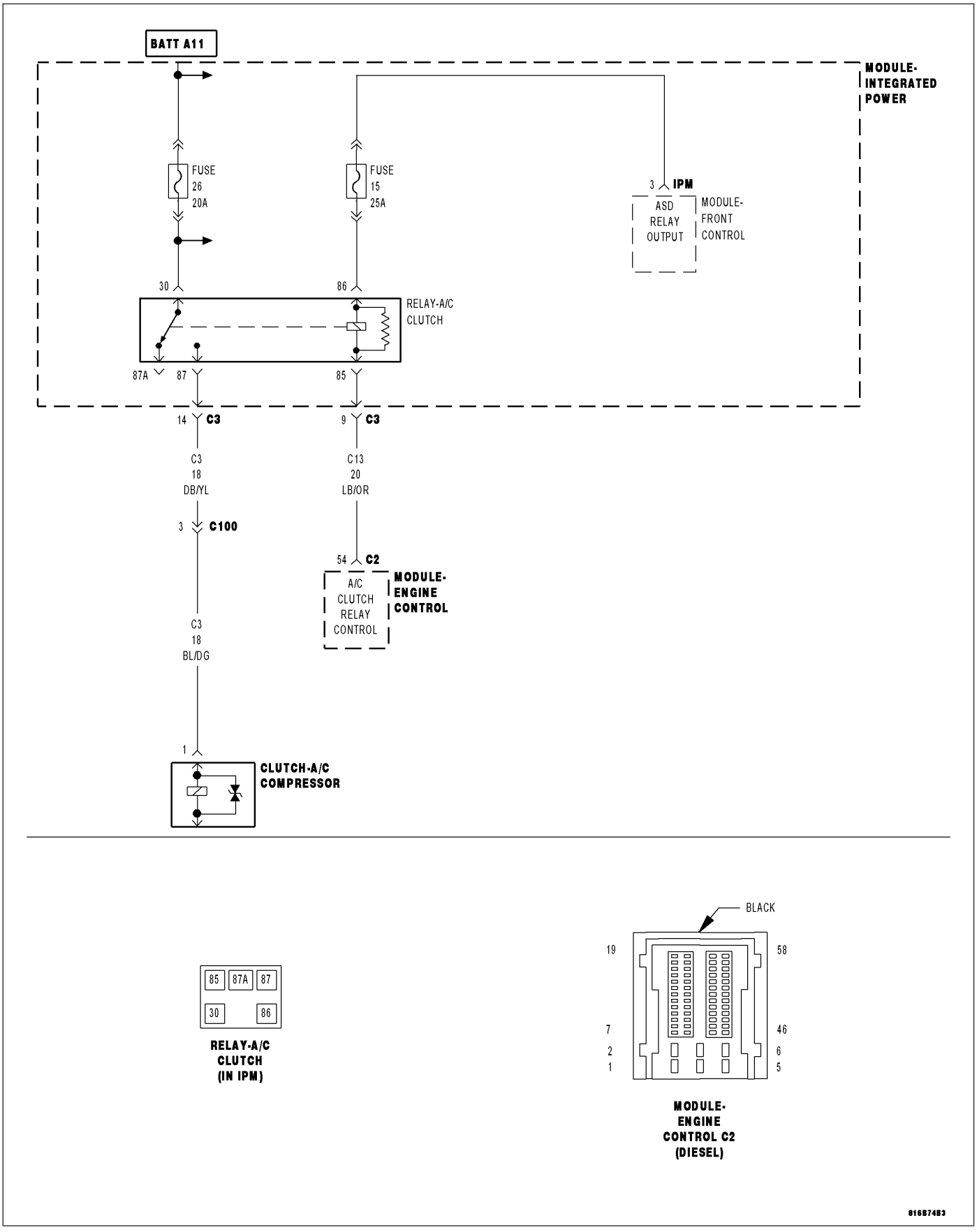

For a complete wiring diagram **Refer to Section 8W**

- **When Monitored:**
  With the ignition on and the A/C Clutch Relay command off.
- **Set Condition:**
  The ECM detects a short to ground on the (C13) A/C Clutch Relay Control circuit for 1.0 second.

Possible Causes
INTERMITTENT DTC
(C13) A/C CLUTCH RELAY CONTROL CIRCUIT SHORTED TO GROUND
(C13) A/C CLUTCH RELAY CONTROL CIRCUIT OPEN OR HIGH RESISTANCE
A/C CLUTCH RELAY
ENGINE CONTROL MODULE (ECM)

Always perform the Pre-Diagnostic Troubleshooting procedure before proceeding. (Refer to 9 - ENGINE - DIAGNOSIS AND TESTING)

Diagnostic Test

1. DTC IS ACTIVE

Ignition on, engine not running.
With the scan tool, Clear DTCs in the Engine Control Module (ECM).
With the scan tool, actuate the A/C Clutch Relay.
Monitor the scan tool for at least two minutes.
With the scan tool, select View DTCs.

Is the status Active for this DTC?

Yes >> Go To 2

No >> Refer to the *CHECKING FOR AN INTERMITTENT DTC Diagnostic Procedure. (Refer to 9 - ENGINE - DIAGNOSIS AND TESTING)

2. (C13) A/C CLUTCH RELAY CONTROL CIRCUIT SHORTED TO GROUND

Turn the ignition off.
Disconnect the A/C Clutch Relay connector.
Disconnect the Engine Control Module (ECM) connector.
Measure the resistance between ground and the (C13) A/C Clutch Relay Control circuit in the A/C Clutch Relay connector.

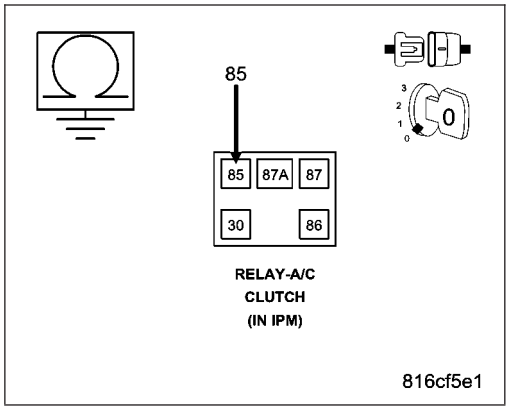

Is the resistance below 1000.0 ohms?

Yes >> Repair the (C13) A/C Clutch Relay Control circuit for a short to ground.
Perform the ECM Verification Test Ver. 1. (Refer to 9 - ENGINE - DIAGNOSIS AND TESTING)

No >> Go to 3

3. (C13) A/C CLUTCH RELAY CONTROL CIRCUIT OPEN OR HIGH RESISTANCE

Measure the resistance of the (C13) A/C Clutch Relay Control circuit between the A/C Clutch Relay connector and the Engine Control Module (ECM) connector.

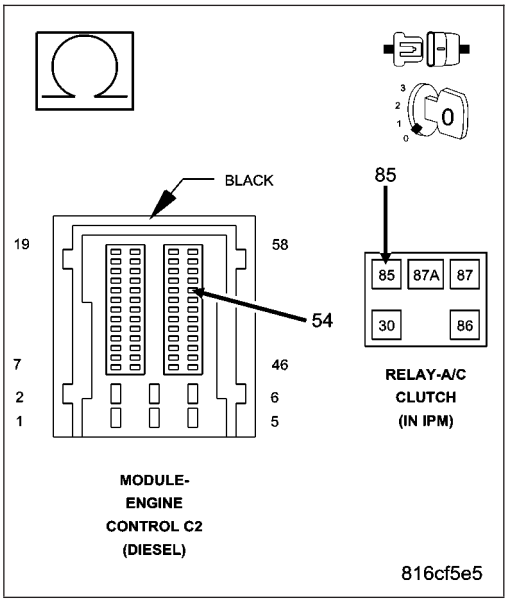

Is the resistance below 10.0 ohms?

Yes >> Go to 4

No >> Repair the (C13) A/C Clutch Relay Control circuit for an open circuit or high resistance.
Perform the ECM Verification Test Ver. 1. (Refer to 9 - ENGINE - DIAGNOSIS AND TESTING)

4. A/C CLUTCH RELAY

Connect the Engine Control Module (ECM) connector.
Install a known good relay in place of the vehicle's A/C Clutch Relay.
Turn the ignition on.
With the scan tool, Clear DTCs.
With the scan tool, actuate the A/C Clutch Relay.
Monitor the scan tool for at least two minutes.
With the scan tool, select View DTCs.

Is the status Active for this DTC?

Yes >> Go to 5

No >> Replace the A/C Clutch Relay in accordance with the Service Information.
Perform the ECM Verification Test Ver. 1. (Refer to 9 - ENGINE - DIAGNOSIS AND TESTING)

5. ENGINE CONTROL MODULE (ECM)

Using the wiring diagram/schematic as a guide, inspect the wiring and connectors between the A/C Clutch Relay and the Engine Control Module (ECM).
Look for any chafed, pierced, pinched, or partially broken wires.
Look for broken, bent, pushed out or corroded terminals.
Refer to any Technical Service Bulletins that may apply.

Were any problems found?

Yes >> Repair as necessary.
Perform the ECM Verification Test Ver. 1. (Refer to 9 - ENGINE - DIAGNOSIS AND TESTING)

No >> Replace the Engine Control Module (ECM) in accordance with the Service Information.
Perform the ECM Verification Test Ver. 1. (Refer to 9 - ENGINE - DIAGNOSIS AND TESTING)

P0647-A/C CLUTCH CONTROL CIRCUIT HIGH

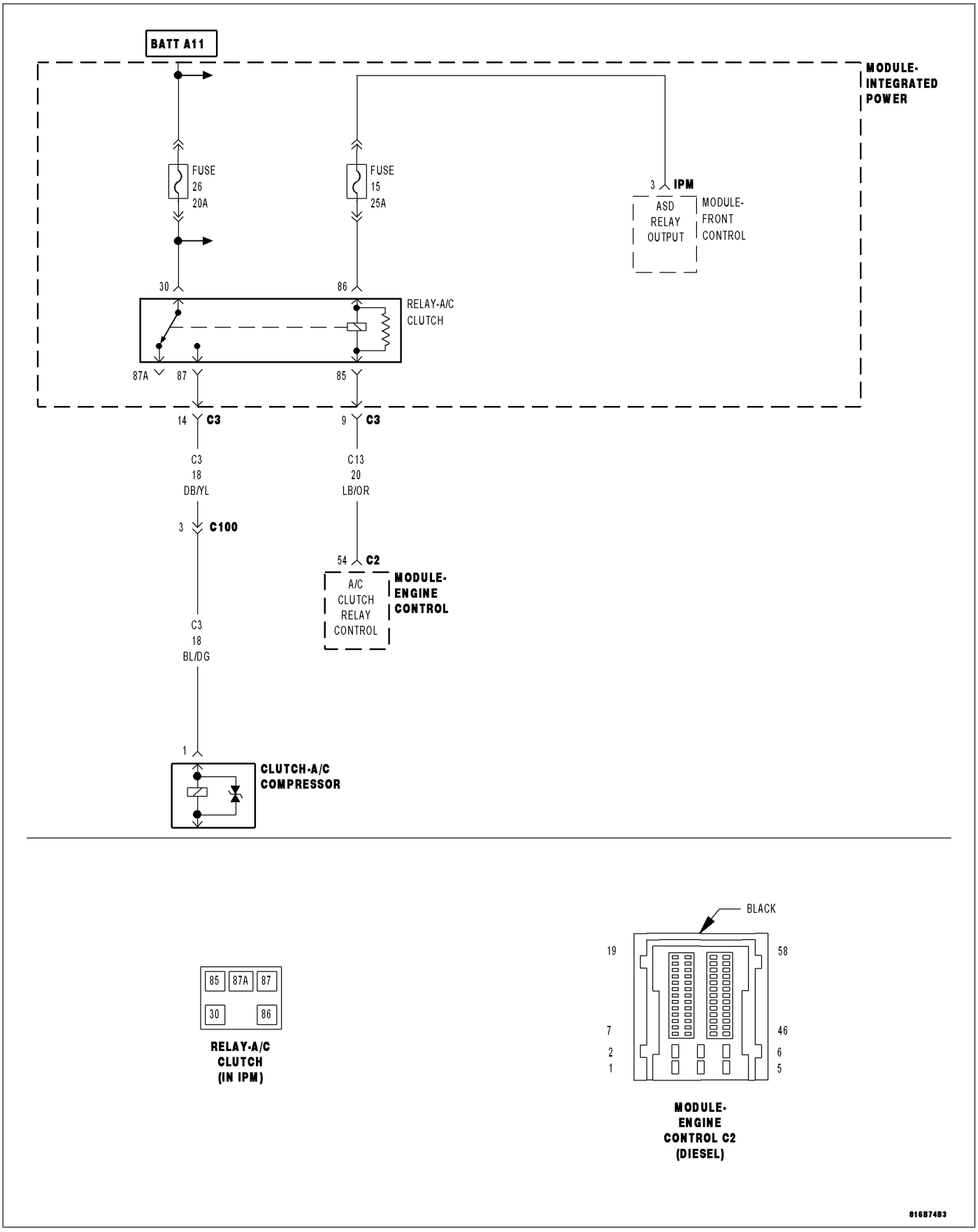

For a complete wiring diagram **Refer to Section 8W**

- **When Monitored:**
  With the ignition on and the A/C Clutch Relay command on.
- **Set Condition:**
  The ECM detects a short circuit on the (C13) A/C Clutch Relay Control circuit for 1.0 second.

Possible Causes
INTERMITTENT DTC
(C13) A/C CLUTCH RELAY CONTROL CIRCUIT SHORTED TO VOLTAGE
(C13) A/C CLUTCH RELAY CONTROL CIRCUIT SHORTED TO THE (K343) FUSED ASD RELAY OUTPUT 2 CIRCUIT
(C13) A/C CLUTCH RELAY CONTROL CIRCUIT OPEN OR HIGH RESISTANCE
A/C CLUTCH RELAY
ENGINE CONTROL MODULE (ECM)

Always perform the Pre-Diagnostic Troubleshooting procedure before proceeding. (Refer to 9 - ENGINE - DIAGNOSIS AND TESTING)

Diagnostic Test

1. DTC IS ACTIVE

Ignition on, engine not running.
With the scan tool, Clear DTCs in the Engine Control Module (ECM).
With the scan tool, actuate the A/C Clutch Relay.
Monitor the scan tool for at least two minutes.
With the scan tool, select View DTCs.

Is the status Active for this DTC?

Yes >> Go To 2

No >> Refer to the *CHECKING FOR AN INTERMITTENT DTC Diagnostic Procedure. (Refer to 9 - ENGINE - DIAGNOSIS AND TESTING)

2. (C13) A/C CLUTCH RELAY CONTROL CIRCUIT SHORTED TO VOLTAGE

Turn the ignition off.
Disconnect the A/C Clutch Relay connector.
Disconnect the Engine Control Module (ECM) connector.
Remove the ASD Relay from the IPM.
Connect a jumper wire between cavity 30 and cavity 87 of the ASD Relay Connector.
Turn the ignition on.
Measure the voltage of the (C13) A/C Clutch Relay Control circuit in the A/C Clutch Relay connector.

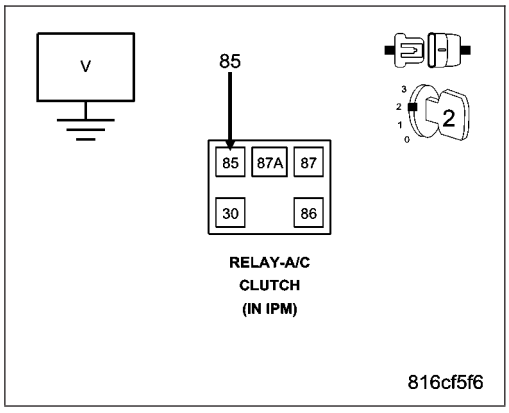

Is there any voltage present?

Yes >> Repair the (C13) A/C Clutch Relay Control circuit for a short to voltage.
Perform the ECM Verification Test Ver. 1. (Refer to 9 - ENGINE - DIAGNOSIS AND TESTING)

No >> Go to 3

3. (C13) A/C CLUTCH RELAY CONTROL CIRCUIT SHORTED TO THE (K343) FUSED ASD RELAY OUTPUT 2 CIRCUIT

Turn the ignition off.

Measure the resistance between the (C13) A/C Clutch Relay Control circuit and the (K343) Fused ASD Relay Output 2 circuit in the A/C Clutch Relay connector.

Is the resistance above 10.0 ohms?

Yes >> Go to 4

No >> Repair the (C13) A/C Clutch Relay Control circuit for a short to the (K343) Fused ASD Relay Output 2 circuit.
Perform the ECM Verification Test Ver. 1. (Refer to 9 - ENGINE - DIAGNOSIS AND TESTING)

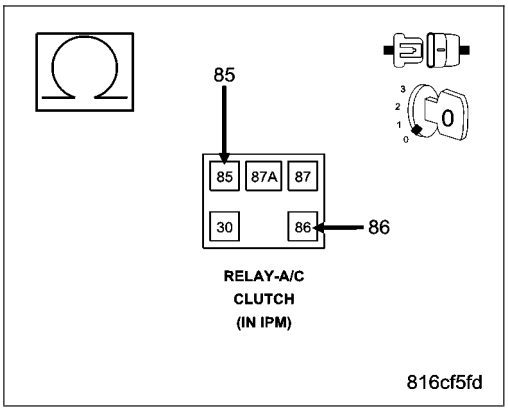

4. (C13) A/C CLUTCH RELAY CONTROL CIRCUIT OPEN OR HIGH RESISTANCE

Measure the resistance of the (C13) A/C Clutch Relay Control circuit between the A/C Clutch Relay connector and the Engine Control Module (ECM) connector.

Is the resistance below 10.0 ohms?

Yes >> Go to 5

No >> Repair the (C13) A/C Clutch Relay Control circuit for an open circuit or high resistance.
Perform the ECM Verification Test Ver. 1. (Refer to 9 - ENGINE - DIAGNOSIS AND TESTING)

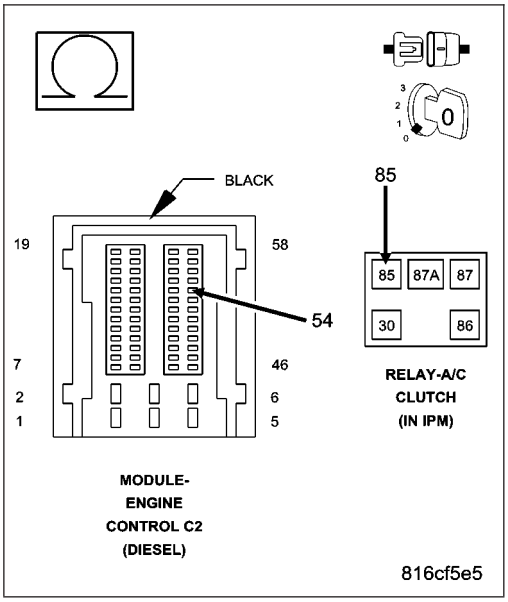

5. A/C CLUTCH RELAY

Connect the Engine Control Module (ECM) connector.

Install a known good relay in place of the vehicle's A/C Clutch Relay.

Turn the ignition on.

With the scan tool, Clear DTCs.

With the scan tool, actuate the A/C Clutch Relay.

Monitor the scan tool for at least two minutes.

With the scan tool, select View DTCs.

Is the status Active for this DTC?

Yes >> Go to 6

No >> Replace the A/C Clutch Relay in accordance with the Service Information.
Perform the ECM Verification Test Ver. 1. (Refer to 9 - ENGINE - DIAGNOSIS AND TESTING)

6. ENGINE CONTROL MODULE (ECM)

Using the wiring diagram/schematic as a guide, inspect the wiring and connectors between the A/C Clutch Relay and the Engine Control Module (ECM).

Look for any chafed, pierced, pinched, or partially broken wires.

Look for broken, bent, pushed out or corroded terminals.

Refer to any Technical Service Bulletins that may apply.

Were any problems found?

Yes >> Repair as necessary.
Perform the ECM Verification Test Ver. 1. (Refer to 9 - ENGINE - DIAGNOSIS AND TESTING)

No >> Replace the Engine Control Module (ECM) in accordance with the Service Information.
Perform the ECM Verification Test Ver. 1. (Refer to 9 - ENGINE - DIAGNOSIS AND TESTING)

P0652-SENSOR REFERENCE VOLTAGE 2 TOO LOW

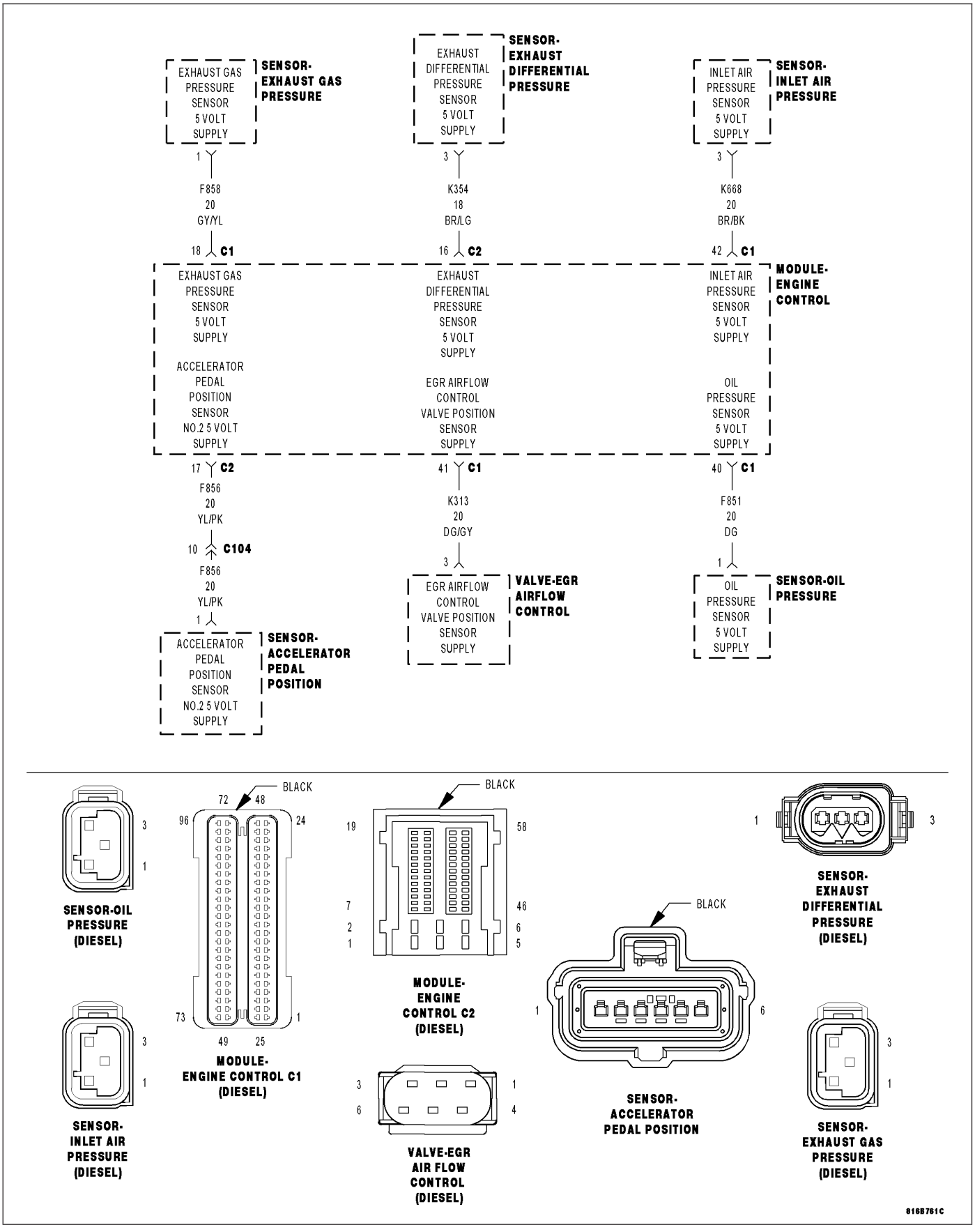

For a complete wiring diagram **Refer to Section 8W**

- **When Monitored:**
  With the ignition on.
- **Set Condition:**
  The ECM detects low voltage on the Sensor Supply #2 circuit for 0.10 second

Possible Causes
INTERMITTENT DTC
ACCELERATOR PEDAL POSITION SENSOR
EXHAUST GAS PRESSURE SENSOR
INLET AIR PRESSURE SENSOR
OIL PRESSURE SENSOR
EGR AIRFLOW CONTROL VALVE
EXHAUST DIFFERENTIAL PRESSURE SENSOR
5-VOLT SUPPLY CIRCUIT SHORTED TO GROUND
ENGINE CONTROL MODULE (ECM)

Always perform the Pre-Diagnostic Troubleshooting procedure before proceeding. (Refer to 9 - ENGINE - DIAGNOSIS AND TESTING)

Theory of Operation

The ECM contains 3 internal 5–Volt Sensor Supply sources. Each 5–Volt Supply source is split into parallel circuits to provide 5 volts to multiple sensors. Sensor Supply 3 provides 5 volts to the Inlet Pressure Sensor, Exhaust Gas Pressure Sensor, Oil Pressure Sensor, EGR Airflow Control Servo Motor Position Sensor, and the Accelerator Pedal Position Sensor #2.

Diagnostic Test

1. CHECK FOR ACTIVE DTC

Turn the ignition on.
With the scan tool, erase ECM DTCs.
Turn the ignition off for 10 seconds.
Turn the ignition on.
With the scan tool, select View DTCs.

Is the status Active for this DTC?

Yes >> Go To 2

No >> Refer to the *CHECKING FOR AN INTERMITTENT DTC Diagnostic Procedure. (Refer to 9 - ENGINE - DIAGNOSIS AND TESTING)

2. ACCELERATOR PEDAL POSITION SENSOR

Turn the ignition off.
Disconnect the APP Sensor harness connector.
Turn the ignition on.
Measure the voltage of the (F856) Accelerator Pedal Position Sensor No. 2 5 Volt Supply circuit.

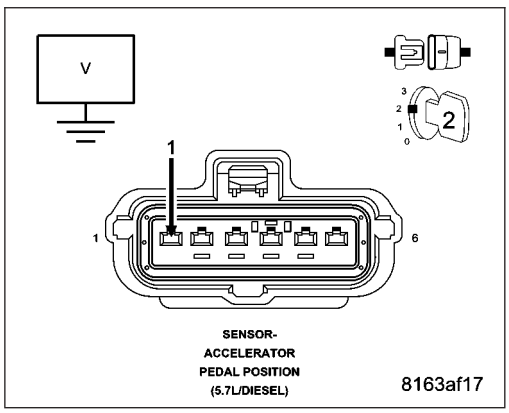

Is the voltage above 4.6 volts?

Yes >> Replace the Accelerator Pedal Position Sensor.
Perform the ECM VERIFICATION TEST. (Refer to 9 - ENGINE - DIAGNOSIS AND TESTING)

No >> Go To 3

3. EXHAUST GAS PRESSURE SENSOR

Turn the ignition off.

Disconnect the Exhaust Gas Pressure Sensor harness connector.

Turn the ignition on.

Measure the voltage of the (F858) Exhaust Gas Pressure Sensor 5 Volt Supply circuit.

Is the voltage above 4.6 volts?

Yes >> Replace the Exhaust Gas Pressure Sensor.
Perform the ECM VERIFICATION TEST. (Refer to 9 - ENGINE - DIAGNOSIS AND TESTING)

No >> Go To 4

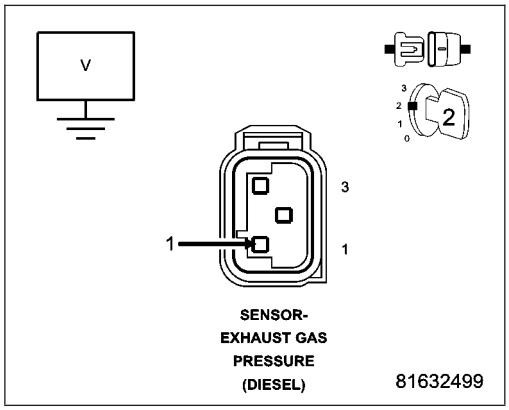

4. INLET AIR PRESSURE SENSOR

Turn the ignition off.

Disconnect the Inlet Air Pressure Sensor harness connector.

Turn the ignition on.

Measure the voltage of the (K668) Inlet Air Pressure Sensor 5 Volt Supply circuit.

Is the voltage above 4.6 volts?

Yes >> Replace the Inlet Air Pressure Sensor.
Perform the ECM VERIFICATION TEST. (Refer to 9 - ENGINE - DIAGNOSIS AND TESTING)

No >> Go To 5

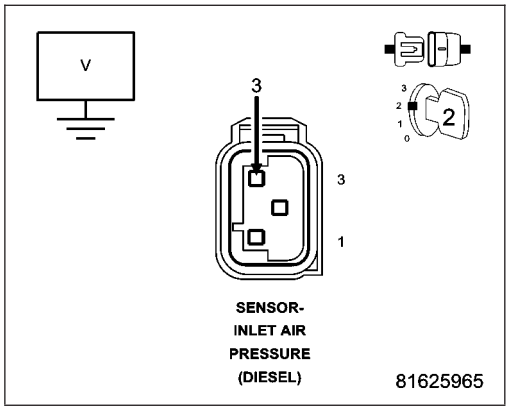

5. OIL PRESSURE SENSOR

Turn the ignition off.

Disconnect the Oil Pressure Sensor harness connector.

Turn the ignition on.

Measure the voltage of the (F851) Oil Pressure Sensor 5 Volt Supply circuit.

Is the voltage above 4.6 volts?

Yes >> Replace the Oil Pressure Sensor.
Perform the ECM VERIFICATION TEST. (Refer to 9 - ENGINE - DIAGNOSIS AND TESTING)

No >> Go To 6

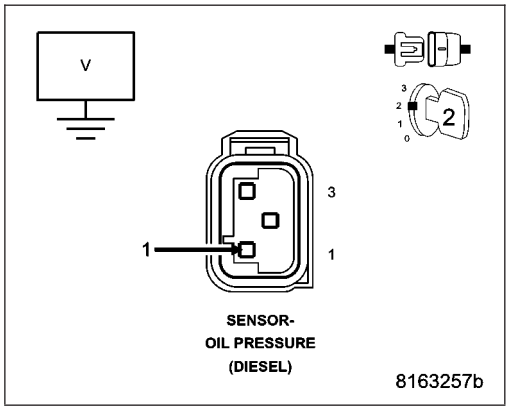

6. EGR AIRFLOW CONTROL VALVE

Turn the ignition off.

Disconnect the EGR Airflow Control Valve harness connector.

Turn the ignition on.

Measure the voltage of the (K313) EGR Airflow Control Valve Supply circuit.

Is the voltage above 4.6 volts?

Yes >> Replace the EGR Airflow Control Valve.
Perform the ECM VERIFICATION TEST. (Refer to 9 - ENGINE - DIAGNOSIS AND TESTING)

No >> Go To 7

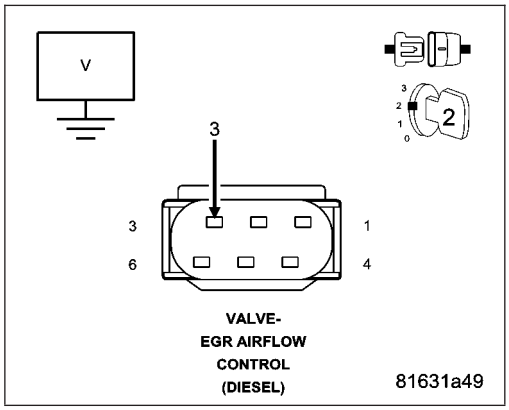

7. EXHAUST DIFFERENTIAL PRESSURE SENSOR

Turn the ignition off.

Disconnect the Exhaust Differential Pressure Sensor harness connector.

Turn the ignition on.

Measure the voltage of the (K354) Exhaust Differential Pressure Sensor 5 Volt Supply circuit.

Is the voltage above 4.6 volts?

Yes >> Replace the Exhaust Differential Pressure Sensor.
Perform the ECM VERIFICATION TEST. (Refer to 9 - ENGINE - DIAGNOSIS AND TESTING)

No >> Go To 8

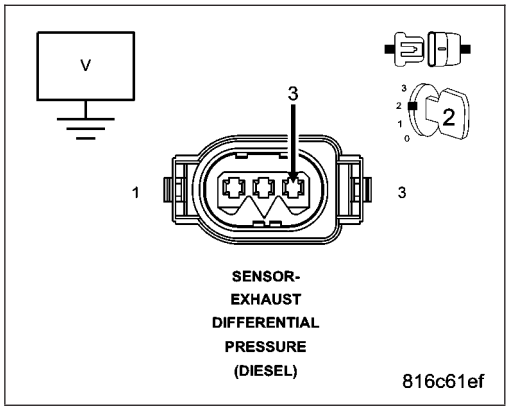

8. 5-VOLT SUPPLY CIRCUIT SHORTED TO GROUND

Turn the ignition off.

Disconnect the ECM harness connectors.

Measure the resistance between ground and the (F856) Accelerator Pedal Position Sensor No. 2 5 Volt Supply circuit.

Measure the resistance between ground and the (F858) Exhaust Gas Pressure Sensor 5 Volt Supply circuit.

Measure the resistance between ground and the (K668) Inlet Air Pressure Sensor 5 Volt Supply circuit.

Measure the resistance between ground and the (F851) Oil Pressure Sensor 5 Volt Supply circuit.

Measure the resistance between ground and the (K313) EGR Airflow Control Valve Supply circuit.

Measure the resistance between ground and the (K354) Exhaust Differential Pressure Sensor 5 Volt Supply circuit.

Is the resistance above 1000 ohms for each circuit?

Yes >> Go To 9

No >> Repair the 5-Volt Supply circuit for a short to ground.
Perform the ECM VERIFICATION TEST. (Refer to 9 - ENGINE - DIAGNOSIS AND TESTING)

9. ENGINE CONTROL MODULE (ECM)

Turn the ignition off.

Inspect the (F856) Accelerator Pedal Position Sensor No. 2 5 Volt Supply circuit between the Accelerator Pedal Position Sensor and the ECM.

Inspect the (F858) Exhaust Gas Pressure Sensor 5 Volt Supply circuit between the Exhaust Gas Pressure Sensor and the ECM.

Inspect the (K668) Inlet Air Pressure Sensor 5 Volt Supply circuit between the Inlet Air Pressure Sensor and the ECM.

Inspect the (F851) Oil Pressure Sensor 5 Volt Supply circuit between the Oil Pressure Sensor and the ECM.

Inspect the (K313) EGR Airflow Control Valve Supply circuit between the EGR Airflow Control Valve and the ECM.

Inspect the (K354) Exhaust Differential Pressure Sensor 5 Volt Supply circuit between the Exhaust Differential Pressure Sensor and the ECM.

Look for any chafed, pierced, pinched, or partially broken wires.

Look for broken, bent, pushed out or corroded terminals.

Refer to any Technical Service Bulletins that may apply.

Were any problems found?

Yes >> Repair as necessary.
Perform the ECM VERIFICATION TEST. (Refer to 9 - ENGINE - DIAGNOSIS AND TESTING)

No >> Replace and program the Engine Control Module in accordance with the Service Information.
Perform the ECM VERIFICATION TEST. (Refer to 9 - ENGINE - DIAGNOSIS AND TESTING)

P0653-SENSOR REFERENCE VOLTAGE 2 TOO HIGH

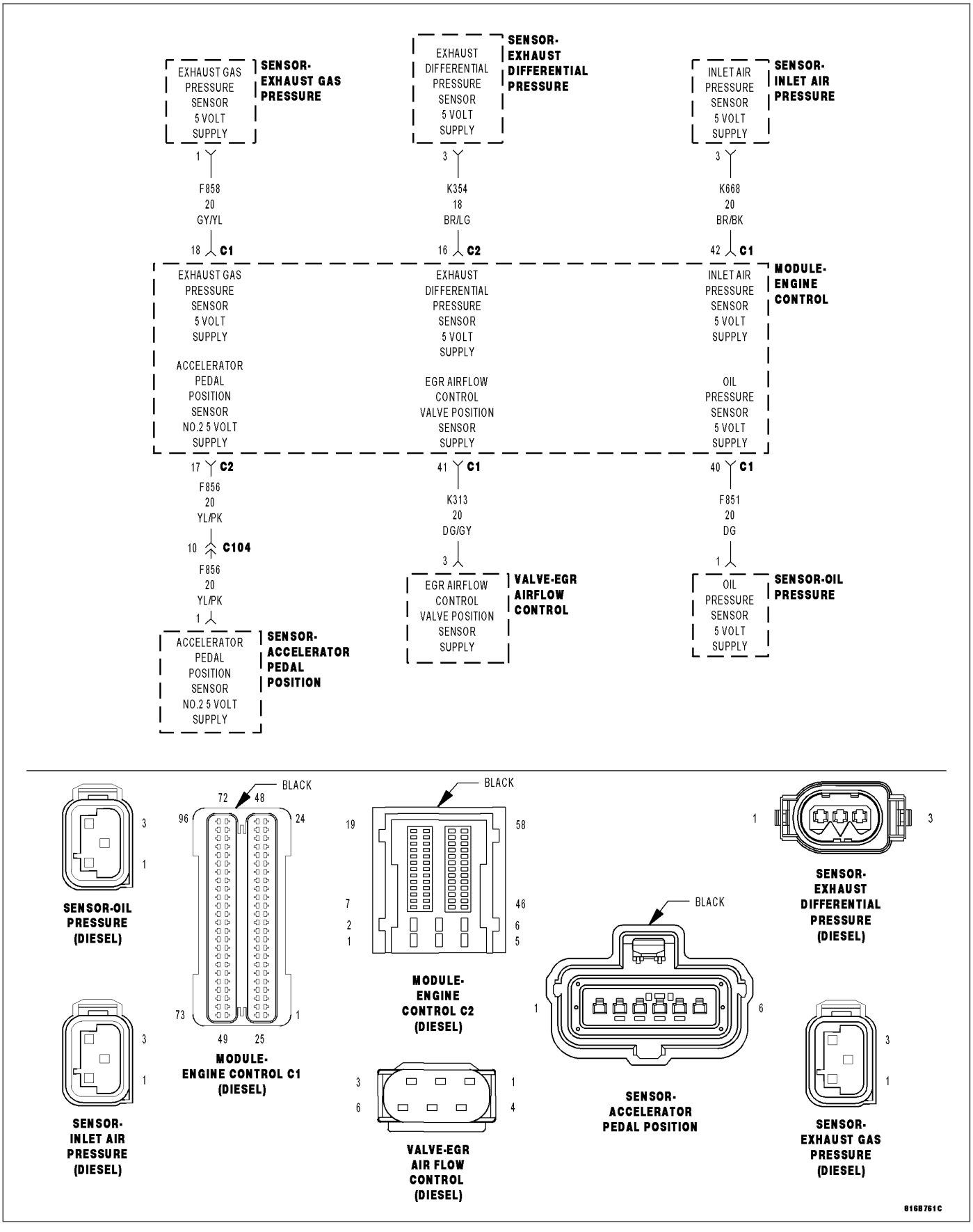

For a complete wiring diagram **Refer to Section 8W**

- **When Monitored:**
  With the ignition on.
- **Set Condition:**
  The ECM detects a short to voltage on the Sensor Supply #2 circuit for 0.10 second.

Possible Causes
INTERMITTENT CONDITION
(F856) ACCELERATOR PEDAL POSITION SENSOR NO. 2 5 VOLT SUPPLY CIRCUIT SHORTED TO VOLTAGE
(F858) EXHAUST GAS PRESSURE SENSOR 5 VOLT SUPPLY CIRCUIT SHORTED TO VOLTAGE
(K354) EXHAUST DIFFERENTIAL PRESSURE SENSOR 5 VOLT SUPPLY CIRCUIT SHORTED TO VOLTAGE
(K668) INLET AIR PRESSURE SENSOR 5 VOLT SUPPLY CIRCUIT SHORTED TO VOLTAGE
(F851) OIL PRESSURE SENSOR 5 VOLT SUPPLY CIRCUIT SHORTED TO VOLTAGE
(K313) EGR AIRFLOW CONTROL VALVE SUPPLY CIRCUIT SHORTED TO VOLTAGE
(K313) EGR AIRFLOW CONTROL VALVE SUPPLY CIRCUIT SHORTED TO THE (K314) EGR AIRFLOW CONTROL VALVE MOTOR (+) CIRCUIT
(K313) EGR AIRFLOW CONTROL VALVE SUPPLY CIRCUIT SHORTED TO THE (K315) EGR AIRFLOW CONTROL VALVE MOTOR (-) CIRCUIT
ENGINE CONTROL MODULE (ECM)

Always perform the Pre-Diagnostic Troubleshooting procedure before proceeding. (Refer to 9 - ENGINE - DIAGNOSIS AND TESTING)

Theory of Operation

The ECM contains 3 internal 5–Volt Sensor Supply sources. Each 5–Volt Supply source is split into parallel circuits to provide 5 volts to multiple sensors. Sensor Supply 3 provides 5 volts to the Inlet Pressure Sensor, Exhaust Gas Pressure Sensor, Oil Pressure Sensor, EGR Airflow Control Servo Motor Position Sensor, and the Accelerator Pedal Position Sensor #2.

Diagnostic Test

1. CHECK FOR ACTIVE DTC

Turn the ignition on.
With the scan tool, erase ECM DTCs.
Turn the ignition off for 10 seconds.
Turn the ignition on.
With the scan tool, select View DTCs.

Is the status Active for this DTC?

Yes >> Go To 2

No >> Refer to the *CHECKING FOR AN INTERMITTENT DTC Diagnostic Procedure. (Refer to 9 - ENGINE - DIAGNOSIS AND TESTING)

2. (F856) ACCELERATOR PEDAL POSITION SENSOR NO. 2 5 VOLT SUPPLY CIRCUIT SHORTED TO VOLTAGE

Turn the ignition off.

Disconnect the Accelerator Pedal Position Sensor harness connector.

Disconnect the ECM harness connectors.

Remove the ASD Relay from the IPM.

Connect a jumper wire between cavity 30 and cavity 87 of the ASD Relay connector.

Turn the ignition on.

Measure the voltage of the (F856) Accelerator Pedal Position Sensor No. 2 5 Volt Supply circuit.

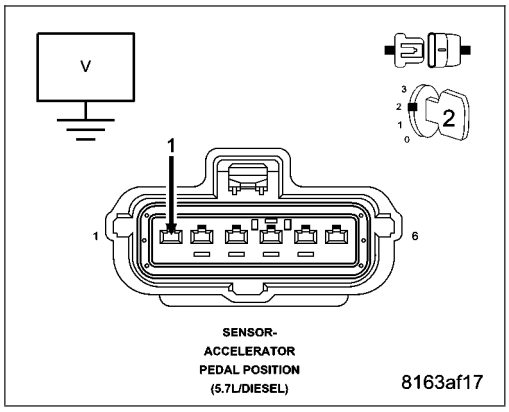

Is there any voltage present?

Yes >> Repair the (F856) Accelerator Pedal Position Sensor No. 2 5 Volt Supply circuit for a short to voltage.
Perform the ECM VERIFICATION TEST. (Refer to 9 - ENGINE - DIAGNOSIS AND TESTING)

No >> Go To 3

3. (F858) EXHAUST GAS PRESSURE SENSOR 5 VOLT SUPPLY CIRCUIT SHORTED TO VOLTAGE

Turn the ignition off.

Disconnect the Exhaust Gas Pressure Sensor harness connector.

Turn the ignition on.

Measure the voltage of the (F858) Exhaust Gas Pressure Sensor 5 Volt Supply circuit.

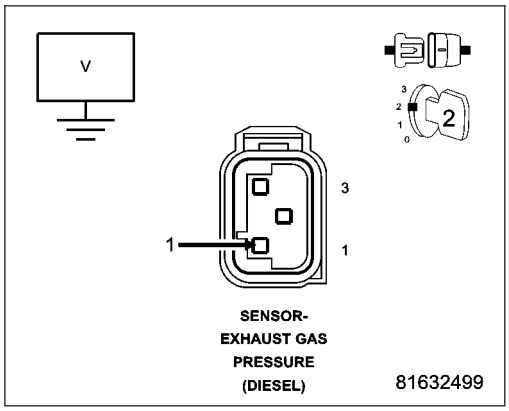

Is there any voltage present?

Yes >> Repair the (F858) Exhaust Gas Pressure Sensor 5 Volt Supply circuit for a short to voltage.
Perform the ECM VERIFICATION TEST. (Refer to 9 - ENGINE - DIAGNOSIS AND TESTING)

No >> Go To 4

4. (K354) EXHAUST DIFFERENTIAL PRESSURE SENSOR 5 VOLT SUPPLY CIRCUIT SHORTED TO VOLTAGE

Turn the ignition off.

Disconnect the Exhaust Differential Pressure Sensor harness connector.

Turn the ignition on.

Measure the voltage of the (K354) Exhaust Differential Pressure Sensor 5 Volt Supply circuit.

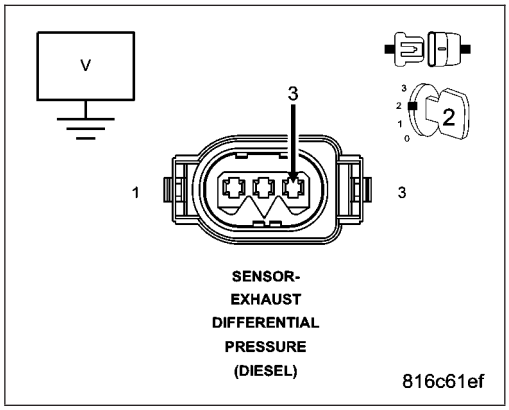

Is there any voltage present?

Yes >> Repair the (K354) Exhaust Differential Pressure Sensor 5 Volt Supply circuit for a short to voltage.
Perform the ECM VERIFICATION TEST. (Refer to 9 - ENGINE - DIAGNOSIS AND TESTING)

No >> Go To 5

5. (K668) INLET AIR PRESSURE SENSOR 5 VOLT SUPPLY CIRCUIT SHORTED TO VOLTAGE

Turn the ignition off.

Disconnect the Inlet Air Pressure Sensor harness connector.

Turn the ignition on.

Measure the voltage of the (K668) Inlet Air Pressure Sensor 5 Volt Supply circuit.

Is there any voltage present?

Yes >> Repair the (K668) Inlet Air Pressure Sensor 5 Volt Supply circuit for a short to voltage.
Perform the ECM VERIFICATION TEST. (Refer to 9 - ENGINE - DIAGNOSIS AND TESTING)

No >> Go To 6

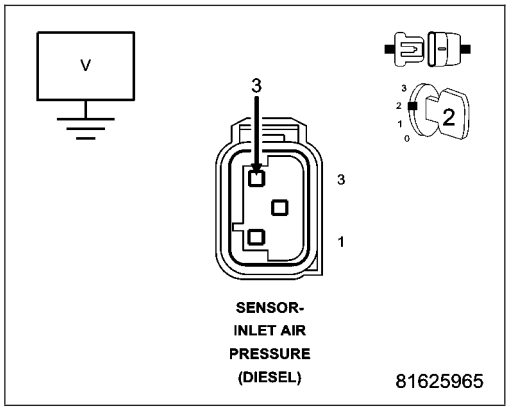

6. (F851) OIL PRESSURE SENSOR 5 VOLT SUPPLY CIRCUIT SHORTED TO VOLTAGE

Turn the ignition off.

Disconnect the Oil Pressure Sensor harness connector.

Turn the ignition on.

Measure the voltage of the (F851) Oil Pressure Sensor 5 Volt Supply circuit.

Is there any voltage present?

Yes >> Repair the (F851) Oil Pressure Sensor 5 Volt Supply circuit for a short to voltage.
Perform the ECM VERIFICATION TEST. (Refer to 9 - ENGINE - DIAGNOSIS AND TESTING)

No >> Go To 7

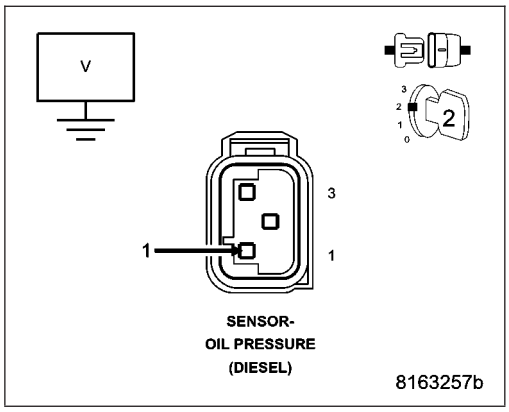

7. (K313) EGR AIRFLOW CONTROL VALVE SUPPLY CIRCUIT SHORTED TO VOLTAGE

Turn the ignition off.

Disconnect the EGR Airflow Control Valve harness connector.

Turn the ignition on.

Measure the voltage of the (K313) EGR Airflow Control Valve Supply circuit.

Is there any voltage present?

Yes >> Replace the (K313) EGR Airflow Control Valve Supply circuit for a short to voltage.
Perform the ECM VERIFICATION TEST. (Refer to 9 - ENGINE - DIAGNOSIS AND TESTING)

No >> Go To 8

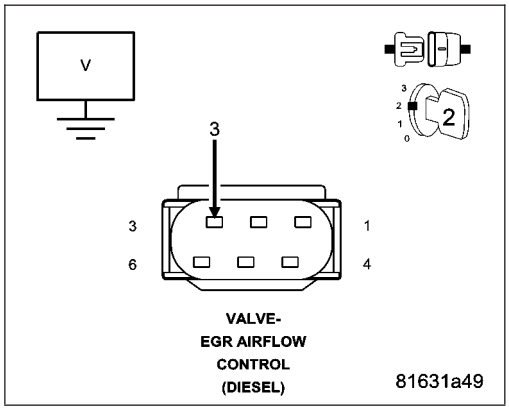

8. (K313) EGR AIRFLOW CONTROL VALVE SUPPLY CIRCUIT SHORTED TO THE EGR AIRFLOW CONTROL VALVE MOTOR CIRCUIT(S)

Turn the ignition off.

Measure the resistance between the (K313) EGR Airflow Control Valve Supply circuit and the (K314) EGR Airflow Control Valve Motor (+) circuit.

Measure the resistance between the (K313) EGR Airflow Control Valve Supply circuit and the (K315) EGR Airflow Control Valve Motor (-) circuit.

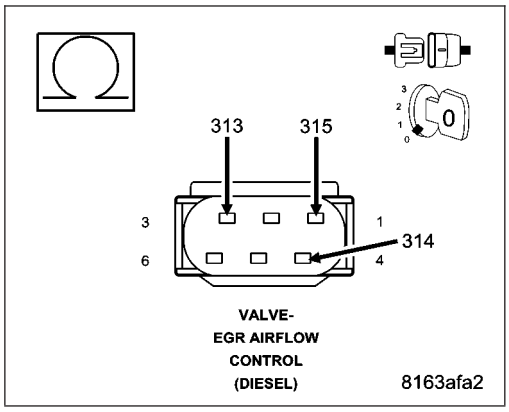

Is the resistance above 1000 ohms between (K313) and both of the Airflow Control Valve Motor circuits?

Yes >> Go To 9

No >> Repair the (K313) EGR Airflow Control Valve Supply circuit for a short to the EGR Airflow Control Valve Motor circuit(s).
Perform the ECM VERIFICATION TEST. (Refer to 9 - ENGINE - DIAGNOSIS AND TESTING)

9. ENGINE CONTROL MODULE (ECM)

Turn the ignition off.

Inspect the (F856) Accelerator Pedal Position Sensor No. 2 5 Volt Supply circuit between the Accelerator Pedal Position Sensor and the ECM.

Inspect the (F858) Exhaust Gas Pressure Sensor 5 Volt Supply circuit between the Exhaust Gas Pressure Sensor and the ECM.

Inspect the (K668) Inlet Air Pressure Sensor 5 Volt Supply circuit between the Inlet Air Pressure Sensor and the ECM.

Inspect the (F851) Oil Pressure Sensor 5 Volt Supply circuit between the Oil Pressure Sensor and the ECM.

Inspect the (K313) EGR Airflow Control Valve Supply circuit between the EGR Airflow Control Valve and the ECM.

Inspect the (K354) Exhaust Differential Pressure Sensor 5 Volt Supply circuit between the Exhaust Differential Pressure Sensor and the ECM.

Look for any chafed, pierced, pinched, or partially broken wires.

Look for broken, bent, pushed out or corroded terminals.

Refer to any Technical Service Bulletins that may apply.

Were any problems found?

Yes >> Repair as necessary.
Perform the ECM VERIFICATION TEST. (Refer to 9 - ENGINE - DIAGNOSIS AND TESTING)

No >> Replace and program the Engine Control Module in accordance with the Service Information.
Perform the ECM VERIFICATION TEST. (Refer to 9 - ENGINE - DIAGNOSIS AND TESTING)

P0657–SOLENOID SUPPLY VOLTAGE CIRCUIT

For a complete wiring diagram **Refer to Section 8W**

- **When Monitored:**
  With the ignition on.
- **Set Condition:**
  The ECM receives a CAN Bus message indicating the presence of a DTC in the TCM.

Possible Causes
VERIFY CURRENT DTC

Always perform the Pre-Diagnostic Troubleshooting procedure before proceeding. (Refer to 9 - ENGINE - DIAGNOSIS AND TESTING)

Diagnostic Test

1. VERIFY CURRENT DTC

NOTE: Diagnose and repair all ECM DTCs prior diagnosing any DTCs set in the TCM.

NOTE: This code was set in the ECM by the Transmission Control Module to indicate a transmission fault. Diagnosis of transmission faults should be done using the Transmission Diagnostic Information.

NOTE: When repairs have been completed, DTCs in the ECM and TCM must be cleared.
Turn the ignition on.

With the scan tool, erase ECM DTCs only.

With the scan tool, read ECM DTCs.

Does this DTC reset?

Yes >> Refer to Transmission Diagnostic Information for the related symptom(s).

No >> Test Complete.

P065A- GENERATOR PERFORMANCE

For a complete wiring diagram **Refer to Section 8W**.

- **When Monitored:**
  With the engine running.
- **Set Condition:**
  The ECM detects that the Generator output is not within specifications.

Possible Causes
GENERATOR BELT
GENERATOR BELT TENSIONER
GENERATOR B+ CIRCUIT OPEN

Always perform the Pre-Diagnostic Troubleshooting procedure before proceeding. (Refer to 9 - ENGINE - DIAGNOSIS AND TESTING)

Diagnostic Test

1. CHECK FOR OTHER DTC'S

Turn the ignition on.
With the scan tool, check the ECM for LIN Bus or System Voltage related DTC's.

Are there any LIN Bus or System Voltage related DTCs?

Yes >> Repair other DTCs before continuing.

No >> Go To 2

2. GENERATOR B+ CIRCUIT

Turn the ignition off.
Using a test light connected to ground, probe the B+ circuit at the generator.

Does the test tight illuminate brightly?

Continue
Go To 3

No >> Repair the Generator B+ circuit for an open.

3. CHECK GENERATOR DRIVE BELT

Visually inspect the generator drive belt for glazing, cracks and other problems.
Inspect the generator drive belt and tensioner for proper tension.

Were any problems found?

Yes >> Repair or replace as necessary.

No >> Go To 4

4. TEST DRIVE THE VEHICLE

Turn the ignition on.
With the scan tool, erase DTC's.
Test drive the vehicle.
With the scan tool, read DTC's.

Does the scan tool display this DTC?

Yes >> Replace the Generator.

No >> Refer to the *CHECKING FOR AN INTERMITTENT DTC Diagnostic Procedure. (Refer to 9 - ENGINE - DIAGNOSIS AND TESTING)

P0671-CYLINDER 1 GLOW PLUG CIRCUIT

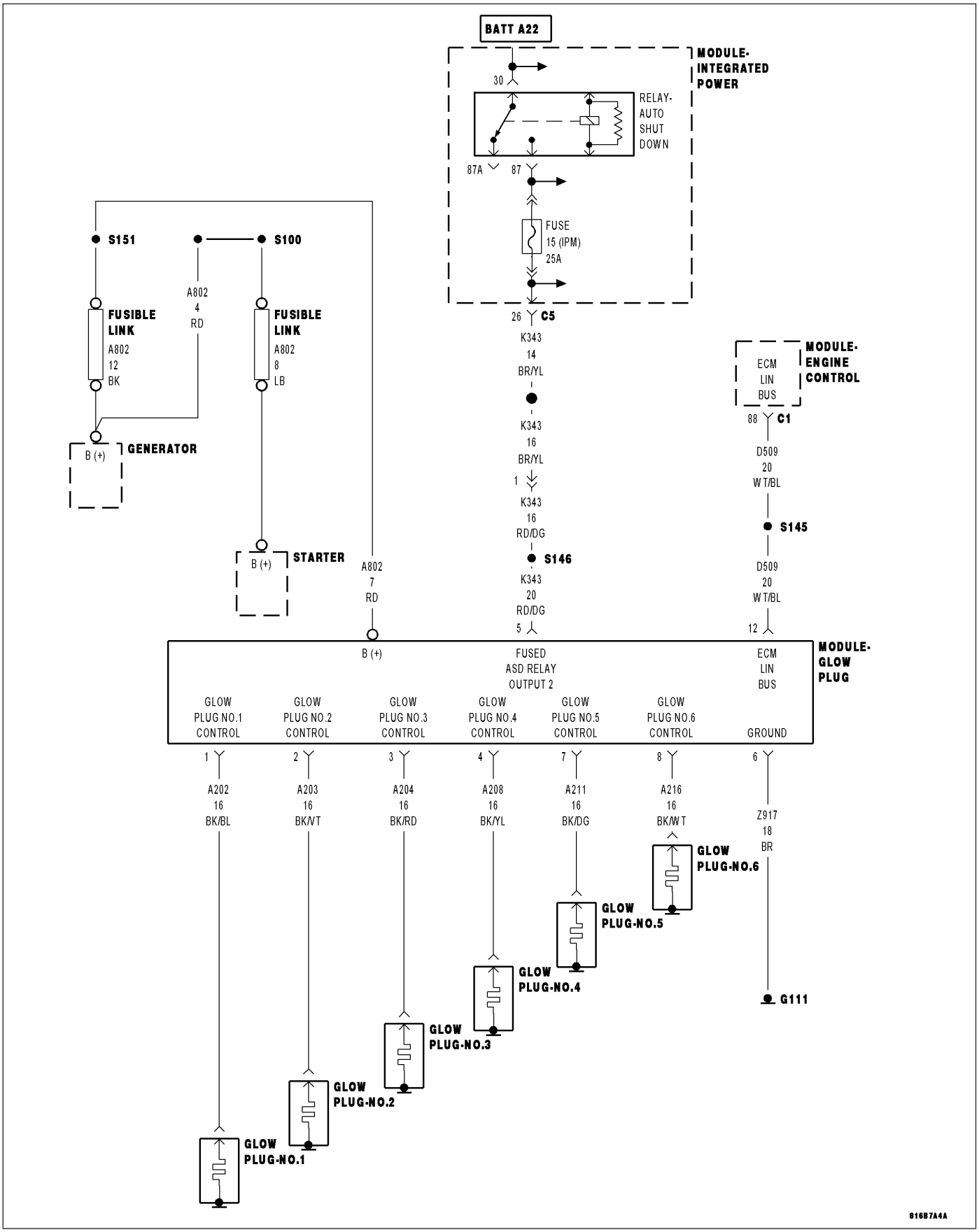

For a complete wiring diagram **Refer to Section 8W**

- **When Monitored:**
  With the ignition on and the Glow Plug Module Glow Plug command on.
- **Set Condition:**
  The Cylinder 1 Glow Plug circuit is open or shorted for 0.5 seconds.

Possible Causes
INTERMITTENT DTC
GLOW PLUG CONTROL CIRCUIT(S) OPEN
GLOW PLUG CONTROL CIRCUIT(S) SHORTED TO GROUND
GLOW PLUG CONTROL CIRCUIT(S) SHORTED TO VOLTAGE
GLOW PLUG
GLOW PLUG MODULE

Always perform the Pre-Diagnostic Troubleshooting procedure before proceeding. (Refer to 9 - ENGINE - DIAGNOSIS AND TESTING)

Diagnostic Test

1. CHECK FOR ACTIVE DTC

Ignition on, engine not running.
With the scan tool, Clear DTCs in the Engine Control Module (ECM).
Perform several ignition cycles leaving the ignition on for at least 10 seconds then off for 10 seconds.
With the scan tool, read the ECM DTCs.

Did this DTC set again?

Yes >> Go To 2

No >> Refer to the *CHECKING FOR AN INTERMITTENT DTC Diagnostic Procedure. (Refer to 9 - ENGINE - DIAGNOSIS AND TESTING)

2. GLOW PLUG CONTROL CIRCUIT OPEN

Turn the ignition off.
Disconnect each Glow Plug harness connector.
Disconnect the Glow Plug Module harness connector.
Measure the resistance of each Glow Plug Control circuit.

Is the resistance below 10.0 ohms for each circuit?

Yes >> Go To 3

No >> Repair the appropriate Glow Plug Control circuit for an open.
Perform ECM Verification Test Ver. 1. (Refer to 9 - ENGINE - DIAGNOSIS AND TESTING)

3. GLOW PLUG CONTROL CIRCUIT SHORTED TO GROUND

Measure the resistance between ground and each Glow Plug Control circuit.

Is the resistance below 1000 ohms for any of the measurements?

Yes >> Repair the appropriate Glow Plug Control circuit for a short to ground.
Perform the ECM Verification Test Ver. 1. (Refer to 9 - ENGINE - DIAGNOSIS AND TESTING)

No >> Go To 4

4. GLOW PLUG CONTROL CIRCUIT SHORTED TO VOLTAGE

Turn the ignition on.
Measure the voltage of each Glow Plug Control circuit.

Is there voltage present on any of the Glow Plug Control circuits?

Yes >> Repair the appropriate Glow Plug Control circuit for a short to voltage
Perform the ECM Verification Test Ver. 1. (Refer to 9 - ENGINE - DIAGNOSIS AND TESTING)

No >> Go To 5

5. GLOW PLUG

Turn the ignition off.
Connect each Glow Plug connector.
Connect the Glow Plug Module connector.
Turn the ignition on.
With the scan tool, erase ECM DTCs.
Refer to the Service Information and perform the Glow Plug Test on each Glow plug.

Did each Glow Plug pass the test?

Yes >> Go to 6

No >> Replace the appropriate Glow Plug in accordance with the Service Information.
Perform the ECM Verification Test Ver. 1. (Refer to 9 - ENGINE - DIAGNOSIS AND TESTING)

6. GLOW PLUG MODULE

Using the wiring diagram/schematic as a guide, inspect the wiring and connectors between the Glow Plugs and the Glow Plug Module.
Look for any chafed, pierced, pinched, or partially broken wires.
Look for broken, bent, pushed out or corroded terminals.
Refer to any Technical Service Bulletins that may apply.

Were any problems found?

Yes >> Repair as necessary.
Perform the ECM Verification Test Ver. 1. (Refer to 9 - ENGINE - DIAGNOSIS AND TESTING)

No >> Replace the Glow Plug Module in accordance with the Service Information.
Perform the ECM Verification Test Ver. 1. (Refer to 9 - ENGINE - DIAGNOSIS AND TESTING)

P0672-CYLINDER 2 GLOW PLUG CIRCUIT

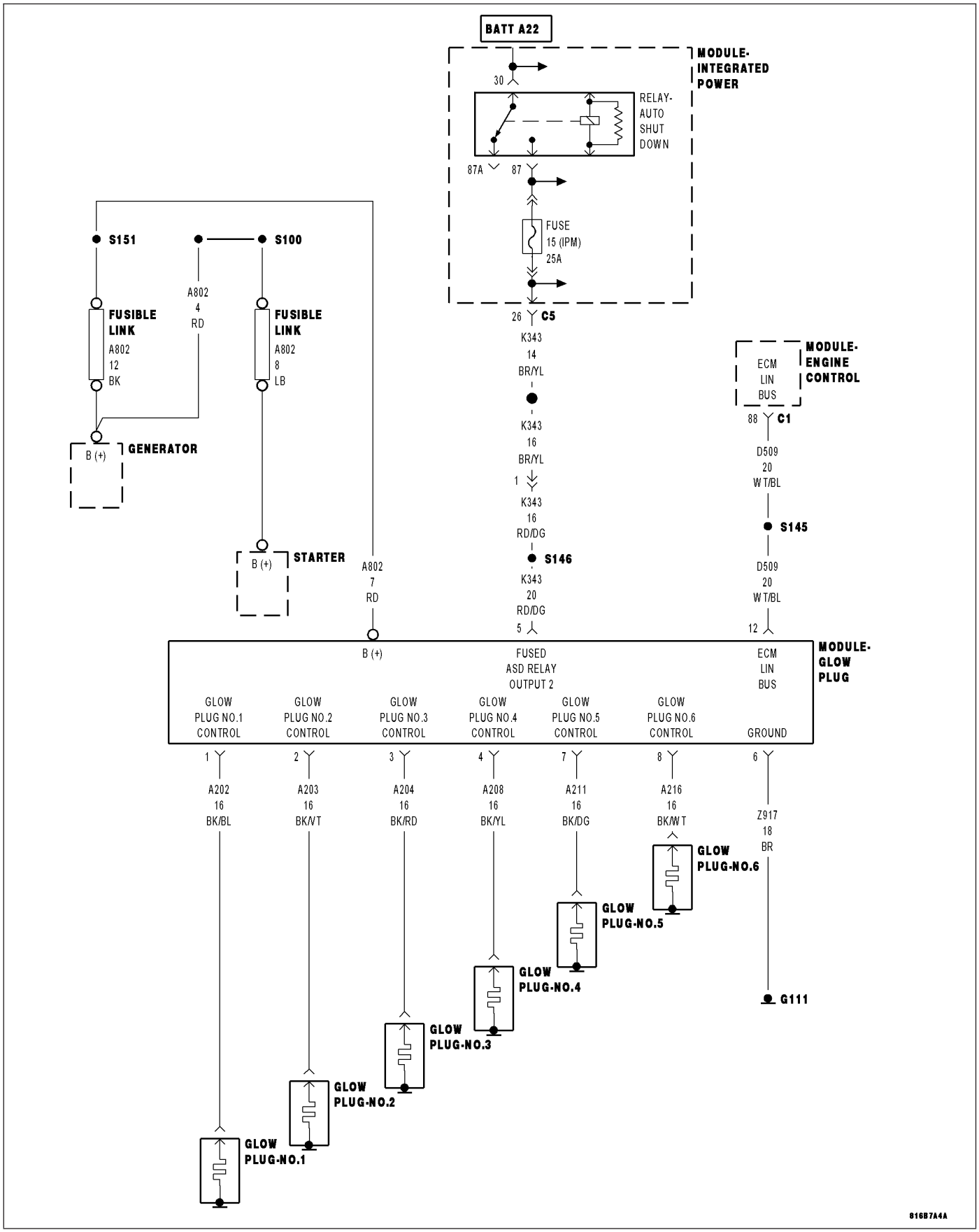

For a complete wiring diagram **Refer to Section 8W**

- **When Monitored:**
  With the ignition on and the Glow Plug Module Glow Plug command on.
- **Set Condition:**
  The Cylinder 2 Glow Plug circuit is open or shorted for 0.5 seconds.

Possible Causes
INTERMITTENT DTC
GLOW PLUG CONTROL CIRCUIT(S) OPEN
GLOW PLUG CONTROL CIRCUIT(S) SHORTED TO GROUND
GLOW PLUG CONTROL CIRCUIT(S) SHORTED TO VOLTAGE
GLOW PLUG
GLOW PLUG MODULE

Always perform the Pre-Diagnostic Troubleshooting procedure before proceeding. (Refer to 9 - ENGINE - DIAGNOSIS AND TESTING)

Diagnostic Test

1. CHECK FOR ACTIVE DTC

Ignition on, engine not running.
With the scan tool, Clear DTCs in the Engine Control Module (ECM).
Perform several ignition cycles leaving the ignition on for at least 10 seconds then off for 10 seconds.
With the scan tool, read the ECM DTCs.

Did this DTC set again?

Yes >> Go To 2

No >> Refer to the *CHECKING FOR AN INTERMITTENT DTC Diagnostic Procedure. (Refer to 9 - ENGINE - DIAGNOSIS AND TESTING)

2. GLOW PLUG CONTROL CIRCUIT OPEN

Turn the ignition off.
Disconnect each Glow Plug harness connector.
Disconnect the Glow Plug Module harness connector.
Measure the resistance of each Glow Plug Control circuit.

Is the resistance below 10.0 ohms for each circuit?

Yes >> Go To 3

No >> Repair the appropriate Glow Plug Control circuit for an open.
Perform ECM Verification Test Ver. 1. (Refer to 9 - ENGINE - DIAGNOSIS AND TESTING)

3. GLOW PLUG CONTROL CIRCUIT SHORTED TO GROUND

Measure the resistance between ground and each Glow Plug Control circuit.

Is the resistance below 1000 ohms for any of the measurements?

Yes >> Repair the appropriate Glow Plug Control circuit for a short to ground.
Perform the ECM Verification Test Ver. 1. (Refer to 9 - ENGINE - DIAGNOSIS AND TESTING)

No >> Go To 4

4. GLOW PLUG CONTROL CIRCUIT SHORTED TO VOLTAGE

Turn the ignition on.
Measure the voltage of each Glow Plug Control circuit.

Is there voltage present on any of the Glow Plug Control circuits?

Yes >> Repair the appropriate Glow Plug Control circuit for a short to voltage
Perform the ECM Verification Test Ver. 1. (Refer to 9 - ENGINE - DIAGNOSIS AND TESTING)

No >> Go To 5

5. GLOW PLUG

Turn the ignition off.
Connect each Glow Plug connector.
Connect the Glow Plug Module connector.
Turn the ignition on.
With the scan tool, erase ECM DTCs.
Refer to the Service Information and perform the Glow Plug Test on each Glow plug.

Did each Glow Plug pass the test?

Yes >> Go to 6

No >> Replace the appropriate Glow Plug in accordance with the Service Information.
Perform the ECM Verification Test Ver. 1. (Refer to 9 - ENGINE - DIAGNOSIS AND TESTING)

6. GLOW PLUG MODULE

Using the wiring diagram/schematic as a guide, inspect the wiring and connectors between the Glow Plugs and the Glow Plug Module.
Look for any chafed, pierced, pinched, or partially broken wires.
Look for broken, bent, pushed out or corroded terminals.
Refer to any Technical Service Bulletins that may apply.

Were any problems found?

Yes >> Repair as necessary.
Perform the ECM Verification Test Ver. 1. (Refer to 9 - ENGINE - DIAGNOSIS AND TESTING)

No >> Replace the Glow Plug Module in accordance with the Service Information.
Perform the ECM Verification Test Ver. 1. (Refer to 9 - ENGINE - DIAGNOSIS AND TESTING)

P0673-CYLINDER 3 GLOW PLUG CIRCUIT

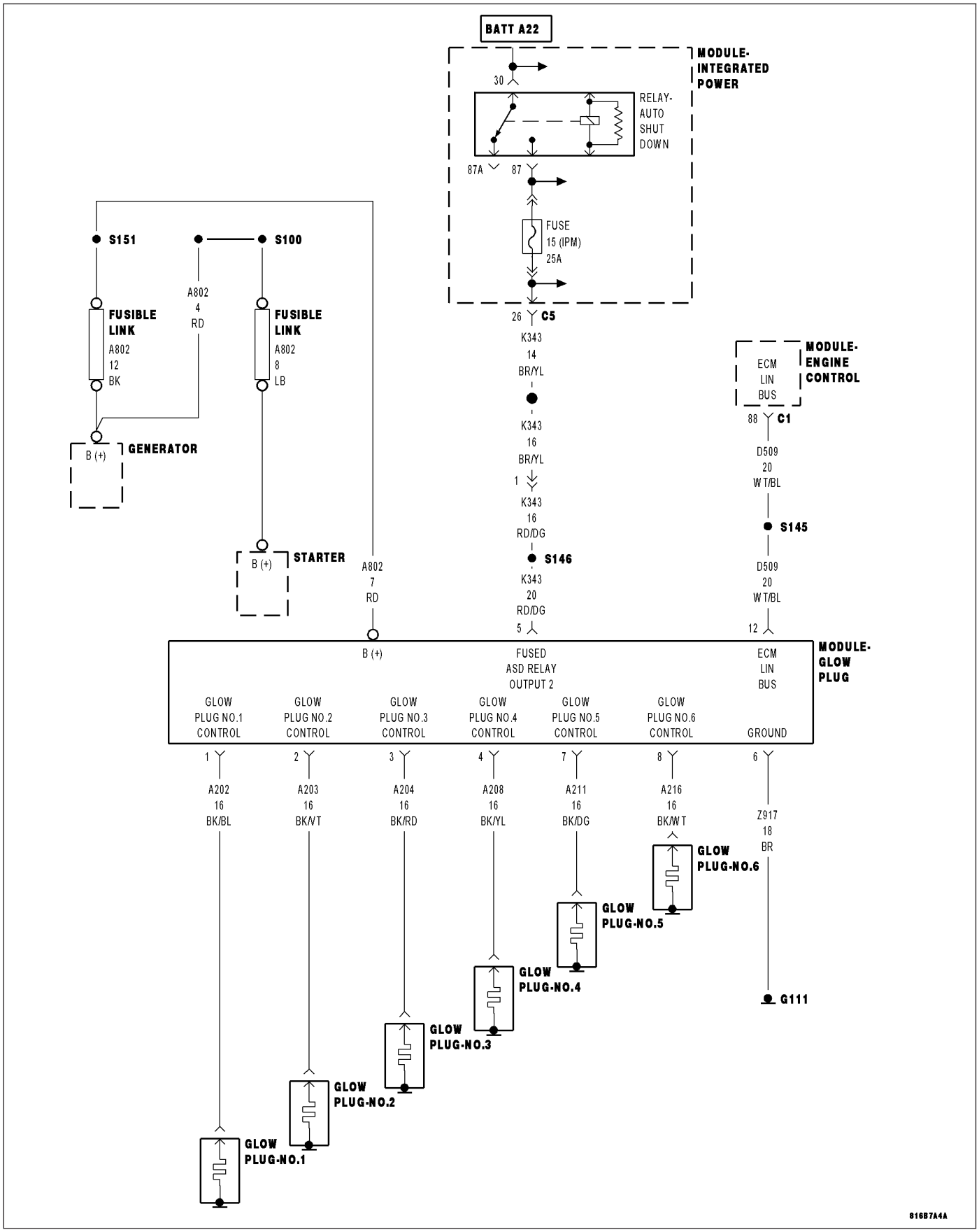

For a complete wiring diagram **Refer to Section 8W**

- **When Monitored:**
  With the ignition on and the Glow Plug Module Glow Plug command on.
- **Set Condition:**
  The Cylinder 3 Glow Plug circuit is open or shorted for 0.5 seconds.

Possible Causes
INTERMITTENT DTC
GLOW PLUG CONTROL CIRCUIT(S) OPEN
GLOW PLUG CONTROL CIRCUIT(S) SHORTED TO GROUND
GLOW PLUG CONTROL CIRCUIT(S) SHORTED TO VOLTAGE
GLOW PLUG
GLOW PLUG MODULE

Always perform the Pre-Diagnostic Troubleshooting procedure before proceeding. (Refer to 9 - ENGINE - DIAGNOSIS AND TESTING)

Diagnostic Test

1. CHECK FOR ACTIVE DTC

Ignition on, engine not running.
With the scan tool, Clear DTCs in the Engine Control Module (ECM).
Perform several ignition cycles leaving the ignition on for at least 10 seconds then off for 10 seconds.
With the scan tool, read the ECM DTCs.

Did this DTC set again?

Yes >> Go To 2

No >> Refer to the *CHECKING FOR AN INTERMITTENT DTC Diagnostic Procedure. (Refer to 9 - ENGINE - DIAGNOSIS AND TESTING)

2. GLOW PLUG CONTROL CIRCUIT OPEN

Turn the ignition off.
Disconnect each Glow Plug harness connector.
Disconnect the Glow Plug Module harness connector.
Measure the resistance of each Glow Plug Control circuit.

Is the resistance below 10.0 ohms for each circuit?

Yes >> Go To 3

No >> Repair the appropriate Glow Plug Control circuit for an open.
Perform ECM Verification Test Ver. 1. (Refer to 9 - ENGINE - DIAGNOSIS AND TESTING)

3. GLOW PLUG CONTROL CIRCUIT SHORTED TO GROUND

Measure the resistance between ground and each Glow Plug Control circuit.

Is the resistance below 1000 ohms for any of the measurements?

Yes >> Repair the appropriate Glow Plug Control circuit for a short to ground.
Perform the ECM Verification Test Ver. 1. (Refer to 9 - ENGINE - DIAGNOSIS AND TESTING)

No >> Go To 4

4. GLOW PLUG CONTROL CIRCUIT SHORTED TO VOLTAGE

Turn the ignition on.
Measure the voltage of each Glow Plug Control circuit.

Is there voltage present on any of the Glow Plug Control circuits?

Yes >> Repair the appropriate Glow Plug Control circuit for a short to voltage.
Perform the ECM Verification Test Ver. 1. (Refer to 9 - ENGINE - DIAGNOSIS AND TESTING)

No >> Go To 5

5. GLOW PLUG

Turn the ignition off.
Connect each Glow Plug connector.
Connect the Glow Plug Module connector.
Turn the ignition on.
With the scan tool, erase ECM DTCs.
Refer to the Service Information and perform the Glow Plug Test on each Glow plug.

Did each Glow Plug pass the test?

Yes >> Go to 6

No >> Replace the appropriate Glow Plug in accordance with the Service Information.
Perform the ECM Verification Test Ver. 1. (Refer to 9 - ENGINE - DIAGNOSIS AND TESTING)

6. GLOW PLUG MODULE

Using the wiring diagram/schematic as a guide, inspect the wiring and connectors between the Glow Plugs and the Glow Plug Module.
Look for any chafed, pierced, pinched, or partially broken wires.
Look for broken, bent, pushed out or corroded terminals.
Refer to any Technical Service Bulletins that may apply.

Were any problems found?

Yes >> Repair as necessary.
Perform the ECM Verification Test Ver. 1. (Refer to 9 - ENGINE - DIAGNOSIS AND TESTING)

No >> Replace the Glow Plug Module in accordance with the Service Information.
Perform the ECM Verification Test Ver. 1. (Refer to 9 - ENGINE - DIAGNOSIS AND TESTING)

P0674-CYLINDER 4 GLOW PLUG CIRCUIT

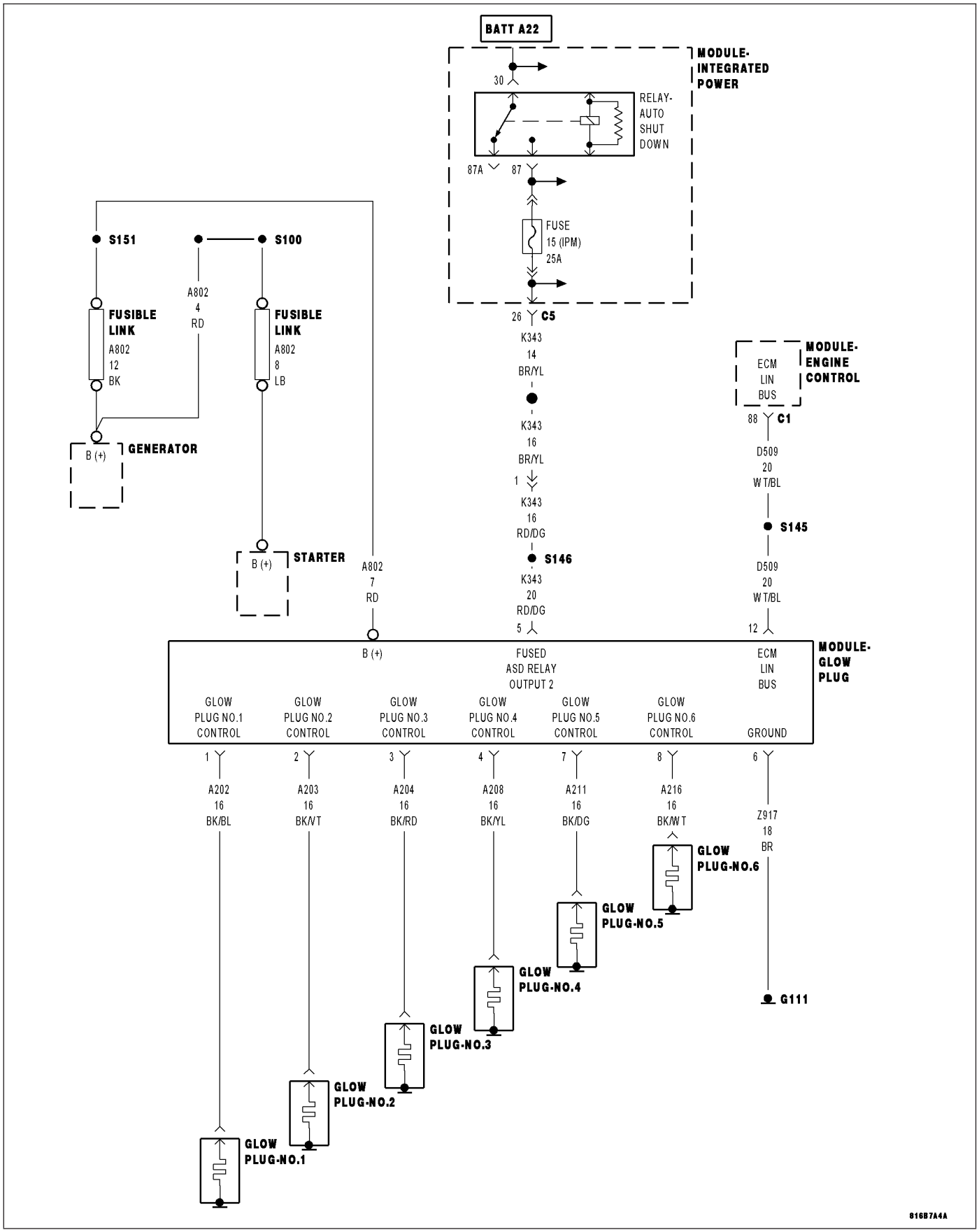

For a complete wiring diagram **Refer to Section 8W**

- **When Monitored:**
  With the ignition on and the Glow Plug Module Glow Plug command on.
- **Set Condition:**
  The Cylinder 4 Glow Plug circuit is open or shorted for 0.5 seconds.

Possible Causes
INTERMITTENT DTC
GLOW PLUG CONTROL CIRCUIT(S) OPEN
GLOW PLUG CONTROL CIRCUIT(S) SHORTED TO GROUND
GLOW PLUG CONTROL CIRCUIT(S) SHORTED TO VOLTAGE
GLOW PLUG
GLOW PLUG MODULE

Always perform the Pre-Diagnostic Troubleshooting procedure before proceeding. (Refer to 9 - ENGINE - DIAGNOSIS AND TESTING)

Diagnostic Test

1. CHECK FOR ACTIVE DTC

Ignition on, engine not running.
With the scan tool, Clear DTCs in the Engine Control Module (ECM).
Perform several ignition cycles leaving the ignition on for at least 10 seconds then off for 10 seconds.
With the scan tool, read the ECM DTCs.

Did this DTC set again?

Yes >> Go To 2

No >> Refer to the *CHECKING FOR AN INTERMITTENT DTC Diagnostic Procedure. (Refer to 9 - ENGINE - DIAGNOSIS AND TESTING)

2. GLOW PLUG CONTROL CIRCUIT OPEN

Turn the ignition off.
Disconnect each Glow Plug harness connector.
Disconnect the Glow Plug Module harness connector.
Measure the resistance of each Glow Plug Control circuit.

Is the resistance below 10.0 ohms for each circuit?

Yes >> Go To 3

No >> Repair the appropriate Glow Plug Control circuit for an open.
Perform ECM Verification Test Ver. 1. (Refer to 9 - ENGINE - DIAGNOSIS AND TESTING)

3. GLOW PLUG CONTROL CIRCUIT SHORTED TO GROUND

Measure the resistance between ground and each Glow Plug Control circuit.

Is the resistance below 1000 ohms for any of the measurements?

Yes >> Repair the appropriate Glow Plug Control circuit for a short to ground.
Perform the ECM Verification Test Ver. 1. (Refer to 9 - ENGINE - DIAGNOSIS AND TESTING)

No >> Go To 4

4. GLOW PLUG CONTROL CIRCUIT SHORTED TO VOLTAGE

Turn the ignition on.
Measure the voltage of each Glow Plug Control circuit.

Is there voltage present on any of the Glow Plug Control circuits?

Yes >> Repair the appropriate Glow Plug Control circuit for a short to voltage
Perform the ECM Verification Test Ver. 1. (Refer to 9 - ENGINE - DIAGNOSIS AND TESTING)

No >> Go To 5

5. GLOW PLUG

Turn the ignition off.
Connect each Glow Plug connector.
Connect the Glow Plug Module connector.
Turn the ignition on.
With the scan tool, erase ECM DTCs.
Refer to the Service Information and perform the Glow Plug Test on each Glow plug.

Did each Glow Plug pass the test?

Yes >> Go to 6

No >> Replace the appropriate Glow Plug in accordance with the Service Information.
Perform the ECM Verification Test Ver. 1. (Refer to 9 - ENGINE - DIAGNOSIS AND TESTING)

6. GLOW PLUG MODULE

Using the wiring diagram/schematic as a guide, inspect the wiring and connectors between the Glow Plugs and the Glow Plug Module.
Look for any chafed, pierced, pinched, or partially broken wires.
Look for broken, bent, pushed out or corroded terminals.
Refer to any Technical Service Bulletins that may apply.

Were any problems found?

Yes >> Repair as necessary.
Perform the ECM Verification Test Ver. 1. (Refer to 9 - ENGINE - DIAGNOSIS AND TESTING)

No >> Replace the Glow Plug Module in accordance with the Service Information.
Perform the ECM Verification Test Ver. 1. (Refer to 9 - ENGINE - DIAGNOSIS AND TESTING)

P0675-CYLINDER 5 GLOW PLUG CIRCUIT

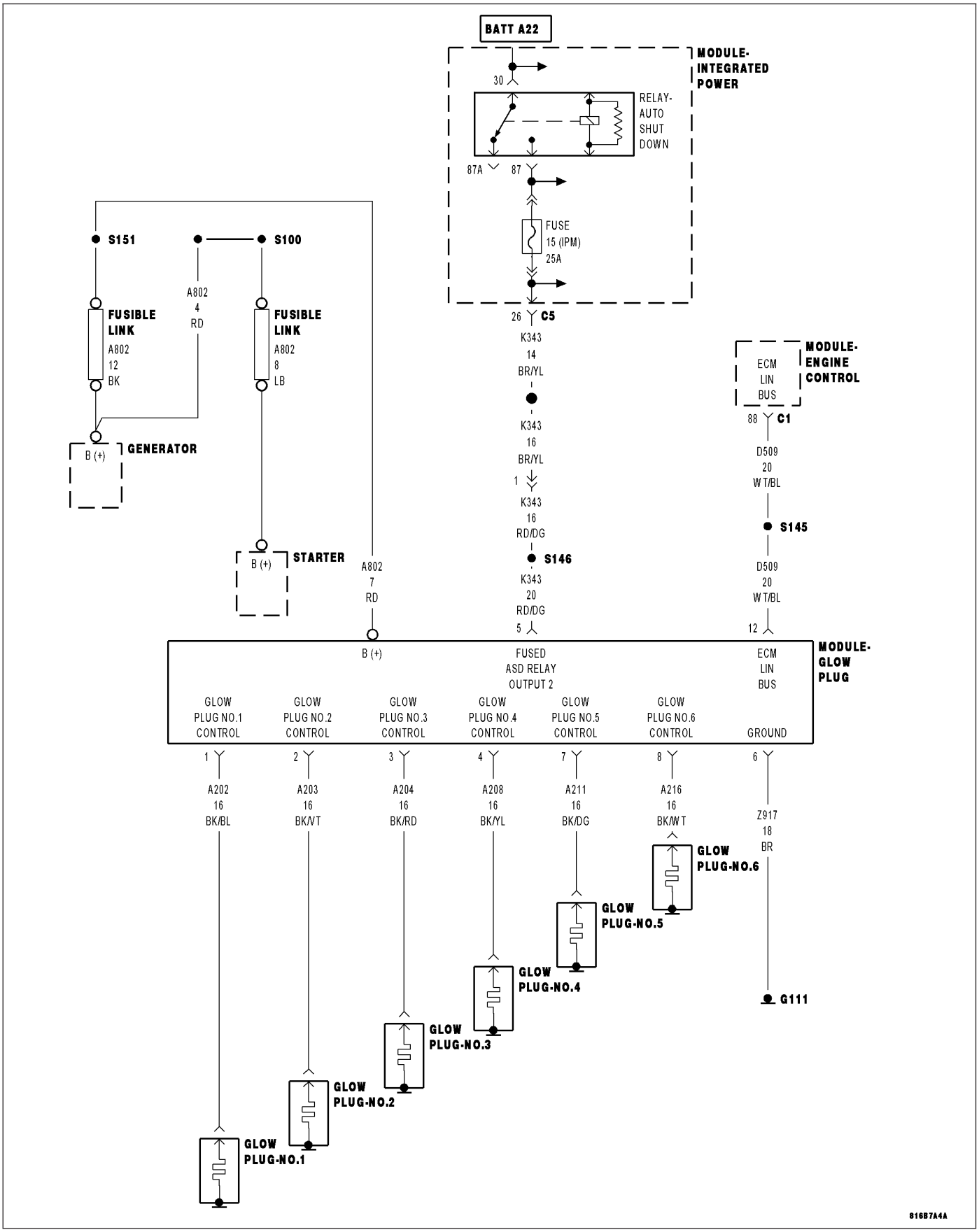

For a complete wiring diagram **Refer to Section 8W**

- **When Monitored:**
  With the ignition on and the Glow Plug Module Glow Plug command on.
- **Set Condition:**
  The Cylinder 5 Glow Plug circuit is open or shorted for 0.5 seconds.

Possible Causes
INTERMITTENT DTC
GLOW PLUG CONTROL CIRCUIT(S) OPEN
GLOW PLUG CONTROL CIRCUIT(S) SHORTED TO GROUND
GLOW PLUG CONTROL CIRCUIT(S) SHORTED TO VOLTAGE
GLOW PLUG
GLOW PLUG MODULE

Always perform the Pre-Diagnostic Troubleshooting procedure before proceeding. (Refer to 9 - ENGINE - DIAGNOSIS AND TESTING)

Diagnostic Test

1. CHECK FOR ACTIVE DTC

Ignition on, engine not running.
With the scan tool, Clear DTCs in the Engine Control Module (ECM).
Perform several ignition cycles leaving the ignition on for at least 10 seconds then off for 10 seconds.
With the scan tool, read the ECM DTCs.

Did this DTC set again?

Yes >> Go To 2

No >> Refer to the *CHECKING FOR AN INTERMITTENT DTC Diagnostic Procedure. (Refer to 9 - ENGINE - DIAGNOSIS AND TESTING)

2. GLOW PLUG CONTROL CIRCUIT OPEN

Turn the ignition off.
Disconnect each Glow Plug harness connector.
Disconnect the Glow Plug Module harness connector.
Measure the resistance of each Glow Plug Control circuit.

Is the resistance below 10.0 ohms for each circuit?

Yes >> Go To 3

No >> Repair the appropriate Glow Plug Control circuit for an open.
Perform ECM Verification Test Ver. 1. (Refer to 9 - ENGINE - DIAGNOSIS AND TESTING)

3. GLOW PLUG CONTROL CIRCUIT SHORTED TO GROUND

Measure the resistance between ground and each Glow Plug Control circuit.

Is the resistance below 1000 ohms for any of the measurements?

Yes >> Repair the appropriate Glow Plug Control circuit for a short to ground.
Perform the ECM Verification Test Ver. 1. (Refer to 9 - ENGINE - DIAGNOSIS AND TESTING)

No >> Go To 4

4. GLOW PLUG CONTROL CIRCUIT SHORTED TO VOLTAGE

Turn the ignition on.
Measure the voltage of each Glow Plug Control circuit.

Is there voltage present on any of the Glow Plug Control circuits?

Yes >> Repair the appropriate Glow Plug Control circuit for a short to voltage
Perform the ECM Verification Test Ver. 1. (Refer to 9 - ENGINE - DIAGNOSIS AND TESTING)

No >> Go To 5

5. GLOW PLUG

Turn the ignition off.
Connect each Glow Plug connector.
Connect the Glow Plug Module connector.
Turn the ignition on.
With the scan tool, erase ECM DTCs.
Refer to the Service Information and perform the Glow Plug Test on each Glow plug.

Did each Glow Plug pass the test?

Yes >> Go to 6

No >> Replace the appropriate Glow Plug in accordance with the Service Information.
Perform the ECM Verification Test Ver. 1. (Refer to 9 - ENGINE - DIAGNOSIS AND TESTING)

6. GLOW PLUG MODULE

Using the wiring diagram/schematic as a guide, inspect the wiring and connectors between the Glow Plugs and the Glow Plug Module.
Look for any chafed, pierced, pinched, or partially broken wires.
Look for broken, bent, pushed out or corroded terminals.
Refer to any Technical Service Bulletins that may apply.

Were any problems found?

Yes >> Repair as necessary.
Perform the ECM Verification Test Ver. 1. (Refer to 9 - ENGINE - DIAGNOSIS AND TESTING)

No >> Replace the Glow Plug Module in accordance with the Service Information.
Perform the ECM Verification Test Ver. 1. (Refer to 9 - ENGINE - DIAGNOSIS AND TESTING)

P0676-CYLINDER 6 GLOW PLUG CIRCUIT

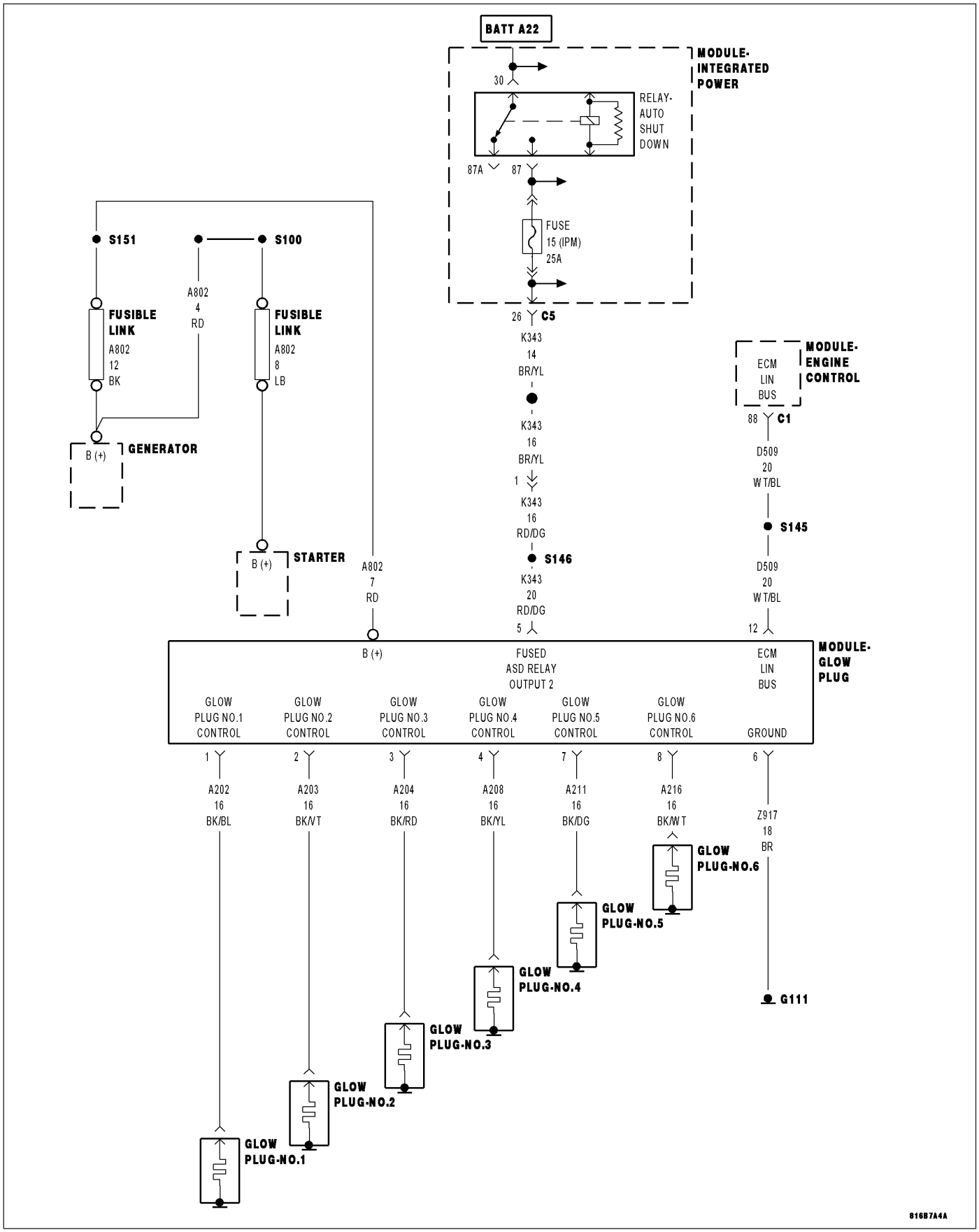

For a complete wiring diagram **Refer to Section 8W**

- **When Monitored:**
  With the ignition on and the Glow Plug Module Glow Plug command on.
- **Set Condition:**
  The Cylinder 6 Glow Plug circuit is open or shorted for 0.5 seconds.

Possible Causes
INTERMITTENT DTC
GLOW PLUG CONTROL CIRCUIT(S) OPEN
GLOW PLUG CONTROL CIRCUIT(S) SHORTED TO GROUND
GLOW PLUG CONTROL CIRCUIT(S) SHORTED TO VOLTAGE
GLOW PLUG
GLOW PLUG MODULE

Always perform the Pre-Diagnostic Troubleshooting procedure before proceeding. (Refer to 9 - ENGINE - DIAGNOSIS AND TESTING)

Diagnostic Test

1. CHECK FOR ACTIVE DTC

Ignition on, engine not running.
With the scan tool, Clear DTCs in the Engine Control Module (ECM).
Perform several ignition cycles leaving the ignition on for at least 10 seconds then off for 10 seconds.
With the scan tool, read the ECM DTCs.

Did this DTC set again?

Yes >> Go To 2

No >> Refer to the *CHECKING FOR AN INTERMITTENT DTC Diagnostic Procedure. (Refer to 9 - ENGINE - DIAGNOSIS AND TESTING)

2. GLOW PLUG CONTROL CIRCUIT OPEN

Turn the ignition off.
Disconnect each Glow Plug harness connector.
Disconnect the Glow Plug Module harness connector.
Measure the resistance of each Glow Plug Control circuit.

Is the resistance below 10.0 ohms for each circuit?

Yes >> Go To 3

No >> Repair the appropriate Glow Plug Control circuit for an open.
Perform ECM Verification Test Ver. 1. (Refer to 9 - ENGINE - DIAGNOSIS AND TESTING)

3. GLOW PLUG CONTROL CIRCUIT SHORTED TO GROUND

Measure the resistance between ground and each Glow Plug Control circuit.

Is the resistance below 1000 ohms for any of the measurements?

Yes >> Repair the appropriate Glow Plug Control circuit for a short to ground.
Perform the ECM Verification Test Ver. 1. (Refer to 9 - ENGINE - DIAGNOSIS AND TESTING)

No >> Go To 4

4. GLOW PLUG CONTROL CIRCUIT SHORTED TO VOLTAGE

Turn the ignition on.
Measure the voltage of each Glow Plug Control circuit.

Is there voltage present on any of the Glow Plug Control circuits?

Yes >> Repair the appropriate Glow Plug Control circuit for a short to voltage
Perform the ECM Verification Test Ver. 1. (Refer to 9 - ENGINE - DIAGNOSIS AND TESTING)

No >> Go To 5

5. GLOW PLUG

Turn the ignition off.
Connect each Glow Plug connector.
Connect the Glow Plug Module connector.
Turn the ignition on.
With the scan tool, erase ECM DTCs.
Refer to the Service Information and perform the Glow Plug Test on each Glow plug.

Did each Glow Plug pass the test?

Yes >> Go to 6

No >> Replace the appropriate Glow Plug in accordance with the Service Information.
Perform the ECM Verification Test Ver. 1. (Refer to 9 - ENGINE - DIAGNOSIS AND TESTING)

6. GLOW PLUG MODULE

Using the wiring diagram/schematic as a guide, inspect the wiring and connectors between the Glow Plugs and the Glow Plug Module.
Look for any chafed, pierced, pinched, or partially broken wires.
Look for broken, bent, pushed out or corroded terminals.
Refer to any Technical Service Bulletins that may apply.

Were any problems found?

Yes >> Repair as necessary.
Perform the ECM Verification Test Ver. 1. (Refer to 9 - ENGINE - DIAGNOSIS AND TESTING)

No >> Replace the Glow Plug Module in accordance with the Service Information.
Perform the ECM Verification Test Ver. 1. (Refer to 9 - ENGINE - DIAGNOSIS AND TESTING)

P068A-ECM RELAY OFF TOO EARLY

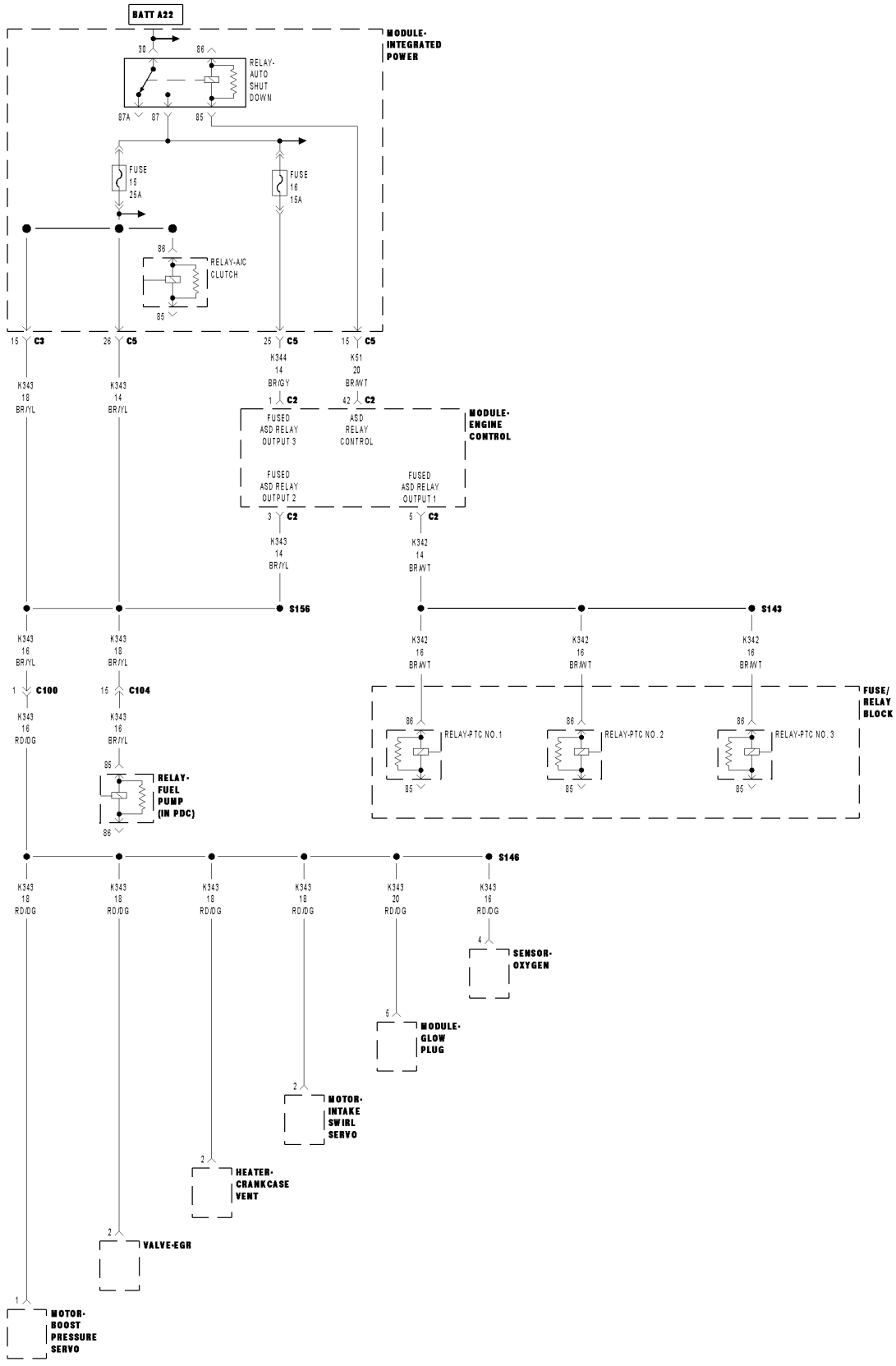

For a complete wiring diagram **Refer to Section 8W**

- **When Monitored:**
  When the ignition is turned off, during after-run mode of operation.
- **Set Condition:**
  The internal ECM timer determines that the ASD Relay has shut off before the AFTER-RUN mode of operation has been completed.

Possible Causes
CHECK FOR OTHER DTCS
INTERMITTENT CONDITION
SUBSTITUTE ASD RELAY
(K51) ASD RELAY CONTROL CIRCUIT OPEN INTERMITTENTLY
ENGINE CONTROL MODULE

Always perform the Pre-Diagnostic Troubleshooting procedure before proceeding. (Refer to 9 - ENGINE - DIAGNOSIS AND TESTING)

Diagnostic Test

1. CHECK FOR OTHER DTCS

Turn the ignition on.
With the scan tool, check for additional DTCs.

Are other DTCs present?

Yes >> Refer to the Symptom List for diagnosis of the other DTCs before continuing.
Perform the ECM Verification Test Ver. 1. (Refer to 9 - ENGINE - DIAGNOSIS AND TESTING)

No >> Go To 2

2. CLEAR CODE AND CHECK IF THE DTC RESETS

With the scan tool, erase ECM DTCs.
Perform several ignition key cycles, pausing for at least 10 seconds between each cycle.
Turn the ignition on.
With the scan tool, read ECM DTCs.

Did this DTC set again?

Yes >> Go To 3

No >> Refer to the *CHECKING FOR AN INTERMITTENT DTC Diagnostic Procedure. (Refer to 9 - ENGINE - DIAGNOSIS AND TESTING)

3. ASD RELAY

Turn the ignition off.
Install a known good relay in place of the ASD Relay.
Turn the ignition on.
With the scan tool, erase ECM DTCs.
Perform several ignition key cycles, pausing for at least 10 seconds between each cycle.
Turn the ignition on.
With the scan tool, read ECM DTCs.

Did this DTC set again?

Yes >> Go To 4

No >> Replace the ASD Relay.
Perform the ECM Verification Test Ver. 1. (Refer to 9 - ENGINE - DIAGNOSIS AND TESTING)

4. (K51) ASD RELAY CONTROL CIRCUIT OPEN INTERMITTENTLY

Turn the ignition off.

Remove the ASD Relay from the IPM.

Disconnect the ECM harness connectors.

Measure the resistance of the ASD Relay Control circuit while wiggling the wiring harness and connectors between the ECM and the IPM.

Was the resistance above 10.0 ohms at any time while wiggling the wiring harness and connectors?

Yes >> Repair the ASD Relay Control circuit for an intermittent open.
Perform the ECM Verification Test Ver. 1. (Refer to 9 - ENGINE - DIAGNOSIS AND TESTING)

No >> Replace and program the Engine Control Module in accordance with the Service Information.
Perform the ECM Verification Test Ver. 1. (Refer to 9 - ENGINE - DIAGNOSIS AND TESTING)

P068B-ECM RELAY OFF TOO LATE

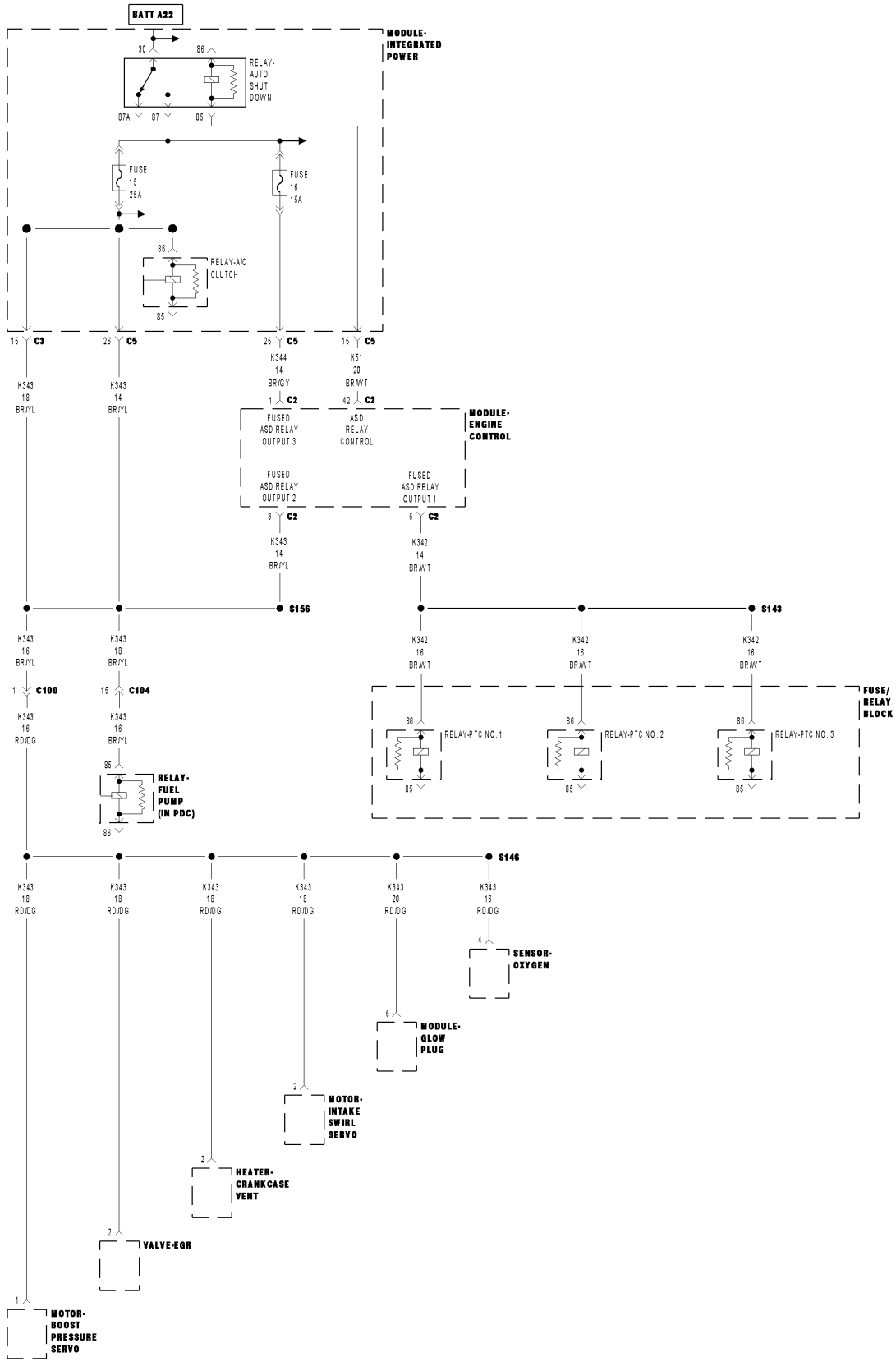

For a complete wiring diagram **Refer to Section 8W**

- **When Monitored:**
  When the ignition is turned off, during AFTER-RUN mode of operation.
- **Set Condition:**
  The internal ECM timer determines that the ASD Relay remained on for 2.0 seconds once AFTER-RUN mode of operation has been completed.

Possible Causes
CHECK FOR OTHER DTCS
INTERMITTENT CONDITION
SUBSTITUTE ASD RELAY
(K51) ASD RELAY CONTROL CIRCUIT SHORTED TO GROUND INTERMITTENTLY
ASD RELAY OUTPUT CIRCUIT SHORTED TO VOLTAGE
ENGINE CONTROL MODULE

Always perform the Pre-Diagnostic Troubleshooting procedure before proceeding. (Refer to 9 - ENGINE - DIAGNOSIS AND TESTING)

Diagnostic Test

1. CHECK FOR OTHER DTCS

Turn the ignition on.
With the scan tool, check for additional DTCs.

Are other DTCs present?

Yes >> Refer to the Symptom List for diagnosis of the other DTCs before continuing.
Perform the ECM Verification Test Ver. 1. (Refer to 9 - ENGINE - DIAGNOSIS AND TESTING)

No >> Go To 2

2. CLEAR CODE AND CHECK IF THE DTC RESETS

Perform several ignition key cycles, pausing for at least 10 seconds between each cycle.
Turn the ignition on.
With the scan tool, read ECM DTCs.

Did this DTC set again?

Yes >> Go To 3

No >> Go To 6

3. ASD RELAY

Turn the ignition off.
Install a known good relay in place of the ASD Relay.
Turn the ignition on.
With the scan tool, erase DTCs.
Perform several ignition key cycles, pausing for at least 10 seconds between each cycle.
Turn the ignition on.
With the scan tool, read ECM DTCs.

Did this DTC set again?

Yes >> Go To 4

No >> Replace the ASD Relay.
Perform the ECM Verification Test Ver. 1. (Refer to 9 - ENGINE - DIAGNOSIS AND TESTING)

4. (K51) ASD RELAY CONTROL CIRCUIT SHORTED TO GROUND INTERMITTENTLY

Turn the ignition off.

Remove the ASD Relay from the IPM.

Disconnect the ECM harness connectors.

Measure the resistance between ground and the (K51) ASD Relay Control circuit while wiggling the wiring harness and connectors.

Was the resistance below 1000 ohms at any time while wiggling the wiring harness and connectors?

Yes >> Repair the (K51) ASD Relay Control circuit for an intermittent short to ground.
Perform the ECM Verification Test Ver. 1. (Refer to 9 - ENGINE - DIAGNOSIS AND TESTING)

No >> Go To 5

5. ASD RELAY OUTPUT CIRCUIT SHORTED TO VOLTAGE

Turn the ignition on.

Measure the voltage of the ASD Relay Output circuit.

Is the voltage below 1.05 volt?

Yes >> Replace and program the Engine Control Module in accordance with the Service Information.
Perform the ECM Verification Test Ver. 1. (Refer to 9 - ENGINE - DIAGNOSIS AND TESTING)

No >> Repair the ASD Relay Output circuit for a short to voltage.
Perform the ECM Verification Test Ver. 1. (Refer to 9 - ENGINE - DIAGNOSIS AND TESTING)

6. INTERMITTENT CONDITION

WARNING: WHEN THE ENGINE IS OPERATING, DO NOT STAND IN A DIRECT LINE WITH THE FAN. DO NOT PUT YOUR HANDS NEAR THE PULLEYS, BELTS OR FAN. DO NOT WEAR LOOSE CLOTHING.

NOTE: The conditions that set the DTC are not present at this time. The following list may help in identifying the intermittent condition.

With the engine running at normal operating temperature, monitor the scan tool parameters related to the DTC while wiggling the wiring harness. Look for parameter values to change and/or a DTC to set.

Review the DTC When Monitored and Set Conditions. If possible, try to duplicate the conditions under which the DTC was set.

Refer to any Technical Service Bulletins (TSB) that may apply.

Visually inspect the related wiring harness. Look for any chafed, pierced, pinched, or partially broken wires.

Visually inspect the related wiring harness connectors. Look for broken, bent, pushed out, or corroded terminals.

Were any of the above conditions present?

Yes >> Repair as necessary.
Perform the ECM Verification Test Ver. 1. (Refer to 9 - ENGINE - DIAGNOSIS AND TESTING)

No >> Test Complete.

P0698-SENSOR REFERENCE VOLTAGE 3 CIRCUIT LOW

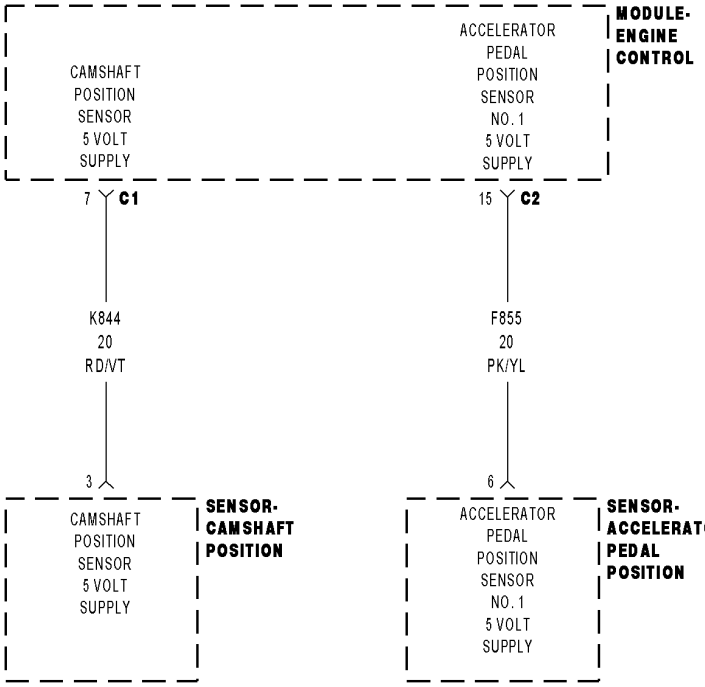

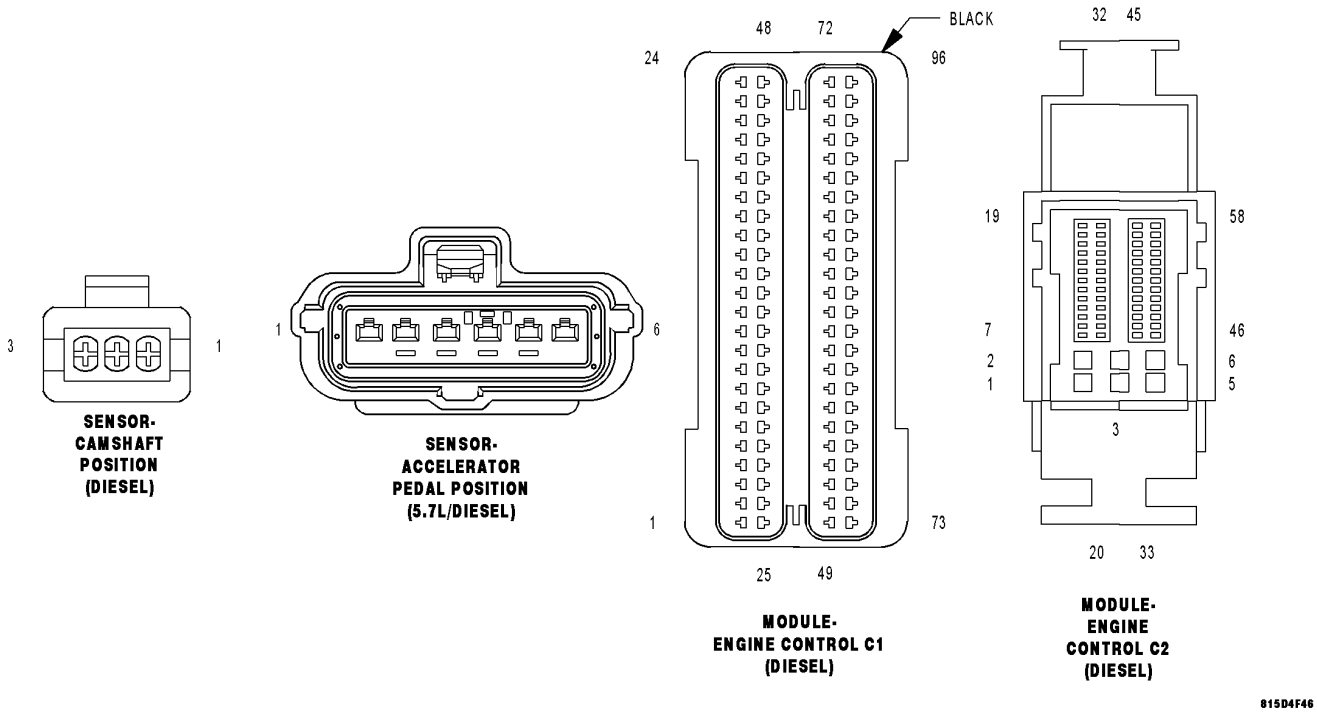

For a complete wiring diagram **Refer to Section 8W**

- **When Monitored:**
  With the ignition on.
- **Set Condition:**
  The ECM detects low voltage on the Sensor Supply #3 circuit for 0.10 seconds.

Possible Causes
INTERMITTENT DTC
5-VOLT SUPPLY CIRCUIT SHORTED TO GROUND
ACCELERATOR PEDAL POSITION SENSOR
CAMSHAFT POSITION SENSOR
ENGINE CONTROL MODULE (ECM)

Always perform the Pre-Diagnostic Troubleshooting procedure before proceeding. (Refer to 9 - ENGINE - DIAGNOSIS AND TESTING)

Theory of Operation

The ECM contains 3 internal 5–Volt Sensor Supply sources. Each 5–Volt Supply source is split into parallel circuits to provide 5 volts to multiple sensors. Sensor Supply 1 provides 5 volts to the Camshaft Position Sensor and the Accelerator Pedal Position Sensor #1.

Diagnostic Test

1. CHECK FOR ACTIVE DTC

Turn the ignition on.

With the scan tool, erase ECM DTCs.

With the scan tool, View DTCs.

Is the status Active for this DTC?

Yes >> Go To 2

No >> Refer to the *CHECKING FOR AN INTERMITTENT DTC Diagnostic Procedure. (Refer to 9 - ENGINE - DIAGNOSIS AND TESTING)

2. CAMSHAFT POSITION SENSOR

Turn the ignition off.

Disconnect the CMP Sensor harness connector.

Turn the ignition on.

Measure the voltage of the (K844) Camshaft Position Sensor 5 Volt Supply circuit.

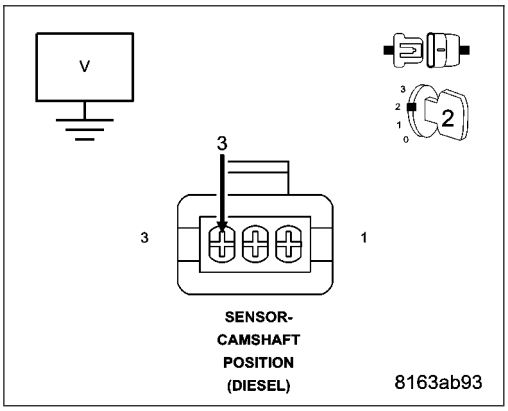

Is the voltage above 4.6 volts?

Yes >> Replace the Camshaft Position Sensor.
Perform the ECM VERIFICATION TEST. (Refer to 9 - ENGINE - DIAGNOSIS AND TESTING)

No >> Go To 3

3. ACCELERATOR PEDAL POSITION SENSOR

Turn the ignition off.

Disconnect the APP Sensor harness connector.

Turn the ignition on.

Measure the voltage of the (F855) Accelerator Pedal Position Sensor No. 1 5 Volt Supply circuit.

Is the voltage above 4.6 volts?

Yes >> Replace the Accelerator Pedal Position Sensor.
Perform the ECM VERIFICATION TEST. (Refer to 9 - ENGINE - DIAGNOSIS AND TESTING)

No >> Go To 4

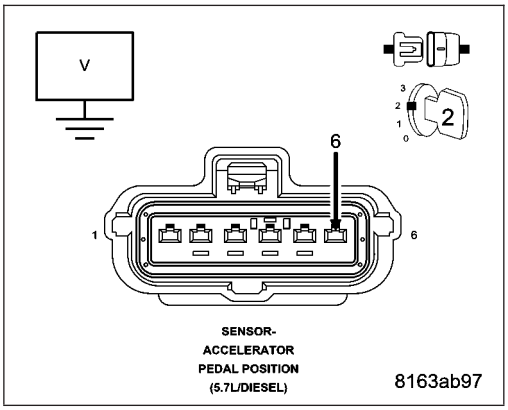

4. (F855) 5-VOLT SUPPLY CIRCUIT SHORTED TO GROUND

Turn the ignition off.

Disconnect the ECM harness connectors.

Measure the resistance between ground and the (F855) Accelerator Pedal Position Sensor No. 1 5 Volt Supply circuit.

Measure the resistance between ground and the (K844) Camshaft Position Sensor 5 Volt Supply circuit.

Is the resistance above 1000 ohms for both circuits?

Yes >> Go To 5

No >> Repair the (F855) 5 Volt Supply circuit for a short to ground.
Perform the ECM VERIFICATION TEST. (Refer to 9 - ENGINE - DIAGNOSIS AND TESTING)

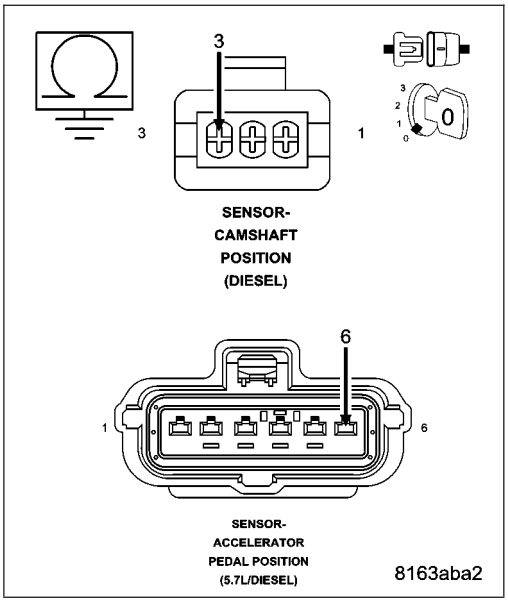

5. ENGINE CONTROL MODULE (ECM)

Inspect the (K844) Camshaft Position Sensor 5 Volt Supply circuit between the CMP harness connector and the ECM harness connector.

Inspect the (F855) Accelerator Pedal Position Sensor No. 1 5 Volt Supply circuit between the APP Sensor harness connector and the ECM harness connector

Look for any chafed, pierced, pinched, or partially broken wires.

Look for broken, bent, pushed out or corroded terminals.

Monitor the scan tool data relative to this circuit and wiggle test the wiring and connectors.

Look for the data to change or for the DTC to reset during the wiggle test.

Refer to any Technical Service Bulletins that may apply.

Were any problems found?

Yes >> Repair as necessary.
Perform the ECM VERIFICATION TEST. (Refer to 9 - ENGINE - DIAGNOSIS AND TESTING)

No >> Replace the ECM in accordance with the Service Information.
Perform the ECM VERIFICATION TEST. (Refer to 9 - ENGINE - DIAGNOSIS AND TESTING)

P0699-SENSOR REFERENCE VOLTAGE 3 CIRCUIT HIGH

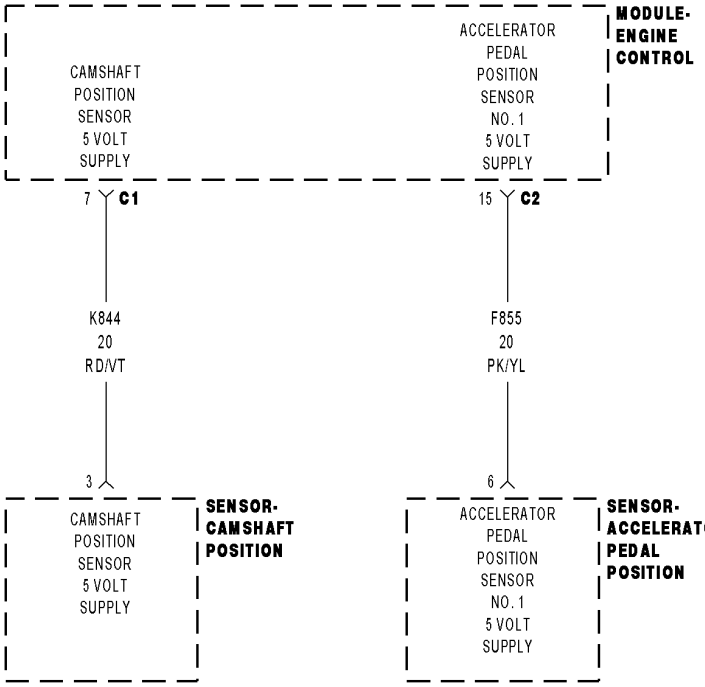

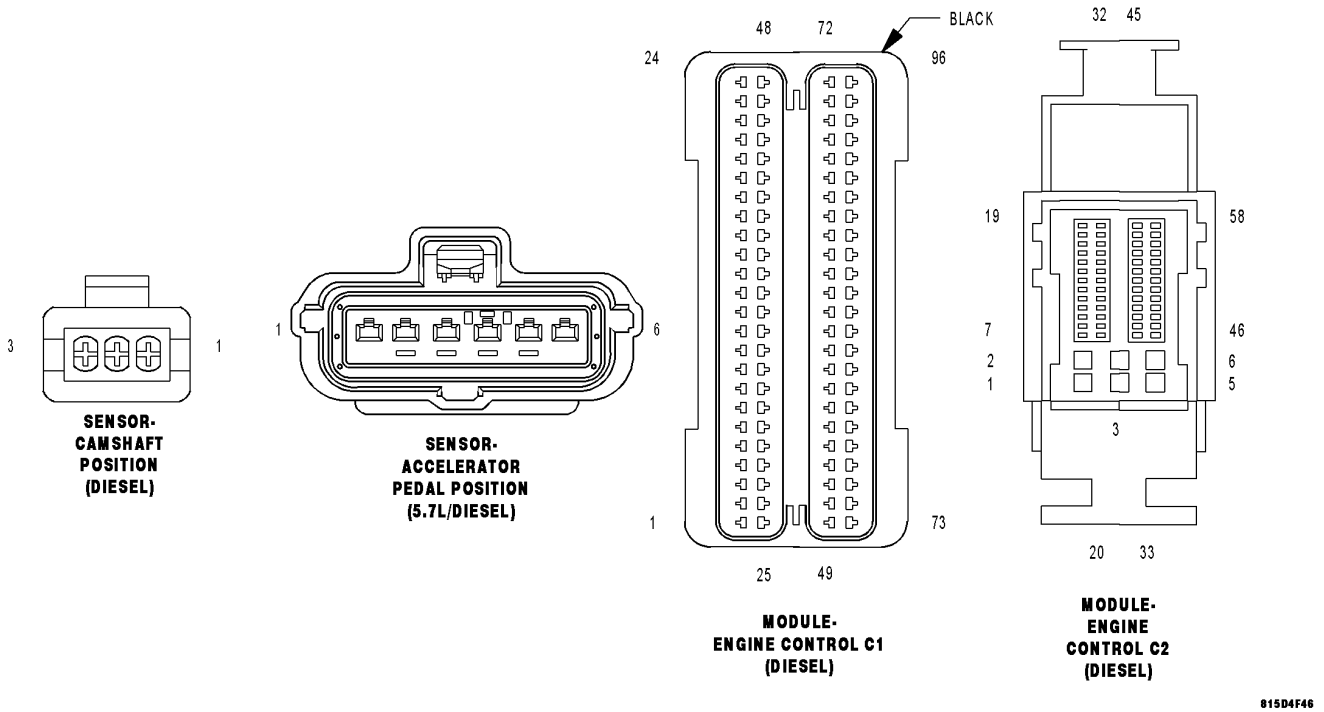

For a complete wiring diagram **Refer to Section 8W**

- **When Monitored:**
  With the ignition on.
- **Set Condition:**
  The ECM detects a short to voltage on the Sensor Supply #3 circuit for 0.10 seconds.

Possible Causes
INTERMITTENT DTC
(F855) ACCELERATOR PEDAL POSITION SENSOR NO.1 5-VOLT SUPPLY CIRCUIT SHORTED TO VOLTAGE
(K844) CAMSHAFT POSITION SENSOR 5-VOLT SUPPLY CIRCUIT SHORTED TO VOLTAGE
ENGINE CONTROL MODULE

Always perform the Pre-Diagnostic Troubleshooting procedure before proceeding. (Refer to 9 - ENGINE - DIAGNOSIS AND TESTING)

Theory of Operation

The ECM contains 3 internal 5–Volt Sensor Supply sources. Each 5–Volt Supply source is split into parallel circuits to provide 5 volts to multiple sensors. Sensor Supply 1 provides 5 volts to the Camshaft Position Sensor and the Accelerator Pedal Position Sensor #1.

Diagnostic Test

1. CHECK FOR ACTIVE DTC

Turn the ignition on.
With the scan tool, erase ECM DTCs.
Turn the ignition off for 10 seconds.
Turn the ignition on.
With the scan tool, View DTCs.

Is the status Active for this DTC?

Yes >> Go To 2

No >> Refer to the *CHECKING FOR AN INTERMITTENT DTC Diagnostic Procedure. (Refer to 9 - ENGINE - DIAGNOSIS AND TESTING)

2. (F855) ACCELERATOR PEDAL POSITION SENSOR NO.1 5-VOLT SUPPLY CIRCUIT SHORTED TO VOLTAGE

Turn the ignition off.
Disconnect the Accelerator Pedal Position Sensor harness connector.
Disconnect the ECM harness connectors.
Remove the ASD Relay from the IPM.
Connect a jumper wire between cavity 30 and cavity 87 of the ASD Relay connector.
Turn the ignition on.
Measure the voltage on the (F855) Accelerator Pedal Position Sensor No. 1 5 Volt Supply circuit.

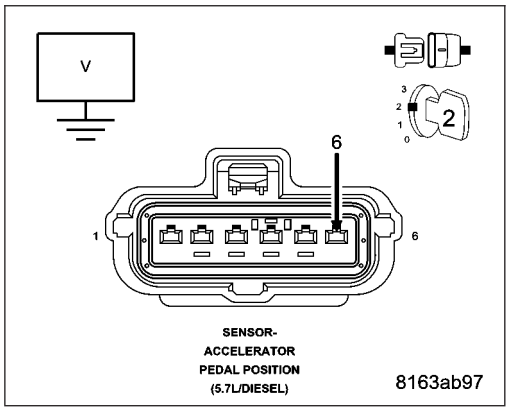

Is the voltage below 1.0 volt?

Yes >> Go To 3

No >> Repair the (F855) Accelerator Pedal Position Sensor No. 1 5 Volt Supply circuit for a short to voltage.
Perform the ECM VERIFICATION TEST. (Refer to 9 - ENGINE - DIAGNOSIS AND TESTING)

3. (K844) CAMSHAFT POSITION SENSOR 5-VOLT SUPPLY CIRCUIT SHORTED TO VOLTAGE

Turn the ignition off.

Disconnect the Camshaft Position Sensor harness connector.

NOTE: The jumper wire should still be in place.

Turn the ignition on.

Measure the voltage on the (K844) Camshaft Position Sensor 5 Volt Supply circuit.

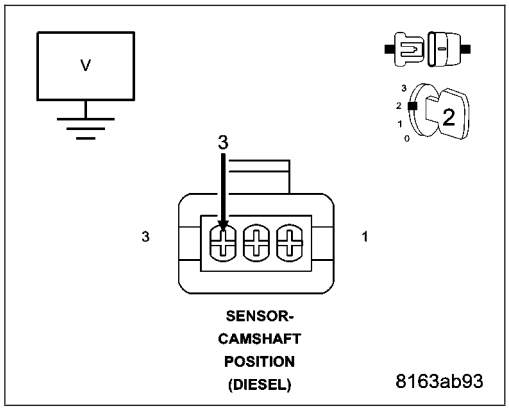

Is the voltage below 1.0 volt?

Yes >> Go To 4

No >> Repair the (K844) Camshaft Position Sensor 5 Volt Supply circuit for a short to voltage.
Perform the ECM VERIFICATION TEST. (Refer to 9 - ENGINE - DIAGNOSIS AND TESTING)

4. ENGINE CONTROL MODULE (ECM)

Turn the ignition off.

Inspect the (K844) Camshaft Position Sensor 5 Volt Supply circuit between the CMP harness connector and the ECM harness connector.

Inspect the (F855) Accelerator Pedal Position Sensor No. 1 5 Volt Supply circuit between the APP Sensor harness connector and the ECM harness connector

Look for any chafed, pierced, pinched, or partially broken wires.

Look for broken, bent, pushed out or corroded terminals.

Monitor the scan tool data relative to this circuit and wiggle test the wiring and connectors.

Look for the data to change or for the DTC to reset during the wiggle test.

Refer to any Technical Service Bulletins that may apply.

Were any problems found?

Yes >> Repair as necessary.
Perform the ECM VERIFICATION TEST. (Refer to 9 - ENGINE - DIAGNOSIS AND TESTING)

No >> Replace and program the Engine Control Module in accordance with the Service Information.
Perform the ECM VERIFICATION TEST. (Refer to 9 - ENGINE - DIAGNOSIS AND TESTING)

P0700-TRANSMISSION CONTROL SYSTEM (MIL REQUEST)

For a complete wiring diagram **Refer to Section 8W**

- **When Monitored:**
  With the ignition on.
- **Set Condition:**
  The ECM receives a CAN Bus message indicating the presence of a DTC in the TCM.

Possible Causes
VERIFY CURRENT DTC

Always perform the Pre-Diagnostic Troubleshooting procedure before proceeding. (Refer to 9 - ENGINE - DIAGNOSIS AND TESTING)

Diagnostic Test

1. VERIFY CURRENT DTC

NOTE: Diagnose and repair all ECM DTCs prior to diagnosing any DTCs set in the TCM.

NOTE: This code was set in the ECM by the Transmission Control Module to indicate a transmission fault. Diagnosis of transmission faults should be done using the Transmission Diagnostic Information.

NOTE: When repairs have been completed, DTCs in the ECM and TCM must be cleared.
Turn the ignition on.

With the scan tool, erase ECM DTCs only.

With the scan tool, read ECM DTCs.

Does this DTC reset?

Yes >> Refer to Transmission Diagnostic Information for the related symptom(s).

No >> Test Complete.

P0706-TRANSMISSION RANGE SENSOR RATIONALITY

For a complete wiring diagram **Refer to Section 8W**

- **When Monitored:**
  With the ignition on.
- **Set Condition:**
  The ECM receives a CAN Bus message indicating the presence of a DTC in the TCM.

Possible Causes
VERIFY CURRENT DTC

Always perform the Pre-Diagnostic Troubleshooting procedure before proceeding. (Refer to 9 - ENGINE - DIAGNOSIS AND TESTING)

Diagnostic Test

1. VERIFY CURRENT DTC

NOTE: Diagnose and repair all ECM DTCs prior to diagnosing any DTCs set in the TCM.

NOTE: This code was set in the ECM by the Transmission Control Module to indicate a transmission fault. Diagnosis of transmission faults should be done using the Transmission Diagnostic Information.

NOTE: When repairs have been completed, DTCs in the ECM and TCM must be cleared.
Turn the ignition on.

With the scan tool, erase ECM DTCs only.

With the scan tool, read ECM DTCs.

Does this DTC reset?

Yes >> Refer to Transmission Diagnostic Information for the related symptom(s).

No >> Test Complete.

P0730-INCORRECT GEAR RATIO

For a complete wiring diagram **Refer to Section 8W**

- **When Monitored:**
  With the ignition on.
- **Set Condition:**
  The ECM receives a CAN Bus message indicating the presence of a DTC in the TCM.

Possible Causes
VERIFY CURRENT DTC

Always perform the Pre-Diagnostic Troubleshooting procedure before proceeding. (Refer to 9 - ENGINE - DIAGNOSIS AND TESTING)

Diagnostic Test

1. VERIFY CURRENT DTC

NOTE: Diagnose and repair all ECM DTCs prior to diagnosing any DTCs set in the TCM.

NOTE: This code was set in the ECM by the Transmission Control Module to indicate a transmission fault. Diagnosis of transmission faults should be done using the Transmission Diagnostic Information.

NOTE: When repairs have been completed, DTCs in the ECM and TCM must be cleared.
Turn the ignition on.

With the scan tool, erase ECM DTCs only.

With the scan tool, read ECM DTCs.

Does this DTC reset?

Yes >> Refer to Transmission Diagnostic Information for the related symptom(s).

No >> Test Complete.

P0740–TCC OUT OF RANGE

For a complete wiring diagram **Refer to Section 8W**

- **When Monitored:**
  With the ignition on.
- **Set Condition:**
  The ECM receives a CAN Bus message indicating the presence of a DTC in the TCM.

Possible Causes
VERIFY CURRENT DTC

Always perform the Pre-Diagnostic Troubleshooting procedure before proceeding. (Refer to 9 - ENGINE - DIAGNOSIS AND TESTING)

Diagnostic Test

1. VERIFY CURRENT DTC

NOTE: Diagnose and repair all ECM DTCs prior to diagnosing any DTCs set in the TCM.

NOTE: This code was set in the ECM by the Transmission Control Module to indicate a transmission fault. Diagnosis of transmission faults should be done using the Transmission Diagnostic Information.

NOTE: When repairs have been completed, DTCs in the ECM and TCM must be cleared.
Turn the ignition on.

With the scan tool, erase ECM DTCs only.

With the scan tool, read ECM DTCs.

Does this DTC reset?

Yes >> Refer to Transmission Diagnostic Information for the related symptom(s).

No >> Test Complete.

P0743–TCC SOLENOID CIRCUIT

For a complete wiring diagram **Refer to Section 8W**

- **When Monitored:**
  With the ignition on.
- **Set Condition:**
  The ECM receives a CAN Bus message indicating the presence of a DTC in the TCM.

Possible Causes
VERIFY CURRENT DTC

Always perform the Pre-Diagnostic Troubleshooting procedure before proceeding. (Refer to 9 - ENGINE - DIAGNOSIS AND TESTING)

Diagnostic Test

1. VERIFY CURRENT DTC

NOTE: Diagnose and repair all ECM DTCs prior to diagnosing any DTCs set in the TCM.

NOTE: This code was set in the ECM by the Transmission Control Module to indicate a transmission fault. Diagnosis of transmission faults should be done using the Transmission Diagnostic Information.

NOTE: When repairs have been completed, DTCs in the ECM and TCM must be cleared.
Turn the ignition on.

With the scan tool, erase ECM DTCs only.

With the scan tool, read ECM DTCs.

Does this DTC reset?

Yes >> Refer to Transmission Diagnostic Information for the related symptom(s).

No >> Test Complete.

P0748–MODULATOR PRESSURE SOLENOID CIRCUIT

For a complete wiring diagram **Refer to Section 8W**

- **When Monitored:**
  With the ignition on.
- **Set Condition:**
  The ECM receives a CAN Bus message indicating the presence of a DTC in the TCM.

Possible Causes
VERIFY CURRENT DTC

Always perform the Pre-Diagnostic Troubleshooting procedure before proceeding. (Refer to 9 - ENGINE - DIAGNOSIS AND TESTING)

Diagnostic Test

1. VERIFY CURRENT DTC

NOTE: Diagnose and repair all ECM DTCs prior to diagnosing any DTCs set in the TCM.

NOTE: This code was set in the ECM by the Transmission Control Module to indicate a transmission fault. Diagnosis of transmission faults should be done using the Transmission Diagnostic Information.

NOTE: When repairs have been completed, DTCs in the ECM and TCM must be cleared.
Turn the ignition on.

With the scan tool, erase ECM DTCs only.

With the scan tool, read ECM DTCs.

Does this DTC reset?

Yes >> Refer to Transmission Diagnostic Information for the related symptom(s).

No >> Test Complete.

P0753 1–2 / 4–5 SOLENOID CIRCUIT

For a complete wiring diagram **Refer to Section 8W**

- **When Monitored:**
  With the ignition on.
- **Set Condition:**
  The ECM receives a CAN Bus message indicating the presence of a DTC in the TCM.

Possible Causes
VERIFY CURRENT DTC

Always perform the Pre-Diagnostic Troubleshooting procedure before proceeding. (Refer to 9 - ENGINE - DIAGNOSIS AND TESTING)

Diagnostic Test

1. VERIFY CURRENT DTC

NOTE: Diagnose and repair all ECM DTCs prior to diagnosing any DTCs set in the TCM.

NOTE: This code was set in the ECM by the Transmission Control Module to indicate a transmission fault. Diagnosis of transmission faults should be done using the Transmission Diagnostic Information.

NOTE: When repairs have been completed, DTCs in the ECM and TCM must be cleared.
Turn the ignition on.

With the scan tool, erase ECM DTCs only.

With the scan tool, read ECM DTCs.

Does this DTC reset?

Yes >> Refer to Transmission Diagnostic Information for the related symptom(s).

No >> Test Complete.

P0758 2–3 SOLENOID CIRCUIT

For a complete wiring diagram **Refer to Section 8W**

- **When Monitored:**
  With the ignition on.
- **Set Condition:**
  The ECM receives a CAN Bus message indicating the presence of a DTC in the TCM.

Possible Causes
VERIFY CURRENT DTC

Always perform the Pre-Diagnostic Troubleshooting procedure before proceeding. (Refer to 9 - ENGINE - DIAGNOSIS AND TESTING)

Diagnostic Test

1. VERIFY CURRENT DTC

NOTE: Diagnose and repair all ECM DTCs prior to diagnosing any DTCs set in the TCM.

NOTE: This code was set in the ECM by the Transmission Control Module to indicate a transmission fault. Diagnosis of transmission faults should be done using the Transmission Diagnostic Information.

NOTE: When repairs have been completed, DTCs in the ECM and TCM must be cleared.
Turn the ignition on.

With the scan tool, erase ECM DTCs only.

With the scan tool, read ECM DTCs.

Does this DTC reset?

Yes >> Refer to Transmission Diagnostic Information for the related symptom(s).

No >> Test Complete.

P0763 3–4 SOLENOID CIRCUIT

For a complete wiring diagram **Refer to Section 8W**

- **When Monitored:**
  With the ignition on.
- **Set Condition:**
  The ECM receives a CAN Bus message indicating the presence of a DTC in the TCM.

Possible Causes
VERIFY CURRENT DTC

Always perform the Pre-Diagnostic Troubleshooting procedure before proceeding. (Refer to 9 - ENGINE - DIAGNOSIS AND TESTING)

Diagnostic Test

1. VERIFY CURRENT DTC

NOTE: Diagnose and repair all ECM DTCs prior to diagnosing any DTCs set in the TCM.

NOTE: This code was set in the ECM by the Transmission Control Module to indicate a transmission fault. Diagnosis of transmission faults should be done using the Transmission Diagnostic Information.

NOTE: When repairs have been completed, DTCs in the ECM and TCM must be cleared.
Turn the ignition on.

With the scan tool, erase ECM DTCs only.

With the scan tool, read ECM DTCs.

Does this DTC reset?

Yes >> Refer to Transmission Diagnostic Information for the related symptom(s).

No >> Test Complete.

P0778–SHIFT PRESSURE SOLENOID CIRCUIT

For a complete wiring diagram **Refer to Section 8W**

- **When Monitored:**
  With the ignition on.
- **Set Condition:**
  The ECM receives a CAN Bus message indicating the presence of a DTC in the TCM.

Possible Causes
VERIFY CURRENT DTC

Always perform the Pre-Diagnostic Troubleshooting procedure before proceeding. (Refer to 9 - ENGINE - DIAGNOSIS AND TESTING)

Diagnostic Test

1. VERIFY CURRENT DTC

NOTE: Diagnose and repair all ECM DTCs prior to diagnosing any DTCs set in the TCM.

NOTE: This code was set in the ECM by the Transmission Control Module to indicate a transmission fault. Diagnosis of transmission faults should be done using the Transmission Diagnostic Information.

NOTE: When repairs have been completed, DTCs in the ECM and TCM must be cleared.
Turn the ignition on.

With the scan tool, erase ECM DTCs only.

With the scan tool, read ECM DTCs.

Does this DTC reset?

Yes >> Refer to Transmission Diagnostic Information for the related symptom(s).

No >> Test Complete.

P1451–DIESEL PARTICULATE FILTER SYSTEM PERFORMANCE

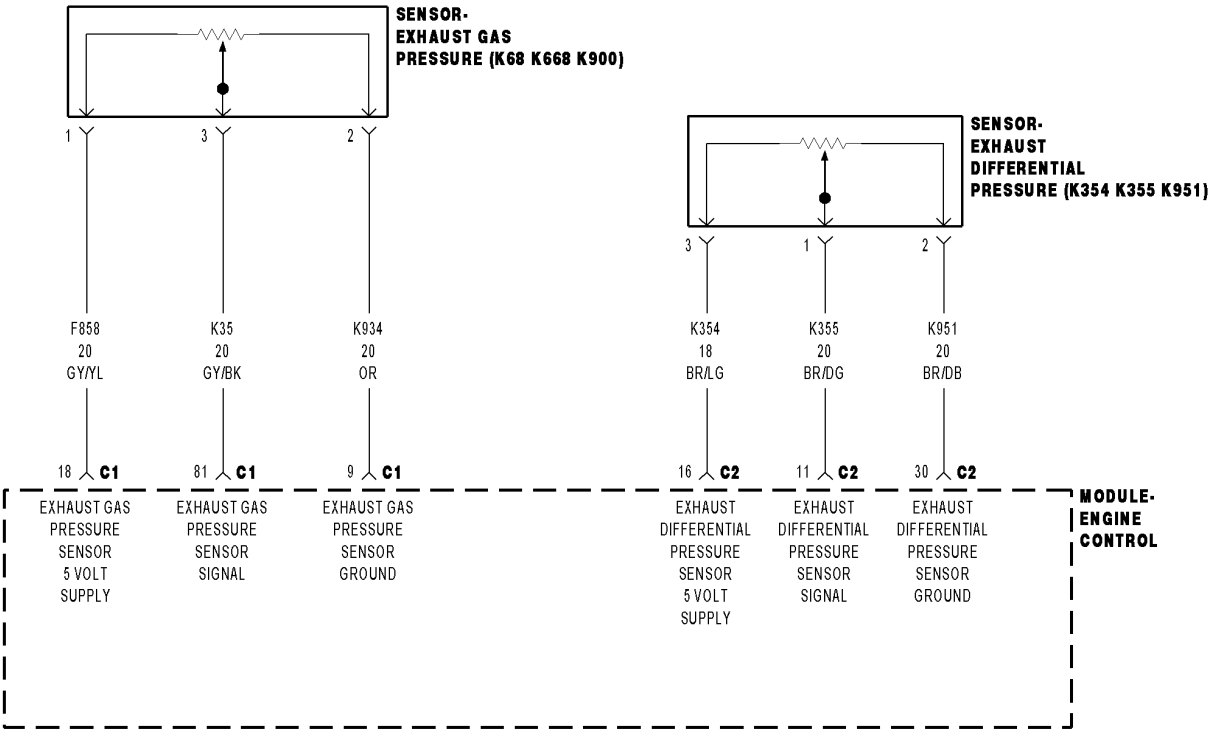

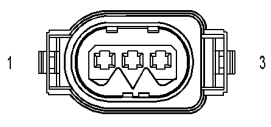

SENSOR-
EXHAUST
DIFFERENTIAL
PRESSURE
(DIESEL)

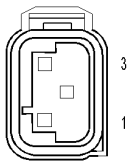

SENSOR-
EXHAUST GAS
PRESSURE
(DIESEL)

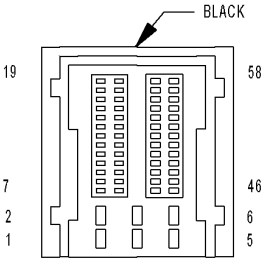

MODULE-
ENGINE
CONTROL C2
(DIESEL)

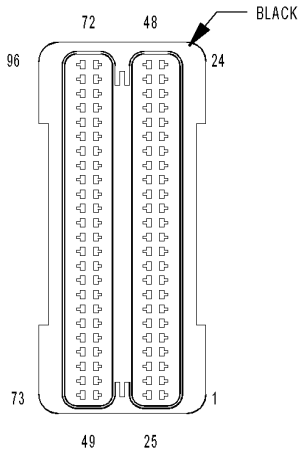

MODULE-
ENGINE CONTROL C1
(DIESEL)

816B74AB

For a complete wiring diagram **Refer to Section 8W**

Theory of Operation

The Diesel particulate filter is an inline canister filter located in the exhaust system between the engine and the muffler. This filter captures and stores ash particles created by the diesel combustion process. This filter is monitored by the ECM with a Differential Pressure Sensor. This sensor measures the difference in exhaust system pressure before and after the particulate filter through tube connections directly to the exhaust pipe. As ash accumulates in the filter, the exhaust pressure at the inlet side of the filter increases as compared to the pressure at the outlet side of the filter. The ECM monitors the sensor to determine when to perform a particulate filter regeneration procedure which is designed to clear “burn-off” the ash collected in the filter.

Possible Causes
DAMAGED EXHAUST SYSTEM
LEAKING EXHAUST SYSTEM
HIGH RESISTANCE IN EXHAUST DIFFERENTIAL PRESSURE SENSOR CIRCUITS
HOSE/TUBE CONNECTIONS TO THE EXHAUST DIFFERENTIAL PRESSURE SENSOR
EXHAUST DIFFERENTIAL PRESSURE SENSOR
DIESEL PARTICULATE FILTER

Always perform the Pre-Diagnostic Troubleshooting procedure before proceeding. (Refer to 9 - ENGINE - DIAGNOSIS AND TESTING)

Diagnostic Test

1. VISUAL INSPECTION

Turn the ignition off.

Visually inspect the Exhaust Differential Pressure Sensor for physical damage, proper electrical connection and proper mechanical connection. Ensure any tubes and/or hoses connected to the sensor are in good working condition and properly connected at all ends.

Visually inspect the entire exhaust system for bent, crushed or otherwise damaged tubes which may cause an exhaust system restriction.

Inspect the exhaust system for exhaust leaks.

Were any problems found?

Yes >> Repair or replace as necessary.

No >> Go To 2

2. PARTICULATE FILTER REGENERATION

Start and idle the engine.

With the scan tool, Clear DTCs in the Engine Control Module (ECM).

With the scan tool, perform the Diesel Particulate Filter Regeneration procedure.

After this procedure is complete, turn the ignition off for 60 seconds.

Test drive the vehicle.

With the scan tool, Read DTCs in the Engine Control Module (ECM).

Is the status Active for this DTC?

Yes >> Go To 3

No >> Test complete.

3. EXHAUST DIFFERENTIAL SENSOR CIRCUIT HIGH RESISTANCE

Turn the ignition off.

Disconnect the Exhaust Differential Pressure Sensor harness connector.

Disconnect the ECM harness connectors.

Measure the resistance of each Exhaust Differential Pressure Sensor circuit between the Exhaust Differential Pressure Sensor harness connector and the ECM harness connector.

Is the resistance below 10.0 ohms for each circuit?

Yes >> Go To 4

No >> Repair the circuit(s) that measured above 10.0 ohms for high resistance. (Refer to 9 - ENGINE - DIAGNOSIS AND TESTING)

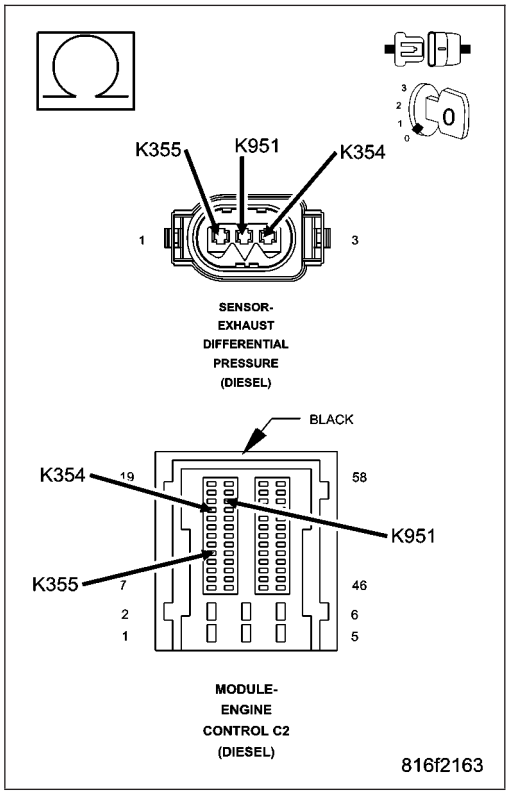

4. EXHAUST DIFFERENTIAL PRESSURE SENSOR

Turn the ignition off.

Replace the Exhaust Differential Pressure Sensor.

Turn the ignition on.

With the scan tool, Clear DTCs in the Engine Control Module (ECM).

Test drive the vehicle

With the scan tool, Read DTCs in the Engine Control Module (ECM).

Is the status Active for this DTC?

Yes >> Replace the Diesel Particulate Filter.

No >> Test Complete.

P1452–DIFFERENTIAL PRESSURE SENSOR HOSE PERFORMANCE

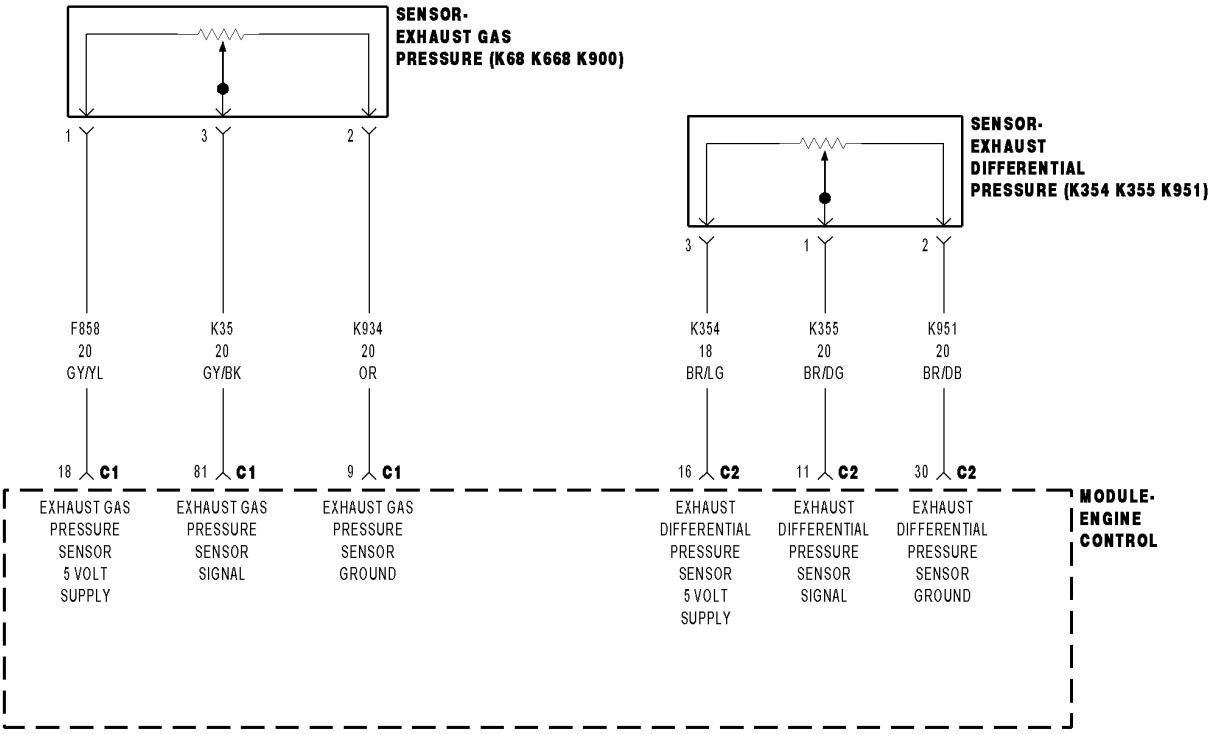

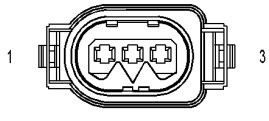

SENSOR-
EXHAUST
DIFFERENTIAL
PRESSURE
(DIESEL)

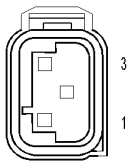

SENSOR-
EXHAUST GAS
PRESSURE
(DIESEL)

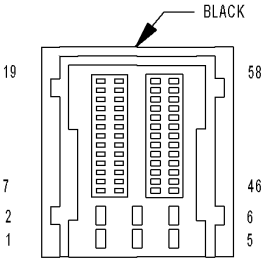

MODULE-
ENGINE
CONTROL C2
(DIESEL)

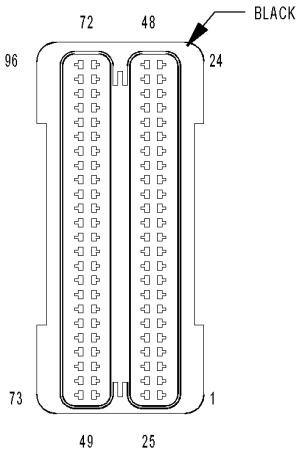

MODULE-
ENGINE CONTROL C1
(DIESEL)

816B74AB

For a complete wiring diagram **Refer to Section 8W**

Theory of Operation

The Diesel particulate filter is an inline canister filter located in the exhaust system between the engine and the muffler. This filter captures and stores ash particles created by the diesel combustion process. This filter is monitored by the ECM with a Differential Pressure Sensor. This sensor measures the difference in exhaust system pressure before and after the particulate filter through tube connections directly to the exhaust pipe. As ash accumulates in the filter, the exhaust pressure at the inlet side of the filter increases as compared to the pressure at the outlet side of the filter. The ECM monitors the sensor to determine when to perform a particulate filter regeneration procedure which is designed to clear or "burn-off" the ash collected in the filter.

- **When Monitored:**
  With the engine running.
- **Set Condition:**
  Differential Pressure Sensor signal indicates (–)10 hpa for 15.0 seconds.

Possible Causes
DAMAGED EXHAUST SYSTEM
LEAKING EXHAUST SYSTEM
HIGH RESISTANCE IN EXHAUST DIFFERENTIAL PRESSURE SENSOR CIRCUITS
HOSE/TUBE CONNECTIONS TO THE EXHAUST DIFFERENTIAL PRESSURE SENSOR
EXHAUST DIFFERENTIAL PRESSURE SENSOR
DIESEL PARTICULATE FILTER

Always perform the Pre-Diagnostic Troubleshooting procedure before proceeding. (Refer to 9 - ENGINE - DIAGNOSIS AND TESTING)

Diagnostic Test

1. VISUAL INSPECTION

Turn the ignition off.

Visually inspect the Exhaust Differential Pressure Sensor for physical damage, proper electrical connection and proper mechanical connection. Ensure any tubes and/or hoses connected to the sensor are in good working condition and properly connected at all ends.

Visually inspect the entire exhaust system for bent, crushed or otherwise damaged tubes which may cause an exhaust system restriction.

Inspect the exhaust system for exhaust leaks.

Were any problems found?

Yes >> Repair or replace as necessary.

No >> Go To 2

2. PARTICULATE FILTER REGENERATION

Start and idle the engine.

With the scan tool, Clear DTCs in the Engine Control Module (ECM).

With the scan tool, perform the Diesel Particulate Filter Regeneration procedure.

After this procedure is complete, turn the ignition off for 60 seconds.

Test drive the vehicle.

With the scan tool, Read DTCs in the Engine Control Module (ECM).

Is the status Active for this DTC?

Yes >> Go To 3

No >> Test complete.

3. EXHAUST DIFFERENTIAL SENSOR CIRCUIT HIGH RESISTANCE

Turn the ignition off.

Disconnect the Exhaust Differential Pressure Sensor harness connector.

Disconnect the ECM harness connectors.

Measure the resistance of each Exhaust Differential Pressure Sensor circuit between the Exhaust Differential Pressure Sensor harness connector and the ECM harness connector.

Is the resistance below 10.0 ohms for each circuit?

Yes >> Go To 4

No >> Repair the circuit(s) that measured above 10.0 ohms for high resistance. (Refer to 9 - ENGINE - DIAGNOSIS AND TESTING)

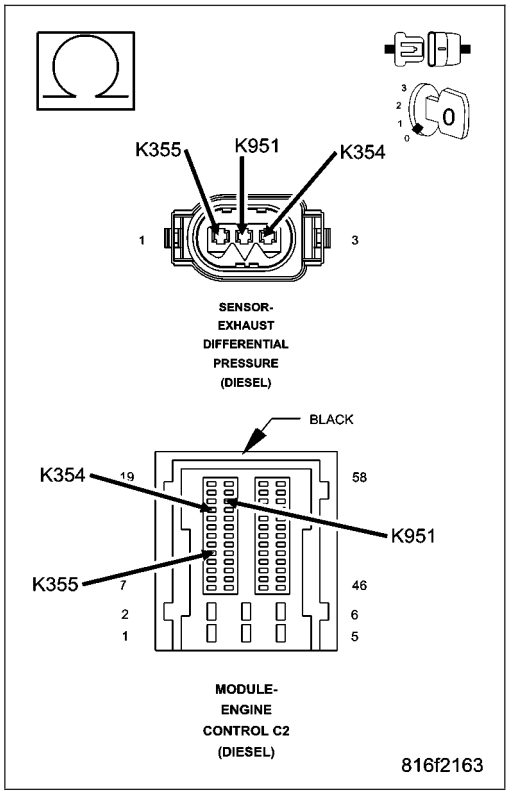

4. EXHAUST DIFFERENTIAL PRESSURE SENSOR

Turn the ignition off.

Replace the Exhaust Differential Pressure Sensor.

Turn the ignition on.

With the scan tool, Clear DTCs in the Engine Control Module (ECM).

Test drive the vehicle

With the scan tool, Read DTCs in the Engine Control Module (ECM).

Is the status Active for this DTC?

Yes >> Replace the Diesel Particulate Filter.

No >> Test Complete.

P1453–DIFFERENTIAL PRESSURE SENSOR HOSE BLOCKED

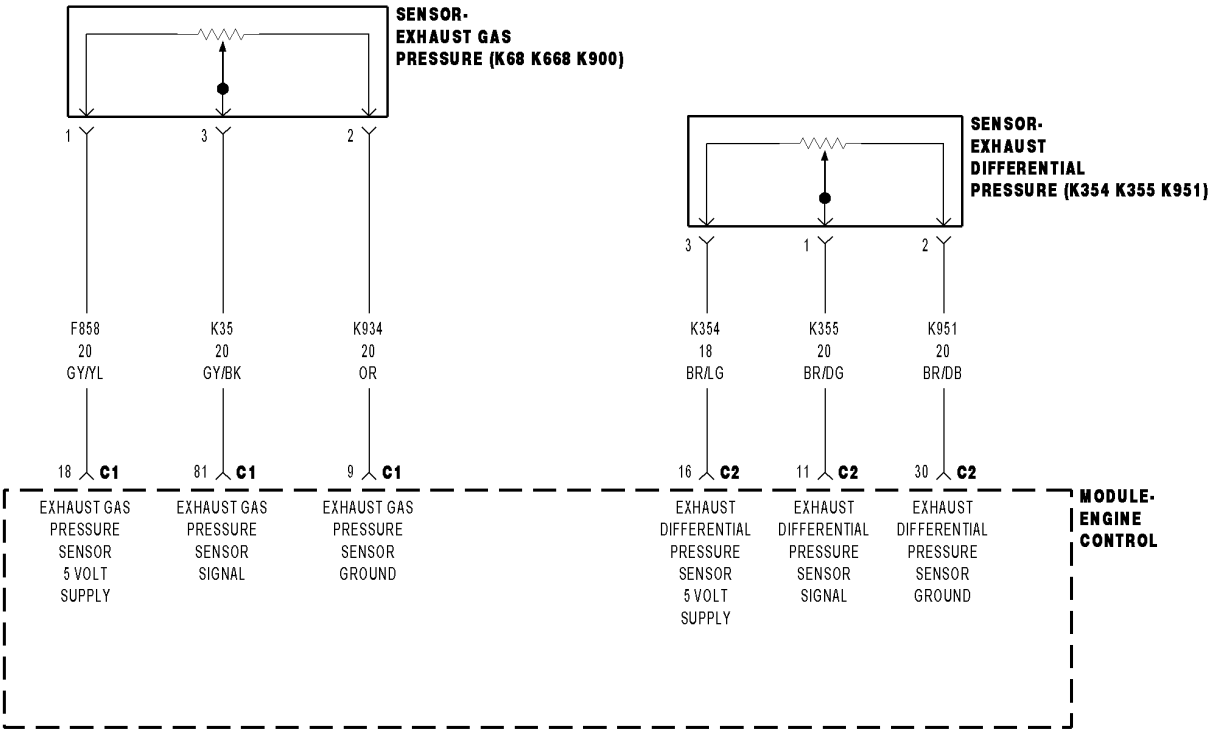

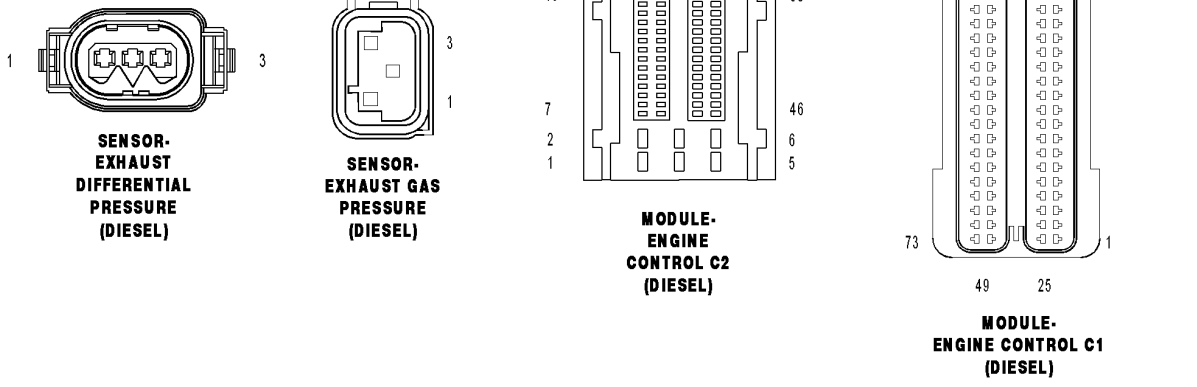

For a complete wiring diagram **Refer to Section 8W**

Theory of Operation

The Diesel particulate filter is an inline canister filter located in the exhaust system between the engine and the muffler. This filter captures and stores ash particles created by the diesel combustion process. This filter is monitored by the ECM with a Differential Pressure Sensor. This sensor measures the difference in exhaust system pressure before and after the particulate filter through tube connections directly to the exhaust pipe. As ash accumulates in the filter, the exhaust pressure at the inlet side of the filter increases as compared to the pressure at the outlet side of the filter. The ECM monitors the sensor to determine when to perform a particulate filter regeneration procedure which is designed to clear “burn-off” the ash collected in the filter.

- **When Monitored:**
  With the engine running.
- **Set Condition:**
  The ECM detects differential pressure that are lower than expected for certain engine operating conditions for 2.0 seconds.

Possible Causes
DAMAGED EXHAUST SYSTEM
LEAKING EXHAUST SYSTEM
HIGH RESISTANCE IN EXHAUST DIFFERENTIAL PRESSURE SENSOR CIRCUITS
HOSE/TUBE CONNECTIONS TO THE EXHAUST DIFFERENTIAL PRESSURE SENSOR
EXHAUST DIFFERENTIAL PRESSURE SENSOR
DIESEL PARTICULATE FILTER

Always perform the Pre-Diagnostic Troubleshooting procedure before proceeding. (Refer to 9 - ENGINE - DIAGNOSIS AND TESTING)

Diagnostic Test

1. VISUAL INSPECTION

Turn the ignition off.

Visually inspect the Exhaust Differential Pressure Sensor for physical damage, proper electrical connection and proper mechanical connection. Ensure any tubes and/or hoses connected to the sensor are in good working condition and properly connected at all ends.

Visually inspect the entire exhaust system for bent, crushed or otherwise damaged tubes which may cause an exhaust system restriction.

Inspect the exhaust system for exhaust leaks.

Were any problems found?

Yes >> Repair or replace as necessary.

No >> Go To 2

2. PARTICULATE FILTER REGENERATION

Start and idle the engine.

With the scan tool, Clear DTCs in the Engine Control Module (ECM).

With the scan tool, perform the Diesel Particulate Filter Regeneration procedure.

After this procedure is complete, turn the ignition off for 60 seconds.

Test drive the vehicle.

With the scan tool, Read DTCs in the Engine Control Module (ECM).

Is the status Active for this DTC?

Yes >> Go To 3

No >> Test complete.

3. EXHAUST DIFFERENTIAL SENSOR CIRCUIT HIGH RESISTANCE

Turn the ignition off.

Disconnect the Exhaust Differential Pressure Sensor harness connector.

Disconnect the ECM harness connectors.

Measure the resistance of each Exhaust Differential Pressure Sensor circuit between the Exhaust Differential Pressure Sensor harness connector and the ECM harness connector.

Is the resistance below 10.0 ohms for each circuit?

Yes >> Go To 4

No >> Repair the circuit(s) that measured above 10.0 ohms for high resistance. (Refer to 9 - ENGINE - DIAGNOSIS AND TESTING)

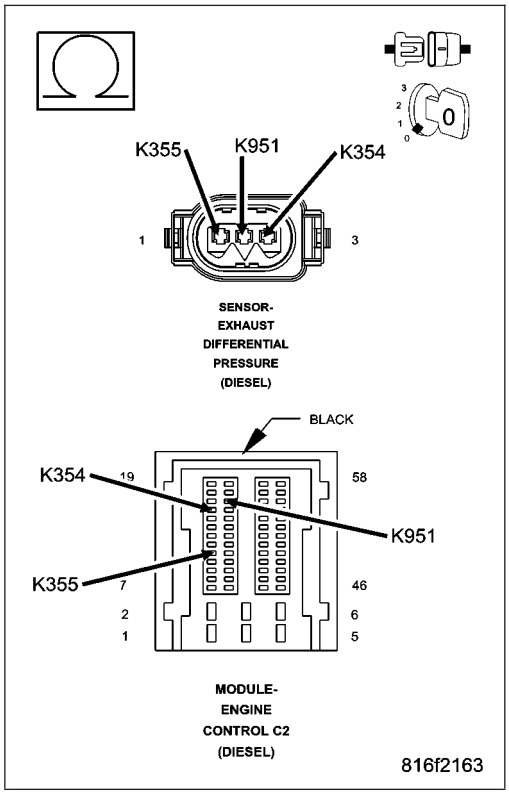

4. EXHAUST DIFFERENTIAL PRESSURE SENSOR

Turn the ignition off.

Replace the Exhaust Differential Pressure Sensor.

Turn the ignition on.

With the scan tool, Clear DTCs in the Engine Control Module (ECM).

Test drive the vehicle

With the scan tool, Read DTCs in the Engine Control Module (ECM).

Is the status Active for this DTC?

Yes >> Replace the Diesel Particulate Filter.

No >> Test Complete.

P1454–DIFFERENTIAL PRESSURE SENSOR FLOW TOO HIGH

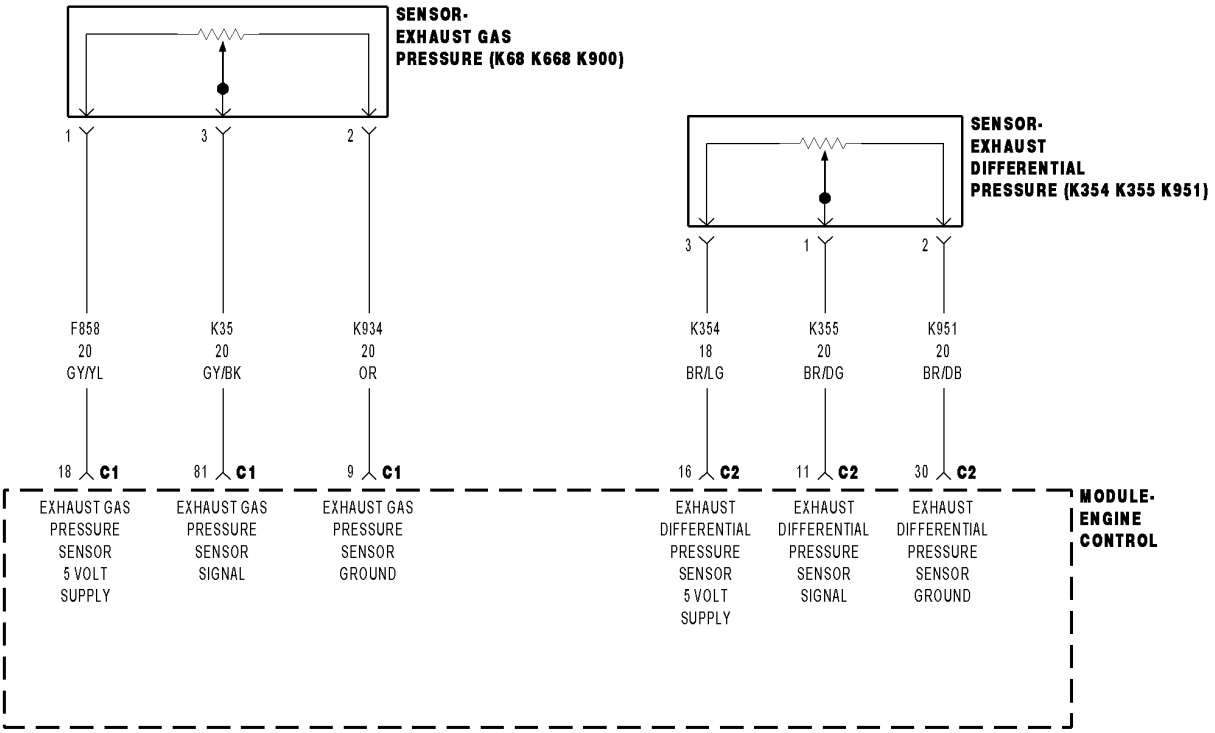

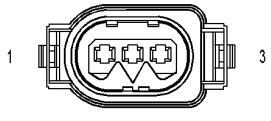

SENSOR-
EXHAUST
DIFFERENTIAL
PRESSURE
(DIESEL)

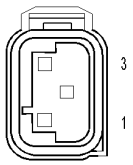

SENSOR-
EXHAUST GAS
PRESSURE
(DIESEL)

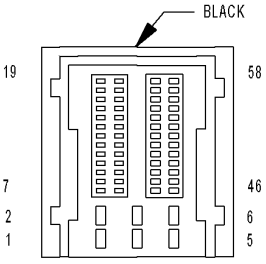

MODULE-
ENGINE
CONTROL C2
(DIESEL)

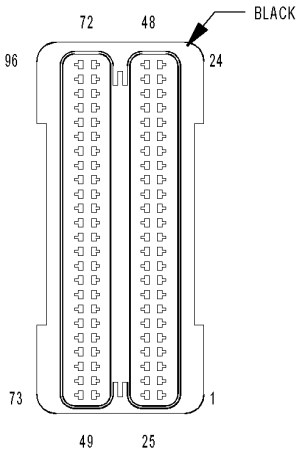

MODULE-
ENGINE CONTROL C1
(DIESEL)

816B74AB

For a complete wiring diagram **Refer to Section 8W**

Theory of Operation

The Diesel particulate filter is an inline canister filter located in the exhaust system between the engine and the muffler. This filter captures and stores ash particles created by the diesel combustion process. This filter is monitored by the ECM with a Differential Pressure Sensor. This sensor measures the difference in exhaust system pressure before and after the particulate filter through tube connections directly to the exhaust pipe. As ash accumulates in the filter, the exhaust pressure at the inlet side of the filter increases as compared to the pressure at the outlet side of the filter. The ECM monitors the sensor to determine when to perform a particulate filter regeneration procedure which is designed to clear “burn-off” the ash collected in the filter.

- **When Monitored:**
  With the engine running.
- **Set Condition:**
  The ECM detects incorrect exhaust flow through the particulate filter during certain engine operating conditions.

Possible Causes
DAMAGED EXHAUST SYSTEM
LEAKING EXHAUST SYSTEM
HIGH RESISTANCE IN EXHAUST DIFFERENTIAL PRESSURE SENSOR CIRCUITS
HOSE/TUBE CONNECTIONS TO THE EXHAUST DIFFERENTIAL PRESSURE SENSOR
EXHAUST DIFFERENTIAL PRESSURE SENSOR
DIESEL PARTICULATE FILTER

Always perform the Pre-Diagnostic Troubleshooting procedure before proceeding. (Refer to 9 - ENGINE - DIAGNOSIS AND TESTING)

Diagnostic Test

1. VISUAL INSPECTION

Turn the ignition off.

Visually inspect the Exhaust Differential Pressure Sensor for physical damage, proper electrical connection and proper mechanical connection. Ensure any tubes and/or hoses connected to the sensor are in good working condition and properly connected at all ends.

Visually inspect the entire exhaust system for bent, crushed or otherwise damaged tubes which may cause an exhaust system restriction.

Inspect the exhaust system for exhaust leaks.

Were any problems found?

Yes >> Repair or replace as necessary.

No >> Go To 2

2. PARTICULATE FILTER REGENERATION

Start and idle the engine.

With the scan tool, Clear DTCs in the Engine Control Module (ECM).

With the scan tool, perform the Diesel Particulate Filter Regeneration procedure.

After this procedure is complete, turn the ignition off for 60 seconds.

Test drive the vehicle.

With the scan tool, Read DTCs in the Engine Control Module (ECM).

Is the status Active for this DTC?

Yes >> Go To 3

No >> Test complete.

3. EXHAUST DIFFERENTIAL SENSOR CIRCUIT HIGH RESISTANCE

Turn the ignition off.

Disconnect the Exhaust Differential Pressure Sensor harness connector.

Disconnect the ECM harness connectors.

Measure the resistance of each Exhaust Differential Pressure Sensor circuit between the Exhaust Differential Pressure Sensor harness connector and the ECM harness connector.

Is the resistance below 10.0 ohms for each circuit?

Yes >> Go To 4

No >> Repair the circuit(s) that measured above 10.0 ohms for high resistance. (Refer to 9 - ENGINE - DIAGNOSIS AND TESTING)

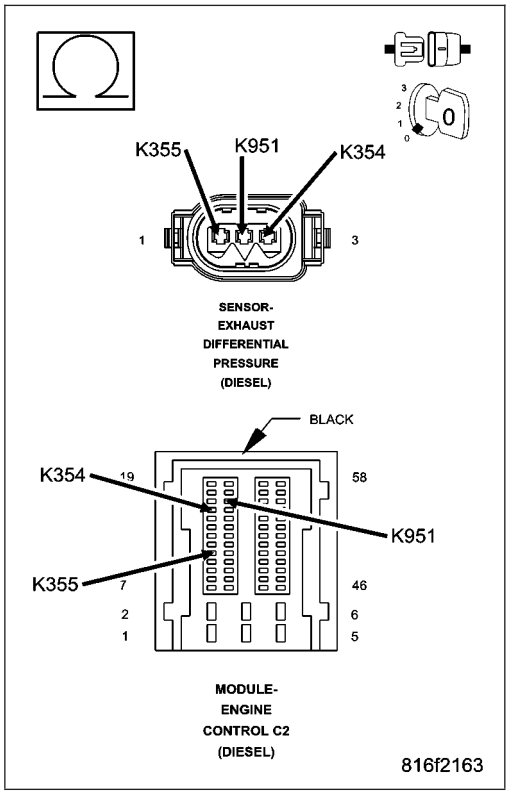

4. EXHAUST DIFFERENTIAL PRESSURE SENSOR

Turn the ignition off.

Replace the Exhaust Differential Pressure Sensor.

Turn the ignition on.

With the scan tool, Clear DTCs in the Engine Control Module (ECM).

Test drive the vehicle

With the scan tool, Read DTCs in the Engine Control Module (ECM).

Is the status Active for this DTC?

Yes >> Replace the Diesel Particulate Filter.

No >> Test Complete.

P1648-GLOW PLUG MODULE INTERNAL

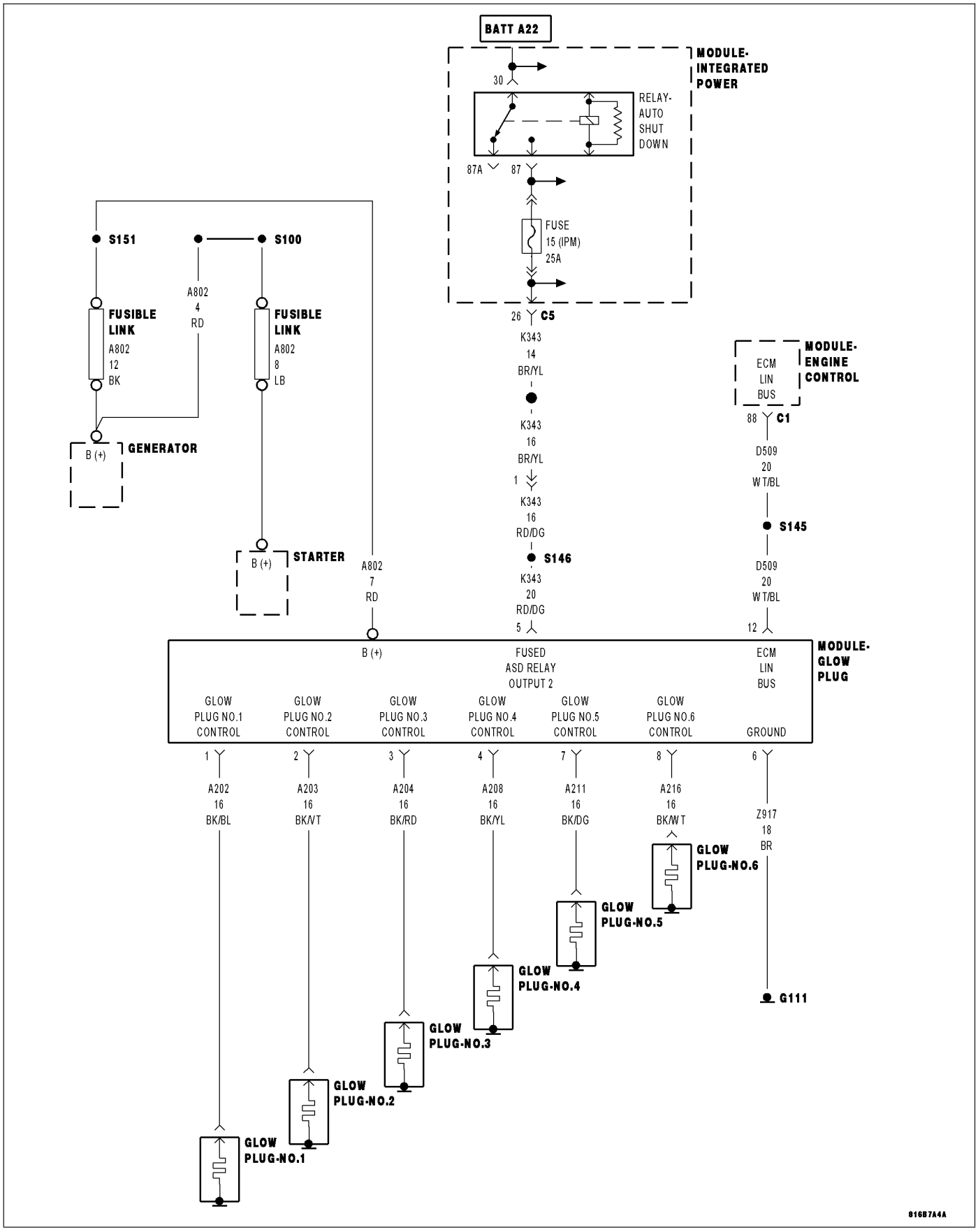

For a complete wiring diagram **Refer to Section 8W**

- **When Monitored:**
  With the ignition on.
- **Set Condition:**
  The Glow Plug Control Module reports an internal fault to the ECM.

Possible Causes
INTERMITTENT DTC
GLOW PLUG MODULE

Always perform the Pre-Diagnostic Troubleshooting procedure before proceeding. (Refer to 9 - ENGINE - DIAGNOSIS AND TESTING)

Diagnostic Test

1. DTC IS ACTIVE

Ignition on, engine not running.
With the scan tool, Clear DTCs.
Monitor the scan tool for at least two minutes.
Cycle the ignition key off and on several times, leaving the ignition on for at least 10 seconds at a time.
Start the engine.
Allow the engine to reach normal operating temperature.
With the scan tool, select View DTCs.

Is the status Active for this DTC?

Yes >> Go To 2

No >> Refer to the *CHECKING FOR AN INTERMITTENT DTC Diagnostic Procedure. (Refer to 9 - ENGINE - DIAGNOSIS AND TESTING)

2. GLOW PLUG MODULE

Using the wiring diagram/schematic as a guide, inspect the Glow Plug Module wiring and connectors.
Look for any chafed, pierced, pinched, or partially broken wires.
Look for broken, bent, pushed out or corroded terminals.
Monitor the scan tool data relative to this circuit and wiggle test the wiring and connectors.
Look for the data to change or for the DTC to reset during the wiggle test.
Refer to any Technical Service Bulletins that may apply.

Were any problems found?

Yes >> Repair as necessary.
Perform the ECM Verification Test Ver. 1. (Refer to 9 - ENGINE - DIAGNOSIS AND TESTING)

No >> Replace the Glow Plug Module in accordance with the Service Information.
Perform the ECM Verification Test Ver. 1. (Refer to 9 - ENGINE - DIAGNOSIS AND TESTING)

P1649-GLOW PLUG MODULE POWER SUPPLY CIRCUIT

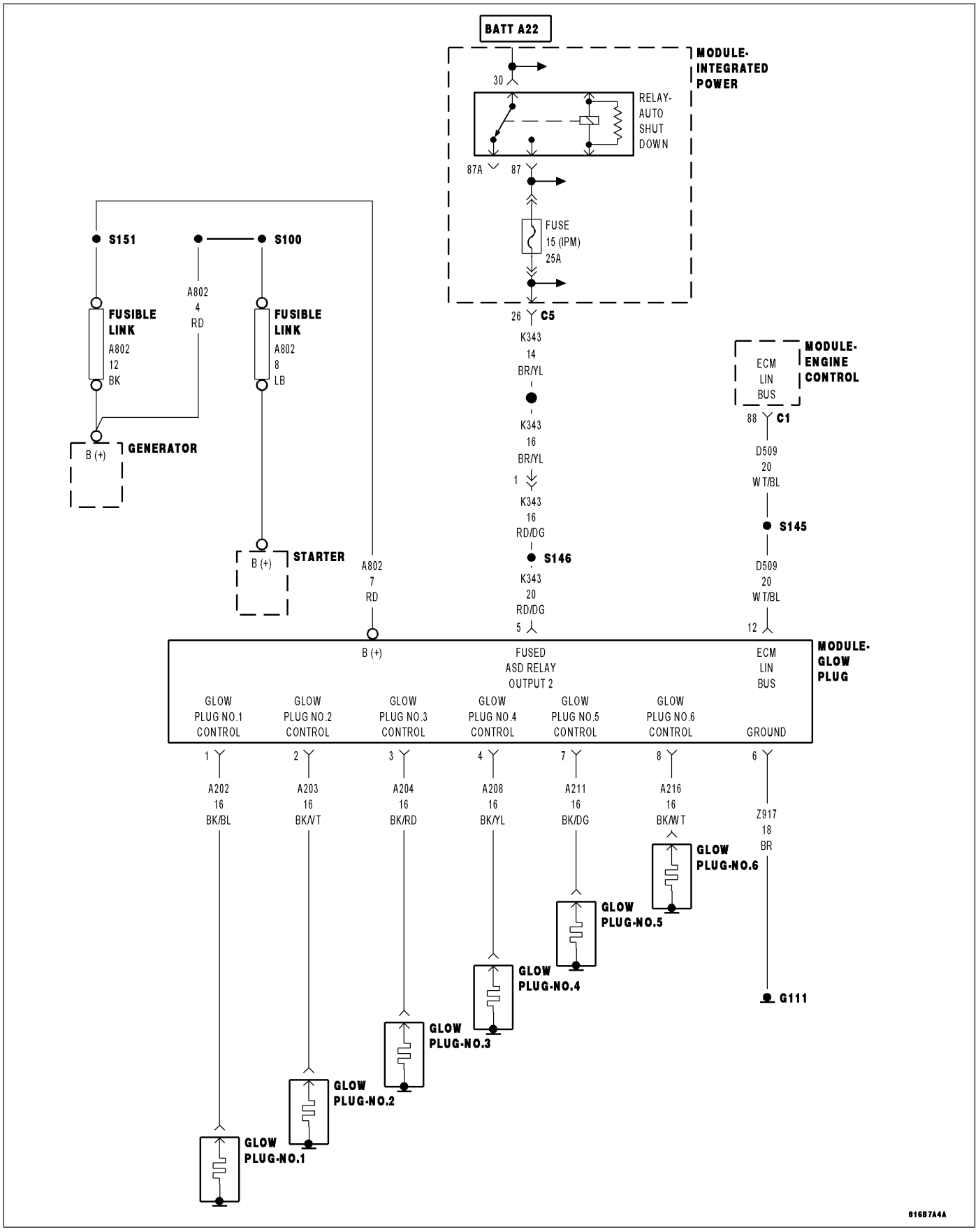

For a complete wiring diagram **Refer to Section 8W**

- **When Monitored:**
  With the ignition on and the Glow Plugs commanded on.
- **Set Condition:**
  The Glow Plug Control Module reports a power supply circuit fault to the ECM.

Possible Causes
INTERMITTENT DTC
(K343) FUSED ASD RELAY OUTPUT 2 CIRCUIT OPEN OR HIGH RESISTANCE
(Z921) GROUND CIRCUIT OPEN OR HIGH RESISTANCE
GLOW PLUG MODULE
ENGINE CONTROL MODULE (ECM)

Always perform the Pre-Diagnostic Troubleshooting procedure before proceeding. (Refer to 9 - ENGINE - DIAGNOSIS AND TESTING)

Diagnostic Test

1. DTC IS ACTIVE

NOTE: Diagnose and repair any system voltage or ASD Relay DTCs before continuing with this test.
Ignition on, engine not running.
With the scan tool, Clear DTCs in the Engine Control Module (ECM).
With the scan tool, actuate the Glow Plugs.
Monitor the scan tool for at least two minutes.
With the scan tool, select View DTCs.

Is the status Active for this DTC?

Yes >> Go To 2

No >> Refer to the *CHECKING FOR AN INTERMITTENT DTC Diagnostic Procedure. (Refer to 9 - ENGINE - DIAGNOSIS AND TESTING)

2. (K343) FUSED ASD RELAY OUTPUT 2 CIRCUIT OPEN OR HIGH RESISTANCE

Turn the ignition off.
Disconnect the Glow Plug Module connector.
Turn the ignition on.
Using a 12 volt test light connected to ground, check the (K343) Fused ASD Relay Output 2 circuit in the Glow Plug Module connector.

NOTE: The test light should be illuminated and bright. Compare the brightness to that of a direct connection to the battery.

Is the test light illuminated and bright?

Yes >> Go to 3

No >> Repair the (K343) Fused ASD Relay Output 2 circuit for an open circuit or high resistance.
Perform the ECM Verification Test Ver. 1. (Refer to 9 - ENGINE - DIAGNOSIS AND TESTING)

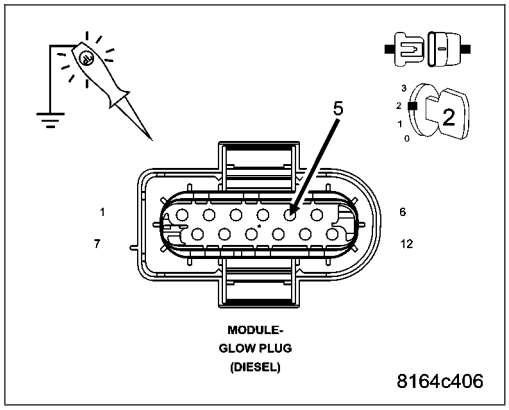

3. (Z921) GROUND CIRCUIT OPEN OR HIGH RESISTANCE

Turn the ignition off.

Using a 12 volt test light connected to B+, check the (Z921) Ground circuit in the Glow Plug Module connector.

NOTE: The test light should be illuminated and bright. Compare the brightness to that of a direct connection to the battery.

Is the test light illuminated and bright?

Yes >> Go to 4

No >> Repair the (Z921) Ground circuit for an open circuit or high resistance.
Perform the ECM Verification Test Ver. 1. (Refer to 9 - ENGINE - DIAGNOSIS AND TESTING)

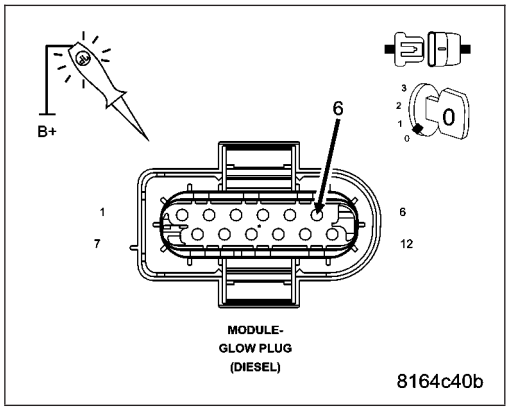

4. GLOW PLUG MODULE

Replace the Glow Plug Module in accordance with the Service Information.

Turn the ignition on.

With the scan tool, Clear DTCs.

With the scan tool, actuate the Glow Plugs.

Monitor the scan tool for at least two minutes.

With the scan tool, select View DTCs.

Is the status Active for this DTC?

Yes >> Go to 5

No >> Test Complete.
Perform the ECM Verification Test Ver. 1. (Refer to 9 - ENGINE - DIAGNOSIS AND TESTING)

5. ENGINE CONTROL MODULE (ECM)

Using the wiring diagram/schematic as a guide, inspect the wiring and connectors between the Glow Plug Module and the Engine Control Module (ECM).

Look for any chafed, pierced, pinched, or partially broken wires.

Look for broken, bent, pushed out or corroded terminals.

Refer to any Technical Service Bulletins that may apply.

Were any problems found?

Yes >> Repair as necessary.
Perform the ECM Verification Test Ver. 1. (Refer to 9 - ENGINE - DIAGNOSIS AND TESTING)

No >> Replace the Engine Control Module (ECM) in accordance with the Service Information.
Perform the ECM Verification Test Ver. 1. (Refer to 9 - ENGINE - DIAGNOSIS AND TESTING)

P1685-SKIM SYSTEM

For a complete wiring diagram **Refer to Section 8W**

- **When Monitored:**
  With the ignition on.
- **Set Condition:**
  A communication error occurs between the ECM and SKREEM.

Possible Causes
INTERMITTENT DTC
SKREEM
ENGINE CONTROL MODULE (ECM)

Always perform the Pre-Diagnostic Troubleshooting procedure before proceeding. (Refer to 9 - ENGINE - DIAGNOSIS AND TESTING)

Diagnostic Test

1. CHECK FOR SKREEM COMMUNICATION AND DTCS

Ignition on, engine not running.
With the scan tool, check for proper communication and active DTCs in the SKREEM.

Are any SKREEM communication problems or DTCs present?

Yes >> Refer to the symptom list for problems related to SKREEM Communication and DTCs before continuing.

No >> Go To 2

2. CHECK FOR ACTIVE DTC

Turn the ignition on.
With the scan tool, clear all ECM DTCs.
Turn the ignition on and off several times pausing 10 seconds between key cycles.
With the scan tool, select View DTCs in the ECM.

Is the status Active for this DTC?

Yes >> Go to 3

No >> Refer to *CHECKING FOR INTERMITTENT DTC in the symptom list. (Refer to 9 - ENGINE - DIAGNOSIS AND TESTING)

3. REPLACE THE SKREEM AND RETEST

Replace and program the SKREEM in accordance with the Service Information.
Turn the ignition on.
With the scan tool, clear all ECM DTCs.
Turn the ignition on and off several times pausing 10 seconds between key cycles.
With the scan tool, select View DTCs in the ECM.

Is the status Active for this DTC?

Yes >> Replace and program the Engine Control Module in accordance the Service Information.
Perform the ECM Verification Test Ver. 1. (Refer to 9 - ENGINE - DIAGNOSIS AND TESTING)

No >> Test complete.

P2002–DIESEL PARTICULATE FILTER EFFICIENCY BELOW THRESHOLD

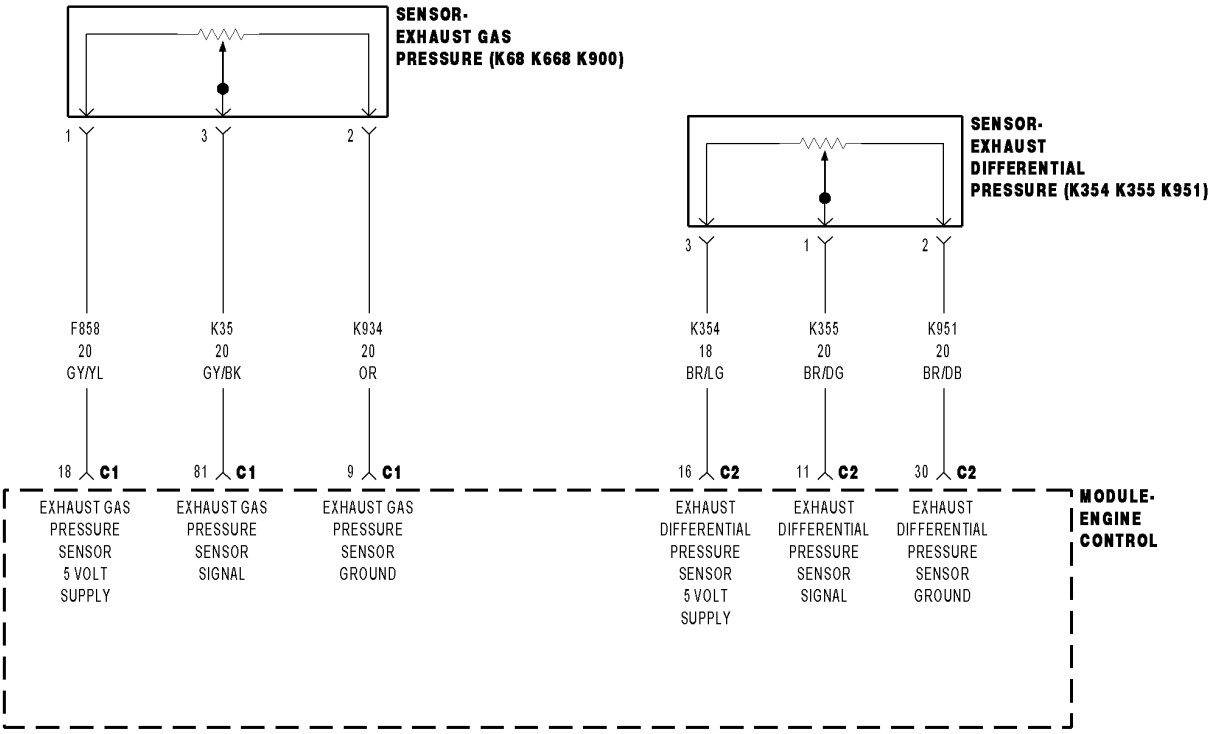

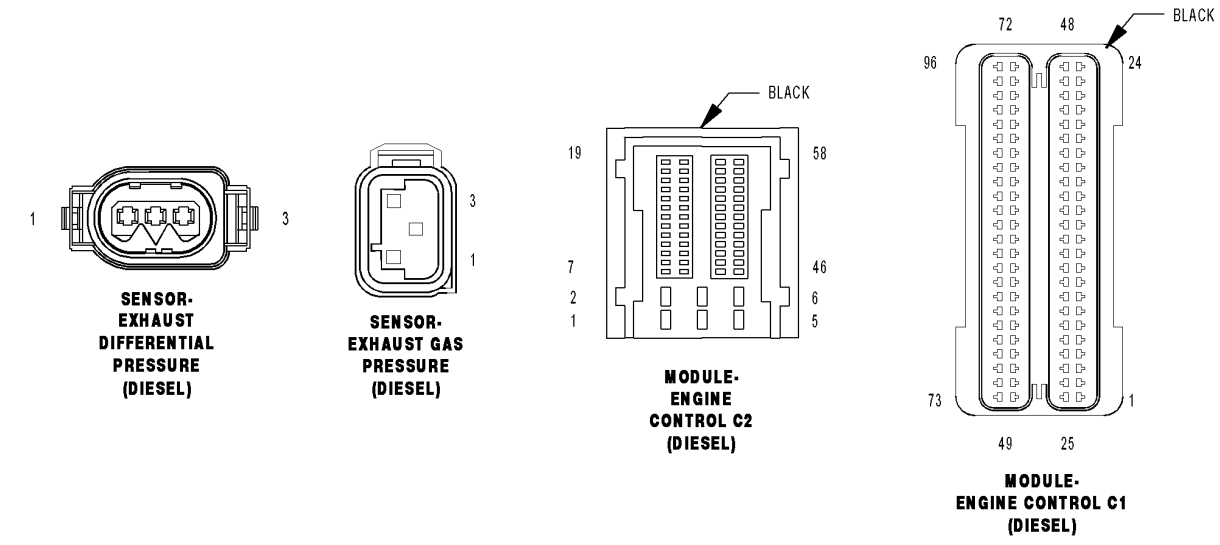

For a complete wiring diagram **Refer to Section 8W**

Theory of Operation

The Diesel particulate filter is an inline canister filter located in the exhaust system between the engine and the muffler. This filter captures and stores ash particles created by the diesel combustion process. This filter is monitored by the ECM with a Differential Pressure Sensor. This sensor measures the difference in exhaust system pressure before and after the particulate filter through tube connections directly to the exhaust pipe. As ash accumulates in the filter, the exhaust pressure at the inlet side of the filter increases as compared to the pressure at the outlet side of the filter. The ECM monitors the sensor to determine when to perform a particulate filter regeneration procedure which is designed to clear “burn-off” the ash collected in the filter.

- **When Monitored:**
  With the engine running.
- **Set Condition:**
  The ECM detects incorrect exhaust flow through the particulate filter during certain engine operating conditions.

Possible Causes
DAMAGED EXHAUST SYSTEM
LEAKING EXHAUST SYSTEM
HIGH RESISTANCE IN EXHAUST DIFFERENTIAL PRESSURE SENSOR CIRCUITS
HOSE/TUBE CONNECTIONS TO THE EXHAUST DIFFERENTIAL PRESSURE SENSOR
EXHAUST DIFFERENTIAL PRESSURE SENSOR
DIESEL PARTICULATE FILTER

Always perform the Pre-Diagnostic Troubleshooting procedure before proceeding. (Refer to 9 - ENGINE - DIAGNOSIS AND TESTING)

Diagnostic Test

1. VISUAL INSPECTION

Turn the ignition off.

Visually inspect the Exhaust Differential Pressure Sensor for physical damage, proper electrical connection and proper mechanical connection. Ensure any tubes and/or hoses connected to the sensor are in good working condition and properly connected at all ends.

Visually inspect the entire exhaust system for bent, crushed or otherwise damaged tubes which may cause an exhaust system restriction.

Inspect the exhaust system for exhaust leaks.

Were any problems found?

Yes >> Repair or replace as necessary.

No >> Go To 2

2. PARTICULATE FILTER REGENERATION

Start and idle the engine.

With the scan tool, Clear DTCs in the Engine Control Module (ECM).

With the scan tool, perform the Diesel Particulate Filter Regeneration procedure.

After this procedure is complete, turn the ignition off for 60 seconds.

Test drive the vehicle.

With the scan tool, Read DTCs in the Engine Control Module (ECM).

Is the status Active for this DTC?

Yes >> Go To 3

No >> Test complete.

3. EXHAUST DIFFERENTIAL PRESSURE SENSOR CIRCUIT HIGH RESISTANCE

Turn the ignition off.

Disconnect the Exhaust Differential Pressure Sensor harness connector.

Disconnect the ECM harness connectors.

Measure the resistance of each Exhaust Differential Pressure Sensor circuit between the Exhaust Differential Pressure Sensor harness connector and the ECM harness connector.

Is the resistance below 10.0 ohms for each circuit?

Yes >> Go To 4

No >> Repair the circuit(s) that measured above 10.0 ohms for high resistance. (Refer to 9 - ENGINE - DIAGNOSIS AND TESTING)

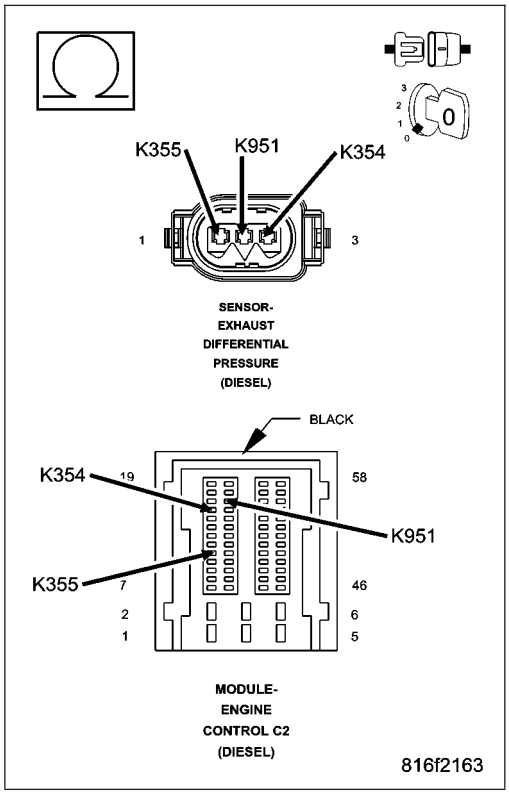

4. EXHAUST DIFFERENTIAL PRESSURE SENSOR

Turn the ignition off.

Replace the Exhaust Differential Pressure Sensor.

Turn the ignition on.

With the scan tool, Clear DTCs in the Engine Control Module (ECM).

Test drive the vehicle

With the scan tool, Read DTCs in the Engine Control Module (ECM).

Is the status Active for this DTC?

Yes >> Replace the Diesel Particulate Filter.

No >> Test Complete.

P2008-INTAKE MANIFOLD RUNNER (SWIRL) CONTROL CIRCUIT OPEN

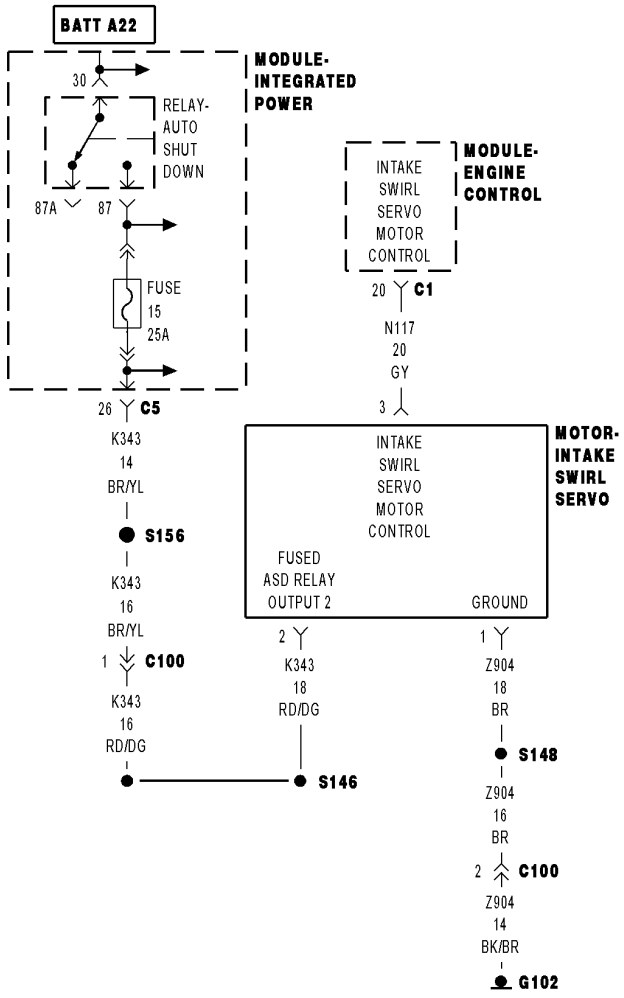

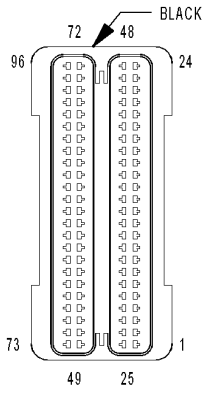

MODULE-
ENGINE CONTROL C1
(DIESEL)

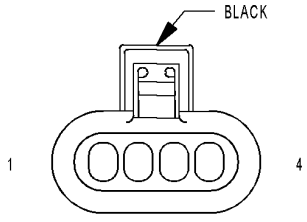

MOTOR-
INTAKE SWIRL
SERVO
(DIESEL)

816B74A3

For a complete wiring diagram **Refer to Section 8W**

- **When Monitored:**
  With the ignition on and the Intake Swirl Servo Motor command off.
- **Set Condition:**
  The ECM does not detect voltage on the (N117) Intake Swirl Servo Motor Control circuit for 2.0 seconds.

Possible Causes
INTERMITTENT DTC
(N117) INTAKE SWIRL SERVO MOTOR CONTROL CIRCUIT SHORTED TO GROUND
(N117) INTAKE SWIRL SERVO MOTOR CONTROL CIRCUIT OPEN OR HIGH RESISTANCE
(K343) FUSED ASD RELAY OUTPUT CIRCUIT 2 OPEN OR HIGH RESISTANCE
INTAKE SWIRL SERVO MOTOR
ENGINE CONTROL MODULE (ECM)

Always perform the Pre-Diagnostic Troubleshooting procedure before proceeding. (Refer to 9 - ENGINE - DIAGNOSIS AND TESTING)

Diagnostic Test

1. DTC IS ACTIVE

Ignition on, engine not running.
With the scan tool, Clear DTCs in the Engine Control Module (ECM).
With the scan tool, actuate the Intake Swirl Servo Motor.
Monitor the scan tool for at least two minutes.
With the scan tool, select View DTCs.

Is the status Active for this DTC?

Yes >> Go To 2

No >> Refer to the *CHECKING FOR AN INTERMITTENT DTC Diagnostic Procedure. (Refer to 9 - ENGINE - DIAGNOSIS AND TESTING)

2. (N117) INTAKE SWIRL SERVO MOTOR CONTROL CIRCUIT SHORTED TO GROUND

Turn the ignition off.
Disconnect the Intake Swirl Servo Motor connector.
Disconnect the Engine Control Module (ECM) connector.
Measure the resistance between ground and the (N117) Intake Swirl Servo Motor Control circuit in the Intake Swirl Servo Motor connector.

Is the resistance above 10.0 ohms?

Yes >> Go to 3

No >> Repair the (N117) Intake Swirl Servo Motor Control circuit for a short to ground.
Perform the ECM Verification Test Ver. 1. (Refer to 9 - ENGINE - DIAGNOSIS AND TESTING)

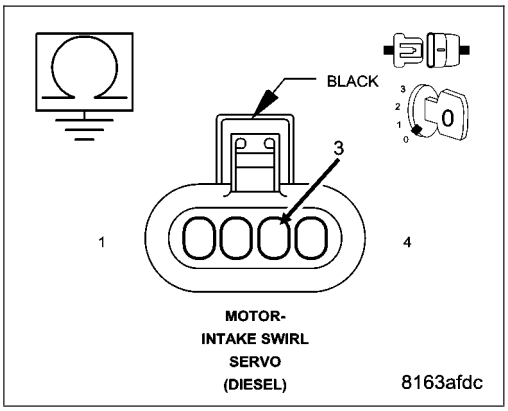

3. (N117) INTAKE SWIRL SERVO MOTOR CONTROL CIRCUIT OPEN OR HIGH RESISTANCE

Measure the resistance of the (N117) Intake Swirl Servo Motor Control circuit between the Intake Swirl Servo Motor connector and the Engine Control Module (ECM) connector.

Is the resistance below 10.0 ohms?

Yes >> Go to 4

No >> Repair the (N117) Intake Swirl Servo Motor Control circuit for an open circuit or high resistance.

Perform the ECM Verification Test Ver. 1. (Refer to 9 - ENGINE - DIAGNOSIS AND TESTING)

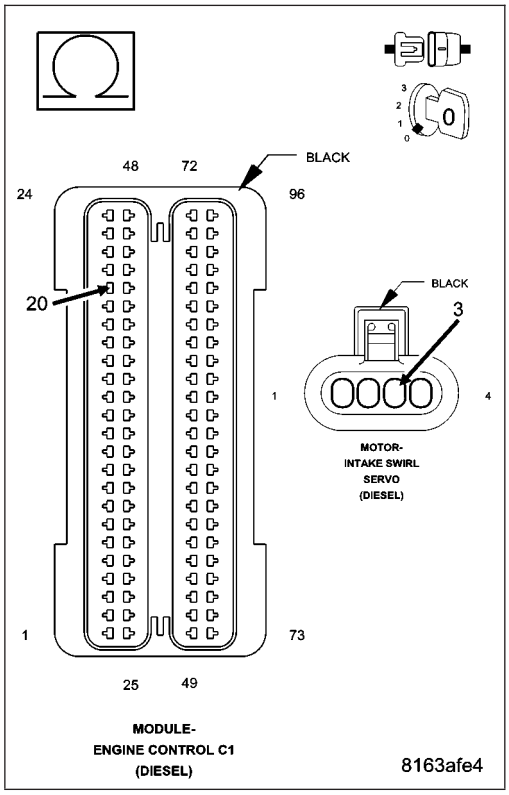

4. (K343) FUSED ASD RELAY OUTPUT 2 CIRCUIT OPEN OR HIGH RESISTANCE

Connect the Engine Control Module (ECM) connector.

Turn the ignition on.

Using a 12 volt test light connected to ground, check the (K343) Fused ASD Relay Output 2 circuit in the Intake Swirl Servo Motor connector.

NOTE: The test light should be illuminated and bright. Compare the brightness to that of a direct connection to the battery.

Is the test light illuminated and bright?

Yes >> Go to 5

No >> Repair the (K343) Fused ASD Relay Output 2 circuit for an open circuit or high resistance.

Perform the ECM Verification Test Ver. 1. (Refer to 9 - ENGINE - DIAGNOSIS AND TESTING)

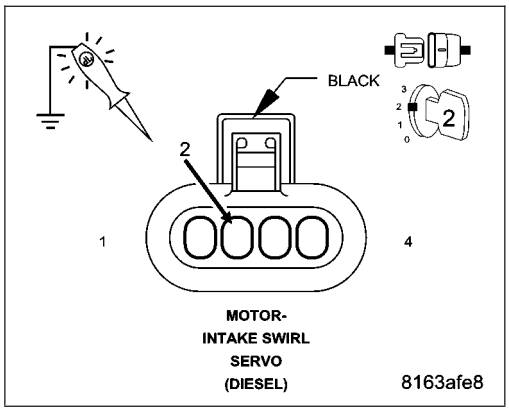

5. INTAKE SWIRL SERVO MOTOR

Connect the Engine Control Module (ECM) connector.

Turn the ignition on.

With the scan tool, actuate the Intake Swirl Servo Motor (Swirl Actuator) to 100%.

Using a 12 volt test light connected to 12 volts, check the (N117) Intake Swirl Servo Motor Control circuit in the Swirl Solenoid harness connector.

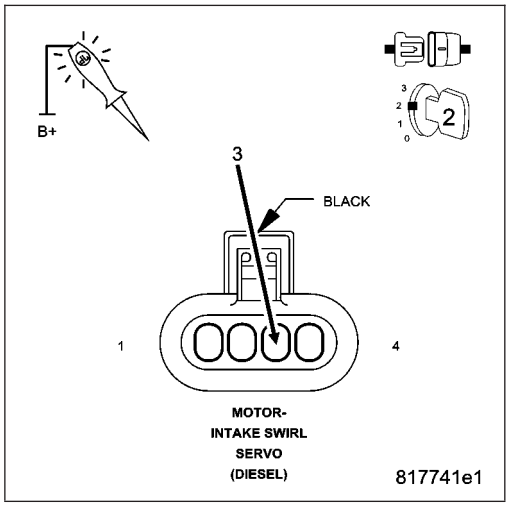

NOTE: The test light should be illuminated and bright. Compare the brightness to that of a direct connection to the battery.

NOTE: The circuit will remain actuated by the controller for 30 seconds. Be certain the actuation is active when checking the circuit.

With the scan tool, actuate the Intake Swirl Servo Motor (Swirl Actuator) to 0%.

Using a 12 volt test light connected to 12 volts, check the (N117) Intake Swirl Servo Motor Control circuit in the Swirl Solenoid harness connector.

NOTE: The test light should not be illuminated.

NOTE: The circuit will remain actuated by the controller for 30 seconds. Be certain the actuation is active when checking the circuit.

Is the test light illuminated and bright with the actuation at 100% and not illuminated with the actuation at 0%?

Yes >> Replace the Intake Swirl Servo Motor in accordance with the Service Information.
Perform the ECM Verification Test Ver. 1 (Refer to 9 - ENGINE - DIAGNOSIS AND TESTING).

No >> Go to 6

6. ENGINE CONTROL MODULE (ECM)

Using the wiring diagram/schematic as a guide, inspect the wiring and connectors between the Intake Swirl Servo Motor and the Engine Control Module (ECM).

Look for any chafed, pierced, pinched, or partially broken wires.

Look for broken, bent, pushed out or corroded terminals.

Refer to any Technical Service Bulletins that may apply.

Were any problems found?

Yes >> Repair as necessary.
Perform the ECM Verification Test Ver. 1. (Refer to 9 - ENGINE - DIAGNOSIS AND TESTING)

No >> Replace the Engine Control Module (ECM) in accordance with the Service Information.
Perform the ECM Verification Test Ver. 1. (Refer to 9 - ENGINE - DIAGNOSIS AND TESTING)

P2009-INTAKE MANIFOLD RUNNER (SWIRL) CONTROL CIRCUIT LOW

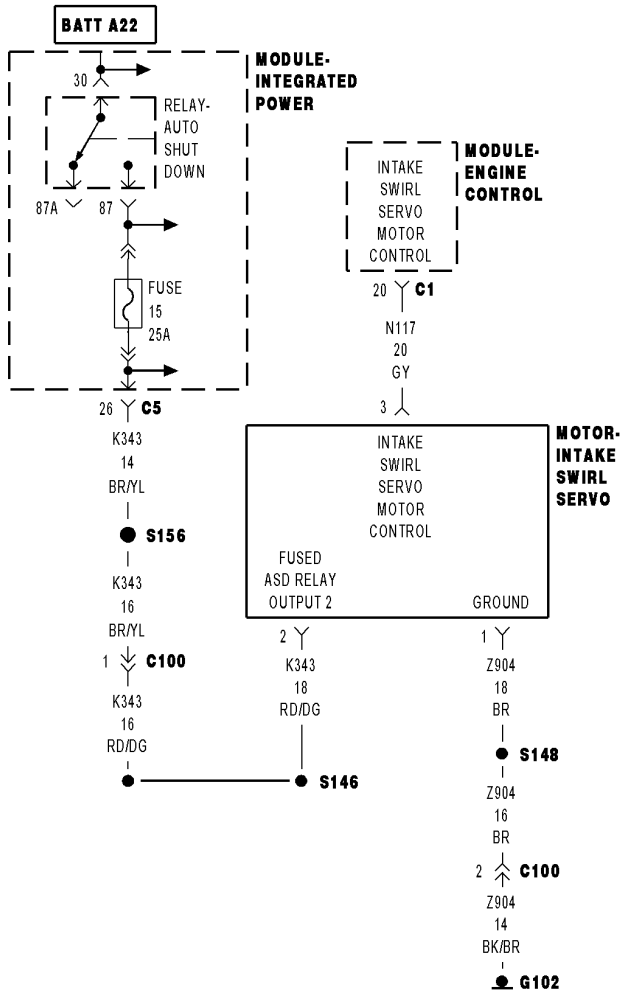

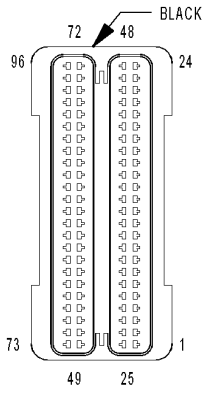

MODULE-
ENGINE CONTROL C1
(DIESEL)

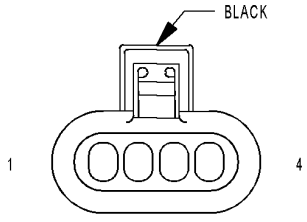

MOTOR-
INTAKE SWIRL
SERVO
(DIESEL)

816B74A3

For a complete wiring diagram **Refer to Section 8W**

- **When Monitored:**
  With the ignition on and the Intake Swirl Servo Motor command off.
- **Set Condition:**
  The ECM detects a short to ground on the (N117) Intake Swirl Servo Motor Control circuit for 2.3 seconds.

Possible Causes
INTERMITTENT DTC
(N117) INTAKE SWIRL SERVO MOTOR CONTROL CIRCUIT SHORTED TO GROUND
(N117) INTAKE SWIRL SERVO MOTOR CONTROL CIRCUIT OPEN OR HIGH RESISTANCE
INTAKE SWIRL SERVO MOTOR
ENGINE CONTROL MODULE (ECM)

Always perform the Pre-Diagnostic Troubleshooting procedure before proceeding.

Diagnostic Test

1. DTC IS ACTIVE

Ignition on, engine not running.
With the scan tool, Clear DTCs in the Engine Control Module (ECM).
With the scan tool, actuate the Intake Swirl Servo Motor.
Monitor the scan tool for at least two minutes.
With the scan tool, select View DTCs.

Is the status Active for this DTC?

Yes >> Go To 2

No >> Refer to the *CHECKING FOR AN INTERMITTENT DTC Diagnostic Procedure. (Refer to 9 - ENGINE - DIAGNOSIS AND TESTING)

2. (N117) INTAKE SWIRL SERVO MOTOR CONTROL CIRCUIT SHORTED TO GROUND

Turn the ignition off.
Disconnect the Intake Swirl Servo Motor connector.
Disconnect the Engine Control Module (ECM) connector.
Measure the resistance between ground and the (N117) Intake Swirl Servo Motor Control circuit in the Intake Swirl Servo Motor connector.

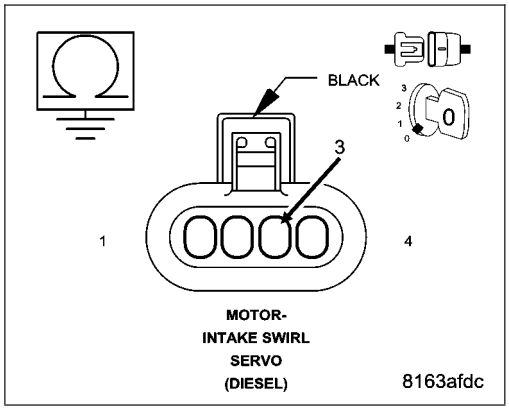

Is the resistance below 1000.0 ohms?

Yes >> Repair the (N117) Intake Swirl Servo Motor Control circuit for a short to ground.
Perform the ECM Verification Test Ver. 1. (Refer to 9 - ENGINE - DIAGNOSIS AND TESTING)

No >> Go to 3

3. (N117) INTAKE SWIRL SERVO MOTOR CONTROL CIRCUIT OPEN OR HIGH RESISTANCE

Measure the resistance of the (N117) Intake Swirl Servo Motor Control circuit between the Intake Swirl Servo Motor connector and the Engine Control Module (ECM) connector.

Is the resistance below 10.0 ohms?

Yes >> Go to 4

No >> Repair the (N117) Intake Swirl Servo Motor Control circuit for an open circuit or high resistance.
Perform the ECM Verification Test Ver. 1. (Refer to 9 - ENGINE - DIAGNOSIS AND TESTING)

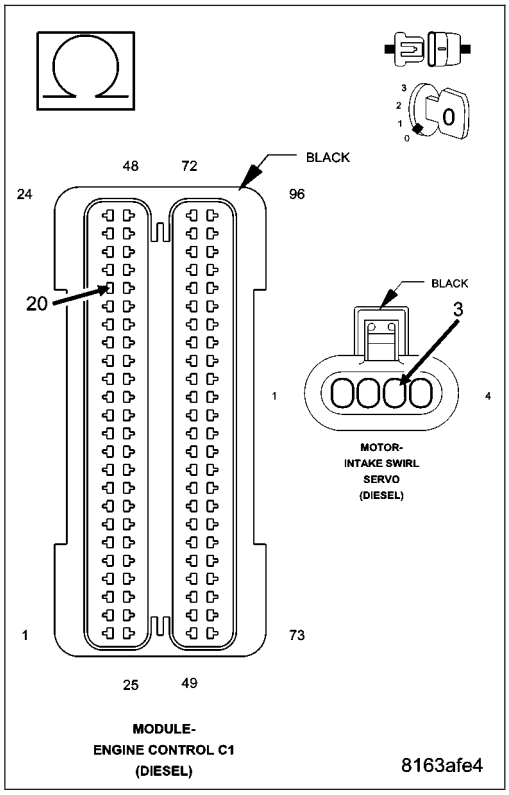

4. INTAKE SWIRL SERVO MOTOR

Connect the Engine Control Module (ECM) connector.

Turn the ignition on.

With the scan tool, actuate the Intake Swirl Servo Motor (Swirl Actuator) to 100%.

Using a 12 volt test light connected to 12 volts, check the (N117) Intake Swirl Servo Motor Control circuit in the Swirl Solenoid harness connector.

NOTE: The test light should be illuminated and bright. Compare the brightness to that of a direct connection to the battery.

NOTE: The circuit will remain actuated by the controller for 30 seconds. Be certain the actuation is active when checking the circuit.
With the scan tool, actuate the Intake Swirl Servo Motor (Swirl Actuator) to 0%.

Using a 12 volt test light connected to 12 volts, check the (N117) Intake Swirl Servo Motor Control circuit in the Swirl Solenoid harness connector.

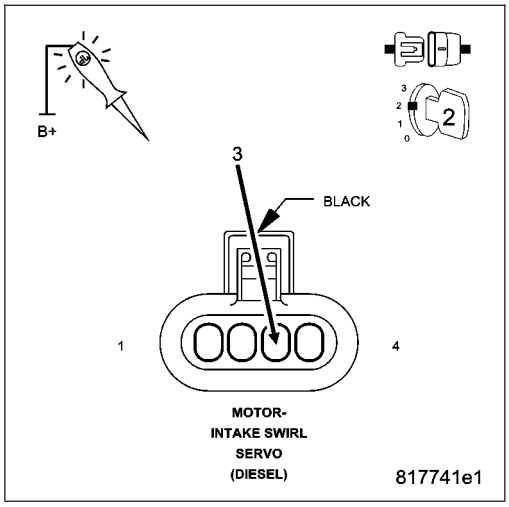

NOTE: The test light should not be illuminated.

NOTE: The circuit will remain actuated by the controller for 30 seconds. Be certain the actuation is active when checking the circuit.

Is the test light illuminated and bright with the actuation at 100% and not illuminated with the actuation at 0%?

Yes >> Replace the Intake Swirl Servo Motor in accordance with the Service Information.
Perform the ECM Verification Test Ver. 1 (Refer to 9 - ENGINE - DIAGNOSIS AND TESTING).

No >> Go to 5

5. ENGINE CONTROL MODULE (ECM)

Using the wiring diagram/schematic as a guide, inspect the wiring and connectors between the Intake Swirl Servo Motor and the Engine Control Module (ECM).

Look for any chafed, pierced, pinched, or partially broken wires.

Look for broken, bent, pushed out or corroded terminals.

Refer to any Technical Service Bulletins that may apply.

Were any problems found?

Yes >> Repair as necessary.
Perform the ECM Verification Test Ver. 1. (Refer to 9 - ENGINE - DIAGNOSIS AND TESTING)

No >> Replace the Engine Control Module (ECM) in accordance with the Service Information.
Perform the ECM Verification Test Ver. 1. (Refer to 9 - ENGINE - DIAGNOSIS AND TESTING)

P2010-INTAKE MANIFOLD RUNNER (SWIRL) CONTROL CIRCUIT HIGH

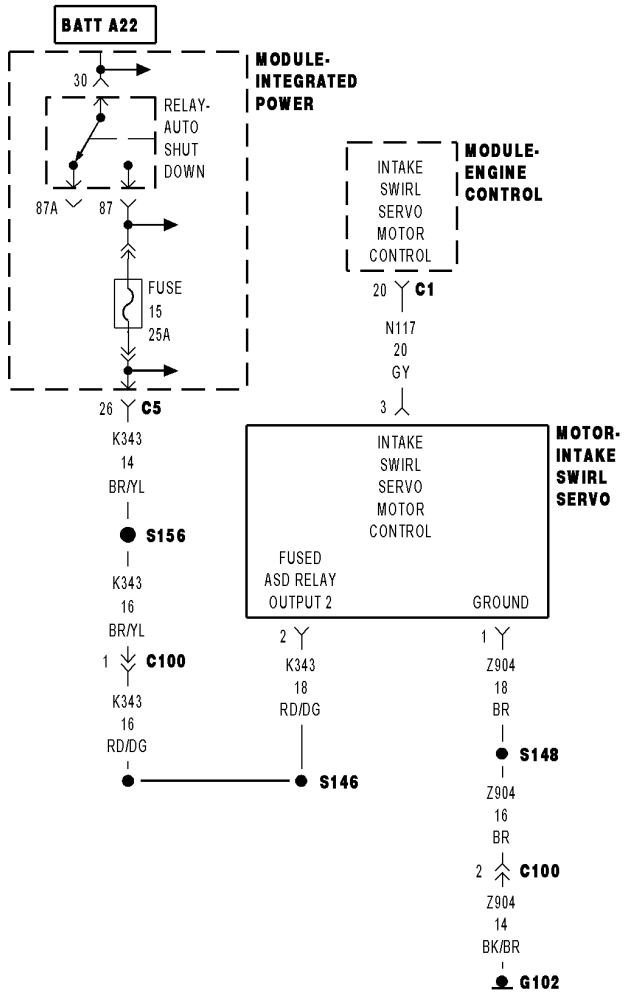

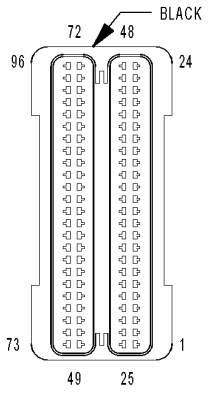

MODULE-
ENGINE CONTROL C1
(DIESEL)

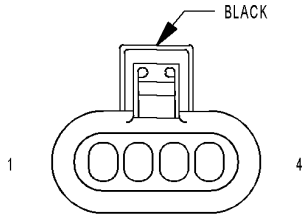

MOTOR-
INTAKE SWIRL
SERVO
(DIESEL)

816B74A3

For a complete wiring diagram **Refer to Section 8W**

- **When Monitored:**
  With the ignition on and the Intake Swirl Servo Motor command on.
- **Set Condition:**
  The ECM detects excessive current on the (N117) Intake Swirl Servo Motor Control circuit for 2.0 seconds.

Possible Causes
INTERMITTENT DTC
(N117) INTAKE SWIRL SERVO MOTOR CONTROL CIRCUIT SHORTED TO VOLTAGE
(N117) INTAKE SWIRL SERVO MOTOR CONTROL CIRCUIT SHORTED TO THE (K343) FUSED ASD RELAY OUTPUT 2 CIRCUIT
(N117) INTAKE SWIRL SERVO MOTOR CONTROL CIRCUIT OPEN OR HIGH RESISTANCE
INTAKE SWIRL SERVO MOTOR
ENGINE CONTROL MODULE (ECM)

Always perform the Pre-Diagnostic Troubleshooting procedure before proceeding. (Refer to 9 - ENGINE - DIAGNOSIS AND TESTING)

Diagnostic Test

1. DTC IS ACTIVE

Ignition on, engine not running.
With the scan tool, Clear DTCs in the Engine Control Module (ECM).
With the scan tool, actuate the Intake Swirl Servo Motor.
Monitor the scan tool for at least two minutes.
With the scan tool, select View DTCs.

Is the status Active for this DTC?

Yes >> Go To 2

No >> Refer to the *CHECKING FOR AN INTERMITTENT DTC Diagnostic Procedure. (Refer to 9 - ENGINE - DIAGNOSIS AND TESTING)

2. (N117) INTAKE SWIRL SERVO MOTOR CONTROL CIRCUIT SHORTED TO VOLTAGE

Turn the ignition off.
Disconnect the Intake Swirl Servo Motor connector.
Disconnect the Engine Control Module (ECM) connector.
Remove the ASD Relay from the IPM.
Connect a jumper wire between cavity 30 and cavity 87 of the ASD Relay Connector.
Turn the ignition on.
Measure the voltage of the (N117) Intake Swirl Servo Motor Control circuit in the Intake Swirl Servo Motor connector.

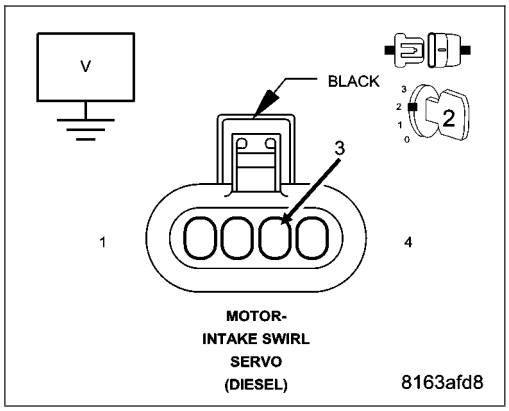

Is there any voltage present?

Yes >> Repair the (N117) Intake Swirl Servo Motor Control circuit for a short to voltage.
Perform the ECM Verification Test Ver. 1. (Refer to 9 - ENGINE - DIAGNOSIS AND TESTING)

No >> Go to 3

3. (N117) INTAKE SWIRL SERVO MOTOR CONTROL CIRCUIT SHORTED TO THE (K343) FUSED ASD RELAY OUTPUT 2 CIRCUIT

Turn the ignition off.

Measure the resistance between the (N117) Intake Swirl Servo Motor Control circuit and the (K343) Fused ASD Relay Output 2 circuit in the Intake Swirl Servo Motor connector.

Is the resistance above 10.0 ohms?

Yes >> Go to 4

No >> Repair the (N117) Intake Swirl Servo Motor Control circuit for a short to the (K343) Fused ASD Relay Output 2 circuit.
Perform the ECM Verification Test Ver. 1. (Refer to 9 - ENGINE - DIAGNOSIS AND TESTING)

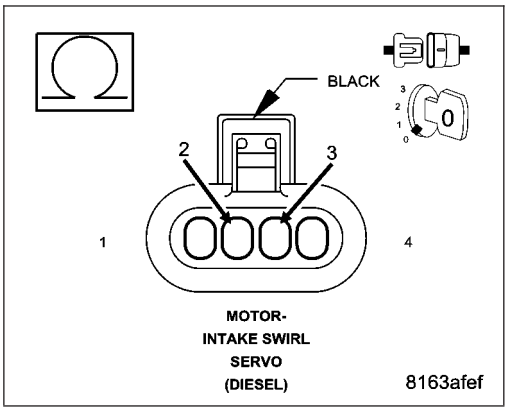

4. (N117) INTAKE SWIRL SERVO MOTOR CONTROL CIRCUIT OPEN OR HIGH RESISTANCE

Measure the resistance of the (N117) Intake Swirl Servo Motor Control circuit between the Intake Swirl Servo Motor connector and the Engine Control Module (ECM) connector.

Is the resistance below 10.0 ohms?

Yes >> Go to 5

No >> Repair the (N117) Intake Swirl Servo Motor Control circuit for an open circuit or high resistance.
Perform the ECM Verification Test Ver. 1. (Refer to 9 - ENGINE - DIAGNOSIS AND TESTING)

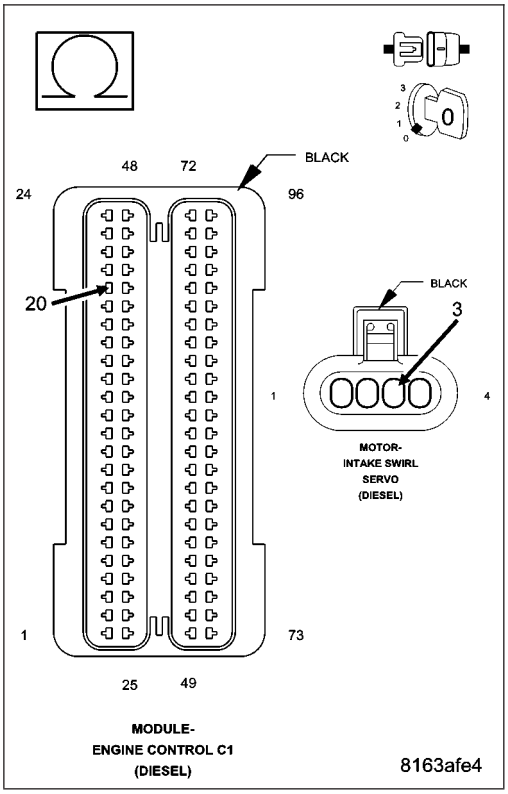

5. INTAKE SWIRL SERVO MOTOR

Connect the Engine Control Module (ECM) connector.

Turn the ignition on.

With the scan tool, actuate the Intake Swirl Servo Motor (Swirl Actuator) to 100%.

Using a 12 volt test light connected to 12 volts, check the (N117) Intake Swirl Servo Motor Control circuit in the Swirl Solenoid harness connector.

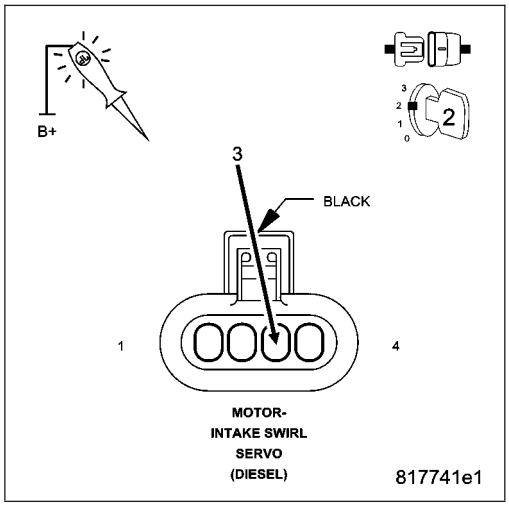

NOTE: The test light should be illuminated and bright. Compare the brightness to that of a direct connection to the battery.

NOTE: The circuit will remain actuated by the controller for 30 seconds. Be certain the actuation is active when checking the circuit.

Is the test light illuminated and bright with the actuation at 100%?

Yes >> Replace the Intake Swirl Servo Motor in accordance with the Service Information.
Perform the ECM Verification Test Ver. 1 (Refer to 9 - ENGINE - DIAGNOSIS AND TESTING).

No >> Go to 6

6. ENGINE CONTROL MODULE (ECM)

Using the wiring diagram/schematic as a guide, inspect the wiring and connectors between the Intake Swirl Servo Motor and the Engine Control Module (ECM).

Look for any chafed, pierced, pinched, or partially broken wires.

Look for broken, bent, pushed out or corroded terminals.

Refer to any Technical Service Bulletins that may apply.

Were any problems found?

Yes >> Repair as necessary.
Perform the ECM Verification Test Ver. 1. (Refer to 9 - ENGINE - DIAGNOSIS AND TESTING)

No >> Replace the Engine Control Module (ECM) in accordance with the Service Information.
Perform the ECM Verification Test Ver. 1. (Refer to 9 - ENGINE - DIAGNOSIS AND TESTING)

P2032-EXHAUST GAS TEMPERATURE SENSOR CIRCUIT LOW - BANK 1 SENSOR 2

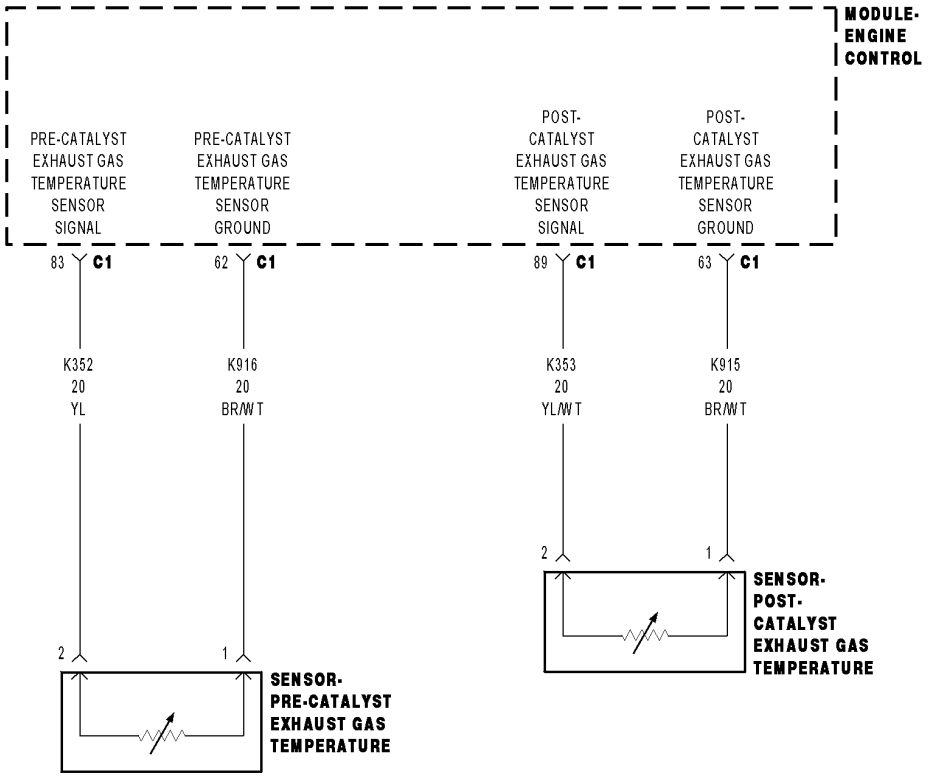

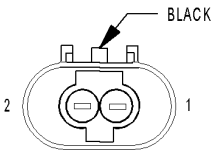

SENSOR-
PRE-CATALYST
EXHAUST GAS
TEMPERATURE
(DIESEL)

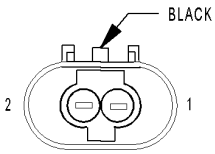

SENSOR-
POST-
CATALYST
EXHAUST GAS
TEMPERATURE
(DIESEL)

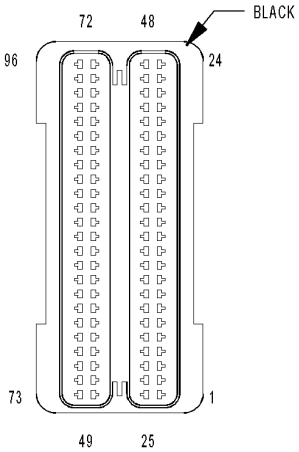

MODULE-
ENGINE CONTROL C1
(DIESEL)

816B748A

For a complete wiring diagram **Refer to Section 8W**

- **When Monitored:**
  With the ignition on.
- **Set Condition:**
  The ECM detects that the (K353) Post-Catalyst Exhaust Temperature Sensor Signal circuit is shorted to ground.

Possible Causes
INTERMITTENT DTC
(K353) POST-CATALYST EXHAUST TEMPERATURE SENSOR SIGNAL CIRCUIT SHORTED TO GROUND
(K353) POST-CATALYST EXHAUST TEMPERATURE SENSOR SIGNAL CIRCUIT SHORTED TO (K915) POST-CATALYST EXHAUST TEMPERATURE SENSOR GROUND
(K353) POST-CATALYST EXHAUST TEMPERATURE SENSOR SIGNAL CIRCUIT OPEN OR HIGH RESISTANCE
POST-CATALYST EXHAUST TEMPERATURE SENSOR
ENGINE CONTROL MODULE (ECM)

Always perform the Pre-Diagnostic Troubleshooting procedure before proceeding. (Refer to 9 - ENGINE - DIAGNOSIS AND TESTING)

Diagnostic Test

1. DTC IS ACTIVE

Ignition on, engine not running.
With the scan tool, Clear DTCs in the Engine Control Module (ECM).
Monitor the scan tool for at least two minutes.
Cycle the ignition key off and on several times, leaving the ignition on for at least 10 seconds at a time.
Start the engine.
Allow the engine to reach normal operating temperature.
With the scan tool, select View DTCs.

Is the status Active for this DTC?

Yes >> Go To 2

No >> Refer to the *CHECKING FOR AN INTERMITTENT DTC Diagnostic Procedure. (Refer to 9 - ENGINE - DIAGNOSIS AND TESTING)

2. (K353) POST-CATALYST EXHAUST TEMPERATURE SENSOR SIGNAL CIRCUIT SHORTED TO GROUND

Turn the ignition off.
Disconnect the Post-Catalyst Exhaust Temperature Sensor connector.
Disconnect the Engine Control Module (ECM) connector.
Measure the resistance between ground and the (K353) Post-Catalyst Exhaust Temperature Sensor Signal circuit in the Post-Catalyst Exhaust Temperature Sensor harness connector.

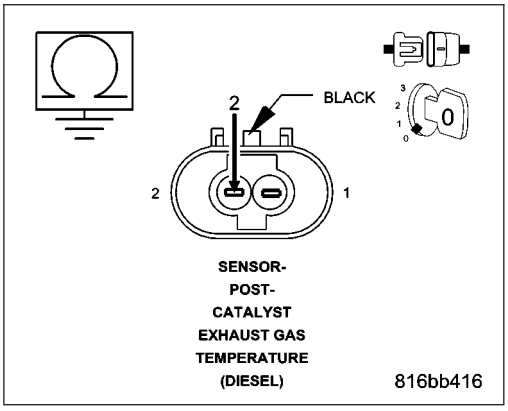

Is the resistance above 1000 ohms?

Yes >> Go to 3

No >> Repair the (K353) Post-Catalyst Exhaust Temperature Sensor Signal circuit for a short to ground.
Perform the ECM Verification Test Ver. 1 (Refer to 9 - ENGINE - DIAGNOSIS AND TESTING).

3. (K353) POST-CATALYST EXHAUST TEMPERATURE SENSOR SIGNAL CIRCUIT SHORTED TO (K915) POST-CATALYST EXHAUST TEMPERATURE SENSOR GROUND CIRCUIT

Measure the resistance between the (K353) Post-Catalyst Exhaust Temperature Sensor Signal circuit and the (K915) Post-Catalyst Exhaust Temperature Sensor Ground circuit in the Post-Catalyst Exhaust Temperature Sensor harness connector.

Is the resistance above 1000 ohms?

Yes >> Go to 4

No >> Repair the (K353) Post-Catalyst Exhaust Temperature Sensor Signal circuit for a short to the (K915) Post-Catalyst Exhaust Temperature Sensor Ground circuit.

Perform the ECM Verification Test Ver. 1 (Refer to 9 - ENGINE - DIAGNOSIS AND TESTING).

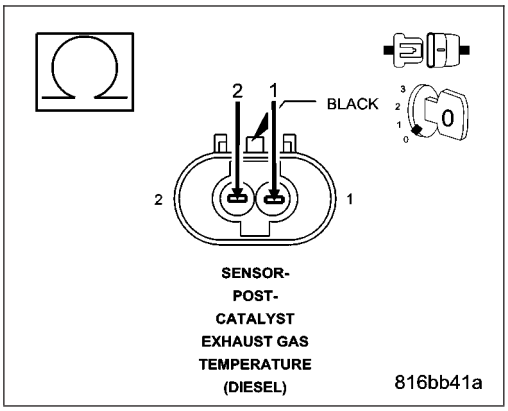

4. (K353) POST-CATALYST EXHAUST TEMPERATURE SENSOR SIGNAL CIRCUIT OPEN CIRCUIT OR HIGH RESISTANCE

Measure the resistance of the (K353) Post-Catalyst Exhaust Temperature Sensor Signal circuit between the Post-Catalyst Exhaust Temperature Sensor harness connector and the Engine Control Module (ECM) harness connector.

Is the resistance below 10.0 ohms?

Yes >> Go to 5

No >> Repair the (K353) Post-Catalyst Exhaust Temperature Sensor Signal circuit for an open circuit or high resistance.

Perform the ECM Verification Test Ver. 1 (Refer to 9 - ENGINE - DIAGNOSIS AND TESTING).

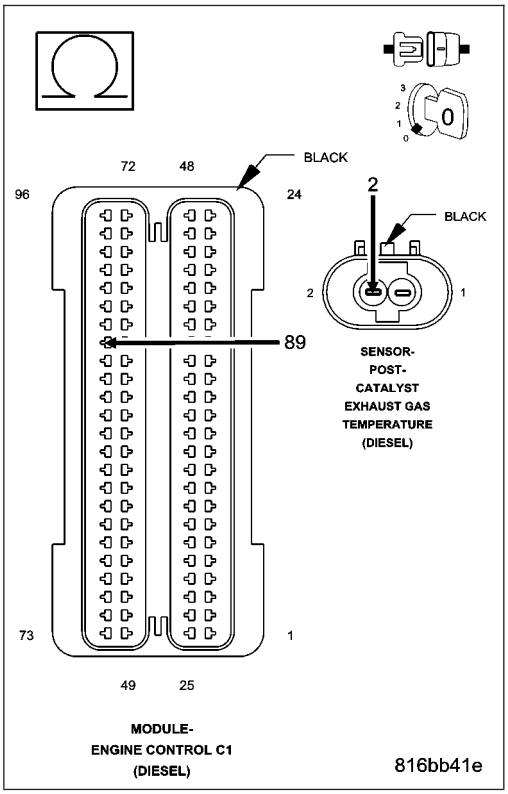

5. POST-CATALYST EXHAUST TEMPERATURE SENSOR

Turn the ignition off.

Connect the Engine Control Module (ECM) connector.

Turn the ignition on.

With the scan tool, clear DTCs.

With the scan tool, select View DTCs.

Monitor the scan tool for at least two minutes.

NOTE: The scan tool should display a Post-Catalyst Exhaust Temperature Sensor high voltage or open circuit DTC with the Post-Catalyst Exhaust Temperature Sensor connector disconnected.

Does the scan tool display the DTC as described above?

Yes >> Replace the Post-Catalyst Exhaust Temperature Sensor in accordance with the service information.
Perform the ECM Verification Test Ver. 1 (Refer to 9 - ENGINE - DIAGNOSIS AND TESTING).

No >> Go to 6

6. ENGINE CONTROL MODULE (ECM)

Using the wiring diagram/schematic as a guide, inspect the wiring and connectors between the Post-Catalyst Exhaust Temperature Sensor and the Engine Control Module (ECM).

Look for any chafed, pierced, pinched, or partially broken wires.

Look for broken, bent, pushed out or corroded terminals.

Monitor the scan tool data relative to this circuit and wiggle test the wiring and connectors.

Look for the data to change or for the DTC to reset during the wiggle test.

Refer to any Technical Service Bulletins that may apply.

Were any problems found?

Yes >> Repair as necessary.
Perform the ECM Verification Test Ver. 1 (Refer to 9 - ENGINE - DIAGNOSIS AND TESTING).

No >> Replace the Engine Control Module (ECM) in accordance with the Service Information.
Perform the ECM Verification Test Ver. 1 (Refer to 9 - ENGINE - DIAGNOSIS AND TESTING).

P2033-EXHAUST GAS TEMPERATURE SENSOR CIRCUIT HIGH - BANK 1 SENSOR 2

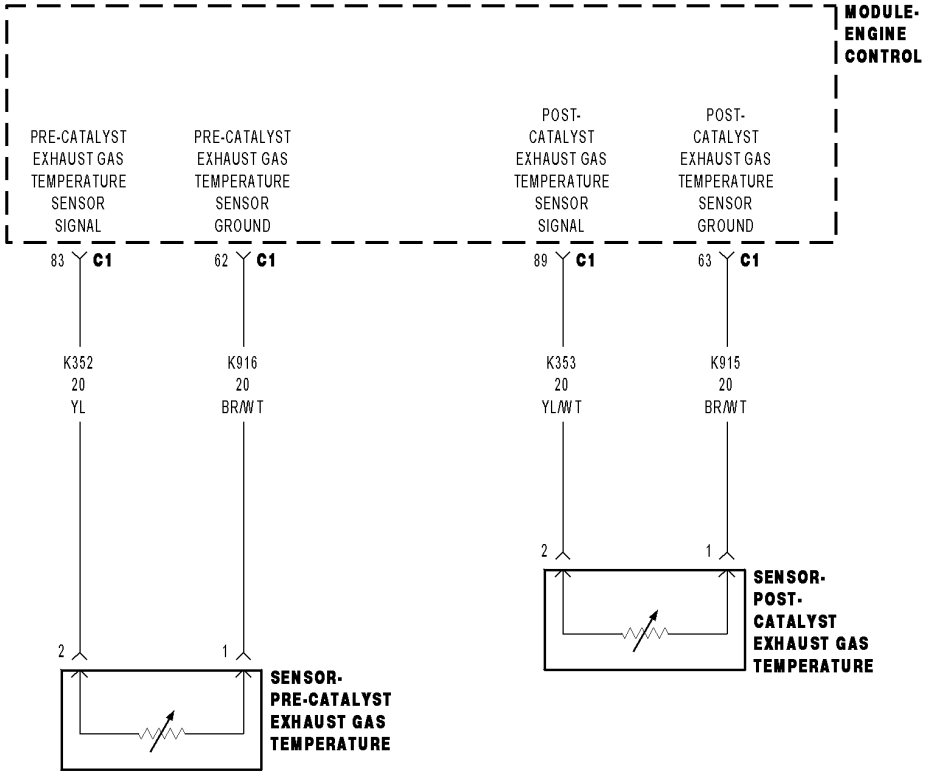

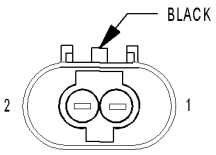

SENSOR-
PRE-CATALYST
EXHAUST GAS
TEMPERATURE
(DIESEL)

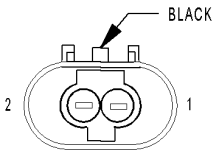

SENSOR-
POST-
CATALYST
EXHAUST GAS
TEMPERATURE
(DIESEL)

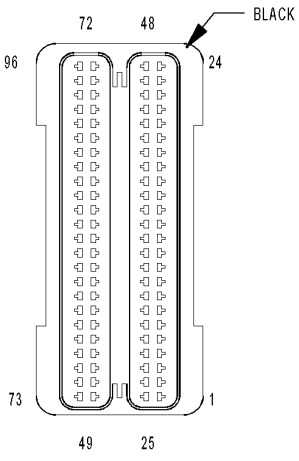

MODULE-
ENGINE CONTROL C1
(DIESEL)

816B748A

For a complete wiring diagram **Refer to Section 8W**

- **When Monitored:**
  With the ignition on.
- **Set Condition:**
  The ECM detects that the (K353) Post-Catalyst Exhaust Temperature Sensor Signal circuit is shorted to voltage.

Possible Causes
INTERMITTENT DTC
(K353) POST-CATALYST EXHAUST TEMPERATURE SENSOR SIGNAL CIRCUIT SHORTED TO VOLTAGE
(K915) POST-CATALYST EXHAUST TEMPERATURE SENSOR GROUND CIRCUIT SHORTED TO VOLTAGE
(K353) POST-CATALYST EXHAUST TEMPERATURE SENSOR SIGNAL CIRCUIT OPEN OR HIGH RESISTANCE
(K915) POST-CATALYST EXHAUST TEMPERATURE SENSOR GROUND CIRCUIT OPEN OR HIGH RESISTANCE
POST-CATALYST EXHAUST TEMPERATURE SENSOR
ENGINE CONTROL MODULE (ECM)

Always perform the Pre-Diagnostic Troubleshooting procedure before proceeding. (Refer to 9 - ENGINE - DIAGNOSIS AND TESTING)

Diagnostic Test

1. DTC IS ACTIVE

Ignition on, engine not running.

With the scan tool, Clear DTCs in the Engine Control Module (ECM).

Monitor the scan tool for at least two minutes.

Cycle the ignition key off and on several times, leaving the ignition on for at least 10 seconds at a time.

Start the engine.

Allow the engine to reach normal operating temperature.

With the scan tool, select View DTCs.

Is the status Active for this DTC?

Yes >> Go To 2

No >> Refer to the *CHECKING FOR AN INTERMITTENT DTC Diagnostic Procedure. (Refer to 9 - ENGINE - DIAGNOSIS AND TESTING)

2. (K353) POST-CATALYST EXHAUST TEMPERATURE SENSOR SIGNAL CIRCUIT SHORTED TO VOLTAGE

Turn the ignition off.

Disconnect the Post-Catalyst Exhaust Temperature Sensor connector.

Disconnect the Engine Control Module (ECM) connector.

Remove the ASD Relay.

Connect a jumper wire between cavity 30 and cavity 87 of the ASD Relay Connector.

Turn the ignition on.

Measure the voltage of the (K353) Post-Catalyst Exhaust Temperature Sensor Signal circuit in the Post-Catalyst Exhaust Temperature Sensor harness connector.

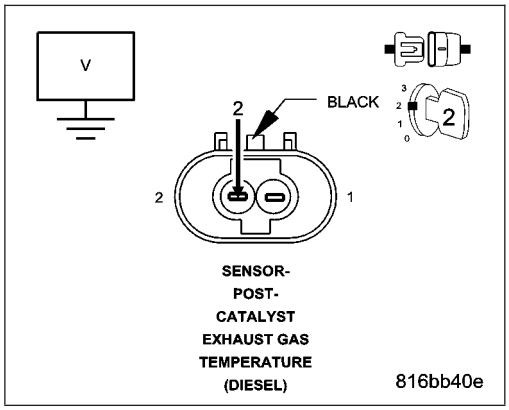

Is there any voltage present?

Yes >> Repair the (K353) Post-Catalyst Exhaust Temperature Sensor Signal circuit for a short to voltage.
Perform the ECM Verification Test Ver. 1 (Refer to 9 - ENGINE - DIAGNOSIS AND TESTING).

No >> Go to 3

3. (K915) POST-CATALYST EXHAUST TEMPERATURE SENSOR GROUND CIRCUIT SHORTED TO VOLTAGE

Measure the voltage of the (K915) Post-Catalyst Exhaust Temperature Sensor Ground circuit in the Post-Catalyst Exhaust Temperature Sensor harness connector.

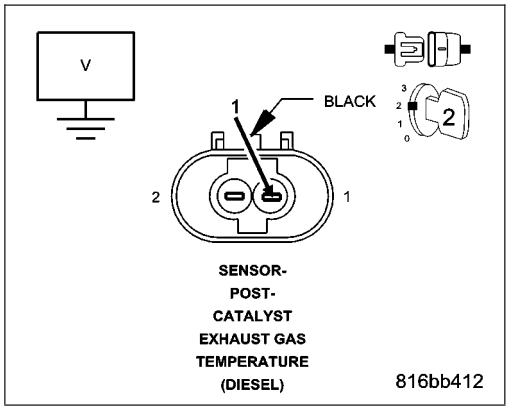

Is there any voltage present?

Yes >> Repair the (K915) Post-Catalyst Exhaust Temperature Sensor Ground circuit for a short to voltage.
Perform the ECM Verification Test Ver. 1 (Refer to 9 - ENGINE - DIAGNOSIS AND TESTING).

No >> Go to 4

4. (K353) POST-CATALYST EXHAUST TEMPERATURE SENSOR SIGNAL OPEN OR HIGH RESISTANCE

Turn the ignition off.

Measure the resistance of the (K353) Post-Catalyst Exhaust Temperature Sensor Signal circuit between the Post-Catalyst Exhaust Temperature Sensor harness connector and the Engine Control Module (ECM) harness connector.

Is the resistance below 10.0 ohms?

Yes >> Go to 5

No >> Repair the (K353) Post-Catalyst Exhaust Temperature Sensor Signal circuit for an open circuit or high resistance.

Perform the ECM Verification Test Ver. 1 (Refer to 9 - ENGINE - DIAGNOSIS AND TESTING).

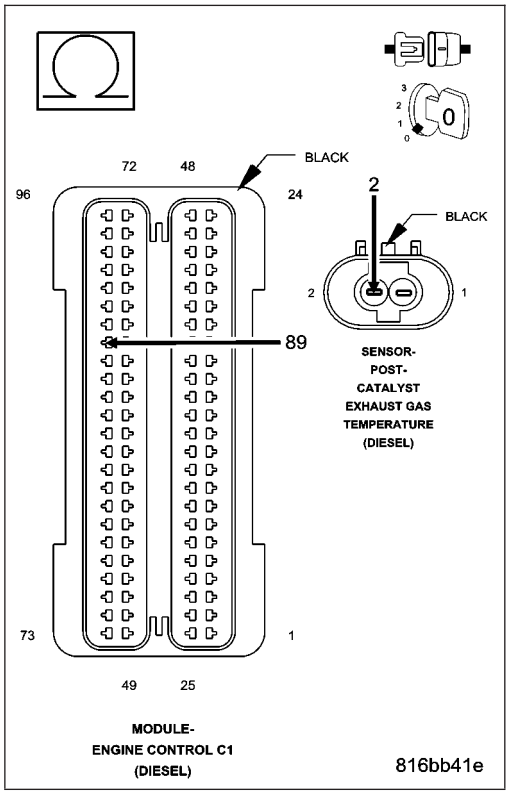

5. (K915) POST-CATALYST EXHAUST TEMPERATURE SENSOR GROUND CIRCUIT OPEN OR HIGH RESISTANCE

Measure the resistance of the (K915) Post-Catalyst Exhaust Temperature Sensor Ground circuit between the Post-Catalyst Exhaust Temperature Sensor harness connector and the Engine Control Module (ECM) harness connector.

Is the resistance below 10.0 ohms?

Yes >> Go to 6

No >> Repair the (K915) Post-Catalyst Exhaust Temperature Sensor Ground circuit for an open circuit or high resistance.

Perform the ECM Verification Test Ver. 1 (Refer to 9 - ENGINE - DIAGNOSIS AND TESTING).

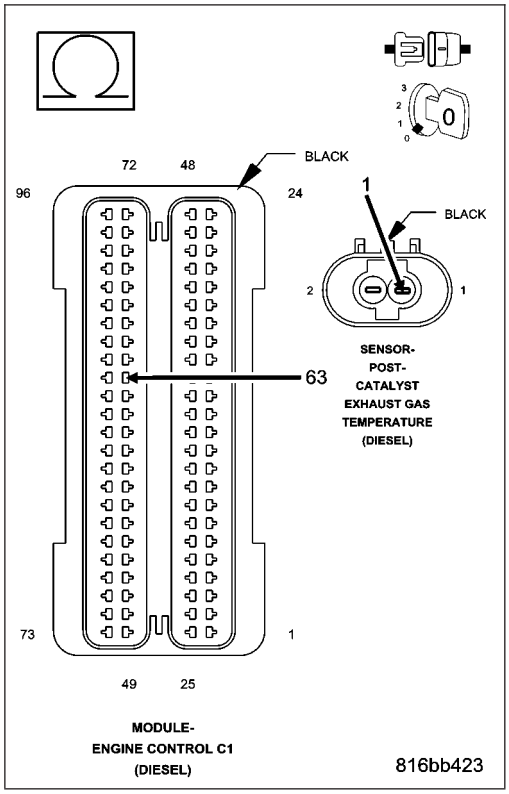

6. POST-CATALYST EXHAUST TEMPERATURE SENSOR

Turn the ignition off.

Connect the Engine Control Module (ECM) connector.

Remove the jumper wire from between cavity 30 and cavity 87 of the ASD Relay Connector.

Install the ASD Relay.

Connect a jumper wire between the (K353) Post-Catalyst Exhaust Temperature Sensor Signal circuit and the (K915) Post-Catalyst Exhaust Temperature Sensor Ground circuit in the Post-Catalyst Exhaust Temperature Sensor harness connector.

Turn the ignition on.

With the scan tool, Clear DTCs.

With the scan tool, select View DTCs.

NOTE: The scan tool should display a Post-Catalyst Exhaust Temperature Sensor low voltage or short to ground DTC with the jumper wire in place.

Does the scan tool display the DTC as described above?

Yes >> Replace the Post-Catalyst Exhaust Temperature Sensor in accordance with the Service Information.
Perform the ECM Verification Test Ver. 1 (Refer to 9 - ENGINE - DIAGNOSIS AND TESTING).

No >> Go to 7

7. ENGINE CONTROL MODULE (ECM)

Using the wiring diagram/schematic as a guide, inspect the wiring and connectors between the Post-Catalyst Exhaust Temperature Sensor and the Engine Control Module (ECM).

Look for any chafed, pierced, pinched, or partially broken wires.

Look for broken, bent, pushed out or corroded terminals.

Monitor the scan tool data relative to this circuit and wiggle test the wiring and connectors.

Look for the data to change or for the DTC to reset during the wiggle test.

Refer to any Technical Service Bulletins that may apply.

Were any problems found?

Yes >> Repair as necessary.
Perform the ECM Verification Test Ver. 1 (Refer to 9 - ENGINE - DIAGNOSIS AND TESTING).

No >> Replace the Engine Control Module (ECM) in accordance with the Service Information.
Perform the ECM Verification Test Ver. 1 (Refer to 9 - ENGINE - DIAGNOSIS AND TESTING).

P2080-EXHAUST GAS TEMPERATURE SENSOR CIRCUIT PERFORMANCE - BANK 1 SENSOR 1

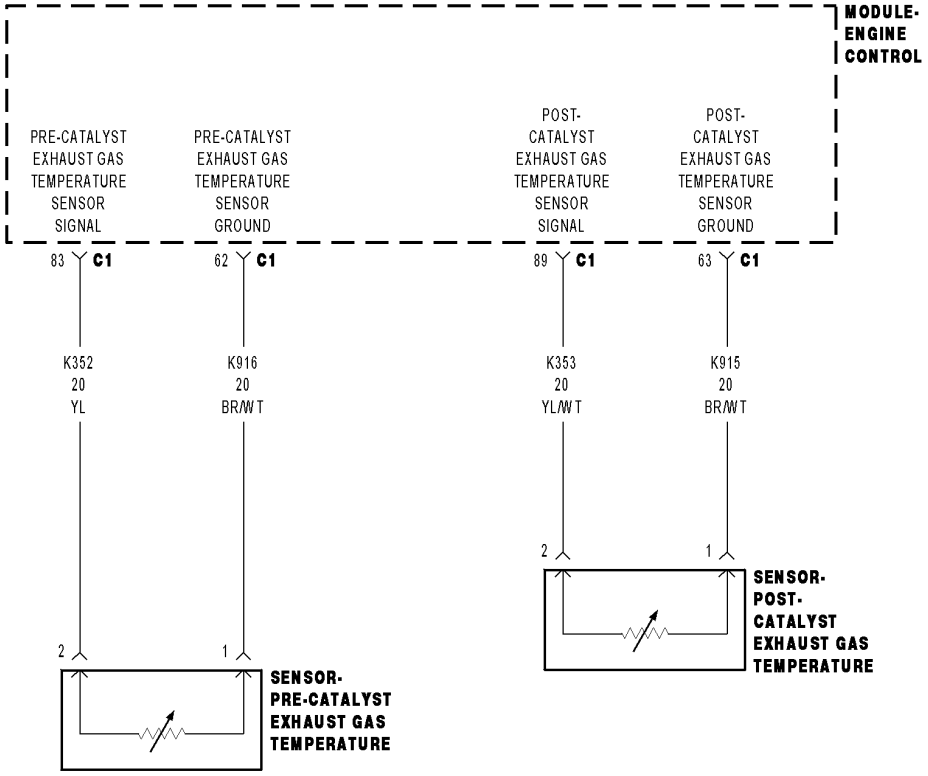

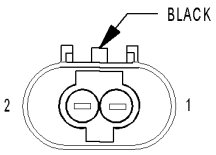

SENSOR-
PRE-CATALYST
EXHAUST GAS
TEMPERATURE
(DIESEL)

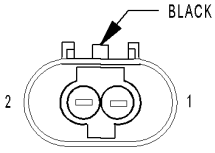

SENSOR-
POST-
CATALYST
EXHAUST GAS
TEMPERATURE
(DIESEL)

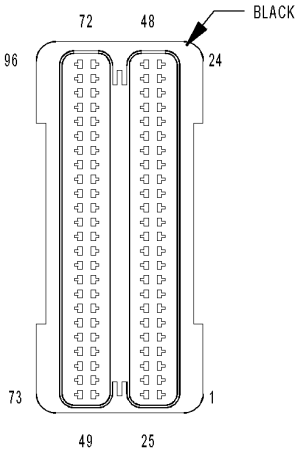

MODULE-
ENGINE CONTROL C1
(DIESEL)

816B748A

For a complete wiring diagram **Refer to Section 8W**

- **When Monitored:**
  At ignition on before engine crank. With no Intake Air Temp sensor DTC's
- **Set Condition:**
  The Engine Control Module (ECM) detects that the (K352) Pre-Catalyst Exhaust Temperature Sensor Signal circuit voltage is implausible.

Possible Causes
INTERMITTENT DTC
(K352) PRE-CATALYST EXHAUST TEMPERATURE SENSOR SIGNAL CIRCUIT SHORTED TO VOLTAGE
(K916) PRE-CATALYST EXHAUST TEMPERATURE SENSOR GROUND CIRCUIT SHORTED TO VOLTAGE
(K352) PRE-CATALYST EXHAUST TEMPERATURE SENSOR SIGNAL CIRCUIT SHORTED TO GROUND
(K352) PRE-CATALYST EXHAUST TEMPERATURE SENSOR SIGNAL CIRCUIT SHORTED TO (K916) PRE-CATALYST EXHAUST TEMPERATURE SENSOR GROUND
(K352) PRE-CATALYST EXHAUST TEMPERATURE SENSOR SIGNAL CIRCUIT OPEN OR HIGH RESISTANCE
(K916) PRE-CATALYST EXHAUST TEMPERATURE SENSOR GROUND CIRCUIT OPEN OR HIGH RESISTANCE
PRE-CATALYST EXHAUST TEMPERATURE SENSOR
ENGINE CONTROL MODULE (ECM)

Always perform the Pre-Diagnostic Troubleshooting procedure before proceeding. (Refer to 9 - ENGINE - DIAGNOSIS AND TESTING)

Diagnostic Test

1. DTC IS ACTIVE

Ignition on, engine not running.
With the scan tool, Clear DTCs in the Engine Control Module (ECM).
Monitor the scan tool for at least two minutes.
Cycle the ignition key off and on several times, leaving the ignition on for at least 10 seconds at a time.
Start the engine.
Allow the engine to reach normal operating temperature.
With the scan tool, select View DTCs.

Is the status Active for this DTC?

Yes >> Go To 2

No >> Refer to the *CHECKING FOR AN INTERMITTENT DTC Diagnostic Procedure. (Refer to 9 - ENGINE - DIAGNOSIS AND TESTING)

2. (K352) PRE-CATALYST EXHAUST TEMPERATURE SENSOR SIGNAL CIRCUIT SHORTED TO VOLTAGE

Turn the ignition off.

Disconnect the Pre-Catalyst Exhaust Temperature Sensor connector.

Disconnect the Engine Control Module (ECM) connector.

Remove the ASD Relay.

Connect a jumper wire between cavity 30 and cavity 87 of the ASD Relay Connector.

Turn the ignition on.

Measure the voltage of the (K352) Pre-Catalyst Exhaust Temperature Sensor Signal circuit in the Pre-Catalyst Exhaust Temperature Sensor harness connector.

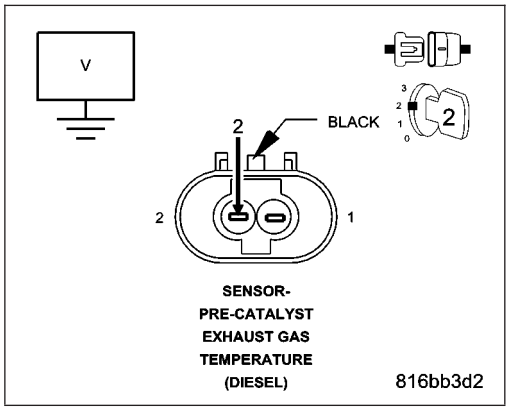

Is there any voltage present?

Yes >> Repair the (K352) Pre-Catalyst Exhaust Temperature Sensor Signal circuit for a short to voltage.
Perform the ECM Verification Test Ver. 1 (Refer to 9 - ENGINE - DIAGNOSIS AND TESTING).

No >> Go to 3

3. (K916) PRE-CATALYST EXHAUST TEMPERATURE SENSOR GROUND CIRCUIT SHORTED TO VOLTAGE

Measure the voltage of the (K916) Pre-Catalyst Exhaust Temperature Sensor Ground circuit in the Pre-Catalyst Exhaust Temperature Sensor harness connector.

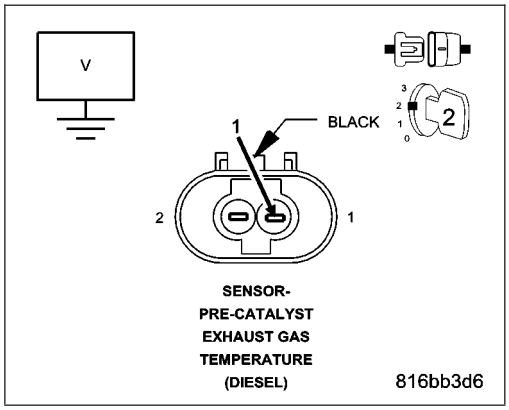

Is there any voltage present?

Yes >> Repair the (K916) Pre-Catalyst Exhaust Temperature Sensor Ground circuit for a short to voltage.
Perform the ECM Verification Test Ver. 1 (Refer to 9 - ENGINE - DIAGNOSIS AND TESTING).

No >> Go to 4

4. (K352) PRE-CATALYST EXHAUST TEMPERATURE SENSOR SIGNAL CIRCUIT SHORTED TO GROUND

Turn the ignition off.

Measure the resistance between ground and the (K352) Pre-Catalyst Exhaust Temperature Sensor Signal circuit in the Pre-Catalyst Exhaust Temperature Sensor harness connector.

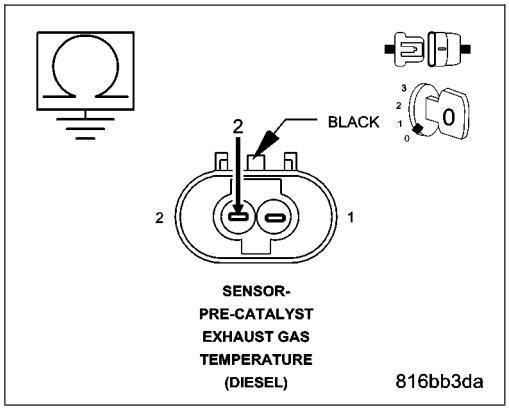

Is the resistance above 1000 ohms?

Yes >> Go to 5

No >> Repair the (K352) Pre-Catalyst Exhaust Temperature Sensor Signal circuit for a short to ground.
Perform the ECM Verification Test Ver. 1 (Refer to 9 - ENGINE - DIAGNOSIS AND TESTING).

5. (K352) PRE-CATALYST EXHAUST TEMPERATURE SENSOR SIGNAL CIRCUIT SHORTED TO (K916) PRE-CATALYST EXHAUST TEMPERATURE SENSOR GROUND CIRCUIT

Measure the resistance between the (K352) Pre-Catalyst Exhaust Temperature Sensor Signal circuit and the (K916) Pre-Catalyst Exhaust Temperature Sensor Ground circuit in the Pre-Catalyst Exhaust Temperature Sensor harness connector.

Is the resistance above 1000 ohms?

Yes >> Go to 6

No >> Repair the (K352) Pre-Catalyst Exhaust Temperature Sensor Signal circuit for a short to the (K916) Pre-Catalyst Exhaust Temperature Sensor Ground circuit.

Perform the ECM Verification Test Ver. 1 (Refer to 9 - ENGINE - DIAGNOSIS AND TESTING).

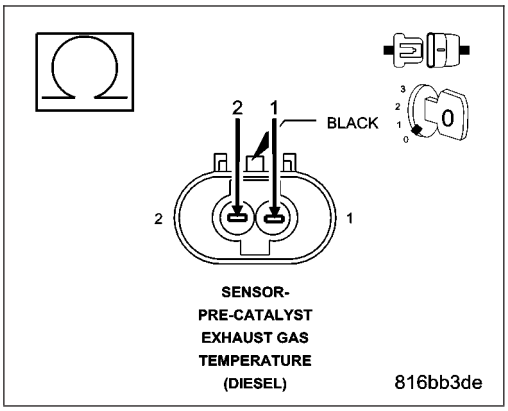

6. (K352) PRE-CATALYST EXHAUST TEMPERATURE SENSOR SIGNAL CIRCUIT OPEN OR HIGH RESISTANCE

Measure the resistance of the (K352) Pre-Catalyst Exhaust Temperature Sensor Signal circuit between the Pre-Catalyst Exhaust Temperature Sensor harness connector and the Engine Control Module (ECM) harness connector.

Is the resistance below 10.0 ohms?

Yes >> Go to 7

No >> Repair the (K352) Pre-Catalyst Exhaust Temperature Sensor Signal circuit for an open circuit or high resistance.

Perform the ECM Verification Test Ver. 1 (Refer to 9 - ENGINE - DIAGNOSIS AND TESTING).

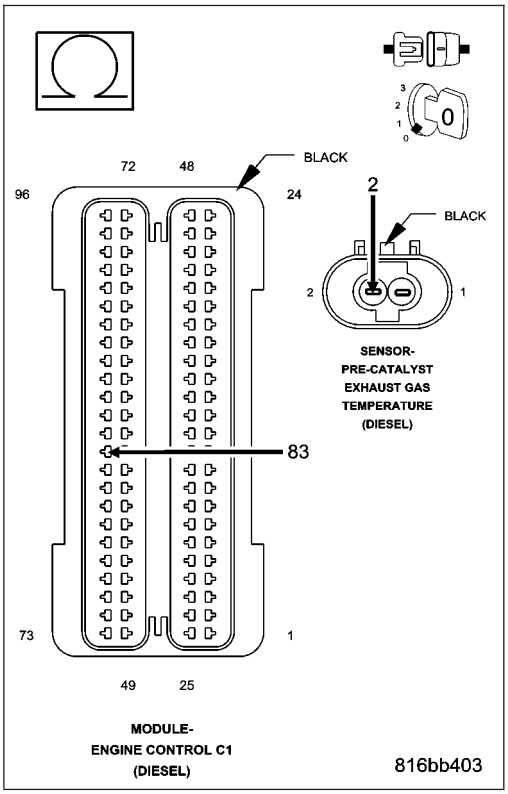

7. (K916) PRE-CATALYST EXHAUST TEMPERATURE SENSOR GROUND CIRCUIT OPEN OR HIGH RESISTANCE

Measure the resistance of the (K916) Pre-Catalyst Exhaust Temperature Sensor Ground circuit between the Pre-Catalyst Exhaust Temperature Sensor harness connector and the Engine Control Module (ECM) harness connector.

Is the resistance below 10.0 ohms?

Yes >> Go to 8

No >> Repair the (K916) Pre-Catalyst Exhaust Temperature Sensor Ground circuit for an open circuit or high resistance.
Perform the ECM Verification Test Ver. 1 (Refer to 9 - ENGINE - DIAGNOSIS AND TESTING).

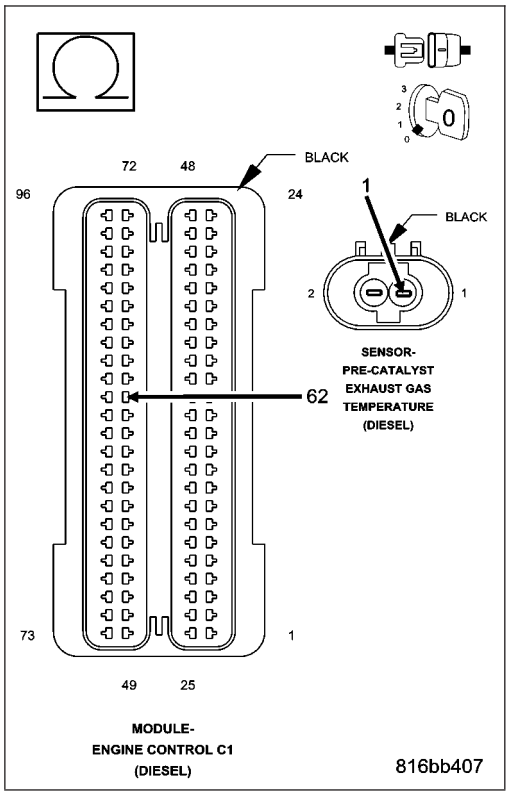

8. PRE-CATALYST EXHAUST TEMPERATURE SENSOR

Turn the ignition off.

Connect the Engine Control Module (ECM) connector.

Remove the jumper wire from between cavity 30 and cavity 87 of the ASD Relay Connector and install the relay.

Connect a jumper wire between the (K916) Pre-Catalyst Exhaust Temperature Sensor Ground circuit and the (K352) Pre-Catalyst Exhaust Temperature Sensor Signal circuit in the Pre-Catalyst Exhaust Temperature Sensor harness connector.

Turn the ignition on.

With the scan tool, Clear DTCs.

With the scan tool, select View DTCs.

NOTE: The scan tool should display a Pre-Catalyst Exhaust Temperature Sensor low voltage or short to ground DTC with the jumper wire in place.

Does the scan tool display the DTC as described above?

Yes >> Replace the Pre-Catalyst Exhaust Temperature Sensor in accordance with the Service Information.
Perform the ECM Verification Test Ver. 1 (Refer to 9 - ENGINE - DIAGNOSIS AND TESTING).

No >> Go to 9

9. ENGINE CONTROL MODULE (ECM)

Using the wiring diagram/schematic as a guide, inspect the wiring and connectors between the Pre-Catalyst Exhaust Temperature Sensor and the Engine Control Module (ECM).

Look for any chafed, pierced, pinched, or partially broken wires.

Look for broken, bent, pushed out or corroded terminals.

Monitor the scan tool data relative to this circuit and wiggle test the wiring and connectors.

Look for the data to change or for the DTC to reset during the wiggle test.

Refer to any Technical Service Bulletins that may apply.

Were any problems found?

Yes >> Repair as necessary.
Perform the ECM Verification Test Ver. 1 (Refer to 9 - ENGINE - DIAGNOSIS AND TESTING).

No >> Replace the Engine Control Module (ECM) in accordance with the Service Information.
Perform the ECM Verification Test Ver. 1 (Refer to 9 - ENGINE - DIAGNOSIS AND TESTING).

P2084-EXHAUST GAS TEMPERATURE SENSOR CIRCUIT PERFORMANCE - BANK 1 SENSOR 2

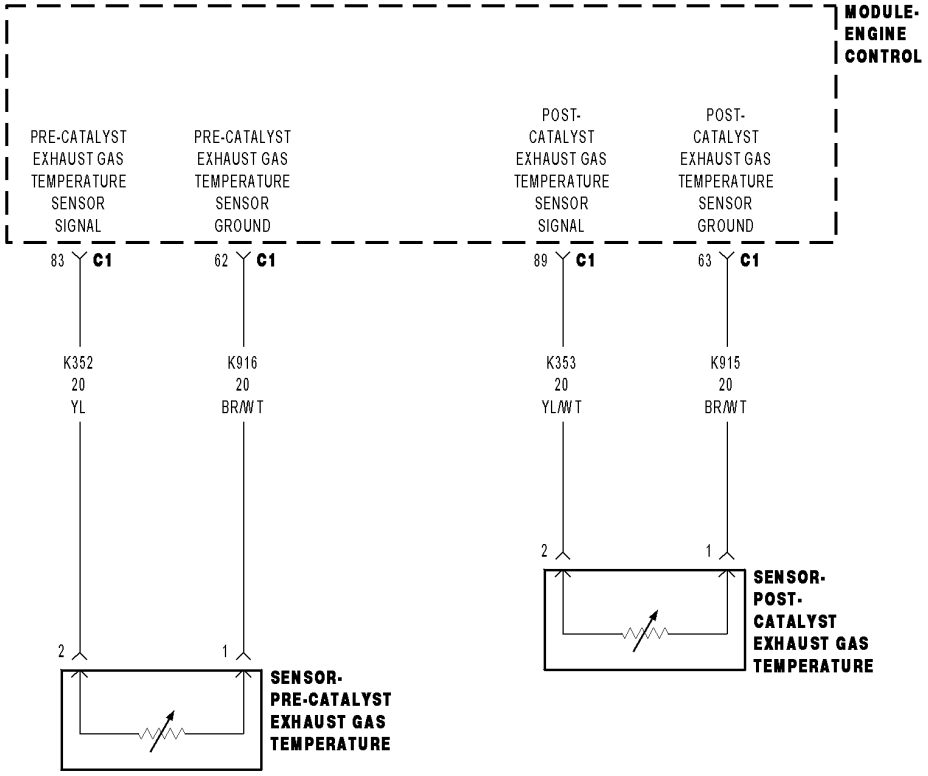

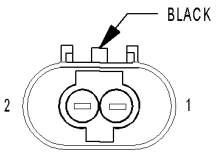

SENSOR-
PRE-CATALYST
EXHAUST GAS
TEMPERATURE
(DIESEL)

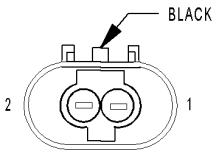

SENSOR-
POST-
CATALYST
EXHAUST GAS
TEMPERATURE
(DIESEL)

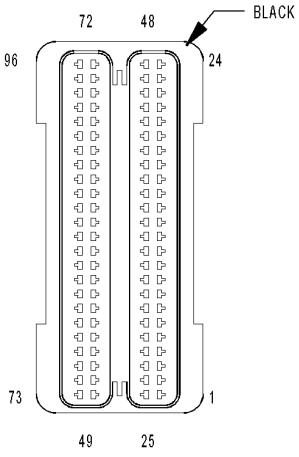

MODULE-
ENGINE CONTROL C1
(DIESEL)

816B748A

For a complete wiring diagram **Refer to Section 8W**

- **When Monitored:**
  With the ignition on.
- **Set Condition:**
  The Engine Control Module (ECM) detects that the (K353) Post-Catalyst Exhaust Temperature Sensor Signal circuit voltage is implausible.

Possible Causes
INTERMITTENT DTC
(K353) POST-CATALYST EXHAUST TEMPERATURE SENSOR SIGNAL CIRCUIT SHORTED TO VOLTAGE
(K915) POST-CATALYST EXHAUST TEMPERATURE SENSOR GROUND CIRCUIT SHORTED TO VOLTAGE
(K353) POST-CATALYST EXHAUST TEMPERATURE SENSOR SIGNAL CIRCUIT SHORTED TO GROUND
(K353) POST-CATALYST EXHAUST TEMPERATURE SENSOR SIGNAL CIRCUIT SHORTED TO (K915) POST-CATALYST EXHAUST TEMPERATURE SENSOR GROUND
(K353) POST-CATALYST EXHAUST TEMPERATURE SENSOR SIGNAL CIRCUIT OPEN OR HIGH RESISTANCE
(K915) POST-CATALYST EXHAUST TEMPERATURE SENSOR GROUND CIRCUIT OPEN OR HIGH RESISTANCE
POST-CATALYST EXHAUST TEMPERATURE SENSOR
ENGINE CONTROL MODULE (ECM)

Always perform the Post-Diagnostic Troubleshooting procedure before proceeding. (Refer to 9 - ENGINE - DIAGNOSIS AND TESTING)

Diagnostic Test

1. DTC IS ACTIVE

Ignition on, engine not running.

With the scan tool, Clear DTCs in the Engine Control Module (ECM).

Monitor the scan tool for at least two minutes.

Cycle the ignition key off and on several times, leaving the ignition on for at least 10 seconds at a time.

Start the engine.

Allow the engine to reach normal operating temperature.

With the scan tool, select View DTCs.

Is the status Active for this DTC?

Yes >> Go To 2

No >> Refer to the *CHECKING FOR AN INTERMITTENT DTC Diagnostic Procedure. (Refer to 9 - ENGINE - DIAGNOSIS AND TESTING)

2. (K353) POST-CATALYST EXHAUST TEMPERATURE SENSOR SIGNAL CIRCUIT SHORTED TO VOLTAGE

Turn the ignition off.

Disconnect the Post-Catalyst Exhaust Temperature Sensor connector.

Disconnect the Engine Control Module (ECM) connector.

Remove the ASD Relay.

Connect a jumper wire between cavity 30 and cavity 87 of the ASD Relay Connector.

Turn the ignition on.

Measure the voltage of the (K353) Post-Catalyst Exhaust Temperature Sensor Signal circuit in the Post-Catalyst Exhaust Temperature Sensor harness connector.

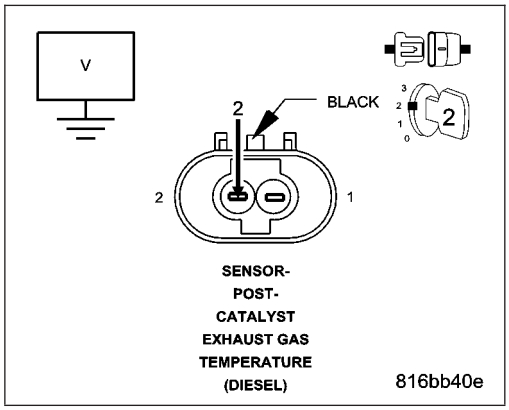

Is there any voltage present?

Yes >> Repair the (K353) Post-Catalyst Exhaust Temperature Sensor Signal circuit for a short to voltage.
Perform the ECM Verification Test Ver. 1 (Refer to 9 - ENGINE - DIAGNOSIS AND TESTING).

No >> Go to 3

3. (K915) POST-CATALYST EXHAUST TEMPERATURE SENSOR GROUND CIRCUIT SHORTED TO VOLTAGE

Measure the voltage of the (K915) Post-Catalyst Exhaust Temperature Sensor Ground circuit in the Post-Catalyst Exhaust Temperature Sensor harness connector.

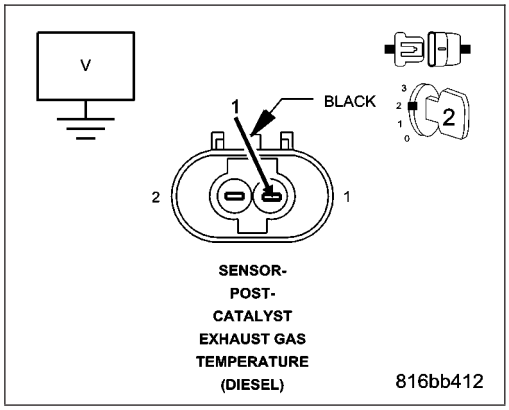

Is there any voltage present?

Yes >> Repair the (K915) Post-Catalyst Exhaust Temperature Sensor Ground circuit for a short to voltage.
Perform the ECM Verification Test Ver. 1 (Refer to 9 - ENGINE - DIAGNOSIS AND TESTING).

No >> Go to 4

4. (K353) POST-CATALYST EXHAUST TEMPERATURE SENSOR SIGNAL CIRCUIT SHORTED TO GROUND

Turn the ignition off.

Measure the resistance between ground and the (K353) Post-Catalyst Exhaust Temperature Sensor Signal circuit in the Post-Catalyst Exhaust Temperature Sensor harness connector.

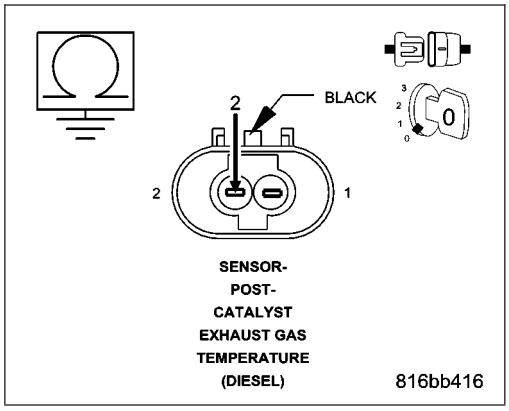

Is the resistance above 1000 ohms?

Yes >> Go to 5

No >> Repair the (K353) Post-Catalyst Exhaust Temperature Sensor Signal circuit for a short to ground.
Perform the ECM Verification Test Ver. 1 (Refer to 9 - ENGINE - DIAGNOSIS AND TESTING).

5. (K353) POST-CATALYST EXHAUST TEMPERATURE SENSOR SIGNAL CIRCUIT SHORTED TO (K915) POST-CATALYST EXHAUST TEMPERATURE SENSOR GROUND CIRCUIT

Measure the resistance between the (K353) Post-Catalyst Exhaust Temperature Sensor Signal circuit and the (K915) Post-Catalyst Exhaust Temperature Sensor Ground circuit in the Post-Catalyst Exhaust Temperature Sensor harness connector.

Is the resistance above 1000 ohms?

Yes >> Go to 6

No >> Repair the (K353) Post-Catalyst Exhaust Temperature Sensor Signal circuit for a short to the (K915) Post-Catalyst Exhaust Temperature Sensor Ground circuit.

Perform the ECM Verification Test Ver. 1 (Refer to 9 - ENGINE - DIAGNOSIS AND TESTING).

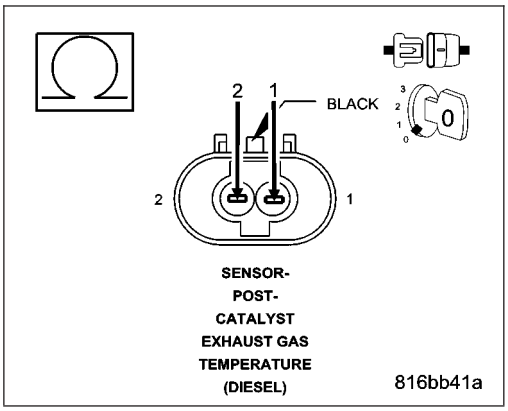

6. (K353) POST-CATALYST EXHAUST TEMPERATURE SENSOR SIGNAL CIRCUIT OPEN OR HIGH RESISTANCE

Measure the resistance of the (K353) Post-Catalyst Exhaust Temperature Sensor Signal circuit between the Post-Catalyst Exhaust Temperature Sensor harness connector and the Engine Control Module (ECM) harness connector.

Is the resistance below 10.0 ohms?

Yes >> Go to 7

No >> Repair the (K353) Post-Catalyst Exhaust Temperature Sensor Signal circuit for an open circuit or high resistance.

Perform the ECM Verification Test Ver. 1 (Refer to 9 - ENGINE - DIAGNOSIS AND TESTING).

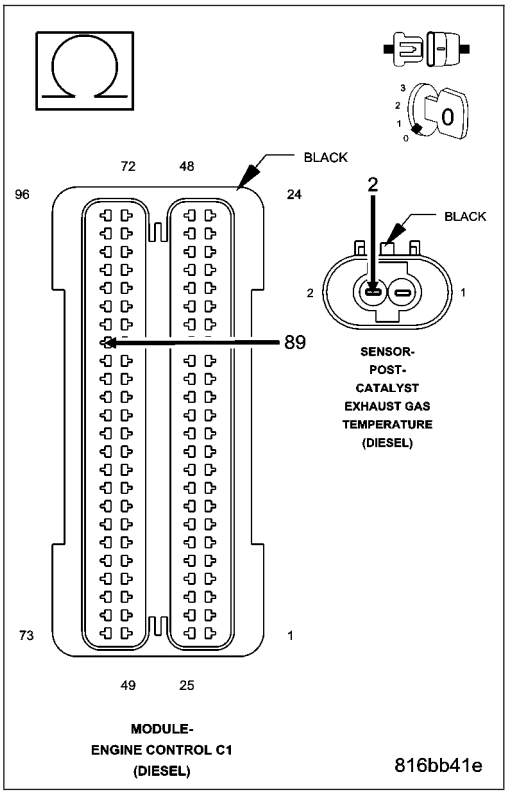

7. (K915) POST-CATALYST EXHAUST TEMPERATURE SENSOR GROUND CIRCUIT OPEN OR HIGH RESISTANCE

Measure the resistance of the (K915) Post-Catalyst Exhaust Temperature Sensor Ground circuit between the Post-Catalyst Exhaust Temperature Sensor harness connector and the Engine Control Module (ECM) harness connector.

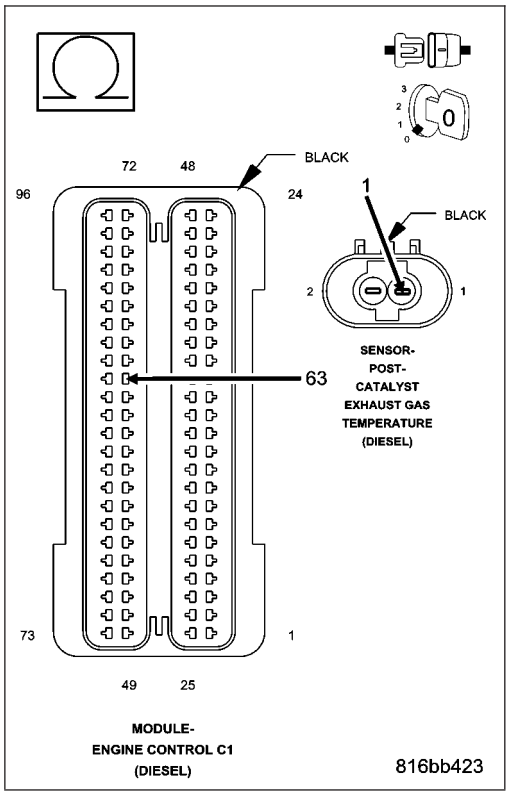

Is the resistance below 10.0 ohms?

Yes >> Go to 8

No >> Repair the (K915) Post-Catalyst Exhaust Temperature Sensor Ground circuit for an open circuit or high resistance.

Perform the ECM Verification Test Ver. 1 (Refer to 9 - ENGINE - DIAGNOSIS AND TESTING).

8. POST-CATALYST EXHAUST TEMPERATURE SENSOR

Turn the ignition off.

Connect the Engine Control Module (ECM) connector.

Remove the jumper wire from between cavity 30 and cavity 87 of the ASD Relay Connector and install the relay.

Connect a jumper wire between the (K915) Post-Catalyst Exhaust Temperature Sensor Ground circuit and the (K353) Post-Catalyst Exhaust Temperature Sensor Signal circuit in the Post-Catalyst Exhaust Temperature Sensor harness connector.

Turn the ignition on.

With the scan tool, Clear DTCs.

With the scan tool, select View DTCs.

NOTE: The scan tool should display a Post-Catalyst Exhaust Temperature Sensor low voltage or short to ground DTC with the jumper wire in place.

Does the scan tool display the DTC as described above?

Yes >> Replace the Post-Catalyst Exhaust Temperature Sensor in accordance with the Service Information.
Perform the ECM Verification Test Ver. 1 (Refer to 9 - ENGINE - DIAGNOSIS AND TESTING).

No >> Go to 9

9. ENGINE CONTROL MODULE (ECM)

Using the wiring diagram/schematic as a guide, inspect the wiring and connectors between the Post-Catalyst Exhaust Temperature Sensor and the Engine Control Module (ECM).

Look for any chafed, pierced, pinched, or partially broken wires.

Look for broken, bent, pushed out or corroded terminals.

Monitor the scan tool data relative to this circuit and wiggle test the wiring and connectors.

Look for the data to change or for the DTC to reset during the wiggle test.

Refer to any Technical Service Bulletins that may apply.

Were any problems found?

Yes >> Repair as necessary.
Perform the ECM Verification Test Ver. 1 (Refer to 9 - ENGINE - DIAGNOSIS AND TESTING).

No >> Replace the Engine Control Module (ECM) in accordance with the Service Information.
Perform the ECM Verification Test Ver. 1 (Refer to 9 - ENGINE - DIAGNOSIS AND TESTING).

P2121-ACCELERATOR PEDAL POSITION SENSOR 1 PERFORMANCE

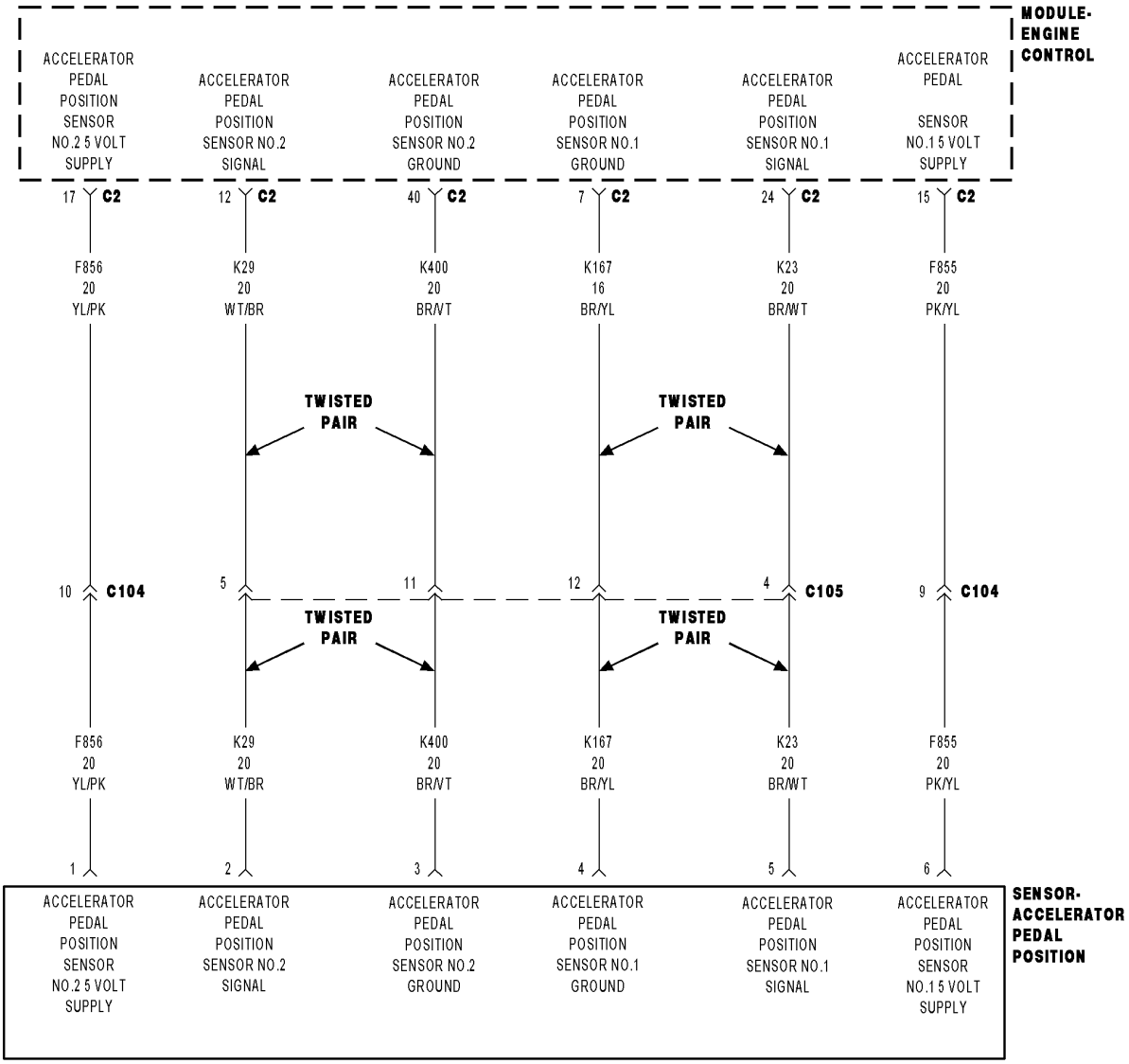

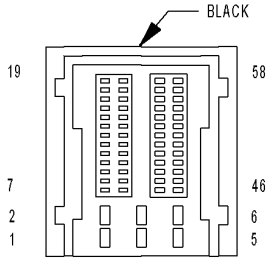

MODULE-ENGINE CONTROL C2 (DIESEL)

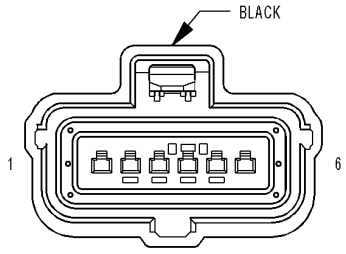

SENSOR-ACCELERATOR PEDAL POSITION

816B7452

For a complete wiring diagram **Refer to Section 8W**

- **When Monitored:**
  With the ignition on.
- **Set Condition:**
  APP Sensor #1 and APP Sensor #2 signals do not agree.

Possible Causes
INTERMITTENT DTC
(F855) ACCELERATOR PEDAL POSITION SENSOR NO. 1 5 VOLT SUPPLY CIRCUIT SHORTED TO VOLTAGE
(K23) ACCELERATOR PEDAL POSITION SENSOR NO. 1 SIGNAL CIRCUIT SHORTED TO VOLTAGE
(K167) ACCELERATOR PEDAL POSITION SENSOR NO. 1 SENSOR GROUND CIRCUIT SHORTED TO VOLTAGE
(K23) ACCELERATOR PEDAL POSITION SENSOR NO. 1 SIGNAL CIRCUIT SHORTED TO THE (F855) ACCELERATOR PEDAL POSITION SENSOR NO. 1 5 VOLT SUPPLY CIRCUIT
(K23) ACCELERATOR PEDAL POSITION SENSOR NO. 1 SIGNAL CIRCUIT SHORTED TO THE (F856) ACCELERATOR PEDAL POSITION SENSOR NO. 2 5 VOLT SUPPLY CIRCUIT
(K23) ACCELERATOR PEDAL POSITION SENSOR NO. 1 SIGNAL CIRCUIT SHORTED TO THE (K167) ACCELERATOR PEDAL POSITION SENSOR NO. 1 SENSOR GROUND CIRCUIT
(K23) ACCELERATOR PEDAL POSITION SENSOR NO. 1 SIGNAL CIRCUIT SHORTED TO THE (K400) ACCELERATOR PEDAL POSITION SENSOR NO. 2 SENSOR GROUND CIRCUIT
(F855) ACCELERATOR PEDAL POSITION SENSOR NO. 1 5 VOLT SUPPLY CIRCUIT OPEN OR HIGH RESISTANCE
(K23) ACCELERATOR PEDAL POSITION SENSOR NO. 1 SIGNAL CIRCUIT OPEN OR HIGH RESISTANCE
(K167) ACCELERATOR PEDAL POSITION SENSOR NO. 1 SENSOR GROUND CIRCUIT OPEN OR HIGH RESISTANCE
(F855) ACCELERATOR PEDAL POSITION SENSOR NO. 1 5 VOLT SUPPLY CIRCUIT SHORTED TO GROUND
(K23) ACCELERATOR PEDAL POSITION SENSOR NO. 1 SIGNAL CIRCUIT SHORTED TO GROUND
ACCELERATOR PEDAL POSITION SENSOR
ENGINE CONTROL MODULE (ECM)

Always perform the Pre-Diagnostic Troubleshooting procedure before proceeding. (Refer to 9 - ENGINE - DIAGNOSIS AND TESTING)

Diagnostic Test

1. DTC IS ACTIVE

NOTE: If any Sensor reference or supply voltage DTCs are present, perform the applicable diagnostic procedure before continuing with this test.

NOTE: The APP Sensor is a device that contains two separate potentiometer type sensors. Each sensor has its own 5-volt supply circuit, sensor ground circuit and signal circuit. The APP Sensor no longer incorporates a low-idle switch.

NOTE: The APP Sensor 2 signal should always be approximately 1/2 the voltage of the APP Sensor 1 signal.
Ignition on, engine not running.

With the scan tool, Clear DTCs in the Engine Control Module (ECM).

Fully depress and release the Accelerator Pedal several times.

With the scan tool, select View DTCs.

Is the status Active for this DTC?

Yes >> Go To 2

No >> Refer to the *CHECKING FOR AN INTERMITTENT DTC Diagnostic Procedure. (Refer to 9 - ENGINE - DIAGNOSIS AND TESTING)

2. ACCELERATOR PEDAL POSITION SENSOR CIRCUITS SHORTED TO VOLTAGE

Turn the ignition off.

Disconnect the Accelerator Pedal Position Sensor connector.

Disconnect the Engine Control Module (ECM) connector.

Remove the ASD Relay from the IPM.

Connect a jumper wire between cavity 30 and cavity 87 of the ASD Relay Connector.

Turn the ignition on.

Measure the voltage of the (F855) Accelerator Pedal Position Sensor No. 1 5 Volt Supply circuit in the Accelerator Pedal Position Sensor connector.

Measure the voltage of the (K23) Accelerator Pedal Position Sensor No. 1 Signal circuit in the Accelerator Pedal Position Sensor connector.

Measure the voltage of the (K167) Accelerator Pedal Position Sensor No. 1 Sensor Ground circuit in the Accelerator Pedal Position Sensor connector.

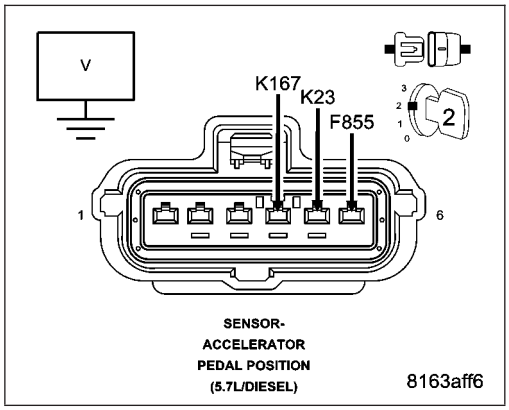

Is there voltage present on any of the circuits?

Yes >> Repair the appropriate circuit that has voltage present.
Perform the ECM Verification Test Ver. 1. (Refer to 9 - ENGINE - DIAGNOSIS AND TESTING)

No >> Go to 3

3. (K23) ACCELERATOR PEDAL POSITION SENSOR NO. 1 SIGNAL CIRCUIT SHORTED TO THE 5 VOLT SUPPLY CIRCUIT

Turn the ignition off.

Measure the resistance between the (K23) Accelerator Pedal Position Sensor No. 1 Signal circuit and the (F855) Accelerator Pedal Position Sensor No. 1 5 Volt Supply circuit in the Accelerator Pedal Position Sensor connector.

Measure the resistance between the (K23) Accelerator Pedal Position Sensor No. 1 Signal circuit and the (F856) Accelerator Pedal Position Sensor No. 2 5 Volt Supply circuit in the Accelerator Pedal Position Sensor connector.

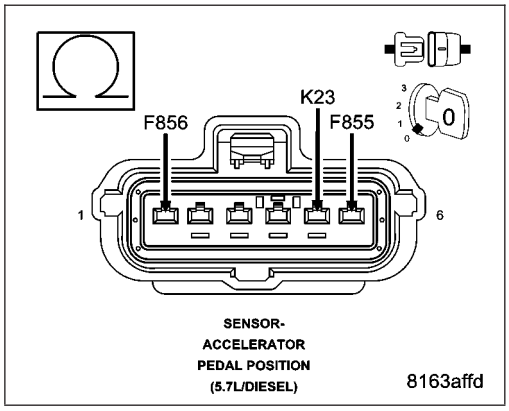

Is the resistance above 1000.0 ohms for both of the circuits?

Yes >> Go to 4

No >> Repair the shorted (K23) Accelerator Pedal Position Sensor No. 1 Signal circuit.
Perform the ECM Verification Test Ver. 1. (Refer to 9 - ENGINE - DIAGNOSIS AND TESTING)

4. ACCELERATOR PEDAL POSITION SENSOR CIRCUIT OPEN OR HIGH RESISTANCE

Turn the ignition off.

Measure the resistance of the (F855) Accelerator Pedal Position Sensor No. 1 5 Volt Supply circuit between the Accelerator Pedal Position Sensor connector and the Engine Control Module (ECM) connector.

Measure the resistance of the (K23) Accelerator Pedal Position Sensor No. 1 Signal circuit between the Accelerator Pedal Position Sensor connector and the Engine Control Module (ECM) connector.

Measure the resistance of the (K167) Accelerator Pedal Position Sensor No. 1 Sensor Ground circuit between the Accelerator Pedal Position Sensor connector and the Engine Control Module (ECM) connector.

Is the resistance below 10.0 ohms for each of the circuits?

Yes >> Go to 5

No >> Repair the appropriate circuit that has a resistance greater than 10.0 ohms.
Perform the ECM Verification Test Ver. 1. (Refer to 9 - ENGINE - DIAGNOSIS AND TESTING)

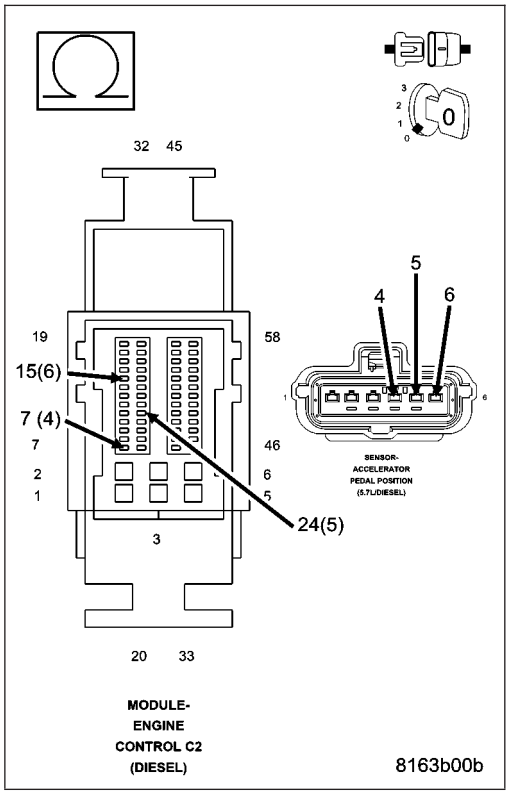

5. ACCELERATOR PEDAL POSITION SENSOR CIRCUIT SHORTED TO GROUND

Measure the resistance between ground and the (F855) Accelerator Pedal Position Sensor No. 1 5 Volt Supply circuit in the Accelerator Pedal Position Sensor connector.

Measure the resistance between ground and the (K23) Accelerator Pedal Position Sensor No. 1 Signal circuit in the Accelerator Pedal Position Sensor connector.

Is the resistance between ground and both of the circuits above 1000.0 ohms?

Yes >> Go to 6

No >> Repair the appropriate circuit for a short to ground.
Perform the ECM Verification Test Ver. 1. (Refer to 9 - ENGINE - DIAGNOSIS AND TESTING)

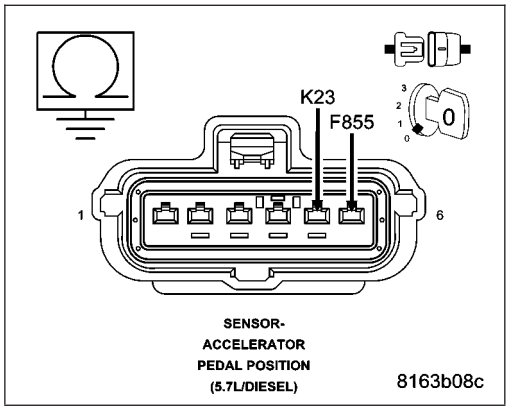

6. (K23) ACCELERATOR PEDAL POSITION SENSOR NO. 1 SIGNAL CIRCUIT SHORTED TO THE SENSOR GROUND CIRCUIT

Measure the resistance between the (K23) Accelerator Pedal Position Sensor No. 1 Signal circuit and the (K167) Accelerator Pedal Position Sensor No. 1 Sensor Ground circuit in the Accelerator Pedal Position Sensor connector.

Measure the resistance between the (K23) Accelerator Pedal Position Sensor No. 1 Signal circuit and the (K400) Accelerator Pedal Position Sensor No. 2 Sensor Ground circuit in the Accelerator Pedal Position Sensor connector.

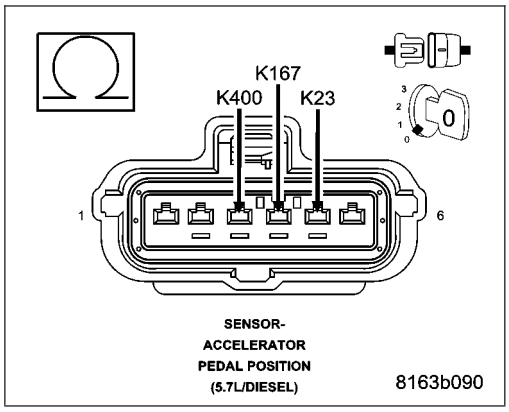

Is the resistance between ground and both of the circuits above 1000.0 ohms?

Yes >> Go to 7

No >> Repair the appropriate circuit for a short to ground.
Perform the ECM Verification Test Ver. 1. (Refer to 9 - ENGINE - DIAGNOSIS AND TESTING)

7. ACCELERATOR PEDAL POSITION SENSOR

Turn the ignition off.

Remove the jumper wire and install the ASD Relay.

Connect the Engine Control Module (ECM) connector.

Connect a jumper wire between the (K167) Accelerator Pedal Position Sensor No. 1 Sensor Ground circuit and the (K23) Accelerator Pedal Position Sensor No. 1 Signal circuit in the Accelerator Pedal Position Sensor connector.

Turn the ignition on.

With the scan tool, Clear DTCs.

Fully depress and release the Accelerator Pedal several times.

With the scan tool, select View DTCs.

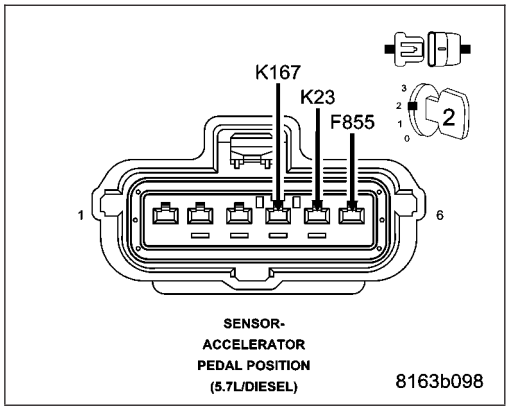

NOTE: The scan tool should display an Accelerator Pedal Position Sensor No. 1 low voltage or short to ground DTC with the jumper wire in place.

Turn the ignition off.

Connect a jumper wire between the (F855) Accelerator Pedal Position Sensor No. 1 5 Volt Supply circuit and the (K23) Accelerator Pedal Position Sensor No. 1 Signal circuit in the Accelerator Pedal Position Sensor connector.

Turn the ignition on.

With the scan tool, Clear DTCs.

Fully depress and release the Accelerator Pedal several times.

With the scan tool, select View DTCs.

NOTE: The scan tool should display an Accelerator Pedal Position Sensor No. 1 high voltage or open DTC with the Accelerator Pedal Position Sensor connector disconnected.

Does the scan tool display the DTCs as described in BOTH cases listed above?

Yes >> Replace the Accelerator Pedal Position Sensor in accordance with the Service Information.
Perform the ECM Verification Test Ver. 1. (Refer to 9 - ENGINE - DIAGNOSIS AND TESTING)

No >> Go to 8

8. ENGINE CONTROL MODULE (ECM)

Using the wiring diagram/schematic as a guide, inspect the wiring and connectors between the Accelerator Pedal Position Sensor and the Engine Control Module (ECM).

Look for any chafed, pierced, pinched, or partially broken wires.

Look for broken, bent, pushed out or corroded terminals.

Monitor the scan tool data relative to this circuit and wiggle test the wiring and connectors.

Look for the data to change or for the DTC to reset during the wiggle test.

Refer to any Technical Service Bulletins that may apply.

Were any problems found?

Yes >> Repair as necessary.
Perform the ECM Verification Test Ver. 1. (Refer to 9 - ENGINE - DIAGNOSIS AND TESTING)

No >> Replace the Engine Control Module (ECM) in accordance with the Service Information.
Perform the ECM Verification Test Ver. 1. (Refer to 9 - ENGINE - DIAGNOSIS AND TESTING)

P2122-ACCELERATOR PEDAL POSITION SENSOR 1 CIRCUIT LOW

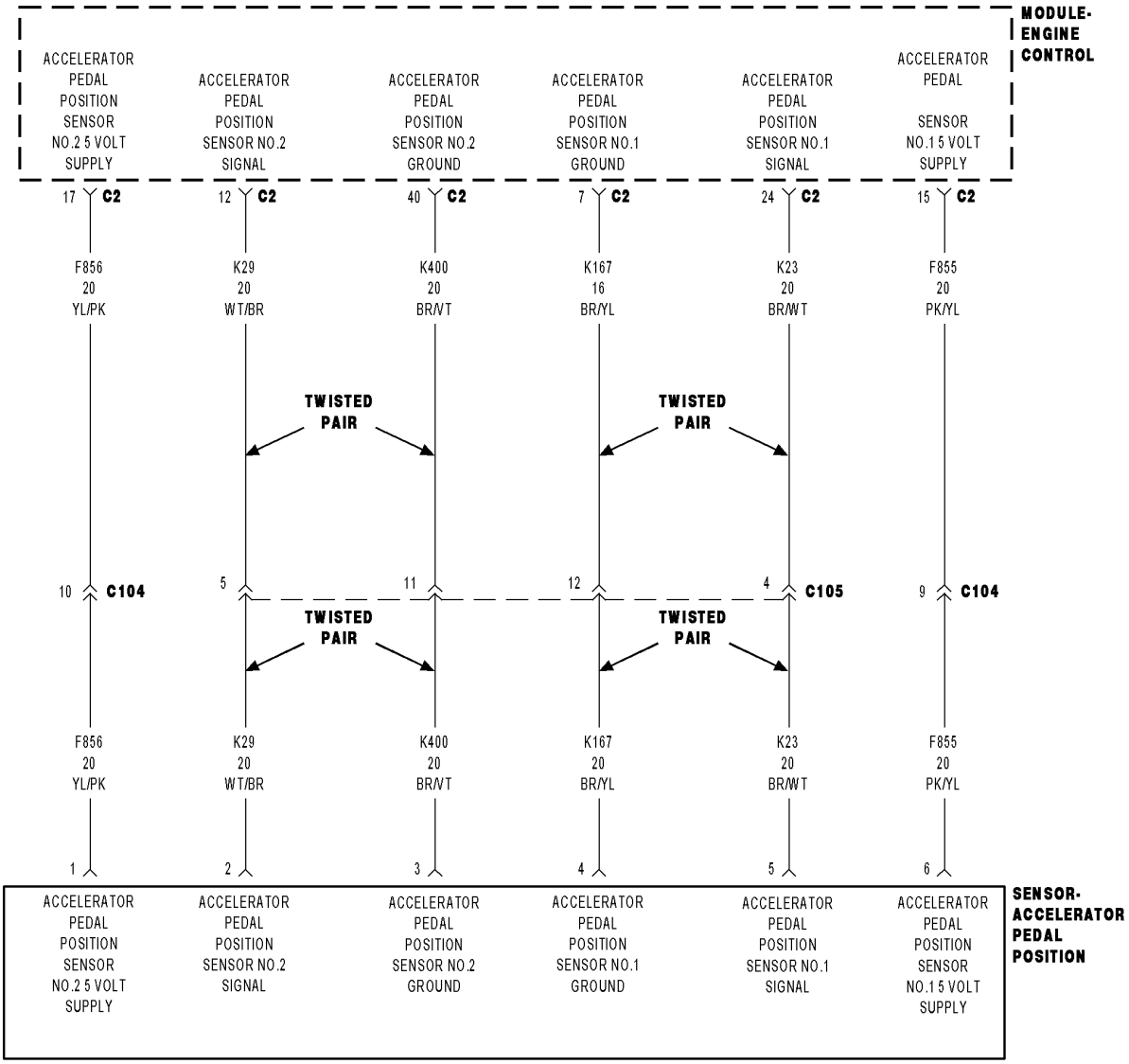

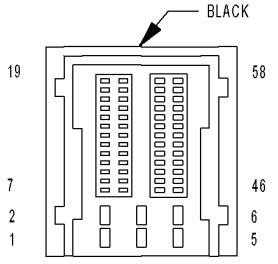

MODULE-ENGINE CONTROL C2 (DIESEL)

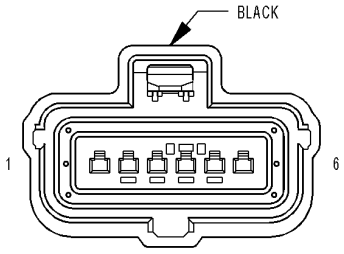

SENSOR-ACCELERATOR PEDAL POSITION

816B7452

For a complete wiring diagram **Refer to Section 8W**

- **When Monitored:**
  With the ignition on.
- **Set Condition:**
  The APP Sensor #1 Signal circuit is below 0.2 volts for 0.32 seconds.

Possible Causes
INTERMITTENT DTC
(F855) ACCELERATOR PEDAL POSITION SENSOR NO. 1 5 VOLT SUPPLY CIRCUIT OPEN OR HIGH RESISTANCE
(K23) ACCELERATOR PEDAL POSITION SENSOR NO. 1 SIGNAL CIRCUIT OPEN OR HIGH RESISTANCE
(K167) ACCELERATOR PEDAL POSITION SENSOR NO. 1 SENSOR GROUND CIRCUIT OPEN OR HIGH RESISTANCE
(F855) ACCELERATOR PEDAL POSITION SENSOR NO. 1 5 VOLT SUPPLY CIRCUIT SHORTED TO GROUND
(K23) ACCELERATOR PEDAL POSITION SENSOR NO. 1 SIGNAL CIRCUIT SHORTED TO GROUND
(K23) ACCELERATOR PEDAL POSITION SENSOR NO. 1 SIGNAL CIRCUIT SHORTED TO THE (K167) ACCELERATOR PEDAL POSITION SENSOR NO. 1 SENSOR GROUND CIRCUIT
(K23) ACCELERATOR PEDAL POSITION SENSOR NO. 1 SIGNAL CIRCUIT SHORTED TO THE (K400) ACCELERATOR PEDAL POSITION SENSOR NO. 2 SENSOR GROUND CIRCUIT
ACCELERATOR PEDAL POSITION SENSOR
ENGINE CONTROL MODULE (ECM)

Always perform the Pre-Diagnostic Troubleshooting procedure before proceeding. (Refer to 9 - ENGINE - DIAGNOSIS AND TESTING)

Diagnostic Test

1. DTC IS ACTIVE

NOTE: If a Sensor reference or supply voltage DTC is also present, perform the applicable diagnostic procedure before continuing with this test.

NOTE: The APP Sensor is a device that contains two separate potentiometer type sensors. Each sensor has its own 5-volt supply circuit, sensor ground circuit and signal circuit. The APP Sensor no longer incorporates a low-idle switch.

NOTE: The APP Sensor 2 signal should always be approximately 1/2 the voltage of the APP Sensor 1 signal.
Ignition on, engine not running.

With the scan tool, Clear DTCs in the Engine Control Module (ECM).

Fully depress and release the Accelerator Pedal several times.

With the scan tool, select View DTCs.

Is the status Active for this DTC?

Yes >> Go To 2

No >> Refer to the *CHECKING FOR AN INTERMITTENT DTC Diagnostic Procedure. (Refer to 9 - ENGINE - DIAGNOSIS AND TESTING)

2. ACCELERATOR PEDAL POSITION SENSOR CIRCUIT OPEN OR HIGH RESISTANCE

Turn the ignition off.

Disconnect the Engine Control Module (ECM) connector.

Measure the resistance of the (F855) Accelerator Pedal Position Sensor No. 1 5 Volt Supply circuit between the Accelerator Pedal Position Sensor connector and the Engine Control Module (ECM) connector.

Measure the resistance of the (K23) Accelerator Pedal Position Sensor No. 1 Signal circuit between the Accelerator Pedal Position Sensor connector and the Engine Control Module (ECM) connector.

Measure the resistance of the (K167) Accelerator Pedal Position Sensor No. 1 Sensor Ground circuit between the Accelerator Pedal Position Sensor connector and the Engine Control Module (ECM) connector.

Is the resistance below 10.0 ohms for each of the circuits?

Yes >> Go to 3

No >> Repair the appropriate circuit for an open circuit or high resistance.

Perform the ECM Verification Test Ver. 1. (Refer to 9 - ENGINE - DIAGNOSIS AND TESTING)

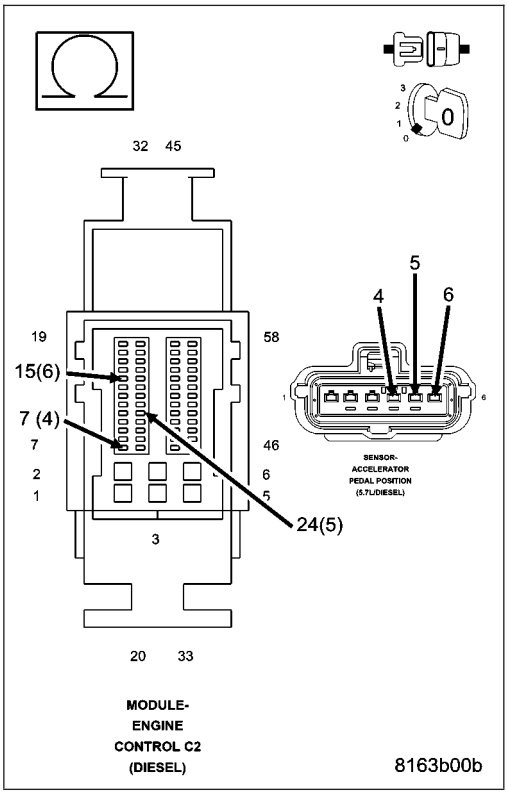

3. ACCELERATOR PEDAL POSITION SENSOR CIRCUIT SHORTED TO GROUND

Measure the resistance between ground and the (F855) Accelerator Pedal Position Sensor No. 1 5 Volt Supply circuit in the Accelerator Pedal Position Sensor connector.

Measure the resistance between ground and the (K23) Accelerator Pedal Position Sensor No. 1 Signal circuit in the Accelerator Pedal Position Sensor connector.

Is the resistance between ground and both of the circuits above 1000.0 ohms?

Yes >> Go to 4

No >> Repair the appropriate circuit for a short to ground.

Perform the ECM Verification Test Ver. 1. (Refer to 9 - ENGINE - DIAGNOSIS AND TESTING)

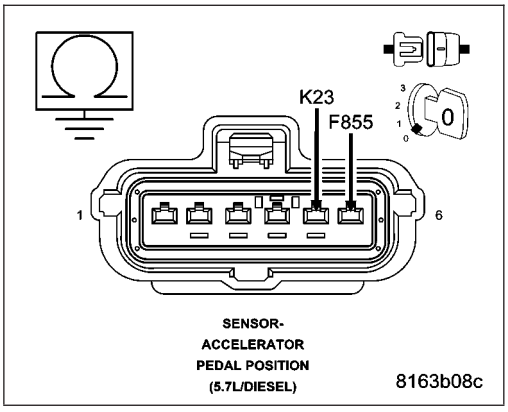

4. (K23) ACCELERATOR PEDAL POSITION SENSOR NO. 1 SIGNAL CIRCUIT SHORTED TO THE SENSOR GROUND CIRCUIT

Measure the resistance between the (K23) Accelerator Pedal Position Sensor No. 1 Signal circuit and the (K167) Accelerator Pedal Position Sensor No. 1 Sensor Ground circuit in the Accelerator Pedal Position Sensor connector.

Measure the resistance between the (K23) Accelerator Pedal Position Sensor No. 1 Signal circuit and the (K400) Accelerator Pedal Position Sensor No. 2 Sensor Ground circuit in the Accelerator Pedal Position Sensor connector.

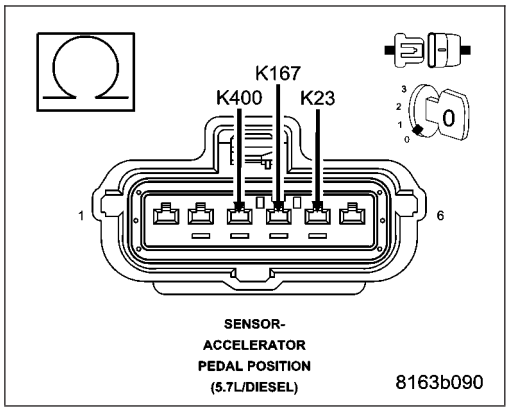

Is the resistance between ground and both of the circuits above 1000.0 ohms?

Yes >> Go to 5

No >> Repair the appropriate circuit for a short to ground.
Perform the ECM Verification Test Ver. 1. (Refer to 9 - ENGINE - DIAGNOSIS AND TESTING)

5. ACCELERATOR PEDAL POSITION SENSOR

Turn the ignition off.

Remove the jumper wire and install the ASD Relay.

Connect the Engine Control Module (ECM) connector.

Connect a jumper wire between the (F855) Accelerator Pedal Position Sensor No. 1 5 Volt Supply circuit and the (K23) Accelerator Pedal Position Sensor No. 1 Signal circuit in the Accelerator Pedal Position Sensor connector.

Turn the ignition on.

With the scan tool, Clear DTCs.

Fully depress and release the Accelerator Pedal several times.

With the scan tool, select View DTCs.

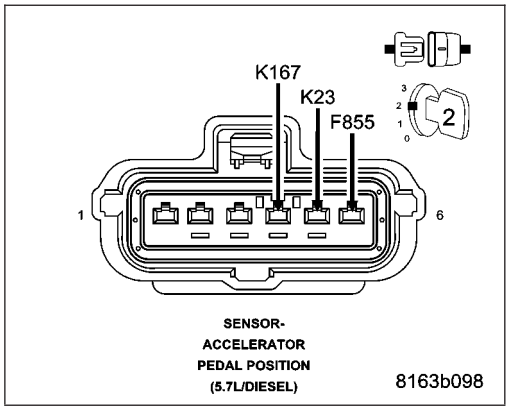

NOTE: The scan tool should display an Accelerator Pedal Position Sensor No. 1 high voltage or open DTC with the Accelerator Pedal Position Sensor connector disconnected.

Does the scan tool display the DTC as described above?

Yes >> Replace the Accelerator Pedal Position Sensor in accordance with the Service Information.
Perform the ECM Verification Test Ver. 1. (Refer to 9 - ENGINE - DIAGNOSIS AND TESTING)

No >> Go to 6

6. ENGINE CONTROL MODULE (ECM)

Using the wiring diagram/schematic as a guide, inspect the wiring and connectors between the Accelerator Pedal Position Sensor and the Engine Control Module (ECM).

Look for any chafed, pierced, pinched, or partially broken wires.

Look for broken, bent, pushed out or corroded terminals.

Monitor the scan tool data relative to this circuit and wiggle test the wiring and connectors.

Look for the data to change or for the DTC to reset during the wiggle test.

Refer to any Technical Service Bulletins that may apply.

Were any problems found?

Yes >> Repair as necessary.
Perform the ECM Verification Test Ver. 1. (Refer to 9 - ENGINE - DIAGNOSIS AND TESTING)

No >> Replace the Engine Control Module (ECM) in accordance with the Service Information.
Perform the ECM Verification Test Ver. 1. (Refer to 9 - ENGINE - DIAGNOSIS AND TESTING)

P2123-ACCELERATOR PEDAL POSITION SENSOR 1 CIRCUIT HIGH

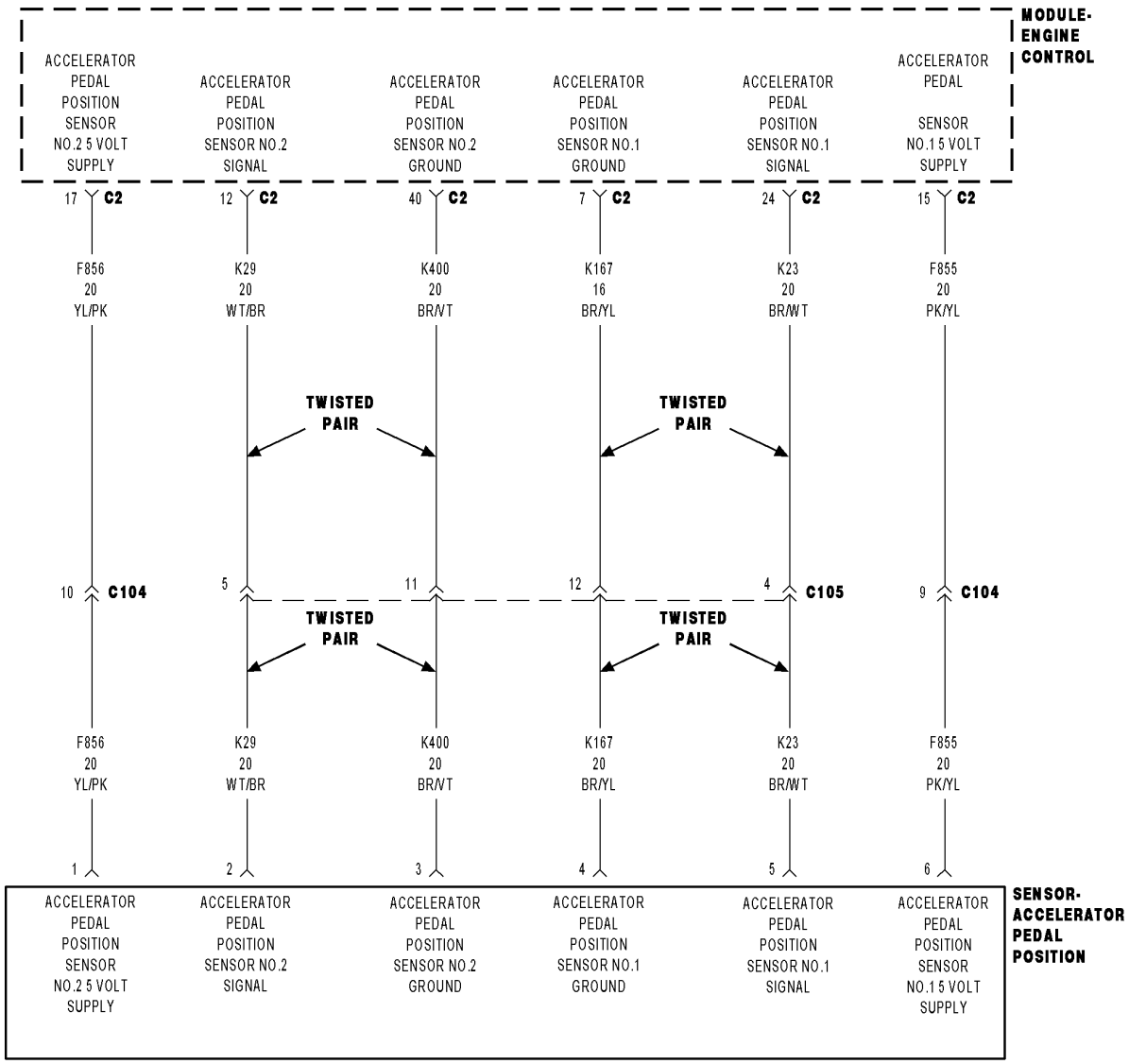

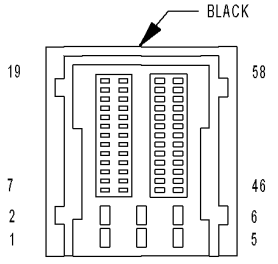

MODULE-ENGINE CONTROL C2 (DIESEL)

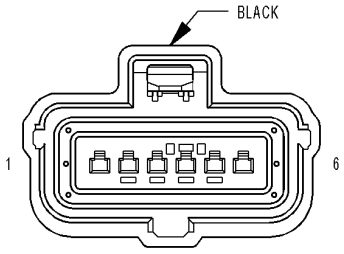

SENSOR-ACCELERATOR PEDAL POSITION

816B7452

For a complete wiring diagram **Refer to Section 8W**

- **When Monitored:**
  With the ignition on.
- **Set Condition:**
  The APP Sensor #1 signal circuit is above 4.8 volts for 0.32 seconds.

Possible Causes
INTERMITTENT DTC
(F855) ACCELERATOR PEDAL POSITION SENSOR NO. 1 5 VOLT SUPPLY CIRCUIT SHORTED TO VOLTAGE
(K23) ACCELERATOR PEDAL POSITION SENSOR NO. 1 SIGNAL CIRCUIT SHORTED TO VOLTAGE
(K167) ACCELERATOR PEDAL POSITION SENSOR NO. 1 SENSOR GROUND CIRCUIT SHORTED TO VOLTAGE
(K23) ACCELERATOR PEDAL POSITION SENSOR NO. 1 SIGNAL CIRCUIT SHORTED TO THE (F855) ACCELERATOR PEDAL POSITION SENSOR NO. 1 5 VOLT SUPPLY CIRCUIT OR (F856) ACCELERATOR PEDAL POSITION SENSOR NO. 2 5 VOLT SUPPLY CIRCUIT
(F855) ACCELERATOR PEDAL POSITION SENSOR NO. 1 5 VOLT SUPPLY CIRCUIT OPEN OR HIGH RESISTANCE
(K23) ACCELERATOR PEDAL POSITION SENSOR NO. 1 SIGNAL CIRCUIT OPEN OR HIGH RESISTANCE
(K167) ACCELERATOR PEDAL POSITION SENSOR NO. 1 SENSOR GROUND CIRCUIT OPEN OR HIGH RESISTANCE
ACCELERATOR PEDAL POSITION SENSOR
ENGINE CONTROL MODULE (ECM)

Always perform the Pre-Diagnostic Troubleshooting procedure before proceeding. (Refer to 9 - ENGINE - DIAGNOSIS AND TESTING)

Diagnostic Test

1. DTC IS ACTIVE

NOTE: If any Sensor reference or supply voltage DTCs are present, perform the applicable diagnostic procedure before continuing with this test.

NOTE: The APP Sensor is a device that contains two separate potentiometer type sensors. Each sensor has its own 5-volt supply circuit, sensor ground circuit and signal circuit. The APP Sensor no longer incorporates a low-idle switch.

NOTE: The APP Sensor 2 signal should always be approximately 1/2 the voltage of the APP Sensor 1 signal.
Ignition on, engine not running.

With the scan tool, Clear DTCs in the Engine Control Module (ECM).

Fully depress and release the Accelerator Pedal several times.

With the scan tool, select View DTCs.

Is the status Active for this DTC?

Yes >> Go To 2

No >> Refer to the *CHECKING FOR AN INTERMITTENT DTC Diagnostic Procedure. (Refer to 9 - ENGINE - DIAGNOSIS AND TESTING)

2. ACCELERATOR PEDAL POSITION SENSOR CIRCUIT SHORTED TO VOLTAGE

Turn the ignition off.

Disconnect the Accelerator Pedal Position Sensor connector.

Disconnect the Engine Control Module (ECM) connector.

Remove the ASD Relay from the IPM.

Connect a jumper wire between cavity 30 and cavity 87 of the ASD Relay Connector.

Turn the ignition on.

Measure the voltage of the (F855) Accelerator Pedal Position Sensor No. 1 5 Volt Supply circuit in the Accelerator Pedal Position Sensor connector.

Measure the voltage of the (K23) Accelerator Pedal Position Sensor No. 1 Signal circuit in the Accelerator Pedal Position Sensor connector.

Measure the voltage of the (K167) Accelerator Pedal Position Sensor No. 1 Sensor Ground circuit in the Accelerator Pedal Position Sensor connector.

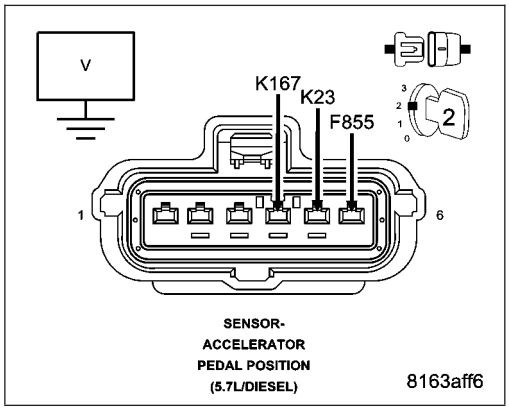

Is there voltage present on any of the circuits?

Yes >> Repair the appropriate circuit that has voltage present.
Perform the ECM Verification Test Ver. 1. (Refer to 9 - ENGINE - DIAGNOSIS AND TESTING)

No >> Go to 3

3. (K23) ACCELERATOR PEDAL POSITION SENSOR NO. 1 SIGNAL CIRCUIT SHORTED TO THE 5 VOLT SUPPLY CIRCUIT

Turn the ignition off.

Disconnect the Engine Control Module (ECM) connector.

Measure the resistance between the (K23) Accelerator Pedal Position Sensor No. 1 Signal circuit and the (F855) Accelerator Pedal Position Sensor No. 1 5 Volt Supply circuit in the Accelerator Pedal Position Sensor connector.

Measure the resistance between the (K23) Accelerator Pedal Position Sensor No. 1 Signal circuit and the (F856) Accelerator Pedal Position Sensor No. 2 5 Volt Supply circuit in the Accelerator Pedal Position Sensor connector.

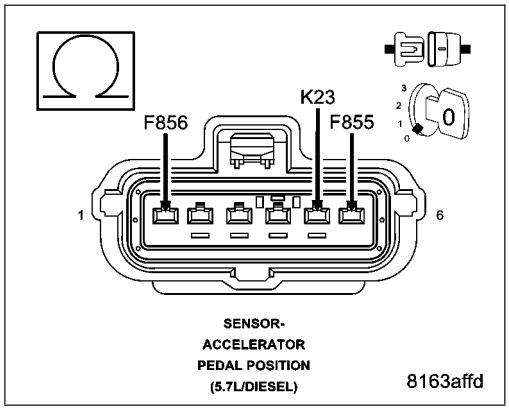

Is the resistance above 10.0 ohms for both of the circuits?

Yes >> Go to 4

No >> Repair the shorted (K23) Accelerator Pedal Position Sensor No. 1 Signal circuit.
Perform the ECM Verification Test Ver. 1. (Refer to 9 - ENGINE - DIAGNOSIS AND TESTING)

4. ACCELERATOR PEDAL POSITION SENSOR CIRCUIT OPEN OR HIGH RESISTANCE

Turn the ignition off.

Disconnect the Engine Control Module (ECM) connector.

Measure the resistance of the (F855) Accelerator Pedal Position Sensor No. 1 5 Volt Supply circuit between the Accelerator Pedal Position Sensor connector and the Engine Control Module (ECM) connector.

Measure the resistance of the (K23) Accelerator Pedal Position Sensor No. 1 Signal circuit between the Accelerator Pedal Position Sensor connector and the Engine Control Module (ECM) connector.

Measure the resistance of the (K167) Accelerator Pedal Position Sensor No. 1 Sensor Ground circuit between the Accelerator Pedal Position Sensor connector and the Engine Control Module (ECM) connector.

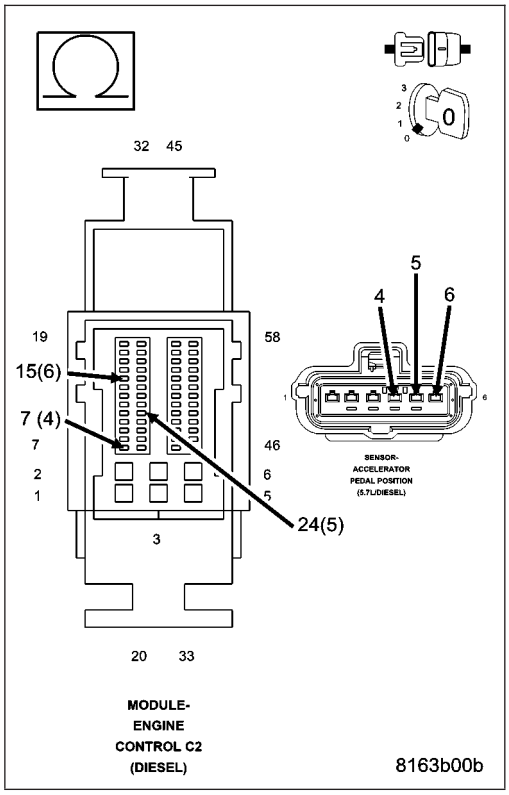

Is the resistance below 10.0 ohms for each of the circuits?

Yes >> Go to 5

No >> Repair the appropriate circuit for an open circuit or high resistance.

Perform the ECM Verification Test Ver. 1. (Refer to 9 - ENGINE - DIAGNOSIS AND TESTING)

5. ACCELERATOR PEDAL POSITION SENSOR

Turn the ignition off.

Remove the jumper wire and install the ASD Relay.

Connect the Engine Control Module (ECM) connector.

Connect a jumper wire between the (K167) Accelerator Pedal Position Sensor No. 1 Sensor Ground circuit and the (K23) Accelerator Pedal Position Sensor No. 1 Signal circuit in the Accelerator Pedal Position Sensor connector.

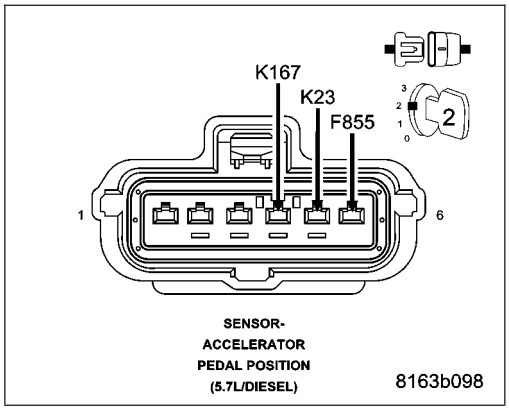

Turn the ignition on.

With the scan tool, Clear DTCs.

Fully depress and release the Accelerator Pedal several times.

With the scan tool, select View DTCs.

NOTE: The scan tool should display an Accelerator Pedal Position Sensor No. 1 low voltage or short to ground DTC with the jumper wire in place.

Does the scan tool display the DTC as described above?

Yes >> Replace the Accelerator Pedal Position Sensor in accordance with the Service Information.
Perform the ECM Verification Test Ver. 1. (Refer to 9 - ENGINE - DIAGNOSIS AND TESTING)

No >> Go to 6

6. ENGINE CONTROL MODULE (ECM)

Using the wiring diagram/schematic as a guide, inspect the wiring and connectors between the Accelerator Pedal Position Sensor and the Engine Control Module (ECM).

Look for any chafed, pierced, pinched, or partially broken wires.

Look for broken, bent, pushed out or corroded terminals.

Monitor the scan tool data relative to this circuit and wiggle test the wiring and connectors.

Look for the data to change or for the DTC to reset during the wiggle test.

Refer to any Technical Service Bulletins that may apply.

Were any problems found?

Yes >> Repair as necessary.
Perform the ECM Verification Test Ver. 1. (Refer to 9 - ENGINE - DIAGNOSIS AND TESTING)

No >> Replace the Engine Control Module (ECM) in accordance with the Service Information.
Perform the ECM Verification Test Ver. 1. (Refer to 9 - ENGINE - DIAGNOSIS AND TESTING)

P2127-ACCELERATOR PEDAL POSITION SENSOR 2 CIRCUIT LOW

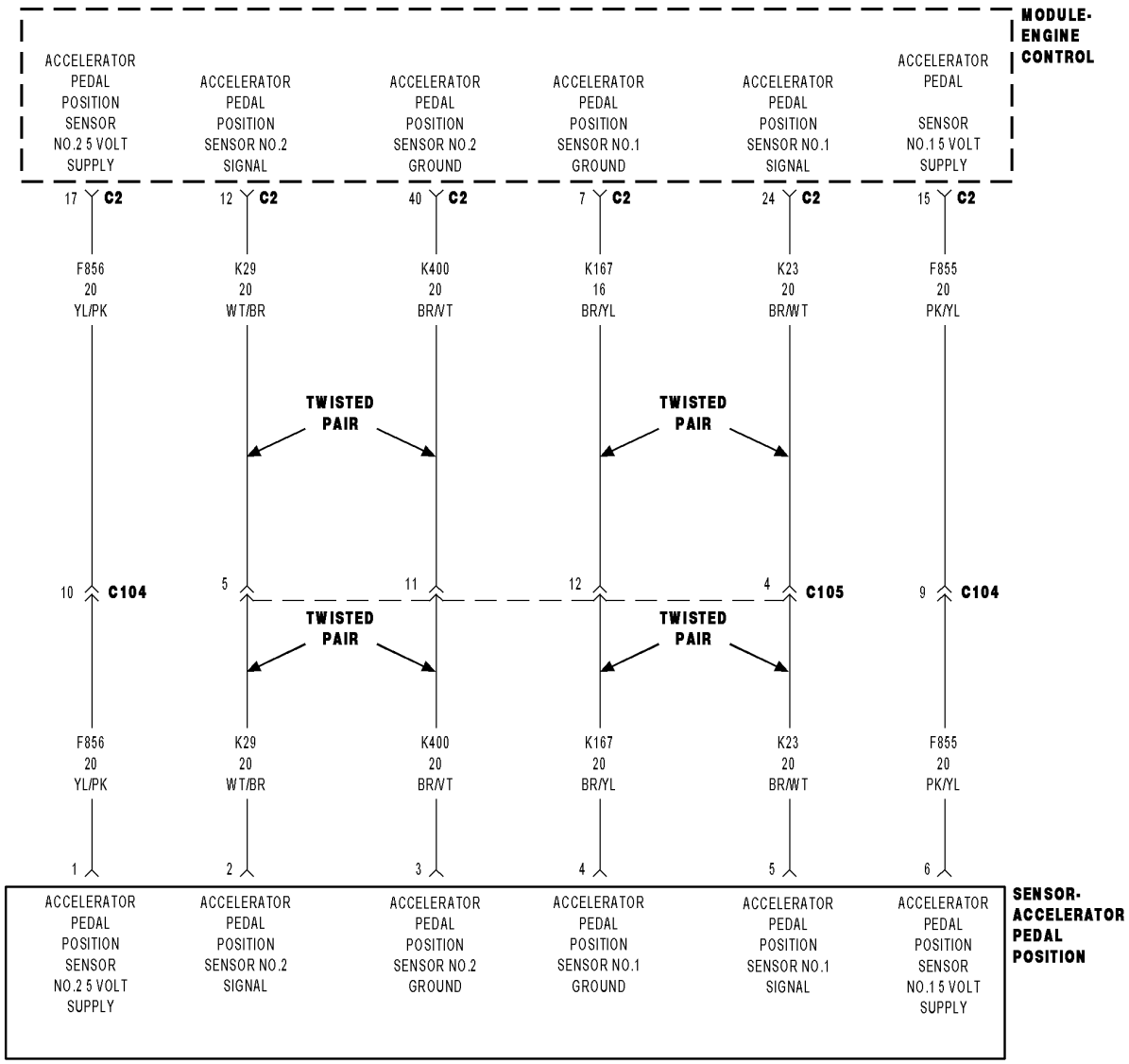

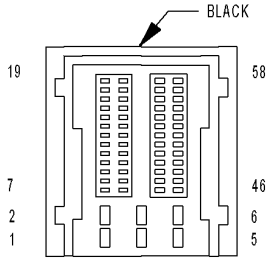

MODULE-ENGINE CONTROL C2 (DIESEL)

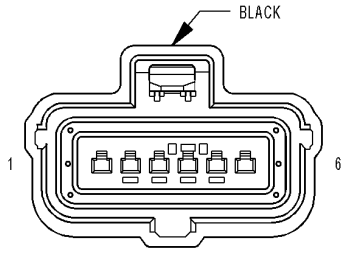

SENSOR-ACCELERATOR PEDAL POSITION

816B7452

For a complete wiring diagram **Refer to Section 8W**

- **When Monitored:**
  With the ignition on.
- **Set Condition:**
  The APP Sensor #2 Signal circuit is below 0.097 volts for 0.32 seconds.

Possible Causes
INTERMITTENT DTC
(F856) ACCELERATOR PEDAL POSITION SENSOR NO. 2 5 VOLT SUPPLY CIRCUIT OPEN OR HIGH RESISTANCE
(K29) ACCELERATOR PEDAL POSITION SENSOR NO. 2 SIGNAL CIRCUIT OPEN OR HIGH RESISTANCE
(K400) ACCELERATOR PEDAL POSITION SENSOR NO. 2 SENSOR GROUND CIRCUIT OPEN OR HIGH RESISTANCE
(F856) ACCELERATOR PEDAL POSITION SENSOR NO. 2 5 VOLT SUPPLY CIRCUIT SHORTED TO GROUND
(K29) ACCELERATOR PEDAL POSITION SENSOR NO. 2 SIGNAL CIRCUIT SHORTED TO GROUND
(K29) ACCELERATOR PEDAL POSITION SENSOR NO. 2 SIGNAL CIRCUIT SHORTED TO THE (K400) ACCELERATOR PEDAL POSITION SENSOR NO. 2 SENSOR GROUND CIRCUIT
(K29) ACCELERATOR PEDAL POSITION SENSOR NO. 2 SIGNAL CIRCUIT SHORTED TO THE (K167) ACCELERATOR PEDAL POSITION SENSOR NO. 1 SENSOR GROUND CIRCUIT
ACCELERATOR PEDAL POSITION SENSOR
ENGINE CONTROL MODULE (ECM)

Always perform the Pre-Diagnostic Troubleshooting procedure before proceeding. (Refer to 9 - ENGINE - DIAGNOSIS AND TESTING)

Diagnostic Test

1. DTC IS ACTIVE

NOTE: If a Sensor reference or supply voltage DTC is also present, perform the applicable diagnostic procedure before continuing with this test.

NOTE: The APP Sensor is a device that contains two separate potentiometer type sensors. Each sensor has its own 5-volt supply circuit, sensor ground circuit and signal circuit. The APP Sensor no longer incorporates a low-idle switch.

NOTE: The APP Sensor 2 signal should always be approximately 1/2 the voltage of the APP Sensor 1 signal.
Ignition on, engine not running.

With the scan tool, Clear DTCs in the Engine Control Module (ECM).

Fully depress and release the Accelerator Pedal several times.

With the scan tool, select View DTCs.

Is the status Active for this DTC?

Yes >> Go To 2

No >> Refer to the *CHECKING FOR AN INTERMITTENT DTC Diagnostic Procedure. (Refer to 9 - ENGINE - DIAGNOSIS AND TESTING)

2. ACCELERATOR PEDAL POSITION SENSOR CIRCUIT OPEN OR HIGH RESISTANCE

Turn the ignition off.

Disconnect the Engine Control Module (ECM) connector.

Measure the resistance of the (F856) Accelerator Pedal Position Sensor No. 2 5 Volt Supply circuit between the Accelerator Pedal Position Sensor connector and the Engine Control Module (ECM) connector.

Measure the resistance of the (K29) Accelerator Pedal Position Sensor No. 2 Signal circuit between the Accelerator Pedal Position Sensor connector and the Engine Control Module (ECM) connector.

Measure the resistance of the (K400) Accelerator Pedal Position Sensor No. 2 Sensor Ground circuit between the Accelerator Pedal Position Sensor connector and the Engine Control Module (ECM) connector.

Is the resistance below 10.0 ohms for each of the circuits?

Yes >> Go to 3

No >> Repair the appropriate circuit for an open circuit or high resistance.

Perform the ECM Verification Test Ver. 1. (Refer to 9 - ENGINE - DIAGNOSIS AND TESTING)

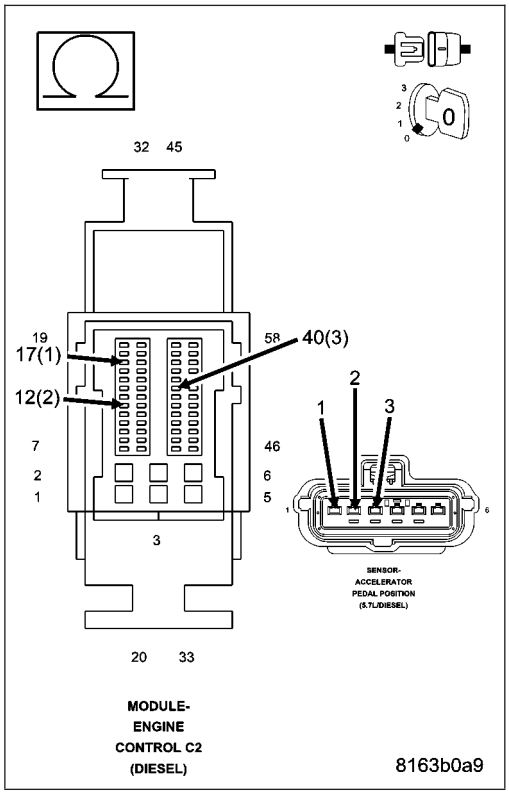

3. ACCELERATOR PEDAL POSITION SENSOR CIRCUIT SHORTED TO GROUND

Measure the resistance between ground and the (F856) Accelerator Pedal Position Sensor No. 2 5 Volt Supply circuit in the Accelerator Pedal Position Sensor connector.

Measure the resistance between ground and the (K29) Accelerator Pedal Position Sensor No. 2 Signal circuit in the Accelerator Pedal Position Sensor connector.

Is the resistance between ground and both of the circuits above 1000.0 ohms?

Yes >> Go to 4

No >> Repair the appropriate circuit for a short to ground.

Perform the ECM Verification Test Ver. 1. (Refer to 9 - ENGINE - DIAGNOSIS AND TESTING)

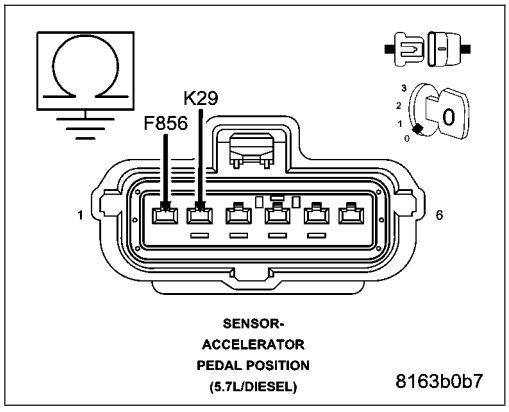

4. (K29) ACCELERATOR PEDAL POSITION SENSOR NO. 2 SIGNAL CIRCUIT SHORTED TO THE SENSOR GROUND CIRCUIT

Measure the resistance between the (K29) Accelerator Pedal Position Sensor No. 2 Signal circuit and the (K400) Accelerator Pedal Position Sensor No. 2 Sensor Ground circuit in the Accelerator Pedal Position Sensor connector.

Measure the resistance between the (K29) Accelerator Pedal Position Sensor No. 2 Signal circuit and the (K167) Accelerator Pedal Position Sensor No. 1 Sensor Ground circuit in the Accelerator Pedal Position Sensor connector.

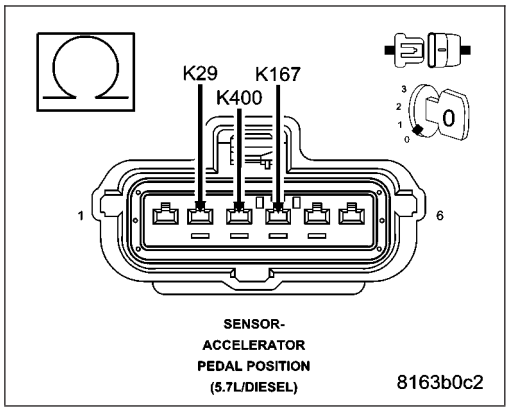

Is the resistance between ground and both of the circuits above 1000.0 ohms?

Yes >> Go to 5

No >> Repair the appropriate circuit for a short to ground.
Perform the ECM Verification Test Ver. 1. (Refer to 9 - ENGINE - DIAGNOSIS AND TESTING)

5. ACCELERATOR PEDAL POSITION SENSOR

Turn the ignition off.

Remove the jumper wire and install the ASD Relay.

Connect the Engine Control Module (ECM) connector.

Connect a jumper wire between the (F856) Accelerator Pedal Position Sensor No. 2 5 Volt Supply circuit and the (K29) Accelerator Pedal Position Sensor No. 2 Signal circuit in the Accelerator Pedal Position Sensor connector.

Turn the ignition on.

With the scan tool, Clear DTCs.

Fully depress and release the Accelerator Pedal several times.

With the scan tool, select View DTCs.

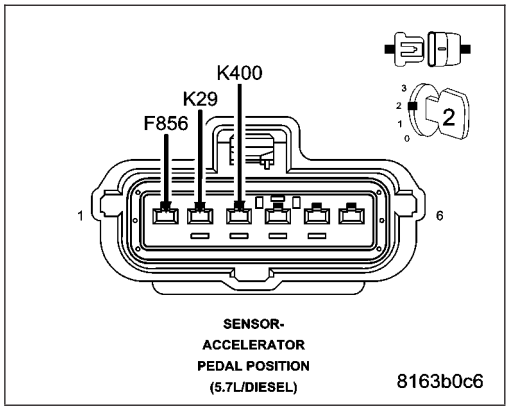

NOTE: The scan tool should display an Accelerator Pedal Position Sensor No. 2 high voltage or open DTC with the Accelerator Pedal Position Sensor connector disconnected and the jumper wire in place.

Does the scan tool display the DTC as described above?

Yes >> Replace the Accelerator Pedal Position Sensor in accordance with the Service Information.
Perform the ECM Verification Test Ver. 1. (Refer to 9 - ENGINE - DIAGNOSIS AND TESTING)

No >> Go to 6

6. ENGINE CONTROL MODULE (ECM)

Using the wiring diagram/schematic as a guide, inspect the wiring and connectors between the Accelerator Pedal Position Sensor and the Engine Control Module (ECM).

Look for any chafed, pierced, pinched, or partially broken wires.

Look for broken, bent, pushed out or corroded terminals.

Monitor the scan tool data relative to this circuit and wiggle test the wiring and connectors.

Look for the data to change or for the DTC to reset during the wiggle test.

Refer to any Technical Service Bulletins that may apply.

Were any problems found?

Yes >> Repair as necessary.
Perform the ECM Verification Test Ver. 1. (Refer to 9 - ENGINE - DIAGNOSIS AND TESTING)

No >> Replace the Engine Control Module (ECM) in accordance with the Service Information.
Perform the ECM Verification Test Ver. 1. (Refer to 9 - ENGINE - DIAGNOSIS AND TESTING)

P2128-ACCELERATOR PEDAL POSITION SENSOR 2 CIRCUIT HIGH

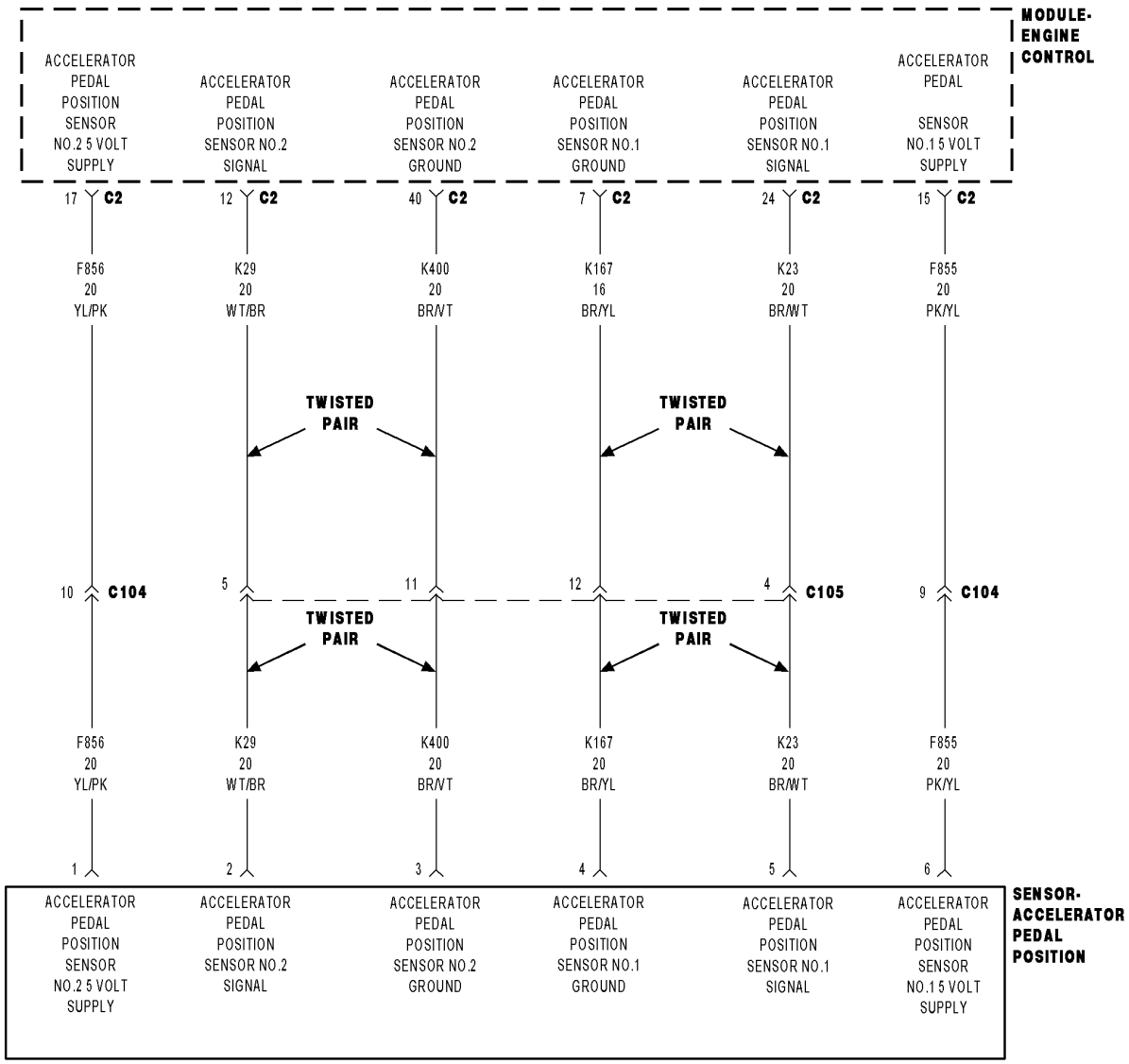

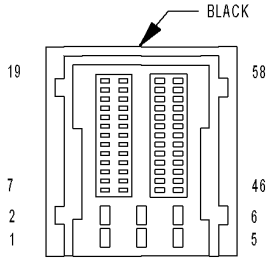

MODULE-ENGINE CONTROL C2 (DIESEL)

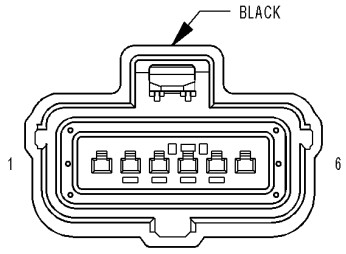

SENSOR-ACCELERATOR PEDAL POSITION

816B7452

For a complete wiring diagram **Refer to Section 8W**

- **When Monitored:**
  With the ignition on.
- **Set Condition:**
  The APP Sensor #2 signal circuit is above 2.5 volts for 0.32 seconds.

Possible Causes
INTERMITTENT DTC
(F856) ACCELERATOR PEDAL POSITION SENSOR NO. 2 5 VOLT SUPPLY CIRCUIT SHORTED TO VOLTAGE
(K29) ACCELERATOR PEDAL POSITION SENSOR NO. 2 SIGNAL CIRCUIT SHORTED TO VOLTAGE
(K400) ACCELERATOR PEDAL POSITION SENSOR NO. 2 SENSOR GROUND CIRCUIT SHORTED TO VOLTAGE
(K29) ACCELERATOR PEDAL POSITION SENSOR NO. 2 SIGNAL CIRCUIT SHORTED TO THE (F856) ACCELERATOR PEDAL POSITION SENSOR NO. 2 5 VOLT SUPPLY CIRCUIT OR (F855) ACCELERATOR PEDAL POSITION SENSOR NO. 1 5 VOLT SUPPLY CIRCUIT
(F856) ACCELERATOR PEDAL POSITION SENSOR NO. 2 5 VOLT SUPPLY CIRCUIT OPEN OR HIGH RESISTANCE
(K29) ACCELERATOR PEDAL POSITION SENSOR NO. 2 SIGNAL CIRCUIT OPEN OR HIGH RESISTANCE
(K400) ACCELERATOR PEDAL POSITION SENSOR NO. 2 SENSOR GROUND CIRCUIT OPEN OR HIGH RESISTANCE
ACCELERATOR PEDAL POSITION SENSOR
ENGINE CONTROL MODULE (ECM)

Always perform the Pre-Diagnostic Troubleshooting procedure before proceeding. (Refer to 9 - ENGINE - DIAGNOSIS AND TESTING)

Diagnostic Test

1. DTC IS ACTIVE

NOTE: If any Sensor reference or supply voltage DTCs are present, perform the applicable diagnostic procedure before continuing with this test.

NOTE: The APP Sensor is a device that contains two separate potentiometer type sensors. Each sensor has its own 5-volt supply circuit, sensor ground circuit and signal circuit. The APP Sensor no longer incorporates a low-idle switch.

NOTE: The APP Sensor 2 signal should always be approximately 1/2 the voltage of the APP Sensor 1 signal.
Ignition on, engine not running.

With the scan tool, Clear DTCs in the Engine Control Module (ECM).

Fully depress and release the Accelerator Pedal several times.

With the scan tool, select View DTCs.

Is the status Active for this DTC?

Yes >> Go To 2

No >> Refer to the *CHECKING FOR AN INTERMITTENT DTC Diagnostic Procedure. (Refer to 9 - ENGINE - DIAGNOSIS AND TESTING)

2. ACCELERATOR PEDAL POSITION SENSOR CIRCUIT SHORTED TO VOLTAGE

Turn the ignition off.

Disconnect the Accelerator Pedal Position Sensor connector.

Disconnect the Engine Control Module (ECM) connector.

Remove the ASD Relay from the IPM.

Connect a jumper wire between cavity 30 and cavity 87 of the ASD Relay Connector.

Turn the ignition on.

Measure the voltage of the (F856) Accelerator Pedal Position Sensor No. 2 5 Volt Supply circuit in the Accelerator Pedal Position Sensor connector.

Measure the voltage of the (K29) Accelerator Pedal Position Sensor No. 2 Signal circuit in the Accelerator Pedal Position Sensor connector.

Measure the voltage of the (K400) Accelerator Pedal Position Sensor No. 2 Sensor Ground circuit in the Accelerator Pedal Position Sensor connector.

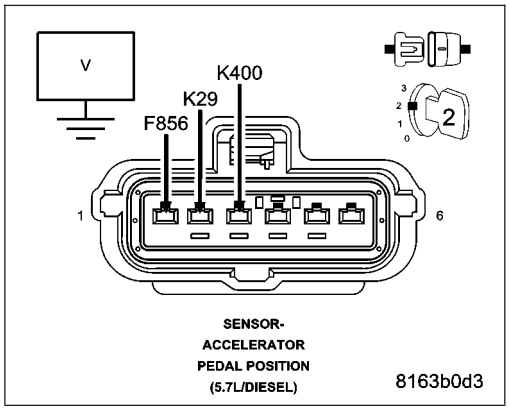

Is there voltage present on any of the circuits?

Yes >> Repair the appropriate circuit that has voltage present.
Perform the ECM Verification Test Ver. 1. (Refer to 9 - ENGINE - DIAGNOSIS AND TESTING)

No >> Go to 3

3. (K29) ACCELERATOR PEDAL POSITION SENSOR NO. 2 SIGNAL CIRCUIT SHORTED TO THE 5 VOLT SUPPLY CIRCUIT

Turn the ignition off.

Disconnect the Engine Control Module (ECM) connector.

Measure the resistance between the (K29) Accelerator Pedal Position Sensor No. 2 Signal circuit and the (F856) Accelerator Pedal Position Sensor No. 2 5 Volt Supply circuit in the Accelerator Pedal Position Sensor connector.

Measure the resistance between the (K29) Accelerator Pedal Position Sensor No. 2 Signal circuit and the (F855) Accelerator Pedal Position Sensor No. 1 5 Volt Supply circuit in the Accelerator Pedal Position Sensor connector.

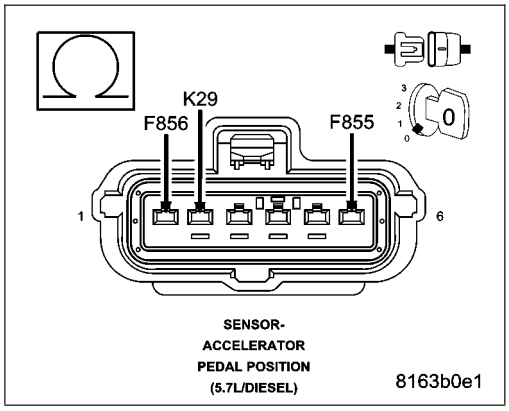

Is the resistance above 1000.0 ohms for both of the circuits?

Yes >> Go to 4

No >> Repair the shorted (K29) Accelerator Pedal Position Sensor No. 2 Signal circuit.
Perform the ECM Verification Test Ver. 1. (Refer to 9 - ENGINE - DIAGNOSIS AND TESTING)

4. ACCELERATOR PEDAL POSITION SENSOR CIRCUIT OPEN OR HIGH RESISTANCE

Disconnect the Engine Control Module (ECM) connector.

Measure the resistance of the (F856) Accelerator Pedal Position Sensor No. 2 5 Volt Supply circuit between the Accelerator Pedal Position Sensor connector and the Engine Control Module (ECM) connector.

Measure the resistance of the (K29) Accelerator Pedal Position Sensor No. 2 Signal circuit between the Accelerator Pedal Position Sensor connector and the Engine Control Module (ECM) connector.

Measure the resistance of the (K400) Accelerator Pedal Position Sensor No. 2 Sensor Ground circuit between the Accelerator Pedal Position Sensor connector and the Engine Control Module (ECM) connector.

Is the resistance below 10.0 ohms for each of the circuits?

Yes >> Go to 5

No >> Repair the appropriate circuit for an open circuit or high resistance.
Perform the ECM Verification Test Ver. 1. (Refer to 9 - ENGINE - DIAGNOSIS AND TESTING)

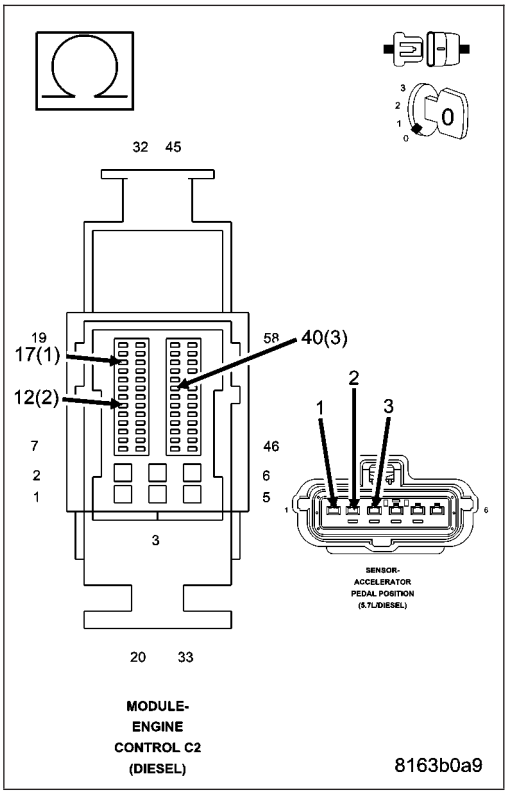

5. ACCELERATOR PEDAL POSITION SENSOR

Remove the jumper wire and install the ASD Relay.

Connect the Engine Control Module (ECM) connector.

Connect a jumper wire between the (K400) Accelerator Pedal Position Sensor No. 2 Sensor Ground circuit and the (K29) Accelerator Pedal Position Sensor No. 2 Signal circuit in the Accelerator Pedal Position Sensor connector.

Turn the ignition on.

With the scan tool, Clear DTCs.

Fully depress and release the Accelerator Pedal several times.

With the scan tool, select View DTCs.

NOTE: The scan tool should display an Accelerator Pedal Position Sensor No. 2 low voltage or short to ground DTC with the jumper wire in place.

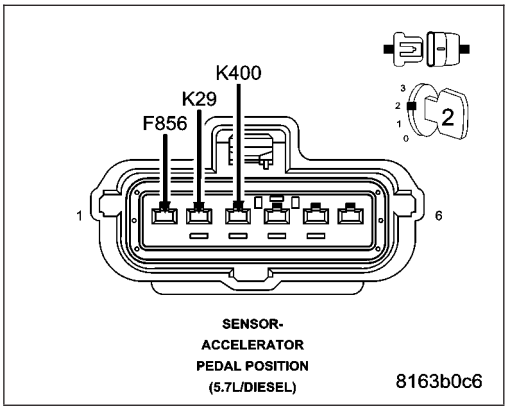

Does the scan tool display the DTC as described above?

Yes >> Replace the Accelerator Pedal Position Sensor in accordance with the Service Information.
Perform the ECM Verification Test Ver. 1. (Refer to 9 - ENGINE - DIAGNOSIS AND TESTING)

No >> Go to 6

6. ENGINE CONTROL MODULE (ECM)

Using the wiring diagram/schematic as a guide, inspect the wiring and connectors between the Accelerator Pedal Position Sensor and the Engine Control Module (ECM).

Look for any chafed, pierced, pinched, or partially broken wires.

Look for broken, bent, pushed out or corroded terminals.

Monitor the scan tool data relative to this circuit and wiggle test the wiring and connectors.

Look for the data to change or for the DTC to reset during the wiggle test.

Refer to any Technical Service Bulletins that may apply.

Were any problems found?

Yes >> Repair as necessary.
Perform the ECM Verification Test Ver. 1. (Refer to 9 - ENGINE - DIAGNOSIS AND TESTING)

No >> Replace the Engine Control Module (ECM) in accordance with the Service Information.
Perform the ECM Verification Test Ver. 1. (Refer to 9 - ENGINE - DIAGNOSIS AND TESTING)

P2138-ACCELERATOR PEDAL POSITION SENSOR 1 / 2 CORRELATION

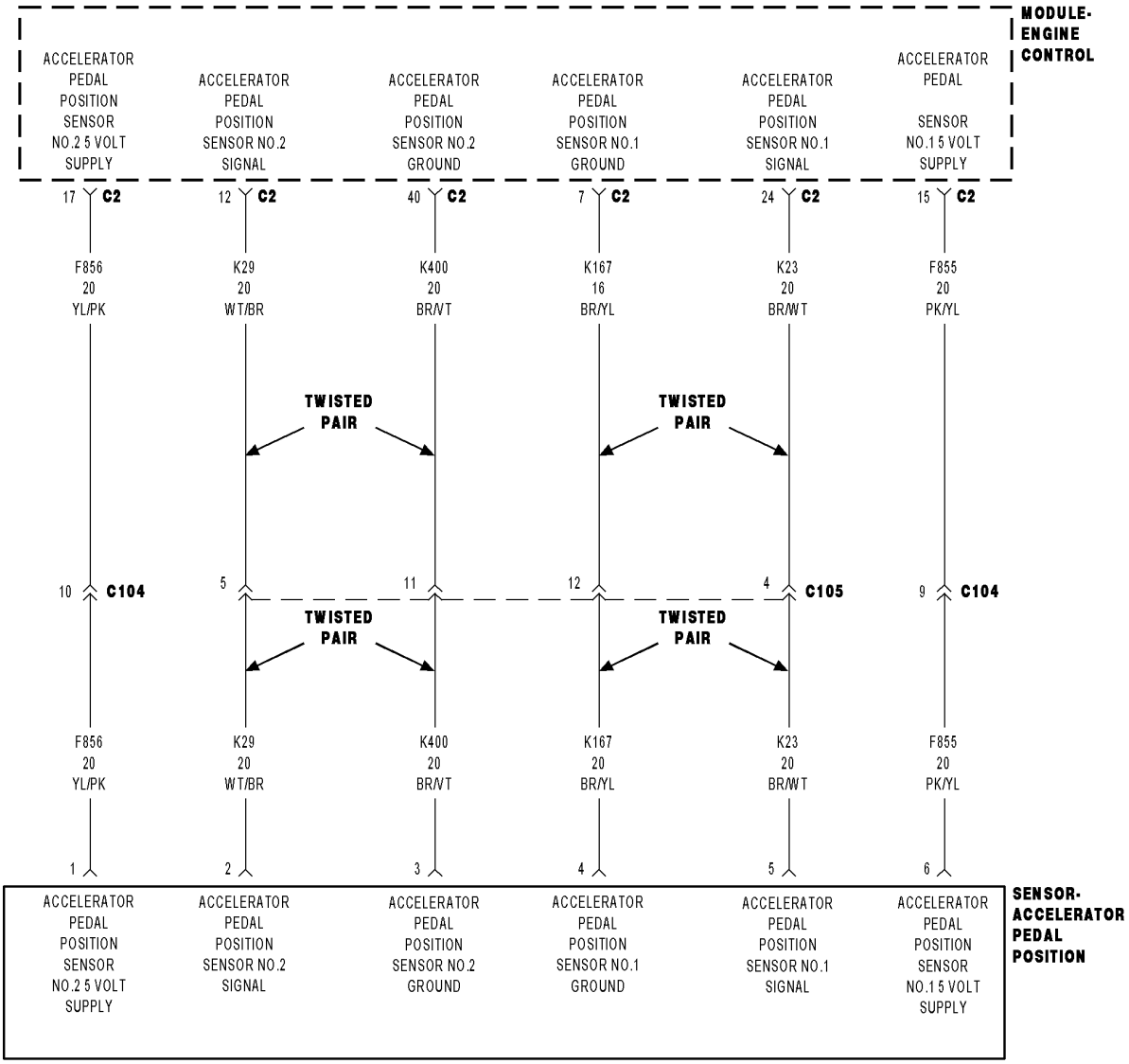

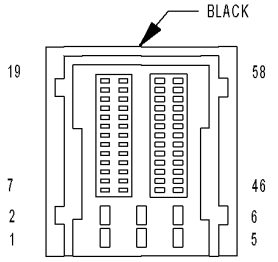

MODULE-ENGINE CONTROL C2 (DIESEL)

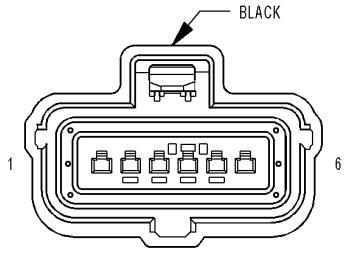

SENSOR-ACCELERATOR PEDAL POSITION

816B7452

For a complete wiring diagram **Refer to Section 8W**

Theory of Operation

The Accelerator Pedal Position Sensor contains two independent three wire sensors. Each sensor provides independent pedal position signals to the ECM. The raw voltage signal from APP #1 sensor is 2 times the raw voltage signal from APP #2. Although the raw voltage signals differ, the scan tool converts and displays these voltages as matching percentages of pedal travel.

- **When Monitored:**
  With the ignition on. No other APP DTC's set. No Sensor Reference Voltage DTC's set.
- **Set Condition:**
  APP Sensor #1 and APP Sensor #2 signals do not agree for 0.36 seconds.

Possible Causes
INTERMITTENT DTC
(F855) ACCELERATOR PEDAL POSITION SENSOR NO. 1 5 VOLT SUPPLY CIRCUIT OPEN OR HIGH RESISTANCE
(K23) ACCELERATOR PEDAL POSITION SENSOR NO. 1 SIGNAL CIRCUIT OPEN OR HIGH RESISTANCE
(K167) ACCELERATOR PEDAL POSITION SENSOR NO. 1 SENSOR GROUND CIRCUIT OPEN OR HIGH RESISTANCE
(F856) ACCELERATOR PEDAL POSITION SENSOR NO. 2 5 VOLT SUPPLY CIRCUIT OPEN OR HIGH RESISTANCE
(K12) ACCELERATOR PEDAL POSITION SENSOR NO. 2 SIGNAL CIRCUIT OPEN OR HIGH RESISTANCE
(K400) ACCELERATOR PEDAL POSITION SENSOR NO. 2 SENSOR GROUND CIRCUIT OPEN OR HIGH RESISTANCE
ACCELERATOR PEDAL POSITION SENSOR

Always perform the Pre-Diagnostic Troubleshooting procedure before proceeding. (Refer to 9 - ENGINE - DIAGNOSIS AND TESTING)

Diagnostic Test

1. DTC IS ACTIVE

NOTE: If any Sensor reference or supply voltage DTCs are present, perform the applicable diagnostic procedure before continuing with this test.

NOTE: The APP Sensor is a device that contains two separate potentiometer type sensors. Each sensor has its own 5-volt supply circuit, sensor ground circuit and signal circuit. The APP Sensor no longer incorporates a low-idle switch.

NOTE: The APP Sensor 2 signal should always be approximately 1/2 the voltage of the APP Sensor 1 signal.
Ignition on, engine not running.

With the scan tool, Clear DTCs in the Engine Control Module (ECM).

Test drive the vehicle.

With the scan tool, select View DTCs.

Is the status Active for this DTC?

Yes >> Go To 2

No >> Refer to the *CHECKING FOR AN INTERMITTENT DTC Diagnostic Procedure. (Refer to 9 - ENGINE - DIAGNOSIS AND TESTING)

2. ACCELERATOR PEDAL POSITION SENSOR CIRCUIT OPEN OR HIGH RESISTANCE

Turn the ignition off.

Measure the resistance of the (F855) Accelerator Pedal Position Sensor No. 1 5 Volt Supply circuit between the Accelerator Pedal Position Sensor connector and the Engine Control Module (ECM) connector.

Measure the resistance of the (K23) Accelerator Pedal Position Sensor No. 1 Signal circuit between the Accelerator Pedal Position Sensor connector and the Engine Control Module (ECM) connector.

Measure the resistance of the (K167) Accelerator Pedal Position Sensor No. 1 Sensor Ground circuit between the Accelerator Pedal Position Sensor connector and the Engine Control Module (ECM) connector.

Measure the resistance of the (F856) Accelerator Pedal Position Sensor No. 2 5 Volt Supply circuit between the Accelerator Pedal Position Sensor connector and the Engine Control Module (ECM) connector.

Measure the resistance of the (K29) Accelerator Pedal Position Sensor No. 2 Signal circuit between the Accelerator Pedal Position Sensor connector and the Engine Control Module (ECM) connector.

Measure the resistance of the (K400) Accelerator Pedal Position Sensor No. 2 Sensor Ground circuit between the Accelerator Pedal Position Sensor connector and the Engine Control Module (ECM) connector.

Is the resistance below 10.0 ohms for each of the circuits?

Yes >> Replace the Accelerator Pedal Position Sensor.

No >> Repair the circuit for an open circuit or high resistance.
Perform the ECM Verification Test Ver. 1. (Refer to 9 - ENGINE - DIAGNOSIS AND TESTING)

P213A-EGR AIRFLOW THROTTLE CONTROL CIRCUIT B OPEN

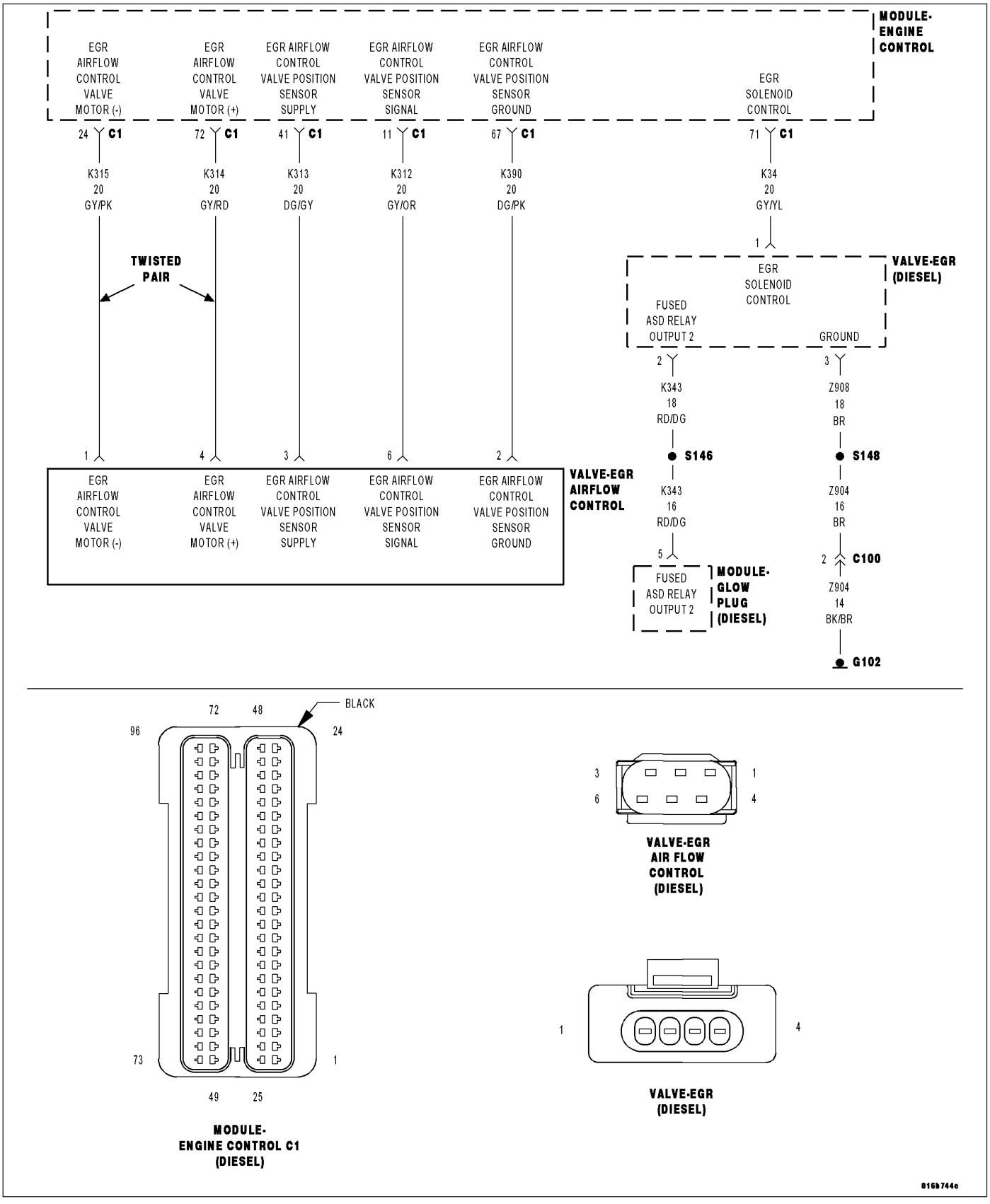

For a complete wiring diagram **Refer to Section 8W**

- **When Monitored:**
  With the engine running and the EGR Airflow Control Valve Motor command off.
- **Set Condition:**
  The ECM does not detect voltage on the (K315) EGR Airflow Control Valve Motor (-) circuit for 0.5 second.

Possible Causes
INTERMITTENT DTC
(K315) EGR AIRFLOW CONTROL VALVE MOTOR (-) CIRCUIT OPEN OR HIGH RESISTANCE
(K314) EGR AIRFLOW CONTROL VALVE MOTOR (+) CIRCUIT OPEN OR HIGH RESISTANCE
EGR AIRFLOW CONTROL VALVE
ENGINE CONTROL MODULE (ECM)

Always perform the Pre-Diagnostic Troubleshooting procedure before proceeding. (Refer to 9 - ENGINE - DIAGNOSIS AND TESTING)

Diagnostic Test

1. DTC IS ACTIVE

Ignition on, engine not running.
With the scan tool, Clear DTCs in the Engine Control Module (ECM).
With the scan tool, actuate the EGR Airflow Control Valve.
Monitor the scan tool for at least two minutes.
With the scan tool, select View DTCs.

Is the status Active for this DTC?

Yes >> Go To 2

No >> Refer to the *CHECKING FOR AN INTERMITTENT DTC Diagnostic Procedure. (Refer to 9 - ENGINE - DIAGNOSIS AND TESTING)

2. (K315) EGR AIRFLOW CONTROL VALVE MOTOR (-) CIRCUIT OPEN OR HIGH RESISTANCE

Turn the ignition off.

Disconnect the Engine Control Module (ECM) connector.

Measure the resistance of the (K315) EGR Airflow Control Valve Motor (-) circuit between the EGR Airflow Control Valve connector and the Engine Control Module (ECM) connector.

Is the resistance below 10.0 ohms?

Yes >> Go to 3

No >> Repair the (K315) EGR Airflow Control Valve Motor (-) circuit for an open circuit or high resistance.

Perform the ECM Verification Test Ver. 1. (Refer to 9 - ENGINE - DIAGNOSIS AND TESTING)

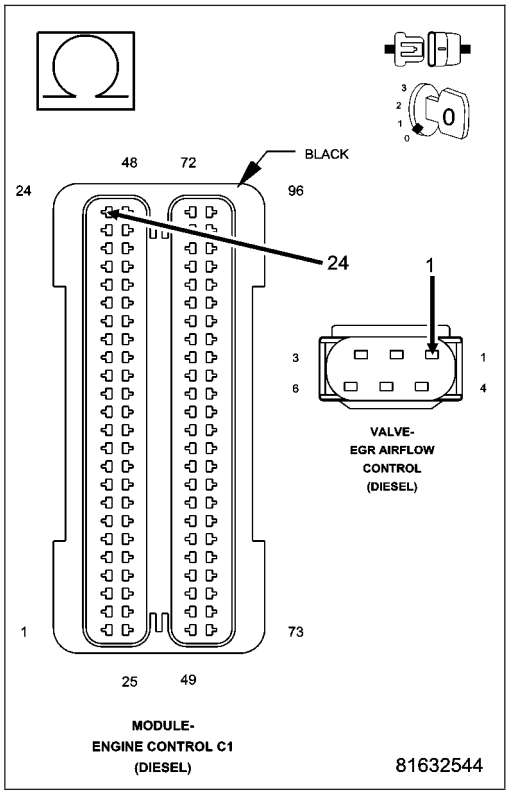

3. (K314) EGR AIRFLOW CONTROL VALVE MOTOR (+) CIRCUIT OPEN OR HIGH RESISTANCE

Measure the resistance of the (K314) EGR Airflow Control Valve Motor (+) circuit between the EGR Airflow Control Valve connector and the Engine Control Module (ECM) connector.

Is the resistance below 10.0 ohms?

Yes >> Go to 4

No >> Repair the (K314) EGR Airflow Control Valve Motor (+) circuit for an open circuit or high resistance.

Perform the ECM Verification Test Ver. 1. (Refer to 9 - ENGINE - DIAGNOSIS AND TESTING)

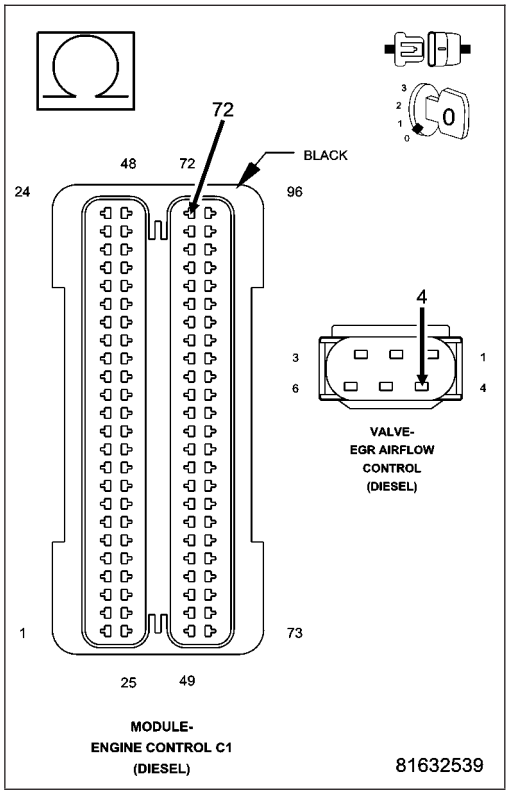

4. EGR AIRFLOW CONTROL VALVE

Turn the ignition off.
Connect the Engine Control Module (ECM) connector.
Replace the EGR Airflow Control Valve in accordance with the Service Information.
Turn the ignition on.
With the scan tool, Clear DTCs in the Engine Control Module (ECM).
With the scan tool, actuate the EGR Airflow Control Valve.
Monitor the scan tool for at least two minutes.
With the scan tool, select View DTCs.

Is the status Active for this DTC?

Yes >> Go to 5

No >> Test complete.
Perform the ECM Verification Test Ver. 1. (Refer to 9 - ENGINE - DIAGNOSIS AND TESTING)

5. ENGINE CONTROL MODULE (ECM)

Using the wiring diagram/schematic as a guide, inspect the wiring and connectors between the EGR Airflow Control Valve and the Engine Control Module (ECM).
Look for any chafed, pierced, pinched, or partially broken wires.
Look for broken, bent, pushed out or corroded terminals.
Monitor the scan tool data relative to this circuit and wiggle test the wiring and connectors.
Look for the data to change or for the DTC to reset during the wiggle test.
Refer to any Technical Service Bulletins that may apply.

Were any problems found?

Yes >> Repair as necessary.
Perform the ECM Verification Test Ver. 1. (Refer to 9 - ENGINE - DIAGNOSIS AND TESTING)

No >> Replace the Engine Control Module (ECM) in accordance with the Service Information.
Perform the ECM Verification Test Ver. 1. (Refer to 9 - ENGINE - DIAGNOSIS AND TESTING)

P213C-EGR AIRFLOW THROTTLE CONTROL CIRCUIT B LOW

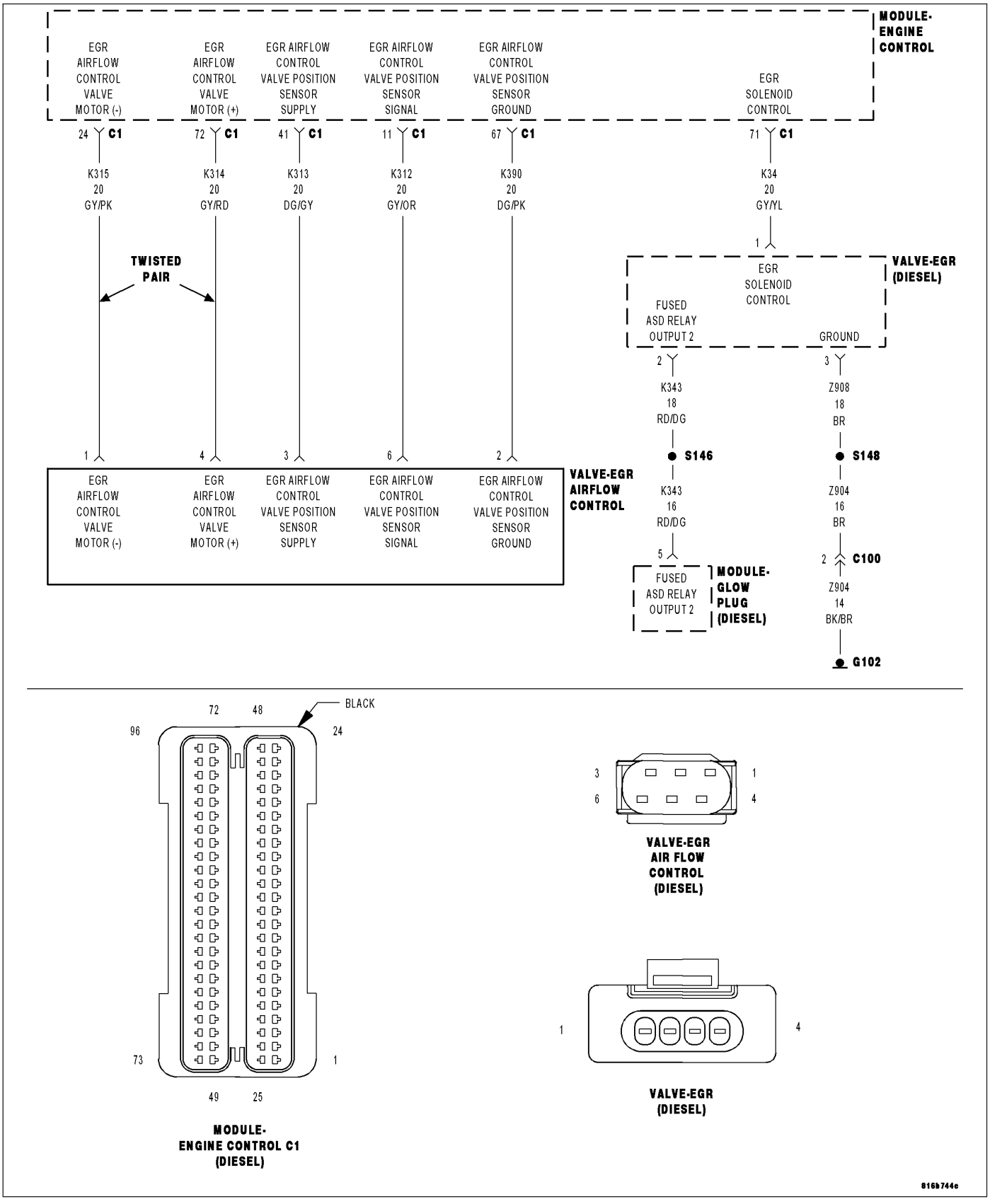

For a complete wiring diagram **Refer to Section 8W**

- **When Monitored:**
  With the engine running and the EGR Airflow Control Valve Motor command off.
- **Set Condition:**
  The (K315) EGR Airflow Control Valve Motor (-) circuit is shorted to ground for 0.2 second.

Possible Causes
INTERMITTENT DTC
(K315) EGR AIRFLOW CONTROL VALVE MOTOR (-) CIRCUIT SHORTED TO GROUND
(K315) EGR AIRFLOW CONTROL VALVE MOTOR (-) CIRCUIT SHORTED TO (K314) EGR AIRFLOW CONTROL VALVE MOTOR (+)
(K315) EGR AIRFLOW CONTROL VALVE MOTOR (-) CIRCUIT OPEN OR HIGH RESISTANCE
EGR AIRFLOW CONTROL VALVE
ENGINE CONTROL MODULE (ECM)

Always perform the Pre-Diagnostic Troubleshooting procedure before proceeding. (Refer to 9 - ENGINE - DIAGNOSIS AND TESTING)

Diagnostic Test

1. DTC IS ACTIVE

Ignition on, engine not running.

With the scan tool, Clear DTCs in the Engine Control Module (ECM).

With the scan tool, actuate the EGR Airflow Control Valve.

Monitor the scan tool for at least two minutes.

With the scan tool, select View DTCs.

Is the status Active for this DTC?

Yes >> Go To 2

No >> Refer to the *CHECKING FOR AN INTERMITTENT DTC Diagnostic Procedure. (Refer to 9 - ENGINE - DIAGNOSIS AND TESTING)

2. (K315) EGR AIRFLOW CONTROL VALVE MOTOR (-) CIRCUIT SHORTED TO GROUND

Turn the ignition off.

Disconnect the Engine Control Module (ECM) connector.

Measure the resistance between ground and the (K315) EGR Airflow Control Valve Motor (-) circuit in the EGR Airflow Control Valve connector.

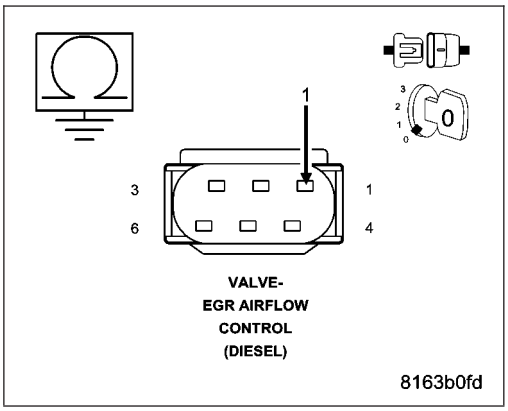

Is the resistance above 1000.0 ohms?

Yes >> Go to 3

No >> Repair the (K315) EGR Airflow Control Valve Motor (-) circuit for a short to ground.
Perform the ECM Verification Test Ver. 1. (Refer to 9 - ENGINE - DIAGNOSIS AND TESTING)

3. (K315) EGR AIRFLOW CONTROL VALVE MOTOR (-) CIRCUIT SHORTED TO (K314) EGR AIRFLOW CONTROL VALVE MOTOR (+) CIRCUIT

Measure the resistance between the (K315) EGR Airflow Control Valve Motor (-) circuit and the (K314) EGR Airflow Control Valve Motor (+) circuit in the EGR Airflow Control Valve connector.

Is the resistance above 1000.0 ohms?

Yes >> Go to 4

No >> Repair the (K315) EGR Airflow Control Valve Motor (-) circuit for a short to the (K314) EGR Airflow Control Valve Motor (+) circuit.

Perform the ECM Verification Test Ver. 1. (Refer to 9 - ENGINE - DIAGNOSIS AND TESTING)

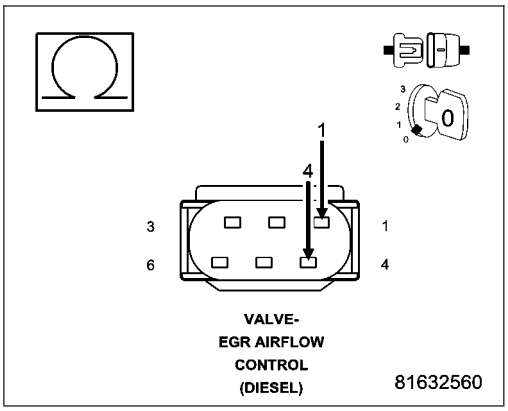

4. (K315) EGR AIRFLOW CONTROL VALVE MOTOR (-) CIRCUIT OPEN CIRCUIT OR HIGH RESISTANCE

Measure the resistance of the (K315) EGR Airflow Control Valve Motor (-) circuit between the EGR Airflow Control Valve connector and the Engine Control Module (ECM) connector.

Is the resistance below 10.0 ohms?

Yes >> Go to 5

No >> Repair the (K315) EGR Airflow Control Valve Motor (-) circuit for an open circuit or high resistance.

Perform the ECM Verification Test Ver. 1. (Refer to 9 - ENGINE - DIAGNOSIS AND TESTING)

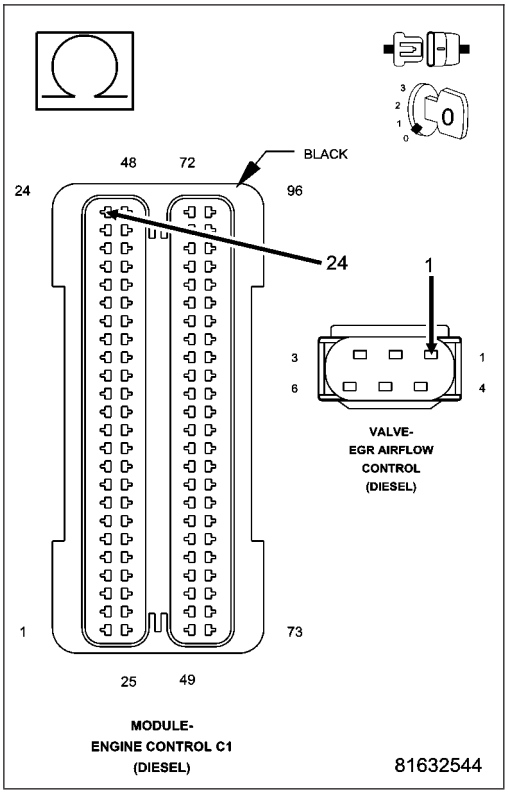

5. EGR AIRFLOW CONTROL VALVE

Turn the ignition off.
Connect the Engine Control Module (ECM) connector.
Replace the EGR Airflow Control Valve in accordance with the Service Information.
Turn the ignition on.
With the scan tool, clear DTCs.
With the scan tool, actuate the EGR Airflow Control Valve.
With the scan tool, select View DTCs.

Is the status Active for this DTC?

Yes >> Go to 6

No >> Test Complete.
Perform the ECM Verification Test Ver. 1. (Refer to 9 - ENGINE - DIAGNOSIS AND TESTING)

6. ENGINE CONTROL MODULE (ECM)

Using the wiring diagram/schematic as a guide, inspect the wiring and connectors between the EGR Airflow Control Valve and the Engine Control Module (ECM).
Look for any chafed, pierced, pinched, or partially broken wires.
Look for broken, bent, pushed out or corroded terminals.
Monitor the scan tool data relative to this circuit and wiggle test the wiring and connectors.
Look for the data to change or for the DTC to reset during the wiggle test.
Refer to any Technical Service Bulletins that may apply.

Were any problems found?

Yes >> Repair as necessary.
Perform the ECM Verification Test Ver. 1. (Refer to 9 - ENGINE - DIAGNOSIS AND TESTING)

No >> Replace the Engine Control Module (ECM) in accordance with the Service Information.
Perform the ECM Verification Test Ver. 1. (Refer to 9 - ENGINE - DIAGNOSIS AND TESTING)

P213D-EGR AIRFLOW THROTTLE CONTROL CIRCUIT B HIGH

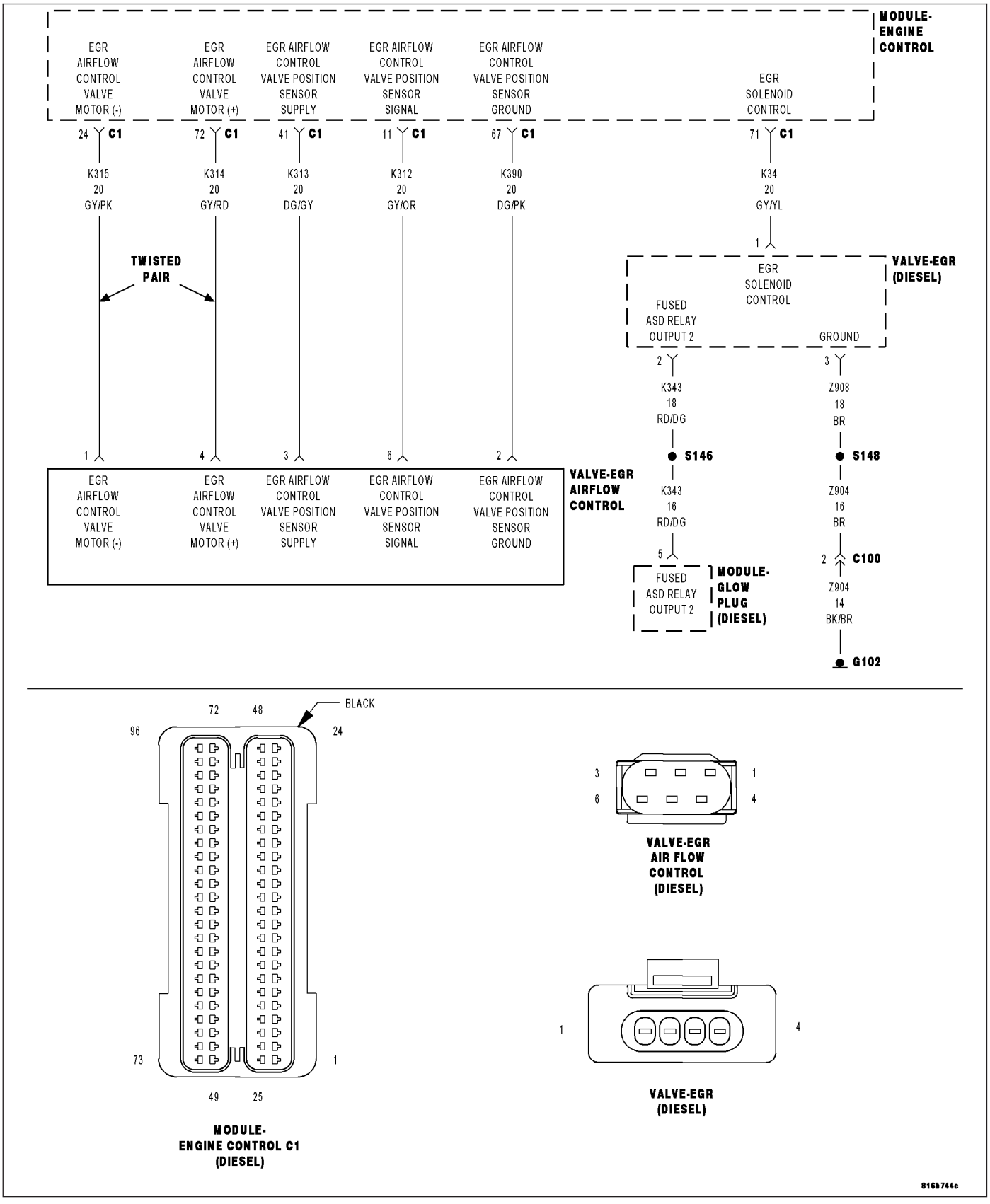

For a complete wiring diagram **Refer to Section 8W**

- **When Monitored:**
  With the engine running and the EGR Airflow Control Valve Motor command on.
- **Set Condition:**
  The (K315) EGR Airflow Control Valve Motor (-) circuit is shorted to voltage for 0.2 seconds.

Possible Causes
INTERMITTENT DTC
(K315) EGR AIRFLOW CONTROL VALVE MOTOR (-) CIRCUIT SHORTED TO VOLTAGE
(K314) EGR AIRFLOW CONTROL VALVE MOTOR (+) CIRCUIT SHORTED TO VOLTAGE
(K315) EGR AIRFLOW CONTROL VALVE MOTOR (-) CIRCUIT OPEN OR HIGH RESISTANCE
(K314) EGR AIRFLOW CONTROL VALVE MOTOR (+) CIRCUIT OPEN OR HIGH RESISTANCE
EGR AIRFLOW CONTROL VALVE
ENGINE CONTROL MODULE (ECM)

Always perform the Pre-Diagnostic Troubleshooting procedure before proceeding. (Refer to 9 - ENGINE - DIAGNOSIS AND TESTING)

Diagnostic Test

1. DTC IS ACTIVE

Ignition on, engine not running.
With the scan tool, Clear DTCs in the Engine Control Module (ECM).
With the scan tool, actuate the EGR Airflow Control Valve.
Monitor the scan tool for at least two minutes.
With the scan tool, select View DTCs.

Is the status Active for this DTC?

Yes >> Go To 2

No >> Refer to the *CHECKING FOR AN INTERMITTENT DTC Diagnostic Procedure. (Refer to 9 - ENGINE - DIAGNOSIS AND TESTING)

2. (K315) EGR AIRFLOW CONTROL VALVE MOTOR (-) CIRCUIT SHORTED TO VOLTAGE

Turn the ignition off.
Disconnect the EGR Airflow Control Valve connector.
Disconnect the Engine Control Module (ECM) connector.
Remove the ASD Relay from the IPM.
Connect a jumper wire between cavity 30 and cavity 87 of the ASD Relay Connector.
Turn the ignition on.
Measure the voltage of the (K315) EGR Airflow Control Valve Motor (-) circuit in the EGR Airflow Control Valve connector.

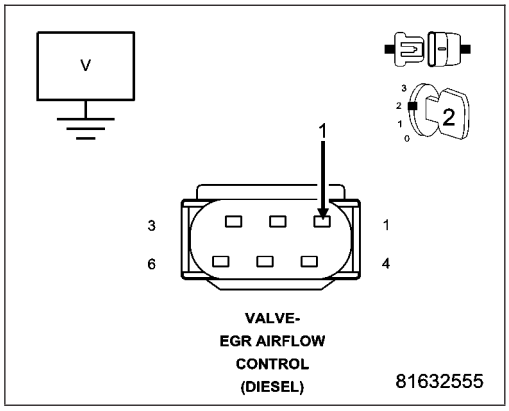

Is there any voltage present?

Yes >> Repair the (K315) EGR Airflow Control Valve Motor (-) circuit for a short to voltage.
Perform the ECM Verification Test Ver. 1. (Refer to 9 - ENGINE - DIAGNOSIS AND TESTING)

No >> Go to 3

3. (K314) EGR AIRFLOW CONTROL VALVE MOTOR (+) CIRCUIT SHORTED TO VOLTAGE

Measure the voltage of the (K314) EGR Airflow Control Valve Motor (+) circuit in the EGR Airflow Control Valve connector.

Is there any voltage present?

Yes >> Repair the (K314) EGR Airflow Control Valve Motor (+) circuit for a short to voltage.

Perform the ECM Verification Test Ver. 1. (Refer to 9 - ENGINE - DIAGNOSIS AND TESTING)

No >> Go to 4

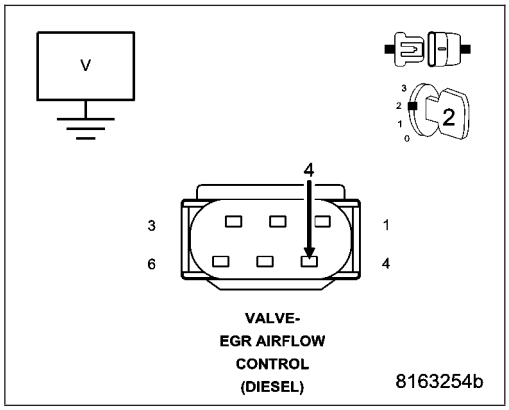

4. (K315) EGR AIRFLOW CONTROL VALVE MOTOR (-) OPEN OR HIGH RESISTANCE

Turn the ignition off.

Measure the resistance of the (K315) EGR Airflow Control Valve Motor (-) circuit between the EGR Airflow Control Valve connector and the Engine Control Module (ECM) connector.

Is the resistance below 10.0 ohms?

Yes >> Go to 5

No >> Repair the (K315) EGR Airflow Control Valve Motor (-) circuit for an open circuit or high resistance.

Perform the ECM Verification Test Ver. 1. (Refer to 9 - ENGINE - DIAGNOSIS AND TESTING)

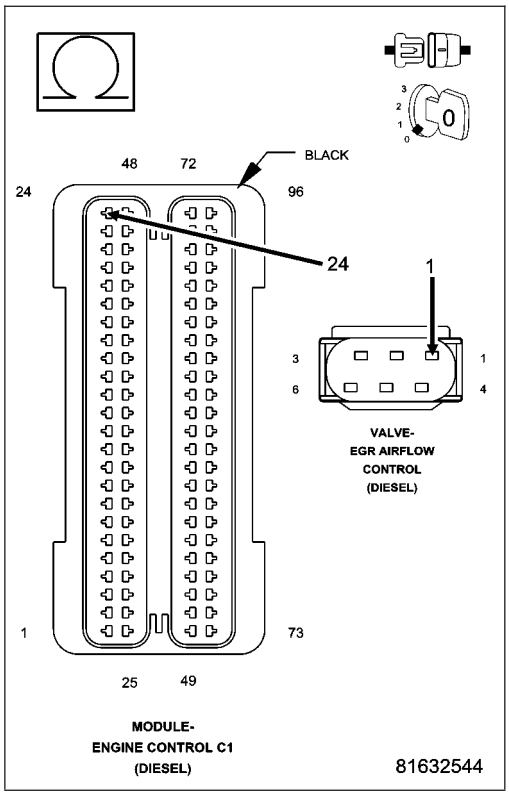

5. (K314) EGR AIRFLOW CONTROL VALVE MOTOR (+) CIRCUIT OPEN OR HIGH RESISTANCE

Measure the resistance of the (K314) EGR Airflow Control Valve Motor (+) circuit between the EGR Airflow Control Valve connector and the Engine Control Module (ECM) connector.

Is the resistance below 10.0 ohms?

Yes >> Go to 6

No >> Repair the (K314) EGR Airflow Control Valve Motor (+) circuit for an open circuit or high resistance.
Perform the ECM Verification Test Ver. 1. (Refer to 9 - ENGINE - DIAGNOSIS AND TESTING)

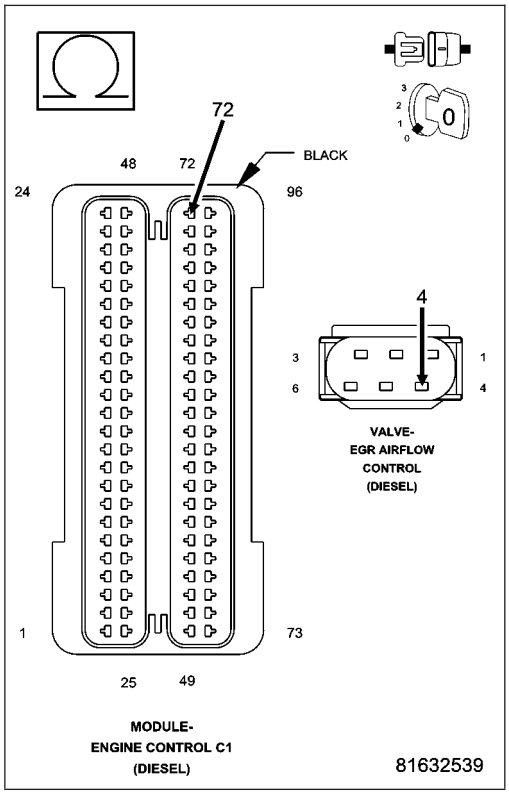

6. EGR AIRFLOW CONTROL VALVE

Turn the ignition on.
Connect the Engine Control Module (ECM) connector.
Replace the EGR Airflow Control Valve in accordance with the Service Information.
Turn the ignition on.
With the scan tool, Clear DTCs in the Engine Control Module (ECM).
With the scan tool, actuate the EGR Airflow Control Valve.
Monitor the scan tool for at least two minutes.
With the scan tool, select View DTCs.

Is the status Active for this DTC?

Yes >> Go to 7

No >> Test complete.
Perform the ECM Verification Test Ver. 1. (Refer to 9 - ENGINE - DIAGNOSIS AND TESTING)

7. ENGINE CONTROL MODULE (ECM)

Using the wiring diagram/schematic as a guide, inspect the wiring and connectors between the EGR Airflow Control Valve and the Engine Control Module (ECM).

Look for any chafed, pierced, pinched, or partially broken wires.

Look for broken, bent, pushed out or corroded terminals.

Monitor the scan tool data relative to this circuit and wiggle test the wiring and connectors.

Look for the data to change or for the DTC to reset during the wiggle test.

Refer to any Technical Service Bulletins that may apply.

Were any problems found?

Yes >> Repair as necessary.
Perform the ECM Verification Test Ver. 1. (Refer to 9 - ENGINE - DIAGNOSIS AND TESTING)

No >> Replace the Engine Control Module (ECM) in accordance with the Service Information.
Perform the ECM Verification Test Ver. 1. (Refer to 9 - ENGINE - DIAGNOSIS AND TESTING)

P2141-EGR AIRFLOW THROTTLE CONTROL CIRCUIT A LOW

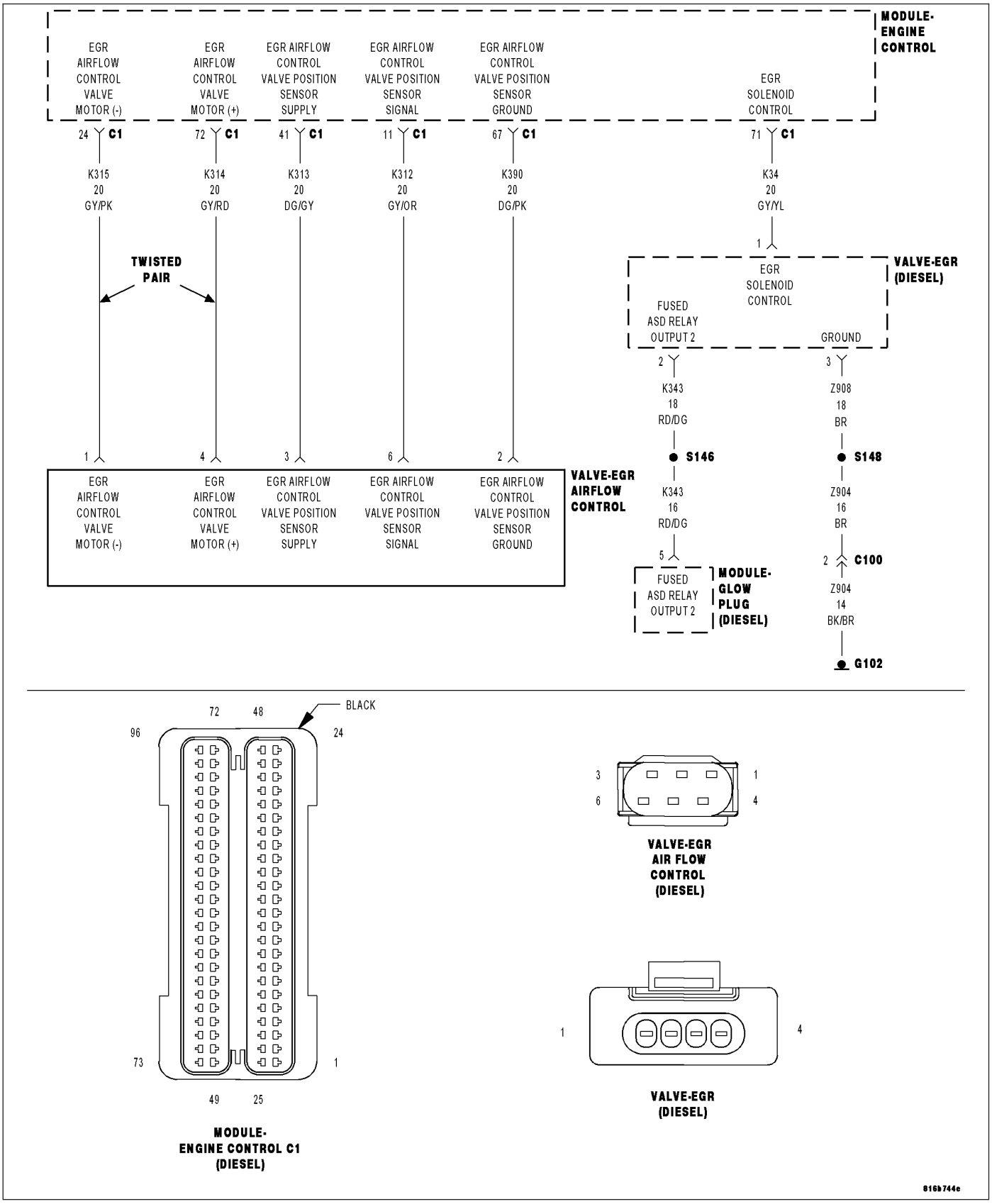

For a complete wiring diagram **Refer to Section 8W**

- **When Monitored:**
  With the engine running and the EGR Airflow Control Valve Motor command off.
- **Set Condition:**
  The (K314) EGR Airflow Control Valve Motor (+) circuit is shorted to ground for 0.2 second.

Possible Causes
INTERMITTENT DTC
(K314) EGR AIRFLOW CONTROL VALVE MOTOR (+) CIRCUIT SHORTED TO GROUND
(K314) EGR AIRFLOW CONTROL VALVE MOTOR (+) CIRCUIT SHORTED TO (K315) EGR AIRFLOW CONTROL VALVE MOTOR (-)
(K314) EGR AIRFLOW CONTROL VALVE MOTOR (+) CIRCUIT OPEN OR HIGH RESISTANCE
EGR AIRFLOW CONTROL VALVE
ENGINE CONTROL MODULE (ECM)

Always perform the Pre-Diagnostic Troubleshooting procedure before proceeding. (Refer to 9 - ENGINE - DIAGNOSIS AND TESTING)

Diagnostic Test

1. DTC IS ACTIVE

Ignition on, engine not running.

With the scan tool, Clear DTCs in the Engine Control Module (ECM).

With the scan tool, actuate the EGR Airflow Control Valve.

Monitor the scan tool for at least two minutes.

With the scan tool, select View DTCs.

Is the status Active for this DTC?

Yes >> Go To 2

No >> Refer to the *CHECKING FOR AN INTERMITTENT DTC Diagnostic Procedure. (Refer to 9 - ENGINE - DIAGNOSIS AND TESTING)

2. (K314) EGR AIRFLOW CONTROL VALVE MOTOR (+) CIRCUIT SHORTED TO GROUND

Turn the ignition off.

Disconnect the EGR Airflow Control Valve connector.

Disconnect the Engine Control Module (ECM) connector.

Measure the resistance between ground and the (K314) EGR Airflow Control Valve Motor (+) circuit in the EGR Airflow Control Valve connector.

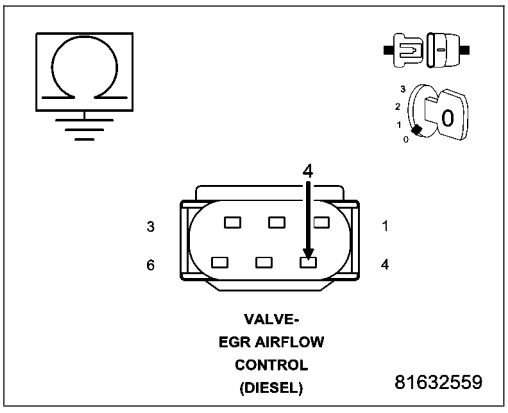

Is the resistance above 1000.0 ohms?

Yes >> Go to 3

No >> Repair the (K314) EGR Airflow Control Valve Motor (+) circuit for a short to ground.
Perform the ECM Verification Test Ver. 1. (Refer to 9 - ENGINE - DIAGNOSIS AND TESTING)

3. (K314) EGR AIRFLOW CONTROL VALVE MOTOR (+) CIRCUIT SHORTED TO (K315) EGR AIRFLOW CONTROL VALVE MOTOR (-) CIRCUIT

Measure the resistance between the (K314) EGR Airflow Control Valve Motor (+) circuit and the (K315) EGR Airflow Control Valve Motor (-) circuit in the EGR Airflow Control Valve connector.

Is the resistance above 1000.0 ohms?

Yes >> Go to 4

No >> Repair the (K314) EGR Airflow Control Valve Motor (+) circuit for a short to the (K315) EGR Airflow Control Valve Motor (-) circuit.

Perform the ECM Verification Test Ver. 1. (Refer to 9 - ENGINE - DIAGNOSIS AND TESTING)

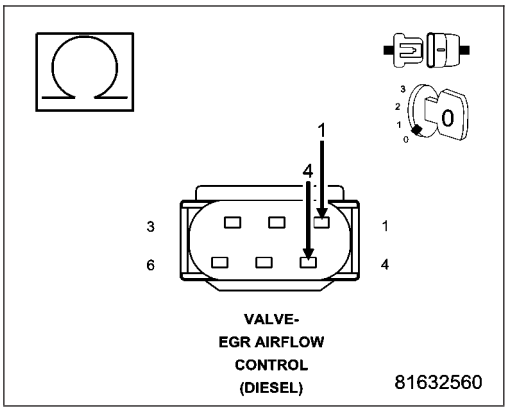

4. (K314) EGR AIRFLOW CONTROL VALVE MOTOR (+) CIRCUIT OPEN CIRCUIT OR HIGH RESISTANCE

Measure the resistance of the (K314) EGR Airflow Control Valve Motor (+) circuit between the EGR Airflow Control Valve connector and the Engine Control Module (ECM) connector.

Is the resistance below 10.0 ohms?

Yes >> Go to 5

No >> Repair the (K314) EGR Airflow Control Valve Motor (+) circuit for an open circuit or high resistance.

Perform the ECM Verification Test Ver. 1. (Refer to 9 - ENGINE - DIAGNOSIS AND TESTING)

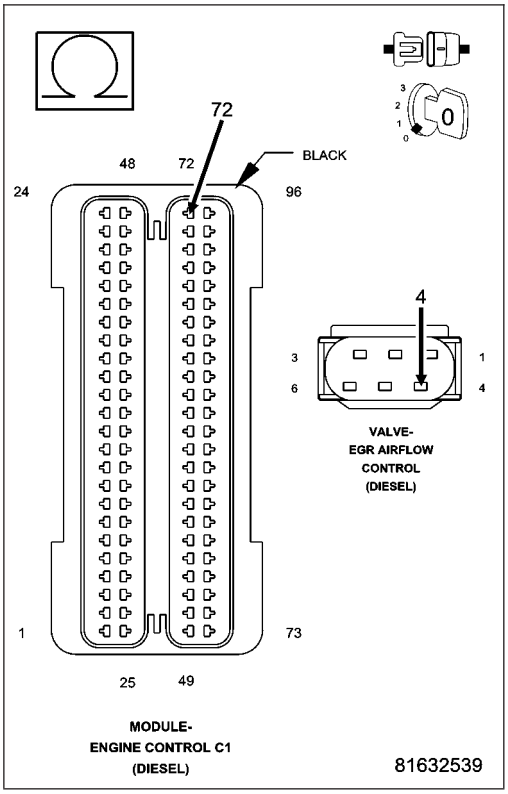

5. EGR AIRFLOW CONTROL VALVE

Turn the ignition off.
Connect the Engine Control Module (ECM) connector.
Replace the EGR Airflow Control Valve in accordance with the service information.
Turn the ignition on.
With the scan tool, clear DTCs.
With the scan tool, actuate the EGR Airflow Control Valve.
Monitor the scan tool for at least two minutes.
With the scan tool, select View DTCs.

Is the status Active for this DTC?

Yes >> Go to 6

No >> Test complete.
Perform the ECM Verification Test Ver. 1. (Refer to 9 - ENGINE - DIAGNOSIS AND TESTING)

6. ENGINE CONTROL MODULE (ECM)

Using the wiring diagram/schematic as a guide, inspect the wiring and connectors between the EGR Airflow Control Valve and the Engine Control Module (ECM).
Look for any chafed, pierced, pinched, or partially broken wires.
Look for broken, bent, pushed out or corroded terminals.
Monitor the scan tool data relative to this circuit and wiggle test the wiring and connectors.
Look for the data to change or for the DTC to reset during the wiggle test.
Refer to any Technical Service Bulletins that may apply.

Were any problems found?

Yes >> Repair as necessary.
Perform the ECM Verification Test Ver. 1. (Refer to 9 - ENGINE - DIAGNOSIS AND TESTING)

No >> Replace the Engine Control Module (ECM) in accordance with the Service Information.
Perform the ECM Verification Test Ver. 1. (Refer to 9 - ENGINE - DIAGNOSIS AND TESTING)

P2142-EGR AIRFLOW THROTTLE CONTROL CIRCUIT A HIGH

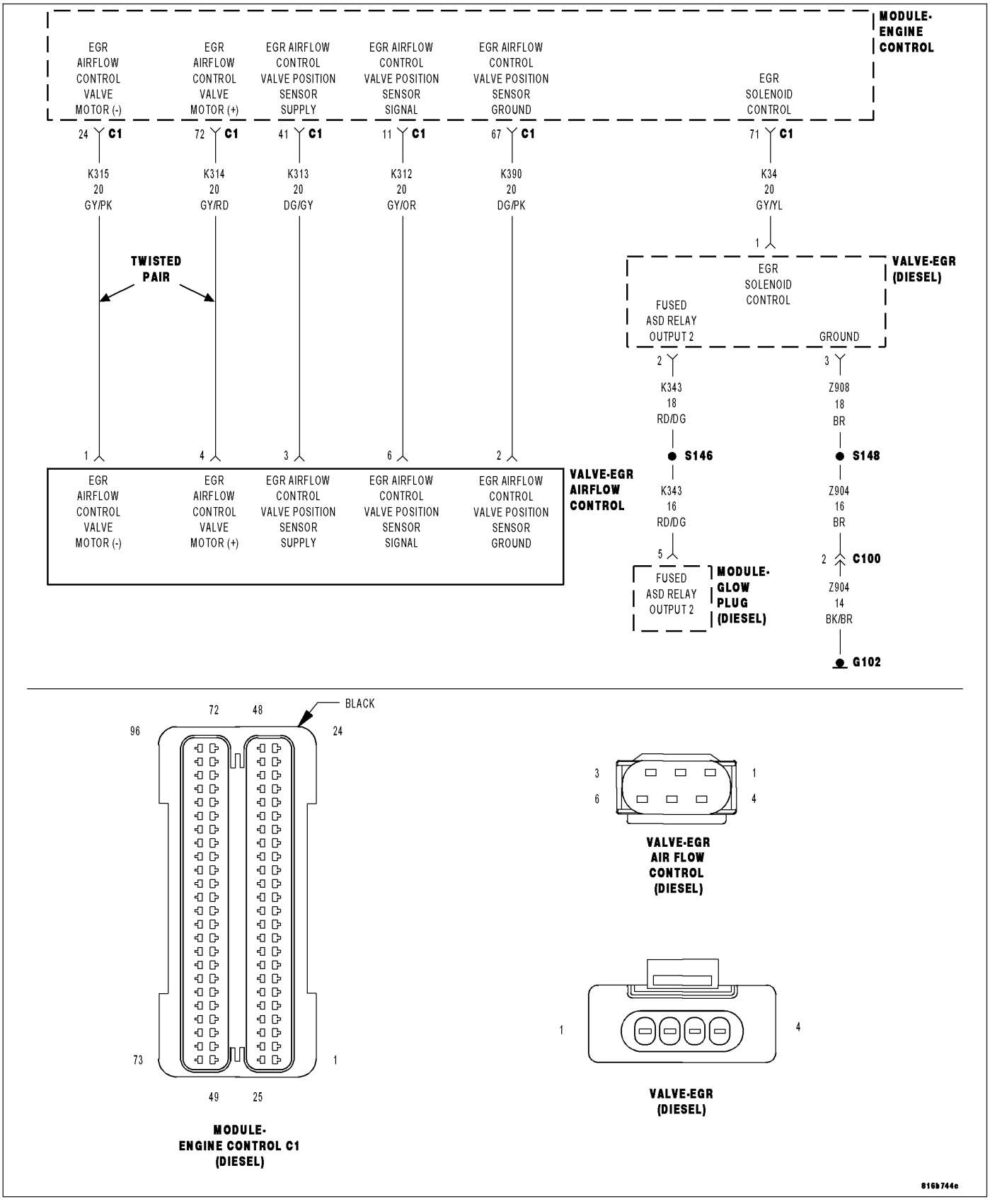

For a complete wiring diagram **Refer to Section 8W**

- **When Monitored:**
  With the engine running and the EGR Airflow Control Valve Motor command on.
- **Set Condition:**
  The (K314) EGR Airflow Control Valve Motor (+) circuit is shorted to voltage for 0.2 second.

Possible Causes
INTERMITTENT DTC
(K314) EGR AIRFLOW CONTROL VALVE MOTOR (+) CIRCUIT SHORTED TO VOLTAGE
(K315) EGR AIRFLOW CONTROL VALVE MOTOR (-) CIRCUIT SHORTED TO VOLTAGE
(K314) EGR AIRFLOW CONTROL VALVE MOTOR (+) CIRCUIT OPEN OR HIGH RESISTANCE
(K315) EGR AIRFLOW CONTROL VALVE MOTOR (-) CIRCUIT OPEN OR HIGH RESISTANCE
EGR AIRFLOW CONTROL VALVE
ENGINE CONTROL MODULE (ECM)

Always perform the Pre-Diagnostic Troubleshooting procedure before proceeding. (Refer to 9 - ENGINE - DIAGNOSIS AND TESTING)

Diagnostic Test

1. DTC IS ACTIVE

Ignition on, engine not running.
With the scan tool, Clear DTCs in the Engine Control Module (ECM).
With the scan tool, actuate the EGR Airflow Control Valve.
Monitor the scan tool for at least two minutes.
With the scan tool, select View DTCs.

Is the status Active for this DTC?

Yes >> Go To 2

No >> Refer to the *CHECKING FOR AN INTERMITTENT DTC Diagnostic Procedure. (Refer to 9 - ENGINE - DIAGNOSIS AND TESTING)

2. (K314) EGR AIRFLOW CONTROL VALVE MOTOR (+) CIRCUIT SHORTED TO VOLTAGE

Turn the ignition off.
Disconnect the EGR Airflow Control Valve connector.
Disconnect the Engine Control Module (ECM) connector.
Remove the ASD Relay from the IPM.
Connect a jumper wire between cavity 30 and cavity 87 of the ASD Relay Connector.
Turn the ignition on.
Measure the voltage of the (K314) EGR Airflow Control Valve Motor (+) circuit in the EGR Airflow Control Valve connector.

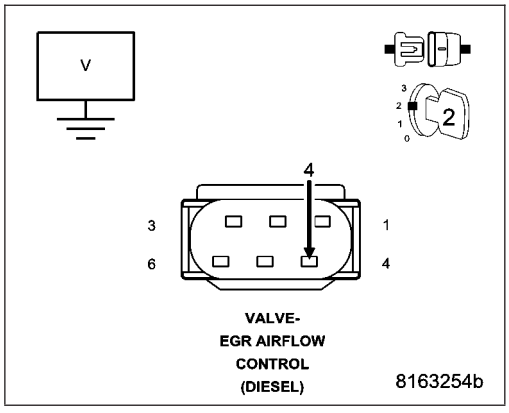

Is there any voltage present?

Yes >> Repair the (K314) EGR Airflow Control Valve Motor (+) circuit for a short to voltage.
Perform the ECM Verification Test Ver. 1. (Refer to 9 - ENGINE - DIAGNOSIS AND TESTING)

No >> Go to 3

3. (K315) EGR AIRFLOW CONTROL VALVE MOTOR (-) CIRCUIT SHORTED TO VOLTAGE

Measure the voltage of the (K315) EGR Airflow Control Valve Motor (-) circuit in the EGR Airflow Control Valve connector.

Is there any voltage present?

Yes >> Repair the (K315) EGR Airflow Control Valve Motor (-) circuit for a short to voltage.

Perform the ECM Verification Test Ver. 1. (Refer to 9 - ENGINE - DIAGNOSIS AND TESTING)

No >> Go to 4

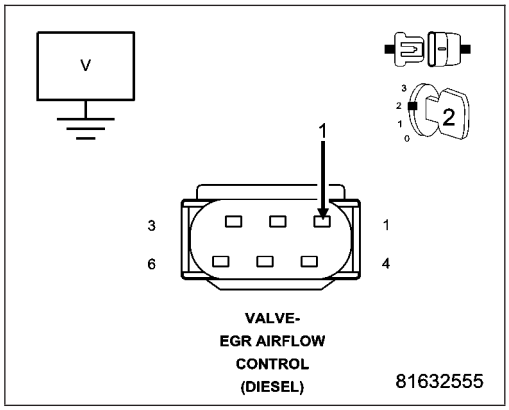

4. (K314) EGR AIRFLOW CONTROL VALVE MOTOR (+) OPEN OR HIGH RESISTANCE

Turn the ignition off.

Measure the resistance of the (K314) EGR Airflow Control Valve Motor (+) circuit between the EGR Airflow Control Valve connector and the Engine Control Module (ECM) connector.

Is the resistance below 10.0 ohms?

Yes >> Go to 5

No >> Repair the (K314) EGR Airflow Control Valve Motor (+) circuit for an open circuit or high resistance.

Perform the ECM Verification Test Ver. 1. (Refer to 9 - ENGINE - DIAGNOSIS AND TESTING)

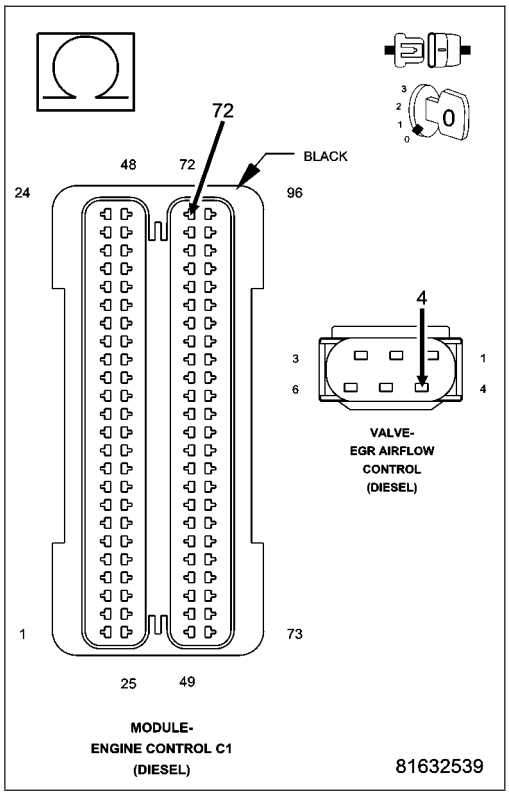

5. (K315) EGR AIRFLOW CONTROL VALVE MOTOR (-) CIRCUIT OPEN OR HIGH RESISTANCE

Measure the resistance of the (K315) EGR Airflow Control Valve Motor (-) circuit between the EGR Airflow Control Valve connector and the Engine Control Module (ECM) connector.

Is the resistance below 10.0 ohms?

Yes >> Go to 6

No >> Repair the (K315) EGR Airflow Control Valve Motor (-) circuit for an open circuit or high resistance.
Perform the ECM Verification Test Ver. 1. (Refer to 9 - ENGINE - DIAGNOSIS AND TESTING)

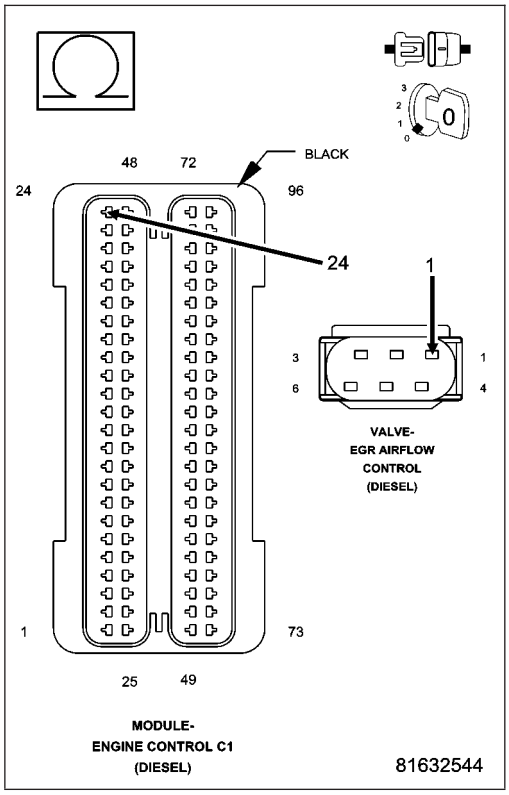

6. EGR AIRFLOW CONTROL VALVE

Turn the ignition off.
Connect the Engine Control Module (ECM) connector.
Replace the EGR Airflow Control Valve in accordance with the Service Information.
Turn the ignition on.
With the scan tool, Clear DTCs in the Engine Control Module (ECM).
With the scan tool, actuate the EGR Airflow Control Valve.
Monitor the scan tool for at least two minutes.
With the scan tool, select View DTCs.

Is the status Active for this DTC?

Yes >> Go to 7

No >> Test complete.
Perform the ECM Verification Test Ver. 1. (Refer to 9 - ENGINE - DIAGNOSIS AND TESTING)

7. ENGINE CONTROL MODULE (ECM)

Using the wiring diagram/schematic as a guide, inspect the wiring and connectors between the EGR Airflow Control Valve and the Engine Control Module (ECM).

Look for any chafed, pierced, pinched, or partially broken wires.

Look for broken, bent, pushed out or corroded terminals.

Monitor the scan tool data relative to this circuit and wiggle test the wiring and connectors.

Look for the data to change or for the DTC to reset during the wiggle test.

Refer to any Technical Service Bulletins that may apply.

Were any problems found?

Yes >> Repair as necessary.
Perform the ECM Verification Test Ver. 1. (Refer to 9 - ENGINE - DIAGNOSIS AND TESTING)

No >> Replace the Engine Control Module (ECM) in accordance with the Service Information.
Perform the ECM Verification Test Ver. 1. (Refer to 9 - ENGINE - DIAGNOSIS AND TESTING)

P2146-FUEL INJECTOR GROUP 1 SUPPLY VOLTAGE CIRCUIT OPEN

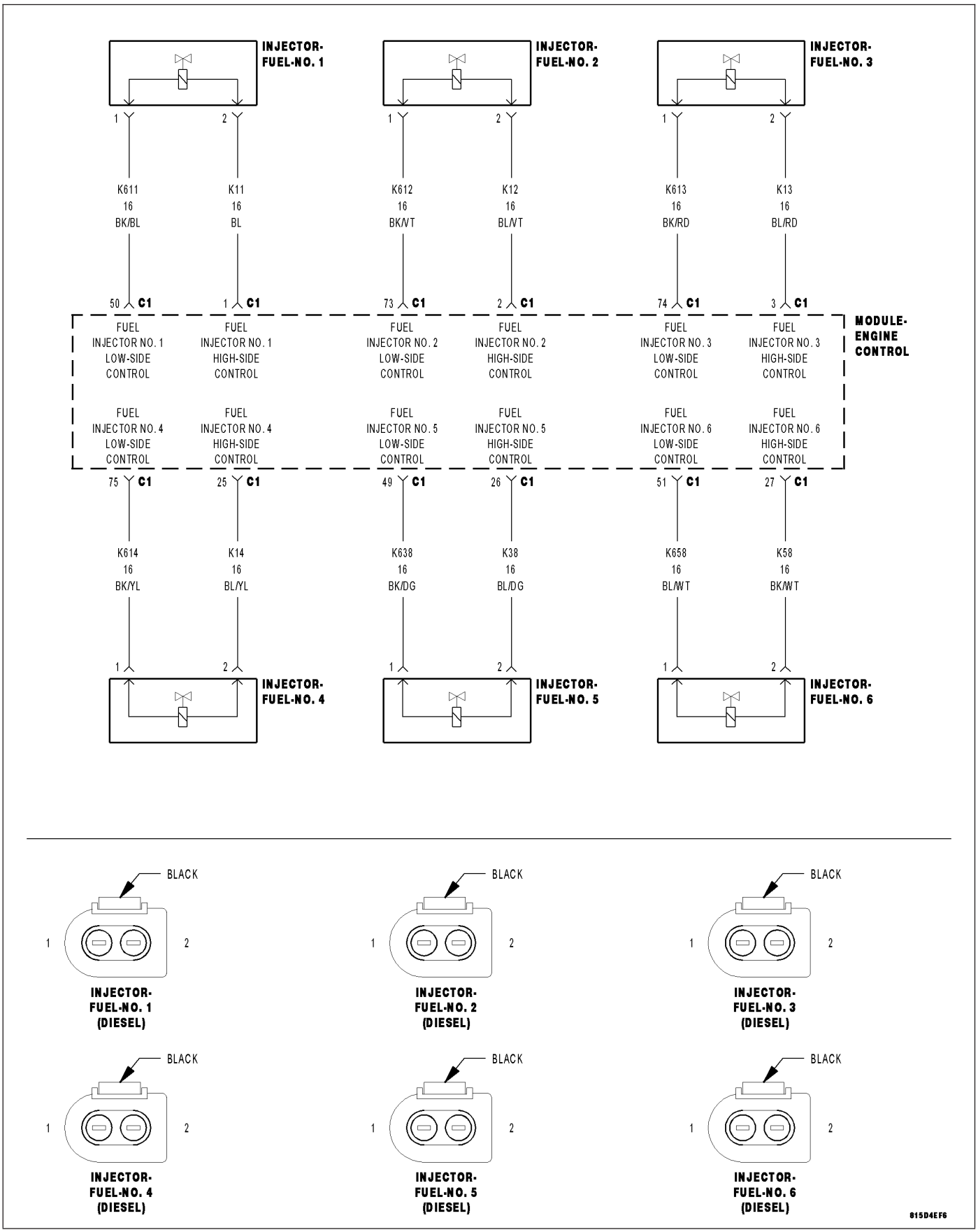

For a complete wiring diagram **Refer to Section 8W**

- **When Monitored:**
  With the engine running.
- **Set Condition:**
  The ECM detects an open circuit error on a fuel injector high-side control circuit.

Possible Causes
INTERMITTENT DTC
FUEL INJECTOR HIGH-SIDE CONTROL CIRCUIT OPEN OR HIGH RESISTANCE
FUEL INJECTOR LOW-SIDE CONTROL CIRCUIT OPEN OR HIGH RESISTANCE
FUEL INJECTOR
ENGINE CONTROL MODULE (ECM)

Always perform the Pre-Diagnostic Troubleshooting procedure before proceeding. (Refer to 9 - ENGINE - DIAGNOSIS AND TESTING)

Diagnostic Test

1. DTC IS ACTIVE

NOTE: This DTC can set as a result of a fault in any of the injector circuits. Be sure to check all injector circuits before replacing an injector and all injectors before replacing a module.
Ignition on, engine not running.
With the scan tool, Clear DTCs in the Engine Control Module (ECM).
Attempt to start the engine and test drive the vehicle.
With the scan tool, select View DTCs.

Is the status Active for this DTC?

Yes >> Go To 2

No >> Refer to the *CHECKING FOR AN INTERMITTENT DTC Diagnostic Procedure. (Refer to 9 - ENGINE - DIAGNOSIS AND TESTING)

2. FUEL INJECTOR HIGH-SIDE CONTROL CIRCUIT OPEN OR HIGH RESISTANCE

Turn the ignition off.
Disconnect each Fuel Injector connector.
Disconnect the Engine Control Module (ECM) connector.
Measure the resistance of each Fuel Injector High-Side Control circuit between the Fuel Injector connector and the Engine Control Module (ECM) connector.

Is the resistance below 10.0 ohms for each circuit?

Yes >> Go to 3

No >> Repair the Fuel Injector High-Side Control circuit for an open circuit or high resistance.
Perform the ECM Verification Test Ver. 1. (Refer to 9 - ENGINE - DIAGNOSIS AND TESTING)

3. FUEL INJECTOR LOW-SIDE CONTROL CIRCUIT OPEN OR HIGH RESISTANCE

Measure the resistance of each Fuel Injector Low-Side Control circuit between the Fuel Injector connector and the Engine Control Module (ECM) connector.

Is the resistance below 10.0 ohms for each circuit?

Yes >> Go to 4

No >> Repair the Fuel Injector Low-Side Control circuit for an open circuit or high resistance.
Perform the ECM Verification Test Ver. 1. (Refer to 9 - ENGINE - DIAGNOSIS AND TESTING)

4. FUEL INJECTOR

Measure the resistance between the terminals of each Fuel Injector.

Is the resistance approximately 185k ohms (+/- 10%) for each injector?

Yes >> Go to 5

No >> Replace the Fuel Injector in accordance with the Service Information.
Perform the ECM Verification Test Ver. 1. (Refer to 9 - ENGINE - DIAGNOSIS AND TESTING)

5. ENGINE CONTROL MODULE (ECM)

Using the wiring diagram/schematic as a guide, inspect the wiring and connectors between the Fuel Injector and the Engine Control Module (ECM).

Look for any chafed, pierced, pinched, or partially broken wires.

Look for broken, bent, pushed out or corroded terminals.

Monitor the scan tool data relative to this circuit and wiggle test the wiring and connectors.

Look for the data to change or for the DTC to reset during the wiggle test.

Refer to any Technical Service Bulletins that may apply.

Were any problems found?

Yes >> Repair as necessary.
Perform the ECM Verification Test Ver. 1. (Refer to 9 - ENGINE - DIAGNOSIS AND TESTING)

No >> Replace the Engine Control Module (ECM) in accordance with the Service Information.
Perform the ECM Verification Test Ver. 1. (Refer to 9 - ENGINE - DIAGNOSIS AND TESTING)

P2147-FUEL INJECTOR GROUP 1 SUPPLY VOLTAGE CIRCUIT LOW

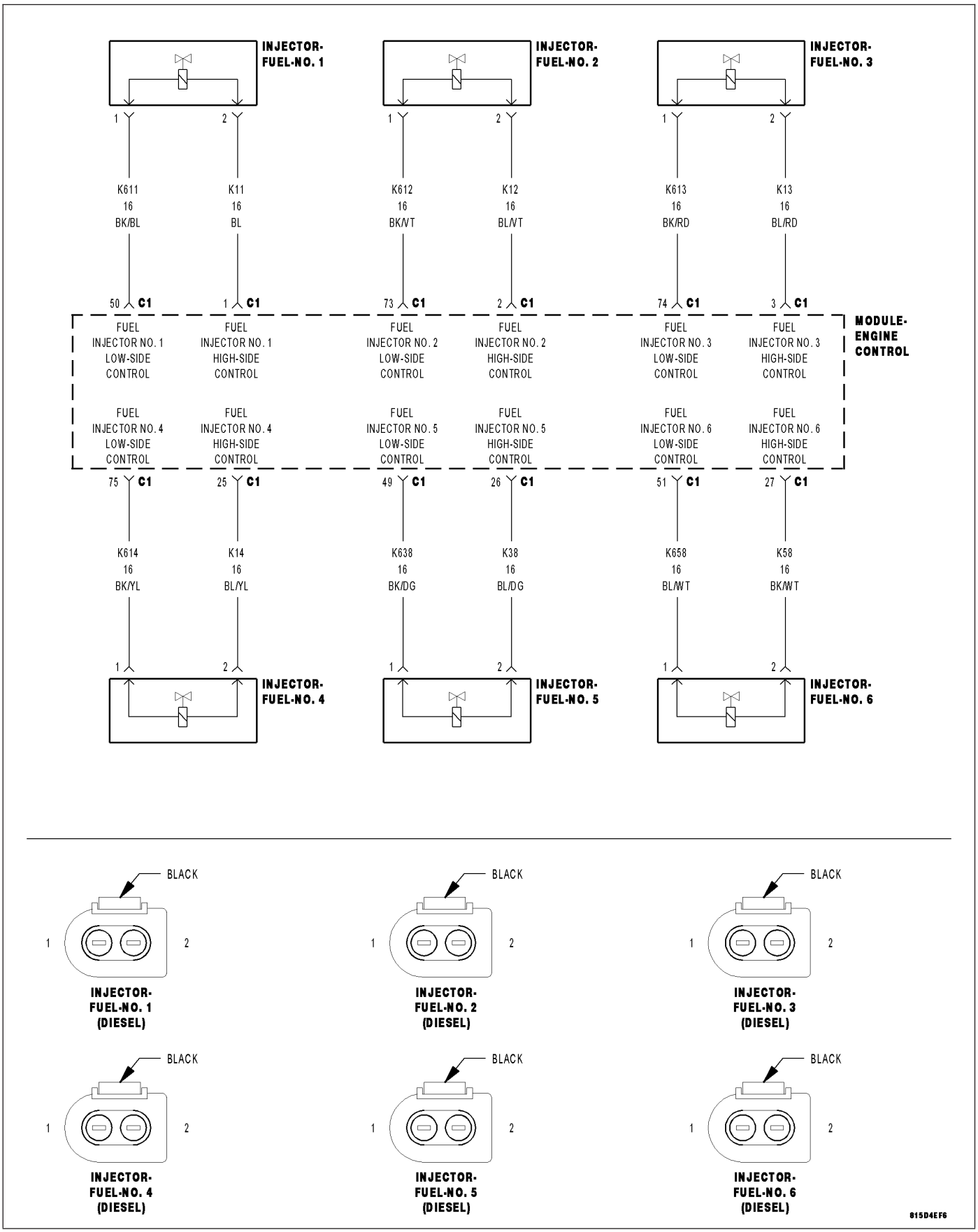

For a complete wiring diagram **Refer to Section 8W**

- **When Monitored:**
  With the engine running.
- **Set Condition:**
  The ECM detects a short to ground error on the injector high-side control circuit.

Possible Causes
INTERMITTENT DTC
FUEL INJECTOR HIGH-SIDE CONTROL CIRCUIT SHORTED TO GROUND
FUEL INJECTOR LOW-SIDE CONTROL CIRCUIT SHORTED TO GROUND
FUEL INJECTOR HIGH-SIDE CONTROL CIRCUIT SHORTED TO FUEL INJECTOR LOW-SIDE CONTROL CIRCUIT
FUEL INJECTOR HIGH-SIDE CONTROL CIRCUIT OPEN OR HIGH RESISTANCE
FUEL INJECTOR LOW-SIDE CONTROL CIRCUIT OPEN OR HIGH RESISTANCE
FUEL INJECTOR
ENGINE CONTROL MODULE (ECM)

Always perform the Pre-Diagnostic Troubleshooting procedure before proceeding. (Refer to 9 - ENGINE - DIAGNOSIS AND TESTING)

Diagnostic Test

1. DTC IS ACTIVE

NOTE: This DTC can set as a result of a fault in any of the injector circuits. Be sure to check all injector circuits before replacing an injector and all injectors before replacing a module.
Ignition on, engine not running.
With the scan tool, Clear DTCs in the Engine Control Module (ECM).
Attempt to start the engine and test drive the vehicle.
With the scan tool, select View DTCs.

Is the status Active for this DTC?

Yes >> Go To 2

No >> Refer to the *CHECKING FOR AN INTERMITTENT DTC Diagnostic Procedure. (Refer to 9 - ENGINE - DIAGNOSIS AND TESTING)

2. FUEL INJECTOR HIGH-SIDE CONTROL CIRCUIT SHORTED TO GROUND

Turn the ignition off.
Disconnect each Fuel Injector connector.
Disconnect the Engine Control Module (ECM) connector.
Measure the resistance between ground and the Fuel Injector High-Side Control circuit in each Fuel Injector connector.

Is the resistance above 1000.0 ohms for each circuit?

Yes >> Go to 3

No >> Repair the Fuel Injector High-Side Control circuit for a short to ground.
Perform the ECM Verification Test Ver. 1. (Refer to 9 - ENGINE - DIAGNOSIS AND TESTING)

3. FUEL INJECTOR LOW-SIDE CONTROL CIRCUIT SHORTED TO GROUND

Measure the resistance between ground and the Fuel Injector Low-Side Control circuit in each Fuel Injector connector.

Is the resistance above 1000.0 ohms for each circuit?

Yes >> Go to 4

No >> Repair the Fuel Injector Low-Side Control circuit for a short to ground.
Perform the ECM Verification Test Ver. 1. (Refer to 9 - ENGINE - DIAGNOSIS AND TESTING)

4. FUEL INJECTOR HIGH-SIDE CONTROL CIRCUIT SHORTED TO FUEL INJECTOR LOW-SIDE CONTROL CIRCUIT

Measure the resistance between the Fuel Injector High-Side Control circuit and the Fuel Injector Low-Side Control circuit in each Fuel Injector connector.

Is the resistance above 1000.0 ohms between the circuits in each connector?

Yes >> Go to 5

No >> Repair the Fuel Injector High-Side Control circuit for a short to the Fuel Injector Low-Side Control circuit.
Perform the ECM Verification Test Ver. 1. (Refer to 9 - ENGINE - DIAGNOSIS AND TESTING)

5. FUEL INJECTOR HIGH-SIDE CONTROL CIRCUIT OPEN OR HIGH RESISTANCE

Measure the resistance of each Fuel Injector High-Side Control circuit between the Fuel Injector connector and the Engine Control Module (ECM) connector.

Is the resistance below 10.0 ohms for each circuit?

Yes >> Go to 6

No >> Repair the Fuel Injector High-Side Control circuit for an open circuit or high resistance.
Perform the ECM Verification Test Ver. 1. (Refer to 9 - ENGINE - DIAGNOSIS AND TESTING)

6. FUEL INJECTOR LOW-SIDE CONTROL CIRCUIT OPEN OR HIGH RESISTANCE

Measure the resistance of each Fuel Injector Low-Side Control circuit between the Fuel Injector connector and the Engine Control Module (ECM) connector.

Is the resistance below 10.0 ohms?

Yes >> Go to 7

No >> Repair the Fuel Injector Low-Side Control circuit for an open circuit or high resistance.
Perform the ECM Verification Test Ver. 1. (Refer to 9 - ENGINE - DIAGNOSIS AND TESTING)

7. FUEL INJECTOR

Measure the resistance between the terminals of each Fuel Injector.

Is the resistance approximately 185k ohms (+/- 10%) for each injector?

Yes >> Go to 8

No >> Replace Fuel Injector in accordance with the Service Information.
Perform the ECM Verification Test Ver. 1. (Refer to 9 - ENGINE - DIAGNOSIS AND TESTING)

8. ENGINE CONTROL MODULE (ECM)

Using the wiring diagram/schematic as a guide, inspect the wiring and connectors between each Fuel Injector and the Engine Control Module (ECM).

Look for any chafed, pierced, pinched, or partially broken wires.

Look for broken, bent, pushed out or corroded terminals.

Monitor the scan tool data relative to this circuit and wiggle test the wiring and connectors.

Look for the data to change or for the DTC to reset during the wiggle test.

Refer to any Technical Service Bulletins that may apply.

Were any problems found?

Yes >> Repair as necessary.
Perform the ECM Verification Test Ver. 1. (Refer to 9 - ENGINE - DIAGNOSIS AND TESTING)

No >> Replace the Engine Control Module (ECM) in accordance with the Service Information.
Perform the ECM Verification Test Ver. 1. (Refer to 9 - ENGINE - DIAGNOSIS AND TESTING)

P2148-FUEL INJECTOR GROUP 1 SUPPLY VOLTAGE CIRCUIT HIGH

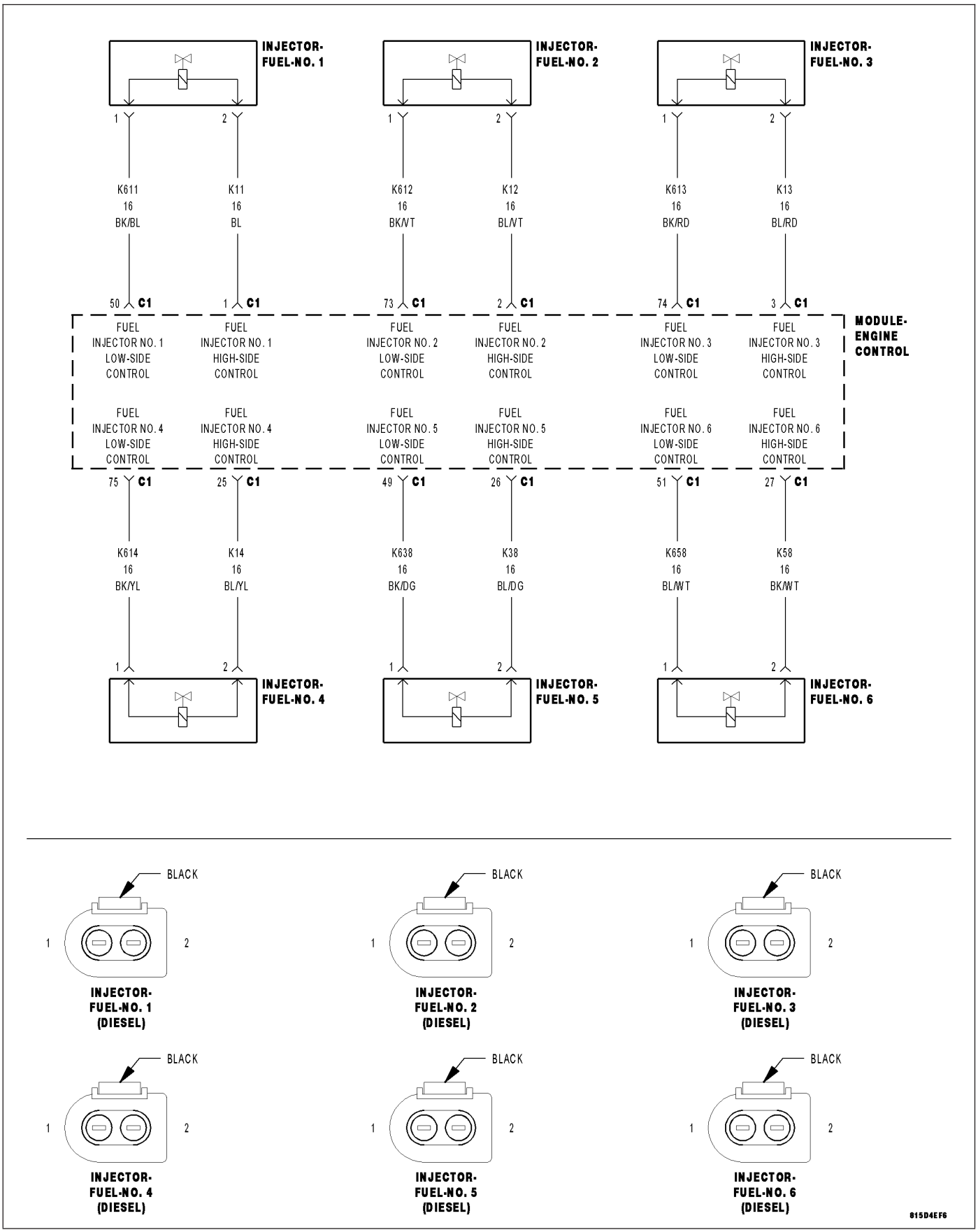

For a complete wiring diagram **Refer to Section 8W**

- **When Monitored:**
  With the engine running.
- **Set Condition:**
  The ECM detects a short to voltage error on one of the injector high-side control circuits.

Possible Causes
INTERMITTENT DTC
FUEL INJECTOR HIGH-SIDE CONTROL CIRCUIT SHORTED TO VOLTAGE
FUEL INJECTOR LOW-SIDE CONTROL CIRCUIT SHORTED TO VOLTAGE
FUEL INJECTOR HIGH-SIDE CONTROL CIRCUIT OPEN OR HIGH RESISTANCE
FUEL INJECTOR LOW-SIDE CONTROL CIRCUIT OPEN OR HIGH RESISTANCE
FUEL INJECTOR
ENGINE CONTROL MODULE (ECM)

Always perform the Pre-Diagnostic Troubleshooting procedure before proceeding. (Refer to 9 - ENGINE - DIAGNOSIS AND TESTING)

Diagnostic Test

1. DTC IS ACTIVE

NOTE: This DTC can set as a result of a fault in any of the injector circuits. Be sure to check all injector circuits before replacing an injector and all injectors before replacing a module.
Ignition on, engine not running.
With the scan tool, Clear DTCs in the Engine Control Module (ECM).
Attempt to start the engine and test drive the vehicle.
With the scan tool, select View DTCs.

Is the status Active for this DTC?

Yes >> Go To 2

No >> Refer to the *CHECKING FOR AN INTERMITTENT DTC Diagnostic Procedure. (Refer to 9 - ENGINE - DIAGNOSIS AND TESTING)

2. FUEL INJECTOR HIGH-SIDE CONTROL CIRCUIT SHORTED TO VOLTAGE

Turn the ignition off.
Disconnect each Fuel Injector connector.
Disconnect the Engine Control Module (ECM) connector.
Remove the ASD Relay.
Connect a jumper wire between cavity 30 and cavity 87 of the ASD Relay Connector.
Turn the ignition on.
Measure the voltage of each Fuel Injector High-Side Control circuit in the Fuel Injector connector.

Is there voltage present on any of the circuits?

Yes >> Repair the Fuel Injector High-Side Control circuit for a short to voltage.
Perform the ECM Verification Test Ver. 1. (Refer to 9 - ENGINE - DIAGNOSIS AND TESTING)

No >> Go to 3

3. FUEL INJECTOR LOW-SIDE CONTROL CIRCUIT SHORTED TO VOLTAGE

NOTE: The jumper wire should still be in place.
Measure the voltage of each Fuel Injector Low-Side Control circuit.

Is there voltage present on any of the circuits?

Yes >> Repair the Fuel Injector Low-Side Control circuit for a short to voltage.
Perform the ECM Verification Test Ver. 1. (Refer to 9 - ENGINE - DIAGNOSIS AND TESTING)

No >> Go to 4

4. FUEL INJECTOR HIGH-SIDE CONTROL CIRCUIT OPEN OR HIGH RESISTANCE

Turn the ignition off.
Measure the resistance of each Fuel Injector High-Side Control circuit between the Fuel Injector connector and the Engine Control Module (ECM) connector.

Is the resistance below 10.0 ohms for all circuits?

Yes >> Go to 5

No >> Repair the Fuel Injector High-Side Control circuit for an open circuit or high resistance.
Perform the ECM Verification Test Ver. 1. (Refer to 9 - ENGINE - DIAGNOSIS AND TESTING)

5. FUEL INJECTOR LOW-SIDE CONTROL CIRCUIT OPEN OR HIGH RESISTANCE

Measure the resistance of each Fuel Injector Low-Side Control circuit between the Fuel Injector connector and the Engine Control Module (ECM) connector.

Is the resistance below 10.0 ohms for all circuits?

Yes >> Go to 6

No >> Repair the Fuel Injector Low-Side Control circuit for an open circuit or high resistance.
Perform the ECM Verification Test Ver. 1. (Refer to 9 - ENGINE - DIAGNOSIS AND TESTING)

6. FUEL INJECTOR

Measure the resistance between the terminals of each Fuel Injector.

Is the resistance approximately 185k ohms (+/- 10%) for all injectors?

Yes >> Go to 7

No >> Replace Fuel Injector in accordance with the Service Information.
Perform the ECM Verification Test Ver. 1. (Refer to 9 - ENGINE - DIAGNOSIS AND TESTING)

7. ENGINE CONTROL MODULE (ECM)

Using the wiring diagram/schematic as a guide, inspect the wiring and connectors between the Fuel Injectors and the Engine Control Module (ECM).
Look for any chafed, pierced, pinched, or partially broken wires.
Look for broken, bent, pushed out or corroded terminals.
Monitor the scan tool data relative to this circuit and wiggle test the wiring and connectors.
Look for the data to change or for the DTC to reset during the wiggle test.
Refer to any Technical Service Bulletins that may apply.

Were any problems found?

Yes >> Repair as necessary.
Perform the ECM Verification Test Ver. 1. (Refer to 9 - ENGINE - DIAGNOSIS AND TESTING)

No >> Replace the Engine Control Module (ECM) in accordance with the Service Information.
Perform the ECM Verification Test Ver. 1. (Refer to 9 - ENGINE - DIAGNOSIS AND TESTING)

P2149-FUEL INJECTOR GROUP 2 SUPPLY VOLTAGE CIRCUIT OPEN

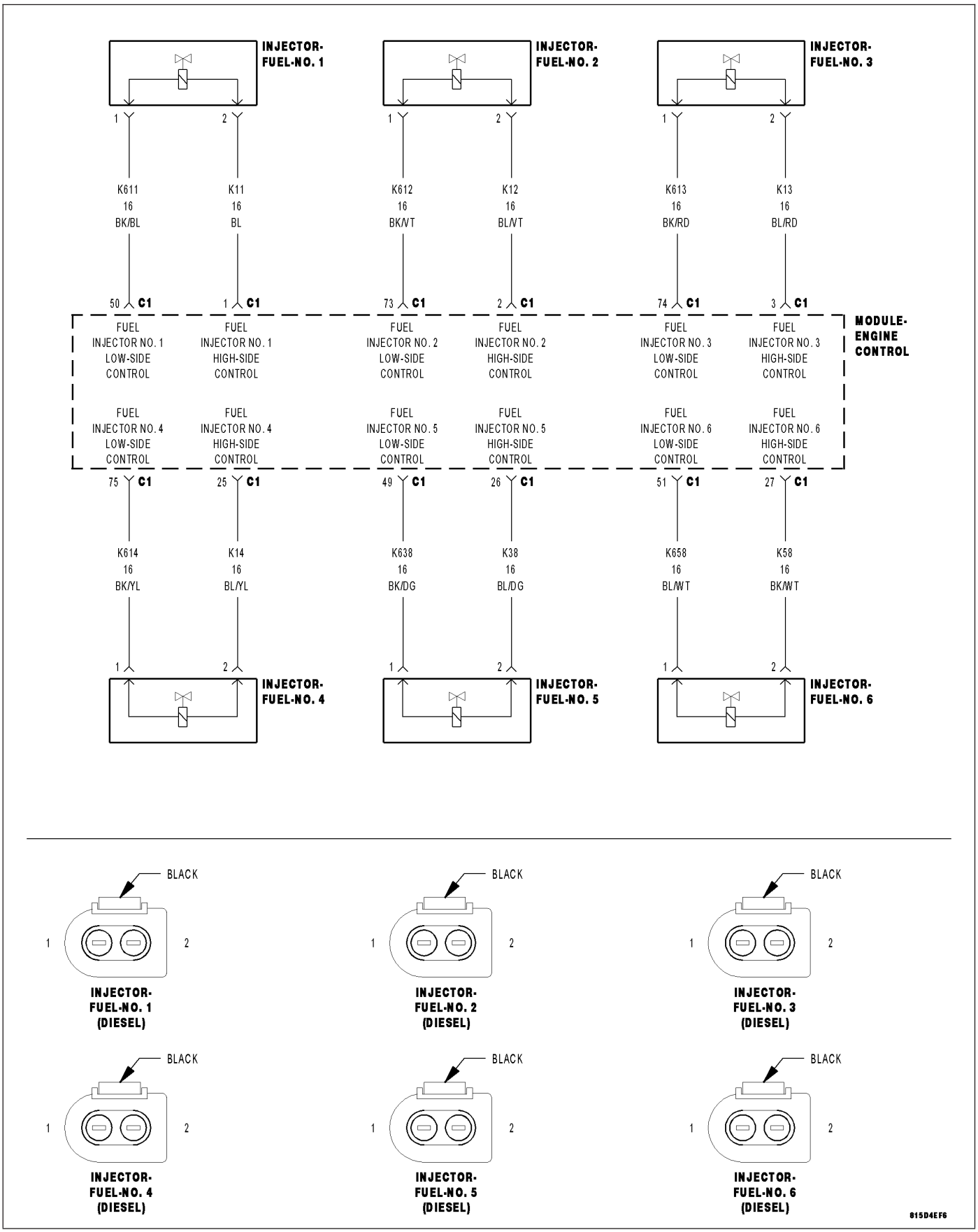

For a complete wiring diagram **Refer to Section 8W**

- **When Monitored:**
  With the engine running.
- **Set Condition:**
  The ECM detects an open circuit error on a fuel injector high-side control circuit.

Possible Causes
INTERMITTENT DTC
FUEL INJECTOR HIGH-SIDE CONTROL CIRCUIT OPEN OR HIGH RESISTANCE
FUEL INJECTOR LOW-SIDE CONTROL CIRCUIT OPEN OR HIGH RESISTANCE
FUEL INJECTOR
ENGINE CONTROL MODULE (ECM)

Always perform the Pre-Diagnostic Troubleshooting procedure before proceeding. (Refer to 9 - ENGINE - DIAGNOSIS AND TESTING)

Diagnostic Test

1. DTC IS ACTIVE

NOTE: This DTC can set as a result of a fault in any of the injector circuits. Be sure to check all injector circuits before replacing an injector and all injectors before replacing a module.
Ignition on, engine not running.
With the scan tool, Clear DTCs in the Engine Control Module (ECM).
Attempt to start the engine and test drive the vehicle.
With the scan tool, select View DTCs.

Is the status Active for this DTC?

Yes >> Go To 2

No >> Refer to the *CHECKING FOR AN INTERMITTENT DTC Diagnostic Procedure. (Refer to 9 - ENGINE - DIAGNOSIS AND TESTING)

2. FUEL INJECTOR HIGH-SIDE CONTROL CIRCUIT OPEN OR HIGH RESISTANCE

Turn the ignition off.
Disconnect each Fuel Injector connector.
Disconnect the Engine Control Module (ECM) connector.
Measure the resistance of each Fuel Injector High-Side Control circuit between the Fuel Injector connector and the Engine Control Module (ECM) connector.

Is the resistance below 10.0 ohms for each circuit?

Yes >> Go to 3

No >> Repair the Fuel Injector High-Side Control circuit for an open circuit or high resistance.
Perform the ECM Verification Test Ver. 1. (Refer to 9 - ENGINE - DIAGNOSIS AND TESTING)

3. FUEL INJECTOR LOW-SIDE CONTROL CIRCUIT OPEN OR HIGH RESISTANCE

Measure the resistance of each Fuel Injector Low-Side Control circuit between the Fuel Injector connector and the Engine Control Module (ECM) connector.

Is the resistance below 10.0 ohms for each circuit?

Yes >> Go to 4

No >> Repair the Fuel Injector Low-Side Control circuit for an open circuit or high resistance.
Perform the ECM Verification Test Ver. 1. (Refer to 9 - ENGINE - DIAGNOSIS AND TESTING)

4. FUEL INJECTOR

Measure the resistance between the terminals of each Fuel Injector.

Is the resistance approximately 185k ohms (+/- 10%) for each injector?

Yes >> Go to 5

No >> Replace the Fuel Injector in accordance with the Service Information.
Perform the ECM Verification Test Ver. 1. (Refer to 9 - ENGINE - DIAGNOSIS AND TESTING)

5. ENGINE CONTROL MODULE (ECM)

Using the wiring diagram/schematic as a guide, inspect the wiring and connectors between the Fuel Injector and the Engine Control Module (ECM).

Look for any chafed, pierced, pinched, or partially broken wires.

Look for broken, bent, pushed out or corroded terminals.

Monitor the scan tool data relative to this circuit and wiggle test the wiring and connectors.

Look for the data to change or for the DTC to reset during the wiggle test.

Refer to any Technical Service Bulletins that may apply.

Were any problems found?

Yes >> Repair as necessary.
Perform the ECM Verification Test Ver. 1. (Refer to 9 - ENGINE - DIAGNOSIS AND TESTING)

No >> Replace the Engine Control Module (ECM) in accordance with the Service Information.
Perform the ECM Verification Test Ver. 1. (Refer to 9 - ENGINE - DIAGNOSIS AND TESTING)

P2150-FUEL INJECTOR GROUP 2 SUPPLY VOLTAGE CIRCUIT LOW

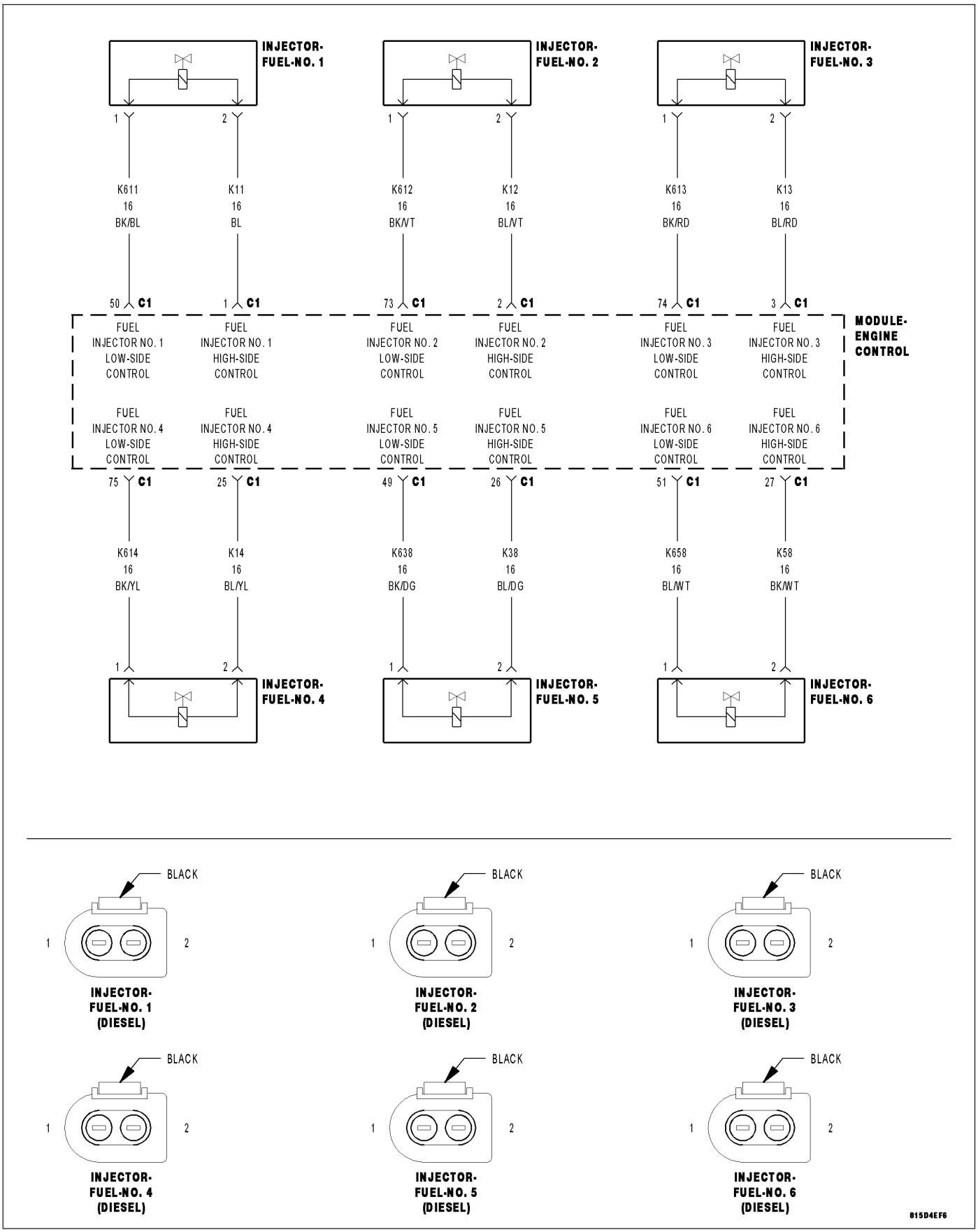

For a complete wiring diagram **Refer to Section 8W**

- **When Monitored:**
  With the engine running.
- **Set Condition:**
  The ECM detects a short to ground error on the injector high-side control circuit.

Possible Causes
INTERMITTENT DTC
FUEL INJECTOR HIGH-SIDE CONTROL CIRCUIT SHORTED TO GROUND
FUEL INJECTOR LOW-SIDE CONTROL CIRCUIT SHORTED TO GROUND
FUEL INJECTOR HIGH-SIDE CONTROL CIRCUIT SHORTED TO FUEL INJECTOR LOW-SIDE CONTROL CIRCUIT
FUEL INJECTOR HIGH-SIDE CONTROL CIRCUIT OPEN OR HIGH RESISTANCE
FUEL INJECTOR LOW-SIDE CONTROL CIRCUIT OPEN OR HIGH RESISTANCE
FUEL INJECTOR
ENGINE CONTROL MODULE (ECM)

Always perform the Pre-Diagnostic Troubleshooting procedure before proceeding. (Refer to 9 - ENGINE - DIAGNOSIS AND TESTING)

Diagnostic Test

1. DTC IS ACTIVE

NOTE: This DTC can set as a result of a fault in any of the injector circuits. Be sure to check all injector circuits before replacing an injector and all injectors before replacing a module.
Ignition on, engine not running.
With the scan tool, Clear DTCs in the Engine Control Module (ECM).
Attempt to start the engine and test drive the vehicle.
With the scan tool, select View DTCs.

Is the status Active for this DTC?

Yes >> Go To 2

No >> Refer to the *CHECKING FOR AN INTERMITTENT DTC Diagnostic Procedure. (Refer to 9 - ENGINE - DIAGNOSIS AND TESTING)

2. FUEL INJECTOR HIGH-SIDE CONTROL CIRCUIT SHORTED TO GROUND

Turn the ignition off.
Disconnect each Fuel Injector connector.
Disconnect the Engine Control Module (ECM) connector.
Measure the resistance between ground and the Fuel Injector High-Side Control circuit in each Fuel Injector connector.

Is the resistance above 1000.0 ohms for each circuit?

Yes >> Go to 3

No >> Repair the Fuel Injector High-Side Control circuit for a short to ground.
Perform the ECM Verification Test Ver. 1. (Refer to 9 - ENGINE - DIAGNOSIS AND TESTING)

3. FUEL INJECTOR LOW-SIDE CONTROL CIRCUIT SHORTED TO GROUND

Measure the resistance between ground and the Fuel Injector Low-Side Control circuit in each Fuel Injector connector.

Is the resistance above 1000.0 ohms for each circuit?

Yes >> Go to 4

No >> Repair the Fuel Injector Low-Side Control circuit for a short to ground.
Perform the ECM Verification Test Ver. 1. (Refer to 9 - ENGINE - DIAGNOSIS AND TESTING)

4. FUEL INJECTOR HIGH-SIDE CONTROL CIRCUIT SHORTED TO FUEL INJECTOR LOW-SIDE CONTROL CIRCUIT

Measure the resistance between the Fuel Injector High-Side Control circuit and the Fuel Injector Low-Side Control circuit in each Fuel Injector connector.

Is the resistance above 1000.0 ohms between the circuits in each connector?

Yes >> Go to 5

No >> Repair the Fuel Injector High-Side Control circuit for a short to the Fuel Injector Low-Side Control circuit.
Perform the ECM Verification Test Ver. 1. (Refer to 9 - ENGINE - DIAGNOSIS AND TESTING)

5. FUEL INJECTOR HIGH-SIDE CONTROL CIRCUIT OPEN OR HIGH RESISTANCE

Measure the resistance of each Fuel Injector High-Side Control circuit between the Fuel Injector connector and the Engine Control Module (ECM) connector.

Is the resistance below 10.0 ohms for each circuit?

Yes >> Go to 6

No >> Repair the Fuel Injector High-Side Control circuit for an open circuit or high resistance.
Perform the ECM Verification Test Ver. 1. (Refer to 9 - ENGINE - DIAGNOSIS AND TESTING)

6. FUEL INJECTOR LOW-SIDE CONTROL CIRCUIT OPEN OR HIGH RESISTANCE

Measure the resistance of each Fuel Injector Low-Side Control circuit between the Fuel Injector connector and the Engine Control Module (ECM) connector.

Is the resistance below 10.0 ohms?

Yes >> Go to 7

No >> Repair the Fuel Injector Low-Side Control circuit for an open circuit or high resistance.
Perform the ECM Verification Test Ver. 1. (Refer to 9 - ENGINE - DIAGNOSIS AND TESTING)

7. FUEL INJECTOR

Measure the resistance between the terminals of each Fuel Injector.

Is the resistance approximately 185k ohms (+/- 10%) for each injector?

Yes >> Go to 8

No >> Replace Fuel Injector in accordance with the Service Information.
Perform the ECM Verification Test Ver. 1. (Refer to 9 - ENGINE - DIAGNOSIS AND TESTING)

8. ENGINE CONTROL MODULE (ECM)

Using the wiring diagram/schematic as a guide, inspect the wiring and connectors between each Fuel Injector and the Engine Control Module (ECM).

Look for any chafed, pierced, pinched, or partially broken wires.

Look for broken, bent, pushed out or corroded terminals.

Monitor the scan tool data relative to this circuit and wiggle test the wiring and connectors.

Look for the data to change or for the DTC to reset during the wiggle test.

Refer to any Technical Service Bulletins that may apply.

Were any problems found?

Yes >> Repair as necessary.
Perform the ECM Verification Test Ver. 1. (Refer to 9 - ENGINE - DIAGNOSIS AND TESTING)

No >> Replace the Engine Control Module (ECM) in accordance with the Service Information.
Perform the ECM Verification Test Ver. 1. (Refer to 9 - ENGINE - DIAGNOSIS AND TESTING)

P2151-FUEL INJECTOR GROUP 2 SUPPLY VOLTAGE CIRCUIT HIGH

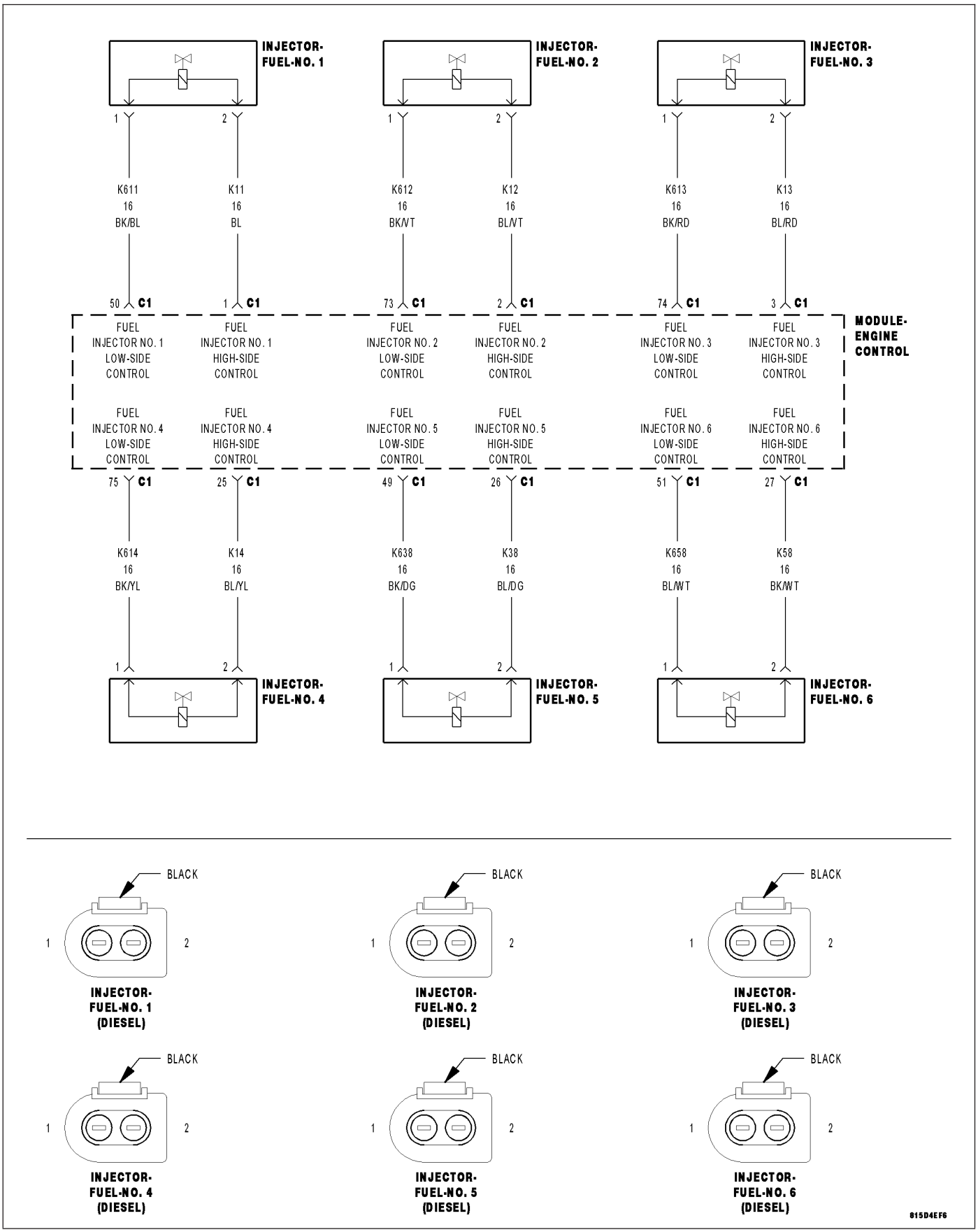

For a complete wiring diagram **Refer to Section 8W**

- **When Monitored:**
  With the engine running.
- **Set Condition:**
  The ECM detects a short to voltage error on one of the injector high-side control circuits.

Possible Causes
INTERMITTENT DTC
FUEL INJECTOR HIGH-SIDE CONTROL CIRCUIT SHORTED TO VOLTAGE
FUEL INJECTOR LOW-SIDE CONTROL CIRCUIT SHORTED TO VOLTAGE
FUEL INJECTOR HIGH-SIDE CONTROL CIRCUIT OPEN OR HIGH RESISTANCE
FUEL INJECTOR LOW-SIDE CONTROL CIRCUIT OPEN OR HIGH RESISTANCE
FUEL INJECTOR
ENGINE CONTROL MODULE (ECM)

Always perform the Pre-Diagnostic Troubleshooting procedure before proceeding. (Refer to 9 - ENGINE - DIAGNOSIS AND TESTING)

Diagnostic Test

1. DTC IS ACTIVE

NOTE: This DTC can set as a result of a fault in any of the injector circuits. Be sure to check all injector circuits before replacing an injector and all injectors before replacing a module.
Ignition on, engine not running.
With the scan tool, Clear DTCs in the Engine Control Module (ECM).
Attempt to start the engine and test drive the vehicle.
With the scan tool, select View DTCs.

Is the status Active for this DTC?

Yes >> Go To 2

No >> Refer to the *CHECKING FOR AN INTERMITTENT DTC Diagnostic Procedure. (Refer to 9 - ENGINE - DIAGNOSIS AND TESTING)

2. FUEL INJECTOR HIGH-SIDE CONTROL CIRCUIT SHORTED TO VOLTAGE

Turn the ignition off.
Disconnect each Fuel Injector connector.
Disconnect the Engine Control Module (ECM) connector.
Remove the ASD Relay.
Connect a jumper wire between cavity 30 and cavity 87 of the ASD Relay Connector.
Turn the ignition on.
Measure the voltage of each Fuel Injector High-Side Control circuit in the Fuel Injector connector.

Is there voltage present on any of the circuits?

Yes >> Repair the Fuel Injector High-Side Control circuit for a short to voltage.
Perform the ECM Verification Test Ver. 1. (Refer to 9 - ENGINE - DIAGNOSIS AND TESTING)

No >> Go to 3

3. FUEL INJECTOR LOW-SIDE CONTROL CIRCUIT SHORTED TO VOLTAGE

NOTE: The jumper wire should still be in place.
Measure the voltage of each Fuel Injector Low-Side Control circuit.

Is there voltage present on any of the circuits?

Yes >> Repair the Fuel Injector Low-Side Control circuit for a short to voltage.
Perform the ECM Verification Test Ver. 1. (Refer to 9 - ENGINE - DIAGNOSIS AND TESTING)

No >> Go to 4

4. FUEL INJECTOR HIGH-SIDE CONTROL CIRCUIT OPEN OR HIGH RESISTANCE

Measure the resistance of each Fuel Injector High-Side Control circuit between the Fuel Injector connector and the Engine Control Module (ECM) connector.

Is the resistance below 10.0 ohms for all circuits?

Yes >> Go to 5

No >> Repair the Fuel Injector High-Side Control circuit for an open circuit or high resistance.
Perform the ECM Verification Test Ver. 1. (Refer to 9 - ENGINE - DIAGNOSIS AND TESTING)

5. FUEL INJECTOR LOW-SIDE CONTROL CIRCUIT OPEN OR HIGH RESISTANCE

Measure the resistance of each Fuel Injector Low-Side Control circuit between the Fuel Injector connector and the Engine Control Module (ECM) connector.

Is the resistance below 10.0 ohms for all circuits?

Yes >> Go to 6

No >> Repair the Fuel Injector Low-Side Control circuit for an open circuit or high resistance.
Perform the ECM Verification Test Ver. 1. (Refer to 9 - ENGINE - DIAGNOSIS AND TESTING)

6. FUEL INJECTOR

Measure the resistance between the terminals of each Fuel Injector.

Is the resistance approximately 185k ohms (+/- 10%) for all injectors?

Yes >> Go to 7

No >> Replace Fuel Injector in accordance with the Service Information.
Perform the ECM Verification Test Ver. 1. (Refer to 9 - ENGINE - DIAGNOSIS AND TESTING)

7. ENGINE CONTROL MODULE (ECM)

Using the wiring diagram/schematic as a guide, inspect the wiring and connectors between the Fuel Injectors and the Engine Control Module (ECM).

Look for any chafed, pierced, pinched, or partially broken wires.

Look for broken, bent, pushed out or corroded terminals.

Monitor the scan tool data relative to this circuit and wiggle test the wiring and connectors.

Look for the data to change or for the DTC to reset during the wiggle test.

Refer to any Technical Service Bulletins that may apply.

Were any problems found?

Yes >> Repair as necessary.
Perform the ECM Verification Test Ver. 1. (Refer to 9 - ENGINE - DIAGNOSIS AND TESTING)

No >> Replace the Engine Control Module (ECM) in accordance with the Service Information.
Perform the ECM Verification Test Ver. 1. (Refer to 9 - ENGINE - DIAGNOSIS AND TESTING)

P2231-O2 SENSOR 1/1 SIGNAL CIRCUIT SHORTED TO HEATER CIRCUIT

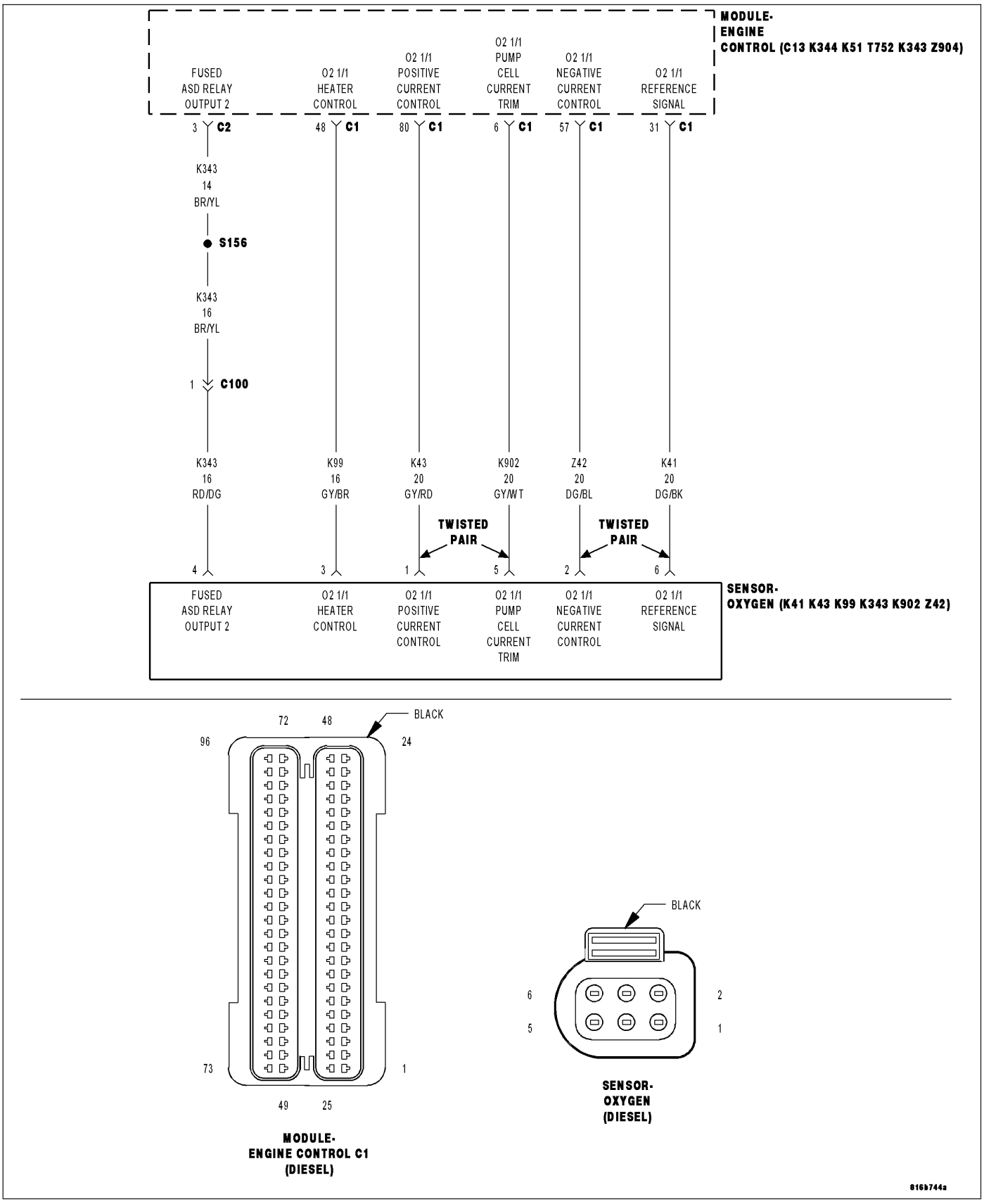

For a complete wiring diagram **Refer to Section 8W**

- **When Monitored:**
  With the ignition on.
- **Set Condition:**
  The ECM detects a short between the (Z43) O2 1/1 Negative Current Control circuit and the (K99) O2 1/1 Heater Control circuit.

Possible Causes
INTERMITTENT DTC
(Z43) O2 1/1 NEGATIVE CURRENT CONTROL CIRCUIT SHORTED TO VOLTAGE
(Z43) O2 1/1 NEGATIVE CURRENT CONTROL CIRCUIT SHORTED TO GROUND
(Z43) O2 1/1 NEGATIVE CURRENT CONTROL CIRCUIT SHORTED TO THE (K343) FUSED ASD RELAY OUTPUT CIRCUIT
(Z43) O2 1/1 NEGATIVE CURRENT CONTROL CIRCUIT SHORTED TO THE (K99) O2 1/1 HEATER CONTROL 2 CIRCUIT
(Z43) O2 1/1 NEGATIVE CURRENT CONTROL CIRCUIT OPEN OR HIGH RESISTANCE
OXYGEN SENSOR
ENGINE CONTROL MODULE (ECM)

Always perform the Pre-Diagnostic Troubleshooting procedure before proceeding. (Refer to 9 - ENGINE - DIAGNOSIS AND TESTING)

Diagnostic Test

1. DTC IS ACTIVE

Ignition on, engine not running.
With the scan tool, Clear DTCs in the Engine Control Module (ECM).
Start the engine.
Allow the engine to reach normal operating temperature.
Monitor the scan tool for at least two minutes.
With the scan tool, select View DTCs.

Is the status Active for this DTC?

Yes >> Go To 2

No >> Refer to the *CHECKING FOR AN INTERMITTENT DTC Diagnostic Procedure. (Refer to 9 - ENGINE - DIAGNOSIS AND TESTING)

2. (Z43) O2 1/1 NEGATIVE CURRENT CONTROL CIRCUIT SHORTED TO VOLTAGE

Turn the ignition off.
Disconnect the Oxygen Sensor connector.
Disconnect the Engine Control Module (ECM) connector.
Remove the ASD Relay from the IPM.
Connect a jumper wire between cavity 30 and cavity 87 of the ASD Relay Connector.
Turn the ignition on.
Measure the voltage of the (Z43) O2 1/1 Negative Current Control circuit in the Oxygen Sensor connector.

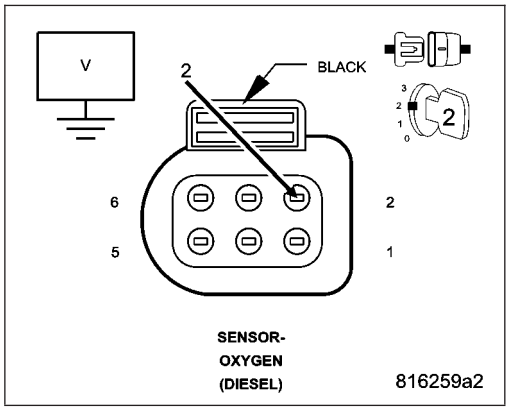

Is there any voltage present?

Yes >> Repair the (Z43) O2 1/1 Negative Current Control circuit for a short to voltage.
Perform the ECM Verification Test Ver. 1. (Refer to 9 - ENGINE - DIAGNOSIS AND TESTING)

No >> Go to 3

3. (Z43) O2 1/1 NEGATIVE CURRENT CONTROL CIRCUIT SHORTED TO GROUND

Turn the ignition off.

Measure the resistance between ground and the (Z43) O2 1/1 Negative Current Control circuit in the Oxygen Sensor connector.

Is the resistance above 1000.0 ohms?

Yes >> Go to 4

No >> Repair the (Z43) O2 1/1 Negative Current Control circuit for a short to ground.

Perform the ECM Verification Test Ver. 1. (Refer to 9 - ENGINE - DIAGNOSIS AND TESTING)

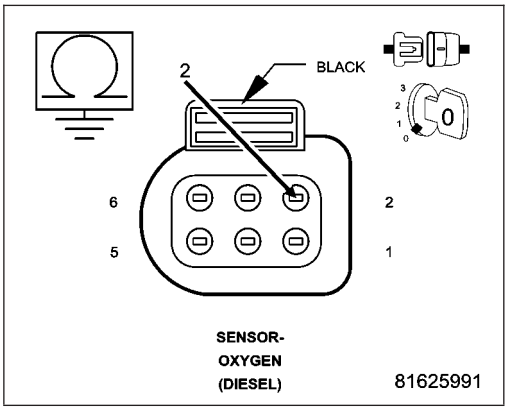

4. (Z43) O2 1/1 NEGATIVE CURRENT CONTROL CIRCUIT SHORTED TO THE (K343) FUSED ASD RELAY OUTPUT 2 CIRCUIT

Measure the resistance between the (Z43) O2 1/1 Negative Current Control circuit and the (K343) Fused ASD Relay Output 2 circuit in the Oxygen Sensor connector.

Is the resistance above 1000.0 ohms?

Yes >> Go to 5

No >> Repair the (Z43) O2 1/1 Negative Current Control circuit for a short to the (K343) Fused ASD Relay Output 2 circuit.

Perform the ECM Verification Test Ver. 1. (Refer to 9 - ENGINE - DIAGNOSIS AND TESTING)

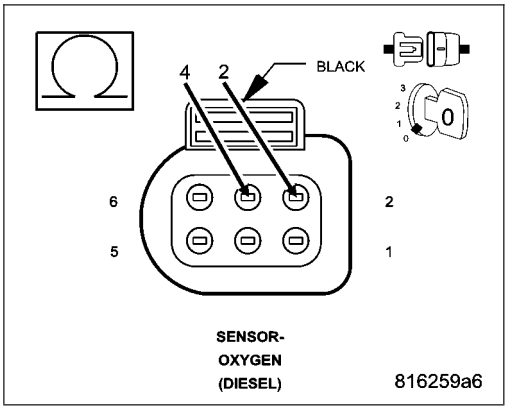

5. (Z43) O2 1/1 NEGATIVE CURRENT CONTROL CIRCUIT SHORTED TO THE (K99) O2 1/1 HEATER CONTROL CIRCUIT

Measure the resistance between the (Z43) O2 1/1 Negative Current Control circuit and the (K99) O2 1/1 Heater Control circuit in the Oxygen Sensor connector.

Is the resistance above 1000.0 ohms?

Yes >> Go to 6

No >> Repair the (Z43) O2 1/1 Negative Current Control circuit for a short to the (K99) O2 1/1 Heater Control circuit.

Perform the ECM Verification Test Ver. 1. (Refer to 9 - ENGINE - DIAGNOSIS AND TESTING)

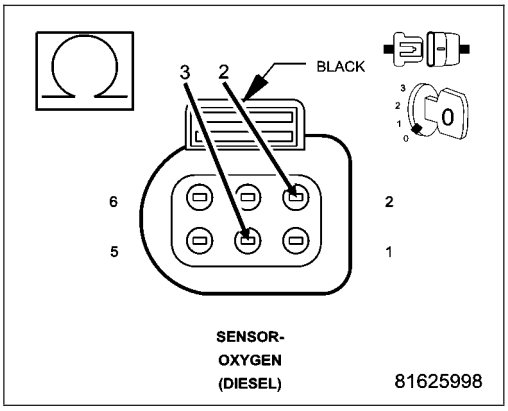

6. (Z43) O2 1/1 NEGATIVE CURRENT CONTROL CIRCUIT OPEN OR HIGH RESISTANCE

Measure the resistance of the (Z43) O2 1/1 Negative Current Control circuit between the Oxygen Sensor connector and the Engine Control Module (ECM) connector.

Is the resistance below 10.0 ohms?

Yes >> Go to 7

No >> Repair the (Z43) 02 1/1 Negative Current Control circuit for an open circuit or high resistance.
Perform the ECM Verification Test Ver. 1. (Refer to 9 - ENGINE - DIAGNOSIS AND TESTING)

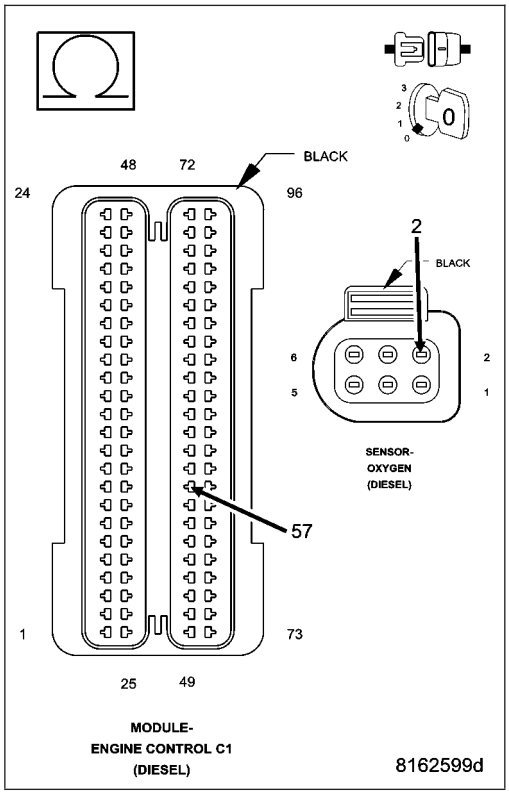

7. OXYGEN SENSOR

Turn the ignition off.
Connect the Engine Control Module (ECM) connector.
Replace the Oxygen Sensor in accordance with the Service Information.
Start the engine.
Allow the engine to reach normal operating temperature.
Monitor the scan tool for at least two minutes.
With the scan tool, select View DTCs.

Is the status Active for this DTC?

Yes >> Go to 8

No >> Test Complete.
Perform the ECM Verification Test Ver. 1. (Refer to 9 - ENGINE - DIAGNOSIS AND TESTING)

8. ENGINE CONTROL MODULE (ECM)

Using the wiring diagram/schematic as a guide, inspect the wiring and connectors between the Oxygen Sensor and the Engine Control Module (ECM).

Look for any chafed, pierced, pinched, or partially broken wires.

Look for broken, bent, pushed out or corroded terminals.

Monitor the scan tool data relative to this circuit and wiggle test the wiring and connectors.

Look for the data to change or for the DTC to reset during the wiggle test.

Refer to any Technical Service Bulletins that may apply.

Were any problems found?

Yes >> Repair as necessary.
Perform the ECM Verification Test Ver. 1. (Refer to 9 - ENGINE - DIAGNOSIS AND TESTING)

No >> Replace the Engine Control Module (ECM) in accordance with the Service Information.
Perform the ECM Verification Test Ver. 1. (Refer to 9 - ENGINE - DIAGNOSIS AND TESTING)

P2237-O2 SENSOR 1/1 PUMP CELL CURRENT CIRCUIT OPEN

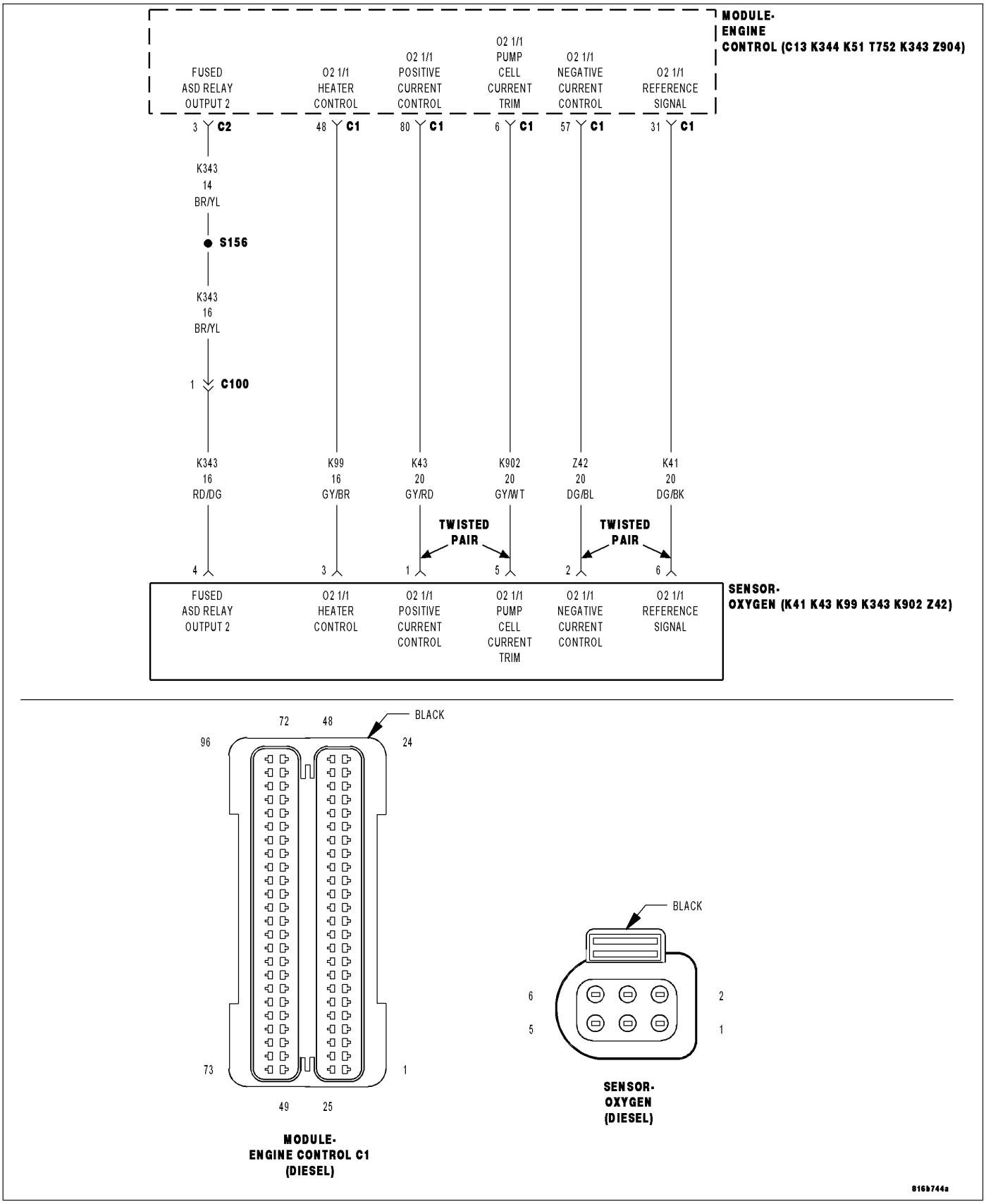

For a complete wiring diagram **Refer to Section 8W**

- **When Monitored:**
  With the ignition on and the O2 1/1 Sensor at operating temperature.
- **Set Condition:**
  The ECM detects an open on the (K43) O2 1/1 Positive Current Control circuit for 2.0 seconds.

Possible Causes
INTERMITTENT DTC
(K43) O2 1/1 POSITIVE CURRENT CONTROL CIRCUIT SHORTED TO VOLTAGE
(K43) O2 1/1 POSITIVE CURRENT CONTROL CIRCUIT SHORTED TO GROUND
(K43) O2 1/1 POSITIVE CURRENT CONTROL CIRCUIT SHORTED TO THE (K343) FUSED ASD RELAY OUTPUT 2 CIRCUIT
(K43) O2 1/1 POSITIVE CURRENT CONTROL CIRCUIT SHORTED TO THE (K99) O2 1/1 HEATER CONTROL CIRCUIT
(K43) O2 1/1 POSITIVE CURRENT CONTROL CIRCUIT OPEN OR HIGH RESISTANCE
OXYGEN SENSOR
ENGINE CONTROL MODULE (ECM)

Always perform the Pre-Diagnostic Troubleshooting procedure before proceeding. (Refer to 9 - ENGINE - DIAGNOSIS AND TESTING)

Diagnostic Test

1. DTC IS ACTIVE

Ignition on, engine not running.
With the scan tool, Clear DTCs in the Engine Control Module (ECM).
Start the engine.
Allow the engine to reach normal operating temperature.
Monitor the scan tool for at least two minutes.
With the scan tool, select View DTCs.

Is the status Active for this DTC?

Yes >> Go To 2

No >> Refer to the *CHECKING FOR AN INTERMITTENT DTC Diagnostic Procedure. (Refer to 9 - ENGINE - DIAGNOSIS AND TESTING)

2. (K43) O2 1/1 POSITIVE CURRENT CONTROL CIRCUIT SHORTED TO VOLTAGE

Turn the ignition off.
Disconnect the Oxygen Sensor connector.
Disconnect the Engine Control Module (ECM) connector.
Remove the ASD Relay from the IPM.
Connect a jumper wire between cavity 30 and cavity 87 of the ASD Relay Connector.
Turn the ignition on.
Measure the voltage of the (K43) O2 1/1 Positive Current Control circuit in the Oxygen Sensor connector.

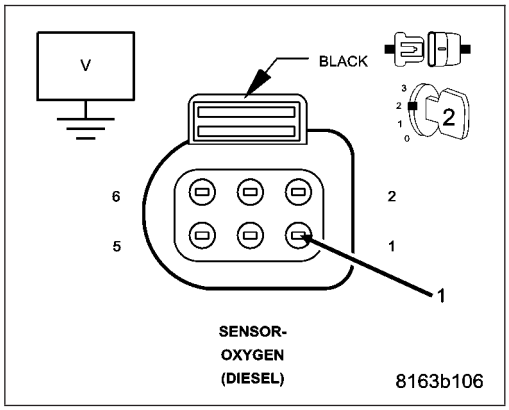

Is there any voltage present?

Yes >> Repair the (K43) O2 1/1 Positive Current Control circuit for a short to voltage.
Perform the ECM Verification Test Ver. 1. (Refer to 9 - ENGINE - DIAGNOSIS AND TESTING)

No >> Go to 3

3. (K43) O2 1/1 POSITIVE CURRENT CONTROL CIRCUIT SHORTED TO GROUND

Turn the ignition off.

Measure the resistance between ground and the (K43) O2 1/1 Positive Current Control circuit in the Oxygen Sensor connector.

Is the resistance above 10.0 ohms?

Yes >> Go to 4

No >> Repair the (K43) O2 1/1 Positive Current Control circuit for a short to ground.

Perform the ECM Verification Test Ver. 1. (Refer to 9 - ENGINE - DIAGNOSIS AND TESTING)

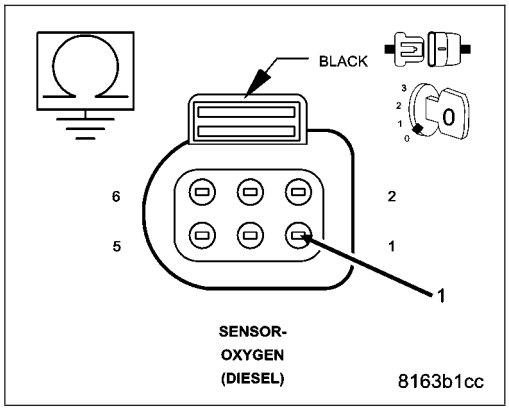

4. (K43) O2 1/1 POSITIVE CURRENT CONTROL CIRCUIT SHORTED TO THE (K343) FUSED ASD RELAY OUTPUT 2 CIRCUIT

Measure the resistance between the (K43) O2 1/1 Positive Current Control circuit and the (K343) Fused ASD Relay Output 2 circuit in the Oxygen Sensor connector.

Is the resistance above 10.0 ohms?

Yes >> Go to 5

No >> Repair the (K43) O2 1/1 Positive Current Control circuit for a short to the (K343) Fused ASD Relay Output 2 circuit.

Perform the ECM Verification Test Ver. 1. (Refer to 9 - ENGINE - DIAGNOSIS AND TESTING)

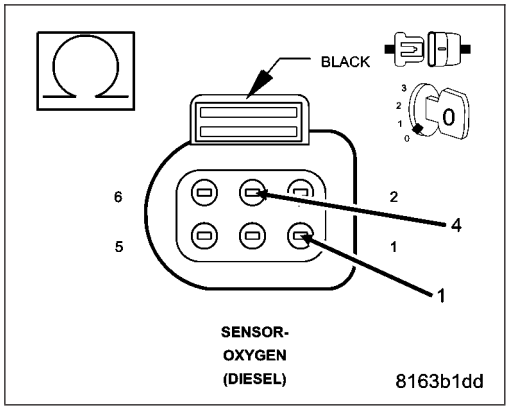

5. (K43) O2 1/1 POSITIVE CURRENT CONTROL CIRCUIT SHORTED TO THE (K99) O2 1/1 HEATER CONTROL CIRCUIT

Measure the resistance between the (K43) O2 1/1 Positive Current Control circuit and the (K99) O2 1/1 Heater Control circuit in the Oxygen Sensor connector.

Is the resistance above 10.0 ohms?

Yes >> Go to 6

No >> Repair the (K43) O2 1/1 Positive Current Control circuit for a short to the (K99) O2 1/1 Heater Control circuit.

Perform the ECM Verification Test Ver. 1. (Refer to 9 - ENGINE - DIAGNOSIS AND TESTING)

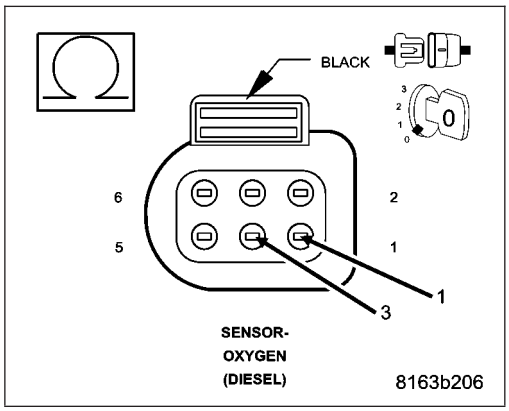

6. (K43) O2 1/1 POSITIVE CURRENT CONTROL CIRCUIT OPEN OR HIGH RESISTANCE

Measure the resistance of the (K43) O2 1/1 Positive Current Control circuit between the Oxygen Sensor connector and the Engine Control Module (ECM) connector.

Is the resistance below 10.0 ohms?

Yes >> Go to 7

No >> Repair the (K43) 02 1/1 Positive Current Control circuit for an open circuit or high resistance.
Perform the ECM Verification Test Ver. 1. (Refer to 9 - ENGINE - DIAGNOSIS AND TESTING)

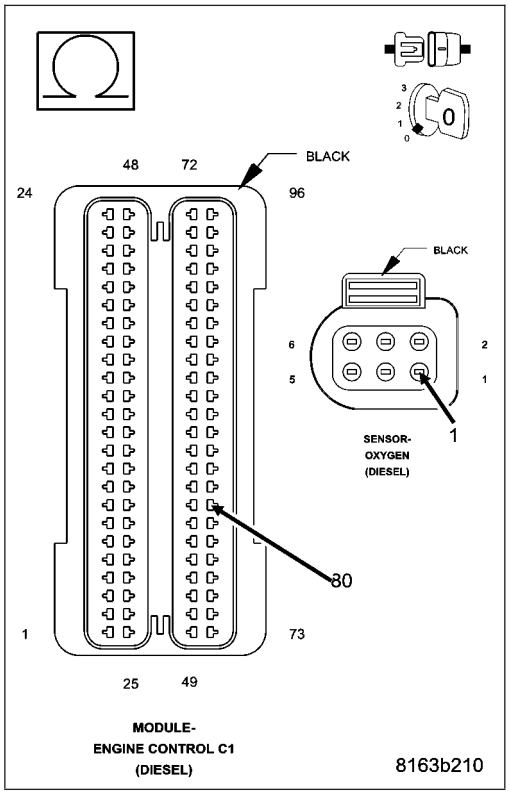

7. OXYGEN SENSOR

Turn the ignition off.
Connect the Engine Control Module (ECM) connector.
Replace the Oxygen Sensor in accordance with the Service Information.
Start the engine.
Allow the engine to reach normal operating temperature.
Monitor the scan tool for at least two minutes.
With the scan tool, select View DTCs.

Is the status Active for this DTC?

Yes >> Go to 8

No >> Test Complete.
Perform the ECM Verification Test Ver. 1. (Refer to 9 - ENGINE - DIAGNOSIS AND TESTING)

8. ENGINE CONTROL MODULE (ECM)

Using the wiring diagram/schematic as a guide, inspect the wiring and connectors between the Oxygen Sensor and the Engine Control Module (ECM).

Look for any chafed, pierced, pinched, or partially broken wires.

Look for broken, bent, pushed out or corroded terminals.

Monitor the scan tool data relative to this circuit and wiggle test the wiring and connectors.

Look for the data to change or for the DTC to reset during the wiggle test.

Refer to any Technical Service Bulletins that may apply.

Were any problems found?

Yes >> Repair as necessary.
Perform the ECM Verification Test Ver. 1. (Refer to 9 - ENGINE - DIAGNOSIS AND TESTING)

No >> Replace the Engine Control Module (ECM) in accordance with the Service Information.
Perform the ECM Verification Test Ver. 1. (Refer to 9 - ENGINE - DIAGNOSIS AND TESTING)

P2238-O2 SENSOR 1/1 PUMP CELL CURRENT CIRCUIT LOW

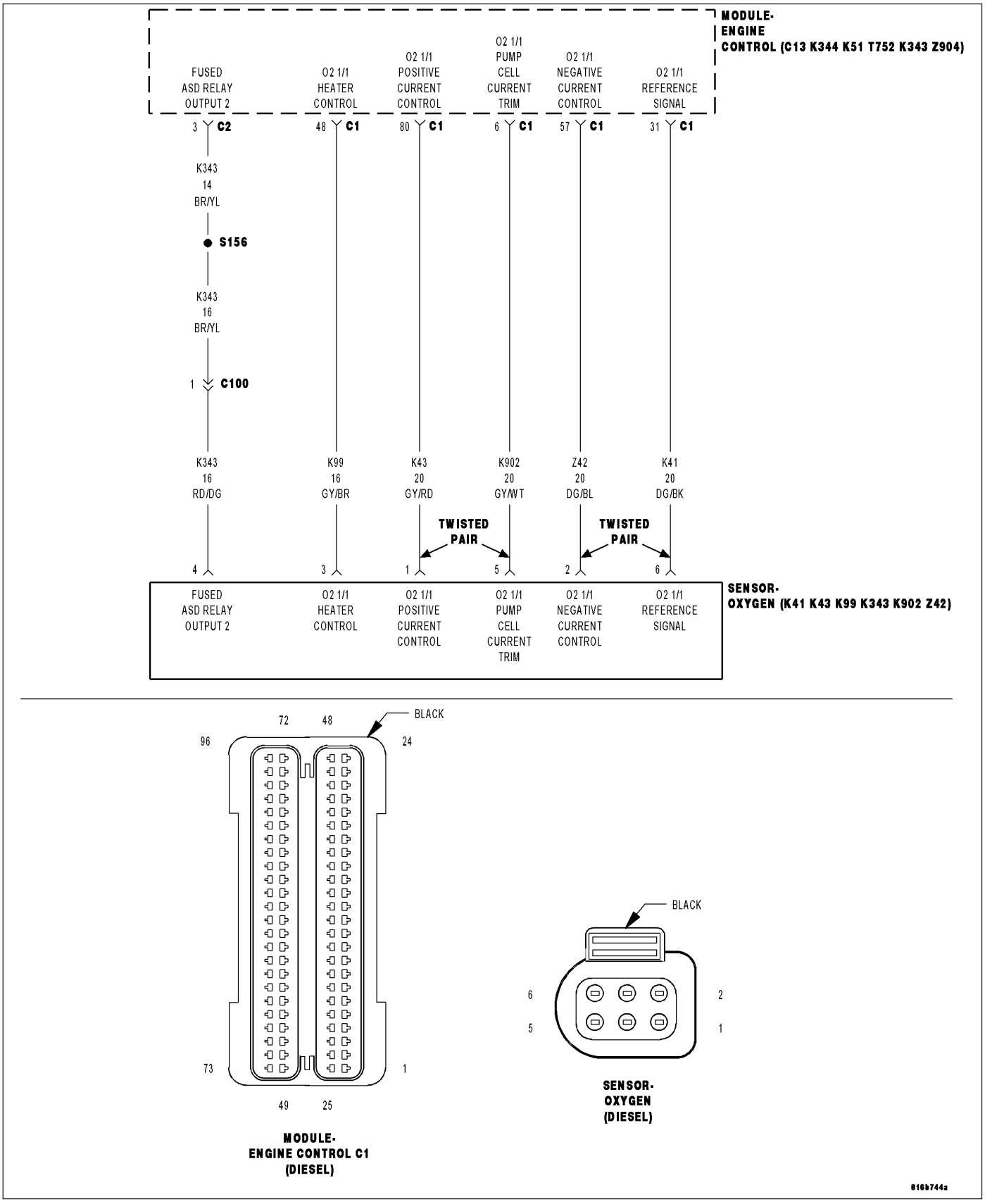

For a complete wiring diagram **Refer to Section 8W**

- **When Monitored:**
  With the ignition on and the O2 1/1 Sensor at operating temperature.
- **Set Condition:**
  The ECM detects a short to ground on the (K43) O2 1/1 Positive Current Control circuit for 2.0 seconds.

Possible Causes
INTERMITTENT DTC
(K43) O2 1/1 POSITIVE CURRENT CONTROL CIRCUIT SHORTED TO GROUND
(K43) O2 1/1 POSITIVE CURRENT CONTROL CIRCUIT SHORTED TO THE (K99) O2 1/1 HEATER CONTROL CIRCUIT
(K43) O2 1/1 POSITIVE CURRENT CONTROL CIRCUIT OPEN OR HIGH RESISTANCE
OXYGEN SENSOR
ENGINE CONTROL MODULE (ECM)

Always perform the Pre-Diagnostic Troubleshooting procedure before proceeding. (Refer to 9 - ENGINE - DIAGNOSIS AND TESTING)

Diagnostic Test

1. DTC IS ACTIVE

Ignition on, engine not running.

With the scan tool, Clear DTCs in the Engine Control Module (ECM).

Start the engine.

Allow the engine to reach normal operating temperature.

Monitor the scan tool for at least two minutes.

With the scan tool, select View DTCs.

Is the status Active for this DTC?

Yes >> Go To 2

No >> Refer to the *CHECKING FOR AN INTERMITTENT DTC Diagnostic Procedure. (Refer to 9 - ENGINE - DIAGNOSIS AND TESTING)

2. (K43) O2 1/1 POSITIVE CURRENT CONTROL CIRCUIT SHORTED TO GROUND

Turn the ignition off.

Disconnect the Oxygen Sensor connector.

Disconnect the Engine Control Module (ECM) connector.

Measure the resistance between ground and the (K43) O2 1/1 Positive Current Control circuit in the Oxygen Sensor connector.

Is the resistance above 1000.0 ohms?

Yes >> Go to 3

No >> Repair the (K43) O2 1/1 Positive Current Control circuit for a short to ground.
Perform the ECM Verification Test Ver. 1. (Refer to 9 - ENGINE - DIAGNOSIS AND TESTING)

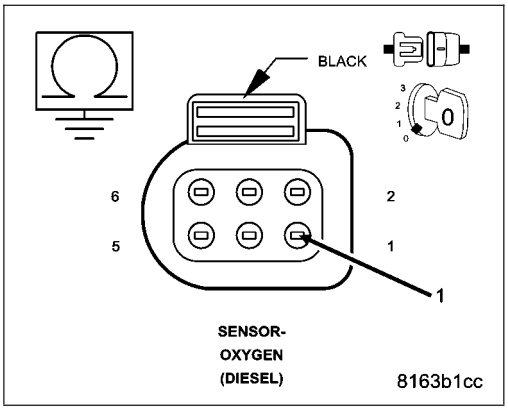

3. (K43) O2 1/1 POSITIVE CURRENT CONTROL CIRCUIT SHORTED TO THE (K99) O2 1/1 HEATER CONTROL CIRCUIT

Measure the resistance between the (K43) O2 1/1 Positive Current Control circuit and the (K99) O2 1/1 Heater Control circuit in the Oxygen Sensor connector.

Is the resistance above 1000.0 ohms?

Yes >> Go to 4

No >> Repair the (K43) O2 1/1 Positive Current Control circuit for a short to the (K99) O2 1/1 Heater Control circuit.

Perform the ECM Verification Test Ver. 1. (Refer to 9 - ENGINE - DIAGNOSIS AND TESTING)

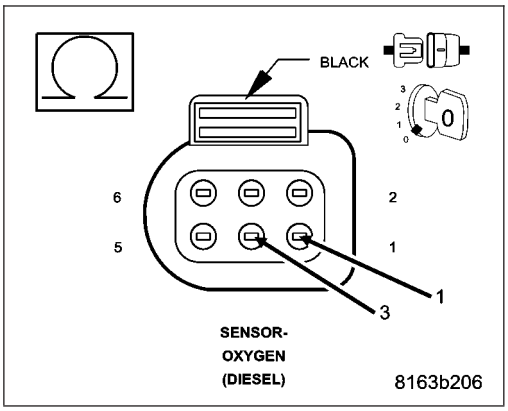

4. (K43) O2 1/1 POSITIVE CURRENT CONTROL CIRCUIT OPEN OR HIGH RESISTANCE

Measure the resistance of the (K43) O2 1/1 Positive Current Control circuit between the Oxygen Sensor connector and the Engine Control Module (ECM) connector.

Is the resistance below 10.0 ohms?

Yes >> Go to 5

No >> Repair the (K43) O2 1/1 Positive Current Control circuit for an open circuit or high resistance.

Perform the ECM Verification Test Ver. 1. (Refer to 9 - ENGINE - DIAGNOSIS AND TESTING)

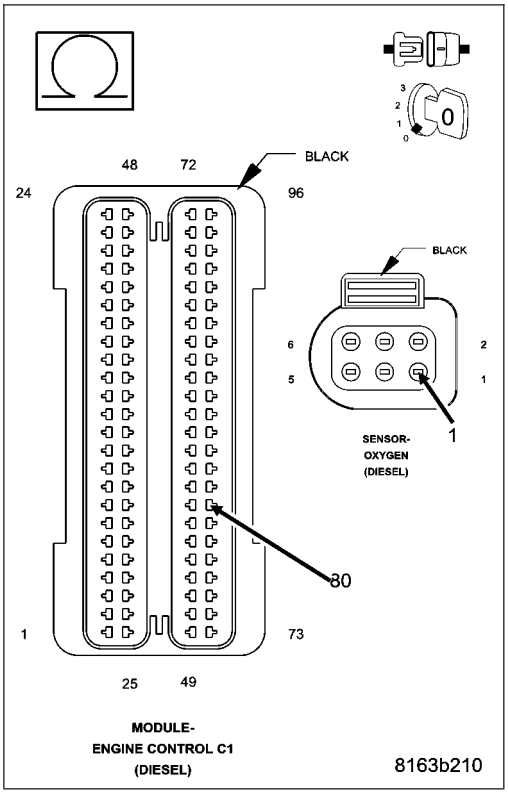

5. OXYGEN SENSOR

Turn the ignition off.
Connect the Engine Control Module (ECM) connector.
Replace the Oxygen Sensor in accordance with the Service Information.
Start the engine.
Allow the engine to reach normal operating temperature.
Monitor the scan tool for at least two minutes.
With the scan tool, select View DTCs.

Is the status Active for this DTC?

Yes >> Go to 6

No >> Test Complete.
Perform the ECM Verification Test Ver. 1. (Refer to 9 - ENGINE - DIAGNOSIS AND TESTING)

6. ENGINE CONTROL MODULE (ECM)

Using the wiring diagram/schematic as a guide, inspect the wiring and connectors between the Oxygen Sensor and the Engine Control Module (ECM).
Look for any chafed, pierced, pinched, or partially broken wires.
Look for broken, bent, pushed out or corroded terminals.
Monitor the scan tool data relative to this circuit and wiggle test the wiring and connectors.
Look for the data to change or for the DTC to reset during the wiggle test.
Refer to any Technical Service Bulletins that may apply.

Were any problems found?

Yes >> Repair as necessary.
Perform the ECM Verification Test Ver. 1. (Refer to 9 - ENGINE - DIAGNOSIS AND TESTING)

No >> Replace the Engine Control Module (ECM) in accordance with the Service Information.
Perform the ECM Verification Test Ver. 1. (Refer to 9 - ENGINE - DIAGNOSIS AND TESTING)

P2239-O2 SENSOR 1/1 PUMP CELL CURRENT CIRCUIT HIGH

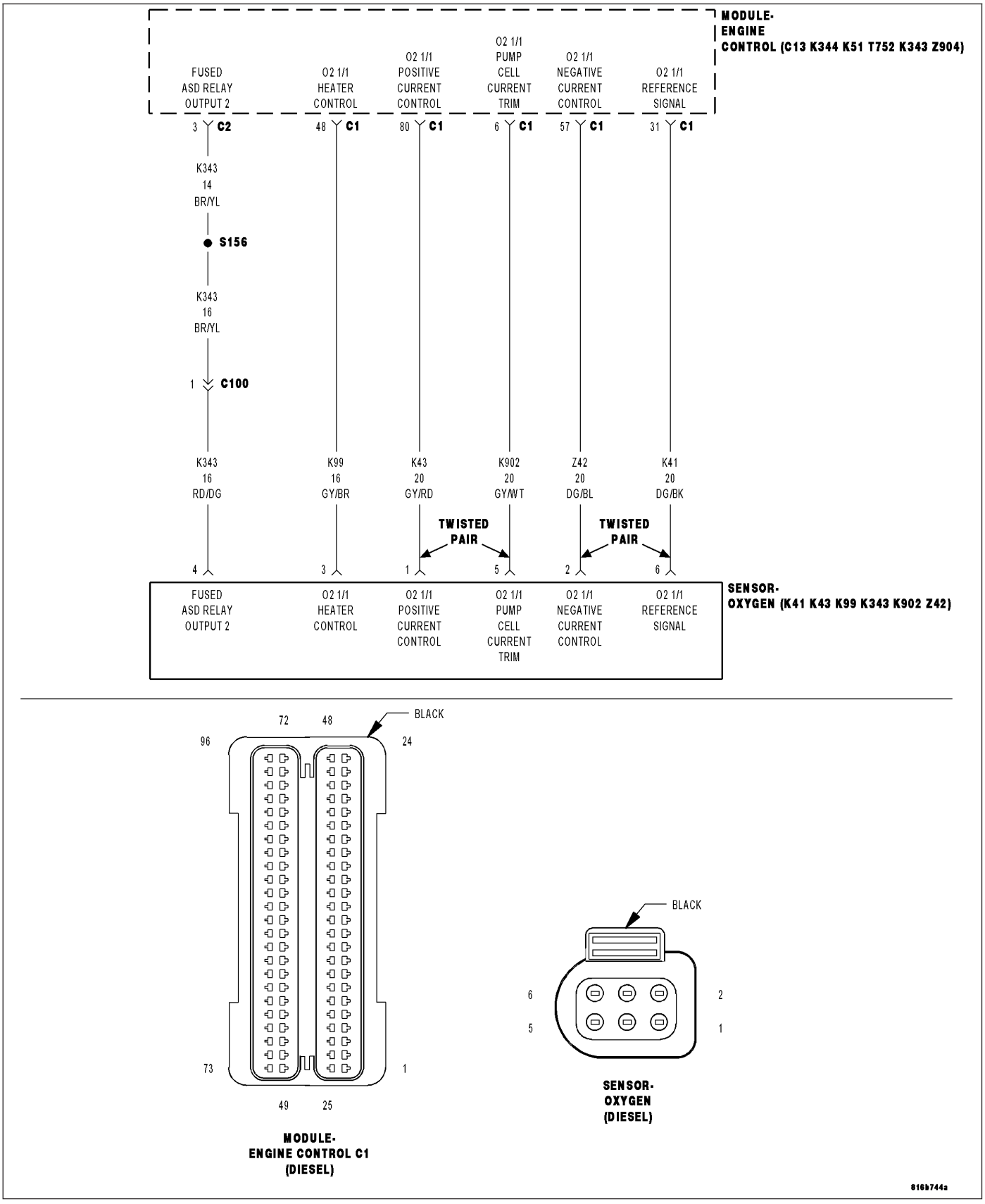

For a complete wiring diagram **Refer to Section 8W**

- **When Monitored:**
  With the ignition on and the O2 1/1 Sensor at operating temperature.
- **Set Condition:**
  The ECM detects a short to voltage on the (K43) O2 1/1 Positive Current Control circuit for 2.0 seconds.

Possible Causes
INTERMITTENT DTC
(K43) O2 1/1 POSITIVE CURRENT CONTROL CIRCUIT SHORTED TO VOLTAGE
(K43) O2 1/1 POSITIVE CURRENT CONTROL CIRCUIT SHORTED TO THE (K343) FUSED ASD RELAY OUTPUT 2 CIRCUIT
(K43) O2 1/1 POSITIVE CURRENT CONTROL CIRCUIT OPEN OR HIGH RESISTANCE
OXYGEN SENSOR
ENGINE CONTROL MODULE (ECM)

Always perform the Pre-Diagnostic Troubleshooting procedure before proceeding. (Refer to 9 - ENGINE - DIAGNOSIS AND TESTING)

Diagnostic Test

1. DTC IS ACTIVE

Ignition on, engine not running.

With the scan tool, Clear DTCs in the Engine Control Module (ECM).

Start the engine.

Allow the engine to reach normal operating temperature.

Monitor the scan tool for at least two minutes.

With the scan tool, select View DTCs.

Is the status Active for this DTC?

Yes >> Go To 2

No >> Refer to the *CHECKING FOR AN INTERMITTENT DTC Diagnostic Procedure. (Refer to 9 - ENGINE - DIAGNOSIS AND TESTING)

2. (K43) O2 1/1 POSITIVE CURRENT CONTROL CIRCUIT SHORTED TO VOLTAGE

Turn the ignition off.

Disconnect the Oxygen Sensor connector.

Disconnect the Engine Control Module (ECM) connector.

Remove the ASD Relay from the IPM.

Connect a jumper wire between cavity 30 and cavity 87 of the ASD Relay Connector.

Turn the ignition on.

Measure the voltage of the (K43) O2 1/1 Positive Current Control circuit in the Oxygen Sensor connector.

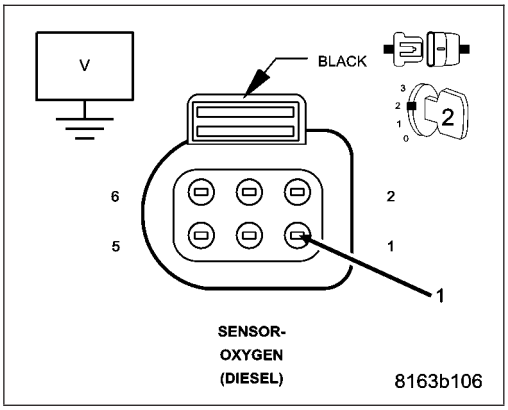

Is there any voltage present?

Yes >> Repair the (K43) O2 1/1 Positive Current Control circuit for a short to voltage.
Perform the ECM Verification Test Ver. 1. (Refer to 9 - ENGINE - DIAGNOSIS AND TESTING)

No >> Go to 3

3. (K43) O2 1/1 POSITIVE CURRENT CONTROL CIRCUIT SHORTED TO THE (K343) FUSED ASD RELAY OUTPUT 2 CIRCUIT

Turn the ignition off.

Measure the resistance between the (K43) O2 1/1 Positive Current Control circuit and the (K343) Fused ASD Relay Output 2 circuit in the Oxygen Sensor connector.

Is the resistance above 10.0 ohms?

Yes >> Go to 4

No >> Repair the (K43) O2 1/1 Positive Current Control circuit for a short to the (K343) Fused ASD Relay Output 2 circuit.
Perform the ECM Verification Test Ver. 1. (Refer to 9 - ENGINE - DIAGNOSIS AND TESTING)

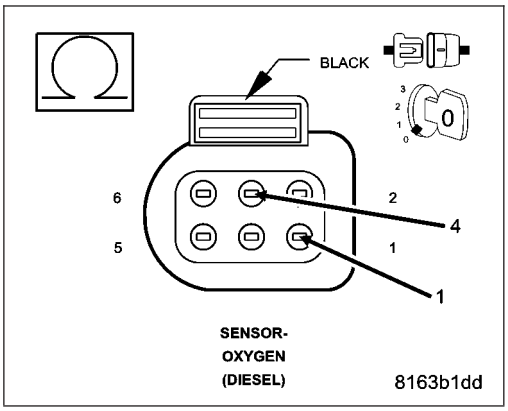

4. (K43) O2 1/1 POSITIVE CURRENT CONTROL CIRCUIT OPEN OR HIGH RESISTANCE

Measure the resistance of the (K43) O2 1/1 Positive Current Control circuit between the Oxygen Sensor connector and the Engine Control Module (ECM) connector.

Is the resistance below 10.0 ohms?

Yes >> Go to 5

No >> Repair the (K43) 02 1/1 Positive Current Control circuit for an open circuit or high resistance.
Perform the ECM Verification Test Ver. 1. (Refer to 9 - ENGINE - DIAGNOSIS AND TESTING)

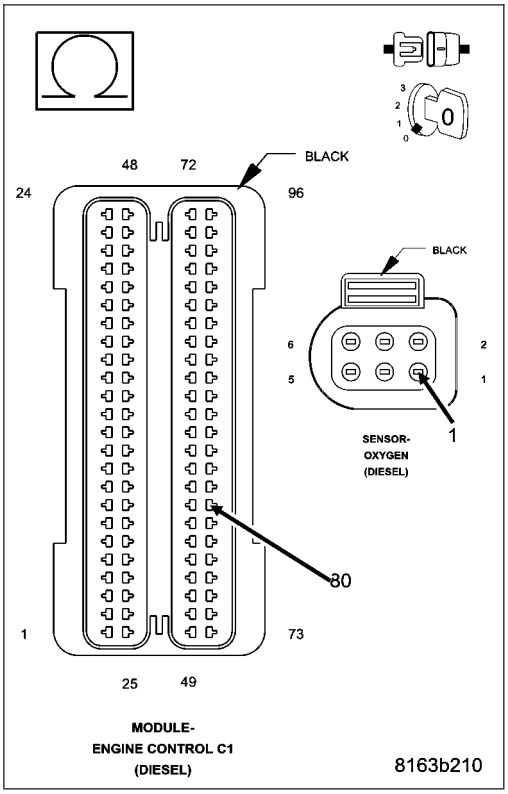

5. OXYGEN SENSOR

Turn the ignition off.
Connect the Engine Control Module (ECM) connector.
Replace the Oxygen Sensor in accordance with the Service Information.
Start the engine.
Allow the engine to reach normal operating temperature.
Monitor the scan tool for at least two minutes.
With the scan tool, select View DTCs.

Is the status Active for this DTC?

Yes >> Go to 6

No >> Test Complete.
Perform the ECM Verification Test Ver. 1. (Refer to 9 - ENGINE - DIAGNOSIS AND TESTING)

6. ENGINE CONTROL MODULE (ECM)

Using the wiring diagram/schematic as a guide, inspect the wiring and connectors between the Oxygen Sensor and the Engine Control Module (ECM).
Look for any chafed, pierced, pinched, or partially broken wires.
Look for broken, bent, pushed out or corroded terminals.
Monitor the scan tool data relative to this circuit and wiggle test the wiring and connectors.
Look for the data to change or for the DTC to reset during the wiggle test.
Refer to any Technical Service Bulletins that may apply.

Were any problems found?

Yes >> Repair as necessary.
Perform the ECM Verification Test Ver. 1. (Refer to 9 - ENGINE - DIAGNOSIS AND TESTING)

No >> Replace the Engine Control Module (ECM) in accordance with the Service Information.
Perform the ECM Verification Test Ver. 1. (Refer to 9 - ENGINE - DIAGNOSIS AND TESTING)

P2243-O2 SENSOR 1/1 REFERENCE VOLTAGE CIRCUIT OPEN

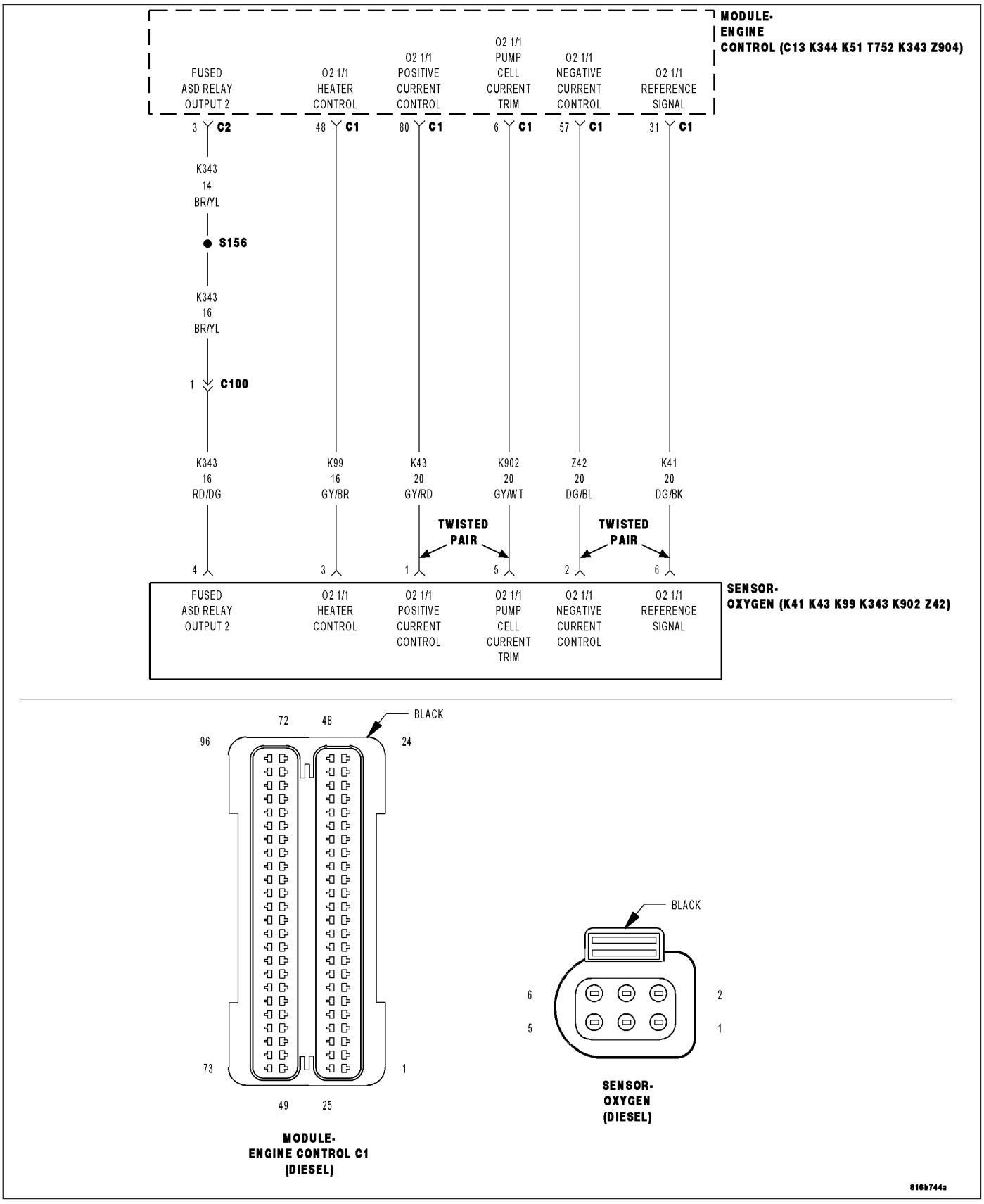

For a complete wiring diagram **Refer to Section 8W**

- **When Monitored:**
  With the ignition on and the O2 1/1 Sensor at operating temperature.
- **Set Condition:**
  The ECM detects an open on the (K41) O2 1/1 Reference Signal circuit for 2.0 seconds.

Possible Causes
INTERMITTENT DTC
(K41) O2 1/1 REFERENCE SIGNAL CIRCUIT SHORTED TO VOLTAGE
(K41) O2 1/1 REFERENCE SIGNAL CIRCUIT SHORTED TO GROUND
(K41) O2 1/1 REFERENCE SIGNAL CIRCUIT SHORTED TO THE (K343) FUSED ASD RELAY OUTPUT 2 CIRCUIT
(K41) O2 1/1 REFERENCE SIGNAL CIRCUIT SHORTED TO THE (K99) O2 1/1 HEATER CONTROL CIRCUIT
(K41) O2 1/1 REFERENCE SIGNAL CIRCUIT OPEN OR HIGH RESISTANCE
OXYGEN SENSOR
ENGINE CONTROL MODULE (ECM)

Always perform the Pre-Diagnostic Troubleshooting procedure before proceeding. (Refer to 9 - ENGINE - DIAGNOSIS AND TESTING)

Diagnostic Test

1. DTC IS ACTIVE

Ignition on, engine not running.
With the scan tool, Clear DTCs in the Engine Control Module (ECM).
Start the engine.
Allow the engine to reach normal operating temperature.
Monitor the scan tool for at least two minutes.
With the scan tool, select View DTCs.

Is the status Active for this DTC?

Yes >> Go To 2

No >> Refer to the *CHECKING FOR AN INTERMITTENT DTC Diagnostic Procedure. (Refer to 9 - ENGINE - DIAGNOSIS AND TESTING)

2. (K41) O2 1/1 REFERENCE SIGNAL CIRCUIT SHORTED TO VOLTAGE

Turn the ignition off.
Disconnect the Oxygen Sensor connector.
Disconnect the Engine Control Module (ECM) connector.
Remove the ASD Relay from the IPM.
Connect a jumper wire between cavity 30 and cavity 87 of the ASD Relay Connector.
Turn the ignition on.
Measure the voltage of the (K41) O2 1/1 Reference Signal circuit in the Oxygen Sensor connector.

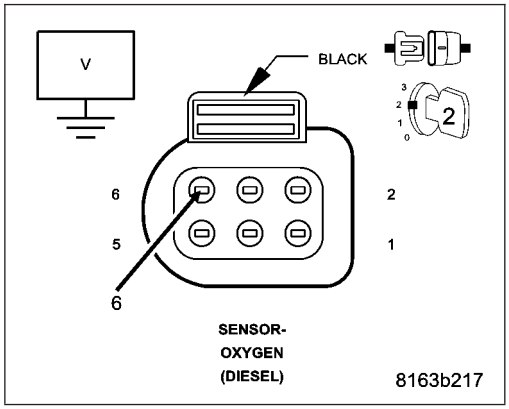

Is there any voltage present?

Yes >> Repair the (K41) O2 1/1 Reference Signal circuit for a short to voltage.
Perform the ECM Verification Test Ver. 1. (Refer to 9 - ENGINE - DIAGNOSIS AND TESTING)

No >> Go to 3

3. (K41) O2 1/1 REFERENCE SIGNAL CIRCUIT SHORTED TO GROUND

Turn the ignition off.

Measure the resistance between ground and the (K41) O2 1/1 Reference Signal circuit in the Oxygen Sensor connector.

Is the resistance above 10.0 ohms?

Yes >> Go to 4

No >> Repair the (K41) O2 1/1 Reference Signal circuit for a short to ground.

Perform the ECM Verification Test Ver. 1. (Refer to 9 - ENGINE - DIAGNOSIS AND TESTING)

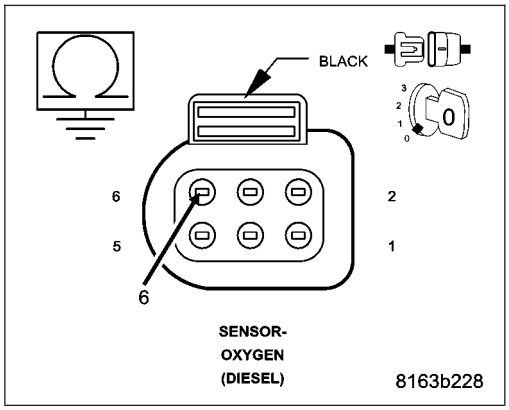

4. (K41) O2 1/1 REFERENCE SIGNAL CIRCUIT SHORTED TO THE (K343) FUSED ASD RELAY OUTPUT 2 CIRCUIT

Measure the resistance between the (K41) O2 1/1 Reference Signal circuit and the (K343) Fused ASD Relay Output 2 circuit in the Oxygen Sensor connector.

Is the resistance above 10.0 ohms?

Yes >> Go to 5

No >> Repair the (K41) O2 1/1 Reference Signal circuit for a short to the (K343) Fused ASD Relay Output 2 circuit.

Perform the ECM Verification Test Ver. 1. (Refer to 9 - ENGINE - DIAGNOSIS AND TESTING)

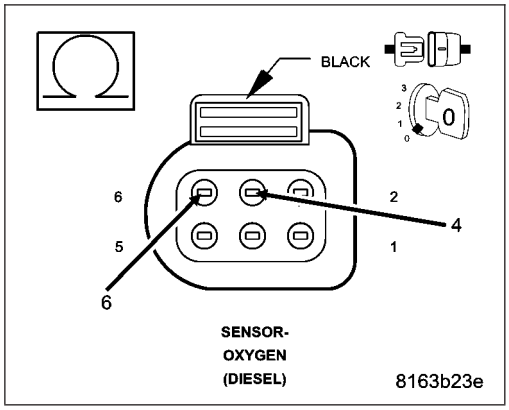

5. (K41) O2 1/1 REFERENCE SIGNAL CIRCUIT SHORTED TO THE (K99) O2 1/1 HEATER CONTROL CIRCUIT

Measure the resistance between the (K41) O2 1/1 Reference Signal circuit and the (K99) O2 1/1 Heater Control circuit in the Oxygen Sensor connector.

Is the resistance above 10.0 ohms?

Yes >> Go to 6

No >> Repair the (K41) O2 1/1 Reference Signal circuit for a short to the (K99) O2 1/1 Heater Control circuit.

Perform the ECM Verification Test Ver. 1. (Refer to 9 - ENGINE - DIAGNOSIS AND TESTING)

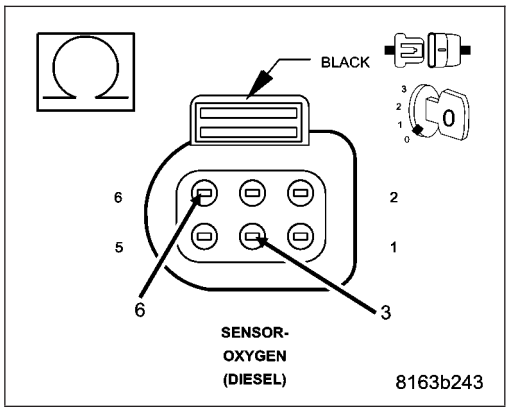

6. (K41) O2 1/1 REFERENCE SIGNAL CIRCUIT OPEN OR HIGH RESISTANCE

Measure the resistance of the (K41) O2 1/1 Reference Signal circuit between the Oxygen Sensor connector and the Engine Control Module (ECM) connector.

Is the resistance below 10.0 ohms?

Yes >> Go to 7

No >> Repair the (K41) 02 1/1 Reference Signal circuit for an open circuit or high resistance.
Perform the ECM Verification Test Ver. 1. (Refer to 9 - ENGINE - DIAGNOSIS AND TESTING)

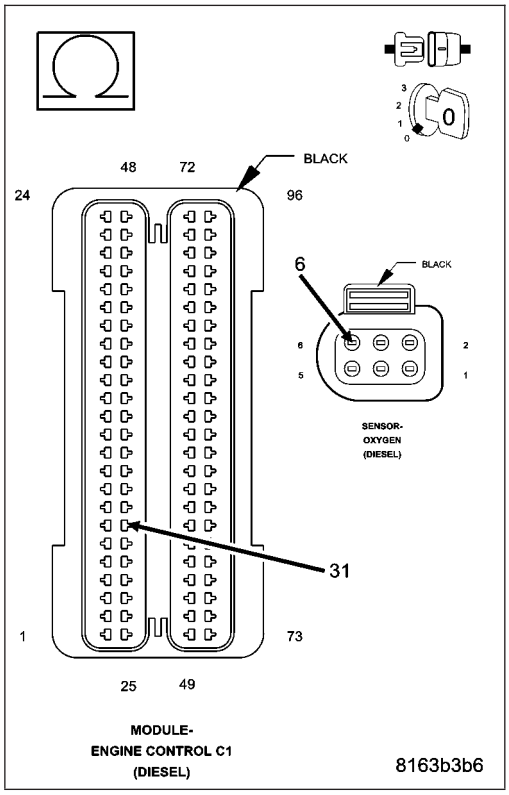

7. OXYGEN SENSOR

Turn the ignition off.
Connect the Engine Control Module (ECM) connector.
Replace the Oxygen Sensor in accordance with the Service Information.
Start the engine.
Allow the engine to reach normal operating temperature.
Monitor the scan tool for at least two minutes.
With the scan tool, select View DTCs.

Is the status Active for this DTC?

Yes >> Go to 8

No >> Test Complete.
Perform the ECM Verification Test Ver. 1. (Refer to 9 - ENGINE - DIAGNOSIS AND TESTING)

8. ENGINE CONTROL MODULE (ECM)

Using the wiring diagram/schematic as a guide, inspect the wiring and connectors between the Oxygen Sensor and the Engine Control Module (ECM).

Look for any chafed, pierced, pinched, or partially broken wires.

Look for broken, bent, pushed out or corroded terminals.

Monitor the scan tool data relative to this circuit and wiggle test the wiring and connectors.

Look for the data to change or for the DTC to reset during the wiggle test.

Refer to any Technical Service Bulletins that may apply.

Were any problems found?

Yes >> Repair as necessary.
Perform the ECM Verification Test Ver. 1. (Refer to 9 - ENGINE - DIAGNOSIS AND TESTING)

No >> Replace the Engine Control Module (ECM) in accordance with the Service Information.
Perform the ECM Verification Test Ver. 1. (Refer to 9 - ENGINE - DIAGNOSIS AND TESTING)

P2244-O2 SENSOR 1/1 REFERENCE VOLTAGE PERFORMANCE

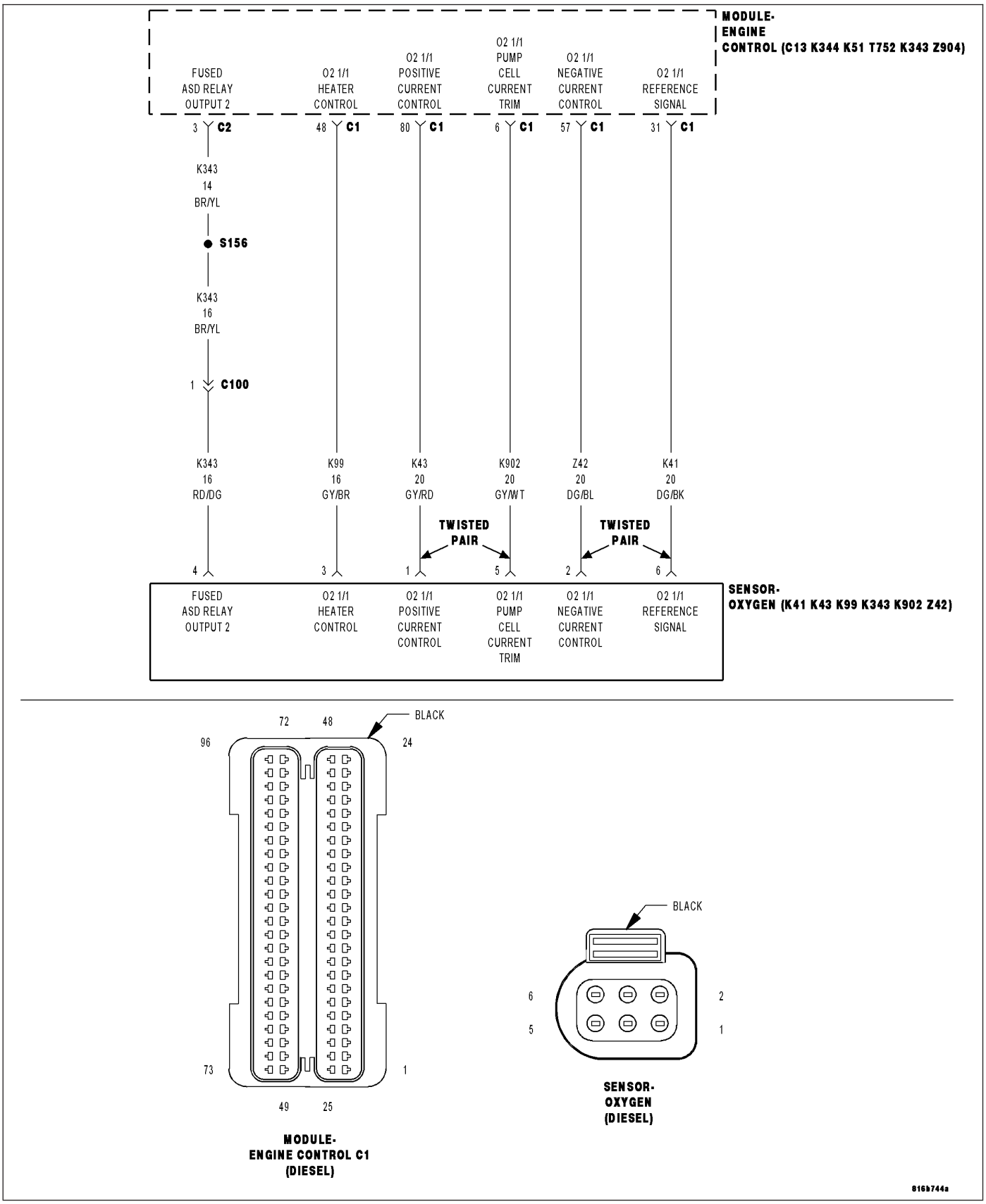

For a complete wiring diagram **Refer to Section 8W**

- **When Monitored:**
  With the ignition on and the O2 1/1 Sensor at operating temperature.
- **Set Condition:**
  The ECM detects an implausible voltage on the (K41) O2 1/1 Reference Signal.

Possible Causes
INTERMITTENT DTC
(K41) O2 1/1 REFERENCE SIGNAL CIRCUIT SHORTED TO VOLTAGE
(K41) O2 1/1 REFERENCE SIGNAL CIRCUIT SHORTED TO GROUND
(K41) O2 1/1 REFERENCE SIGNAL CIRCUIT SHORTED TO THE (K343) FUSED ASD RELAY OUTPUT 2 CIRCUIT
(K41) O2 1/1 REFERENCE SIGNAL CIRCUIT SHORTED TO THE (K99) O2 1/1 HEATER CONTROL CIRCUIT
(K41) O2 1/1 REFERENCE SIGNAL CIRCUIT OPEN OR HIGH RESISTANCE
OXYGEN SENSOR
ENGINE CONTROL MODULE (ECM)

Always perform the Pre-Diagnostic Troubleshooting procedure before proceeding. (Refer to 9 - ENGINE - DIAGNOSIS AND TESTING)

Diagnostic Test

1. DTC IS ACTIVE

Ignition on, engine not running.
With the scan tool, Clear DTCs in the Engine Control Module (ECM).
Start the engine.
Allow the engine to reach normal operating temperature.
Monitor the scan tool for at least two minutes.
With the scan tool, select View DTCs.

Is the status Active for this DTC?

Yes >> Go To 2

No >> Refer to the *CHECKING FOR AN INTERMITTENT DTC Diagnostic Procedure. (Refer to 9 - ENGINE - DIAGNOSIS AND TESTING)

2. (K41) O2 1/1 REFERENCE SIGNAL CIRCUIT SHORTED TO VOLTAGE

Turn the ignition off.
Disconnect the Oxygen Sensor connector.
Disconnect the Engine Control Module (ECM) connector.
Remove the ASD Relay from the IPM.
Connect a jumper wire between cavity 30 and cavity 87 of the ASD Relay Connector.
Turn the ignition on.
Measure the voltage of the (K41) O2 1/1 Reference Signal circuit in the Oxygen Sensor connector.

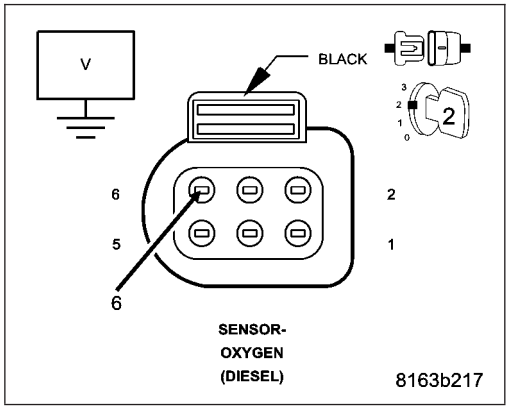

Is there any voltage present?

Yes >> Repair the (K41) O2 1/1 Reference Signal circuit for a short to voltage.
Perform the ECM Verification Test Ver. 1. (Refer to 9 - ENGINE - DIAGNOSIS AND TESTING)

No >> Go to 3

3. (K41) O2 1/1 REFERENCE SIGNAL CIRCUIT SHORTED TO GROUND

Turn the ignition off.

Measure the resistance between ground and the (K41) O2 1/1 Reference Signal circuit in the Oxygen Sensor connector.

Is the resistance above 1000.0 ohms?

Yes >> Go to 4

No >> Repair the (K41) O2 1/1 Reference Signal circuit for a short to ground.

Perform the ECM Verification Test Ver. 1. (Refer to 9 - ENGINE - DIAGNOSIS AND TESTING)

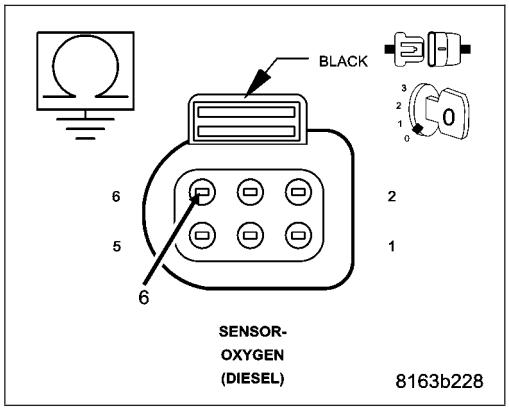

4. (K41) O2 1/1 REFERENCE SIGNAL CIRCUIT SHORTED TO THE (K343) FUSED ASD RELAY OUTPUT 2 CIRCUIT

Measure the resistance between the (K41) O2 1/1 Reference Signal circuit and the (K343) Fused ASD Relay Output 2 circuit in the Oxygen Sensor connector.

Is the resistance above 1000.0 ohms?

Yes >> Go to 5

No >> Repair the (K41) O2 1/1 Reference Signal circuit for a short to the (K343) Fused ASD Relay Output 2 circuit.

Perform the ECM Verification Test Ver. 1. (Refer to 9 - ENGINE - DIAGNOSIS AND TESTING)

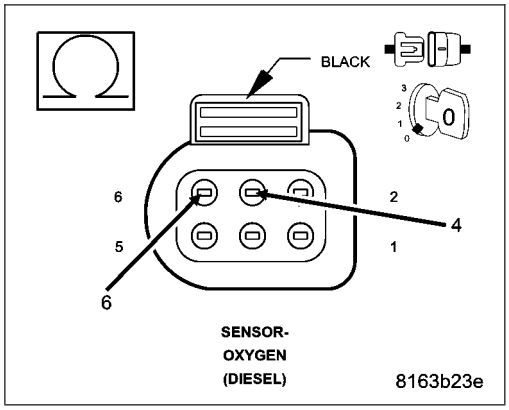

5. (K41) O2 1/1 REFERENCE SIGNAL CIRCUIT SHORTED TO THE (K99) O2 1/1 HEATER CONTROL CIRCUIT

Measure the resistance between the (K41) O2 1/1 Reference Signal circuit and the (K99) O2 1/1 Heater Control circuit in the Oxygen Sensor connector.

Is the resistance above 1000.0 ohms?

Yes >> Go to 6

No >> Repair the (K41) O2 1/1 Reference Signal circuit for a short to the (K99) O2 1/1 Heater Control circuit.

Perform the ECM Verification Test Ver. 1. (Refer to 9 - ENGINE - DIAGNOSIS AND TESTING)

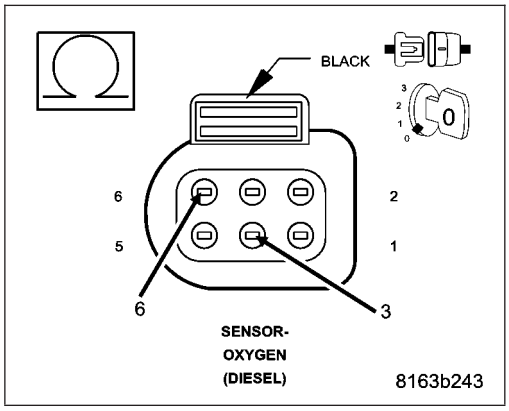

6. (K41) O2 1/1 REFERENCE SIGNAL CIRCUIT OPEN OR HIGH RESISTANCE

Measure the resistance of the (K41) O2 1/1 Reference Signal circuit between the Oxygen Sensor connector and the Engine Control Module (ECM) connector.

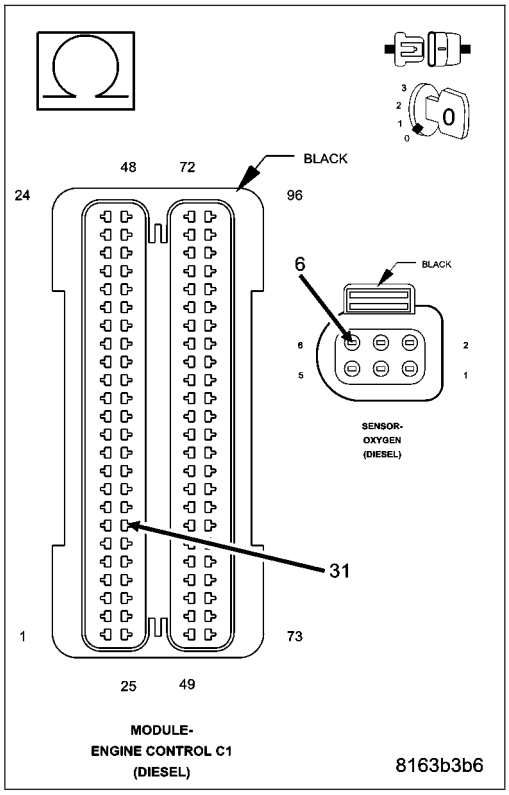

Is the resistance below 10.0 ohms?

Yes >> Go to 7

No >> Repair the (K41) 02 1/1 Reference Signal circuit for an open circuit or high resistance.
Perform the ECM Verification Test Ver. 1. (Refer to 9 - ENGINE - DIAGNOSIS AND TESTING)

7. OXYGEN SENSOR

Turn the ignition off.
Connect the Engine Control Module (ECM) connector.
Replace the Oxygen Sensor in accordance with the Service Information.
Start the engine.
Allow the engine to reach normal operating temperature.
Monitor the scan tool for at least two minutes.
With the scan tool, select View DTCs.

Is the status Active for this DTC?

Yes >> Go to 8

No >> Test Complete.
Perform the ECM Verification Test Ver. 1. (Refer to 9 - ENGINE - DIAGNOSIS AND TESTING)

8. ENGINE CONTROL MODULE (ECM)

Using the wiring diagram/schematic as a guide, inspect the wiring and connectors between the Oxygen Sensor and the Engine Control Module (ECM).

Look for any chafed, pierced, pinched, or partially broken wires.

Look for broken, bent, pushed out or corroded terminals.

Monitor the scan tool data relative to this circuit and wiggle test the wiring and connectors.

Look for the data to change or for the DTC to reset during the wiggle test.

Refer to any Technical Service Bulletins that may apply.

Were any problems found?

Yes >> Repair as necessary.
Perform the ECM Verification Test Ver. 1. (Refer to 9 - ENGINE - DIAGNOSIS AND TESTING)

No >> Replace the Engine Control Module (ECM) in accordance with the Service Information.
Perform the ECM Verification Test Ver. 1. (Refer to 9 - ENGINE - DIAGNOSIS AND TESTING)

P2245-O2 SENSOR 1/1 REFERENCE VOLTAGE CIRCUIT LOW

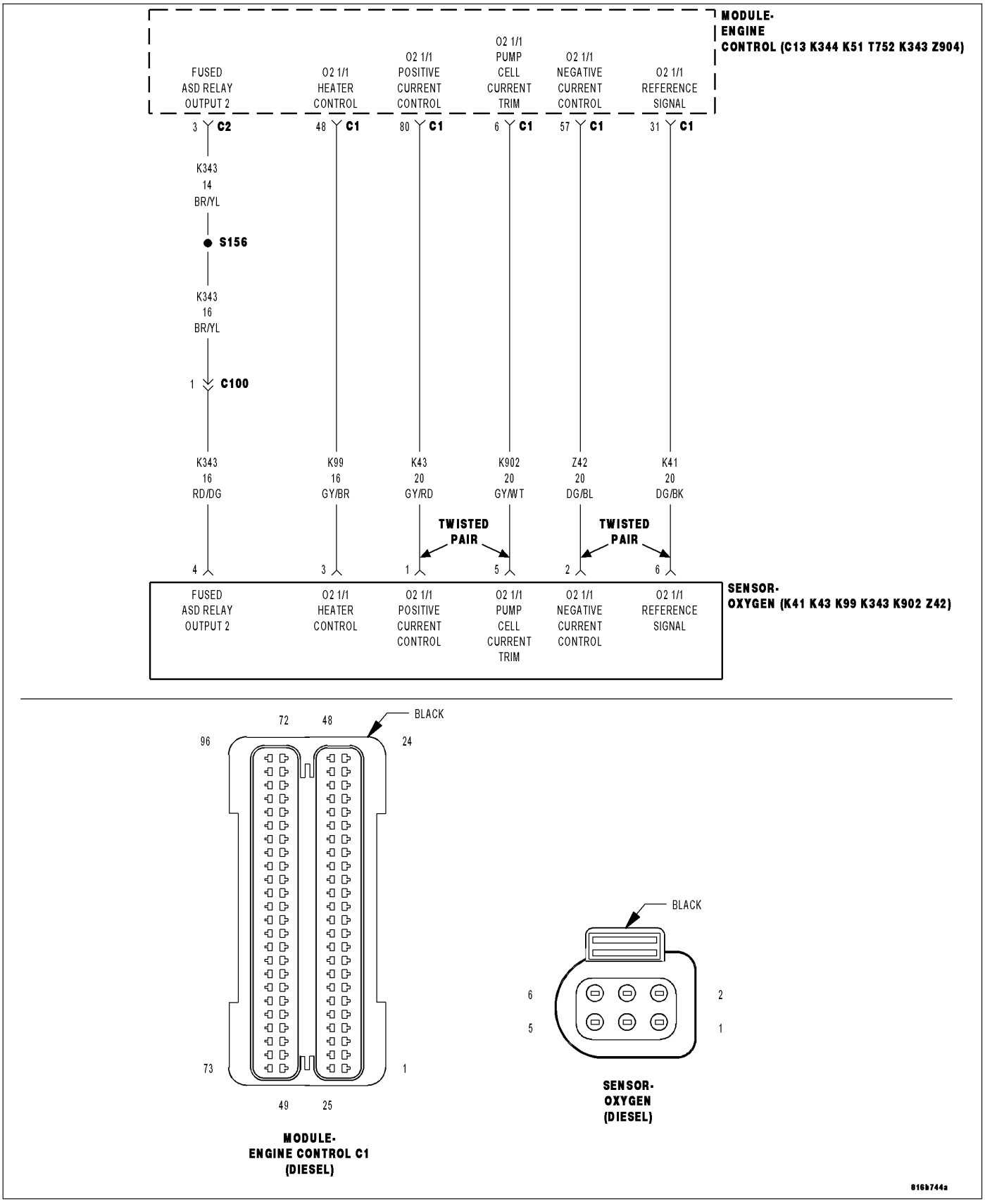

For a complete wiring diagram **Refer to Section 8W**

- **When Monitored:**
  With the ignition on and the O2 1/1 Sensor at operating temperature.
- **Set Condition:**
  The ECM detects a short to ground on the (K41) O2 1/1 Reference Signal circuit for 2.0 seconds.

Possible Causes
INTERMITTENT DTC
(K41) O2 1/1 REFERENCE SIGNAL CIRCUIT SHORTED TO GROUND
(K41) O2 1/1 REFERENCE SIGNAL CIRCUIT SHORTED TO THE (K99) O2 1/1 HEATER CONTROL CIRCUIT
(K41) O2 1/1 REFERENCE SIGNAL CIRCUIT OPEN OR HIGH RESISTANCE
OXYGEN SENSOR
ENGINE CONTROL MODULE (ECM)

Always perform the Pre-Diagnostic Troubleshooting procedure before proceeding. (Refer to 9 - ENGINE - DIAGNOSIS AND TESTING)

Diagnostic Test

1. DTC IS ACTIVE

Ignition on, engine not running.
With the scan tool, Clear DTCs in the Engine Control Module (ECM).
Start the engine.
Allow the engine to reach normal operating temperature.
Monitor the scan tool for at least two minutes.
With the scan tool, select View DTCs.

Is the status Active for this DTC?

Yes >> Go To 2

No >> Refer to the *CHECKING FOR AN INTERMITTENT DTC Diagnostic Procedure. (Refer to 9 - ENGINE - DIAGNOSIS AND TESTING)

2. (K41) O2 1/1 REFERENCE SIGNAL CIRCUIT SHORTED TO GROUND

Turn the ignition off.
Disconnect the Oxygen Sensor connector.
Disconnect the Engine Control Module (ECM) connector.
Measure the resistance between ground and the (K41) O2 1/1 Reference Signal circuit in the Oxygen Sensor connector.

Is the resistance above 1000.0 ohms?

Yes >> Go to 3

No >> Repair the (K41) O2 1/1 Reference Signal circuit for a short to ground.
Perform the ECM Verification Test Ver. 1. (Refer to 9 - ENGINE - DIAGNOSIS AND TESTING)

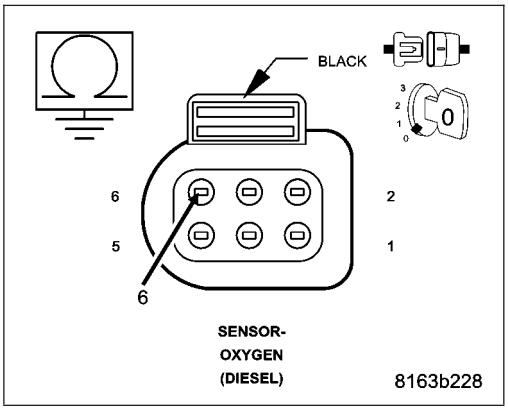

3. (K41) O2 1/1 REFERENCE SIGNAL CIRCUIT SHORTED TO THE (K99) O2 1/1 HEATER CONTROL CIRCUIT

Measure the resistance between the (K41) O2 1/1 Reference Signal circuit and the (K99) O2 1/1 Heater Control circuit in the Oxygen Sensor connector.

Is the resistance above 1000.0 ohms?

Yes >> Go to 4

No >> Repair the (K41) O2 1/1 Reference Signal circuit for a short to the (K99) O2 1/1 Heater Control circuit.

Perform the ECM Verification Test Ver. 1. (Refer to 9 - ENGINE - DIAGNOSIS AND TESTING)

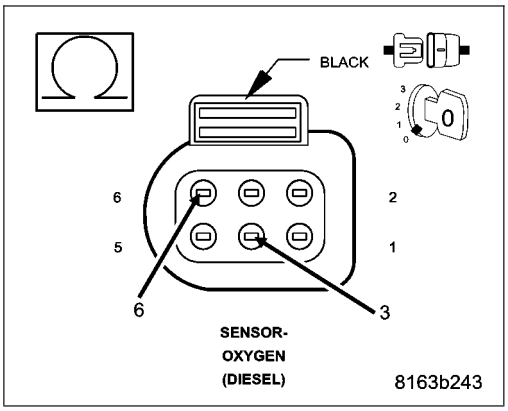

4. (K41) O2 1/1 REFERENCE SIGNAL CIRCUIT OPEN OR HIGH RESISTANCE

Measure the resistance of the (K41) O2 1/1 Reference Signal circuit between the Oxygen Sensor connector and the Engine Control Module (ECM) connector.

Is the resistance below 10.0 ohms?

Yes >> Go to 5

No >> Repair the (K41) O2 1/1 Reference Signal circuit for an open circuit or high resistance.

Perform the ECM Verification Test Ver. 1. (Refer to 9 - ENGINE - DIAGNOSIS AND TESTING)

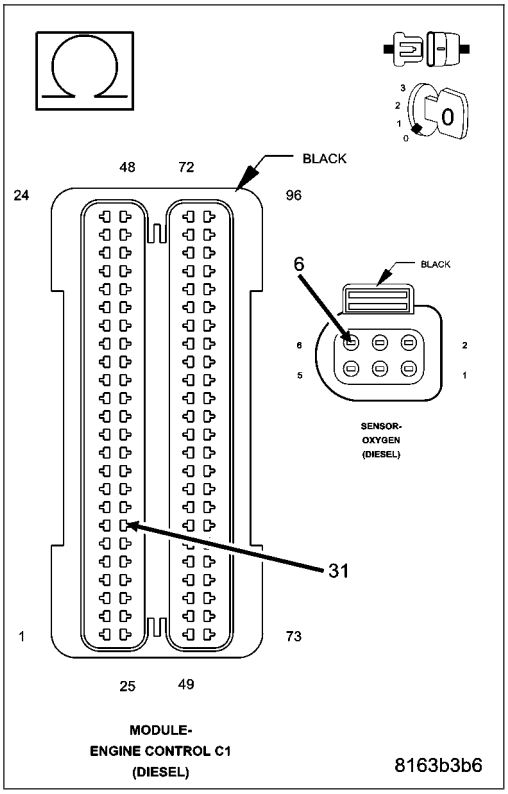

5. OXYGEN SENSOR

Turn the ignition off.
Connect the Engine Control Module (ECM) connector.
Replace the Oxygen Sensor in accordance with the Service Information.
Start the engine.
Allow the engine to reach normal operating temperature.
Monitor the scan tool for at least two minutes.
With the scan tool, select View DTCs.

Is the status Active for this DTC?

Yes >> Go to 6

No >> Test Complete.
Perform the ECM Verification Test Ver. 1. (Refer to 9 - ENGINE - DIAGNOSIS AND TESTING)

6. ENGINE CONTROL MODULE (ECM)

Using the wiring diagram/schematic as a guide, inspect the wiring and connectors between the Oxygen Sensor and the Engine Control Module (ECM).
Look for any chafed, pierced, pinched, or partially broken wires.
Look for broken, bent, pushed out or corroded terminals.
Monitor the scan tool data relative to this circuit and wiggle test the wiring and connectors.
Look for the data to change or for the DTC to reset during the wiggle test.
Refer to any Technical Service Bulletins that may apply.

Were any problems found?

Yes >> Repair as necessary.
Perform the ECM Verification Test Ver. 1. (Refer to 9 - ENGINE - DIAGNOSIS AND TESTING)

No >> Replace the Engine Control Module (ECM) in accordance with the Service Information.
Perform the ECM Verification Test Ver. 1. (Refer to 9 - ENGINE - DIAGNOSIS AND TESTING)

P2246-O2 SENSOR 1/1 REFERENCE VOLTAGE CIRCUIT HIGH

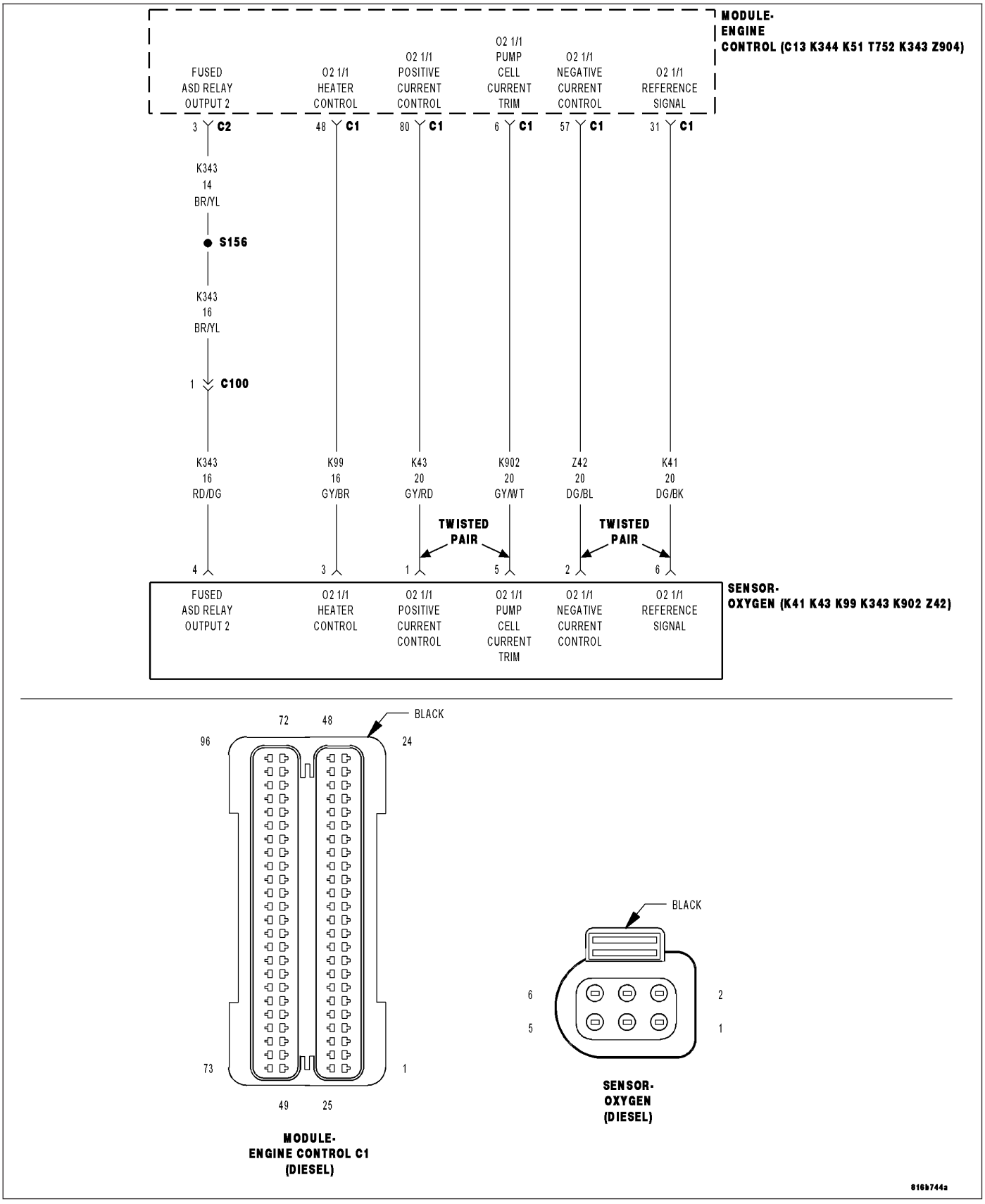

For a complete wiring diagram **Refer to Section 8W**

- **When Monitored:**
  With the ignition on and the O2 1/1 Sensor at operating temperature.
- **Set Condition:**
  The ECM detects a short to voltage on the (K41) O2 1/1 Reference Signal circuit for 2.0 seconds.

Possible Causes
INTERMITTENT DTC
(K41) O2 1/1 REFERENCE SIGNAL CIRCUIT SHORTED TO VOLTAGE
(K41) O2 1/1 REFERENCE SIGNAL CIRCUIT SHORTED TO THE (A15) FUSED ASD RELAY OUTPUT CIRCUIT
(K41) O2 1/1 REFERENCE SIGNAL CIRCUIT OPEN OR HIGH RESISTANCE
OXYGEN SENSOR
ENGINE CONTROL MODULE (ECM)

Always perform the Pre-Diagnostic Troubleshooting procedure before proceeding. (Refer to 9 - ENGINE - DIAGNOSIS AND TESTING)

Diagnostic Test

1. DTC IS ACTIVE

Ignition on, engine not running.
With the scan tool, Clear DTCs in the Engine Control Module (ECM).
Start the engine.
Allow the engine to reach normal operating temperature.
Monitor the scan tool for at least two minutes.
With the scan tool, select View DTCs.

Is the status Active for this DTC?

Yes >> Go To 2

No >> Refer to the *CHECKING FOR AN INTERMITTENT DTC Diagnostic Procedure. (Refer to 9 - ENGINE - DIAGNOSIS AND TESTING)

2. (K41) O2 1/1 REFERENCE SIGNAL CIRCUIT SHORTED TO VOLTAGE

Turn the ignition off.
Disconnect the Oxygen Sensor connector.
Disconnect the Engine Control Module (ECM) connector.
Remove the ASD Relay from the IPM.
Connect a jumper wire between cavity 30 and cavity 87 of the ASD Relay Connector.
Turn the ignition on.
Measure the voltage of the (K41) O2 1/1 Reference Signal circuit in the Oxygen Sensor connector.

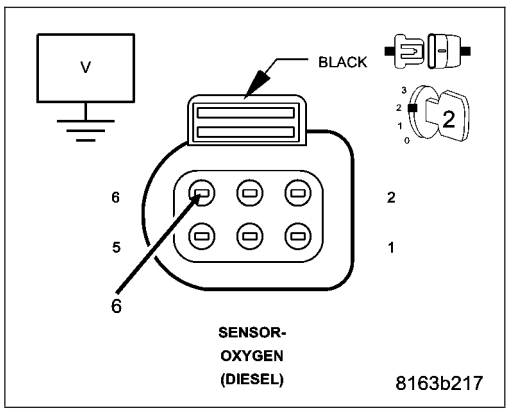

Is there any voltage present?

Yes >> Repair the (K41) O2 1/1 Reference Signal circuit for a short to voltage.
Perform the ECM Verification Test Ver. 1. (Refer to 9 - ENGINE - DIAGNOSIS AND TESTING)

No >> Go to 3

3. (K41) O2 1/1 REFERENCE SIGNAL CIRCUIT SHORTED TO THE (A15) FUSED ASD RELAY OUTPUT CIRCUIT

Turn the ignition off.

Measure the resistance between the (K41) O2 1/1 Reference Signal circuit and the (A15) Fused ASD Relay Output circuit in the Oxygen Sensor connector.

Is the resistance above 10.0 ohms?

Yes >> Go to 4

No >> Repair the (K41) O2 1/1 Reference Signal circuit for a short to the (A15) Fused ASD Relay Output circuit.
Perform the ECM Verification Test Ver. 1. (Refer to 9 - ENGINE - DIAGNOSIS AND TESTING)

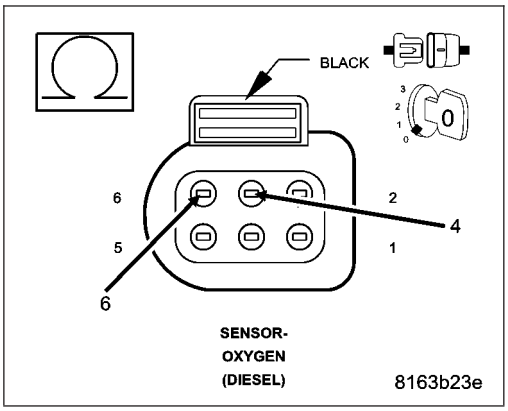

4. (K41) O2 1/1 REFERENCE SIGNAL CIRCUIT OPEN OR HIGH RESISTANCE

Measure the resistance of the (K41) O2 1/1 Reference Signal circuit between the Oxygen Sensor connector and the Engine Control Module (ECM) connector.

Is the resistance below 10.0 ohms?

Yes >> Go to 5

No >> Repair the (K41) 02 1/1 Reference Signal circuit for an open circuit or high resistance.
Perform the ECM Verification Test Ver. 1. (Refer to 9 - ENGINE - DIAGNOSIS AND TESTING)

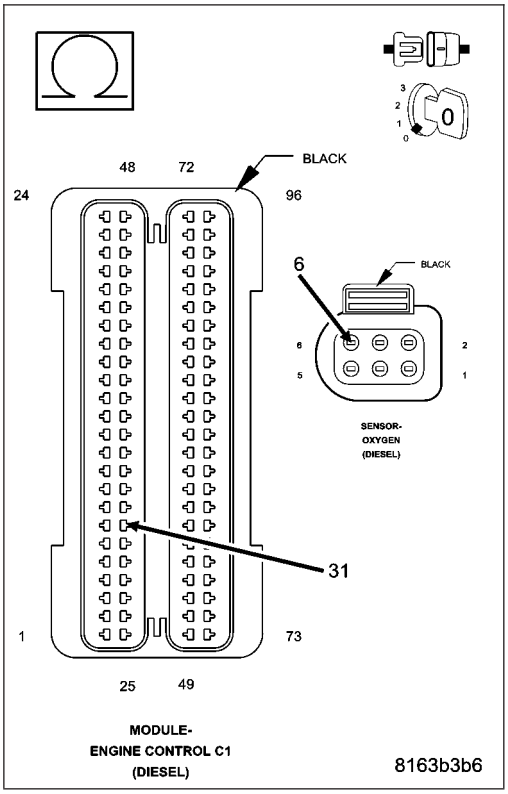

5. OXYGEN SENSOR

Turn the ignition off.
Connect the Engine Control Module (ECM) connector.
Replace the Oxygen Sensor in accordance with the Service Information.
Start the engine.
Allow the engine to reach normal operating temperature.
Monitor the scan tool for at least two minutes.
With the scan tool, select View DTCs.

Is the status Active for this DTC?

Yes >> Go to 6

No >> Test Complete.
Perform the ECM Verification Test Ver. 1. (Refer to 9 - ENGINE - DIAGNOSIS AND TESTING)

6. ENGINE CONTROL MODULE (ECM)

Using the wiring diagram/schematic as a guide, inspect the wiring and connectors between the Oxygen Sensor and the Engine Control Module (ECM).
Look for any chafed, pierced, pinched, or partially broken wires.
Look for broken, bent, pushed out or corroded terminals.
Monitor the scan tool data relative to this circuit and wiggle test the wiring and connectors.
Look for the data to change or for the DTC to reset during the wiggle test.
Refer to any Technical Service Bulletins that may apply.

Were any problems found?

Yes >> Repair as necessary.
Perform the ECM Verification Test Ver. 1. (Refer to 9 - ENGINE - DIAGNOSIS AND TESTING)

No >> Replace the Engine Control Module (ECM) in accordance with the Service Information.
Perform the ECM Verification Test Ver. 1. (Refer to 9 - ENGINE - DIAGNOSIS AND TESTING)

P2280 - AIR FILTER RESTRICTION

For a complete wiring diagram **Refer to Section 8W**

- **When Monitored:**
  With the engine running. The ECM compares mass airflow volume/engine rpm to atmospheric pressure.
- **Set Condition:**
  The ECM detects a 50% or more drop in airflow through the air filter for 5 minutes.

Possible Causes
INTERMITTENT DTC
CLOGGED AIR FILTER
INTAKE AIR RESTRICTION
INTAKE AIR LEAK

Always perform the Pre-Diagnostic Troubleshooting procedure before proceeding. (Refer to 9 - ENGINE - DIAGNOSIS AND TESTING)

Diagnostic Test

1. CHECK THE AIR FILTER

Turn the ignition off.

Remove and inspect the Air Filter for soiling or excessive dirt and debris which may cause air flow restriction.

Were any of these problems found?

Yes >> Replace the Air Filter element

No >> Go to 2

2. CHECK FOR INTAKE SYSTEM RESTRICTIONS

NOTE: Damaged, restricted or poorly connected intake and turbocharger related tubes can cause this DTC to set.

Inspect all air intake and turbocharger related hoses/tubes and connections for leaks, restrictions and damage.

Were any problems found?

Yes >> Repair or replace as necessary.
Perform the ECM Verification Test Ver. 1. (Refer to 9 - ENGINE - DIAGNOSIS AND TESTING)

No >> Go to 3

3. CHECK FOR INTAKE SYSTEM AIR LEAKS

Remove the Crankcase Vent Heater.

Remove the Mass Air Flow Sensor from the turbocharger inlet tube.

Seal off and/or plug the turbocharger inlet tube where the MAF sensor was removed.

Connect smoke machine 84–04 to the Crankcase Vent Heater port in the intake duct and begin injecting smoke into the intake system.

Observe all intake system components for evidence of smoke leakage.

Is there evidence of smoke leakage?

Yes >> Repair or replace as necessary.
Perform the ECM Verification Test Ver. 1. (Refer to 9 - ENGINE - DIAGNOSIS AND TESTING)

No >> Test Complete.

P2299- BRAKE PEDAL POSITION/ACCELERATOR PEDAL POSITION INCOMPATIBLE

For a complete wiring diagram **Refer to Section 8W**.

- **When Monitored:**
  With the engine running (engine speed above 570 rpm). No other APP or Brake Signal DTC's. Vehicle speed above 3 km/h.
- **Set Condition:**
  The ECM detects a brake signal input (brakes applied) and Accelerator Pedal Position above 3% at the same time for 15.0 seconds.

Possible Causes
ACCELERATOR PEDAL POSITION SENSOR
ACCELERATOR PEDAL OBSTRUCTION
BRAKE SWITCH ADJUSTMENT
BRAKE SWITCH
INTERMITTENT WIRING/CONNECTOR PROBLEM

Always perform the Pre-Diagnostic Troubleshooting procedure before proceeding. (Refer to 9 - ENGINE - DIAGNOSIS AND TESTING)

Diagnostic Test

1. CHECK FOR ACTIVE DTC

NOTE: This DTC may be set if the vehicle operator is "riding" the brake pedal (driving with both feet).
With the scan tool, clear all ECM DTCs.
Test drive the vehicle performing several stop-and-go operations.
With the scan tool, view active ECM DTCs.

Does the scan tool display this DTC?

Yes >> Go To 2

No >> Refer to the *CHECKING FOR AN INTERMITTENT DTC Diagnostic Procedure. (Refer to 9 - ENGINE - DIAGNOSIS AND TESTING)

2. CHECK BRAKE SWITCH OPERATION

NOTE: This DTC may be set if the Brake Switch is not properly adjusted. Check Brake Switch adjustment before continuing.
Turn the ignition on.
With the scan tool, read the Primary and Secondary Brake Switch Input.

Are the Primary and Secondary Brake Switch inputs operating properly?

Yes >> Go To 3

No >> Refer to the Service Information Wiring to diagnose Brake Switch and/or Brake Switch wiring problem. Perform the ECM Verification Test Ver. 1. (Refer to 9 - ENGINE - DIAGNOSIS AND TESTING)

3. CHECK ACCELERATOR PEDAL MOVEMENT

Turn the ignition off.

Check the Accelerator Pedal for obstructions or other problem that could restrict pedal travel, cause binding or prohibit the pedal from traveling to the complete rest position.

Were any of these problems found?

Yes >> Repair or replace as necessary.
Perform the ECM Verification Test Ver. 1. (Refer to 9 - ENGINE - DIAGNOSIS AND TESTING)

No >> Go To 4

4. CHECK ACCELERATOR PEDAL POSITION SENSOR INPUT

Turn the ignition on.

NOTE: The Accelerator Pedal must be at the complete rest position for this test. Ensure the pedal is at rest and free from any obstruction.

With the scan tool, read the APP #1 and APP #2 percentages.

Does the scan tool display below 2% for APP #1 and APP #2 percentages?

Yes >> Go To 5

No >> Replace the Accelerator Pedal Position Sensor.
Perform the ECM Verification Test Ver. 1. (Refer to 9 - ENGINE - DIAGNOSIS AND TESTING)

5. INTERMITTENT APP SENSOR/BRAKE SWITCH

Turn the ignition on.

With the scan tool, read the APP #1 and APP #2 percentages

Fully depress and release the Accelerator Pedal several times.

With the scan tool, read the Primary and Secondary Brake Switch inputs.

Fully depress and release the Brake Pedal several times.

Were any problems found with the inputs during pedal actuation for the Brakes or Accelerator?

Yes >> Repair or replace as necessary.

No >> Using the wiring diagrams check the connectors and wiring associated with the Accelerator Pedal Sensor and Brake Switch for damage, corrosion or other problems that could cause an intermittent DTC.

P242F–DIESEL PARTICULATE FILTER RESTRICTION — ASH ACCUMULATION

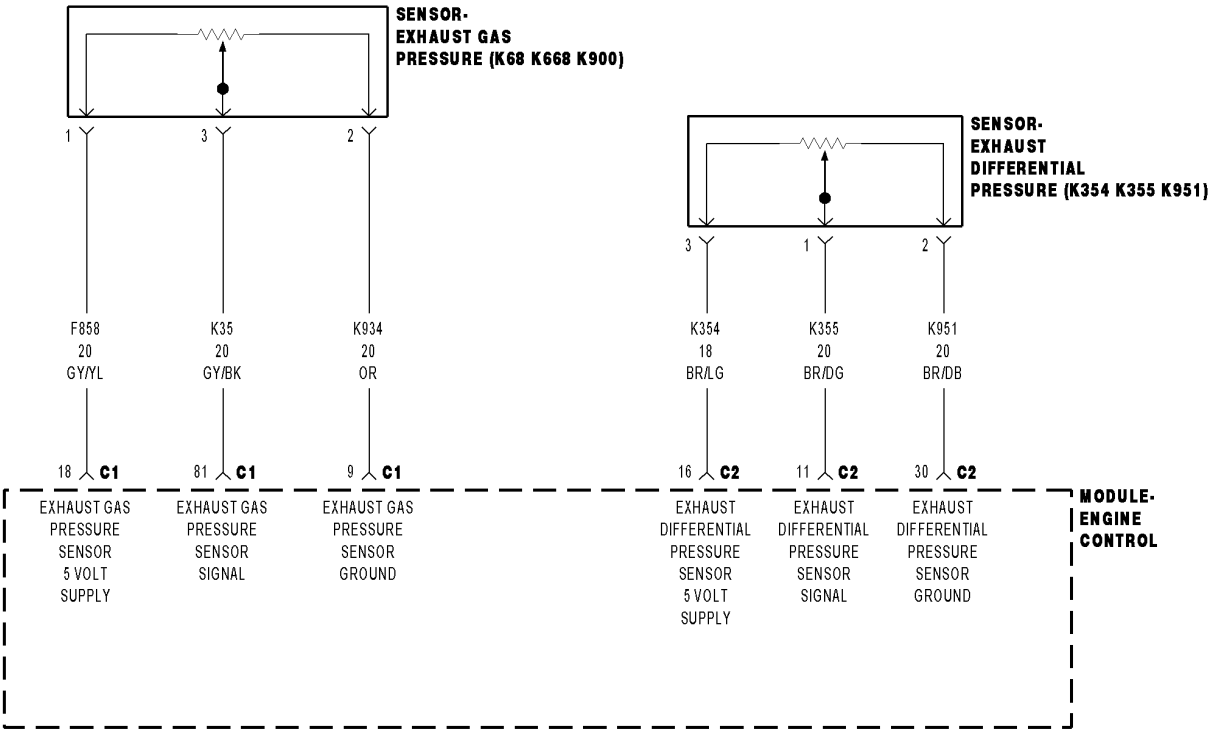

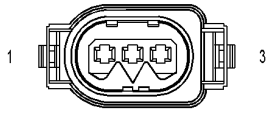

SENSOR-
EXHAUST
DIFFERENTIAL
PRESSURE
(DIESEL)

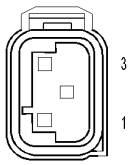

SENSOR-
EXHAUST GAS
PRESSURE
(DIESEL)

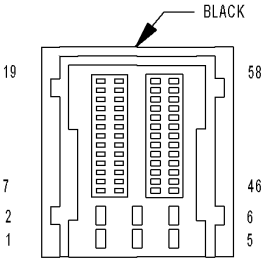

MODULE-
ENGINE
CONTROL C2
(DIESEL)

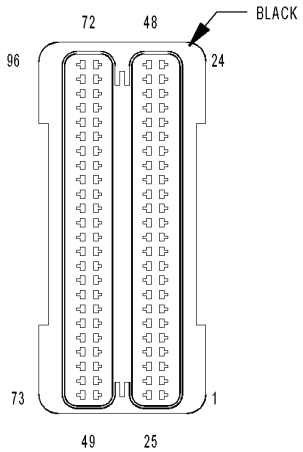

MODULE-
ENGINE CONTROL C1
(DIESEL)

816B74AB

For a complete wiring diagram **Refer to Section 8W**

Theory of Operation

The Diesel particulate filter is an inline canister filter located in the exhaust system between the engine and the muffler. This filter captures and stores ash particles created by the diesel combustion process. This filter is monitored by the ECM with a Differential Pressure Sensor. This sensor measures the difference in exhaust system pressure before and after the particulate filter through tube connections directly to the exhaust pipe. As ash accumulates in the filter, the exhaust pressure at the inlet side of the filter increases as compared to the pressure at the outlet side of the filter. The ECM monitors the sensor to determine when to perform a particulate filter regeneration procedure which is designed to clear or “burn-off” the ash collected in the filter.

- **When Monitored:**
  With the engine running.
- **Set Condition:**
  The Differential Pressure Sensor signal indicates partial clogging of the particulate filter due to the accumulation of ash or other debris.

Possible Causes
DAMAGED EXHAUST SYSTEM
LEAKING EXHAUST SYSTEM
HIGH RESISTANCE IN EXHAUST DIFFERENTIAL PRESSURE SENSOR CIRCUITS
HOSE/TUBE CONNECTIONS TO THE EXHAUST DIFFERENTIAL PRESSURE SENSOR
EXHAUST DIFFERENTIAL PRESSURE SENSOR
DIESEL PARTICULATE FILTER

Always perform the Pre-Diagnostic Troubleshooting procedure before proceeding. (Refer to 9 - ENGINE - DIAGNOSIS AND TESTING)

Diagnostic Test

1. VISUAL INSPECTION

Turn the ignition off.

Visually inspect the Exhaust Differential Pressure Sensor for physical damage, proper electrical connection and proper mechanical connection. Ensure any tubes and/or hoses connected to the sensor are in good working condition and properly connected at all ends.

Visually inspect the entire exhaust system for bent, crushed or otherwise damaged tubes which may cause an exhaust system restriction.

Inspect the exhaust system for exhaust leaks.

Were any problems found?

Yes >> Repair or replace as necessary.

No >> Go To 2

2. PARTICULATE FILTER REGENERATION

Start and idle the engine.

With the scan tool, Clear DTCs in the Engine Control Module (ECM).

With the scan tool, perform the Diesel Particulate Filter Regeneration procedure.

After this procedure is complete, turn the ignition off for 60 seconds.

Test drive the vehicle.

With the scan tool, Read DTCs in the Engine Control Module (ECM).

Is the status Active for this DTC?

Yes >> Go To 3

No >> Test complete.

3. EXHAUST DIFFERENTIAL PRESSURE SENSOR CIRCUIT HIGH RESISTANCE

Turn the ignition off.

Disconnect the Exhaust Differential Pressure Sensor harness connector.

Disconnect the ECM harness connectors.

Measure the resistance of each Exhaust Differential Pressure Sensor circuit between the Exhaust Differential Pressure Sensor harness connector and the ECM harness connector.

Is the resistance below 10.0 ohms for each circuit?

Yes >> Go To 4

No >> Repair the circuit(s) that measured above 10.0 ohms for high resistance. (Refer to 9 - ENGINE - DIAGNOSIS AND TESTING)

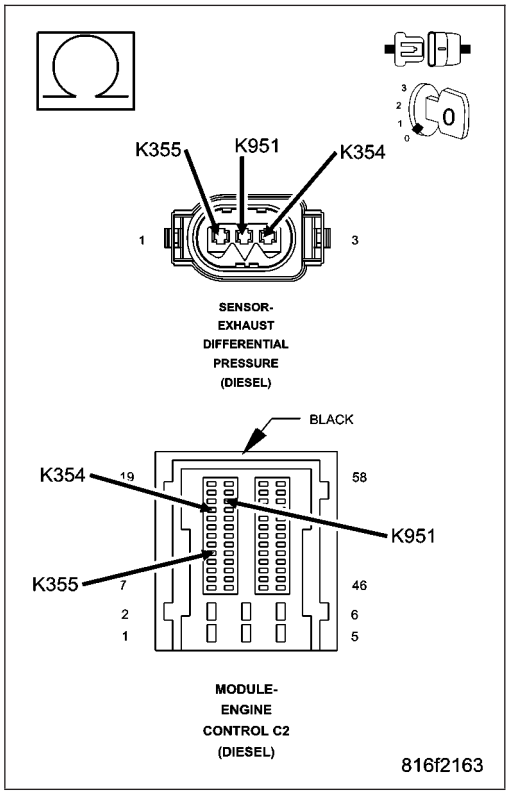

4. EXHAUST DIFFERENTIAL PRESSURE SENSOR

Turn the ignition off.

Replace the Exhaust Differential Pressure Sensor.

Turn the ignition on.

With the scan tool, Clear DTCs in the Engine Control Module (ECM).

Test drive the vehicle

With the scan tool, Read DTCs in the Engine Control Module (ECM).

Is the status Active for this DTC?

Yes >> Replace the Diesel Particulate Filter.

No >> Test Complete.

P244B–DIESEL PARTICULATE FILTER DIFFERENTIAL PRESSURE TOO HIGH

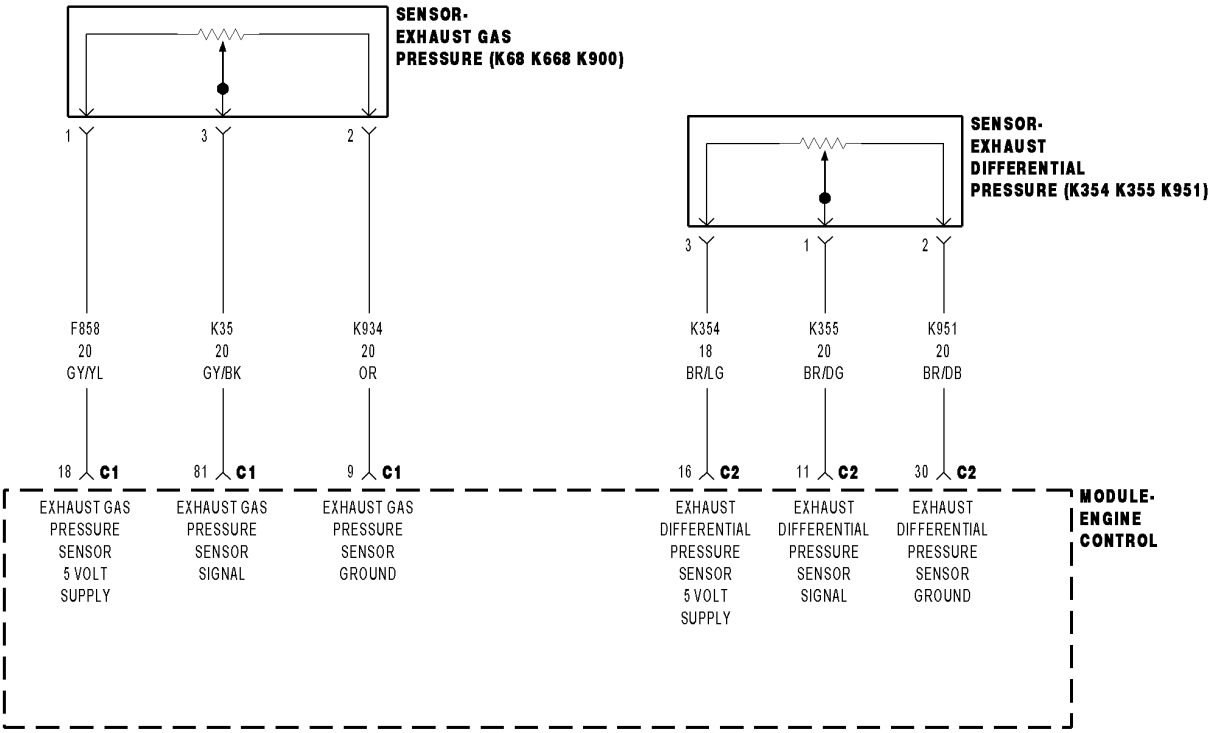

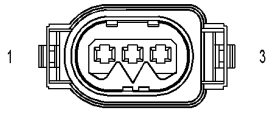

SENSOR-
EXHAUST
DIFFERENTIAL
PRESSURE
(DIESEL)

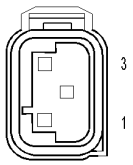

SENSOR-
EXHAUST GAS
PRESSURE
(DIESEL)

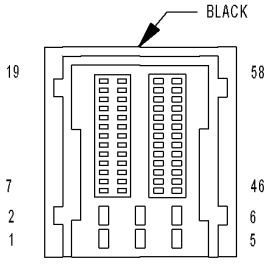

MODULE-
ENGINE
CONTROL C2
(DIESEL)

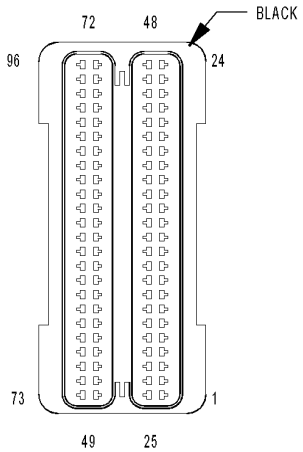

MODULE-
ENGINE CONTROL C1
(DIESEL)

816B74AB

For a complete wiring diagram **Refer to Section 8W**

Theory of Operation

The Diesel particulate filter is an inline canister filter located in the exhaust system between the engine and the muffler. This filter captures and stores ash particles created by the diesel combustion process. This filter is monitored by the ECM with a Differential Pressure Sensor. This sensor measures the difference in exhaust system pressure before and after the particulate filter through tube connections directly to the exhaust pipe. As ash accumulates in the filter, the exhaust pressure at the inlet side of the filter increases as compared to the pressure at the outlet side of the filter. The ECM monitors the sensor to determine when to perform a particulate filter regeneration procedure which is designed to clear or “burn-off” the ash collected in the filter.

- **When Monitored:**
  With the engine running.
- **Set Condition:**
  The ECM detects excessive pressure at the particulate filter.

Possible Causes
DAMAGED EXHAUST SYSTEM
LEAKING EXHAUST SYSTEM
HIGH RESISTANCE IN EXHAUST DIFFERENTIAL PRESSURE SENSOR CIRCUITS
HOSE/TUBE CONNECTIONS TO THE EXHAUST DIFFERENTIAL PRESSURE SENSOR
EXHAUST DIFFERENTIAL PRESSURE SENSOR
DIESEL PARTICULATE FILTER

Always perform the Pre-Diagnostic Troubleshooting procedure before proceeding. (Refer to 9 - ENGINE - DIAGNOSIS AND TESTING)

Diagnostic Test

1. VISUAL INSPECTION

Turn the ignition off.

Visually inspect the Exhaust Differential Pressure Sensor for physical damage, proper electrical connection and proper mechanical connection. Ensure any tubes and/or hoses connected to the sensor are in good working condition and properly connected at all ends.

Visually inspect the entire exhaust system for bent, crushed or otherwise damaged tubes which may cause an exhaust system restriction.

Inspect the exhaust system for exhaust leaks.

Were any problems found?

Yes >> Repair or replace as necessary.

No >> Go To 2

2. PARTICULATE FILTER REGENERATION

Start and idle the engine.

With the scan tool, Clear DTCs in the Engine Control Module (ECM).

With the scan tool, perform the Diesel Particulate Filter Regeneration procedure.

After this procedure is complete, turn the ignition off for 60 seconds.

Test drive the vehicle.

With the scan tool, Read DTCs in the Engine Control Module (ECM).

Is the status Active for this DTC?

Yes >> Go To 3

No >> Test complete.

3. EXHAUST DIFFERENTIAL PRESSURE SENSOR CIRCUIT HIGH RESISTANCE

Turn the ignition off.

Disconnect the Exhaust Differential Pressure Sensor harness connector.

Disconnect the ECM harness connectors.

Measure the resistance of each Exhaust Differential Pressure Sensor circuit between the Exhaust Differential Pressure Sensor harness connector and the ECM harness connector.

Is the resistance below 10.0 ohms for each circuit?

Yes >> Go To 4

No >> Repair the circuit(s) that measured above 10.0 ohms for high resistance. (Refer to 9 - ENGINE - DIAGNOSIS AND TESTING)

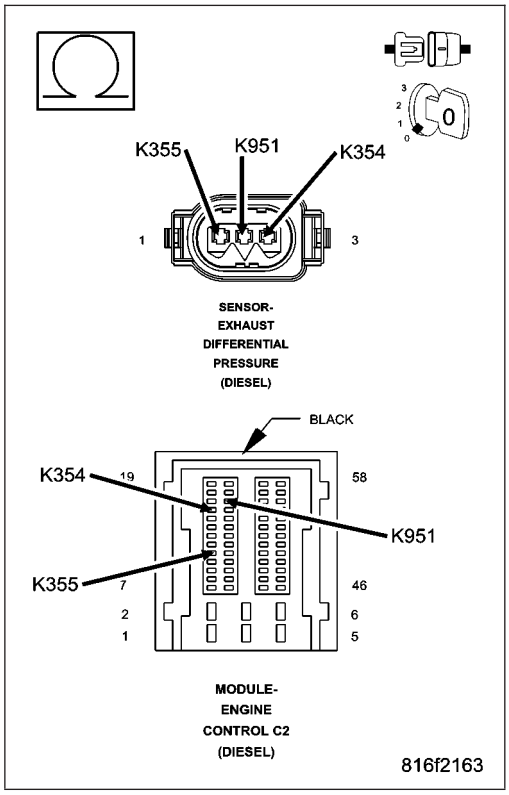

4. EXHAUST DIFFERENTIAL PRESSURE SENSOR

Turn the ignition off.

Replace the Exhaust Differential Pressure Sensor.

Turn the ignition on.

With the scan tool, Clear DTCs in the Engine Control Module (ECM).

Test drive the vehicle

With the scan tool, Read DTCs in the Engine Control Module (ECM).

Is the status Active for this DTC?

Yes >> Replace the Diesel Particulate Filter.

No >> Test Complete.

P2453-DIESEL PARTICULATE FILTER DIFFERENTIAL PRESSURE SENSOR CIRCUIT PERFORMANCE

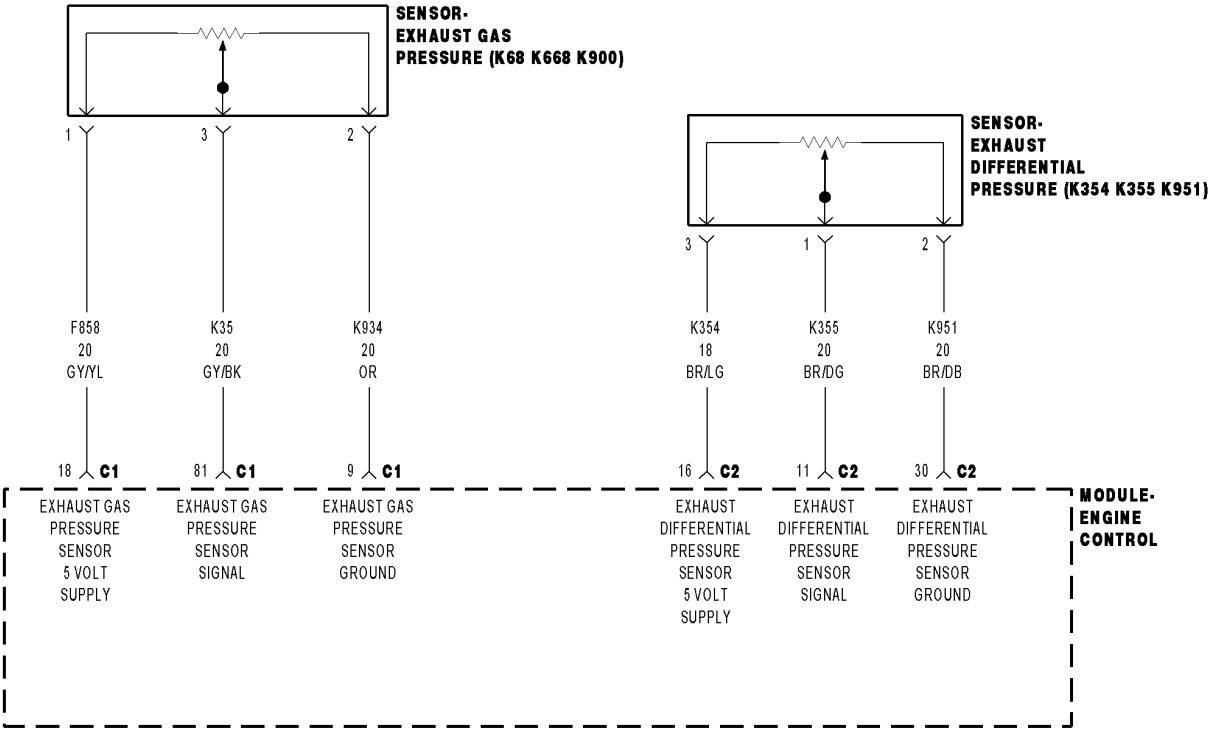

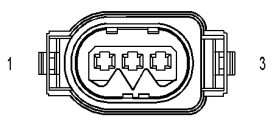

SENSOR-
EXHAUST
DIFFERENTIAL
PRESSURE
(DIESEL)

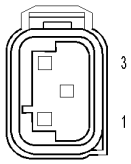

SENSOR-
EXHAUST GAS
PRESSURE
(DIESEL)

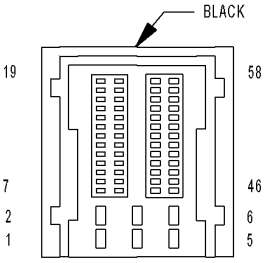

MODULE-
ENGINE
CONTROL C2
(DIESEL)

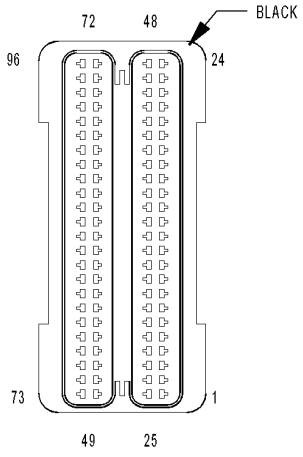

MODULE-
ENGINE CONTROL C1
(DIESEL)

816B74AB

For a complete wiring diagram **Refer to Section 8W**

Theory of Operation

The Diesel particulate filter is an inline canister filter located in the exhaust system between the engine and the muffler. This filter captures and stores ash particles created by the diesel combustion process. This filter is monitored by the ECM with a Differential Pressure Sensor. This sensor measures the difference in exhaust system pressure before and after the particulate filter through tube connections directly to the exhaust pipe. As ash accumulates in the filter, the exhaust pressure at the inlet side of the filter increases as compared to the pressure at the outlet side of the filter. The ECM monitors the sensor to determine when to perform a particulate filter regeneration procedure which is designed to clear or “burn-off” the ash collected in the filter.

- **When Monitored:**
  At the beginning of engine crank.
- **Set Condition:**
  The Differential Pressure Sensor Signal is below negative 40 hpa or above positive 40 hpa.

Possible Causes
INTERMITTENT DTC
(K354) EXHAUST DIFFERENTIAL PRESSURE SENSOR 5 VOLT SUPPLY CIRCUIT SHORTED TO GROUND
(K354) EXHAUST DIFFERENTIAL PRESSURE SENSOR 5 VOLT SUPPLY CIRCUIT SHORTED TO (K951) EXHAUST DIFFERENTIAL PRESSURE SENSOR GROUND
(K354) EXHAUST DIFFERENTIAL PRESSURE SENSOR 5 VOLT SUPPLY CIRCUIT OPEN OR HIGH RESISTANCE
(K355) EXHAUST DIFFERENTIAL PRESSURE SENSOR SIGNAL CIRCUIT OPEN OR HIGH RESISTANCE
(K951) EXHAUST DIFFERENTIAL PRESSURE SENSOR GROUND CIRCUIT OPEN OR HIGH RESISTANCE
EXHAUST DIFFERENTIAL PRESSURE SENSOR
ENGINE CONTROL MODULE (ECM)

Always perform the Pre-Diagnostic Troubleshooting procedure before proceeding. (Refer to 9 - ENGINE - DIAGNOSIS AND TESTING)

Diagnostic Test

1. DTC IS ACTIVE

Ignition on, engine not running.

With the scan tool, Clear DTCs in the Engine Control Module (ECM).

Monitor the scan tool for at least two minutes.

Cycle the ignition key off and on several times, leaving the ignition on for at least 10 seconds at a time.

Start the engine.

Allow the engine to reach normal operating temperature.

With the scan tool, select View DTCs.

Is the status Active for this DTC?

Yes >> Go To 2

No >> Refer to the *CHECKING FOR AN INTERMITTENT DTC Diagnostic Procedure. (Refer to 9 - ENGINE - DIAGNOSIS AND TESTING)

2. (K354) EXHAUST DIFFERENTIAL PRESSURE SENSOR 5 VOLT SUPPLY CIRCUIT VOLTAGE

Turn the ignition off.

Disconnect the Exhaust Differential Pressure Sensor connector.

Turn the ignition on.

Measure the voltage of the (K354) Exhaust Differential Pressure Sensor 5 Volt Supply circuit in the Exhaust Differential Pressure Sensor connector.

Is the voltage above 4.5 volts?

Yes >> Go to 3

No >> Go to 6

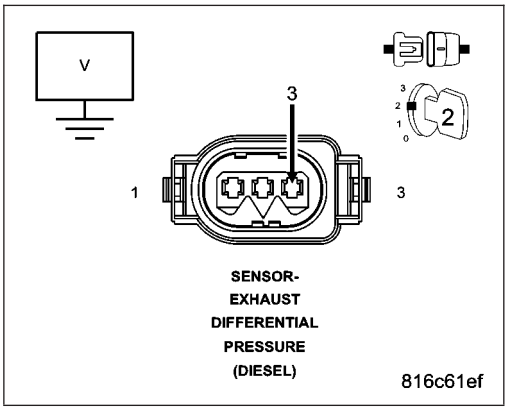

3. (K354) EXHAUST DIFFERENTIAL PRESSURE SENSOR 5 VOLT SUPPLY CIRCUIT SHORTED TO GROUND

Turn the ignition off.

Disconnect the Engine Control Module (ECM) connector.

Measure the resistance between ground and the (K354) Exhaust Differential Pressure Sensor 5 Volt Supply circuit in the Exhaust Differential Pressure Sensor harness connector.

Is the resistance above 1000 ohms?

Yes >> Go to 4

No >> Repair the (K354) Exhaust Differential Pressure Sensor 5 Volt Supply circuit for a short to ground.

Perform the ECM Verification Test Ver. 1 (Refer to 9 - ENGINE - DIAGNOSIS AND TESTING).

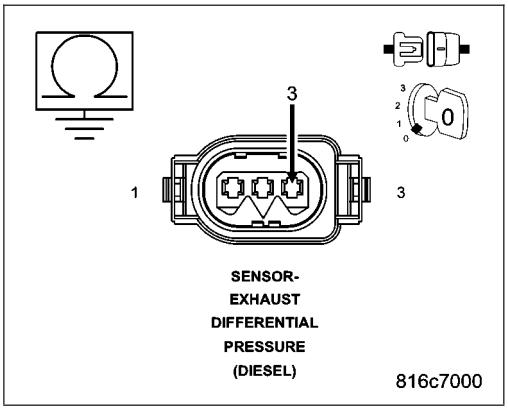

4. (K354) EXHAUST DIFFERENTIAL PRESSURE SENSOR 5 VOLT SUPPLY CIRCUIT SHORTED TO (K951) EXHAUST DIFFERENTIAL PRESSURE SENSOR GROUND CIRCUIT

Measure the resistance between the (K354) Exhaust Differential Pressure Sensor 5 Volt Supply circuit and the (K951) Exhaust Differential Pressure Sensor Ground circuit in the Exhaust Differential Pressure Sensor harness connector.

Is the resistance above 1000 ohms?

Yes >> Go to 5

No >> Repair the (K354) Exhaust Differential Pressure Sensor 5 Volt Supply circuit for a short to the (K951) Exhaust Differential Pressure Sensor Ground circuit.

Perform the ECM Verification Test Ver. 1 (Refer to 9 - ENGINE - DIAGNOSIS AND TESTING).

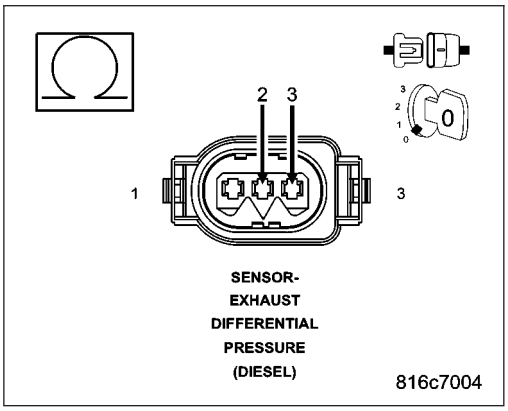

5. (K354) EXHAUST DIFFERENTIAL PRESSURE SENSOR 5 VOLT SUPPLY CIRCUIT OPEN OR HIGH RESISTANCE

Measure the resistance of the (K354) Exhaust Differential Pressure Sensor 5 Volt Supply circuit between the Exhaust Differential Pressure Sensor harness connector and the Engine Control Module (ECM) harness connector.

Is the resistance below 10.0 ohms?

Yes >> Go to 9

No >> Repair the (K354) Exhaust Differential Pressure Sensor 5 Volt Supply circuit for an open circuit or high resistance.

Perform the ECM Verification Test Ver. 1 (Refer to 9 - ENGINE - DIAGNOSIS AND TESTING).

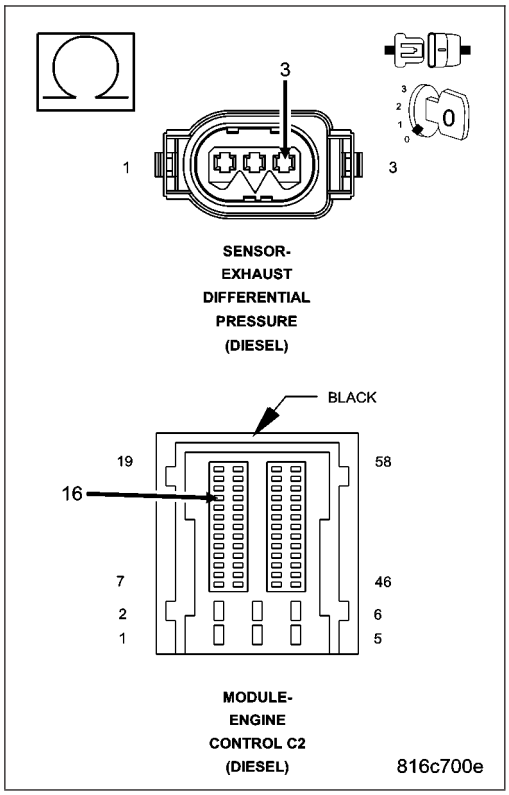

6. (K355) EXHAUST DIFFERENTIAL PRESSURE SENSOR SIGNAL CIRCUIT OPEN OR HIGH RESISTANCE

Disconnect the Engine Control Module (ECM) connector.

Measure the resistance of the (K355) Exhaust Differential Pressure Sensor Signal circuit between the Exhaust Differential Pressure Sensor harness connector and the Engine Control Module (ECM) harness connector.

Is the resistance below 10.0 ohms?

Yes >> Go to 7

No >> Repair the (K355) Exhaust Differential Pressure Sensor Signal circuit for an open circuit or high resistance.

Perform the ECM Verification Test Ver. 1 (Refer to 9 - ENGINE - DIAGNOSIS AND TESTING).

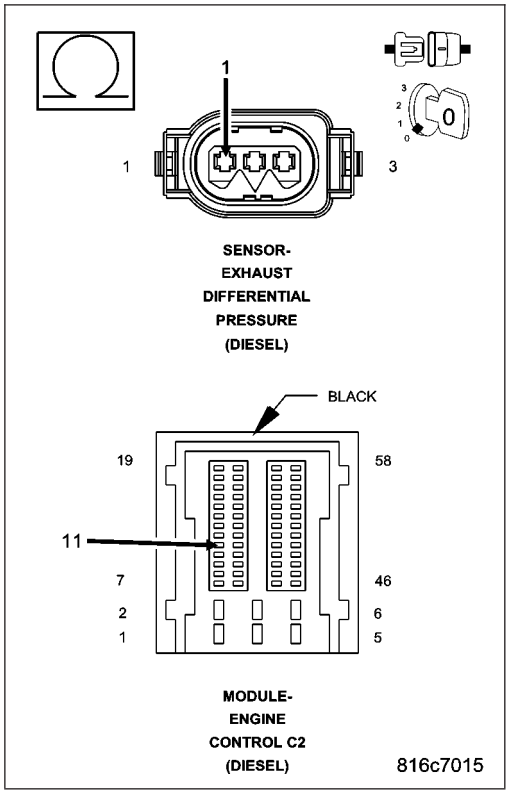

7. (K951) EXHAUST DIFFERENTIAL PRESSURE SENSOR GROUND CIRCUIT OPEN OR HIGH RESISTANCE

Measure the resistance of the (K951) Exhaust Differential Pressure Sensor Ground circuit between the Exhaust Differential Pressure Sensor harness connector and the Engine Control Module (ECM) harness connector.

Is the resistance below 10.0 ohms?

Yes >> Go to 8

No >> Repair the (K951) Exhaust Differential Pressure Sensor Ground circuit for an open circuit or high resistance.
Perform the ECM Verification Test Ver. 1 (Refer to 9 - ENGINE - DIAGNOSIS AND TESTING).

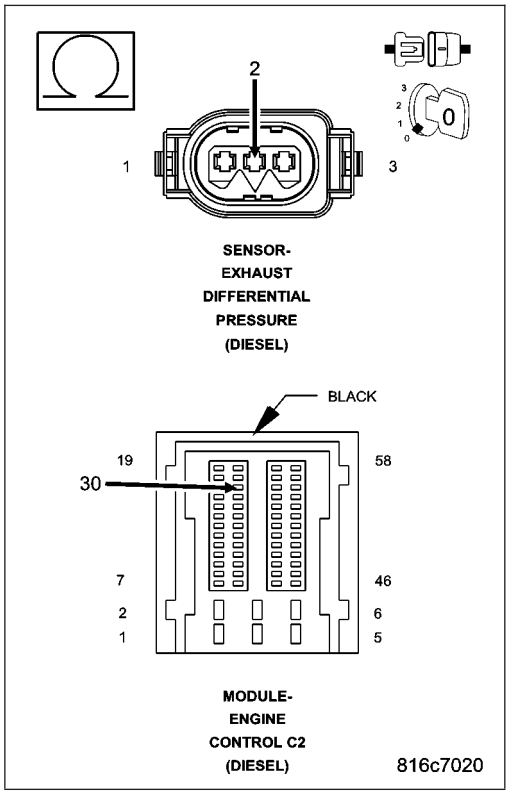

8. EXHAUST DIFFERENTIAL PRESSURE SENSOR

Turn the ignition off.

Connect the Engine Control Module (ECM) connector.

Connect a jumper between the (K355) Exhaust Differential Pressure Sensor Signal circuit and the (K951) Exhaust Differential Pressure Sensor Ground circuit in the Exhaust Differential Pressure Sensor harness connector.

Turn the ignition on.

With the scan tool, Clear DTCs.

With the scan tool, select View DTCs.

NOTE: The scan tool should display an Exhaust Differential Pressure Sensor low voltage or short to ground DTC with the jumper wire in place.

Does the scan tool display the DTC(s) as described above?

Yes >> Replace the Exhaust Differential Pressure Sensor.
Perform the ECM Verification Test Ver. 1 (Refer to 9 - ENGINE - DIAGNOSIS AND TESTING).

No >> Go to 9

9. ENGINE CONTROL MODULE (ECM)

Using the wiring diagram/schematic as a guide, inspect the wiring and connectors between the Exhaust Differential Pressure Sensor and the Engine Control Module (ECM).

Look for any chafed, pierced, pinched, or partially broken wires.

Look for broken, bent, pushed out or corroded terminals.

Monitor the scan tool data relative to this circuit and wiggle test the wiring and connectors.

Look for the data to change or for the DTC to reset during the wiggle test.

Refer to any Technical Service Bulletins that may apply.

Were any problems found?

Yes >> Repair as necessary.
Perform the ECM Verification Test Ver. 1 (Refer to 9 - ENGINE - DIAGNOSIS AND TESTING).

No >> Replace the Engine Control Module (ECM) in accordance with the Service Information.
Perform the ECM Verification Test Ver. 1 (Refer to 9 - ENGINE - DIAGNOSIS AND TESTING).

P2454-DIESEL PARTICULATE FILTER DIFFERENTIAL PRESSURE SENSOR CIRCUIT LOW

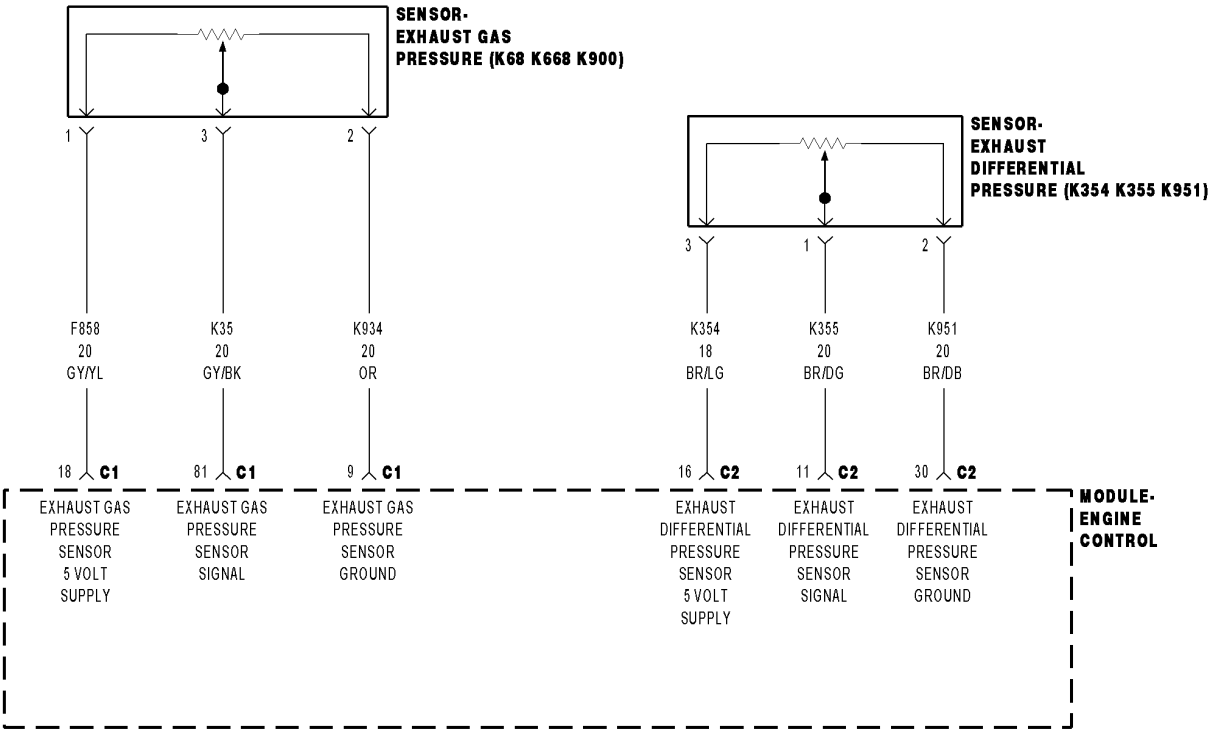

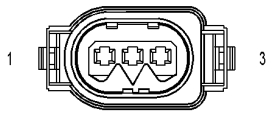

SENSOR-
EXHAUST
DIFFERENTIAL
PRESSURE
(DIESEL)

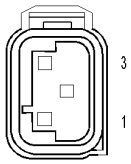

SENSOR-
EXHAUST GAS
PRESSURE
(DIESEL)

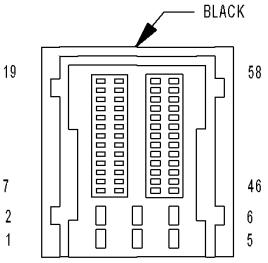

MODULE-
ENGINE
CONTROL C2
(DIESEL)

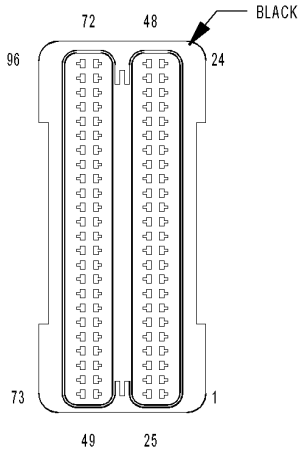

MODULE-
ENGINE CONTROL C1
(DIESEL)

816B74AB

For a complete wiring diagram **Refer to Section 8W**

Theory of Operation

The Diesel particulate filter is an inline canister filter located in the exhaust system between the engine and the muffler. This filter captures and stores ash particles created by the diesel combustion process. This filter is monitored by the ECM with a Differential Pressure Sensor. This sensor measures the difference in exhaust system pressure before and after the particulate filter through tube connections directly to the exhaust pipe. As ash accumulates in the filter, the exhaust pressure at the inlet side of the filter increases as compared to the pressure at the outlet side of the filter. The ECM monitors the sensor to determine when to perform a particulate filter regeneration procedure which is designed to clear or “burn-off” the ash collected in the filter.

- **When Monitored:**
  With the ignition on.
- **Set Condition:**
  The (K355) Exhaust Differential Pressure Sensor signal is below 0.24 volts for 2.0 seconds.

Possible Causes
INTERMITTENT DTC
(K354) EXHAUST DIFFERENTIAL PRESSURE SENSOR 5 VOLT SUPPLY CIRCUIT SHORTED TO GROUND
(K355) EXHAUST DIFFERENTIAL PRESSURE SENSOR SIGNAL CIRCUIT SHORTED TO GROUND
(K354) EXHAUST DIFFERENTIAL PRESSURE SENSOR 5 VOLT SUPPLY CIRCUIT SHORTED TO (K951) EXHAUST DIFFERENTIAL PRESSURE SENSOR GROUND CIRCUIT
(K355) EXHAUST DIFFERENTIAL PRESSURE SENSOR SIGNAL CIRCUIT SHORTED TO (K951) EXHAUST DIFFERENTIAL PRESSURE SENSOR GROUND CIRCUIT
(K354) EXHAUST DIFFERENTIAL PRESSURE SENSOR 5 VOLT SUPPLY CIRCUIT OPEN OR HIGH RESISTANCE
(K355) EXHAUST DIFFERENTIAL PRESSURE SENSOR SIGNAL CIRCUIT OPEN OR HIGH RESISTANCE
EXHAUST DIFFERENTIAL PRESSURE SENSOR
ENGINE CONTROL MODULE (ECM)

Always perform the Pre-Diagnostic Troubleshooting procedure before proceeding. (Refer to 9 - ENGINE - DIAGNOSIS AND TESTING)

Diagnostic Test

1. DTC IS ACTIVE

Ignition on, engine not running.

With the scan tool, Clear DTCs in the Engine Control Module (ECM).

Monitor the scan tool for at least two minutes.

Cycle the ignition key off and on several times, leaving the ignition on for at least 10 seconds at a time.

Start the engine.

Allow the engine to reach normal operating temperature.

With the scan tool, select View DTCs.

Is the status Active for this DTC?

Yes >> Go To 2

No >> Refer to the *CHECKING FOR AN INTERMITTENT DTC Diagnostic Procedure. (Refer to 9 - ENGINE - DIAGNOSIS AND TESTING)

2. (K354) EXHAUST DIFFERENTIAL PRESSURE SENSOR 5 VOLT SUPPLY CIRCUIT VOLTAGE

Turn the ignition off.

Disconnect the Exhaust Differential Pressure Sensor connector.

Turn the ignition on.

Measure the voltage of the (K354) Exhaust Differential Pressure Sensor 5 Volt Supply circuit in the Exhaust Differential Pressure Sensor harness connector.

Is the voltage above 4.5 volts?

Yes >> Go to 6

No >> Go to 3

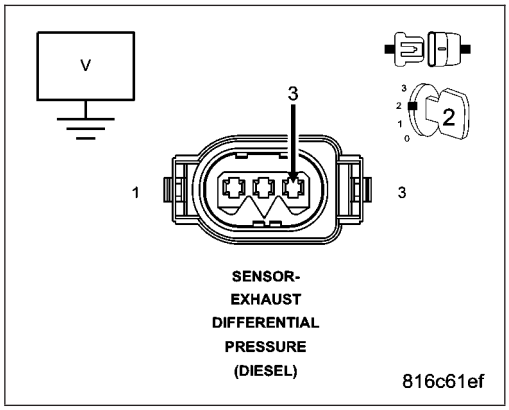

3. (K354) EXHAUST DIFFERENTIAL PRESSURE SENSOR 5 VOLT SUPPLY CIRCUIT SHORTED TO GROUND

Turn the ignition off.

Disconnect the Engine Control Module (ECM) connector.

Measure the resistance between ground and the (K354) Exhaust Differential Pressure Sensor 5 Volt Supply circuit in the Exhaust Differential Pressure Sensor harness connector.

Is the resistance above 1000 ohms?

Yes >> Go to 4

No >> Repair the (K354) Exhaust Differential Pressure Sensor 5 Volt Supply circuit for a short to ground.

Perform the ECM Verification Test Ver. 1 (Refer to 9 - ENGINE - DIAGNOSIS AND TESTING).

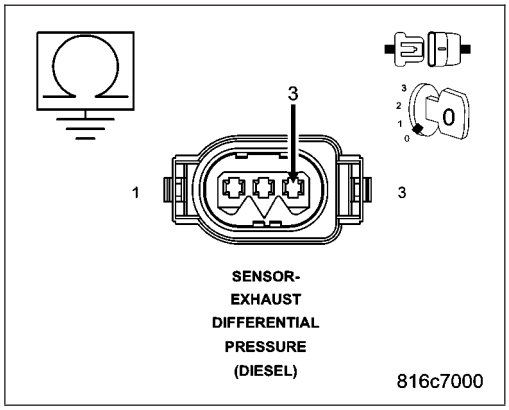

4. (K354) EXHAUST DIFFERENTIAL PRESSURE SENSOR 5 VOLT SUPPLY CIRCUIT SHORTED TO (K951) EXHAUST DIFFERENTIAL PRESSURE SENSOR GROUND CIRCUIT

Measure the resistance between the (K354) Exhaust Differential Pressure Sensor 5 Volt Supply circuit and the (K951) Exhaust Differential Pressure Sensor Ground circuit in the Exhaust Differential Pressure Sensor harness connector.

Is the resistance above 1000 ohms?

Yes >> Go to 5

No >> Repair the (K354) Exhaust Differential Pressure Sensor 5 Volt Supply circuit for a short to the (K951) Exhaust Differential Pressure Sensor Ground circuit.

Perform the ECM Verification Test Ver. 1 (Refer to 9 - ENGINE - DIAGNOSIS AND TESTING).

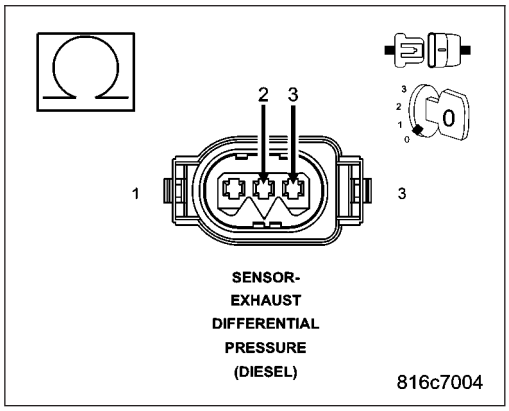

5. (K354) EXHAUST DIFFERENTIAL PRESSURE SENSOR 5 VOLT SUPPLY CIRCUIT OPEN OR HIGH RESISTANCE

Measure the resistance of the (K354) Exhaust Differential Pressure Sensor 5 Volt Supply circuit between the Exhaust Differential Pressure Sensor harness connector and the Engine Control Module (ECM) harness connector.

Is the resistance below 10.0 ohms?

Yes >> Go to 10

No >> Repair the (K354) Exhaust Differential Pressure Sensor 5 Volt Supply circuit for an open circuit or high resistance.

Perform the ECM Verification Test Ver. 1 (Refer to 9 - ENGINE - DIAGNOSIS AND TESTING).

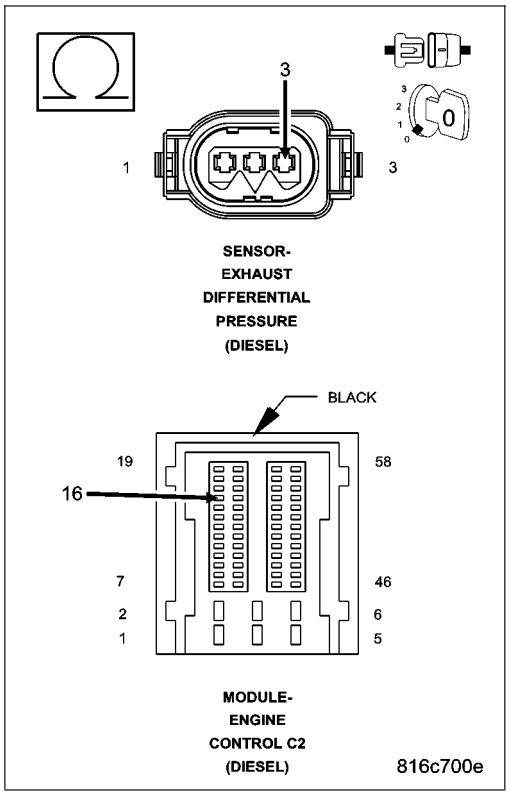

6. (K355) EXHAUST DIFFERENTIAL PRESSURE SENSOR SIGNAL CIRCUIT SHORTED TO GROUND

Disconnect the Engine Control Module (ECM) connector.

Measure the resistance between ground and the (K355) Exhaust Differential Pressure Sensor Signal circuit in the Exhaust Differential Pressure Sensor harness connector.

Is the resistance above 1000 ohms?

Yes >> Go to 7

No >> Repair the (K355) Exhaust Differential Pressure Sensor Signal circuit for a short to ground.

Perform the ECM Verification Test Ver. 1 (Refer to 9 - ENGINE - DIAGNOSIS AND TESTING).

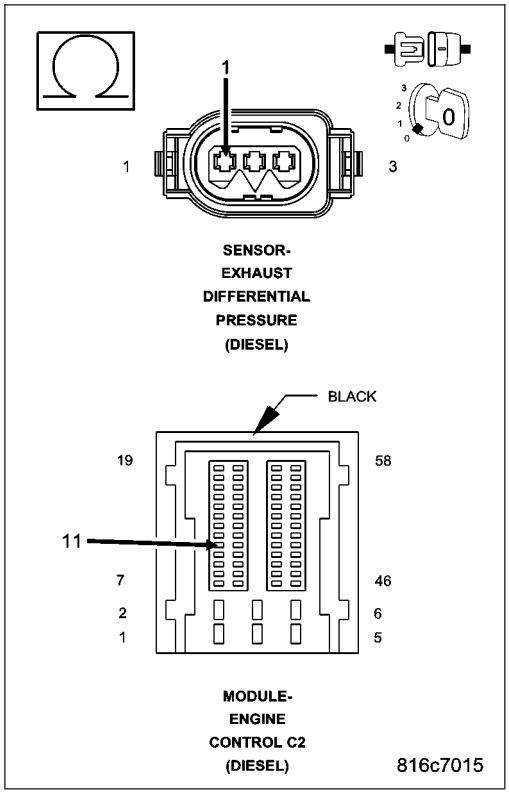

7. (K355) EXHAUST DIFFERENTIAL PRESSURE SENSOR SIGNAL CIRCUIT SHORTED TO (K951) EXHAUST DIFFERENTIAL PRESSURE SENSOR GROUND CIRCUIT

Measure the resistance between the (K355) Exhaust Differential Pressure Sensor Signal circuit and the (K951) Exhaust Differential Pressure Sensor Ground circuit in the Exhaust Differential Pressure Sensor harness connector.

Is the resistance above 1000 ohms?

Yes >> Go to 8

No >> Repair the (K355) Exhaust Differential Pressure Sensor Signal circuit for a short to the (K951) Exhaust Differential Pressure Sensor Ground circuit.

Perform the ECM Verification Test Ver. 1 (Refer to 9 - ENGINE - DIAGNOSIS AND TESTING).

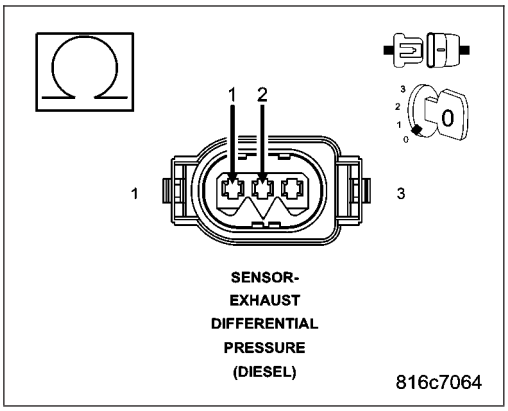

8. (K355) EXHAUST DIFFERENTIAL PRESSURE SENSOR SIGNAL CIRCUIT OPEN OR HIGH RESISTANCE

Measure the resistance of the (K355) Exhaust Differential Pressure Sensor Signal circuit between the Exhaust Differential Pressure Sensor harness connector and the Engine Control Module (ECM) harness connector.

Is the resistance below 10.0 ohms?

Yes >> Go to 9

No >> Repair the (K355) Exhaust Differential Pressure Sensor Signal circuit for an open circuit or high resistance.

Perform the ECM Verification Test Ver. 1 (Refer to 9 - ENGINE - DIAGNOSIS AND TESTING).

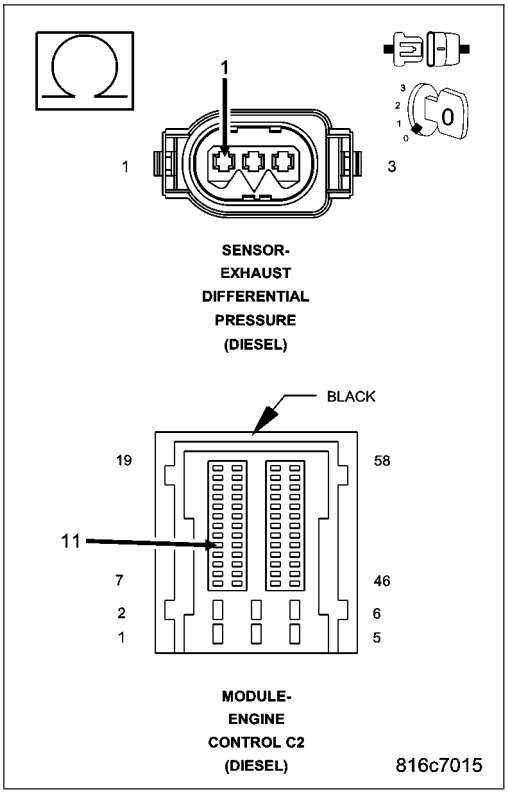

9. EXHAUST DIFFERENTIAL PRESSURE SENSOR

Turn the ignition off.

Connect the Engine Control Module (ECM) connector.

Connect a jumper wire between the (K354) Exhaust Differential Pressure Sensor 5 Volt Supply circuit and the (K355) Exhaust Differential Pressure Sensor Signal circuit in the Exhaust Differential Pressure Sensor harness connector.

Turn the ignition on.

With the scan tool, Clear DTCs.

With the scan tool, select View DTCs.

NOTE: The scan tool should display an Exhaust Differential Pressure Sensor high voltage or open DTC with the Exhaust Differential Pressure Sensor connector disconnected and the jumper wire in place.

Does the scan tool display the DTC as described above?

Yes >> Replace the Exhaust Differential Pressure Sensor in accordance with the Service Information.
Perform the ECM Verification Test Ver. 1 (Refer to 9 - ENGINE - DIAGNOSIS AND TESTING).

No >> Go to 10

10. ENGINE CONTROL MODULE (ECM)

Using the wiring diagram/schematic as a guide, inspect the wiring and connectors between the Exhaust Differential Pressure Sensor and the Engine Control Module (ECM).

Look for any chafed, pierced, pinched, or partially broken wires.

Look for broken, bent, pushed out or corroded terminals.

Monitor the scan tool data relative to this circuit and wiggle test the wiring and connectors.

Look for the data to change or for the DTC to reset during the wiggle test.

Refer to any Technical Service Bulletins that may apply.

Were any problems found?

Yes >> Repair as necessary.
Perform the ECM Verification Test Ver. 1 (Refer to 9 - ENGINE - DIAGNOSIS AND TESTING).

No >> Replace the Engine Control Module (ECM) in accordance with the Service Information.
Perform the ECM Verification Test Ver. 1 (Refer to 9 - ENGINE - DIAGNOSIS AND TESTING).

P2455-DIESEL PARTICULATE FILTER DIFFERENTIAL PRESSURE SENSOR CIRCUIT HIGH

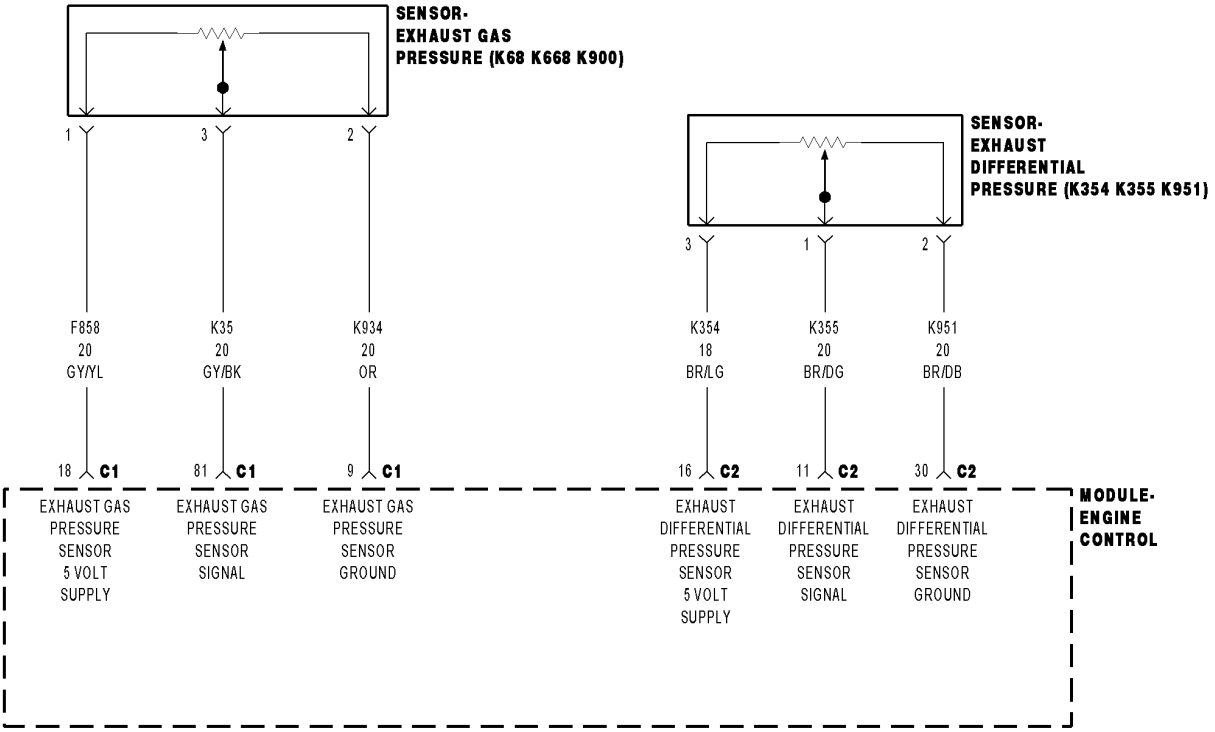

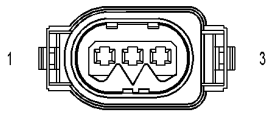

SENSOR-
EXHAUST
DIFFERENTIAL
PRESSURE
(DIESEL)

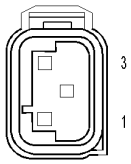

SENSOR-
EXHAUST GAS
PRESSURE
(DIESEL)

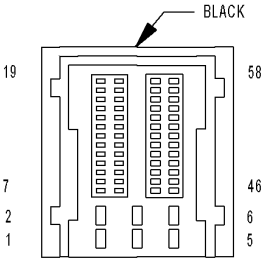

MODULE-
ENGINE
CONTROL C2
(DIESEL)

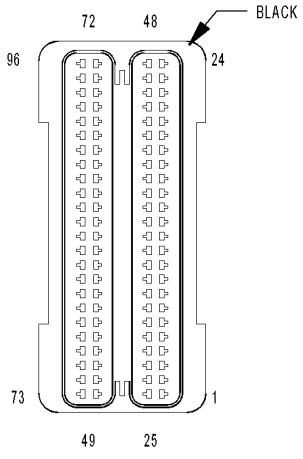

MODULE-
ENGINE CONTROL C1
(DIESEL)

816B74AB

For a complete wiring diagram **Refer to Section 8W**

Theory of Operation

The Diesel particulate filter is an inline canister filter located in the exhaust system between the engine and the muffler. This filter captures and stores ash particles created by the diesel combustion process. This filter is monitored by the ECM with a Differential Pressure Sensor. This sensor measures the difference in exhaust system pressure before and after the particulate filter through tube connections directly to the exhaust pipe. As ash accumulates in the filter, the exhaust pressure at the inlet side of the filter increases as compared to the pressure at the outlet side of the filter. The ECM monitors the sensor to determine when to perform a particulate filter regeneration procedure which is designed to clear or “burn-off” the ash collected in the filter.

- **When Monitored:**
  With the ignition on.
- **Set Condition:**
  The (K355) Exhaust Differential Pressure Sensor signal is above 4.96 volts for 2.0 seconds.

Possible Causes
INTERMITTENT DTC
(K354) EXHAUST DIFFERENTIAL PRESSURE SENSOR 5 VOLT SUPPLY CIRCUIT SHORTED TO VOLTAGE
(K355) EXHAUST DIFFERENTIAL PRESSURE SENSOR SIGNAL CIRCUIT SHORTED TO VOLTAGE
(K951) EXHAUST DIFFERENTIAL PRESSURE SENSOR GROUND CIRCUIT SHORTED TO VOLTAGE
(K355) EXHAUST DIFFERENTIAL PRESSURE SENSOR SIGNAL CIRCUIT OPEN OR HIGH RESISTANCE
(K951) EXHAUST DIFFERENTIAL PRESSURE SENSOR GROUND CIRCUIT OPEN OR HIGH RESISTANCE
EXHAUST DIFFERENTIAL PRESSURE SENSOR
ENGINE CONTROL MODULE (ECM)

Always perform the Pre-Diagnostic Troubleshooting procedure before proceeding. (Refer to 9 - ENGINE - DIAGNOSIS AND TESTING)

Diagnostic Test

1. DTC IS ACTIVE

Ignition on, engine not running.

With the scan tool, Clear DTCs in the Engine Control Module (ECM).

Monitor the scan tool for at least two minutes.

Cycle the ignition key off and on several times, leaving the ignition on for at least 10 seconds at a time.

Start the engine.

Allow the engine to reach normal operating temperature.

With the scan tool, select View DTCs.

Is the status Active for this DTC?

Yes >> Go To 2

No >> Refer to the *CHECKING FOR AN INTERMITTENT DTC Diagnostic Procedure. (Refer to 9 - ENGINE - DIAGNOSIS AND TESTING)

2. (K354) EXHAUST DIFFERENTIAL PRESSURE SENSOR 5 VOLT SUPPLY CIRCUIT SHORTED TO VOLTAGE

Turn the ignition off.

Disconnect the Exhaust Differential Pressure Sensor connector.

Disconnect the Engine Control Module (ECM) connector.

Remove the ASD Relay.

Connect a jumper wire between cavity 30 and cavity 87 of the ASD Relay Connector.

Turn the ignition on.

Measure the voltage of the (K354) Exhaust Differential Pressure Sensor 5 Volt Supply circuit in the Exhaust Differential Pressure Sensor harness connector.

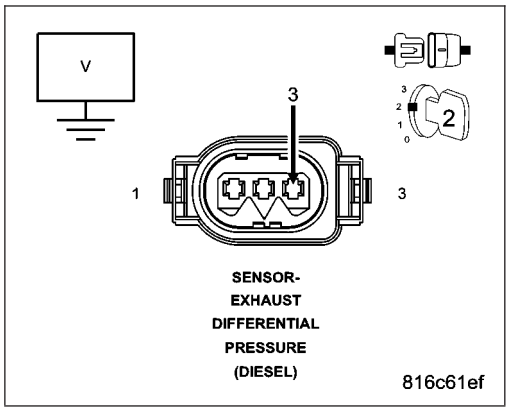

Is there any voltage present?

Yes >> Repair the (K354) Exhaust Differential Pressure Sensor 5 Volt Supply circuit for a short to voltage.
Perform the ECM Verification Test Ver. 1 (Refer to 9 - ENGINE - DIAGNOSIS AND TESTING).

No >> Go to 3

3. (K355) EXHAUST DIFFERENTIAL PRESSURE SENSOR SIGNAL CIRCUIT SHORTED TO VOLTAGE

NOTE: The jumper wire should still be in place.

Measure the voltage of the (K355) Exhaust Differential Pressure Sensor Signal circuit in the Exhaust Differential Pressure Sensor harness connector.

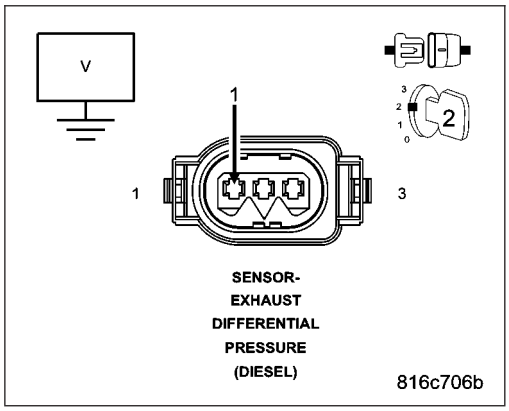

Is there any voltage present?

Yes >> Repair the (K355) Exhaust Differential Pressure Sensor Signal circuit for a short to voltage.
Perform the ECM Verification Test Ver. 1 (Refer to 9 - ENGINE - DIAGNOSIS AND TESTING).

No >> Go to 4

4. (K951) EXHAUST DIFFERENTIAL PRESSURE SENSOR GROUND CIRCUIT SHORTED TO VOLTAGE

NOTE: The jumper wire should still be in place.

Measure the voltage of the (K951) Exhaust Differential Pressure Sensor Ground circuit in the Exhaust Differential Pressure Sensor harness connector.

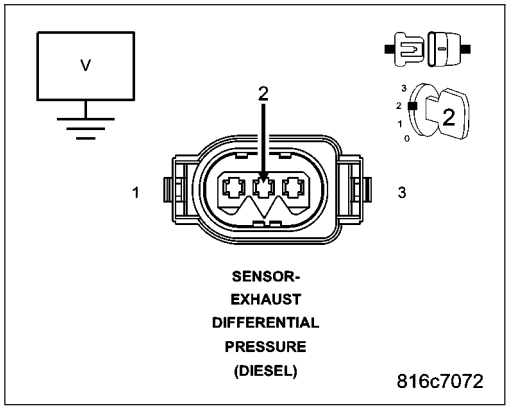

Is there any voltage present?

Yes >> Repair the (K951) Exhaust Differential Pressure Sensor Ground circuit for a short to voltage.
Perform the ECM Verification Test Ver. 1 (Refer to 9 - ENGINE - DIAGNOSIS AND TESTING).

No >> Go to 5

5. (K355) EXHAUST DIFFERENTIAL PRESSURE SENSOR SIGNAL CIRCUIT OPEN OR HIGH RESISTANCE

Turn the ignition off.

Measure the resistance of the (K355) Exhaust Differential Pressure Sensor Signal circuit between the Exhaust Differential Pressure Sensor harness connector and the Engine Control Module (ECM) harness connector.

Is the resistance below 10.0 ohms?

Yes >> Go to 6

No >> Repair the (K355) Exhaust Differential Pressure Sensor Signal circuit for an open circuit or high resistance.
Perform the ECM Verification Test Ver. 1 (Refer to 9 - ENGINE - DIAGNOSIS AND TESTING).

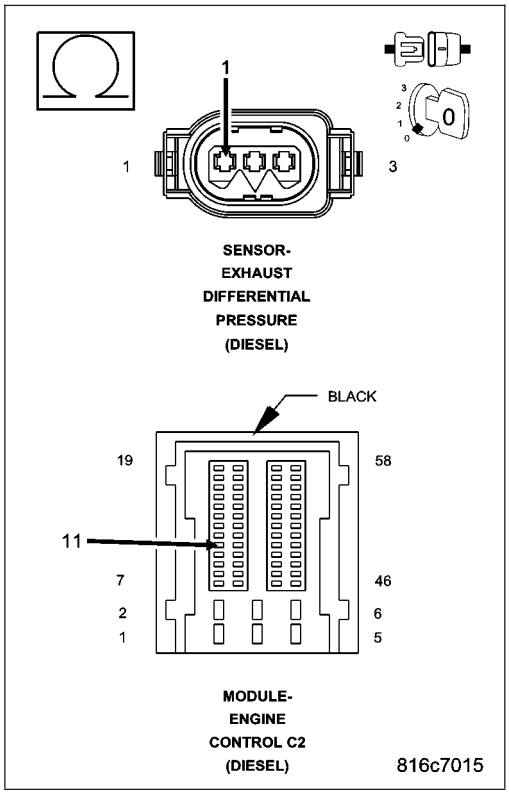

6. (K951) EXHAUST DIFFERENTIAL PRESSURE SENSOR GROUND CIRCUIT OPEN OR HIGH RESISTANCE

Measure the resistance of the (K951) Exhaust Differential Pressure Sensor Ground circuit between the Exhaust Differential Pressure Sensor harness connector and the Engine Control Module (ECM) harness connector.

Is the resistance below 10.0 ohms?

Yes >> Go to 7

No >> Repair the (K951) Exhaust Differential Pressure Sensor Ground circuit for an open circuit or high resistance.
Perform the ECM Verification Test Ver. 1 (Refer to 9 - ENGINE - DIAGNOSIS AND TESTING).

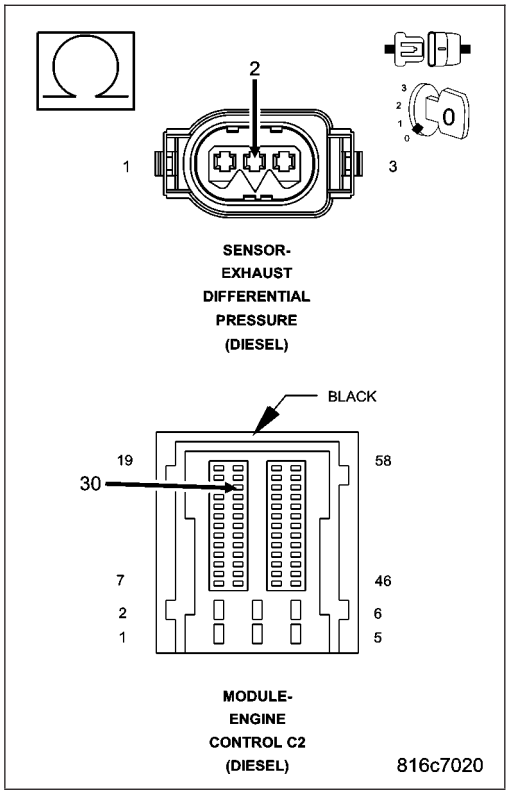

7. EXHAUST DIFFERENTIAL PRESSURE SENSOR

Turn the ignition off.

Connect the Engine Control Module (ECM) connector.

Remove the jumper wire from between cavity 30 and cavity 87 of the ASD Relay Connector.

Install the ASD Relay.

Connect a jumper wire between the (K951) Exhaust Differential Pressure Sensor Ground circuit and the (K355) Exhaust Differential Pressure Sensor Signal circuit in the Exhaust Differential Pressure Sensor harness connector.

Turn the ignition on.

With the scan tool, Clear DTCs.

With the scan tool, select View DTCs.

NOTE: The scan tool should display an Exhaust Differential Pressure Sensor low voltage or short to ground DTC with the jumper wire in place.

Does the scan tool display the DTC as described above?

Yes >> Replace the Exhaust Differential Pressure Sensor in accordance with the Service Information.
Perform the ECM Verification Test Ver. 1 (Refer to 9 - ENGINE - DIAGNOSIS AND TESTING).

No >> Go to 8

8. ENGINE CONTROL MODULE (ECM)

Using the wiring diagram/schematic as a guide, inspect the wiring and connectors between the Exhaust Differential Pressure Sensor and the Engine Control Module (ECM).

Look for any chafed, pierced, pinched, or partially broken wires.

Look for broken, bent, pushed out or corroded terminals.

Monitor the scan tool data relative to this circuit and wiggle test the wiring and connectors.

Look for the data to change or for the DTC to reset during the wiggle test.

Refer to any Technical Service Bulletins that may apply.

Were any problems found?

Yes >> Repair as necessary.
Perform the ECM Verification Test Ver. 1 (Refer to 9 - ENGINE - DIAGNOSIS AND TESTING).

No >> Replace the Engine Control Module (ECM) in accordance with the Service Information.
Perform the ECM Verification Test Ver. 1 (Refer to 9 - ENGINE - DIAGNOSIS AND TESTING).

P2627-O2 SENSOR 1/1 PUMP CELL CURRENT TRIM CIRCUIT LOW

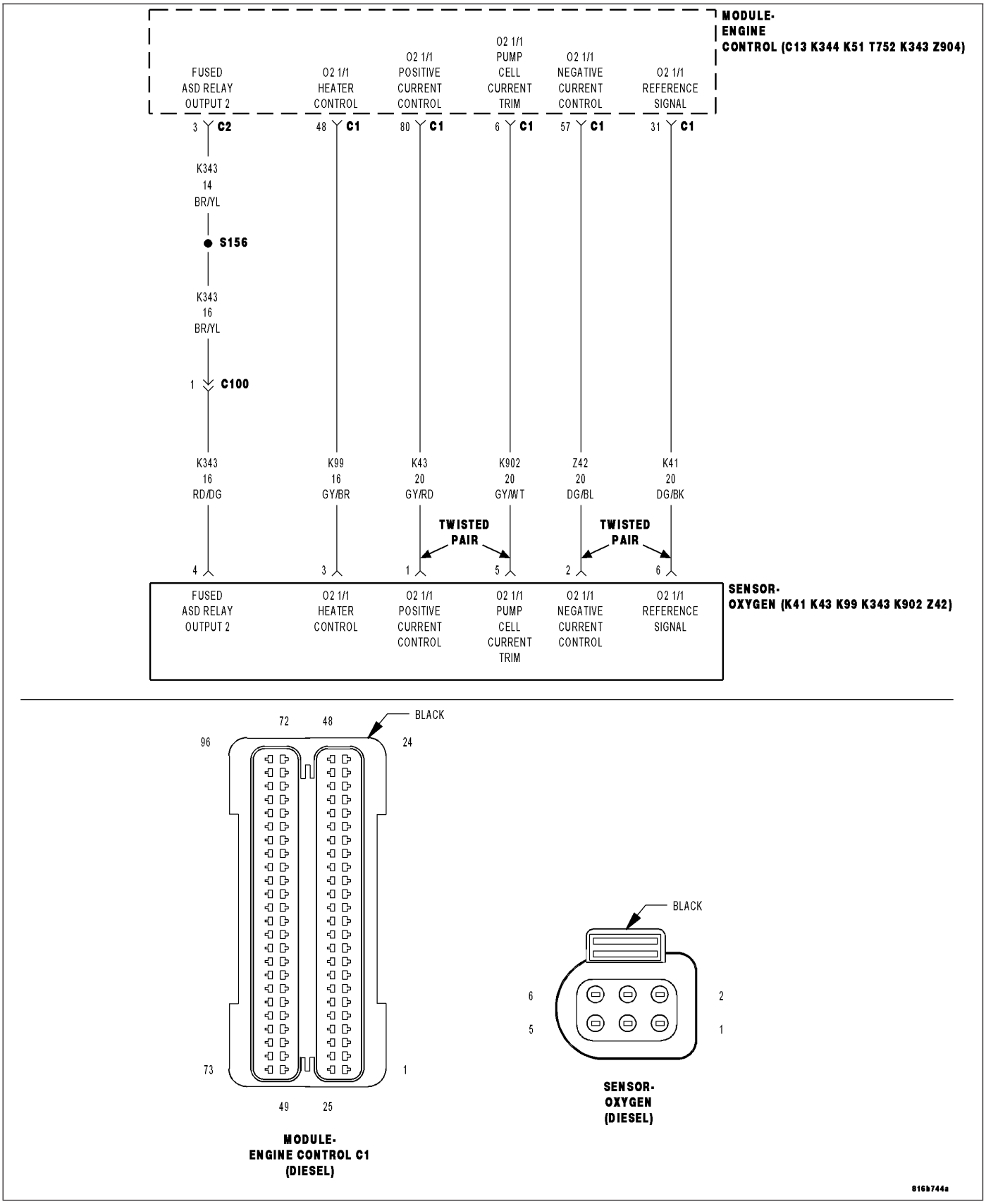

For a complete wiring diagram **Refer to Section 8W**

- **When Monitored:**
  With the ignition on.
- **Set Condition:**
  The ECM detects a short to ground on the (K902) O2 1/1 Pump Cell Current Trim circuit for 2.0 seconds.

Possible Causes
INTERMITTENT DTC
(K902) O2 1/1 PUMP CELL CURRENT TRIM CIRCUIT SHORTED TO GROUND
(K902) O2 1/1 PUMP CELL CURRENT TRIM CIRCUIT SHORTED TO THE (K99) O2 1/1 HEATER CONTROL CIRCUIT
(K902) O2 1/1 PUMP CELL CURRENT TRIM CIRCUIT OPEN OR HIGH RESISTANCE
OXYGEN SENSOR
ENGINE CONTROL MODULE (ECM)

Always perform the Pre-Diagnostic Troubleshooting procedure before proceeding. (Refer to 9 - ENGINE - DIAGNOSIS AND TESTING)

Diagnostic Test

1. DTC IS ACTIVE

Ignition on, engine not running.

With the scan tool, Clear DTCs in the Engine Control Module (ECM).

Start the engine.

Allow the engine to reach normal operating temperature.

Monitor the scan tool for at least two minutes.

With the scan tool, select View DTCs.

Is the status Active for this DTC?

Yes >> Go To 2

No >> Refer to the *CHECKING FOR AN INTERMITTENT DTC Diagnostic Procedure. (Refer to 9 - ENGINE - DIAGNOSIS AND TESTING)

2. (K902) O2 1/1 PUMP CELL CURRENT TRIM CIRCUIT SHORTED TO GROUND

Turn the ignition off.

Disconnect the Oxygen Sensor connector.

Disconnect the Engine Control Module (ECM) connector.

Measure the resistance between ground and the (K902) O2 1/1 Pump Cell Current Trim circuit in the Oxygen Sensor connector.

Is the resistance above 1000.0 ohms?

Yes >> Go to 3

No >> Repair the (K902) O2 1/1 Pump Cell Current Trim circuit for a short to ground.
Perform the ECM Verification Test Ver. 1. (Refer to 9 - ENGINE - DIAGNOSIS AND TESTING)

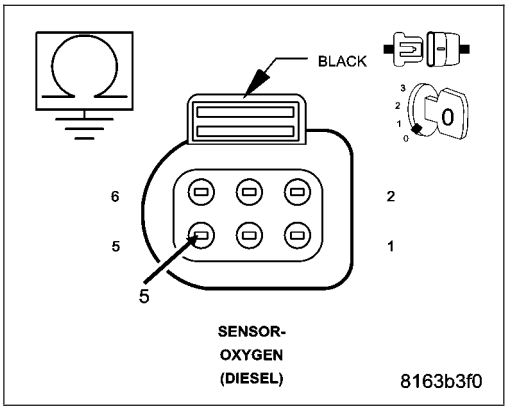

3. (K902) O2 1/1 PUMP CELL CURRENT TRIM CIRCUIT SHORTED TO THE (K99) O2 1/1 HEATER CONTROL CIRCUIT

Measure the resistance between the (K902) O2 1/1 Pump Cell Current Trim circuit and the (K99) O2 1/1 Heater Control circuit in the Oxygen Sensor connector.

Is the resistance above 1000.0 ohms?

Yes >> Go to 4

No >> Repair the (K902) O2 1/1 Pump Cell Current Trim circuit for a short to the (K99) O2 1/1 Heater Control circuit.

Perform the ECM Verification Test Ver. 1. (Refer to 9 - ENGINE - DIAGNOSIS AND TESTING)

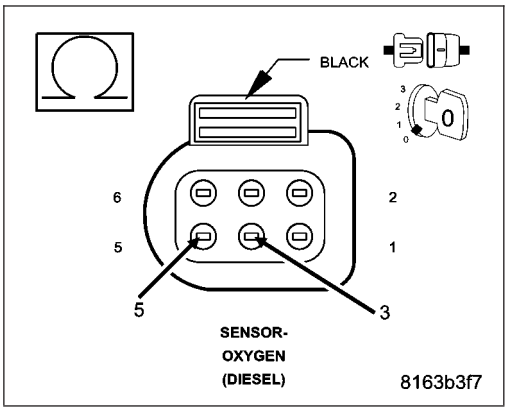

4. (K902) O2 1/1 PUMP CELL CURRENT TRIM CIRCUIT OPEN OR HIGH RESISTANCE

Measure the resistance of the (K902) O2 1/1 Pump Cell Current Trim circuit between the Oxygen Sensor connector and the Engine Control Module (ECM) connector.

Is the resistance below 10.0 ohms?

Yes >> Go to 5

No >> Repair the (K902) O2 1/1 Pump Cell Current Trim circuit for an open circuit or high resistance.

Perform the ECM Verification Test Ver. 1. (Refer to 9 - ENGINE - DIAGNOSIS AND TESTING)

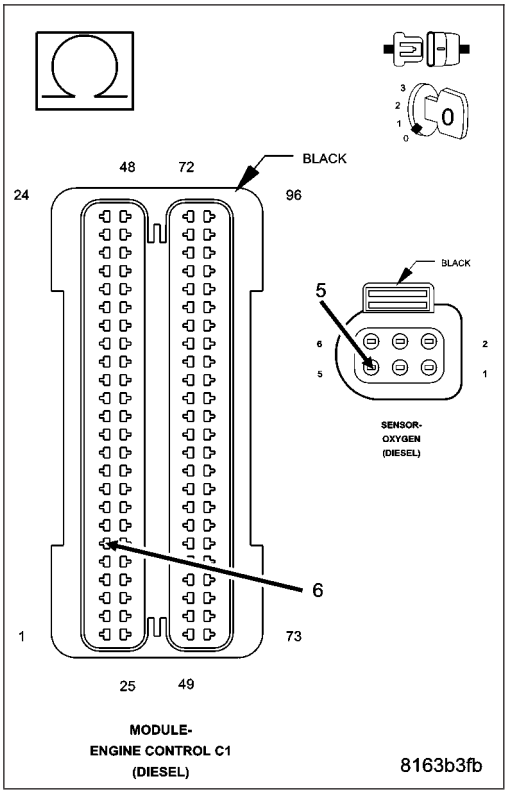

5. OXYGEN SENSOR

Turn the ignition off.
Connect the Engine Control Module (ECM) connector.
Replace the Oxygen Sensor in accordance with the Service Information.
Start the engine.
Allow the engine to reach normal operating temperature.
Monitor the scan tool for at least two minutes.
With the scan tool, select View DTCs.

Is the status Active for this DTC?

Yes >> Go to 6

No >> Test Complete.
Perform the ECM Verification Test Ver. 1. (Refer to 9 - ENGINE - DIAGNOSIS AND TESTING)

6. ENGINE CONTROL MODULE (ECM)

Using the wiring diagram/schematic as a guide, inspect the wiring and connectors between the Oxygen Sensor and the Engine Control Module (ECM).
Look for any chafed, pierced, pinched, or partially broken wires.
Look for broken, bent, pushed out or corroded terminals.
Monitor the scan tool data relative to this circuit and wiggle test the wiring and connectors.
Look for the data to change or for the DTC to reset during the wiggle test.
Refer to any Technical Service Bulletins that may apply.

Were any problems found?

Yes >> Repair as necessary.
Perform the ECM Verification Test Ver. 1. (Refer to 9 - ENGINE - DIAGNOSIS AND TESTING)

No >> Replace the Engine Control Module (ECM) in accordance with the Service Information.
Perform the ECM Verification Test Ver. 1. (Refer to 9 - ENGINE - DIAGNOSIS AND TESTING)

P2628-O2 SENSOR 1/1 PUMP CELL CURRENT TRIM CIRCUIT HIGH

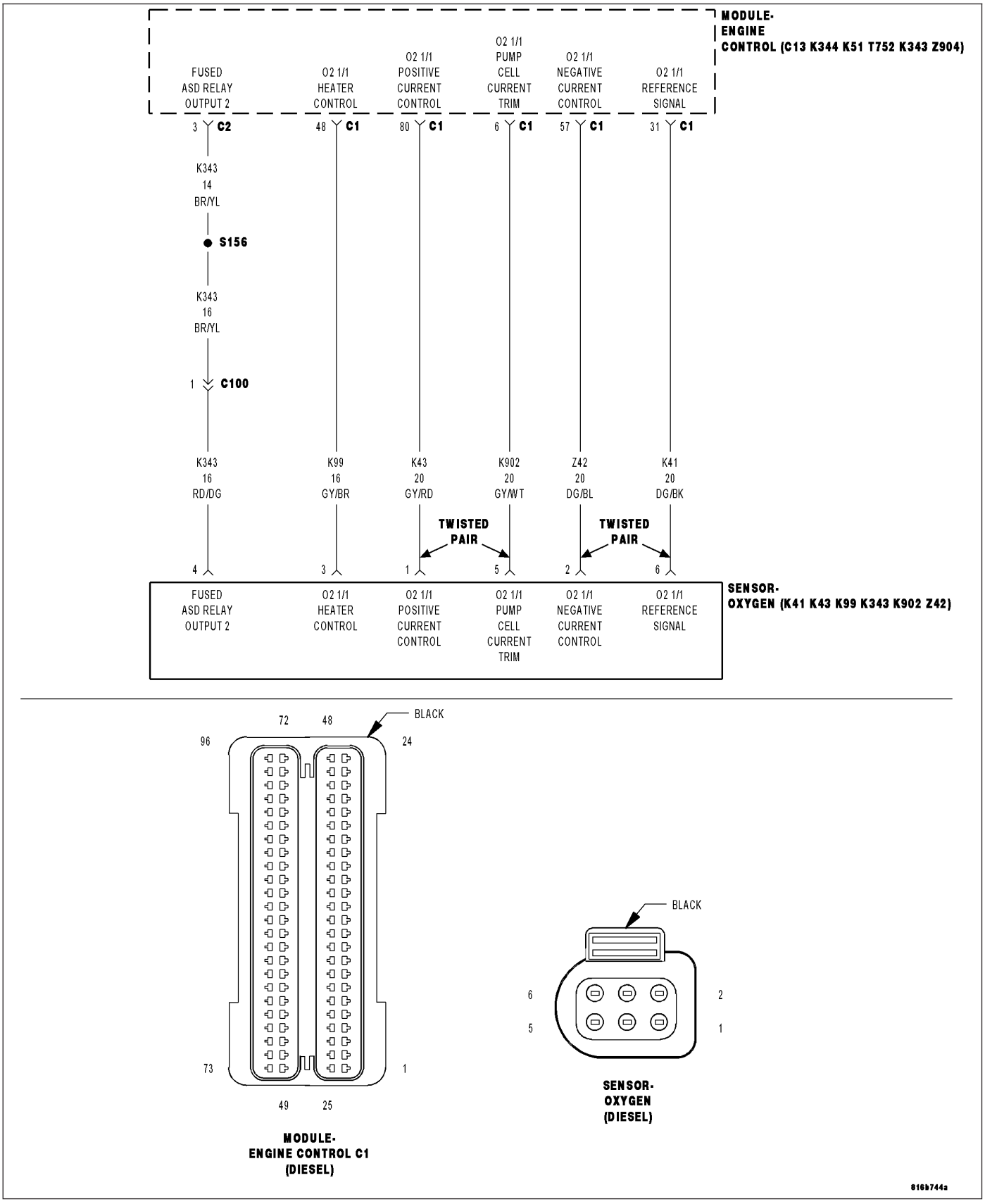

For a complete wiring diagram **Refer to Section 8W**

- **When Monitored:**
  With the ignition on.
- **Set Condition:**
  The ECM detects a short to voltage on the (K902) O2 1/1 Pump Cell Current Trim circuit for 2.0 seconds.

Possible Causes
INTERMITTENT DTC
(K902) O2 1/1 PUMP CELL CURRENT TRIM CIRCUIT SHORTED TO VOLTAGE
(K902) O2 1/1 PUMP CELL CURRENT TRIM CIRCUIT SHORTED TO THE (K343) FUSED ASD RELAY OUTPUT 2 CIRCUIT
(K902) O2 1/1 PUMP CELL CURRENT TRIM CIRCUIT OPEN OR HIGH RESISTANCE
OXYGEN SENSOR
ENGINE CONTROL MODULE (ECM)

Always perform the Pre-Diagnostic Troubleshooting procedure before proceeding. (Refer to 9 - ENGINE - DIAGNOSIS AND TESTING)

Diagnostic Test

1. DTC IS ACTIVE

Ignition on, engine not running.

With the scan tool, Clear DTCs in the Engine Control Module (ECM).

Start the engine.

Allow the engine to reach normal operating temperature.

Monitor the scan tool for at least two minutes.

With the scan tool, select View DTCs.

Is the status Active for this DTC?

Yes >> Go To 2

No >> Refer to the *CHECKING FOR AN INTERMITTENT DTC Diagnostic Procedure. (Refer to 9 - ENGINE - DIAGNOSIS AND TESTING)

2. (K902) O2 1/1 PUMP CELL CURRENT TRIM CIRCUIT SHORTED TO VOLTAGE

Turn the ignition off.

Disconnect the Oxygen Sensor connector.

Disconnect the Engine Control Module (ECM) connector.

Remove the ASD Relay from the IPM.

Connect a jumper wire between cavity 30 and cavity 87 of the ASD Relay Connector.

Turn the ignition on.

Measure the voltage of the (K902) O2 1/1 Pump Cell Current Trim circuit in the Oxygen Sensor connector.

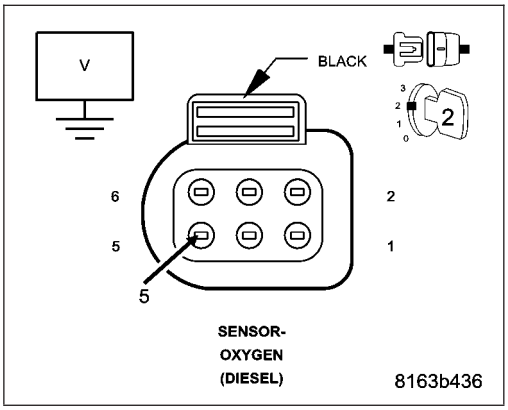

Is there any voltage present?

Yes >> Repair the (K902) O2 1/1 Pump Cell Current Trim circuit for a short to voltage.
Perform the ECM Verification Test Ver. 1. (Refer to 9 - ENGINE - DIAGNOSIS AND TESTING)

No >> Go to 3

3. (K902) O2 1/1 PUMP CELL CURRENT TRIM CIRCUIT SHORTED TO THE (K343) FUSED ASD RELAY OUTPUT 2 CIRCUIT

Turn the ignition off.

Measure the resistance between the (K902) O2 1/1 Pump Cell Current Trim circuit and the (K343) Fused ASD Relay Output 2 circuit in the Oxygen Sensor connector.

Is the resistance above 10.0 ohms?

Yes >> Go to 4

No >> Repair the (K902) O2 1/1 Pump Cell Current Trim circuit for a short to the (K343) Fused ASD Relay Output 2 circuit.
Perform the ECM Verification Test Ver. 1. (Refer to 9 - ENGINE - DIAGNOSIS AND TESTING)

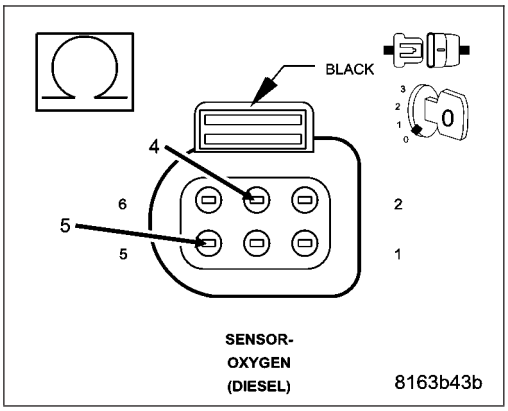

4. (K902) O2 1/1 PUMP CELL CURRENT TRIM CIRCUIT OPEN OR HIGH RESISTANCE

Measure the resistance of the (K902) O2 1/1 Pump Cell Current Trim circuit between the Oxygen Sensor connector and the Engine Control Module (ECM) connector.

Is the resistance below 10.0 ohms?

Yes >> Go to 5

No >> Repair the (K902) 02 1/1 Pump Cell Current Trim circuit for an open circuit or high resistance.
Perform the ECM Verification Test Ver. 1. (Refer to 9 - ENGINE - DIAGNOSIS AND TESTING)

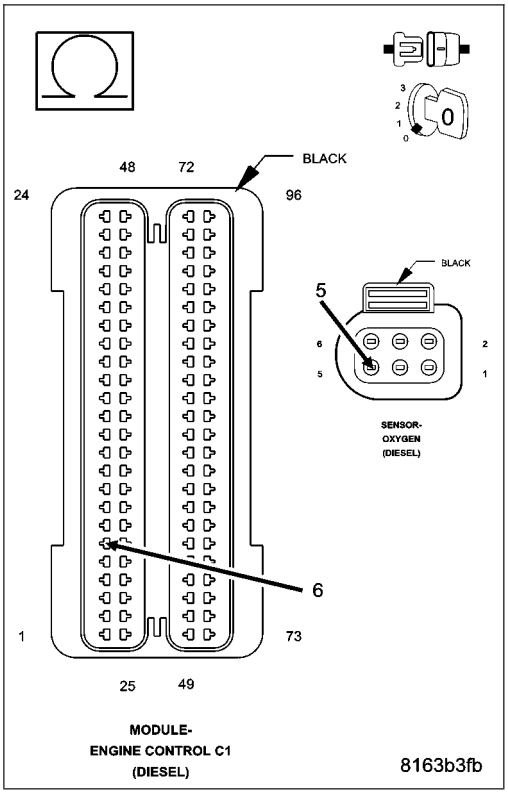

5. OXYGEN SENSOR

Turn the ignition off.
Connect the Engine Control Module (ECM) connector.
Replace the Oxygen Sensor in accordance with the Service Information.
Start the engine.
Allow the engine to reach normal operating temperature.
Monitor the scan tool for at least two minutes.
With the scan tool, select View DTCs.

Is the status Active for this DTC?

Yes >> Go to 6

No >> Test Complete.
Perform the ECM Verification Test Ver. 1. (Refer to 9 - ENGINE - DIAGNOSIS AND TESTING)

6. ENGINE CONTROL MODULE (ECM)

Using the wiring diagram/schematic as a guide, inspect the wiring and connectors between the Oxygen Sensor and the Engine Control Module (ECM).
Look for any chafed, pierced, pinched, or partially broken wires.
Look for broken, bent, pushed out or corroded terminals.
Monitor the scan tool data relative to this circuit and wiggle test the wiring and connectors.
Look for the data to change or for the DTC to reset during the wiggle test.
Refer to any Technical Service Bulletins that may apply.

Were any problems found?

Yes >> Repair as necessary.
Perform the ECM Verification Test Ver. 1. (Refer to 9 - ENGINE - DIAGNOSIS AND TESTING)

No >> Replace the Engine Control Module (ECM) in accordance with the Service Information.
Perform the ECM Verification Test Ver. 1. (Refer to 9 - ENGINE - DIAGNOSIS AND TESTING)

P0706-INPUT SPEED SENSOR 1/2 CORRELATION

For a complete wiring diagram **Refer to Section 8W**

- **When Monitored:**
  With the ignition on.
- **Set Condition:**
  The ECM receives a CAN Bus message indicating the presence of a DTC in the TCM.

Possible Causes
VERIFY CURRENT DTC

Always perform the Pre-Diagnostic Troubleshooting procedure before proceeding. (Refer to 9 - ENGINE - DIAGNOSIS AND TESTING)

Diagnostic Test

1. VERIFY CURRENT DTC

NOTE: Diagnose and repair all ECM DTCs prior diagnosing any DTCs set in the TCM.

NOTE: This code was set in the ECM by the Transmission Control Module to indicate a transmission fault. Diagnosis of transmission faults should be done using the Transmission Diagnostic Information.

NOTE: When repairs have been completed, DTCs in the ECM and TCM must be cleared.
Turn the ignition on.

With the scan tool, erase ECM DTCs only.

With the scan tool, read ECM DTCs.

Does this DTC reset?

Yes >> Refer to Transmission Diagnostic Information for the related symptom(s).

No >> Test Complete.

P2A00-O2 SENSOR 1/1 CIRCUIT PERFORMANCE

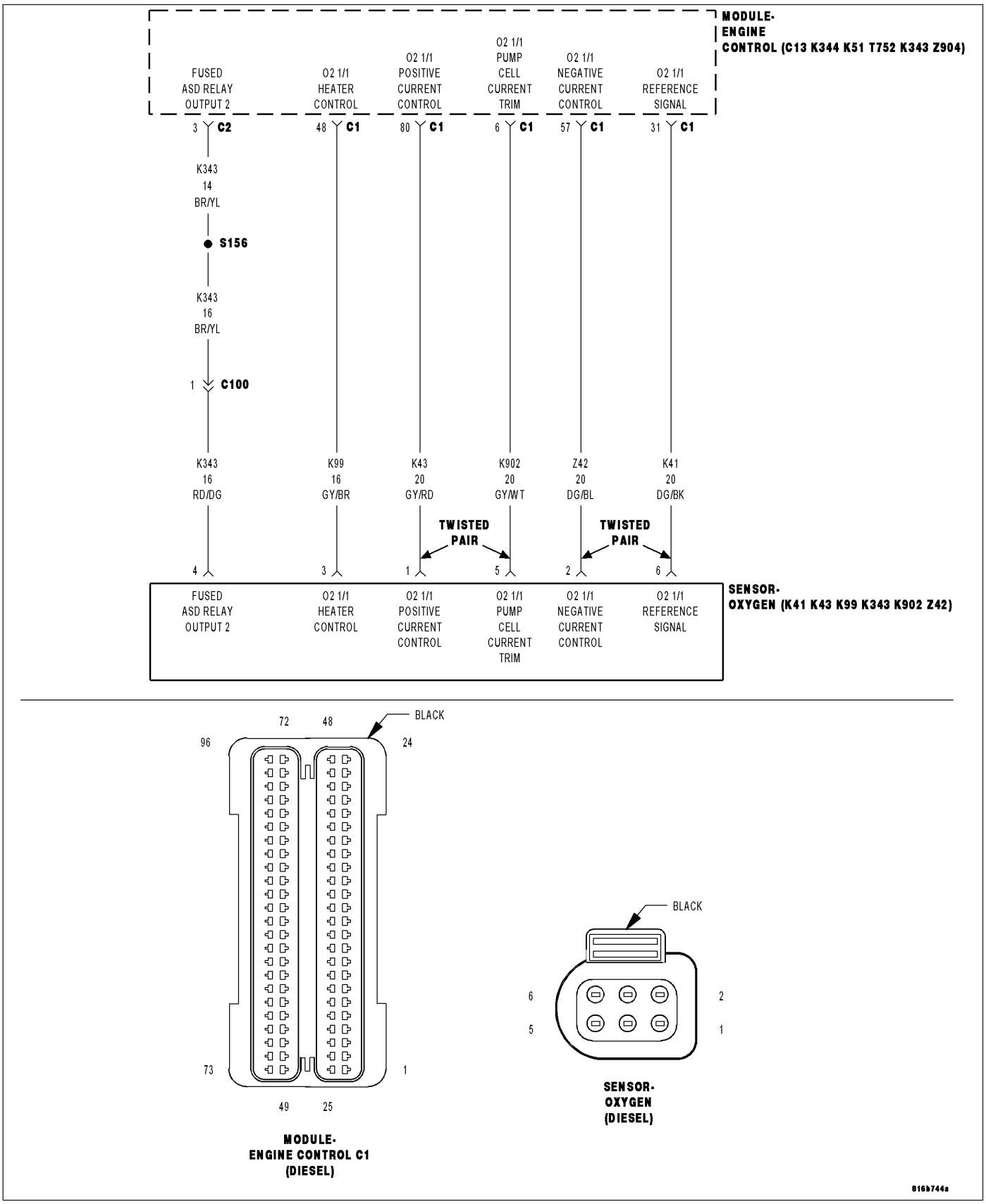

For a complete wiring diagram **Refer to Section 8W**

- **When Monitored:**
  With the ignition on.
- **Set Condition:**
  The ECM detects an open or implausible voltage on the (Z43) O2 1/1 Negative Current Control for 2.0 seconds.

Possible Causes
INTERMITTENT DTC
(Z43) O2 1/1 NEGATIVE CURRENT CONTROL CIRCUIT SHORTED TO VOLTAGE
(Z43) O2 1/1 NEGATIVE CURRENT CONTROL CIRCUIT SHORTED TO GROUND
(Z43) O2 1/1 NEGATIVE CURRENT CONTROL CIRCUIT SHORTED TO THE (K343) FUSED ASD RELAY OUTPUT 2 CIRCUIT
(Z43) O2 1/1 NEGATIVE CURRENT CONTROL CIRCUIT SHORTED TO THE (K99) O2 1/1 HEATER CONTROL CIRCUIT
(Z43) O2 1/1 NEGATIVE CURRENT CONTROL CIRCUIT OPEN OR HIGH RESISTANCE
OXYGEN SENSOR
ENGINE CONTROL MODULE (ECM)

Always perform the Pre-Diagnostic Troubleshooting procedure before proceeding. (Refer to 9 - ENGINE - DIAGNOSIS AND TESTING)

Diagnostic Test

1. DTC IS ACTIVE

Ignition on, engine not running.

With the scan tool, Clear DTCs in the Engine Control Module (ECM).

Start the engine.

Allow the engine to reach normal operating temperature.

Monitor the scan tool for at least two minutes.

With the scan tool, select View DTCs.

Is the status Active for this DTC?

Yes >> Go To 2

No >> Refer to the *CHECKING FOR AN INTERMITTENT DTC Diagnostic Procedure. (Refer to 9 - ENGINE - DIAGNOSIS AND TESTING)

2. (Z43) O2 1/1 NEGATIVE CURRENT CONTROL CIRCUIT SHORTED TO VOLTAGE

Turn the ignition off.

Disconnect the Oxygen Sensor connector.

Disconnect the Engine Control Module (ECM) connector.

Remove the ASD Relay from the IPM.

Connect a jumper wire between cavity 30 and cavity 87 of the ASD Relay Connector.

Turn the ignition on.

Measure the voltage of the (Z43) O2 1/1 Negative Current Control circuit in the Oxygen Sensor connector.

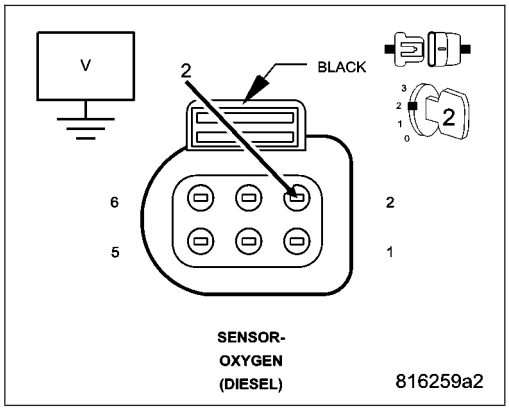

Is there any voltage present?

Yes >> Repair the (Z43) O2 1/1 Negative Current Control circuit for a short to voltage.
Perform the ECM Verification Test Ver. 1. (Refer to 9 - ENGINE - DIAGNOSIS AND TESTING)

No >> Go to 3

3. (Z43) O2 1/1 NEGATIVE CURRENT CONTROL CIRCUIT SHORTED TO GROUND

Turn the ignition off.

Measure the resistance between ground and the (Z43) O2 1/1 Negative Current Control circuit in the Oxygen Sensor connector.

Is the resistance above 1000.0 ohms?

Yes >> Go to 4

No >> Repair the (Z43) O2 1/1 Negative Current Control circuit for a short to ground.

Perform the ECM Verification Test Ver. 1. (Refer to 9 - ENGINE - DIAGNOSIS AND TESTING)

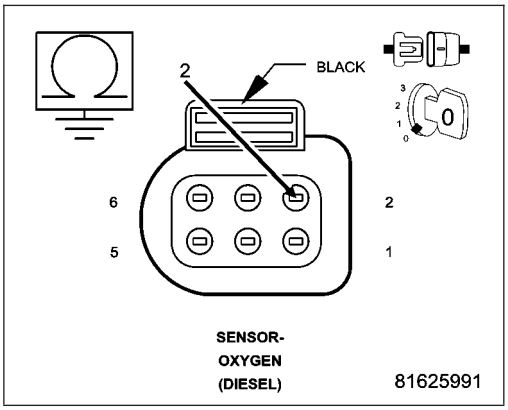

4. (Z43) O2 1/1 NEGATIVE CURRENT CONTROL CIRCUIT SHORTED TO THE (K343) FUSED ASD RELAY OUTPUT 2 CIRCUIT

Measure the resistance between the (Z43) O2 1/1 Negative Current Control circuit and the (K343) Fused ASD Relay Output 2 circuit in the Oxygen Sensor connector.

Is the resistance above 1000.0 ohms?

Yes >> Go to 5

No >> Repair the (Z43) O2 1/1 Negative Current Control circuit for a short to the (K343) Fused ASD Relay Output 2 circuit.

Perform the ECM Verification Test Ver. 1. (Refer to 9 - ENGINE - DIAGNOSIS AND TESTING)

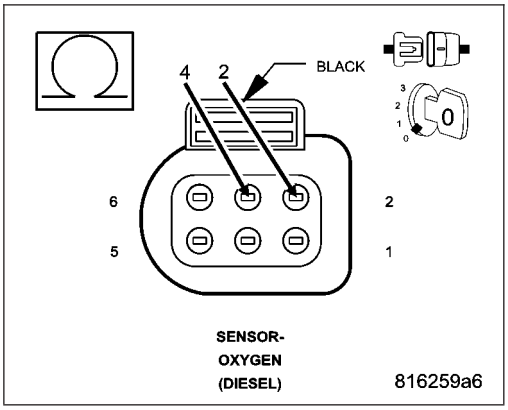

5. (Z43) O2 1/1 NEGATIVE CURRENT CONTROL CIRCUIT SHORTED TO THE (K99) O2 1/1 HEATER CONTROL CIRCUIT

Measure the resistance between the (Z43) O2 1/1 Negative Current Control circuit and the (K99) O2 1/1 Heater Control circuit in the Oxygen Sensor connector.

Is the resistance above 1000.0 ohms?

Yes >> Go to 6

No >> Repair the (Z43) O2 1/1 Negative Current Control circuit for a short to the (K99) O2 1/1 Heater Control circuit.

Perform the ECM Verification Test Ver. 1. (Refer to 9 - ENGINE - DIAGNOSIS AND TESTING)

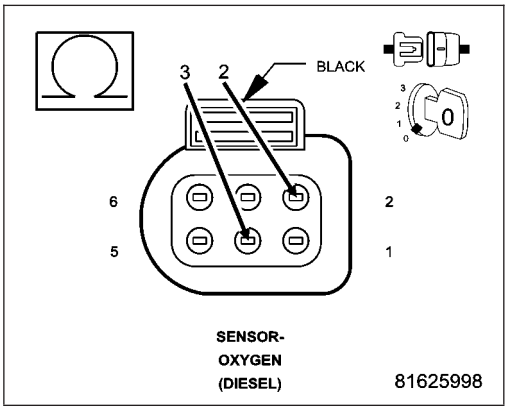

6. (Z43) O2 1/1 NEGATIVE CURRENT CONTROL CIRCUIT OPEN OR HIGH RESISTANCE

Measure the resistance of the (Z43) O2 1/1 Negative Current Control circuit between the Oxygen Sensor connector and the Engine Control Module (ECM) connector.

Is the resistance below 10.0 ohms?

Yes >> Go to 7

No >> Repair the (Z43) 02 1/1 Negative Current Control circuit for an open circuit or high resistance.
Perform the ECM Verification Test Ver. 1. (Refer to 9 - ENGINE - DIAGNOSIS AND TESTING)

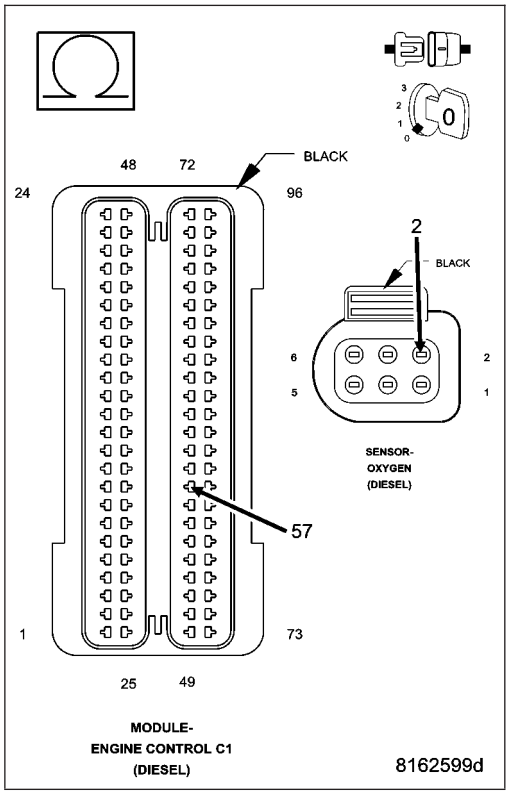

7. OXYGEN SENSOR

Turn the ignition off.
Connect the Engine Control Module (ECM) connector.
Replace the Oxygen Sensor in accordance with the Service Information.
Start the engine.
Allow the engine to reach normal operating temperature.
Monitor the scan tool for at least two minutes.
With the scan tool, select View DTCs.

Is the status Active for this DTC?

Yes >> Go to 8

No >> Test Complete.
Perform the ECM Verification Test Ver. 1. (Refer to 9 - ENGINE - DIAGNOSIS AND TESTING)

8. ENGINE CONTROL MODULE (ECM)

Using the wiring diagram/schematic as a guide, inspect the wiring and connectors between the Oxygen Sensor and the Engine Control Module (ECM).

Look for any chafed, pierced, pinched, or partially broken wires.

Look for broken, bent, pushed out or corroded terminals.

Monitor the scan tool data relative to this circuit and wiggle test the wiring and connectors.

Look for the data to change or for the DTC to reset during the wiggle test.

Refer to any Technical Service Bulletins that may apply.

Were any problems found?

Yes >> Repair as necessary.
Perform the ECM Verification Test Ver. 1. (Refer to 9 - ENGINE - DIAGNOSIS AND TESTING)

No >> Replace the Engine Control Module (ECM) in accordance with the Service Information.
Perform the ECM Verification Test Ver. 1. (Refer to 9 - ENGINE - DIAGNOSIS AND TESTING)

B10B3 - CABIN HEATER 1 CONTROL CIRCUIT

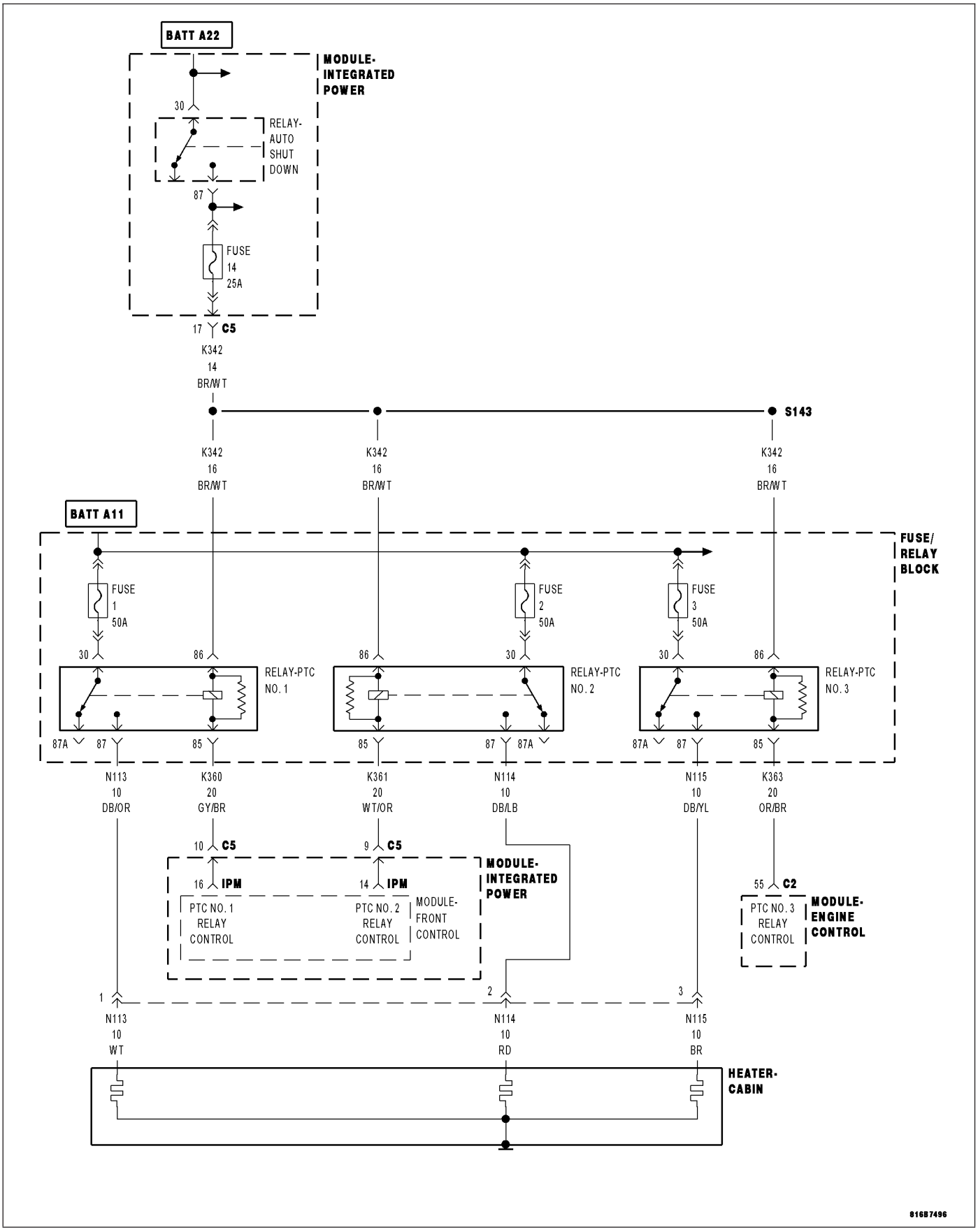

For a complete wiring diagram **Refer to Section 8W**

- **When Monitored:**
  With the ignition on.
- **Set Condition:**
  A Cabin Heater (PTC) #1 error message has been received over the CAN bus from the Front Control Module.

Possible Causes
INTERMITTENT DTC
DTC SET IN FRONT CONTROL MODULE (FCM)
ENGINE CONTROL MODULE (ECM)

Always perform the Pre-Diagnostic Troubleshooting procedure before proceeding. (Refer to 9 - ENGINE - DIAGNOSIS AND TESTING)

Diagnostic Test

1. DTC IS ACTIVE

NOTE: This DTC will set if the Engine Control Module (ECM) receives a message from the Front Control Module indicating that a PTC Heater Relay DTC is present.

Ignition on, engine not running.

With the scan tool, Clear DTCs in the Engine Control Module (ECM).

With the scan tool, actuate the PTC Heater Relay 1.

With the scan tool, select View DTCs.

Is the status Active for this DTC?

Yes >> Go To 2

No >> Refer to the *CHECKING FOR AN INTERMITTENT DTC Diagnostic Procedure. (Refer to 9 - ENGINE - DIAGNOSIS AND TESTING)

2. ENGINE CONTROL MODULE (ECM)

With the scan tool, select View DTCs in the Front Control Module.

Is there a stored or active PTC Heater Relay DTC present in the Front Control Module?

Yes >> Refer to 24 - HVAC — ELECTRICAL DIAGNOSTICS for diagnostic procedures and for further possible causes.

No >> Replace the Engine Control Module (ECM) in accordance with the Service Information.
Perform the ECM Verification Test Ver. 1. (Refer to 9 - ENGINE - DIAGNOSIS AND TESTING)

B10B7 - CABIN HEATER 2 CONTROL CIRCUIT

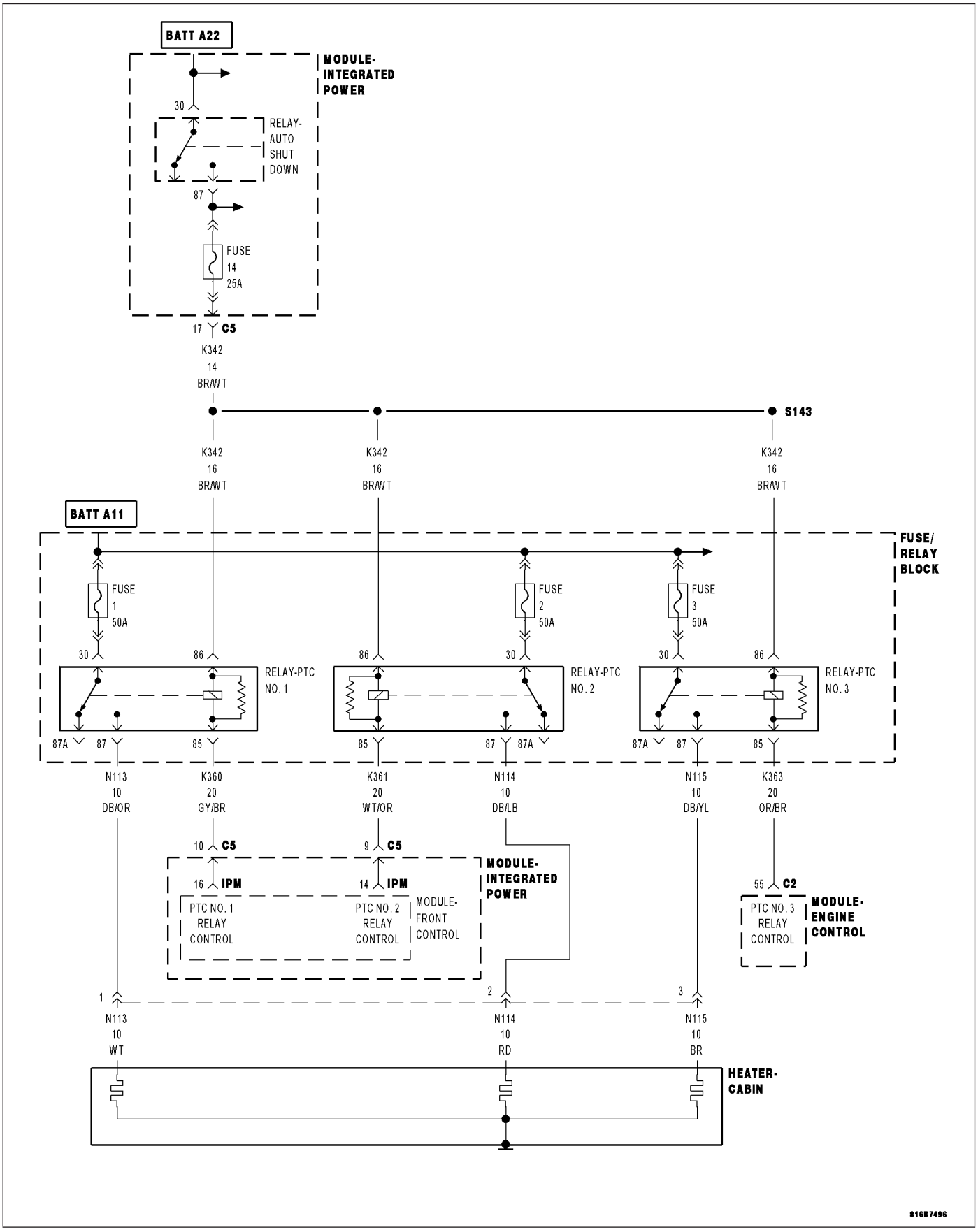

For a complete wiring diagram **Refer to Section 8W**

- **When Monitored:**
  With the ignition on.
- **Set Condition:**
  A Cabin Heater (PTC) #2 error message has been received over the CAN bus from the Front Control Module.

Possible Causes
INTERMITTENT DTC
DTC SET IN FRONT CONTROL MODULE (FCM)
ENGINE CONTROL MODULE (ECM)

Always perform the Pre-Diagnostic Troubleshooting procedure before proceeding. (Refer to 9 - ENGINE - DIAGNOSIS AND TESTING)

Diagnostic Test

1. DTC IS ACTIVE

NOTE: This DTC will set if the Engine Control Module (ECM) receives a message from the Front Control Module indicating that a PTC Heater Relay DTC is present.

Ignition on, engine not running.

With the scan tool, Clear DTCs in the Engine Control Module (ECM).

With the scan tool, actuate the PTC Heater Relay 2.

With the scan tool, select View DTCs.

Is the status Active for this DTC?

Yes >> Go To 2

No >> Refer to the *CHECKING FOR AN INTERMITTENT DTC Diagnostic Procedure. (Refer to 9 - ENGINE - DIAGNOSIS AND TESTING)

2. ENGINE CONTROL MODULE (ECM)

With the scan tool, select View DTCs in the Front Control Module.

Is there a stored or active PTC Heater Relay DTC present in the Front Control Module?

Yes >> Refer to 24 - HVAC — ELECTRICAL DIAGNOSTICS for diagnostic procedures and for further possible causes.

No >> Replace the Engine Control Module (ECM) in accordance with the Service Information.
Perform the ECM Verification Test Ver. 1. (Refer to 9 - ENGINE - DIAGNOSIS AND TESTING)

B1138 - CABIN HEATER 3 CONTROL CIRCUIT LOW

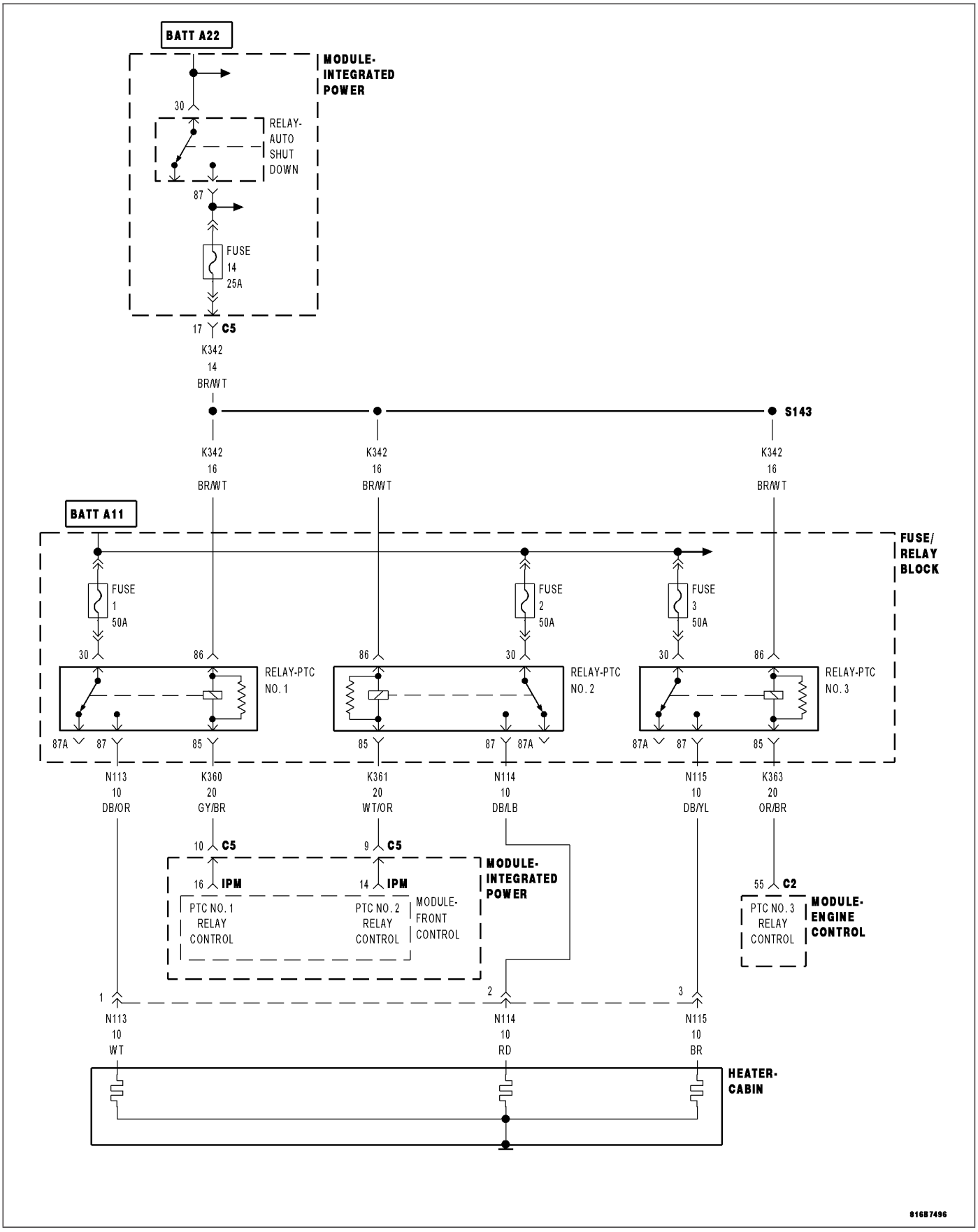

For a complete wiring diagram **Refer to Section 8W**

- **When Monitored:**
  With the ignition on and the PTC No. 3 Relay command off.
- **Set Condition:**
  The ECM detects a short to ground on the (K363) PTC No. 3 Relay Control circuit for 1.0 second.

Possible Causes
INTERMITTENT DTC
(K342) FUSED ASD RELAY OUTPUT CIRCUIT 1 OPEN OR HIGH RESISTANCE
(K363) PTC NO. 3 RELAY CONTROL CIRCUIT SHORTED TO GROUND
(K363) PTC NO. 3 RELAY CONTROL CIRCUIT OPEN OR HIGH RESISTANCE
PTC NO. 3 RELAY
ENGINE CONTROL MODULE (ECM)

Always perform the Pre-Diagnostic Troubleshooting procedure before proceeding. (Refer to 9 - ENGINE - DIAGNOSIS AND TESTING)

Diagnostic Test

1. DTC IS ACTIVE

Ignition on, engine not running.

With the scan tool, Clear DTCs in the Engine Control Module (ECM).

With the scan tool, actuate the PTC No. 3 Relay.

With the scan tool, select View DTCs.

Is the status Active for this DTC?

Yes >> Go To 2

No >> Refer to the *CHECKING FOR AN INTERMITTENT DTC Diagnostic Procedure. (Refer to 9 - ENGINE - DIAGNOSIS AND TESTING)

2. (K342) FUSED ASD RELAY OUTPUT 1 CIRCUIT OPEN OR HIGH RESISTANCE

Turn the ignition off.

Remove the PTC No. 3 Relay.

Turn the ignition on.

Using a 12 volt test light connected to ground, check the (K342) Fused ASD Relay Output 1 circuit in the PTC No. 3 Relay connector.

NOTE: The test light should be illuminated and bright. Compare the brightness to that of a direct connection to the battery.

Is the test light illuminated and bright?

Yes >> Go to 3

No >> Repair the (K342) Fused ASD Relay Output 1 circuit for an open circuit or high resistance.
Perform the ECM Verification Test Ver. 1. (Refer to 9 - ENGINE - DIAGNOSIS AND TESTING)

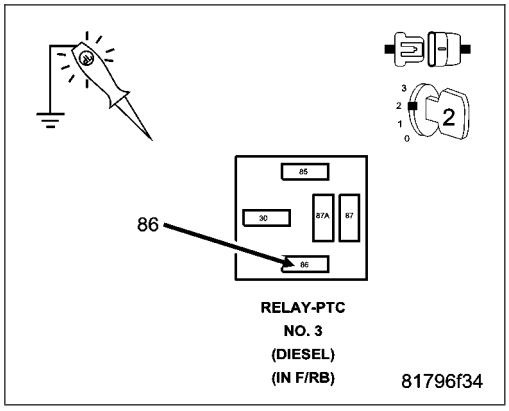

3. (K363) PTC NO. 3 RELAY CONTROL CIRCUIT SHORTED TO GROUND

Turn the ignition off.

Disconnect the Engine Control Module (ECM) harness connector.

Measure the resistance between ground and the (K363) PTC No. 3 Relay Control circuit in the PTC No. 3 Relay connector.

Is the resistance above 1000.0 ohms?

Yes >> Go to 4

No >> Repair the (K363) PTC No. 3 Relay Control circuit for a short to ground.

Perform the ECM Verification Test Ver. 1. (Refer to 9 - ENGINE - DIAGNOSIS AND TESTING)

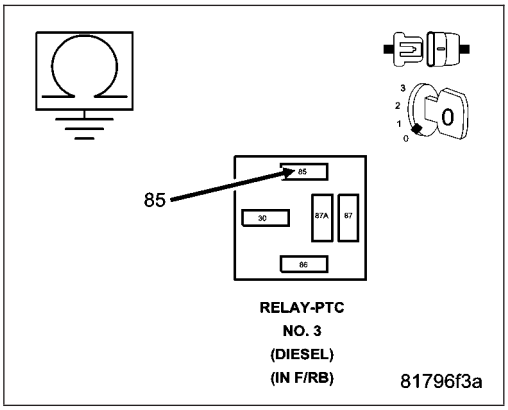

4. (K363) PTC NO. 3 RELAY CONTROL CIRCUIT OPEN OR HIGH RESISTANCE

Measure the resistance of the (K363) PTC No. 3 Relay Control circuit between the PTC No. 3 Relay connector and the Engine Control Module (ECM) harness connector.

Is the resistance below 10.0 ohms?

Yes >> Go to 5

No >> Repair the (K363) PTC No. 3 Relay Control circuit for an open circuit or high resistance.

Perform the ECM Verification Test Ver. 1. (Refer to 9 - ENGINE - DIAGNOSIS AND TESTING)

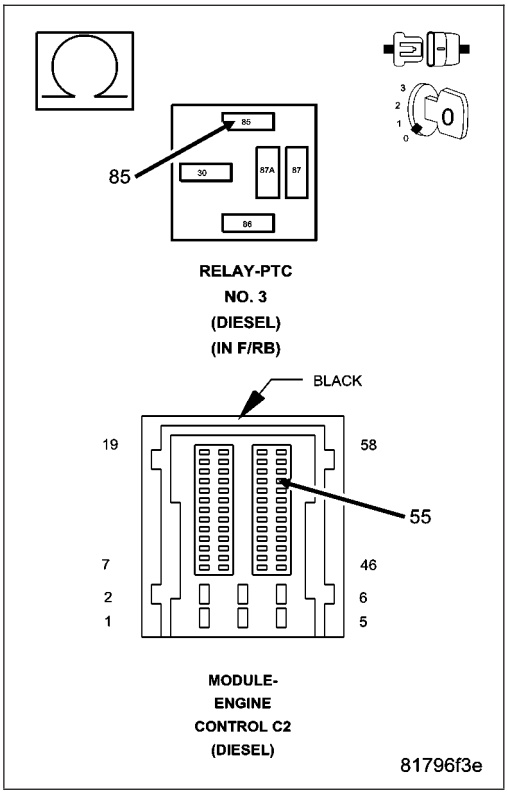

5. PTC NO. 3 RELAY

Turn the ignition off.
Install a substitute PTC No. 3 Relay in place of the vehicle's PTC No. 3 Relay.
Turn the ignition on.
With the scan tool, Clear DTCs.
With the scan tool, actuate the PTC No. 3 Relay.
With the scan tool, select View DTCs.

Is the status Active for this DTC?

Yes >> Go to 6

No >> Replace the PTC No. 3 Relay.
Perform the ECM Verification Test Ver. 1. (Refer to 9 - ENGINE - DIAGNOSIS AND TESTING)

6. ENGINE CONTROL MODULE (ECM)

Using the wiring diagram/schematic as a guide, inspect the wiring and connectors between the PTC No. 3 Relay and the Engine Control Module (ECM).
Look for any chafed, pierced, pinched, or partially broken wires.
Look for broken, bent, pushed out or corroded terminals.
Refer to any Technical Service Bulletins that may apply.

Were any problems found?

Yes >> Repair as necessary.
Perform the ECM Verification Test Ver. 1. (Refer to 9 - ENGINE - DIAGNOSIS AND TESTING)

No >> Replace the Engine Control Module (ECM) in accordance with the Service Information.
Perform the ECM Verification Test Ver. 1. (Refer to 9 - ENGINE - DIAGNOSIS AND TESTING)

B1139 - CABIN HEATER 3 CONTROL CIRCUIT HIGH

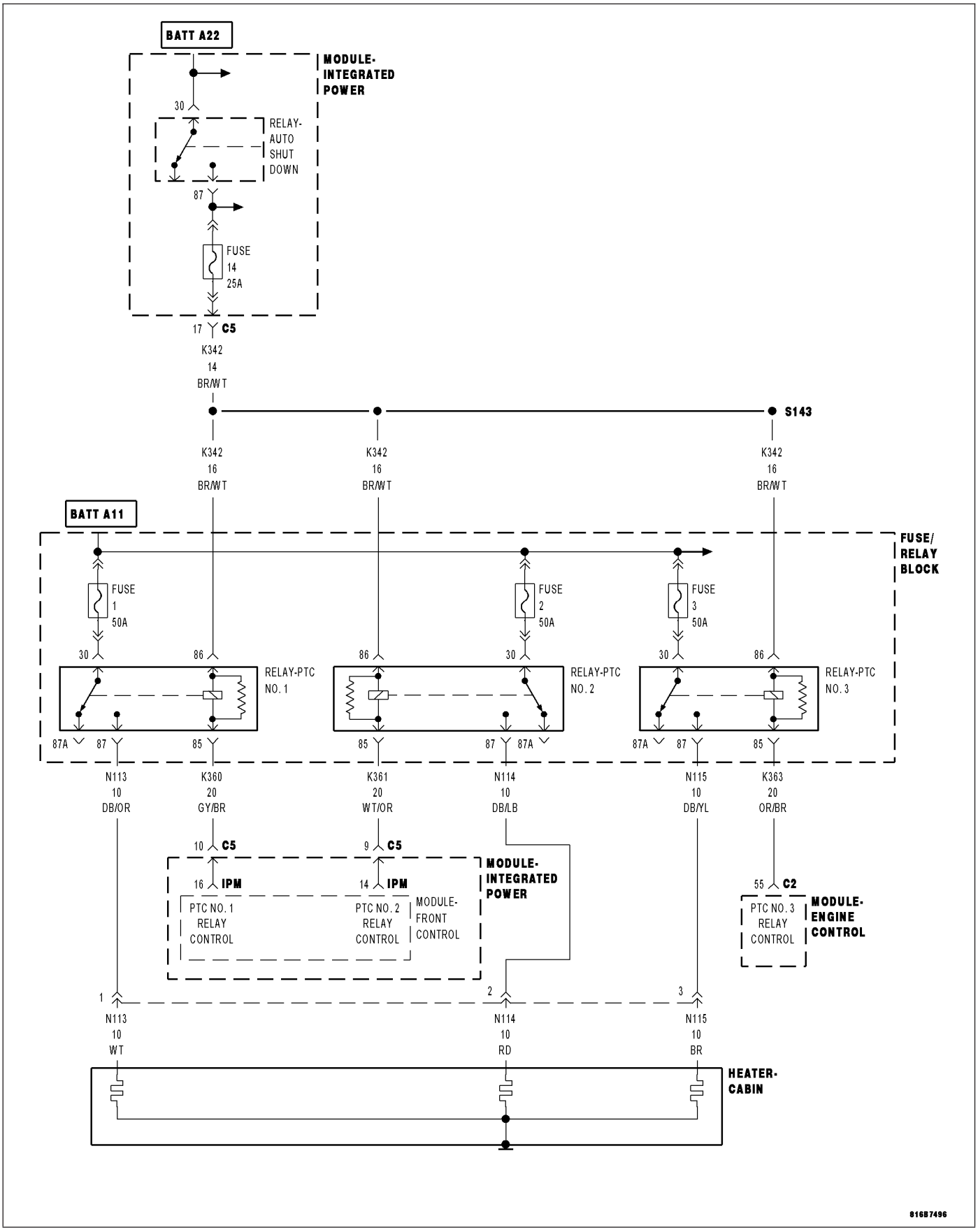

For a complete wiring diagram **Refer to Section 8W**

- **When Monitored:**
  With the ignition on and the PTC No. 3 Relay command on.
- **Set Condition:**
  The ECM detects a short circuit on the (K363) PTC No. 3 Relay Control circuit voltage for 1.0 second.

Possible Causes
INTERMITTENT DTC
(K363) PTC NO. 3 RELAY CONTROL CIRCUIT SHORTED TO VOLTAGE
(K363) PTC NO. 3 RELAY CONTROL CIRCUIT OPEN OR HIGH RESISTANCE
PTC NO. 3 RELAY
ENGINE CONTROL MODULE (ECM)

Always perform the Pre-Diagnostic Troubleshooting procedure before proceeding. (Refer to 9 - ENGINE - DIAGNOSIS AND TESTING)

Diagnostic Test

1. DTC IS ACTIVE

Ignition on, engine not running.
With the scan tool, Clear DTCs in the Engine Control Module (ECM).
With the scan tool, actuate the PTC No. 3 Relay.
With the scan tool, select View DTCs.

Is the status Active for this DTC?

Yes >> Go To 2

No >> Refer to the *CHECKING FOR AN INTERMITTENT DTC Diagnostic Procedure. (Refer to 9 - ENGINE - DIAGNOSIS AND TESTING)

2. PTC NO. 3 RELAY

Turn the ignition off.
Install a substitute PTC No. 3 Relay in place of the vehicle's PTC No. 3 Relay.
Turn the ignition on.
With the scan tool, Clear DTCs.
With the scan tool, actuate the PTC No. 3 Relay.
With the scan tool, select View DTCs.

Is the status Active for this DTC?

Yes >> Go to 3

No >> Replace the PTC No. 3 Relay in accordance with the Service Information.
Perform the ECM Verification Test Ver. 1. (Refer to 9 - ENGINE - DIAGNOSIS AND TESTING)

3. (K363) PTC NO. 3 RELAY CONTROL CIRCUIT SHORTED TO VOLTAGE

Turn the ignition off.

Disconnect the Engine Control Module (ECM) harness connector.

Remove the ASD Relay from the IPM.

Connect a jumper wire between cavity 30 and cavity 87 of the ASD Relay Connector.

Turn the ignition on.

Measure the voltage of the (K363) PTC No. 3 Relay Control circuit in the PTC No. 3 Relay connector.

Is there any voltage present?

Yes >> Repair the (K363) PTC No. 3 Relay Control circuit for a short to voltage.
Perform the ECM Verification Test Ver. 1. (Refer to 9 - ENGINE - DIAGNOSIS AND TESTING)

No >> Go to 4

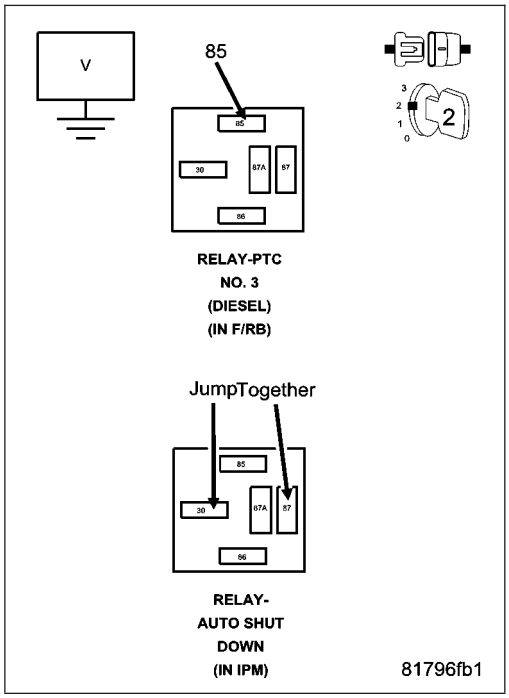

4. (K363) PTC NO. 3 RELAY CONTROL OPEN OR HIGH RESISTANCE

Turn the ignition off.

Measure the resistance of the (K363) PTC No. 3 Relay Control circuit between the PTC No. 3 Relay connector and the Engine Control Module (ECM) harness connector.

Is the resistance below 10.0 ohms?

Yes >> Go to 5

No >> Repair the (K363) PTC No. 3 Relay Control circuit for an open circuit or high resistance.
Perform the ECM Verification Test Ver. 1. (Refer to 9 - ENGINE - DIAGNOSIS AND TESTING)

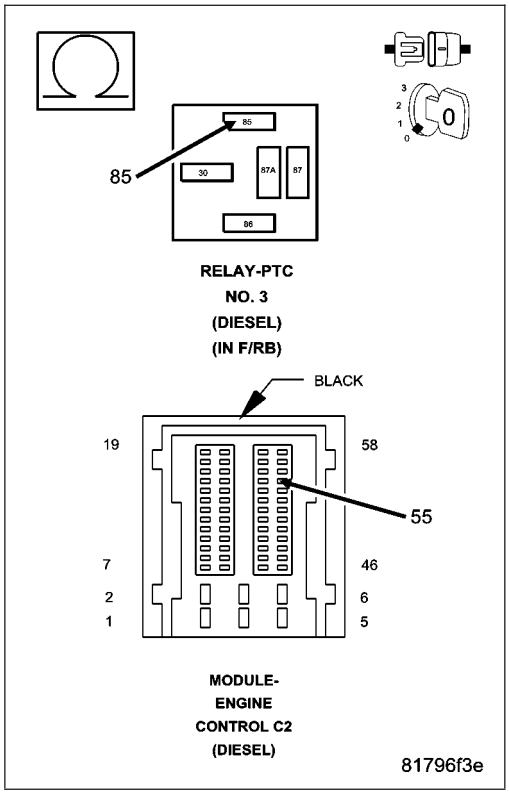

5. ENGINE CONTROL MODULE (ECM)

Using the wiring diagram/schematic as a guide, inspect the wiring and connectors between the PTC No. 3 Relay and the Engine Control Module (ECM).

Look for any chafed, pierced, pinched, or partially broken wires.

Look for broken, bent, pushed out or corroded terminals.

Refer to any Technical Service Bulletins that may apply.

Were any problems found?

Yes >> Repair as necessary.
Perform the ECM Verification Test Ver. 1. (Refer to 9 - ENGINE - DIAGNOSIS AND TESTING)

No >> Replace the Engine Control Module (ECM) in accordance with the Service Information.
Perform the ECM Verification Test Ver. 1. (Refer to 9 - ENGINE - DIAGNOSIS AND TESTING)

B113A - CABIN HEATER 3 CONTROL CIRCUIT OPEN

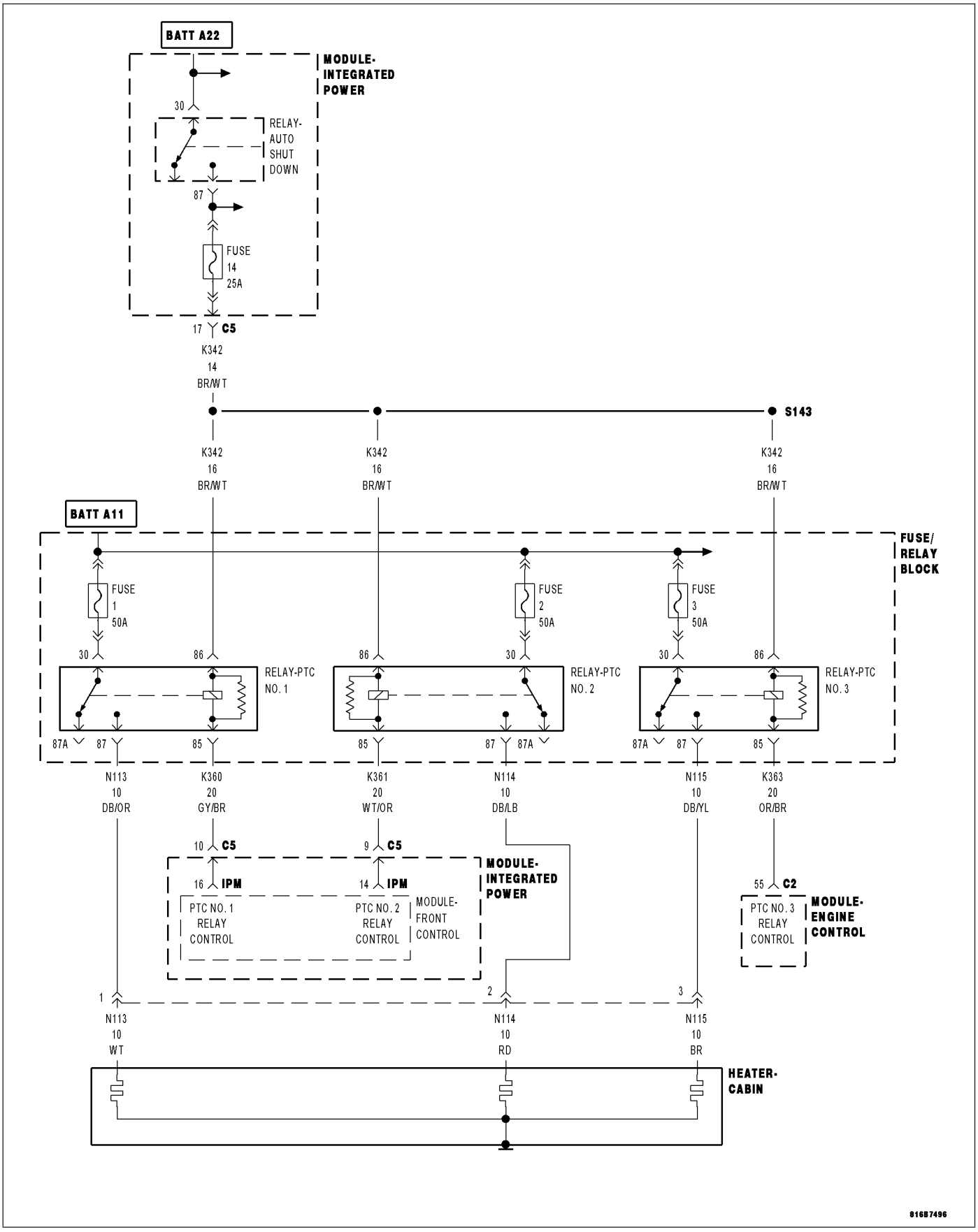

For a complete wiring diagram **Refer to Section 8W**

- **When Monitored:**
  With the ignition on and the PTC No. 3 Relay command off.
- **Set Condition:**
  The ECM does not detect voltage on the (K363) PTC No. 3 Relay Control circuit for 1.0 second.

Possible Causes
INTERMITTENT DTC
(K342) FUSED ASD RELAY OUTPUT 1 CIRCUIT OPEN OR HIGH RESISTANCE
(K363) PTC NO. 3 RELAY CONTROL CIRCUIT SHORTED TO GROUND
(K363) PTC NO. 3 RELAY CONTROL CIRCUIT OPEN OR HIGH RESISTANCE
PTC NO. 3 RELAY
ENGINE CONTROL MODULE (ECM)

Always perform the Pre-Diagnostic Troubleshooting procedure before proceeding. (Refer to 9 - ENGINE - DIAGNOSIS AND TESTING)

Diagnostic Test

1. DTC IS ACTIVE

Ignition on, engine not running.

With the scan tool, Clear DTCs in the Engine Control Module (ECM).

With the scan tool, actuate the PTC No. 3 Relay.

With the scan tool, select View DTCs.

Is the status Active for this DTC?

Yes >> Go To 2

No >> Refer to the *CHECKING FOR AN INTERMITTENT DTC Diagnostic Procedure. (Refer to 9 - ENGINE - DIAGNOSIS AND TESTING)

2. (K342) FUSED ASD RELAY OUTPUT 1 CIRCUIT OPEN OR HIGH RESISTANCE

Turn the ignition off.

Remove the PTC No. 3 Relay.

Turn the ignition on.

Using a 12 volt test light connected to ground, check the (K342) Fused ASD Relay Output 1 circuit in the PTC No. 3 Relay connector.

NOTE: The test light should be illuminated and bright. Compare the brightness to that of a direct connection to the battery.

Is the test light illuminated and bright?

Yes >> Go to 3

No >> Repair the (K342) Fused ASD Relay Output 1 circuit for an open circuit or high resistance.
Perform the ECM Verification Test Ver. 1. (Refer to 9 - ENGINE - DIAGNOSIS AND TESTING)

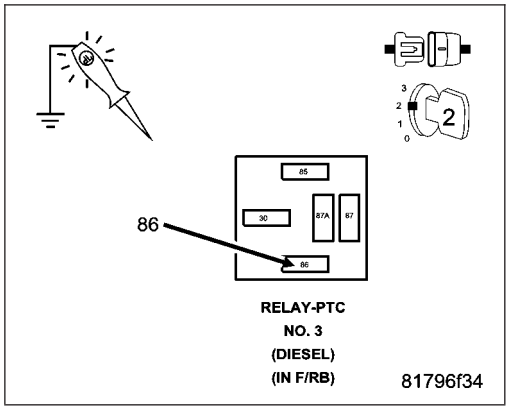

3. (K363) PTC NO. 3 RELAY CONTROL CIRCUIT SHORTED TO GROUND

Turn the ignition off.

Disconnect the Engine Control Module (ECM) harness connector.

Measure the resistance between ground and the (K363) PTC No. 3 Relay Control circuit in the PTC No. 3 Relay connector.

Is the resistance above 10.0 ohms?

Yes >> Go to 4

No >> Repair the (K363) PTC No. 3 Relay Control circuit for a short to ground.

Perform the ECM Verification Test Ver. 1. (Refer to 9 - ENGINE - DIAGNOSIS AND TESTING)

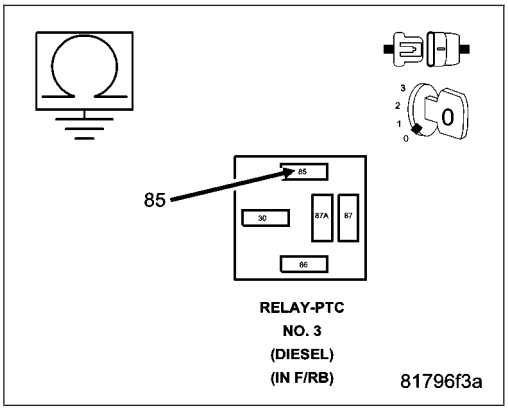

4. (K363) PTC NO. 3 RELAY CONTROL CIRCUIT OPEN OR HIGH RESISTANCE

Measure the resistance of the (K363) PTC No. 3 Relay Control circuit between the PTC No. 3 Relay connector and the Engine Control Module (ECM) harness connector.

Is the resistance below 10.0 ohms?

Yes >> Go to 5

No >> Repair the (K363) PTC No. 3 Relay Control circuit for an open circuit or high resistance.

Perform the ECM Verification Test Ver. 1. (Refer to 9 - ENGINE - DIAGNOSIS AND TESTING)

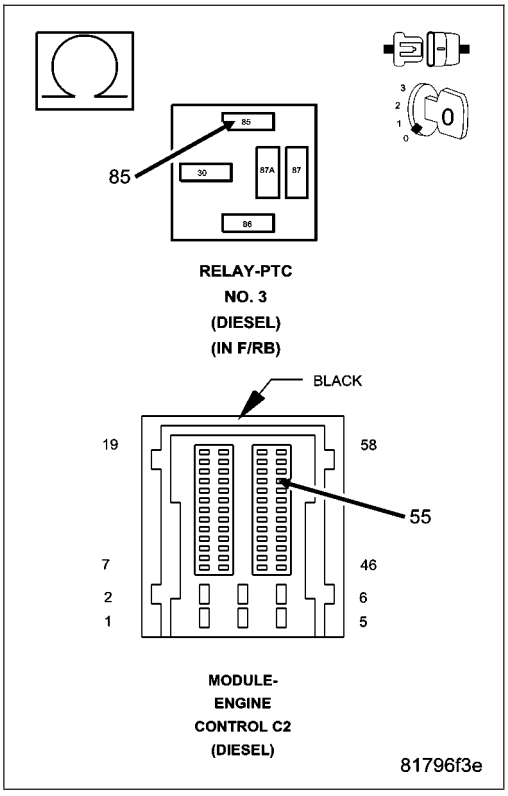

5. PTC NO. 3 RELAY

Turn the ignition off.
Install a substitute PTC No. 3 Relay in place of the vehicle's PTC No. 3 Relay.
Turn the ignition on.
With the scan tool, Clear DTCs.
With the scan tool, actuate the PTC No. 3 Relay.
With the scan tool, select View DTCs.

Is the status Active for this DTC?

Yes >> Go to 6

No >> Replace the PTC No. 3 Relay.
Perform the ECM Verification Test Ver. 1. (Refer to 9 - ENGINE - DIAGNOSIS AND TESTING)

6. ENGINE CONTROL MODULE (ECM)

Using the wiring diagram/schematic as a guide, inspect the wiring and connectors between the PTC No. 3 Relay and the Engine Control Module (ECM).
Look for any chafed, pierced, pinched, or partially broken wires.
Look for broken, bent, pushed out or corroded terminals.
Refer to any Technical Service Bulletins that may apply.

Were any problems found?

Yes >> Repair as necessary.
Perform the ECM Verification Test Ver. 1. (Refer to 9 - ENGINE - DIAGNOSIS AND TESTING)

No >> Replace the Engine Control Module (ECM) in accordance with the Service Information.
Perform the ECM Verification Test Ver. 1. (Refer to 9 - ENGINE - DIAGNOSIS AND TESTING)

B1C32- AIRBAG DEPLOYMENT DETECTED

- **When Monitored:**
  With the ignition on.
- **Set Condition:**
  The ACM sends a CAN Bus message to the ECM indicating that the airbags have been deployed.

Always perform the Pre-Diagnostic Troubleshooting procedure before proceeding.

Diagnostic Test

1. DTC EXPLANATION

NOTE: This DTC indicates that the vehicle has been in an accident and the airbag module has deployed the airbags.

View Repair.

Yes >> Test Complete.

U0101-LOST COMMUNICATION WITH TRANSMISSION CONTROL MODULE

For a complete wiring diagram **Refer to Section 8W**

- **When Monitored:**
  With the ignition on.
- **Set Condition:**
  The ECM doesn't receive a Bus Message from the Transmission Control Module.

Possible Causes
INTERMITTENT DTC
CAN BUS OPEN OR SHORTED CONDITION
TRANSMISSION CONTROL MODULE
ENGINE CONTROL MODULE (ECM)

Always perform the Pre-Diagnostic Troubleshooting procedure before proceeding. (Refer to 9 - ENGINE - DIAGNOSIS AND TESTING)

Diagnostic Test

1. DTC IS ACTIVE

Ignition on, engine not running.
With the scan tool, Clear DTCs in the Engine Control Module (ECM).
Monitor the scan tool for at least two minutes.
Cycle the ignition key off and on several times, leaving the ignition on for at least 10 seconds at a time.
Start the engine.
Allow the engine to reach normal operating temperature.
With the scan tool, select View DTCs.

Is the status Active for this DTC?

Yes >> Refer to 8 - ELECTRICAL/ELECTRONIC CONTROL MODULES - DIAGNOSIS AND TESTING for diagnostic procedures and for further possible causes.

No >> Refer to the *CHECKING FOR AN INTERMITTENT DTC Diagnostic Procedure. (Refer to 9 - ENGINE - DIAGNOSIS AND TESTING)

U0103-LOST COMMUNICATION WITH ELECTRIC GEAR SHIFT MODULE

For a complete wiring diagram **Refer to Section 8W**

- **When Monitored:**
  Continuously while the system is active.
- **Set Condition:**
  The ECM doesn't receive a Bus Message from the Electric Gear Shift Module.

Possible Causes
INTERMITTENT DTC
CAN BUS OPEN OR SHORTED CONDITION
ELECTRIC GEAR SHIFT MODULE
ENGINE CONTROL MODULE (ECM)

Always perform the Pre-Diagnostic Troubleshooting procedure before proceeding. (Refer to 9 - ENGINE - DIAGNOSIS AND TESTING)

Diagnostic Test

1. DTC IS ACTIVE

Ignition on, engine not running.
With the scan tool, Clear DTCs in the Engine Control Module (ECM).
Monitor the scan tool for at least two minutes.
Cycle the ignition key off and on several times, leaving the ignition on for at least 10 seconds at a time.
Start the engine.
Allow the engine to reach normal operating temperature.
With the scan tool, select View DTCs.

Is the status Active for this DTC?

Yes >> Refer to 8 - ELECTRICAL/ELECTRONIC CONTROL MODULES - DIAGNOSIS AND TESTING for diagnostic procedures and for further possible causes.

No >> Refer to the *CHECKING FOR AN INTERMITTENT DTC Diagnostic Procedure. (Refer to 9 - ENGINE - DIAGNOSIS AND TESTING)

U1132-GENERATOR COMMUNICATION

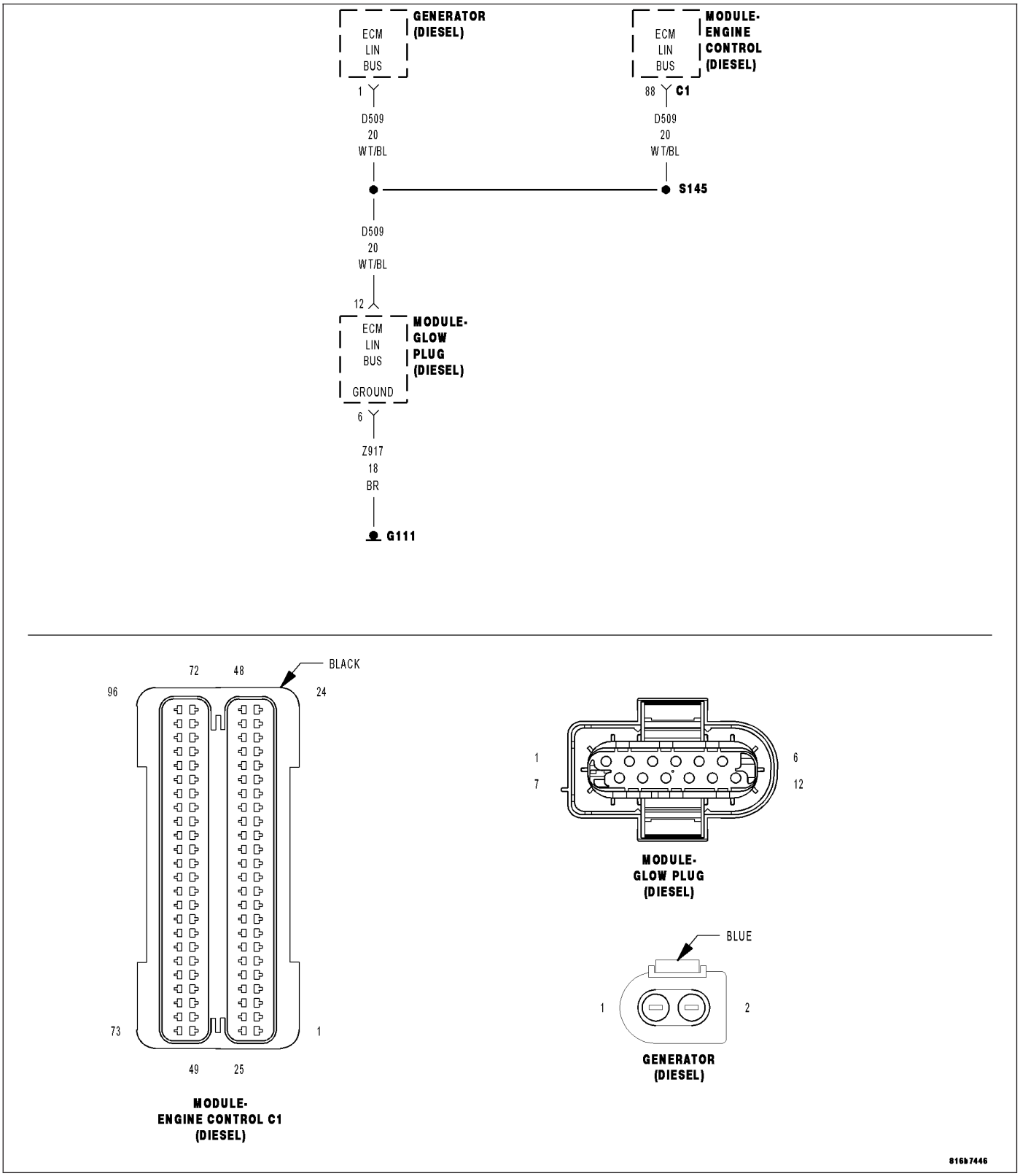

For a complete wiring diagram **Refer to Section 8W**

- **When Monitored:**
  Continuously while the system is active.
- **Set Condition:**
  The ECM isn't receiving a LIN bus message from the Generator.

Possible Causes
INTERMITTENT DTC
(D509) LIN BUS CIRCUIT OPEN OR HIGH RESISTANCE
GENERATOR
ENGINE CONTROL MODULE (ECM)

Always perform the Pre-Diagnostic Troubleshooting procedure before proceeding. (Refer to 9 - ENGINE - DIAGNOSIS AND TESTING)

Diagnostic Test

1. DTC IS ACTIVE

Turn the ignition on.

With a scan tool, View DTCs.

Record all DTC information.

NOTE: If DTC U1008 LIN 1 BUS is active in addition to this DTC, perform the diagnostic procedure for that DTC before continuing with this test.

NOTE: If DTC U0106 LOST COMMUNICATION WITH GLOW PLUG MODULE is active or stored in addition to this DTC, proceed with this diagnostic procedure.

With a scan tool, Clear DTCs.

Start the engine and allow it to reach normal operating temperature.

Monitor the scan tool for at least 2 minutes.

With a scan tool, View DTCs.

Is the status Active for this DTC?

Yes >> Go To 2

No >> Refer to the INTERMITTENT CONDITION Diagnostic Procedure. (Refer to 9 - ENGINE - DIAGNOSIS AND TESTING)

2. U0106 LOST COMMUNICATION WITH GLOW PLUG MODULE DTC IS PRESENT

With a scan tool, View DTCs.

Is DTC U0106 LOST COMMUNICATION WITH GLOW PLUG MODULE Active in addition to this DTC?

Yes >> Go To 3

No >> Go To 4

3. (D509) LIN BUS CIRCUIT OPEN OR HIGH RESISTANCE

Turn the ignition off.

Disconnect the Generator connector.

Disconnect the Glow Plug Module connector.

Disconnect the Engine Control Module (ECM) connector.

Measure the resistance of the (D509) LIN Bus circuit between the Generator connector and the Engine Control Module (ECM) connector.

Measure the resistance of the (D509) LIN Bus circuit between the Glow Plug Module connector and the Engine Control Module (ECM) connector.

Is the resistance below 10 ohms for both measurements?

Yes >> Go To 6

No >> Repair the (D509) LIN Bus for an open circuit or high resistance.

Perform the ECM Verification Test Ver. 1. (Refer to 9 - ENGINE - DIAGNOSIS AND TESTING)

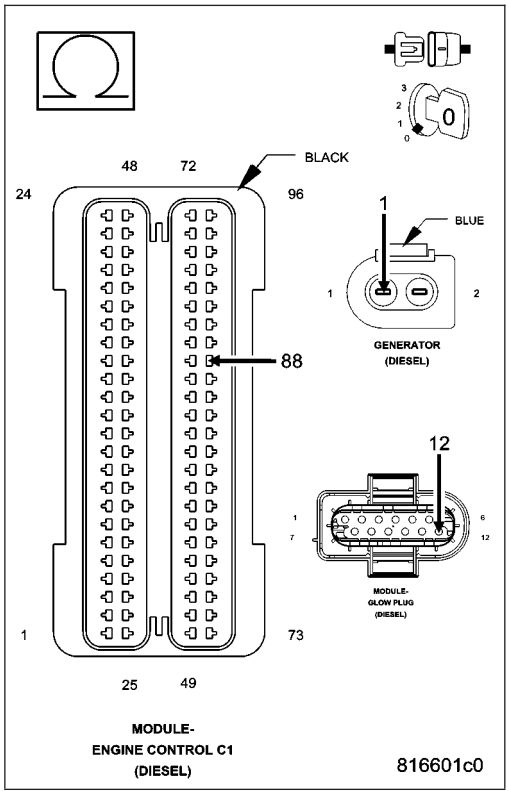

4. (D509) LIN BUS CIRCUIT OPEN OR HIGH RESISTANCE

Turn the ignition off.

Disconnect the Generator connector.

Disconnect the Engine Control Module (ECM) connector.

Measure the resistance of the (D509) LIN Bus circuit between the Generator connector and the Engine Control Module (ECM) connector.

Is the resistance below 10 ohms?

Yes >> Go To 5

No >> Repair the (D509) LIN Bus for an open circuit or high resistance.

Perform the ECM Verification Test Ver. 1. (Refer to 9 - ENGINE - DIAGNOSIS AND TESTING)

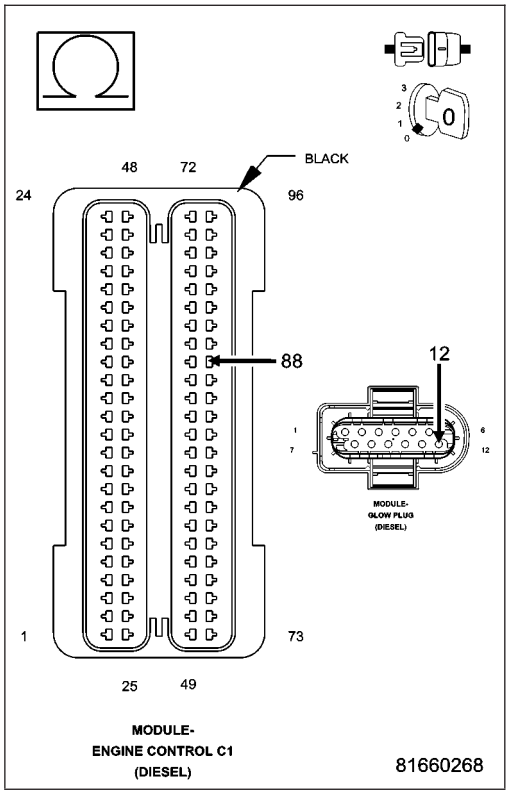

5. GENERATOR

Ignition off, engine not running.
Connect the Engine Control Module (ECM) connector.
Replace the Generator in accordance with the Service Information.
Turn the ignition on.
With a scan tool, Clear DTCs.
Start the engine and allow it to reach normal operating temperature.
Monitor the scan tool for at least 2 minutes.
With a scan tool, View DTCs.

Is the status Active for this DTC?

Yes >> Go to 6

No >> Test Complete.
Perform the ECM Verification Test Ver. 1. (Refer to 9 - ENGINE - DIAGNOSIS AND TESTING)

6. ENGINE CONTROL MODULE (ECM)

Using the wiring diagram/schematic as a guide, inspect the wiring and connectors between the Generator and the Engine Control Module (ECM).
Look for any chafed, pierced, pinched, or partially broken wires.
Look for broken, bent, pushed out or corroded terminals.
Monitor the scan tool data relative to this circuit and wiggle test the wiring and connectors.
Look for the data to change or for the DTC to reset during the wiggle test.
Refer to any Technical Service Bulletins that may apply.

Were any problems found?

Yes >> Repair as necessary.
Perform the ECM Verification Test Ver. 1. (Refer to 9 - ENGINE - DIAGNOSIS AND TESTING)

No >> Replace the Engine Control Module (ECM) in accordance with the Service Information.
Perform the ECM Verification Test Ver. 1. (Refer to 9 - ENGINE - DIAGNOSIS AND TESTING)

U0114-LOST COMMUNICATION WITH FINAL DRIVE CONTROL MODULE

For a complete wiring diagram **Refer to Section 8W**

- **When Monitored:**
  Continuously while the system is active.
- **Set Condition:**
  The ECM doesn't receive a Bus Message from the Final Drive Control Module (FDCM).

Possible Causes
INTERMITTENT DTC
CAN BUS OPEN OR SHORTED CONDITION
FINAL DRIVE CONTROL MODULE (FDCM)
ENGINE CONTROL MODULE (ECM)

Always perform the Pre-Diagnostic Troubleshooting procedure before proceeding. (Refer to 9 - ENGINE - DIAGNOSIS AND TESTING)

Diagnostic Test

1. DTC IS ACTIVE

Ignition on, engine not running.
With the scan tool, Clear DTCs in the Engine Control Module (ECM).
Monitor the scan tool for at least two minutes.
Cycle the ignition key off and on several times, leaving the ignition on for at least 10 seconds at a time.
Start the engine.
Allow the engine to reach normal operating temperature.
With the scan tool, select View DTCs.

Is the status Active for this DTC?

Yes >> Refer to 8 - ELECTRICAL/ELECTRONIC CONTROL MODULES - DIAGNOSIS AND TESTING for diagnostic procedures and for further possible causes.

No >> Refer to the *CHECKING FOR AN INTERMITTENT DTC Diagnostic Procedure. (Refer to 9 - ENGINE - DIAGNOSIS AND TESTING)

U0121-LOST COMMUNICATION WITH ANTI-LOCK BRAKE MODULE

For a complete wiring diagram **Refer to Section 8W**

- **When Monitored:**
  Continuously while the system is active.
- **Set Condition:**
  The ECM doesn't receive a Bus Message from the Anti-lock Brake Module.

Possible Causes
INTERMITTENT DTC
CAN BUS OPEN OR SHORTED CONDITION
ANTI-LOCK BRAKE MODULE
ENGINE CONTROL MODULE (ECM)

Always perform the Pre-Diagnostic Troubleshooting procedure before proceeding. (Refer to 9 - ENGINE - DIAGNOSIS AND TESTING)

Diagnostic Test

1. DTC IS ACTIVE

Ignition on, engine not running.
With the scan tool, Clear DTCs in the Engine Control Module (ECM).
Monitor the scan tool for at least two minutes.
Cycle the ignition key off and on several times, leaving the ignition on for at least 10 seconds at a time.
Start the engine.
Allow the engine to reach normal operating temperature.
With the scan tool, select View DTCs.

Is the status Active for this DTC?

Yes >> Refer to 8 - ELECTRICAL/ELECTRONIC CONTROL MODULES - DIAGNOSIS AND TESTING for diagnostic procedures and for further possible causes.

No >> Refer to the *CHECKING FOR AN INTERMITTENT DTC Diagnostic Procedure. (Refer to 9 - ENGINE - DIAGNOSIS AND TESTING)

U0141-LOST COMMUNICATION WITH FRONT CONTROL MODULE

For a complete wiring diagram **Refer to Section 8W**

- **When Monitored:**
  Continuously while the system is active.
- **Set Condition:**
  The ECM doesn't receive a Bus Message from the Front Control Module.

Possible Causes
INTERMITTENT DTC
CAN BUS OPEN OR SHORTED CONDITION
FRONT CONTROL MODULE (FCM)
ENGINE CONTROL MODULE (ECM)

Always perform the Pre-Diagnostic Troubleshooting procedure before proceeding. (Refer to 9 - ENGINE - DIAGNOSIS AND TESTING)

Diagnostic Test

1. DTC IS ACTIVE

Ignition on, engine not running.
With the scan tool, Clear DTCs in the Engine Control Module (ECM).
Monitor the scan tool for at least two minutes.
Cycle the ignition key off and on several times, leaving the ignition on for at least 10 seconds at a time.
Start the engine.
Allow the engine to reach normal operating temperature.
With the scan tool, select View DTCs.

Is the status Active for this DTC?

Yes >> Refer to 8 - ELECTRICAL/ELECTRONIC CONTROL MODULES - DIAGNOSIS AND TESTING for diagnostic procedures and for further possible causes.

No >> Refer to the *CHECKING FOR AN INTERMITTENT DTC Diagnostic Procedure. (Refer to 9 - ENGINE - DIAGNOSIS AND TESTING)

U0402-IMPLAUSIBLE DATA RECEIVED FROM TCM

For a complete wiring diagram **Refer to Section 8W**

- **When Monitored:**
  Continuously while the system is active.
- **Set Condition:**
  An error message has been received over the bus from the Transmission Control Module (TCM).

Possible Causes
INTERMITTENT DTC
CAN BUS OPEN OR SHORTED CONDITION
TRANSMISSION CONTROL MODULE (TCM)
ENGINE CONTROL MODULE (ECM)

Always perform the Pre-Diagnostic Troubleshooting procedure before proceeding. (Refer to 9 - ENGINE - DIAGNOSIS AND TESTING)

Diagnostic Test

1. ACTIVE DTC

NOTE: Diagnose all CAN B and C communication DTCs before continuing.
Ignition on, engine not running.
With a scan tool, view DTCs.

Is the status Active for this DTC?

Yes >> Go To 2

No >> Refer to the INTERMITTENT CONDITION Diagnostic Procedure. (Refer to 9 - ENGINE - DIAGNOSIS AND TESTING)
Perform the ECM Verification Test Ver. 1. (Refer to 9 - ENGINE - DIAGNOSIS AND TESTING)

2. COMMUNICATION DTCS PRESENT IN THE TRANSMISSION CONTROL MODULE (TCM)

With a scan tool check for DTCs in the Transmission Control Module (TCM).

Are there any CAN bus DTCs active in the Transmission Control Module (TCM) at this time?

Yes >> Refer to 8 - ELECTRICAL/ELECTRONIC CONTROL MODULES - DIAGNOSIS AND TESTING for additional vehicle communication diagnostic procedures.
Perform BODY VERIFICATION TEST – VER 1. (Refer to 8 - ELECTRICAL/ELECTRONIC CONTROL MODULES - STANDARD PROCEDURE)

No >> Replace and program the Engine Control Module (ECM) in accordance with the Service Information.
Perform the ECM Verification Test Ver. 1. (Refer to 9 - ENGINE - DIAGNOSIS AND TESTING)

U0415-IMPLAUSIBLE DATA RECEIVED FROM ABS

For a complete wiring diagram **Refer to Section 8W**

- **When Monitored:**
  Continuously while the system is active.
- **Set Condition:**
  An error message has been received over the bus from the Anti-lock Brake Module.

Possible Causes
INTERMITTENT DTC
CAN BUS OPEN OR SHORTED CONDITION
ANTI-LOCK BRAKE MODULE
ENGINE CONTROL MODULE (ECM)

Always perform the Pre-Diagnostic Troubleshooting procedure before proceeding. (Refer to 9 - ENGINE - DIAGNOSIS AND TESTING)

Diagnostic Test

1. ACTIVE DTC

NOTE: Diagnose all CAN B and C communication DTCs before continuing.
Ignition on, engine not running.
With a scan tool, view DTCs.

Is the status Active for this DTC?

Yes >> Go To 2

No >> Refer to the INTERMITTENT CONDITION Diagnostic Procedure. (Refer to 9 - ENGINE - DIAGNOSIS AND TESTING)
Perform the ECM Verification Test Ver. 1. (Refer to 9 - ENGINE - DIAGNOSIS AND TESTING)

2. COMMUNICATION DTCS PRESENT IN THE ANTI-LOCK BRAKE MODULE

With a scan tool check for DTCs in the Anti-lock Brake Module.

Are there any CAN bus DTCs active in the Anti-lock Brake Module at this time?

Yes >> Refer to 8 - ELECTRICAL/ELECTRONIC CONTROL MODULES - DIAGNOSIS AND TESTING for additional vehicle communication diagnostic procedures.
Perform BODY VERIFICATION TEST – VER 1. (Refer to 8 - ELECTRICAL/ELECTRONIC CONTROL MODULES - STANDARD PROCEDURE)

No >> Replace and program the Engine Control Module (ECM) in accordance with the Service Information.
Perform the ECM Verification Test Ver. 1. (Refer to 9 - ENGINE - DIAGNOSIS AND TESTING)

U0429-IMPLAUSIBLE DATA RECEIVED FROM SCM

For a complete wiring diagram **Refer to Section 8W**

- **When Monitored:**
  Continuously while the system is active.
- **Set Condition:**
  An error message has been received over the bus from the Steering Control Module (SCM).

Possible Causes
INTERMITTENT DTC
CAN BUS OPEN OR SHORTED CONDITION
STEERING CONTROL MODULE (SCM)
ENGINE CONTROL MODULE (ECM)

Always perform the Pre-Diagnostic Troubleshooting procedure before proceeding. (Refer to 9 - ENGINE - DIAGNOSIS AND TESTING)

Diagnostic Test

1. ACTIVE DTC

NOTE: Diagnose all CAN B and C communication DTCs before continuing.
Ignition on, engine not running.
With a scan tool, view DTCs.

Is the status Active for this DTC?

Yes >> Go To 2

No >> Refer to the INTERMITTENT CONDITION Diagnostic Procedure. (Refer to 9 - ENGINE - DIAGNOSIS AND TESTING)

2. COMMUNICATION DTCS PRESENT IN THE STEERING CONTROL MODULE (SCM)

With a scan tool check for DTCs in the Steering Control Module (SCM).

Are there any CAN bus DTCs active in the Steering Control Module (SCM) at this time?

Yes >> Refer to 8 - ELECTRICAL/ELECTRONIC CONTROL MODULES - DIAGNOSIS AND TESTING for additional vehicle communication diagnostic procedures.
Perform BODY VERIFICATION TEST – VER 1. (Refer to 8 - ELECTRICAL/ELECTRONIC CONTROL MODULES - STANDARD PROCEDURE)

No >> Replace and program the Engine Control Module (ECM) in accordance with the Service Information.
Perform the ECM Verification Test Ver. 1. (Refer to 9 - ENGINE - DIAGNOSIS AND TESTING)

U1004-CAN C BUS TRANSMIT PERFORMANCE

For a complete wiring diagram **Refer to Section 8W**

- **When Monitored:**
  Continuously while the system is active and there are no ECM system voltage DTCs present.
- **Set Condition:**
  The ECM is reporting an error condition when attempting to transmit a CAN bus message.

Possible Causes
INTERMITTENT DTC
CAN BUS ERROR CONDITION
ENGINE CONTROL MODULE (ECM)

Always perform the Pre-Diagnostic Troubleshooting procedure before proceeding. (Refer to 9 - ENGINE - DIAGNOSIS AND TESTING)

Diagnostic Test

1. ACTIVE DTC

NOTE: Diagnose all CAN B and C communication DTCs before continuing.
Ignition on, engine not running.
With a scan tool, view DTCs.

Is the status Active for this DTC?

Yes >> Go To 2

No >> Refer to the INTERMITTENT CONDITION Diagnostic Procedure. (Refer to 9 - ENGINE - DIAGNOSIS AND TESTING)

2. COMMUNICATION DTCS PRESENT

With a scan tool check for any other communication DTCs present in other modules on the CAN C bus.

Are there any CAN C bus DTCs active at this time?

Yes >> Refer to 8 - ELECTRICAL/ELECTRONIC CONTROL MODULES - DIAGNOSIS AND TESTING for additional vehicle communication diagnostic procedures.

No >> Replace and program the Engine Control Module (ECM) in accordance with the Service Information. Perform the ECM Verification Test Ver. 1. (Refer to 9 - ENGINE - DIAGNOSIS AND TESTING)

U1008-LIN 1 BUS

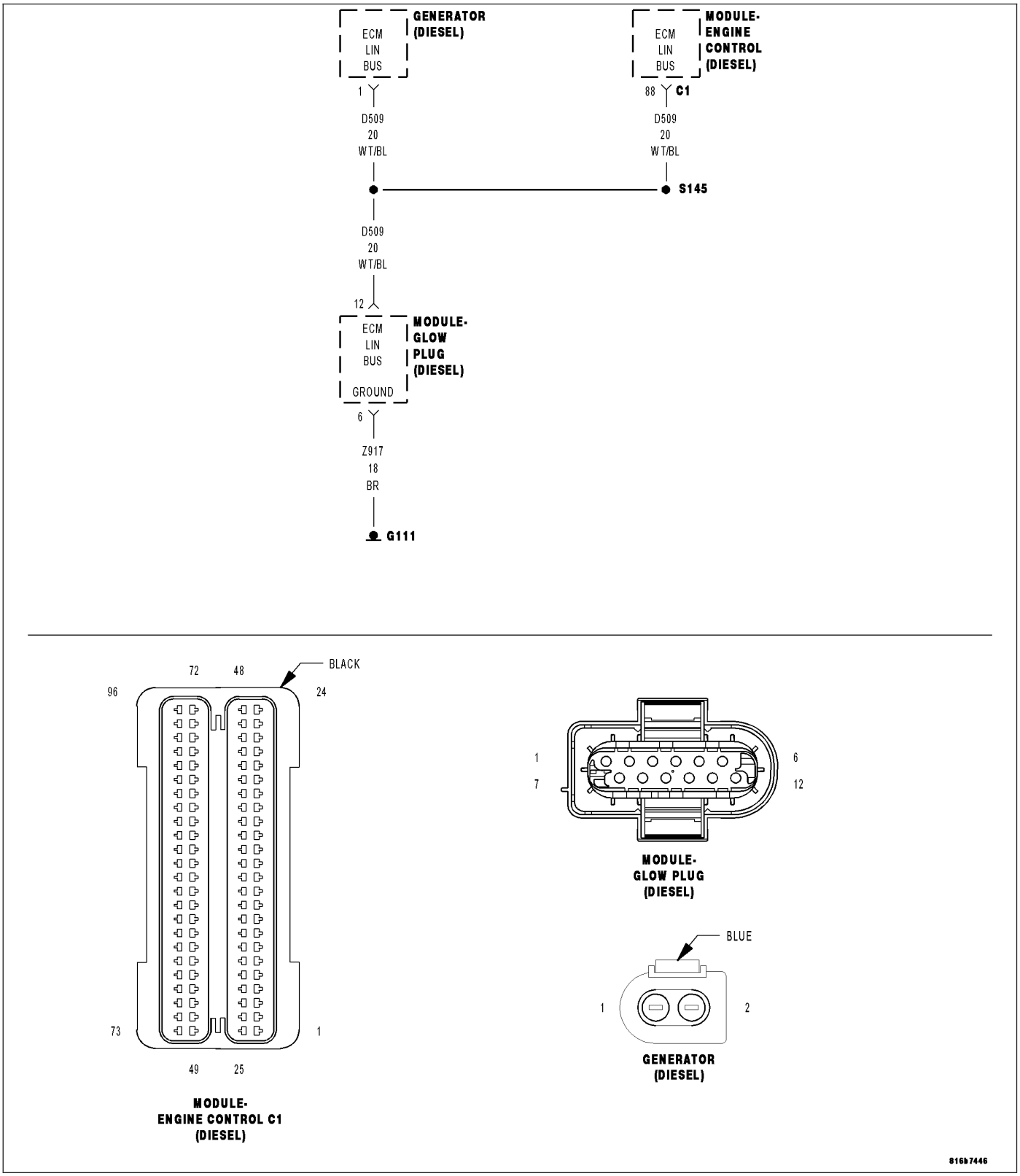

For a complete wiring diagram **Refer to Section 8W**

- **When Monitored:**
  Continuously while the system is active.
- **Set Condition:**
  The ECM is receiving a LIN bus error message.

Possible Causes
INTERMITTENT DTC
(D509) LIN BUS CIRCUIT SHORTED TO GROUND
(D509) LIN BUS CIRCUIT SHORTED TO VOLTAGE
GLOW PLUG MODULE
GENERATOR
ENGINE CONTROL MODULE (ECM)

Always perform the Pre-Diagnostic Troubleshooting procedure before proceeding. (Refer to 9 - ENGINE - DIAGNOSIS AND TESTING)

Diagnostic Test

1. DTC IS ACTIVE

Turn the ignition on.
With a scan tool, View DTCs.
Record all DTC information.
With a scan tool, Clear DTCs.
Start the engine and allow it to reach normal operating temperature.
Monitor the scan tool for at least 2 minutes.
With a scan tool, View DTCs.

Is the status Active for this DTC?

Yes >> Go To 2

No >> Refer to the INTERMITTENT CONDITION Diagnostic Procedure. (Refer to 9 - ENGINE - DIAGNOSIS AND TESTING)

2. GLOW PLUG MODULE

Turn the ignition off.
Disconnect the Glow Plug Module connector.
Turn the ignition on.
With a scan tool, Clear DTCs.
With a scan tool, View DTCs.
Monitor the scan tool for at least 2 minutes.

NOTE: If the Glow Plug Module LIN bus circuit is shorted internally, the LIN Bus DTC will not set with the module disconnected. If the LIN bus is shorted to voltage or ground, or the Generator is internally shorted, this DTC will remain Active.

Is the status Active for this DTC?

Yes >> Go To 3

No >> Replace the Glow Plug Module in accordance with the Service Information.
Perform the ECM Verification Test Ver. 1. (Refer to 9 - ENGINE - DIAGNOSIS AND TESTING)

3. GENERATOR

Turn the ignition off.
Connect the Glow Plug Module connector.
Disconnect the Generator connector.
Turn the ignition on.
With a scan tool, Clear DTCs.
With a scan tool, View DTCs.
Monitor the scan tool for at least 2 minutes.

NOTE: If the Generator LIN bus circuit is shorted internally, the LIN Bus DTC will not set with the Generator disconnected. If the LIN bus is shorted to voltage or ground, this DTC will remain Active.

Is the status Active for this DTC?

Yes >> Go To 4

No >> Replace the Generator in accordance with the Service Information.
Perform the ECM Verification Test Ver. 1. (Refer to 9 - ENGINE - DIAGNOSIS AND TESTING)

4. (D509) LIN BUS CIRCUIT SHORTED TO GROUND

Turn the ignition off.
Disconnect the Glow Plug Module connector.
Disconnect the Engine Control Module (ECM) connector.
Measure the resistance between ground and the (D509) LIN Bus circuit in the Generator connector.

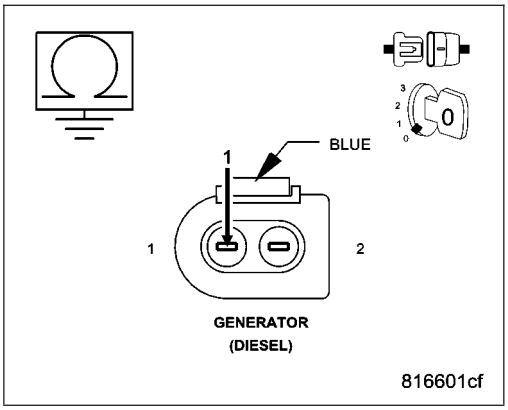

Is the resistance above 1000 ohms?

Yes >> Go To 5

No >> Repair the (D509) LIN Bus for a short to ground.
Perform the ECM Verification Test Ver. 1. (Refer to 9 - ENGINE - DIAGNOSIS AND TESTING)

5. (D509) LIN BUS CIRCUIT SHORTED TO VOLTAGE

Remove the ASD Relay.
Connect a jumper wire between cavity 30 and cavity 87 of the ASD Relay Connector.
Turn the ignition on.
Measure the voltage of the (D509) LIN Bus circuit in the Generator connector.

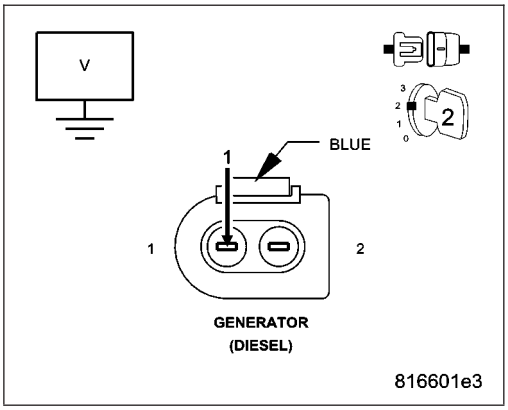

Is there any voltage present?

Yes >> Repair the (D509) LIN Bus circuit for a short to voltage.
Perform the ECM Verification Test Ver. 1. (Refer to 9 - ENGINE - DIAGNOSIS AND TESTING)

No >> Go To 6

6. ENGINE CONTROL MODULE (ECM)

Using the wiring diagram/schematic as a guide, inspect the wiring and connectors between the Glow Plug Module and the Engine Control Module (ECM).

Look for any chafed, pierced, pinched, or partially broken wires.

Look for broken, bent, pushed out or corroded terminals.

Monitor the scan tool data relative to this circuit and wiggle test the wiring and connectors.

Look for the data to change or for the DTC to reset during the wiggle test.

Refer to any Technical Service Bulletins that may apply.

Were any problems found?

Yes >> Repair as necessary.
Perform the ECM Verification Test Ver. 1. (Refer to 9 - ENGINE - DIAGNOSIS AND TESTING)

No >> Replace the Engine Control Module (ECM) in accordance with the Service Information.
Perform the ECM Verification Test Ver. 1. (Refer to 9 - ENGINE - DIAGNOSIS AND TESTING)

U110A-LOST COMMUNICATION WITH SCM - CAN-C

For a complete wiring diagram **Refer to Section 8W**

- **When Monitored:**
  Continuously while the system is active.
- **Set Condition:**
  The ECM doesn't receive a Bus Message from the Steering Control Module (SCM).

Possible Causes
INTERMITTENT DTC
CAN BUS OPEN OR SHORTED CONDITION
STEERING CONTROL MODULE (SCM)
ENGINE CONTROL MODULE (ECM)

Always perform the Pre-Diagnostic Troubleshooting procedure before proceeding. (Refer to 9 - ENGINE - DIAGNOSIS AND TESTING)

Diagnostic Test

1. DTC IS ACTIVE

Ignition on, engine not running.

With the scan tool, Clear DTCs in the Engine Control Module (ECM).

Monitor the scan tool for at least two minutes.

Cycle the ignition key off and on several times, leaving the ignition on for at least 10 seconds at a time.

Start the engine.

Allow the engine to reach normal operating temperature.

With the scan tool, select View DTCs.

Is the status Active for this DTC?

Yes >> Refer to 8 - ELECTRICAL/ELECTRONIC CONTROL MODULES - DIAGNOSIS AND TESTING for diagnostic procedures and for further possible causes.

No >> Refer to the *CHECKING FOR AN INTERMITTENT DTC Diagnostic Procedure. (Refer to 9 - ENGINE - DIAGNOSIS AND TESTING)

U1113-LOST AC PRESSURE MESSAGE

For a complete wiring diagram **Refer to Section 8W**

- **When Monitored:**
  Continuously while the system is active.
- **Set Condition:**
  An invalid message has been received over the bus from the Front Control Module (FCM).

Possible Causes
INTERMITTENT DTC
CAN BUS OPEN OR SHORTED CONDITION
FRONT CONTROL MODULE (FCM)
ENGINE CONTROL MODULE (ECM)

Always perform the Pre-Diagnostic Troubleshooting procedure before proceeding. (Refer to 9 - ENGINE - DIAGNOSIS AND TESTING)

Diagnostic Test

1. ACTIVE DTC

NOTE: Diagnose all CAN B and C communication DTCs before continuing.
Ignition on, engine not running.
With a scan tool, view DTCs.

Is the status Active for this DTC?

Yes >> Go To 2

No >> Refer to the INTERMITTENT CONDITION Diagnostic Procedure. (Refer to 9 - ENGINE - DIAGNOSIS AND TESTING)

2. COMMUNICATION DTCS PRESENT IN THE FRONT CONTROL MODULE (FCM)

With a scan tool check for DTCs in the Front Control Module (FCM).

Are there any CAN bus DTCs active in the Front Control Module (FCM) at this time?

Yes >> Refer to 8 - ELECTRICAL/ELECTRONIC CONTROL MODULES - DIAGNOSIS AND TESTING for additional vehicle communication diagnostic procedures.
Perform BODY VERIFICATION TEST – VER 1. (Refer to 8 - ELECTRICAL/ELECTRONIC CONTROL MODULES - STANDARD PROCEDURE)

No >> Replace and program the Engine Control Module (ECM) in accordance with the Service Information.
Perform the ECM Verification Test Ver. 1. (Refer to 9 - ENGINE - DIAGNOSIS AND TESTING)

U1132-GENERATOR COMMUNICATION

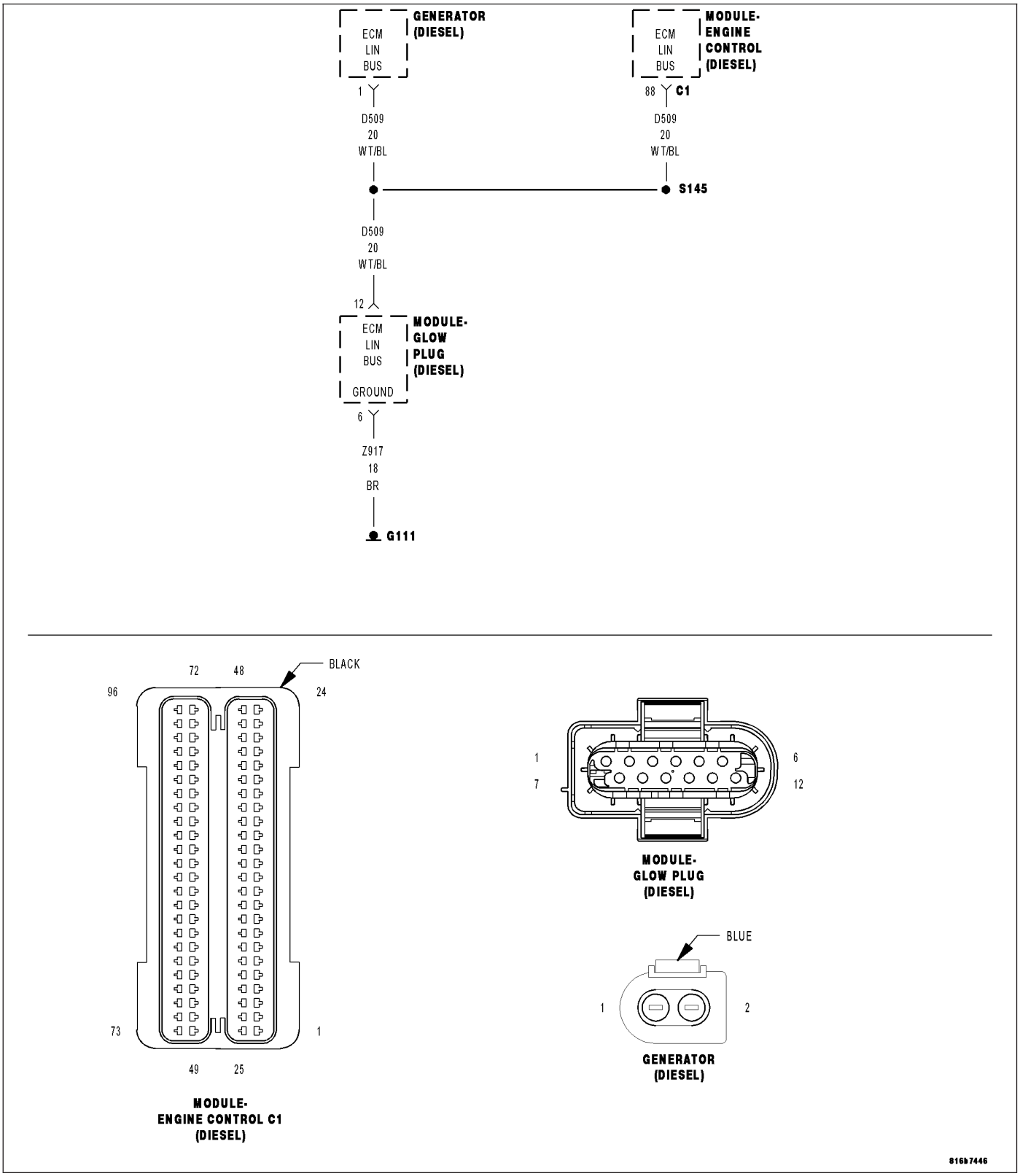

For a complete wiring diagram **Refer to Section 8W**

- **When Monitored:**
  Continuously while the system is active.
- **Set Condition:**
  The ECM isn't receiving a LIN bus message from the Generator.

Possible Causes
INTERMITTENT DTC
(D509) LIN BUS CIRCUIT OPEN OR HIGH RESISTANCE
GLOW PLUG MODULE
ENGINE CONTROL MODULE (ECM)

Always perform the Pre-Diagnostic Troubleshooting procedure before proceeding. (Refer to 9 - ENGINE - DIAGNOSIS AND TESTING)

Diagnostic Test

1. DTC IS ACTIVE

Turn the ignition on.

With a scan tool, View DTCs.

Record all DTC information.

NOTE: If DTC U1008 LIN 1 BUS is active in addition to this DTC, perform the diagnostic procedure for that DTC before continuing with this test.

NOTE: If DTC U0106 LOST COMMUNICATION WITH GLOW PLUG MODULE is active or stored in addition to this DTC, proceed with this diagnostic procedure.

With a scan tool, Clear DTCs.

Start the engine and allow it to reach normal operating temperature.

Monitor the scan tool for at least 2 minutes.

With a scan tool, View DTCs.

Is the status Active for this DTC?

Yes >> Go To 2

No >> Refer to the INTERMITTENT CONDITION Diagnostic Procedure. (Refer to 9 - ENGINE - DIAGNOSIS AND TESTING)

2. U0106 LOST COMMUNICATION WITH GLOW PLUG MODULE DTC IS PRESENT

With a scan tool, View DTCs.

Is DTC U0106 LOST COMMUNICATION WITH GLOW PLUG MODULE Active in addition to this DTC?

Yes >> Go To 3

No >> Go To 4

3. (D509) LIN BUS CIRCUIT OPEN OR HIGH RESISTANCE

Turn the ignition off.

Disconnect the Glow Plug Module connector.

Disconnect the Generator connector.

Disconnect the Engine Control Module (ECM) connector.

Measure the resistance of the (D509) LIN Bus circuit between the Glow Plug Module connector and the Engine Control Module (ECM) connector.

Measure the resistance of the (D509) LIN Bus circuit between the Generator connector and the Engine Control Module (ECM) connector.

Is the resistance below 10 ohms for both measurements?

Yes >> Go To 6

No >> Repair the (D509) LIN Bus circuit for an open circuit or high resistance.

Perform the ECM Verification Test Ver. 1. (Refer to 9 - ENGINE - DIAGNOSIS AND TESTING)

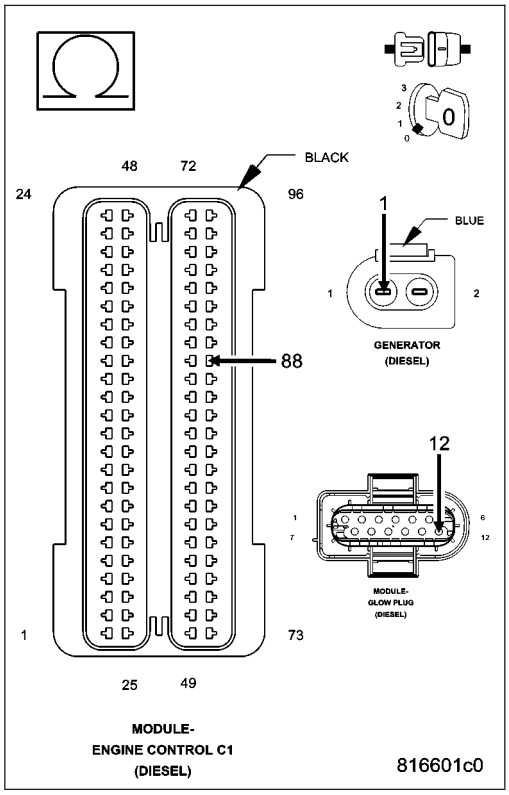

4. (D509) LIN BUS CIRCUIT OPEN OR HIGH RESISTANCE

Turn the ignition off.

Disconnect the Generator connector.

Disconnect the Engine Control Module (ECM) connector.

Measure the resistance of the (D509) LIN Bus circuit between the Glow Plug Module connector and the Engine Control Module (ECM) connector.

Is the resistance below 10 ohms?

Yes >> Go To 5

No >> Repair the (D509) LIN Bus circuit for an open circuit or high resistance.

Perform the ECM Verification Test Ver. 1. (Refer to 9 - ENGINE - DIAGNOSIS AND TESTING)

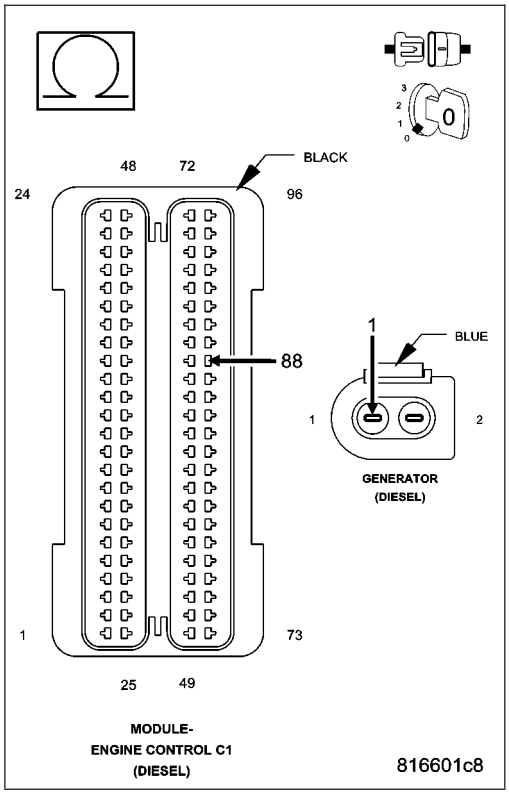

5. GENERATOR

Ignition off, engine not running.
Connect the Engine Control Module (ECM) connector.
Replace the Generator in accordance with the Service Information.
Turn the ignition on.
With a scan tool, Clear DTCs.
Start the engine and allow it to reach normal operating temperature.
Monitor the scan tool for at least 2 minutes.
With a scan tool, View DTCs.

Is the status Active for this DTC?

Yes >> Go to 6

No >> Test Complete.
Perform the ECM Verification Test Ver. 1. (Refer to 9 - ENGINE - DIAGNOSIS AND TESTING)

6. ENGINE CONTROL MODULE (ECM)

Using the wiring diagram/schematic as a guide, inspect the wiring and connectors between the Glow Plug Module and the Engine Control Module (ECM).
Look for any chafed, pierced, pinched, or partially broken wires.
Look for broken, bent, pushed out or corroded terminals.
Monitor the scan tool data relative to this circuit and wiggle test the wiring and connectors.
Look for the data to change or for the DTC to reset during the wiggle test.
Refer to any Technical Service Bulletins that may apply.

Were any problems found?

Yes >> Repair as necessary.
Perform the ECM Verification Test Ver. 1. (Refer to 9 - ENGINE - DIAGNOSIS AND TESTING)

No >> Replace the Engine Control Module (ECM) in accordance with the Service Information.
Perform the ECM Verification Test Ver. 1. (Refer to 9 - ENGINE - DIAGNOSIS AND TESTING)

*ENGINE CRANKS BUT WILL NOT START

For a complete wiring diagram **Refer to Section 8W**

Possible Causes
INTAKE SYSTEM RESTRICTION
ECM CODES PRESENT
ECT SENSOR
ENGINE CONTROL MODULE
ENGINE DRIVE CHAIN
FUEL PRESSURE SENSOR
FUEL SUPPLY CONTAMINATION
SUPPLY SIDE FUEL SYSTEM PRESSURE
FUEL SYSTEM RESTRICTION
GLOW PLUGS
SKREEM CODES PRESENT

Diagnostic Test

1. ECM CODES PRESENT

NOTE: The ECM must have proper power and ground connections for the following tests to be valid. Refer to Checking the ECM Power and Grounds in the symptom list.

Turn the ignition on.

With the scan tool, read the ECM DTCs.

Does the scan tool display any ECM DTCs?

Yes >> Refer to symptom list for problems related to ECM DTC.
Perform the ECM Verification Test Ver. 1. (Refer to 9 - ENGINE - DIAGNOSIS AND TESTING)

No >> Go To 2

2. SKREEM CODES PRESENT

With the scan tool, read the SKREEM DTCs.

Does the scan tool display any SKREEM DTCs?

Yes >> Refer to symptom list for problems related to SKREEM DTC.
Perform the ECM Verification Test Ver. 1. (Refer to 9 - ENGINE - DIAGNOSIS AND TESTING)

No >> Go To 3

3. CHECK FOR INTAKE SYSTEM RESTRICTIONS

Turn the ignition off.

Ensure vehicle has adequate fuel supply in fuel tank.

Inspect all air intake and turbocharger related hoses/tubes and connections.

Inspect the air filter for excessive dirt, soiling or other problems that may cause restricted air flow.

Were any problems found?

Yes >> Repair or replace as necessary.
Perform the ECM Verification Test Ver. 1. (Refer to 9 - ENGINE - DIAGNOSIS AND TESTING)

No >> Go to 4

4. ECT SENSOR

Using a temperature probe, check the vehicle temperature near the ECT Sensor.
Turn the ignition on.
With the scan tool in Sensors, read the ECT Sensor temperature.
Compare the temperature probe reading with the scan tool reading.

Are the two readings within 10°C of each other?

Yes >> Go To 5

No >> Repair as necessary.
Perform the ECM Verification Test Ver. 1. (Refer to 9 - ENGINE - DIAGNOSIS AND TESTING)

5. GLOW PLUGS

NOTE: Prior to performing this test, be sure to check the Glow Plug Relay operation. Refer to CHECKING GLOW PLUG OPERATION for the related symptom(s).
Refer to the Service Information and check the Glow Plugs for proper operation.

Are the Glow Plugs operating properly?

Yes >> Go To 6

No >> Repair as necessary.
Perform the ECM Verification Test Ver. 1. (Refer to 9 - ENGINE - DIAGNOSIS AND TESTING)

6. FUEL SYSTEM RESTRICTION

Inspect the fuel system lines for restrictions, leaks or other problems.

NOTE: Refer to the Service Information to ensure that the fuel system is properly primed. An unprimed system or excessive air in the supply system will cause a no-start condition.

Is there any evidence of problems?

Yes >> Repair as necessary.
Perform the ECM Verification Test Ver. 1. (Refer to 9 - ENGINE - DIAGNOSIS AND TESTING)

No >> Go To 7

7. FUEL CONTAMINATION

Inspect the fuel supply for contamination.

Is the fuel contaminated?

Yes >> Refer to the Service Information to remove and replace fuel throughout the fuel system.
Perform the ECM Verification Test Ver. 1. (Refer to 9 - ENGINE - DIAGNOSIS AND TESTING)

No >> Go To 8

8. SUPPLY SIDE FUEL SYSTEM PRESSURE

Refer to the Service Information and perform the Supply Side Fuel System Pressure Test.

Is the fuel pressure within specification?

Yes >> Go To 9

No >> Repair as necessary.
Perform the ECM Verification Test Ver. 1. (Refer to 9 - ENGINE - DIAGNOSIS AND TESTING)

9. FUEL PRESSURE SENSOR

Turn the ignition on, engine off.

With the scan tool, read the Fuel Pressure Sensor volts.

Is the Fuel Pressure Sensor voltage 0.45 and 0.60 volt?

Yes >> Go To 10

No >> Refer to the Service Information Wiring to check Fuel Pressure Sensor circuits. If Fuel Pressure Sensor circuitry is o.k., replace the Fuel Pressure Sensor.

10. CHECK FUEL PRESSURE AT ENGINE CRANKING

With the scan tool, read the Fuel Pressure Sensor signal while cranking the engine.

Does the Fuel Pressure Sensor signal increase to above 3500 psi (240 bar) within a few seconds after engine cranking begins?

Yes >> Go To 11

No >> Go To 12

11. ENGINE DRIVE CHAINS

Refer to the Service Information to ensure the Engine Drive Chains are installed correctly and the camshaft and crankshaft gears are timed correctly.

Were any problems found?

Yes >> Repair as necessary.
Perform the ECM Verification Test Ver. 1. (Refer to 9 - ENGINE - DIAGNOSIS AND TESTING)

No >> Replace and program the Engine Control Module in accordance with the Service Information.

12. FUEL PRESSURE SOLENOID

Turn the ignition off.

Refer to the Service Information and replace the Fuel Pressure Solenoid.

Turn the ignition on.

With the scan tool, erase the ECM DTC's.

Attempt to start the vehicle.

Does the vehicle start and run?

Yes >> Repair is complete.
Perform the ECM Verification Test Ver. 1. (Refer to 9 - ENGINE - DIAGNOSIS AND TESTING)

No >> Refer to the Service Information and replace the Fuel Injection Pump assembly.
Perform the ECM Verification Test Ver. 1. (Refer to 9 - ENGINE - DIAGNOSIS AND TESTING)

*ENGINE WILL NOT CRANK

For a complete wiring diagram **Refer to Section 8W**

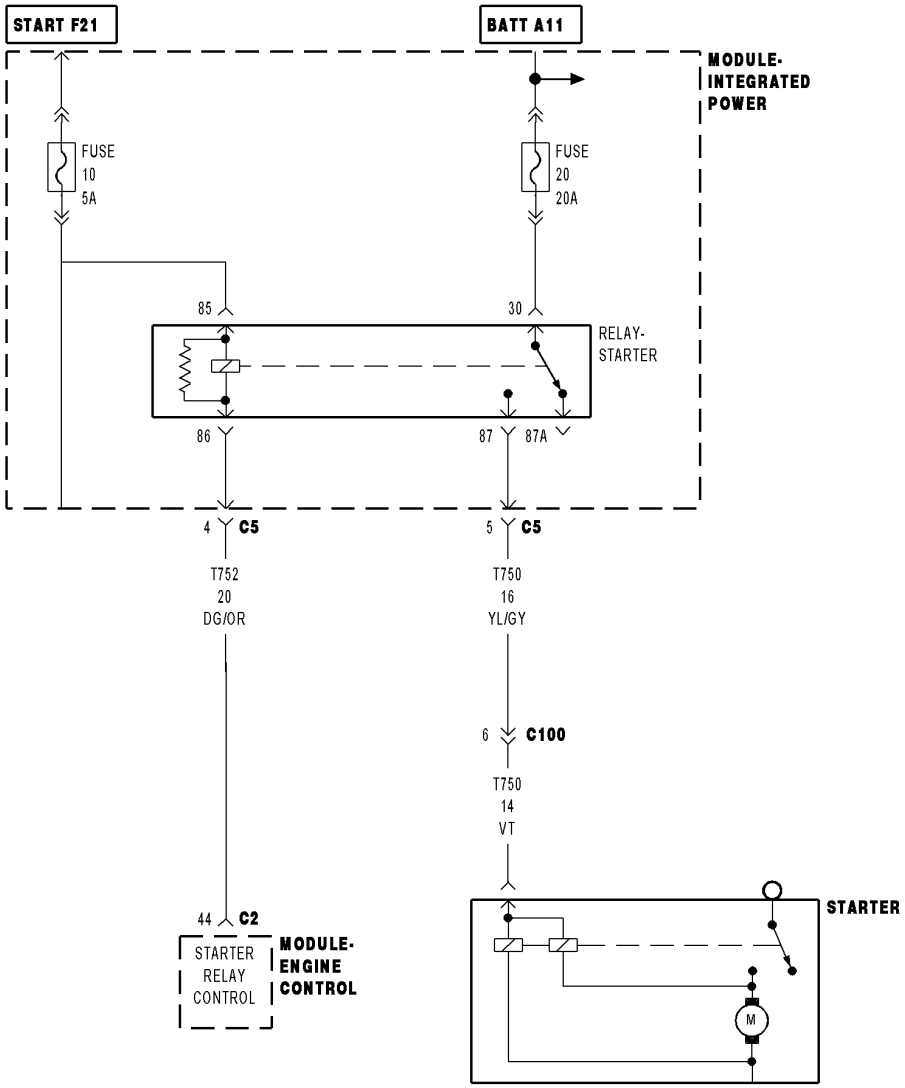

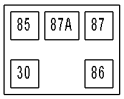

RELAY-
STARTER
(IN IPM)

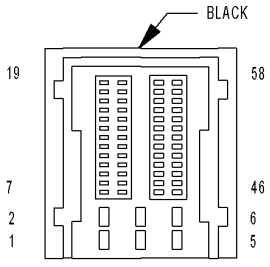

MODULE-
ENGINE
CONTROL C2
(DIESEL)

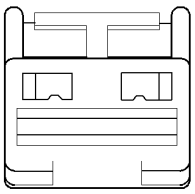

STARTER
(DIESEL)

816B74BC

Possible Causes
BATTERY CABLE HIGH RESISTANCE
BATTERY CABLES
ECM
MECHANICAL PROBLEM
OPEN FUSED BATTERY (+) CIRCUIT
(T751) OPEN IGNITION SWITCH (RUN/START) OUTPUT
SKREEM CODES PRESENT
STARTER MOTOR
STARTER RELAY
(T752) STARTER RELAY CONTROL CIRCUIT OPEN
(T752) STARTER RELAY CONTROL CIRCUIT SHORTED TO VOLTAGE
(T750) STARTER RELAY OUTPUT CIRCUIT OPEN

Diagnostic Test

1. BATTERY CABLES

NOTE: The battery must be fully charged before diagnosing a no crank condition.
Turn the ignition off.
Inspect the battery cables for corrosion, looseness or other problems.

Is there evidence of problems?

Yes >> Repair as necessary.
Perform the ECM Verification Test Ver. 1. (Refer to 9 - ENGINE - DIAGNOSIS AND TESTING)

No >> Go To 2

2. BATTERY CABLE HIGH RESISTANCE

Using the Service Information, check the battery cables for high resistance.

Did either battery cable have a voltage drop greater than 0.2 volts?

Yes >> Replace the battery cable(s).
Perform the ECM Verification Test Ver. 1. (Refer to 9 - ENGINE - DIAGNOSIS AND TESTING)

No >> Go To 3

3. SKREEM CODES PRESENT

Turn the ignition on.
With the scan tool, read the SKREEM DTCs.

Does the scan tool display any SKREEM DTCs?

Yes >> Refer to symptom list for problems related to SKREEM.
Perform the ECM Verification Test Ver. 1. (Refer to 9 - ENGINE - DIAGNOSIS AND TESTING)

No >> Go To 4

4. CHECKING STARTER OPERATION

Turn the ignition off.

Remove the Starter Relay from the IPM.

WARNING: THE TRANSMISSION MUST BE IN NEUTRAL AND THE PARK BRAKE MUST BE SET FOR THIS TEST.

WARNING: THE ENGINE MAY CRANK IN THE NEXT STEP. WHEN THE ENGINE IS CRANKING, DO NOT STAND IN A DIRECT LINE WITH THE FAN. DO NOT PUT YOUR HANDS NEAR THE PULLEYS, BELTS OR FAN. DO NOT WEAR LOOSE CLOTHING.

Momentarily jumper Starter Relay connector cavities 30 and 87 in the IPM connector.

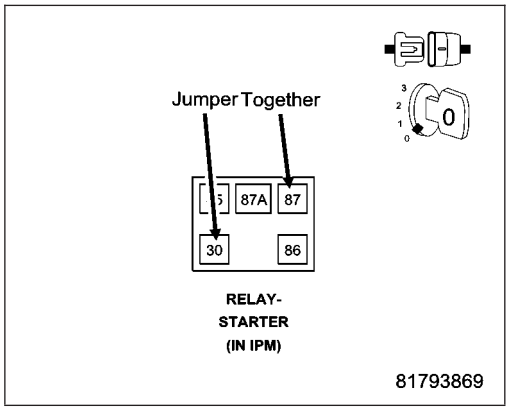

Did the engine crank?

Yes >> Go To 5

No >> Go To 10

5. STARTER RELAY

Install a known good relay in place of the Starter Relay.

Attempt to start the engine.

Does the engine crank?

Yes >> Replace the Starter Relay.
Perform the ECM Verification Test Ver. 1. (Refer to 9 - ENGINE - DIAGNOSIS AND TESTING)

No >> Go To 6

6. CHECK POWER AND GROUNDS

Refer to the symptom list and perform the Checking the ECM Power and Ground test.

Were any problem found with the ECM powers and grounds?

Yes >> Repair as necessary.
Perform the ECM Verification Test Ver. 1. (Refer to 9 - ENGINE - DIAGNOSIS AND TESTING)

No >> Go To 7

7. (T751) IGNITION SWITCH START/RUN OUTPUT CIRCUIT OPEN

Turn the ignition off.

Remove the Starter Relay from the IPM.

Using a 12-volt test light connected to ground, check the (T751) Ignition Switch Start/Run Output circuit while turning the ignition switch to the START position.

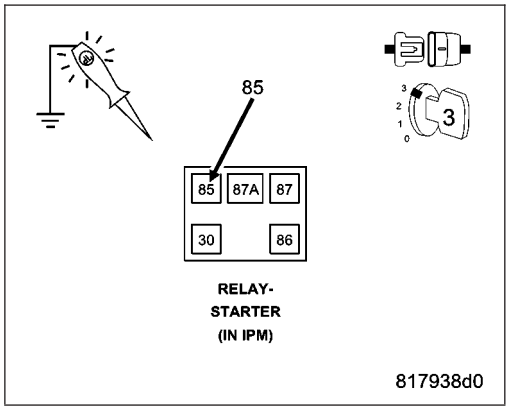

Does the test light illuminate with the ignition switch in the START position?

Yes >> Go To 8

No >> Repair the (T751) Ignition Switch Start/Run Output circuit for an open.
Perform the ECM Verification Test Ver. 1. (Refer to 9 - ENGINE - DIAGNOSIS AND TESTING)

8. (T752) STARTER RELAY CONTROL CIRCUIT SHORTED TO VOLTAGE

Turn the ignition off.

Disconnect the ECM harness connectors.

Remove the ASD Relay from the IPM.

Using a jumper wire, connect ASD Relay connector cavities 30 and 87 in the IPM.

Turn the ignition on.

Measure the voltage of the (T752) Starter Relay Control circuit.

Is the voltage above 1.0 volt?

Yes >> Repair the (T752) Starter Relay Control circuit for a short to voltage.

Perform the ECM Verification Test Ver. 1. (Refer to 9 - ENGINE - DIAGNOSIS AND TESTING)

No >> Go To 9

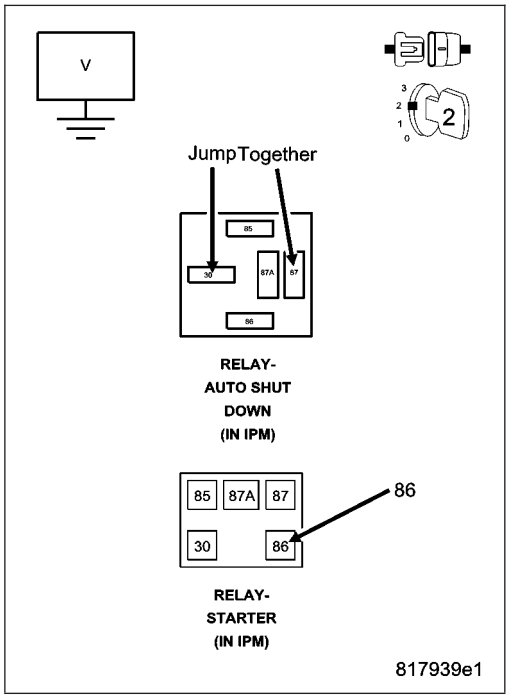

9. (T752) STARTER RELAY CONTROL CIRCUIT OPEN

Turn the ignition off.

Measure the resistance of the (T752) Starter Relay Control circuit between the ECM harness connector and the Starter Relay connector in the IPM.

Is the resistance below 10.0 ohms?

Yes >> Replace the Engine Control Module in accordance with the Service Information.

Perform the ECM Verification Test Ver. 1. (Refer to 9 - ENGINE - DIAGNOSIS AND TESTING)

No >> Repair the (T752) Starter Relay Control circuit for an open.

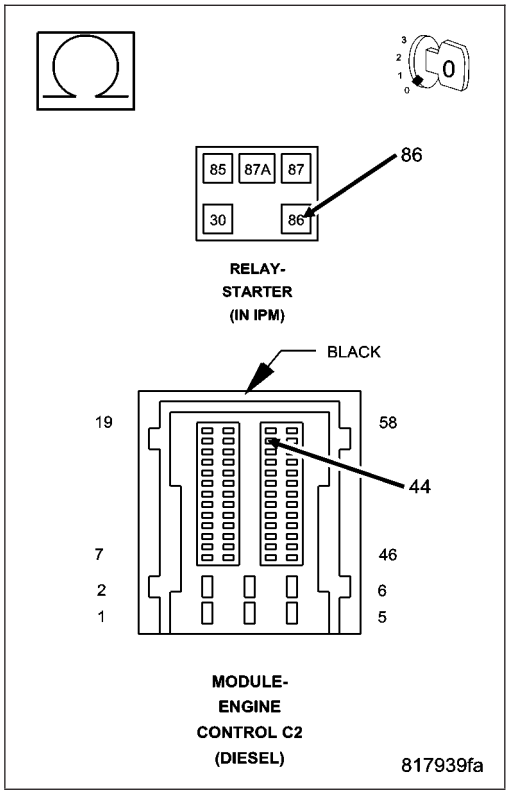

10. FUSED B(+) CIRCUIT OPEN

Using a 12-volt test light connected to ground, check the Fused B(+)circuit in the Starter Relay connector in the IPM.

Is the test light on?

Yes >> Go To 11

No >> Repair the Fused B(+) circuit for an open.
Perform the ECM Verification Test Ver. 1. (Refer to 9 - ENGINE - DIAGNOSIS AND TESTING)

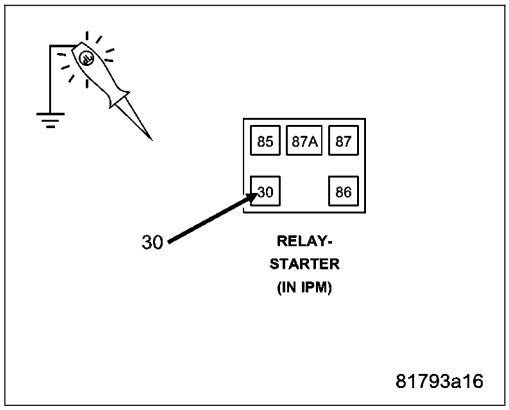

11. (T750) STARTER RELAY OUTPUT CIRCUIT OPEN

Disconnect the (T750) Starter Relay Output wire from the Starter Solenoid.

Connect the (T750) Starter Relay Output wire (at the Starter) to ground.

Using a 12-volt test light connected to 12-volts, check the (T750) Starter Relay Output circuit at the Starter Relay connector in the IPM.

Does the test light illuminate brightly?

Yes >> Go To 12

No >> Repair the (T750) Starter Relay Output circuit for an open.
Perform the ECM Verification Test Ver. 1. (Refer to 9 - ENGINE - DIAGNOSIS AND TESTING)

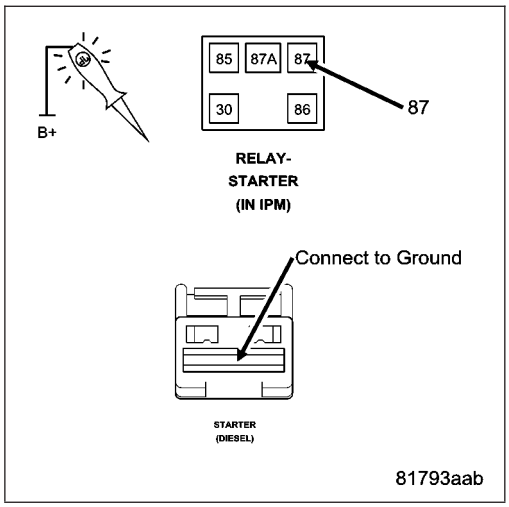

12. MECHANICAL PROBLEM

Turn the ignition off.

Attempt to manually rotate the crankshaft 360°.

Is the crankshaft able to rotate 360°?

Yes >> Replace the Starter Motor.
Perform the ECM Verification Test Ver. 1. (Refer to 9 - ENGINE - DIAGNOSIS AND TESTING)

No >> Repair the engine mechanical problem.
Perform the ECM Verification Test Ver. 1. (Refer to 9 - ENGINE - DIAGNOSIS AND TESTING)

*LACK OF ENGINE POWER

For a complete wiring diagram **Refer to Section 8W**

Possible Causes
AIR IN FUEL SYSTEM
FUEL INJECTOR CLASSIFICATION
INTAKE/EXHAUST SYSTEM RESTRICTION
EGR SYSTEM PROBLEM
LOW ENGINE COMPRESSION
INTAKE AIR SYSTEM LEAK
FUEL DELIVERY SYSTEM RESTRICTION
ENGINE DRIVE BELT/CHAIN
FUEL INJECTOR(S)
FUEL PRESSURE SOLENOID
FUEL INJECTION PUMP
FUEL SYSTEM CONTAMINATION
FUEL SYSTEM LEAK
TURBOCHARGER

Diagnostic Test

1. CHECKING FOR ECM DTCS

WARNING: HIGH-PRESSURE FUEL LINES DELIVER DIESEL FUEL UNDER EXTREME PRESSURE FROM THE INJECTION PUMP TO THE FUEL INJECTORS. THIS MAY BE AS HIGH AS 23,200 PSI (1600 BAR). USE EXTREME CAUTION WHEN INSPECTING FOR HIGH-PRESSURE FUEL LEAKS.

WARNING: FUEL UNDER THIS AMOUNT OF PRESSURE CAN PENETRATE SKIN CAUSING PERSONAL INJURY OR DEATH. INSPECT FOR HIGH-PRESSURE FUEL LEAKS WITH A SHEET OF CARDBOARD. WEAR SAFETY GOGGLES AND ADEQUATE PROTECTIVE CLOTHING WHEN SERVICING FUEL SYSTEM.

Turn the ignition on.

With the scan tool, read the ECM DTCs.

Are there any DTCs present?

Yes >> Refer to symptom list for problems related to this DTC.
Perform the ECM Verification Test Ver. 1. (Refer to 9 - ENGINE - DIAGNOSIS AND TESTING)

No >> Go To 2

2. FUEL SYSTEM LEAK

Turn the ignition off.

WARNING: HIGH-PRESSURE FUEL LINES DELIVER DIESEL FUEL UNDER EXTREME PRESSURE FROM THE INJECTION PUMP TO THE FUEL INJECTORS. THIS MAY BE AS HIGH AS 23,200 PSI (1600 BAR). USE EXTREME CAUTION WHEN INSPECTING FOR HIGH-PRESSURE FUEL LEAKS.

WARNING: FUEL UNDER THIS AMOUNT OF PRESSURE CAN PENETRATE SKIN CAUSING PERSONAL INJURY OR DEATH. INSPECT FOR HIGH-PRESSURE FUEL LEAKS WITH A SHEET OF CARDBOARD. WEAR SAFETY GOGGLES AND ADEQUATE PROTECTIVE CLOTHING WHEN SERVICING FUEL SYSTEM.

Inspect the entire fuel system for leakage.

Is there any evidence of leakage?

Yes >> Repair as necessary in accordance with the Service Information.
Perform the ECM Verification Test Ver. 1. (Refer to 9 - ENGINE - DIAGNOSIS AND TESTING)

No >> Go To 3

3. FUEL SYSTEM CONTAMINATION

NOTE: Mixing any other fuels such as gasoline or kerosine can cause this symptom to occur.
Turn the ignition off.

WARNING: HIGH-PRESSURE FUEL LINES DELIVER DIESEL FUEL UNDER EXTREME PRESSURE FROM THE INJECTION PUMP TO THE FUEL INJECTORS. THIS MAY BE AS HIGH AS 23,200 PSI (1600 BAR). USE EXTREME CAUTION WHEN INSPECTING FOR HIGH-PRESSURE FUEL LEAKS.

WARNING: FUEL UNDER THIS AMOUNT OF PRESSURE CAN PENETRATE SKIN CAUSING PERSONAL INJURY OR DEATH. INSPECT FOR HIGH-PRESSURE FUEL LEAKS WITH A SHEET OF CARDBOARD. WEAR SAFETY GOGGLES AND ADEQUATE PROTECTIVE CLOTHING WHEN SERVICING FUEL SYSTEM.
Inspect the fuel system for contamination.

Is the fuel contaminated?

Yes >> Repair as necessary in accordance with the Service Information.
Perform the ECM Verification Test Ver. 1. (Refer to 9 - ENGINE - DIAGNOSIS AND TESTING)

No >> Go To 4

4. CHECKING BOOST PRESSURE

Turn the ignition on.

NOTE: This test requires two people. One person to test drive the vehicle while a technician observes the scan tool readings.
With the scan tool in Sensors, read and compare the Boost Pressure (PSI) with the Boost Pressure Desired/Setpoint (PSI) while test driving the vehicle under various load conditions such as idle, hard acceleration, and cruise.

NOTE: The Boost Pressure reading should directionally follow (trail) the Boost Pressure Desired/Setpoint reading.

Does the Boost Pressure reading follow the Boost Pressure Desired/Setpoint reading?

Yes >> Go To 5

No >> Go To 13

5. CHECKING FUEL PRESSURE

Turn the ignition on.

NOTE: This test requires two people. One person to test drive the vehicle while a technician observes the scan tool readings.
With the scan tool in Sensors, read and compare the Fuel Pressure (PSI) with the Fuel Pressure Desired/Setpoint (PSI) while test driving the vehicle under various load conditions such as idle, hard acceleration, cruise and deceleration.

NOTE: The Fuel Pressure reading should directionally follow (trail) the Fuel Pressure Desired/Setpoint reading.

Does the Fuel Pressure reading directionally follow the Fuel Pressure Desired/Setpoint reading?

Yes >> Go To 6

No >> Go To 10

6. FUEL INJECTOR CLASSIFICATION

NOTE: Each Fuel Injector is labeled with a code. This code determines the injector classification. Each Injector classification must be programmed into the ECM using the scan tool.
Turn the ignition off.
Refer to the Service Information to locate each fuel injector label and check for the correct classification for each fuel injector in the ECM.

Are all of the injectors classified correctly?

Yes >> Go To 7

No >> Using the scan tool, program the correct Fuel Injector classifications into the ECM.
Perform the ECM Verification Test Ver. 1. (Refer to 9 - ENGINE - DIAGNOSIS AND TESTING)

7. ENGINE COMPRESSION

Start and idle the engine.
With the scan tool, perform the Cylinder Compression Test.

Does the Cylinder Compression Test indicate low compression in any of the cylinders?

Yes >> Using the Service Information, repair the engine as necessary to regain proper cylinder compression.
Perform the ECM Verification Test Ver. 1. (Refer to 9 - ENGINE - DIAGNOSIS AND TESTING)

No >> Go To 8

8. FUEL INJECTOR

NOTE: An injector that sticks open can cause this symptom. A sticking injector will cause the engine to misfire and emit excessive black smoke from the exhaust system.
Start and idle the engine.
With the scan tool, perform the Cylinder Fuel Quantity Correction Test.

NOTE: A problem injector will be indicated by a significant change in correction quantity as compared to the rest of the injectors.

Are any of the injectors displaying a significant amount of injection quantity correction?

Yes >> Using the Service Information, remove and inspect the Fuel Injectors for signs of damage or debris that may cause the injector to stick. Sticking injectors may cause the combustion chamber to become black and oil soaked. Replace Injector(s) as necessary.
Perform the ECM Verification Test Ver. 1. (Refer to 9 - ENGINE - DIAGNOSIS AND TESTING)

No >> Go To 9

9. ENGINE DRIVE BELT/CHAIN

Refer to the Service Information to ensure the Engine Drive Belt/Chain is installed correctly and the camshaft and crankshaft gears are timed correctly.

Were any problems found?

Yes >> Repair as necessary.
Perform the ECM Verification Test Ver. 1. (Refer to 9 - ENGINE - DIAGNOSIS AND TESTING)

No >> Test Complete.

10. CHECKING THE SUPPLY SIDE FUEL DELIVERY SYSTEM

Refer to the appropriate Service Information and test for proper Fuel pressure and volume from the fuel tank to the high pressure Fuel Injection Pump.

NOTE: The following is a list of problems that can cause fuel pressure to deviate from specification: restricted fuel filter or fuel lines, air in fuel system, failed fuel sending unit, contaminated fuel.

Were there any problems with the Fuel Delivery System?

Yes >> Repair as necessary in accordance with the Service Information.
Perform the ECM Verification Test Ver. 1. (Refer to 9 - ENGINE - DIAGNOSIS AND TESTING)

No >> Go To 11

11. CHECKING FOR AIR IN FUEL SYSTEM

Start the engine.

With the scan tool in Sensors, compare the Fuel Pressure Setpoint with the Actual Fuel Pressure readings.

NOTE: If there is air in the fuel system, the Actual Fuel Pressure will oscillate more than 100 psi (7.0 bar) above and/or below the Fuel Pressure Setpoint.

Does Actual Fuel Pressure oscillate more than 100 psi (7.0 bar) above and/or below the Fuel Pressure Setpoint?

Yes >> Refer to the Service Information to purge air from the fuel system.
Perform the ECM Verification Test Ver. 1. (Refer to 9 - ENGINE - DIAGNOSIS AND TESTING)

No >> Go To 12

12. FUEL PRESSURE SOLENOID

Turn the ignition off.

Replace the Fuel Pressure Solenoid in accordance with the Service Information.

Turn the ignition on.

With the scan tool, erase the ECM DTCs.

Attempt to start and test drive the vehicle.

With the scan tool, read the ECM DTCs.

Does the ECM display this DTC?

Yes >> Refer to the Service Information and replace the Fuel Injection Pump assembly.
Perform the ECM Verification Test Ver. 1. (Refer to 9 - ENGINE - DIAGNOSIS AND TESTING)

No >> Test Complete.

13. CHECK FOR INTAKE AND EXHAUST SYSTEM RESTRICTIONS

Turn the ignition off.

Inspect the exhaust system for damaged components that could cause exhaust flow blockage.

Inspect all air intake, crankcase vent and turbocharger related hoses/tubes and connections for damage, air leaks or blockage.

Inspect the air filter for excessive dirt, soiling or other problems that may cause restricted air flow.

Were any problems found?

Yes >> Repair or replace as necessary.
Perform the ECM Verification Test Ver. 1. (Refer to 9 - ENGINE - DIAGNOSIS AND TESTING)

No >> Go to 14

14. CHECKING FOR AIR LEAKS

NOTE: Inspect all air intake and turbocharger related tubes for damage, restriction or poor connection. Any of these conditions can cause a poor performance/lack of power symptom.

Turn the ignition off.

Remove the Crankcase Vent Heater.

Remove the Mass Air Flow Sensor from the turbocharger inlet tube.

Seal off and/or plug the turbocharger inlet tube where the MAF sensor was removed.

Connect smoke machine 84–04 to the Crankcase Vent Heater port in the intake duct and begin injecting smoke into the intake system.

Observe all intake system components for evidence of smoke leakage.

Is there evidence of smoke leakage?

Yes >> Repair or replace as necessary.
Perform the ECM Verification Test Ver. 1. (Refer to 9 - ENGINE - DIAGNOSIS AND TESTING)

No >> Go To 15

15. EGR SYSTEM

Refer to the symptom list and perform the CHECKING THE EGR SYSTEM test.

Were any problems found during the EGR System test?

Yes >> Repair or replace as necessary.
Perform the ECM Verification Test Ver. 1. (Refer to 9 - ENGINE - DIAGNOSIS AND TESTING)

No >> Check for proper linkage connection between the Boost Pressure Servo Motor and the Turbocharge assembly. Repair or replace as necessary. If o.k., refer to the Service Information and replace the Turbocharger assembly.

*CHECKING THE ACCELERATOR PEDAL POSITION SENSOR CALIBRATION

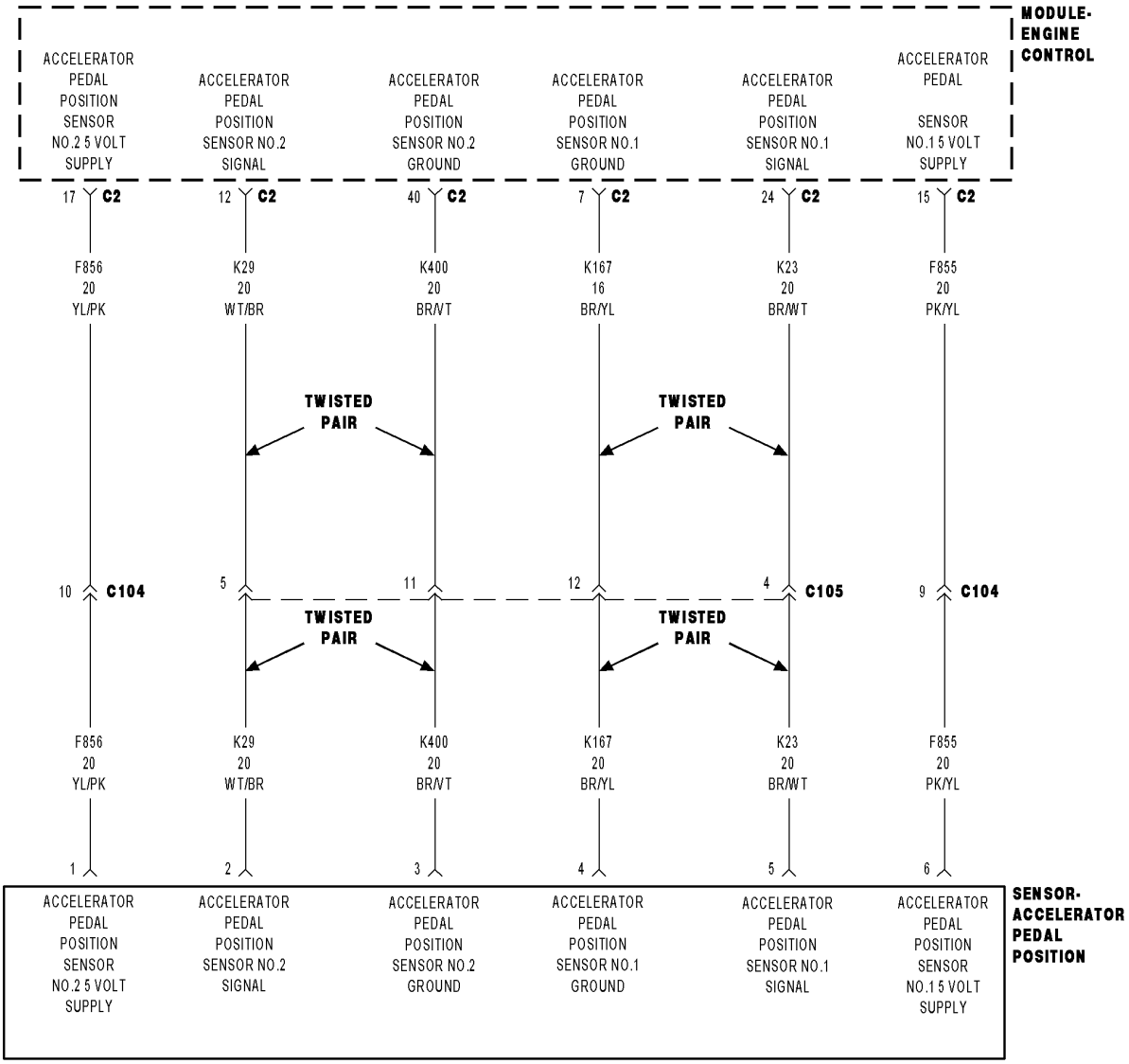

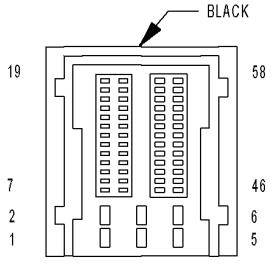

MODULE-ENGINE CONTROL C2 (DIESEL)

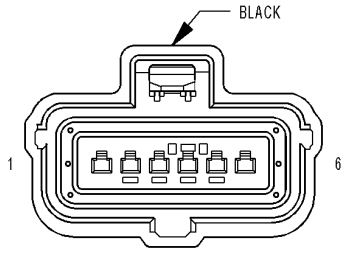

SENSOR-ACCELERATOR PEDAL POSITION

816B7452

For a complete wiring diagram **Refer to Section 8W**

Possible Causes
APP SENSOR 1
APP SENSOR 2

Diagnostic Test

1. APP SENSOR IDLE VOLTAGE

NOTE: If there are any Accelerator Pedal Position Sensor DTC's active in the ECM, diagnose DTC's before continuing this test.

NOTE: The APP Sensor is a device that contains two separate potentiometer type sensors. Each sensor has its own 5-volt supply circuit, sensor ground circuit and signal circuit. The APP Sensor no longer incorporates a low-idle switch.

NOTE: The APP Sensor 1 signal should always be double the voltage of the APP Sensor 2 signal.

NOTE: Ensure the accelerator pedal is free from any restriction or binding before continuing.

Turn the ignition on.

With the scan tool, read the APP Sensor 1 and APP Sensor 2 Volts with the accelerator pedal in the at rest position.

Does the scan tool display between 0.38 and 0.53 volt for sensor 1 and 0.19 and 0.27 volt for sensor 2?

Yes >> Go To 2

No >> Check the APP Sensor circuits for proper resistance. If o.k., replace the APP Sensor in accordance with the Service Information.
Perform the ECM Verification Test Ver. 1. (Refer to 9 - ENGINE - DIAGNOSIS AND TESTING)

2. APP SENSOR 1

While back probing, measure the voltage of the APP Sensor 1 Signal circuit at the ECM.

Monitor the voltmeter while slowly pressing the accelerator pedal completely down.

NOTE: APP signals are displayed in voltage and percentage on the scan tool. Although APP 1 voltage is double APP 2 voltage, the percentage display of APP 1 and APP 2 should be within 2.5% of each other during all phases of accelerator pedal travel.

Did the voltage increase smoothly with pedal travel?

Yes >> Go To 3

No >> Replace the Accelerator Pedal Position Sensor in accordance with the Service Information.
Perform the ECM Verification Test Ver. 1. (Refer to 9 - ENGINE - DIAGNOSIS AND TESTING)

3. APP SENSOR 2

While back probing, measure the voltage of the APP Sensor 2 Signal circuit at the ECM.

Monitor the voltmeter while slowly pressing the accelerator pedal completely down.

NOTE: APP signals are displayed in voltage and percentage on the scan tool. Although APP 1 voltage is double APP 2 voltage, the percentage display of APP 1 and APP 2 should be equal during all phases of accelerator pedal travel.

Did the voltage increase smoothly with pedal travel?

Yes >> Go To 4

No >> Replace the Accelerator Pedal Position Sensor in accordance with the Service Information.
Perform the ECM Verification Test Ver. 1. (Refer to 9 - ENGINE - DIAGNOSIS AND TESTING)

4. APP SENSOR WIDE OPEN THROTTLE VOLTAGE

Fully depress the accelerator pedal.

With the scan tool, read the voltage for APP Sensor 1 and APP Sensor 2.

Does the scan tool display between 4.40 and 4.70 volts for sensor 1 and 2.20 and 2.35 volts for sensor 2?

Yes >> Test Complete.

No >> Check the APP Sensor circuits for proper resistance. If o.k., replace the APP Sensor in accordance with the Service Information.

Perform the ECM Verification Test Ver. 1. (Refer to 9 - ENGINE - DIAGNOSIS AND TESTING)

*CHECKING THE BOOST PRESSURE SENSOR CALIBRATION

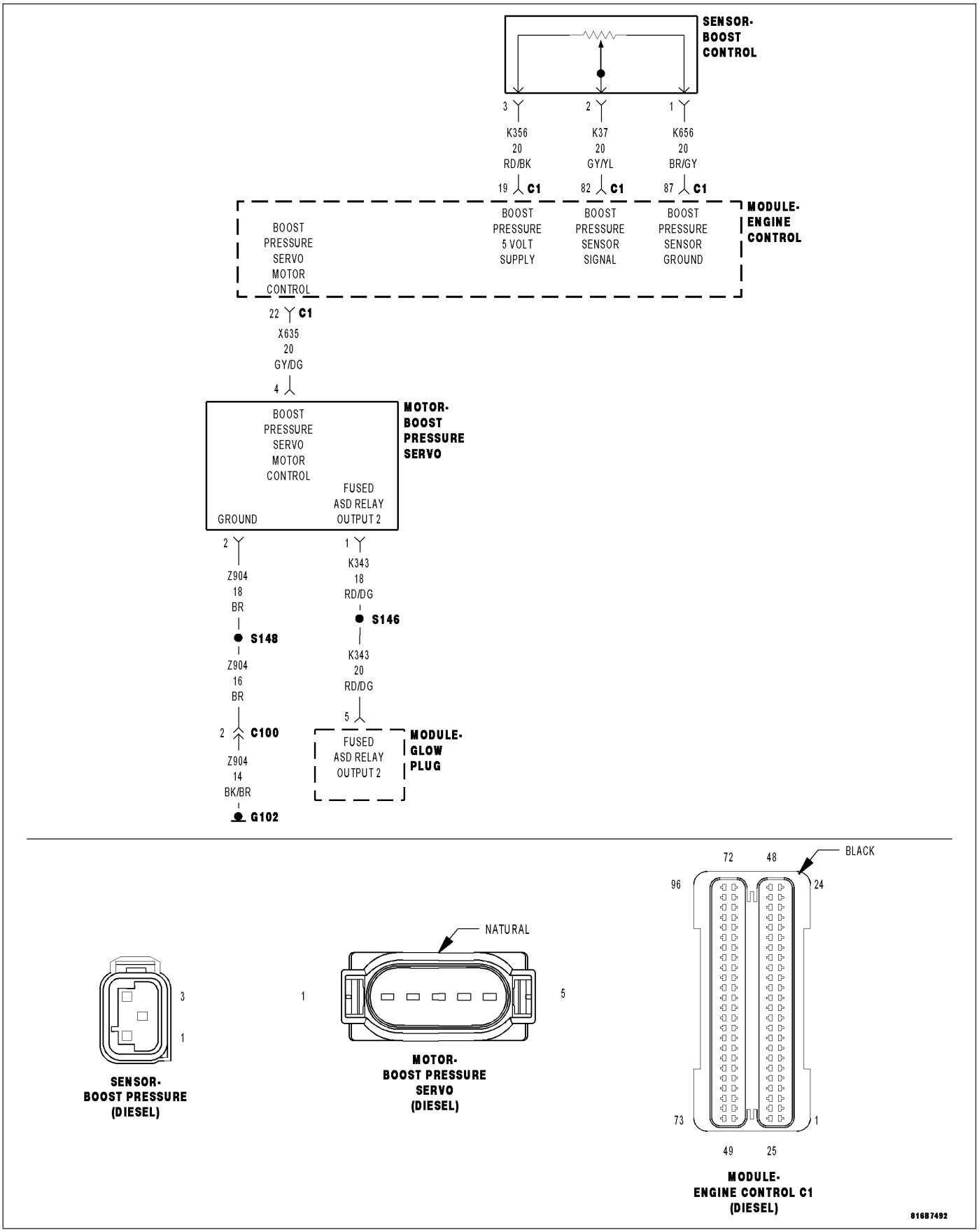

For a complete wiring diagram **Refer to Section 8W**

Possible Causes
TURBOCHARGER BOOST PRESSURE SENSOR CALIBRATION

Diagnostic Test

1. BOOST PRESSURE SENSOR CALIBRATION

Turn the ignition on.

With the scan tool, read the Boost Pressure Voltage and Boost Pressure hpa.

NOTE: The Boost Pressure hpa and Intake/Inlet Air Pressure hpa readings should both match closely to the Atmoshperic Pressure hpa reading. These readings will change depending on altitude.

Is the Boost Pressure Voltage between 1.12 and 1.36 volt?

Yes >> Test Complete.

No >> Replace the Turbocharger Boost Pressure Sensor.
Perform the ECM Verification Test Ver. 1. (Refer to 9 - ENGINE - DIAGNOSIS AND TESTING)

*CHECKING THE BOOST PRESSURE SERVO MOTOR

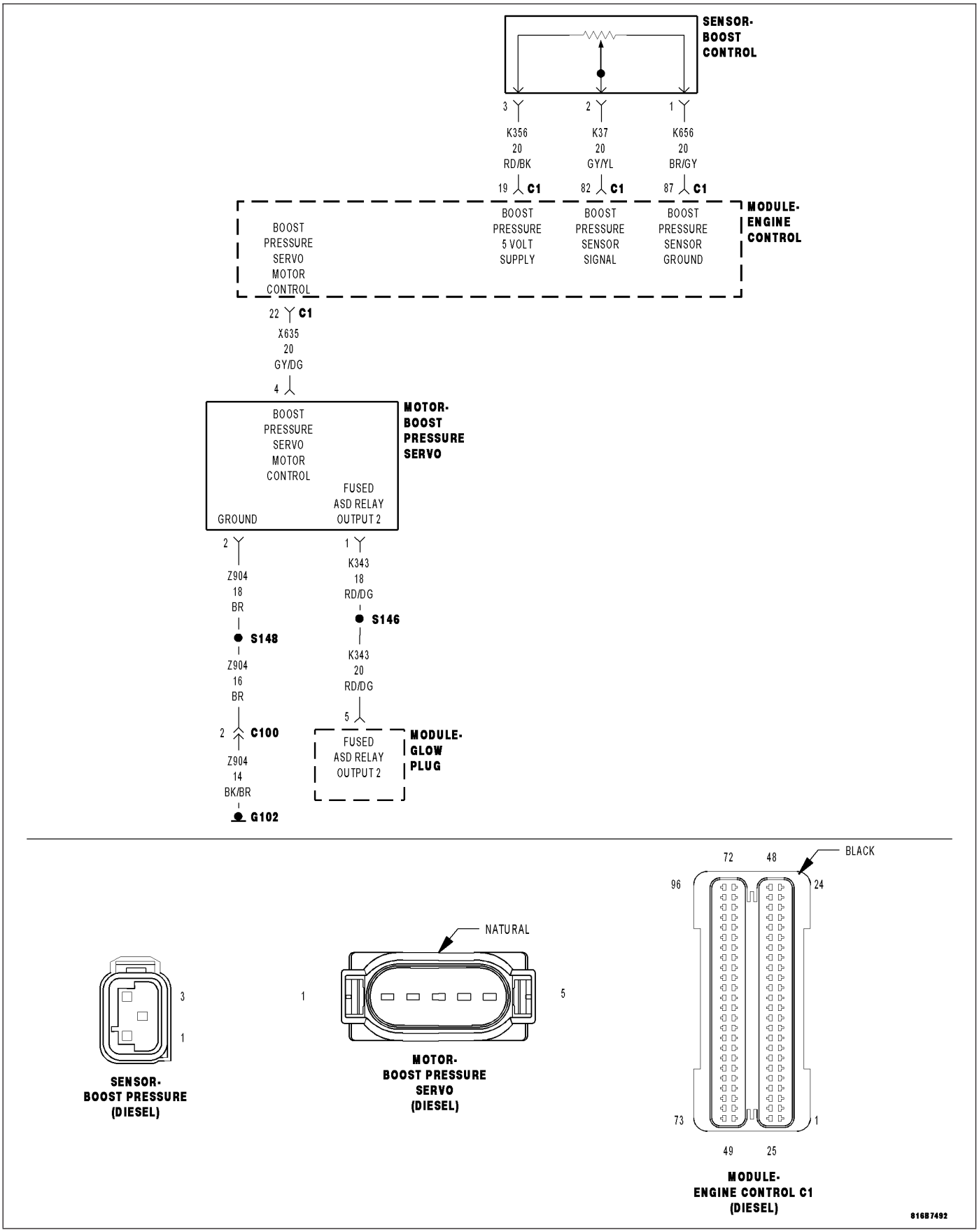

For a complete wiring diagram **Refer to Section 8W**

Possible Causes
(A15) ASD RELAY OUTPUT CIRCUIT OPEN
(Z42) BOOST PRESSURE SERVO MOTOR GROUND CIRCUIT OPEN
BOOST PRESSURE SERVO MOTOR
INTAKE OR EXHAUST SYSTEM PROBLEM

1. CHECKING THE BOOST PRESSURE SERVO MOTOR OPERATION

NOTE: The engine temperature must be above 160°F for this test to be valid.

NOTE: Engine must be idling in park at approximately 670 rpm.
Turn the ignition off.

Wait 30 seconds.

While standing in front of the vehicle, observe the position of the Boost Pressure Servo Motor armature.

NOTE: The armature should be in the 3 o'clock position with the ignition off (armature in rest position).
Turn the ignition on, engine off.

With the scan tool, actuate the Boost Pressure Servo Motor to 0%, then to 100% while monitoring the movement of the Boost Pressure Servo Motor armature.

NOTE: The Boost Pressure Servo Motor actuation will only occur for a short period of time then actuation will stop automatically. Any readings, observations or measurements must be taken within shortly after the beginning of actuation.

NOTE: The armature should move 90°from the 2 o'clock position to the 5 o'clock position.
Repeat this actuation several times to ensure smooth consistent armature travel.

Is the Boost Pressure Servo Motor operating from the 2 o'clock (0%) to the 5 o'clock (100%) position during actuation as described?

Yes >> Boost Pressure Servo Motor is operating correctly. Test Complete.

No >> Go To 2

2. CHECK FOR BOOST PRESSURE SERVO MOTOR LINKAGE PROBLEM

Disconnect the linkage from the Boost Pressure Servo Motor and inspect the linkage for foreign debris, binding or damage that could cause restricted movement.

Were any problems found?

Yes >> Repair or replace as necessary.
Perform the ECM Verification Test Ver. 1. (Refer to 9 - ENGINE - DIAGNOSIS AND TESTING)

No >> Go to 3

3. CHECK FOR INTAKE AND EXHAUST SYSTEM RESTRICTIONS

Inspect the exhaust system for damaged components that could cause exhaust flow blockage.

Inspect all air intake, crankcase vent and turbocharger related hoses/tubes and connections for damage, air leaks or blockage.

Inspect the air filter for excessive dirt, soiling or other problems that may cause restricted air flow.

Were any problems found?

Yes >> Repair or replace as necessary.
Perform the ECM Verification Test Ver. 1. (Refer to 9 - ENGINE - DIAGNOSIS AND TESTING)

No >> Go to 4

4. (A15) FUSED ASD RELAY OUTPUT CIRCUIT OPEN

Turn the ignition off.

Disconnect the Boost Pressure Servo Motor harness connector.

Turn the ignition on.

Using a 12-volt test light connected to ground, check the (A15) Fused ASD Relay Output circuit at the Boost Pressure Servo Motor harness connector.

Is the test light on?

Yes >> Go To 5

No >> Repair the (A15) Fused ASD Relay Output circuit for an open.
Perform the ECM Verification Test Ver. 1. (Refer to 9 - ENGINE - DIAGNOSIS AND TESTING)

5. (Z42) BOOST PRESSURE SERVO MOTOR GROUND CIRCUIT OPEN

Turn the ignition off.

Using a 12-volt test light connected to 12-volts, check the (Z42) Boost Pressure Servo Motor Ground circuit at the Boost Pressure Servo Motor harness connector.

Is the test light on?

Yes >> Replace the Boost Pressure Servo Motor.

No >> Repair the (Z42) Boost Pressure Servo Motor Ground circuit for an open.
Perform the ECM Verification Test Ver. 1. (Refer to 9 - ENGINE - DIAGNOSIS AND TESTING)

*CHECKING THE ENGINE COOLANT TEMPERATURE SENSOR CALIBRATION

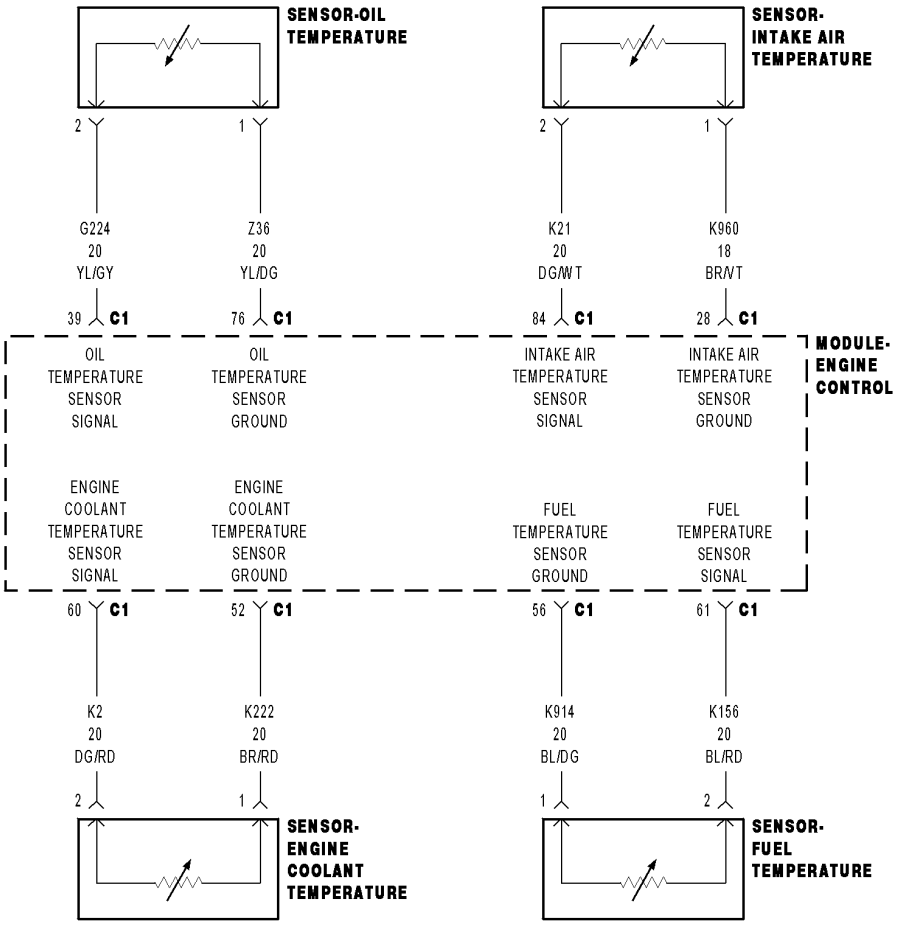

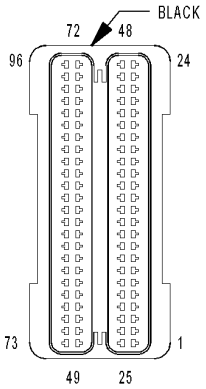

MODULE-ENGINE CONTROL C1 (DIESEL)

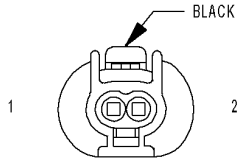

SENSOR-INTAKE AIR TEMPERATURE (DIESEL)

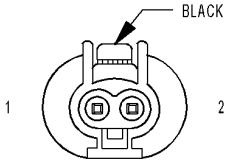

SENSOR-OIL TEMPERATURE (DIESEL)

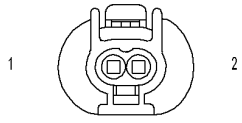

SENSOR-FUEL TEMPERATURE (DIESEL)

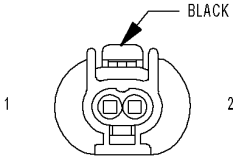

SENSOR-ENGINE COOLANT TEMPERATURE (DIESEL)

816B7486

For a complete wiring diagram **Refer to Section 8W**

Possible Causes
ECT SENSOR - COLD
ECT SENSOR - HOT

Diagnostic Test

1. ECT SENSOR - COLD

NOTE: The thermostat must be operating correctly for this test to be valid.
With the scan tool in Sensors, read and note the engine coolant temperature.

Using a temperature probe, measure the engine block temperature near the ECT Sensor.

NOTE: The engine temperature should be below 50°C (120°F).

Are the readings within 7°C (13°F) of each other?

Yes >> Go To 2

No >> Check the wiring and connectors associated with the ECT Sensor for corrosion, damage or other problems. Repair as necessary. If wiring and connectors are o.k., replace the Engine Coolant Temperature Sensor.

Perform the ECM Verification Test Ver. 1. (Refer to 9 - ENGINE - DIAGNOSIS AND TESTING)

2. ECT SENSOR - HOT

NOTE: The thermostat must be operating correctly for this test to be valid.
Start the engine and bring the engine to operating temperature (thermostat open).

Turn the engine off and wait 10 minutes to allow the engine temperature to stabilize.

Using a temperature probe, measure the engine block temperature near the ECT Sensor.

With the scan tool, select Engine, then Sensors and read the engine coolant temperature.

Are the readings within 7°C (13°F) of each other?

Yes >> Test Complete.

No >> Check the wiring and connectors associated with the ECT Sensor for corrosion, damage or other problems. Repair as necessary. If wiring and connectors are o.k., replace the Engine Coolant Temperature Sensor.

Perform the ECM Verification Test Ver. 1. (Refer to 9 - ENGINE - DIAGNOSIS AND TESTING)

*CHECKING THE EGR SYSTEM

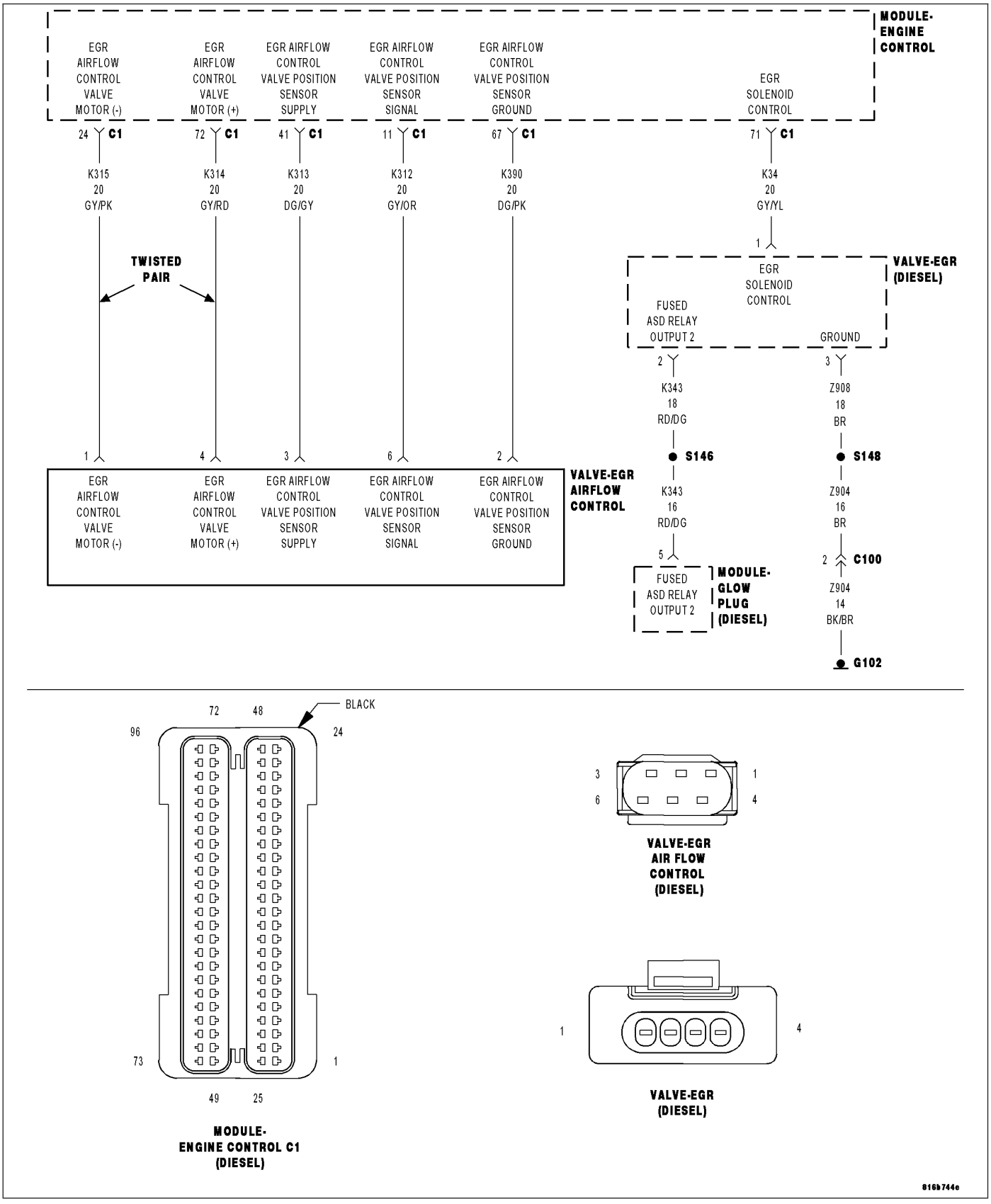

For a complete wiring diagram **Refer to Section 8W**

Possible Causes
(A15) FUSED ASD RELAY OUTPUT CIRCUIT OPEN
(Z42) EGR SOLENOID GROUND CIRCUIT OPEN
EGR SOLENOID/VALVE
INTAKE OR EXHAUST SYSTEM PROBLEM

1. EGR VALVE

PERCENTAGE EGR ACTUATION (%)	MAF PER CYLINDER MG/HU
0%	420 — 485
40%	280 — 340
60%	210 — 270
100%	170 — 230

NOTE: The engine temperature must be above 160°F for this test to be valid.

NOTE: Engine must be idling in park at approximately 670 rpm.

With the scan tool, actuate the EGR Solenoid at 0%.

Select Data Display and read and note the MAF Per Cyl mg/hu reading.

NOTE: The EGR actuation will only occur for 30 seconds then actuation will stop automatically. Any readings or measurements must be taken within 30 seconds of beginning of actuation.

Repeat the above steps actuating the EGR Valve at 0%, 40%, 60%, and 100% noting the MAF readings during each actuation.

Refer to the chart and compare each of the EGR actuations and the expected MAF readings for each actuation.

Are the MAF Per Cyl mg/hu within the chart specifications for each percentage of EGR actuation?

Yes >> EGR system operating correctly. Test Complete.

No >> Go To 2

2. CHECK FOR INTAKE AND EXHAUST SYSTEM RESTRICTIONS

Turn the ignition off.

Inspect the exhaust system for damaged components that could cause exhaust flow blockage.

Inspect all air intake, crankcase vent and turbocharger related hoses/tubes and connections for damage, air leaks or blockage.

Inspect the air filter for excessive dirt, soiling or other problems that may cause restricted air flow.

Were any problems found?

Yes >> Repair or replace as necessary.
Perform the ECM Verification Test Ver. 1. (Refer to 9 - ENGINE - DIAGNOSIS AND TESTING)

No >> Go to 3

3. (A15) FUSED ASD RELAY OUTPUT CIRCUIT OPEN

Turn the ignition off.

Disconnect the EGR Solenoid harness connector.

Turn the ignition on.

Using a 12-volt test light connected to ground, check the (A15) Fused ASD Relay Output circuit at the EGR Solenoid harness connector.

Is the test light on?

Yes >> Go To 4

No >> Repair the (A15) Fused ASD Relay Output circuit for an open.
Perform the ECM Verification Test Ver. 1. (Refer to 9 - ENGINE - DIAGNOSIS AND TESTING)

4. (Z42) EGR SOLENOID GROUND CIRCUIT OPEN

Turn the ignition off.

Using a 12-volt test light connected to 12-volts, check the (Z42) EGR Solenoid Ground circuit at the EGR Solenoid harness connector.

Is the test light on?

Yes >> Replace the EGR Solenoid/Valve.

No >> Repair the (Z42) EGR Solenoid Ground circuit for an open.
Perform the ECM Verification Test Ver. 1. (Refer to 9 - ENGINE - DIAGNOSIS AND TESTING)

*CHECKING THE EGR THROTTLE VALVE

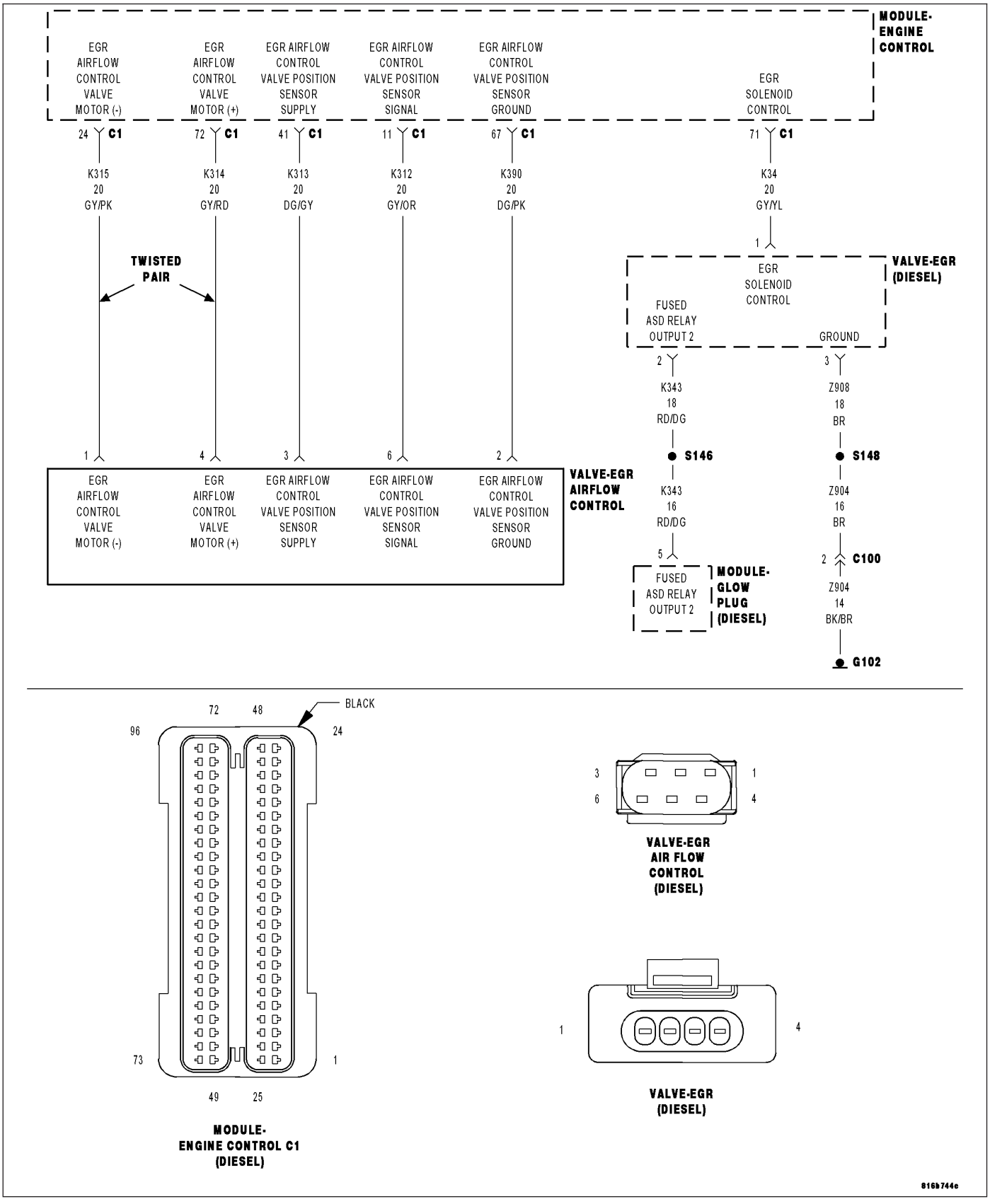

For a complete wiring diagram **Refer to Section 8W**

Possible Causes
EGR THROTTLE VALVE
WIRING AND/OR CONNECTORS

1. EGR THROTTLE VALVE

Disconnect the hose/tube on the inlet side of the EGR Throttle Valve.

Use a mirror to observe the throttle plate position inside the EGR Throttle Valve for the following steps

With the scan tool, actuate the EGR Throttle Valve at 0%, 40% and 100% while observing the throttle plate position.

NOTE: The EGR Throttle Valve actuation will only occur for a short period of time then actuation will stop automatically. Any readings, observations or measurements must be completed within shortly after the beginning of actuation.

NOTE: With the ignition on, engine off the throttle plate position should be wide open. The throttle plate position should be wide open at 0% actuation, midway between open and closed at 40% actuation and completely closed at 100% actuation.

Does the throttle plate move smoothly, without binding, to the correct position based on actuation percentage described in the note above?

Yes >> EGR system operating correctly. Test Complete.

No >> Check the wiring and connectors between the EGR Throttle Valve and the ECM for proper connection and resistance. Repair as necessary. If wiring and connections are o.k., replace the EGR Throttle Valve. Perform the ECM Verification Test Ver. 1. (Refer to 9 - ENGINE - DIAGNOSIS AND TESTING)

*CHECKING THE ENGINE MECHANICAL SYSTEMS

For a complete wiring diagram **Refer to Section 8W**

Possible Causes
CHECKING ENGINE MECHANICAL SYSTEMS

Diagnostic Test

1. CHECKING ENGINE MECHANICAL

NOTE: The following items should be checked as a possible cause of a Driveability or No-Start problem.

WARNING: Do not attempt to remove or separate high pressure fuel line. Attempting to do so could result in severe bodily injury or death.

Engine Valve Timing - must be within specification

Engine Compression - must be within specifications

Camshaft Lobes - check for abnormal wear

Camshaft Position Sensor - check the camshaft position sensor tooth for debris and deterioration

Crankshaft Position Sensor - check the crankshaft tone wheel for debris and deterioration

Engine Exhaust System - must be free of any restriction

Engine Drive Chains and Sprockets - must be properly positioned

Vacuum System - must operate properly and be free of any vacuum leaks

Fuel - must have adequate supply and must be free of contamination (ie. debris, water and gasoline)

Fuel Injectors - must not be plugged or restricted

Fuel Lift Pump - must operate properly (where applicable)

Fuel Injection Pump - must be producing the correct output volume and pressure

Inspect the Fuel Lines, Fuel Filter and Fuel Pressure Relief Valve for signs of restriction and leaks

NOTE: Check for any Technical Service Bulletins that may relate to the problem.

Are there any problems evident?

Yes >> Repair as necessary.
Perform the ECM Verification Test Ver. 1. (Refer to 9 - ENGINE - DIAGNOSIS AND TESTING)

No >> Test Complete.

CHECKING THE HIGH-SIDE FUEL SYSTEM

For a complete wiring diagram **Refer to Section 8W**

Possible Causes
AIR IN FUEL SYSTEM
FUEL PRESSURE SENSOR
FUEL PRESSURE SOLENOID
FUEL PRESSURE SOLENOID RETURN VOLUME TEST
LOW/SUPPLY SIDE FUEL SYSTEM PROBLEM
FUEL INJECTION PUMP
FUEL SYSTEM LEAK
INJECTOR RETURN VOLUME TEST

Diagnostic Test

1. CHECKING FUEL PRESSURE

NOTE: The Low/Supply Side Fuel System must be working properly for this test to be valid. Refer to the Service Information and Perform the Low/Supply Side Fuel System Test before continuing.
Turn the ignition on.

NOTE: This test requires two people. One person to test drive the vehicle while a technician observes the scan tool readings
With the scan tool in Sensors, read and compare the Fuel Pressure (PSI) with the Fuel Pressure Desired/Setpoint (PSI) while test driving the vehicle under various load conditions such as idle, hard acceleration, cruise and deceleration.

NOTE: The Fuel Pressure reading should directionally follow (trail) the Fuel Pressure Desired/Setpoint reading.

Does the Fuel Pressure reading directionally follow the Fuel Pressure Desired/Setpoint reading?

Yes >> Test Complete.

No >> Go To 2

2. FUEL PRESSURE SENSOR CALIBRATION

Turn the ignition on.

With the scan tool, read the Fuel Pressure Sensor volts.

Does the scan tool display between 0.45 and 0.60 volts for the Fuel Pressure Sensor?

Yes >> Go To 3

No >> Check the Fuel Pressure Sensor wiring and connectors for corrosion or poor terminal contact that could cause high resistance. Repair as necessary. If wiring and connectors are o.k., replace the Fuel Pressure Sensor.

Perform the ECM Verification Test Ver. 1. (Refer to 9 - ENGINE - DIAGNOSIS AND TESTING)

3. FUEL SYSTEM LEAK

Turn the ignition off.

WARNING: HIGH-PRESSURE FUEL LINES DELIVER DIESEL FUEL UNDER EXTREME PRESSURE FROM THE INJECTION PUMP TO THE FUEL INJECTORS. THIS MAY BE AS HIGH AS 23,200 PSI (1600 BAR). USE EXTREME CAUTION WHEN INSPECTING FOR HIGH-PRESSURE FUEL LEAKS.

WARNING: FUEL UNDER THIS AMOUNT OF PRESSURE CAN PENETRATE SKIN CAUSING PERSONAL INJURY OR DEATH. INSPECT FOR HIGH-PRESSURE FUEL LEAKS WITH A SHEET OF CARDBOARD. WEAR SAFETY GOGGLES AND ADEQUATE PROTECTIVE CLOTHING WHEN SERVICING FUEL SYSTEM.

Inspect the entire fuel system for leakage.

Is there any evidence of leakage?

Yes >> Repair as necessary in accordance with the Service Information.
Perform the ECM Verification Test Ver. 1. (Refer to 9 - ENGINE - DIAGNOSIS AND TESTING)

No >> Go To 4

4. CHECKING FOR AIR IN FUEL SYSTEM

Start the engine.

With the scan tool in Sensors, compare the Fuel Pressure Setpoint with the Actual Fuel Pressure readings.

NOTE: If there is air in the fuel system, the Actual Fuel Pressure will oscillate more than 100 psi above and/or below the Fuel Pressure Setpoint.

Does Actual Fuel Pressure oscillate more than 100 psi above and/or below the Fuel Pressure Setpoint?

Yes >> Refer to the Service Information to purge air from the fuel system.
Perform the ECM Verification Test Ver. 1. (Refer to 9 - ENGINE - DIAGNOSIS AND TESTING)

No >> Go To 5

5. FUEL PRESSURE SOLENOID

Turn the ignition off.

Replace the Fuel Pressure Solenoid in accordance with the Service Information.

Turn the ignition on.

With the scan tool in Sensors, read and compare the Fuel Pressure (PSI) with the Fuel Pressure Desired/Setpoint (PSI) while test driving the vehicle under various load conditions such as idle, hard acceleration, cruise and deceleration.

NOTE: The Fuel Pressure reading should directionally follow (trail) the Fuel Pressure Desired/Setpoint reading.

Does the Fuel Pressure reading directionally follow the Fuel Pressure Desired/Setpoint reading?

Yes >> Test Complete.

No >> Refer to the Service Information and replace the Fuel Injection Pump assembly.
Perform the ECM Verification Test Ver. 1. (Refer to 9 - ENGINE - DIAGNOSIS AND TESTING)

*CHECKING THE ECM POWER AND GROUND CIRCUITS

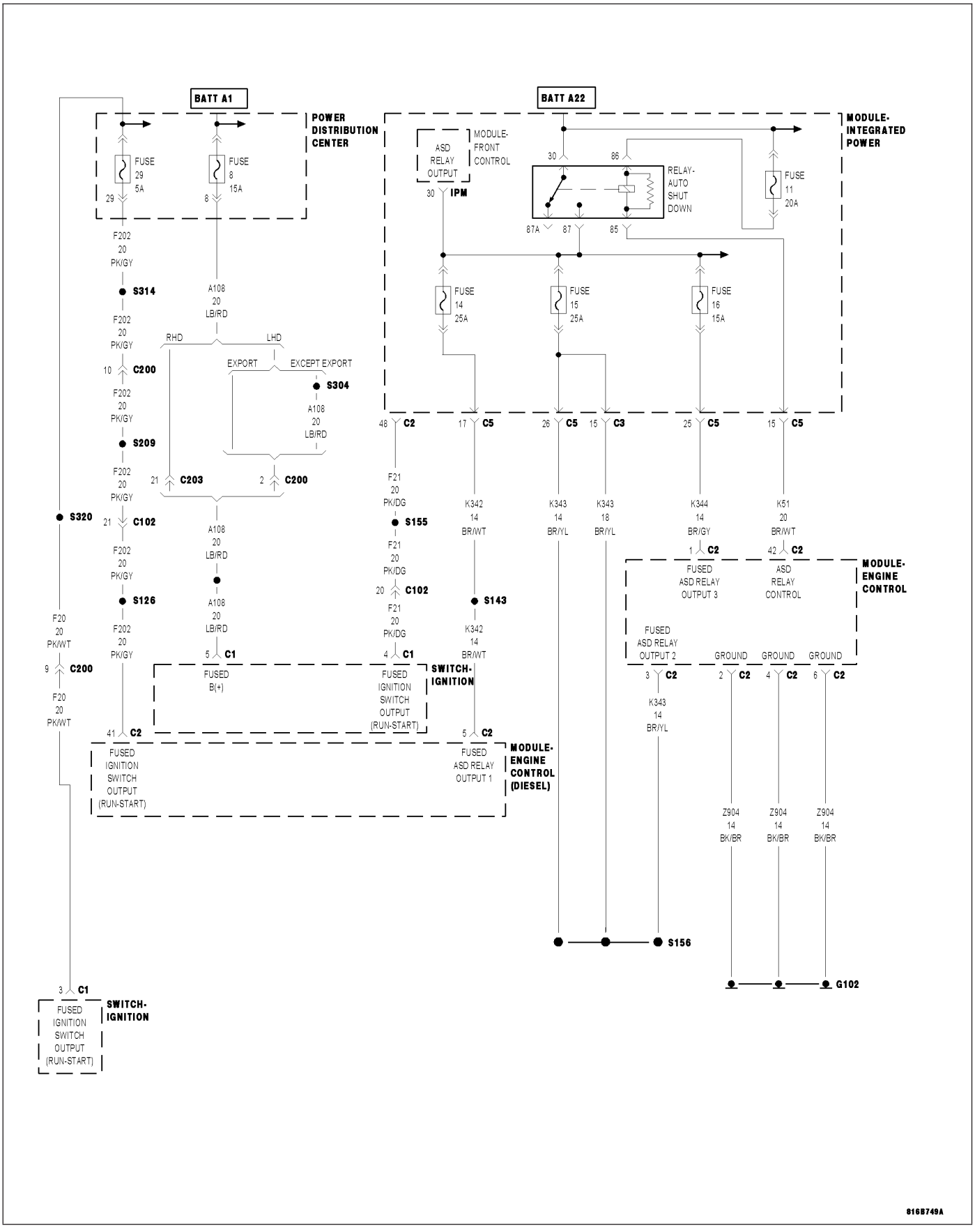

Possible Causes
ASD RELAY CONTROL CIRCUIT OPEN
ASD RELAY OUTPUT CIRCUIT(S) OPEN
CHECKING THE ASD RELAY SYSTEM
ECM GROUND CIRCUIT(S) OPEN
FUSED ASD RELAY BATTERY SUPPLY CIRCUIT OPEN
FUSED IGNITION SWITCH (START) OUTPUT CIRCUIT OPEN
FUSED IGNITION SWITCH (START/RUN) OUTPUT CIRCUIT OPEN
SUBSTITUTE ASD RELAY
ASD RELAY CONTROL CIRCUIT SHORTED TO VOLTAGE

Diagnostic Test

1. ECM GROUND CIRCUIT(S) OPEN

Turn the ignition off.

Disconnect the ECM harness connectors.

Using a 12-volt test light connected to 12-volts, check each of the ECM ground circuits in ECM harness connector C2 cavities 2, 4 and 6.

Did the test light illuminate for each cavity?

Yes >> Go To 2

No >> Repair the ECM Ground circuit(s) for an open.
Perform the ECM Verification Test Ver. 1. (Refer to 9 - ENGINE - DIAGNOSIS AND TESTING)

2. FUSED IGNITION SWITCH START OUTPUT CIRCUIT OPEN

Turn the ignition to the Start position.

Using a 12-volt test light connected to ground, check the Fused Ignition Switch Start Output circuit in ECM harness connector C2 cavity 48.

Is the test light on?

Yes >> Go To 3

No >> Repair the Fused Ignition Switch Start Output circuit for an open.
Perform the ECM Verification Test Ver. 1. (Refer to 9 - ENGINE - DIAGNOSIS AND TESTING)

3. FUSED IGNITION SWITCH START/RUN OUTPUT CIRCUIT OPEN

Turn the ignition to the Start position.

Using a 12-volt test light connected to ground, check the Fused Ignition Switch Start/Run Output circuit in ECM harness connector C2 cavity 41.

Turn the ignition to the Run position.

Using a 12-volt test light connected to ground, check the Fused Ignition Switch Start/Run Output circuit in ECM harness connector C2 cavity 41.

Is the test light on for both ignition switch positions?

Yes >> Go To 4

No >> Repair the Fused Ignition Switch Start/Run Output circuit for an open.
Perform the ECM Verification Test Ver. 1. (Refer to 9 - ENGINE - DIAGNOSIS AND TESTING)

4. CHECKING THE ASD RELAY SYSTEM

Turn the ignition off.

Connect a jumper wire between ground and the ASD Relay Control circuit in ECM C2 harness connector cavity 42.

Turn the ignition on.

Using a 12-volt test light connected to ground, check the Fused ASD Relay Output circuits at the ECM C2 harness connector cavities 1, 3 and 5.

Does the test light illuminate brightly for each circuit?

Yes >> Test Complete.

No >> Go To 5

5. FUSED ASD RELAY BATTERY SUPPLY CIRCUIT OPEN

Turn the ignition off.

Remove the ASD Relay from the IPM.

Using a 12-volt test light connected to ground, check both Fused ASD Relay Battery Supply circuits in ASD Relay connector.

Is the test light on?

Yes >> Go To 6

No >> Repair the Fused ASD Relay Battery Supply circuit(s) for an open.
Perform the ECM Verification Test Ver. 1. (Refer to 9 - ENGINE - DIAGNOSIS AND TESTING)

6. ASD RELAY OUTPUT CIRCUIT OPEN

Connect a jumper wire between cavity 30 and cavity 87 in the ASD Relay connector.

Using a 12-volt test light connected to ground, check the ASD Relay Output circuit in ECM harness connector C2 cavities 1, 3 and 5.

Did the test light illuminate for each circuit?

Yes >> Go To 7

No >> Repair the ASD Relay Output circuit(s) for an open.
Perform the ECM Verification Test Ver. 1. (Refer to 9 - ENGINE - DIAGNOSIS AND TESTING)

7. ASD RELAY

Turn the ignition off.

Install a known good relay in place of the ASD Relay.

Connect a jumper wire between ground and the ASD Relay Control circuit in ECM C2 harness connector cavity 42.

Turn the ignition on.

Using a 12-volt test light connected to ground, check the Fused ASD Relay Output circuits at the ECM C2 harness connector cavities 1, 3 and 5.

Did the test light illuminate brightly for each circuit?

Yes >> Replace the ASD Relay.
Perform the ECM Verification Test Ver. 1. (Refer to 9 - ENGINE - DIAGNOSIS AND TESTING)

No >> Go To 8

8. ASD RELAY CONTROL CIRCUIT OPEN

Turn the ignition off.

Remove the ASD Relay from the IPM.

Measure the resistance of the ASD Relay Control circuit between the IPM connector and the ECM harness connector.

Is the resistance below 10.0 ohms?

Yes >> Go To 9

No >> Repair the ASD Relay Control circuit for an open.
Perform the ECM Verification Test Ver. 1. (Refer to 9 - ENGINE - DIAGNOSIS AND TESTING)

9. ASD RELAY CONTROL CIRCUIT SHORTED TO VOLTAGE

Connect a jumper wire between cavity 30 and cavity 87 of the ASD Relay connector in the IPM.

Turn the ignition on.

Measure the voltage on the ASD Relay Control circuit.

Is the voltage above 1.0 volt?

Yes >> Repair the ASD Relay Control circuit for a short to voltage.
Perform the ECM Verification Test Ver. 1. (Refer to 9 - ENGINE - DIAGNOSIS AND TESTING)

No >> Test Complete.

*INTERMITTENT DTC

For a complete wiring diagram **Refer to Section 8W**

Diagnostic Test

1. INTERMITTENT DTC

WARNING: When the engine is operating, do not stand in direct line with the fan. Do not put your hands near the pulleys, belts, or fan. Do not wear loose clothing. Failure to follow these instructions can result in personal injury or death.

The conditions necessary to set this DTC are not present at this time.

Review the scan tool environmental data. If possible, try to duplicate the conditions under which the DTC set.

If applicable, actuate the component with the scan tool.

Monitor the scan tool data relative to this circuit and wiggle test the wiring and connectors.

Look for the data to change, the actuation to be interrupted, or for the DTC to reset during the wiggle test.

Refer to any Technical Service Bulletins (TSBs) that may apply.

Turn the ignition off.

Visually inspect the related wire harness. Disconnect all the related harness connectors. Look for any chafed, pierced, pinched, partially broken wires and broken, bent, pushed out, or corroded terminals.

Perform a voltage drop test on the related circuits between the suspected component and the ECM.

Inspect and clean all ECM, engine, and chassis grounds that are related to the most current DTC.

If numerous trouble codes were set, use a schematic and inspect any common ground or supply circuits.

For intermittent Misfire DTCs check for restrictions in the Intake and Exhaust system, proper installation of Sensors, vacuum leaks, and binding components that are run by the accessory drive belt.

Use the scan tool to perform a System Test if one applies to the component.

A co-pilot, data recorder, and/or lab scope should be used to help diagnose intermittent conditions.

Were any problems found during the above inspections?

Yes >> Perform the necessary repairs.
Perform the ECM Verification Test Ver. 1. (Refer to 9 - ENGINE - DIAGNOSIS AND TESTING)

No >> Test Complete.

PRE-DIAGNOSTIC TROUBLESHOOTING PROCEDURE

For a complete wiring diagram **Refer to Section 8W**.

Diagnostic Test

1. NO RESPONSE

NOTE: For vehicle communication problems, use the scan tool to refer to the Network Review Screen. The screen depicts a high level view of the vehicle network. Fault and problem areas appear in red.

Does the scan tool display a Vehicle Network problem or NO RESPONSE condition?

Yes >> Refer to the appropriate BUS Communication test in Section 8 ELECTRONIC CONTROL MODULES - ELECTRICAL DIAGNOSTICS.

No >> Go To 2

2. NO START

Does the vehicle have a NO START condition?

Yes >> Check the vehicle for any DTC(s), including Vehicle Theft Security related DTC(s), that may cause a no-start condition.

If no DTC(s) are present that relate to a no-start condition, refer to the Non DTC Diagnostic Procedures that relate to Fuel and Starting.

No >> Go To 3

3. VEHICLE REPAIR HISTORY AND TSB(s)

Check the vehicle repair history for repairs that may relate to the current condition.

Inspect the vehicle for aftermarket accessories that may have been installed incorrectly.

Check for any TSB(s) related to the condition or DTC(s).

If a TSB applies, follow the procedure outlined in the TSB.

Select the appropriate response for the condition that applies:

Performing a TSB procedure repaired the condition.

Test Complete.

Perform the ECM Verification Test Ver. 1.

A DTC is present, no TSB applies, or the TSB didn't repair the condition.

Go To 4

No DTC(s) or conditions are present.

Refer to the INTERMITTENT CONDITION Diagnostic Procedure.

4. VEHICLE INSPECTION

WARNING: WHEN THE ENGINE IS OPERATING, DO NOT STAND IN A DIRECT LINE WITH THE FAN. DO NOT PUT YOUR HANDS NEAR THE PULLEYS, BELTS OR FAN. DO NOT WEAR LOOSE CLOTHING.

Based on the diagnostic condition that applies, review the following list and perform any tests that relate to the condition:

If multiple DTCs are set in the ECM, review the wiring schematics for problems in any shared supply or ground circuits. Refer to the diagnostic procedure for Checking the ECM Power and Ground Circuits.

Inspect the air intake system and turbocharger related tubes for damage, restriction, or poor connection.

Inspect the exhaust system and related tubes for damage, restriction, or poor connection.

Remove and inspect the Air Filter for soiling or excessive dirt and debris which may cause an air flow restriction.

If the ECM detects and stores a DTC, the ECM also stores the environmental conditions under which the DTC was set.

Before erasing stored DTCs, record these conditions. Attempting to duplicate these conditions may assist when checking for an active DTC.

With the scan tool, Clear the stored DTC(s).

Attempt to duplicate the environmental conditions under which the DTC was set.

Review the DTC When Monitored and Set Conditions. If possible, try to duplicate the vehicle conditions under which the DTC conditions will be monitored. Operate the vehicle under those conditions.

Using the wiring diagram/schematic as a guide, inspect the wiring and connectors between the component and the module.

If the DTC(s) are fuel or air related, check the fuel level and quality.

Were any repairs made that corrected the DTC or condition?

Yes >> Test complete.
Perform the ECM Verification Test Ver. 1.

No >> Refer to the diagnostic test procedure related to the DTC.

STANDARD PROCEDURE

VERIFICATION TEST

For a complete wiring diagram **Refer to Section 8W**.

Diagnostic Test

1. SELECT THE PROPER VERIFICATION TEST

Select the verification test for the repair that has been completed:

Speed Control repair
Go To 2

Charging System repair
Go To 3

No Start repair
Go To 4

All other repairs
Go To 5

2. SPEED CONTROL VERIFICATION TEST

1. Inspect the vehicle to ensure that all engine components are properly installed and connected. Reassemble and reconnect components as necessary.
2. With the scan tool, erase all diagnostic trouble codes (DTCs).
3. Road test the vehicle at a speed above 60 km/h (35 MPH).
4. Turn the speed control ON/OFF switch on.
5. Depress and release the SET switch. If the speed control does not engage, the repair is not complete, continue with step 12.
6. Quickly depress and release the RESUME/ACCEL switch. If the vehicle speed does not increase by 3 km/h (2 MPH), the repair is not complete, continue with step 12.
7. Using caution, depress and release the brake pedal. If the speed control does not disengage, the repair is not complete, continue with step 12.
8. With the vehicle speed at least 60 km/h (35 MPH), depress the RESUME/ACCEL switch. If the speed control does not resume at the previously set speed, the repair is not complete, continue with step 12.
9. Hold down the COAST switch. If the vehicle does not decelerate, the repair is not complete, continue with step 12.
10. While still holding down the COAST switch, ensure the vehicle speed is at least 60 km/h (35 MPH) and release the COAST switch. If the vehicle does not adjust and set a new vehicle speed, the repair is not complete, continue with step 12.
11. With the speed control engaged, depress the ON/OFF switch. If the speed control does not disengage, the repair is not complete, continue with step 12.
12. If the vehicle did not successfully perform all of the previous steps, check for Technical Service Bulletins (TSBs) that pertain to this speed control problem and then, if necessary, return to the Symptom List.
13. If the vehicle successfully performed all of the previous steps, the speed control system is now functioning as designed. The repair is now complete.

Are any DTCs or symptoms remaining?

Yes >> Repair is not complete, refer to the appropriate diagnostic procedure.

No >> Repair is complete.

3. CHARGING SYSTEM VERIFICATION TEST

1. Inspect the vehicle to ensure that all engine components are properly installed and connected. Reassemble and reconnect components as necessary.
2. With the scan tool, erase all diagnostic trouble codes (DTCs).
3. Start the engine.
4. Raise the engine speed to 2000 RPM for at least 30 seconds.
5. Allow the engine to idle.
6. Turn the ignition off for 20 seconds.
7. Turn the ignition on.
8. With the scan tool, read ECM DTCs.
9. If this DTC has set again, or another DTC has set, look for any Technical Service Bulletins (TSBs) that may relate to this condition. Return to the Symptom List if necessary.
10. If the charging system is functioning correctly and there are no DTCs, the repair is now complete.

Are any DTCs or symptoms remaining?

Yes >> Repair is not complete, refer to the appropriate diagnostic procedure.

No >> Repair is complete.

4. NO START VERIFICATION TEST

NOTE: 1. IMPORTANT! If the Engine Control Module or Sentry Key Immobilizer Module has been replaced, ensure the programming procedure for the module has been performed in accordance with the Service Information.

2. Inspect the vehicle to ensure that all engine components are properly installed and connected. Reassemble and reconnect components as necessary.
3. Inspect the engine oil for contamination. If it is contaminated, change the oil and filter.
4. With the scan tool, erase all diagnostic trouble codes (DTCs).
5. Turn the ignition off for at least 10 seconds.
6. Attempt to start the engine.
7. If the engine is unable to start, look for any Technical Service Bulletins (TSBs) that may relate to this condition. Return to the Symptom List if necessary.
8. If the engine starts and continues to run, the repair is now complete.

Are any DTCs or symptoms remaining?

Yes >> Repair is not complete, refer to the appropriate diagnostic procedure.

No >> Repair is complete.

5. ROAD TEST VERIFICATION TEST

1. Inspect the vehicle to ensure that all engine components are properly installed and connected. Reassemble and reconnect components as necessary.
2. If this verification procedure is being performed after a non-DTC test, perform steps 3 and 4. If not, proceed to step 5.
3. Check to see if the initial symptom still exists. If there are no trouble codes and the symptom no longer exists, the repair was successful and testing is now complete.
4. If the initial or another symptom exists, the repair is not complete. Check all pertinent Technical Service Bulletins (TSBs) and return to the Symptom List if necessary.
5. For previously read DTCs that have not been dealt with, return to the Symptom List and follow the diagnostic path for that DTC; otherwise, continue.
6. If the Engine Control Module (ECM) has been replaced, continue with step 9.
7. With the scan tool, erase all diagnostic trouble codes (DTCs), then disconnect the scan tool.
8. Turn the ignition off for at least 10 seconds.
9. If equipped with a Transfer Case Position Switch, perform step 10, otherwise, continue with step 11.
10. With the ignition switch on, place the Transfer Case Shift Lever in each gear position, stopping for 15 seconds in each position.
11. Road test the vehicle. For some of the road test, go at least 64 km/h (40 MPH). If this test is for an A/C Relay Control Circuit, drive the vehicle for at least 5 minutes with the A/C on.
12. At some point, stop the vehicle and turn the engine off for at least 10 seconds, then restart the engine and continue.
13. Upon completion of the road test, turn the engine off and check for DTCs with the scan tool.
14. If the repaired DTC has set again, the repair is not complete. Check for any pertinent Technical Service Bulletins (TSBs) and return to the Symptom List. If there are no DTCs, the repair was successful and is now complete.

Are any DTCs or symptoms remaining?

Yes >> Repair is not complete, refer to the appropriate diagnostic procedure.

No >> Repair is complete.

ENGINE - 2.7L DOHC - SERVICE INFORMATION

TABLE OF CONTENTS

page

ENGINE - 2.7L DOHC - SERVICE INFORMATION
DESCRIPTION 1901
DIAGNOSIS AND TESTING
ENGINE DIAGNOSIS - INTRODUCTION 1902
ENGINE DIAGNOSIS - PERFORMANCE 1903
ENGINE DIAGNOSIS - MECHANICAL 1904
CYLINDER COMPRESSION PRESSURE TEST 1906
CYLINDER COMBUSTION PRESSURE LEAKAGE TEST 1906
ENGINE OIL LEAK INSPECTION 1907
STANDARD PROCEDURE
REPAIR OF DAMAGED OR WORN THREADS. 1908
HYDROSTATIC LOCKED ENGINE 1908
FORM-IN-PLACE GASKETS AND SEALERS . 1909
ENGINE GASKET SURFACE PREPARATION . . 1910
ENGINE CORE AND OIL GALLERY PLUGS . 1910
REMOVAL - ENGINE ASSEMBLY 1911
INSTALLATION - ENGINE ASSEMBLY 1918
SPECIFICATIONS
2.7L ENGINE 1924
TORQUE 1928
SPECIAL TOOLS
2.7L ENGINE 1930
HOUSING-AIR CLEANER
REMOVAL 1934
INSTALLATION 1934
CYLINDER HEAD
DESCRIPTION 1935
DIAGNOSIS AND TESTING
CYLINDER HEAD GASKET 1935
STANDARD PROCEDURE - Cylinder Head Oil Gallery Cup Plug Service 1936
REMOVAL 1937
CLEANING 1942
INSPECTION 1942
INSTALLATION 1942
CAMSHAFT(S)
DESCRIPTION 1947
OPERATION 1947
REMOVAL 1948
INSPECTION 1949
INSTALLATION 1950
COVER(S)-CYLINDER HEAD
REMOVAL
LEFT 1952
RIGHT 1954
INSTALLATION
LEFT 1956
RIGHT 1958

page

VALVES & SEATS-INTAKE/EXHAUST
DESCRIPTION 1961
STANDARD PROCEDURE - VALVE AND VALVE SEAT REFACING 1961
REMOVAL 1965
INSPECTION 1966
INSTALLATION 1967
SPRINGS-VALVE
DESCRIPTION 1968
REMOVAL
IN VEHICLE 1969
OFF VEHICLE 1971
INSPECTION 1971
INSTALLATION
IN VEHICLE 1972
OFF VEHICLE 1974
SEALS-VALVE STEM
REMOVAL 1976
INSTALLATION 1976
ADJUSTERS-HYDRAULIC LASH
DIAGNOSIS AND TESTING
HYDRAULIC LASH ADJUSTER NOISE DIAGNOSIS 1977
REMOVAL 1978
INSTALLATION 1978
ARMS-ROCKER
DESCRIPTION 1979
REMOVAL 1979
INSPECTION 1979
INSTALLATION 1980
ENGINE BLOCK
DESCRIPTION 1981
STANDARD PROCEDURE - CYLINDER BORE HONING 1981
CLEANING 1982
INSPECTION 1982
BEARINGS-CONNECTING ROD
STANDARD PROCEDURE
CONNECTING ROD AND BEARING FITTING . . 1984
CRANKSHAFT
DESCRIPTION 1986
STANDARD PROCEDURE - CRANKSHAFT END PLAY 1986
REMOVAL 1987
INSTALLATION 1989
BEARINGS-CRANKSHAFT MAIN
STANDARD PROCEDURE
CRANKSHAFT MAIN BEARING FITTING 1993
SEAL- CRANKSHAFT FRONT OIL
REMOVAL 1995
INSTALLATION 1995

SEAL-CRANKSHAFT REAR OIL
REMOVAL 1996
INSTALLATION 1998
PLATE-FLEX
REMOVAL 2001
INSTALLATION 2001
ROD-PISTON & CONNECTING
DESCRIPTION 2002
STANDARD PROCEDURE - FITTING PISTONS . . 2002
REMOVAL 2003
INSTALLATION 2003
RINGS-PISTON
STANDARD PROCEDURE - PISTON RING FITTING 2007
REMOVAL 2007
INSTALLATION 2008
DAMPER-CRANKSHAFT
REMOVAL 2010
INSTALLATION 2011
WINDAGE TRAY
REMOVAL 2013
INSTALLATION 2015
COLLAR-STRUCTURAL
REMOVAL 2017
INSTALLATION 2019
MOUNT-LEFT
REMOVAL 2021
INSTALLATION 2023
MOUNT-RIGHT
REMOVAL 2026
INSTALLATION 2028
MOUNT-REAR
REMOVAL 2030
INSTALLATION 2031
LUBRICATION
DESCRIPTION 2032
OPERATION 2032
DIAGNOSIS AND TESTING
CHECKING ENGINE OIL PRESSURE 2035
OIL
DESCRIPTION 2036
STANDARD PROCEDURE
ENGINE OIL AND FILTER CHANGE 2036
ENGINE OIL LEVEL CHECK 2037
COOLER & LINES-OIL
DESCRIPTION 2038
OPERATION 2038
REMOVAL 2039
INSTALLATION 2039
FILTER-OIL
REMOVAL 2040
INSTALLATION 2041
PAN-OIL
REMOVAL 2043
INSTALLATION 2047
SWITCH-OIL PRESSURE
DESCRIPTION 2052
REMOVAL 2052
INSTALLATION 2053
PUMP-OIL
REMOVAL 2054
DISASSEMBLY 2055
CLEANING 2055
INSPECTION 2055
ASSEMBLY 2058
INSTALLATION 2058
MANIFOLD-INTAKE
DIAGNOSIS AND TESTING
INTAKE MANIFOLD LEAKS 2060
STANDARD PROCEDURE - INTAKE MANIFOLD VACUUM PORT REPAIR 2060
REMOVAL
INTAKE MANIFOLD UPPER 2061
REMOVAL - INTAKE MANIFOLD LOWER . . . 2063
INSPECTION
INTAKE MANIFOLD UPPER 2064
INSPECTION - INTAKE MANIFOLD LOWER . 2064
INSTALLATION
INTAKE MANIFOLD UPPER 2064
INTAKE MANIFOLD LOWER 2066
MANIFOLD-EXHAUST
REMOVAL
LEFT EXHAUST MANIFOLD 2068
RIGHT EXHAUST MANIFOLD 2069
INSPECTION 2070
INSTALLATION
LEFT EXHAUST MANIFOLD 2070
RIGHT EXHAUST MANIFOLD 2072
VALVE TIMING
DESCRIPTION 2074
STANDARD PROCEDURE
ENGINE TIMING - VERIFICATION 2075
COVER-TIMING CHAIN
REMOVAL 2077
INSTALLATION 2078
CHAIN AND SPROCKETS-TIMING
REMOVAL
TIMING CHAIN 2080
CRANKSHAFT SPROCKET 2082
INSTALLATION
TIMING CHAIN 2083
CRANKSHAFT SPROCKET 2088
TENSIONER-TIMING CHAIN
REMOVAL 2089
INSTALLATION
RESETTING TENSIONER 2091
TENSIONER-TIMING CHAIN 2093

ENGINE - 2.7L DOHC - SERVICE INFORMATION

DESCRIPTION

The 2.7 Liter (167 Cubic Inches) 60 degree V-6 engine is a double overhead camshaft design with hydraulic lifters and four valves per cylinder. The engine does not have provisions for a free wheeling valve train.

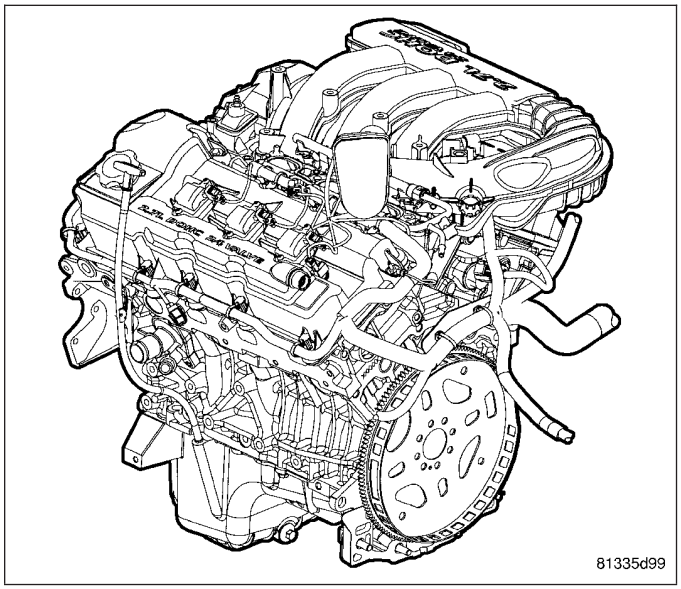

The cylinders are numbered from front to rear, with the right bank odd numbered, and the left bank even numbered. The firing order is 1–2–3–4–5–6.

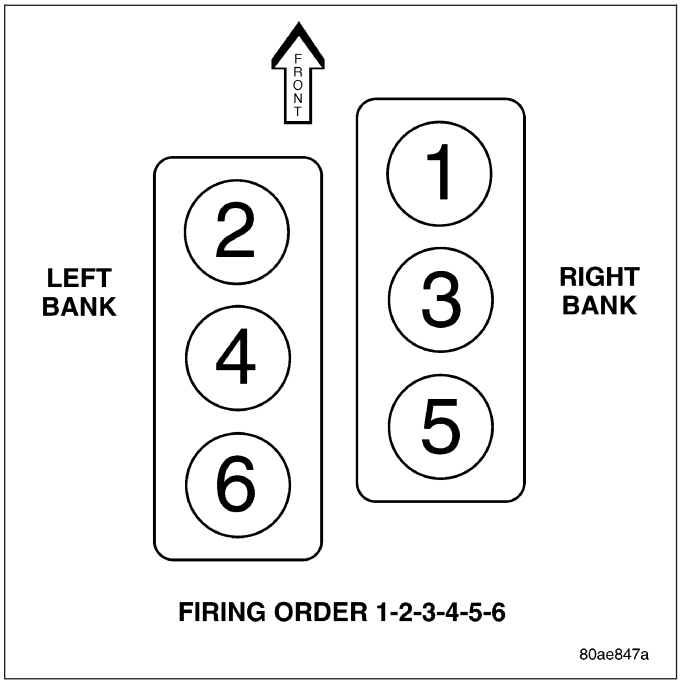

The engine identification number is located on the rear of the cylinder block just below the left cylinder head

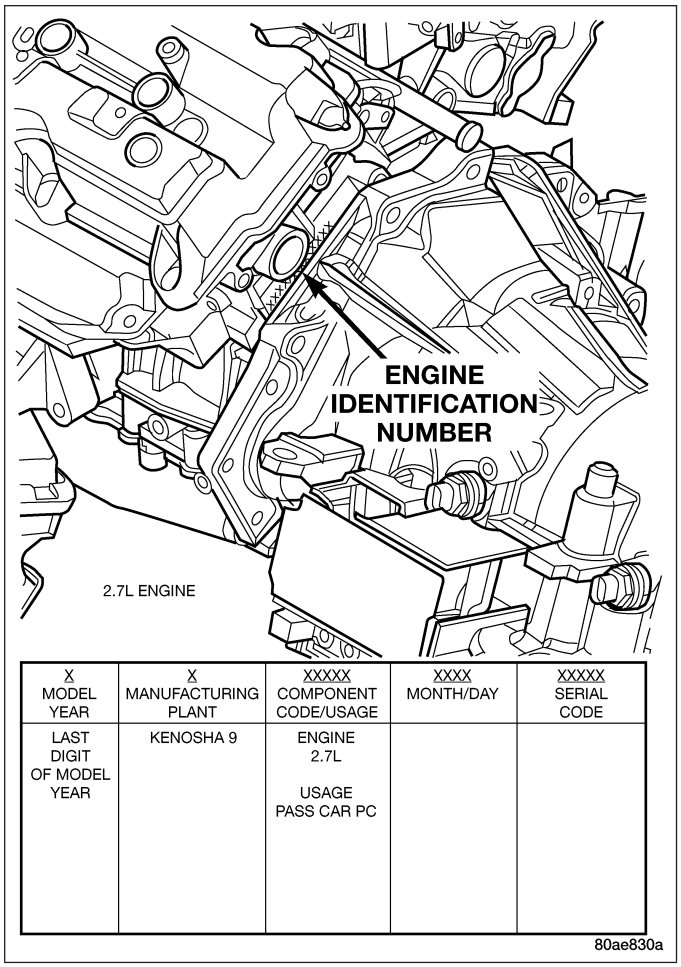

X MODEL YEAR	X MANUFACTURING PLANT	XXXXX COMPONENT CODE/USAGE	XXXX MONTH/DAY	XXXXX SERIAL CODE
LAST DIGIT OF MODEL YEAR	KENOSHA 9	ENGINE 2.7L USAGE PASS CAR PC		

80ae830a

DIAGNOSIS AND TESTING

ENGINE DIAGNOSIS - INTRODUCTION

Engine diagnosis is helpful in determining the causes of malfunctions not detected and remedied by routine maintenance.

These malfunctions may be classified as either mechanical (e.g., a strange noise), or performance (e.g., engine idles rough and stalls).

Refer to Service Diagnosis—Mechanical Chart and Service Diagnosis—Performance Chart, for possible causes and corrections of malfunctions. Refer to FUEL SYSTEM for the fuel system diagnosis.

Additional tests and diagnostic procedures may be necessary for specific engine malfunctions that cannot be isolated with the Service Diagnosis charts. Information concerning additional tests and diagnosis is provided within the following:

- Cylinder Compression Pressure Test
- Cylinder Combustion Pressure Leakage Test
- Cylinder Head Gasket Failure Diagnosis
- Intake Manifold Leakage Diagnosis
- Lash Adjuster (Tappet) Noise Diagnosis
- Engine Oil Leak Inspection

ENGINE DIAGNOSIS - PERFORMANCE

CONDITION	POSSIBLE CAUSE	CORRECTION
ENGINE WILL NOT START	1. Weak battery.	1. Test battery. Charge or replace as necessary. (Refer to 8 - ELECTRICAL/BATTERY SYSTEM/ BATTERY - DESCRIPTION)
	2. Corroded or loose battery connections.	2. Clean and tighten battery connections. Apply a coat of light mineral grease to terminals.
	3. Faulty starter.	3. Test starting system. (Refer to 8 - ELECTRICAL/STARTING - DIAGNOSIS AND TESTING)
	4. Faulty coil(s) or control unit.	4. Test and replace as needed. (Refer to Appropriate Diagnostic Information)
	5. Incorrect spark plug gap.	5. Check and adjust gap as needed.
	6. Contamination in fuel system.	6. Clean system and replace fuel filter.
	7. Faulty fuel pump.	7. Test fuel pump and replace as needed. (Refer to Appropriate Diagnostic Information)
	8. Incorrect engine timing.	8. Check for a skipped timing chain.
ENGINE STALLS OR IDLES ROUGH	1. Idle speed too low.	1. Test minimum air flow. (Refer to Appropriate Diagnostic Information)
	2. Incorrect fuel mixture.	2. (Refer to Appropriate Diagnostic Information)
	3. Intake manifold leakage.	3. Inspect intake manifold gasket, manifold, and vacuum hoses.
	4. Faulty coil(s).	4. Test and replace as necessary. (Refer to Appropriate Diagnostic Information)
ENGINE LOSS OF POWER	1. Dirty or incorrectly gapped plugs.	1. Set gap as needed or replace plug(s).
	2. Contamination in fuel system.	2. Clean system and replace fuel filter.
	3. Faulty fuel pump.	3. Test and replace as necessary. (Refer to Appropriate Diagnostic Information)
	4. Incorrect valve timing.	4. Correct valve timing as needed.
	5. Leaking cylinder head gasket.	5. Replace cylinder head gasket.
	6. Low compression.	6. Test compression of each cylinder.
	7. Burned, warped, or pitted valves.	7. Replace valves.
	8. Plugged or restricted exhaust system.	8. Check exhaust system restriction. Replace parts, as necessary.
	9. Faulty coil(s).	9. Test and replace as necessary. (Refer to Appropriate Diagnostic Information)

CONDITION	POSSIBLE CAUSE	CORRECTION
ENGINE MISSES ON ACCELERATION	1. Dirty or incorrectly gapped spark plugs.	1. Set gap as needed or replace plug(s).
	2. Contamination in Fuel System.	2. Clean fuel system and replace fuel filter.
	3. Burned, warped, or pitted valves.	3. Replace valves.
	4. Faulty coil(s).	4. Test and replace as necessary. (Refer to Appropriate Diagnostic Information)
ENGINE MISSES AT HIGH SPEED	1. Dirty or incorrect spark plug gap.	1. Set gap as needed or replace plug(s).
	2. Faulty coil(s).	2. Test and replace as necessary. (Refer to Appropriate Diagnostic Information)
	3. Dirty fuel injector(s).	Test and replace as necessary. (Refer to Appropriate Diagnostic Information)
	4. Contamination in fuel system.	4. Clean system and replace fuel filter.

ENGINE DIAGNOSIS - MECHANICAL

CONDITION	POSSIBLE CAUSES	CORRECTION
NOISY VALVES	1. High or low oil level in crankcase.	1. Check and correct engine oil level.
	2. Thin or diluted oil.	2. Change oil to correct viscosity.
	3. Thick oil	3. (a.) Change oil and filter.
		(b.) Run engine to operating temperature.
		(c.) Change oil and filter again.
	4. Low oil pressure.	4. Check and correct engine oil level.
	5. Dirt in tappets/lash adjusters.	5. Replace rocker arm/hydraulic lash adjuster assembly.
	6. Worn rocker arms.	6. Inspect oil supply to rocker arms.
	7. Worn tappets/lash adjusters.	7. Install new rocker arm/hydraulic lash adjuster assembly.
	8. Worn valve guides.	8. Ream guides and install new valves with oversize stems.
	9. Excessive runout of valve seats on valve faces.	9. Grind valve seats and valves.
	10. Missing adjuster pivot.	10. Replace rocker arm/hydraulic lash adjuster assembly.

CONDITION	POSSIBLE CAUSES	CORRECTION
CONNECTING ROD NOISE	1. Insufficient oil supply.	1. Check engine oil level.
	2. Low oil pressure.	2. Check engine oil level. Inspect oil pump relief valve and spring.
	3. Thin or diluted oil.	3. Change oil to correct viscosity.
	4. Thick oil	4. (a.) Change oil and filter. (b.) Run engine to operating temperature. (c.) Change oil and filter again.
	5. Excessive bearing clearance.	5. Measure bearings for correct clearance. Repair as necessary.
	6. Connecting rod journal out-of-round.	6. Replace crankshaft or grind surface.
	7. Misaligned connecting rods.	7. Replace bent connecting rods.
MAIN BEARING NOISE	1. Insufficient oil supply.	1. Check engine oil level.
	2. Low oil pressure.	2. Check engine oil level. Inspect oil pump relief valve and spring.
	3. Thin or diluted oil.	3. Change oil to correct viscosity.
	4. Thick oil.	4. (a.) Change oil and filter. (b.) Run engine to operating temperature. (c.) Change oil and filter again.
	5. Excessive bearing clearance.	5. Measure bearings for correct clearance. Repair as necessary.
	6. Excessive end play.	6. Check thrust bearing for wear on flanges.
	7. Crankshaft journal out-of-round or worn.	7. Replace crankshaft or grind journals.
	8. Loose flywheel or torque converter.	8. Tighten to correct torque.
OIL PRESSURE DROP	1. Low oil level.	1. Check engine oil level.
	2. Faulty oil pressure sending unit.	2. Install new sending unit.
	3. Low oil pressure.	3. Check sending unit and main bearing oil clearance.
	4. Clogged oil filter.	4. Install new oil filter.
	5. Worn parts in oil pump.	5. Replace worn parts or pump.
	6. Thin or diluted oil.	6. Change oil to correct viscosity.
	7. Oil pump relief valve stuck.	7. Remove valve and inspect, clean, or replace.
	8. Oil pump suction tube loose.	8. Remove oil pan and install new tube or clean, if necessary.
	9. Oil pump cover warped or cracked.	9. Install new oil pump.
	10. Excessive bearing clearance.	10. Measure bearings for correct clearance.

CONDITION	POSSIBLE CAUSES	CORRECTION
OIL LEAKS	1. Misaligned or deteriorated gaskets.	1. Replace gasket(s).
	2. Loose fastener, broken or porous metal part.	2. Tighten, repair or replace the part.
	3. Misaligned or deteriorated cup or threaded plug.	3. Replace as necessary.
OIL CONSUMPTION OR SPARK PLUGS FOULED	1. PCV system malfunction.	1. Check system and repair as necessary. (Refer to Appropriate Diagnostic Manual)
	2. Worn, scuffed or broken rings.	2. Hone cylinder bores. Install new rings.
	3. Carbon in oil ring slots.	3. Clean pistons and install new rings.
	4. Rings fitted too tightly in grooves.	4. Remove rings and check grooves. If groove is not proper width, replace piston.
	5. Worn valve guide(s).	5. Replace cylinder head(s).
	6. Valve stem seal(s) worn or damaged.	6. Replace seal(s).

CYLINDER COMPRESSION PRESSURE TEST

The results of a cylinder compression pressure test can be utilized to diagnose several engine malfunctions.

Ensure the battery is completely charged and the engine starter motor is in good operating condition. Otherwise the indicated compression pressures may not be valid for diagnosis purposes.

1. Check engine oil level and add oil if necessary.
2. Drive the vehicle until engine reaches normal operating temperature. Select a route free from traffic and other forms of congestion, observe all traffic laws, and accelerate through the gears several times briskly.
3. Remove all spark plugs from engine. As spark plugs are being removed, check electrodes for abnormal firing indicators fouled, hot, oily, etc. Record cylinder number of spark plug for future reference.
4. Remove the Auto Shutdown (ASD) relay from the PDC.
5. Be sure throttle blade is fully open during the compression check.
6. Insert compression gauge adaptor Special Tool 8116 or the equivalent, into the #1 spark plug hole in cylinder head. Connect the 0–500 psi (Blue) pressure transducer (Special Tool CH7059) with cable adaptors to the DRBIII®. For Special Tool identification, (Refer to 9 - ENGINE - SPECIAL TOOLS).
7. Crank engine until maximum pressure is reached on gauge. Record this pressure as #1 cylinder pressure.
8. Repeat the previous step for all remaining cylinders.
9. Compression should not be less than 689 kPa (100 psi) and not vary more than 25 percent from cylinder to cylinder.
10. If one or more cylinders have abnormally low compression pressures, repeat the compression test.
11. If the same cylinder or cylinders repeat an abnormally low reading on the second compression test, it could indicate the existence of a problem in the cylinder in question. **The recommended compression pressures are to be used only as a guide to diagnosing engine problems. An engine should not be disassembled to determine the cause of low compression unless some malfunction is present.**

CYLINDER COMBUSTION PRESSURE LEAKAGE TEST

The combustion pressure leakage test provides an accurate means for determining engine condition.

Combustion pressure leakage testing will detect:

- Exhaust and intake valve leaks (improper seating).
- Leaks between adjacent cylinders or into water jacket.

- Any causes for combustion/compression pressure loss.

WARNING: Do not remove the pressure cap with the system hot and under pressure because serious burns from coolant can occur.

Check the coolant level and fill as required. DO NOT install the pressure cap.

Start and operate the engine until it attains normal operating temperature, then turn the engine OFF.

Clean spark plug recesses with compressed air.

Remove the spark plugs.

Remove the oil filler cap.

Remove the air cleaner.

Calibrate the tester according to the manufacturer's instructions. The shop air source for testing should maintain 483 kPa (70 psi) minimum, 1,379 kPa (200 psi) maximum, with 552 kPa (80 psi) recommended.

Perform the test procedures on each cylinder according to the tester manufacturer's instructions. While testing, listen for pressurized air escaping through the throttle body, tailpipe and oil filler cap opening. Check for bubbles in the coolant.

All gauge pressure indications should be equal, with no more than 25% leakage per cylinder.

FOR EXAMPLE: At 552 kPa (80 psi) input pressure, a minimum of 414 kPa (60 psi) should be maintained in the cylinder.

ENGINE OIL LEAK INSPECTION

Begin with a thorough visual inspection of the engine, particularly at the area of the suspected leak. If an oil leak source is not readily identifiable, the following steps should be followed:

1. Do not clean or degrease the engine at this time because some solvents may cause rubber to swell, temporarily stopping the leak.
2. Add an oil soluble dye (use as recommended by manufacturer). Start the engine and let idle for approximately 15 minutes. Check the oil level indicator to make sure the dye is thoroughly mixed as indicated with a bright yellow color under a black light.
3. Using a black light, inspect the entire engine for fluorescent dye, particularly at the suspected area of oil leak. If the oil leak is found and identified, repair as necessary.
4. If dye is not observed, drive the vehicle at various speeds for approximately 24 km (15 miles), and repeat inspection.
5. **If the oil leak source is not positively identified at this time**, proceed with the air leak detection test method as follows:
   - Disconnect the fresh air hose (make-up air) at the cylinder head cover and plug or cap the nipple on the cover.
   - Remove the PCV valve hose from the cylinder head cover. Cap or plug the PCV valve nipple on the cover.
   - Attach an air hose with pressure gauge and regulator to the oil level indicator tube.

CAUTION: Do not subject the engine assembly to more than 20.6 kpa (3 PSI) of test pressure.

   - Gradually apply air pressure from 1 psi to 2.5 psi maximum while applying soapy water at the suspected source. Adjust the regulator to the suitable test pressure that provides the best bubbles which will pinpoint the leak source. If the oil leak is detected and identified, repair per service manual procedures.
   - If the leakage occurs at the crankshaft rear oil seal area, refer to the section, Inspection for Rear Seal Area Leak.
6. If no leaks are detected, turn off the air supply. Remove the air hose, all plugs, and caps. Install the PCV valve and fresh air hose (make-up air). Proceed to next step.
7. Clean the oil off the suspect oil leak area using a suitable solvent. Drive the vehicle at various speeds approximately 24 km (15 miles). Inspect the engine for signs of an oil leak by using a black light.

NOTE: If oil leakage is observed at the oil level indicator tube to block location; remove the tube, clean and reseal using Mopar® Stud & Bearing Mount (press fit tube applications only), and for O-ring style tubes, remove tube and replace the O-ring seal.

INSPECTION FOR REAR SEAL AREA LEAKS

Since it is sometimes difficult to determine the source of an oil leak in the rear seal area of the engine, a more involved inspection is necessary. The following steps should be followed to help pinpoint the source of the leak.

If the leakage occurs at the crankshaft rear oil seal area:

1. Disconnect the battery.
2. Raise the vehicle.
3. Remove torque converter or clutch housing cover and inspect rear of block for evidence of oil. Use a black light to check for the oil leak. If a leak is present in this area, remove transmission for further inspection.
   a. Circular spray pattern generally indicates seal leakage or crankshaft damage.
   b. Where leakage tends to run straight down, possible causes are a porous block, oil gallery cup plug, bedplate to cylinder block mating surfaces and seal bore. See proper repair procedures for these items.
4. If no leaks are detected, pressurize the crankcase as previously described.

CAUTION: Do not exceed 20.6 kPa (3 psi).

5. If the leak is not detected, very slowly turn the crankshaft and watch for leakage. If a leak is detected between the crankshaft and seal while slowly turning the crankshaft, it is possible the crankshaft seal surface is damaged. The seal area on the crankshaft could have minor nicks or scratches that can be polished out with emery cloth.

CAUTION: Use extreme caution when crankshaft polishing is necessary to remove minor nicks and scratches. The crankshaft seal flange is specially machined to complement the function of the rear oil seal.

6. For bubbles that remain steady with shaft rotation, no further inspection can be done until disassembled.
7. After the oil leak root cause and appropriate corrective action have been identified, replace component(s) as necessary.

STANDARD PROCEDURE

REPAIR OF DAMAGED OR WORN THREADS

Damaged or worn threads (excluding spark plug and camshaft bearing cap attaching threads) can be repaired. Essentially, this repair consists of drilling out worn or damaged threads, tapping the hole with a special Heli-Coil Tap, (or equivalent) and installing an insert into the tapped hole. This brings the hole back to its original thread size.

CAUTION: Be sure that the tapped holes maintain the original center line.

Heli-Coil tools and inserts are readily available from automotive parts jobbers.

HYDROSTATIC LOCKED ENGINE

When an engine is suspected to be hydrostatically locked, regardless of what caused the problem, the following steps should be used.

CAUTION: DO NOT use starter motor to rotate the engine, severe damage may occur.

1. Inspect air cleaner, induction system and intake manifold to insure system is dry and clear of foreign material.
2. Remove negative battery cable.
3. Place a shop towel around the spark plugs when removing them from the engine. This will catch any fluid that may possibly be in the cylinder under pressure.
4. With all spark plugs removed, rotate engine crankshaft using a breaker bar and socket.
5. Identify the fluid in the cylinder(s) (i.e., coolant, fuel, oil or other).

6. Make sure all fluid has been removed from the cylinders. Inspect engine for damage (i.e., connecting rods, pistons, valves, etc.)
7. Repair engine or components as necessary to prevent this problem from re-occurring.

CAUTION: Squirt approximately one teaspoon of oil into the cylinders, rotate engine to lubricate the cylinder walls to prevent damage on restart.

8. Install new spark plugs.
9. Drain engine oil and remove oil filter.
10. Install a new oil filter.
11. Fill engine with specified amount of approved oil.
12. Connect negative battery cable.
13. Start engine and check for any leaks.

FORM-IN-PLACE GASKETS AND SEALERS

There are numerous places where form-in-place gaskets are used on the engine. Care must be taken when applying form-in-place gaskets to assure obtaining the desired results. **Do not use form-in-place gasket material unless specified.** Bead size, continuity, and location are of great importance. Too thin a bead can result in leakage while too much can result in spill-over which can break off and obstruct fluid feed lines. A continuous bead of the proper width is essential to obtain a leak-free gasket.

There are numerous types of form-in-place gasket materials that are used in the engine area. Mopar® Engine RTV GEN II, Mopar® ATF-RTV, and Mopar® Gasket Maker gasket materials, each have different properties and can not be used in place of the other.

MOPAR® ENGINE RTV GEN II is used to seal components exposed to engine oil. This material is a specially designed black silicone rubber RTV that retains adhesion and sealing properties when exposed to engine oil. Moisture in the air causes the material to cure. This material is available in three ounce tubes and has a shelf life of one year. After one year this material will not properly cure. Always inspect the package for the expiration date before use.

MOPAR® ATF RTV is a specifically designed black silicone rubber RTV that retains adhesion and sealing properties to seal components exposed to automatic transmission fluid, engine coolants, and moisture. This material is available in three ounce tubes and has a shelf life of one year. After one year this material will not properly cure. Always inspect the package for the expiration date before use.

MOPAR® GASKET MAKER is an anaerobic type gasket material. The material cures in the absence of air when squeezed between two metallic surfaces. It will not cure if left in the uncovered tube. The anaerobic material is for use between two machined surfaces. Do not use on flexible metal flanges.

MOPAR® BED PLATE SEALANT is a unique (green-in-color) anaerobic type gasket material that is specially made to seal the area between the bed plate and cylinder block without disturbing the bearing clearance or alignment of these components. The material cures slowly in the absence of air when torqued between two metallic surfaces, and will rapidly cure when heat is applied.

MOPAR® GASKET SEALANT is a slow drying, permanently soft sealer. This material is recommended for sealing threaded fittings and gaskets against leakage of oil and coolant. Can be used on threaded and machined parts under all temperatures. This material is used on engines with multi-layer steel (MLS) cylinder head gaskets. This material also will prevent corrosion. Mopar® Gasket Sealant is available in a 13 oz. aerosol can or 4oz./16 oz. can w/applicator.

SEALER APPLICATION

Mopar® Gasket Maker material should be applied sparingly 1 mm (0.040 in.) diameter or less of sealant to one gasket surface. Be certain the material surrounds each mounting hole. Excess material can easily be wiped off. Components should be torqued in place within 15 minutes. The use of a locating dowel is recommended during assembly to prevent smearing material off the location.

Mopar® Engine RTV GEN II or ATF RTV gasket material should be applied in a continuous bead approximately 3 mm (0.120 in.) in diameter. All mounting holes must be circled. For corner sealing, a 3.17 or 6.35 mm (1/8 or 1/4 in.) drop is placed in the center of the gasket contact area. Uncured sealant may be removed with a shop towel. Com-

ponents should be torqued in place while the sealant is still wet to the touch (within 10 minutes). The usage of a locating dowel is recommended during assembly to prevent smearing material off the location.

Mopar® Gasket Sealant in an aerosol can should be applied using a thin, even coat sprayed completely over both surfaces to be joined, and both sides of a gasket. Then proceed with assembly. Material in a can w/applicator can be brushed on evenly over the sealing surfaces. Material in an aerosol can should be used on engines with multi-layer steel gaskets.

ENGINE GASKET SURFACE PREPARATION

To ensure engine gasket sealing, proper surface preparation must be performed, especially with the use of aluminum engine components and multi-layer steel cylinder head gaskets.

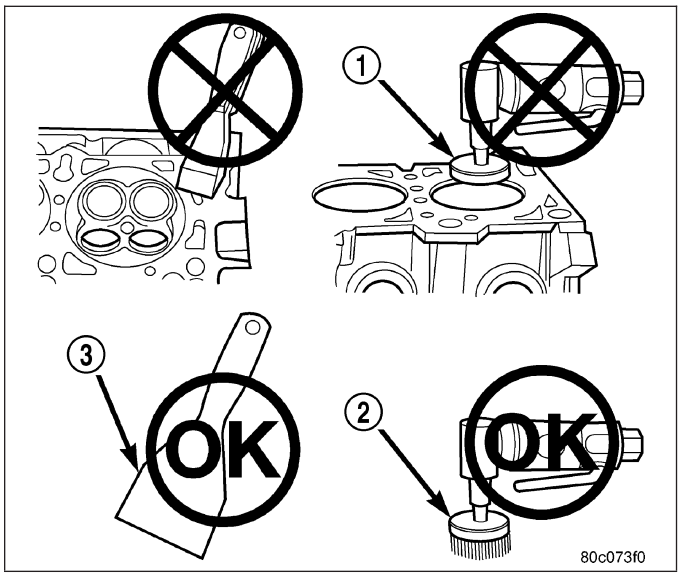

Never use the following to clean gasket surfaces:

- Metal scraper
- Abrasive pad or paper to clean cylinder block and head
- High speed power tool with an abrasive pad or a wire brush

NOTE: Multi-Layer Steel (MLS) head gaskets require a scratch free sealing surface.

Only use the following for cleaning gasket surfaces:

- Solvent or a commercially available gasket remover
- Plastic or wood scraper
- Drill motor with 3M Roloc™ Bristle Disc (white or yellow)

CAUTION: Excessive pressure or high RPM (beyond the recommended speed), can damage the sealing surfaces. The mild (white, 120 grit) bristle disc is recommended. If necessary, the medium (yellow, 80 grit) bristle disc may be used on cast iron surfaces with care.

ENGINE CORE AND OIL GALLERY PLUGS

Using a blunt tool such as a drift and a hammer, strike the bottom edge of the cup plug. With the cup plug rotated, grasp firmly with pliers or other suitable tool and remove plug.

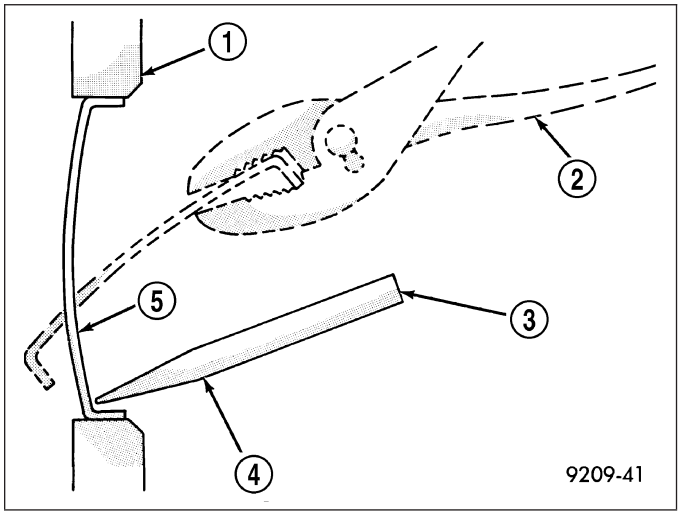

CAUTION: Do not drive cup plug into the casting as restricted cooling can result and cause serious engine problems.

Thoroughly clean inside of cup plug hole in cylinder block or head. Be sure to remove old sealer. Lightly coat inside of cup plug hole with Mopar® Stud and Bearing Mount. Make certain the new plug is cleaned of all oil or grease. Using proper drive plug, drive plug into hole so that the sharp edge of the plug is at least 0.5 mm (0.020 in.) inside the lead-in chamfer.

It is not necessary to wait for curing of the sealant. The cooling system can be refilled and the vehicle placed in service immediately.

REMOVAL - ENGINE ASSEMBLY

1. Remove hood.
2. Release fuel pressure (Refer to 14 - FUEL SYSTEM/FUEL DELIVERY - STANDARD PROCEDURE).
3. Disconnect negative battery cable located in the trunk.

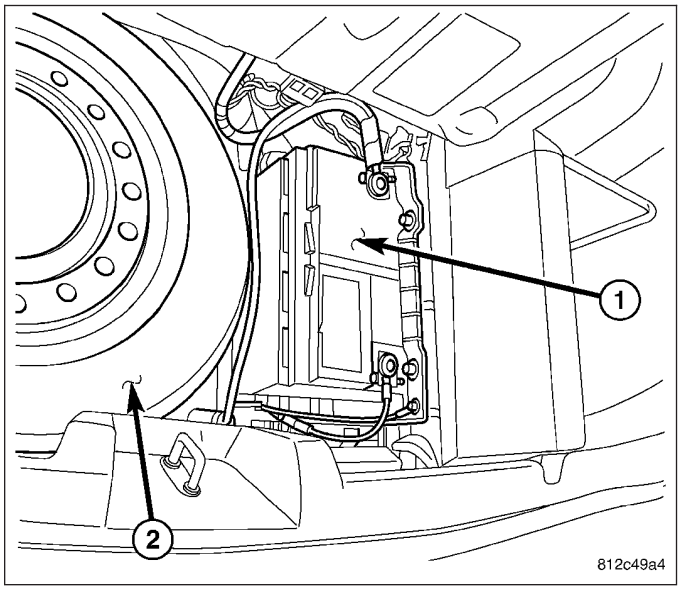

4. Disconnect intake air temperature sensor electrical connector.
5. Remove air cleaner housing assembly (3) (Refer to 9 - ENGINE/AIR INTAKE SYSTEM/AIR CLEANER HOUSING - REMOVAL).

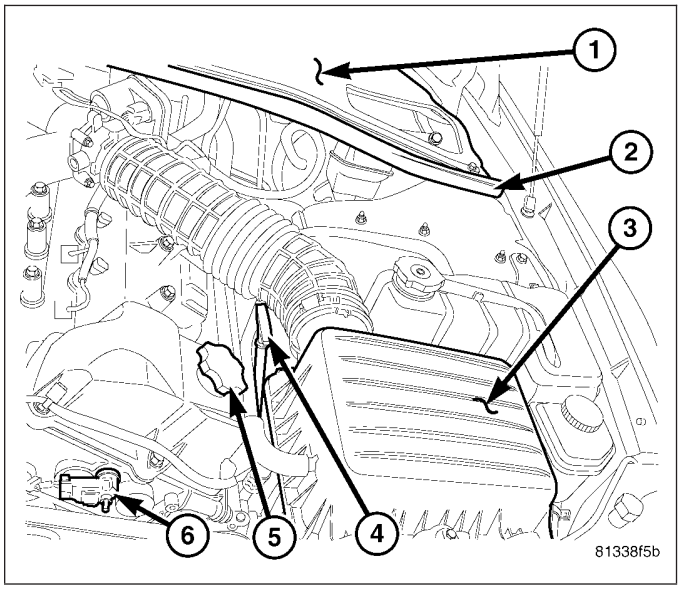

6. Remove accessory drive belt (5) (Refer to 7 - COOLING/ACCESSORY DRIVE/DRIVE BELTS - REMOVAL).
7. Disconnect lines from power steering pump (3).
8. Remove power steering pump attaching bolts and set pump aside (3).
9. Recover A/C system using a suitable refrigerant recovery machine (Refer to 24 - HEATING & AIR CONDITIONING/PLUMBING - STANDARD PROCEDURE).
10. Disconnect A/C compressor (4) electrical connectors.
11. Remove A/C compressor (4) (Refer to 24 - HEATING & AIR CONDITIONING/PLUMBING/A/C COMPRESSOR - REMOVAL).

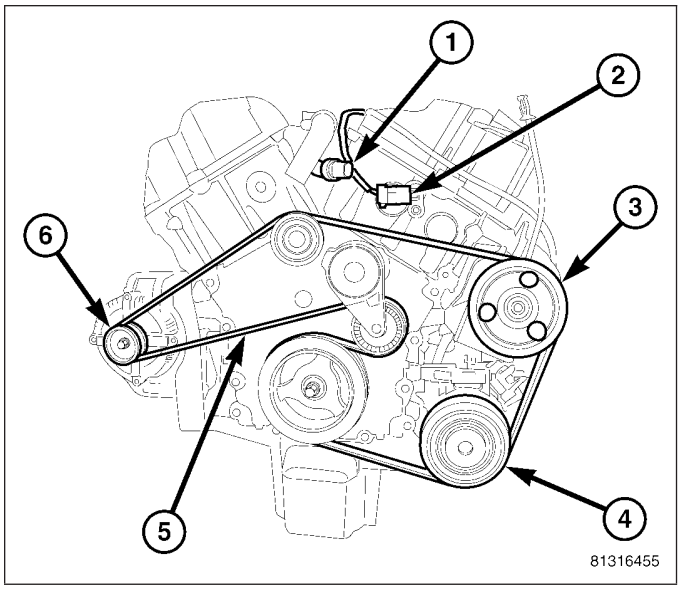

12. Raise vehicle.
13. Remove lower splash shield bolts (1) and remove splash shield (2).
14. Drain cooling system (Refer to 7 - COOLING/ENGINE - STANDARD PROCEDURE).

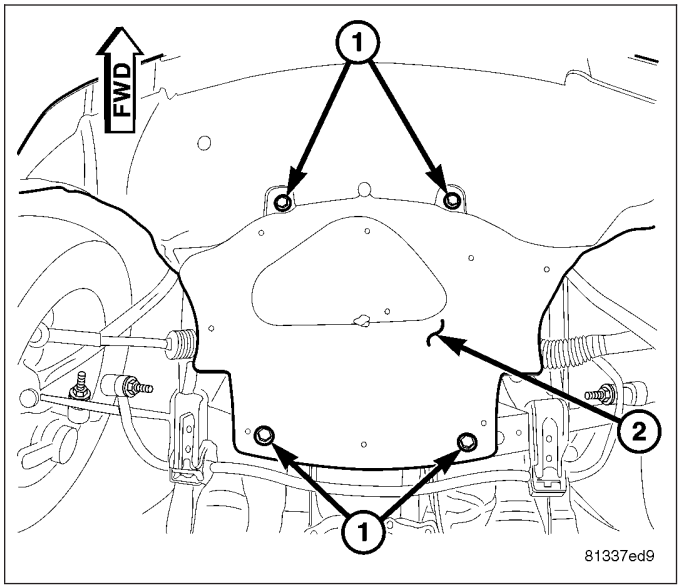

15. Drain the engine oil (5) and remove the oil filter (3).
16. Disconnect down stream oxygen sensor connectors.
17. Disconnect exhaust pipes at the manifolds.

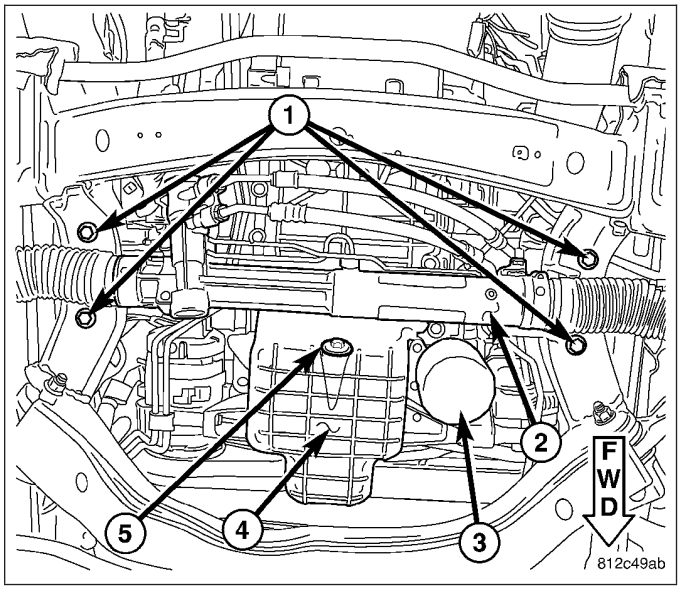

18. Disconnect starter (2) electrical connectors.
19. Remove starter (2) bolts and set starter aside.

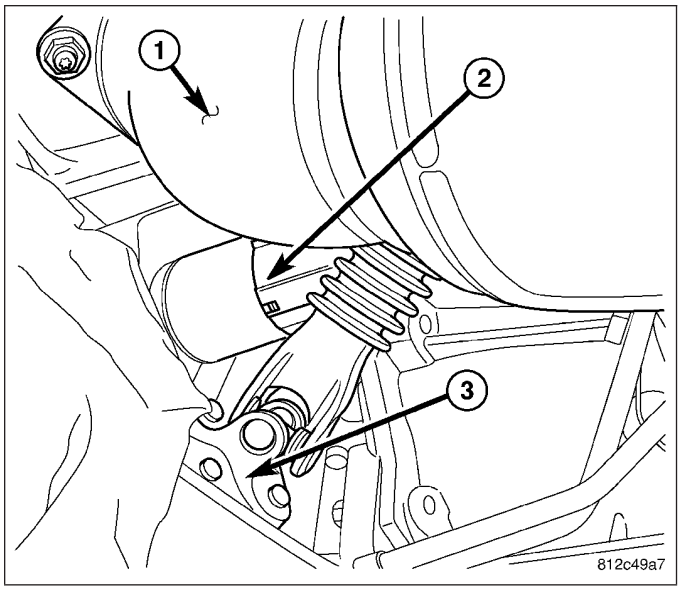

20. Disconnect coolant pipe (1) near starter from hose.
21. Disconnect crankshaft position sensor electrical connector and remove sensor (Refer to 14 - FUEL SYSTEM/FUEL INJECTION/CRANKSHAFT POSITION SENSOR - REMOVAL).
22. Disconnect ground strap.

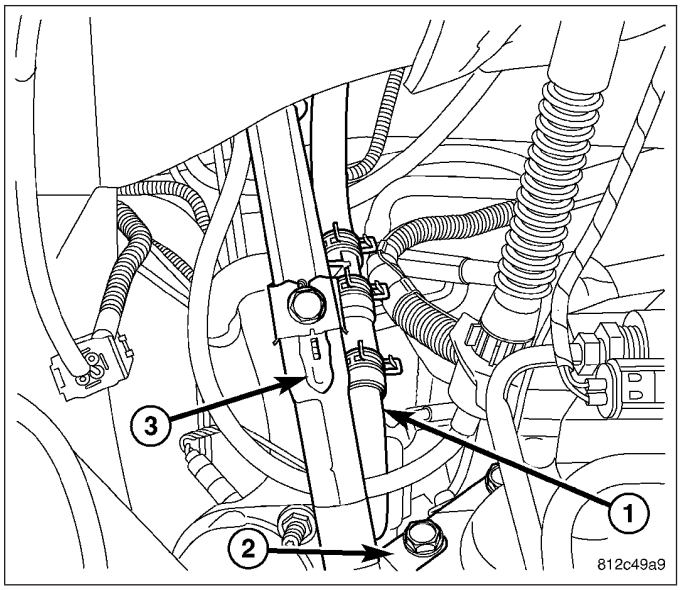

23. Disconnect oil pressure sensor (1) electrical connector.

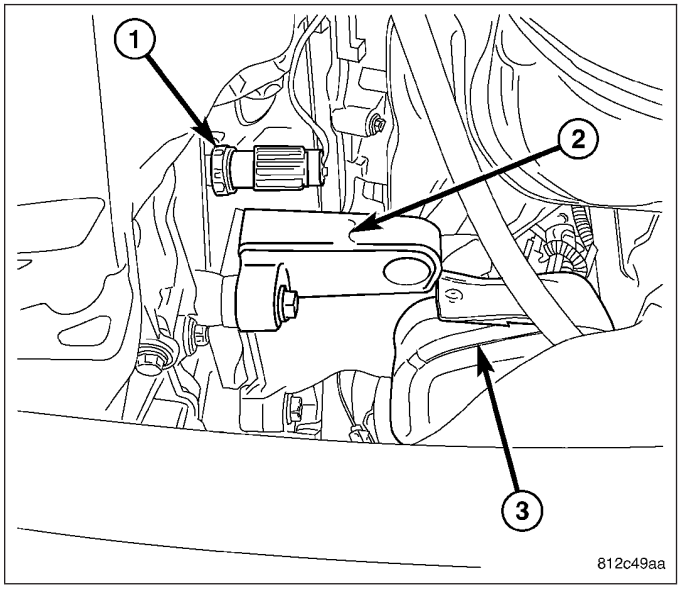

24. Remove 4 engine mount nuts (1).
25. Remove engine mount studs (1) from mount.

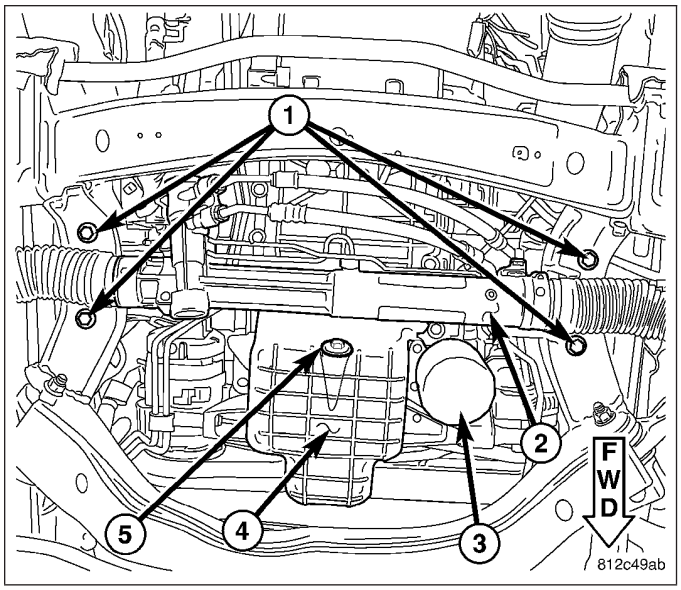

26. Remove steering gear mounting bolts (1) and lower steering gear (2) for clearance.

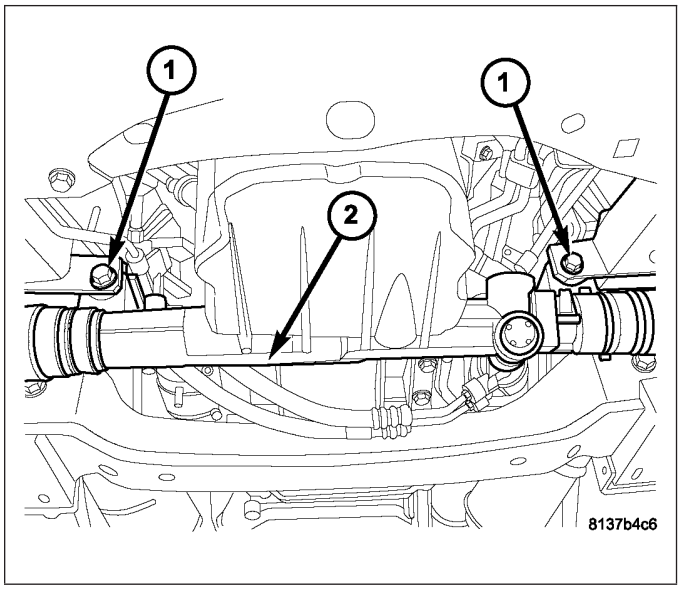

27. Using a block of wood and a suitable lifting device under the oil pan, raise the engine.
28. Remove structural collar bolts (2 & 4).
29. Remove structural collar (3).
30. Remove lower bell housing bolts.
31. Lower engine and remove jack stand.
32. Mark flex plate to torque converter location.
33. Remove torque converter bolts.
34. Lower vehicle.

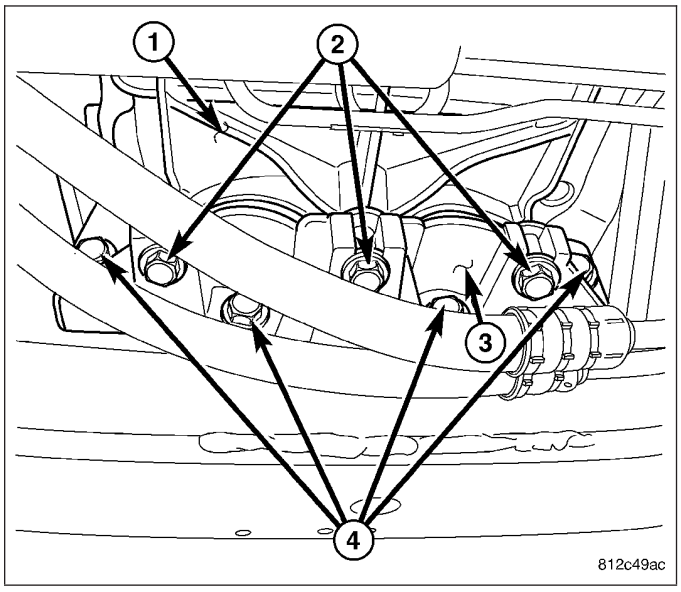

35. Remove wiper arms (Refer to 8 - ELECTRICAL/ WIPERS/WASHERS/WIPER ARMS - REMOVAL).
36. Remove wiper cowl (1) (Refer to 8 - ELECTRICAL/WIPERS/WASHERS/WIPER MODULE - REMOVAL).
37. Remove strut tower support (2).

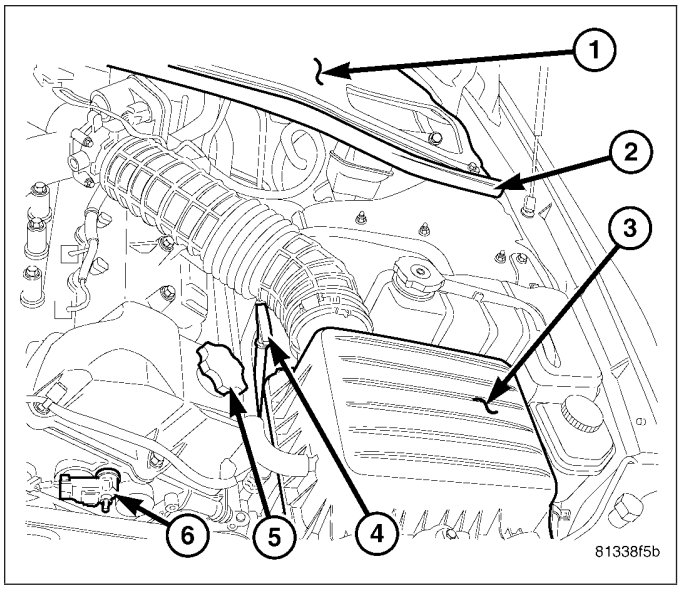

38. Reposition purge solenoid (5).

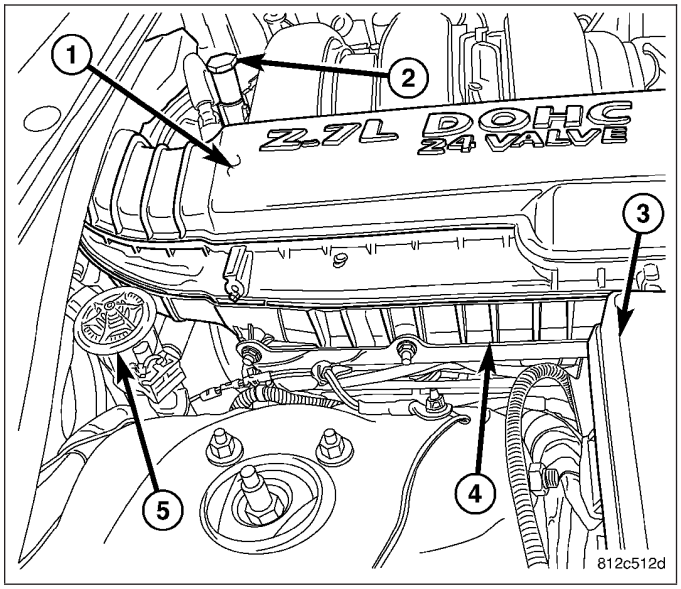

39. Remove the intake manifold (2) (Refer to 9 - ENGINE/MANIFOLDS/INTAKE MANIFOLD - REMOVAL).
40. Disconnect all vacuum lines and electrical connectors.
41. Disconnect all ground straps attaching to the engine.

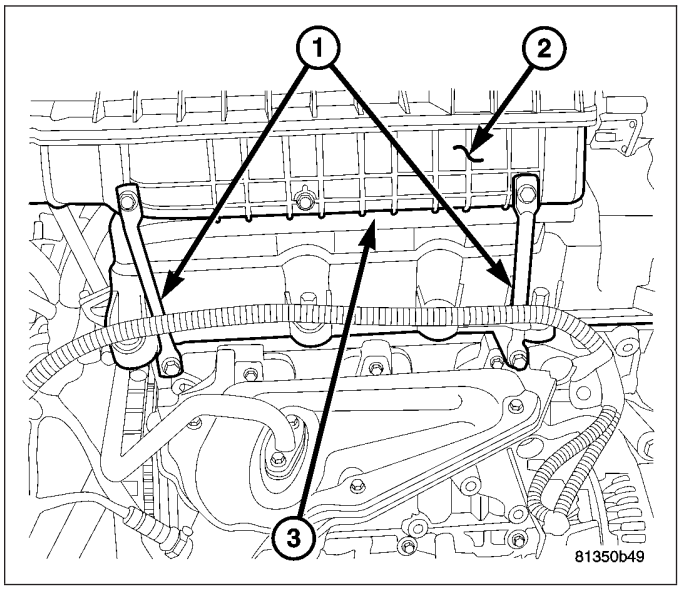

42. Disconnect fuel line at fuel rail (1).
43. Disconnect coil, injector (2), capacitor, and knock sensor connectors.
44. Remove EGR valve and tube assembly (Refer to 25 - EMISSIONS CONTROL/EXHAUST GAS RECIRCULATION/VALVE - REMOVAL).
45. Remove upper bellhousing bolts and reposition electrical harness.

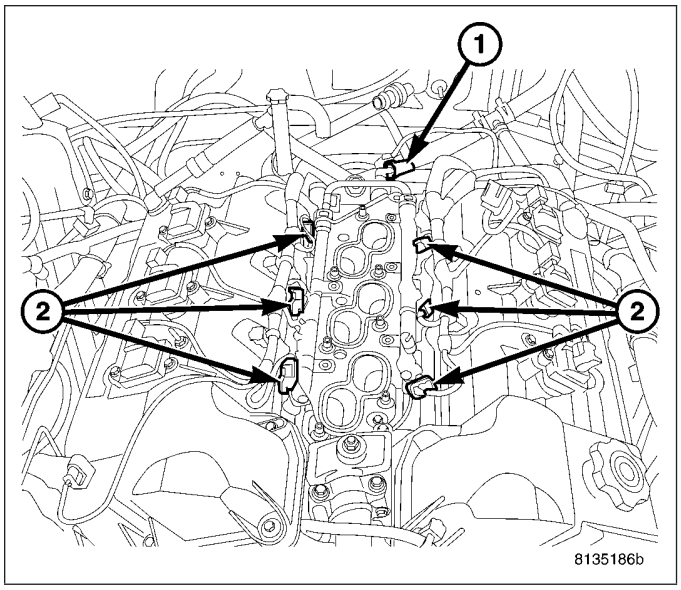

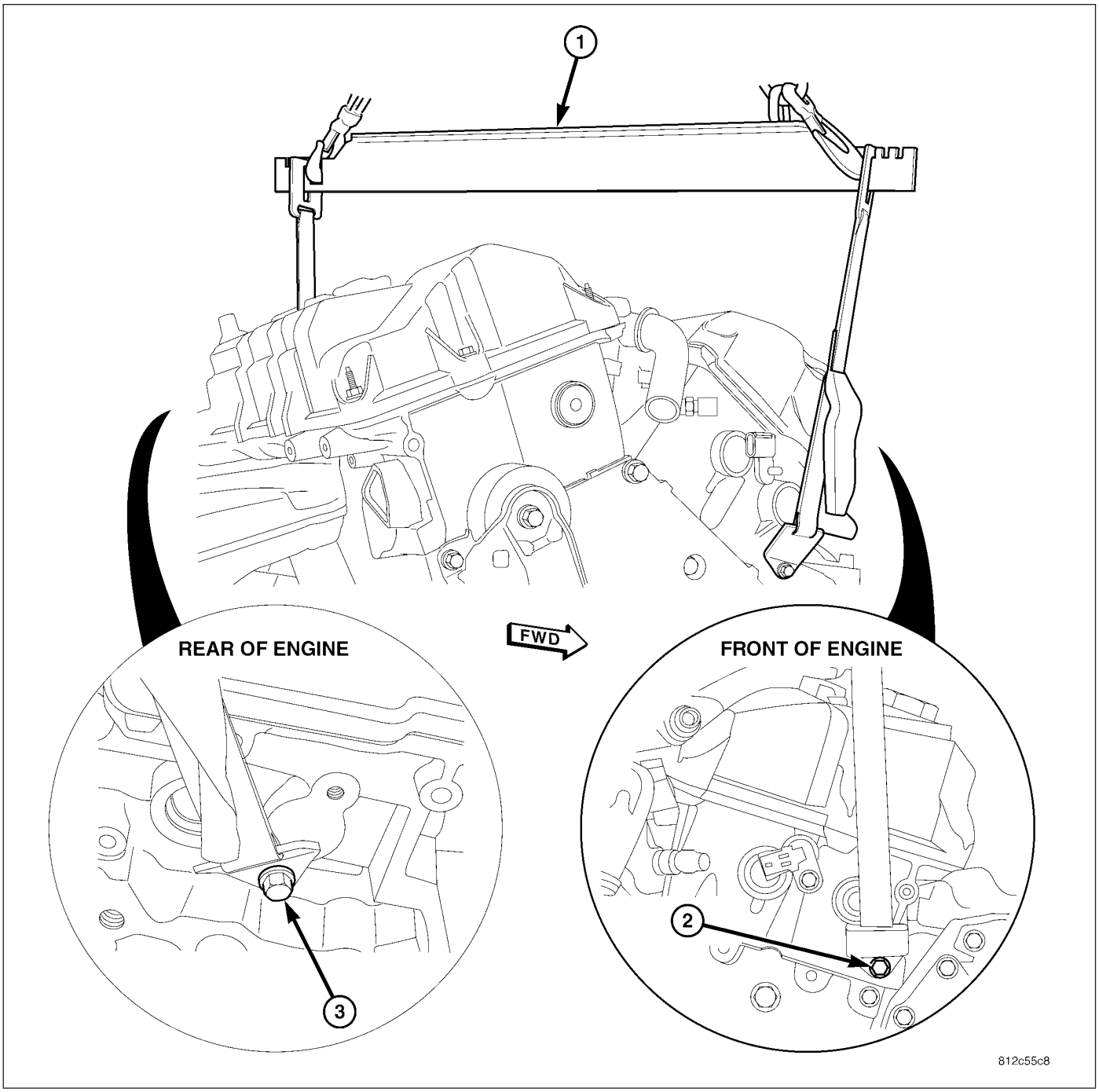

46. Attach special tool #8342A (1).
    a. Attach special tool #8342A to the front of the left cylinder head (2).
    b. Attach special tool #8342A to the rear of the right cylinder head (3).
47. Support transmission with a block of wood and floor jack.
48. Hoist engine from engine compartment.

INSTALLATION - ENGINE ASSEMBLY

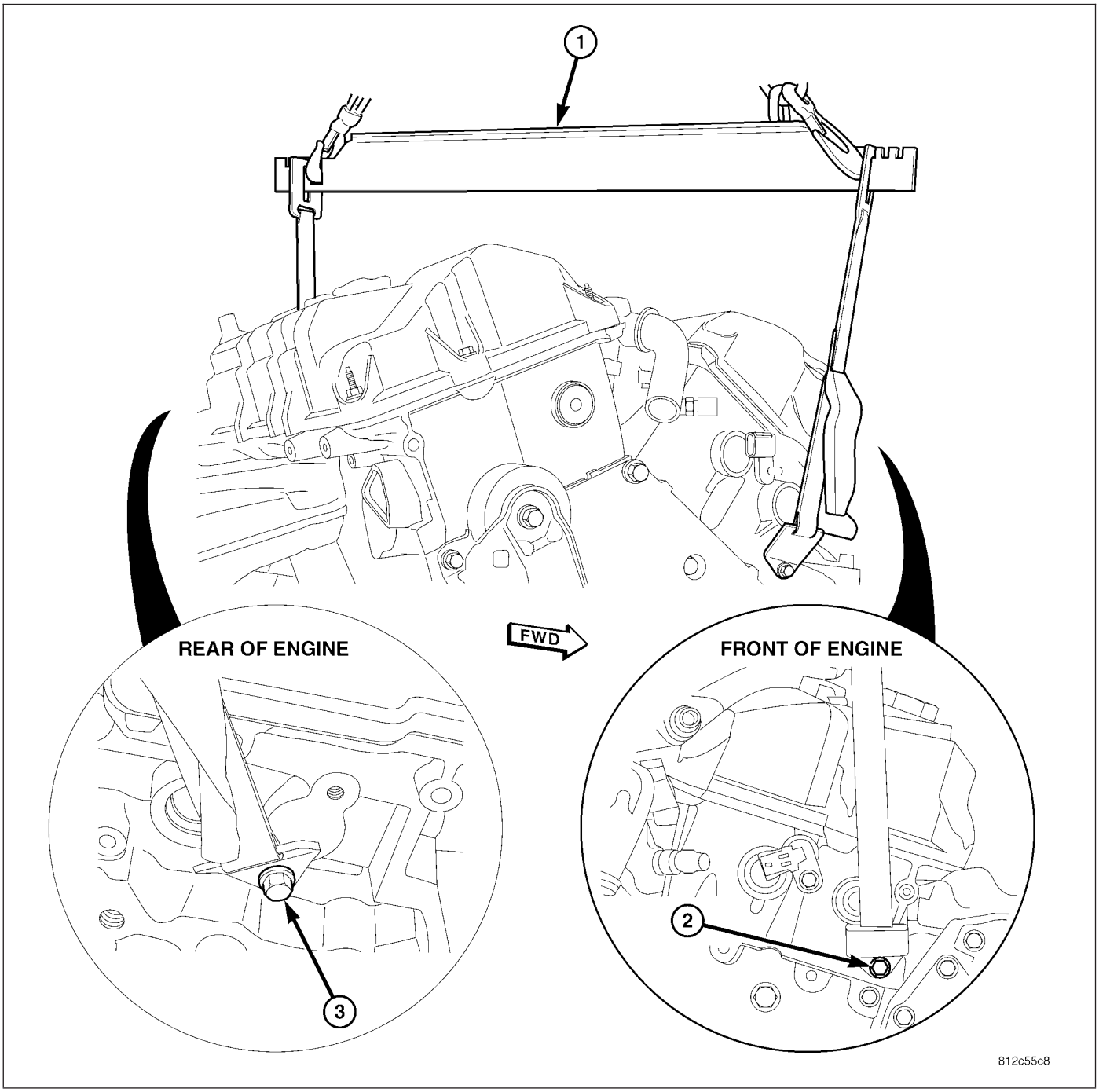

1. Attach special tool #8342A engine lifting fixture (1).
   a. Attach special tool #8342A to the front of the left cylinder head (2).
   b. Attach special tool #8342A to the rear of the right cylinder head (3).
2. Lower engine into engine compartment.
3. Remove special tool #8342A (1).

CAUTION: Do not tighten the transmission case to engine block bolts until all bolts have been hand started, and the two mating surfaces are completely joined together, as damage to cylinder block or transmission could occur.

4. Install bell housing to cylinder block bolts and tighten to 68 N·m (50 ft. lbs.).

5. Install EGR valve and tube assembly (Refer to 25 - EMISSIONS CONTROL/EXHAUST GAS RECIRCULATION/ VALVE - INSTALLATION).
6. Connect coil, injector (2), capacitor, and knock sensor connectors.
7. Connect the fuel line (1).
8. Install upper intake manifold (Refer to 9 - ENGINE/ MANIFOLDS/INTAKE MANIFOLD - INSTALLATION).

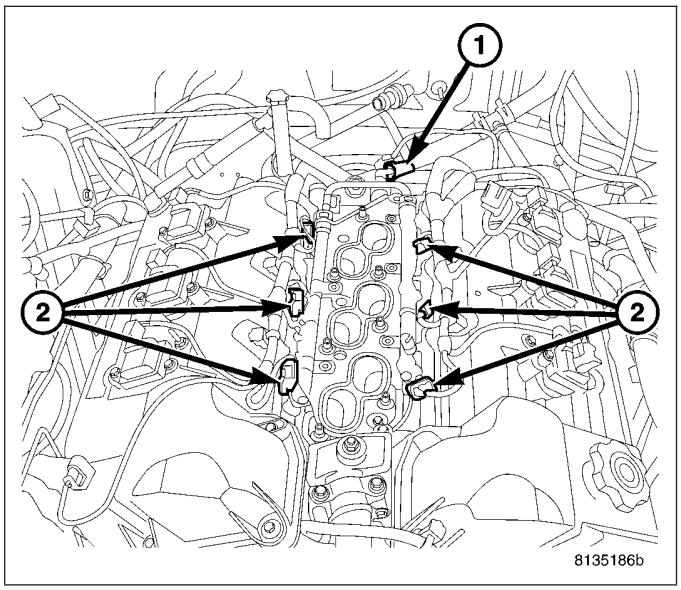

9. Install purge solenoid (5).
10. Connect all ground straps.
11. Connect all vacuum lines and electrical connectors.

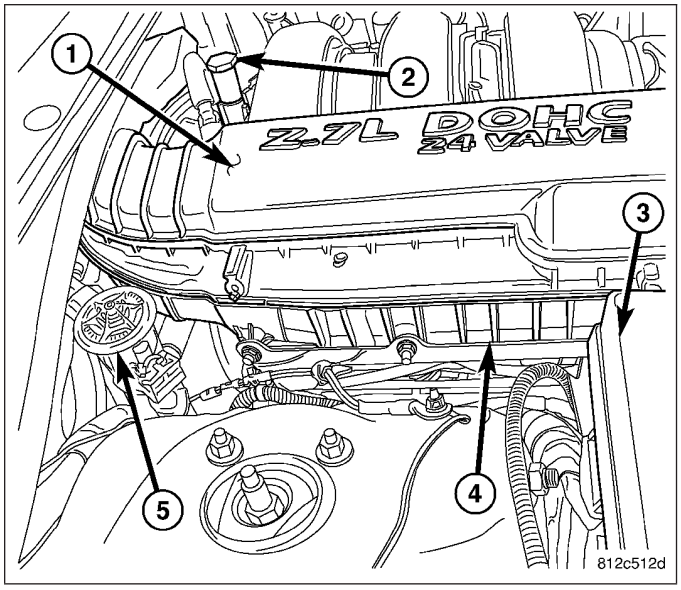

12. Raise vehicle.
13. Align flexplate and torque converter.

NOTE: Make sure all four bolts are installed finger tight before torqueing bolts.

14. Tighten torque converter bolts to 75 N·m (55 ft. lbs.).
15. Using a block of wood and a suitable lifting device under the oil pan, raise the engine.
16. Install the structural collar (3) and position in place.

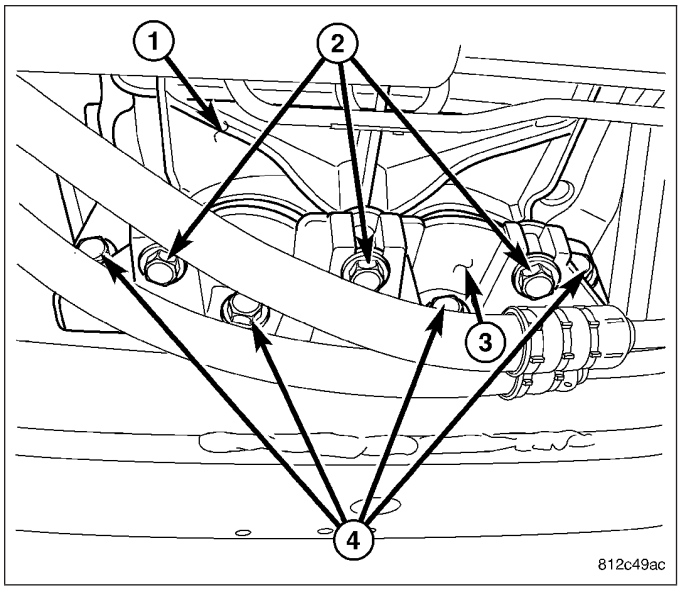

NOTE: Make sure that structural collar (3) is flush with the oil pan (1) and the transmission bell housing.

17. Finger tighten all bolts (2) & (4).
18. Tighten the structural collar to oil pan bolts (2) to 55 N·m (40 ft. lbs.).
19. Tighten structural collar to transmission bolts (4) to 55 N·m (40 ft. lbs.).
20. Install the power steering pump (3).
21. Install the A/C compressor (4) (Refer to 24 - HEATING & AIR CONDITIONING/PLUMBING/A/C COMPRESSOR - INSTALLATION).

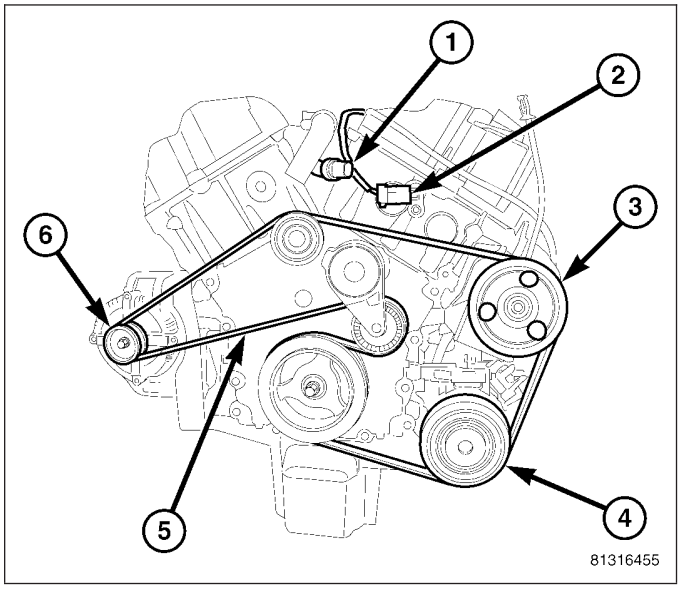

22. Install the crankshaft position sensor and connect electrical connector (Refer to 14 - FUEL SYSTEM/ FUEL INJECTION/CRANKSHAFT POSITION SENSOR - INSTALLATION).
23. Connect oil pressure sensor (1) electrical connector.

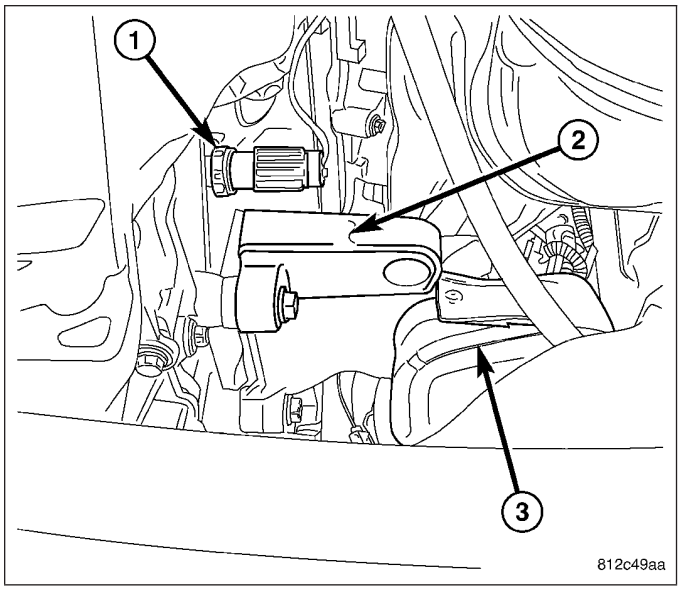

24. Install starter (2), tighten bolts to 41 N·m (30 ft. lbs.)
25. Connect electrical connectors at starter.

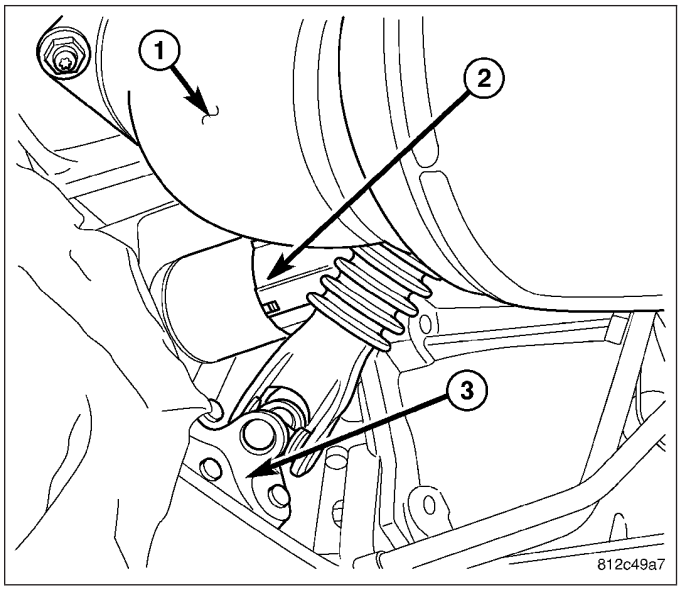

26. Connect the coolant pipe (1) to coolant hose.
27. Connect the exhaust pipes to the manifolds.
28. Connect the down stream oxygen sensor connectors.
29. Connect A/C compressor electrical connetors.

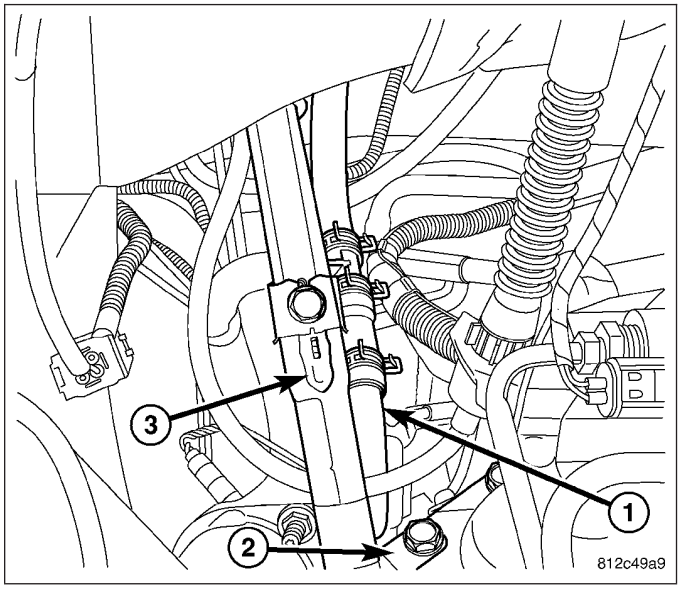

30. Install new oil filter (3).

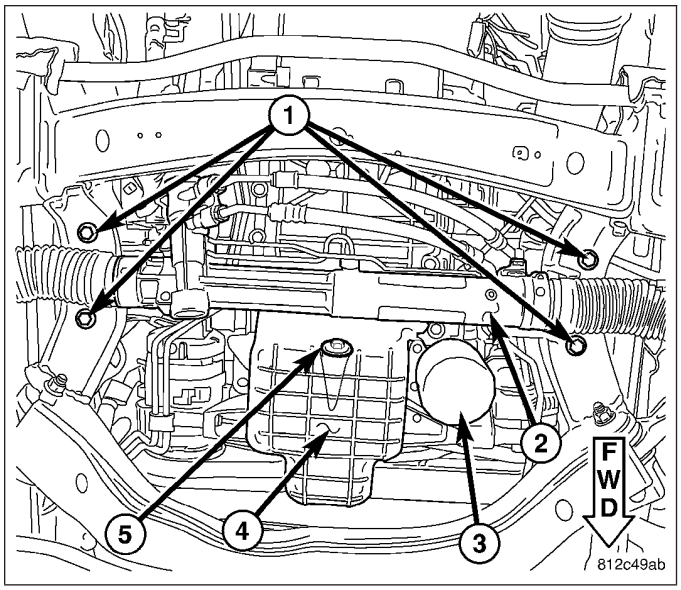

31. Install lower splash shield (2) and tighten retaining bolts (1).
32. Lower vehicle.

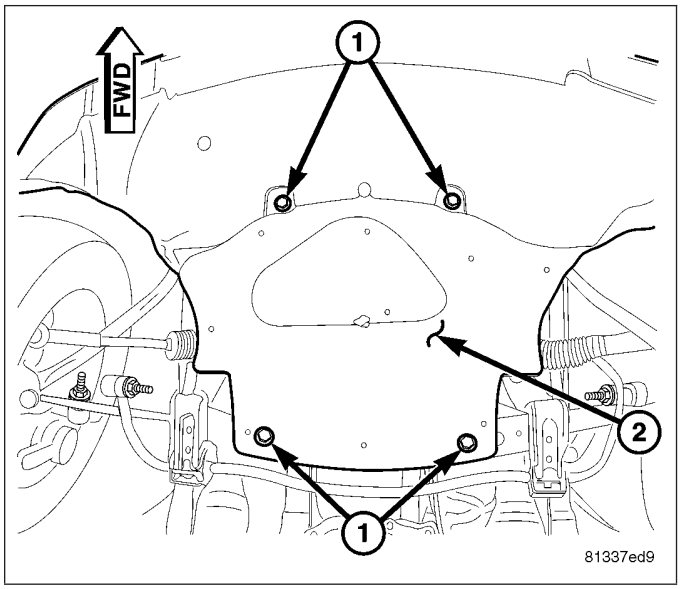

33. Install power steering pump (3) (Refer to 19 - STEERING/PUMP - INSTALLATION).
34. Connect lines to power steering pump (3).
35. Install accessory drive belt (5) (Refer to 7 - COOLING/ACCESSORY DRIVE/DRIVE BELTS - INSTALLATION).

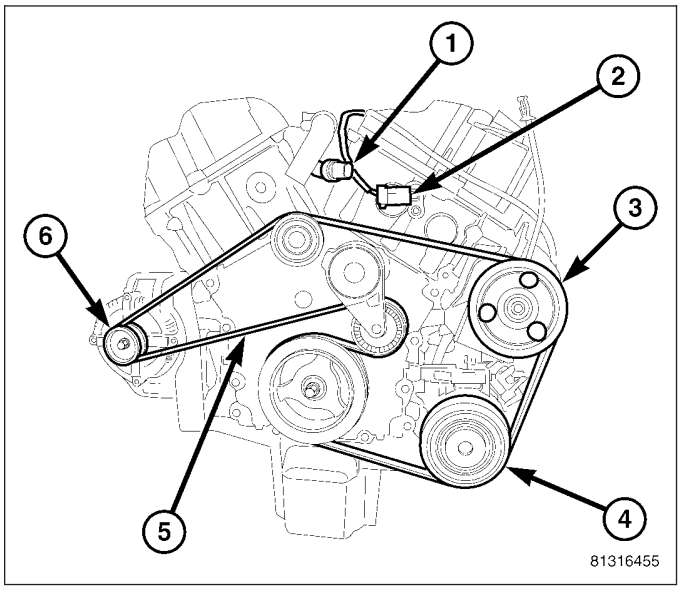

36. Install air cleaner housing assembly (3) (Refer to 9 - ENGINE/AIR INTAKE SYSTEM/AIR CLEANER HOUSING - INSTALLATION).
37. Connect intake air temperature sensor connector.

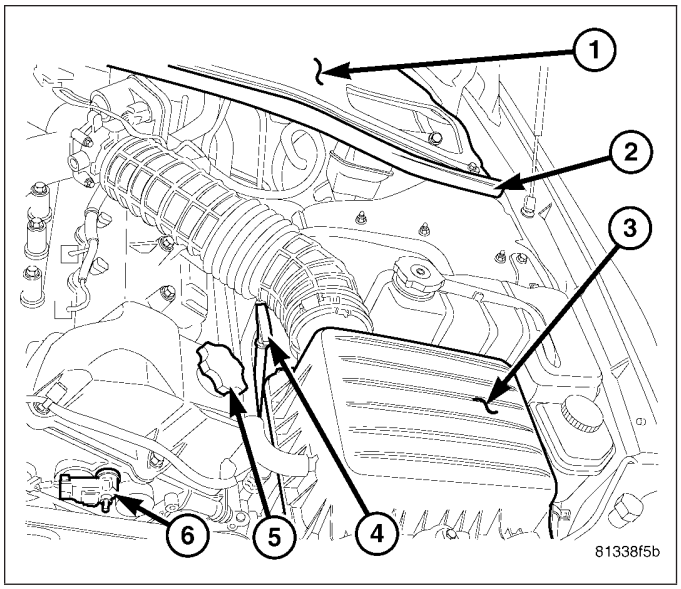

38. Connect negative battery (1) cable.

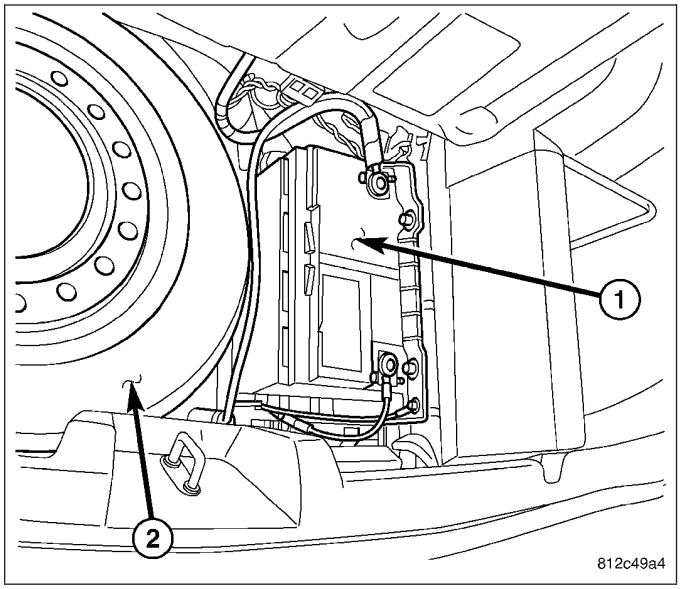

39. Fill coolant system (Refer to 7 - COOLING - STANDARD PROCEDURE).
40. Fill engine with correct grade of oil (5).
41. Install strut tower support (2).
42. Install cowl screen (1).
43. Install wiper arms (Refer to 8 - ELECTRICAL/ WIPERS/WASHERS/WIPER ARMS - INSTALLATION).
44. Install the hood.

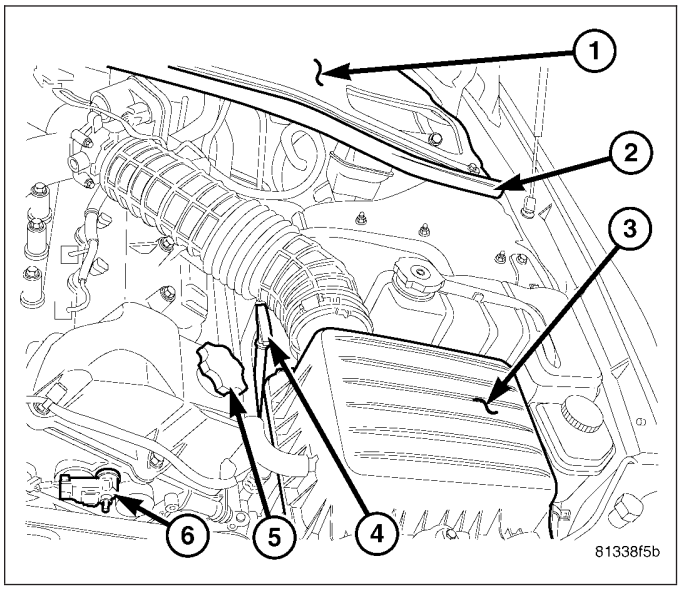

45. Fill and bleed power steering system (Refer to 19 - STEERING/PUMP - STANDARD PROCEDURE).
46. Evacuate and charge A/C system (Refer to 24 - HEATING & AIR CONDITIONING/PLUMBING - STANDARD PROCEDURE). (Refer to 24 - HEATING & AIR CONDITIONING/PLUMBING - STANDARD PROCEDURE).
47. Start engine and check for leaks.

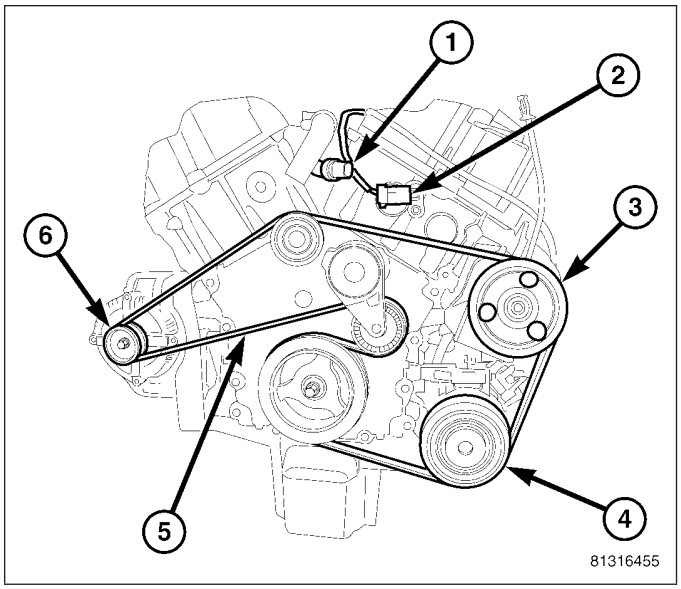

SPECIFICATIONS

2.7L ENGINE

DESCRIPTION	SPECIFICATION	
Type	60° DOHC V-6 24-Valve	
Compression Ratio	9.67:1	
Lead Cylinder	#1 Right Bank	
Firing Order	1-2-3-4-5-6	
	Metric	**Standard**
Displacement	2.7 Liters	167 Cubic Inches
Bore & Stroke	86.0 x 78.5 mm	3.386 in. x 3.091 in.

CYLINDER BLOCK

Description	Specification	
	Metric	**Standard**
Cylinder Bore Diameter	86.0 mm ±0.0076	3.3859 in. ±0.0003
Out of Round (Max.)	0.076 mm	0.003 in.
Taper (Max.)	0.051 mm	0.002 in.

PISTONS

Description	Specification	
	Metric	**Standard**
Material	Aluminum Alloy	
Piston Diameter	85.983 mm ±0.019	3.3851 in. ±0.0017
Clearance at Size Location	- 0.0096 to +0.0436 mm	- 0.0003 to +0.0016 in.
Piston Weight	316-326 grams	11.1466-11.4994 oz.
Piston Ring Groove Diameter—No. 1	77.8-78 mm	3.063-3.070 in.

Description	Specification	
	Metric	Standard
Piston Ring Groove Diameter—No. 2	75.9-76.1 mm	2.988-2.996 in.
Piston Ring Groove Diameter—No. 3	76.5-76.7 mm	3.011-3.019 in.

PISTON PINS

Description	Specification	
	Metric	Standard
Type	Full Floating	
Pin Diameter	21.997-22.000 mm	0.8661-0.8662 in.
Clearance in Piston	0.005-0.013 mm	0.0002-0.0005 in.
Clearance in Rod	0.007-0.018 mm	0.0003-0.0008 in.

PISTON RINGS

Description	Specification	
	Metric	Standard
Ring Gap-Top Compression Ring	0.20-0.36 mm	0.008-0.014 in.
Ring Gap-2nd Compression Ring	0.37-0.63 mm	0.0146-0.0249 in.
Ring Gap-Oil Control (Steel Rails)	0.25-0.76 mm	0.010-0.030 in.

PISTON RING SIDE CLEARANCE

Description	Specification	
	Metric	Standard
Compression Ring-Top	0.035-0.083 mm	0.0013-0.0032 in.
Compression Ring-Second	0.040-0.080 mm	0.0016-0.0031 in.
Oil Ring (Steel Rails)	0.058-0.204 mm	0.0022-0.0080 in.

PISTON RING WIDTH

Description	Specification	
	Metric	Standard
Compresion Rings-Top and Second	1.47-1.49 mm	0.0579-0.0587 in.
Oil Ring (Steel Rails	0.445-0.470 mm	0.0176-0.0186 in.

CONNECTING RODS

Description	Specification	
	Metric	Standard
Side Clearance	0.13-0.38 mm	0.0052-0.015 in.
Side Clearance (Max.)	0.4318 mm	0.017 in.
Piston Pin Bore Diameter	22.007-22.015 mm	0.8665-0.8668 in.
Bearing Bore Out of Round (Max.)	0.004 mm	0.0002 in.
Total Weight (Less Bearing)	529.9 ±7 grams	18.6917 ±0.247 oz.

CRANKSHAFT MAIN BEARING JOURNALS

Description	Specification	
	Metric	Standard
Diameter	63.49-63.51 mm	2.4997-2.5004 in.
Bearing Clearance	0.032-0.056 mm	0.0012-0.0022 in.
Bearing Clearance (Max) (Wear Limit)	0.070 mm	0.0028 in.
Out of Round (Max)	0.008 mm	0.0003 in.
Diametrical Taper (Max)	0.010 mm	0.0004 in.
End Play	0.048-0.260 mm	0.002-0.010 in.
End Play (Max)	0.37 mm	0.015 in.

CONNECTING ROD JOURNALS

Description	Specification	
	Metric	Standard
Diameter	53.51-53.49 mm	2.1067-2.106 in.
Bearing Clearance	0.030-0.065 mm	0.0012-0.0026 in.
Bearing Clearance (Wear Limit)	0.075 mm	0.0030 in.
Out of Round (Max)	0.008 mm	0.0003 in.
Diametrical Taper (Max)	0.010 mm	0.0004 in.

CAMSHAFT

Description	Specification	
	Metric	Standard
Bore Diameter	24.050-24.071 mm	0.9469-0.09476 in.
Bearing Journal Diameter	24.000-23.981 mm	0.9449-0.9441 in.
Bearing Clearance	0.05-0.09 mm	0.0020-0.0035 in.
Bearing Clearance (Max.)	0.10 mm	0.004 in.
End Play	0.13-0.28 mm	0.0051-0.0110 in.

VALVE TIMING-INTAKE VALVES

Description	Specification
Opens (ATDC)	2°
Closes (ABDC)	44°
Duration	222°

VALVE TIMING-EXHAUST VALVES

Description	Specification
Opens (BBDC)	36°
Closes (ATDC)	4°
Duration	220°
Valve Overlap	2°

CYLINDER HEAD

Description	Specification	
	metric	Standard
Gasket Thickness (Compressed)	1.50 mm ±0.05	0.0591 in. ±0.002 in.
Valve Seat Angle	45°-45.5°	
Valve Seat Runout (Max.)	0.05 mm	0.002 in.
Intake Valve Seat Width	1.00-1.5 mm	0.0394-0.0591 in.
Exhaust Valve Seat Width	1.25-1.75 mm	0.0492-0.0689 in.
Guide Bore Diameter (Std.)	5.975-6.00 mm	0.2353-0.2363 in.
Valve Guide Height*—Intake & Exhaust	13.25-13.75 mm	0.5217-0.5414 in.
*Measured from cylinder head surface to top of guide		

VALVES

Description	Specification	
	Metric	Standard
Face Angle	44.5°-45.5°	
Head Diameter-Intake	33.67-33.93	1.3256-1.3358 in.
Head Diameter-Exhaust	27.67-27.93 mm	1.0894-1.1000 in.
Length-Intake (Overall)	107.89-108.39 mm	4.2476-4.2673 in.
Length-Exhaust (Overall)	105.88-106.38 mm	4.1685-4.1882 in.
Stem Diameter-Intake	5.934-5.952 mm	0.2337-0.2344 in.
Stem Diameter-Exhaust	5.906-5.924 mm	0.2326-0.2333 in.
Stem-to-Guide Clearance-Intake (New)	0.023-0.066 mm	0.0009-0.0026 in.
Stem-to-Guide Clearance-Exhaust (New)	0.051-0.094 mm	0.002-0.0037 in.
Stem-to-Guide Clearance-Intake (Max., Rocking Method)	0.29 mm	0.0114 in.
Stem-to-Guide Clearance-Exhaust (Max., Rocking Method)	0.370 mm	0.0146 in.
Valve Lift-Intake (Zero Lash)	9.0 mm	0.3543 in.
Valve Lift-Exhaust (Zero Lash)	8.0 mm	0.3150 in.
Valve Stem Tip Height-Intake	47.125 ±0.711 mm	1.8550 ±0.028 in.
Valve Stem Tip Height-Exhaust	47.187 ±0.65 mm	1.858 ±0.026 in.

VALVE SPRING

Description	Specification	
	Metric	Standard
Free Length—Intake & Exhaust (Approx.)	45.63 mm	1.7965 in.
Spring Force—Intake & Exhaust (Valve Closed)	249-284 N @ 38.0 mm	56.0-64.0 lbs. @ 1.4961 in.
Spring Force—Intake (Valve Open)	658-721 N @ 29.0 mm	147.9-162.1 lbs. @ 1.1417 in.

Spring Force—Exhaust (Valve Open)	614-671 N @ 30.0 mm	138.0-150.8 lbs. @ 1.1811 in.
Number of Coils—Intake & Exhaust	7.35	
Wire Diameter—Intake & Exhaust	3.861 mm	0.1520 in.
Installed Height—Intake & Exhaust (Spring seat to bottom of retainer)	38.0 mm	1.4961 in.

OIL PUMP

Description	Specification	
	Metric	Standard
Clearance Over Rotors (Max.)	0.077 mm	0.003 in.
Cover-Out-of-Flat (Max.)	0.025 mm	0.001 in.
Inner & Outer Rotor Thickness	9.955-9.980 mm	0.3919-0.3929 in.
Outer Rotor Clearance (Max.)	0.39 mm	0.015 in.
Outer Rotor Diameter (Min.)	89.175 mm	3.5109 in.
Tip Clearance Between Rotors (Max.)	0.20 mm	0.008 in.

OIL PRESSURE

Description	Specification	
	Metric	Standard
(NOTE: At Normal Operating Temperatures)		
Pressure @ Curb Idle Speed*	34.7 kPa Min.	5 psi Min.
Pressure @ 3000 RPM	300-724 kPa	45-105 psi
*CAUTION: If oil pressure is zero at idle, DO NOT run engine at 3000 RPM.		

TORQUE

DESCRIPTION	N·m	Ft. Lbs.	In. Lbs.
A/C Compressor to Engine - Bolts	28	21	-
Camshaft Sprocket - Bolts	28	-	250
Camshaft Chain Tensioner (Secondary) - Bolts	12	-	105
Camshaft Bearing Cap - Bolts	12	-	105
Connecting Rod Cap - Bolts	27 +¼ Turn	20 +¼ Turn	-
Cooling System Bleed Screw	12	-	110
Crankshaft Main Bearing Cap - Tie Bolts	28	-	250
Crankshaft Main Bearing Cap - Outer Cap Bolts	27 +¼ Turn	20 +¼ Turn	-
Crankshaft Main Bearing Cap - Inner Cap Bolts	20 +¼ Turn	15 +¼ Turn	-
Crankshaft Damper - Bolt	170	125	-
Crankshaft Rear Seal Retainer - Bolts	12	-	105
Cylinder Head - Bolts	(Refer to 9 - ENGINE/CYLINDER HEAD - INSTALLATION)		

DESCRIPTION	N·m	Ft. Lbs.	In. Lbs.
Cylinder Head Cover - Bolts	12	-	105
Exhaust Manifold - Bolts	23	-	200
Exhaust Manifold Heat Shield - Bolts	12	-	105
Engine Mount Bracket to Block - Bolts	61	45	-
Engine Mount Isolator - Nuts	61	45	-
Intake Manifold (Upper and Lower) - Bolts	12	-	105
Generator Bracket-Bolts	41	30	-
Oil Pan - m8 Bolts	28	-	250
Oil Pan - m6 Nuts	12	-	105
Oil Pan Drain - Plug	27	20	-
Oil Cooler - Stud	61	45	-
Oil Filter	16	12	-
Oil Pump to Block - Bolts	28	-	250
Oil Pump Cover - Bolts	12	-	105
Oil Pump Pick Up Tube - Bolt	28	-	250
PCV Valve	7	-	60
Spark Plugs	20	15	-
Starter Mounting - Bolts	41	30	-
Structural Collar	(Refer to 9 - ENGINE/ENGINE BLOCK/ STRUCTURAL COVER - INSTALLATION)		
Thermostat Housing/Water Inlet Connector - Bolts	12	-	105
Throttle Body - Bolts	12	-	105
Timing Chain Cover - M6 Bolts	12	-	105
Timing Chain Cover - M10 Bolts	54	40	-
Timing Chain Tensioner (Primary)	12	-	105
Timing Chain Guide Access Plug	20	15	-
Torque Converter	75	55	-
Water Pump - Bolts	12	-	105
Water Outlet Housing - Bolts	12	-	105

SPECIAL TOOLS

2.7L ENGINE

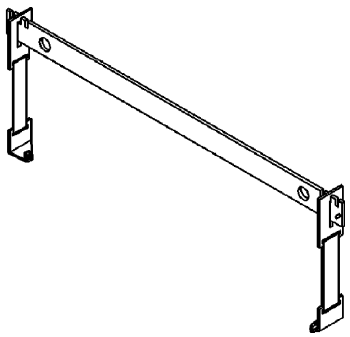

Engine Lifting Fixture 8342

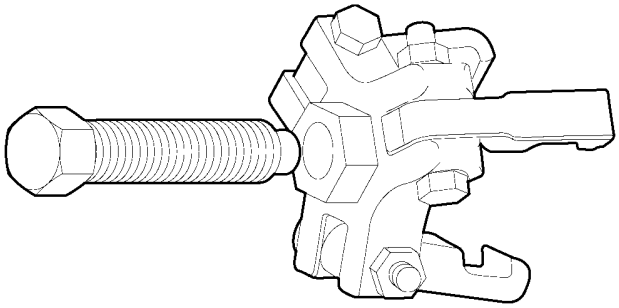

80b39f2c

Puller 8454

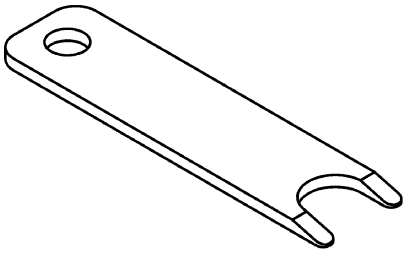

Disconnect Tool, 6638A

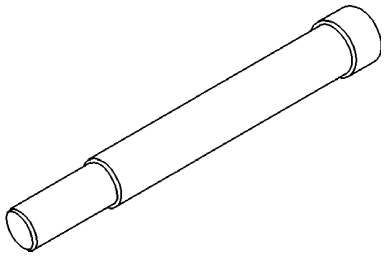

Crankshaft Damper Remover Insert 8194

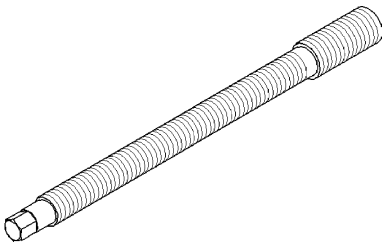

Crankshaft Damper Installer Screw 8179

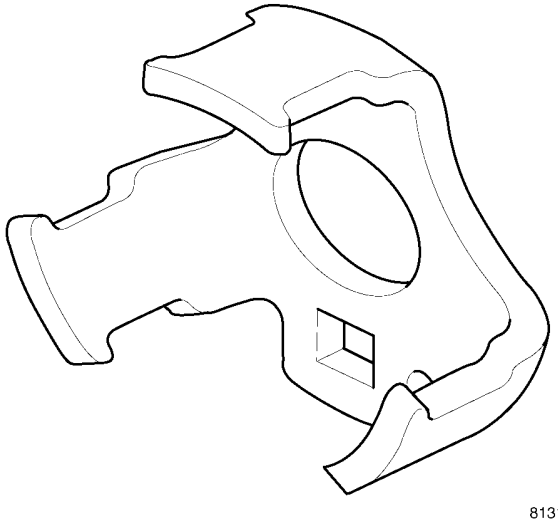

8131dc6d

Damper Holding Fixture 9365

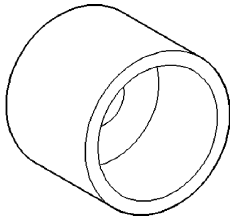

Crankshaft Damper Installer 6792-1

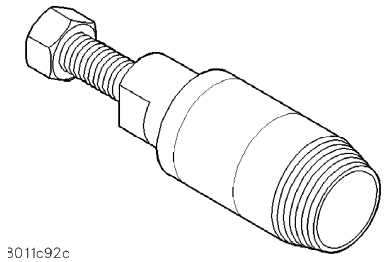

Crankshaft Seal Remover 6771

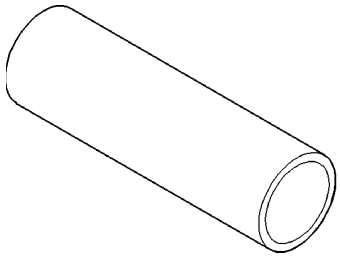

Crankshaft Seal & Sprocket Installer 6780-1

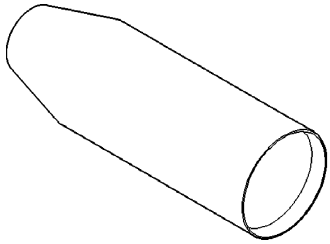

Crankshaft Seal Protector 6780-2

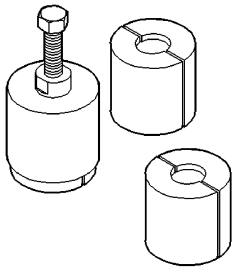

Puller 5048

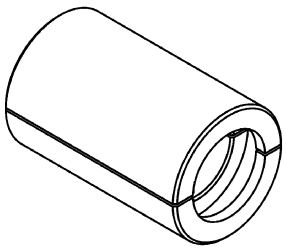

Puller Adaptor 8539

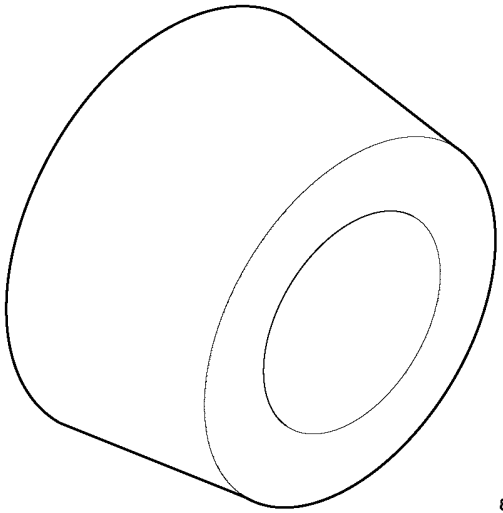

Crankshaft Rear Seal Guide 6926-1 & Installer 6926-2

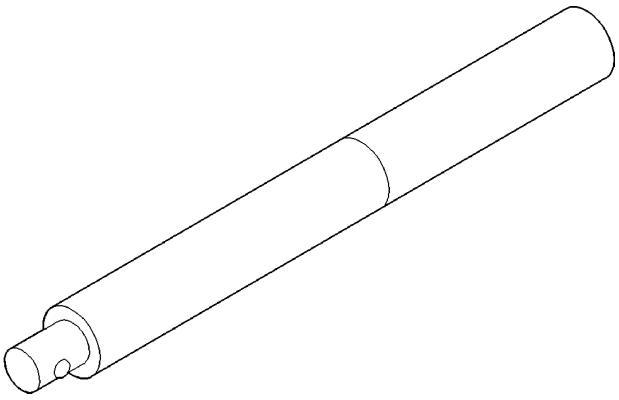

Driver Handle C-4171

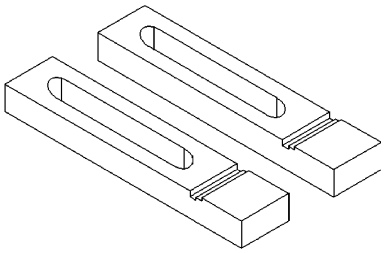

Crankshaft Real Seal Retainer Alignment Fixture 8225

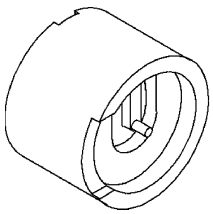

Timing Chain Tensioner Resetting Gauge 8186

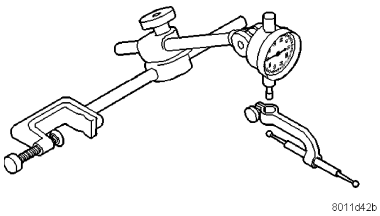

Dial Indicator C-3339

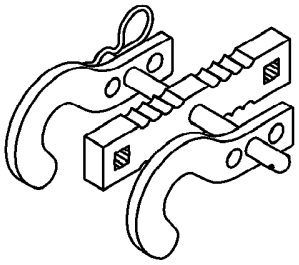

Valve Spring Compressor 8215-A

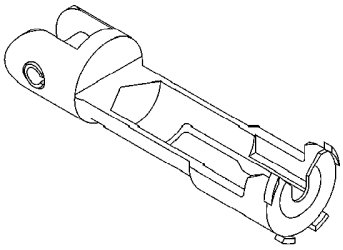

Adaptor 8216-A

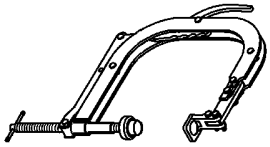

Valve Spring Compressor C-3422-D

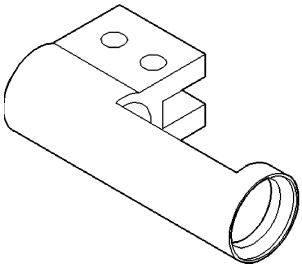

Valve Spring Adapter 6526

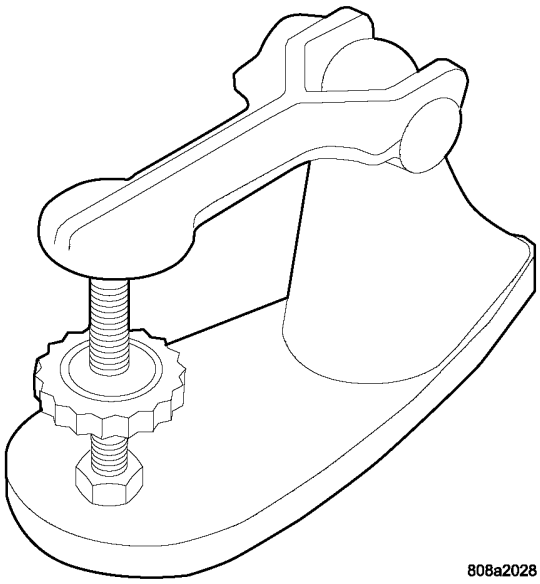

Valve Spring Tester C-647

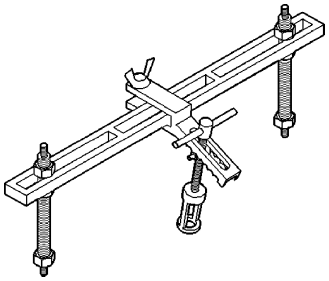

Valve Spring Compressor MD-998772-A

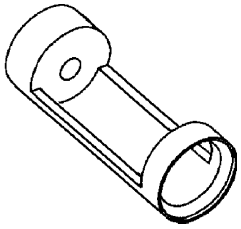

Valve Spring Adapter 6527

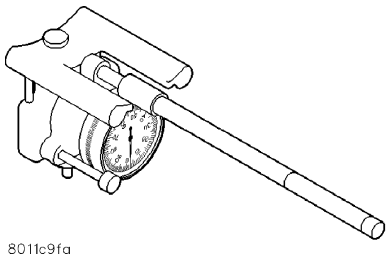

Indicator Bore Size C-119

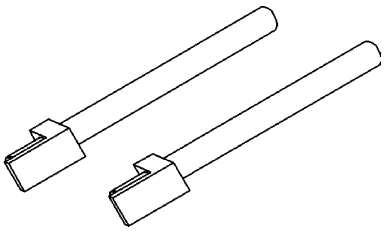

Connecting Rod Installation Guides 8189

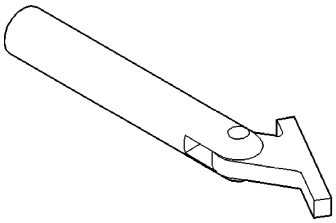

Main Bearing Remover/Installer C-3059

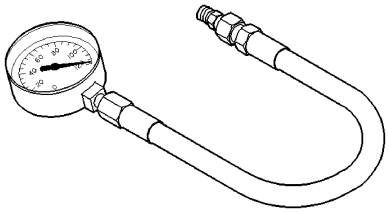

Pressure Gauge C-3292

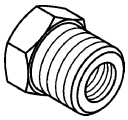

Adapter 8406



DRB III® with PEP Module – OT-CH6010A

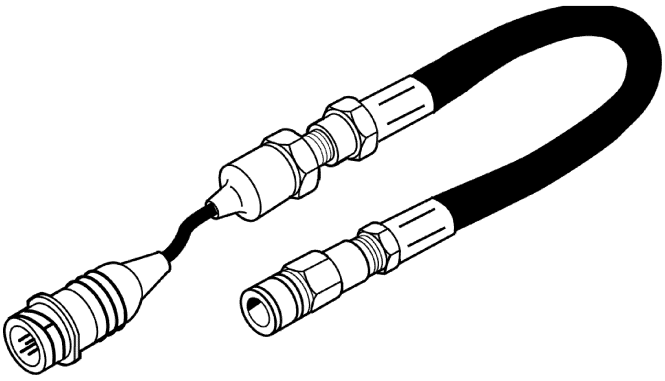

Pressure Transducer CH7059

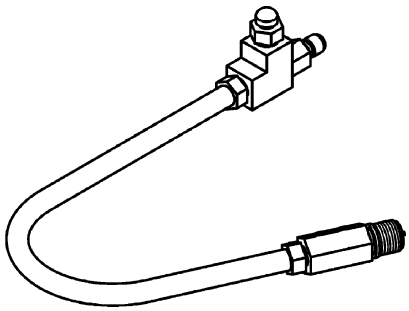

Adaptor 8116

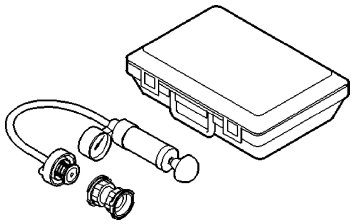

Cooling System Tester 7700

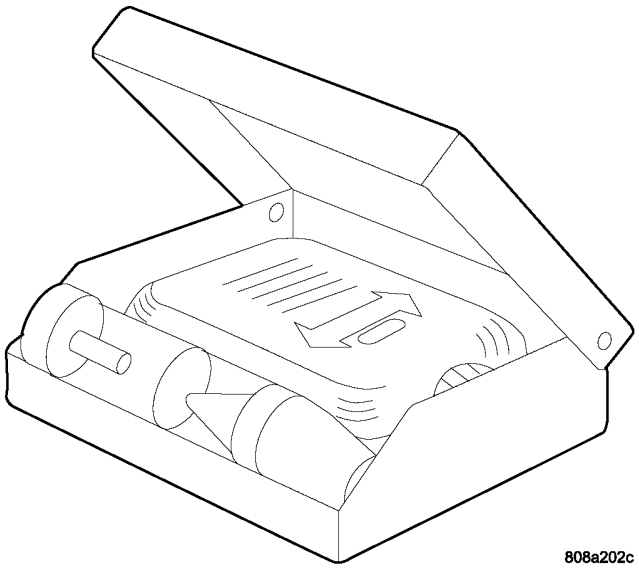

Combustion Leak Tester C-3685-A

HOUSING-AIR CLEANER

REMOVAL

1. Disconnect negative battery cable.
2. DIsconnect mass airflow sensor electrical connector.
3. Remove clean air duct between throttle body and air filter housing.
4. Remove vent tube.
5. Remove mounting bolt.
6. Remove air filter housing.
7. Raise vehicle.
8. Partially remove front fascia to gain access to air filter resonator (Refer to 13 - FRAME & BUMPERS/BUMPERS/FRONT FASCIA - REMOVAL).
9. Remove mounting bolt.
10. Remove air cleaner resonator.

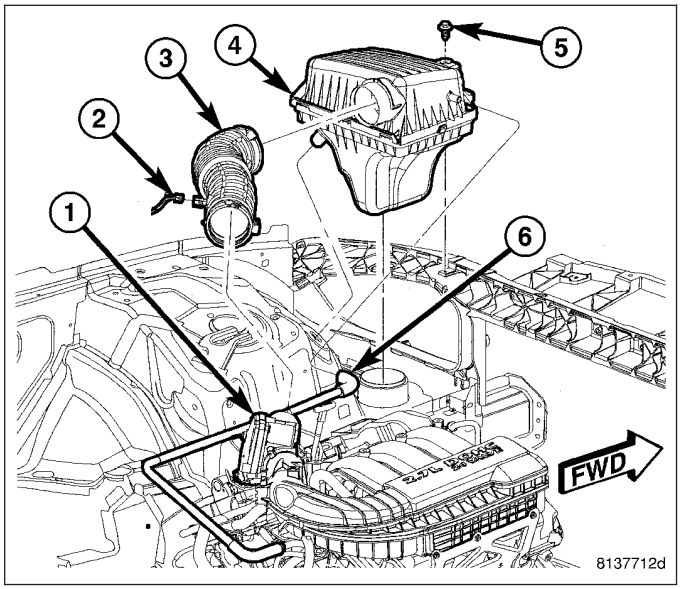

INSTALLATION

1. Position air cleaner resonator assembly in vehicle.
2. Install mounting bolt. Tighten bolt to 10 N·m (89 in. lbs).
3. Install front fascia (Refer to 13 - FRAME & BUMPERS/BUMPERS/FRONT FASCIA - INSTALLATION).
4. Position air filter assembly in vehicle.
5. Install mounting bolt. Tighten to 10 N·m (89 in. lbs.).
6. Install vent tube.
7. Install clean air duct between air filter housing and throttle body.

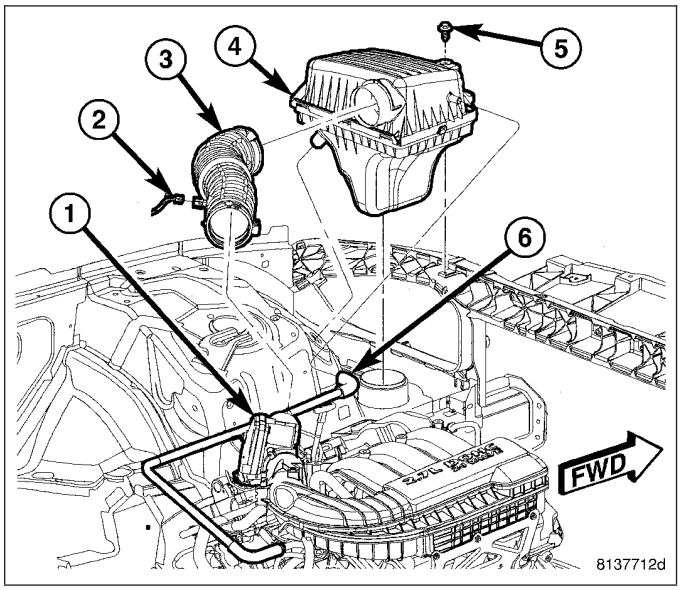

CYLINDER HEAD

DESCRIPTION

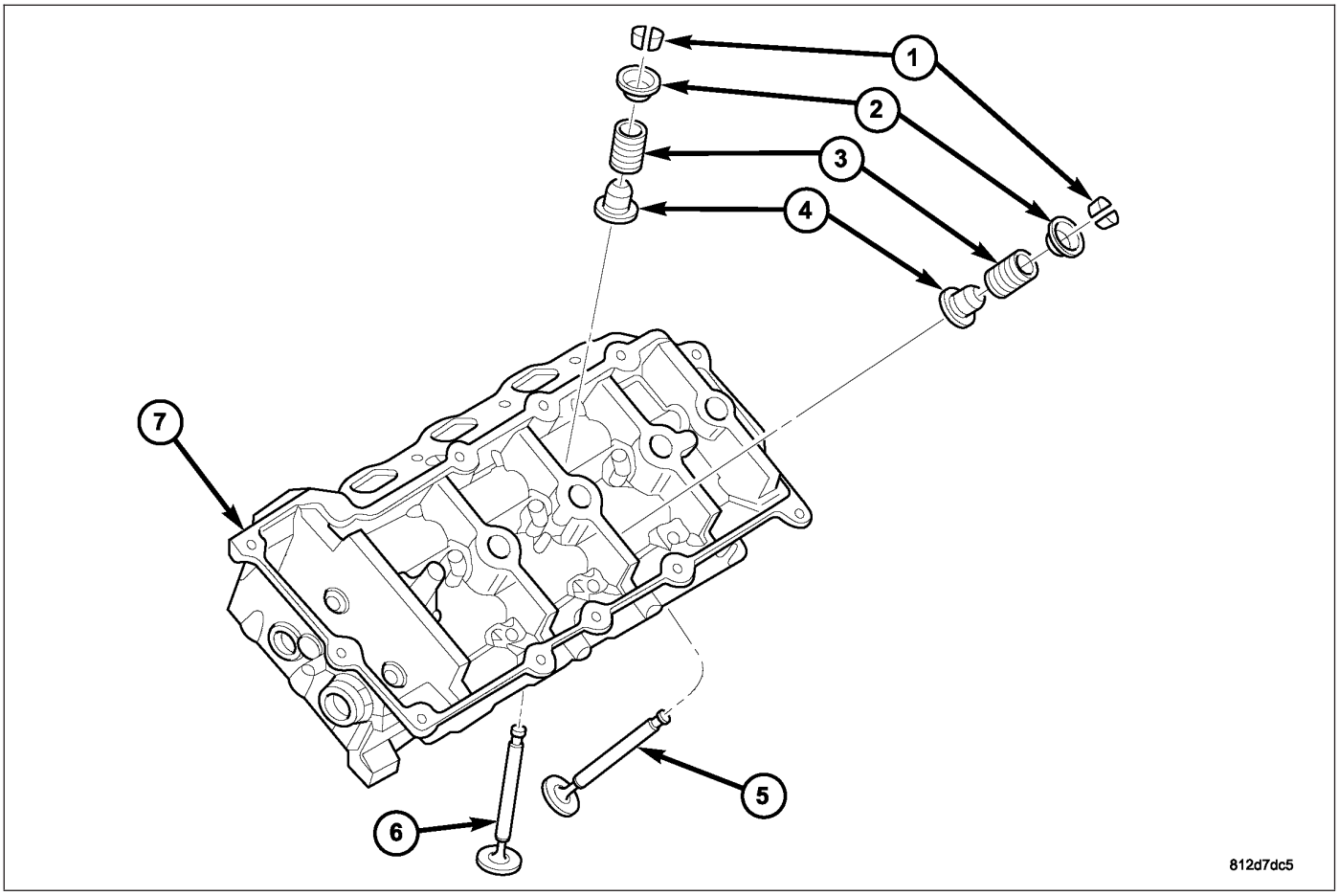

The cylinder heads (7) are made of an aluminum alloy. The cylinder head features four valves (5) & (6) per cylinder with pressed in powdered metal valve guides. The cylinder heads provide enclosures for the timing chain drive, necessitating a unique right and left cylinder head.

DIAGNOSIS AND TESTING

CYLINDER HEAD GASKET

A cylinder head gasket leak can be located between adjacent cylinders or between a cylinder and the adjacent water jacket.

Possible indications of the cylinder head gasket leaking between adjacent cylinders are:

- Loss of engine power
- Engine misfiring
- Poor fuel economy

Possible indications of the cylinder head gasket leaking between a cylinder and an adjacent water jacket are:

- Engine overheating
- Loss of coolant
- Excessive steam (white smoke) emitting from exhaust
- Coolant foaming

CYLINDER-TO-CYLINDER LEAKAGE TEST

To determine if an engine cylinder head gasket is leaking between adjacent cylinders, follow the procedures in Cylinder Compression Pressure Test (Refer to 9 - ENGINE - DIAGNOSIS AND TESTING). An engine cylinder head gasket leaking between adjacent cylinders will result in approximately a 50–70% reduction in compression pressure.

CYLINDER-TO-WATER JACKET LEAKAGE TEST

WARNING: Use extreme caution when the engine is operating with coolant pressure cap removed.

VISUAL TEST METHOD

With the engine cool, remove the coolant pressure cap. Start the engine and allow it to warm up until thermostat opens.

If a large combustion/compression pressure leak exists, bubbles will be visible in the coolant.

COOLING SYSTEM TESTER METHOD

WARNING: With cooling system tester in place, pressure will build up fast. Excessive pressure built up, by continuous engine operation, must be released to a safe pressure point. Never permit pressure to exceed 138 kpa (20 psi).

Install Cooling System Tester 7700 or equivalent to pressure cap neck. Start the engine and observe the tester's pressure gauge. If gauge pulsates with every power stroke of a cylinder a combustion pressure leak is evident.

CHEMICAL TEST METHOD

Combustion leaks into the cooling system can also be checked by using Bloc-Chek Kit C-3685-A or equivalent. Perform test following the procedures supplied with the tool kit.

STANDARD PROCEDURE - Cylinder Head Oil Gallery Cup Plug Service

NOTE: Determine which cup plug is leaking before performing this procedure. If necessary, perform an engine oil leak dye test.

Each cylinder head on a 2.7L engine has 6 external oil gallery cup plugs. It is not necessary to remove the original cup plug to install a new cup plug. The cup plug bore is deep enough to allow for two plugs. If it becomes necessary to service an oil gallery cup plug, perform the Repair Procedure.

NOTE: Inspect the cup plug bore in question for the presence of two cup plugs. If the cup plug flange is just inside (1–2 mm) the chamfered edge of the bore two cup plugs are already in place and the cylinder head cannot be repaired.

Repair Procedure

1. Remove component(s) necessary to gain access to the oil gallery cup plug requiring service.

NOTE: Some of the oil gallery cup plugs are serviceable with the head installed on the engine and the engine in the vehicle, while others require removing the affected cylinder head from the engine. In either case only replace the cup plug requiring service.

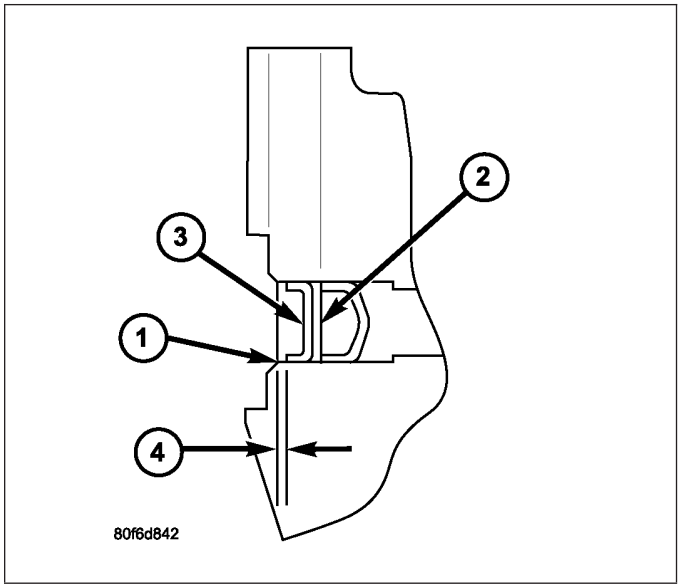

2. Clean the cup plug bore with brake cleaner and compressed air. It is not necessary to remove the existing cup plug.
3. Lightly coat the new cup plug with sealer; p/n 04318083.
4. Using an appropriate installation tool drive the new cup plug into the bore until the flanged edge of the plug is just inside (1-2 mm) the chamfered edge of the bore.
5. Allow the sealant to cure for at least 20 minutes.
6. Assemble any components removed in step #1 as necessary.

REMOVAL

1. Perform fuel pressure release procedure **before attempting any repairs.** (Refer to 14 - FUEL SYSTEM/FUEL DELIVERY - STANDARD PROCEDURE)
2. Disconnect negative cable from battery (1).
3. Raise vehicle on hoist.
4. Drain cooling system (Refer to 7 - COOLING/ENGINE - STANDARD PROCEDURE).

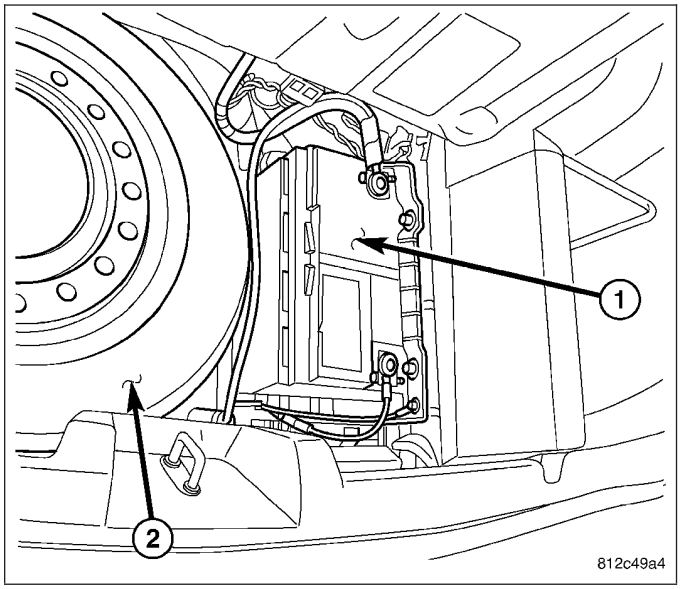

5. Remove accessory drive belt (5). (Refer to 7 - COOLING/ACCESSORY DRIVE/DRIVE BELTS - REMOVAL).
6. Remove the vibration damper (Refer to 9 - ENGINE/ENGINE BLOCK/VIBRATION DAMPER - REMOVAL).
7. Disconnect camshaft position sensor (2), and coolant temperature sensor (1) connectors.
8. Remove upper intake manifold (Refer to 9 - ENGINE/MANIFOLDS/INTAKE MANIFOLD - REMOVAL).

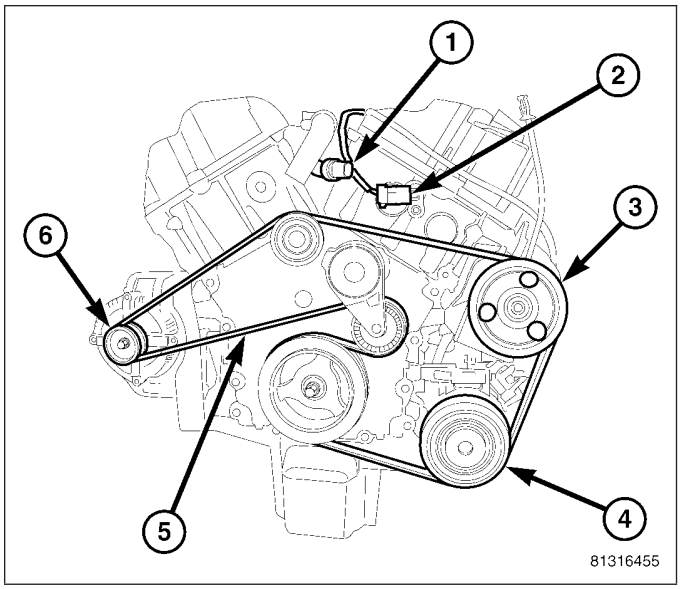

9. Disconnect coils (3), capacitors, and injector connectors (2).
10. Reposition harness out of the way.

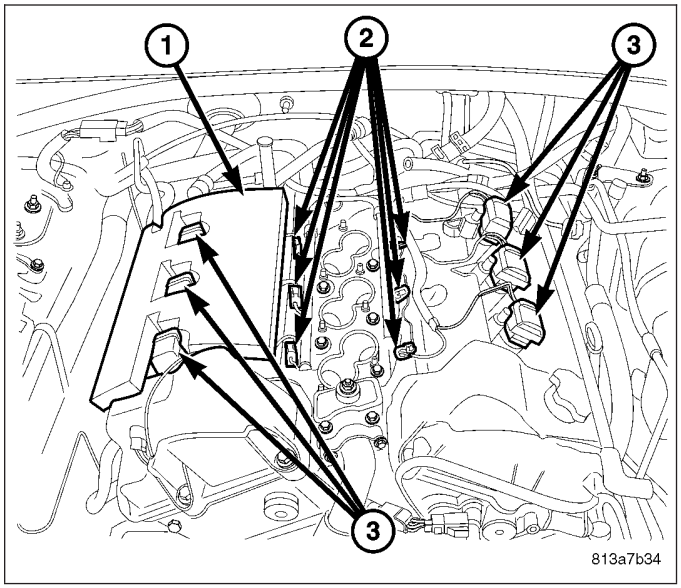

11. Disconnect fuel feed line (1) (Refer to 14 - FUEL SYSTEM/FUEL DELIVERY/QUICK CONNECT FITTING - STANDARD PROCEDURE).
12. Remove lower intake manifold.
13. Remove cylinder head covers (Refer to 9 - ENGINE/CYLINDER HEAD/CYLINDER HEAD COVER(S) - REMOVAL).

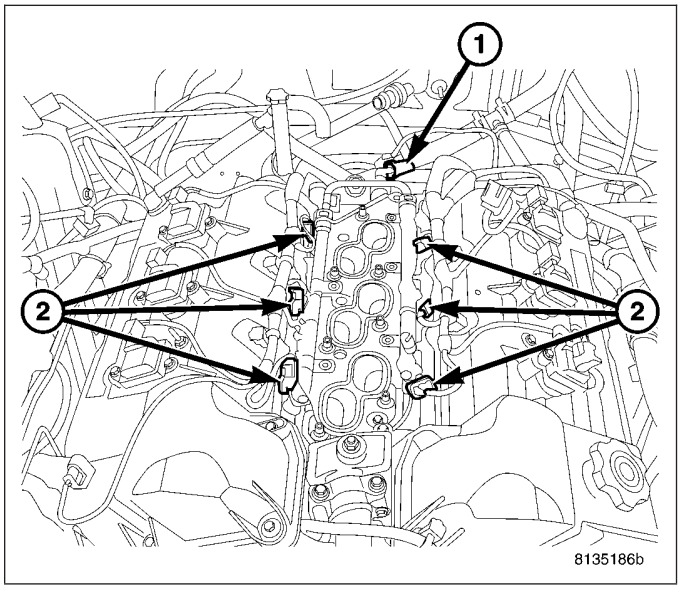

14. Remove coolant outlet (3) (Refer to 7 - COOLING/ENGINE/COOLANT OUTLET HOUSING - REMOVAL).
15. Remove timing chain cover (4) (Refer to 9 - ENGINE/VALVE TIMING/TIMING CHAIN COVER - REMOVAL).

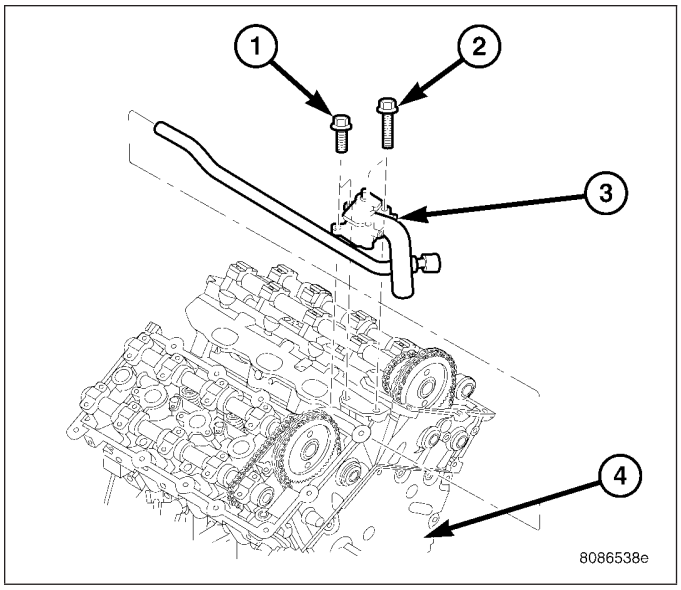

16. Rotate crankshaft until crankshaft sprocket timing mark aligns with timing mark on oil pump housing (2).

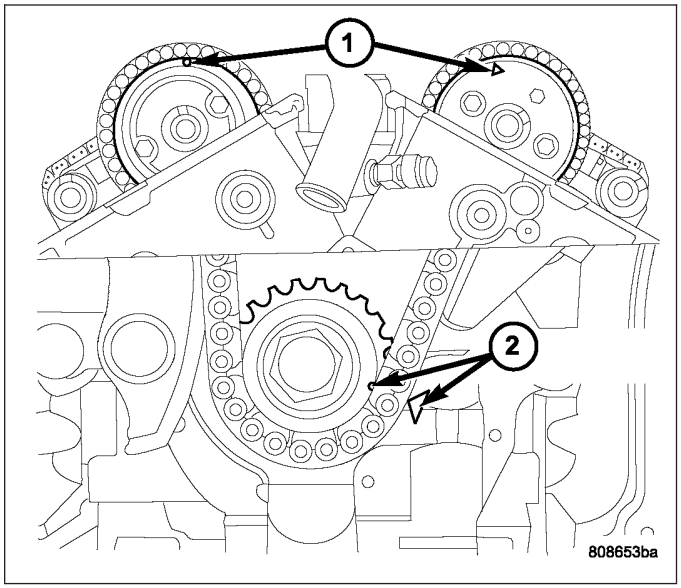

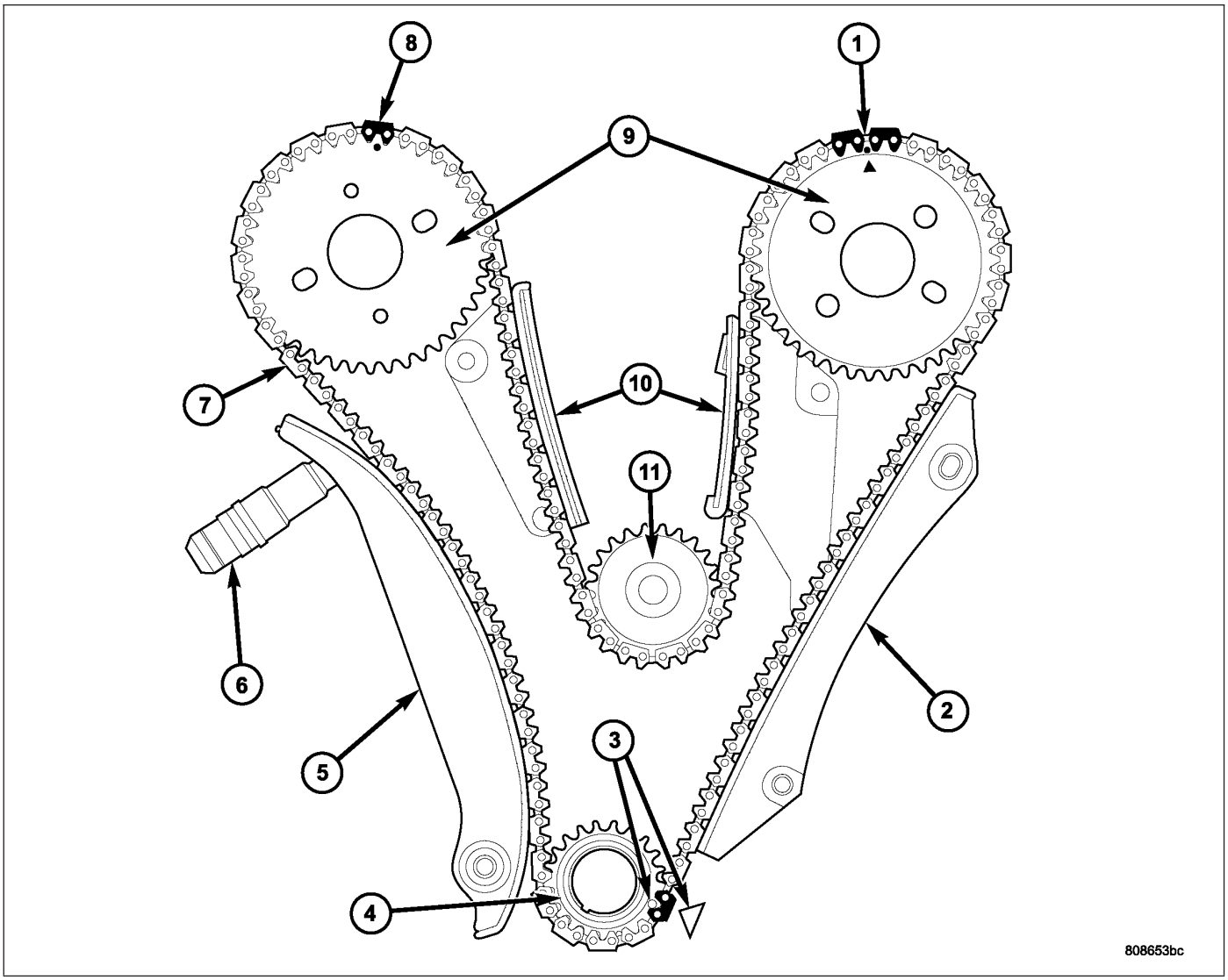

17. Remove primary timing chain (7) (Refer to 9 - ENGINE/VALVE TIMING/TIMING CHAIN AND SPROCKETS - REMOVAL).
18. Remove upper primary timing chain guides (10).
19. Remove camshaft bearing caps **gradually** in the sequence shown.

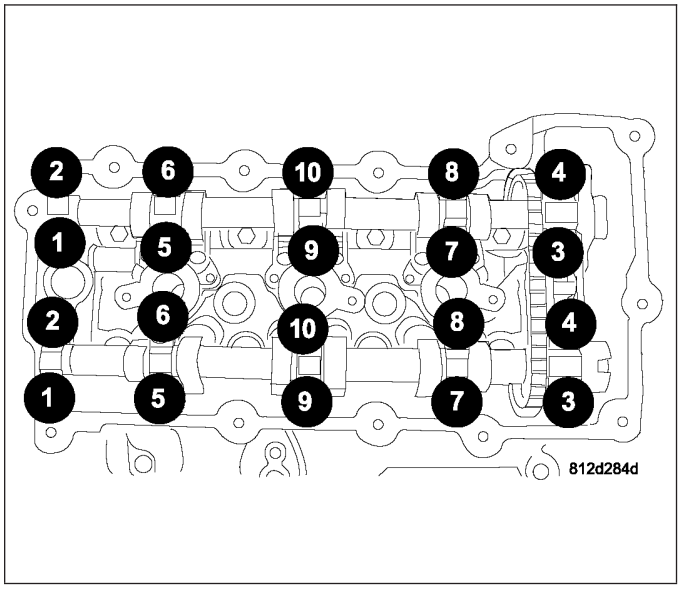

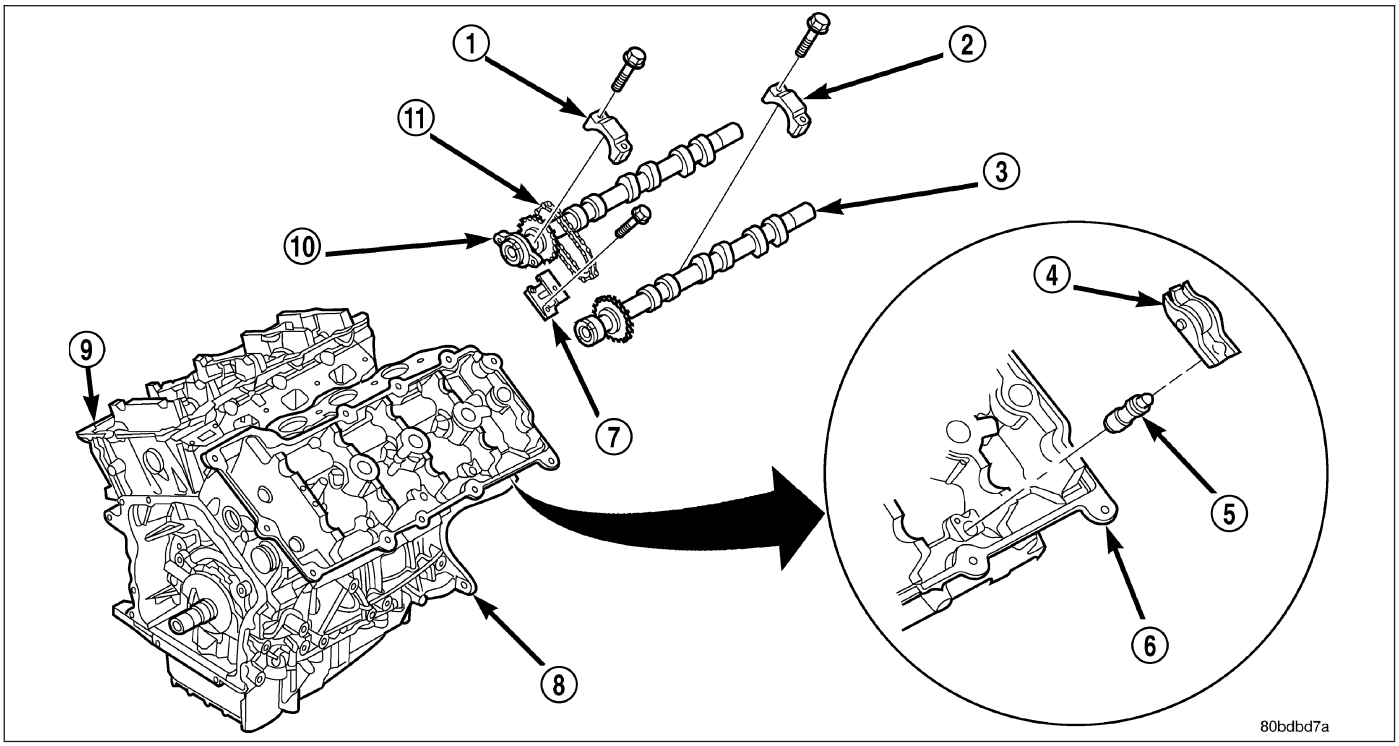

20. Remove camshafts (3) & (10) and valvetrain components from cylinder head. Note component locations for re-installation in original locations.
21. For left cylinder head removal:
    - Remove fastener securing engine oil dipstick tube to cylinder head. Remove engine oil dipstick tube.
    - Remove generator.
22. For right cylinder head removal:
    - Remove cylinder head ground strap.
    - Disconnect EGR valve electrical connector and remove EGR valve from head (Refer to 25 - EMISSIONS CONTROL/EXHAUST GAS RECIRCULATION/VALVE - REMOVAL).

CAUTION: Ensure cylinder head bolts 1 - 3 are removed before attempting the removal of cylinder head, as damage to cylinder head and/or block may occur.

23. Remove cylinder left head bolts (2) and right head bolts (1) in sequence shown.
24. Remove cylinder head(s).
25. Remove and discard cylinder head gasket.
26. Clean cylinder head and block sealing surfaces (Refer to 9 - ENGINE/CYLINDER HEAD - CLEANING).

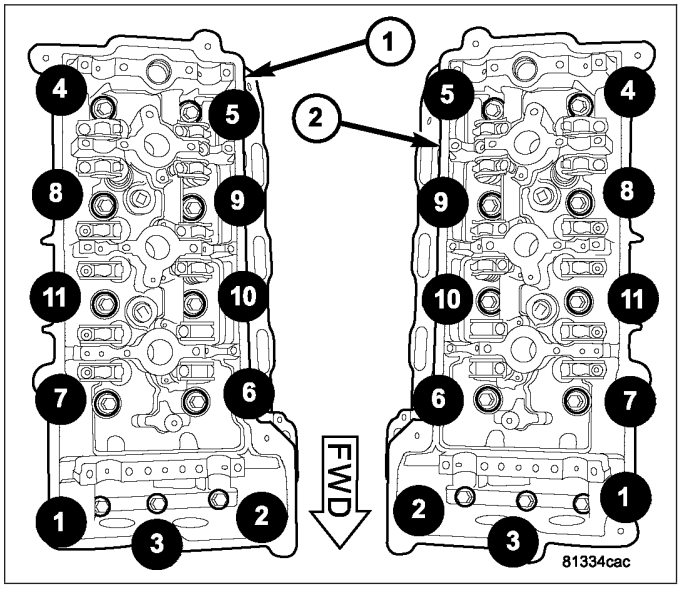

CLEANING

To ensure engine gasket sealing, proper surface preparation must be performed, especially with the use of aluminum engine components and multi-layer steel cylinder head gaskets.

NOTE: Multi-Layer Steel (MLS) head gaskets require a scratch free sealing surface.

Remove all gasket material from cylinder head and block (Refer to 9 - ENGINE - STANDARD PROCEDURE). Be careful not to gouge or scratch the aluminum head sealing surface.

Clean all engine oil passages.

INSPECTION

1. Before cleaning, check for leaks, damage and cracks.
2. Clean cylinder head and oil passages.
3. Check cylinder head for flatness .
4. Cylinder head must be flat within:
   - Standard dimension = less than 0.05 mm (0.002 inch.)
   - Service Limit = 0.2 mm (0.008 inch.)
   - Grinding Limit = Maximum of 0.2 mm (0.008 inch.) is permitted.

CAUTION: 0.20 mm (0.008 in.) MAX is a combined total dimension of the stock removal limit from cylinder head and block top surface (Deck) together.

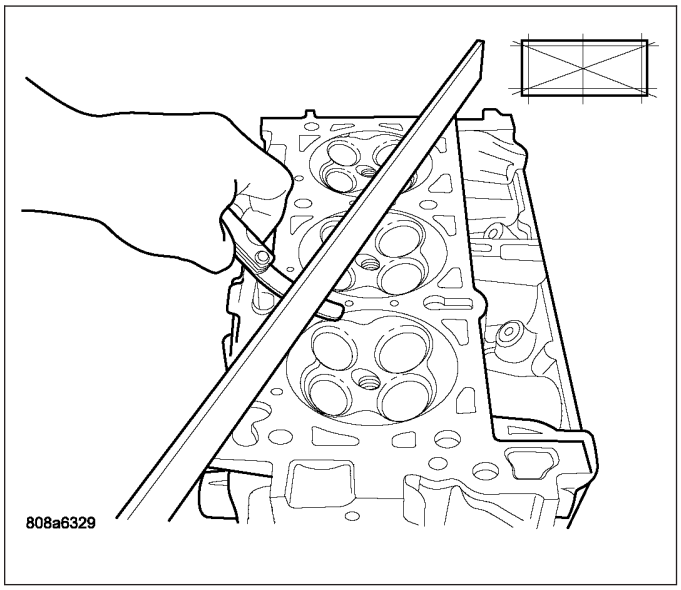

INSTALLATION

NOTE: The cylinder head bolts are tightened using a torque plus angle procedure. The bolts must be examined BEFORE reuse. If the threads are necked down the bolts must be replaced

Necking can be checked by holding a straight edge against the threads (3). If all the threads do not contact the scale (2), the bolt must be replaced.

CAUTION: When cleaning cylinder head and cylinder block surfaces, DO NOT use a metal scraper because the surfaces could be cut or ground. Use ONLY a wooden or plastic scraper.

1. Clean sealing surfaces of cylinder head and block (Refer to 9 - ENGINE - STANDARD PROCEDURE).
2. Install new head gasket over locating dowels.
3. Install cylinder head to block, assuring head is properly positioned over locating dowels.

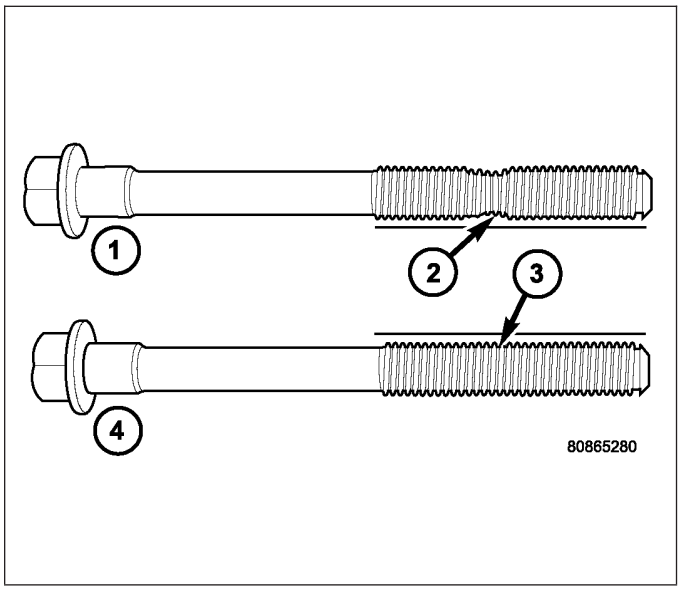

4. Lubricate bolt threads with clean engine oil and install bolts.
5. Tighten bolts in sequence shown for left head (2) and right head (1), using the following steps and torque values:
   - Step 1: Bolts 1–8 to 48 N·m (35 ft. lbs.)
   - Step 2: Bolts 1–8 to 75 N·m (55 ft. lbs.)
   - Step 3: Bolts 1–8 to 75 N·m (55 ft. lbs.)
   - Step 4: Bolts 1–8 to +90° Turn **Do not use a torque wrench for this step.**
   - Step 5: Bolts 9–11 to 28 N·m (250 in. lbs.)

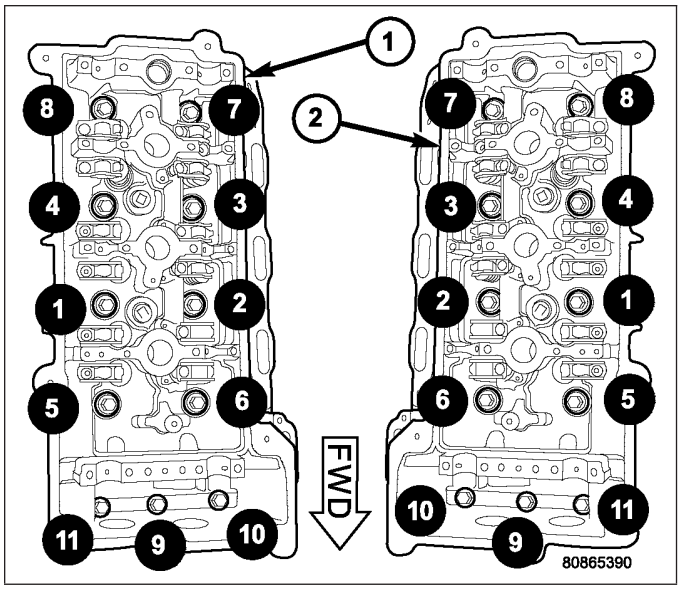

6. For left cylinder head installation:
   - Install engine oil dipstick tube.
   - Install generator.
7. For right cylinder head Installation:
   - Install cylinder head ground strap.
   - Install EGR valve (if equipped) (Refer to 25 - EMISSIONS CONTROL/EXHAUST GAS RECIRCULATION/ VALVE - INSTALLATION).
8. Install all valvetrain components and camshafts (Refer to 9 - ENGINE/CYLINDER HEAD/CAM-SHAFT(S) - INSTALLATION). Tighten camshaft bearing caps in sequence shown to 12 N·m (105 in. lbs.).

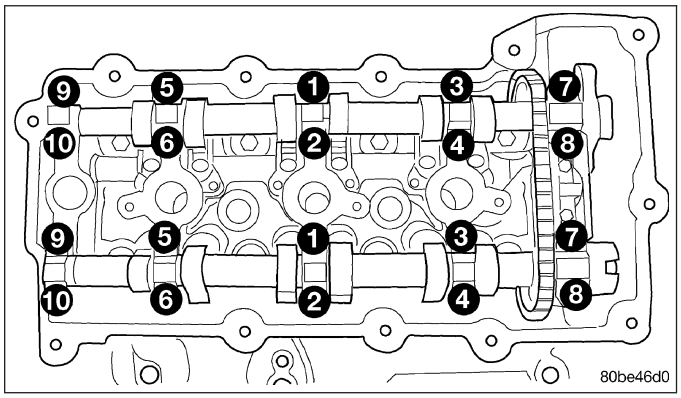

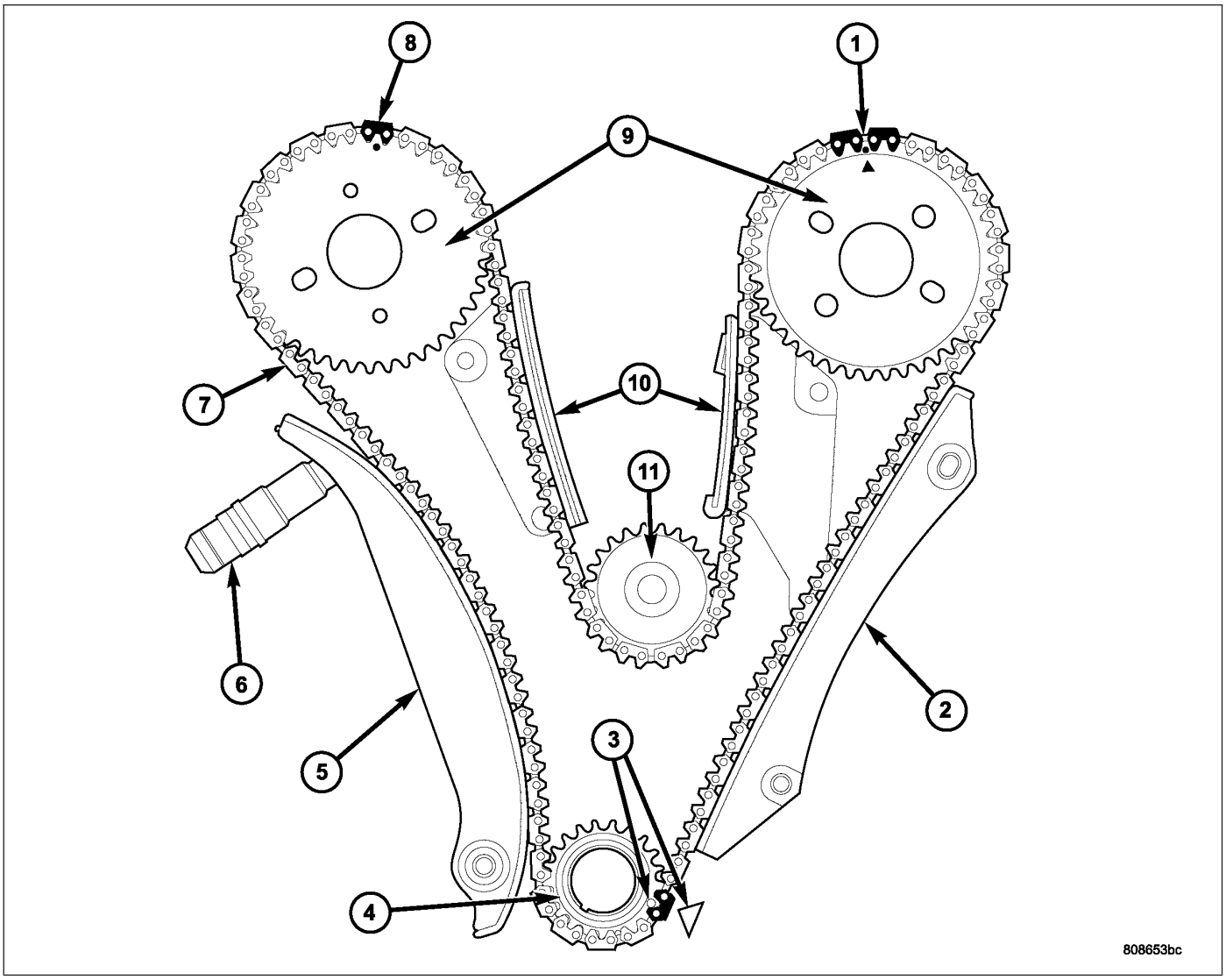

9. Install primary timing chain (7), guides (2,5,10) and sprockets (9) (Refer to 9 - ENGINE/VALVE TIMING/TIMING CHAIN AND SPROCKETS - INSTALLATION).
10. Install coolant outlet (3) (Refer to 7 - COOLING/ ENGINE/COOLANT OUTLET HOUSING - INSTALLATION).

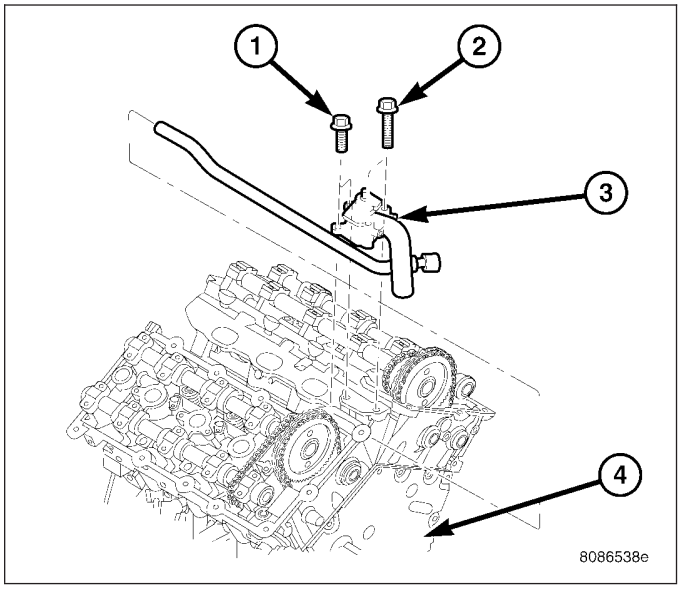

11. Install lower intake manifold (Refer to 9 - ENGINE/MANIFOLDS/INTAKE MANIFOLD - INSTALLATION).
12. Install cylinder head covers (Refer to 9 - ENGINE/CYLINDER HEAD/CYLINDER HEAD COVER(S) - INSTALLATION).
13. Connect camshaft position sensor (2) and coolant temperature sensor (1) connectors.
14. Install timing chain cover (Refer to 9 - ENGINE/VALVE TIMING/TIMING CHAIN COVER(S) - INSTALLATION).
15. Install crankshaft vibration damper (Refer to 9 - ENGINE/ENGINE BLOCK/VIBRATION DAMPER - INSTALLATION).
16. Install upper intake manifold (Refer to 9 - ENGINE/MANIFOLDS/INTAKE MANIFOLD - INSTALLATION).

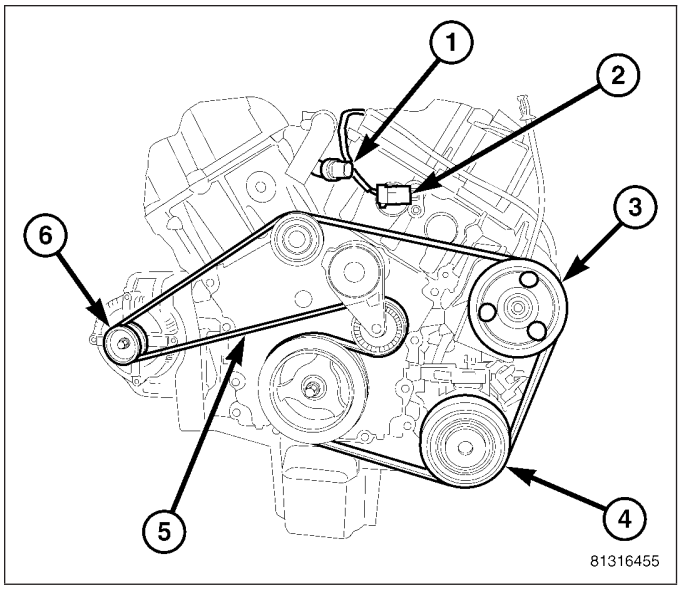

17. Connect oil pressure sensor (1) connector.

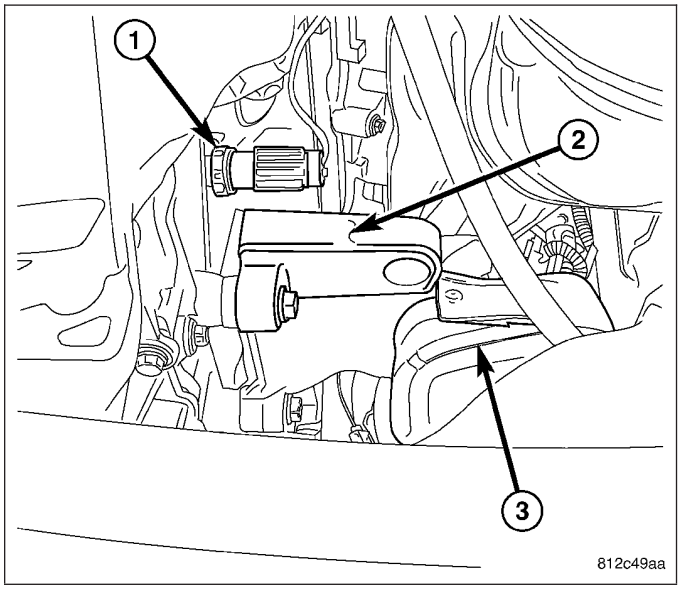

18. Install accessory drive belt (5) (Refer to 7 - COOLING/ACCESSORY DRIVE/DRIVE BELTS - INSTALLATION).
19. Fill cooling system (Refer to 7 - COOLING/ENGINE - STANDARD PROCEDURE).

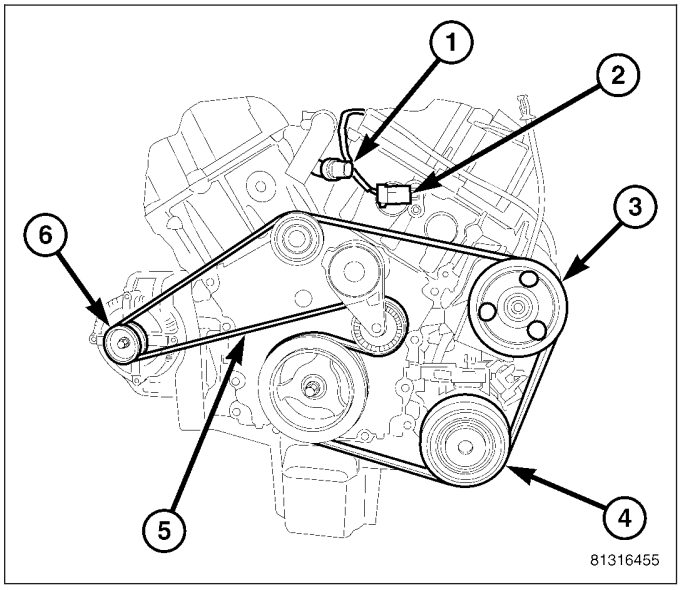

20. Connect negative battery (1) cable.
21. Start engine and check for leaks.

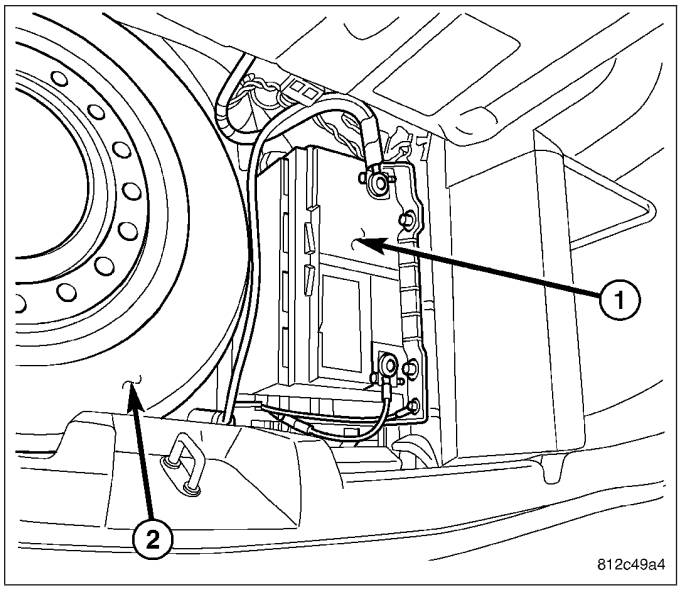

CAMSHAFT(S)

DESCRIPTION

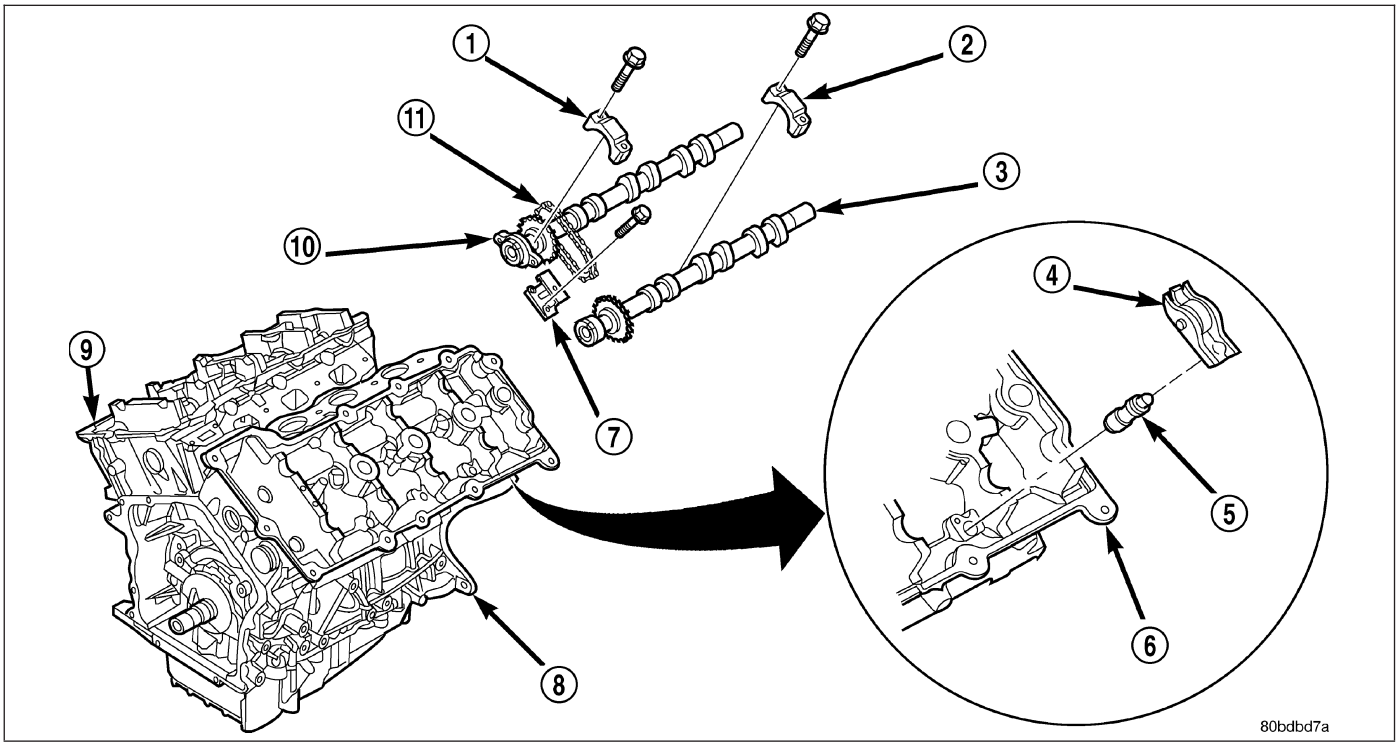

The assembled fabricated camshafts are composed of five bearing journals machined onto a hollow steel tube. The camshafts are secured in the cylinder head (6) by the camshaft bearing caps (1)&(2). Six steel lobes, a secondary timing drive sprocket, and a primary sprocket/thrust flange are pressed onto the camshaft tube using a unique assembly process. Camshaft end play is controlled by the primary camshaft sprocket attachment flange on the intake camshafts (7) and by a thrust flange on the exhaust camshafts (3). The intake camshafts are driven by the primary chain. The exhaust camshafts (3) are driven by the intake camshafts (10) through a secondary chain (11). The secondary chain tensioner (7) keeps tension on the secondary chain (11).

OPERATION

The camshaft has precisely machined (egg shaped) lobes to provide accurate valve timing and duration. The camshaft is driven by the crankshaft via drive sprockets and chains.

REMOVAL

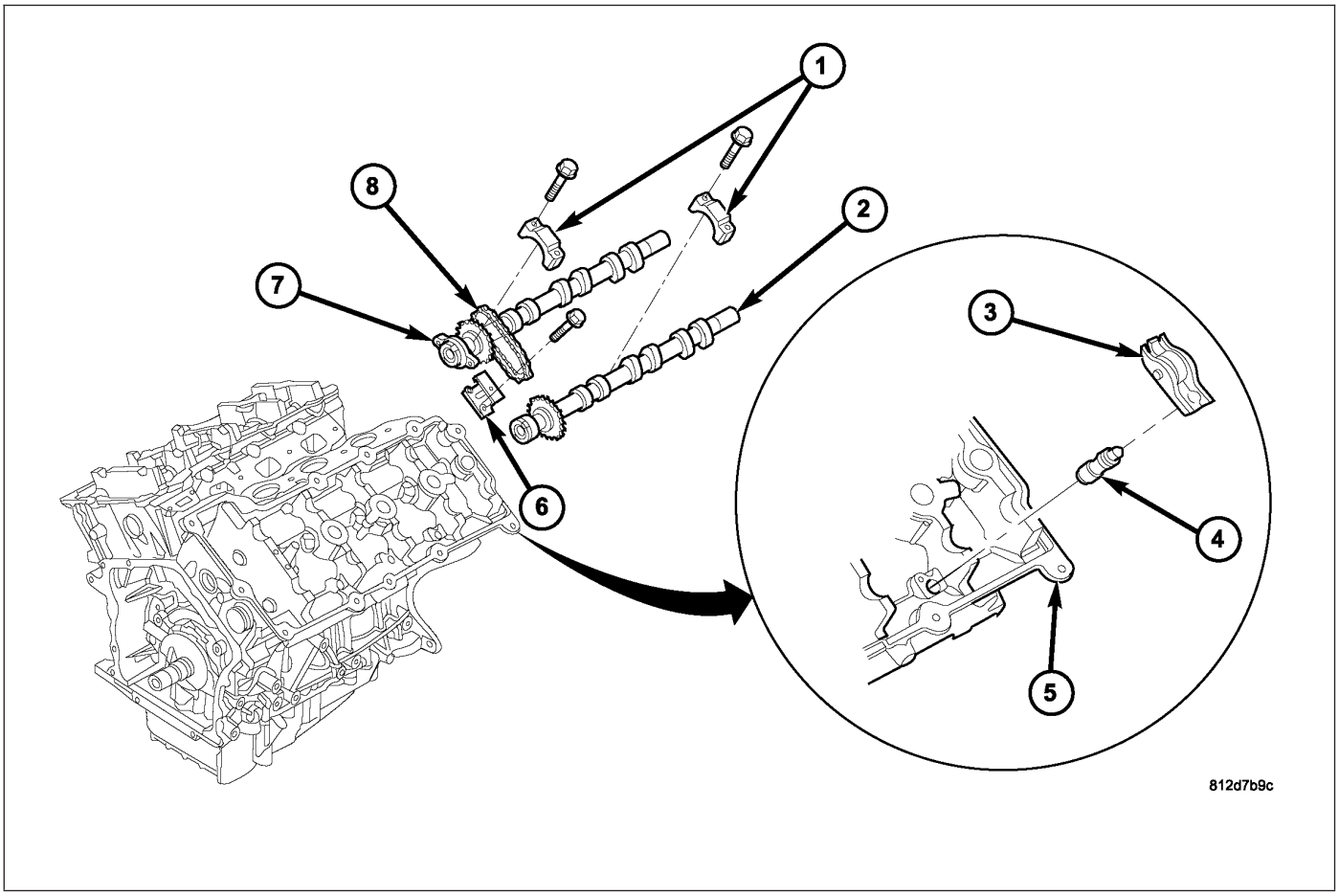

1. Remove the primary timing chain (Refer to 9 - ENGINE/VALVE TIMING/TIMING BELT/CHAIN AND SPROCKETS - REMOVAL).
2. Remove secondary chain tensioner (6) mounting bolts.

NOTE: Camshaft bearing caps have been marked during engine manufacturing. For example, number one exhaust camshaft bearing is marked “1E”.

3. Slowly loosen camshaft bearing cap bolts in the order shown.

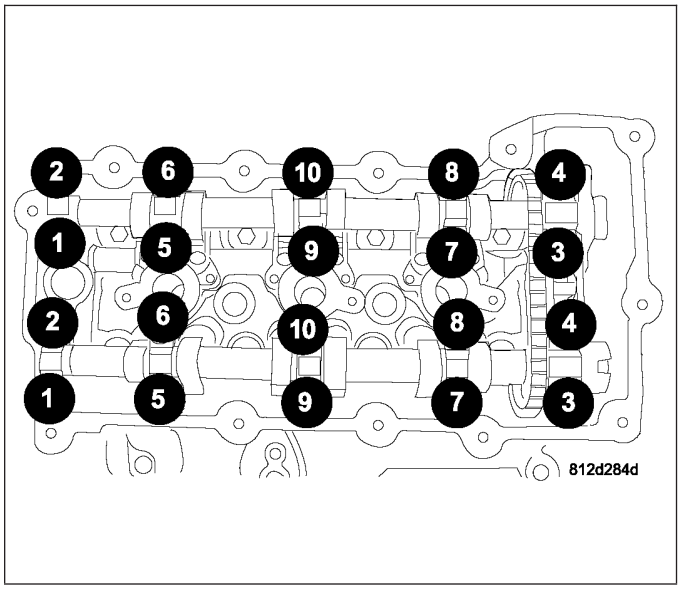

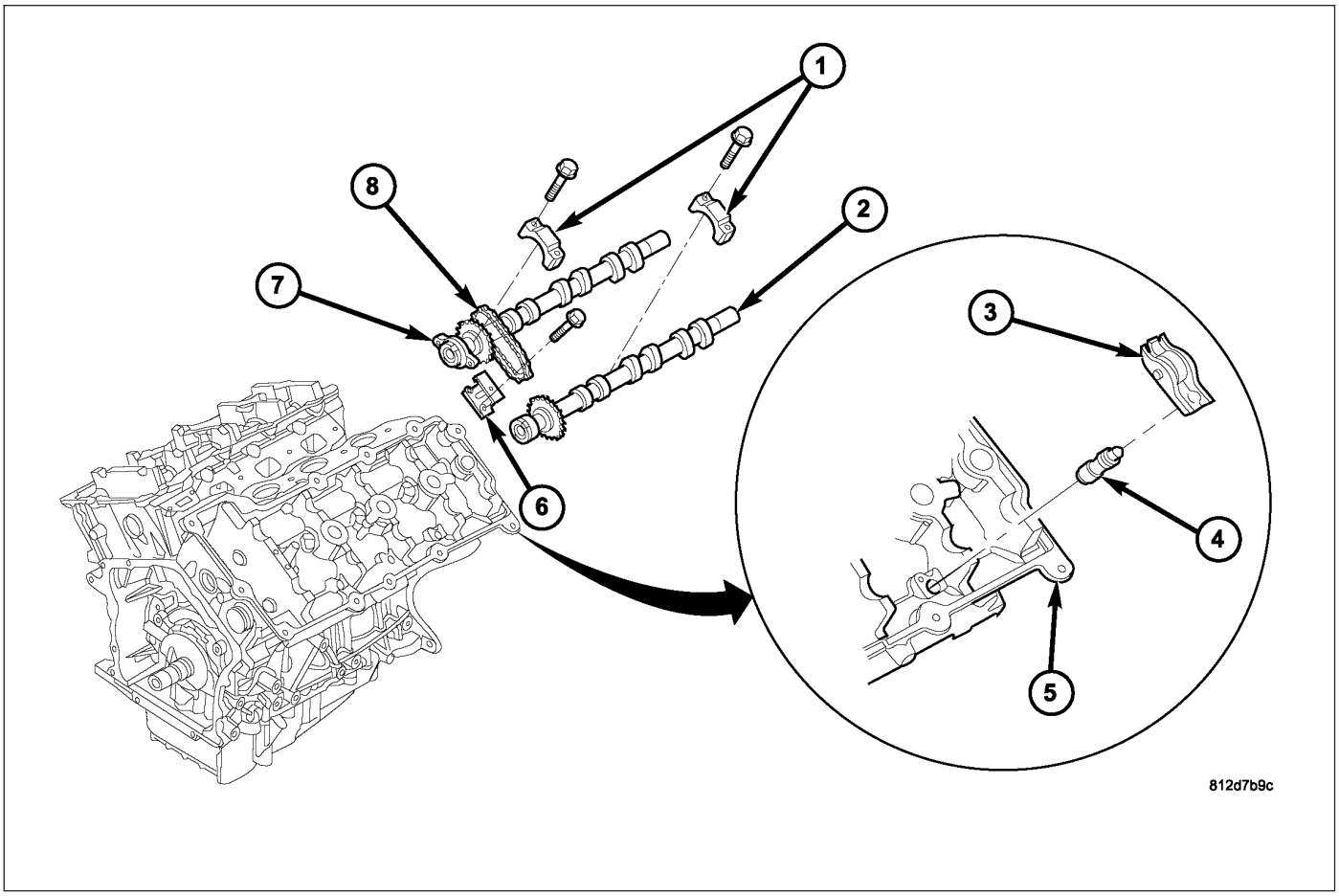

4. Remove camshaft bearing caps (1).
5. Remove intake camshaft (7), exhaust camshaft (2), secondary timing chain (8), and secondary timing chain tensioner (6) together as an assembly.
6. Remove secondary timing chain tensioner (6) and secondary timing chain (8) from camshafts (2)&(7).
7. Inspect camshafts (Refer to 9 - ENGINE/CYLINDER HEAD/CAMSHAFT(S) - INSPECTION).

INSPECTION

1. Inspect camshaft bearing journals (2) for damage and binding. If journals are binding, check the cylinder head for damage. Also check cylinder head oil holes for clogging.
2. Inspect camshaft sprockets for excessive wear. Replace camshafts if necessary.
3. Check the cam lobe (5) surfaces for abnormal wear and damage. Replace camshaft if defective. Measure the actual wear and replace, if out of limits—standard value is 0.0254 mm (0.001 in.); wear **limit** is 0.254 mm (0.010 in.).

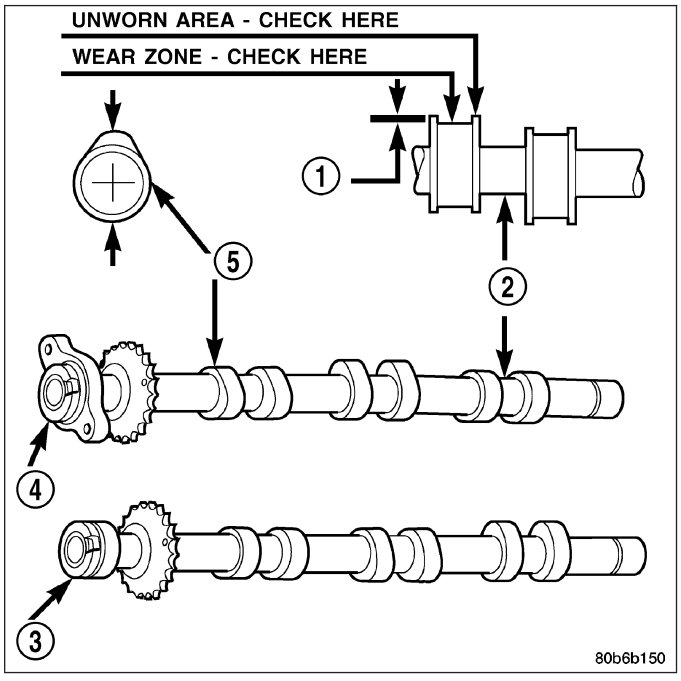

INSTALLATION

CAUTION: When the timing chain is removed and the cylinder heads are installed, DO NOT rotate the camshafts or crankshaft without first locating the proper crankshaft position. Failure to do so will result in valve and/or piston damage.

1. Assemble camshaft chain on the cams. Verify that plated links (1) are facing toward the front. Align the plated links (1) to the dots (4) on the camshaft sprockets.

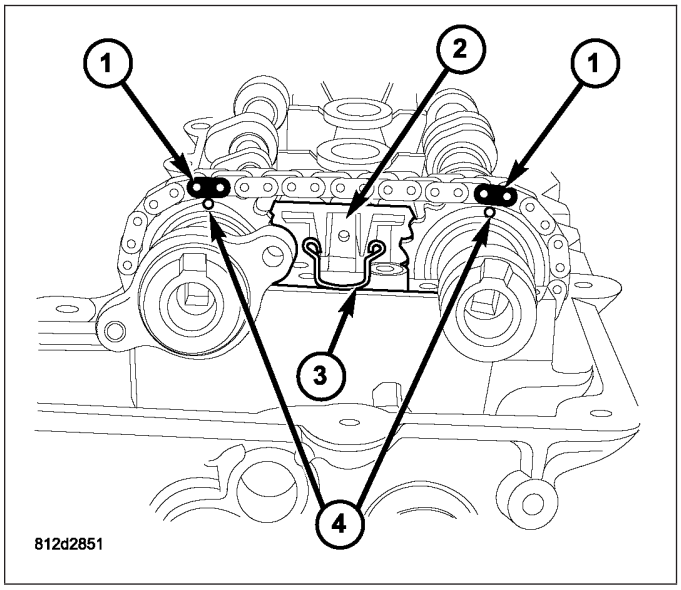

2. If camshaft chain tensioner is already in the compressed and locked position, proceed to step #4.
3. When the camshaft chain tensioner is removed, it is necessary to compress and lock the tensioner using the following procedures:
   a. Place tensioner (1) into a soft jaw vise.
   b. SLOWLY compress tensioner until fabricated lock pin (2) or the equivalent can be inserted into the locking holes.
   c. Remove compressed and locked tensioner from the vise.

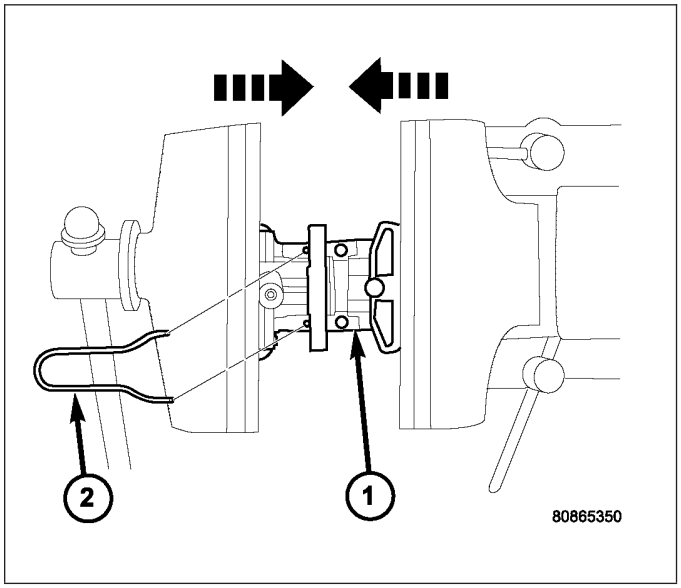

4. Insert the compressed and locked camshaft chain tensioner (2) in between the camshafts and chain.
5. Rotate the cams so that the plated links (1) and dots (4) are facing the 12:00 o'clock position.
6. Install cams to cylinder head. Verify that rocker arms are correctly seated and in proper positions.

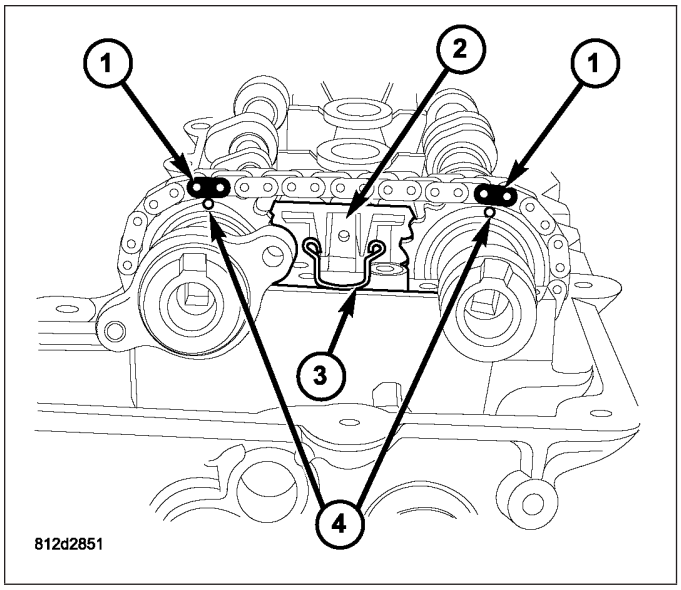

7. Install camshaft bearing caps. Verify that bearing caps are installed in same position as removed.
8. Tighten cam bearing cap bolts gradually in sequence shown in to 12 N·m (105 in. lbs.).

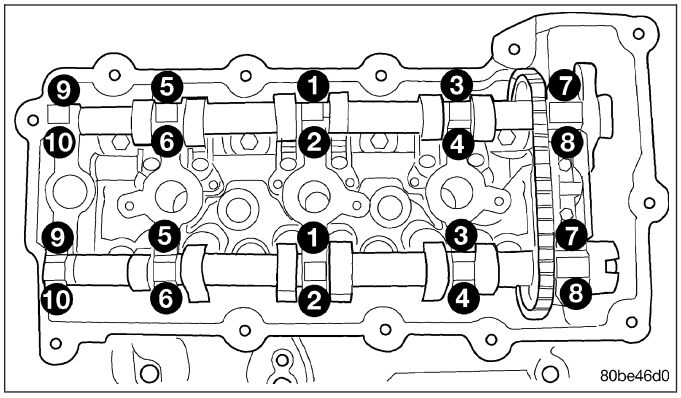

9. Install secondary chain tensioner (2) bolts and tighten to 12 N·m (105 in. lbs.).
10. Remove locking pin (3) from secondary tensioners (2).
11. Measure camshafts end play (Refer to 9 - ENGINE/CYLINDER HEAD/CAMSHAFT(S) - STANDARD PROCEDURE).
12. Install the primary timing chain (Refer to 9 - ENGINE/VALVE TIMING/TIMING BELT/CHAIN AND SPROCKETS - INSTALLATION).

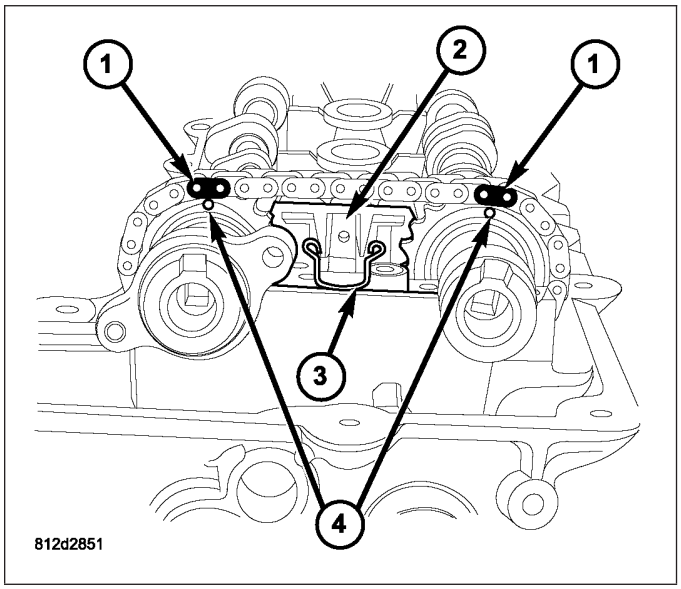

COVER(S)-CYLINDER HEAD

REMOVAL

LEFT

1. Disconnect negative battery (1) cable located in trunk.

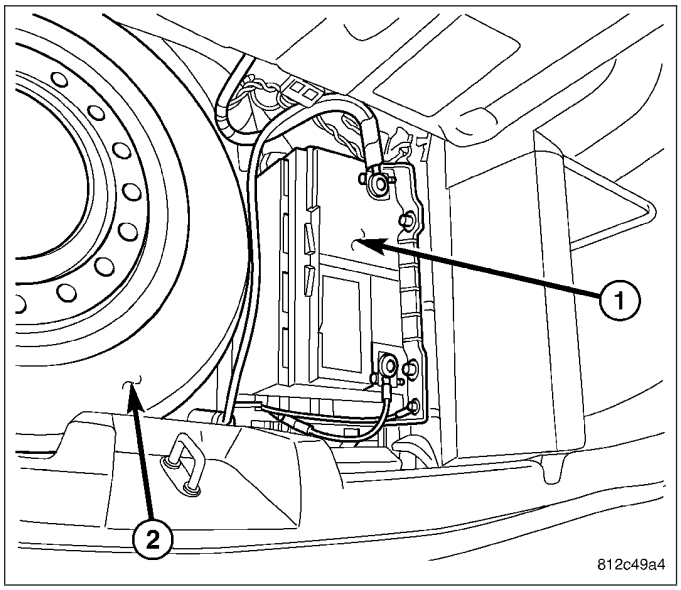

2. Remove upper intake manifold (Refer to 9 - ENGINE/MANIFOLDS/INTAKE MANIFOLD - REMOVAL).
3. Disconnect electrical connectors from ignition coils (1).

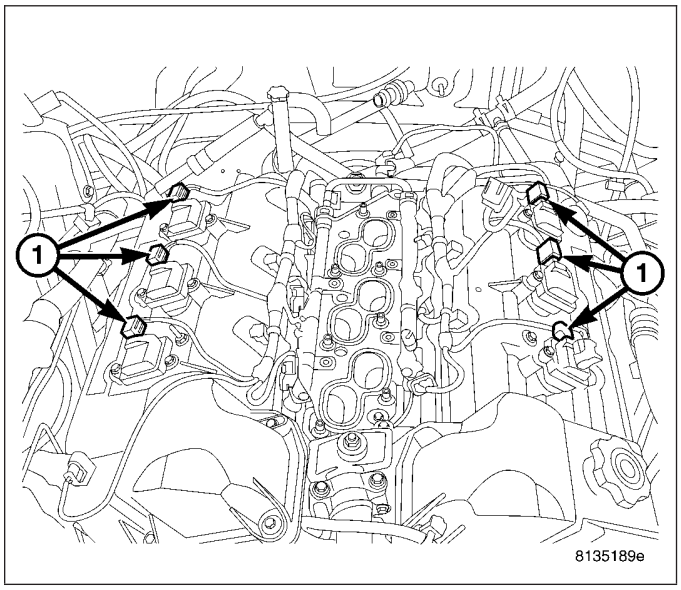

4. Remove ground strap from cylinder head cover stud (1) and disconnect capacitor connector (2). Reposition electrical harness.
5. Disconnect electrical harness retaining clips from cylinder head cover studs. Reposition electrical harness.

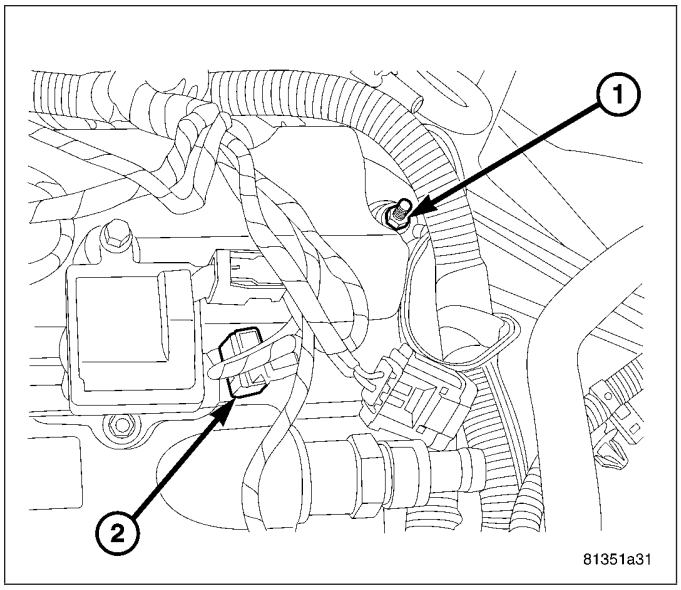

6. Remove make up air hose.
7. Remove fastener attaching ignition coil capacitor.
8. Remove ignition coils (1).

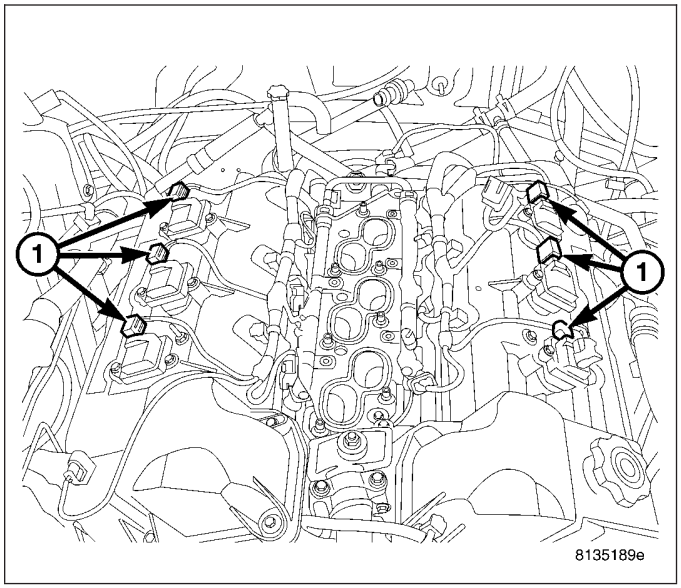

9. Loosen all cylinder head cover fasteners (1)&(2).

NOTE: Cylinder head cover attaching bolts are captured to the cover.

CAUTION: Make certain the double ended studs (1) in the center of the cylinder head cover are loose before attempting to remove cover.

10. Remove cylinder head cover.

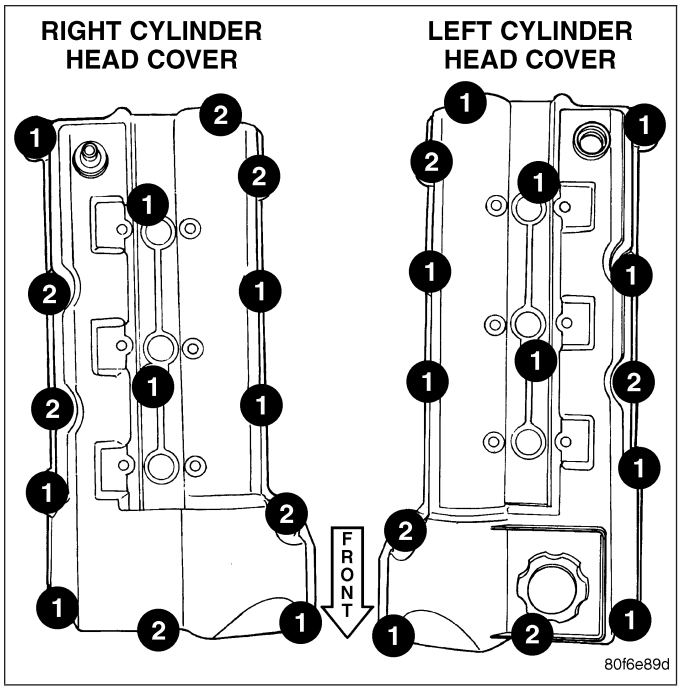

RIGHT

1. Disconnect negative battery (1) cable.

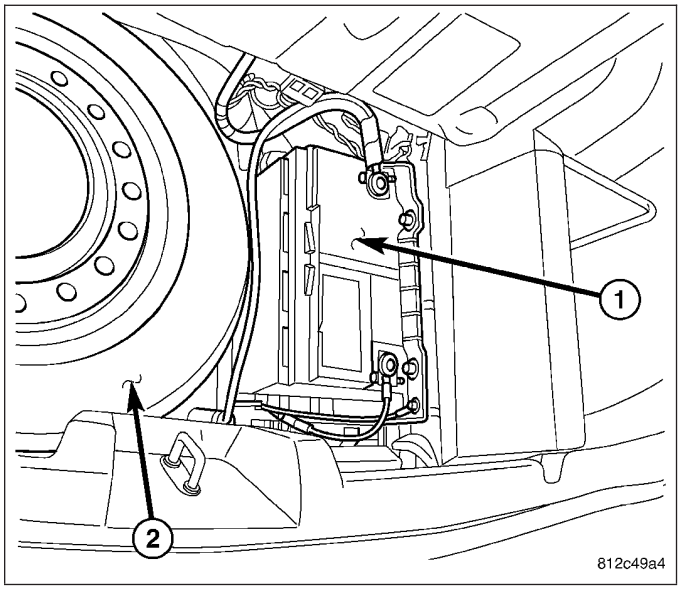

2. Remove upper intake manifold (Refer to 9 - ENGINE/MANIFOLDS/INTAKE MANIFOLD - REMOVAL).
3. Disconnect electrical connectors from ignition coils (1).

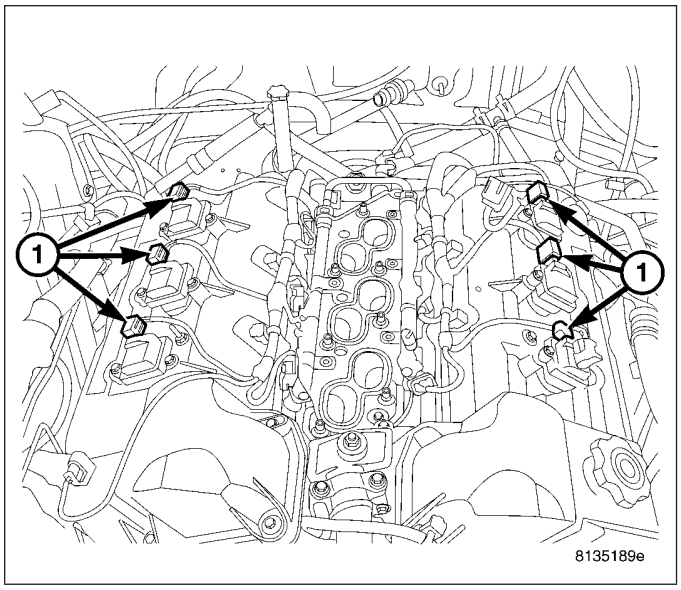

4. Disconnect capacitor electrical connector (2).
5. Remove PCV hose from cylinder head cover grommet.
6. Remove ground strap from cylinder head cover stud (1).
7. Disconnect electrical harness retaining clips from cylinder head cover studs. Reposition electrical harness.
8. Remove fastener attaching ignition coil capacitor.
9. Remove ignition coils.

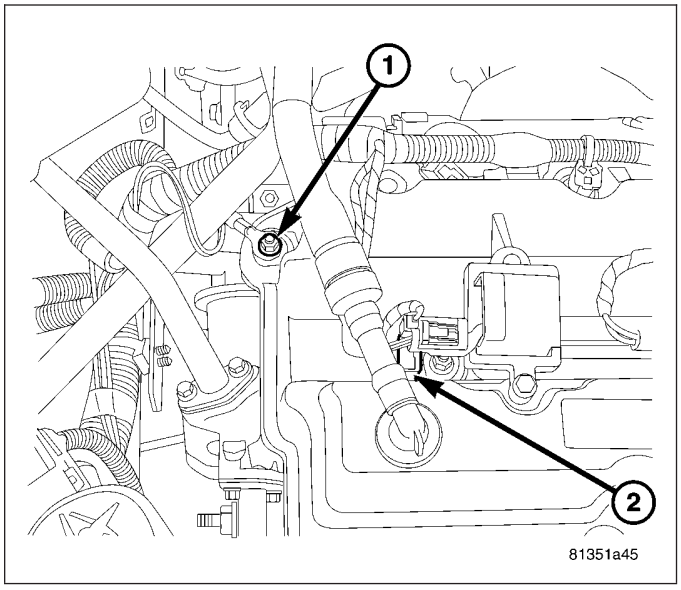

10. Remove foam insulator (1).

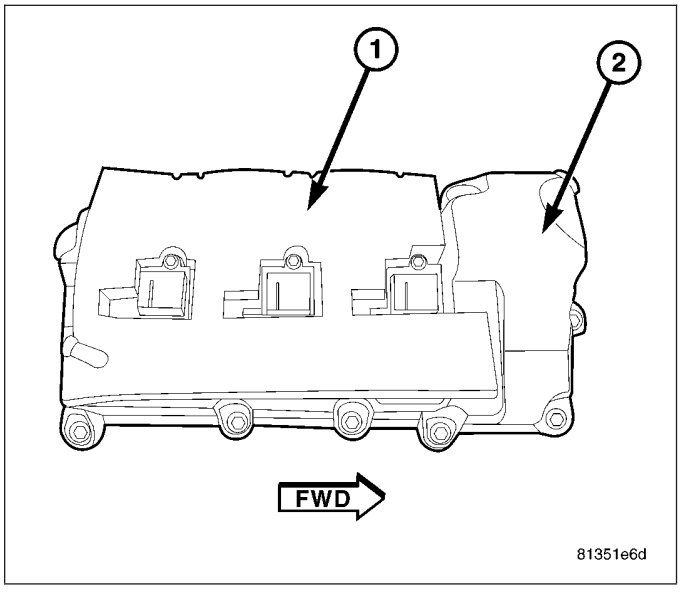

11. Loosen all cylinder head cover fasteners.

NOTE: Cylinder head cover attaching bolts are captured to the cover.

CAUTION: Make certain the double ended studs in the center of the cylinder head cover are loose before attempting to remove cover.

12. Remove cylinder head cover.

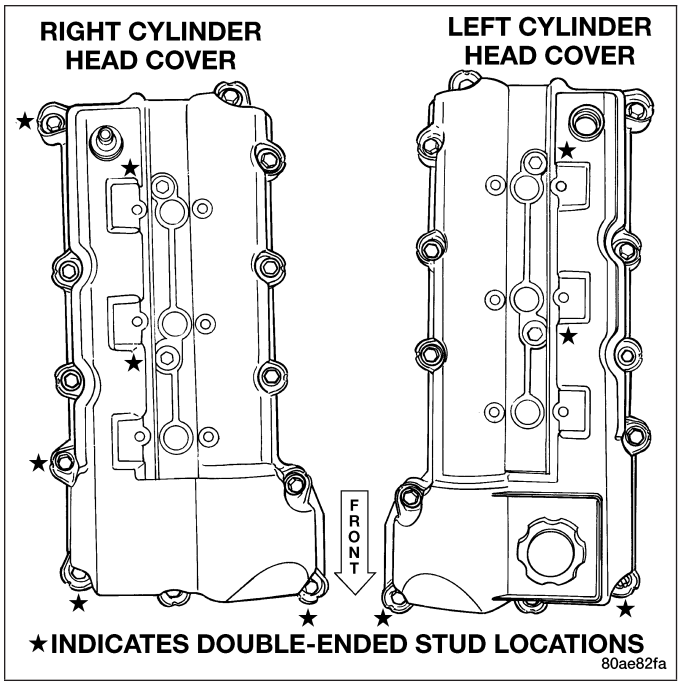

INSTALLATION

LEFT

1. Clean cylinder head cover and both sealing surfaces. Inspect and replace gaskets (1)&(2) as necessary.

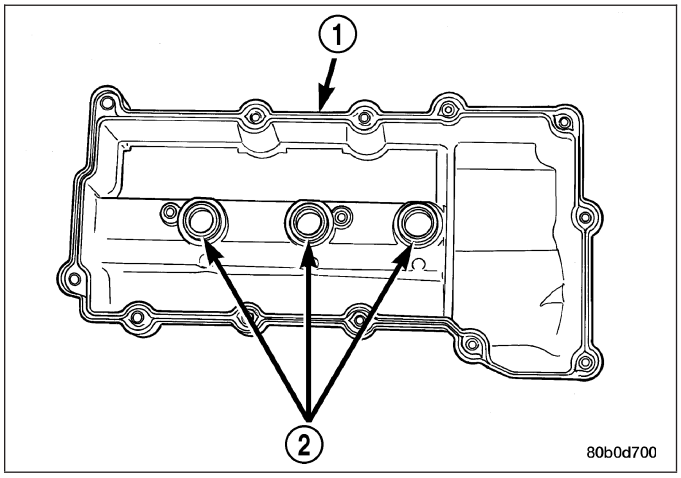

2. Install cylinder head cover and hand start all fasteners. Verify that all double-ended studs are in the correct locations.
3. Tighten cylinder head cover attaching bolts and double-ended studs to 12 N·m (105 in. lbs.).

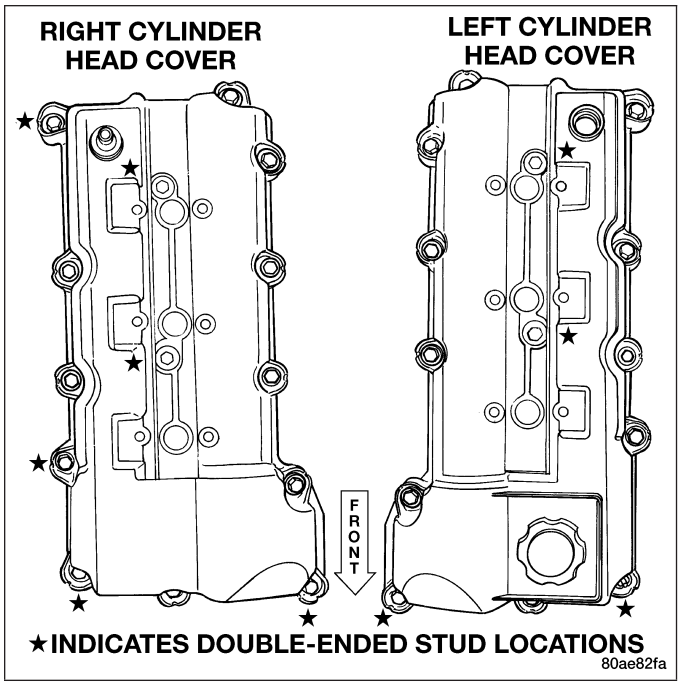

4. Install ignition coils (1).

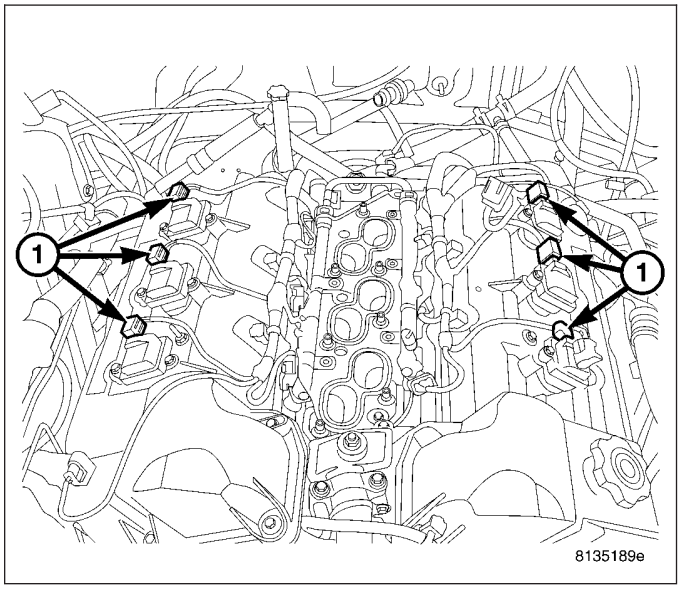

5. Install ignition coil capacitor (2) and fastener.
6. Install ground strap (1) to cylinder head cover stud.
7. Connect all electrical connectors and harness clips.
8. Connect make up air hose.
9. Install upper intake manifold (Refer to 9 - ENGINE/ MANIFOLDS/INTAKE MANIFOLD - INSTALLATION).

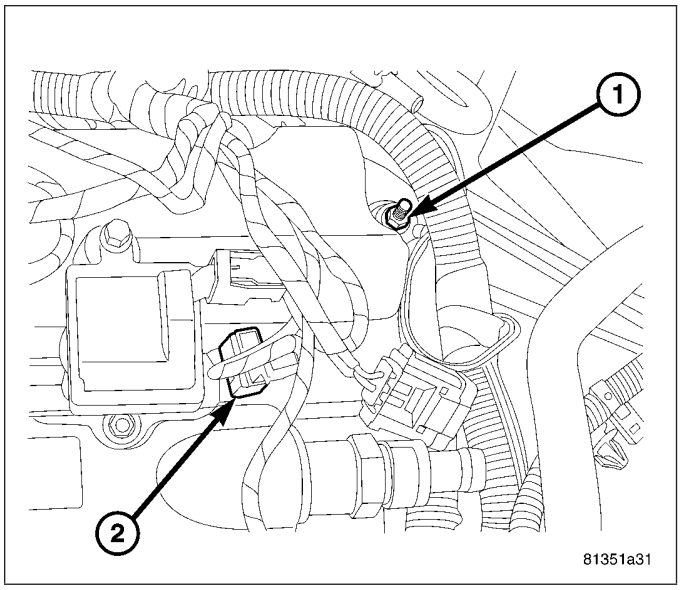

10. Connect negative battery (1) cable.

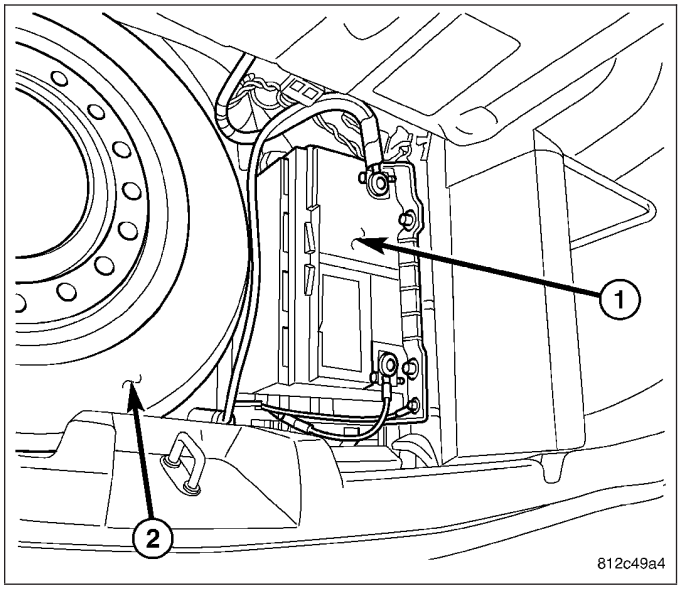

RIGHT

1. Clean cylinder head cover and both sealing surfaces. Inspect and replace gaskets (1)&(2) as necessary.

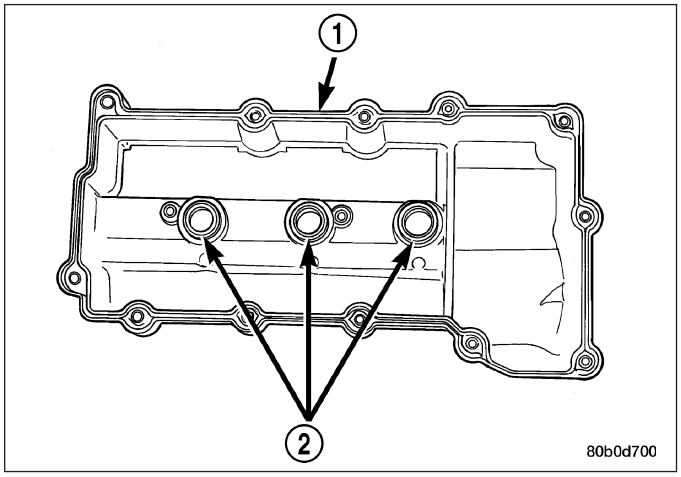

2. Install cylinder head cover and hand start all fasteners. Verify that all double-ended studs are in the correct locations.
3. Tighten cylinder head cover attaching bolts and double-ended studs to 12 N·m (105 in. lbs.).

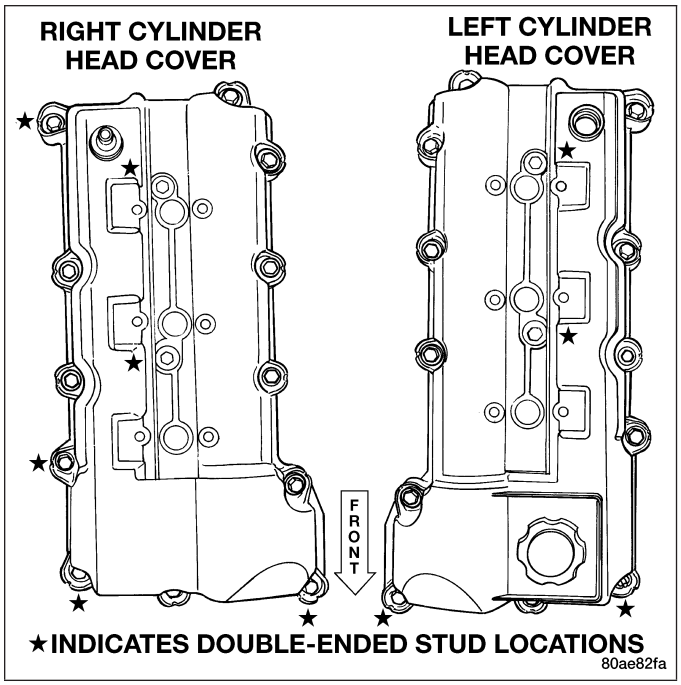

4. Install ignition coils (1).

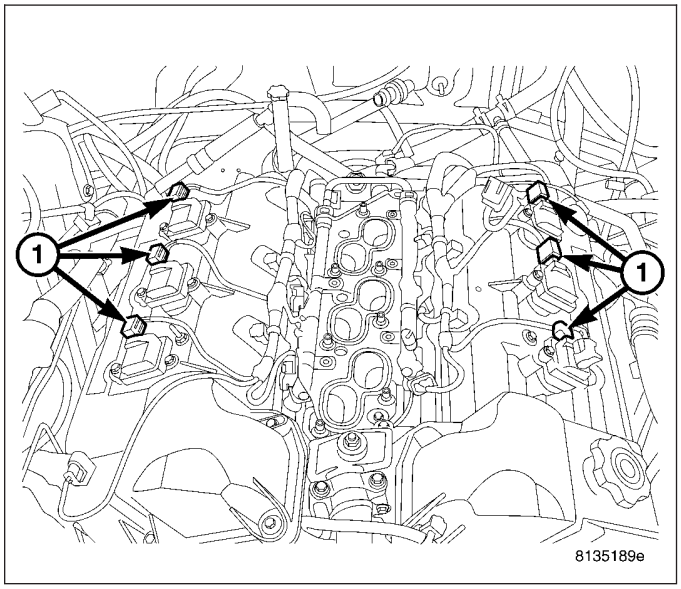

5. Install ignition coil capacitor (2) and fastener.
6. Connect ground strap (1) to cylinder head cover stud.
7. Connect PCV hose to cylinder head cover grommet.
8. Connect all electrical connectors and harness clips.

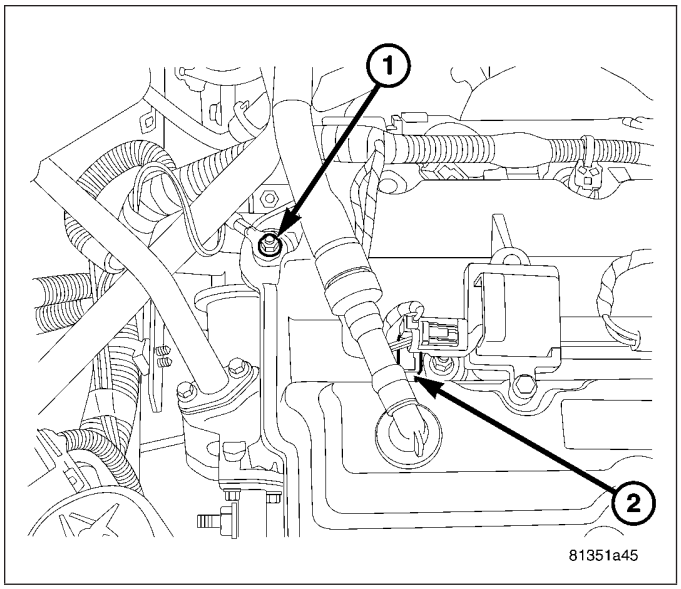

9. Install foam insulator (1) on top of cylinder head cover (2).
10. Install upper intake manifold (Refer to 9 - ENGINE/MANIFOLDS/INTAKE MANIFOLD - INSTALLATION).

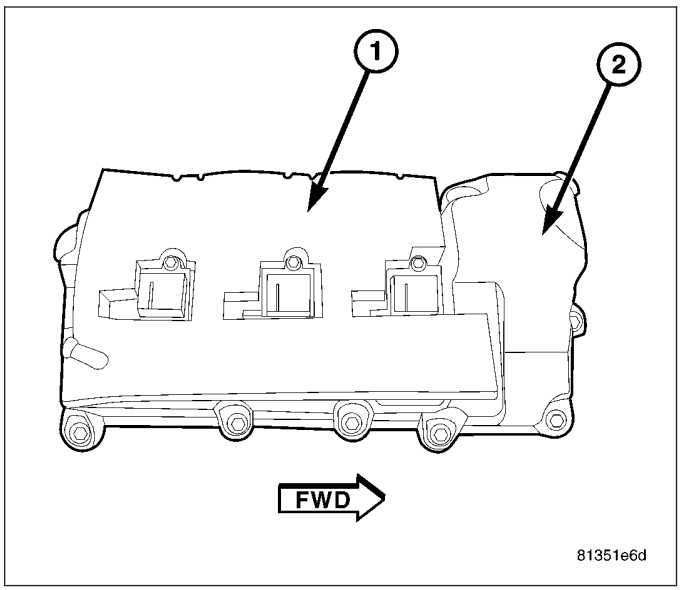

11. Connect negative battery (1) cable.

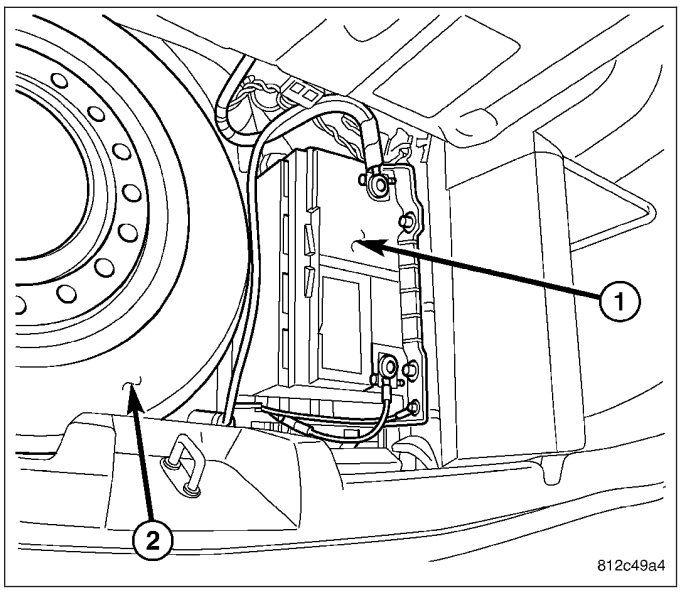

VALVES & SEATS-INTAKE/EXHAUST

DESCRIPTION

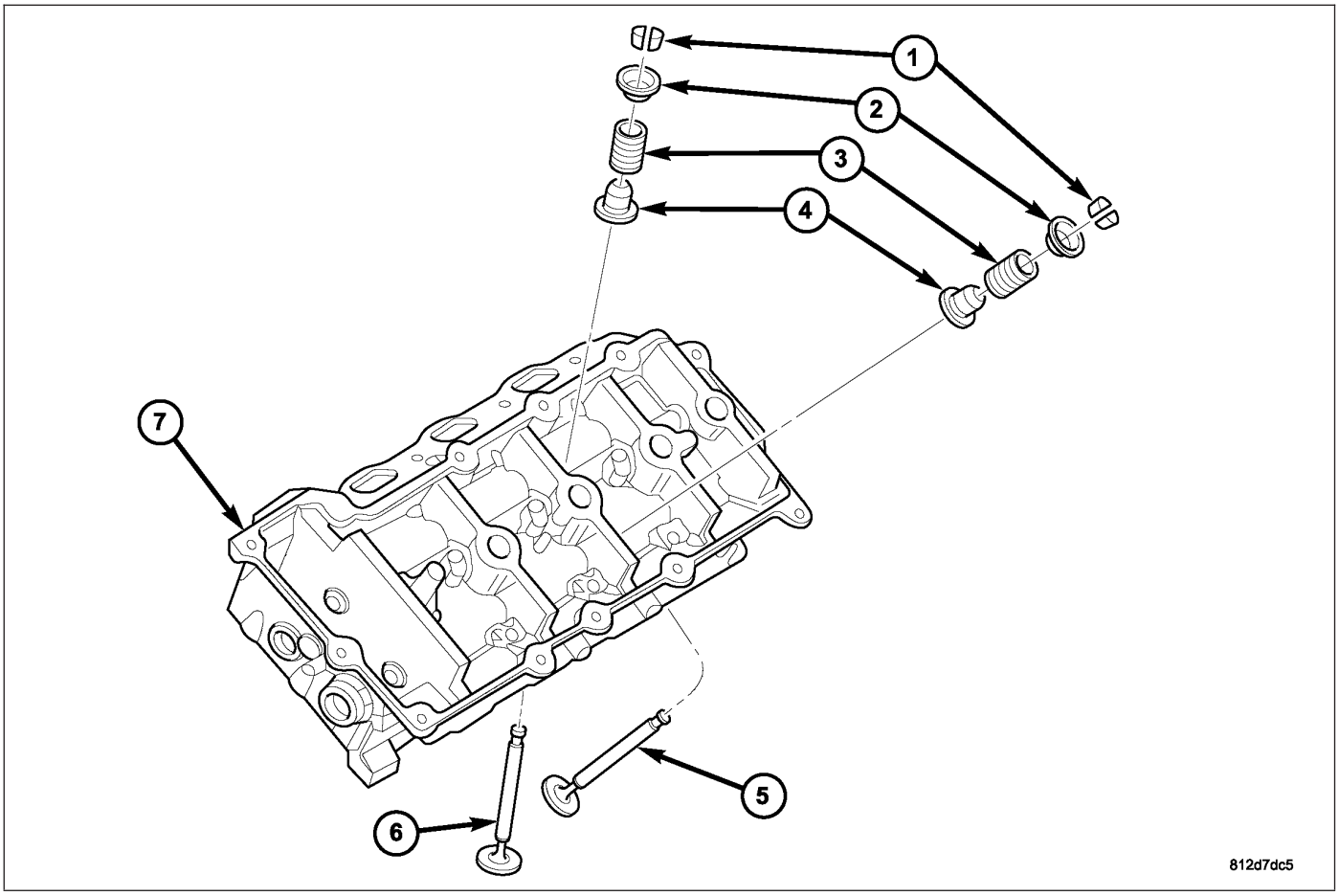

The valves (5)&(6) are made of heat resistant steel, and have chrome plated stems to prevent scuffing. The four valves per cylinder (two intake (6) and two exhaust (5)) are actuated by roller rocker arms, which pivot on stationary lash adjusters. All valves use three bead lock keepers (1) to retain springs (3) and to promote valve rotation.

STANDARD PROCEDURE - VALVE AND VALVE SEAT REFACING

The intake and exhaust valves have a 44.5 to 45 degree face angle (1). The valve seats (2) have a 45 to 45.5 degree face angle.

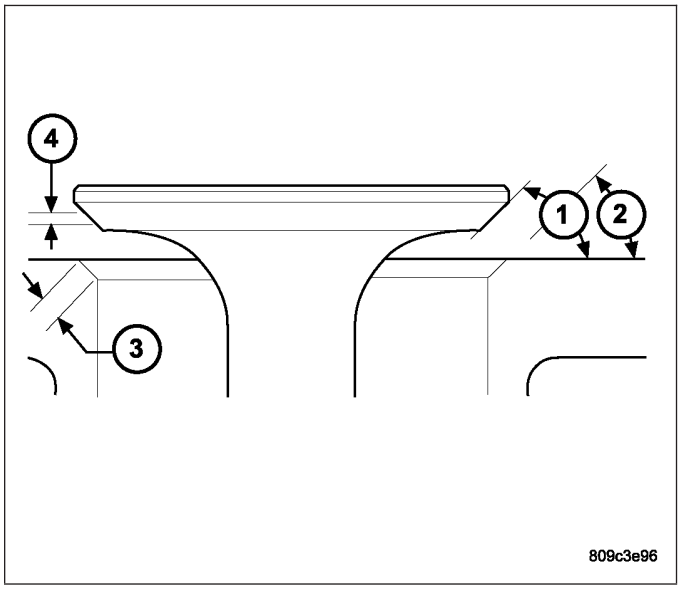

VALVES

Inspect the remaining margin (5) after the valves are refaced (Refer to 9 - ENGINE - SPECIFICATIONS).

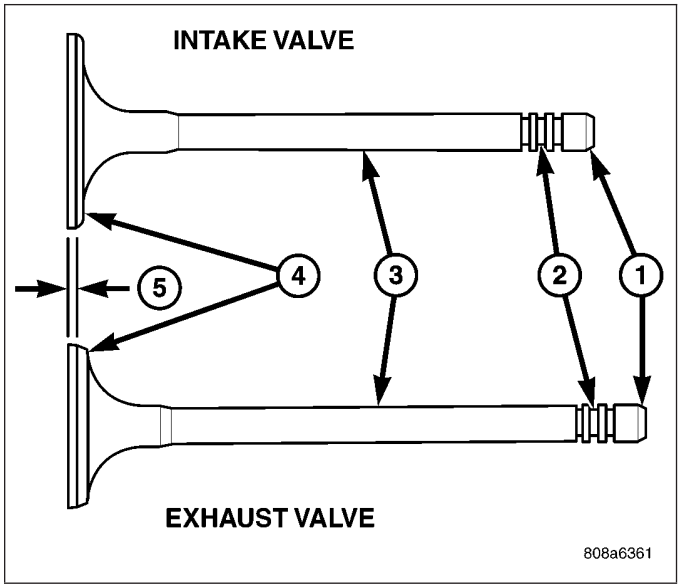

VALVE SEATS

NOTE: When refacing valve seats, it is important that the correct size valve guide pilot be used for reseating stones. A true and complete surface must be obtained.

1. Measure the concentricity of valve seat using dial indicator. Total runout should not exceed 0.051 mm (0.002 inch.) total indicator reading.
2. Inspect the valve seat (3) with Prussian blue to determine where the valve contacts the seat. To do this, coat valve seat (3)**LIGHTLY** with Prussian blue then set valve in place. Rotate the valve with light pressure. If the blue is transferred to the center of valve face (4), contact is satisfactory. If the blue is transferred to top edge of valve face, then lower valve seat with a 15 degree stone. If the blue is transferred to the bottom edge of valve face, then raise valve seat with a 65 degree stone.

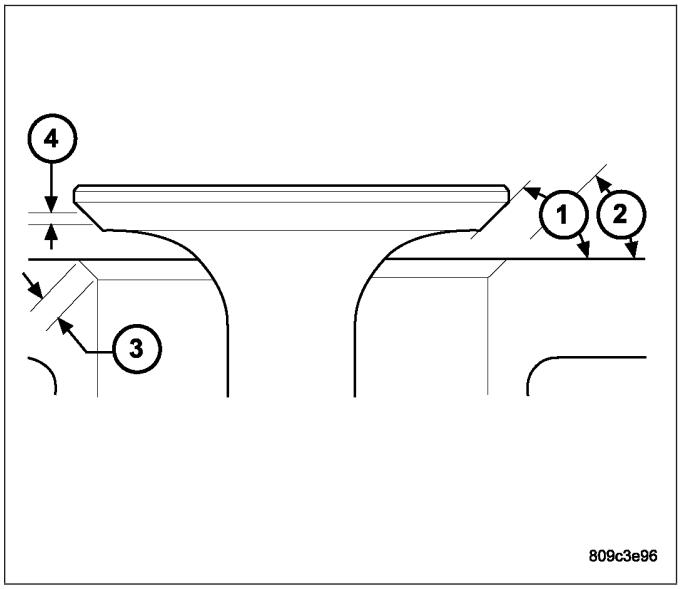

NOTE: Valve seats which are worn or burned can be reworked, provided that correct angle and seat width are maintained. Otherwise cylinder head must be replaced.

3. When seat is properly positioned the width of the intake 1.00 to 1.50 mm (0.0394 to 0.0591 in.) and exhaust seats should be 1.25 to 1.75 mm (0.049 to 0.069 in.).

4. Check the valve spring installed height (4) after refacing the valve and seat.

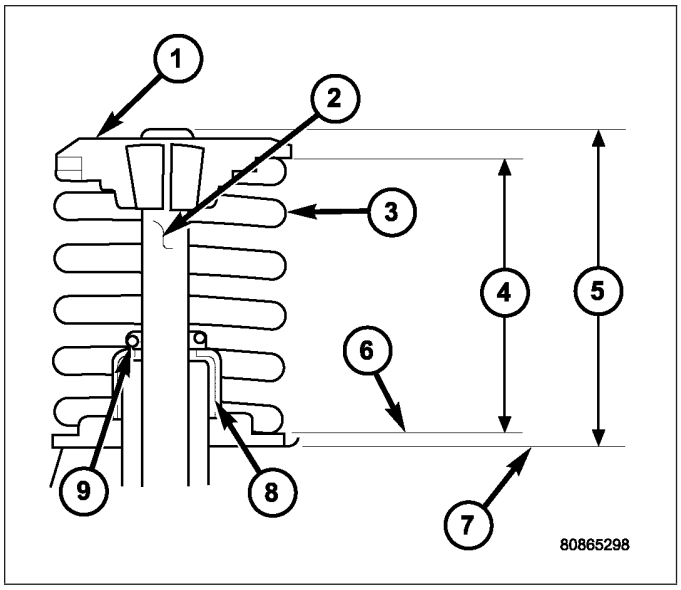

VALVE AND SPRING INSTALLED HEIGHT

1. Coat valve stems (2) with clean engine oil and insert them in cylinder head.
2. If valves or seats have been refaced, check valve tip height (5). If valve tip height (5) for intake valve is greater than 47.836 mm (1.883 in.) or 47.837 mm (1.883 in.) for exhaust valve, grind valve tip until within specifications. Make sure measurement is taken from cylinder head surface to the top of valve stem.
3. Install valve seal/spring seat assembly (8) over valve guides on all valve stems. Ensure that the garter spring (9) is intact around the top of the rubber seal.

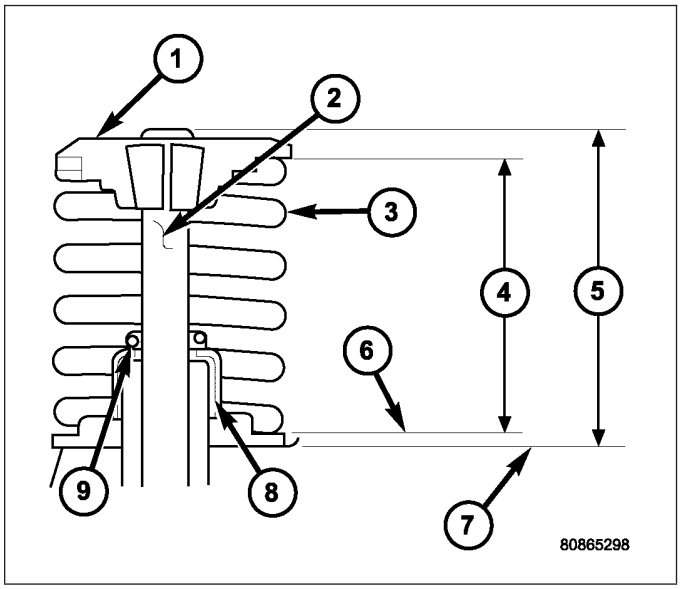

4. Position valve springs (3) and retainer (2) on spring seat (4).
5. Compress valve spring with a valve spring compressor.
6. Install retainer locks (1) and release tool.

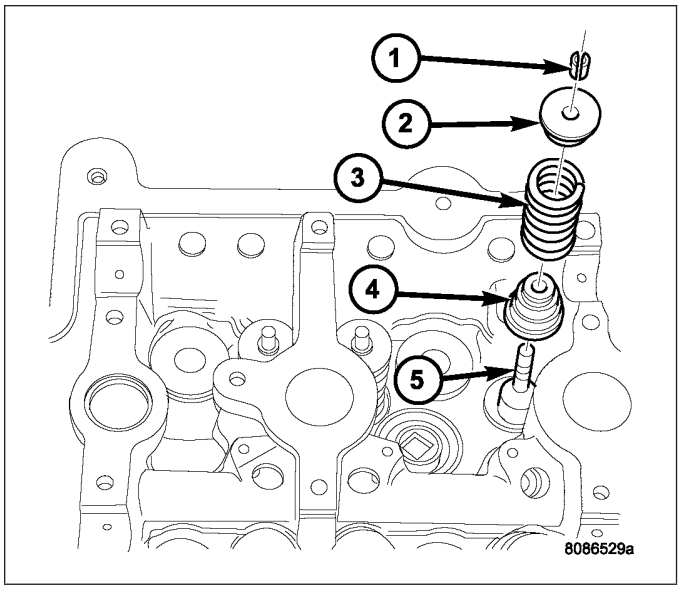

7. If valves and/or seats are refaced, measure the installed height of springs (4). Measurement is taken from top of spring seat to the bottom surface of spring retainer. If height is greater than 38.75 mm (1.5256 in.), install a 0.762 mm (0.030 in.) spacer in head counterbore under the valve spring seat to bring spring height back within specification.

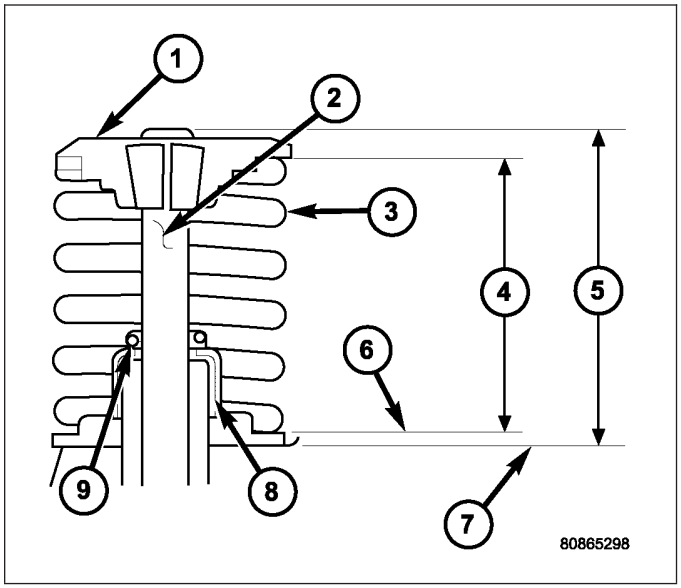

REMOVAL

1. Remove cylinder head(s) (Refer to 9 - ENGINE/ CYLINDER HEAD - REMOVAL).
2. Remove valve spring (3) (Refer to 9 - ENGINE/ CYLINDER HEAD/VALVE SPRINGS - REMOVAL).

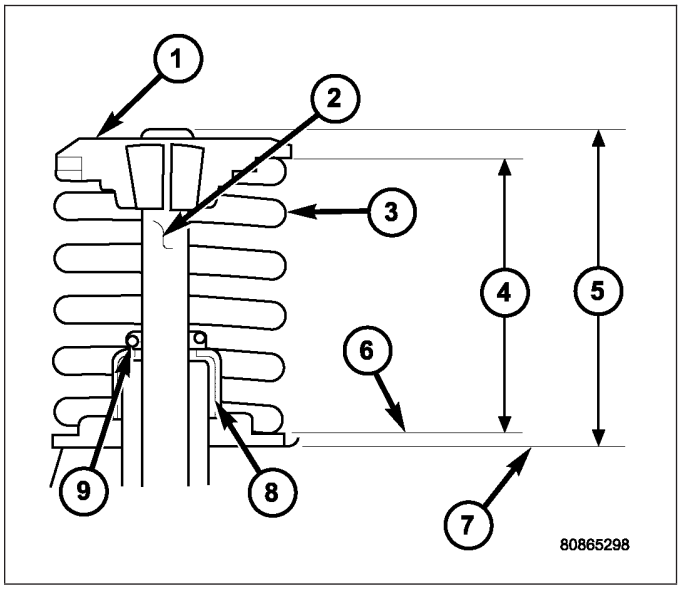

3. Before removing valves (3), **remove any burrs from valve stem retainer lock grooves (2) and stem tip (1) to prevent damage to the valve guides.**
4. Remove valve. Identify each valve to ensure installation in original location.

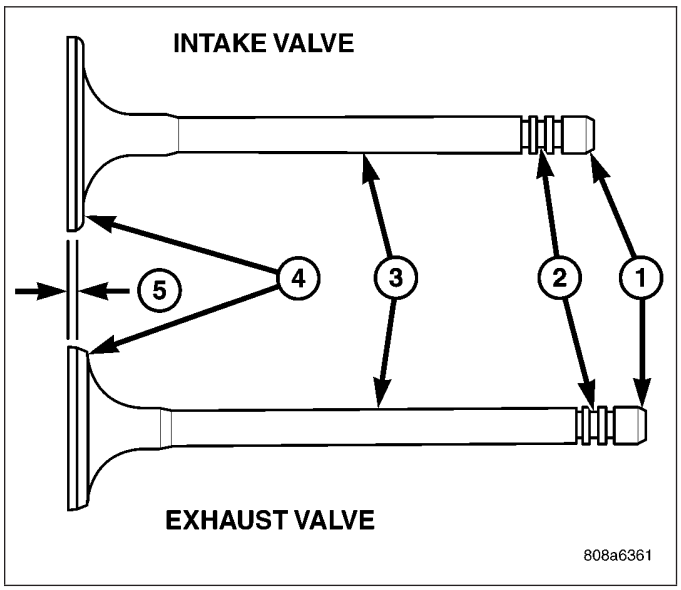

INSPECTION

VALVES

1. Clean and inspect valves thoroughly. Replace burned, warped and cracked valves.
2. Inspect retainer lock grooves for wear or damage (2).
3. Inspect valve face (4) for for wear and pitting.
4. Measure valve stems (3) and margins (5) for wear. For valve specifications, (Refer to 9 - ENGINE - SPECIFICATIONS).

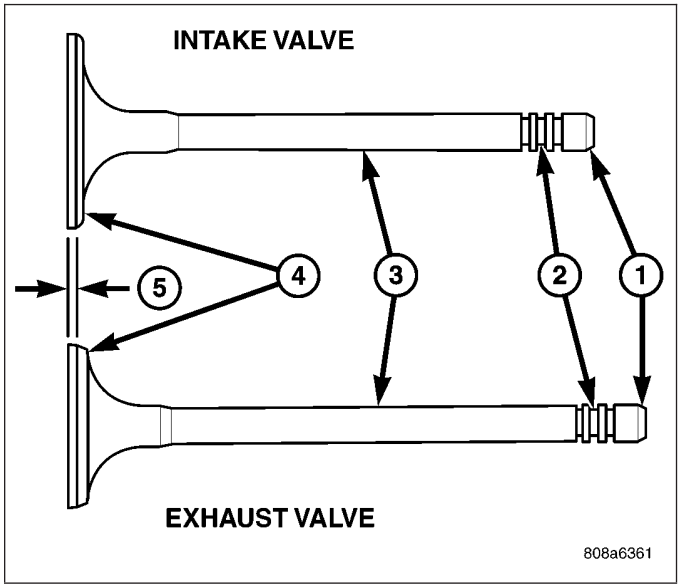

NOTE: Valve stems (3) are chrome plated and should not be polished.

VALVE GUIDES

1. Remove carbon and varnish deposits from inside of valve guides with a reliable guide cleaner.
2. Measure valve stem-to-guide clearance as follows:
3. Install valve (2) into cylinder head so it is 15 mm (0.590 inch.) off the valve seat. A small piece of hose may be used to hold valve in place.
4. Attach dial indicator Tool C-3339 (1) to cylinder head and set it at right angle of valve stem being measured.
5. Move valve to and from the indicator. For clearance specifications, (Refer to 9 - ENGINE - SPECIFICATIONS).

NOTE: If stem-to-guide clearance exceeds specifications, you must measure valve stem. If valve stem is within specifications or if guide is loose in cylinder head, replace cylinder head.

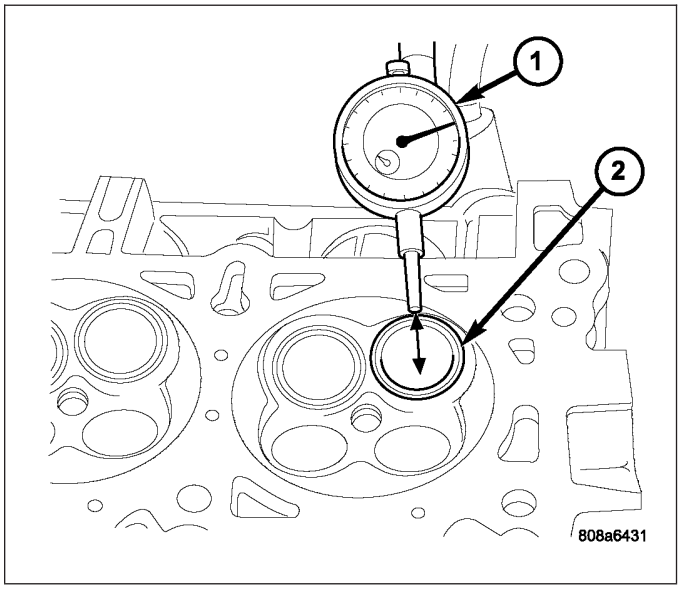

INSTALLATION

1. Coat valve stems (2) with clean engine oil and insert them in cylinder head.
2. If valves or seats have been reground, check valve tip height (5). If valve tip height (5) for intake valve is greater than 47.836 mm (1.883 in.) or 47.837 mm (1.883 in.) for exhaust valve, grind valve tip until within specifications. Make sure measurement is taken from cylinder head surface (7) to the top of valve stem (2).
3. Install valve stem seals (8) (Refer to 9 - ENGINE/CYLINDER HEAD/VALVE STEM SEALS - INSTALLATION).
4. After installing valve stem seals, make sure the garter spring (9) is in place.
5. Install valve spring (3) (Refer to 9 - ENGINE/CYLINDER HEAD/VALVE SPRINGS - INSTALLATION).

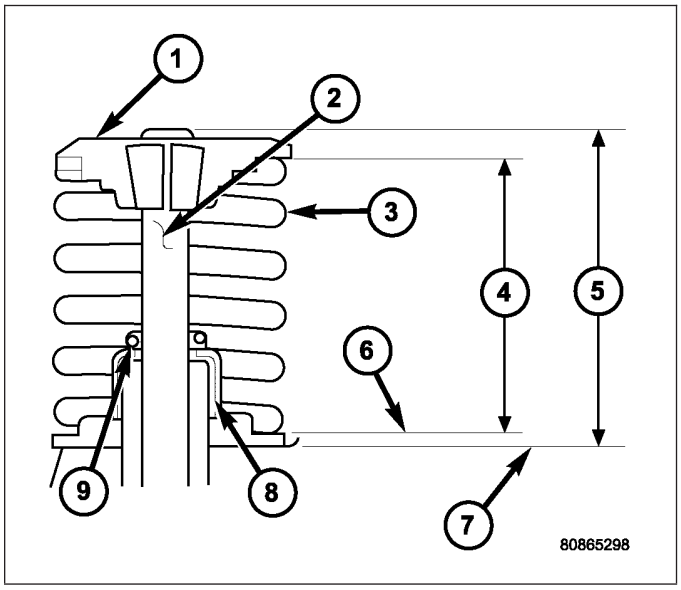

SPRINGS-VALVE

DESCRIPTION

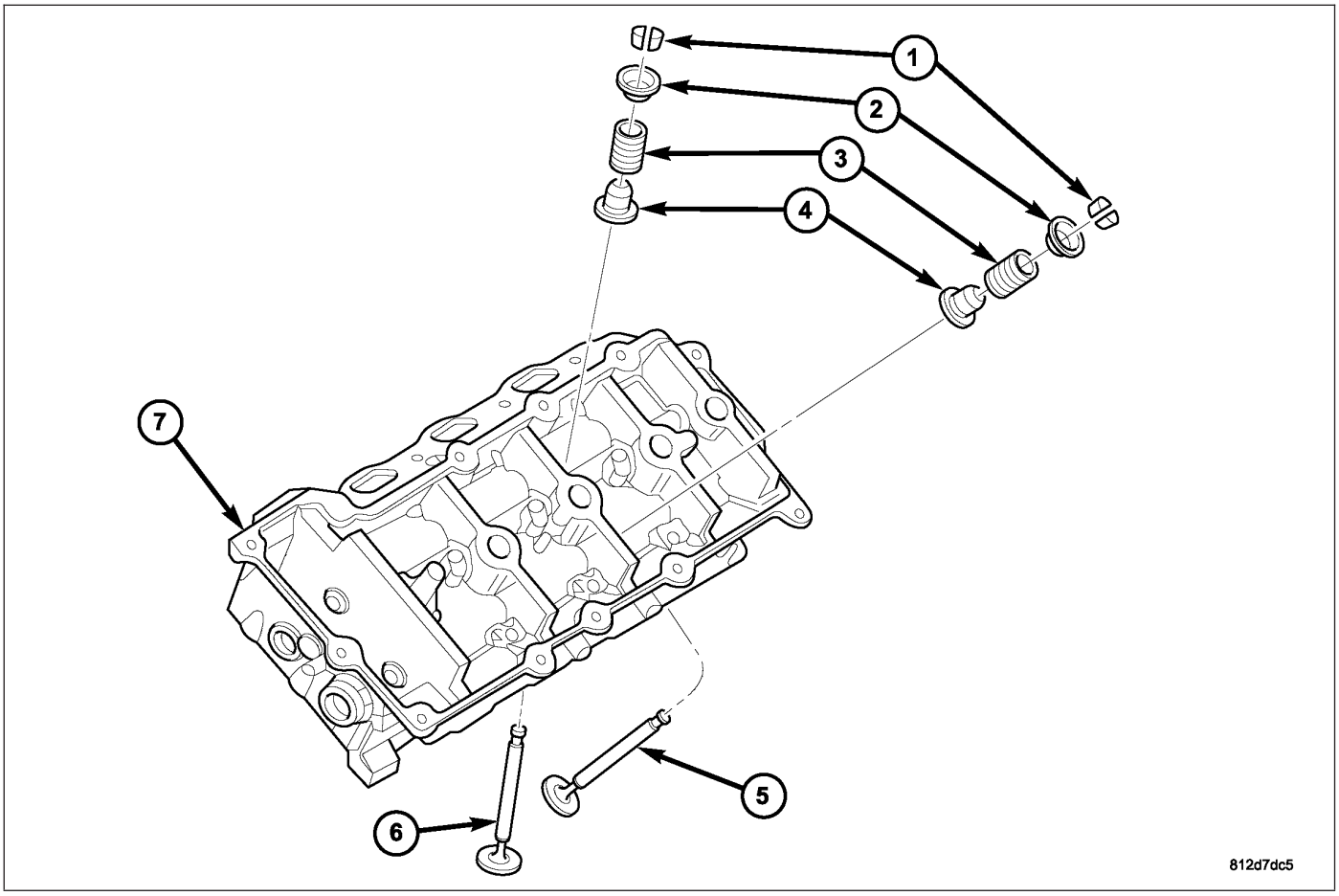

The valve springs (3) are made from high strength, chrome-silicon steel. The springs are common for intake and exhaust applications. The valve spring seat is integral with the valve stem seal (4), which incorporates a garter spring to maintain consistent lubrication control to the valve stem.

REMOVAL

IN VEHICLE

1. Release fuel pressure **before attempting any repairs** (Refer to 14 - FUEL SYSTEM/FUEL DELIVERY - STANDARD PROCEDURE).
2. Disconnect negative battery (1) cable located in trunk.

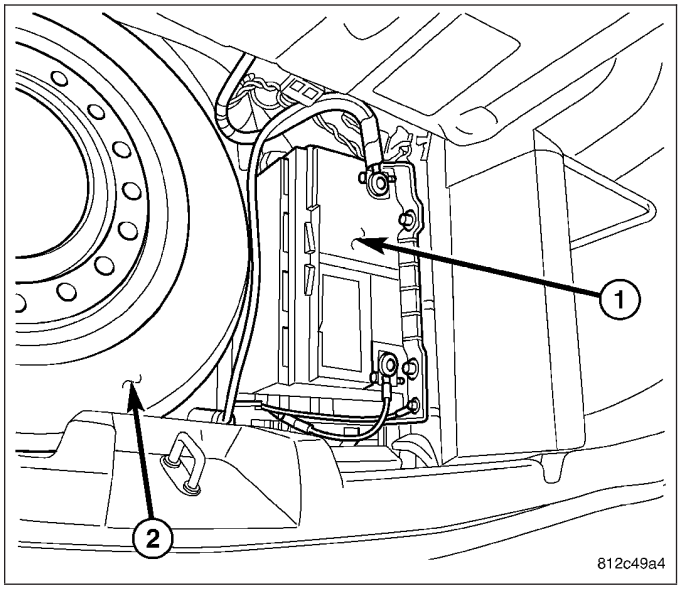

3. Remove air cleaner housing (3) and inlet hose (Refer to 9 - ENGINE/AIR INTAKE SYSTEM/AIR CLEANER HOUSING - REMOVAL).

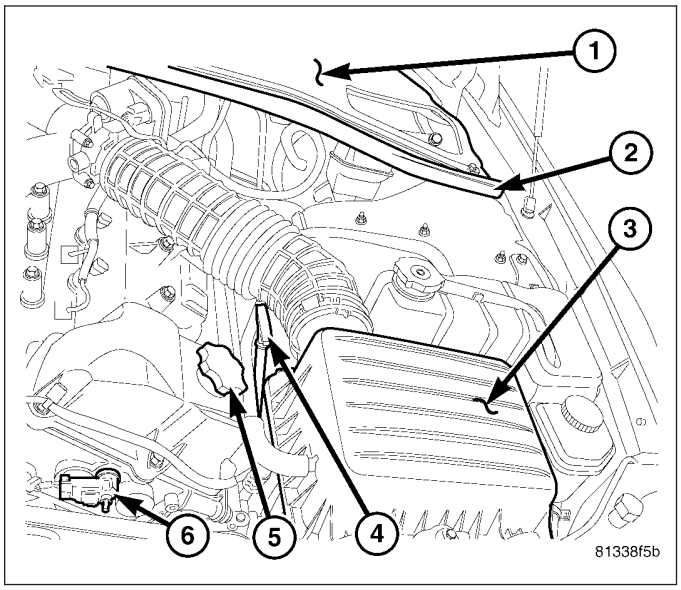

4. Remove upper intake manifold (1) (Refer to 9 - ENGINE/MANIFOLDS/INTAKE MANIFOLD - REMOVAL).
5. Remove cylinder head covers (Refer to 9 - ENGINE/CYLINDER HEAD/CYLINDER HEAD COVER(S) - REMOVAL).
6. Remove crankshaft vibration damper (Refer to 9 - ENGINE/ENGINE BLOCK/VIBRATION DAMPER - REMOVAL).
7. Remove timing chain cover (Refer to 9 - ENGINE/ VALVE TIMING/TIMING BELT / CHAIN COVER(S) - REMOVAL).
8. Remove timing chain (Refer to 9 - ENGINE/VALVE TIMING/TIMING BELT/CHAIN AND SPROCKETS - REMOVAL).
9. Remove camshafts and rocker arms (Refer to 9 - ENGINE/CYLINDER HEAD/CAMSHAFT(S) - REMOVAL).

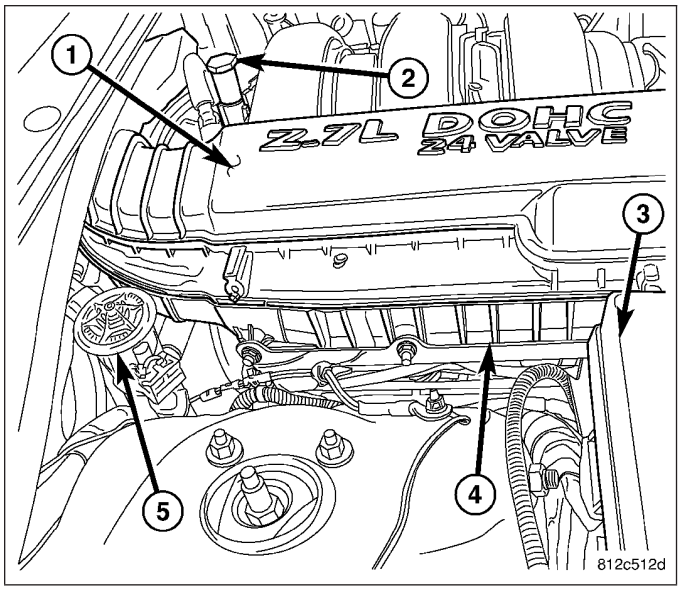

10. With air hose attached to spark plug adapter installed in the cylinder being serviced, apply 620.5–689 kPa (90–100 psi) air pressure. This is to hold valves in place while servicing components.
11. Using Special Tool MD 998772A with adapter 6779, compress valve spring and remove valve locks, retainer, and valve spring.
12. Remove valve stem seal (Refer to 9 - ENGINE/CYLINDER HEAD/VALVE STEM SEALS - REMOVAL).

OFF VEHICLE

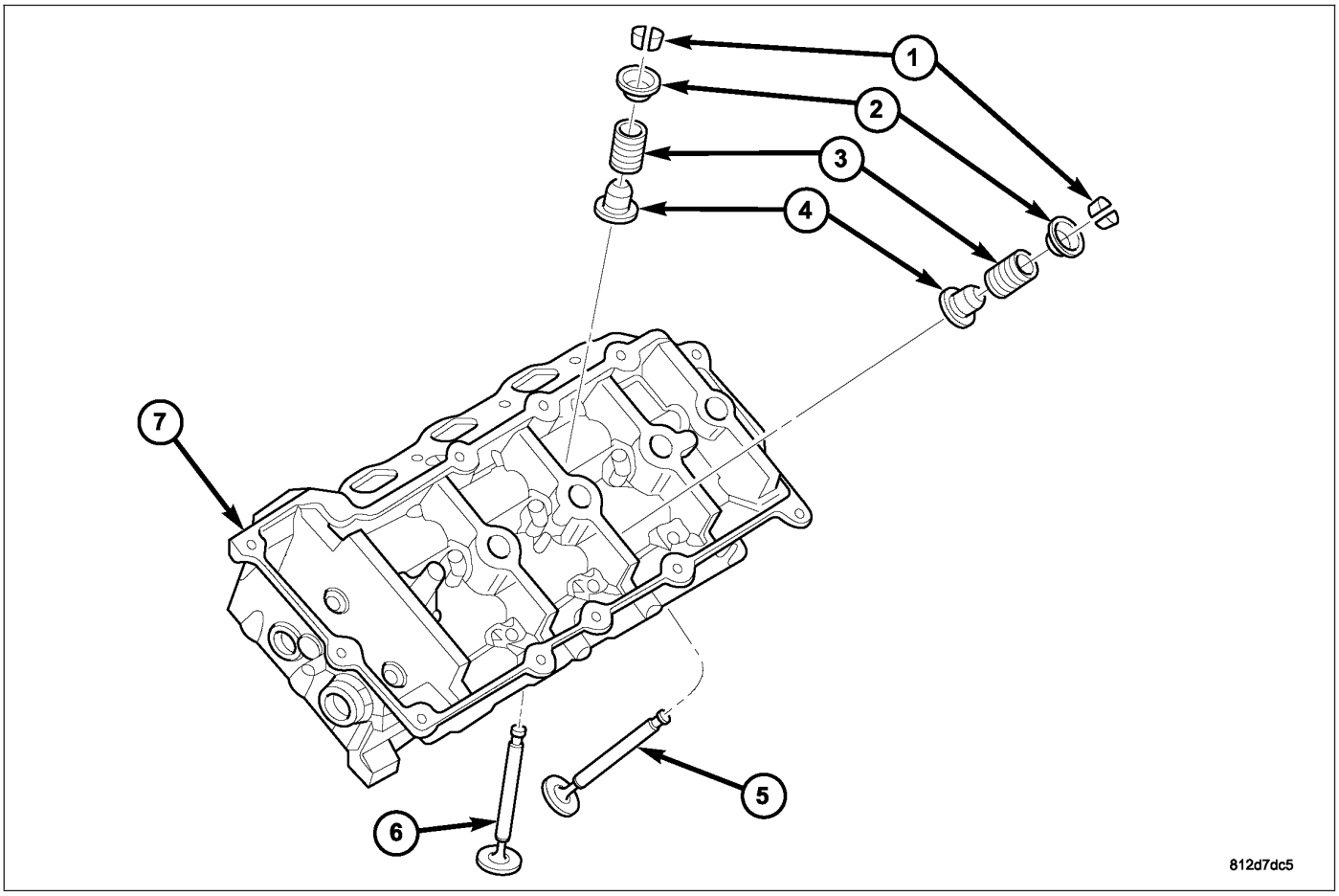

1. With cylinder head removed, compress valve springs (3) using a Special Tool C-3422-D, Valve Spring Compressor.
2. Remove valve retaining locks (1), valve spring retainers (2), valve springs (3).

INSPECTION

Whenever valves have been removed for inspection, reconditioning or replacement, valve springs (1) should be tested . **As an example;** the compression length of a spring to be tested is 38.00 mm (1.496 in.). Turn the table of Tool C-647 (2) until surface is in line with the 38.00 mm (1.496 in.) mark on the threaded stud and the zero mark on the front. Place spring (1) over stud on the table and lift compressing lever to set tone device. Pull on torque wrench until ping is heard. Take reading on torque wrench at this instant. Multiply this reading by two. This will give the spring load at test length. Fractional measurements are indicated on the table for finer adjustments. Refer to Engine Specifications to obtain specified height and allowable tensions (Refer to 9 - ENGINE - SPECIFICATIONS). Replace any springs that do not meet specifications.

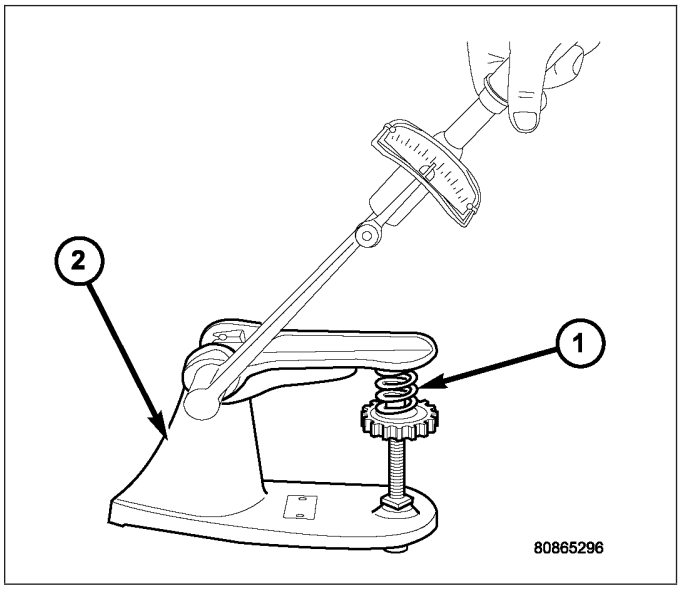

INSTALLATION

IN VEHICLE

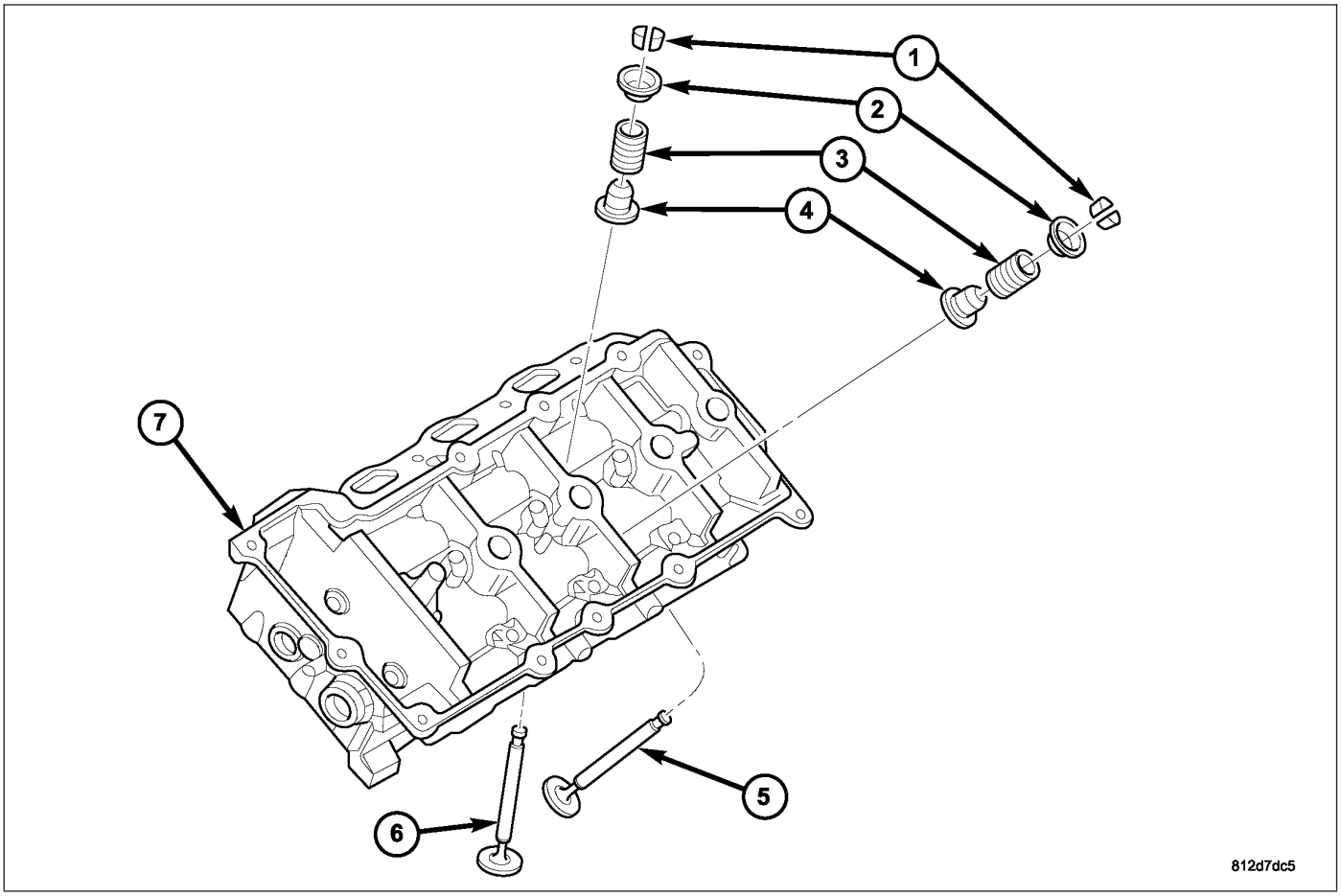

1. The valve stem seal/valve spring seat (4) should be pushed firmly and squarely over the valve guide using the valve stem as guide. **Do Not Force** seal against top of guide. When installing the valve retainer locks (1), compress the spring (3) **only enough** to install locks (1).
2. Follow the same procedure on the remaining cylinders using the firing sequence 1-2-3-4-5-6. **Make sure piston is at TDC on the cylinder that the valve spring is to be removed.**
3. Remove spark plug adapter tool and Special Tool MD 998772A.
4. Install rocker arm(s) (Refer to 9 - ENGINE/CYLINDER HEAD/ROCKER ARMS - INSTALLATION).
5. Install camshafts (Refer to 9 - ENGINE/CYLINDER HEAD/CAMSHAFT(S) - INSTALLATION), timing chain (Refer to 9 - ENGINE/VALVE TIMING/TIMING BELT/CHAIN AND SPROCKETS - INSTALLATION), and timing chain cover (Refer to 9 - ENGINE/VALVE TIMING/TIMING BELT / CHAIN COVER(S) - INSTALLATION).
6. Install cylinder head covers (Refer to 9 - ENGINE/CYLINDER HEAD/CYLINDER HEAD COVER(S) - INSTALLATION).

7. Install upper intake manifold (1) (Refer to 9 - ENGINE/MANIFOLDS/INTAKE MANIFOLD - INSTALLATION).

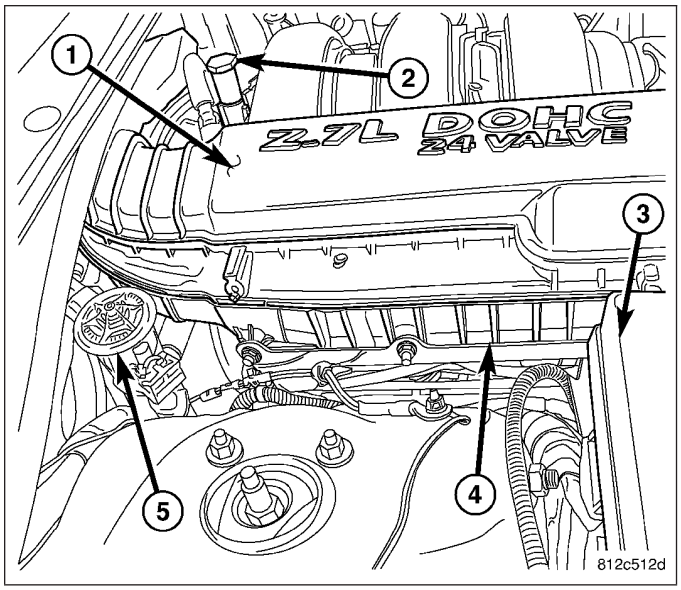

8. Install air cleaner housing (3) and inlet hose (Refer to 9 - ENGINE/AIR INTAKE SYSTEM/AIR CLEANER HOUSING - INSTALLATION).

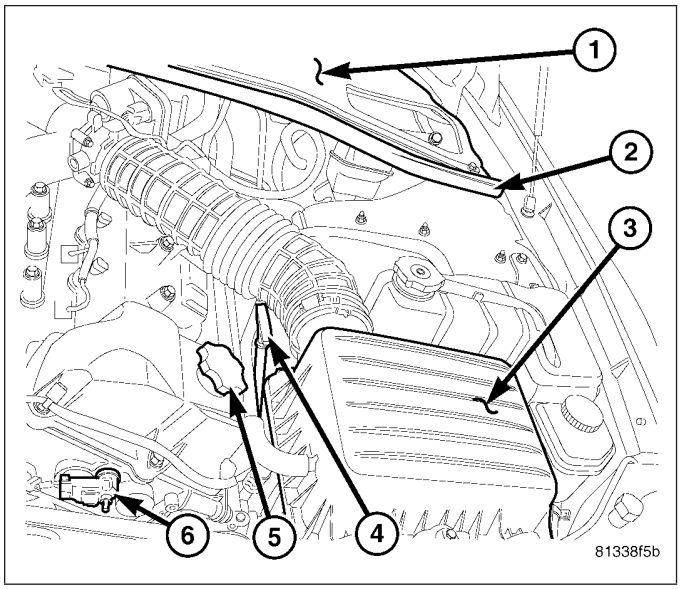

9. Connect negative battery (1) cable.

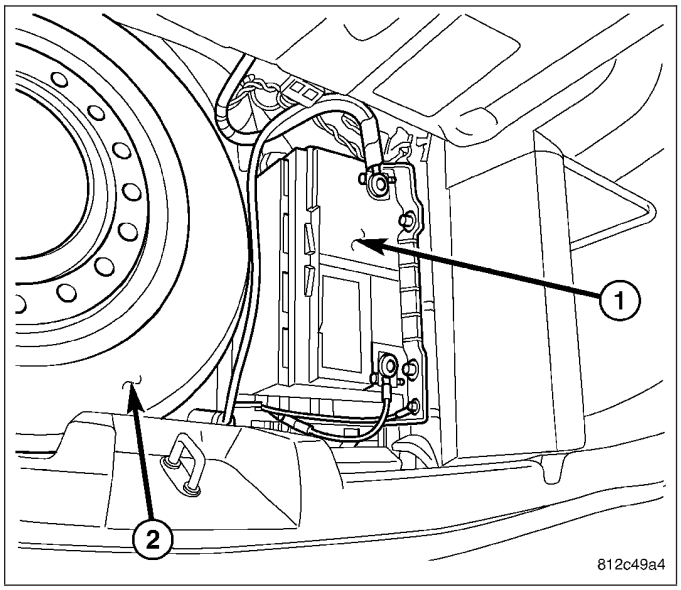

OFF VEHICLE

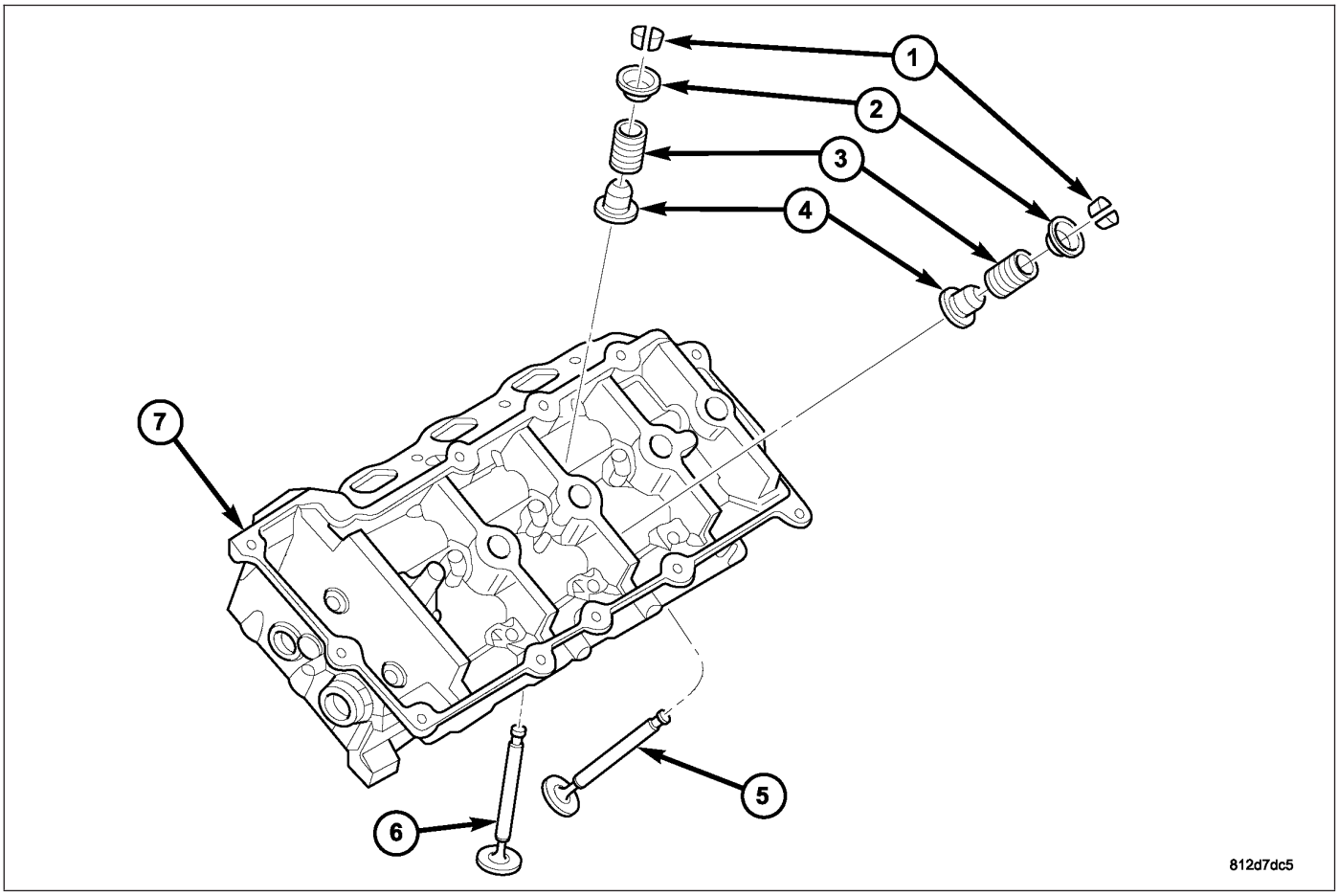

1. If removed, install valve(s) (5)&(6) (Refer to 9 - ENGINE/CYLINDER HEAD/INTAKE/EXHAUST VALVES & SEATS - INSTALLATION).
2. If valves or seats have been reground, check valve tip height (5). If valve tip height for intake valve is greater than 47.836 mm (1.883 in.) or 47.837 mm (1.883 in.) for exhaust valve, grind valve tip until within specifications. Make sure measurement is taken from cylinder head surface to the top of valve stem.

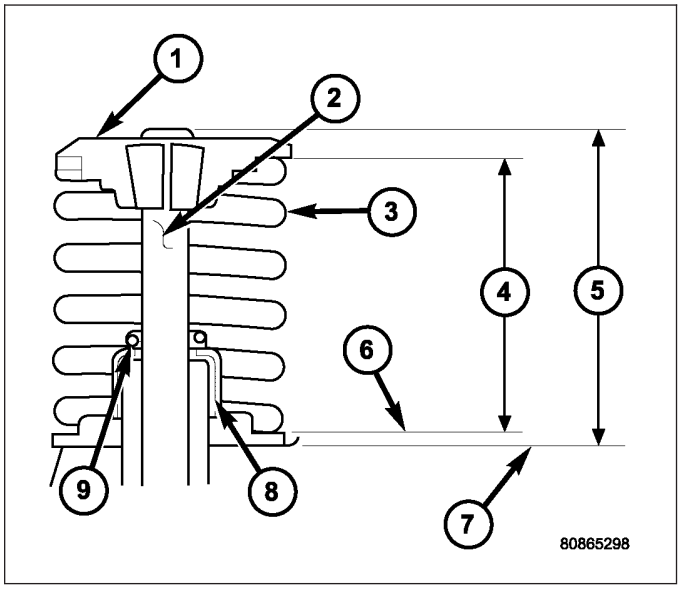

3. Install valve seal/spring seat assembly (4) over valve guides on all valve stems (5).

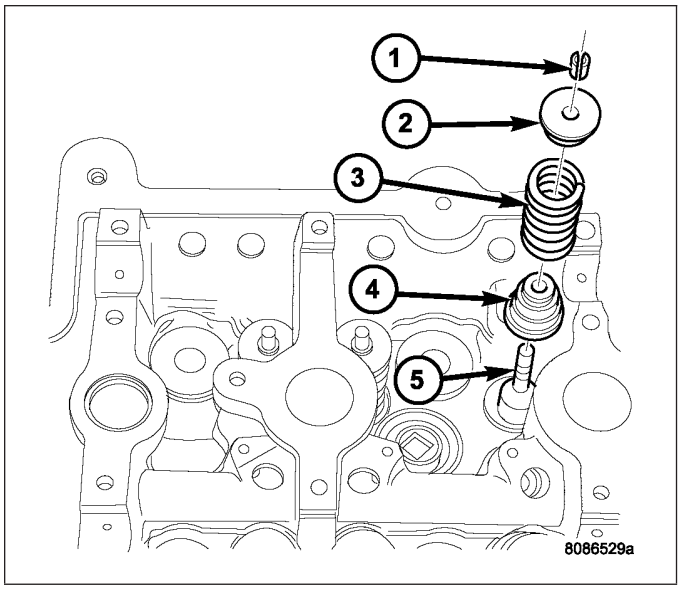

NOTE: Ensure that the garter spring (9) is intact around the top of the rubber seal. Install valve springs (3) , valve retainers (1).

4. Compress valve springs with a valve spring compressor install locks and release tool. **If valves and/or seats are reground, measure the installed height of springs (4), make sure measurements are taken from top of spring seat (6) to the bottom surface of spring retainer (1).** If height is greater than 38.75 mm (1.5256 in.), install a 0.762 mm (0.030 in.) spacer in head counterbore under the valve seal/spring seat (8) to bring spring height back within specification.

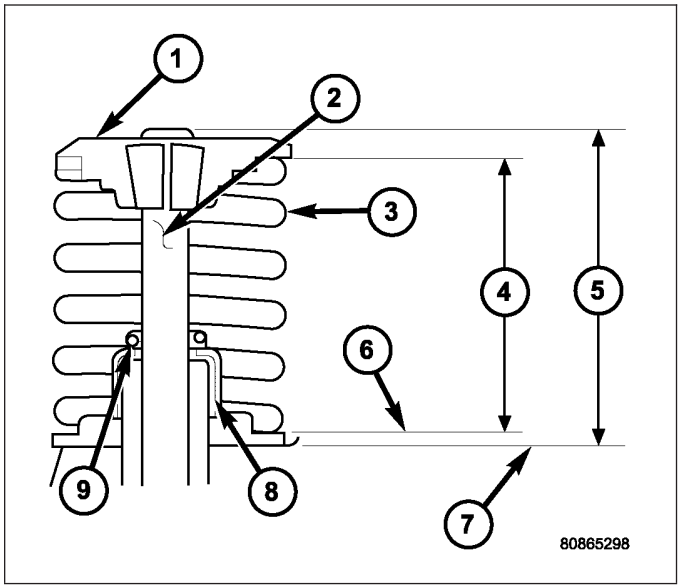

SEALS-VALVE STEM

REMOVAL

1. Remove valve spring (3) (Refer to 9 - ENGINE/ CYLINDER HEAD/VALVE SPRINGS - REMOVAL).

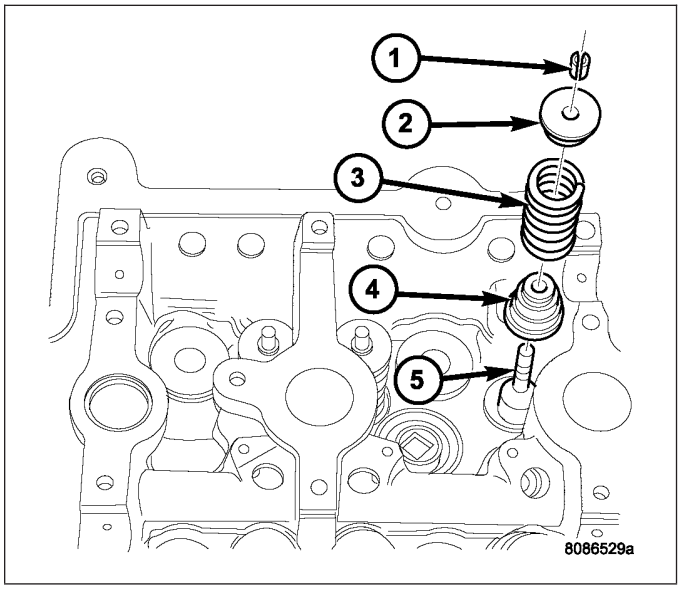

2. Remove valve stem seal by using a valve seal tool (1).

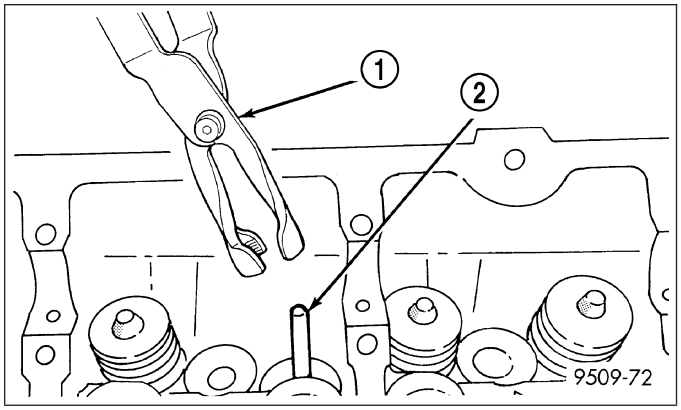

INSTALLATION

1. The valve stem seal/valve spring seat (4) should be pushed firmly and squarely over the valve guide using the valve stem (5) as guide. **Do Not Force** seal against top of guide.
2. Install valve spring (3) (Refer to 9 - ENGINE/CYL-INDER HEAD/VALVE SPRINGS - INSTALLATION).

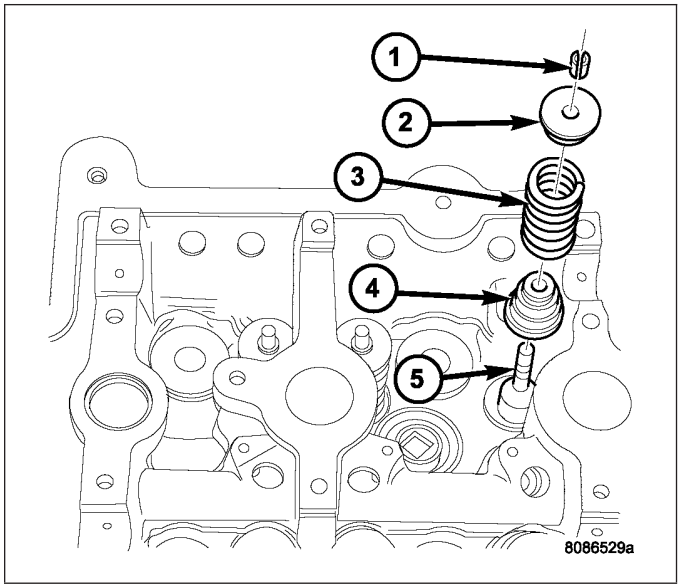

ADJUSTERS-HYDRAULIC LASH

DIAGNOSIS AND TESTING

HYDRAULIC LASH ADJUSTER NOISE DIAGNOSIS

Proper noise diagnosis is essential in locating the source of a NVH complaint. Locating a lash adjuster (tappet) type noise can sometimes be difficult. As a result, an initial misdiagnosis may occur.

Refer to LASH ADJUSTER (TAPPET) NOISE CHART indicating possible lash adjuster (tappet) noise sources and possible sources that could lead to a misdiagnosis.

Refer to LASH ADJUSTER (TAPPET) NOISE CHART for possible causes and correction of a lash adjuster (tappet) type noise.

LASH ADJUSTER (TAPPET) NOISE CHART

POSSIBLE CAUSES	CORRECTION
1. Engine oil level—too high or too low. This may cause aerated oil to enter the adjusters and cause them to be spongy.	1. Check and correct engine oil level.
2. Insufficient running time after rebuilding cylinder head.	2. Low speed running of up to 1 hour may be required to fully evacuate trapped air from the valve train system. During this time, turn engine off and let set for a few minutes before restarting. Repeat this several times after engine has reached normal operating temperature.
3. Air trapped in lash adjuster (after 1 hour run time).	3. See below: (a) Check lash adjusters for sponginess while installed in cylinder head. Depress part of rocker arm over adjuster. Normal adjusters should feel very firm. Very spongy adjusters can be bottomed out easily. (b) If lash adjuster(s) are still spongy, replace with new adjuster/rocker arm assembly.
4. Low oil pressure	4. See below: (a) Check and correct engine oil level. (b) Check engine oil pressure. (c) Check for excessive bearing clearance and correct. (d) Check for worn oil pump.
5. Oil passage to cylinder head(s) plugged with debris.	5. Check cylinder head oil passages and cylinder head gasket restrictor for blockage. Clean or replace as necessary.
6. Worn valve guide(s).	6. Ream guide(s) and replace valve(s) with oversize valves and seal(s).
7. Air ingested into oil due to broken or cracked oil pump pickup tube.	7. Inspect pickup tube and replace as necessary.
8. Collapsed lash adjuster due to debris ingestion.	8. Clean debris from engine and replace lash adjuster(s).

REMOVAL

1. Remove cylinder head cover(s). (Refer to 9 - ENGINE/CYLINDER HEAD/CYLINDER HEAD COVER(S) - REMOVAL)
2. Remove rocker arm(s). (Refer to 9 - ENGINE/CYLINDER HEAD/ROCKER ARMS - REMOVAL)

CAUTION: If lash adjusters and rocker arms are to be reused, always mark position for reassembly in their original positions.

3. Remove lash adjuster(s).

INSTALLATION

1. Install hydraulic lash adjuster making sure adjusters are at least partially full of oil. This can be verified by little or no plunger travel when lash adjuster is depressed.
2. Install rocker arm(s) (Refer to 9 - ENGINE/CYLINDER HEAD/ROCKER ARMS - INSTALLATION) and cylinder head covers (Refer to 9 - ENGINE/CYLINDER HEAD/CYLINDER HEAD COVER(S) - INSTALLATION).

ARMS-ROCKER

DESCRIPTION

The rocker arms are composed of steel stampings with an integral roller bearing (3). The rocker arms incorporate a 0.5 mm (0.0197 in.) oil hole (2) in the lash adjuster socket (1) for roller/camshaft lobe lubrication.

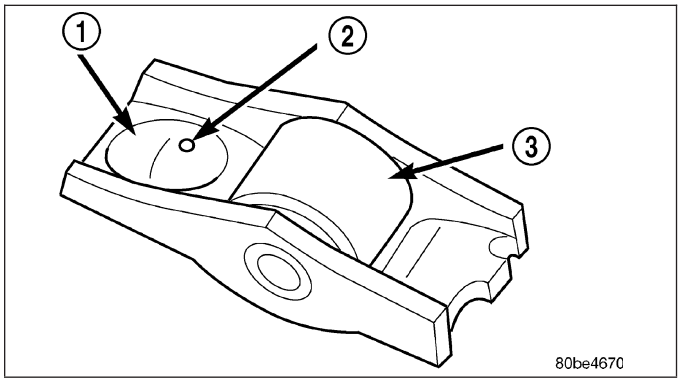

REMOVAL

1. Remove cylinder head cover(s). (Refer to 9 - ENGINE/CYLINDER HEAD/CYLINDER HEAD COVER(S) - REMOVAL)

CAUTION: Always rotate engine by turning the crankshaft. Failure to do so will result in valve and/or piston damage.

2. Rotate engine until the cam lobe is on its base circle (heel), on the rocker arm being removed.

CAUTION: Depress valve spring only enough to remove rocker arm.

3. Using Special Tools 8215 (1) and 8216 Adaptor (2) and a 3/8″ ratchet (3), depress valve spring only enough to release tension on rocker arm.
4. Remove rocker arm from cylinder head.

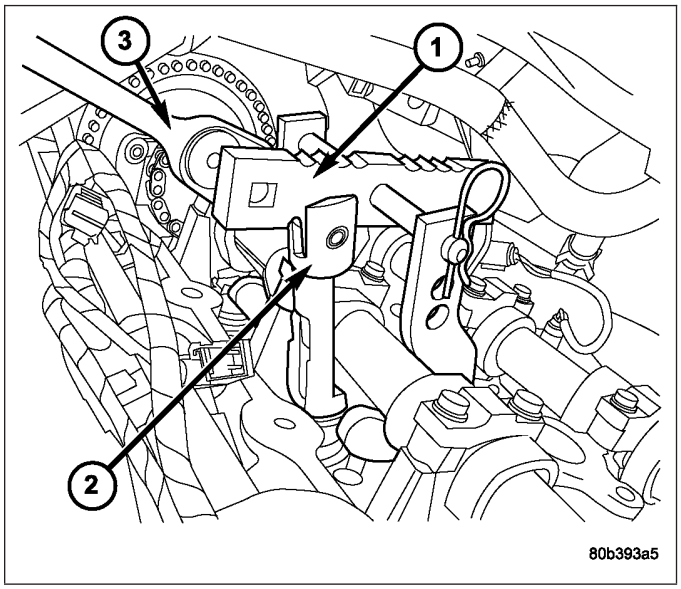

CAUTION: If rocker arms are to be reused, identify position of rocker arms for reassembly in their original positions.

5. Repeat procedure for each rocker arm removed.
6. Inspect the rocker arm for wear or damage. (Refer to 9 - ENGINE/CYLINDER HEAD/ROCKER ARMS - INSPECTION).

INSPECTION

Inspect the cam follower assembly for wear or damage. Replace as necessary.

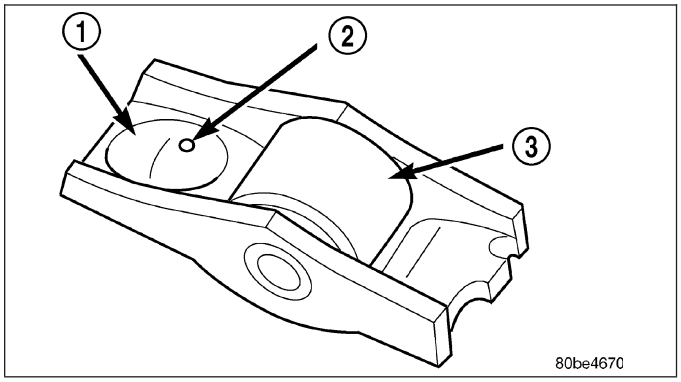

INSTALLATION

1. Lubricate rocker arms with clean engine oil before installation.
2. Rotate engine until cam lobe is on its base circle (heel) of rocker arm being installed.

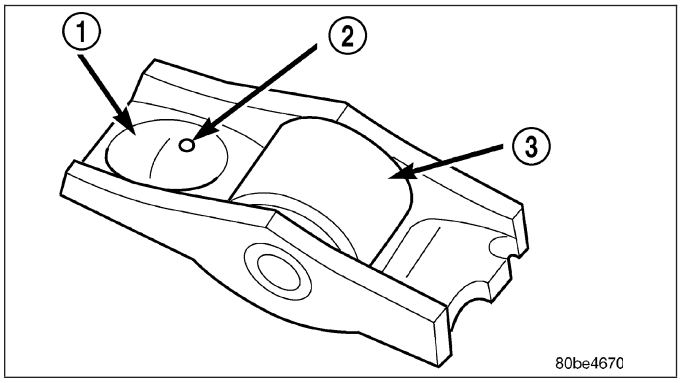

3. Using Special Tools 8215-A (1), 8216-A adaptor (2), and a 3/8″ Drive Ratchet (3),depress valve spring only enough to install rocker arm.
4. Install rocker arm in original position (if reused) over valve and lash adjuster. Release tension on valve spring.

NOTE: Inspect rocker arm for proper engagement into lash adjuster and valve tip.

5. Repeat procedure for each rocker arm being installed.
6. Install cylinder head cover(s). Refer to procedure in this section.

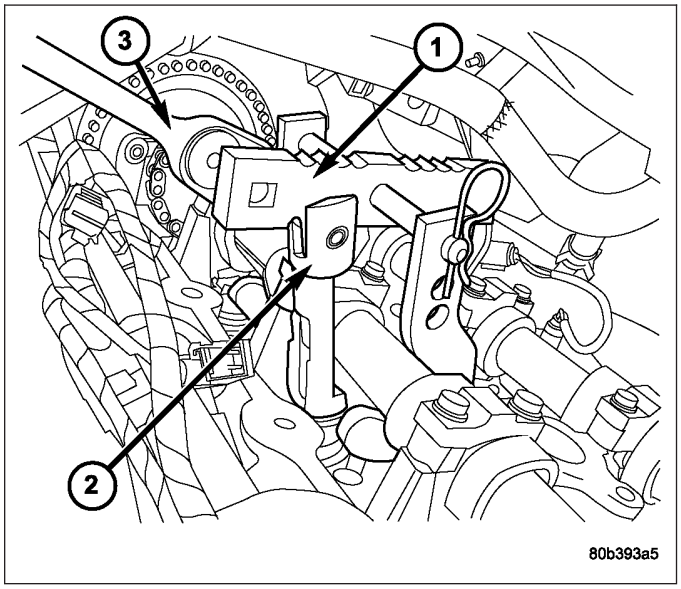

ENGINE BLOCK

DESCRIPTION

The cylinder block (6) is made of heat treated aluminum with cast-in-place iron liners. The block is a closed deck design with the right bank forward. To provide high rigidity and improved NVH, the block has cast-in contours and ribs, along with powdered metal main caps (2) each with 6 bolts 4 vertical (1) and 2 horizontal (5). The engine is equipped with a windage tray mounted to the main caps.

The block design allows coolant flow between the cylinder bores and an internal coolant by-pass to the thermostat.

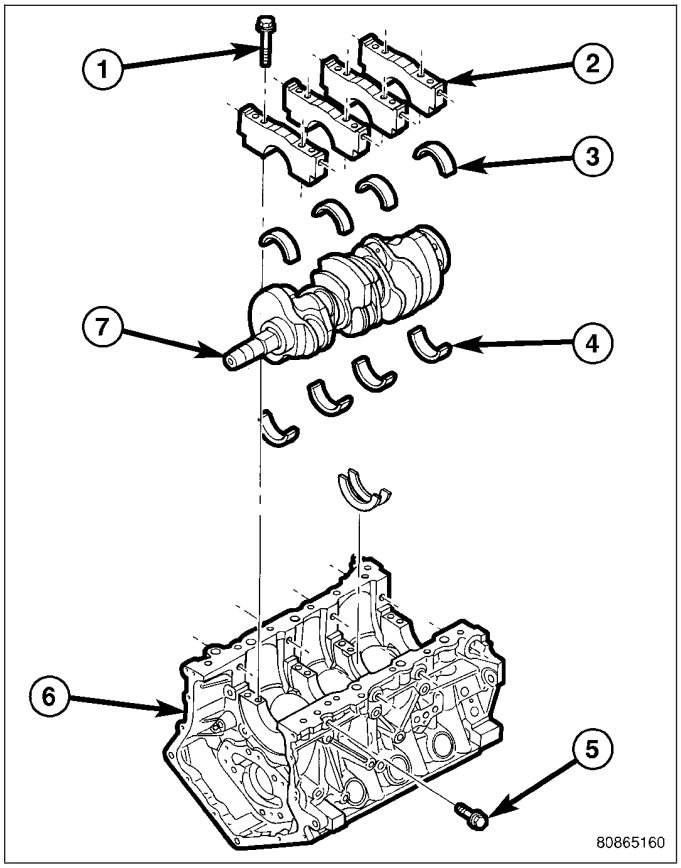

STANDARD PROCEDURE - CYLINDER BORE HONING

1. Used carefully, the cylinder bore resizing hone, recommended tool C-823 or equivalent, equipped with 220 grit stones, is the best tool for this honing procedure. In addition to deglazing, it will reduce taper and out-of-round as well as removing light scuffing, scoring or scratches. Usually a few strokes will clean up a bore and maintain the required limits.
2. Deglazing of the cylinder walls may be done using a cylinder surfacing hone, recommended tool C-3501 or equivalent, equipped with 280 grit stones, if the cylinder bore is straight and round. 20–60 strokes depending on the bore condition, will be sufficient to provide a satisfactory surface. Use a light honing oil. **Do not use engine or transmission oil, mineral spirits or kerosene.** Inspect cylinder walls after each 20 strokes.

3. Honing should be done by moving the hone up and down fast enough to get a cross-hatch pattern (1). When hone marks **intersect** at 40-60 degrees (2), the cross hatch angle is most satisfactory for proper seating of rings.

NOTE: A controlled hone motor speed between 200–300 RPM is necessary to obtain the proper cross-hatch angle. The number of up and down strokes per minute can be regulated to get the desired 40–60 degree angle (2). Faster up and down strokes increase the cross-hatch angle.

4. After honing, it is necessary that the block be cleaned again to remove all traces of abrasive.

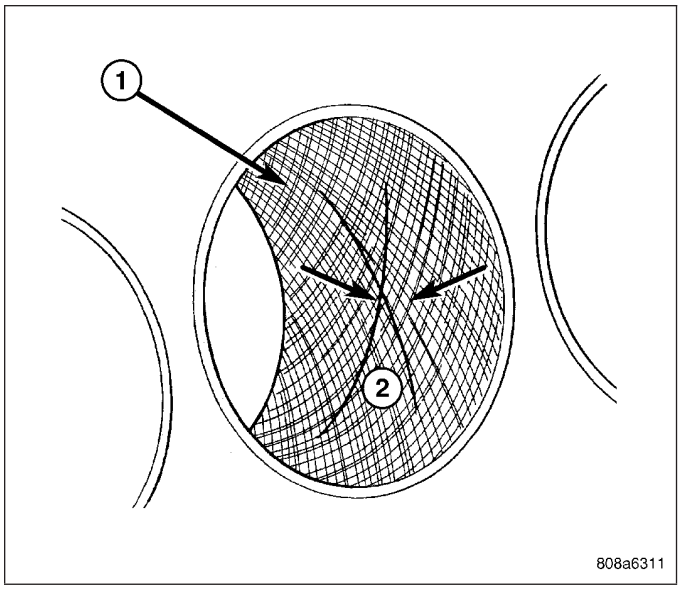

CAUTION: Ensure all abrasives are removed from engine parts after honing. It is recommended that a solution of soap and hot water be used with a brush and the parts then thoroughly dried. The bore can be considered clean when it can be wiped clean with a white cloth and cloth remains clean. Oil the bores after cleaning to prevent rusting.

CLEANING

Clean cylinder block thoroughly using a suitable cleaning solvent.

INSPECTION

ENGINE BLOCK

1. Clean cylinder block thoroughly and check all core hole plugs for evidence of leaking.
2. If new core plugs are to be installed, (Refer to 9 - ENGINE - STANDARD PROCEDURE - ENGINE CORE AND OIL GALLERY PLUGS).
3. Examine block and cylinder bores for cracks or fractures.
4. Check block deck surfaces for flatness. Deck surface must be within service limit of 0.1 mm (0.004 in.).

CYLINDER BORE

NOTE: The cylinder bores should be measured at normal room temperature, 21°C (70°F).

The cylinder walls should be checked for out-of-round and taper with Tool C119 or equivalent (Refer to 9 - ENGINE - SPECIFICATIONS). If the cylinder walls are badly scuffed or scored, the cylinder block should be replaced, and new pistons and rings fitted.

Measure the cylinder bore at three levels in directions A and B. Top measurement should be 10 mm (3/8 in.) down and bottom measurement should be 10 mm (3/8 in.) up from bottom of bore. (Refer to 9 - ENGINE - SPECIFICATIONS).

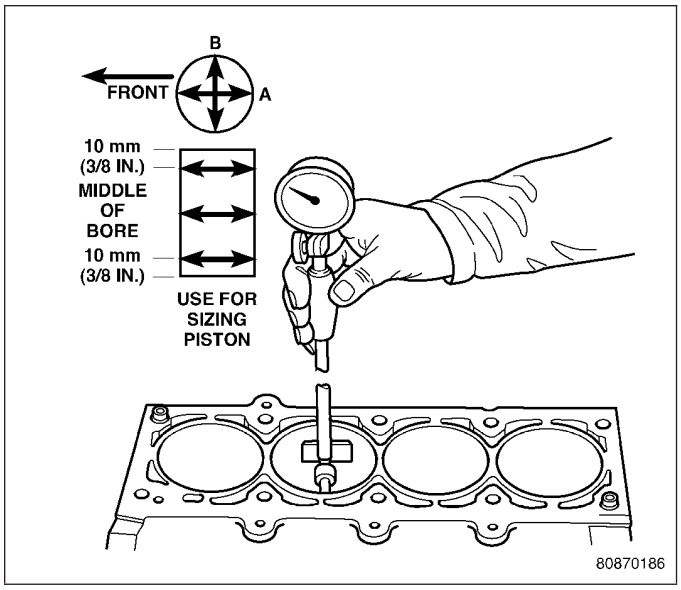

BEARINGS-CONNECTING ROD

STANDARD PROCEDURE

CONNECTING ROD AND BEARING FITTING

Fit all connecting rods on one bank until complete.

The bearing caps are not interchangeable and should be marked at removal to ensure correct assembly.

CAUTION: Do not use a punch to mark rods as rod damage may occur.

CAUTION: Care must be taken not to damage the fractured rod and cap joint face surfaces as engine damage may occur.

The bearing shells must be installed with the tangs inserted into the machined grooves in the rods and caps. Also, assure that the hole in upper bearing half aligns with oil squirt hole in rod. Install cap with the tangs on the same side as the rod.

CAUTION: Assure that hole in upper bearing half aligns with hole in connecting rod as engine damage may occur.

Limits of taper on any crankshaft journals should be held to 0.015 mm (0.0006 in.). Limits of out-of-round on any crankshaft journal should be held to 0.010 mm (0.0004 in.). Bearings are available 0.025 mm (0.001 in.) and 0.250 mm (0.010 in.) undersize. **Install the bearings in pairs. Do not use a new bearing half with an old bearing half. Do not file the rods or bearing caps.**

1. For measuring Main Bearing Clearance and Connecting Rod Bearing Clearance use plastigage. For more information on using plastigage (Refer to 9 - ENGINE - STANDARD PROCEDURE). Refer to Engine Specifications for bearing clearance specifications (Refer to 9 - ENGINE - SPECIFICATIONS).

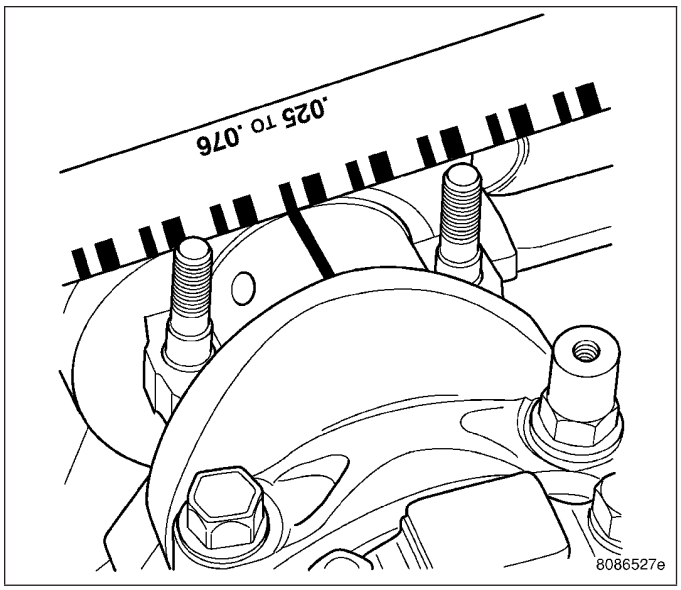

CONNECTING ROD BOLTS

NOTE: The connecting rod bearing cap bolts must be examined before reuse. If the threads are necked down due to stretching, the bolt(s) must be replaced.

NOTE: Connecting rod bolts are retained in the rod cap with a light press fit. If bolts are to be removed, use a hammer and punch to drive bolts from connecting rod cap using care not to damage fractured cap surface.

1. Examine connecting rod bolt for stretching. Stretching can be checked by holding a scale or straight edge against the threads. If all the threads do not contact the scale (2) the bolt should be replaced.
2. Before installing the bolts, lubricate the threads with engine oil.
3. Install bolts finger tight. Then alternately torque each nut to assemble the cap properly.
4. Tighten the nuts to specification (Refer to 9 - ENGINE - SPECIFICATIONS).

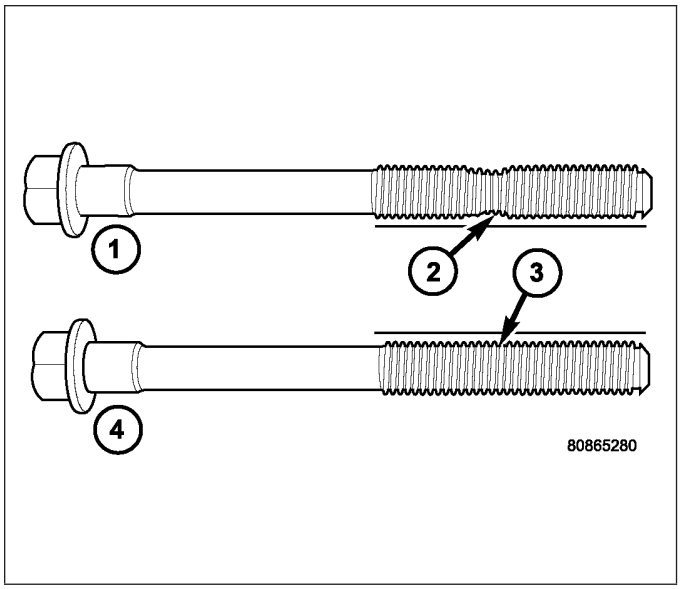

CONNECTING ROD SIDE CLEARANCE

1. Mount a dial indicator to a stationary point on engine. Locate probe perpendicular to and resting against the connecting rod cap being checked. Move connecting rod all the way to rear of its travel. Zero the dial indicator. Move connecting rod forward to limit of travel and read the dial indicator. Compare measurement to specification listed in engine specifications (Refer to 9 - ENGINE - SPECIFICATIONS). Repeat procedure for each connecting rod. Turn crankshaft for connecting rod accessibility.

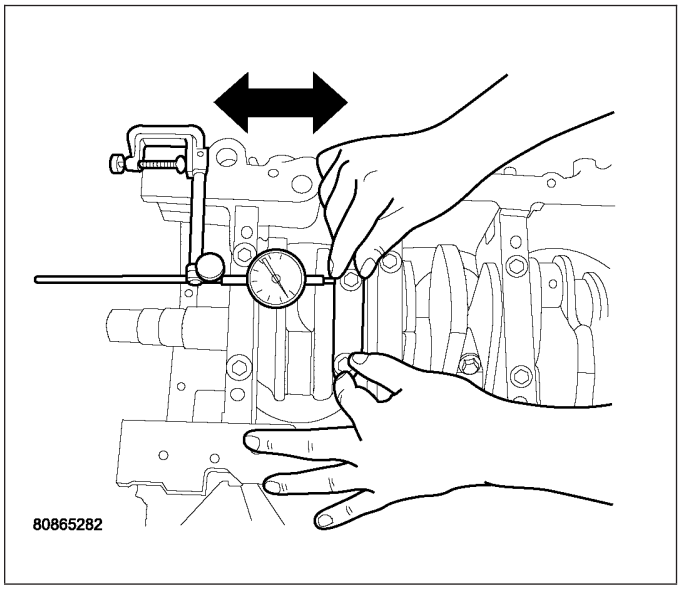

CRANKSHAFT

DESCRIPTION

The crankshaft (7) is constructed of a forged micro alloy steel. The six throw, nine counterweight crankshaft is supported by four select fit main bearings with the number three serving as the thrust washer location. The select fit identification markings will be on the rear side of the number nine (rearmost) counterweight. The six separate connecting rod throws are an even-firing design which reduces torque fluctuations while a vibration damper is used to control torsional vibration.

The crankshaft oil seals are a one piece design. The front seal is retained by the timing chain cover, and the rear seal is part of a housing that attaches to the cylinder block.

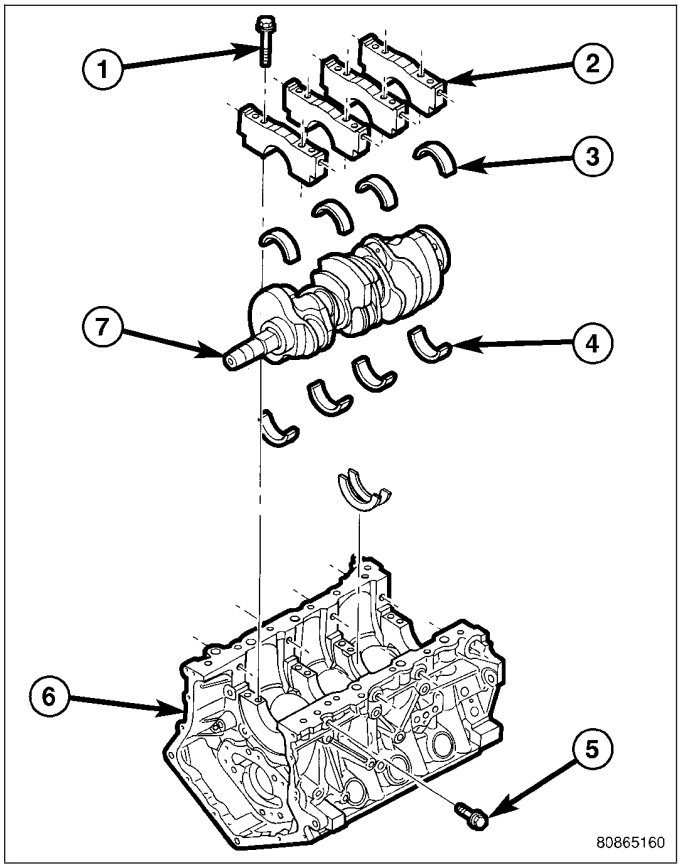

STANDARD PROCEDURE - CRANKSHAFT END PLAY

1. Mount a dial indicator to a stationary point at front of engine. Locate the probe perpendicular against nose of crankshaft.
2. Move crankshaft all the way to the rear of its travel.
3. Zero the dial indicator.
4. Move crankshaft all the way to the front and read the dial indicator. For crankshaft end play clearances (Refer to 9 - ENGINE - SPECIFICATIONS).

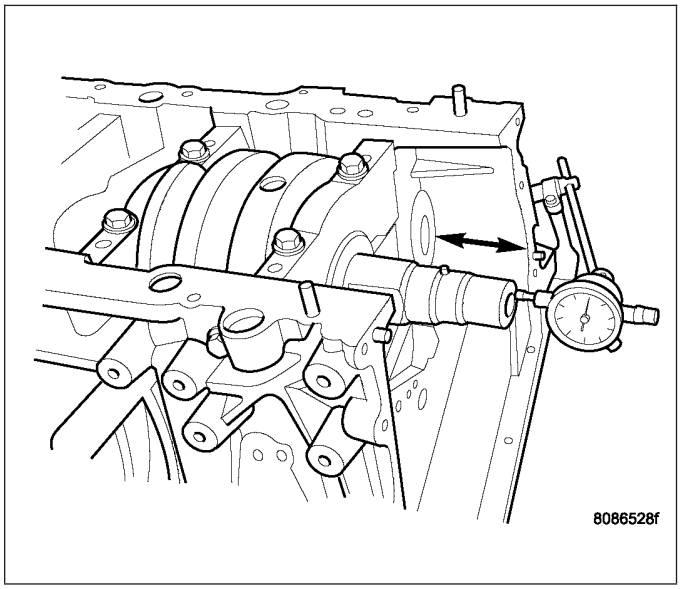

REMOVAL

1. Drain engine oil (5) and remove oil filter (3).
2. Remove engine from vehicle (Refer to 9 - ENGINE - REMOVAL).
3. Mount engine on an engine stand.
4. Remove oil pan and oil pick-up tube (Refer to 9 - ENGINE/LUBRICATION/OIL PAN - REMOVAL).
5. Remove idler pulley bracket for accessory drive belt.
6. Remove upper intake manifold (Refer to 9 - ENGINE/MANIFOLDS/INTAKE MANIFOLD - REMOVAL).
7. Remove cylinder head covers (Refer to 9 - ENGINE/CYLINDER HEAD/CYLINDER HEAD COVER(S) - REMOVAL).
8. Remove timing chain cover (Refer to 9 - ENGINE/ VALVE TIMING/TIMING CHAIN COVER - REMOVAL).

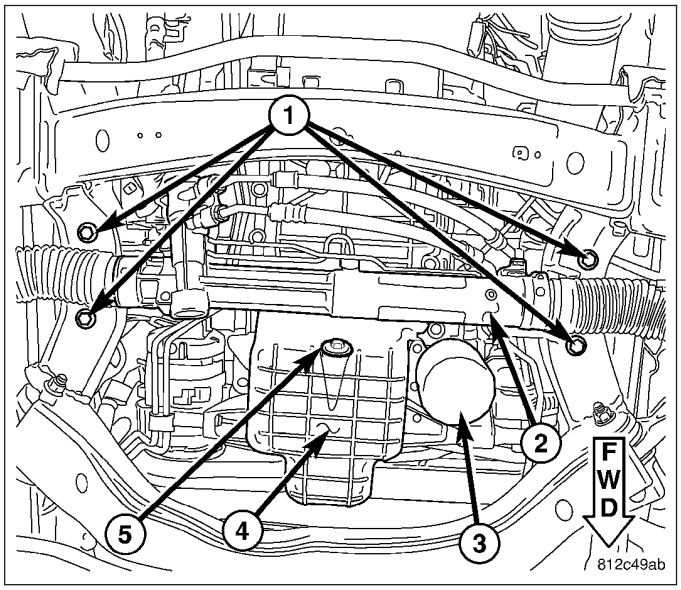

9. Remove primary timing chain (Refer to 9 - ENGINE/VALVE TIMING/TIMING CHAIN AND SPROCKETS - REMOVAL).
10. Remove crankshaft sprocket (Refer to 9 - ENGINE/VALVE TIMING/TIMING CHAIN AND SPROCKETS - REMOVAL).
11. Remove oil pump (Refer to 9 - ENGINE/LUBRICATION/OIL PUMP - REMOVAL).
12. Remove crankshaft rear oil seal retainer (Refer to 9 - ENGINE/ENGINE BLOCK/CRANKSHAFT REAR OIL SEAL RETAINER - REMOVAL).
13. Remove windage tray (1) (Refer to 9 - ENGINE/ ENGINE BLOCK/WINDAGE TRAY / STRUCT SUPPORT - REMOVAL).
14. Turn crankshaft until connecting rod cap to be removed is accessible.

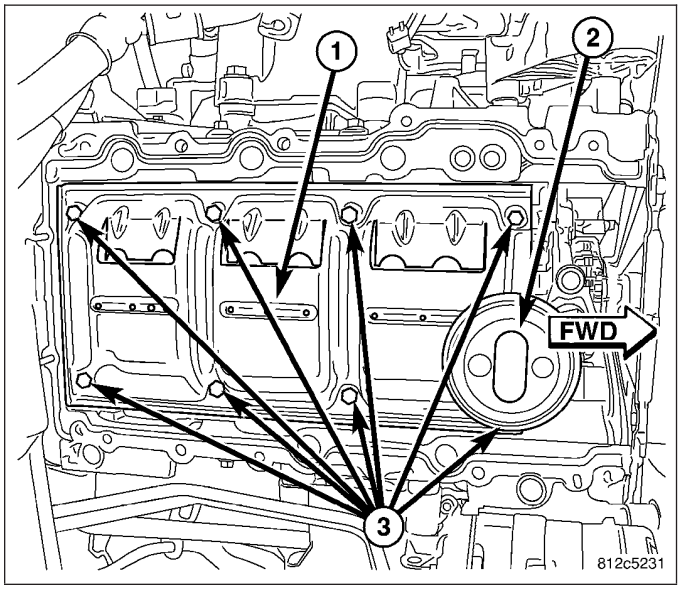

NOTE: Connecting rod bearing caps are not interchangeable and should be marked before removing to ensure correct reassembly.

CAUTION: DO NOT use a number stamp or a punch to mark connecting rods. Damage to connecting rod could occur.

15. Mark connecting rod bearing cap positions using a permanent ink marker or scribe tool.
16. Remove connecting rod bearing caps. Use care to prevent damage to the crankshaft bearing surfaces.

CAUTION: Care should be taken not to damage the fractured rod and cap joint face surfaces or damage to the engine may occur.

17. Remove main bearing cap bolts and tie bolts (1)&(2).

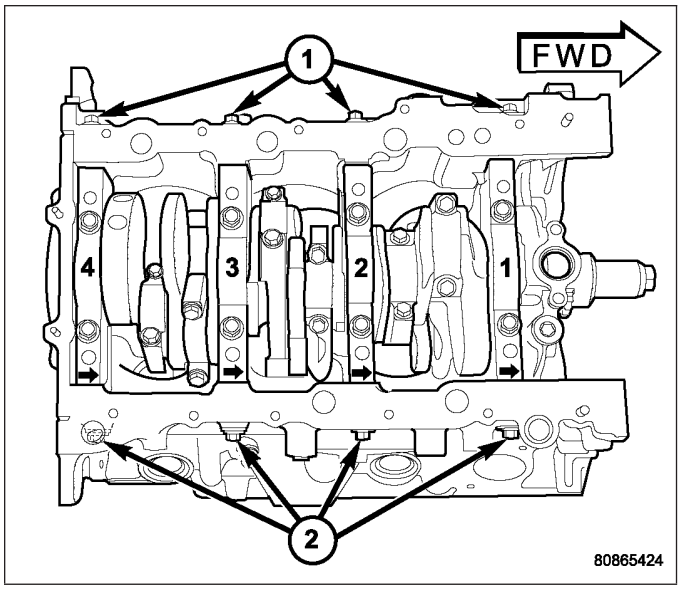

18. Remove main bearing caps (2).

CAUTION: When removing crankshaft, use care not to damage bearing surfaces on the crankshaft.

19. Remove crankshaft (7) from cylinder block (6).

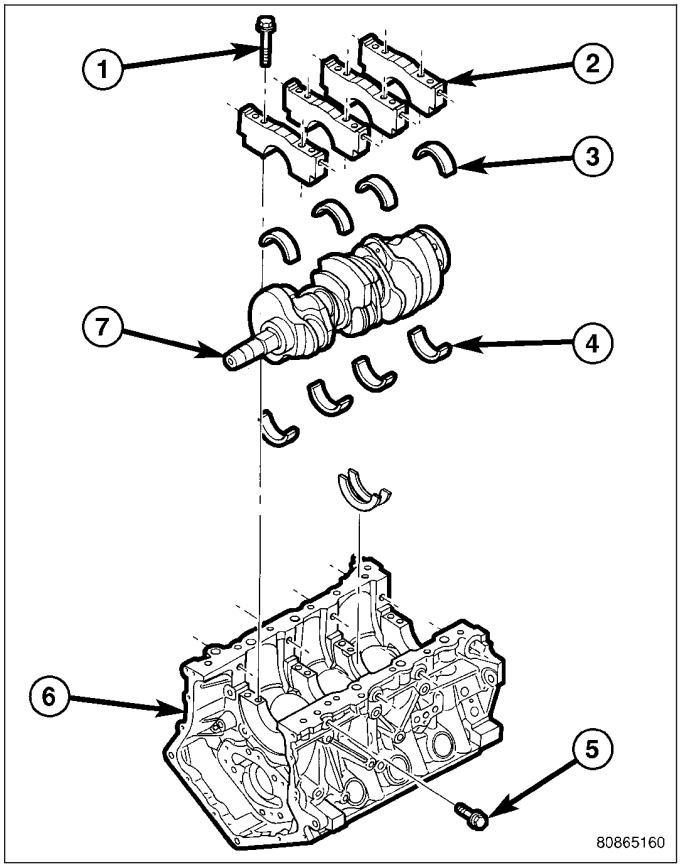

INSTALLATION

NOTE: Upper and lower bearing halves are NOT interchangeable.

CAUTION: Main bearings are select fit (Refer to 9 - ENGINE/ENGINE BLOCK/CRANKSHAFT MAIN BEARINGS - STANDARD PROCEDURE).

1. Install the main bearing in the block and main caps making sure the tangs engage the slots in the block and main caps.
2. Lubricate upper main bearing halves with engine oil.

CAUTION: When installing crankshaft, use care not to damage bearing surfaces on the crankshaft.

3. Install crankshaft.

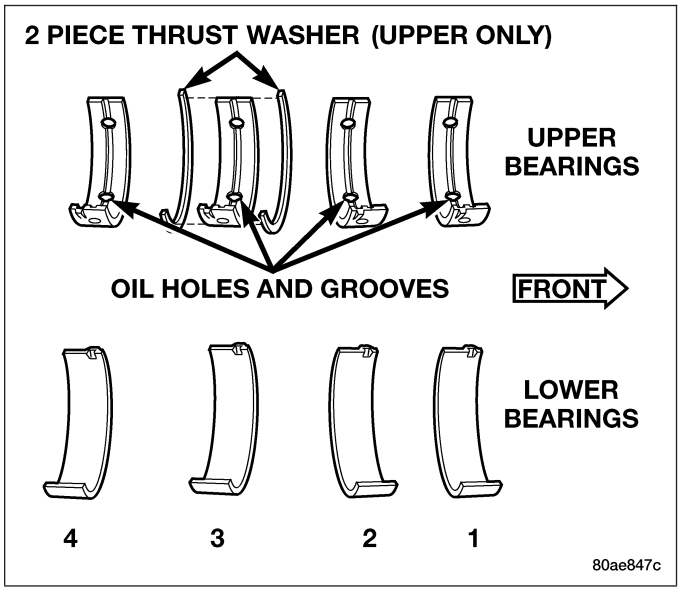

NOTE: Make sure that the coated and oil groove side of crankshaft thrust washer faces the crankshaft thrust surface.

4. Push crankshaft forward. Lubricate and install the front thrust washer (1) by rolling the thrust washer onto the machined shelf between the No. 3 upper main bulk head and crankshaft thrust surface.
5. Move crankshaft rearward. Lubricate and install the rear thrust washer by rolling the thrust washer onto the machined shelf between the No. 3 upper main bulk head and crankshaft thrust surface.

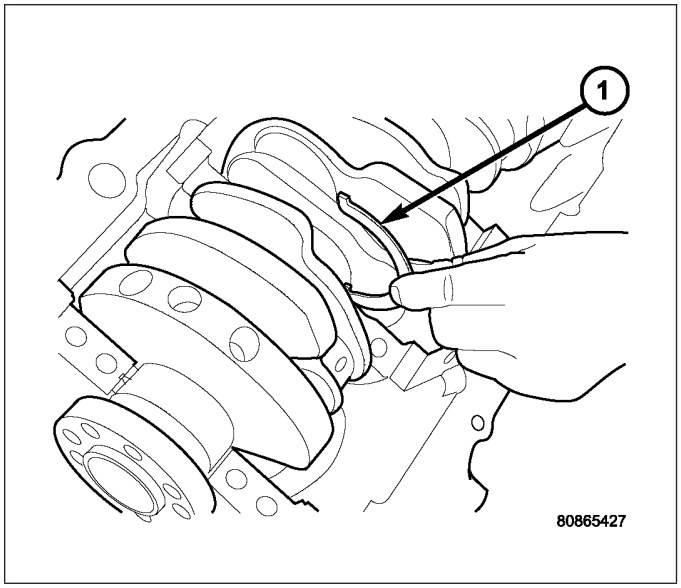

6. Lubricate lower main bearings with engine oil.
7. Install main bearings caps.

NOTE: Lubricate main bearing cap bolts with engine oil before installation.

NOTE: The main bearing cap bolts must be tightened in the proper sequence. First the inner main cap bolts, secondly the windage tray bolts, and lastly the main cap tie (horizontal) bolts.

8. Install the inner main bearing cap bolts and tighten to 20 N·m + 1/4 Turn (15 ft. lbs. + 1/4 Turn).

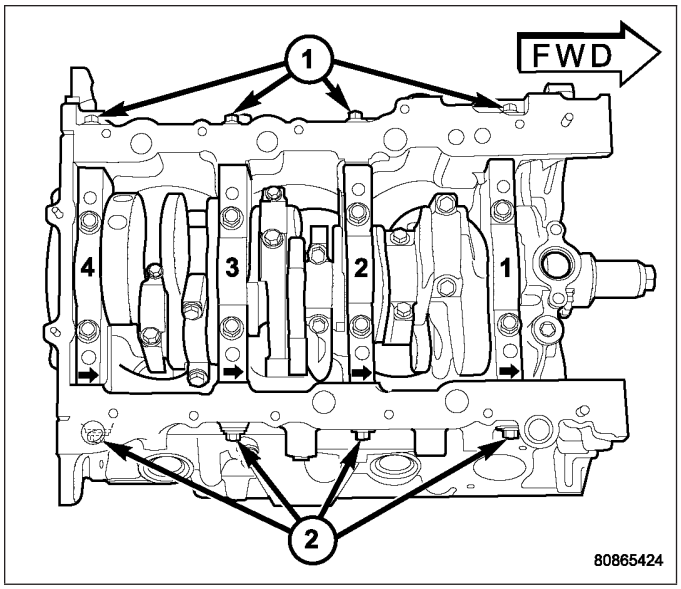

9. Measure crankshaft end play (Refer to 9 - ENGINE/ENGINE BLOCK/CRANKSHAFT - STANDARD PROCEDURE).

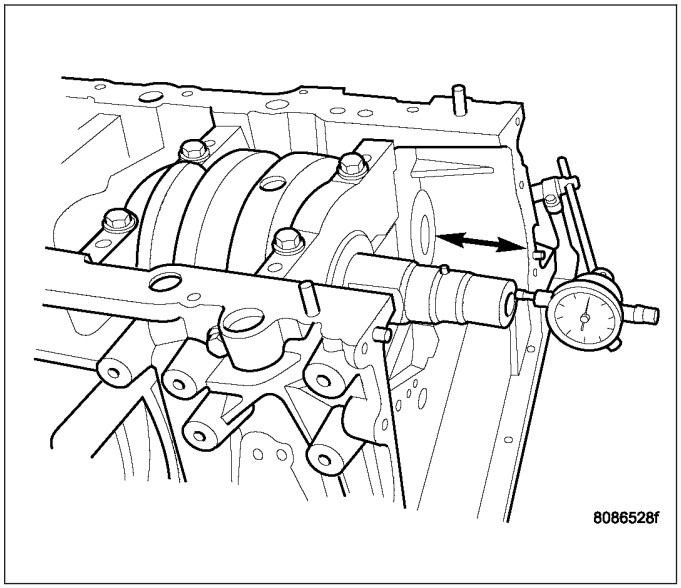

10. Install connecting rods and measure side clearance (Refer to 9 - ENGINE/ENGINE BLOCK/PISTON & CONNECTING ROD - INSTALLATION) (Refer to 9 - ENGINE/ENGINE BLOCK/CONNECTING ROD BEARINGS - STANDARD PROCEDURE).

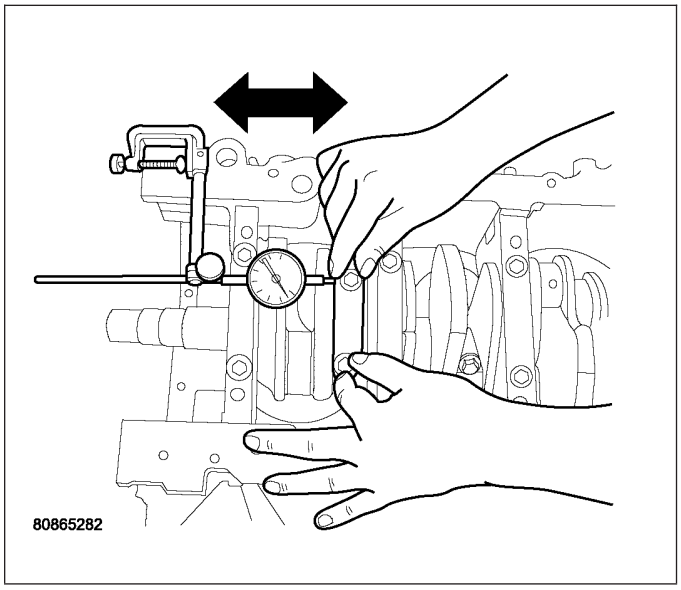

11. Install windage tray (1) with the slots to right side of engine. Lubricate bolts (3) with engine oil and tighten to 27 N·m + 1/4 Turn (20 ft. lbs. + 1/4 turn).

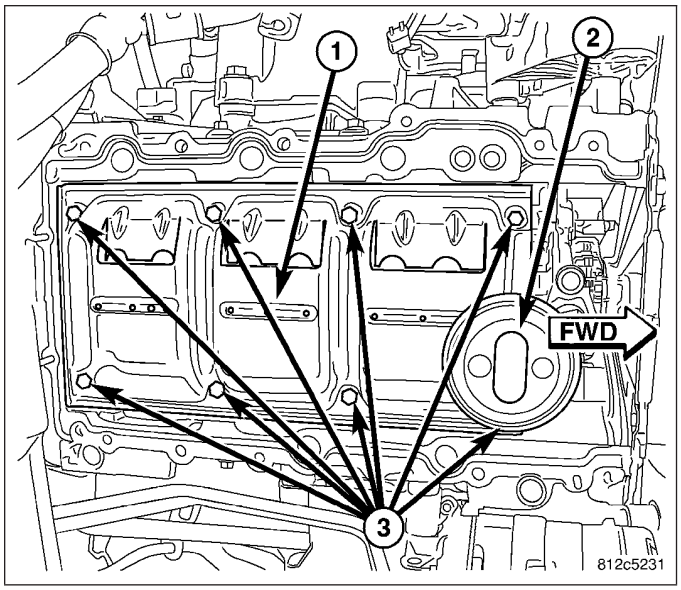

12. Install the main cap tie (horizontal) bolts (1&2) and tighten to 28 N·m (250 in. lbs.).
13. Install rear crankshaft oil seal retainer and oil seal assembly (Refer to 9 - ENGINE/ENGINE BLOCK/ CRANKSHAFT REAR OIL SEAL RETAINE - INSTALLATION).

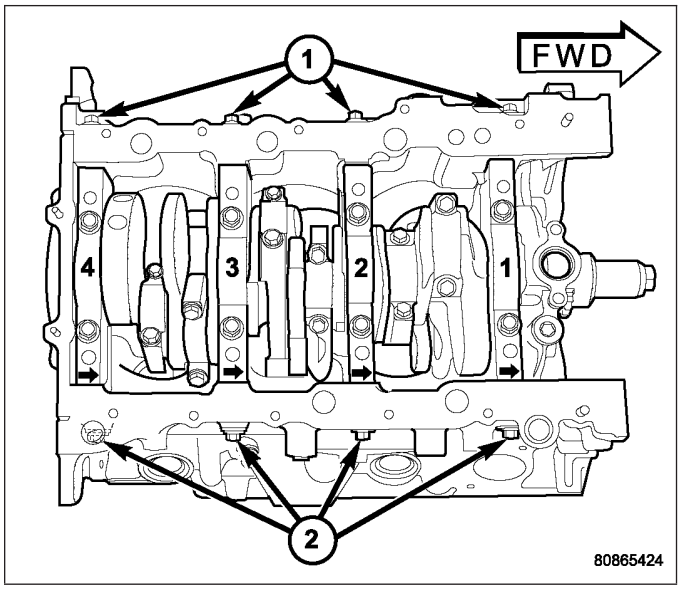

14. Install oil pump assembly (5) (Refer to 9 - ENGINE/LUBRICATION/OIL PUMP - INSTALLATION).
15. Install oil pick-up tube (3) and O-ring (2). Tighten bolts (4) to 28 N·m (250 in.lbs.).
16. Install oil pan gasket, oil pan, and oil filter (Refer to 9 - ENGINE/LUBRICATION/OIL PAN - INSTALLATION).
17. Install crankshaft sprocket (Refer to 9 - ENGINE/ VALVE TIMING/TIMING CHAIN AND SPROCKETS - INSTALLATION).
18. Install timing chain (Refer to 9 - ENGINE/VALVE TIMING/TIMING CHAIN AND SPROCKETS - INSTALLATION).
19. Install timing chain cover (Refer to 9 - ENGINE/ VALVE TIMING/TIMING CHAIN COVER - INSTALLATION).

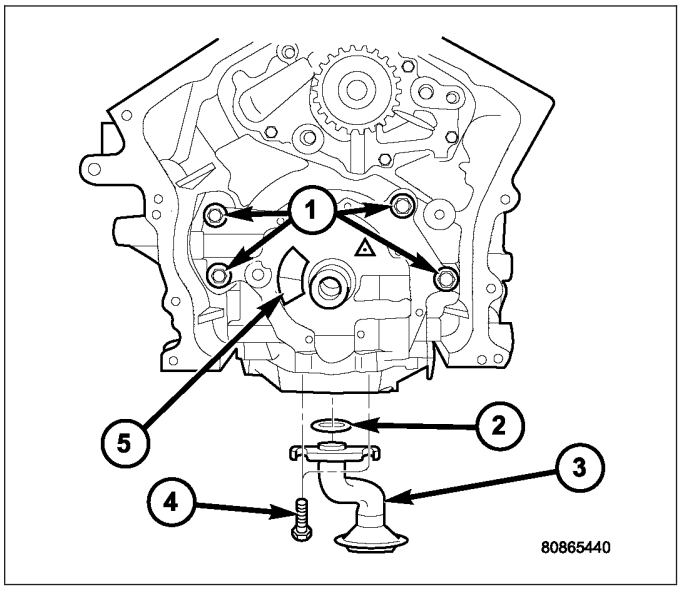

20. Install cylinder head covers (Refer to 9 - ENGINE/ CYLINDER HEAD/CYLINDER HEAD COVER(S) - INSTALLATION).

21. Install oil dipstick tube.
22. Install engine assembly (Refer to 9 - ENGINE - INSTALLATION).
23. Fill engine crankcase with proper oil to correct level (Refer to 9 - ENGINE/LUBRICATION/OIL - STANDARD PROCEDURE).
24. Fill with coolant (Refer to 7 - COOLING - STANDARD PROCEDURE).
25. Start engine and check for leaks.

BEARINGS-CRANKSHAFT MAIN

STANDARD PROCEDURE

CRANKSHAFT MAIN BEARING FITTING

The main bearings are “select fit” to achieve proper oil clearances. For main bearing selection, the block and crankshaft have grade identification marks.

The grade marks for the cylinder block main bearing bore grade is located on the pan rail just below the left side engine mount bracket. These marks are read left to right, corresponding to main bore 1, 2, 3, 4.

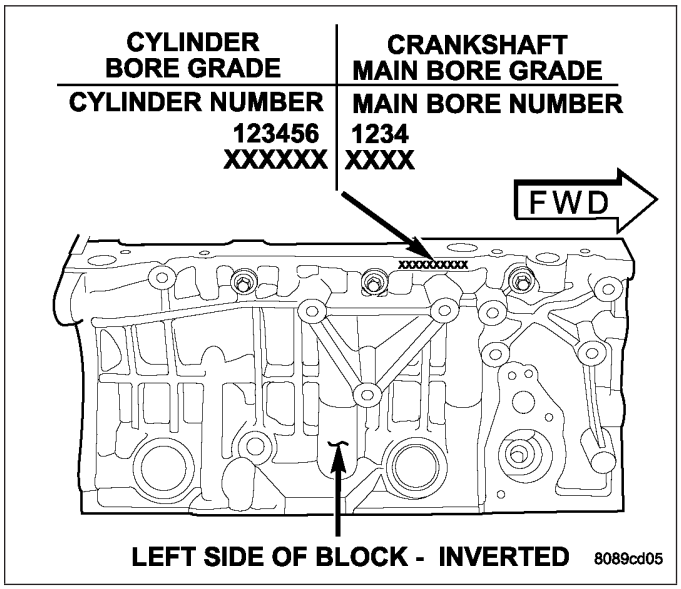

The grade marks for the crankshaft are located on the rearmost crankshaft counter weight as shown in. The crankshaft journal grade marks are read left to right, corresponding with journal number 1, 2, 3, 4.

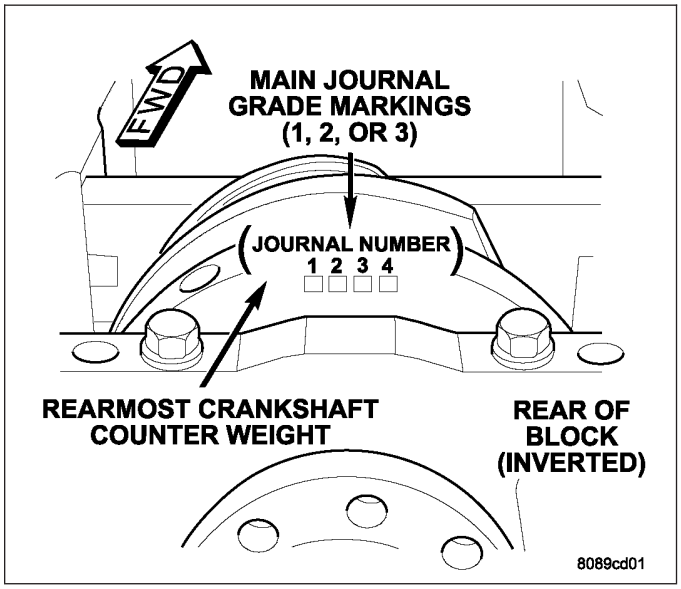

MAIN BEARING SELECTION CHART - 2.7L

	Main Bearing Bore Grade Mark			
	1	**2**	**3**	
Crankshaft Main Journal Grade Mark	**1**	(3) standard	(2) +0.003 mm (+0.0001 in.)	(1) +0.006 mm (+0.0002 in.)
	2	(4) -0.003 mm (-0.0001)	(3) standard	(2) +0.003 mm (+0.0001 in.)
	3	(5) -0.006 mm (-0.0002 in.)	(4) -0.003 mm (-0.0001 in.)	(3) standard

Refer to the MAIN BEARING SELECTION CHART - 2.7L to properly select the main bearings. For an example, if the main bore grade is 3 and the journal grade is 2, the proper select fit bearing would be (2) +0.003 mm (+0.0002 in.). Each bearing grade increment of 0.003 mm is for wall thickness so diametrical clearances are adjusted 0.006 m per select fit class.

NOTE: Service main bearings have a number from 1–5 marked in ink on the bearing surface. For verification, use the MAIN BEARING SELECTION CHART - 2.7L for number to size identification.

The upper main bearing (2) has a oil feed hole and a center groove (3) to allow lubrication of the main journal and must be properly positioned in the block.

NOTE: Although cylinder bores are graded for size, there is only one piston size.

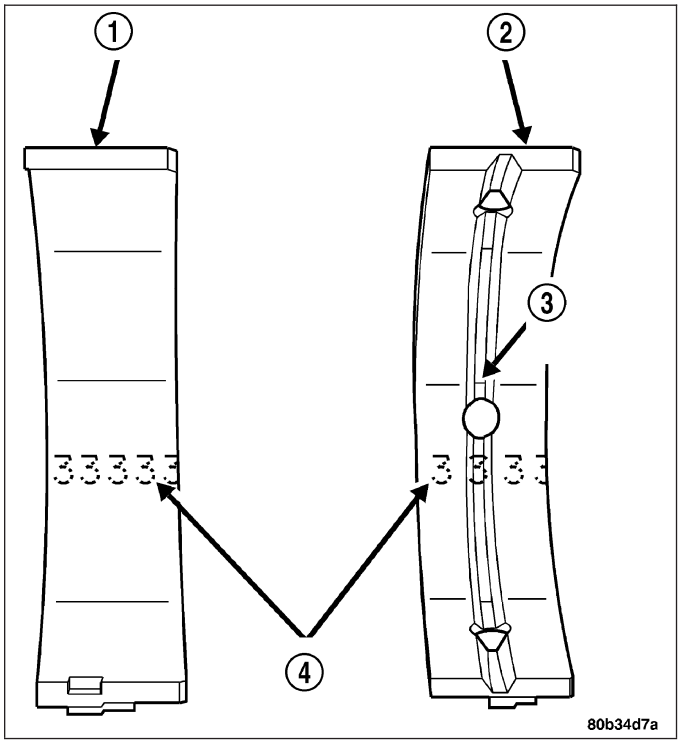

SEAL- CRANKSHAFT FRONT OIL

REMOVAL

1. Remove crankshaft vibration damper (Refer to 9 - ENGINE/ENGINE BLOCK/VIBRATION DAMPER - REMOVAL).
2. Install Special Tool 8194 (1), Insert into crankshaft nose. Remove seal using Special Tool 6771, Remover.

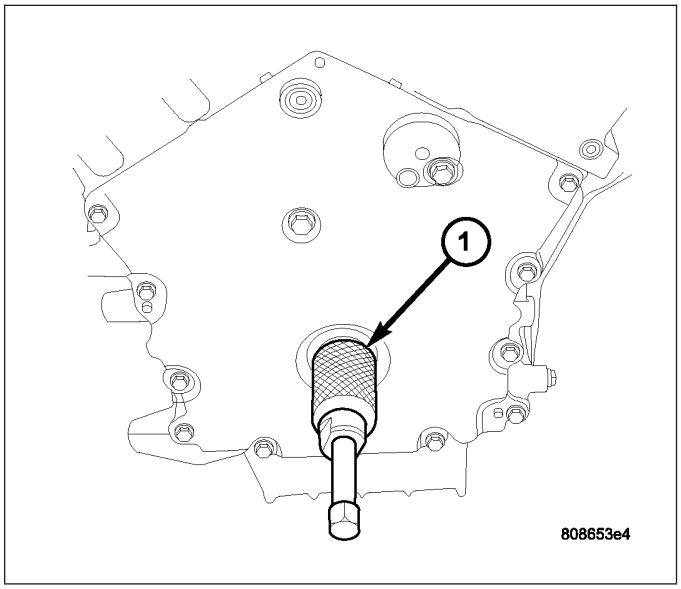

INSTALLATION

1. Install new seal (4) using Special Tools 6780-2 Sleeve (1), 6780-1 Installer (3), and 8179 Stud (2).
2. Install crankshaft vibration damper (Refer to 9 - ENGINE/ENGINE BLOCK/VIBRATION DAMPER - INSTALLATION).

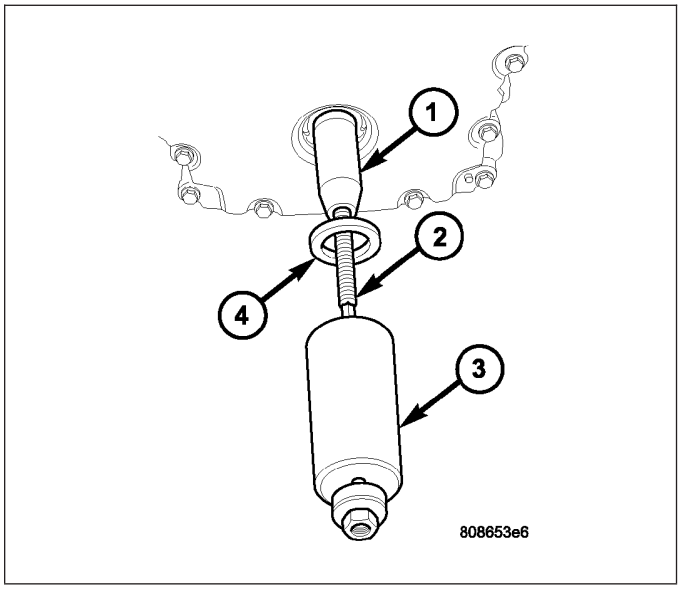

SEAL-CRANKSHAFT REAR OIL

REMOVAL

The crankshaft rear oil seal is incorporated in the seal adapter (2) and can not be removed from the adapter. The crankshaft rear oil seal/seal adapter (2) are serviced as an assembly.

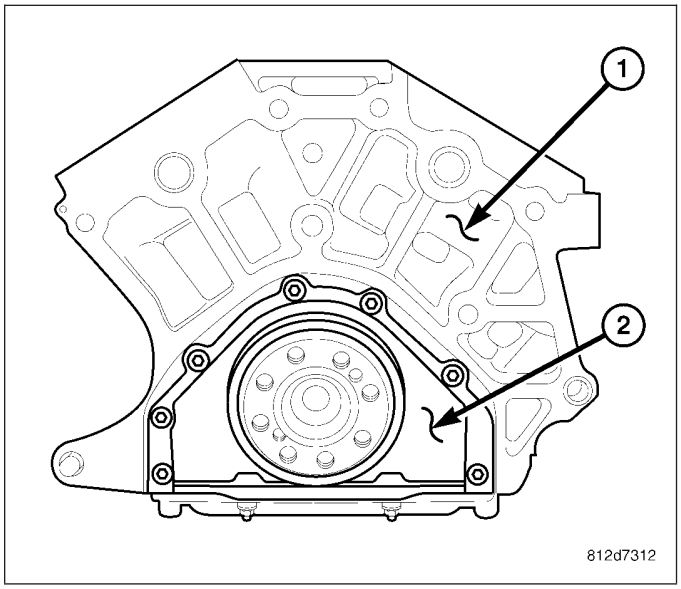

1. Disconnect negative battery (1) cable.

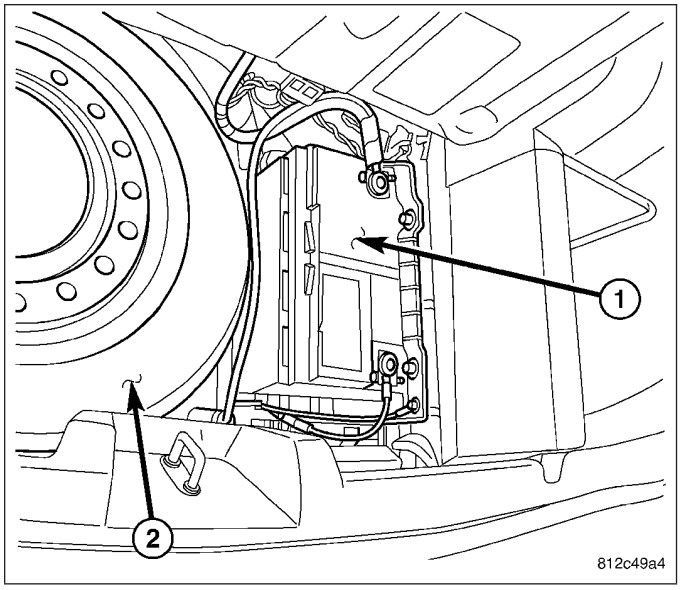

2. Raise vehicle.
3. Remove splash shield retaining bolts (1) and splash shield (2).
4. Remove the structural collar (Refer to 9 - ENGINE/ENGINE BLOCK/STRUCTURAL COVER - REMOVAL).
5. Remove transmission (Refer to 21 - TRANSMISSION/TRANSAXLE/AUTOMATIC - 42RLE - REMOVAL).

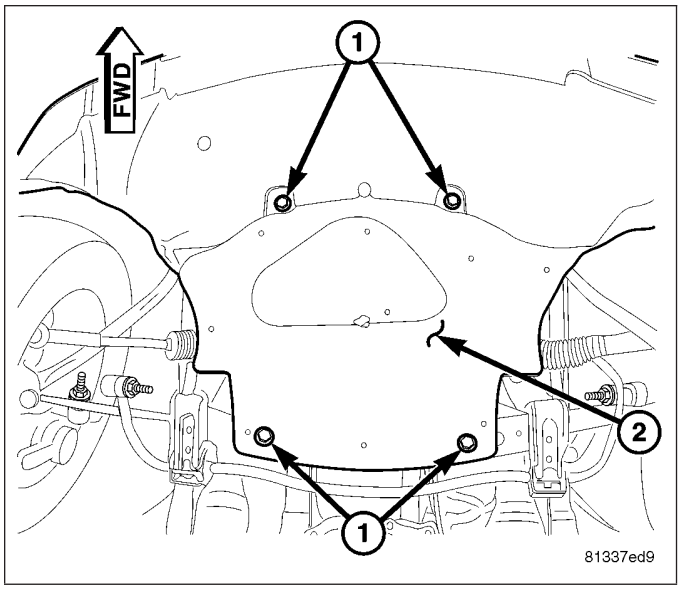

6. Remove flex plate attaching bolts (2), backing plate (3), and flex plate (1).
7. Remove oil pan (Refer to 9 - ENGINE/LUBRICATION/OIL PAN - REMOVAL).

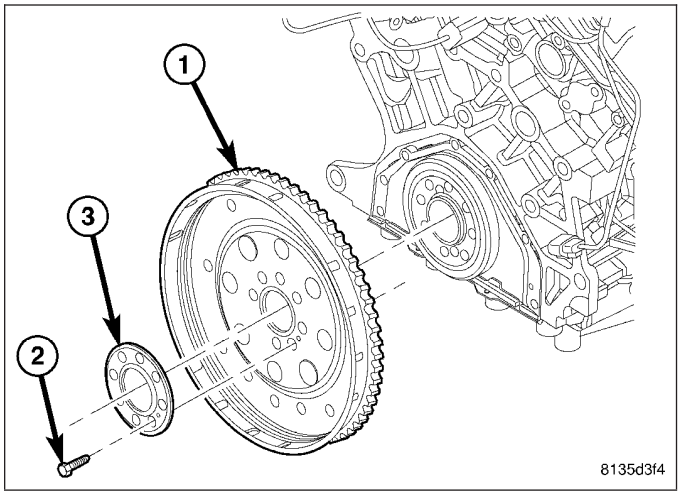

NOTE: The integrated stamped steel rear crankshaft seal is not interchangable with the cast aluminum rear seal adapter and seal assembly.

8. Remove seal retainer attaching screws.
9. Remove crankshaft rear oil seal/adapter (2).

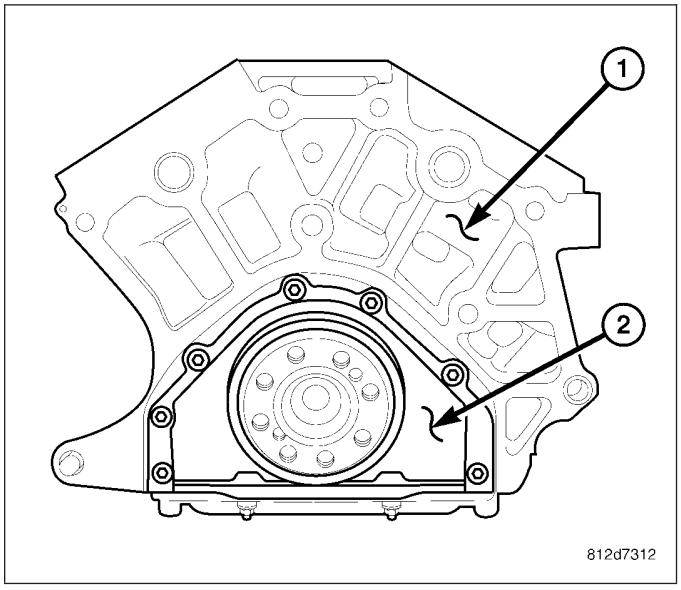

INSTALLATION

NOTE: The integrated rear crankshaft seal (2) is not interchangeable with the cast aluminum rear seal adapter and seal assembly.

NOTE: Inspect the crankshaft to make sure no nicks or burrs are on the seal surface.

1. Clean sealing surfaces thoroughly.
2. Apply engine oil to the seal lip inside diameter.

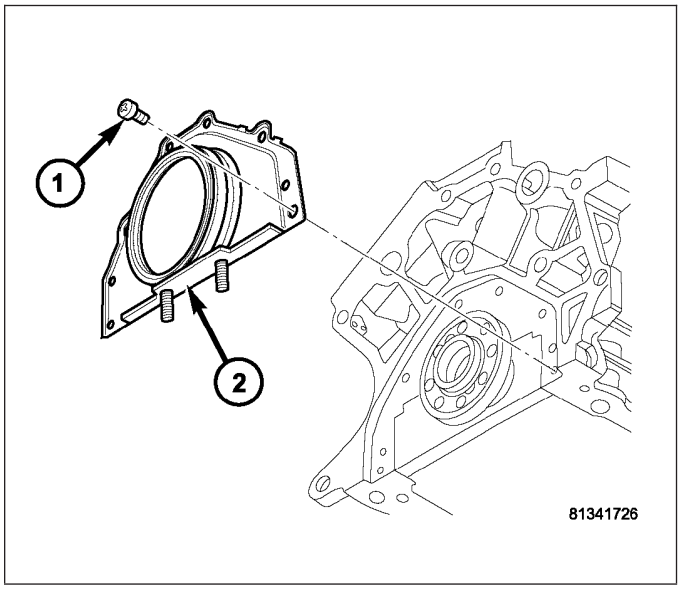

NOTE: The seal lip (2) on the retainer must always uniformly curl inward toward the engine on the crankshaft (1).

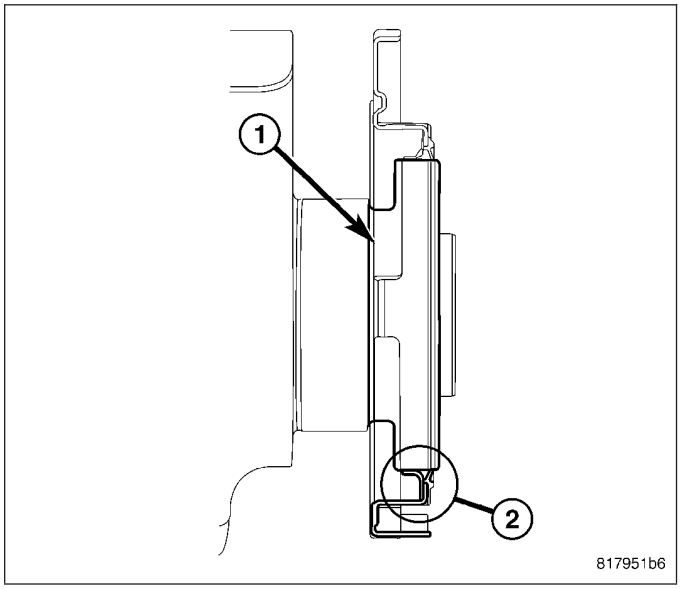

3. Position the special tool 6926 (1) onto the crankshaft and gently slide the seal (2) over the crankshaft.
4. Install seal retaining bolts finger tight.

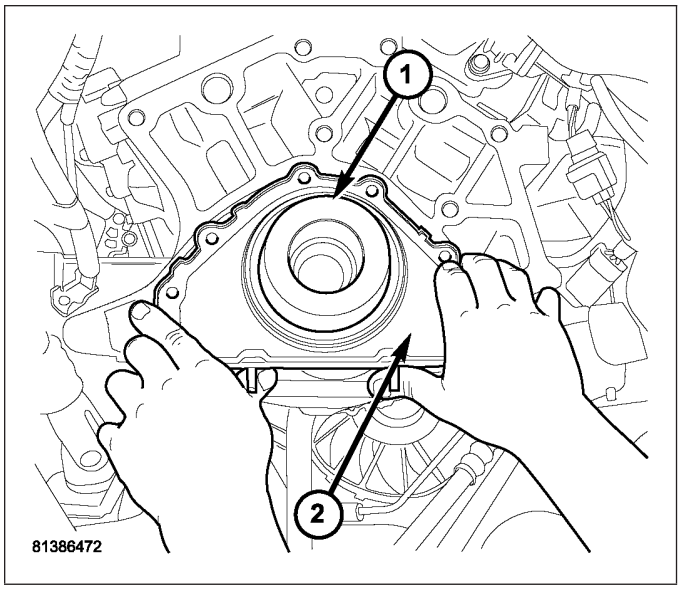

NOTE: The following steps must be performed to prevent oil leaks at sealing joints.

5. Attach Special Tools 8225 (1) to pan rail using the oil pan fasteners.

NOTE: Make sure that the "2.7L" stamped on the special tool is facing the cylinder block (flat side of tools against pan rail).

NOTE: Make sure that the seal flange is flush with the block oil pan sealing surface.

6. While applying firm pressure to the seal assembly (2) against Special Tools 8225 (1), tighten seal assembly screws to 12 N·m (105 in. lbs.).
7. Remove special tool 8225.
8. Install oil pan (Refer to 9 - ENGINE/LUBRICATION/OIL PAN - INSTALLATION).
9. Install flex plate (1), backing plate (3), and attaching bolts (2) (Refer to 9 - ENGINE/ENGINE BLOCK/FLEX PLATE - INSTALLATION).
10. Install transmission (Refer to 21 - TRANSMISSION/TRANSAXLE/AUTOMATIC - 42RLE - INSTALLATION).

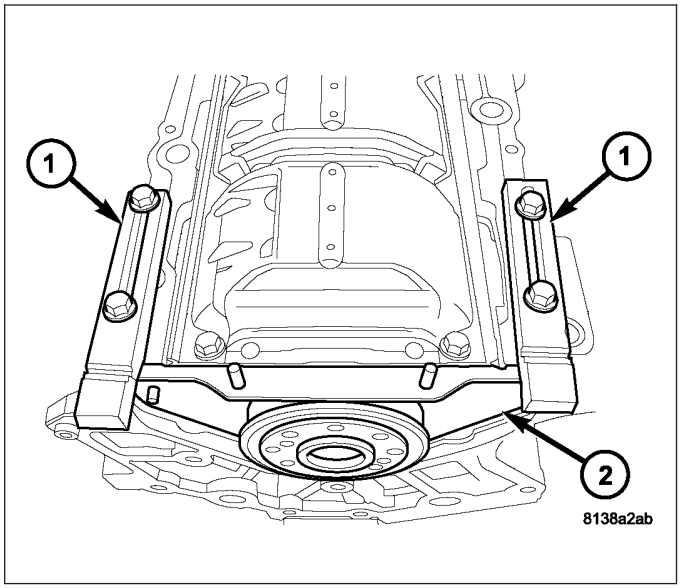

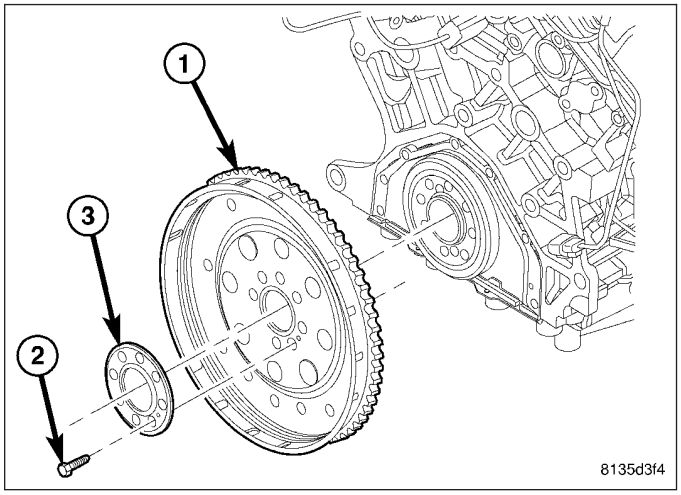

11. Install lower splash shield retaining bolts (1) and splash shield (2).
12. Lower vehicle.

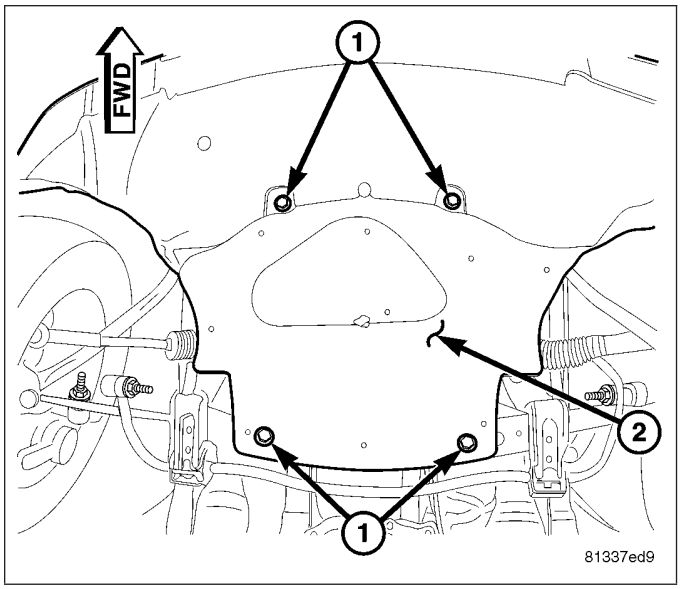

13. Fill with oil (5).

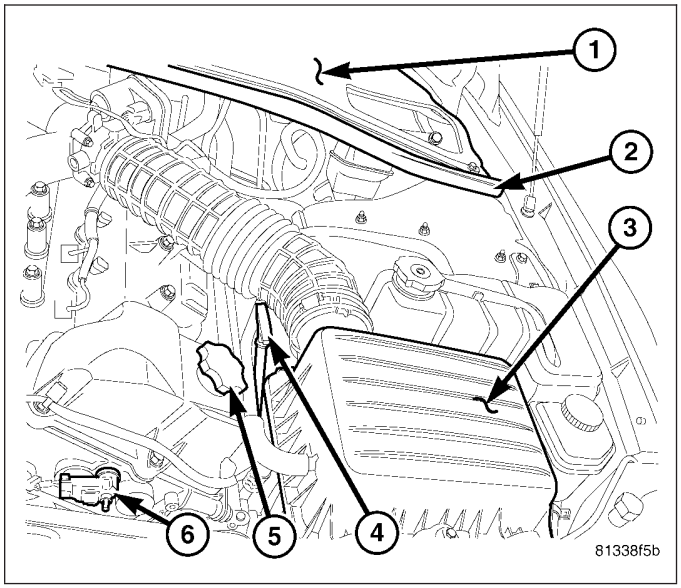

14. Connect negative battery (1) cable.
15. Start engine and check for leaks.

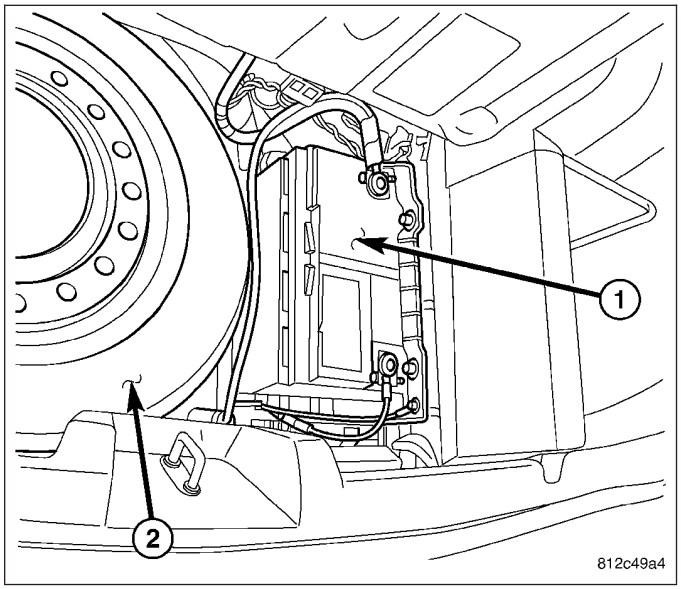

PLATE-FLEX

REMOVAL

1. Remove transmission (Refer to 21 - TRANSMISSION/TRANSAXLE/AUTOMATIC - 42RLE - REMOVAL).
2. Remove flex plate attaching bolts (2).
3. Remove backing plate (3) and flex plate (1).

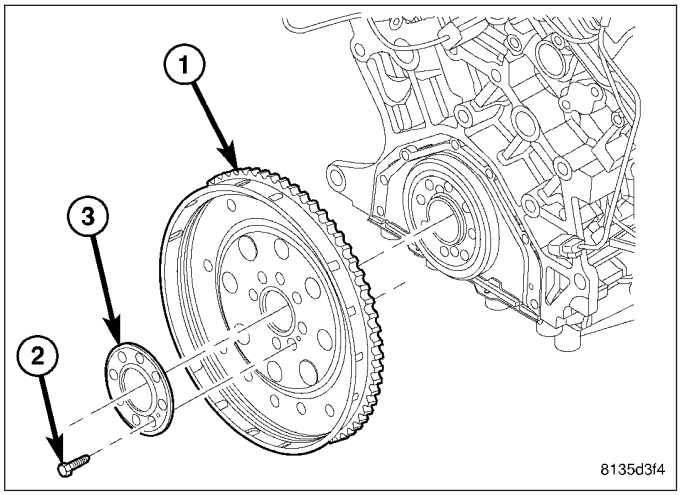

INSTALLATION

1. Install flex plate (1) and backing plate (3).
2. Apply MOPAR® Lock & Seal Adhesive to the flex plate bolts.
3. Install all flex plate bolts (2) finger tight.
4. Tighten flex plate bolts (2) to 95 N·m (70 ft. lbs.).
5. Install transmission (Refer to 21 - TRANSMISSION/TRANSAXLE/AUTOMATIC - 42RLE - INSTALLATION).

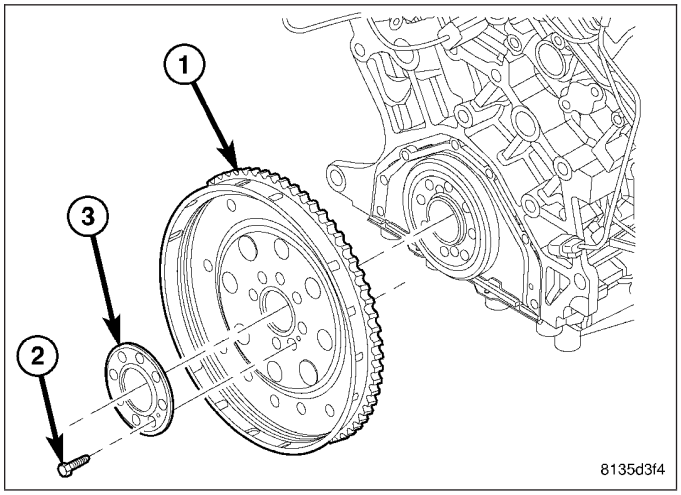

ROD-PISTON & CONNECTING

DESCRIPTION

The pistons (1) are made of a high strength aluminum alloy with an anodized top ring groove. Piston skirts are coated with a solid lubricant for scuff resistance. The pistons have an “F” cast into the side next to the pin bore that must face towards the front of the engine. The connecting rods are made of powdered metal with a “fractured cap” design. The connecting rod attaches to the piston with a full floating pin retained by lock rings. The piston and connecting rod are serviced as an assembly.

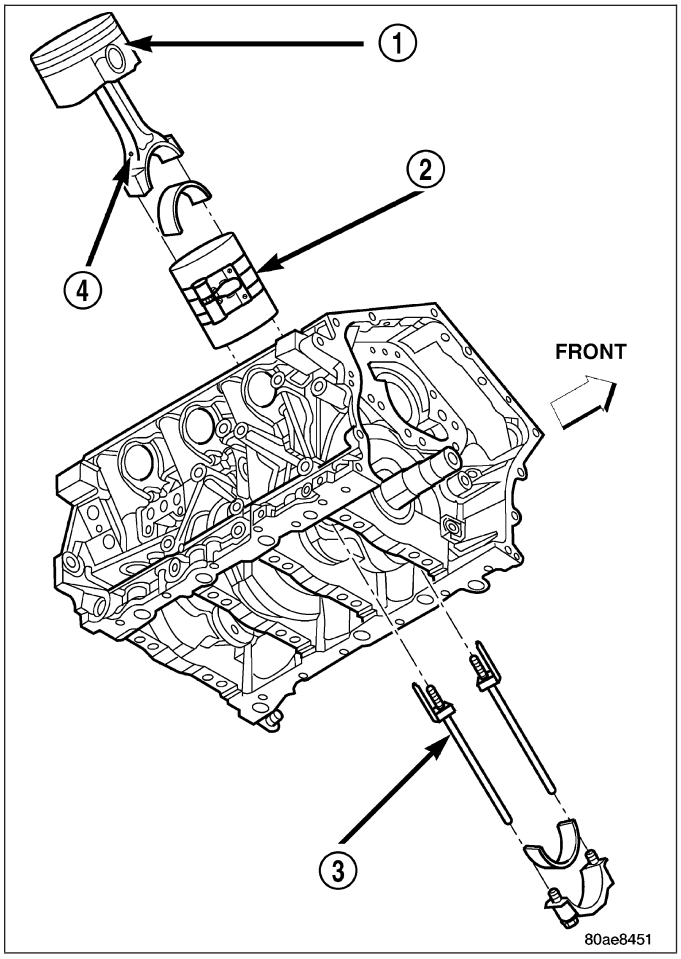

STANDARD PROCEDURE - FITTING PISTONS

The pistons have been cast and machined to one size and weight. The piston and rod assemblies are matched to weigh the same for engine balance.

Piston and cylinder wall must be clean and dry. Piston diameter should be measured 90 degrees to piston pin at size location shown. Cylinder bores should be measured halfway down the cylinder bore and transverse to the engine crankshaft center line. Refer to Engine Specifications. (Refer to 9 - ENGINE - SPECIFICATIONS) **Pistons and cylinder bores should be measured at normal room temperature, 70°F (21°C).**

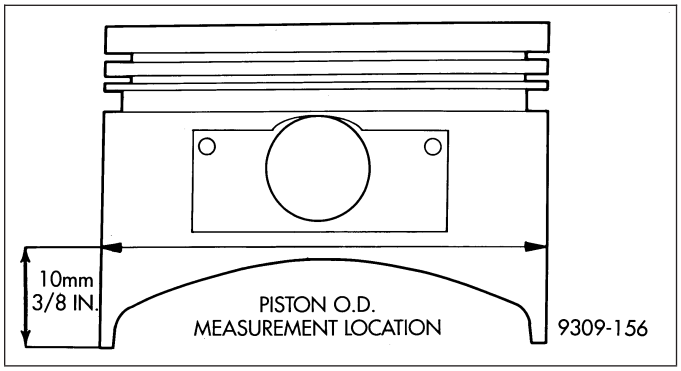

PISTON PINS

The piston pin is full floating and is held in place by lock rings. **Do Not switch pistons with other rods**. Pistons and connecting rods are serviced as an assembly for balance.

REMOVAL

1. Remove top ridge of cylinder bores with a reliable ridge reamer before removing pistons from cylinder block. **Be sure to keep tops of pistons covered during this operation. Pistons and connecting rods must be removed from top of cylinder block. When removing piston and connecting rod assemblies from the engine, rotate crankshaft so that each connecting rod is centered in cylinder bore.**

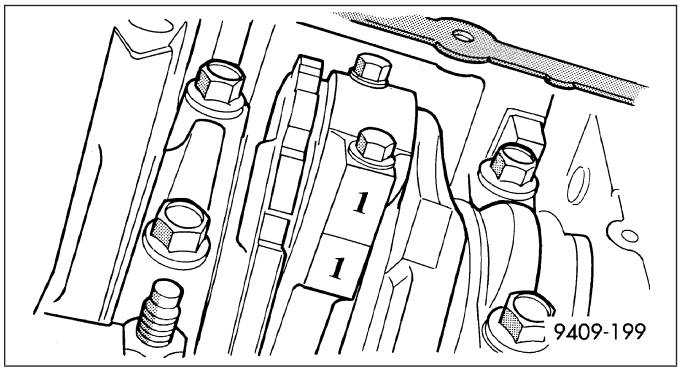

NOTE: Connecting rod bearing caps are not interchangeable and should be marked before removing to ensure correct reassembly.

CAUTION: DO NOT use a number stamp or a punch to mark connecting rods. Damage to connecting rod could occur.

2. Mark connecting rod and bearing cap positions using a permanent ink marker or scribe tool.

CAUTION: Care must be taken not to damage the fractured rod and cap joint face surfaces, as engine damage may occur.

3. Remove connecting rod cap. Install Special Tool 8189 Connecting Rod Guides (1) into the connecting rod being removed. Remove each piston and rod assembly out of cylinder bore.

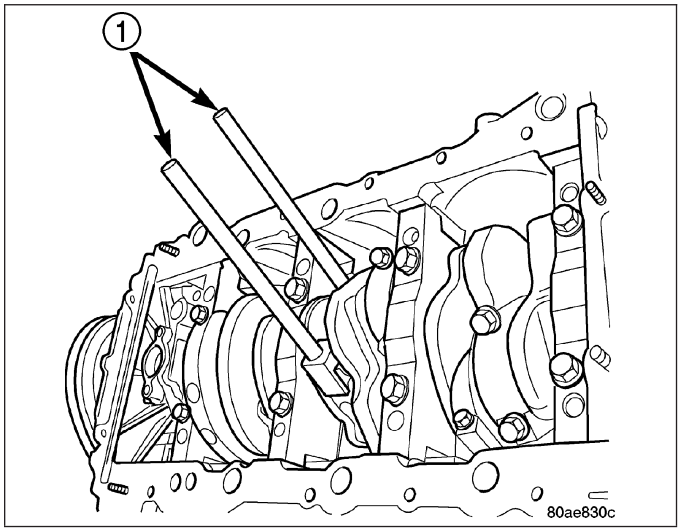

NOTE: Be careful not to nick crankshaft journals.

4. After removal, install bearing cap on the mating rod to prevent damage to the fractured cap to rod surfaces.

INSTALLATION

1. Install the piston rings (Refer to 9 - ENGINE/ENGINE BLOCK/PISTON RINGS - INSTALLATION).
2. Before installing piston and connecting rod assemblies into the bore, ensure that compression ring gaps (2)&(5) are staggered so that neither is in line with oil ring rail gap (1)&(4).

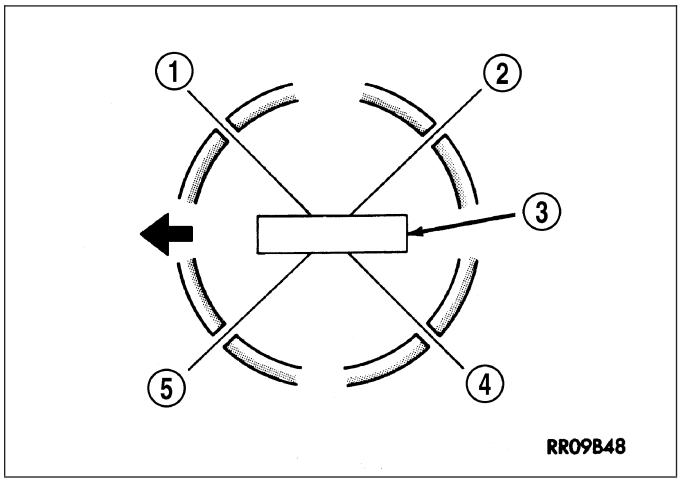

NOTE: Make sure that the oil hole in the connecting rod is facing the thrust side of the cylinder bore (Left side of block viewed from front and pan rail down).

3. Before installing the ring compressor, make sure the oil ring expander (5) ends are butted and the rail gaps located as shown (1)&(4).
4. Immerse the piston head and rings in clean engine oil, slide the ring compressor over the piston and tighten with the special wrench. **Ensure position of rings does not change during this operation.**

CAUTION: Ensure the hole in bearing half aligns with hole in connecting rod, as damage to engine may occur.

5. Position bearing onto connecting rod. Ensure that hole in bearing half is aligned to hole in connecting rod. Lubricate bearing surface with clean engine oil.
6. Install Special Tools 8189 Connecting Rod Guides (3) into connecting rod.
7. The pistons (1) are marked on top with an arrow and with an “F” (Front) above the pin boss. These marks must be pointing towards the front of engine on both cylinder banks.

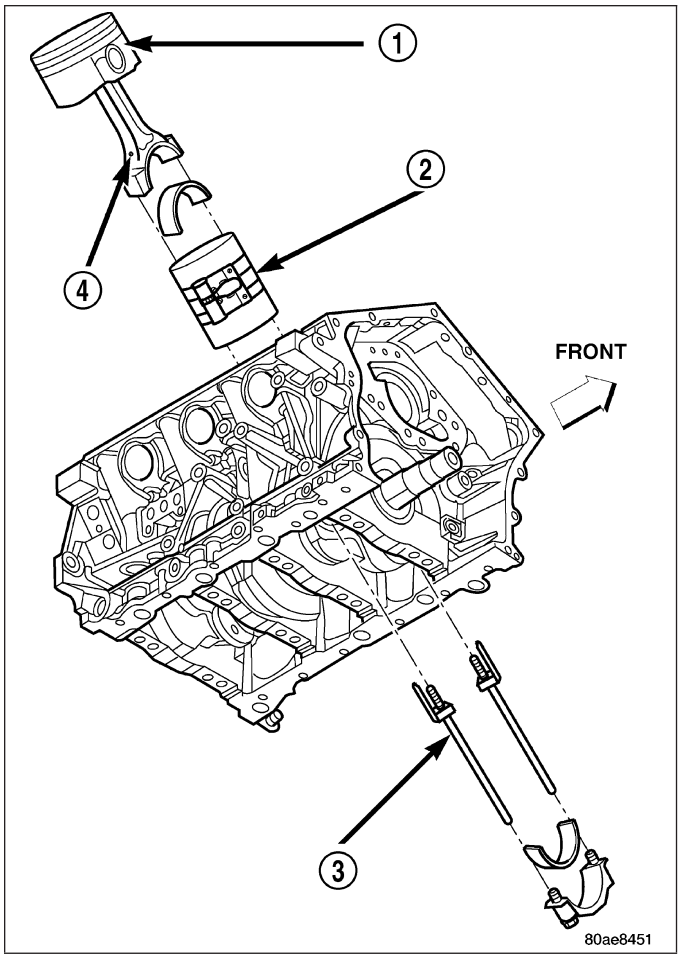

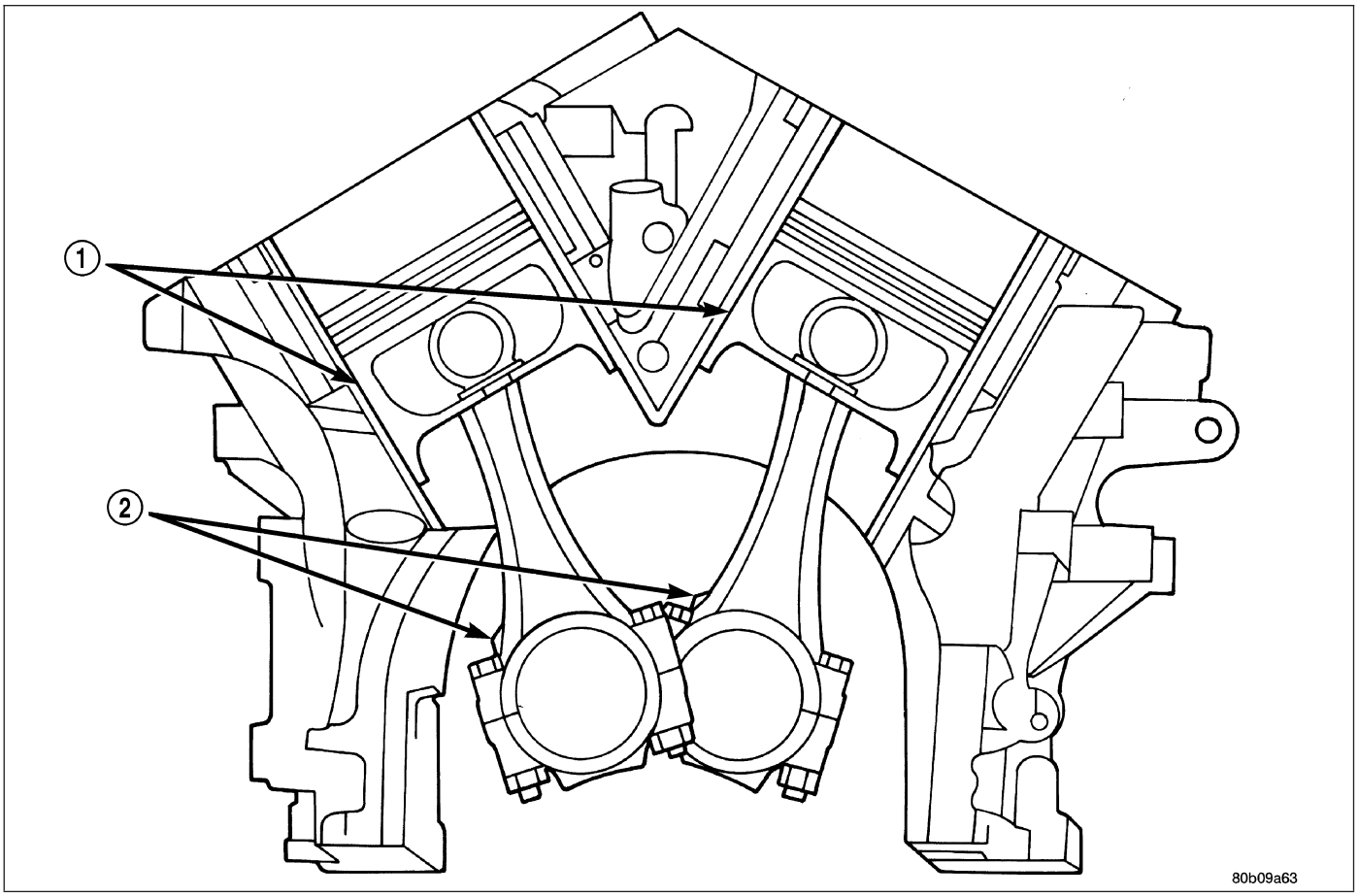

8. The connecting rod oil squirt hole (2) faces the major thrust (right) side of the block (1).

9. Rotate crankshaft so that the connecting rod journal is on the center of the cylinder bore. Insert rod and piston into cylinder bore and guide rod over the crankshaft journal.

CAUTION: Do Not interchange piston assemblies bank to bank, as engine damage may occur.

10. Tap the piston down in cylinder bore, using a hammer handle. At the same time, guide connecting rod into position on connecting rod journal.
11. Lubricate rod bolts and bearing surface with engine oil. Install connecting rod cap and bearing. Tighten bolts to 27 N·m (20 ft. lbs.) Plus 1/4 turn.

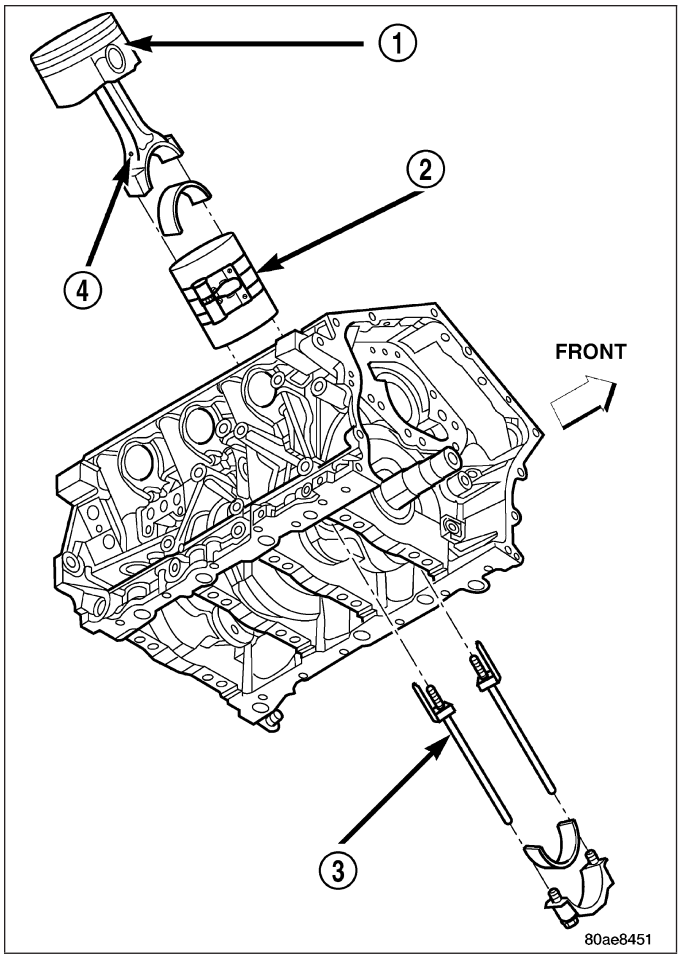

RINGS-PISTON

STANDARD PROCEDURE - PISTON RING FITTING

1. Wipe cylinder bore clean. Insert ring and push down with piston to ensure it is square in bore. The ring gap measurement must be made with the ring positioning at least 12 mm (0.50 inch.) from bottom of cylinder bore. Check gap with feeler gauge (1). Refer to (Refer to 9 - ENGINE - SPECIFICATIONS) for clearance measurements.

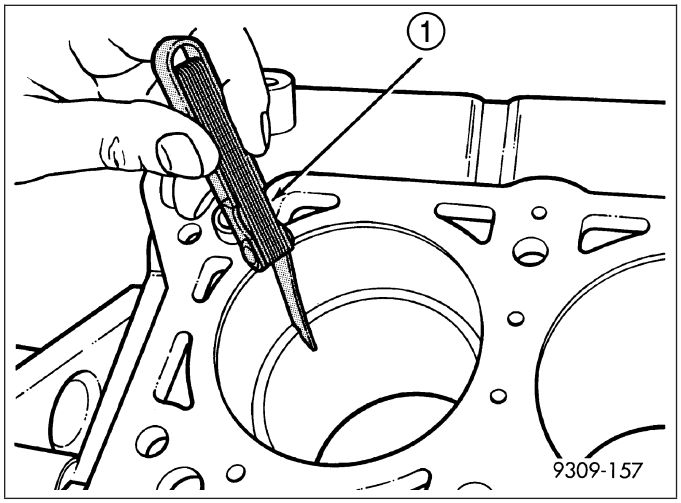

2. Check piston ring to groove clearance with feeler gauge (1). For clearance specifications (Refer to 9 - ENGINE - SPECIFICATIONS).

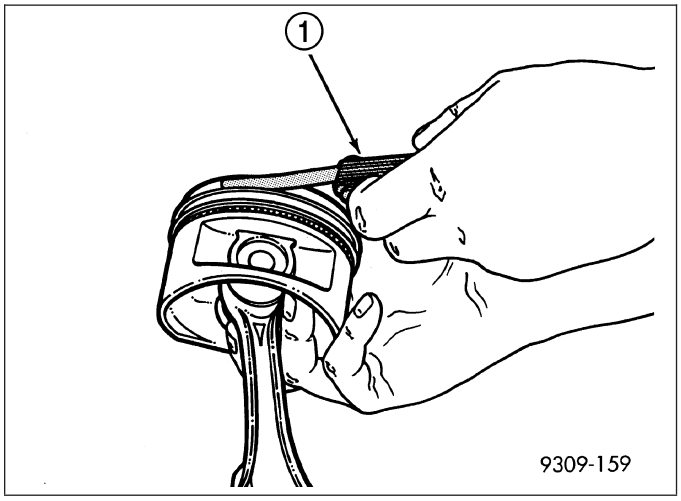

REMOVAL

1. Remove piston and connecting rod (Refer to 9 - ENGINE/ENGINE BLOCK/PISTON & CONNECTING ROD - REMOVAL).
2. Remove #1 and #2 piston rings from piston using a ring expander tool.

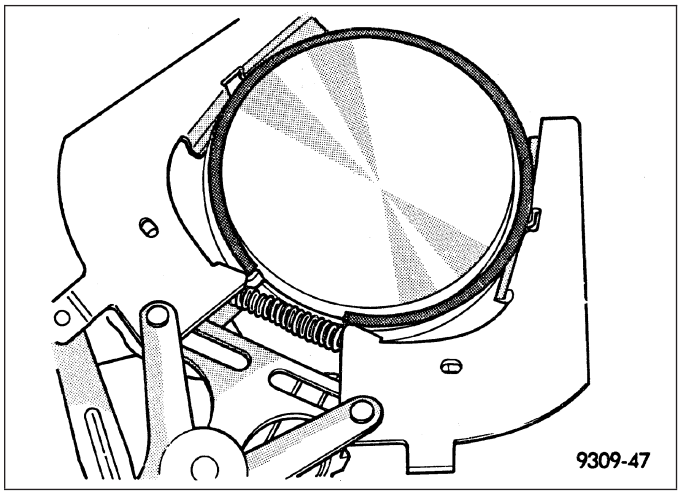

3. Remove upper oil ring side rail (2).
4. Remove lower oil ring side rail (2).
5. Remove oil ring expander (1).

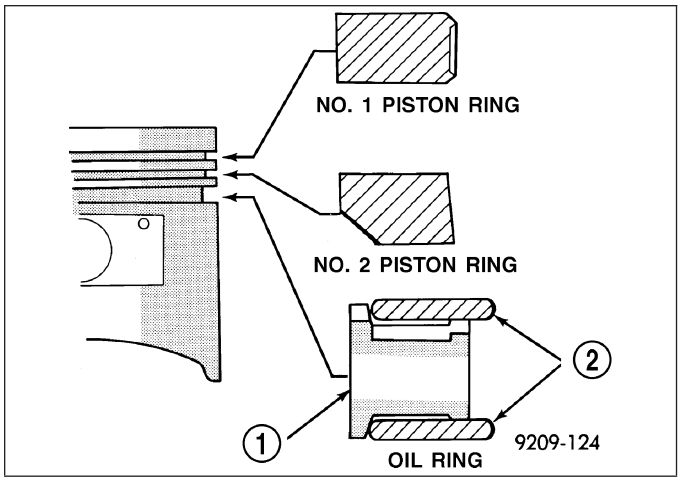

INSTALLATION

1. Measure clearance of piston rings to the cylinder bore and piston. (Refer to 9 - ENGINE/ENGINE BLOCK/PISTON RINGS - STANDARD PROCEDURE)

CAUTION: Install piston rings in the following order:

- Oil ring expander.
- Lower oil ring side rail.
- Upper oil ring side rail.
- No. 2 Intermediate piston ring.
- No. 1 Upper piston ring.

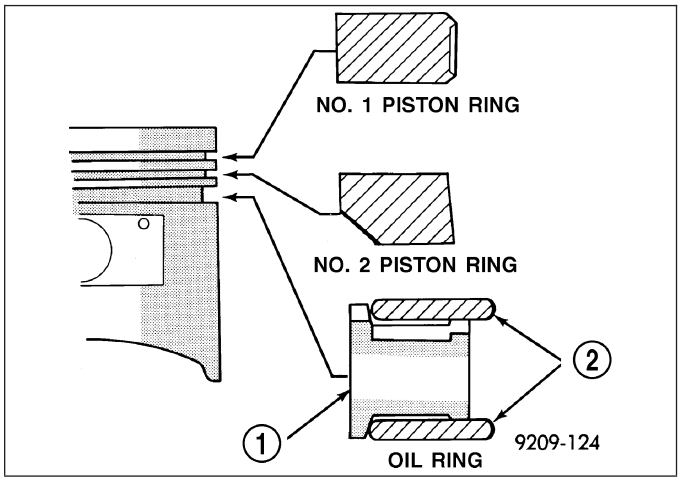

2. Install oil ring expander.

Install the side rail by placing one end between the piston ring groove and the oil ring expander. Hold end firmly and press down the portion to be installed until side rail is in position. **Do not use a piston ring expander during this step.**

3. Install lower side rail first and then the upper side rail.

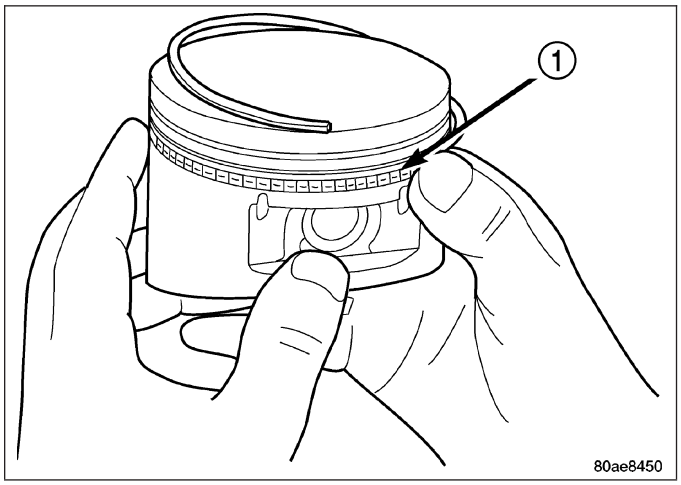

NOTE: The No. 1 and No. 2 piston rings have a different cross section. Ensure No. 2 ring is installed with manufacturers I.D. mark (dot) facing up, towards top of the piston.

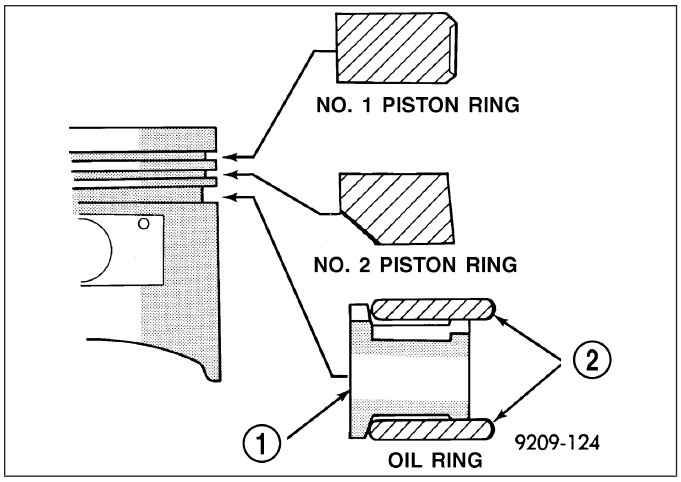

NOTE: Be sure to use a ring expander to install piston rings.

4. Install No. 2 piston ring and then No. 1 piston ring.

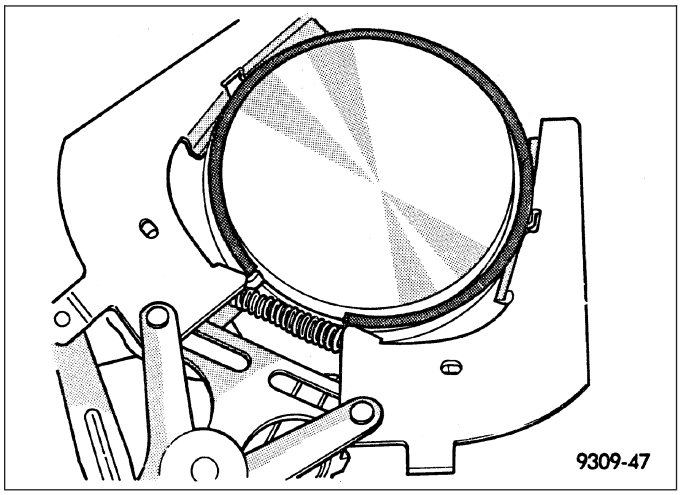

5. Position oil ring expander gap (5) as shown. Staggering ring gap is important for oil control.
6. Position piston lower side rail end gap (4) as shown.
7. Position piston upper side rail end gap (1) as shown.
8. Position piston ring #2 (5) end gap as shown.
9. Position piston ring #1 (2) end gap as shown.

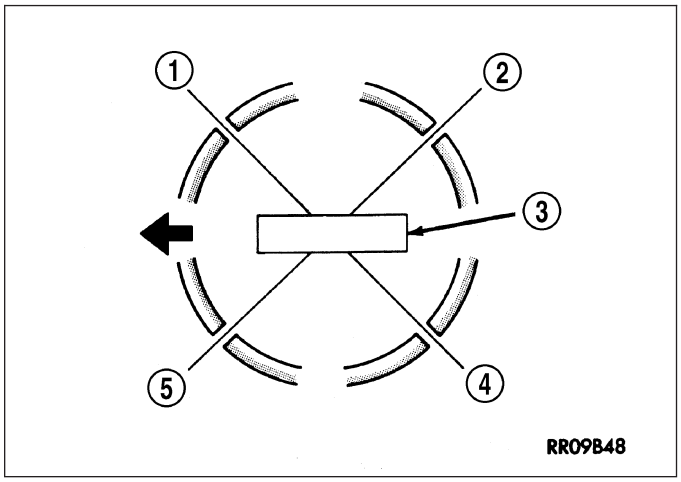

DAMPER-CRANKSHAFT

REMOVAL

1. Disconnect negative battery (1) cable located in trunk.
2. Remove accessory drive belts (Refer to 7 - COOLING/ACCESSORY DRIVE/DRIVE BELTS - REMOVAL).

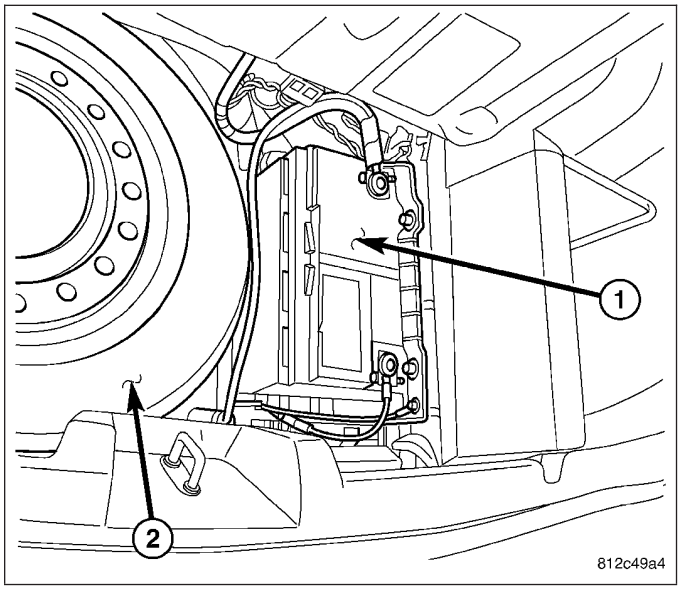

3. Use special tool 9365 Damper Holder (2) to hold damper (1) while removing attaching bolt (3).

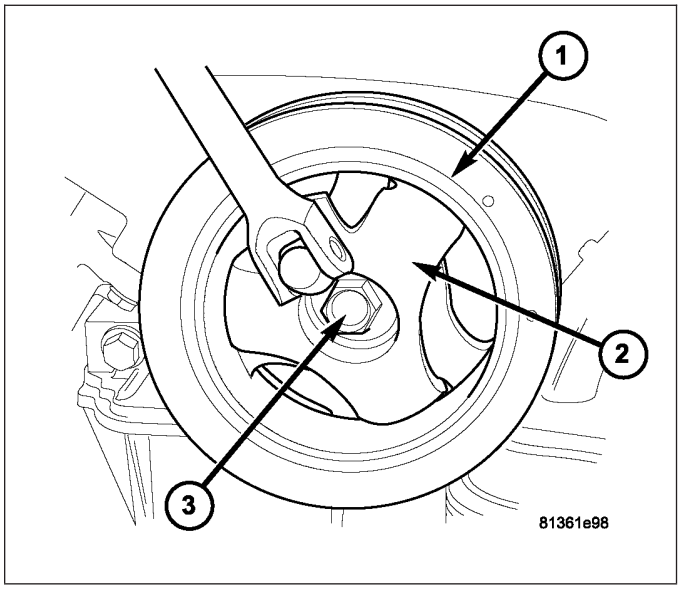

4. Remove damper by using Special Tools 8194 Insert (1) and 8454 Puller (2).

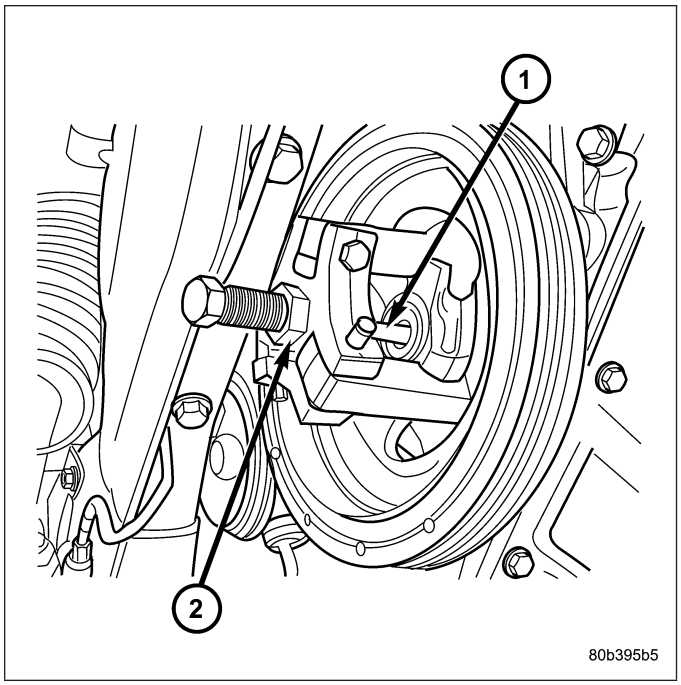

INSTALLATION

1. Install damper (1) using Special Tools 8179 Screw (3), with Nut and Thrust Bearing from 6792, and 6792-1 Installer (2).

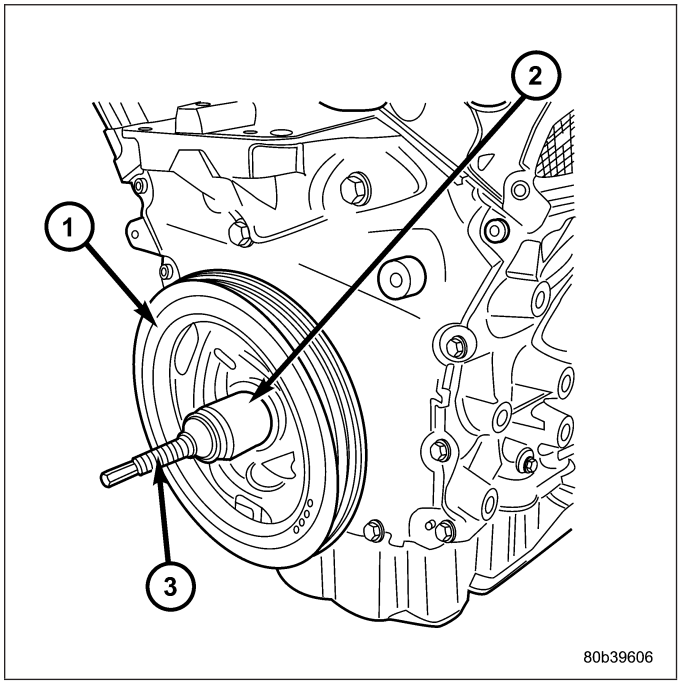

2. Install damper attaching bolt (3). Use special tool 9365 damper holder (2) to hold damper (1) while tightening attaching bolt to 170 N·m (125 ft. lbs.).
3. Install accessory drive belts (Refer to 7 - COOLING/ACCESSORY DRIVE/DRIVE BELTS - INSTALLATION).

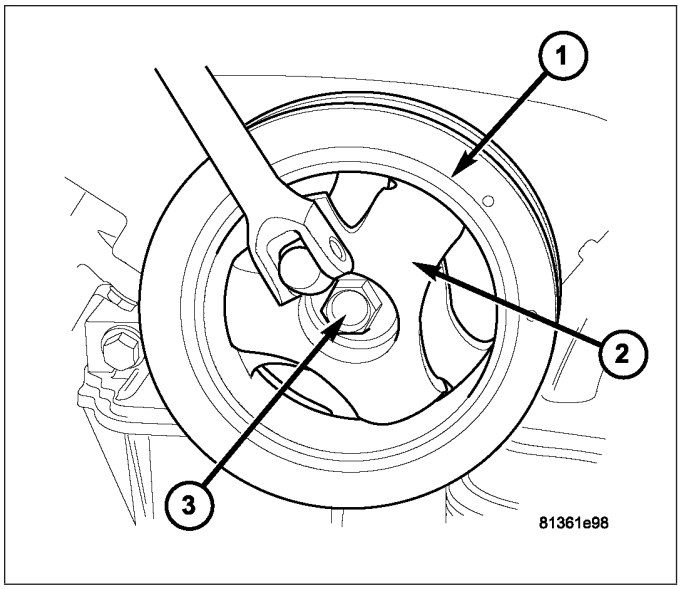

4. Connect negative battery (1) cable located in trunk.

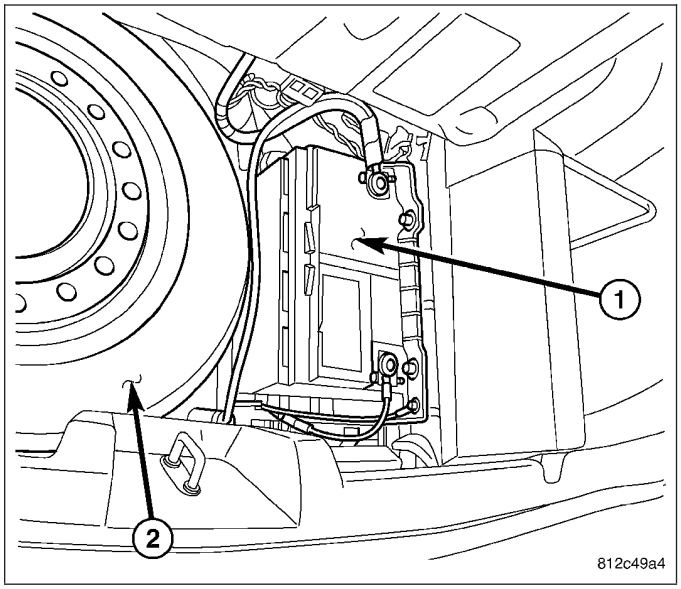

WINDAGE TRAY

REMOVAL

1. Disconnect negative battery (1) cable located in the trunk.
2. Raise vehicle.

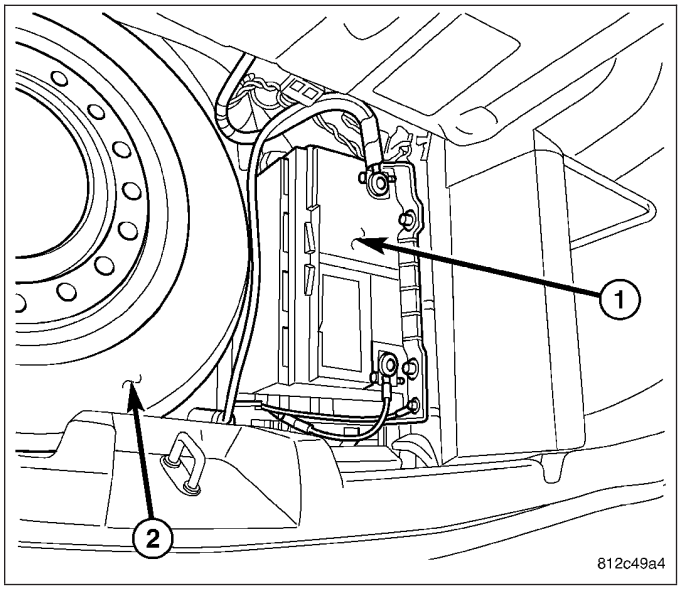

3. Remove lower splash shield retaining bolts (1) and splash shield (2).

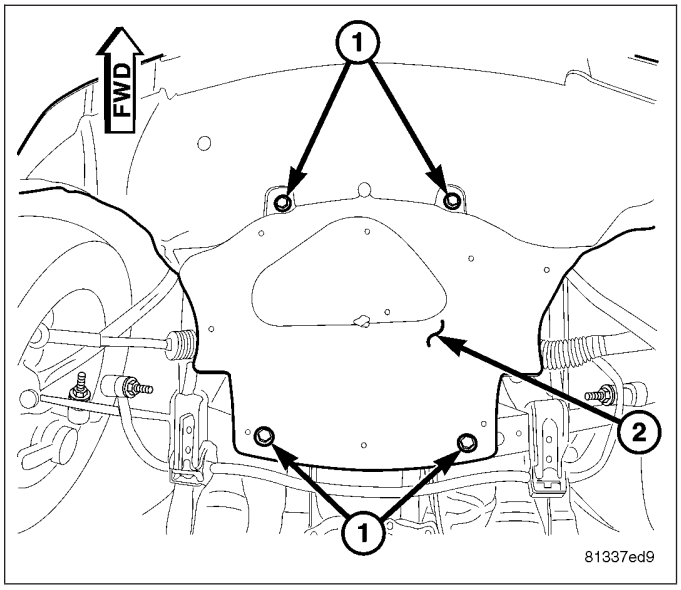

4. Remove oil filter (3).
5. Remove oil pan (4) (Refer to 9 - ENGINE/LUBRICATION/OIL PAN - REMOVAL).

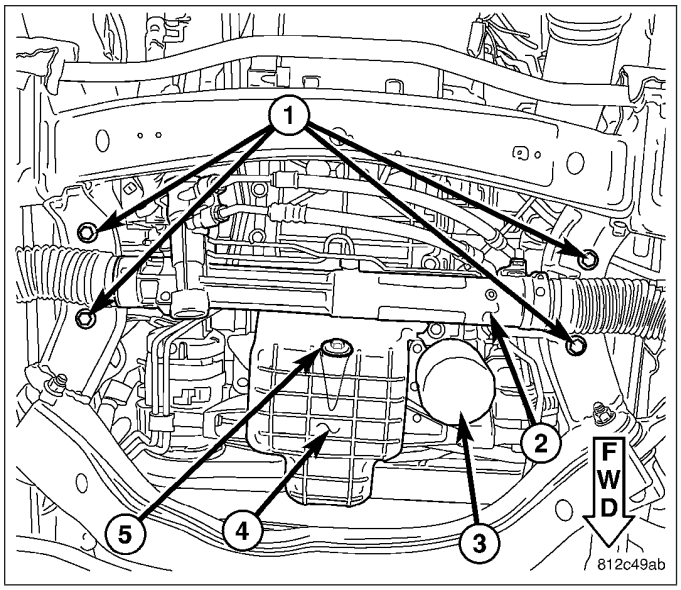

6. Remove oil pump pickup tube (2).
7. Remove windage tray/outer main bearing cap bolts (3).
8. Remove windage tray (1).

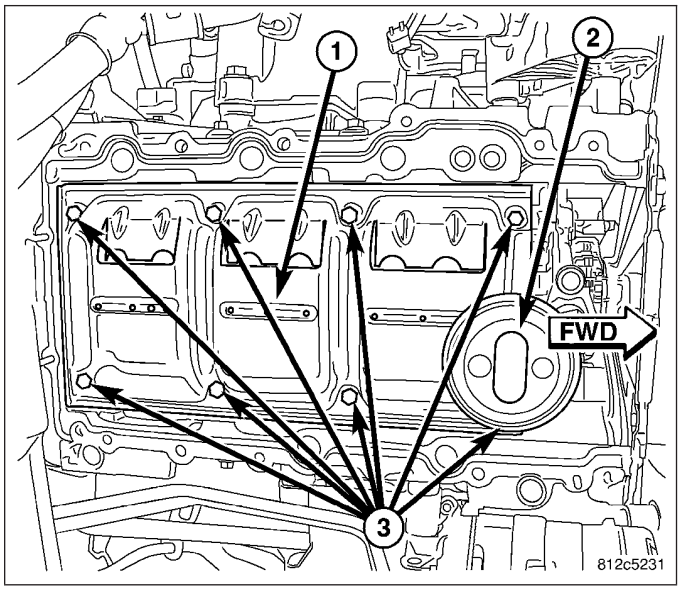

INSTALLATION

NOTE: Slots in windage tray should be on the right side of engine. If windage tray is improperly installed, damage to oil pan could result.

1. Install windage tray (1) torque mounting bolts to 27 N·m + ¼ turn (20 Ft. Lbs. +¼ turn).
2. Install oil pump pick up tube, torque mounting bolts to 28 N·m (250 In. Lbs.).

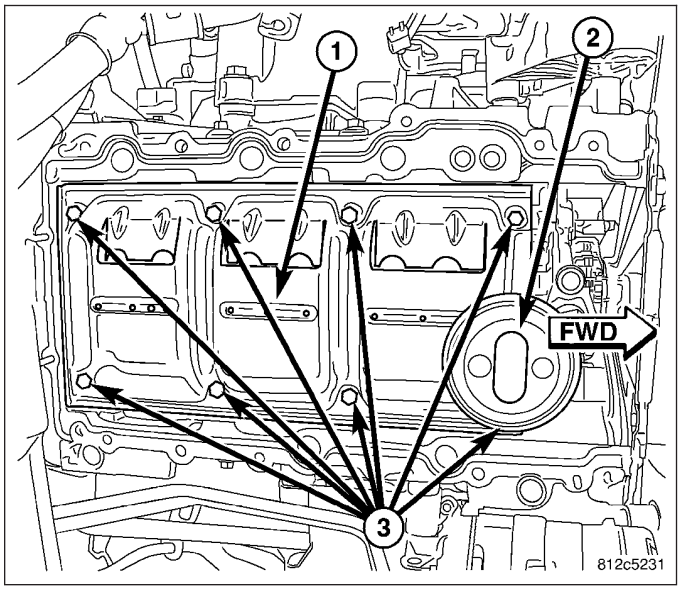

3. Install oil pan (Refer to 9 - ENGINE/LUBRICATION/ OIL PAN - INSTALLATION).
4. Install oil filter (3).

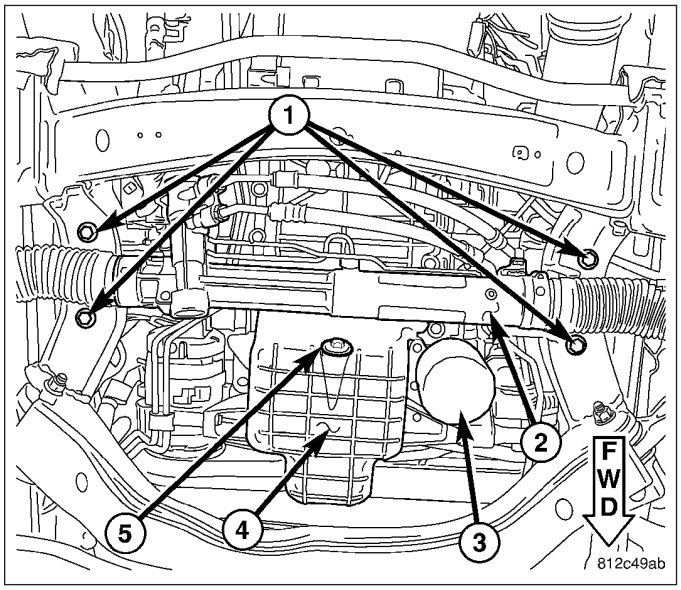

5. Install lower splash shield (2) and retaining bolts (1).
6. Lower vehicle.
7. Fill with correct grade of oil.

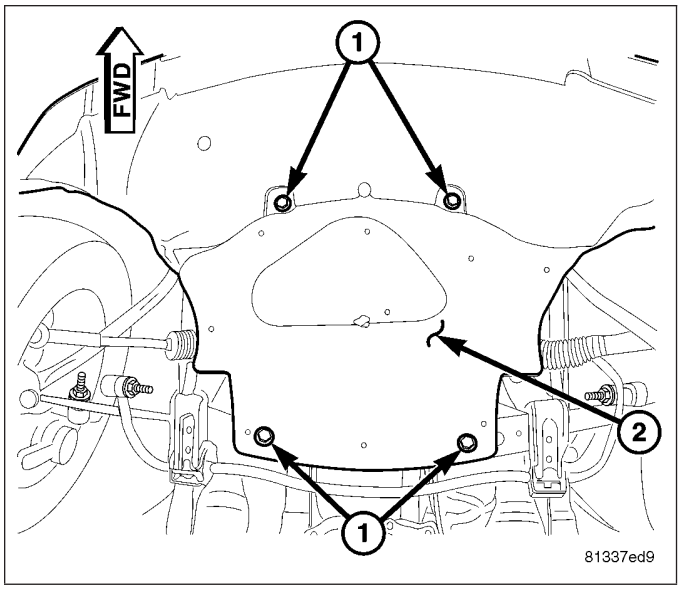

8. Connect negative battery (1) cable located in trunk.
9. Start engine and check for leaks.

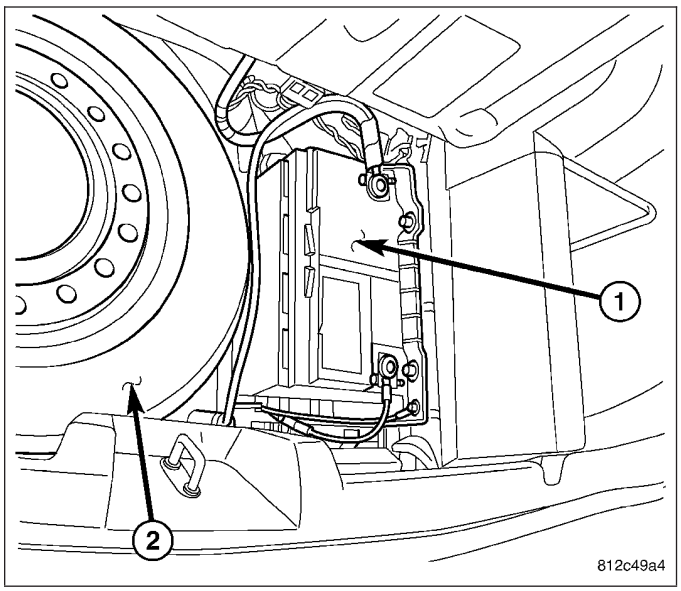

COLLAR-STRUCTURAL

REMOVAL

1. Disconnect negative battery (1) cable located in trunk.

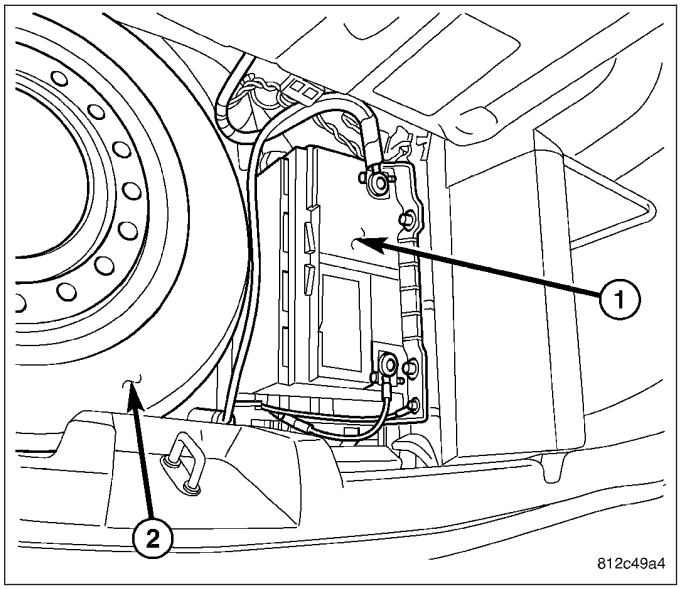

2. Raise vehicle on hoist.
3. Remove lower splash shield retaining bolts (1) and splash shield (2).

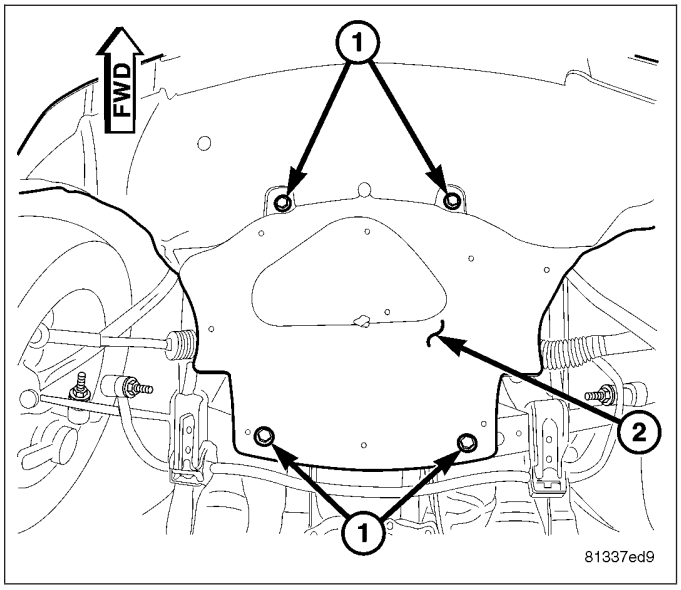

4. Remove transmission mount bolts (2).
5. Place a transmission jack under the transmission pan and raise engine and transmission.

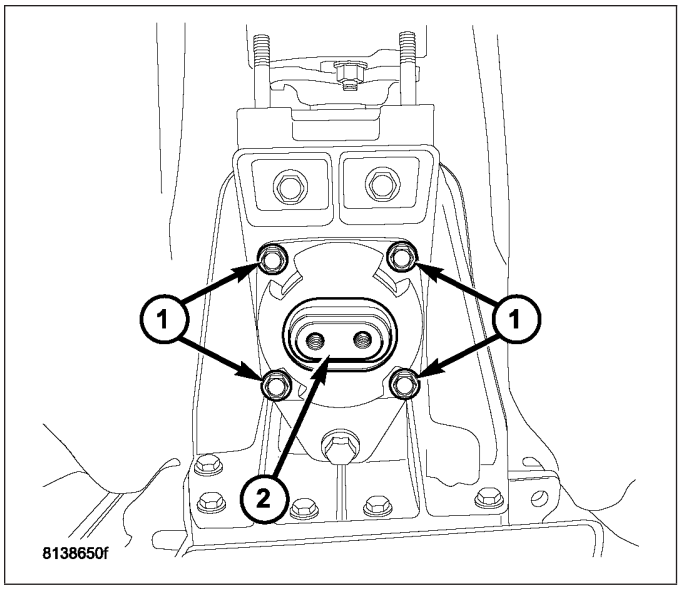

6. Remove bolts attaching structural collar to oil pan (3) and transmission bell housing (4).

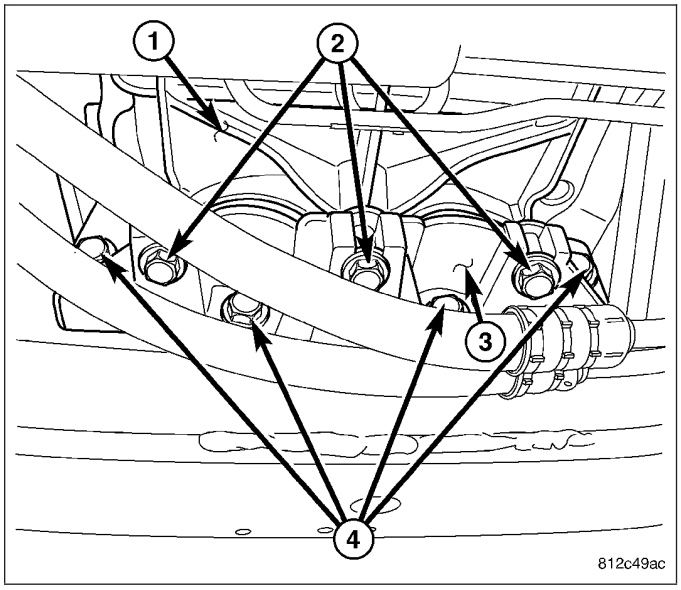

7. Move structural collar (1) to the right.
8. Remove structural collar (1) out towards the rear.

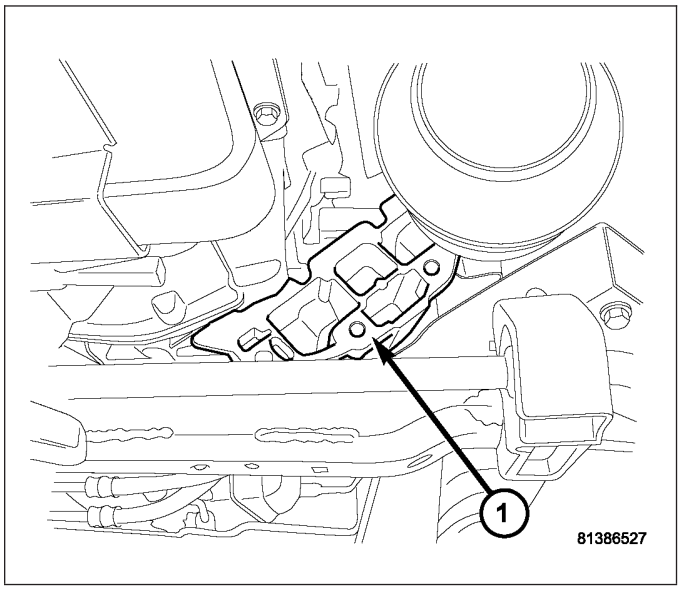

INSTALLATION

1. Install structural collar (1) from the right rear.

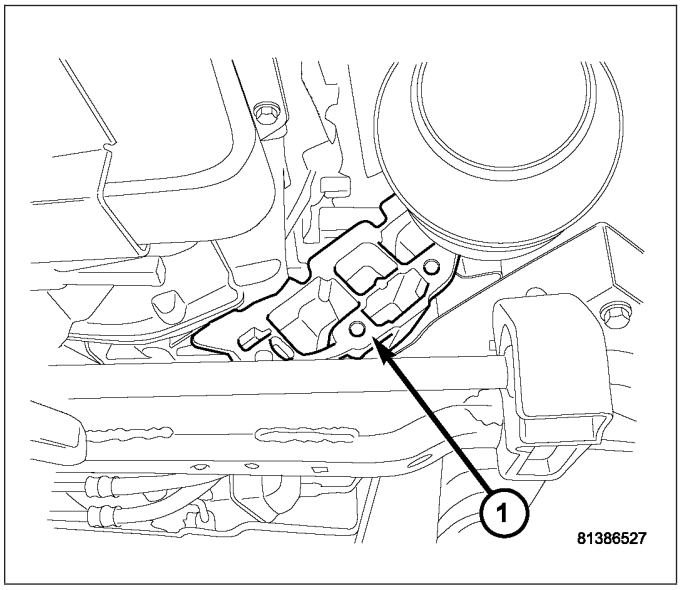

CAUTION: The structural collar must be tightened using this service procedure, or damage to transmission case and/or oil pan may occur.

2. Position structural collar (3) in place.
3. Finger tighten all bolts (2),(4).

NOTE: Make sure that structural collar (3) is flush with the oil pan (1) and the transmission bell housing.

4. Install the vertical collar bolts (2) to oil pan, pre-torque bolts to 1.1 N·m (10 in. lbs.).
5. Install the horizontal collar bolts (4) to transmission and tighten to 55 N·m (40 ft. lbs.).
6. Starting with the center vertical bolts and working outward, final torque all bolts to 55 N·m (40 ft. lbs.).

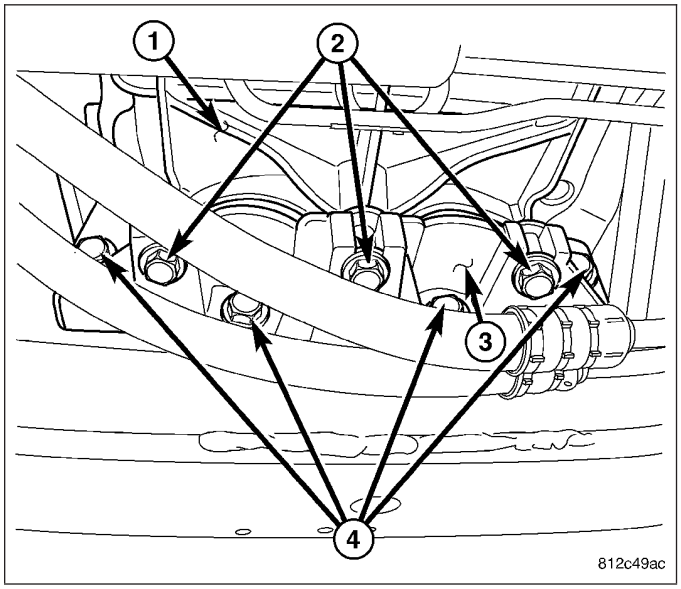

7. Install lower splash shield (2) and retaining bolts (1).
8. Lower vehicle.

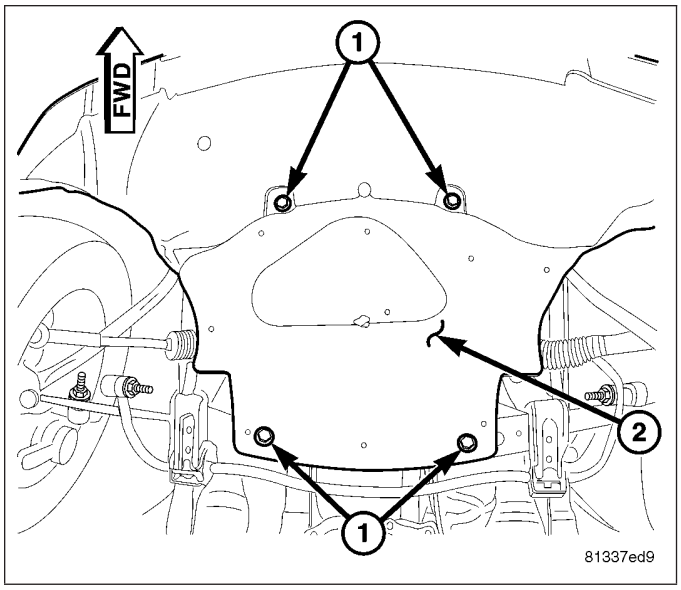

9. Connect negative battery (1) cable.

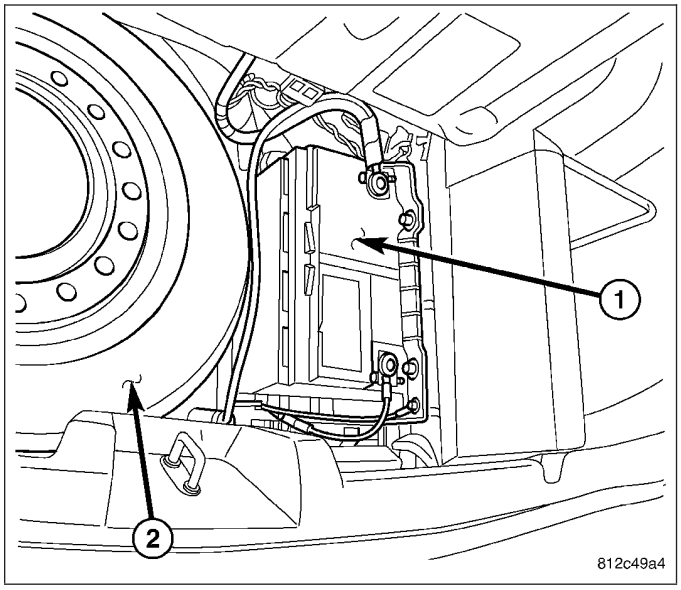

MOUNT-LEFT

REMOVAL

1. Disconnect negative battery (1) cable located in trunk.

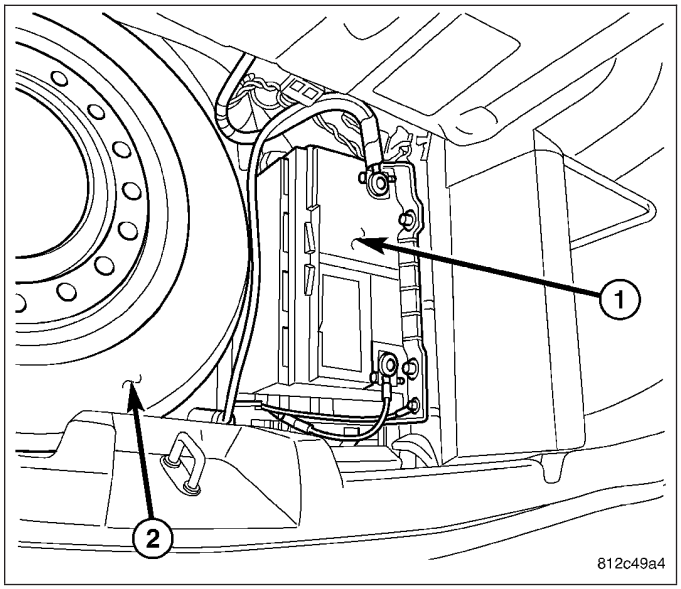

2. Remove air cleaner housing (3) (Refer to 9 - ENGINE/AIR INTAKE SYSTEM/AIR CLEANER HOUSING - REMOVAL).
3. Raise vehicle.

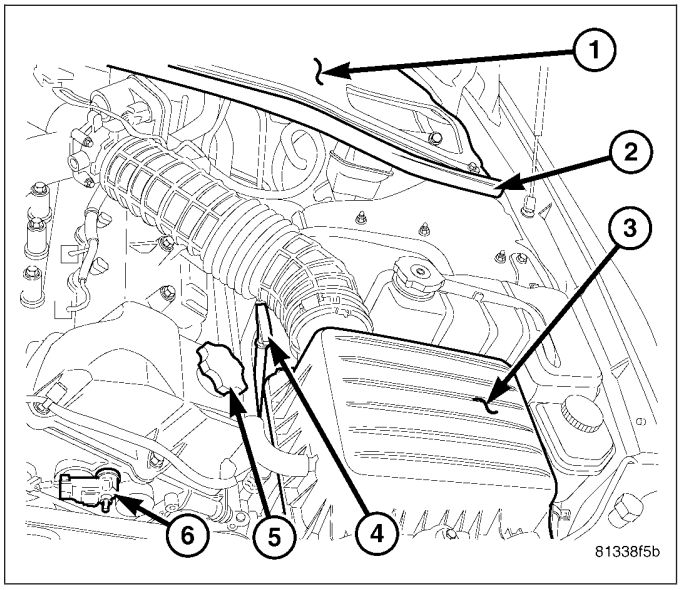

4. Remove lower splash shield retaining bolts (1) and splash shield (2).

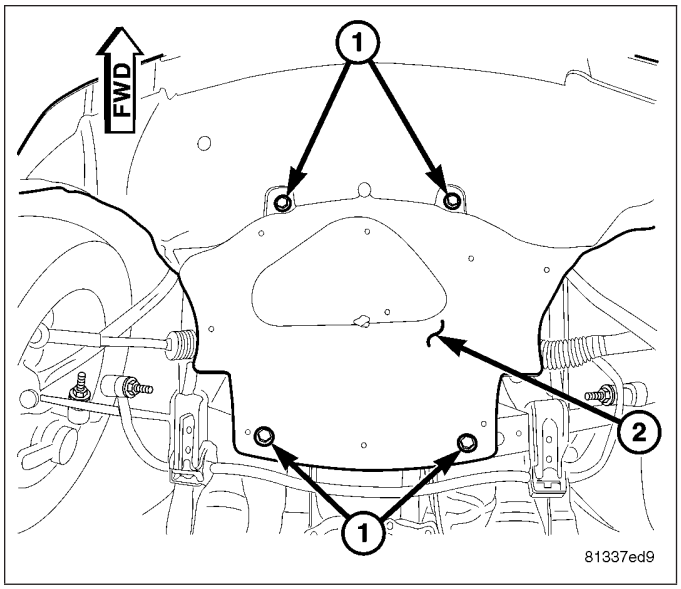

5. Remove engine mount nuts (1).
6. Remove engine mount studs (1) from the left mount isolater.
7. Place a block of wood under the oil pan (4) and raise engine with suitable jackstand.

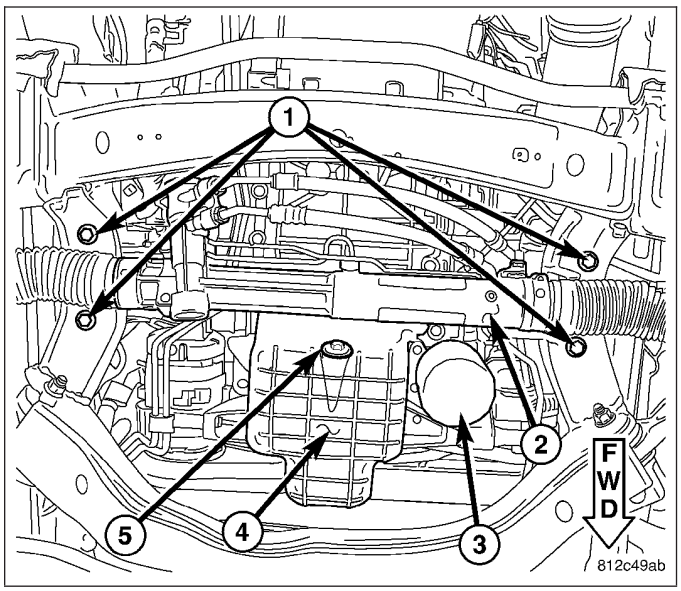

8. Remove engine mount isolater (1) to engine mount adapter (2) bolts.

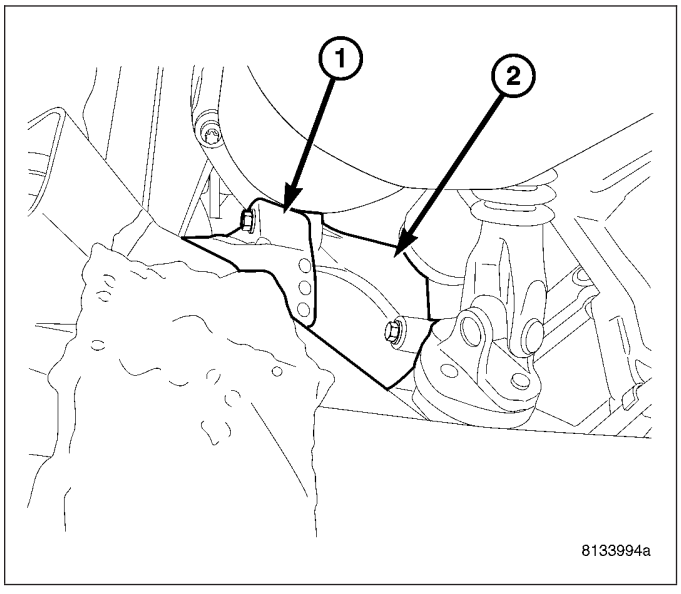

9. Remove engine mount isolater (1).

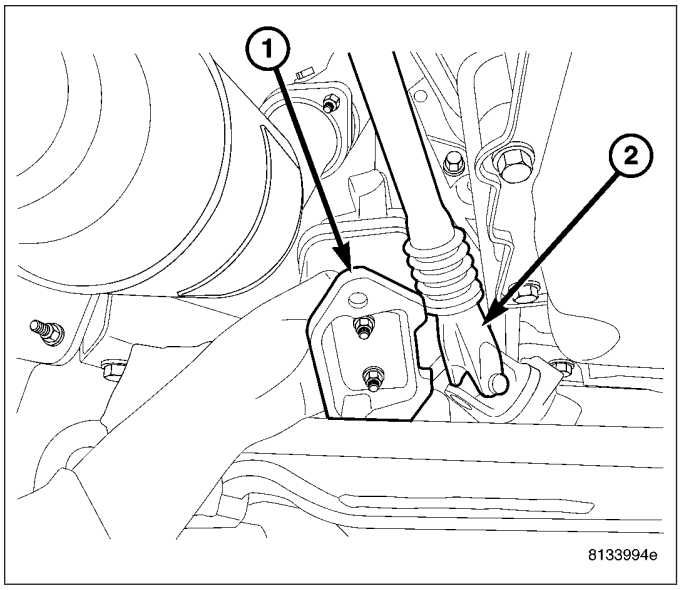

INSTALLATION

1. Install engine mount isolater (1) in place.

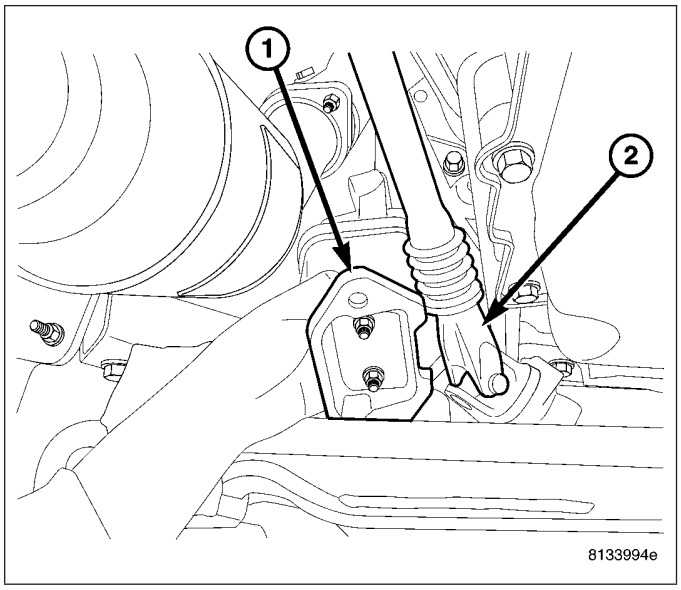

2. Attach left engine mount isolater (1) to engine mount adapter (2). Install bolts and tighten to 75 N·m (55 ft. lbs.).
3. Lower engine but do not do not let mount contact frame.
4. Install engine mount studs and tighten to 12 N·m (106 in. lbs.).

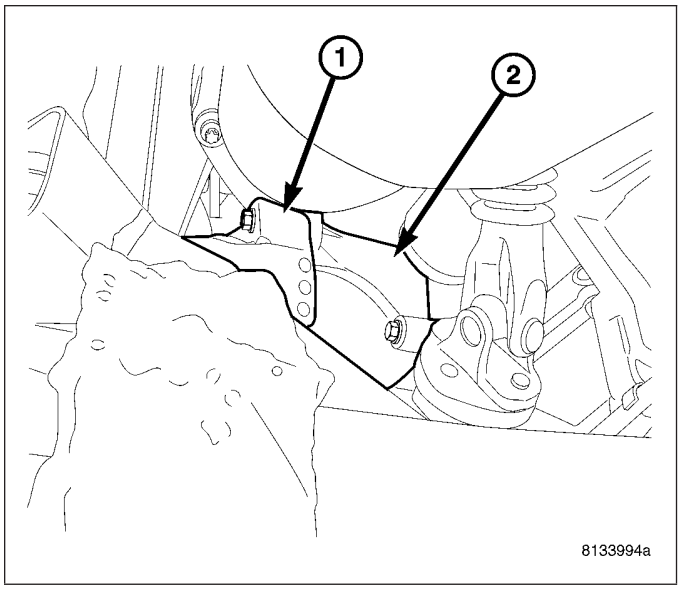

5. Lower engine and remove lifting device.
6. Tighten engine mount isolater nuts (1) to 75 N·m (55 ft. lbs.).

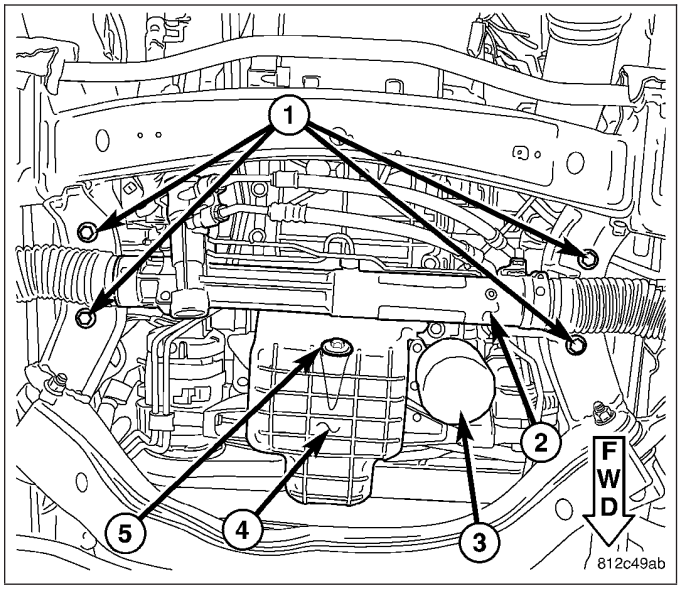

7. Install lower splash shield (2) and tighten retaining bolts (1).
8. Lower vehicle.

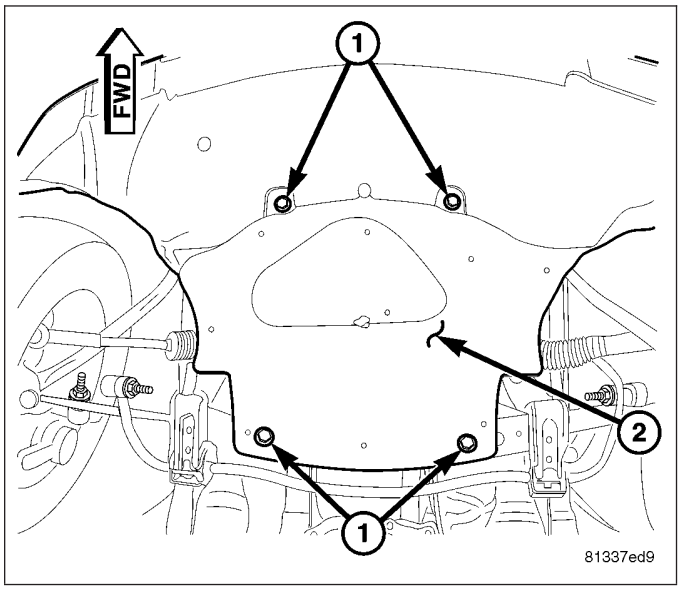

9. Install air cleaner housing assembly (3) (Refer to 9 - ENGINE/AIR INTAKE SYSTEM/AIR CLEANER HOUSING - INSTALLATION).

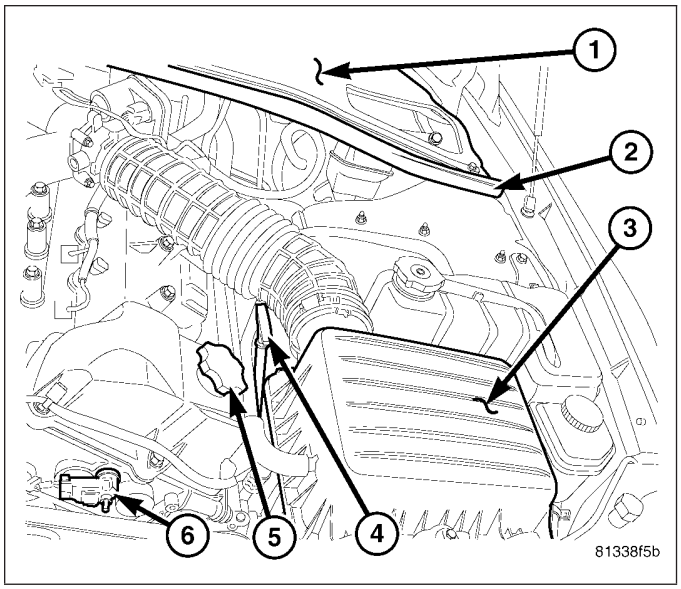

10. Connect negative battery (1) cable.

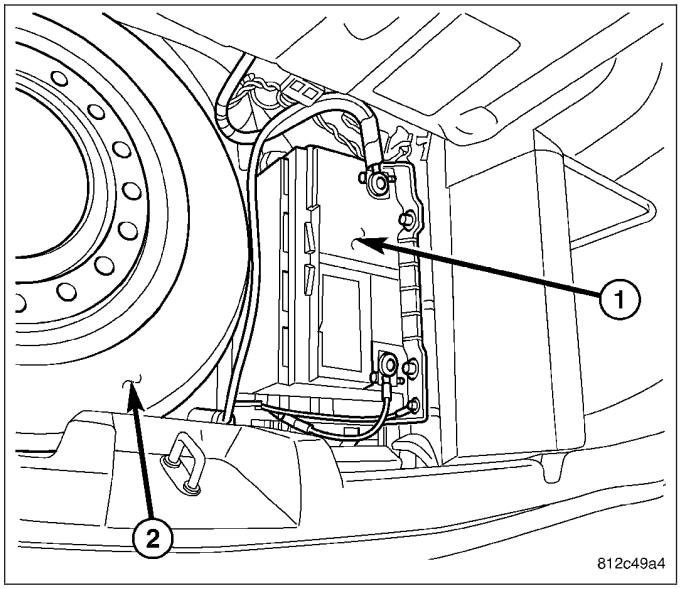

MOUNT-RIGHT

REMOVAL

1. Disconnect negative battery (1) cable located in trunk.

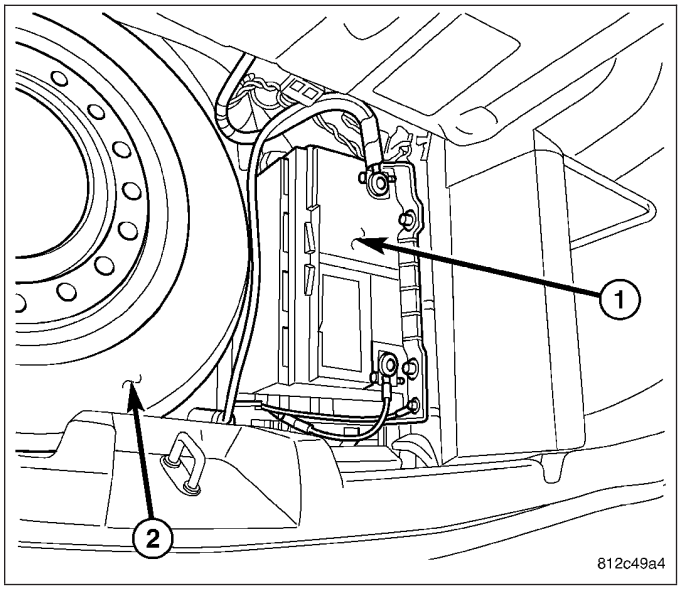

2. Remove air cleaner housing (3) (Refer to 9 - ENGINE/AIR INTAKE SYSTEM/AIR CLEANER HOUSING - REMOVAL).
3. Raise vehicle.

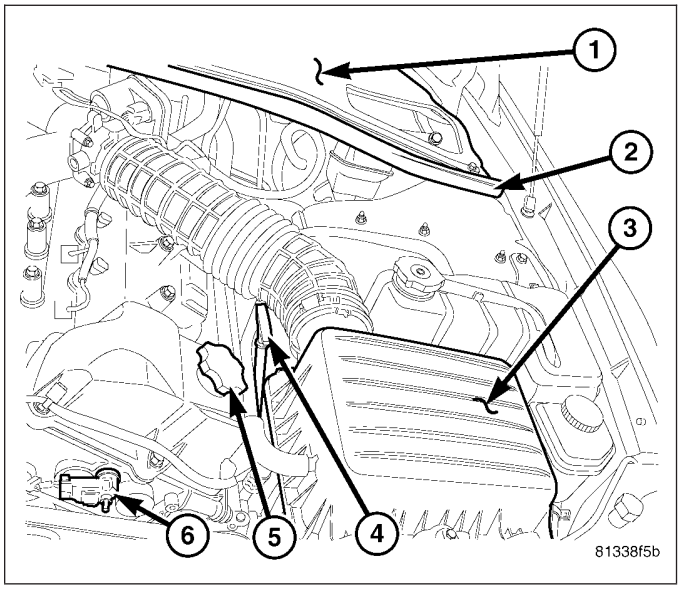

4. Remove lower splash shield retaining bolts (1) and splash shield (2).

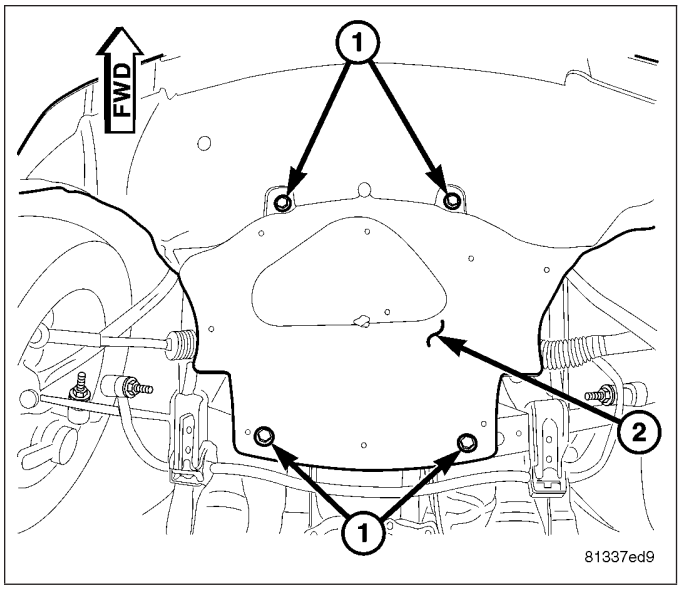

5. Remove engine mount nuts (1).
6. Remove engine mount studs (1) from the right engine mount isolater.
7. Place a block of wood under the oil pan (4) and raise engine with suitable jackstand.

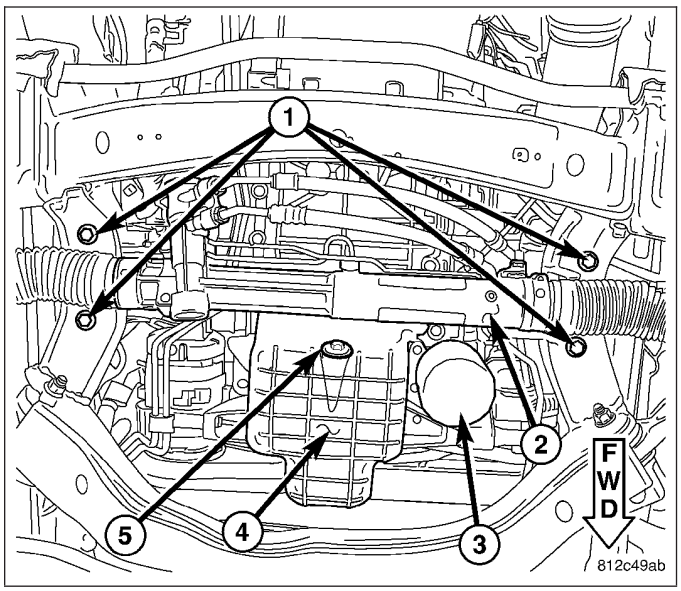

8. Remove engine mount isolater to engine mount adapter bolts (1).
9. Remove engine mount isolater (2).

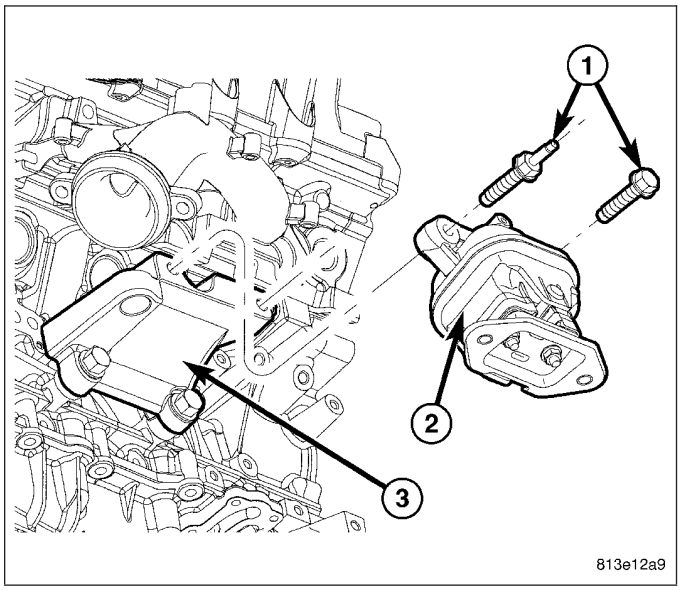

INSTALLATION

1. Install right engine mount isolator to engine mount adapter bolts (1). Tighten bolts to 75 N·m (55 ft. lbs.).
2. Lower engine but do not do not let mount contact frame.

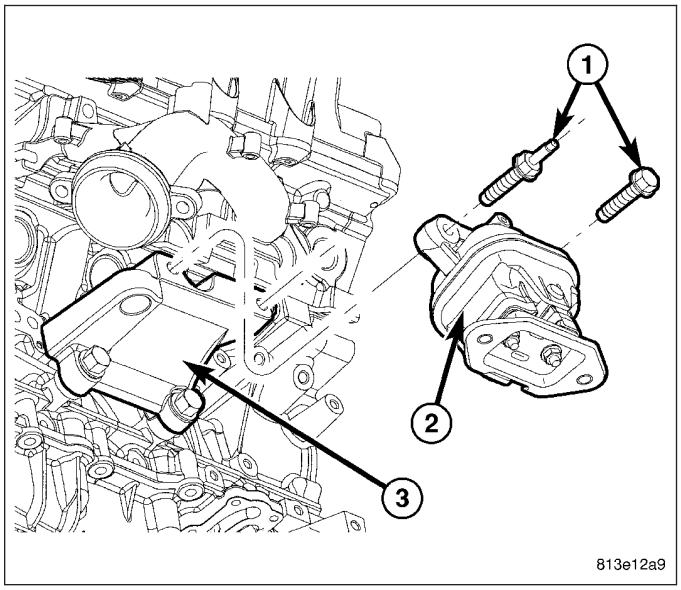

3. Install engine mount studs (1) and tighten to 12 N·m (106 in. lbs.).
4. Lower engine and remove lifting device.
5. Tighten engine mount isolator nuts (1) to 75 N·m (55 ft. lbs.).

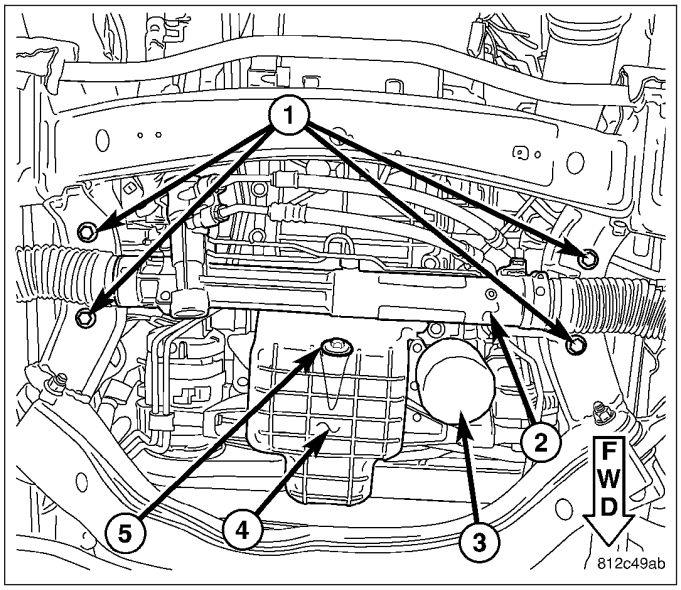

6. Install lower splash shield (2) and tighten retaining bolts (1).
7. Lower vehicle.

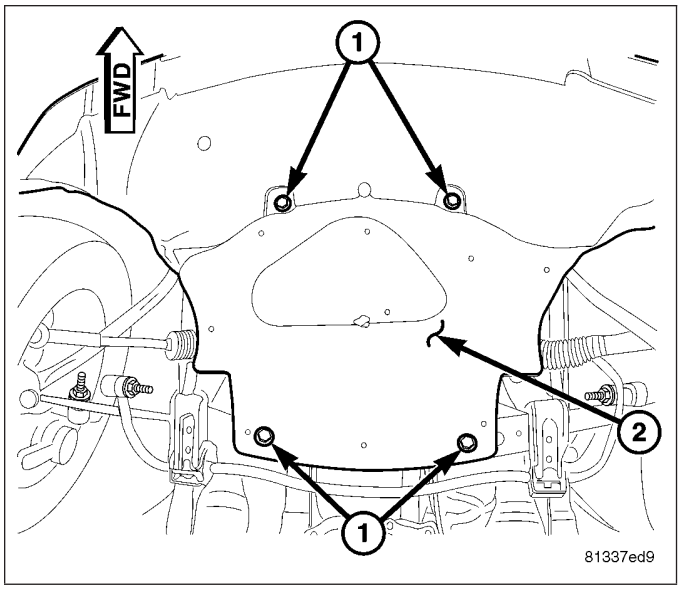

8. Install air cleaner housing assembly (3) (Refer to 9 - ENGINE/AIR INTAKE SYSTEM/AIR CLEANER HOUSING - INSTALLATION).

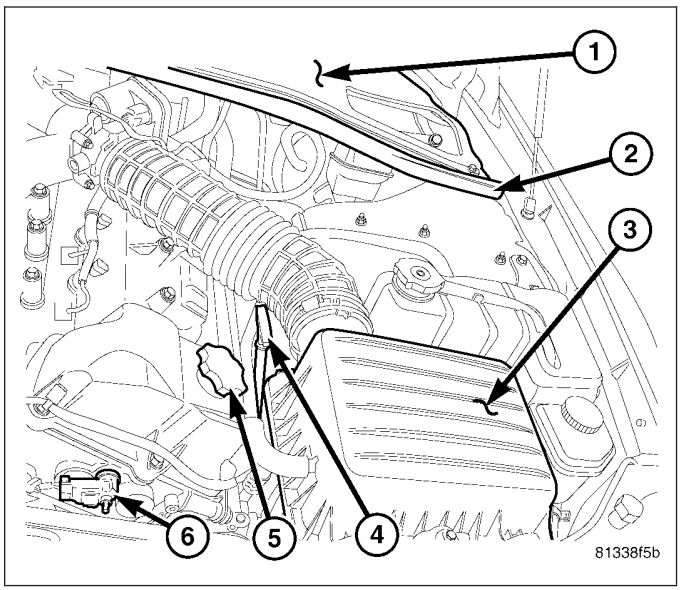

9. Connect negative battery (1) cable.

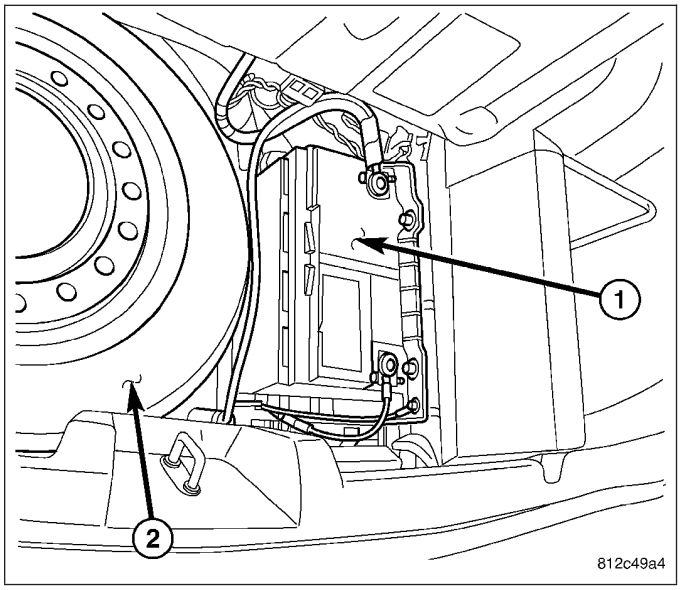

MOUNT-REAR

REMOVAL

1. Raise vehicle on hoist.
2. Remove cross member to mount bolts (2).
3. Place transmission jack under transmission pan and raise transmission.
4. Remove cross member attaching bolts and remove crossmember (1).

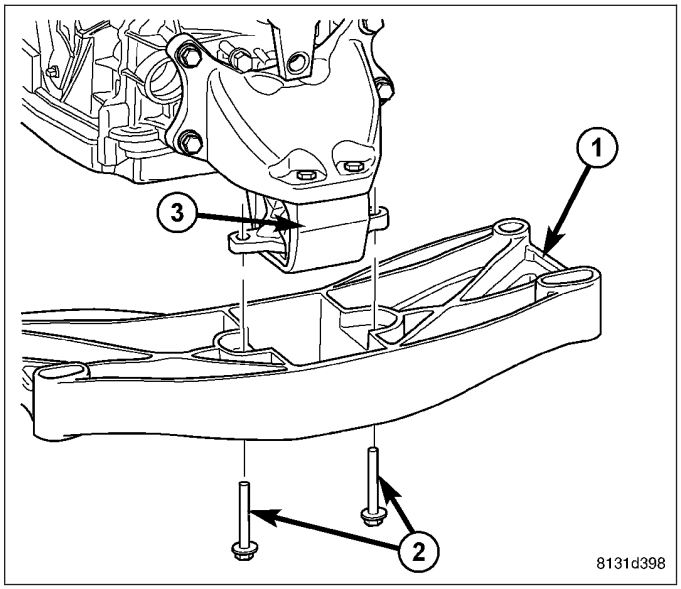

5. Remove mount to transmission bolts (2), remove mount (1).

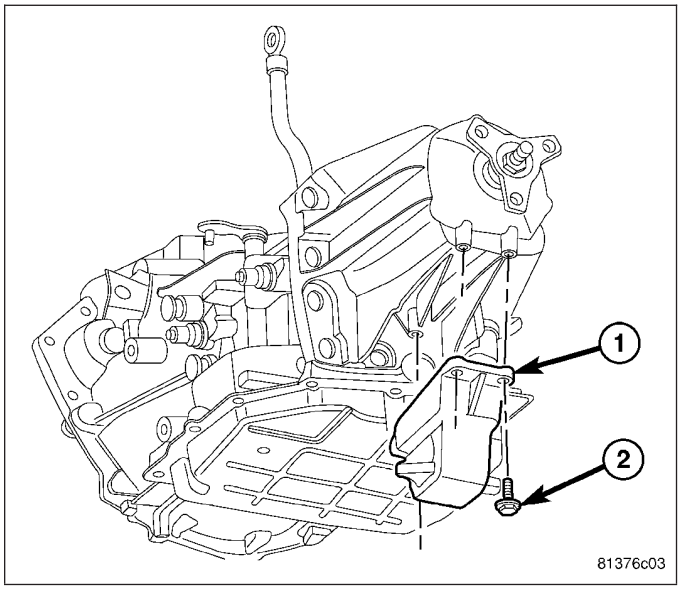

INSTALLATION

1. Install mount to transmission bolts (2) and tighten to 47 N·m (35 ft.lbs.).

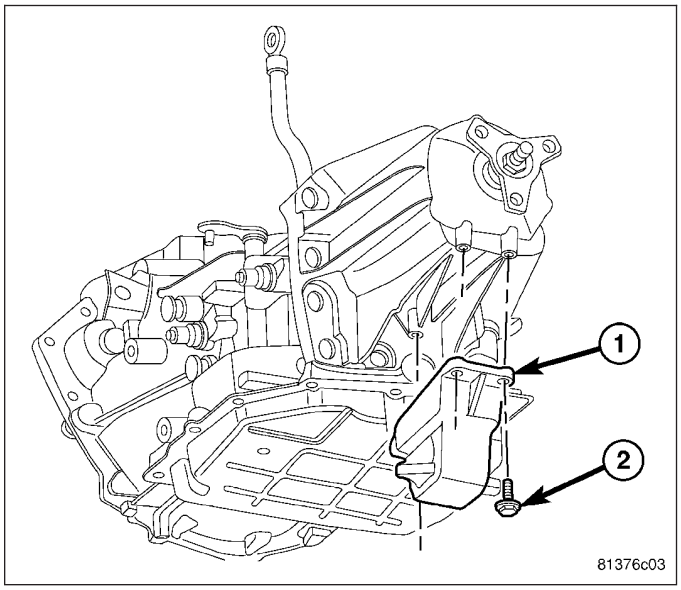

2. Install cross member (1) and attaching bolts. Tighten bolts to 68 N·m (50 ft.lbs.).
3. Lower transmission so cross member to mount bolts (2) can be started tightened by hand.
4. Lower transmission and remove jack.
5. Tighten mount bolts (2) to 47 N·m (39 ft.lbs.).

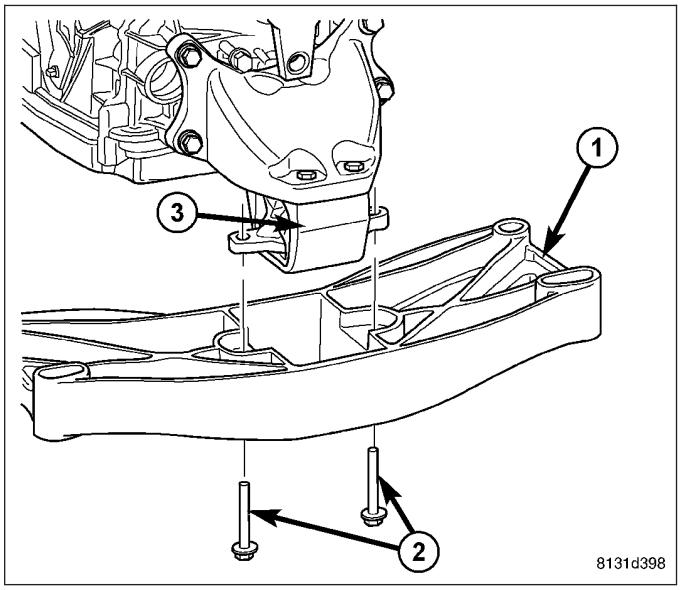

LUBRICATION

DESCRIPTION

The lubrication system is a full-flow filtration, pressure feed type. The oil pump body is mounted to the engine block. The pump inner rotor is driven by the crankshaft. A windage tray is used to increase power by minimizing oil windage at high engine RPM. An engine oil cooler is used on some models.

OPERATION

Oil from the oil pan is pumped by a geroter type oil pump (3) directly coupled to the crankshaft. Oil pressure is controlled by a relief valve mounted inside the oil pump housing. Refer to Cylinder Block, Left Cylinder Head or Right Cylinder Head art between the charts for engine oil lubrication circuits.

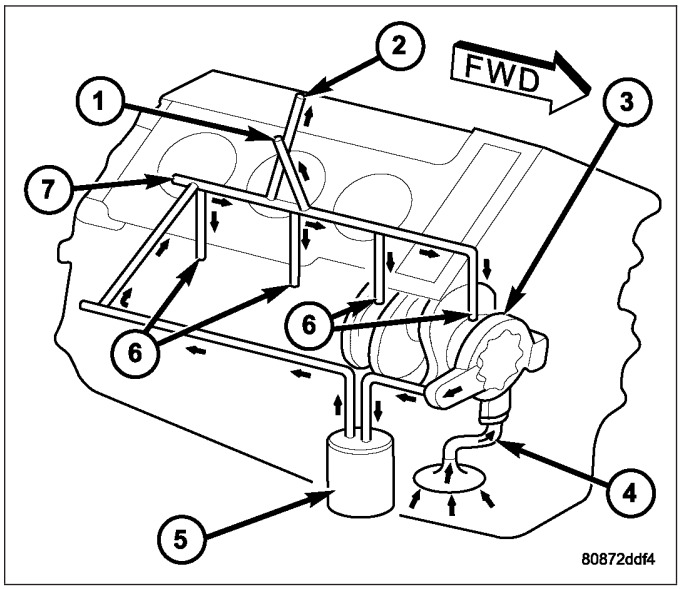

FROM:	TO:	FROM:	TO:
Oil Pump	Oil Filter Mounting (inlet)	Main Oil Gallery - Center of Block	1. Crankshaft Main Bearings
Oil Filter Mounting (inlet)	Oil Filter		2. Left Cylinder Head*
Oil Filter	Oil Filter Mounting (outlet)		3. Right Cylinder Head*
Oil Filter Mounting (outlet)	Oil Gallery - Right side of Block	Crankshaft Main Bearings	Connecting Rod Bearings
Oil Gallery - Right side of Block	Oil Gallery - Rear of Block and to Oil Cooler (some models)	Left Cylinder Head	Refer to Left Cylinder Head Art
Oil Gallery - Rear of Block	Main Oil Gallery - Center of Block	Right Cylinder Head	Refer to Right Cylinder Head Art
*The cylinder head gaskets have an oil restrictor to control oil flow to the cylinder heads.			

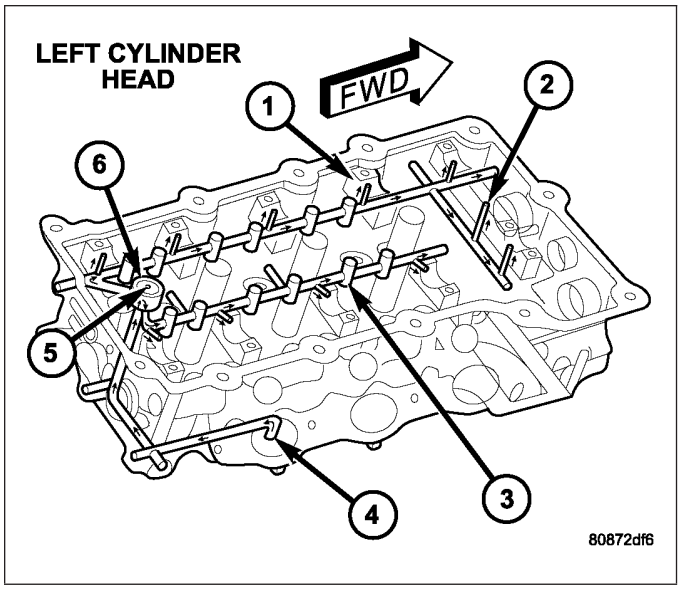

FROM:	TO:
Left Cylinder Head Oil Inlet Gallery (intake side of head)	Oil Gallery and Accumulator – Rear of Head*
Oil Gallery and Accumulator – Rear of Head*	1. Exhaust Camshaft Oil Passage 2. Intake Camshaft Oil Passage
Left Exhaust Camshaft Oil Passage	1. Left Exhaust Camshaft Journals 2. Hydraulic Valve Lash Adjusters and Rocker Arms 3. Left Camshaft (Secondary) Chain Tensioner**
Left Intake Camshaft Oil Passage	1. Left Intake Camshaft Journals 2. Hydraulic Valve Lash Adjusters and Rocker Arms
* When oil reaches the back of the cylinder head, the oil gallery feeds oil into an accumulator chamber that is located towards center of the head. The accumulator chamber is closed off with a pressed in core plug that has a small orifice to act as a vent. Oil then travels down at a 45 degree angle from the accumulator into two passages, one for the intake and one for the exhaust side of the cylinder head.	
** The secondary camshaft chain tensioner is the last component to receive oil on the left cylinder head.	

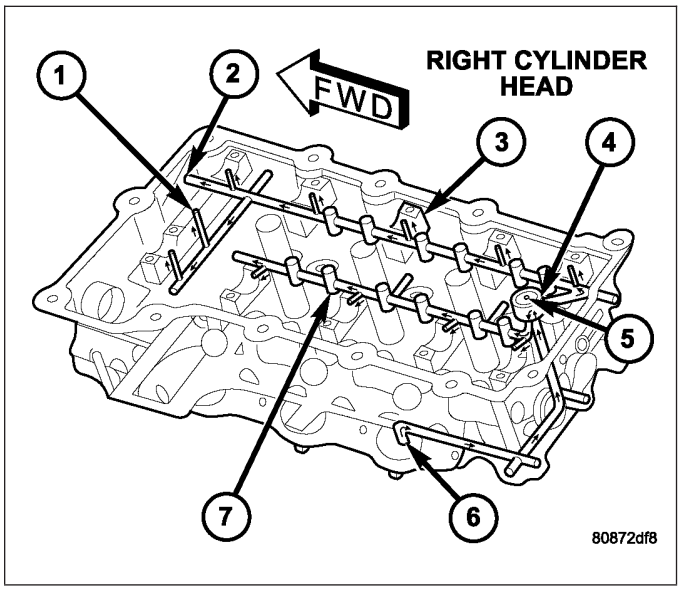

FROM:	TO:
Right Cylinder Head Oil Inlet Gallery (intake side of head)	Oil Gallery and Accumulator – Rear of Head*
Oil Gallery and Accumulator – Rear of Head*	1. Exhaust Camshaft Oil Passage 2. Intake Camshaft Oil Passage
Right Exhaust Camshaft Oil Passage	1. Right Exhaust Camshaft Journals 2. Hydraulic Valve Lash Adjusters and Rocker Arms 3. Right Camshaft (Secondary) Chain Tensioner 4. Primary Timing Chain Tensioner - Right Head**
Right Intake Camshaft Oil Passage	1. Right Intake Camshaft Journals 2. Hydraulic Valve Lash Adjusters and Rocker Arms
* When oil reaches the back of the cylinder head, the oil gallery feeds oil into an accumulator chamber that is located towards center of the head. The accumulator chamber is closed off with a pressed in core plug that has a small orifice to act as a vent. Oil then travels down at a 45 degree angle from the accumulator into two passages, one for the intake and one for the exhaust side of the cylinder head.	
** The timing (primary) chain tensioner is the last component to receive oil on the right cylinder head.	

DIAGNOSIS AND TESTING

CHECKING ENGINE OIL PRESSURE

1. Remove the oil pressure switch (1) (Refer to 9 - ENGINE/LUBRICATION/OIL PRESSURE SENSOR/SWITCH - REMOVAL).
2. Install oil pressure test gauge assembly, Special Tools C-3292 with 8406 adaptor.
3. Start engine and monitor gauge readings.

CAUTION: If oil pressure is 0 at idle, Do not run engine at 3000 RPM.

4. Oil Pressure (engine at operating temperature): **Curb Idle** 34.5 kPa (5 psi) minimum **3000 RPM** 300–724 kPa (45–105 psi).
5. If oil pressure is 0 at idle. shut off engine, check for pressure relief valve stuck open or a clogged oil pickup screen.
6. Remove oil pressure test gauge assembly, Special Tools C-3292 with 8406 adaptor and install oil pressure switch after testing is completed (Refer to 9 - ENGINE/LUBRICATION/OIL PRESSURE SENSOR/SWITCH - INSTALLATION).

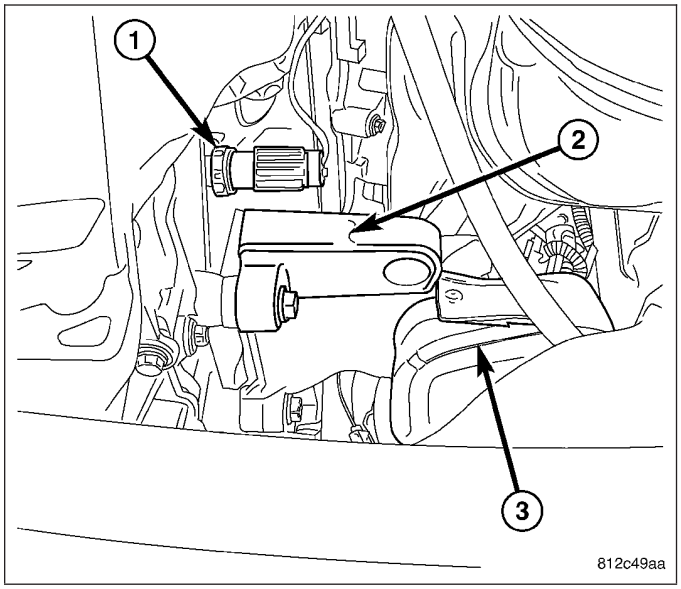

OIL

DESCRIPTION

For engine oil type and capacity (Refer to LUBRICATION & MAINTENANCE/FLUID TYPES - DESCRIPTION - ENGINE OIL)

STANDARD PROCEDURE

ENGINE OIL AND FILTER CHANGE

WARNING: New or used engine oil can be irritating to the skin. Avoid prolonged or repeated skin contact with engine oil. Contaminants in used engine oil, caused by internal combustion, can be hazardous to your health. Thoroughly wash exposed skin with soap and water. Do not wash skin with gasoline, diesel fuel, thinner, or solvents, health problems can result. Do not pollute, dispose of used engine oil properly. Contact your dealer or government agency for location of collection center in your area.

Change engine oil and filter at mileage and time intervals described in the Maintenance Schedule (Refer to LUBRICATION & MAINTENANCE/MAINTENANCE SCHEDULES - DESCRIPTION).

TO CHANGE ENGINE OIL

1. Run engine until achieving normal operating temperature.
2. Position the vehicle on a level surface and turn engine off.
3. Hoist and support vehicle on safety stands (Refer to LUBRICATION & MAINTENANCE/HOISTING - STANDARD PROCEDURE).
4. Remove engine splash shields.
5. Place a suitable drain pan under crankcase drain (5).
6. Remove drain plug (5) from oil pan and allow oil to drain into pan. Inspect drain plug (5) threads for stretching or other damage. Replace drain plug (5) and gasket if damaged.
7. Remove oil filter (3). Refer to (Refer to 9 - ENGINE/LUBRICATION/OIL FILTER - REMOVAL)
8. Install drain plug (5) in oil pan. Tighten plug to 27 N·m (20 ft. lbs.).
9. Install new oil filter (3) (Refer to 9 - ENGINE/LUBRICATION/OIL FILTER - INSTALLATION).

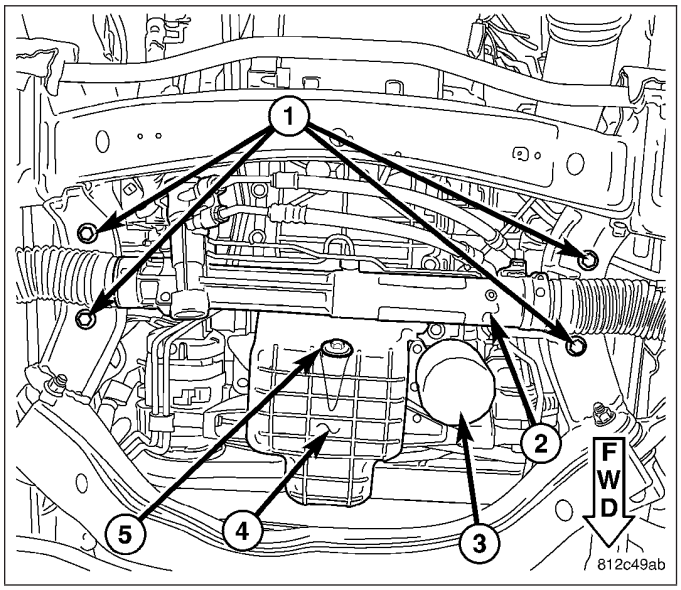

10. Lower vehicle and remove oil fill cap (5). Fill crankcase with specified type and amount of engine oil, (Refer to LUBRICATION & MAINTENANCE/FLUID TYPES - DESCRIPTION - ENGINE OIL) (Refer to LUBRICATION & MAINTENANCE - SPECIFICATIONS).
11. Install oil fill cap (5).
12. Start engine and inspect for leaks.
13. Stop engine and inspect oil level (4).

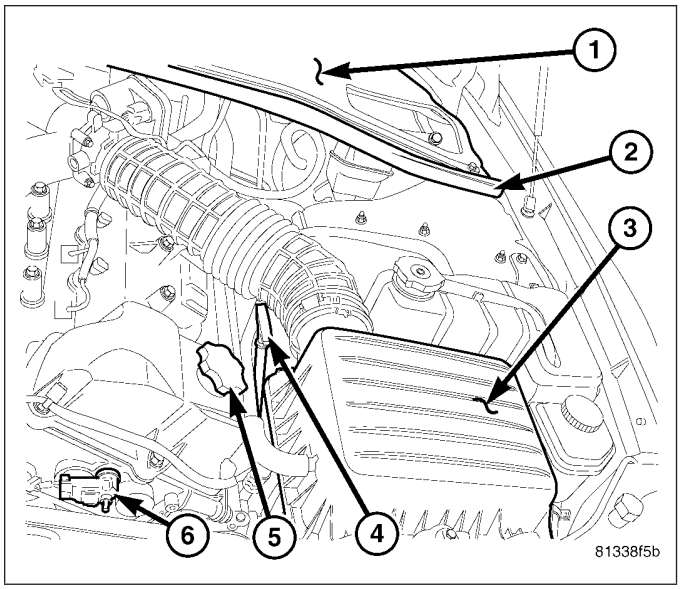

OIL FILTER SPECIFICATION

All engines are equipped with a high quality full-flow, disposable type oil filter. When replacing oil filter, use a Mopar® filter or equivalent.

USED ENGINE OIL DISPOSAL

Care should be exercised when disposing used engine oil after it has been drained from a vehicle engine. Refer to the WARNING listed above.

ENGINE OIL LEVEL CHECK

The best time to check engine oil level is after it has sat overnight, or if the engine has been running, allow the engine to be shut off for at least 5 minutes before checking oil level (4).

Checking the oil while the vehicle is on level ground will improve the accuracy of the oil level reading. Add oil in the oil fill (5) only when the level is at or below the ADD mark.

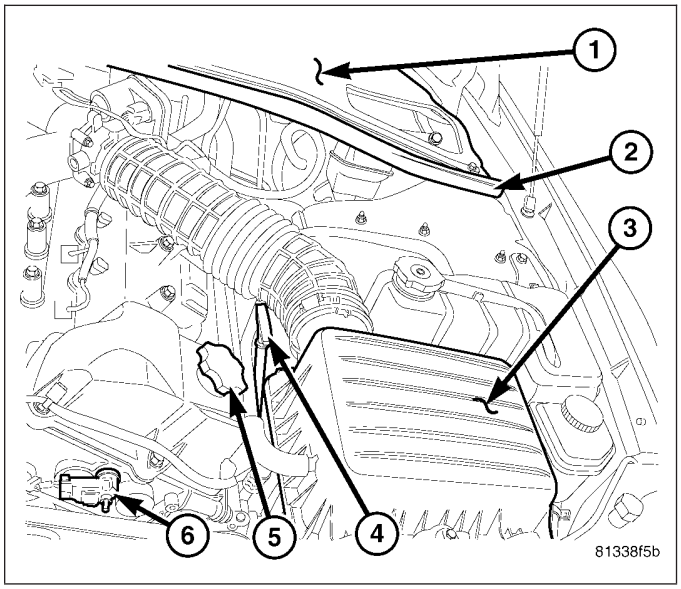

COOLER & LINES-OIL

DESCRIPTION

The 2.7L engine oil cooler (if equipped) is an oil-to-coolant type engine oil cooler (4). The cooler (4) is mounted between the oil filter adapter and the oil filter (3). If equipped, the engine will hose assembly (2). If not equipped, the engine will have hose assembly (1).

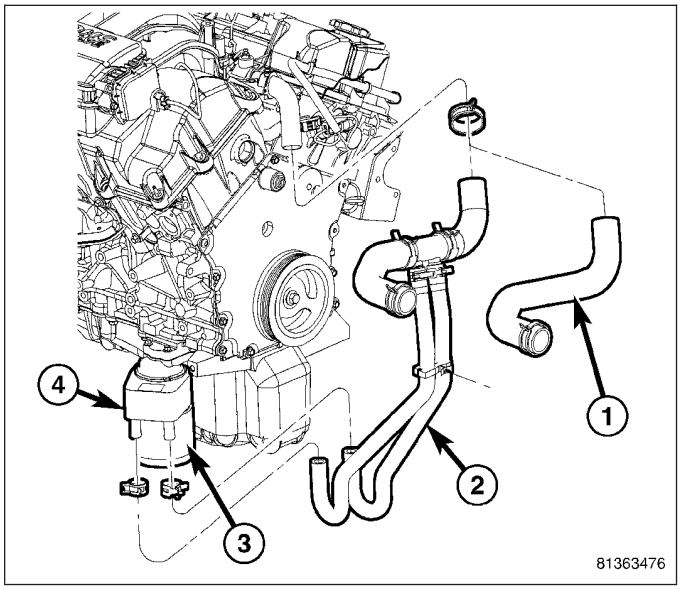

OPERATION

Engine oil travels from the oil cooler (4) and into the oil filter (3). Engine oil then exits the filter into the main gallery. Engine coolant flows from the upper radiator hose to and from the cooler through hoses (2) and back to the upper radiator hose.

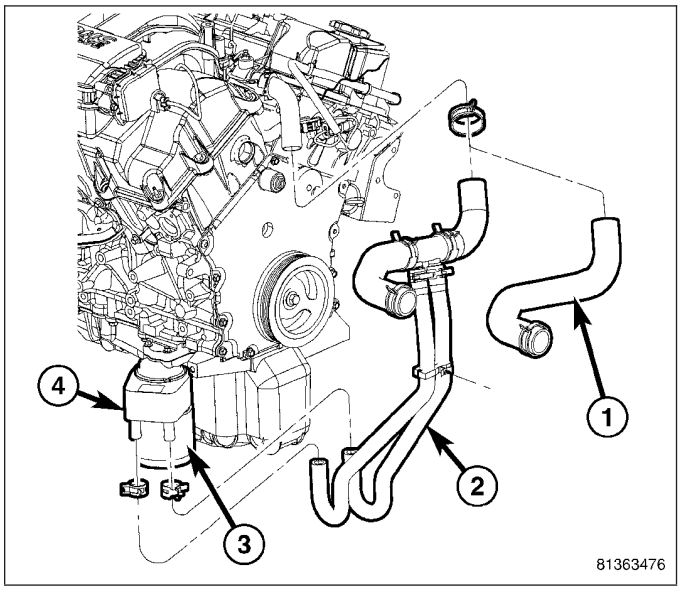

REMOVAL

1. Drain cooling system (Refer to 7 - COOLING - STANDARD PROCEDURE).
2. Raise vehicle on hoist.
3. Disconnect coolant hoses (2) from oil cooler (4).
4. Remove oil filter (3).
5. Remove oil cooler attaching fastener from center of oil cooler (4).
6. Remove oil cooler (4).

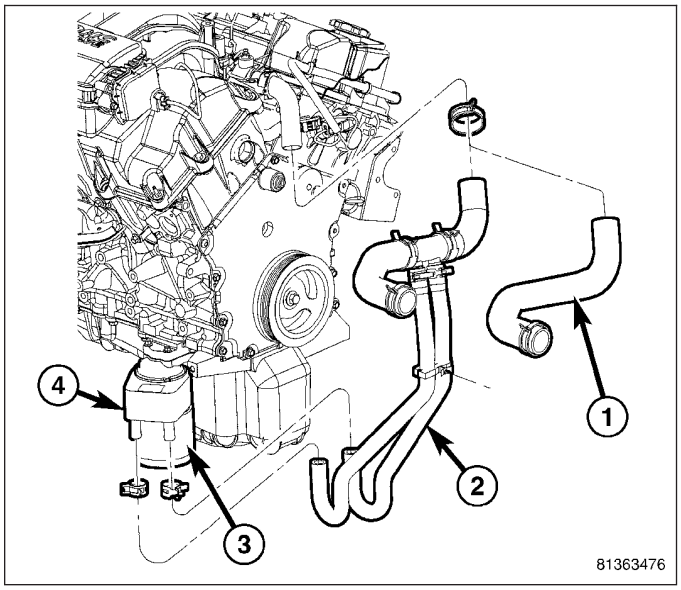

INSTALLATION

1. Install oil cooler (4).

NOTE: The cut out section of the oil cooler seal retainer flange (top), must be aligned with the tab on the oil pan. The oil cooler must be prevented from turning during the tightening sequence.

2. Install oil cooler (4) attaching fastener and tighten to 61 N·m (45 ft. lbs.).
3. Install oil filter (3).
4. Connect coolant hoses (2) to oil cooler (4).
5. Lower vehicle.
6. Fill cooling system (Refer to 7 - COOLING - STANDARD PROCEDURE).
7. Start engine and check for leaks.
8. Check engine oil and add as needed.

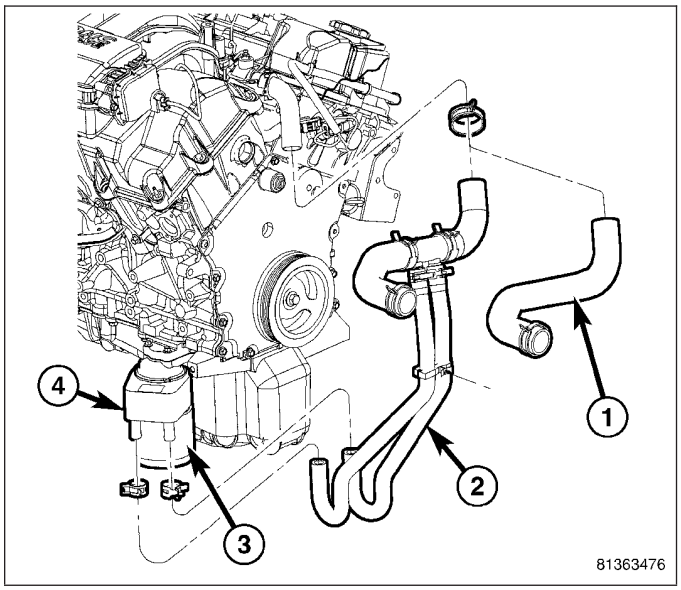

FILTER-OIL

REMOVAL

1. Raise vehicle on hoist.
2. Remove lower splash shield retaining bolts (1) and splash shield (2).

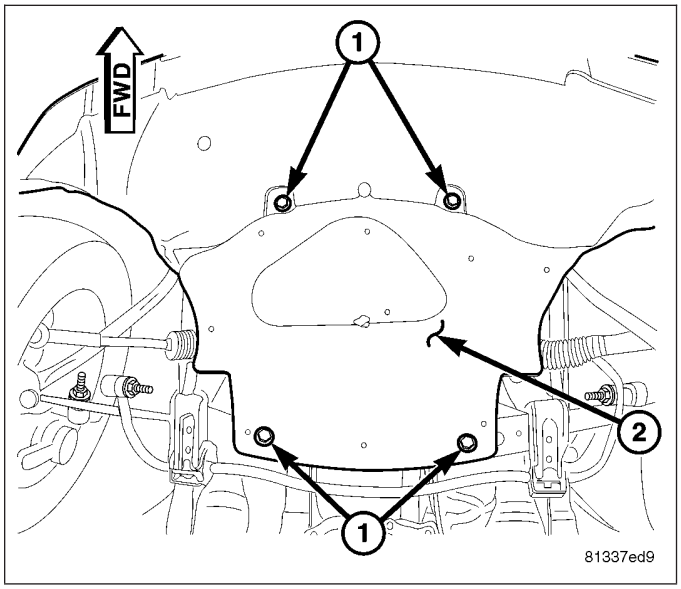

3. Position a suitable collecting container under oil filter (3) location.
4. Remove oil filter (3) using a suitable oil filter wrench. Dispose of oil filter (3) following environmental guidelines.

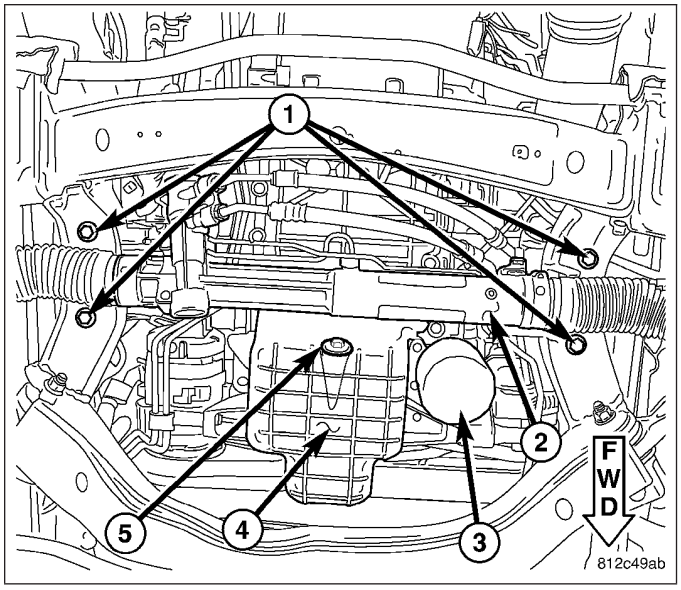

INSTALLATION

1. Wipe filter base clean, then inspect gasket sealing surface.
2. Lubricate gasket of new filter with clean engine oil.
3. Install oil filter (3) and tighten to 16 N·m (9 ft. lbs.) of torque after gasket contacts base. Use filter wrench if necessary.

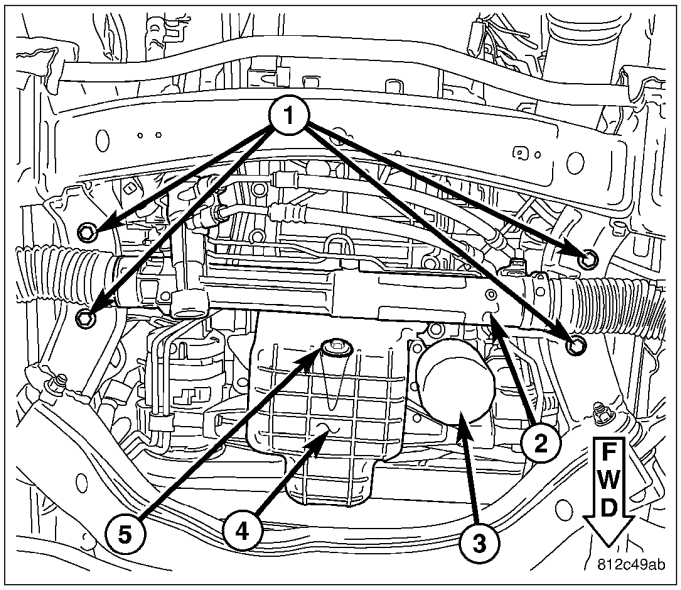

4. Install lower splash shield (2) and retaining bolts (1).

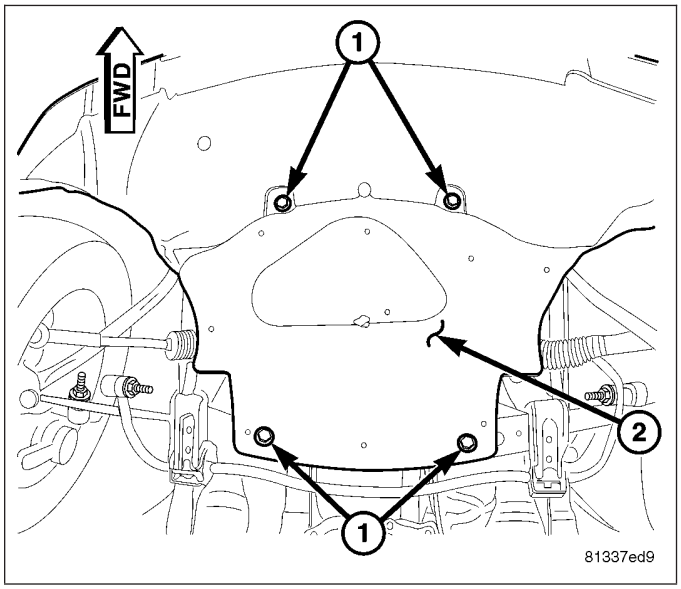

5. Fill crankcase with proper engine oil to correct level. Start engine and check for leaks.
6. Check engine oil level on dipstick (4) and fill as needed (5).

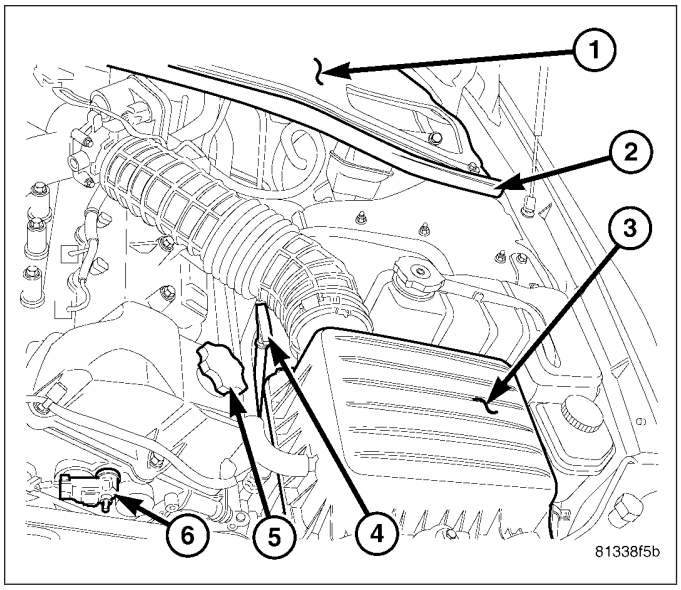

PAN-OIL

REMOVAL

1. Disconnect negative battery cable (1) located in trunk.

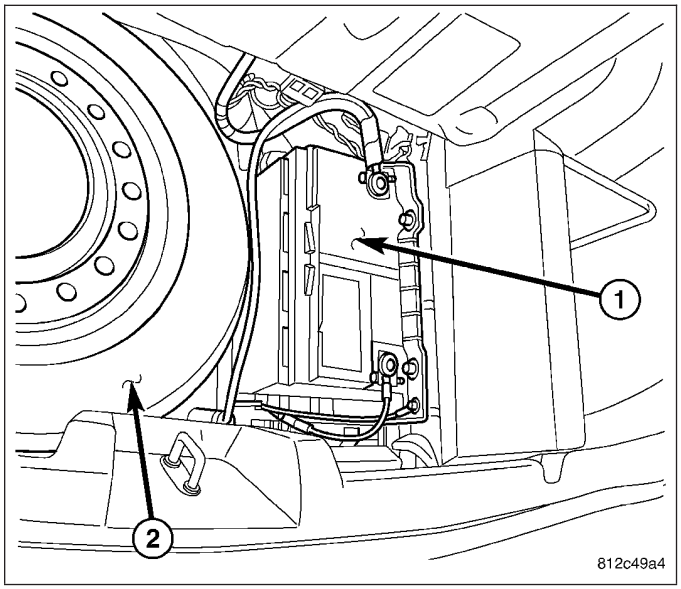

2. Remove engine oil indicator (4).
3. Raise vehicle on hoist.

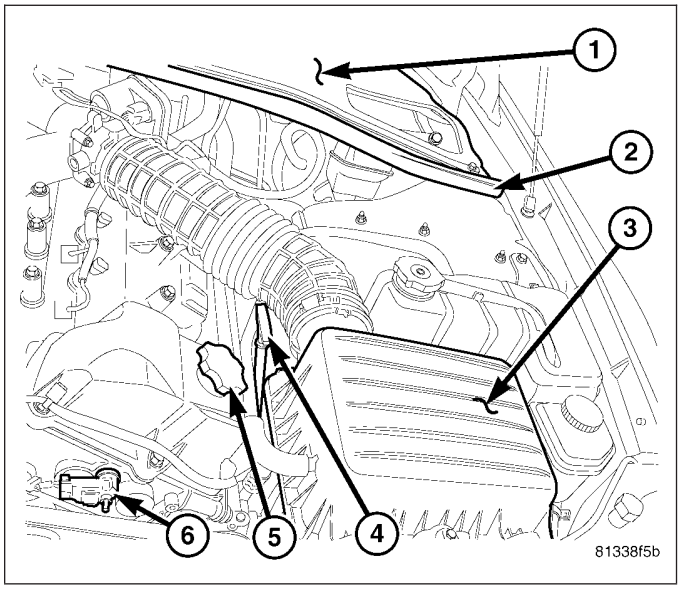

4. Remove lower splash shield retaining bolts (1) and splash shield (2).

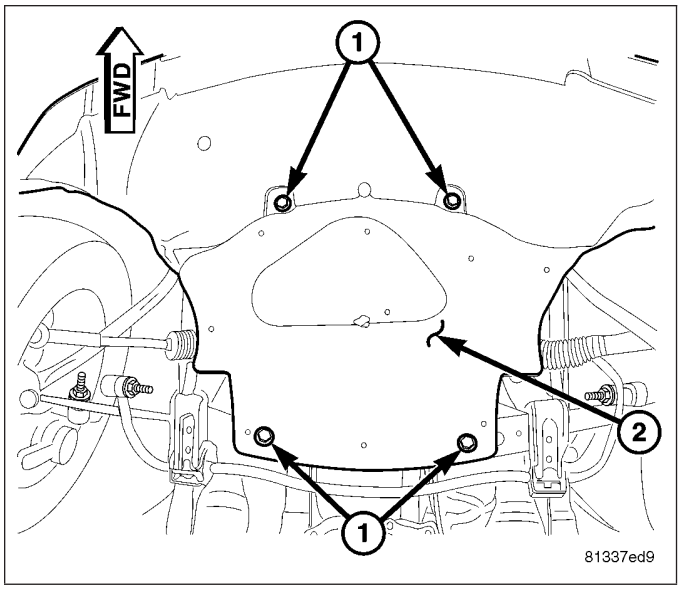

5. Drain engine oil (5) and remove oil filter (3).

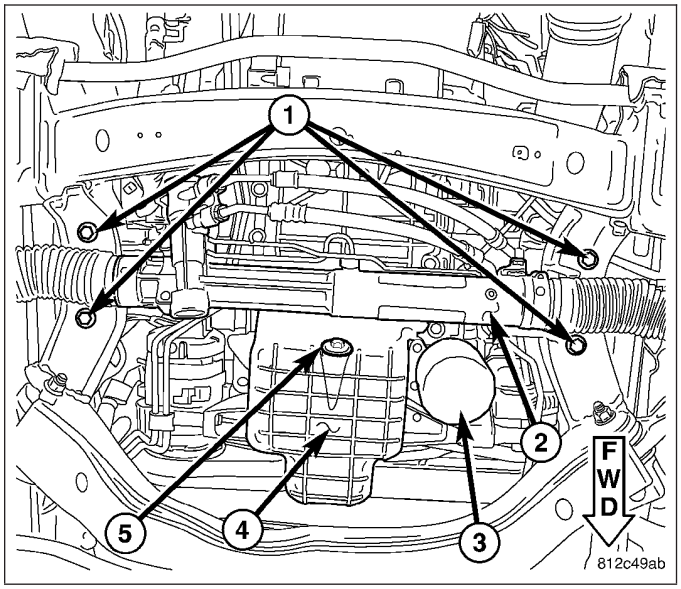

6. Remove the steering coupler bolt (4) and separate coupler (1) from rack (3).

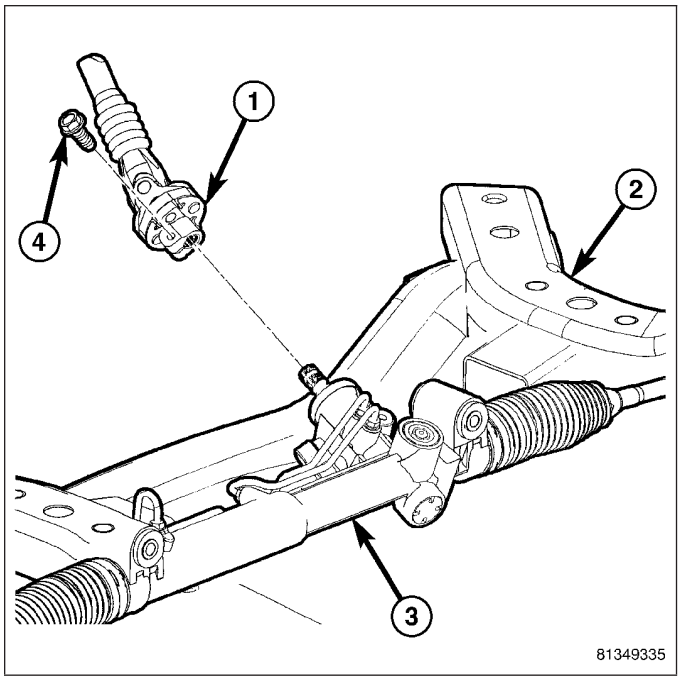

7. Disconnect power steering pressure switch electrical connector (1).

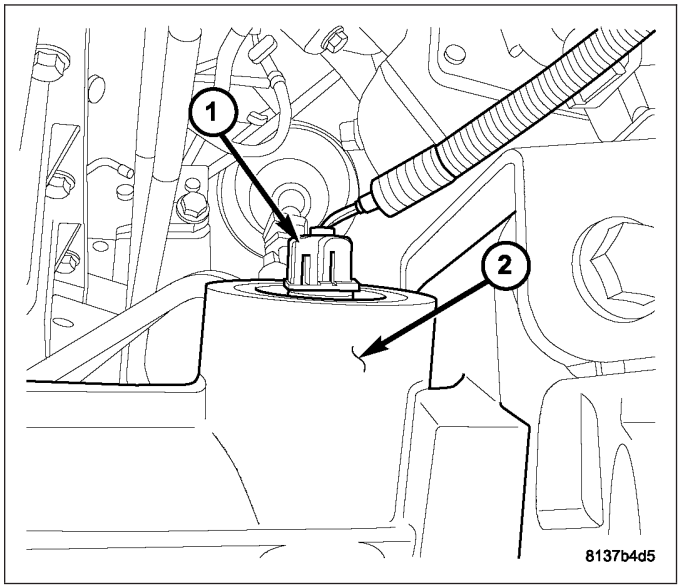

8. Remove steering rack mounting bolts (1).

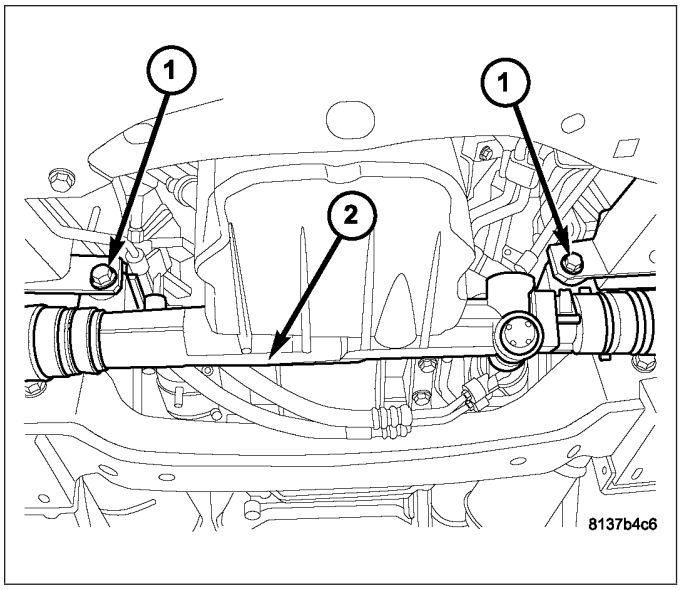

9. Remove power steering line support (2) from frame.
10. Reposition rack out of the way.
11. Remove structural collar (Refer to 9 - ENGINE/ ENGINE BLOCK/STRUCTURAL COVER - REMOVAL).

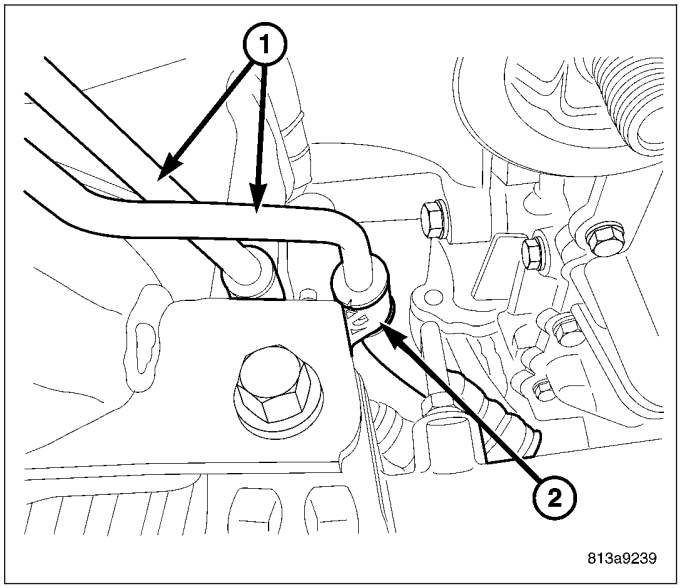

12. Remove mounting bracket to oil pan lower bolt (1).
13. Remove A/C compressor bracket to oil pan lower bolt (2).

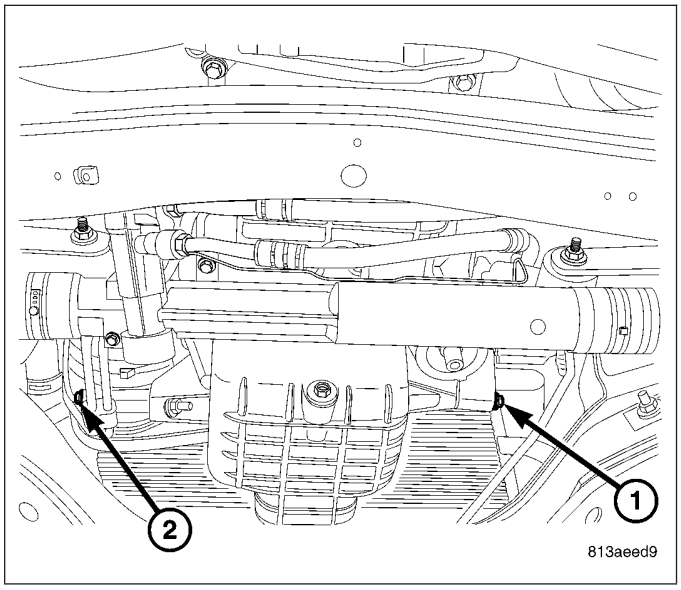

14. Remove lower timing chain cover to oil pan bolts (1).

CAUTION: Assure removal of the four lower timing cover bolts, as damage to the timing cover and/or oil pan may occur.

15. Remove oil pan and gasket.

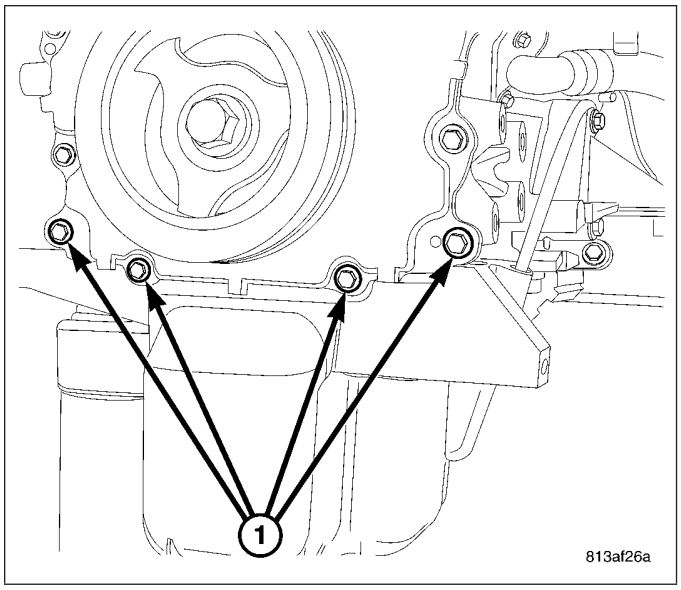

INSTALLATION

1. Clean oil pan and sealing surfaces. Inspect timing chain cover gaskets. Replace as necessary.
2. Apply an 1/8 inch bead of Mopar® Engine RTV GEN II to the front T-joints (1) (oil pan gasket to timing cover gasket interface) and the rear T-joints (2) (oil pan gasket to crankshaft rear oil seal retainer gasket interface).
3. Install oil pan gasket to block.

NOTE: To prevent oil leaks at oil pan to timing chain cover, the following tightening sequence procedure must be performed.

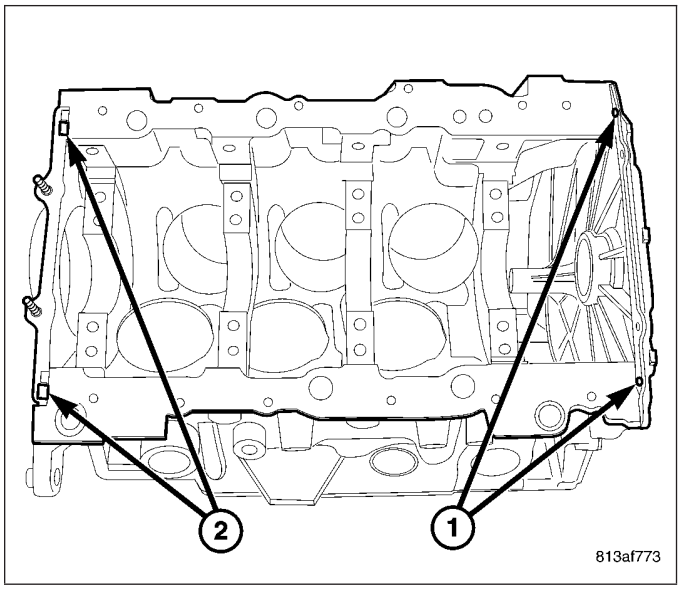

4. Install oil pan while aligning the oil level indicator tube and attach fasteners using the following tightening sequence:
   a. Install oil pan bolts and nuts **finger tight only—just tight enough to compress the gasket's rubber seal. Line up front of oil pan to be flush with front face of block.**
   b. Install lower timing chain cover bolts (1) and tighten to 12 N·m (105 in. lbs.).
   c. Tighten oil pan bolts to 28 N·m (250 in. lbs.).
   d. Tighten oil pan nuts to 12 N·m (105 in. lbs.).

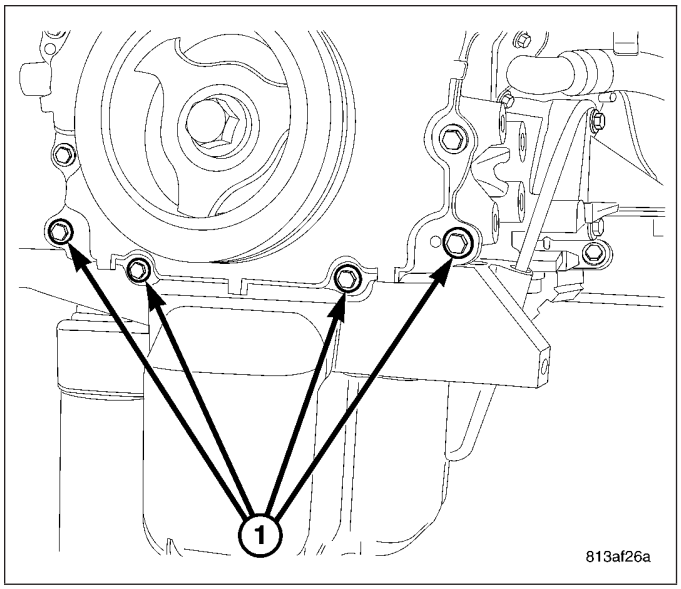

5. Install lower bolt attaching the A/C compressor to oil pan (2). Tighten bolt to 28 N·m (21 ft. lbs.).
6. Install lower bolt attaching the alternator bracket to oil pan (1). Tighten bolt to 28 N·m (21 ft. lbs.).

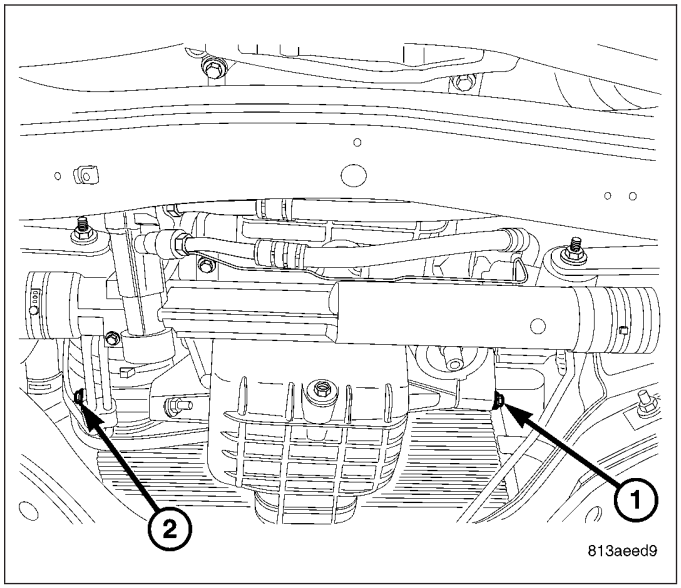

7. Install oil filter (3) and drain plug (5).
8. Install structural collar (Refer to 9 - ENGINE/ENGINE BLOCK/STRUCTURAL COVER - INSTALLATION).

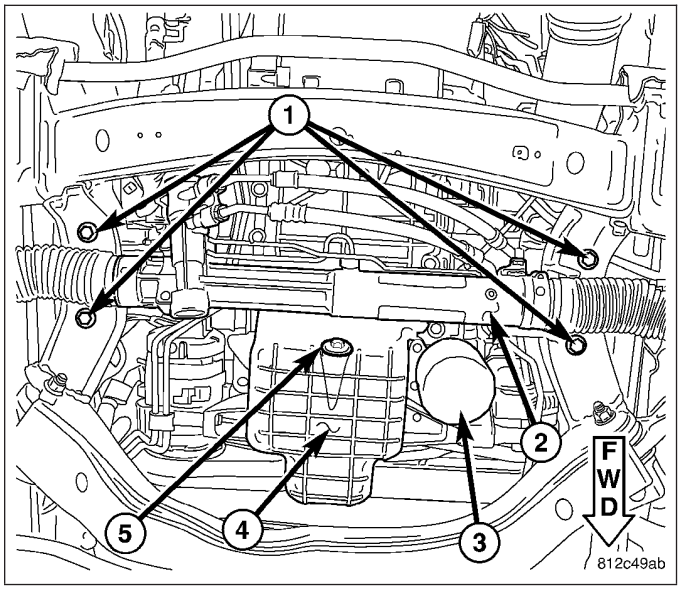

9. Position steering gear (2) in place and install mounting bolts (1). Tighten bolts (1) to 70 N·m (95 ft. lbs.).

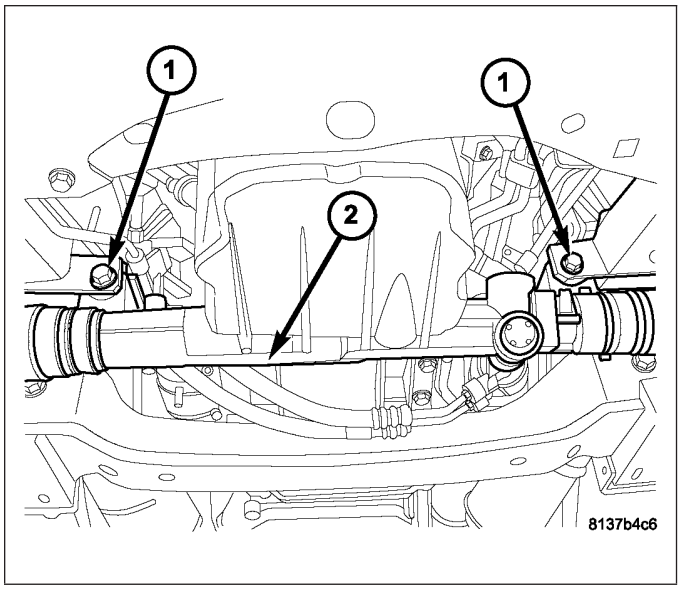

10. Install the steering coupling (2) lower pinch bolt (1) at the gear (3) **using a new bolt (1).** Tighten to 30 N·m (22 ft.lbs.) (Refer to 19 - STEERING/ COLUMN/STEERING COUPLING - INSTALLATION).

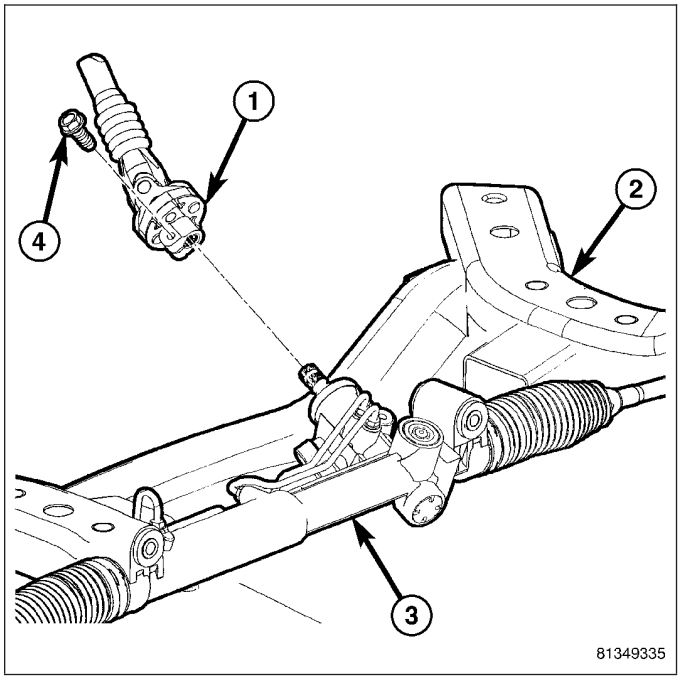

11. Connect electrical connector (1) to steering gear (2).

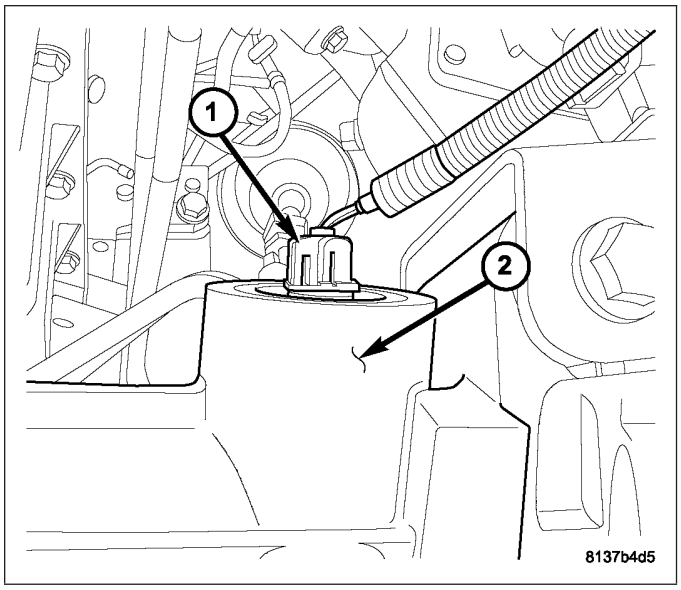

12. Install power steering line support (2) and tighten.

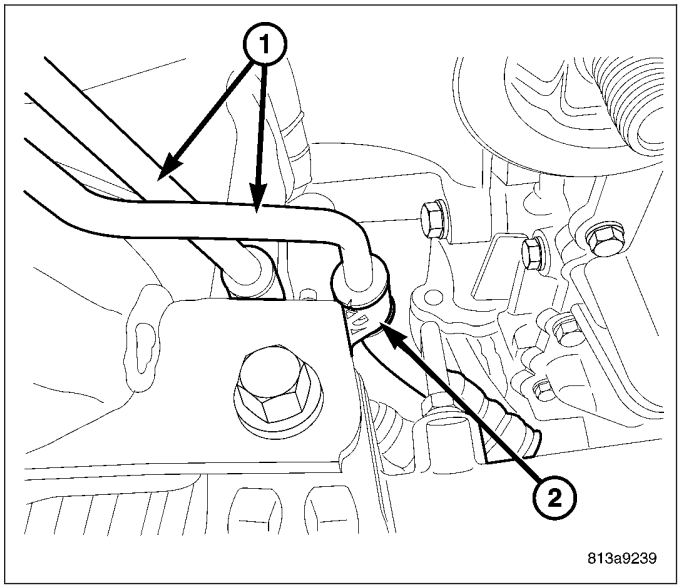

13. Install lower spalsh shield (2) and retaining bolts (1).
14. Lower vehicle.

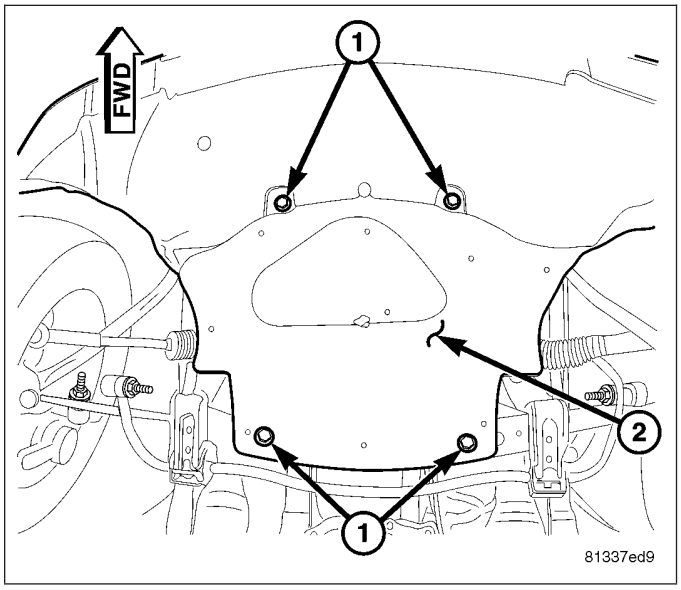

15. Install engine oil level indicator (4).
16. Fill engine crankcase (5) with proper oil to correct level.

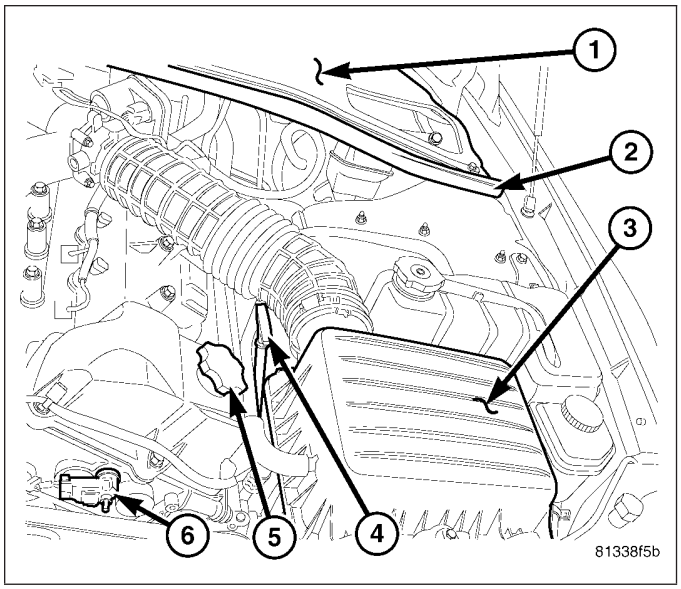

17. Connect negative battery (1) cable.
18. Start engine and check for leaks.

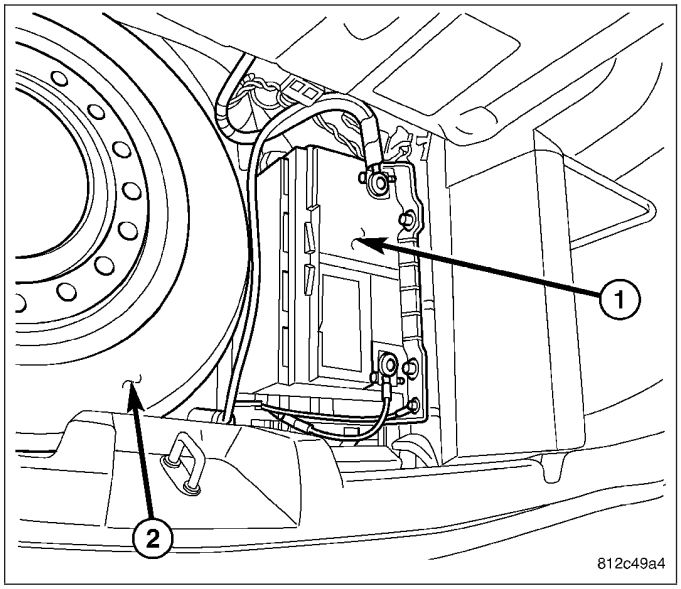

SWITCH-OIL PRESSURE

DESCRIPTION

The engine oil pressure switch (1) is located on the right side of the engine block. The switch screws into the engine main oil gallery. The normally closed switch provides an input through a single wire to the low pressure indicator light on the instrument cluster.

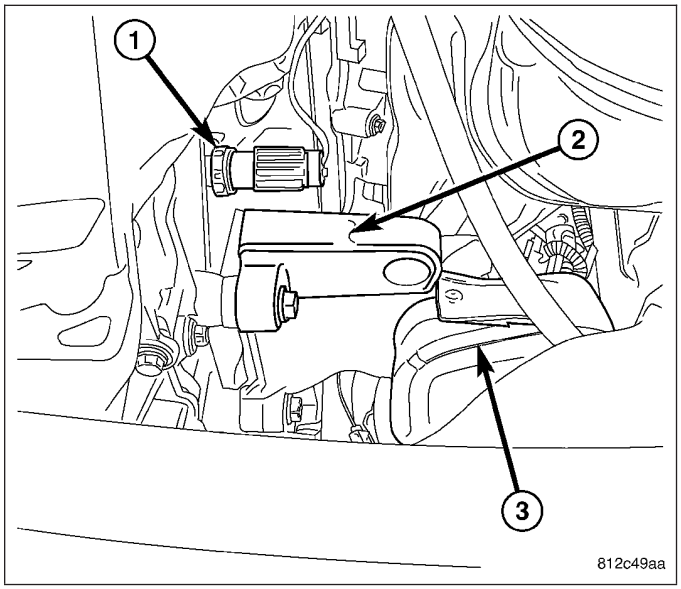

REMOVAL

1. Raise vehicle on hoist.
2. Remove lower splash shield.
3. Disconnect oil pressure switch (1) electrical connector.
4. Position an oil collecting container under switch location.
5. Remove switch by unscrewing from the engine block.

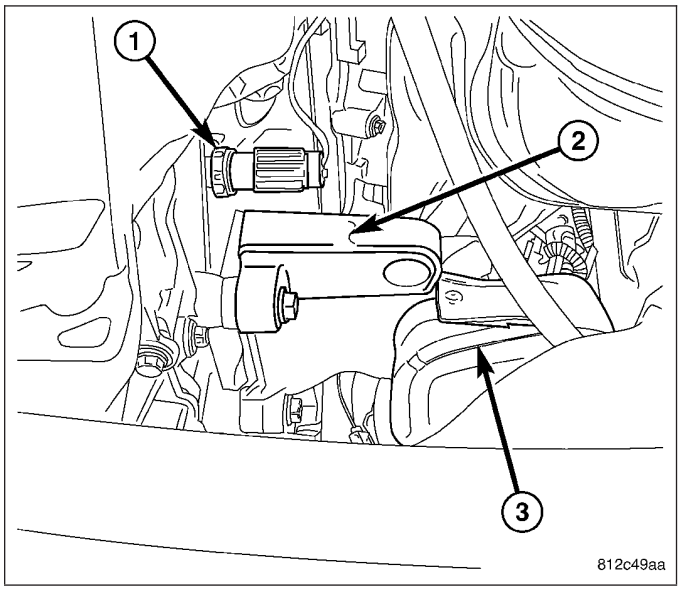

INSTALLATION

1. Apply Mopar® Thread Sealant to the switch threads.
2. Install oil pressure switch (1).
3. Connect electrical connector.
4. Lower vehicle.
5. Start engine and check for leaks.
6. Check engine oil level and adjust as neccessary.

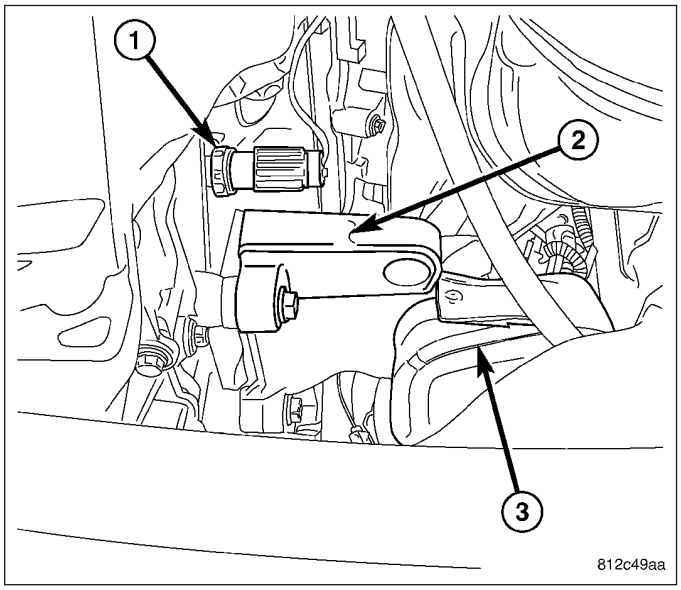

PUMP-OIL

REMOVAL

1. Remove crankshaft vibration damper (Refer to 9 - ENGINE/ENGINE BLOCK/VIBRATION DAMPER - REMOVAL).
2. Remove timing chain cover (Refer to 9 - ENGINE/ VALVE TIMING/TIMING BELT / CHAIN COVER(S) - REMOVAL).
3. Remove timing chain and sprockets (Refer to 9 - ENGINE/VALVE TIMING/TIMING BELT/CHAIN AND SPROCKETS - REMOVAL).
4. Remove oil pan (Refer to 9 - ENGINE/LUBRICATION/OIL PAN - REMOVAL).
5. Remove oil pick-up tube (3) and O-ring (2).

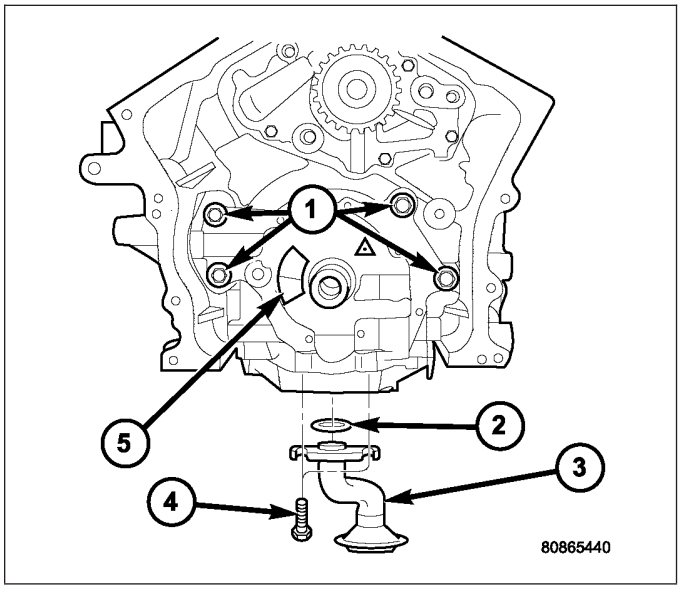

6. Ensure that crankshaft position is at 60° ATDC of No.1 cylinder, or crankshaft sprocket mark aligns with mark on oil pump (1). This position will properly locate oil pump upon installation.

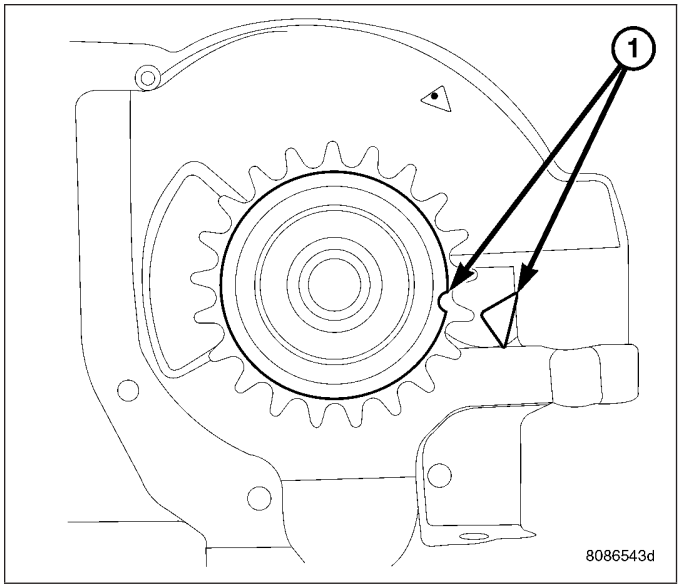

7. Remove oil pump attaching bolts (1).
8. Remove oil pump (5).

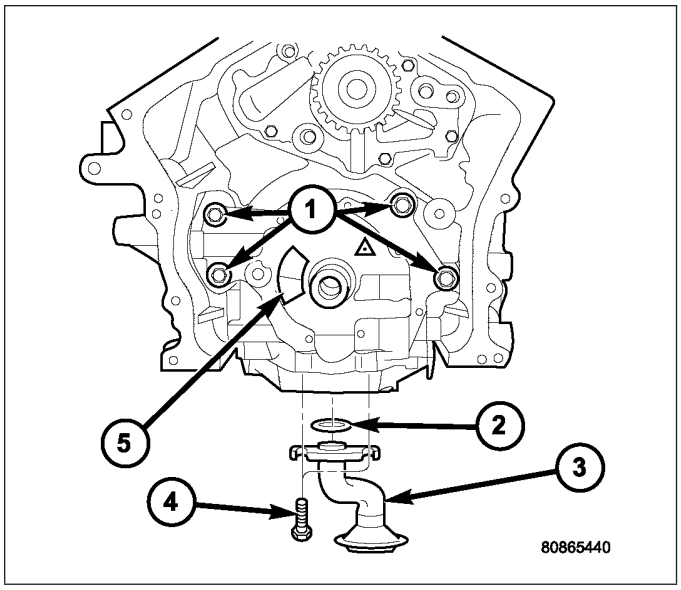

DISASSEMBLY

NOTE: DO NOT remove oil pressure relief valve. If the oil pressure relief valve is suspect, replace the oil pump assembly.

1. Remove oil pump cover screws (2) and lift off oil pump cover (1).
2. Remove inner pump rotor (3) and outer pump rotor (5).
3. Wash all parts in a suitable solvent.
4. Inspect components carefully for damage or wear (Refer to 9 - ENGINE/LUBRICATION/OIL PUMP - INSPECTION).

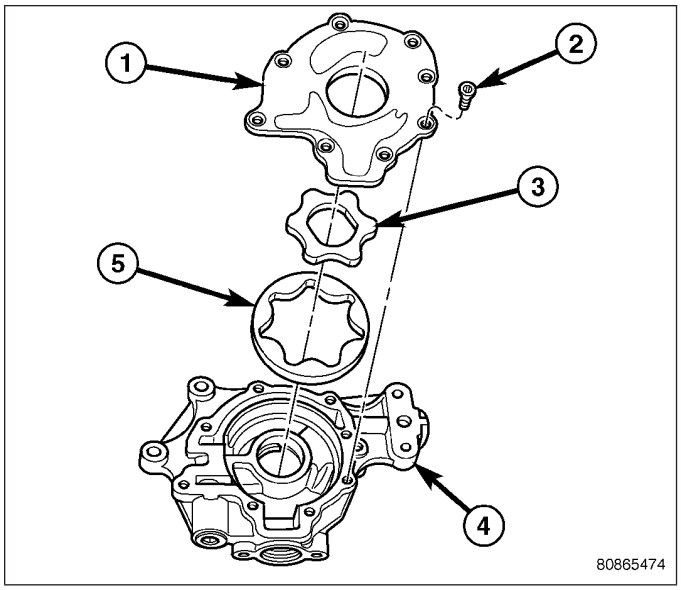

CLEANING

1. Clean all parts thoroughly in a suitable solvent.

INSPECTION

NOTE: DO NOT remove oil pressure relief valve. If the oil pressure relief valve is suspect, replace the oil pump assembly.

1. Disassemble the oil pump (Refer to 9 - ENGINE/ LUBRICATION/OIL PUMP - DISASSEMBLY).
2. Clean all oil pump components (Refer to 9 - ENGINE/LUBRICATION/OIL PUMP - CLEANING).
3. Inspect mating surface of the oil pump housing and cover. Replace oil pump if deeply scratched or grooved (minor surface scratches and polishing is normal).
4. Lay a straightedge (1) across the pump cover (3) surface. If a 0.025 mm (0.001 in.) feeler gauge (2) can be inserted between cover and straight edge, cover should be replaced.

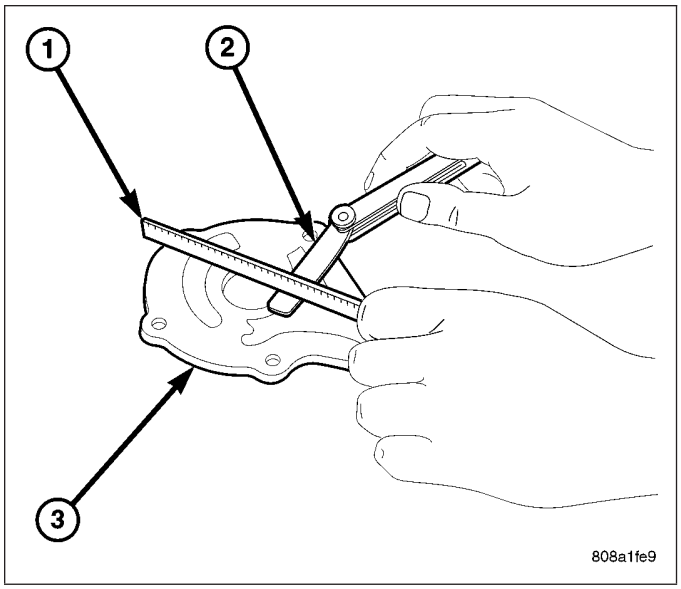

5. Measure thickness and diameter of outer rotor. If outer rotor thickness measures 9.954 mm (0.392 in.) or less , or if the diameter is 89.174 mm (3.5108 in.) or less, replace outer rotor.

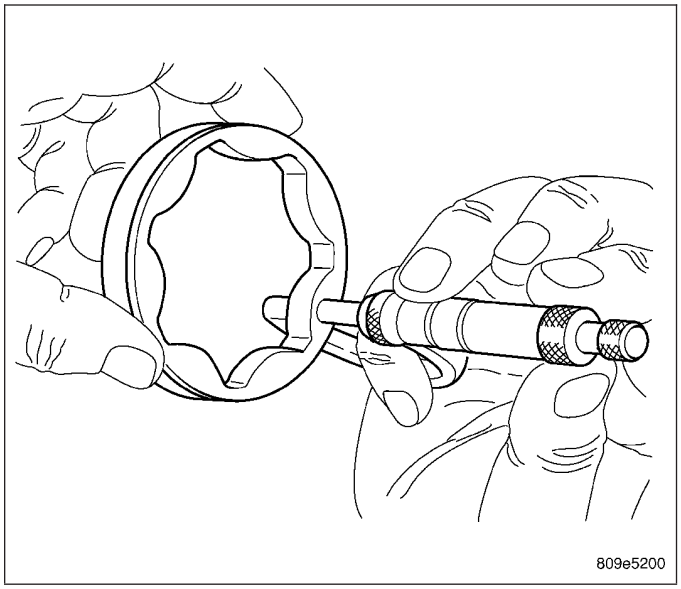

6. Measure the inner rotor, if inner rotor measures 9.954 mm (0.392 in.) or less replace inner rotor.

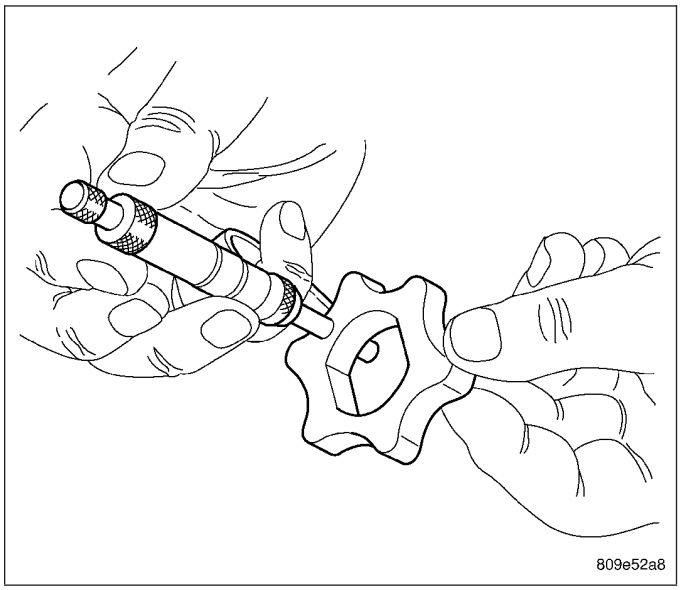

7. Slide outer rotor into body, press to one side with fingers and measure clearance between rotor and body (2). If measurement is 0.39 mm (0.015 in.) or more, replace body only if outer rotor is in specifications.

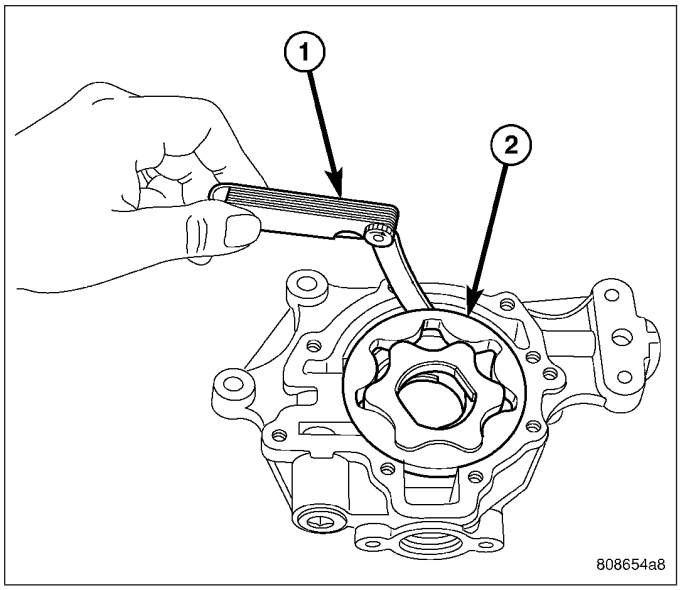

8. Install inner rotor (3) into body. If clearance between inner rotor (3) and outer rotor (1) is 0.20 mm (0.008 in.) or more, replace both rotors.

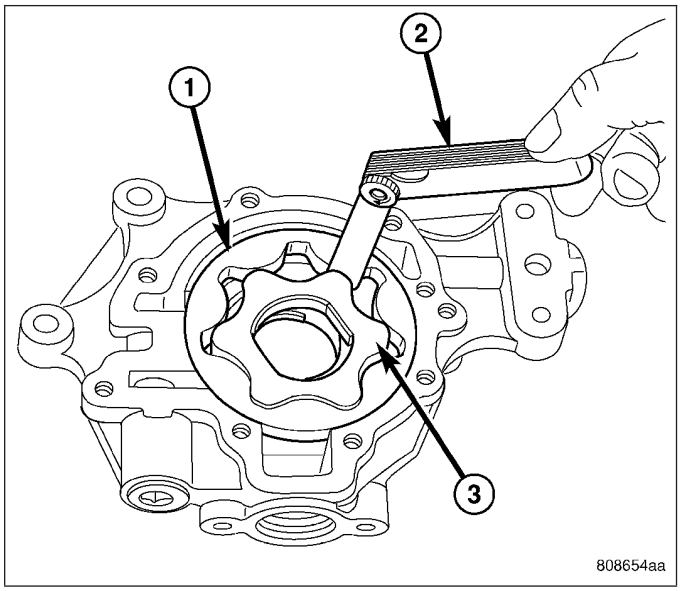

9. Place a straightedge (1) across the face of the body, between bolt holes. If a feeler gauge (2) of 0.077 mm (0.003 in.) or more can be inserted between rotors and the straightedge, replace pump assembly **ONLY** if rotors are in specification.
10. Assemble oil pump (Refer to 9 - ENGINE/LUBRICATION/OIL PUMP - ASSEMBLY).

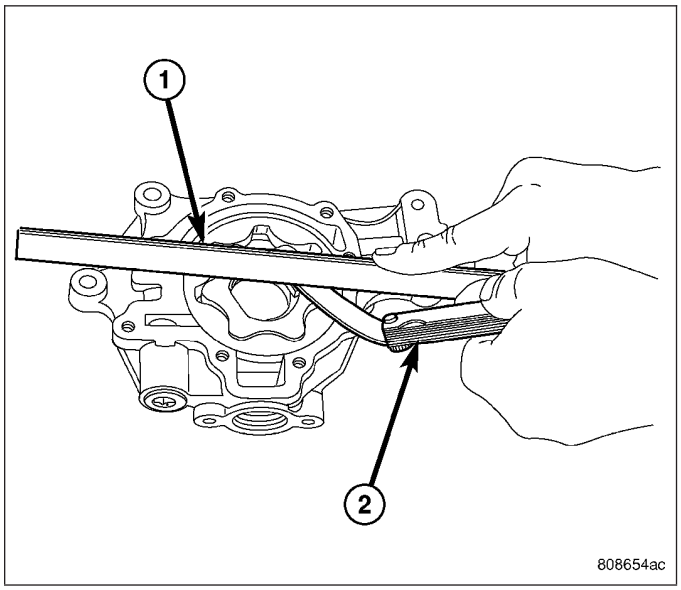

ASSEMBLY

1. Assemble pump using new parts as required.
2. Tighten cover screws (2) to 12 N·m (105 in. lbs.).
3. Prime oil pump before installation by filling rotor cavity with engine oil.

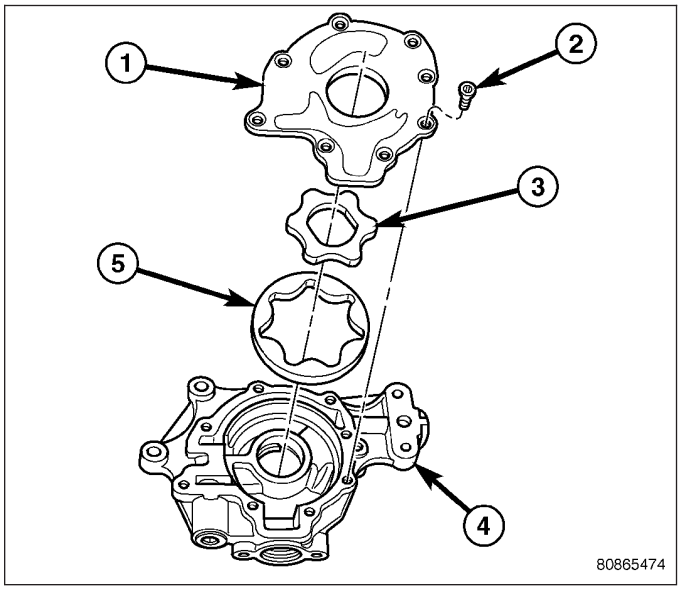

INSTALLATION

CAUTION: Crankshaft position must be at 60° ATDC of No.1 cylinder before installing oil pump (1). This position will properly locate oil pump. If not properly located, severe damage to oil pump can occur.

1. Prime oil pump before installation by filling rotor cavity with engine oil.
2. If crankshaft has been rotated, it must be repositioned to 60° ATDC of No.1 cylinder (1) prior to oil pump installation.

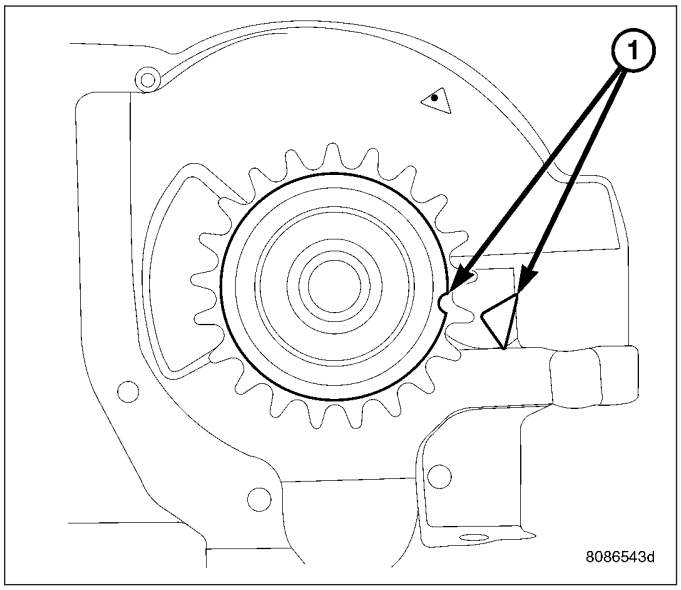

3. Install oil pump (5) carefully over crankshaft and into position.
4. Install oil pump attaching bolts (1). Tighten bolts to 28 N·m (250 in. lbs.).
5. Install oil pick-up tube (3) with new O-ring (2). Lubricate O-ring (2) with clean engine oil before installation. Tighten attaching bolts (1) to 28 N·m (250 in. lbs.).
6. Install oil pan (Refer to 9 - ENGINE/LUBRICATION/OIL PAN - INSTALLATION).
7. Install timing chain and sprockets (Refer to 9 - ENGINE/VALVE TIMING/TIMING BELT/CHAIN AND SPROCKETS - INSTALLATION).
8. Install timing chain cover (Refer to 9 - ENGINE/VALVE TIMING/TIMING BELT / CHAIN COVER(S) - INSTALLATION).
9. Install crankshaft vibration damper (Refer to 9 - ENGINE/ENGINE BLOCK/VIBRATION DAMPER - INSTALLATION).
10. Fill crankcase with engine oil to correct level.

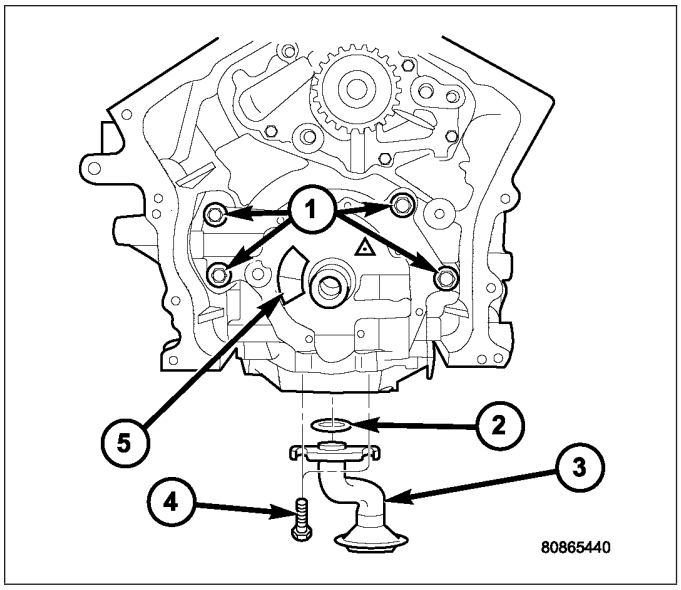

MANIFOLD-INTAKE

DIAGNOSIS AND TESTING

INTAKE MANIFOLD LEAKS

An intake manifold air leak is characterized by lower than normal manifold vacuum. Also, one or more cylinders may not be functioning.

WARNING: Use extreme caution when the engine is operating. Do not stand in a direct line with the fan. Do not put your hands near the pulleys, belts or the fan. Do not wear loose clothing.

1. Start the engine.
2. Spray a small stream of water (Spray Bottle) at the suspected leak area.
3. If engine RPM'S change, the area of the suspected leak has been found.
4. Repair as required.

STANDARD PROCEDURE - INTAKE MANIFOLD VACUUM PORT REPAIR

The composite intake manifold vacuum ports can be repaired. Although, if the manifold plenum chamber is damaged or cracked, the manifold must be replaced.

To repair a broken or damaged vacuum nipple (port) on the composite intake manifold, perform the following procedure:

PARTS REQUIRED	TOOLS REQUIRED
Brass Nipple – 3/8″ O.D. x 1/4″ pipe thread (Speed Control Port)	Pipe Tap – 1/4″ - 18 NPT
Brass Nipple – 1/2″ O.D. x 1/4″ pipe thread (Brake Booster Port)	Drill Bit – 7/16″
	File/Sand Paper

NOTE: While performing this procedure, avoid getting the manifold material residue into the plenum chamber.

1. File or sand the remaining port back until a flat surface is obtained (plane normal to nipple (port) axis).
2. Drill out the nipple port (2) base using a 7/16" drill bit.
3. Using a 1/4"–18 NPT pipe tap (1), cut internal threads. Use caution to start tap in a axis same as original nipple.
4. Apply Mopar® Thread Sealant to threads of repair nipple(s).
5. Install repair nipple(s). Do not over torque repair nipple(s).

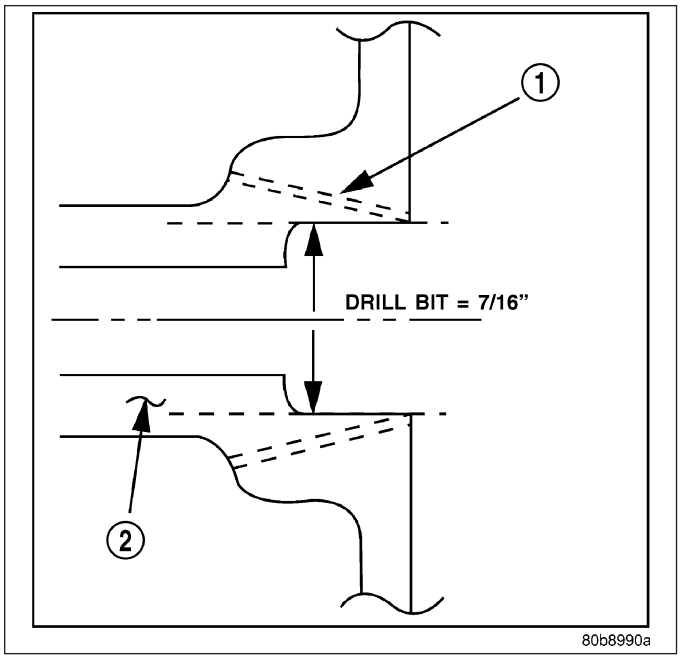

REMOVAL

INTAKE MANIFOLD UPPER

1. Disconnect negative battery (1) cable.

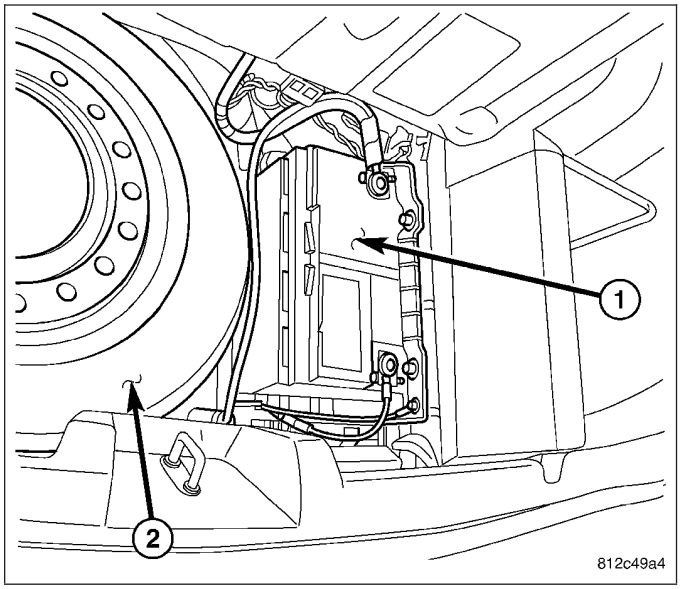

2. Remove throttle body air inlet hose and air cleaner housing assembly (3) (Refer to 9 - ENGINE/AIR INTAKE SYSTEM/AIR CLEANER HOUSING - REMOVAL).
3. Disconnect electrical connectors from the following components:
   - Manifold Absolute Pressure (MAP) Sensor
   - Electronic Throttle Control
   - Manifold Tuning Valve
4. Disconnect Vapor Purge hose, Brake Booster hose, Positive Crankcase Ventilation (PCV) hose.

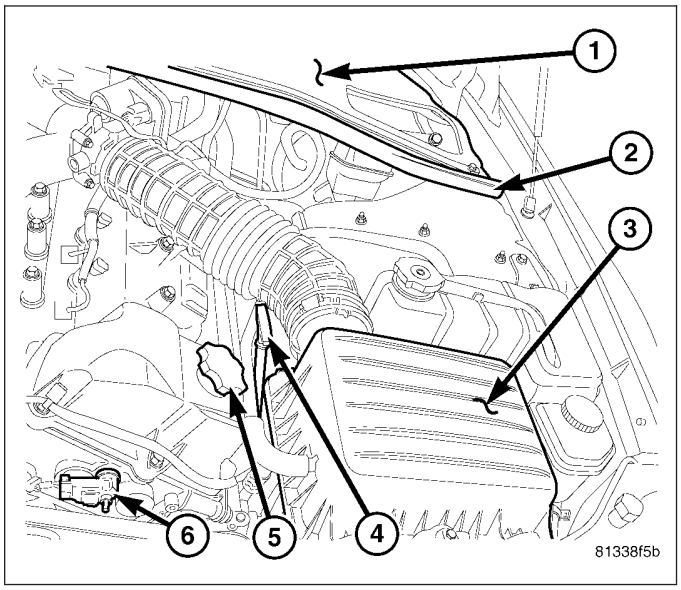

5. Remove manifold support brackets (1).

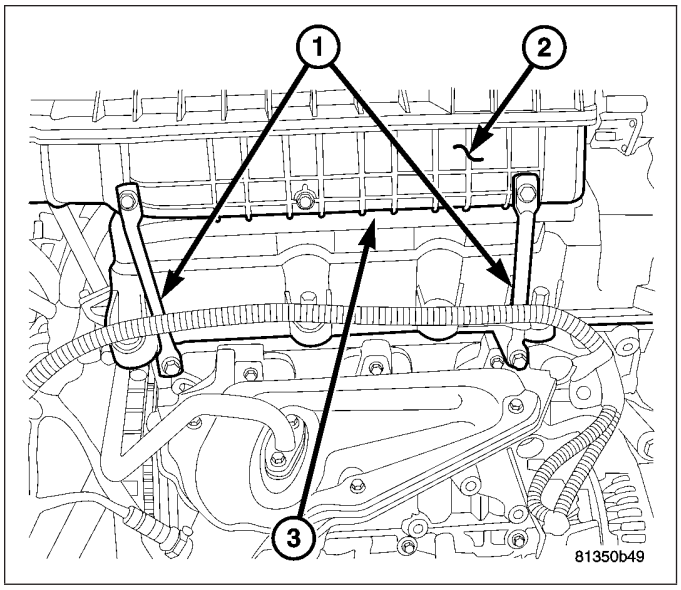

6. Remove manifold attaching bolts.

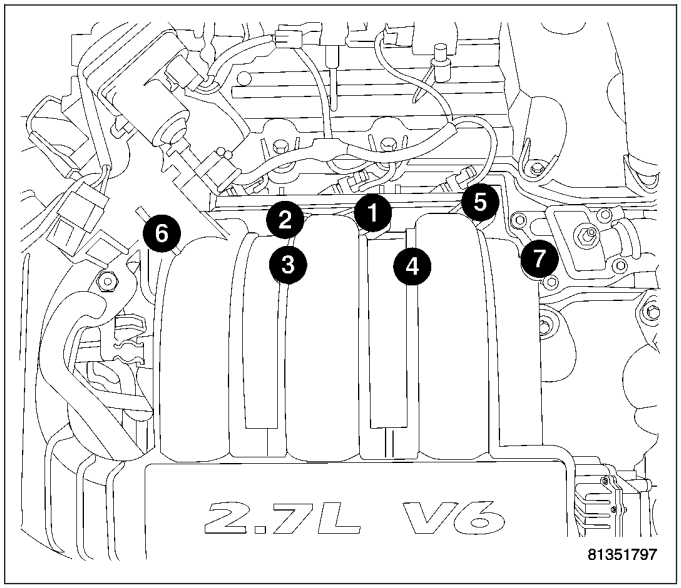

7. Remove upper manifold (2).
8. Remove foam insulator (3).
9. Inspect manifold (2) (Refer to 9 - ENGINE/MANIFOLDS/INTAKE MANIFOLD - INSPECTION).

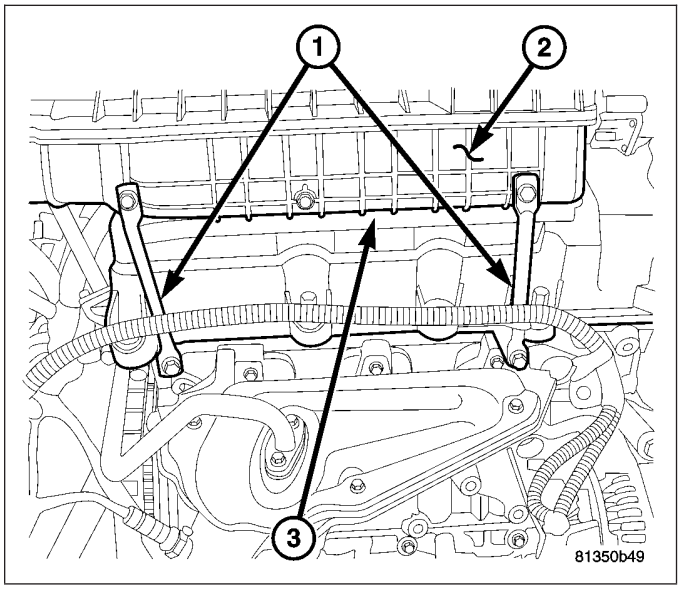

REMOVAL - INTAKE MANIFOLD LOWER

1. Release fuel system pressure (Refer to 14 - FUEL SYSTEM/FUEL DELIVERY - STANDARD PROCEDURE).
2. Disconnect negative battery (1) cable located in trunk.
3. Remove upper intake manifold (Refer to 9 - ENGINE/MANIFOLDS/INTAKE MANIFOLD - REMOVAL).

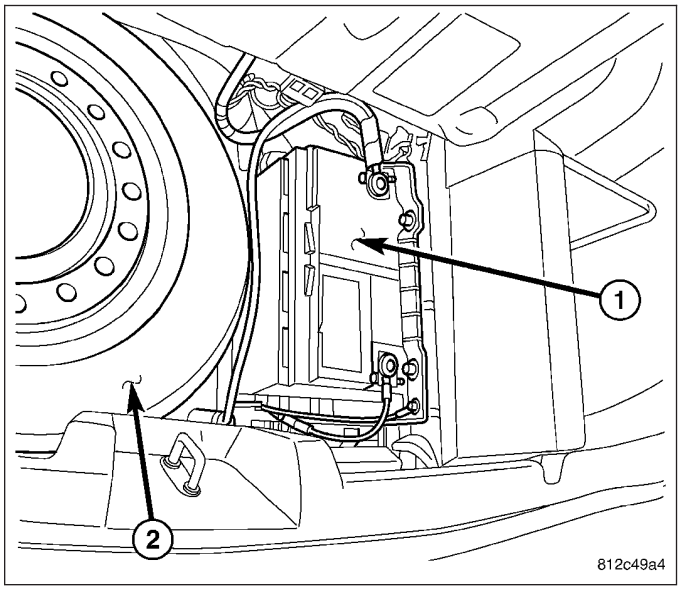

4. Disconnect injector electrical connectors (2).
5. Disconnect fuel supply hose (1) from fuel rail (Refer to 14 - FUEL SYSTEM/FUEL DELIVERY/ FUEL LINES - STANDARD PROCEDURE).

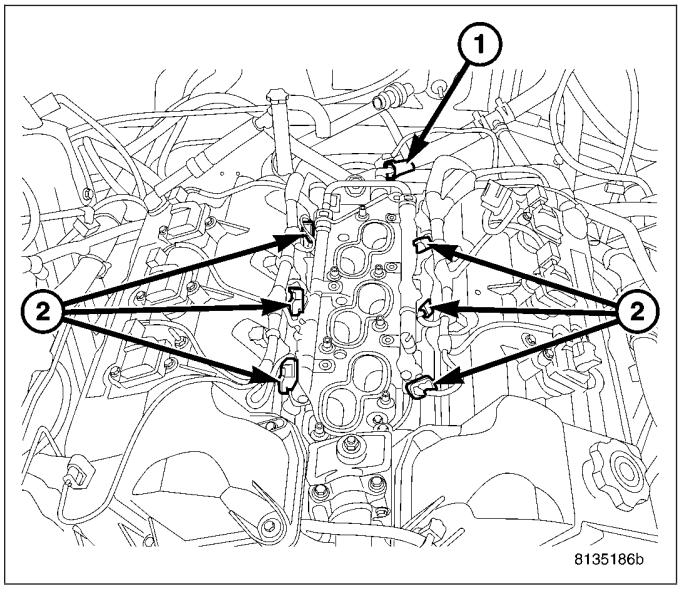

6. Remove bolts attaching fuel rail (1 - 4).
7. Remove fuel rail and injectors as an assembly.
8. Remove manifold attaching bolts.
9. Remove lower manifold.
10. Inspect manifold (Refer to 9 - ENGINE/MANIFOLDS/INTAKE MANIFOLD - INSPECTION).

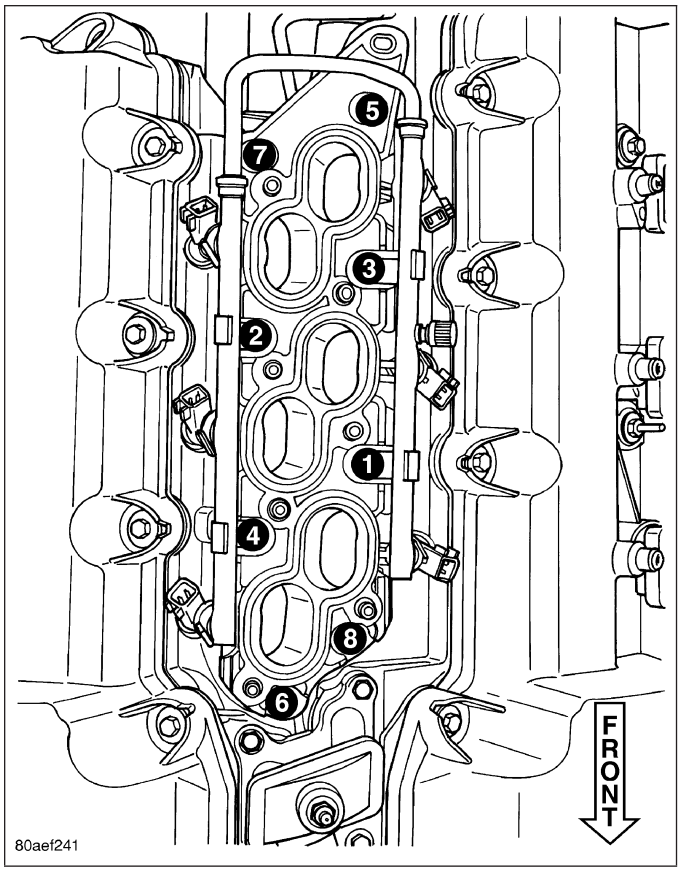

INSPECTION

INTAKE MANIFOLD UPPER

Check manifold for:

- Damage and cracks
- Gasket surface damage or warpage
- Damaged or clogged EGR ports

If the manifold exihibits any damaged or warped conditions, replace the manifold. Clean EGR ports as neccessary.

If a vacuum port is damaged, a repair procedure can be performed (Refer to 9 - ENGINE/MANIFOLDS/INTAKE MANIFOLD - STANDARD PROCEDURE).

INSPECTION - INTAKE MANIFOLD LOWER

Check manifold for:

- Damage and cracks
- Gasket surface damage or warpage
- Damaged fuel injector ports

If the manifold exihibits any of these conditions, replace the manifold.

INSTALLATION

INTAKE MANIFOLD UPPER

1. Clean and inspect sealing surfaces. Gaskets can be reused, if free of cuts or tears.

NOTE: Make sure fuel injectors and wiring harnesses are in correct position to not interfere with upper manifold installation.

2. Install upper manifold gasket.

3. Position upper manifold onto lower manifold.

4. Install manifold attaching bolts and tighten in sequence shown in to 12 N·m (105 in. lbs.).
5. Connect PCV, brake booster, and vapor purge hoses.
6. Connect electrical connectors to the following components:
   - Manifold Absolute Pressure (MAP) Sensor
   - Electronic Throttle Control
   - Manifold Tuning Valve
7. Install throttle body air inlet hose and air cleaner housing assembly (Refer to 9 - ENGINE/AIR INTAKE SYSTEM/AIR CLEANER HOUSING - INSTALLATION).

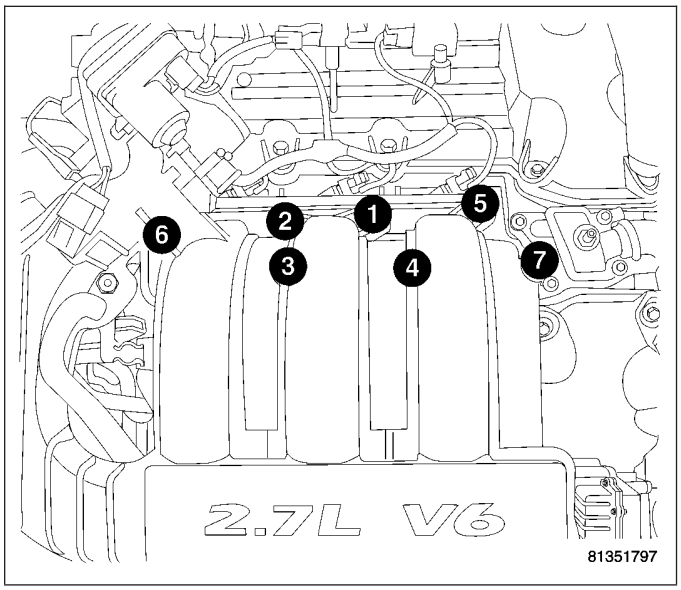

8. Connect negative battery (1) cable.

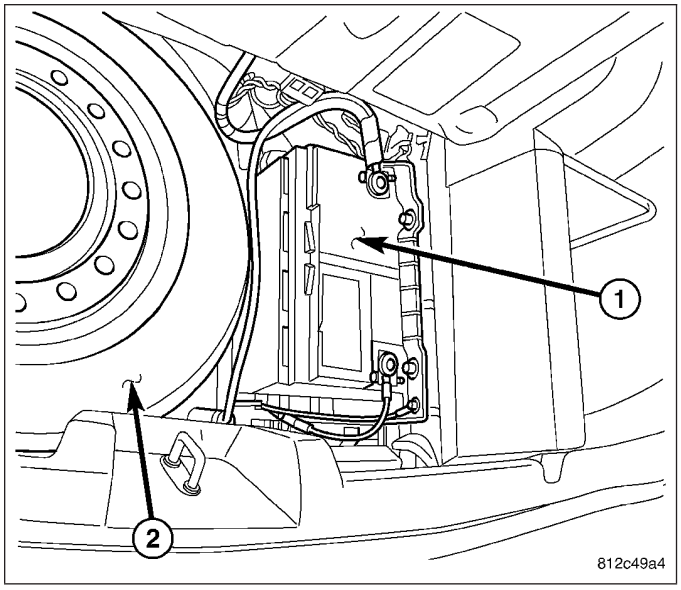

INTAKE MANIFOLD LOWER

1. Clean and inspect sealing surfaces of cylinder head and manifold. Gaskets can be reused provided they are free of cuts or tears.
2. Install lower manifold gasket.
3. Position manifold on cylinder head surfaces.

NOTE: For ease of installing upper intake manifold, install a bolt 2 – 3 turns to the rearmost attaching hole of intake. This will properly position lower manifold.

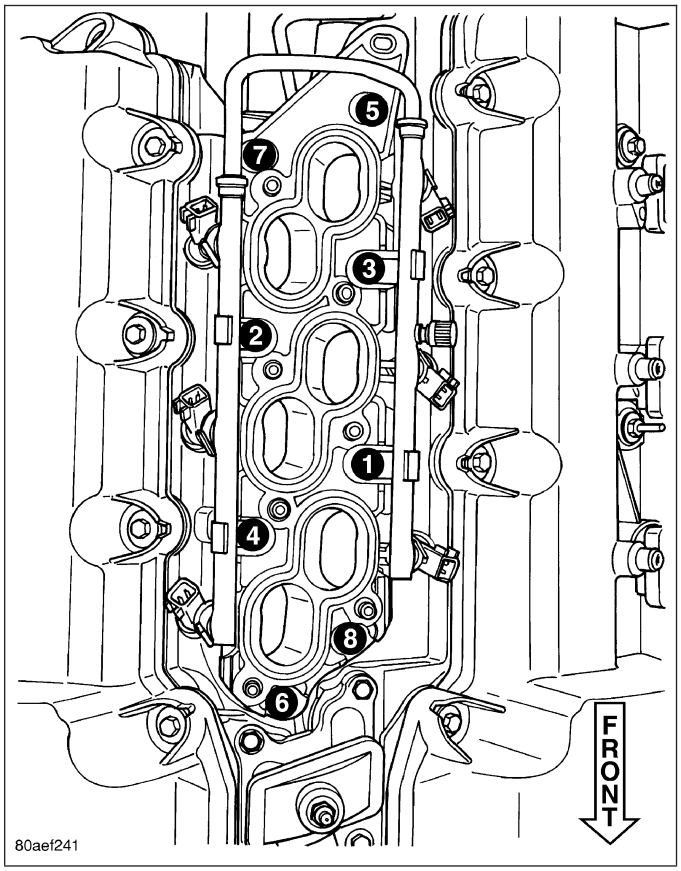

4. Install fuel rail with injectors and start bolts (1 - 4).
5. Install manifold attaching bolts and tighten in sequence shown in to 12 N·m (105 in. lbs.). Remove bolt used for aligning manifold.

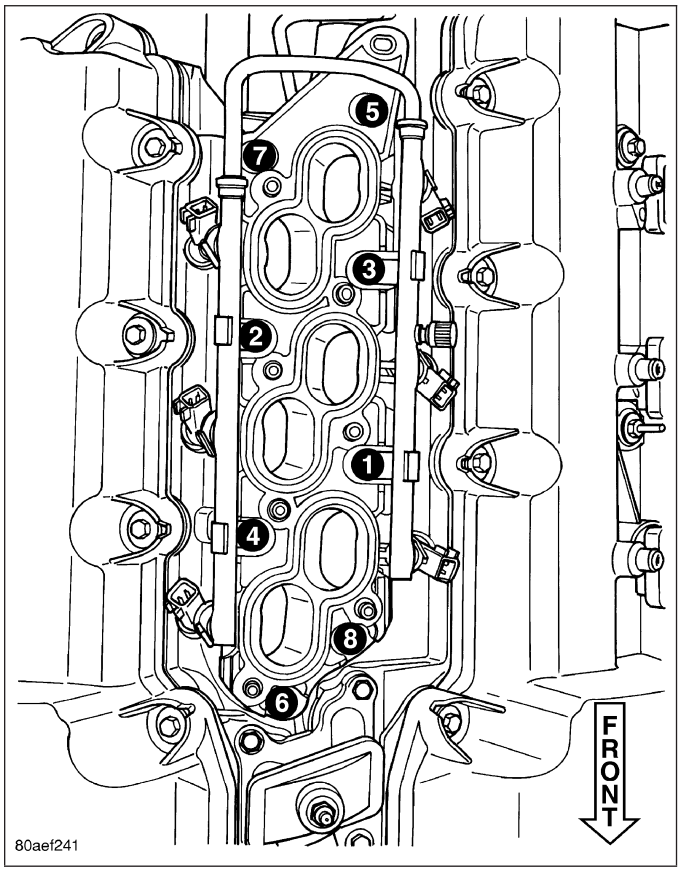

6. Connect the fuel injector electrical connectors (2).

NOTE: Make sure fuel injectors are located in the correct location and position, as upper intake manifold interference could occur.

7. Connect fuel supply hose (1) to fuel rail. (Refer to 14 - FUEL SYSTEM/FUEL DELIVERY/FUEL LINES - STANDARD PROCEDURE)
8. Install upper intake manifold. (Refer to 9 - ENGINE/ MANIFOLDS/INTAKE MANIFOLD - INSTALLATION)

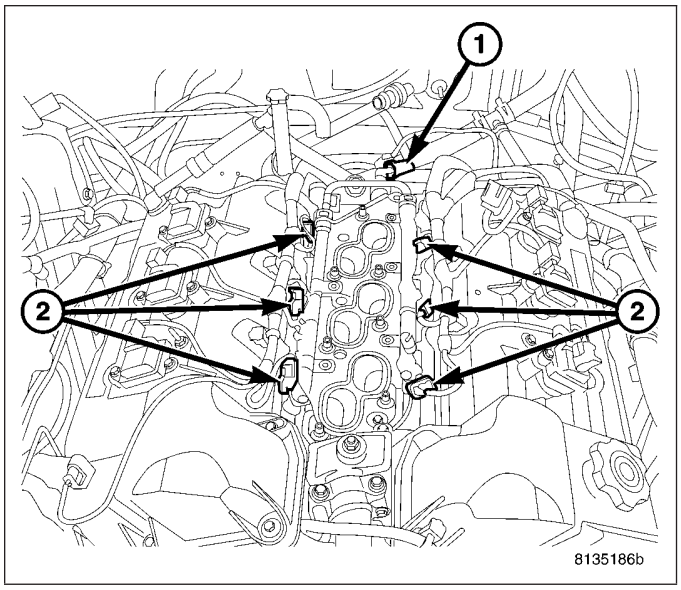

MANIFOLD-EXHAUST

REMOVAL

LEFT EXHAUST MANIFOLD

1. Disconnect negative battery (1) cable located in trunk.

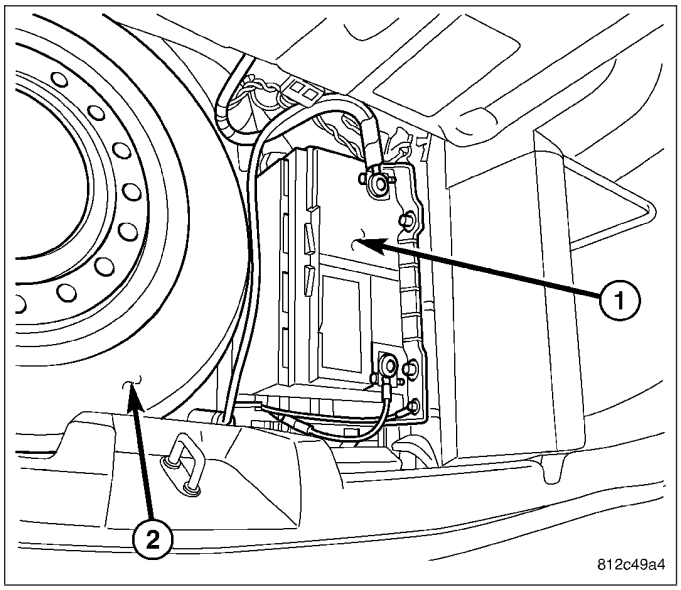

2. Disconnect intake air temperature sensor connector.
3. Remove air cleaner housing assembly (3) (Refer to 9 - ENGINE/AIR INTAKE SYSTEM/AIR CLEANER HOUSING - REMOVAL).
4. Remove oil dipstick tube (4).

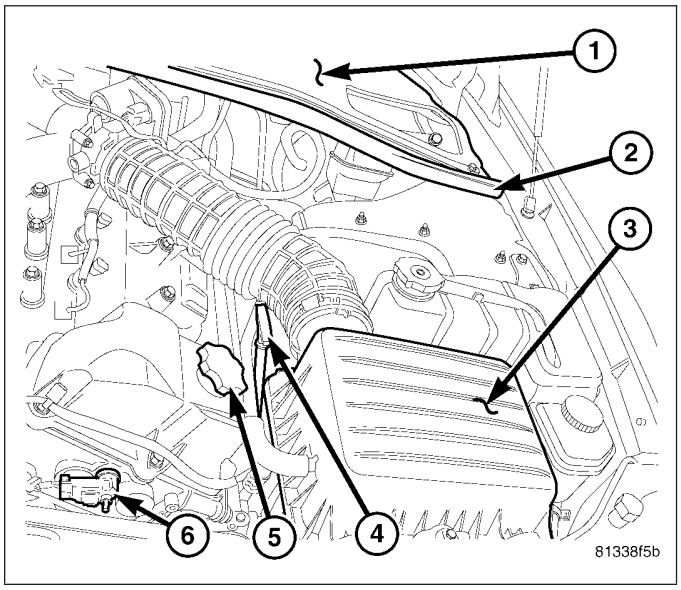

5. Disconnect and remove oxygen sensor (2).
6. Remove upper heat shield (1) and lower heat shield (4).
7. Raise vehicle on hoist.
8. Disconnect down stream oxygen sensor connector.
9. Remove exhaust pipe from manifold (Refer to 11 - EXHAUST SYSTEM/CATALYTIC CONVERTER - REMOVAL).
10. Remove exhaust manifold attaching bolts and remove manifold.

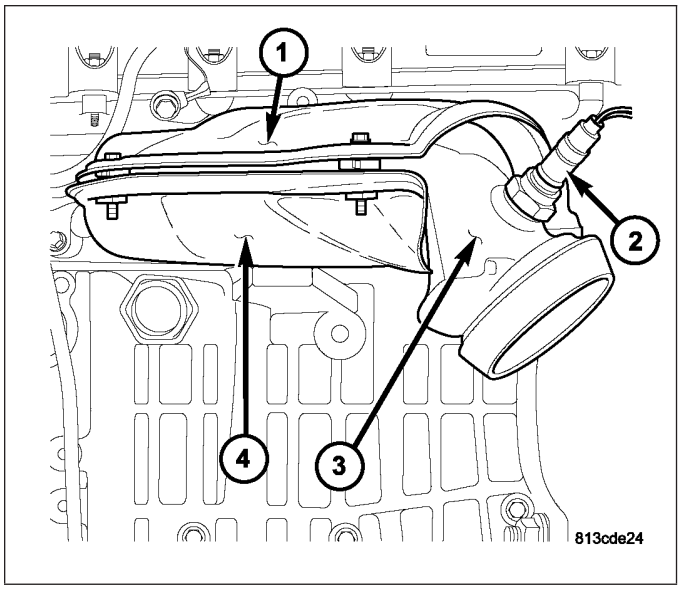

RIGHT EXHAUST MANIFOLD

1. Disconnect negative battery (1) cable located in trunk.

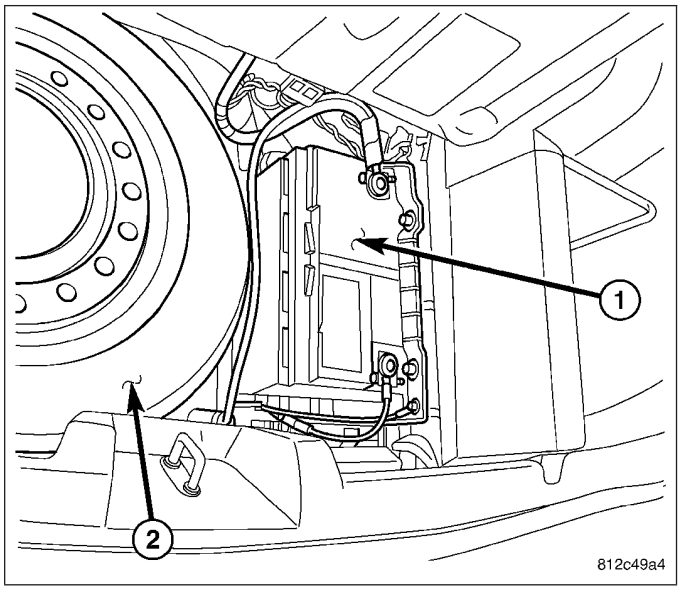

2. Disconnect and remove upstream oxygen sensor (5).
3. Raise vehicle.
4. Remove EGR tube at EGR valve (1).
5. Remove EGR tube at manifold (4).
6. Disconnect down stream oxygen sensor electrical connector.
7. Disconnect exhaust pipe from manifold (4) (Refer to 11 - EXHAUST SYSTEM/CATALYTIC CONVERTER - REMOVAL).
8. Remove upper heat shield (2) and lower heat shield (3).
9. Remove manifold attaching bolts and remove manifold.

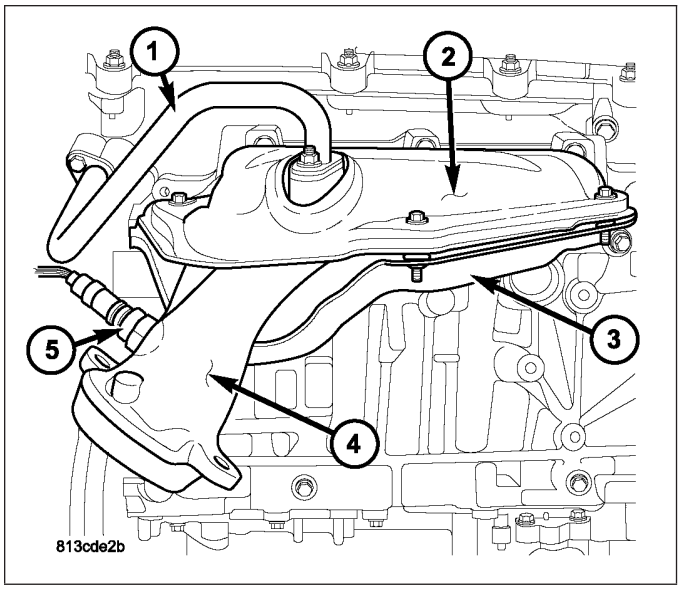

INSPECTION

1. Inspect exhaust manifolds for damage or cracks.
2. Check manifold flatness.
3. Inspect the exhaust manifold gasket for obvious discoloration or distortion.
4. Check distortion of the cylinder head mounting surface with a straightedge and thickness gauge.

INSTALLATION

LEFT EXHAUST MANIFOLD

1. Disconnect negative battery (1) cable.

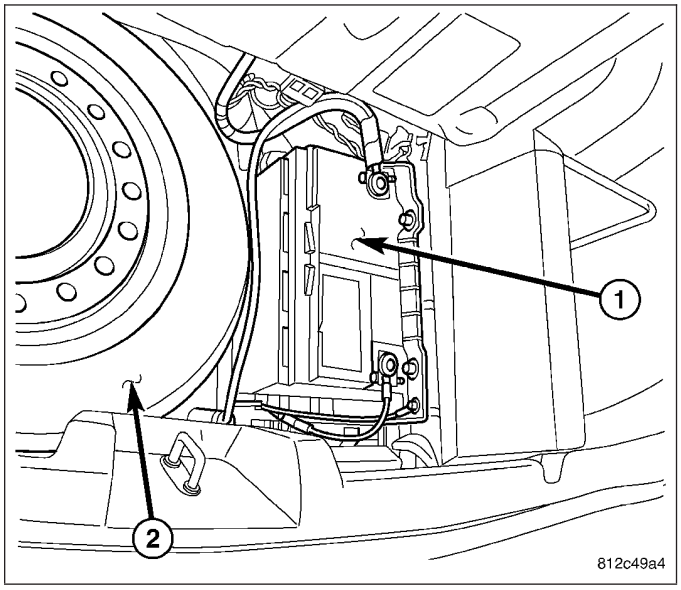

2. Raise vehicle on hoist.
3. Install exhaust manifold gasket (3) and manifold (4). Tighten bolts starting at the center working outward to 23 N·m (200 in. lbs.).
4. Instal manifold lower heat shield (6) and upper heat shield (1). Tighten fasteners to 28 N·m (250 in. lbs.).
5. Install exhaust pipes to manifolds (Refer to 11 - EXHAUST SYSTEM/CATALYTIC CONVERTER - INSTALLATION).
6. Connect down stream oxygen sensor connectors.
7. Lower vehicle.

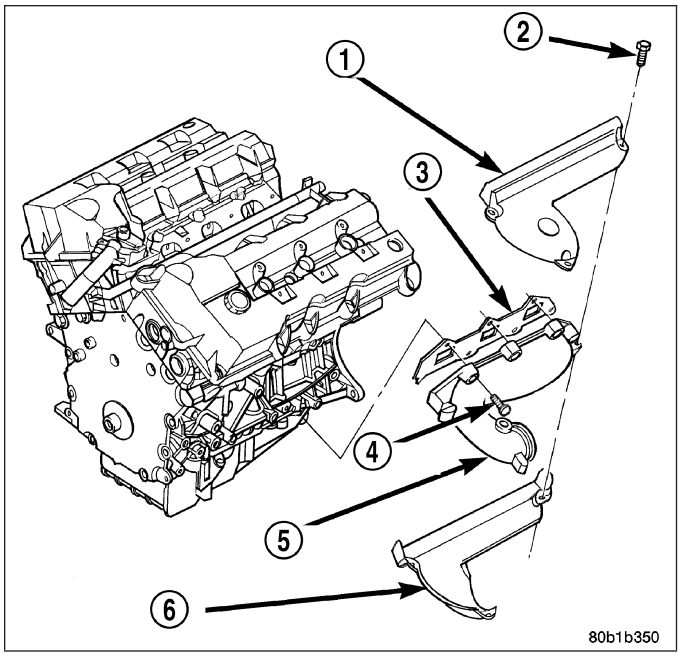

8. Install oxygen sensor (2) and connect electrical connector.

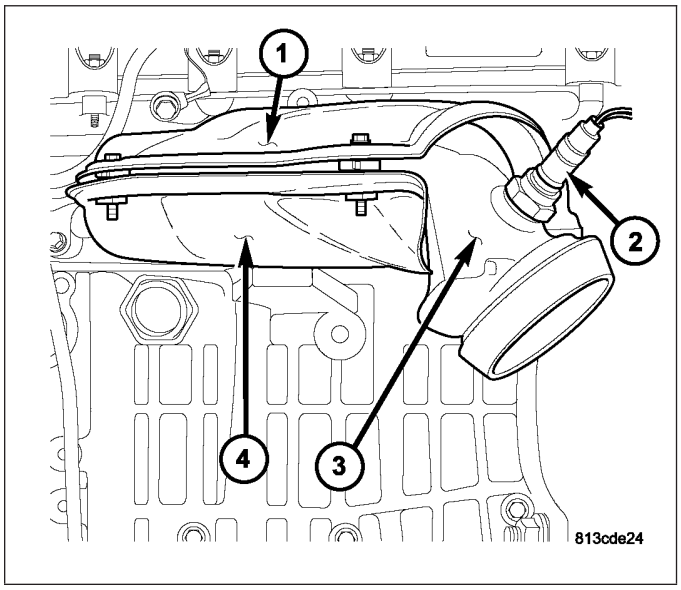

9. Connect negative battery (1) cable.

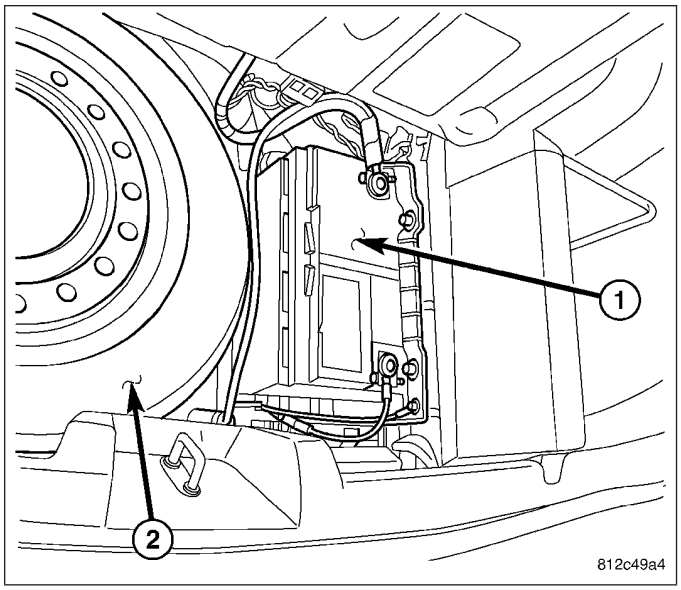

RIGHT EXHAUST MANIFOLD

1. Install exhaust manifold gasket and manifold (4). Tighten bolts working from center outwards to 23 N·m (200 in. lbs.).
2. Install exhaust pipe to manifold (Refer to 11 - EXHAUST SYSTEM/CATALYTIC CONVERTER - INSTALLATION).
3. Install lower heat shield (3) and upper heat shield (2).
4. Install oxygen sensor (5) and connect electrical connector.
5. Connect down stream oxygen sensor electrical connector.
6. Lower vehicle.
7. Install EGR tube (1) using new gaskets. Tighten screws to 11 N·m (95 in. lbs.).

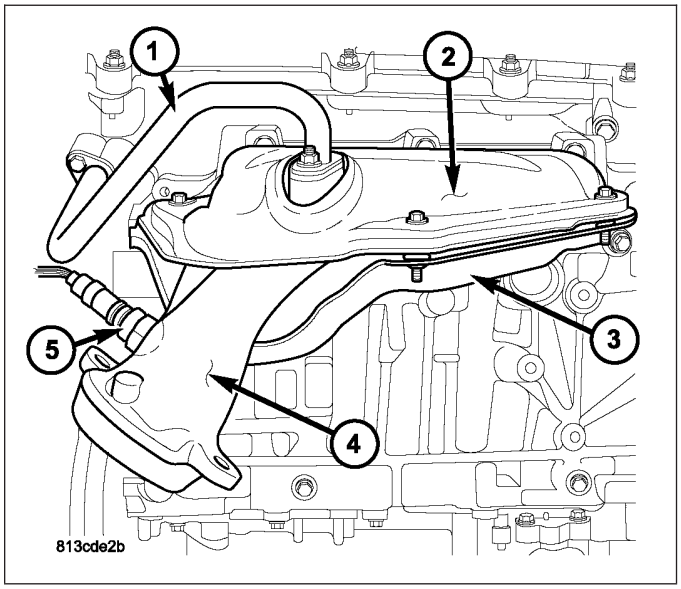

8. Connect negative battery (1) cable.

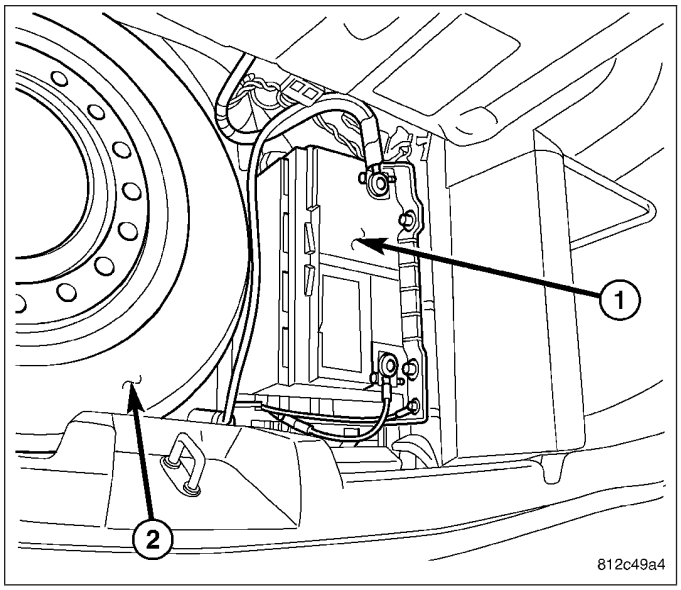

VALVE TIMING

DESCRIPTION

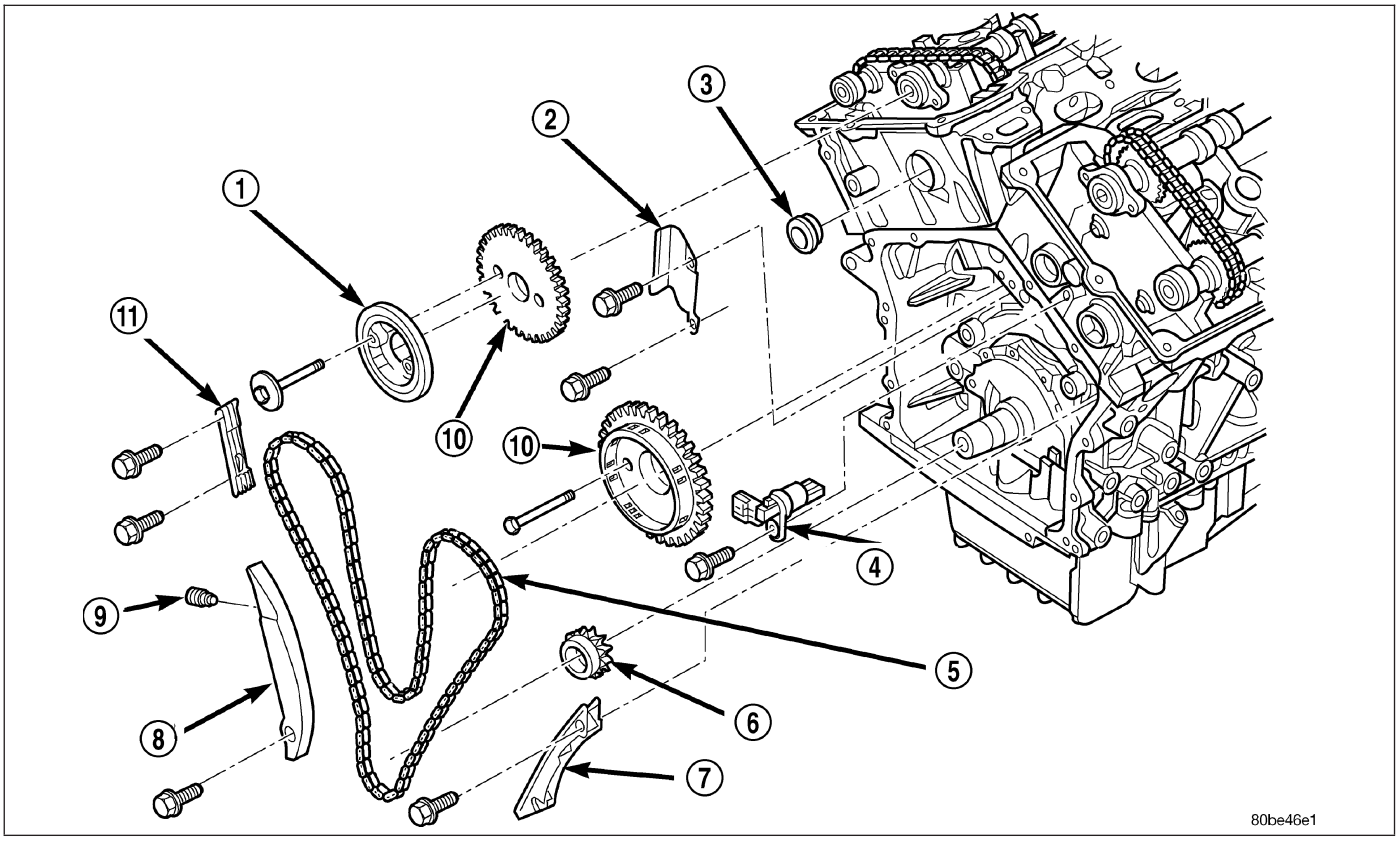

The timing drive system has been designed to provide quiet performance and reliability to support a **NON** free-wheeling engine. The system consists of a primary (5) drive chain and a secondary chain drive.

The **primary** timing chain (5) is a double-flexure, inverted tooth type chain. The primary chain drives both of the intake camshafts directly from a sprocket mounted on the crankshaft. In addition, the water pump is driven by the “back side” of the primary chain, necessitating the double-flexure type chain.

The chain is controlled by three fixed chain guides (2),(7),(11) and a pivoting tensioner arm (8). These guides utilize low-friction and long wearing nylon plastic wear faces. To tension the primary chain, a fully automatic spring-loaded, engine oil-fed, hydraulic tensioner (9) is used. The tensioner (9) is mounted in the right cylinder head with the plunger contacting the pivoting tensioner arm. A mechanical ratchet mechanism inside the tensioner prevents excessive chain slack upon engine start-up as the chain wears. The tensioner is designed with an internal oil reservoir to assure noise-free performance, even during engine start-up before oil pressure reaches the tensioner.

For lubrication the primary chain utilizes oil leakage from the front of the oil pump. This oil spills on the crankshaft sprocket, which is then carried by the chain throughout the primary drive.

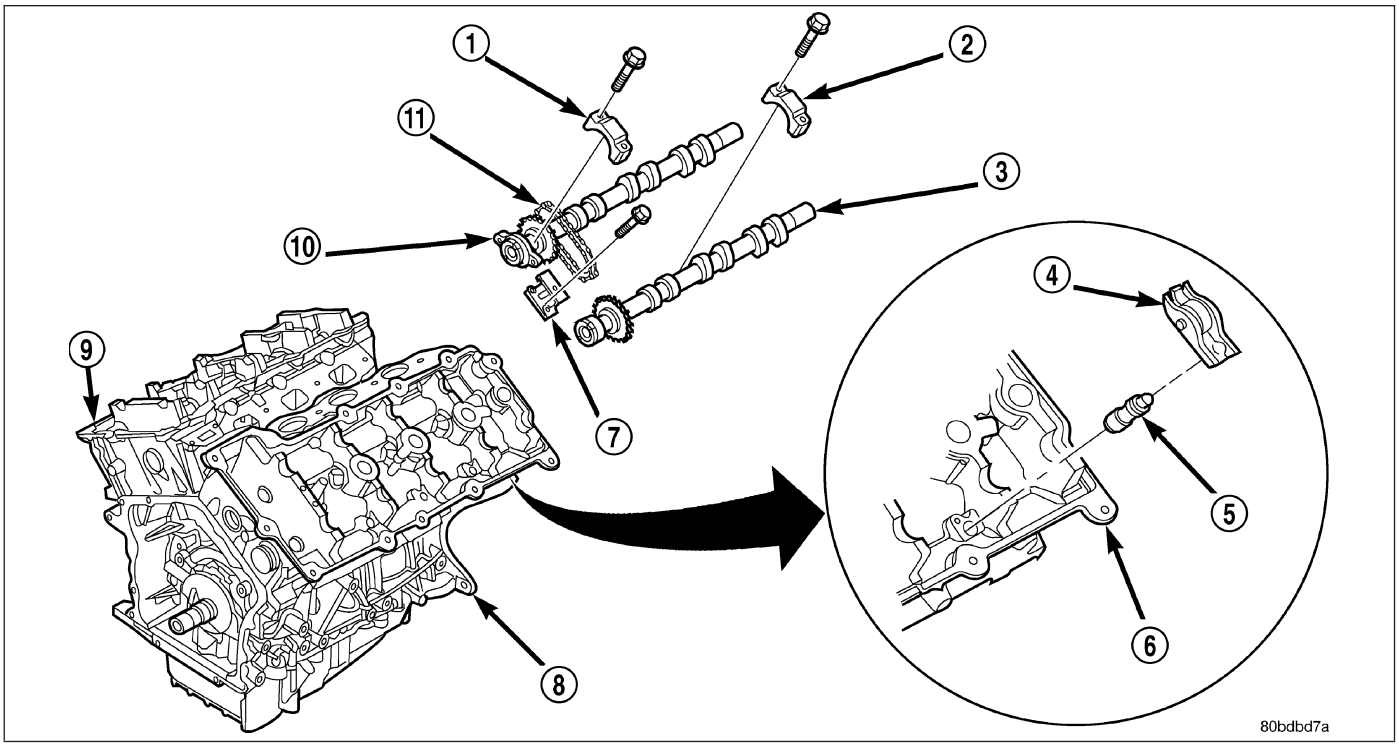

The **secondary** timing chain (11) drive system uses two conventional roller-type chains, one at each cylinder bank. The purpose of the secondary chain (11) is to provide a mechanical driven connection between the intake and exhaust camshafts. The intake camshafts drive the exhaust camshafts. The sprockets for both intake and exhaust camshafts are a press-fit and are only serviced as an assembly with the camshafts.

To tension the secondary chain a spring-loaded, hydraulic tensioners (7) are used at each bank and attaches to each cylinder head between the intake and exhaust camshafts. The tensioner (7) incorporates upper and lower chain guide faces. The lower guide face is attached directly to the tensioner's hydraulic plunger. Also, the tensioner uses an internal oil reservoir design to prevent engine start-up noise. The secondary chains are lubricated via an oil passage through the upper guide face on each tensioner.

STANDARD PROCEDURE

ENGINE TIMING - VERIFICATION

Correct timing is critical for the NON free-wheeling designed, 2.7L engine. Engine timing can be verified by using the following procedures:

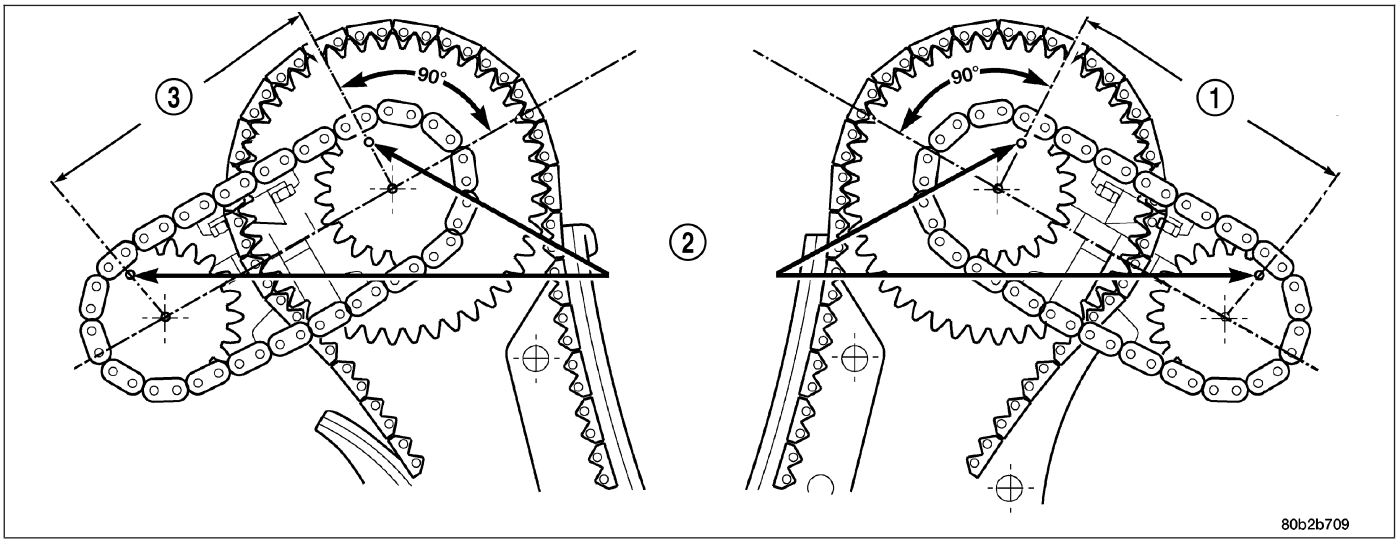

1. Remove cylinder head covers. (Refer to 9 - ENGINE/CYLINDER HEAD/CYLINDER HEAD COVER(S) - REMOVAL)
2. Rotate engine until number one cylinder is at TDC on the EXHAUST stroke.
3. View the intake camshaft sprocket timing mark. The mark should be 90° from the cylinder head cover sealing surface on both right and left cylinder banks.
4. Count chain pins from the mark on the intake camshaft towards the exhaust camshaft (1)&(3). Engine is timed correctly when there are 12 chain pins between the timing marks (2) on the intake camshaft and exhaust camshaft.
5. If marks are not correctly aligned, proceed to Timing Chain and Sprockets for service procedures (Refer to 9 - ENGINE/VALVE TIMING/TIMING BELT/CHAIN AND SPROCKETS - REMOVAL).

COVER-TIMING CHAIN

REMOVAL

1. Disconnect negative battery (1) cable.
2. Drain cooling system (Refer to 7 - COOLING/ENGINE - STANDARD PROCEDURE).
3. Remove coolant pressure container (Refer to 7 - COOLING/ENGINE/COOLANT RECOVERY PRESS CONTAINER - REMOVAL).

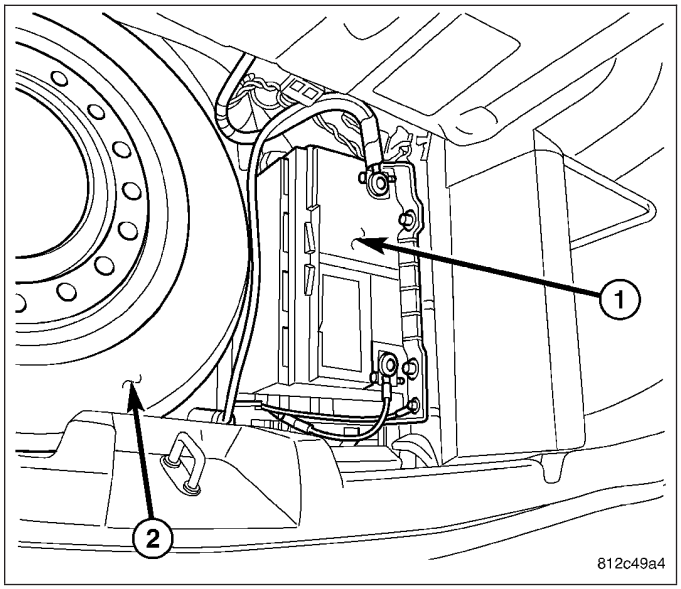

4. Raise vehicle on hoist.
5. Remove lower splash shield retaining bolts (1) and splash shield (2).
6. Remove accessory drive belts (Refer to 7 - COOLING/ACCESSORY DRIVE/DRIVE BELTS - REMOVAL).
7. Remove crankshaft vibration damper (Refer to 9 - ENGINE/ENGINE BLOCK/VIBRATION DAMPER - REMOVAL).
8. Lower vehicle.

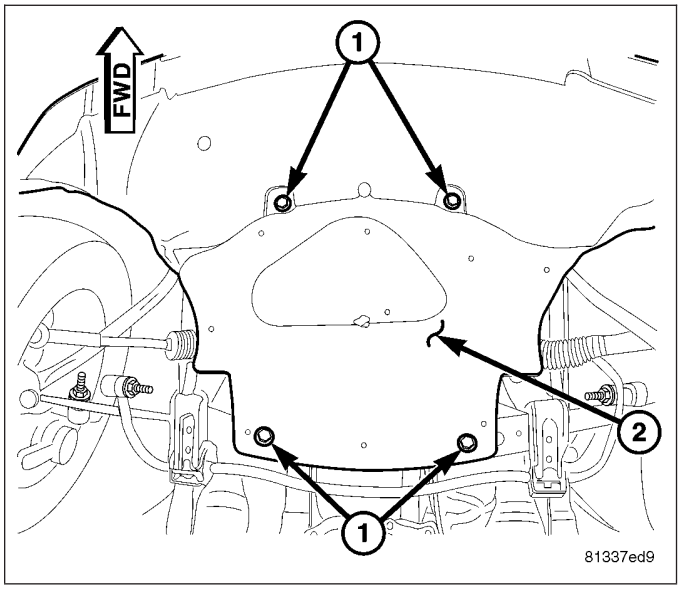

9. Remove timing chain cover bolts (3)&(4).
10. Remove timing chain cover (2).
11. Discard timing chain cover gasket (1). Remove front crankshaft oil seal from cover (2).

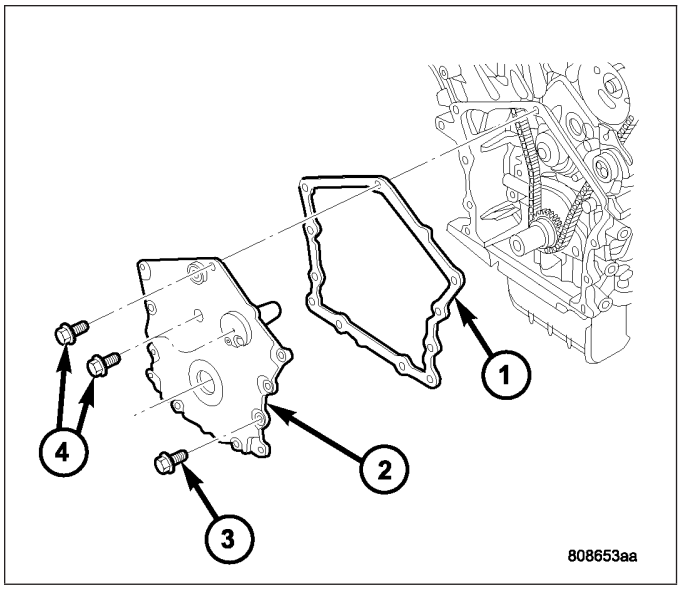

INSTALLATION

1. Inspect and clean timing chain cover sealing surfaces.
2. Before installing timing cover gasket apply a 1/8 inch bead of Mopar® Engine RTV GEN II to the parting lines between the oil pan and cylinder block (1).

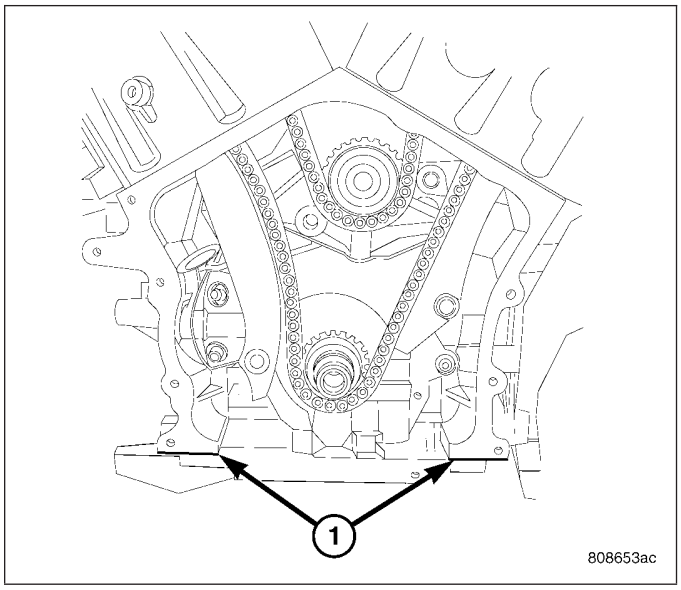

3. Install timing cover (2) and gasket (1). Tighten M10 cover bolts (4) to 54 N·m (40 ft. lbs.) and M6 bolts (3) to 12 N·m (105 in. lbs.).
4. Install front crankshaft oil seal using Special Tool 6780-2 sleeve and 6780-1 installer (Refer to 9 - ENGINE/ENGINE BLOCK/CRANKSHAFT OIL SEAL - FRONT - INSTALLATION).
5. Install crankshaft vibration damper (Refer to 9 - ENGINE/ENGINE BLOCK/VIBRATION DAMPER - INSTALLATION).
6. Install accessory drive belts (Refer to 7 - COOLING/ACCESSORY DRIVE/DRIVE BELTS - INSTALLATION).

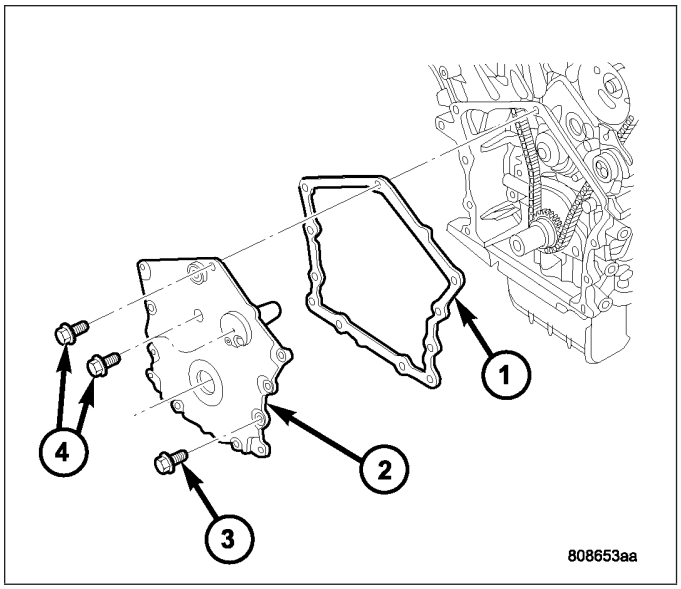

7. Install lower splash shield (2) and retaining bolts (1).

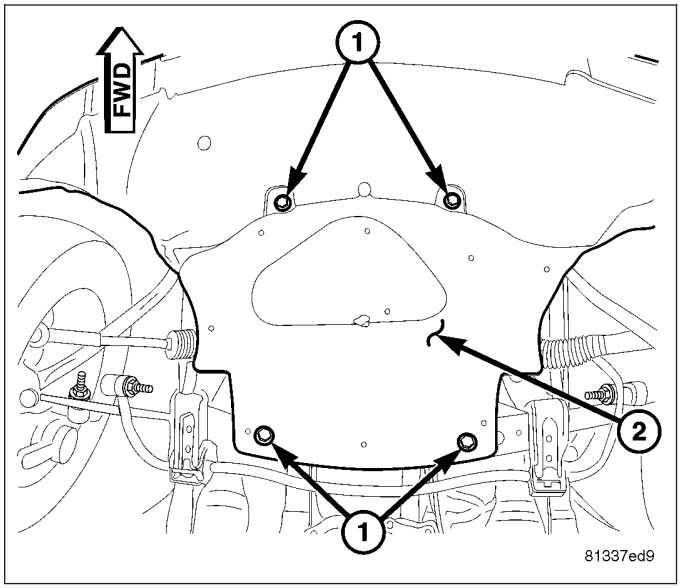

8. Lower vehicle.
9. Fill cooling system (Refer to 7 - COOLING/ENGINE - STANDARD PROCEDURE).
10. Connect negative battery (1) cable.

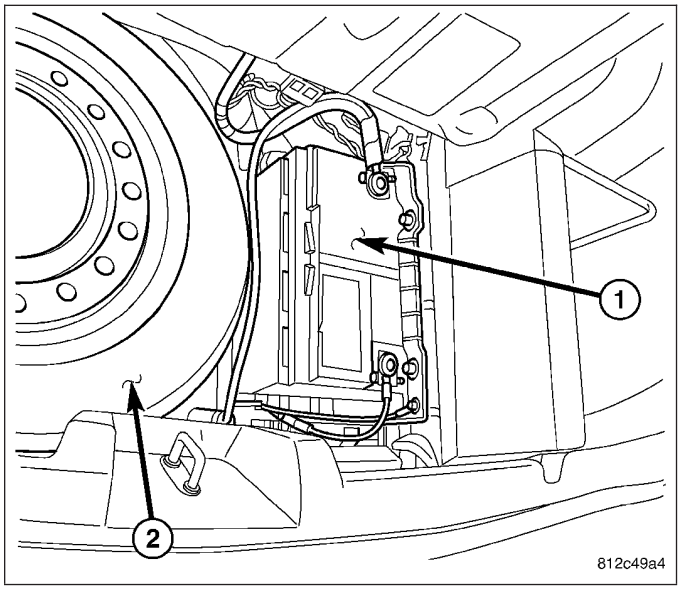

CHAIN AND SPROCKETS-TIMING

REMOVAL

TIMING CHAIN

1. Disconnect negative battery (1) cable.
2. Drain cooling system (Refer to 7 - COOLING/ENGINE - STANDARD PROCEDURE).
3. Remove upper intake manifold (Refer to 9 - ENGINE/MANIFOLDS/INTAKE MANIFOLD - REMOVAL).
4. Remove cylinder head covers, crankshaft vibration damper, and timing chain cover (Refer to 9 - ENGINE/CYLINDER HEAD/CYLINDER HEAD COVER(S) - REMOVAL) (Refer to 9 - ENGINE/ENGINE BLOCK/VIBRATION DAMPER - REMOVAL) (Refer to 9 - ENGINE/VALVE TIMING/TIMING BELT / CHAIN COVER(S) - REMOVAL).

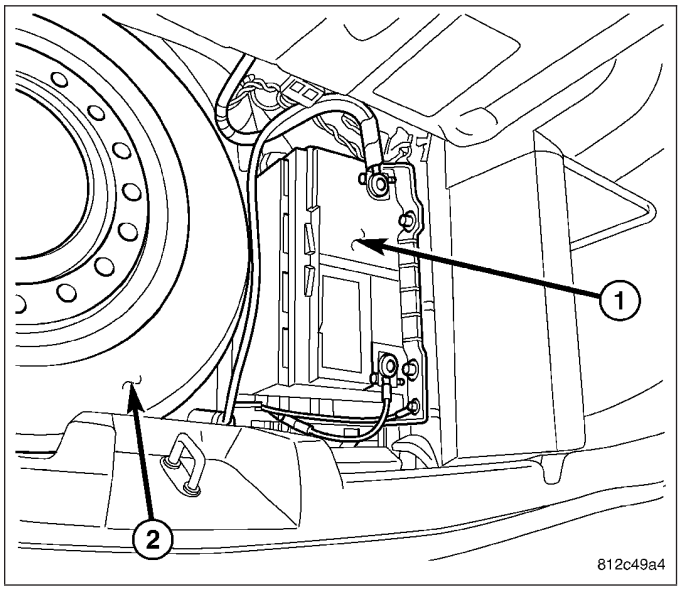

CAUTION: When aligning timing marks, always rotate engine by turning the crankshaft. Failure to do so will result in valve and/or piston damage.

5. Align crankshaft sprocket timing mark to mark on oil pump housing (2). The mark on oil pump housing is 60° ATDC of #1 cylinder.

CAUTION: When the timing chain is removed and the cylinder heads are still installed, DO NOT rotate the camshafts or crankshaft without first locating the proper crankshaft position. Failure to do so will result in valve and/or piston damage.

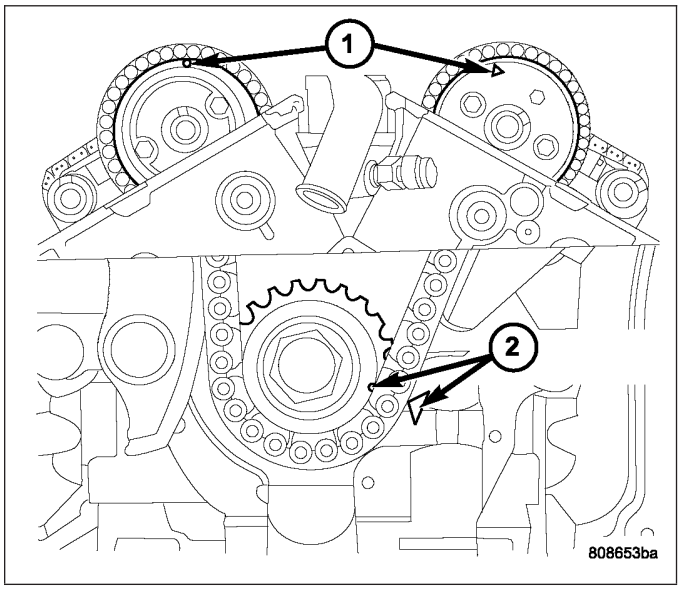

6. Remove primary timing chain tensioner retainer cap (2) and tensioner (1) from right cylinder head.

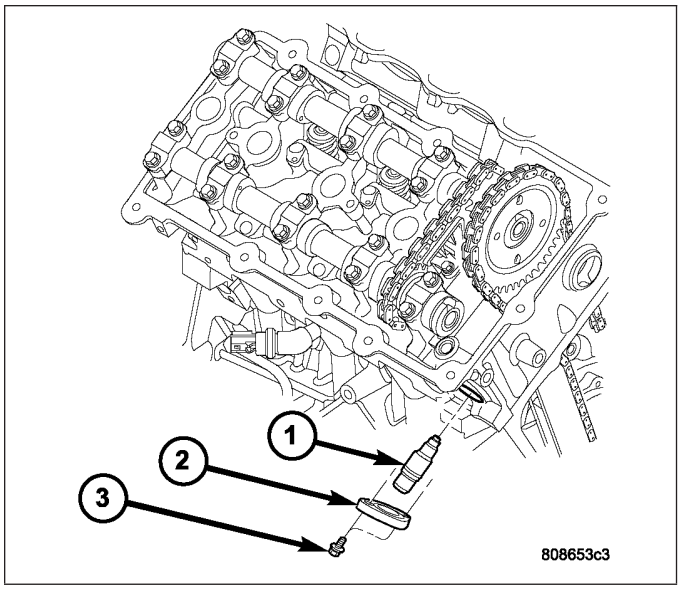

7. Disconnect and remove camshaft position sensor (4) from left cylinder head.
8. Remove timing chain guide access plugs (3) from cylinder heads.

NOTE: When camshaft sprocket bolts are removed, the camshafts will rotate in a clockwise direction.

9. Starting with the right camshaft sprocket, remove the sprocket attaching bolts. Remove camshaft damper (1) (if equipped) and sprocket.
10. Remove left side camshaft sprocket attaching bolts and remove sprocket.
11. Remove lower chain guide (7) and tensioner arm (8).
12. Remove the primary timing chain (5).
13. For removal of crankshaft sprocket (6), (Refer to 9 - ENGINE/ENGINE BLOCK/CRANKSHAFT - REMOVAL).

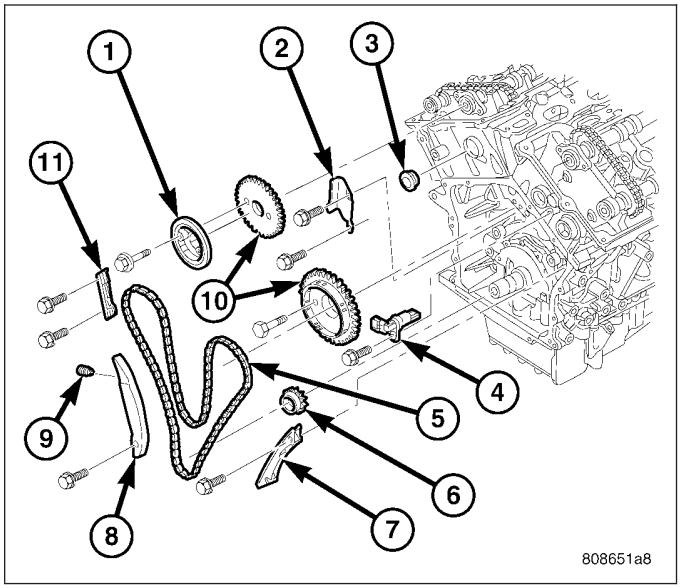

CRANKSHAFT SPROCKET

1. Remove primary timing chain (Refer to 9 - ENGINE/VALVE TIMING/TIMING BELT/CHAIN AND SPROCKETS - REMOVAL).

CAUTION: Use care not to turn crankshaft while removing crankshaft sprocket, as damage to valves and or pistons could occur.

2. Remove crankshaft sprocket by first installing the crankshaft damper bolt. Apply grease or equivalent to damper bolt head and position Special Tools 5048-1(3), 5048-6 (2), and 8539 (1) on sprocket and crankshaft nose. Remove sprocket using care not to rotate the crankshaft.

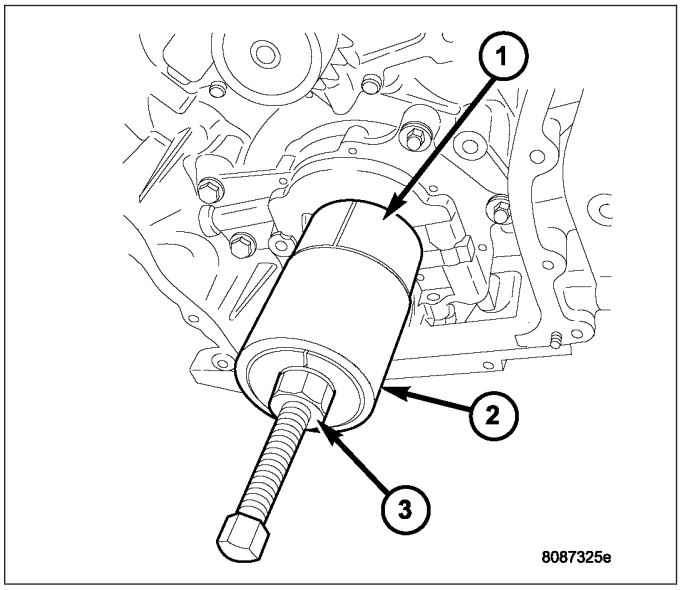

INSTALLATION

TIMING CHAIN

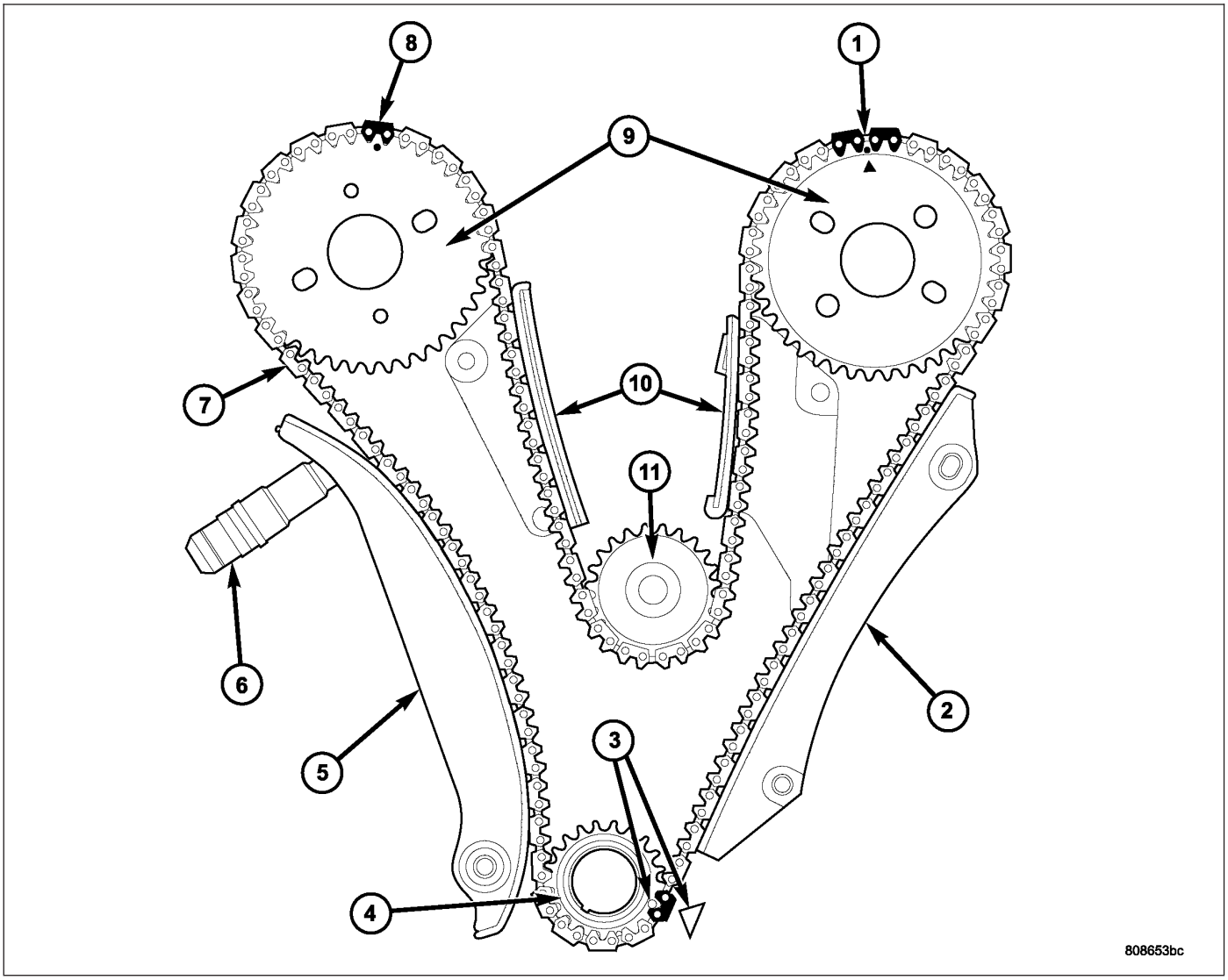

1. Inspect all sprockets (4),(9),(11) and chain guides (2),(5),(10). Replace if worn.
2. For crankshaft sprocket installation procedures (Refer to 9 - ENGINE/ENGINE BLOCK/CRANKSHAFT - INSTALLATION).
3. If removed, install right and left side short chain guides (11). Tighten attaching bolts to 28 N·m (250 in. lbs.).
4. Align crankshaft sprocket timing mark to the mark on oil pump housing(3).

NOTE: Lubricate timing chain and guides with engine oil before installation.

5. Place left side primary chain sprocket onto the chain so that the timing mark is located in between the two (plated) timing links (1).

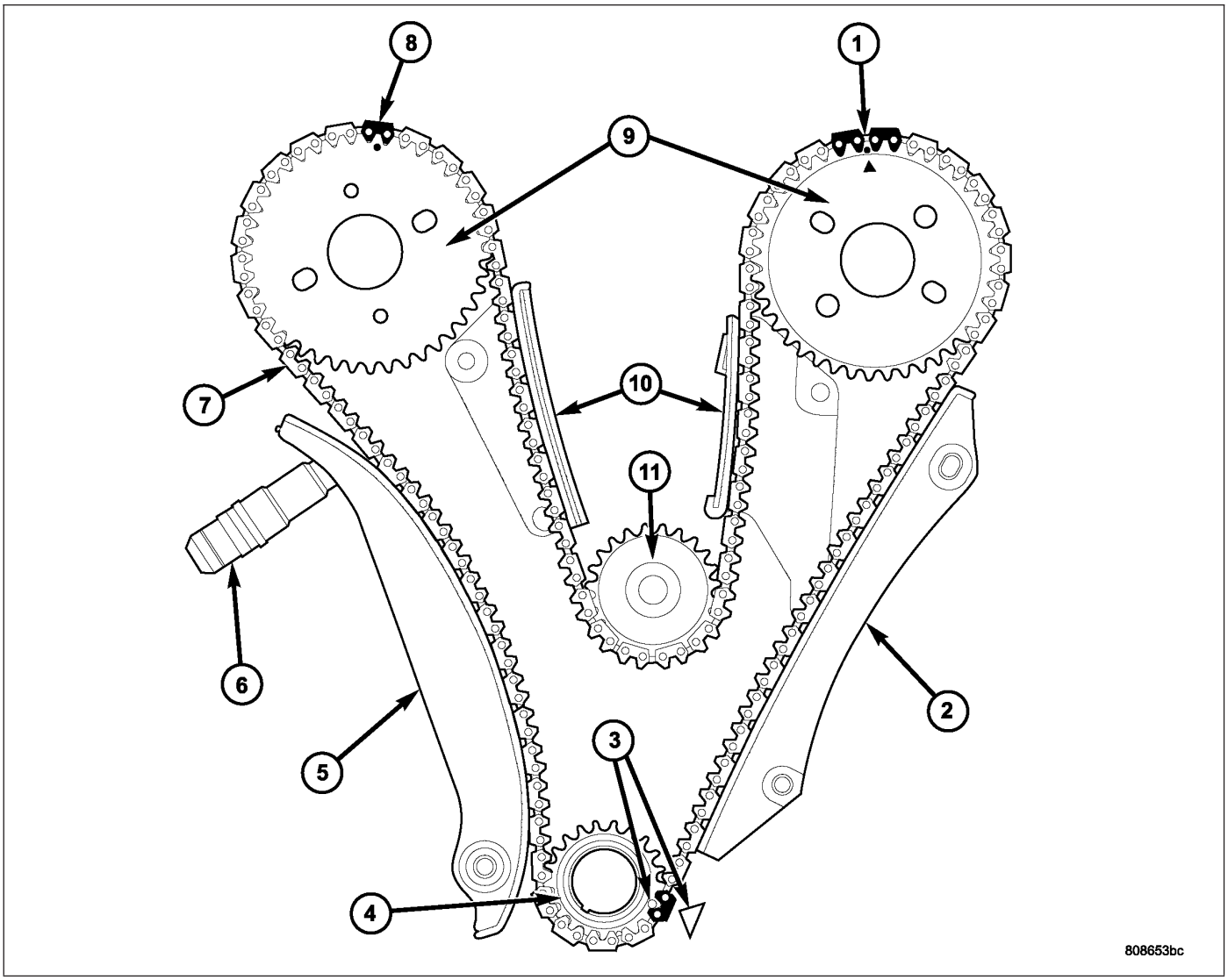

6. Lower the primary chain with left side sprocket through the left cylinder head opening.

NOTE: The camshaft sprockets can be allowed to float on the camshaft hub during installation.

7. Loosely position left side camshaft sprocket over camshaft hub.
8. Align timing (plated) link to the crankshaft sprocket timing mark (3).
9. Position primary chain onto water pump drive sprocket (11).
10. Align right camshaft sprocket timing mark to the timing (plated) link on the timing chain (8) and loosely position over camshaft hub.
11. Verify that all chain timing (plated) links are properly aligned to the timing marks on all sprockets.
12. Install left side lower chain guide (2) and tensioner arm (5). Tighten attaching bolts to 28 N·m (250 in. lbs.).

NOTE: Inspect O-ring on chain guide access plugs before installing. Replace O-ring as necessary.

13. Install chain guide access plugs to cylinder heads. Tighten plugs to 20 N·m (15 ft. lbs.).

NOTE: To reset the primary timing chain tensioner, engine oil will first need to be purged from the tensioner.

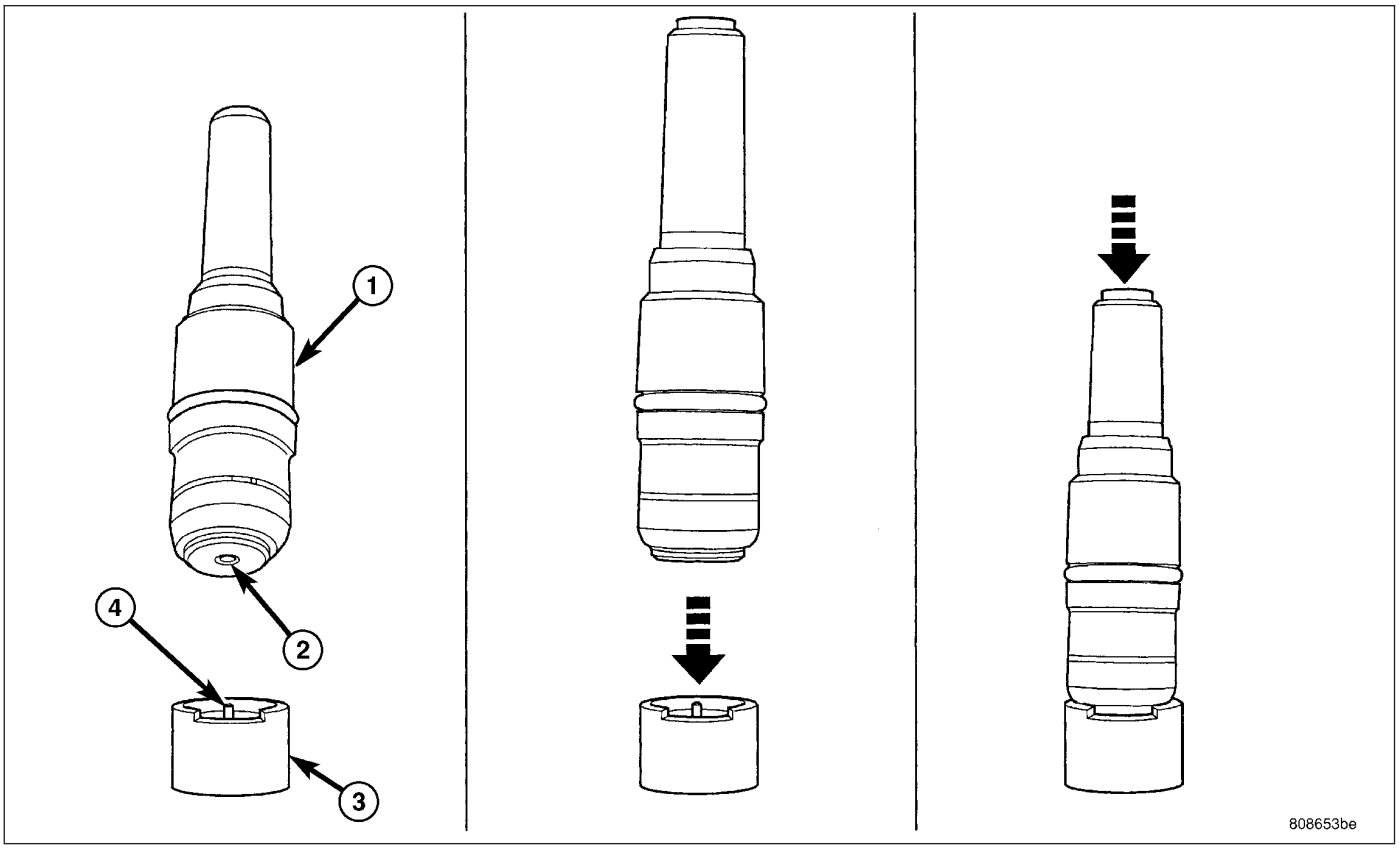

14. Purge oil from timing chain tensioner using the following procedure:
    a. Place the check ball (2) end of tensioner into the shallow end of Special Tool 8186 (3).
    b. Using hand pressure, slowly depress tensioner until oil is purged from tensioner.

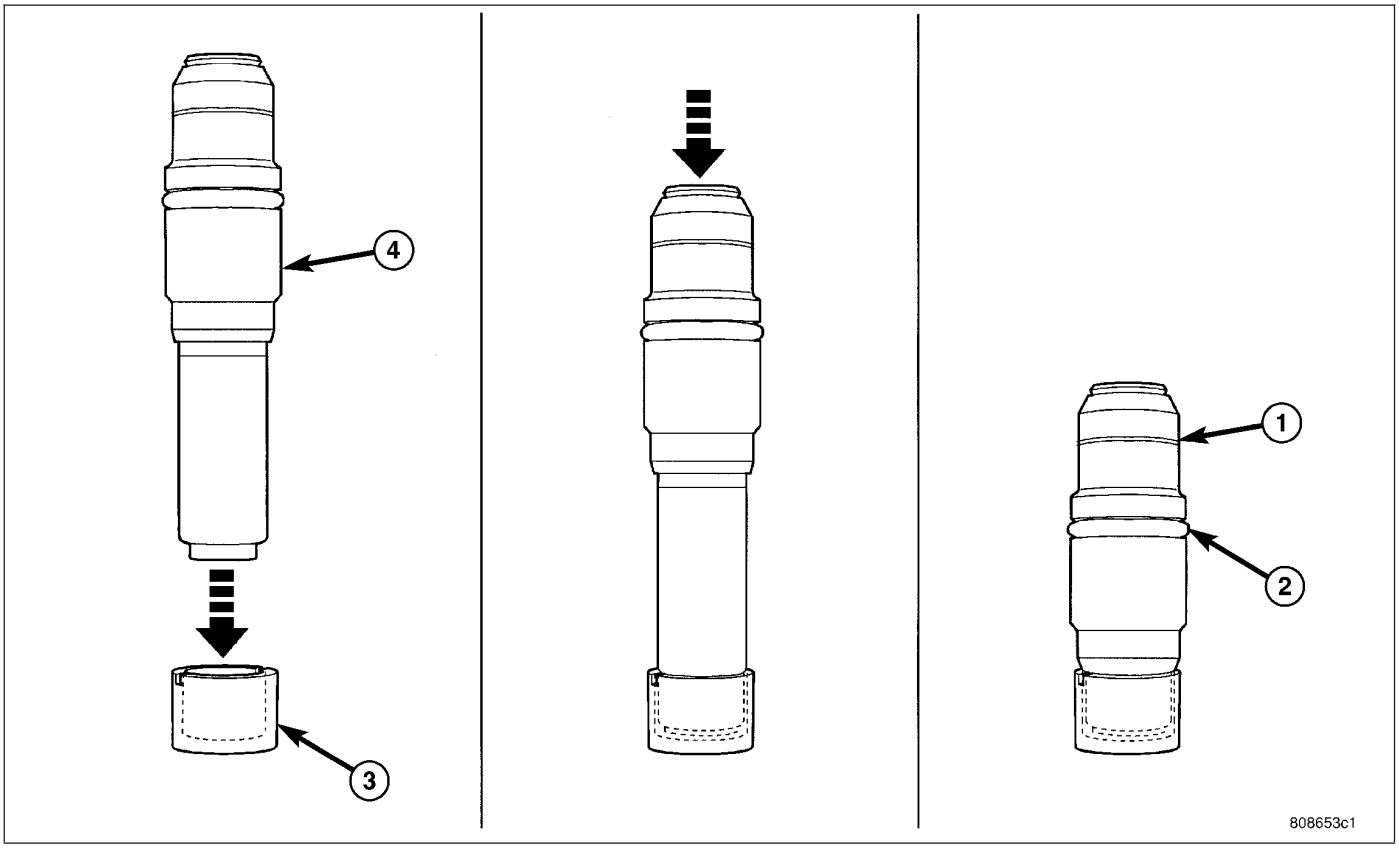

15. Reset timing chain tensioner using the following procedure:
    a. Position cylinder plunger (4) into the deeper end of Special Tool 8186 (3).
    b. Apply a downward force until tensioner is reset.

NOTE: If oil was not first purged from the tensioner, use slight finger pressure to assist the center arm pin of Special Tool 8186 to unseat the tensioner's check ball.

CAUTION: Ensure the tensioner is properly reset. The tensioner body (4) must bottom against the top edge of Special Tool 8186 (3). Failure to properly perform the resetting procedure may cause tensioner jamming.

NOTE: Inspect the tensioner o-ring (2) for nicks or cuts and make sure the snap ring (1) is correctly installed, replace as necessary.

16. Install the reset chain tensioner (1) into the right cylinder head.
17. Position tensioner retaining plate (2) and tighten bolts (1) to 12 N·m (105 in. lbs.).

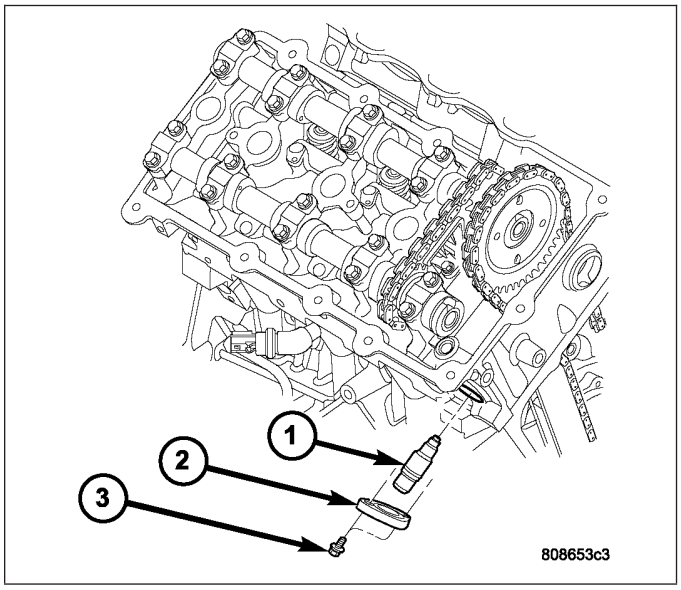

18. Starting at the right cylinder bank, first position the camshaft damper (1) (if equipped) on camshaft hub, then insert a 3/8" square drive extension with a breaker bar into intake camshaft drive hub. Rotate camshaft until the camshaft hub aligns to the camshaft sprocket and damper attaching holes. Install the sprocket attaching bolts and tighten to 28 N·m (250 in. lbs.).
19. Turn the left side camshaft by inserting a 3/8" square drive extension with a breaker bar into intake camshaft drive hub and rotate camshaft until the sprocket attaching bolts can be installed. Tighten sprocket bolts to 28 N·m (250 in. lbs.).
20. Rotate engine slightly clockwise to remove timing chain slack, if necessary.

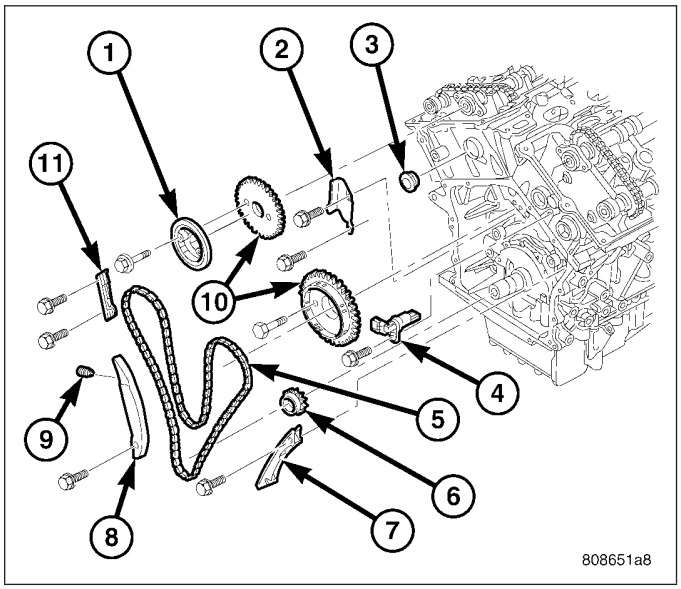

21. Activate the timing chain tensioner by using a flat bladed pry tool to gently pry tensioner arm towards the tensioner slightly. Then release the tensioner arm. Verify the tensioner is activated (extends).

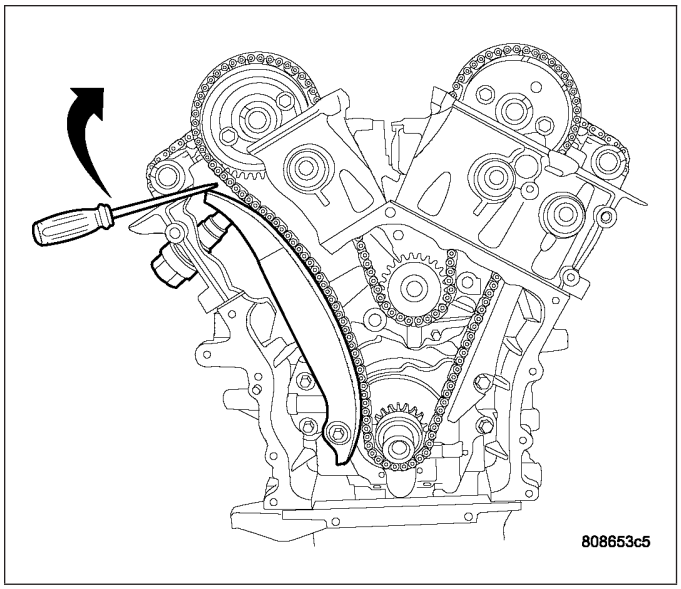

22. Install camshaft position sensor (2) and connect electrical connector.
23. Install the timing chain cover, crankshaft vibration damper, and cylinder head covers. (Refer to 9 - ENGINE/VALVE TIMING/TIMING BELT / CHAIN COVER(S) - INSTALLATION) (Refer to 9 - ENGINE/ENGINE BLOCK/VIBRATION DAMPER - INSTALLATION) (Refer to 9 - ENGINE/CYLINDER HEAD/CYLINDER HEAD COVER(S) - INSTALLATION)
24. Install upper intake manifold. (Refer to 9 - ENGINE/MANIFOLDS/INTAKE MANIFOLD - INSTALLATION)

NOTE: After installation of a reset tensioner, engine noise will occur after initial start-up. This noise will normally disappear within 5–10 seconds.

25. Fill cooling system (Refer to 7 - COOLING/ENGINE - STANDARD PROCEDURE).
26. Connect negative battery (1) cable.

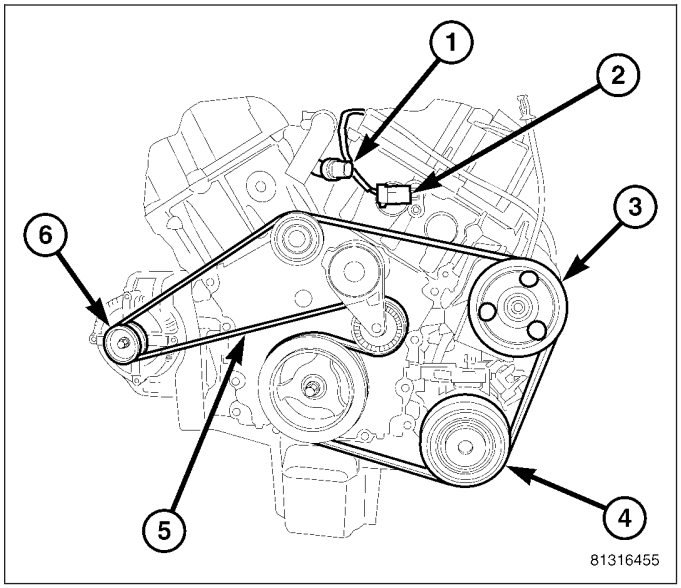

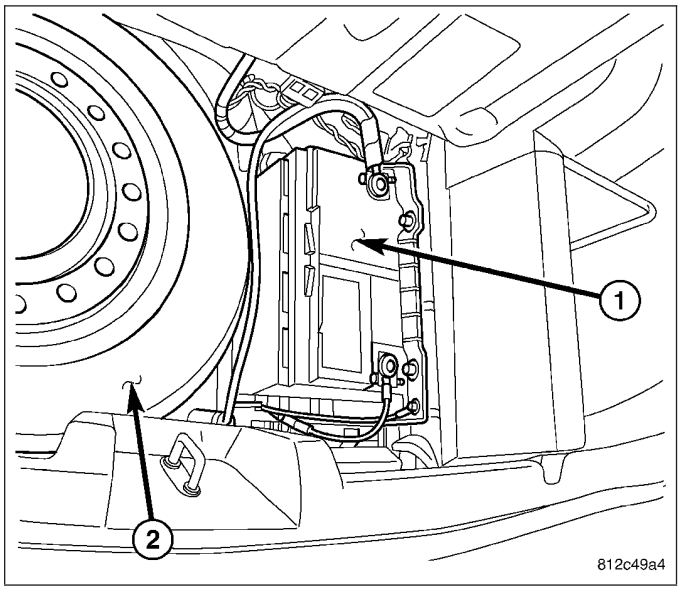

CRANKSHAFT SPROCKET

1. Install crankshaft sprocket using Special Tools 6780-1 (1) and 8179 (2) until sprocket bottoms against crankshaft step flange. Use care not to rotate crankshaft.

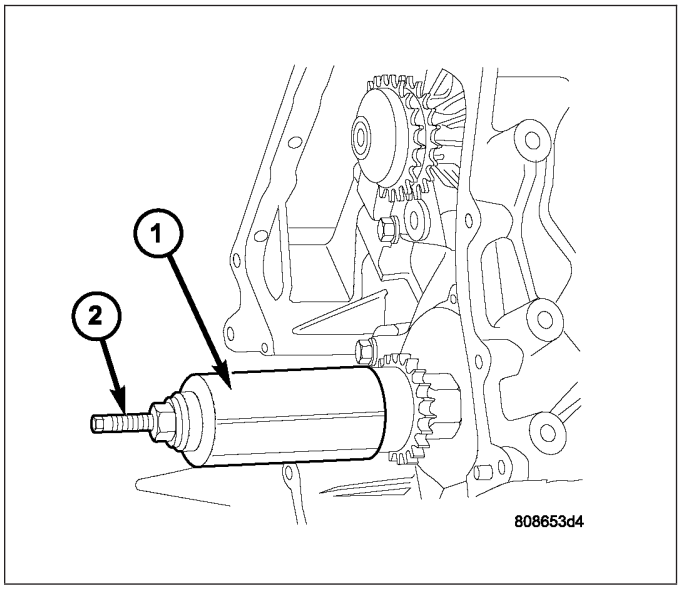

2. Verify that crankshaft sprocket is installed to proper depth by measuring from sprocket outer face to end of crankshaft. Measurement should read: 39.05 ±0.50 mm (1.5374 ±0.020 in.).
3. Install primary timing chain (Refer to 9 - ENGINE/ VALVE TIMING/TIMING BELT/CHAIN AND SPROCKETS - INSTALLATION).

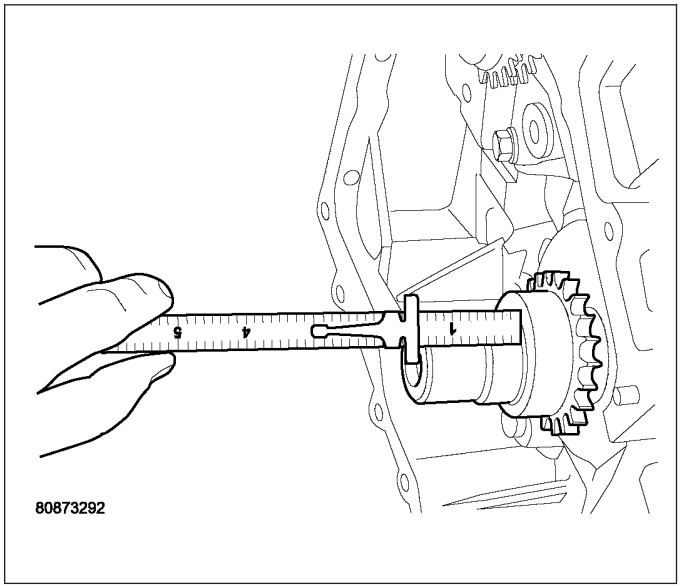

TENSIONER-TIMING CHAIN

REMOVAL

1. Disconnect negative battery (1) cable.
2. Remove timing chain cover (Refer to 9 - ENGINE/ VALVE TIMING/TIMING BELT / CHAIN COVER(S) - REMOVAL).

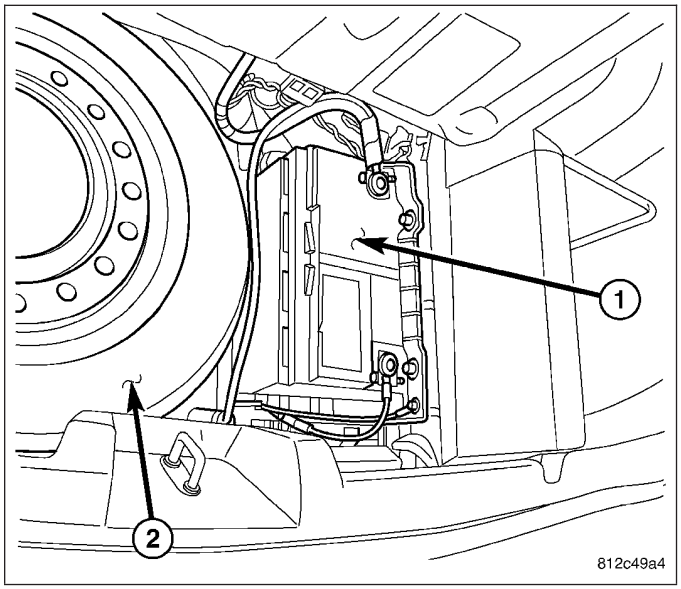

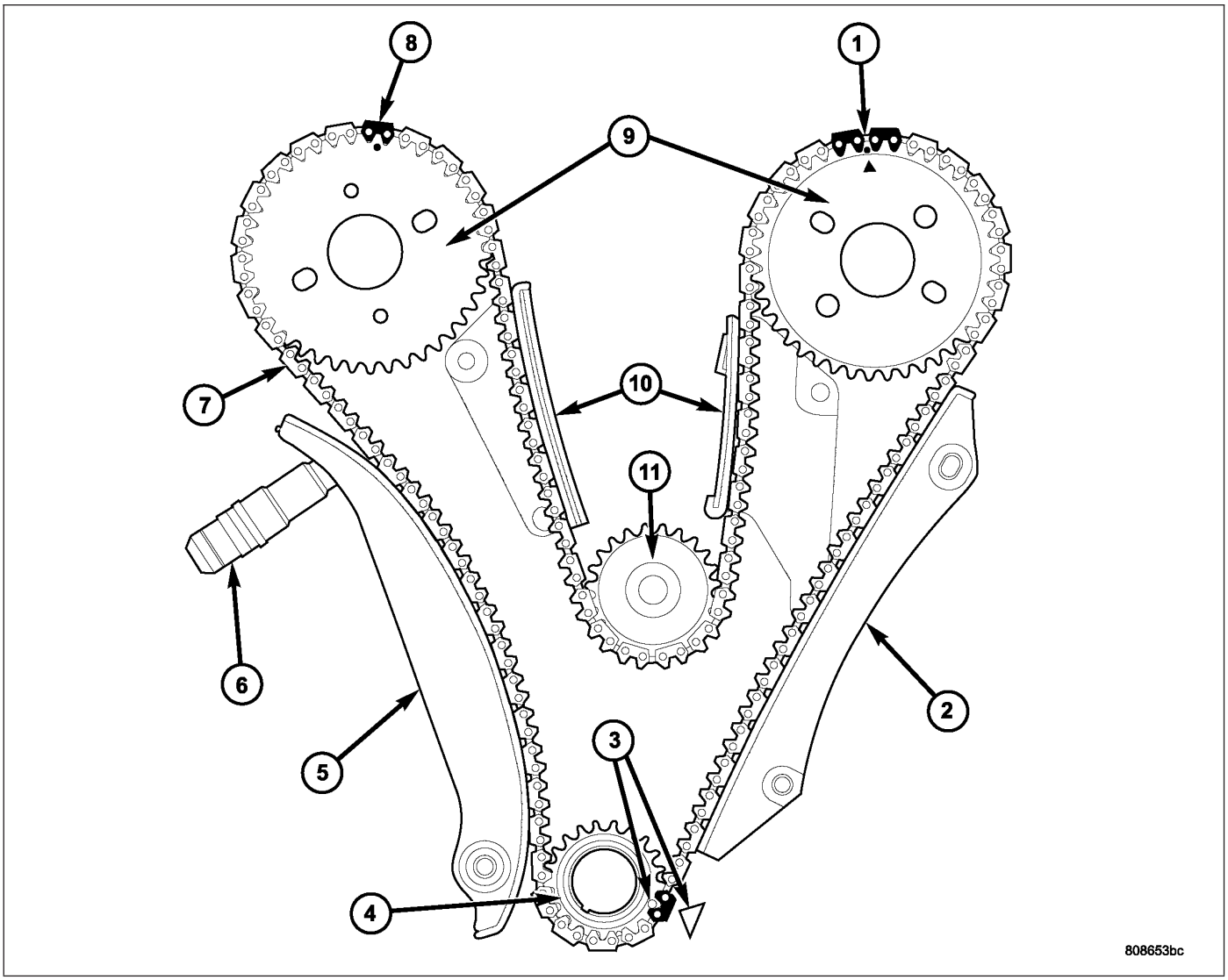

3. Align timing marks (1),(3),(8) (Refer to 9 - ENGINE/VALVE TIMING - STANDARD PROCEDURE).
4. Remove timing chain tensioner cover (2).
5. Remove timing chain tensioner (1).

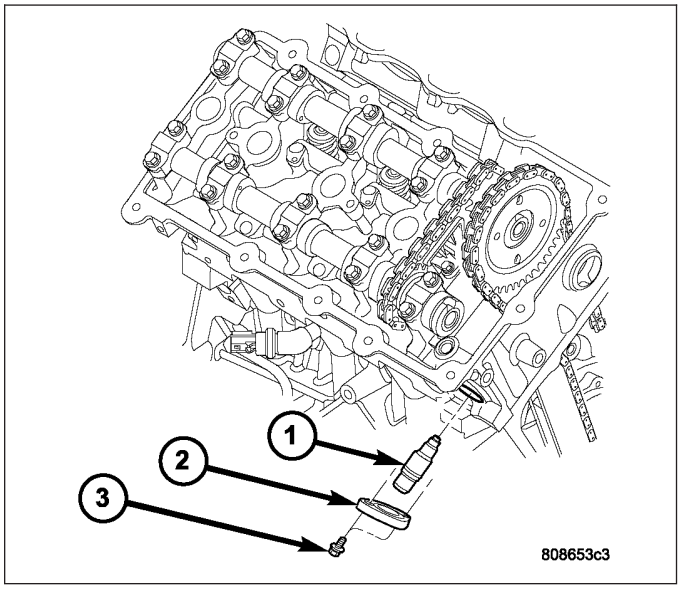

INSTALLATION

RESETTING TENSIONER

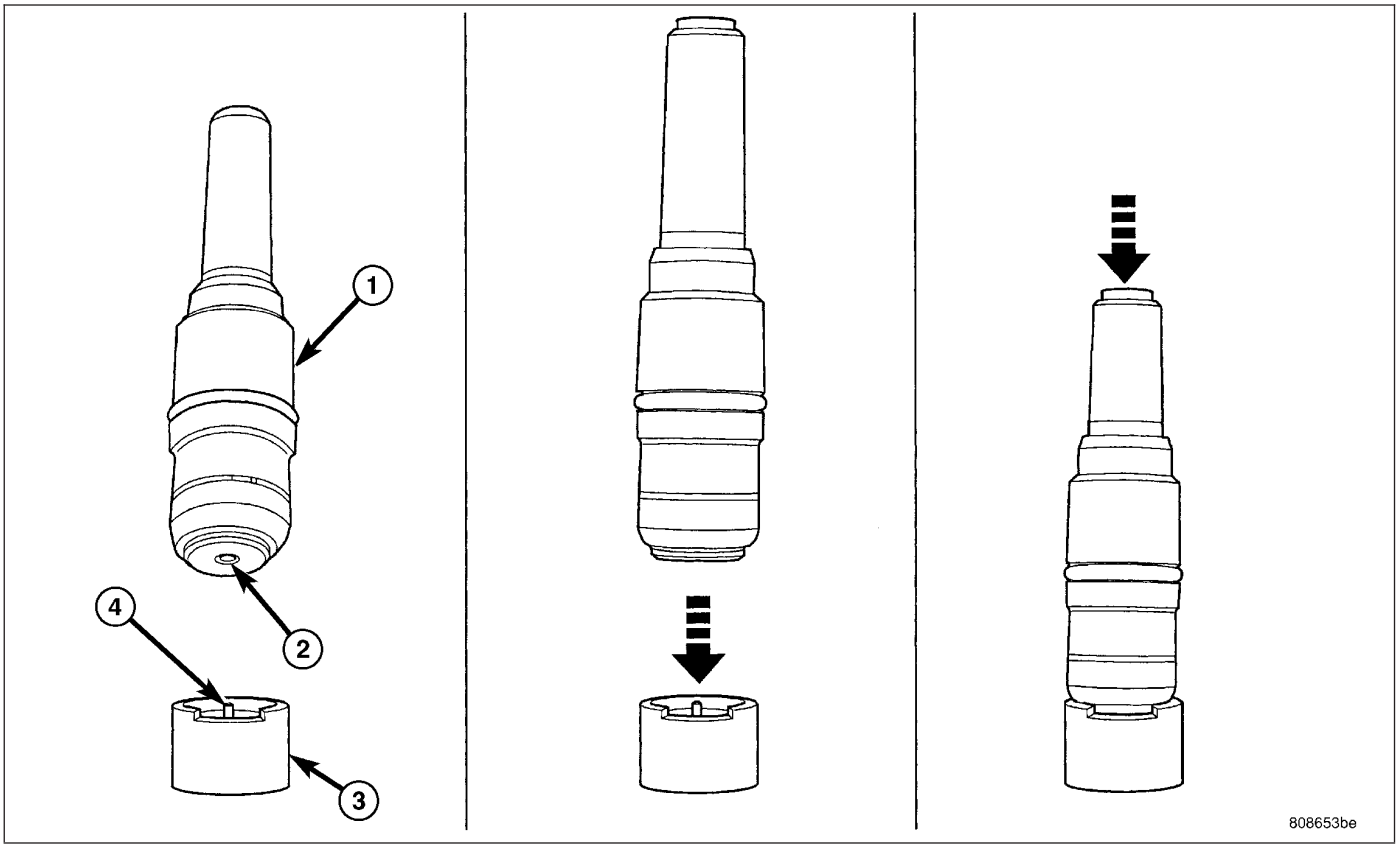

The timing chain tensioner is a spring loaded hydraulic tensioner. To reset the timing chain tensioner, the following procedure must be followed.

1. Purge oil from timing chain tensioner using the following procedure:
   a. Place the check ball end of tensioner (1) into the shallow end of Special Tool 8186 (3).
   b. Using hand pressure, slowly depress tensioner (1) until all of the oil is purged out.

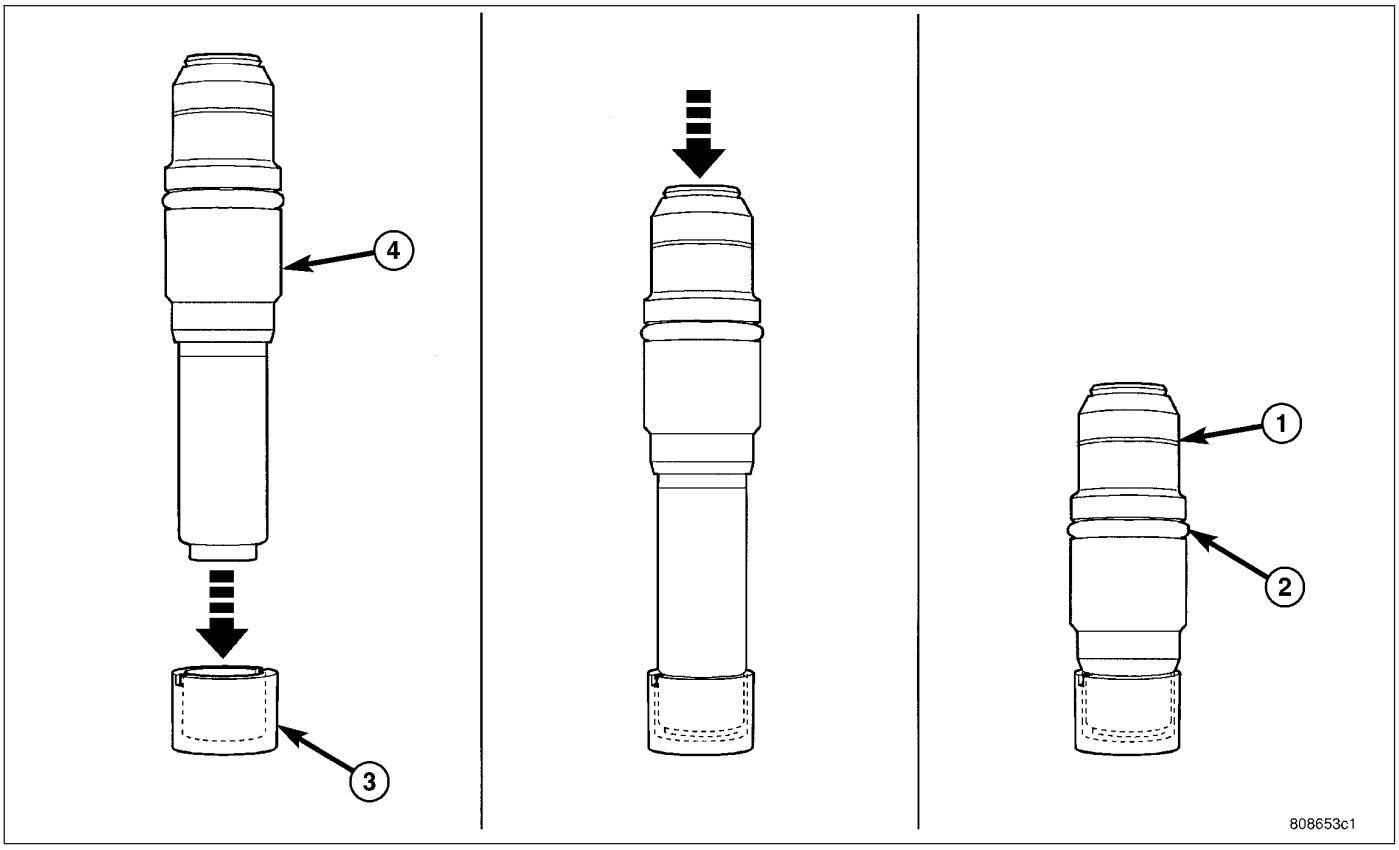

NOTE: To reset the primary timing chain tensioner, engine oil will first need to be purged from the tensioner.

2. Reset timing chain tensioner (4) using the following procedure:
   a. Position cylinder plunger into the deeper end of Special Tool 8186 (3).
   b. Apply a downward force until tensioner (4) is reset.

NOTE: If oil was not first purged from the tensioner, use slight finger pressure to assist the center arm pin of Special Tool 8186 (3) to unseat the tensioner's check ball.

NOTE: Inspect the tensioner o-ring (2) for nicks or cuts and make sure the snap ring (1) is correctly installed, replace as necessary.

TENSIONER-TIMING CHAIN

NOTE: Verify proper timing alignment prior to tensioner installation (Refer to 9 - ENGINE/VALVE TIMING - STANDARD PROCEDURE).

1. Reset tensioner (Refer to 9 - ENGINE/VALVE TIMING/TMNG BELT/CHAIN TENSIONER&PULLEY - INSTALLATION).

NOTE: Inspect tensioner o-ring and snap ring, replace as necessary.

2. Install tensioner (1) in cylinder head.

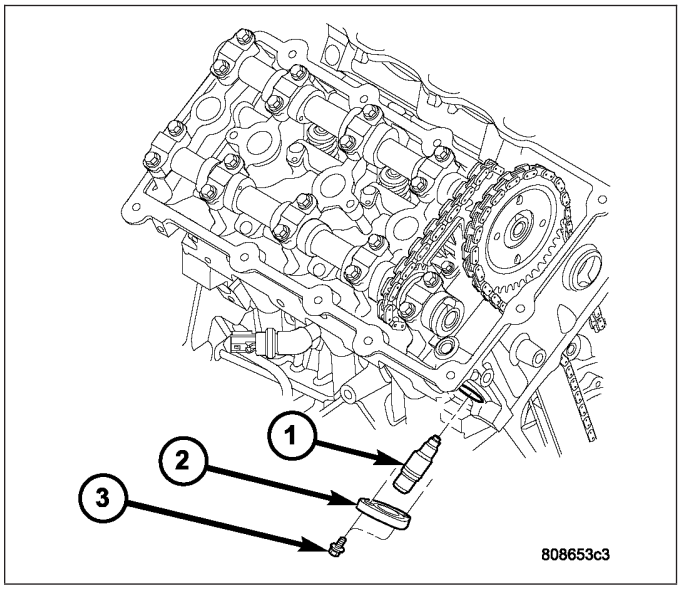

NOTE: Tensioner retaining plate dowel pin (3) must be aligned with hole in cylinder head for proper installation.

3. Inspect tensioner retaining plate o-ring (2) and replace as necessary.

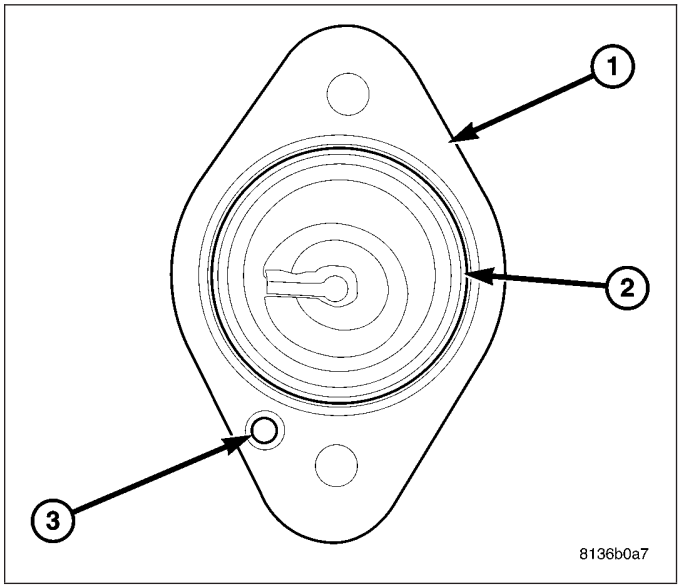

4. Install tensioner retaining plate (2) and attaching bolts (3). Tighten bolts to 12 N·m (105 in. lbs.).

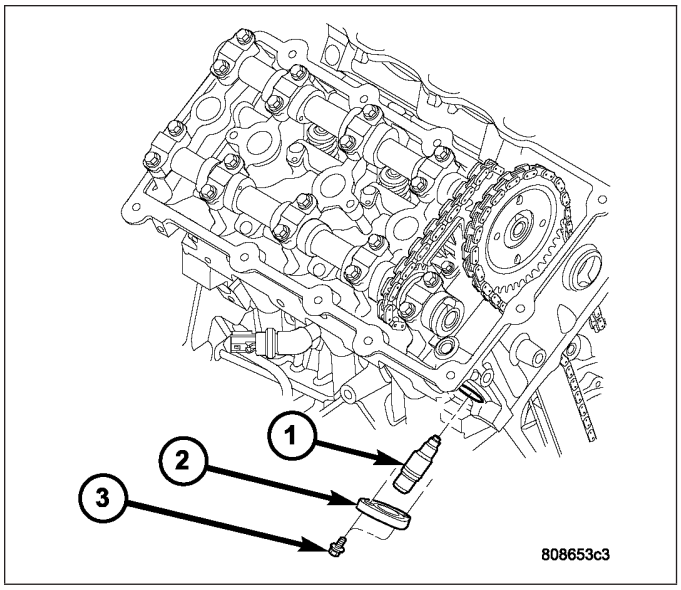

ENGINE - 3.5L - SERVICE INFORMATION

TABLE OF CONTENTS

page

ENGINE - 3.5L - SERVICE INFORMATION
DESCRIPTION
3.5L 2098
DIAGNOSIS AND TESTING
INTRODUCTION 2099
ENGINE PERFORMANCE 2100
ENGINE MECHANICAL 2102
CYLINDER COMPRESSION PRESSURE TEST 2104
CYLINDER COMBUSTION PRESSURE LEAKAGE TEST 2104
ENGINE OIL LEAK INSPECTION 2105
STANDARD PROCEDURE
FORM-IN-PLACE GASKETS AND SEALERS . 2106
ENGINE GASKET SURFACE PREPARATION . . 2107
REPAIR OF DAMAGED OR WORN THREADS. 2107
HYDROSTATIC LOCKED ENGINE 2107
ENGINE CORE AND OIL GALLERY PLUGS . 2108
REMOVAL 2109
INSTALLATION 2115
SPECIFICATIONS
3.5L ENGINE 2123
TORQUE - 3.5L 2127
SPECIAL TOOLS
3.5L ENGINE 2129
ELEMENT-AIR CLEANER
REMOVAL 2132
INSTALLATION 2133
HOUSING-AIR CLEANER
REMOVAL 2134
INSTALLATION 2134
CYLINDER HEAD(S)
DESCRIPTION 2135
DIAGNOSIS AND TESTING
CYLINDER HEAD GASKET 2135
REMOVAL - CYLINDER HEAD(S) 2136
CLEANING 2144
INSPECTION 2144
INSTALLATION - CYLINDER HEAD(S) 2144
SEAL -CAMSHAFT OIL
REMOVAL 2153
INSTALLATION 2158
CAMSHAFT(S)
DESCRIPTION 2165
OPERATION 2165
REMOVAL 2165
INSPECTION 2165
INSTALLATION 2166
COVER CYLINDER HEAD - LEFT
REMOVAL 2167
INSTALLATION 2167
COVER CYLINDER HEAD - RIGHT
REMOVAL 2169
INSTALLATION 2169
VALVES & SEATS -INTAKE/EXHAUST
DESCRIPTION 2171
OPERATION 2171
STANDARD PROCEDURE
VALVE AND VALVE SEAT REFACING 2171
REMOVAL 2173
CLEANING 2173
INSPECTION
VALVES 2173
VALVE GUIDES 2173
INSTALLATION 2174
ROCKER ARM SHAFT/ ROCKER ARM / LASH ADJUSTER
DESCRIPTION
ROCKER ARM 2175
ROCKER ARM SHAFTS 2175
OPERATION 2175
DIAGNOSIS AND TESTING
LASH ADJUSTER (TAPPET) NOISE DIAGNOSIS 2175
STANDARD PROCEDURE
HYDRAULIC LASH ADJUSTER BLEEDING . . 2177
REMOVAL 2178
DISASSEMBLY 2179
INSPECTION 2179
ASSEMBLY 2180
INSTALLATION 2181
TUBE -SPARK PLUG
REMOVAL 2182
INSTALLATION 2182
SEAL -VALVE STEM
REMOVAL 2183
INSTALLATION 2183
SPRING -VALVE
DESCRIPTION 2184
OPERATION 2184
REMOVAL
CYLINDER HEAD OFF 2184
CYLINDER HEAD ON 2184
INSPECTION 2185
INSTALLATION
CYLINDER HEAD OFF 2185
CYLINDER HEAD ON 2186
BLOCK -CYLINDER
DESCRIPTION 2187
CLEANING 2187
INSPECTION 2187

BEARING -CONNECTING ROD
STANDARD PROCEDURE
CONNECTING RODS AND BEARINGS 2189
CRANKSHAFT
DESCRIPTION 2191
OPERATION 2191
REMOVAL 2191
INSPECTION 2193
INSTALLATION 2193
BEARING -CRANKSHAFT MAIN
STANDARD PROCEDURE
CRANKSHAFT MAIN BEARING FITTING 2197
REMOVAL 2199
INSTALLATION 2200
SEAL -CRANKSHAFT OIL FRONT
REMOVAL 2203
INSTALLATION 2203
SEAL - CRANKSHAFT OIL REAR
DESCRIPTION 2204
REMOVAL 2204
INSTALLATION 2205
PLATE - FLEX
REMOVAL 2207
INSTALLATION 2207
ROD - PISTON & CONNECTING
DESCRIPTION 2208
OPERATION 2208
STANDARD PROCEDURE
FITTING PISTONS 2208
REMOVAL 2208
INSTALLATION 2209
RING - PISTON
DESCRIPTION 2213
STANDARD PROCEDURE
PISTON RING FITTING 2213
REMOVAL 2214
INSTALLATION 2215
DAMPER - CRANKSHAFT
REMOVAL 2217
INSTALLATION 2218
ENGINE MOUNTING
DESCRIPTION 2220
MOUNT -LEFT
REMOVAL 2221
INSTALLATION 2222
MOUNT LEFT - AWD
REMOVAL 2223
INSTALLATION 2223
MOUNT - RIGHT
REMOVAL 2224
INSTALLATION 2225
MOUNT RIGHT - AWD
REMOVAL 2226
INSTALLATION 2226
MOUNT - REAR
REMOVAL 2227
INSTALLATION 2228
LUBRICATION
DESCRIPTION 2229
OPERATION 2230
DIAGNOSIS AND TESTING
CHECKING ENGINE OIL PRESSURE 2231
OIL
DESCRIPTION 2232
STANDARD PROCEDURE
ENGINE OIL LEVEL CHECK 2232
ENGINE OIL AND FILTER CHANGE 2232
COOLER-ENGINE OIL
DESCRIPTION 2235
OPERATION 2235
REMOVAL 2235
INSTALLATION 2236
FILTER -OIL
REMOVAL 2237
INSTALLATION 2237
PAN - OIL
REMOVAL
RWD 2238
AWD 2240
INSTALLATION
RWD 2243
AWD 2245
SWITCH-OIL PRESSURE SENSOR
REMOVAL 2249
INSTALLATION 2249
PUMP - OIL
REMOVAL 2250
DISASSEMBLY 2251
CLEANING 2251
INSPECTION 2251
ASSEMBLY 2254
INSTALLATION 2254
MANIFOLD - INTAKE
REMOVAL
UPPER INTAKE MANIFOLD 2256
LOWER INTAKE MANIFOLD 2258
INSTALLATION
UPPER INTAKE MANIFOLD 2260
LOWER INTAKE MANIFOLD 2263
MANIFOLD-EXHAUST LEFT
REMOVAL
LEFT EXHAUST MANIFOLD 2265
INSPECTION 2266
INSTALLATION
LEFT EXHAUST MANIFOLD 2266
MANIFOLD-EXHAUST RIGHT
REMOVAL
RIGHT EXHAUST MANIFOLD 2267
INSTALLATION
RIGHT EXHAUST MANIFOLD 2268
VALVE TIMING
DESCRIPTION 2269
COVER-FRONT TIMING BELT
REMOVAL 2270
INSTALLATION 2271
COVER-REAR TIMING BELT
REMOVAL 2272
INSTALLATION 2272

BELT-TIMING AND SPROCKETS
REMOVAL
TIMING BELT 2274
CAMSHAFT SPROCKETS 2275
CRANKSHAFT SPROCKET 2277
INSPECTION
TIMING BELT 2277
TIMING VERIFICATION 2278
INSTALLATION
TIMING BELT 2278
CAMSHAFT SPROCKETS 2280
CRANKSHAFT SPROCKET 2281
TENSIONER - TIMING BELT & PULLEY
REMOVAL
TENSIONER 2282
TENSIONER PULLEY ASSEMBLY 2282
INSPECTION
TENSIONER 2283
TENSIONER PULLEY ASSEMBLY 2283
INSTALLATION
TENSIONER PULLEY ASSEMBLY 2284
TENSIONER 2284

ENGINE - 3.5L - SERVICE INFORMATION

DESCRIPTION

3.5L

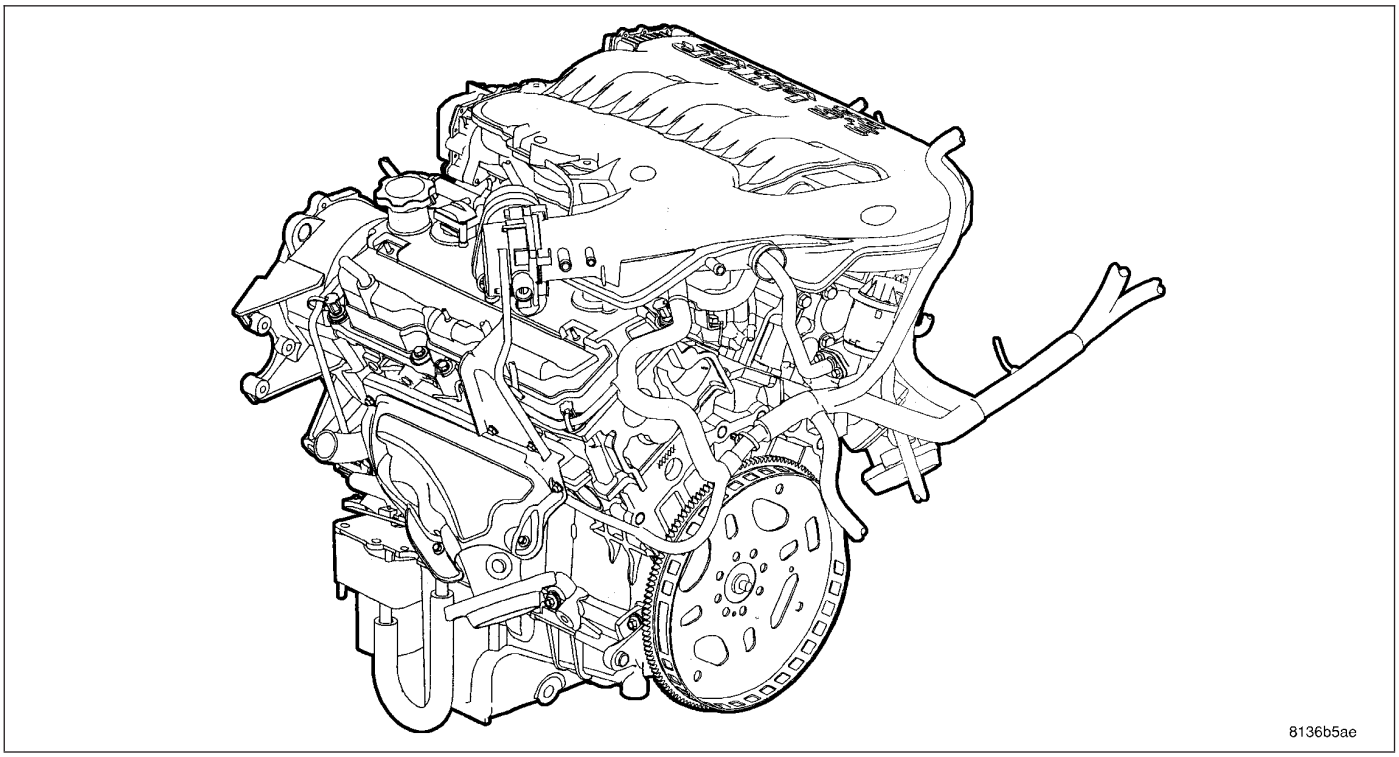

The 3.5 Liter (214 Cubic Inches) 60°V-6 engine is a single overhead camshaft design with hydraulic lifters and four valves per cylinder. The engine does not have provisions for a free wheeling valve train.

The cylinders are numbered from front to rear, with the right bank odd numbered, and the left bank even numbered. The firing order is 1–2–3–4–5–6.

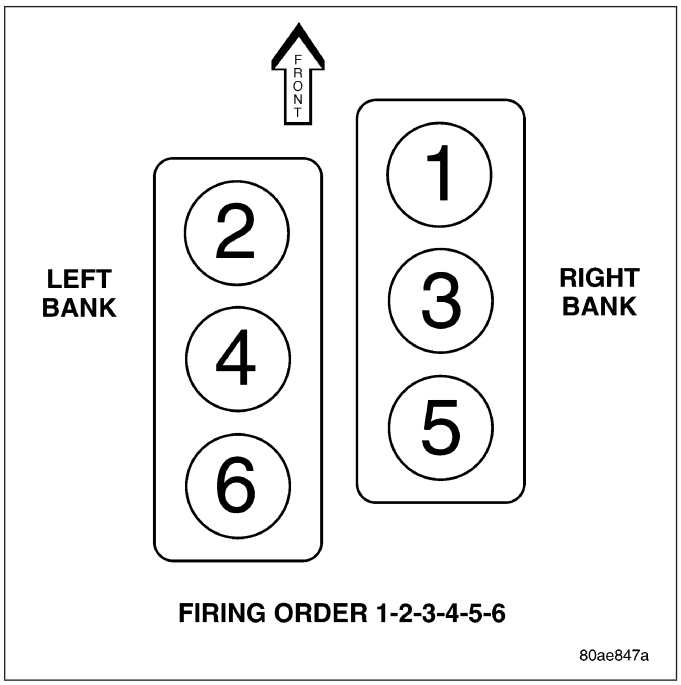

The engine identification number (2) is located on the rear of engine block just below the left cylinder head (1).

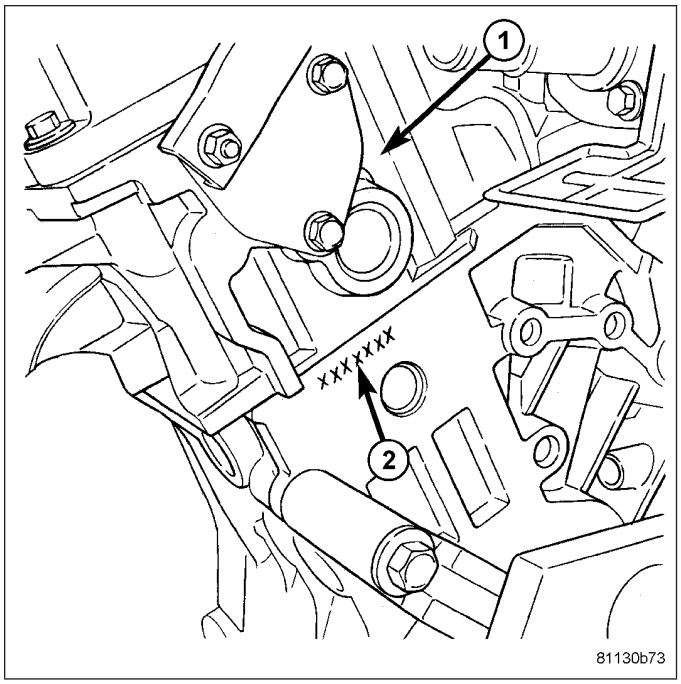

DIAGNOSIS AND TESTING

INTRODUCTION

Engine diagnosis is helpful in determining the causes of malfunctions not detected and remedied by routine maintenance.

These malfunctions may be classified as either mechanical (e.g., a strange noise), or performance (e.g., engine idles rough and stalls).

Refer to (Service Diagnosis - Mechanical Chart) and (Service Diagnosis - Performance Chart), for possible causes and corrections of malfunctions. Refer to FUEL SYSTEM for the fuel system diagnosis.

Additional tests and diagnostic procedures may be necessary for specific engine malfunctions that cannot be isolated with the Service Diagnosis charts. Information concerning additional tests and diagnosis is provided within the following:

- Cylinder Compression Pressure Test
- Cylinder Combustion Pressure Leakage Test
- Cylinder Head Gasket Failure Diagnosis
- Intake Manifold Leakage Diagnosis
- Lash Adjuster (Tappet) Noise Diagnosis
- Engine Oil Leak Inspection

ENGINE PERFORMANCE

CONDITION	POSSIBLE CAUSE	CORRECTION
ENGINE WILL NOT START	1. Weak battery.	1. Test battery. Charge or replace as necessary. (Refer to 8 - ELECTRICAL/BATTERY SYSTEM/ BATTERY - DESCRIPTION)
	2. Corroded or loose battery connections.	2. Clean and tighten battery connections. Apply a coat of light mineral grease to terminals.
	3. Faulty starter.	3. Test starting system. (Refer to 8 - ELECTRICAL/STARTING - DIAGNOSIS AND TESTING)
	4. Faulty coil(s) or control unit.	4. Test and replace as needed. (Refer to Appropriate Diagnostic Information)
	5. Incorrect spark plug gap.	5. Check and adjust gap as needed.
	6. Contamination in fuel system.	6. Clean system and replace fuel filter.
	7. Faulty fuel pump.	7. Test fuel pump and replace as needed. (Refer to Appropriate Diagnostic Information)
	8. Incorrect engine timing.	8. Check for a skipped timing belt or a loose camshaft sprocket.
ENGINE STALLS OR IDLES ROUGH	1. Idle speed too low.	1. Test minimum air flow. (Refer to Appropriate Diagnostic Information)
	2. Incorrect fuel mixture.	2. (Refer to Appropriate Diagnostic Information)
	3. Intake manifold leakage.	3. Inspect intake manifold gasket, manifold, and vacuum hoses.
	4. Faulty coil(s).	4. Test and replace as necessary. (Refer to Appropriate Diagnostic Information)

CONDITION	POSSIBLE CAUSE	CORRECTION
ENGINE LOSS OF POWER	1. Dirty or incorrectly gapped plugs.	1. Set gap as needed or replace plug(s).
	2. Contamination in fuel system.	2. Clean system and replace fuel filter.
	3. Faulty fuel pump.	3. Test and replace as necessary. (Refer to Appropriate Diagnostic Information)
	4. Incorrect valve timing.	4. Correct valve timing as needed.
	5. Leaking cylinder head gasket.	5. Replace cylinder head gasket.
	6. Low compression.	6. Test compression of each cylinder.
	7. Burned, warped, or pitted valves.	7. Replace valves.
	8. Plugged or restricted exhaust system.	8. Check exhaust system restriction. Replace parts, as necessary.
	9. Faulty coil(s).	9. Test and replace as necessary. (Refer to Appropriate Diagnostic Information)
ENGINE MISSES ON ACCELERATION	1. Dirty or incorrectly gapped spark plugs.	1. Set gap as needed or replace plug(s).
	2. Contamination in Fuel System.	2. Clean fuel system and replace fuel filter.
	3. Burned, warped, or pitted valves.	3. Replace valves.
	4. Faulty coil(s).	4. Test and replace as necessary. (Refer to Appropriate Diagnostic Information)
ENGINE MISSES AT HIGH SPEED	1. Dirty or incorrect spark plug gap.	1. Set gap as needed or replace plug(s).
	2. Faulty coil(s).	2. Test and replace as necessary. (Refer to Appropriate Diagnostic Information)
	3. Dirty fuel injector(s).	Test and replace as necessary. (Refer to Appropriate Diagnostic Information)
	4. Contamination in fuel system.	4. Clean system and replace fuel filter.

ENGINE MECHANICAL

CONDITION	POSSIBLE CAUSES	CORRECTION
NOISY VALVES	1. High or low oil level in crankcase.	1. Check and correct engine oil level.
	2. Thin or diluted oil.	2. Change oil to correct viscosity.
	3. Thick oil	3. (a.) Change oil and filter. (b.) Run engine to operating temperature. (c.) Change oil and filter again.
	4. Low oil pressure.	4. Check and correct engine oil level.
	5. Dirt in tappets/lash adjusters.	5. Replace rocker arm/hydraulic lash adjuster assembly.
	6. Worn rocker arms.	6. Inspect oil supply to rocker arms.
	7. Worn tappets/lash adjusters.	7. Install new rocker arm/hydraulic lash adjuster assembly.
	8. Worn valve guides.	8. Replace cylinder head(s).
	9. Excessive runout of valve seats on valve faces.	9. Grind valve seats and valves.
	10. Missing adjuster pivot.	10. Replace rocker arm/hydraulic lash adjuster assembly.
CONNECTING ROD NOISE	1. Insufficient oil supply.	1. Check engine oil level.
	2. Low oil pressure.	2. Check engine oil level. Inspect oil pump relief valve and spring.
	3. Thick / Thin or diluted oil.	3. Change oil to correct viscosity. 3. (a.) Change oil and filter. (b.) Run engine to operating temperature. (c.) Change oil and filter again.
	4. Excessive bearing clearance.	4. Measure bearings for correct clearance. Repair as necessary.
	5. Connecting rod journal out-of-round.	5. Replace crankshaft or grind surface.
	6. Misaligned connecting rods.	6. Replace bent connecting rods.

CONDITION	POSSIBLE CAUSES	CORRECTION
MAIN BEARING NOISE	1. Insufficient oil supply.	1. Check engine oil level.
	2. Low oil pressure.	2. Check engine oil level. Inspect oil pump relief valve and spring.
	3. Thick / Thin or diluted oil.	3. Change oil to correct viscosity. 3. (a.) Change oil and filter. (b.) Run engine to operating temperature. (c.) Change oil and filter again.
	4. Excessive bearing clearance.	4. Measure bearings for correct clearance. Repair as necessary.
	5. Excessive end play.	5. Check thrust bearing for wear on flanges.
	6. Crankshaft journal out-of-round or worn.	6. Replace crankshaft or grind journals.
	7. Loose flywheel or torque converter.	7. Tighten to correct torque.
OIL PRESSURE DROP	1. Low oil level.	1. Check engine oil level.
	2. Faulty oil pressure sending unit.	2. Install new sending unit.
	3. Low oil pressure.	3. Check sending unit and main bearing oil clearance.
	4. Clogged oil filter.	4. Install new oil filter.
	5. Worn parts in oil pump.	5. Replace worn parts or pump.
	6. Thin or diluted oil.	6. Change oil to correct viscosity.
	7. Oil pump relief valve stuck.	7. Remove valve and inspect, clean, or replace.
	8. Oil pump suction tube loose.	8. Remove oil pan and install new tube or clean, if necessary.
	9. Oil pump cover warped or cracked.	9. Install new oil pump.
	10. Excessive bearing clearance.	10. Measure bearings for correct clearance.
OIL LEAKS	1. Misaligned or deteriorated gaskets.	1. Replace gasket(s).
	2. Loose fastener, broken or porous metal part.	2. Tighten, repair or replace the part.
	3. Misaligned or deteriorated cup or threaded plug.	3. Replace as necessary.

CONDITION	POSSIBLE CAUSES	CORRECTION
OIL CONSUMPTION OR SPARK PLUGS FOULED	1. PCV system malfunction.	1. Check system and repair as necessary. (Refer to Appropriate Diagnostic Manual)
	2. Worn, scuffed or broken rings.	2. Hone cylinder bores. Install new rings.
	3. Carbon in oil ring slots.	3. Clean pistons and install new rings.
	4. Rings fitted too tightly in grooves.	4. Remove rings and check grooves. If groove is not proper width, replace piston.
	5. Worn valve guide(s).	5. Replace cylinder head(s).
	6. Valve stem seal(s) worn or damaged.	6. Replace seal(s).

CYLINDER COMPRESSION PRESSURE TEST

The results of a cylinder compression pressure test can be utilized to diagnose several engine malfunctions.

Ensure the battery is completely charged and the engine starter motor is in good operating condition. Otherwise the indicated compression pressures may not be valid for diagnosis purposes.

1. Check engine oil level and add oil if necessary.
2. Drive the vehicle until engine reaches normal operating temperature. Select a route free from traffic and other forms of congestion, observe all traffic laws, and accelerate through the gears several times briskly.
3. Remove all spark plugs from engine. As spark plugs are being removed, check electrodes for abnormal firing indicators fouled, hot, oily, etc. Record cylinder number of spark plug for future reference.
4. Remove the Auto Shutdown (ASD) relay from the PDC.
5. Be sure throttle blade is fully open during the compression check.
6. Insert compression gauge adaptor Special Tool 8116 or the equivalent, into the #1 spark plug hole in cylinder head. Connect the 0-500 psi (Blue) pressure transducer (Special Tool CH7059) with cable adaptors to the DRBIII®. For Special Tool identification, (Refer to 9 - ENGINE - SPECIAL TOOLS).
7. Crank engine until maximum pressure is reached on gauge. Record this pressure as #1 cylinder pressure.
8. Repeat the previous step for all remaining cylinders.
9. Compression should not be less than 689 kPa (100 psi) and not vary more than 25 percent from cylinder to cylinder.
10. If one or more cylinders have abnormally low compression pressures, repeat the compression test.
11. If the same cylinder or cylinders repeat an abnormally low reading on the second compression test, it could indicate the existence of a problem in the cylinder in question. **The recommended compression pressures are to be used only as a guide to diagnosing engine problems. An engine should not be disassembled to determine the cause of low compression unless some malfunction is present.**

CYLINDER COMBUSTION PRESSURE LEAKAGE TEST

The combustion pressure leakage test provides an accurate means for determining engine condition.

Combustion pressure leakage testing will detect:

- Exhaust and intake valve leaks (improper seating).
- Leaks between adjacent cylinders or into water jacket.
- Any causes for combustion/compression pressure loss.

WARNING: DO NOT REMOVE THE PRESSURE CAP WITH THE SYSTEM HOT AND UNDER PRESSURE BECAUSE SERIOUS BURNS FROM COOLANT CAN OCCUR.

1. Check the coolant level and fill as required. DO NOT install the pressure cap.
2. Start and operate the engine until it attains normal operating temperature, then turn the engine OFF.

3. Clean spark plug recesses with compressed air.
4. Remove the spark plugs.
5. Remove the oil filler cap.
6. Remove the air cleaner.
7. Calibrate the tester according to the manufacturer's instructions. The shop air source for testing should maintain 483 kPa (70 psi) minimum, 1,379 kPa (200 psi) maximum, with 552 kPa (80 psi) recommended.
8. Perform the test procedures on each cylinder according to the tester manufacturer's instructions. While testing, listen for pressurized air escaping through the throttle body, tailpipe and oil filler cap opening. Check for bubbles in the coolant.
9. All gauge pressure indications should be equal, with no more than 25% leakage per cylinder.
10. **FOR EXAMPLE:** At 552 kPa (80 psi) input pressure, a minimum of 414 kPa (60 psi) should be maintained in the cylinder.

ENGINE OIL LEAK INSPECTION

Begin with a thorough visual inspection of the engine, particularly at the area of the suspected leak. If an oil leak source is not readily identifiable, the following steps should be followed:

1. Do not clean or degrease the engine at this time because some solvents may cause rubber to swell, temporarily stopping the leak.
2. Add an oil soluble dye (use as recommended by manufacturer). Start the engine and let idle for approximately 15 minutes. Check the oil level indicator to make sure the dye is thoroughly mixed as indicated with a bright yellow color under a black light.
3. Using a black light, inspect the entire engine for fluorescent dye, particularly at the suspected area of oil leak. If the oil leak is found and identified, repair as necessary.
4. If dye is not observed, drive the vehicle at various speeds for approximately 24 km (15 miles), and repeat inspection.
5. **If the oil leak source is not positively identified at this time**, proceed with the air leak detection test method as follows:
   - Disconnect the fresh air hose (make-up air) at the cylinder head cover and plug or cap the nipple on the cover.
   - Remove the PCV valve hose from the cylinder head cover. Cap or plug the PCV valve nipple on the cover.
   - Attach an air hose with pressure gauge and regulator to the oil level indicator tube.

CAUTION: Do not subject the engine assembly to more than 20.6 kpa (3 PSI) of test pressure.

   - Gradually apply air pressure from 1 psi to 2.5 psi maximum while applying soapy water at the suspected source. Adjust the regulator to the suitable test pressure that provides the best bubbles which will pinpoint the leak source. If the oil leak is detected and identified, repair per service manual procedures.
   - If the leakage occurs at the crankshaft rear oil seal area, refer to the section, Inspection for Rear Seal Area Leak.
6. If no leaks are detected, turn off the air supply. Remove the air hose, all plugs, and caps. Install the PCV valve and fresh air hose (make-up air). Proceed to next step.
7. Clean the oil off the suspect oil leak area using a suitable solvent. Drive the vehicle at various speeds approximately 24 km (15 miles). Inspect the engine for signs of an oil leak by using a black light.

NOTE: If oil leakage is observed at the oil level indicator tube to block location; remove the tube, clean and reseal using Mopar® Stud & Bearing Mount (press fit tube applications only), and for O-ring style tubes, remove tube and replace the O-ring seal.

INSPECTION FOR REAR SEAL AREA LEAKS

Since it is sometimes difficult to determine the source of an oil leak in the rear seal area of the engine, a more involved inspection is necessary. The following steps should be followed to help pinpoint the source of the leak.

If the leakage occurs at the crankshaft rear oil seal area:

1. Disconnect the battery.
2. Raise the vehicle.

3. Remove torque converter or clutch housing cover and inspect rear of block for evidence of oil. Use a black light to check for the oil leak. If a leak is present in this area, remove transmission for further inspection.
   a. Circular spray pattern generally indicates seal leakage or crankshaft damage.
   b. Where leakage tends to run straight down, possible causes are a porous block, oil gallery cup plug, bedplate to cylinder block mating surfaces and seal bore. See proper repair procedures for these items.
4. If no leaks are detected, pressurize the crankcase as previously described.

CAUTION: Do not exceed 20.6 kPa (3 psi).

5. If the leak is not detected, very slowly turn the crankshaft and watch for leakage. If a leak is detected between the crankshaft and seal while slowly turning the crankshaft, it is possible the crankshaft seal surface is damaged. The seal area on the crankshaft could have minor nicks or scratches that can be polished out with emery cloth.

CAUTION: Use extreme caution when crankshaft polishing is necessary to remove minor nicks and scratches. The crankshaft seal flange is specially machined to complement the function of the rear oil seal.

6. For bubbles that remain steady with shaft rotation, no further inspection can be done until disassembled.
7. After the oil leak root cause and appropriate corrective action have been identified, replace component(s) as necessary.

STANDARD PROCEDURE

FORM-IN-PLACE GASKETS AND SEALERS

There are numerous places where form-in-place gaskets are used on the engine. Care must be taken when applying form-in-place gaskets to assure obtaining the desired results. **Do not use form-in-place gasket material unless specified.** Bead size, continuity, and location are of great importance. Too thin a bead can result in leakage while too much can result in spill-over which can break off and obstruct fluid feed lines. A continuous bead of the proper width is essential to obtain a leak-free gasket.

There are numerous types of form-in-place gasket materials that are used in the engine area. Mopar® Engine RTV GEN II, Mopar® ATF-RTV, and Mopar® Gasket Maker gasket materials, each have different properties and can not be used in place of the other.

MOPAR® ENGINE RTV GEN II is used to seal components exposed to engine oil. This material is a specially designed black silicone rubber RTV that retains adhesion and sealing properties when exposed to engine oil. Moisture in the air causes the material to cure. This material is available in three ounce tubes and has a shelf life of one year. After one year this material will not properly cure. Always inspect the package for the expiration date before use.

MOPAR® ATF RTV is a specifically designed black silicone rubber RTV that retains adhesion and sealing properties to seal components exposed to automatic transmission fluid, engine coolants, and moisture. This material is available in three ounce tubes and has a shelf life of one year. After one year this material will not properly cure. Always inspect the package for the expiration date before use.

MOPAR® GASKET MAKER is an anaerobic type gasket material. The material cures in the absence of air when squeezed between two metallic surfaces. It will not cure if left in the uncovered tube. The anaerobic material is for use between two machined surfaces. Do not use on flexible metal flanges.

MOPAR® BED PLATE SEALANT is a unique (green-in-color) anaerobic type gasket material that is specially made to seal the area between the bedplate and cylinder block without disturbing the bearing clearance or alignment of these components. The material cures slowly in the absence of air when torqued between two metallic surfaces, and will rapidly cure when heat is applied.

MOPAR® GASKET SEALANT is a slow drying, permanently soft sealer. This material is recommended for sealing threaded fittings and gaskets against leakage of oil and coolant. Can be used on threaded and machined parts under all temperatures. This material is used on engines with multi-layer steel (MLS) cylinder head gaskets. This material also will prevent corrosion. Mopar® Gasket Sealant is available in a 13 oz. aerosol can or 4oz./16 oz. can w/applicator.

SEALER APPLICATION

Mopar® Gasket Maker material should be applied sparingly 1 mm (0.040 in.) diameter or less of sealant to one gasket surface. Be certain the material surrounds each mounting hole. Excess material can easily be wiped off. Components should be torqued in place within 15 minutes. The use of a locating dowel is recommended during assembly to prevent smearing material off the location.

Mopar® Engine RTV GEN II or ATF RTV gasket material should be applied in a continuous bead approximately 3 mm (0.120 in.) in diameter. All mounting holes must be circled. For corner sealing, a 3.17 or 6.35 mm (1/8 or 1/4 in.) drop is placed in the center of the gasket contact area. Uncured sealant may be removed with a shop towel. Components should be torqued in place while the sealant is still wet to the touch (within 10 minutes). The usage of a locating dowel is recommended during assembly to prevent smearing material off the location.

Mopar® Gasket Sealant in an aerosol can should be applied using a thin, even coat sprayed completely over both surfaces to be joined, and both sides of a gasket. Then proceed with assembly. Material in a can w/applicator can be brushed on evenly over the sealing surfaces. Material in an aerosol can should be used on engines with multi-layer steel gaskets.

ENGINE GASKET SURFACE PREPARATION

To ensure engine gasket sealing, proper surface preparation must be performed, especially with the use of aluminum engine components and multi-layer steel cylinder head gaskets.

Never use the following to clean gasket surfaces:

- Metal scraper
- Abrasive pad or paper to clean cylinder block and head
- High speed power tool with an abrasive pad or a wire brush.

NOTE: Multi-Layer Steel (MLS) head gaskets require a scratch free sealing surface.

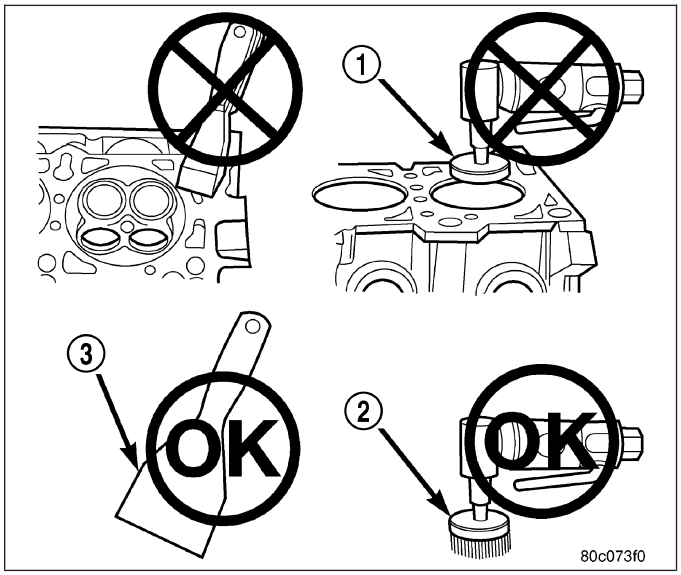

Only use the following for cleaning gasket surfaces:

- Solvent or a commercially available gasket remover
- Plastic or wood scraper.
- Drill motor with 3M Roloc™ Bristle Disc (white or yellow).

CAUTION: Excessive pressure or high RPM (beyond the recommended speed), can damage the sealing surfaces. The mild (white, 120 grit) bristle disc is recommended. If necessary, the medium (yellow, 80 grit) bristle disc may be used on cast iron surfaces with care.

REPAIR OF DAMAGED OR WORN THREADS

Damaged or worn threads (excluding spark plug and camshaft bearing cap attaching threads) can be repaired. Essentially, this repair consists of drilling out worn or damaged threads, tapping the hole with a special Heli-Coil Tap, (or equivalent) and installing an insert into the tapped hole. This brings the hole back to its original thread size.

CAUTION: Be sure that the tapped holes maintain the original center line.

Heli-Coil tools and inserts are readily available from automotive parts jobbers.

HYDROSTATIC LOCKED ENGINE

When an engine is suspected to be hydrostatically locked, regardless of what caused the problem, the following steps should be used.

CAUTION: DO NOT use starter motor to rotate the engine, severe damage may occur.

1. Inspect air cleaner, induction system and intake manifold to insure system is dry and clear of foreign material.
2. Remove negative battery cable.
3. Place a shop towel around the spark plugs when removing them from the engine. This will catch any fluid that may possibly be in the cylinder under pressure.
4. With all spark plugs removed, rotate engine crankshaft using a breaker bar and socket.
5. Identify the fluid in the cylinder(s) (i.e., coolant, fuel, oil or other).
6. Make sure all fluid has been removed from the cylinders. Inspect engine for damage (i.e., connecting rods, pistons, valves, etc.)
7. Repair engine or components as necessary to prevent this problem from re-occurring.

CAUTION: Squirt approximately one teaspoon of oil into the cylinders, rotate engine to lubricate the cylinder walls to prevent damage on restart.

8. Install new spark plugs.
9. Drain engine oil and remove oil filter.
10. Install a new oil filter.
11. Fill engine with specified amount of approved oil.
12. Connect negative battery cable.
13. Start engine and check for any leaks.

ENGINE CORE AND OIL GALLERY PLUGS

Using a blunt tool such as a drift (3) and a hammer, strike the bottom edge of the cup plug (5). With the cup plug rotated, grasp firmly with pliers (2) or other suitable tool and remove plug (5).

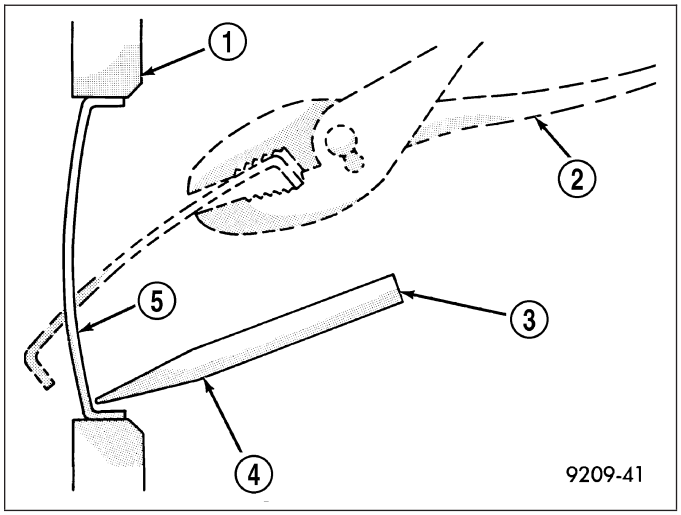

CAUTION: Do not drive cup plug into the casting as restricted cooling can result and cause serious engine problems.

Thoroughly clean inside of cup plug hole in cylinder block or head. Be sure to remove old sealer. Lightly coat inside of cup plug hole with Mopar® Stud and Bearing Mount. Make certain the new plug is cleaned of all oil or grease. Using proper drive plug, drive plug into hole so that the sharp edge of the plug is at least 0.5 mm (0.020 in.) inside the lead-in chamfer.

It is not necessary to wait for curing of the sealant. The cooling system can be refilled and the vehicle placed in service immediately.

REMOVAL

NOTE: Capture and store any residual fluid drainage, or leakage from ancillary components, in the appropriately marked containers.

1. Perform the fuel pressure release procedure (Refer to 14 - FUEL SYSTEM/FUEL DELIVERY - STANDARD PROCEDURE).
2. Center and secure the steering wheel.
3. Disconnect negative battery cable.
4. Evacuate the air conditioning system (Refer to 24 - HEATING & AIR CONDITIONING/PLUMBING - STANDARD PROCEDURE).
5. Remove the hood.
6. Remove the windshield cowl assembly.
7. Raise and support the vehicle.
8. Remove the lower engine close out panel.
9. Drain the cooling system (Refer to 7 - COOLING - STANDARD PROCEDURE).
10. Disconnect the lower radiator hose (2).

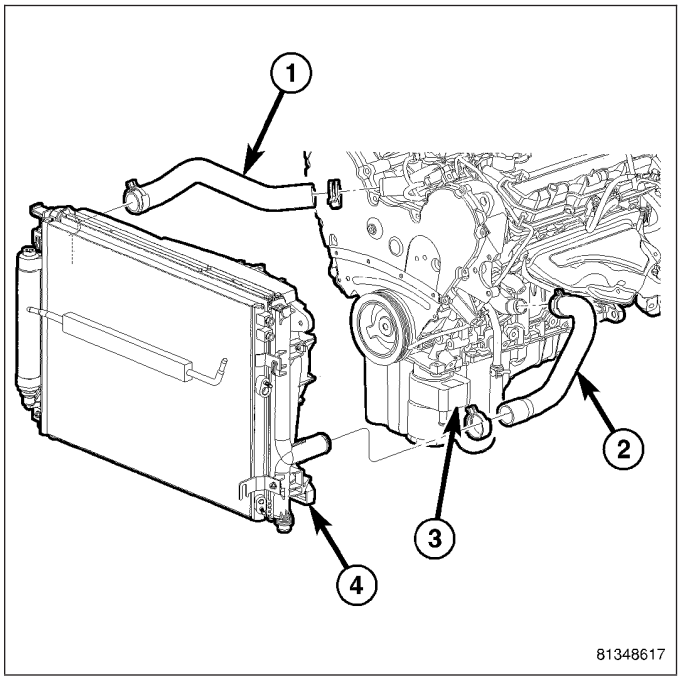

11. Remove the front drive axles and housing (if equipped with AWD).

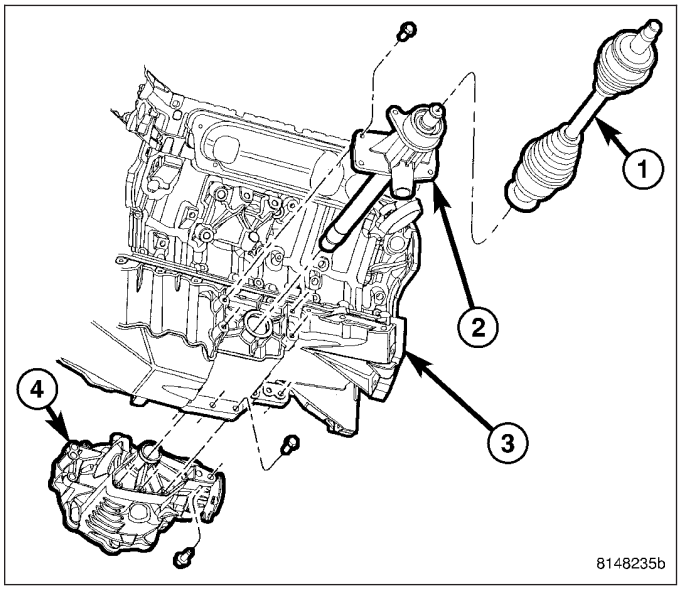

12. Disconnect the generator electrical connectors (Refer to 8 - ELECTRICAL/CHARGING/GENERATOR - REMOVAL).
13. Separate the steering column coupling (1) from the steering gear (3).

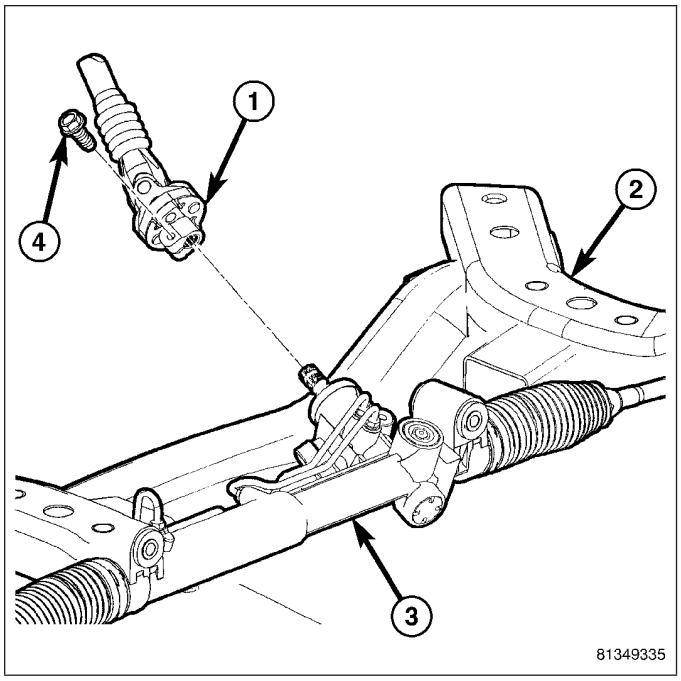

14. Remove the starter and spacer plate (Refer to 8 - ELECTRICAL/STARTING/STARTER MOTOR - REMOVAL).
15. Disconnect the oil cooler hose at the oil cooler (3) and remove the cooler hose retainer at the transmission.
16. Disconnect the transmission line bracket at the A/C compressor and allow the bolt to rest on the cradle.

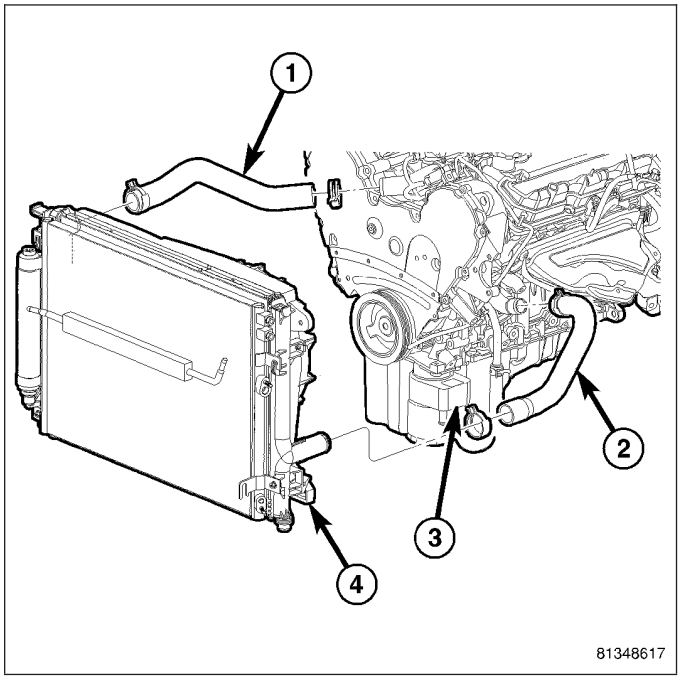

17. Disconnect the ground strap (3) at the right transmission housing.
18. Disconnect the engine block heater wiring connector (4) and set aside (if equipped).
19. Remove the crankshaft position sensor (Refer to 14 - FUEL SYSTEM/FUEL INJECTION/CRANKSHAFT POSITION SENSOR - REMOVAL).

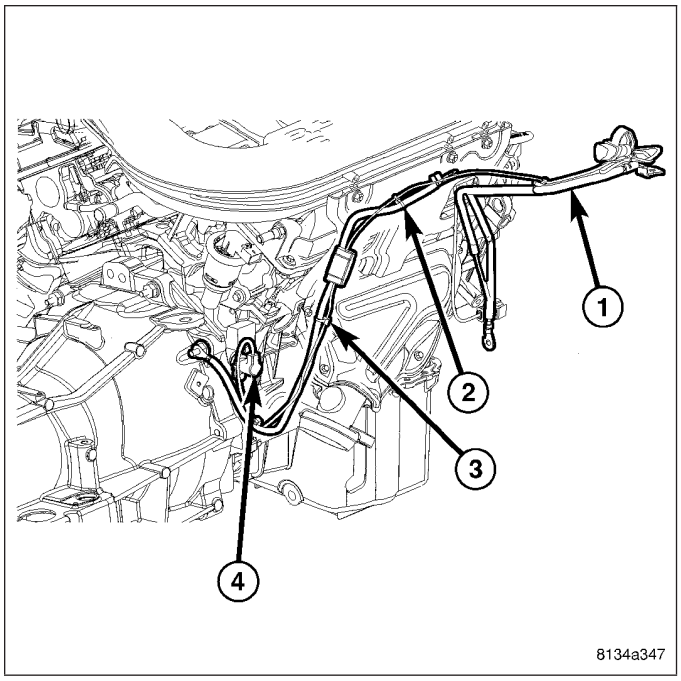

20. Disconnect the left #2 oxygen senor (3) electrical connector and separate the exhaust manifold from the left exhaust pipe (2).

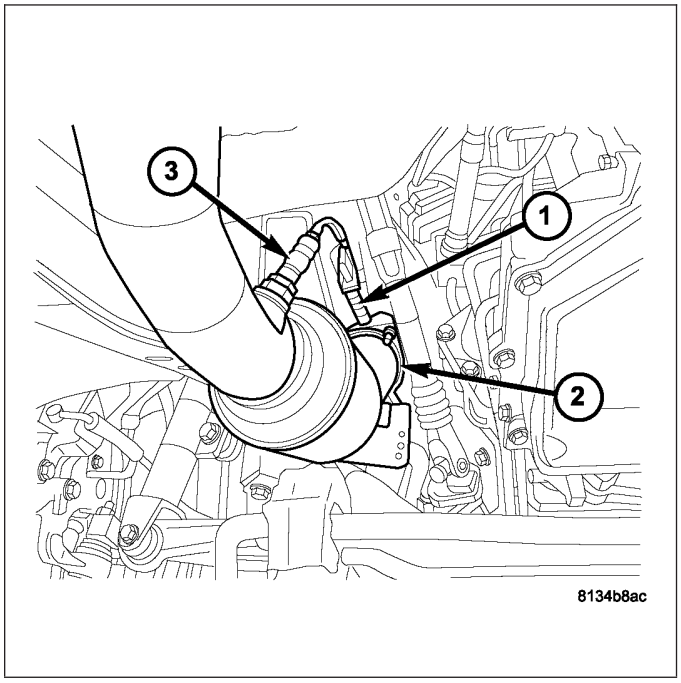

21. Disconnect the right #2 oxygen senor (2) electrical connector and separate the exhaust manifold from the right exhaust pipe (1).

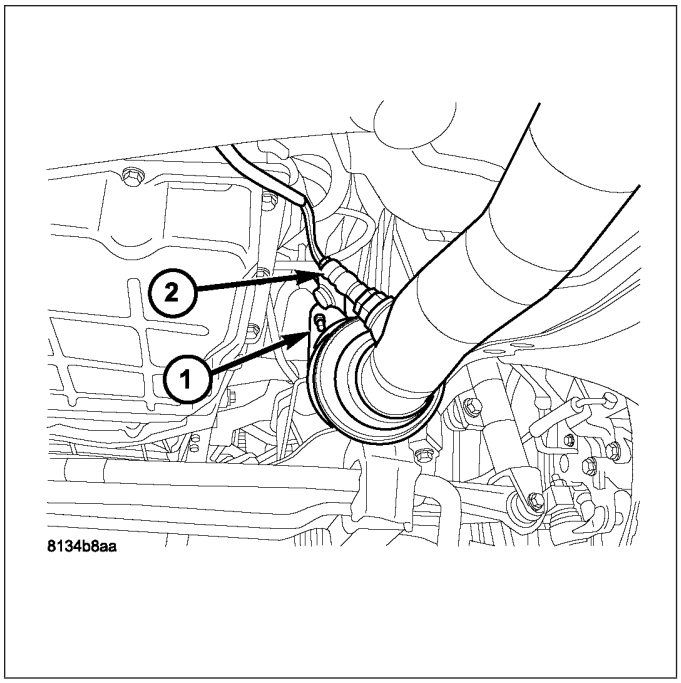

22. Remove the flex plate inspection cover and torque converter bolts (3).

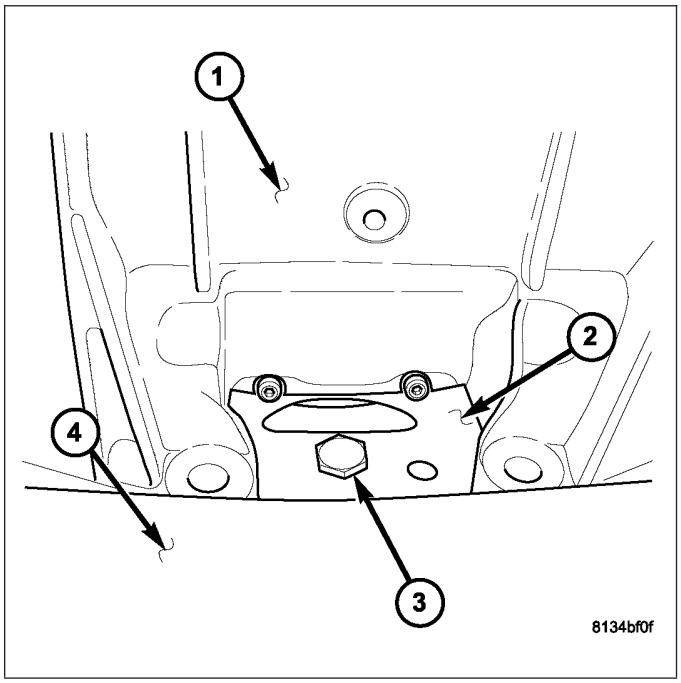

23. Remove the transmission housing to engine mounting bolts (2) accessible.
24. Remove the engine mounting to cradle fasteners.

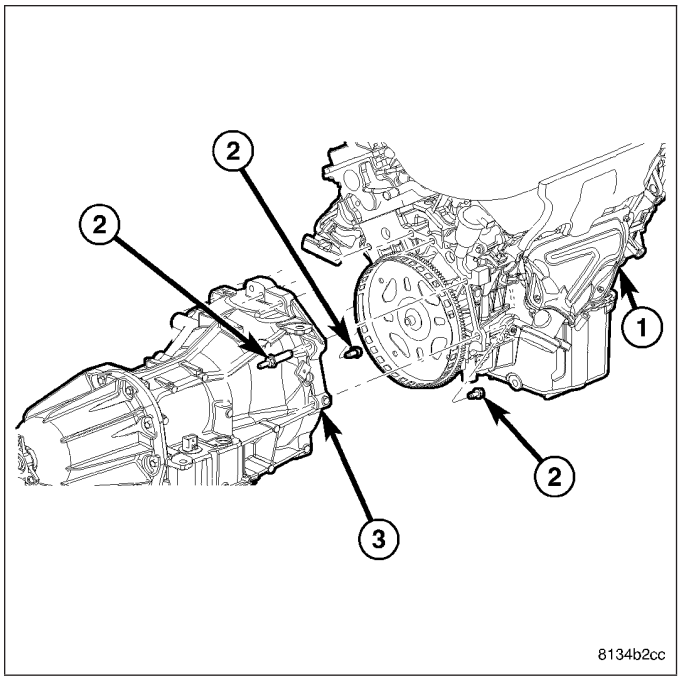

25. Lower the vehicle.
26. Remove the upper intake manifold (Refer to 9 - ENGINE/MANIFOLDS/INTAKE MANIFOLD - REMOVAL).
27. Disconnect the heater hose (2) and coolant reservoir hose (3) from the rear coolant pipe (1).

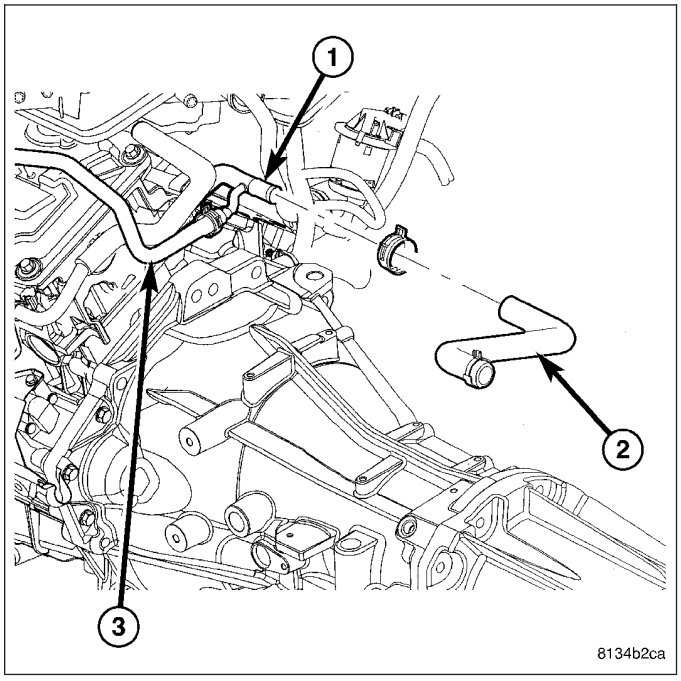

28. Disconnect the oxygen sensor connector and the ground wire on the left cylinder head cover.
29. Disconnect the coolant temperature, cam position, oil pressure sensor electrical connectors.
30. Disconnect the left ignition coil (2) and fuel injector harness connectors and position the wiring harness (3) aside

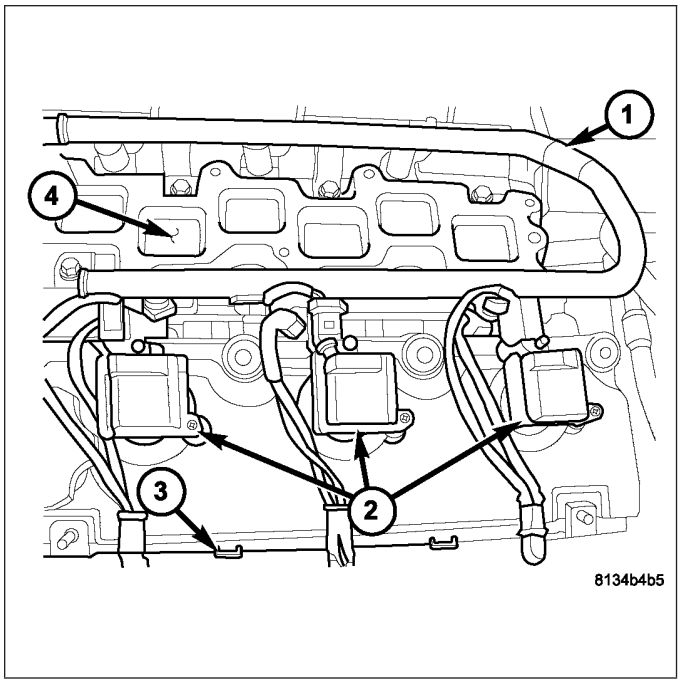

.

31. Remove the right intake manifold support braces.
32. Disconnect the capacitor and ground strap from the right cylinder head cover.
33. Disconnect the oxygen sensor, knock, EGR, injector and ignition coil harness connectors and position the wiring harness aside.
34. Disconnect the engine wiring harness from the transmission housing and remove the remaining transmission housing bolts.

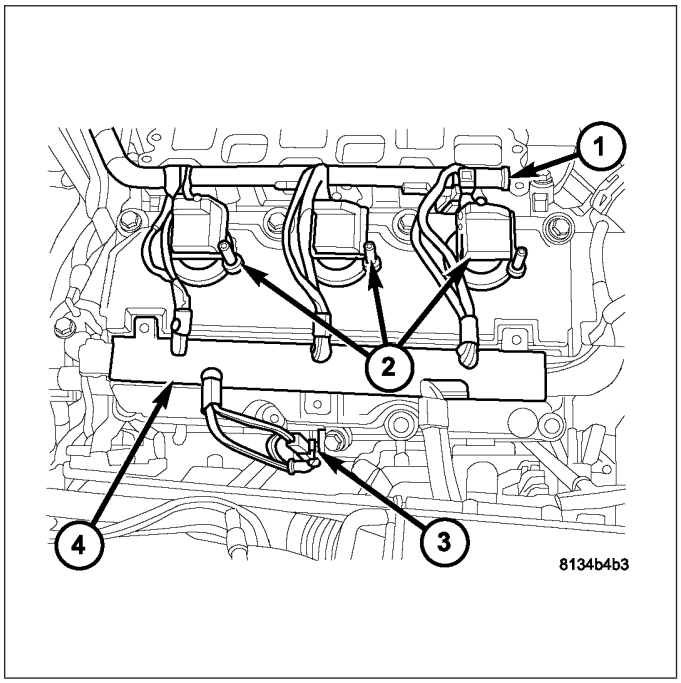

35. Connect the engine lifting bracket (2) from special tool kit 8534B to the right rear of the cylinder head outer most bolt access hole (5).
36. Install a bolt into the inner most bolt access hole (5) next to the engine lift bracket to assure lifting bracket positioning.

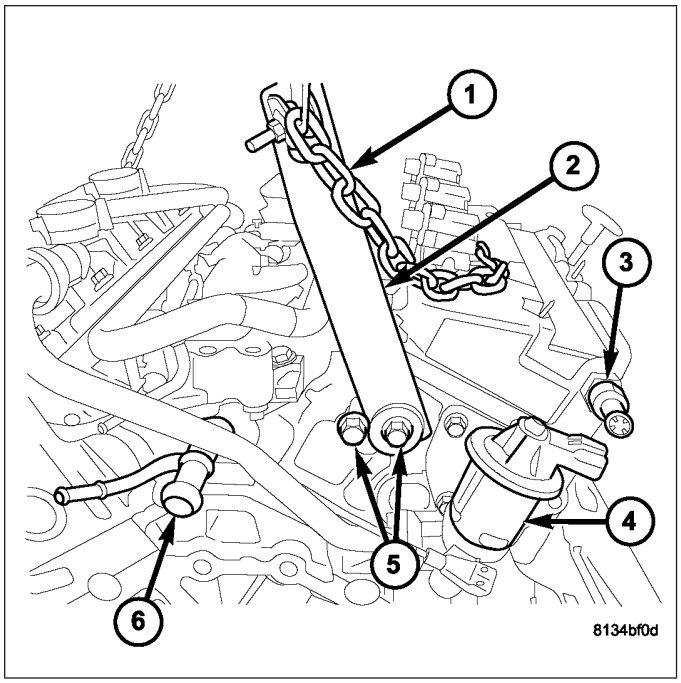

37. Connect a engine hoisting chain (1) to the left timing chain cover (2) engine lifting point and engine lift bracket.

CAUTION: While slowly separating the engine from the vehicle, constant checks must be made to assure proper positioning and that no damage to other components or wiring harnesses occur during separation.

NOTE: As the engine is hoisted from the engine bay area, remove the loosened A/C compressor bolt retaining the transmission cooler lines and direct the lines aside.

38. Carefully remove the engine from the engine bay area.

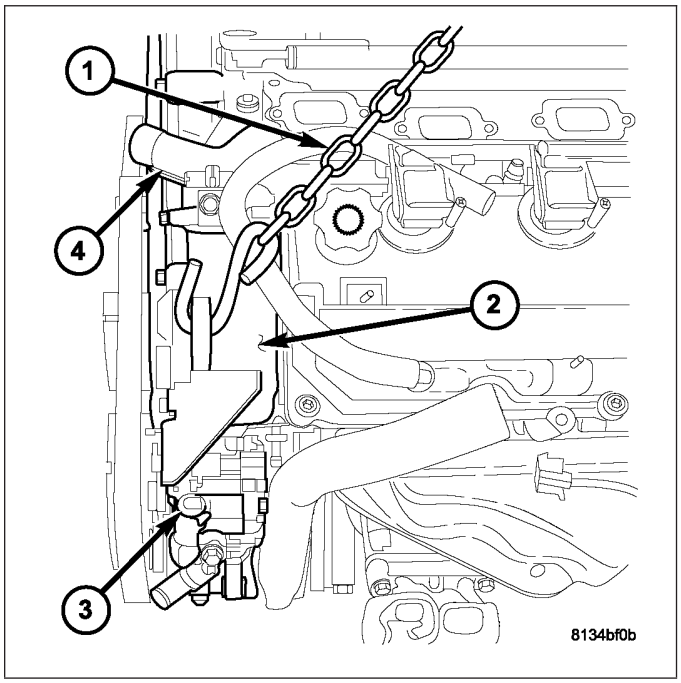

INSTALLATION

CAUTION: Care must be taken when installing the engine to prevent pinching the power steering rack sensor with the left engine mount.

1. Install special tool #8534B, engine lifting bracket (2) to the right rear of the cylinder head and install a bolt into the inner most bolt hole (5) next to the bracket (5).

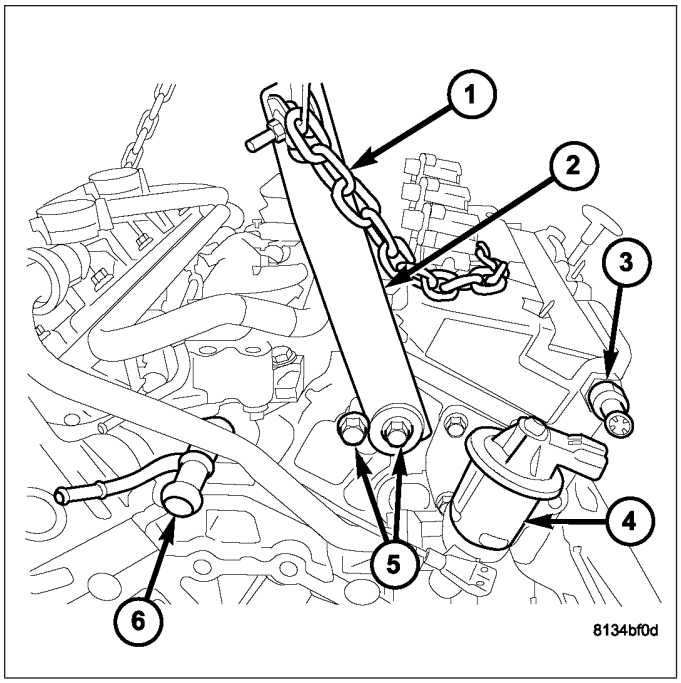

2. Connect a engine hoisting chain (1) to the left timing chain cover (2) lifting point and the engine lifting bracket.

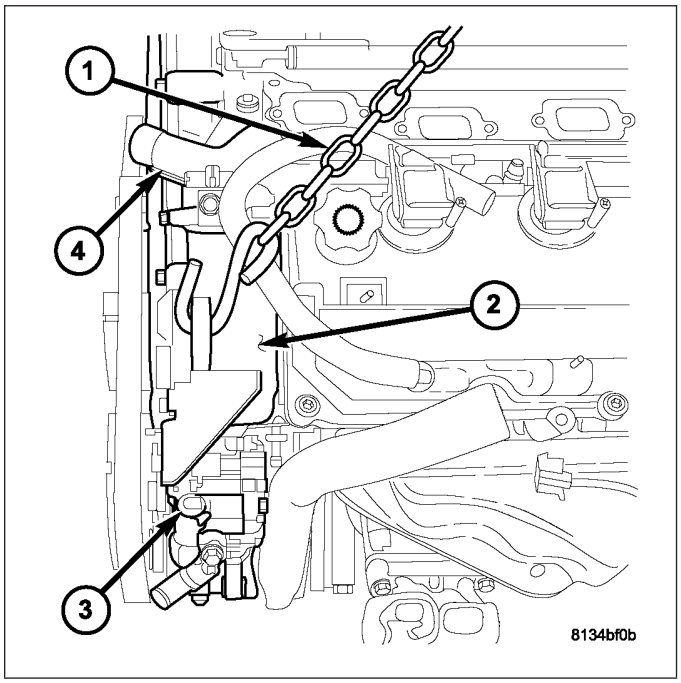

CAUTION: Care must be taken when installing the engine to prevent pinching the power steering rack sensor with the left engine mount. Constantly check to assure proper positioning and no damage occurs to other components or harnesses until union is made.

NOTE: As the engine is lowered into the engine bay area, install and hand tighten the A/C compressor bolt retaining the transmission cooler lines.

3. Carefully install the engine into the engine bay area and complete the union with the transmission.
4. Properly route the engine wiring harness behind the engine and tighten the accessible transmission bolts to 68N·m (50 ft.lbs.).

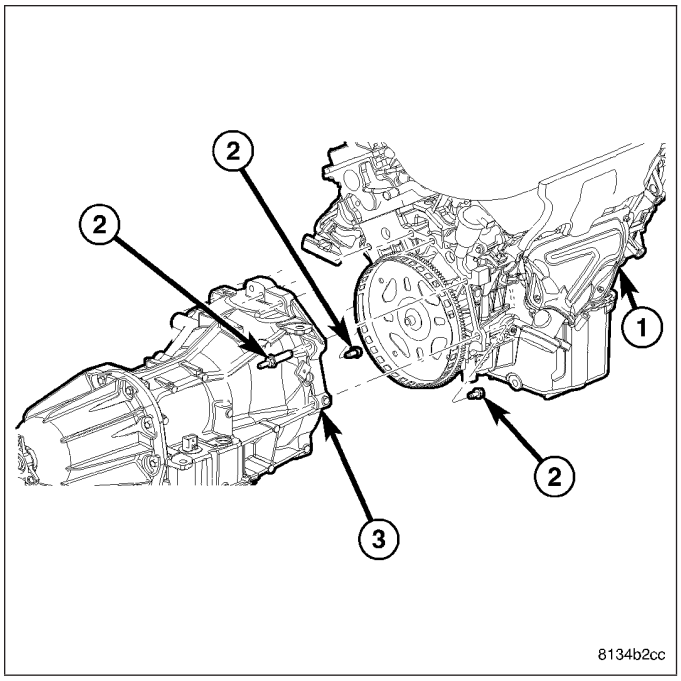

5. Properly position the right engine harness (4) and connect the oxygen sensor, knock sensor, EGR, fuel injector and ignition coil harness connectors.
6. Connect the capacitor (3) and ground strap (3) to the right cylinder head cover.
7. Install the right intake manifold support braces.

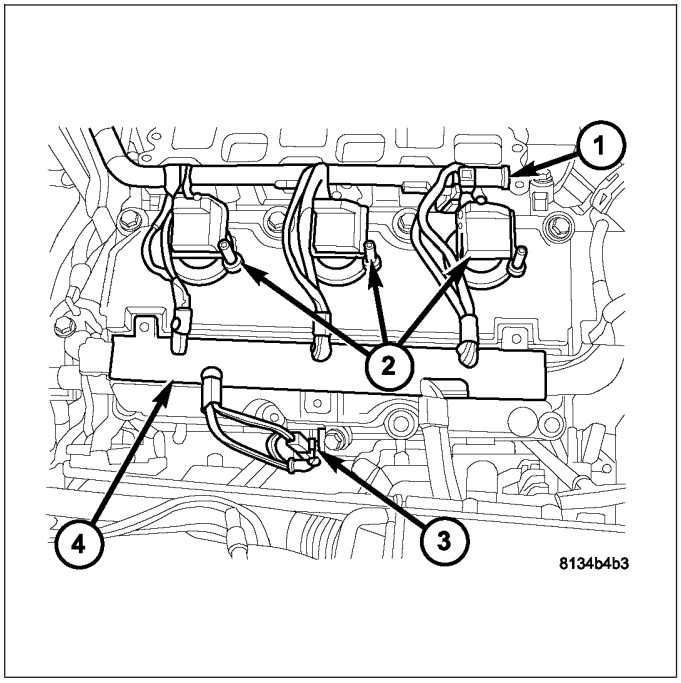

8. Properly position the left engine harness (3) and connect the ignition coil (2) and fuel injector harness connectors.
9. Connect the coolant temperature, cam position, oil pressure sensor harness connectors.
10. Connect the oxygen sensor, and the ground wire, to the left cylinder head cover.

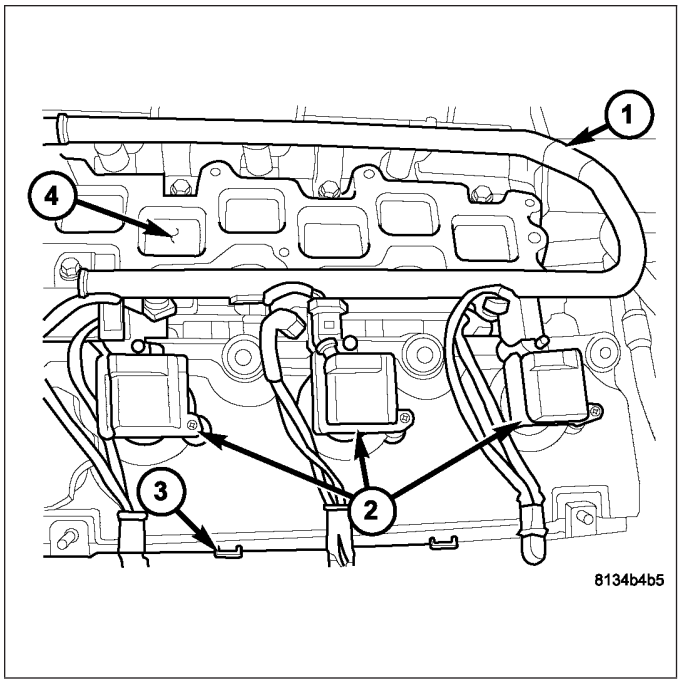

11. Connect the heater hose (2) and coolant reservoir hose (3) to the rear coolant pipe (1).
12. Install the upper intake manifold (Refer to 9 - ENGINE/MANIFOLDS/INTAKE MANIFOLD - INSTALLATION).
13. Connect the upper radiator hose.

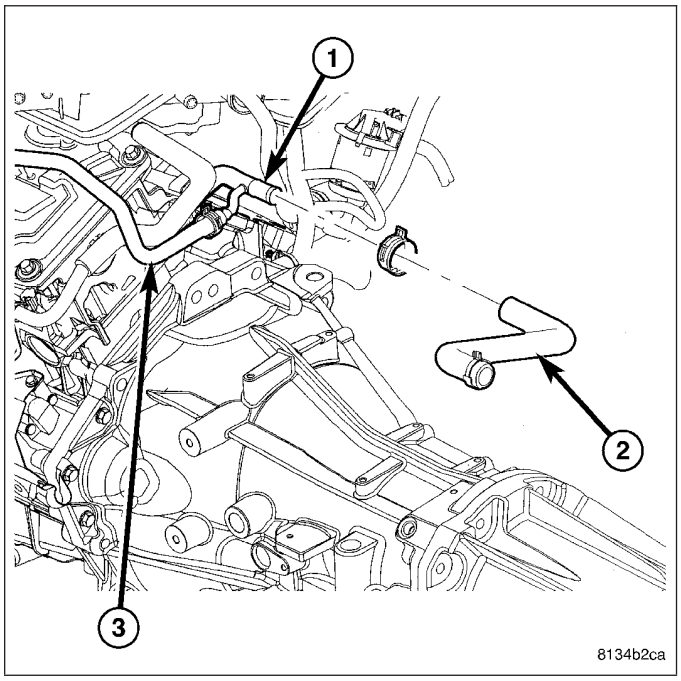

14. Raise and support the vehicle.
15. Install the engine mounting nuts and tighten to 101 N·m (75 lbs.ft.).
16. Install the remaining transmission housing bolts and tighten to 68 N·m (50 ft.lbs.).

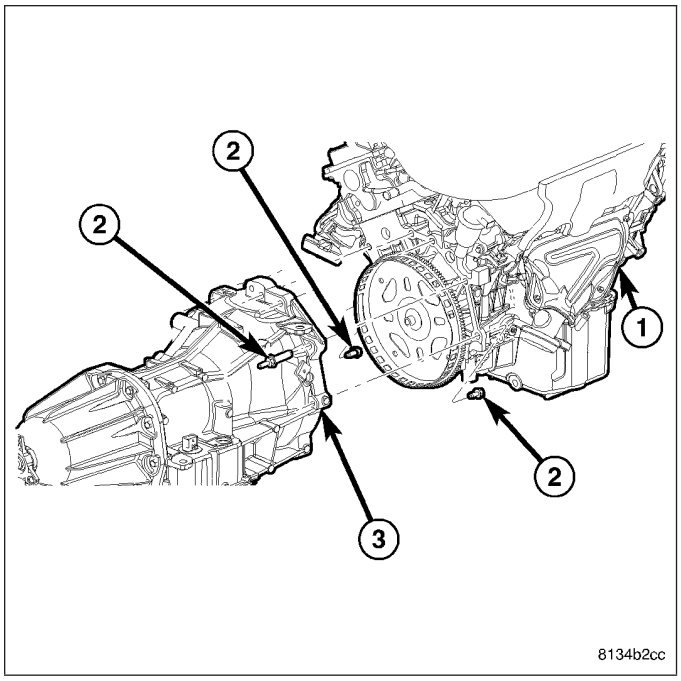

17. Install the torque converter bolts (3). Tighten bolts to 75 N·m (55 lbs.ft.).
18. Install the torque converter inspection cover. Tighten bolts to 12 N·m (105 lbs. in.)

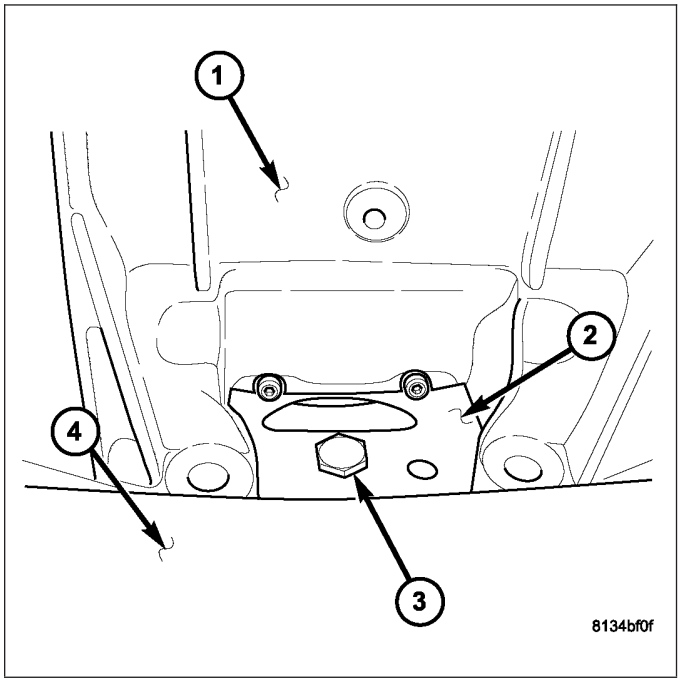

19. Connect the right exhaust pipe to the exhaust manifold (1) and connect the oxygen sensor (2).

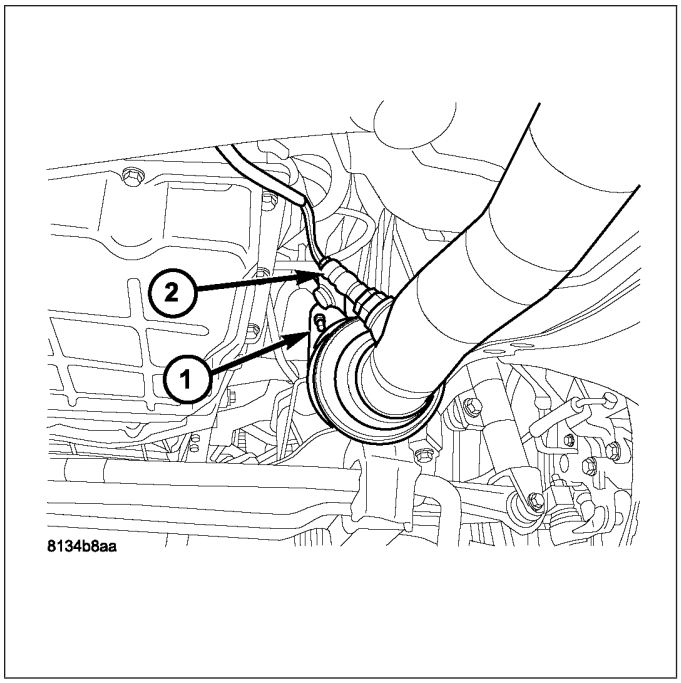

20. Install the front drive axle housing and front axle shafts (if equipped with AWD).

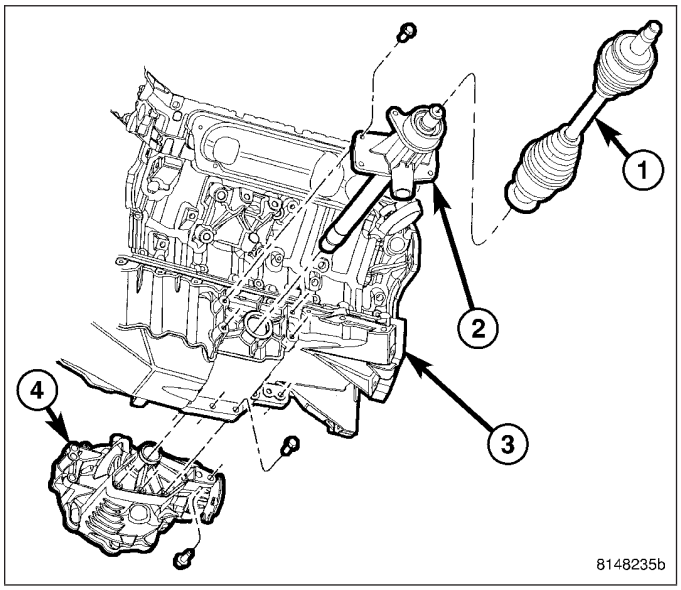

21. Connect the left exhaust pipe to the exhaust manifold (2) and connect the oxygen sensor (3)
22. Install the crankshaft position sensor (Refer to 14 - FUEL SYSTEM/FUEL INJECTION/CRANKSHAFT POSITION SENSOR - INSTALLATION).

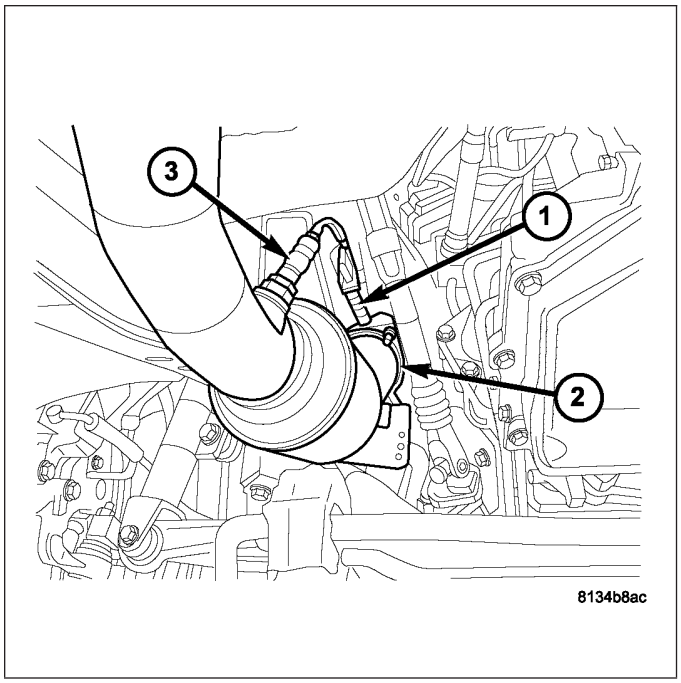

23. Connect the engine block heater (4) (if equipped).
24. Connect the ground strap (3) at the right transmission housing.

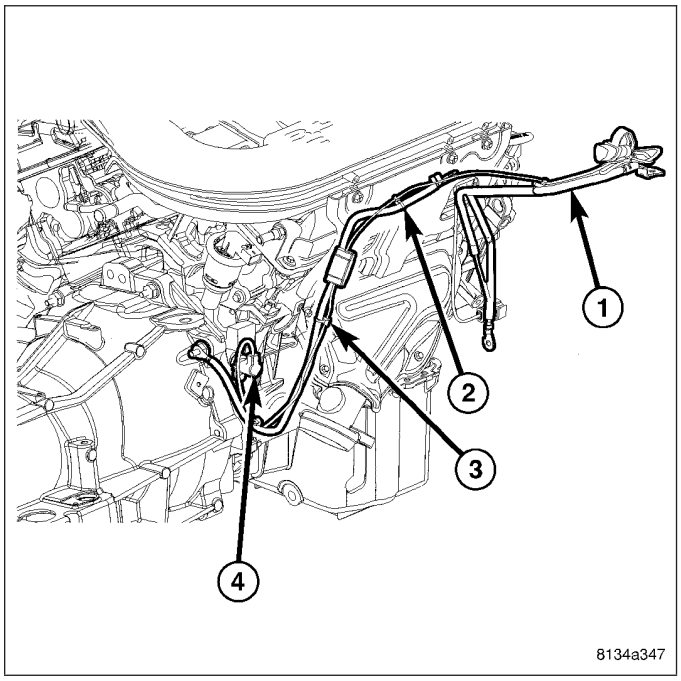

25. Tighten the transmission line bracket at the A/C compressor.
26. Connect the oil cooler hose at the cooler (3) and secure the cooler hose retainer at the transmission.
27. Connect the lower radiator hose (2).
28. Install the starter and spacer plate (Refer to 8 - ELECTRICAL/STARTING/STARTER MOTOR - INSTALLATION).

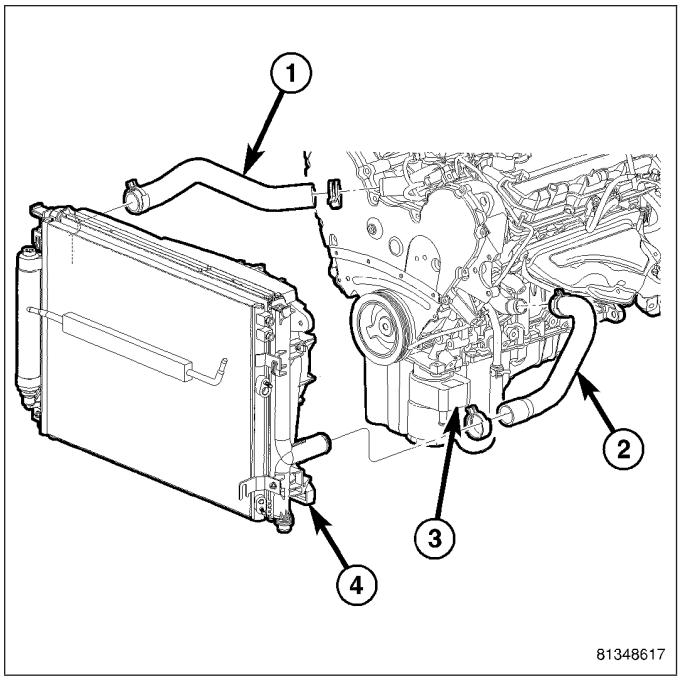

29. Align and connect the steering column coupler (1) to the steering gear (3).
30. Connect the generator electrical connectors (Refer to 8 - ELECTRICAL/CHARGING/GENERATOR - INSTALLATION).
31. Install new oil filter.
32. Install the lower engine close out panel.
33. Lower the vehicle.
34. Fill the cooling system to the proper level using the appropriate coolant (Refer to 7 - COOLING/ENGINE/COOLANT - STANDARD PROCEDURE).
35. Fill engine crankcase with proper oil to correct level (Refer to LUBRICATION & MAINTENANCE/FLUID TYPES - SPECIFICATIONS).
36. Evacuate and recharge air conditioning.
37. Install the windshield wiper cowl assembly.
38. Install the hood.
39. Connect the negative battery cable.
40. Start engine and run until operating temperature is reached and radiator fans cycle.
41. Check all fluid levels and properly fill.

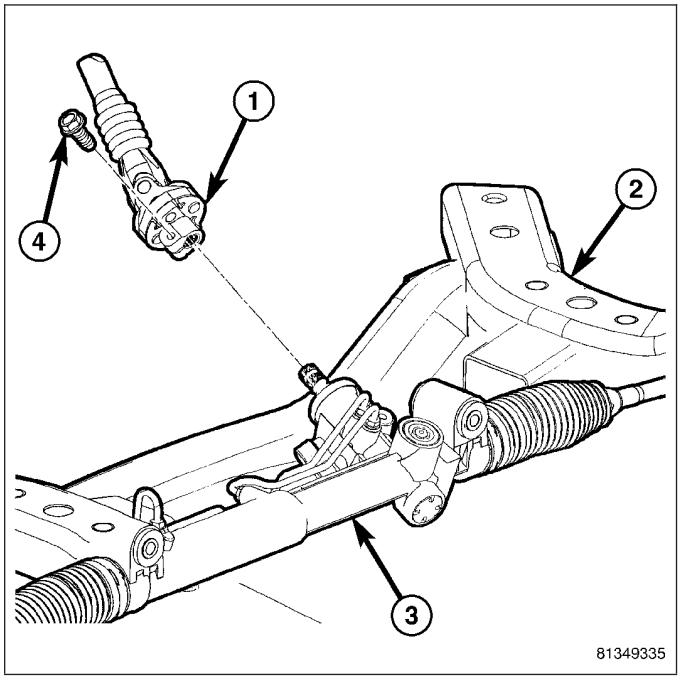

SPECIFICATIONS

3.5L ENGINE

DESCRIPTION	SPECIFICATION	
Type	60° SOHC V-6 24-Valve	
Displacement	3.5L	
Firing Order	1-2-3-4-5-6	
Compression Ratio	10:1	
Lead Cylinder	#1 Right Bank	
	Metric	**Standard**
Displacement	3.5L Liters	214 cu. in.
Bore	96.0 mm	3.780 in.
Stroke	81.0 mm	3.189 in.

CYLINDER BLOCK

DESCRIPTION	SPECIFICATIONS	
	Metric	**Standard**
Cylinder Bore Diameter	96.0 mm ± 0.0076	3.780 in. ± 0.0003 in.
Out-of-Round (Max.)	0.076 mm	0.003 in.
Taper (Max.)	0.051 mm	0.002 in.

PISTONS

DESCRIPTION	SPECIFICATIONS	
	Metric	**Standard**
Material Type	Aluminum (Full Floating Pins)	
Piston Diameter	95.98 mm ± 0.019 mm	3.7788 in. ± 0.0008 in.
Clearance at Size Location	-0.007 to +0.047 mm	-0.003 to +0.0018 in.
Piston Weight - A	438-443 grams	15.45-15.62 oz.
Piston Weight - B	433-438 grams	15.27-15.45 oz.
Piston Ring Groove Diameter #1	87.4-87.6 mm	3.441-3.449 in.
Piston Ring Groove Diameter #2	86.3-86.5 mm	3.397-3.4055 in.
Piston Ring Groove Diameter #3	85.8-86.0 mm	3.378-3.385 in.

PISTON PINS

DESCRIPTION	SPECIFICATIONS	
	Metric	**Standard**
Type	Full Floating	
Clearance in Piston	0.005-0.015 mm	0.002-0.0006 in.
Clearance in Rod	0.007-0.018 mm	0.0003-0.007 in.
Diameter	23.997-24.000 mm	0.9448-0.9449 in.

PISTON RINGS

DESCRIPTION	SPECIFICATIONS	
	Metric	Standard
Ring Gap-Top Compression Ring	0.20-0.36 mm	0.008-0.014 in.
Ring Gap-2nd Compression Ring (Micro-Napier	0.20-0.40 mm	0.0078-0.0157 in.
Ring Gap-Oil Control (Steel Rails)	0.25-0.76 mm	0.010-0.030 in.

PISTON RING SIDE CLEARANCE

DESCRIPTION	SPECIFICATIONS	
	Metric	Standard
Top and Second Compression Ring	0.04-0.08 mm	0.0016-0.0031 in.
Oil Ring (Steel Rails	0.038-0.184 mm	0.0015-0.0073 in.

PISTON RING WIDTH

DESCRIPTION	SPECIFICATIONS	
	Metric	Standard
Top Compression Ring	1.17-1.19 mm	0.0461-0.0469 in.
2nd Compression Ring (Micro-Napier	1.47-1.49 mm	0.058-0.059 in.
Oil Control (Steel Rails)	0.445-0.470 mm	0.0176-0.0186 in.

CONNECTING RODS

DESCRIPTION	SPECIFICATIONS	
	Metric	Standard
Bearing Clearance	0.035-0.073 mm	0.0013-0.0028 in.
Piston Pin Bore Diameter	24.0076-24.0153 mm	0.9452-0.9455 in.
Side Clearance (MAX)	0.39 mm	0.0153 in.
Total Weight (Less Bearing)	647 grams	22.8223 oz.

CRANKSHAFT MAIN BEARING JOURNALS

DESCRIPTION	SPECIFICATIONS	
	Metric	Standard
Diameter	63.987-64.013 mm	2.519-2.520 in.
Main Bearing Diametrical Clearance	0.032-0.062 mm	0.0013-0.0024 in.
Bearing Clearance (Wear Limit)	0.072 mm	0.0028 in.
Out-of-Round (MAX)	0.008 mm	0.0003 in.
Diametrical Taper (MAX)	0.010 mm	0.0004 in.
End Play	0.048-0.260 mm	0.002-0.010 in.
End Play (MAX)	0.37 mm	0.015 in.

CONNECTING ROD JOURNALS

DESCRIPTION	SPECIFICATIONS	
	Metric	Standard
Diameter	57.982-58.002 mm	2.282-2.283 in.
Bearing Diametrical Clearance	0.035-0.073 mm	0.0014-0.0029 in.
Bearing Clearance (Wear Limit)	0.080 mm	0.003 in.
Out-of-Round (MAX)	0.008 mm	0.0003 in.
Diametrical Taper (MAX)	0.010 mm	0.0004 in.

CAMSHAFT

DESCRIPTION	SPECIFICATIONS	
	Metric	Standard
Bore Diameter	43.038-43.059 mm	1.6944-1.6953 in.
Diametrical Clearance	0.078-0.12 mm	0.003-0.0047 in.
Diametrical Clearance (MAX)	0.15 mm	0.0059 in.
Bearing Journal Diameter	42.939-42.960 mm	1.6905-1.6913 in.
End Play	0.03-0.035 mm	0.001-0.014 in.

VALVE TIMING-INTAKE VALVE

DESCRIPTION	SPECIFICATIONS (CRANKSHAFT DEGREES)
Opens (ATDC)	3°
Closes (ABDC)	61°
Duration	238°
Centerline	122°

VALVE TIMING-EXHAUST VALVE

DESCRIPTION	SPECIFICATIONS (CRANKSHAFT DEGREES)
Opens (BBDC)	56°
Closes (ATDC)	16°
Duration	252°
Centerline	110°

CYLINDER HEAD

DESCRIPTION	SPECIFICATIONS	
	Metric	Standard
Gasket Thickness (Compressed)	1.78 mm	0.059 in.
Valve Seat Angle (From Horizontial)	45-45.5°	
Valve Seat Runout (MAX)	0.051 mm	0.002 in.
Valve Seat Width-Intake	0.8-1.2 mm	0.031-0.067 in.
Valve Seat Width-Exhaust	1.3-1.7 mm	0.05-0.067 in.
Guide Bore Diameter (Std.)	6.975-7.00 mm	0.2746-0.2756 in.
Valve Guide Height *	9.5-10.5 mm	0.3740-0.4134 in.
* Measured from cylinder head surface		

VALVES

DESCRIPTION	SPECIFICATIONS	
	Metric	Standard
Face Angle (From Horizontial)	44.5°-45°	
Head Diameter-Intake	36.37-36.63 mm	1.4319-14421 in.
Head Diameter-Exhaust	28.87-29.13 mm	1.1366-1.1469 in.
Length-Intake (Overall)	114.41-114.99 mm	4.5043-4.5272 in.
Length-Exhaust (Overall)	126.17-126.75 mm	4.9673-4.9902 in.
Stem Diameter-Intake	6.935-6.953 mm	0.2730-0.2737 in.
Stem Diameter-Exhaust	6.906-6.924 mm	0.2719-0.2726 in.
Stem-to-Guide Clearance-Intake	0.022-0.065 mm	0.0009-0.0026 in.
Stem-to-Guide Clearance-Intake (MAX.) Rocking Method	0.29 mm	0.0114 in.
Stem-to-Guide Clearance-Exhaust	0.051-0.094 mm	0.002-0.0037 in.
Stem-to-Guide Clearance-Intake (MAX.) Rocking Method	0.370 mm	0.0146 in.
Valve Lift-Intake (Zero Lash)	8.55 mm	0.3367 in.
Valve Lift-Exhaust (Zero Lash)	6.53 mm	0.2571 in.
Valve Margin-Intake	0.835-1.165 mm	0.0329-0.0459 in.
Valve Margin-Exhaust	1.44-1.77 mm	0.0567-0.0697 in.
Valve Stem Tip Height-Intake	42.366-43.665 mm	1.6680-1.7187 in.
Valve Stem Tip Height-Exhaust	45.205-46.486 mm	1.780-1.8305 in.

VALVE SPRINGS

DESCRIPTION	SPECIFICATIONS	
	Metric	Standard
Free Length-Intake (Approx.)	43.675 mm	1.7195 in.
Free Length-Exhaust- Yellow (Approx.)	47.1 mm	1.8543 in.
Free Length-Exhaust- White (Approx.)	48.3 mm	1.9015 in.
Spring Force-Intake (Valve Closed)	309-358 N @ 38.0 mm	69.5-80.5 lbs. @ 1.4961 in.
Spring Force-Exhaust- Yellow-(Valve Closed)	314-354 N @ 38.0 mm	70.5-79.5 lbs. @ 1.496 in.
Spring Force-Exhaust- White-(Valve Closed)	355-401 N @ 38.0 mm	80-90 lbs. @ 1.496 in.
Spring Force-Exhaust- Yellow-(Valve Open)	579-640 N @ 31.47 mm	130-144 lbs. @ 1.239 in.
Spring Force-Exhaust- White-(Valve Open)	621-687 N @ 31.47 mm	139.5-154.5 lbs. @ 1.239 in.
Spring Force-Intake (Valve Open)	836-907 N @ 29.45 mm	188-204 lbs. @ 1.1594 in.
Number of Coils-Intake	6.86	
Number of Coils-Exhaust	7.66	
Color of Spring (Top of Coils)-Intake-Right Hand Coil Direction	Orange	

DESCRIPTION	SPECIFICATIONS	
	Metric	Standard
Color of Spring (Top of Coils)-Exhaust-Left Hand Coil Direction	Yellow or White	
Wire Diameter-Intake	4.29-4.35 mm	0.1547-0.1570 in.
Wire Diameter-Exhaust	3.93-3.99 mm	0.1547-0.1570 in.
Spring Installed Height *	38.0 mm	1.4961 in.
* Spring Seat to Bottom Retainer-Intake and Exhaust		

OIL PUMP

DESCRIPTION	SPECIFICATIONS	
	Metric	Standard
Clearance Over Rotors	0.077 mm	0.003 in.
Cover-Out-of-Flat (MAX.)	0.025 mm	0.001 in.
Inner and Outer Rotor Thickness (MIN.)	14.229 mm	0.563 in.
Outer Rotor Thickness (MAX.)	0.39 mm	0.015 in.
Outer Rotor Diameter (MIN.)	79.997 mm	3.149 in.
Tip Clearance Between Rotors (MAX.)	0.20 mm	0.008 in.

OIL PRESSURE

DESCRIPTION	SPECIFICATIONS
NOTE: At Normal Operating Temperatures	
Pressure @ Curb Idle Speed *	34.47 kPa Min. (5 PSI MIN.)
Pressure @ 3000 RPM	300-724 kPa (45-105 PSI.)
*CAUTION: If pressure is zero at curb idle, DO NOT run engine at 3000 RPM.	

TORQUE - 3.5L

DESCRIPTION	N·m	Ft. Lbs.	In. Lbs.
Camshaft Sprocket Bolt - Right Side	102 +¼ Turn	75 +¼ Turn	-
Camshaft Sprocket Bolt - Left Side	102 +¼ Turn	75 +¼ Turn	-
Camshaft Thrust Plate - Bolts	28	-	250
Connecting Rod Cap - Bolts	27 +¼ Turn	20 +¼ Turn	-
Crankshaft Main Bearing Cap Inner Main Cap Bolts	20 +¼ Turn	15 +¼ Turn	-
Crankshaft Main Bearing Cap Outer Main Cap Bolts	27 +¼ Turn	20 +¼ Turn	-
Tie Bolts (Horizontal)	28	-	250
Crankshaft Damper - Bolt	95	70	-
Cylinder Head Bolts* -Step 1	61	45	-

DESCRIPTION	N·m	Ft. Lbs.	In. Lbs.
Cylinder Head Bolts* -Step 2	88	65	-
Cylinder Head Bolts* -Step 3	88	65	-
Cylinder Head Bolts* -Step 4	+¼ Turn	+¼ Turn	-
*Refer to procedure for tightening sequence. (Refer to 9 - ENGINE/CYLINDER HEAD - INSTALLATION)			
Cylinder Head Cover - Bolts	12	-	105
Exhaust Manifold to Cylinder Head - Bolts	23	-	200
Exhaust Manifold Heat Shield - Bolts	12	-	105
Flex plate to Crankshaft	95	70	-
Flex plate to Torque Converter	75	55	-
Intake Manifold - Lower	28	-	250
Intake Manifold - Upper	12	-	105
Oil Pan -M6 Bolts	12	-	105
Oil Pan -M8 Bolts	28	-	250
Oil Pan to Transmission Bell Housing	55	40	-
Flex Plate Inspection Cover	11	—	97
Oil Pan Drain Plug	27	20	-
Oil Cooler Connector Bolt	61	45	-
Oil Filter	12	-	102
Oil Pump to Block - Bolts	28	-	250
Oil Pump Cover - Bolts	12	-	105
Oil Pump Pick Up Tube - Bolt	28	-	250
Crankshaft Rear Seal Retainer	12	-	105
Engine Mount to Mounting Bracket	75	55	-
Engine Mount to Cradle - Nuts	75	55	-
Engine Mount Heat Shield	11	-	97
Engine Mount Through Studs	12	-	106
Rocker Shaft Pedestal Retaining - Bolts	31	-	275
Spark Plugs	28	20	-
Timing Belt Tensioner-Bolts	28	-	250
Timing Belt Tensioner Pulley Assembly - Bolt	61	45	-
Timing Belt Cover -M6 Bolts	12	-	105
Timing Belt Cover -M8 Bolts	28	-	250
Timing Belt Cover -M10 Bolts	54	40	-

SPECIAL TOOLS

3.5L ENGINE

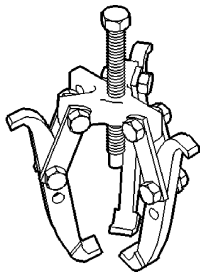

Puller 1023

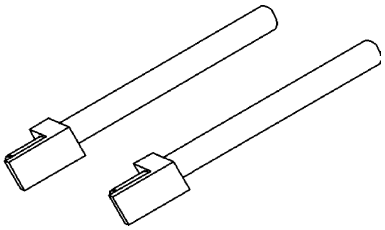

Connecting Rod Installation Guides 8189

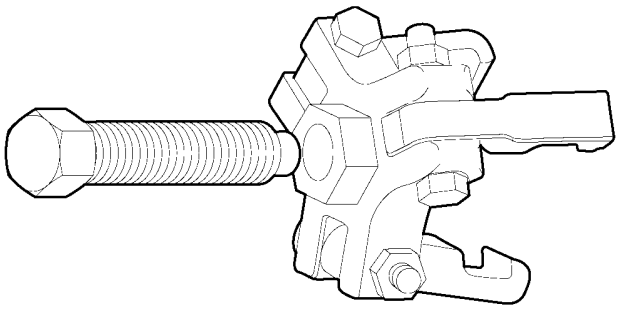

80b39f2c

Puller 8454

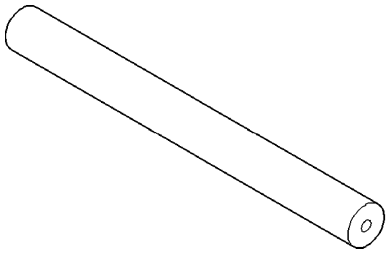

Vibration Damper Remover Insert 9020 - Crank Sprocket Remover Insert C4685-C2

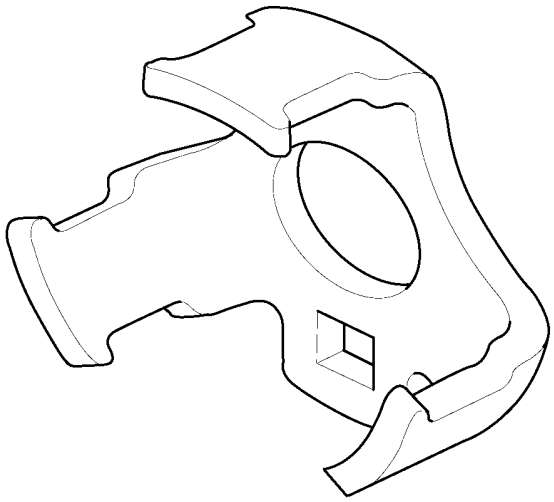

8131dc6d

Damper Holding Fixture 9365

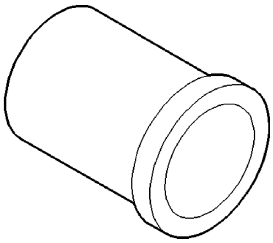

Camshaft Seal Installer MD-998306

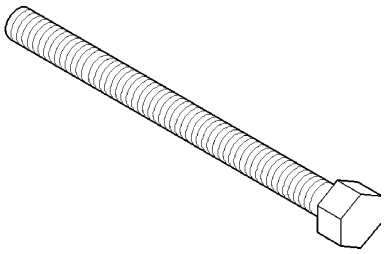

Crankshaft Damper Installer Bolt C-4685-C1

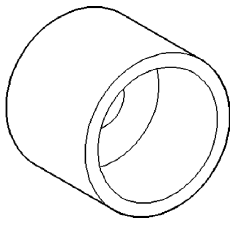

Crankshaft Damper Installer 6792-1

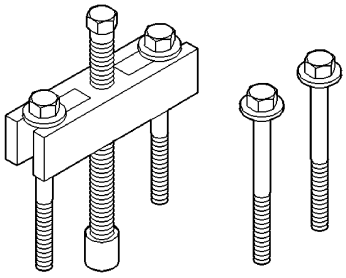

Gear Puller L-4407A

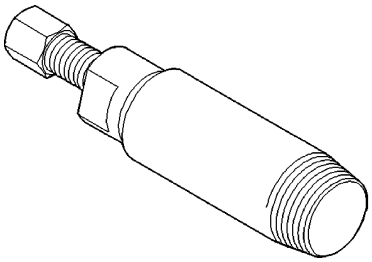

Front Crankshaft Seal Remover 6341A

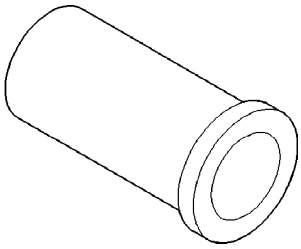

Driver 6342

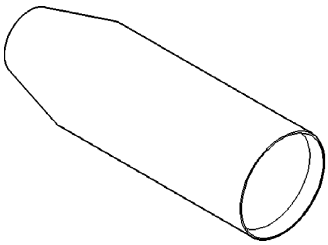

Crankshaft Seal Protector 6780-2

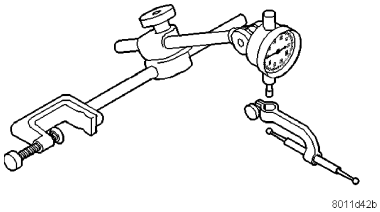

DIAL INDICATOR C-3339

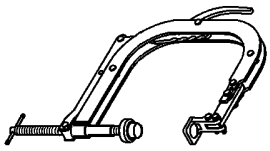

Valve Spring Compressor C-3422-D

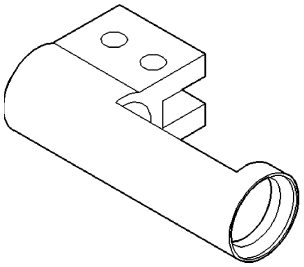

Spring Compressor Adapter 6526

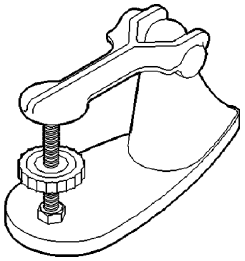

Valve Spring Tester C-647

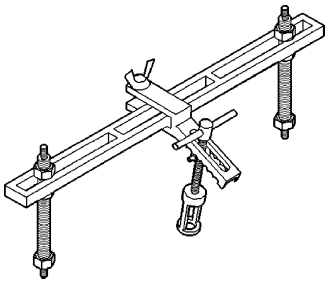

Valve Spring Compressor MD998772A

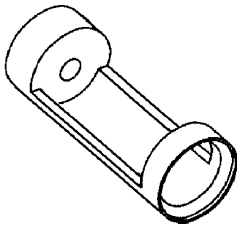

Valve Spring Adapter 6527

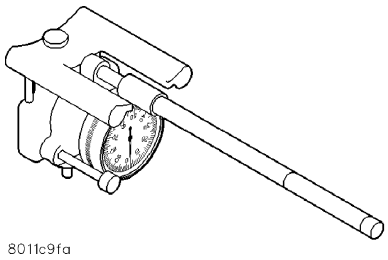

Indicator, Cylinder Bore C-119

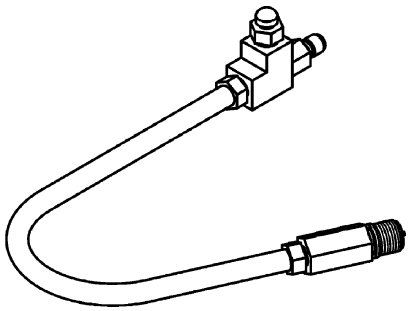

Cylinder Compression Pressure Adaptor 8116

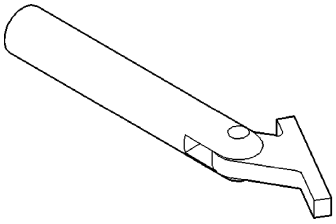

Crankshaft Main Bearing Remover C-3059

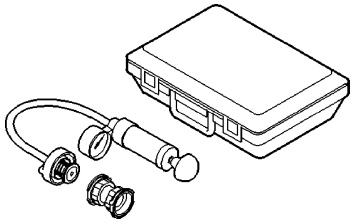

Pressure Tester Kit 7700

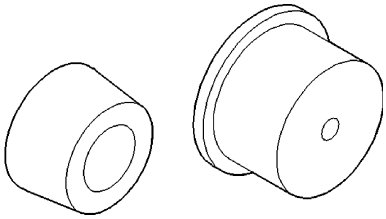

Rear Crankshaft Oil Seal Installer 6926

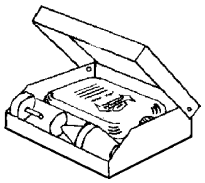

Bloc–Chek–Kit C-3685–A

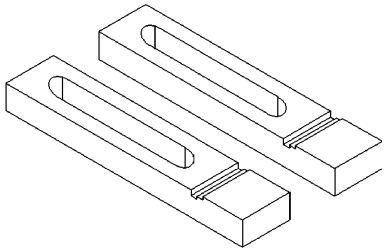

Crankshaft Real Seal Retainer Alignment Fixture 8225

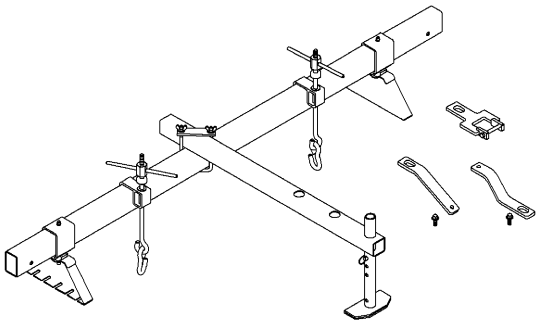

Driveline Support Fixture 8534B

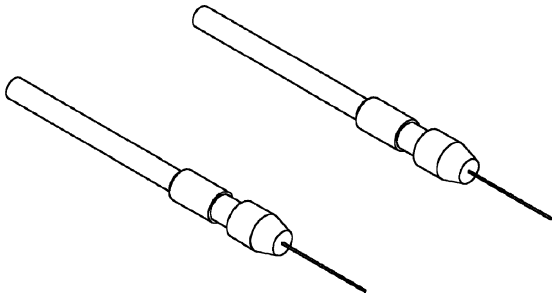

Release Probe 8351

ELEMENT-AIR CLEANER

REMOVAL

1. Disconnect the CCV hose (4) at the housing cover (2).
2. Release the housing cover tabs (3).

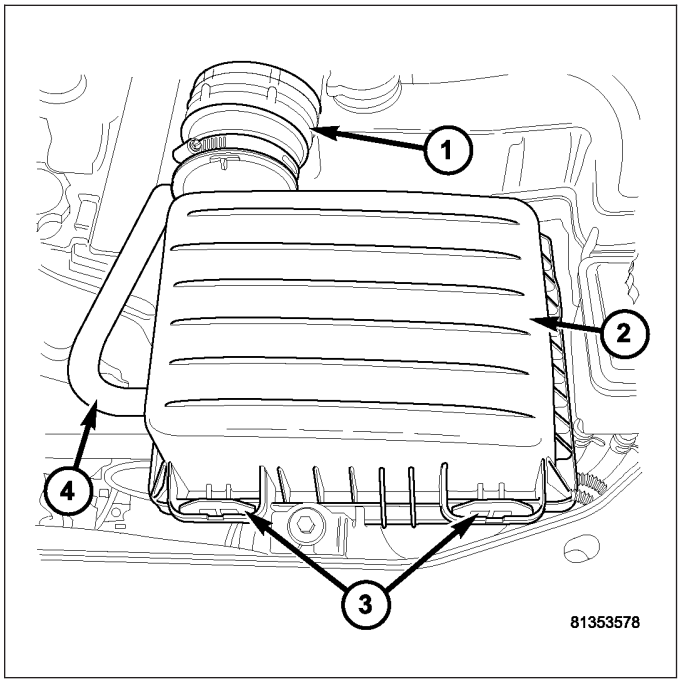

3. Lift the cover (1) and pull toward the front of the vehicle to release the rear cover to housing alignment tabs.
4. Remove the element (2).

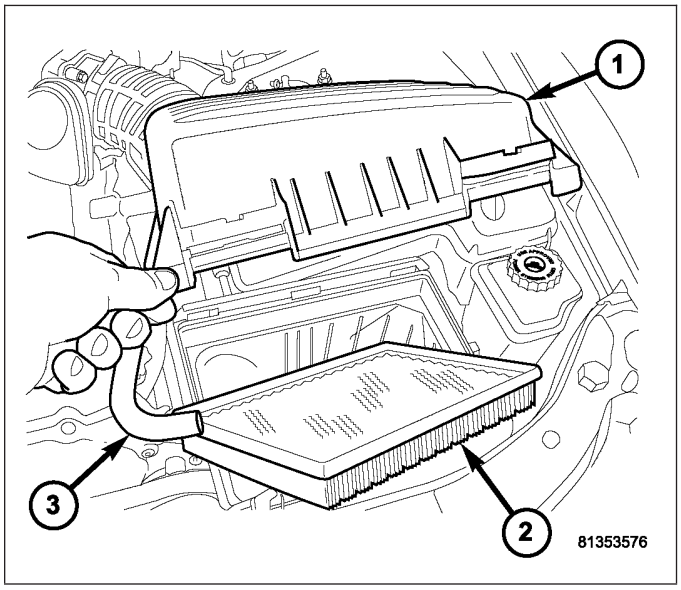

INSTALLATION

1. Install the air filter element (2) into air box.
2. Position the cover (1) so that the rear locking tabs insert into the lower housing.
3. Seat cover (1) onto element housing and assure that the front locking tabs engage.
4. Reconnect the CCV hose (3).

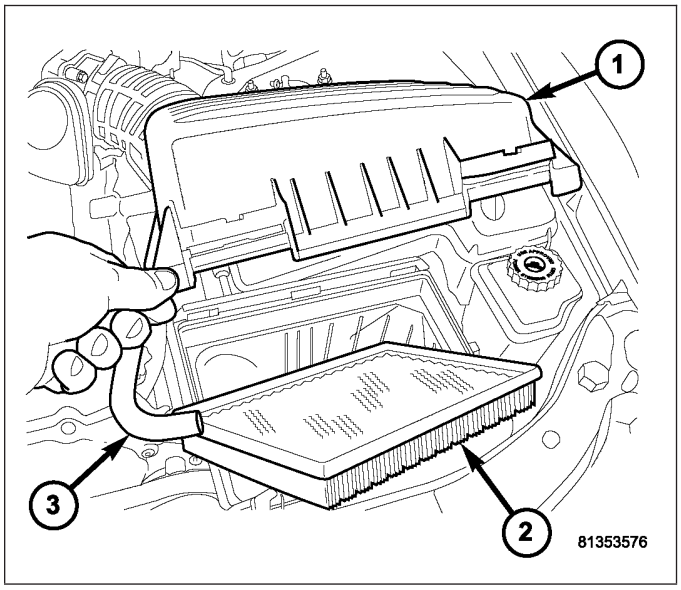

HOUSING-AIR CLEANER

REMOVAL

1. Separate the air inlet duct (5) at the element housing (6).
2. Disconnect the CCV hose (2) at the element housing (6).
3. Remove the housing retaining bolt (1).
4. Pull housing up and off of the locating pin.
5. Remove element housing (6) from vehicle.

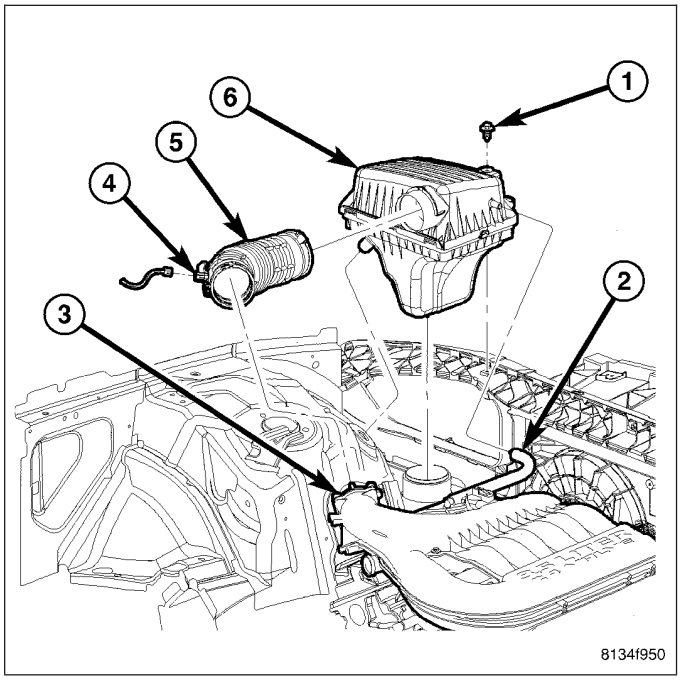

INSTALLATION

1. Align the housing (6) with the lower air inlet duct and alignment grommet in the wheel housing.
2. Properly fit the housing (6) and install housing retaining bolt (1).
3. Connect the inlet air duct (5) to the housing (6) and tighten clamp.
4. Connect the CCV hose (2) to housing.

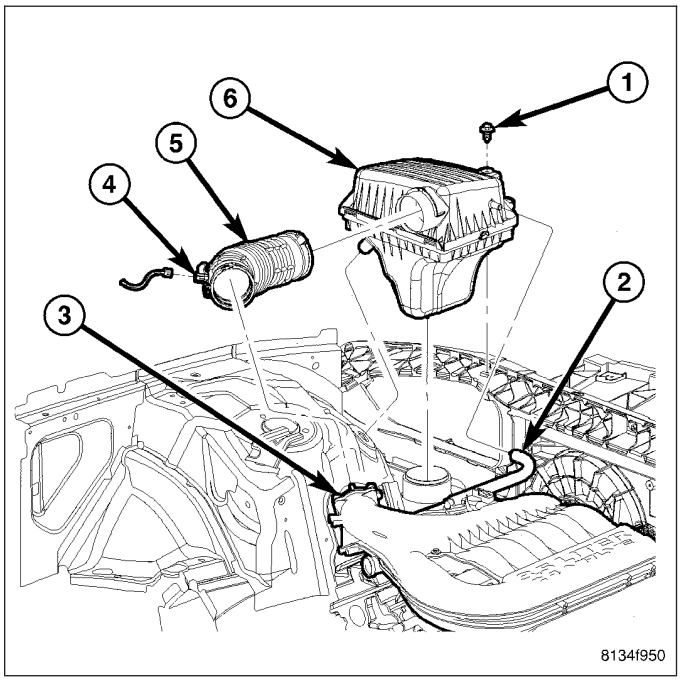

CYLINDER HEAD(S)

DESCRIPTION

The aluminum alloy cylinder heads feature cross- flow type intake and exhaust ports. Valve guides and seat inserts are powdered metal. Valves are arranged in a “V”, with each camshaft on center. To improve combustion speed the chambers are a compact spherical design with a squish area of approximately 30 percent of the piston top area. The cylinder heads are common to either cylinder bank by reversing the direction of installation.

DIAGNOSIS AND TESTING

CYLINDER HEAD GASKET

A cylinder head gasket leak can be located between adjacent cylinders or between a cylinder and the adjacent water jacket.

Possible indications of the cylinder head gasket leaking between adjacent cylinders are:

- Loss of engine power
- Engine misfiring
- Poor fuel economy

Possible indications of the cylinder head gasket leaking between a cylinder and an adjacent water jacket are:

- Engine overheating
- Loss of coolant
- Excessive steam (white smoke) emitting from exhaust
- Coolant foaming

CYLINDER-TO-CYLINDER LEAKAGE TEST

To determine if an engine cylinder head gasket is leaking between adjacent cylinders, follow the procedures in Cylinder Compression Pressure Test (Refer to 9 - ENGINE - DIAGNOSIS AND TESTING). An engine cylinder head gasket leaking between adjacent cylinders will result in approximately a 50–70% reduction in compression pressure.

CYLINDER-TO-WATER JACKET LEAKAGE TEST

WARNING: USE EXTREME CAUTION WHEN THE ENGINE IS OPERATING WITH COOLANT PRESSURE CAP REMOVED.

VISUAL TEST METHOD

With the engine cool, remove the coolant pressure cap. Start the engine and allow it to warm up until thermostat opens.

If a large combustion/compression pressure leak exists, bubbles will be visible in the coolant.

COOLING SYSTEM TESTER METHOD

WARNING: WITH COOLING SYSTEM TESTER IN PLACE, PRESSURE WILL BUILD UP FAST. EXCESSIVE PRESSURE BUILT UP, BY CONTINUOUS ENGINE OPERATION, MUST BE RELEASED TO A SAFE PRESSURE POINT. NEVER PERMIT PRESSURE TO EXCEED 138 kPa (20 psi).

Install Cooling System Tester 7700 or equivalent to pressure cap neck. Start the engine and observe the tester’s pressure gauge. If gauge pulsates with every power stroke of a cylinder a combustion pressure leak is evident.

CHEMICAL TEST METHOD

Combustion leaks into the cooling system can also be checked by using Bloc-Chek Kit C-3685-A or equivalent. Perform test following the procedures supplied with the tool kit.

REMOVAL - CYLINDER HEAD(S)

RIGHT CYLINDER HEAD

1. Perform the fuel relief procedure.
2. Disconnect the negative battery cable.
3. Drain cooling system (Refer to 7 - COOLING - STANDARD PROCEDURE).
4. Remove the upper intake manifold (Refer to 9 - ENGINE/MANIFOLDS/INTAKE MANIFOLD - REMOVAL).
5. Remove the lower intake manifold (Refer to 9 - ENGINE/MANIFOLDS/INTAKE MANIFOLD - REMOVAL).
6. Remove accessory drive belt (6).
7. Remove accessory drive belt idler pulley.
8. Remove the power steering mounting bolts and set the pump aside (Refer to 19 - STEERING/PUMP - REMOVAL).
9. Raise the vehicle.
10. Remove crankshaft damper (4) (Refer to 9 - ENGINE/ENGINE BLOCK/VIBRATION DAMPER - REMOVAL.
11. Remove lower outer timing belt cover bolts.

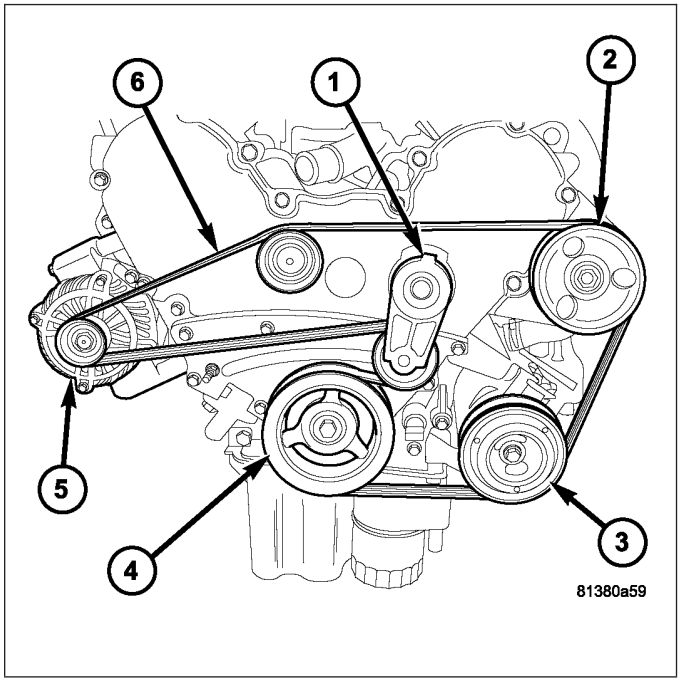

12. Remove front exhaust pipe to exhaust manifold mounting nuts (1).
13. Disconnect both oxygen sensor (2) harness connectors on each side.
14. Lower vehicle.
15. Remove the remaining outer timing belt cover bolts and cover.

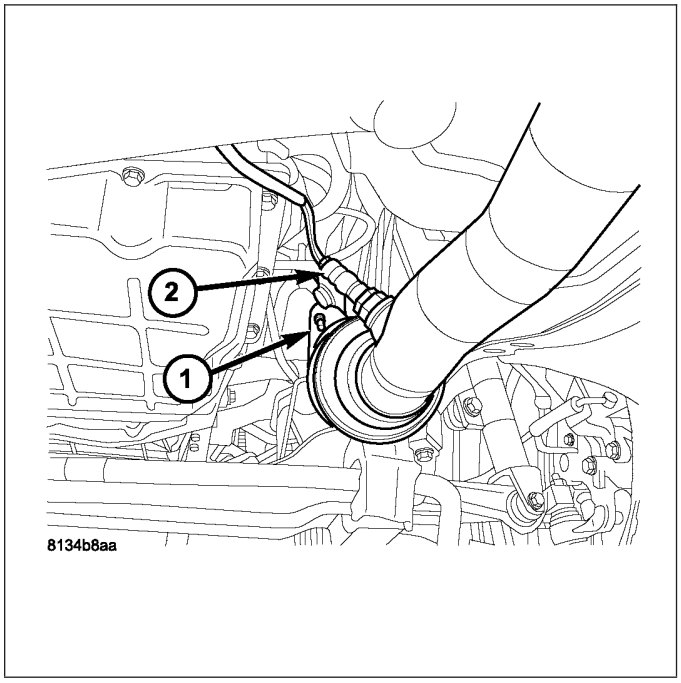

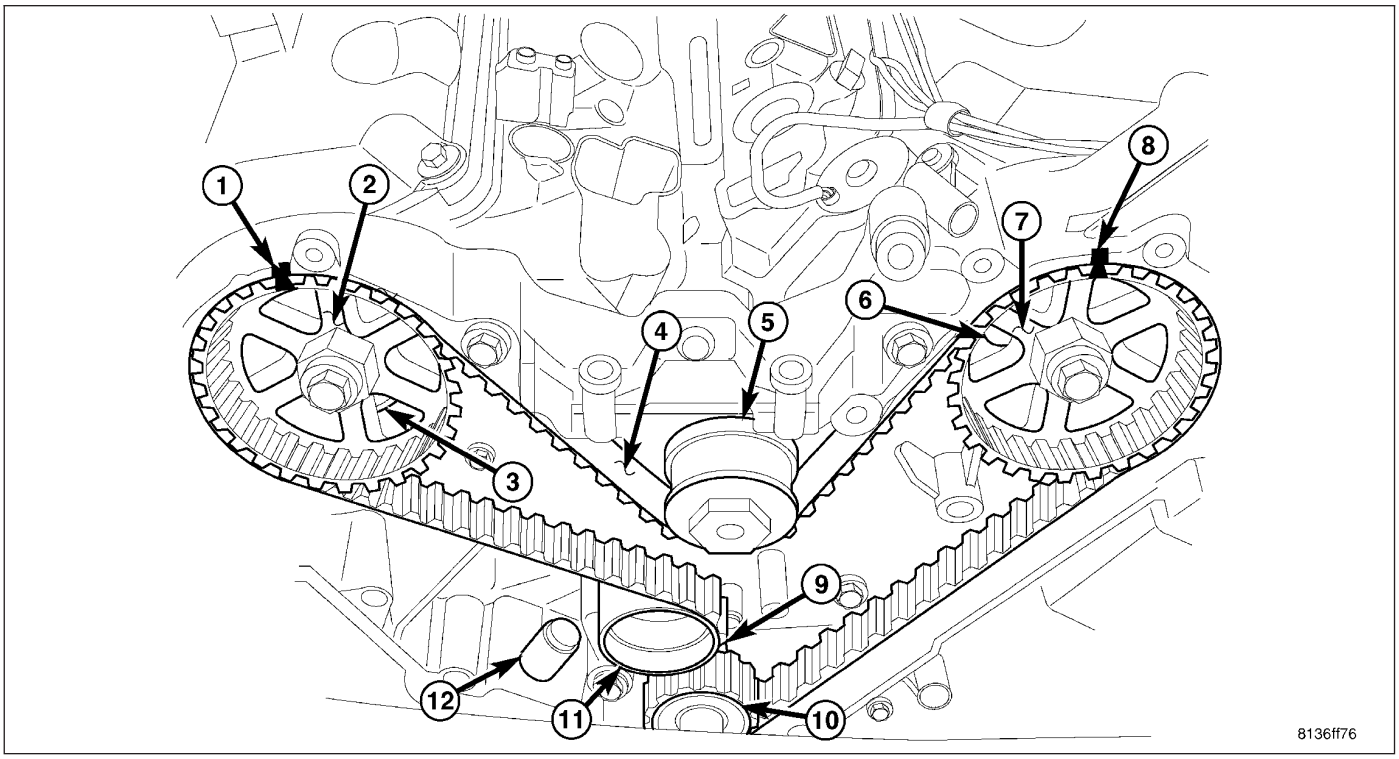

TIMING GEAR ALIGNMENT

1 - RIGHT CAMSHAFT GEAR ALIGNMENT MARK
2 - RIGHT CAMSHAFT GEAR
3 - CYLINDER HEAD TO INNER TIMING BELT COVER BOLTS - RIGHT
4 - TIMING BELT
5 - WATER PUMP PULLEY
6 - CYLINDER HEAD TO INNER TIMING BELT COVER BOLTS - LEFT
7 - LEFT CAMSHAFT GEAR
8 - LEFT CAMSHAFT GEAR ALIGNMENT MARK
9 - CRANKSHAFT GEAR ALIGNMENT MARK
10 - CRANKSHAFT GEAR
11 - TIMING BELT TENSIONER PULLEY
12 - TIMING BELT TENSIONER

16. Rotate the engine to TDC and align timing belt marks (1,8,9).
17. Remove the timing belt tensioner (12) and reset the tensioner (Refer to 9 - ENGINE/VALVE TIMING/TMNG BELT/CHAIN TENSIONER&PULLEY - REMOVAL).
18. Remove the timing belt (4) (Refer to 9 - ENGINE/VALVE TIMING/TIMING BELT/CHAIN AND SPROCKETS - REMOVAL).

19. Remove the right cylinder head cover to cylinder head ground strap and capacitor (3).
20. Remove the EGR valve and tube assembly.
21. Remove the right cylinder head cover.

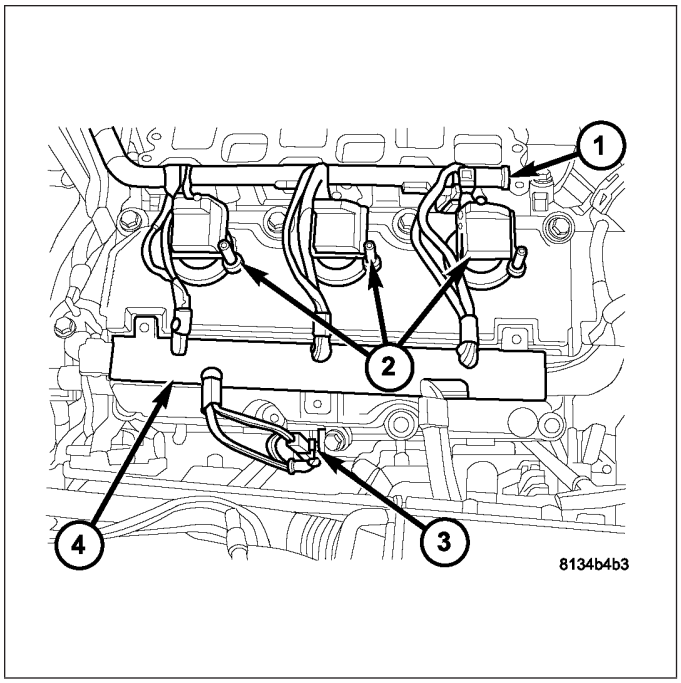

22. Remove the right rocker arm assembly (2).

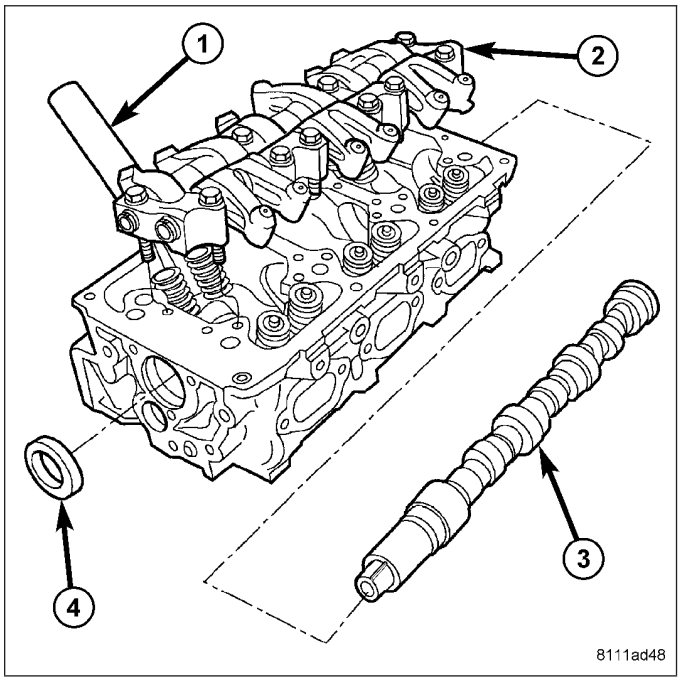

23. Remove the right rear camshaft thrust plate (1).

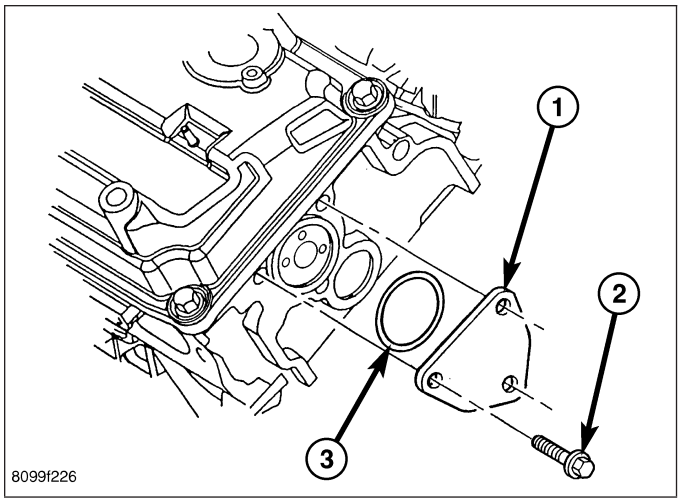

24. Counterhold the cam gear and remove the right cam gear retaining bolt.

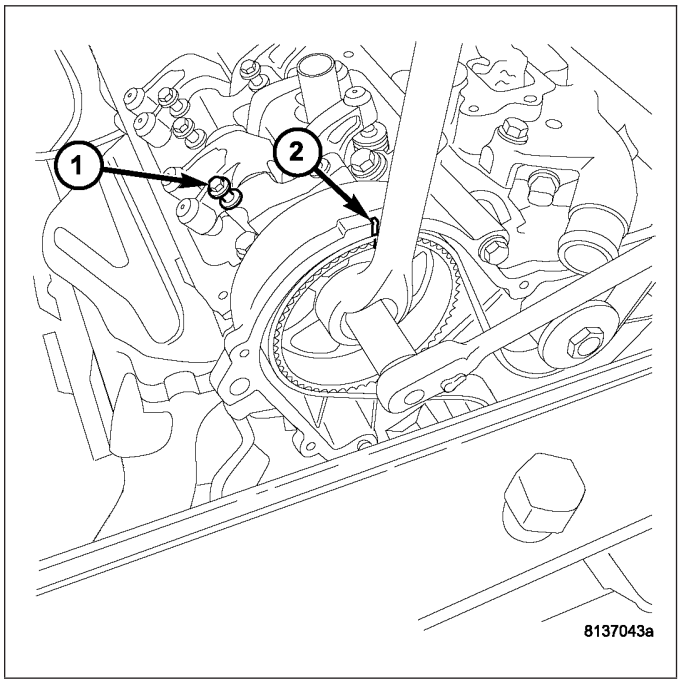

25. Push the camshaft (5) out of the back of the cylinder head approximately 3.5 inches and remove the right cam gear.

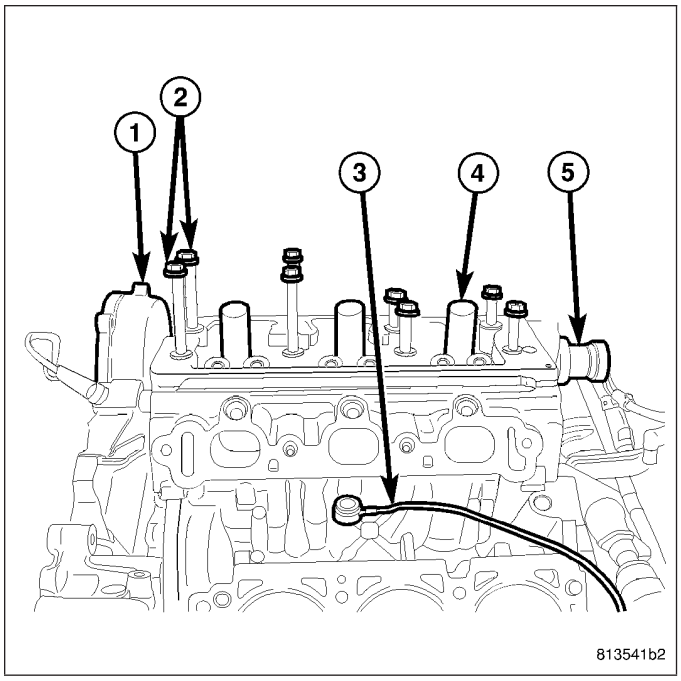

26. Remove the inner timing cover to cylinder head retaining bolts.
27. Remove the cylinder head bolts in REVERSE of tightening sequence.
28. Remove the cylinder head.
29. Clean and inspect all mating surfaces.

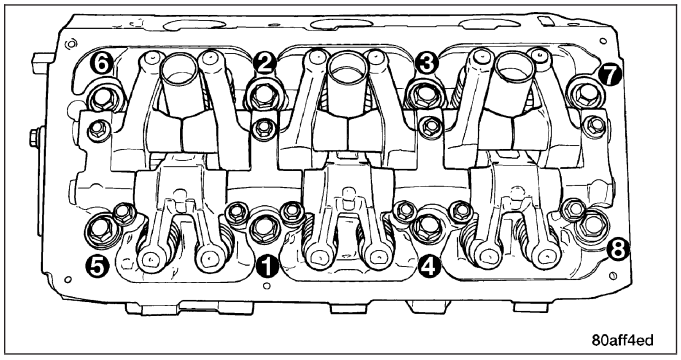

LEFT CYLINDER HEAD

1. Perform the fuel relief procedure.
2. Disconnect the negative battery cable.
3. Drain cooling system (Refer to 7 - COOLING - STANDARD PROCEDURE).
4. Remove the upper intake manifold.
5. Remove the lower intake manifold (Refer to 9 - ENGINE/MANIFOLDS/INTAKE MANIFOLD - REMOVAL).
6. Remove the accessory drive belt (6).
7. Remove the belt tensioner (1).
8. Remove the accessory drive idler pulley.
9. Remove the power steering mounting bolts and set pump (2) aside.
10. Remove the crankshaft damper (4) (Refer to 9 - ENGINE/ENGINE BLOCK/VIBRATION DAMPER - REMOVAL.
11. Remove the lower outer timing belt cover.
12. Raise and support the vehicle.

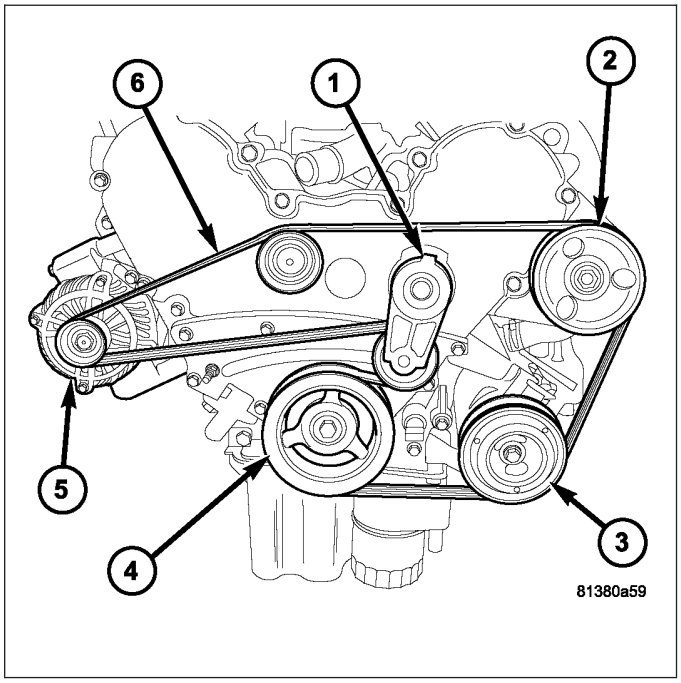

13. Remove the front exhaust pipe to exhaust manifold mounting nuts (2).
14. Disconnect both oxygen sensor harness connectors (1,2).

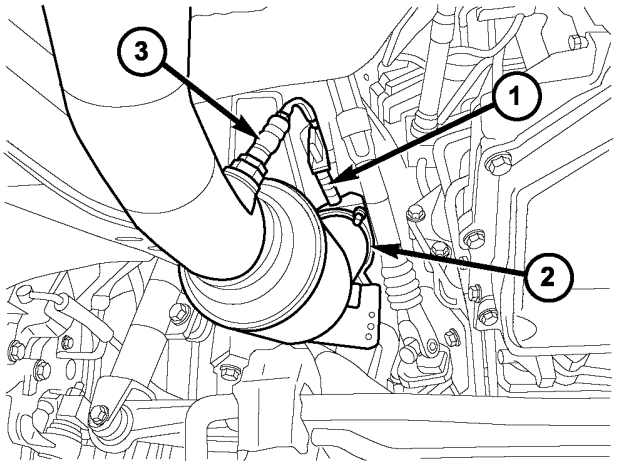

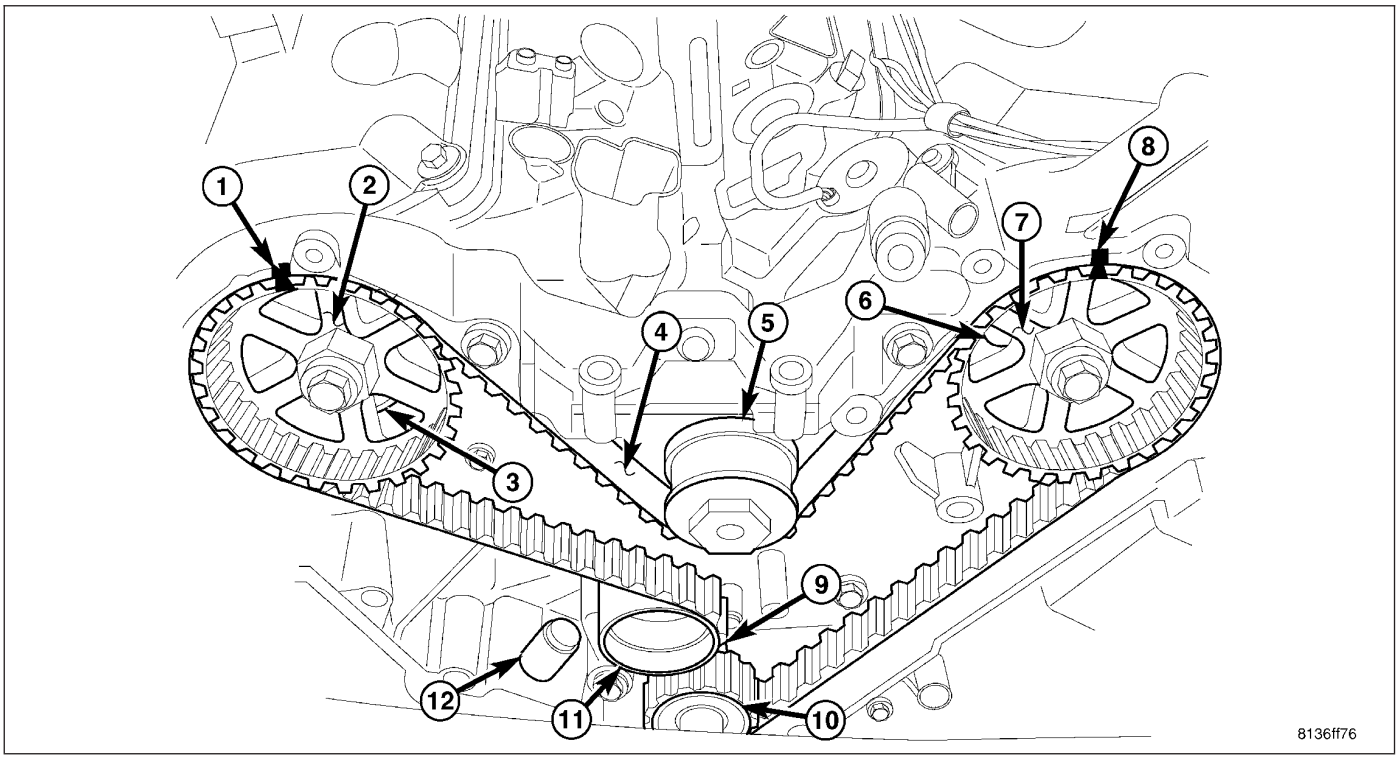

TIMING GEAR ALIGNMENT

1 - RIGHT CAMSHAFT GEAR ALIGNMENT MARK
2 - RIGHT CAMSHAFT GEAR
3 - CYLINDER HEAD TO INNER TIMING BELT COVER BOLTS - RIGHT
4 - TIMING BELT
5 - WATER PUMP PULLEY
6 - CYLINDER HEAD TO INNER TIMING BELT COVER BOLTS - LEFT
7 - LEFT CAMSHAFT GEAR
8 - LEFT CAMSHAFT GEAR ALIGNMENT MARK
9 - CRANKSHAFT GEAR ALIGNMENT MARK
10 - CRANKSHAFT GEAR
11 - TIMING BELT TENSIONER PULLEY
12 - TIMING BELT TENSIONER

15. Lower the vehicle.
16. Remove the outer timing belt cover (Refer to 9 - ENGINE/VALVE TIMING/TIMING BELT / CHAIN COVER(S) - REMOVAL).

17. Rotate the engine to TDC and align the timing marks (1,8,9).
18. Remove the timing belt tensioner (12), timing belt (4), then reset tensioner. (Refer to 9 - ENGINE/VALVE TIMING/TMNG BELT/CHAIN TENSIONER&PULLEY - REMOVAL)
19. Remove the left cylinder head cover to cylinder head ground strap (3).
20. Remove the left cylinder head cover.

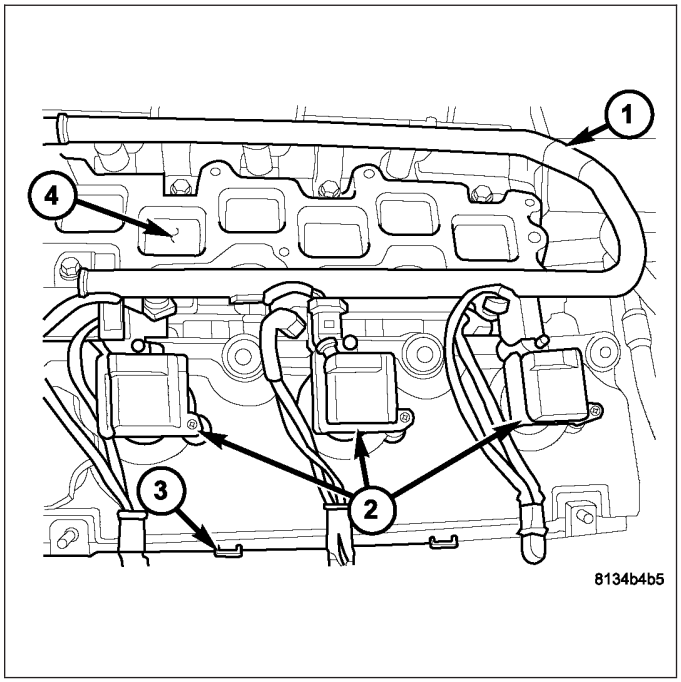

21. Remove the left rocker arm assembly (2).

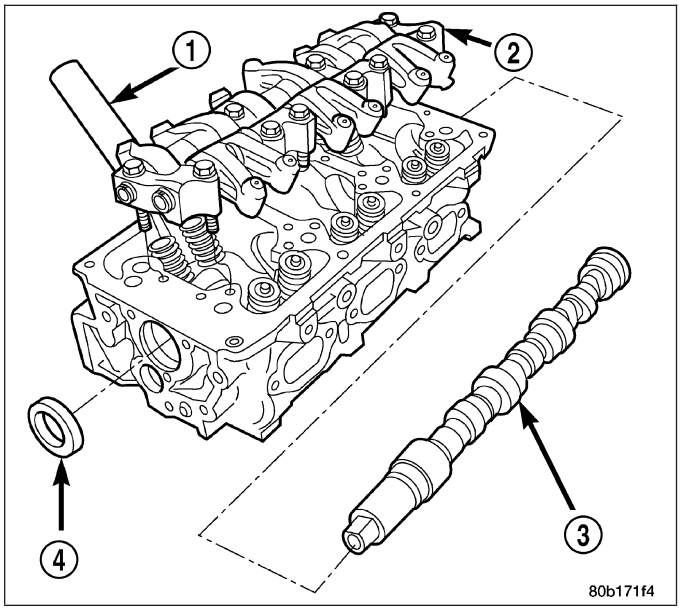

22. Remove the left camshaft thrust plate (1).

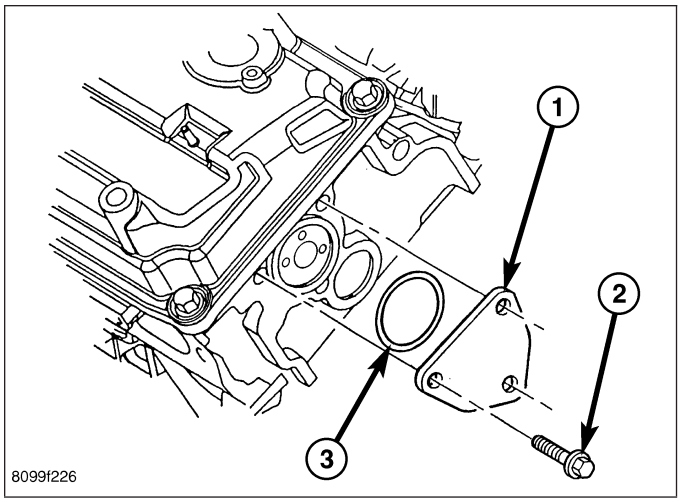

23. Counterhold the left cam gear and remove the cam gear retaining bolt. (Refer to 9 - ENGINE/ VALVE TIMING/TIMING BELT/CHAIN AND SPROCKETS - REMOVAL)
24. Push the camshaft out of the back of the cylinder head approximately 3.5 inches and remove the cam gear.Remove the front timing belt housing to cylinder head bolts.

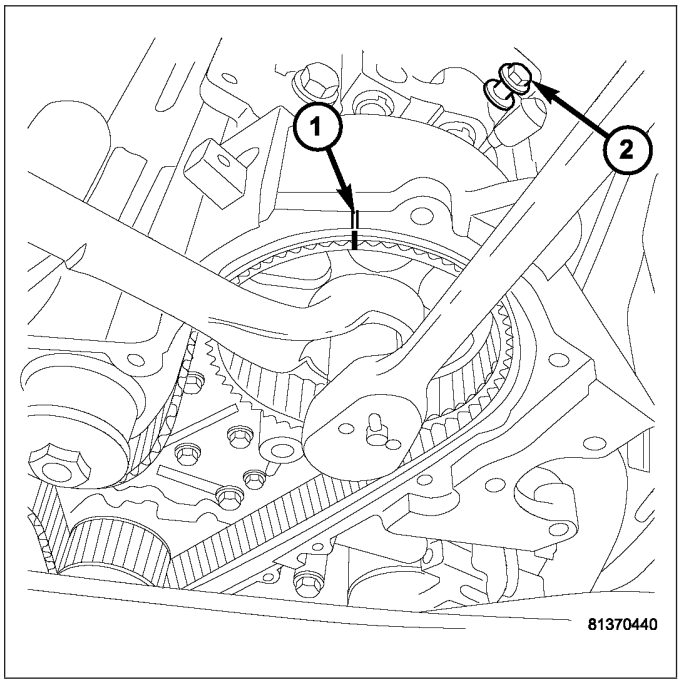

25. Remove the cylinder head bolts in REVERSE of tightening sequence.
26. Remove the cylinder head.
27. Clean and inspect all mating surfaces.

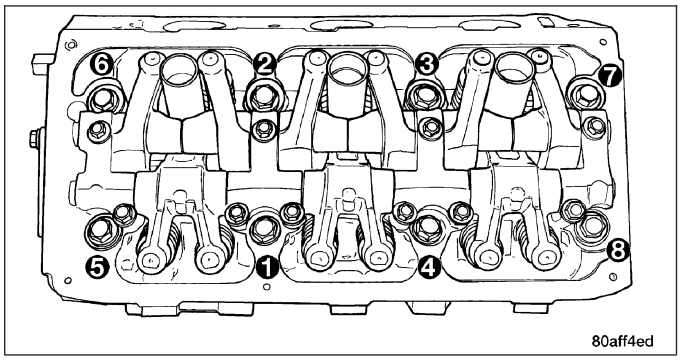

.

CLEANING

To ensure engine gasket sealing, proper surface preparation must be performed, especially with the use of aluminum engine components and multi-layer steel cylinder head gaskets.

NOTE: Multi-Layer Steel (MLS) head gaskets require a scratch free sealing surface.

Remove all gasket material from cylinder head and block (Refer to 9 - ENGINE - STANDARD PROCEDURE). Be careful not to gouge or scratch the aluminum head sealing surface.

Clean all engine oil passages.

INSPECTION

1. Before cleaning, check for leaks, damage and cracks.
2. Clean cylinder head and oil passages.
3. Check cylinder head for flatness.
4. Cylinder head must be flat within:
   - Standard dimension = less than 0.05 mm (0.002 inch.)
   - Service Limit = 0.2 mm (0.008 inch.)
   - Grinding Limit = Maximum of 0.2 mm (0.008 inch.) is permitted.

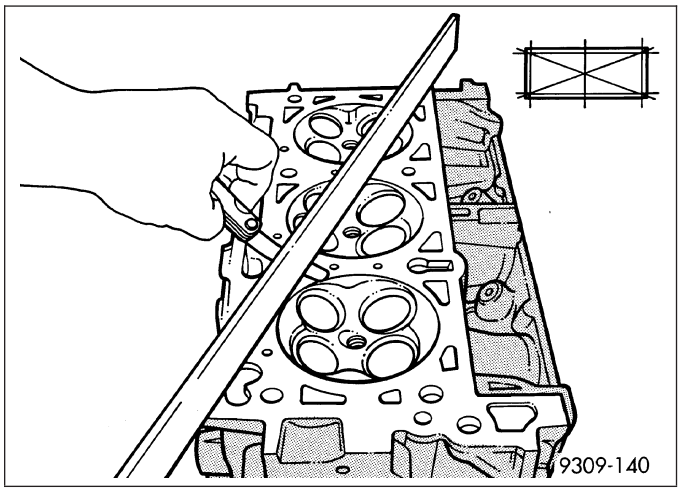

CAUTION: 0.20 mm (0.008 in.) MAX is a combined total dimension of the stock removal limit from cylinder head and block top surface (Deck) together.

INSTALLATION - CYLINDER HEAD(S)

RIGHT CYLINDER HEAD

CAUTION: THE CYLINDER HEAD GASKETS ARE NOT INTERCHANGEABLE BETWEEN CYLINDER HEADS AND ARE CLEARLY MARKED RIGHT OR LEFT.

The cylinder head bolts are tightened using a torque plus angle procedure. The bolts must be examined BEFORE reuse. If the threads are necked down the bolts must be replaced..

Necking can be checked by holding a scale or straight edge against the threads. If all the threads do not contact the scale the bolt must be replaced.

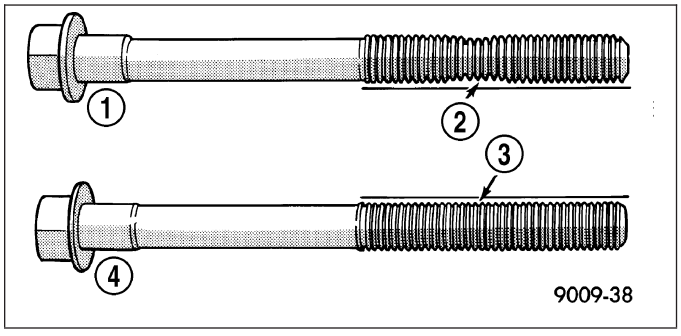

CAUTION: When cleaning cylinder head and cylinder block surfaces, DO NOT use a metal scraper because the surfaces could be cut or ground. Use ONLY a wooden or plastic scraper (Refer to 9 - ENGINE - STANDARD PROCEDURE - ENGINE GASKET SURFACE PREPARATION).

1. Clean sealing surfaces of cylinder head and block.

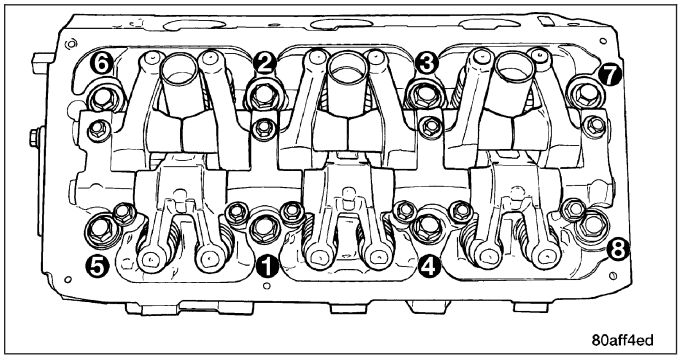

CAUTION: Ensure that the correct head gaskets are used and are oriented correctly on cylinder block.

NOTE: Before installing the cylinder head bolts, lubricate the threads with clean engine oil.

2. Install the cylinder head over locating dowels and finger tighten the head bolts.
3. Tighten the cylinder head bolts in the following sequence, using the 4 step torque-turn method. Tighten according to the following torque values:.
   - Step 1: All to 61 N·m (45 ft. lbs.)
   - Step 2: All to 88 N·m (65 ft. lbs.)
   - Step 3: All (again) to 88 N·m (65 ft. lbs.)
   - Step 4: + 90° Turn **Do not use a torque wrench for this step.**
4. Bolt torque after 90° turn should be over 122 N·m (90 ft. lbs.) in the tightening direction. If not, replace the bolt.
5. Install the inner timing cover to cylinder head bolts. Tighten bolts to 54 N·m (40 lbs.ft.).
6. Install camshaft sprocket (2) Counterhold the camshaft sprocket gear (2) and tighten the camshaft sprocket bolt to 102 N·m plus a 1/4 turn (75 lbs. ft. plus a 1/4 turn). (Refer to 9 - ENGINE/VALVE TIMING/TIMING BELT/CHAIN AND SPROCKETS - INSTALLATION).

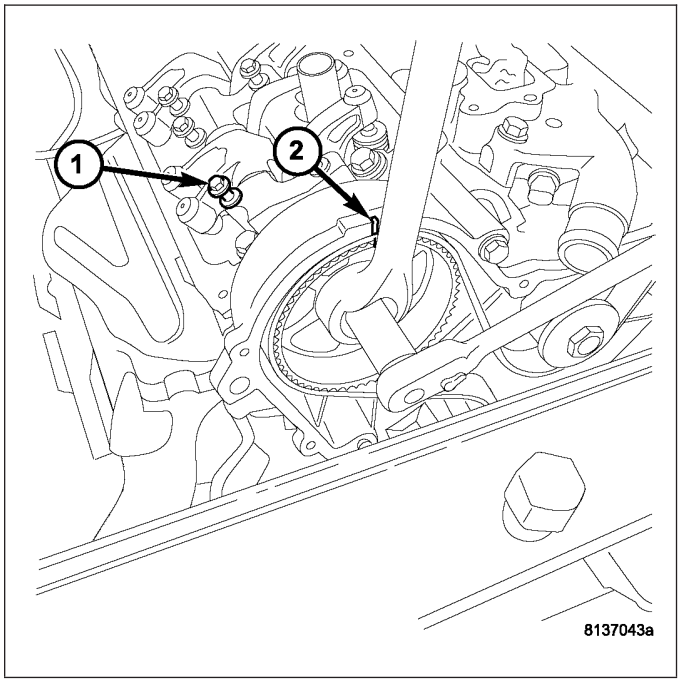

7. Install the rear camshaft thrust plate (1) and seal (3) and the EGR valve.

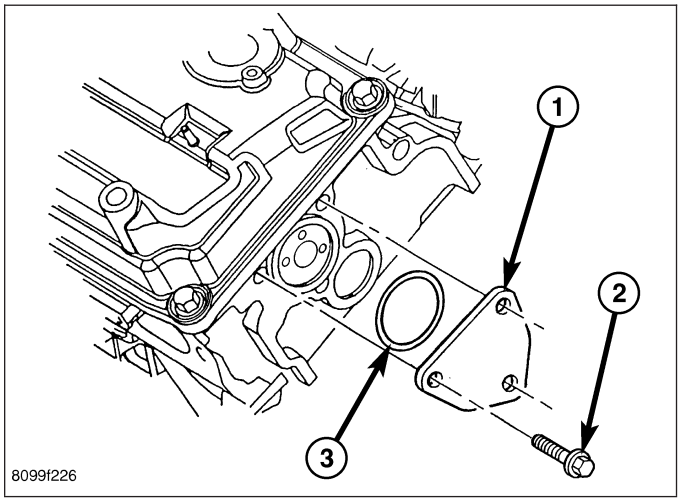

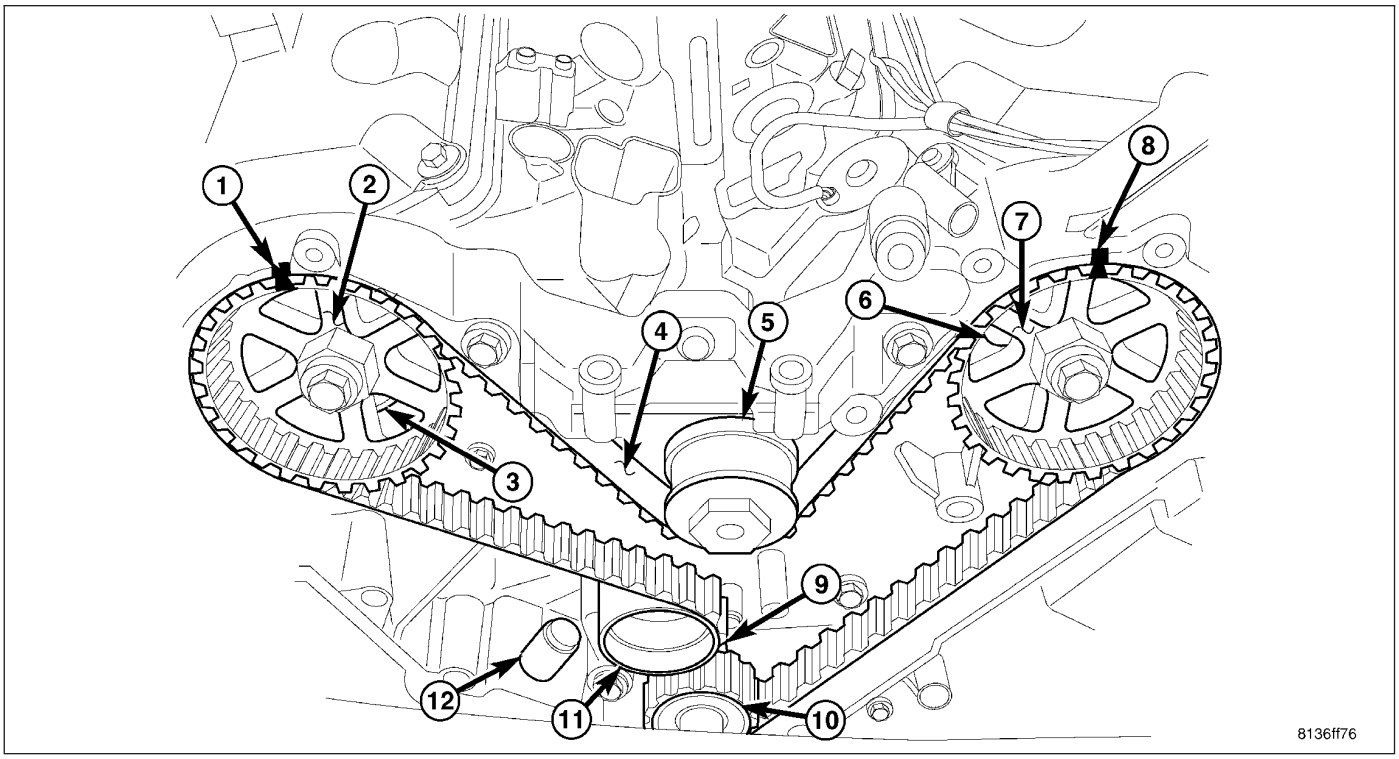

TIMING GEAR ALIGNMENT

1 - RIGHT CAMSHAFT GEAR ALIGNMENT MARK
2 - RIGHT CAMSHAFT GEAR
3 - CYLINDER HEAD TO INNER TIMING BELT COVER BOLTS - RIGHT
4 - TIMING BELT
5 - WATER PUMP PULLEY
6 - CYLINDER HEAD TO INNER TIMING BELT COVER BOLTS - LEFT
7 - LEFT CAMSHAFT GEAR
8 - LEFT CAMSHAFT GEAR ALIGNMENT MARK
9 - CRANKSHAFT GEAR ALIGNMENT MARK
10 - CRANKSHAFT GEAR
11 - TIMING BELT TENSIONER PULLEY
12 - TIMING BELT TENSIONER

8. Rotate the camshaft gear to it's alignment mark (1) and check the left camshaft gear (7) and crankshaft gear timing alignment marks (9).
9. Install the timing belt (4) and tensioner (12) (Refer to 9 - ENGINE/VALVE TIMING/TIMING BELT/CHAIN AND SPROCKETS - INSTALLATION).

10. Install the timing belt outer cover (1) (Refer to 9 - ENGINE/VALVE TIMING/TIMING BELT / CHAIN COVER(S) - INSTALLATION).

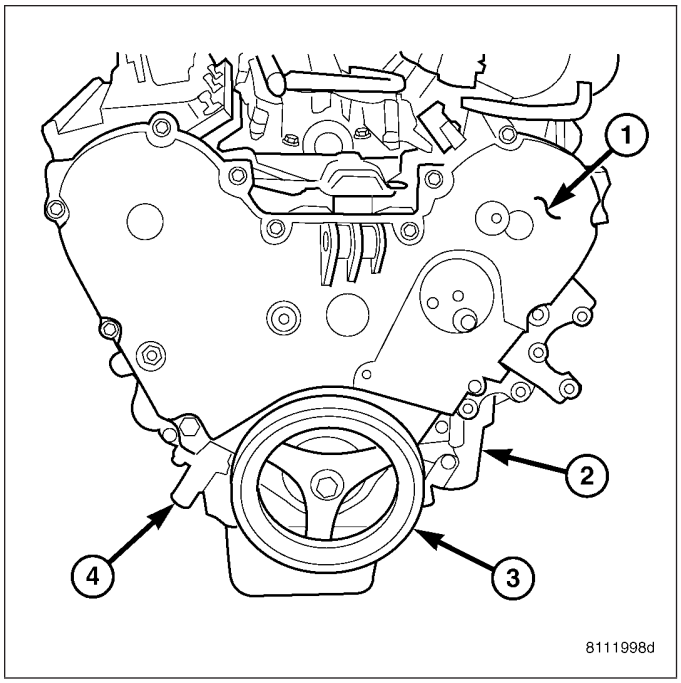

11. Install the power steering reservoir (2).
12. Install the vibration damper (4) (Refer to 9 - ENGINE/ENGINE BLOCK/VIBRATION DAMPER - INSTALLATION).
13. Install the accessory drive belt tensioner (1).
14. Install the accessory drive belt idler pulley.

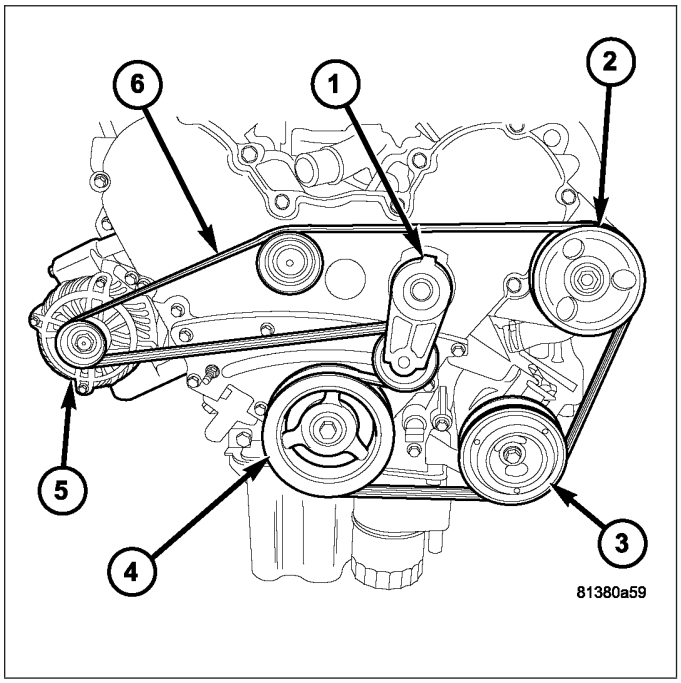

15. Install the right exhaust manifold (Refer to 9 - ENGINE/MANIFOLDS/EXHAUST MANIFOLD - INSTALLATION).
16. Raise and support the vehicle.
17. Install the front exhaust pipe (1) and connect the oxygen sensors (2).
18. Lower the vehicle.

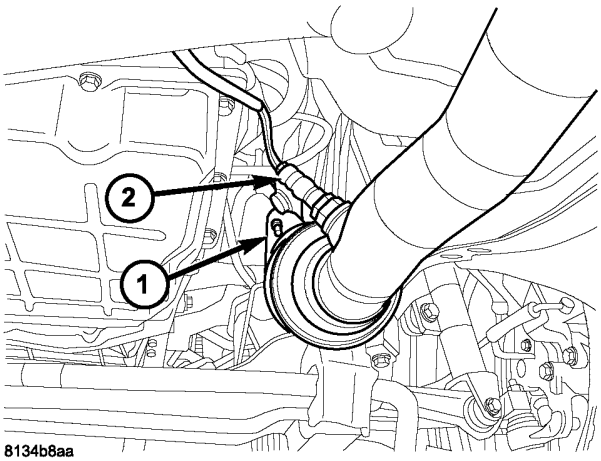

19. Install the right rocker arm assembly.
20. Install the right cylinder head cover, ground strap (3) and insulator.
21. Install lower intake manifold (Refer to 9 - ENGINE/MANIFOLDS/INTAKE MANIFOLD - INSTALLATION).
22. Install the fuel rail.
23. Install the upper intake manifold (Refer to 9 - ENGINE/MANIFOLDS/INTAKE MANIFOLD - INSTALLATION).
24. Connect the air cleaner element housing (Refer to 9 - ENGINE/AIR INTAKE SYSTEM/AIR CLEANER HOUSING - INSTALLATION).
25. Fill the coolant system.
26. Connect the negative battery cable.

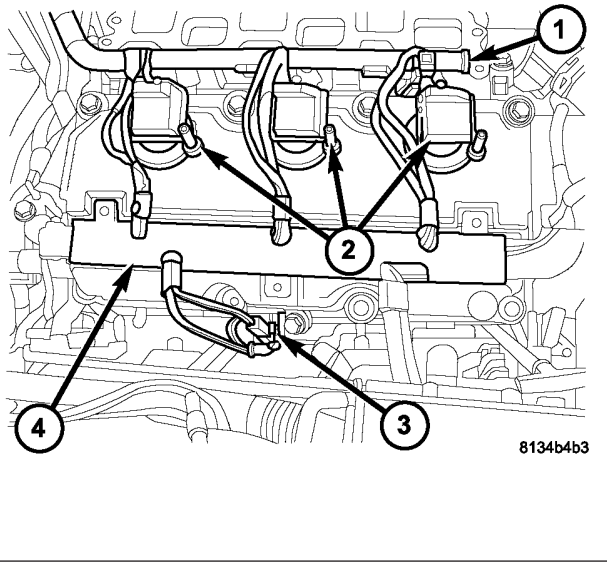

LEFT CYLINDER HEAD

CAUTION: THE CYLINDER HEAD GASKETS ARE NOT INTERCHANGEABLE BETWEEN CYLINDER HEADS AND ARE CLEARLY MARKED RIGHT OR LEFT.

The cylinder head bolts are tightened using a torque plus angle procedure. The bolts must be examined BEFORE reuse. If the threads are necked down the bolts must be replaced.

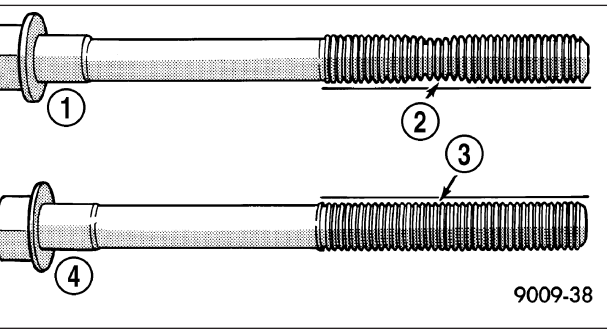

Necking can be checked by holding a scale or straight edge against the threads. If all the threads do not contact the scale the bolt must be replaced.

CAUTION: When cleaning cylinder head and cylinder block surfaces, DO NOT use a metal scraper because the surfaces could be cut or ground. Use ONLY a wooden or plastic scraper (Refer to 9 - ENGINE - STANDARD PROCEDURE - ENGINE GASKET SURFACE PREPARATION).

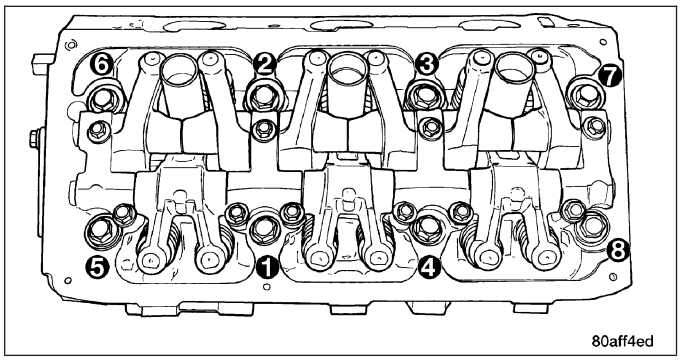

1. Clean sealing surfaces of cylinder head and block.

CAUTION: Ensure that the correct head gaskets are used and are oriented correctly on cylinder block.

2. Install head gasket over locating dowels. Ensure the gasket is installed on the correct side of engine.

NOTE: Before installing the cylinder head bolts, lubricate the threads with engine oil.

3. Install the cylinder head over locating dowels, insert and finger tighten the head bolts.
4. Tighten the cylinder head bolts in the sequence shown in. Using the 4 step torque-turn method, tighten according to the following torque values:
   - Step 1: All to 61 N·m (45 ft. lbs.)
   - Step 2: All to 88 N·m (65 ft. lbs.)
   - Step 3: All (again) to 88 N·m (65 ft. lbs.)
   - Step 4: + 90° Turn **Do not use a torque wrench for this step.**
5. Bolt torque after 90° turn should be over 122 N·m (90 ft. lbs.) in the tightening direction. If not, replace the bolt.
6. Install the inner timing cover to cylinder head bolts. Tighten bolts to 54 N·m (40 lbs.ft.).
7. Install camshaft sprocket. Counterhold the camshaft sprocket gear and tighten the camshaft sprocket bolt to 102 N·m plus a 1/4 turn (75 lbs. ft. plus a 1/4 turn)

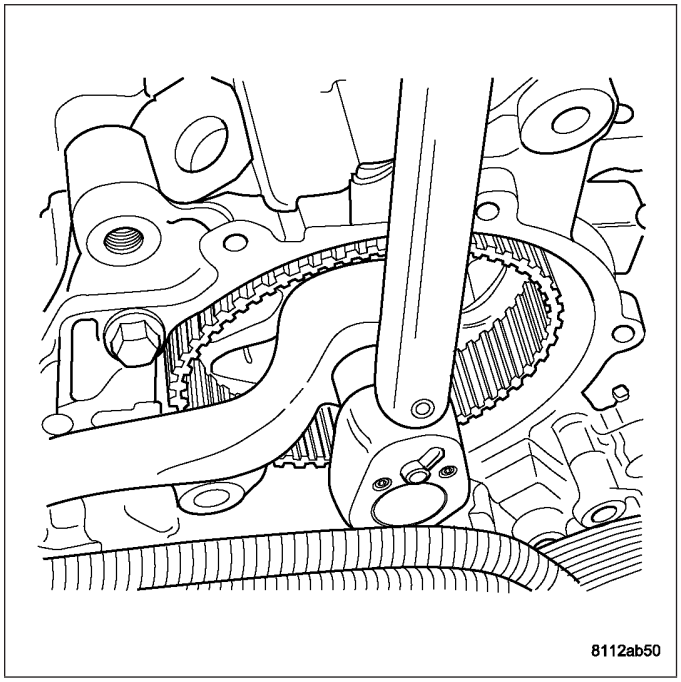

8. Install the rear camshaft thrust plate (1) and seal (3).

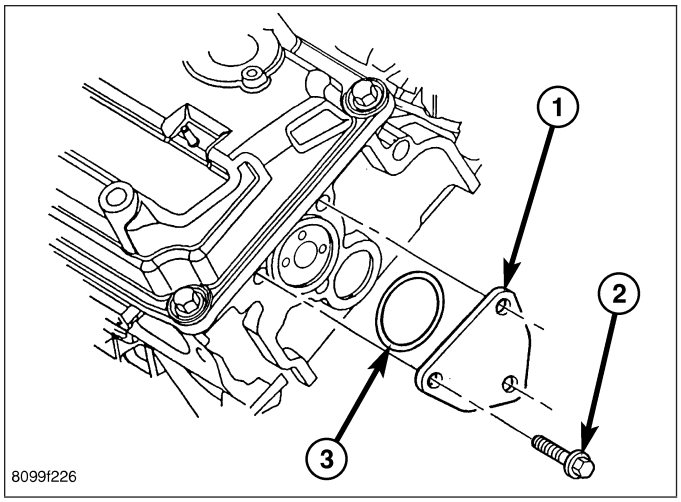

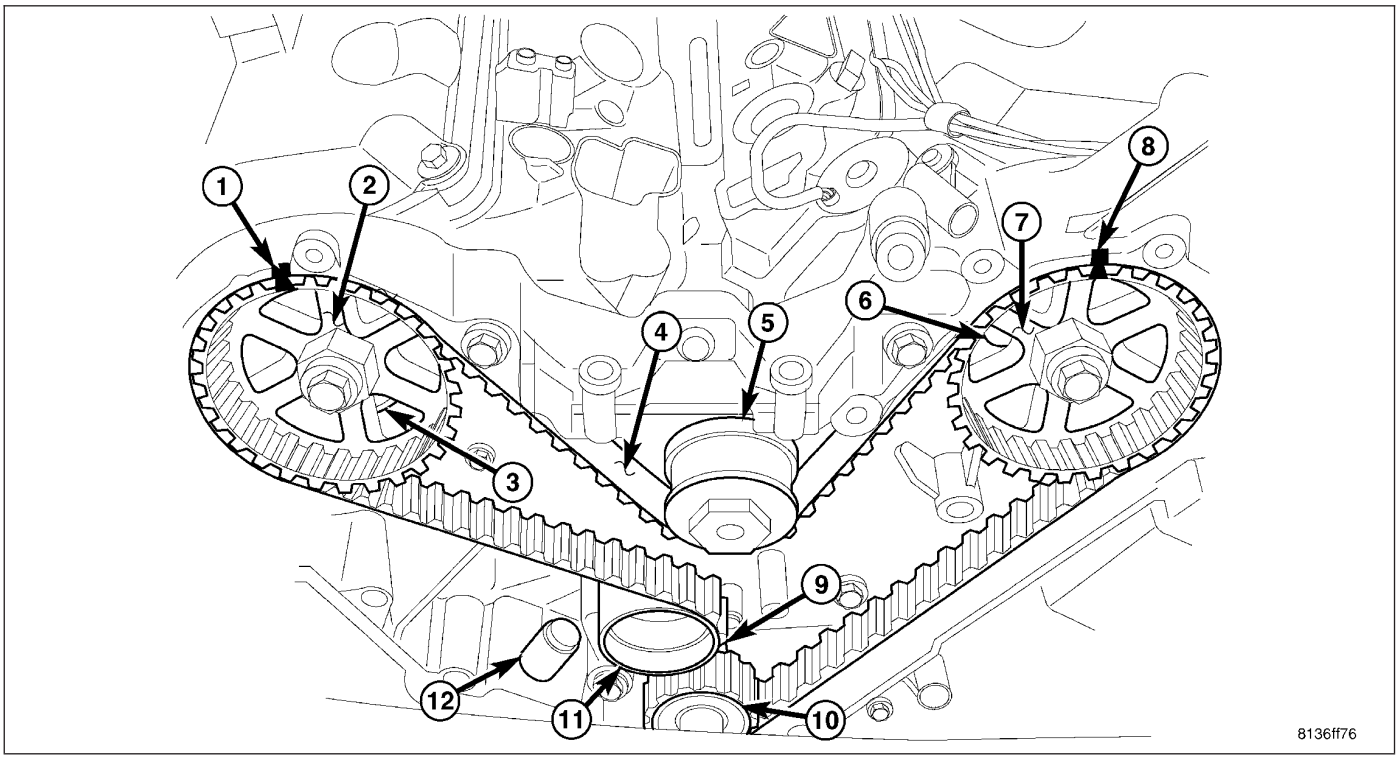

TIMING GEAR ALIGNMENT

1 - RIGHT CAMSHAFT GEAR ALIGNMENT MARK
2 - RIGHT CAMSHAFT GEAR
3 - CYLINDER HEAD TO INNER TIMING BELT COVER BOLTS - RIGHT
4 - TIMING BELT
5 - WATER PUMP PULLEY
6 - CYLINDER HEAD TO INNER TIMING BELT COVER BOLTS - LEFT
7 - LEFT CAMSHAFT GEAR
8 - LEFT CAMSHAFT GEAR ALIGNMENT MARK
9 - CRANKSHAFT GEAR ALIGNMENT MARK
10 - CRANKSHAFT GEAR
11 - TIMING BELT TENSIONER PULLEY
12 - TIMING BELT TENSIONER

9. Rotate the camshaft gear (7) to it's alignment mark (8) and check the right camshaft gear (1) and crankshaft gear timing (9) alignment marks.
10. Install the timing belt (4) and tensioner (11) (Refer to 9 - ENGINE/VALVE TIMING/TIMING BELT/CHAIN AND SPROCKETS - INSTALLATION).

11. Install the timing belt front cover (1) (Refer to 9 - ENGINE/VALVE TIMING/TIMING BELT / CHAIN COVER(S) - INSTALLATION).

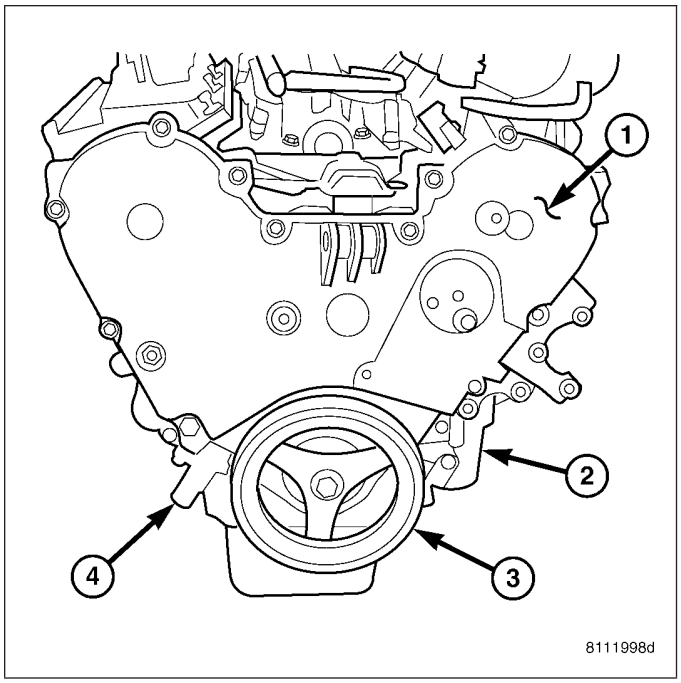

12. Install the accessory drive belt tensioner (1).
13. Install the accessory drive belt idler pulley.
14. Install the vibration damper (3) (Refer to 9 - ENGINE/ENGINE BLOCK/VIBRATION DAMPER - INSTALLATION).

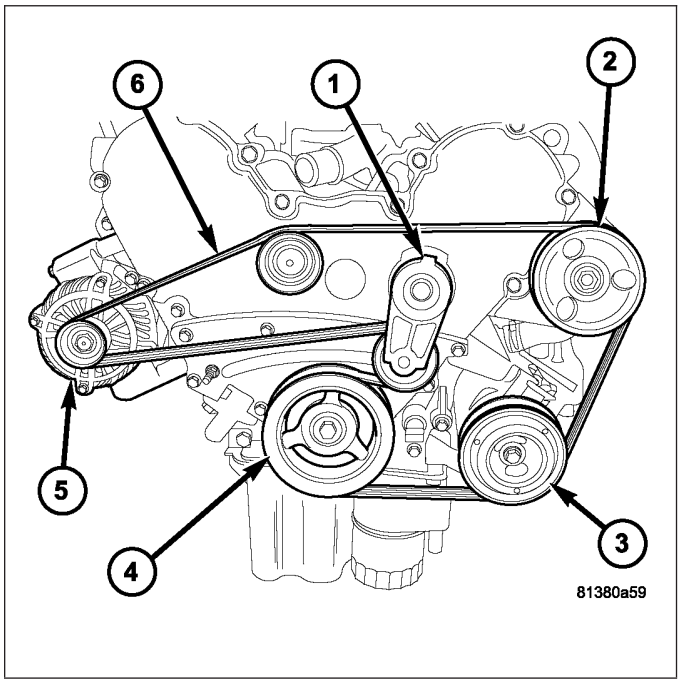

15. Install the left exhaust manifold. (Refer to 9 - ENGINE/MANIFOLDS/EXHAUST MANIFOLD - INSTALLATION).
16. Raise the vehicle.
17. Connect the left exhaust pipe (2) and connect the oxygen sensor (3).

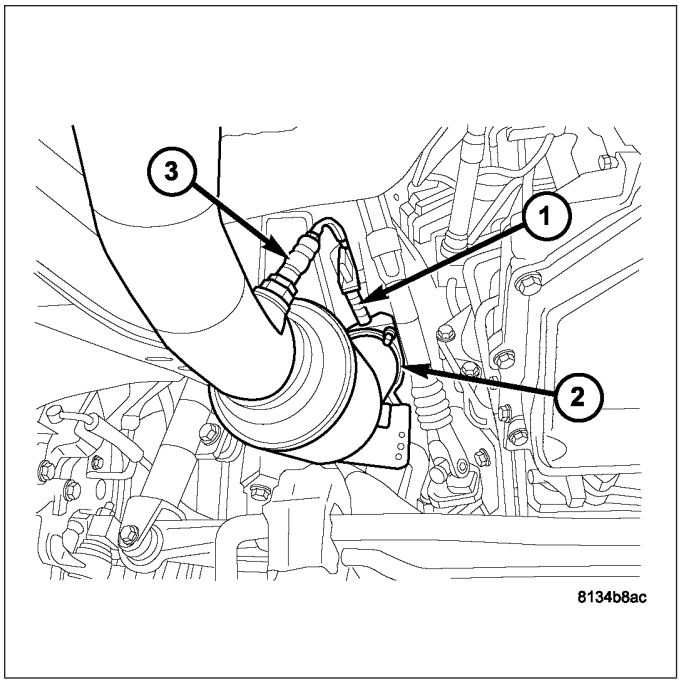

18. Lower the vehicle.
19. Install the left rocker arm assembly.
20. Install the left cylinder head cover and ground strap.
21. Install lower intake manifold (4) (Refer to 9 - ENGINE/MANIFOLDS/INTAKE MANIFOLD - INSTALLATION).
22. Install the fuel rail (1).
23. Install the upper intake manifold (Refer to 9 - ENGINE/MANIFOLDS/INTAKE MANIFOLD - INSTALLATION).
24. Connect the air cleaner element housing (Refer to 9 - ENGINE/AIR INTAKE SYSTEM/AIR CLEANER HOUSING - INSTALLATION).
25. Fill the coolant system.
26. Connect the negative battery cable.

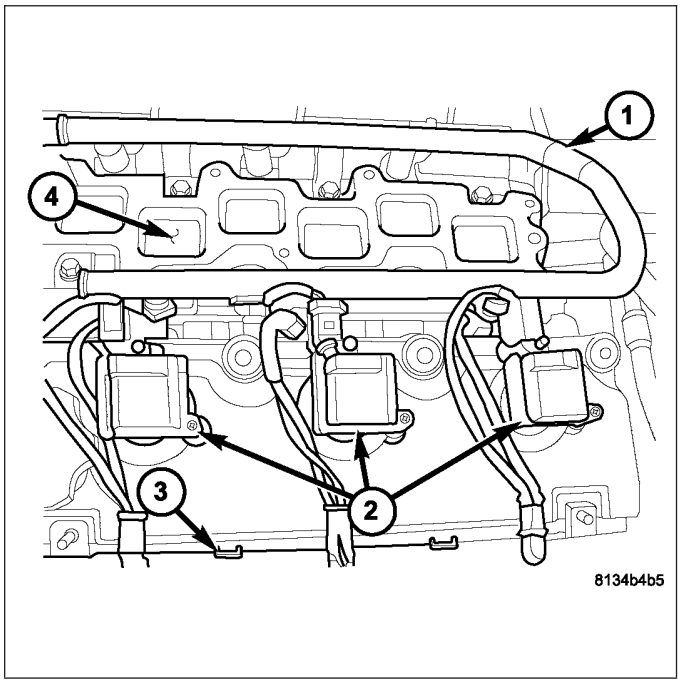

SEAL -CAMSHAFT OIL

REMOVAL

RIGHT CYLINDER HEAD

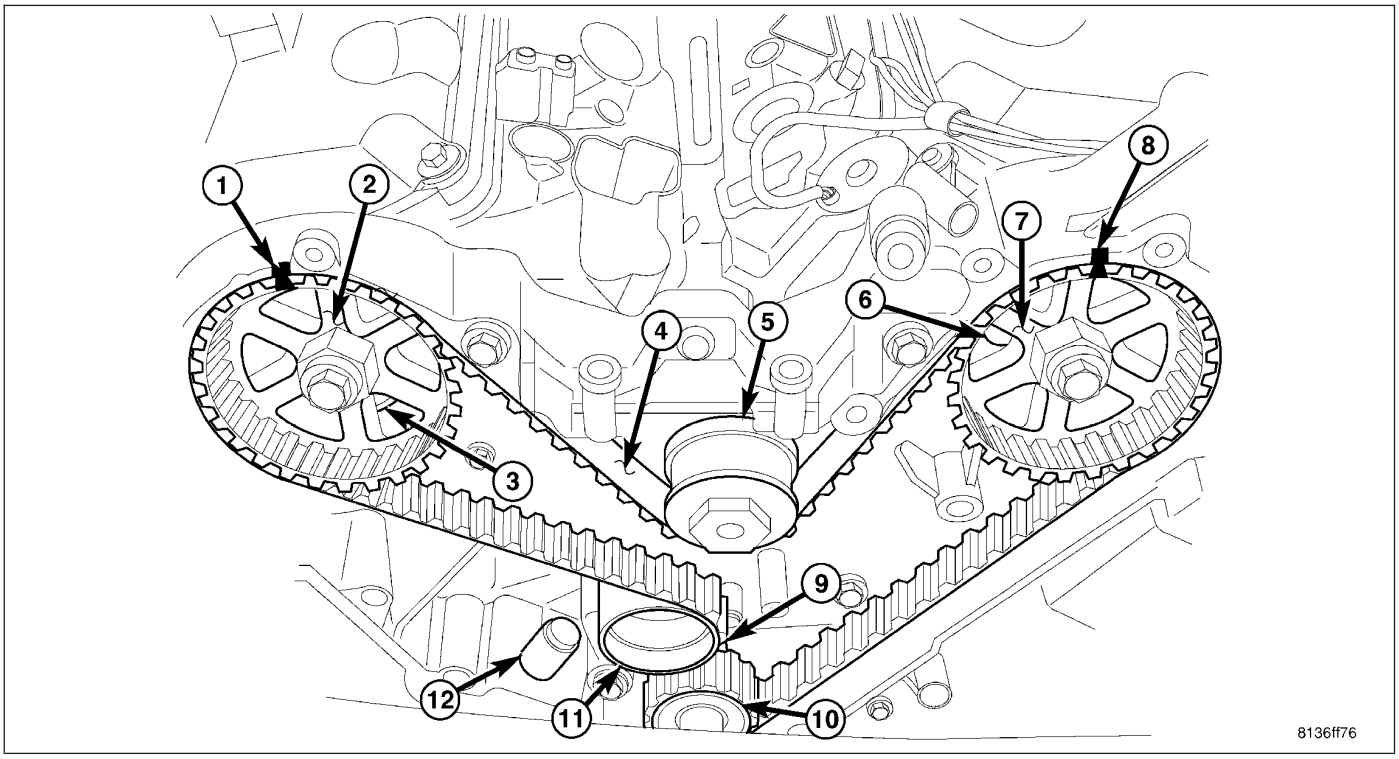

TIMING GEAR ALIGNMENT

1 - RIGHT CAMSHAFT GEAR ALIGNMENT MARK
2 - RIGHT CAMSHAFT GEAR
3 - CYLINDER HEAD TO INNER TIMING BELT COVER BOLTS - RIGHT
4 - TIMING BELT
5 - WATER PUMP PULLEY
6 - CYLINDER HEAD TO INNER TIMING BELT COVER BOLTS - LEFT
7 - LEFT CAMSHAFT GEAR
8 - LEFT CAMSHAFT GEAR ALIGNMENT MARK
9 - CRANKSHAFT GEAR ALIGNMENT MARK
10 - CRANKSHAFT GEAR
11 - TIMING BELT TENSIONER PULLEY
12 - TIMING BELT TENSIONER

1. Disconnect the negative battery cable.
2. Remove front timing cover and align the camshaft gear (1,8) and crankshaft gear timing mark (9) to TDC (Refer to 9 - ENGINE/VALVE TIMING/TIMING BELT / CHAIN COVER(S) - REMOVAL).
3. Remove timing belt (4).

4. Remove the right camshaft sprocket (Refer to 9 - ENGINE/VALVE TIMING/TIMING BELT/CHAIN AND SPROCKETS - REMOVAL).

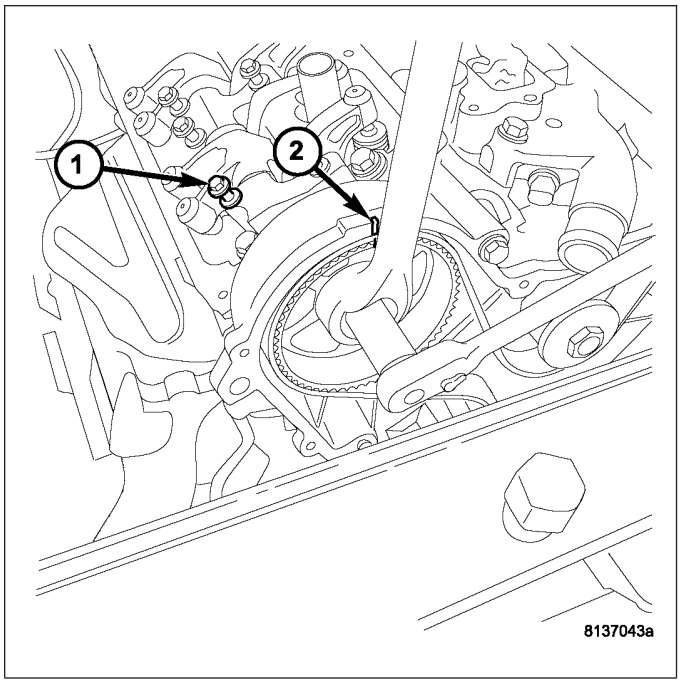

5. Remove the EGR valve and camshaft thrust plate (1) from the rear of the cylinder head.

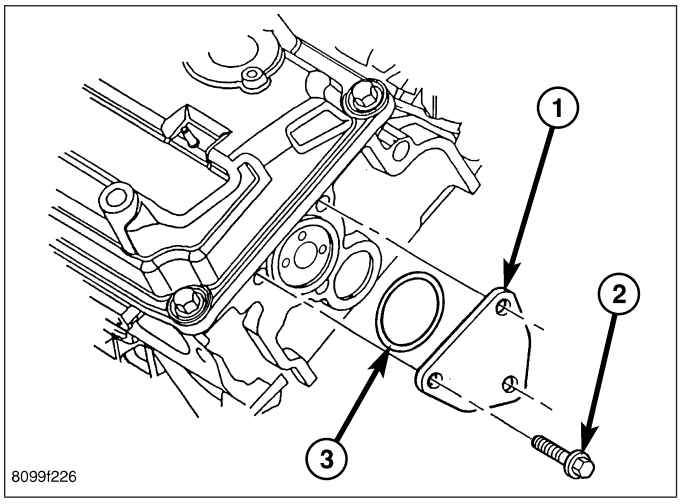

6. Remove the cylinder head cover (Refer to 9 - ENGINE/CYLINDER HEAD/CYLINDER HEAD COVER(S) - REMOVAL).
7. Remove the rocker arm assembly (Refer to 9 - ENGINE/CYLINDER HEAD/ROCKER ARM / ADJUSTER ASSY - REMOVAL).
8. Maneuver the camshaft rearward and out of the cylinder head approximately 3.5 inches.

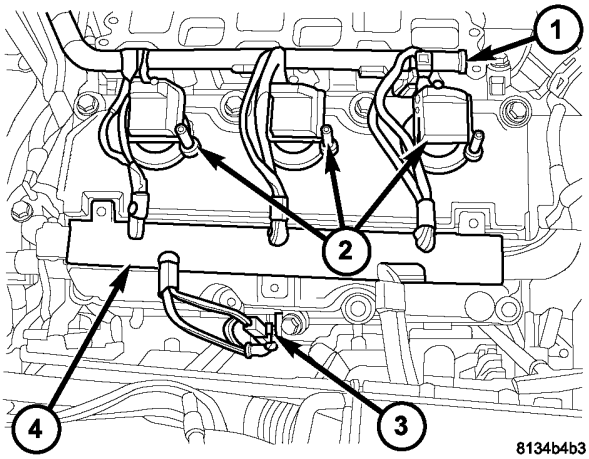

NOTE: Care must be taken not to damage the cylinder head to seal or camshaft journal surfaces when removing the camshaft seal.

9. Using an appropriate driver carefully remove camshaft oil seal.

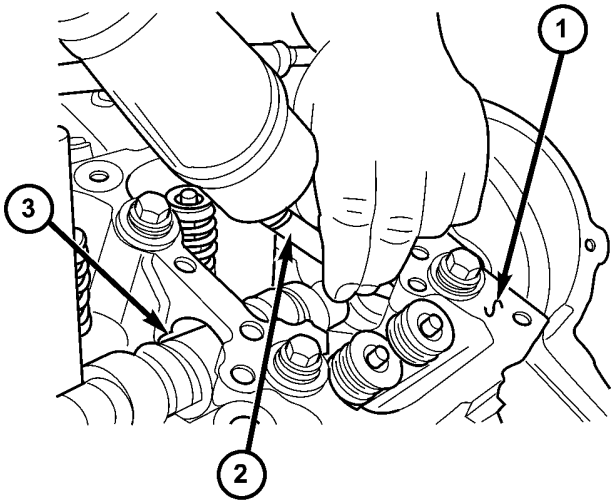

LEFT CYLINDER HEAD

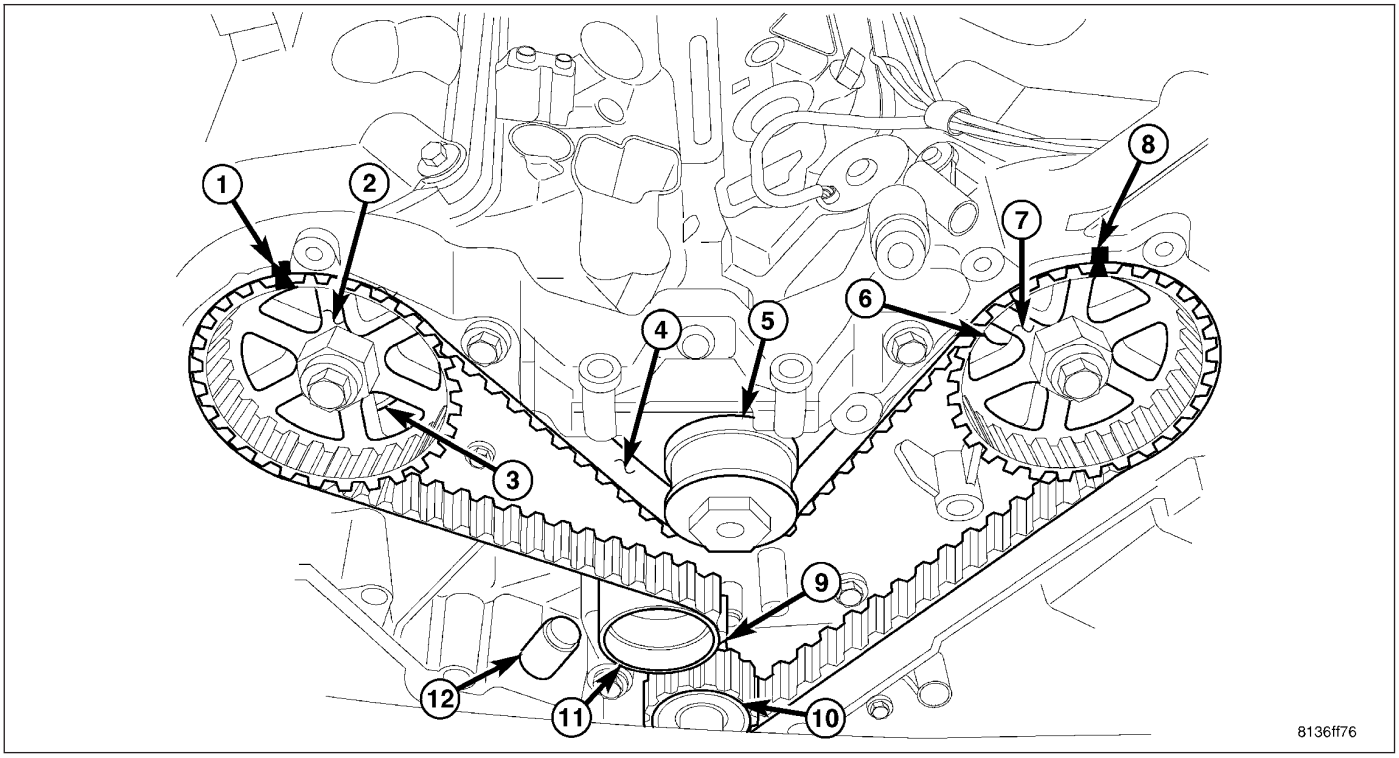

TIMING GEAR ALIGNMENT

1 - RIGHT CAMSHAFT GEAR ALIGNMENT MARK
2 - RIGHT CAMSHAFT GEAR
3 - CYLINDER HEAD TO INNER TIMING BELT COVER BOLTS - RIGHT
4 - TIMING BELT
5 - WATER PUMP PULLEY
6 - CYLINDER HEAD TO INNER TIMING BELT COVER BOLTS - LEFT
7 - LEFT CAMSHAFT GEAR
8 - LEFT CAMSHAFT GEAR ALIGNMENT MARK
9 - CRANKSHAFT GEAR ALIGNMENT MARK
10 - CRANKSHAFT GEAR
11 - TIMING BELT TENSIONER PULLEY
12 - TIMING BELT TENSIONER

1. Disconnect the negative battery cable.
2. Drain cooling system.
3. Remove front timing cover and align the camshaft gear and crankshaft gear timing marks to TDC (Refer to 9 - ENGINE/VALVE TIMING/TIMING BELT / CHAIN COVER(S) - REMOVAL).
4. Remove the rear timing cover (Refer to 9 - ENGINE/VALVE TIMING/TIMING BELT / CHAIN COVER(S) - REMOVAL).
5. Remove the cylinder head cover (Refer to 9 - ENGINE/CYLINDER HEAD/CYLINDER HEAD COVER(S) - REMOVAL).
6. Remove the rocker arm assembly (Refer to 9 - ENGINE/CYLINDER HEAD/ROCKER ARM / ADJUSTER ASSY - REMOVAL).

7. Remove the camshaft thrust plate (1) from the rear of the cylinder head.
8. Maneuver the camshaft rearward and out of the cylinder head approximately 3.5 inches

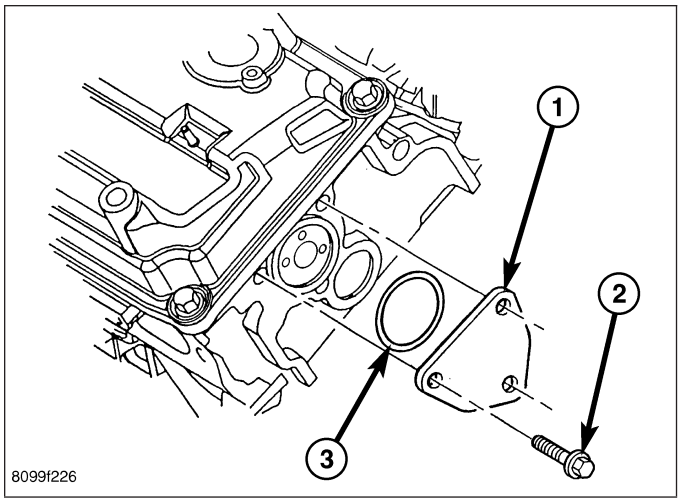

NOTE: Care must be taken not to damage the cylinder head to seal or camshaft journal surfaces when removing the camshaft seal.

9. Using an appropriate driver (1) carefully remove camshaft oil seal.

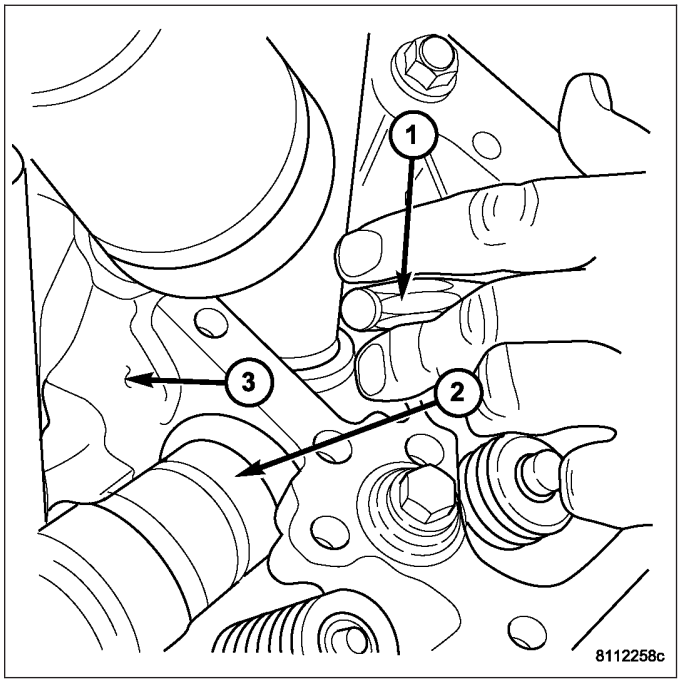

INSTALLATION

RIGHT CYLINDER HEAD

1. Position the camshaft seal into the cylinder head.
2. Using MD-998306 (2) tap the seal into place.

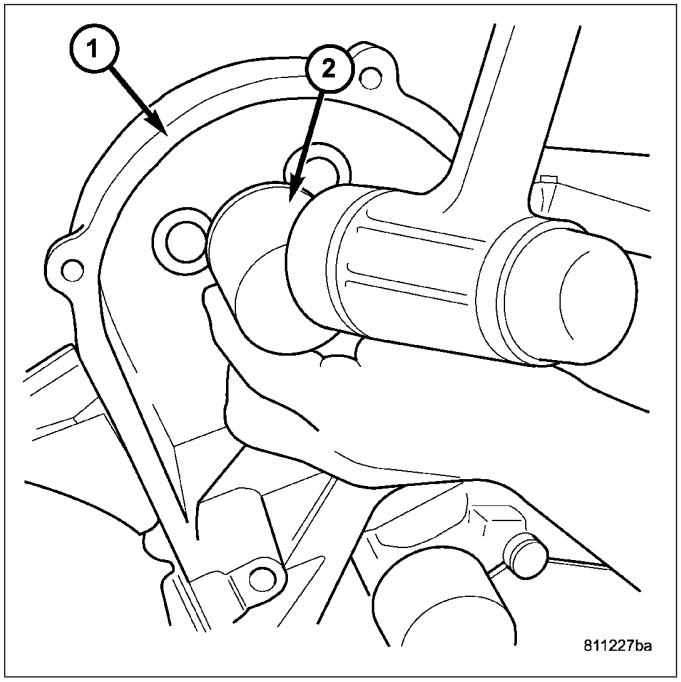

3. Apply light coat of clean engine oil to the camshaft oil seal lip and 6788 Seal Protector Sleeve (2).
4. Install oil seal 6788 Seal Protector Sleeve (2) onto the camshaft.
5. Slide the camshaft (3) forward, inserting the seal protector (2) through the camshaft seal until the camshaft (3) seats.
6. Remove Special Tool (2) from the camshaft.

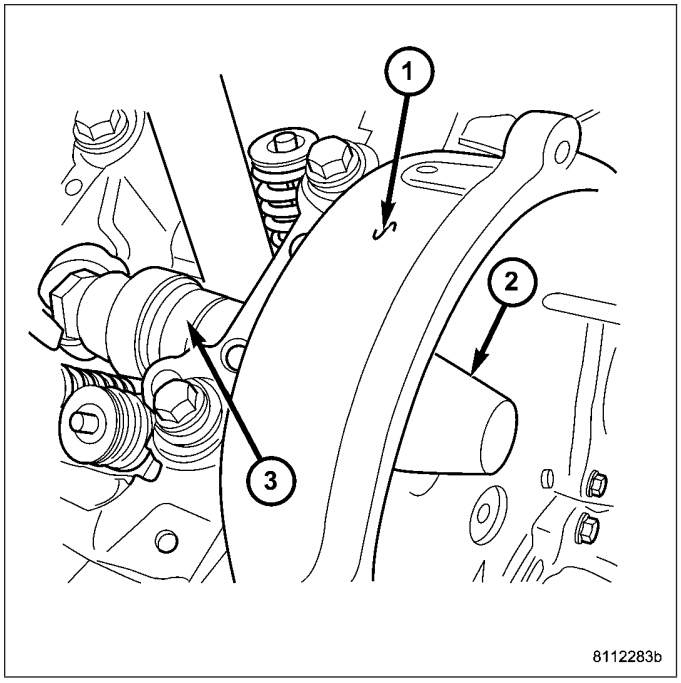

7. Install the camshaft thrust plate (1), and new seal (3) to the rear of the cylinder head.

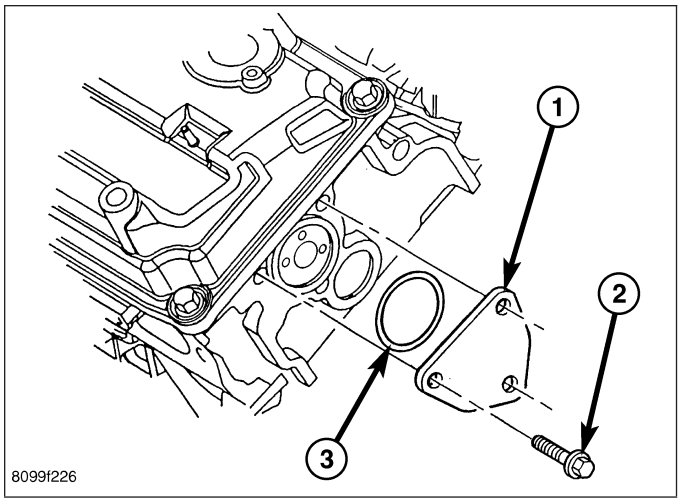

8. Install the EGR valve (2).

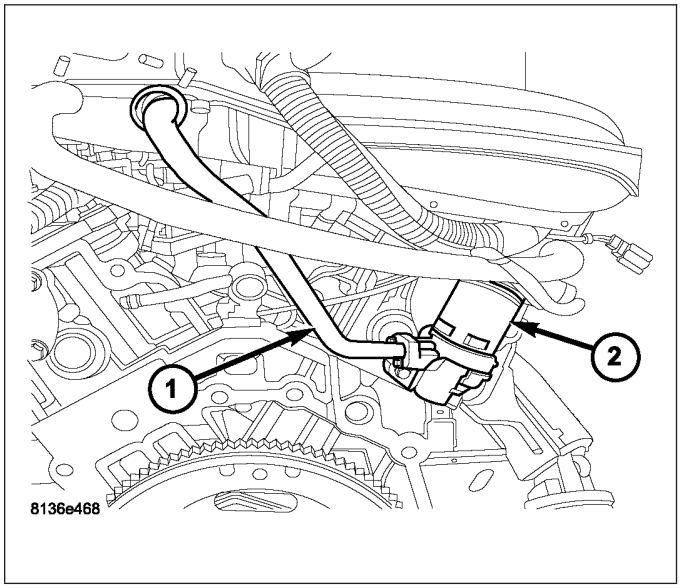

9. Install camshaft sprocket (2) and tighten the camshaft sprocket bolt to 102 N·m (75 ft.lbs.).

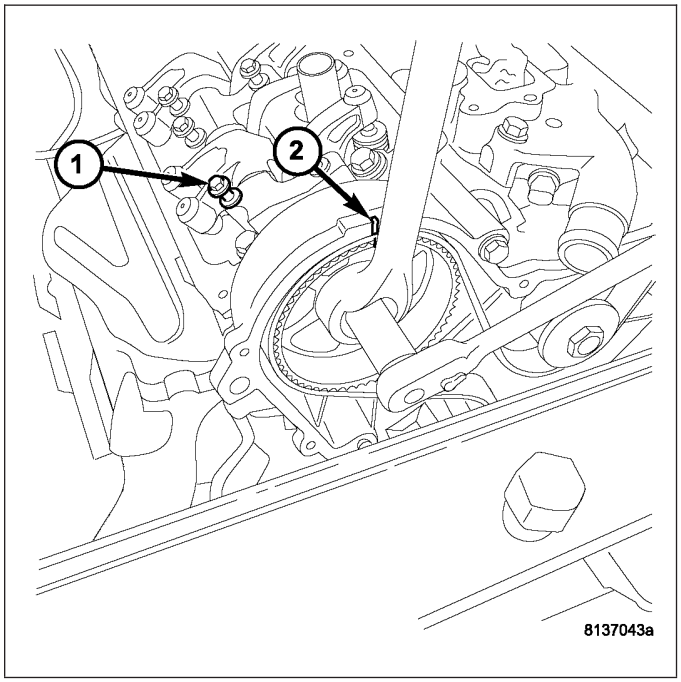

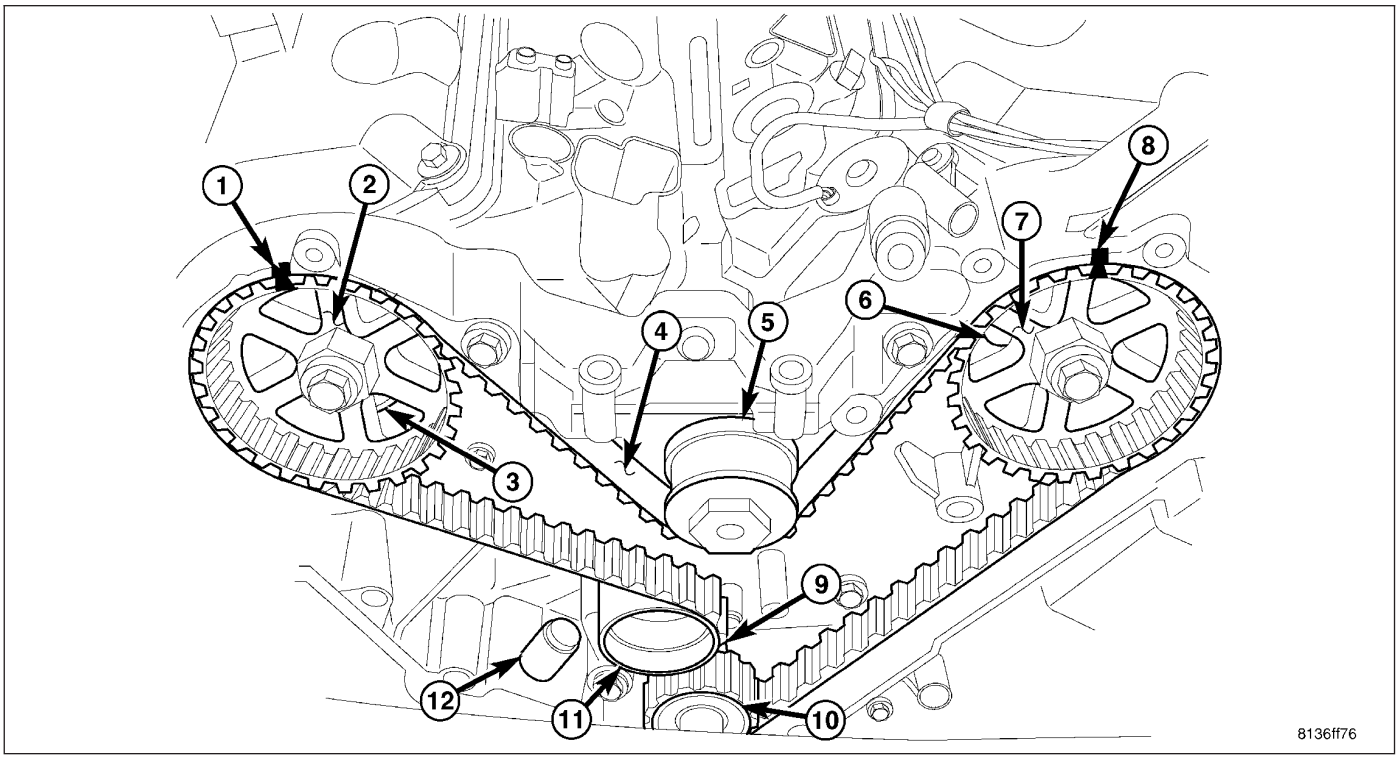

TIMING GEAR ALIGNMENT

1 - RIGHT CAMSHAFT GEAR ALIGNMENT MARK
2 - RIGHT CAMSHAFT GEAR
3 - CYLINDER HEAD TO INNER TIMING BELT COVER BOLTS - RIGHT
4 - TIMING BELT
5 - WATER PUMP PULLEY
6 - CYLINDER HEAD TO INNER TIMING BELT COVER BOLTS - LEFT
7 - LEFT CAMSHAFT GEAR
8 - LEFT CAMSHAFT GEAR ALIGNMENT MARK
9 - CRANKSHAFT GEAR ALIGNMENT MARK
10 - CRANKSHAFT GEAR
11 - TIMING BELT TENSIONER PULLEY
12 - TIMING BELT TENSIONER

10. Install the timing belt (4) (Refer to 9 - ENGINE/VALVE TIMING/TIMING BELT/CHAIN AND SPROCKETS - INSTALLATION).
11. Install rocker assembly (1) (Refer to 9 - ENGINE/CYLINDER HEAD/ROCKER ARM / ADJUSTER ASSY - INSTALLATION).

12. Install cylinder head cover (Refer to 9 - ENGINE/ CYLINDER HEAD/CYLINDER HEAD COVER(S) - INSTALLATION)

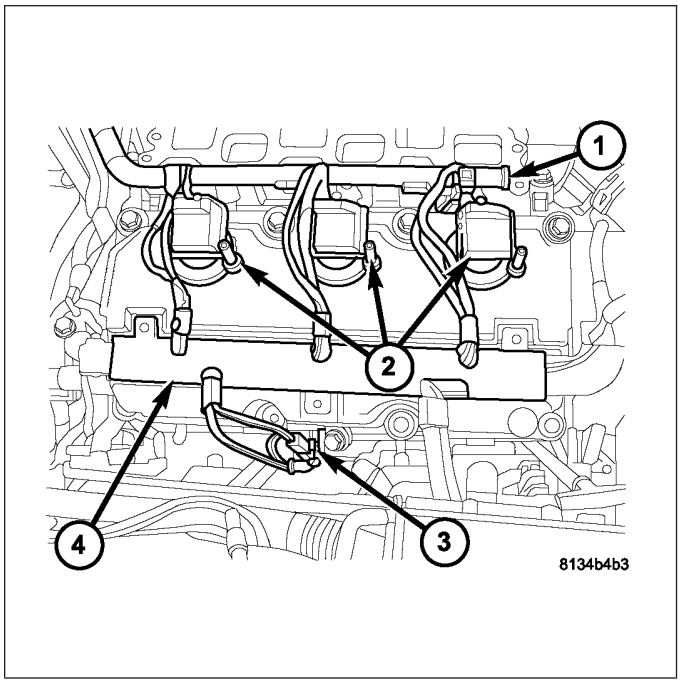

13. Install the front timing belt cover (Refer to 9 - ENGINE/VALVE TIMING/TIMING BELT / CHAIN COVER(S) - INSTALLATION).
14. Install the vibration damper (4) (Refer to 9 - ENGINE/ENGINE BLOCK/VIBRATION DAMPER - INSTALLATION).
15. Fill cooling system (Refer to 7 - COOLING - STANDARD PROCEDURE).
16. Connect the negative battery cable.

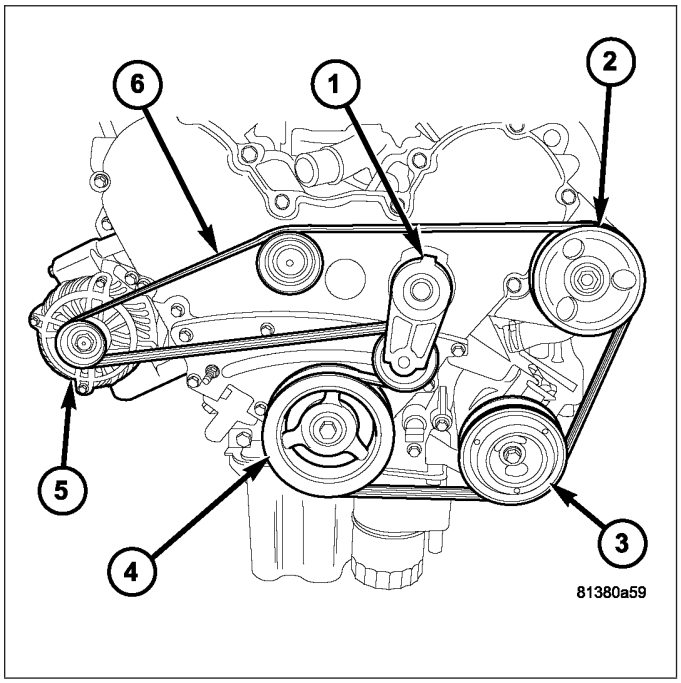

LEFT CYLINDER HEAD

1. Position the camshaft seal into the cylinder head (3)
2. Using MD-998306 (2) tap the seal into place.

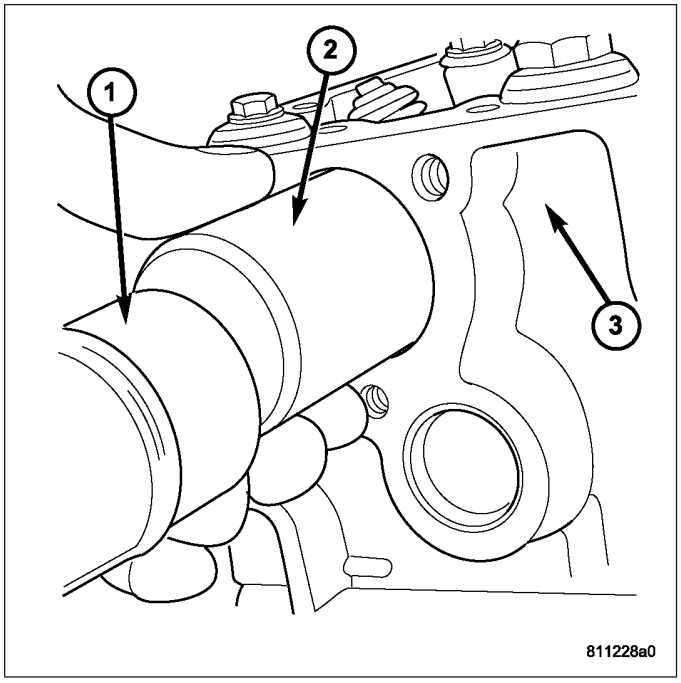

3. Apply light coat of engine oil to the camshaft oil seal lip (3) and 6788 (2) Seal Protector Sleeve.
4. Install oil seal (3) 6788 Seal Protector Sleeve (2) onto the camshaft (1)
5. Slide the camshaft (1) forward, inserting the seal protector (2) through the camshaft seal (3) until the camshaft seats.
6. Remove 6788 (2) from the camshaft (1).

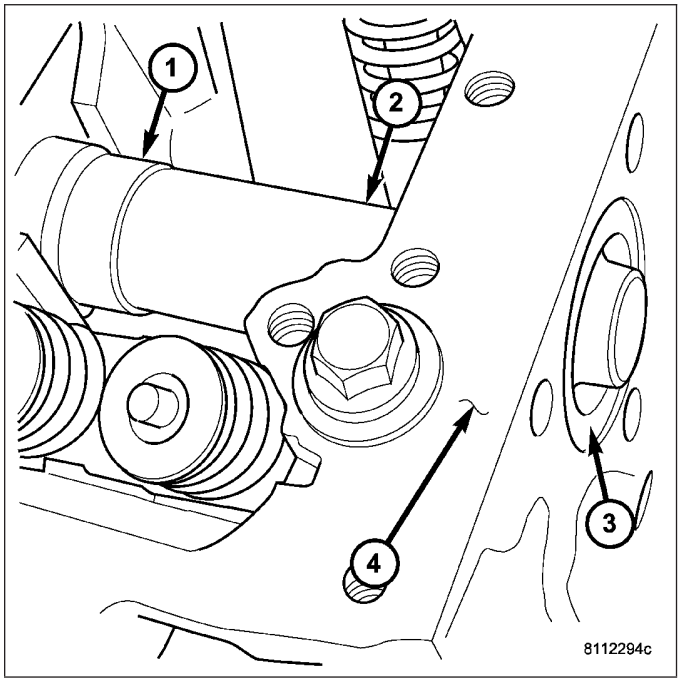

7. Install the camshaft thrust plate (1) and new seal (3) to the rear of the cylinder head.
8. Install rear timing belt cover (Refer to 9 - ENGINE/ VALVE TIMING/TIMING BELT / CHAIN COVER(S) - INSTALLATION).

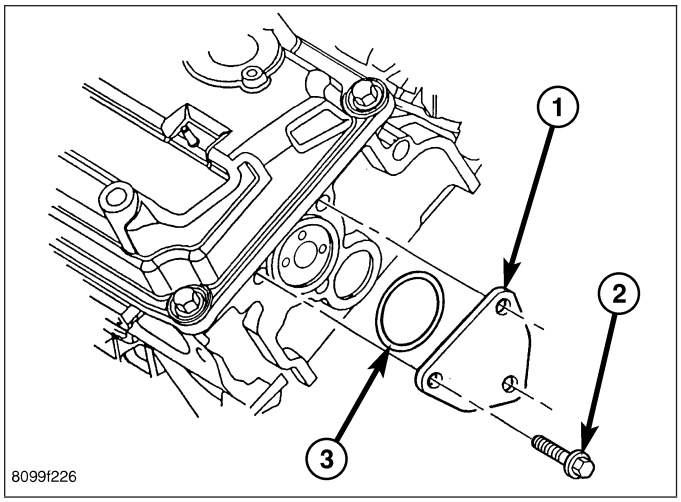

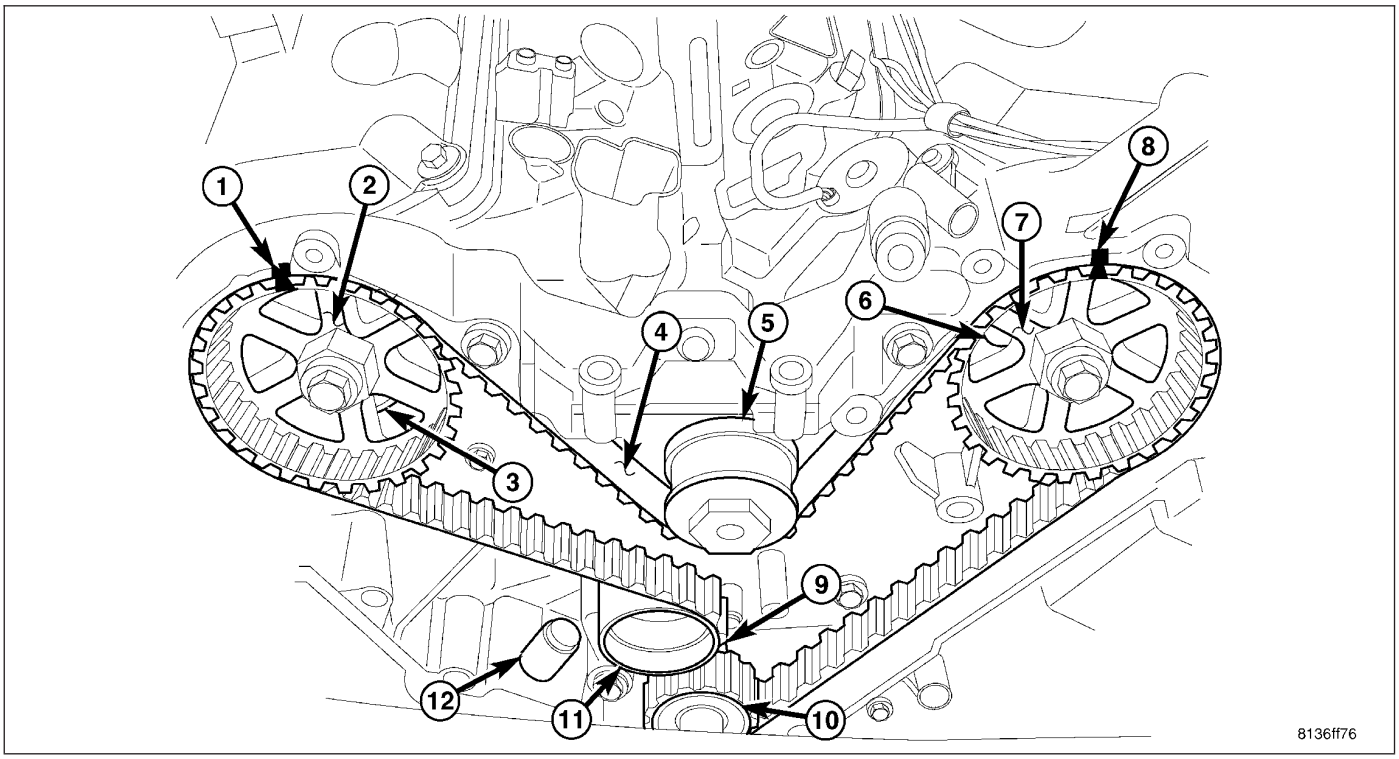

TIMING GEAR ALIGNMENT

1 - RIGHT CAMSHAFT GEAR ALIGNMENT MARK
2 - RIGHT CAMSHAFT GEAR
3 - CYLINDER HEAD TO INNER TIMING BELT COVER BOLTS - RIGHT
4 - TIMING BELT
5 - WATER PUMP PULLEY
6 - CYLINDER HEAD TO INNER TIMING BELT COVER BOLTS - LEFT
7 - LEFT CAMSHAFT GEAR
8 - LEFT CAMSHAFT GEAR ALIGNMENT MARK
9 - CRANKSHAFT GEAR ALIGNMENT MARK
10 - CRANKSHAFT GEAR
11 - TIMING BELT TENSIONER PULLEY
12 - TIMING BELT TENSIONER

9. Install the camshaft gear (7) and align the timing marks (1,8,9) (Refer to 9 - ENGINE/VALVE TIMING/TIMING BELT/CHAIN AND SPROCKETS - INSTALLATION).
10. Install the timing belt (4) (Refer to 9 - ENGINE/VALVE TIMING/TIMING BELT/CHAIN AND SPROCKETS - INSTALLATION).

11. Install the rocker arm assembly (Refer to 9 - ENGINE/CYLINDER HEAD/ROCKER ARM / ADJUSTER ASSY - INSTALLATION).
12. Install the cylinder head cover.

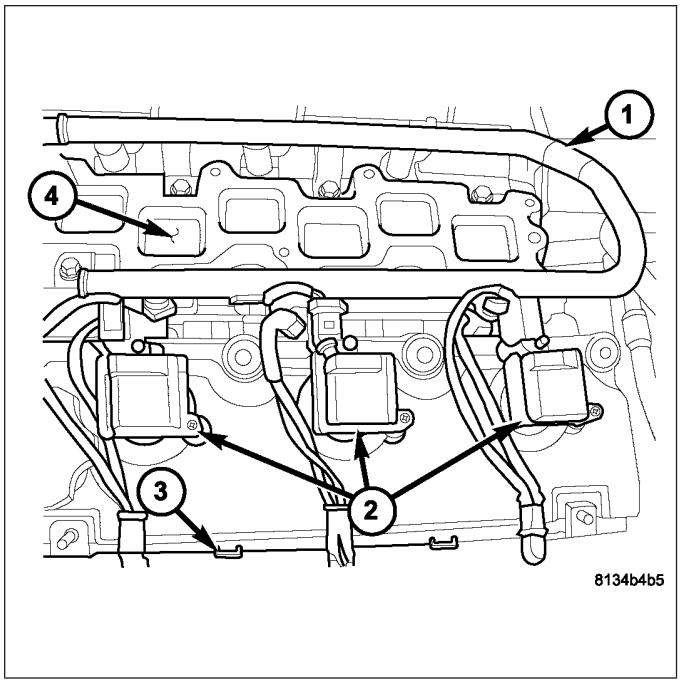

13. Install the front timing belt cover (Refer to 9 - ENGINE/VALVE TIMING/TIMING BELT / CHAIN COVER(S) - INSTALLATION).
14. Install the vibration damper (4) (Refer to 9 - ENGINE/ENGINE BLOCK/VIBRATION DAMPER - INSTALLATION).
15. Fill cooling system (Refer to 7 - COOLING - STANDARD PROCEDURE).
16. Connect the negative battery cable.

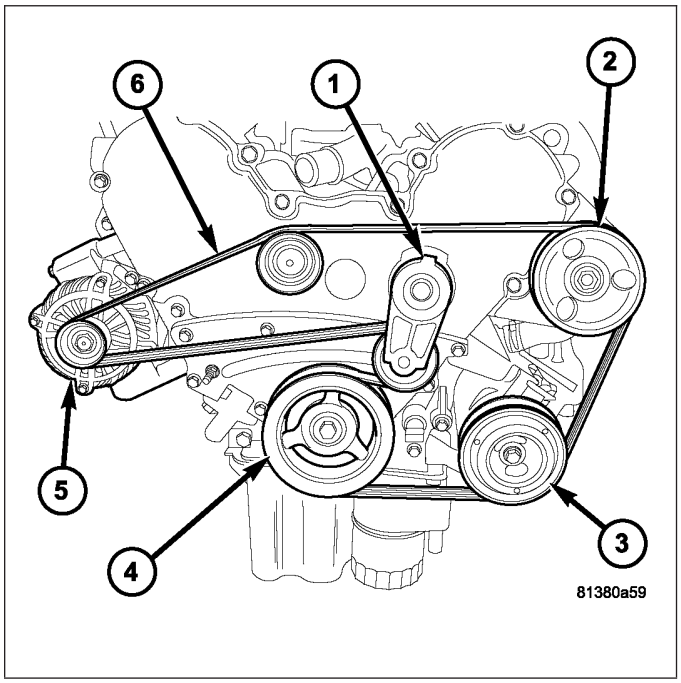

CAMSHAFT(S)

DESCRIPTION

A single overhead camshaft per cylinder head provides valve actuation. The left camshaft accommodates a cam sensor pick-up wheel and is therefore longer. Each camshaft is supported by four bearing journals. A thrust plate attached to the rear of each cylinder head controls camshaft end play. Right and left camshaft driving sprockets support a timing mark, are keyed, and not interchangeable because of the cam sensor pick-up wheel on the left sprocket. Camshaft bearing lubrication is provided via a oil supply passage through each rocker shaft pedestal dowel.

OPERATION

The camshaft is driven by the crankshaft via drive sprockets and belt. The camshaft has precisely machined lobes to provide accurate valve timing and duration.

REMOVAL

NOTE: Camshafts are removed from the rear of each cylinder head.

1. Remove the cylinder head (Refer to 9 - ENGINE/ CYLINDER HEAD - REMOVAL).

CAUTION: Care must be taken not to nick or scratch the journals when removing the camshaft.

2. Carefully remove the camshaft (3) from the rear of the cylinder head.

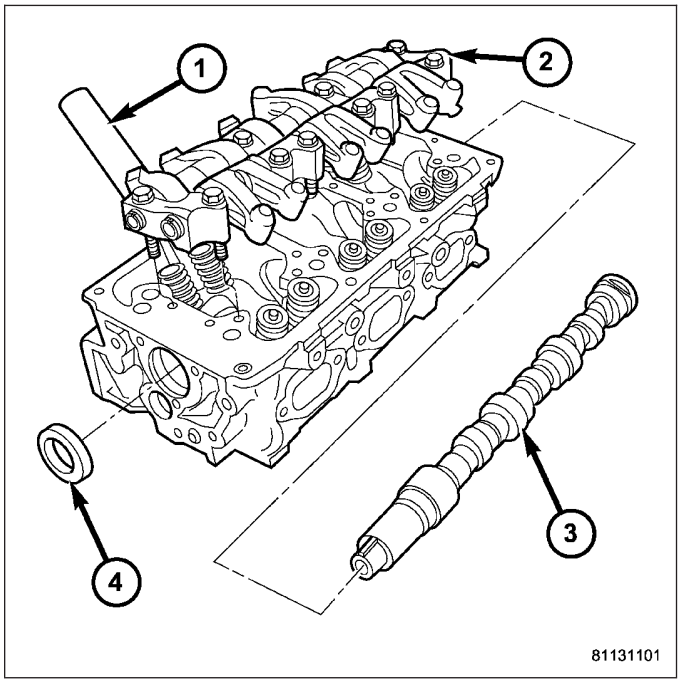

INSPECTION

1. Inspect camshaft bearing journals (4) for damage and binding. If journals are binding, check the cylinder head for damage. Also check cylinder head oil holes for clogging.
2. Check the cam lobe (5) and bearing surfaces for abnormal wear and damage. Replace camshaft if defective.

NOTE: If camshaft is replaced due to lobe wear or damage, always replace the rocker arms.

3. Measure the lobe (5) actual wear and replace camshaft if out of limit. Standard value is 0.0254 mm (0.001 in.), wear **limit** is 0.254 mm (0.010 in.).

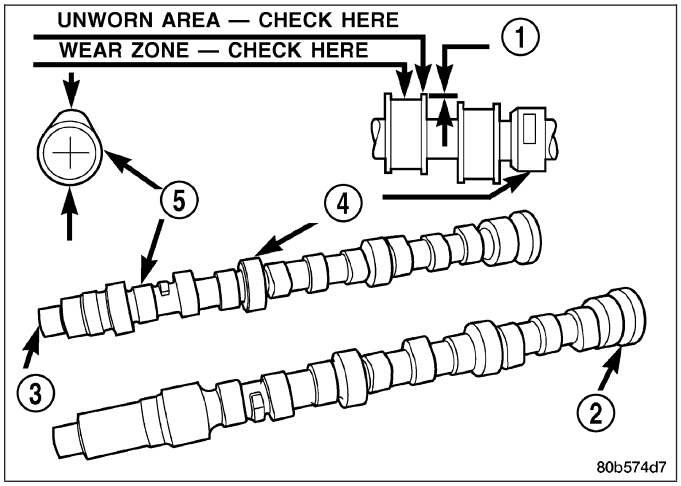

INSTALLATION

NOTE: Care must be taken not to scrape or nick the camshaft journals when installing the camshaft into position.

1. Lubricate camshaft (3) bearing journals, camshaft lobes and camshaft seal (4) with clean engine oil and install camshaft (3) into cylinder head.
2. Install the cylinder head (Refer to 9 - ENGINE/ CYLINDER HEAD - INSTALLATION).

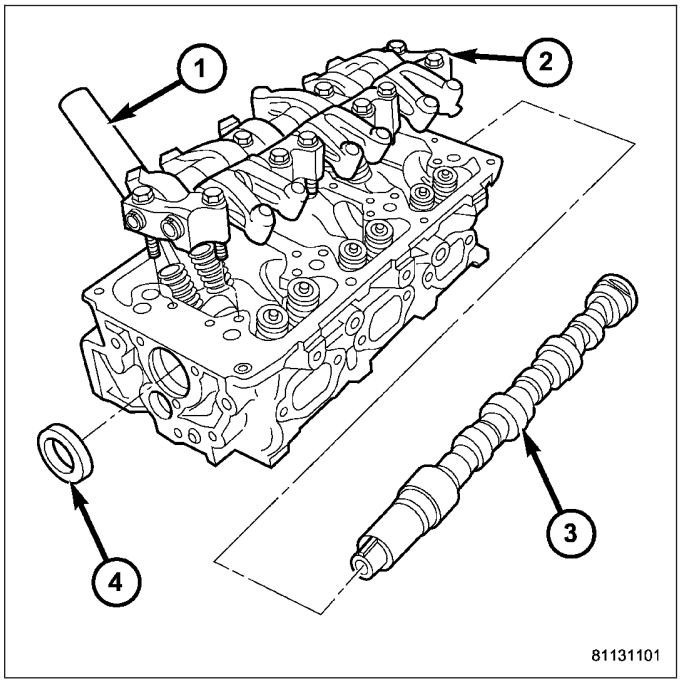

COVER CYLINDER HEAD - LEFT

REMOVAL

WARNING: DO NOT START OR RUN ENGINE WITH CYLINDER HEAD COVER REMOVED FROM THE ENGINE. DAMAGE OR PERSONAL INJURY MAY OCCUR.

1. Disconnect and isolate the negative battery cable.
2. Remove the upper intake manifold from the engine (Refer to 9 - ENGINE/MANIFOLDS/INTAKE MANIFOLD - REMOVAL).
3. Cover lower intake manifold (4) with a suitable cover during service.
4. Disconnect and remove the three ignition coils (2).
5. Remove the ground strap/resistor retaining bolt from the cylinder head cover.
6. Lift up on the wire harness track (3) retaining tabs.

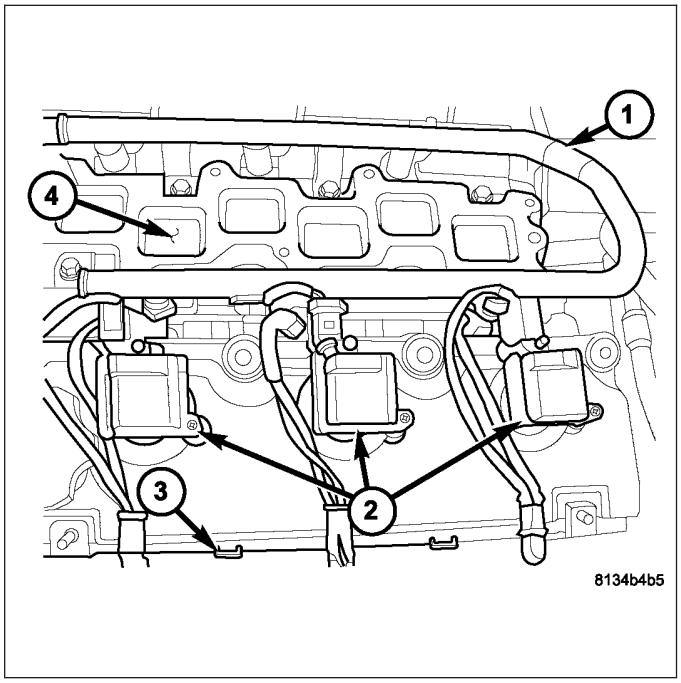

7. Completely loosen the cylinder head cover retaining bolts and remove the cylinder head cover.

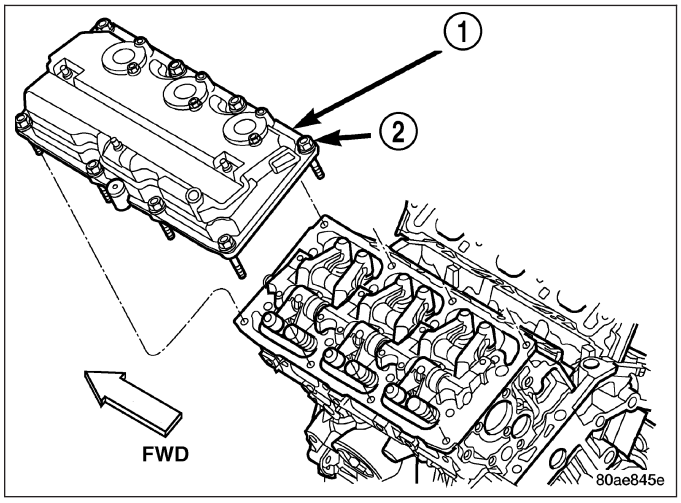

INSTALLATION

1. Clean cylinder head and cover mating surfaces. Inspect and replace gasket (1) and seals (2) as necessary.

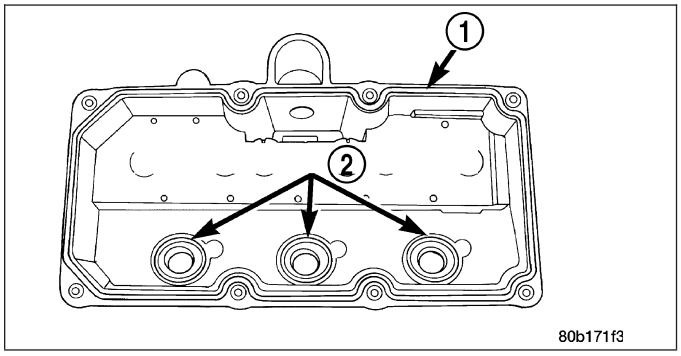

2. To replace spark plug tube seals (2):
   a. Using a suitable pry tool, carefully remove tube seals (2).
   b. Position new seal (2) with the part number on seal facing cylinder head cover.
   c. Install seals using MD-998306 (1).

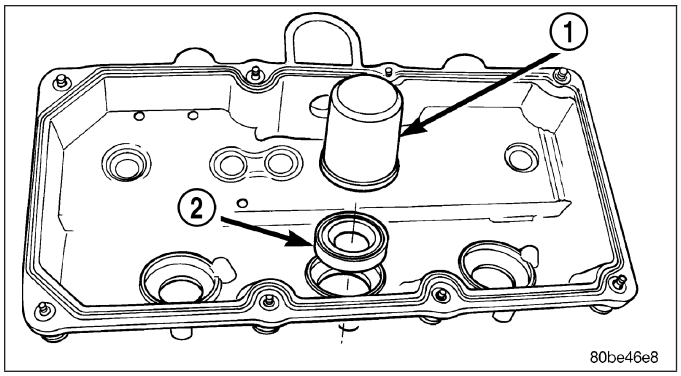

3. Install cylinder head cover (1) and bolts (2). Tighten to 12 N·m (105 in. lbs.).

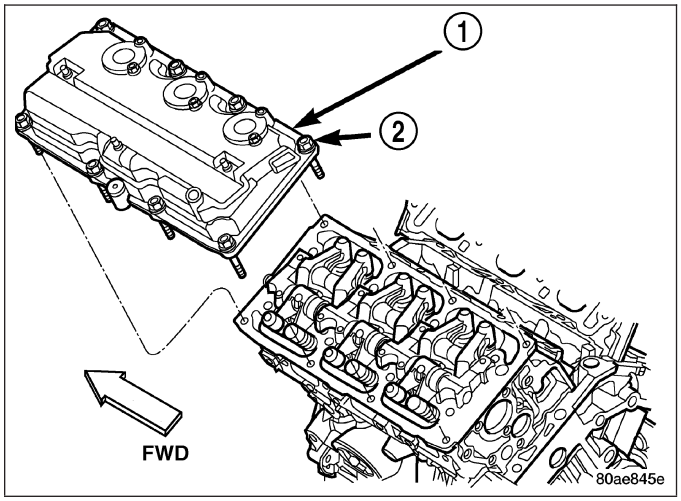

4. Position the wiring harness (3) on the cylinder head cover.
5. Reclip the wire harness track retaining tabs into the cover.
6. Install the ground strap/resistor retaining bolt onto the cylinder head cover.
7. Install the ignition coils (2). Tighten mounting screws to 6.7 N.m (60 in. lbs.)
8. Connect the ignition coil electrical connectors (2).
9. Install upper intake manifold (Refer to 9 - ENGINE/ MANIFOLDS/INTAKE MANIFOLD - INSTALLATION).
10. Connect negative battery cable.

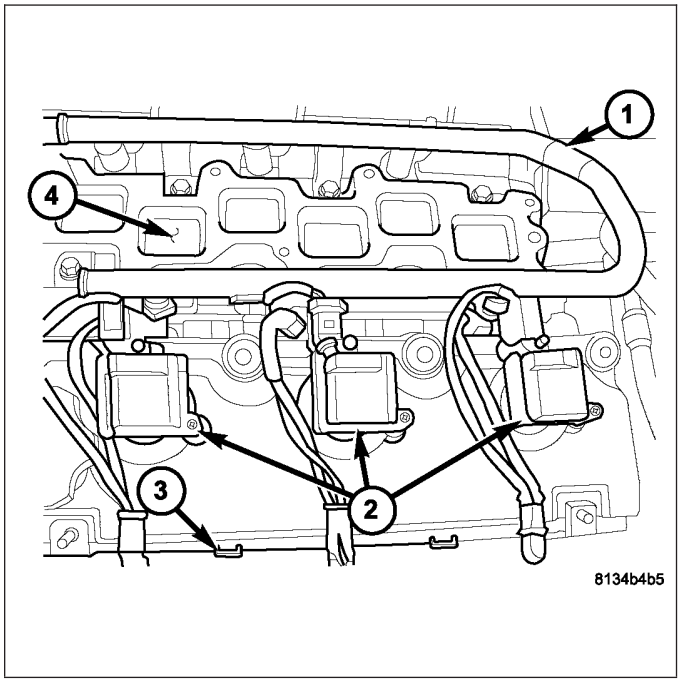

COVER CYLINDER HEAD - RIGHT

REMOVAL

WARNING: DO NOT START OR RUN ENGINE WITH CYLINDER HEAD COVER REMOVED FROM THE ENGINE. DAMAGE OR PERSONAL INJURY MAY OCCUR.

1. Disconnect the negative battery cable.
2. Remove the upper intake manifold (Refer to 9 - ENGINE/MANIFOLDS/INTAKE MANIFOLD - REMOVAL).
3. Cover lower intake manifold openings during service.
4. Disconnect and remove the three ignition coils (2).
5. Lift up on the wire harness track retaining tabs (4).
6. Remove the ground strap retaining bolt (3) from the cylinder head cover.
7. Completely loosen the cylinder head cover retaining bolts and remove the cylinder head cover.

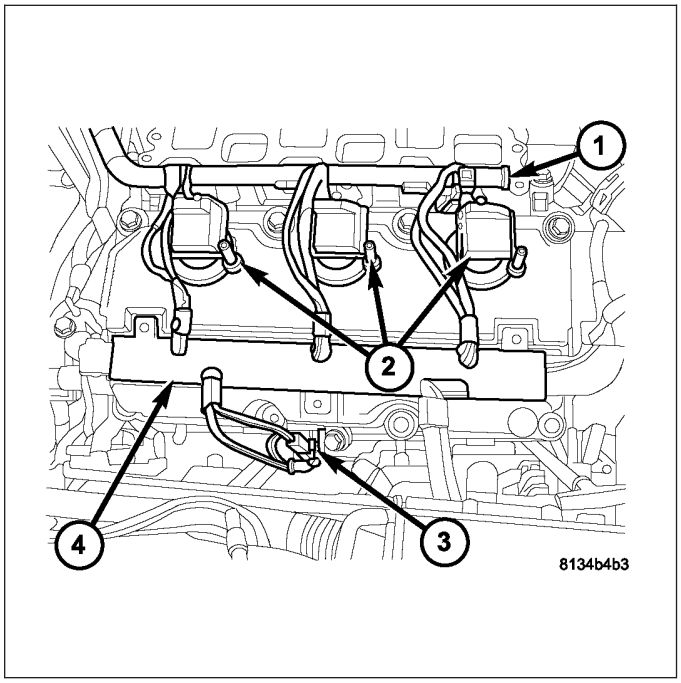

INSTALLATION

1. Clean cylinder head and cover mating surfaces. Inspect and replace gasket (1) and seals (2) as necessary.

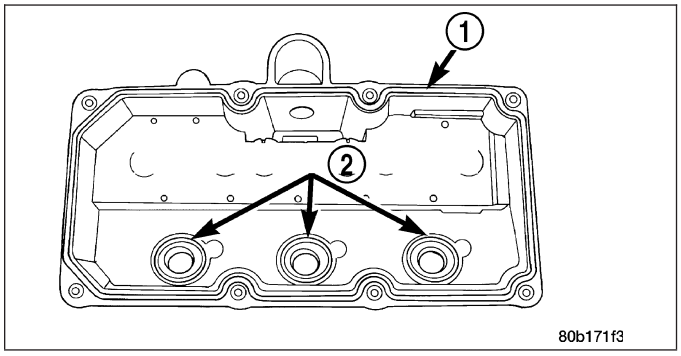

2. To replace spark plug tube seals (2):
   a. Using a suitable pry tool, carefully remove tube seals (2).
   b. Position new seal (2) with the part number on seal facing cylinder head cover.
   c. Install seals using MD-99830 (1).

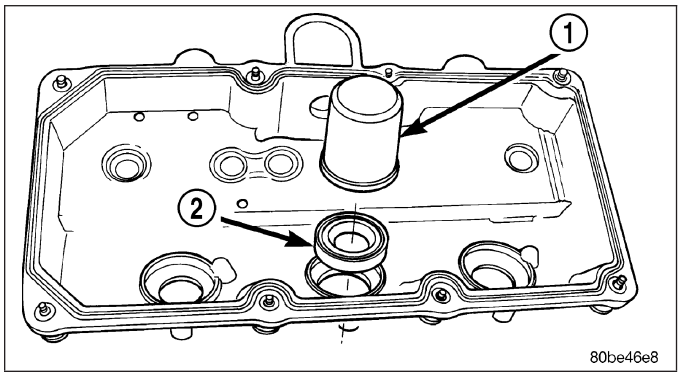

3. Install cylinder head cover bolts and tighten to 12 N·m (105 in. lbs.).
4. Install the ground strap retaining bolt (3) to the cylinder head cover.
5. Install the wire harness track (4).
6. Install the ignition coils (2). Tighten mounting screws to 6.7 N.m (60 in. lbs.).
7. Connect the ignition coil electrical connectors (2).
8. Install upper intake manifold (Refer to 9 - ENGINE/ MANIFOLDS/INTAKE MANIFOLD - INSTALLATION).
9. Connect negative battery cable

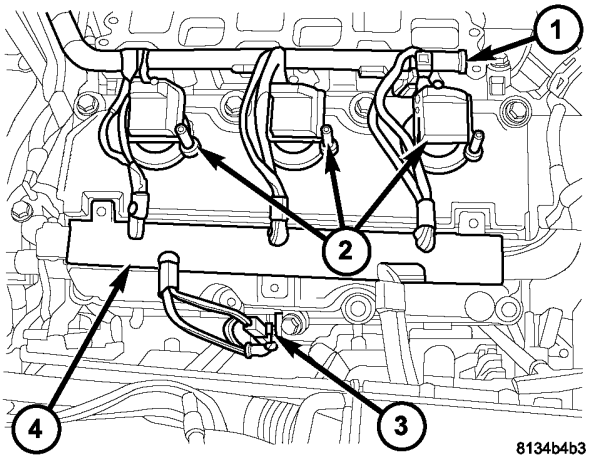

VALVES & SEATS -INTAKE/EXHAUST

DESCRIPTION

Valves are made of highly heat-resistant steel and are chrome plated to prevent stem scuffing. The intake valve is a one-piece forging, while the exhaust valve has a forged head with a welded stem for lock groove hardness. The four valves (two intake and two exhaust) employ a three-groove lock design to help facilitate valve rotation.

OPERATION

The intake valve allows the air/fuel mixture to enter the combustion chamber. The exhaust valve allows the burned air/fuel mixture to exit the combustion chamber. Also, the intake and exhaust valves seal the combustion chamber during the compression and power strokes.

STANDARD PROCEDURE

VALVE AND VALVE SEAT REFACING

VALVES

1. Inspect the remaining margin (1) after the valves are refaced (Refer to 9 - ENGINE - SPECIFICATIONS).

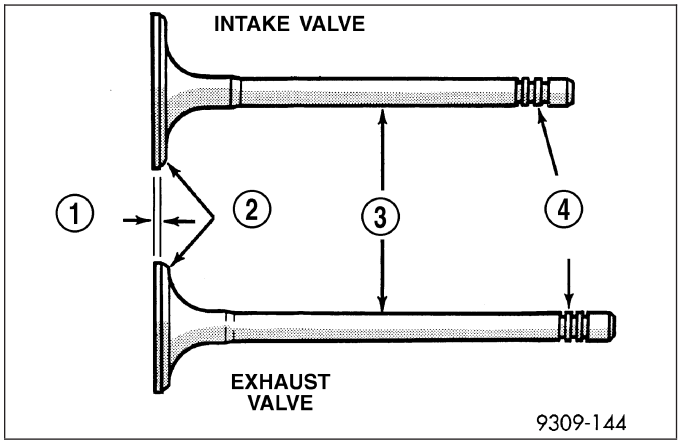

VALVE SEATS

1. When refacing valve seats, it is important that the correct size valve guide pilot be used for reseating stones. A true and complete surface must be obtained.
2. Measure the concentricity of valve seat using dial indicator. Total runout should not exceed 0.051 mm (0.002 inch.) total indicator reading.
3. Inspect the valve seat (3) with Prussian blue to determine where the valve (1) contacts the seat. To do this, coat valve seat (1) **LIGHTLY** with Prussian blue then set valve in place. Rotate the valve with light pressure. If the blue is transferred to the center of valve face (2), contact is satisfactory. If the blue is transferred to top edge of valve face (2), then lower valve seat (3) with a 15° stone. If the blue is transferred to the bottom edge of valve face (2), then raise valve seat (3) with a 65° stone.

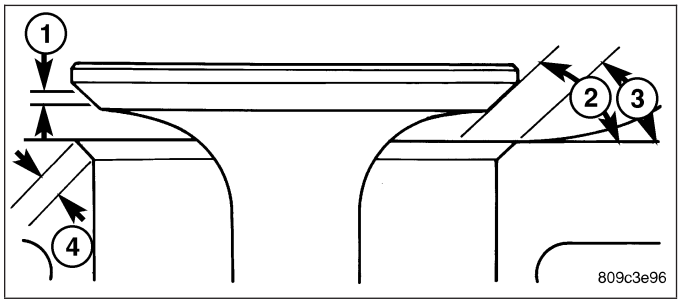

NOTE: Valve seats (1) which are worn or burned can be reworked, provided that correct angle and seat width (1) are maintained. Otherwise cylinder head must be replaced.

4. When seat is properly positioned the width of the intake seats should be 0.75 to 1.25 mm (0.0296 to 0.0493 in.) and exhaust seats should be 1.25 to 1.75 mm (0.049 to 0.069 in.).

VALVE AND SPRING INSTALLED HEIGHT

1. Coat valve stems with clean engine oil and insert them in cylinder head.
2. If valves or seats have been refaced, check valve tip height (A). If valve tip height is greater than 43.65 mm (1.7185 in.) intake or 46.48 mm (1.8299 in.) exhaust, grind valve tip until within specifications. Make sure measurement is taken from cylinder head surface to the top of valve stem.
3. Install valve seal/spring seat assembly over valve guides on all valve stem. Ensure that the garter spring is intact around the top of the rubber seal.

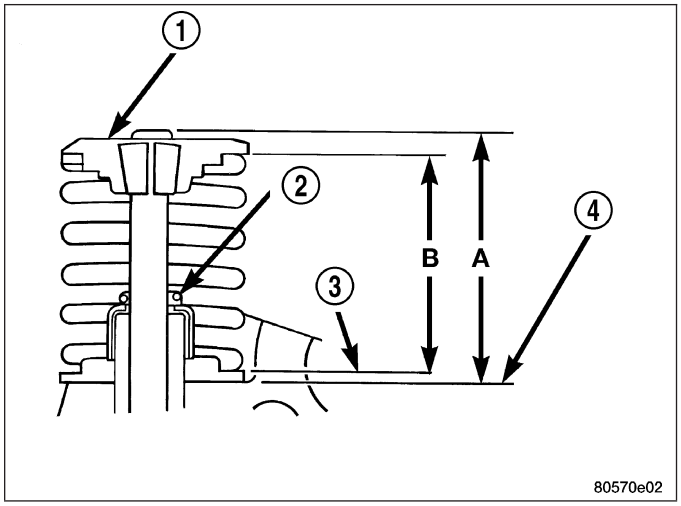

4. Place valve spring (color-coded end facing up) and valve retainer into position on spring seat.

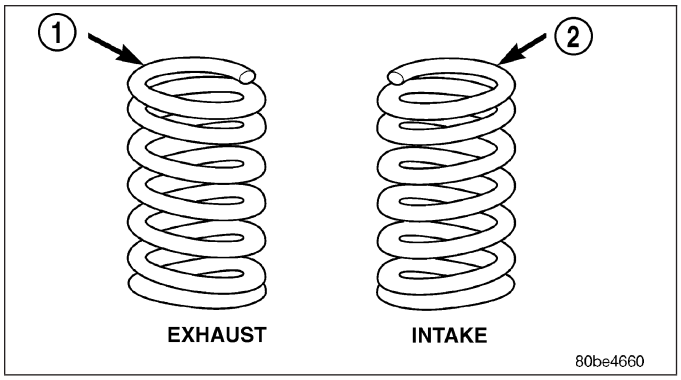

5. Compress valve springs (4) with valve spring compressor C-3422-D and adapter 6526 (Refer to 9 - ENGINE - SPECIAL TOOLS), install locks (2) and release tool.
6. If valves (1) and/or seats are refaced, measure the installed height of springs. Measurements are taken from top of spring (4) seat to the bottom surface of spring retainer. If height is greater than 38.75 mm (1.5256 in.), install a 0.762 mm (0.030 in.) spacer in head counterbore under the valve spring seat to bring spring height back within specification.

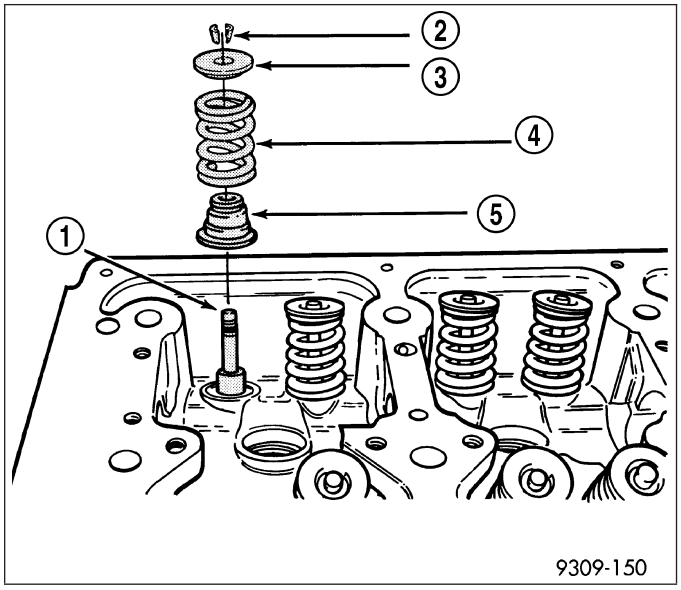

REMOVAL

1. Remove cylinder head(s) (Refer to 9 - ENGINE/CYLINDER HEAD - REMOVAL).
2. Remove rocker arm assembly (Refer to 9 - ENGINE/CYLINDER HEAD/ROCKER ARM / ADJUSTER ASSY - REMOVAL).
3. Remove valve spring(s) (Refer to 9 - ENGINE/CYLINDER HEAD/VALVE SPRINGS - REMOVAL).
4. Before removing valve, **remove any burrs from valve stem lock grooves to prevent damage to the valve guides.** Identify valves to insure installation in original location.
5. Remove valve(s) from cylinder head.

CLEANING

1. Clean all valves thoroughly and discard burned, warped and cracked valves.

INSPECTION

VALVES

1. Measure valve stems for wear approximately 60 mm (2.36 in.) below the valve lock grooves.
2. Compare measurement to specifications, (Refer to 9 - ENGINE - SPECIFICATIONS).

NOTE: Valve stems are chrome plated and should not be polished.

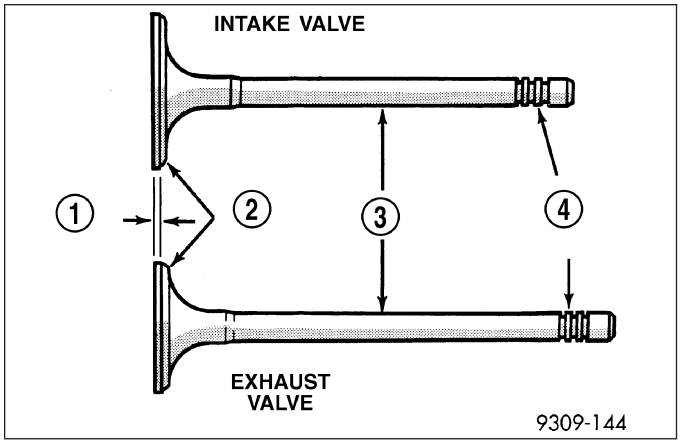

VALVE GUIDES

1. Measure valve stem-to-guide clearance as follows:
2. Install valve into cylinder head so it is 15 mm (0.590 inch.) off the valve seat. A small piece of hose may be used to hold valve in place.
3. Attach dial indicator Tool C-3339 to cylinder head and set it at right angle of valve stem being measured.
4. Move valve to and from the indicator.
5. Note dial indicator reading and compare to engine specifications. (Refer to 9 - ENGINE - SPECIFICATIONS)

NOTE: Replace cylinder head if stem-to-guide clearance exceeds specifications, or if guide is loose in cylinder head.

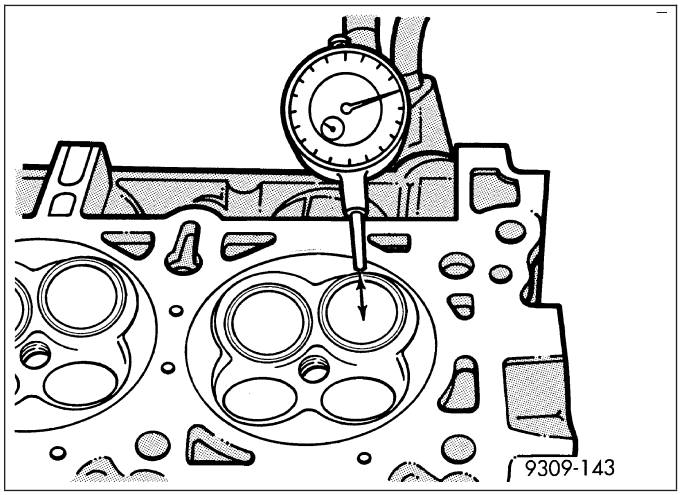

INSTALLATION

1. Coat valve stems with clean engine oil and insert them in cylinder head.
2. If valves or seats have been reground, check valve tip height (A). If valve tip height is greater than 43.65 mm (1.7185 in.) intake or 46.48 mm (1.8299 in.) exhaust, grind valve tip until within specifications. Make sure measurement is taken from cylinder head surface to the top of valve stem.
3. Install new valve stem seals.
4. Install valve springs (Refer to 9 - ENGINE/CYLINDER HEAD/VALVE SPRINGS - INSTALLATION).
5. Install cylinder head(s) (Refer to 9 - ENGINE/CYLINDER HEAD - INSTALLATION).

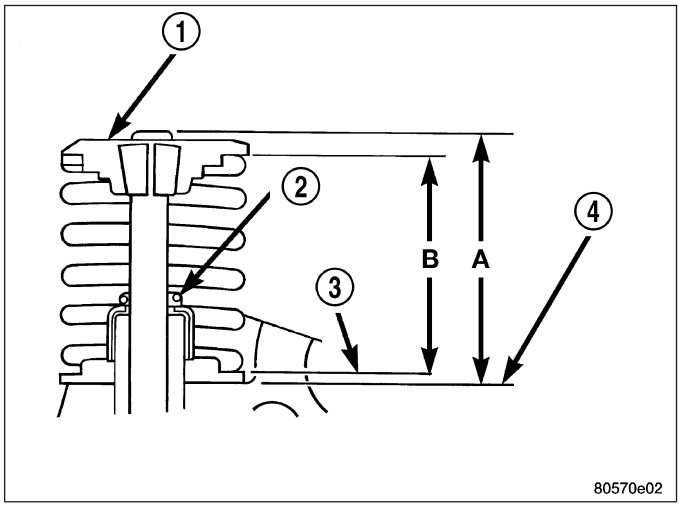

ROCKER ARM SHAFT/ ROCKER ARM / LASH ADJUSTER

DESCRIPTION

ROCKER ARM

Rocker arms are made of light weight permanent mold aluminum alloy with a roller (3) type follower operating against the camshaft. The valve actuating end of the rocker arms are machined to retain hydraulic lash adjusters, eliminating the need for manual valve lash adjustment.

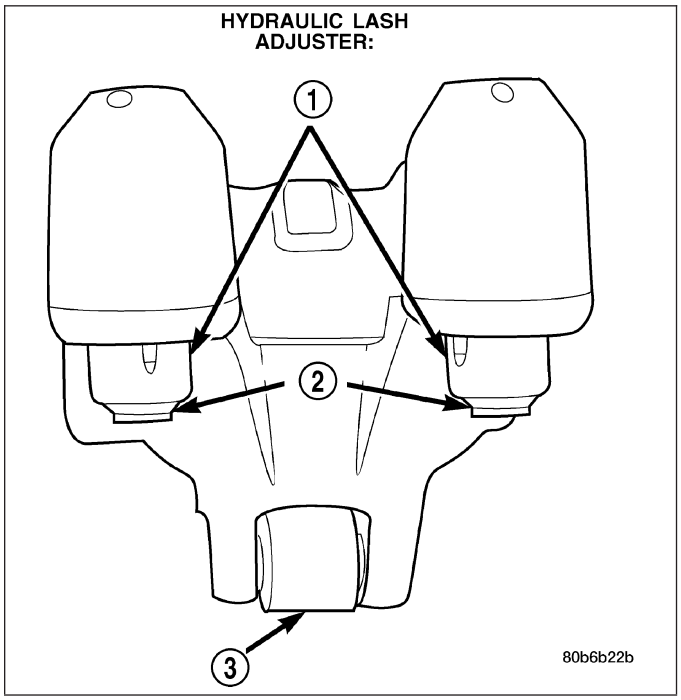

ROCKER ARM SHAFTS

The rocker arm shafts are tubular steel and are supported by several forged aluminum alloy pedestals, which are fastened to the cylinder head. Four shafts are used, one for each intake and exhaust rocker arm bank on each cylinder head. The shafts are hollow to provide a duct for lubricating oil flow from the cylinder head to the valve mechanisms. One hollow dowel per pedestal is used to locate the pedestal to the cylinder head, orient the exhaust rocker shaft, and serve as a cam bearing oil feed passage.

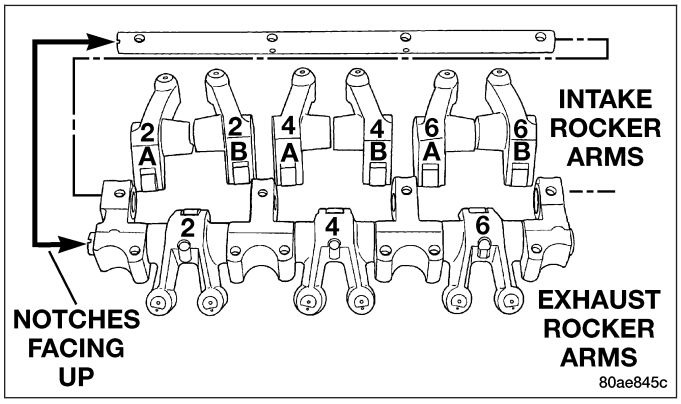

OPERATION

The rocker arm is the pivot point between the camshaft lobe and the valve.

DIAGNOSIS AND TESTING

LASH ADJUSTER (TAPPET) NOISE DIAGNOSIS

Proper noise diagnosis is essential in locating the source of a NVH complaint. Locating a lash adjuster (tappet) type noise can sometimes be difficult. As a result, an initial misdiagnosis may occur.

Refer to the following chart indicating possible lash adjuster (tappet) noise sources and possible sources that could lead to a misdiagnosis.

Refer to Lash Adjuster (Tappet) Noise Chart for Possible Causes and Correction of a lash adjuster (tappet) type noise.

POSSIBLE NOISE SOURCES	POSSIBLE NOISE MISDIAGNOSIS SOURCES
Spongy/soft/aerated lash adjusters.	Exhaust leak.
Missing lash adjuster swivel contact pads.	Exhaust rocker arm-to-cylinder head cover contact.
Intake rocker-to-camshaft bearing journal contact.	Piston pin bore fit.
Rocker arm bind-up.	Timing drive hydraulic tensioner tick.
Intake rocker arm-to-spark plug tube contact.	Accessory drive belt deterioration.
Excessive cam end play.	Piston-to-bore clearance knock.
Broken valve spring.	Crankshaft bearing noise.
Broken/loose camshaft sprocket bolt.	
Incomplete cam lobe machining.	
Cracked lash adjuster cartridge body.	

LASH ADJUSTER (TAPPET) NOISE CHART

POSSIBLE CAUSES	CORRECTION
1. Engine oil level—too high or too low. This may cause aerated oil to enter the adjusters and cause them to be spongy.	1. Check and correct engine oil level.
2. Insufficient running time after rebuilding cylinder head.	2. Low speed running of up to 1 hour may be required to fully evacuate trapped air from the valve train system. During this time, turn engine off and let set for a few minutes before restarting. Repeat this several times after engine has reached normal operating temperature.
3. Air trapped in lash adjuster (after 1 hour run time).	3. See below: (a) Check lash adjusters for sponginess while installed in cylinder head. Depress part of rocker arm over adjuster. Normal adjusters should feel very firm. Very spongy adjusters can be bottomed out easily. (b) Before proceeding, perform Lash Adjuster Bleeding procedure. (c) If lash adjuster(s) are still spongy, replace with new adjuster/rocker arm assembly*.
4. Low oil pressure	4. See below: (a) Check and correct engine oil level. (b) Check engine oil pressure. (c) Check for excessive bearing clearance and correct. (d) Check for worn oil pump.
5. Oil passage to cylinder head(s) plugged with debris.	5. Check cylinder head oil passages and cylinder head gasket restrictor for blockage. Clean or replace as necessary.
6. Worn valve guide(s).	6. Ream guide(s) and replace valve(s) with oversize valves and seal(s).
7. Air injested into oil due to broken or cracked oil pump pickup tube.	7. Inspect pickup tube and replace as necessary.
8. Collapsed lash adjuster due to debris injestion.	8. Clean debris from engine and replace lash adjuster/rocker assembly*.

POSSIBLE CAUSES	CORRECTION
9. Intake rocker arm roller clevis ear(s) contacting camshaft bearing journal(s) on side.	9. Inspect camshaft end play and all valve train components for wear. Replace as necessary.
***Lash adjusters are serviced with the rocker arms—do not disassemble.**	

STANDARD PROCEDURE

HYDRAULIC LASH ADJUSTER BLEEDING

Use this procedure to manually bleed aerated oil from the lash adjuster and remove sponginess.

1. Run the engine, bringing it to operating temperature in order to freshly pressurize and warm the valvetrain system oil supply.
2. Remove cylinder head cover(s).
3. Ensure the rocker arm is positioned on the base circle (1) of the cam. Rotate engine as necessary.

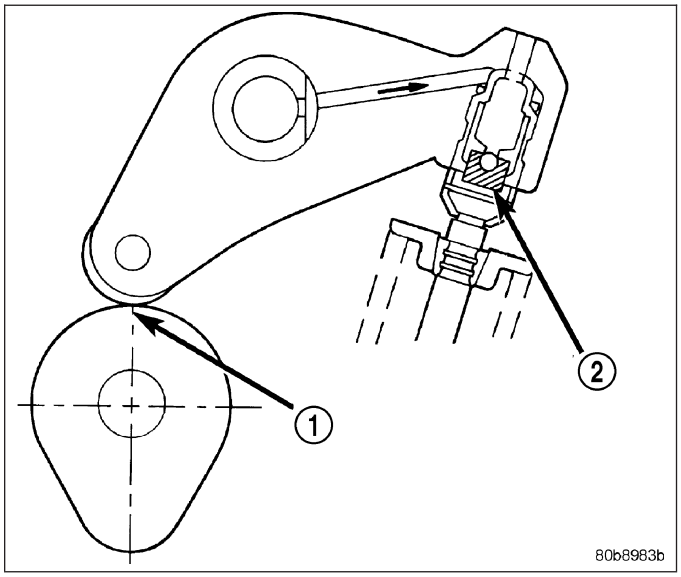

4. For intake rocker arm positions:
   a. Adjust Special Tool 8351 (1) Release Probe's gauge pin to extend approximately 20 mm (0.787 in.). Then, carefully insert the release probe gauge pin into the lash adjuster (6) service access hole (2).

CAUTION: If probe tip (1) breaks off within the lash adjuster (6), replace the affected rocker arm (3).

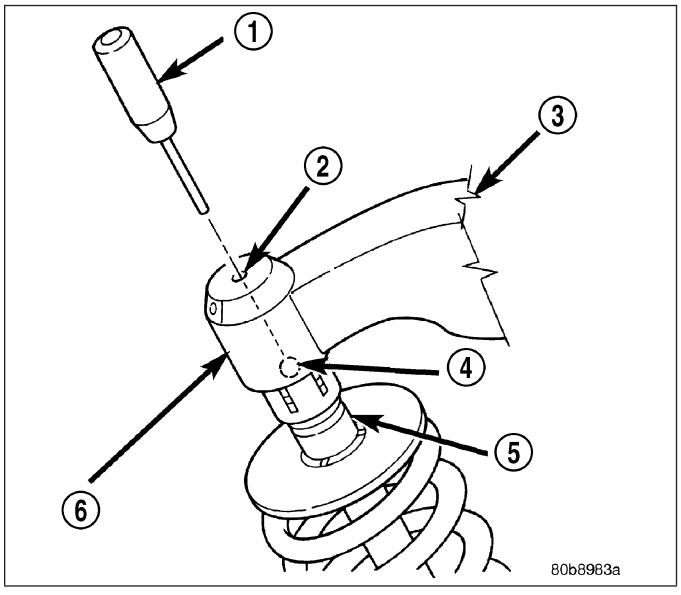

   b. Gently unseat lash adjuster's internal check ball (4).
   c. While the internal check ball (4) is held unseated, press the rocker arm (3) into the valve tip (5), allowing the lash adjuster (6) to fully collapse. Hold this fully collapsed position for about one second, or longer.
   d. Slowly release the rocker arm (3), thereby allowing the lash adjuster (6) to extend, which in turn refills the high pressure chamber with non-aerated oil.
   e. Remove probe to allow check ball (4) to seat.
   f. Recheck for sponginess. If the lash adjuster (6) sponginess is not completely or nearly eliminated, then repeat procedure.
   g. If the spongy condition cannot be removed, replace effected rocker arm(s) (3).
5. For exhaust rocker arm (3) positions:

a. Adjust Special Tool 8351 (1) Release Probe gauge pin to extend approximately 20 mm (0.787 in.). Then, using two release probes, carefully insert gauge pins into the lash adjuster service access holes.

CAUTION: If probe tip (1) breaks off within the lash adjuster (6), replace the affected rocker arm (3).

b. Gently unseat BOTH lash adjuster's internal check ball (4) at the same time.

c. While the internal check ball (4) is held unseated, press the rocker arm (6) into the valve tip, allowing the lash adjuster to fully collapse. Hold this fully collapsed position for about one second, or longer.

d. Slowly release the rocker arm (3), thereby allowing the lash adjuster (6) to extend, which in turn refills the high pressure chamber with non-aerated oil.

e. Remove probes (1) to allow check balls (4) to seat.

f. Recheck for sponginess. If the lash adjuster (6) sponginess is not completely or nearly eliminated, then repeat procedure.

g. If the spongy condition cannot be removed, replace effected rocker arm(s) (3).

6. Install cylinder head cover(s).

REMOVAL

CAUTION: The rocker arm shafts are hollow and are used as lubrication oil passages. The rocker arm and shaft assembly on the RIGHT side of the engine has an oil passage hole from the cylinder head to the third rocker shaft support. The rocker arm shaft assembly on the LEFT side of the engine has an oil passage hole from the cylinder head to the second rocker shaft support.

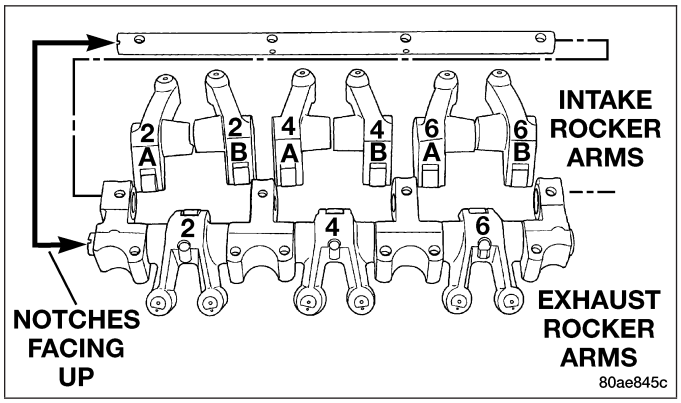

1. Remove cylinder head covers. (Refer to 9 - ENGINE/CYLINDER HEAD/CYLINDER HEAD COVER(S) - REMOVAL)
2. Identify the rocker arm assembly and rocker arms before disassembly.
3. Remove rocker arm assembly bolts.
4. Remove rocker arm assembly.

NOTE: To prevent air ingestion into lash adjusters, avoid turning rocker arm assembly upside down.

CAUTION: Do not allow rocker arm assembly to rest on lash adjusters, as damage may occur to lash adjusters and/or plastic retainers.

DISASSEMBLY

1. Remove rocker arm and shafts. (Refer to 9 - ENGINE/CYLINDER HEAD/ROCKER ARM / ADJUSTER ASSY - REMOVAL)
2. Remove dowel pin using a 4 mm screw, nut, spacer, and washer installed into the pin. Thread the screw into the pin, then loosen the nut on the screw. This will pull the dowel out of the shaft support. Do not reuse dowel pins. Remove the rocker arms and pedestals in order.
3. Check the rocker arm mounting portion of the shafts for wear or damage. Replace if damaged or heavily worn.
4. Check shaft oil holes for clogging with small wire, clean as required.

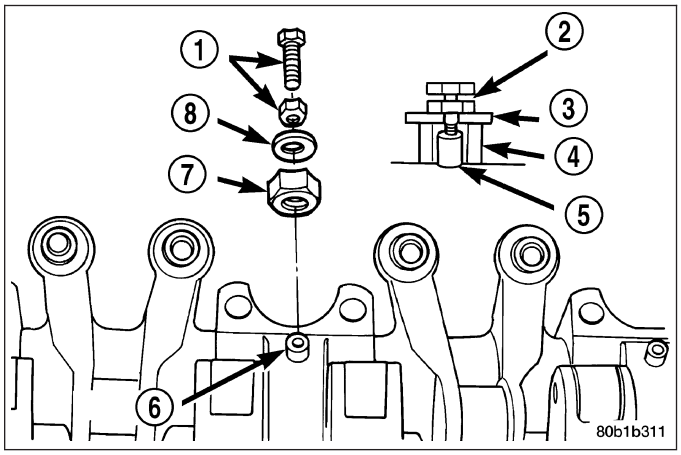

INSPECTION

The rocker arm shafts are hollow and are used as lubrication oil ducts. The rocker arm and shaft assembly on the **right** side of the engine has an oil passage hole from the cylinder head located at the third rocker shaft support pedestal. The rocker arm and shaft assembly on the **left** side of the engine has an oil passage hole from the cylinder head located at the second rocker shaft support pedestal.

NOTE: To prevent air ingestion into lash adjusters, avoid turning rocker arm assembly upside down.

CAUTION: Do not allow rocker arm assembly to rest on lash adjusters, as damage may occur to lash adjuster and plastic retainer.

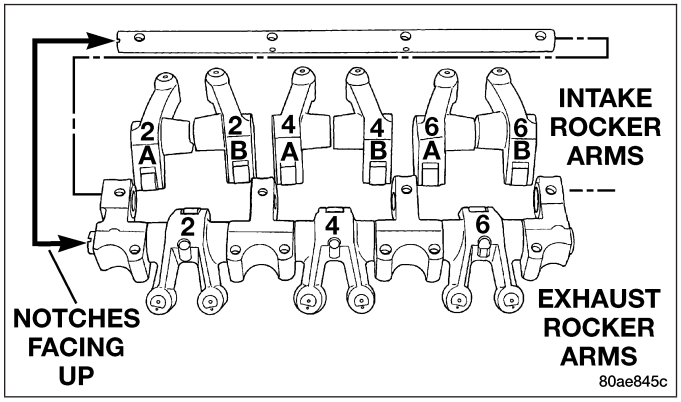

The intake and exhaust rocker arms are different. They should be identified before disassembling the assembly.

Check rocker arms for wear or damage :

- Roller scuffing or wear
- Shaft bore scuffing or wear
- Swivel pad on lash adjuster missing or broken
- Rocker arm showing signs of fatigue or cracking
- Roller axle protruding from arm

Replace assembly as necessary if any rocker arms shows signs of wear.

CAUTION: Do Not remove lash adjuster from rocker arm assembly. Damage to the adjuster and rocker arm will result.

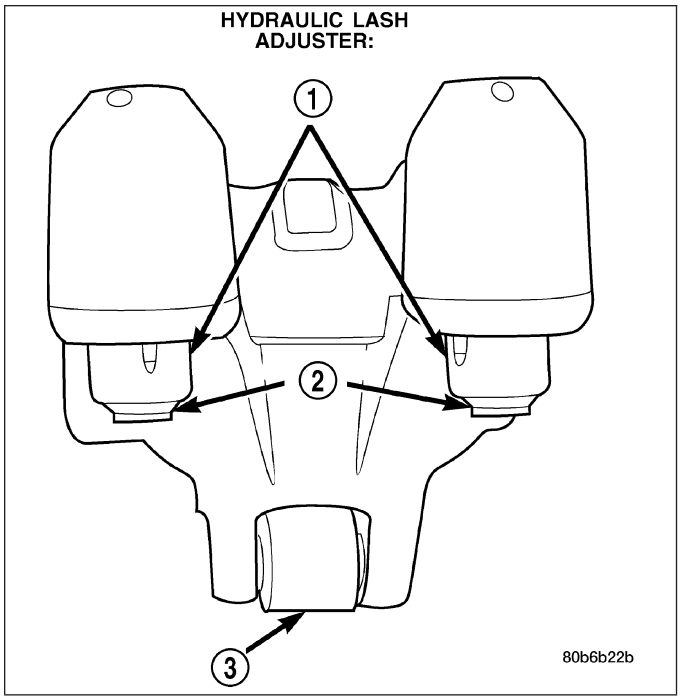

ASSEMBLY

CAUTION: New dowel pins must be installed when reassembling.

1. Install the rocker arms, and pedestals (3) onto the shaft.
2. Install dowel pins (2). Dowel pins (2) pass through the pedestal (3) into the exhaust rocker shafts. Dowel pins (2) should be pressed in until they bottom-out against the rocker shaft in the pedestal (3).
3. Install rocker arm and shafts. (Refer to 9 - ENGINE/CYLINDER HEAD/ROCKER ARM / ADJUSTER ASSY - INSTALLATION)

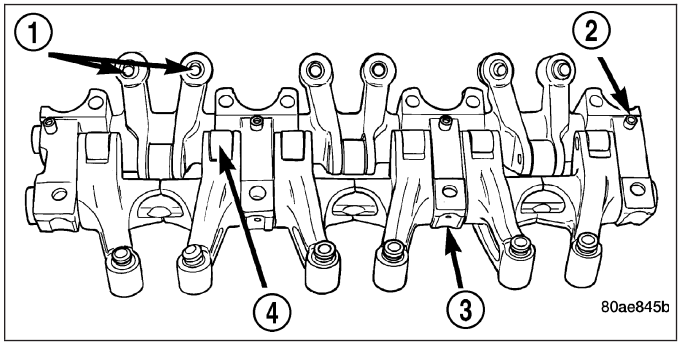

INSTALLATION

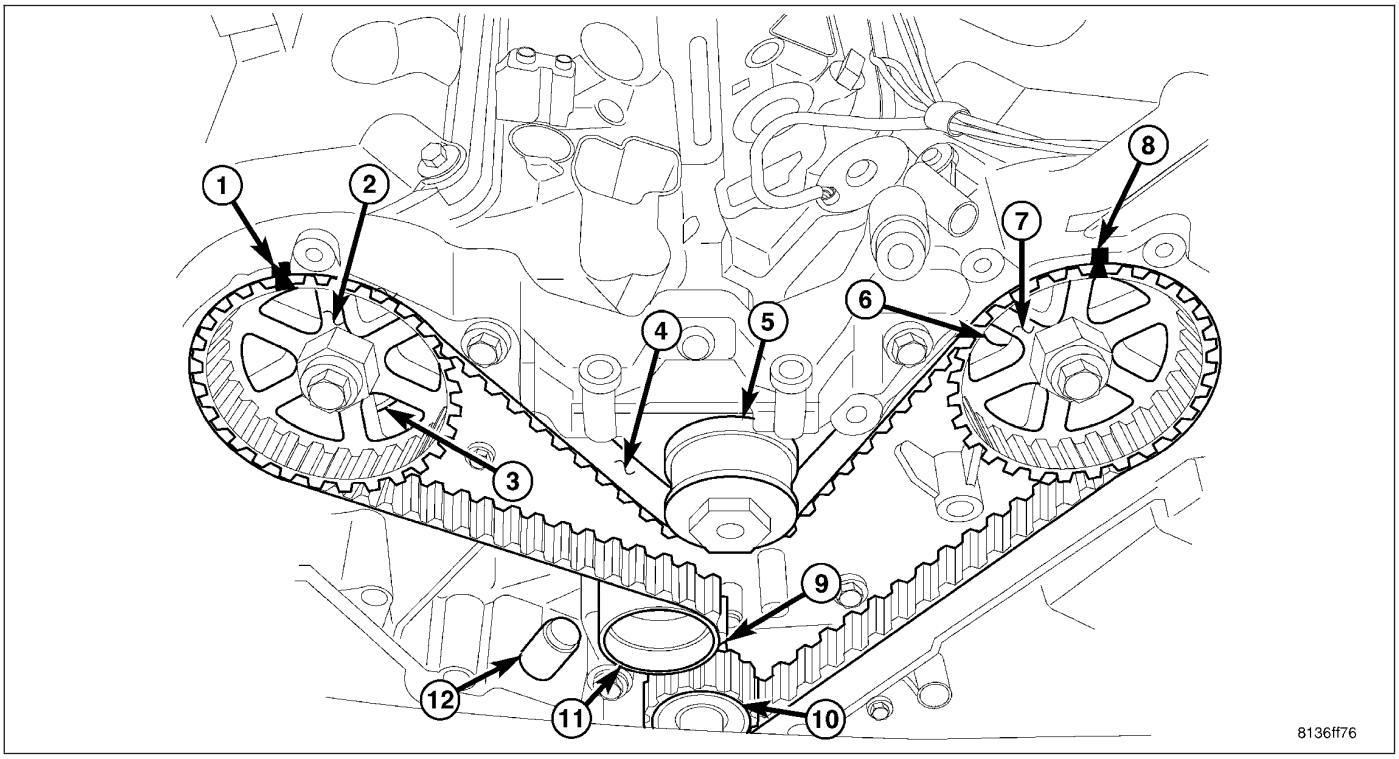

TIMING GEAR ALIGNMENT

1 - RIGHT CAMSHAFT GEAR ALIGNMENT MARK
2 - RIGHT CAMSHAFT GEAR
3 - CYLINDER HEAD TO INNER TIMING BELT COVER BOLTS - RIGHT
4 - TIMING BELT
5 - WATER PUMP PULLEY
6 - CYLINDER HEAD TO INNER TIMING BELT COVER BOLTS - LEFT
7 - LEFT CAMSHAFT GEAR
8 - LEFT CAMSHAFT GEAR ALIGNMENT MARK
9 - CRANKSHAFT GEAR ALIGNMENT MARK
10 - CRANKSHAFT GEAR
11 - TIMING BELT TENSIONER PULLEY
12 - TIMING BELT TENSIONER

NOTE: Rocker arm and shaft assembly can be installed either prior to or after (preferred) cylinder head installation.

1. Rotate camshaft gears to the position shown in (1,8,9). With the camshaft gears in these positions the lobes are in a neutral position (no load to the valve). This will allow the rocker arm shaft assembly to be tightened into position with little or no valve spring load on it.
2. Install the rocker arm and shaft assembly making sure that the identification marks face toward the front of engine for left head and toward the rear of the engine for right head.
3. Tighten rocker arm/shaft assembly bolts in sequence to 31 N·m (275 in. lbs.).
4. Install cylinder head covers (Refer to 9 - ENGINE/ CYLINDER HEAD/CYLINDER HEAD COVER(S) - INSTALLATION).

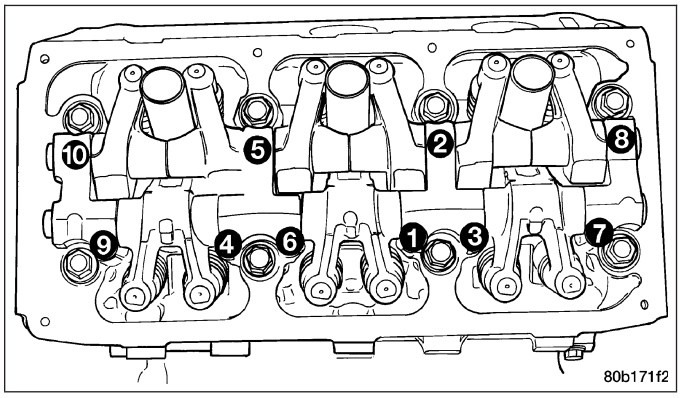

TUBE -SPARK PLUG

REMOVAL

1. Remove cylinder head cover(s). (Refer to 9 - ENGINE/CYLINDER HEAD/CYLINDER HEAD COVER(S) - REMOVAL)
2. Using suitable locking pliers, remove the tube from the cylinder head and discard tube.
3. Clean area around spark plug with Mopar® Parts Cleaner or equivalent.

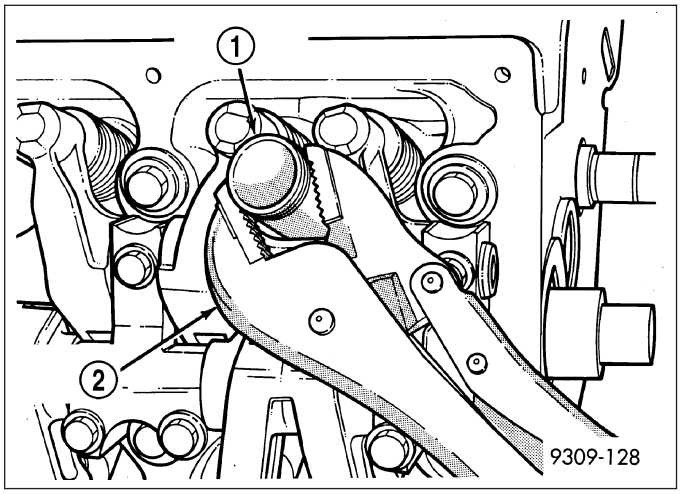

INSTALLATION

1. Apply Mopar® Stud and Bearing Mount to a new tube (1) approximately 1 mm (0.039 in.) from the end of tube, in a 3 mm (0.118 in.) wide area.
2. Install sealer end of tube (1) into the cylinder head. Then carefully install the tube (1) using a hardwood block and mallet. Install the tube (1) until it is seated into the bottom of the bore.
3. For spark plug tube (1) seal replacement, (Refer to 9 - ENGINE/CYLINDER HEAD/CYLINDER HEAD COVER(S) - REMOVAL).
4. Install cylinder head cover(s). (Refer to 9 - ENGINE/CYLINDER HEAD/CYLINDER HEAD COVER(S) - INSTALLATION)

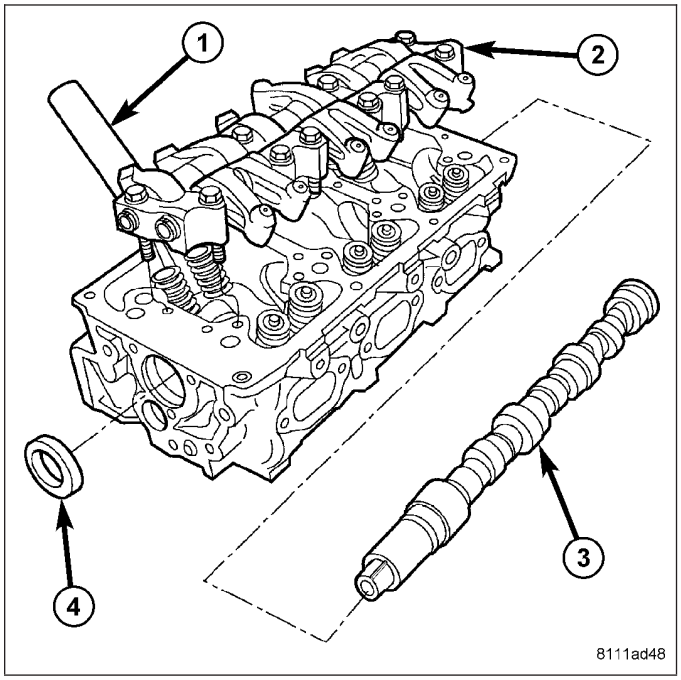

SEAL -VALVE STEM

REMOVAL

1. Remove valve spring. (Refer to 9 - ENGINE/CYLINDER HEAD/VALVE SPRINGS - REMOVAL)
2. Remove valve stem seals by using a valve stem seal tool.

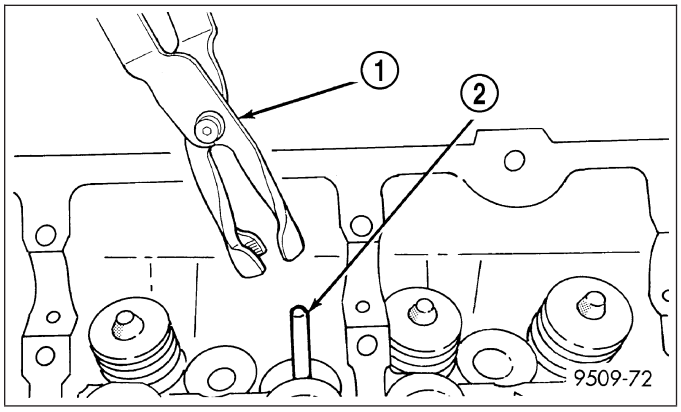

INSTALLATION

1. The valve stem seal/valve spring seat should be pushed firmly and squarely over the valve guide using the valve stem as guide. **Do Not Force** seal against top of guide. When installing the valve retainer locks, compress the spring **only enough** to install the locks.

CAUTION: Do not remove garter spring (2) around the seal at the top of the valve stem seal.

2. Install valve spring. (Refer to 9 - ENGINE/CYLINDER HEAD/VALVE SPRINGS - INSTALLATION)

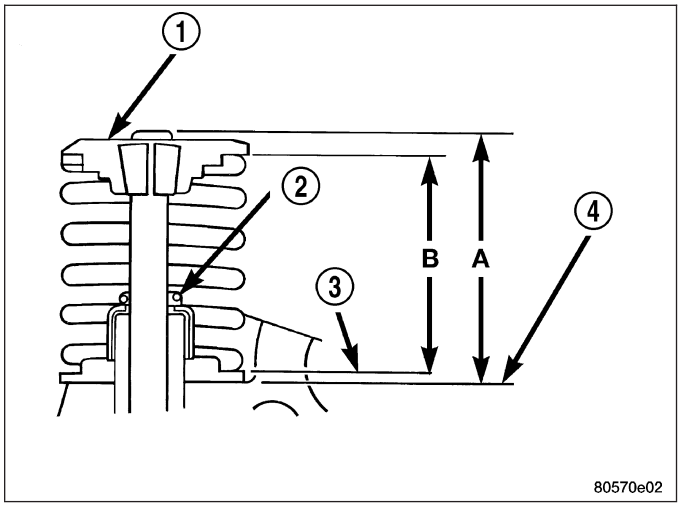

SPRING -VALVE

DESCRIPTION

The valve springs are made from chrome silicon alloy wire and incorporate a “bee-hive” design. Valve spring retainers and locks are common from valve-to-valve. The valve spring seat is integral with the valve stem oil seal, which incorporates a garter spring to maintain consistent lubrication control to the valve stem.

The valve springs are unique for intake compared to exhaust. Both have different lengths and are wound in opposite directions. The valve springs are color coded, intake spring is right hand coil direction with orange dye on the top coils, and the exhaust spring is left hand coil direction with a yellow or white dye on the top coils.

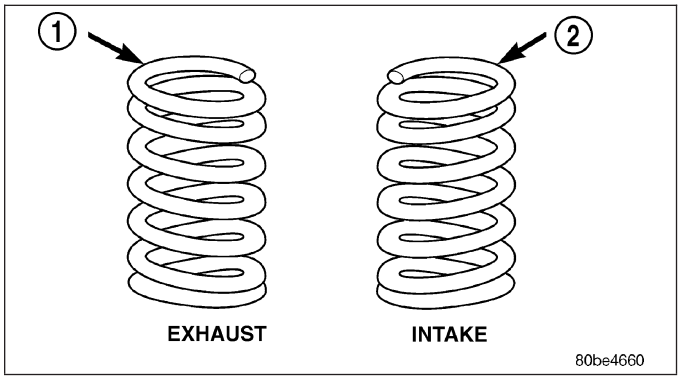

The exhaust spring with the white dye on the top of the coils has an increased open and closed load when compared to the exhaust spring with the yellow dye. A yellow and a white exhaust valve spring **should never** be used on a single forked rocker arm. Color coated exhaust springs should always be used in pairs for a forked exhaust rocker springs.

OPERATION

The valve spring returns the valve against its seat for a positive seal of the combustion chamber.

REMOVAL

CYLINDER HEAD OFF

1. Compress valve spring with valve spring compressor C-3422-D and adapter 6526 (Refer to 9 - ENGINE - SPECIAL TOOLS).
2. Remove valve retaining locks. Release valve spring compressor. Remove valve spring retainer and valve spring.
3. Remove valve stem seal assembly. (Refer to 9 - ENGINE/CYLINDER HEAD/VALVE STEM SEALS - REMOVAL)

CYLINDER HEAD ON

1. Disconnect negative battery cable.
2. Remove upper intake manifold (Refer to 9 - ENGINE/MANIFOLDS/INTAKE MANIFOLD - REMOVAL).
3. Remove cylinder head cover(s) (Refer to 9 - ENGINE/CYLINDER HEAD/CYLINDER HEAD COVER(S) - REMOVAL).
4. Remove rocker arm and shaft assembly (Refer to 9 - ENGINE/CYLINDER HEAD/ROCKER ARM / ADJUSTER ASSY - REMOVAL).
5. Remove spark plugs.
6. Rotate the crankshaft clockwise, until the number 1 piston is at Top Dead Center (TDC) on the compression stroke.
7. With air hose attached to spark plug adapter installed in number 1 spark plug hole, apply 620.5 to 689 kPa (90 to 100 psi) air pressure. This is to hold valves into place while servicing components.
8. Using Tool MD 998772A (1) with adapter 6527 (4) or equivalent, compress valve spring and remove

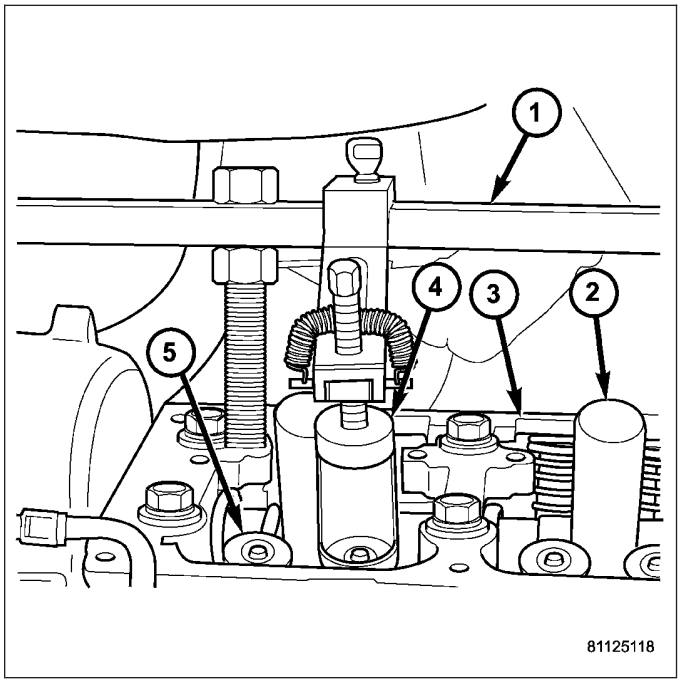

valve locks (5). Release tension on valve spring, remove retainer (5) and valve spring (Refer to 9 - ENGINE - SPECIAL TOOLS).

9. Remove valve stem seal, if required. (Refer to 9 - ENGINE/CYLINDER HEAD/VALVE STEM SEALS - REMOVAL)
10. Follow the same procedure on the remaining 5 cylinders using the firing sequence 1-2-3-4-5-6. **Make sure piston is at TDC in each cylinder of the valve spring that is being removed.**
11. Remove spark plug adapter tool.

INSPECTION

When valves have been removed for inspection, reconditioning or replacement, valve springs should be tested. **As an example;** the compression length of the spring to be tested is 38.00 mm (1.496 in.). Turn table of Tool C-647 until surface is in line with the 38.00 mm (1.496 inches.) mark on the threaded stud and the zero mark on the front. Place spring over stud on the table and lift compressing lever to set tone device. Pull on torque wrench until ping is heard. Take reading on torque wrench at this instant. Multiply this reading by two. This will give the spring load at test length. Fractional measurements are indicated on the table for finer adjustments. Refer to Engine Specifications to obtain specified height and allowable tensions (Refer to 9 - ENGINE - SPECIFICATIONS). Replace springs that do not meet specifications.

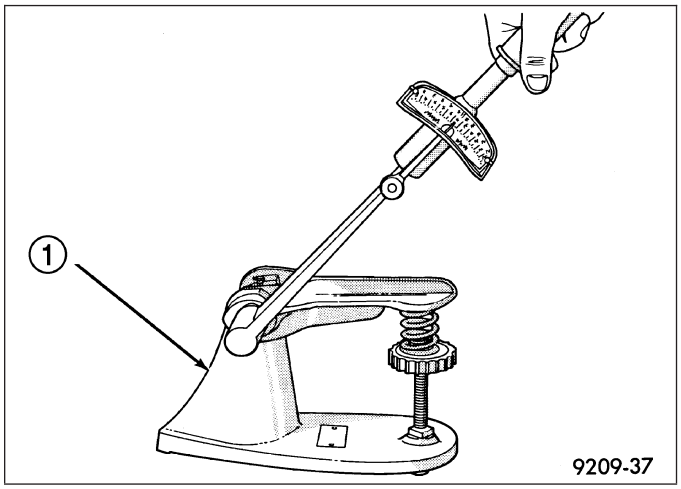

INSTALLATION

CYLINDER HEAD OFF

1. Install valves if removed.
2. Install valve stem seal/spring seat assembly (5) over valve guides on all valve stems. Ensure that the garter spring is intact around the top of the rubber seal.
3. Place valve spring (color-coded end facing up) (4) and valve retainer into position.

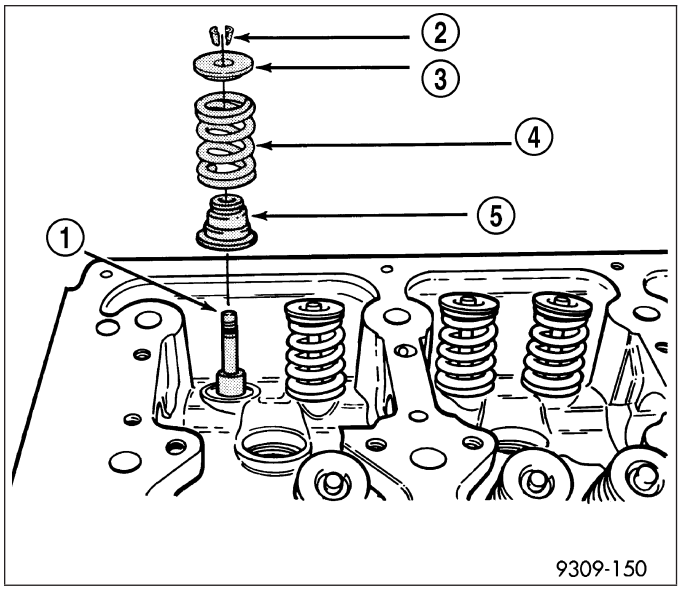

4. Compress valve spring with valve spring compressor. Install locks and release tool. **If valve and/or seat are reground, measure the installed height of springs (B), make sure measurements are taken from top of spring seat to the bottom surface of spring retainer**. If height is greater than 38.75 mm (1.5256 in.), install a 0.762 mm (0.030 in.) spacer in head counterbore under the valve spring seat to bring spring height back within specification.

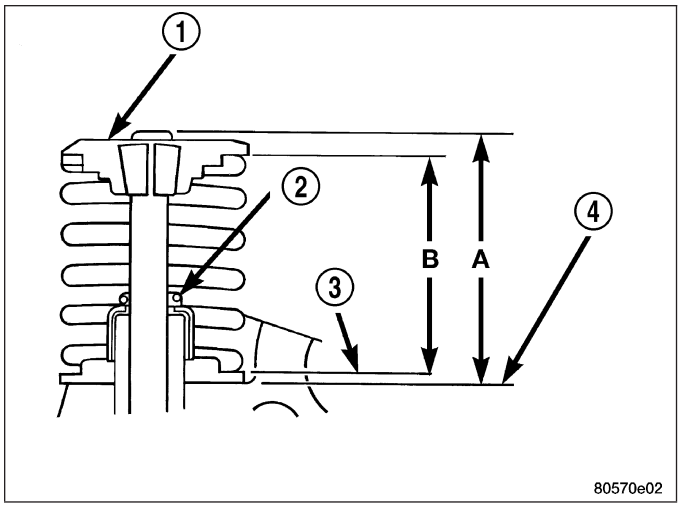

CYLINDER HEAD ON

1. Install new valve seal(s) if required (Refer to 9 - ENGINE/CYLINDER HEAD/VALVE STEM SEALS - INSTALLATION).
2. Place valve spring (color-coded end facing up) and valve retainer into position.
3. Compress valve spring using Special Tool MD 998772A (1) with Adaptor 6527 (4) only enough to install locks (5).
4. After installing locks, release tension on valve spring and verify proper installation.
5. Remove Special Tool MD 998772A (1) and spark plug adapter tool.
6. Install rocker arm and shaft assembly. (Refer to 9 - ENGINE/CYLINDER HEAD/ROCKER ARM / ADJUSTER ASSY - INSTALLATION)
7. Install cylinder head cover(s) (Refer to 9 - ENGINE/ CYLINDER HEAD/CYLINDER HEAD COVER(S) - INSTALLATION).
8. Install spark plugs.
9. Install upper intake manifold (Refer to 9 - ENGINE/ MANIFOLDS/INTAKE MANIFOLD - INSTALLATION).
10. Connect negative battery cable.

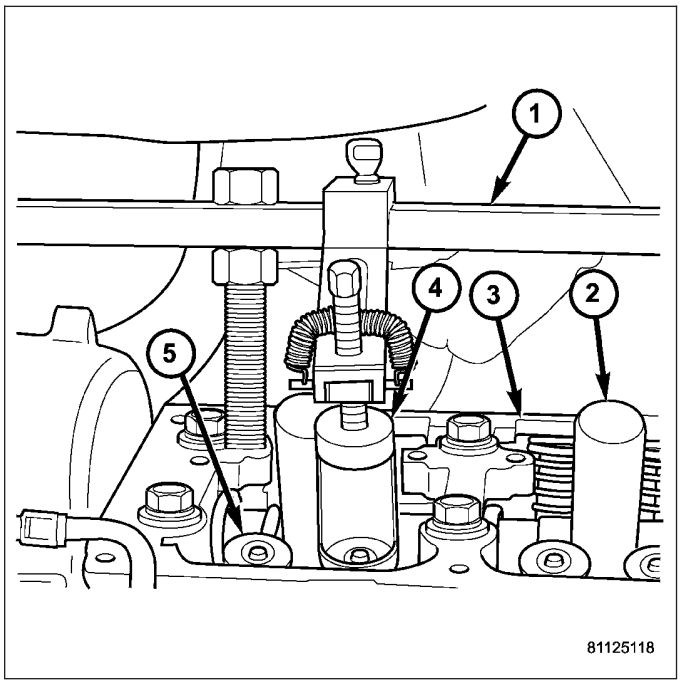

BLOCK -CYLINDER

DESCRIPTION

The cylinder block is made of heat treated aluminum with cast-in-place iron liners. The block is a closed deck design with the right bank forward. To provide high rigidity and improved noise, vibration and harshness (NVH), the block has cast-in contours and ribs, along with powdered metal 6 bolt main caps (4 vertical, 2 horizontal), with a die cast aluminum structural beam windage tray mounted to the main caps.

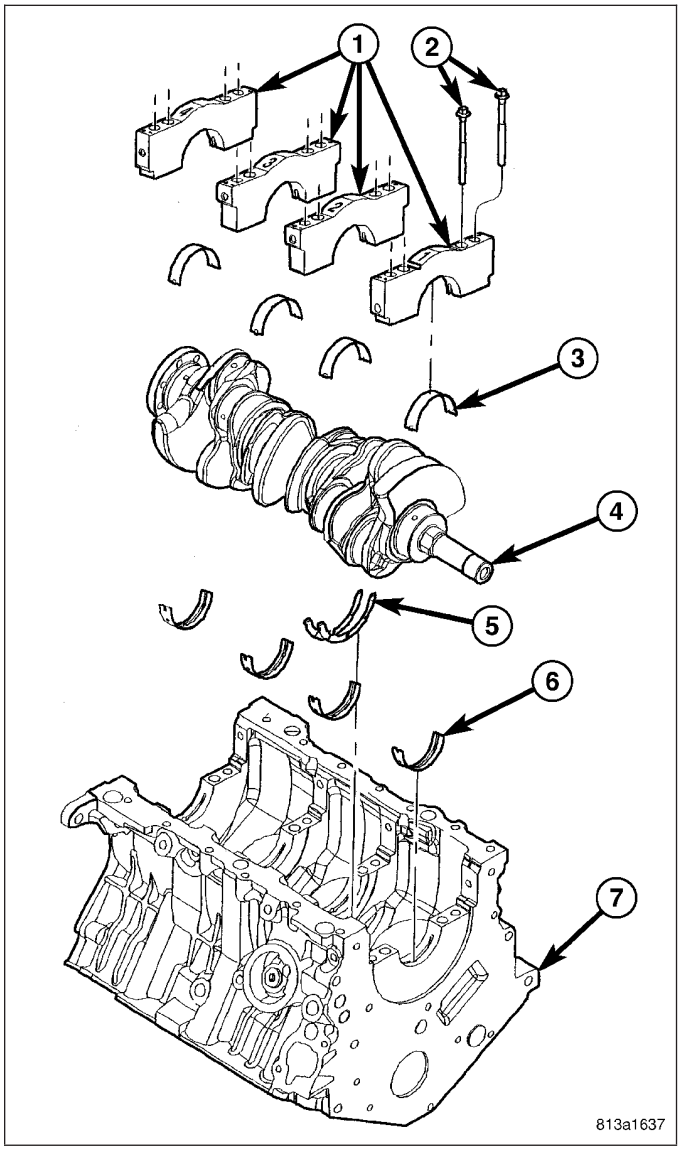

CLEANING

Clean cylinder block thoroughly using a suitable cleaning solvent.

INSPECTION

ENGINE BLOCK

1. Clean cylinder block thoroughly and check all core hole plugs for evidence of leaking.
2. If new core plugs are to be installed, (Refer to 9 - ENGINE - STANDARD PROCEDURE - ENGINE CORE AND OIL GALLERY PLUGS).
3. Examine block and cylinder bores for cracks or fractures.
4. Check block deck surfaces for flatness. Deck surface must be within service limit of 0.1 mm (0.004 in.).

CYLINDER BORE

NOTE: The cylinder bores should be measured at normal room temperature, 21°C (70°F).

The cylinder walls should be checked for out-of-round and taper with Tool C119 cylinder bore gauge, or equivalent (Refer to 9 - ENGINE - SPECIFICATIONS). If the cylinder walls are badly scuffed or scored, the cylinder block should be replaced, and new pistons and rings fitted.

Measure the cylinder bore at three levels in directions A and B. Top measurement should be 10 mm (3/8 in.) down and bottom measurement should be 10 mm (3/8 in.) up from bottom of bore. (Refer to 9 - ENGINE - SPECIFICATIONS).

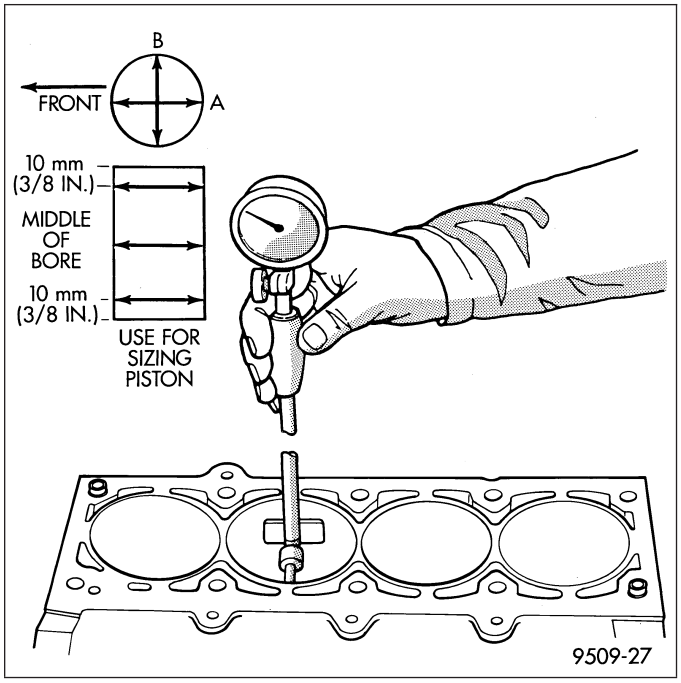

BEARING -CONNECTING ROD

STANDARD PROCEDURE

CONNECTING RODS AND BEARINGS

CAUTION: The bearing caps are not interchangeable and should be paint marked or scribed at removal to insure correct assembly. DO NOT use a metal stanp.

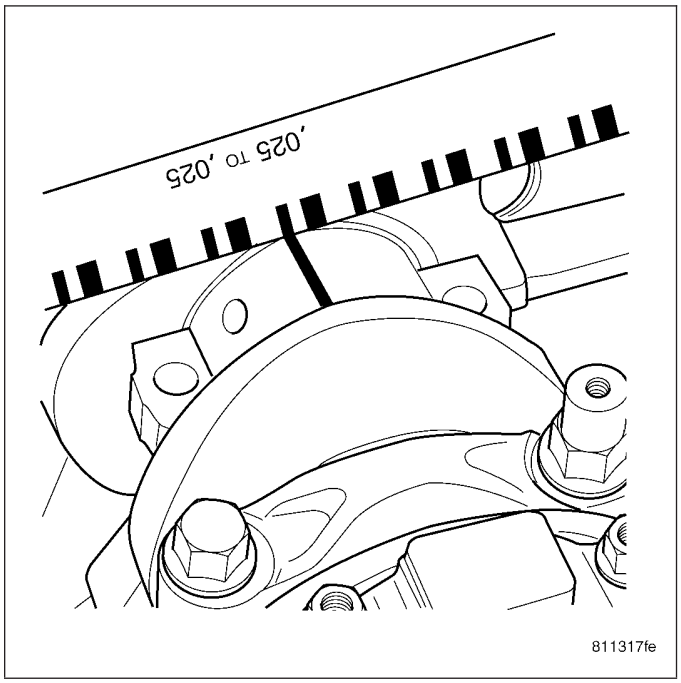

The bearing shells must be installed with the tangs inserted into the machined grooves in the rods and caps. Install cap with the tangs on the same side as the rod.

Fit all rods on one bank until complete.

Limits of out-of-round on any crankshaft journals should be held to 0.008 mm (0.0003 in.). Bearings are available in standard, 0.025 mm (0.001 in.), and 0.254 mm (0.010 in.) undersizes. **Install the bearings in pairs. Do not use a new bearing half with an old bearing half. Do not file the rods or bearing caps.**

1. For measuring main bearing clearance and connecting rod bearing clearance use plastigage. For more information on using plastigage (Refer to 9 - ENGINE - STANDARD PROCEDURE). Refer to Engine Specifications for bearing clearance specifications (Refer to 9 - ENGINE - SPECIFICATIONS).

NOTE: The rod bearing bolts should be examined before reuse. If the threads are necked down the bolts must be replaced.

CONNECTING ROD BOLTS

1. Examine connecting rod bolts for stretching (1). Stretching (1) can be checked by holding a scale or straight edge against the threads. If all the threads do not contact the scale the bolt must be replaced.
2. Before installing the bolts the threads should be cleaned and inspected.
3. Install clean bolts finger tight. Then alternately torque each bolt to assemble the cap properly.
4. Tighten the connecting rod cap bolts to specification. (Refer to 9 - ENGINE - SPECIFICATIONS).

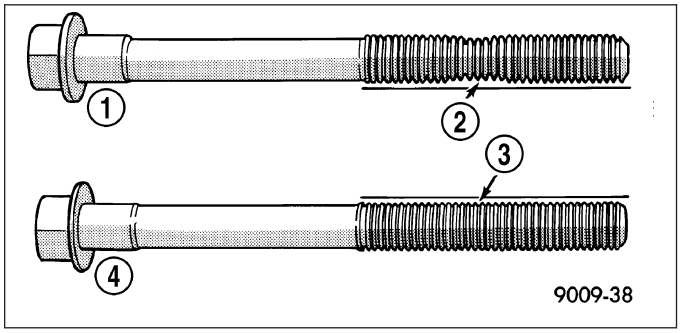

CONNECTING ROD SIDE CLEARANCE

1. Mount a dial indicator to a stationary point on engine. Locate probe perpendicular to and resting against the connecting rod cap being checked. Move connecting rod all the way to rear of its travel. Zero the dial indicator. Move connecting rod forward to limit of travel and read the dial indicator. Compare measurement to specification listed in engine specifications (Refer to 9 - ENGINE - SPECIFICATIONS). Repeat procedure for each connecting rod. Turn crankshaft for connecting rod accessibility.

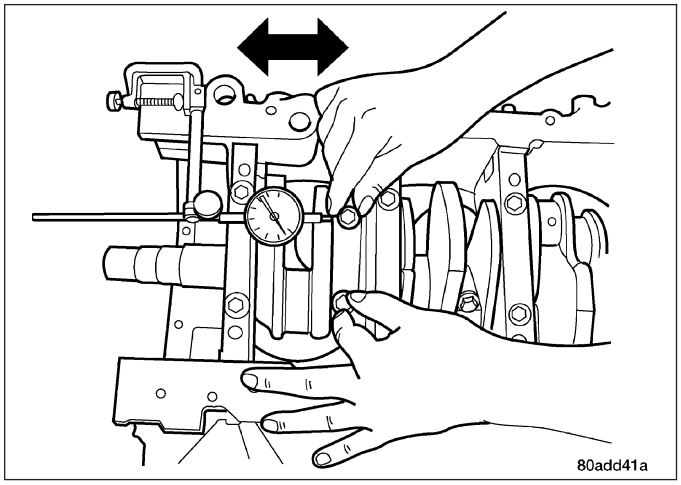

CRANKSHAFT

DESCRIPTION

The crankshaft is constructed of a forged micro alloy steel. A six throw, nine counterweight crankshaft is supported by four select fit main bearings with number two serving as the thrust washer location. The six separate connecting rod throws are an even-firing design which reduces torque fluctuations while a torsional vibration damper is used to control torsion caused vibration of the crankshaft. Rubber lipped seals are used at front and rear. The front seal is retained in the oil pump case and the rear seal is retained in a block-mounted housing.

OPERATION

The crankshaft transfers force generated by combustion within the cylinder to the flywheel or flexplate.

REMOVAL

1. Remove engine from vehicle (Refer to 9 - ENGINE - REMOVAL).
2. Remove oil pan (Refer to 9 - ENGINE/LUBRICATION/OIL PAN - REMOVAL).
3. Remove oil pickup tube.
4. Remove front timing belt cover (Refer to 9 - ENGINE/VALVE TIMING/TIMING BELT / CHAIN COVER(S) - REMOVAL).
5. Remove timing belt and tensioner (Refer to 9 - ENGINE/VALVE TIMING/TIMING BELT/CHAIN AND SPROCKETS - REMOVAL).
6. Remove crankshaft sprocket (Refer to 9 - ENGINE/VALVE TIMING/TIMING BELT/CHAIN AND SPROCKETS - REMOVAL).
7. Tap dowel pin out of crankshaft.
8. Remove oil pump assembly (Refer to 9 - ENGINE/LUBRICATION/OIL PUMP - REMOVAL).
9. Remove crankshaft rear oil seal retainer (Refer to 9 - ENGINE/ENGINE BLOCK/CRANKSHAFT REAR OIL SEAL RETAINER - REMOVAL).

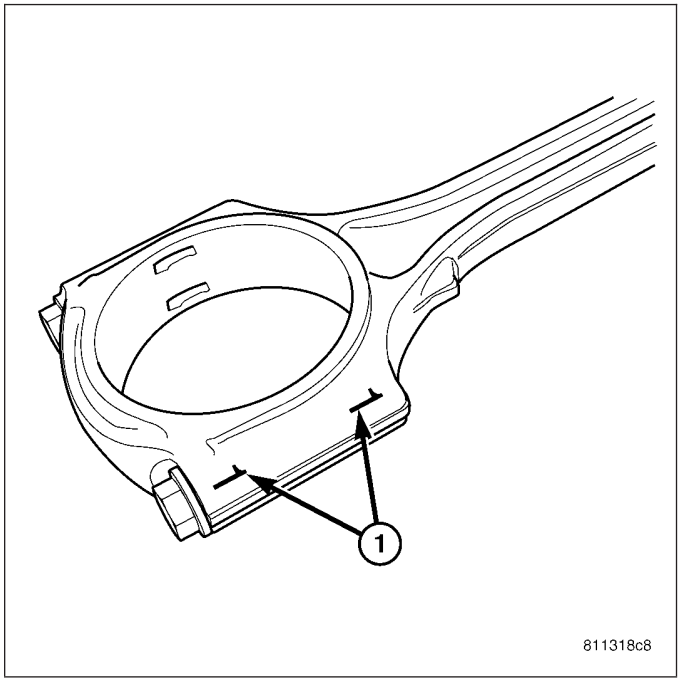

CAUTION: Connecting rod bearing caps are not interchangeable and should be paint marked or scribed before removal to insure correct assembly. DO NOT use a metal stamp to mark the bearing caps.

10. Remove connecting rod bearing caps.

WARNING: Main bearing caps are not interchangeable and should be paint marked or scribed before removal to insure correct assembly. DO NOT use a metal stamp to mark the bearing caps.

11. Remove main bearing caps (1). Main bearing caps (1) are not interchangeable and are marked to insure correct assembly.

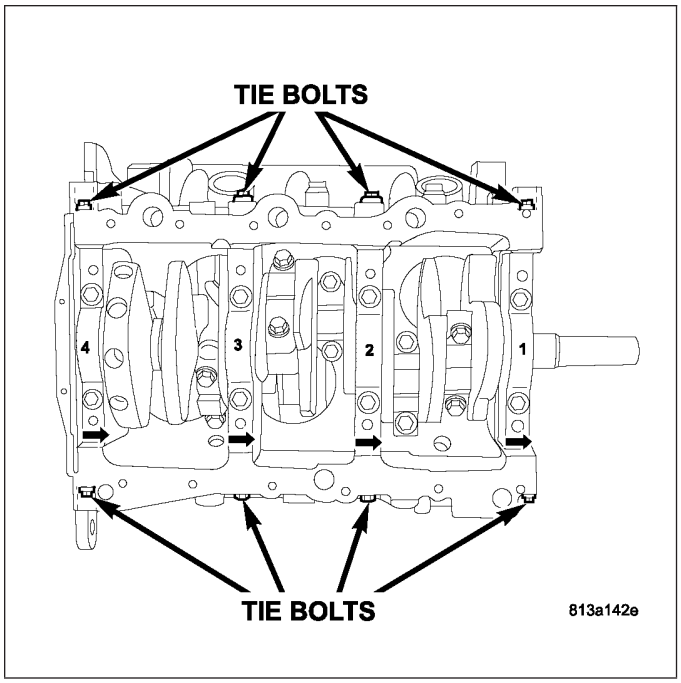

12. Remove crankshaft (4) from cylinder block (7).

NOTE: Before installing crankshaft, refer to Fitting Main Bearings and Installation of Connecting Rod Bearings. (Refer to 9 - ENGINE/ENGINE BLOCK/ CRANKSHAFT MAIN BEARINGS - STANDARD PROCEDURE) (Refer to 9 - ENGINE/ENGINE BLOCK/CONNECTING ROD BEARINGS - STANDARD PROCEDURE)

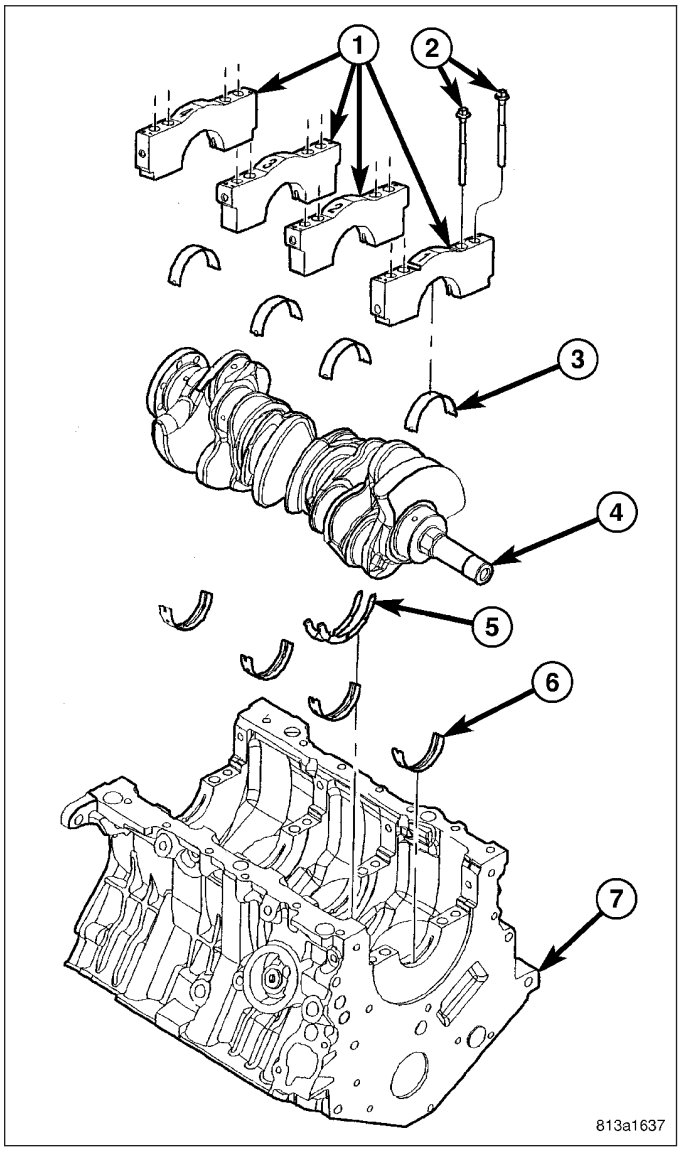

INSPECTION

The crankshaft journals should be checked for excessive wear, taper and scoring. Limits of taper on any crankshaft journals should be held to 0.010 mm (0.0004 in.). Limits for journal roundness should be 0.008 mm (0.0003 in.). Journal grinding should not exceed 0.254 mm (0.010 in.) under the standard journal diameter. DO NOT grind thrust faces of Number 2 main bearing. DO NOT nick crank pin or bearing fillets. After grinding, remove rough edges from crankshaft oil holes and clean out all passages. Crank journals must be polished smooth 0.10 micron ra.

CAUTION: With a forged steel crankshaft it is important that the final paper or cloth polish after any journal regrind be in the same direction as normal rotation in the engine.

INSTALLATION

CAUTION: Main bearings are select fit (Refer to 9 - ENGINE/ENGINE BLOCK/CRANKSHAFT MAIN BEARINGS - STANDARD PROCEDURE) for proper bearing size selection.

1. Install crankshaft upper main bearings in cylinder block. Ensure oil holes in bearings line up with oil holes in cylinder block. (Refer to 9 - ENGINE/ENGINE BLOCK/CRANKSHAFT MAIN BEARINGS - STANDARD PROCEDURE)

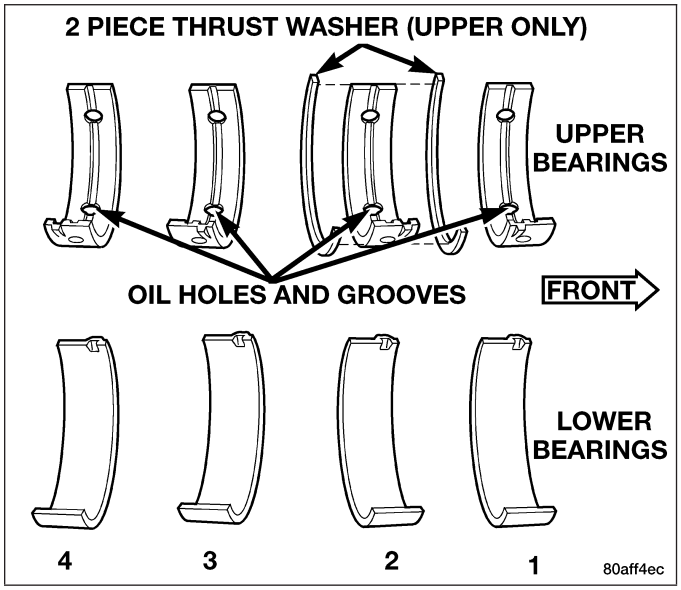

NOTE: Care must be taken not to damage the journals or bearings during crankshaft installation.

2. Install the crankshaft (4) to cylinder block (7)

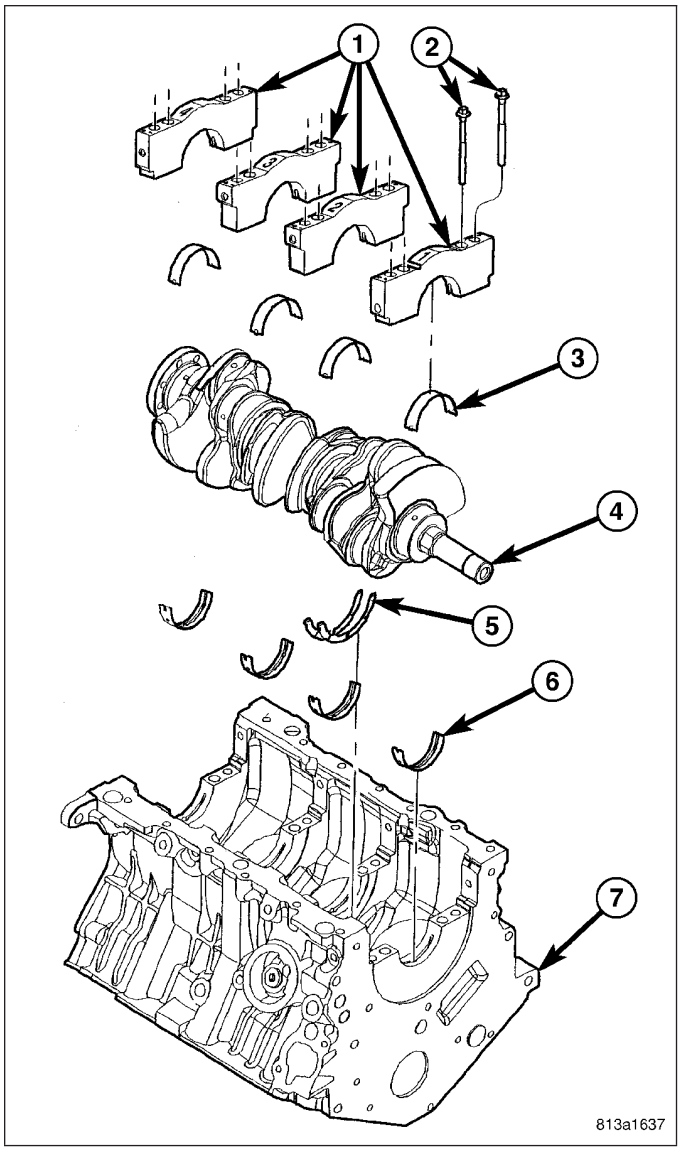

3. Move crankshaft forward to limit of travel. Lubricate and install the front thrust washer (1) by rolling the washer (1) onto the machined shelf between the No. 2 upper main bulk head and crankshaft thrust surface.
4. Move crankshaft rearward to limit of travel. Lubricate and install the rear thrust washer by rolling the washer onto the machined shelf between the No. 2 upper main bulk head and crankshaft thrust surface.

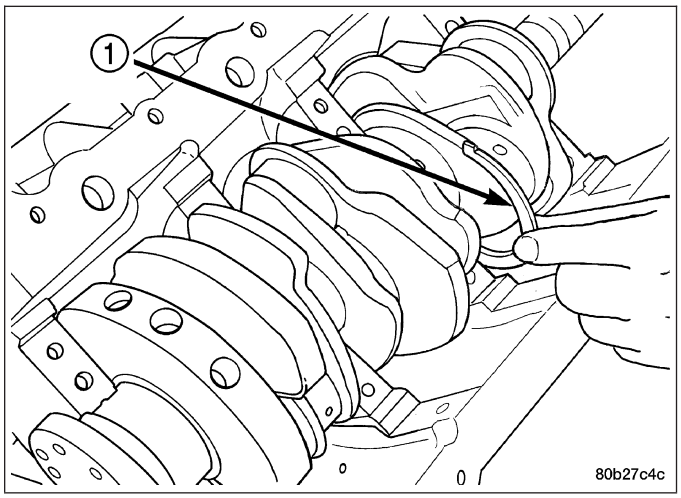

5. Install lower main bearings (3) into main bearing caps (1).
6. Lubricate lower main bearings (3) with clean engine oil.

NOTE: Lubricate main bearing cap bolts (2) with engine oil before installation.

7. Install each main cap (1) and tighten bolts finger tight.

The main bearing cap bolts (2) must be tightened in the proper sequence. First the inner main cap bolts (2), secondly the windage tray bolts, lastly the main cap tie (horizontal) bolts (6).

8. Install the inside main bearing cap bolts (2) and tighten to 20 N·m + 1/4 turn (15 ft. lbs. + 1/4 turn).
9. Measure crankshaft end play. (Refer to 9 - ENGINE/ENGINE BLOCK/CRANKSHAFT - STANDARD PROCEDURE)
10. Install connecting rods and measure side clearance. (Refer to 9 - ENGINE/ENGINE BLOCK/ CONNECTING ROD BEARINGS - STANDARD PROCEDURE)
11. Install windage tray. Lubricate bolts with engine oil and tighten to 27 N·m + 1/4 turn (20 ft. lbs. + 1/4 turn).

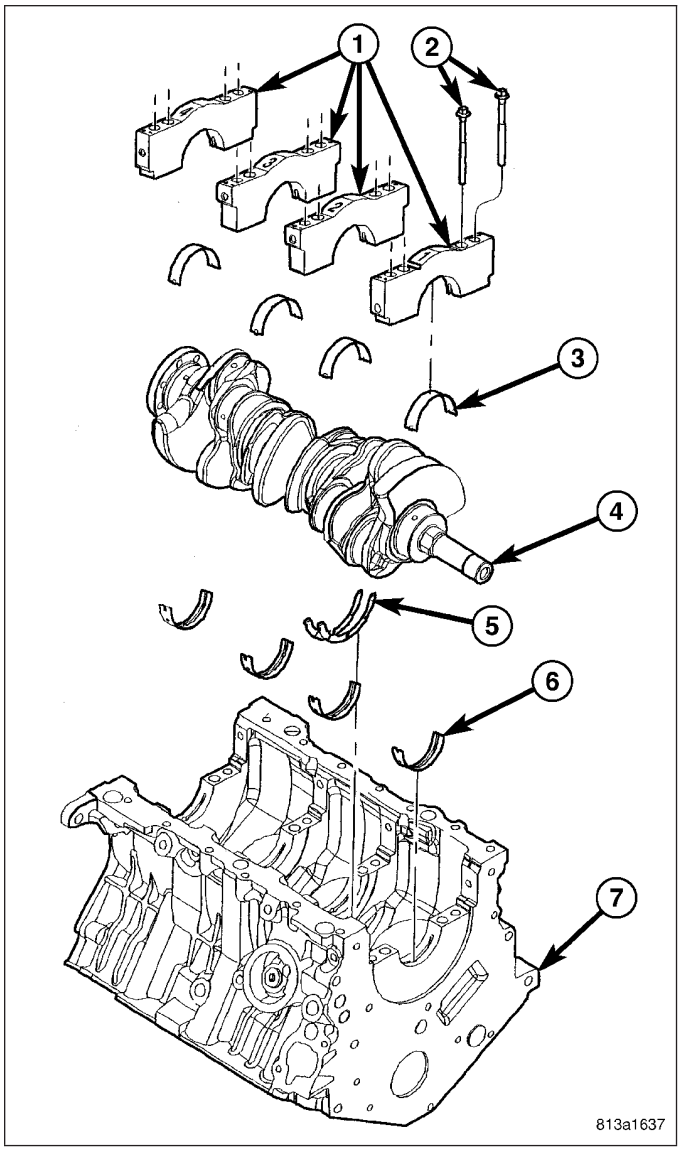

12. Install the main cap tie (horizontal) bolts and tighten to 28 N·m (250 in. lbs.).
13. Install rear crankshaft oil seal retainer and oil seal (Refer to 9 - ENGINE/ENGINE BLOCK/CRANKSHAFT REAR OIL SEAL RETAINER - INSTALLATION) and (Refer to 9 - ENGINE/ENGINE BLOCK/CRANKSHAFT OIL SEAL - REAR - INSTALLATION)
14. Install oil pump assembly (Refer to 9 - ENGINE/ LUBRICATION/OIL PUMP - INSTALLATION).
15. Install dowel pin in crankshaft (Refer to 9 - ENGINE/ENGINE BLOCK/CRANKSHAFT OIL SEAL - FRONT - INSTALLATION).
16. Install crankshaft sprocket (Refer to 9 - ENGINE/ VALVE TIMING/TIMING BELT/CHAIN AND SPROCKETS - INSTALLATION).
17. Install timing belt and tensioner (Refer to 9 - ENGINE/VALVE TIMING/TIMING BELT/CHAIN AND SPROCKETS - INSTALLATION).

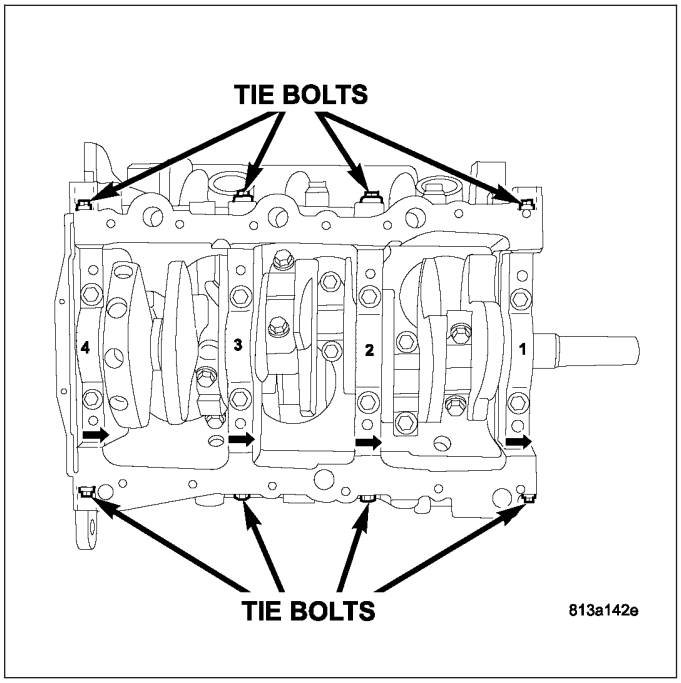

18. Install front timing belt cover (Refer to 9 - ENGINE/VALVE TIMING/TIMING BELT / CHAIN COVER(S) - INSTALLATION).
19. Install oil pickup tube and tighten bolt to 28 N·m (250 in. lbs.).
20. Install oil pan (Refer to 9 - ENGINE/LUBRICATION/OIL PAN - INSTALLATION).
21. Install engine assembly (Refer to 9 - ENGINE - INSTALLATION).
22. Fill engine crankcase with proper amount of oil.

BEARING -CRANKSHAFT MAIN

STANDARD PROCEDURE

CRANKSHAFT MAIN BEARING FITTING

The main bearings are a “select fit” to achieve proper oil clearances. For main bearing selection, the block and crankshaft have grade identification marks.

The marks for the cylinder block main bore grade are located on the right front side of the engine block. These grade marks (1, 2, or 3) are read left to right, corresponding to main bore 1, 2, 3, 4. The 5th digit is a check some digit for plant validation during manufacturing.

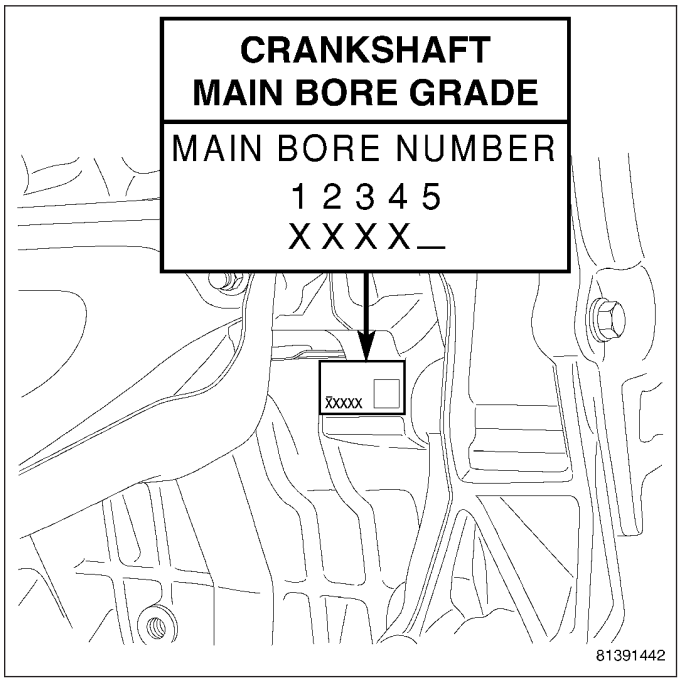

The grade marks for the crankshaft are located on the rearmost crankshaft counter weight as shown in. The crankshaft journal grade marks (A, B, or C) are read left to right, corresponding with journal number 1, 2, 3, 4.

Refer to the MAIN BEARING SELECTION CHART to properly select the main bearings. For an example, if the main bore grade is 3 and the journal grade is B, the proper select fit bearing would be a (2) +0.003 mm (+0.0002 in.).

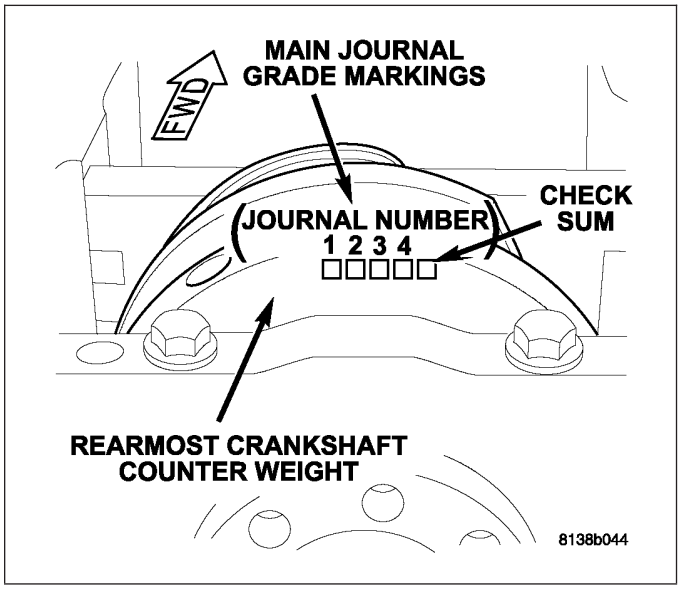

NOTE: Service main bearings have a number from (1–5) marked in ink on the bearing surface. For verification, refer to the MAIN BEARING SELECTION CHART for number to size identification.

The upper main bearing (2) has a oil feed hole and a center groove to allow lubrication of the main journal and must be properly positioned in the block.

MAIN BEARING SELECTION CHART

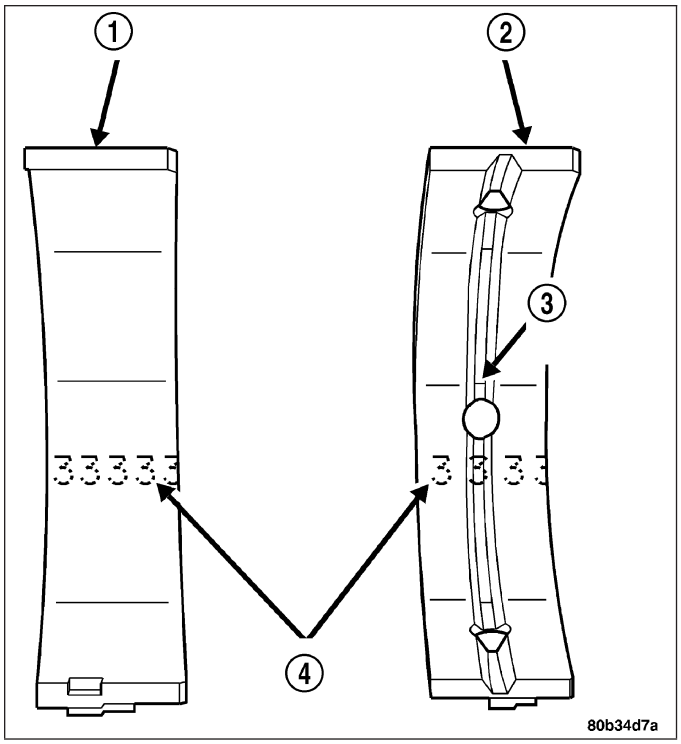

		Main Bearing Bore Grade Marks		
		1	2	3
Crankshaft Main Journal Grade Marks Each bearing grade increment of 0.003 mm is for wall thickness so diametrical clearances are adjusted 0.006 mm per select fit class	**A**	(3) Standard	(2) +003 mm (+0.0001 in.)	(1) +0.006 mm (+0.0002 in.)
	B	(4) -0.003 mm (-0.0001 in.)	(3) Standard	(2) +003 mm (+0.0001 in.)
	C	(5) -0.006 mm (-0.0002 in.)	(4) -0.003 mm (-0.0001 in.)	(3) Standard

CHART 1

Crankshaft Diameter (mm)		
Min	Max	Grade
63.9870 mm	63.9956 mm	A
63.9957 mm	64.0042 mm	B
64.0043 mm	64.0130 mm	C

CHART 2

Block Main Bore Diameter (mm)		
Min	Max	Grade
68.9895 mm	68.9964 mm	1
68.9965 mm	69.0034 mm	2
69.0035 mm	69.0105 mm	3

		Block Main Bore Grade		
		1	2	3
Crankshaft Journal Grade	**A**	Class 3	Class 2	Class 1
	B	Class 4	Class 3	Class 2
	C	Class 5	Class 4	Class 3

REMOVAL

Bearing caps are not interchangeable and are marked to insure correct assembly. Upper and lower bearing halves are NOT interchangeable.

1. Remove oil pan. (Refer to 9 - ENGINE/LUBRICATION/OIL PAN - REMOVAL)
2. Remove oil pick-up tube and windage tray.
3. Identify bearing caps before removal.

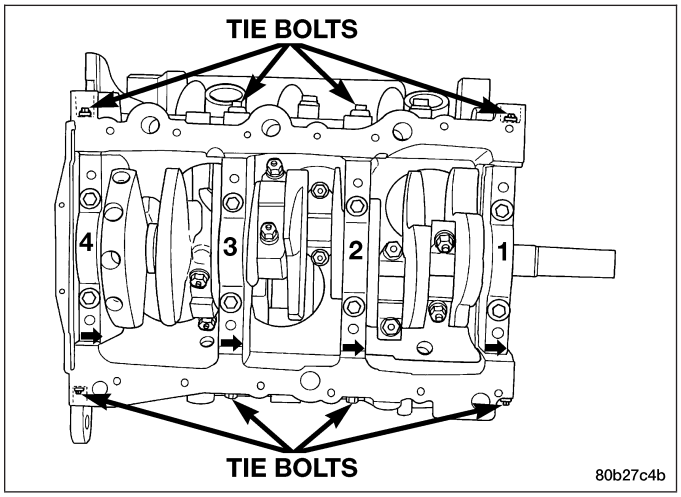

4. Remove bearing caps one at a time. Remove upper half of bearing by inserting Main Bearing Tool C-3059 into the oil hole of crankshaft.
5. Slowly rotate crankshaft clockwise, forcing out upper half of bearing shell.

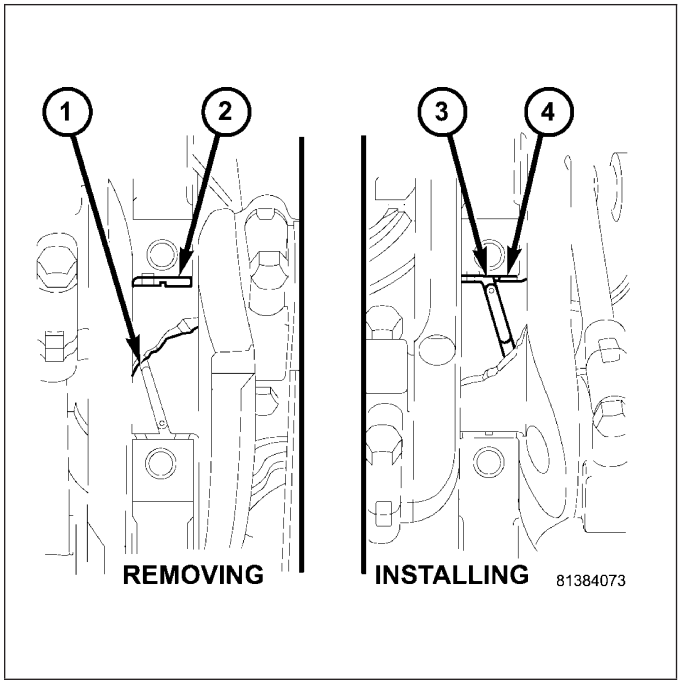

INSTALLATION

Bearing caps are not interchangeable and are marked to insure correct assembly. Upper and lower bearing halves are NOT interchangeable.

CAUTION: Main bearings are select fit. (Refer to 9 - ENGINE/ENGINE BLOCK/CRANKSHAFT MAIN BEARINGS - STANDARD PROCEDURE)

NOTE: Only one main bearing should be selectively fitted while all other main bearing caps are properly tightened.

When installing a new upper bearing shell, slightly chamber the sharp edges from the plain side.

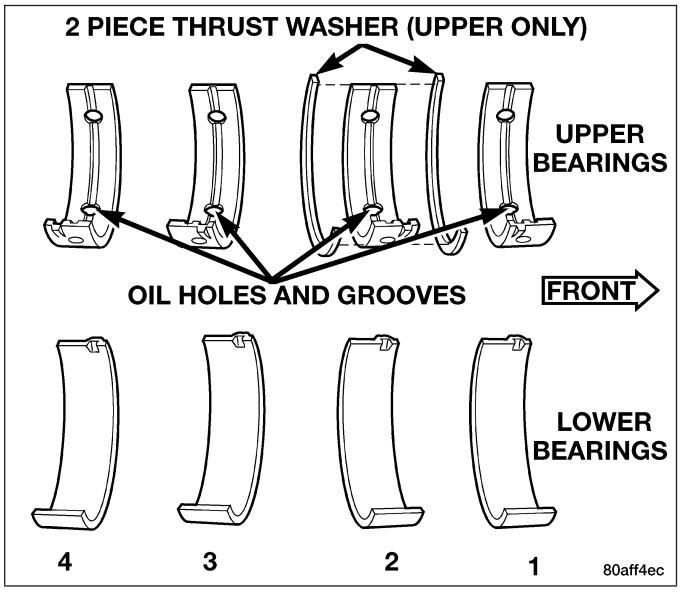

1. Lubricate main bearing (4) with clean engine oil.
2. Start bearing (4) in place, and insert Main Bearing Tool C-3059 (3) into oil hole of crankshaft.
3. Slowly rotate crankshaft counterclockwise sliding the bearing into position. Remove Main Bearing Tool C-3059.

NOTE: Lubricate main bearing cap bolts with engine oil before installation.

4. Lubricate and install lower bearing half and main cap Tighten bolts finger tight.

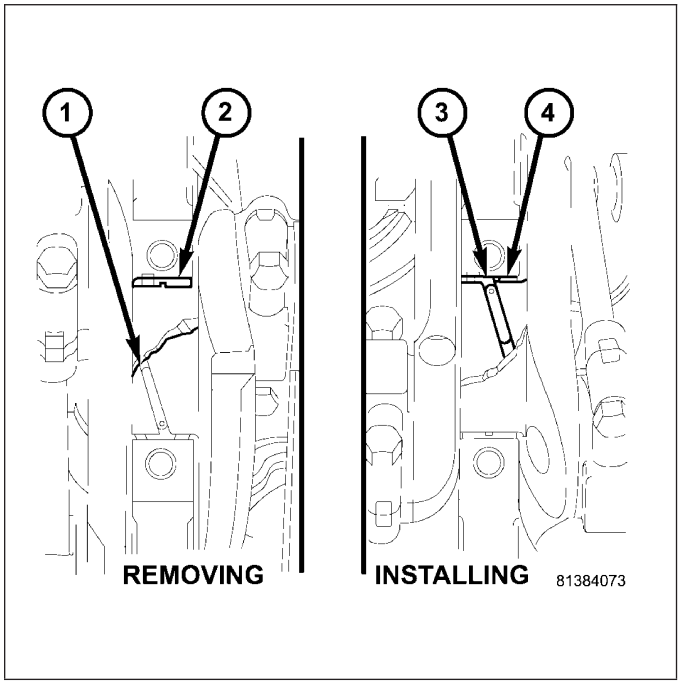

5. For installing thrust washers (1) at the No. 2 main bearing location, use the following procedure:
   a. Move crankshaft forward to limit of travel. Lubricate and install the front thrust washer (1) by rolling the washer onto the machined shelf between the No. 2 upper main bulk head and crankshaft thrust surface.
   b. Move crankshaft rearward to limit of travel. Lubricate and install the rear thrust washer by rolling the washer onto the machined shelf between the No. 2 upper main bulk head and crankshaft thrust surface.

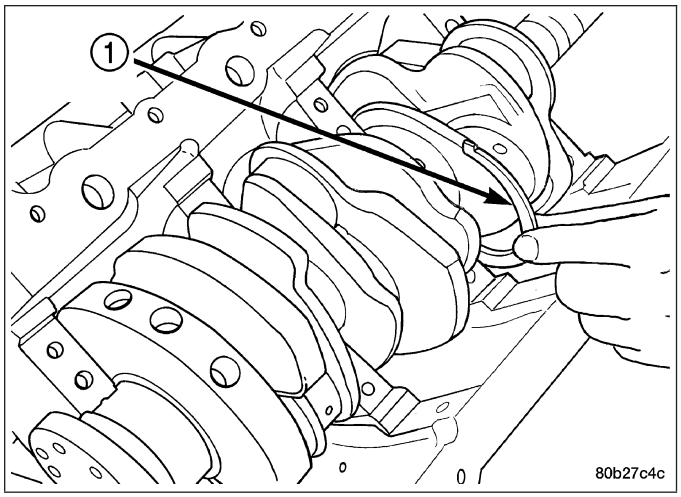

The main bearing cap bolts (2) must be tightened in the proper sequence. First the inner main cap bolts, secondly the windage tray bolts, lastly the main cap tie (horizontal) bolts.

6. Install each main bearing cap (1) and tighten inner bolts finger tight.
7. Tighten inner main bearing cap bolts (2) to 20 N·m + 1/4 turn (15 ft. lbs. + 1/4 turn).
8. Measure crankshaft end play. (Refer to 9 - ENGINE/ENGINE BLOCK/CRANKSHAFT - STANDARD PROCEDURE)
9. Install windage tray. Lubricate bolts with engine oil and tighten to 27 N·m + 1/4 turn (20 ft. lbs. + 1/4 turn).

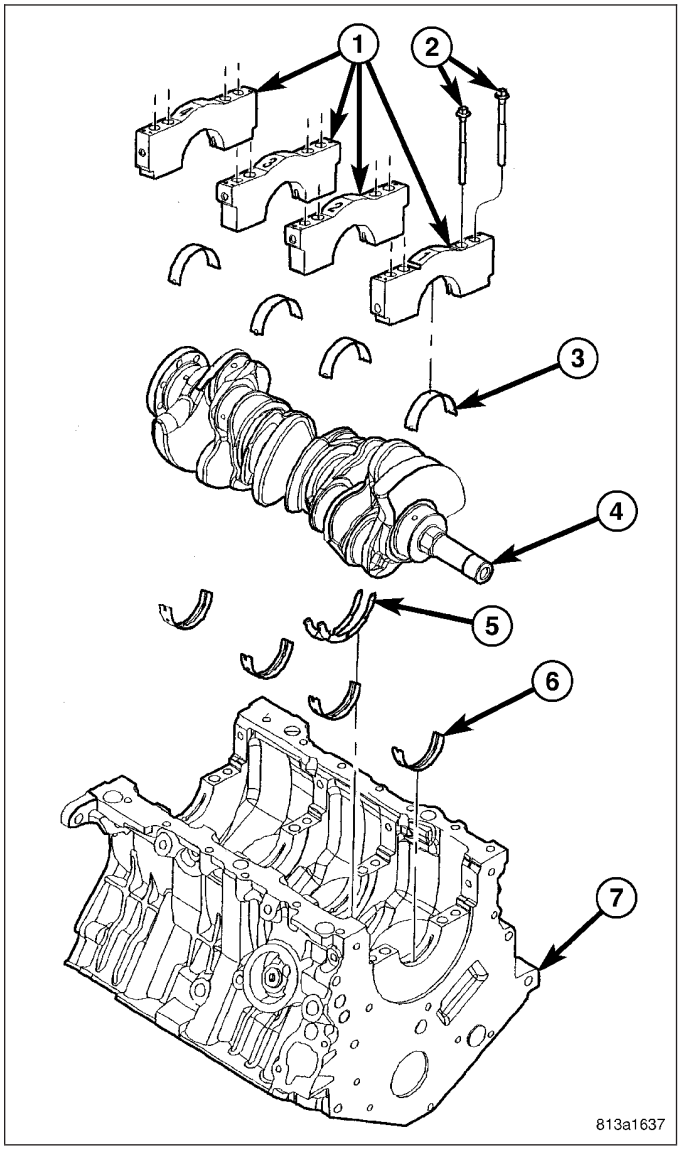

10. Install the main cap tie (horizontal) bolts and tighten to 28 N·m (250 in. lbs.)
11. Install oil pick-up tube.
12. Install oil pan. (Refer to 9 - ENGINE/LUBRICATION/OIL PAN - INSTALLATION)
13. Fill engine crankcase with proper oil to correct level.

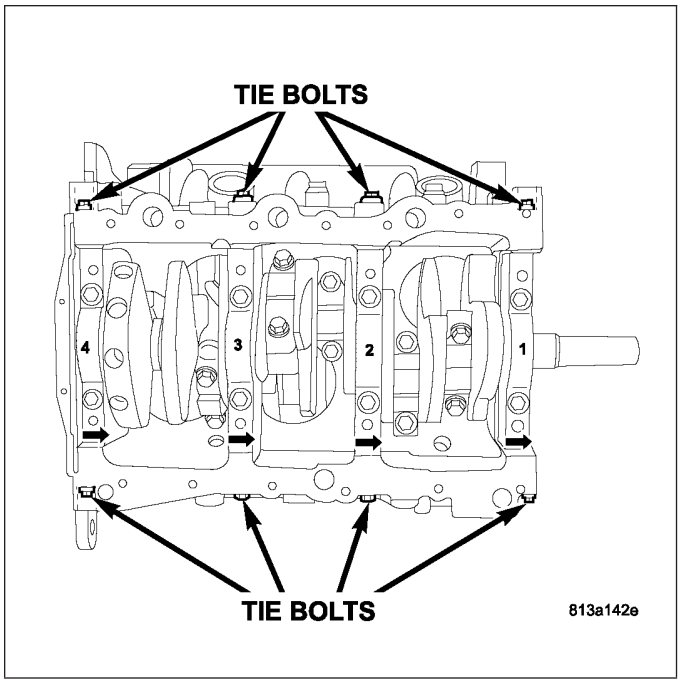

SEAL -CRANKSHAFT OIL FRONT

REMOVAL

1. Remove the crankshaft sprocket. (Refer to 9 - ENGINE/VALVE TIMING/TIMING BELT/CHAIN AND SPROCKETS - REMOVAL)
2. Tap the dowel pin (2) out of the crankshaft.

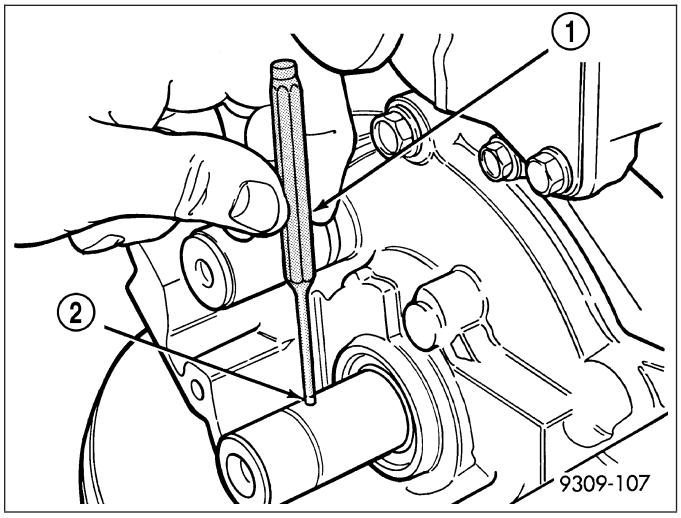

3. Remove crankshaft seal using Tool 6341A (1).

CAUTION: Do not nick shaft seal surface or seal bore.

4. Shaft seal lip surface must be free of varnish, dirt or nicks. Polish with 400 grit paper if necessary.

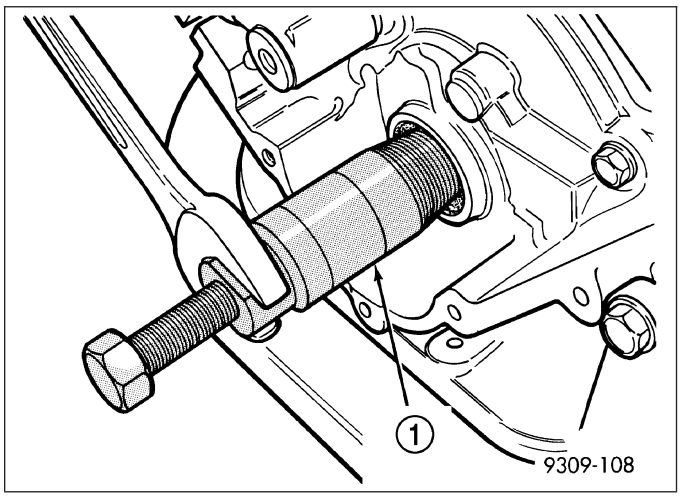

INSTALLATION

1. Install crankshaft seal using Special Tool 6342 (1).
2. Install the dowel pin into the crankshaft to 1.2 mm (0.047 in.) protrusion.
3. Install the crankshaft sprocket (Refer to 9 - ENGINE/VALVE TIMING/TIMING BELT/CHAIN AND SPROCKETS - INSTALLATION.)

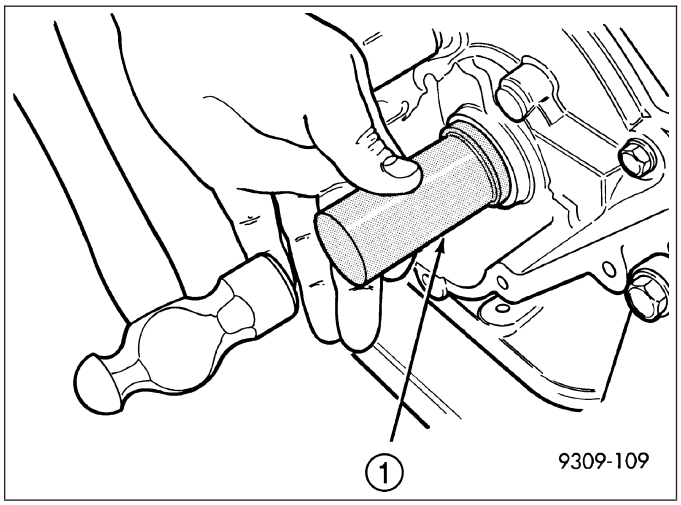

SEAL - CRANKSHAFT OIL REAR

DESCRIPTION

The rear crankshaft oil seal (1) and retainer (3) are molded and serviced as an assembly. This assembly also includes a separate rear crankshaft seal protector (1) that should not be removed before the seal is installed on the engine block. Once the seal protector (1) is separated from the assembly it can not be re-installed on the assembly or reused.

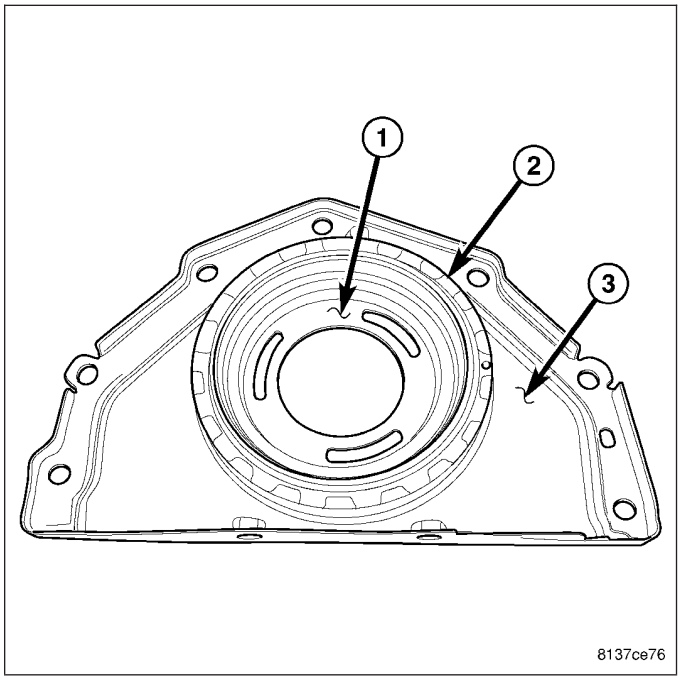

REMOVAL

1. Remove the engine oil pan (Refer to 9 - ENGINE/ LUBRICATION/OIL PAN - REMOVAL).
2. Lower the weight of the engine back onto the engine mounts.
3. Remove transmission from vehicle. (Refer to 21 - TRANSMISSION/TRANSAXLE/AUTOMATIC - 42LE - REMOVAL)
4. Remove the flex plate.
5. Remove the rear crankshaft oil seal retainer bolts.
6. Remove the crankshaft oil seal and clean all mating surfaces.

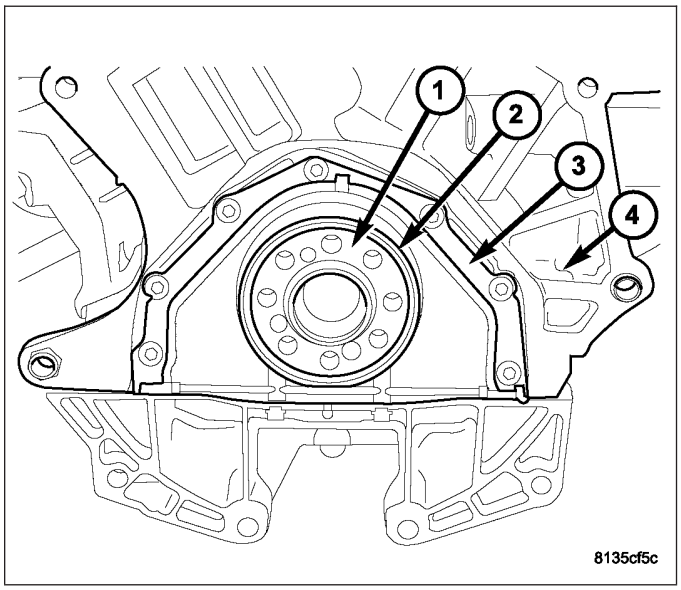

INSTALLATION

NOTE: The seal lip (2) must always uniformly curl inward toward the engine on the crankshaft (1).

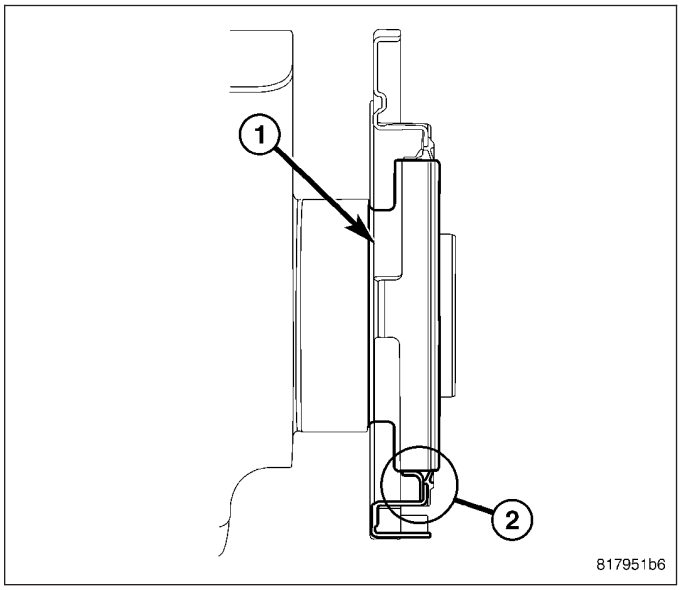

CAUTION: If a burr or scratch is present on the crankshaft edge (chamfer), clean surface using 400 grit sand paper to prevent seal damage during installation.

NOTE: The rear crankshaft oil seal and retainer are an assembly. DO NOT separate the seal protector from the rear crankshaft oil seal before installation on engine. Damage to the seal lip will occur if the seal protector is removed and installed prior to installation on engine.

1. Apply engine oil to crankshaft seal surface.
2. Carefully position the oil seal, retainer and seal protector on crankshaft and push firmly into place on engine block (the seal protector will be removed from the rear oil seal assembly as a result of installing the rear oil seal). Hand tighten the rear oil seal fasteners.

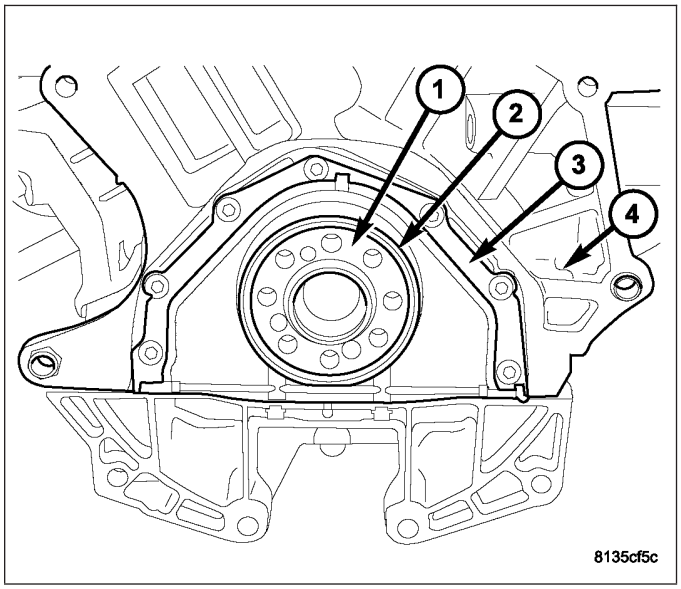

NOTE: The following steps must be performed to prevent oil leaks at sealing joints.

3. Attach Special Tools 8225 (1) to pan rail using the oil pan fasteners.

NOTE: Special Tools 8225 (1), are use to assist with the fit of the flush mount rear main seal retainer. The notch on tool should be located away the seal retainer.

4. While applying firm pressure to the seal retainer against Special Tools 8225 (1), tighten seal retainer screws to 12 N·m (105 in. lbs.).
5. Remove special tool #8225 (1).

NOTE: Make sure that the seal flange is flush with the block oil pan sealing surface.

6. Install oil pan. Tighten the 6mm fasteners to 12N·m (105 in.lbs.) and the 8mm fasteners to 28N·m (250 in.lbs.).
7. Install the flex plate and transmission.

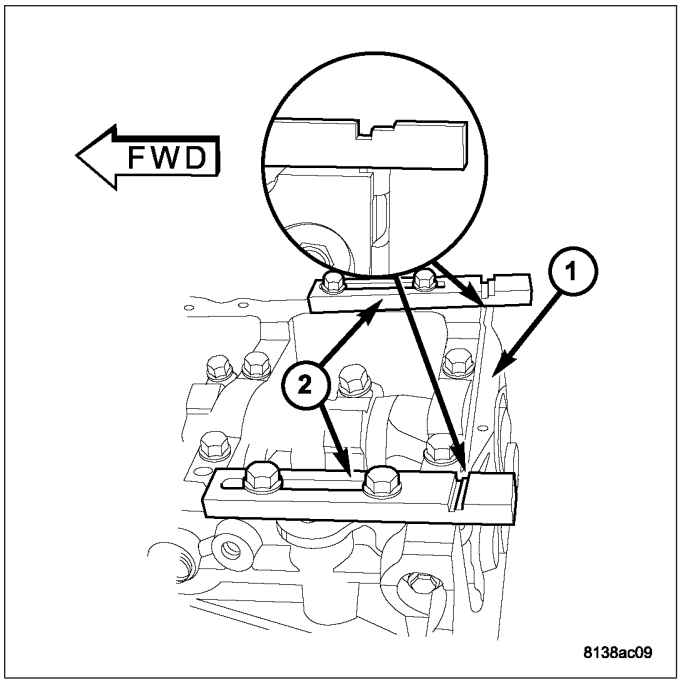

PLATE - FLEX

REMOVAL

1. Remove the transmission.
2. Remove flex plate attaching bolts (2).
3. Remove the flex plate (1).

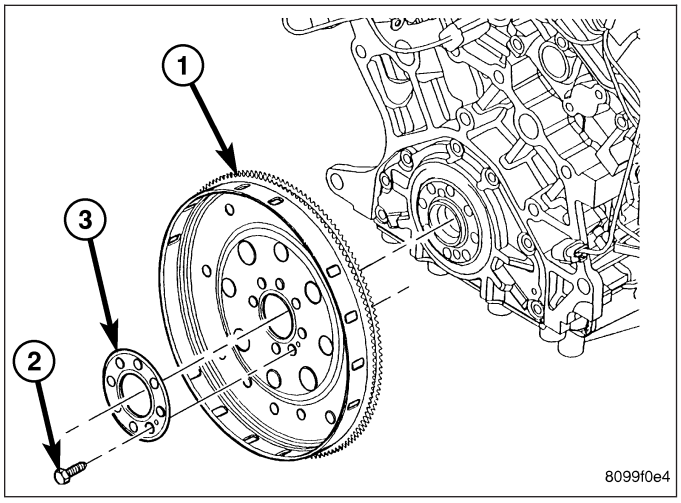

INSTALLATION

1. Position flex plate (1) with backing plate (3) on the crankshaft.
2. Apply Mopar® Lock & Seal Adhesive to the flex plate bolts (2).
3. Install flex plate bolts (2). Tighten bolts to 95 N·m (70 ft. lbs.).
4. Install the transmission.

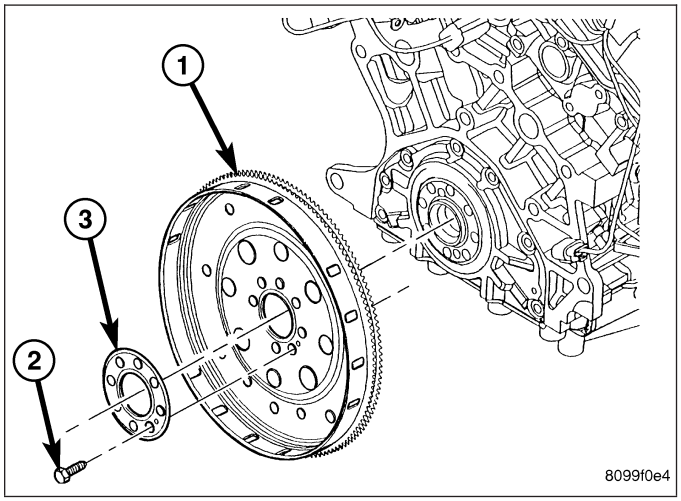

ROD - PISTON & CONNECTING

DESCRIPTION

The pistons are made of a high strength aluminum alloy. Top land height has been decreased to reduce emissions. Piston skirts are coated with a solid lubricant for scuff resistance. Connecting rod is forged steel with a fractured connecting rod cap design. The connecting rod is also equipped with a squirt hole and attaches to the piston with a full floating pin retained by lock rings.

OPERATION

The piston and connecting rod assembly is the link between the combustion force and the crankshaft.

STANDARD PROCEDURE

FITTING PISTONS

The pistons are machined to two different weight specifications and matched to rods based on weight. All piston and rod assemblies weigh the same to maintain engine balance.

Piston and cylinder wall must be clean and dry. Piston diameter should be measured 90° to piston pin at size location shown in. Cylinder bores should be measured halfway down the cylinder bore and transverse to the engine crankshaft center line (Refer to 9 - ENGINE - SPECIFICATIONS). **Pistons and cylinder bores should be measured at normal room temperature, 70°F (21°C).**

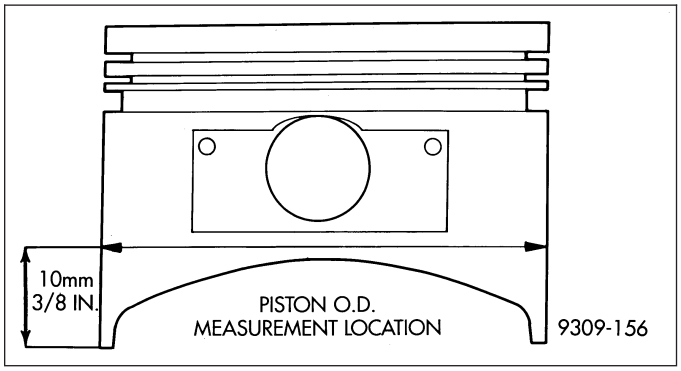

REMOVAL

1. Remove the cylinder heads (Refer to 9 - ENGINE/ CYLINDER HEAD - REMOVAL)
2. Remove the oil pan. (Refer to 9 - ENGINE/LUBRICATION/OIL PAN - REMOVAL)
3. Remove top ridge of cylinder bores with a reliable ridge reamer before removing pistons from cylinder block. **Be sure to keep tops of pistons covered during this operation. Pistons and connecting rods must be removed from top of cylinder block. When removing piston and connecting rod assemblies from the engine, rotate crankshaft so that each connecting rod is centered in cylinder bore.**

CAUTION: DO NOT stamp the connecting rods for cylinder identification

4. Inspect connecting rods and connecting rod caps for cylinder identification. Identify them with a paint mark or scribe, if necessary.

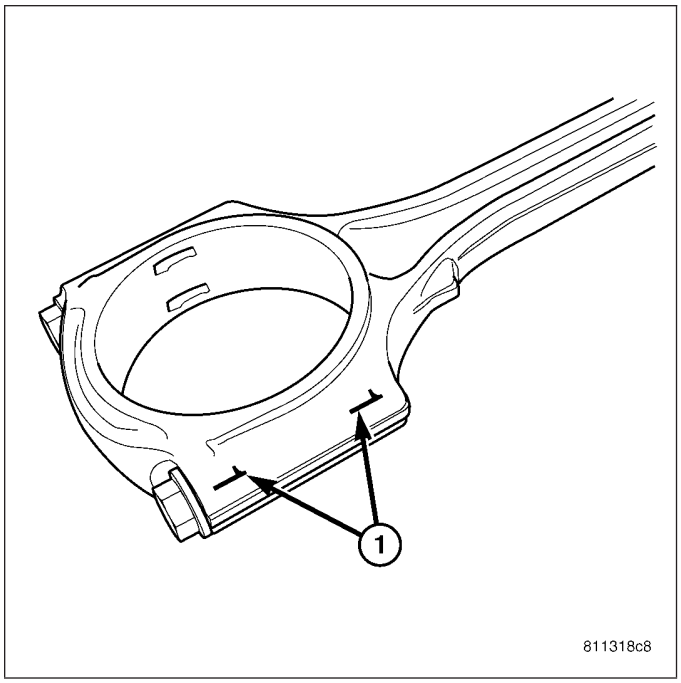

5. Remove connecting rod cap. Install protectors, tool 8189, on connecting rod. Guide each piston and rod assembly out of cylinder bore.

NOTE: Be careful not to nick crankshaft journals.

6. After removal, install bearing cap on the mating rod.

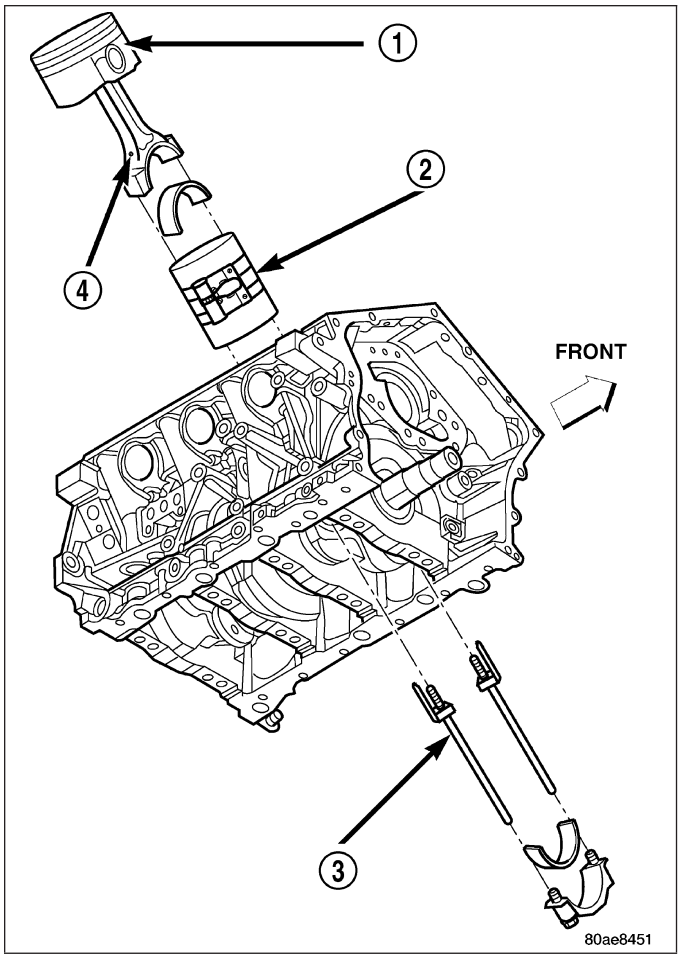

INSTALLATION

1. Install the piston rings. (Refer to 9 - ENGINE/ENGINE BLOCK/PISTON RINGS - INSTALLATION).

NOTE: The connecting rod bearing cap bolts must be examined before reuse. If the threads are necked down, the bolts must be replaced.

2. Check connecting rod bolts for necking by holding a scale or straight edge against the threads. If all threads do not contact the scale, the bolt must be replaced.

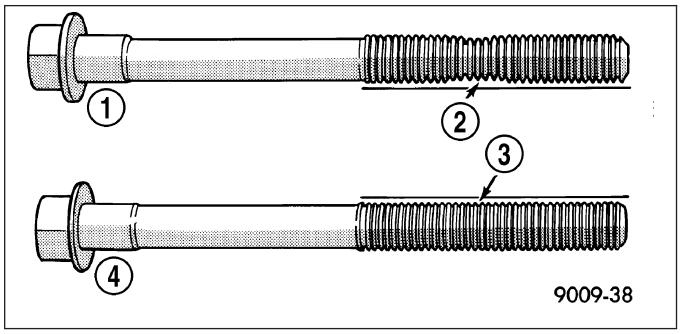

3. Before installing pistons and connecting rod assemblies into the bore, ensure that compression ring gaps are staggered so that neither is in line with oil ring rail gap.

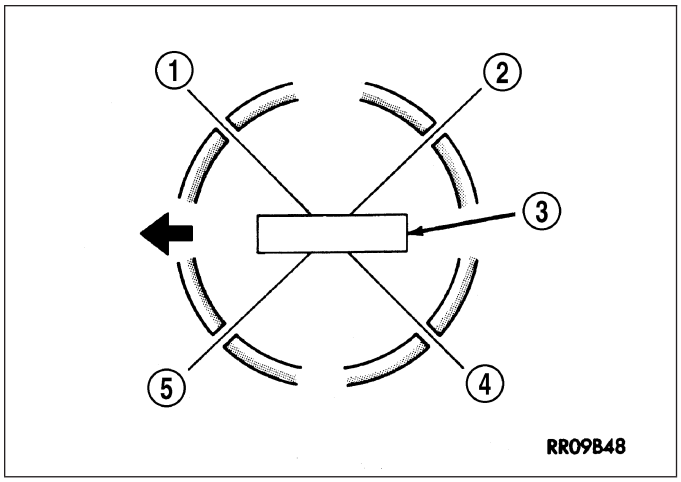

4. Immerse the piston head and rings in clean engine oil, slide the ring compressor over the piston and tighten with the special wrench. **Ensure position of rings does not change during this operation.**
5. Install connecting rod bolt protectors, special tool # 8189.
6. Rotate crankshaft so that the connecting rod journal is on the center of the cylinder bore. Insert the rod and piston into cylinder bore and guide the rod over the crankshaft journal.

CAUTION: Do Not interchange piston assemblies cylinder-to-cylinder or bank-to-bank.

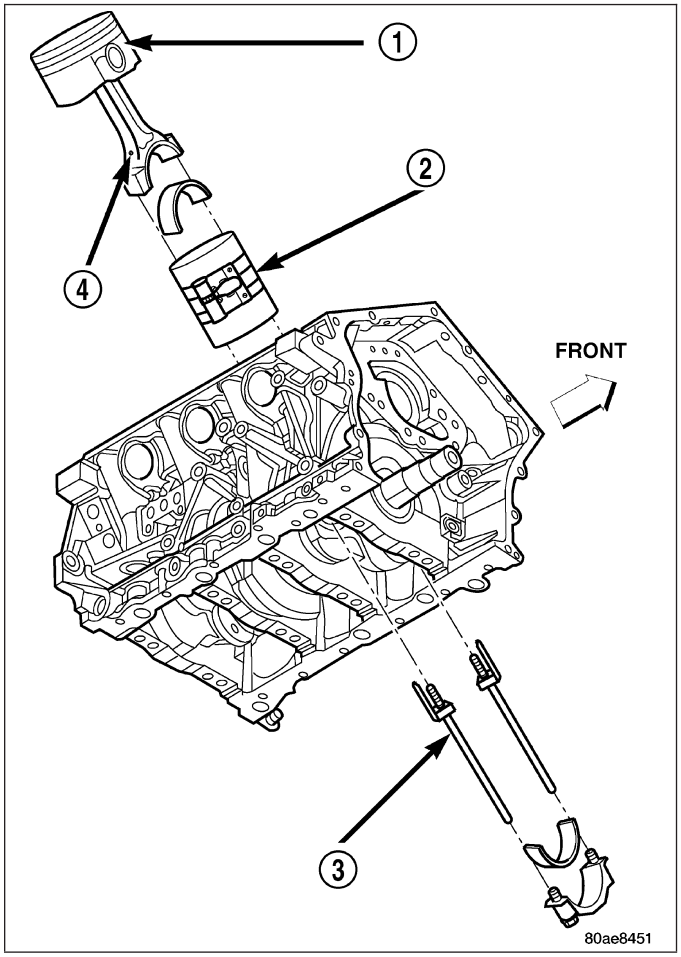

7. The arrow on top of piston must be pointing toward front of engine.

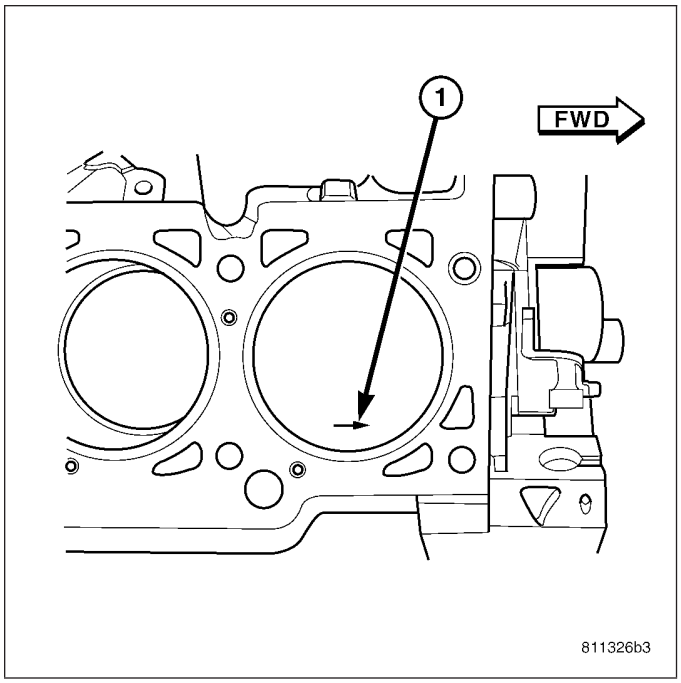

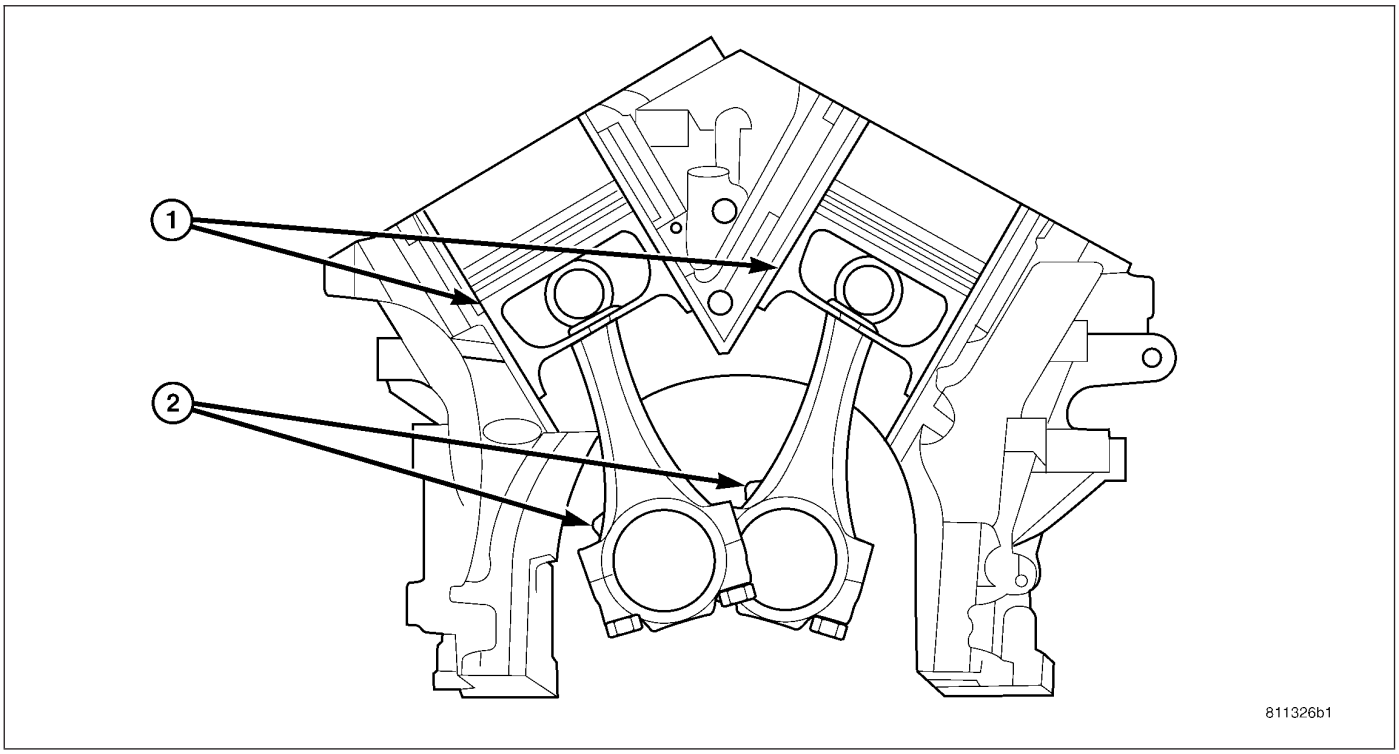

CAUTION: View of connecting rod oil squirt hole is from the front of the engine.

8. The oil squirt hole on connecting rod faces the major thrust side of the cylinder bore.

NOTE: Make sure the rod bearings are seated with the oil squirt hole aligned.

9. Tap the piston down in cylinder bore, using a hammer handle. At the same time, guide connecting rod into position on connecting rod journal.

NOTE: Connecting rod bolts must be lubricated with clean engine oil.

10. Install the rod caps. Install cleaned and inspected connecting rod bolts and tighten to 27 N·m (20 ft. lbs.) Plus 1/4 turn.

11. Install the cylinder head(s) (Refer to 9 - ENGINE/CYLINDER HEAD - INSTALLATION)
12. Install the oil pan. (Refer to 9 - ENGINE/LUBRICATION/OIL PAN - INSTALLATION.)

RING - PISTON

DESCRIPTION

The piston rings include a moly-filled top ring with a symmetric barrel face. The intermediate piston ring is of the standard chrome design OR Micro-Napier design. The Micro-Napier design has a reduced “hook” on the running face, removes the need for chroming and improves oil economy. The oil control package consists of two steel rails and an expander spacer.

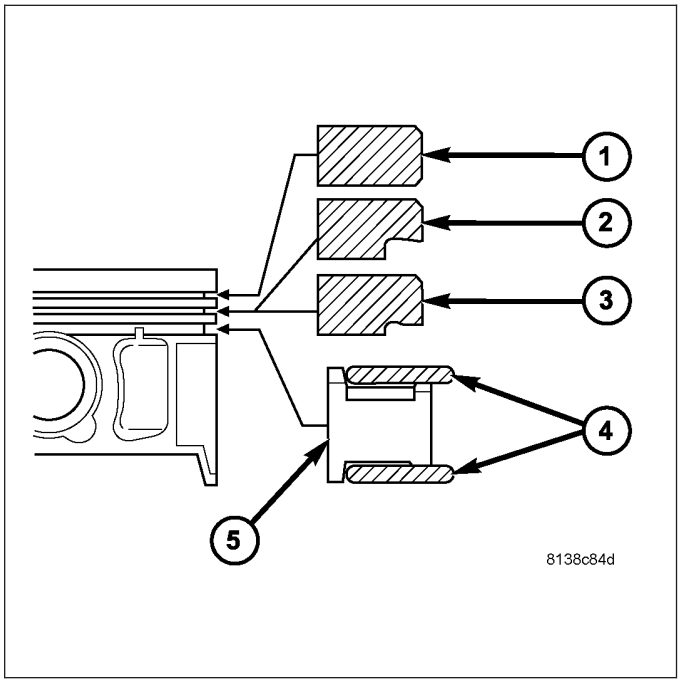

STANDARD PROCEDURE

PISTON RING FITTING

1. Wipe cylinder bore clean. Insert ring and push down with piston to ensure it is square in bore. The ring gap measurement must be made with the ring positioning at least 12 mm (0.50 in.) from bottom of cylinder bore. Check gap with feeler gauge. For clearance specifications, (Refer to 9 - ENGINE - SPECIFICATIONS).

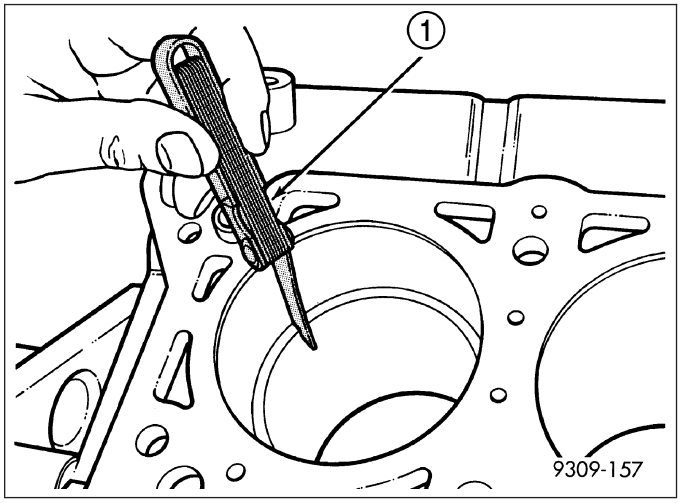

2. Check piston ring to groove clearance:. For clearance specifications, (Refer to 9 - ENGINE - SPECIFICATIONS).

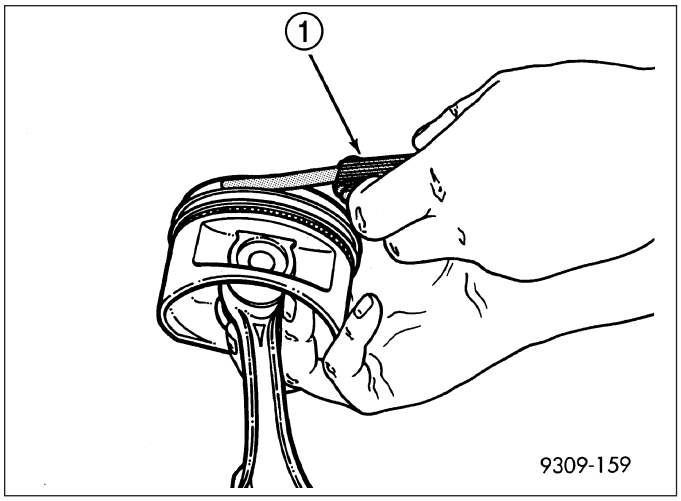

REMOVAL

1. Remove piston and connecting rod. (Refer to 9 - ENGINE/ENGINE BLOCK/PISTON & CONNECTING ROD - REMOVAL)
2. Remove No. 1 and No.2 piston rings from piston using a ring expander tool.

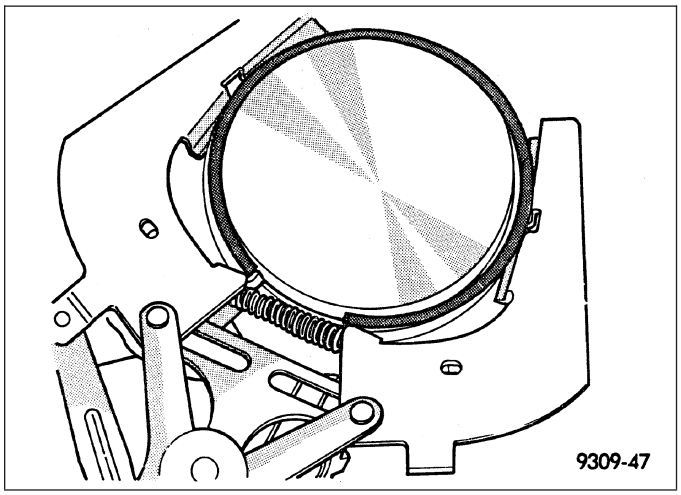

3. Remove upper oil control ring side rail.
4. Remove lower oil control ring side rail.
5. Remove oil control ring expander

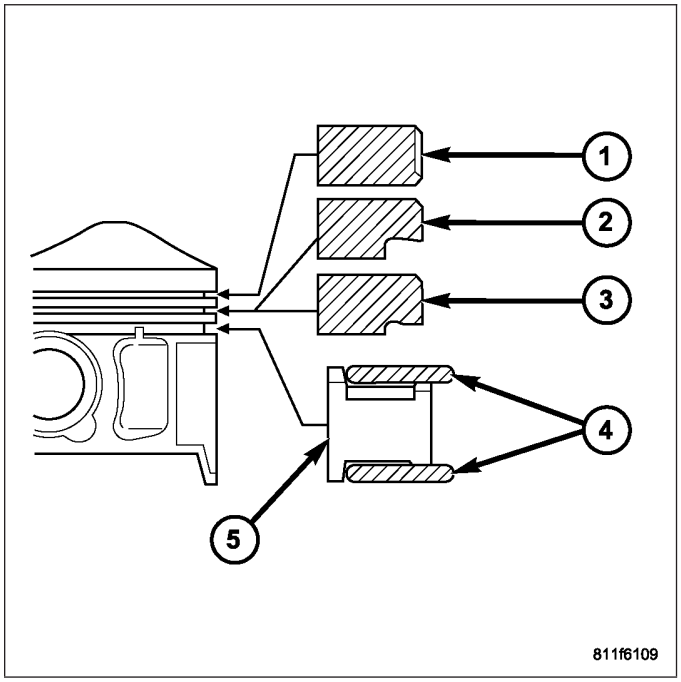

INSTALLATION

1. Measure clearance of piston rings to the cylinder bore and piston. (Refer to 9 - ENGINE/ENGINE BLOCK/PISTON RINGS - STANDARD PROCEDURE)

The No. 1 and No. 2 piston rings have a different cross section. Insure that which ever design No. 2 ring is installed, it is installed with manufacturers I.D. mark (dot) facing up, towards top of the piston (Refer to 9 - ENGINE/ENGINE BLOCK/PISTON RINGS - DESCRIPTION).

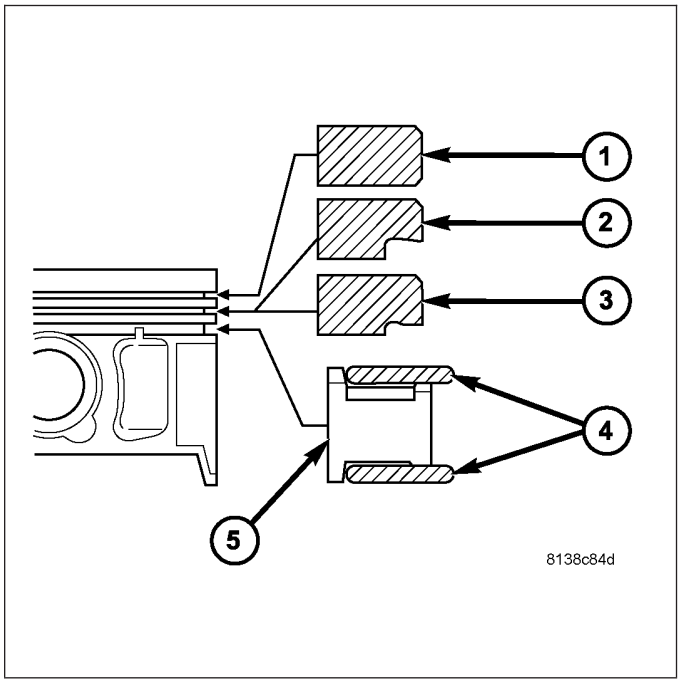

CAUTION: Install piston rings in the following order:

- Oil ring expander.
- Lower oil control ring side rail.
- Upper oil control ring side rail.
- No. 2 Intermediate piston ring.
- No. 1 Upper piston ring.

2. Install the side rail by placing one end between the piston ring groove and the spacer. Hold end firmly and press down the portion to be installed until side rail is in position. **Do not use a piston ring expander tool during this step.**

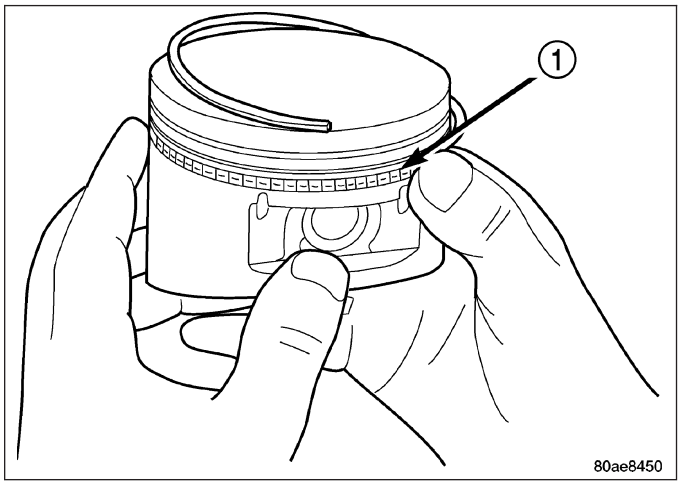

3. Install lower side rail first and then the upper side rail.

The No. 1 and No. 2 piston rings have a different cross section. Insure that which ever design No. 2 ring is installed, it is installed with manufacturers I.D. mark (dot) facing up, towards top of the piston (Refer to 9 - ENGINE/ENGINE BLOCK/PISTON RINGS - DESCRIPTION).

4. Install No. 2 piston ring and then No. 1 piston ring.

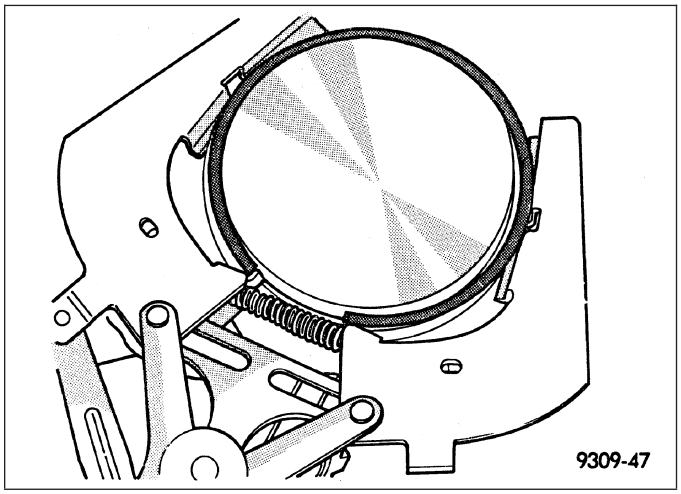

5. Position piston ring end gaps as shown in.
6. Position oil control ring expander gap at least 45° from the side rail gaps but **not** on the piston pin center or on the thrust direction. Staggering ring gap is important for oil control.

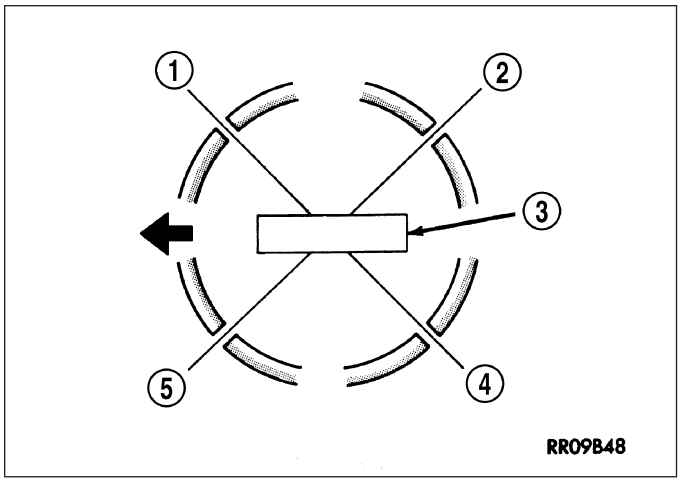

DAMPER - CRANKSHAFT

REMOVAL

1. Disconnect negative battery cable.
2. Remove the accessory drive belt (Refer to 7 - COOLING/ACCESSORY DRIVE/DRIVE BELTS - REMOVAL).
3. Raise vehicle on hoist.

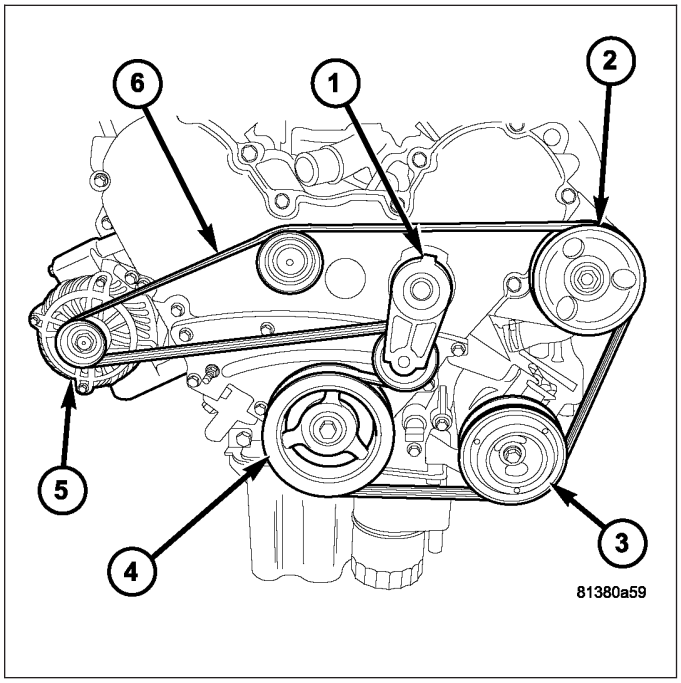

4. Remove crankshaft damper bolt.
5. Use 1023 puller, and insert 9020–R, remove crankshaft damper

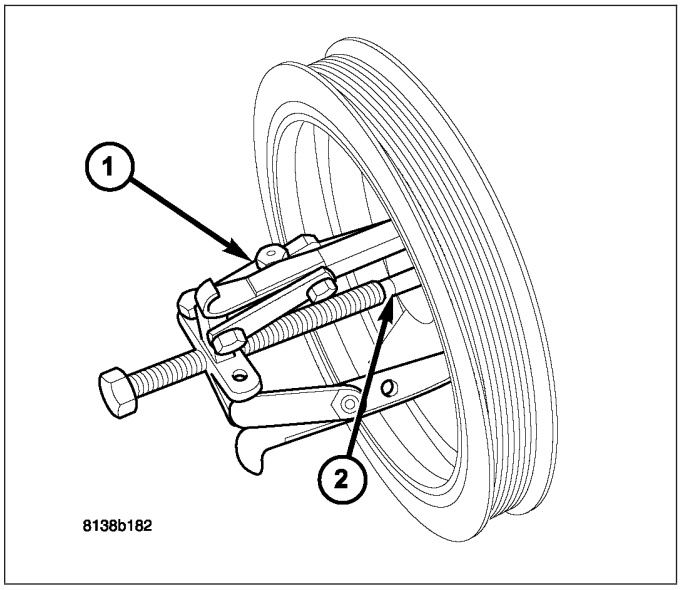

INSTALLATION

1. Install crankshaft damper using Special Tools C-4685-C1 (5.9 in.) Bolt, with Nut and Thrust Bearing from 6792, and 6792-1 Installer.

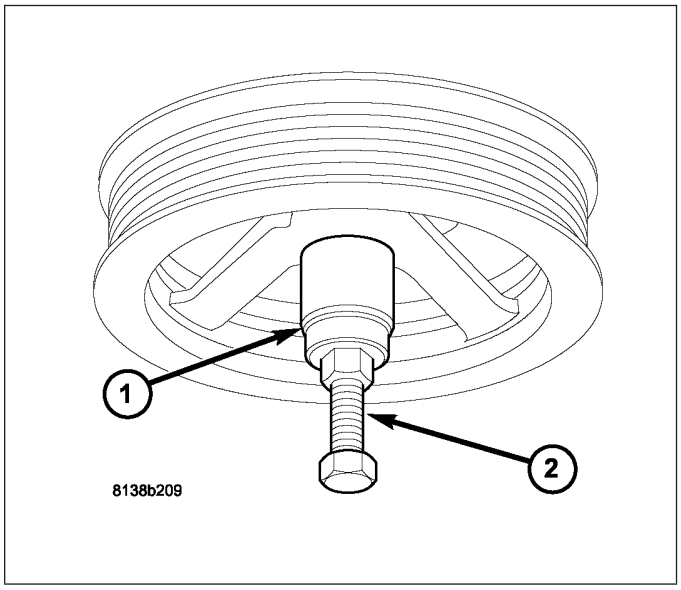

2. Install crankshaft damper bolt. Torque bolt to 95 N·m (70 ft. lbs.) while holding damper with Special Tool 9365.
3. Lower vehicle.

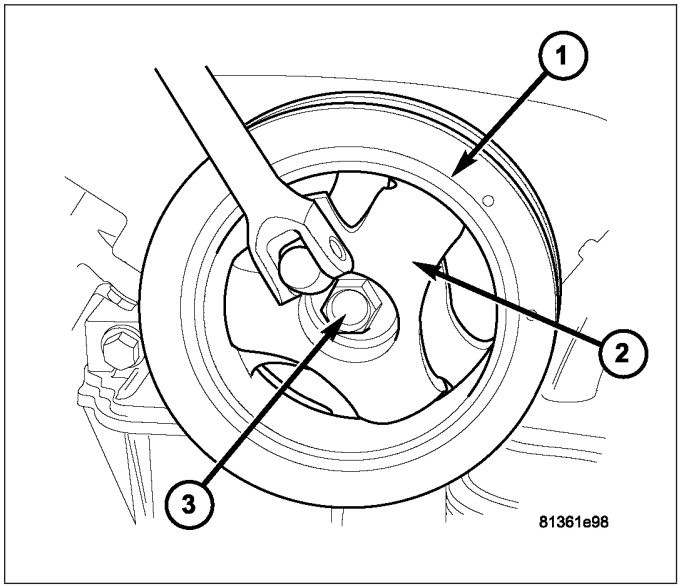

4. Install accessory drive belt.
5. Connect negative battery cable.

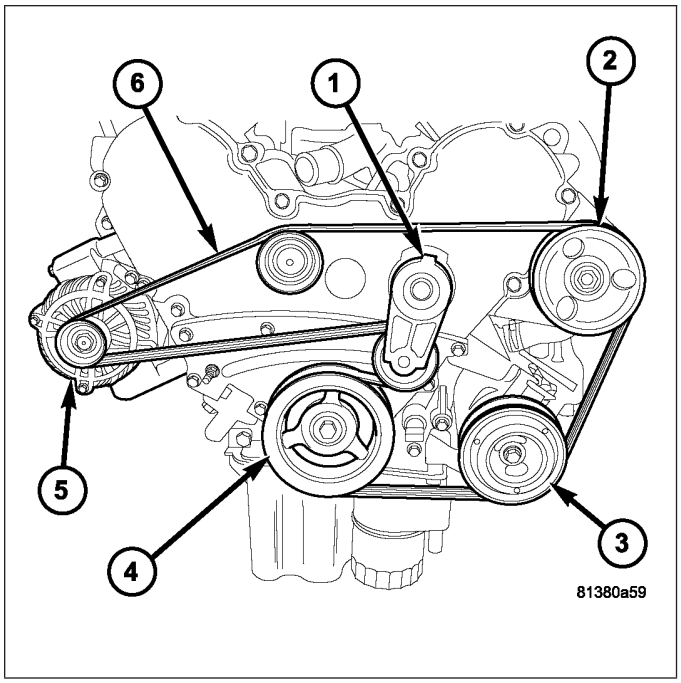

ENGINE MOUNTING

DESCRIPTION

The engine mounting system are of molded rubber material and consist of two mounts; right and a left side support the powertrain, and control powertrain torque.

MOUNT -LEFT

REMOVAL

1. Disconnect the negative battery cable.
2. Raise and support the vehicle.
3. Remove both engine mount to cradle nuts and remove the left engine mount studs.
4. Using a suitable jack and a block of wood under the oil pan, raise the engine until the weight is off of the mounts (approximately 5mm).
5. Remove the engine mount heat shield.

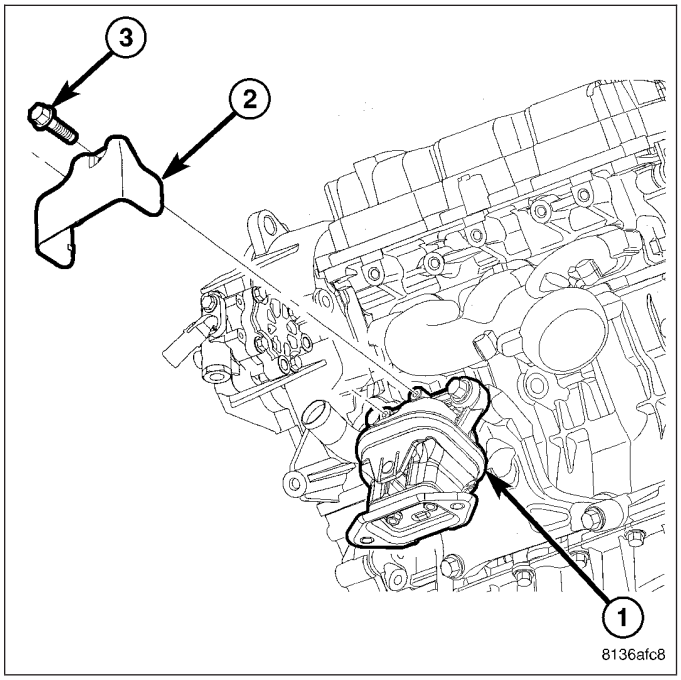

6. Remove the engine mount bolts and remove the mount.

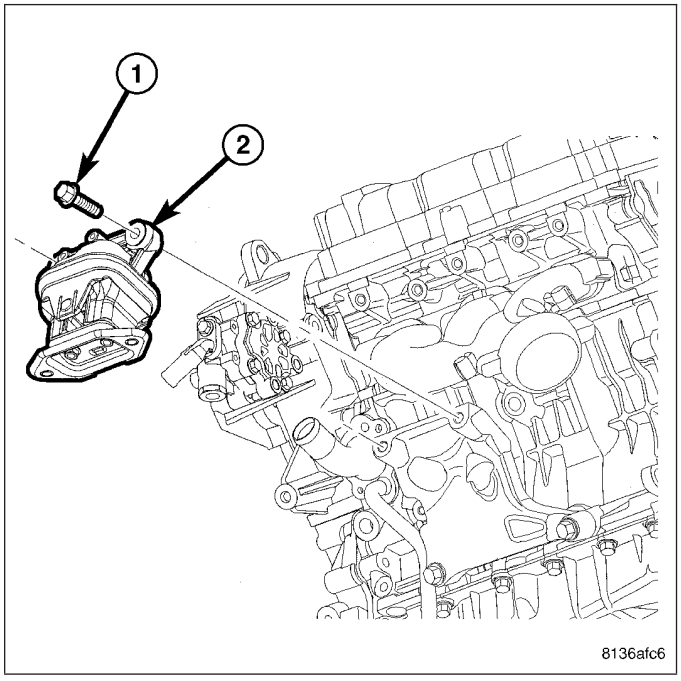

INSTALLATION

1. Install the left mount (2) to the engine mounting bracket. Hand tighten fasteners.
2. Install and hand tighten the engine mount through studs.
3. Tighten the engine mount to mounting bracket fasteners to 75 N·m (55 ft.lbs.).
4. Lower the engine and remove lifting device.
5. Tighten the engine mount through studs to nut to 12 N·m (106 in.lbs.).

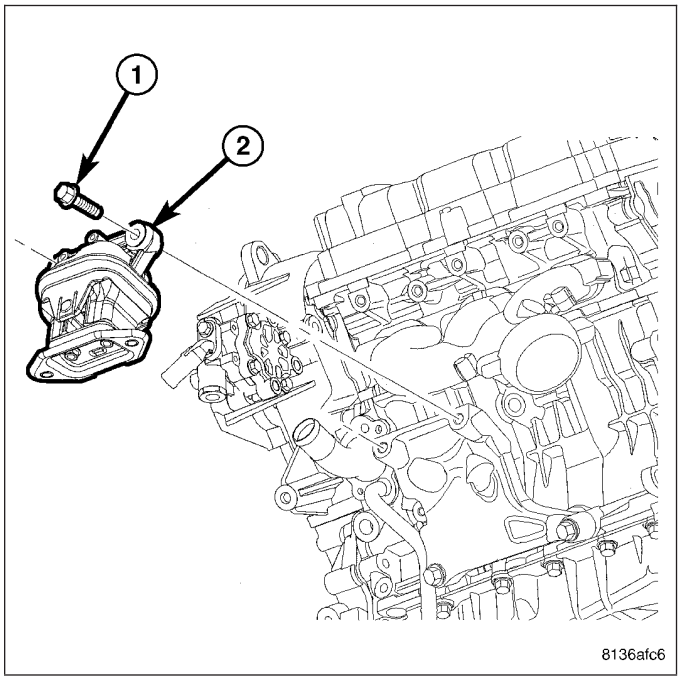

6. Install the engine mount heat shield (2). Tighten fasteners to 11 N·m (97 in.lbs.).
7. Install the left engine mount to cradle nuts and tighten both to 75 N·m (55 ft. lbs.).
8. Lower the vehicle.
9. Connect the negative battery cable.

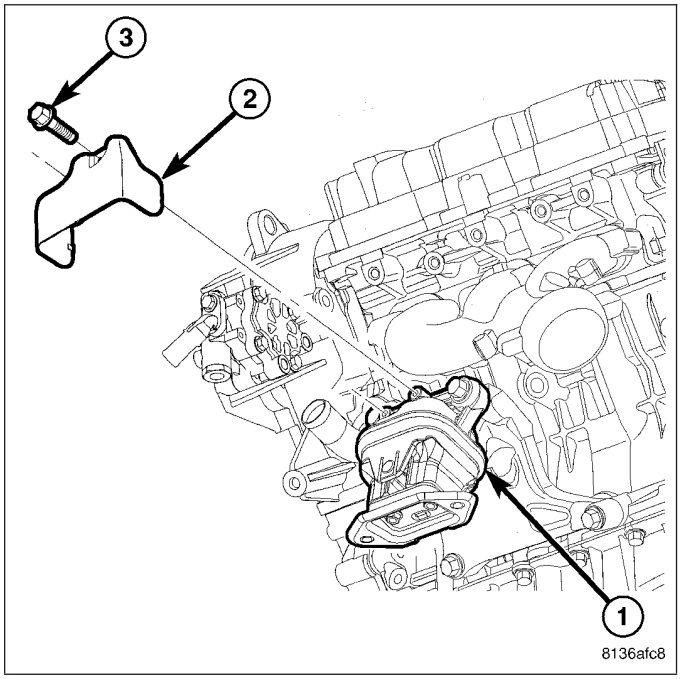

MOUNT LEFT - AWD

REMOVAL

1. Disconnect the negative battery cable.
2. Raise and support the vehicle.
3. Remove the left front wheel.
4. Remove the left engine mount to cradle fastener.
5. Place a jack stand under the engine and support the engine weight.
6. Remove the engine mount fasteners and remove the mount.

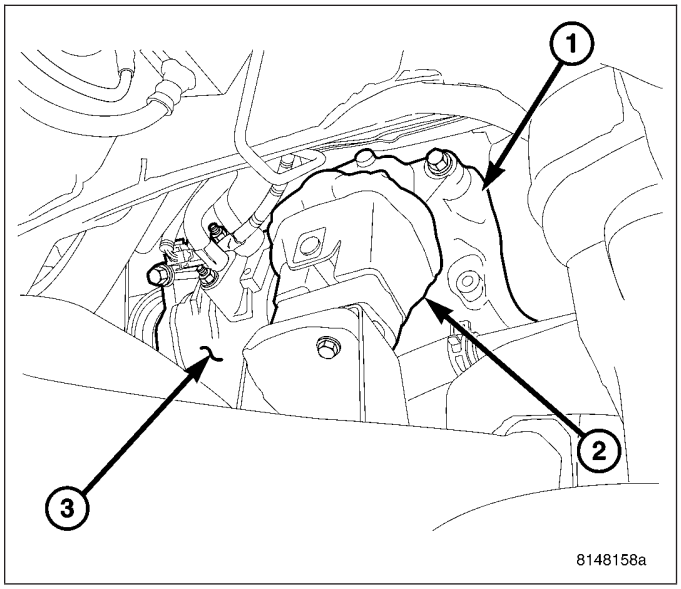

INSTALLATION

1. Carefully position the engine mount and hand tighten the mount retaining bolts.
2. Tighten the engine mount to bracket bolts to 60 N·m (44 lbs. ft.).
3. Lower the engine onto the cradle and remove the jack stand.
4. Tighten the engine mount to cradle bolt to 75 N·m (55 lbs. ft.).
5. Install the right front wheel.
6. Lower the vehicle.
7. Connect the negative battery cable.

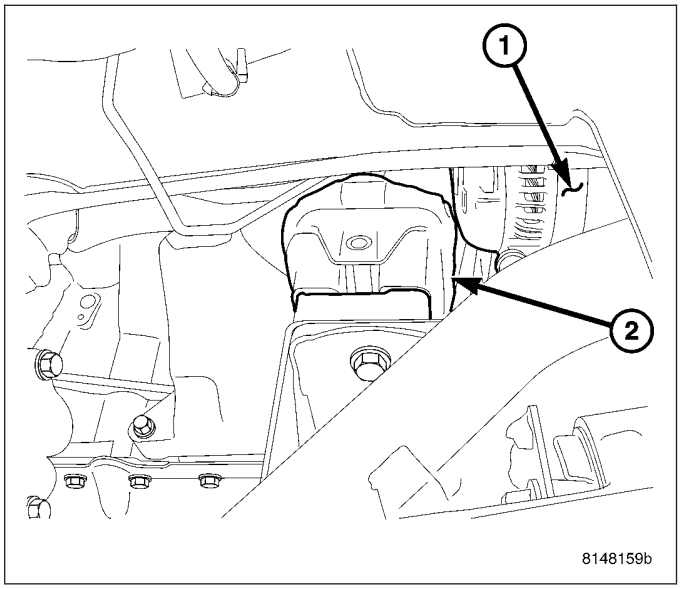

MOUNT - RIGHT

REMOVAL

1. Disconnect the negative battery cable.
2. Raise and support the vehicle.
3. Remove both of the engine mount to cradle nuts.
4. Remove both of the engine mount through studs.
5. Using a suitable jack stand and a block of wood positioned under the oil pan, raise the engine until the weight is off of the mounts (approximately 5 mm.).
6. Remove the right mount heat shield (2) bolts.

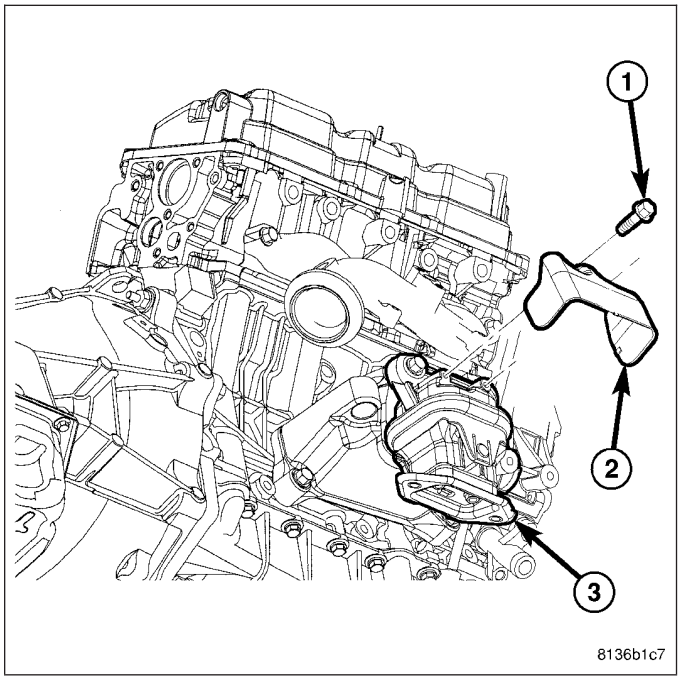

7. Remove the engine mount (2).

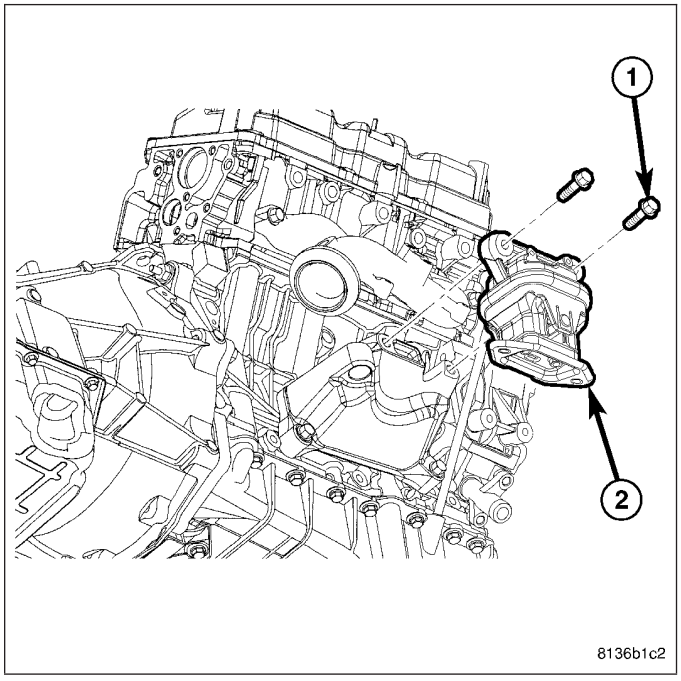

INSTALLATION

1. Install the engine mount to the engine bracket and hand tighten . Tighten bolts to 54 N·m (40 lbs. ft.).
2. Install and hand tighten the engine mount through studs.
3. Tighten the engine mount to engine bracket fasteners to 75 N·m (55 lbs. ft.).

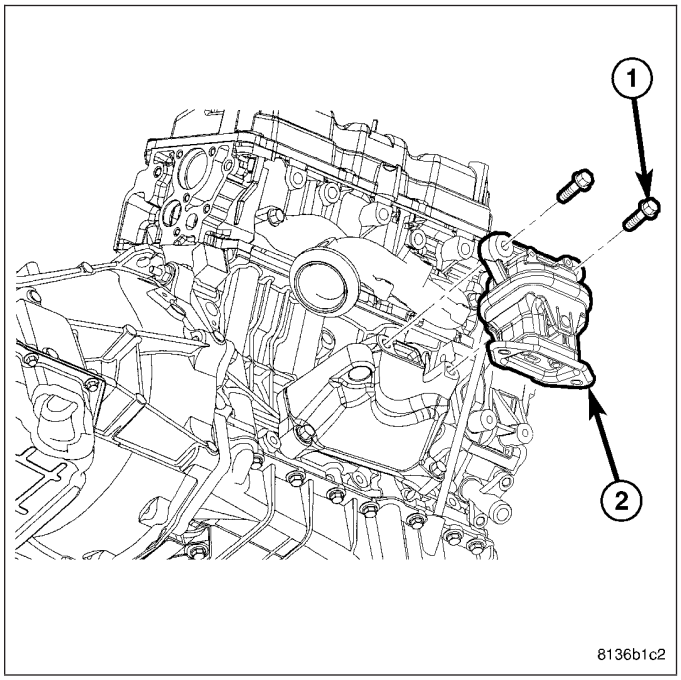

4. Install the engine mount heat shield (2). Tighten the fasteners to 11 N·m (97 in. lbs.).
5. Lower the engine and remove the lifting devise.
6. Tighten the engine mount through studs to 12 N·m (106 in. lbs.).
7. Install the right engine mount to cradle nuts and tighten both engine mount fasteners to 75 N·m (55 lbs. ft.).
8. Lower the vehicle.
9. Connect the negative battery cable.

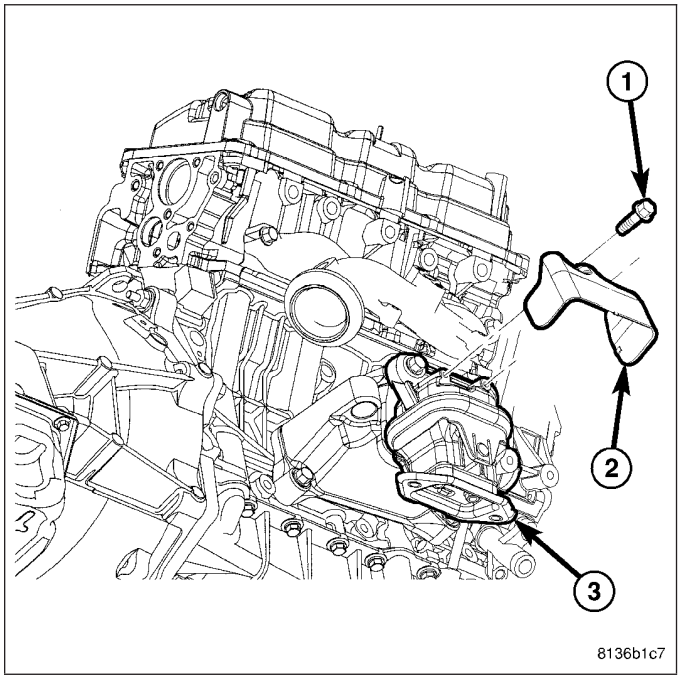

MOUNT RIGHT - AWD

REMOVAL

1. Disconnect the negative battery cable.
2. Raise and support the vehicle.
3. Remove the right front wheel.
4. Place a jack stand under the engine.
5. Remove the engine mount to cradle fastener.
6. Raise the engine with the jack stand and support the engine weight.
7. Remove the engine mount bolts and the engine mount.

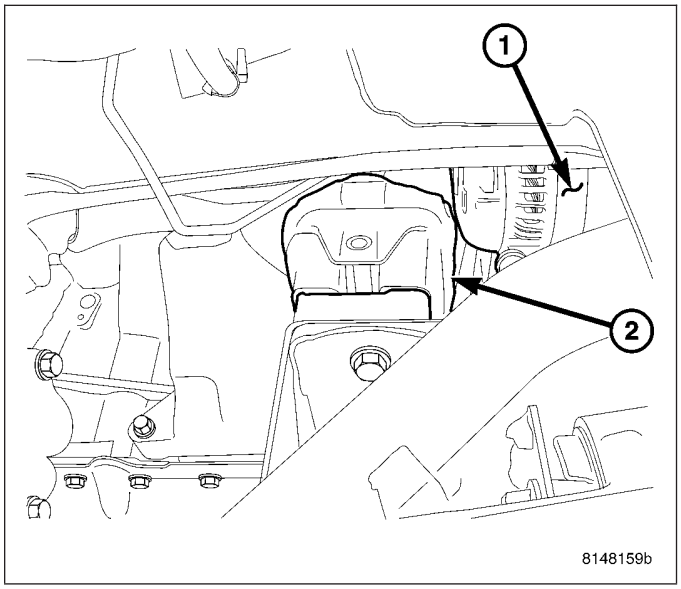

INSTALLATION

1. Carefully position the engine mount and hand tighten the mount retaining bolts.
2. Tighten the engine mount to bracket bolts to 60 N·m (44 lbs. ft.).
3. Lower the engine onto the cradle and remove the jack stand.
4. Tighten the engine mount to cradle bolt to 75 N·m (55 lbs. ft.).
5. Install the right front wheel.
6. Lower the vehicle.
7. Connect the negative battery cable.

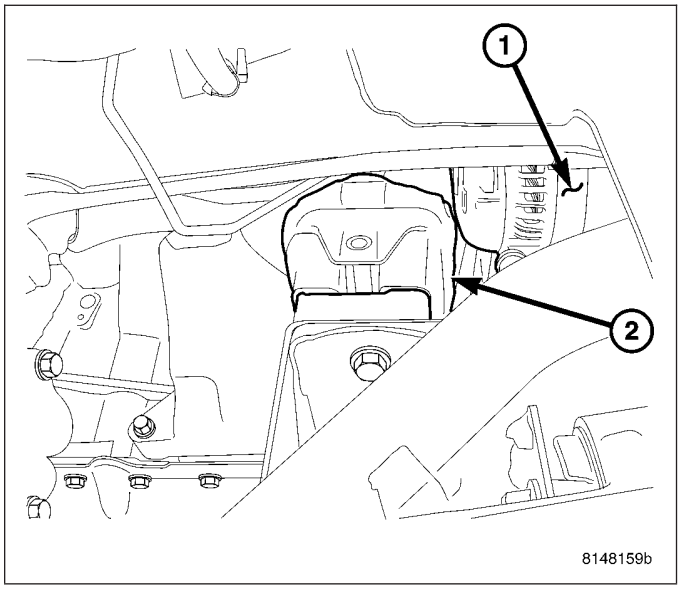

MOUNT - REAR

REMOVAL

1. Raise vehicle on hoist.
2. Remove cross member to mount bolts (2).
3. Place transmission jack under transmission pan and raise transmission.
4. Remove cross member attaching bolts and remove cross member (1).

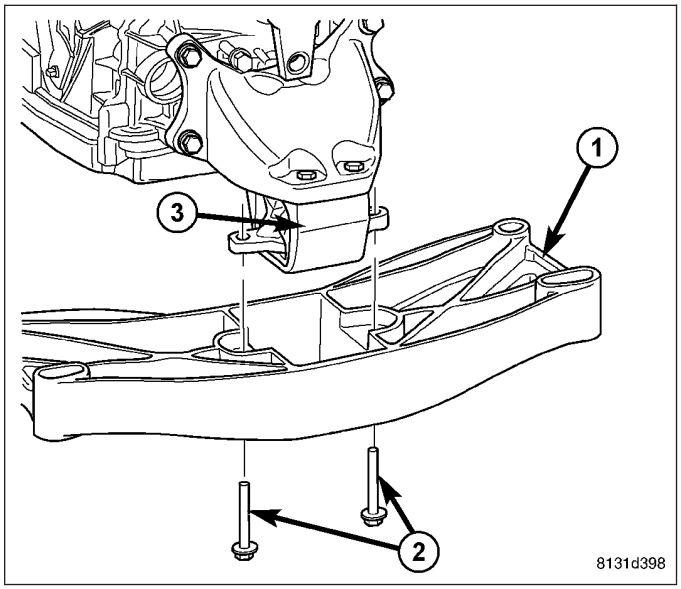

5. Remove mount to transmission bolts (2), remove mount (1).

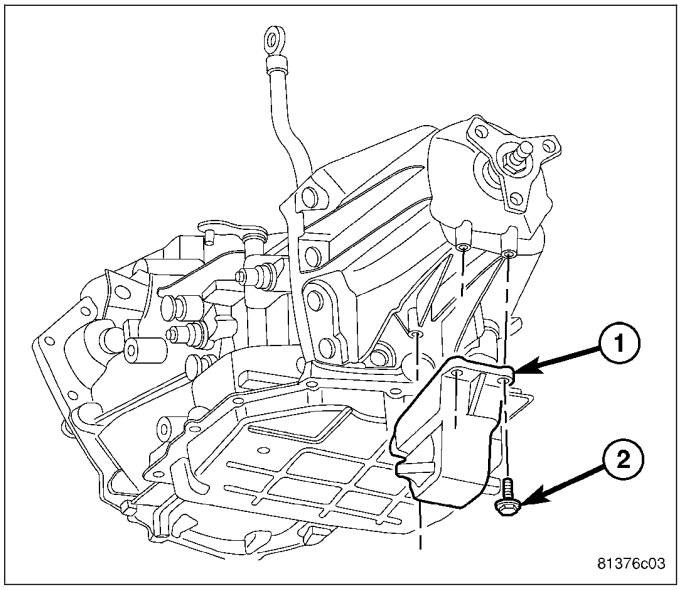

INSTALLATION

1. Install mount to transmission bolts (2) and tighten to 47 N·m (35 ft.lbs.).

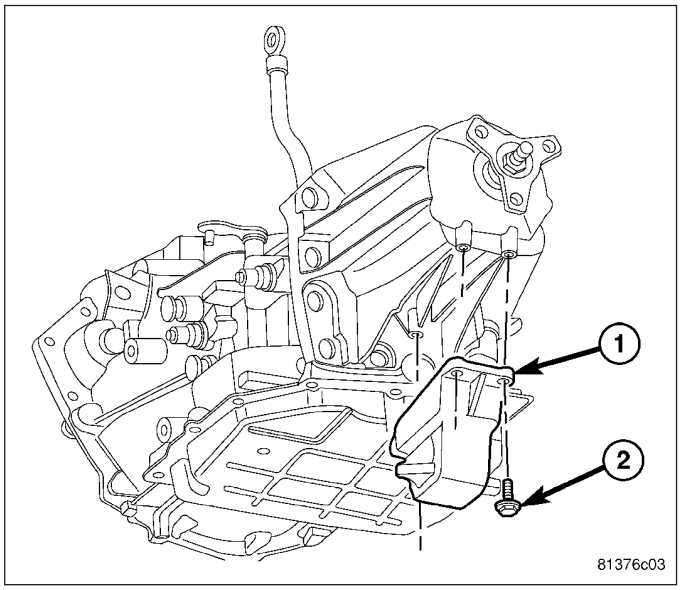

2. Install cross member (1) and attaching bolts. Tighten bolts to 68 N·m (50 ft.lbs.).
3. Lower transmission so cross member to mount bolts (2) can be started tightened by hand.
4. Lower transmission and remove jack.
5. Tighten mount bolts (2) to 47 N·m (39 ft.lbs.).

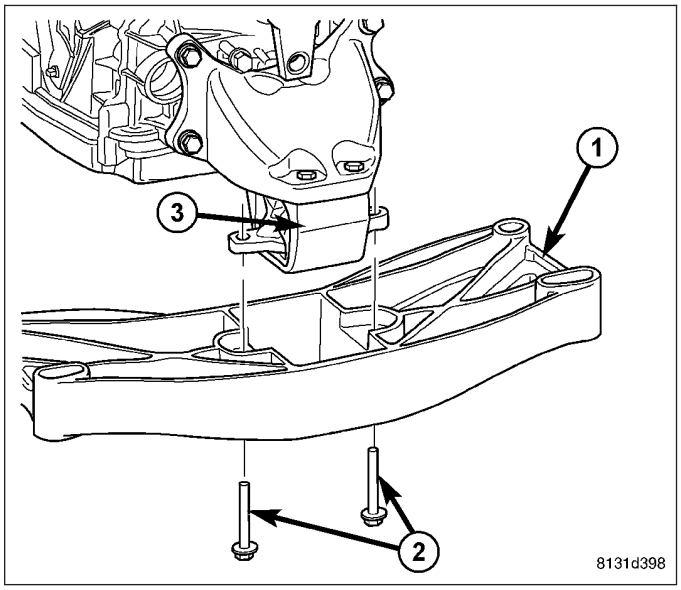

LUBRICATION

DESCRIPTION

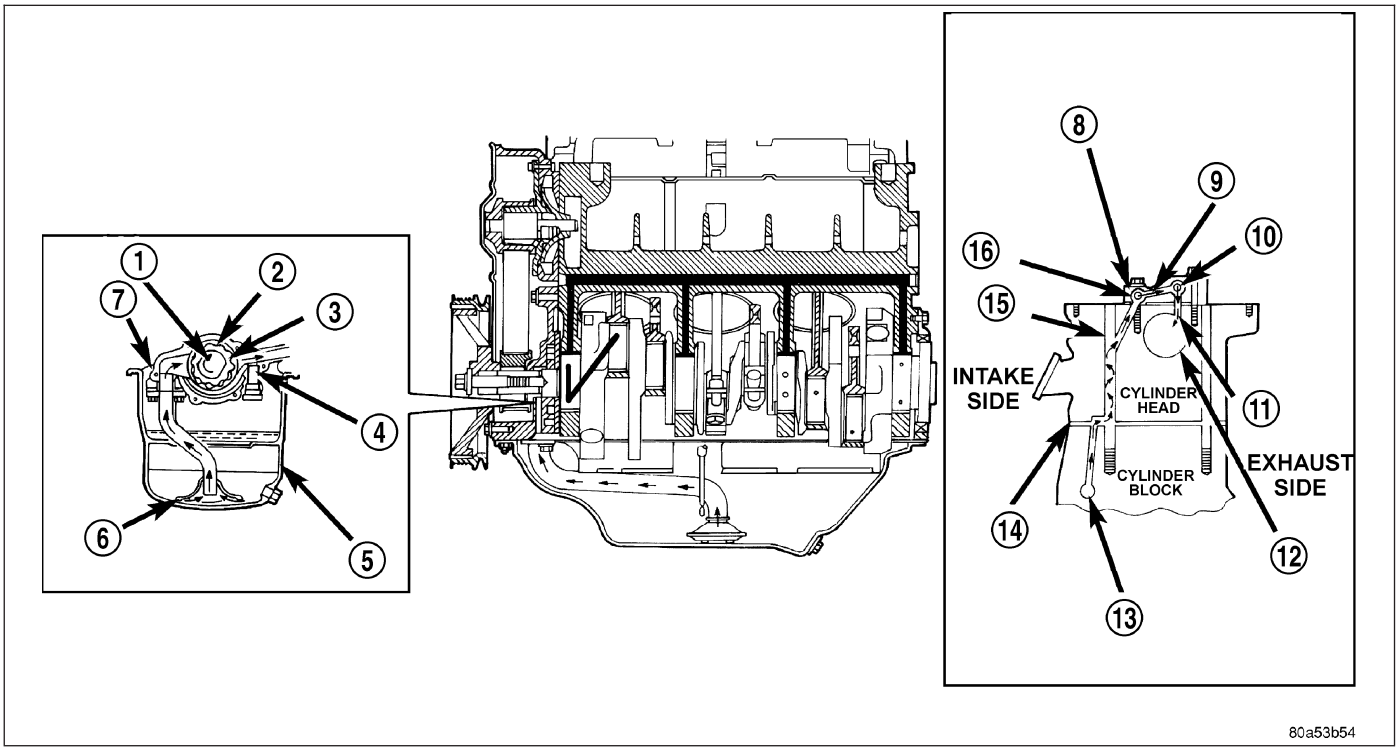

Oil Lubrication System

1 - CRANKSHAFT
2 - OUTER ROTOR
3 - INNER ROTOR
4 - RELIEF VALVE
5 - OIL PAN
6 - OIL SCREEN
7 - OIL PUMP CASE
8 - OIL FLOWS TO ONLY ONE PEDESTAL ON EACH HEAD - SECOND FROM REAR ON RIGHT HEAD - SECOND FROM FRONT ON LEFT HEAD
9 - PEDESTAL DRILLED PASSAGE
10 - EXHAUST ROCKER SHAFT
11 - SHAFT/PEDESTAL DOWEL PASSAGE
12 - CAMSHAFT BEARING BORE
13 - CYLINDER BLOCK OIL GALLERY
14 - CYLINDER HEAD GASKET
15 - HEAD BOLT HOLE
16 - INTAKE ROCKER SHAFT

The oil lubrication system is a full-flow filtration, pressure feed type. The oil pump body is mounted to the engine block. The pump inner rotor is driven by the crankshaft. A windage tray, increases power by minimizing oil windage at high engine RPM. For increased oil cooling, an oil pan mounted, oil-to-coolant oil cooler is used.

OPERATION

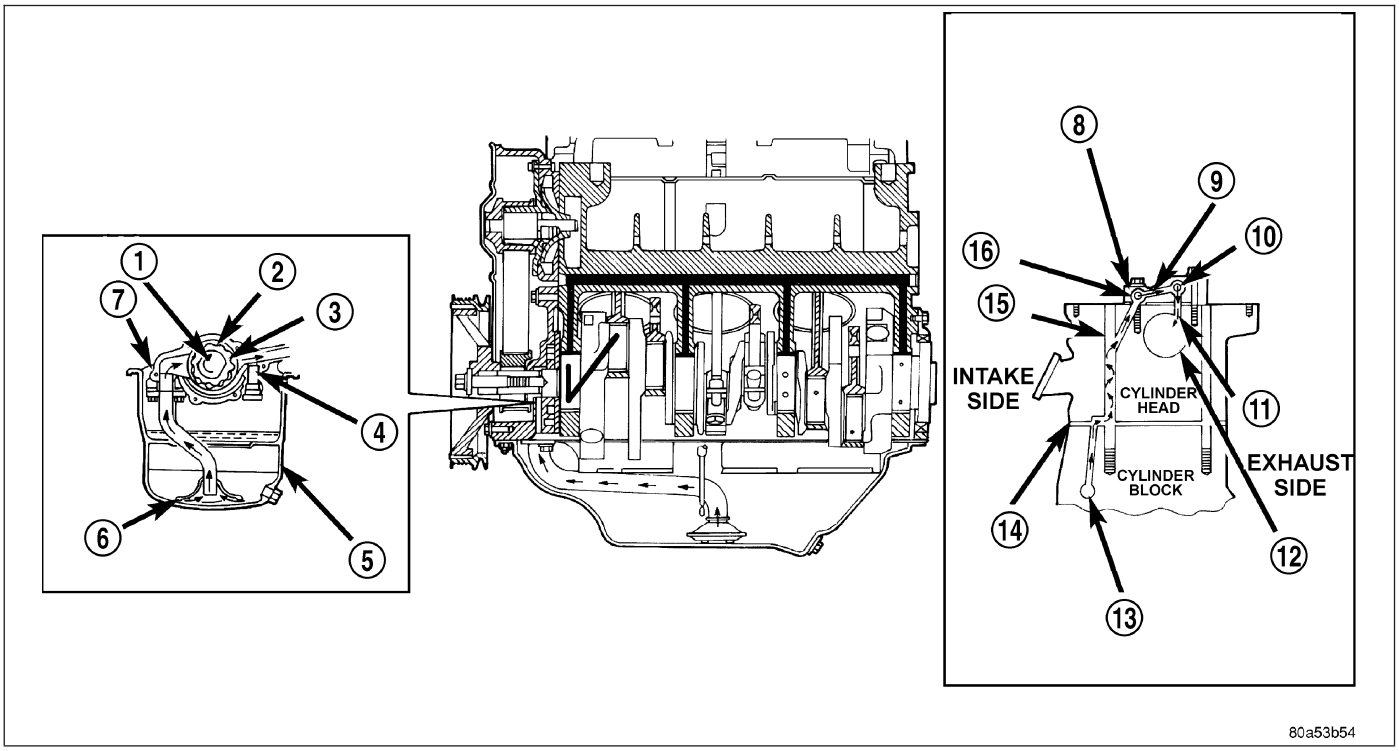

Oil Lubrication System

1 - CRANKSHAFT
2 - OUTER ROTOR
3 - INNER ROTOR
4 - RELIEF VALVE
5 - OIL PAN
6 - OIL SCREEN
7 - OIL PUMP CASE
8 - OIL FLOWS TO ONLY ONE PEDESTAL ON EACH HEAD - SECOND FROM REAR ON RIGHT HEAD - SECOND FROM FRONT ON LEFT HEAD
9 - PEDESTAL DRILLED PASSAGE
10 - EXHAUST ROCKER SHAFT
11 - SHAFT/PEDESTAL DOWEL PASSAGE
12 - CAMSHAFT BEARING BORE
13 - CYLINDER BLOCK OIL GALLERY
14 - CYLINDER HEAD GASKET
15 - HEAD BOLT HOLE
16 - INTAKE ROCKER SHAFT

Engine oil stored in the oil pan (5) is drawn in and discharged by a gear rotor type oil pump (2, 3). The oil pump is directly coupled to the crankshaft (1). Oil pressure is regulated by a relief valve (4). The oil is fed through an oil filter and to the crankshaft journals from the oil gallery (8) in the cylinder block. This gallery also feeds oil under pressure to the cylinder heads. Oil flows through each cylinder heads oil passage to the rocker shafts (10, 16). Oil then feeds the camshaft journals (12), rocker arms, and hydraulic lash adjusters.

DIAGNOSIS AND TESTING

CHECKING ENGINE OIL PRESSURE

Check oil pressure using a gauge at oil pressure switch (1) location.

1. Remove the oil pressure switch (1) (Refer to 9 - ENGINE/LUBRICATION/OIL PRESSURE SENSOR/SWITCH - REMOVAL).
2. Install oil pressure test gauge, C-3292 with Adapter 8406. For Special Tool identification, (Refer to 9 - ENGINE - SPECIAL TOOLS).

CAUTION: If oil pressure is 0 at idle, Do Not Run engine at 3000 RPM.

3. Warm engine to normal operating temperature.
4. Monitor gauge readings at idle and 3000 rpm. For specifications (Refer to 9 - ENGINE - SPECIFICATIONS).

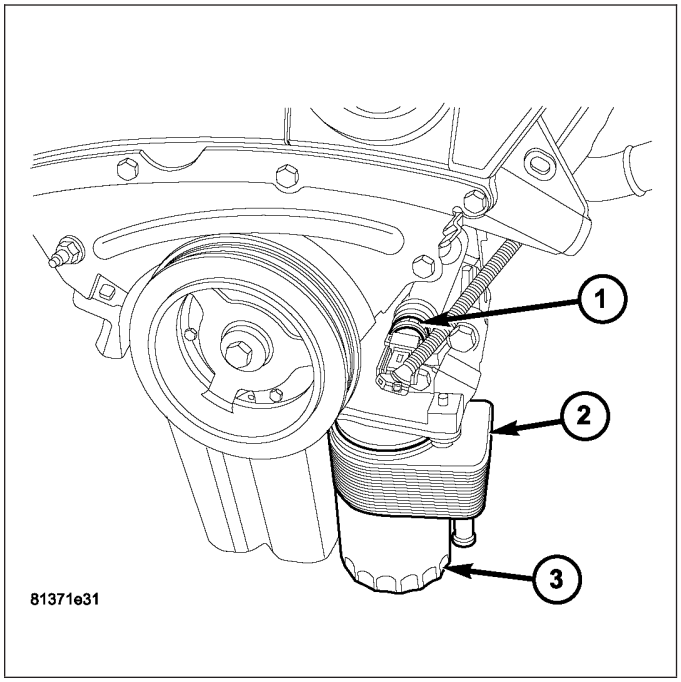

OIL

DESCRIPTION

For engine oil type and capacity (Refer to LUBRICATION & MAINTENANCE/FLUID TYPES - DESCRIPTION - ENGINE OIL)

STANDARD PROCEDURE

ENGINE OIL LEVEL CHECK

The best time to check engine oil level (2) is after the engine has sat overnight, or if the engine has been running, allow the engine to be shut off for at least 5 minutes before checking oil level.

Checking the oil (2) while the vehicle is on level ground will improve the accuracy of the oil level reading. Add oil (1) only when the level is at, or below, the ADD mark on the indicator (2).

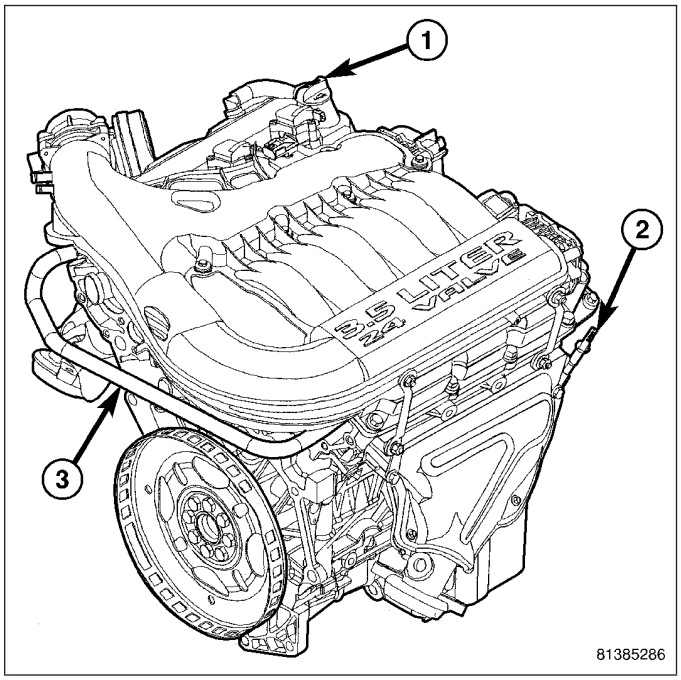

ENGINE OIL AND FILTER CHANGE

Change engine oil at mileage and time intervals described in the Maintenance Schedule. (Refer to LUBRICATION & MAINTENANCE/MAINTENANCE SCHEDULES - DESCRIPTION)

WARNING: NEW OR USED ENGINE OIL CAN BE IRRITATING TO THE SKIN. AVOID PROLONGED OR REPEATED SKIN CONTACT WITH ENGINE OIL. CONTAMINANTS IN USED ENGINE OIL, CAUSED BY INTERNAL COMBUSTION, CAN BE HAZARDOUS TO YOUR HEALTH. THOROUGHLY WASH EXPOSED SKIN WITH SOAP AND WATER. DO NOT WASH SKIN WITH GASOLINE, DIESEL FUEL, THINNER, OR SOLVENTS, HEALTH PROBLEMS CAN RESULT. DO NOT POLLUTE, DISPOSE OF USED ENGINE OIL PROPERLY. CONTACT YOUR DEALER OR GOVERNMENT AGENCY FOR LOCATION OF COLLECTION CENTER IN YOUR AREA.

TO CHANGE ENGINE OIL

1. Run engine until achieving normal operating temperature.
2. Position the vehicle on a level surface and turn engine off.
3. Open hood, remove engine oil fill cap (1).

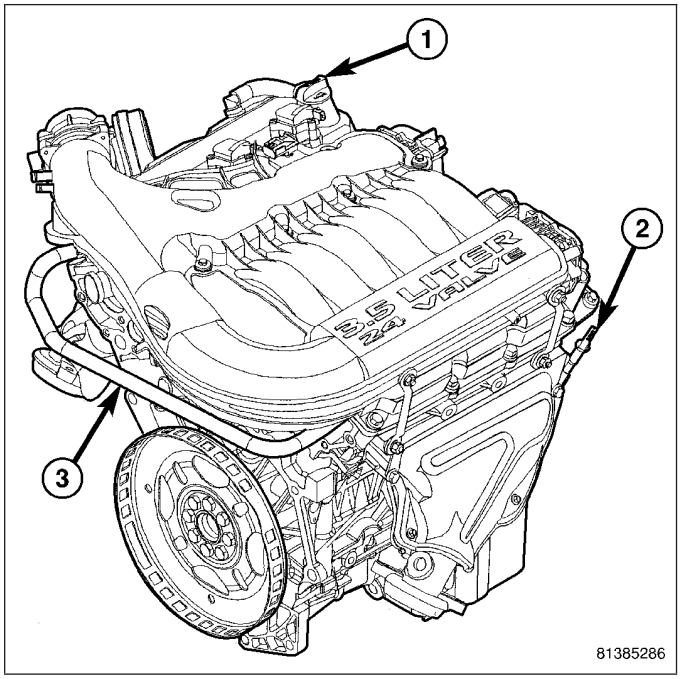

4. Raise vehicle on hoist.
5. Place a suitable drain pan under crankcase drain.
6. Remove oil pan drain plug from crankcase and allow oil to drain into pan. Inspect drain plug threads for stretching or other damage. Replace drain plug and gasket if damaged.
7. Remove oil filter (3).
8. Install drain plug in crankcase. Torque oil pan drain plug to 27 N·m (20 ft. lbs.).
9. Install new oil filter (3).

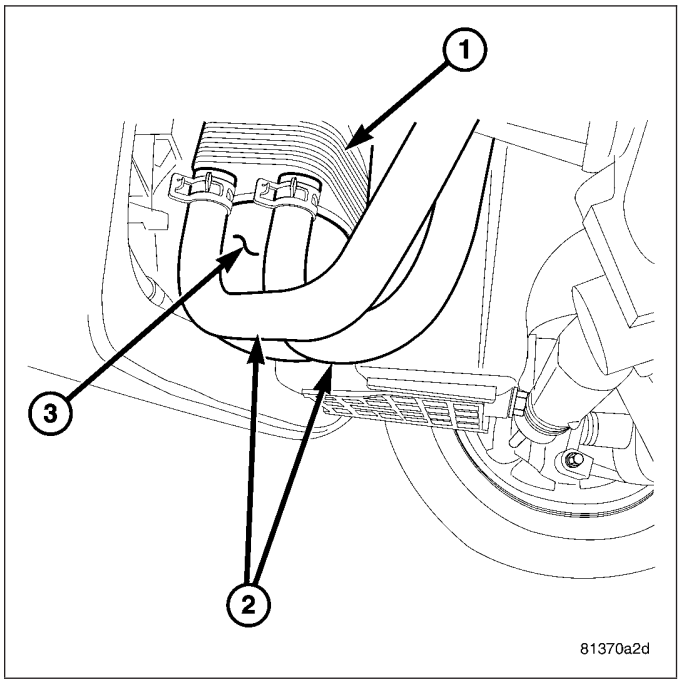

10. Lower vehicle.
11. Fill crankcase (1) with specified amount and type of engine oil. (Refer to LUBRICATION & MAINTENANCE/FLUID TYPES - DESCRIPTION - ENGINE OIL) (Refer to LUBRICATION & MAINTENANCE - SPECIFICATIONS)
12. Install oil fill cap (1).
13. Start engine and inspect for leaks.
14. Stop engine and inspect oil level (2).

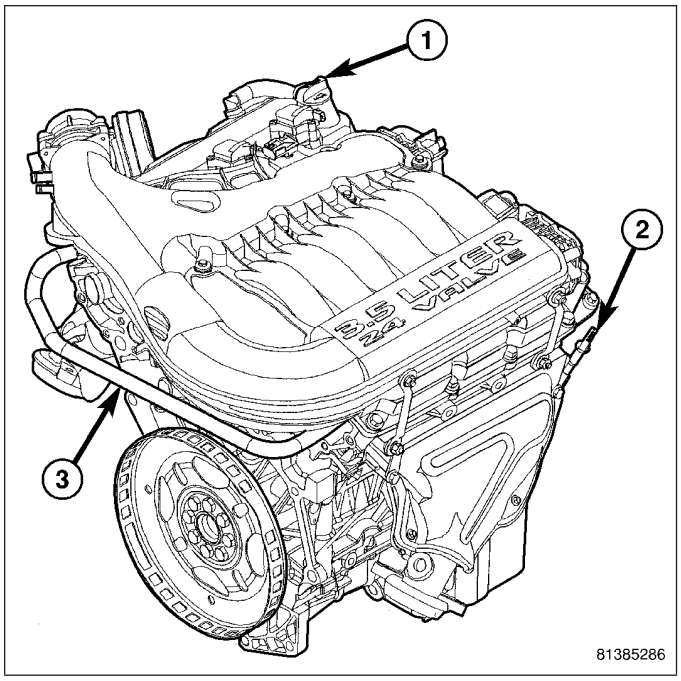

OIL FILTER SPECIFICATION

All engines are equipped with a high quality full-flow, disposable type oil filter. When replacing oil filter, use a Mopar® filter or equivalent.

USED ENGINE OIL DISPOSAL

Care should be exercised when disposing used engine oil after it has been drained from a vehicle engine. Refer to the WARNING above.

COOLER-ENGINE OIL

DESCRIPTION

The engine oil cooler is a oil-to-coolant type and is mounted between the oil filter and the oil pan.

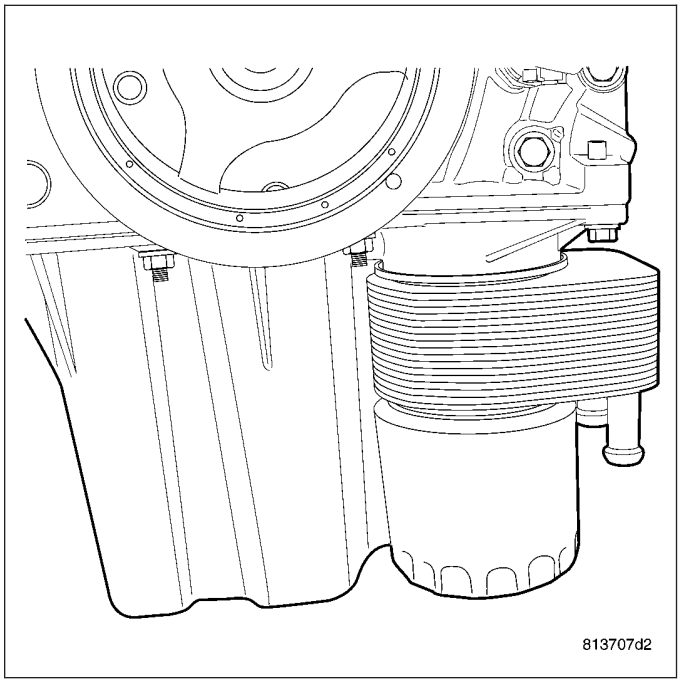

OPERATION

Engine oil travels from the oil cooler and into the oil filter. Engine oil then exits the filter into the main gallery. Engine coolant flows into the cooler from the heater return tube and exits into the water inlet tube.

REMOVAL

1. Drain cooling system (Refer to 7 - COOLING/ENGINE/COOLANT - STANDARD PROCEDURE).
2. Raise vehicle on hoist.
3. Disconnect coolant hoses (2) from oil cooler (1).
4. Remove oil filter (3).
5. Remove oil cooler attaching fastener from center of oil cooler (1).
6. Remove oil cooler (1).

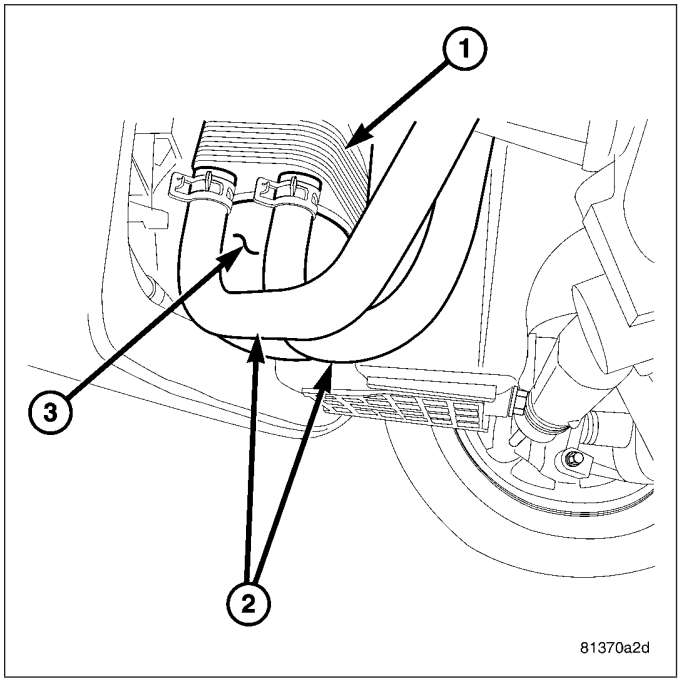

INSTALLATION

1. Position oil cooler to fitting on oil pan.

NOTE: Remove all oil and debris from the seal retainer surface. The cut out section of the oil cooler seal retainer flange (top), must be aligned with the tab on the oil pan. The oil cooler must be prevented from turning during the tightening sequence.

2. Install oil cooler (1) attaching fastener and tighten to 61 N·m (45 ft. lbs.).
3. Install oil filter (3) and tighten to 12 N·m (106 in. lbs.).
4. Connect coolant hoses to oil cooler (2).
5. Fill cooling system (Refer to 7 - COOLING/ENGINE/COOLANT - STANDARD PROCEDURE).

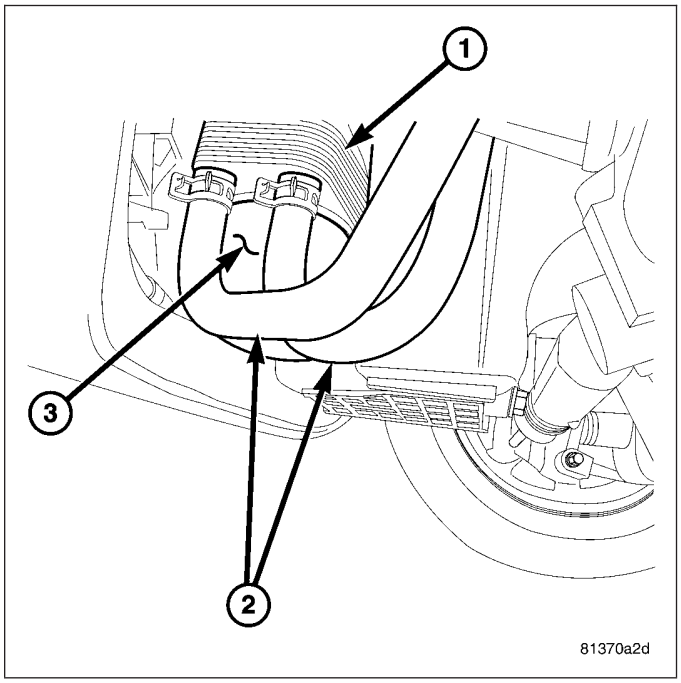

FILTER -OIL

REMOVAL

NOTE: When servicing the oil filter, avoid deforming the filter can. Install the remove/install tool band strap against the base lock seam. The lock seam joining the can to the base is reinforced by the base plate.

1. Using a suitable oil filter wrench, unscrew filter (3) from base and discard.

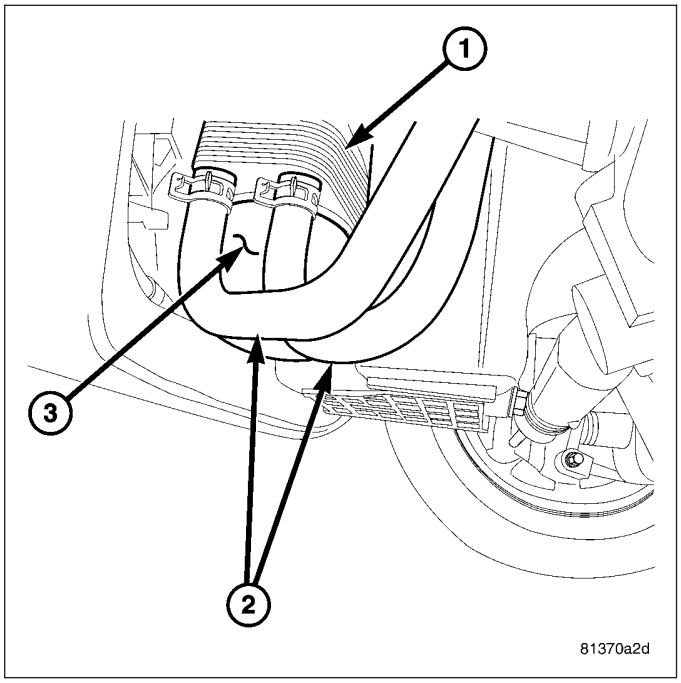

INSTALLATION

1. Wipe base clean, then inspect gasket contact surface.
2. Lubricate gasket of new filter (2) with clean engine oil.
3. Install and tighten filter to 12 N·m (106 in. lbs.) of torque after gasket contacts base. Use filter wrench if necessary.
4. Start engine and check for leaks.

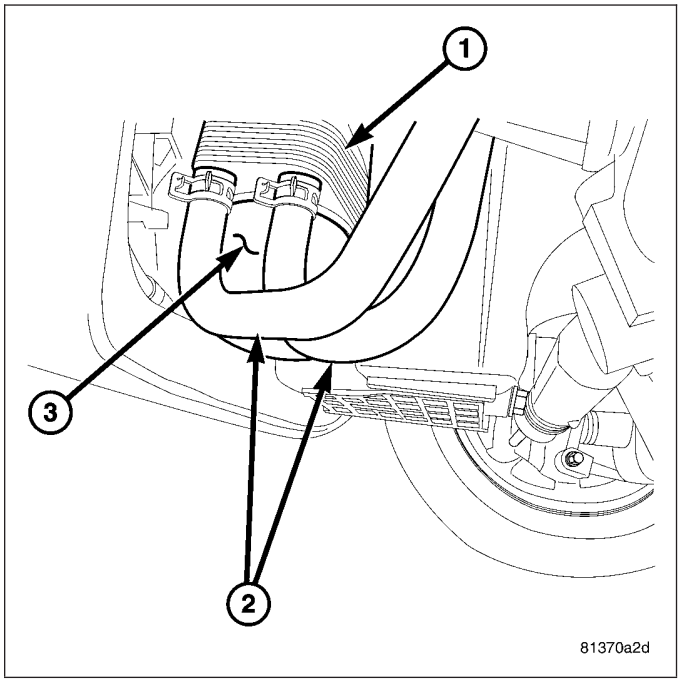

PAN - OIL

REMOVAL

RWD

1. Disconnect negative battery cable.
2. Lock the steering wheel in the center position.
3. Remove engine oil indicator.
4. Raise and support the vehicle.
5. Remove the splash shield.
6. Drain engine oil and remove the oil filter (Refer to 9 - ENGINE/LUBRICATION/OIL - STANDARD PROCEDURE).
7. Remove the oil filter / oil cooler mounting stud and set oil cooler aside (Refer to 9 - ENGINE/LUBRICATION/OIL COOLER & LINES - REMOVAL).
8. Separate the steering column coupler (1) from the steering gear (3).
9. Remove steering gear (3) to cradle mounting bolts and suspend steering gear aside.

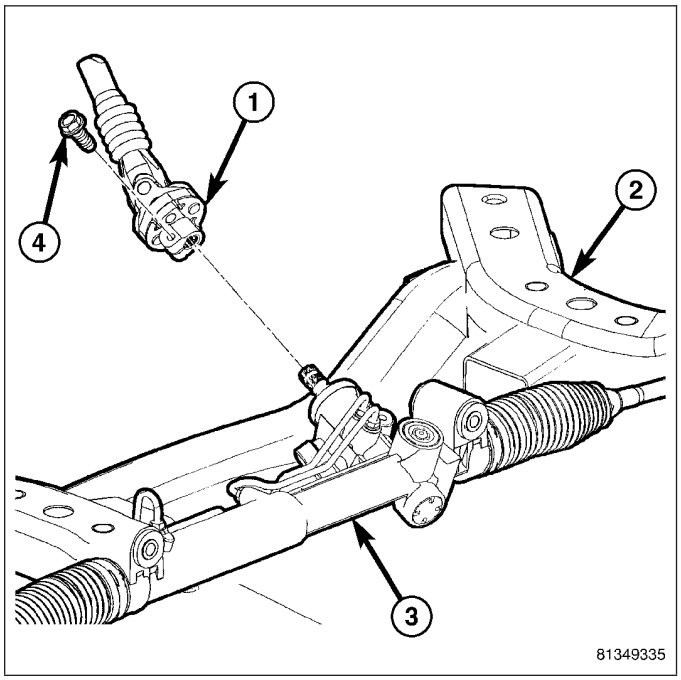

10. Remove the flex plate access cover (1).

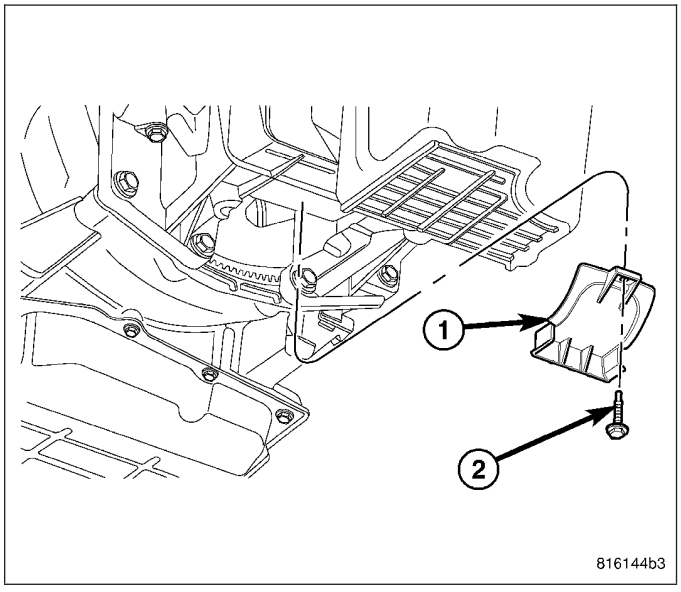

11. Remove the rear oil pan (2) to transmission (3) bolts (1).

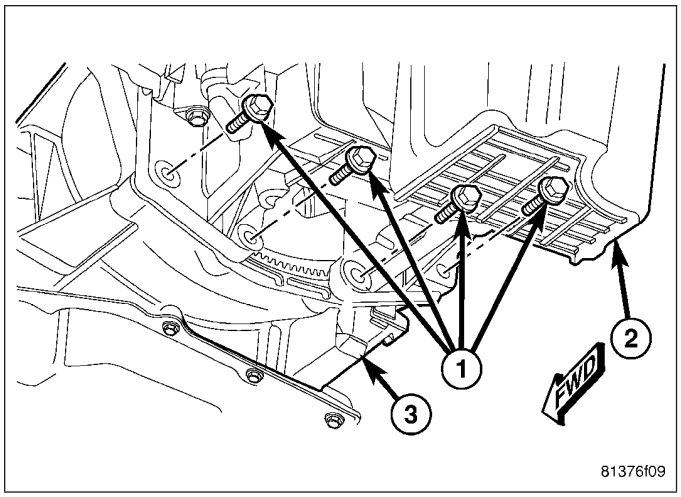

12. Remove the two rear oil pan bolts (3).

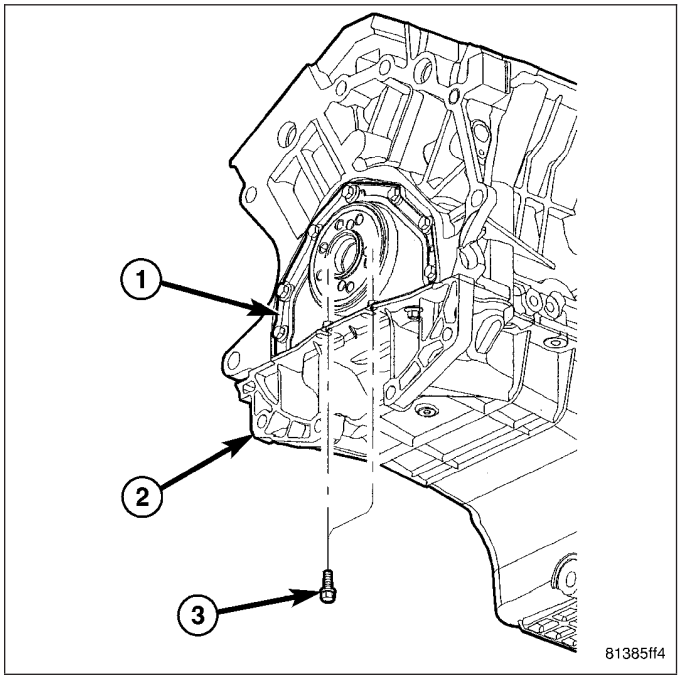

13. Remove the remaining oil pan bolts and nuts.
14. Loosen the engine mount bolts at the cradle.
15. Raise and support the engine using a suitable floor jack with a block of wood at the transmission housing.
16. Remove the oil pan (1).

NOTE: A small amount of oil will remain in the oil pan. Use care when removing the oil pan from the engine.

17. Clean all mating surfaces.

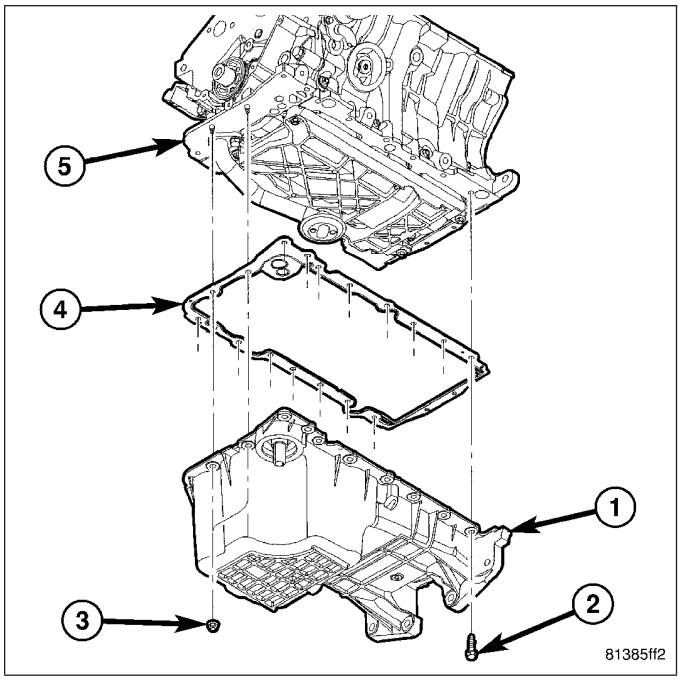

AWD

1. Disconnect the negative battery cable.
2. Drain the cooling system (Refer to 7 - COOLING - STANDARD PROCEDURE).
3. Remove the oil level indicator tube (2) fastener at the right exhaust manifold.

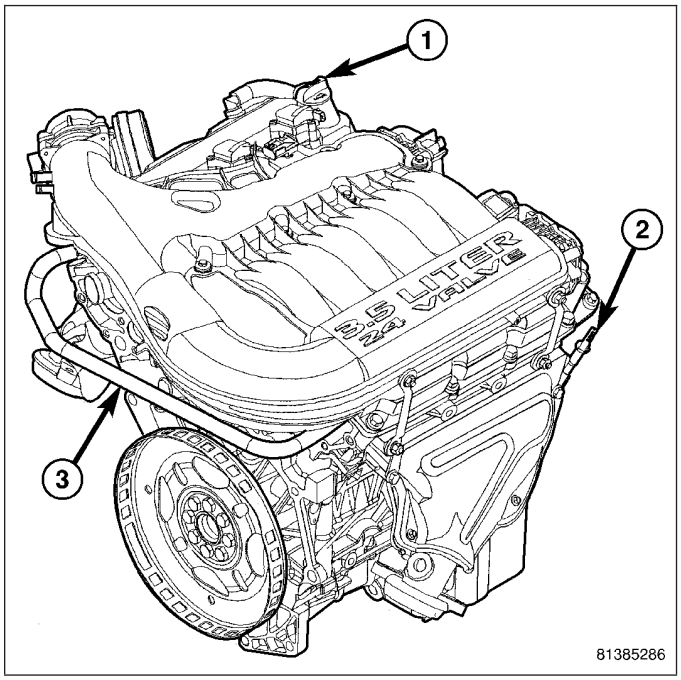

4. Raise and support the vehicle.
5. Remove the splash shield.
6. Drain engine oil and remove the oil filter.
7. Remove the left axle shaft (2).
8. Disconnect the power steering hoses from the power steering rack.
9. Remove the left front axle intermediate shaft support bracket and housing (3).

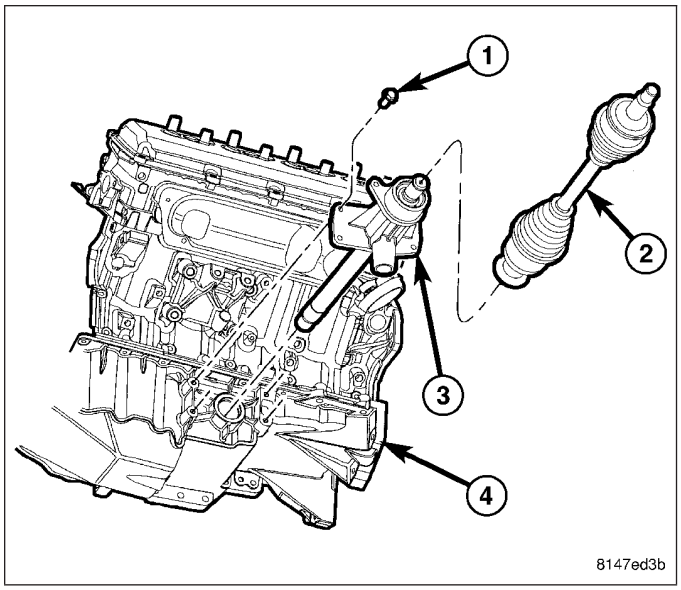

10. Remove the front drive shaft heat shield (4).
11. Paint mark and remove the front drive shaft.
12. Remove the right catalytic converter.
13. Separate the power steering hose from cradle hold down and position the hose aside.
14. Remove the lower engine mount to cradle fasteners.
15. Remove the front sway bar.
16. Raise and support the engine with a jack stand.
17. Remove the front axle housing support bracket (1).

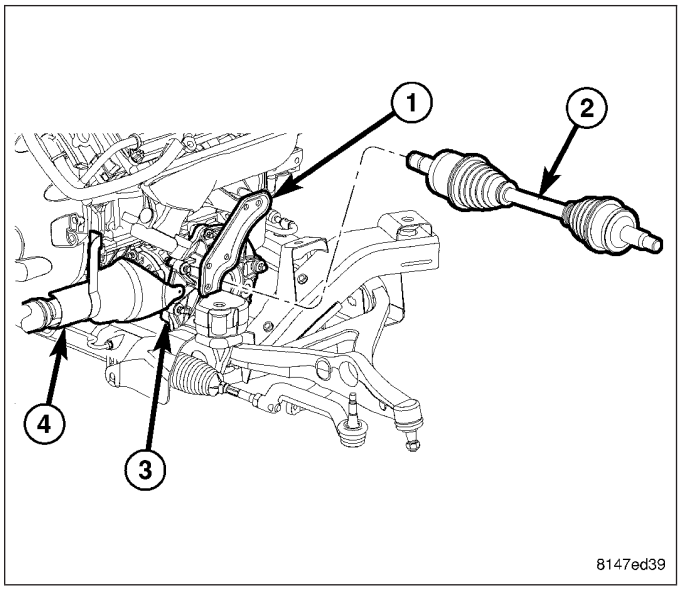

18. Remove the front axle housing (3) fasteners, rotate the housing position and remove the axle housing (3).
19. Lower the engine and remove the jack stand.

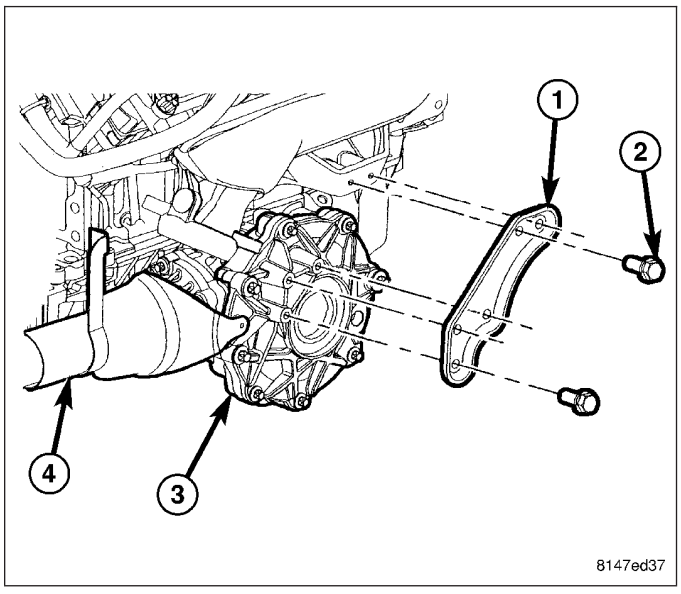

20. Remove the oil cooler hoses from the oil cooler and remove the oil cooler (if equipped) (Refer to 9 - ENGINE/LUBRICATION/OIL COOLER & LINES - REMOVAL).
21. Separate the oil level indicator tube from the oil pan.
22. Remove the flex plate cover (1).

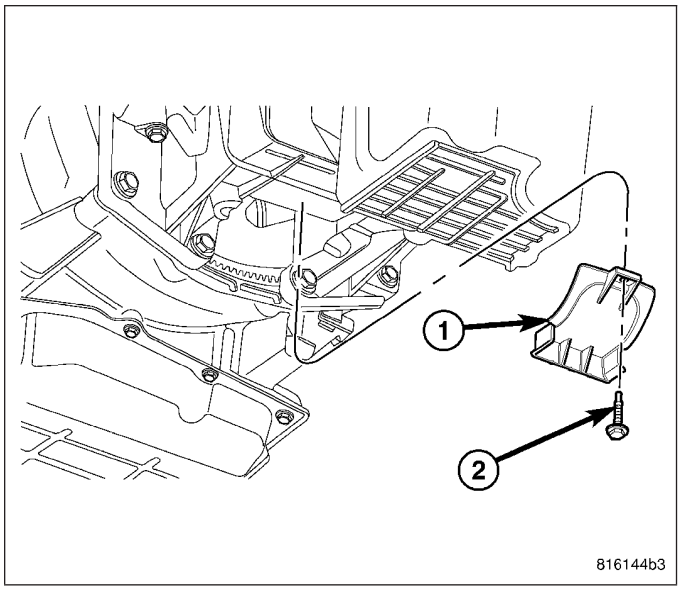

23. Remove the oil pan (1).

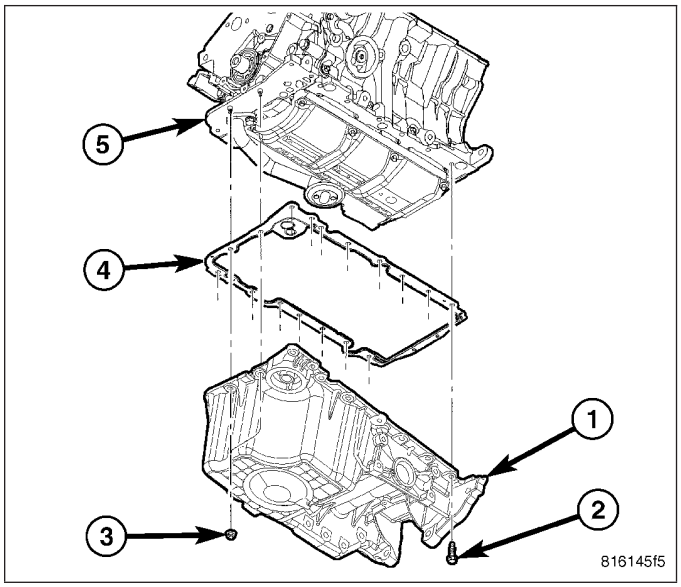

INSTALLATION

RWD

1. Clean oil pan and all gasket surfaces.
2. Apply a 1/8 inch bead of Mopar® Engine RTV GEN II at the parting line of the oil pump housing and the rear seal retainer.

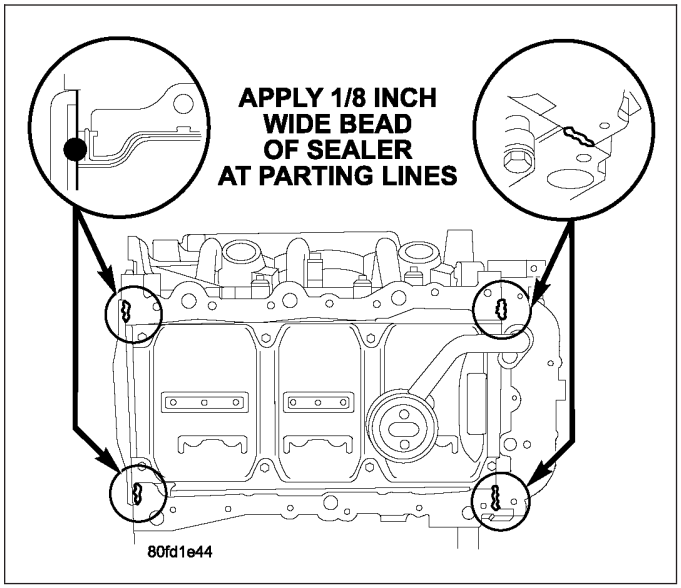

3. Install oil pan gasket to the engine block.
4. Install the oil pan while aligning the oil level indicator tube and attach fasteners finger tight.

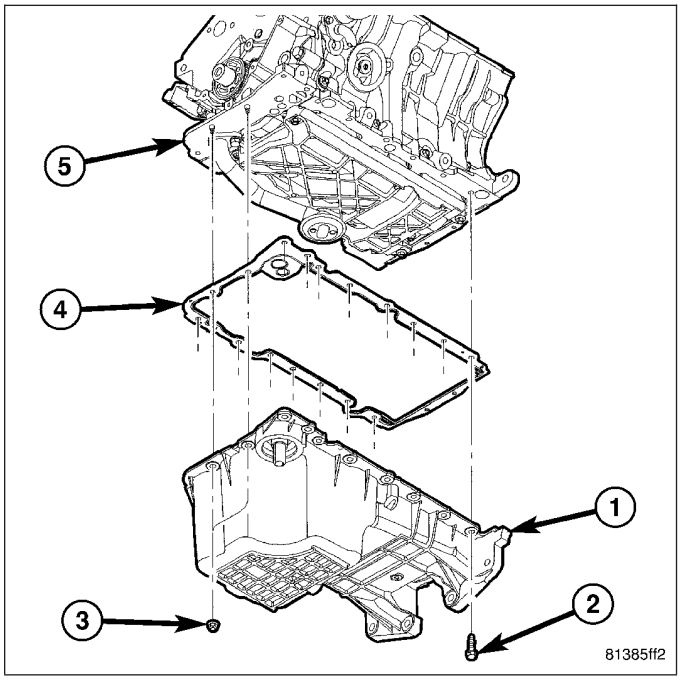

NOTE: Assure that the rear face of the oil pan is flush to the transmission bell housing when installing the oil pan.

5. Pre-torque the horizontal rear oil pan to transmission bolts to 1.4 N·m (12 in. lbs.).
6. First tighten the M8 (1) oil pan alignment bolt to 28N·m (250 lbs. in.), then tighten bolt (2) to 28N·m (250 lbs. in.).
7. Tighten the remaining M8 bolts and M8 nuts to 28 N.m (250 in. lbs.), and the M6 bolts to 12 N.m (105 in. lbs.).
8. Tighten the four M10 oil pan to transmission bolts to 55 N·m (40 ft.lbs.).
9. Lower the engine and remove the lifting fixture. Tighten the engine mount to cradle fasteners to 75 N·m (55 lbs. ft.).

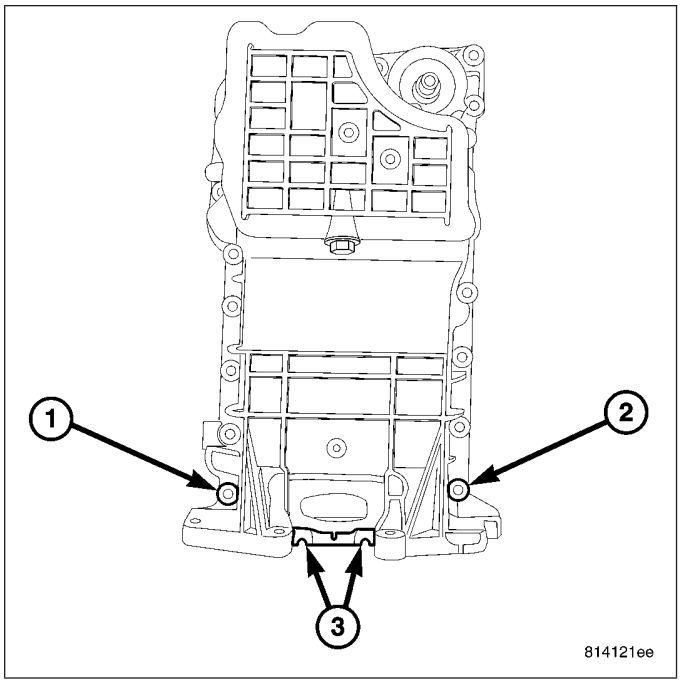

10. Install the flex plate inspection cover (1) and tighten the fastener (2) to 11 N·m (97 in. lbs.).
11. Install the oil cooler (align the oil cooler notch to oil pan tab) (Refer to 9 - ENGINE/LUBRICATION/ OIL COOLER & LINES - INSTALLATION).
12. Install the engine oil filter. Tighten filter to 12 N·m (106 in. lbs.).

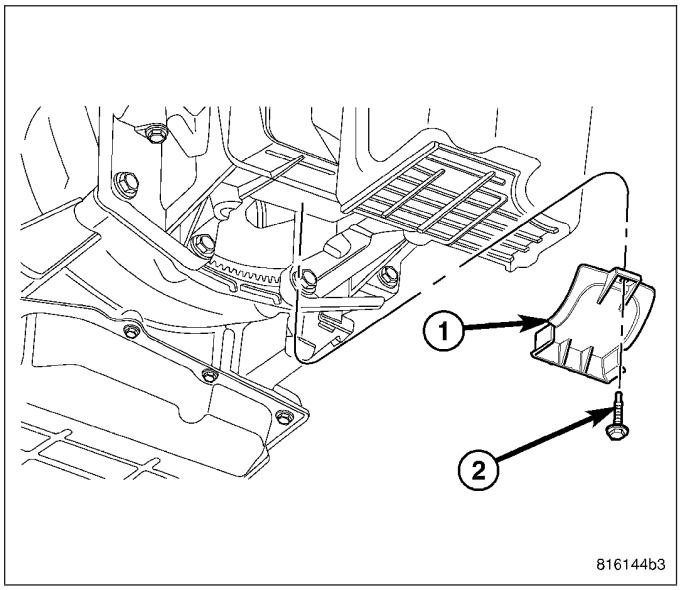

13. Install the steering gear to cradle bolts and tighten the fasteners to 70 N·m (95 ft. lbs.).
14. Connect the steering gear coupler and tighten the fastener to 30 N·m (22 ft. lbs.)
15. Attach the splash shield.
16. Lower the vehicle.
17. Install the engine oil indicator.
18. Fill engine crankcase with proper oil to correct level.
19. Connect negative battery cable.

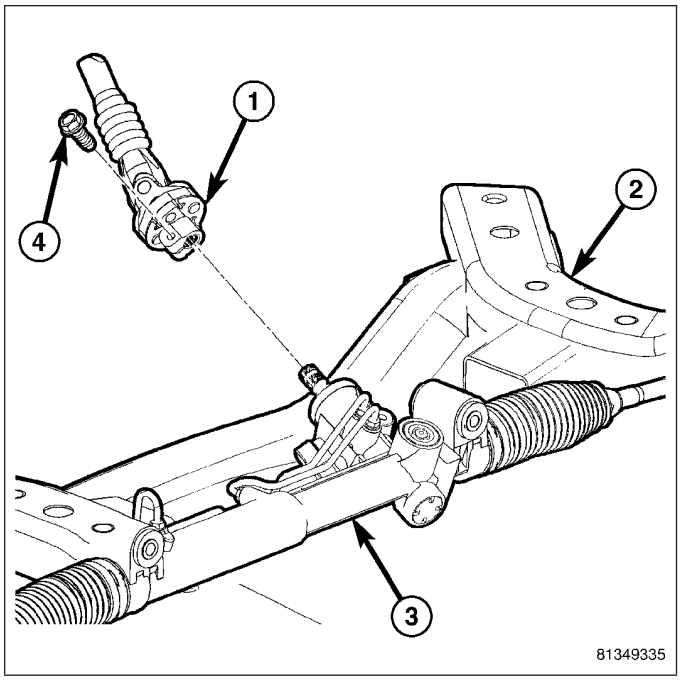

AWD

1. Clean oil pan and all mating surfaces.
2. Replace the oil level indicator tube seal.
3. Apply a 1/8 inch bead of Mopar® Engine RTV GEN II at the parting line of the oil pump housing and the rear seal retainer.

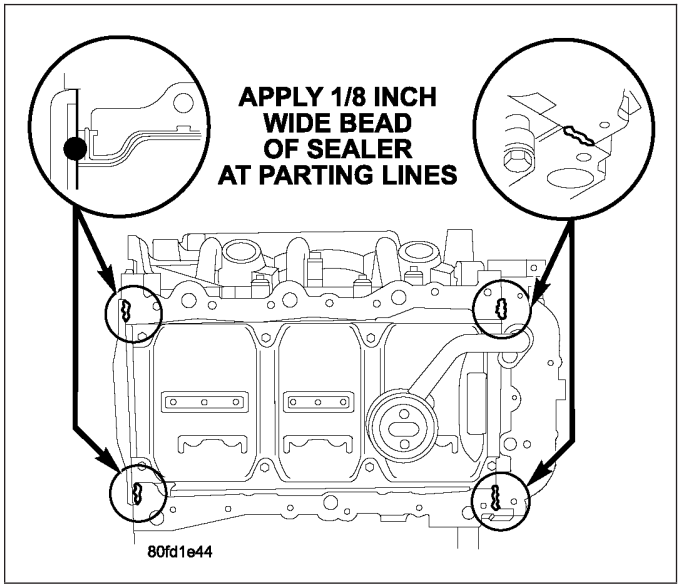

4. Install the oil pan gasket (4) to the engine block (5).
5. Install the oil pan (1) while aligning the oil level indicator tube and attach the fasteners finger tight.

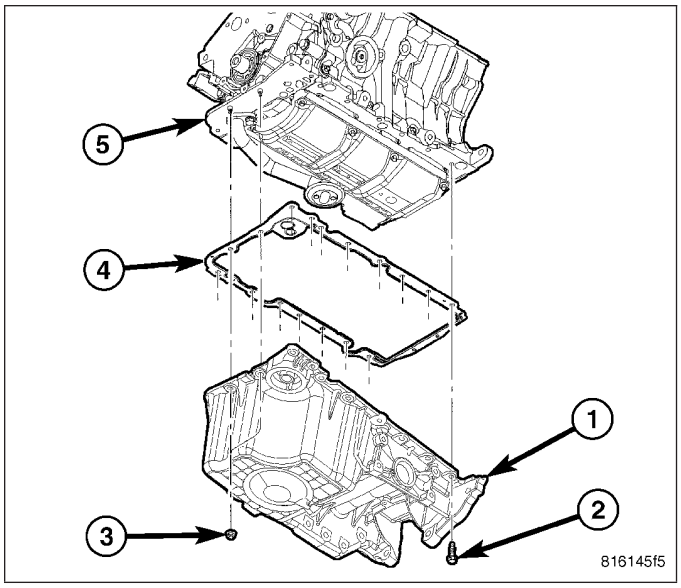

NOTE: Assure that the rear face of the oil pan is flush to the transmission bell housing when installing the oil pan.

6. Pre-torque the horizontal rear oil pan to transmission bolts to 1.4 N·m (12 lbs. in.).
7. First tighten the M8 (1) oil pan alignment bolt to 28 N·m (250 lbs. in.), then tighten bolt (2) to 28 N·m (250 lbs. in.).
8. Tighten the remaining M8 bolts and M8 nuts to 28 N·m (250 lbs. in.), and the M6 bolts to 12 N·m (105 lbs. in).

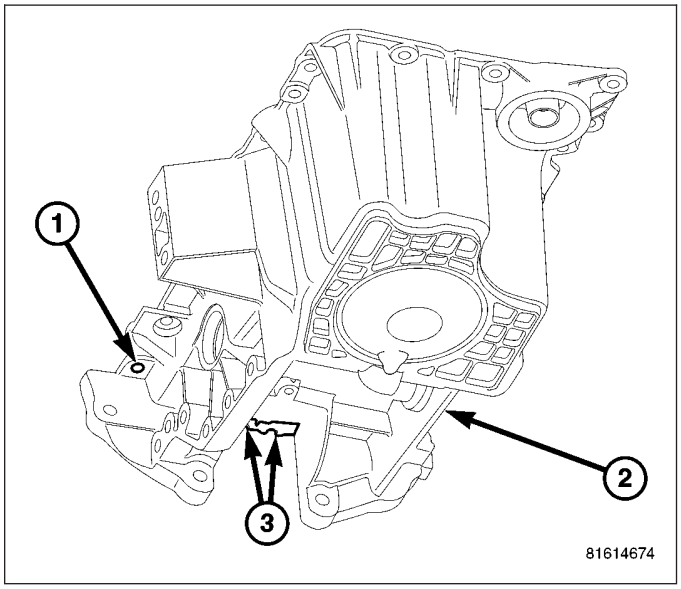

9. Tighten the four M10 oil pan (2) to transmission (3) bolts (1) to 55 N·m (40 lbs.ft.).

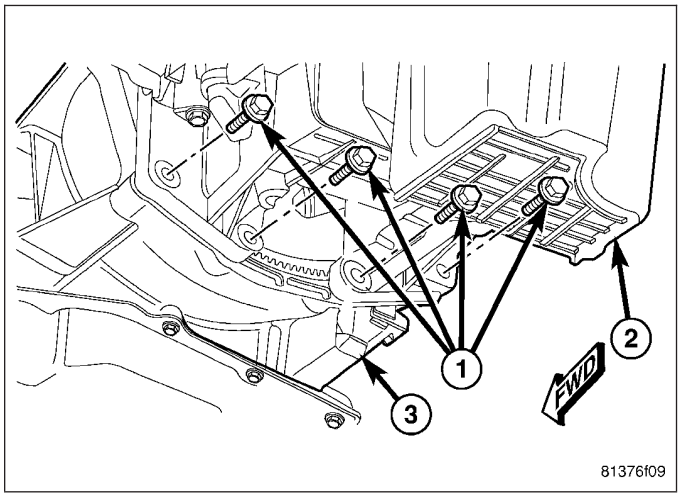

10. Install the torque converter access cover (1) and tighten the fastener (2) to 11 N·m (97 lbs. in.).
11. Install the engine oil cooler and new oil filter (Refer to 9 - ENGINE/LUBRICATION/OIL COOLER & LINES - INSTALLATION).

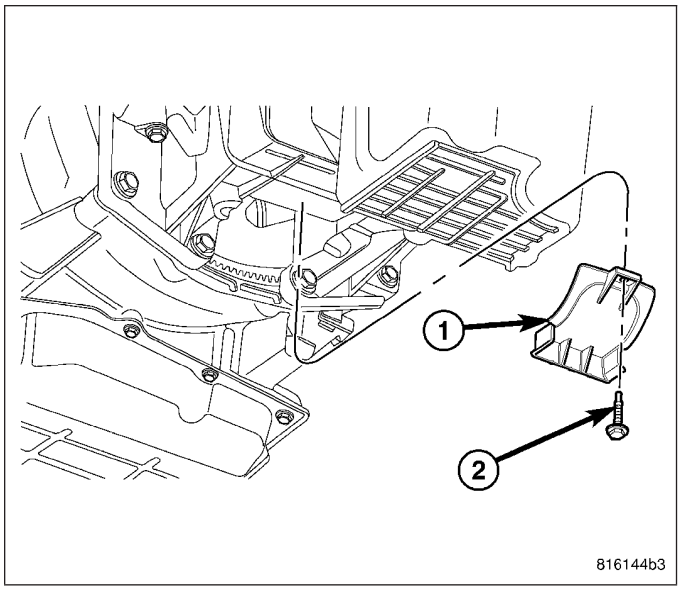

12. Support the engine with a jack stand.
13. Install the front drive axle housing (3). Tighten mounting bolts to oil pan to 65 N·m (48 lbs. ft.).
14. Remove the jack stand.

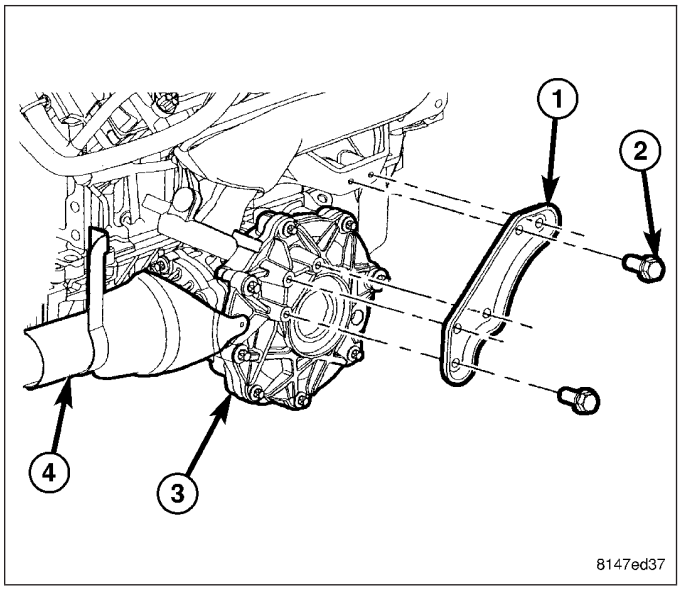

15. Install the front drive axle housing support bracket (1).
16. Install the front suspension sway bar to cradle.
17. Install the engine mount to front cradle fasteners. Tighten the fasteners to 75 N·m (55 lbs. ft.).
18. Position and install the power steering hose to cradle hold downs.
19. Install the right catalytic converter.
20. Align the paint marks and install the front drive shaft.
21. Install the front drive shaft heat shield (4).

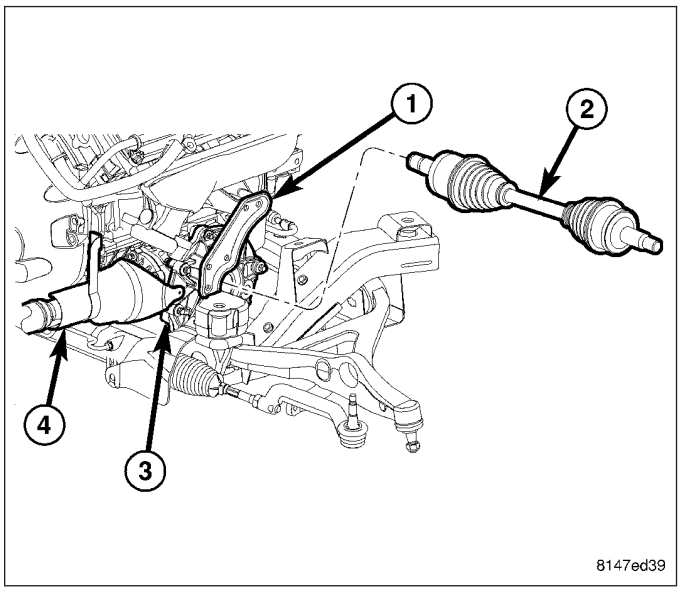

22. Install the left front drive axle intermediate shaft housing (3) and support bracket. Tighten fasteners to 25 N·m (19 lbs. ft.).
23. Connect the power steering hoses to the steering rack.
24. Install the left front drive axle (2).

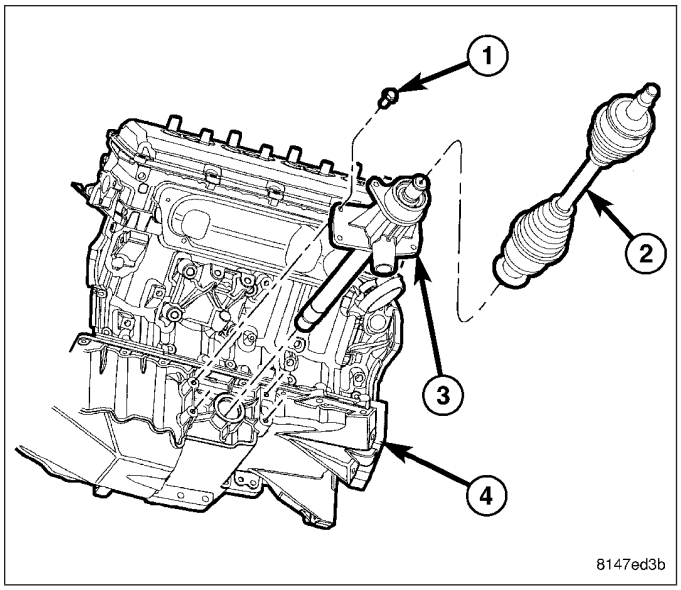

25. Install the right front drive axle (2).
26. Lower the vehicle.

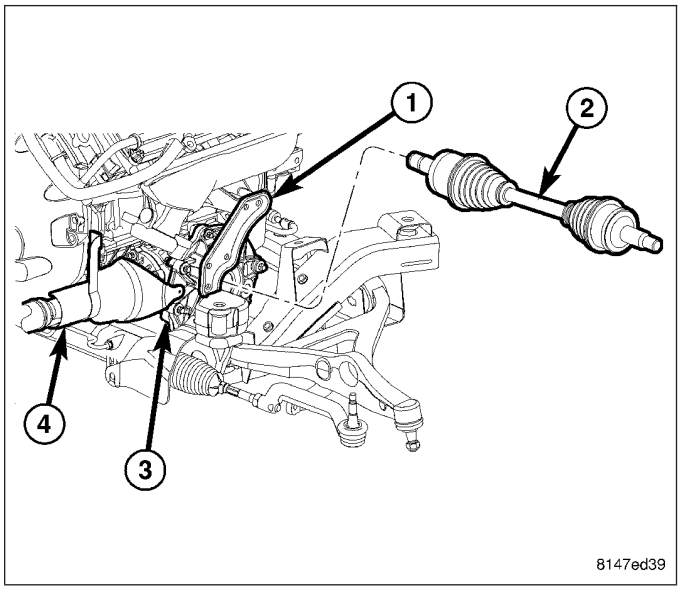

27. Fill engine crankcase with the proper oil to the correct level (Refer to LUBRICATION & MAINTENANCE/FLUID TYPES - SPECIFICATIONS).
28. Fill the cooling system (Refer to 7 - COOLING - STANDARD PROCEDURE).
29. Fill the power steering.
30. Connect the negative battery cable.

SWITCH-OIL PRESSURE SENSOR

REMOVAL

1. Raise vehicle on hoist.
2. Position an oil collecting container under switch location.
3. Disconnect electrical connector.
4. Unscrew oil pressure switch (1).

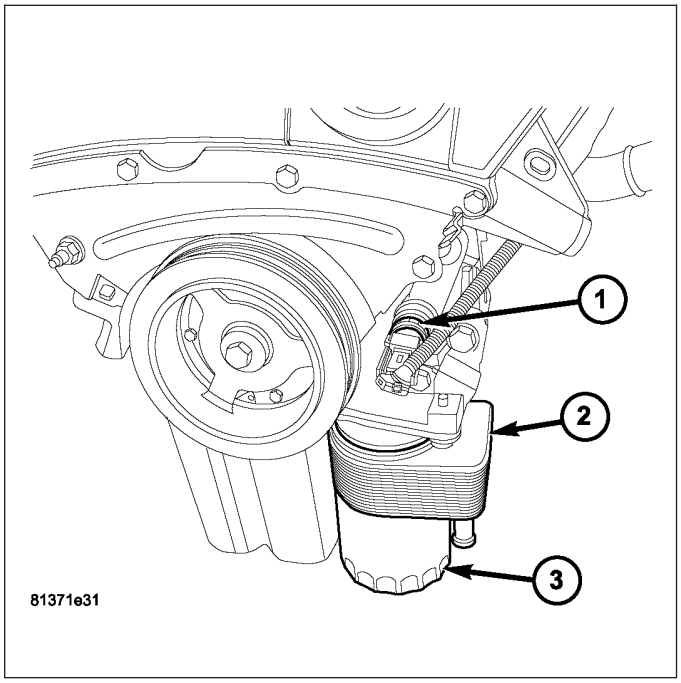

INSTALLATION

1. Apply Mopar® Thread Sealant to the switch (1) threads.
2. Install oil pressure switch (1) to fitting.
3. Connect electrical connector.
4. Lower vehicle.
5. Start engine and check for leaks.
6. Check engine oil level and adjust as necessary.

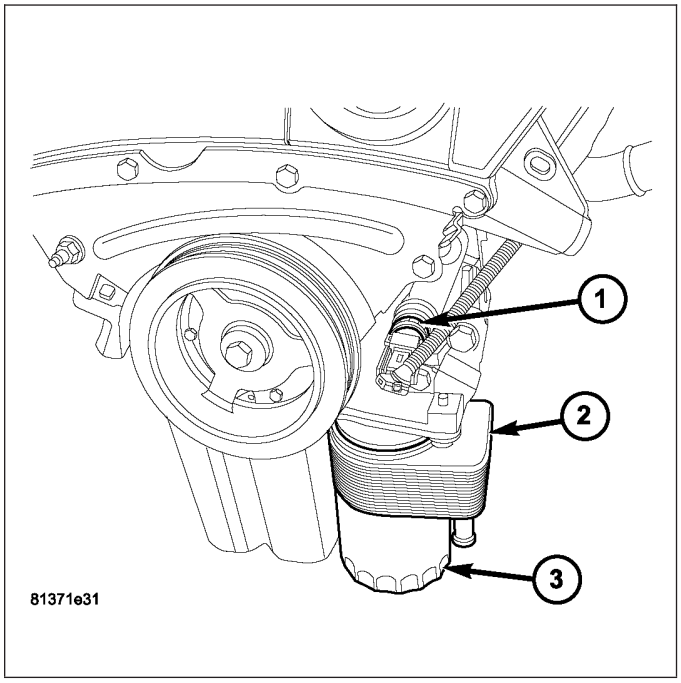

PUMP - OIL

REMOVAL

1. Drain the cooling system. (Refer to 7 - COOLING - STANDARD PROCEDURE)
2. Remove the timing belt. (Refer to 9 - ENGINE/ VALVE TIMING/TIMING BELT/CHAIN AND SPROCKETS - REMOVAL)
3. Remove the crankshaft sprocket. (Refer to 9 - ENGINE/VALVE TIMING/TIMING BELT/CHAIN AND SPROCKETS - REMOVAL)
4. Remove the oil pan. (Refer to 9 - ENGINE/LUBRICATION/OIL PAN - REMOVAL).

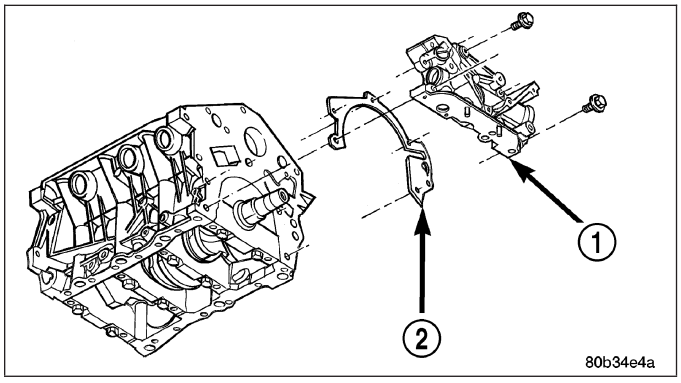

5. Remove the oil pickup tube.

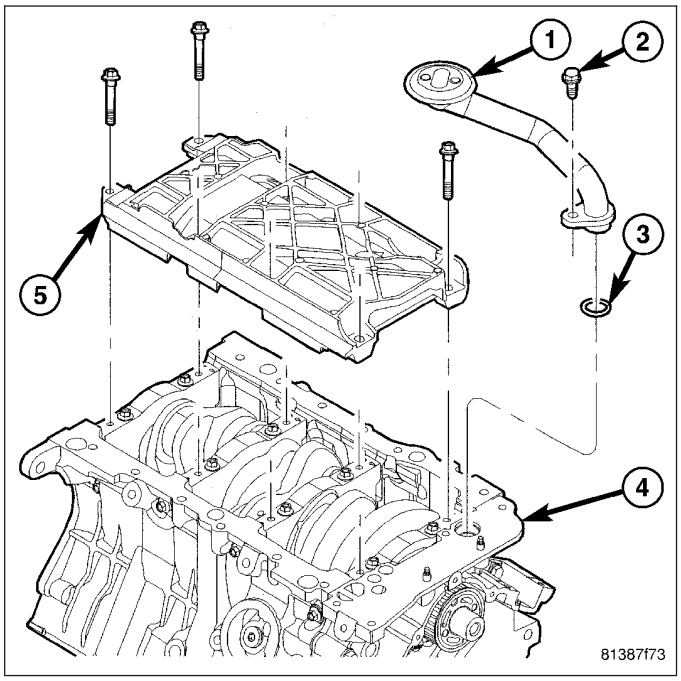

6. Remove the oil pump fasteners. Remove the oil pump and gasket from engine.

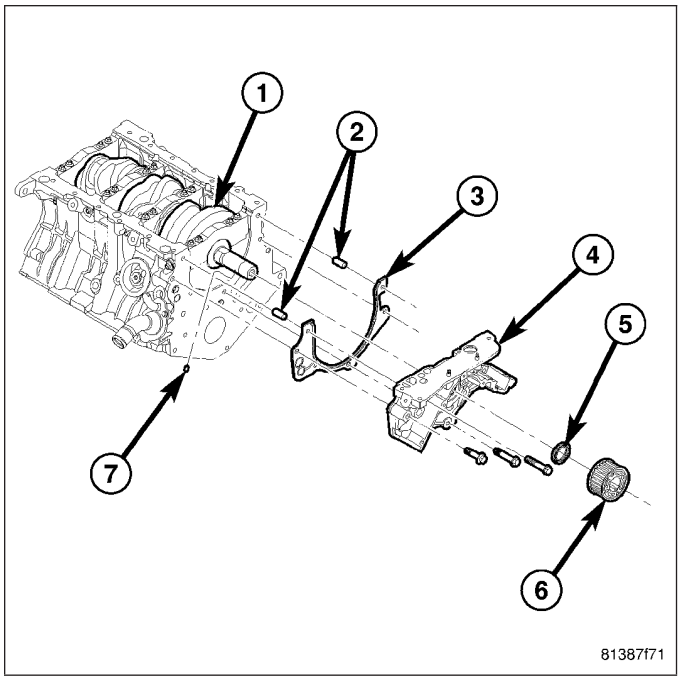

DISASSEMBLY

1. Remove oil pump cover screws (3) and lift off cover (4).
2. Remove pump rotors (2, 5).
3. Wash all parts in a suitable solvent and inspect carefully for damage or wear.

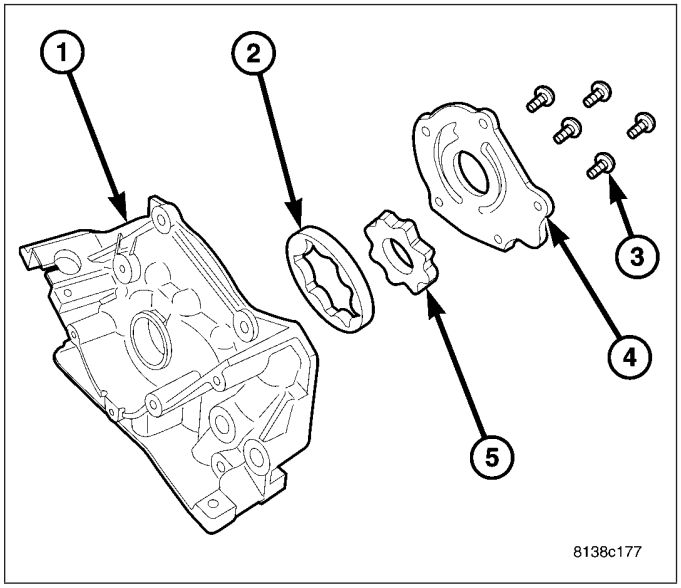

CLEANING

1. Clean all parts thoroughly in a suitable solvent.

INSPECTION

NOTE: DO NOT inspect the oil relief valve assembly. If the oil relief valve is suspect, replace the oil pump.

1. Disassemble oil pump. (Refer to 9 - ENGINE/LUBRICATION/OIL PUMP - DISASSEMBLY)
2. Clean all parts thoroughly. Mating surface of the oil pump housing should be smooth. Replace pump cover if scratched or grooved.
3. Lay a straightedge (1) across the pump cover (3) surface. If a 0.025 mm (0.001 in.) feeler gauge can be inserted between cover and straight edge, cover should be replaced.

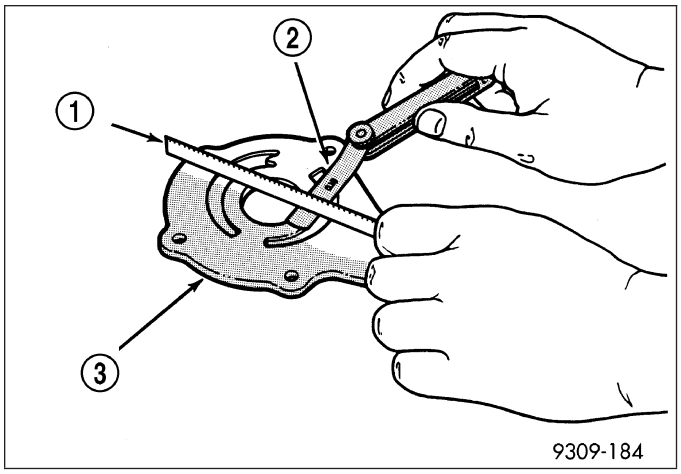

4. Measure thickness and diameter of outer rotor. If outer rotor thickness measures 14.299 mm (0.563 in.) or less , or if the diameter is 79.78 mm (3.141 inches.) or less, replace outer rotor.

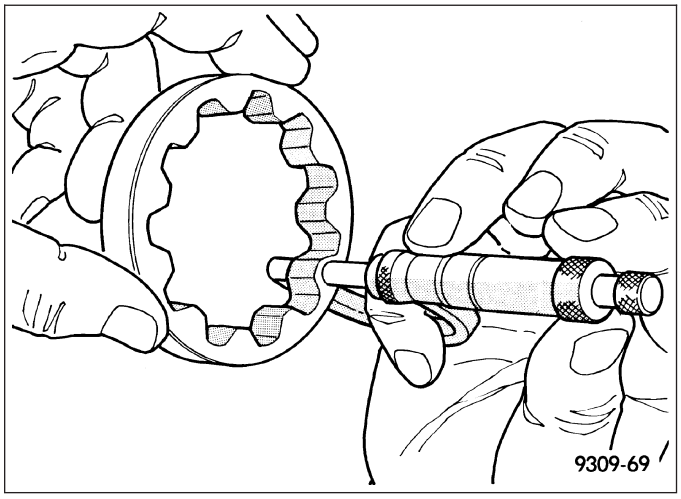

5. If inner rotor measures 14.299 mm (0.563 in.) or less replace inner rotor.

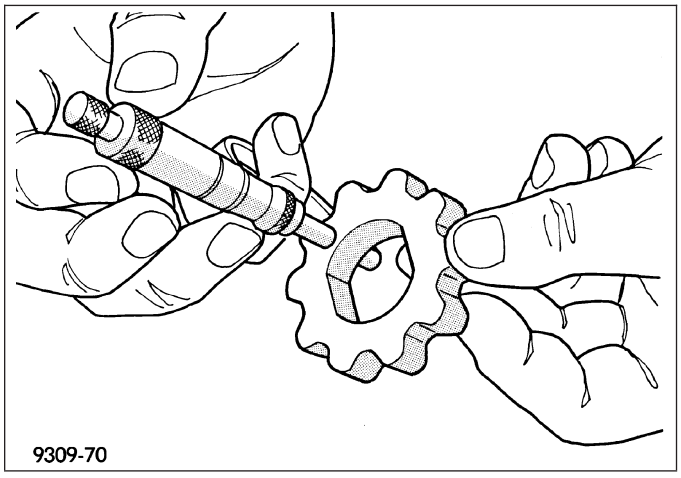

6. Slide outer rotor (2) into body, press to one side with fingers and measure clearance between rotor and body. If measurement is 0.39 mm (0.015 inch.) or more, replace body only if outer rotor is in specifications.

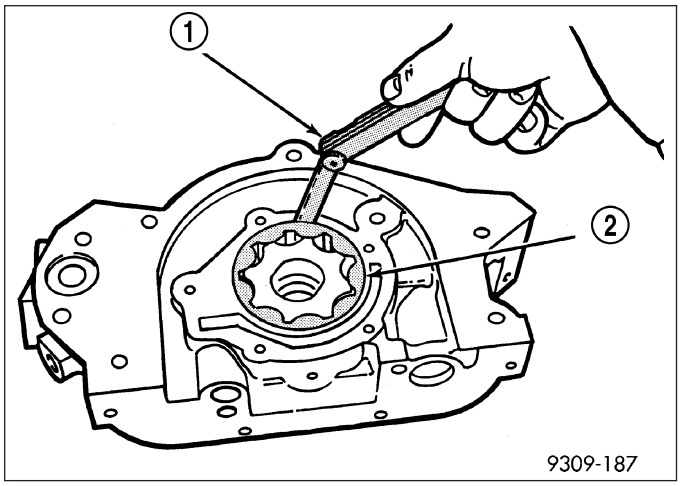

7. Install inner rotor into body. If clearance between inner (3) and outer rotors (2) is 0.20 mm (0.008 inch.) or more, replace both rotors.

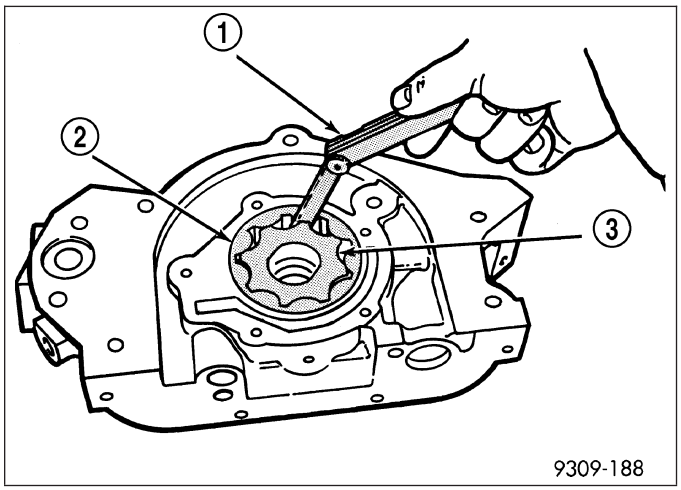

8. Place a straightedge (1) across the face of the body, between bolt holes. If a feeler gauge of 0.077 mm (0.003 in.) or more can be inserted between rotors and the straightedge, replace pump assembly **ONLY** if rotors are in specs.

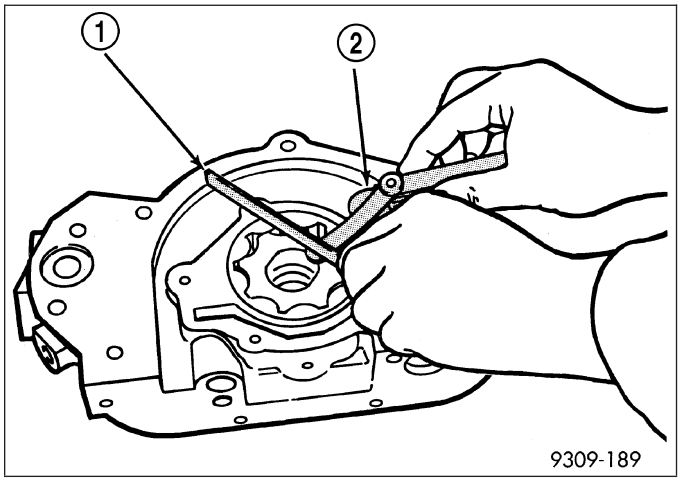

9. Assemble oil pump. (Refer to 9 - ENGINE/LUBRICATION/OIL PUMP - ASSEMBLY)

ASSEMBLY

1. Assemble oil pump using new parts as required.
2. Tighten cover screws (3) to 12 N·m (105 in. lbs.).
3. Prime oil pump before installation by filling rotor cavity with engine oil.
4. If oil pressure is low and pump is within specifications, inspect for worn engine bearings or other reasons for oil pressure loss.

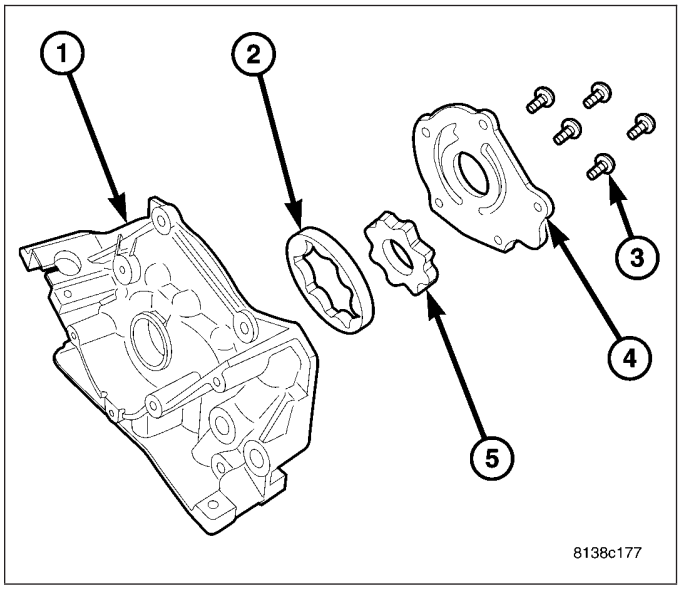

INSTALLATION

1. Prime oil pump (4) before installation by filling rotor cavity with clean engine oil.
2. Install oil pump (4) and gasket (3) carefully over the crankshaft. Position pump onto block and tighten bolts to 28 N·m (250 in. lbs.).

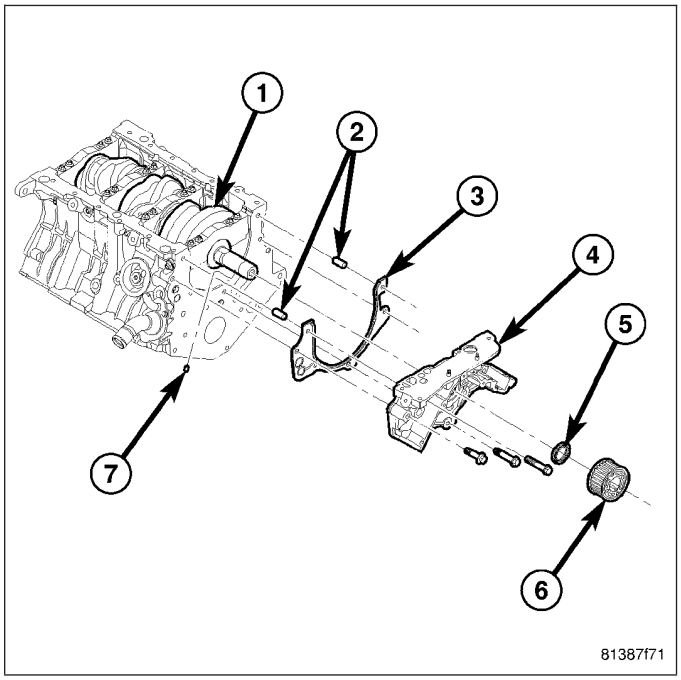

3. Install new O-ring (3) on oil pickup tube (1).
4. Install oil pickup tube (1).
5. Install oil pan. (Refer to 9 - ENGINE/LUBRICATION/OIL PAN - INSTALLATION)
6. Install crankshaft sprocket. (Refer to 9 - ENGINE/VALVE TIMING/TIMING BELT/CHAIN AND SPROCKETS - INSTALLATION)
7. Install timing belt. (Refer to 9 - ENGINE/VALVE TIMING/TIMING BELT/CHAIN AND SPROCKETS - INSTALLATION)
8. Install the timing belt covers. (Refer to 9 - ENGINE/VALVE TIMING/TIMING BELT / CHAIN COVER(S) - INSTALLATION)

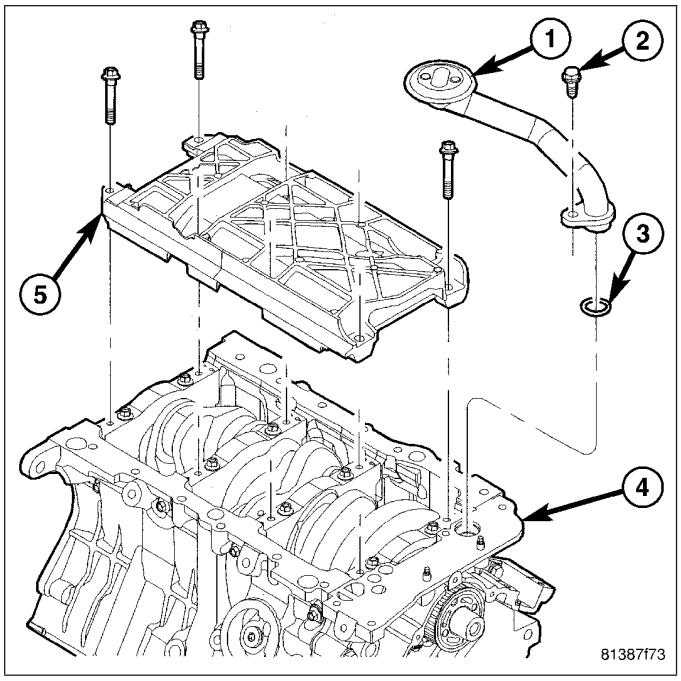

9. Install the crankshaft vibration damper (4). (Refer to 9 - ENGINE/ENGINE BLOCK/VIBRATION DAMPER - INSTALLATION)
10. Install the accessory drive belt (6). (Refer to 7 - COOLING/ACCESSORY DRIVE/DRIVE BELTS - INSTALLATION)
11. Fill the cooling system. (Refer to 7 - COOLING - STANDARD PROCEDURE)
12. Fill engine crankcase with proper oil to the correct level.

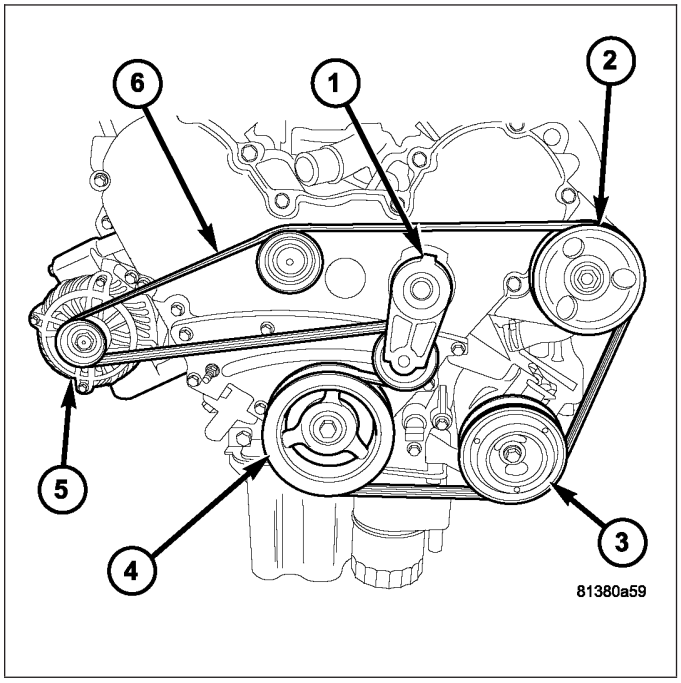

MANIFOLD - INTAKE

REMOVAL

UPPER INTAKE MANIFOLD

1. Disconnect negative battery cable.
2. Disconnect the IAT sensor electrical connector.
3. Remove air inlet hose from the throttle body.

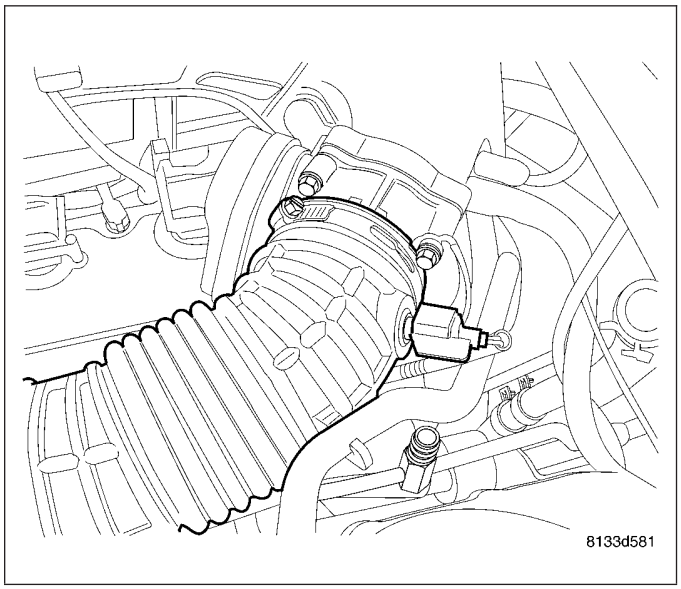

4. Disconnect the MAP sensor electrical connector.

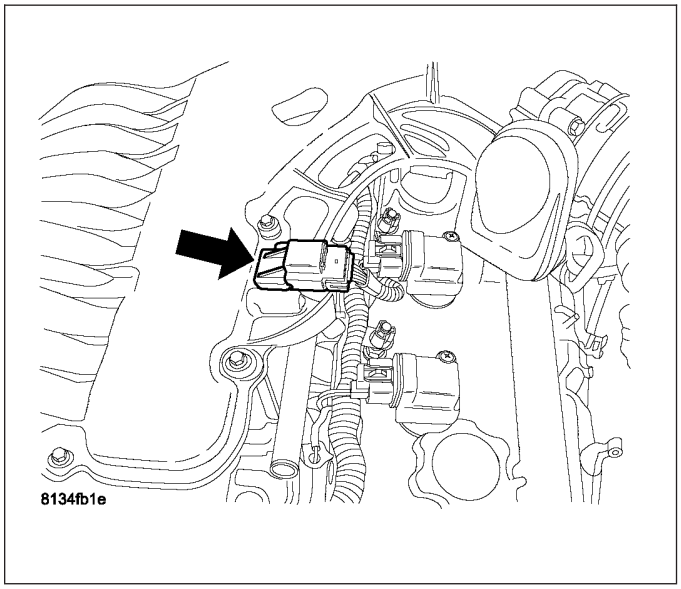

5. Separate the engine electrical harness connectors from the intake manifold.
6. Disconnect the EGR tube, PCV, Purge and power brake booster vacuum hoses from the upper intake manifold.
7. Disconnect the electronic throttle control electrical connector.
8. Remove the throttle bracket (4) fasteners from the throttle body and cylinder head.

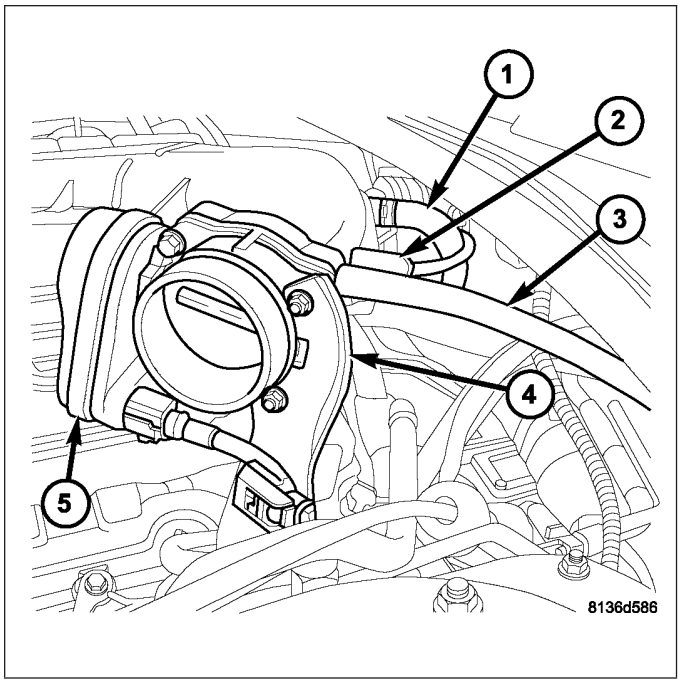

9. Disconnect electrical connectors from the Manifold Tuning Valve (MTV) and Short Runner Valve.

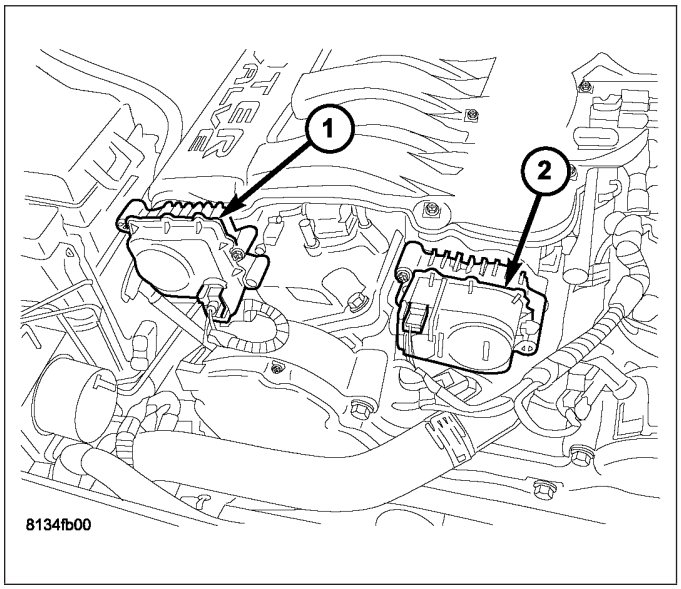

10. Remove the right intake manifold support brackets.

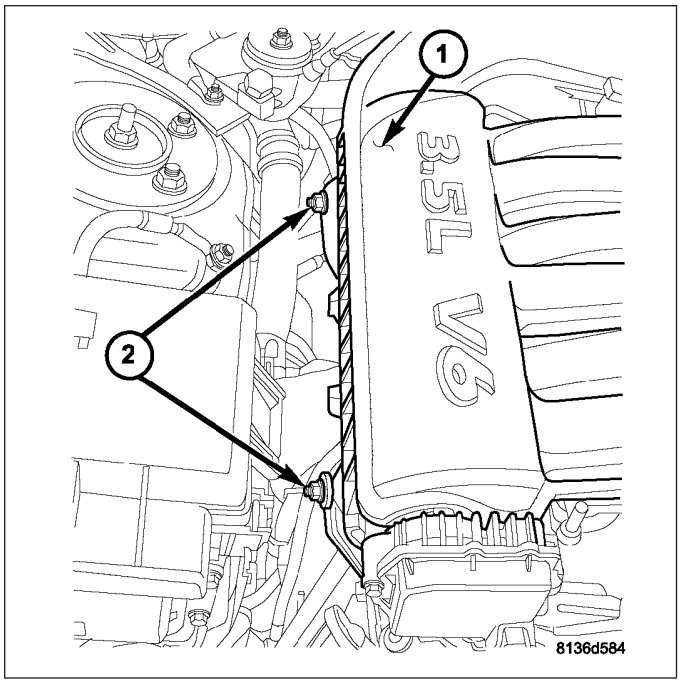

11. Remove the upper intake manifold retaining bolts, insulation foam pad and manifold. Clean all gasket sealing surfaces.

LOWER INTAKE MANIFOLD

1. Perform fuel pressure release procedure. (Refer to 14 - FUEL SYSTEM/FUEL DELIVERY - STANDARD PROCEDURE)
2. Drain the cooling system (Refer to 7 - COOLING/ENGINE/COOLANT - STANDARD PROCEDURE).
3. Disconnect the upper radiator hose from the thermostat housing.
4. Remove the upper intake manifold (Refer to 9 - ENGINE/MANIFOLDS/INTAKE MANIFOLD - REMOVAL).
5. Reposition power steering fluid reservoir and bracket.
6. Disconnect the electrical connectors to fuel injectors and coolant temperature sensor.

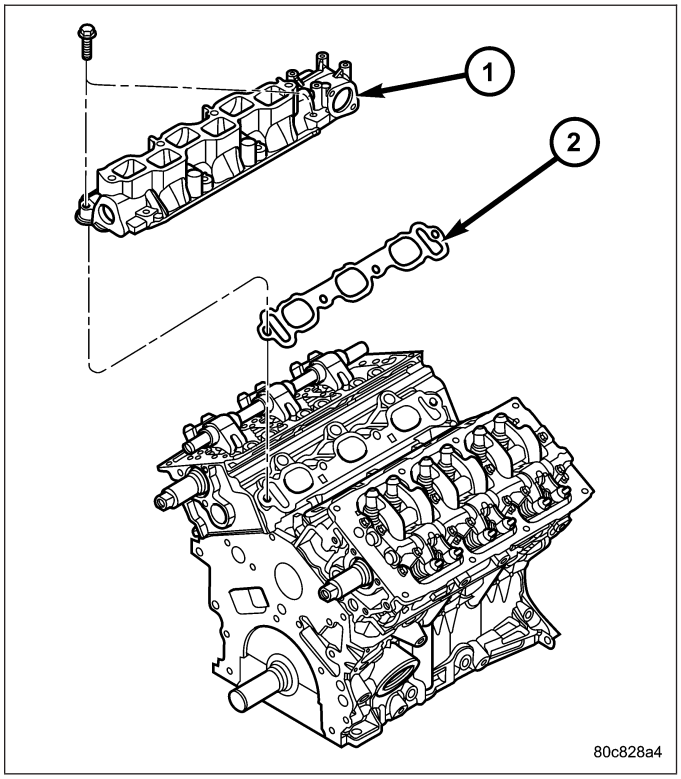

7. Disconnect heater hose from the rear intake manifold.
8. Disconnect the coolant container hose at the rear intake manifold.

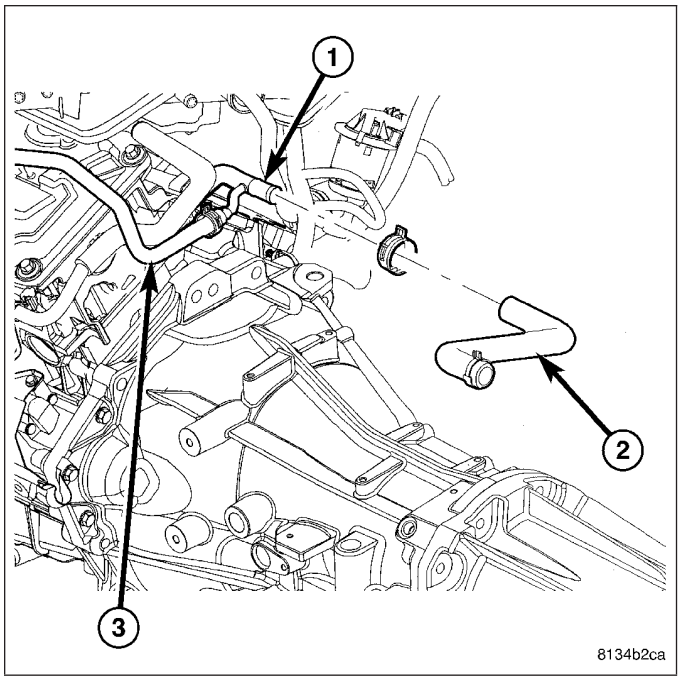

9. Disconnect the fuel supply hose from fuel rail (Refer to 14 - FUEL SYSTEM/FUEL DELIVERY/ FUEL LINES - STANDARD PROCEDURE).
10. Remove the bolts attaching fuel rail.
11. Remove fuel rail and injectors as an assembly.
12. Remove bolts attaching lower intake and remove intake manifold.

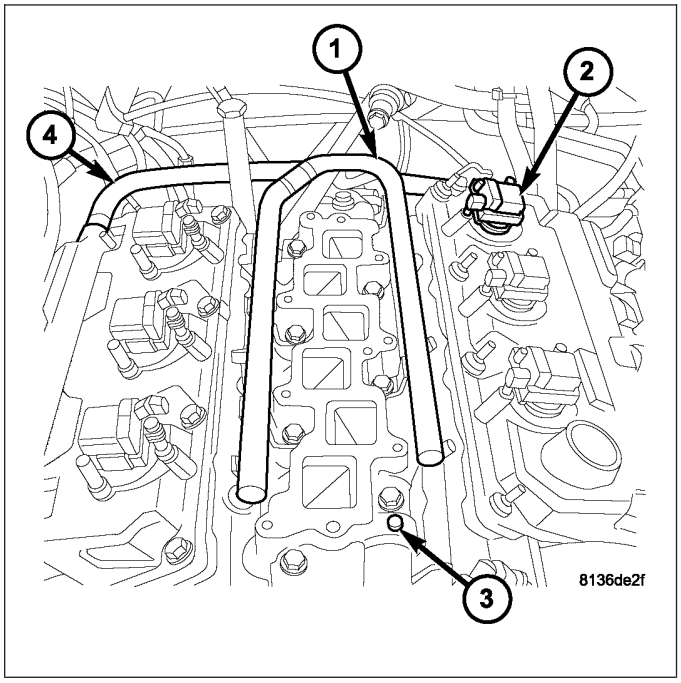

INSTALLATION

UPPER INTAKE MANIFOLD

1. Clean and inspect gasket sealing surfaces.
2. Position new gasket.
3. Install the upper intake manifold insulator foam.
4. Install the upper intake manifold. Tighten bolts to 12 N·m (105 in.lbs.) starting in the center working outward in a cross sequence pattern.
5. Install the right manifold support brackets. Tighten fasteners to 12 N·m (105 in.lbs.).

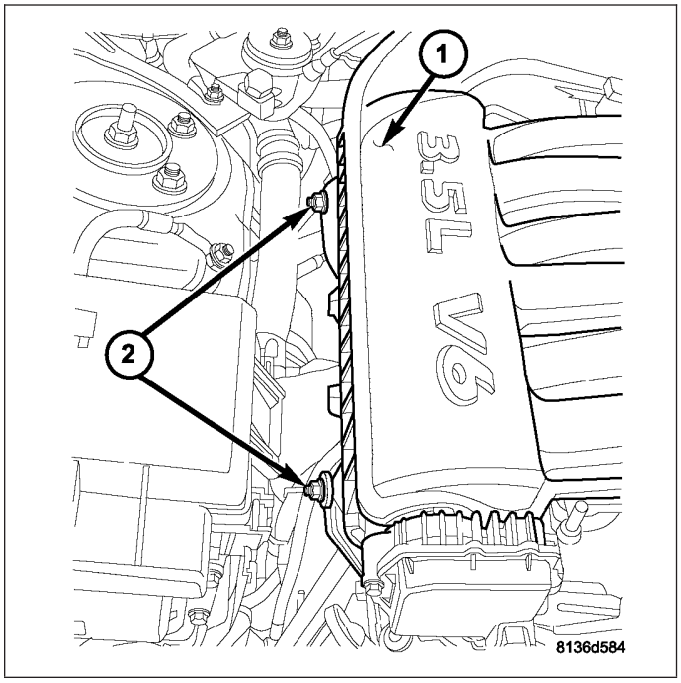

6. Install the throttle bracket. Tighten fasteners to 12 N·m (105 in.lbs.) at the throttle body and 28N·m (259 in.lbs.) at the cylinder head.

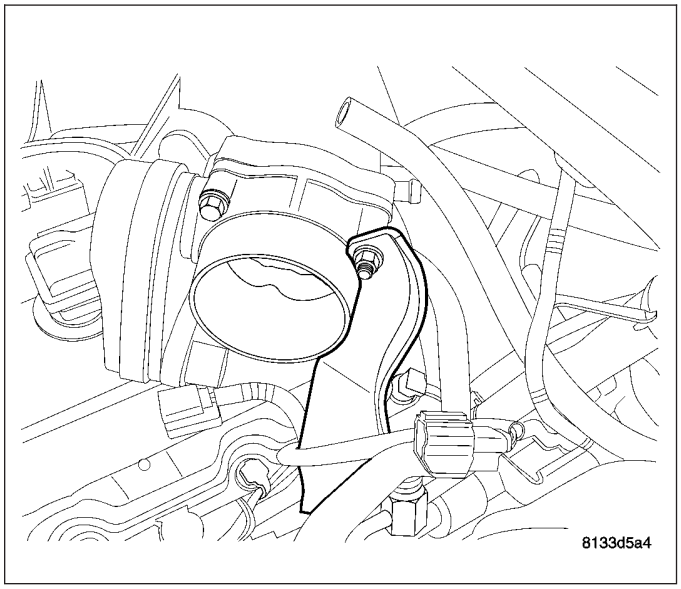

7. Connect the manifold tuning valve and short runner valve electrical connectors.

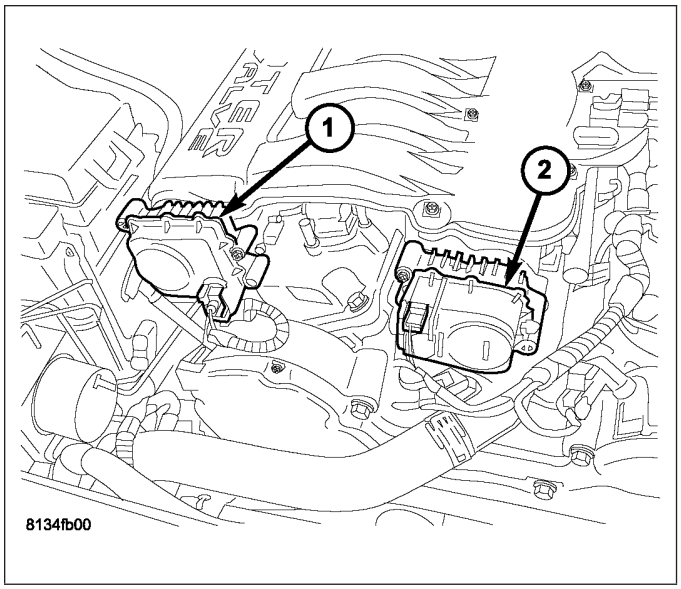

8. Connect the electronic throttle control harness connector.
9. Connect the engine electrical connectors to the intake manifold.
10. Connect the EGR tube, PCV, Purge and power brake booster vacuum hoses to the intake manifold.

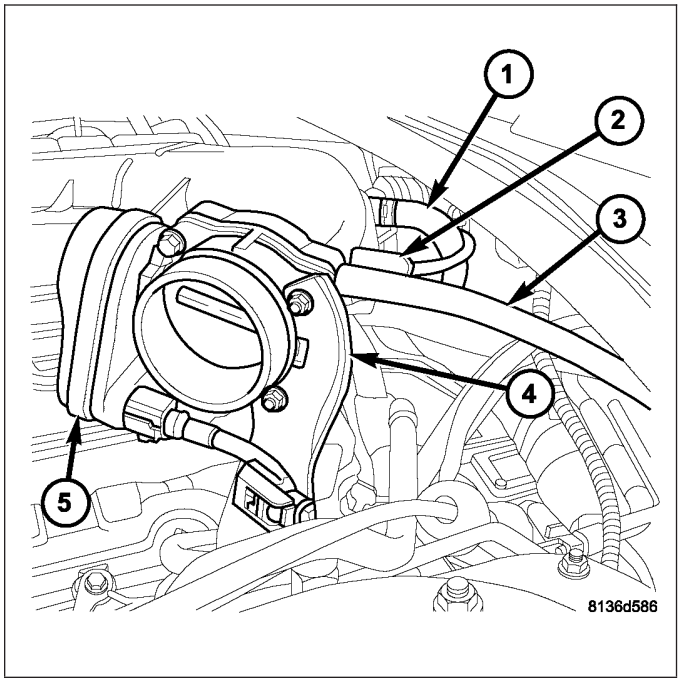

11. Connect the MAP sensor harness connector.

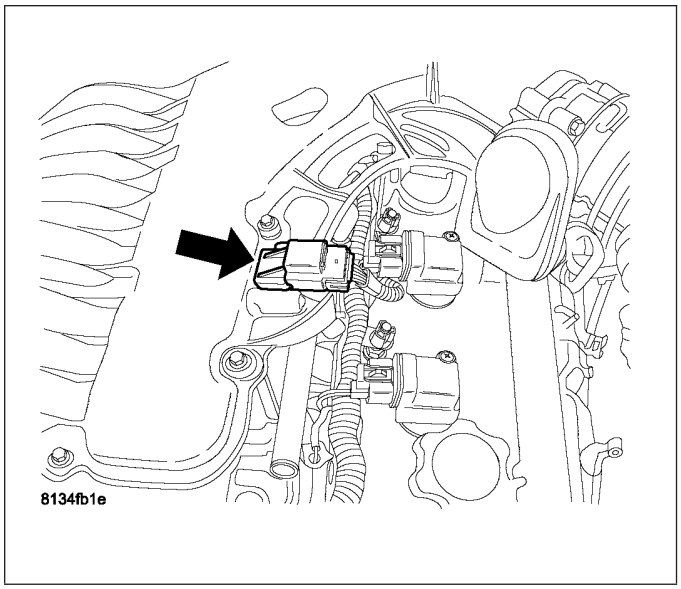

12. Install the inlet hose and connect the IAT sensor harness connector.
13. Connect negative battery cable.

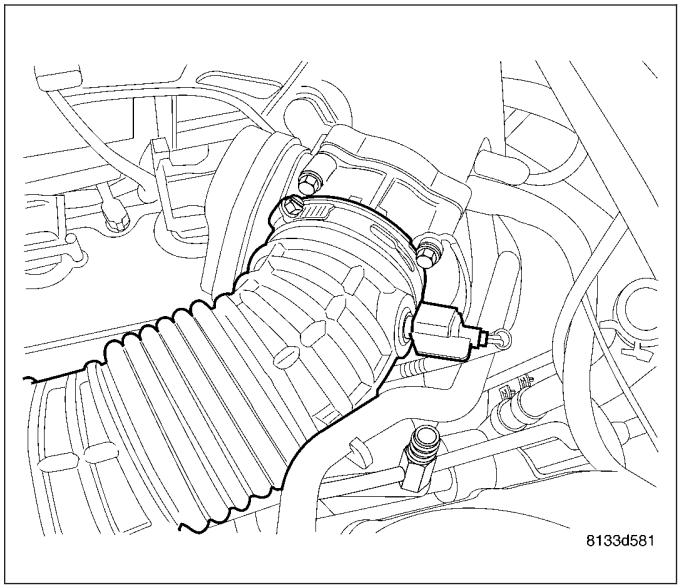

LOWER INTAKE MANIFOLD

1. Clean all sealing surfaces.
2. Position new gaskets and intake manifold on cylinder head surfaces.
3. Install intake manifold bolts and gradually tighten in sequence shown until a torque of 28 N·m (250 in. lbs.) is obtained.

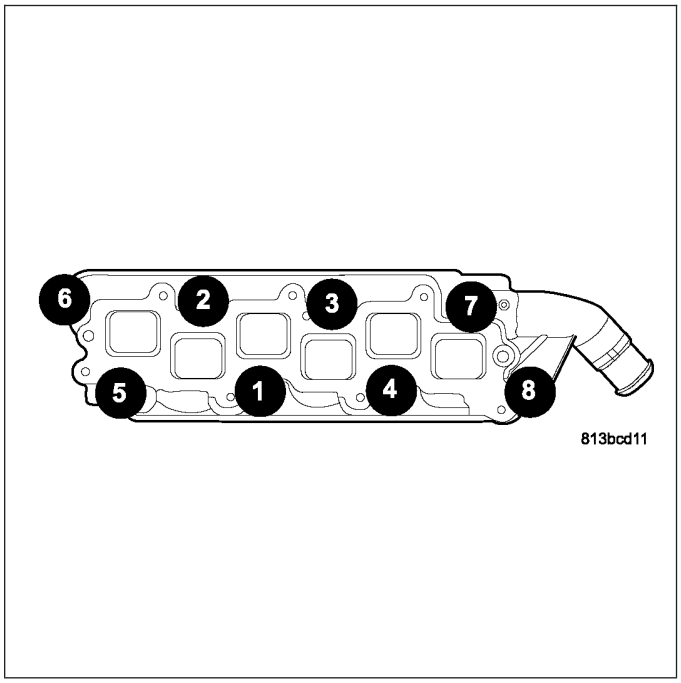

4. Install fuel rail and injectors as an assembly, (Refer to 14 - FUEL SYSTEM/FUEL INJECTION/FUEL INJECTOR - INSTALLATION).
5. Connect fuel supply hose to fuel rail. (Refer to 14 - FUEL SYSTEM/FUEL DELIVERY/FUEL LINES - STANDARD PROCEDURE)

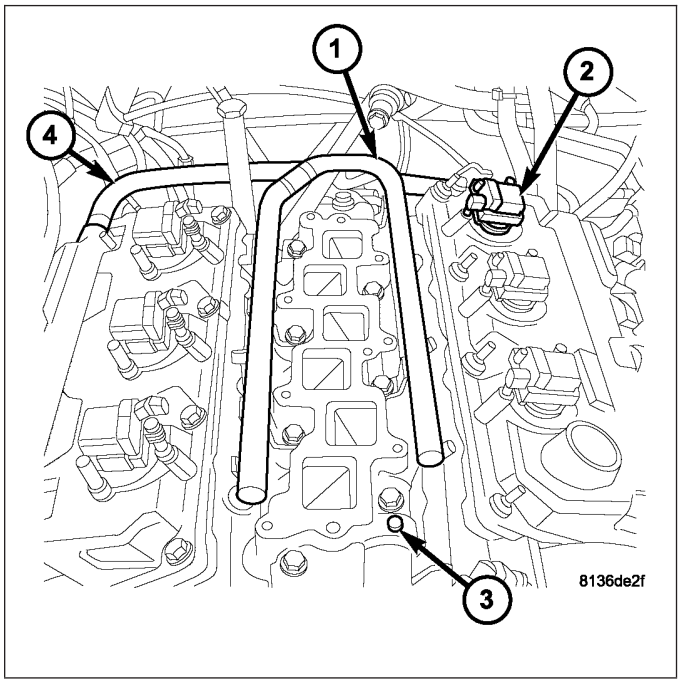

6. Connect heater hose to rear lower intake manifold.
7. Connect coolant container hose to the rear lower intake manifold.

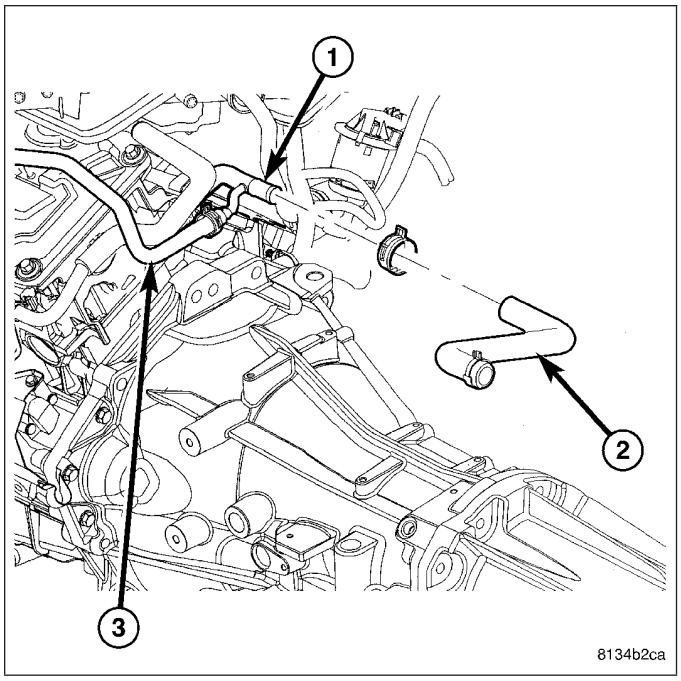

8. Connect electrical connectors to fuel injectors and coolant temperature sensor.
9. Install power steering fluid reservoir and bracket.
10. Install upper intake manifold (Refer to 9 - ENGINE/MANIFOLDS/INTAKE MANIFOLD - INSTALLATION).
11. Connect the upper radiator hose to the thermostat housing.
12. Fill the cooling system (Refer to 7 - COOLING/ENGINE/COOLANT - STANDARD PROCEDURE).

MANIFOLD-EXHAUST LEFT

REMOVAL

LEFT EXHAUST MANIFOLD

1. Disconnect and isolate the negative battery cable.
2. Raise and support the vehicle.
3. Separate the front exhaust pipe to manifold union (2).

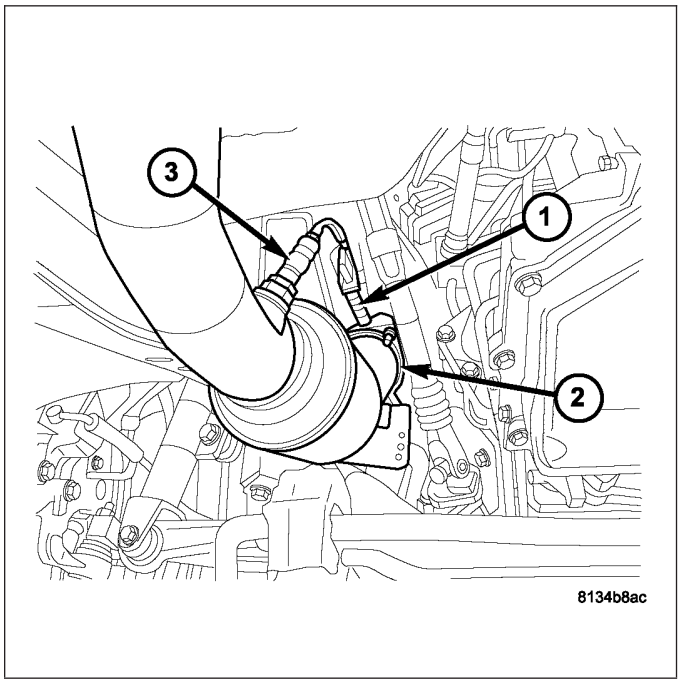

4. Lower the vehicle.
5. Disconnect and remove the oxygen sensor from the exhaust manifold (7)
6. Remove the exhaust manifold shield (5) retaining bolts, exhaust manifold (7) , and discard gasket (1).

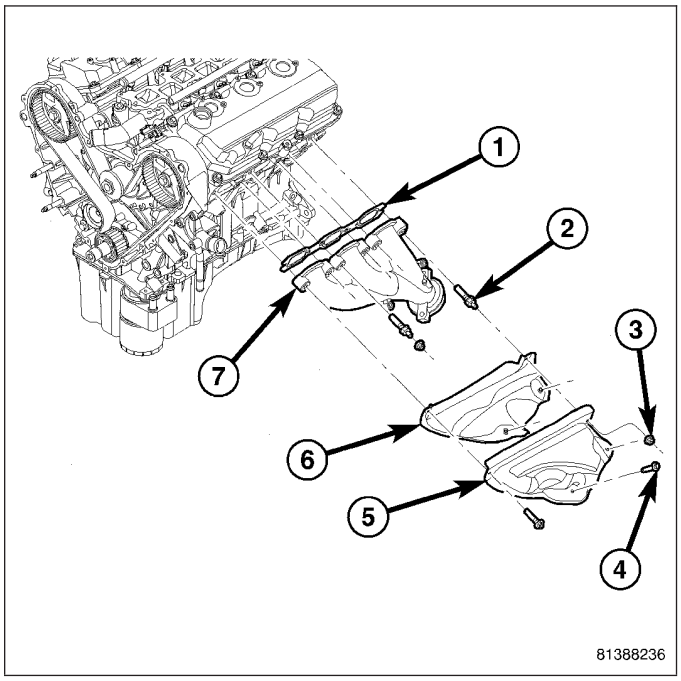

INSPECTION

1. Inspect exhaust manifolds for damage or cracks.
2. Check manifold flatness.
3. Inspect the exhaust manifold gasket for obvious discoloration or distortion.
4. Check distortion of the cylinder head mounting surface with a straightedge and thickness gauge.

INSTALLATION

LEFT EXHAUST MANIFOLD

NOTE: If replacing the exhaust manifold, tighen the exhaust outlet studs to manifold to 40N·m (350 in.lbs.).

1. Position the exhaust manifold (7) and gasket (1). Install the retaining bolts (2). Tighten 4 bolts starting at the center working outward to 23 N.m (200 in. lbs.).
2. Install the exhaust manifold heat shields (5,6). Tighten the bolts to 12N·m (105 in. lbs.).
3. Tighten the out most stud nuts to 8N·m (73 in.lbs.).
4. Connect the oxygen sensor.

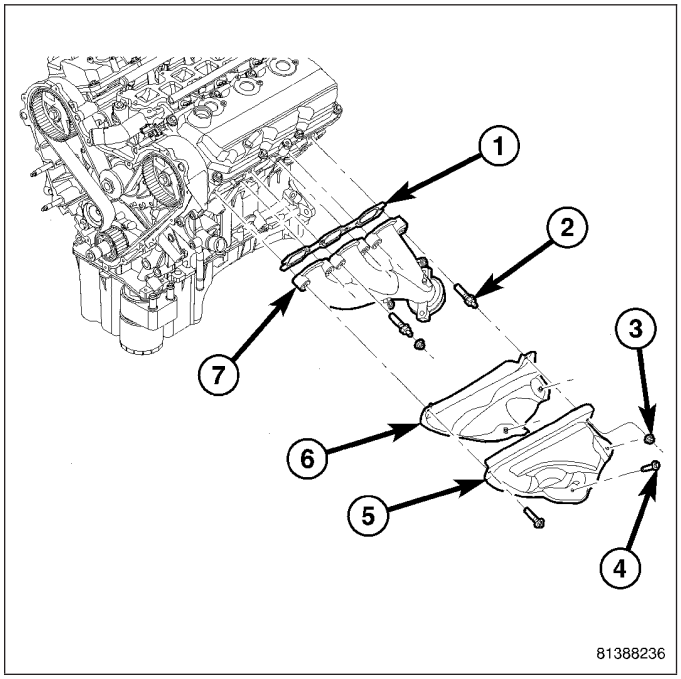

5. Raise and support the vehicle.
6. Connect the exhaust pipe to manifold union (3). Tighten the exhaust stud nuts to 34N·m (300 in.lbs.).
7. Connect the negative battery cable.

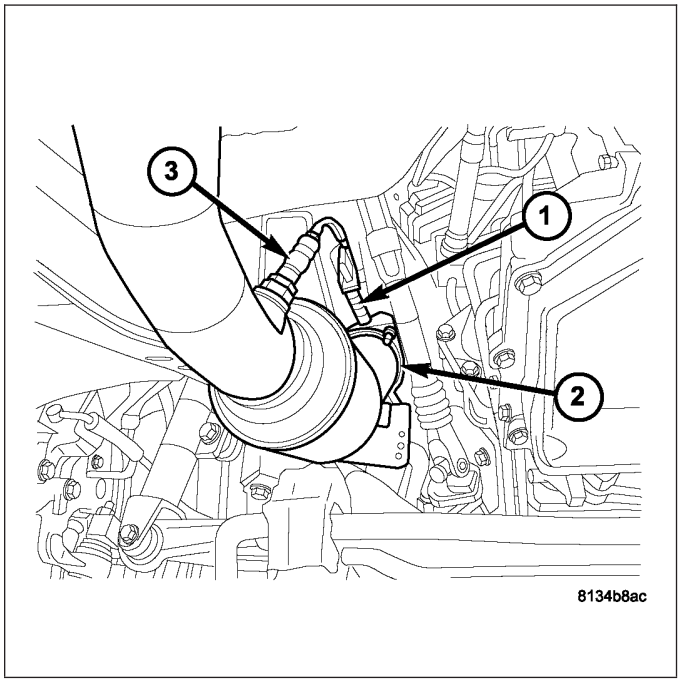

MANIFOLD-EXHAUST RIGHT

REMOVAL

RIGHT EXHAUST MANIFOLD

1. Disconnect the negative battery cable.
2. Disconnect the upstream oxygen sensor electrical connector.
3. Raise and support the vehicle.
4. Remove the exhaust manifold to exhaust pipe flange retaining bolts (1).

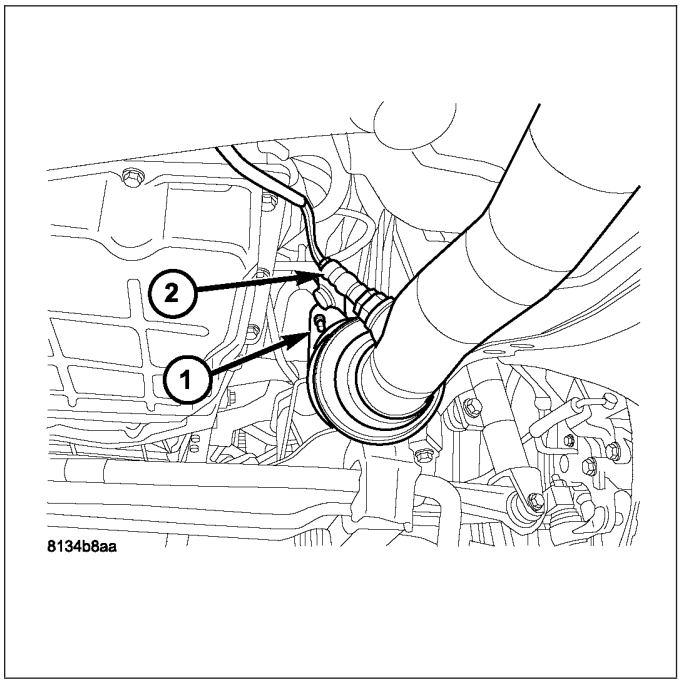

5. Lower the vehicle.
6. Remove the exhaust manifold heat shield and manifold.
7. Remove the oxygen sensor from the exhaust manifold.

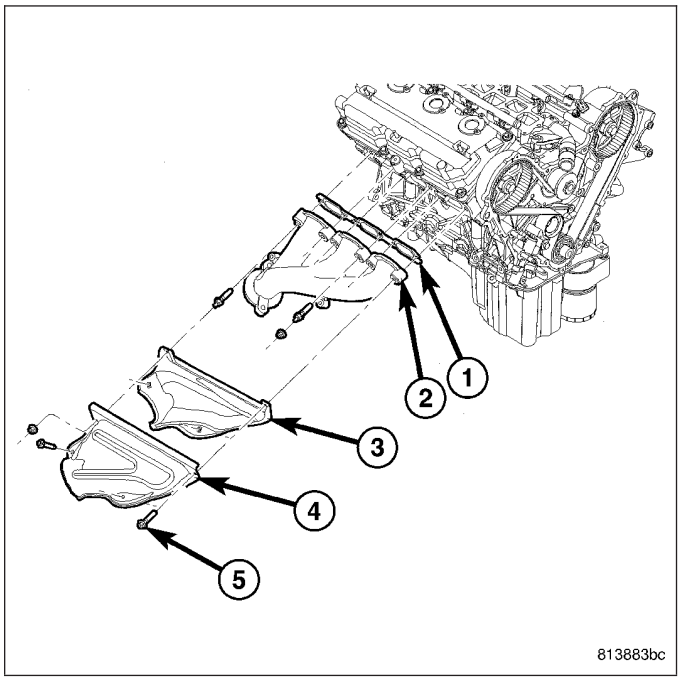

INSTALLATION

RIGHT EXHAUST MANIFOLD

1. Clean gasket surfaces.

NOTE: If replacing the exhaust manifold, tighten the exhaust outlet studs to 39N·m (350 in.lbs.).

2. Position the exhaust manifold and gasket. Install the retaining bolts. Tighten 4 bolts starting at the center working outward to 23 N.m (200 in. lbs.).
3. Install the heat shields. Tighten the heat shield fasteners to 12 N·m (105 in.lbs.).
4. Tighten the 2 out most nuts to 8 N·m (73 in.lbs.).
5. Connect the oxygen sensor.
6. Raise and support the vehicle.

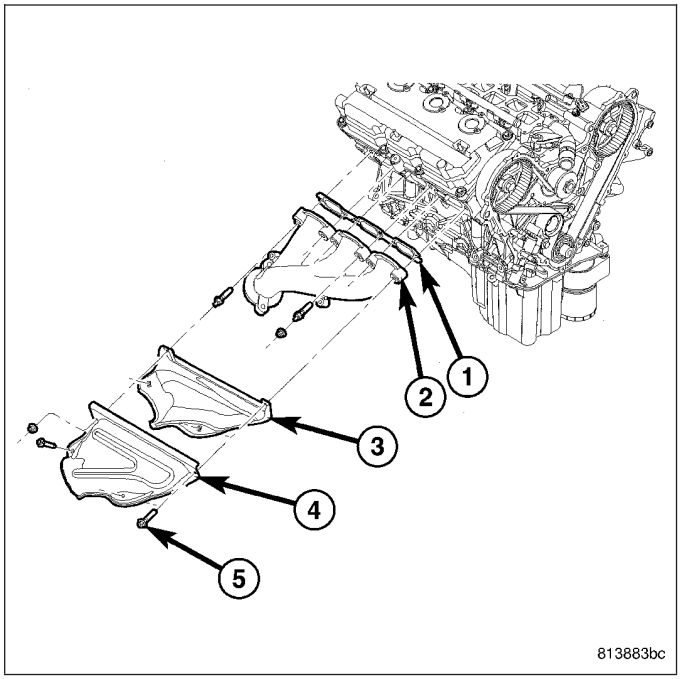

7. Connect the front exhaust pipe to exhaust manifold. Tighten the fasteners to 34 N.m (300 in. lbs.).
8. Connect the negative battery cable.

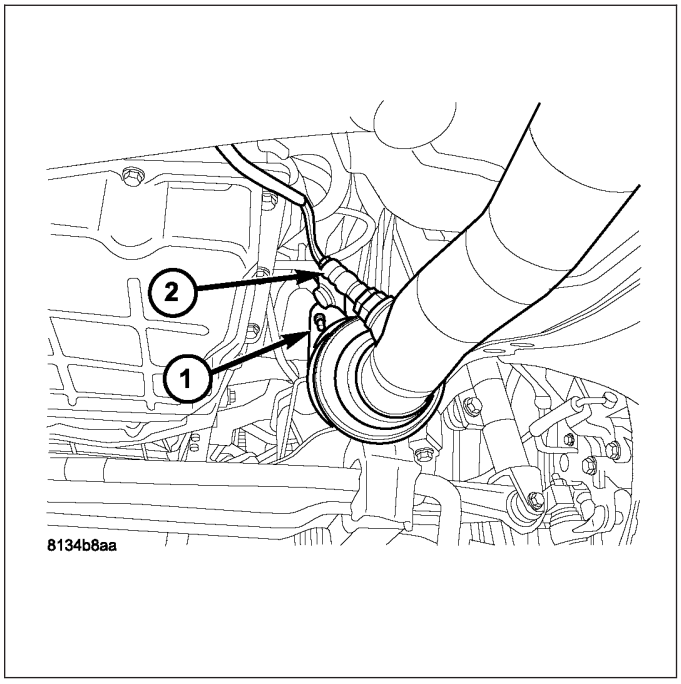

VALVE TIMING

DESCRIPTION

The timing drive system has been designed to provide quiet performance and reliability to support a **NON** free-wheeling engine.

The timing drive components include a crankshaft sprocket (4), camshaft sprockets, tensioner pulley, hydraulic tensioner and a timing belt (3). The water pump (2) is driven by the back side of the timing belt (3). The right and left camshaft sprockets are keyed and not interchangeable because of the cam sensor pick-up wheel on the left sprocket.

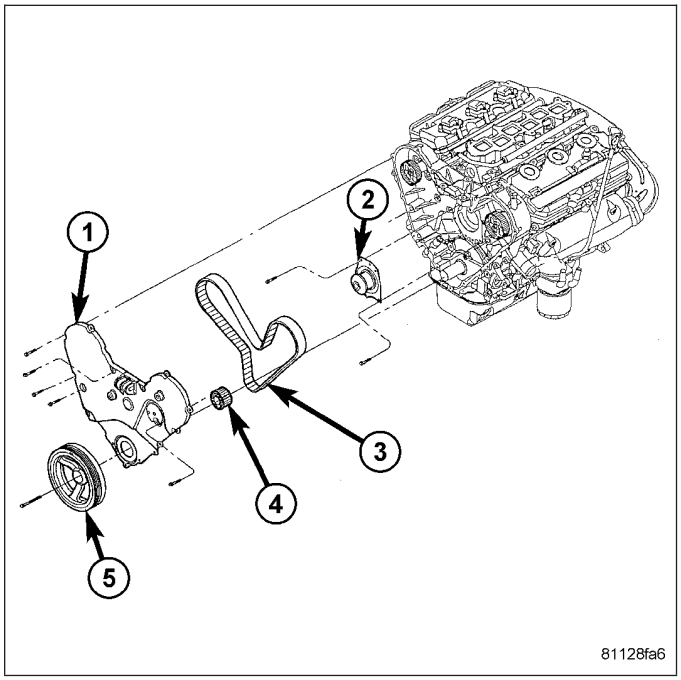

COVER-FRONT TIMING BELT

REMOVAL

1. Perform fuel pressure release procedure. (Refer to 14 - FUEL SYSTEM/FUEL DELIVERY - STANDARD PROCEDURE).
2. Disconnect negative battery cable.
3. Remove accessory drive belt (Refer to 7 - COOLING/ACCESSORY DRIVE/DRIVE BELTS - REMOVAL).
4. Remove accessory drive belt tensioner.
5. Remove bolts for power steering pump. Reposition power steering pump aside.
6. Raise vehicle on hoist.
7. Remove crankshaft damper (Refer to 9 - ENGINE/ENGINE BLOCK/VIBRATION DAMPER - REMOVAL).
8. Remove the lower front timing belt cover fasteners.

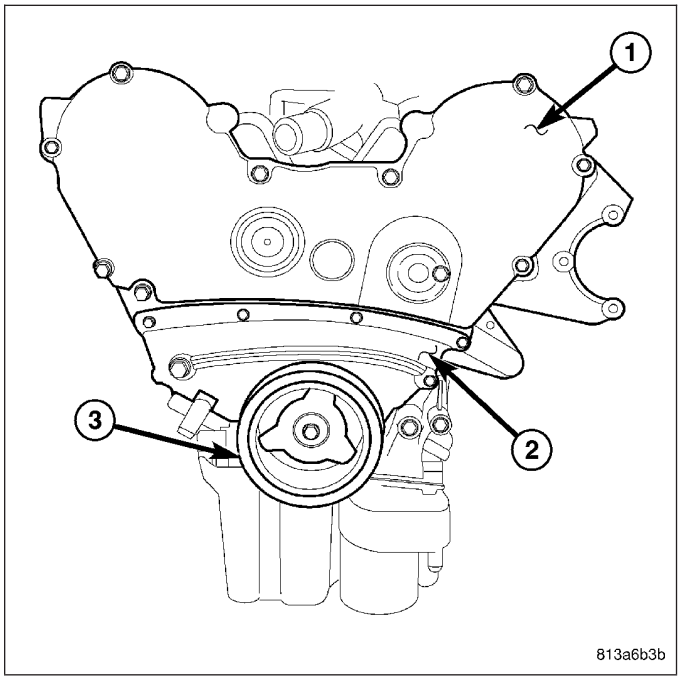

9. Lower the vehicle.
10. Remove the upper timing belt cover bolts and remove front timing belt cover.

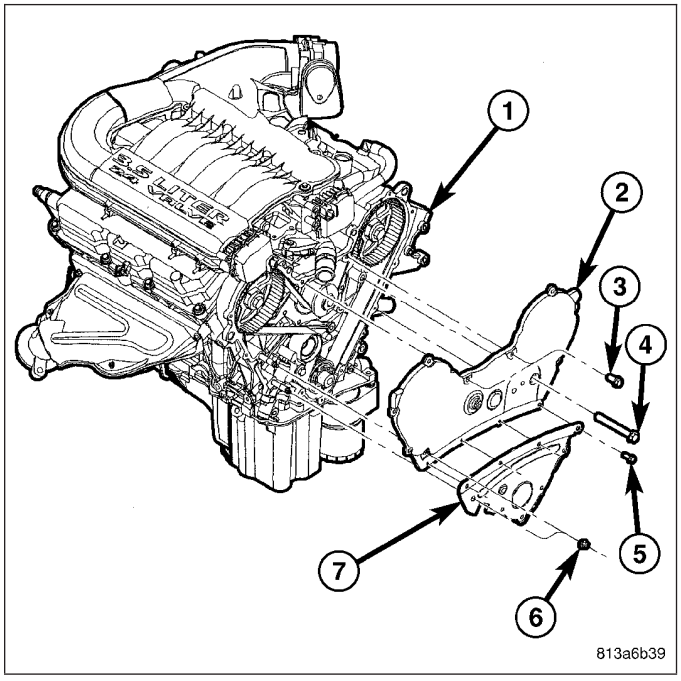

INSTALLATION

1. Exchange the accessory drive belt pulley if necessary. Tighten bolt to 61 N·m (45 ft.lbs.).
2. Install upper front timing belt cover.
3. Install lower timing belt front cover.
4. Tighten the timing cover bolts as follows:
   - M6 bolts - 12N·m (105 in.lbs.)
   - M8 bolts - 28N·m (250 in.lbs.)
   - M10 bolts - 54N·m (40 lbs.ft.)
5. Install power steering pump fasteners. Tighten bolts to 23 N·m (200 lbs. in.).
6. Install crankshaft damper (Refer to 9 - ENGINE/ENGINE BLOCK/VIBRATION DAMPER - INSTALLATION).
7. Install accessory drive belt tensioner (Refer to 7 - COOLING/ACCESSORY DRIVE/BELT TENSIONERS - INSTALLATION). Torque fastener to 28 N·m (250 in. lbs.).
8. Install accessory drive belt (Refer to 7 - COOLING/ACCESSORY DRIVE/DRIVE BELTS - INSTALLATION).
9. Lower vehicle.
10. Connect negative battery cable.

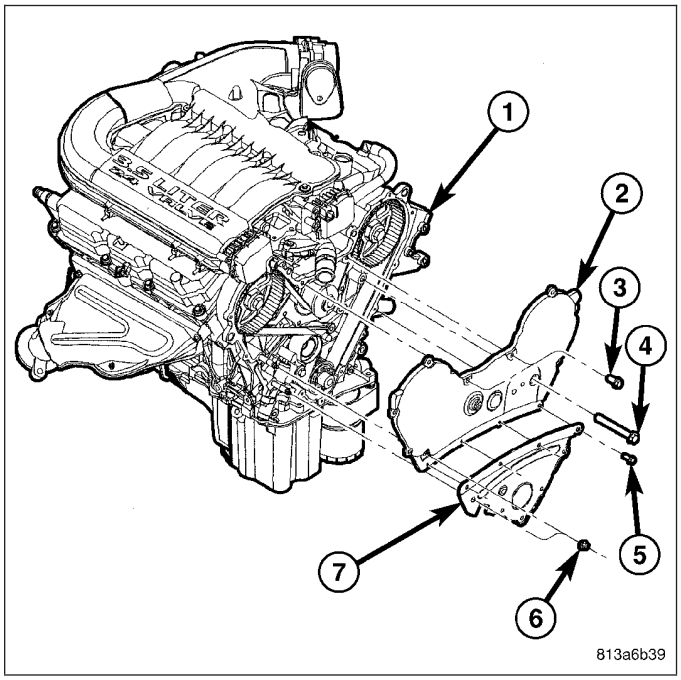

COVER-REAR TIMING BELT

REMOVAL

NOTE: The rear timing belt cover has O-rings to seal the water pump passages to cylinder block. Do not reuse the O-rings.

1. Perform fuel pressure release procedure. (Refer to 14 - FUEL SYSTEM/FUEL DELIVERY - STANDARD PROCEDURE).
2. Disconnect the negative battery cable.
3. Remove timing belt (Refer to 9 - ENGINE/VALVE TIMING/TIMING BELT/CHAIN AND SPROCKETS - REMOVAL).
4. Remove camshaft sprockets (Refer to 9 - ENGINE/VALVE TIMING/TIMING BELT/CHAIN AND SPROCKETS - REMOVAL).
5. Remove rear timing belt cover bolts (1, 2, 3).
6. Remove the rear cover.

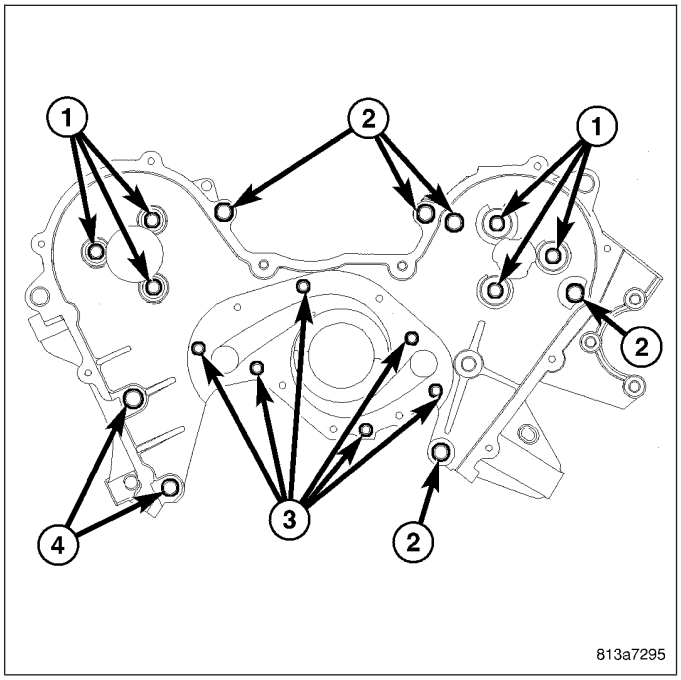

INSTALLATION

1. Clean rear timing belt cover O-ring (1) sealing surfaces and grooves. Lubricate new O-rings with Mopar® Dielectric Grease or equivalent to facilitate assembly.
2. Position **NEW** O-rings on cover (2).

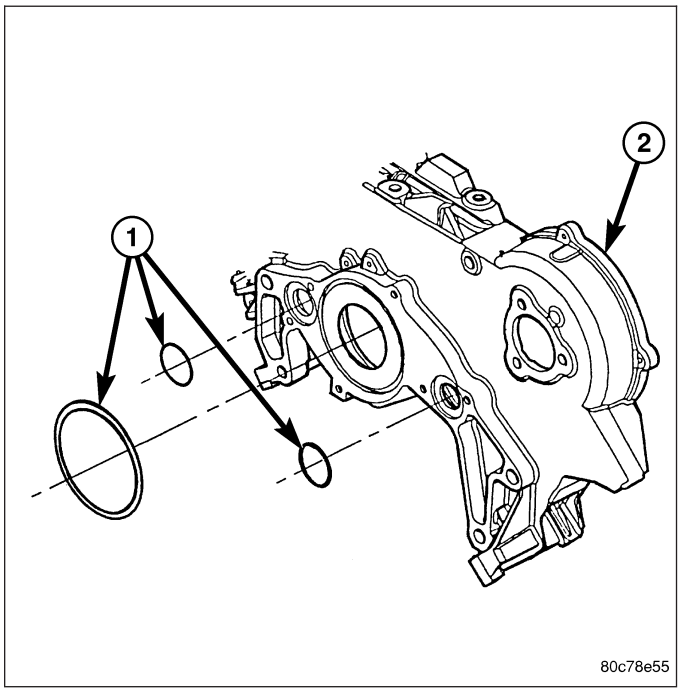

3. Install rear timing belt cover (4). Tighten bolts to the following specified torque:
   - M10 (2, 5) - 54 N·m (40 ft. lbs.)
   - M8 (1) - 28 N·m (20 ft. lbs.)
   - M6 (3) - 12 N·m (105 in. lbs.)
4. Install camshaft sprockets (Refer to 9 - ENGINE/ VALVE TIMING/TIMING BELT/CHAIN AND SPROCKETS - INSTALLATION).
5. Install timing belt (Refer to 9 - ENGINE/VALVE TIMING/TIMING BELT/CHAIN AND SPROCKETS - INSTALLATION).

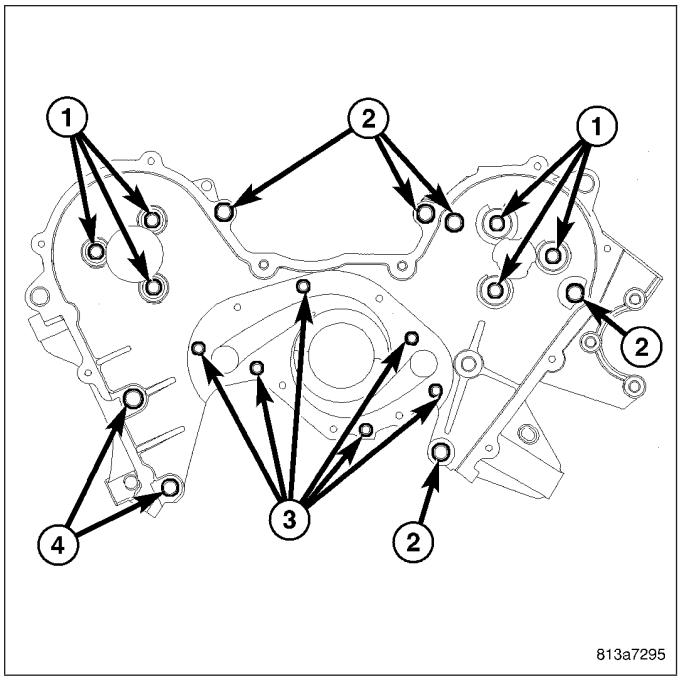

BELT-TIMING AND SPROCKETS

REMOVAL

TIMING BELT

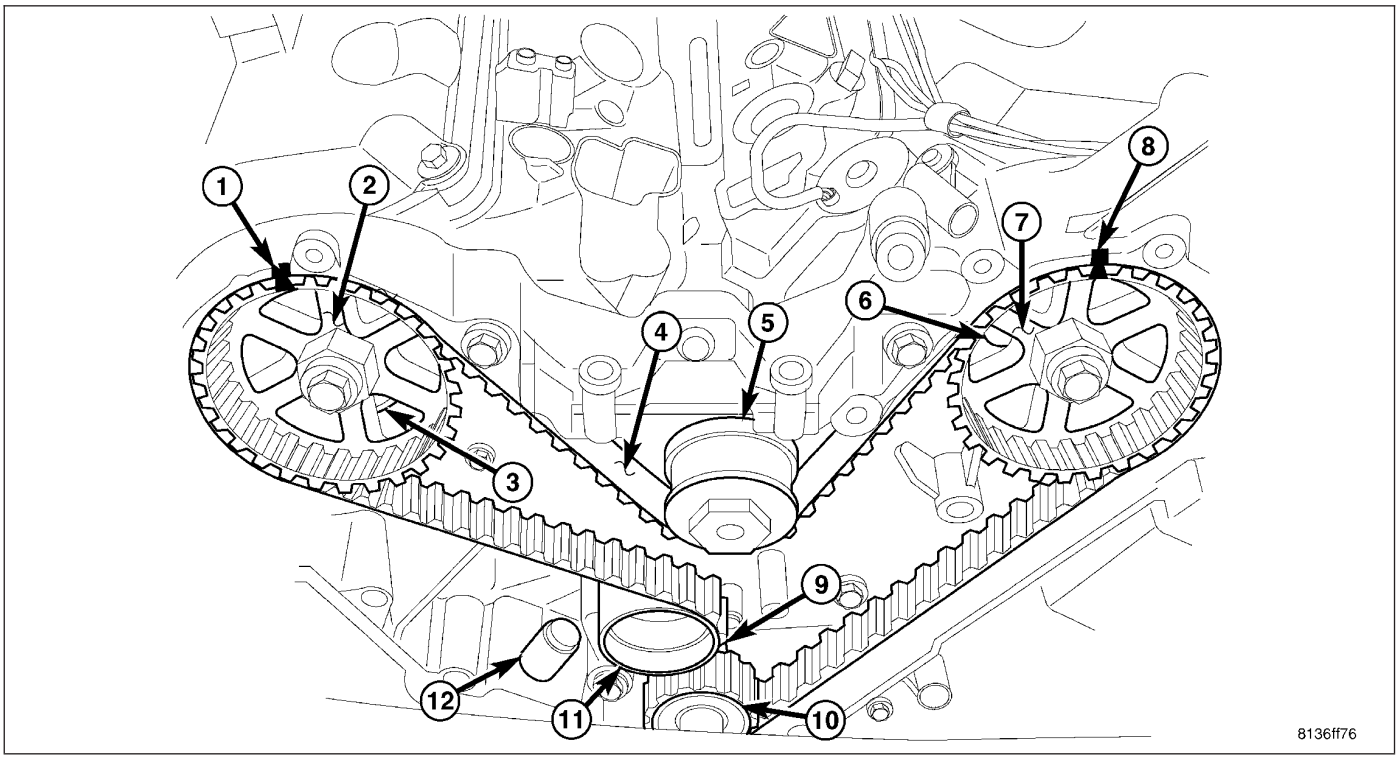

TIMING GEAR ALIGNMENT

1 - RIGHT CAMSHAFT GEAR ALIGNMENT MARK
2 - RIGHT CAMSHAFT GEAR
3 - CYLINDER HEAD TO INNER TIMING BELT COVER BOLTS - RIGHT
4 - TIMING BELT
5 - WATER PUMP PULLEY
6 - CYLINDER HEAD TO INNER TIMING BELT COVER BOLTS - LEFT
7 - LEFT CAMSHAFT GEAR
8 - LEFT CAMSHAFT GEAR ALIGNMENT MARK
9 - CRANKSHAFT GEAR ALIGNMENT MARK
10 - CRANKSHAFT GEAR
11 - TIMING BELT TENSIONER PULLEY
12 - TIMING BELT TENSIONER

CAUTION: The 3.5L is NOT a freewheeling engine. Therefore, loosen the valve train rocker assemblies before servicing the timing drive.

1. Perform fuel pressure release procedure. (Refer to 14 - FUEL SYSTEM/FUEL DELIVERY - STANDARD PROCEDURE).
2. Disconnect negative battery cable.
3. Remove both cylinder head covers and loosen the rocker arm assemblies (Refer to 9 - ENGINE/CYLINDER HEAD/ROCKER ARM / ADJUSTER ASSY - REMOVAL).
4. Remove the front timing belt cover (Refer to 9 - ENGINE/VALVE TIMING/TIMING BELT / CHAIN COVER(S) - REMOVAL).
5. Mark belt running direction, if timing belt is to be reused.

CAUTION: When aligning timing marks, always rotate engine by turning the crankshaft. Failure to do so will result in valve and/or piston damage.

6. Rotate engine clockwise until crankshaft (10) mark aligns with the TDC mark on oil pump housing (9) and the camshaft sprocket (2, 7) timing marks (1, 8) are aligned with the marks on the rear cover.
7. Remove the timing belt tensioner (12) and remove timing belt.

8. Inspect the tensioner for fluid leakage.
9. Inspect the pivot and bolt for free movement, bearing grease leakage, and smooth rotation. If not rotating freely, replace the arm and pulley assembly.
10. When tensioner is removed from the engine it is necessary to compress the plunger into the tensioner body.

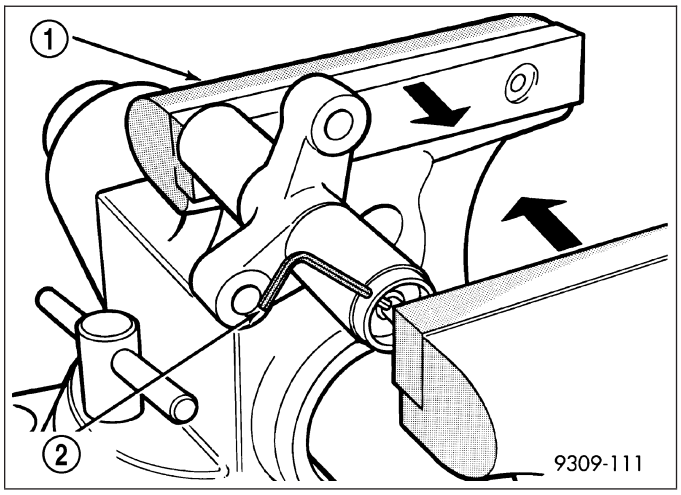

CAUTION: Index the tensioner in the vise the same way it is installed on the engine. This ensures proper pin orientation when tensioner is installed on the engine.

a. Place the tensioner into a vise (1) and SLOWLY compress the plunger. Total bleed down of tensioner should take about 5 minutes.

b. When plunger is compressed into the tensioner body install a pin (2) through the body and plunger to retain plunger in place until tensioner is installed.

CAMSHAFT SPROCKETS

CAUTION: The 3.5L engine is NOT a free-wheeling design. Therefore, care should be taken not to rotate the camshafts or crankshaft with the timing belt removed.

NOTE: The camshaft timing gears are keyed to the camshaft.

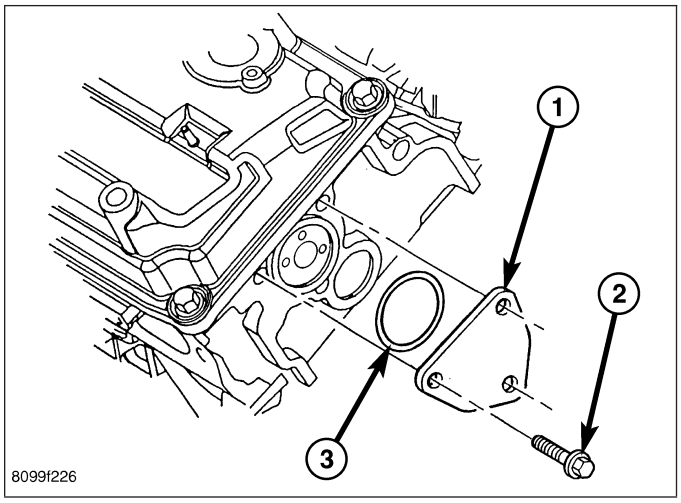

1. Perform fuel pressure release procedure. (Refer to 14 - FUEL SYSTEM/FUEL DELIVERY - STANDARD PROCEDURE).
2. Remove front timing belt cover (Refer to 9 - ENGINE/VALVE TIMING/TIMING BELT / CHAIN COVER(S) - REMOVAL).
3. Position crankshaft sprocket to the TDC mark on the oil pump housing by turning crankshaft in the clockwise direction.
4. Install a dial indicator in number 1 cylinder to check TDC of the piston. Rotate the crankshaft until the piston is at exactly TDC.
5. Remove camshaft retainer/thrust plate (1) from rear of right cylinder head.
6. Remove the right cylinder head cover.
7. Remove the right rocker arm assembly.
8. Remove the timing belt tensioner and timing belt.

9. Hold left camshaft sprocket with a 36 mm (1 7/16 in.) box end wrench.
10. Loosen and remove the camshaft gear retaining bolt and washer. The left bolt is 255 mm (10.0 in.) long.

NOTE: The camshaft timing gears are keyed to the camshaft.

11. Remove the camshaft sprocket.

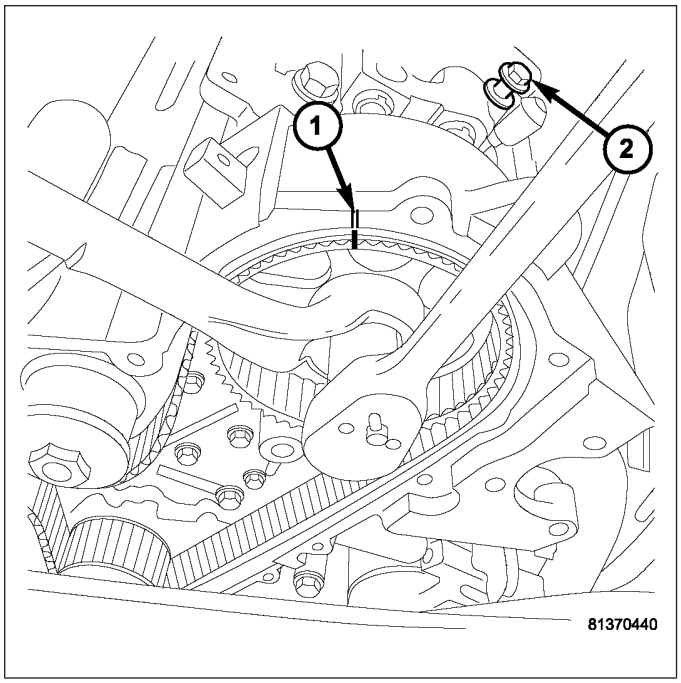

CAUTION: The right camshaft must be pushed rearward approximately 3 1/2 inches to remove the camshaft gear retaining bolt and gear. Care must be taken not to scratch or nick the camshaft or cylinder head journals when moving camshaft.

12. Hold right camshaft sprocket with a 36 mm (1 7/16 in.) box end wrench.
13. Loosen and remove the camshaft gear retaining bolt and washer. The right bolt is 213 mm (8 3/8 in.) long.

NOTE: The camshaft timing gears are keyed to the camshaft.

14. Remove the camshaft sprocket.

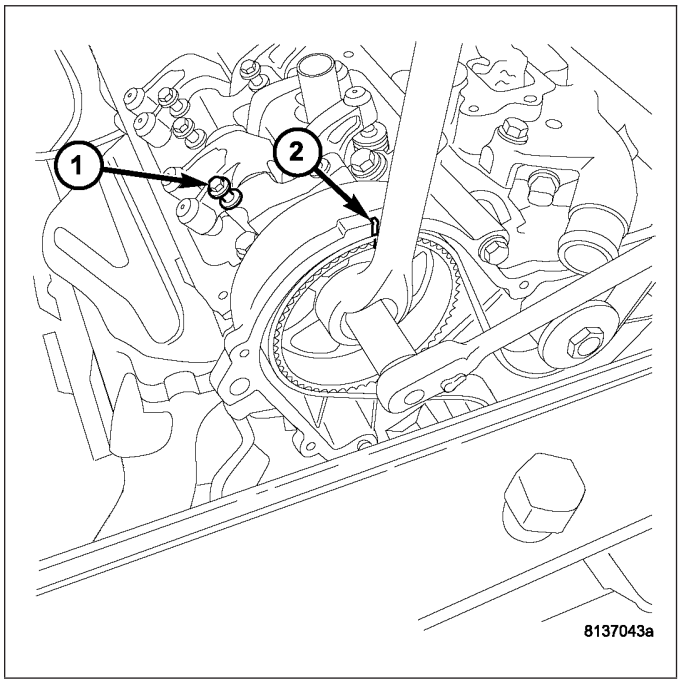

CRANKSHAFT SPROCKET

1. Remove the timing belt (Refer to 9 - ENGINE/ VALVE TIMING/TIMING BELT/CHAIN AND SPROCKETS - REMOVAL).
2. Remove crankshaft sprocket using Special Tool L-4407-A (1).

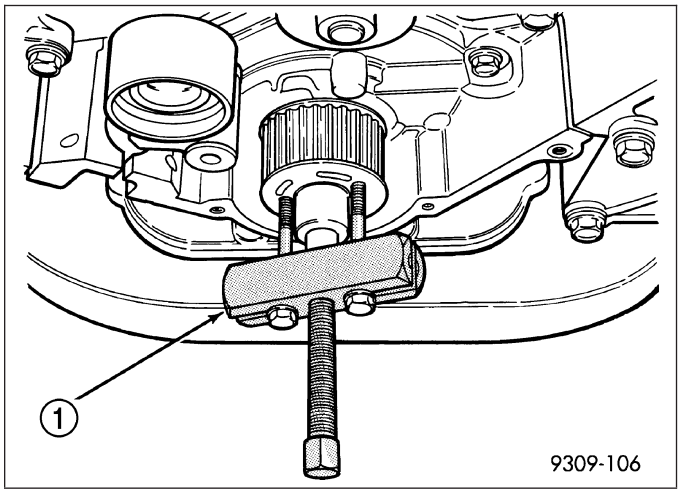

INSPECTION

TIMING BELT

1. Remove front timing belt cover (Refer to 9 - ENGINE/VALVE TIMING/TIMING BELT / CHAIN COVER(S) - REMOVAL).
2. Inspect both sides of the timing belt. Replace belt if any of the following conditions exist :
   a. Hardening of back rubber back side is glossy without resilience and leaves no indent when pressed with fingernail.
   b. Cracks (4) on rubber back.
   c. Cracks or peeling (1) of canvas.
   d. Cracks on rib root.
   e. Cracks on belt sides.
   f. Missing teeth (2).
   g. Abnormal wear (7) of belt sides. The sides are normal if they are sharp as if cut by a knife.
   h. Vehicle mileage or time at component maintenance requirement. (Refer to LUBRICATION & MAINTENANCE/MAINTENANCE SCHEDULES - DESCRIPTION)

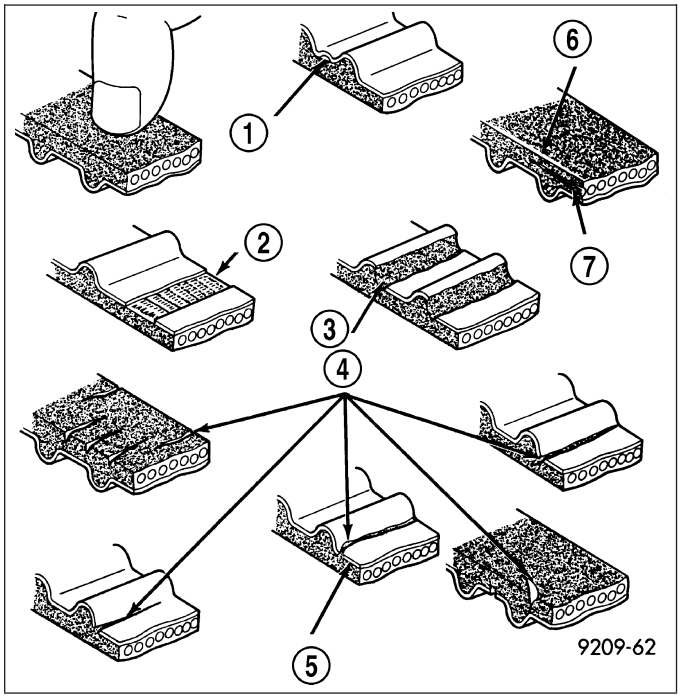

3. If none of the above conditions are seen on the belt, the front timing belt cover can be installed (Refer to 9 - ENGINE/VALVE TIMING/TIMING BELT / CHAIN COVER(S) - INSTALLATION).

TIMING VERIFICATION

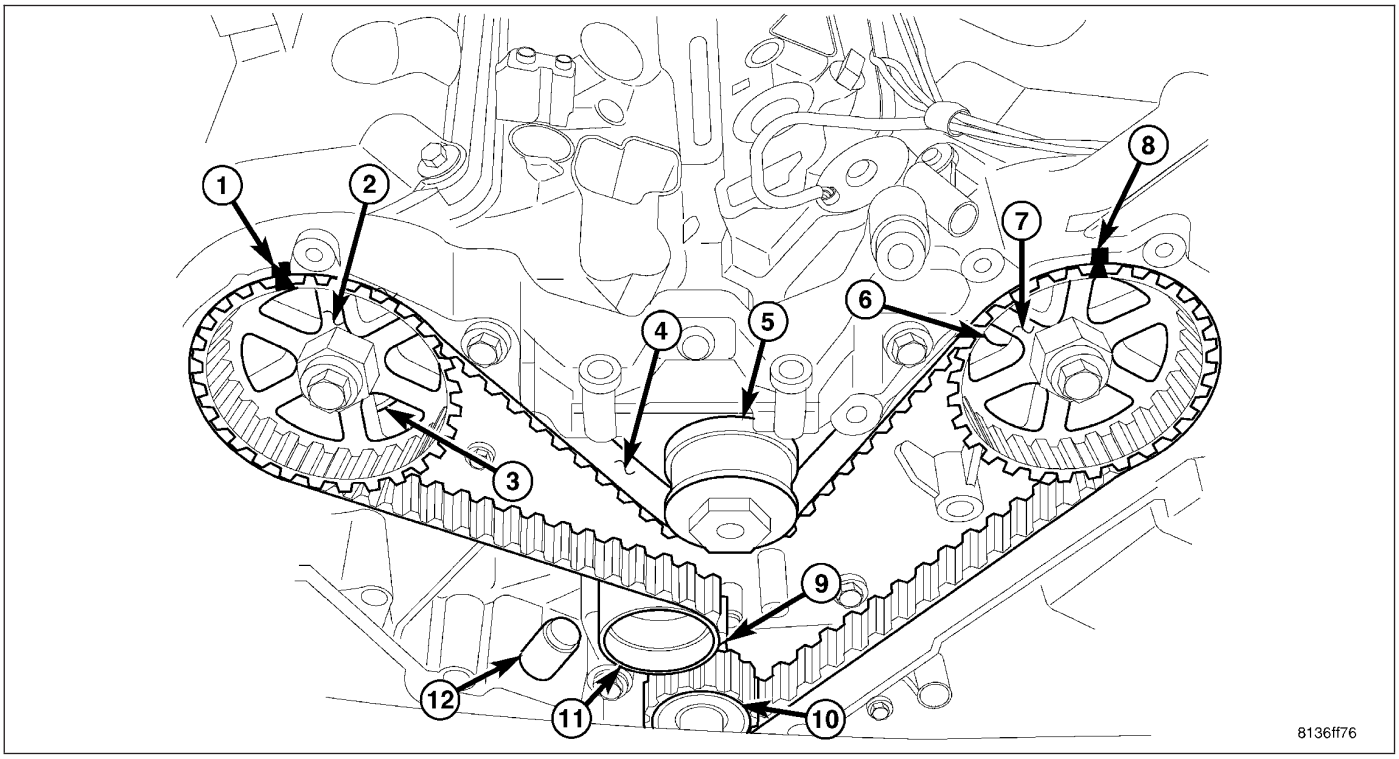

TIMING GEAR ALIGNMENT

1 - RIGHT CAMSHAFT GEAR ALIGNMENT MARK
2 - RIGHT CAMSHAFT GEAR
3 - CYLINDER HEAD TO INNER TIMING BELT COVER BOLTS - RIGHT
4 - TIMING BELT
5 - WATER PUMP PULLEY
6 - CYLINDER HEAD TO INNER TIMING BELT COVER BOLTS - LEFT
7 - LEFT CAMSHAFT GEAR
8 - LEFT CAMSHAFT GEAR ALIGNMENT MARK
9 - CRANKSHAFT GEAR ALIGNMENT MARK
10 - CRANKSHAFT GEAR
11 - TIMING BELT TENSIONER PULLEY
12 - TIMING BELT TENSIONER

Remove the outer timing covers. Rotate the crankshaft until the pointer on the crankshaft sprocket (10) aligns the TDC mark on the oil pump (9). Check to determine if the camshaft sprocket (2, 7) timing marks (1, 8) are aligned with the marks on the inner timing cover. It may take an additional full revolution of the crankshaft before the camshaft sprocket marks are aligned.

INSTALLATION

TIMING BELT

CAUTION: If camshafts have moved from the timing marks, always rotate camshaft towards the direction nearest to the timing marks (DO NOT TURN CAMSHAFTS A FULL REVOLUTION OR DAMAGE to valves and/or pistons could result).

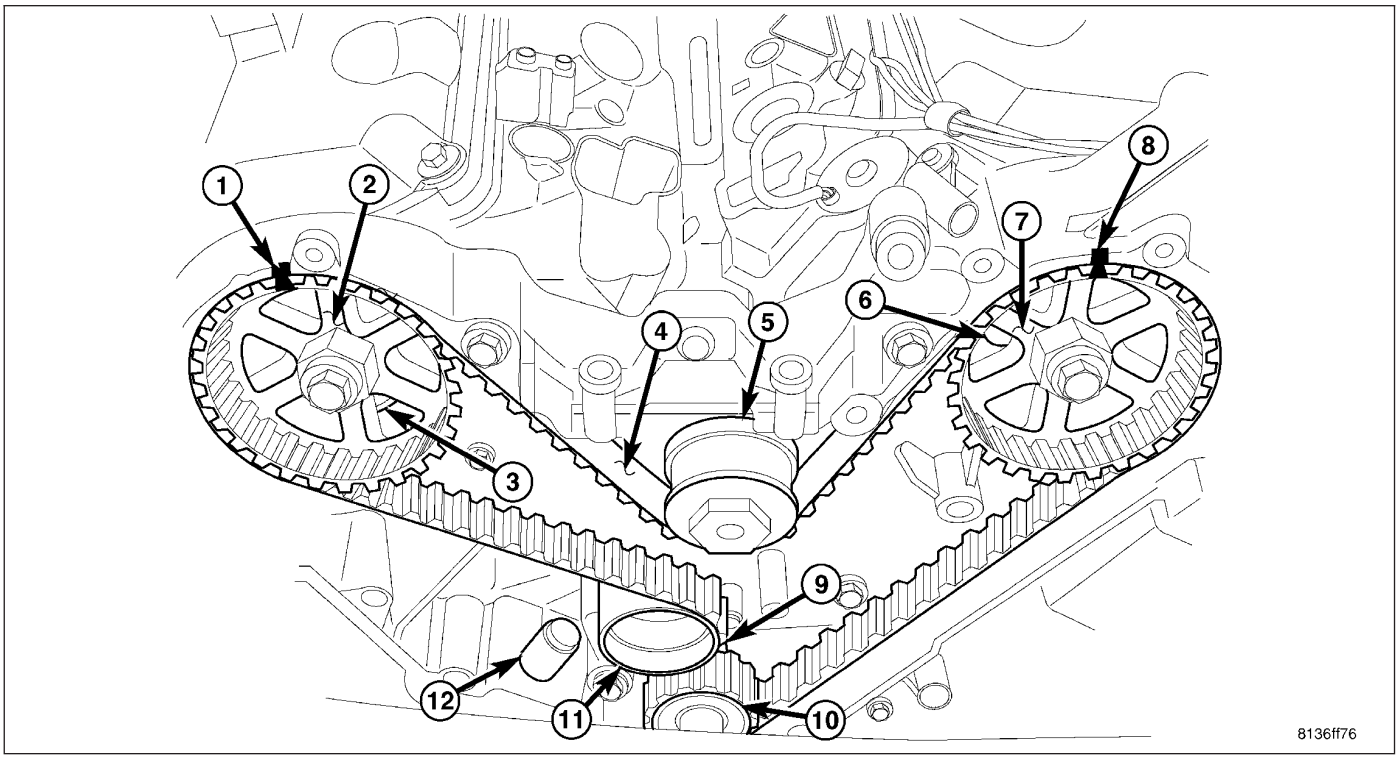

TIMING GEAR ALIGNMENT

1 - RIGHT CAMSHAFT GEAR ALIGNMENT MARK
2 - RIGHT CAMSHAFT GEAR
3 - CYLINDER HEAD TO INNER TIMING BELT COVER BOLTS - RIGHT
4 - TIMING BELT
5 - WATER PUMP PULLEY
6 - CYLINDER HEAD TO INNER TIMING BELT COVER BOLTS - LEFT
7 - LEFT CAMSHAFT GEAR
8 - LEFT CAMSHAFT GEAR ALIGNMENT MARK
9 - CRANKSHAFT GEAR ALIGNMENT MARK
10 - CRANKSHAFT GEAR
11 - TIMING BELT TENSIONER PULLEY
12 - TIMING BELT TENSIONER

1. Align the crankshaft sprocket (10) with the TDC mark (9) on oil pump cover.
2. Align the camshaft sprockets (2, 7) timing reference marks (1, 8) with the marks on the rear cover.
3. Install the timing belt starting at the crankshaft sprocket (10) going in a counterclockwise direction. Install the belt around the last sprocket. Maintain tension on the belt as it is positioned around the tensioner pulley (11).

NOTE: If the camshaft gears have been removed it is only necessary to have the camshaft gear retaining bolts installed to a snug torque at this time.

4. Holding the tensioner pulley (11) against the belt, install the tensioner into the housing and tighten to 28 N·m (250 in. lbs.). Each camshaft sprocket mark should remain aligned the cover marks.
5. When tensioner is in place pull retaining pin to allow the tensioner to extend to the pulley bracket.
6. Rotate crankshaft sprocket 2 revolutions and check the timing marks on the camshafts and crankshaft. The marks should line up within their respective locations. If marks do not line up, repeat procedure.

NOTE: If camshaft gears have been removed and timing is correct, counterhold and tighten the camshaft gears to final torque specification (Refer to 9 - ENGINE/VALVE TIMING/TIMING BELT/CHAIN AND SPROCKETS - INSTALLATION).

7. Install the front timing belt cover (Refer to 9 - ENGINE/VALVE TIMING/TIMING BELT / CHAIN COVER(S) - INSTALLATION).
8. Tighten the rocker arm assemblies and install the cylinder head covers (Refer to 9 - ENGINE/CYLINDER HEAD/ROCKER ARM / ADJUSTER ASSY - INSTALLATION).
9. Connect negative battery cable.

CAMSHAFT SPROCKETS

CAUTION: The camshaft sprockets are keyed and not interchangeable from side to side because of the camshaft position sensor pick-up.

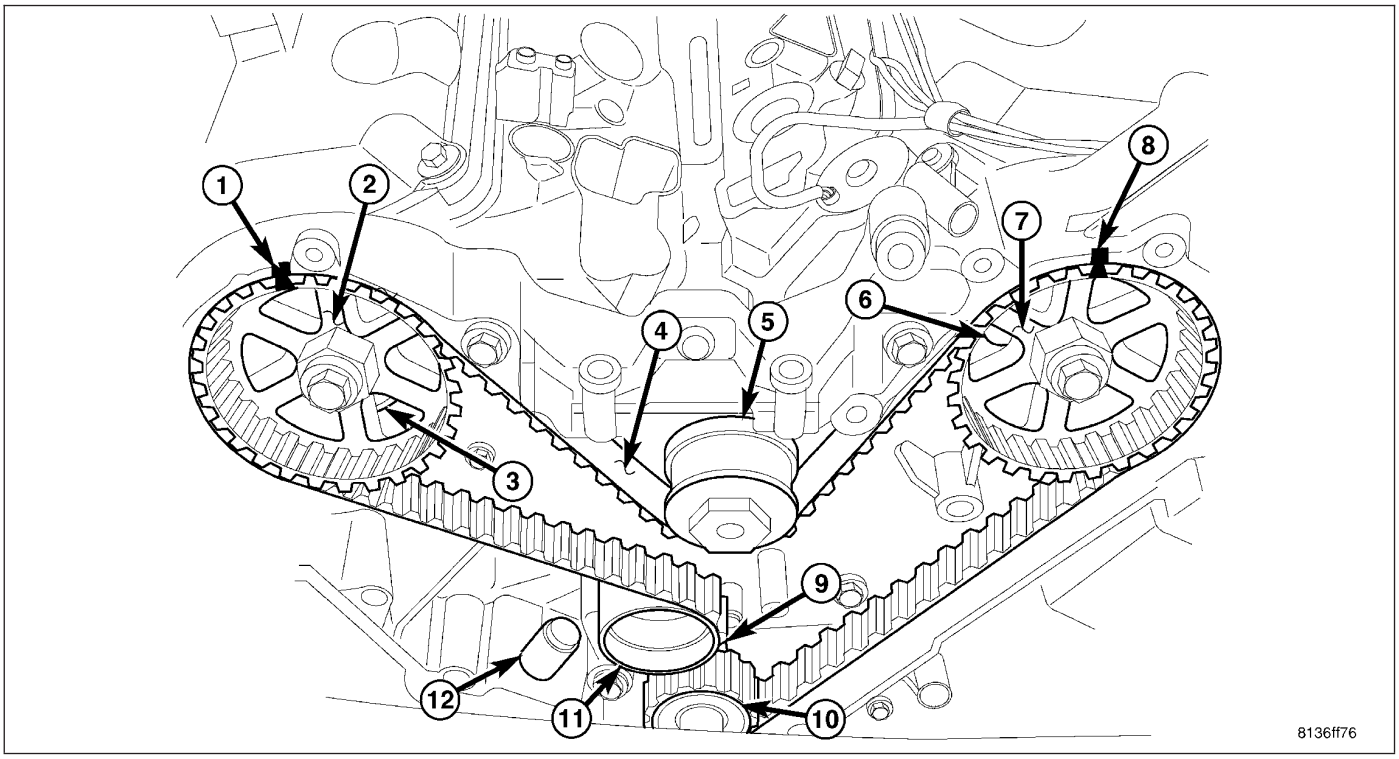

TIMING GEAR ALIGNMENT

1 - RIGHT CAMSHAFT GEAR ALIGNMENT MARK
2 - RIGHT CAMSHAFT GEAR
3 - CYLINDER HEAD TO INNER TIMING BELT COVER BOLTS - RIGHT
4 - TIMING BELT
5 - WATER PUMP PULLEY
6 - CYLINDER HEAD TO INNER TIMING BELT COVER BOLTS - LEFT
7 - LEFT CAMSHAFT GEAR
8 - LEFT CAMSHAFT GEAR ALIGNMENT MARK
9 - CRANKSHAFT GEAR ALIGNMENT MARK
10 - CRANKSHAFT GEAR
11 - TIMING BELT TENSIONER PULLEY
12 - TIMING BELT TENSIONER

1. Install camshaft sprockets onto the camshafts. Install **NEW** sprocket attaching bolts into place. The 255 mm (10 in.) bolt is to be installed in the left camshaft and the 213 mm (8 3/8 in.) bolt is to be installed into the right camshaft. **Do not tighten the bolts; tightened at later step.** Camshaft sprocket (2, 7) marks (1, 8) should be aligned with the marks on the cover at both sprockets.
2. Install the camshaft thrust plates (1) and o-ring (3). Tighten bolts (2) to 28 N·m (250 in. lbs.).
3. Install the timing belt starting first at the crankshaft sprocket (10), then to remaining components in a counterclockwise direction.
4. Install the belt around the last sprocket. Maintain tension on the belt as it is positioned around the tensioner pulley (11). Each camshaft sprockets mark should still be aligned with the rear cover marks.

NOTE: For timing belt tensioner reset procedure, (Refer to 9 - ENGINE/VALVE TIMING/TIMING BELT AND SPROCKETS - TIMING BELT - REMOVAL).

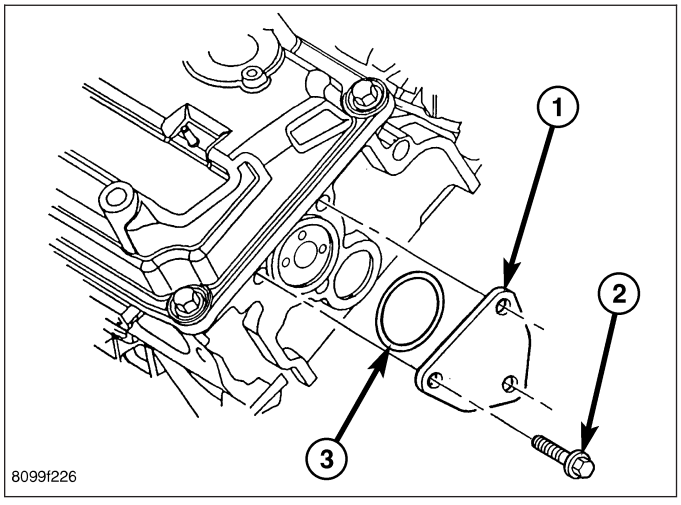

5. Hold the tensioner pulley against the belt and install the reset (pinned) timing belt tensioner into the housing. Tighten attaching bolts to 28 N·m (250 in. lbs.).
6. Remove tensioner retaining pin to allow the tensioner to extend to the pulley bracket.
7. Using a dial indicator, position the number 1 piston at TDC.
8. Hold the camshaft sprocket hex with a 36 mm (1 7/16 in.) wrench and tighten the camshaft bolts to the following:
   - Right side = 102 N·m (75 ft. lbs.) +90° turn
   - Left side = 102 N·m (75 ft. lbs.) +90° turn
9. Remove dial indicator and install spark plug.
10. Remove Special Tools 6642.
11. Install front timing belt cover (Refer to 9 - ENGINE/VALVE TIMING/TIMING BELT / CHAIN COVER(S) - INSTALLATION).

CRANKSHAFT SPROCKET

CAUTION: To ensure proper installation depth of crankshaft sprocket, Special Tool 6641 must be used.

1. Install crankshaft sprocket using Special Tools 6641 (1) and C-4685-C1.
2. Install timing belt (Refer to 9 - ENGINE/VALVE TIMING/TIMING BELT/CHAIN AND SPROCKETS - INSTALLATION).

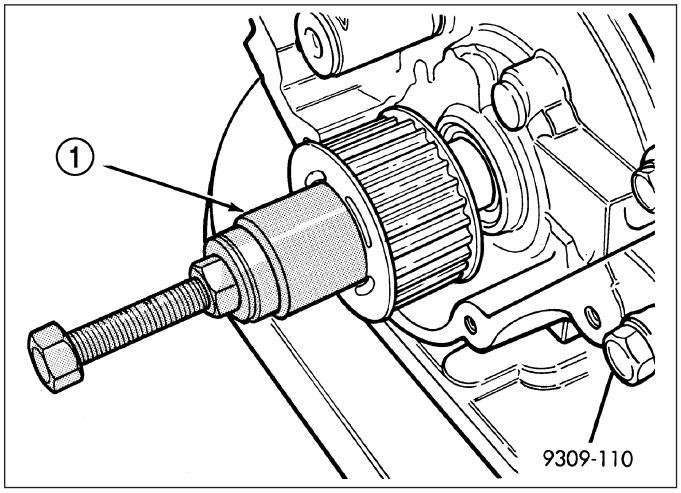

TENSIONER - TIMING BELT & PULLEY

REMOVAL

TENSIONER

1. For timing belt tensioner removal procedure (Refer to 9 - ENGINE/VALVE TIMING/TIMING BELT AND SPROCKETS - REMOVAL - TIMING BELT)

TENSIONER PULLEY ASSEMBLY

1. Remove the timing belt. (Refer to 9 - ENGINE/VALVE TIMING/TIMING BELT AND SPROCKETS - REMOVAL - TIMING BELT)
2. Remove the timing belt tensioner pulley (1) and bracket (3) assembly by unscrewing the pivot bolt (2) from the oil pump housing.

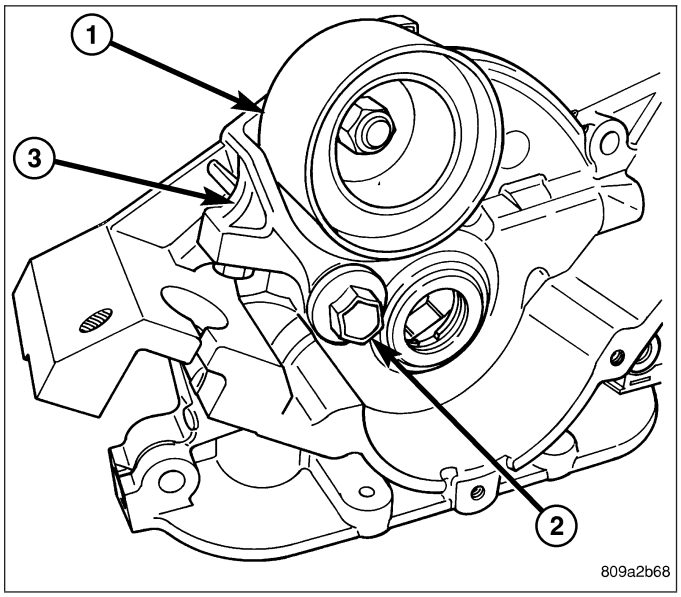

INSPECTION

TENSIONER

1. Inspect hydraulic tensioner (2) for fluid loss around the plunger (1) seal. Replace tensioner if leaking.

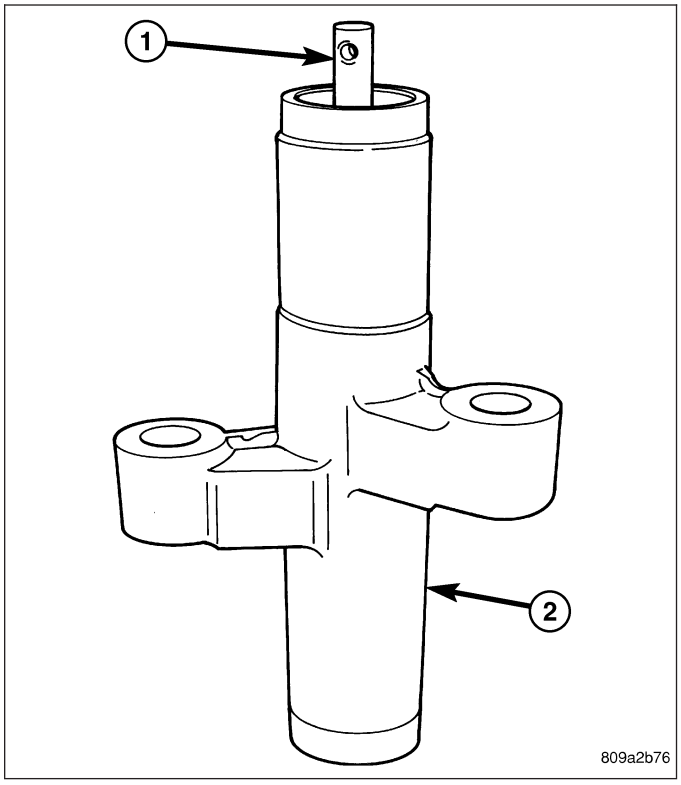

TENSIONER PULLEY ASSEMBLY

NOTE: The tensioner pulley (1), bracket (3), and pivot bolt (2) is serviced as an assembly.

1. Inspect pulley (1) for free movement. Replace if pulley is loose, seized, or rough turning.
2. Inspect pulley bearing and seal. Replace if damaged.
3. Inspect pivot bolt (2) for free movement in assembly housing. Replace assembly if seized or excessive looseness.

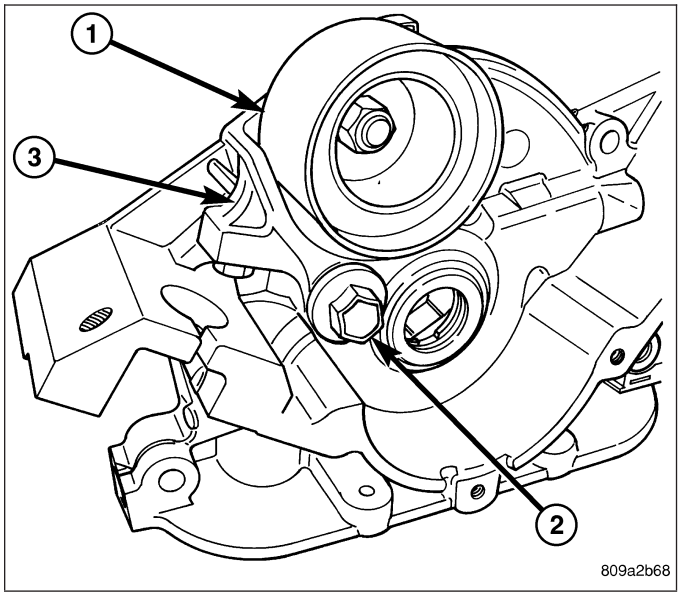

INSTALLATION

TENSIONER PULLEY ASSEMBLY

1. Install the timing belt tensioner pulley (1) assembly. Tighten the pivot bolt (2) to 61 N·m (45 ft. lbs.).
2. Install the timing belt. (Refer to 9 - ENGINE/VALVE TIMING/TIMING BELT AND SPROCKETS - INSTALLATION - TIMING BELT)

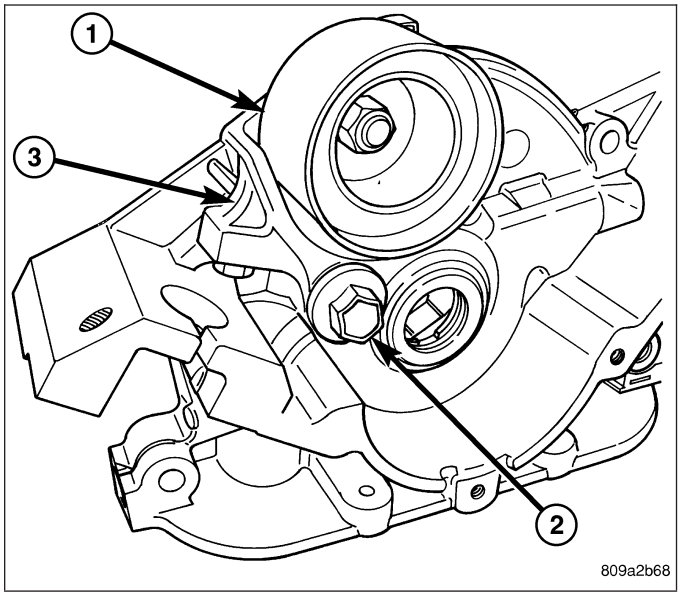

TENSIONER

1. For timing belt tensioner installation procedure (Refer to 9 - ENGINE/VALVE TIMING/TIMING BELT AND SPROCKETS - INSTALLATION - TIMING BELT).

ENGINE - 5.7L SERVICE INFORMATION

TABLE OF CONTENTS

page

ENGINE - 5.7L SERVICE INFORMATION
DESCRIPTION 2287
DIAGNOSIS AND TESTING
DIAGNOSIS AND TESTING - ENGINE DIAGNOSIS - INTRODUCTION. 2287
DIAGNOSIS AND TESTING - ENGINE DIAGNOSIS - PERFORMANCE 2287
DIAGNOSIS AND TESTING - ENGINE DIAGNOSIS - MECHANICAL 2288
DIAGNOSIS AND TESTING - CYLINDER COMPRESSION PRESSURE 2289
DIAGNOSIS AND TESTING - CYLINDER COMBUSTION PRESSURE LEAKAGE 2289
DIAGNOSIS AND TESTING - ENGINE DIAGNOSIS - LUBRICATION. 2290
DIAGNOSIS AND TESTING - ENGINE DIAGNOSIS - MECHANICAL 2291
STANDARD PROCEDURE
STANDARD PROCEDURE - REPAIR DAMAGED OR WORN THREADS 2293
STANDARD PROCEDURE - HYDROSTATIC LOCK. 2293
REMOVAL - ENGINE 2294
INSTALLATION - ENGINE 2301
SPECIFICATIONS
5.7L ENGINE 2308
TORQUE 2313
SPECIAL TOOLS
5.7L ENGINE 2315
AIR INTAKE SYSTEM
REMOVAL 2318
INSTALLATION 2319
CYLINDER HEAD
OPERATION—CYLINDER HEAD 2320
DIAGNOSIS AND TESTING - CYLINDER HEAD GASKET FAILURE 2320
REMOVAL 2321
CLEANING 2323
INSPECTION 2323
INSTALLATION 2324
COVER-CYLINDER HEAD
REMOVAL 2329
INSTALLATION 2332
VALVES & SEATS - INTAKE/EXHAUST
DESCRIPTION
DESCRIPTION - VALVE GUIDES 2335
DESCRIPTION 2335
STANDARD PROCEDURE - REFACING 2335
REMOVAL 2336
INSTALLATION 2336

page

ROCKER ARM
REMOVAL 2337
INSTALLATION 2339
SEALS-VALVE GUIDE
DESCRIPTION 2342
SPRINGS-VALVE
REMOVAL 2343
INSTALLATION 2349
ENGINE BLOCK
CLEANING 2354
INSPECTION 2354
CAMSHAFT
REMOVAL
REMOVAL - CAMSHAFT CORE HOLE PLUG . . 2355
REMOVAL - CAMSHAFT 2355
INSPECTION 2359
INSTALLATION
CAMSHAFT CORE HOLE PLUG 2359
INSTALLATION - CAMSHAFT 2360
CRANKSHAFT
REMOVAL 2365
INSTALLATION 2369
BEARINGS-CRANKSHAFT MAIN
STANDARD PROCEDURE - CRANKSHAFT MAIN BEARING - FITTING 2374
INSPECTION 2374
SEAL-CRANKSHAFT OIL-FRONT
REMOVAL 2375
INSTALLATION 2376
SEAL-CRANKSHAFT OIL-REAR
DIAGNOSIS AND TESTING - REAR SEAL AREA LEAKS 2377
REMOVAL 2377
INSTALLATION 2378
RETAINER-CRANK REAR OIL - SEAL
REMOVAL 2379
INSTALLATION 2379
FLEX PLATE
REMOVAL 2380
INSTALLATION 2380
TAPPETS-HYDRAULIC ROLLER
DIAGNOSIS AND TESTING - HYDRAULIC TAPPETS 2381
REMOVAL 2381
INSTALLATION 2382
PISTON & CONNECTING ROD
DESCRIPTION 2384
STANDARD PROCEDURE - PISTON FITTING . 2384
REMOVAL 2385
CLEANING 2386
INSPECTION 2386

INSTALLATION 2387
RINGS-PISTON
STANDARD PROCEDURE - PISTON RING FITTING 2389
DAMPER-CRANKSHAFT
REMOVAL 2392
INSTALLATION 2392
COVER-STRUCTURAL
DESCRIPTION 2394
OPERATION 2394
SOLENOID-MDS
DESCRIPTION 2395
OPERATION 2395
DIAGNOSIS AND TESTING 2395
REMOVAL 2396
INSTALLATION 2396
ENGINE MOUNTING-FRONT
REMOVAL
REMOVAL 2397
REMOVAL - AWD 2399
INSTALLATION
INSTALLATION 2401
INSTALLATION - AWD 2405
MOUNTING-ENGINE REAR
REMOVAL 2408
INSTALLATION 2409
LUBRICATION
DESCRIPTION 2411
DIAGNOSIS AND TESTING
DIAGNOSIS AND TESTING - CHECKING ENGINE OIL PRESSURE 2411
DIAGNOSIS AND TESTING - ENGINE OIL LEAK 2411
OIL
STANDARD PROCEDURE - ENGINE OIL SERVICE 2413
FILTER-ENGINE OIL
REMOVAL 2414
INSTALLATION 2414
PAN-ENGINE OIL
REMOVAL 2415
INSTALLATION 2417
PAN-ENGINE OIL-AWD
REMOVAL 2421
INSTALLATION 2425
PUMP-ENGINE OIL
REMOVAL 2430
CLEANING 2430
INSPECTION 2431
INSTALLATION 2432
COOLER ENGINE OIL
DESCRIPTION 2433
REMOVAL 2433
INSTALLATION 2433
MANIFOLD - INTAKE
DESCRIPTION 2434
DIAGNOSIS AND TESTING - INTAKE MANIFOLD LEAKAGE 2434
REMOVAL 2434
CLEANING 2434
INSPECTION 2434
INSTALLATION 2435
MANIFOLD - EXHAUST
DESCRIPTION 2436
OPERATION 2436
REMOVAL 2436
CLEANING 2438
INSPECTION 2438
INSTALLATION 2438
COVER-TIMING
REMOVAL 2441
INSTALLATION 2443
TIMING CHAIN & SPROCKETS
REMOVAL 2445
INSTALLATION 2448
TENSIONER - TIMING CHAIN
DESCRIPTION 2451
OPERATION 2451

ENGINE - 5.7L SERVICE INFORMATION

DESCRIPTION

The 5.7L engine (345 CID) eight-cylinder engine is a 90° V-Type lightweight, deep skirt cast iron block, aluminum heads, single cam, overhead valve engine with hydraulic roller tappets. The heads incorporate splayed valves with a hemispherical style combustion chamber and dual spark plugs. The cylinders are numbered from front to rear; 1, 3, 5, 7 on the left bank and 2, 4, 6, 8 on the right bank. The firing order is 1-8-4-3-6-5-7-2.

DIAGNOSIS AND TESTING

DIAGNOSIS AND TESTING - ENGINE DIAGNOSIS - INTRODUCTION

Engine diagnosis is helpful in determining the causes of malfunctions not detected and remedied by routine maintenance.

These malfunctions may be classified as either performance (e.g., engine idles rough and stalls) or mechanical (e.g., a strange noise).

(Refer to 9 - ENGINE - DIAGNOSIS AND TESTING) - PERFORMANCE and (Refer to 9 - ENGINE - DIAGNOSIS AND TESTING)—MECHANICAL for possible causes and corrections of malfunctions. (Refer to 14 - FUEL SYSTEM/FUEL DELIVERY - DIAGNOSIS AND TESTING) and (Refer to 14 - FUEL SYSTEM/FUEL INJECTION - DIAGNOSIS AND TESTING) for the fuel system diagnosis.

Additional tests and diagnostic procedures may be necessary for specific engine malfunctions that can not be isolated with the Service Diagnosis charts. Information concerning additional tests and diagnosis is provided within the following diagnosis:

- Cylinder Compression Pressure Test (Refer to 9 - ENGINE - DIAGNOSIS AND TESTING).
- Cylinder Combustion Pressure Leakage Test (Refer to 9 - ENGINE - DIAGNOSIS AND TESTING).
- Engine Cylinder Head Gasket Failure Diagnosis (Refer to 9 - ENGINE/CYLINDER HEAD - DIAGNOSIS AND TESTING).
- Intake Manifold Leakage Diagnosis (Refer to 9 - ENGINE/MANIFOLDS/INTAKE MANIFOLD - DIAGNOSIS AND TESTING).

DIAGNOSIS AND TESTING - ENGINE DIAGNOSIS - PERFORMANCE

CONDITION	POSSIBLE CAUSE	CORRECTION
ENGINE WILL NOT START	1. Weak battery	1. Charge or replace as necessary.
	2. Corroded or loose battery connections.	2. Clean and tighten battery connections. Apply a coat of light mineral grease to the terminals.
	3. Faulty starter.	3. (Refer to 8 - ELECTRICAL/ STARTING - DIAGNOSIS AND TESTING).
	4. Incorrect spark plug gap.	4. (Refer to 8 - ELECTRICAL/ IGNITION CONTROL/SPARK PLUG - CLEANING).
	5. Dirt or water in fuel system.	5. Clean system and replace fuel filter.
	6. Faulty fuel pump, relay or wiring.	6. (Refer to 9 - ENGINE - DIAGNOSIS AND TESTING)

CONDITION	POSSIBLE CAUSE	CORRECTION
ENGINE STALLS OR ROUGH IDLE	1. Idle speed set to low.	1. (Refer to 9 - ENGINE - DIAGNOSIS AND TESTING)
	2. Vacuum leak.	2. Inspect intake manifold and vacuum hoses, repair or replace as necessary.
	3. Incorrect engine timing.	3. (Refer to 9 - ENGINE/VALVE TIMING - STANDARD PROCEDURE).
ENGINE LOSS OF POWER	1. Dirty or incorrectly gapped spark plugs.	1. Replace spark plugs.
	2. Dirt or water in fuel system.	2. Clean system and replace fuel filter.
	3. Blown cylinder head gasket.	3. Replace cylinder head gasket.
	4. Low compression.	4. (Refer to 9 - ENGINE - DIAGNOSIS AND TESTING).
	5. Burned, warped or pitted valves.	5. Replace as necessary.
	6. Plugged or restricted exhaust system.	6. Inspect and replace as necessary.

DIAGNOSIS AND TESTING - ENGINE DIAGNOSIS - MECHANICAL

CONDITION	POSSIBLE CAUSES	CORRECTIONS
NOISY VALVES	1. High or low oil level in crankcase.	1. (Refer to LUBRICATION & MAINTENANCE - SPECIFICATIONS)
	2. Thin or diluted oil.	2. Change oil and filter.
	3. Low oil pressure.	3. Check oil pump, if Ok, check rod and main bearings for excessive wear.
	4. Dirt in lash adjusters.	4. Replace as necessary.
	5. Worn rocker arms.	5. Replace as necessary.
	6. Worn lash adjusters	6. Replace as necessary.
	7. Worn valve guides.	7. (Refer to 9 - ENGINE/CYLINDER HEAD/INTAKE/EXHAUST VALVES & SEATS - STANDARD PROCEDURE)
	8. Excessive runout of valve seats on valve faces.	8. (Refer to 9 - ENGINE/CYLINDER HEAD/INTAKE/EXHAUST VALVES & SEATS - STANDARD PROCEDURE)

CONDITION	POSSIBLE CAUSES	CORRECTIONS
CONNECTING ROD NOISE	1. Insufficient oil supply.	1. (Refer to LUBRICATION & MAINTENANCE - SPECIFICATIONS)
	2. Low oil pressure.	2. Check oil pump, if Ok, check rod and main bearings for excessive wear.
	3. Thin or diluted oil.	3. Change oil and filter.
	4. Excessive bearing clearance.	4. Replace as necessary.
	5. Connecting rod journal out-of-round.	5. Service or replace crankshaft.
	6. Misaligned connecting rods.	6. Replace bent connecting rods.
MAIN BEARING NOISE	1. Insufficient oil supply.	1. (Refer to LUBRICATION & MAINTENANCE - SPECIFICATIONS)
	2. Low oil pressure.	2. Check oil pump, if Ok, check rod and main bearings for excessive wear.
	3. Thin or diluted oil.	3. Change oil and filter.
	4. Excessive bearing clearance.	4. Replace as necessary.
	5. Excessive end play.	5. Check thrust washers for wear.
	6. Crankshaft journal out-of round.	6. Service or replace crankshaft.
	7. Loose flywheel or torque converter.	7. Tighten to correct torque

DIAGNOSIS AND TESTING - CYLINDER COMPRESSION PRESSURE

The results of a cylinder compression pressure test can be utilized to diagnose several engine malfunctions.

Ensure the battery is completely charged and the engine starter motor is in good operating condition. Otherwise the indicated compression pressures may not be valid for diagnosis purposes.

1. Clean the spark plug recesses with compressed air.
2. Remove the spark plugs.
3. Disable the fuel system (Refer to 14 - FUEL SYSTEM/FUEL DELIVERY - DESCRIPTION).
4. Remove the ASD relay (Refer to 8 - ELECTRICAL/IGNITION CONTROL/AUTO SHUT DOWN RELAY - REMOVAL).
5. Insert a compression pressure gauge and rotate the engine with the engine starter motor for three revolutions.
6. Record the compression pressure on the 3rd revolution. Continue the test for the remaining cylinders.
7. (Refer to 9 - ENGINE - SPECIFICATIONS) for the correct engine compression pressures.

DIAGNOSIS AND TESTING - CYLINDER COMBUSTION PRESSURE LEAKAGE

The combustion pressure leakage test provides an accurate means for determining engine condition.

Combustion pressure leakage testing will detect:

- Exhaust and intake valve leaks (improper seating).
- Leaks between adjacent cylinders or into water jacket.
- Any causes for combustion/compression pressure loss.

1. Check the coolant level and fill as required. DO NOT install the radiator cap.
2. Start and operate the engine until it attains normal operating temperature, then turn the engine OFF.
3. Remove the spark plugs.
4. Remove the oil filler cap.

5. Remove the air cleaner hose.
6. Calibrate the tester according to the manufacturer's instructions. The shop air source for testing should maintain 483 kPa (70 psi) minimum, 1,379 kPa (200 psi) maximum and 552 kPa (80 psi) recommended.
7. Perform the test procedures on each cylinder according to the tester manufacturer's instructions. Set piston of cylinder to be tested at TDC compression,While testing, listen for pressurized air escaping through the throttle body, tailpipe and oil filler cap opening. Check for bubbles in the radiator coolant.

All gauge pressure indications should be equal, with no more than 25% leakage.

FOR EXAMPLE: At 552 kPa (80 psi) input pressure, a minimum of 414 kPa (60 psi) should be maintained in the cylinder.

Refer to CYLINDER COMBUSTION PRESSURE LEAKAGE DIAGNOSIS CHART .

CYLINDER COMBUSTION PRESSURE LEAKAGE DIAGNOSIS CHART

CONDITION	POSSIBLE CAUSE	CORRECTION
AIR ESCAPES THROUGH THROTTLE BODY	Intake valve bent, burnt, or not seated properly	Inspect valve and valve seat. Reface or replace, as necessary. Inspect valve springs. Replace as necessary.
AIR ESCAPES THROUGH TAILPIPE	Exhaust valve bent, burnt, or not seated properly	Inspect valve and valve seat. Reface or replace, as necessary. Inspect valve springs. Replace as necessary.
AIR ESCAPES THROUGH RADIATOR	Head gasket leaking or cracked cylinder head or block	Remove cylinder head and inspect. Replace defective part
MORE THAN 50% LEAKAGE FROM ADJACENT CYLINDERS	Head gasket leaking or crack in cylinder head or block between adjacent cylinders	Remove cylinder head and inspect. Replace gasket, head, or block as necessary
MORE THAN 25% LEAKAGE AND AIR ESCAPES THROUGH OIL FILLER CAP OPENING ONLY	Stuck or broken piston rings; cracked piston; worn rings and/or cylinder wall	Inspect for broken rings or piston. Measure ring gap and cylinder diameter, taper and out-of-round. Replace defective part as necessary

DIAGNOSIS AND TESTING - ENGINE DIAGNOSIS - LUBRICATION

CONDITION	POSSIBLE CAUSES	CORRECTION
OIL LEAKS	1. Gaskets and O-Rings.	1. Replace as necessary.
	(a) Misaligned or damaged.	(a) Replace as necessary.
	(b) Loose fasteners, broken or porous metal parts.	(b) Tighten fasteners, Repair or replace metal parts.
	2. Crankshaft rear seal	2. Replace as necessary.
	3. Crankshaft seal flange. Scratched, nicked or grooved.	3. Polish or replace crankshaft.
	4. Oil pan flange cracked.	4. Replace oil pan.
	5.Front cover seal, damaged or misaligned.	5. Replace seal.
	6. Scratched or damaged vibration damper hub.	6. Polish or replace damper.
	7. Crankshaft Rear Flange Microporosity	7. Replace Crankshaft

CONDITION	POSSIBLE CAUSES	CORRECTION
OIL PRESSURE DROP	1. Low oil level.	1. Check and correct oil level.
	2. Faulty oil pressure sending unit.	2. Replace sending unit.
	3. Low oil pressure.	3. Check pump and bearing clearance.
	4. Clogged oil filter.	4. Replace oil filter.
	5. Worn oil pump.	5. Replace as necessary.
	6. Thin or diluted oil.	6. Change oil and filter.
	7. Excessive bearing clearance.	7. Replace as necessary.
	8. Oil pump relief valve stuck.	8. Replace oil pump.
	9. Oil pickup tube loose or damaged.	9. Replace as necessary.
OIL PUMPING AT RINGS; SPARK PLUGS FOULING	1. Worn or damaged rings.	1. Hone cylinder bores and replace rings.
	2. Carbon in oil ring slots.	2. Replace rings.
	3. Incorrect ring size installed.	3. Replace rings.
	4. Worn valve guides.	4. Ream guides and replace valves.
	5. Leaking intake gasket.	5. Replace intake gaskets.
	6. Leaking valve guide seals.	6. Replace valve guide seals.

DIAGNOSIS AND TESTING - ENGINE DIAGNOSIS - MECHANICAL

ENGINE MECHANICAL DIAGNOSIS CHART

CONDITION	POSSIBLE CAUSES	CORRECTION
NOISY VALVES/LIFTERS	1. High or low oil level in crankcase	1. Check for correct oil level. Adjust oil level by draining or adding as needed
	2. Thin or diluted oil	2. Change oil. (Refer to 9 - ENGINE/LUBRICATION/OIL - STANDARD PROCEDURE)
	3. Low oil pressure	3. Check engine oil level. If ok, Perform oil pressure test. (Refer to 9 - ENGINE/LUBRICATION - DIAGNOSIS AND TESTING) for engine oil pressure test/ specifications
	4. Dirt in tappets/lash adjusters	4. Clean/replace hydraulic tappets/lash adjusters
	5. Bent push rod(s)	5. Install new push rods
	6. Worn rocker arms	6. Inspect oil supply to rocker arms and replace worn arms as needed
	7. Worn tappets/lash adjusters	7. Install new hydraulic tappets/lash adjusters
	8. Worn valve guides	8. Inspect all valve guides and replace as necessary
	9. Excessive runout of valve seats or valve faces	9. Grind valves and seats

CONDITION	POSSIBLE CAUSES	CORRECTION
CONNECTING ROD NOISE	1. Insufficient oil supply	1. Check engine oil level.
	2. Low oil pressure	2. Check engine oil level. If ok, Perform oil pressure test. (Refer to 9 - ENGINE/LUBRICATION - DIAGNOSIS AND TESTING) engine oil pressure test/specifications
	3. Thin or diluted oil	3. Change oil to correct viscosity. (Refer to 9 - ENGINE/ LUBRICATION/OIL - STANDARD PROCEDURE) for correct procedure/engine oil specifications
	4. Excessive connecting rod bearing clearance	4. Measure bearings for correct clearance with plasti-gage. Repair as necessary
	5. Connecting rod journal out of round	5. Replace crankshaft or grind journals
	6. Misaligned connecting rods	6. Replace bent connecting rods
MAIN BEARING NOISE	1. Insufficient oil supply	1. Check engine oil level.
	2. Low oil pressure	2. Check engine oil level. If ok, Perform oil pressure test. (Refer to 9 - ENGINE/LUBRICATION - DIAGNOSIS AND TESTING)
	3. Thin or diluted oil	3. Change oil to correct viscosity.
	4. Excessive main bearing clearance	4. Measure bearings for correct clearance. Repair as necessary
	5. Excessive end play	5. Check crankshaft thrust bearing for excessive wear on flanges
	6. Crankshaft main journal out of round or worn	6. Grind journals or replace crankshaft
	7. Loose flywheel or torque converter	7. Inspect crankshaft, flexplate/ flywheel and bolts for damage. Tighten to correct torque
LOW OIL PRESSURE	1. Low oil level	1. Check oil level and fill if necessary
	2. Faulty oil pressure sending unit	2. Install new sending unit
	3. Clogged oil filter	3. Install new oil filter
	4. Worn oil pump	4. Replace oil pump assembly.
	5. Thin or diluted oil	5. Change oil to correct viscosity.
	6. Excessive bearing clearance	6. Measure bearings for correct clearance
	7. Oil pump relief valve stuck	7. Remove valve to inspect, clean and reinstall
	8. Oil pickup tube loose, broken, bent or clogged	8. Inspect oil pickup tube and pump, and clean or replace if necessary
	9. Oil pump cover warped or cracked	9. Install new oil pump

CONDITION	POSSIBLE CAUSES	CORRECTION
OIL LEAKS	1. Misaligned or deteriorated gaskets	1. Replace gasket
	2. Loose fastener, broken or porous metal part	2. Tighten, repair or replace the part
	3. Front or rear crankshaft oil seal leaking	3. Replace seal
	4. Leaking oil gallery plug or cup plug	4. Remove and reseal threaded plug. Replace cup style plug
EXCESSIVE OIL CONSUMPTION OR SPARK PLUGS OIL FOULED	1. CCV System malfunction	1. (Refer to 25 - EMISSIONS CONTROL/EVAPORATIVE EMISSIONS - DESCRIPTION) for correct operation
	2. Defective valve stem seal(s)	2. Repair or replace seal(s)
	3. Worn or broken piston rings	3. Hone cylinder bores. Install new rings
	4. Scuffed pistons/cylinder walls	4. Hone cylinder bores and replace pistons as required
	5. Carbon in oil control ring groove	5. Remove rings and de-carbon piston
	6. Worn valve guides	6. Inspect/replace valve guides as necessary
	7. Piston rings fitted too tightly in grooves	7. Remove rings and check ring end gap and side clearance. Replace if necessary

STANDARD PROCEDURE

STANDARD PROCEDURE - REPAIR DAMAGED OR WORN THREADS

CAUTION: Be sure that the tapped holes maintain the original center line.

Damaged or worn threads can be repaired. Essentially, this repair consists of:

- Drilling out worn or damaged threads.
- Tapping the hole with a special Heli-Coil Tap, or equivalent.
- Installing an insert into the tapped hole to bring the hole back to its original thread size.

STANDARD PROCEDURE - HYDROSTATIC LOCK

CAUTION: DO NOT use the starter motor to rotate the crankshaft. Severe damage could occur.

When an engine is suspected of hydrostatic lock (regardless of what caused the problem), follow the steps below.

1. Perform the Fuel Pressure Release Procedure (Refer to 14 - FUEL SYSTEM/FUEL DELIVERY - STANDARD PROCEDURE).
2. Disconnect the negative cable(s) from the battery.
3. Inspect air cleaner, induction system, and intake manifold to ensure system is dry and clear of foreign material.
4. Place a shop towel around the spark plugs to catch any fluid that may possibly be under pressure in the cylinder head. Remove the spark plugs.
5. With all spark plugs removed, rotate the crankshaft using a breaker bar and socket.
6. Identify the fluid in the cylinders (coolant, fuel, oil, etc.).
7. Be sure all fluid has been removed from the cylinders.

8. Repair engine or components as necessary to prevent this problem from occurring again.
9. Squirt a small amount of engine oil into the cylinders to lubricate the walls. This will prevent damage on restart.
10. Install new spark plugs. Tighten the spark plugs to 41 N·m (30 ft. lbs.) torque.
11. Drain engine oil. Remove and discard the oil filter.
12. Install the drain plug. Tighten the plug to 34 N·m (25 ft. lbs.) torque.
13. Install a new oil filter.
14. Fill engine crankcase with the specified amount and grade of oil. (Refer to LUBRICATION & MAINTENANCE - SPECIFICATIONS).
15. Connect the negative cable(s) to the battery.
16. Start the engine and check for any leaks.

REMOVAL - ENGINE

1. Remove the engine cover (1).
2. Perform the Fuel System Pressure Release procedure (Refer to 14 - FUEL SYSTEM/FUEL DELIVERY - STANDARD PROCEDURE).
3. Disconnect the battery negative cable.
4. Remove the air cleaner resonator and duct work as an assembly.
5. Remove the cowl top panel (Refer to 23 - BODY/EXTERIOR/COWL GRILLE - REMOVAL).
6. Drain cooling system (Refer to 7 - COOLING - STANDARD PROCEDURE).
7. Remove the accessory drive belt (Refer to 7 - COOLING/ACCESSORY DRIVE/DRIVE BELTS - REMOVAL).
8. Remove radiator fan shroud (Refer to 7 - COOLING/ENGINE/RADIATOR FAN - REMOVAL).

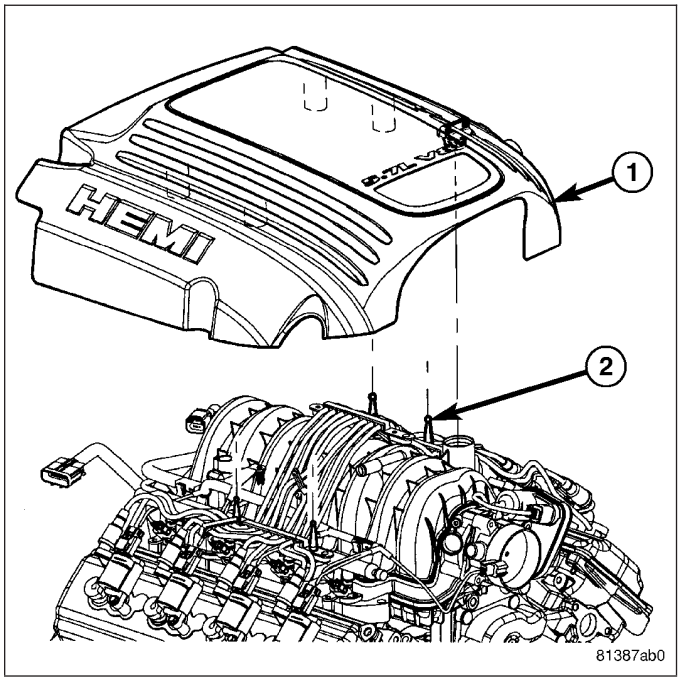

9. Remove the A/C compressor (3) with the lines attached. Secure compressor out of the way.

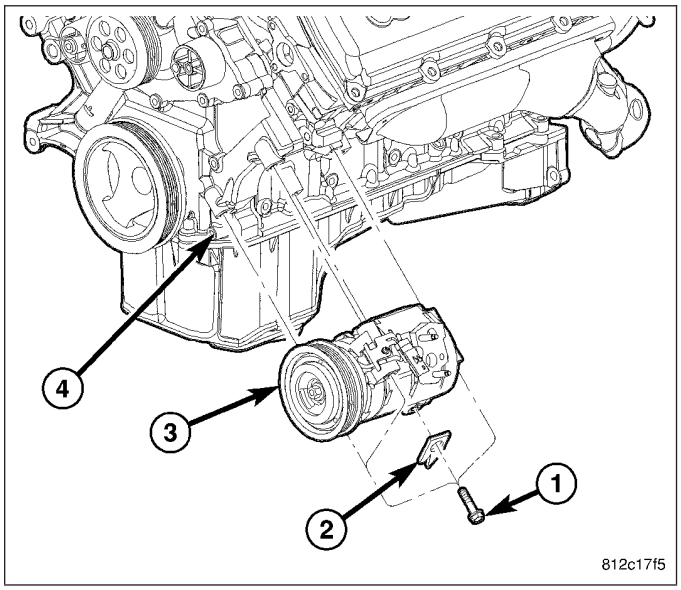

10. Remove the generator support bracket (1).

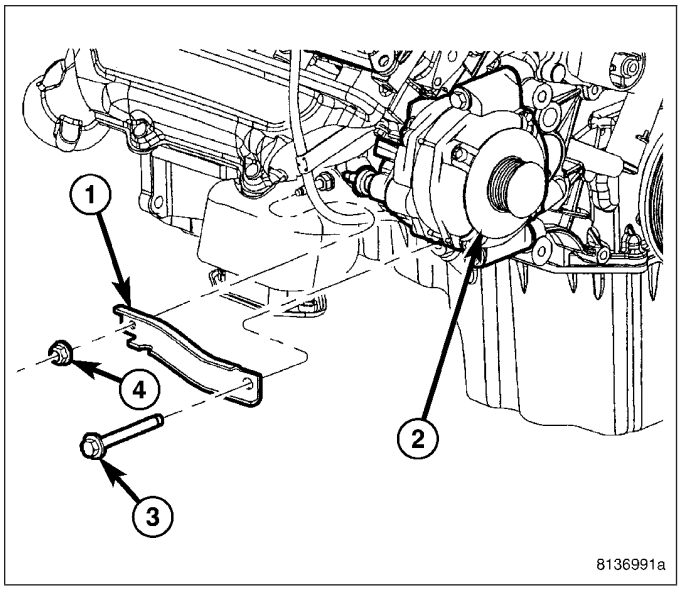

11. Remove generator (2) (Refer to 8 - ELECTRICAL/ CHARGING/GENERATOR - REMOVAL).

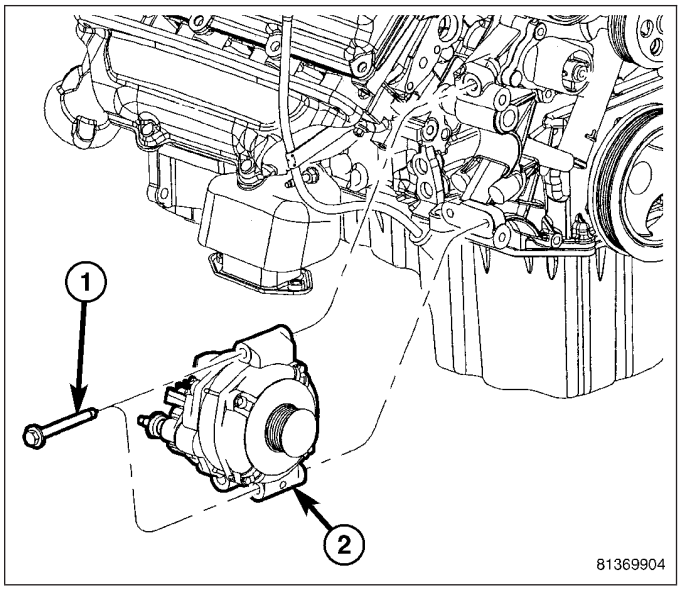

12. Remove the intake manifold and IAFM as an assembly (Refer to 9 - ENGINE/MANIFOLDS/INTAKE MANIFOLD - REMOVAL).
13. Remove the ground wires from the rear of each cylinder head.
14. Disconnect the heater hoses (1).

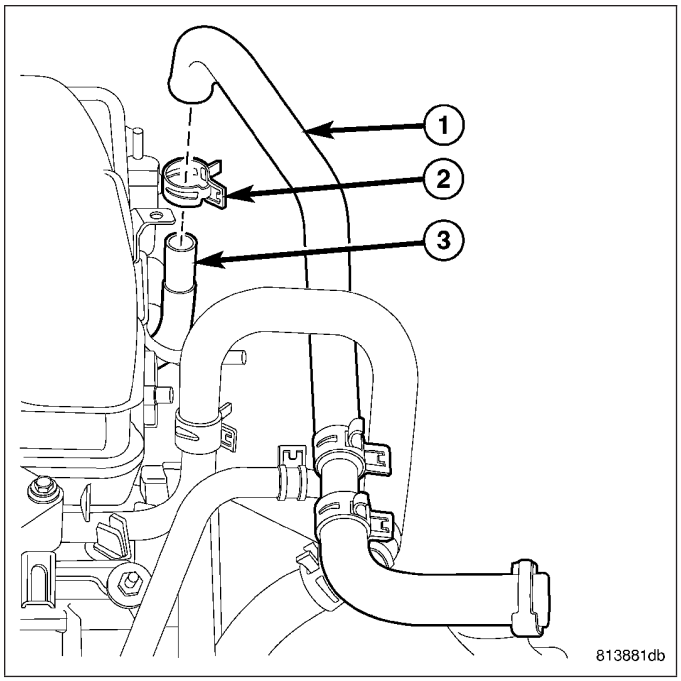

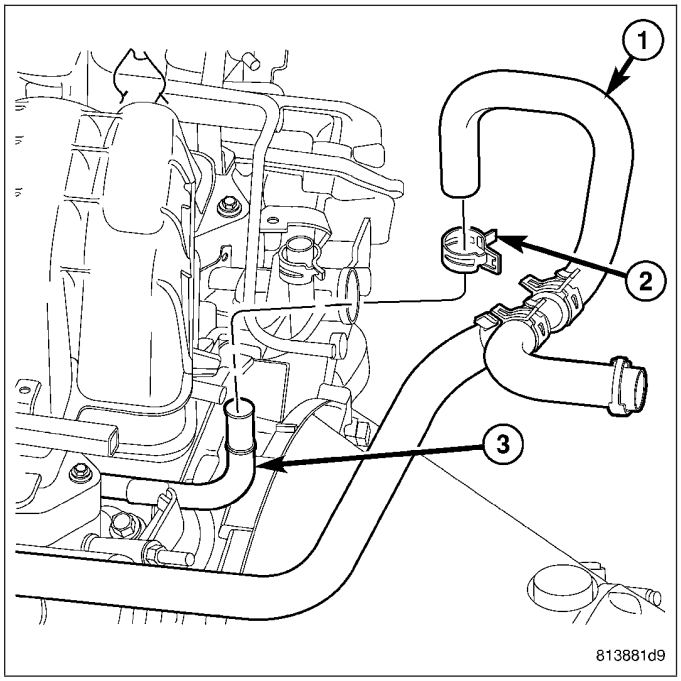

NOTE: It is not necessary to disconnect P/S hoses from pump, for P/S pump removal.

15. Remove the power steering pump and set aside.
16. Disconnect the fuel supply line (Refer to 14 - FUEL SYSTEM/FUEL DELIVERY/QUICK CONNECT FITTING - STANDARD PROCEDURE).
17. Raise and support the vehicle on a hoist and drain the engine oil.
18. Remove the belly pan (2) (Refer to 23 - BODY/EXTERIOR/BELLY PAN - REMOVAL).

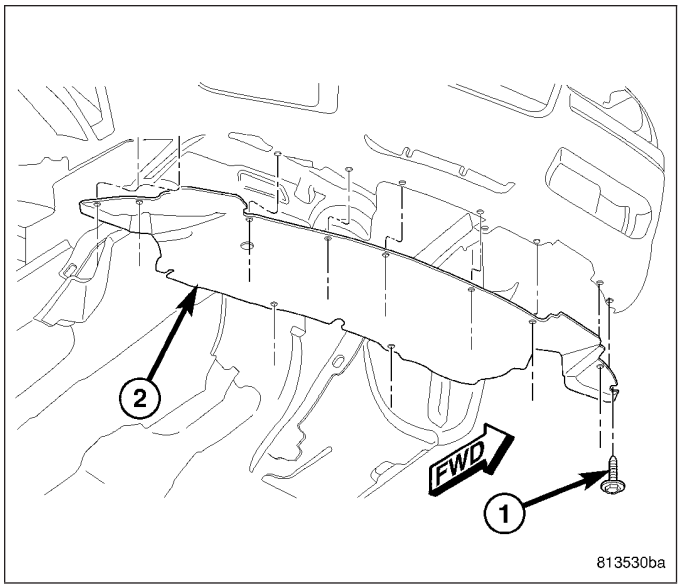

19. Remove engine front mount to frame nuts.
20. **FOR AWD ONLY** Mark the front driveshaft to the flange at both ends to ensure correct installation.
21. **FOR AWD ONLY** Remove front drive shaft fasteners from the differential and transfer case. Remove the driveshaft from the vehicle.
22. **FOR AWD ONLY** Remove the left (2) and right front drive axles.

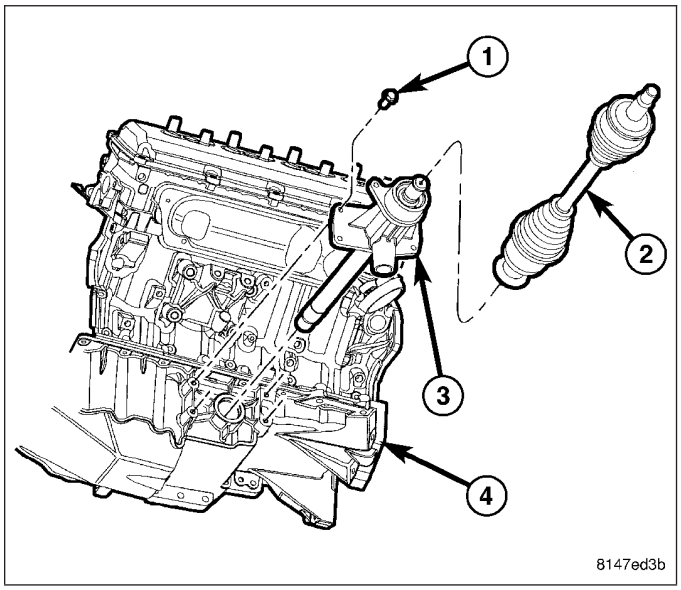

23. **FOR AWD ONLY** Remove the differential support bracket (1) from the differential to the engine block.

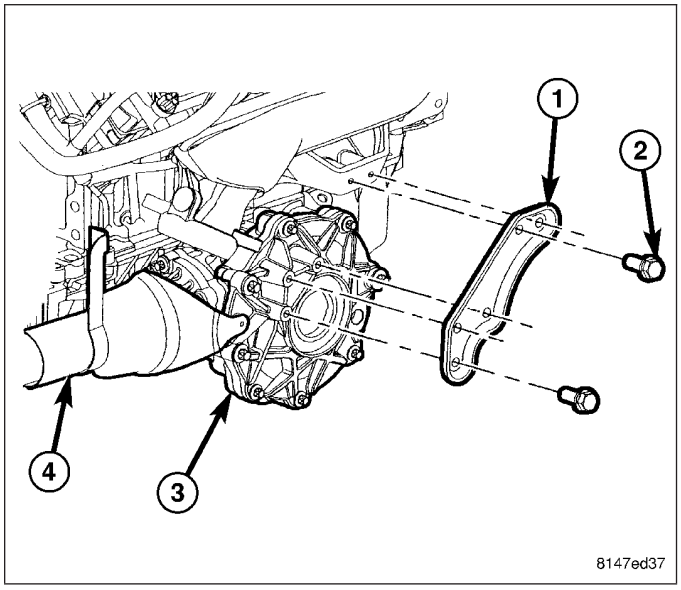

24. **FOR AWD ONLY** Unbolt the differential (4) from the oil pan (3).
25. **FOR AWD ONLY** Rotate the differential (4) so the drive flange is facing forward and the oil pan side is facing up. Remove the differential out through the opening at the rear of the cradle.

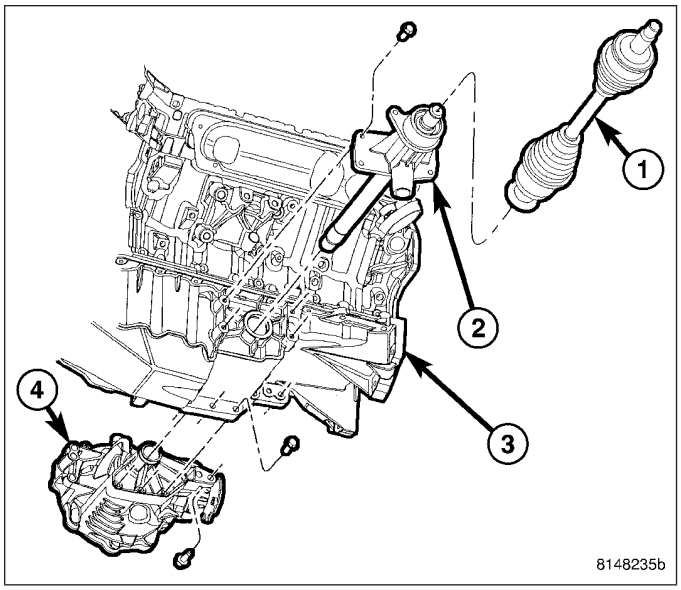

26. **FOR AWD ONLY** Remove the intermediate shaft (2) from the oil pan (3).

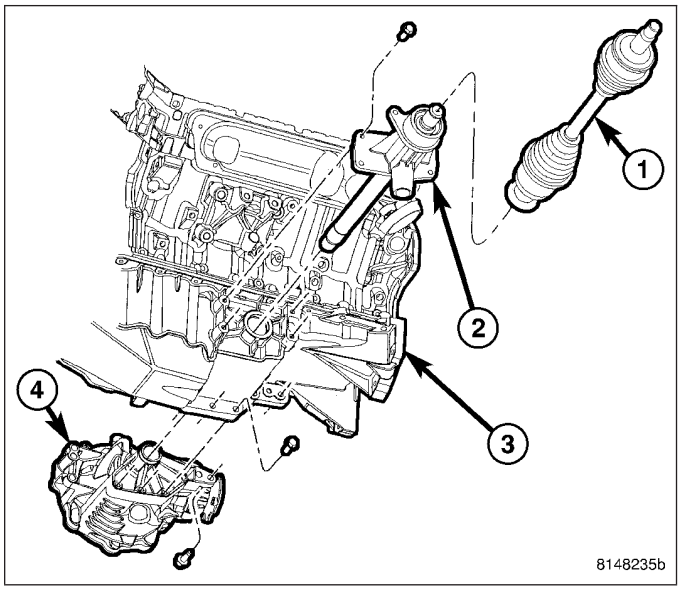

27. Disconnect the transmission oil cooler lines from their retainers at the oil pan bolts.
28. Disconnect exhaust pipe at manifolds.
29. Disconnect the starter wires. Remove starter motor (1) (Refer to 8 - ELECTRICAL/STARTING/ STARTER MOTOR - REMOVAL).

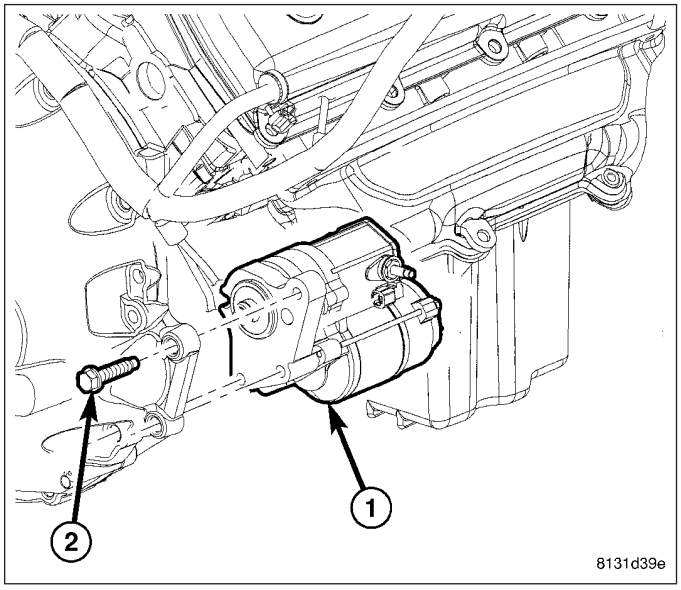

30. Remove the torque converter access cover (1).

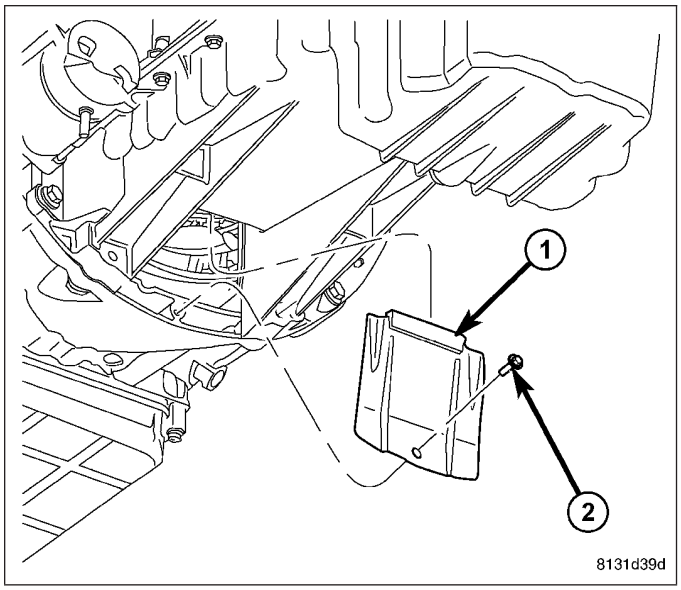

31. Remove drive plate to converter bolts (1).

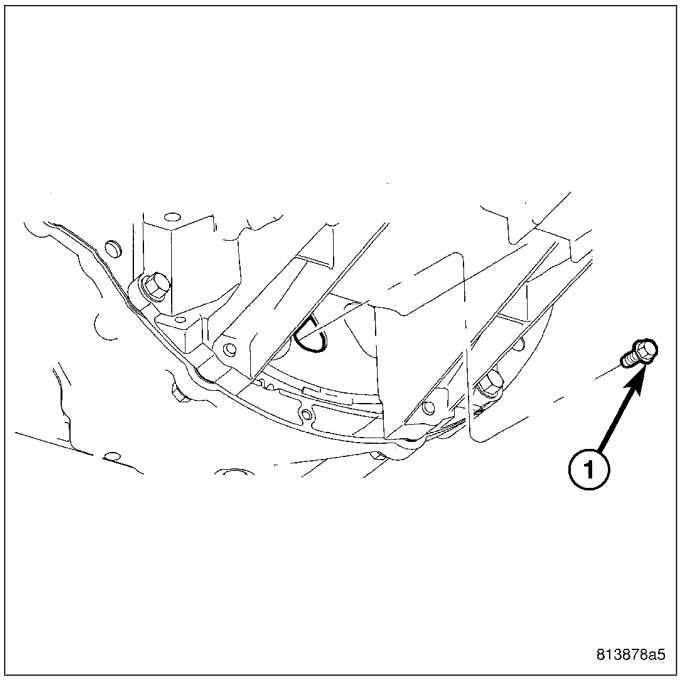

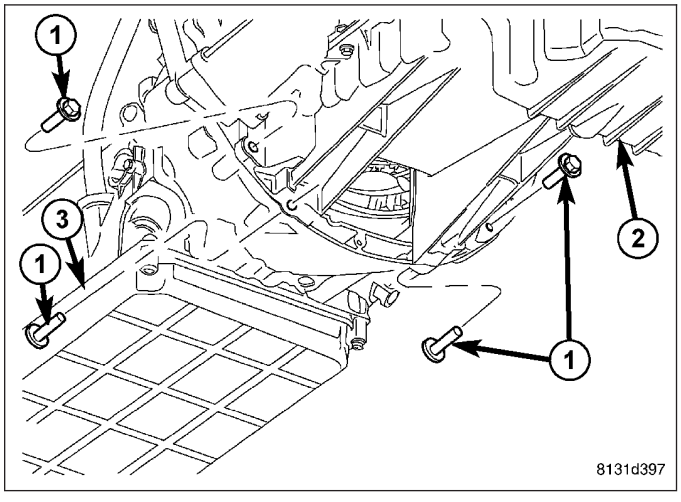

32. Remove transmission bell housing to engine block bolts (2).

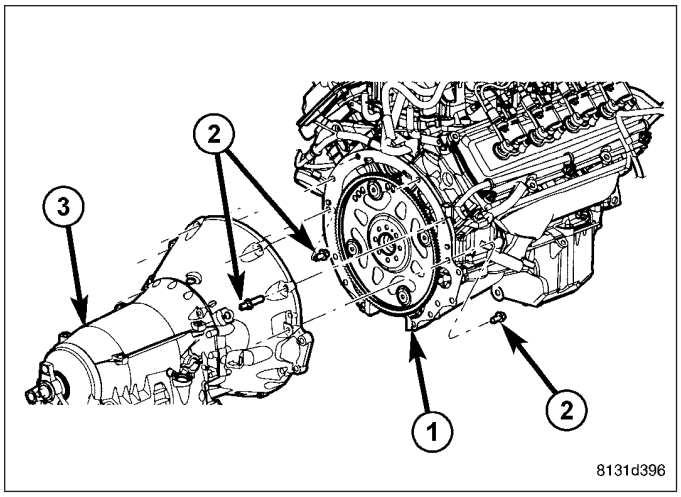

33. Lower the vehicle.
34. Install engine lift fixture (2), special tool # 8984 and 8984–UPD (4).
35. Separate engine from transmission, remove engine from vehicle, and install engine assembly on a repair stand.

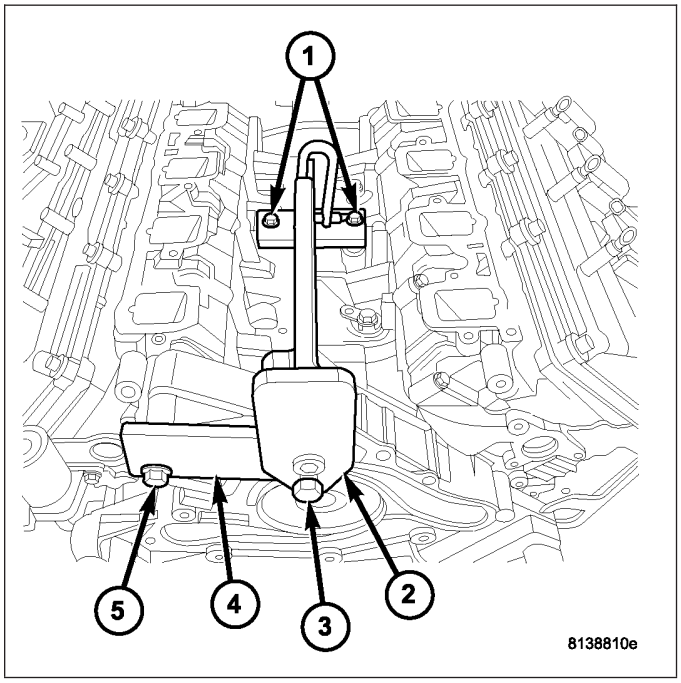

INSTALLATION - ENGINE

1. Install engine lift fixture (2) Special tool # 8984 and 8984–UPD (4).
2. Position the engine in the engine compartment.
3. Lower engine into compartment and align engine with transmission.
4. Mate engine and transmission and install two transmission to engine block mounting bolts finger tight.
5. Lower engine assembly until engine mount studs rest in frame perches.

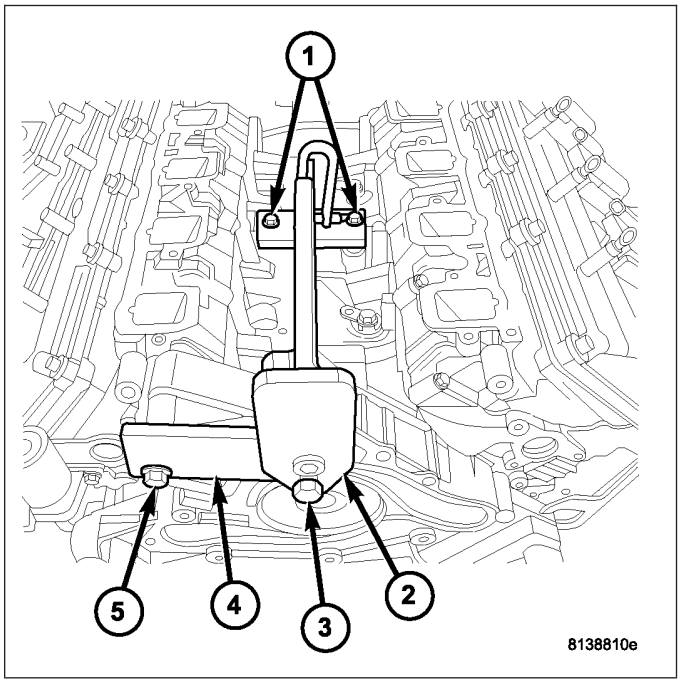

6. Install remaining transmission to engine block mounting bolts (1, 2)and tighten.
7. Install and tighten engine mount to frame nuts.

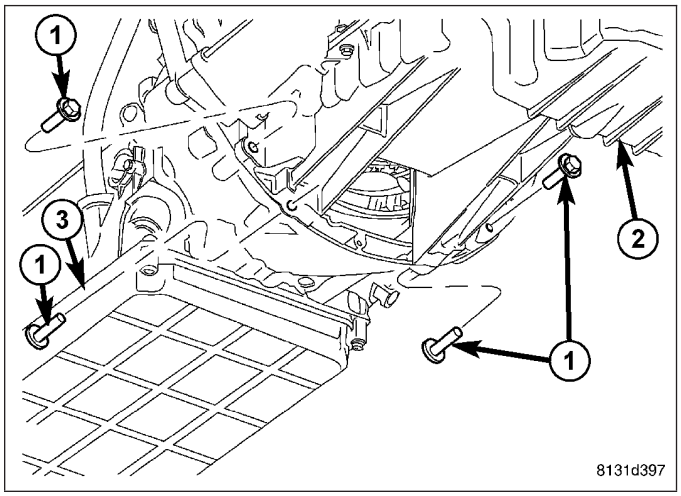

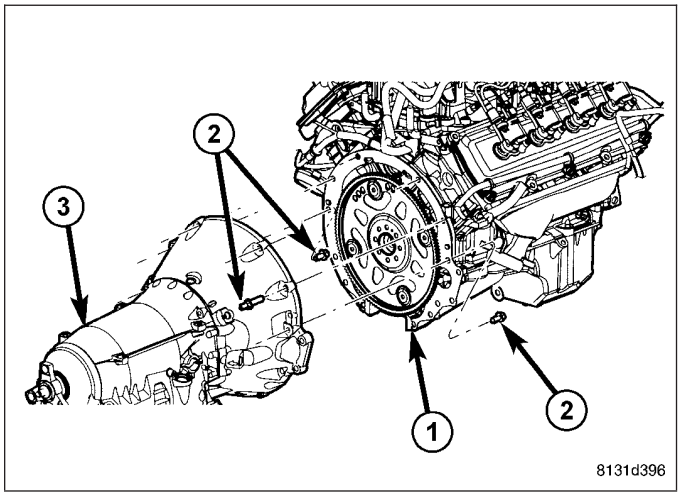

8. Install drive plate to torque converter bolts (1).

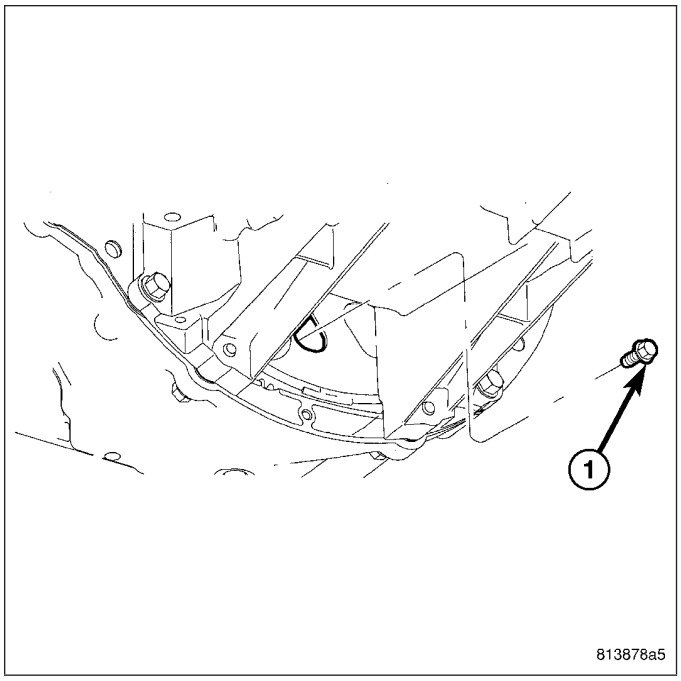

9. Install the torque convertor access cover (1).

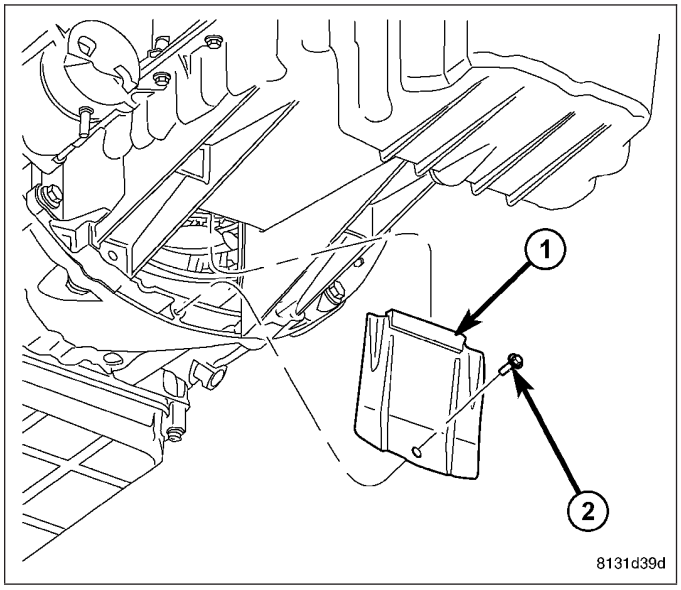

10. Install the starter (1) and connect the starter wires (Refer to 8 - ELECTRICAL/STARTING/STARTER MOTOR - INSTALLATION).

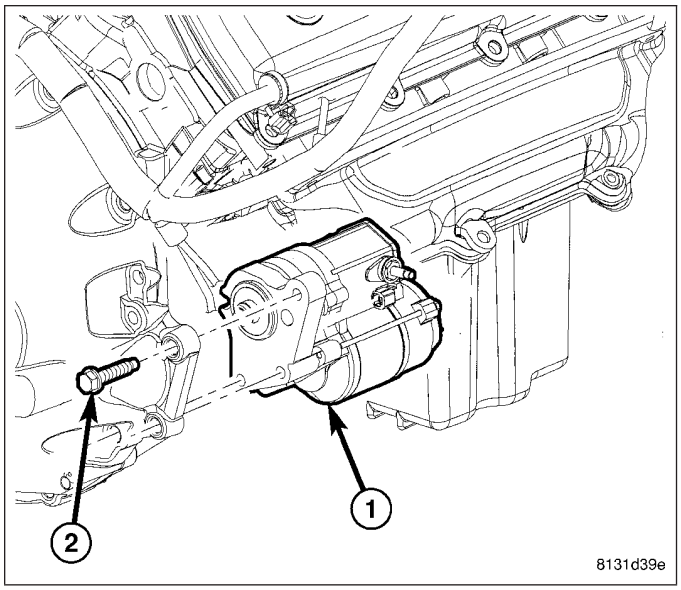

11. **FOR AWD ONLY** Install the intermediate shaft (2) to the oil pan (3). Torque fasteners to 28N·m (21ft. lbs).

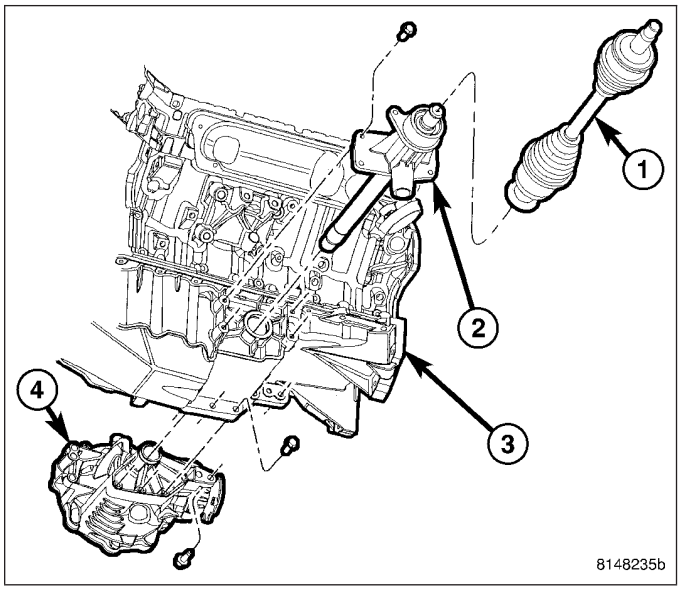

12. **FOR AWD ONLY** Install the front differential through the opening at the rear of the cradle, and attach to the oil pan.
13. **FOR AWD ONLY** Fasten the differential (4) to the oil pan (3) Torque to 65 N·m (48 ft. lbs).

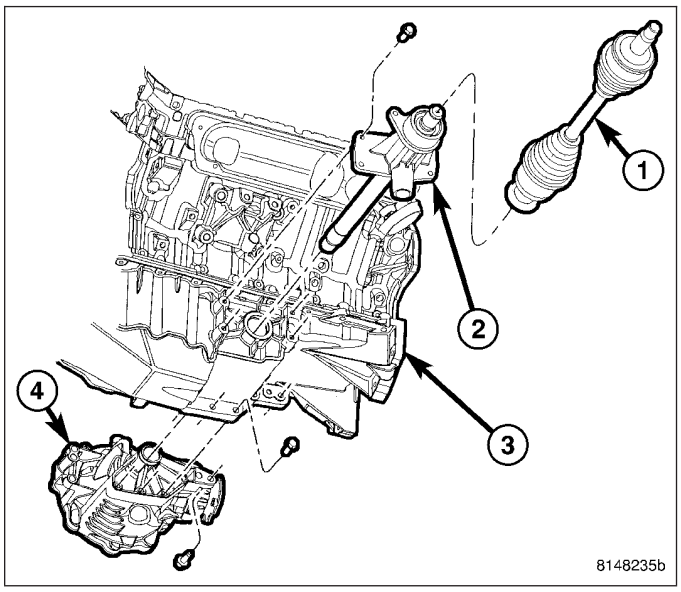

14. **FOR AWD ONLY** Install the differential support bracket (1) to the differential and the engine block.

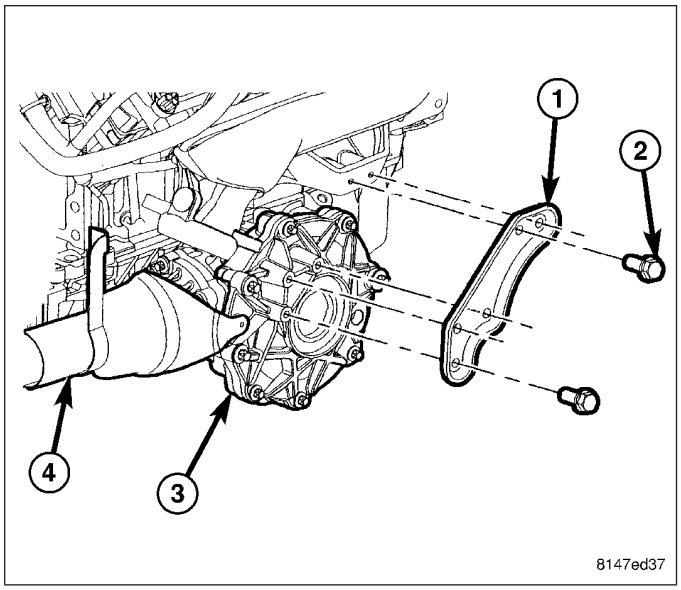

15. **FOR AWD ONLY** Install the left (2) and right front drive axles. (Refer to 3 - DIFFERENTIAL & DRIVELINE/HALF SHAFT - INSTALLATION).
16. **FOR AWD ONLY** Install front drive shaft into the differential and transfer case. (Refer to 3 - DIFFERENTIAL & DRIVELINE/PROPELLER SHAFT - INSTALLATION)
17. Install exhaust pipe to manifold.
18. Lower the vehicle.

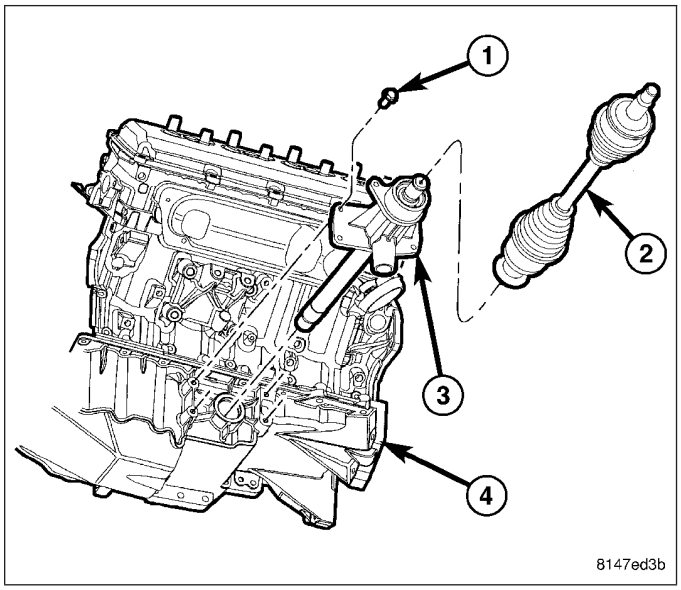

19. Remove engine lift fixture (2), special tool # 8984 and 8984–UPD (4).
20. Connect the fuel supply line (Refer to 14 - FUEL SYSTEM/FUEL DELIVERY/QUICK CONNECT FITTING - STANDARD PROCEDURE).
21. Reinstall the power steering pump.

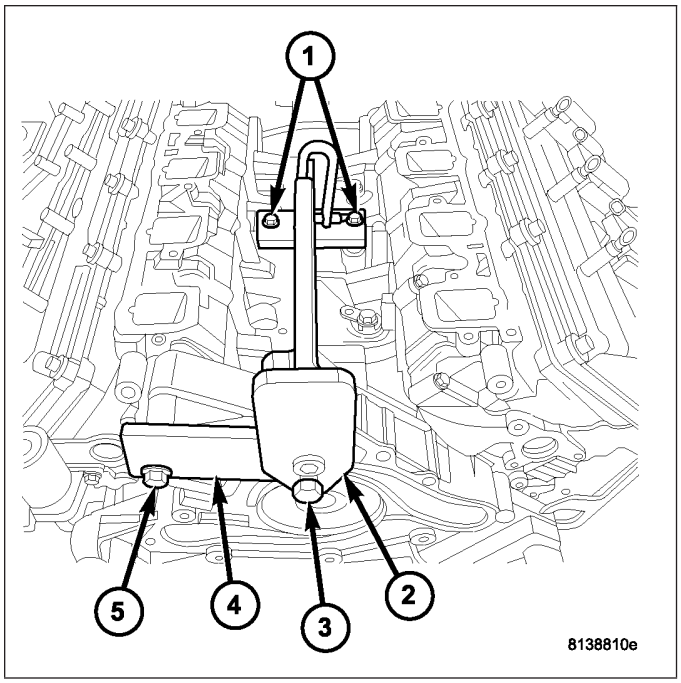

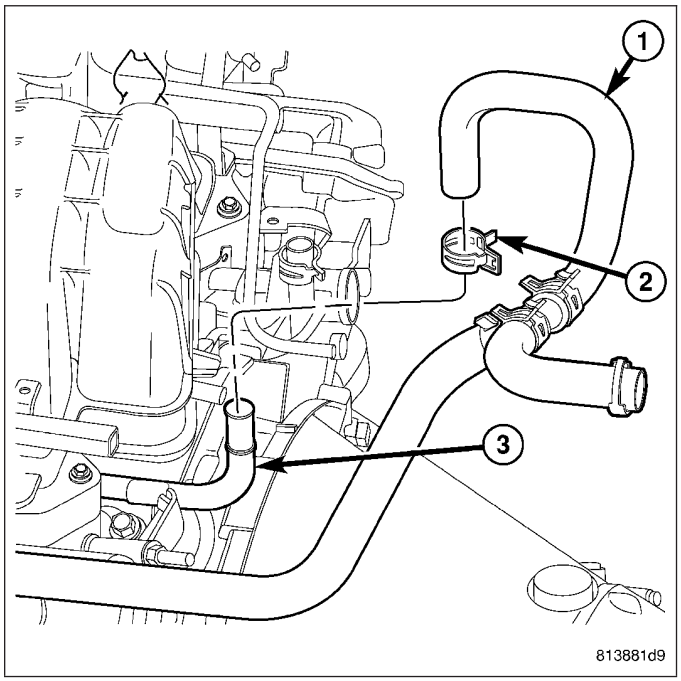

22. Connect the heater hoses(1, 1,).
23. Reconnect the ground wires to the rear of each cylinder head.
24. Install the intake manifold. (Refer to 9 - ENGINE/ MANIFOLDS/INTAKE MANIFOLD - INSTALLATION).

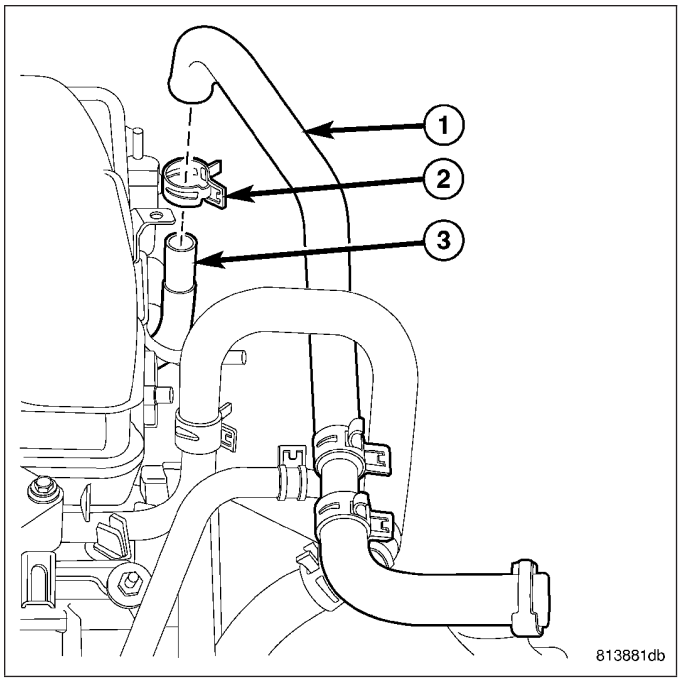

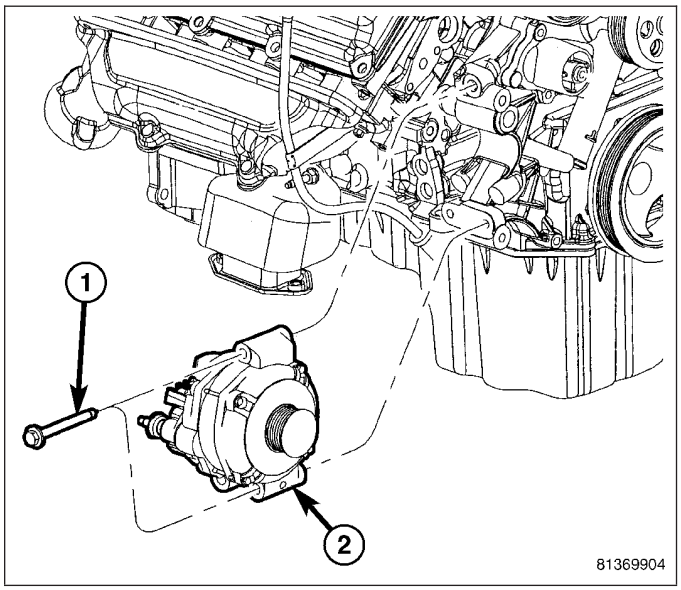

25. Install the generator (2), generator support bracket (1), and wire connections (Refer to 8 - ELECTRICAL/CHARGING/GENERATOR - INSTALLATION).

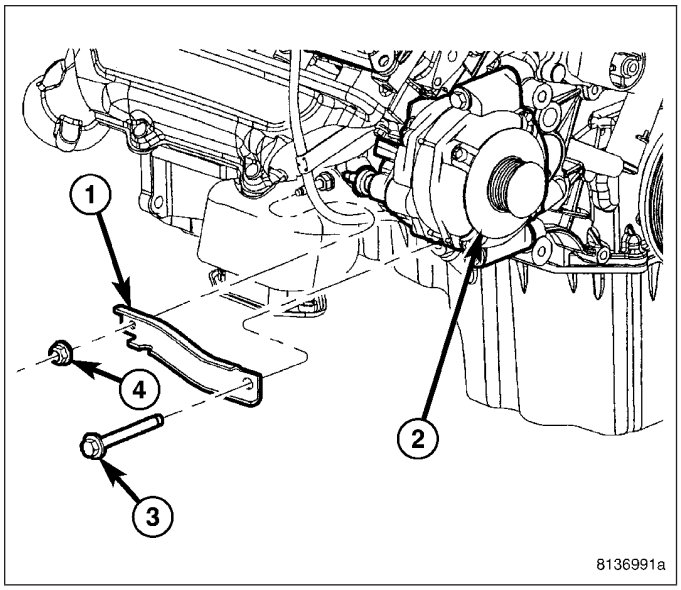

26. Install a/c compressor (3) (Refer to 24 - HEATING & AIR CONDITIONING/PLUMBING/A/C COMPRESSOR - INSTALLATION).
27. Install the accessory drive belt (Refer to 7 - COOLING/ACCESSORY DRIVE/DRIVE BELTS - INSTALLATION).
28. Install the radiator fan shroud (Refer to 7 - COOLING/ENGINE/RADIATOR FAN - INSTALLATION).
29. Connect the radiator lower hose.
30. Connect the transmission oil cooler lines to the radiator.
31. Connect the radiator upper hose.

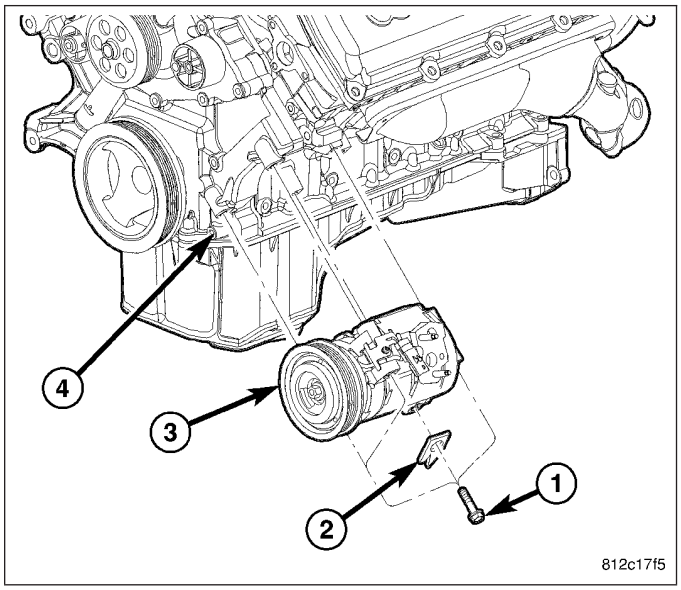

32. Install cowl top panel (Refer to 23 - BODY/EXTERIOR/COWL GRILLE - INSTALLATION).
33. Install the air cleaner resonator and duct work.
34. Add engine oil to crankcase (Refer to LUBRICATION & MAINTENANCE/FLUID TYPES - SPECIFICATIONS).
35. Fill cooling system (Refer to 7 - COOLING - STANDARD PROCEDURE).
36. Install the engine cover (1).

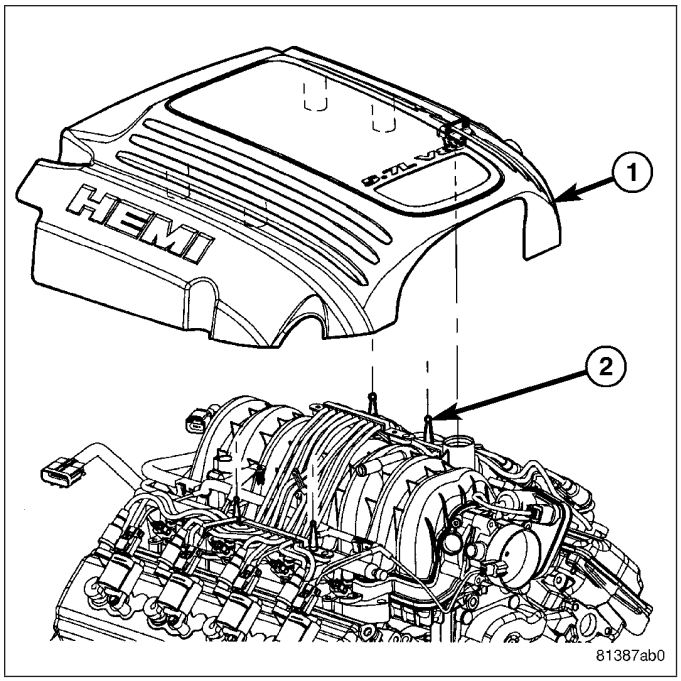

37. Connect battery negative cable.
38. Start engine and inspect for leaks.
39. Install the belly pan (2) (Refer to 23 - BODY/EXTERIOR/BELLY PAN - INSTALLATION).
40. Road test vehicle.

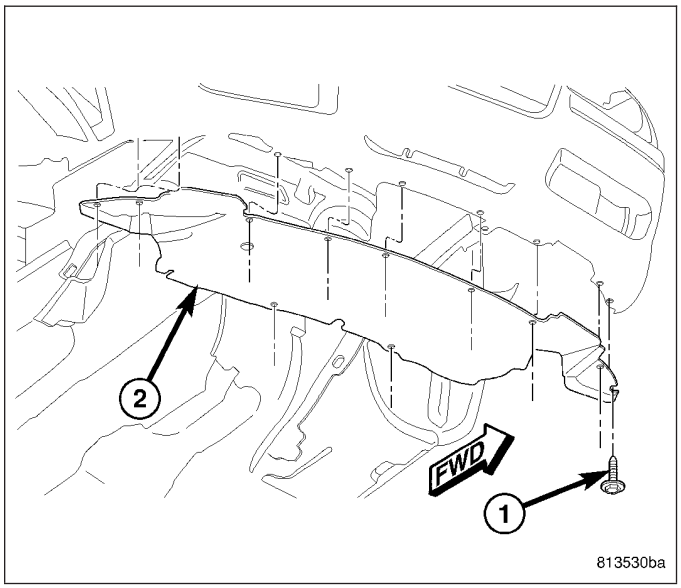

SPECIFICATIONS

5.7L ENGINE

GENERAL DESCRIPTION

DESCRIPTION	SPECIFICATION
Engine Type	90° V-8 OHV
Displacement	5.7 Liters 345 (Cubic Inches)
Bore	99.5 mm (3.91 in.)
Stroke	90.9 mm (3.58 in.)
Compression Ratio	9.6:1
Max. Variation Between Cylinders	25%

DESCRIPTION	SPECIFICATION
Firing Order	1-8-4-3-6-5-7-2
Lubrication	Pressure Feed - Full Flow Filtration
Cooling System	Liquid Cooled - Forced Circulation
Cylinder Block	Cast Iron
Cylinder Head	Aluminum
Crankshaft	Nodular Iron
Camshaft	Hollow Assembled Camshaft
Pistons	Aluminum Alloy
Connecting Rods	Powdered Metal

CYLINDER BLOCK

DESCRIPTION	SPECIFICATION	
	Metric	Standard
Cylinder Bore Diameter	99.50 mm	3.917 in.
Out of Round (MAX)	0.0076 mm	0003 in.
Taper (MAX)	0.0127 mm	0.0005 in.
Lifter Bore Diameter	21.45 - 21.425 mm	0.8444 - 0.8435 in.

PISTONS

DESCRIPTION	SPECIFICATION	
	Metric	Standard
Clearance Measured at 38.0 mm (1.5 in.) Below Deck	0.0215 - 0.0485 mm	0.0008 - 0.0019 in.
Ring Groove Diameter		
Groove #1	89.6 - 89.8 mm	3.527 - 3.535 in.
Groove #2	88.1 - 88.3 mm	3.468 - 3.476 in.
Weight	414.5 grams	14.62 oz
Piston Length	54.70 - 55.30	2.153 - 2.177 in.
Ring Groove Width		
No. 1	1.51 - 1.54 mm	0.0594 - 0.0606 in
No. 2	1.51 - 1.53 mm	0.0594 - 0.0602 in.
No. 3	3.030 - 3.055 mm	0.1192 - 0.1202 in.

PISTON PINS

DESCRIPTION	SPECIFICATION	
	Metric	Standard
Clearance In Piston	0.009 - 0.018 mm	0.00035 - 0.0007 in.
Diameter	24.0 - 24.003 mm	0.9448 - 0.9449 in.
Length	70.53 - 71.03 mm	2.78 - 2.80 in.

PISTON RINGS

DESCRIPTION	SPECIFICATION	
	Metric	Standard
Ring Gap		
Top Compression Ring	0.23 - 0.38 mm	0.0090 - 0.0149 in.
Second Compression Ring	0.35 - 0.60 mm	0.0137 - 0.0236 in.
Oil Control (Steel Rails)	0.15 - 0.66 mm	0.0059 - 0.0259 in.
Side Clearance		
Top Compression Ring	.02 - .068 mm	0.0007 - 0.0026 in.
Second Compression Ring	0.02 - 0.058 mm	0.0007 - 0.0022 in.
Oil Ring (Steel Ring)	.019 - .229 mm	.0007 - .0091 in.
Ring Width		
Top Compression Ring	1.472 - 1.490 mm	0.0579 - 0.0586 in.
Second Compression Ring	1.472 - 1.490 mm	0.0579 - 0.0586 in.
Oil Ring (Steel Rails)	0.447 - 0.473 mm	0.0175 - 0.0186 in.

CONNECTING RODS

DESCRIPTION	SPECIFICATION	
	Metric	Standard
Piston Pin Bore Diameter	23.955 - 23.975 mm	0.9431 - 0.9438 in.
Side Clearance	0.10 - 0.35 mm	0.003 - 0.0137 in.

CRANKSHAFT

DESCRIPTION	SPECIFICATION	
	Metric	Standard
Main Bearing Journal Diameter	64.988 - 65.012 mm	2.5585 - 2.5595 in.
Bearing Clearance	0.023 - 0.051 mm	0.0009 - 0.002 in.
Out of Round (MAX)	0.005 mm	0.0002 in.
Taper (MAX)	0.003 mm	0.0001 in.
End Play	0.052 - 0.282 mm	0.002 - 0.011 in.
End Play (MAX)	0.282 mm	0.011 in.
Connecting Rod Journal Diameter	53.992 - 54.008 mm	2.125 - 2.126 in.
Bearing Clearance	0.020 - 0.060 mm	0.0007 - 0.0023 in.
Out of Round (MAX)	0.005 mm	0.0002 in.
Taper (MAX)	0.003 mm	0.0001 in.

CAMSHAFT

DESCRIPTION	SPECIFICATION	
	Metric	Standard
Bearing Journal Diameter		
No. 1	58.2 mm	2.29 in.
No. 2	57.8 mm	2.27 in.
No. 3	57.4 mm	2.26 in.
No. 4	57.0 mm	2.24 in.
No. 5	43.633 mm	1.72 in.
Bearing To Journal Clearance Standard		
No. 1	0.040 - 0.080 mm	.0015 - .003 in.
No. 2	0.050 -0.090 mm	0.0019 - .0035 in.
No. 3	0.040 - 0.080 mm	.0015 - .003 in.
No. 4	0.050 - 0.090 mm	0.0019 - .0035 in.
No. 5	0.040 - 0.080 mm	.0015 - .003 in.
Camshaft End Play	.080 - 0.290mm	0.0031 - 0.0114 in.

VALVE TIMING

DESCRIPTION	SPECIFICATION
Intake	
Opens (BTDC)	5.0°
Closes (ATDC)	255.0°
Exhaust	
Opens (BTDC)	236°
Closes (ATDC)	32°
Duration	269.3°
Valve Overlap	37°

CYLINDER HEAD

DESCRIPTION	SPECIFICATION
Valve Seat Angle	44.5° - 45.0°
Valve Seat Runout (MAX)	0.05 mm (0.0019 in.)
Valve Seat Width (Finish)	
Intake	1.018 - 1.62 mm (0.0464 - 0.0637 in.)
Exhaust	1.48 - 1.92 mm (0.0582 - 0.0755 in.)
Guide Bore Diameter (Std.)	7.975 - 8.00 mm (0.313 - 0.314 in.)

HYDRAULIC TAPPETS

DESCRIPTION	SPECIFICATION	
	Metric	Standard
Body Diameter	21.387 - 21.405 mm	0.8420 - 0.8427 in.
Clearance (To Bore)	0.020 - 0.063 mm	0.0007 - 0.0024 in.
Dry Lash	3.0 mm (at the valve)	0.1181 in.

VALVES

DESCRIPTION	SPECIFICATION
Face Angle	45.0° - 45.5°
Head Diameter	
Intake	50.67 - 50.93 mm (1.99 - 2.00 in.)
Exhaust	39.27 - 39.53 mm (1.54 - 1.55 in.)
Length (Overall)	
Intake	123.38 - 123.76 mm (4.857 - 4.872 in.)
Exhaust	120.475 - 120.855 mm (4.743 - 4.758 in.)
Stem Diameter	
Intake	7.935 - 7.953 mm (0.312 - 0.313 in.)
Exhaust	7.932 - 7.950 mm (0.312 - 0.313 in.)
Stem - to - Guide Clearance	
Intake	0.022 - 0.065 mm (0.0008 - 0.0025 in.)
Exhaust	0.025 - 0.065 mm (0.0009 - 0.0025 in.)
Valve Lift (@ Zero Lash)	
Intake	12.0 mm (0.472 in.)
Exhaust	11.70 mm (0.460 in.)

VALVE SPRING

DESCRIPTION	SPECIFICATION
Spring Force (Valve Closed)	
Intake and Exhaust	435.0 N +/- 22.0 N @ 45 mm (97.8 lbs +/- 5.0 lbs. @ 1.771 in.)
Spring Force (Valve Open)	1077.0 N +/- 48.0 N @ 32.6 mm.
Intake and Exhaust	(242.0 lbs. +/- 11 lbs. @ 1.283 in.)
Free Length (approx)	55.6 mm (2.189 in.)

DESCRIPTION	SPECIFICATION
Number of Coils Intake and Exhaust	7.95
Wire Diameter Intake and Exhaust	4.95 × 4.1 mm (0.194 - 0.161 in.)
Installed Height (Spring Seat to Bottom of Retainer) Intake and Exhaust	46.0 mm (1.81 in.)

OIL PUMP

DESCRIPTION	SPECIFICATION
Clearance Over Rotors (MAX)	0.095 mm (0.0038 in.)
Outer Rotor to Pump Body Clearance (MAX)	.235 mm (.009 in.)
Tip Clearance Between Rotors (MAX)	0.150 mm (0.006 in.)

OIL PRESSURE

SPECIFICATION	SPECIFICATION
At Curb Idle Speed (MIN)*	25 kPa (4 psi)
@ 3000 rpm	170 - 758 kPa (25 - 110 psi)
*** CAUTION: If pressure is zero at curb idle, DO NOT run engine**	

TORQUE

TORQUE CHART 5.7L ENGINE

DESCRIPTION	N·m	Ft. Lbs.	In. Lbs.
Block Pipe Plugs (1/4 NPT)	20	—	177
(3/8 NPT)	27	—	240
Camshaft Sprocket—Bolt	122	90	—
Camshaft Tensioner Plate—Bolts	28	—	250
Coil to Cylinder Head Cover— Bolts	7	—	62
Timing Chain Case Cover—Bolts	28	—	250
Lifting Stud	55	40	—
Connecting Rod Cap—Bolts	21 plus 90° Turn	15 plus 90° Turn	—
Main Bearing Cap—Bolts M-12	27 plus 90° Turn	—	—
Crossbolts M-8	28	—	—
Cylinder Head—Bolts M-12 Bolts			
Step 1	34	25	—
Step 2	54	40	—
Step 3	Turn 90°	Turn 90°	—

DESCRIPTION	N·m	Ft.	In.
M-8 Bolts			—
Step 1	20	15	—
Step 2	34	25	—
Cylinder Head Cover—Bolts	8	—	70
Exhaust Manifold to Cylinder Head	25	—	220
Flexplate to crankshaft—Bolts	95	70	—
Flywheel to crankshaft—Bolts	75	55	—
Front Insulator—Through bolt/nut	95	70	—
Front Insulator to Block—Bolts	95	70	—
Generator—Mounting Bolt	55	40	—
Intake Manifold—Bolts	Refer to Procedure		
Lifter Guide Holder	12	—	106
Oil Pan Bolts	12	-	105
Oil Dipstick Tube	12	—	105
Oil Pan—Drain Plug	27	20	—
Oil Pump—Attaching Bolts	28	—	250
Oil Pump Pickup Tube – Bolt and Nut	28	—	250
Rear Seal Retainer Attaching Bolts	15	—	132
Rear Insulator to Bracket—	68	50	—
Rear Insulator to Crossmember	41	30	—
Rear Insulator to Transmission—	68	50	—
Rear Insulator Bracket—Bolts	68	50	—
Rocker Arm—Bolts	22	—	195
Spark Plugs	—	—	—
Thermostat Housing—Bolts	28	—	250
Throttle Body—Bolts	12	—	105
Vibration Damper—Bolt	176	129	—
Water Pump to Timing Chain Case Cover—Bolts	28	—	250

SPECIAL TOOLS

5.7L ENGINE

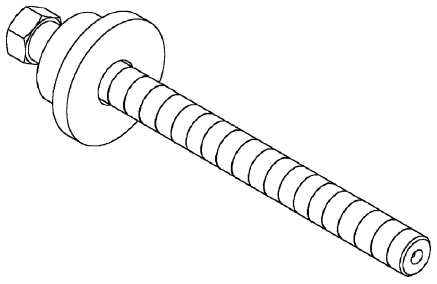

Crankshaft Damper Installer 8512

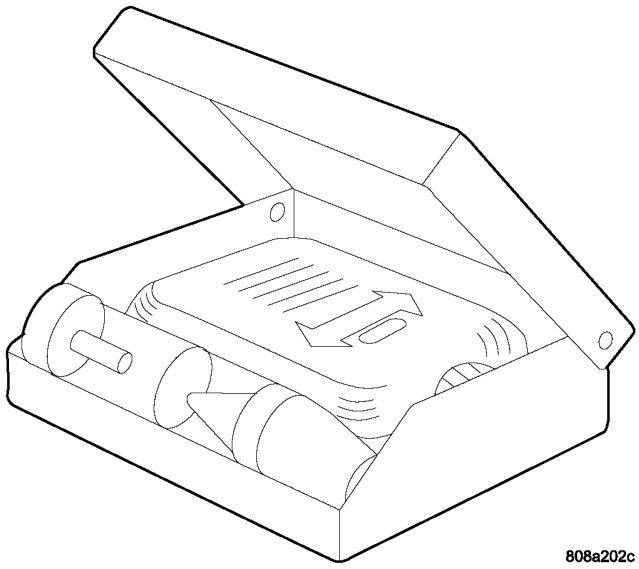

808a202c

BLOC-CHEK KIT C-3685

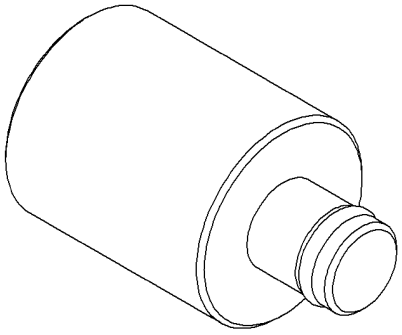

CRANKSHAFT DAMPER REMOVER INSERT - 8513-A

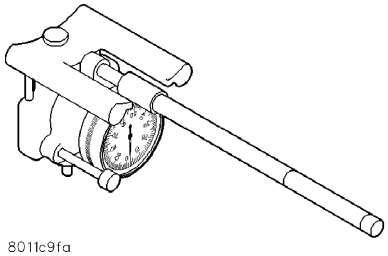

8011c9fa

Bore Size Indicator C-119

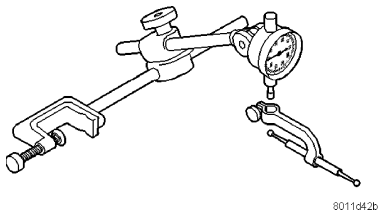

8011d42b

Dial Indicator C-3339

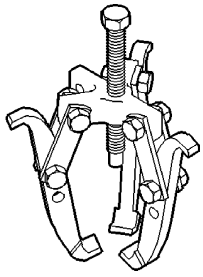

Puller 1023

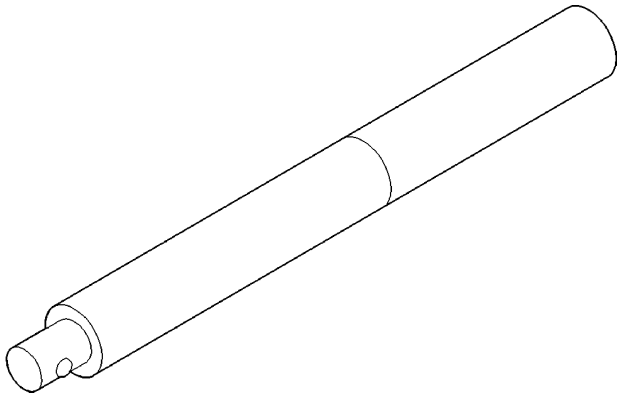

Driver Handle C-4171

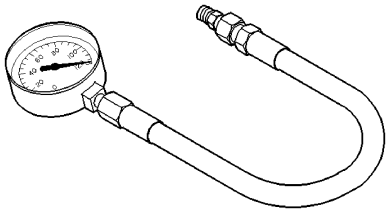

Oil Pressure Gauge C-3292

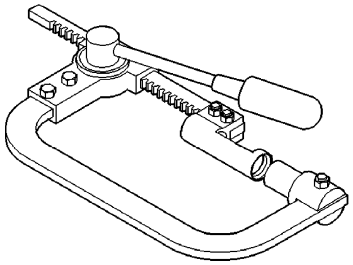

Valve Spring Compressor C-3422-B

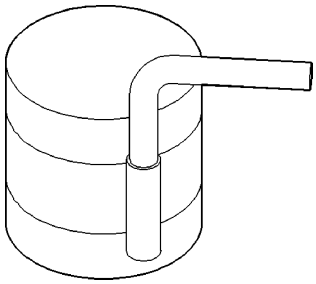

Piston Ring Compressor C-385

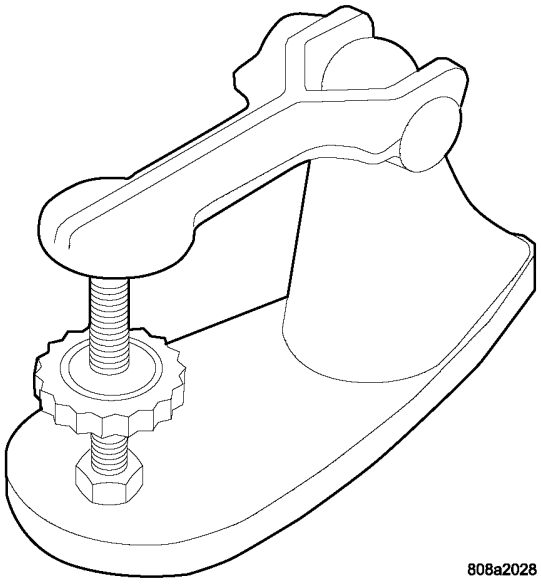

Valve Spring Tester C-647

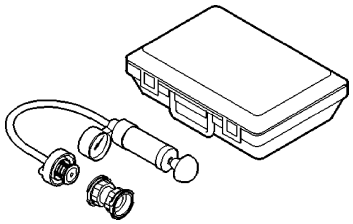

Pressure Tester Kit 7700

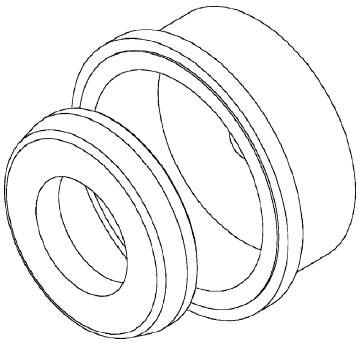

Rear Crankshaft Seal Installer 8349

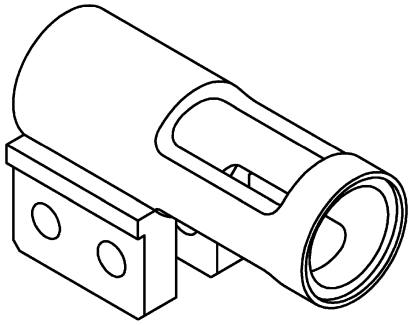

Adapter, Valve Spring Compressor Off-vehicle 8464

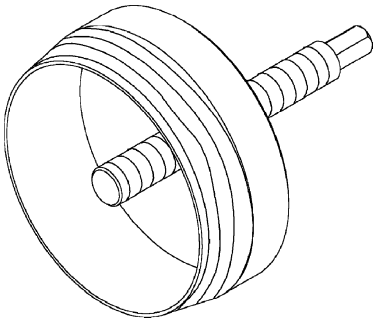

Rear Crankshaft Seal Remover 8506

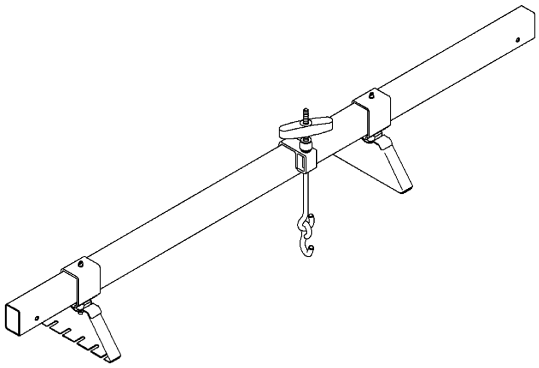

ENGINE SUPPORT FIXTURE 8534

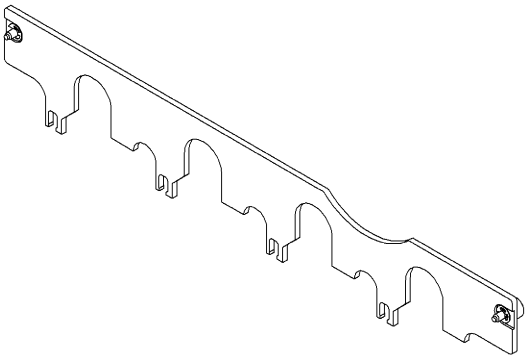

PUSHROD RETAINING PLATE - 9070

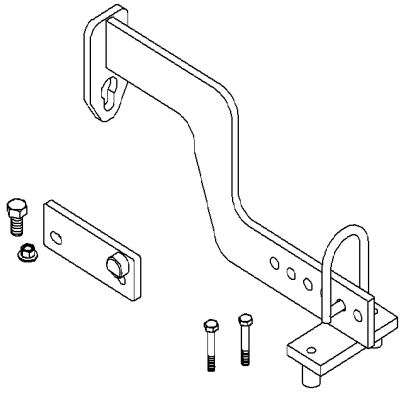

ENGINE LIFT FIXTURE AND ADAPTER

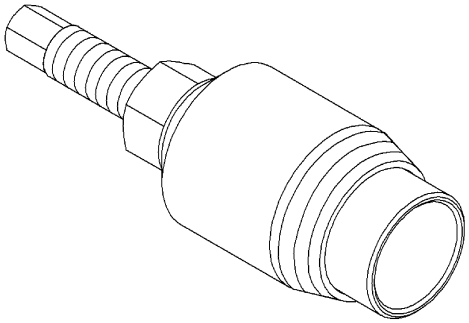

FRONT CRANK SEAL REMOVER - 9071

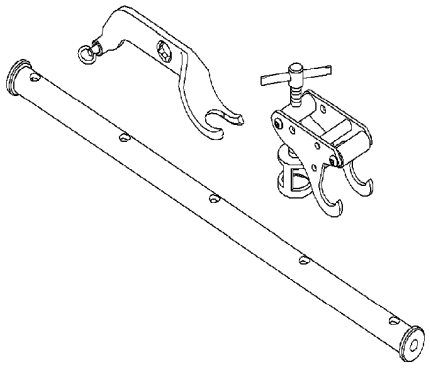

VALVE SPRING COMPRESSOR 9065A

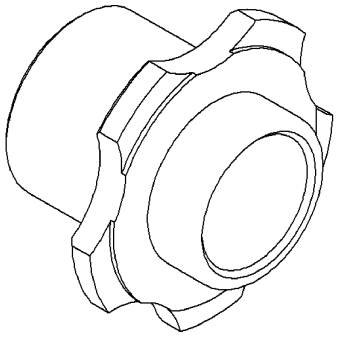

FRONT CRANK SEAL INSTALLER 9072

AIR INTAKE SYSTEM

REMOVAL

Filter Element Only

Housing removal is not necessary for element (filter) replacement.

1. Loosen clamp and disconnect air duct at air cleaner cover.
2. Pry over 4 spring clips (5) from housing cover (3) (spring clips retain cover to housing).
3. Release housing cover (3) from locating tabs (4) on housing and remove cover (3).
4. Remove air cleaner element (filter) from housing.
5. Clean inside of housing before replacing element.

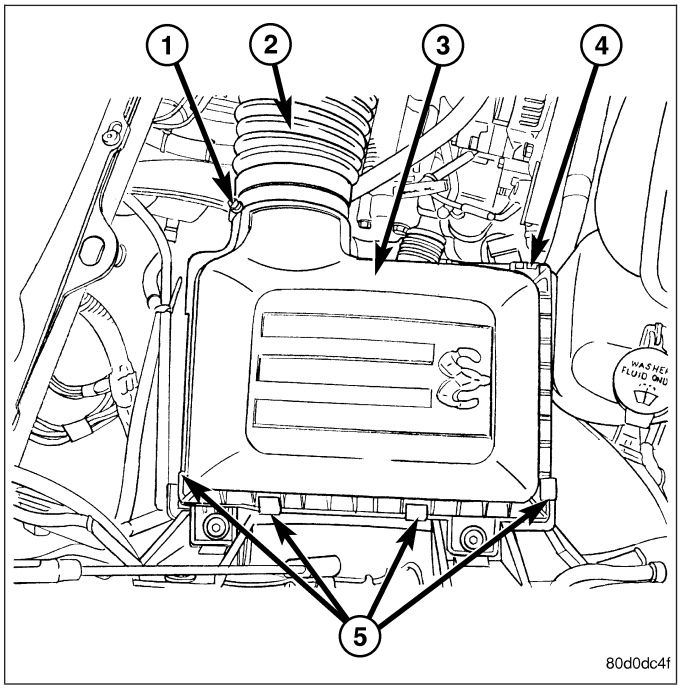

Housing Assembly

1. Loosen clamp and disconnect air duct at air cleaner cover.
2. Lift entire housing (1) assembly from 4 locating pins (2).

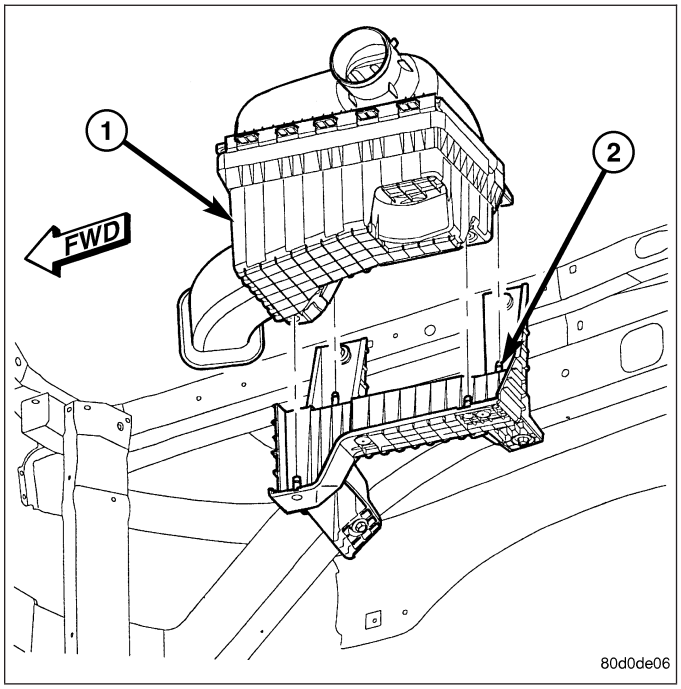

INSTALLATION

1. Install filter element into housing.
2. Position housing cover into housing locating tabs (4).
3. Pry up 4 spring clips(5) and lock cover to housing.
4. Install air duct to air cleaner cover and tighten hose clamp to 3 N·m (30 in. lbs.) torque.
5. If any other hose clamps were removed from air intake system, tighten them to 3.4 N·m (30 in. lbs.) torque.
6. If any bolts were removed from air resonator housing or air intake tubing, tighten them to 4.5 N·m (40 in. lbs.) torque.

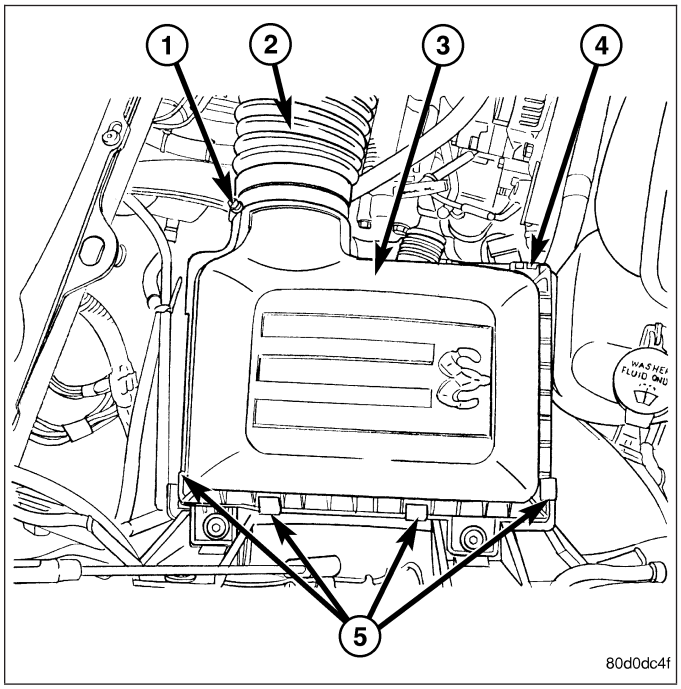

7. Install filter housing (1) into locating pins (2).

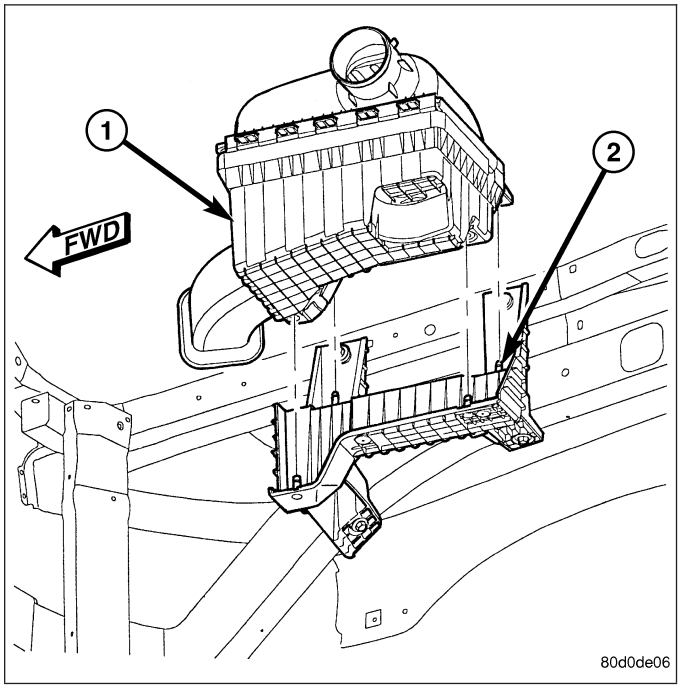

CYLINDER HEAD

OPERATION—CYLINDER HEAD

The cylinder head closes the combustion chamber allowing the pistons to compress the air fuel mixture to the correct ratio for ignition. The valves located in the cylinder head open and close to either allow clean air into the combustion chamber or to allow the exhaust gases out, depending on the stroke of the engine.

DIAGNOSIS AND TESTING - CYLINDER HEAD GASKET FAILURE

A cylinder head gasket leak can be located between adjacent cylinders or between a cylinder and the adjacent water jacket.

- Possible indications of the cylinder head gasket leaking between adjacent cylinders are:
  - Loss of engine power
  - Engine misfiring
  - Poor fuel economy
- Possible indications of the cylinder head gasket leaking between a cylinder and an adjacent water jacket are:
  - Engine overheating
  - Loss of coolant
  - Excessive steam (white smoke) emitting from exhaust
  - Coolant foaming

CYLINDER-TO-CYLINDER LEAKAGE TEST

To determine if an engine cylinder head gasket is leaking between adjacent cylinders, follow the procedures in Cylinder Compression Pressure Test in this section. An engine cylinder head gasket leaking between adjacent cylinders will result in approximately a 50–70% reduction in compression pressure.

CYLINDER-TO-WATER JACKET LEAKAGE TEST

WARNING: USE EXTREME CAUTION WHEN THE ENGINE IS OPERATING WITH COOLANT PRESSURE CAP REMOVED.

VISUAL TEST METHOD

With the engine cool, remove the coolant pressure cap. Start the engine and allow it to warm up until thermostat opens.

If a large combustion/compression pressure leak exists, bubbles will be visible in the coolant.

COOLING SYSTEM TESTER METHOD

WARNING: WITH COOLING SYSTEM TESTER IN PLACE, PRESSURE WILL BUILD UP FAST. EXCESSIVE PRESSURE BUILT UP, BY CONTINUOUS ENGINE OPERATION, MUST BE RELEASED TO A SAFE PRESSURE POINT. NEVER PERMIT PRESSURE TO EXCEED 138 kPa (20 psi).

Install Cooling System Tester 7700 or equivalent to pressure cap neck. Start the engine and observe the tester's pressure gauge. If gauge pulsates with every power stroke of a cylinder a combustion pressure leak is evident.

CHEMICAL TEST METHOD

Combustion leaks into the cooling system can also be checked by using Bloc-Chek Kit C-3685-A or equivalent. Perform test following the procedures supplied with the tool kit.

REMOVAL

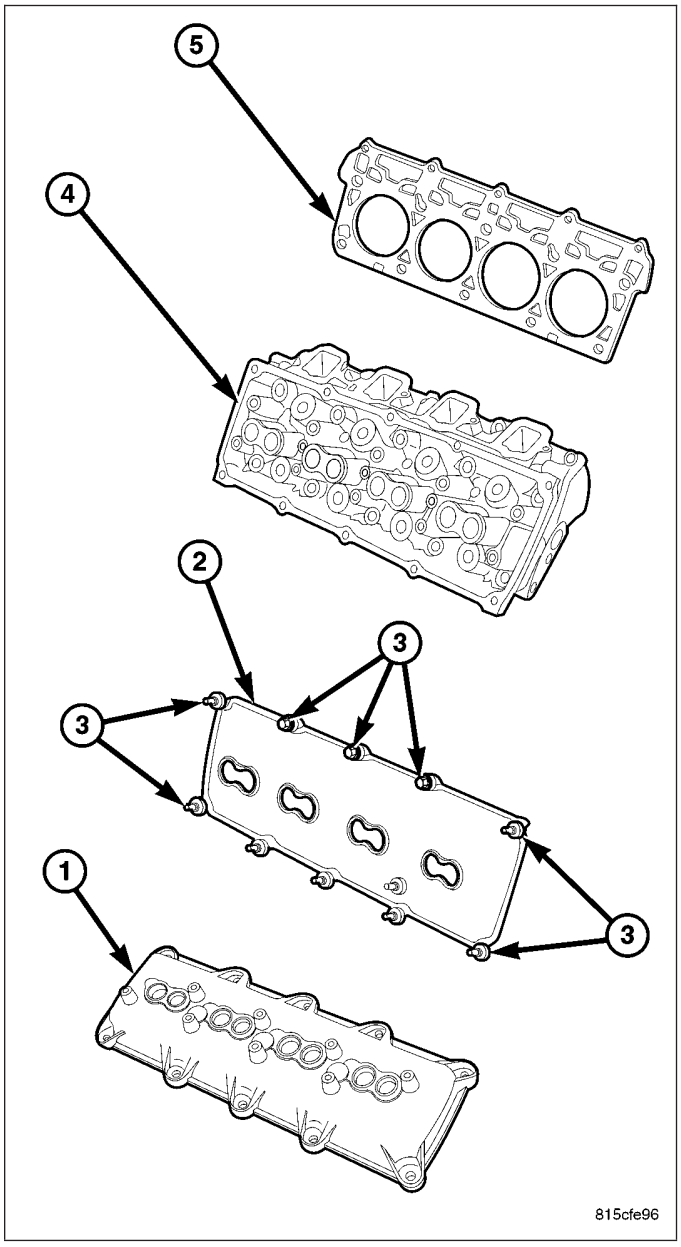

1. Perform the Fuel System Pressure Release procedure (Refer to 14 - FUEL SYSTEM/FUEL DELIVERY - STANDARD PROCEDURE). Disconnect the fuel supply line (Refer to 14 - FUEL SYSTEM/ FUEL DELIVERY/QUICK CONNECT FITTING - STANDARD PROCEDURE).
2. Disconnect the battery negative cable.
3. Drain cooling system (Refer to 7 - COOLING - STANDARD PROCEDURE).
4. Remove the air cleaner resonator and duct work (Refer to 9 - ENGINE/AIR INTAKE SYSTEM - REMOVAL).
5. Remove closed crankcase ventilation system.
6. Disconnect the exhaust at the exhaust manifolds.
7. Disconnect the evaporation control system.
8. Disconnect heater hoses.
9. Remove the power steering pump.
10. Remove cylinder head covers (1), using the sequence provided, and gaskets (2). (Refer to 9 - ENGINE/CYLINDER HEAD/CYLINDER HEAD COVER(S) - REMOVAL) .
11. Remove intake manifold and throttle body as an assembly. (Refer to 9 - ENGINE/MANIFOLDS/INTAKE MANIFOLD - REMOVAL).
12. Remove rocker arm assemblies and push rods. Identify to ensure installation in original locations. (Refer to 9 - ENGINE/CYLINDER HEAD/ ROCKER ARM / ADJUSTER ASSY - REMOVAL).

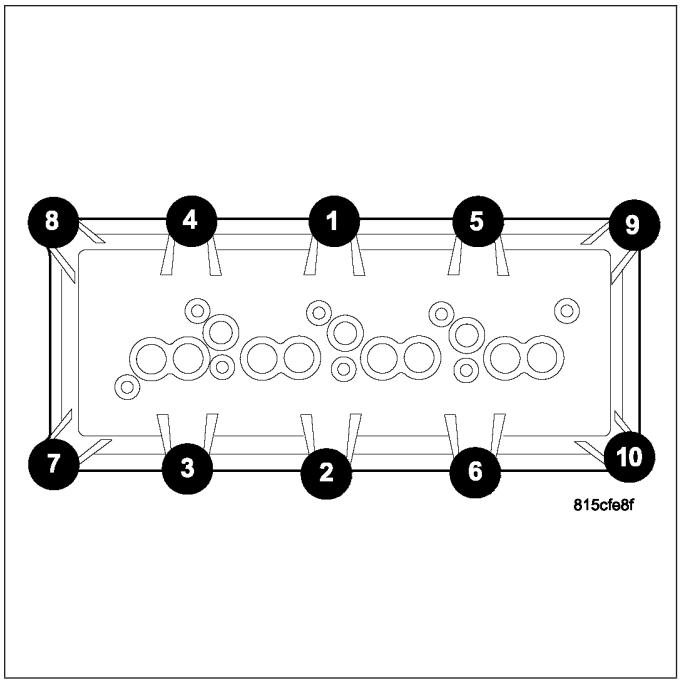

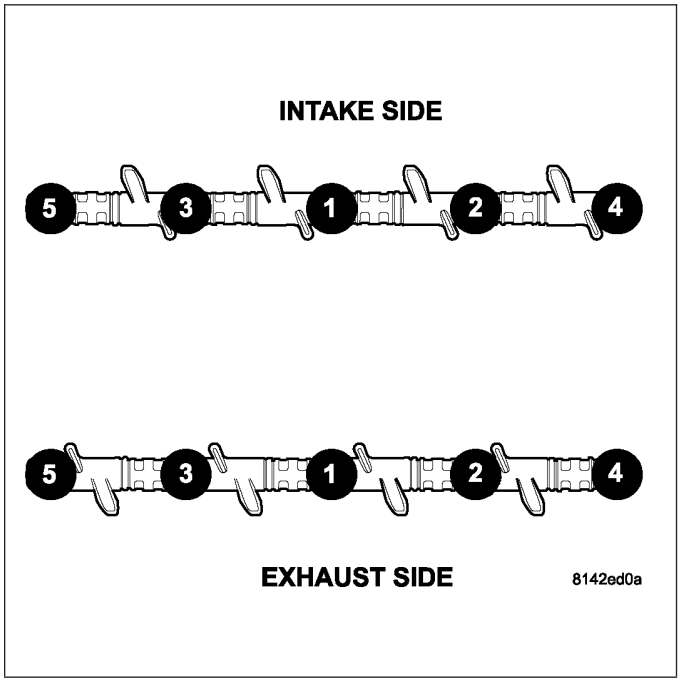

13. Remove the head bolts from each cylinder head, using the sequence provided, and remove cylinder heads. Discard the cylinder head gasket.

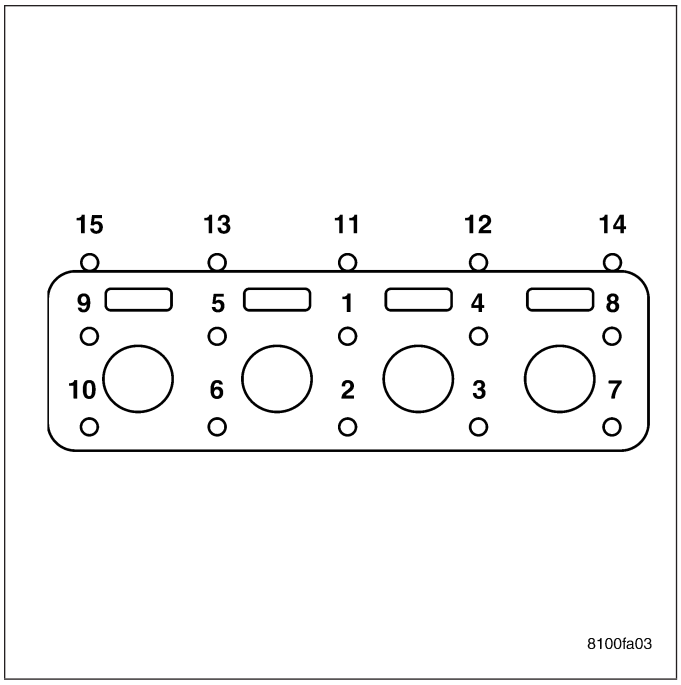

CLEANING

Clean all surfaces of cylinder block and cylinder heads.

Clean cylinder block front and rear gasket surfaces using a suitable solvent.

INSPECTION

1. Inspect the cylinder head for out-of-flatness, using a straightedge and a feeler gauge. If tolerances exceed 0.0508 mm (0.002 in.) replace the cylinder head.
2. Inspect the valve seats for damage. Service the valve seats as necessary.
3. Inspect the valve guides for wear, cracks or looseness. If either condition exist, replace the cylinder head.
4. Inspect pushrods. Replace worn or bent pushrods.

INSTALLATION

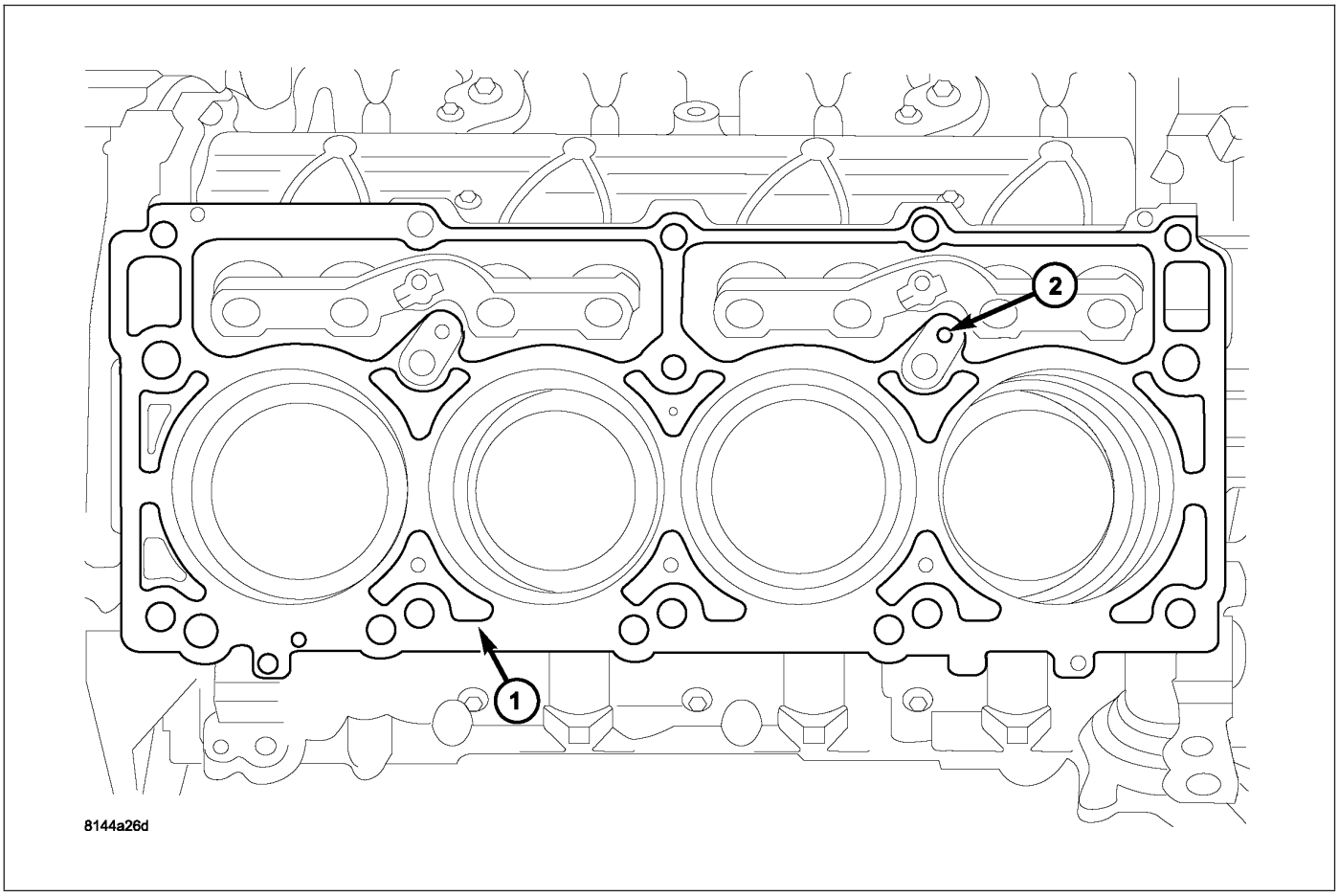

1. Clean all surfaces of cylinder block and cylinder heads.
2. Clean cylinder block front and rear gasket surfaces using a suitable solvent.

CAUTION: The head gaskets (1) are not interchangeable between left and right sides. They are marked “L” and “R” to indicate left and right sides.

CAUTION: The head gaskets (1) are marked “TOP” to indicate which side goes up.

3. Position new cylinder head gaskets (5) onto the cylinder block.
4. Position cylinder heads (4) onto head gaskets (5) and cylinder block.

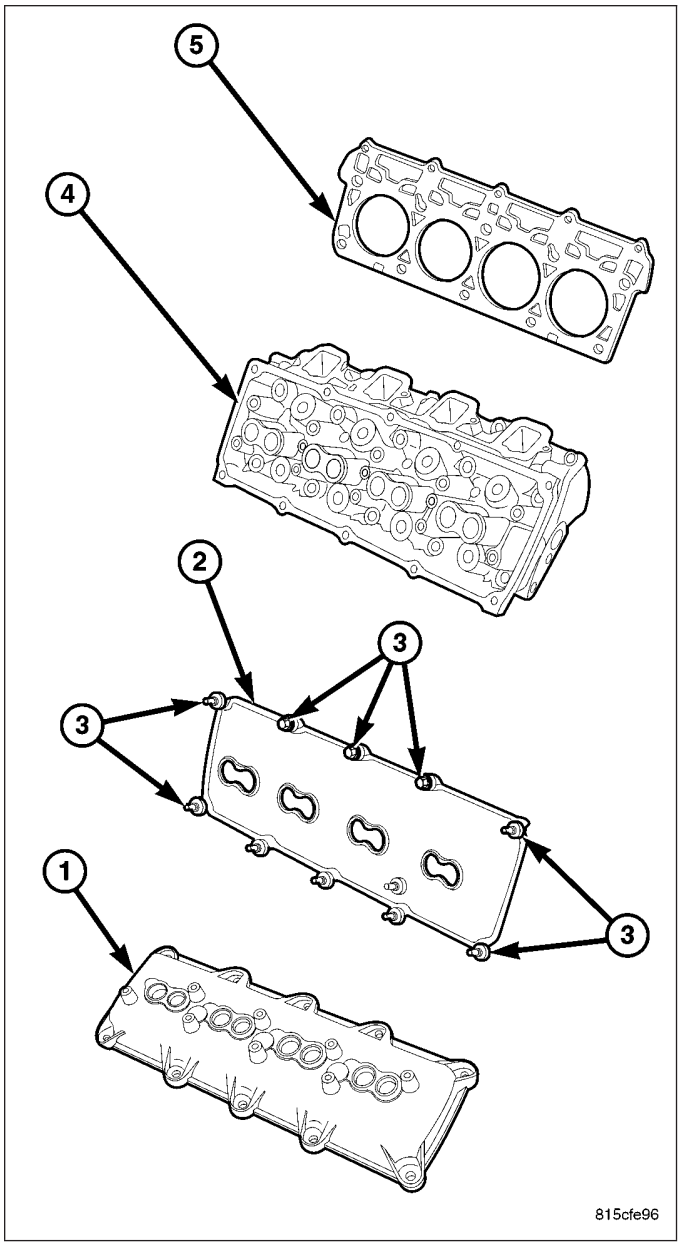

5. Tighten the cylinder head bolts in three steps using the sequence provided :
   - Step 1— Snug tighten M12 cylinder head bolts, in sequence, to 34 N·m (25 ft. lbs.) and M8 bolts to 20 N·m (15 ft. lbs.) torque.
   - Step 2— Tighten M12 cylinder head bolts, in sequence, to 54 N·m (40 ft. lbs.) and verify M8 bolts to 20 N·m (15 ft. lbs.) torque..
   - Step 3— Turn M12 cylinder head bolts, in sequence, 90 degrees and tighten M8 bolts to 34 N·m (25 ft. lbs.) torque.

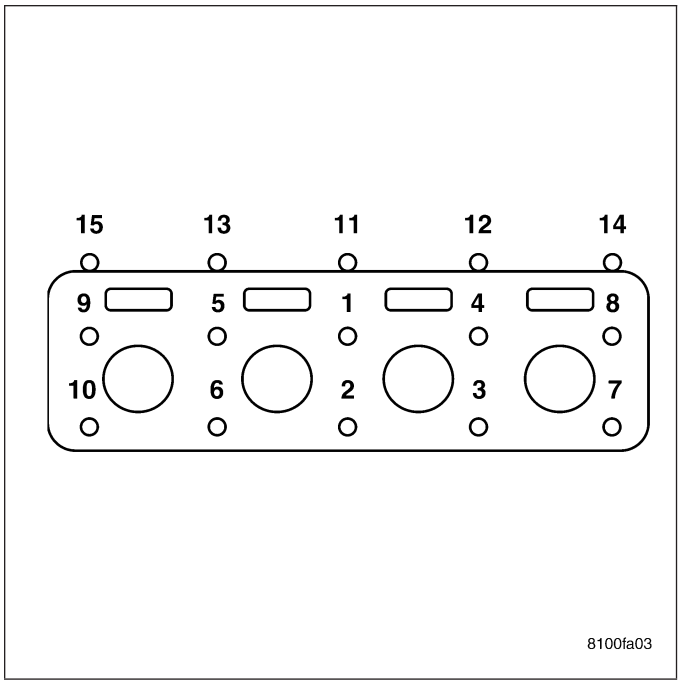

6. Install push rods and rocker arm assemblies in their original position, using pushrod retaining plate (1) special tool# 9070. (Refer to 9 - ENGINE/CYLINDER HEAD/ROCKER ARM / ADJUSTER ASSY - INSTALLATION).
7. Install the intake manifold and throttle body assembly (Refer to 9 - ENGINE/MANIFOLDS/INTAKE MANIFOLD - INSTALLATION).
8. If required, adjust spark plugs to specifications. Install the plugs.
9. Connect the heater hoses.
10. Install the fuel supply line.
11. Install the power steering pump.
12. Install the drive belt (Refer to 7 - COOLING/ACCESSORY DRIVE/DRIVE BELTS - INSTALLATION).

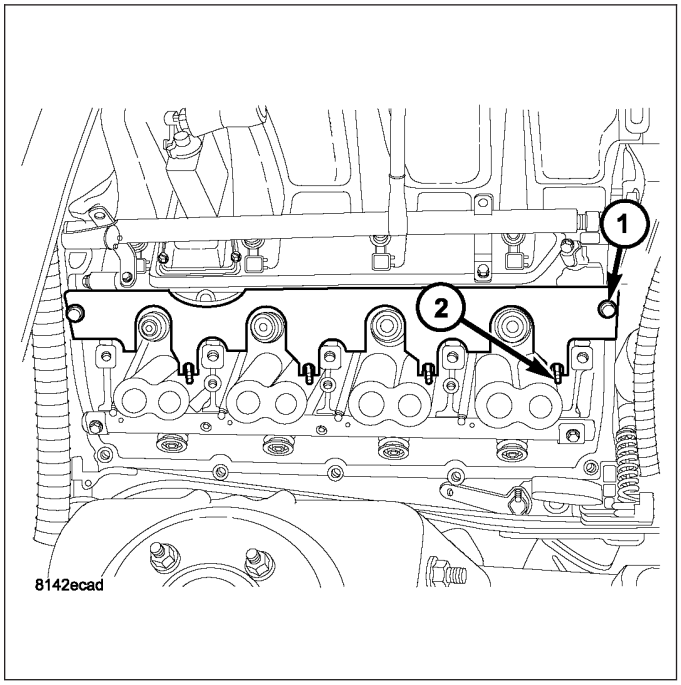

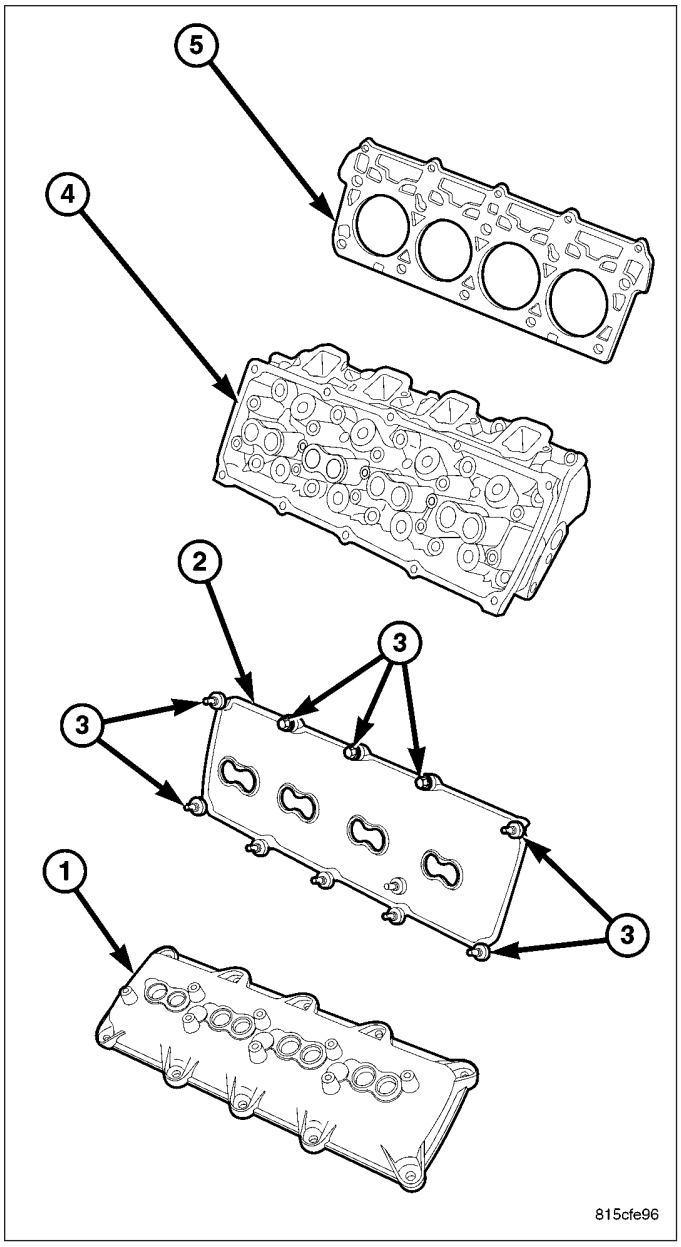
5
4
2
3
3
1
3
815cfe96

13. Install cylinder head covers (1) (Refer to 9 - ENGINE/CYLINDER HEAD/CYLINDER HEAD COVER(S) - INSTALLATION).
14. Connect the evaporation control system.
15. Install the air cleaner (Refer to 9 - ENGINE/AIR INTAKE SYSTEM - INSTALLATION).
16. Fill cooling system (Refer to 7 - COOLING - STANDARD PROCEDURE).
17. Connect the negative cable to the battery.
18. Start engine check for leaks.

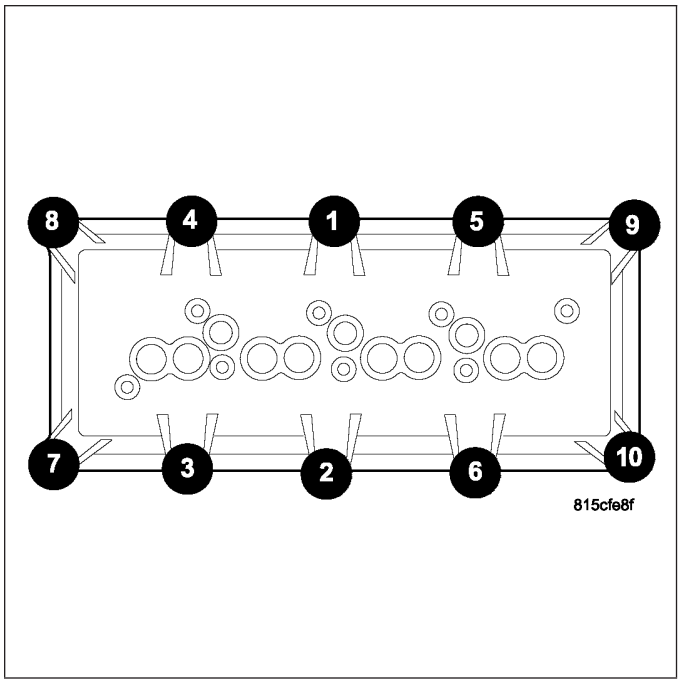

COVER-CYLINDER HEAD

REMOVAL

1. Disconnect battery negative cable.
2. Disconnect ignition coil connector (1).
3. Remove ignition coil retaining bolts (3).

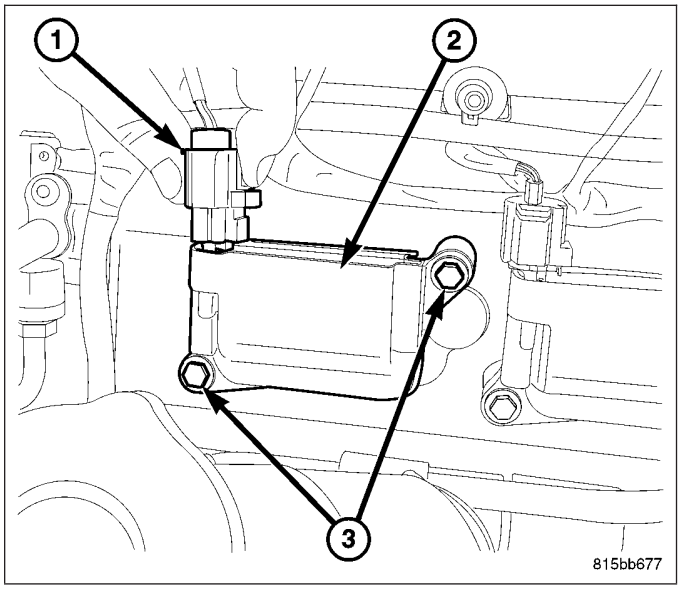

4. Remove ignition coil (1).

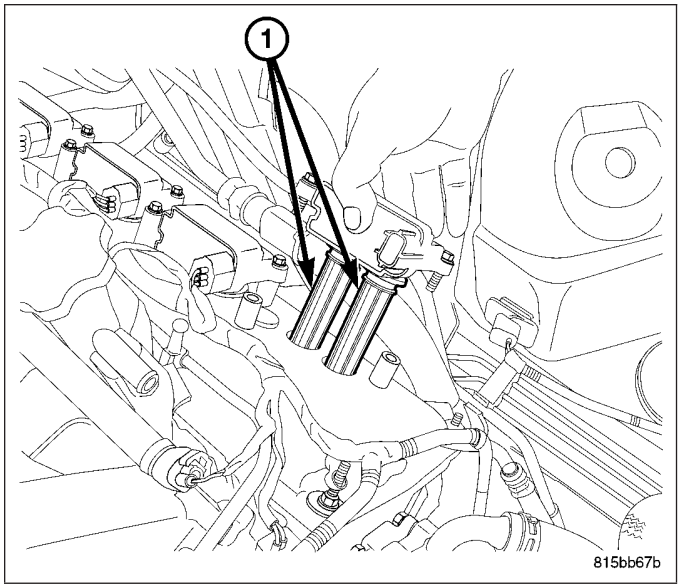

5. Remove cylinder head cover retaining bolts.

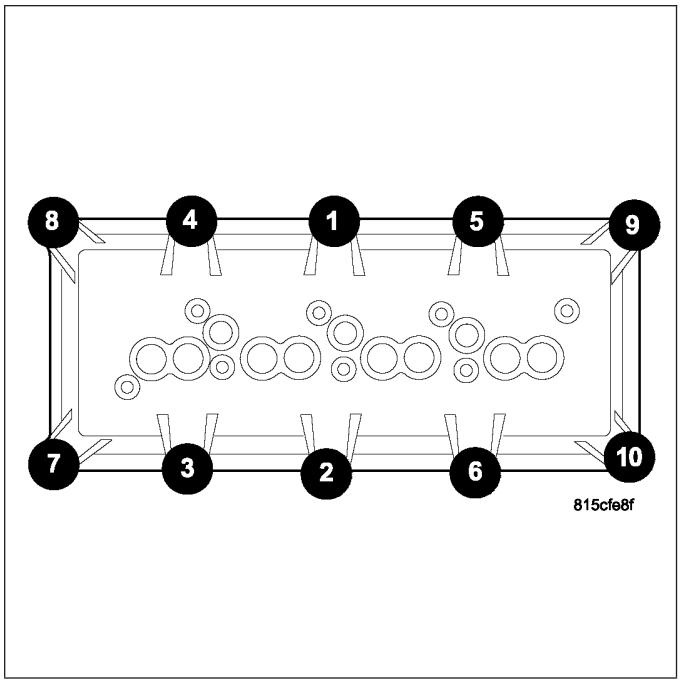

6. Remove cylinder head cover (1).

NOTE: The gasket (2) may be used again, provided no cuts, tears, or deformation has occurred.

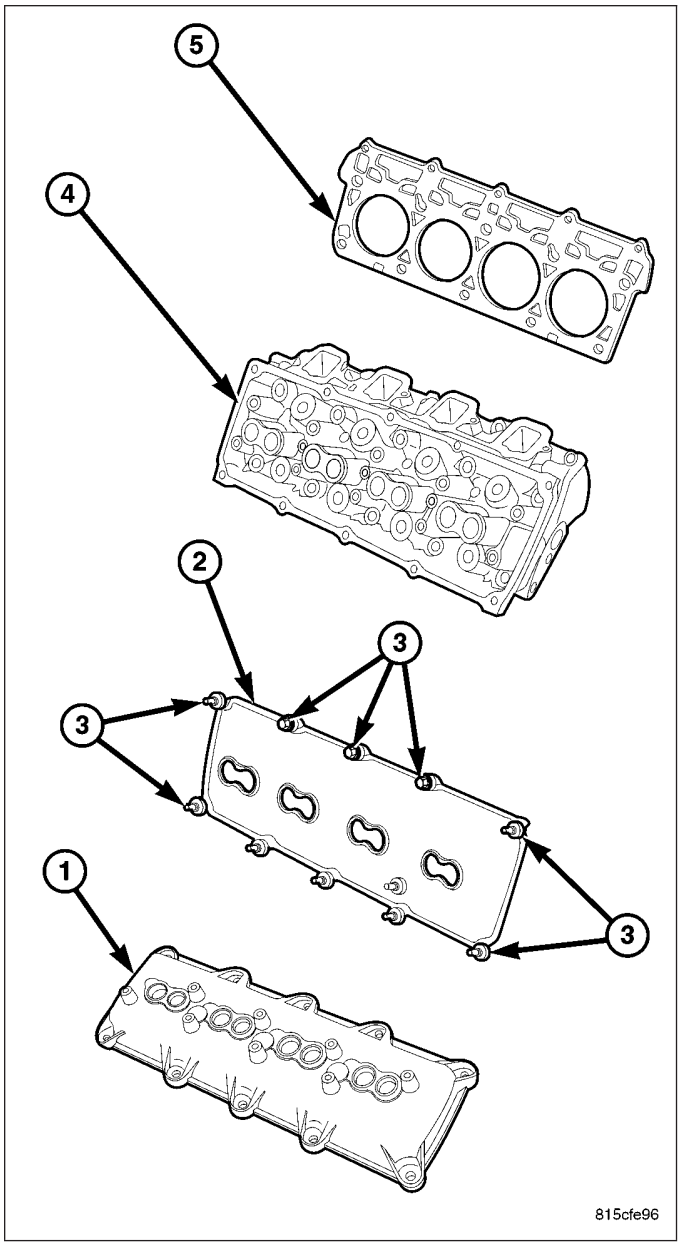

INSTALLATION

CAUTION: Do not use harsh cleaners to clean the cylinder head covers. Severe damage to covers may occur.

CAUTION: DO NOT allow other components including the wire harness to rest on or against the engine cylinder head cover. Prolonged contact with other objects may wear a hole in the cylinder head cover.

1. Clean cylinder head cover (1) and both sealing surfaces (1,4,). Inspect and replace gasket (2) as necessary.
2. Install cylinder head cover and hand start all fasteners. Verify that all double ended studs (3) are in the correct location.

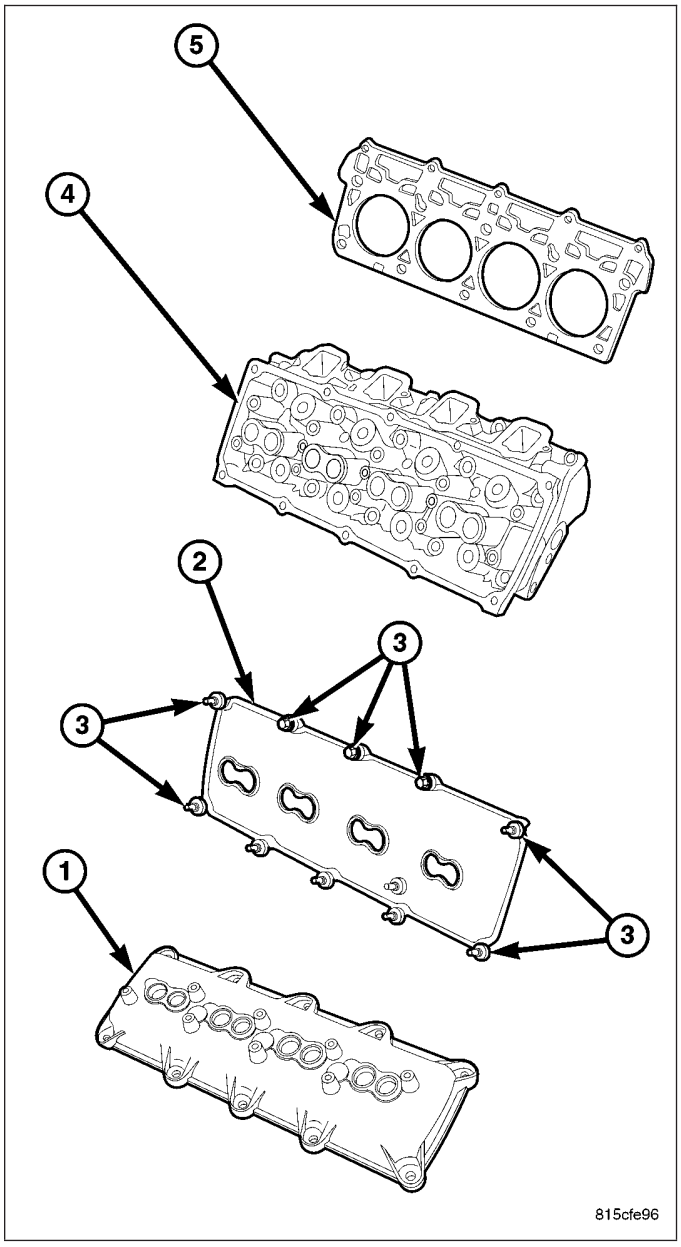

3. Tighten cylinder head cover bolts and double ended studs to 8N·m (70 in. lbs). Begin torque sequence in the middle of head cover and torque bolts moving outward in a crisscross pattern from top to bottom.

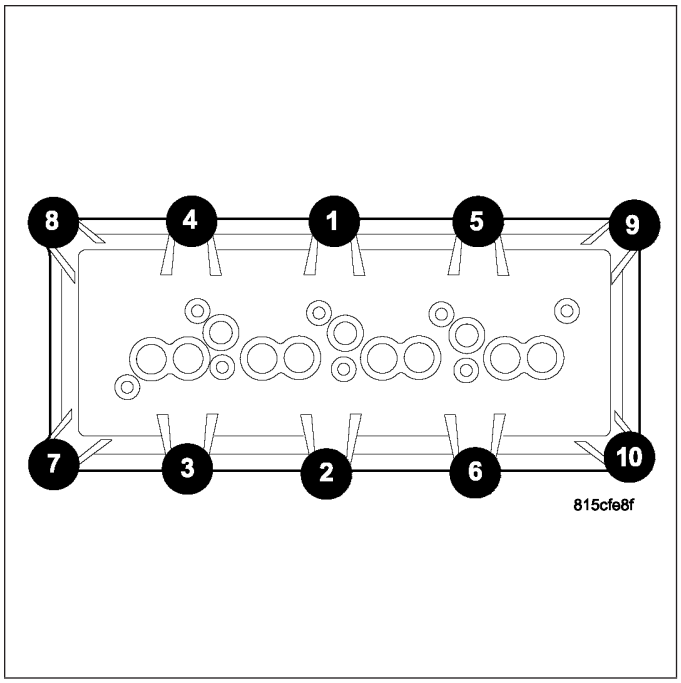

4. Before installing coil(s), apply dielectric grease to inside of spark plug boots (1).
5. Install ignition coils.

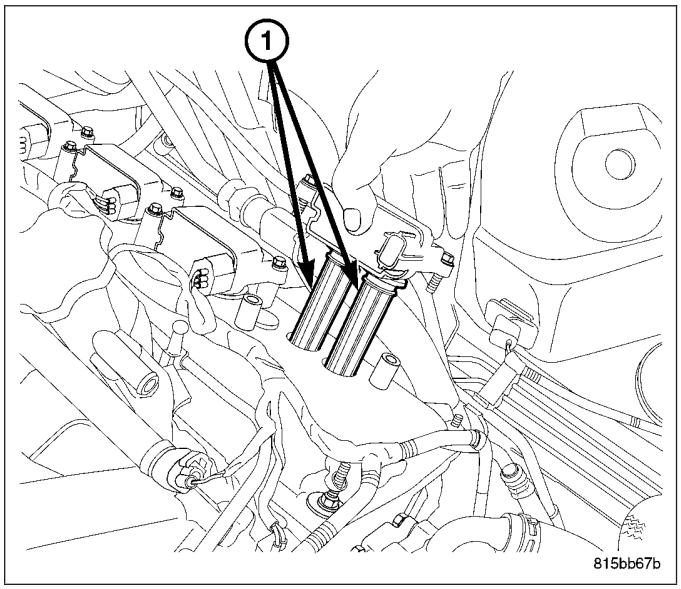

6. Torque fasteners (3) to 7N·m (62 in. lbs).
7. Connect, ignition coil electrical connectors (1).
8. Install PCV hose.
9. Connect battery negative cable.

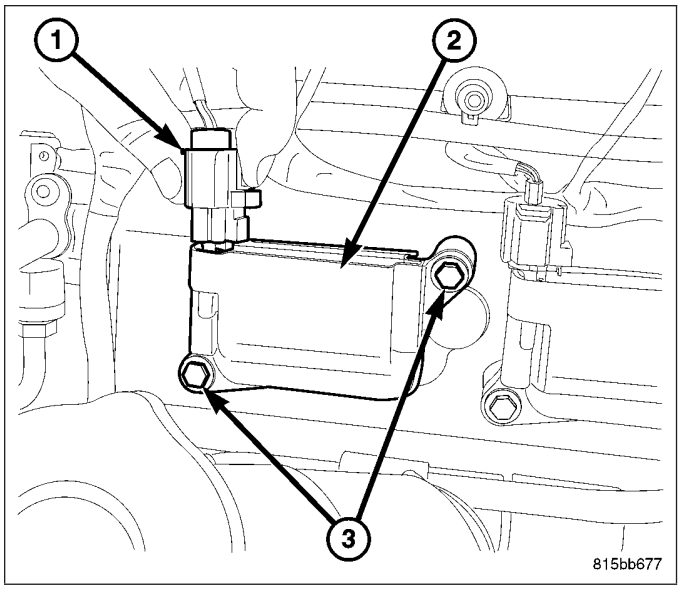

VALVES & SEATS - INTAKE/EXHAUST

DESCRIPTION

DESCRIPTION - VALVE GUIDES

The valve guides are made of powdered metal and are pressed into the cylinder head. The guides are not replaceable or serviceable, and valve guide reaming is not recommended. If the guides are worn beyond acceptable limits, replace the cylinder heads.

DESCRIPTION

Both the intake and exhaust valves are made of steel. The intake valve is 50.93 mm (2.00 inches) in diameter and the exhaust valve is 39.53 mm (1.55 inches) in diameter. All valves use three bead lock keepers to retain the springs and promote valve rotation.

STANDARD PROCEDURE - REFACING

NOTE: Valve seats that are worn or burned can be reworked, provided that correct angle and seat width are maintained. Otherwise the cylinder head must be replaced.

NOTE: When refacing valves and valve seats, it is important that the correct size valve guide pilot be used for reseating stones. A true and complete surface must be obtained.

1. Using a suitable dial indicator measure the center of the valve seat Total run out must not exceed 0.051 mm (0.002 in).
2. Apply a small amount of Prussian blue to the valve seat, insert the valve into the cylinder head, while applying light pressure on the valve rotate the valve. Remove the valve and examine the valve face. If the blue is transferred below the top edge of the valve face, lower the valve seat using a 15 degree stone. If the blue is transferred to the bottom edge of the valve face, raise the valve seat using a 65 degree stone.
3. When the seat is properly positioned the width of the intake seat must be 1.018 - 1.62 mm (0.0464 - 0.0637 in.) and the exhaust seat must be 1.48 - 1.92 mm (0.058 - 0.075 in.).
4. Check the valve spring installed height after refacing the valve and seat. The installed height for both intake and exhaust valve springs must not exceed 46.0 mm (1.81 in.).

VALVE FACE AND VALVE SEAT ANGLE CHART

DESCRIPTION	SPECIFICATION
SEAT WIDTH	
INTAKE	1.018 - 1.62 mm (0.0464 - 0.0637 in.)
EXHAUST	1.48 - 1.92 mm (0.058 - 0.075 in.)
FACE ANGLE (INT. AND EXT.)	45° - 45½°
SEAT ANGLE (INT. AND EXT.)	44½° - 45°

5. The valve seat must maintain an angle of 44.5 – 45.0 degrees angle.
6. The valve face must maintain a face angle of 45.0 – 45.5 degrees angle.

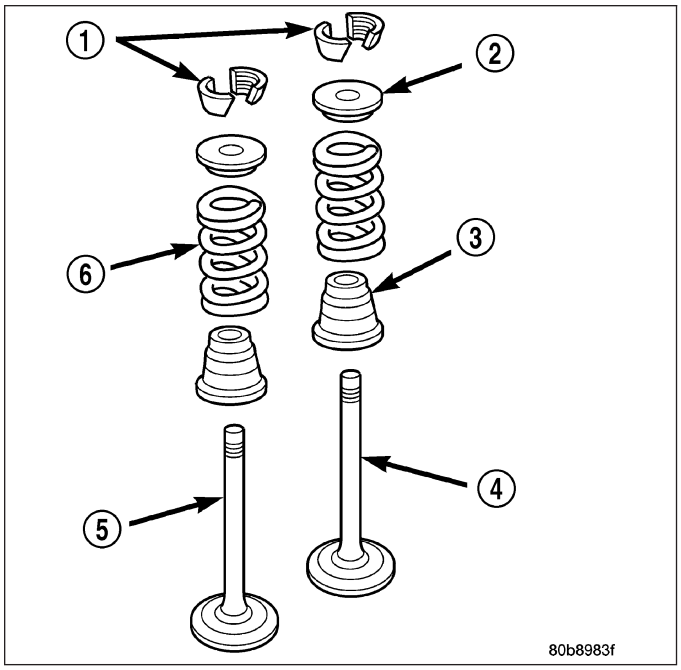

REMOVAL

1. Remove the cylinder head (Refer to 9 - ENGINE/CYLINDER HEAD - REMOVAL).
2. Compress valve springs using Valve Spring Compressor Tool special tool # C-3422 and adapter 8464.
3. Remove valve retaining locks, valve spring retainers, valve stem seals and valve springs.
4. Before removing valves, remove any burrs from valve stem lock grooves to prevent damage to the valve guides. Identify valves to ensure installation in original location.

INSTALLATION

1. Clean valves thoroughly. Discard burned, warped and cracked valves.
2. Remove carbon and varnish deposits from inside of valve guides with a reliable guide cleaner.
3. Measure valve stems for wear. If wear exceeds 0.051 mm (0.002 inch), replace the valve.
4. Coat valve stems with lubrication oil and insert them in cylinder head.
5. If valves or seats are reground, check valve stem height. If valve is too long, replace cylinder head.
6. Install new seals on all valve guides. Install valve springs and valve retainers.
7. Compress valve springs with Valve Spring Compressor Tool special tool # C- 3422 and adapter 8464, install locks and release tool. If valves and/or seats are ground, measure the installed height of springs. Make sure the measurement is taken from bottom of spring seat in cylinder head to the bottom surface of spring retainer.
8. Install cylinder head (Refer to 9 - ENGINE/CYLINDER HEAD - INSTALLATION).

ROCKER ARM

REMOVAL

1. Remove cylinder head cover. (Refer to 9 - ENGINE/CYLINDER HEAD/CYLINDER HEAD COVER(S) - REMOVAL).

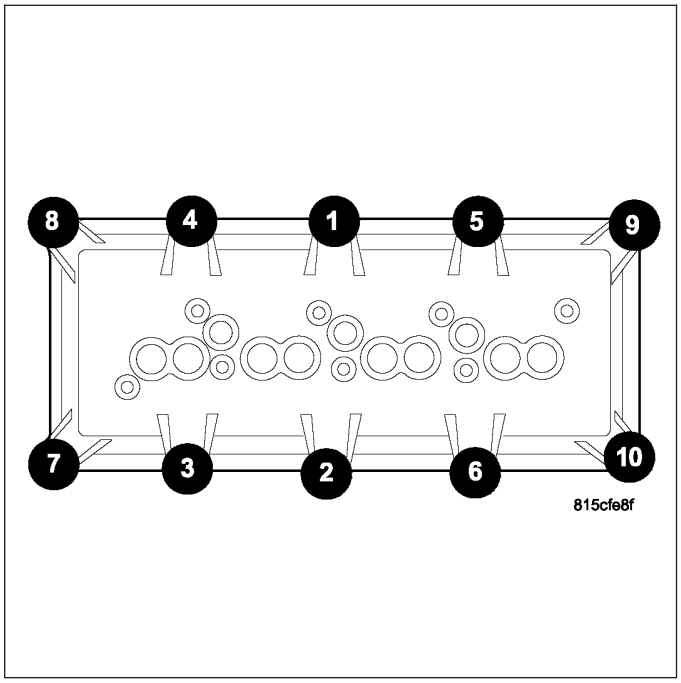

2. Install pushrod retaining plate (1)special tool 9070.

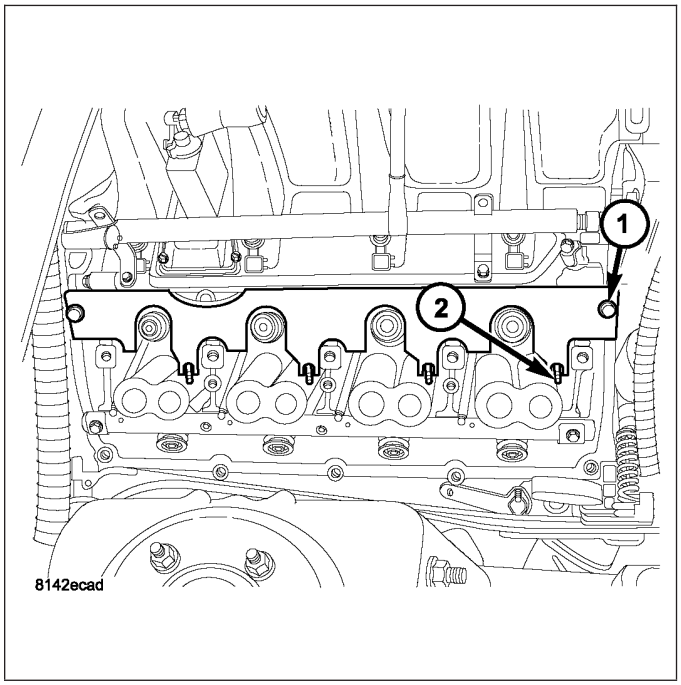

3. Loosen the rocker shafts using the sequence provided.

CAUTION: The rocker shaft assemblies are not interchangeable between intake and exhaust. The intake rocker arms are marked with an "I".

4. Remove the rocker shafts. Note location for reassembly.

CAUTION: The longer push rods are for the exhaust side, and the shorter push rods are for intake side.

5. Remove the pushrods. Note pushrod location for reassembly.

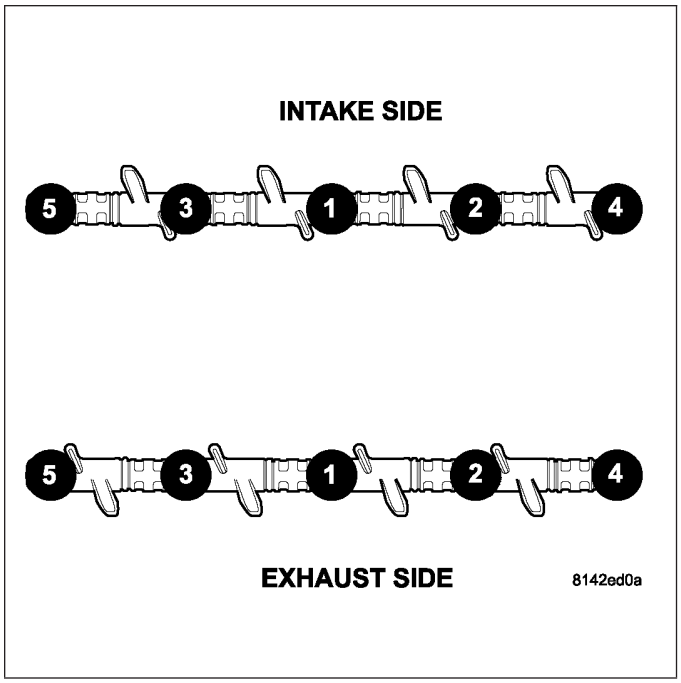

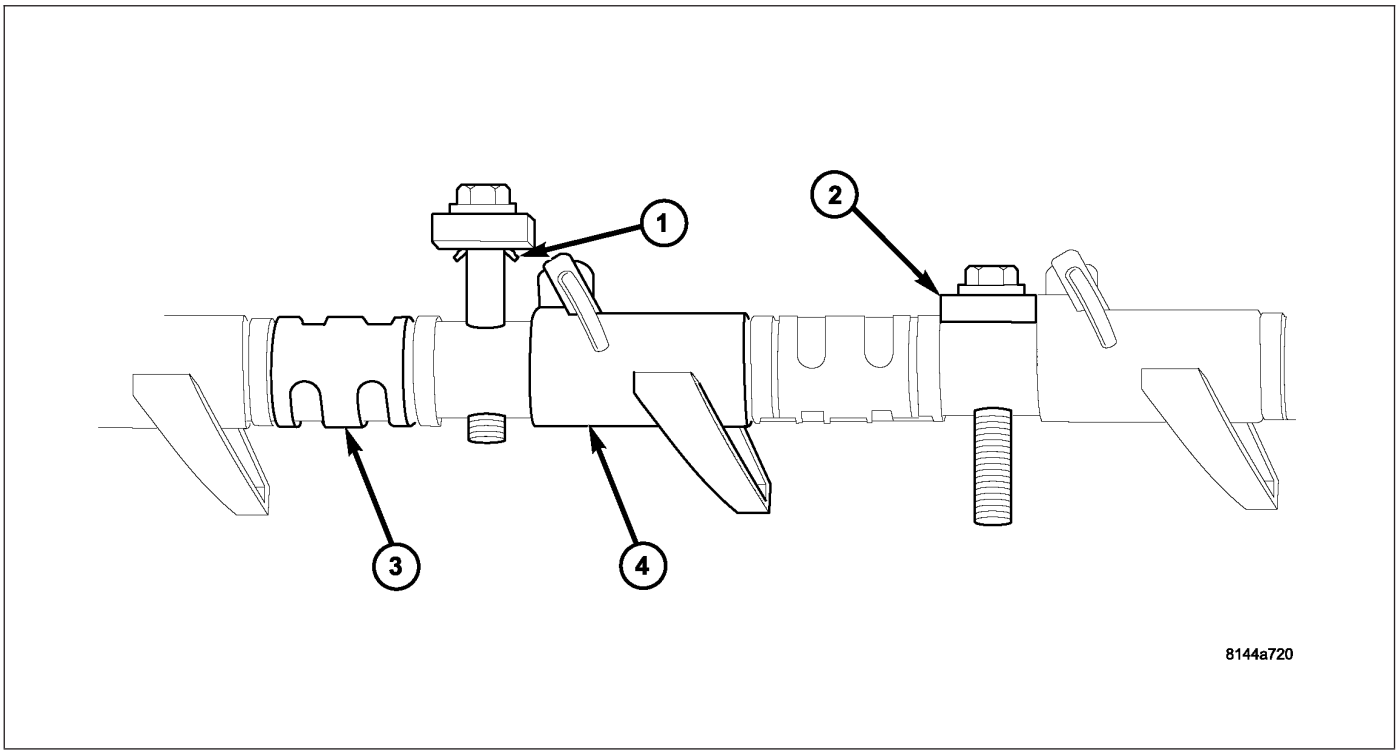

CAUTION: Do not remove the retainers from the rocker shaft. The assembly tangs (1) at the bottom of the retainers (2) can be damaged, causing the assembly tangs to break off, and get into the engine.

INSTALLATION

CAUTION: The longer push rods are for the exhaust side, and the shorter push rods are for intake side.

1. Install the push rods in the same order as removed.
2. Install the pushrod retaining plate (1) special tool 9070.

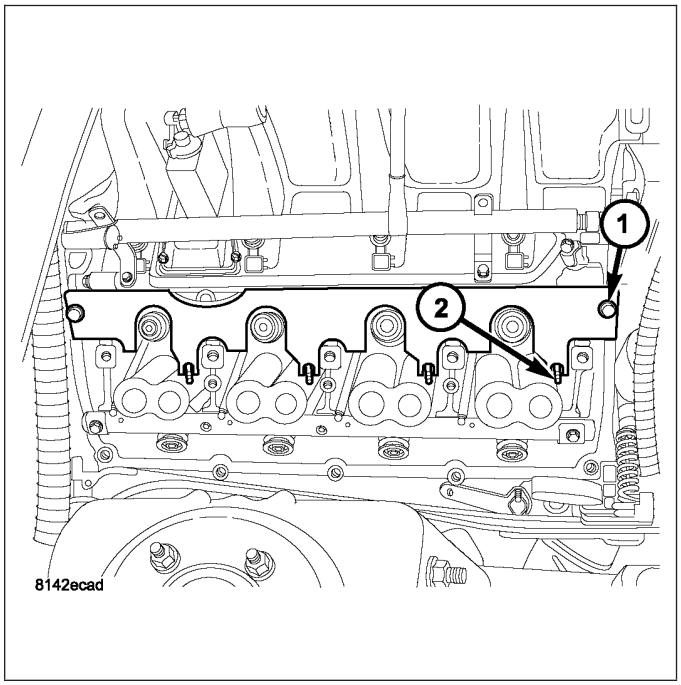

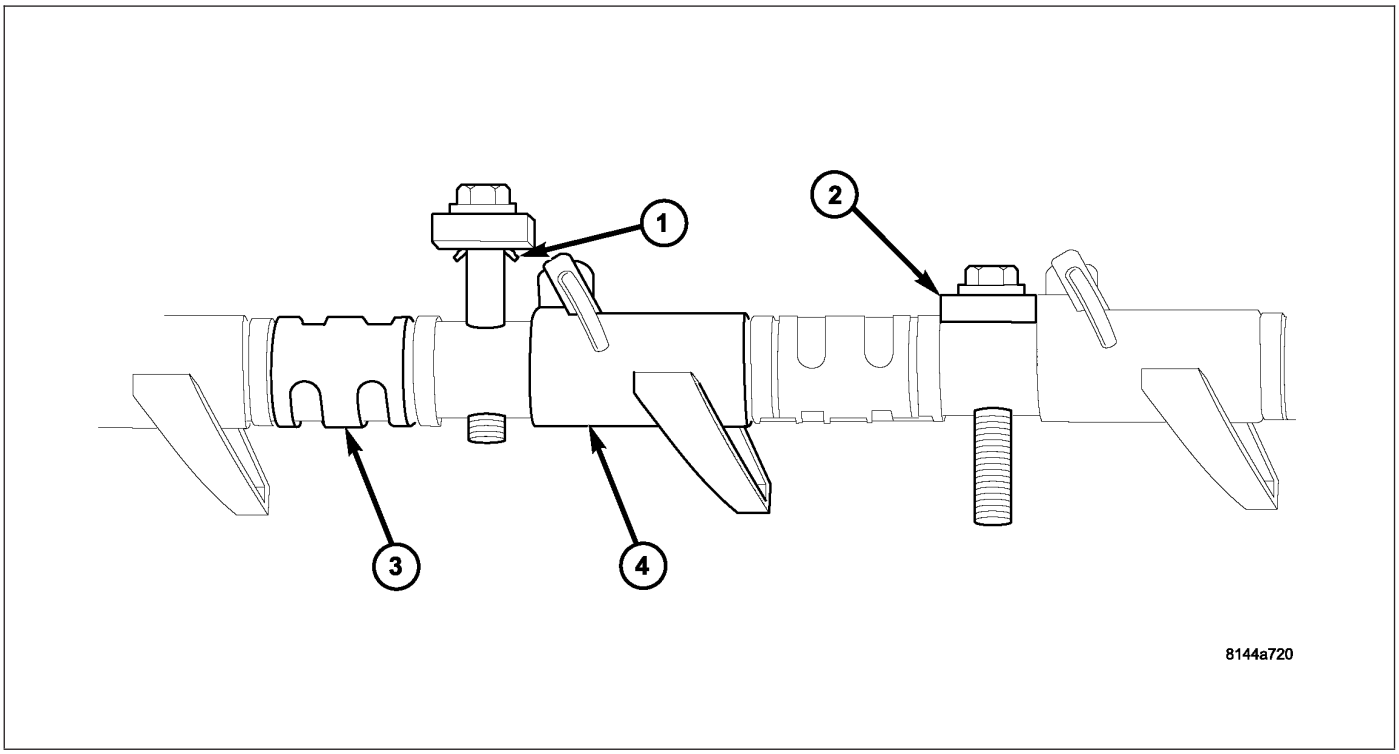

CAUTION: Ensure that retainers (2) and rocker arms (4) are not overlapped when torquing bolts.

CAUTION: Verify that pushrod is installed into rocker arm (4) and tappet correctly while installing rocker shaft assembly. Recheck after rocker shaft has been torqued to specification.

CAUTION: The rocker shaft assemblies are not interchangeable between intake and exhaust. The intake rocker arms are marked with the letter "I".

3. Install rocker shaft assemblies in the same order as removed.
4. Tighten the rocker shaft bolts to 22 N·m (195 in. lbs.) torque,using the sequence provided.

CAUTION: DO NOT rotate or crank the engine during or immediately after rocker arm installation. Allow the hydraulic roller tappets adequate time to bleed down (about 5 minutes).

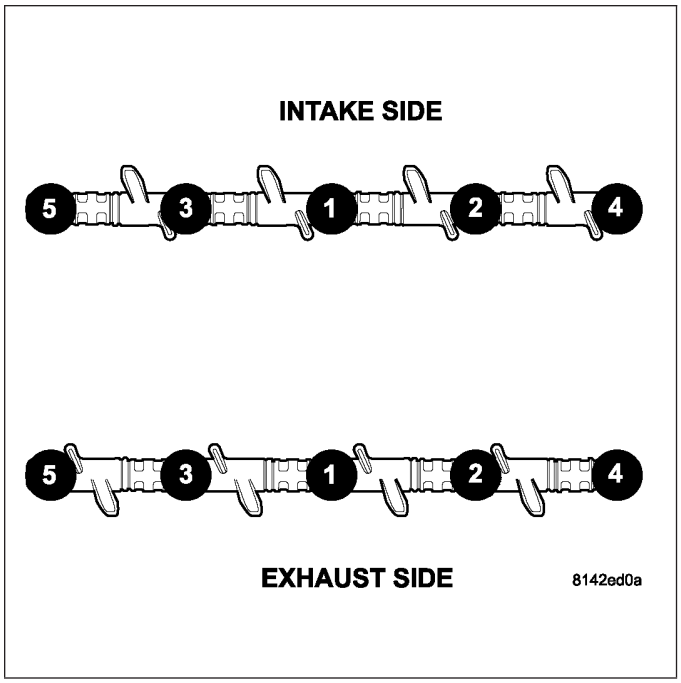

5. Remove pushrod retaining plate (1) special tool 9070.

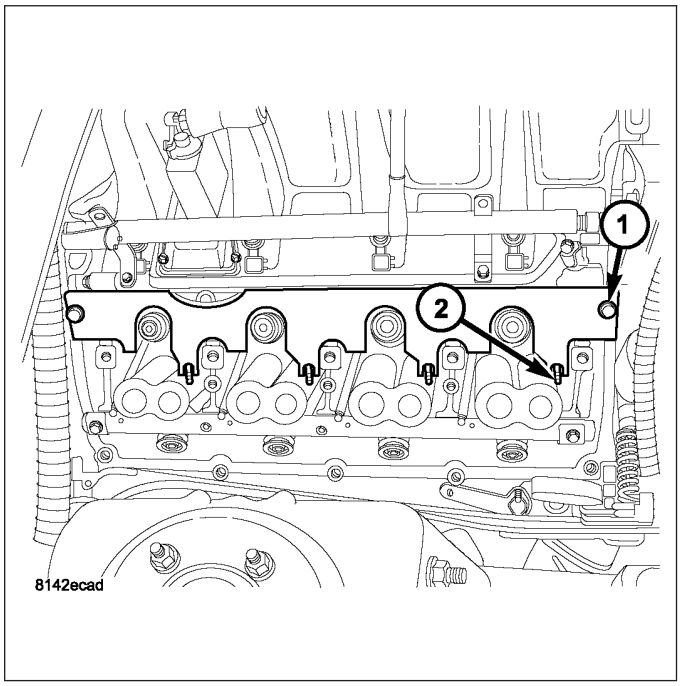

6. Install cylinder head cover (Refer to 9 - ENGINE/ CYLINDER HEAD/CYLINDER HEAD COVER(S) - INSTALLATION).

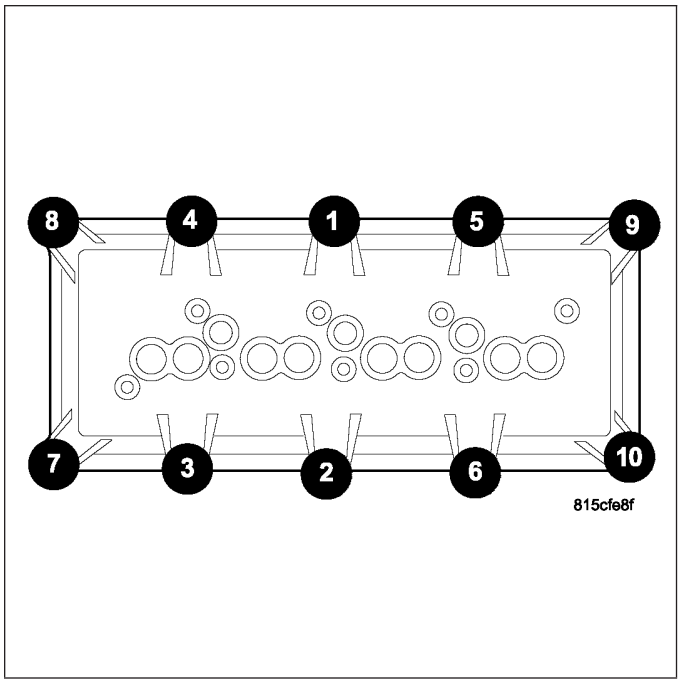

SEALS-VALVE GUIDE

DESCRIPTION

The valve guide seals are made of rubber and incorporate an integral steel valve spring seat. The integral garter spring maintains consistent lubrication control to the valve stems.

SPRINGS-VALVE

REMOVAL

1. Disconnect negative battery cable.
2. Remove air cleaner assembly.
3. Remove air intake resonator.
4. Remove ignition coil connector (1).
5. Remove ignition coils (2).
6. Remove one spark plug.

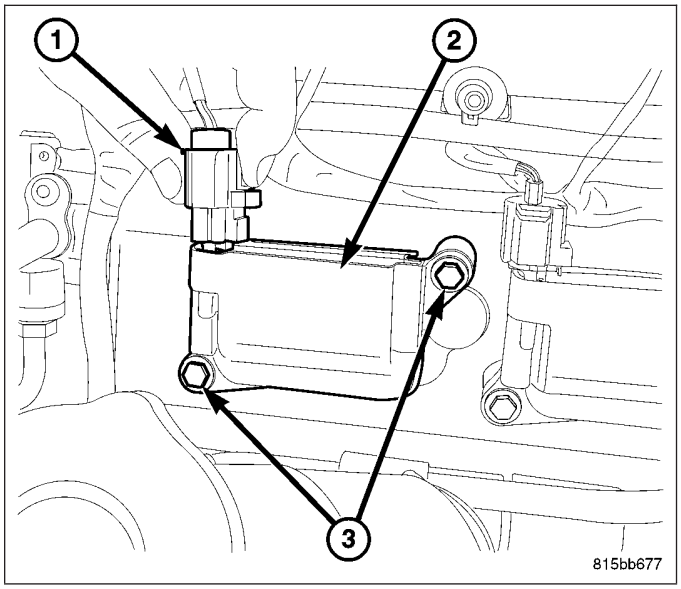

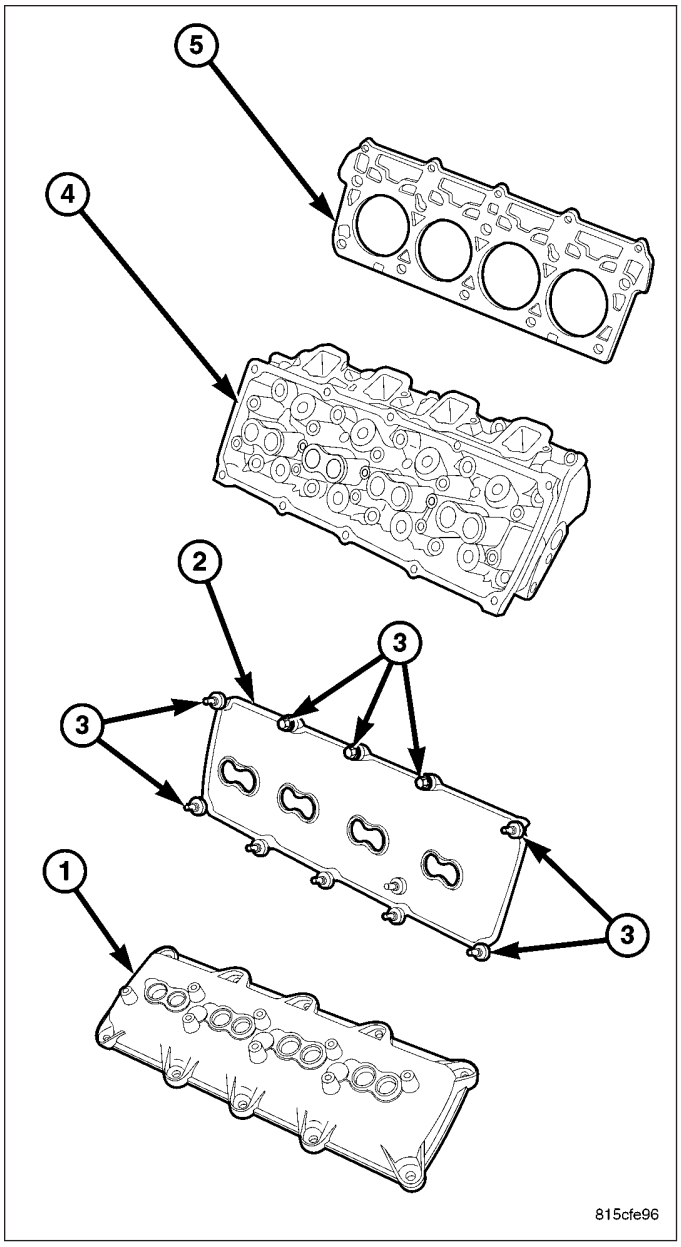
5
4
2
3
3
1
3
815cfe96

7. Remove cylinder head cover (1) using the sequence shown (Refer to 9 - ENGINE/CYLINDER HEAD/CYLINDER HEAD COVER(S) - REMOVAL).

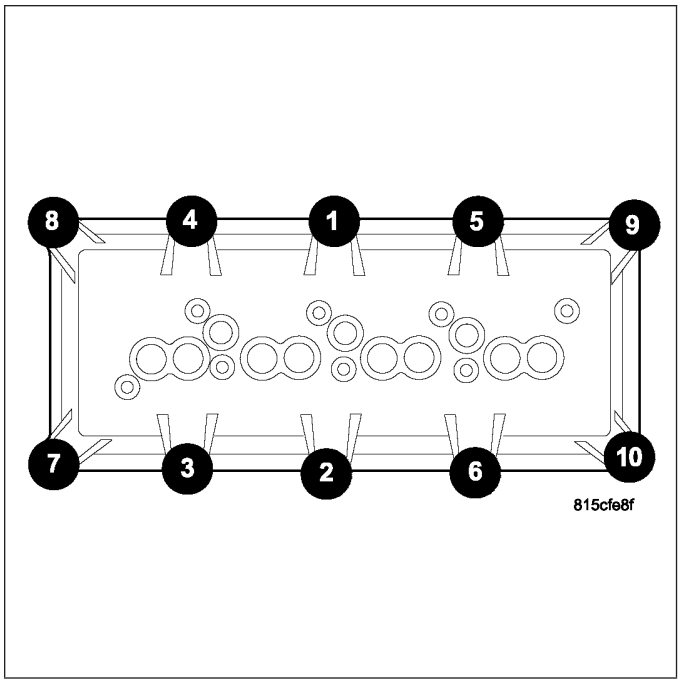

CAUTION: The piston must be at TDC, and both valves closed on the cylinder to be serviced.

NOTE: If removing intake valve spring, install special tool# 9070, pushrod retaining plate (1), to retain the intake pushrods (2).

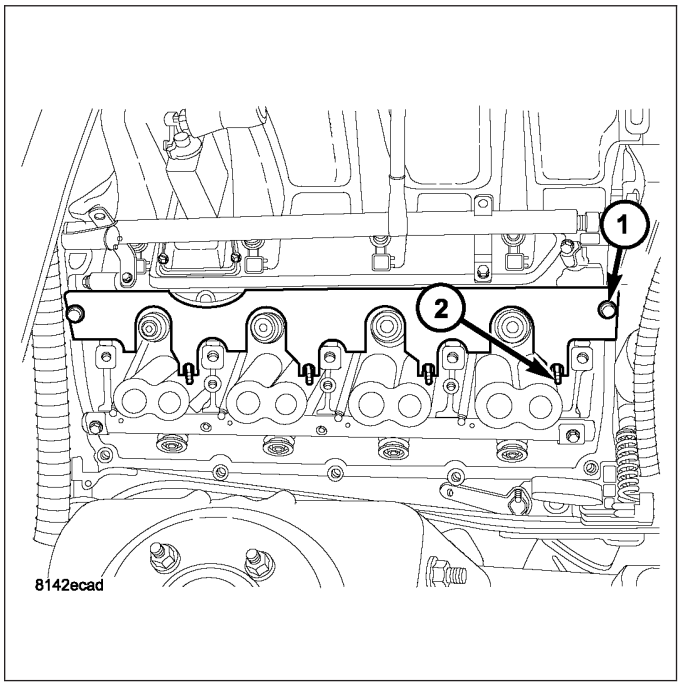

8. Remove exhaust/intake rocker arm shafts using the sequence shown.

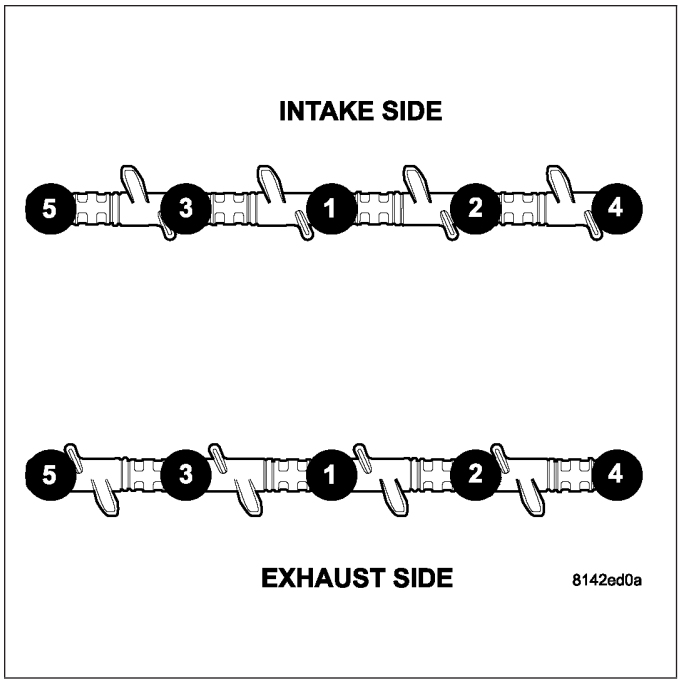

9. Install rocker arm shaft (1) special tool# 9065.

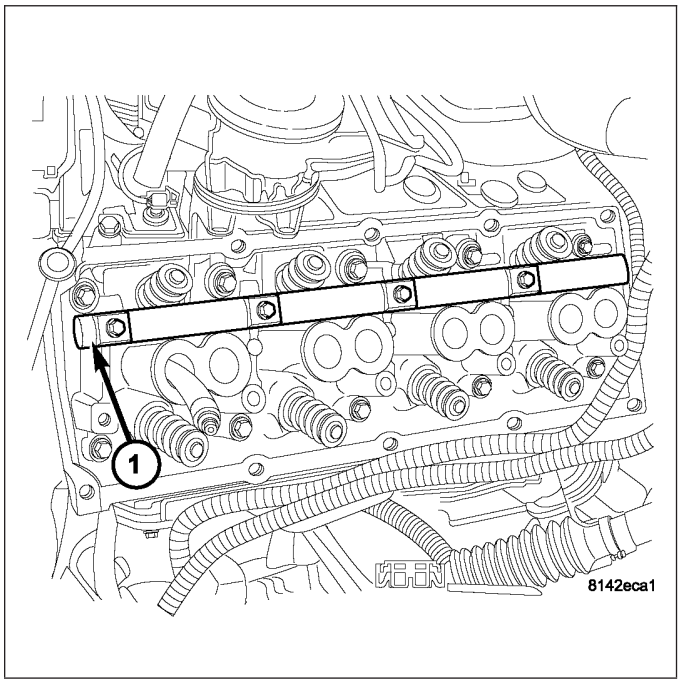

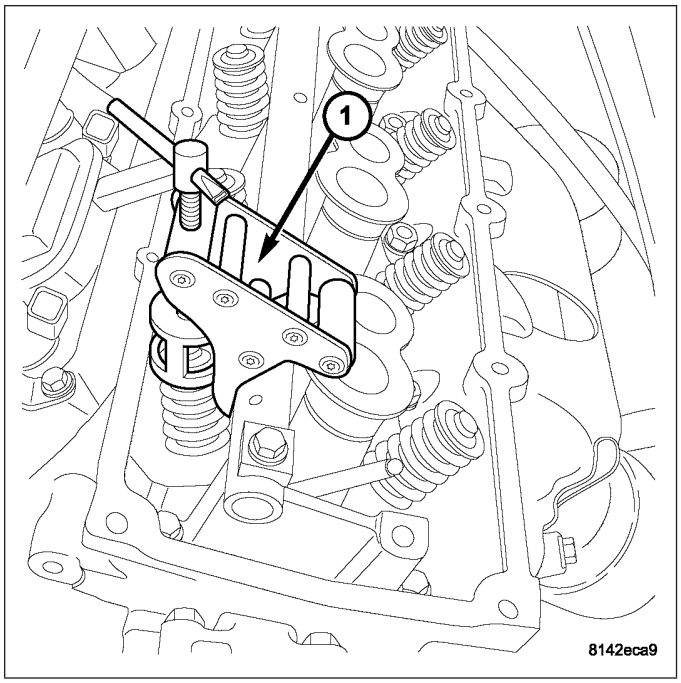
1
8142eca9

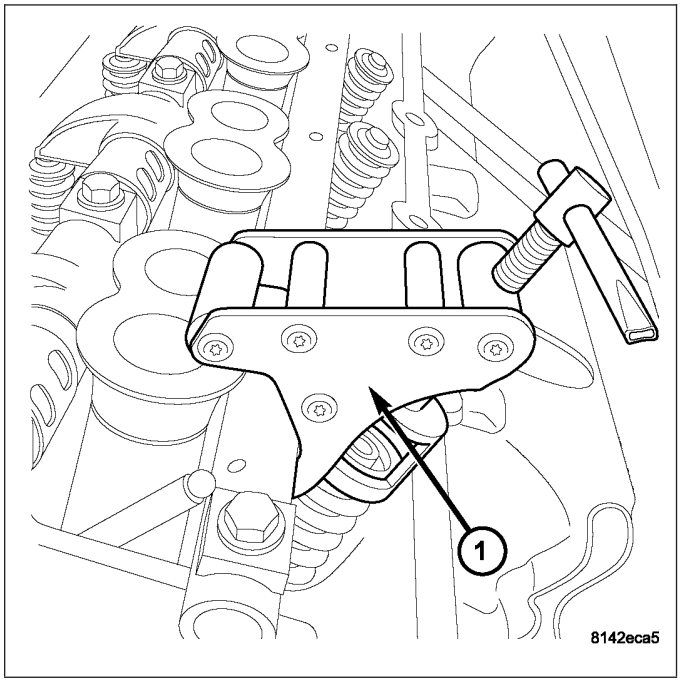
1
8142eca5

10. Install spring compressor (1,3,), special tool# 9065, and exhaust adapter arm (1) tool # 9065if needed.

NOTE: All valve springs and seals are removed in the same manner.

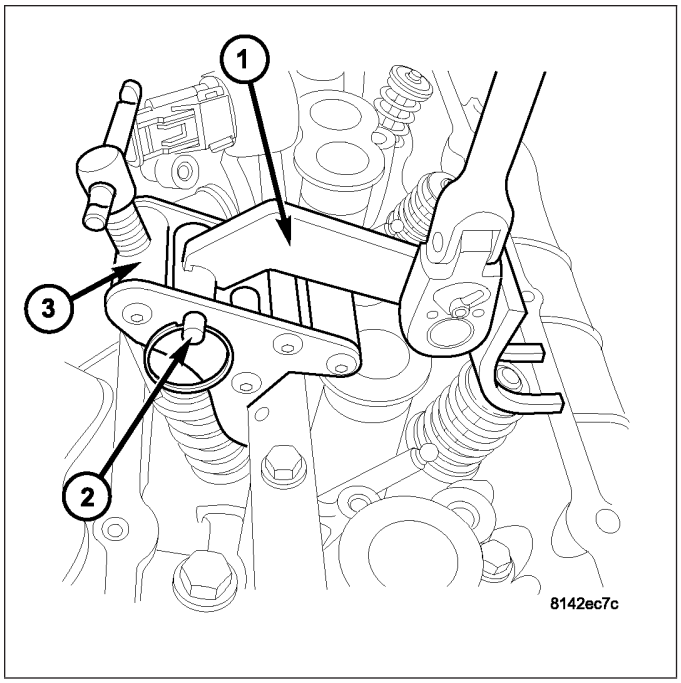

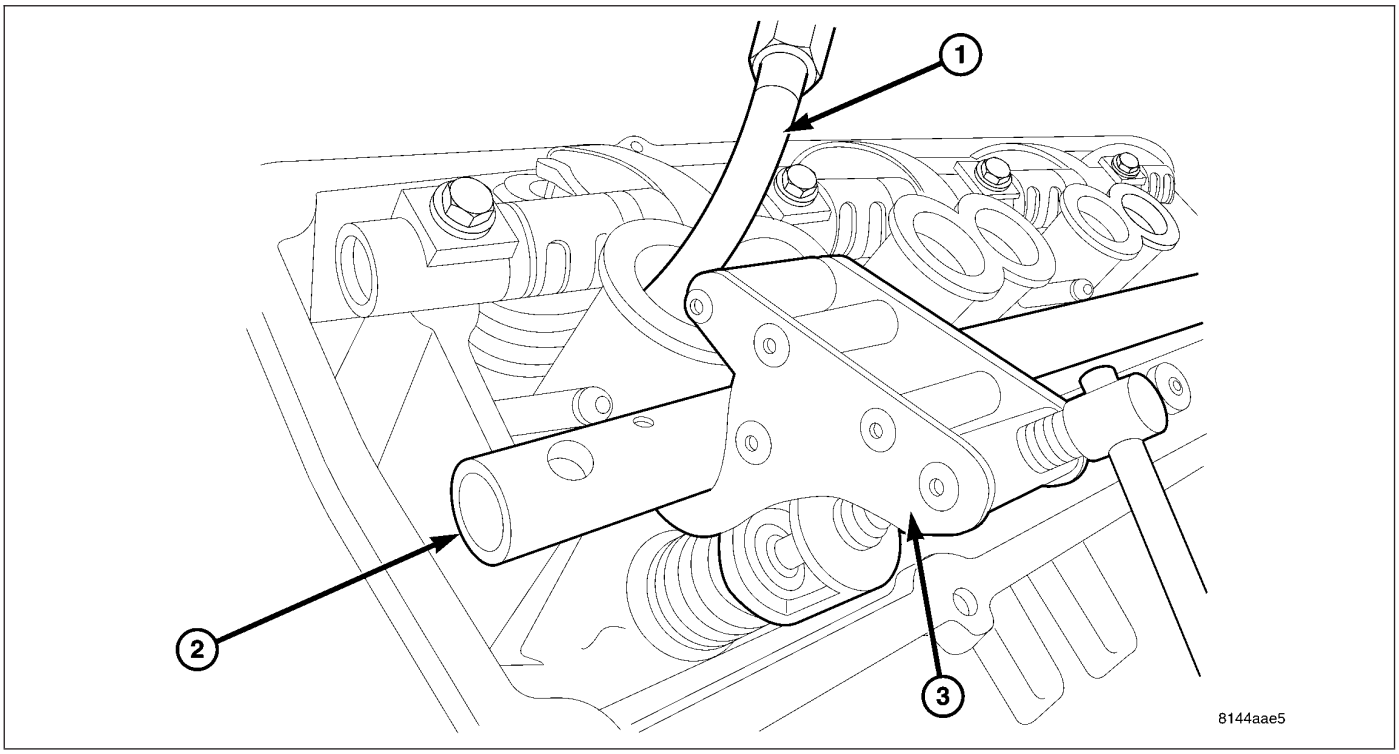

11. Insert air hose (1) into spark plug hole and charge cylinder with air.

NOTE: Tap the top of the valve spring retainer to loosen the spring retainers locks.

12. Compress valve spring with valve spring compessor (3) tool # 9065and remove valve retainer locks.
13. Release spring compressor (3) and remove valve spring.

NOTE: The valve springs are interchangeable between intake and exhaust.

14. Remove valve seal.

INSTALLATION

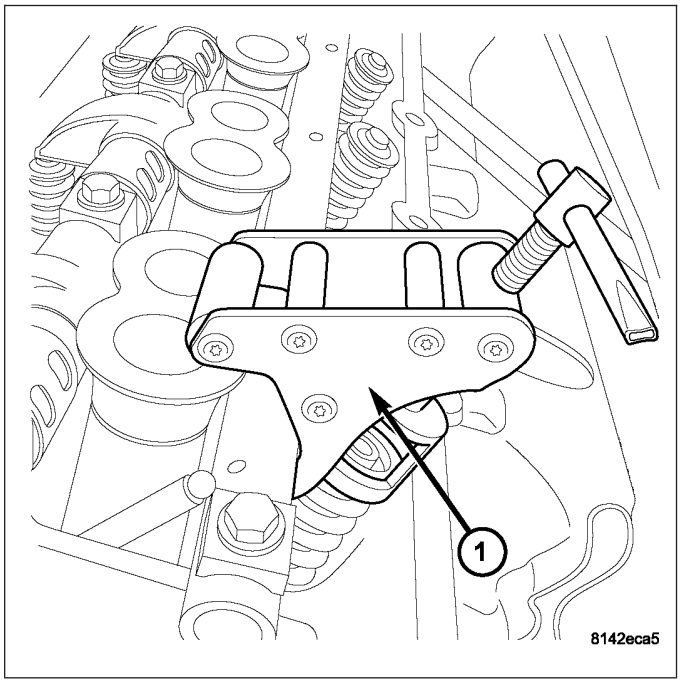

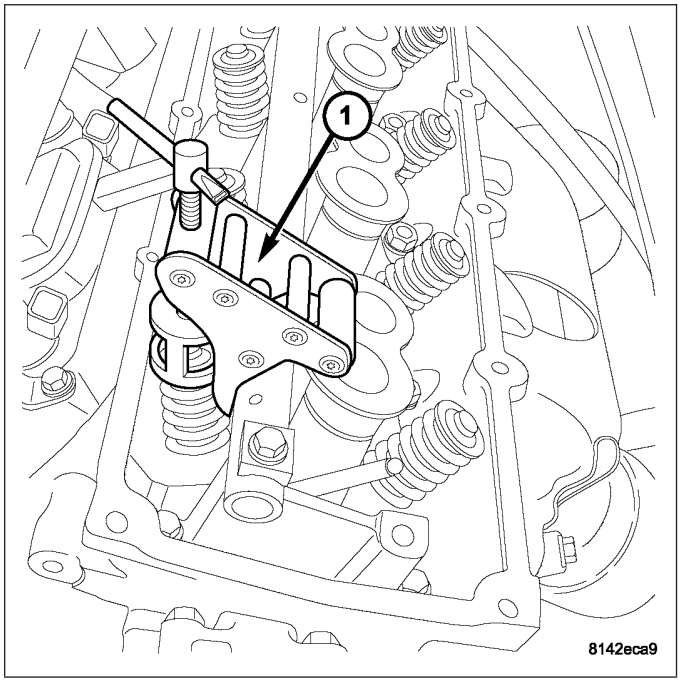

1. Install valve seal.
2. Install valve spring.
3. Using special tool# 9065 (1,3,), compress valve spring and install valve spring retainer and locks.

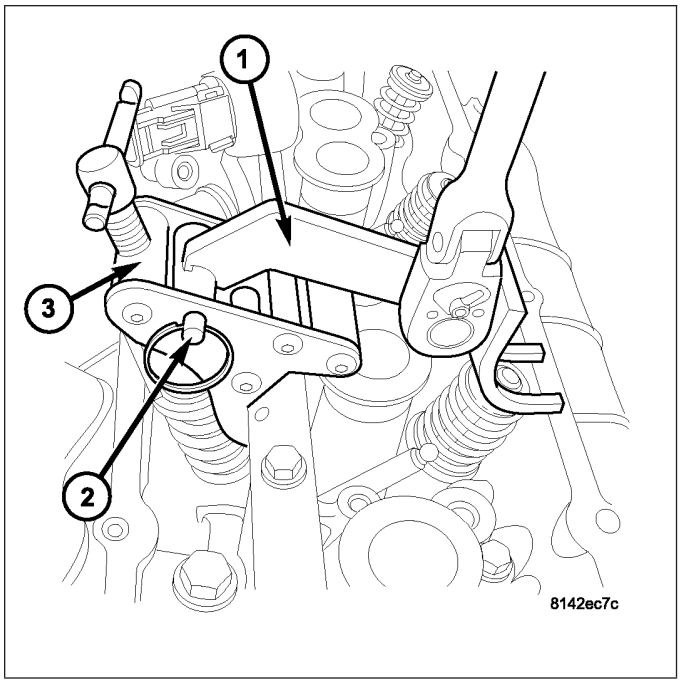

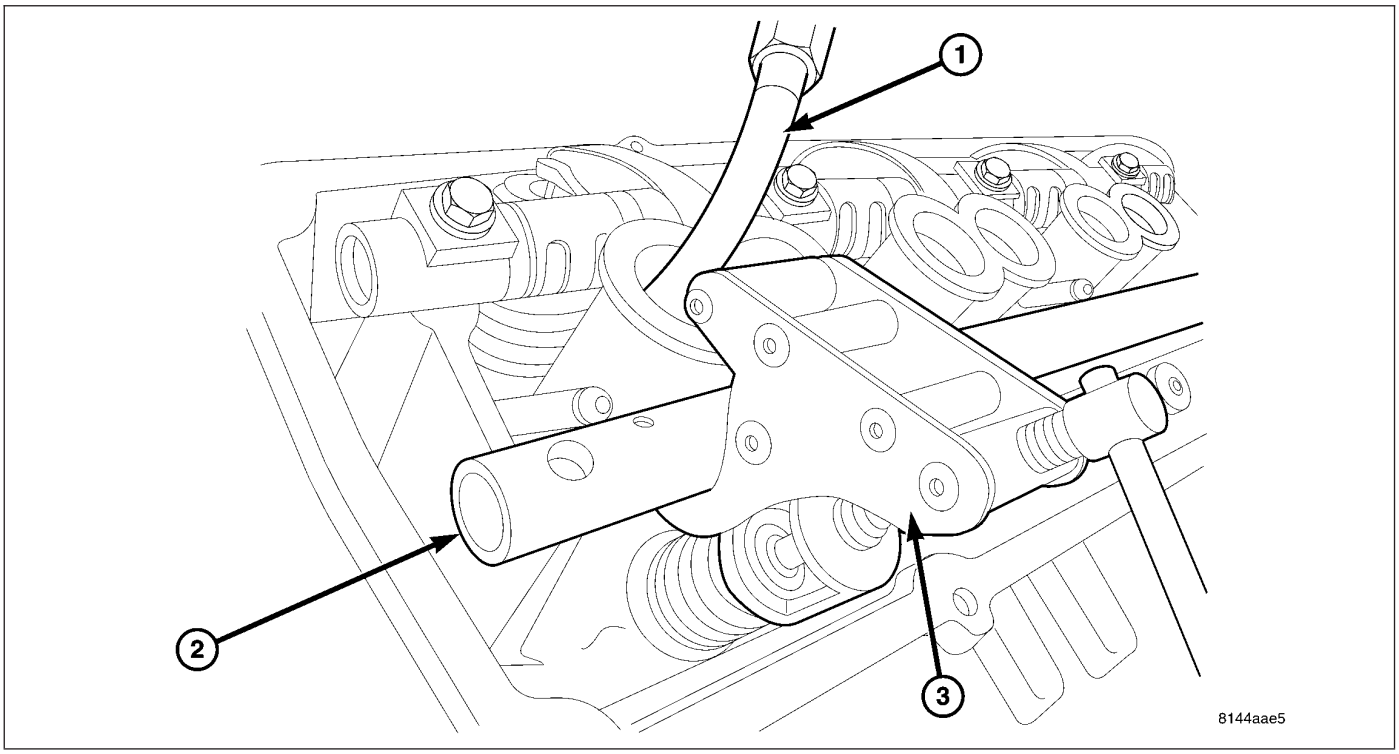

4. Release air charge in cylinder (1).
5. Remove spring compressor tool # 9065 (3).

CAUTION: Verify that the pushrods are fully seated into lifter and rocker arm. Recheck after rocker arm shaft has been torqued to specification.

6. Install rocker arm shaft and pushrods (Refer to 9 - ENGINE/CYLINDER HEAD/ROCKER ARM / ADJUSTER ASSY - INSTALLATION).
7. Tighten the rocker shaft bolts to 22 N·m (195 in. lbs.) torque, using the rocker shaft torque sequence.

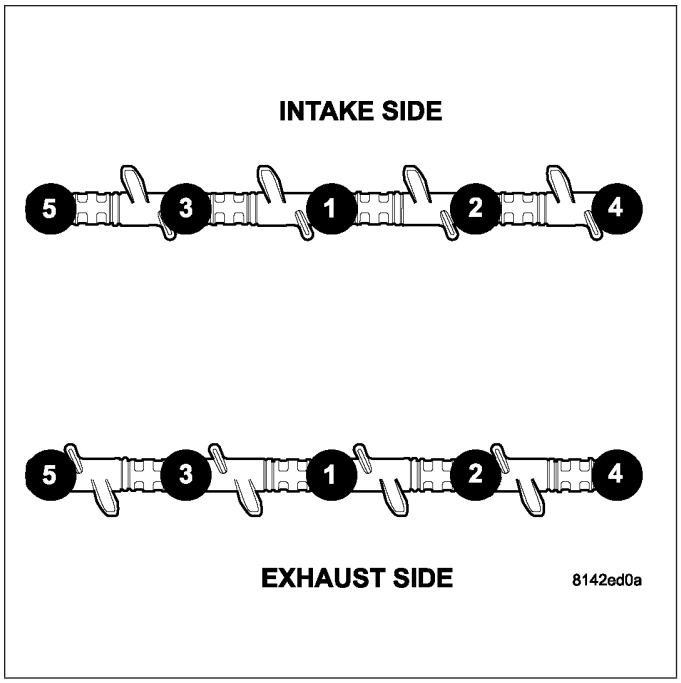

8. Remove special tool# 9070, pushrod retaining plate (1), if used.

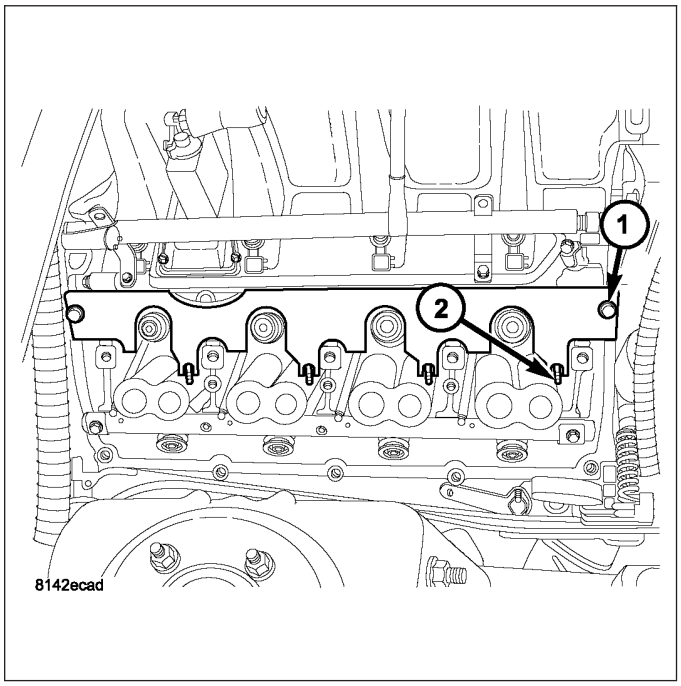

9. Install cylinder head cover (1).

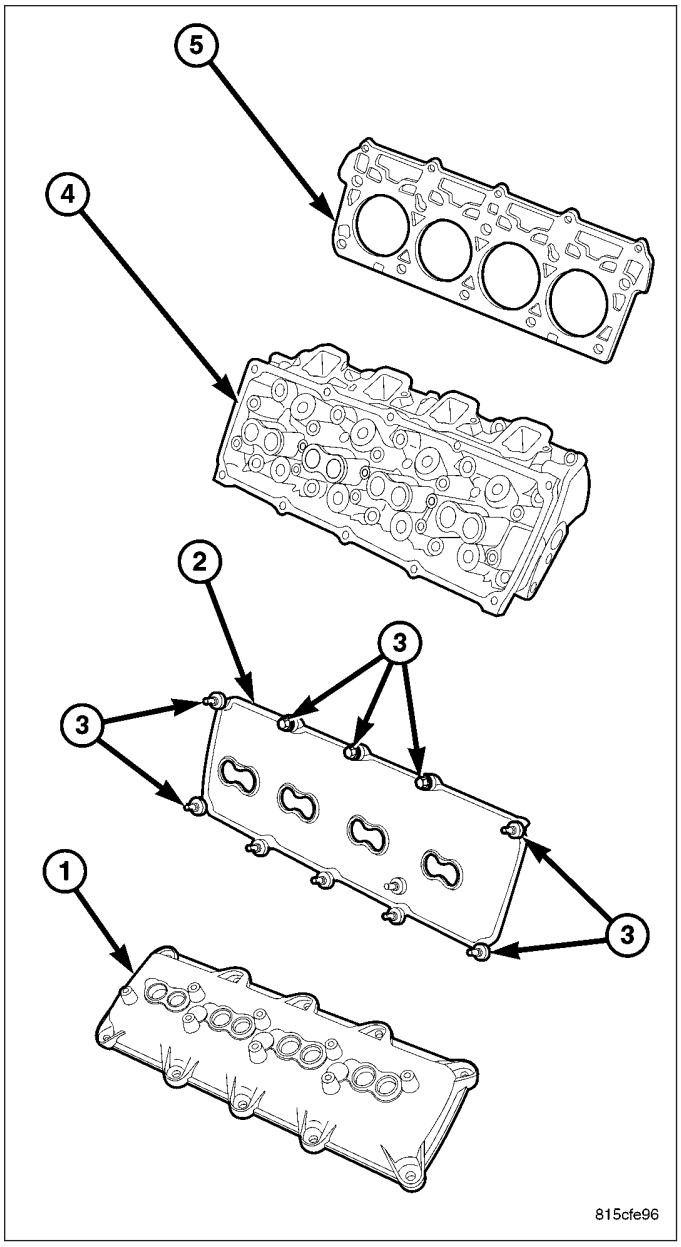

10. Tighten cylinder head cover bolts and double ended studs (Refer to 9 - ENGINE/CYLINDER HEAD/CYLINDER HEAD COVER(S) - INSTALLATION) .
11. Install spark plugs.

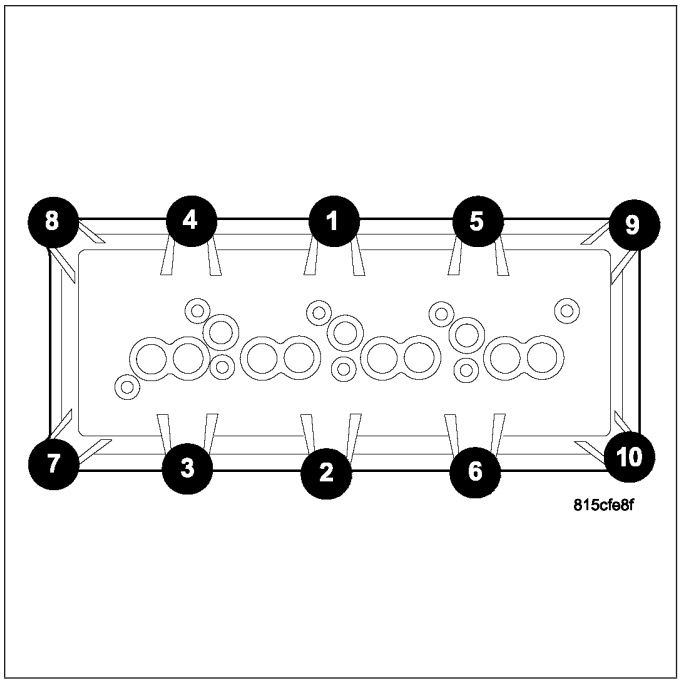

12. Install ignition coil on plug (2), and torque fasteners (3) to 7 N·m (62 in. lbs)
13. Install ignition coil connectors (4).
14. Install air intake resonator.
15. Install air cleaner assembly.
16. Connect negative battery cable.

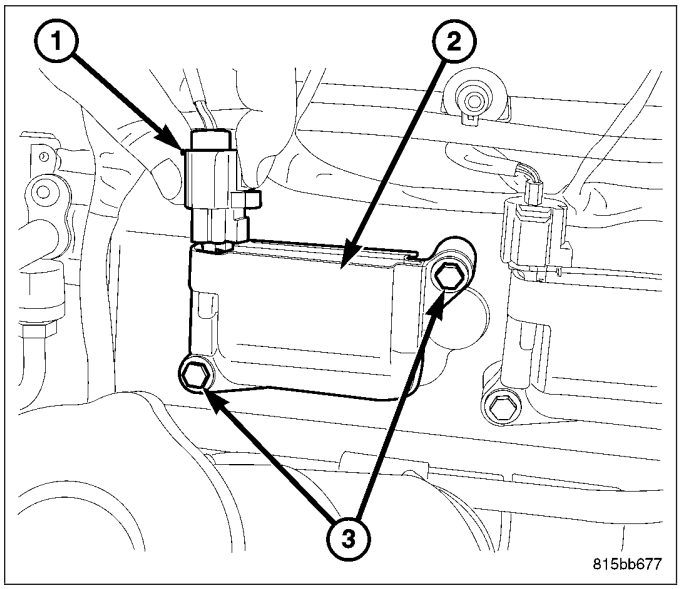

ENGINE BLOCK

CLEANING

Thoroughly clean the oil pan and engine block gasket surfaces.

Use compressed air to clean out:

- The galley at the oil filter adaptor hole.
- The front and rear oil galley holes.
- The MDS oil galley holes in the valley.
- The feed holes for the crankshaft main bearings.

Drill and tapped holes should be free of debris upon assembly.

Once the block has been completely cleaned, apply Loctite PST pipe sealant with Teflon 592 to the threads of the front and rear oil galley plugs, and coolant drain plugs. Tighten the oil galley 1/4 inch x 18 NPT plugs to 20 N·m (177 in. lbs.) torque. Tighten the coolant drain 1/4 inch x 18 NPT plugs to 34N·m (300 in. lbs.) torque. Tighten the 3/8 inch x 18 NPT plugs to 27 N·m (240 in. lbs.) torque.

INSPECTION

1. It is mandatory to use a dial bore gauge to measure each cylinder bore diameter. To correctly select the proper size piston, a cylinder bore gauge, capable of reading in 0.003 mm (.0001 in.) INCREMENTS is required. If a bore gauge is not available, do not use an inside micrometer.
2. Measure the inside diameter of the cylinder bore at three levels below top of bore. Start perpendicular (across or at 90 degrees) to the axis of the crankshaft and then take two additional reading.
3. Measure the cylinder bore diameter crosswise to the cylinder block near the top of the bore. Repeat the measurement near the middle of the bore, then repeat the measurement near the bottom of the bore.
4. Determine taper by subtracting the smaller diameter from the larger diameter.
5. Rotate measuring device 90° and repeat steps above.
6. Determine out-of-roundness by comparing the difference between each measurement.

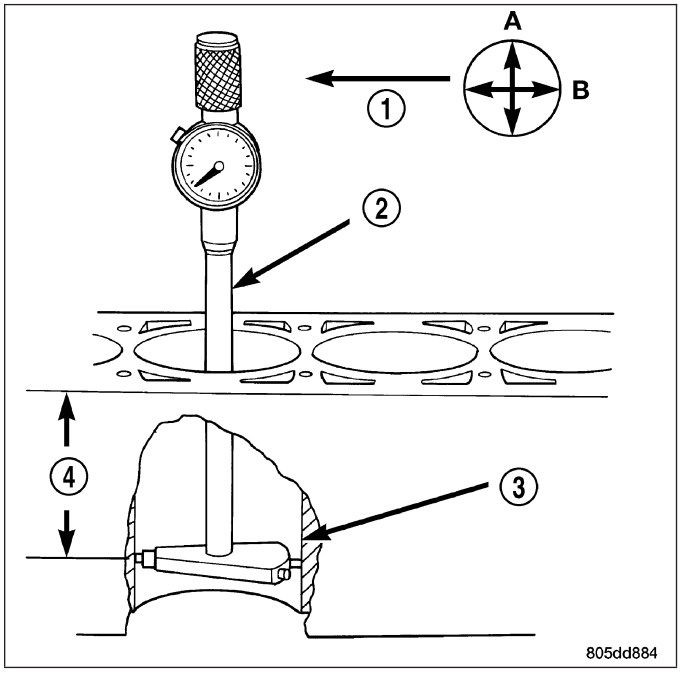

7. If cylinder bore taper does not exceed 0.025 mm (0.001 inch) and out-of-roundness does not exceed 0.015 mm (0.0006 inch), the cylinder bore can be honed. If the cylinder bore taper or out- of-round condition exceeds these maximum limits, the cylinder block must be replaced. A slight amount of taper always exists in the cylinder bore after the engine has been in use for a period of time.

CAMSHAFT

REMOVAL

REMOVAL - CAMSHAFT CORE HOLE PLUG

CAUTION: Do not damage the rear surface of the camshaft or the core plug sealing surface, when removing the core plug.

1. Remove the rear cam bearing core plug.

REMOVAL - CAMSHAFT

1. Remove the battery negative cable.
2. Remove the air cleaner assembly. (Refer to 9 - ENGINE/AIR INTAKE SYSTEM - REMOVAL)
3. Drain coolant. (Refer to 7 - COOLING - STANDARD PROCEDURE)
4. Remove the accessory drive belt. (Refer to 7 - COOLING/ACCESSORY DRIVE/DRIVE BELTS - REMOVAL)
5. Remove the generator.
6. Remove the A/C compressor, and set aside.
7. Remove the radiator (Refer to 7 - COOLING/ENGINE/RADIATOR - REMOVAL).
8. Remove intake manifold (Refer to 9 - ENGINE/MANIFOLDS/INTAKE MANIFOLD - REMOVAL).
9. Remove cylinder head covers (Refer to 9 - ENGINE/CYLINDER HEAD/CYLINDER HEAD COVER(S) - REMOVAL).

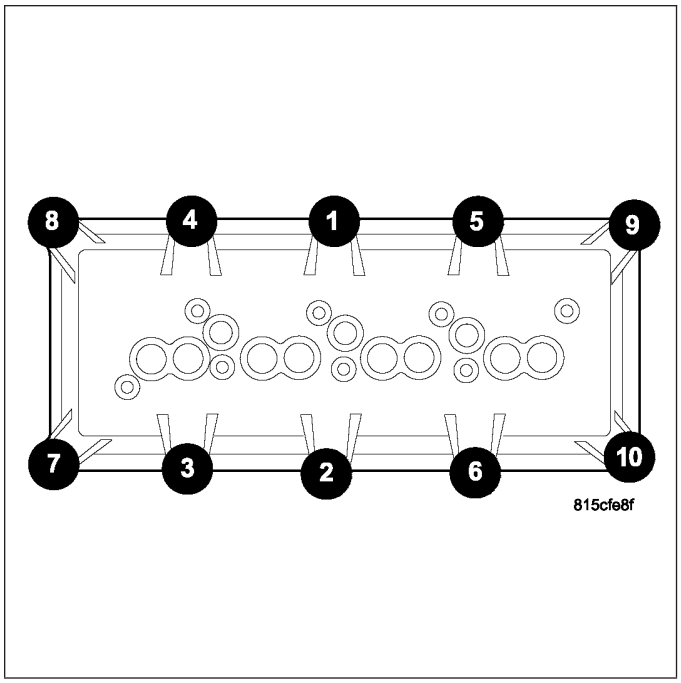

10. Remove both left and right cylinder heads (4) (Refer to 9 - ENGINE/CYLINDER HEAD - REMOVAL).
11. Remove the oil pan (Refer to 9 - ENGINE/LUBRICATION/OIL PAN - REMOVAL).

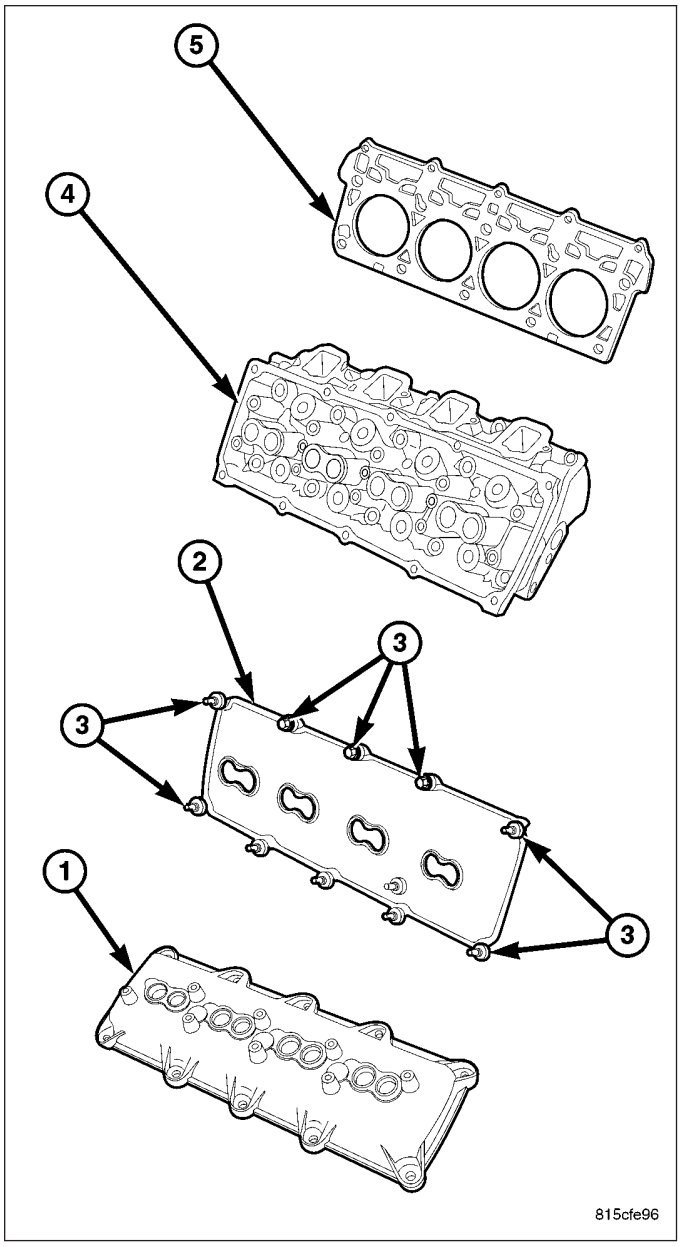

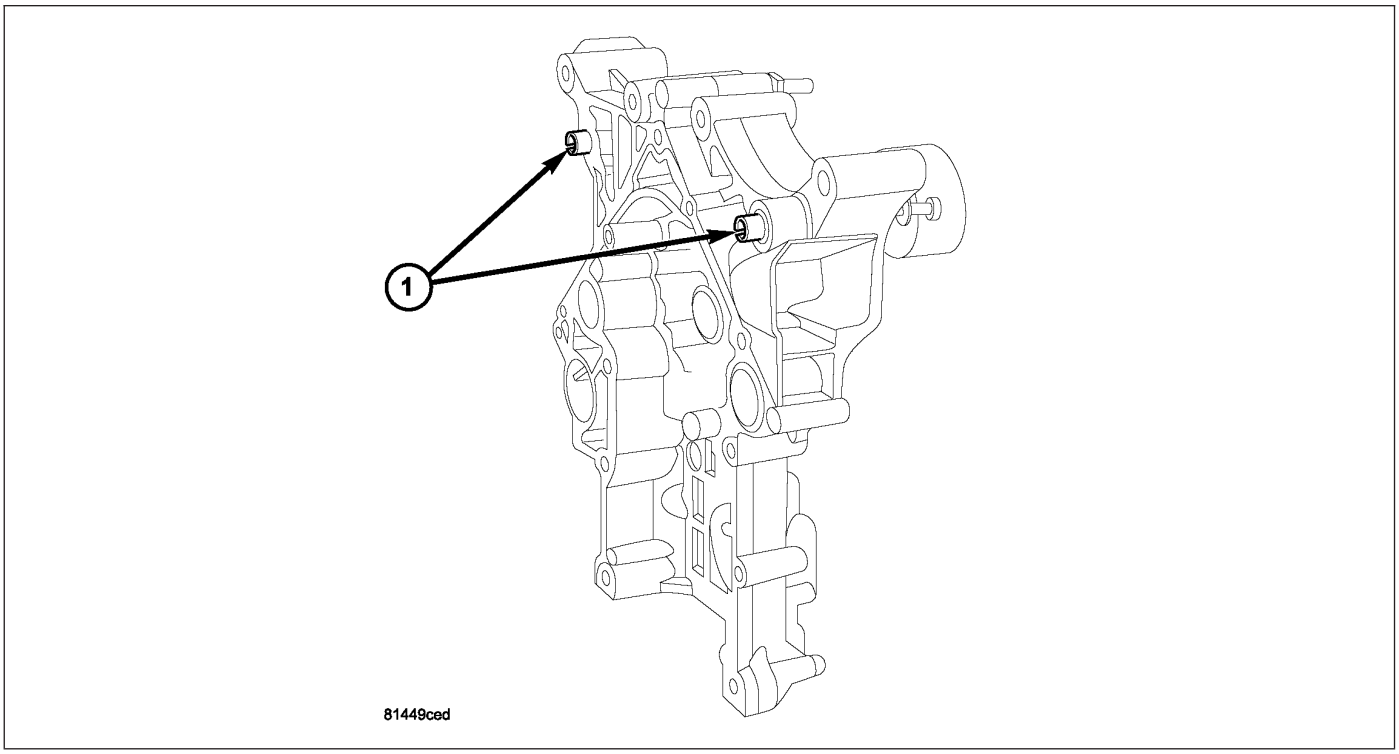

12. Remove timing case cover (1) (Refer to 9 - ENGINE/VALVE TIMING/TIMING BELT / CHAIN COVER(S) - REMOVAL).
13. Remove the oil pick up tube.

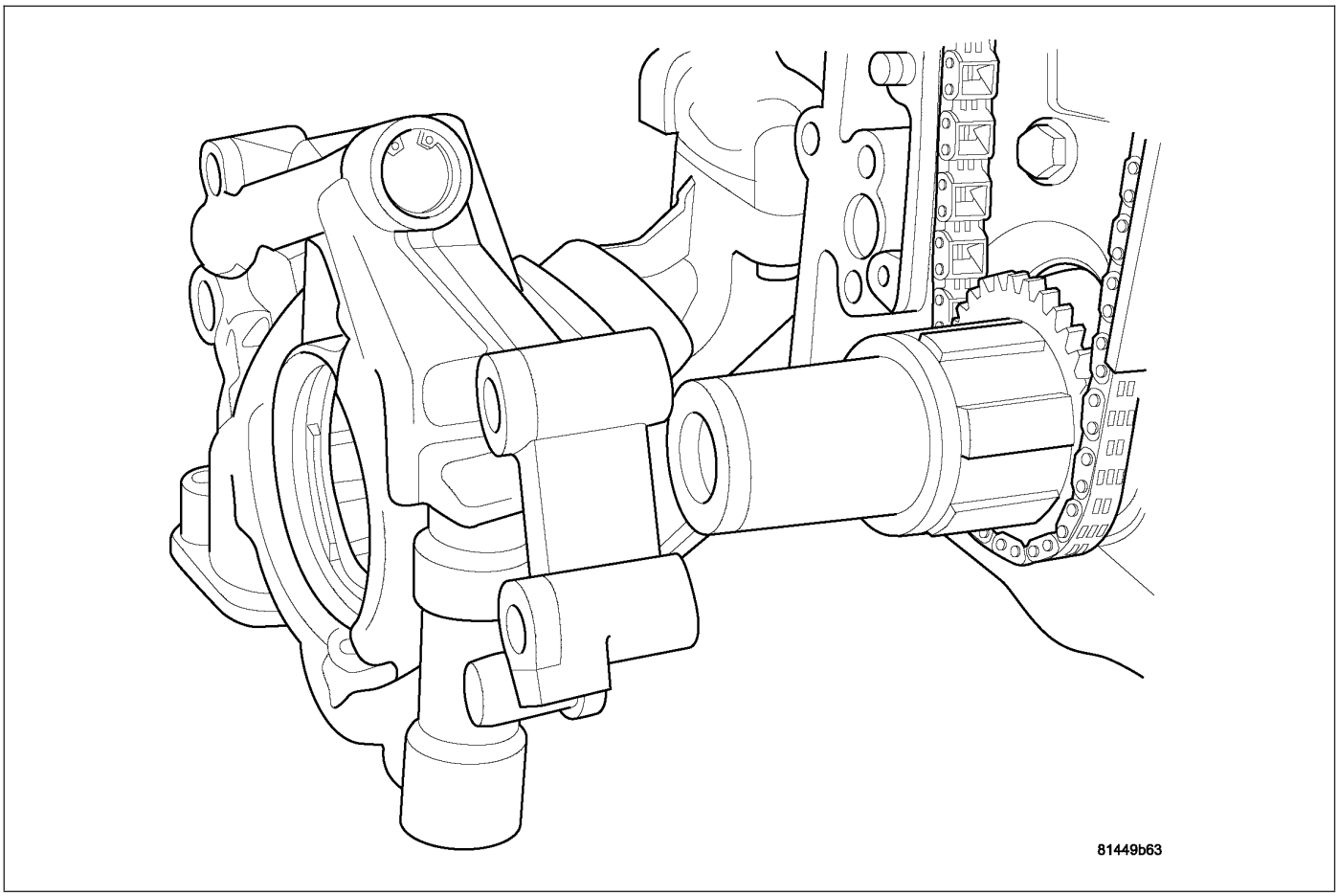

14. Remove the oil pump (Refer to 9 - ENGINE/LUBRICATION/OIL PUMP - REMOVAL).

15. Remove timing chain (2) (Refer to 9 - ENGINE/ VALVE TIMING/TIMING BELT/CHAIN AND SPROCKETS - REMOVAL).
16. Remove camshaft tensioner/thrust plate assembly.

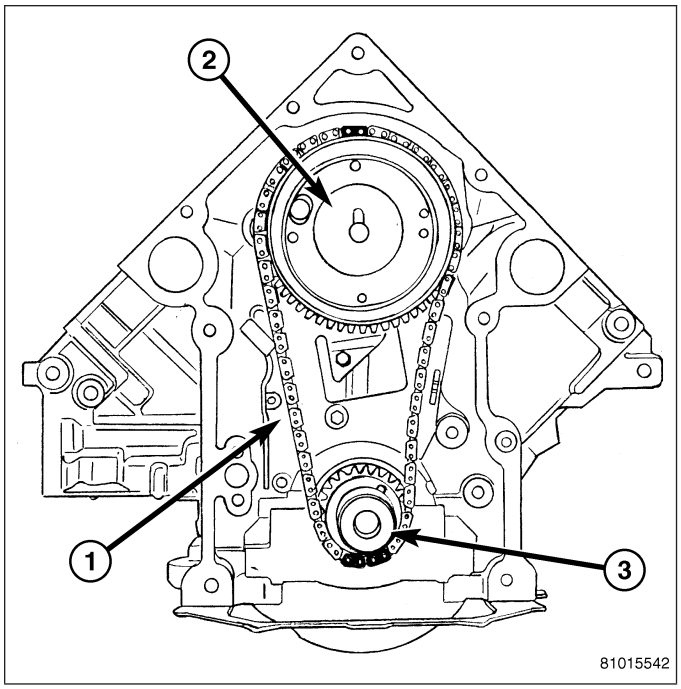

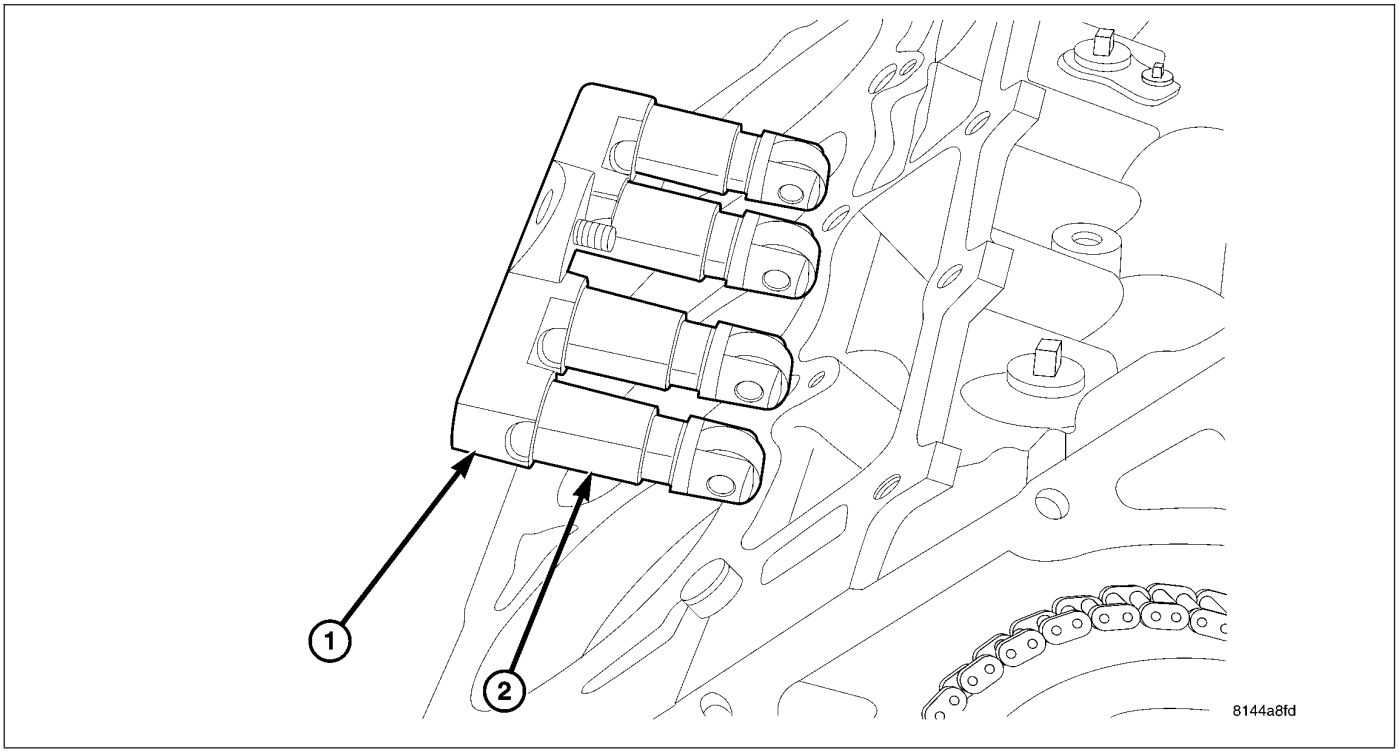

NOTE: Identify lifters to ensure installation in original location.

17. Remove the tappets (2) and retainer (1) assembly.

18. Install a long bolt into front of camshaft to aid in removal of the camshaft. Remove camshaft, being careful not to damage cam bearings with the cam lobes.

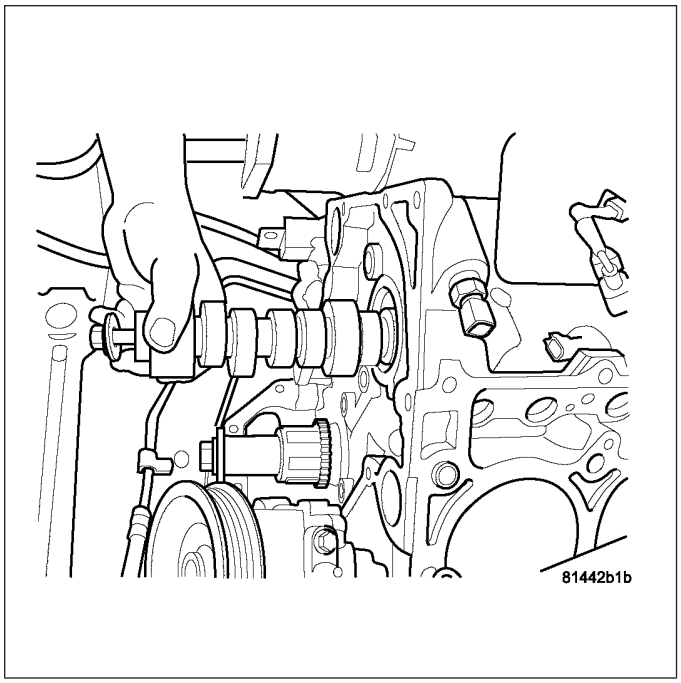

INSPECTION

1. The cam bearings are not serviceable. Do not attempt to replace cam bearings for any reason.

INSTALLATION

CAMSHAFT CORE HOLE PLUG

1. Clean core hole in block.

NOTE: Do not apply adhesive to the new core hole plug. A new plug will have adhesive pre-applied.

2. Install a new core hole plug at the rear of camshaft, using suitable flat faced tool. The plug must be fully seated on the cylinder block shoulder.

INSTALLATION - CAMSHAFT

CAUTION: The 5.7L LX engine uses a unique camshaft for use with the Multi Displacement System. When installing a new camshaft, the replacement camshaft must be compatible with the Multi Displacement System.

1. Lubricate camshaft lobes and camshaft bearing journals and insert the camshaft.

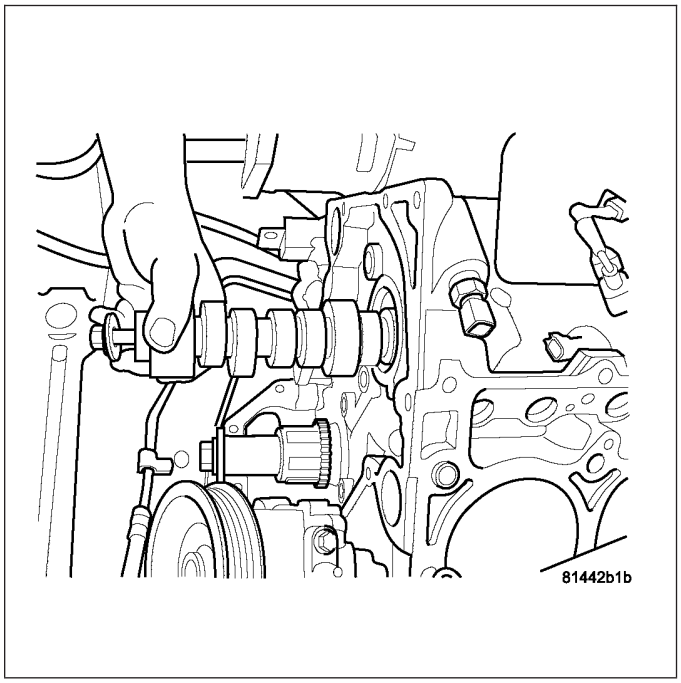

2. Install camshaft Tensioner plate assembly. Tighten bolts to 28 N·m (250 in. lbs.) torque.
3. Install timing chain and sprockets (Refer to 9 - ENGINE/VALVE TIMING/TIMING BELT/CHAIN AND SPROCKETS - INSTALLATION).
4. Measure camshaft end play (Refer to 9 - ENGINE - SPECIFICATIONS). If not within limits install a new thrust plate.

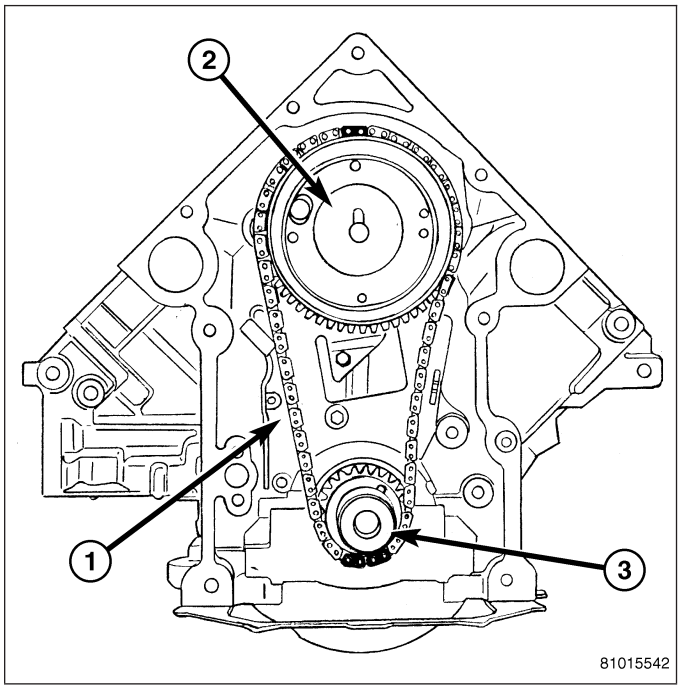

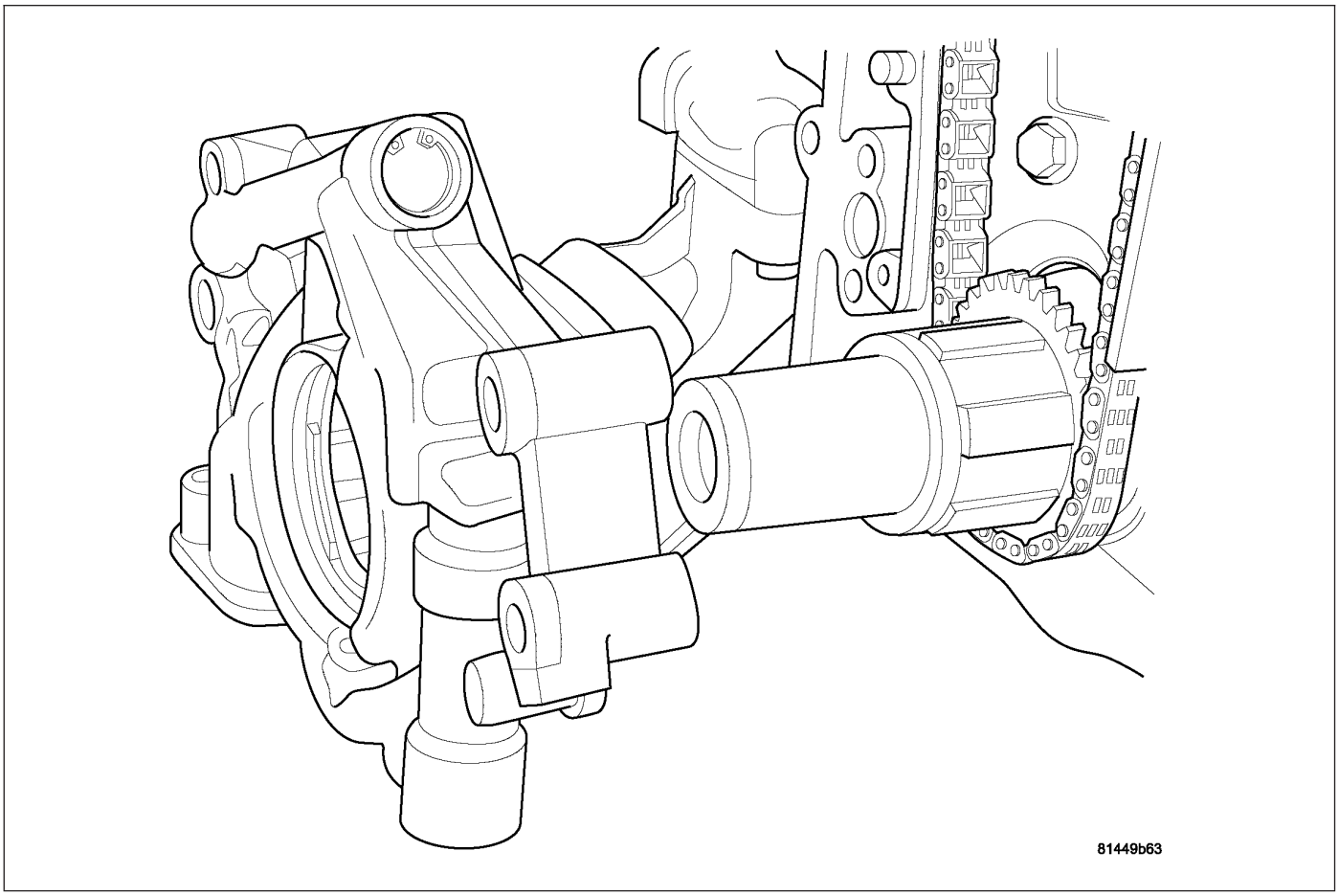

5. Install the oil pump (Refer to 9 - ENGINE/LUBRICATION/OIL PUMP - INSTALLATION).
6. Install the oil pick up tube.

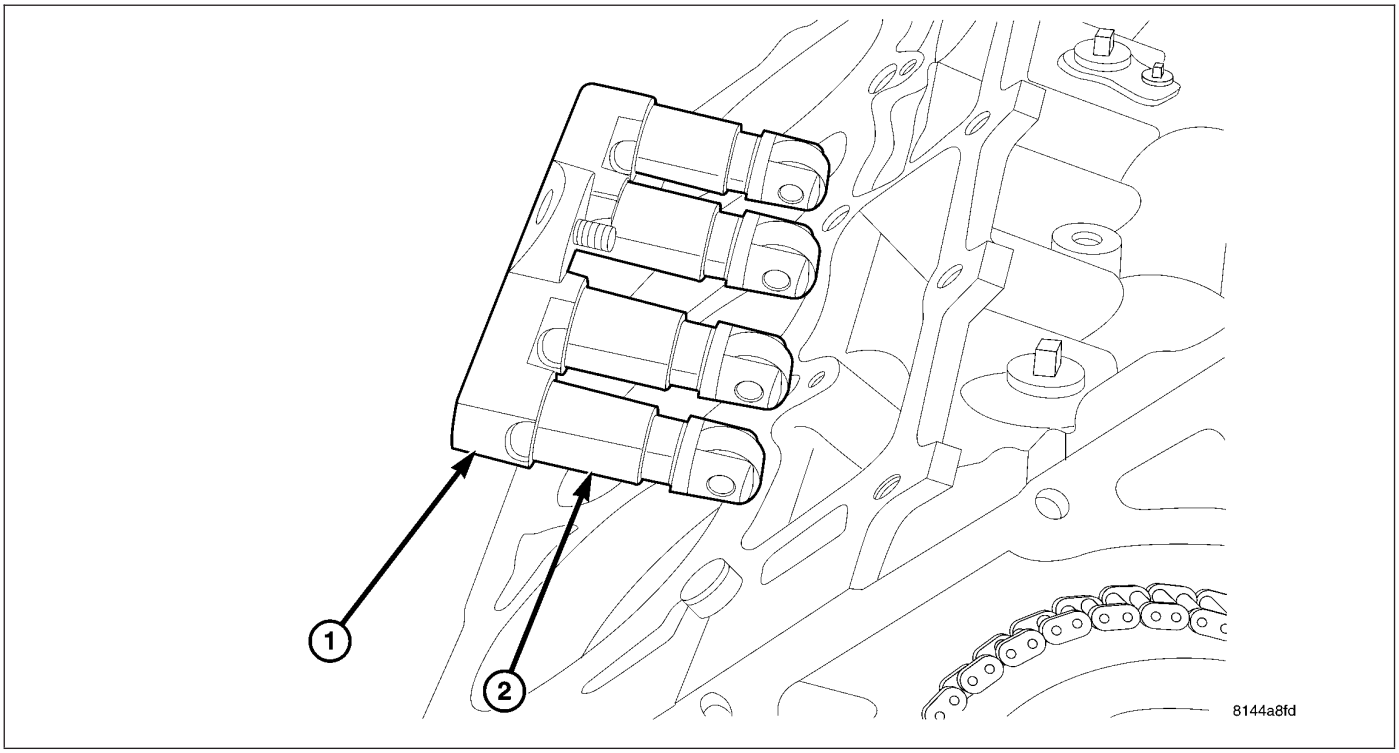

7. Each tappet reused must be installed in the same position from which it was removed. **When camshaft is replaced, all of the tappets must be replaced.**

CAUTION: The 5.7L LX engine uses both standard roller tappets and deactivating roller tappets, for use with the Multi Displacement System. The deactivating roller tappets must be used in cylinders 1,4,6,7. The deactivating tappets can be identified by the two holes in the side of the tappet body, for the latching pins.

8. Install tappets (2) and retaining yoke assembly (1). (Refer to 9 - ENGINE/ENGINE BLOCK/HYDRAULIC LIFTERS (CAM IN BLOCK) - INSTALLATION).
9. Install both left and right cylinder heads (4) (Refer to 9 - ENGINE/CYLINDER HEAD - INSTALLATION).
10. Install pushrods.

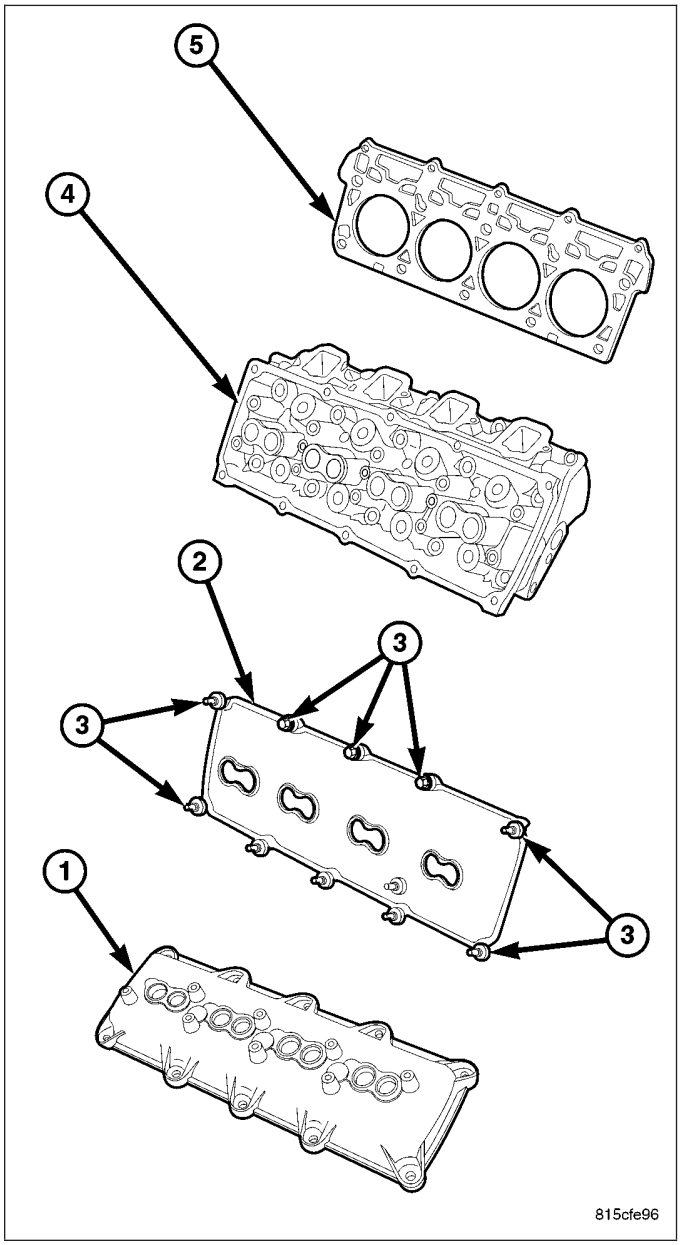

11. Install rocker arms (Refer to 9 - ENGINE/CYLINDER HEAD/ROCKER ARM / ADJUSTER ASSY - INSTALLATION).

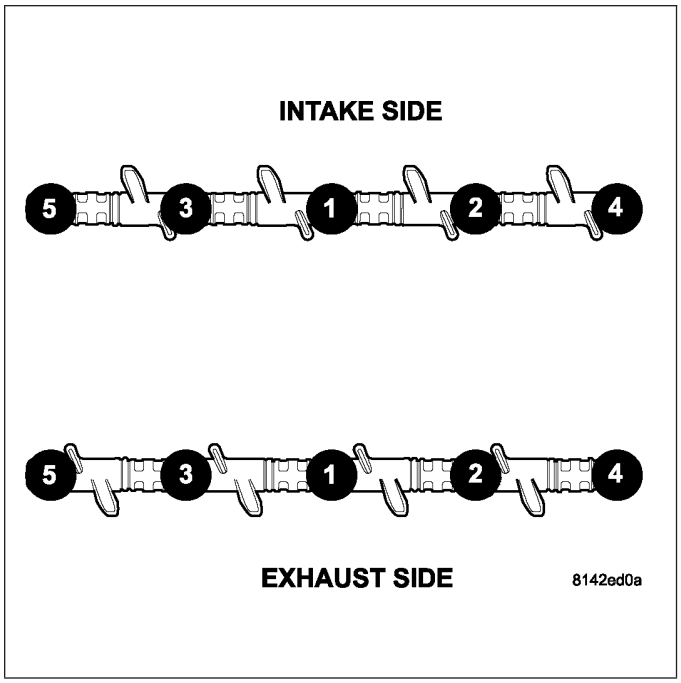

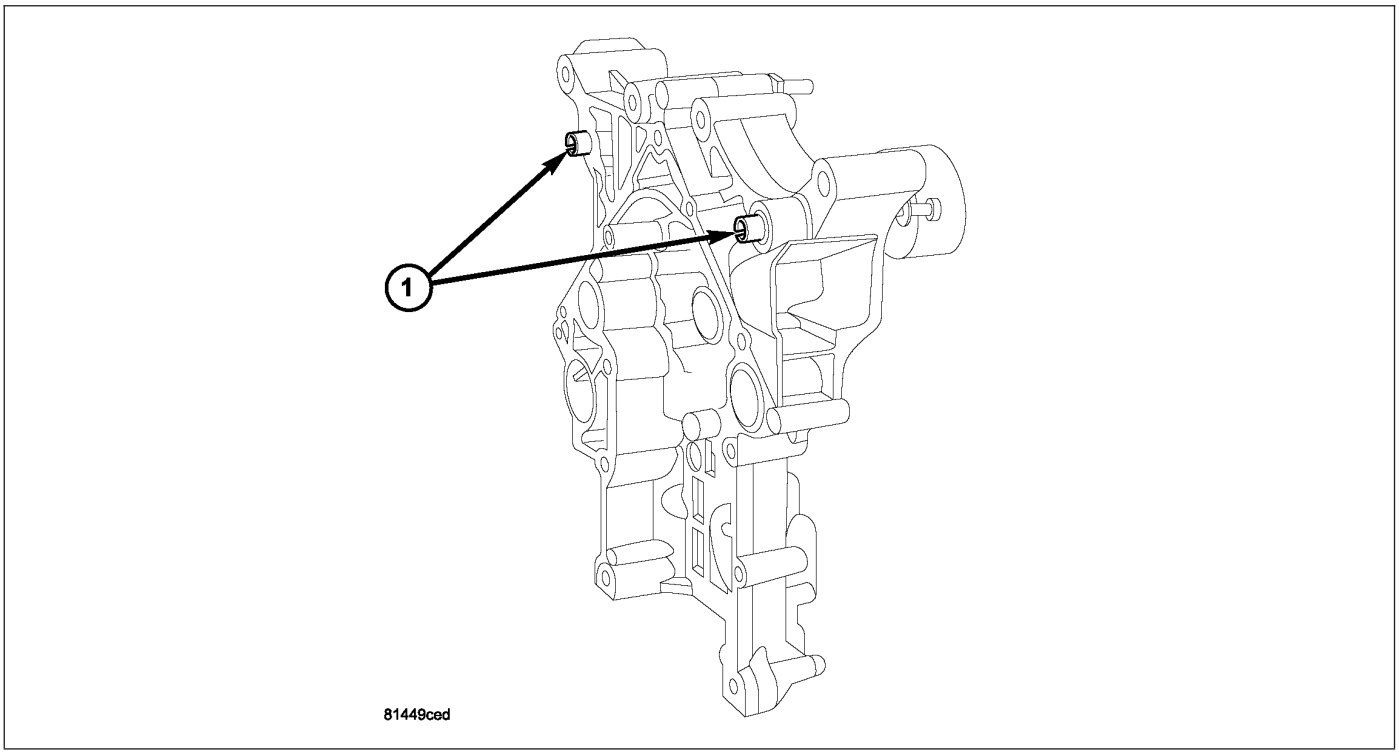

12. Install timing case cover (Refer to 9 - ENGINE/VALVE TIMING/TIMING BELT / CHAIN COVER(S) - INSTALLATION).
13. Install the oil pan (Refer to 9 - ENGINE/LUBRICATION/OIL PAN - INSTALLATION).

14. Install cylinder head covers (Refer to 9 - ENGINE/CYLINDER HEAD/CYLINDER HEAD COVER(S) - INSTALLATION).
15. Install intake manifold (Refer to 9 - ENGINE/MANIFOLDS/INTAKE MANIFOLD - INSTALLATION).
16. Install the A/C compressor.
17. Install the generator.
18. Install the accessory drive belt. (Refer to 7 - COOLING/ACCESSORY DRIVE/DRIVE BELTS - INSTALLATION)
19. Install the radiator (Refer to 7 - COOLING/ENGINE/RADIATOR - INSTALLATION).
20. Install the air cleaner assembly. (Refer to 9 - ENGINE/AIR INTAKE SYSTEM - INSTALLATION)
21. Install the battery negative cable.
22. Refill coolant. (Refer to 7 - COOLING - STANDARD PROCEDURE)
23. Refill engine oil.
24. Start engine and check for leaks.

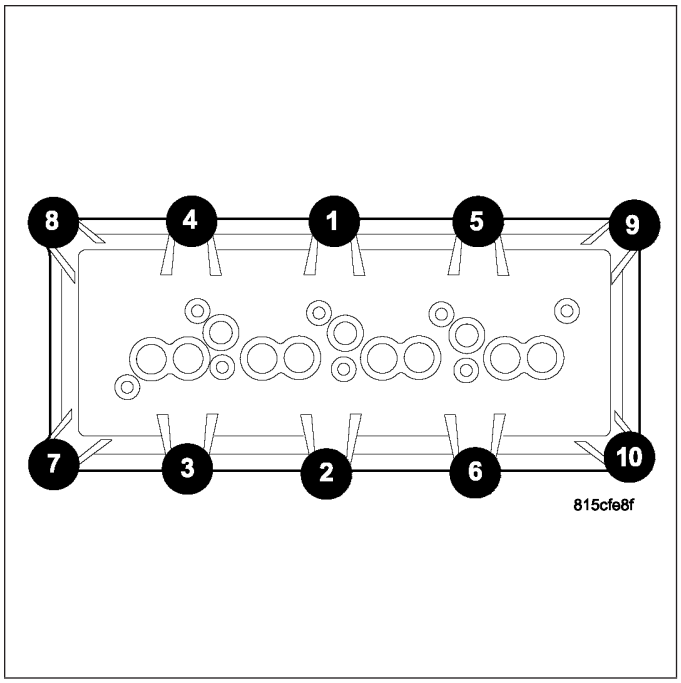

CRANKSHAFT

REMOVAL

1. Remove the vibration damper (1) (Refer to 9 - ENGINE/ENGINE BLOCK/VIBRATION DAMPER - REMOVAL).

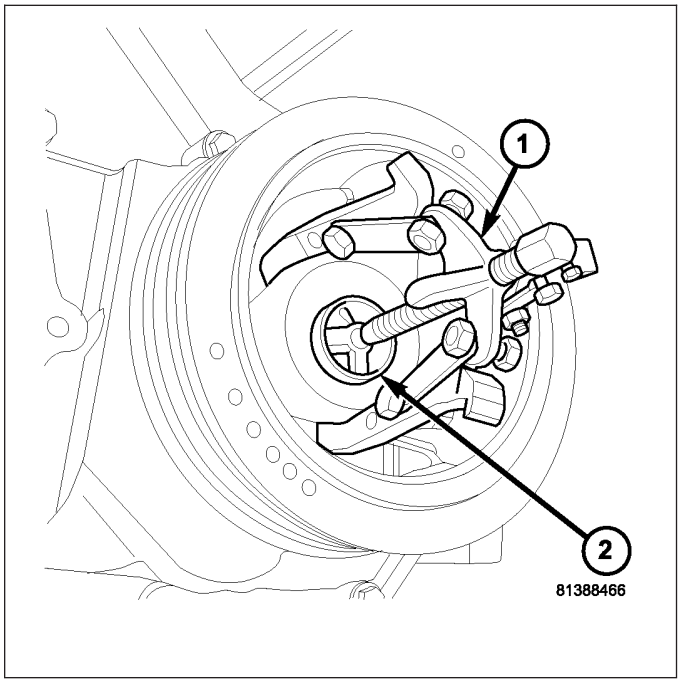

2. Remove the rear oil seal retainer (Refer to 9 - ENGINE/ENGINE BLOCK/CRANKSHAFT REAR OIL SEAL RETAINE - REMOVAL).
3. Remove the oil pan (Refer to 9 - ENGINE/LUBRICATION/OIL PAN - REMOVAL).
4. Remove the oil pump pickup.
5. Remove the windage tray/oil pan gasket.

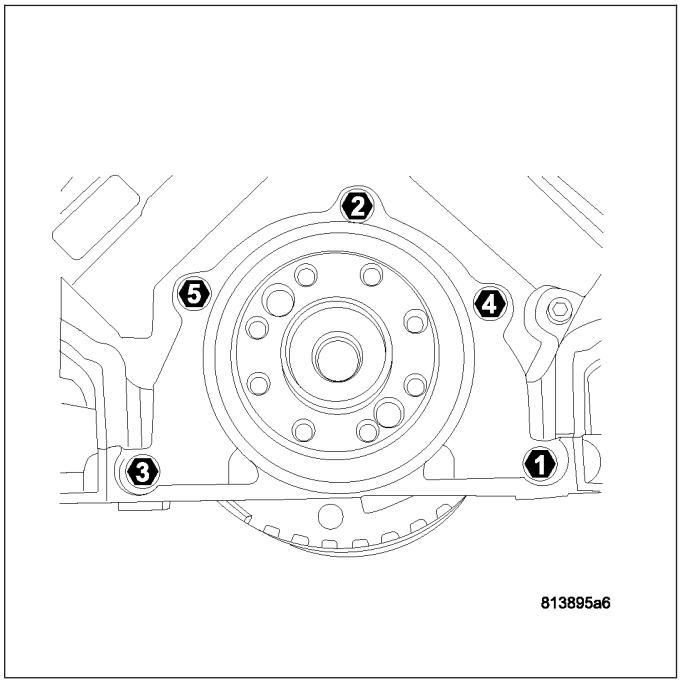

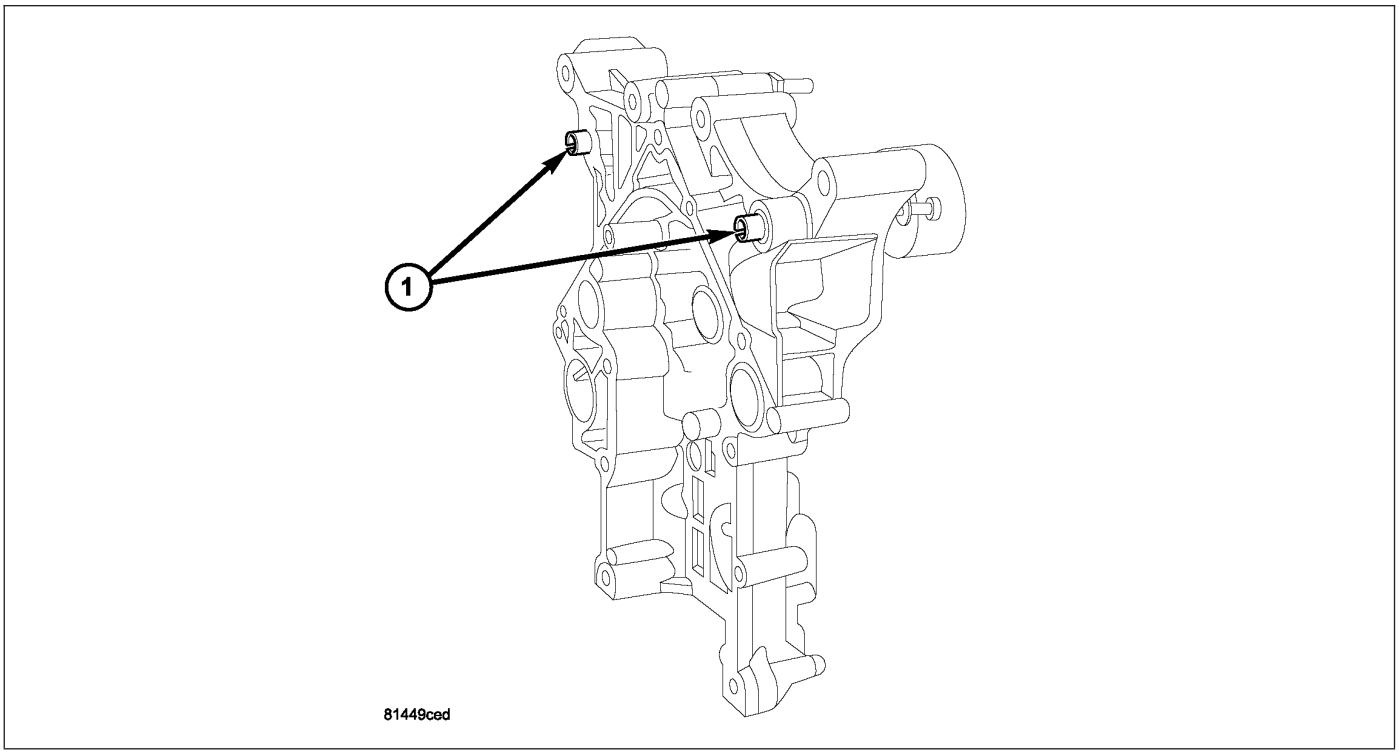

6. Remove the timing chain cover (Refer to 9 - ENGINE/VALVE TIMING/TIMING BELT / CHAIN COVER(S) - REMOVAL).

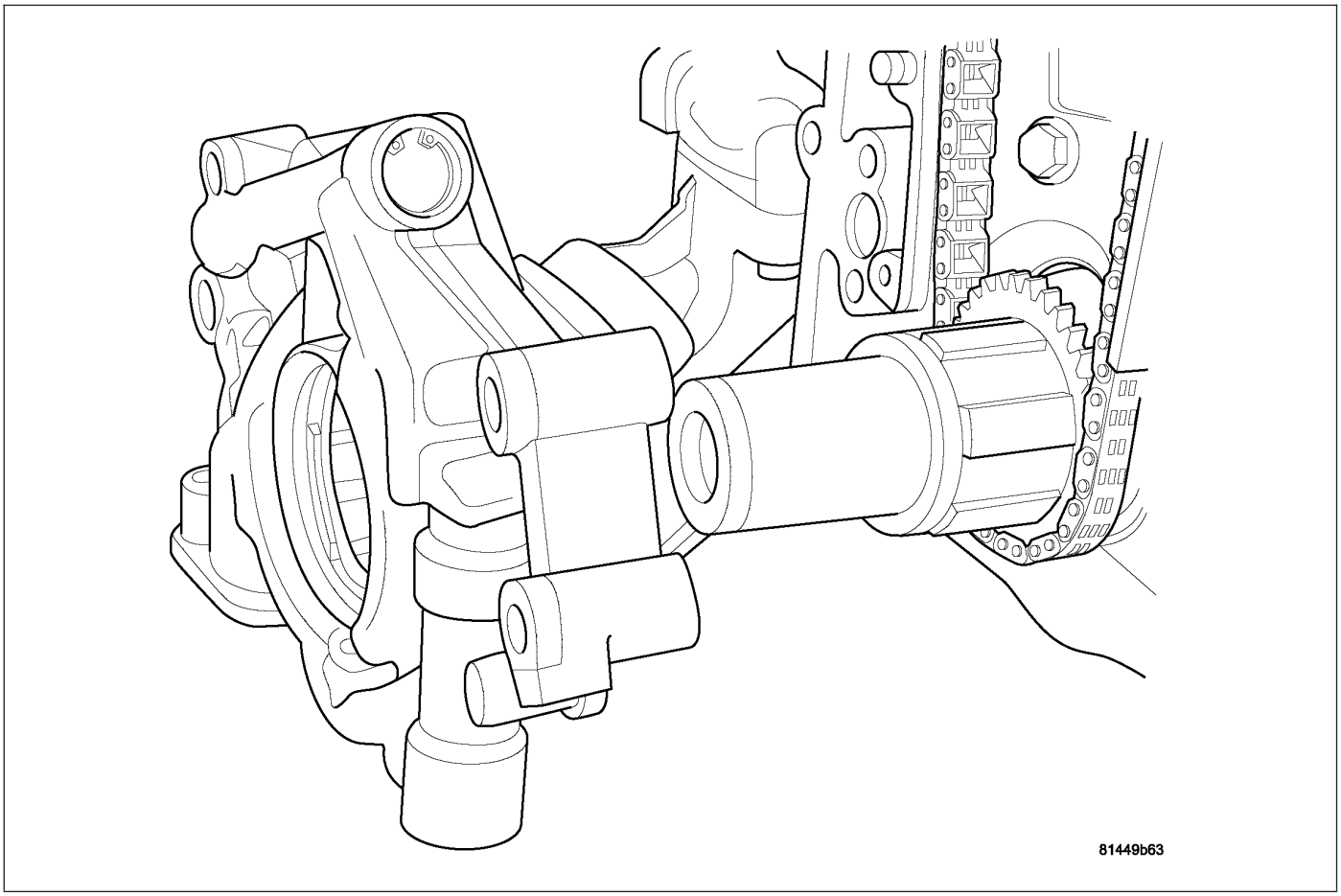

7. Remove the oil pump (Refer to 9 - ENGINE/LUBRICATION/OIL PUMP - REMOVAL).

8. Remove the timing drive (2) (Refer to 9 - ENGINE/ VALVE TIMING/TIMING BELT/CHAIN AND SPROCKETS - REMOVAL).

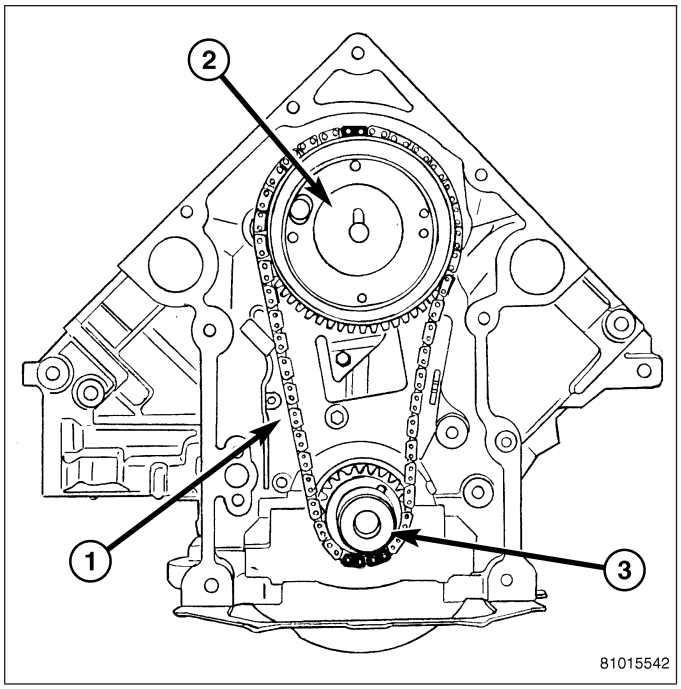

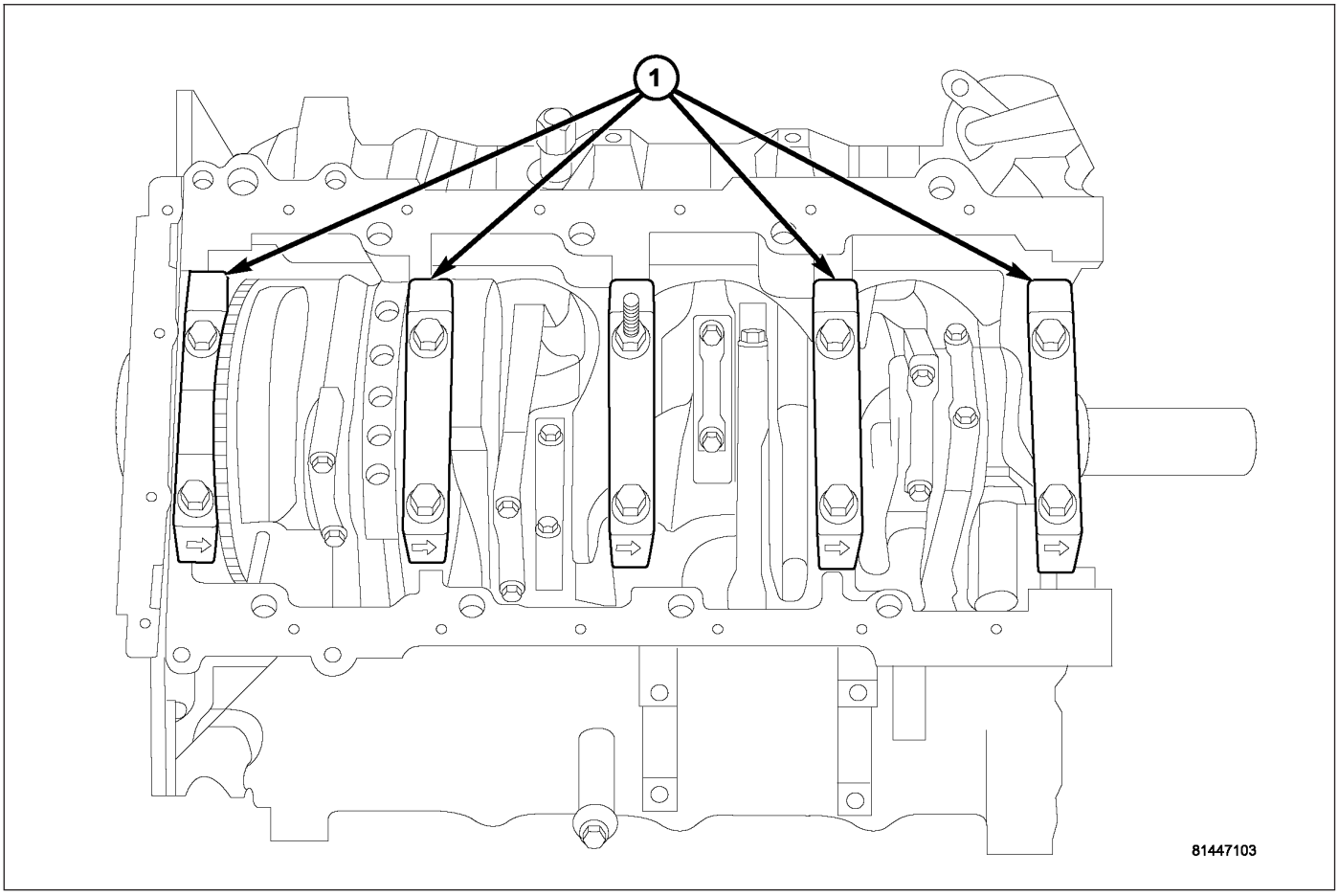

9. Identify rod bearing caps before removal. Remove rod bearing caps with bearings.
10. Identify main bearing caps (1) before removal.

11. Remove main bearing caps (1) and bearings one at a time.

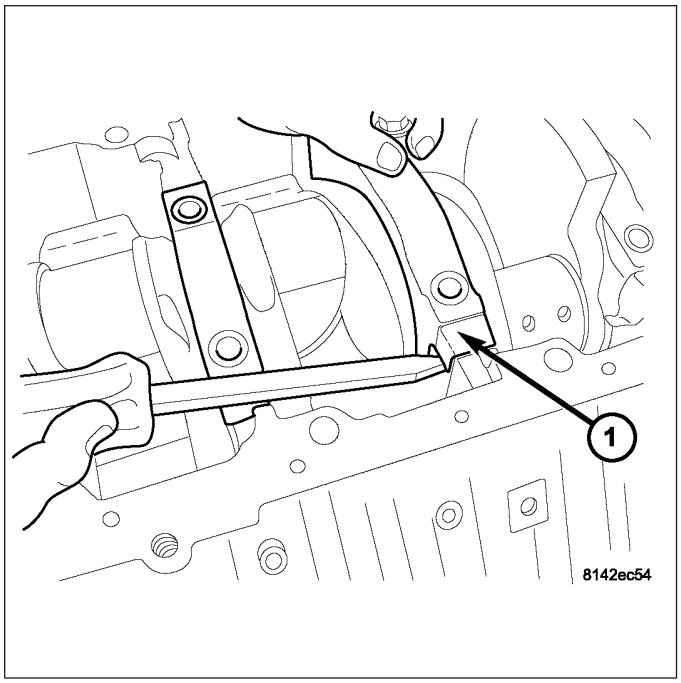

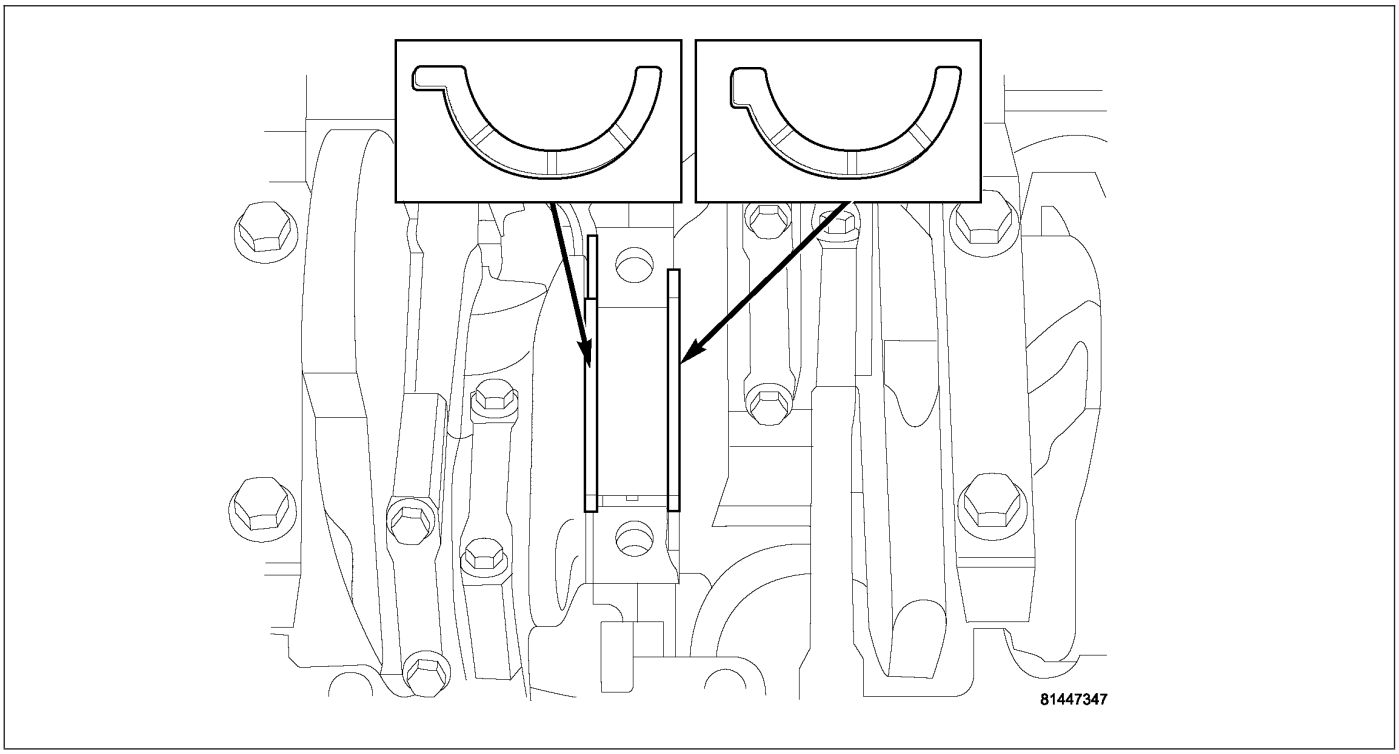

12. Remove the thrust washers.
13. Remove the crankshaft out of the block.

INSTALLATION

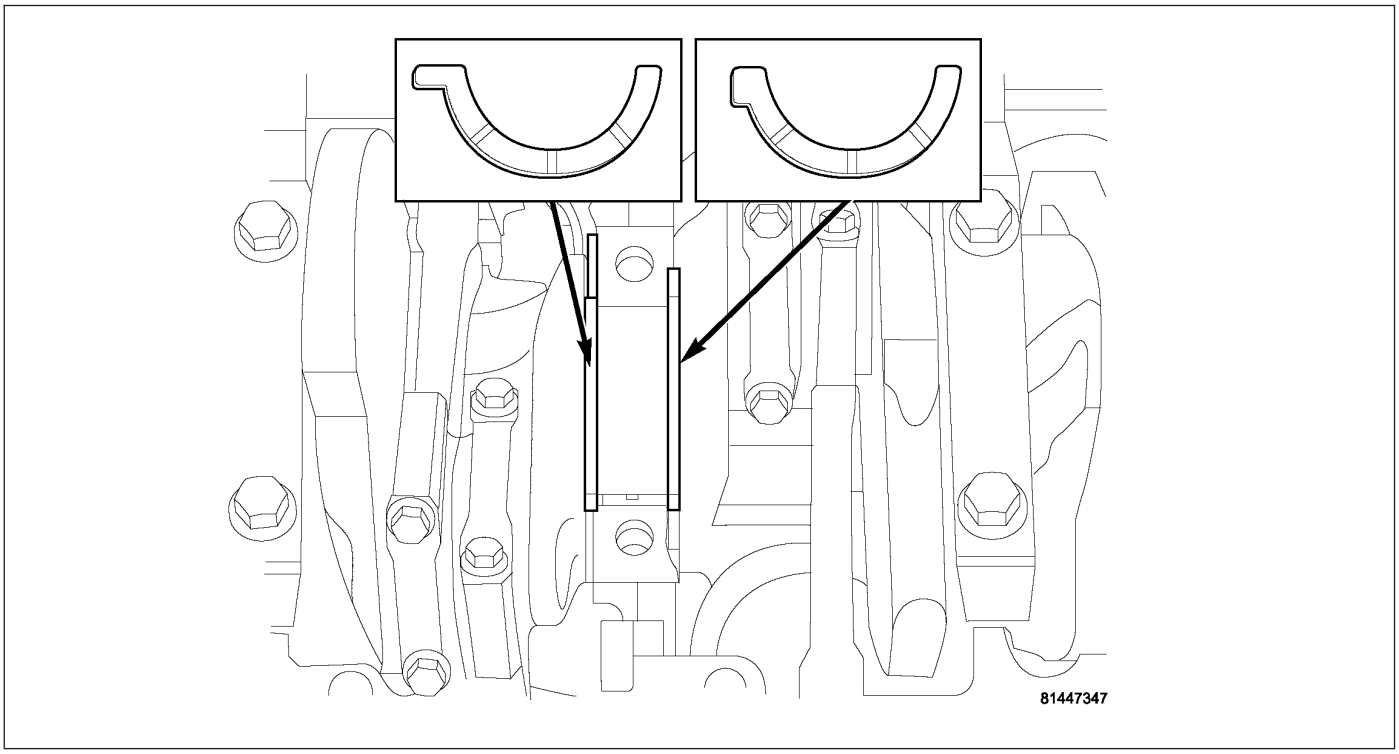

1. Select the proper main bearings (Refer to 9 - ENGINE/ENGINE BLOCK/CRANKSHAFT MAIN BEARINGS - STANDARD PROCEDURE).
2. Install main bearings in block and caps, and lubricate bearings.
3. Position the crankshaft into the cylinder block.
4. Install the thrust washers (1).

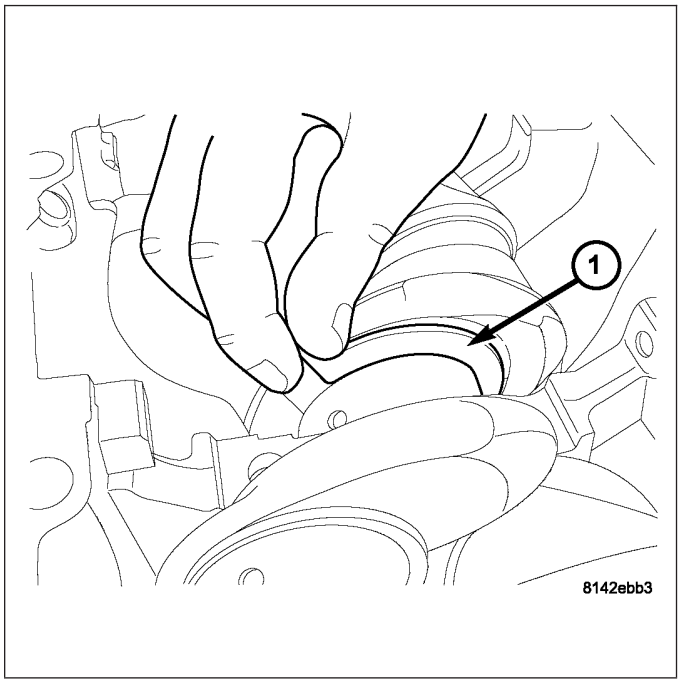

NOTE: The main cap crossbolts are torqued after final torque of the main cap bolts. Always use a new washer/seal on crossbolts.

5. Clean and oil all cap bolts. Install all main bearing caps (1). Install all cap bolts and alternately tighten in two steps using the following sequence.

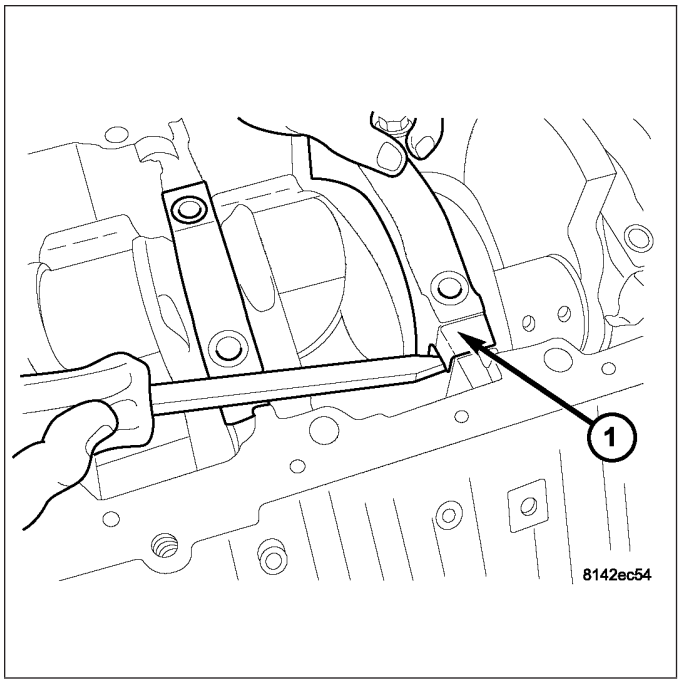

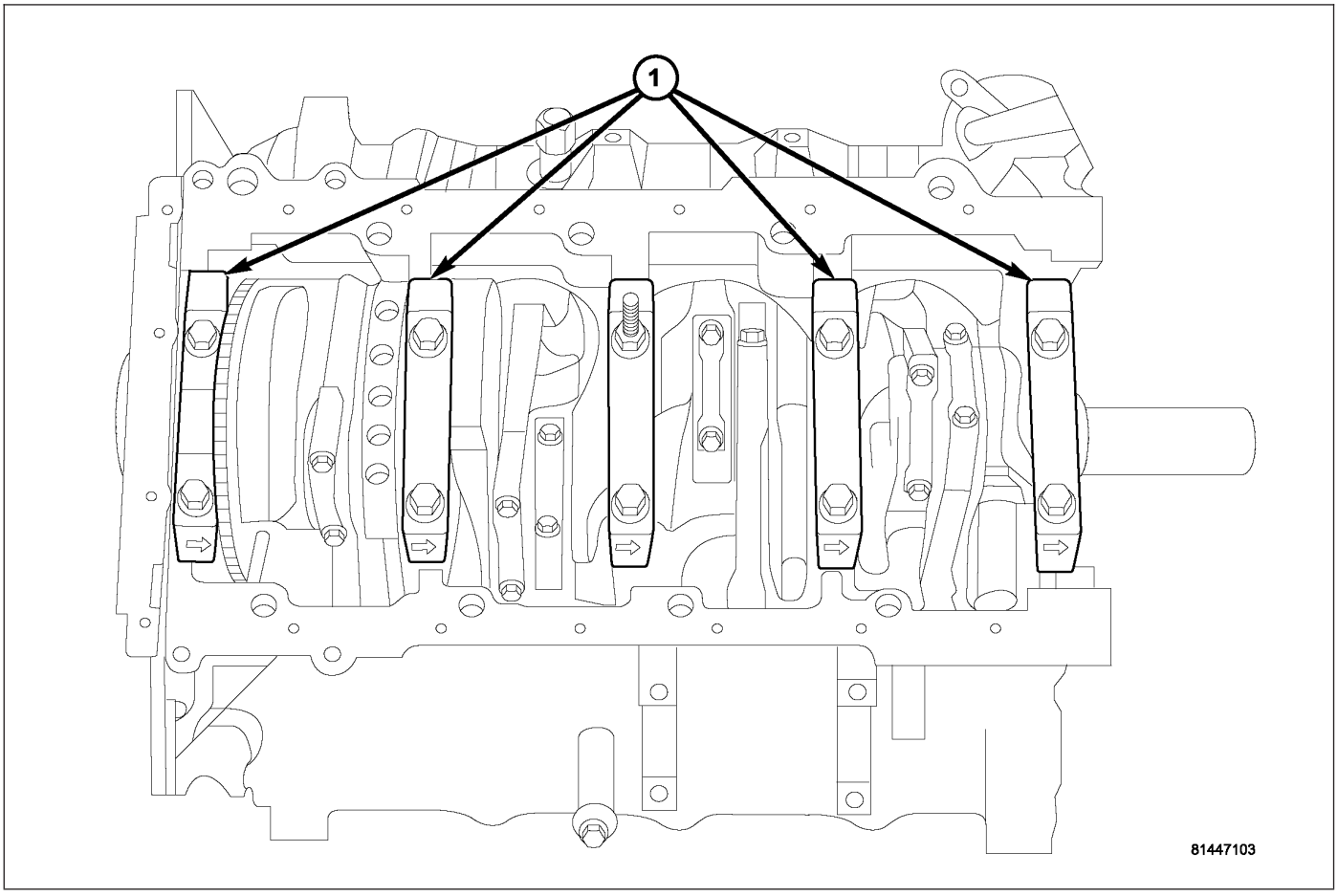

6. • Step 1 – 27 N·m (20 ft. lbs.) torque.
7. • Step 2 – Turn main cap bolts an additional 90°.
8. Install the crossbolts with new washer/gasket. Starting with crossbolt A torque each crossbolt to 28 N·m (21 ft. lbs.)torque.
9. Repeat crossbolt torque procedure.
10. Measure crankshaft end play (Refer to 9 - ENGINE/ENGINE BLOCK/CRANKSHAFT MAIN BEARINGS - STANDARD PROCEDURE).

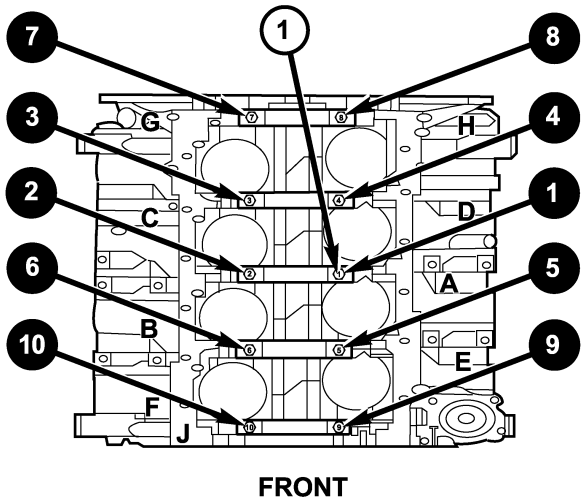

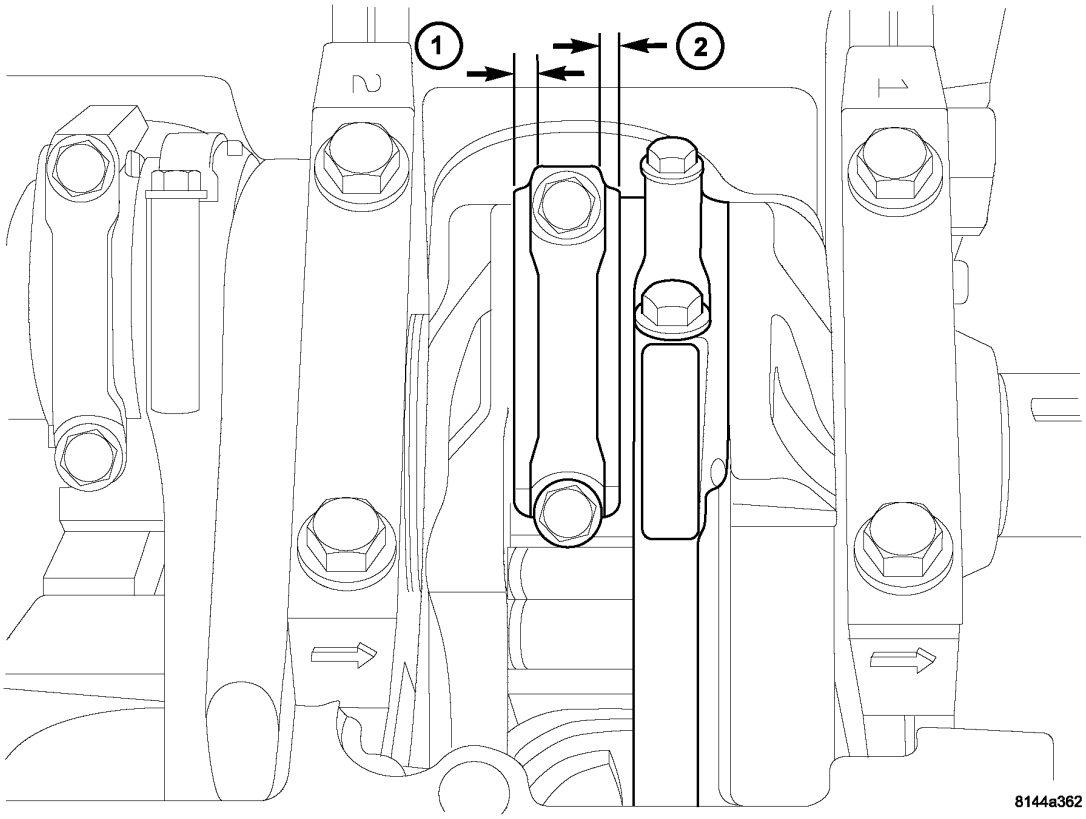

11. Position the connecting rods onto the crankshaft and install the rod bearing caps (Refer to 9 - ENGINE/ENGINE BLOCK/PISTON & CONNECTING ROD - INSTALLATION).

12. Install timing drive (2) (Refer to 9 - ENGINE/ VALVE TIMING/TIMING BELT/CHAIN AND SPROCKETS - INSTALLATION).

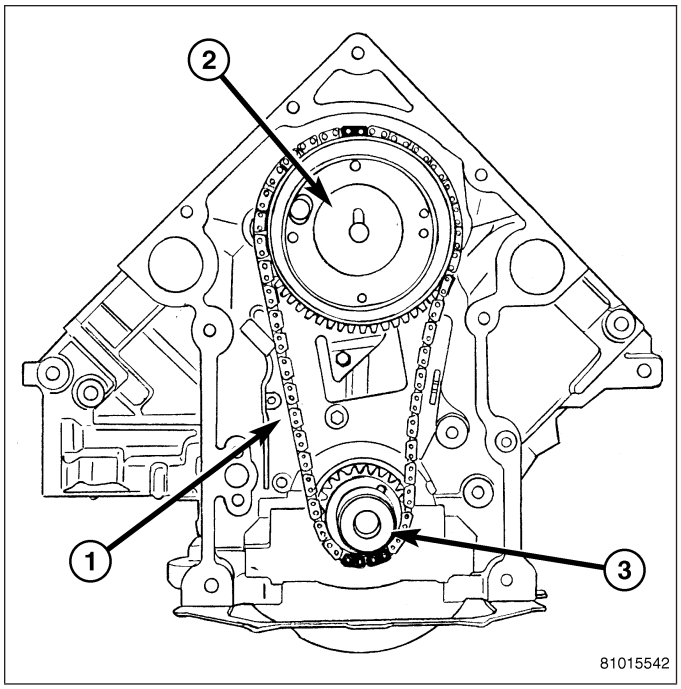

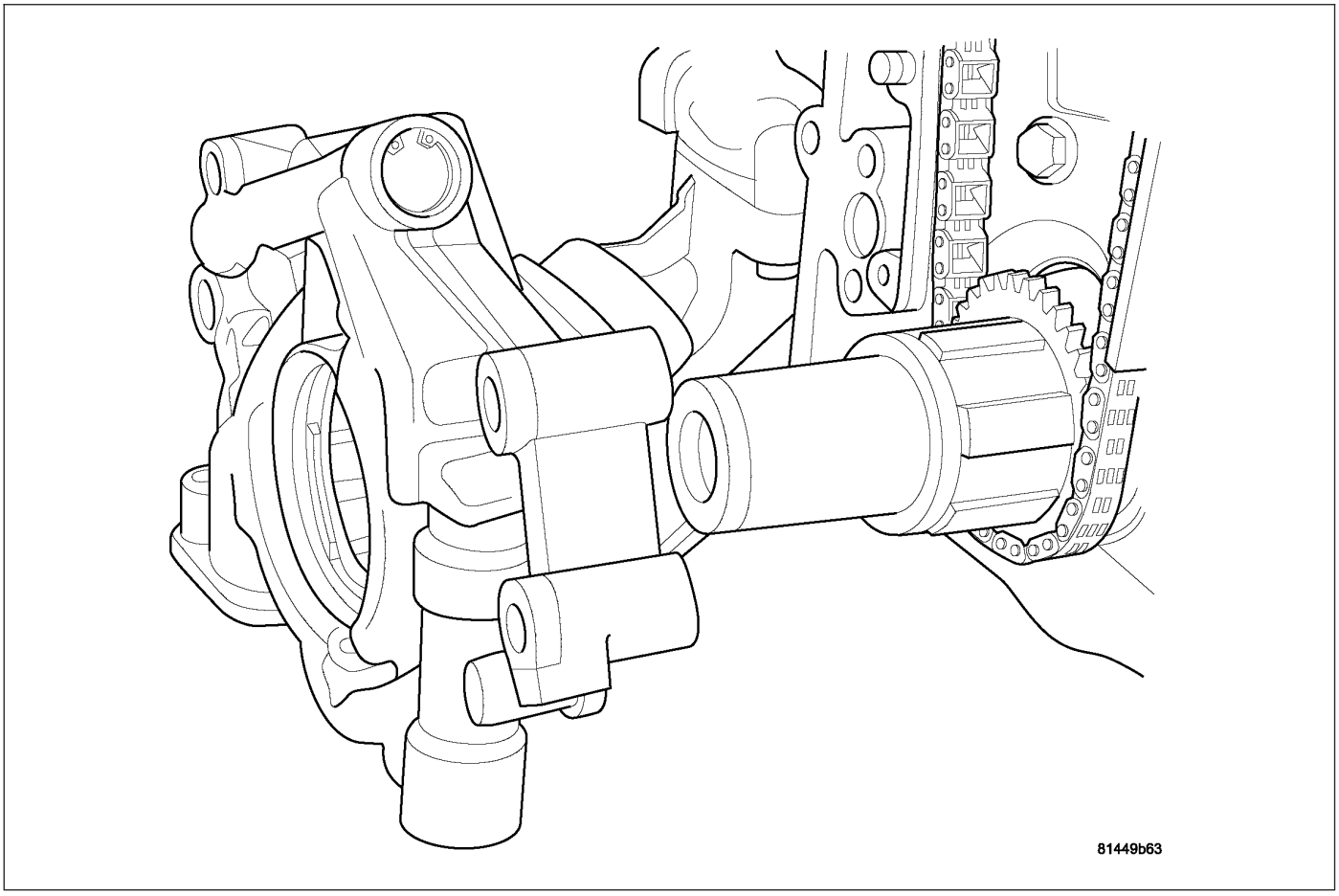

13. Install oil pump (Refer to 9 - ENGINE/LUBRICATION/OIL PUMP - INSTALLATION).

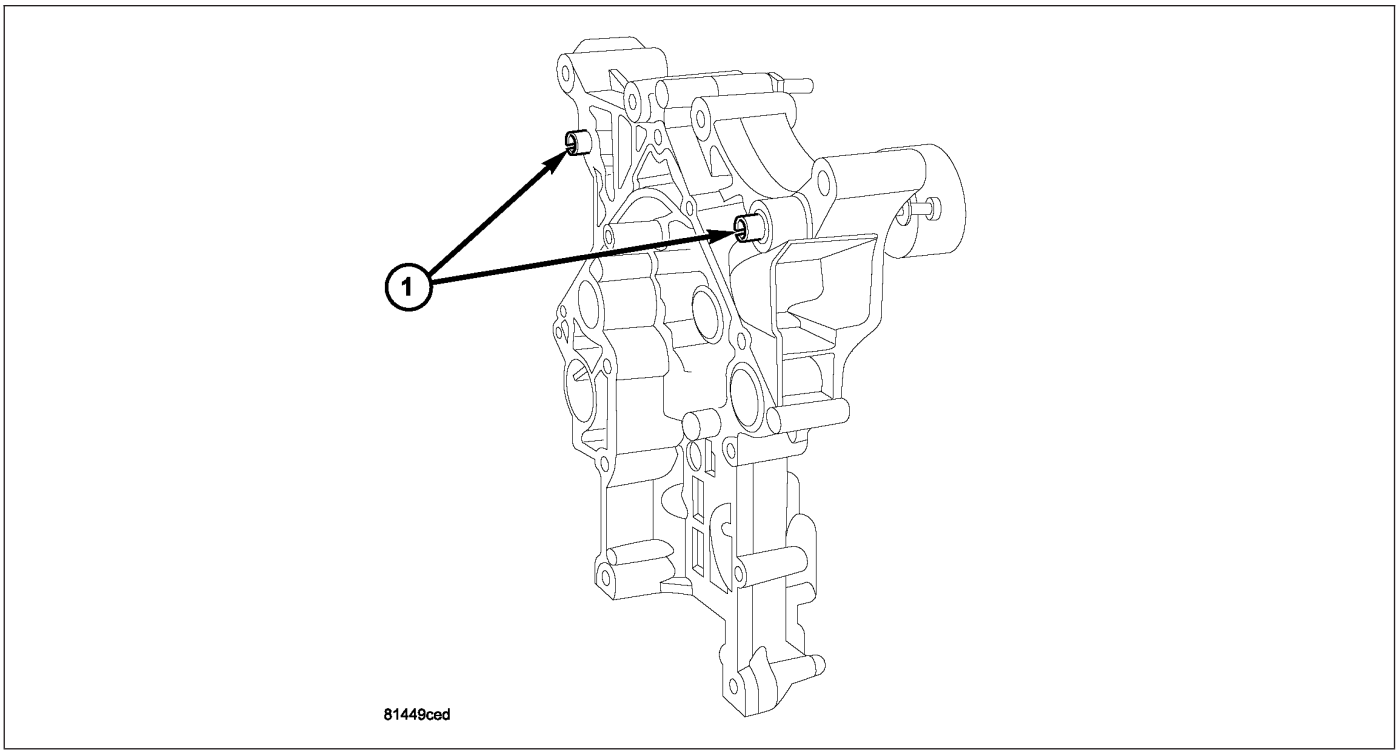

14. Install the timing chain cover (1) (Refer to 9 - ENGINE/VALVE TIMING/TIMING BELT / CHAIN COVER(S) - INSTALLATION).
15. Install the rear main seal and retainer (Refer to 9 - ENGINE/ENGINE BLOCK/CRANKSHAFT REAR OIL SEAL RETAINE - INSTALLATION).
16. Install the windage tray/oil pan gasket.
17. Install the oil pick up tube.
18. Install the oil pan (Refer to 9 - ENGINE/LUBRICATION/OIL PAN - INSTALLATION).
19. Install the vibration damper (Refer to 9 - ENGINE/ENGINE BLOCK/VIBRATION DAMPER - INSTALLATION).
20. Install the engine (Refer to 9 - ENGINE - INSTALLATION).

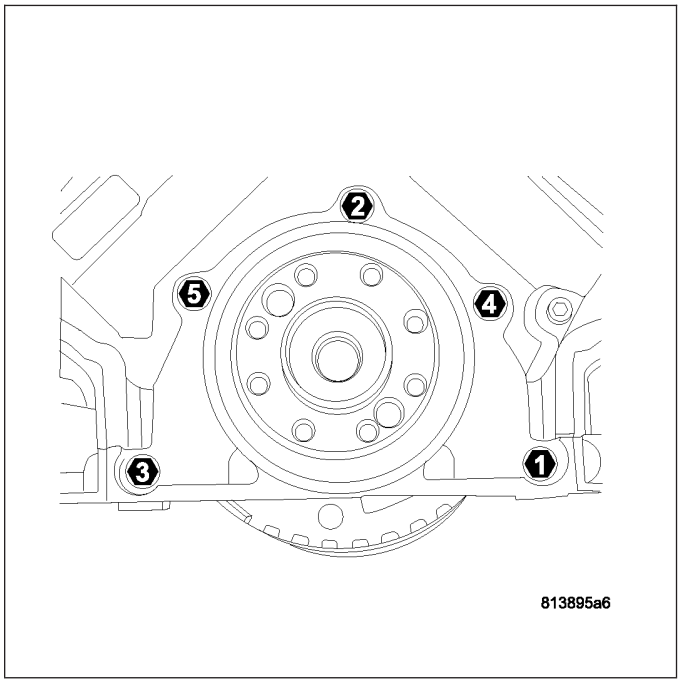

BEARINGS-CRANKSHAFT MAIN

STANDARD PROCEDURE - CRANKSHAFT MAIN BEARING - FITTING

MAIN BEARING JOURNAL DIAMETER (CRANKSHAFT REMOVED)

Crankshaft removed from the cylinder block.

Clean the oil off the main bearing journal.

Determine the maximum diameter of the journal with a micrometer. Measure at two locations 90° apart at each end of the journal.

The maximum allowable taper is 0.008mm (0.0004 inch.) and maximum out of round is 0.005mm (0.0002 inch). Compare the measured diameter with the journal diameter specification (Main Bearing Fitting Chart). Select inserts required to obtain the specified bearing-to-journal clearance.

CRANKSHAFT MAIN BEARING SELECTION

The main bearings are “select fit” to achieve proper oil clearances. For main bearing selection, the crankshaft counterweight has grade identification marks stamped into it. These marks are read from left to right, corresponding with journal number 1, 2, 3, 4 and 5.

NOTE: Service main bearings are coded. These codes identify what size (grade) the bearing is.

MAIN BEARING SELECTION CHART - 5.7L

GRADE MARKING	SIZE mm (in.)	FOR USE WITH JOURNAL SIZE
A	0.008 mm U/S (0.0004 in.) U/S	64.988–64.995 mm (2.5585– 2.5588in.)
B	NOMINAL	64.996–65.004 mm (2.5588–2.5592 in.)
C	0.008 mm O/S (0.0004 in.) O/S	65.005–65.012 mm (2.5592–2.5595 in.)

INSPECTION

Wipe the inserts clean and inspect for abnormal wear patterns and for metal or other foreign material imbedded in the lining. Normal main bearing insert wear patterns are illustrated.

NOTE: If any of the crankshaft journals are scored, the crankshaft must be repaired or replaced.

Inspect the back of the inserts for fractures, scrapings or irregular wear patterns.

Inspect the upper insert locking tabs for damage.

Replace all damaged or worn bearing inserts.

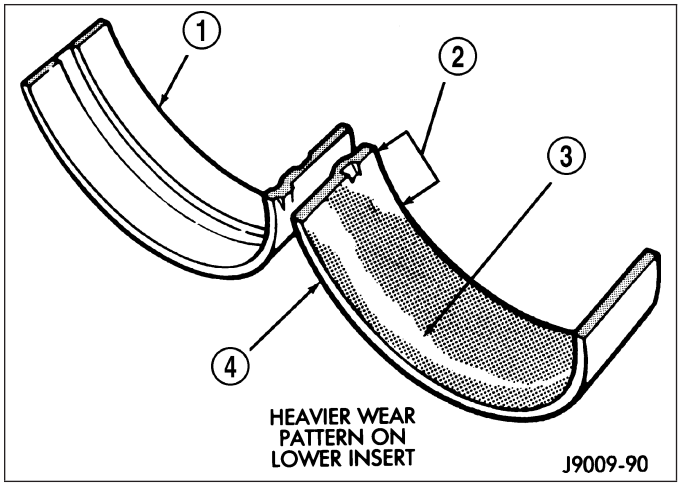

SEAL-CRANKSHAFT OIL-FRONT

REMOVAL

1. Disconnect negative cable from battery.
2. Remove accessory drive belt (Refer to 7 - COOLING/ACCESSORY DRIVE/DRIVE BELTS - REMOVAL).
3. Drain cooling system (Refer to 7 - COOLING - STANDARD PROCEDURE).
4. Remove upper radiator hose.
5. Remove radiator shroud attaching fasteners.
6. Remove radiator cooling fan and shroud (Refer to 7 - COOLING/ENGINE/RADIATOR FAN - REMOVAL).
7. Remove crankshaft damper bolt.
8. Remove damper using Special Tools 8513A Insert (2) and 1023 Three Jaw Puller (1) (Refer to 9 - ENGINE/ENGINE BLOCK/VIBRATION DAMPER - REMOVAL).

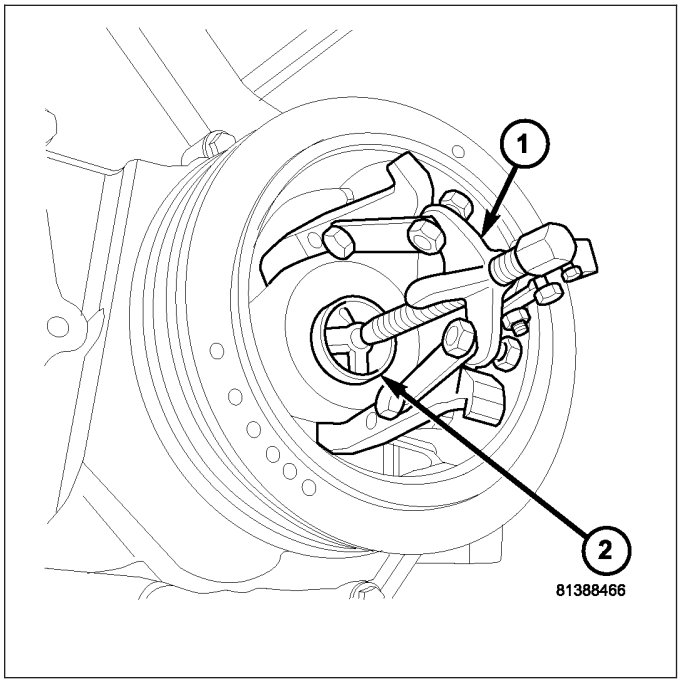

9. Using Special Tool 9071 (1), remove crankshaft front seal (2).

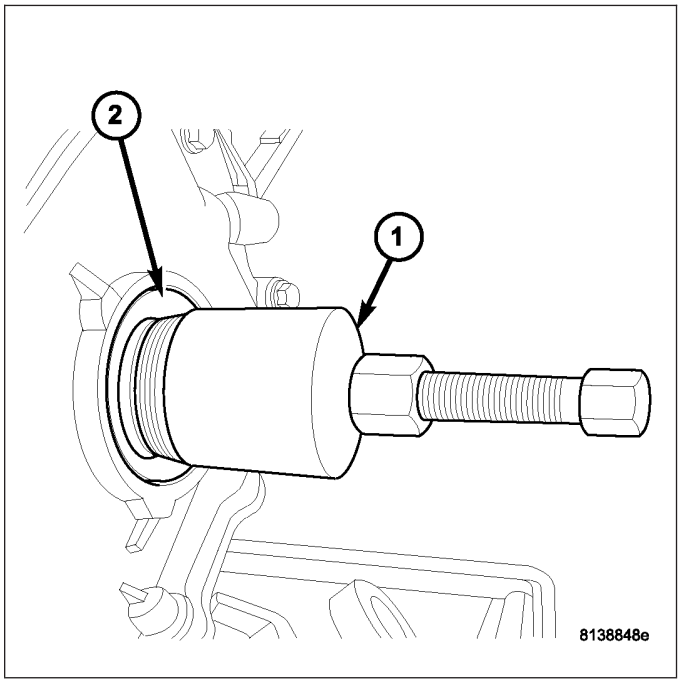

INSTALLATION

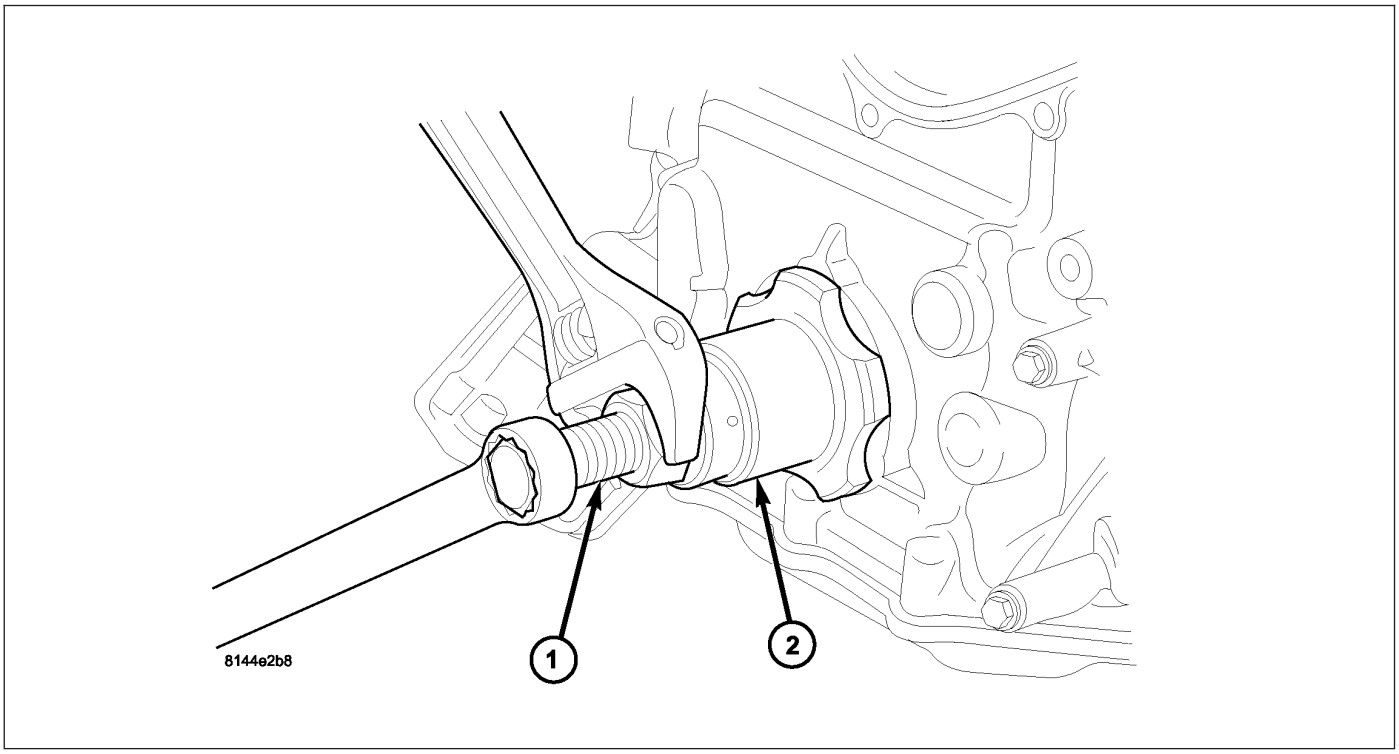

CAUTION: The front crankshaft seal must be installed dry. Do not apply lubricant to sealing lip or to outer edge.

1. Using Special Tool 9072 and 8512A, install crankshaft front seal.

CAUTION: To prevent severe damage to the Crankshaft or Damper, thoroughly clean the damper bore and the crankshaft nose before installing Damper.

2. Install vibration damper (Refer to 9 - ENGINE/ENGINE BLOCK/VIBRATION DAMPER - INSTALLATION).
3. Install radiator cooling fan and shroud (Refer to 7 - COOLING/ENGINE/RADIATOR FAN - INSTALLATION).
4. Install upper radiator hose.
5. Install accessory drive belt refer (Refer to 7 - COOLING/ACCESSORY DRIVE/DRIVE BELTS - INSTALLATION).
6. Refill cooling system (Refer to 7 - COOLING - STANDARD PROCEDURE).
7. Connect negative cable to battery.

SEAL-CRANKSHAFT OIL-REAR

DIAGNOSIS AND TESTING - REAR SEAL AREA LEAKS

Since it is sometimes difficult to determine the source of an oil leak in the rear seal area of the engine, a more involved inspection is necessary. The following steps should be followed to help pinpoint the source of the leak.

If the leakage occurs at the crankshaft rear oil seal area:

1. Disconnect the battery.
2. Raise the vehicle.
3. Remove torque converter or clutch housing cover and inspect rear of block for evidence of oil. Use a black light to check for the oil leak:
   a. Circular spray pattern generally indicates seal leakage or crankshaft damage.
   b. Where leakage tends to run straight down, possible causes are a porous block, camshaft bore cup plugs, oil galley pipe plugs, oil filter runoff, and main bearing cap to cylinder block mating surfaces. See Engine, for proper repair procedures of these items.
4. If no leaks are detected, pressurized the crankcase as outlined in the section, Inspection (Engine oil Leaks in general)

CAUTION: Do not exceed 20.6 kPa (3 psi).

5. If the leak is not detected, very slowly turn the crankshaft and watch for leakage. If a leak is detected between the crankshaft and seal while slowly turning the crankshaft, it is possible the crankshaft seal surface is damaged. The seal area on the crankshaft could have minor nicks or scratches that can be polished out with emery cloth.

CAUTION: Use extreme caution when crankshaft polishing is necessary to remove minor nicks or scratches. The crankshaft seal flange is specially machined to complement the function of the rear oil seal.

6. For bubbles that remain steady with shaft rotation, no further inspection can be done until disassembled. (Refer to 9 - ENGINE - DIAGNOSIS AND TESTING), under the Oil Leak row, for components inspections on possible causes and corrections.
7. After the oil leak root cause and appropriate corrective action have been identified, (Refer to 9 - ENGINE/ENGINE BLOCK/CRANKSHAFT OIL SEAL - REAR - REMOVAL).

REMOVAL

NOTE: This procedure can be performed in vehicle.

1. If being performed in vehicle, remove the transmission.
2. Remove the flexplate (Refer to 9 - ENGINE/ENGINE BLOCK/FLEX PLATE - REMOVAL).

NOTE: The crankshaft oil seal CAN NOT be reused after removal.

NOTE: The crankshaft rear oil seal remover Special Tool 8506 must be installed deeply into the seal. Continue to tighten the removal tool into the seal until the tool can not be turned farther. Failure to install tool correctly the first time will cause tool to pull free of seal without removing seal from engine.

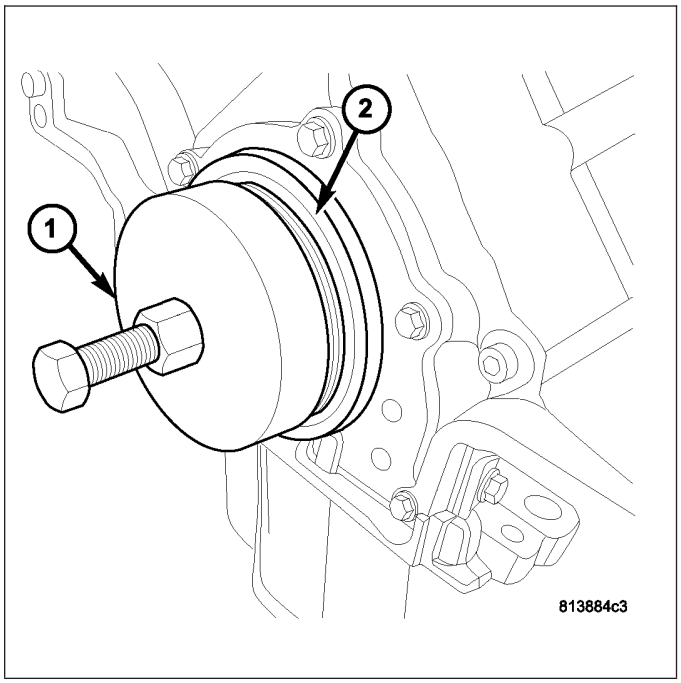

3. Using Special Tool 8506 (1), remove the crankshaft rear oil seal (2).

INSTALLATION

CAUTION: The rear seal must be installed dry for proper operation. Do not lubricate the seal lip or outer edge.

1. Position the plastic seal guide (2) onto the crankshaft rear face. Then position the crankshaft rear oil seal (3) onto the guide.
2. Using Special Tools 8349 Crankshaft Rear Oil Seal Installer (1) and C-4171 Driver Handle, with a hammer, tap the seal (3) into place. Continue to tap on the driver handle until the seal installer seats against the cylinder block crankshaft bore.
3. Install the flexplate. (Refer to 9 - ENGINE/ENGINE BLOCK/FLEX PLATE - INSTALLATION).
4. Install the transmission.

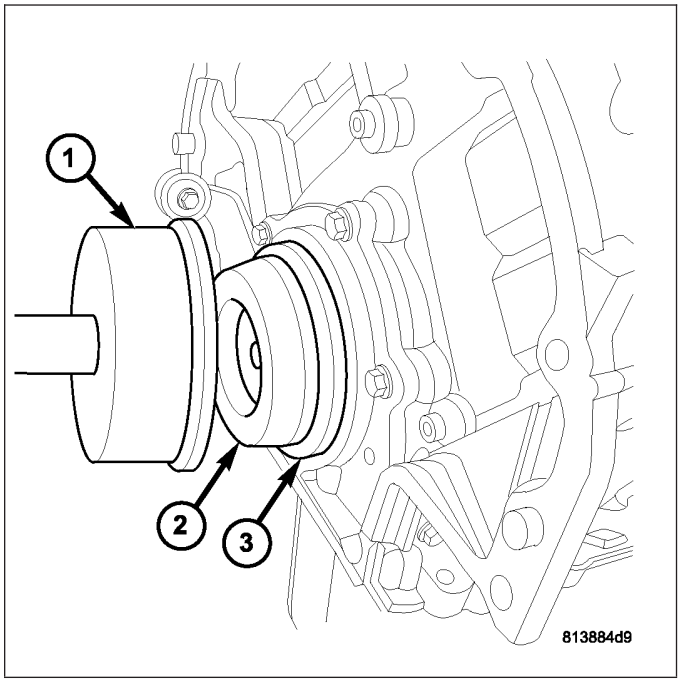

RETAINER-CRANK REAR OIL - SEAL

REMOVAL

1. Disconnect negative cable from battery.
2. Remove the transmission. (Refer to 21 - TRANSMISSION/TRANSAXLE/AUTOMATIC - NAG1 - REMOVAL).
3. Remove the flexplate. (Refer to 9 - ENGINE/ENGINE BLOCK/FLEX PLATE - REMOVAL).
4. Remove the oil pan. (Refer to 9 - ENGINE/LUBRICATION/OIL PAN - REMOVAL)
5. Remove the rear oil seal retainer mounting bolts.
6. Carefully remove the retainer from the engine block.

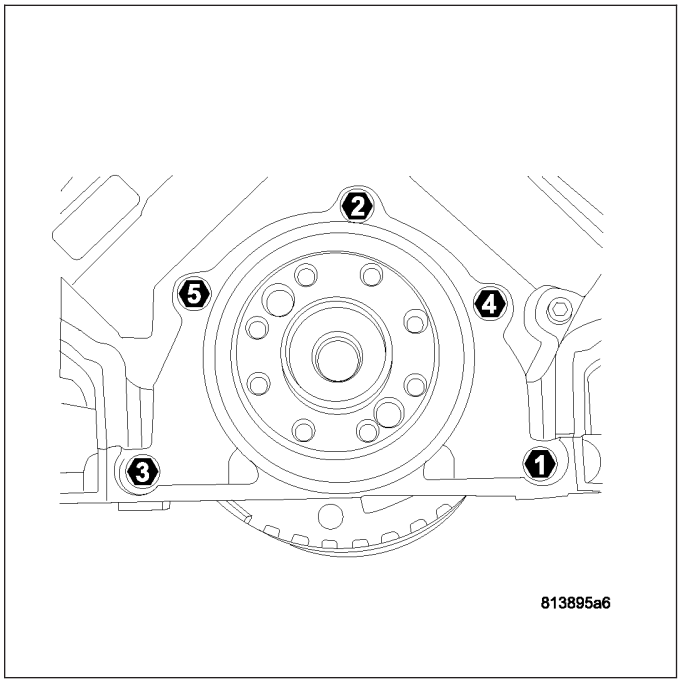

INSTALLATION

1. Throughly clean all gasket resdue from the engine block.
2. Use extream care and clean all gasket resdue from the retainer.
3. Position the gasket onto the retainer.
4. Position the retainer onto the engine block.
5. Install the retainer mounting bolts. Tighten the bolts to 15 N·m (132 in. lbs.) using the procedure shown.
6. Install the oil pan (Refer to 9 - ENGINE/LUBRICATION/OIL PAN - INSTALLATION).
7. Install the flexplate (Refer to 9 - ENGINE/ENGINE BLOCK/FLEX PLATE - INSTALLATION).
8. Install the transmission (Refer to 21 - TRANSMISSION/TRANSAXLE/AUTOMATIC - NAG1 - INSTALLATION).
9. Check and verify engine oil level.
10. Start engine and check for leaks.

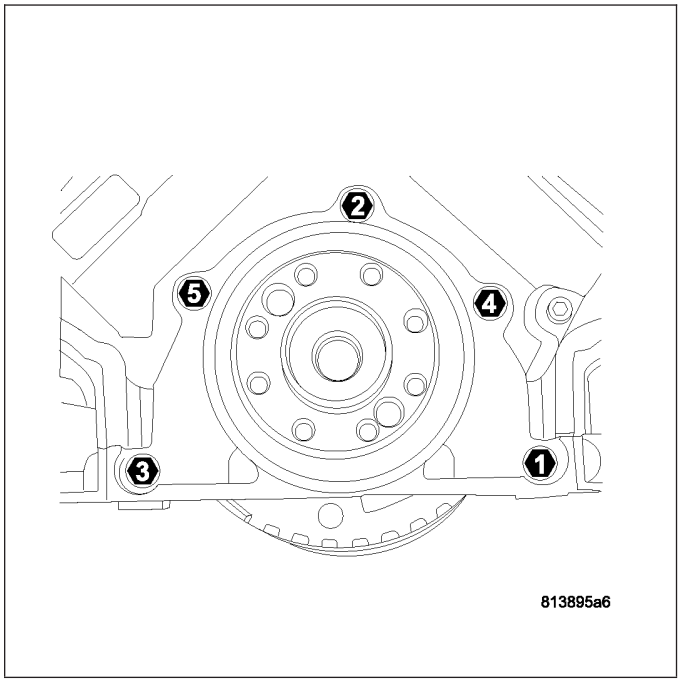

FLEX PLATE

REMOVAL

1. Remove the transmission. (Refer to 21 - TRANSMISSION/TRANSAXLE/AUTOMATIC - NAG1 - REMOVAL).
2. Remove the bolts and flexplate (1).

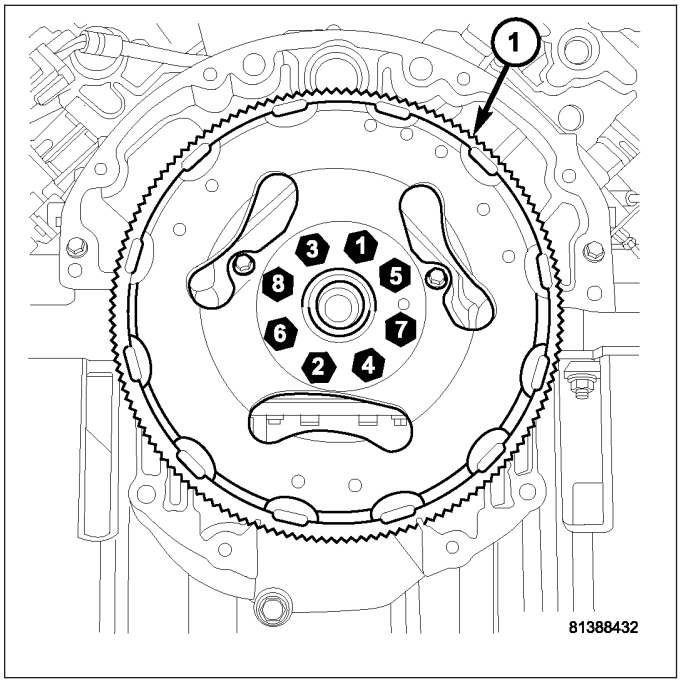

INSTALLATION

1. Position the flexplate or flywheel onto the crankshaft and install the bolts hand tight.
2. **For automatic transmissions:** Tighten the flexplate retaining bolts to 95 N·m (70 ft. lbs.).

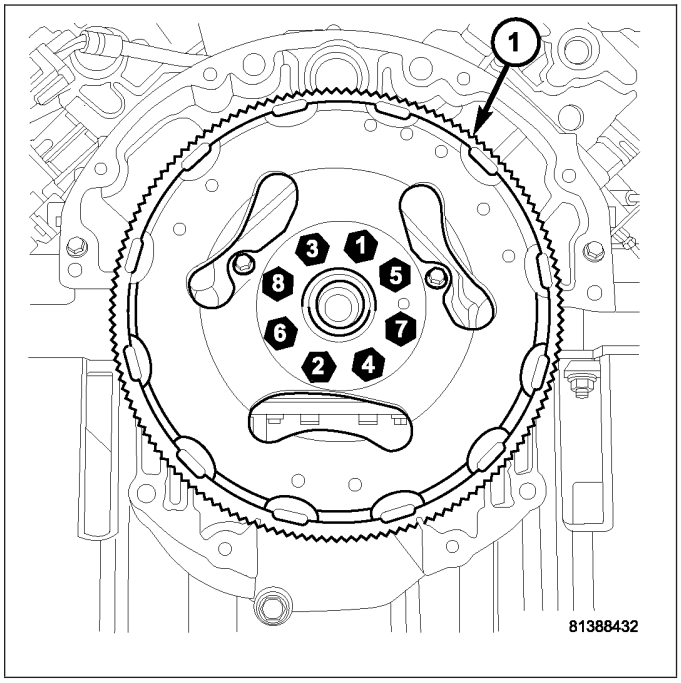

3. Install the transmission. (Refer to 21 - TRANSMISSION/TRANSAXLE/AUTOMATIC - NAG1 - INSTALLATION).

TAPPETS-HYDRAULIC ROLLER

DIAGNOSIS AND TESTING - HYDRAULIC TAPPETS

Before disassembling any part of the engine to correct tappet noise, check the oil pressure. If vehicle has no oil pressure gauge, install a reliable gauge at the pressure sending-unit. The pressure should be between 207-552 kPa (30-70 psi) at 3,000 RPM.

Check the oil level after the engine reaches normal operating temperature. Allow 5 minutes to stabilize oil level, check dipstick. The oil level in the pan should never be above the FULL mark or below the ADD OIL mark on dipstick. Either of these two conditions could be responsible for noisy tappets.

OIL LEVEL

HIGH

If oil level is above the FULL mark, it is possible for the connecting rods to dip into the oil. With the engine running, this condition could create foam in the oil pan. Foam in oil pan would be fed to the hydraulic tappets by the oil pump causing them to lose length and allow valves to seat noisily.

LOW

Low oil level may allow oil pump to take in air. When air is fed to the tappets, they lose length, which allows valves to seat noisily. Any leaks on intake side of oil pump through which air can be drawn will create the same tappet action. Check the lubrication system from the intake strainer to the pump cover, including the relief valve retainer cap. When tappet noise is due to aeration, it may be intermittent or constant, and usually more than one tappet will be noisy. When oil level and leaks have been corrected, operate the engine at fast idle. Run engine for a sufficient time to allow all of the air inside the tappets to be bled out.

TAPPET NOISE DIAGNOSIS

1. To determine source of tappet noise, crank over engine with cylinder head covers removed.
2. Feel each valve spring or rocker arm to detect noisy tappet. The noisy tappet will cause the affected spring and/or rocker arm to vibrate or feel rough in operation.

NOTE: Worn valve guides or cocked springs are sometimes mistaken for noisy tappets. If such is the case, noise may be dampened by applying side thrust on the valve spring. If noise is not appreciably reduced, it can be assumed the noise is in the tappet. Inspect the rocker arm push rod sockets and push rod ends for wear.

3. Valve tappet noise ranges from light noise to a heavy click. A light noise is usually caused by excessive leak-down around the unit plunger, or by the plunger partially sticking in the tappet body cylinder. The tappet should be replaced. A heavy click is caused by a tappet check valve not seating, or by foreign particles wedged between the plunger and the tappet body. This will cause the plunger to stick in the down position. This heavy click will be accompanied by excessive clearance between the valve stem and rocker arm as valve closes. In either case, tappet assembly should be removed for inspection and cleaning.
4. The valve train generates a noise very much like a light tappet noise during normal operation. Care must be taken to ensure that tappets are making the noise. If more than one tappet seems to be noisy, it's probably not the tappets.

REMOVAL

1. Disconnect the negative cable from the battery.
2. Remove the air cleaner (Refer to 9 - ENGINE/AIR INTAKE SYSTEM - REMOVAL).
3. Remove intake manifold (Refer to 9 - ENGINE/MANIFOLDS/INTAKE MANIFOLD - REMOVAL).
4. Remove cylinder head cover (Refer to 9 - ENGINE/CYLINDER HEAD/CYLINDER HEAD COVER(S) - REMOVAL).
5. Remove rocker arm assembly and push rods (Refer to 9 - ENGINE/CYLINDER HEAD/ROCKER ARM / ADJUSTER ASSY - REMOVAL). Identify push rods to ensure installation in original location.
6. Remove the cylinder head (Refer to 9 - ENGINE/CYLINDER HEAD - REMOVAL).

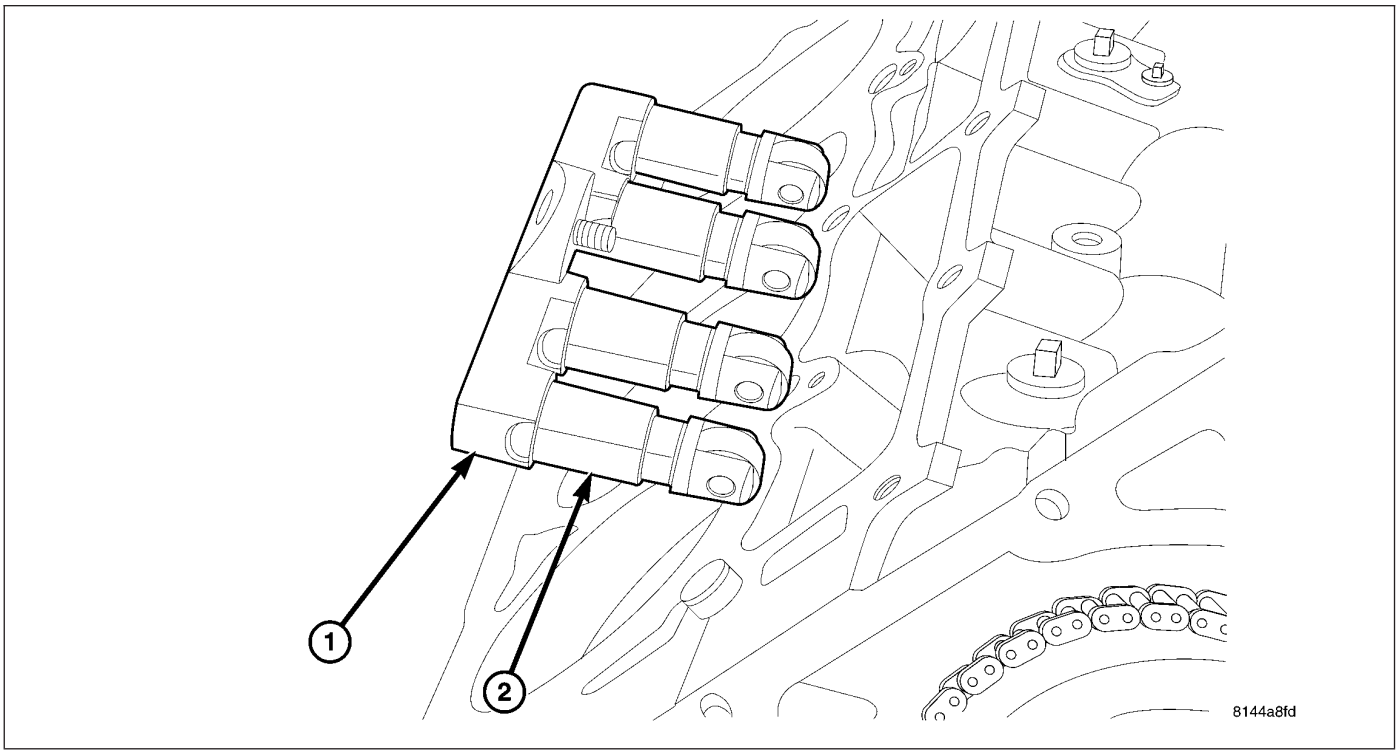

7. Remove bolt from tappet guide holder.
8. Remove tappet guide holder.
9. Pull tappet out of bore with a twisting motion. **If all tappets are to be removed and reused, identify tappets to ensure installation in original location.**
10. Check camshaft lobes for abnormal wear.

INSTALLATION

1. Lubricate tappets.

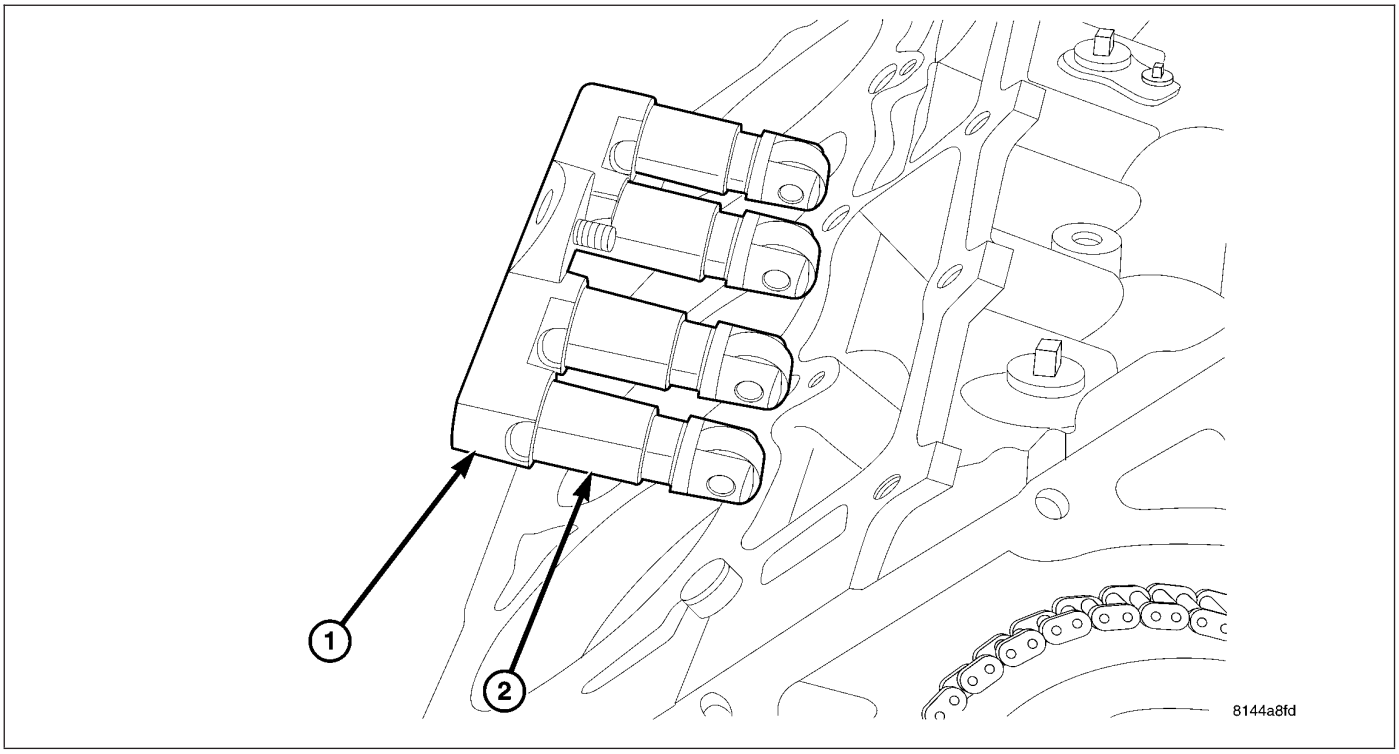

2. Install tappets in their original positions.

CAUTION: 5.7L engines equipped with MDS uses both standard roller tappets and deactivating roller tappets, for use with the Multi Displacement System. The deactivating roller tappets must be used in cylinders 1,4,6,7. The deactivating tappets can be identified by the two holes in the side of the tappet body, for the latching pins.

3. Install tappet guide yoke. Install the tappet guide yoke bolt and tighten to 12 N·m (106 in. lbs.) torque.
4. Install cylinder head (Refer to 9 - ENGINE/CYLINDER HEAD - INSTALLATION).
5. Install pushrods and rocker arm assembly (Refer to 9 - ENGINE/CYLINDER HEAD/ROCKER ARM / ADJUSTER ASSY - INSTALLATION).
6. Install cylinder head cover (Refer to 9 - ENGINE/CYLINDER HEAD/CYLINDER HEAD COVER(S) - INSTALLATION).
7. Install intake manifold (Refer to 9 - ENGINE/MANIFOLDS/INTAKE MANIFOLD - INSTALLATION).
8. Install the air cleaner (Refer to 9 - ENGINE/AIR INTAKE SYSTEM - INSTALLATION).
9. Connect the negative cable to the battery.

CAUTION: To prevent damage to valve mechanism, engine must not be run above fast idle until all hydraulic tappets have filled with oil and have become quiet.

10. Road test vehicle and check for leaks.

PISTON & CONNECTING ROD

DESCRIPTION

CAUTION: Do not use a metal stamp to mark connecting rods as damage may result, instead use ink or a scratch awl.

The pistons are made of a high strength aluminum alloy. Piston skirts are coated with a solid lubricant (Molykote) to reduce friction and provide scuff resistance. The piston top ring groove and land is anodized. The connecting rods are made of forged powdered metal, with a “fractured cap” design. A pressed fit piston pin is used to attach the piston and connecting rod.

STANDARD PROCEDURE - PISTON FITTING

1. To correctly select the proper size piston, a cylinder bore gauge, capable of reading in 0.003 mm (.0001 in.) INCREMENTS is required. If a bore gauge is not available, do not use an inside micrometer.
2. Measure the inside diameter of the cylinder bore at a point 38.0 mm (1.5 inches) below top of bore. Start perpendicular (across or at 90 degrees) to the axis of the crankshaft at point A and then take an additional bore reading 90 degrees to that at point B.
3. The coated pistons will be serviced with the piston pin and connecting rod pre-assembled. The piston-rod assembly is specific for the left cylinder bank (odd numbered) and the right cylinder bank (even numbered) and must not be interchanged.

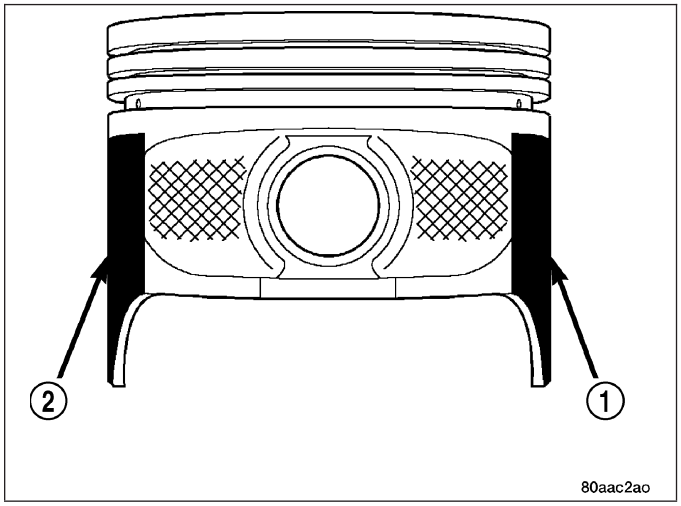

4. The coating material is applied to the piston after the final piston machining process. Measuring the outside diameter of a coated piston will not provide accurate results. Therefore measuring the inside diameter of the cylinder bore with a dial Bore Gauge is **MANDATORY**. To correctly select the proper size piston, a cylinder bore gauge capable of reading in 0.003 mm (.0001 in.) increments is required.
5. Piston installation into the cylinder bore requires slightly more pressure than that required for non-coated pistons. The bonded coating on the piston will give the appearance of a line-to-line fit with the cylinder bore.

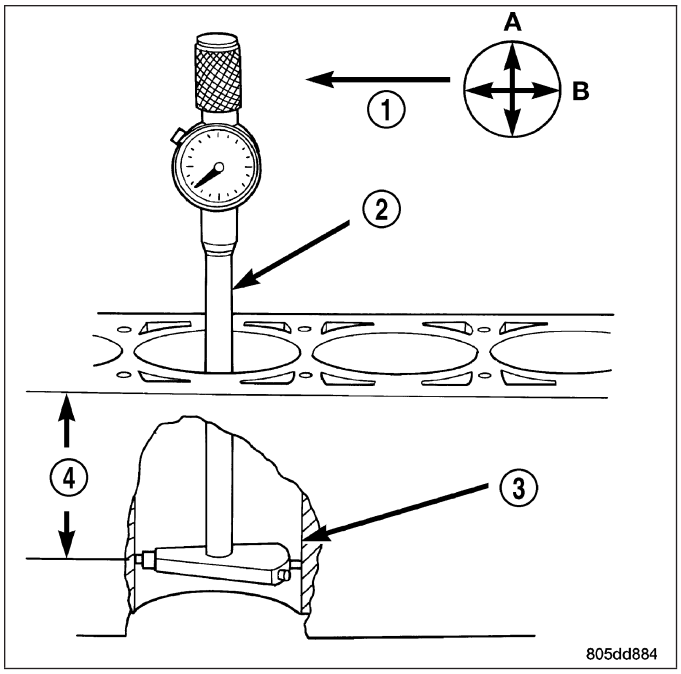

REMOVAL

1. Disconnect negative cable from battery.
2. Remove the following components:
   - Oil pan and gasket/windage tray (Refer to 9 - ENGINE/LUBRICATION/OIL PAN - REMOVAL).
   - Cylinder head covers (Refer to 9 - ENGINE/CYLINDER HEAD/CYLINDER HEAD COVER(S) - REMOVAL) and (Refer to 9 - ENGINE/CYLINDER HEAD/CYLINDER HEAD COVER(S) - REMOVAL).
   - Timing chain cover (Refer to 9 - ENGINE/VALVE TIMING/TIMING BELT / CHAIN COVER(S) - REMOVAL).
   - Cylinder head(s) (Refer to 9 - ENGINE/CYLINDER HEAD - REMOVAL) and (Refer to 9 - ENGINE/CYLINDER HEAD - REMOVAL).
3. If necessary, remove top ridge of cylinder bores with a reliable ridge reamer before removing pistons from cylinder block. **Be sure to keep tops of pistons covered during this operation.** Pistons and connecting rods must be removed from top of cylinder block. When removing piston and connecting rod assemblies from the engine, rotate crankshaft so the each connecting rod is centered in cylinder bore.

CAUTION: DO NOT use a number stamp or a punch to mark connecting rods or caps, as damage to connecting rods could occur

NOTE: Connecting rods and bearing caps are not interchangeable and should be marked before removing to ensure correct reassembly.

4. Mark connecting rod and bearing cap positions using a permanent ink marker or scribe tool.

CAUTION: Care must be taken not to damage the fractured rod and cap joint face surfaces, as engine damage may occur.

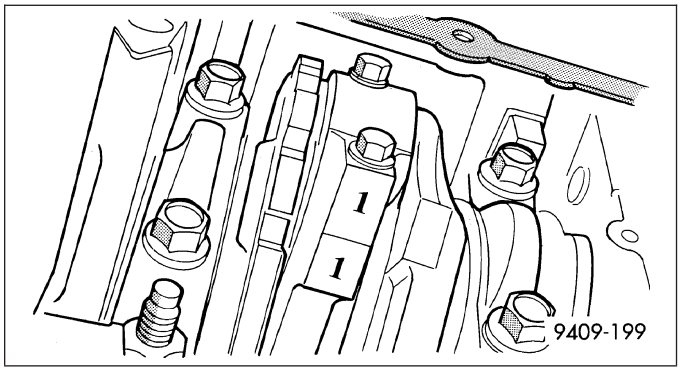

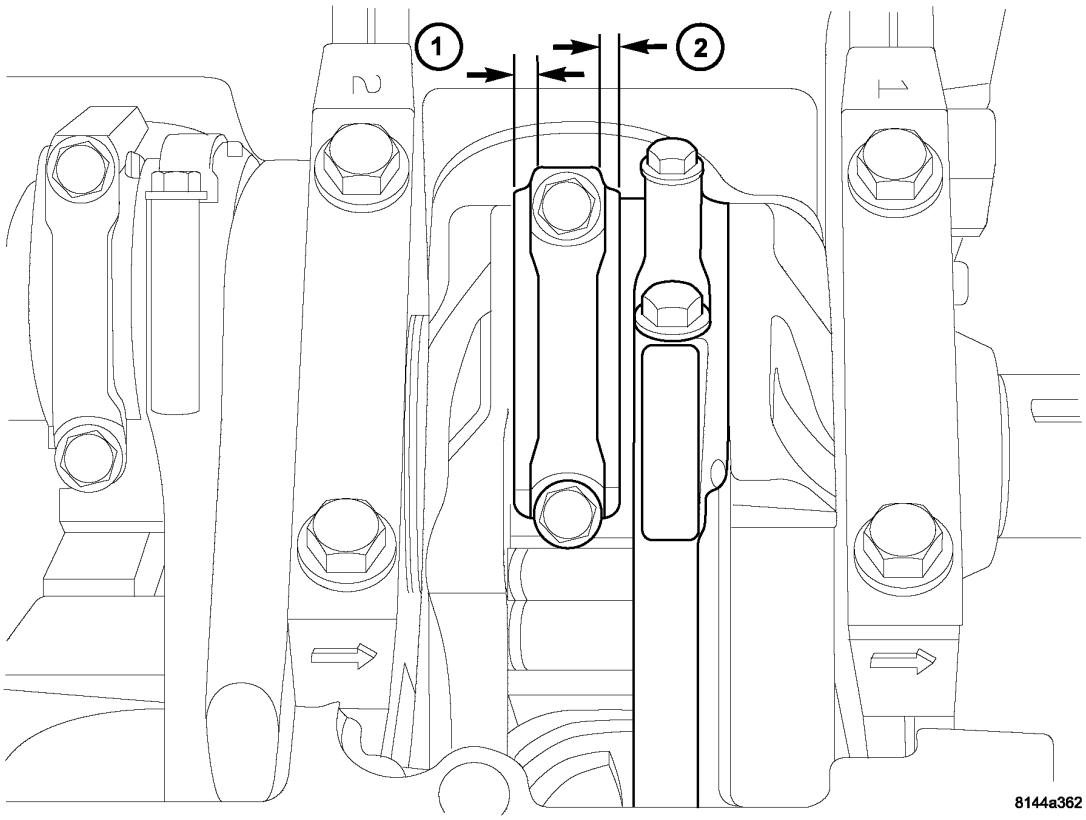

5. Remove connecting rod cap. Install Special Tool 8507 Connecting Rod Guides into the connecting rod being removed. Remove piston from cylinder bore. Repeat this procedure for each piston being removed.

CAUTION: Care must be taken not to nick crankshaft journals, as engine damage may occur

6. Immediately after piston and connecting rod removal, install bearing cap on the mating connecting rod to prevent damage to the fractured cap and rod surfaces.
7. Carefully remove piston rings from piston(s), starting from the top ring down.

CLEANING

CAUTION: DO NOT use a wire wheel or other abrasive cleaning devise to clean the pistons or connecting rods. The pistons have a Moly coating, this coating must not be damaged.

1. Using a suitable cleaning solvent clean the pistons in warm water and towel dry.
2. Use a wood or plastic scraper to clean the ring land grooves.

CAUTION: DO NOT remove the piston pin from the piston and connecting rod assembly.

INSPECTION

Check the connecting rod journal for excessive wear, taper and scoring (Refer to 9 - ENGINE/ENGINE BLOCK/ CONNECTING ROD BEARINGS - STANDARD PROCEDURE).

Check the connecting rod for signs of twist or bending.

Check the piston for taper and elliptical shape before it is fitted into the cylinder bore (Refer to 9 - ENGINE/ENGINE BLOCK/PISTON & CONNECTING ROD - STANDARD PROCEDURE).

Check the piston for scoring, or scraping marks in the piston skirts. Check the ring lands for cracks and/or deterioration.

INSTALLATION

1. Before installing piston and connecting rod assemblies into the bore, install the piston rings (Refer to 9 - ENGINE/ENGINE BLOCK/PISTON RINGS - STANDARD PROCEDURE).
2. Immerse the piston head and rings in clean engine oil. Position a ring compressor over the piston and rings. Tighten ring compressor. **Ensure position of rings do not change during this operation.**
3. Position bearing onto connecting rod. Lubricate bearing surface with clean engine oil.
4. Install Special Tool 8507 Connecting Rod Guides into connecting rod bolt threads.
5. The pistons are marked on the piston pin bore surface with an raised “F” or arrow on top of piston indicating installation position. This mark must be pointing toward the front of engine on both cylinder banks.
6. Wipe cylinder bore clean and lubricate with engine oil.

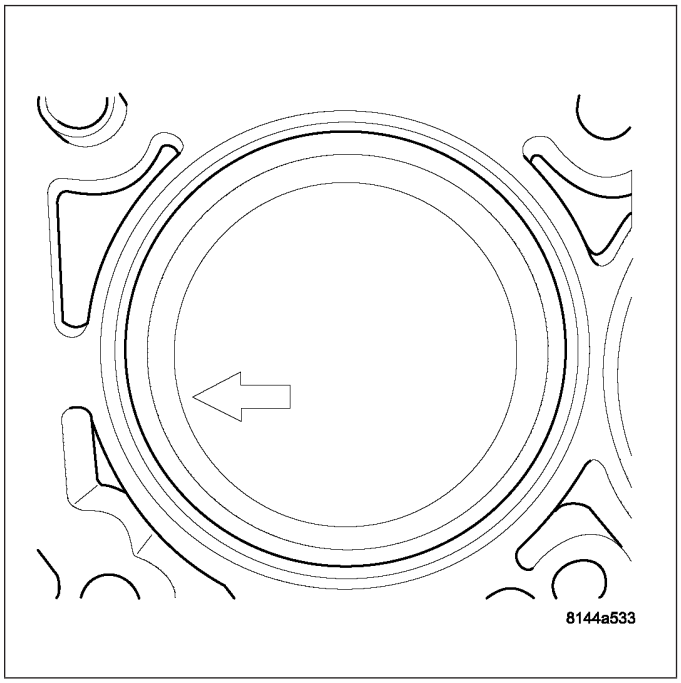

7. Rotate crankshaft until connecting rod journal is on the center of cylinder bore. Insert rod and piston into cylinder bore and carefully position connecting rod guides over crankshaft journal.
8. Tap piston down in cylinder bore using a hammer handle. While at the same time, guide connecting rod into position on rod journal.

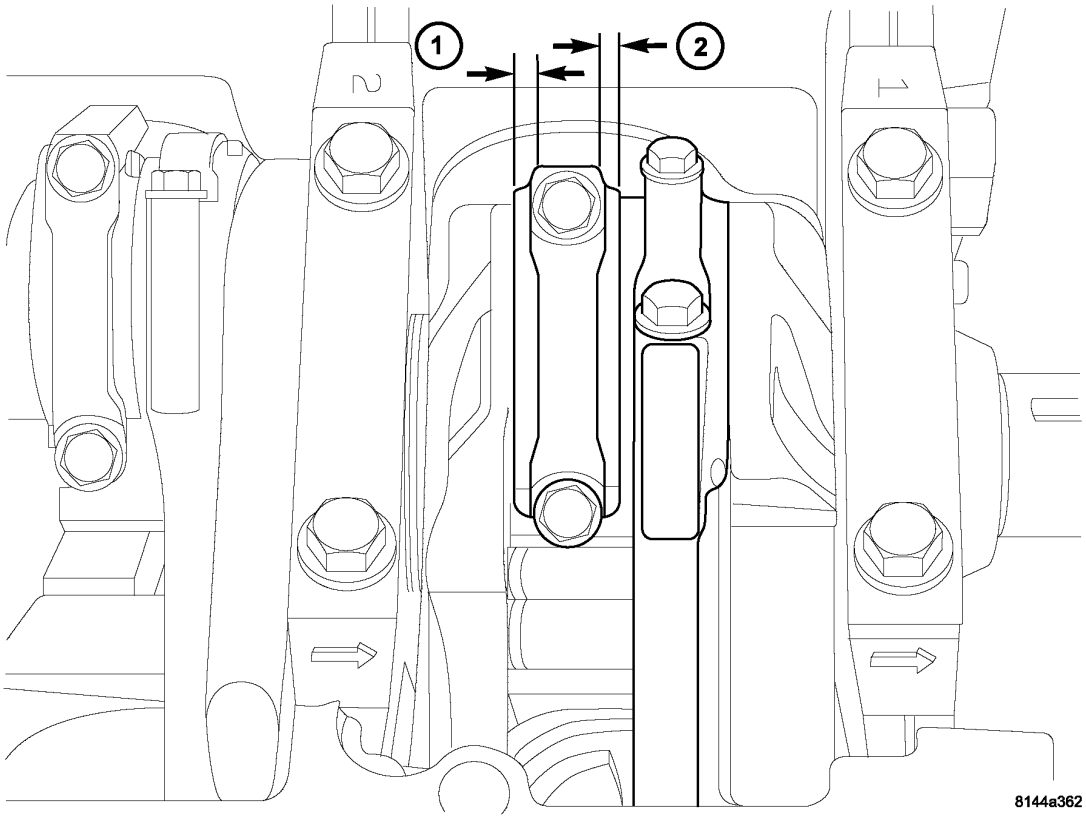

CAUTION: Connecting Rod Bolts are Torque to Yield Bolts and Must Not Be Reused. Always replace the Rod Bolts whenever they are loosened or removed.

9. Lubricate rod bolts and bearing surfaces with engine oil. Install connecting rod cap and bearing. Tighten bolts to 21 N·m (15 ft. lbs.) plus a 90° turn.
10. Install the following components:
    - Cylinder head(s). (Refer to 9 - ENGINE/CYLINDER HEAD - INSTALLATION).
    - Cylinder head covers (Refer to 9 - ENGINE/CYLINDER HEAD/CYLINDER HEAD COVER(S) - INSTALLATION).
    - Install the intake manifold.
    - Oil pan and gasket/windage tray. (Refer to 9 - ENGINE/LUBRICATION/OIL PAN - INSTALLATION).
11. Fill crankcase with proper engine oil to correct level.
12. Connect negative cable to battery.

RINGS-PISTON

STANDARD PROCEDURE - PISTON RING FITTING

Before reinstalling used rings or installing new rings, the ring clearances must be checked.

1. Wipe the cylinder bore clean.
2. Insert the ring in the cylinder bore.

NOTE: The ring gap measurement must be made with the ring positioned at least 12mm (0.50 inch.) from bottom of cylinder bore.

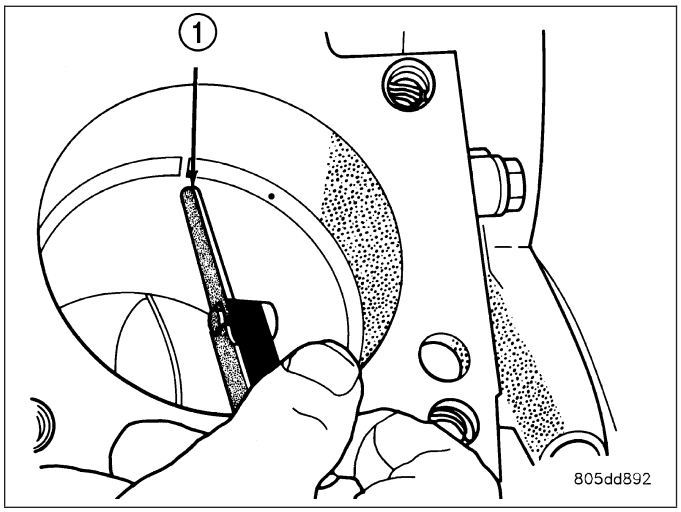

3. Using a piston, to ensure that the ring is squared in the cylinder bore, slide the ring downward into the cylinder.
4. Using a feeler gauge check the ring end gap. Replace any rings not within specification.

PISTON RING SIDE CLEARANCE

NOTE: Make sure the piston ring grooves are clean and free of nicks and burrs.

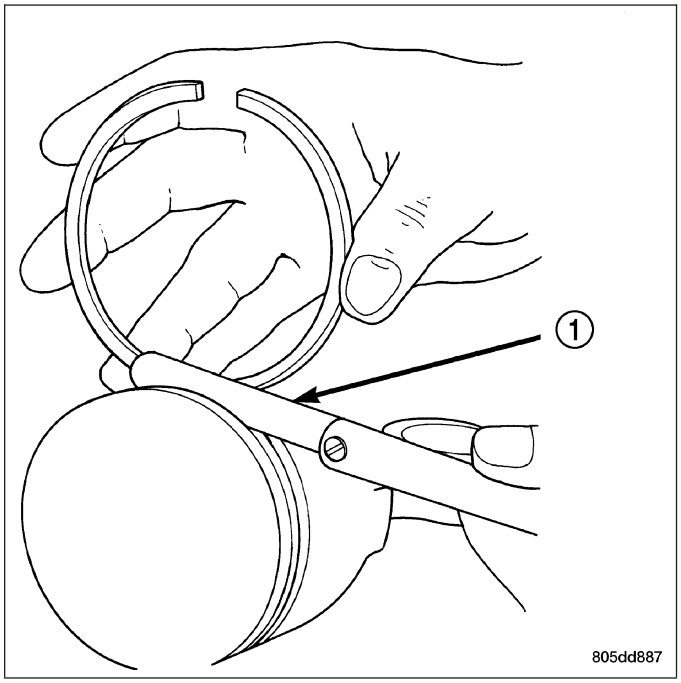

5. Measure the ring side clearance as shown make sure the feeler gauge fits snugly between the ring land and the ring. Replace any ring not within specification.
6. Rotate the ring around the piston, the ring must rotate in the groove with out binding.

PISTON RING SPECIFICATION CHART

Ring Position	Ring/Groove Side Clearance	Maximum Clearance
Upper Ring	0.02-0.07mm (0.0008- 0.0028 in.)	0.11mm (0.004 in.)
Intermediate Ring	0.02-0.06 mm (0.0008-0.0023 in.)	0.10mm (0.004 in.)

Ring Position Ring Position	Ring/Groove Ring Gap	Maximum Wear Limit
Upper Ring	0.23-0.38mm (0.0090-0.0149 in.)	0.43mm (0.017 in.)
Intermediate Ring	0.35-0.60mm (0.0137-0.0236 in.)	0.74mm (0.029 in.)
Oil Control Ring (Steel Rail)	0.015-0.66mm (0.0059- 0.0259 in.)	0.76mm (0.030 in.)

7. The No. 1 and No. 2 piston rings have a different cross section. Ensure No. 2 ring is installed with manufacturers I.D. mark (Dot) facing up, towards top of the piston.

NOTE: Piston rings are installed in the following order:
- **Oil ring expander.**
- **Lower oil ring side rail.**
- **Upper oil ring side rail.**
- **No. 2 Intermediate piston ring.**
- **No. 1 Upper piston ring.**

8. Install the oil ring expander.
9. Install upper side rail by placing one end between the piston ring groove and the expander ring. Hold end firmly and press down the portion to be installed until side rail is in position. Repeat this step for the lower side rail.

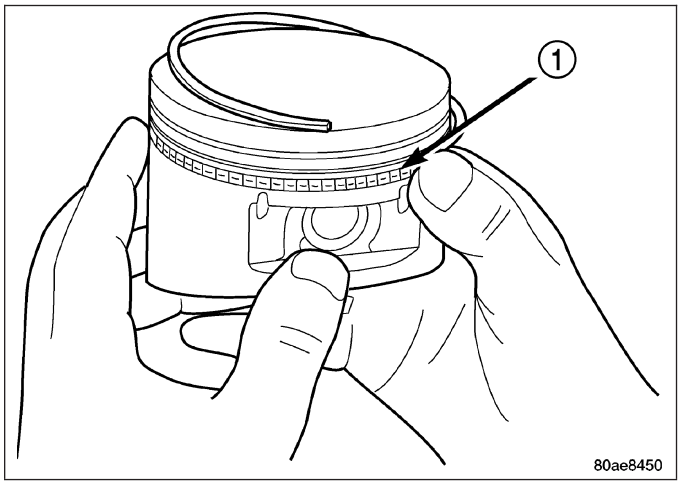

10. Install No. 2 intermediate piston ring using a piston ring installer.
11. Install No. 1 upper piston ring using a piston ring installer.

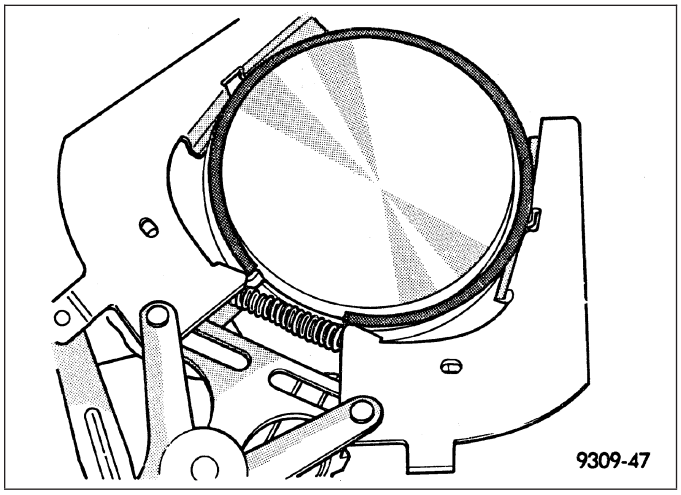

12. Position piston ring end gaps as shown in. It is important that expander ring gap is at least 45° from the side rail gaps, but not on the piston pin center or on the thrust direction.

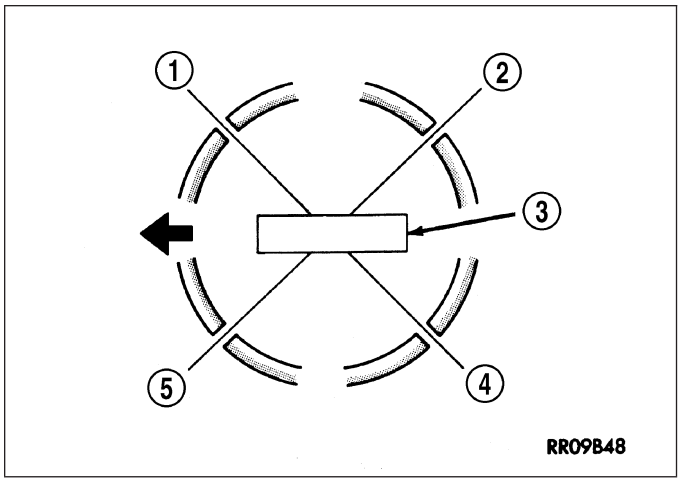

DAMPER-CRANKSHAFT

REMOVAL

1. Disconnect negative cable from battery.
2. Remove accessory drive belt (Refer to 7 - COOLING/ACCESSORY DRIVE/DRIVE BELTS - REMOVAL).
3. Drain cooling system (Refer to 7 - COOLING - STANDARD PROCEDURE).
4. Remove radiator upper hose.
5. Remove fan shroud (Refer to 7 - COOLING/ENGINE/RADIATOR FAN - REMOVAL).
6. Remove crankshaft damper bolt.
7. Remove damper using Special Tools 8513A Insert and 1023 Three Jaw Puller.

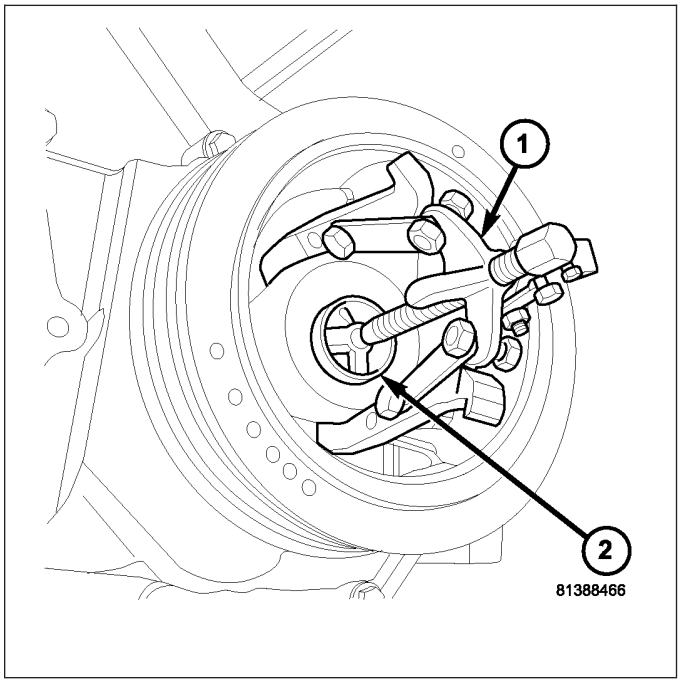

INSTALLATION

CAUTION: To prevent severe damage to the Crankshaft, Damper or Special Tool 8512–A, thoroughly clean the damper bore and the crankshaft nose before installing Damper.

1. Slide damper onto crankshaft slightly.

CAUTION: Special Tool 8512–A, is assembled in a specific sequence. Failure to assemble this tool in this sequence can result in tool failure and severe damage to either the tool or the crankshaft.

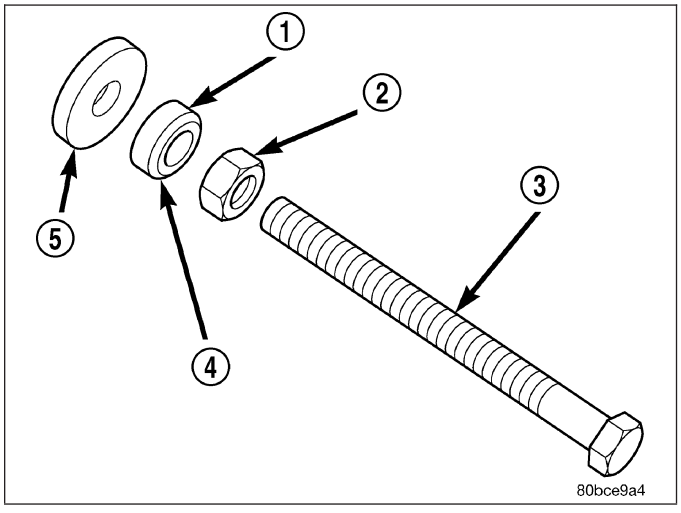

2. Assemble Special Tool 8512–A as follows, The nut is threaded onto the shaft first (2). Then the roller bearing (1) is placed onto the threaded rod (3) The hardened bearing surface of the bearing (1) **MUST** face the nut (2). Then the hardened washer (5) slides onto the threaded rod (3). Once assembled coat the threaded rod's threads with Mopar® Nickel Anti-Seize or (Loctite No. 771).
3. Using Special Tool 8512–A, press damper onto crankshaft.
4. Install then tighten crankshaft damper bolt to 176 N·m (129 ft. lbs.).
5. Install radiator upper hose.

6. Install accessory drive belt (Refer to 7 - COOLING/ACCESSORY DRIVE/DRIVE BELTS - INSTALLATION).
7. Refill cooling system (Refer to 7 - COOLING - STANDARD PROCEDURE).
8. Connect negative cable to battery.

COVER-STRUCTURAL

DESCRIPTION

The structural dust cover is made of die cast aluminum and joins the lower half of the transmission bell housing to the engine. The LX uses an integral one piece aluminum oil pan/structural cover.

OPERATION

The structural cover provides additional powertrain stiffness and reduces noise and vibration. The LX uses an integral structural cover/oil pan.

SOLENOID-MDS

DESCRIPTION

The Multi Displacement System selectively deactivates cylinders 1,4,6, and 7, to improve fuel economy. It has two modes of operation :

- 8 cylinders for acceleraton and heavy loads.
- 4 cylinders for cruising and city traffic.

The main components of the Multi Displacement System are :

- Unique MDS camshaft.
- Deactivating roller tappets.
- 4 control valves/solenoids.
- control valve/solenoid wiring harness.
- oil temp sensor.

OPERATION

Cylinder Deactivation

- Trap an exhaust charge from a normal combustion event
- Normal combustion event
- Don't open the exhaust valve
- Don't open the intake valve
- Piston is an air spring
- Cylinders deactivated in firing sequence

Cylinder Reactivation

- Open the exhaust valve
- Empty the cylinder
- Open the intake valve
- Normal combustion event
- Cylinders reactivated in firing sequence

DIAGNOSIS AND TESTING

The Multi Displacement System has the following detectible issues:

- Solenoid circuit
- Fail to deactivate a cylinder(s)
- Fail to reactivate a cylinder(s)
- Low oil pressure

CONDITION	POSSIBLE CAUSES	CORRECTION
MDS does not activate	1. Low oil pressure 2. Bad oil temp sensor 3. Malfunctioning MDS Solenoid 4. Malfunctioning MDS Tappet	1. Check for proper oil pressure 2. Replace oil temp sensor 3. Replace Solenoid 4. Replace Tappet
MDS Does Not Deactivate	1. Low oil pressure 2. Bad oil temp sensor 3. Malfunctioning MDS Solenoid 4. Malfunctioning MDS Tappet	1. Check for proper oil pressure 2. Replace oil temp sensor 3. Replace Solenoid 4. Replace Tappet

REMOVAL

1. Disconnect the negative battery cable.
2. Remove the intake manifold. (Refer to 9 - ENGINE/MANIFOLDS/INTAKE MANIFOLD - REMOVAL).
3. Remove wiring harness connectors from the MDS solenoids.
4. Remove hold down bolt from MDS solenoid.
5. Remove MDS solenoid.

INSTALLATION

1. Verify that MDS bores are free of debris, before solenoid installation.
2. Install MDS solenoid fully into block.
3. Install hold down bolt and torque to 11 N·m (97 in. lbs.).
4. Reconnect the MDS wiring harness to the solenoids.
5. Install the intake manifold. (Refer to 9 - ENGINE/MANIFOLDS/INTAKE MANIFOLD - INSTALLATION).

ENGINE MOUNTING-FRONT

REMOVAL

REMOVAL

1. Disconnect negative battery cable.
2. Raise vehicle.
3. Remove the generator support bracket (1).

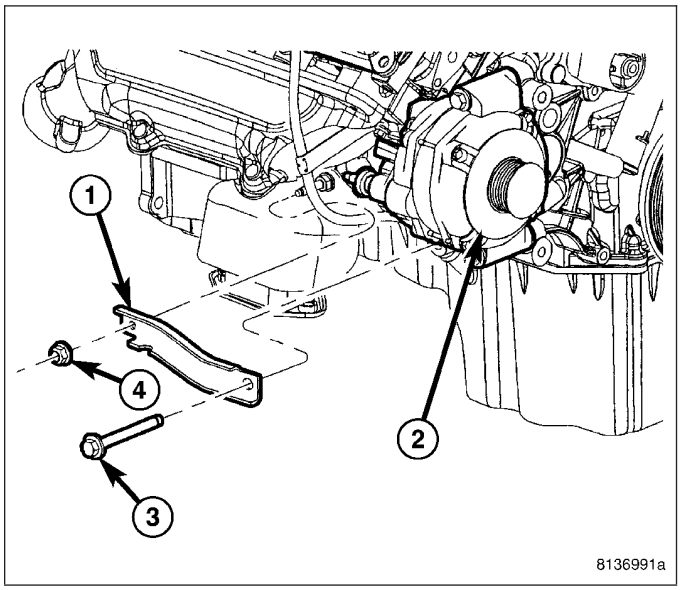

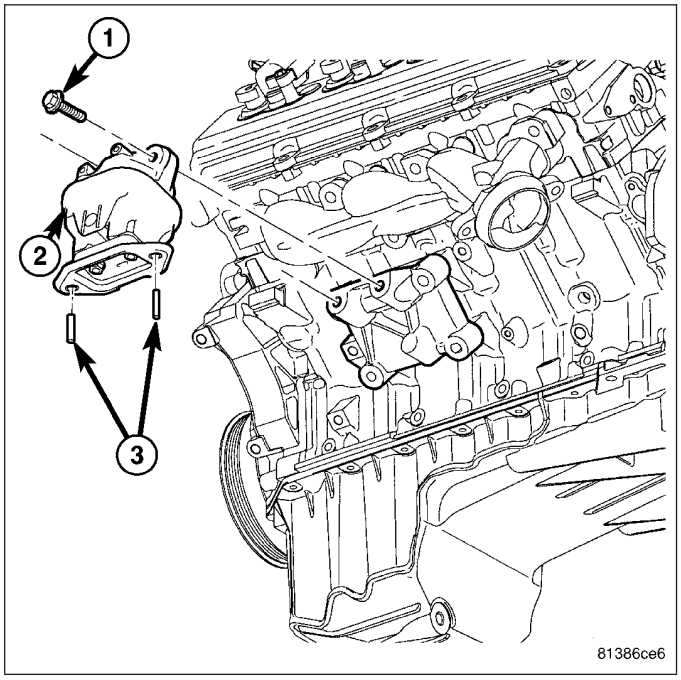

4. Remove hydromount to frame studs (3,4) and nuts.
5. Raise engine using suitable jack.
6. Remove hydromount to bracket fasteners (1,2).
7. Remove hydromount from engine.

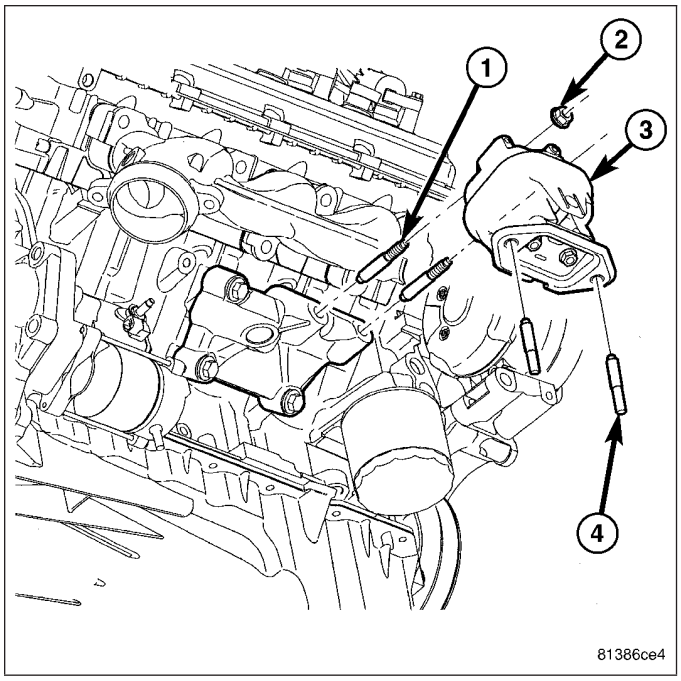

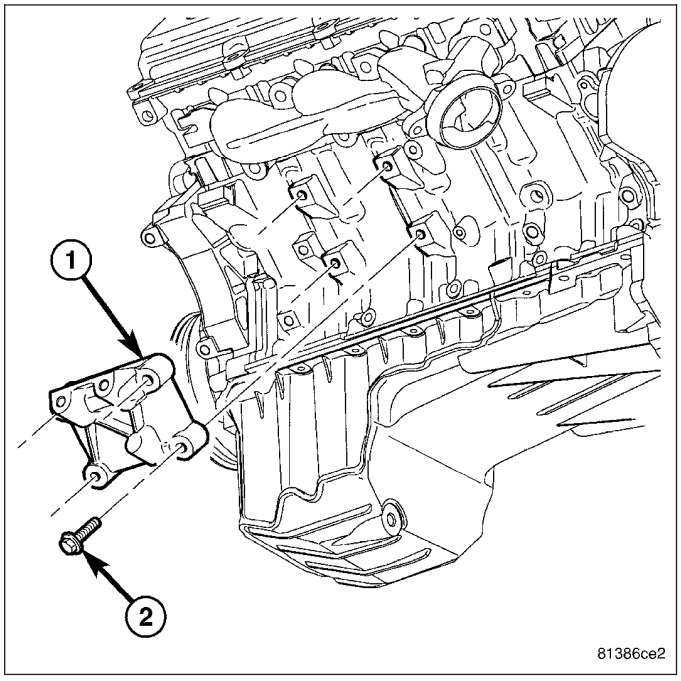

8. Remove engine mount brackets (1), if needed.

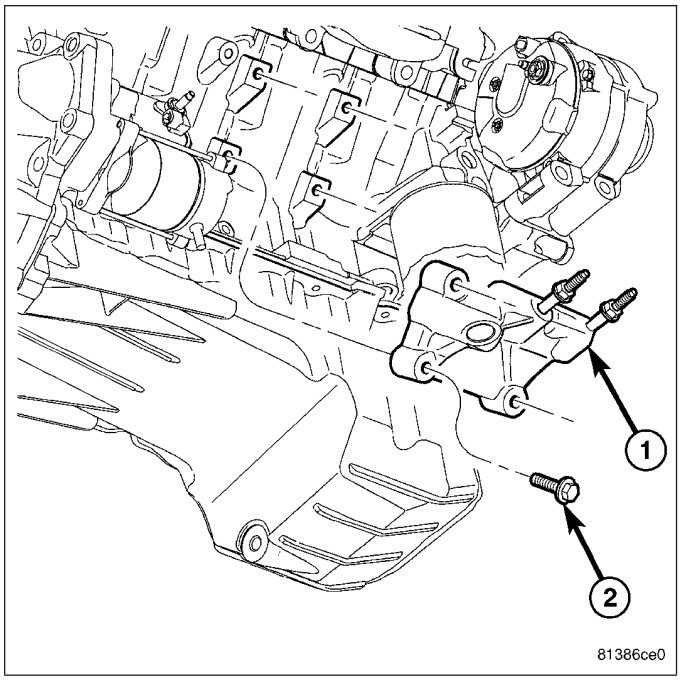

REMOVAL - AWD

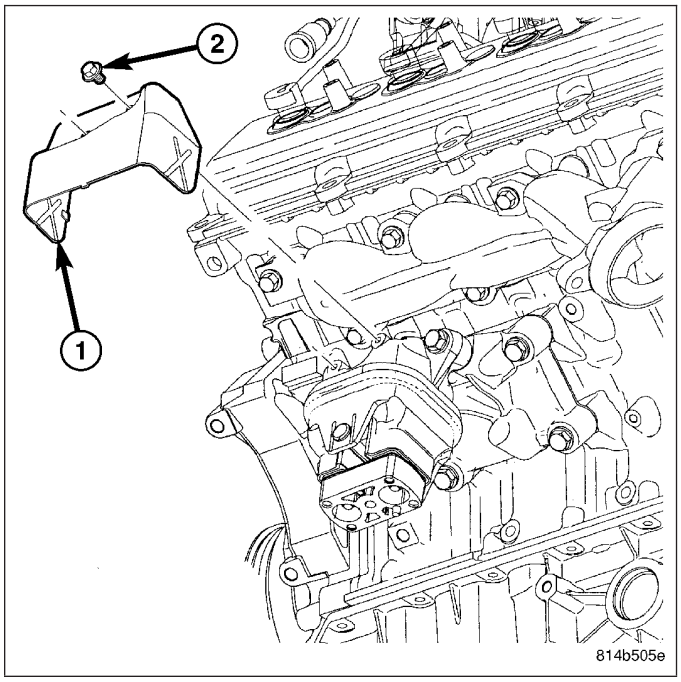

1. Disconnect negative battery cable.
2. Raise vehicle.
3. Remove the generator support bracket.
4. Remove the heat shield (1).

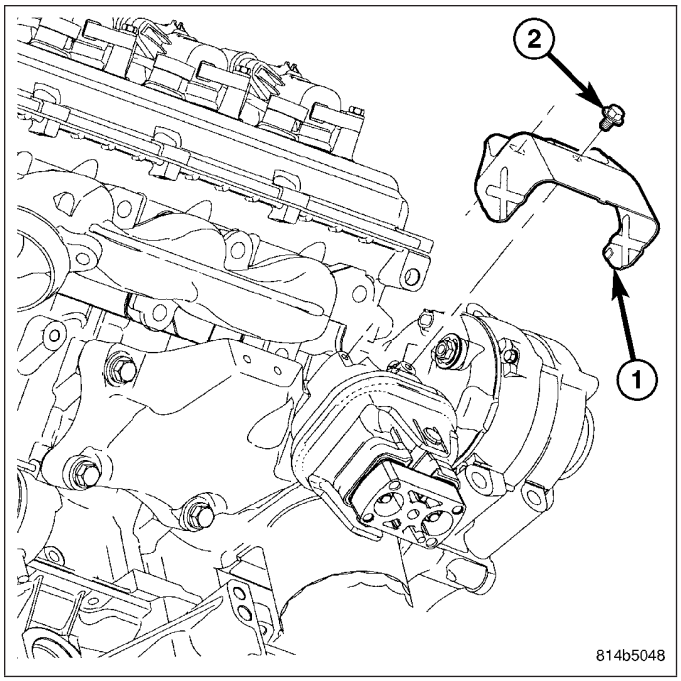

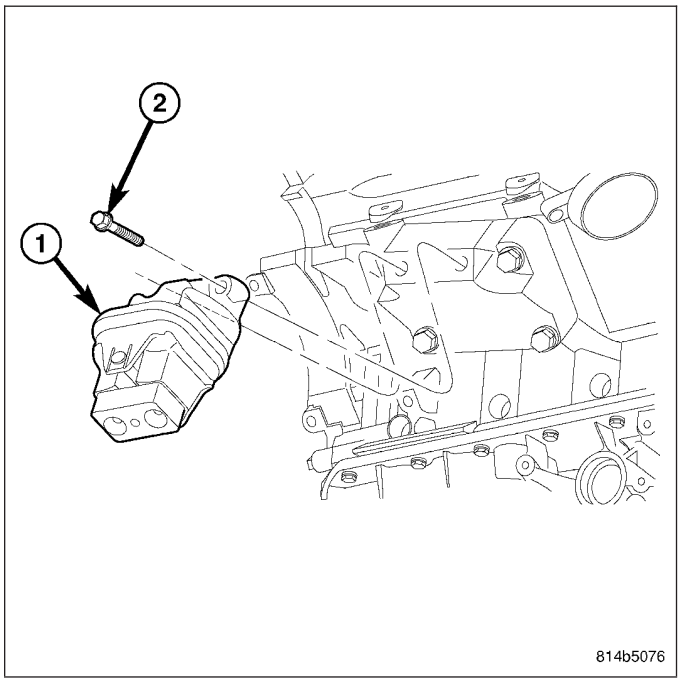

5. Remove engine hydromount to frame nuts, and studs (3).
6. Raise engine using suitable jack.
7. Remove engine mount to insulator bolts (2).
8. Remove engine hydromount (1) from engine.

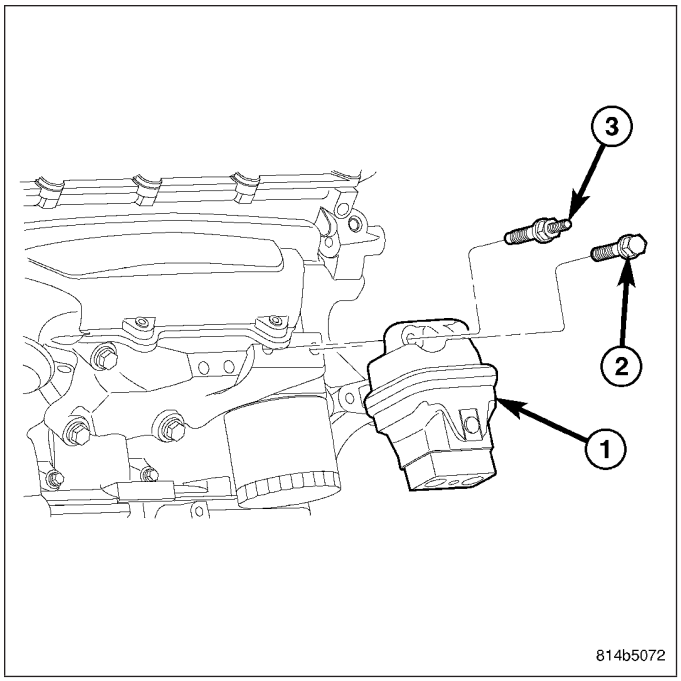

INSTALLATION

INSTALLATION

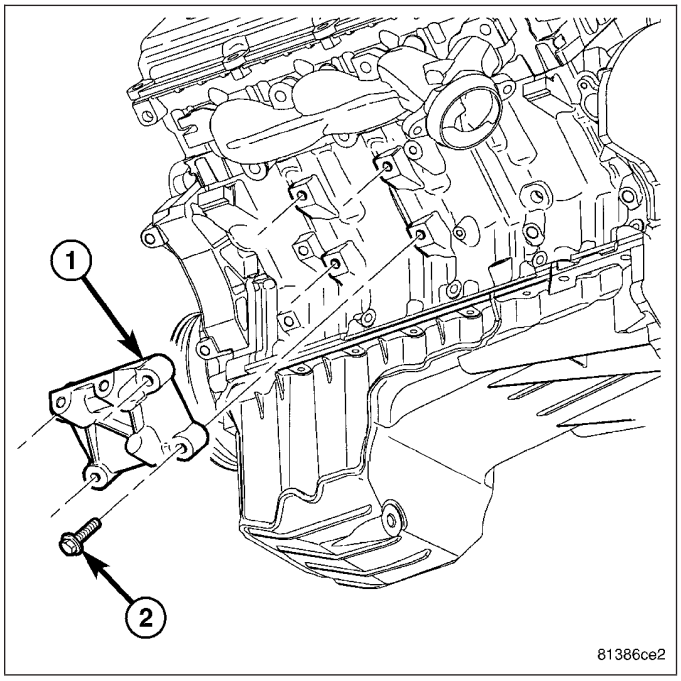

1. Install the engine mount brackets (1), if removed.

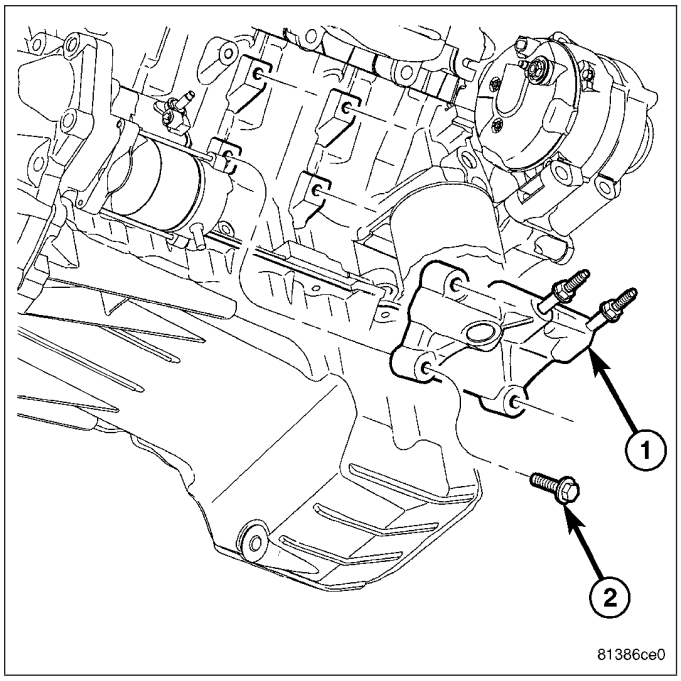

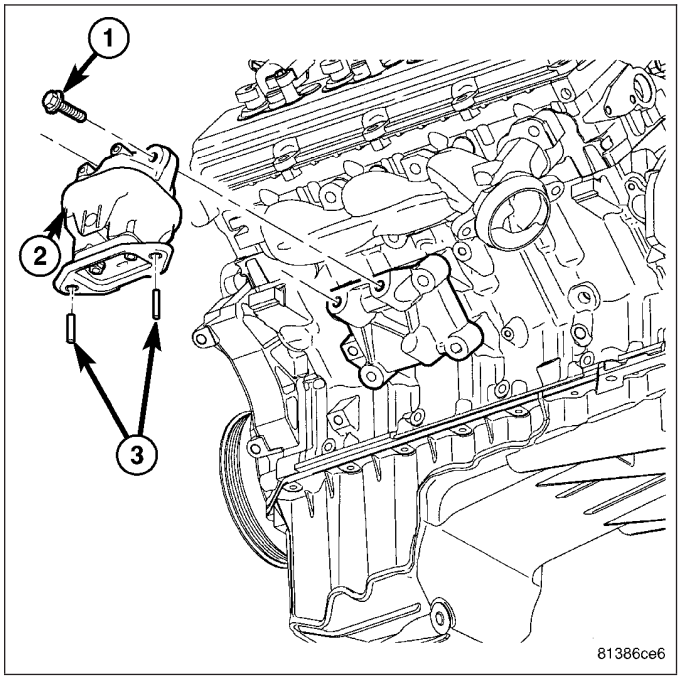

2. Install hydromount (3) on the engine. Tighten hydromount to bracket fasteners.
3. Install the studs (3,1) to the hydromount (2).

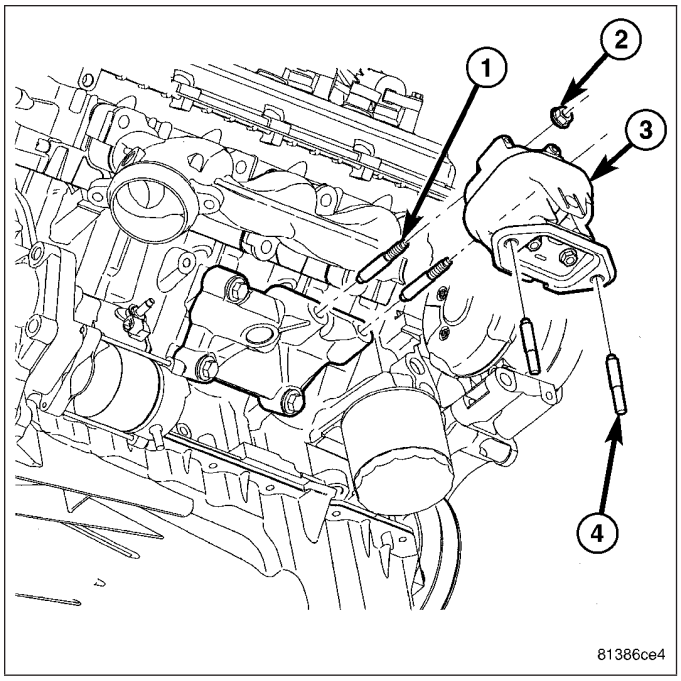

4. Install the generator support bracket (1).
5. Lower the engine.

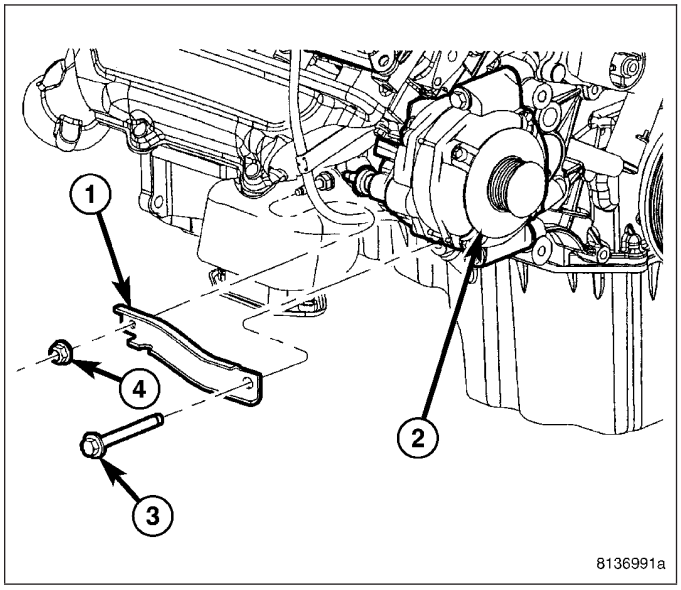

6. Install the nuts on the studs (3,4), and tighten.
7. Lower vehicle.
8. Connect negative battery cable.

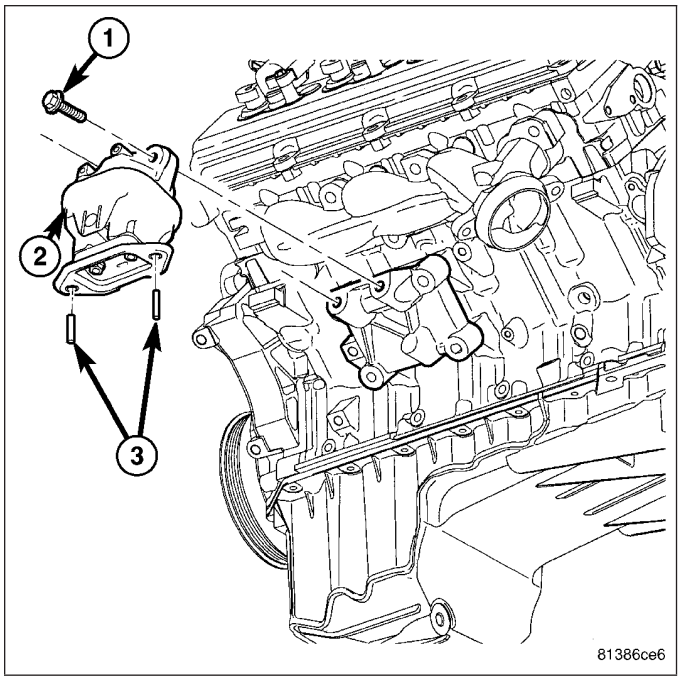

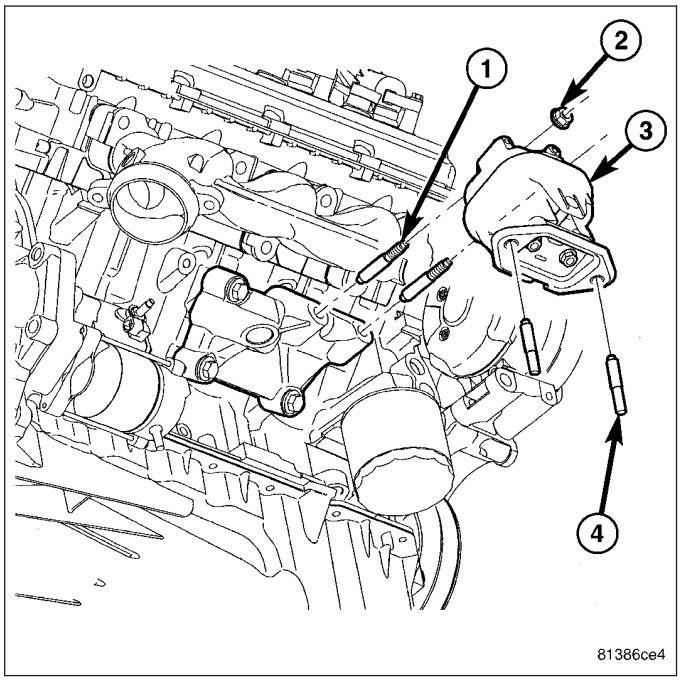

INSTALLATION - AWD

1. Install the engine mount brackets, if removed.
2. Install hydromount (1) on the engine. Tighten hydromount to bracket fasteners.
3. Install the fasteners to the hydromount (2,3,).
4. Install the generator support bracket.

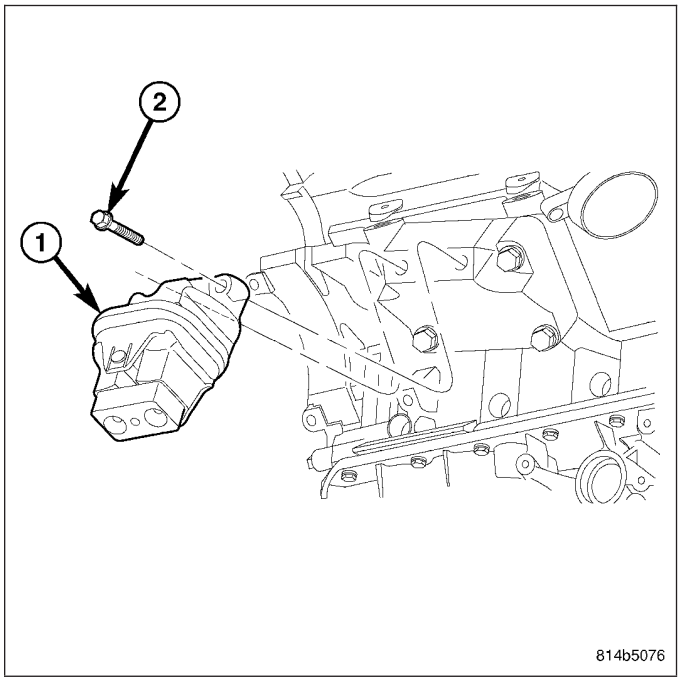

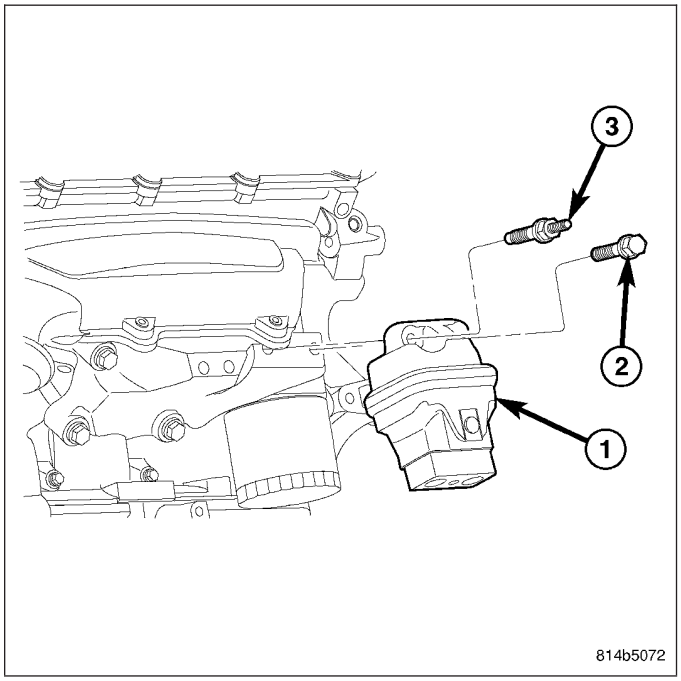

5. Install the heat shields (1).
6. Lower the engine.

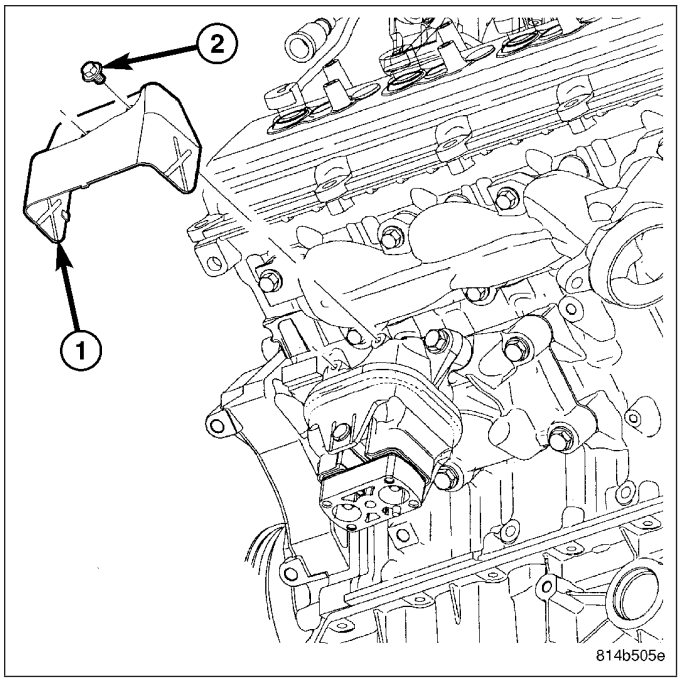

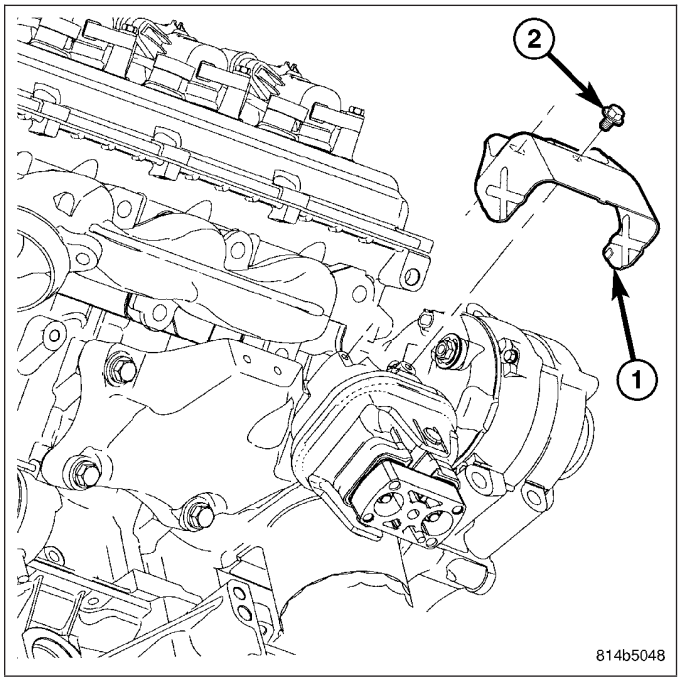

7. Install the hydromount (1) to frame nuts on the studs, and tighten.
8. Lower vehicle.
9. Connect negative battery cable.

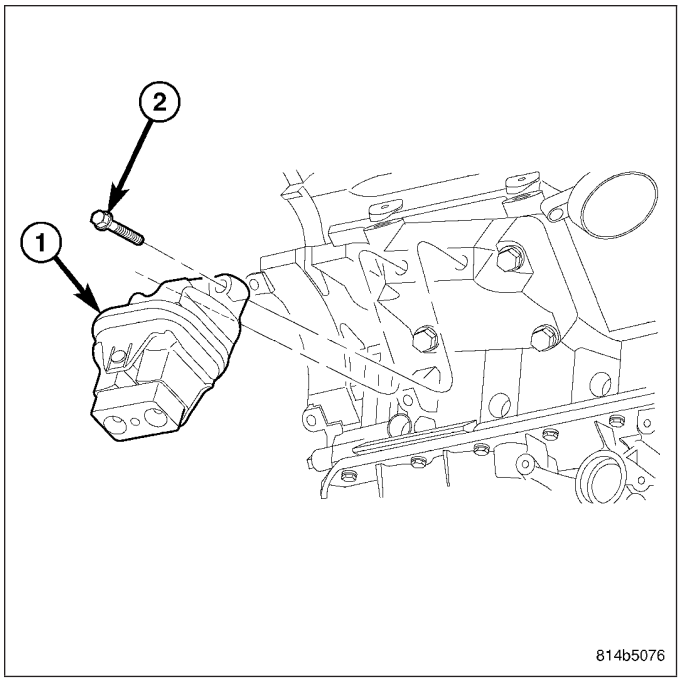

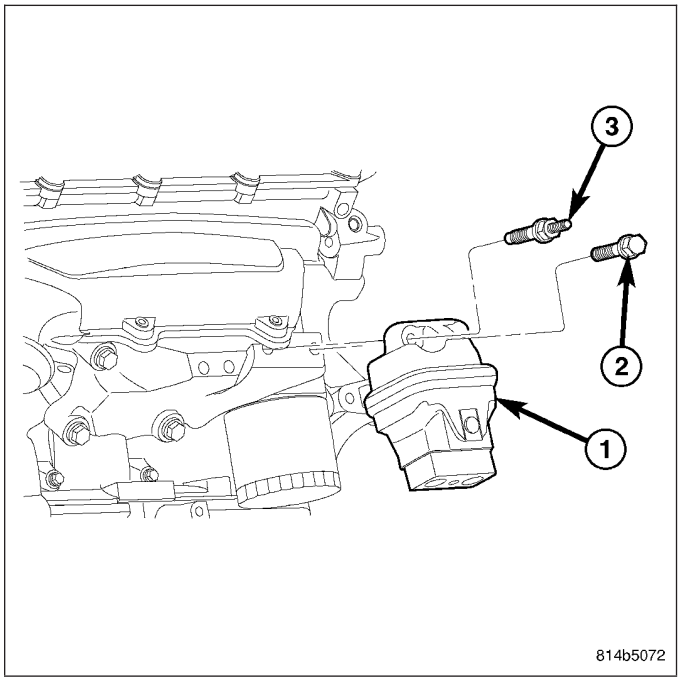

MOUNTING-ENGINE REAR

REMOVAL

1. Raise the vehicle on a hoist.
2. Using a suitable jack, support transmission.
3. Remove the crossmember (2).

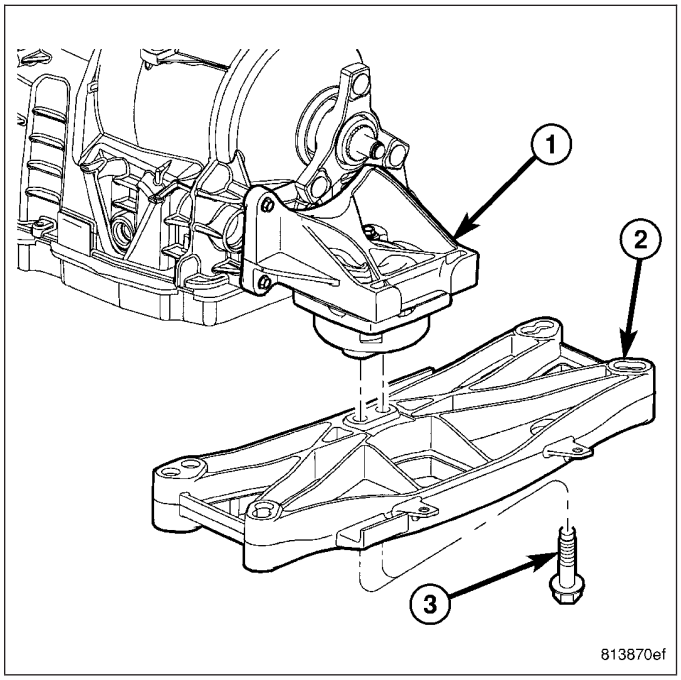

4. Remove the fasteners (1) from the transmission mount (3) to crossmember.
5. Remove the mount (3).

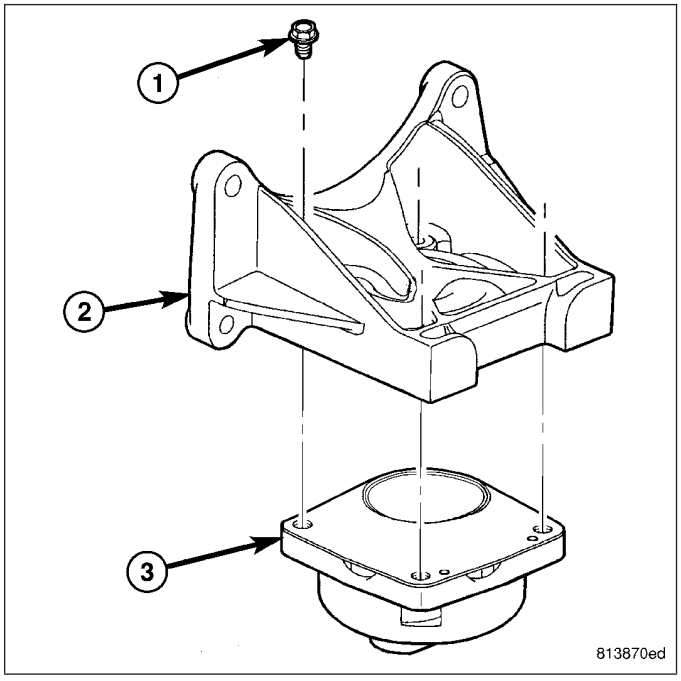

6. Remove the transmission mount bracket (2), if required.

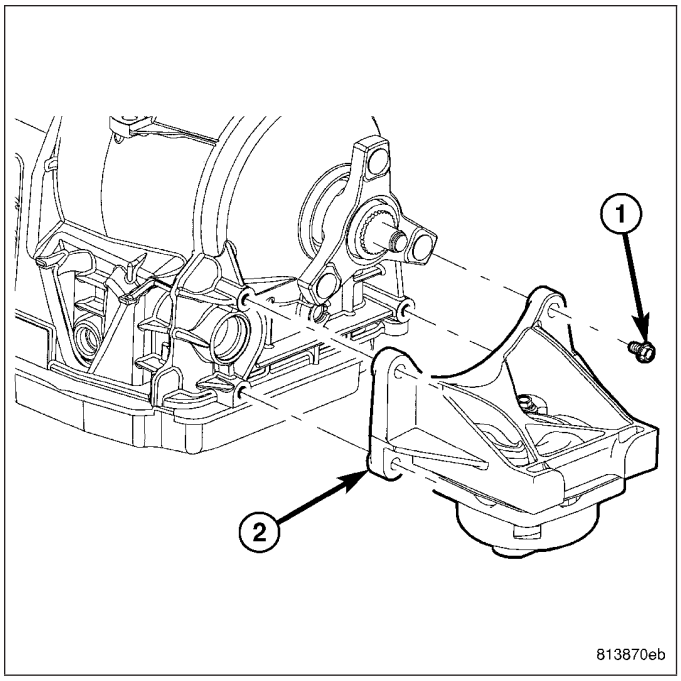

INSTALLATION

1. Install the transmission mount bracket (2), if removed.

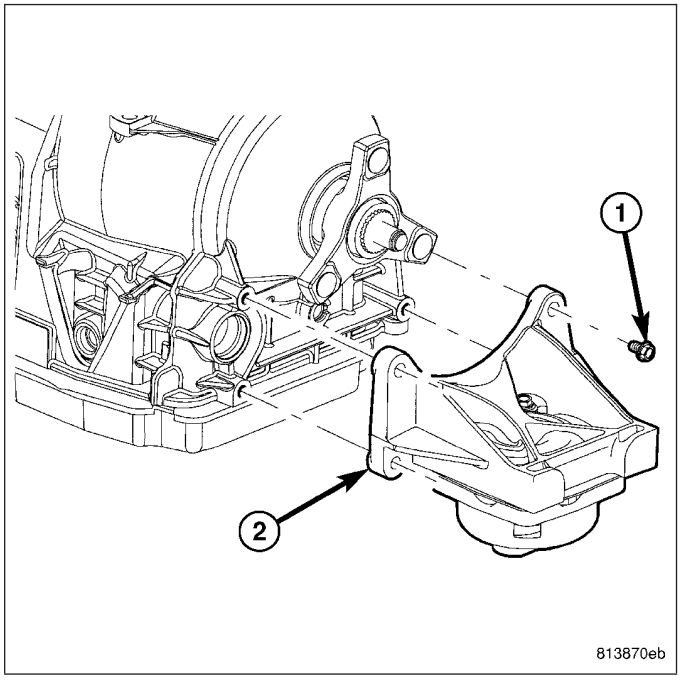

2. Position the transmission mount (3) on the transmission mount bracket (2). Install the bolts (1) that attach the transmission mount (3) to the bracket (2).
3. Torque the bolts to N·m (ft.lbs.) torque.

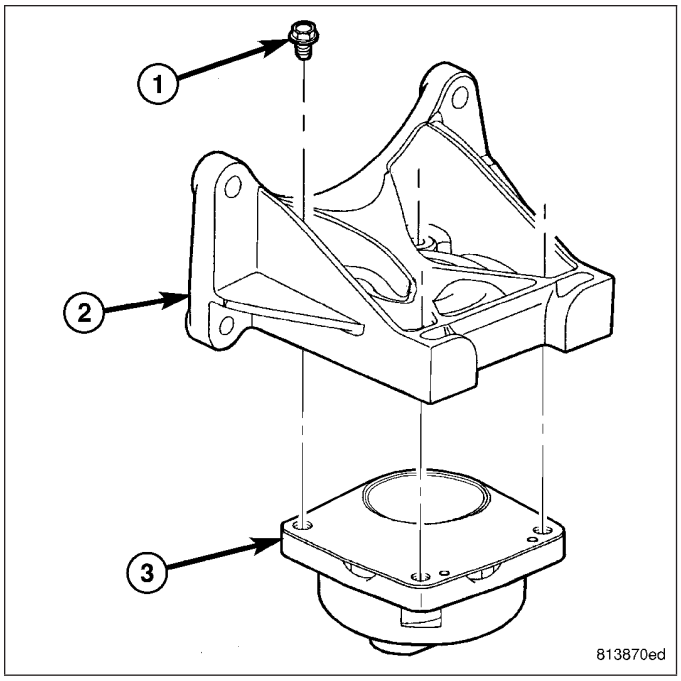

4. Install the crossmember (2).

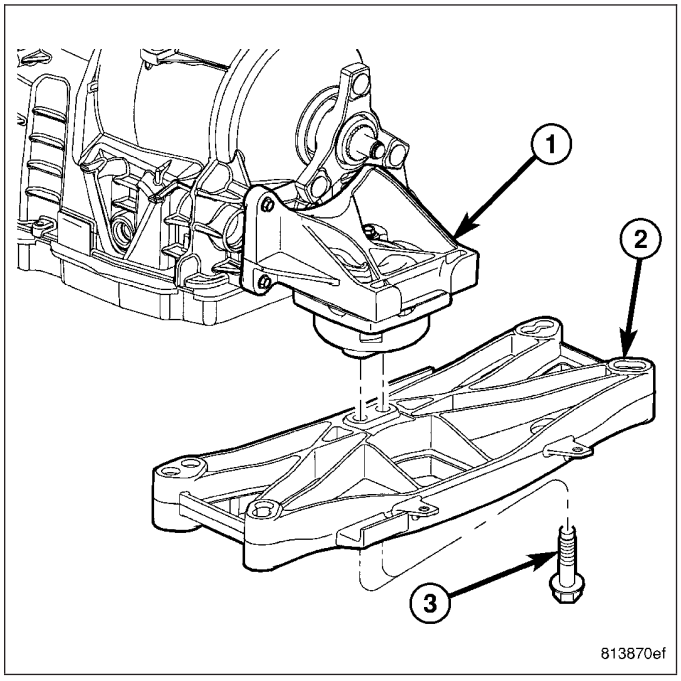

LUBRICATION

DESCRIPTION

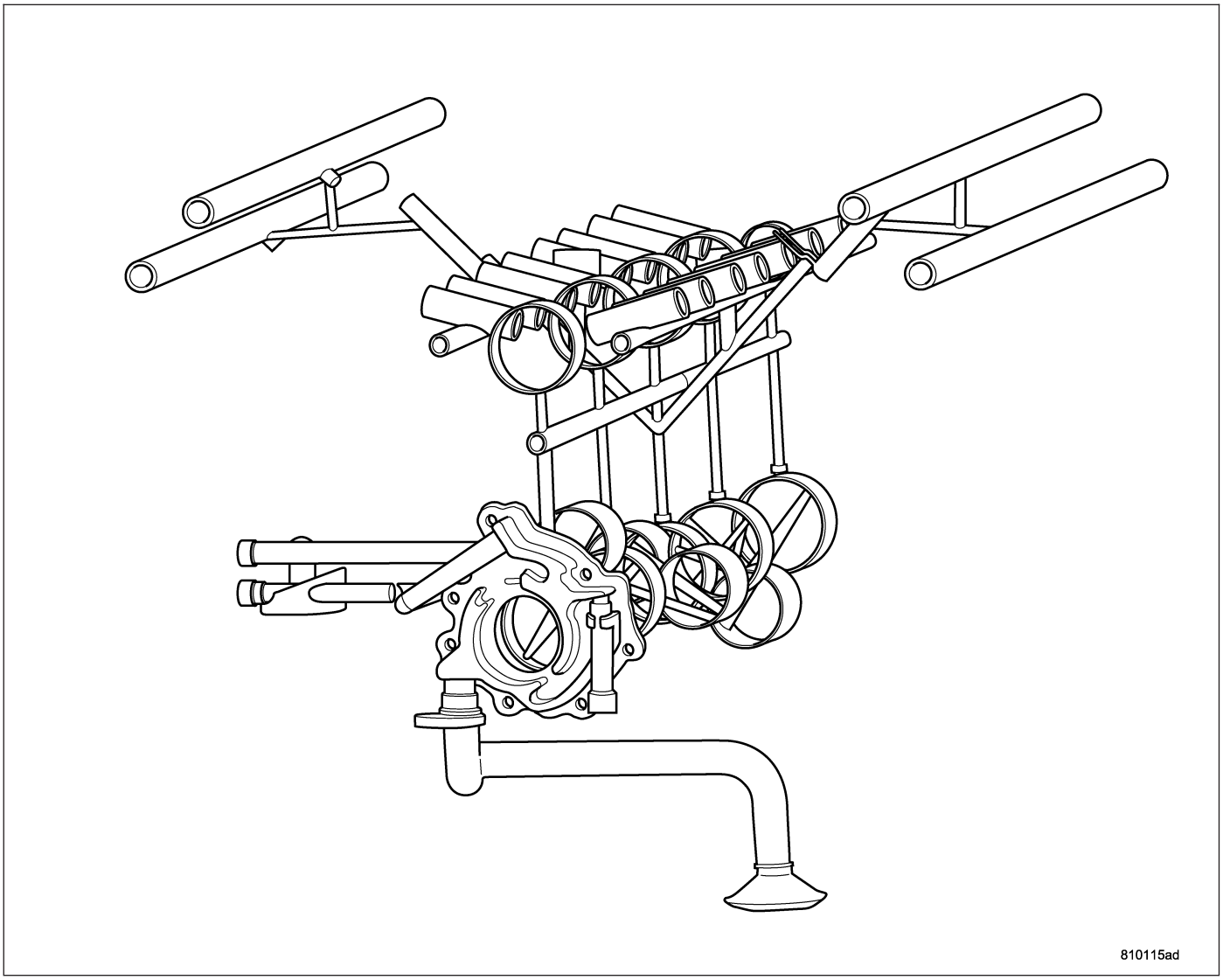

The lubrication system is a full flow filtration pressure feed type.

DIAGNOSIS AND TESTING

DIAGNOSIS AND TESTING - CHECKING ENGINE OIL PRESSURE

1. Remove oil pressure sending unit and install gauge assembly C-3292.
2. Run engine until thermostat opens.
3. Oil Pressure:
   - Curb Idle–25 kPa (4 psi) minimum
   - 3000 rpm–170 - 758 kPa (25 - 110 psi)
4. If oil pressure is 0 at idle, shut off engine. Check for a clogged oil pick-up screen or a pressure relief valve stuck open.

DIAGNOSIS AND TESTING - ENGINE OIL LEAK

Begin with a thorough visual inspection of the engine, particularly at the area of the suspected leak. If an oil leak source is not readily identifiable, the following steps should be followed:

1. Do not clean or degrease the engine at this time because some solvents may cause rubber to swell, temporarily stopping the leak.
2. Add an oil soluble dye (use as recommended by manufacturer). Start the engine and let idle for approximately 15 minutes. Check the oil dipstick to make sure the dye is thoroughly mixed as indicated with a bright yellow color under a black light.
3. Using a black light, inspect the entire engine for fluorescent dye, particularly at the suspected area of oil leak. If the oil leak is found and identified, repair per service manual instructions.
4. If dye is not observed, drive the vehicle at various speeds for approximately 24 km (15 miles), and repeat inspection.**If the oil leak source is not positively identified at this time**, proceed with the air leak detection test method.

Air Leak Detection Test Method

1. Remove the PCV valve from the IAFM. Cap or plug the PCV valve grommet.
2. Attach an air hose with pressure gauge and regulator to the dipstick tube.

CAUTION: Do not subject the engine assembly to more than 20.6 kPa (3 PSI) of test pressure.

3. Gradually apply air pressure from 1 psi to 2.5 psi maximum while applying soapy water at the suspected source. Adjust the regulator to the suitable test pressure that provide the best bubbles which will pinpoint the leak source. If the oil leak is detected and identified, repair per service manual procedures.
4. If the leakage occurs at the rear oil seal area, refer to the section, Inspection for Rear Seal Area Leak.
5. If no leaks are detected, turn off the air supply and remove the air hose and all plugs and caps. Install the PCV valve.
6. Clean the oil off the suspect oil leak area using a suitable solvent. Drive the vehicle at various speeds approximately 24 km (15 miles). Inspect the engine for signs of an oil leak by using a black light.

INSPECTION FOR REAR SEAL AREA LEAKS

Since it is sometimes difficult to determine the source of an oil leak in the rear seal area of the engine, a more involved inspection is necessary. The following steps should be followed to help pinpoint the source of the leak.

If the leakage occurs at the crankshaft rear oil seal area:

1. Disconnect the battery.
2. Raise the vehicle.
3. Remove torque converter or clutch housing cover and inspect rear of block for evidence of oil. Use a black light to check for the oil leak:
   a. Circular spray pattern generally indicates seal leakage or crankshaft damage.
   b. Where leakage tends to run straight down, possible causes are a porous block, distributor seal, camshaft bore cup plugs oil galley pipe plugs, oil filter runoff, and main bearing cap to cylinder block mating surfaces.
4. If no leaks are detected, pressurize the crankcase as outlined in the, Inspection (Engine oil Leaks in general)

CAUTION: Do not exceed 20.6 kPa (3 psi).

5. If the leak is not detected, very slowly turn the crankshaft and watch for leakage. If a leak is detected between the crankshaft and seal while slowly turning the crankshaft, it is possible the crankshaft seal surface is damaged. The seal area on the crankshaft could have minor nicks or scratches that can be polished out with emery cloth.

CAUTION: Use extreme caution when crankshaft polishing is necessary to remove minor nicks and scratches. The crankshaft seal flange is especially machined to complement the function of the rear oil seal.

6. For bubbles that remain steady with shaft rotation, no further inspection can be done until disassembled.

OIL

STANDARD PROCEDURE - ENGINE OIL SERVICE

The engine oil level indicator is located at the right hand of the engine on the 5.7L engines.

CRANKCASE OIL LEVEL INSPECTION

CAUTION: Do not overfill crankcase with engine oil, pressure loss or oil foaming can result.

Inspect engine oil level approximately every 800 kilometers (500 miles). Unless the engine has exhibited loss of oil pressure, run the engine for about ten minutes before checking oil level. Checking engine oil level on a cold engine is not accurate.

To ensure proper lubrication of an engine, the engine oil must be maintained at an acceptable level. The acceptable levels are indicated between the ADD and SAFE marks on the engine oil dipstick.

1. Position vehicle on level surface.
2. With engine OFF, allow approximately five minutes for oil to settle to bottom of crankcase, remove engine oil dipstick.
3. Wipe dipstick clean.
4. Install dipstick and verify it is seated in the tube.
5. Remove dipstick, with handle held above the tip, take oil level reading.
6. Add oil only if level is below the ADD mark on dipstick.

ENGINE OIL CHANGE

Change engine oil at mileage and time intervals described in Maintenance Schedules (Refer to LUBRICATION & MAINTENANCE/MAINTENANCE SCHEDULES - DESCRIPTION).

Run engine until achieving normal operating temperature.

1. Position the vehicle on a level surface and turn engine off.
2. Remove oil fill cap.
3. Hoist and support vehicle on safety stands.
4. Remove the belly pan (Refer to 23 - BODY/EXTERIOR/BELLY PAN - REMOVAL).
5. Place a suitable drain pan under crankcase drain.
6. Remove drain plug from crankcase and allow oil to drain into pan. Inspect drain plug threads for stretching or other damage. Replace drain plug if damaged.
7. Install drain plug in crankcase. Torque to 27 N·m (20 ft. lbs.).
8. Lower vehicle and fill crankcase with specified type and amount of engine oil described in this section.
9. Install oil fill cap.
10. Start engine and inspect for leaks.
11. Stop engine and inspect oil level.
12. Install the belly pan (Refer to 23 - BODY/EXTERIOR/BELLY PAN - INSTALLATION).

NOTE: Care should be exercised when disposing used engine oil after it has been drained from a vehicle engine. Refer to the WARNING at beginning of this section.

FILTER-ENGINE OIL

REMOVAL

All engines are equipped with a high quality full-flow, disposable type oil filter. DaimlerChrysler Corporation recommends a Mopar® or equivalent oil filter be used.

1. Remove belly pan (Refer to 23 - BODY/EXTERIOR/BELLY PAN - REMOVAL) .
2. Position a drain pan under the oil filter.
3. Using a suitable oil filter wrench loosen filter.
4. Rotate the oil filter counterclockwise to remove it from the cylinder block oil filter boss.
5. When filter separates from cylinder block oil filter boss, tip gasket end upward to minimize oil spill. Remove filter from vehicle.

NOTE: Make sure filter gasket was removed with filter.

6. With a wiping cloth, clean the gasket sealing surface of oil and grime.

INSTALLATION

1. Lightly lubricate oil filter gasket (2) with engine oil.
2. Thread filter onto adapter nipple. When gasket makes contact with sealing surface, hand tighten filter one half turn, or 180°,do not over tighten.
3. Add oil, verify crankcase oil level and start engine. Inspect for oil leaks.
4. Install belly pan (Refer to 23 - BODY/EXTERIOR/ BELLY PAN - INSTALLATION).

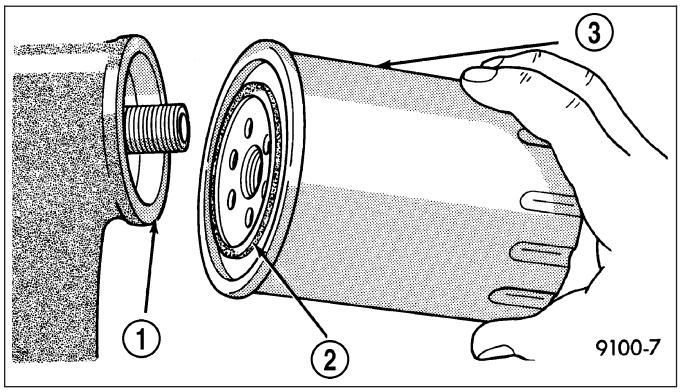

PAN-ENGINE OIL

REMOVAL

1. Disconnect the negative battery cable.
2. Remove the intake manifold. (Refer to 9 - ENGINE/ MANIFOLDS/INTAKE MANIFOLD - REMOVAL).
3. Install engine lift fixture (2)special tool # 8984 and adapter (4) # 8984–UPD. **Never use air tools when installing fasteners to engine.**
4. Raise vehicle.

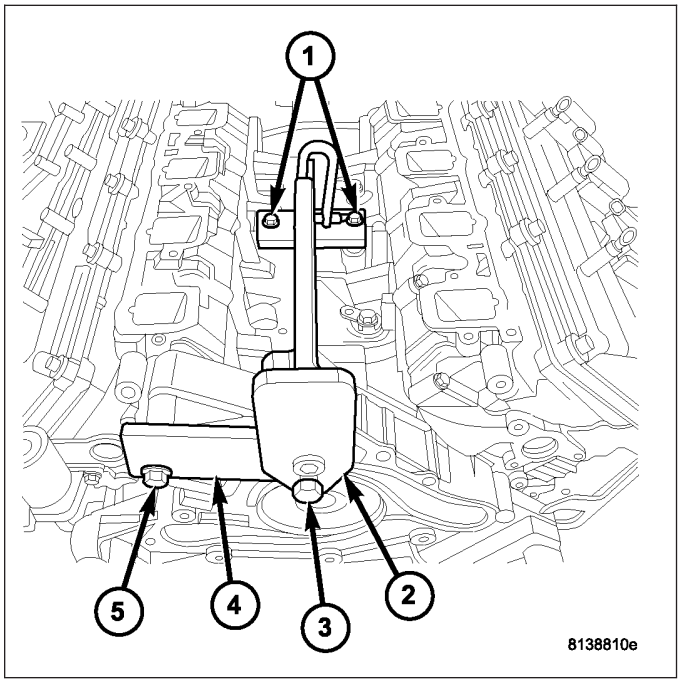

5. Remove the belly pan (2) (Refer to 23 - BODY/EXTERIOR/BELLY PAN - REMOVAL).
6. Drain engine oil and remove the oil filter.
7. Unbolt and lower the steering rack from the mounts. **Do not remove P/S hoses, tie rod ends or disconnect steering column.**

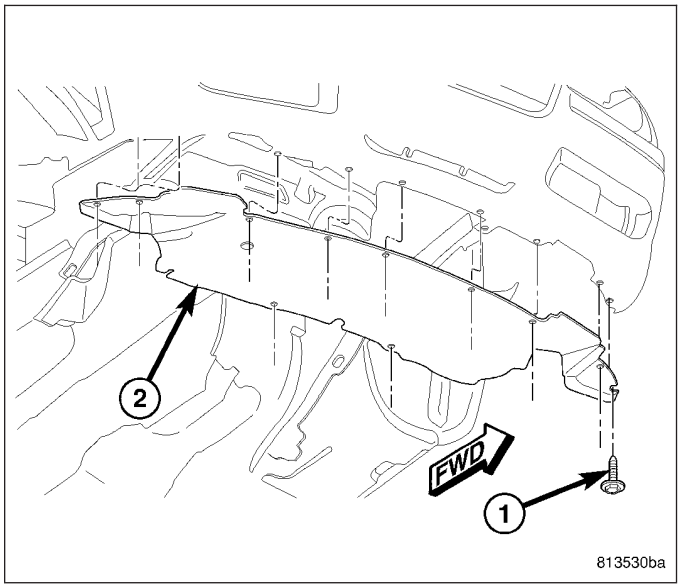

8. Remove both left and right side engine hydromount to frame nuts, and studs (3,4).
9. Remove the engine oil dipstick and tube from the oil pan.
10. Lower the vehicle.
11. Install engine support fixture special tool # 8534. **Do not use the third leg.**
12. Raise engine using special tool # 8534 and #8984 to provide clearance to remove oil pan.

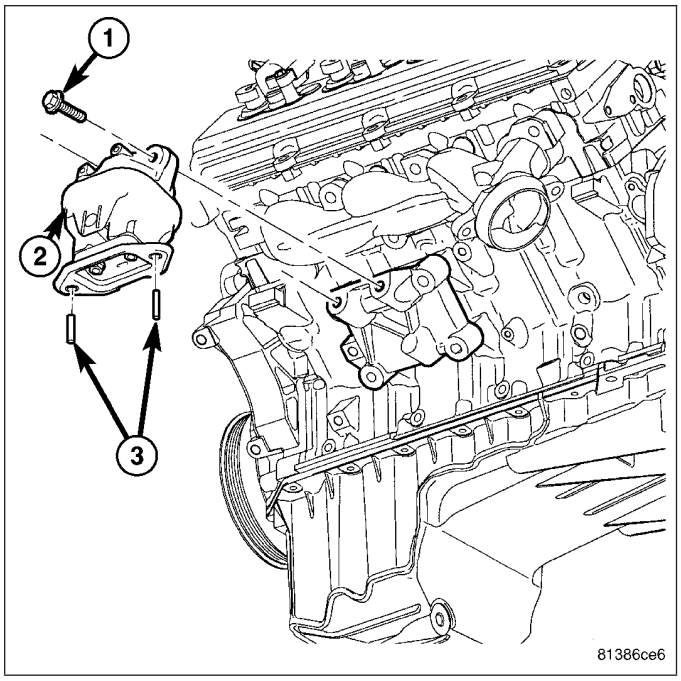

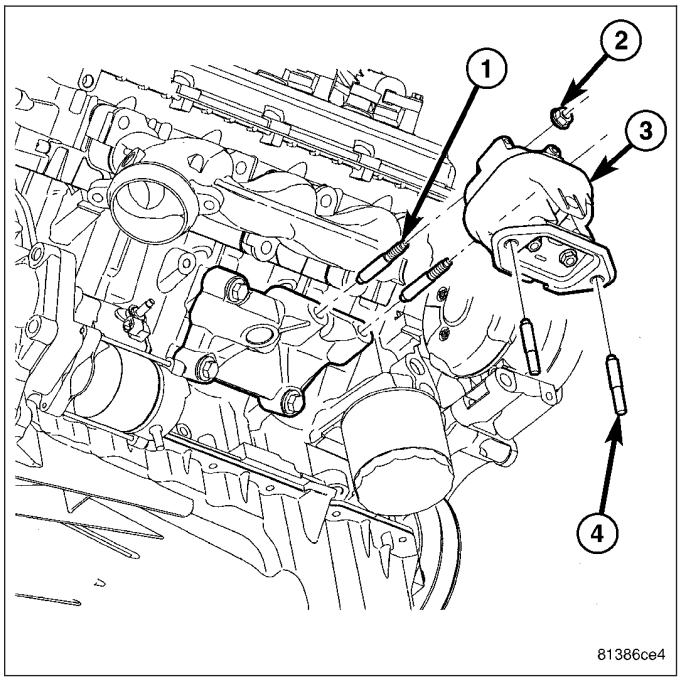

NOTE: Do not pry on oil pan or oil pan gasket. Gasket is integral to engine windage tray and does not come out with oil pan.

NOTE: The horizontal M10 fasteners are 5 mm longer in length, and must be reinstalled in original locations.

13. Remove the M10 fasteners (vertical and horizontal) from the rear of the oil pan to the transmission and engine.
14. Remove the oil pan mounting bolts and oil pan.

NOTE: When the oil pan is removed, a new oil pan gasket/windage tray assembly must be installed. The old gasket cannot be reused.

15. Discard the integral windage tray and gasket and replace.

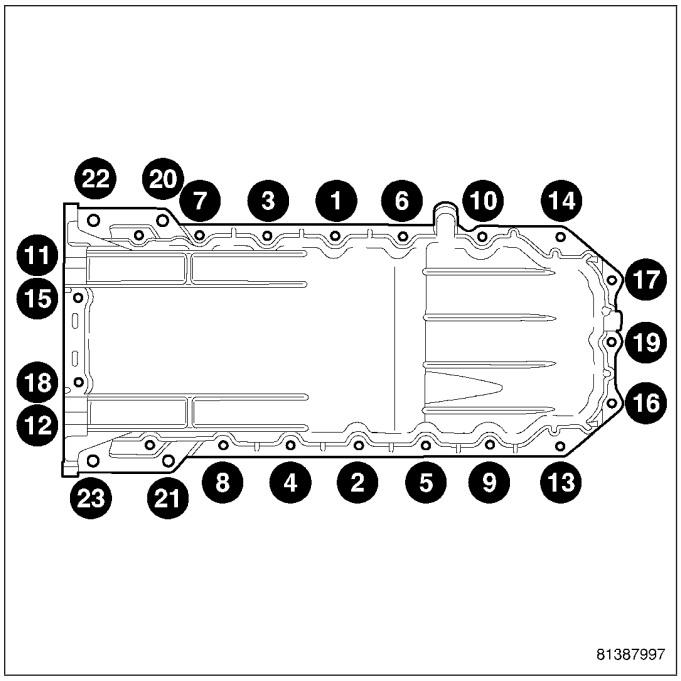

INSTALLATION

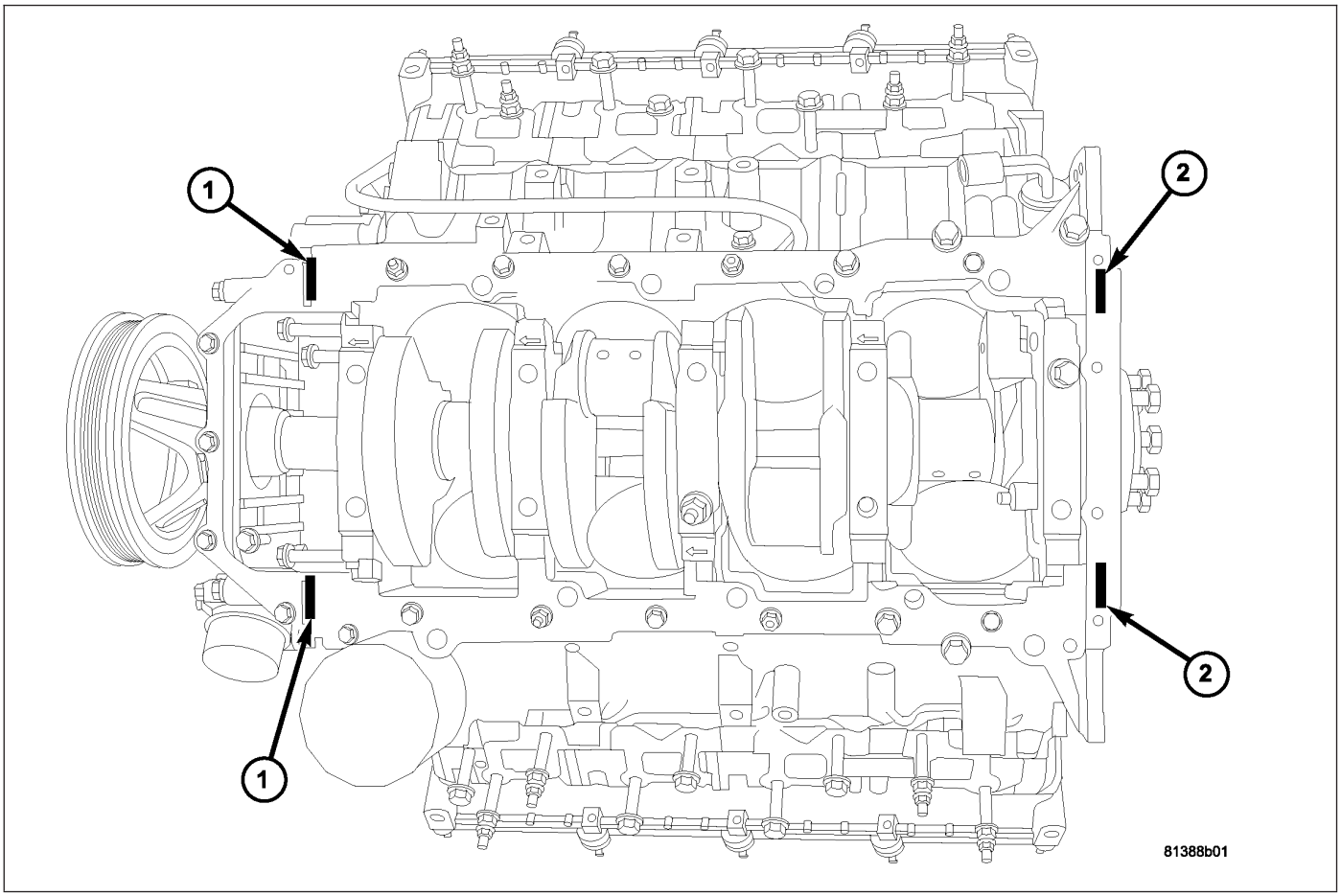

1. Clean the oil pan gasket mating surface of the block and oil pan.

NOTE: Mopar® Engine RTV must be applied to the 4 T-joints, (area where front cover, rear retainer, block, and oil pan gasket meet). The bead of RTV should cover the bottom of the gasket. This area is approximately 4.5 mm x 25 mm in each of the 4 T-joint locations.

2. Apply Mopar® Engine RTV at the 4 T- joints.

NOTE: When the oil pan is removed, a new oil pan gasket/windage tray assembly must be installed. The old gasket cannot be reused.

3. Install a new oil pan gasket/windage tray assembly.
4. If removed, reinstall the oil pump pickup tube with new o-ring. Tighten tube to pump fasteners to 28 N·m (250 in. lbs.).

NOTE: The horizontal M10 fasteners are 5 mm longer in length, and must be reinstalled in original locations.

NOTE: New M6 fasteners must be used when reinstalling the oil pan. Do not reuse the old M6 fasteners.

5. Align the rear of the oil pan with the rear face of the engine block, and install the M10 and M6 oil pan fasteners finger tight. Using the following torque sequence, torque the M6 mounting bolts to 5 N·m (44 in.lbs.).
6. Using the following torque sequence, torque the M10 oil pan fasteners to 54 N·m (39 ft.lbs.).
7. Using the following torque sequence, torque the M6 oil pan fasteners to 12 N·m (106 in.lbs.).
8. Lower the engine into mounts using special tool # 8534.

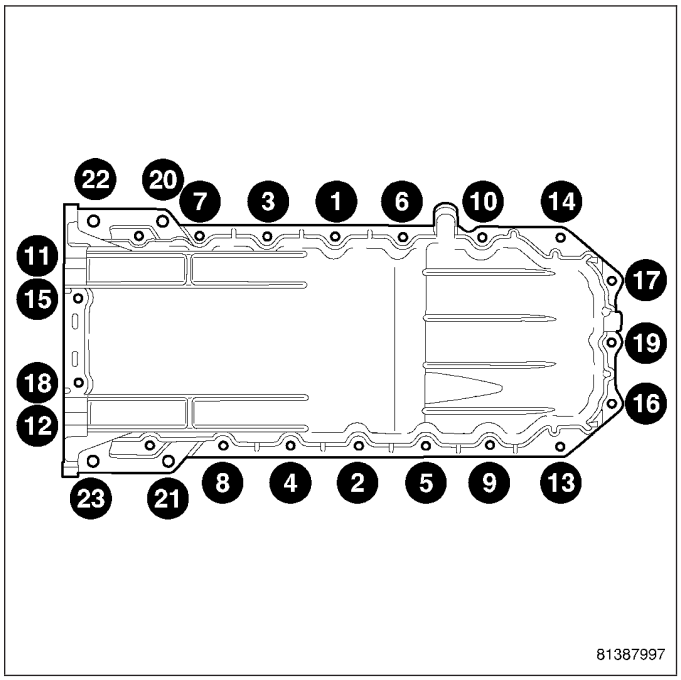

9. Install the left side engine mount studs (3) and nuts. Torque the studs and nuts to N·m (ft. lbs.).

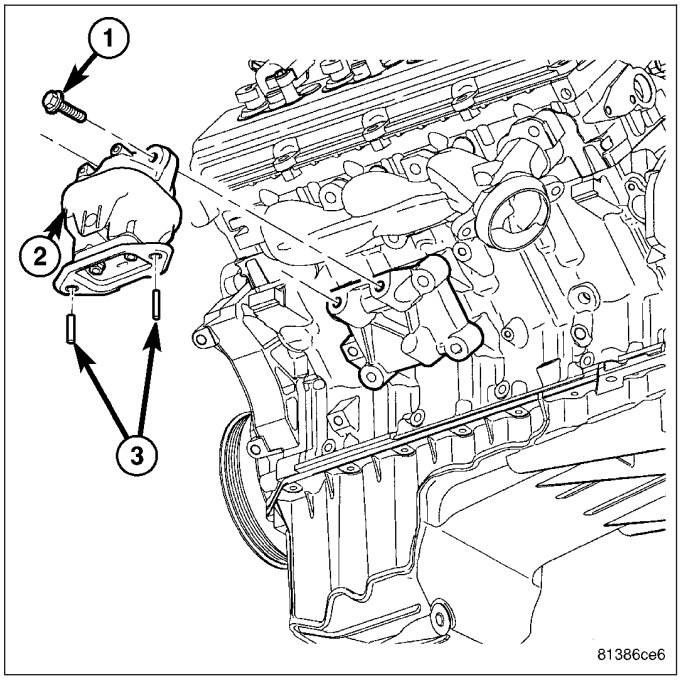

10. Install the right side engine mount studs (4) and nuts. Torque the studs and nuts to N·m (ft. lbs.).
11. Install the engine oil dipstick and tube.
12. Install the steering rack. (Refer to 19 - STEERING/GEAR - INSTALLATION).
13. Remove special tool # 8534.

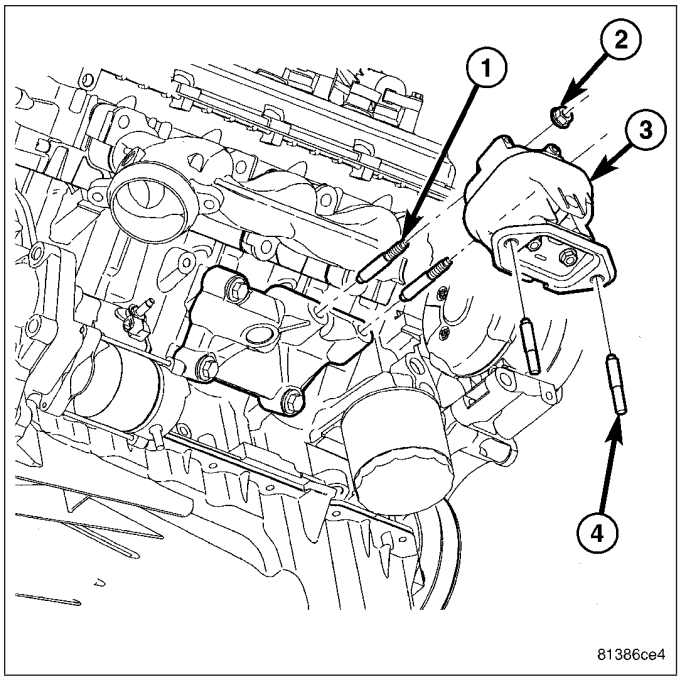

14. Remove special tool # 8984 (2).
15. Install the intake manifold. (Refer to 9 - ENGINE/MANIFOLDS/INTAKE MANIFOLD - INSTALLATION).
16. Fill engine oil.
17. Install oil filter, if removed.

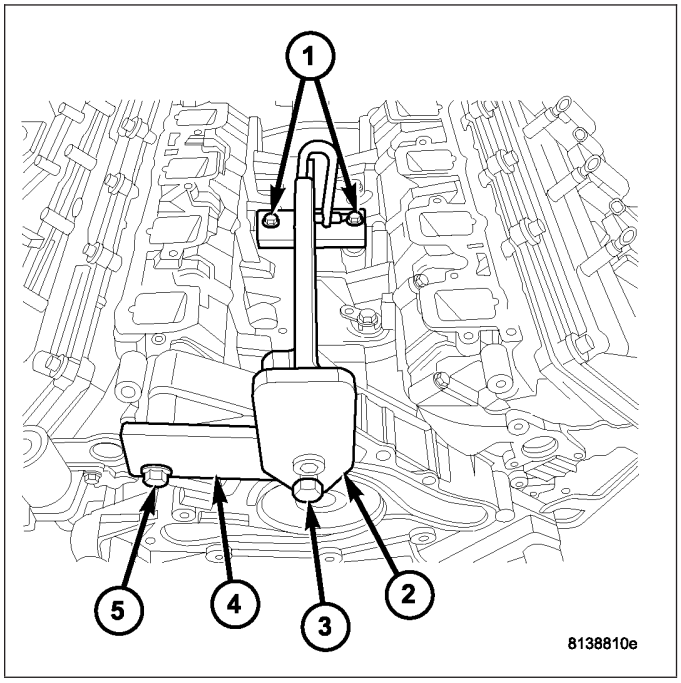

18. Reconnect the negative battery cable.
19. Start engine and check for leaks.
20. Install the belly pan (2) (Refer to 23 - BODY/EXTERIOR/BELLY PAN - INSTALLATION).

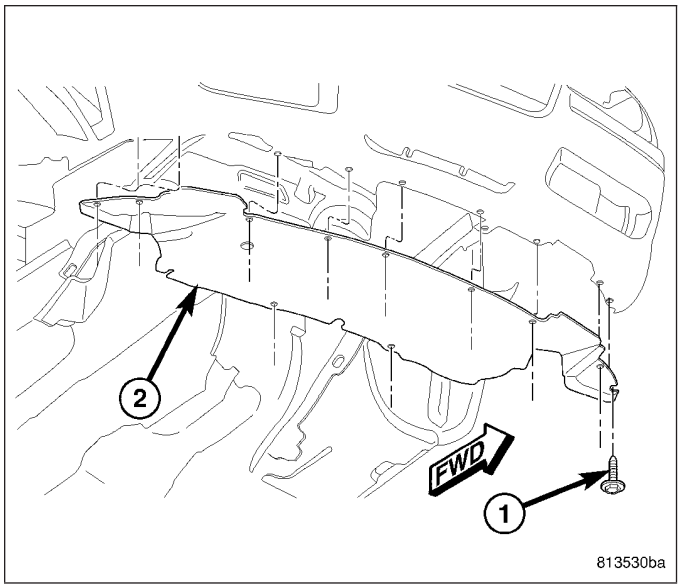

PAN-ENGINE OIL-AWD

REMOVAL

1. Disconnect the negative battery cable.
2. Remove the engine cover (1).

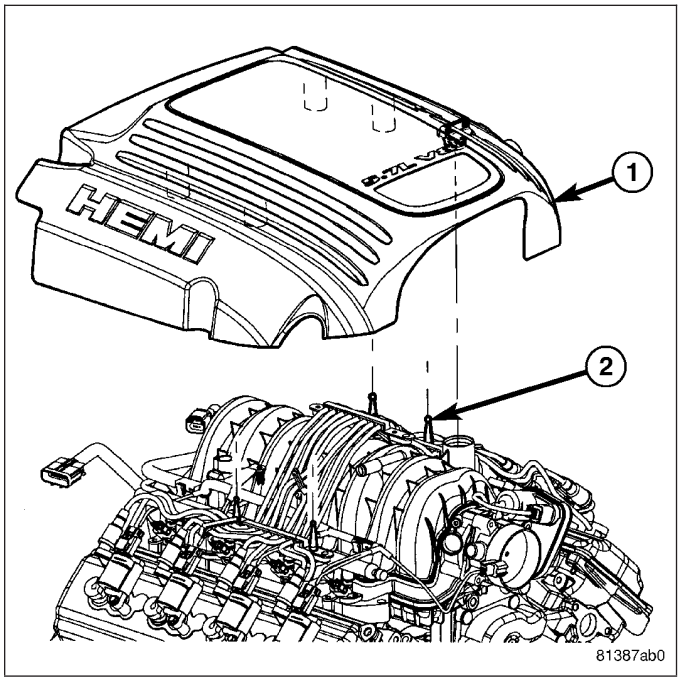

3. Remove the intake manifold. (Refer to 9 - ENGINE/MANIFOLDS/INTAKE MANIFOLD - REMOVAL).
4. Install engine lift fixture (2) special tool # 8984 and adapter # 8984–UPD. **Never use air tools when installing fasteners to engine.**
5. Raise vehicle.

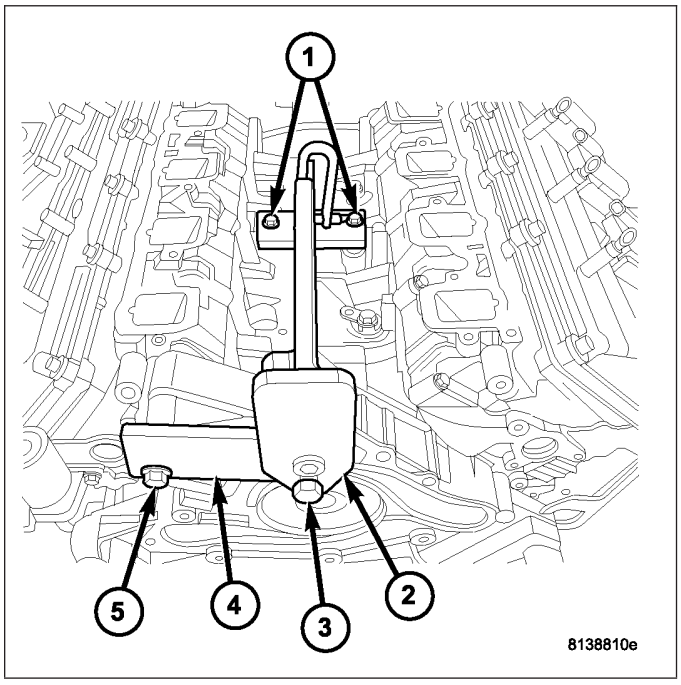

6. Remove the belly pan (2) (Refer to 23 - BODY/EXTERIOR/BELLY PAN - REMOVAL).
7. Remove both left and right side engine mount to frame fasteners.
8. Drain engine oil and remove the oil filter.

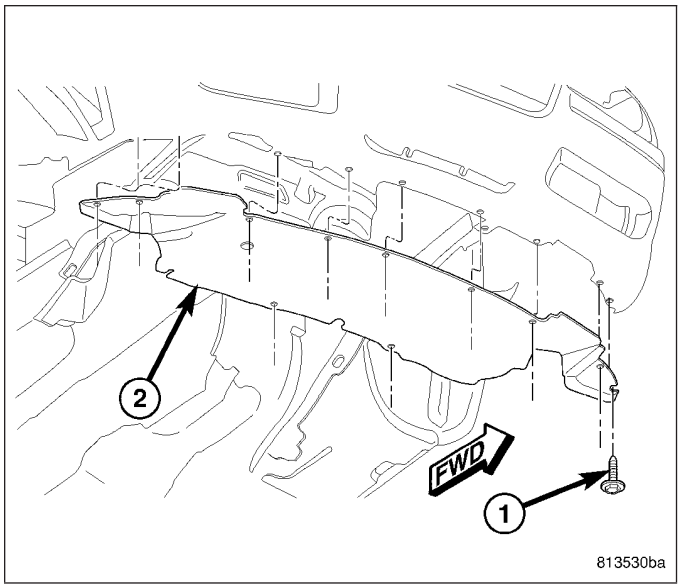

9. Unbolt (2,3,4) and lower the steering rack (1) from the mounts. **Do not remove P/S hoses, tie rod ends or disconnect steering column.**
10. Remove the engine oil dipstick and tube from the oil pan.
11. Remove the left and right side exhaust at the manifolds. (Refer to 11 - EXHAUST SYSTEM/CATALYTIC CONVERTER - REMOVAL).

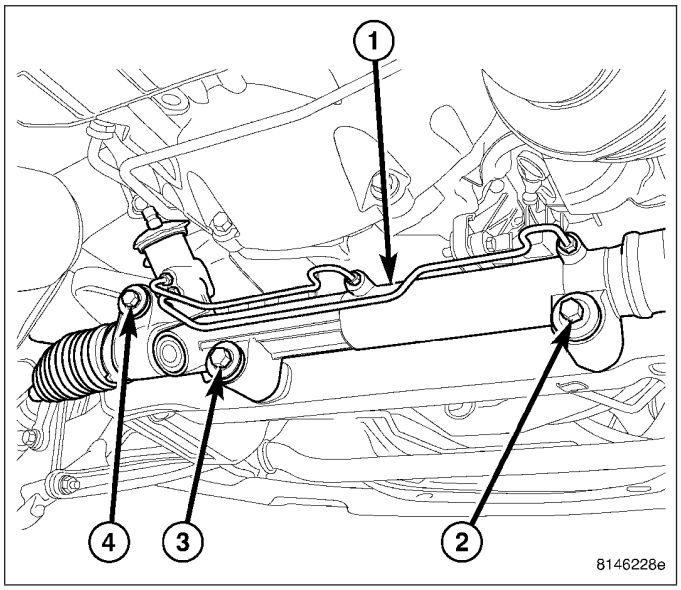

12. Mark the front driveshaft to the flange at both ends to ensure correct installation.
13. Remove front drive shaft fasteners from the differential and transfer case. Remove the driveshaft from the vehicle.
14. Remove the left (2) and right front drive axles.

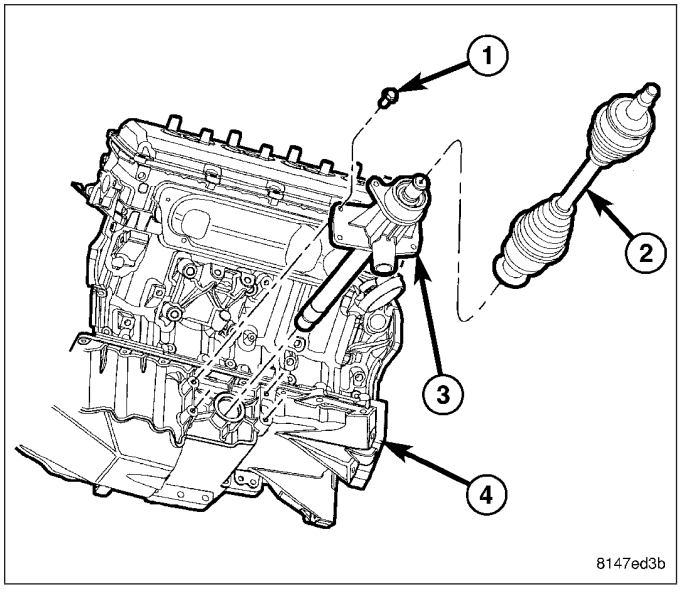

15. Remove the differential support bracket (1) from the differential to the engine block.

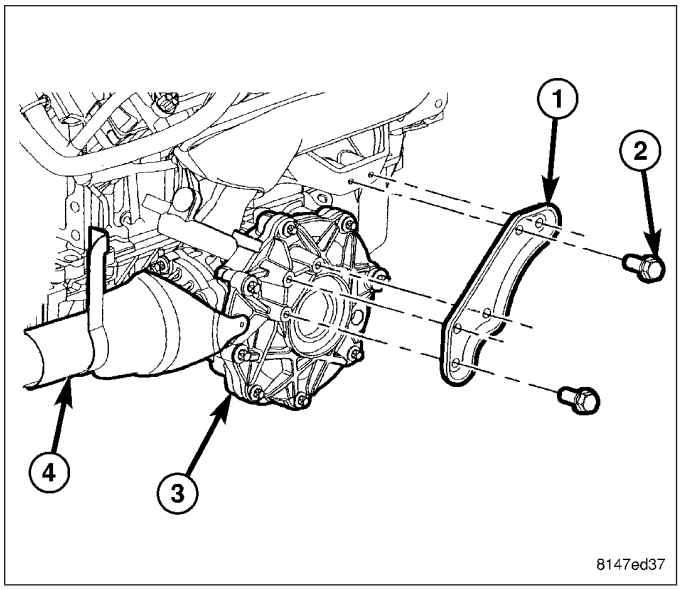

16. Unbolt the differential (4) from the oil pan (3).
17. Rotate the differential (4) so the drive flange is facing forward and the oil pan side is facing up. Remove the differential out through the opening at the rear of the cradle.

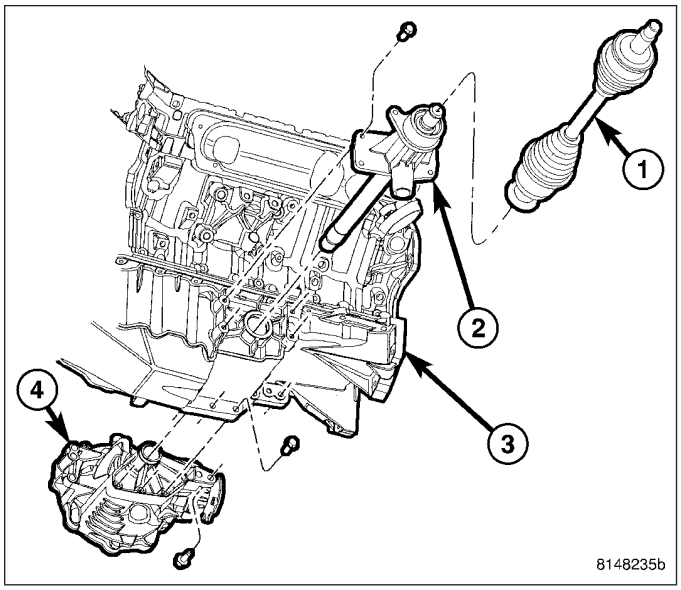

18. Remove the intermediate shaft (2) from the oil pan (3).

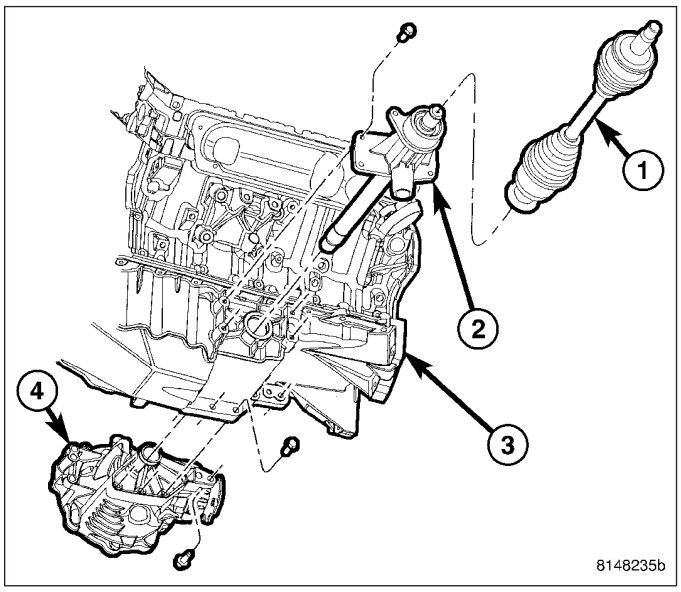

19. Lower the vehicle.
20. Install engine support fixture special tool # 8534. **Do not attempt to fasten fixture to vehicle body, or attach the third support leg to the radiator support.**
21. Raise engine using special tool # 8534 and #8984 to provide clearance to remove oil pan.
22. Raise vehicle.

NOTE: Do not pry on oil pan or oil pan gasket. Gasket is integral to engine windage tray and does not come out with oil pan.

NOTE: The horizontal M10 fasteners are 5 mm longer in length, and must be reinstalled in original locations.

23. Remove the M10 fasteners (vertical and horizontal) from the rear of the oil pan to the transmission and engine.
24. Remove the oil pan mounting bolts and oil pan.

NOTE: When the oil pan is removed, a new oil pan gasket/windage tray assembly must be installed. The old gasket cannot be reused.

25. Discard the integral windage tray and gasket and replace.

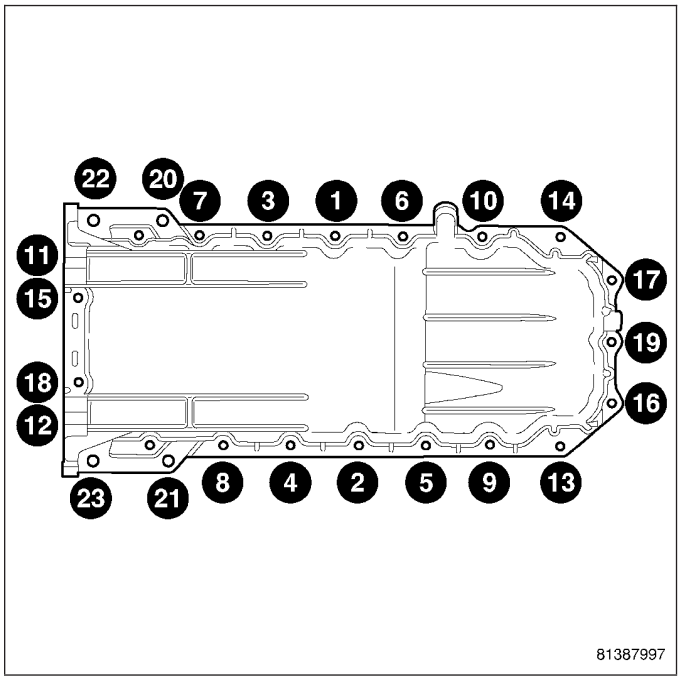

INSTALLATION

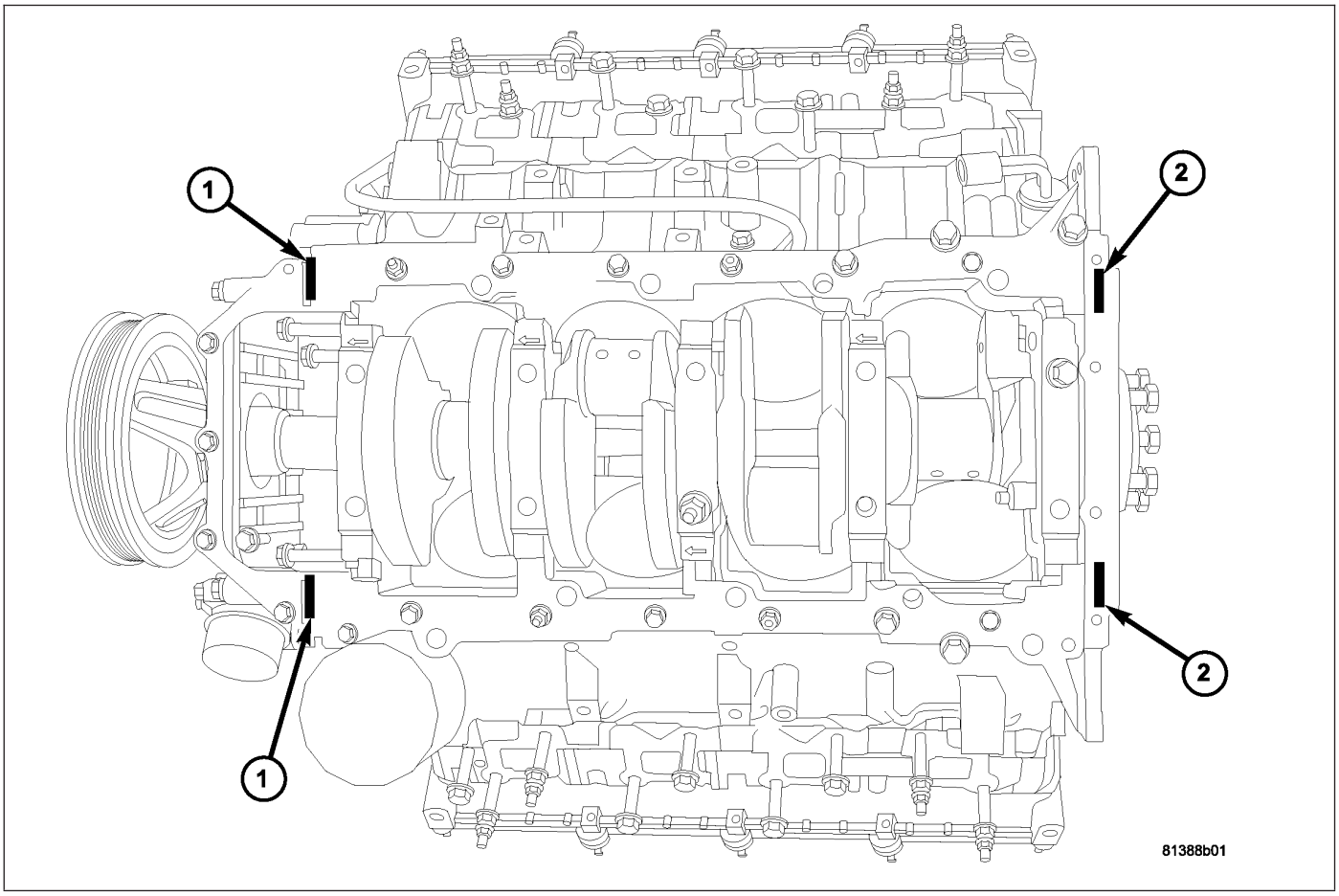

1. Clean the oil pan gasket mating surface of the block and oil pan.

NOTE: Mopar® Engine RTV must be applied to the 4 T-joints, (area where front cover, rear retainer, block, and oil pan gasket meet). The bead of RTV should cover the bottom of the gasket. This area is approximately 4.5 mm x 25 mm in each of the 4 T-joint locations.

2. Apply Mopar® Engine RTV at the 4 T- joints (1,2).

NOTE: When the oil pan is removed, a new oil pan gasket/windage tray assembly must be installed. The old gasket cannot be reused.

3. Install a new oil pan gasket/windage tray assembly.
4. If removed, reinstall the oil pump pickup tube with new o-ring. Tighten tube to pump fasteners to 28 N·m (250 in. lbs.).

NOTE: The horizontal M10 fasteners are 5 mm longer in length, and must be reinstalled in original locations.

NOTE: New M6 fasteners must be used when reinstalling the oil pan. Do not reuse the old M6 fasteners.

5. Align the rear of the oil pan with the rear face of the engine block, and install the M10 and M6 oil pan fasteners finger tight. Using the following torque sequence, torque the M6 mounting bolts to 5 N·m (44 in.lbs.).

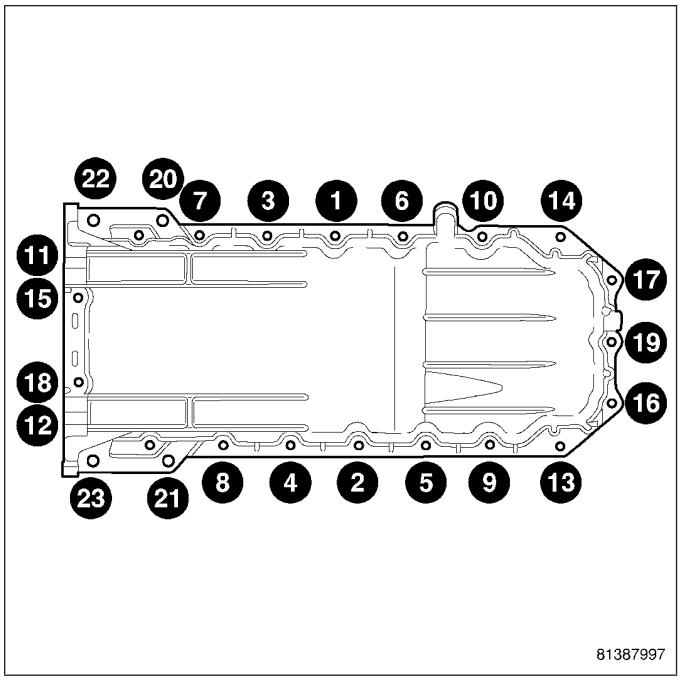

6. Using the following torque sequence, torque the M10 oil pan fasteners to 54 N·m (39 ft.lbs.).
7. Using the following torque sequence, torque the M6 oil pan fasteners to 12 N·m (106 in.lbs.).
8. Install the intermediate shaft (2) to the oil pan (3). Torque fasteners to 28N·m (21ft. lbs).

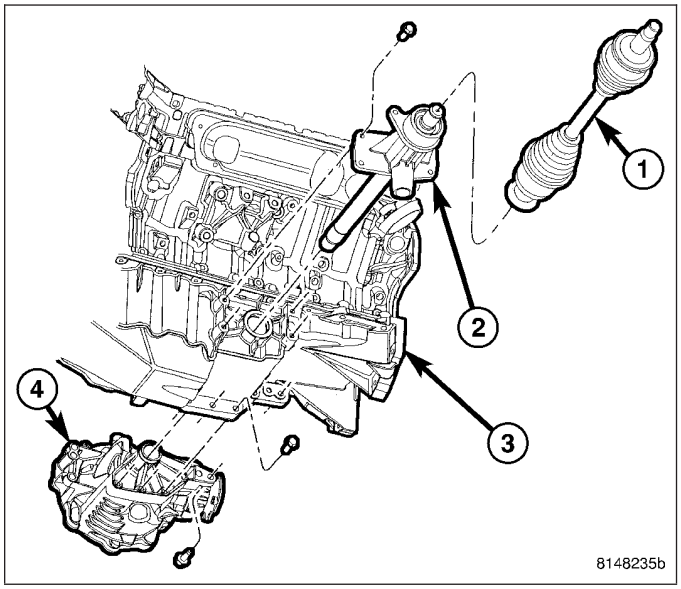

9. Install the front differential through the opening at the rear of the cradle, and attach to the oil pan..
10. Fasten the differential (4) to the oil pan (3) Torque to 65 N·m (48 ft. lbs).

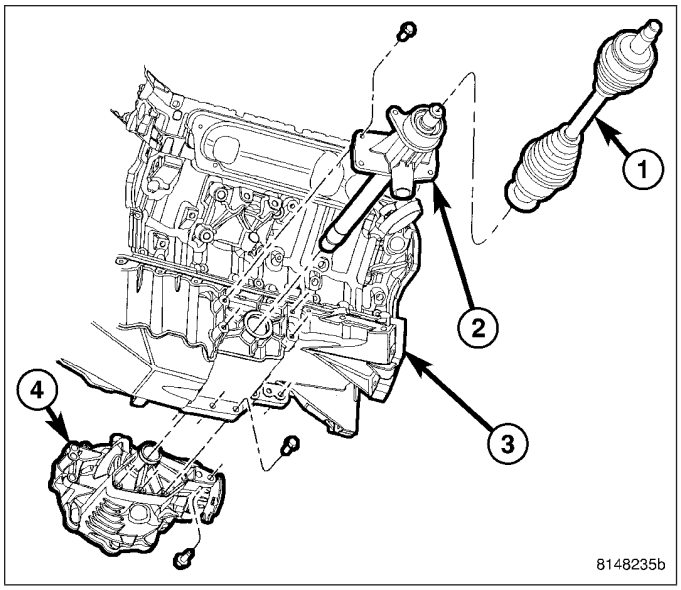

11. Install the differential support bracket (1) to the differential and the engine block.

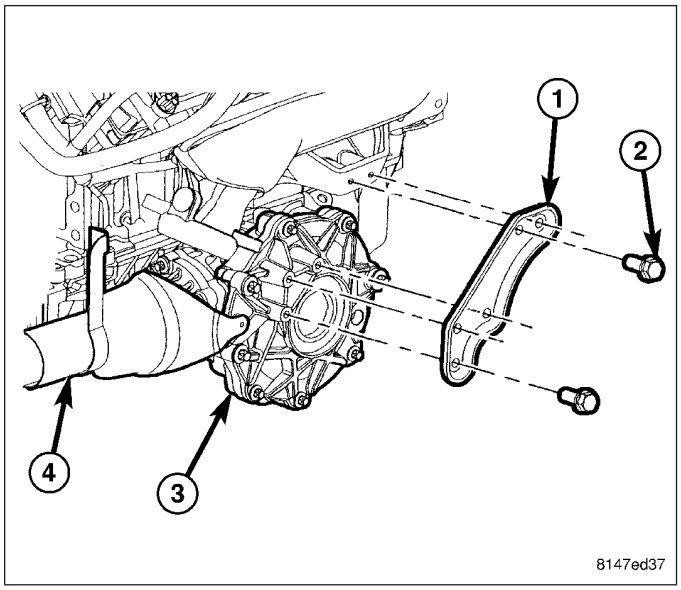

12. Install the left (2) and right front drive axles. (Refer to 3 - DIFFERENTIAL & DRIVELINE/HALF SHAFT - INSTALLATION).
13. Install front drive shaft into the differential and transfer case. (Refer to 3 - DIFFERENTIAL & DRIVELINE/PROPELLER SHAFT - INSTALLATION)
14. Install the engine oil dipstick and tube.

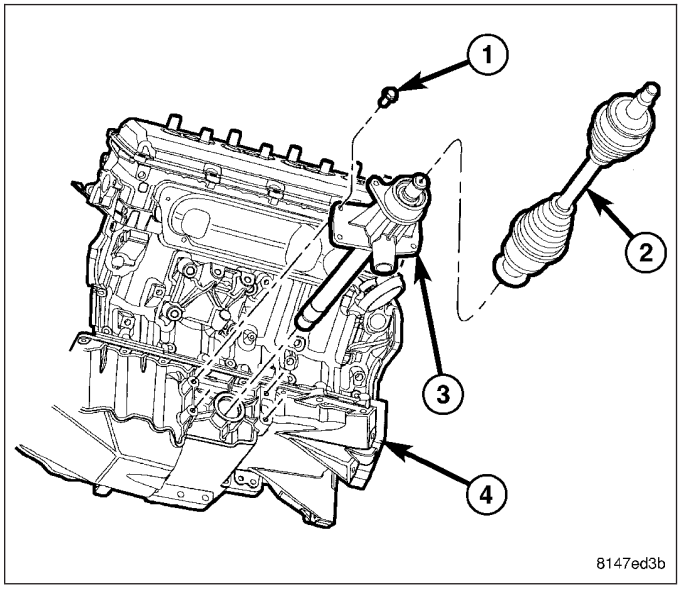

15. Install the steering gear (1). (Refer to 19 - STEERING/GEAR - INSTALLATION).
16. Lower the engine into mounts using special tool # 8534.
17. Install both the left and right side engine mount studs and nuts.

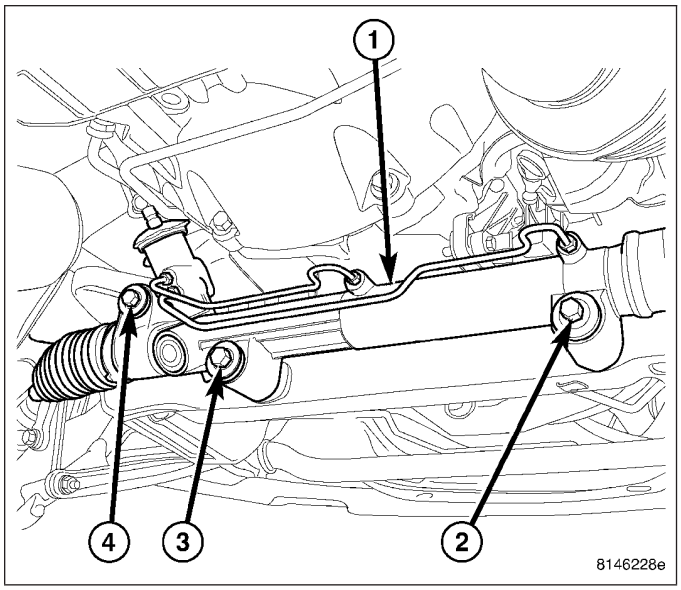

18. Remove special tool # 8534.
19. Remove special tool # 8984 (2,4).
20. Install the intake manifold. (Refer to 9 - ENGINE/ MANIFOLDS/INTAKE MANIFOLD - INSTALLATION).
21. Install the left and right side exhaust at the manifolds. (Refer to 11 - EXHAUST SYSTEM/CATALYTIC CONVERTER - INSTALLATION).
22. Fill engine oil.
23. Install oil filter, if removed.
24. Reconnect the negative battery cable.
25. Start engine and check for leaks.

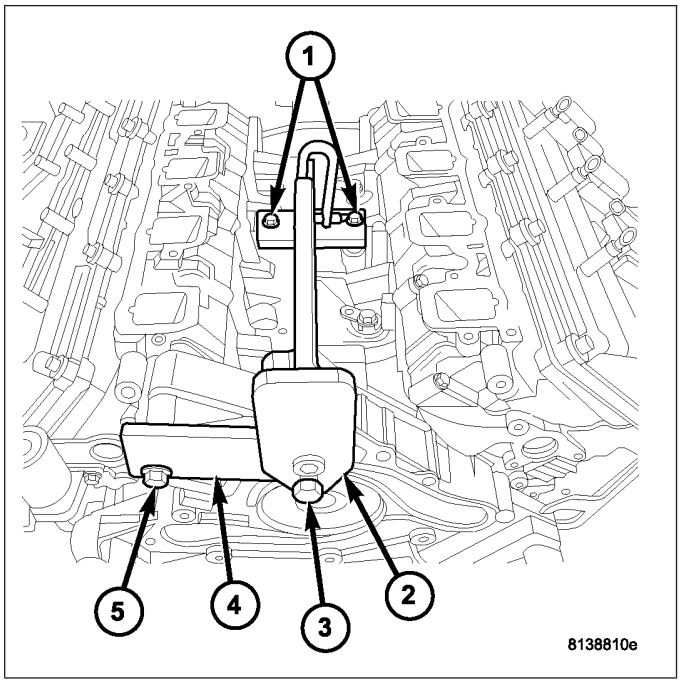

26. Install the engine cover (1).

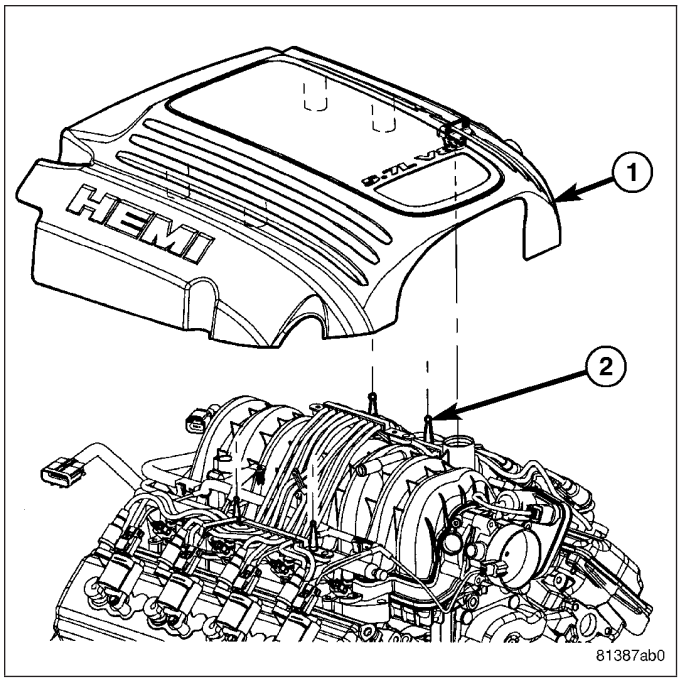

27. Install the belly pan (2) (Refer to 23 - BODY/EXTERIOR/BELLY PAN - INSTALLATION).

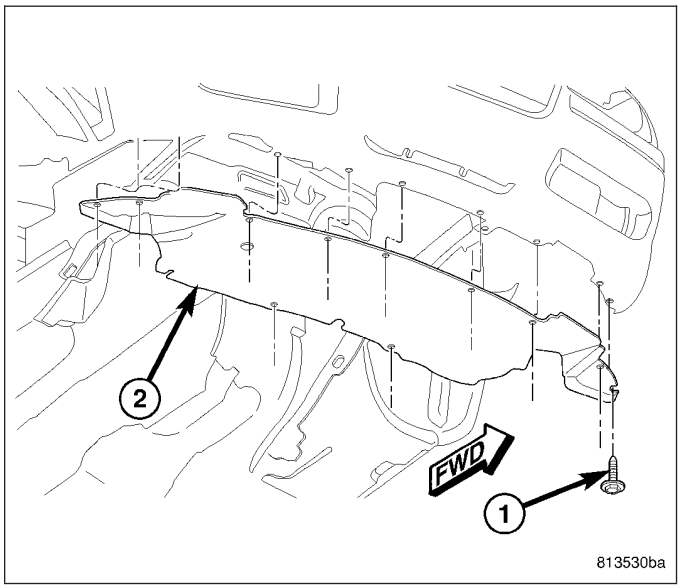

PUMP-ENGINE OIL

REMOVAL

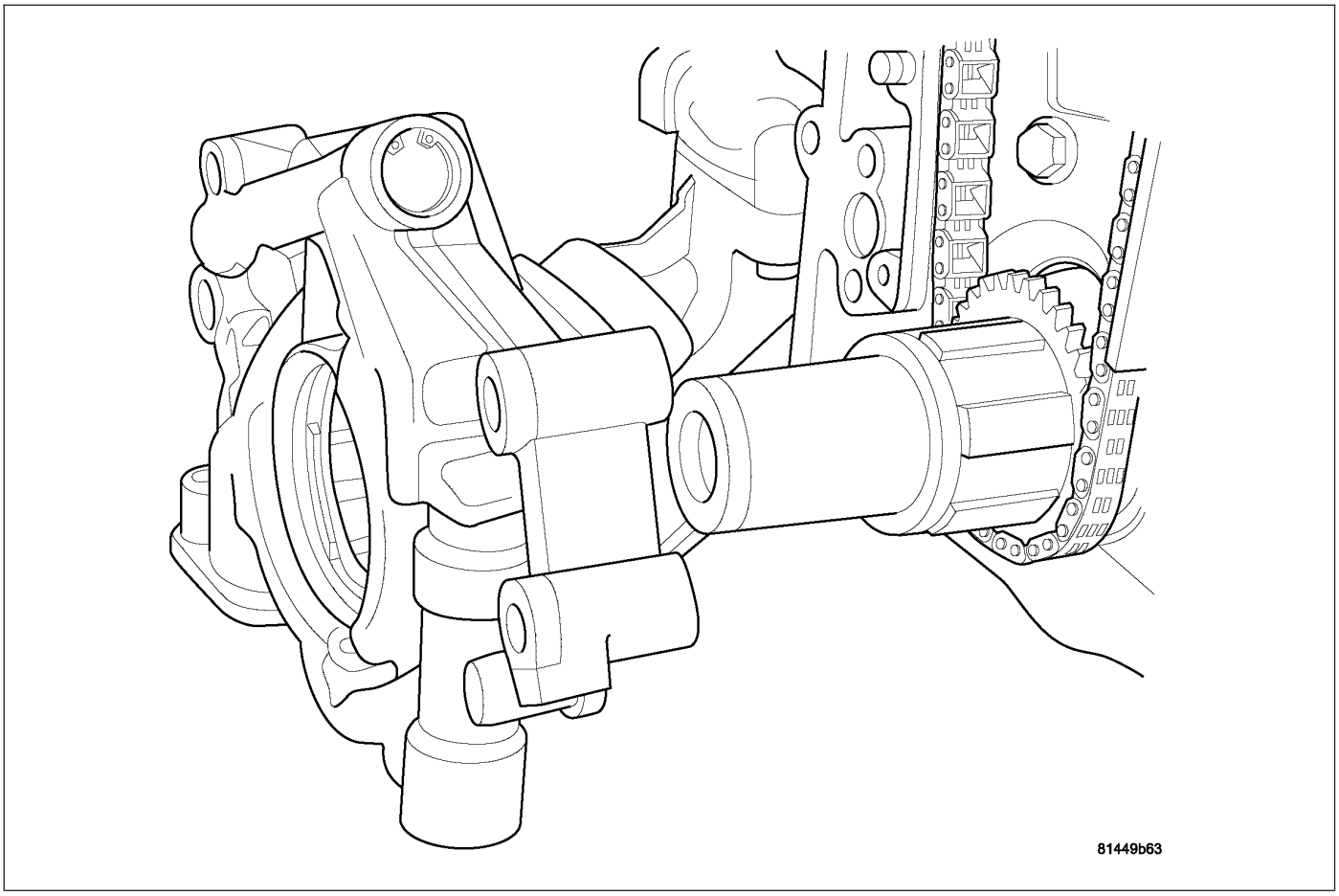

1. Remove the oil pan and pick-up tube (Refer to 9 - ENGINE/LUBRICATION/OIL PAN - REMOVAL).
2. Remove the timing chain cover (Refer to 9 - ENGINE/VALVE TIMING/TIMING BELT / CHAIN COVER(S) - REMOVAL).
3. Remove the four bolts, and the oil pump.

CLEANING

1. Wash all parts in a suitable solvent.

INSPECTION

CAUTION: Oil pump pressure relief valve and spring should not be removed from the oil pump. If these components are disassembled and or removed from the pump the entire oil pump assembly must be replaced.

1. Remove the pump cover.
2. Clean all parts thoroughly. Mating surface of the oil pump housing should be smooth. If the pump cover is scratched or grooved the oil pump assembly should be replaced.
3. Slide outer rotor into the body of the oil pump. Press the outer rotor to one side of the oil pump body and measure clearance between the outer rotor (2) and the body. If the measurement is 0.235mm (0.009 in.) or more the oil pump assembly must be replaced.

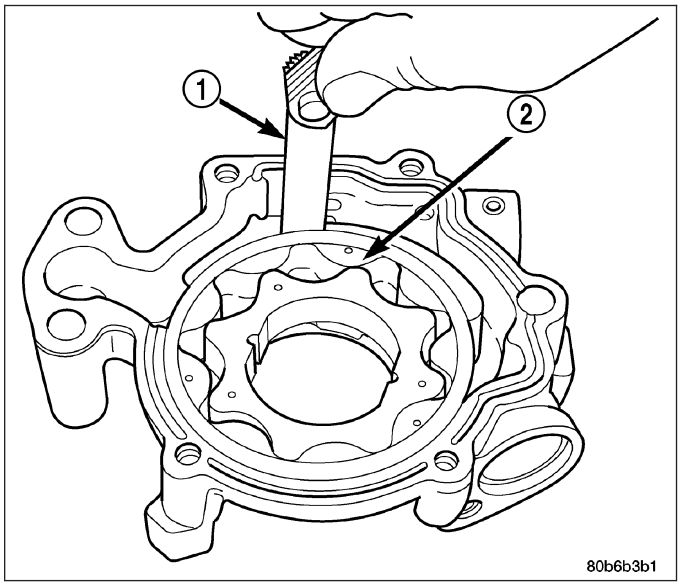

4. Install the inner rotor in the into the oil pump body. Measure the clearance between the inner (3) and outer rotors (1). If the clearance between the rotors is .150 mm (0.006 in.) or more the oil pump assembly must be replaced.

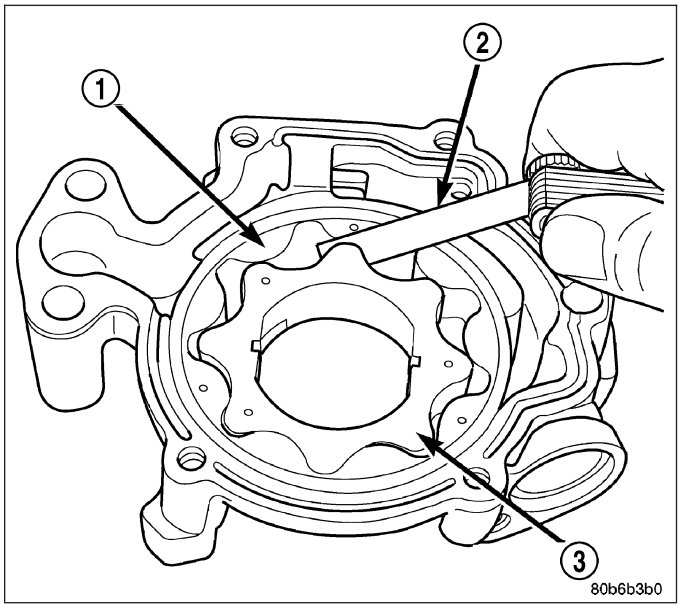

5. Place a straight edge (1) across the body of the oil pump (between the bolt holes), if a feeler gauge (2) of .095 mm (0.0038 in.) or greater can be inserted between the straightedge and the rotors, the pump must be replaced.
6. Reinstall the pump cover. Torque fasteners to 15 N·m (132 in. lbs.).

NOTE: The 5.7 Oil pump is released as an assembly. There are no DaimlerChrysler part numbers for Sub-Assembly components. In the event the oil pump is not functioning or out of specification it must be replaced as an assembly.

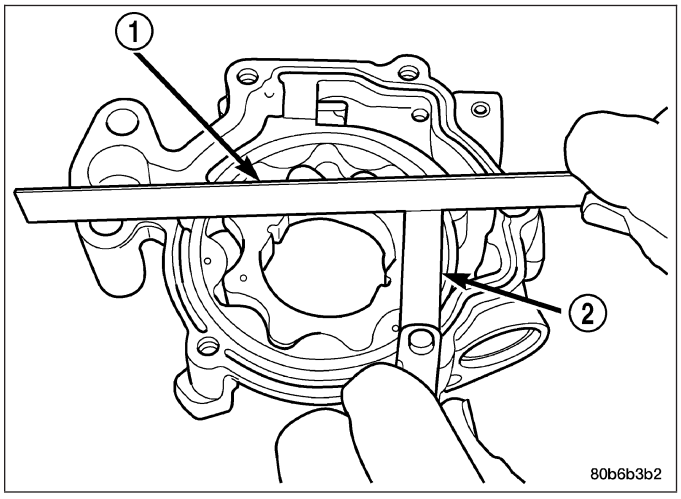

INSTALLATION

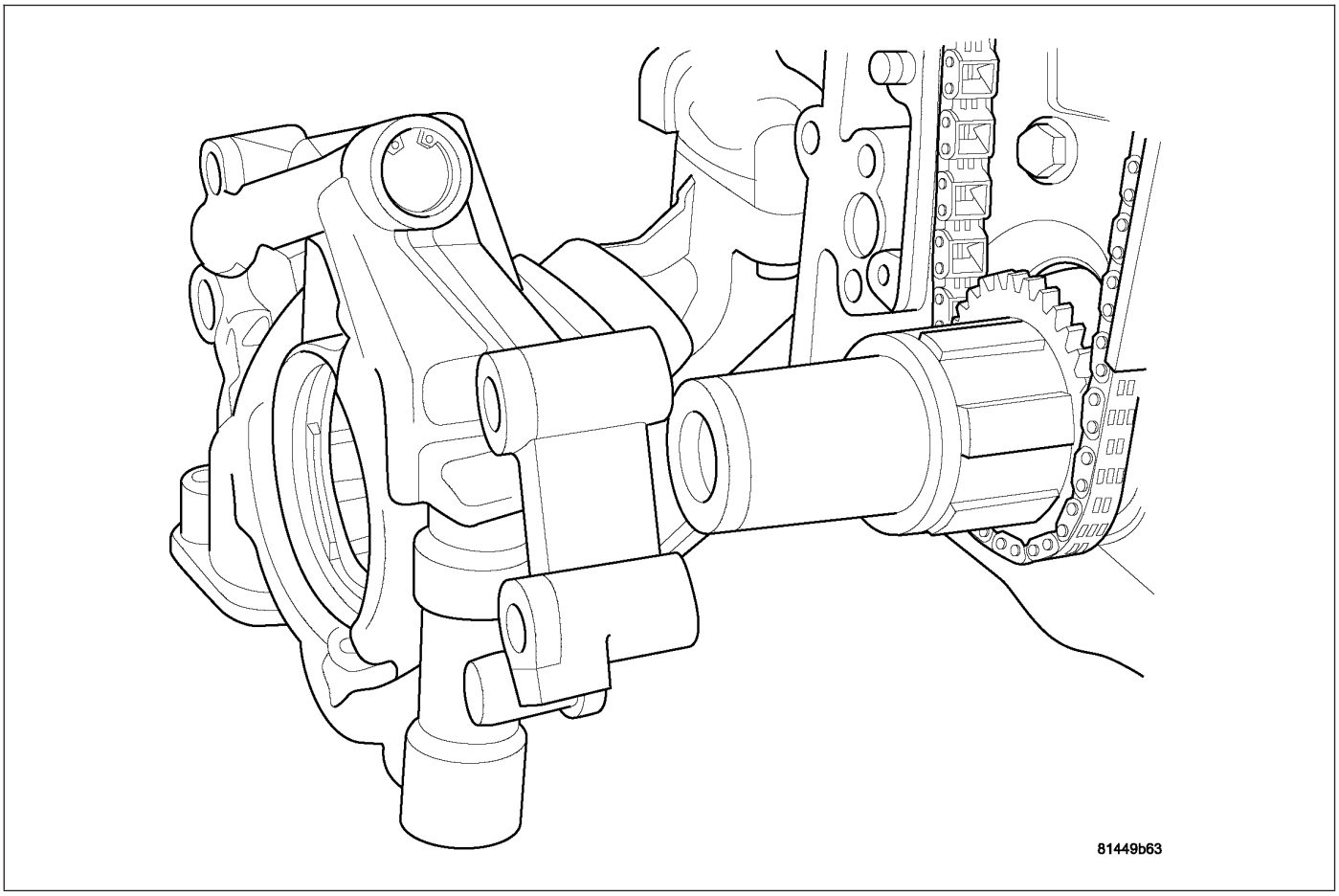

1. Position the oil pump onto the crankshaft and install the 4 oil pump retaining bolts.
2. Tighten the oil pump retaining bolts to 28 N·m (250 in. lbs.).
3. Install the timing chain cover (Refer to 9 - ENGINE/VALVE TIMING/TIMING BELT / CHAIN COVER(S) - INSTALLATION).
4. Install the pick-up tube and oil pan (Refer to 9 - ENGINE/LUBRICATION/OIL PAN - INSTALLATION).

COOLER ENGINE OIL

DESCRIPTION

An engine oil cooler is used on the 5.7L engine, equipped with the police package. The cooler is a coolant-to-oil type and mounted between the oil filter and oil filter adapter.

REMOVAL

1. Raise vehicle on hoist.
2. Drain cooling system. (Refer to 7 - COOLING - STANDARD PROCEDURE).
3. Disconnect oil cooler coolant hoses.
4. Remove oil filter.
5. Remove oil cooler connector bolt.
6. Remove oil cooler.

INSTALLATION

1. Replace oil cooler seal.
2. Lubricate seal and position oil cooler to oil filter adapter, aligning notch to tab.
3. Install oil cooler connector bolt. Torque connector bolt to 55 N·m (41 ft. lbs.).
4. Install oil filter.
5. Connect oil cooler coolant hoses.
6. Lower vehicle.
7. Fill cooling system. (Refer to 7 - COOLING - STANDARD PROCEDURE).

MANIFOLD - INTAKE

DESCRIPTION

The intake manifold is made of a composite material and features long runners which maximizes low end torque. The intake manifold uses single plane sealing which consist of eight individual press in place port gaskets to prevent leaks.

DIAGNOSIS AND TESTING - INTAKE MANIFOLD LEAKAGE

An intake manifold air leak is characterized by lower than normal manifold vacuum. Also, one or more cylinders may not be functioning.

WARNING: USE EXTREME CAUTION WHEN THE ENGINE IS OPERATING. DO NOT STAND IN A DIRECT LINE WITH THE FAN. DO NOT PUT YOUR HANDS NEAR THE PULLEYS, BELTS OR THE FAN. DO NOT WEAR LOOSE CLOTHING.

1. Start the engine.
2. Spray a small stream of water at the suspected leak area.
3. If a change in RPM is observed the area of the suspected leak has been found.
4. Repair as required.

REMOVAL

1. Remove engine cover.
2. Bleed fuel system (Refer to 14 - FUEL SYSTEM/FUEL DELIVERY - STANDARD PROCEDURE).
3. Disconnect negative cable from battery.
4. Remove air inlet hose.
5. Remove ignition wires from on top of intake manifold.
6. Disconnect electrical connectors for the following components:
   - Manifold Absolute Pressure (MAP) Sensor
   - Fuel Injectors
   - ETC (Electric Throttle Control)
7. Remove wire harness from intake manifold.
8. Disconnect brake booster hose, purge hose, and MUA hose (Make Up Air Hose).
9. Remove EGR tube from intake manifold.
10. Remove intake manifold retaining fasteners in a crisscross pattern starting from the outside bolts and ending at the middle bolts.
11. Remove intake manifold as an assembly.

CLEANING

NOTE: There is NO approved repair procedure for the intake manifold. If severe damage is found during inspection, the intake manifold must be replaced.

Before installing the intake manifold thoroughly clean the mating surfaces. Use a suitable cleaning solvent, then air dry.

INSPECTION

1. Inspect the intake sealing surface for cracks, nicks and distortion.
2. Inspect the intake manifold vacuum hose fittings for looseness or blockage.

INSTALLATION

1. Position intake manifold.
2. Install intake manifold retaining bolts, and tighten in sequence from the middle bolts towards the outside in a crisscross pattern. Torque fasteners to 12 N·m (105 in. lbs.).
3. Install EGR tube.
4. Install wire harness on intake manifold.
5. Connect electrical connectors for the following components:
   - Manifold Absolute Pressure (MAP) Sensor
   - Fuel Injectors
   - ETC (Electronic Throttle Control)
6. Install ignition wires.
7. Connect Brake booster hose, purge hose, and MUA hose (Make Up Air hose).
8. Install air inlet hose.
9. Connect negative cable to battery.
10. Install engine cover.

MANIFOLD - EXHAUST

DESCRIPTION

The exhaust manifolds are log style with a patented flow enhancing design to maximize performance. The exhaust manifolds are made of high silicon molybdenum cast iron. A multi-layer stainless steel exhaust manifold gasket is used to improve sealing to the cylinder head. The exhaust manifolds are covered by a three layer laminated heat shield for thermal protection and noise reduction. The heat shields are fastened with a torque prevailing nut that is backed off slightly to allow for the thermal expansion of the exhaust manifold, with the exception of the nut, which also secures the oil dipstick tube bracket. That nut should not be backed off.

OPERATION

The exhaust manifolds collect the engine exhaust exiting the combustion chambers, then channels the exhaust gases to the exhaust pipes attached to the manifolds.

REMOVAL

EXHAUST MANIFOLD

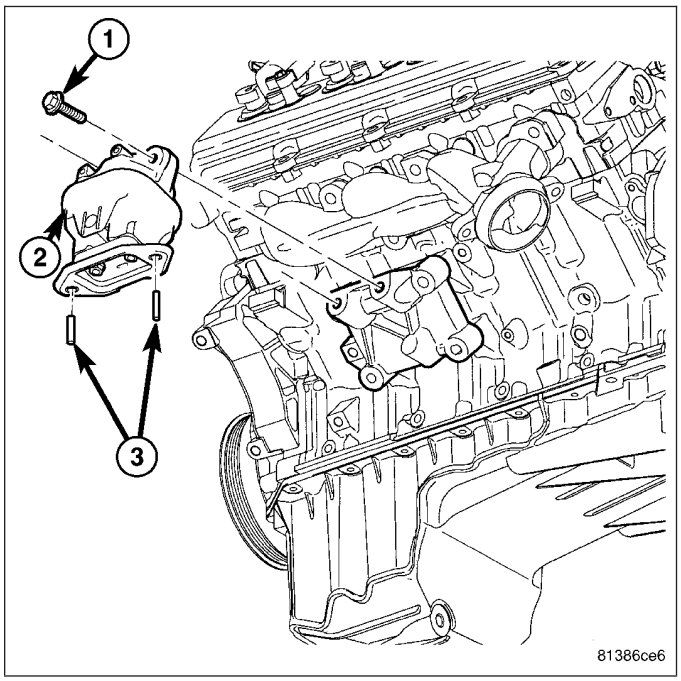

1. Disconnect negative battery cable.
2. Raise vehicle.
3. Remove exhaust pipe to manifold bolts.
4. Remove engine mount to frame fasteners (3,4).
5. Using suitable jack, raise engine enough to remove manifolds.

CAUTION: Do not damage engine harness while raising the engine.

6. Remove the engine mount (Refer to 9 - ENGINE/ ENGINE MOUNTING/FRONT MOUNT - REMOVAL).

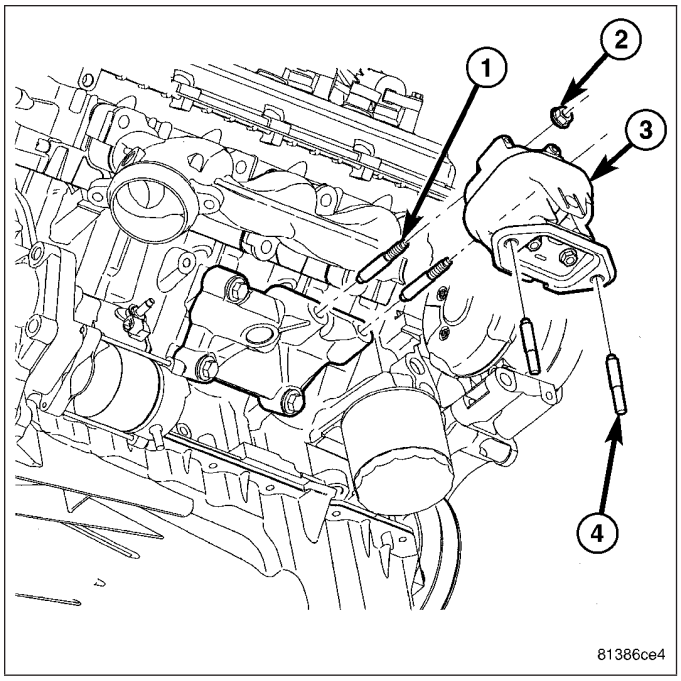

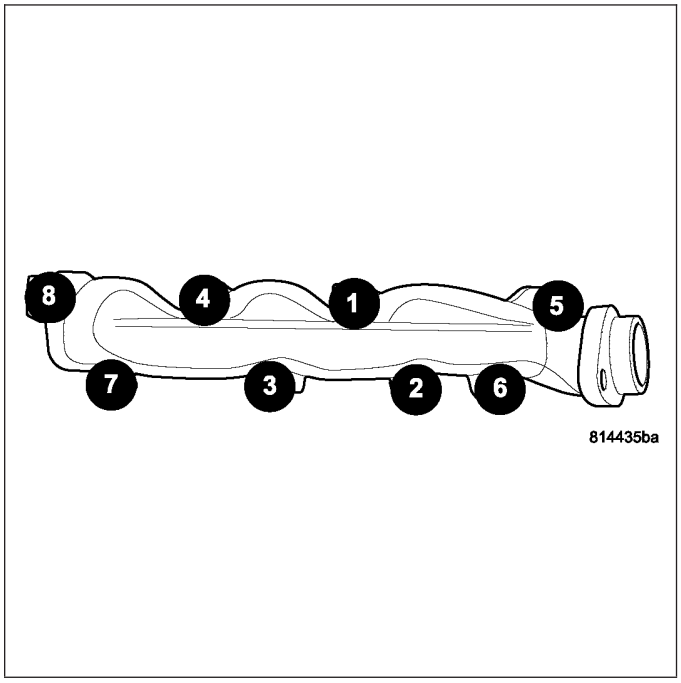

7. Remove heat shield.
8. Remove manifold bolts using sequence provided.
9. Remove manifold and gasket.

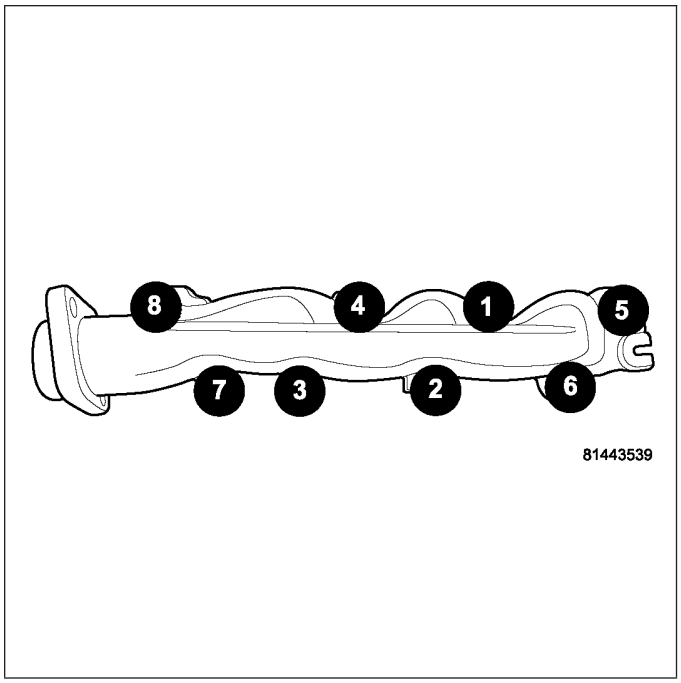

CLEANING

Clean mating surfaces on cylinder head and manifold. Wash with solvent and blow dry with compressed air.

INSPECTION

Inspect manifold for cracks.

Inspect mating surfaces of manifold for flatness with a straight edge. Gasket surfaces must be flat within 0.2 mm per 300 mm (0.008 inch per foot).

INSTALLATION

EXHAUST MANIFOLD

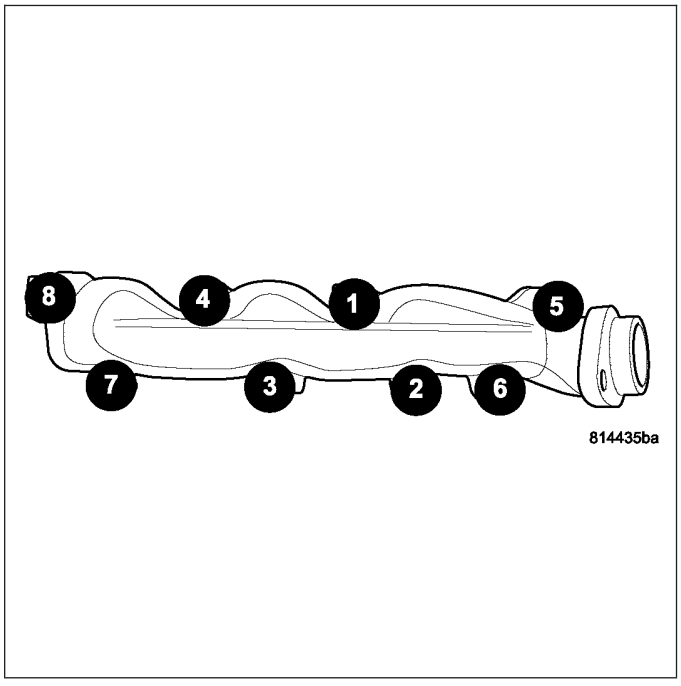

1. Install manifold gasket and manifold.
2. Install manifold bolts and tighten to 25 N·m (18 ft. lbs.).
3. Install heat shield and tighten nuts to 8 N·m (70 in. lbs.).

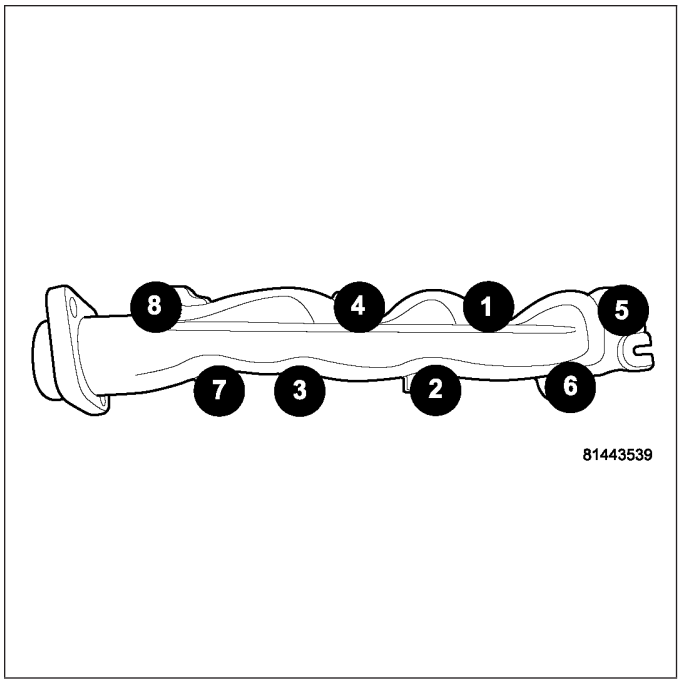

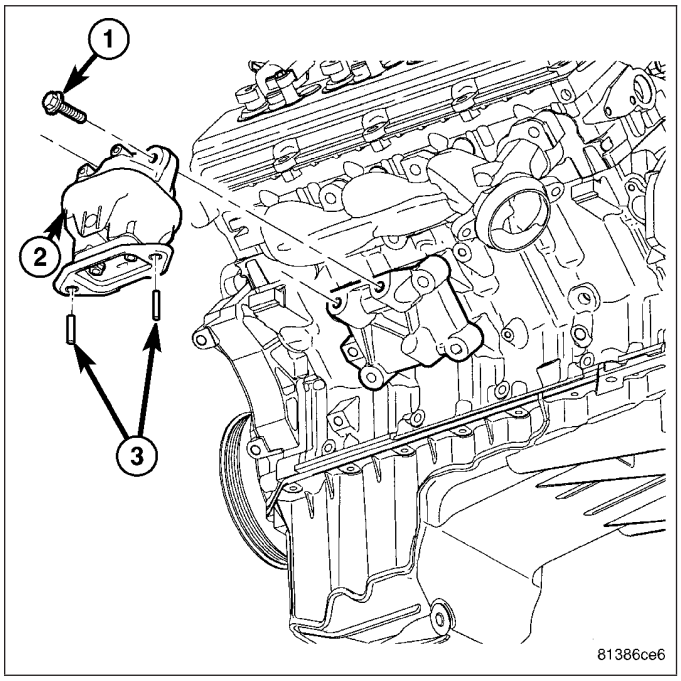

4. Install engine mounts (3). (Refer to 9 - ENGINE/ ENGINE MOUNTING/FRONT MOUNT - INSTALLATION)
5. Lower engine.

CAUTION: Do not damage engine harness while lowering the engine.

6. Install and tighten right and left side engine mount to frame fasteners (4) (Refer to 9 - ENGINE/ENGINE MOUNTING/FRONT MOUNT - INSTALLATION).
7. Install exhaust flange to pipe bolts.
8. Lower vehicle.
9. Connect negative battery cable.

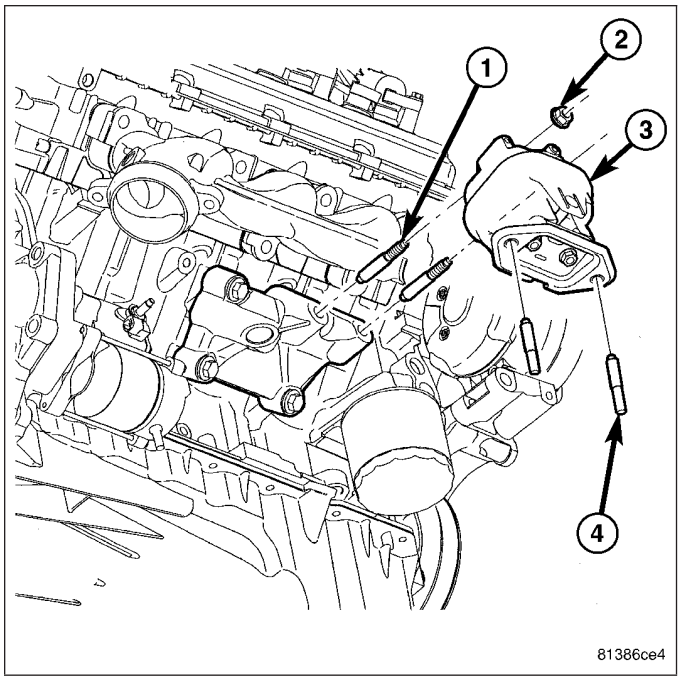

COVER-TIMING

REMOVAL

1. Disconnect the battery negative cable.
2. Remove the engine cover (1).
3. Remove air cleaner assembly.
4. Drain cooling system.
5. Remove accessory drive belt.
6. Remove fan and fan drive assembly (Refer to 7 - COOLING/ENGINE/FAN DRIVE VISCOUS CLUTCH - REMOVAL).
7. Remove coolant bottle and washer bottle.
8. Remove fan shroud.

NOTE: It is not necessary to disconnect A/C lines or discharge freon.

9. Remove A/C compressor and set aside.

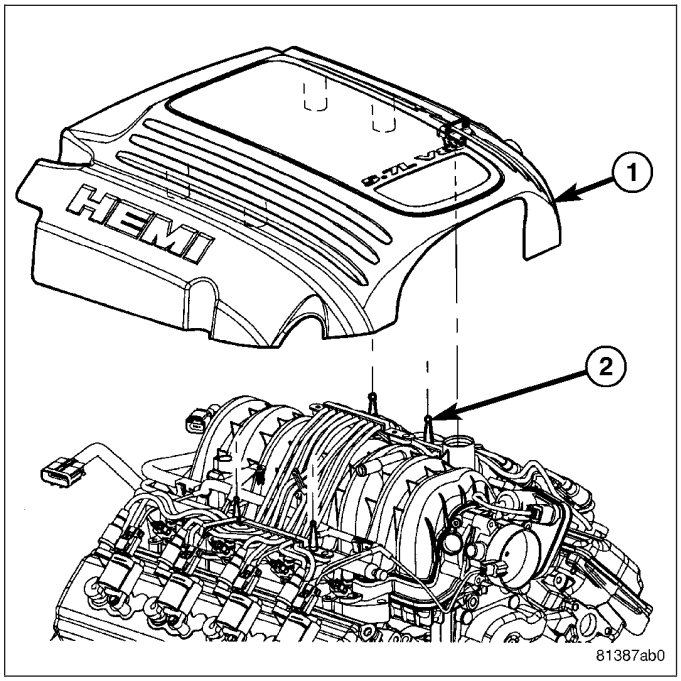

10. Remove the generator.
11. Remove upper radiator hose.
12. Disconnect both heater hoses at timing cover.
13. Disconnect lower radiator hose at engine.
14. Remove accessory drive belt tensioner and both idler pulleys.
15. Remove crankshaft damper (2) (Refer to 9 - ENGINE/ENGINE BLOCK/VIBRATION DAMPER - REMOVAL).

NOTE: Do not remove the hoses from the power steering pump.

16. Remove power steering pump and set aside.

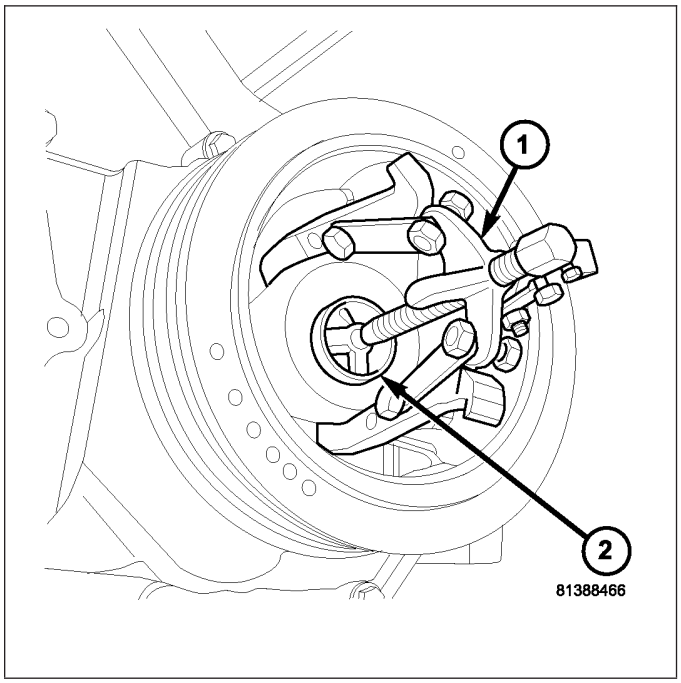

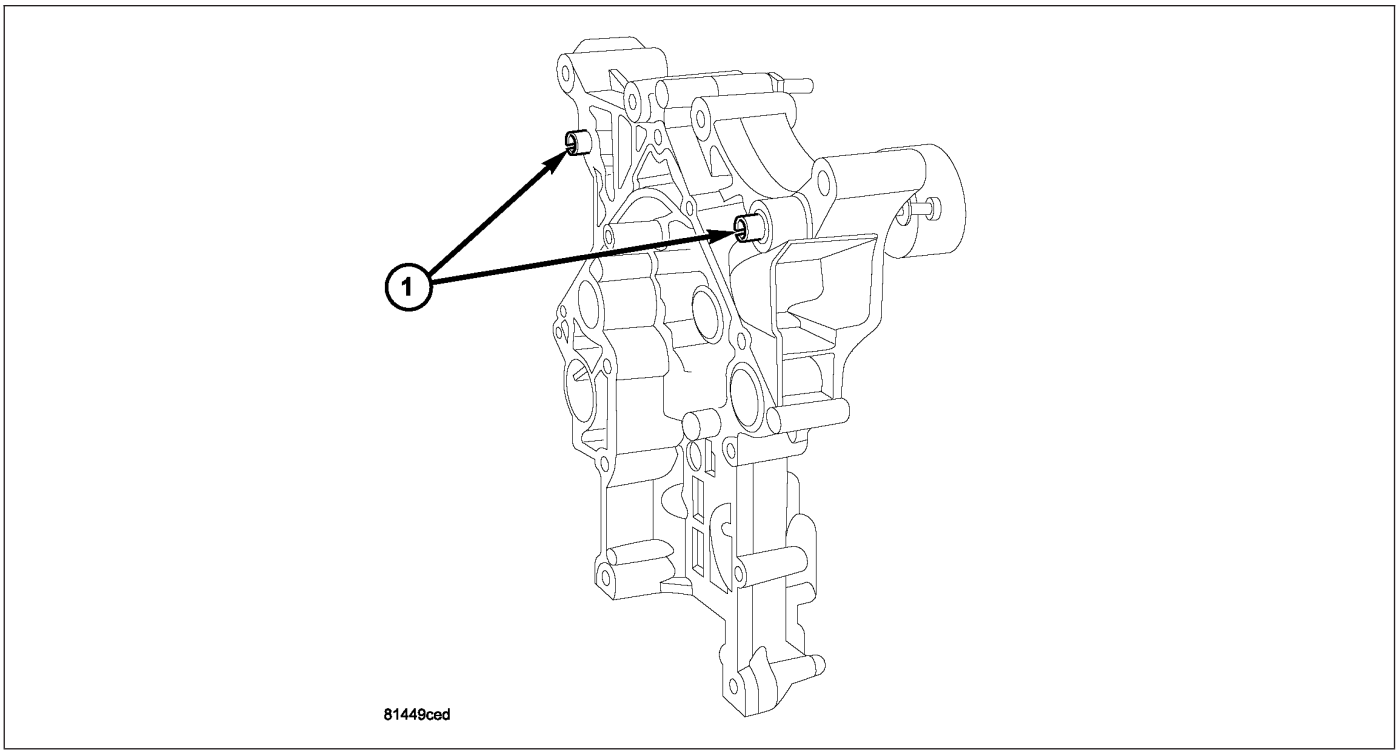

17. Remove the dipstick support bolt.
18. Drain the engine oil.
19. Remove the oil pan and pick up tube (Refer to 9 - ENGINE/LUBRICATION/OIL PAN - REMOVAL).

NOTE: It is not necessary to remove water pump for timing cover removal.

20. Remove timing cover bolts and remove cover.
21. Verify that timing cover slide bushings (1) are located in timing cover.

INSTALLATION

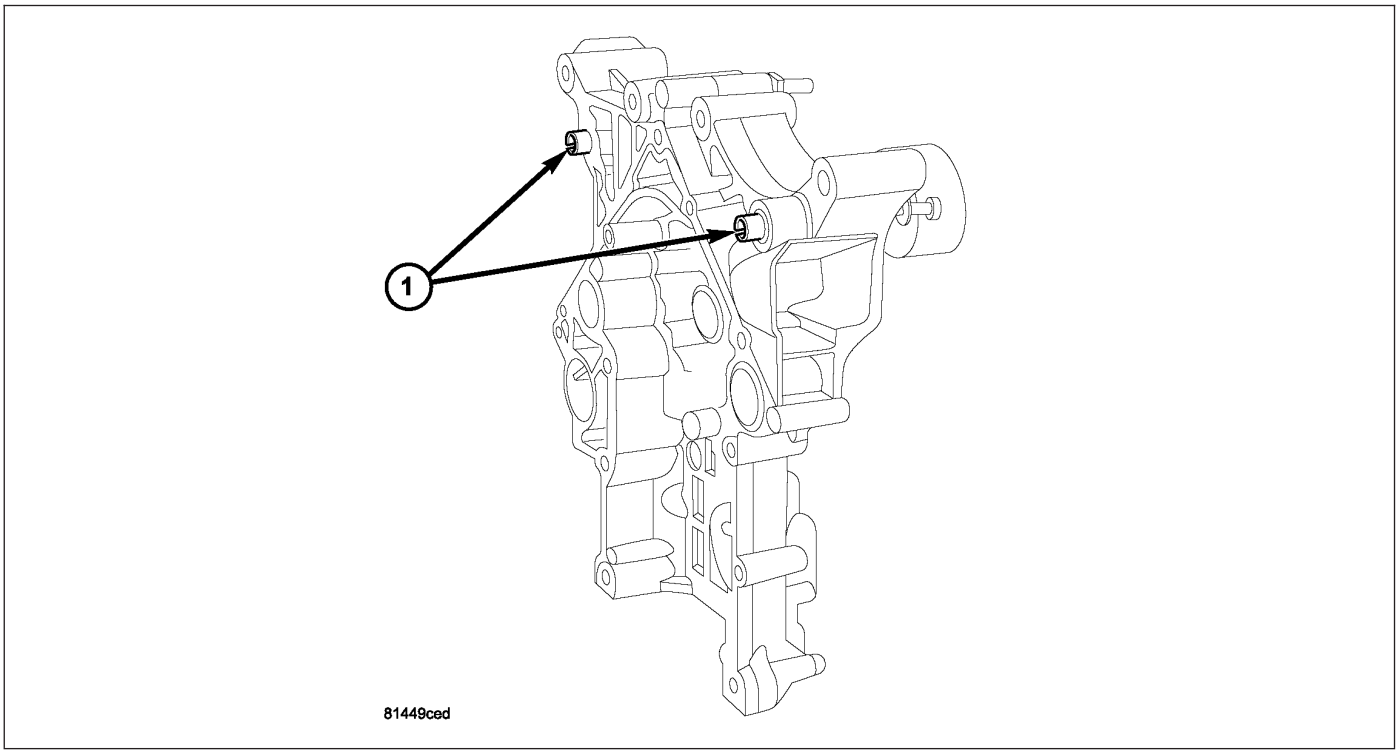

1. Clean timing chain cover and block surface.

NOTE: Always install a new gasket on timing cover.

2. Verify that the slide bushings (1) are installed in timing cover.
3. Install cover and new gasket. Tighten fasteners to 28 N·m (250 in. lbs.).

NOTE: The large lifting stud is torqued to 55 N·m (40 ft. lbs.).

4. Install the oil pan and pick up tube (Refer to 9 - ENGINE/LUBRICATION/OIL PAN - INSTALLATION).
5. Install the A/C compressor.
6. Install the generator.
7. Install power steering pump.
8. Install the dipstick support bolt.
9. Install the thermostat housing.
10. Install crankshaft damper (Refer to 9 - ENGINE/ENGINE BLOCK/VIBRATION DAMPER - INSTALLATION).
11. Install accessory drive belt tensioner assembly and both idler pulleys.

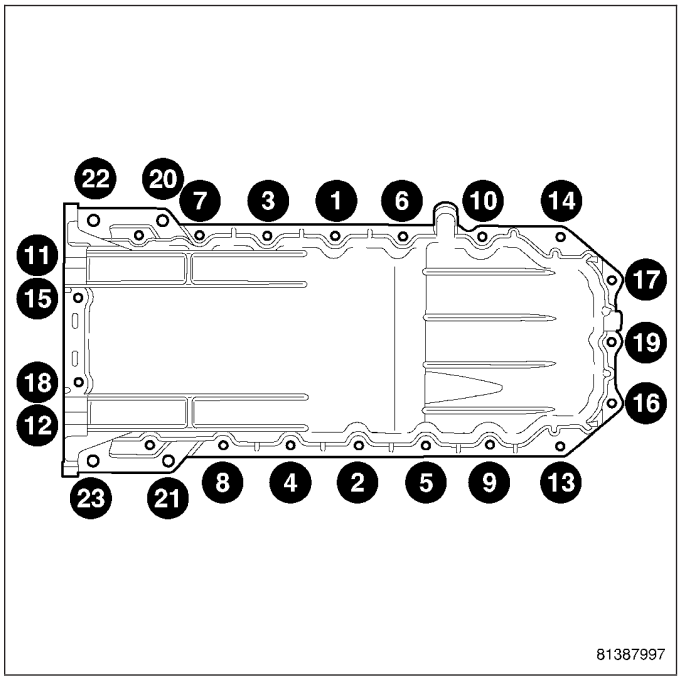

12. Install radiator lower hose.
13. Install both heater hoses.
14. Install radiator fan shroud.
15. Install the fan and fan drive assembly
16. Install the accessory drive belt.
17. Install the coolant bottle and washer bottle.
18. Install the upper radiator hose.
19. Install the air cleaner assembly.
20. Fill cooling system.
21. Refill engine oil.
22. Connect the battery negative cable.
23. Install the engine cover (1).

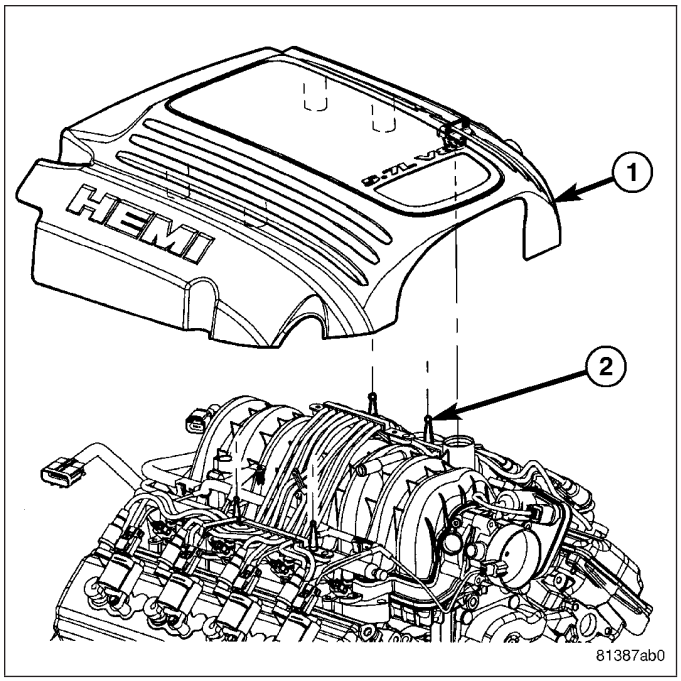

TIMING CHAIN & SPROCKETS

REMOVAL

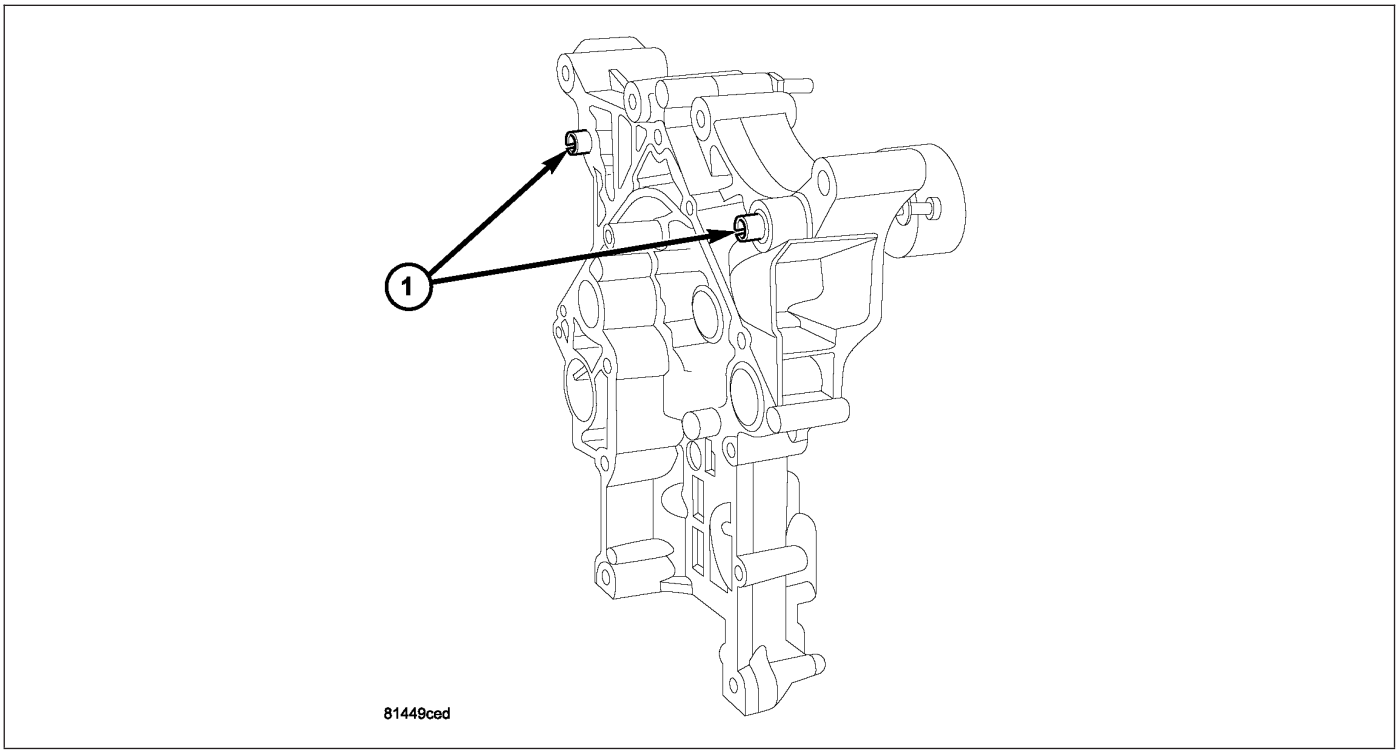

1. Disconnect battery negative cable.
2. Drain cooling system.
3. Remove Timing Chain Cover (1).
4. Re-install the vibration damper bolt finger tight. Using a suitable socket and breaker bar, rotate the crankshaft to align timing chain sprockets and keyways as shown.

CAUTION: The camshaft pin and the slot in the cam sprocket must be clocked at 12:00 (2). The crankshaft keyway must be clocked at 2:00 (3). The crankshaft sprocket must be installed so that the dots and or paint marking is at 6:00.

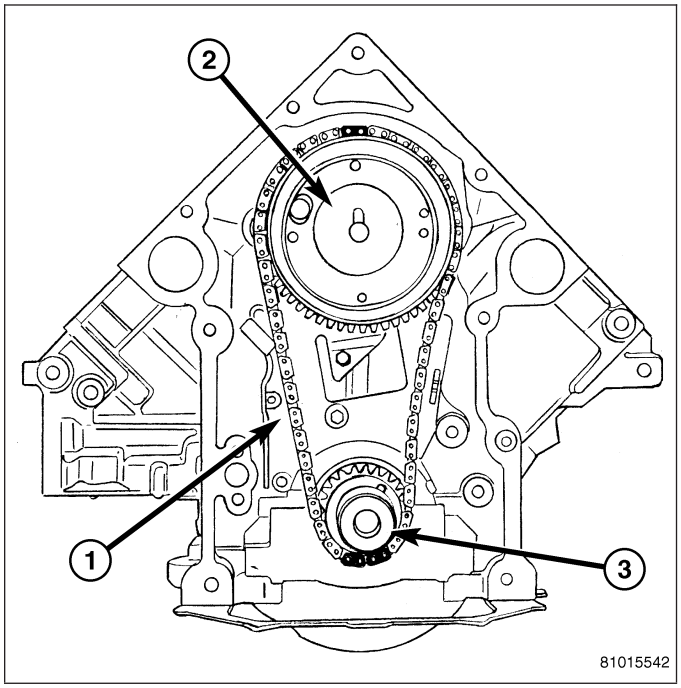

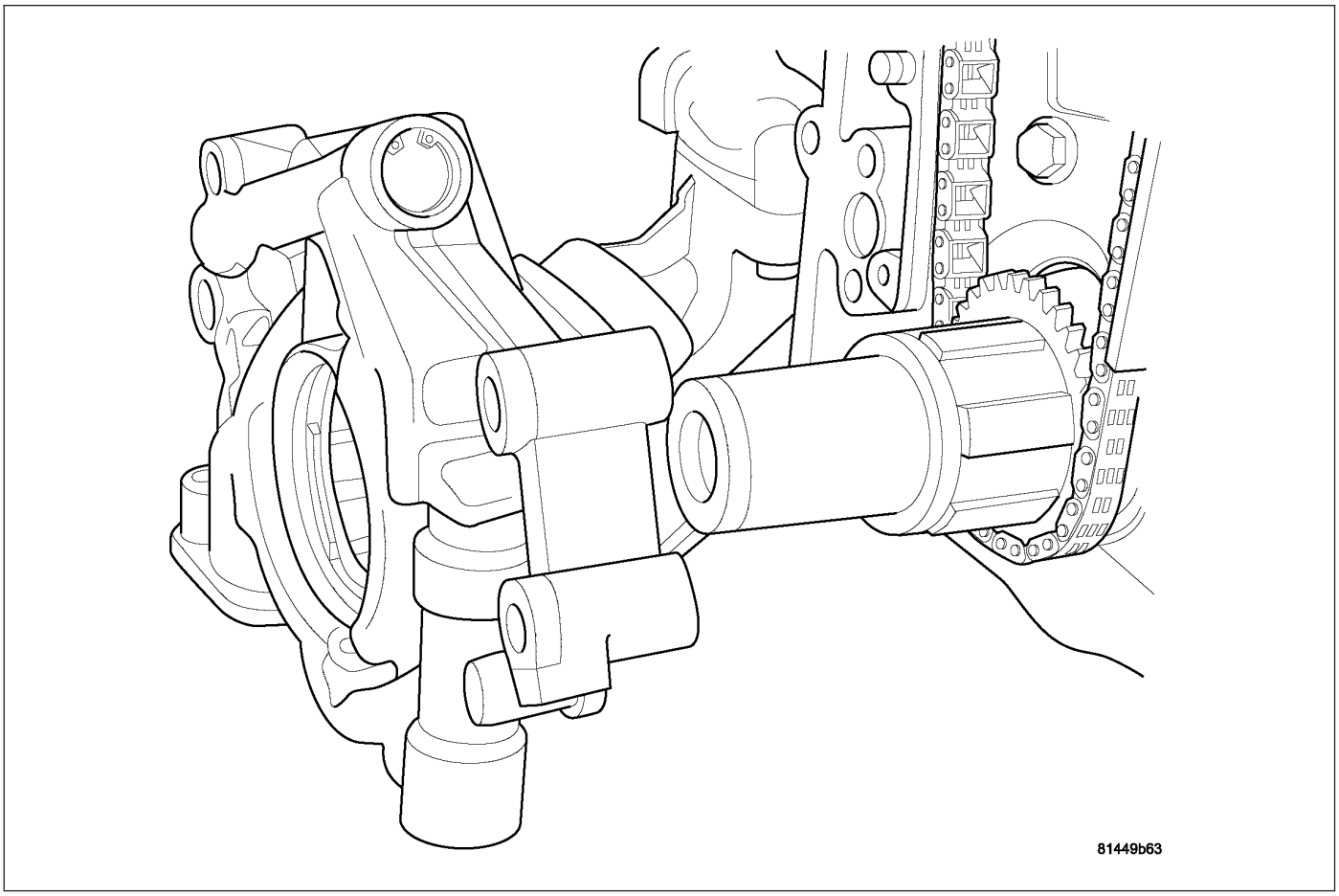

5. Remove oil pump.

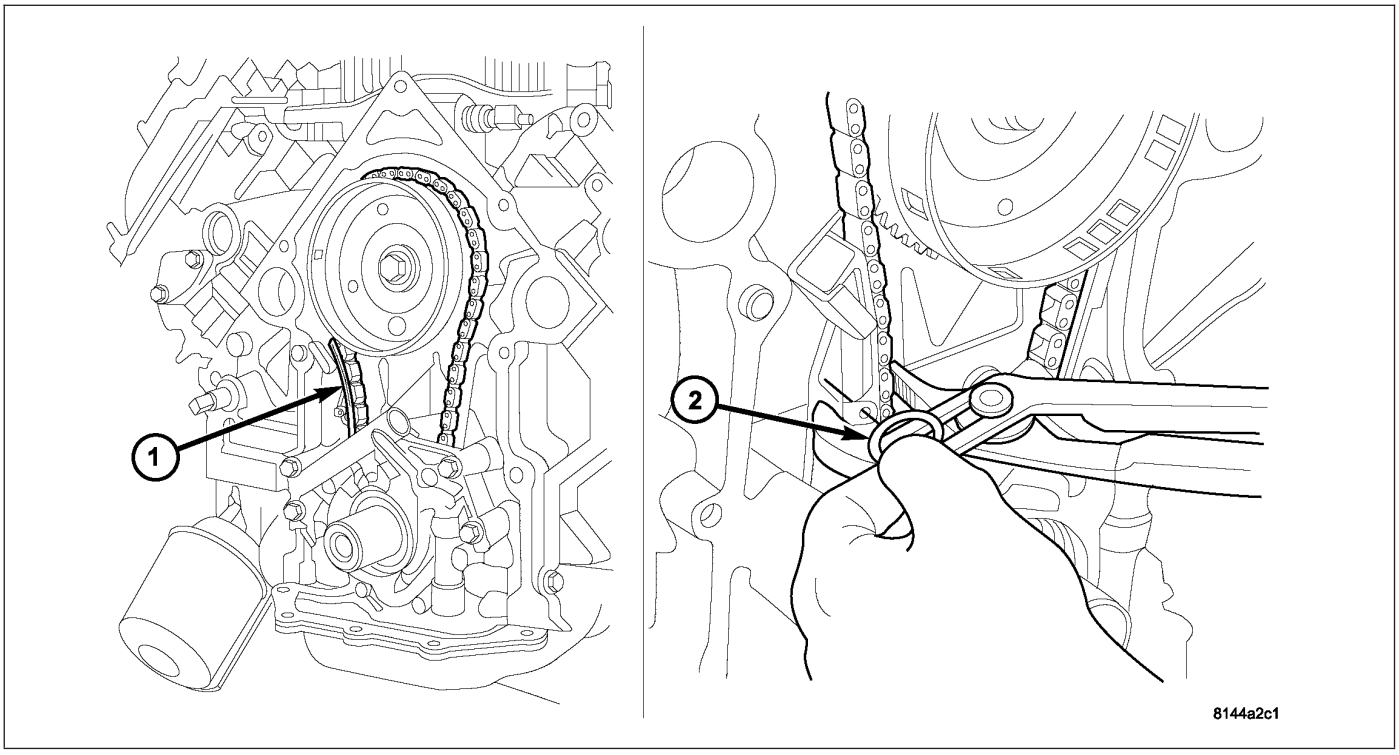

6. Retract tensioner shoe (1) until hole in shoe lines up with hole in bracket..

7. Slide a suitable pin (1) into the holes.

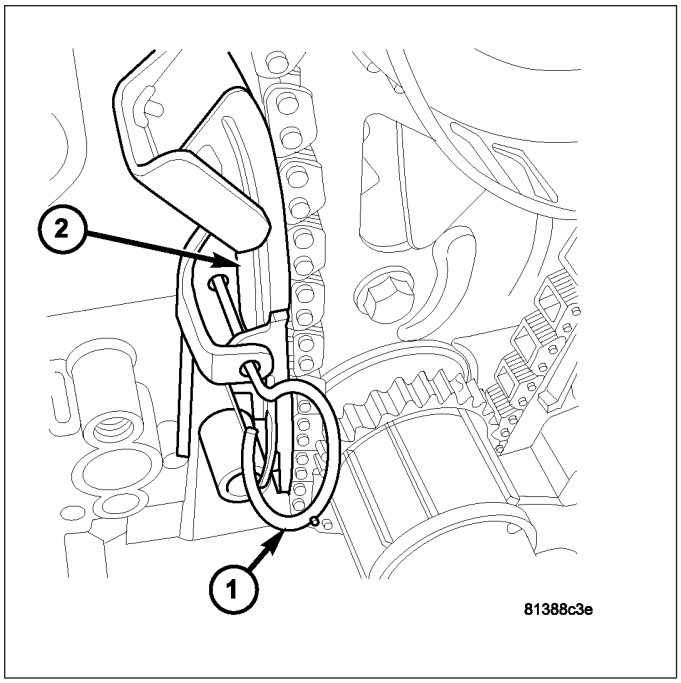

8. Remove camshaft sprocket attaching bolt and remove timing chain with crankshaft and camshaft sprockets (2).
9. If tensioner assembly is to be replaced, remove the tensioner to block bolts and remove tensioner assembly.

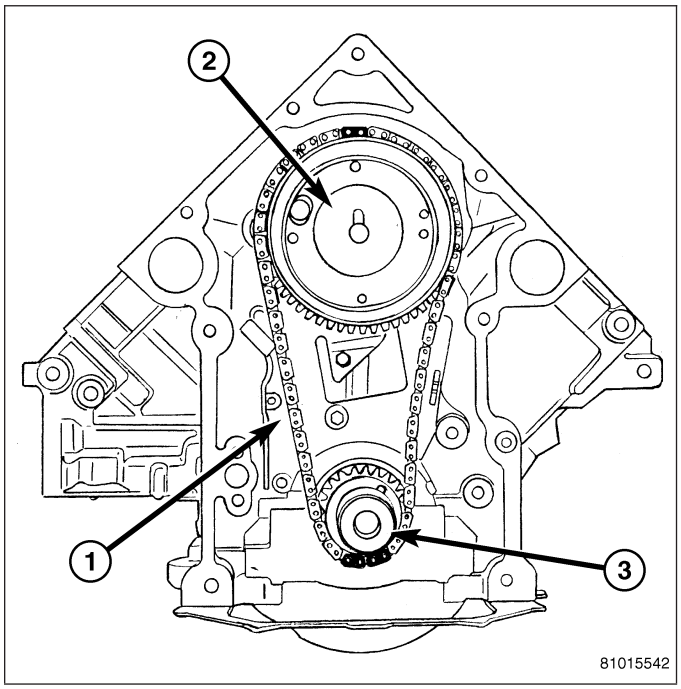

INSTALLATION

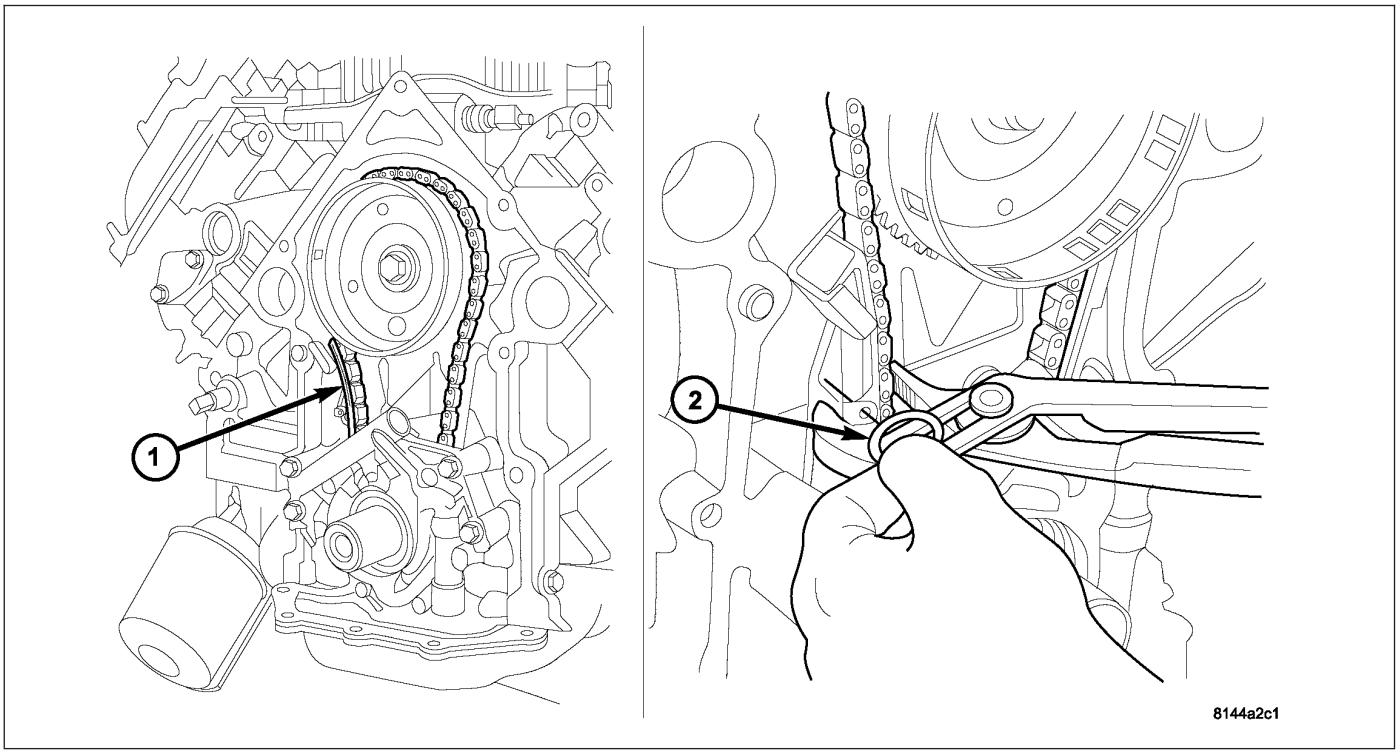

1. If tensioner (1) assembly is being replaced, install tensioner and mounting bolts. Torque bolts to 28 N·m (250 in. lbs.).
2. Retract tensioner (2) if required.

CAUTION: The timing chain must be installed with the single plated link aligned with the dot and or paint marking on the camshaft sprocket. The crankshaft sprocket is aligned with the dot and or paint marking on the sprocket between two plated timing chain links.

CAUTION: The camshaft pin and the slot in the cam sprocket must be clocked at 12:00. The crankshaft keyway must be clocked at 2:00. The crankshaft sprocket must be installed so that the dots and or paint marking is at 6:00.

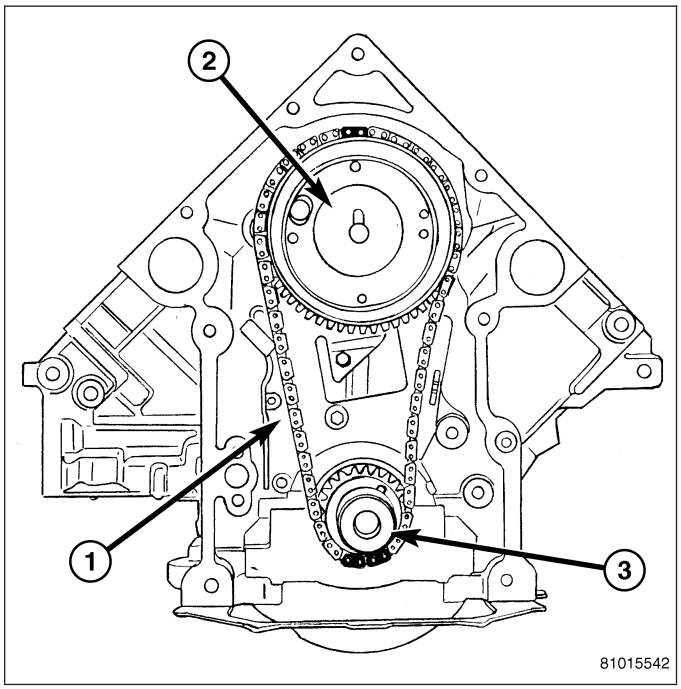

3. Place both camshaft sprocket and crankshaft sprocket on the bench with timing marks on exact imaginary center line through both camshaft and crankshaft bores.
4. Place timing chain around both sprockets.
5. Lift sprockets and chain (keep sprockets tight against the chain in position as shown).
6. Slide both sprockets (2,3) evenly over their respective shafts and check alignment of timing marks.
7. Install the camshaft bolt. Tighten the bolt to 122 N·m (90 ft. lbs.) torque.

8. **Remove tensioner pin. (1)** Again, verify alignment of timing marks.

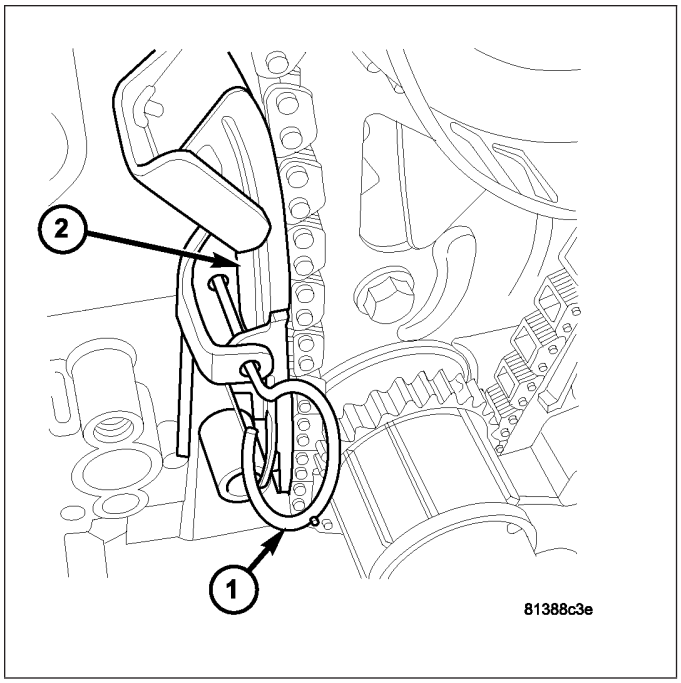

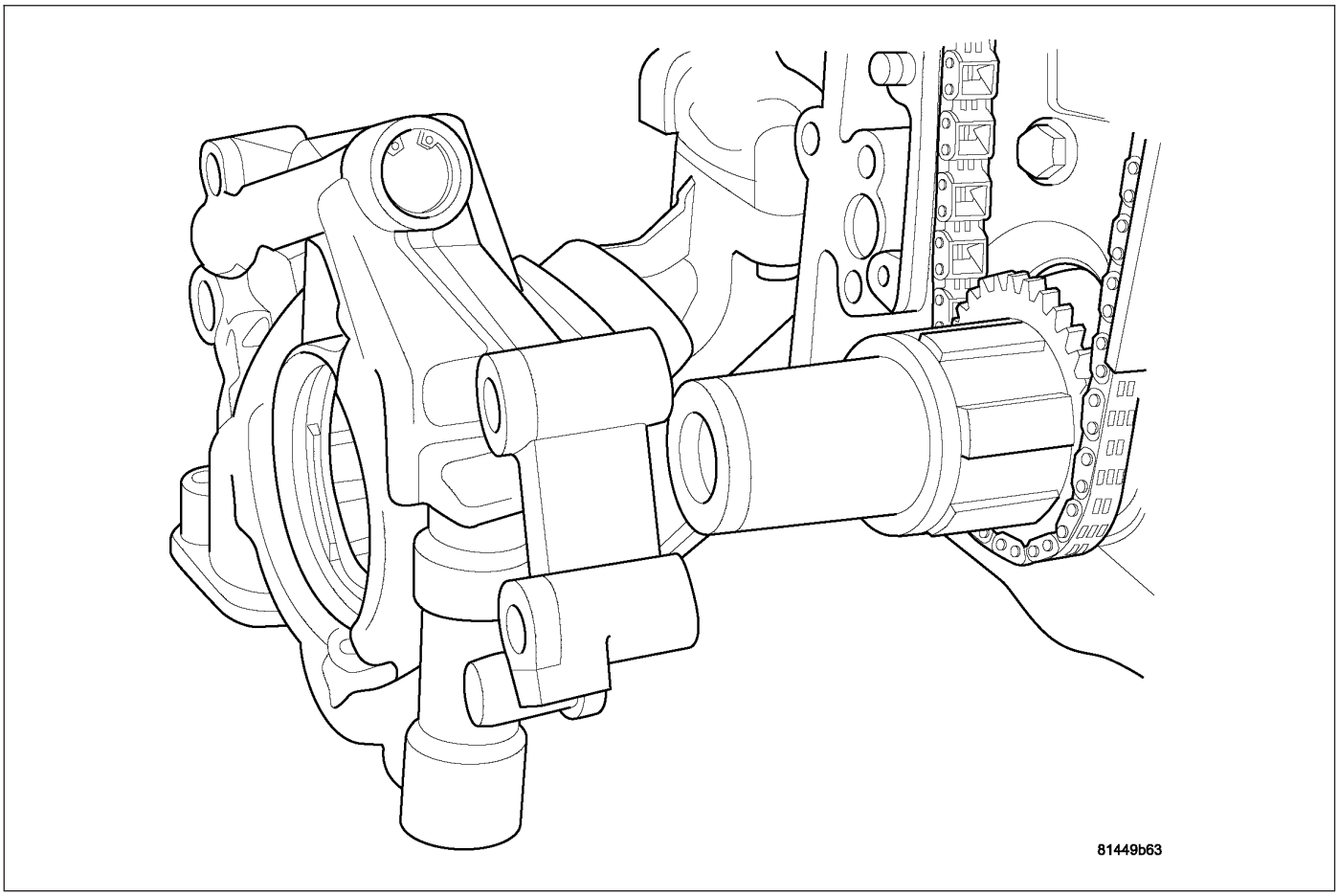

9. Install the oil pump (Refer to 9 - ENGINE/LUBRICATION/OIL PUMP - INSTALLATION).
10. Install the oil pan and pick up (Refer to 9 - ENGINE/LUBRICATION/OIL PAN - INSTALLATION).

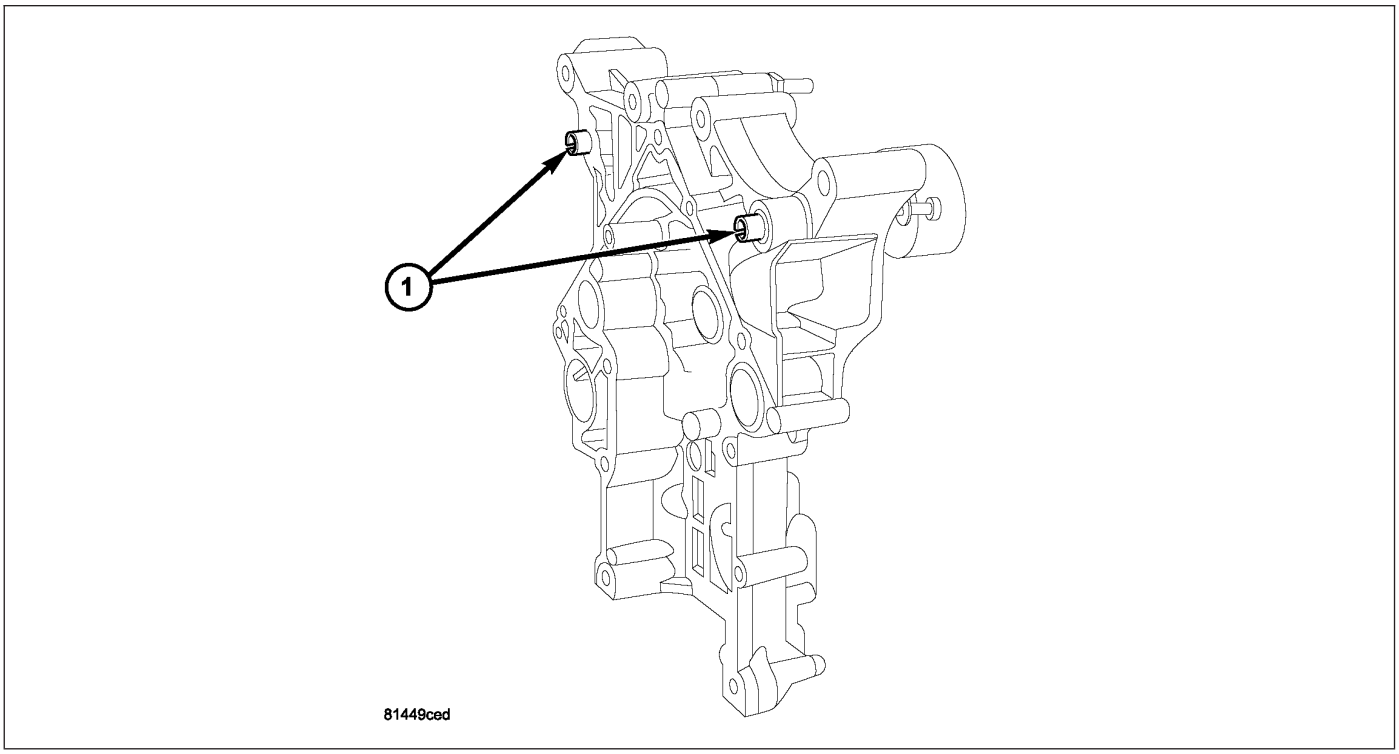

11. Install the timing chain cover (Refer to 9 - ENGINE/VALVE TIMING/TIMING BELT / CHAIN COVER(S) - INSTALLATION).
12. Refill engine oil.
13. Fill cooling system (Refer to 7 - COOLING - STANDARD PROCEDURE).
14. Connect battery negative cable.
15. Start engine and check for oil and coolant leaks.

TENSIONER - TIMING CHAIN

DESCRIPTION

The timing chain tensioner is a stamped steel constant tension mechanical design. It is mounted to the front of the engine, behind the timing chain drive.

OPERATION

The timing chain tension is maintained by routing the timing chain through the tensioner assembly. A nylon covered spring steel arm presses on the timing chain maintaining the correct chain tension.

ENGINE - 6.1L SERVICE INFORMATION

TABLE OF CONTENTS

page

ENGINE - 6.1L SERVICE INFORMATION
DESCRIPTION 2454
DIAGNOSIS AND TESTING
DIAGNOSIS AND TESTING - ENGINE DIAGNOSIS - MECHANICAL 2455
DIAGNOSIS AND TESTING - ENGINE DIAGNOSIS - LUBRICATION 2457
DIAGNOSIS AND TESTING - CYLINDER COMBUSTION PRESSURE LEAKAGE 2458
DIAGNOSIS AND TESTING - CYLINDER COMPRESSION PRESSURE 2459
DIAGNOSIS AND TESTING - ENGINE DIAGNOSIS - MECHANICAL 2459
DIAGNOSIS AND TESTING - ENGINE DIAGNOSIS - PERFORMANCE 2460
DIAGNOSIS AND TESTING - ENGINE DIAGNOSIS - INTRODUCTION 2461
STANDARD PROCEDURE
STANDARD PROCEDURE - REPAIR DAMAGED OR WORN THREADS 2461
STANDARD PROCEDURE - HYDROSTATIC LOCK 2461
REMOVAL - ENGINE 2462
INSTALLATION - ENGINE 2468
SPECIFICATIONS
6.1L ENGINE 2473
TORQUE 2478
SPECIAL TOOLS
6.1L ENGINE 2480
AIR INTAKE SYSTEM
REMOVAL 2483
INSTALLATION 2485
CYLINDER HEAD
OPERATION—CYLINDER HEAD 2487
DIAGNOSIS AND TESTING - CYLINDER HEAD GASKET FAILURE 2487
REMOVAL 2488
CLEANING 2491
INSPECTION 2491
INSTALLATION 2492
COVER-CYLINDER HEAD
REMOVAL 2497
INSTALLATION 2500
VALVES & SEATS - INTAKE/EXHAUST
DESCRIPTION
DESCRIPTION - VALVE GUIDES 2503
DESCRIPTION - VALVES 2503
STANDARD PROCEDURE - REFACING 2503
REMOVAL 2504
INSTALLATION 2504

page

ROCKER ARM
REMOVAL 2505
INSTALLATION 2507
SEALS-VALVE GUIDE
DESCRIPTION 2510
SPRINGS-VALVE
REMOVAL 2511
INSTALLATION 2517
ENGINE BLOCK
CLEANING 2522
INSPECTION 2522
CAMSHAFT
REMOVAL
REMOVAL - CAMSHAFT CORE HOLE PLUG . . 2523
REMOVAL - CAMSHAFT 2523
INSPECTION 2527
INSTALLATION
INSTALLATION - CAMSHAFT CORE HOLE PLUG 2527
INSTALLATION - CAMSHAFT 2528
CRANKSHAFT
REMOVAL 2533
INSTALLATION 2537
BEARINGS-CRANKSHAFT MAIN
STANDARD PROCEDURE - CRANKSHAFT MAIN BEARING - FITTING 2542
INSPECTION 2542
SEAL-CRANKSHAFT OIL-FRONT
REMOVAL 2543
INSTALLATION 2544
SEAL-CRANKSHAFT OIL-REAR
DIAGNOSIS AND TESTING - REAR SEAL AREA LEAKS 2545
REMOVAL 2545
INSTALLATION 2546
RETAINER-CRANK REAR OIL - SEAL
REMOVAL 2547
INSTALLATION 2547
FLEX PLATE
REMOVAL 2548
INSTALLATION 2548
TAPPETS-HYDRAULIC ROLLER
DIAGNOSIS AND TESTING - HYDRAULIC TAPPETS 2549
REMOVAL 2549
INSTALLATION 2551
PISTON & CONNECTING ROD
DESCRIPTION 2552
STANDARD PROCEDURE - PISTON FITTING . 2552
REMOVAL 2553
CLEANING 2554

INSPECTION 2554
INSTALLATION 2555
RINGS-PISTON
STANDARD PROCEDURE - PISTON RING FITTING 2557
DAMPER-CRANKSHAFT
REMOVAL 2560
INSTALLATION 2560
COVER-STRUCTURAL
DESCRIPTION 2562
OPERATION 2562
ENGINE MOUNTING-FRONT
REMOVAL 2563
INSTALLATION 2565
MOUNTING-ENGINE REAR
REMOVAL 2569
INSTALLATION 2570
LUBRICATION
DESCRIPTION 2572
DIAGNOSIS AND TESTING
DIAGNOSIS AND TESTING - CHECKING ENGINE OIL PRESSURE 2572
DIAGNOSIS AND TESTING - ENGINE OIL LEAK 2572
OIL
STANDARD PROCEDURE - ENGINE OIL SERVICE 2574
FILTER-ENGINE OIL
REMOVAL 2575
INSTALLATION 2575
PAN-OIL
REMOVAL 2576
INSTALLATION 2578
PUMP-ENGINE OIL
REMOVAL 2582
CLEANING 2582
INSPECTION 2583
INSTALLATION 2584
MANIFOLD - INTAKE
DESCRIPTION 2585
DIAGNOSIS AND TESTING - INTAKE MANIFOLD LEAKAGE 2585
REMOVAL 2585
CLEANING 2585
INSPECTION 2586
INSTALLATION 2586
MANIFOLD - EXHAUST
DESCRIPTION 2587
OPERATION 2587
REMOVAL 2587
CLEANING 2588
INSPECTION 2588
INSTALLATION 2589
COVER-TIMING
REMOVAL 2591
INSTALLATION 2593
TIMING CHAIN & SPROCKETS
REMOVAL 2595
INSTALLATION 2598
TENSIONER - TIMING CHAIN
DESCRIPTION 2601
OPERATION 2601

ENGINE - 6.1L SERVICE INFORMATION

DESCRIPTION

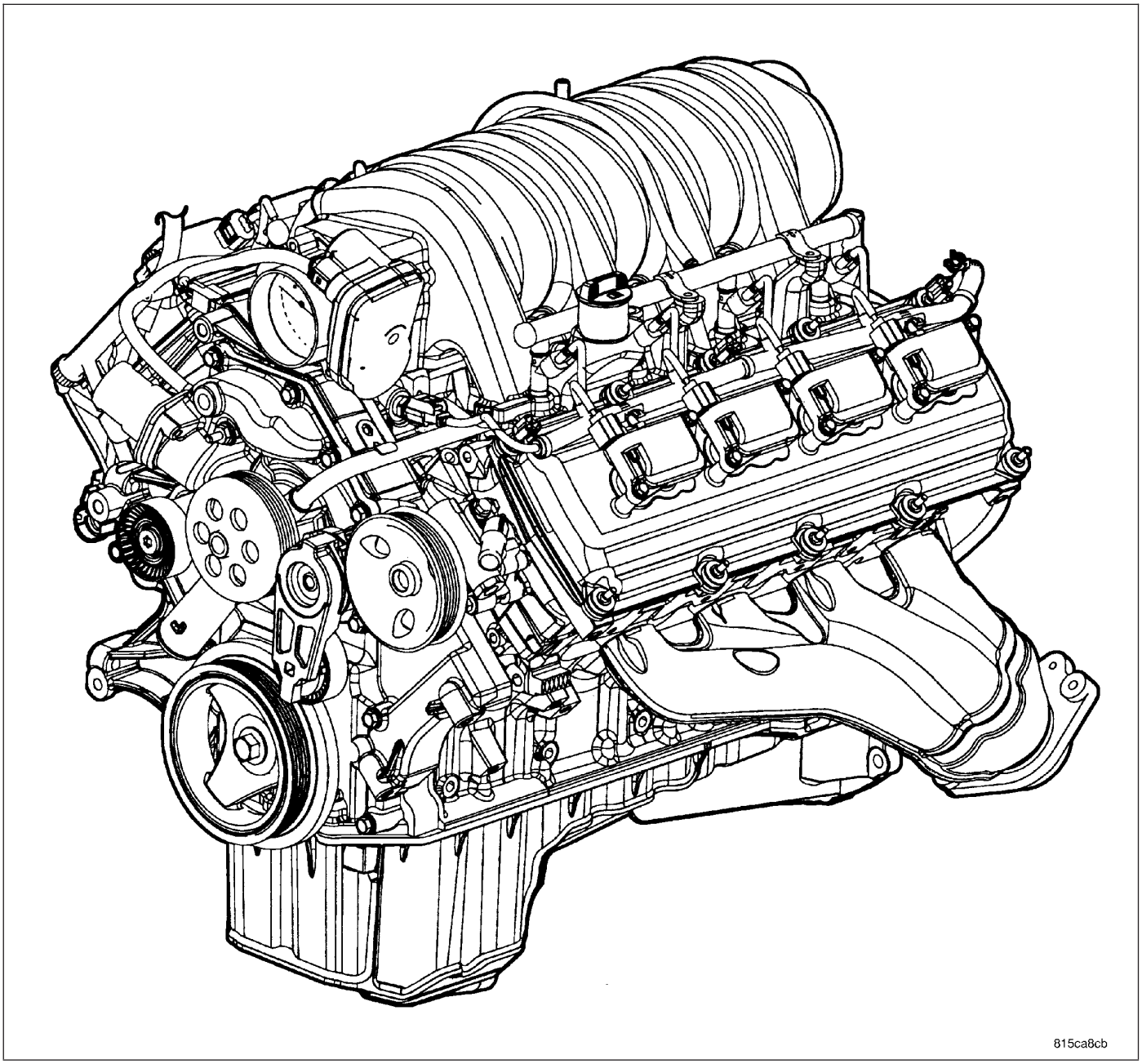

The 6.1L engine (370 CID) eight-cylinder engine is a 90° V-Type lightweight, deep skirt cast iron block, aluminum heads, single cam, overhead valve engine with hydraulic roller tappets. The heads incorporate splayed valves with a hemispherical style combustion chamber and dual spark plugs. The cylinders are numbered from front to rear; 1, 3, 5, 7 on the left bank and 2, 4, 6, 8 on the right bank. The firing order is 1-8-4-3-6-5-7-2.

DIAGNOSIS AND TESTING

DIAGNOSIS AND TESTING - ENGINE DIAGNOSIS - MECHANICAL

ENGINE MECHANICAL DIAGNOSIS CHART

CONDITION	POSSIBLE CAUSES	CORRECTION
NOISY VALVES/LIFTERS	1. High or low oil level in crankcase	1. Check for correct oil level. Adjust oil level by draining or adding as needed
	2. Thin or diluted oil	2. Change oil. (Refer to 9 - ENGINE/LUBRICATION/OIL - STANDARD PROCEDURE)
	3. Low oil pressure	3. Check engine oil level. If ok, Perform oil pressure test. (Refer to 9 - ENGINE/LUBRICATION - DIAGNOSIS AND TESTING) for engine oil pressure test/ specifications
	4. Dirt in tappets/lash adjusters	4. Clean/replace hydraulic tappets/lash adjusters
	5. Bent push rod(s)	5. Install new push rods
	6. Worn rocker arms	6. Inspect oil supply to rocker arms and replace worn arms as needed
	7. Worn tappets/lash adjusters	7. Install new hydraulic tappets/lash adjusters
	8. Worn valve guides	8. Inspect all valve guides and replace as necessary
	9. Excessive runout of valve seats or valve faces	9. Grind valves and seats
CONNECTING ROD NOISE	1. Insufficient oil supply	1. Check engine oil level.
	2. Low oil pressure	2. Check engine oil level. If ok, Perform oil pressure test. (Refer to 9 - ENGINE/LUBRICATION - DIAGNOSIS AND TESTING) engine oil pressure test/specifications
	3. Thin or diluted oil	3. Change oil to correct viscosity. (Refer to 9 - ENGINE/ LUBRICATION/OIL - STANDARD PROCEDURE) for correct procedure/engine oil specifications
	4. Excessive connecting rod bearing clearance	4. Measure bearings for correct clearance with plasti-gage. Repair as necessary
	5. Connecting rod journal out of round	5. Replace crankshaft or grind journals
	6. Misaligned connecting rods	6. Replace bent connecting rods

CONDITION	POSSIBLE CAUSES	CORRECTION
MAIN BEARING NOISE	1. Insufficient oil supply	1. Check engine oil level.
	2. Low oil pressure	2. Check engine oil level. If ok, Perform oil pressure test. (Refer to 9 - ENGINE/LUBRICATION - DIAGNOSIS AND TESTING)
	3. Thin or diluted oil	3. Change oil to correct viscosity.
	4. Excessive main bearing clearance	4. Measure bearings for correct clearance. Repair as necessary
	5. Excessive end play	5. Check crankshaft thrust bearing for excessive wear on flanges
	6. Crankshaft main journal out of round or worn	6. Grind journals or replace crankshaft
	7. Loose flywheel or torque converter	7. Inspect crankshaft, flexplate/ flywheel and bolts for damage. Tighten to correct torque
LOW OIL PRESSURE	1. Low oil level	1. Check oil level and fill if necessary
	2. Faulty oil pressure sending unit	2. Install new sending unit
	3. Clogged oil filter	3. Install new oil filter
	4. Worn oil pump	4. Replace oil pump assembly.
	5. Thin or diluted oil	5. Change oil to correct viscosity.
	6. Excessive bearing clearance	6. Measure bearings for correct clearance
	7. Oil pump relief valve stuck	7. Remove valve to inspect, clean and reinstall
	8. Oil pickup tube loose, broken, bent or clogged	8. Inspect oil pickup tube and pump, and clean or replace if necessary
	9. Oil pump cover warped or cracked	9. Install new oil pump
	10. Faulty or missing piston cooling jets.	10. Replace piston cooling jets.
OIL LEAKS	1. Misaligned or deteriorated gaskets	1. Replace gasket
	2. Loose fastener, broken or porous metal part	2. Tighten, repair or replace the part
	3. Front or rear crankshaft oil seal leaking	3. Replace seal
	4. Leaking oil gallery plug or cup plug	4. Remove and reseal threaded plug. Replace cup style plug

CONDITION	POSSIBLE CAUSES	CORRECTION
EXCESSIVE OIL CONSUMPTION OR SPARK PLUGS OIL FOULED	1. CCV System malfunction	1. (Refer to 25 - EMISSIONS CONTROL/EVAPORATIVE EMISSIONS - DESCRIPTION) for correct operation
	2. Defective valve stem seal(s)	2. Repair or replace seal(s)
	3. Worn or broken piston rings	3. Hone cylinder bores. Install new rings
	4. Scuffed pistons/cylinder walls	4. Hone cylinder bores and replace pistons as required
	5. Carbon in oil control ring groove	5. Remove rings and de-carbon piston
	6. Worn valve guides	6. Inspect/replace valve guides as necessary
	7. Piston rings fitted too tightly in grooves	7. Remove rings and check ring end gap and side clearance. Replace if necessary

DIAGNOSIS AND TESTING - ENGINE DIAGNOSIS - LUBRICATION

CONDITION	POSSIBLE CAUSES	CORRECTION
OIL LEAKS	1. Gaskets and O-Rings.	1.
	(a) Misaligned or damaged.	(a) Replace as necessary.
	(b) Loose fasteners, broken or porous metal parts.	(b) Tighten fasteners, Repair or replace metal parts.
	2. Crankshaft rear seal	2. Replace as necessary.
	3. Crankshaft seal flange. Scratched, nicked or grooved.	3. Polish or replace crankshaft.
	4. Oil pan flange cracked.	4. Replace oil pan.
	5.Front cover seal, damaged or misaligned.	5. Replace seal.
	6. Scratched or damaged vibration damper hub.	6. Polish or replace damper.
	7. Crankshaft Rear Flange Microporosity	7. Replace Crankshaft
OIL PRESSURE DROP	1. Low oil level.	1. Check and correct oil level.
	2. Faulty oil pressure sending unit.	2. Replace sending unit.
	3. Low oil pressure.	3. Check pump and bearing clearance.
	4. Clogged oil filter.	4. Replace oil filter.
	5. Worn oil pump.	5. Replace as necessary.
	6. Thin or diluted oil.	6. Change oil and filter.
	7. Excessive bearing clearance.	7. Replace as necessary.
	8. Oil pump relief valve stuck.	8. Replace oil pump.
	9. Oil pickup tube loose or damaged.	9. Replace as necessary.
	10. Faulty or missing piston cooling jets.	10. Replace piston cooling jets.

CONDITION	POSSIBLE CAUSES	CORRECTION
OIL PUMPING AT RINGS; SPARK PLUGS FOULING	1. Worn or damaged rings.	1. Hone cylinder bores and replace rings.
	2. Carbon in oil ring slots.	2. Replace rings.
	3. Incorrect ring size installed.	3. Replace rings.
	4. Worn valve guides.	4. Ream guides and replace valves.
	5. Leaking intake gasket.	5. Replace intake gaskets.
	6. Leaking valve guide seals.	6. Replace valve guide seals.

DIAGNOSIS AND TESTING - CYLINDER COMBUSTION PRESSURE LEAKAGE

The combustion pressure leakage test provides an accurate means for determining engine condition.

Combustion pressure leakage testing will detect:

- Exhaust and intake valve leaks (improper seating).
- Leaks between adjacent cylinders or into water jacket.
- Any causes for combustion/compression pressure loss.

1. Check the coolant level and fill as required. DO NOT install the radiator cap.
2. Start and operate the engine until it attains normal operating temperature, then turn the engine OFF.
3. Remove the spark plugs.
4. Remove the oil filler cap.
5. Remove the air cleaner hose.
6. Calibrate the tester according to the manufacturer's instructions. The shop air source for testing should maintain 483 kPa (70 psi) minimum, 1,379 kPa (200 psi) maximum and 552 kPa (80 psi) recommended.
7. Perform the test procedures on each cylinder according to the tester manufacturer's instructions. Set piston of cylinder to be tested at TDC compression,While testing, listen for pressurized air escaping through the throttle body, tailpipe and oil filler cap opening. Check for bubbles in the radiator coolant.

All gauge pressure indications should be equal, with no more than 25% leakage.

FOR EXAMPLE: At 552 kPa (80 psi) input pressure, a minimum of 414 kPa (60 psi) should be maintained in the cylinder.

Refer to CYLINDER COMBUSTION PRESSURE LEAKAGE DIAGNOSIS CHART .

CYLINDER COMBUSTION PRESSURE LEAKAGE DIAGNOSIS CHART

CONDITION	POSSIBLE CAUSE	CORRECTION
AIR ESCAPES THROUGH THROTTLE BODY	Intake valve bent, burnt, or not seated properly	Inspect valve and valve seat. Reface or replace, as necessary. Inspect valve springs. Replace as necessary.
AIR ESCAPES THROUGH TAILPIPE	Exhaust valve bent, burnt, or not seated properly	Inspect valve and valve seat. Reface or replace, as necessary. Inspect valve springs. Replace as necessary.
AIR ESCAPES THROUGH RADIATOR	Head gasket leaking or cracked cylinder head or block	Remove cylinder head and inspect. Replace defective part
MORE THAN 50% LEAKAGE FROM ADJACENT CYLINDERS	Head gasket leaking or crack in cylinder head or block between adjacent cylinders	Remove cylinder head and inspect. Replace gasket, head, or block as necessary
MORE THAN 25% LEAKAGE AND AIR ESCAPES THROUGH OIL FILLER CAP OPENING ONLY	Stuck or broken piston rings; cracked piston; worn rings and/or cylinder wall	Inspect for broken rings or piston. Measure ring gap and cylinder diameter, taper and out-of-round. Replace defective part as necessary

DIAGNOSIS AND TESTING - CYLINDER COMPRESSION PRESSURE

The results of a cylinder compression pressure test can be utilized to diagnose several engine malfunctions.

Ensure the battery is completely charged and the engine starter motor is in good operating condition. Otherwise the indicated compression pressures may not be valid for diagnosis purposes.

1. Clean the spark plug recesses with compressed air.
2. Remove the spark plugs.
3. Disable the fuel system (Refer to 14 - FUEL SYSTEM/FUEL DELIVERY - DESCRIPTION).
4. Remove the ASD relay (Refer to 8 - ELECTRICAL/IGNITION CONTROL/AUTO SHUT DOWN RELAY - REMOVAL).
5. Insert a compression pressure gauge and rotate the engine with the engine starter motor for three revolutions.
6. Record the compression pressure on the 3rd revolution. Continue the test for the remaining cylinders.
7. (Refer to 9 - ENGINE - SPECIFICATIONS) for the correct engine compression pressures.

DIAGNOSIS AND TESTING - ENGINE DIAGNOSIS - MECHANICAL

CONDITION	POSSIBLE CAUSES	CORRECTIONS
NOISY VALVES	1. High or low oil level in crankcase.	1. (Refer to LUBRICATION & MAINTENANCE - SPECIFICATIONS)
	2. Thin or diluted oil.	2. Change oil and filter.
	3. Low oil pressure.	3. Check oil pump, if Ok, check rod and main bearings for excessive wear.
	4. Dirt in lash adjusters.	4. Replace as necessary.
	5. Worn rocker arms.	5. Replace as necessary.
	6. Worn lash adjusters	6. Replace as necessary.
	7. Worn valve guides.	7. (Refer to 9 - ENGINE/CYLINDER HEAD/INTAKE/EXHAUST VALVES & SEATS - STANDARD PROCEDURE)
	8. Excessive runout of valve seats on valve faces.	8. (Refer to 9 - ENGINE/CYLINDER HEAD/INTAKE/EXHAUST VALVES & SEATS - STANDARD PROCEDURE)
CONNECTING ROD NOISE	1. Insufficient oil supply.	1. (Refer to LUBRICATION & MAINTENANCE - SPECIFICATIONS)
	2. Low oil pressure.	2. Check oil pump, if Ok, check rod and main bearings for excessive wear.
	3. Thin or diluted oil.	3. Change oil and filter.
	4. Excessive bearing clearance.	4. Replace as necessary.
	5. Connecting rod journal out-of-round.	5. Service or replace crankshaft.
	6. Misaligned connecting rods.	6. Replace bent connecting rods.

CONDITION	POSSIBLE CAUSES	CORRECTIONS
MAIN BEARING NOISE	1. Insufficient oil supply.	1. (Refer to LUBRICATION & MAINTENANCE - SPECIFICATIONS)
	2. Low oil pressure.	2. Check oil pump, if Ok, check rod and main bearings for excessive wear.
	3. Thin or diluted oil.	3. Change oil and filter.
	4. Excessive bearing clearance.	4. Replace as necessary.
	5. Excessive end play.	5. Check thrust washers for wear.
	6. Crankshaft journal out-of round.	6. Service or replace crankshaft.
	7. Loose flywheel or torque converter.	7. Tighten to correct torque

DIAGNOSIS AND TESTING - ENGINE DIAGNOSIS - PERFORMANCE

CONDITION	POSSIBLE CAUSE	CORRECTION
ENGINE WILL NOT START	1. Weak battery	1. Charge or replace as necessary.
	2. Corroded or loose battery connections.	2. Clean and tighten battery connections. Apply a coat of light mineral grease to the terminals.
	3. Faulty starter.	3. (Refer to 8 - ELECTRICAL/ STARTING - DIAGNOSIS AND TESTING).
	4. Incorrect spark plug gap.	4. (Refer to 8 - ELECTRICAL/ IGNITION CONTROL/SPARK PLUG - CLEANING).
	5. Dirt or water in fuel system.	5. Clean system and replace fuel filter.
	6. Faulty fuel pump, relay or wiring.	6. (Refer to 9 - ENGINE - DIAGNOSIS AND TESTING)
ENGINE STALLS OR ROUGH IDLE	1. Idle speed set to low.	1. (Refer to 9 - ENGINE - DIAGNOSIS AND TESTING)
	2. Vacuum leak.	2. Inspect intake manifold and vacuum hoses, repair or replace as necessary.
	3. Incorrect engine timing.	3. (Refer to 9 - ENGINE/VALVE TIMING - STANDARD PROCEDURE).

CONDITION	POSSIBLE CAUSE	CORRECTION
ENGINE LOSS OF POWER	1. Dirty or incorrectly gapped spark plugs.	1. Replace spark plugs.
	2. Dirt or water in fuel system.	2. Clean system and replace fuel filter.
	3. Blown cylinder head gasket.	3. Replace cylinder head gasket.
	4. Low compression.	4. (Refer to 9 - ENGINE - DIAGNOSIS AND TESTING).
	5. Burned, warped or pitted valves.	5. Replace as necessary.
	6. Plugged or restricted exhaust system.	6. Inspect and replace as necessary.

DIAGNOSIS AND TESTING - ENGINE DIAGNOSIS - INTRODUCTION

Engine diagnosis is helpful in determining the causes of malfunctions not detected and remedied by routine maintenance.

These malfunctions may be classified as either performance (e.g., engine idles rough and stalls) or mechanical (e.g., a strange noise).

(Refer to 9 - ENGINE - DIAGNOSIS AND TESTING) - PERFORMANCE and (Refer to 9 - ENGINE - DIAGNOSIS AND TESTING)—MECHANICAL for possible causes and corrections of malfunctions. (Refer to 14 - FUEL SYSTEM/FUEL DELIVERY - DIAGNOSIS AND TESTING) and (Refer to 14 - FUEL SYSTEM/FUEL INJECTION - DIAGNOSIS AND TESTING) for the fuel system diagnosis.

Additional tests and diagnostic procedures may be necessary for specific engine malfunctions that can not be isolated with the Service Diagnosis charts. Information concerning additional tests and diagnosis is provided within the following diagnosis:

- Cylinder Compression Pressure Test (Refer to 9 - ENGINE - DIAGNOSIS AND TESTING).
- Cylinder Combustion Pressure Leakage Test (Refer to 9 - ENGINE - DIAGNOSIS AND TESTING).
- Engine Cylinder Head Gasket Failure Diagnosis (Refer to 9 - ENGINE/CYLINDER HEAD - DIAGNOSIS AND TESTING).
- Intake Manifold Leakage Diagnosis (Refer to 9 - ENGINE/MANIFOLDS/INTAKE MANIFOLD - DIAGNOSIS AND TESTING).

STANDARD PROCEDURE

STANDARD PROCEDURE - REPAIR DAMAGED OR WORN THREADS

CAUTION: Be sure that the tapped holes maintain the original center line.

Damaged or worn threads can be repaired. Essentially, this repair consists of:

- Drilling out worn or damaged threads.
- Tapping the hole with a special Heli-Coil Tap, or equivalent.
- Installing an insert into the tapped hole to bring the hole back to its original thread size.

STANDARD PROCEDURE - HYDROSTATIC LOCK

CAUTION: DO NOT use the starter motor to rotate the crankshaft. Severe damage could occur.

When an engine is suspected of hydrostatic lock (regardless of what caused the problem), follow the steps below.

1. Perform the Fuel Pressure Release Procedure (Refer to 14 - FUEL SYSTEM/FUEL DELIVERY - STANDARD PROCEDURE).
2. Disconnect the negative cable(s) from the battery.
3. Inspect air cleaner, induction system, and intake manifold to ensure system is dry and clear of foreign material.

4. Place a shop towel around the spark plugs to catch any fluid that may possibly be under pressure in the cylinder head. Remove the spark plugs.
5. With all spark plugs removed, rotate the crankshaft using a breaker bar and socket.
6. Identify the fluid in the cylinders (coolant, fuel, oil, etc.).
7. Be sure all fluid has been removed from the cylinders.
8. Repair engine or components as necessary to prevent this problem from occurring again.
9. Squirt a small amount of engine oil into the cylinders to lubricate the walls. This will prevent damage on restart.
10. Install new spark plugs. Tighten the spark plugs to 41 N·m (30 ft. lbs.) torque.
11. Drain engine oil. Remove and discard the oil filter.
12. Install the drain plug. Tighten the plug to 34 N·m (25 ft. lbs.) torque.
13. Install a new oil filter.
14. Fill engine crankcase with the specified amount and grade of oil. (Refer to LUBRICATION & MAINTENANCE - SPECIFICATIONS).
15. Connect the negative cable(s) to the battery.
16. Start the engine and check for any leaks.

REMOVAL - ENGINE

1. Remove the engine covers (1).
2. Perform the Fuel System Pressure Release procedure (Refer to 14 - FUEL SYSTEM/FUEL DELIVERY - STANDARD PROCEDURE).
3. Disconnect the battery negative cable.
4. Remove the air cleaner resonator and duct work as an assembly.
5. Remove the cowl top panel (Refer to 23 - BODY/EXTERIOR/COWL GRILLE - REMOVAL).
6. Drain cooling system (Refer to 7 - COOLING - STANDARD PROCEDURE).
7. Remove the accessory drive belt (Refer to 7 - COOLING/ACCESSORY DRIVE/DRIVE BELTS - REMOVAL).
8. Remove radiator fan shroud (Refer to 7 - COOLING/ENGINE/RADIATOR FAN - REMOVAL).

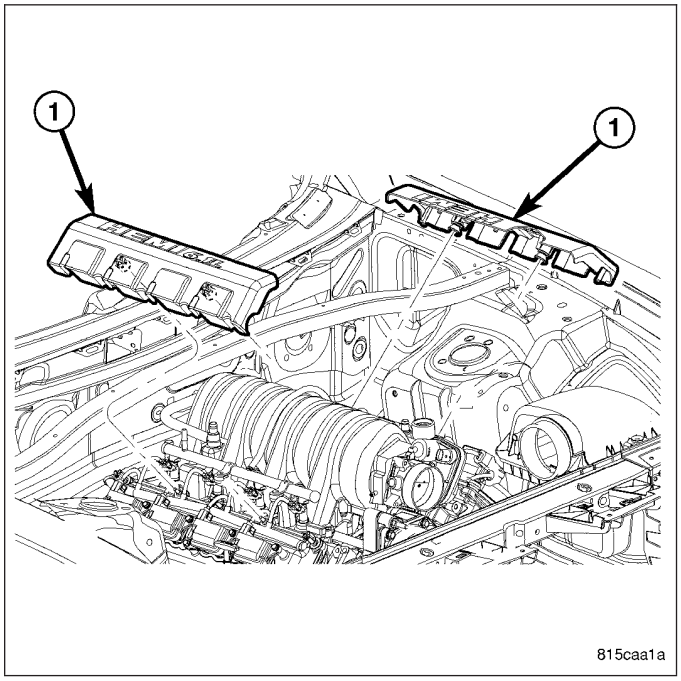

9. Remove the A/C compressor (3) with the lines attached. Secure compressor out of the way.

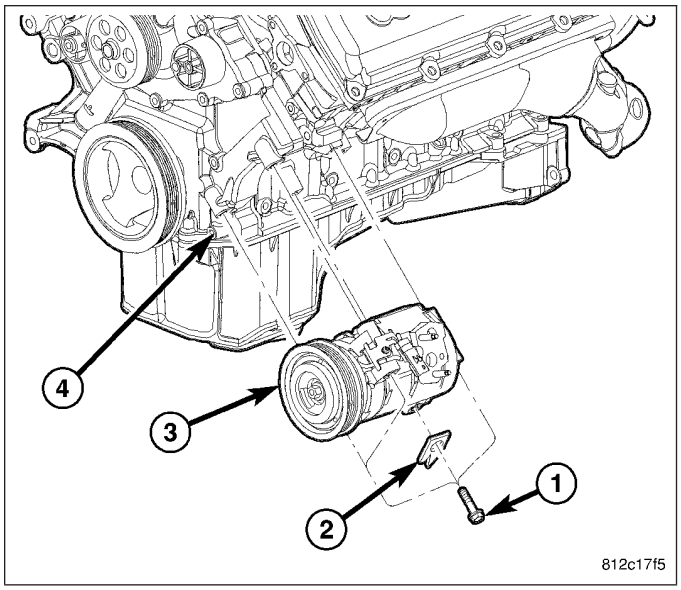

10. Remove the generator support bracket (1).

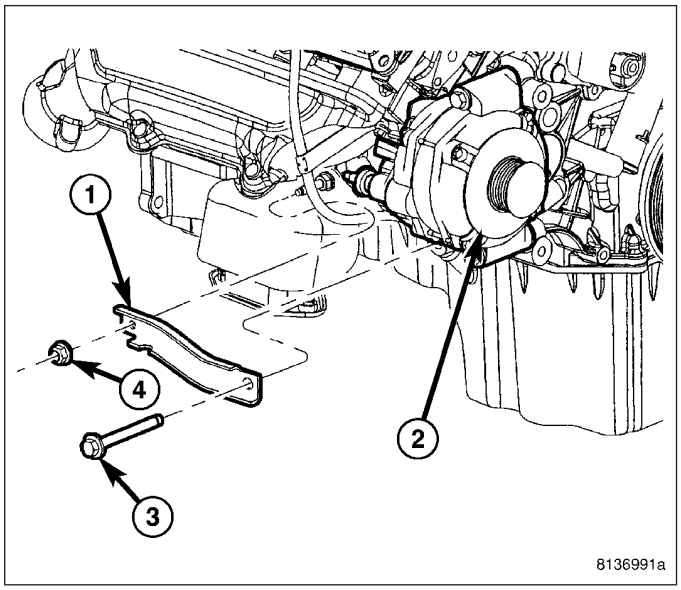

11. Remove generator (2) (Refer to 8 - ELECTRICAL/ CHARGING/GENERATOR - REMOVAL).

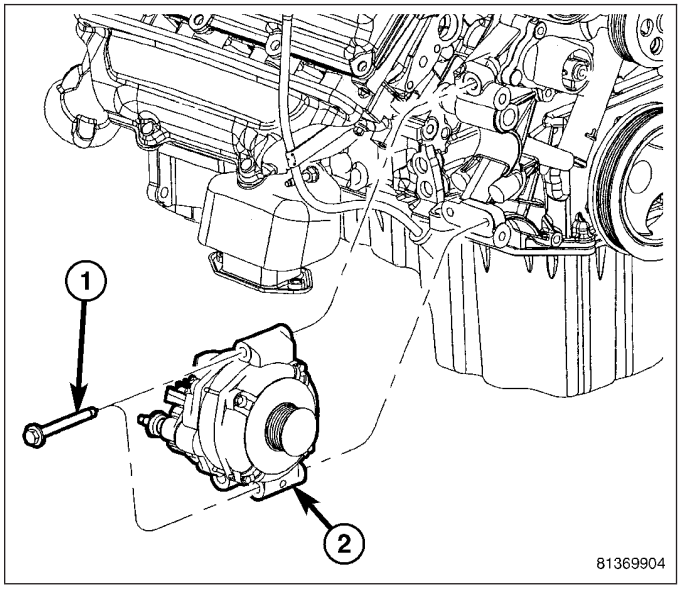

12. Remove the intake manifold and IAFM as an assembly (Refer to 9 - ENGINE/MANIFOLDS/INTAKE MANIFOLD - REMOVAL).
13. Remove the ground wires from the rear of each cylinder head.
14. Disconnect the heater hoses (1).

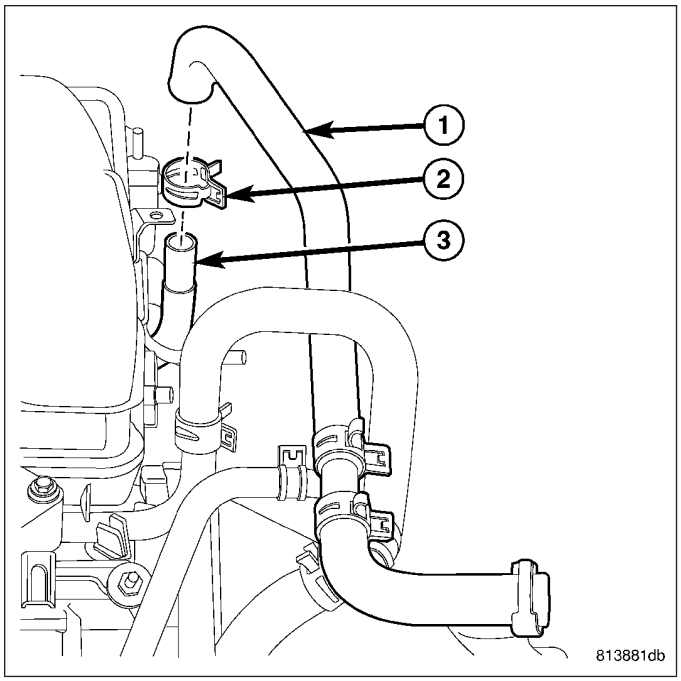

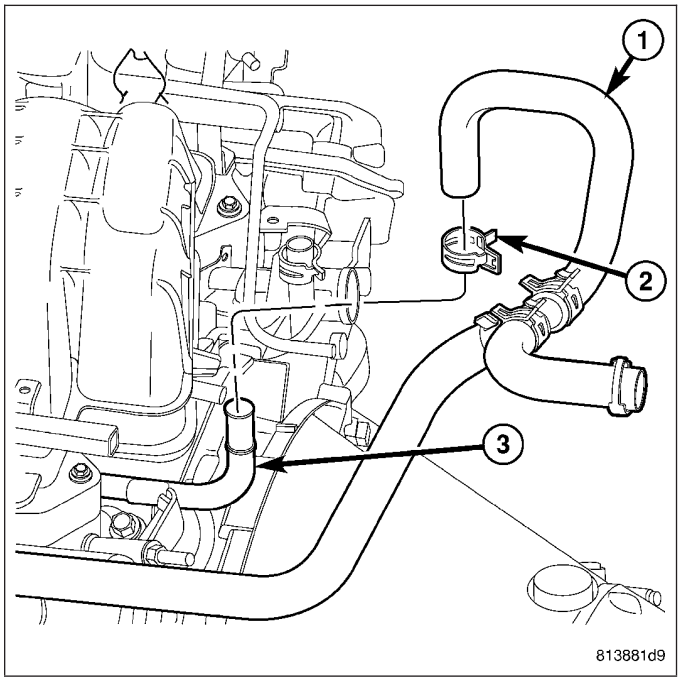

NOTE: It is not necessary to disconnect P/S hoses from pump, for P/S pump removal.

15. Remove the power steering pump and set aside.
16. Disconnect the fuel supply line (Refer to 14 - FUEL SYSTEM/FUEL DELIVERY/QUICK CONNECT FITTING - STANDARD PROCEDURE).
17. Raise and support the vehicle on a hoist and drain the engine oil.
18. Remove the belly pan (2) (Refer to 23 - BODY/EXTERIOR/BELLY PAN - REMOVAL).
19. Remove engine front mount to frame nuts.

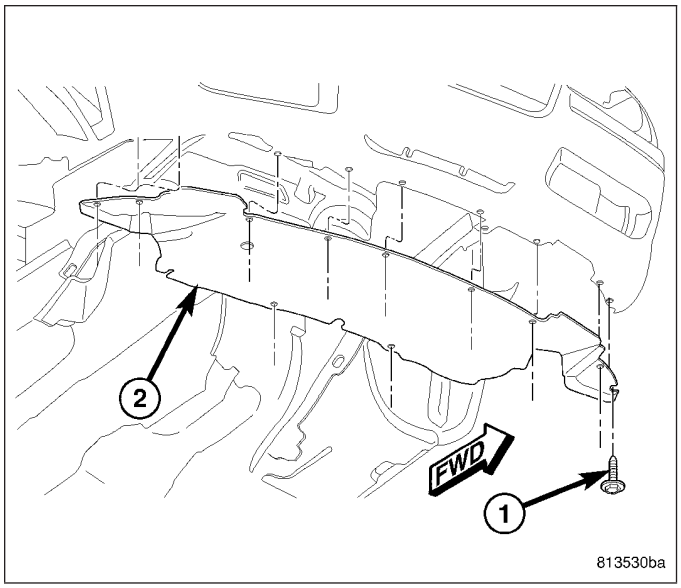

20. Disconnect the transmission oil cooler lines from their retainers at the oil pan bolts.
21. Disconnect exhaust pipe at manifolds.
22. Disconnect the starter wires. Remove starter motor (1) (Refer to 8 - ELECTRICAL/STARTING/STARTER MOTOR - REMOVAL).

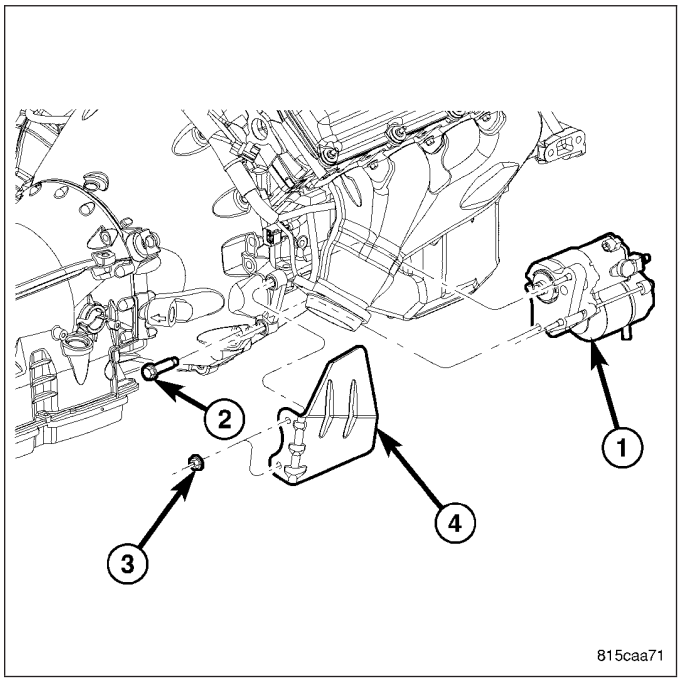

23. Remove the torque converter access cover (1).

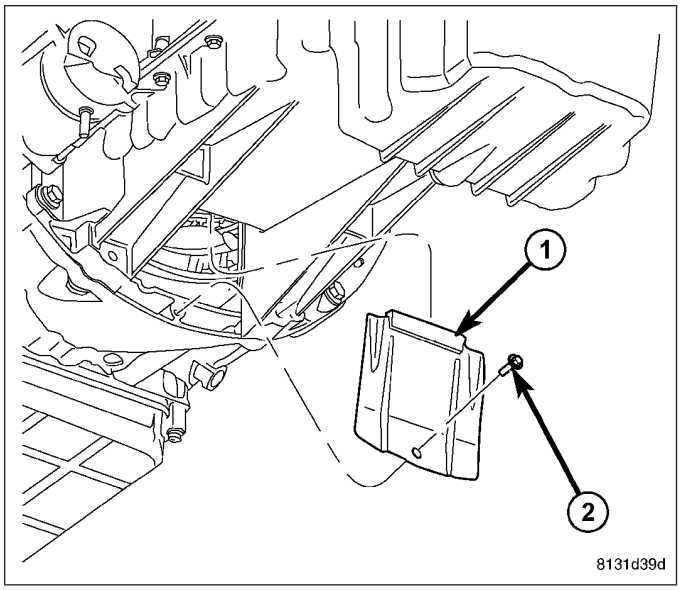

24. Remove drive plate to converter bolts (1).

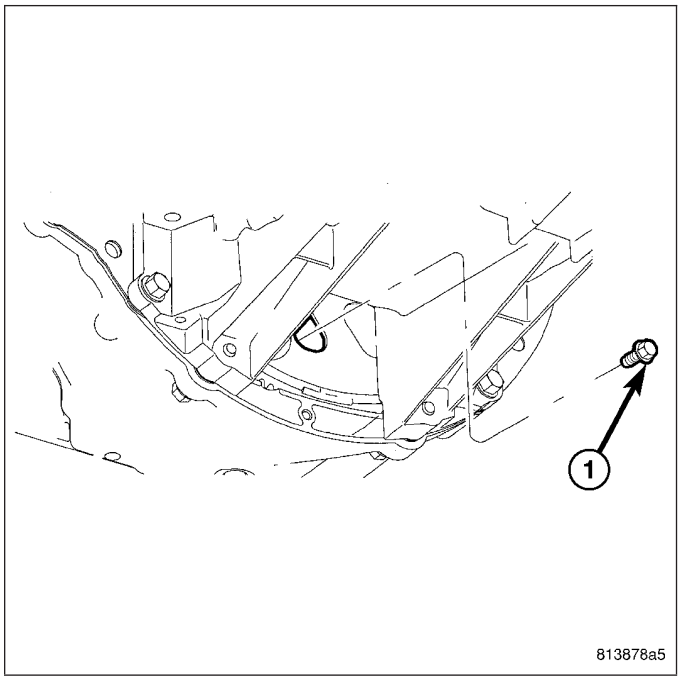

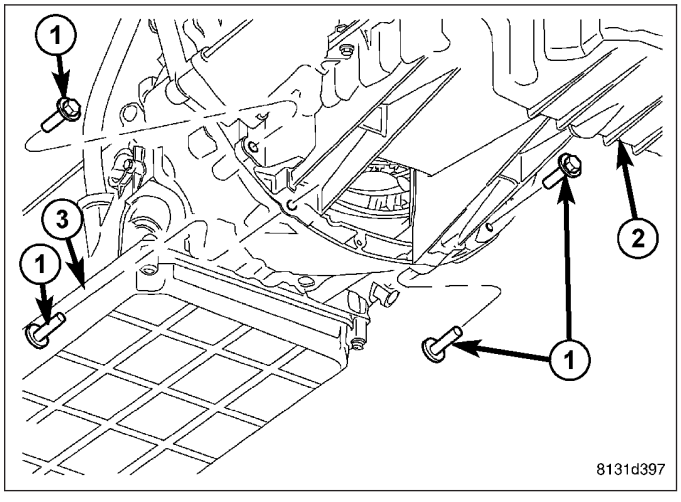

25. Remove transmission bell housing to engine block bolts (2).

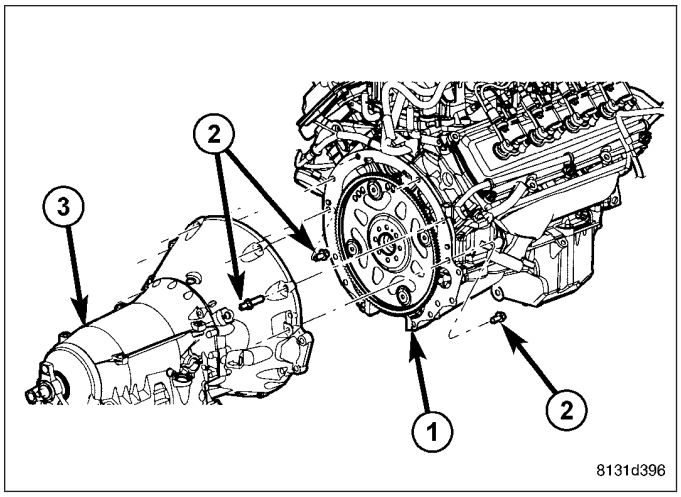

26. Lower the vehicle.
27. Install engine lift fixture (2), special tool # 8984 and 8984–UPD (4).
28. Separate engine from transmission, remove engine from vehicle, and install engine assembly on a repair stand.

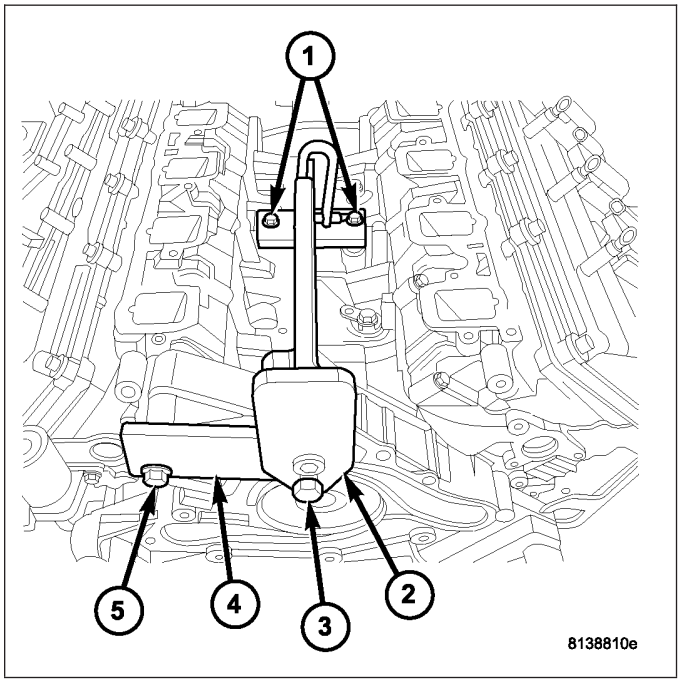

INSTALLATION - ENGINE

1. Install engine lift fixture (2) Special tool # 8984 and 8984–UPD (4).
2. Position the engine in the engine compartment.
3. Lower engine into compartment and align engine with transmission.
4. Mate engine and transmission and install two transmission to engine block mounting bolts finger tight.
5. Lower engine assembly until engine mount studs rest in frame perches.

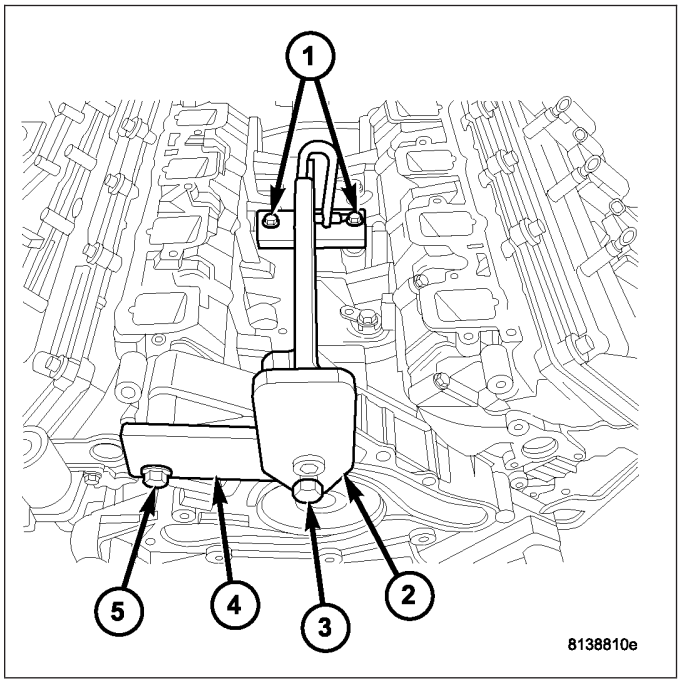

6. Install remaining transmission to engine block mounting bolts (1, 2)and tighten.
7. Install and tighten engine mount to frame nuts.

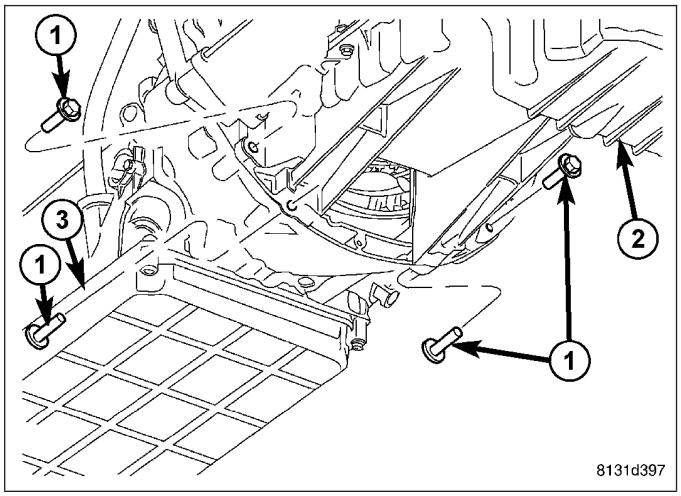

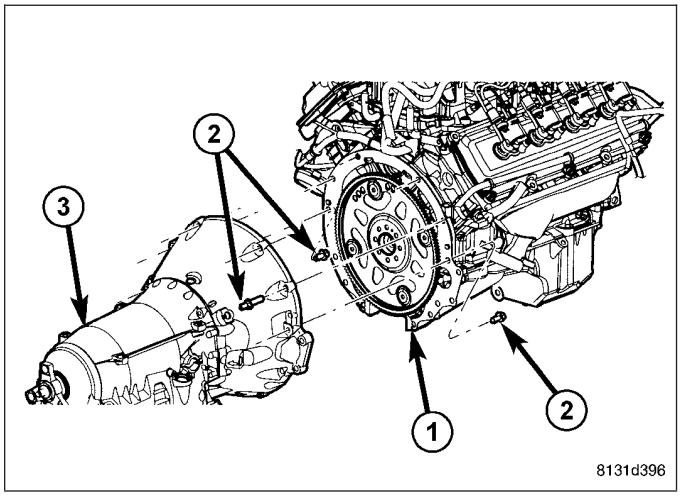

8. Install drive plate to torque converter bolts (1).

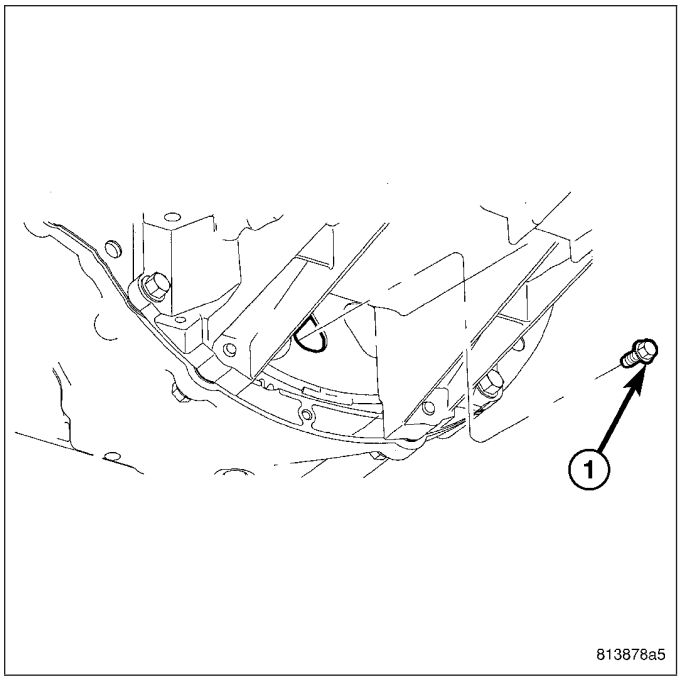

9. Install the torque convertor access cover (1).

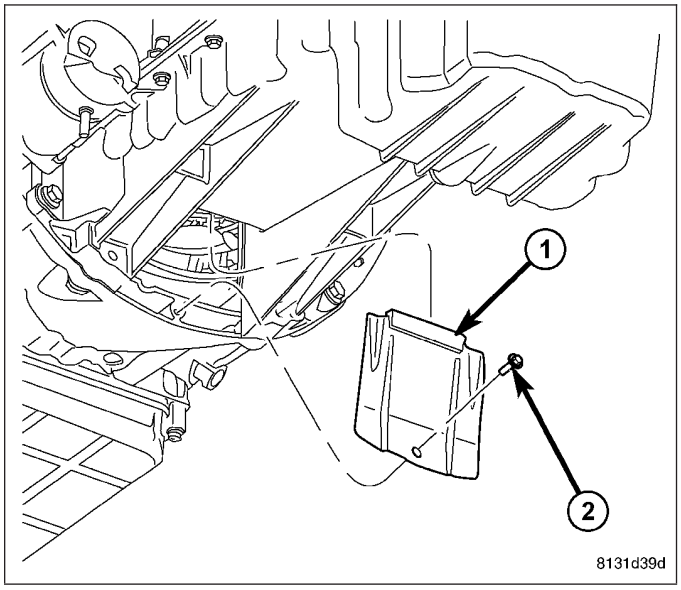

10. Install the starter (1) and heat shield (4) and connect the starter wires (Refer to 8 - ELECTRICAL/ STARTING/STARTER MOTOR - INSTALLATION).
11. Install exhaust pipe to manifold.
12. Lower the vehicle.

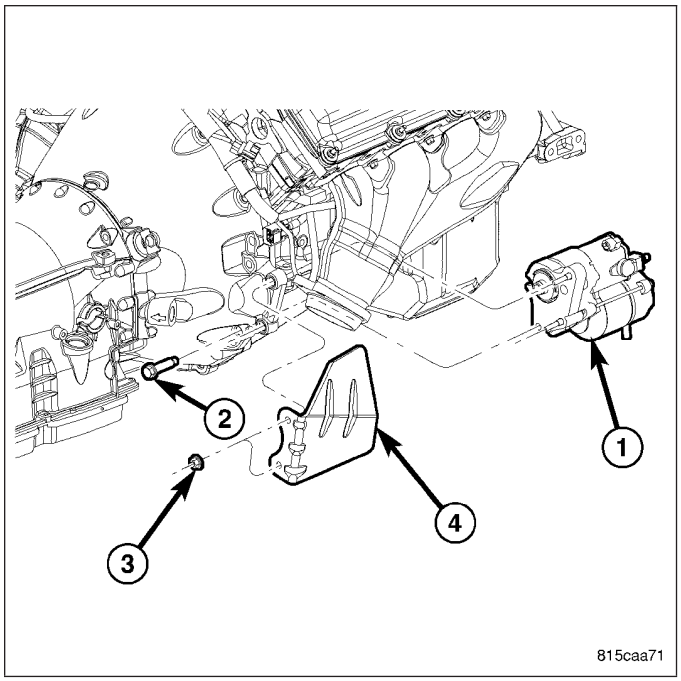

13. Remove engine lift fixture (2), special tool # 8984 and 8984–UPD (4).
14. Connect the fuel supply line (Refer to 14 - FUEL SYSTEM/FUEL DELIVERY/QUICK CONNECT FITTING - STANDARD PROCEDURE).
15. Reinstall the power steering pump.

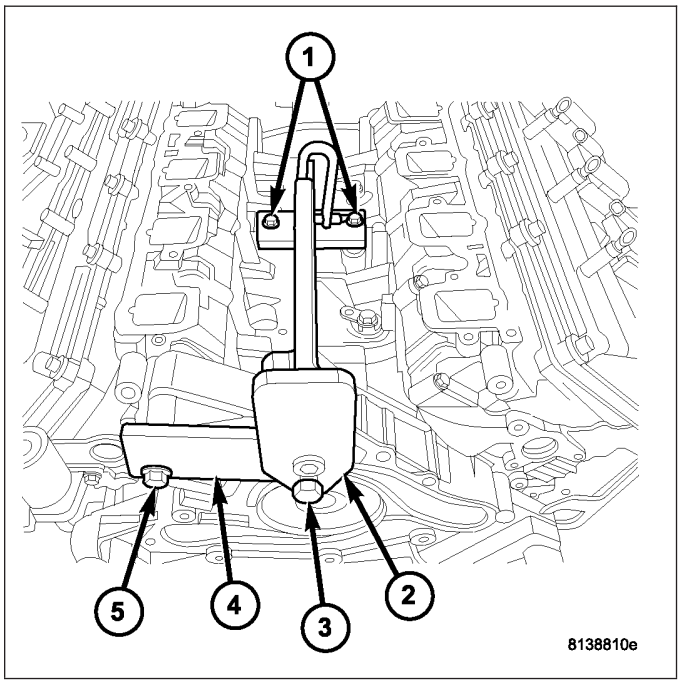

16. Connect the heater hoses(1, 1,).
17. Reconnect the ground wires to the rear of each cylinder head.
18. Install the intake manifold. (Refer to 9 - ENGINE/ MANIFOLDS/INTAKE MANIFOLD - INSTALLATION).

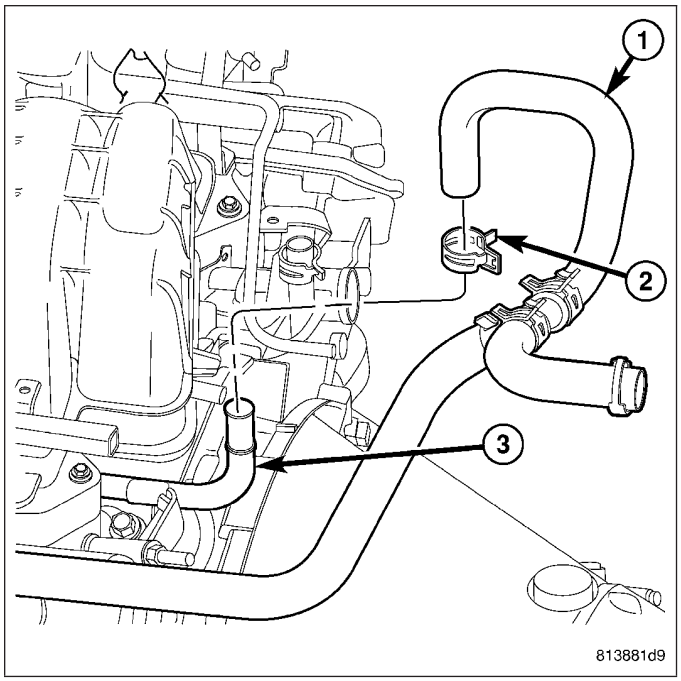

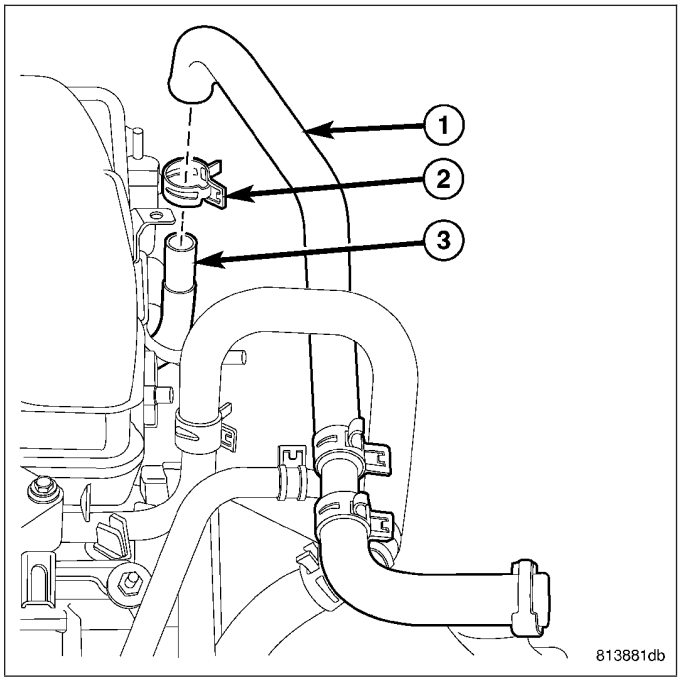

19. Install the generator (2), generator support bracket (1), and wire connections (Refer to 8 - ELECTRICAL/CHARGING/GENERATOR - INSTALLATION).

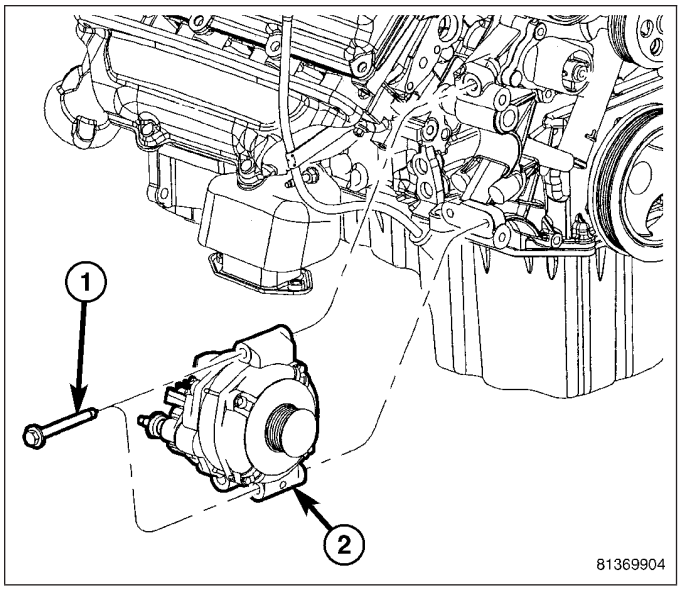

20. Install a/c compressor (3) (Refer to 24 - HEATING & AIR CONDITIONING/PLUMBING/A/C COMPRESSOR - INSTALLATION).
21. Install the accessory drive belt (Refer to 7 - COOLING/ACCESSORY DRIVE/DRIVE BELTS - INSTALLATION).
22. Install the radiator fan shroud (Refer to 7 - COOLING/ENGINE/RADIATOR FAN - INSTALLATION).
23. Connect the radiator lower hose.
24. Connect the transmission oil cooler lines to the radiator.
25. Connect the radiator upper hose.

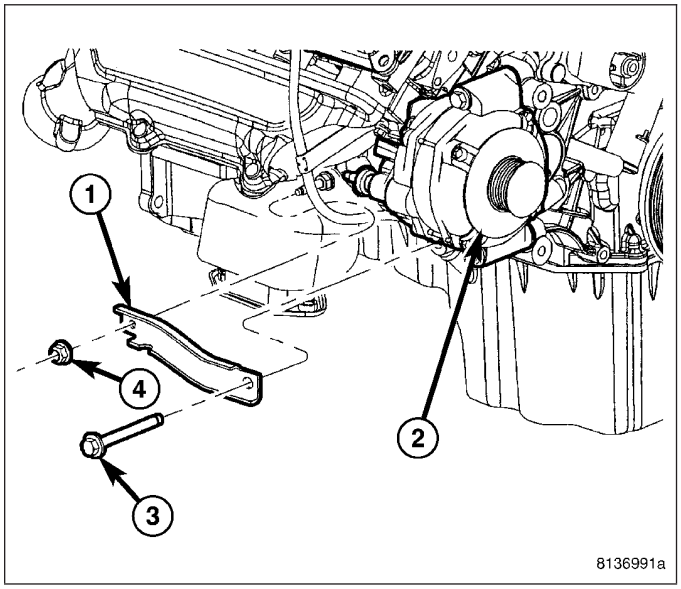

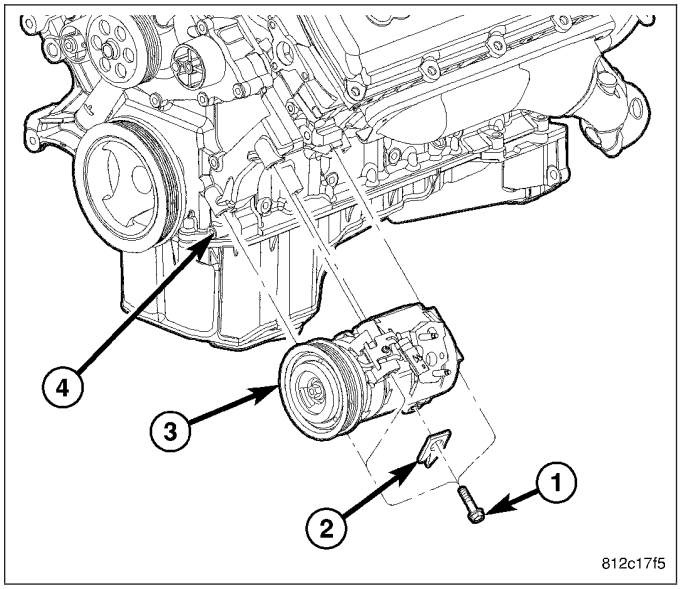

26. Install cowl top panel (Refer to 23 - BODY/EXTERIOR/COWL GRILLE - INSTALLATION).
27. Install the air cleaner resonator and duct work.
28. Add engine oil to crankcase (Refer to LUBRICATION & MAINTENANCE/FLUID TYPES - SPECIFICATIONS).
29. Fill cooling system (Refer to 7 - COOLING - STANDARD PROCEDURE).
30. Install the engine covers (1).

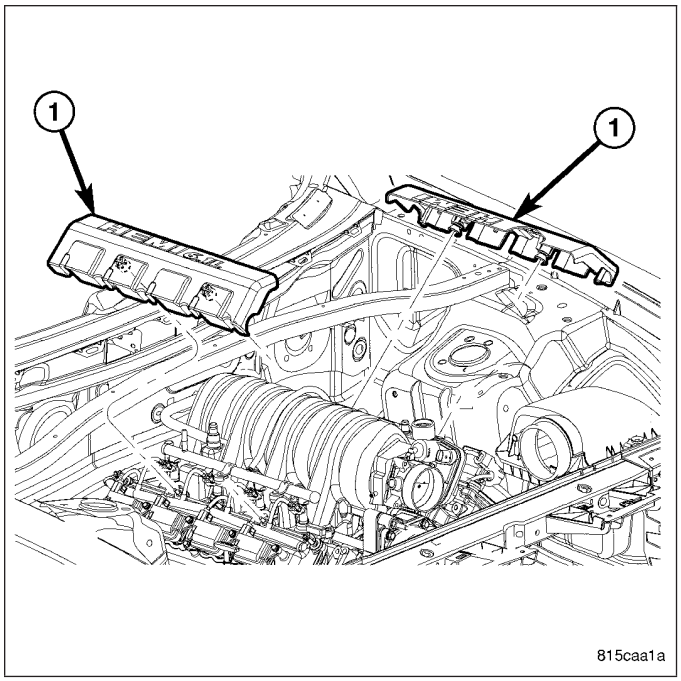

31. Connect battery negative cable.
32. Start engine and inspect for leaks.
33. Install the belly pan (2) (Refer to 23 - BODY/EXTERIOR/BELLY PAN - INSTALLATION).
34. Road test vehicle.

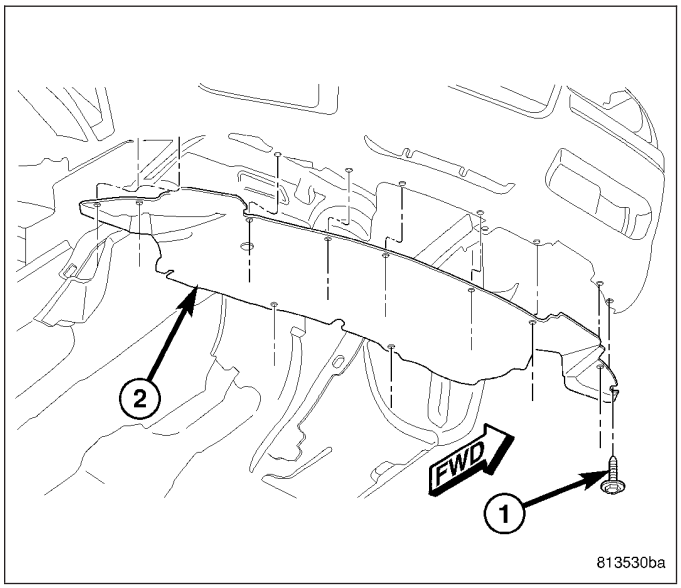

SPECIFICATIONS

6.1L ENGINE

GENERAL DESCRIPTION

DESCRIPTION	SPECIFICATION
Engine Type	90° V-8 OHV
Displacement	6.1 Liters 370 (Cubic Inches)
Bore	103 mm (4.055 in.)
Stroke	90.9 mm (3.58 in.)
Compression Ratio	10.3:1
Firing Order	1-8-4-3-6-5-7-2

DESCRIPTION	SPECIFICATION
Lubrication	Pressure Feed - Full Flow Filtration
Cooling System	Liquid Cooled - Forced Circulation
Cylinder Block	Cast Iron
Cylinder Head	Aluminum
Crankshaft	Forged Steel
Camshaft	Hollow Assembled Camshaft
Pistons	Aluminum Alloy
Connecting Rods	Powdered Metal

CYLINDER BLOCK

DESCRIPTION	SPECIFICATION	
	Metric	Standard
Cylinder Bore Diameter	103 mm	4.055 in.
Out of Round (MAX)	0.008 mm	0003 in.
Taper (MAX)	0.0127 mm	0.0005 in.
Lifter Bore Diameter	21.45 - 21.425 mm	0.8444 - 0.8435 in.

PISTONS

DESCRIPTION	SPECIFICATION	
	Metric	Standard
Clearance Measured at 38.0 mm (1.5 in.) Below Deck	0.0245 - 0.0515 mm	0.00096 - 0.0020 in.
Ring Groove Diameter		
Groove #1	93.1 - 93.4 mm	3.665 - 3.677 in.
Groove #2	91.6 - 91.8 mm	3.606 - 3.614 in.
Weight	435 grams	15.34 oz
Piston Length	54.70 - 55.30	2.153 - 2.177 in.
Ring Groove Width		
No. 1	1.51 - 1.54 mm	0.0594 - 0.0606 in
No. 2	1.51 - 1.53 mm	0.0594 - 0.0602 in.
No. 3	3.030 - 3.055 mm	0.1192 - 0.1202 in.

PISTON PINS

DESCRIPTION	SPECIFICATION	
	Metric	Standard
Clearance In Piston	0.006 - 0.015 mm	0.00023 - 0.00059 in.
Diameter	25.0 - 25.003 mm	0.9843 - 0.9844 in.
Length	64.785 - 65.215 mm	2.551 - 2.568 in.

PISTON RINGS

DESCRIPTION	SPECIFICATION	
	Metric	Standard
Ring Gap		
Top Compression Ring	0.30 - 0.40 mm	0.0118 - 0.0157 in.
Second Compression Ring	0.35 - 0.60 mm	0.0137 - 0.0236 in.
Oil Control (Steel Rails)	0.20 - 0.71 mm	0.0079 - 0.028 in.
Side Clearance		
Top Compression Ring	.02 - .068 mm	0.0007 - 0.0026 in.
Second Compression Ring	0.02 - 0.058 mm	0.0007 - 0.0022 in.
Oil Ring (Steel Ring)	.019 - .229 mm	.0007 - .0091 in.
Ring Width		
Top Compression Ring	1.472 - 1.490 mm	0.0579 - 0.0586 in.
Second Compression Ring	1.472 - 1.490 mm	0.0579 - 0.0586 in.
Oil Ring (Steel Rails)	0.447 - 0.473 mm	0.0175 - 0.0186 in.

CONNECTING RODS

DESCRIPTION	SPECIFICATION	
	Metric	Standard
Piston Pin Bore Diameter	23.955 - 23.975 mm	0.9431 - 0.9438 in.
Side Clearance	0.10 - 0.35 mm	0.003 - 0.0137 in.

CRANKSHAFT

DESCRIPTION	SPECIFICATION	
	Metric	Standard
Main Bearing Journal Diameter	64.988 - 65.012 mm	2.5585 - 2.5595 in.
Bearing Clearance	0.023 - 0.051 mm	0.0009 - 0.002 in.
Out of Round (MAX)	0.005 mm	0.0002 in.
Taper (MAX)	0.003 mm	0.0001 in.
End Play	0.052 - 0.282 mm	0.002 - 0.011 in.
End Play (MAX)	0.282 mm	0.011 in.
Connecting Rod Journal Diameter	53.992 - 54.008 mm	2.125 - 2.126 in.
Bearing Clearance	0.020 - 0.074 mm	0.0007 - 0.0029 in.
Out of Round (MAX)	0.005 mm	0.0002 in.
Taper (MAX)	0.003 mm	0.0001 in.

CAMSHAFT

DESCRIPTION	SPECIFICATION	
	Metric	Standard
Bearing Journal Diameter		
No. 1	58.2 mm	2.29 in.
No. 2	57.8 mm	2.27 in.
No. 3	57.4 mm	2.26 in.
No. 4	57.0 mm	2.24 in.
No. 5	43.633 mm	1.72 in.
Bearing To Journal Clearance Standard		
No. 1	0.040 - 0.080 mm	.0015 - .003 in.
No. 2	0.050 -0.090 mm	0.0019 - .0035 in.
No. 3	0.040 - 0.080 mm	.0015 - .003 in.
No. 4	0.050 - 0.090 mm	0.0019 - .0035 in.
No. 5	0.040 - 0.080 mm	.0015 - .003 in.
Camshaft End Play	.080 - 0.290mm	0.0031 - 0.0114 in.

VALVE TIMING @ SAE 0.006”

DESCRIPTION	SPECIFICATION
Intake	
Opens (BTDC)	15.0°
Closes (ATDC)	268.0°
Duration	283.0°
Exhaust	
Opens (BTDC)	251°
Closes (ATDC)	35°
Duration	286.0°
Valve Overlap	50°

CYLINDER HEAD

DESCRIPTION	SPECIFICATION
Valve Seat Angle	44.5° - 45.0°
Valve Seat Runout (MAX)	0.05 mm (0.0019 in.)
Valve Seat Width (Finish)	
Intake	1.18 - 1.62 mm (0.0464 - 0.0637 in.)
Exhaust	1.48 - 1.92 mm (0.0582 - 0.0755 in.)
Guide Bore Diameter (Std.)	7.975 - 8.00 mm (0.313 - 0.314 in.)

HYDRAULIC TAPPETS

DESCRIPTION	SPECIFICATION	
	Metric	Standard
Body Diameter	21.387 - 21.405 mm	0.8420 - 0.8427 in.
Clearance (To Bore)	0.020 - 0.063 mm	0.0007 - 0.0024 in.
Dry Lash	3.0 mm (at the valve)	0.1181 in.

VALVES

DESCRIPTION	SPECIFICATION
Face Angle	
Intake	45.5° - 46.0°
Exhaust	45.0° - 45.5°
Head Diameter	
Intake	52.67 - 52.93 mm (2.07 - 2.08 in.)
Exhaust	40.37 - 40.63 mm (1.57 - 1.60 in.)
Length (Overall From Gage Line)	
Intake	124.38 - 124.76 mm (4.897 - 4.912 in.)
Exhaust	122.47 - 122.85 mm (4.822 - 4.837 in.)
Stem Diameter	
Intake	7.734 - 7.954 mm (0.312 - 0.313 in.)
Exhaust	7.930 - 7.950 mm (0.312 - 0.313 in.)
Stem - to - Guide Clearance	
Intake	0.021 - 0.066 mm (0.0008 - 0.0025 in.)
Exhaust	0.025 - 0.070 mm (0.0010 - 0.0028 in.)
Valve Lift (@ Zero Lash)	
Intake	14.5 mm (0.571 in.)
Exhaust	14.0 mm (0.551 in.)

VALVE SPRING

DESCRIPTION	SPECIFICATION
Spring Force (Valve Closed)	
Intake	445.0 N +/- 22.0 N @ 47.5 mm (99.0 lbs +/- 4.0 - 9.0 lbs. @ 1.870 in.)
Exhaust	445.0 N +/- 22.0 N @ 45 mm (99.0 lbs +/- 4.0 - 9.0 lbs. @ 1.772 in.)

DESCRIPTION	SPECIFICATION
Spring Force (Valve Open)	
Intake	1450.0 N +/- 68.0 N @ 33.0 mm. (325.5 lbs. +/- 15.3 lbs. @ 1.3 in.)
Exhaust	1450.0 N +/- 68.0 N @ 31.0 mm. (325.5 lbs. +/- 15.3 lbs. @ 1.22 in.)
Free Length (approx)	
Intake	54.2 mm (2.133 in.)
Exhaust	51.4 mm (2.023 in.)
Number of Coils	
Intake	7.35
Exhaust	7.0
Wire Diameter	
Intake and Exhaust	5.65 × 4.51 mm (0.222 - 0.178 in.)
Installed Height (Spring Seat to Bottom of Retainer)	
Intake	47.5 mm (1.870 in.)
Exhaust	45.0 mm (1.772 in.)

OIL PUMP

DESCRIPTION	SPECIFICATION
Clearance Over Rotors (MAX)	0.095 mm (0.0038 in.)
Outer Rotor to Pump Body Clearance (MAX)	.235 mm (.009 in.)
Tip Clearance Between Rotors (MAX)	0.150 mm (0.006 in.)

OIL PRESSURE

SPECIFICATION	SPECIFICATION
At Curb Idle Speed (MIN)*	25 kPa (4 psi)
@ 3000 rpm	170 - 758 kPa (25 - 110 psi)
*** CAUTION: If pressure is zero at curb idle, DO NOT run engine**	

TORQUE

TORQUE CHART 6.1L ENGINE

DESCRIPTION	N·m	Ft. Lbs.	In. Lbs.
Block Pipe Plugs (1/4 NPT)	20	—	177
(3/8 NPT)	27	—	240
Camshaft Sprocket—Bolt	122	90	—
Camshaft Tensioner Plate—Bolts	28	—	250
Timing Chain Case Cover—Bolts	28	—	250
Lifting Stud	55	40	—

DESCRIPTION	N·m	Ft.	In.
Connecting Rod Cap—Bolts	45 plus 60° Turn	33 plus 60° Turn	—
Main Bearing Cap—Bolts M-12	28 plus 90° Turn	—	—
Crossbolts M-8	21.5	—	—
Cylinder Head—Bolts M-12 Bolts			
Step 1	34	25	—
Step 2	54	40	—
Step 3	Turn 90°	Turn 90°	—
M-8 Bolts			—
Step 1	20	15	—
Step 2	34	25	—
Cylinder Head Cover—Bolts	8	—	70
Exhaust Manifold to Cylinder Head	31	—	270
Flexplate to crankshaft—Bolts	95	70	—
Flywheel to crankshaft—Bolts	75	55	—
Front Insulator—Through bolt/nut	95	70	—
Front Insulator to Block—Bolts	95	70	—
Generator—Mounting Bolt	55	40	—
Intake Manifold—Bolts	Refer to Procedure		
Lifter Guide Holder	12	—	106
Oil Pan Bolts	12	-	105
Oil Dipstick Tube	6	—	53
Oil Pan—Drain Plug	27	20	—
Oil Pump—Attaching Bolts	28	—	250
Oil Pump Pickup Tube – Bolt and Nut	28	—	250
Rear Seal Retainer Attaching Bolts	15	—	132
Rear Insulator to Bracket—	68	50	—
Rear Insulator to Crossmember	41	30	—
Rear Insulator to Transmission—	68	50	—
Rear Insulator Bracket—Bolts	68	50	—
Rocker Arm—Bolts	22	—	195
Spark Plugs	—	—	—
Thermostat Housing—Bolts	28	—	250
Throttle Body—Bolts	12	—	105
Vibration Damper—Bolt	176	129	—
Water Pump to Timing Chain Case Cover—Bolts	28	—	250

SPECIAL TOOLS

6.1L ENGINE

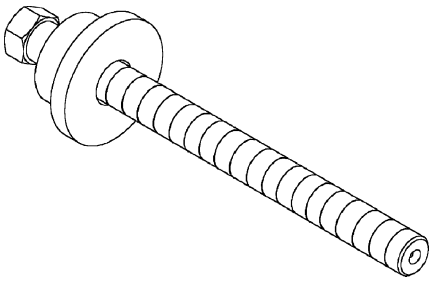

Crankshaft Damper Installer 8512

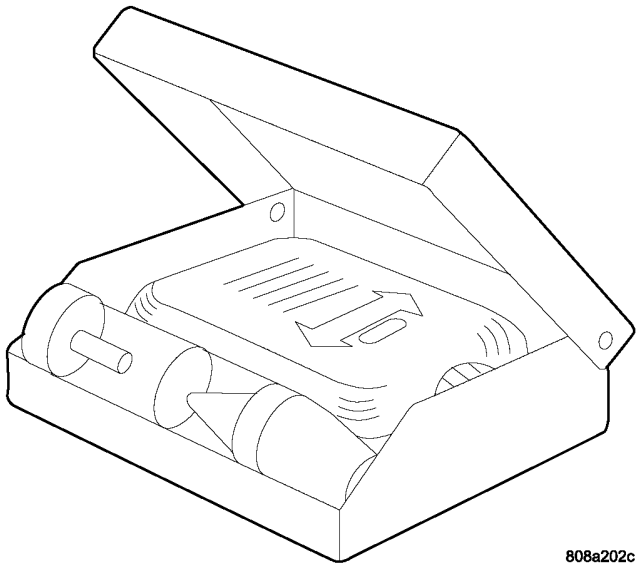

Combustion Leak Tester C-3685-A

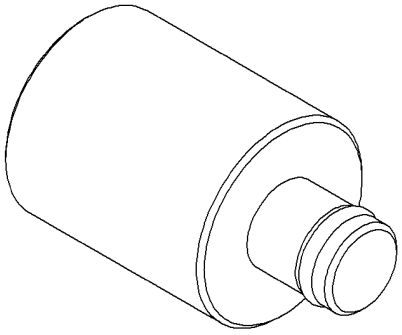

CRANKSHAFT DAMPER REMOVER INSERT - 8513-A

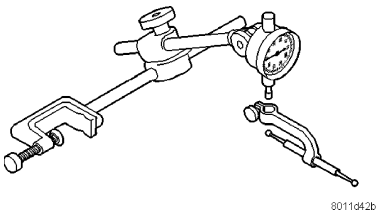

Dial Indicator C-3339

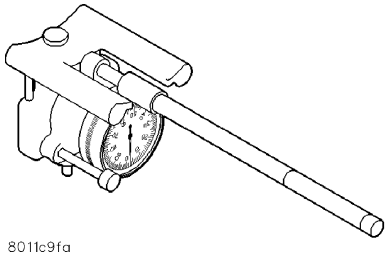

Indicator Bore Size C-119

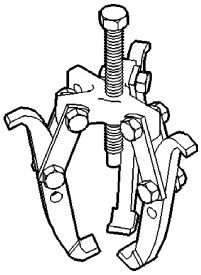

Puller 1023

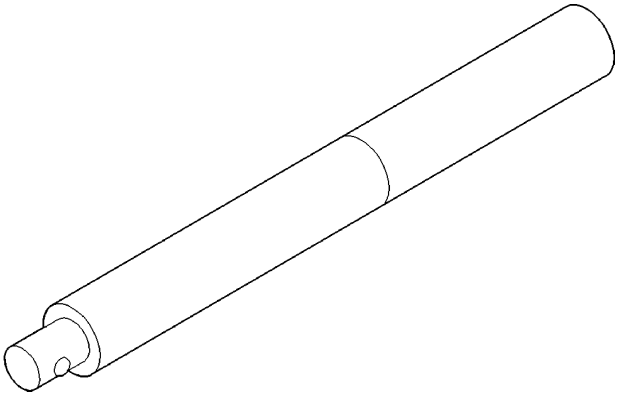

Driver Handle C-4171

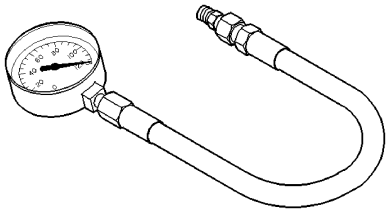

Pressure Gauge C-3292

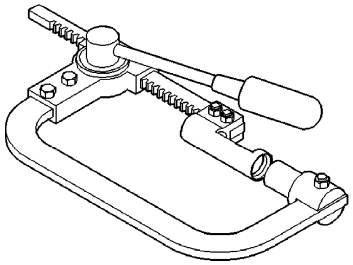

Valve Spring Compressor C-3422-B

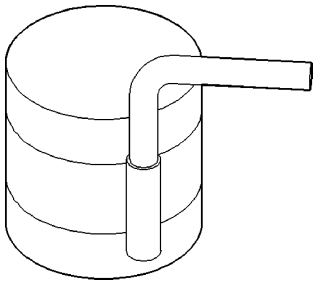

Piston Ring Compressor C-385

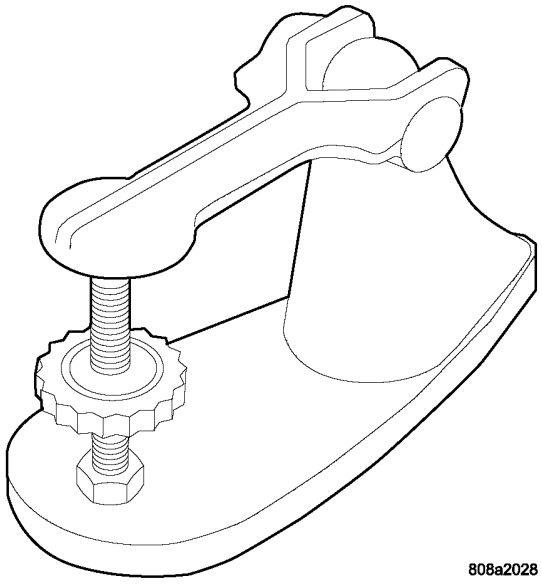

Valve Spring Tester C-647

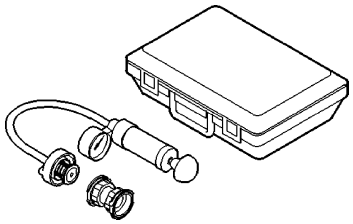

Cooling System Tester 7700

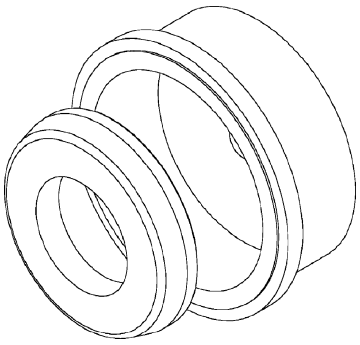

Rear Crankshaft Seal Installer 8349

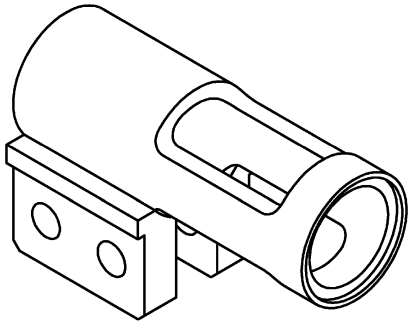

Adapter, Valve Spring Compressor Off-vehicle 8464

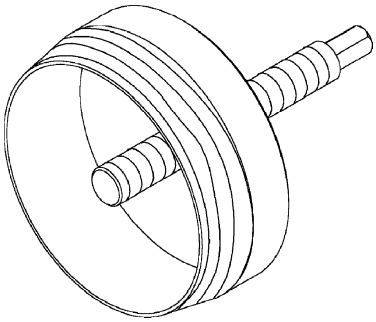

Rear Crankshaft Seal Remover 8506

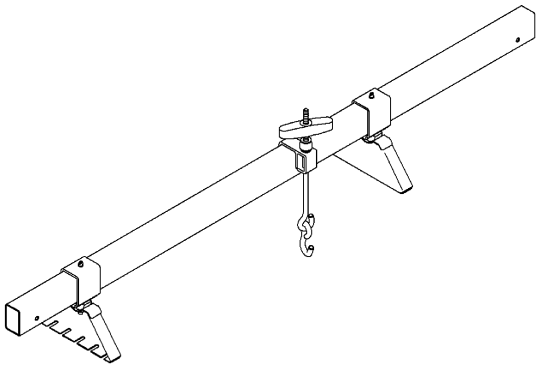

ENGINE SUPPORT FIXTURE 8534

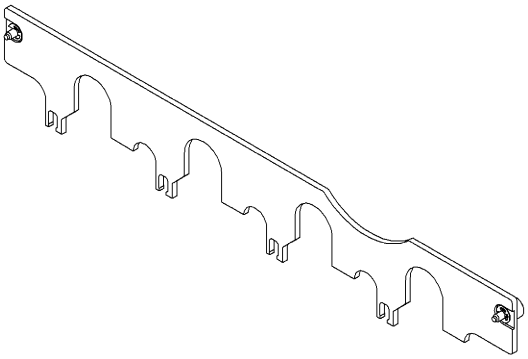

PUSHROD RETAINING PLATE - 9070

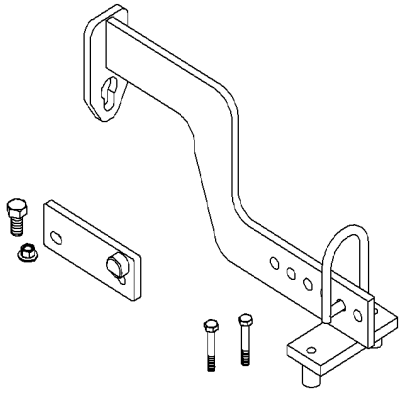

ENGINE LIFT FIXTURE AND ADAPTER

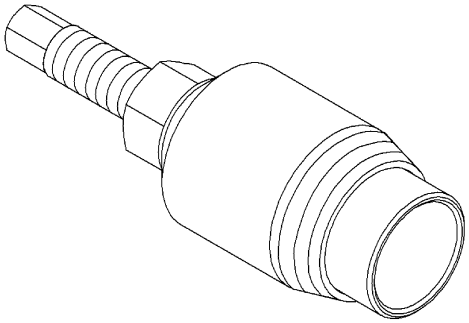

FRONT CRANK SEAL REMOVER - 9071

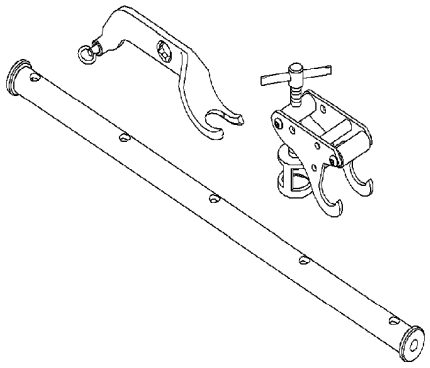

VALVE SPRING COMPRESSOR 9065A

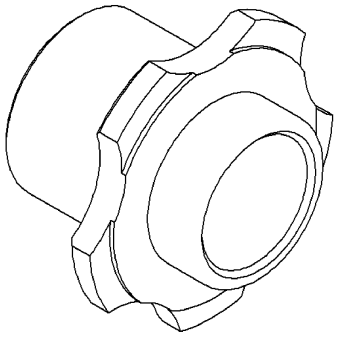

FRONT CRANK SEAL INSTALLER 9072

AIR INTAKE SYSTEM

REMOVAL

Filter Element Only

Housing removal is not necessary for element (filter) replacement.

1. Loosen clamp and disconnect air duct at air cleaner cover (2).

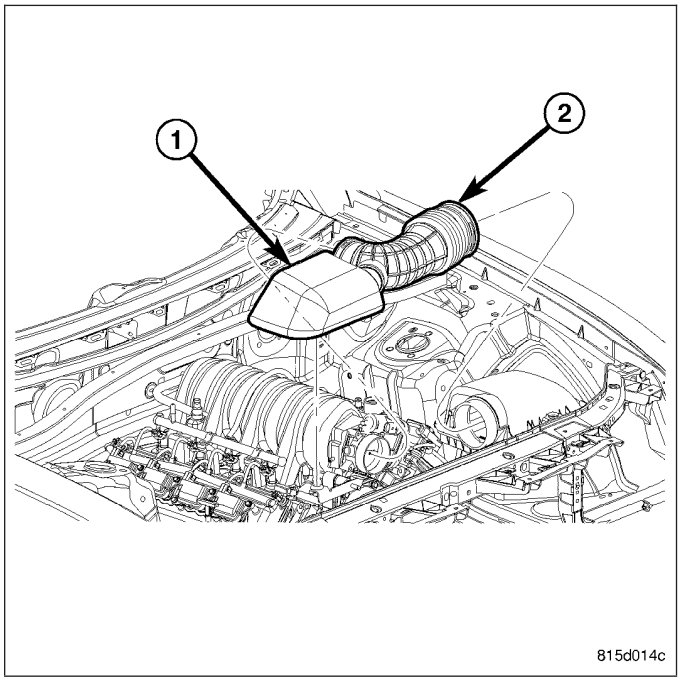

2. Pry over 4 spring clips (5) from housing cover (3) (spring clips retain cover to housing).
3. Release housing cover (3) from locating tabs (4) on housing and remove cover (3).
4. Remove air cleaner element (filter) from housing.
5. Clean inside of housing before replacing element.

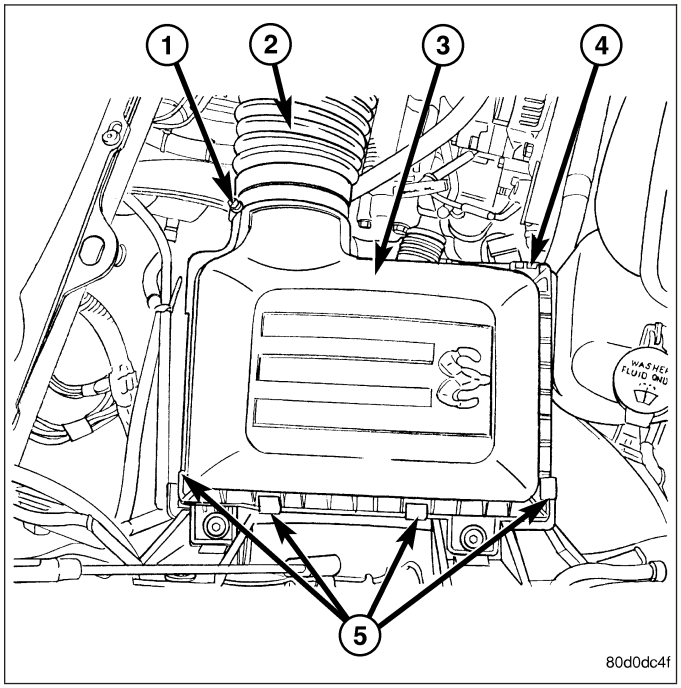

Housing Assembly

1. Loosen clamp and disconnect air duct at air cleaner cover (2).

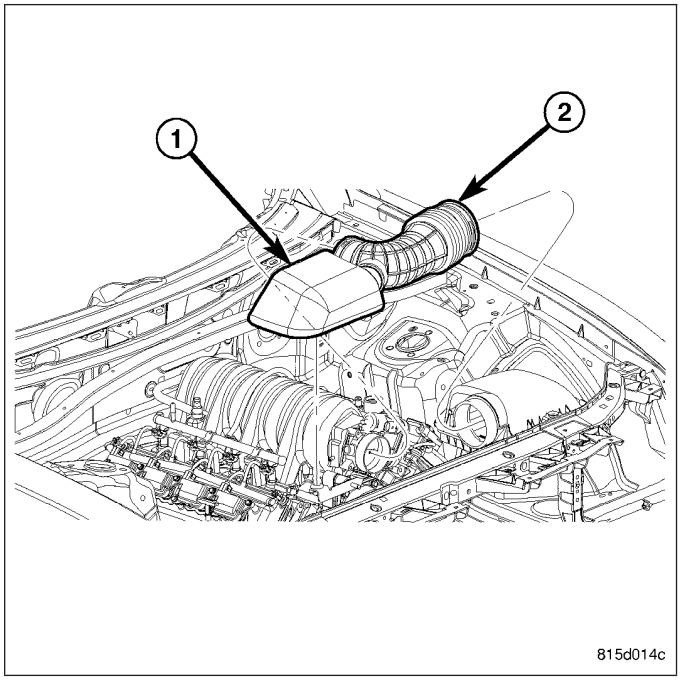

2. Lift entire housing (1) assembly from the locating pin (3).

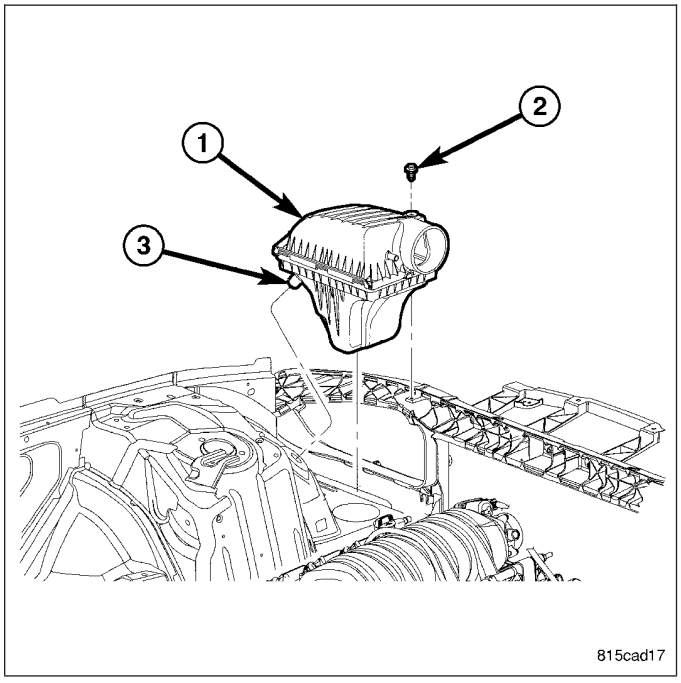

INSTALLATION

1. Install filter element into housing.
2. Position housing cover into housing locating tabs (4).
3. Pry up 4 spring clips(5) and lock cover to housing.

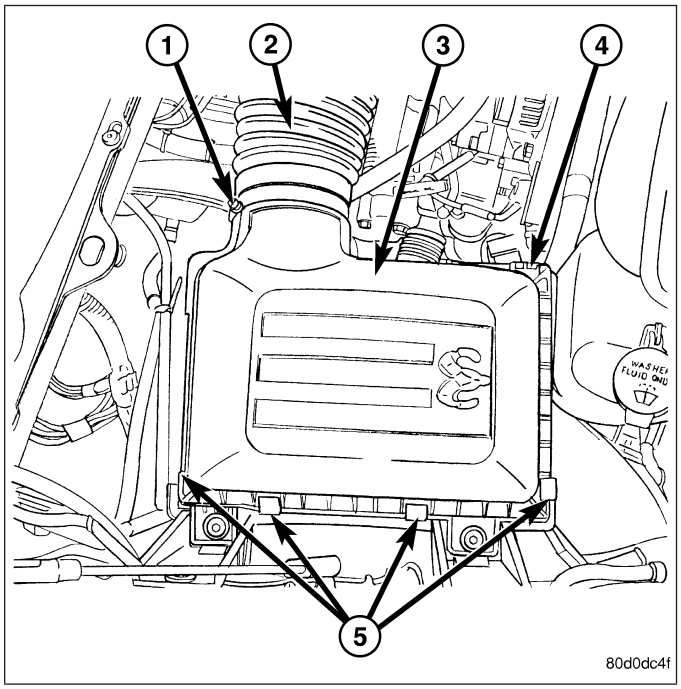

4. Install the air filter housing (1) into locating pin (3).
5. Install the hold down bolt (2) into the air filter housing (1).

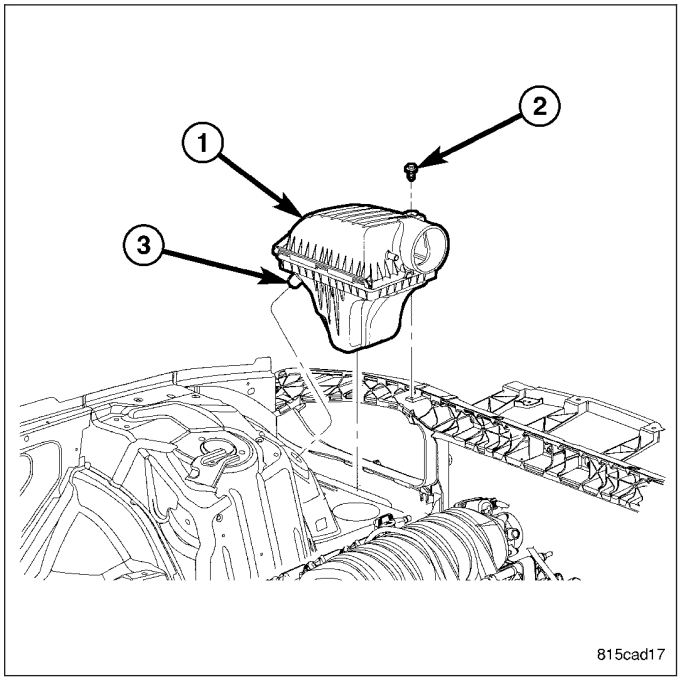

6. Install air duct (2) to air cleaner cover and tighten hose clamp to 3 N·m (30 in. lbs.) torque.
7. If any other hose clamps were removed from air intake system, tighten them to 3.4 N·m (30 in. lbs.) torque.

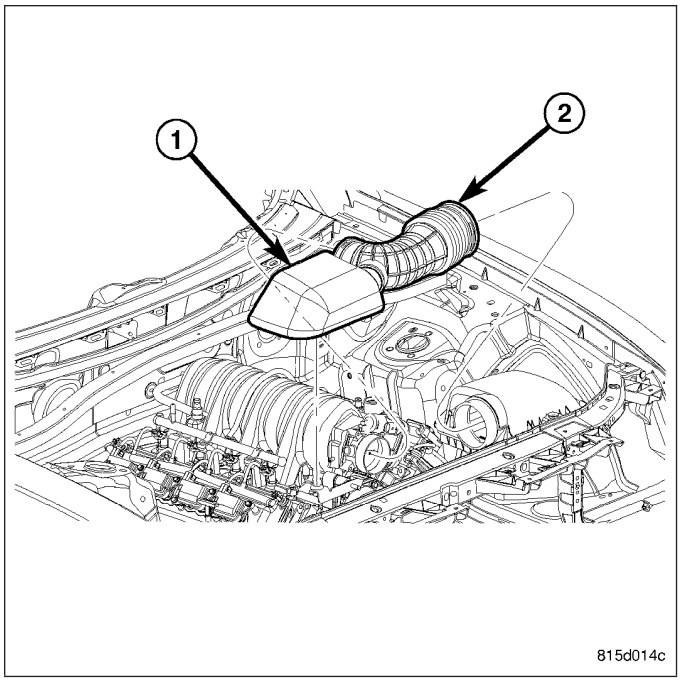

CYLINDER HEAD

OPERATION—CYLINDER HEAD

The cylinder head closes the combustion chamber allowing the pistons to compress the air fuel mixture to the correct ratio for ignition. The valves located in the cylinder head open and close to either allow clean air into the combustion chamber or to allow the exhaust gases out, depending on the stroke of the engine.

DIAGNOSIS AND TESTING - CYLINDER HEAD GASKET FAILURE

A cylinder head gasket leak can be located between adjacent cylinders or between a cylinder and the adjacent water jacket.

- Possible indications of the cylinder head gasket leaking between adjacent cylinders are:
  - Loss of engine power
  - Engine misfiring
  - Poor fuel economy
- Possible indications of the cylinder head gasket leaking between a cylinder and an adjacent water jacket are:
  - Engine overheating
  - Loss of coolant
  - Excessive steam (white smoke) emitting from exhaust
  - Coolant foaming

CYLINDER-TO-CYLINDER LEAKAGE TEST

To determine if an engine cylinder head gasket is leaking between adjacent cylinders, follow the procedures in Cylinder Compression Pressure Test in this section. An engine cylinder head gasket leaking between adjacent cylinders will result in approximately a 50–70% reduction in compression pressure.

CYLINDER-TO-WATER JACKET LEAKAGE TEST

WARNING: USE EXTREME CAUTION WHEN THE ENGINE IS OPERATING WITH COOLANT PRESSURE CAP REMOVED.

VISUAL TEST METHOD

With the engine cool, remove the coolant pressure cap. Start the engine and allow it to warm up until thermostat opens.

If a large combustion/compression pressure leak exists, bubbles will be visible in the coolant.

COOLING SYSTEM TESTER METHOD

WARNING: WITH COOLING SYSTEM TESTER IN PLACE, PRESSURE WILL BUILD UP FAST. EXCESSIVE PRESSURE BUILT UP, BY CONTINUOUS ENGINE OPERATION, MUST BE RELEASED TO A SAFE PRESSURE POINT. NEVER PERMIT PRESSURE TO EXCEED 138 kPa (20 psi).

Install Cooling System Tester 7700 or equivalent to pressure cap neck. Start the engine and observe the tester's pressure gauge. If gauge pulsates with every power stroke of a cylinder a combustion pressure leak is evident.

CHEMICAL TEST METHOD

Combustion leaks into the cooling system can also be checked by using Bloc-Chek Kit C-3685-A or equivalent. Perform test following the procedures supplied with the tool kit.

REMOVAL

1. Perform the Fuel System Pressure Release procedure (Refer to 14 - FUEL SYSTEM/FUEL DELIVERY - STANDARD PROCEDURE). Disconnect the fuel supply line (Refer to 14 - FUEL SYSTEM/ FUEL DELIVERY/QUICK CONNECT FITTING - STANDARD PROCEDURE).
2. Disconnect the battery negative cable.
3. Drain cooling system (Refer to 7 - COOLING - STANDARD PROCEDURE).
4. Remove the air cleaner resonator and duct work (Refer to 9 - ENGINE/AIR INTAKE SYSTEM - REMOVAL).
5. Remove closed crankcase ventilation system.
6. Disconnect the evaporation control system.

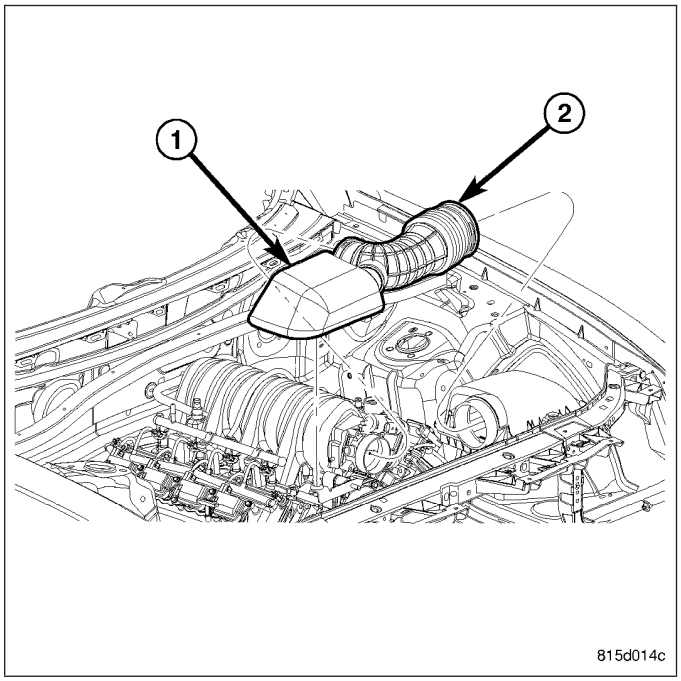

7. Unplug the ignition coil (1).
8. Remove ignition coil mounting bolts (3).
9. Disconnect heater hoses.

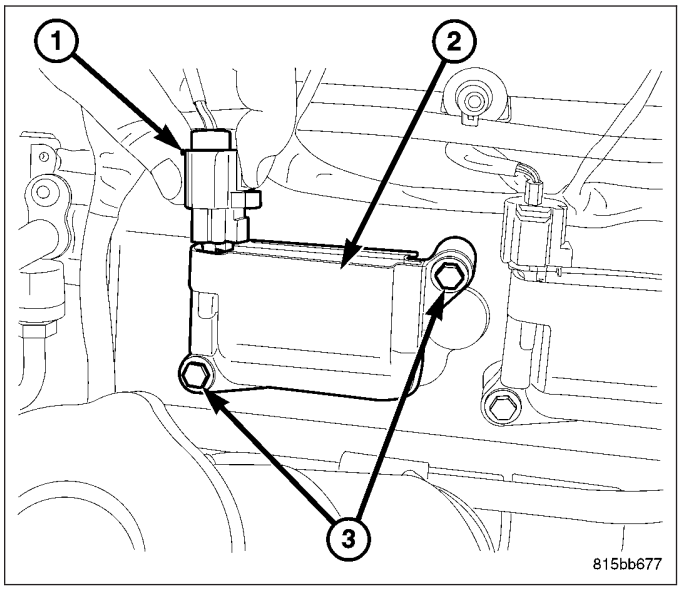

10. Remove the power steering pump.
11. Disconnect the exhaust at the exhaust manifolds.
12. Remove the ignition coils (1).

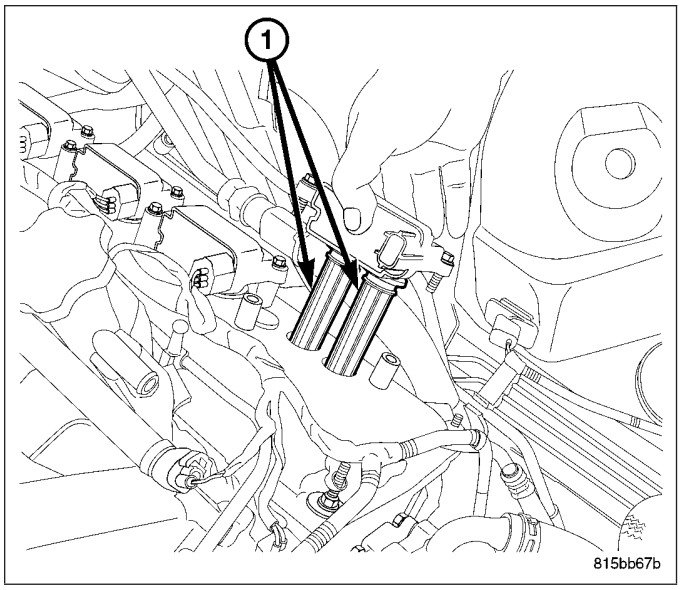

13. Unbolt the cylinder head covers using the sequence provided.

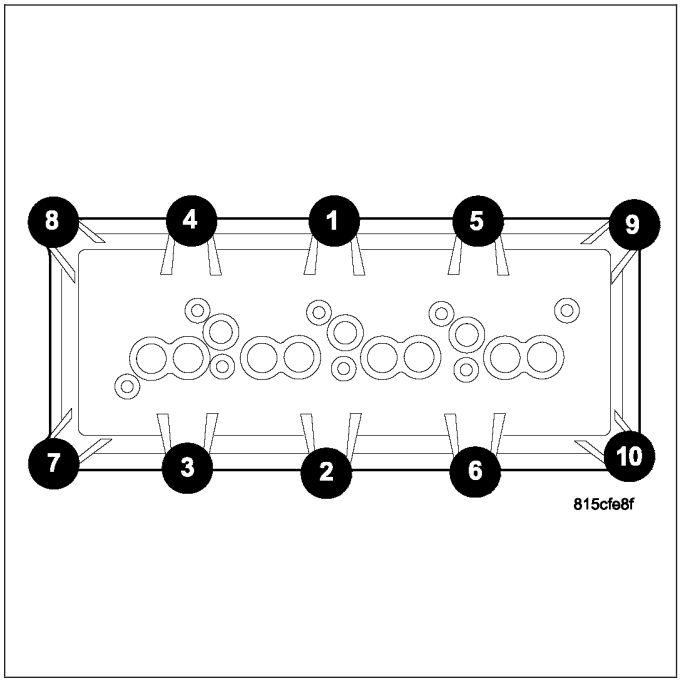

14. Remove the cylinder head cover (1). (Refer to 9 - ENGINE/CYLINDER HEAD/CYLINDER HEAD COVER(S) - REMOVAL).

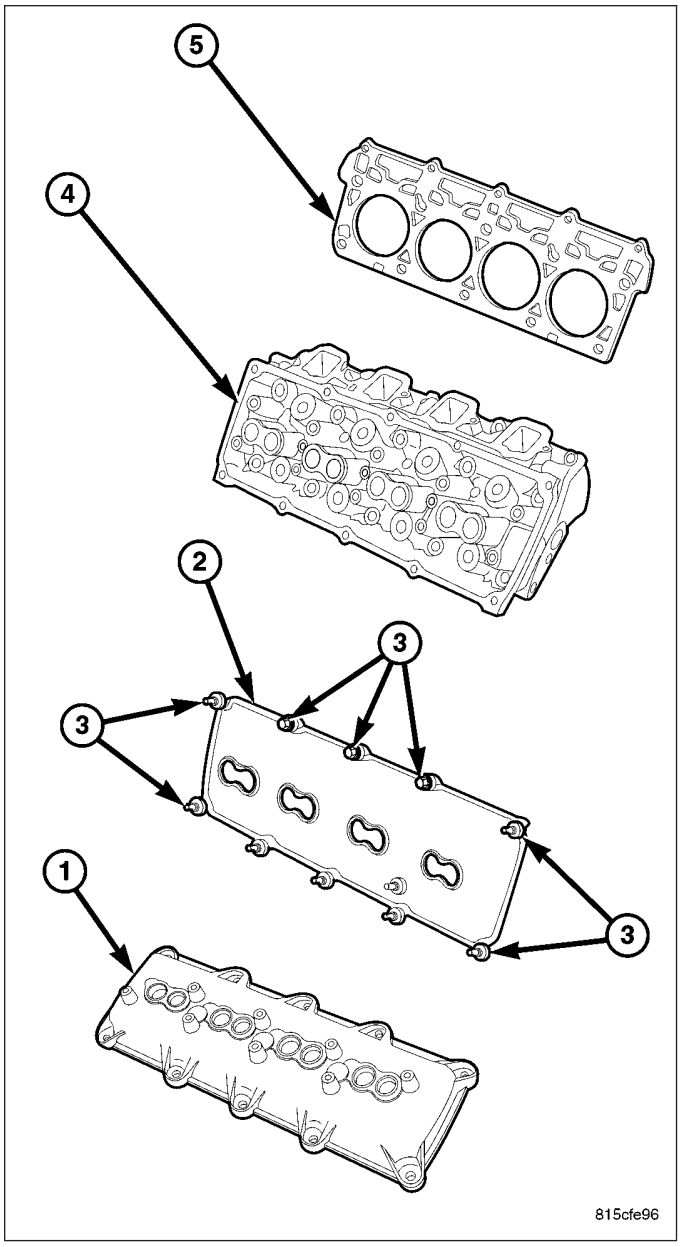

15. Remove intake manifold and throttle body as an assembly. (Refer to 9 - ENGINE/MANIFOLDS/INTAKE MANIFOLD - REMOVAL).
16. Remove rocker arm assemblies and push rods. Identify to ensure installation in original locations. (Refer to 9 - ENGINE/CYLINDER HEAD/ ROCKER ARM / ADJUSTER ASSY - REMOVAL).

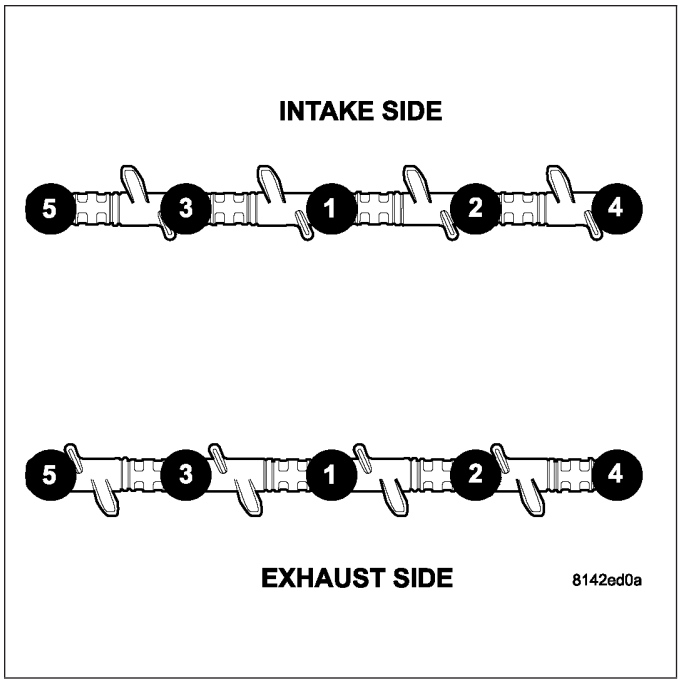

17. Remove the head bolts from each cylinder head, using the sequence provided, and remove cylinder heads. Discard the cylinder head gasket.

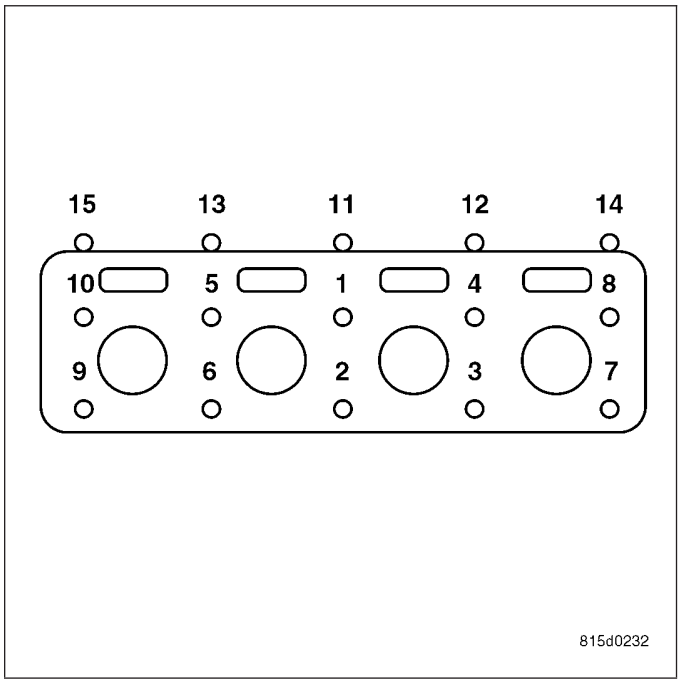

CLEANING

Clean all surfaces of cylinder block and cylinder heads.

Clean cylinder block front and rear gasket surfaces using a suitable solvent.

INSPECTION

1. Inspect the cylinder head for out-of-flatness, using a straightedge and a feeler gauge. If tolerances exceed 0.0508 mm (0.002 in.) replace the cylinder head.
2. Inspect the valve seats for damage. Service the valve seats as necessary.
3. Inspect the valve guides for wear, cracks or looseness. If either condition exist, replace the cylinder head.
4. Inspect pushrods. Replace worn or bent pushrods.

INSTALLATION

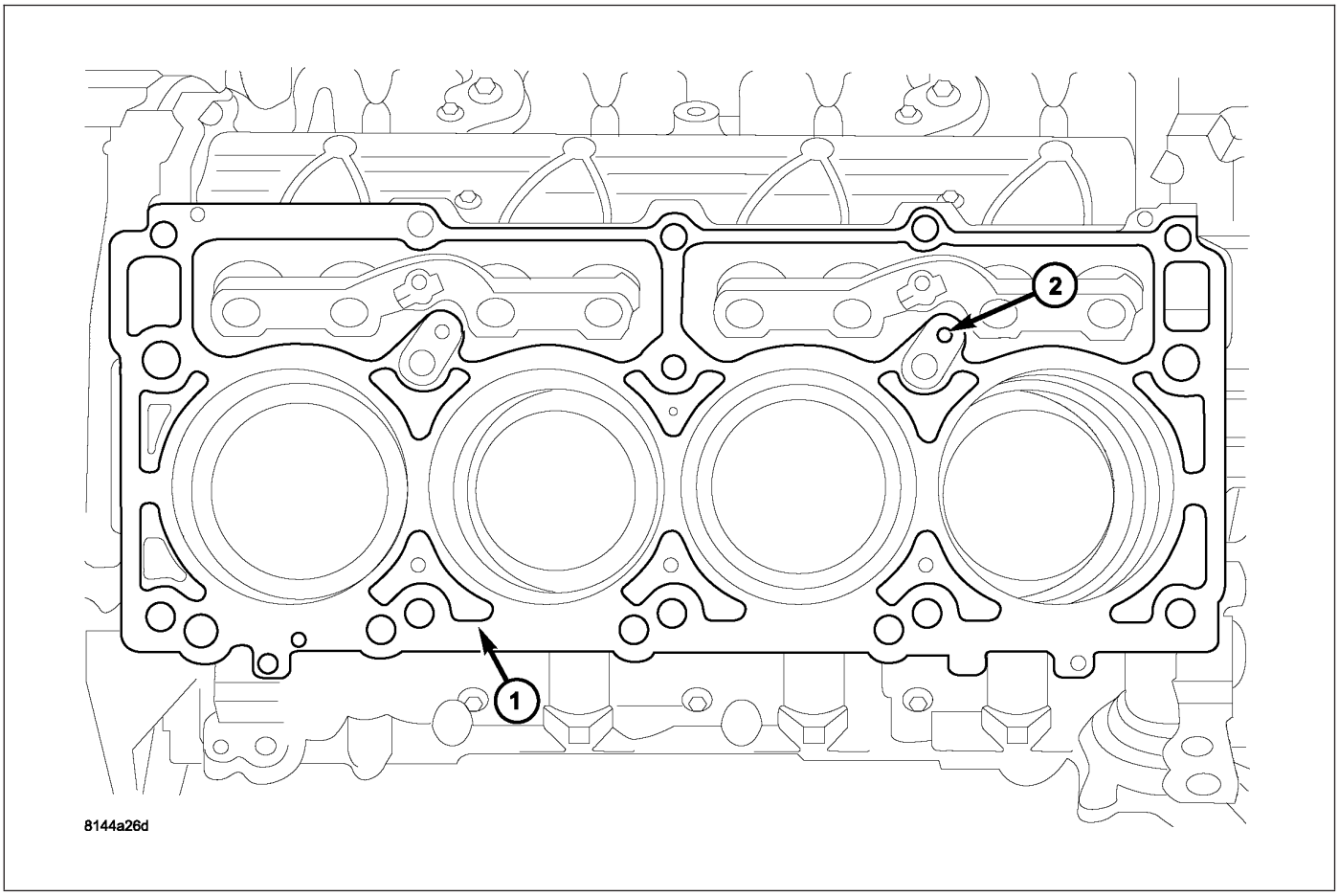

1. Clean all surfaces of cylinder block and cylinder heads.
2. Clean cylinder block front and rear gasket surfaces using a suitable solvent.

CAUTION: The head gaskets (1) are interchangeable between left and right sides. They are marked “UP” to indicate direction to face up.

NOTE: Rotate crankshaft @ 45°, so that all pistons are ½ the way down the cylinder bore to avoid piston to valve contact.

3. Position new cylinder head gaskets (5) onto the cylinder block.
4. Position cylinder heads (4) onto head gaskets (5) and cylinder block.

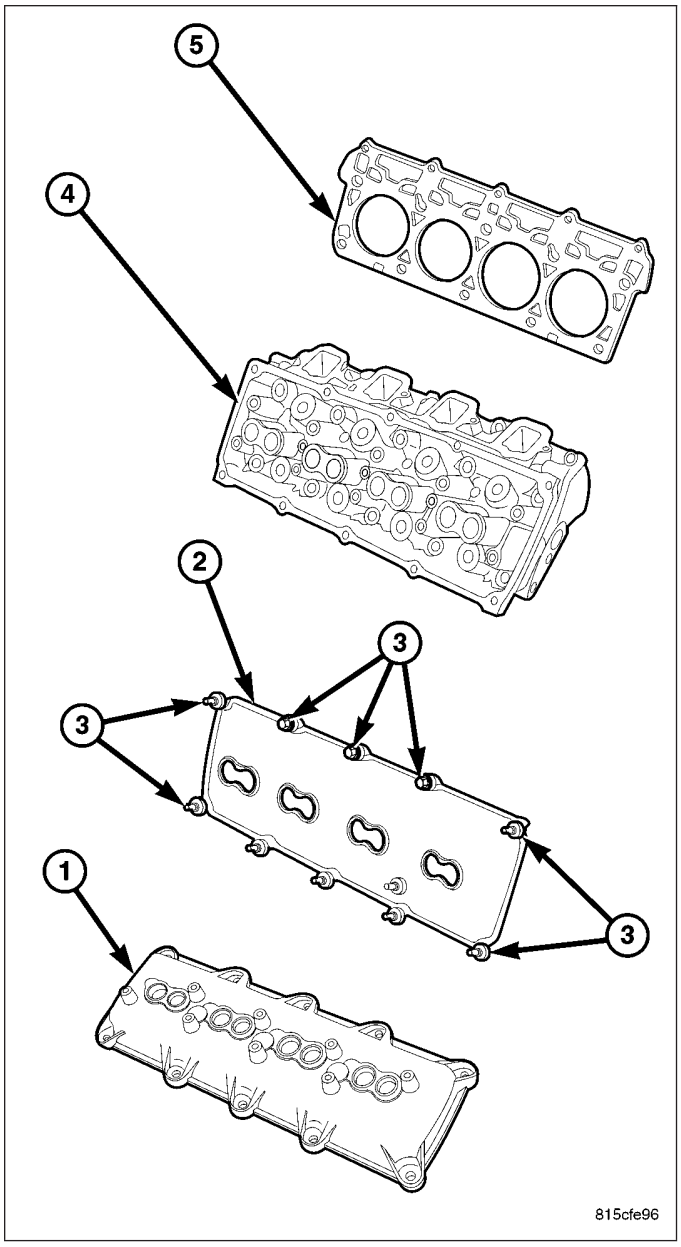

5. Tighten the cylinder head bolts in three steps using the sequence provided :
   - Step 1— Snug tighten M12 cylinder head bolts, in sequence, to 34 N·m (25 ft. lbs.) and M8 bolts to 20 N·m (15 ft. lbs.) torque.
   - Step 2— Tighten M12 cylinder head bolts, in sequence, to 54 N·m (40 ft. lbs.) and verify M8 bolts to 20 N·m (15 ft. lbs.) torque..
   - Step 3— Turn M12 cylinder head bolts, in sequence, 90 degrees and tighten M8 bolts to 34 N·m (25 ft. lbs.) torque.

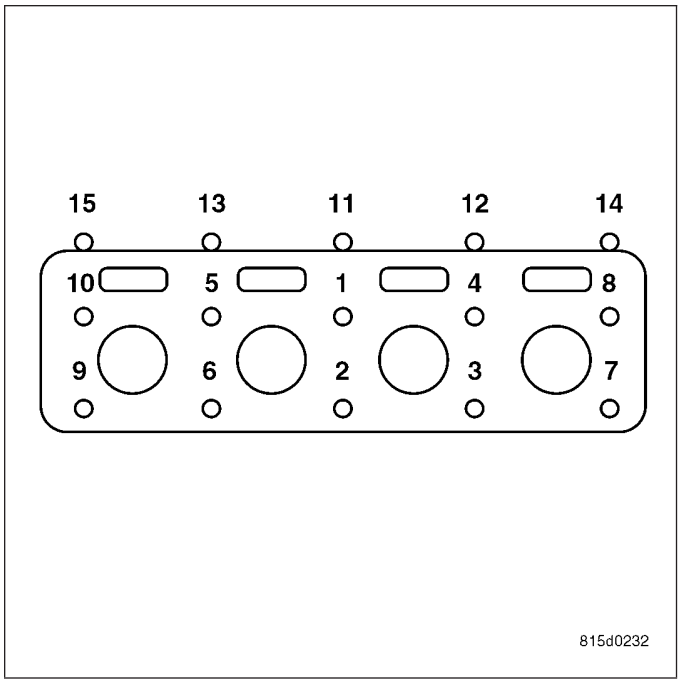

6. Install push rods and rocker arm assemblies in their original position, using pushrod retaining plate (1) special tool# 9070. (Refer to 9 - ENGINE/CYLINDER HEAD/ROCKER ARM / ADJUSTER ASSY - INSTALLATION).
7. Install the intake manifold and throttle body assembly (Refer to 9 - ENGINE/MANIFOLDS/INTAKE MANIFOLD - INSTALLATION).
8. If required, adjust spark plugs to specifications. Install the plugs.
9. Connect the heater hoses.
10. Install the fuel supply line.
11. Install the power steering pump.
12. Install the drive belt (Refer to 7 - COOLING/ACCESSORY DRIVE/DRIVE BELTS - INSTALLATION).

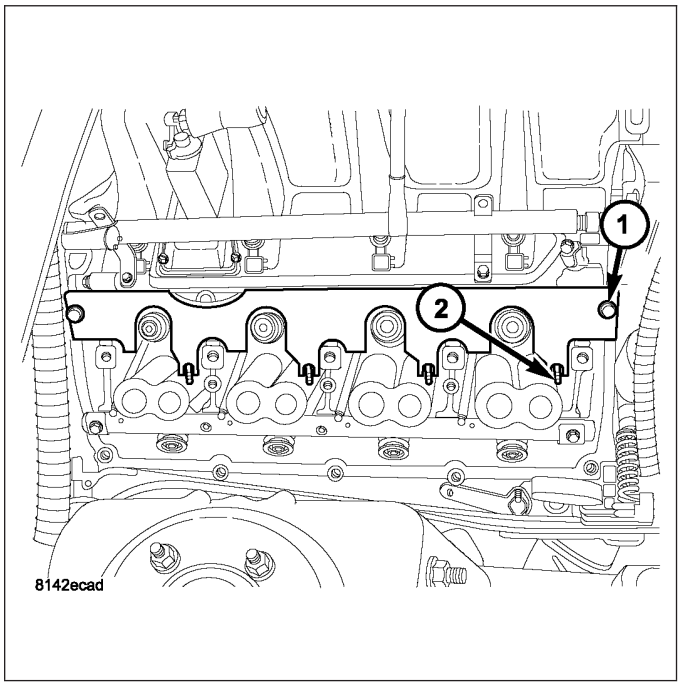

13. Install cylinder head covers (1) (Refer to 9 - ENGINE/CYLINDER HEAD/CYLINDER HEAD COVER(S) - INSTALLATION).

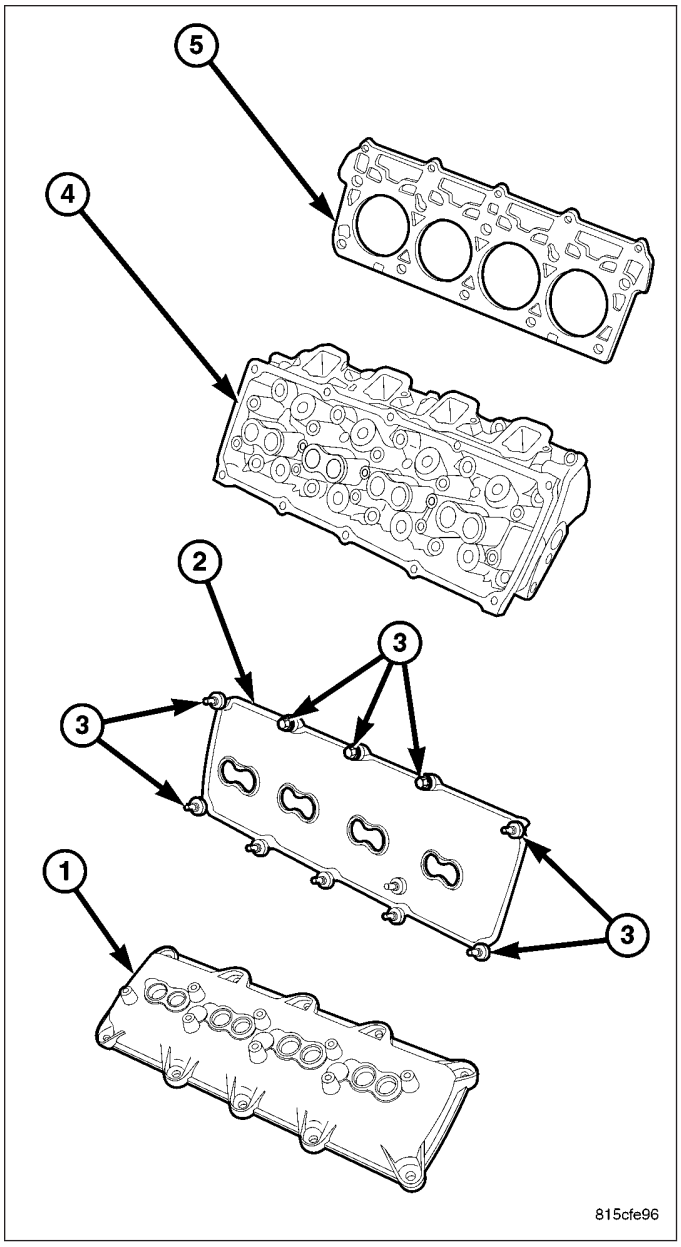

14. Install the ignition coils (1) (Refer to 8 - ELECTRICAL/IGNITION CONTROL/IGNITION COIL - INSTALLATION).

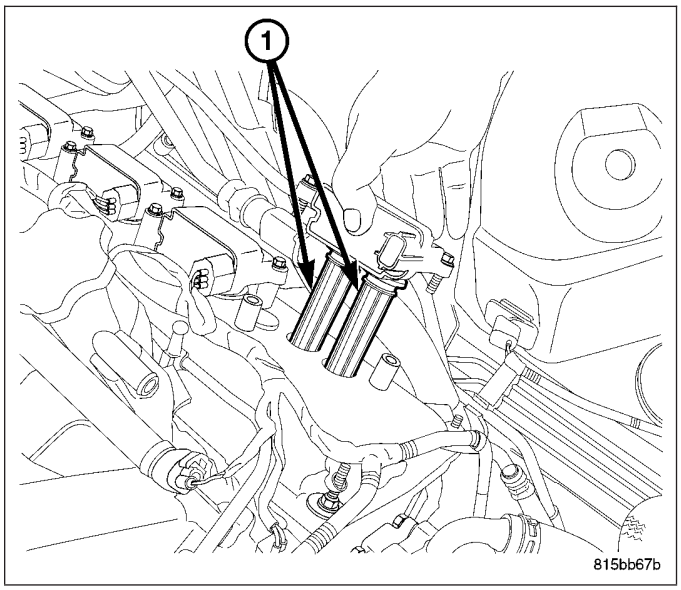

15. Reconnect the ignition coil wiring (1) (Refer to 8 - ELECTRICAL/IGNITION CONTROL/IGNITION COIL - INSTALLATION).

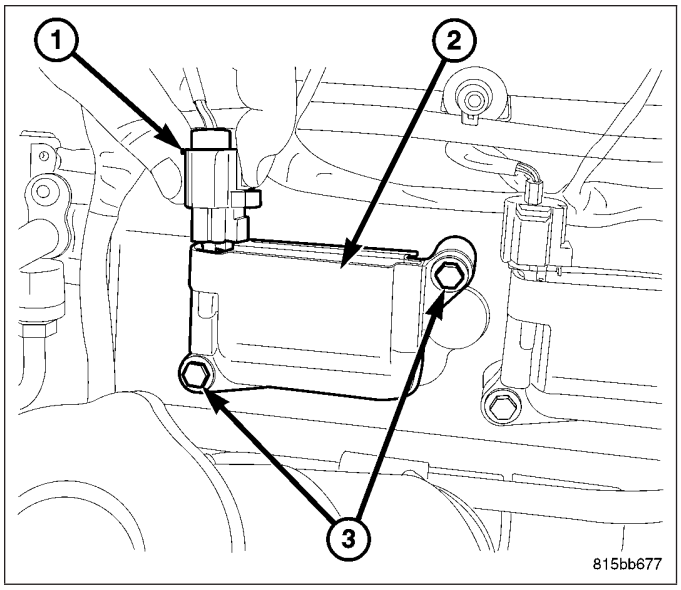

16. Connect the evaporation control system.
17. Install the air cleaner duct (2) (Refer to 9 - ENGINE/AIR INTAKE SYSTEM - INSTALLATION).
18. Fill cooling system (Refer to 7 - COOLING - STANDARD PROCEDURE).
19. Connect the negative cable to the battery.
20. Start engine check for leaks.

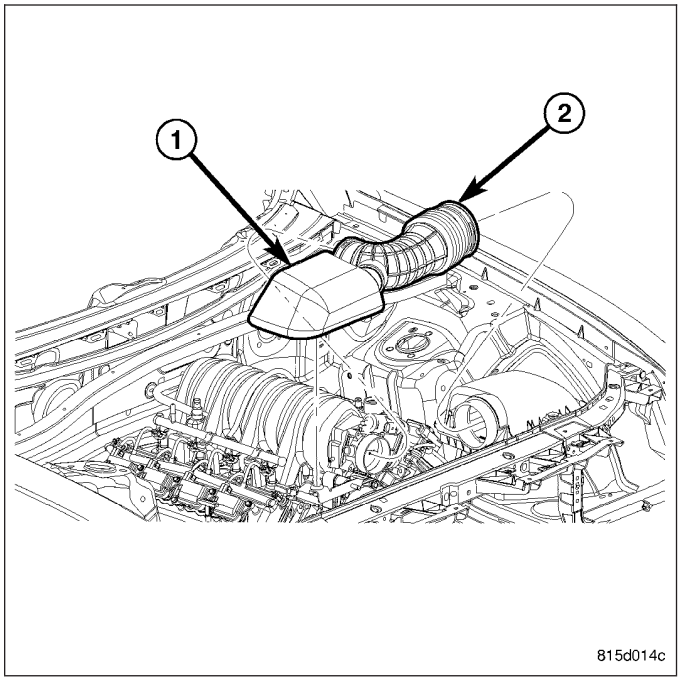

COVER-CYLINDER HEAD

REMOVAL

1. Disconnect battery negative cable.
2. Disconnect ignition coil connector (1).
3. Remove ignition coil retaining bolts (3).

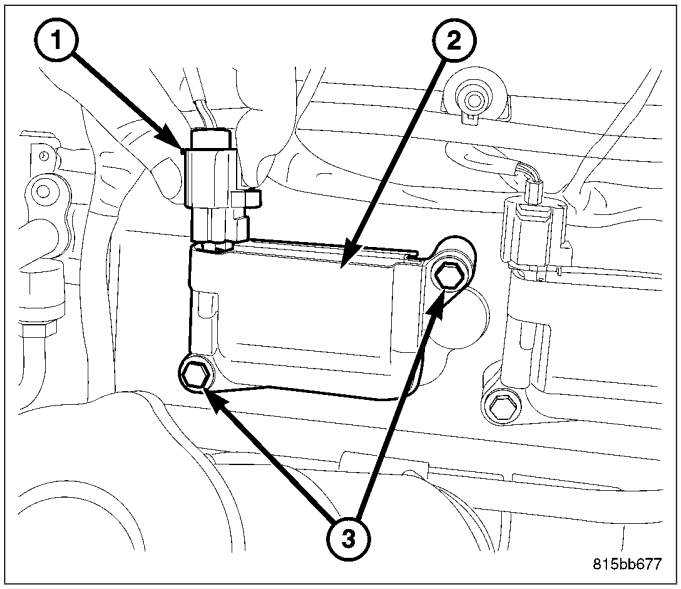

4. Remove ignition coil (1).

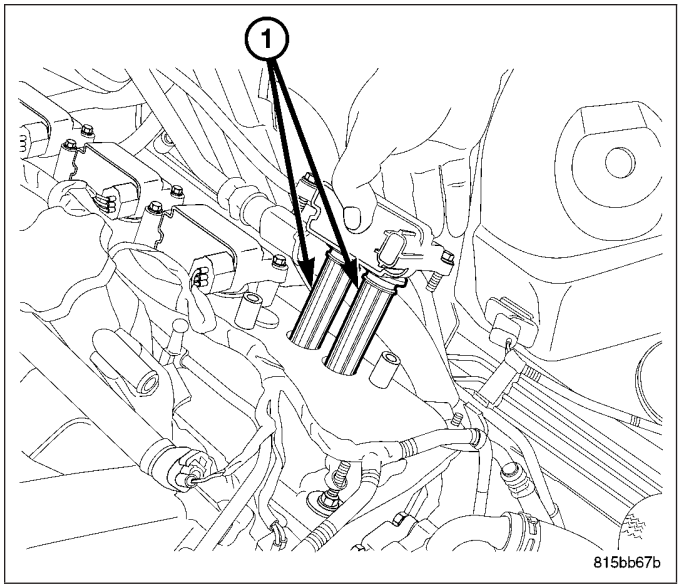

5. Remove cylinder head cover retaining bolts.

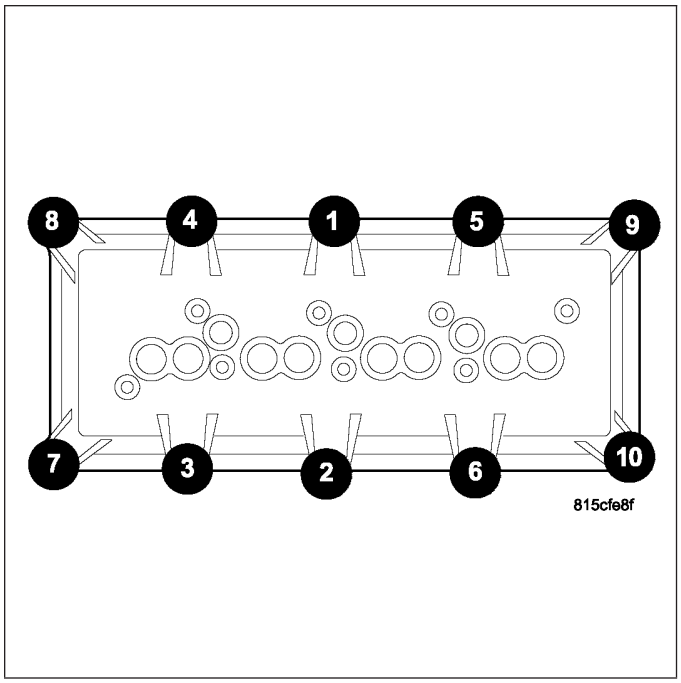

6. Remove cylinder head cover (1).

NOTE: The gasket (2) may be used again, provided no cuts, tears, or deformation has occurred.

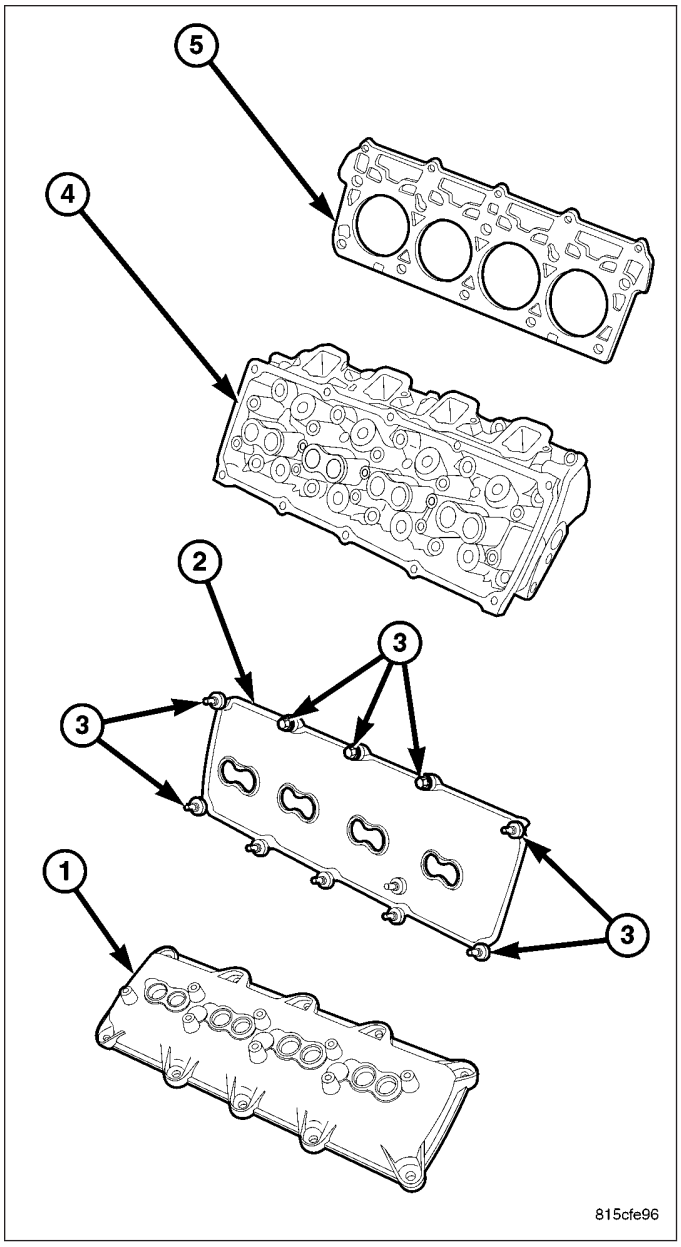

INSTALLATION

CAUTION: Do not use harsh cleaners to clean the cylinder head covers. Severe damage to covers may occur.

CAUTION: DO NOT allow other components including the wire harness to rest on or against the engine cylinder head cover. Prolonged contact with other objects may wear a hole in the cylinder head cover.

1. Clean cylinder head cover (1) and both sealing surfaces (1,4,). Inspect and replace gasket (2) as necessary.
2. Install cylinder head cover and hand start all fasteners. Verify that all double ended studs (3) are in the correct location.

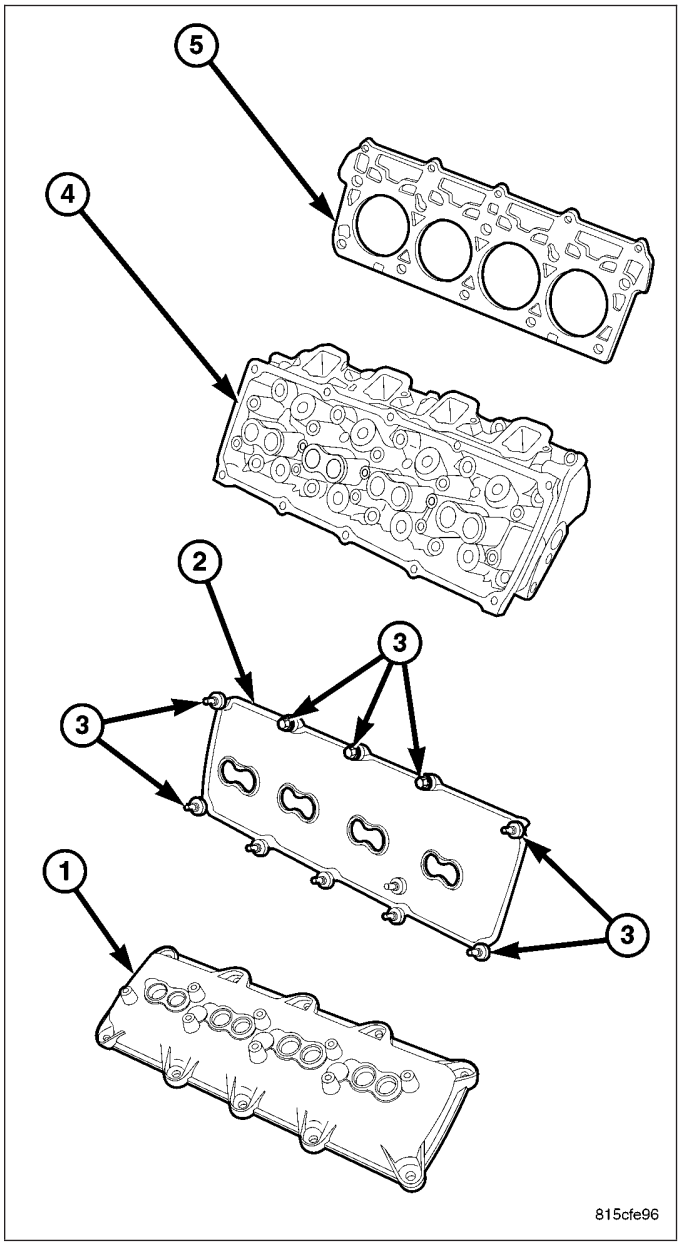

3. Tighten cylinder head cover bolts and double ended studs to 8N·m (70 in. lbs). Begin torque sequence in the middle of head cover and torque bolts moving outward in a crisscross pattern from top to bottom.

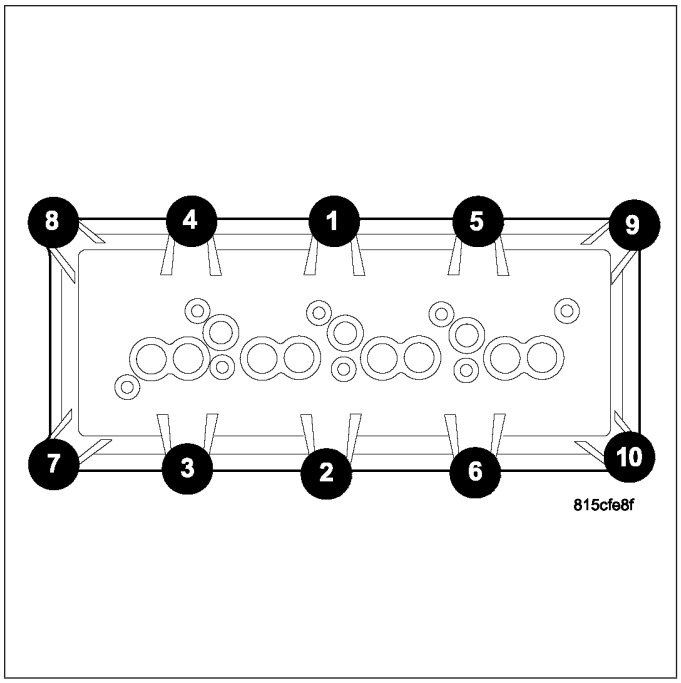

4. Before installing coil(s), apply dielectric grease to inside of spark plug boots (1).
5. Install ignition coils.

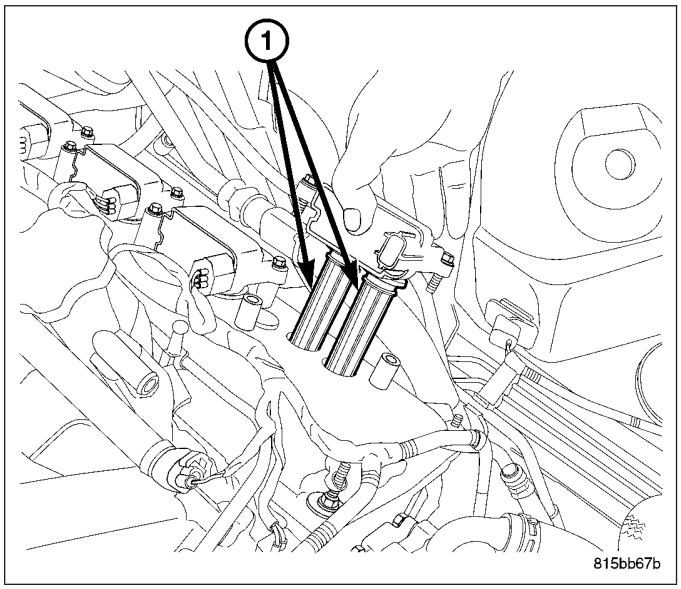

6. Torque fasteners (3) to 7N·m (62 in. lbs).
7. Connect, ignition coil electrical connectors (1).
8. Install PCV hose.
9. Connect battery negative cable.

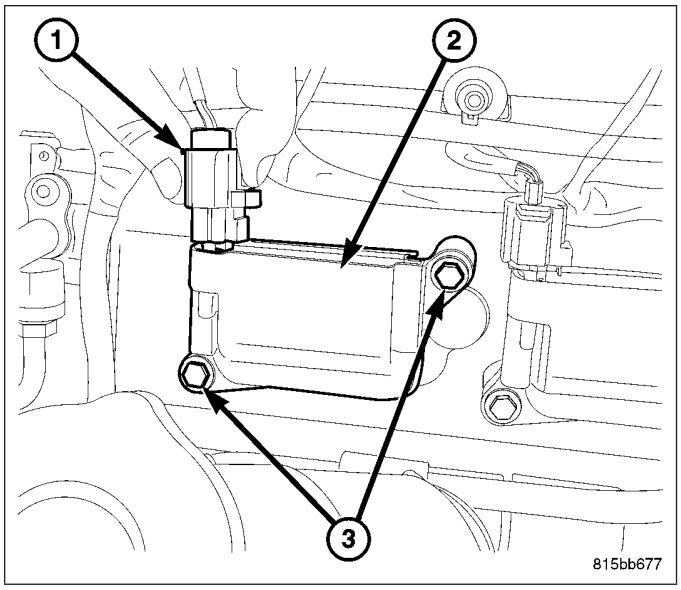

VALVES & SEATS - INTAKE/EXHAUST

DESCRIPTION

DESCRIPTION - VALVE GUIDES

The valve guides are made of powered metal and are pressed into the cylinder head. The guides are not replaceable or serviceable, and valve guide reaming is not recommended. If the guides are worn beyond acceptable limits, replace the cylinder heads.

DESCRIPTION - VALVES

Both the intake and exhaust valves are made of steel. The intake valve is 52.8 mm (2.08 inches) in diameter and the exhaust valve is 40.5 mm (1.59 inches) in diameter. All valves use three bead lock keepers to retain the springs and promote valve rotation.

STANDARD PROCEDURE - REFACING

NOTE: Valve seats that are worn or burned can be reworked, provided that correct angle and seat width are maintained. Otherwise the cylinder head must be replaced.

NOTE: When refacing valves and valve seats, it is important that the correct size valve guide pilot be used for reseating stones. A true and complete surface must be obtained.

1. Using a suitable dial indicator measure the center of the valve seat Total run out must not exceed 0.051 mm (0.002 in).
2. Apply a small amount of Prussian blue to the valve seat, insert the valve into the cylinder head, while applying light pressure on the valve rotate the valve. Remove the valve and examine the valve face. If the blue is transferred below the top edge of the valve face, lower the valve seat using a 15 degree stone. If the blue is transferred to the bottom edge of the valve face, raise the valve seat using a 65 degree stone.
3. When the seat is properly positioned the width of the intake seat must be 1.018 - 1.62 mm (0.0464 - 0.0637 in.) and the exhaust seat must be 1.48 - 1.92 mm (0.058 - 0.075 in.).
4. Check the valve spring installed height after refacing the valve and seat. The installed height for both intake and exhaust valve springs must not exceed 46.0 mm (1.81 in.).

VALVE FACE AND VALVE SEAT ANGLE CHART

DESCRIPTION	SPECIFICATION
SEAT WIDTH	
INTAKE	1.018 - 1.62 mm (0.0464 - 0.0637 in.)
EXHAUST	1.48 - 1.92 mm (0.058 - 0.075 in.)
FACE ANGLE	
INTAKE	45 ½° - 46°
EXHAUST	45° - 45½°
SEAT ANGLE (INT. AND EXT.)	44½° - 45°

5. The valve seat must maintain an angle of 44.5 – 45.0 degrees angle.
6. The valve face must maintain a face angle of 45.5 – 46.0 degrees angle for the Intake, and 45.0 – 45.5 degrees angle for the exhaust .

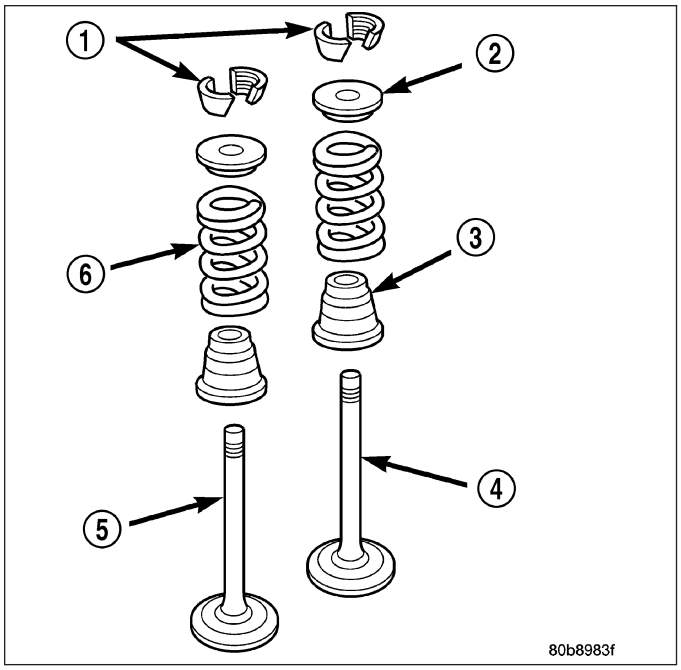

REMOVAL

1. Remove the cylinder head (Refer to 9 - ENGINE/CYLINDER HEAD - REMOVAL).
2. Compress valve springs using Valve Spring Compressor Tool special tool # C-3422and adapter 8464.
3. Remove valve retaining locks, valve spring retainers, valve stem seals and valve springs.
4. Before removing valves, remove any burrs from valve stem lock grooves to prevent damage to the valve guides. Identify valves to ensure installation in original location.

INSTALLATION

1. Clean valves thoroughly. Discard burned, warped and cracked valves.
2. Remove carbon and varnish deposits from inside of valve guides with a reliable guide cleaner.
3. Measure valve stems for wear. If wear exceeds 0.051 mm (0.002 inch), replace the valve.
4. Coat valve stems with lubrication oil and insert them in cylinder head.
5. If valves or seats are reground, check valve stem height. If valve is too long, replace cylinder head.
6. Install new seals on all valve guides. Install valve springs and valve retainers.
7. Compress valve springs with Valve Spring Compressor Tool special tool # C- 3422and adapter 8464, install locks and release tool. If valves and/or seats are ground, measure the installed height of springs. Make sure the measurement is taken from bottom of spring seat in cylinder head to the bottom surface of spring retainer.
8. Install cylinder head (Refer to 9 - ENGINE/CYLINDER HEAD - INSTALLATION).

ROCKER ARM

REMOVAL

1. Remove cylinder head cover. (Refer to 9 - ENGINE/CYLINDER HEAD/CYLINDER HEAD COVER(S) - REMOVAL).

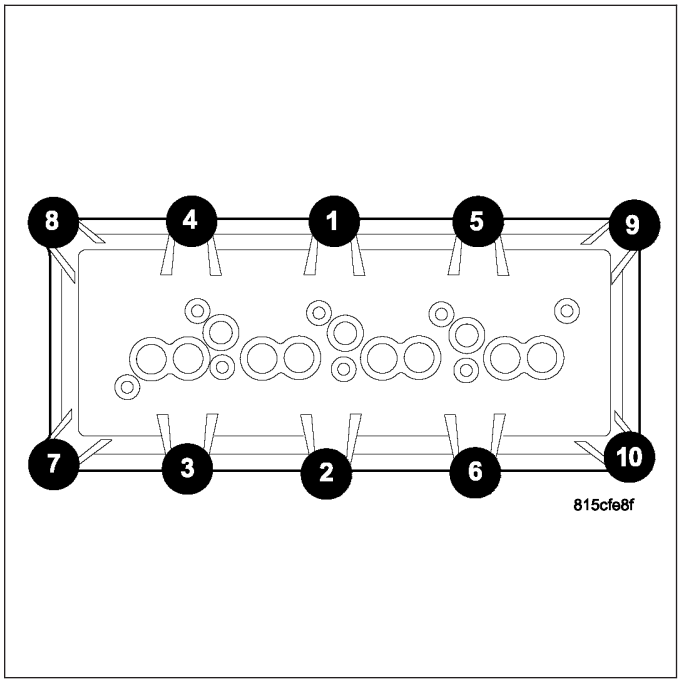

2. Install pushrod retaining plate (1)special tool 9070.

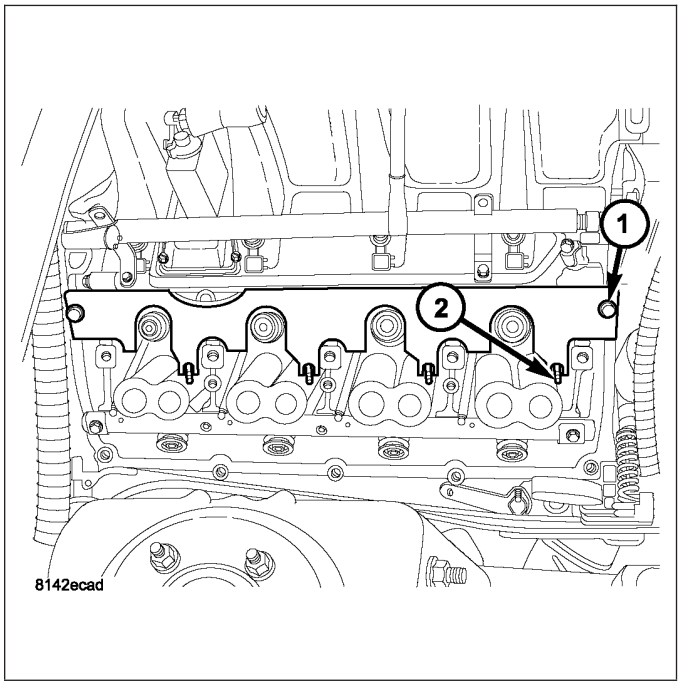

3. Loosen the rocker shafts using the sequence provided.

CAUTION: The rocker shaft assemblies are not interchangeable between intake and exhaust. The intake rocker arms are marked with an "I".

4. Remove the rocker shafts. Note location for reassembly.

CAUTION: The longer push rods are for the exhaust side, and the shorter push rods are for intake side.

5. Remove the pushrods. Note pushrod location for reassembly.

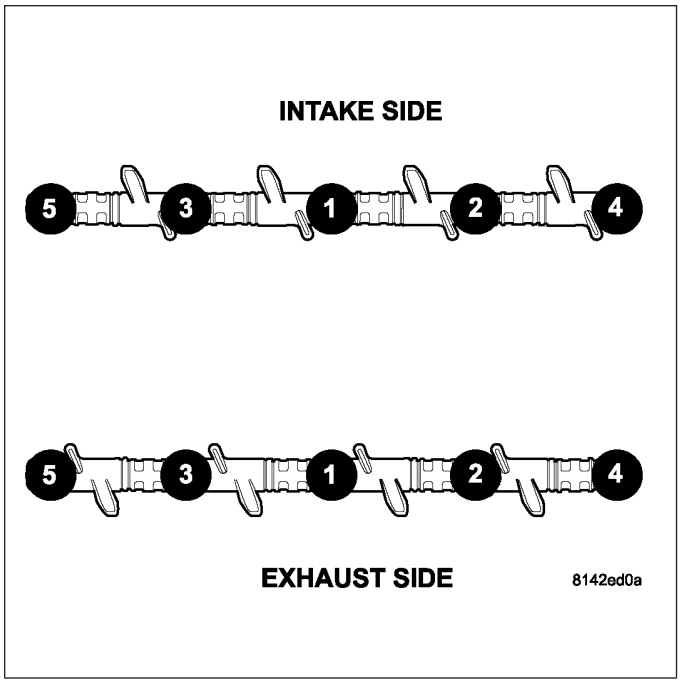

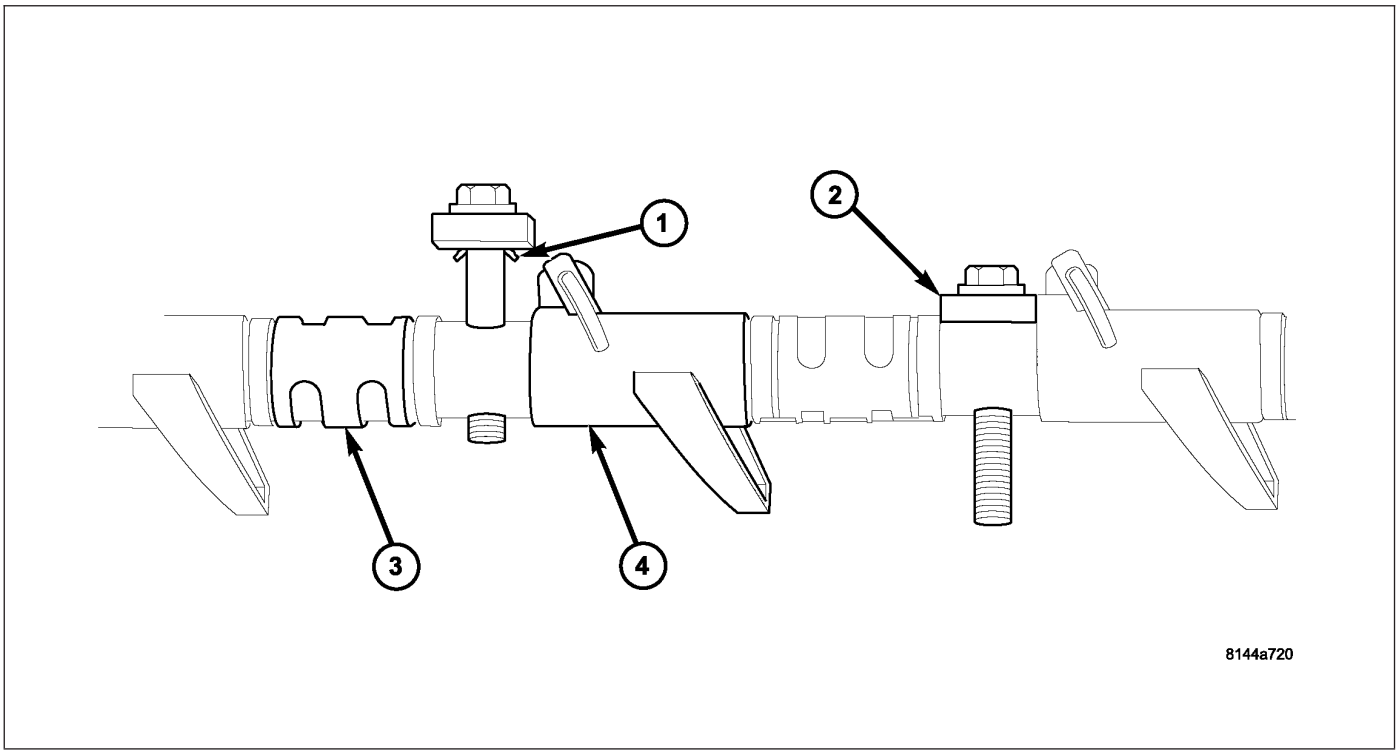

CAUTION: Do not remove the retainers from the rocker shaft. The assembly tangs (1) at the bottom of the retainers (2) can be damaged, causing the assembly tangs to break off, and get into the engine.

INSTALLATION

CAUTION: The longer push rods are for the exhaust side, and the shorter push rods are for intake side.

1. Install the push rods in the same order as removed.
2. Install the pushrod retaining plate (1) special tool 9070.

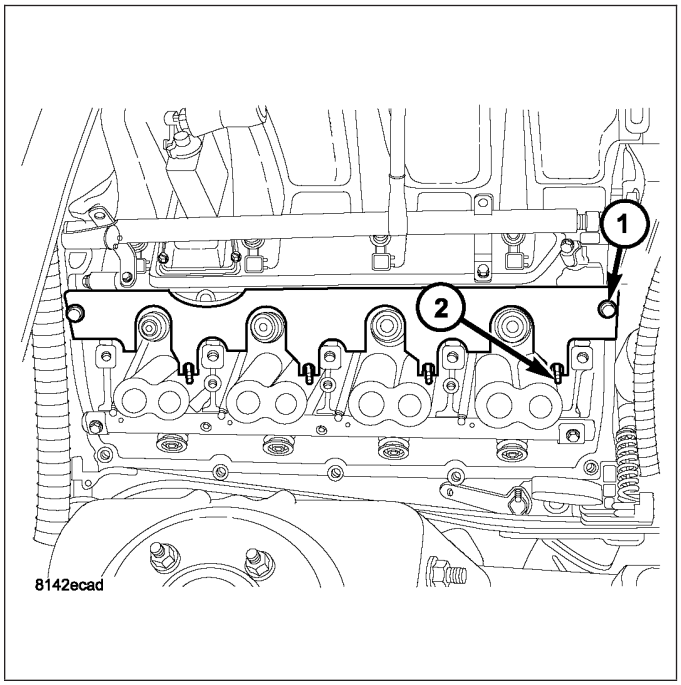

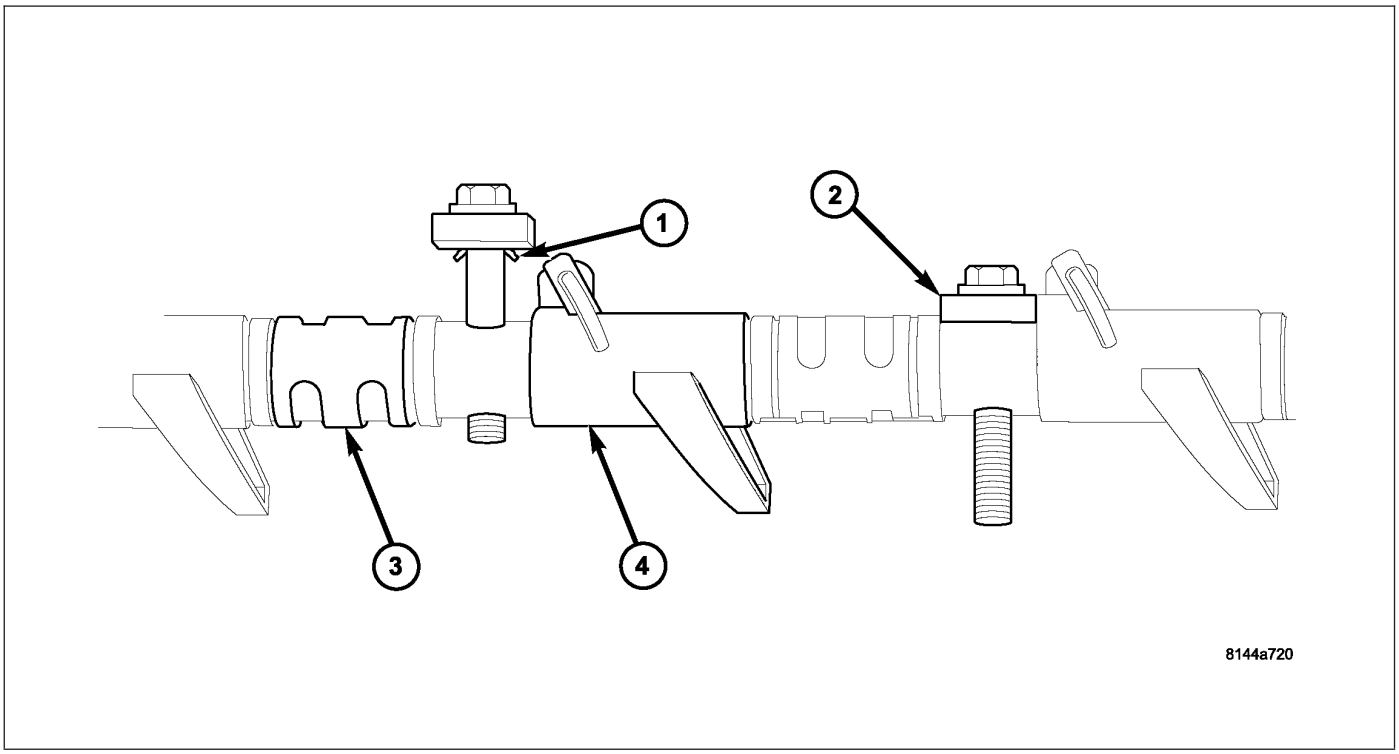

CAUTION: Ensure that retainers (2) and rocker arms (4) are not overlapped when torquing bolts.

CAUTION: Verify that pushrod is installed into rocker arm (4) and tappet correctly while installing rocker shaft assembly. Recheck after rocker shaft has been torqued to specification.

CAUTION: The rocker shaft assemblies are not interchangeable between intake and exhaust. The intake rocker arms are marked with the letter "I".

3. Install rocker shaft assemblies in the same order as removed.
4. Tighten the rocker shaft bolts to 22 N·m (195 in. lbs.) torque,using the sequence provided.

CAUTION: DO NOT rotate or crank the engine during or immediately after rocker arm installation. Allow the hydraulic roller tappets adequate time to bleed down (about 5 minutes).

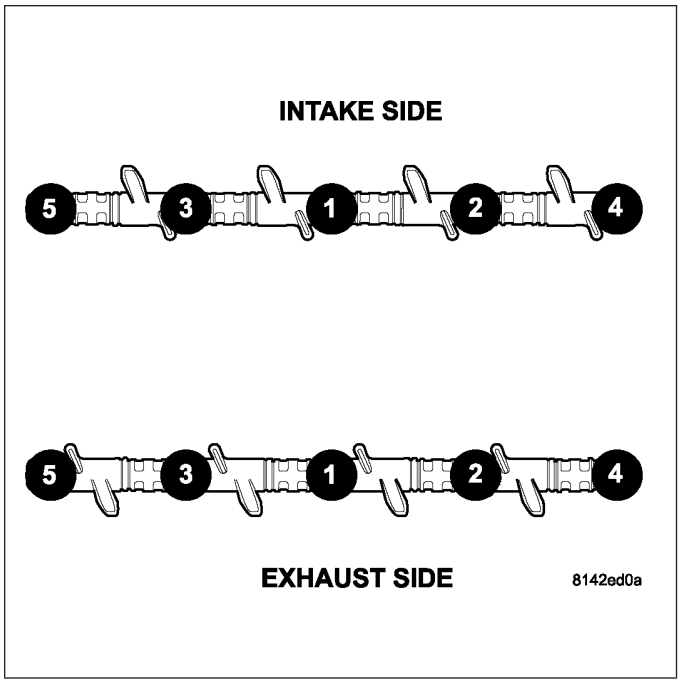

5. Remove pushrod retaining plate (1) special tool 9070.

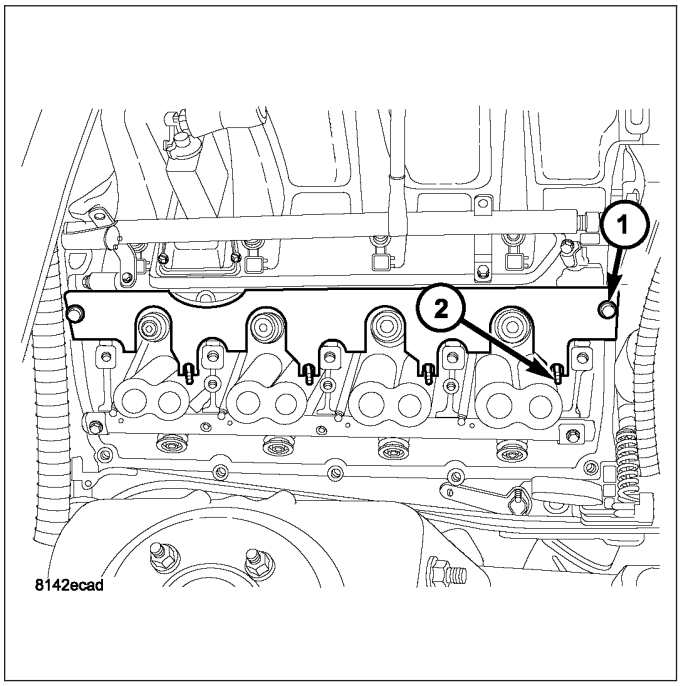

6. Install cylinder head cover (Refer to 9 - ENGINE/ CYLINDER HEAD/CYLINDER HEAD COVER(S) - INSTALLATION).

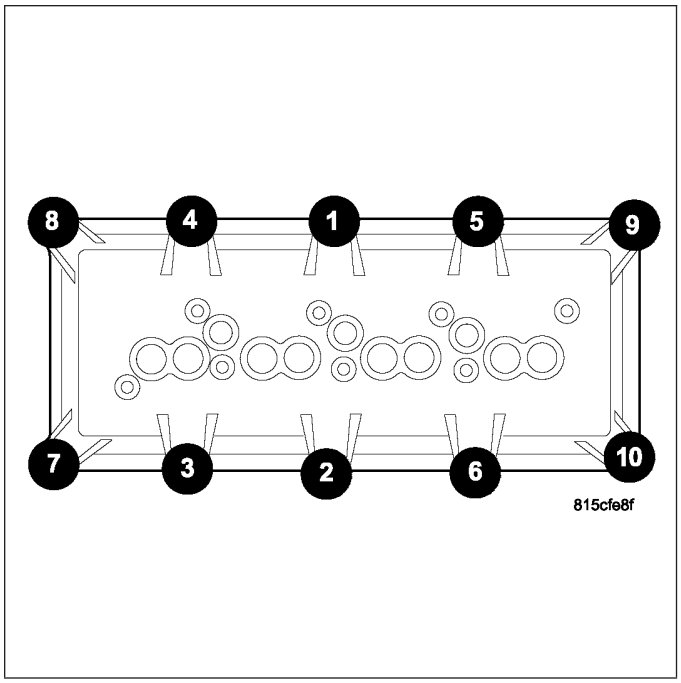

SEALS-VALVE GUIDE

DESCRIPTION

The valve guide seals are made of rubber and incorporate an integral steel valve spring seat. The integral garter spring maintains consistent lubrication control to the valve stems. The intake valve stem seal has a smaller valve spring seat compared to the exhaust valve stem seal. The intake and exhaust valve stem seals are identified by different colors.

SPRINGS-VALVE

REMOVAL

1. Disconnect negative battery cable.
2. Remove air cleaner assembly.
3. Remove air intake resonator.
4. Remove spark plug cables.
5. Remove ignition coil connectors (1).
6. Remove ignition coils (2).
7. Remove one spark plug.

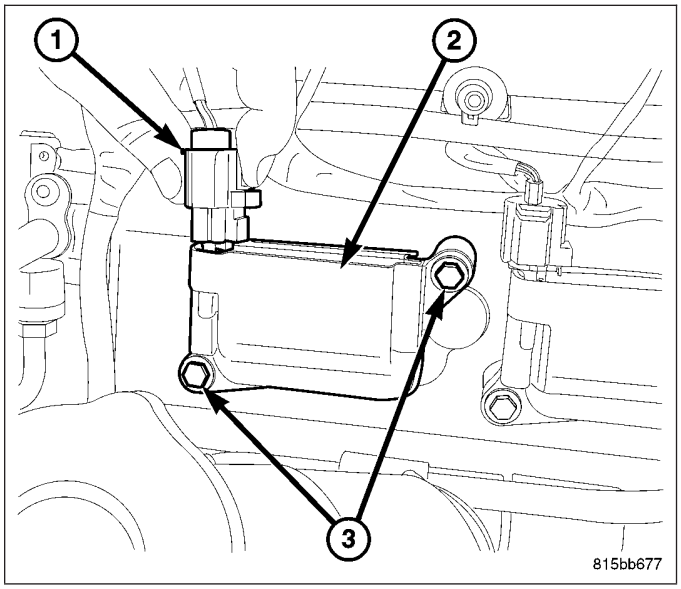

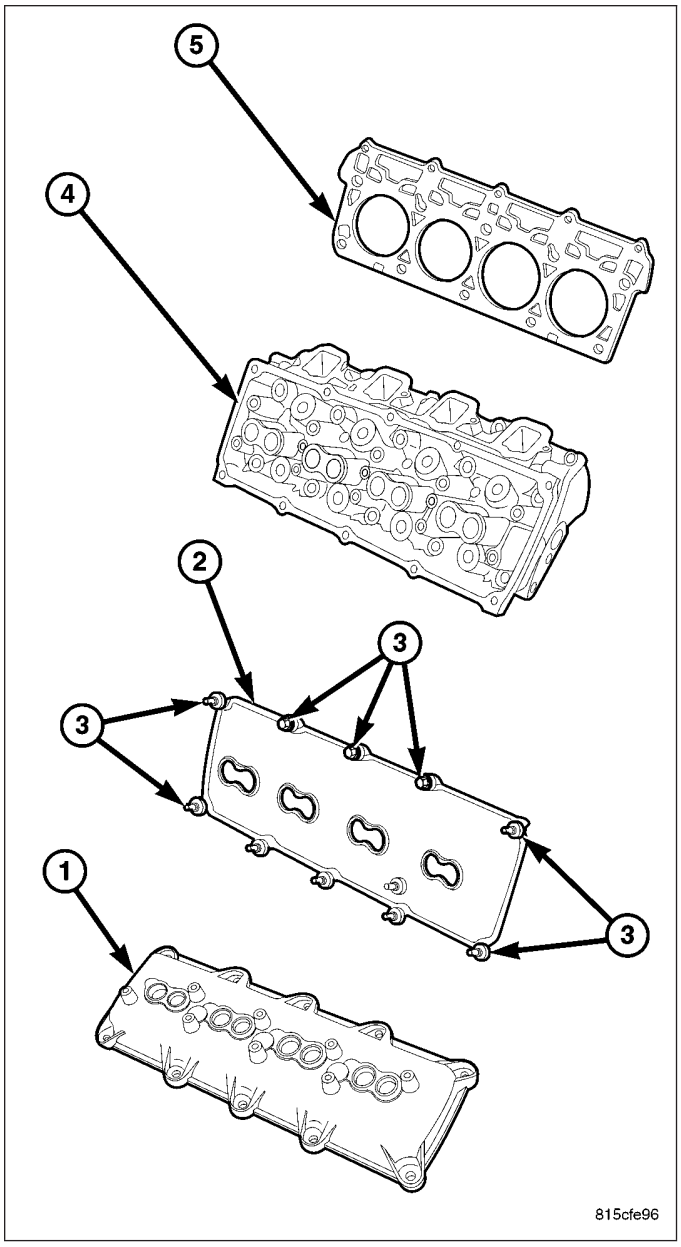
5
4
2
3
3
1
3
815cfe96

8. Remove cylinder head cover (1) using the sequence shown (Refer to 9 - ENGINE/CYLINDER HEAD/CYLINDER HEAD COVER(S) - REMOVAL).

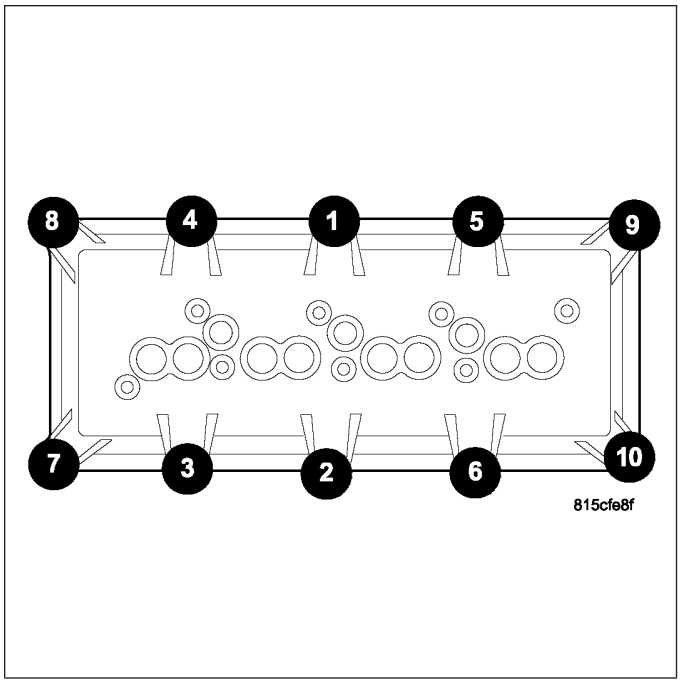

CAUTION: The piston must be at TDC, and both valves closed on the cylinder to be serviced.

NOTE: If removing intake valve spring, install special tool# 9070, pushrod retaining plate (1), to retain the intake pushrods (2).

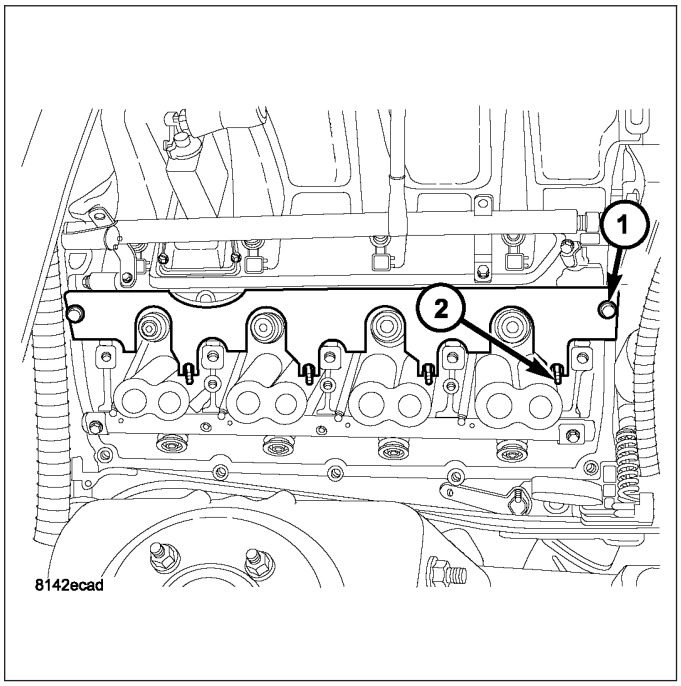

9. Remove exhaust/intake rocker arm shafts using the sequence shown.

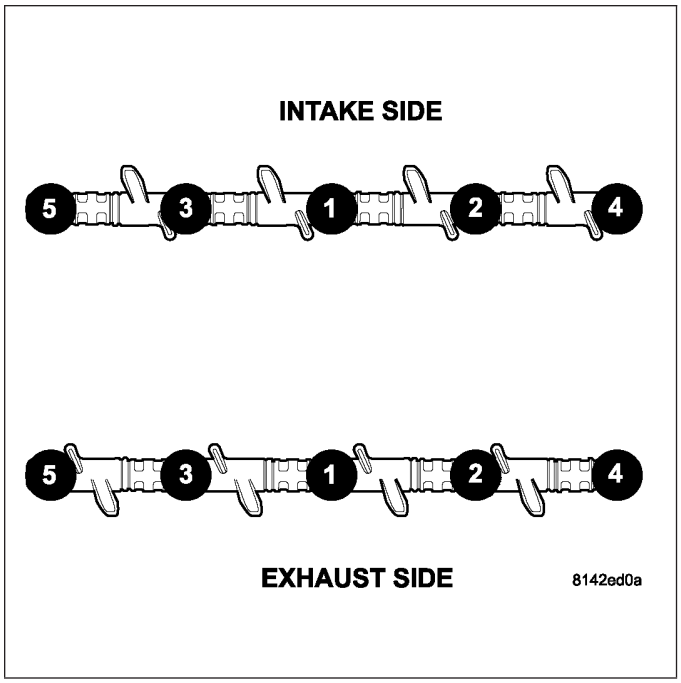

10. Install rocker arm shaft (1) special tool# 9065.

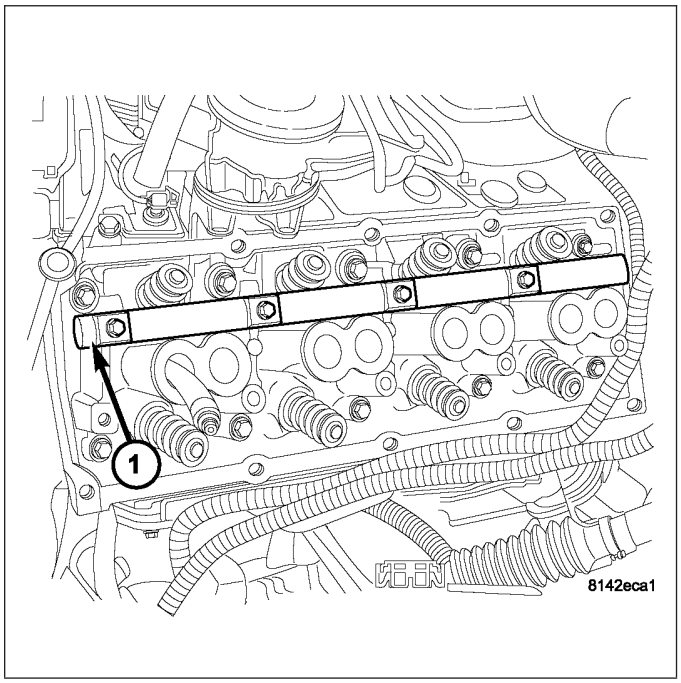

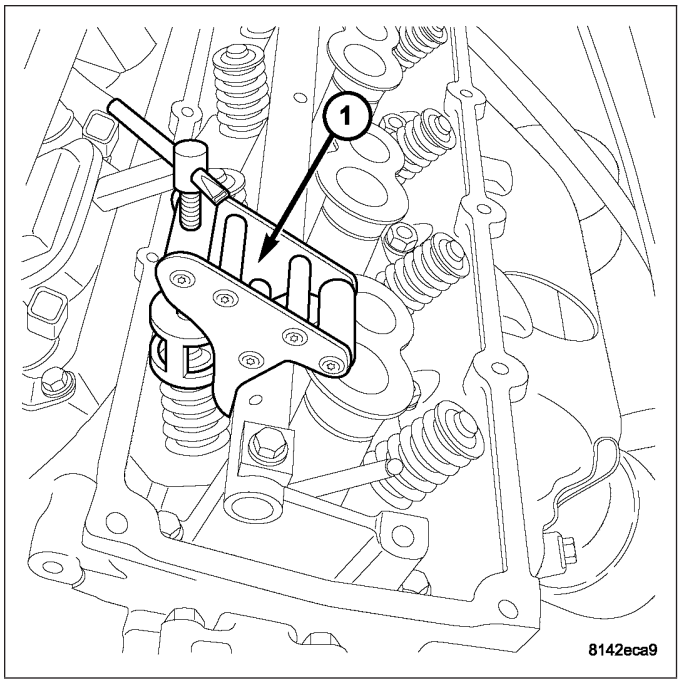
1
8142eca9

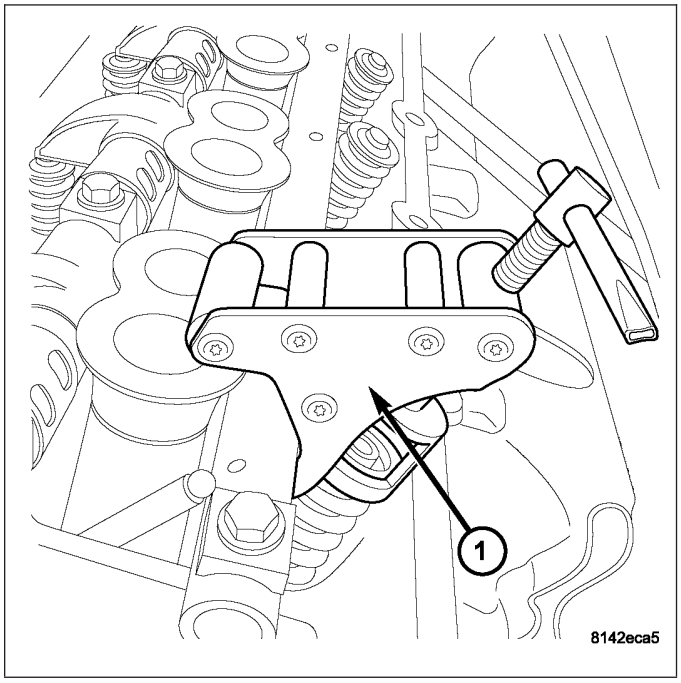
1
8142eca5

11. Install spring compressor (1,3,), special tool# 9065, and exhaust adapter arm (1) tool # 9065if needed.

NOTE: All valve springs and seals are removed in the same manner.

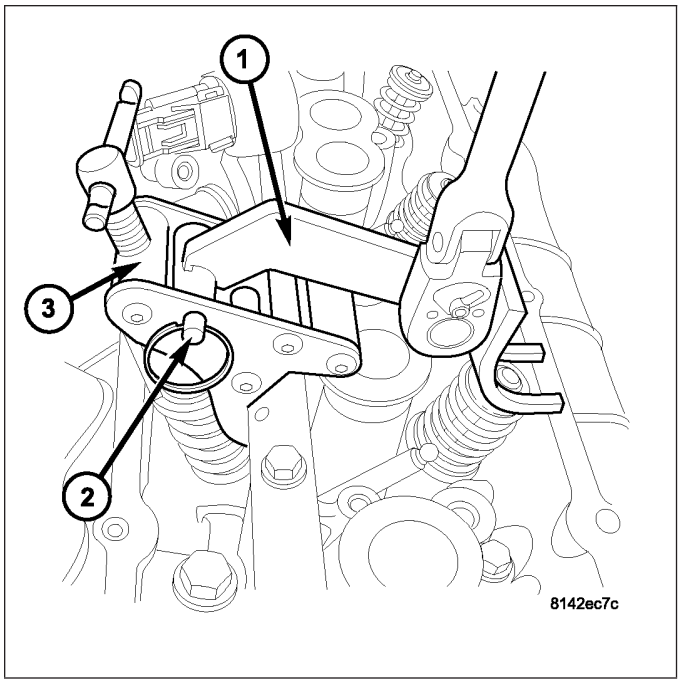

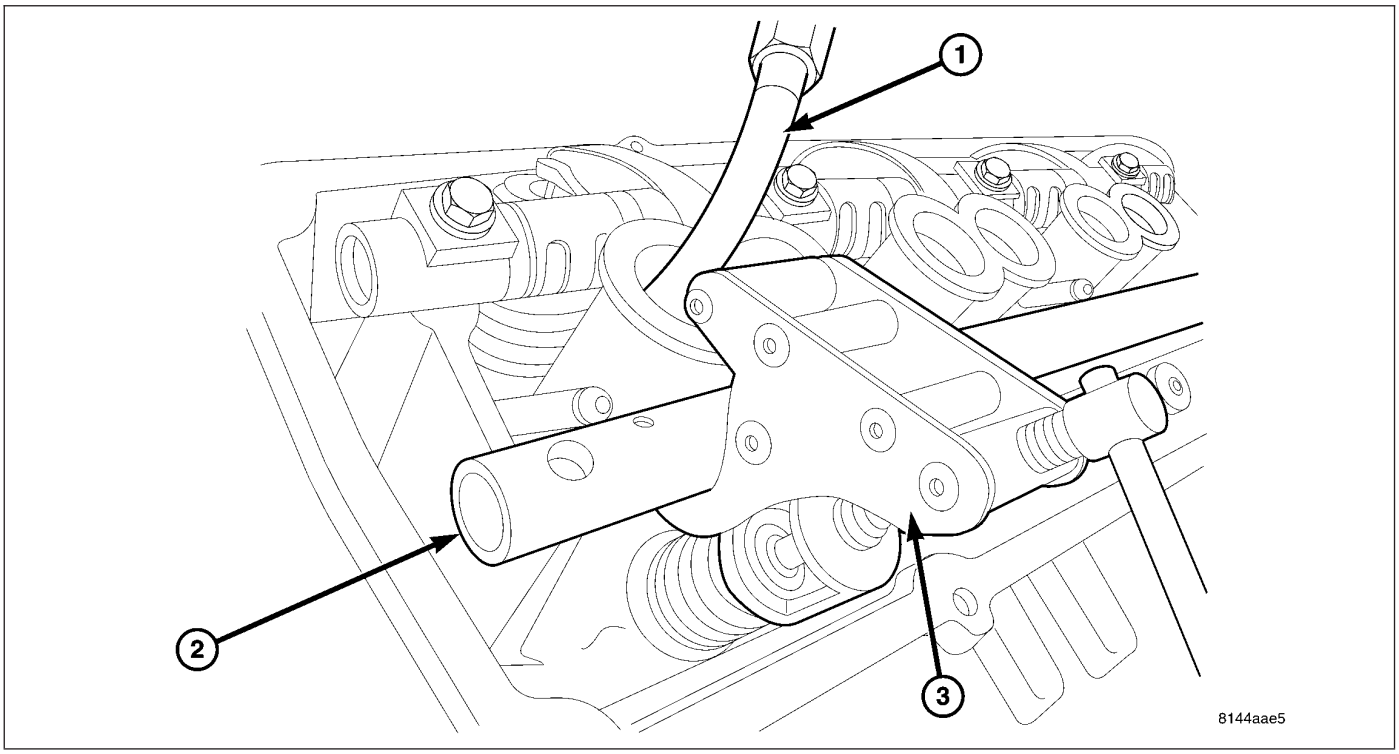

12. Insert air hose (1) into spark plug hole and charge cylinder with air.

NOTE: Tap the top of the valve spring retainer to loosen the spring retainers locks.

13. Compress valve spring with valve spring compessor (3) tool # 9065and remove valve retainer locks.
14. Release spring compressor (3) and remove valve spring.

NOTE: The valve springs are interchangeable between intake and exhaust.

15. Remove valve seal.

INSTALLATION

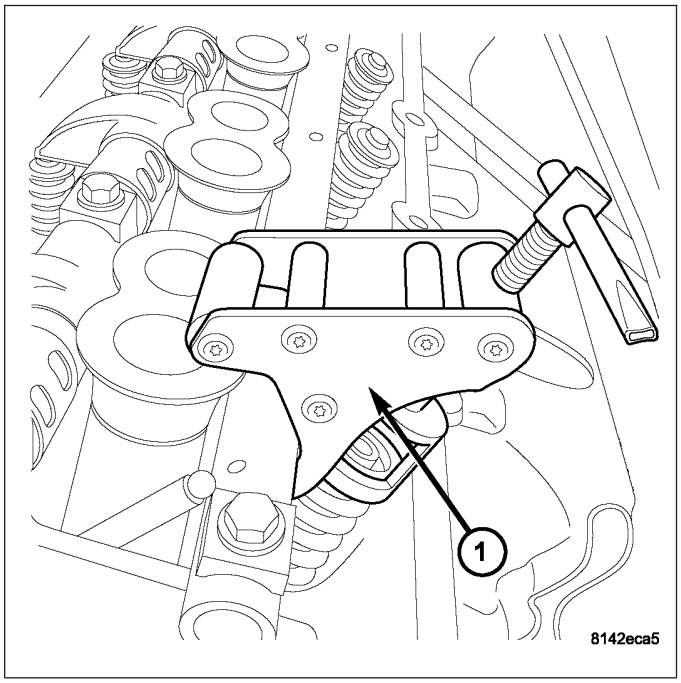

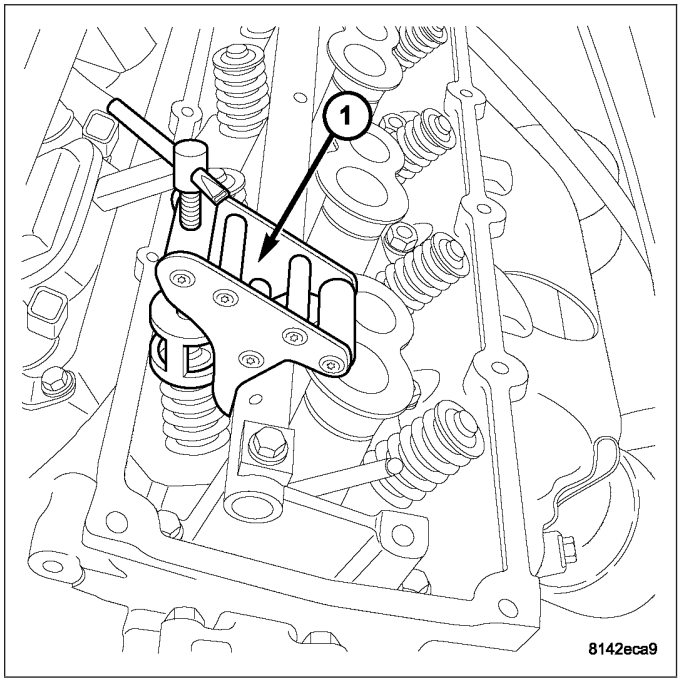

NOTE: The intake seal has a smaller spring seat diameter compared to the exhaust seal.

1. Install valve seal.

NOTE: The intake spring damper has a longer free length compared to the exhaust spring damper.

2. Install valve spring.
3. Using special tool# 9065 (1,3,), compress valve spring and install valve spring retainer and locks.

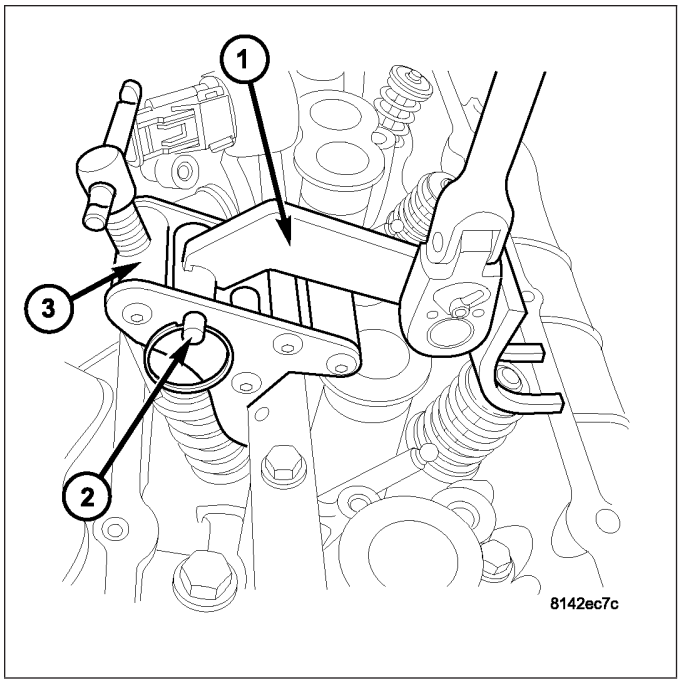

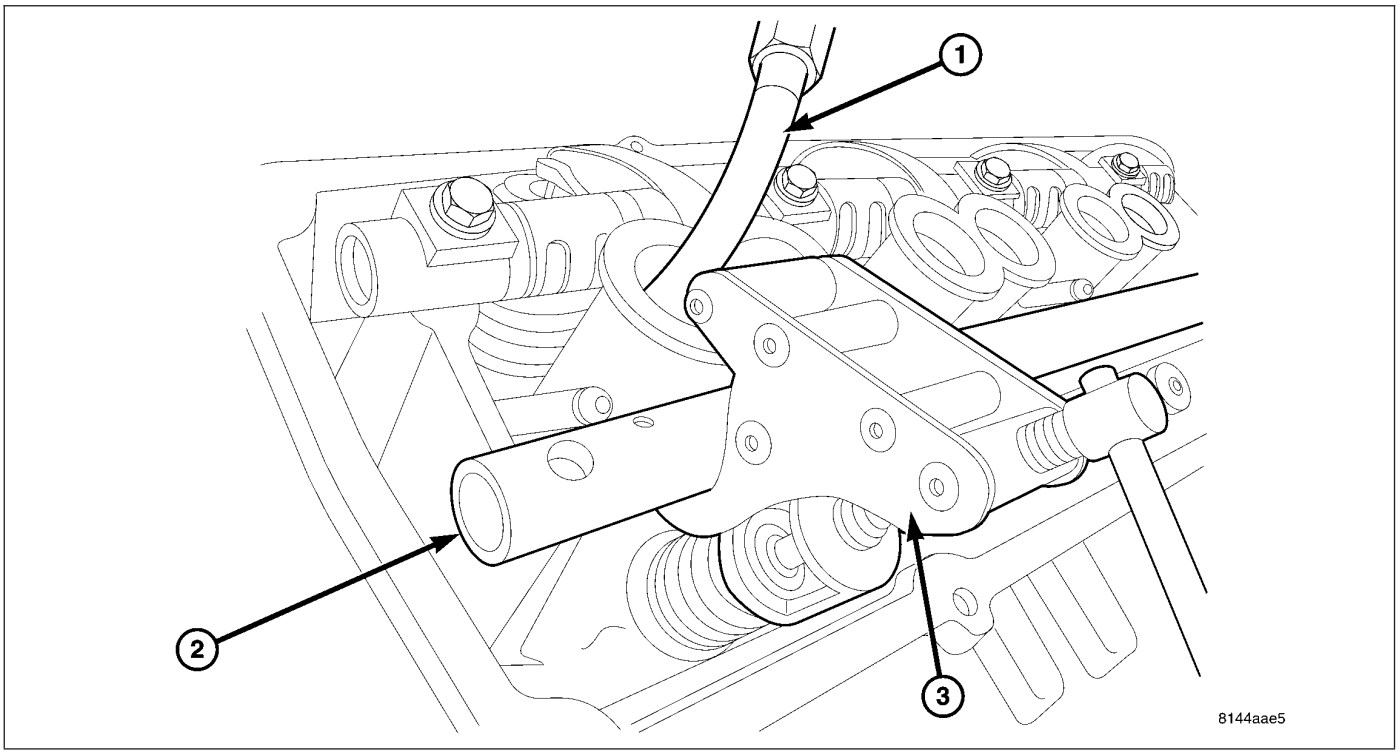

4. Release air charge in cylinder (1).
5. Remove spring compressor tool # 9065 (3).

CAUTION: Verify that the pushrods are fully seated into lifter and rocker arm. Recheck after rocker arm shaft has been torqued to specification.

6. Install rocker arm shaft and pushrods (Refer to 9 - ENGINE/CYLINDER HEAD/ROCKER ARM / ADJUSTER ASSY - INSTALLATION).
7. Tighten the rocker shaft bolts to 22 N·m (195 in. lbs.) torque, using the rocker shaft torque sequence.

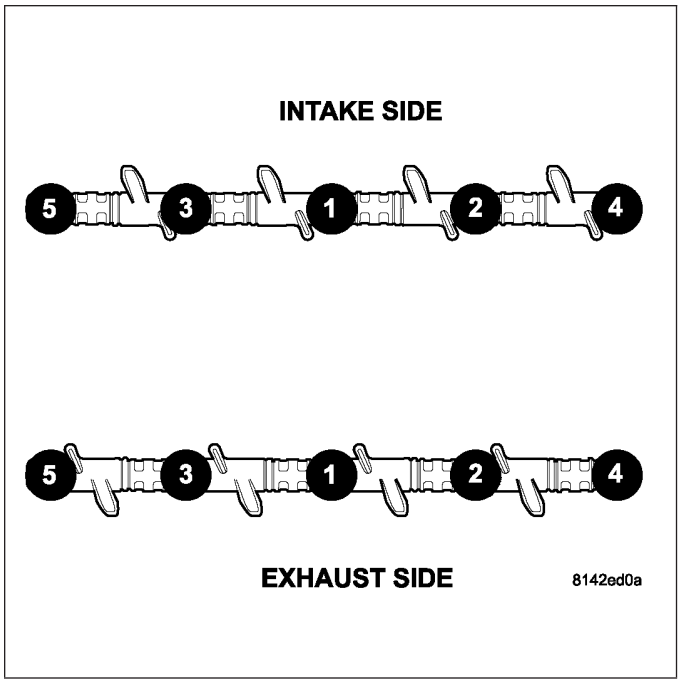

8. Remove special tool# 9070, pushrod retaining plate (1), if used.

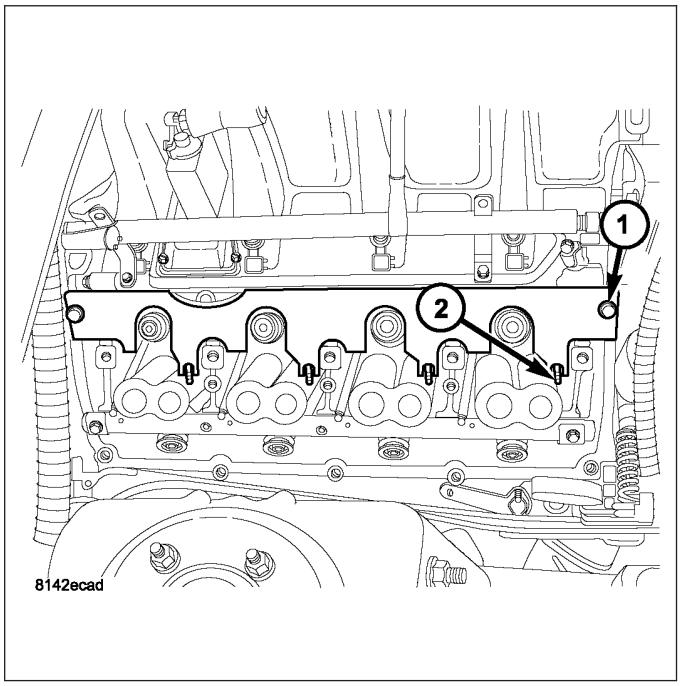

9. Install cylinder head cover (1).

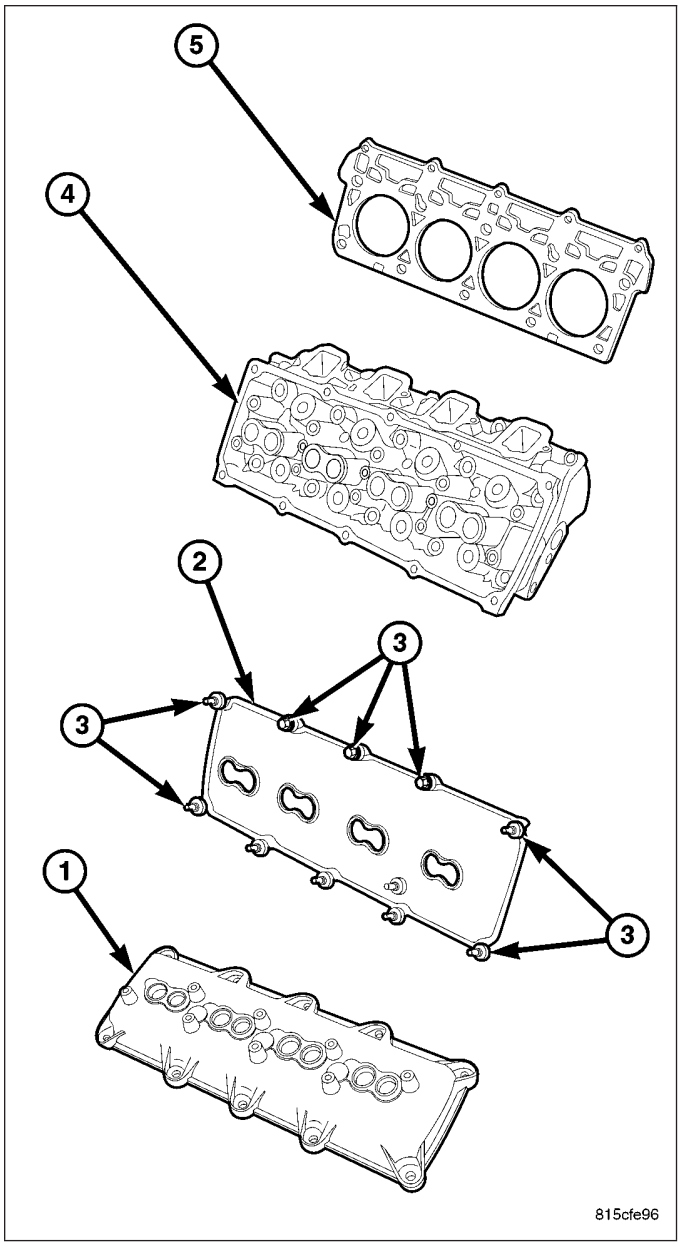

10. Tighten cylinder head cover bolts and double ended studs (Refer to 9 - ENGINE/CYLINDER HEAD/CYLINDER HEAD COVER(S) - INSTALLATION) .
11. Install spark plugs.

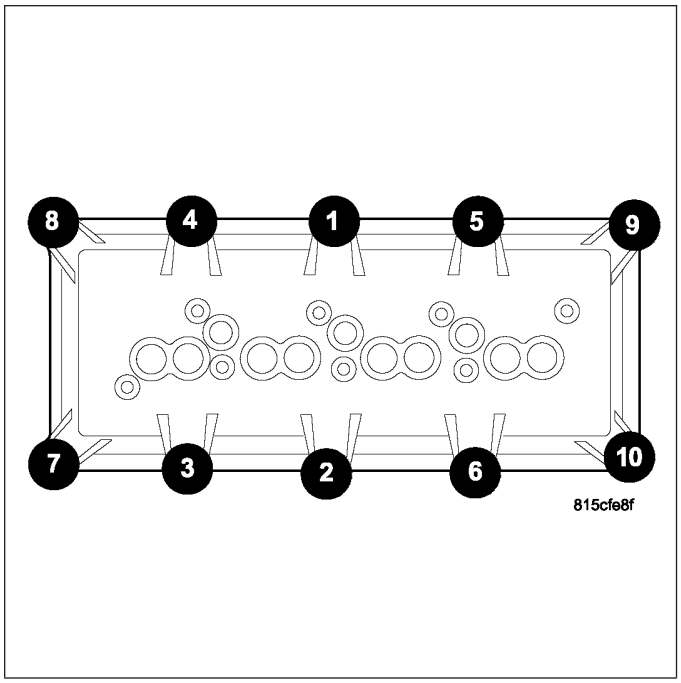

12. Install ignition coil on plug (2), and torque fasteners (3) to 12 N·m (105 in. lbs)
13. Install ignition coil connectors (1).
14. Install spark plug cables.
15. Install air intake resonator.
16. Install air cleaner assembly.
17. Connect negative battery cable.

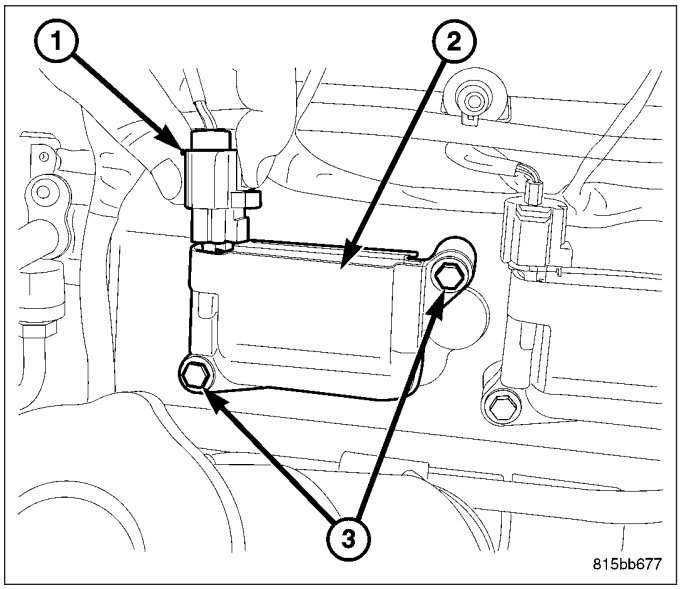

ENGINE BLOCK

CLEANING

Thoroughly clean the oil pan and engine block gasket surfaces.

Use compressed air to clean out:

- The galley at the oil filter adaptor hole.
- The front and rear oil galley holes.
- The feed holes for the crankshaft main bearings.

Once the block has been completely cleaned, apply Loctite PST pipe sealant with Teflon 592 to the threads of the front and rear oil galley plugs. Tighten the 1/4 inch NPT plugs to 20 N·m (177 in. lbs.) torque. Tighten the 3/8 inch NPT plugs to 27 N·m (240 in. lbs.) torque.

INSPECTION

1. It is mandatory to use a dial bore gauge to measure each cylinder bore diameter. To correctly select the proper size piston, a cylinder bore gauge, capable of reading in 0.003 mm (.0001 in.) INCREMENTS is required. If a bore gauge is not available, do not use an inside micrometer.
2. Measure the inside diameter of the cylinder bore at three levels below top of bore. Start perpendicular (across or at 90 degrees) to the axis of the crankshaft and then take two additional reading.
3. Measure the cylinder bore diameter crosswise to the cylinder block near the top of the bore. Repeat the measurement near the middle of the bore, then repeat the measurement near the bottom of the bore.
4. Determine taper by subtracting the smaller diameter from the larger diameter.
5. Rotate measuring device 90° and repeat steps above.
6. Determine out-of-roundness by comparing the difference between each measurement.

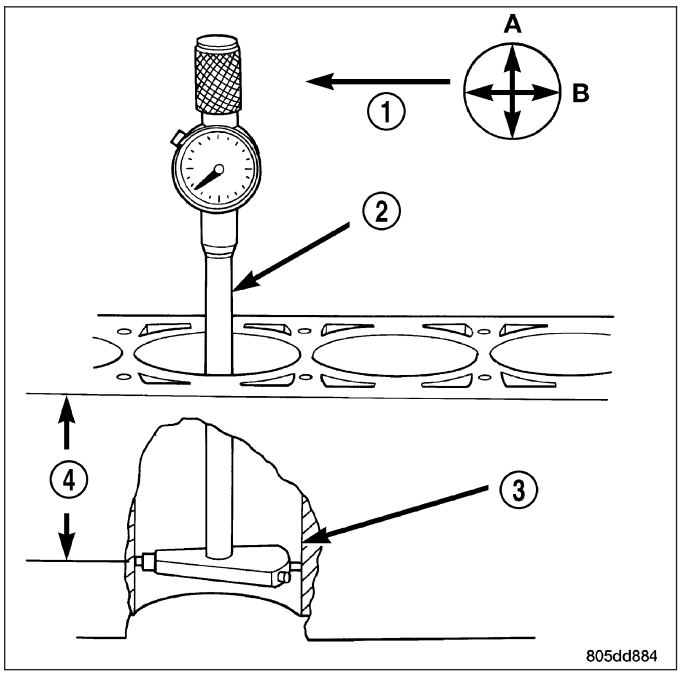

7. If cylinder bore taper does not exceed 0.025 mm (0.001 inch) and out-of-roundness does not exceed 0.025 mm (0.001 inch), the cylinder bore can be honed. If the cylinder bore taper or out- of-round condition exceeds these maximum limits, the cylinder block must be replaced. A slight amount of taper always exists in the cylinder bore after the engine has been in use for a period of time.

CAMSHAFT

REMOVAL

REMOVAL - CAMSHAFT CORE HOLE PLUG

CAUTION: Do not damage the rear surface of the camshaft or the core plug sealing surface, when removing the core plug.

1. Remove the rear cam bearing core plug.

REMOVAL - CAMSHAFT

1. Remove the battery negative cable.
2. Remove the air cleaner assembly. (Refer to 9 - ENGINE/AIR INTAKE SYSTEM - REMOVAL)
3. Drain coolant. (Refer to 7 - COOLING - STANDARD PROCEDURE)
4. Remove the accessory drive belt. (Refer to 7 - COOLING/ACCESSORY DRIVE/DRIVE BELTS - REMOVAL)
5. Remove the generator.
6. Remove the A/C compressor, and set aside.
7. Remove the radiator (Refer to 7 - COOLING/ENGINE/RADIATOR - REMOVAL).
8. Remove intake manifold (Refer to 9 - ENGINE/MANIFOLDS/INTAKE MANIFOLD - REMOVAL).
9. Remove cylinder head covers (Refer to 9 - ENGINE/CYLINDER HEAD/CYLINDER HEAD COVER(S) - REMOVAL).

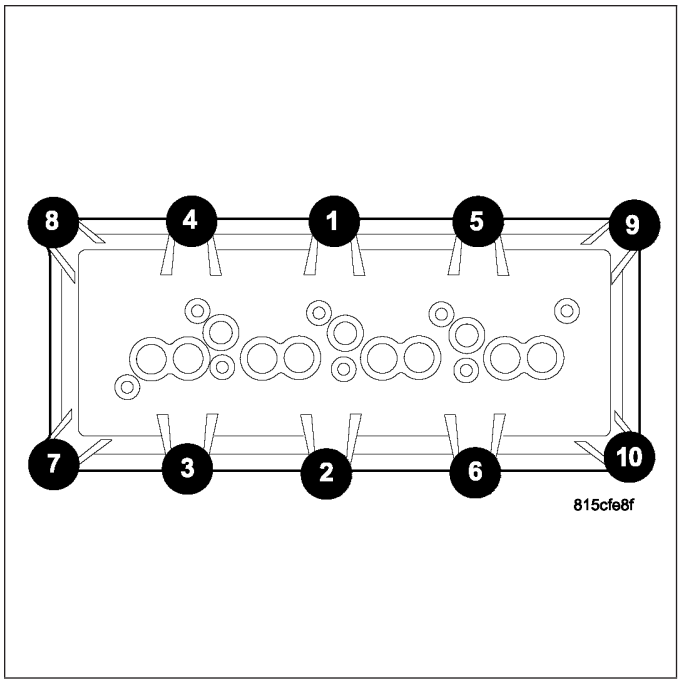

10. Remove both left and right cylinder heads (4) (Refer to 9 - ENGINE/CYLINDER HEAD - REMOVAL).
11. Remove the oil pan (Refer to 9 - ENGINE/LUBRICATION/OIL PAN - REMOVAL).

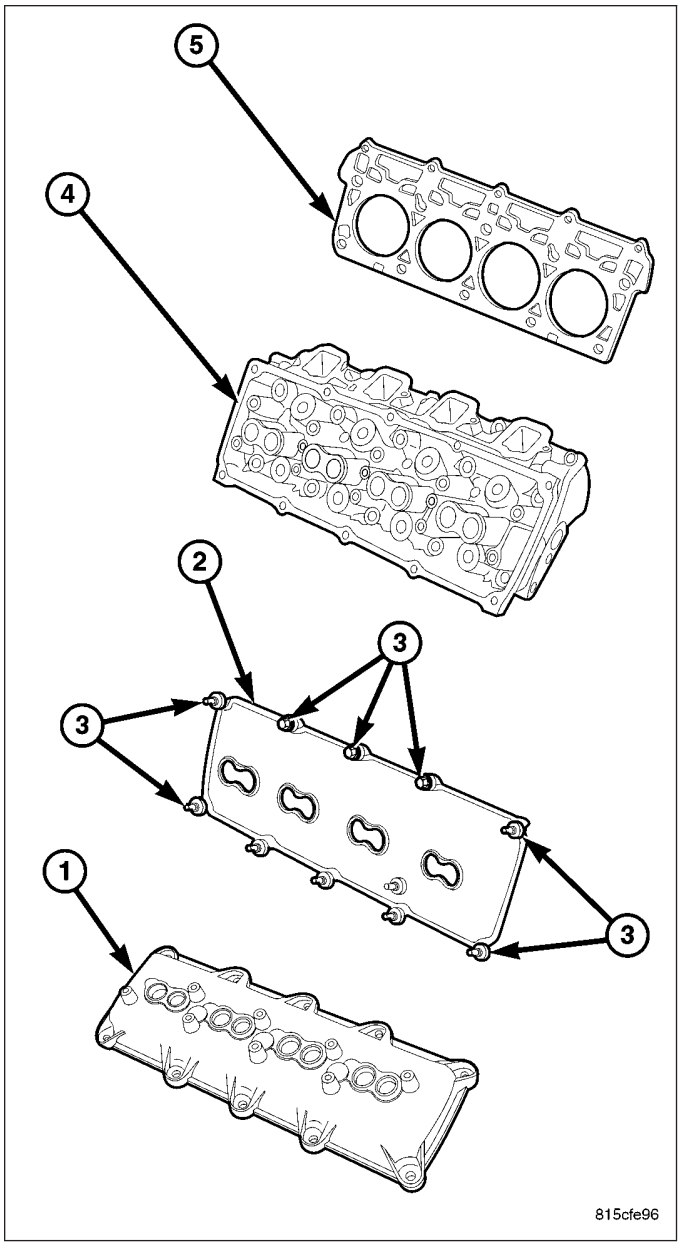

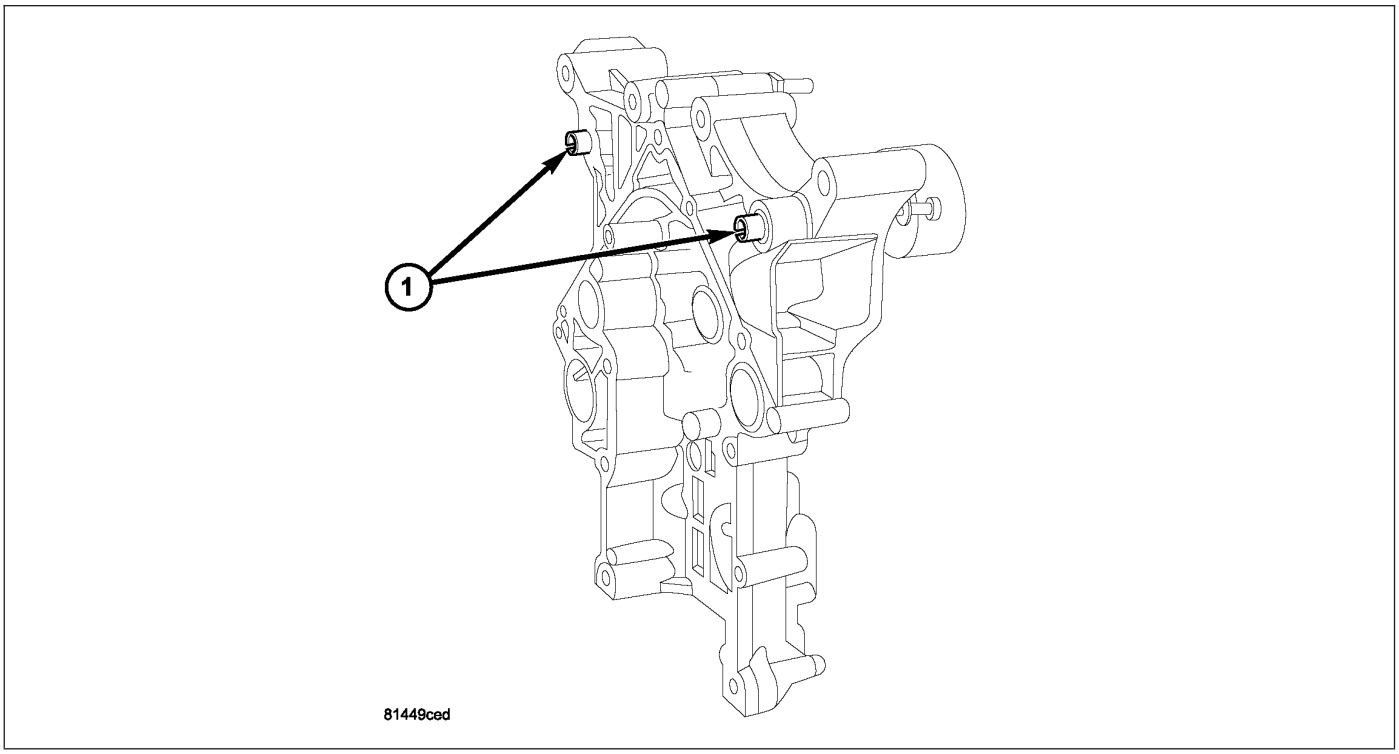

12. Remove timing case cover (1) (Refer to 9 - ENGINE/VALVE TIMING/TIMING BELT / CHAIN COVER(S) - REMOVAL).
13. Remove the oil pick up tube.

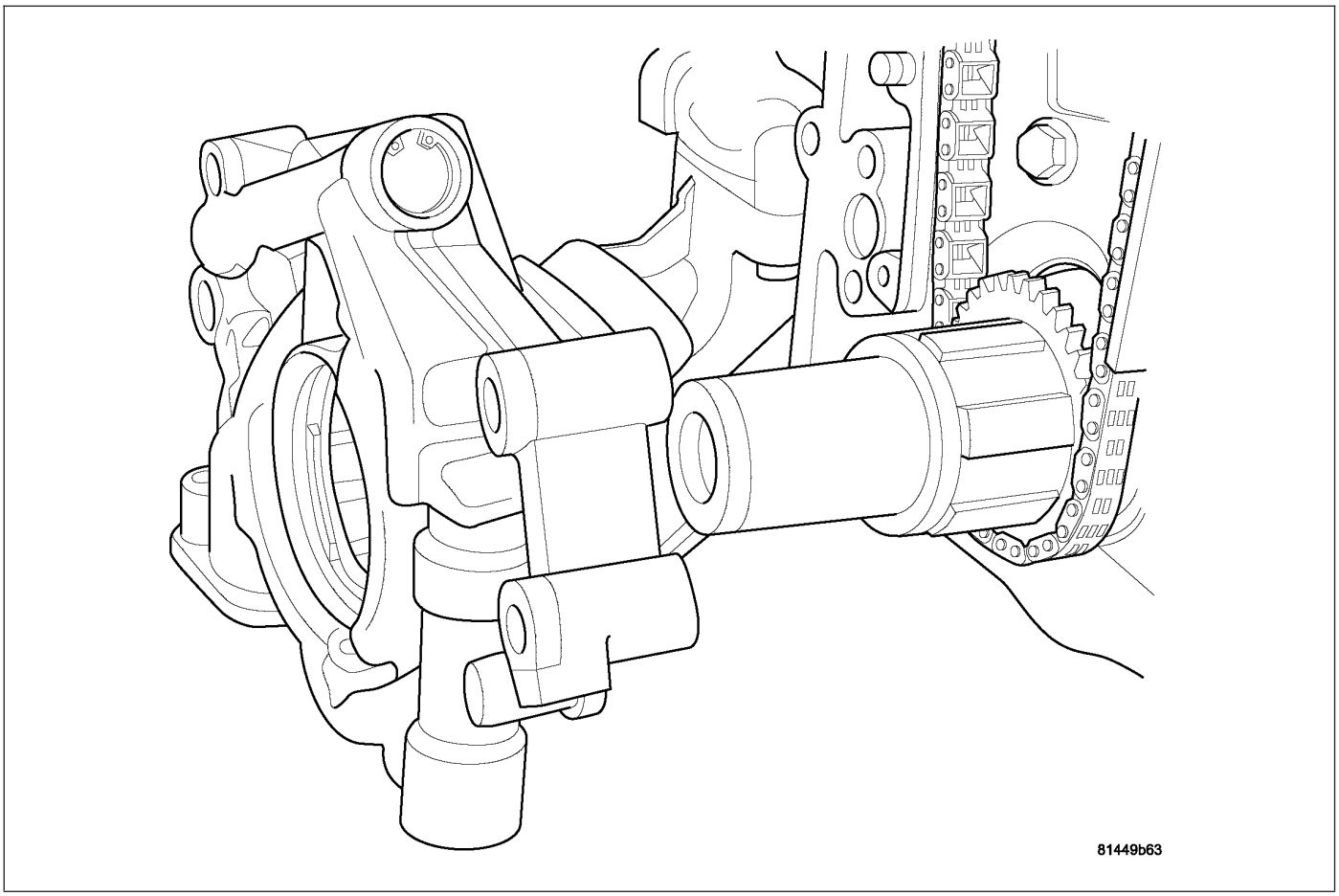

14. Remove the oil pump (Refer to 9 - ENGINE/LUBRICATION/OIL PUMP - REMOVAL).

15. Remove timing chain (2) (Refer to 9 - ENGINE/ VALVE TIMING/TIMING BELT/CHAIN AND SPROCKETS - REMOVAL).
16. Remove camshaft tensioner/thrust plate assembly.

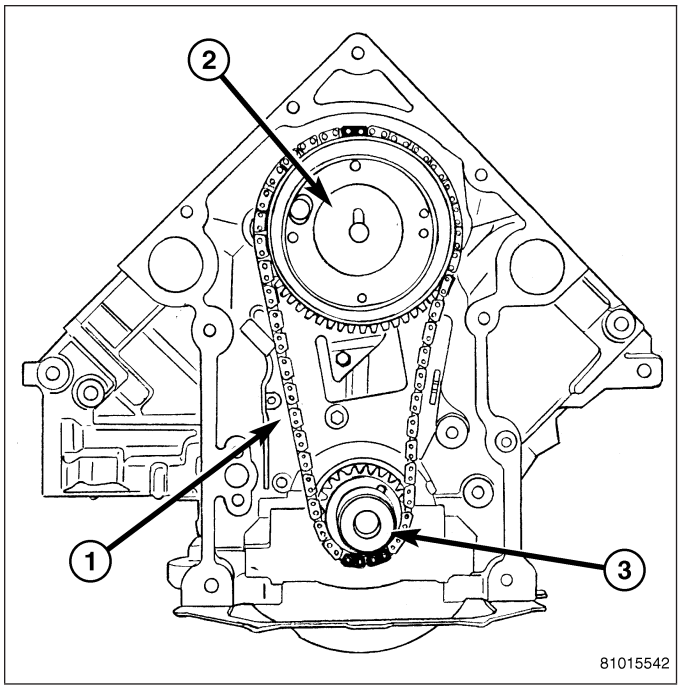

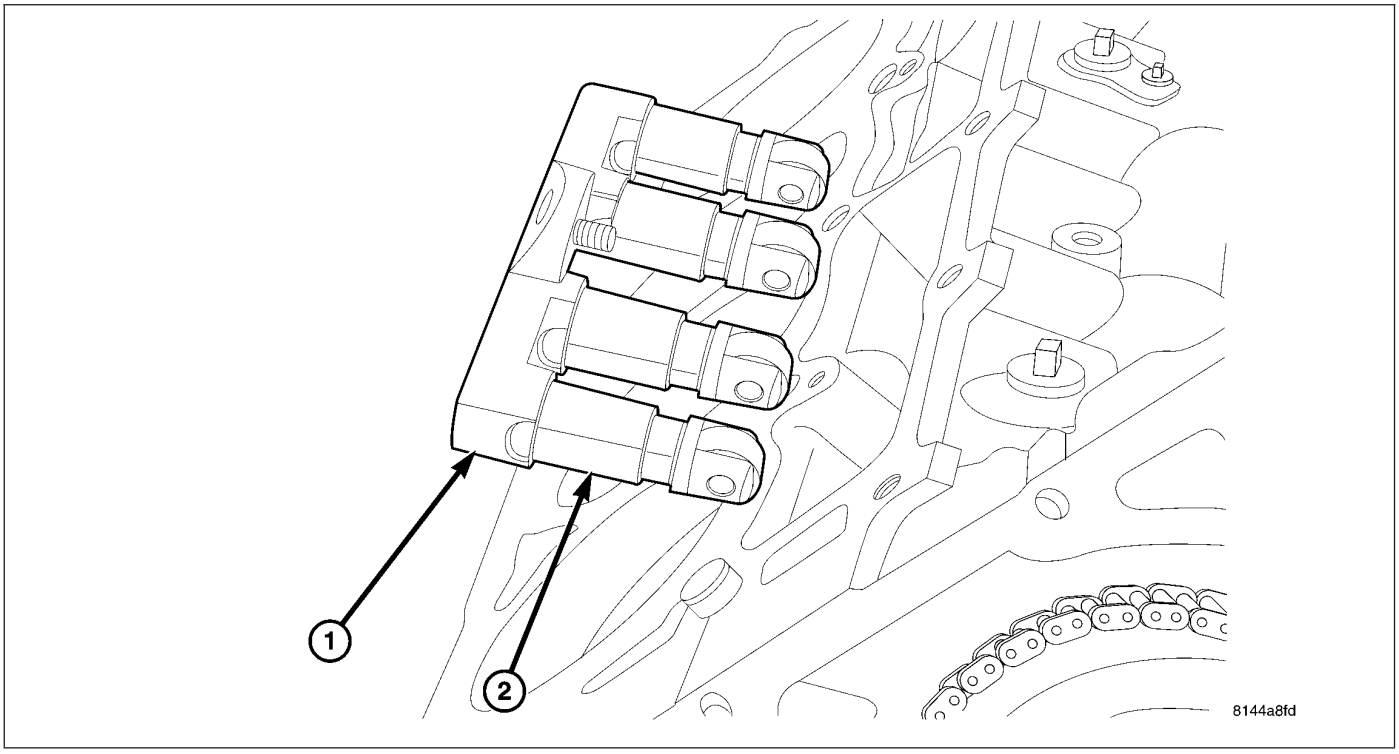

NOTE: Identify lifters to ensure installation in original location.

17. Remove the tappets (2) and retainer (1) assembly.

18. Install a long bolt into front of camshaft to aid in removal of the camshaft. Remove camshaft, being careful not to damage cam bearings with the cam lobes.

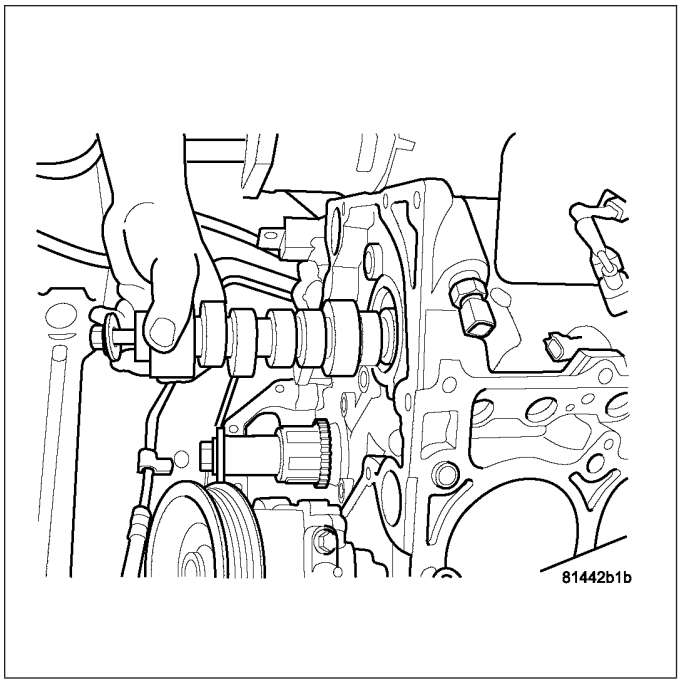

INSPECTION

1. The cam bearings are not serviceable. Do not attempt to replace cam bearings for any reason.

INSTALLATION

INSTALLATION - CAMSHAFT CORE HOLE PLUG

1. Clean core hole in block.

NOTE: Do not apply adhesive to the new core hole plug. A new plug will have adhesive pre-applied.

2. Install a new core hole plug at the rear of camshaft, using suitable flat faced tool. The plug must be fully seated on the cylinder block shoulder.

INSTALLATION - CAMSHAFT

1. Lubricate camshaft lobes and camshaft bearing journals and insert the camshaft.

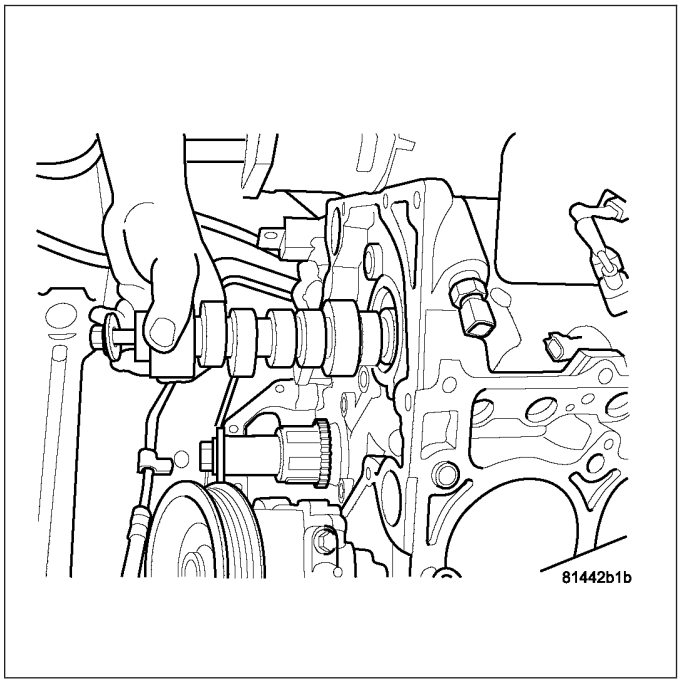

2. Install camshaft Tensioner plate assembly. Tighten bolts to 28 N·m (250 in. lbs.) torque.
3. Install timing chain and sprockets (Refer to 9 - ENGINE/VALVE TIMING/TIMING BELT/CHAIN AND SPROCKETS - INSTALLATION).
4. Measure camshaft end play (Refer to 9 - ENGINE - SPECIFICATIONS). If not within limits install a new thrust plate.

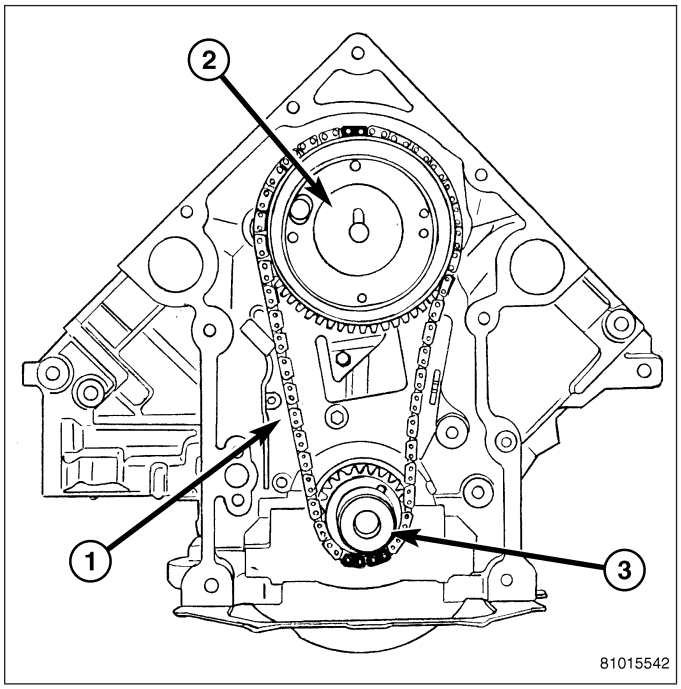

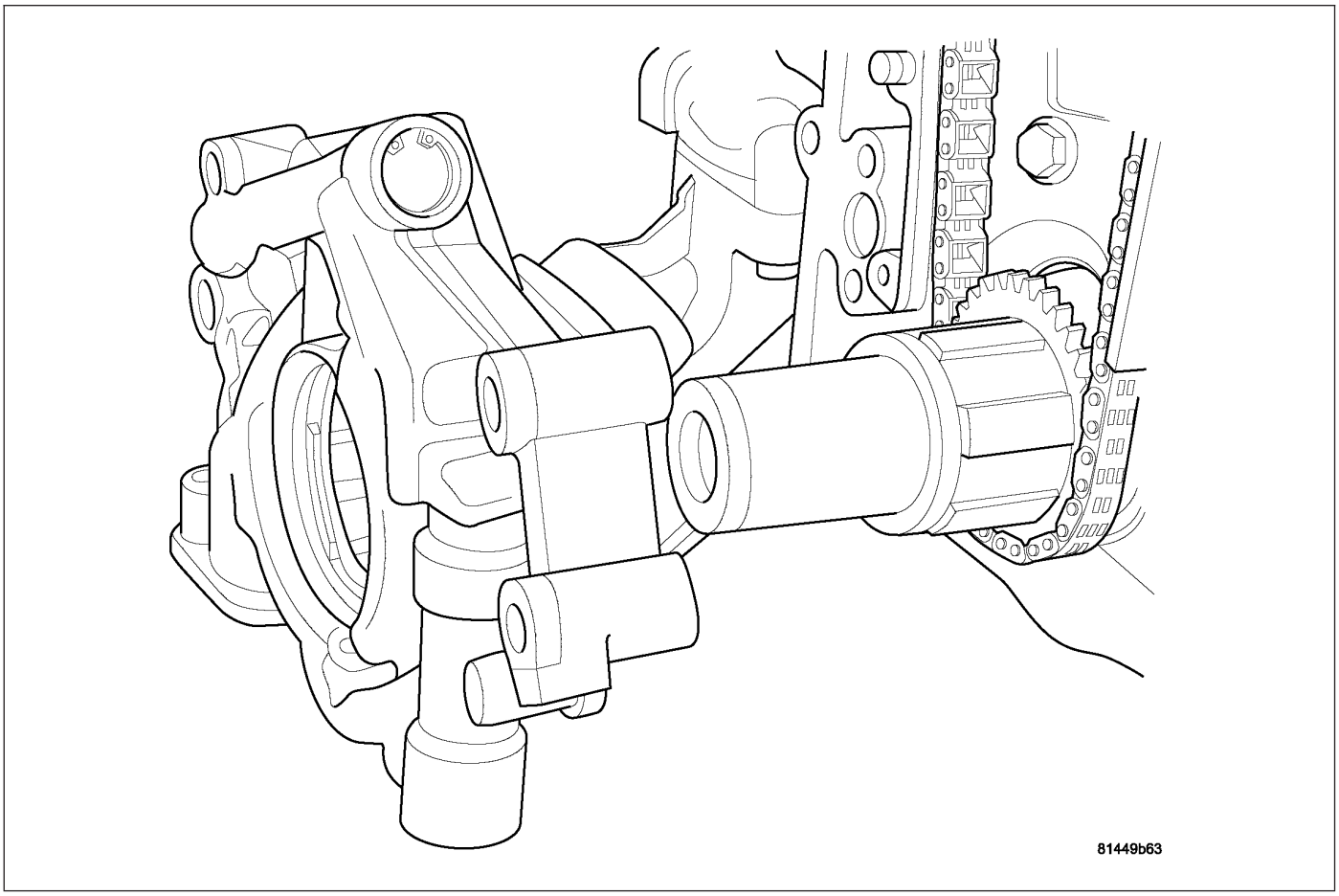

5. Install the oil pump (Refer to 9 - ENGINE/LUBRICATION/OIL PUMP - INSTALLATION).
6. Install the oil pick up tube.

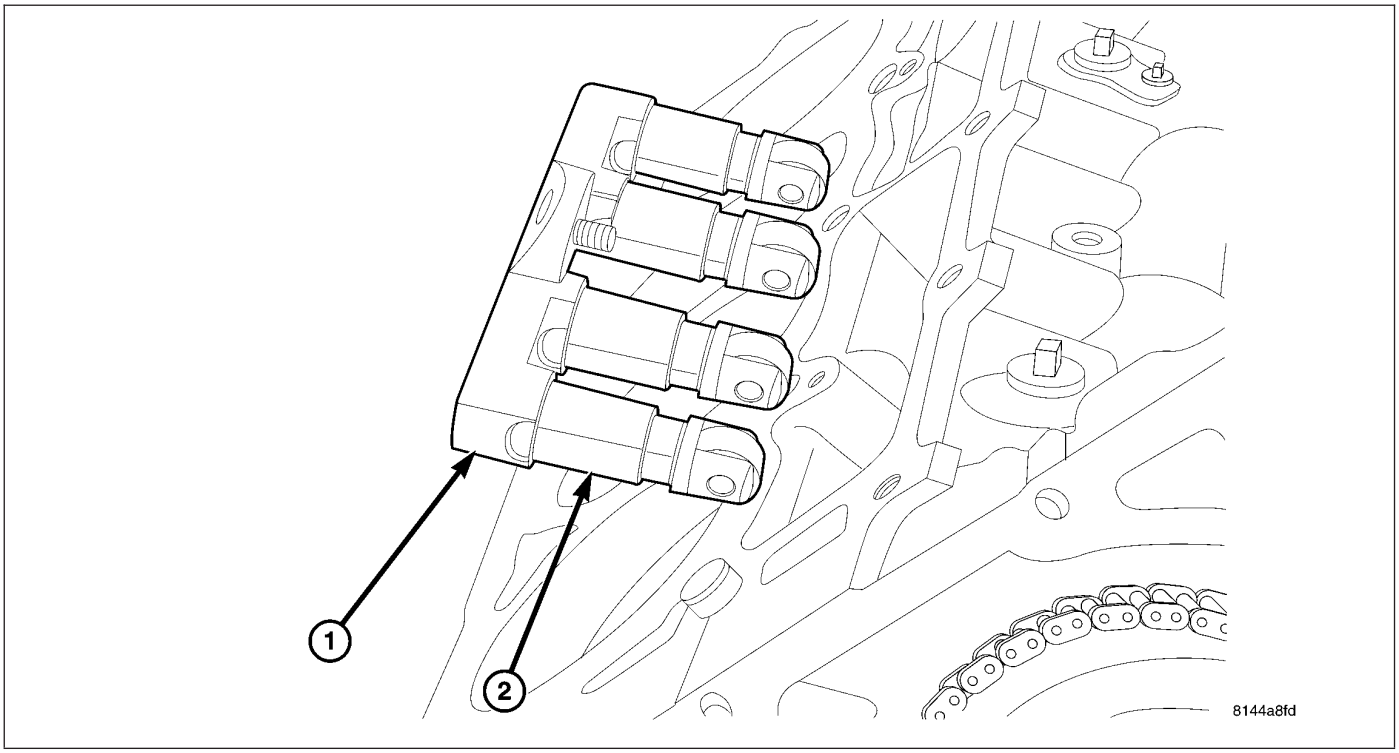

7. Each tappet reused must be installed in the same position from which it was removed. **When camshaft is replaced, all of the tappets must be replaced.**

8. Install tappets (2) and retaining yoke assembly (1). (Refer to 9 - ENGINE/ENGINE BLOCK/HYDRAULIC LIFTERS (CAM IN BLOCK) - INSTALLATION).
9. Install both left and right cylinder heads (4) (Refer to 9 - ENGINE/CYLINDER HEAD - INSTALLATION).
10. Install pushrods.

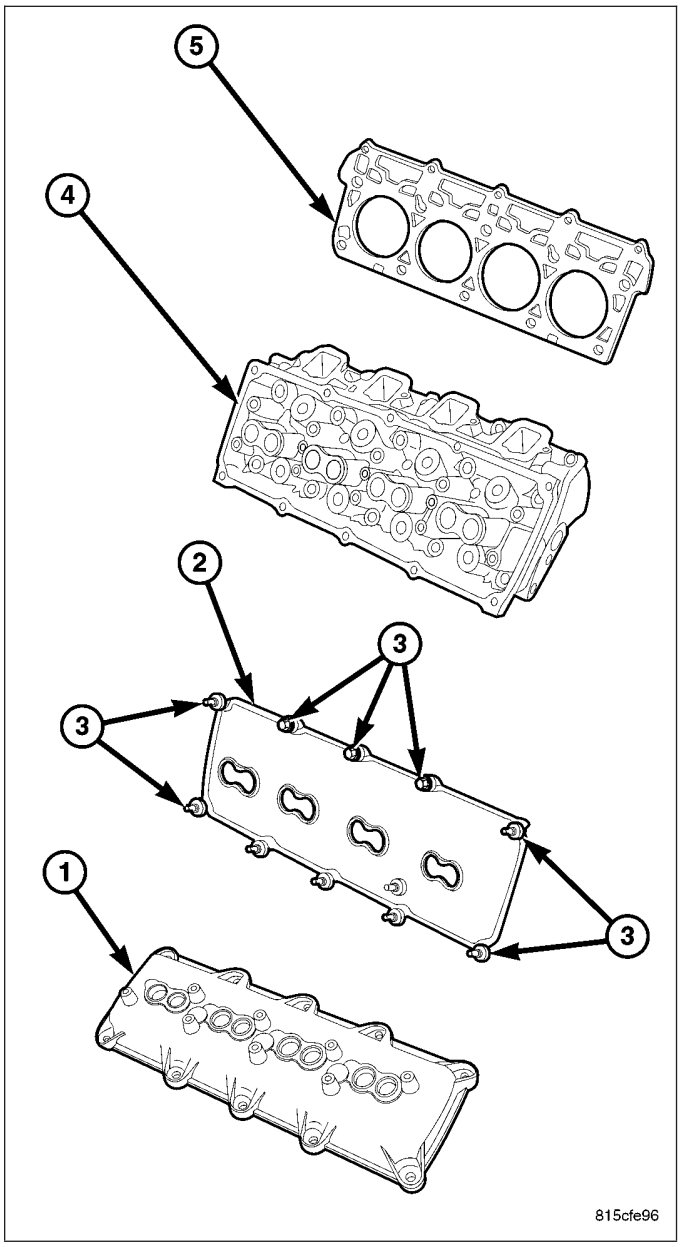

11. Install rocker arms (Refer to 9 - ENGINE/CYLINDER HEAD/ROCKER ARM / ADJUSTER ASSY - INSTALLATION).

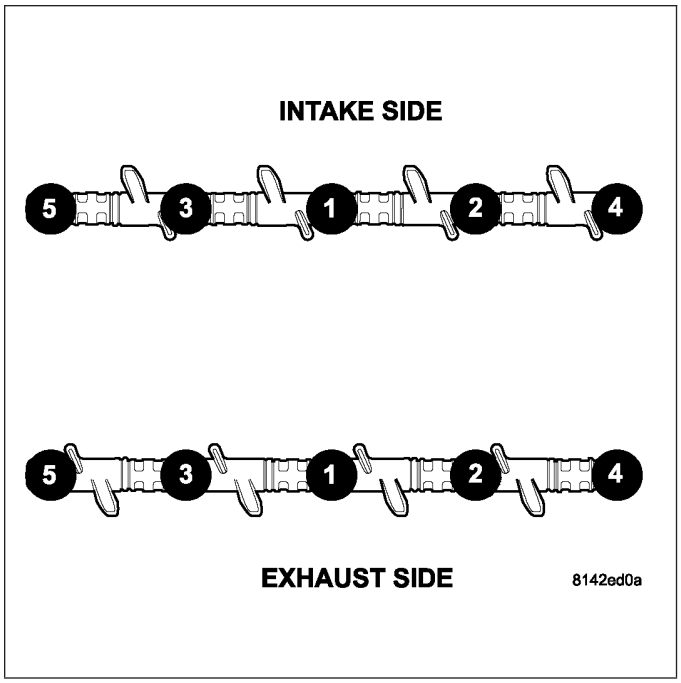

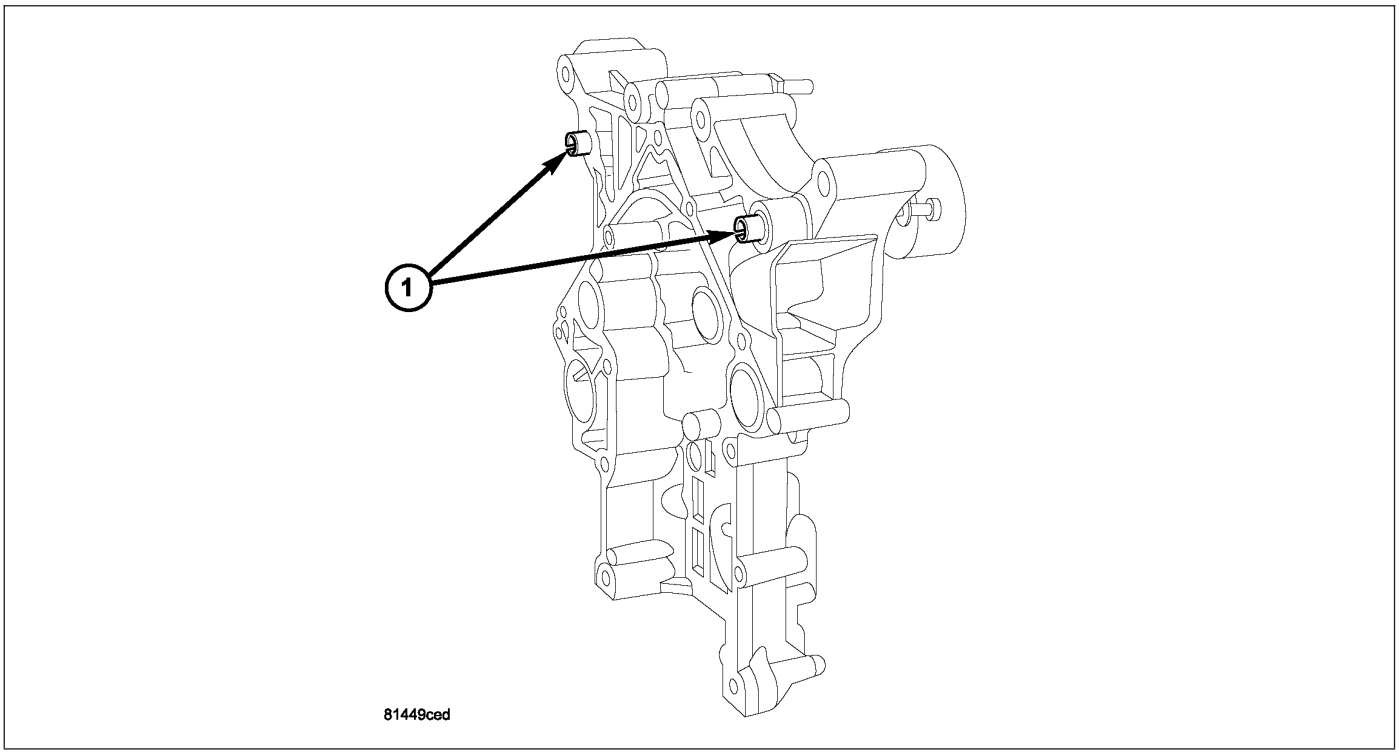

12. Install timing case cover (Refer to 9 - ENGINE/VALVE TIMING/TIMING BELT / CHAIN COVER(S) - INSTALLATION).
13. Install the oil pan (Refer to 9 - ENGINE/LUBRICATION/OIL PAN - INSTALLATION).

14. Install cylinder head covers (Refer to 9 - ENGINE/CYLINDER HEAD/CYLINDER HEAD COVER(S) - INSTALLATION).
15. Install intake manifold (Refer to 9 - ENGINE/MANIFOLDS/INTAKE MANIFOLD - INSTALLATION).
16. Install the A/C compressor.
17. Install the generator.
18. Install the accessory drive belt. (Refer to 7 - COOLING/ACCESSORY DRIVE/DRIVE BELTS - INSTALLATION)
19. Install the radiator (Refer to 7 - COOLING/ENGINE/RADIATOR - INSTALLATION).
20. Install the air cleaner assembly. (Refer to 9 - ENGINE/AIR INTAKE SYSTEM - INSTALLATION)
21. Install the battery negative cable.
22. Refill coolant. (Refer to 7 - COOLING - STANDARD PROCEDURE)
23. Refill engine oil.
24. Start engine and check for leaks.

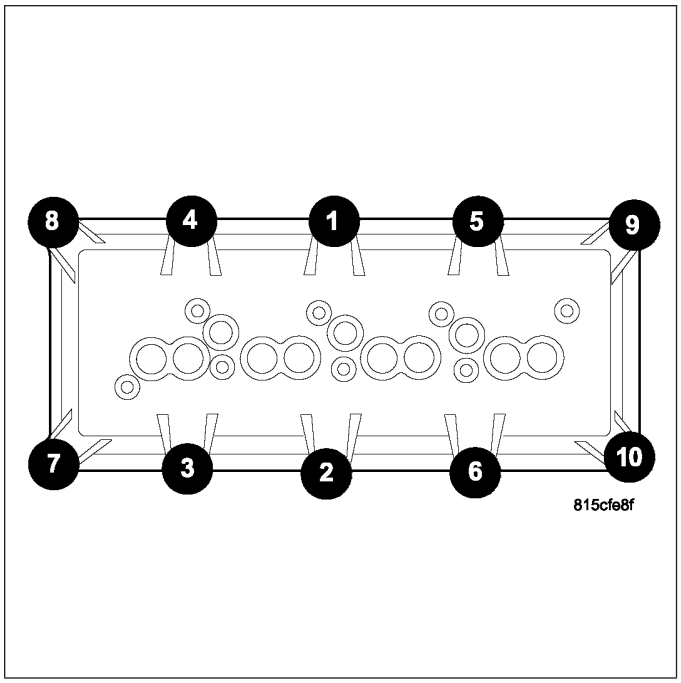

CRANKSHAFT

REMOVAL

1. Remove the vibration damper (1) (Refer to 9 - ENGINE/ENGINE BLOCK/VIBRATION DAMPER - REMOVAL).

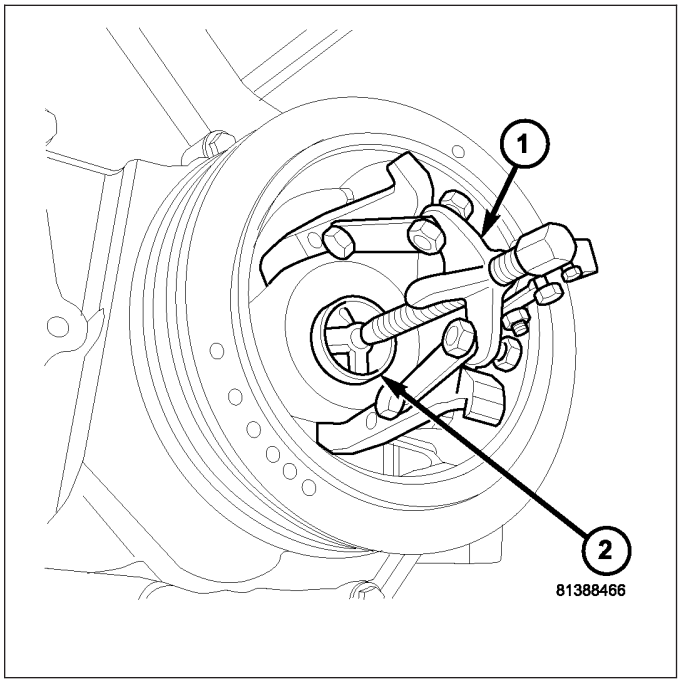

2. Remove the rear oil seal retainer (Refer to 9 - ENGINE/ENGINE BLOCK/CRANKSHAFT REAR OIL SEAL RETAINE - REMOVAL).
3. Remove the oil pan (Refer to 9 - ENGINE/LUBRICATION/OIL PAN - REMOVAL).
4. Remove the oil pump pickup.
5. Remove the windage tray/oil pan gasket.

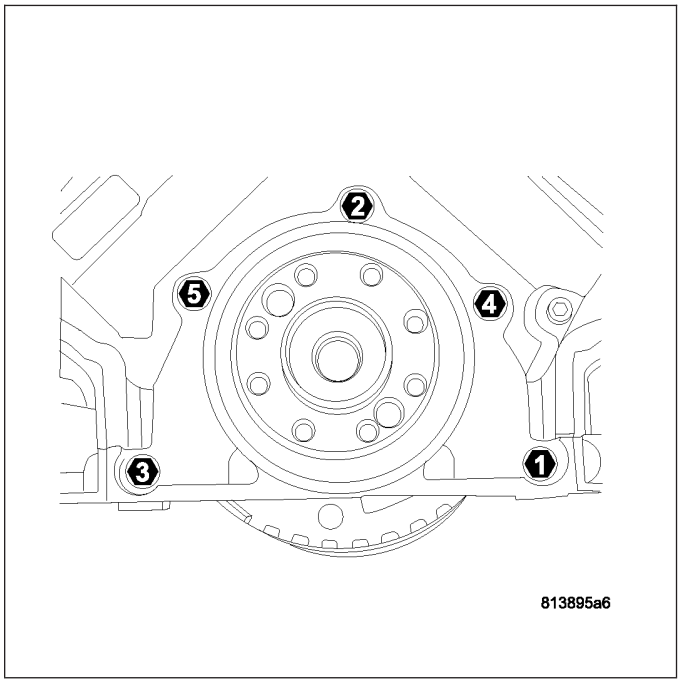

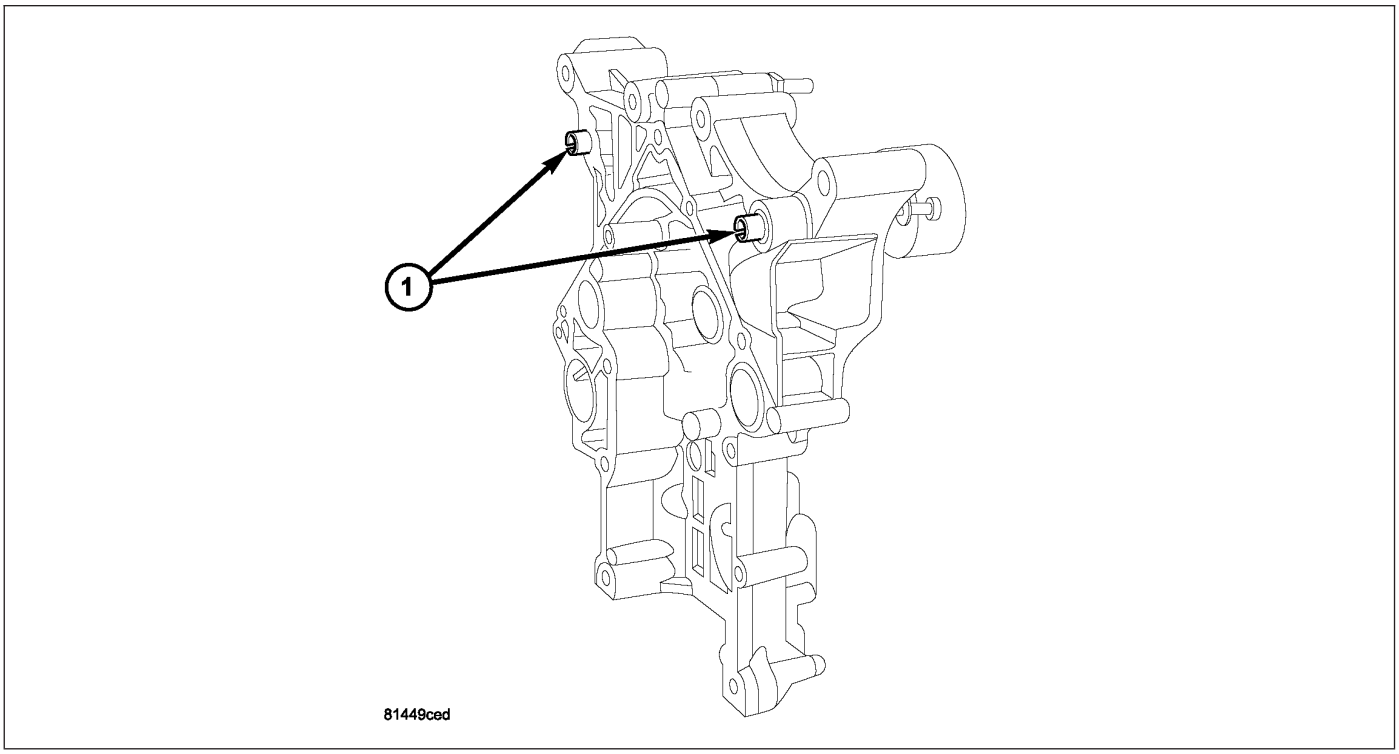

6. Remove the timing chain cover (Refer to 9 - ENGINE/VALVE TIMING/TIMING BELT / CHAIN COVER(S) - REMOVAL).

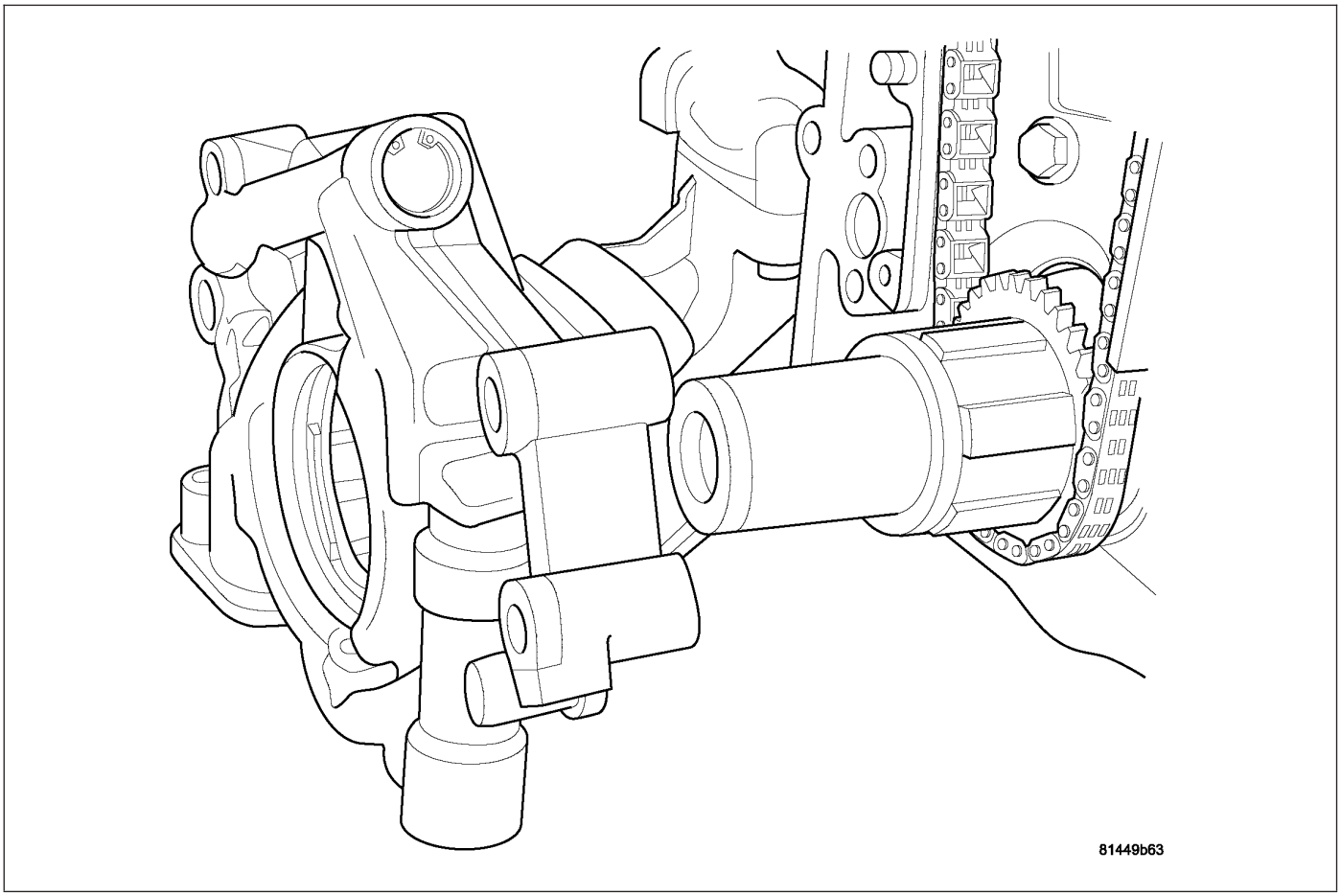

7. Remove the oil pump (Refer to 9 - ENGINE/LUBRICATION/OIL PUMP - REMOVAL).

8. Remove the timing drive (2) (Refer to 9 - ENGINE/ VALVE TIMING/TIMING BELT/CHAIN AND SPROCKETS - REMOVAL).

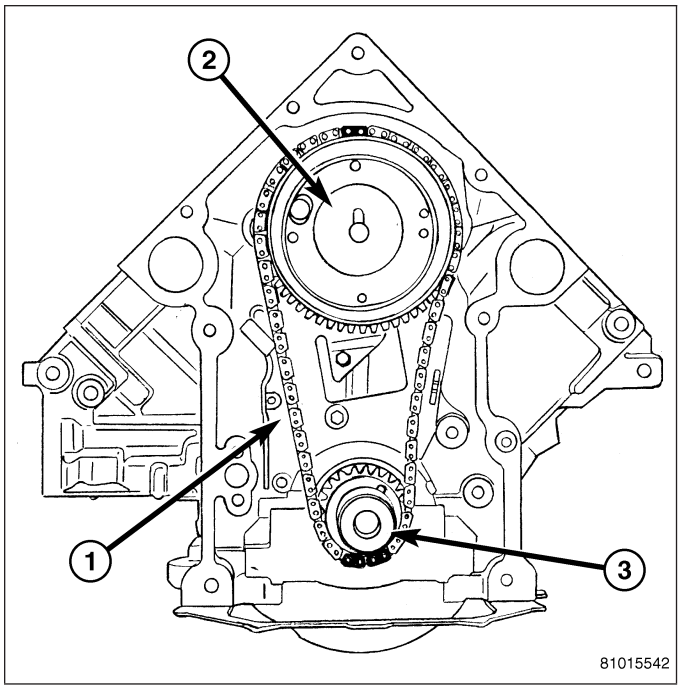

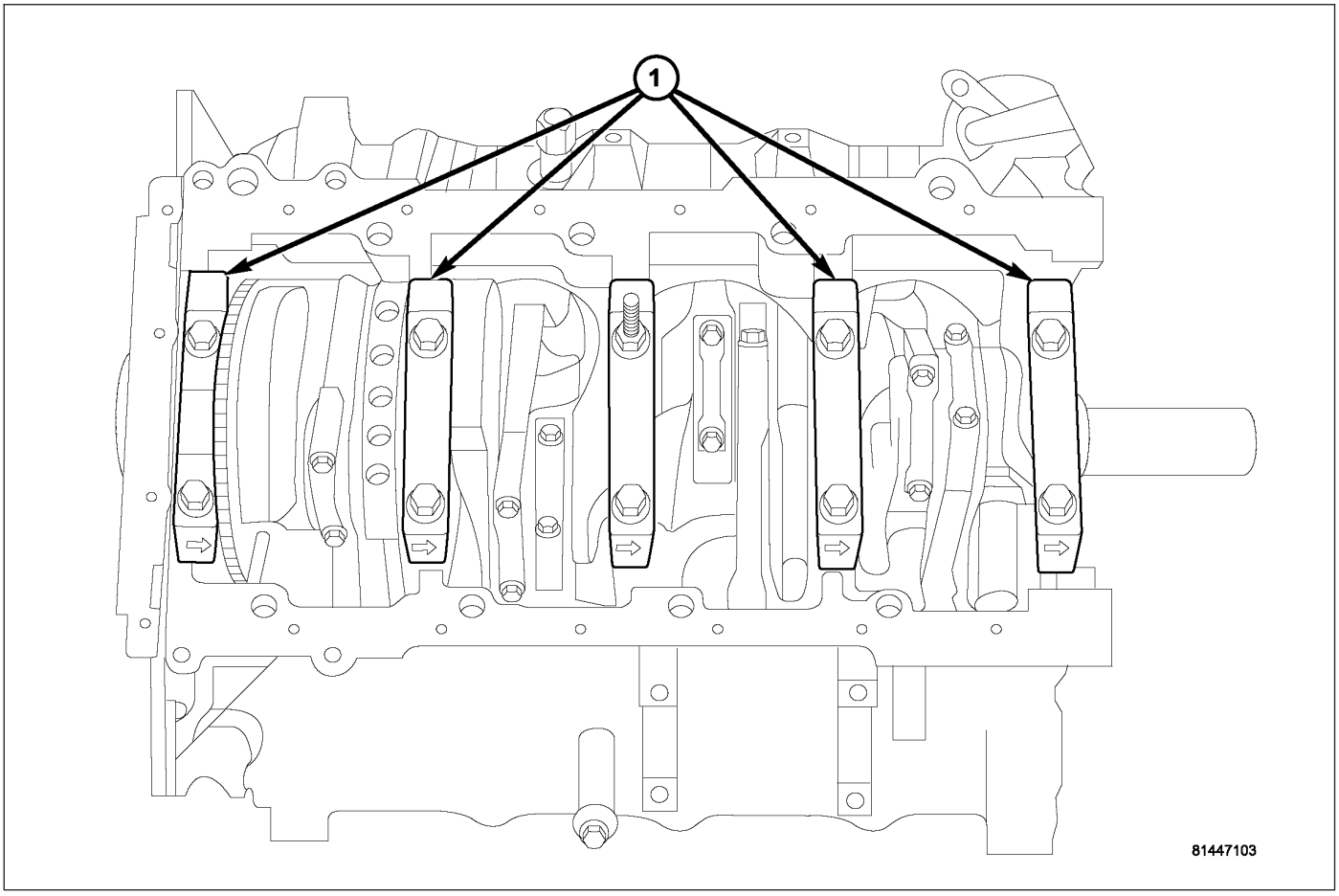

9. Identify rod bearing caps before removal. Remove rod bearing caps with bearings.
10. Identify main bearing caps (1) before removal.

11. Remove main bearing caps (1) and bearings one at a time.

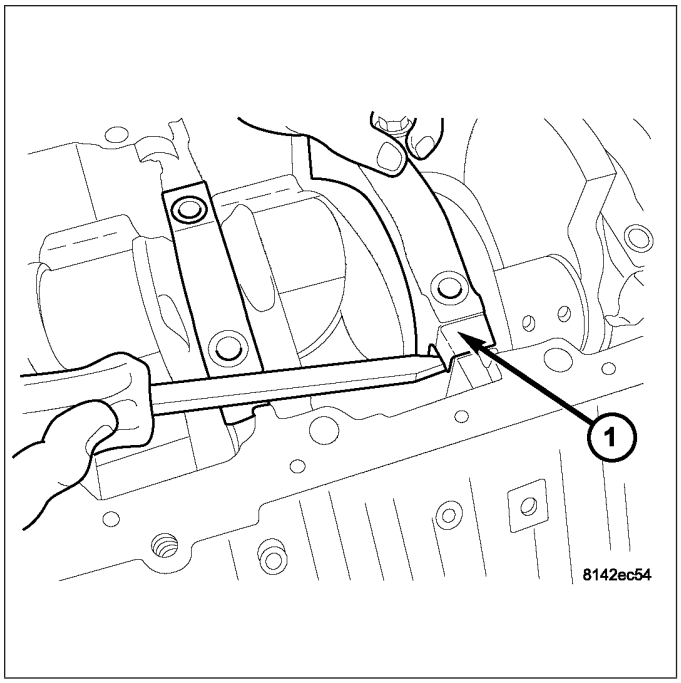

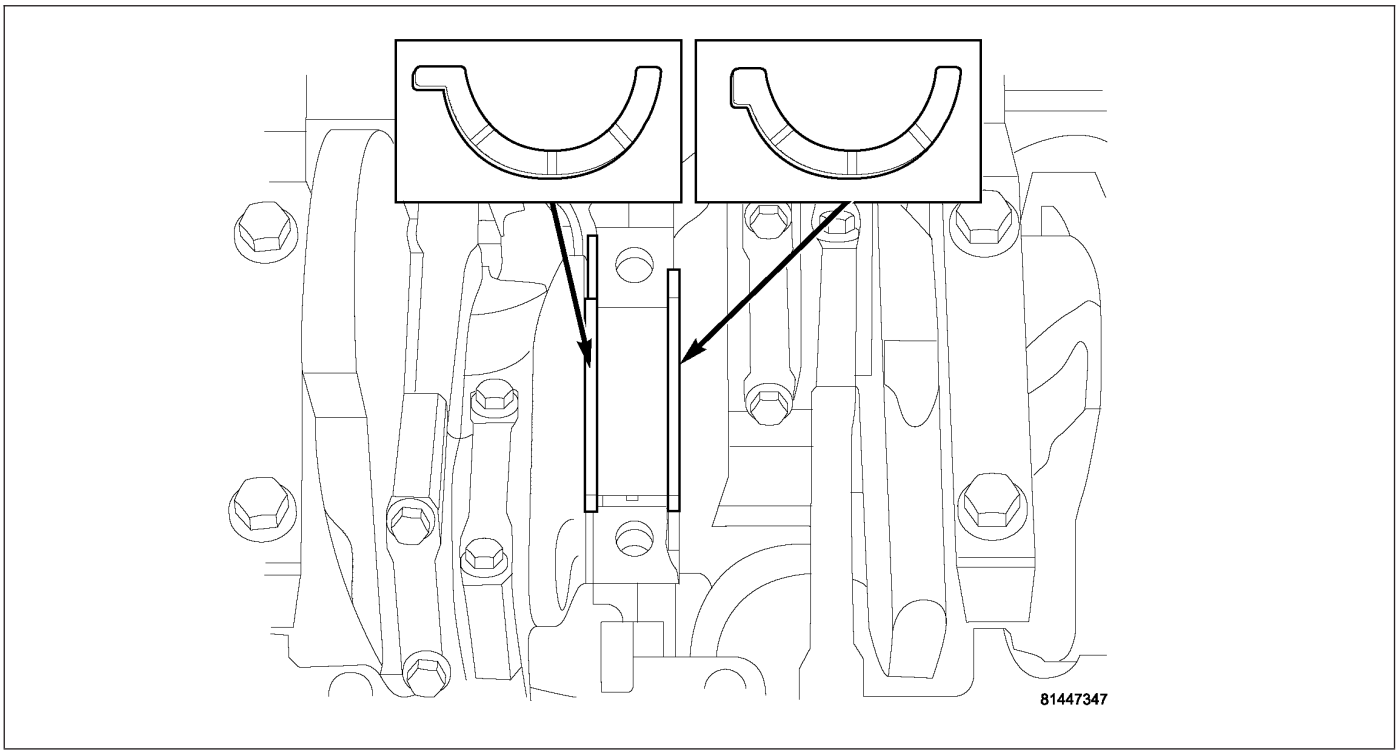

12. Remove the thrust washers.
13. Remove the crankshaft out of the block.

INSTALLATION

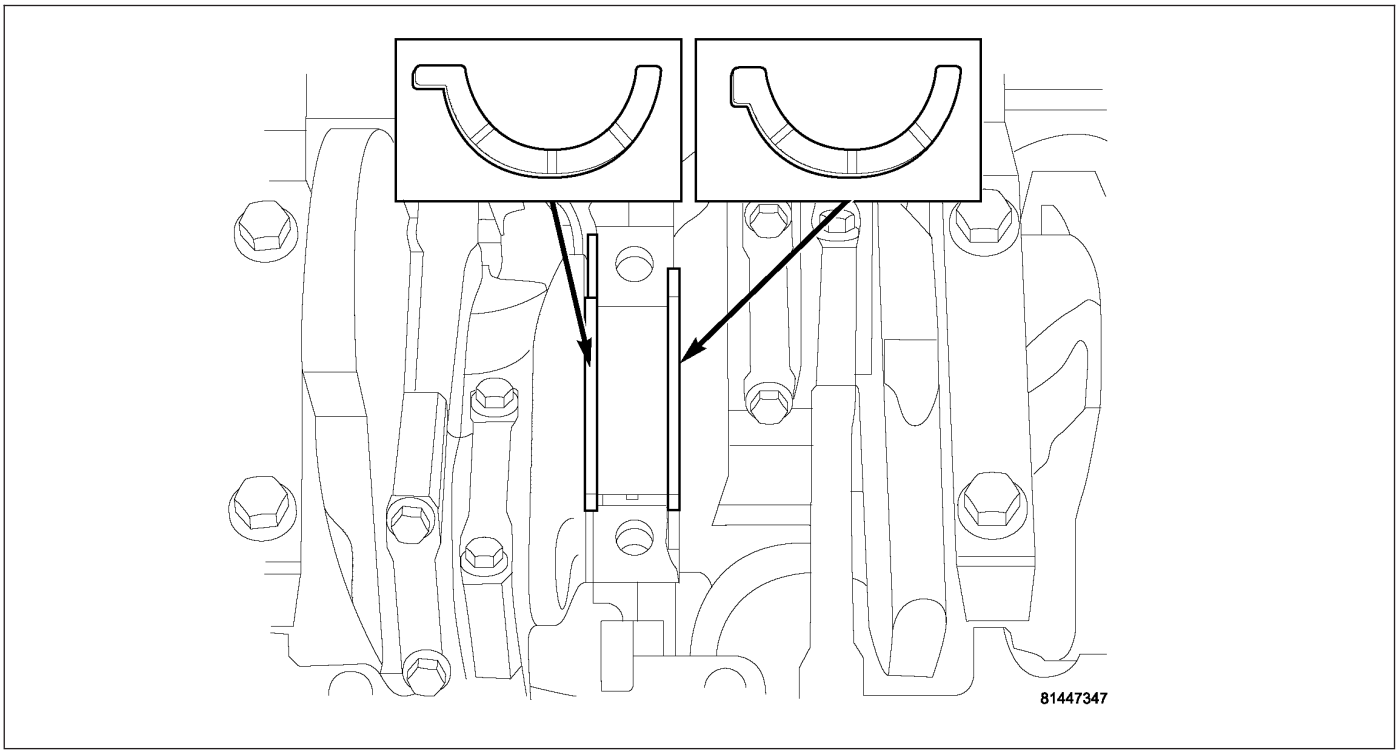

1. Select the proper main bearings (Refer to 9 - ENGINE/ENGINE BLOCK/CRANKSHAFT MAIN BEARINGS - STANDARD PROCEDURE).
2. Install main bearings in block and caps, and lubricate bearings.
3. Position the crankshaft into the cylinder block.
4. Install the thrust washers (1).

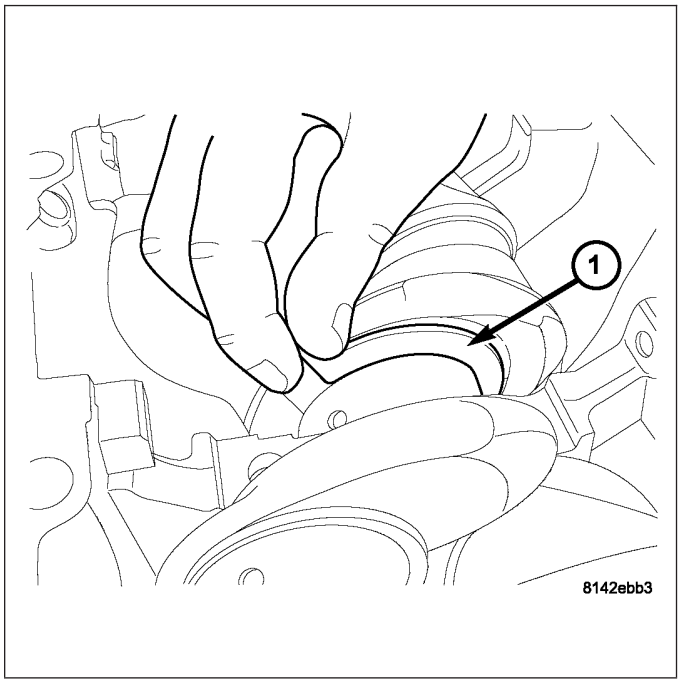

NOTE: The main cap crossbolts are torqued after final torque of the main cap bolts. Always use a new washer/seal on crossbolts.

5. Clean and oil all cap bolts. Install all main bearing caps (1). Install all cap bolts and alternately tighten in two steps using the following sequence.

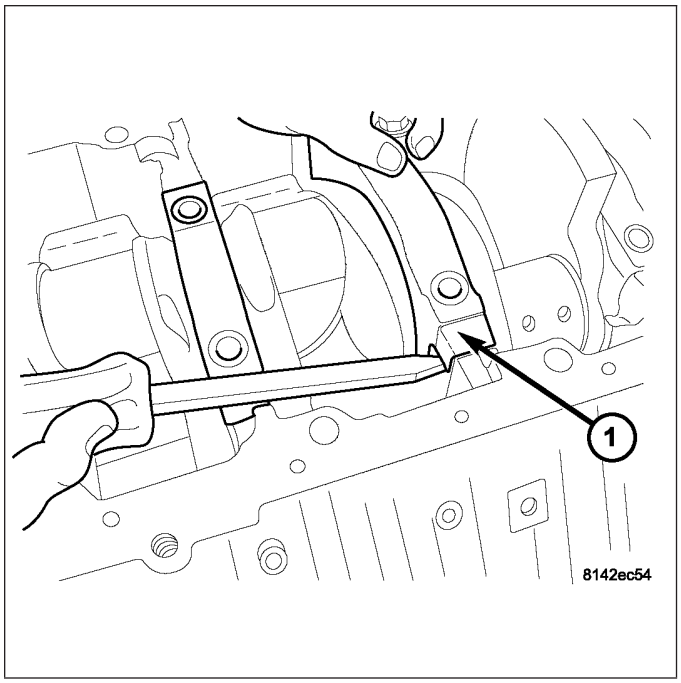

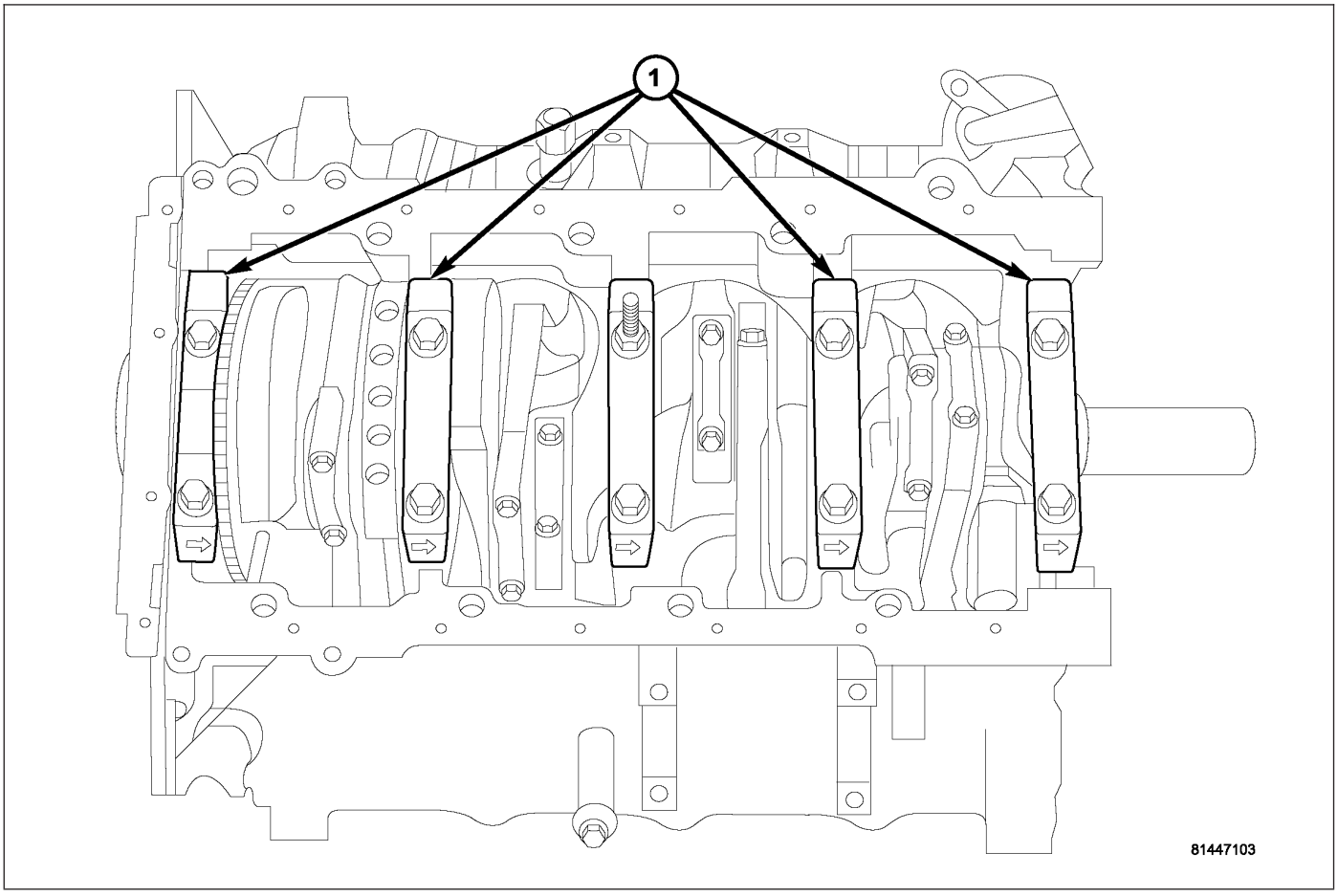

6. • Step 1 – 27 N·m (20ft. lbs.) torque.
7. • Step 2 – Turn main cap bolts an additional 90°.
8. Install the crossbolts with new washer/gasket. Starting with crossbolt A torque each crossbolt to 28 N·m (21ft. lbs.)torque.
9. Repeat crossbolt torque procedure.
10. Measure crankshaft end play (Refer to 9 - ENGINE/ENGINE BLOCK/CRANKSHAFT MAIN BEARINGS - STANDARD PROCEDURE).

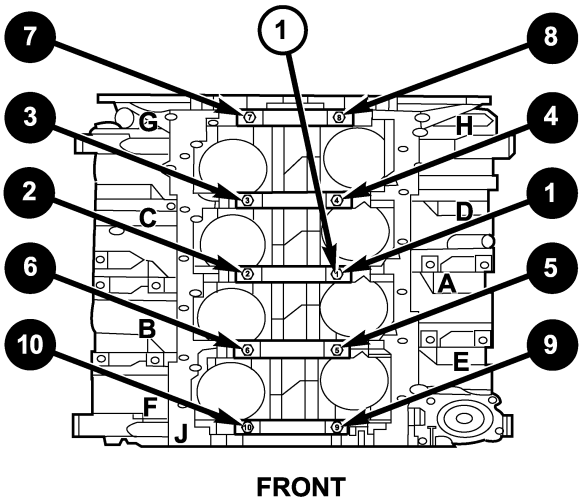

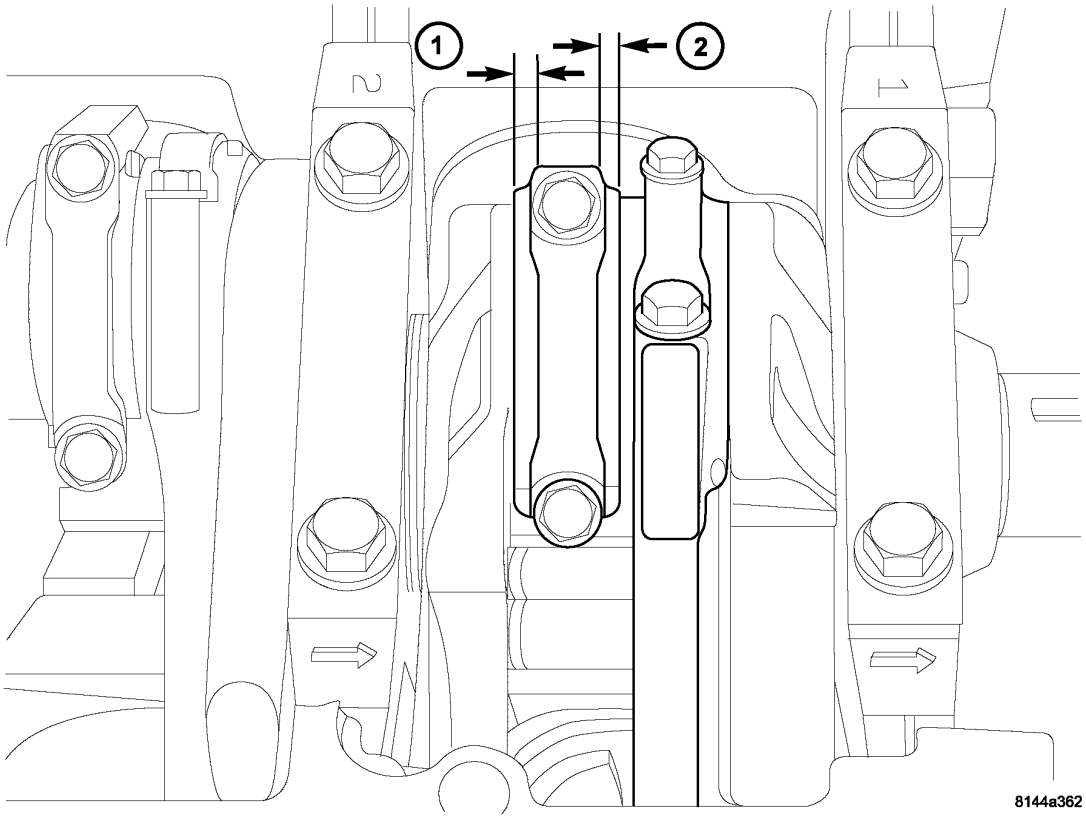

11. Position the connecting rods onto the crankshaft and install the rod bearing caps (Refer to 9 - ENGINE/ENGINE BLOCK/PISTON & CONNECTING ROD - INSTALLATION).

12. Install timing drive (2) (Refer to 9 - ENGINE/ VALVE TIMING/TIMING BELT/CHAIN AND SPROCKETS - INSTALLATION).

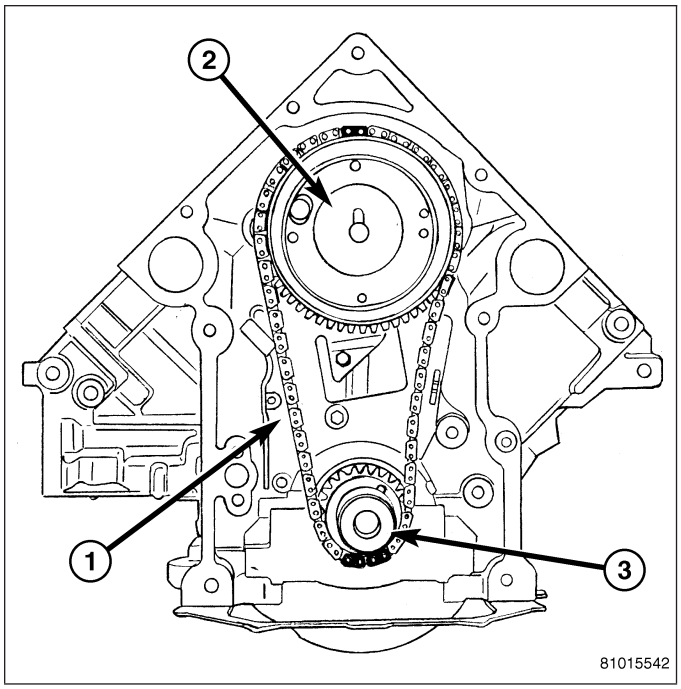

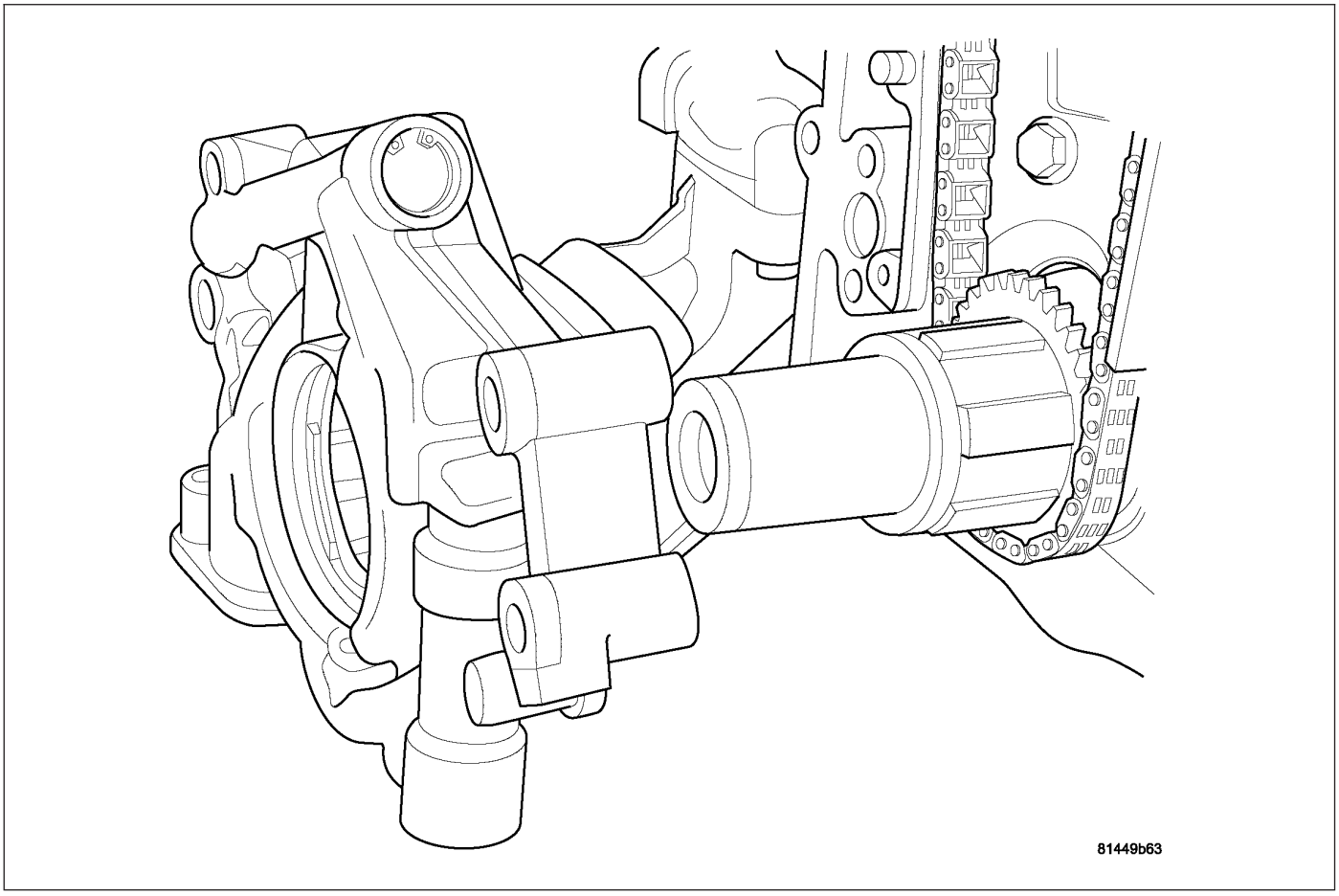

13. Install oil pump (Refer to 9 - ENGINE/LUBRICATION/OIL PUMP - INSTALLATION).

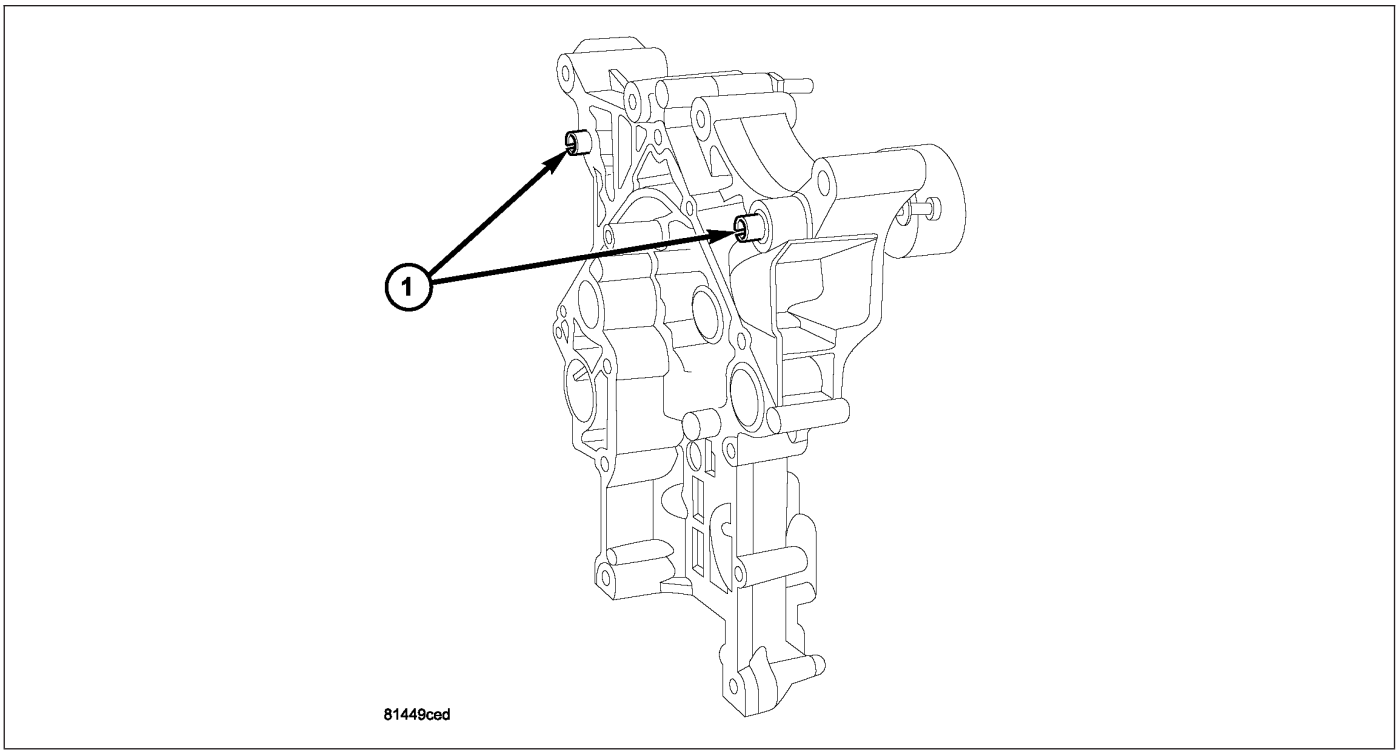

14. Install the timing chain cover (1) (Refer to 9 - ENGINE/VALVE TIMING/TIMING BELT / CHAIN COVER(S) - INSTALLATION).
15. Install the rear main seal and retainer (Refer to 9 - ENGINE/ENGINE BLOCK/CRANKSHAFT REAR OIL SEAL RETAINE - INSTALLATION).
16. Install the windage tray/oil pan gasket.
17. Install the oil pick up tube.
18. Install the oil pan (Refer to 9 - ENGINE/LUBRICATION/OIL PAN - INSTALLATION).
19. Install the vibration damper (Refer to 9 - ENGINE/ENGINE BLOCK/VIBRATION DAMPER - INSTALLATION).
20. Install the engine (Refer to 9 - ENGINE - INSTALLATION).

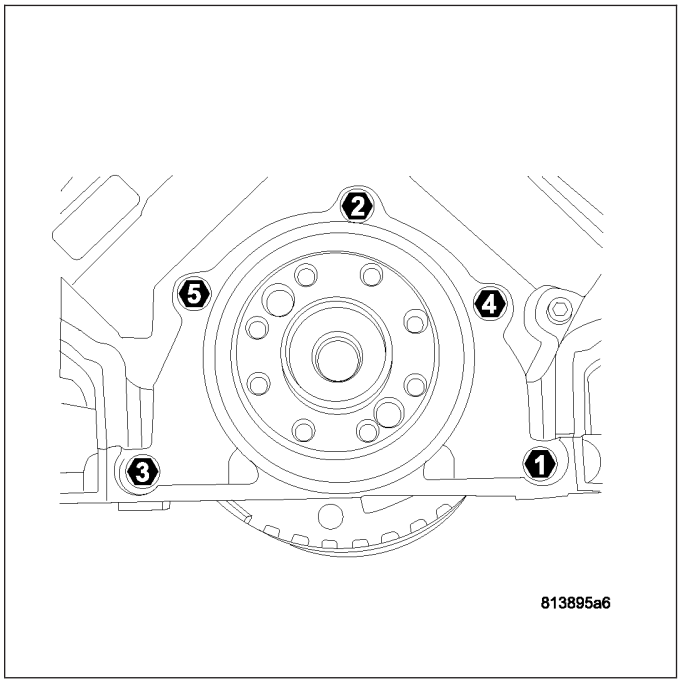

BEARINGS-CRANKSHAFT MAIN

STANDARD PROCEDURE - CRANKSHAFT MAIN BEARING - FITTING

MAIN BEARING JOURNAL DIAMETER (CRANKSHAFT REMOVED)

Crankshaft removed from the cylinder block.

Clean the oil off the main bearing journal.

Determine the maximum diameter of the journal with a micrometer. Measure at two locations 90° apart at each end of the journal.

The maximum allowable taper is 0.008mm (0.0004 inch.) and maximum out of round is 0.005mm (0.0002 inch). Compare the measured diameter with the journal diameter specification (Main Bearing Fitting Chart). Select inserts required to obtain the specified bearing-to-journal clearance.

CRANKSHAFT MAIN BEARING SELECTION

The main bearings are “select fit” to achieve proper oil clearances. For main bearing selection, the crankshaft counterweight has grade identification marks stamped into it. These marks are read from left to right, corresponding with journal number 1, 2, 3, 4 and 5.

NOTE: Service main bearings are coded. These codes identify what size (color) the bearing is.

MAIN BEARING SELECTION CHART - 5.7 - 6.1L

COLOR MARKING	SIZE mm (in.)	FOR USE WITH JOURNAL SIZE
LOWER ORANGE	0.008 mm U/S (0.0004 in.) U/S	64.988–64.995 mm (2.5585– 2.5588in.)
LOWER BLACK	NOMINAL	64.996–65.004 mm (2.5588–2.5592 in.)
LOWER GREEN	0.008 mm O/S (0.0004 in.) O/S	65.005–65.012 mm (2.5592–2.5595 in.)

INSPECTION

Wipe the inserts clean and inspect for abnormal wear patterns and for metal or other foreign material imbedded in the lining. Normal main bearing insert wear patterns are illustrated.

NOTE: If any of the crankshaft journals are scored, the crankshaft must be repaired or replaced.

Inspect the back of the inserts for fractures, scrapings or irregular wear patterns.

Inspect the upper insert locking tabs for damage.

Replace all damaged or worn bearing inserts.

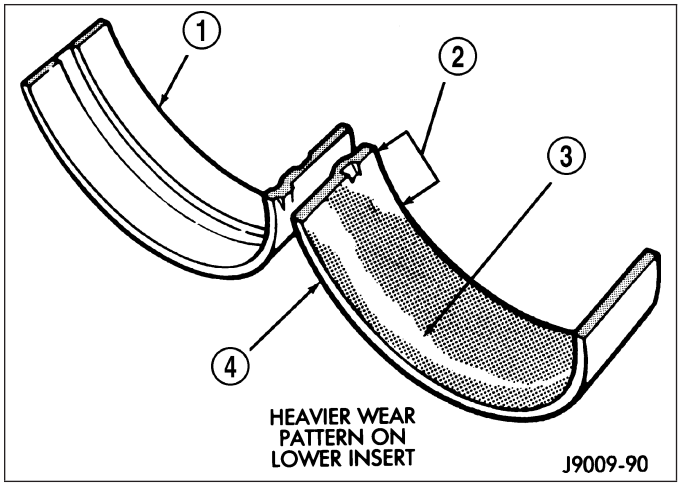

SEAL-CRANKSHAFT OIL-FRONT

REMOVAL

1. Disconnect negative cable from battery.
2. Remove accessory drive belt (Refer to 7 - COOLING/ACCESSORY DRIVE/DRIVE BELTS - REMOVAL).
3. Drain cooling system (Refer to 7 - COOLING - STANDARD PROCEDURE).
4. Remove upper radiator hose.
5. Remove radiator shroud attaching fasteners.
6. Remove radiator cooling fan and shroud (Refer to 7 - COOLING/ENGINE/RADIATOR FAN - REMOVAL).
7. Remove crankshaft damper bolt.
8. Remove damper using Special Tools 8513A Insert (2) and 1023 Three Jaw Puller (1) (Refer to 9 - ENGINE/ENGINE BLOCK/VIBRATION DAMPER - REMOVAL).

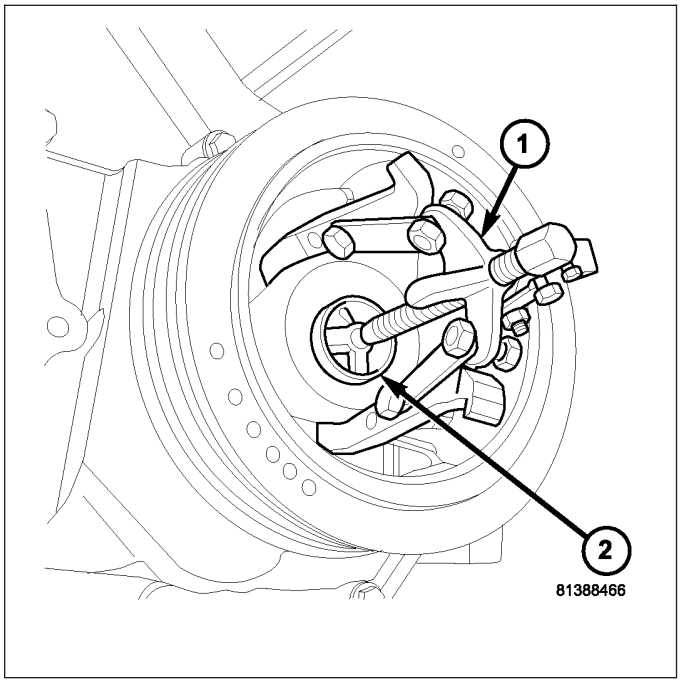

9. Using Special Tool 9071 (1), remove crankshaft front seal (2).

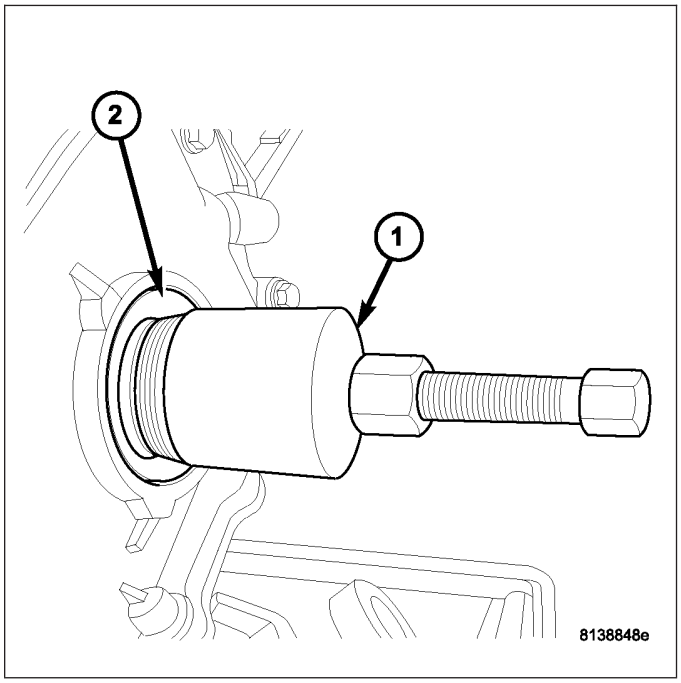

INSTALLATION

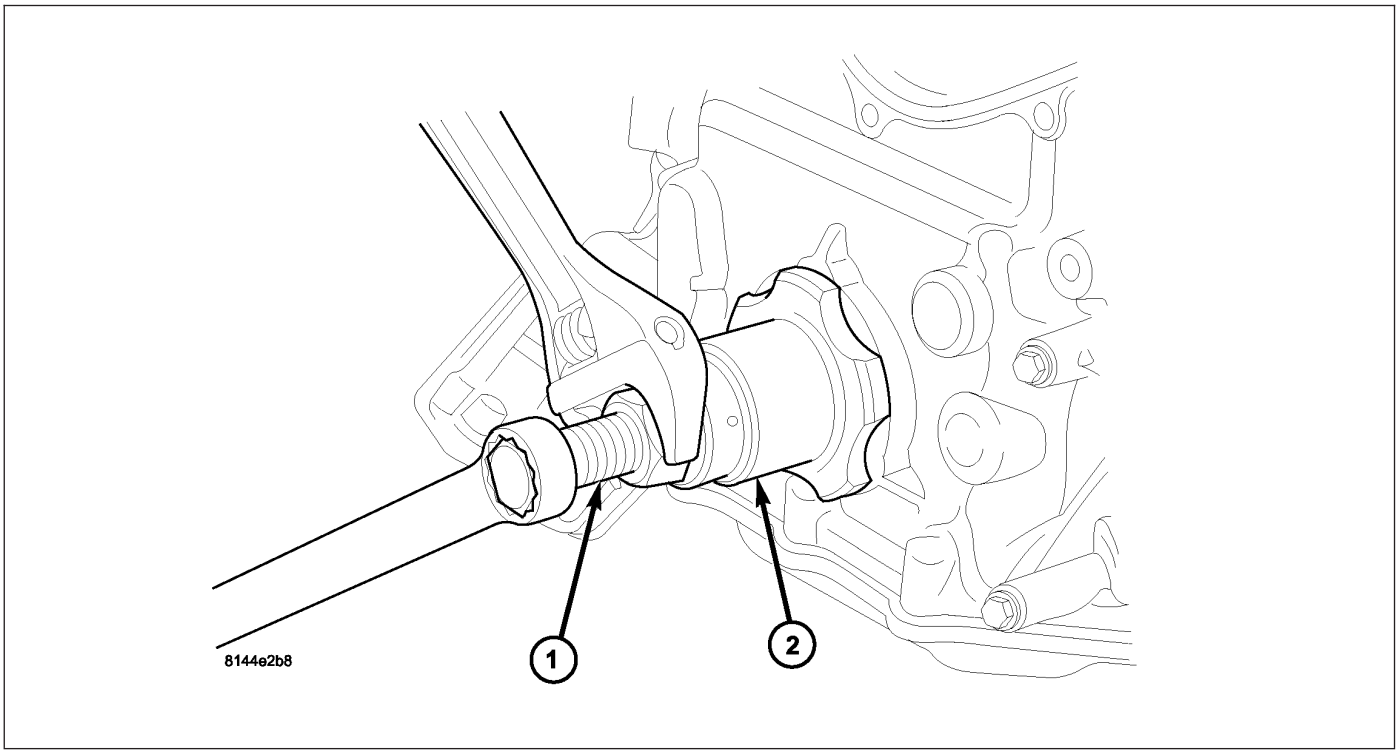

CAUTION: The front crankshaft seal must be installed dry. Do not apply lubricant to sealing lip or to outer edge.

1. Using Special Tool 8348 and 8512A, install crankshaft front seal.

CAUTION: To prevent severe damage to the Crankshaft or Damper, thoroughly clean the damper bore and the crankshaft nose before installing Damper.

2. Install vibration damper (Refer to 9 - ENGINE/ENGINE BLOCK/VIBRATION DAMPER - INSTALLATION).
3. Install radiator cooling fan and shroud (Refer to 7 - COOLING/ENGINE/RADIATOR FAN - INSTALLATION).
4. Install upper radiator hose.
5. Install accessory drive belt refer (Refer to 7 - COOLING/ACCESSORY DRIVE/DRIVE BELTS - INSTALLATION).
6. Refill cooling system (Refer to 7 - COOLING - STANDARD PROCEDURE).
7. Connect negative cable to battery.

SEAL-CRANKSHAFT OIL-REAR

DIAGNOSIS AND TESTING - REAR SEAL AREA LEAKS

Since it is sometimes difficult to determine the source of an oil leak in the rear seal area of the engine, a more involved inspection is necessary. The following steps should be followed to help pinpoint the source of the leak.

If the leakage occurs at the crankshaft rear oil seal area:

1. Disconnect the battery.
2. Raise the vehicle.
3. Remove torque converter or clutch housing cover and inspect rear of block for evidence of oil. Use a black light to check for the oil leak:
   a. Circular spray pattern generally indicates seal leakage or crankshaft damage.
   b. Where leakage tends to run straight down, possible causes are a porous block, camshaft bore cup plugs, oil galley pipe plugs, oil filter runoff, and main bearing cap to cylinder block mating surfaces. See Engine, for proper repair procedures of these items.
4. If no leaks are detected, pressurized the crankcase as outlined in the section, Inspection (Engine oil Leaks in general)

CAUTION: Do not exceed 20.6 kPa (3 psi).

5. If the leak is not detected, very slowly turn the crankshaft and watch for leakage. If a leak is detected between the crankshaft and seal while slowly turning the crankshaft, it is possible the crankshaft seal surface is damaged. The seal area on the crankshaft could have minor nicks or scratches that can be polished out with emery cloth.

CAUTION: Use extreme caution when crankshaft polishing is necessary to remove minor nicks or scratches. The crankshaft seal flange is specially machined to complement the function of the rear oil seal.

6. For bubbles that remain steady with shaft rotation, no further inspection can be done until disassembled. (Refer to 9 - ENGINE - DIAGNOSIS AND TESTING), under the Oil Leak row, for components inspections on possible causes and corrections.
7. After the oil leak root cause and appropriate corrective action have been identified, (Refer to 9 - ENGINE/ENGINE BLOCK/CRANKSHAFT OIL SEAL - REAR - REMOVAL).

REMOVAL

NOTE: This procedure can be performed in vehicle.

1. If being performed in vehicle, remove the transmission.
2. Remove the flexplate (Refer to 9 - ENGINE/ENGINE BLOCK/FLEX PLATE - REMOVAL).

NOTE: The crankshaft oil seal CAN NOT be reused after removal.

NOTE: The crankshaft rear oil seal remover Special Tool 8506 must be installed deeply into the seal. Continue to tighten the removal tool into the seal until the tool can not be turned farther. Failure to install tool correctly the first time will cause tool to pull free of seal without removing seal from engine.

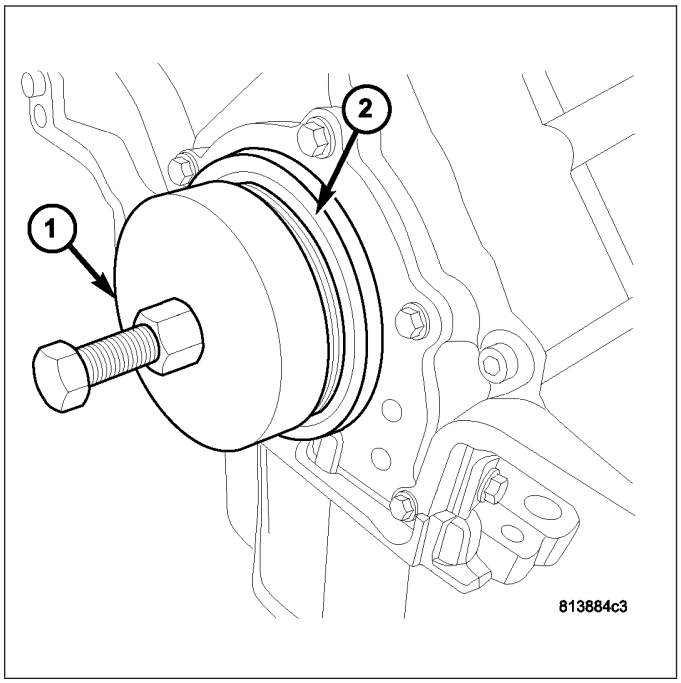

3. Using Special Tool 8506 (1), remove the crankshaft rear oil seal (2).

INSTALLATION

CAUTION: The rear seal must be installed dry for proper operation. Do not lubricate the seal lip or outer edge.

1. Position the plastic seal guide (2) onto the crankshaft rear face. Then position the crankshaft rear oil seal (3) onto the guide.
2. Using Special Tools 8349 Crankshaft Rear Oil Seal Installer (1) and C-4171 Driver Handle, with a hammer, tap the seal (3) into place. Continue to tap on the driver handle until the seal installer seats against the cylinder block crankshaft bore.
3. Install the flexplate. (Refer to 9 - ENGINE/ENGINE BLOCK/FLEX PLATE - INSTALLATION).
4. Install the transmission.

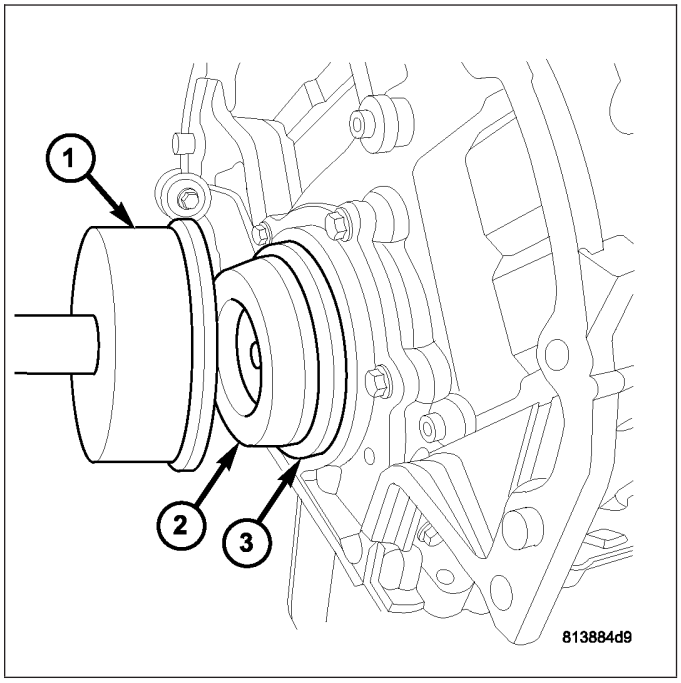

RETAINER-CRANK REAR OIL - SEAL

REMOVAL

1. Disconnect negative cable from battery.
2. Remove the transmission. (Refer to 21 - TRANSMISSION/TRANSAXLE/AUTOMATIC - NAG1 - REMOVAL).
3. Remove the flexplate. (Refer to 9 - ENGINE/ENGINE BLOCK/FLEX PLATE - REMOVAL).
4. Remove the oil pan. (Refer to 9 - ENGINE/LUBRICATION/OIL PAN - REMOVAL)
5. Remove the rear oil seal retainer mounting bolts.
6. Carefully remove the retainer from the engine block.

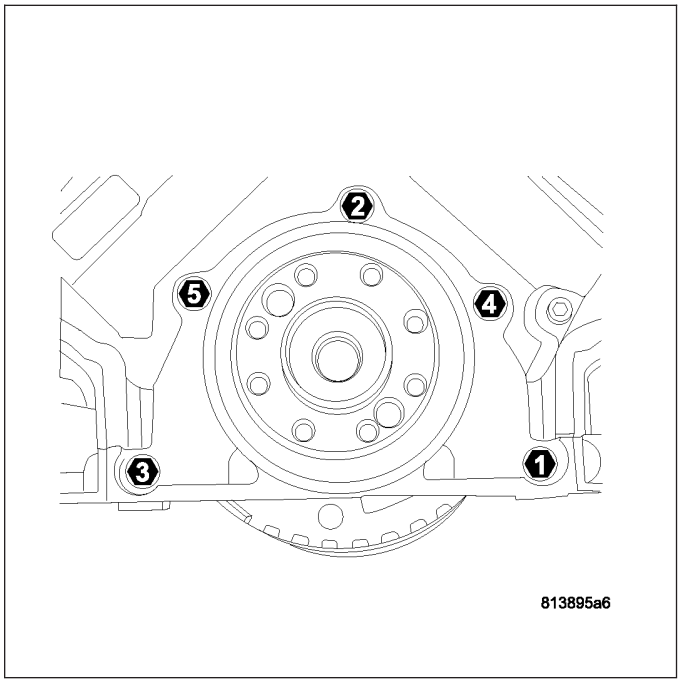

INSTALLATION

1. Throughly clean all gasket resdue from the engine block.
2. Use extream care and clean all gasket resdue from the retainer.
3. Position the gasket onto the retainer.
4. Position the retainer onto the engine block.
5. Install the retainer mounting bolts. Tighten the bolts to 15 N·m (132 in. lbs.) using the procedure shown.
6. Install the oil pan (Refer to 9 - ENGINE/LUBRICATION/OIL PAN - INSTALLATION).
7. Install the flexplate (Refer to 9 - ENGINE/ENGINE BLOCK/FLEX PLATE - INSTALLATION).
8. Install the transmission (Refer to 21 - TRANSMISSION/TRANSAXLE/AUTOMATIC - NAG1 - INSTALLATION).
9. Check and verify engine oil level.
10. Start engine and check for leaks.

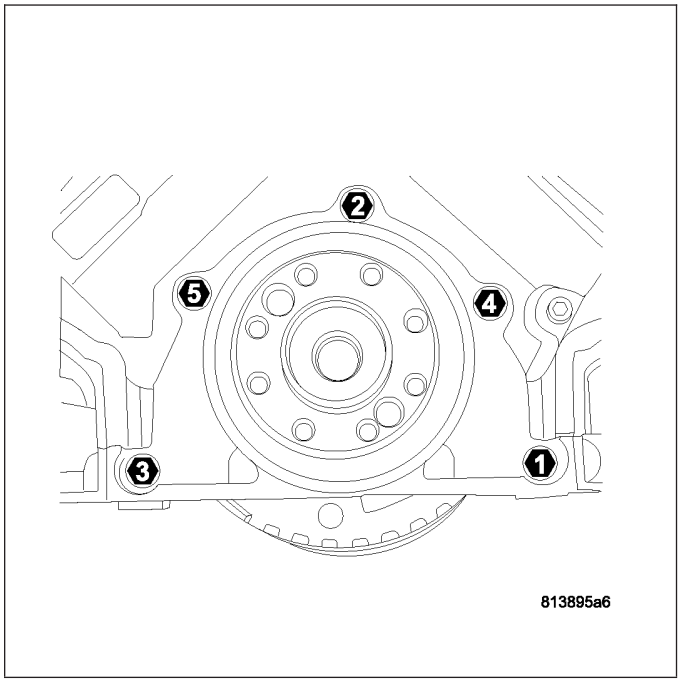

FLEX PLATE

REMOVAL

1. Remove the transmission. (Refer to 21 - TRANSMISSION/TRANSAXLE/AUTOMATIC - NAG1 - REMOVAL).
2. Remove the bolts and flexplate (1).

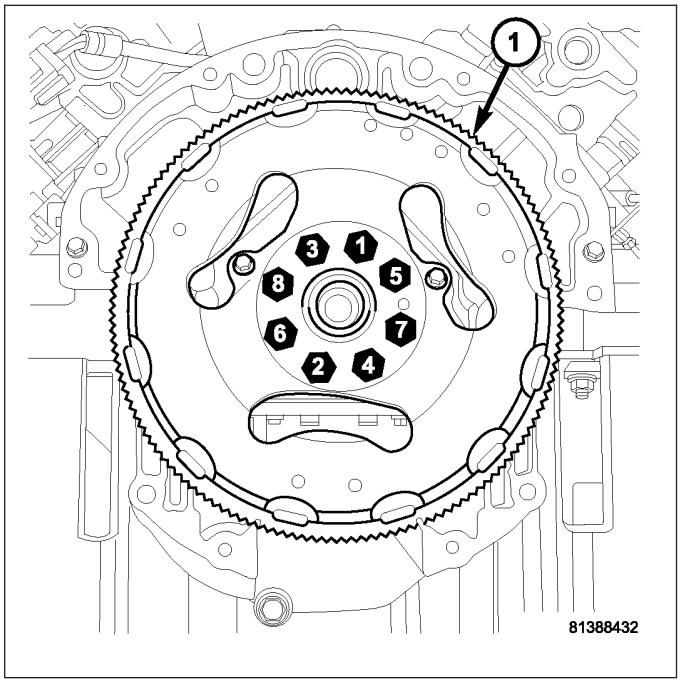

INSTALLATION

1. Position the flexplate or flywheel onto the crankshaft and install the bolts hand tight.
2. **For automatic transmissions:** Tighten the flexplate retaining bolts to 95 N·m (70 ft. lbs.).

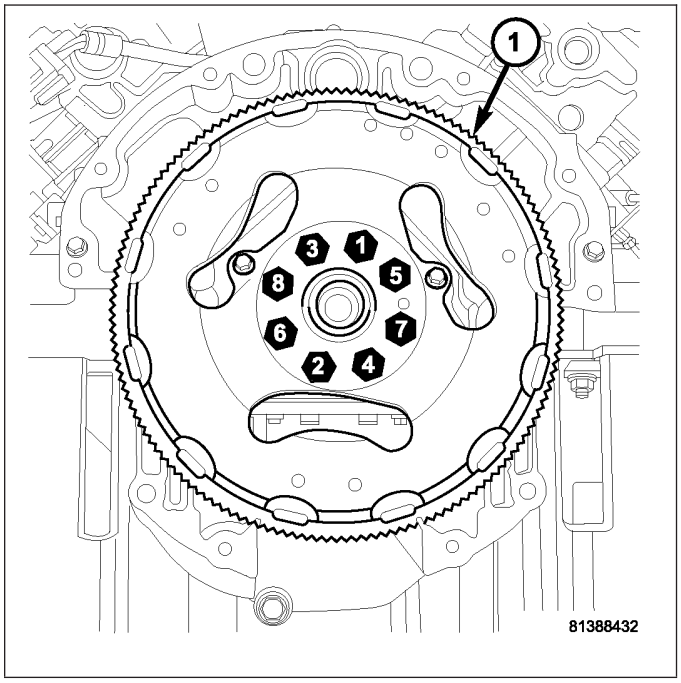

3. Install the transmission. (Refer to 21 - TRANSMISSION/TRANSAXLE/AUTOMATIC - NAG1 - INSTALLATION).

TAPPETS-HYDRAULIC ROLLER

DIAGNOSIS AND TESTING - HYDRAULIC TAPPETS

Before disassembling any part of the engine to correct tappet noise, check the oil pressure. If vehicle has no oil pressure gauge, install a reliable gauge at the pressure sending-unit. The pressure should be between 207-552 kPa (30-70 psi) at 3,000 RPM.

Check the oil level after the engine reaches normal operating temperature. Allow 5 minutes to stabilize oil level, check dipstick. The oil level in the pan should never be above the FULL mark or below the ADD OIL mark on dipstick. Either of these two conditions could be responsible for noisy tappets.

OIL LEVEL

HIGH

If oil level is above the FULL mark, it is possible for the connecting rods to dip into the oil. With the engine running, this condition could create foam in the oil pan. Foam in oil pan would be fed to the hydraulic tappets by the oil pump causing them to lose length and allow valves to seat noisily.

LOW

Low oil level may allow oil pump to take in air. When air is fed to the tappets, they lose length, which allows valves to seat noisily. Any leaks on intake side of oil pump through which air can be drawn will create the same tappet action. Check the lubrication system from the intake strainer to the pump cover, including the relief valve retainer cap. When tappet noise is due to aeration, it may be intermittent or constant, and usually more than one tappet will be noisy. When oil level and leaks have been corrected, operate the engine at fast idle. Run engine for a sufficient time to allow all of the air inside the tappets to be bled out.

TAPPET NOISE DIAGNOSIS

1. To determine source of tappet noise, crank over engine with cylinder head covers removed.
2. Feel each valve spring or rocker arm to detect noisy tappet. The noisy tappet will cause the affected spring and/or rocker arm to vibrate or feel rough in operation.

NOTE: Worn valve guides or cocked springs are sometimes mistaken for noisy tappets. If such is the case, noise may be dampened by applying side thrust on the valve spring. If noise is not appreciably reduced, it can be assumed the noise is in the tappet. Inspect the rocker arm push rod sockets and push rod ends for wear.

3. Valve tappet noise ranges from light noise to a heavy click. A light noise is usually caused by excessive leak-down around the unit plunger, or by the plunger partially sticking in the tappet body cylinder. The tappet should be replaced. A heavy click is caused by a tappet check valve not seating, or by foreign particles wedged between the plunger and the tappet body. This will cause the plunger to stick in the down position. This heavy click will be accompanied by excessive clearance between the valve stem and rocker arm as valve closes. In either case, tappet assembly should be removed for inspection and cleaning.
4. The valve train generates a noise very much like a light tappet noise during normal operation. Care must be taken to ensure that tappets are making the noise. If more than one tappet seems to be noisy, it's probably not the tappets.

REMOVAL

1. Disconnect the negative cable from the battery.
2. Remove the air cleaner (Refer to 9 - ENGINE/AIR INTAKE SYSTEM - REMOVAL).
3. Remove intake manifold (Refer to 9 - ENGINE/MANIFOLDS/INTAKE MANIFOLD - REMOVAL).
4. Remove cylinder head cover (Refer to 9 - ENGINE/CYLINDER HEAD/CYLINDER HEAD COVER(S) - REMOVAL).
5. Remove rocker arm assembly and push rods (Refer to 9 - ENGINE/CYLINDER HEAD/ROCKER ARM / ADJUSTER ASSY - REMOVAL). Identify push rods to ensure installation in original location.
6. Remove the cylinder head (Refer to 9 - ENGINE/CYLINDER HEAD - REMOVAL).

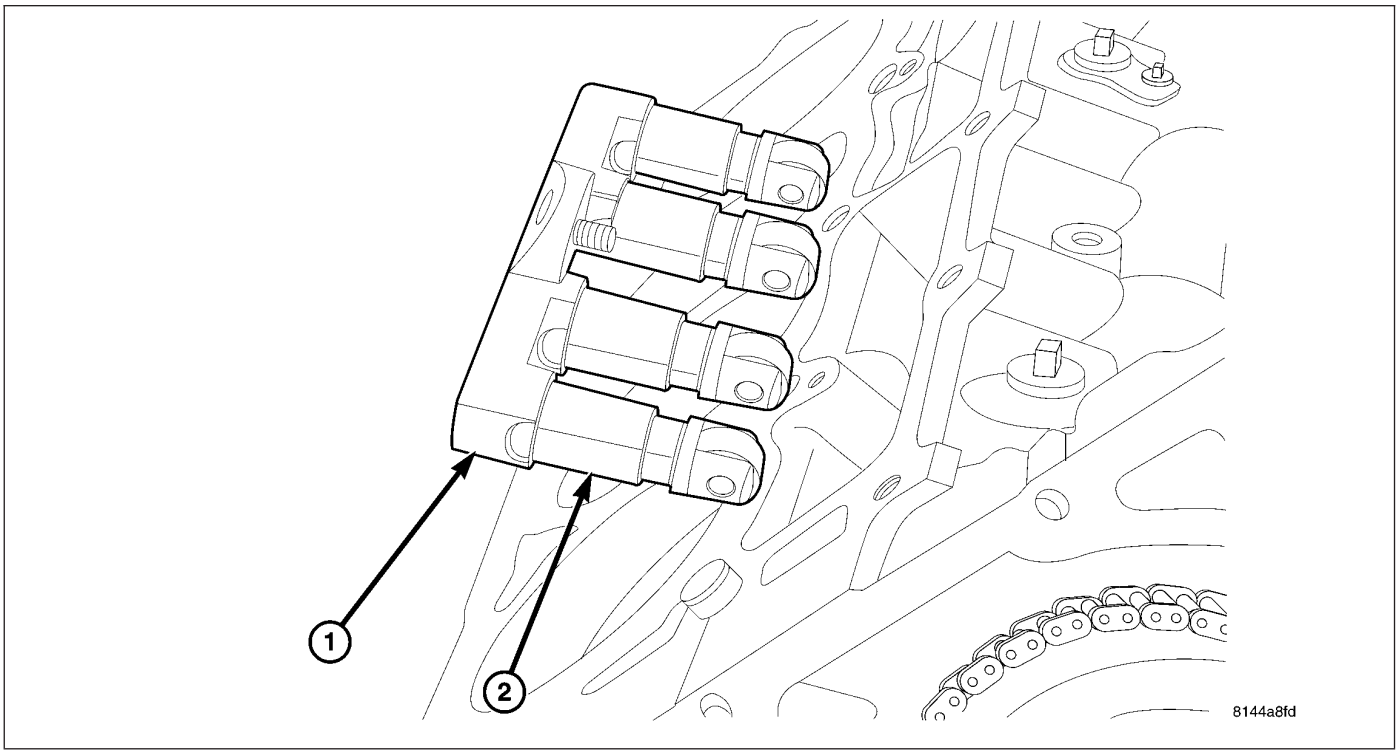

7. Remove bolt from tappet guide holder.
8. Remove tappet guide holder.
9. Pull tappet out of bore with a twisting motion. **If all tappets are to be removed and reused, identify tappets to ensure installation in original location.**
10. Check camshaft lobes for abnormal wear.

INSTALLATION

1. Lubricate tappets.

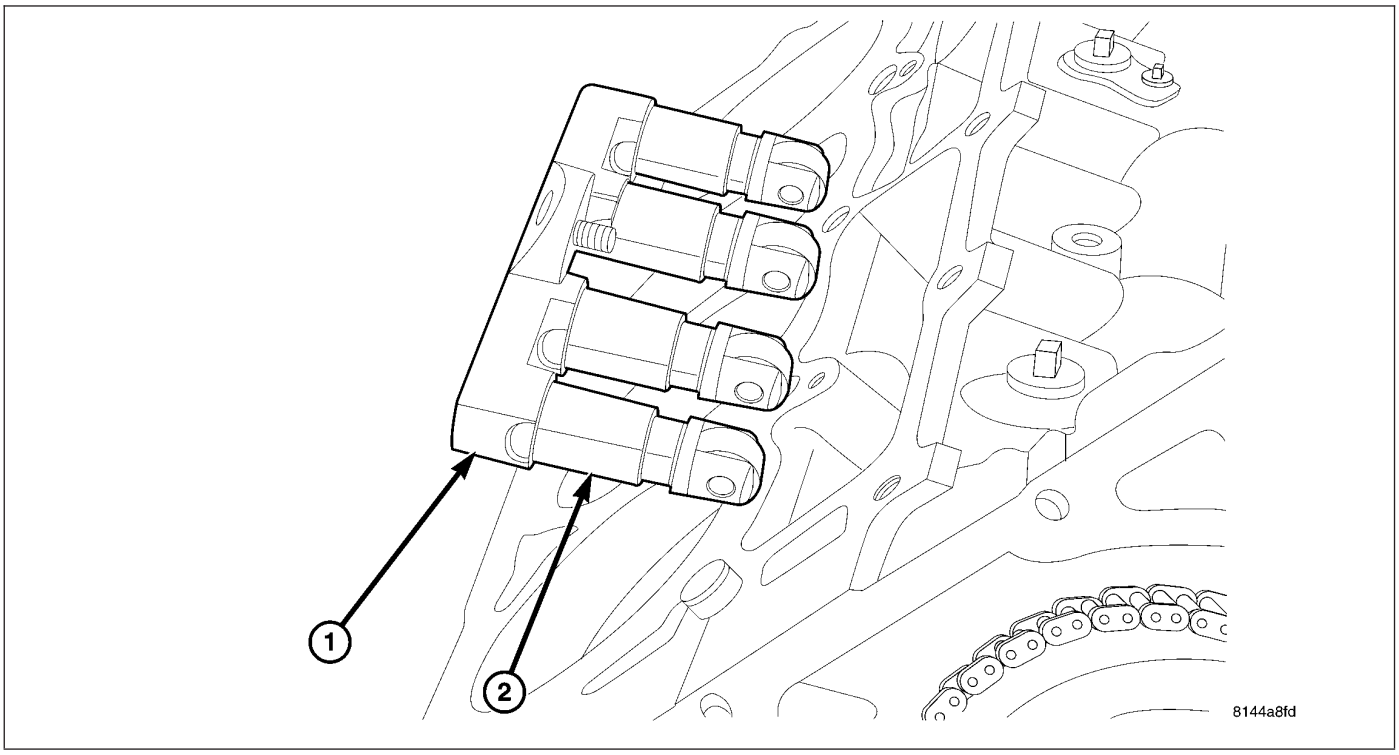

2. Install tappets in their original positions.
3. Install tappet guide yoke. Install the tappet guide yoke bolt and tighten to 12 N·m (106 in. lbs.) torque.
4. Install cylinder head (Refer to 9 - ENGINE/CYLINDER HEAD - INSTALLATION).
5. Install pushrods and rocker arm assembly (Refer to 9 - ENGINE/CYLINDER HEAD/ROCKER ARM / ADJUSTER ASSY - INSTALLATION).
6. Install cylinder head cover (Refer to 9 - ENGINE/CYLINDER HEAD/CYLINDER HEAD COVER(S) - INSTALLATION).
7. Install intake manifold (Refer to 9 - ENGINE/MANIFOLDS/INTAKE MANIFOLD - INSTALLATION).
8. Install the air cleaner (Refer to 9 - ENGINE/AIR INTAKE SYSTEM - INSTALLATION).
9. Connect the negative cable to the battery.

CAUTION: To prevent damage to valve mechanism, engine must not be run above fast idle until all hydraulic tappets have filled with oil and have become quiet.

10. Road test vehicle and check for leaks.

PISTON & CONNECTING ROD

DESCRIPTION

CAUTION: Do not use a metal stamp to mark connecting rods as damage may result, instead use ink or a scratch awl.

The pistons are made of a high strength aluminum alloy. Piston skirts are coated with a solid lubricant (Molykote) to reduce friction and provide scuff resistance. The piston top ring groove and land is anodized. The connecting rods are made of forged powdered metal, with a “fractured cap” design. A floating piston pin is used to attach the piston and connecting rod.

STANDARD PROCEDURE - PISTON FITTING

1. To correctly select the proper size piston, a cylinder bore gauge, capable of reading in 0.003 mm (.0001 in.) INCREMENTS is required. If a bore gauge is not available, do not use an inside micrometer.
2. Measure the inside diameter of the cylinder bore at a point 38.0 mm (1.5 inches) below top of bore. Start perpendicular (across or at 90 degrees) to the axis of the crankshaft at point A and then take an additional bore reading 90 degrees to that at point B.

NOTE: Always install new retaining clips for the piston pin. Never reuse the old clips.

NOTE: Use care not to distort the clip while installing.

3. Once assembled, the piston-rod assembly is specific for the left cylinder bank (odd numbered) and the right cylinder bank (even numbered) and must not be interchanged.

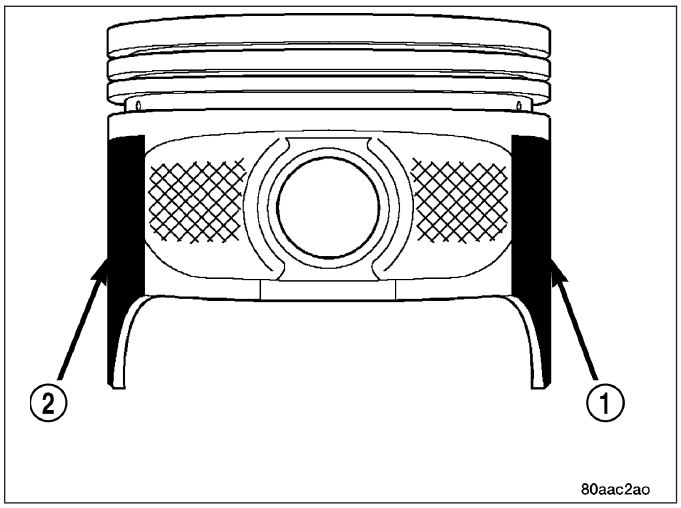

4. The coating material is applied to the piston after the final piston machining process. Measuring the outside diameter of a coated piston will not provide accurate results. Therefore measuring the inside diameter of the cylinder bore with a dial Bore Gauge is **MANDATORY**. To correctly select the proper size piston, a cylinder bore gauge capable of reading in 0.003 mm (.0001 in.) increments is required.
5. Piston installation into the cylinder bore requires slightly more pressure than that required for non-coated pistons. The bonded coating on the piston will give the appearance of a line-to-line fit with the cylinder bore.

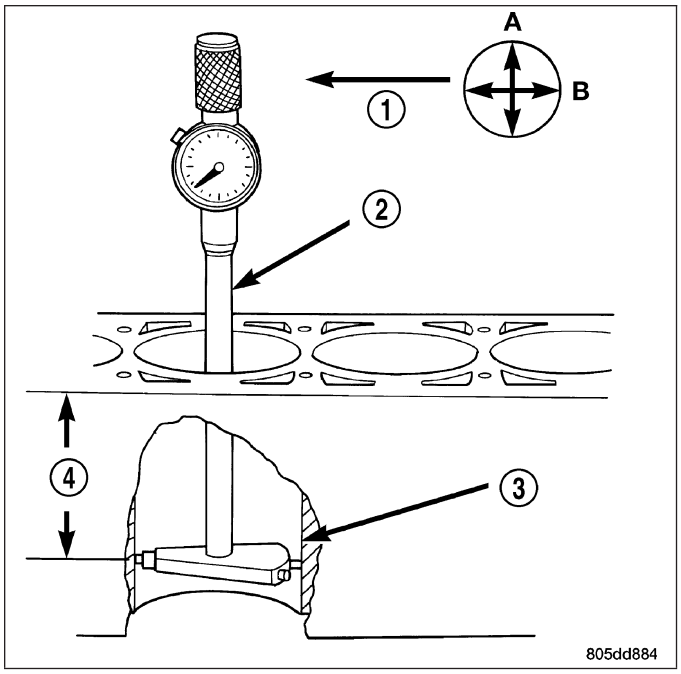

REMOVAL

1. Disconnect negative cable from battery.
2. Remove the following components:
   - Oil pan and gasket/windage tray (Refer to 9 - ENGINE/LUBRICATION/OIL PAN - REMOVAL).
   - Cylinder head covers (Refer to 9 - ENGINE/CYLINDER HEAD/CYLINDER HEAD COVER(S) - REMOVAL) and (Refer to 9 - ENGINE/CYLINDER HEAD/CYLINDER HEAD COVER(S) - REMOVAL).
   - Timing chain cover (Refer to 9 - ENGINE/VALVE TIMING/TIMING BELT / CHAIN COVER(S) - REMOVAL).
   - Cylinder head(s) (Refer to 9 - ENGINE/CYLINDER HEAD - REMOVAL) and (Refer to 9 - ENGINE/CYLINDER HEAD - REMOVAL).
3. If necessary, remove top ridge of cylinder bores with a reliable ridge reamer before removing pistons from cylinder block. **Be sure to keep tops of pistons covered during this operation.** Pistons and connecting rods must be removed from top of cylinder block. When removing piston and connecting rod assemblies from the engine, rotate crankshaft so the each connecting rod is centered in cylinder bore.

CAUTION: DO NOT use a number stamp or a punch to mark connecting rods or caps, as damage to connecting rods could occur

NOTE: Connecting rods and bearing caps are not interchangeable and should be marked before removing to ensure correct reassembly.

4. Mark connecting rod and bearing cap positions using a permanent ink marker or scribe tool.

CAUTION: Care must be taken not to damage the fractured rod and cap joint face surfaces, as engine damage may occur.

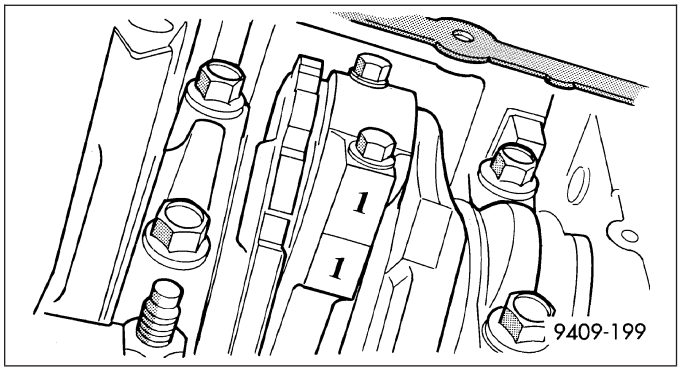

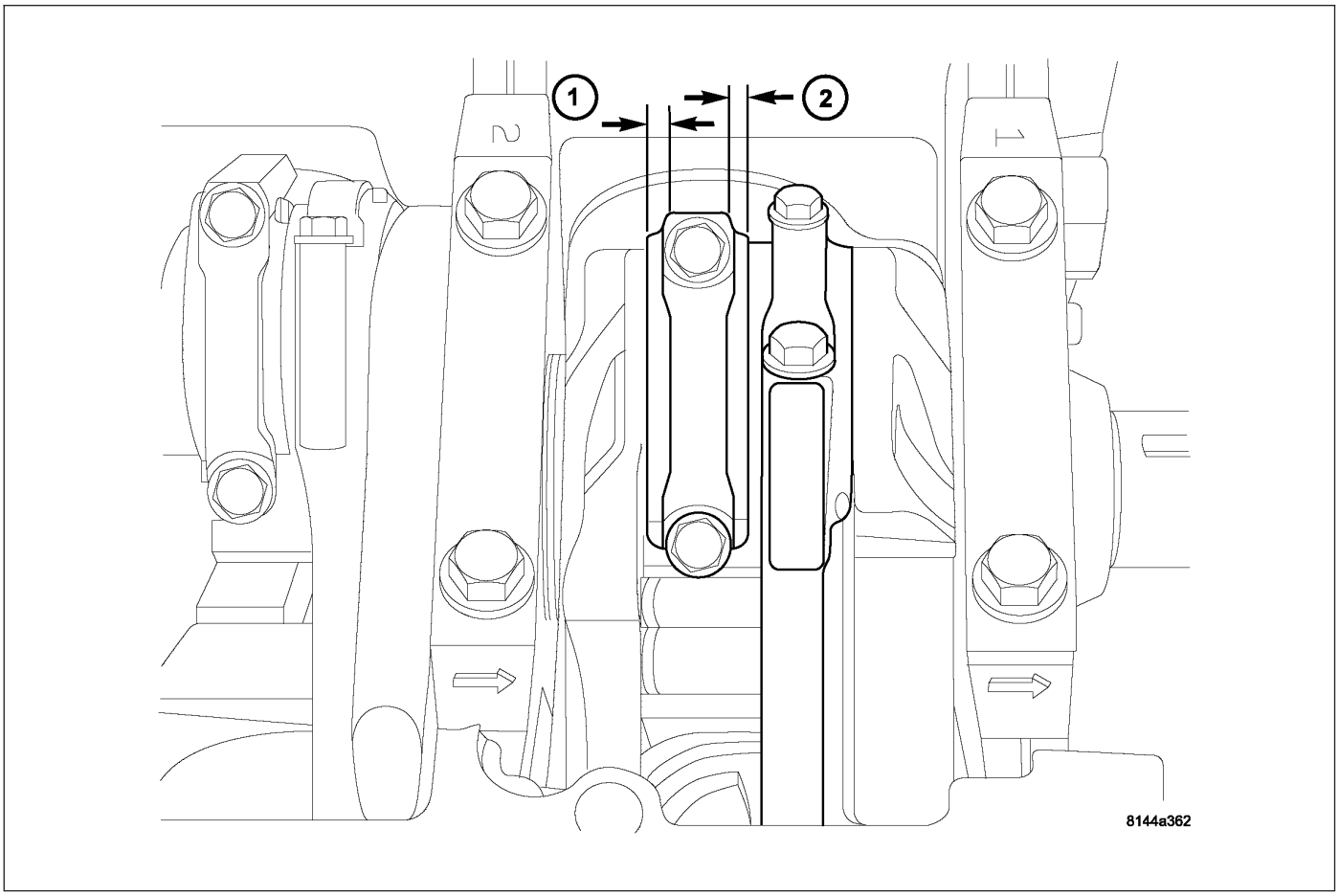

5. Remove connecting rod cap. Install Special Tool 8507 Connecting Rod Guides into the connecting rod being removed. Remove piston from cylinder bore. Repeat this procedure for each piston being removed.

CAUTION: Care must be taken not to nick crankshaft journals, as engine damage may occur

CAUTION: When removing and installing the piston and connecting rod assembly, Do not damage the piston cooling jets. If the jets are bent, engine damage may occur.

6. Immediately after piston and connecting rod removal, install bearing cap on the mating connecting rod to prevent damage to the fractured cap and rod surfaces.
7. Carefully remove piston rings from piston(s), starting from the top ring down.

CLEANING

CAUTION: DO NOT use a wire wheel or other abrasive cleaning devise to clean the pistons or connecting rods. The pistons have a Moly coating, this coating must not be damaged.

1. Using a suitable cleaning solvent clean the pistons in warm water and towel dry.
2. Use a wood or plastic scraper to clean the ring land grooves.

INSPECTION

Check the connecting rod journal for excessive wear, taper and scoring (Refer to 9 - ENGINE/ENGINE BLOCK/ CONNECTING ROD BEARINGS - STANDARD PROCEDURE).

Check the connecting rod for signs of twist or bending.

Use the proper tool when removing the piston clip. If the clip is pried out, a burr may form on the groove that will inhibit pin removal and installation.

Check the piston for taper and elliptical shape before it is fitted into the cylinder bore (Refer to 9 - ENGINE/ENGINE BLOCK/PISTON & CONNECTING ROD - STANDARD PROCEDURE).

Check the piston for scoring, or scraping marks in the piston skirts. Check the ring lands for cracks and/or deterioration.

INSTALLATION

1. Before installing piston and connecting rod assemblies into the bore, install the piston rings (Refer to 9 - ENGINE/ENGINE BLOCK/PISTON RINGS - STANDARD PROCEDURE).
2. Immerse the piston head and rings in clean engine oil. Position a ring compressor over the piston and rings. Tighten ring compressor. **Ensure position of rings do not change during this operation.**
3. Position bearing onto connecting rod. Lubricate bearing surface with clean engine oil.
4. Install Special Tool 8507 Connecting Rod Guides into connecting rod bolt threads.
5. The pistons are marked on the piston pin bore surface with an raised “F” or arrow on top of piston indicating installation position. This mark must be pointing toward the front of engine on both cylinder banks.
6. Wipe cylinder bore clean and lubricate with engine oil.

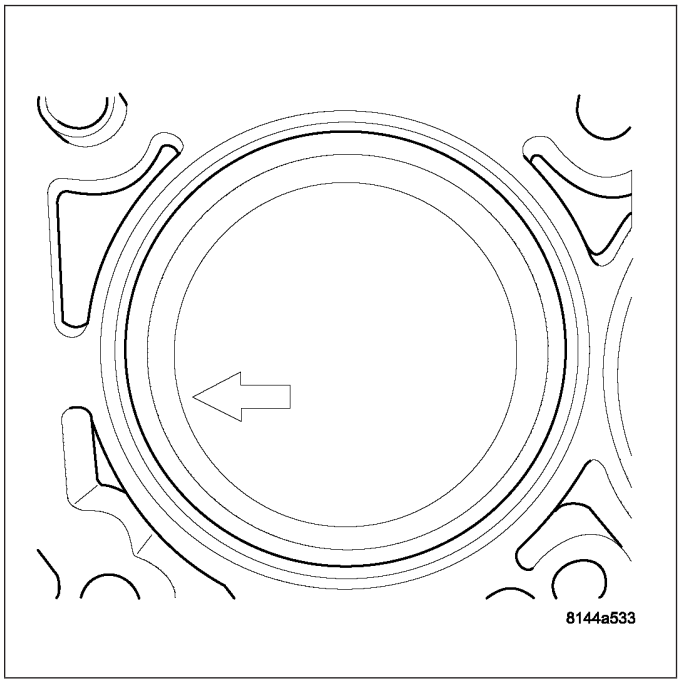

7. Rotate crankshaft until connecting rod journal is on the center of cylinder bore. Insert rod and piston into cylinder bore and carefully position connecting rod guides over crankshaft journal.
8. Tap piston down in cylinder bore using a hammer handle. While at the same time, guide connecting rod into position on rod journal.

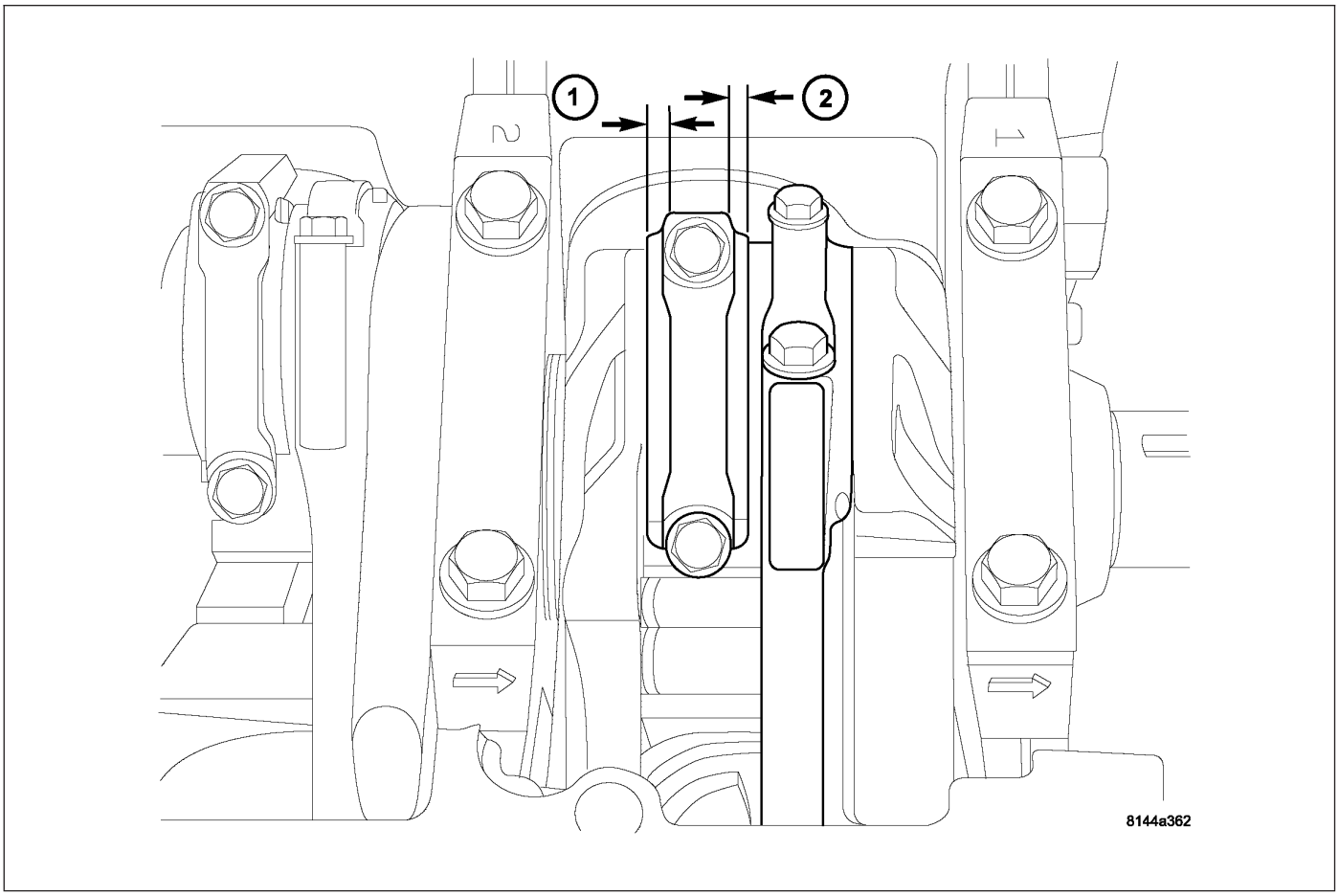

CAUTION: Always replace the Rod Bolts whenever they are loosened or removed.

9. Lubricate rod bolts and bearing surfaces with engine oil. Install connecting rod cap and bearing. Tighten bolts to 45 N·m (33 ft. lbs.) plus a 60° turn.
10. Install the following components:
    - Cylinder head(s). (Refer to 9 - ENGINE/CYLINDER HEAD - INSTALLATION).
    - Cylinder head covers (Refer to 9 - ENGINE/CYLINDER HEAD/CYLINDER HEAD COVER(S) - INSTALLATION).
    - Install the intake manifold.
    - Oil pan and gasket/windage tray. (Refer to 9 - ENGINE/LUBRICATION/OIL PAN - INSTALLATION).
11. Fill crankcase with proper engine oil to correct level.
12. Connect negative cable to battery.

RINGS-PISTON

STANDARD PROCEDURE - PISTON RING FITTING

Before reinstalling used rings or installing new rings, the ring clearances must be checked.

1. Wipe the cylinder bore clean.
2. Insert the ring in the cylinder bore.

NOTE: The ring gap measurement must be made with the ring positioned at least 12mm (0.50 inch.) from bottom of cylinder bore.

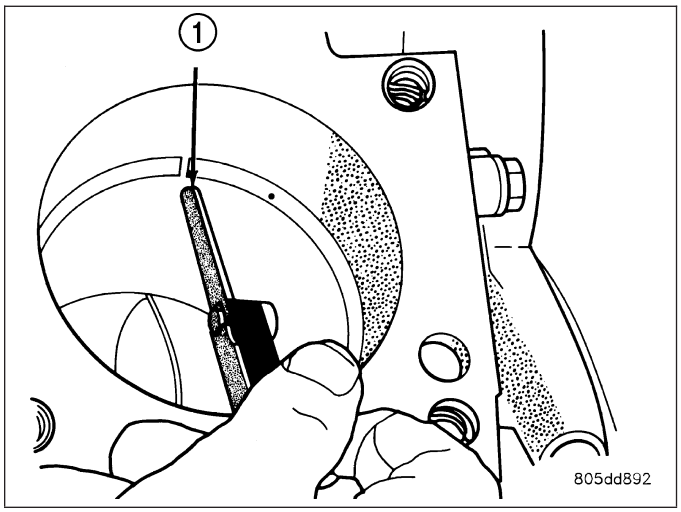

3. Using a piston, to ensure that the ring is squared in the cylinder bore, slide the ring downward into the cylinder.
4. Using a feeler gauge check the ring end gap. Replace any rings not within specification.

PISTON RING SIDE CLEARANCE

NOTE: Make sure the piston ring grooves are clean and free of nicks and burrs.

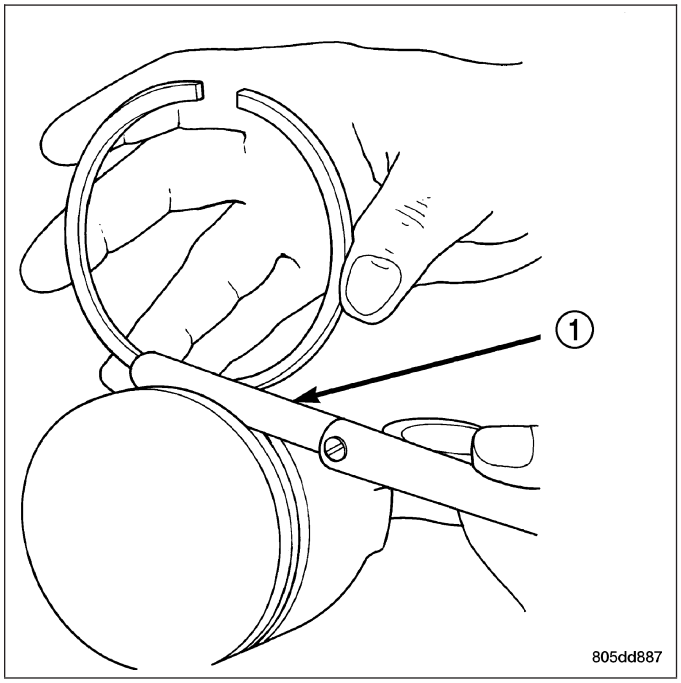

5. Measure the ring side clearance as shown.Make sure the feeler gauge fits snugly between the ring land and the ring. Replace any ring not within specification.
6. Rotate the ring around the piston, The ring must rotate in the groove with out binding.

PISTON RING SPECIFICATION CHART

Ring Position	Ring/Groove Side Clearance	Maximum Clearance
Upper Ring	0.02-0.07mm (0.0008- 0.0028 in.)	0.11mm (0.004 in.)
Intermediate Ring	0.02-0.06 mm (0.0008-0.0023 in.)	0.10mm (0.004 in.)

Ring Position Ring Position	Ring/Groove Ring Gap	Maximum Wear Limit
Upper Ring	0.30-0.40mm (0.0118-0.0157 in.)	0.45mm (0.0177 in.)
Intermediate Ring	0.35-0.60mm (0.0137-0.0236 in.)	0.74mm (0.029 in.)
Oil Control Ring (Steel Rail)	0.020-0.71mm (0.0078- 0.0279 in.)	0.76mm (0.030 in.)

7. The No. 1 and No. 2 piston rings have a different cross section. Ensure No. 1 ring is installed with manufacturers I.D. mark (Dot) facing up, towards top of the piston.

NOTE: Piston rings are installed in the following order:
- **Oil ring expander.**
- **Lower oil ring side rail.**
- **Upper oil ring side rail.**
- **No. 2 Intermediate piston ring.**
- **No. 1 Upper piston ring.**

8. Install the oil ring expander as shown.
9. Install upper side rail by placing one end between the piston ring groove and the expander ring. Hold end firmly and press down the portion to be installed until side rail is in position. Repeat this step for the lower side rail.

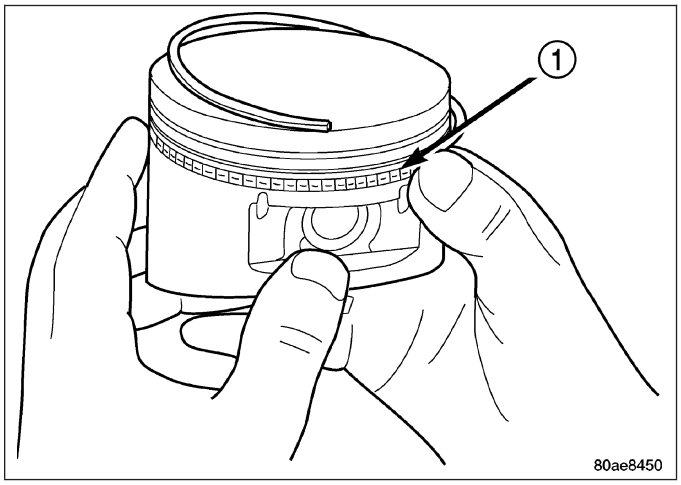

10. Install No. 2 intermediate piston ring using a piston ring installer.
11. Install No. 1 upper piston ring using a piston ring installer.

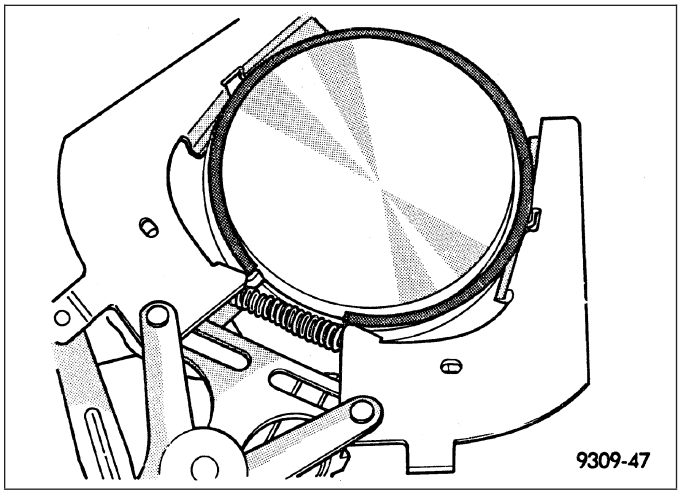

12. Position piston ring end gaps as shown in. It is important that expander ring gap is at least 45° from the side rail gaps, but not on the piston pin center or on the thrust direction.

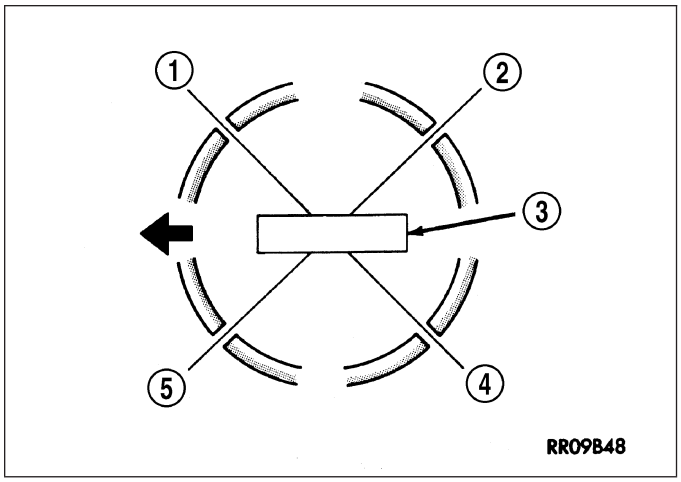

DAMPER-CRANKSHAFT

REMOVAL

1. Disconnect negative cable from battery.
2. Remove accessory drive belt (Refer to 7 - COOLING/ACCESSORY DRIVE/DRIVE BELTS - REMOVAL).
3. Drain cooling system (Refer to 7 - COOLING - STANDARD PROCEDURE).
4. Remove radiator upper hose.
5. Remove fan shroud (Refer to 7 - COOLING/ENGINE/RADIATOR FAN - REMOVAL).
6. Remove crankshaft damper bolt.
7. Remove damper using Special Tools 8513A Insert and 1023 Three Jaw Puller.

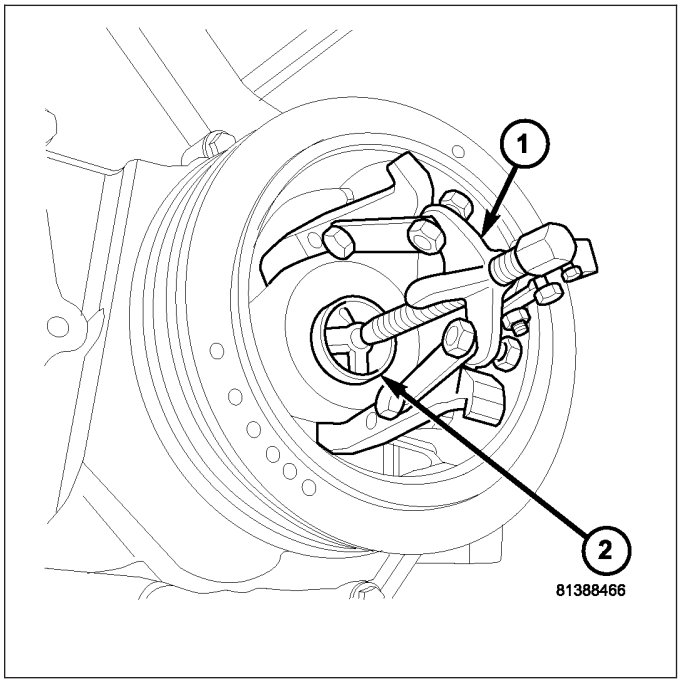

INSTALLATION

CAUTION: To prevent severe damage to the Crankshaft, Damper or Special Tool 8512–A, thoroughly clean the damper bore and the crankshaft nose before installing Damper.

1. Slide damper onto crankshaft slightly.

CAUTION: Special Tool 8512–A, is assembled in a specific sequence. Failure to assemble this tool in this sequence can result in tool failure and severe damage to either the tool or the crankshaft.

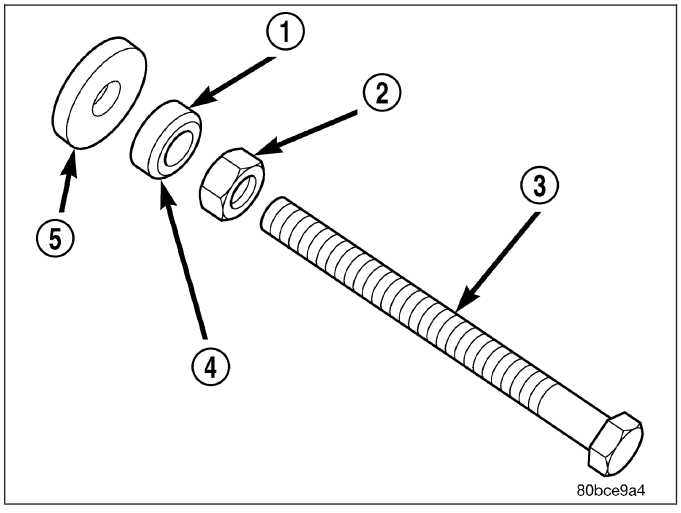

2. Assemble Special Tool 8512–A as follows, The nut is threaded onto the shaft first (2). Then the roller bearing (1) is placed onto the threaded rod (3) The hardened bearing surface of the bearing (1) **MUST** face the nut (2). Then the hardened washer (5) slides onto the threaded rod (3). Once assembled coat the threaded rod's threads with Mopar® Nickel Anti-Seize or (Loctite No. 771).
3. Using Special Tool 8512–A, press damper onto crankshaft.
4. Install then tighten crankshaft damper bolt to 176 N·m (129 ft. lbs.).
5. Install radiator upper hose.

6. Install accessory drive belt (Refer to 7 - COOLING/ACCESSORY DRIVE/DRIVE BELTS - INSTALLATION).
7. Refill cooling system (Refer to 7 - COOLING - STANDARD PROCEDURE).
8. Connect negative cable to battery.

COVER-STRUCTURAL

DESCRIPTION

The structural dust cover is made of die cast aluminum and joins the lower half of the transmission bell housing to the engine. The LX uses an integral one piece aluminum oil pan/structural cover.

OPERATION

The structural cover provides additional powertrain stiffness and reduces noise and vibration. The LX uses an integral structural cover/oil pan.

ENGINE MOUNTING-FRONT

REMOVAL

1. Disconnect negative battery cable.
2. Raise vehicle.
3. Remove the generator support bracket (1).

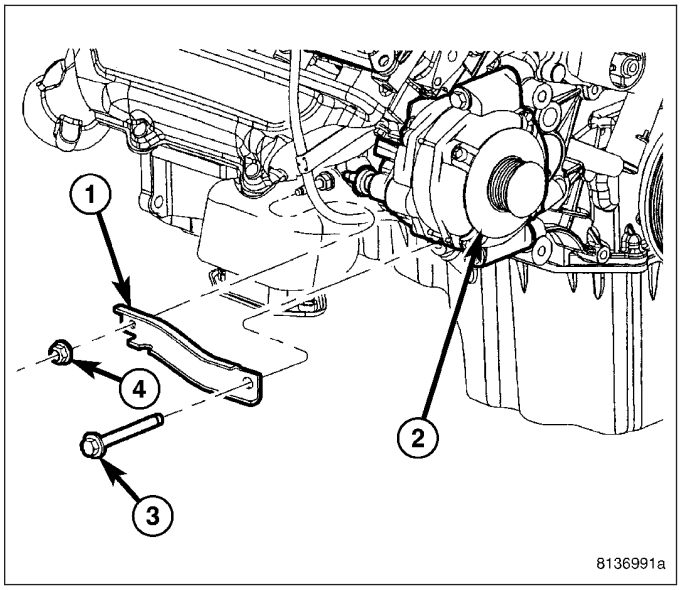

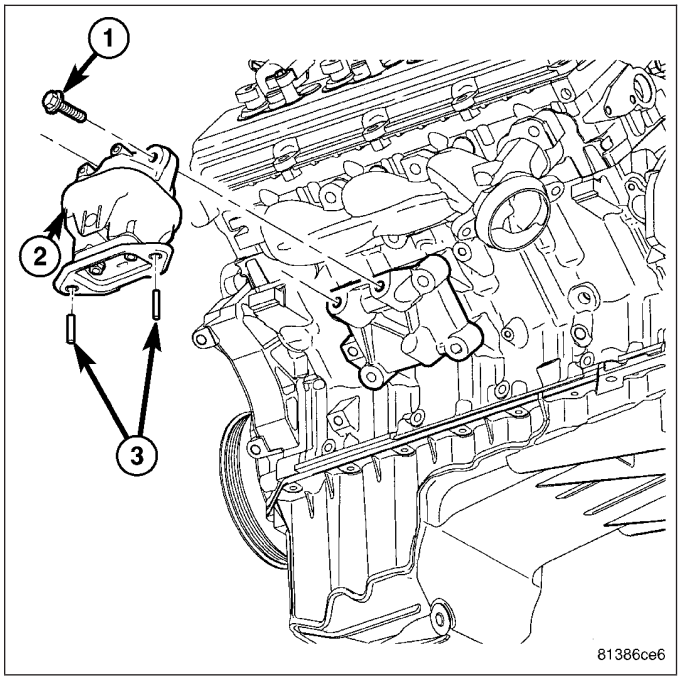

4. Remove hydromount to frame studs (3,4) and nuts.
5. Raise engine using suitable jack.
6. Remove hydromount to bracket fasteners (1,2).
7. Remove hydromount from engine.

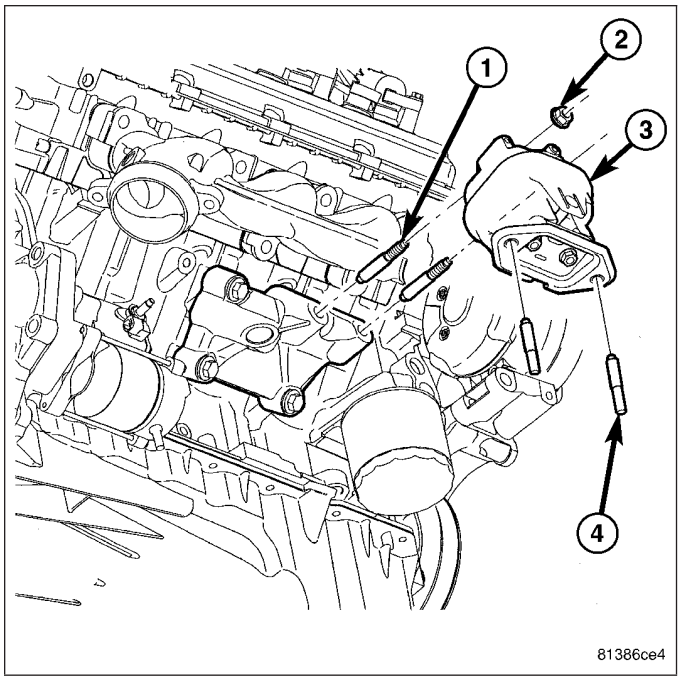

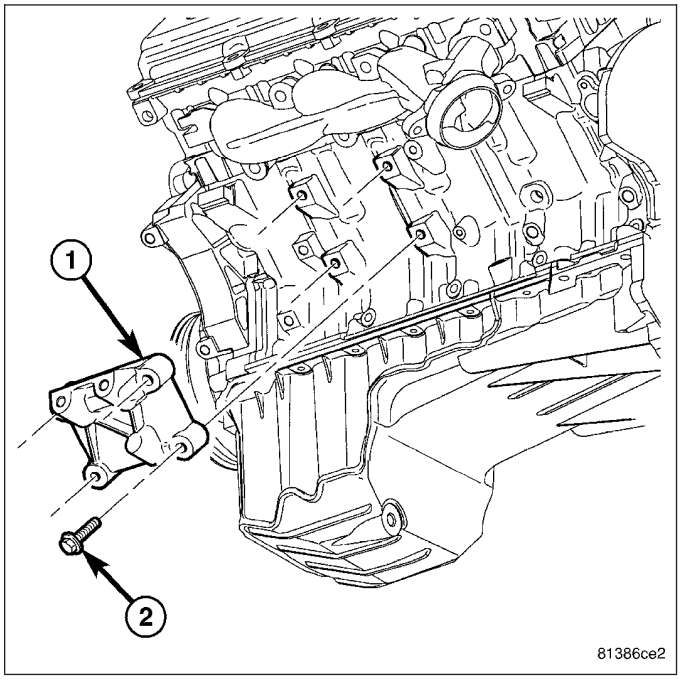

8. Remove engine mount brackets (1), if needed.

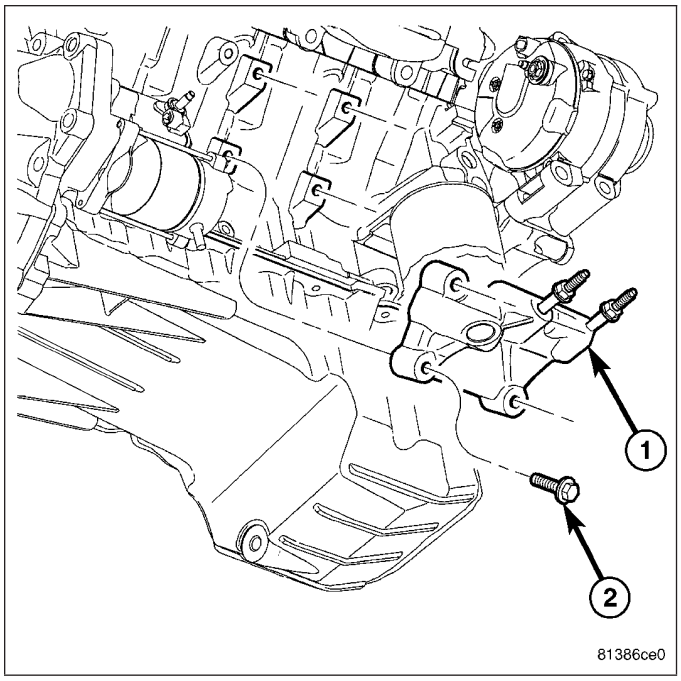

INSTALLATION

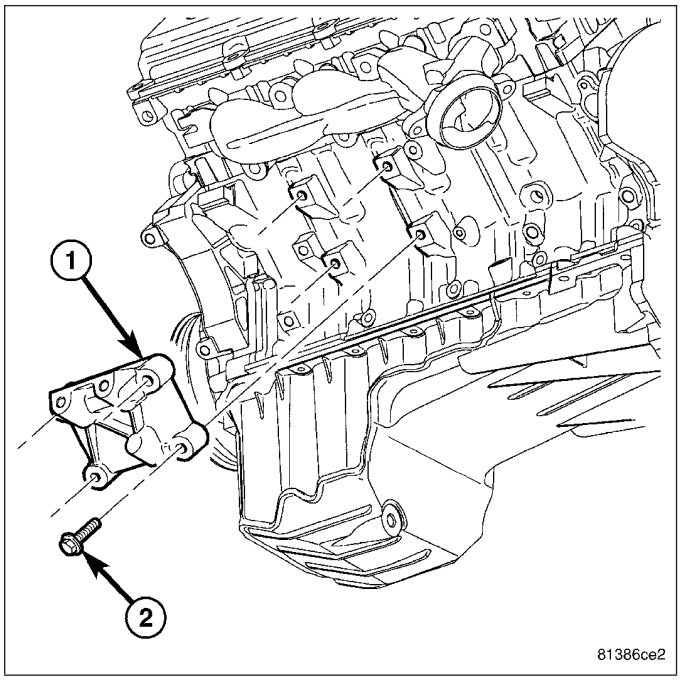

1. Install the engine mount brackets (1), if removed.

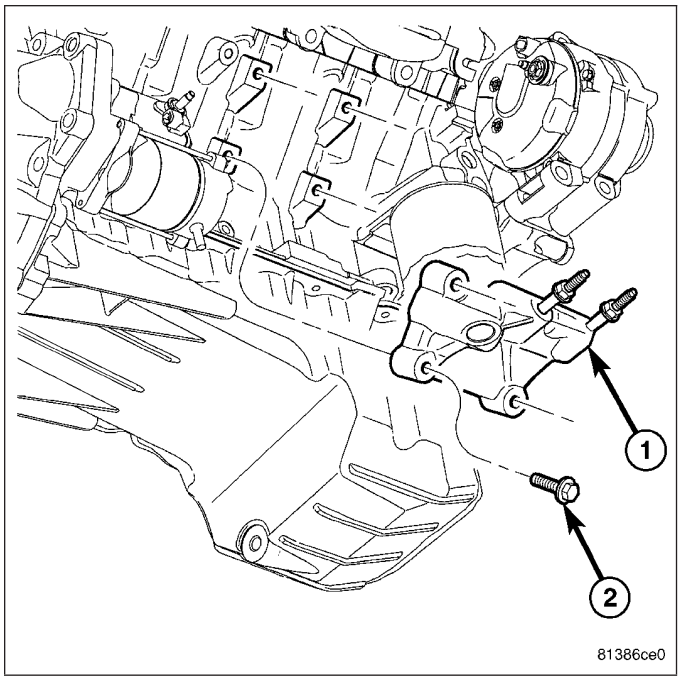

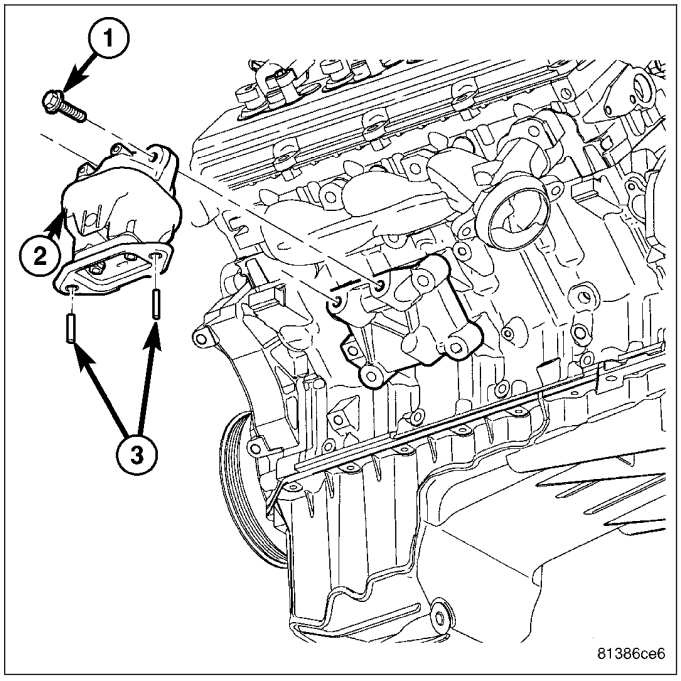

2. Install hydromount (3) on the engine. Tighten hydromount to bracket fasteners.
3. Install the studs (3,1) to the hydromount (2).

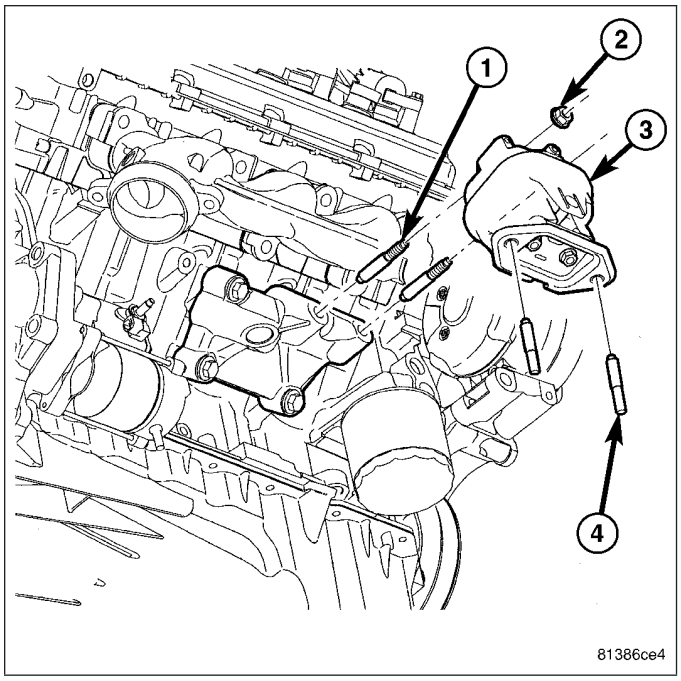

4. Install the generator support bracket (1).
5. Lower the engine.

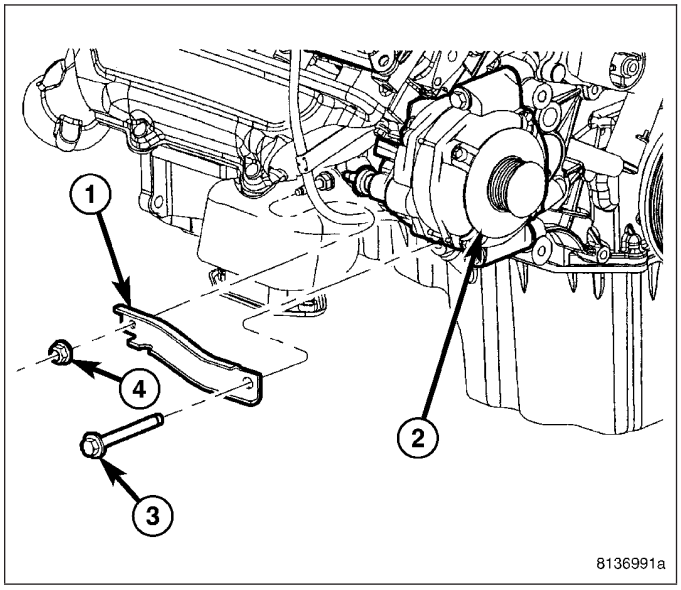

6. Install the nuts on the studs (3,4), and tighten.
7. Lower vehicle.
8. Connect negative battery cable.

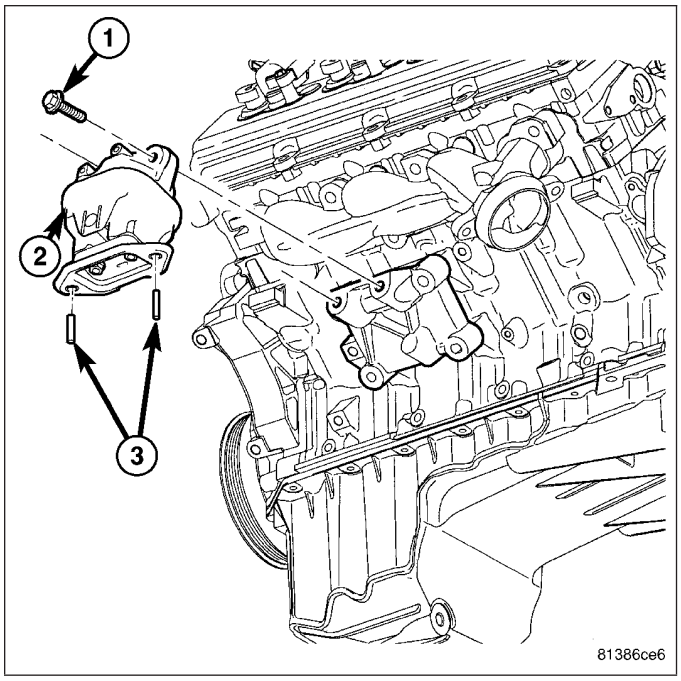

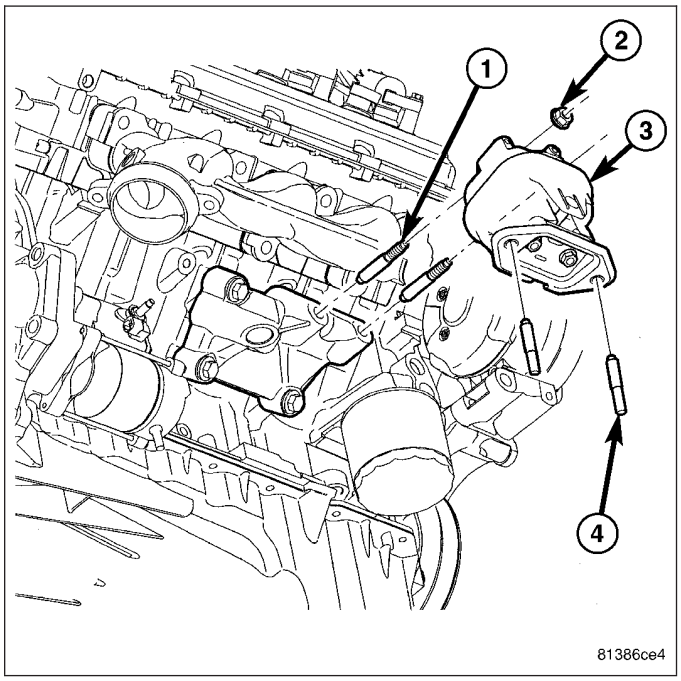

MOUNTING-ENGINE REAR

REMOVAL

1. Raise the vehicle on a hoist.
2. Using a suitable jack, support transmission.
3. Remove the crossmember (2).

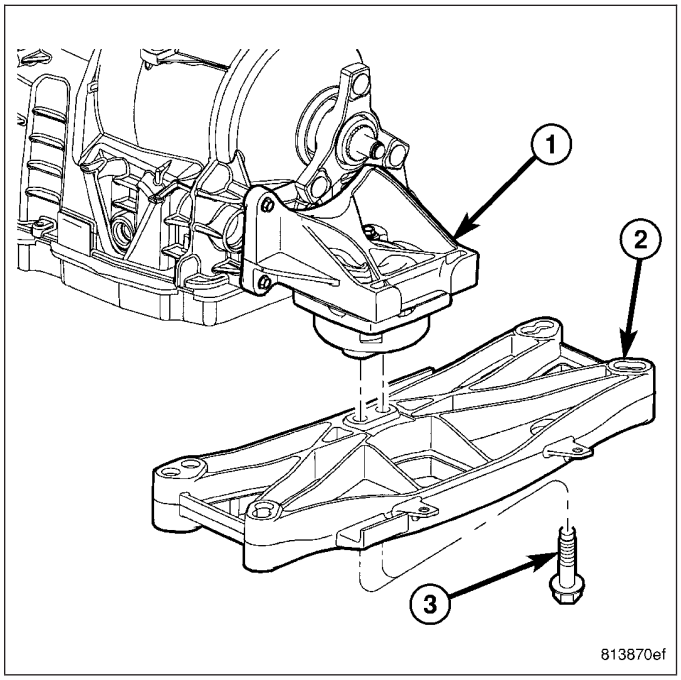

4. Remove the fasteners (1) from the transmission mount (3) to crossmember.
5. Remove the mount (3).

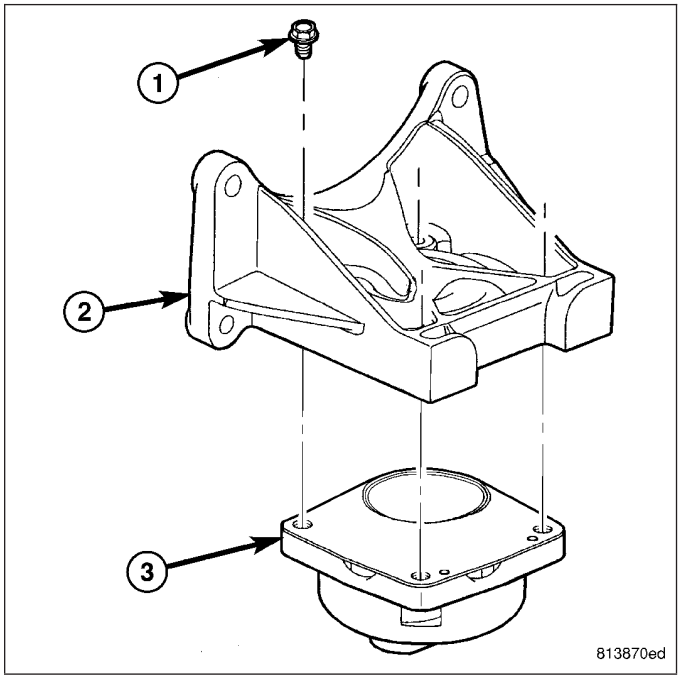

6. Remove the transmission mount bracket (2), if required.

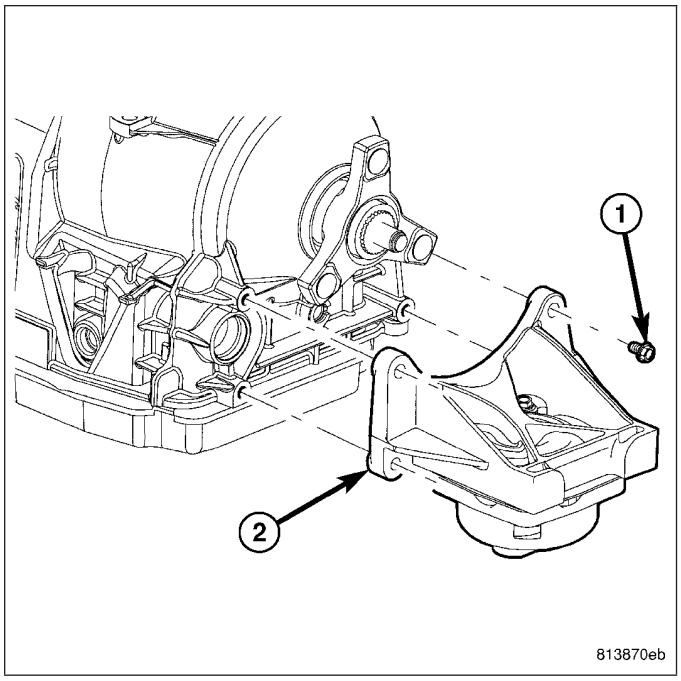

INSTALLATION

1. Install the transmission mount bracket (2), if removed.

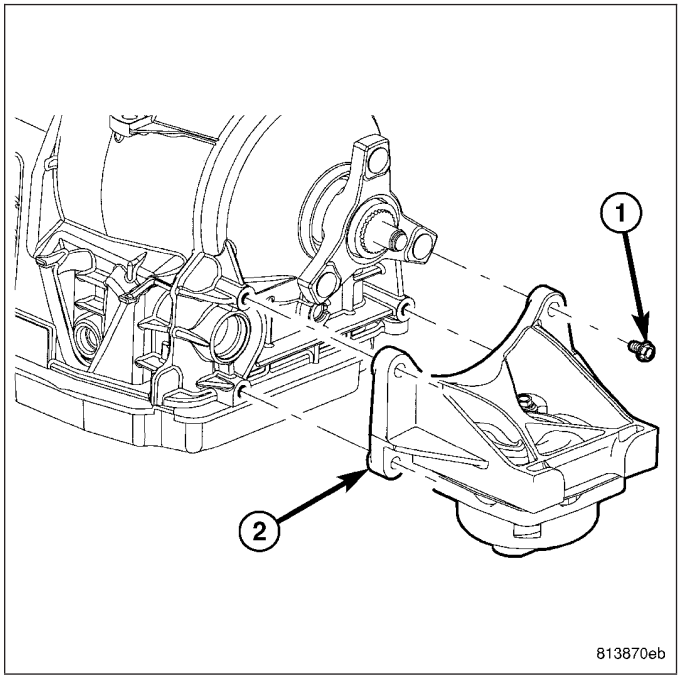

2. Position the transmission mount (3) on the transmission mount bracket (2). Install the bolts (1) that attach the transmission mount (3) to the bracket (2).
3. Torque the bolts to N·m (ft.lbs.) torque.

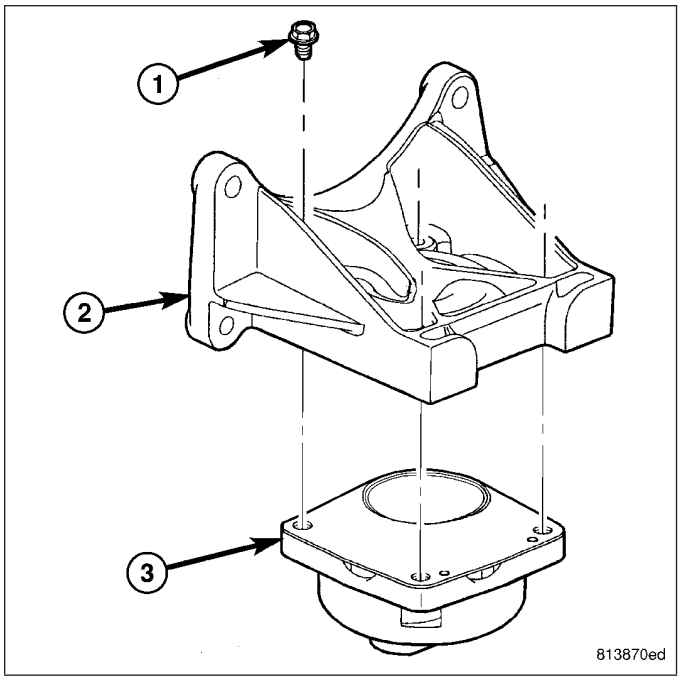

4. Install the crossmember (2).

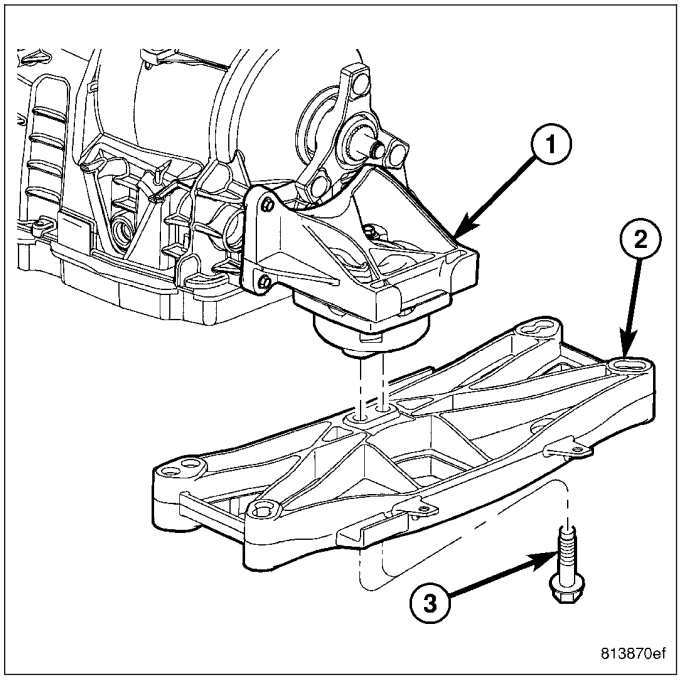

LUBRICATION

DESCRIPTION

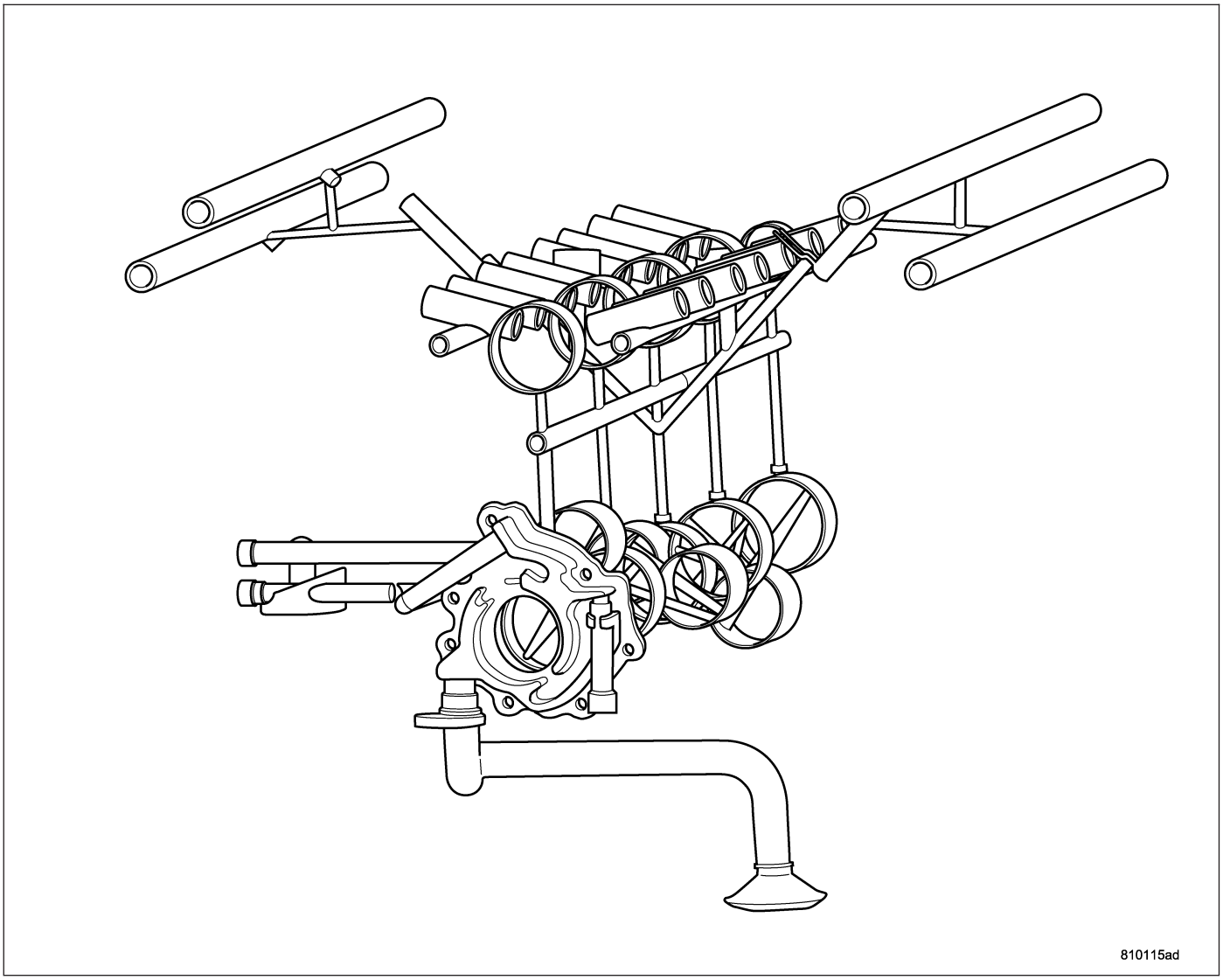

The lubrication system is a full flow filtration pressure feed type.

DIAGNOSIS AND TESTING

DIAGNOSIS AND TESTING - CHECKING ENGINE OIL PRESSURE

1. Remove oil pressure sending unit and install gauge assembly C-3292.
2. Run engine until thermostat opens.
3. Oil Pressure:
   - Curb Idle–25 kPa (4 psi) minimum
   - 3000 rpm–170 - 758 kPa (25 - 110 psi)
4. If oil pressure is 0 at idle, shut off engine. Check for a clogged oil pick-up screen or a pressure relief valve stuck open.

DIAGNOSIS AND TESTING - ENGINE OIL LEAK

Begin with a thorough visual inspection of the engine, particularly at the area of the suspected leak. If an oil leak source is not readily identifiable, the following steps should be followed:

1. Do not clean or degrease the engine at this time because some solvents may cause rubber to swell, temporarily stopping the leak.
2. Add an oil soluble dye (use as recommended by manufacturer). Start the engine and let idle for approximately 15 minutes. Check the oil dipstick to make sure the dye is thoroughly mixed as indicated with a bright yellow color under a black light.
3. Using a black light, inspect the entire engine for fluorescent dye, particularly at the suspected area of oil leak. If the oil leak is found and identified, repair per service manual instructions.
4. If dye is not observed, drive the vehicle at various speeds for approximately 24 km (15 miles), and repeat inspection.**If the oil leak source is not positively identified at this time**, proceed with the air leak detection test method.

Air Leak Detection Test Method

1. Remove the PCV valve from the IAFM. Cap or plug the PCV valve grommet.
2. Attach an air hose with pressure gauge and regulator to the dipstick tube.

CAUTION: Do not subject the engine assembly to more than 20.6 kPa (3 PSI) of test pressure.

3. Gradually apply air pressure from 1 psi to 2.5 psi maximum while applying soapy water at the suspected source. Adjust the regulator to the suitable test pressure that provide the best bubbles which will pinpoint the leak source. If the oil leak is detected and identified, repair per service manual procedures.
4. If the leakage occurs at the rear oil seal area, refer to the section, Inspection for Rear Seal Area Leak.
5. If no leaks are detected, turn off the air supply and remove the air hose and all plugs and caps. Install the PCV valve.
6. Clean the oil off the suspect oil leak area using a suitable solvent. Drive the vehicle at various speeds approximately 24 km (15 miles). Inspect the engine for signs of an oil leak by using a black light.

INSPECTION FOR REAR SEAL AREA LEAKS

Since it is sometimes difficult to determine the source of an oil leak in the rear seal area of the engine, a more involved inspection is necessary. The following steps should be followed to help pinpoint the source of the leak.

If the leakage occurs at the crankshaft rear oil seal area:

1. Disconnect the battery.
2. Raise the vehicle.
3. Remove torque converter or clutch housing cover and inspect rear of block for evidence of oil. Use a black light to check for the oil leak:
   a. Circular spray pattern generally indicates seal leakage or crankshaft damage.
   b. Where leakage tends to run straight down, possible causes are a porous block, distributor seal, camshaft bore cup plugs oil galley pipe plugs, oil filter runoff, and main bearing cap to cylinder block mating surfaces.
4. If no leaks are detected, pressurize the crankcase as outlined in the, Inspection (Engine oil Leaks in general)

CAUTION: Do not exceed 20.6 kPa (3 psi).

5. If the leak is not detected, very slowly turn the crankshaft and watch for leakage. If a leak is detected between the crankshaft and seal while slowly turning the crankshaft, it is possible the crankshaft seal surface is damaged. The seal area on the crankshaft could have minor nicks or scratches that can be polished out with emery cloth.

CAUTION: Use extreme caution when crankshaft polishing is necessary to remove minor nicks and scratches. The crankshaft seal flange is especially machined to complement the function of the rear oil seal.

6. For bubbles that remain steady with shaft rotation, no further inspection can be done until disassembled.

OIL

STANDARD PROCEDURE - ENGINE OIL SERVICE

The engine oil level indicator is located at the right hand of the engine on the 6.1L engines.

CRANKCASE OIL LEVEL INSPECTION

CAUTION: Do not overfill crankcase with engine oil, pressure loss or oil foaming can result.

Inspect engine oil level approximately every 800 kilometers (500 miles). Unless the engine has exhibited loss of oil pressure, run the engine for about ten minutes before checking oil level. Checking engine oil level on a cold engine is not accurate.

To ensure proper lubrication of an engine, the engine oil must be maintained at an acceptable level. The acceptable levels are indicated between the ADD and SAFE marks on the engine oil dipstick.

1. Position vehicle on level surface.
2. With engine OFF, allow approximately five minutes for oil to settle to bottom of crankcase, remove engine oil dipstick.
3. Wipe dipstick clean.
4. Install dipstick and verify it is seated in the tube.
5. Remove dipstick, with handle held above the tip, take oil level reading.
6. Add oil only if level is below the ADD mark on dipstick.

ENGINE OIL CHANGE

Change engine oil at mileage and time intervals described in Maintenance Schedules (Refer to LUBRICATION & MAINTENANCE/MAINTENANCE SCHEDULES - DESCRIPTION).

Run engine until achieving normal operating temperature.

1. Position the vehicle on a level surface and turn engine off.
2. Remove oil fill cap.
3. Hoist and support vehicle on safety stands.
4. Remove the belly pan (Refer to 23 - BODY/EXTERIOR/BELLY PAN - REMOVAL).
5. Place a suitable drain pan under crankcase drain.
6. Remove drain plug from crankcase and allow oil to drain into pan. Inspect drain plug threads for stretching or other damage. Replace drain plug if damaged.
7. Install drain plug in crankcase. Torque to 27 N·m (20 ft. lbs.).
8. Lower vehicle and fill crankcase with specified type and amount of engine oil described in this section.
9. Install oil fill cap.
10. Start engine and inspect for leaks.
11. Stop engine and inspect oil level.
12. Install the belly pan (Refer to 23 - BODY/EXTERIOR/BELLY PAN - INSTALLATION).

NOTE: Care should be exercised when disposing used engine oil after it has been drained from a vehicle engine. Refer to the WARNING at beginning of this section.

FILTER-ENGINE OIL

REMOVAL

All engines are equipped with a high quality full-flow, disposable type oil filter. DaimlerChrysler Corporation recommends a Mopar® or equivalent oil filter be used.

1. Remove belly pan (Refer to 23 - BODY/EXTERIOR/BELLY PAN - REMOVAL) .
2. Position a drain pan under the oil filter.
3. Using a suitable oil filter wrench loosen filter.
4. Rotate the oil filter counterclockwise to remove it from the cylinder block oil filter boss.
5. When filter separates from cylinder block oil filter boss, tip gasket end upward to minimize oil spill. Remove filter from vehicle.

NOTE: Make sure filter gasket was removed with filter.

6. With a wiping cloth, clean the gasket sealing surface of oil and grime.

INSTALLATION

1. Lightly lubricate oil filter gasket (2) with engine oil.
2. Thread filter onto adapter nipple. When gasket makes contact with sealing surface, hand tighten filter one half turn, or 180°,do not over tighten.
3. Add oil, verify crankcase oil level and start engine. Inspect for oil leaks.
4. Install belly pan (Refer to 23 - BODY/EXTERIOR/ BELLY PAN - INSTALLATION).

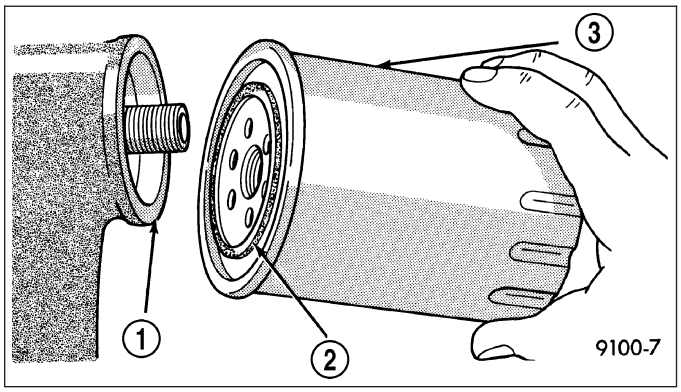

PAN-OIL

REMOVAL

1. Disconnect the negative battery cable.
2. Remove the intake manifold. (Refer to 9 - ENGINE/ MANIFOLDS/INTAKE MANIFOLD - REMOVAL).
3. Install engine lift fixture (2)special tool # 8984 and adapter (4) # 8984–UPD. **Never use air tools when installing fasteners to engine.**
4. Raise vehicle.

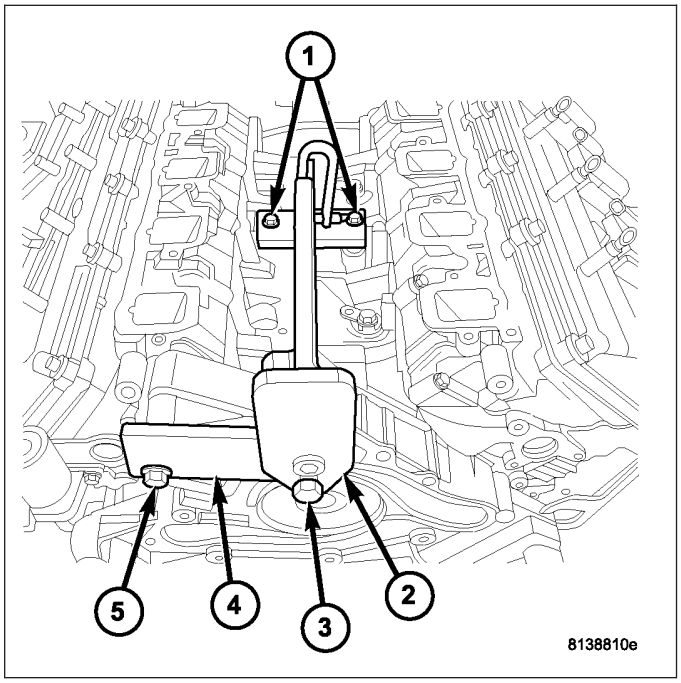

5. Remove the belly pan (2) (Refer to 23 - BODY/EXTERIOR/BELLY PAN - REMOVAL).
6. Drain engine oil and remove the oil filter.
7. Unbolt and lower the steering rack from the mounts. **Do not remove P/S hoses, tie rod ends or disconnect steering column.**

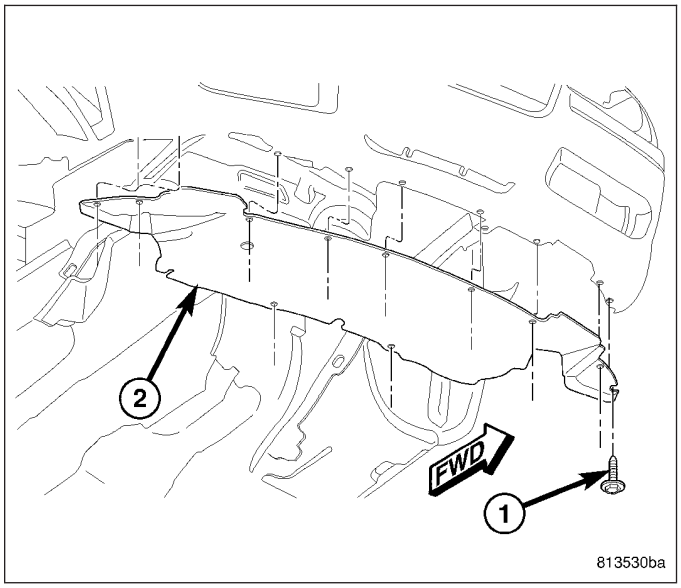

8. Remove both left and right side engine hydromount to frame nuts, and studs (3,4).
9. Remove the engine oil dipstick and tube from the oil pan.
10. Lower the vehicle.
11. Install engine support fixture special tool # 8534. **Do not use the third leg.**
12. Raise engine using special tool # 8534 and #8984 to provide clearance to remove oil pan.

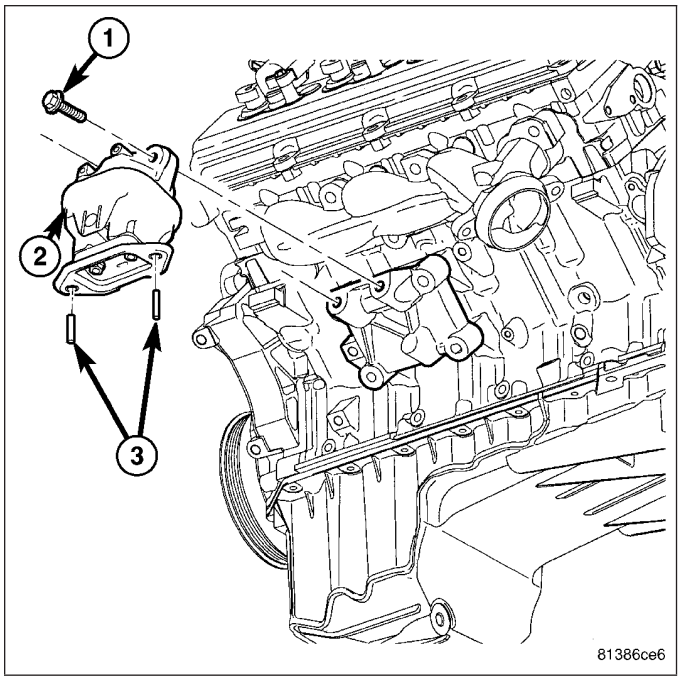

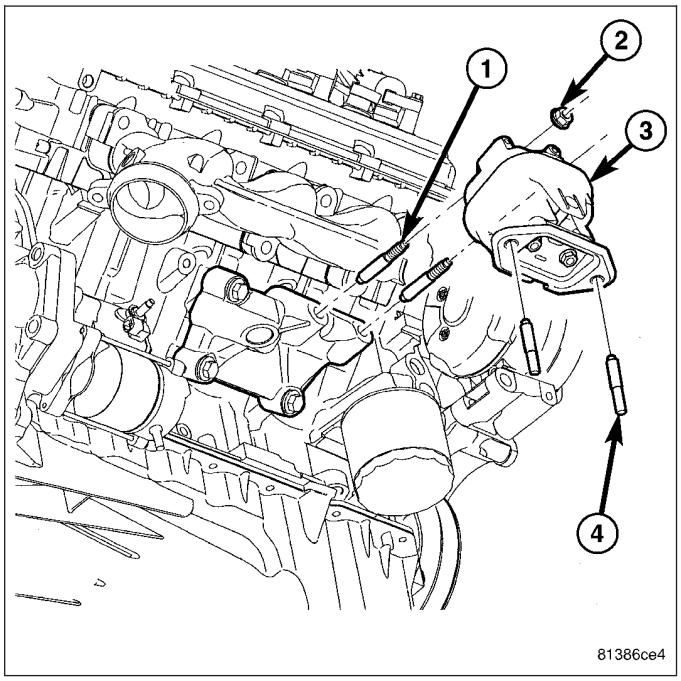

NOTE: Do not pry on oil pan or oil pan gasket. Gasket is integral to engine windage tray and does not come out with oil pan.

NOTE: The horizontal M10 fasteners are 5 mm longer in length, and must be reinstalled in original locations.

13. Remove the M10 fasteners (vertical and horizontal) from the rear of the oil pan to the transmission and engine.
14. Remove the oil pan mounting bolts and oil pan.

NOTE: When the oil pan is removed, a new oil pan gasket/windage tray assembly must be installed. The old gasket cannot be reused.

15. Discard the integral windage tray and gasket and replace.

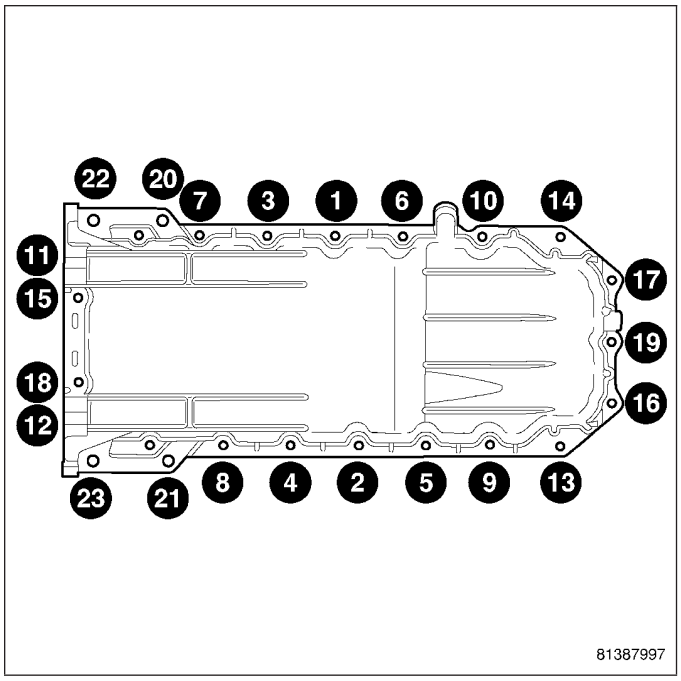

INSTALLATION

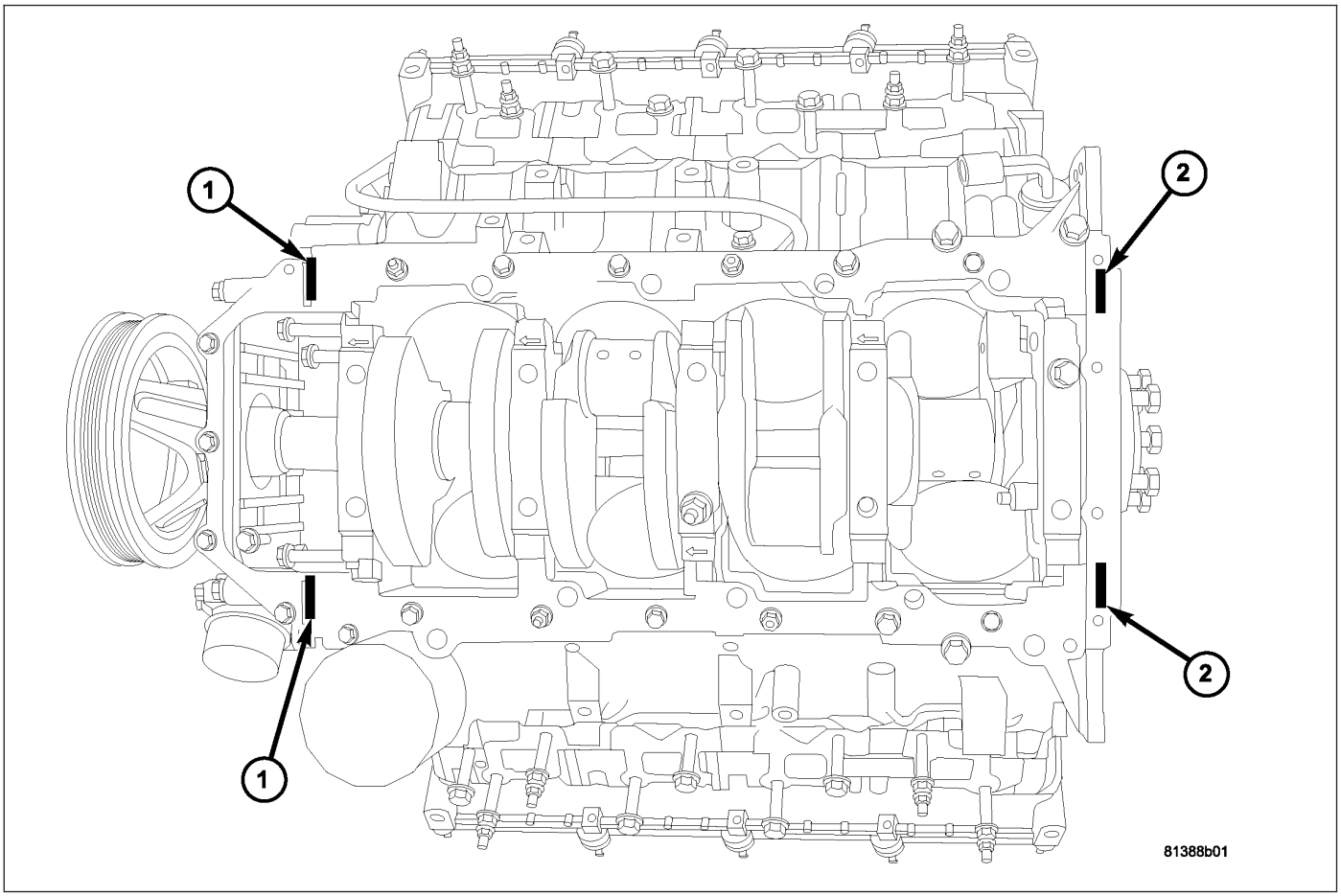

1. Clean the oil pan gasket mating surface of the block and oil pan.

NOTE: Mopar® Engine RTV must be applied to the 4 T-joints, (area where front cover, rear retainer, block, and oil pan gasket meet). The bead of RTV should cover the bottom of the gasket. This area is approximately 4.5 mm x 25 mm in each of the 4 T-joint locations.

2. Apply Mopar® Engine RTV at the 4 T- joints.

NOTE: When the oil pan is removed, a new oil pan gasket/windage tray assembly must be installed. The old gasket cannot be reused.

3. Install a new oil pan gasket/windage tray assembly.
4. If removed, reinstall the oil pump pickup tube with new o-ring. Tighten tube to pump fasteners to 28 N·m (250 in. lbs.).

NOTE: The horizontal M10 fasteners are 5 mm longer in length, and must be reinstalled in original locations.

NOTE: New M6 fasteners must be used when reinstalling the oil pan. Do not reuse the old M6 fasteners.

5. Align the rear of the oil pan with the rear face of the engine block, and install the M10 and M6 oil pan fasteners finger tight. Using the following torque sequence, torque the M6 mounting bolts to 5 N·m (44 in.lbs.).
6. Using the following torque sequence, torque the M10 oil pan fasteners to 54 N·m (39 ft.lbs.).
7. Using the following torque sequence, torque the M6 oil pan fasteners to 12 N·m (106 in.lbs.).
8. Lower the engine into mounts using special tool # 8534.

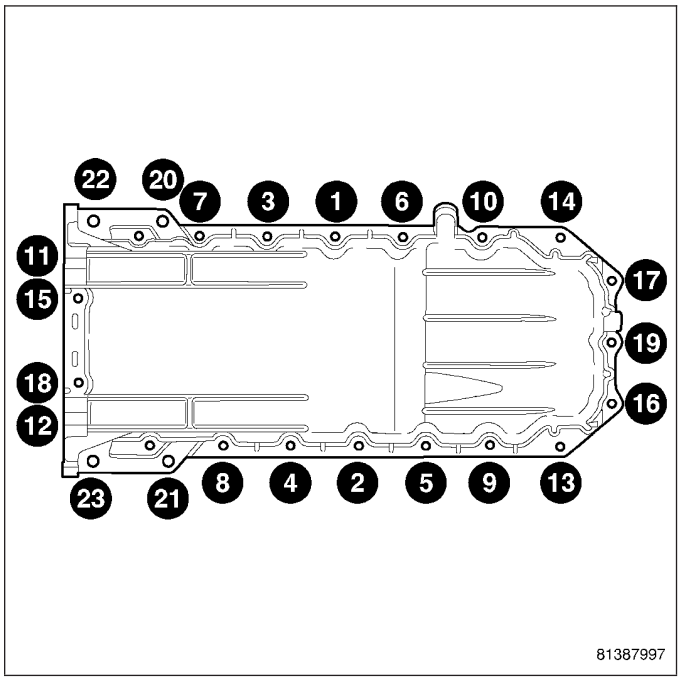

9. Install the left side engine mount studs (3) and nuts. Torque the studs and nuts to N·m (ft. lbs.).

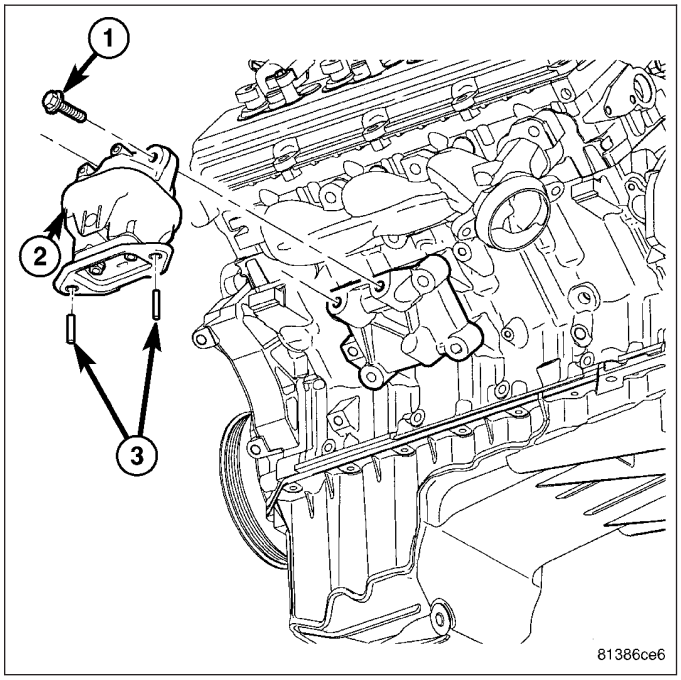

10. Install the right side engine mount studs (4) and nuts. Torque the studs and nuts to N·m (ft. lbs.).
11. Install the engine oil dipstick and tube.
12. Install the steering rack. (Refer to 19 - STEERING/GEAR - INSTALLATION).
13. Remove special tool # 8534.

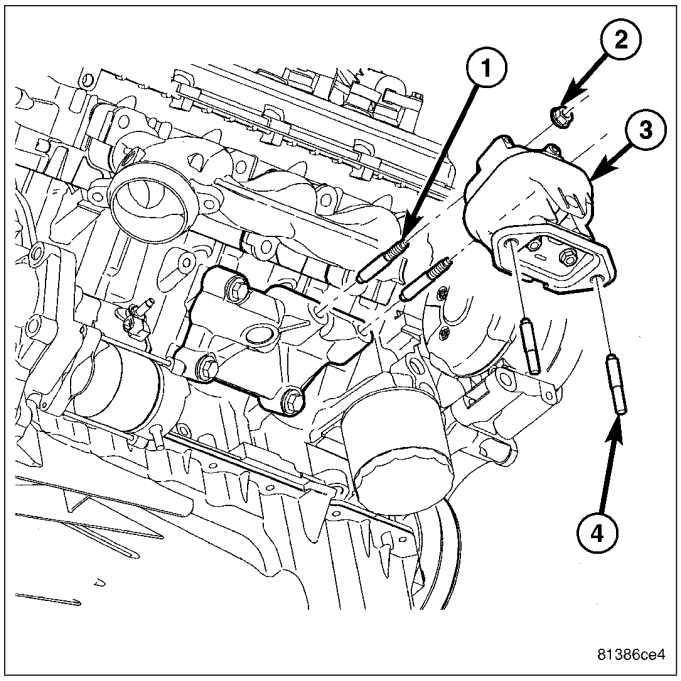

14. Remove special tool # 8984 (2).
15. Install the intake manifold. (Refer to 9 - ENGINE/MANIFOLDS/INTAKE MANIFOLD - INSTALLATION).
16. Fill engine oil.
17. Install oil filter, if removed.

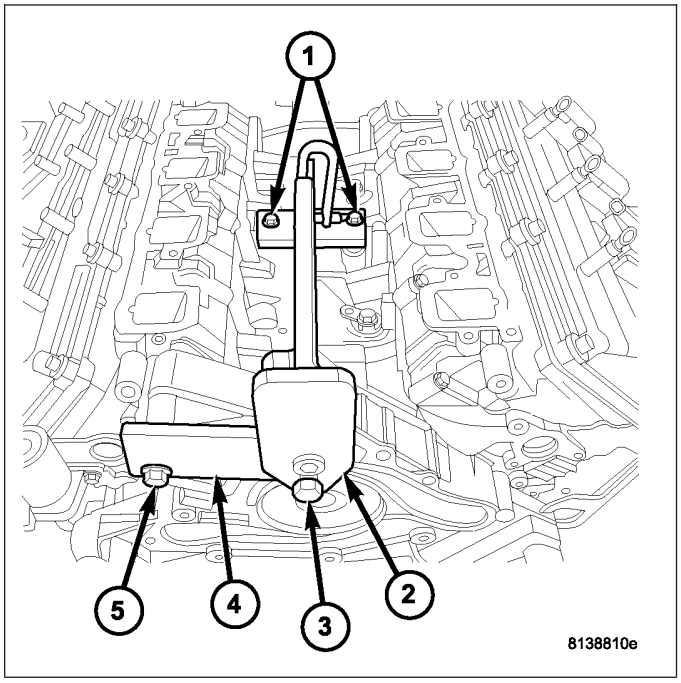

18. Reconnect the negative battery cable.
19. Start engine and check for leaks.
20. Install the belly pan (2) (Refer to 23 - BODY/EXTERIOR/BELLY PAN - INSTALLATION).

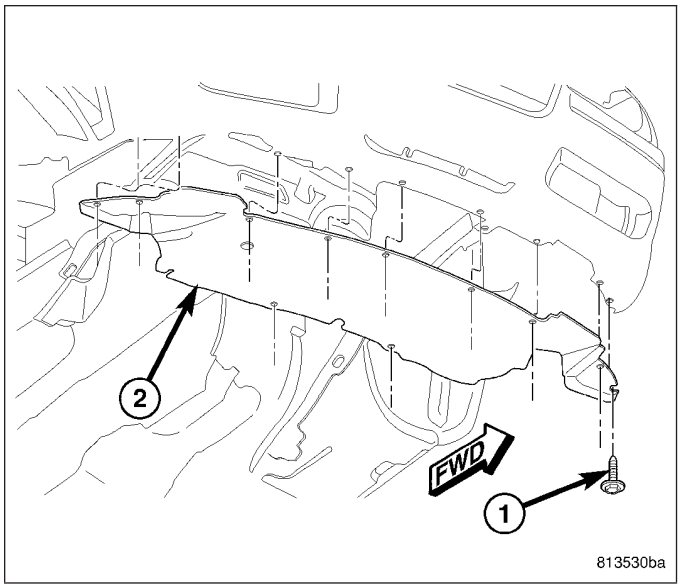

PUMP-ENGINE OIL

REMOVAL

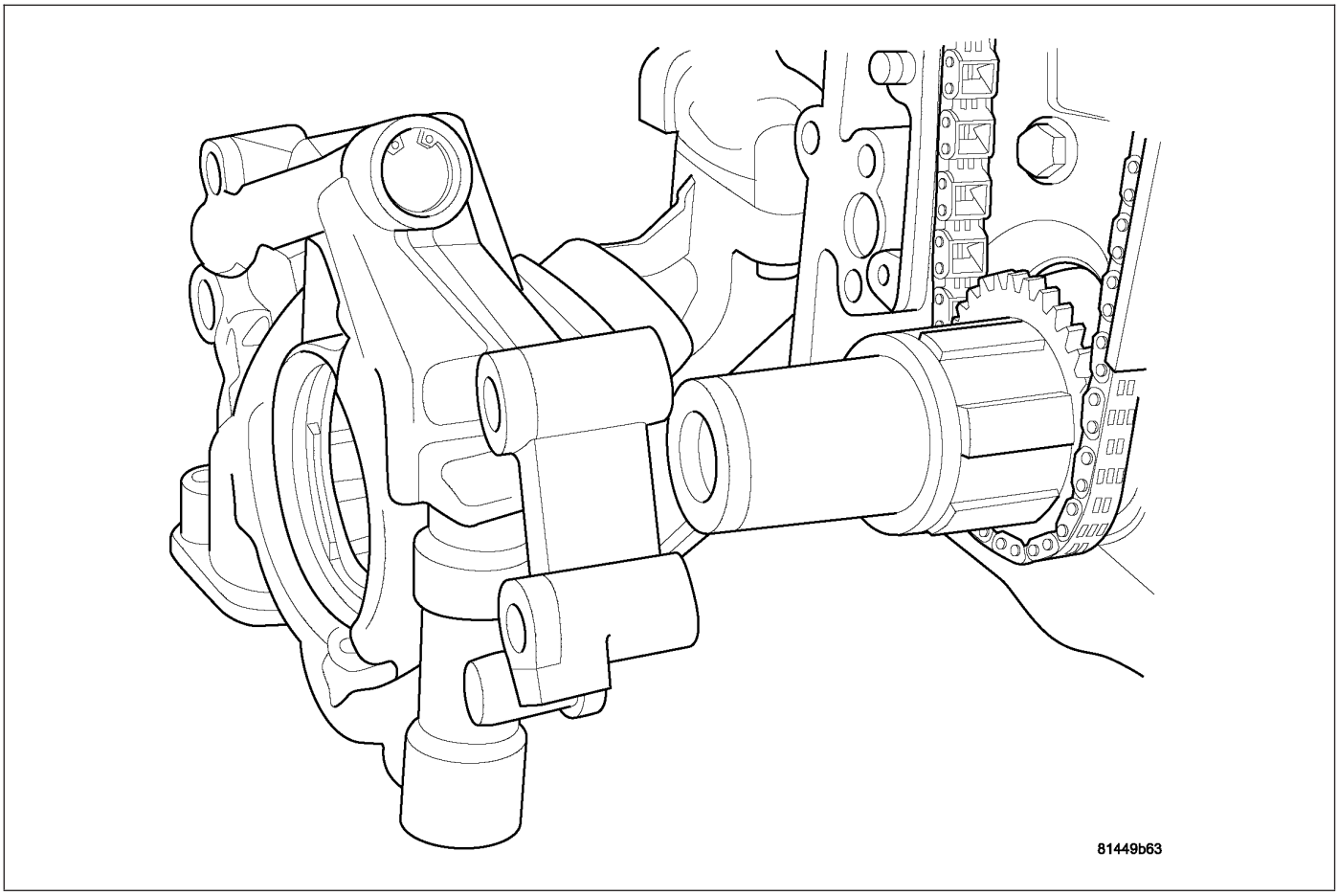

1. Remove the oil pan and pick-up tube (Refer to 9 - ENGINE/LUBRICATION/OIL PAN - REMOVAL).
2. Remove the timing chain cover (Refer to 9 - ENGINE/VALVE TIMING/TIMING BELT / CHAIN COVER(S) - REMOVAL).
3. Remove the four bolts, and the oil pump.

CLEANING

1. Wash all parts in a suitable solvent.

INSPECTION

CAUTION: Oil pump pressure relief valve and spring should not be removed from the oil pump. If these components are disassembled and or removed from the pump the entire oil pump assembly must be replaced.

1. Remove the pump cover.
2. Clean all parts thoroughly. Mating surface of the oil pump housing should be smooth. If the pump cover is scratched or grooved the oil pump assembly should be replaced.
3. Slide outer rotor into the body of the oil pump. Press the outer rotor to one side of the oil pump body and measure clearance between the outer rotor (2) and the body. If the measurement is 0.235mm (0.009 in.) or more the oil pump assembly must be replaced.

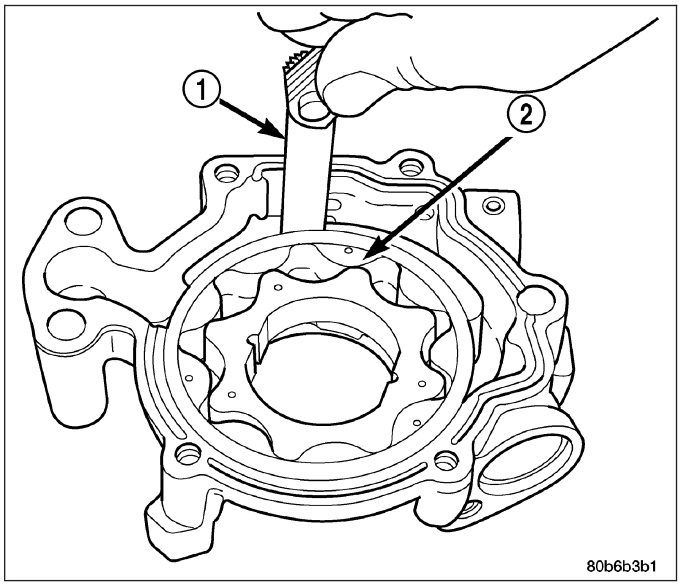

4. Install the inner rotor in the into the oil pump body. Measure the clearance between the inner (3) and outer rotors (1). If the clearance between the rotors is .150 mm (0.006 in.) or more the oil pump assembly must be replaced.

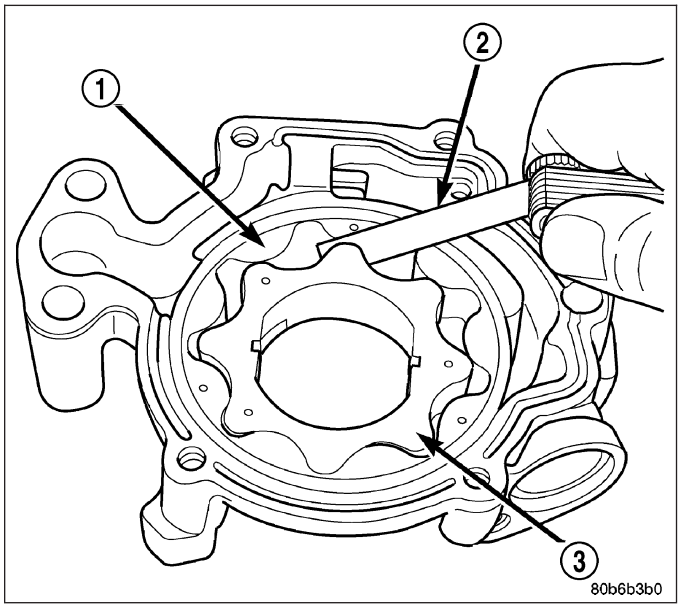

5. Place a straight edge (1) across the body of the oil pump (between the bolt holes), if a feeler gauge (2) of .095 mm (0.0038 in.) or greater can be inserted between the straightedge and the rotors, the pump must be replaced.
6. Reinstall the pump cover. Torque fasteners to 15 N·m (132 in. lbs.).

NOTE: The 6.1L Oil pump is released as an assembly. There are no DaimlerChrysler part numbers for Sub-Assembly components. In the event the oil pump is not functioning or out of specification it must be replaced as an assembly.

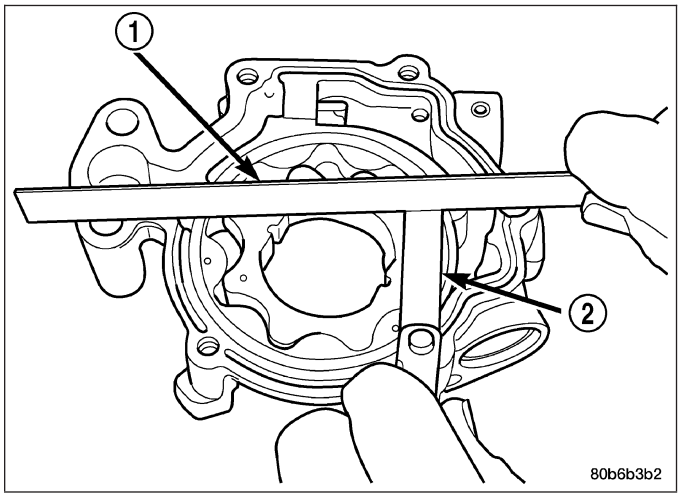

INSTALLATION

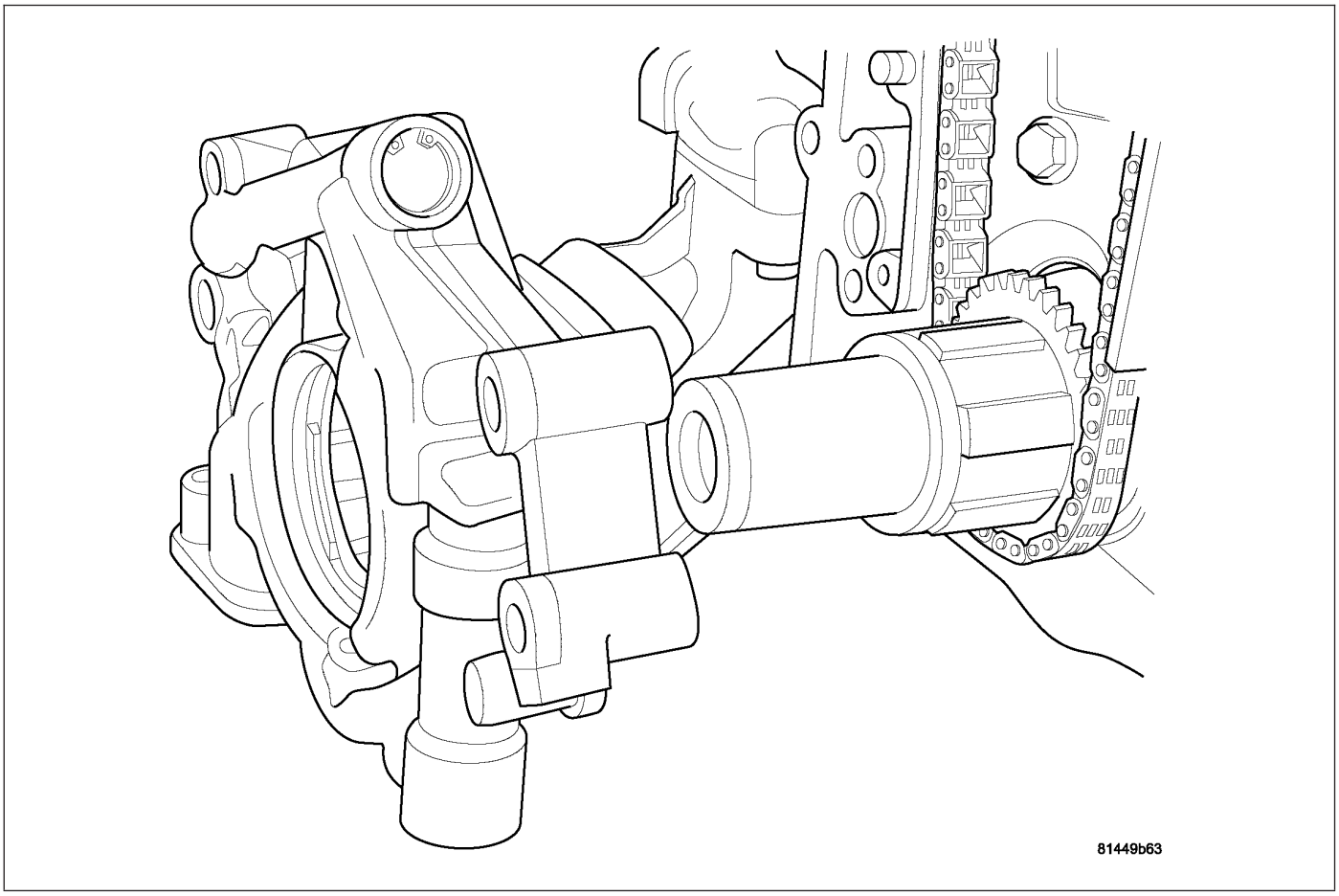

1. Position the oil pump onto the crankshaft and install the 4 oil pump retaining bolts.
2. Tighten the oil pump retaining bolts to 28 N·m (250 in. lbs.).
3. Install the timing chain cover (Refer to 9 - ENGINE/VALVE TIMING/TIMING BELT / CHAIN COVER(S) - INSTALLATION).
4. Install the pick-up tube and oil pan (Refer to 9 - ENGINE/LUBRICATION/OIL PAN - INSTALLATION).

MANIFOLD - INTAKE

DESCRIPTION

The intake manifold is made of aluminum, and features runners to maximize power. The intake manifold uses single plane sealing which consist of two edge molded gaskets to prevent leaks.

DIAGNOSIS AND TESTING - INTAKE MANIFOLD LEAKAGE

An intake manifold air leak is characterized by lower than normal manifold vacuum. Also, one or more cylinders may not be functioning.

WARNING: USE EXTREME CAUTION WHEN THE ENGINE IS OPERATING. DO NOT STAND IN A DIRECT LINE WITH THE FAN. DO NOT PUT YOUR HANDS NEAR THE PULLEYS, BELTS OR THE FAN. DO NOT WEAR LOOSE CLOTHING.

1. Start the engine.
2. Spray a small stream of water at the suspected leak area.
3. If a change in RPM is observed the area of the suspected leak has been found.
4. Repair as required.

REMOVAL

1. Remove engine covers (1).
2. Bleed fuel system (Refer to 14 - FUEL SYSTEM/ FUEL DELIVERY - STANDARD PROCEDURE).
3. Disconnect negative cable from battery.
4. Remove air inlet hose.
5. Disconnect electrical connectors for the following components:
   - Manifold Absolute Pressure (MAP) Sensor
   - Fuel Injectors
   - ETC (Electric Throttle Control)
6. Disconnect brake booster hose, purge hose, and MUA hose (Make Up Air Hose).
7. Remove intake manifold retaining fasteners in a crisscross pattern starting from the outside bolts and ending at the middle bolts.
8. Remove intake manifold as an assembly.

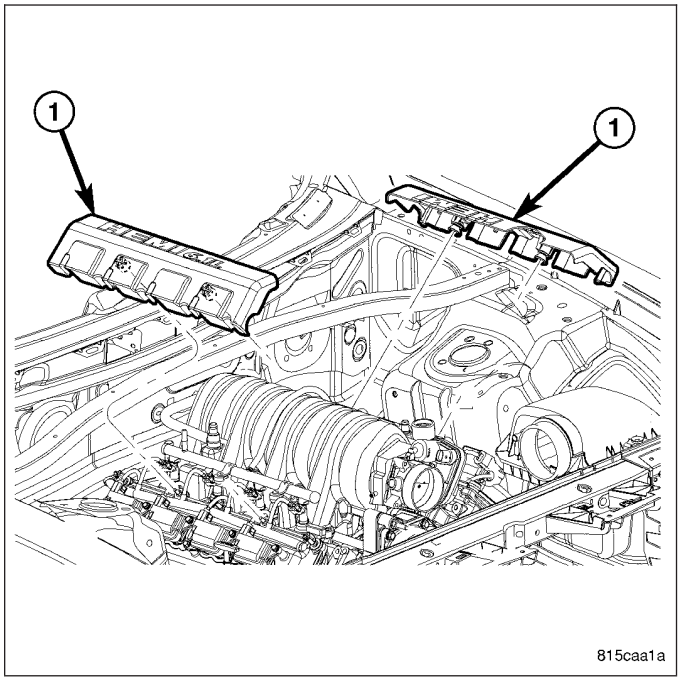

CLEANING

NOTE: There is NO approved repair procedure for the intake manifold. If severe damage is found during inspection, the intake manifold must be replaced.

Before installing the intake manifold thoroughly clean the mating surfaces. Use a suitable cleaning solvent, then air dry.

INSPECTION

1. Inspect the intake sealing surface for cracks, nicks and distortion.
2. Inspect the intake manifold vacuum hose fittings for looseness or blockage.

INSTALLATION

1. Position intake manifold.
2. Install intake manifold retaining bolts, and tighten in sequence from the middle bolts towards the outside in a crisscross pattern. Torque fasteners to 124 N·m (124 in. lbs.).
3. Connect electrical connectors for the following components:
   - Manifold Absolute Pressure (MAP) Sensor
   - Fuel Injectors
   - ETC (Electronic Throttle Control)
4. Connect Brake booster hose, purge hose, and MUA hose (Make Up Air hose).
5. Install air inlet hose.
6. Connect negative cable to battery.
7. Install engine covers (1).

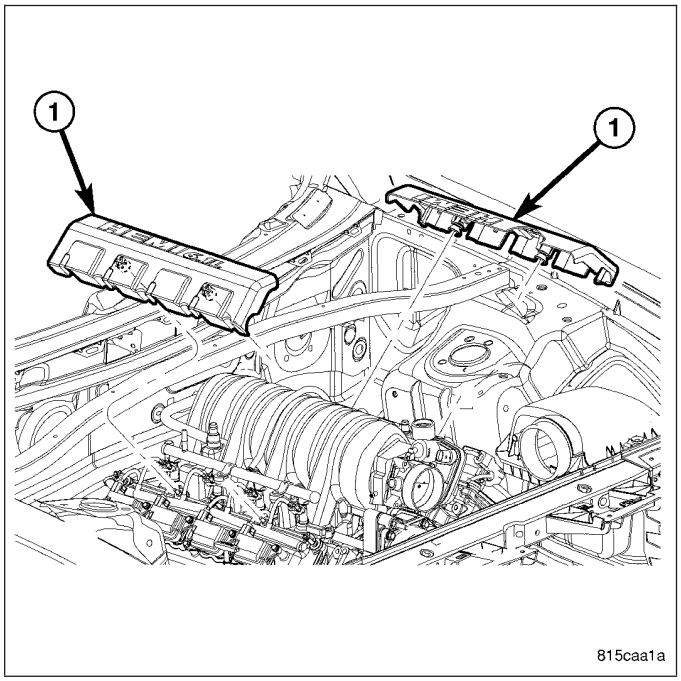

MANIFOLD - EXHAUST

DESCRIPTION

The exhaust manifolds are tube in shell airgap design to maximize durability and performance. The exhaust manifolds are made of stainless steel stamped shells and stainless steel tubes with a powdered metal outlet. A layered graphite over perforated steel manifold gasket is used to provide sealing to the cylinder head.

OPERATION

The exhaust manifolds collect the engine exhaust exiting the combustion chambers, then channels the exhaust gases to the exhaust pipes attached to the manifolds.

REMOVAL

EXHAUST MANIFOLD - LEFT SIDE

1. Disconnect negative battery cable.
2. Remove exhaust pipe to manifold bolts, remove pipe.
3. Remove knock sensor.
4. Remove air cleaner housing (1).
5. Remove coolant bottle, and set aside without removing hoses.
6. Remove the top row of bolts from manifold from under the hood.
7. Remove the bottom row of bolts from manifold from under vehicle.
8. Remove manifold from under vehicle.

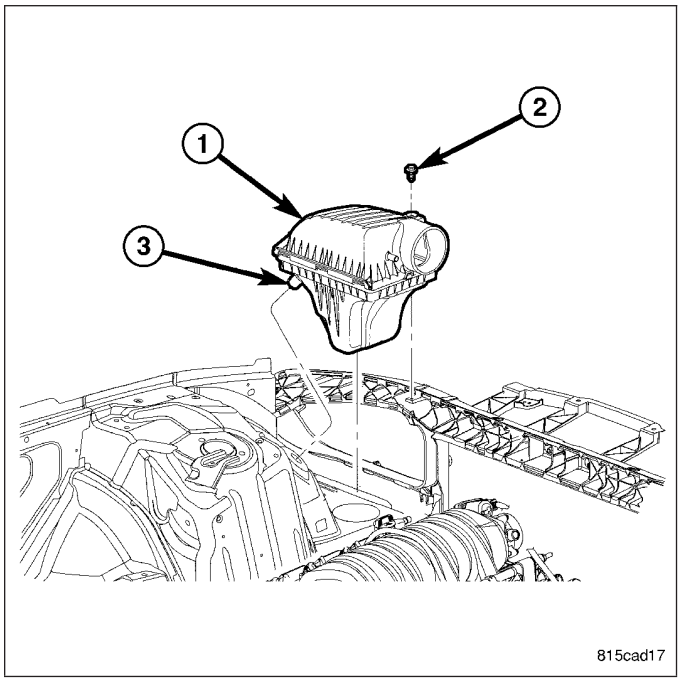

EXHAUST MANIFOLD - RIGHT SIDE

1. Disconnect negative battery cable.
2. Remove exhaust pipe to manifold bolts, remove pipe.
3. Remove knock sensor.
4. Remove starter (1) and heat shield (4).
5. Remove power distribution box.
6. Loosen the power distribution box mounting bracket.
7. Unfasten, and relocate the wire harness mounted on the right hand inner fender panel.
8. Remove the top row of bolts from manifold from under the hood.
9. Remove the bottom row of bolts from manifold from under vehicle.
10. Remove the manifold from under vehicle.

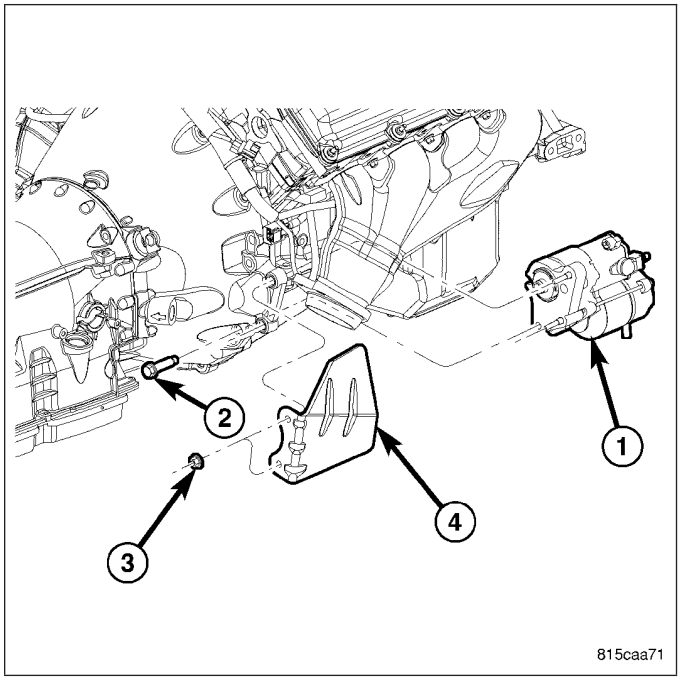

CLEANING

Clean mating surfaces on cylinder head and manifold. Wash with solvent and blow dry with compressed air.

INSPECTION

Inspect manifold for cracks.

Inspect mating surfaces of manifold for flatness with a straight edge. Gasket surfaces must be flat within 0.375 mm (0.0147 in.) around each port opening, and 0.75 mm (0.0295 in.) overall.

INSTALLATION

EXHAUST MANIFOLD - LEFT SIDE

1. Install manifold gasket and manifold.
2. Install manifold bolts and torque to 31 N·m (23 ft. lbs.) using the sequence provided.
3. Install the coolant bottle.

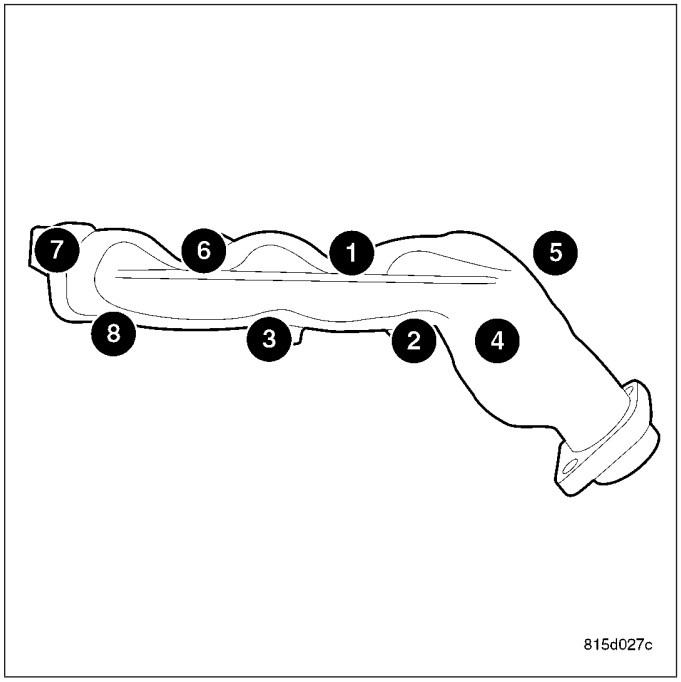

4. Install the air cleaner housing (1).
5. Install the knock sensor.
6. Install the exhaust pipe to manifold bolts.
7. Reconnect negative battery cable.

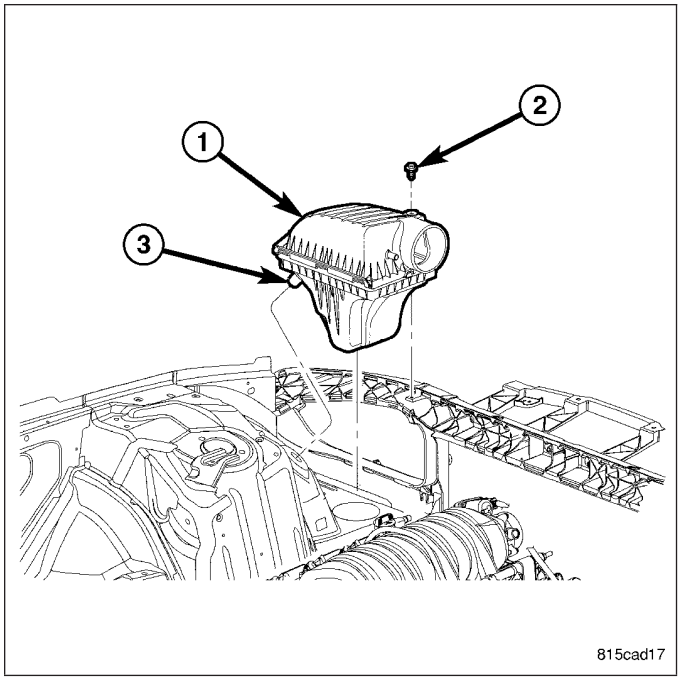

EXHAUST MANIFOLD - RIGHT SIDE

1. Install manifold gasket and manifold.
2. Install manifold bolts and torque to 31 N·m (23 ft. lbs.) using the sequence provided.
3. Reconnect the wire harness mounted on the right hand inner fender panel.
4. Reinstall the power distribution box mounting bracket.
5. Install the power distribution box.

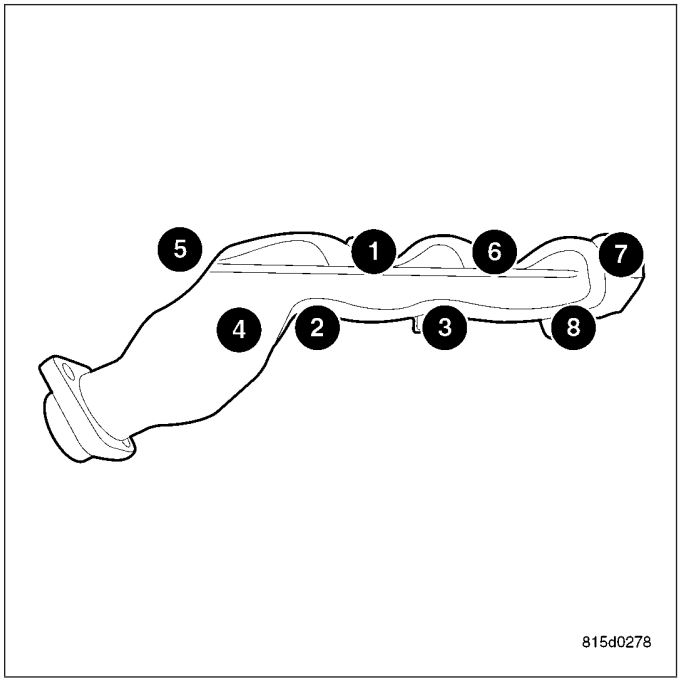

6. Install the starter (1) and heat shield (4).
7. Install the knock sensor.
8. Install the exhaust pipe to manifold bolts.
9. Reconnect negative battery cable.

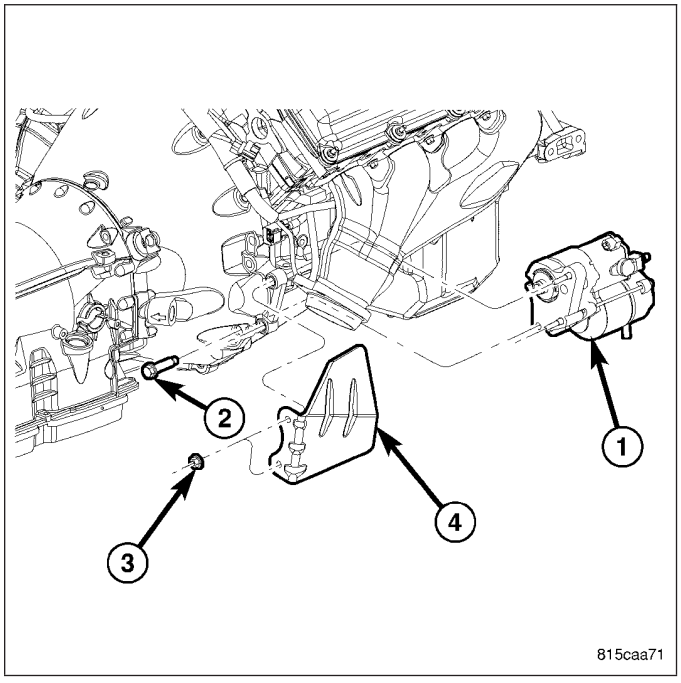

COVER-TIMING

REMOVAL

1. Disconnect the battery negative cable.
2. Remove the engine cover (1).
3. Remove air cleaner assembly.
4. Drain cooling system.
5. Remove accessory drive belt.
6. Remove fan and fan drive assembly (Refer to 7 - COOLING/ENGINE/FAN DRIVE VISCOUS CLUTCH - REMOVAL).
7. Remove coolant bottle and washer bottle.
8. Remove fan shroud.

NOTE: It is not necessary to disconnect A/C lines or discharge freon.

9. Remove A/C compressor and set aside.

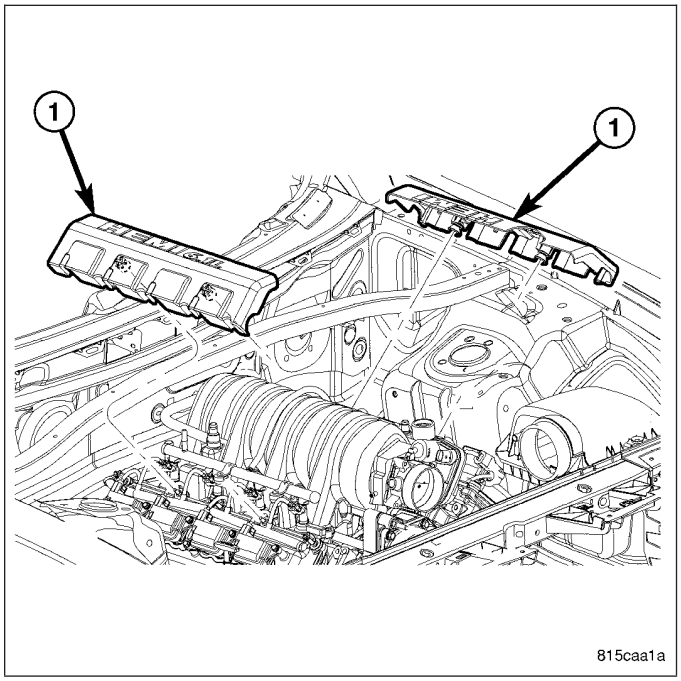

10. Remove the generator.
11. Remove upper radiator hose.
12. Disconnect both heater hoses at timing cover.
13. Disconnect lower radiator hose at engine.
14. Remove accessory drive belt tensioner and both idler pulleys.
15. Remove crankshaft damper (2) (Refer to 9 - ENGINE/ENGINE BLOCK/VIBRATION DAMPER - REMOVAL).

NOTE: Do not remove the hoses from the power steering pump.

16. Remove power steering pump and set aside.

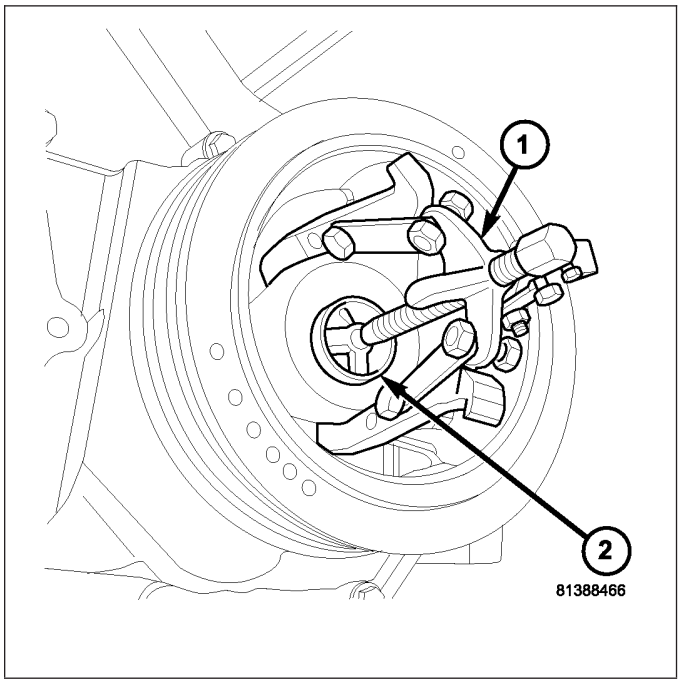

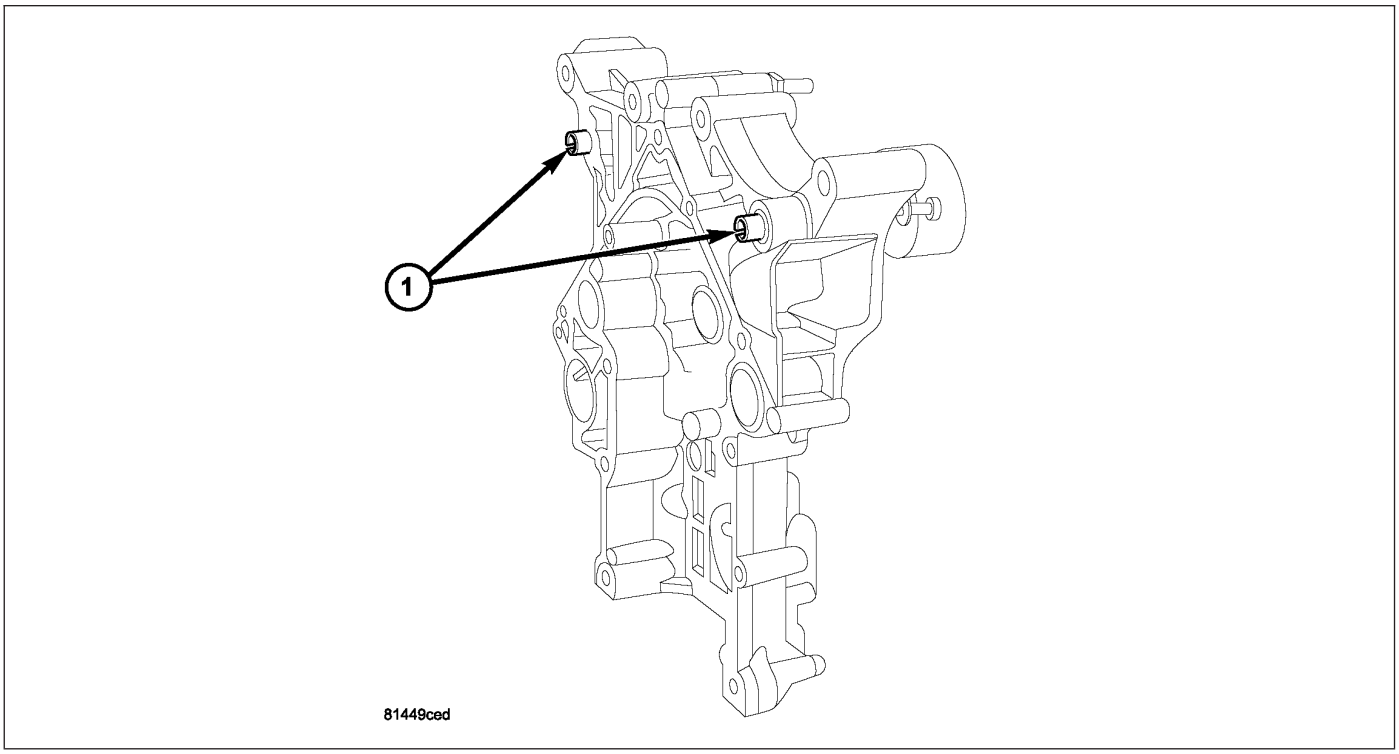

17. Remove the dipstick support bolt.
18. Drain the engine oil.
19. Remove the oil pan and pick up tube (Refer to 9 - ENGINE/LUBRICATION/OIL PAN - REMOVAL).

NOTE: It is not necessary to remove water pump for timing cover removal.

20. Remove timing cover bolts and remove cover.
21. Verify that timing cover slide bushings (1) are located in timing cover.

INSTALLATION

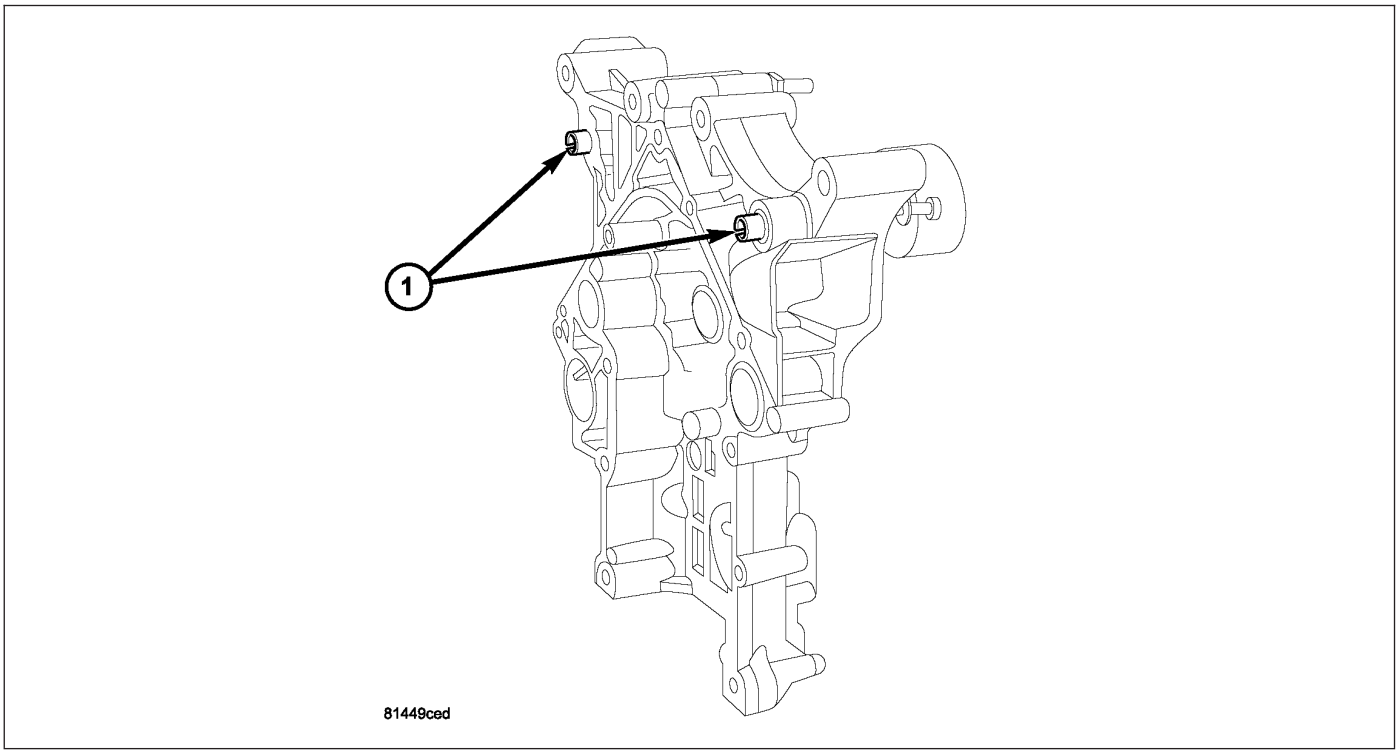

1. Clean timing chain cover and block surface.

NOTE: Always install a new gasket on timing cover.

2. Verify that the slide bushings (1) are installed in timing cover.
3. Install cover and new gasket. Tighten fasteners to 28 N·m (250 in. lbs.).

NOTE: The large lifting stud is torqued to 55 N·m (40 ft. lbs.).

4. Install the oil pan and pick up tube (Refer to 9 - ENGINE/LUBRICATION/OIL PAN - INSTALLATION).
5. Install the A/C compressor.
6. Install the generator.
7. Install power steering pump.
8. Install the dipstick support bolt.
9. Install the thermostat housing.
10. Install crankshaft damper (Refer to 9 - ENGINE/ENGINE BLOCK/VIBRATION DAMPER - INSTALLATION).
11. Install accessory drive belt tensioner assembly and both idler pulleys.

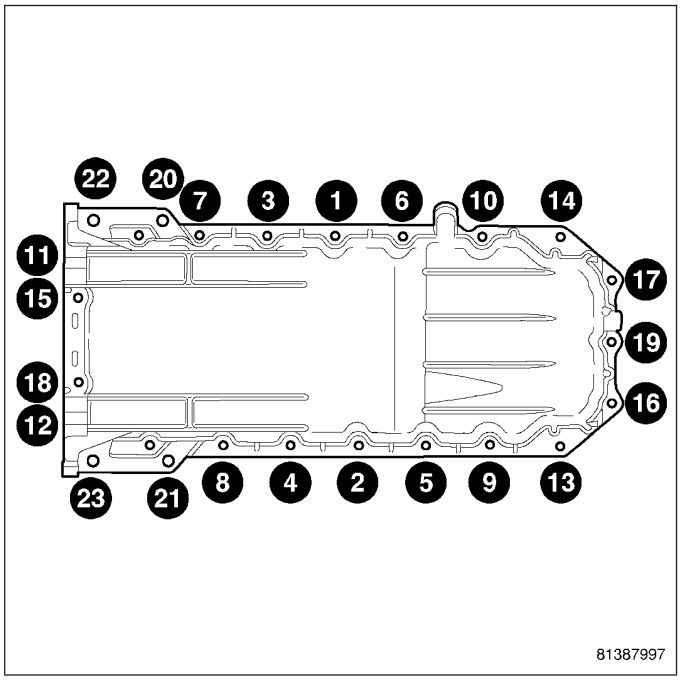

12. Install radiator lower hose.
13. Install both heater hoses.
14. Install radiator fan shroud.
15. Install the fan and fan drive assembly
16. Install the accessory drive belt.
17. Install the coolant bottle and washer bottle.
18. Install the upper radiator hose.
19. Install the air cleaner assembly.
20. Fill cooling system.
21. Refill engine oil.
22. Connect the battery negative cable.
23. Install the engine cover (1).

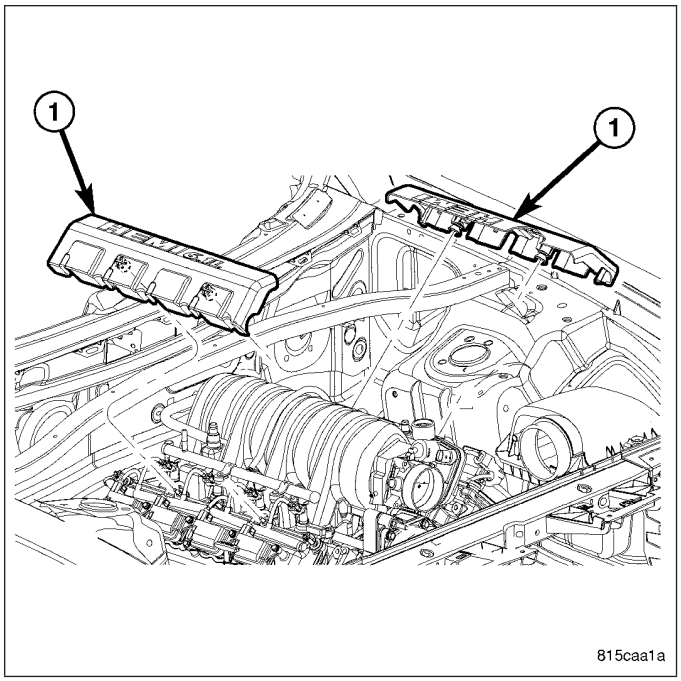

TIMING CHAIN & SPROCKETS

REMOVAL

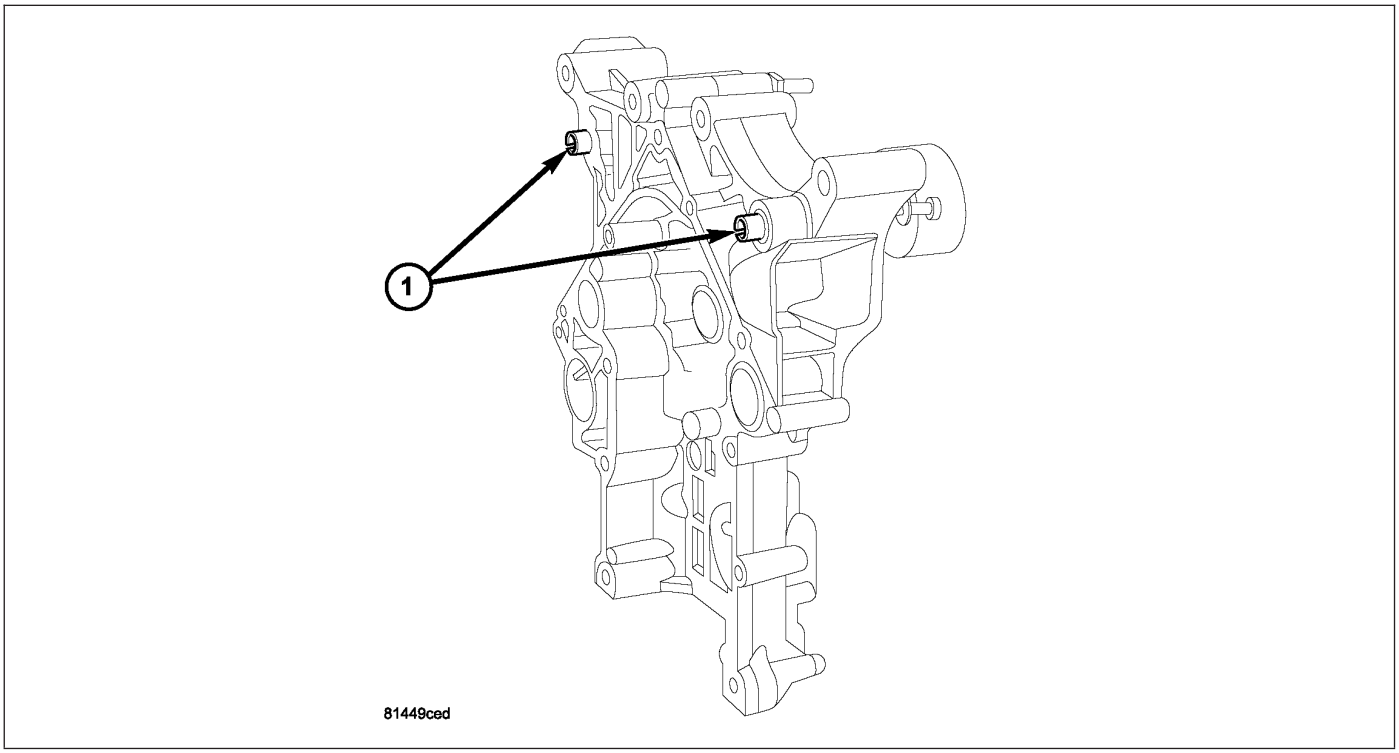

1. Disconnect battery negative cable.
2. Drain cooling system.
3. Remove Timing Chain Cover (1).
4. Re-install the vibration damper bolt finger tight. Using a suitable socket and breaker bar, rotate the crankshaft to align timing chain sprockets and keyways as shown.

CAUTION: The camshaft pin and the slot in the cam sprocket must be clocked at 12:00 (2). The crankshaft keyway must be clocked at 2:00 (3). The crankshaft sprocket must be installed so that the dots and or paint marking is at 6:00.

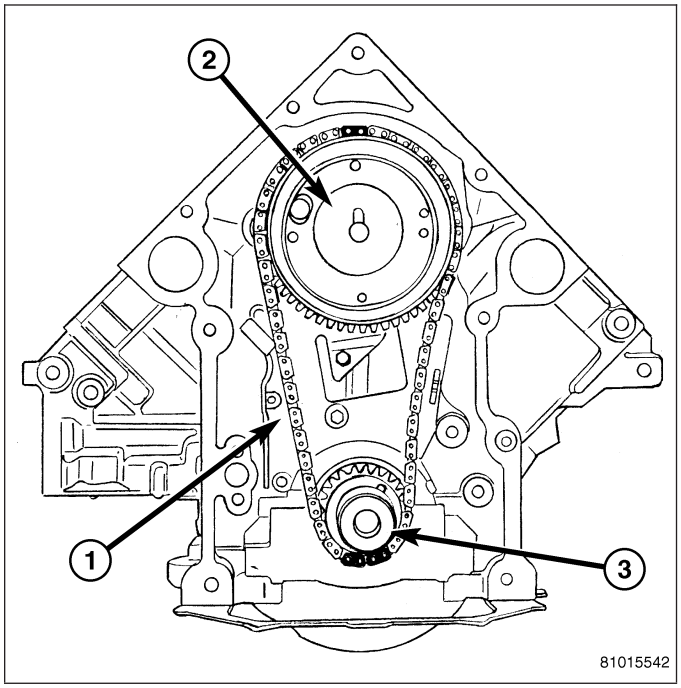

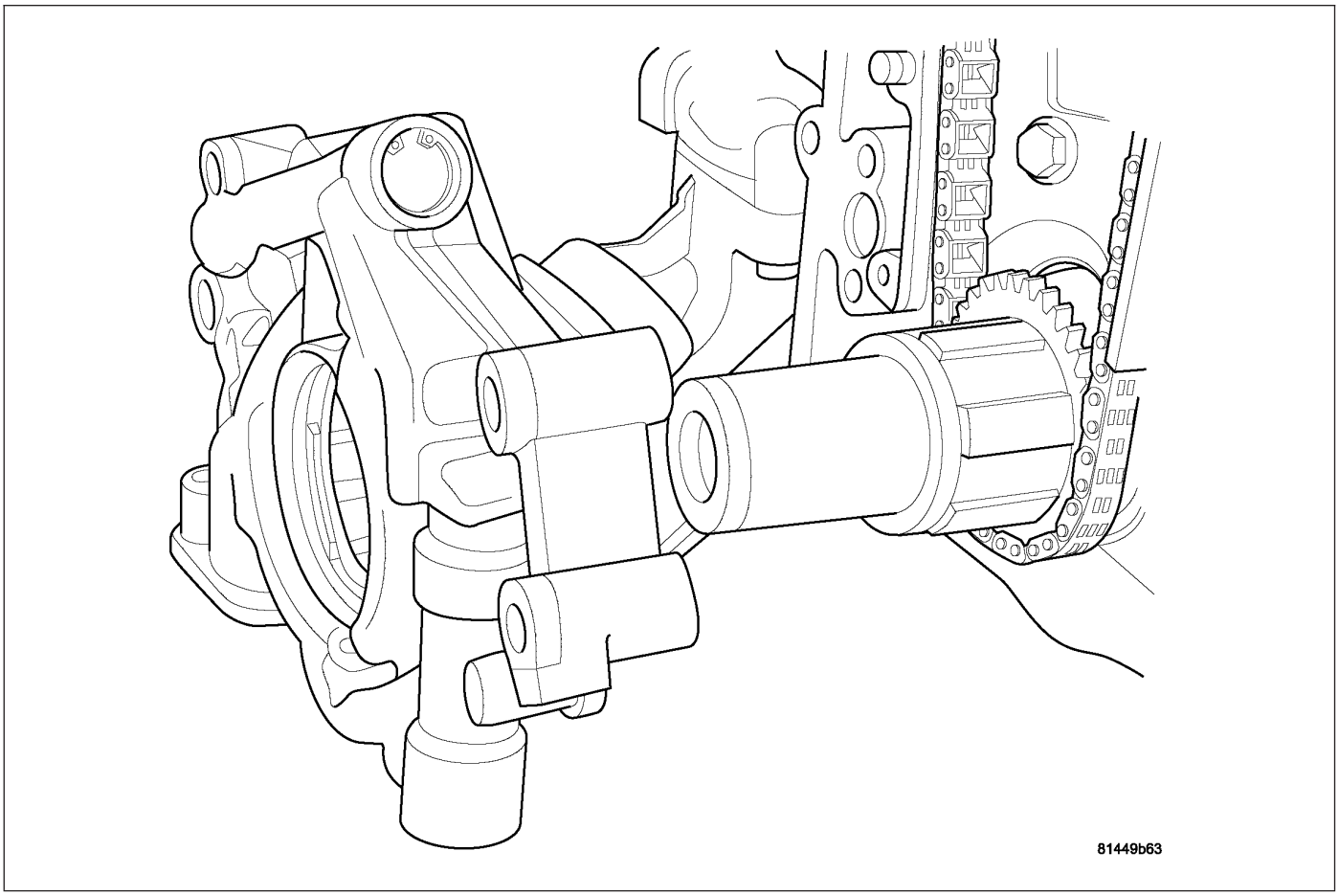

5. Remove oil pump.

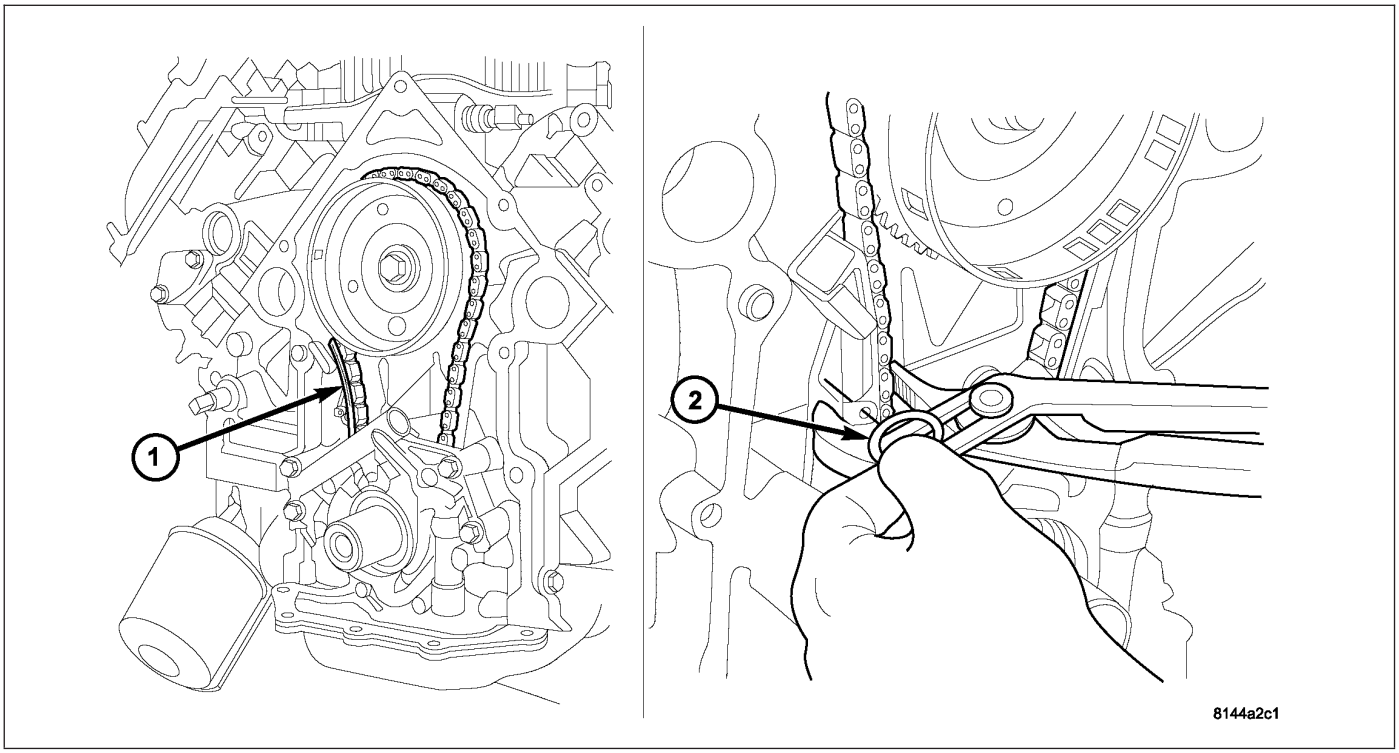

6. Retract tensioner shoe (1) until hole in shoe lines up with hole in bracket..

7. Slide a suitable pin (2) into the holes.

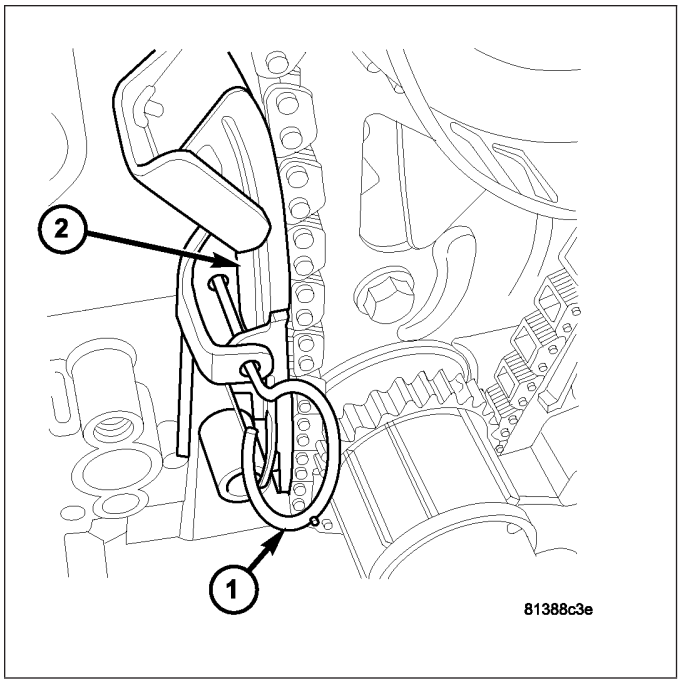

8. Remove camshaft sprocket attaching bolt and remove timing chain with crankshaft and camshaft sprockets (2).
9. If tensioner assembly is to be replaced, remove the tensioner to block bolts and remove tensioner assembly.

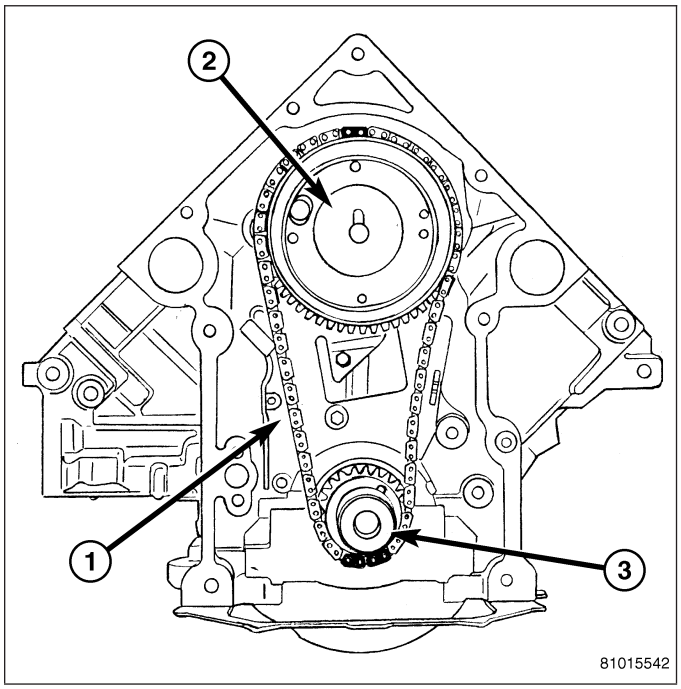

INSTALLATION

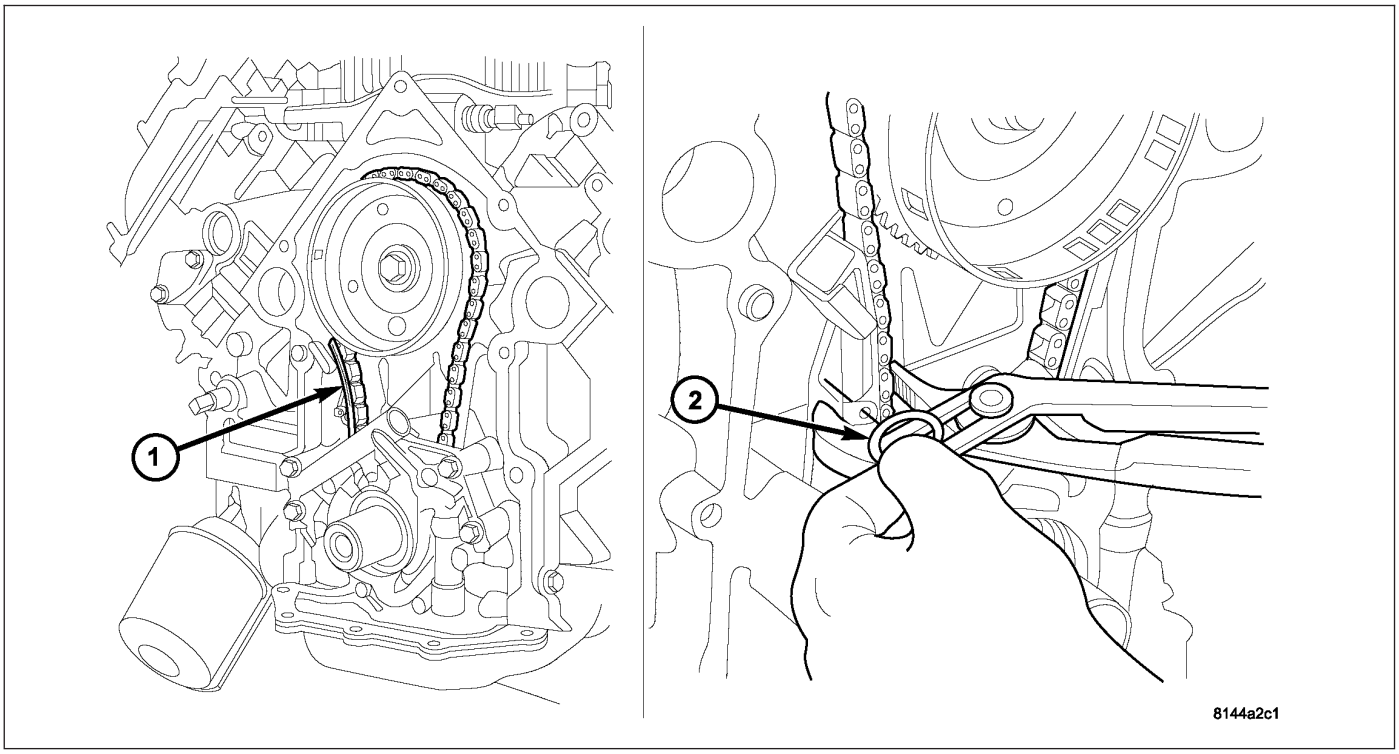

1. If tensioner (1) assembly is being replaced, install tensioner and mounting bolts. Torque bolts to 28 N·m (250 in. lbs.).
2. Retract tensioner (2) if required.

CAUTION: The timing chain must be installed with the single plated link aligned with the dot and or paint marking on the camshaft sprocket. The crankshaft sprocket is aligned with the dot and or paint marking on the sprocket between two plated timing chain links.

CAUTION: The camshaft pin and the slot in the cam sprocket must be clocked at 12:00. The crankshaft keyway must be clocked at 2:00. The crankshaft sprocket must be installed so that the dots and or paint marking is at 6:00.

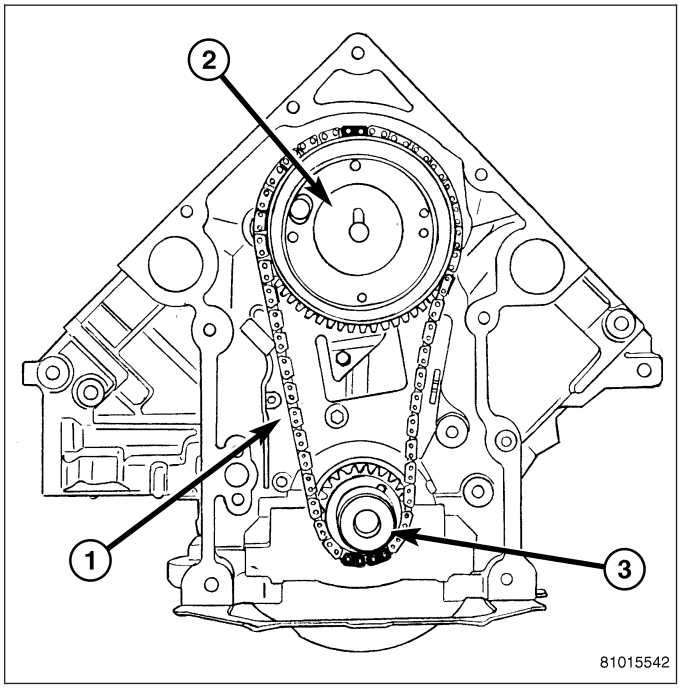

3. Place both camshaft sprocket and crankshaft sprocket on the bench with timing marks on exact imaginary center line through both camshaft and crankshaft bores.
4. Place timing chain around both sprockets.
5. Lift sprockets and chain (keep sprockets tight against the chain in position as shown).
6. Slide both sprockets (2,3) evenly over their respective shafts and check alignment of timing marks.
7. Install the camshaft bolt. Tighten the bolt to 122 N·m (90 ft. lbs.) torque.

8. **Remove tensioner pin. (1)** Again, verify alignment of timing marks.

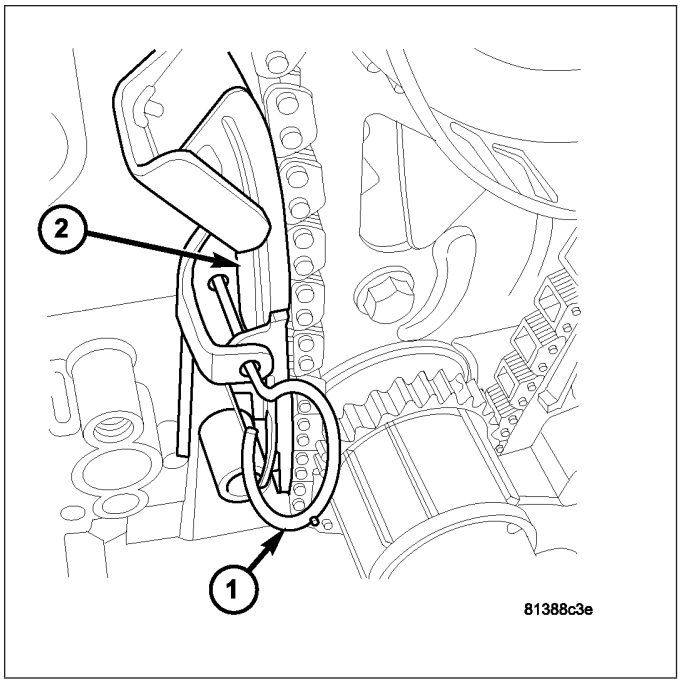

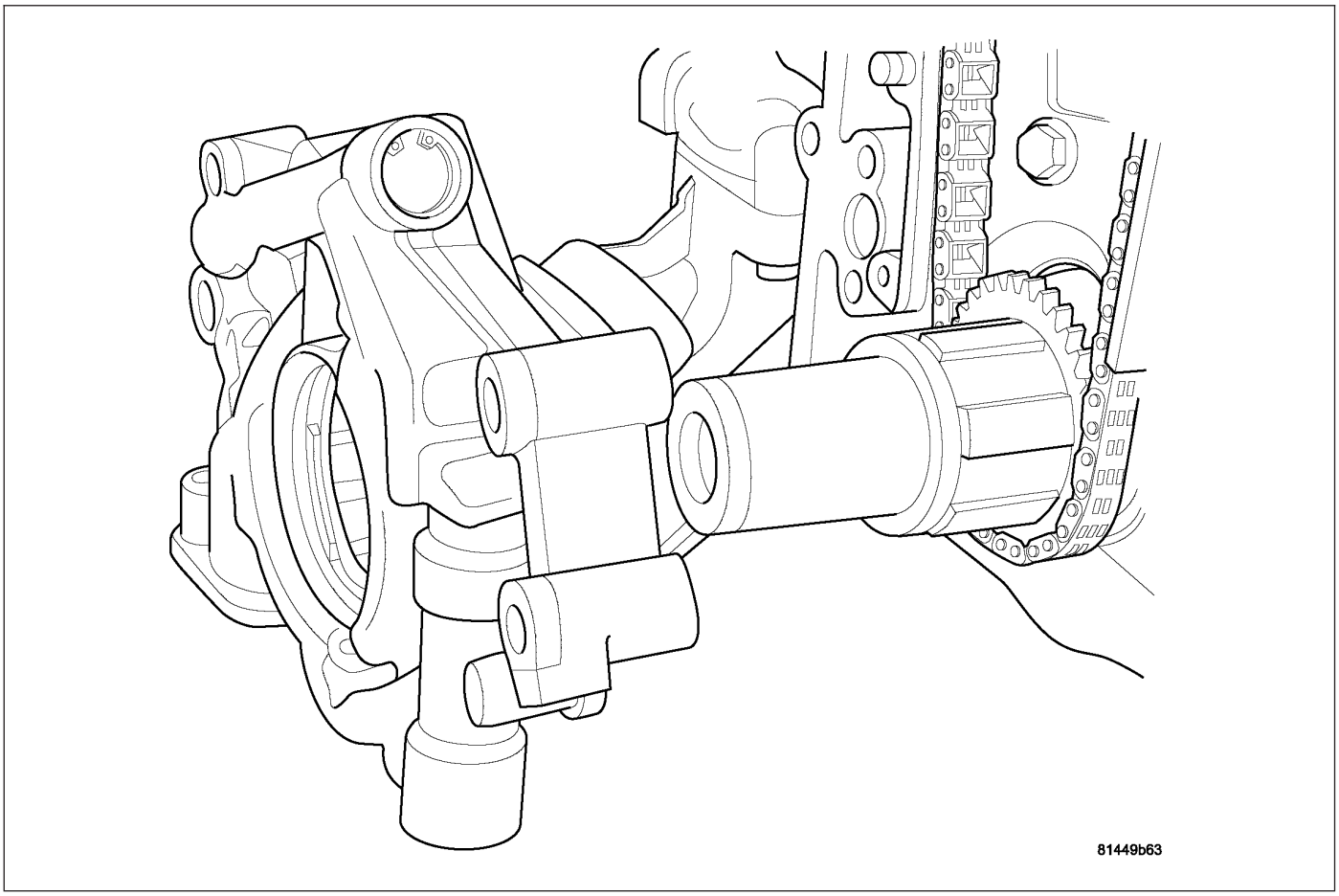

9. Install the oil pump (Refer to 9 - ENGINE/LUBRICATION/OIL PUMP - INSTALLATION).
10. Install the oil pan and pick up (Refer to 9 - ENGINE/LUBRICATION/OIL PAN - INSTALLATION).

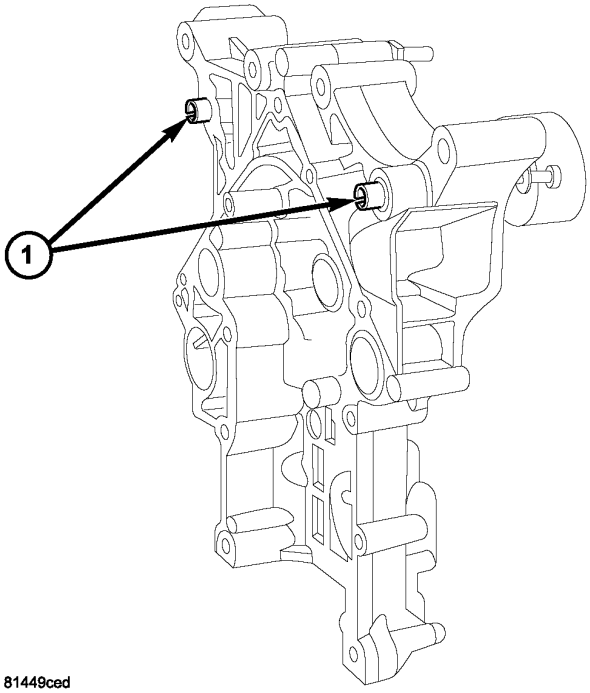

11. Install the timing chain cover (Refer to 9 - ENGINE/VALVE TIMING/TIMING BELT / CHAIN COVER(S) - INSTALLATION).
12. Refill engine oil.
13. Fill cooling system (Refer to 7 - COOLING - STANDARD PROCEDURE).
14. Connect battery negative cable.
15. Start engine and check for oil and coolant leaks.

TENSIONER - TIMING CHAIN

DESCRIPTION

The timing chain tensioner is a stamped steel constant tension mechanical design. It is mounted to the front of the engine, behind the timing chain drive.

OPERATION

The timing chain tension is maintained by routing the timing chain through the tensioner assembly. A nylon covered spring steel arm presses on the timing chain maintaining the correct chain tension.

ENGINE - 3.0L TD SERVICE INFORMATION

TABLE OF CONTENTS

page

ENGINE - 3.0L TD SERVICE INFORMATION
DESCRIPTION
3.0L COMMON RAIL DIESEL ENGINE 2604
ENGINE COVER 2606
DIAGNOSIS AND TESTING
ENGINE DIAGNOSIS - MECHANICAL 2606
SMOKE DIAGNOSIS CHARTS 2608
STANDARD PROCEDURE
FORM-IN-PLACE GASKETS AND SEALERS . 2610
REPAIR DAMAGED OR WORN THREADS .. 2611
HYDROSTATIC LOCK 2611
REMOVAL
3.0L COMMON RAIL DIESEL ENGINE 2612
ENGINE COVER 2617
INSTALLATION
3.0L COMMON RAIL DIESEL ENGINE 2617
ENGINE COVER 2623
SPECIFICATIONS
ENGINE SPECIFICATIONS 2623
TORQUE 2628
SPECIAL TOOLS - 3.0L TURBODIESEL 2630
ELEMENT-AIR CLEANER
REMOVAL 2634
INSTALLATION 2635
HOUSING-AIR CLEANER
REMOVAL 2636
INSTALLATION 2637
CYLINDER HEAD
DESCRIPTION 2638
STANDARD PROCEDURE
CYLINDER HEAD BOLT INSPECTION 2638
VALVE SEALS - IN VEHICLE 2638
VALVE SERVICE 2640
REMOVAL
LEFT 2642
RIGHT 2649
CLEANING 2655
INSPECTION 2655
INSTALLATION
LEFT 2656
RIGHT 2666
CAMSHAFT OIL SEAL(S)
REMOVAL
LEFT 2676
RIGHT 2679
INSTALLATION
LEFT 2682
RIGHT 2687
CAMSHAFT(S)
DESCRIPTION 2691
OPERATION 2691
REMOVAL
LEFT 2691
RIGHT 2694
INSTALLATION
LEFT 2696
RIGHT 2698
CYLINDER HEAD COVER
DESCRIPTION 2701
REMOVAL
LEFT 2701
RIGHT 2704
INSTALLATION
LEFT 2706
RIGHT 2708
ROCKER ARMS
DESCRIPTION 2710
OPERATION 2710
REMOVAL 2710
INSTALLATION 2711
HYDRAULIC LIFTERS
DESCRIPTION 2712
REMOVAL 2712
INSPECTION 2712
INSTALLATION 2713
ENGINE BLOCK
DESCRIPTION 2714
CRANKSHAFT
DESCRIPTION 2716
OPERATION 2716
STANDARD PROCEDURE
MEASURE CRANKSHAFT AND BLOCK JOURNALS 2716
CHECKING CRANKSHAFT END PLAY 2717
REMOVAL - CRANKSHAFT 2717
INSTALLATION - CRANKSHAFT 2718
CRANKSHAFT MAIN BEARINGS
DESCRIPTION 2720
SEAL - CRANKSHAFT OIL - FRONT
REMOVAL 2721
INSTALLATION 2723
CRANKSHAFT OIL SEAL - REAR
DESCRIPTION 2725
REMOVAL 2725
INSTALLATION 2726
FLEX PLATE
REMOVAL 2727
INSTALLATION 2727
CYLINDER LINERS
DESCRIPTION 2728
INSPECTION 2728

PISTON & CONNECTING ROD
DESCRIPTION 2729
STANDARD PROCEDURE - PISTON RING FITTING 2730
REMOVAL 2730
INSPECTION 2731
INSTALLATION 2732
DAMPER - VIBRATION
REMOVAL 2736
INSTALLATION 2737
VACUUM PUMP
DESCRIPTION 2739
OPERATION 2739
REMOVAL 2740
INSTALLATION 2740
LEFT MOUNT
REMOVAL 2741
INSTALLATION 2741
RIGHT MOUNT
REMOVAL 2742
INSTALLATION 2742
LUBRICATION
DESCRIPTION 2743
OIL
DESCRIPTION 2744
OIL FILTER
REMOVAL 2745
INSTALLATION 2745
OIL PAN
REMOVAL
REMOVAL 2746
OIL PAN - LOWER 2747
INSTALLATION
INSTALLATION 2749
OIL PAN - INSTALLATION 2751
OIL PRESSURE RELIEF VALVE
DESCRIPTION 2753
OIL PRESSURE SENDING UNIT
DESCRIPTION 2754
OPERATION 2754
REMOVAL 2754
INSTALLATION 2755
OIL PUMP
REMOVAL
OIL PUMP PICKUP TUBE 2756
REMOVAL 2756
INSTALLATION
OIL PUMP PICKUP TUBE 2757
INSTALLATION 2757
OIL JET
DESCRIPTION 2758
REMOVAL 2758
INSTALLATION 2759
PCV
DESCRIPTION 2760
REMOVAL 2760
INSTALLATION 2761
OIL COOLER
DESCRIPTION 2762
REMOVAL 2762
INSTALLATION 2763
INTAKE MANIFOLD
DESCRIPTION 2764
REMOVAL 2764
INSTALLATION 2766
EXHAUST MANIFOLD
REMOVAL
RIGHT 2770
LEFT 2771
INSTALLATION
RIGHT 2772
LEFT 2773
TIMING CHAIN COVER
REMOVAL 2774
INSTALLATION 2776
TIMING CHAIN AND SPROCKETS
REMOVAL
REMOVAL - TIMING CHAIN GUIDE - UPPER . . 2780
REMOVAL - TIMING CHAIN TENSIONING RAIL. 2780
REMOVAL - TIMING CHAIN 2780
INSTALLATION
INSTALLATION - TENSIONING AND SLIDE RAIL. 2782
INSTALLATION - TIMING CHAIN TENSIONING RAIL. 2783
ADJUSTMENTS
INSTALLATION - TIMING CHAIN 2783
TIMING CHAIN TENSIONER
DESCRIPTION 2789
REMOVAL 2789
INSTALLATION 2789

ENGINE - 3.0L TD SERVICE INFORMATION

DESCRIPTION

3.0L COMMON RAIL DIESEL ENGINE

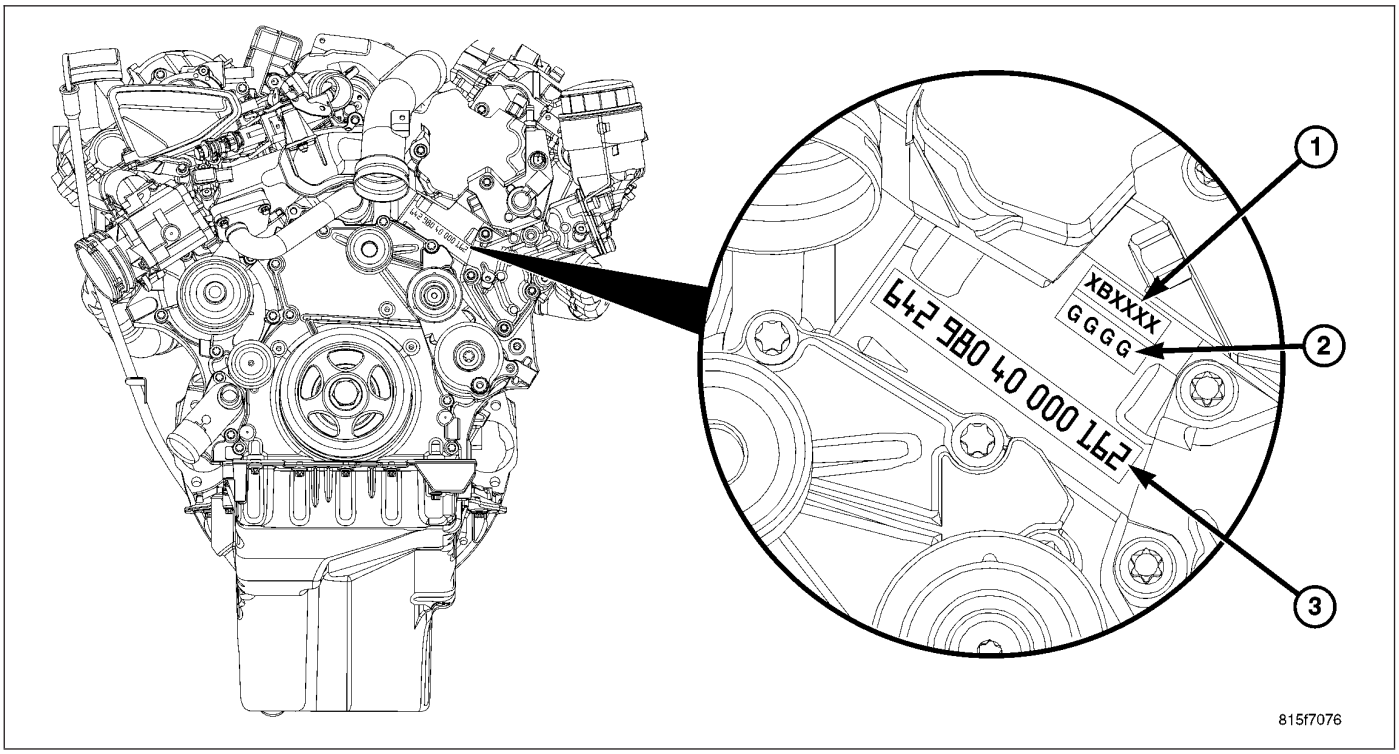

The 3.0L (183 C.I.D.) six - cylinder “common rail” direct injection engine is a 72°, overhead valve design. The engine utilize a cast aluminum cylinder block molded around cast iron piston sleeves. The engine has aluminum cross flow cylinder heads, four valves per cylinder, central injectors and dual overhead camshafts. The 3.0L is turbocharged, intercooled, and also equipped with a EGR cooler.

Additional features are:

- Finger Follower Actuated Valves with Hydraulic Adjusters
- Counter Rotating Balance Shaft
- Oil Jet Cooled Pistons
- Swirl Intake Ports
- Chain driven D.O.H.C. per bank of cylinders, with 4 valves per cylinder

The engine identification stamp (3) for the 3.0L is located on the left side of the engine block, below the high pressure pump along with the 4 digit main bearing identifying stamp (2) and the 6 digit cylinder bore identifying stamp (1).

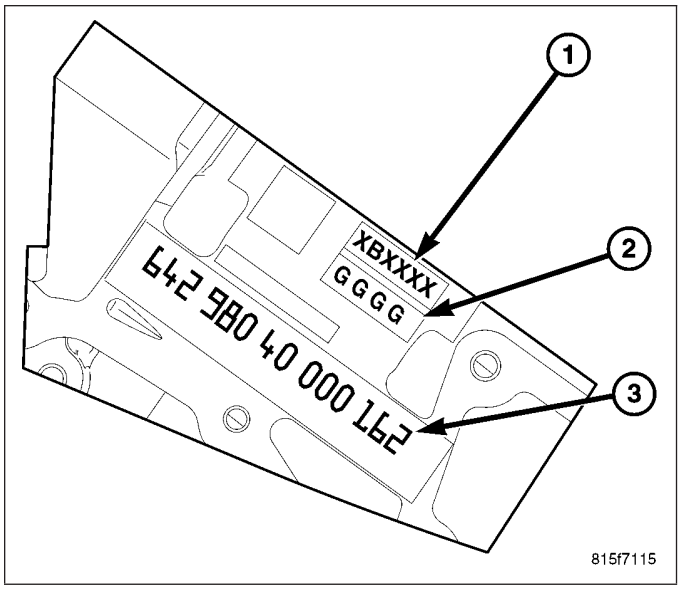

The engine identification number encompasses the production number, engine plant code, engine type and engine model.

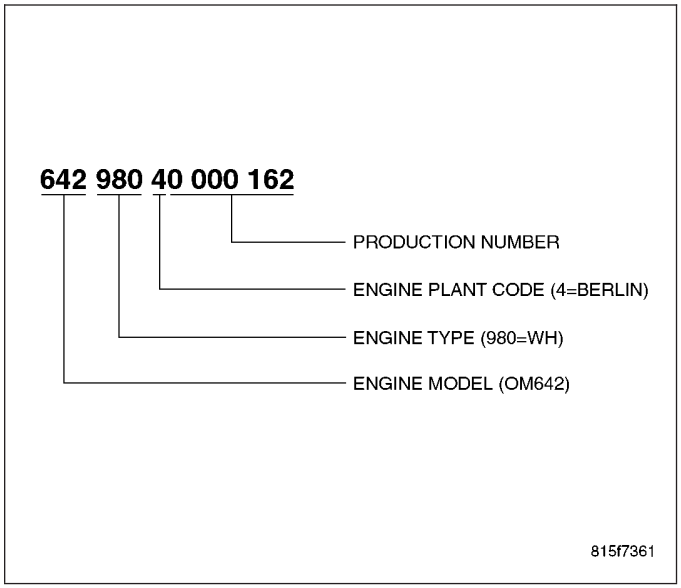

ENGINE COVER

The insulated engine cover (1) is made of composite material and used cosmetically to cover the top of the engine and greatly reduce engine noise. Three brackets secure the cover to the engine.

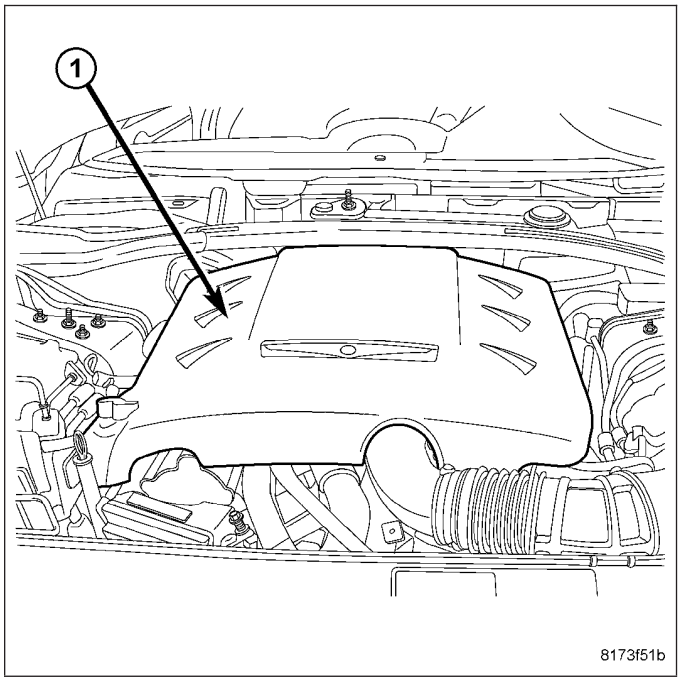

DIAGNOSIS AND TESTING

ENGINE DIAGNOSIS - MECHANICAL

CONDITION	POSSIBLE CAUSES	CORRECTION
LUBRICATING OIL PRESSURE LOW	1. Low oil level.	1. (a) Check and fill with clean engine oil. (b) Check for a severe oil leak, worn rings (burning oil), oil leaking from the turbocharger to the intake, or other root causes for low oil level.
	2. Oil viscosity thin, diluted or wrong specification.	2. (a) Verify the correct engine oil is being used. (b) Look for reduced viscosity from fuel dilution.
	3. Improperly operating pressure switch/gauge.	3. Verify the pressure switch is functioning correctly. If not, replace switch/gauge.
	4. Relief valve stuck open.	4. Check/replace valve.
	5. If cooler was replaced, shipping plugs may have been left in cooler	5. Check/remove shipping plugs.
	6. Worn oil pump.	6. Check and replace oil pump.
	7. Suction tube loose or seal leaking.	7. Check and replace seal.
	8. Loose main bearing cap.	8. Check and install new bearing. Tighten cap to proper torque.
	9. Worn bearings or wrong bearings installed.	9. Inspect and replace connecting rod or main bearings. Check and replace directed piston cooling nozzles.

CONDITION	POSSIBLE CAUSES	CORRECTION
	10. Directed piston cooling nozzles under piston, bad fit into main carrier.	10. Check directed piston cooling nozzles position.
	12. Loose directed piston cooling nozzle.	12. Tighten directed piston cooling nozzle.
LUBRICATING OIL PRESSURE TOO HIGH	1. Pressure switch/gauge not operating properly.	1. Verify pressure switch is functioning correctly. If not, replace switch/gauge.
ENGINE BREATHER RESTRICTED	2. Engine running too cold.	2. Coolant Temperature Below Normal
	3. Oil viscosity too thick.	3. Make sure the correct oil is being used.
	4. Oil pressure relief valve stuck closed or binding	4. Check and replace valve.
LUBRICATING OIL LOSS	1. External leaks.	1. Visually inspect for oil leaks. Repair as required.
	2. Crankcase overfilled.	2. Verify that the correct dipstick is being used.
	3. Incorrect oil specification or viscosity.	3. (a) Make sure the correct oil is being used. (b) Look for reduced viscosity from dilution with fuel. (c) Review/reduce oil change intervals.
	4. Oil cooler leak	4. Check and replace the oil cooler.
	5. High blow-by forcing oil out the breather.	5. Check the breather tube area for signs of oil loss. Perform the required repairs.
	6. Turbocharger leaking oil to the air intake.	6. Inspect the air ducts for evidence of oil transfer. Repair as required (slight oil residue is normal).
COMPRESSION KNOCKS	1. Air in the fuel system.	1. Identify location of air leak and repair. Do not bleed high pressure fuel system.
	2. Poor quality fuel or water/gasoline contaminated fuel.	2. Verify by operating from a temporary tank with good fuel. Clean and flush the fuel tank. Replace fuel/water separator filter.
	3. Engine overloaded.	3. Verify the engine load rating is not being exceeded.
	4. Improperly operating injectors.	4. Check and replace misfiring/inoperative injectors.
EXCESSIVE VIBRATION	1. Loose or broken engine mounts.	1. Replace engine mounts.
	2. Damaged fan or improperly operating accessories.	2. Check and replace the vibrating components.
	3. Improperly operating vibration damper	3. Inspect/replace vibration damper.
	4. Improperly operating balance shaft	4. Inspect/replace balance shaft.
	5. Improperly operating electronically controlled viscous fan drive.	5. Inspect/replace fan drive.
	6. Worn or damaged generator bearing.	6. Check/replace generator.
	7. Flywheel housing misaligned.	7. Check/correct flywheel alignment.

CONDITION	POSSIBLE CAUSES	CORRECTION
	8. Loose or broken power component.	8. Inspect the crankshaft and rods for damage that causes an unbalance condition. Repair/replace as required.
	9. Worn or unbalanced driveline components.	9. Check/repair driveline components.
EXCESSIVE ENGINE NOISES	1. Drive belt squeal, insufficient tension or abnormally high loading.	1. Check the automatic tensioner and inspect the drive belt. Make sure water pump, tensioner pulley, fan hub, generator and power steering pump turn freely.
	2. Intake air or exhaust leaks.	2. Refer to Excessive Exhaust Smoke (Refer to 9 - ENGINE - DIAGNOSIS AND TESTING).
	3. Excessive valve lash.	3. Adjust valves. Make sure the rocker arms are not bent. Replace bent or severely worn components.
	4. Turbocharger noise.	4. Check turbocharger impeller and turbine wheel for housing contact. Repair/replace as required.
	5. Gear train noise.	5. Visually inspect and measure gear backlash. Replace gears as required.
	6. Power function knock.	6. Check/replace rod and main bearings.

SMOKE DIAGNOSIS CHARTS

The following charts include possible causes and corrections for **excess or abnormal** exhaust smoke. Small amounts of exhaust smoke (at certain times) are to be considered normal for a diesel powered engine.

EXCESSIVE BLACK SMOKE	
POSSIBLE CAUSE	**CORRECTION**
Air filter dirty or plugged.	Check and/or replace filter
Air intake system restricted.	Check entire air intake system including all hoses and tubes for restrictions, collapsed parts or damage. Repair/replace as necessary.
Air Leak in Intake System.	Check entire air intake system including all hoses and tubes for collapse, cracks, loose clamps and/or holes in rubber ducts. Also check intake manifold for loose mounting hardware.
Diagnostic Trouble Codes (DTC's) active or multiple, intermittent DTC's.	Refer to Powertrain Diagnostic Procedures Information.
Engine Control Module (ECM) has incorrect calibration.	Refer to Powertrain Diagnostic Procedures Information.
Exhaust system restriction is above specifications.	Check exhaust pipes for damage/restrictions. Repair as necessary.
Fuel grade is not correct or fuel quality is poor.	Temporarily change fuel brands and note condition. Change brand if necessary.
Fuel injection pump malfunctioning.	A DTC may have been set. If so, refer to Powertrain Diagnostic Procedures Information.
Fuel injector malfunctioning.	A DTC may have been set. Perform "Injector Classification Programming" using scan tool. Also refer to Powertrain Diagnostic Procedures Information and, Return Fuel Quantity Test.
Fuel injector lower washer doubled or missing.	Remove and inspect injector washer.

EXCESSIVE BLACK SMOKE	
POSSIBLE CAUSE	**CORRECTION**
Fuel return system restricted.	Check fuel return lines for restriction.
Intake manifold restricted.	Remove restriction.
Manifold Air Pressure (Boost) Sensor or sensor circuit malfunctioning.	A DTC should have been set. Refer to Powertrain Diagnostic Procedures Information.
Turbocharger air intake restriction.	Remove restriction.
Turbocharger damaged.	Refer to Exhaust and Turbochanger Diagnostic Procedures
Turbocharger has excess build up on compressor wheel and/or diffuser vanes.	Refer to Exhaust and Turbochanger Diagnostic Procedures
Turbocharger wheel clearance out of specification.	Refer to Exhaust and Turbochanger Diagnostic Procedures

EXCESSIVE WHITE SMOKE	
POSSIBLE CAUSE	**CORRECTION**
Air in fuel supply: Possible leak in fuel supply side.	Inspect fuel system
Coolant leaking into combustion chamber.	Perform pressure test of cooling system.
Diagnostic Trouble Codes (DTC's) active or multiple, intermittent DTC's.	Refer to Powertrain Diagnostic Procedures Information.
In very cold ambient temperatures, engine block heater is malfunctioning (if equipped).	Refer to In-Block Heater
Engine coolant temperature sensor malfunctioning.	A DTC should have been set. Refer to Powertrain Diagnostic Procedures Information. Also check thermostat operation.
Engine Control Module (ECM) has incorrect calibration.	A DTC should have been set. Refer to Powertrain Diagnostic Procedures Information.
Fuel filter plugged.	Refer to Powertrain Diagnostic Manual for fuel system testing.
Fuel grade not correct or fuel quality is poor.	Temporarily change fuel brands and note condition. Change brand if necessary.
Fuel heater element or fuel heater temperature sensor malfunctioning. This will cause wax type build-up in fuel filter.	Refer to Fuel Heater Testing (Refer to 14 - FUEL SYSTEM/FUEL DELIVERY/FUEL HEATER - DIAGNOSIS AND TESTING).
Fuel injector malfunctioning.	A DTC should have been set. Perform "Injector Identification Programming" or "Cylinder Cutout Test" using scan tool to isolate individual cylinders. Also refer to Powertrain Diagnostic Procedures Information.
Fuel injector hold-down(s) loose.	Replace the copper washer(s)(shim) and torque to specifications.
Fuel injector protrusion not correct.	Check washer (shim) at bottom of fuel injector for correct thickness.
Fuel injection pump malfunctioning.	A DTC should have been set. Refer to Powertrain Diagnostic Procedures Information.
Fuel supply side restriction.	Refer to Powertrain Diagnostic Manual for fuel system testing.
Intake manifold air temperature sensor malfunctioning.	A DTC should have been set. Refer to Powertrain Diagnostic Procedures Information.

EXCESSIVE WHITE SMOKE	
POSSIBLE CAUSE	**CORRECTION**
Intake manifold heater circuit not functioning correctly in cold weather.	A DTC should have been set. Refer to Powertrain Diagnostic Procedures Information. Also check heater elements for correct operation.
Intake manifold heater elements not functioning correctly in cold weather.	A DTC should have been set if heater elements are malfunctioning. Refer to Powertrain Diagnostic Procedures Information.
Internal engine damage (scuffed cylinder).	Analyze engine oil and inspect oil filter to locate area of probable damage.
Restriction in fuel supply side of fuel system.	Refer to Powertrain Diagnostic Manual for fuel system testing.

EXCESSIVE BLUE SMOKE	
POSSIBLE CAUSE	**CORRECTION**
Dirty air cleaner or restricted turbocharger intake duct.	Check Air Cleaner Housing for debris and replace filter as necessary
Air leak in boost system between turbocharger compressor outlet and intake manifold.	Service charge air system.
Obstruction in exhaust manifold.	Remove exhaust manifold and inspect for blockage.
Restricted turbocharger drain tube.	Remove turbocharger drain tube and remove obstruction.
Crankcase ventilation system plugged.	Inspect oil separator system for function and clear drain back hole in cylinder head cover/intake manifold
Valve seals are worn, brittle, or improperly installed.	Replace valve stem oil seals
Valve stems and/or guides are worn.	Remove valves and inspect valves and guides.
Broken or Improperly installed piston rings.	Tear down engine and inspect piston rings.
Excessive piston ring end gap.	Remove pistons and measure piston ring end gap.
Excessive cylinder liner wear and taper.	Remove pistons and measure cylinder liner wear and taper.
Cylinder damage.	Remove pistons and inspect cylinder liner for cracks or porosity. Repair with new cylinder liner if necessary.
Piston damage.	Remove pistons and inspect for cracks, holes. Measure piston for out-of-round and taper.
Turbocharger failure.	Refer to Exhaust and Turbocharger Procedures

STANDARD PROCEDURE

FORM-IN-PLACE GASKETS AND SEALERS

There are numerous places where form-in-place gaskets are used on the engine. Care must be taken when applying form-in-place gaskets to assure obtaining the desired results. **Do not use form-in-place gasket material unless specified.** Bead size, continuity, and location are of great importance. Too thin a bead can result in leakage while too much can result in spill-over which can break off and obstruct fluid feed lines. A continuous bead of the proper width is essential to obtain a leak-free gasket.

There are numerous types of form-in-place gasket materials that are used in the engine area. Mopar® Engine RTV GEN II, Mopar® ATF-RTV, and Mopar® Gasket Maker gasket materials, each have different properties and can not be used in place of the other.

MOPAR® ENGINE RTV GEN II

Mopar® Engine RTV GEN II is used to seal components exposed to engine oil. This material is a specially designed black silicone rubber RTV that retains adhesion and sealing properties when exposed to engine oil. Moisture in the

air causes the material to cure. This material is available in three ounce tubes and has a shelf life of one year. After one year this material will not properly cure. Always inspect the package for the expiration date before use.

MOPAR® ATF RTV

Mopar® ATF RTV is a specifically designed black silicone rubber RTV that retains adhesion and sealing properties to seal components exposed to automatic transmission fluid, engine coolants, and moisture. This material is available in three ounce tubes and has a shelf life of one year. After one year this material will not properly cure. Always inspect the package for the expiration date before use.

MOPAR® GASKET MAKER

Mopar® Gasket Maker is an anaerobic type gasket material. The material cures in the absence of air when squeezed between two metallic surfaces. It will not cure if left in the uncovered tube. The anaerobic material is for use between two machined surfaces. Do not use on flexible metal flanges.

MOPAR® GASKET SEALANT

Mopar® Gasket Sealant is a slow drying, permanently soft sealer. This material is recommended for sealing threaded fittings and gaskets against leakage of oil and coolant. Can be used on threaded and machined parts under all temperatures. This material is used on engines with multi-layer steel (MLS) cylinder head gaskets. This material also will prevent corrosion. Mopar® Gasket Sealant is available in a 13 oz. aerosol can or 4oz./16 oz. can w/applicator.

FORM-IN-PLACE GASKET AND SEALER APPLICATION

Assembling parts using a form-in-place gasket requires care but it's easier than using precut gaskets.

Mopar® Gasket Maker material should be applied sparingly 1 mm (0.040 in.) diameter or less of sealant to one gasket surface. Be certain the material surrounds each mounting hole. Excess material can easily be wiped off. Components should be torqued in place within 15 minutes. The use of a locating dowel is recommended during assembly to prevent smearing material off the location.

Mopar® Engine RTV GEN II or ATF RTV gasket material should be applied in a continuous bead approximately 3 mm (0.120 in.) in diameter. All mounting holes must be circled. For corner sealing, a 3.17 or 6.35 mm (1/8 or 1/4 in.) drop is placed in the center of the gasket contact area. Uncured sealant may be removed with a shop towel. Components should be torqued in place while the sealant is still wet to the touch (within 10 minutes). The usage of a locating dowel is recommended during assembly to prevent smearing material off the location.

Mopar® Gasket Sealant in an aerosol can should be applied using a thin, even coat sprayed completely over both surfaces to be joined, and both sides of a gasket. Then proceed with assembly. Material in a can w/applicator can be brushed on evenly over the sealing surfaces. Material in an aerosol can should be used on engines with multi-layer steel gaskets.

REPAIR DAMAGED OR WORN THREADS

CAUTION: Be sure that the tapped holes maintain the original center line.

Damaged or worn threads can be repaired. Essentially, this repair consists of:

- Drilling out worn or damaged threads.
- Tapping the hole with a special Heli-Coil Tap, or equivalent.
- Installing an insert into the tapped hole to bring the hole back to its original thread size.

HYDROSTATIC LOCK

CAUTION: DO NOT use the starter motor to rotate the crankshaft. Severe damage could occur.

When an engine is suspected of hydrostatic lock (regardless of what caused the problem), follow the steps below.

1. Disconnect the negative cable(s) from the battery.
2. Inspect air cleaner, induction system, and intake manifold to ensure system is dry and clear of foreign material.
3. Place a shop towel around the fuel injectors to catch any fluid that may possibly be under pressure in the cylinder head. Remove the fuel injectors (Refer to 14 - FUEL SYSTEM/FUEL INJECTION/FUEL INJECTOR - REMOVAL).

CAUTION: DO NOT use the starter motor to rotate the crankshaft. Severe damage could occur.

4. With all injectors removed, rotate the crankshaft using the crankshaft.
5. Identify the fluid in the cylinders (coolant, fuel, oil, etc.).
6. Be sure all fluid has been removed from the cylinders.
7. Repair engine or components as necessary to prevent this problem from occurring again.
8. Squirt a small amount of engine oil into the cylinders to lubricate the walls. This will prevent damage on restart.
9. Install fuel injectors (Refer to 14 - FUEL SYSTEM/FUEL INJECTION/FUEL INJECTOR - INSTALLATION).
10. Drain engine oil. Remove and discard the oil filter.
11. Install the drain plug. Tighten the plug to 50 N·m (37 ft. lbs.) torque.
12. Install a new oil filter and tighten to 10 N·m 88 in. lbs.) torque.
13. Fill engine crankcase with the specified amount and grade of oil (Refer to LUBRICATION & MAINTENANCE/ FLUID TYPES - SPECIFICATIONS).
14. Connect the negative cable(s) to the battery.
15. Start the engine, allow to warm, turn engine off and check for any leaks. (Refer to 14 - FUEL SYSTEM - WARNING).

REMOVAL

3.0L COMMON RAIL DIESEL ENGINE

1. Disconnect negative battery cable. (Refer to 8 - ELECTRICAL/BATTERY SYSTEM/CABLES - REMOVAL)
2. Drain cooling system. (Refer to 7 - COOLING - STANDARD PROCEDURE)
3. Remove engine cover (1).
4. Remove air cleaner housing (Refer to 9 - ENGINE/ AIR INTAKE SYSTEM/AIR CLEANER HOUSING - REMOVAL).

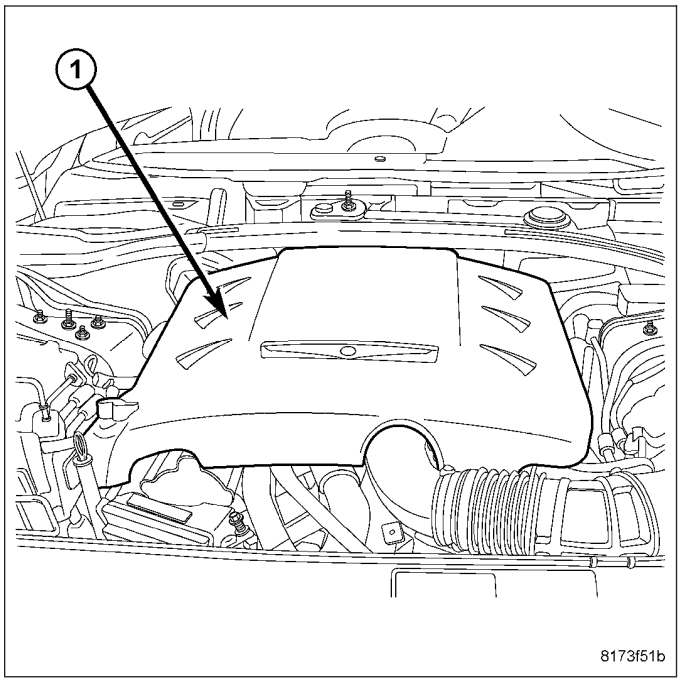

5. Remove the wiper arms. (Refer to 8 - ELECTRICAL/WIPERS/WASHERS/WIPER ARMS - REMOVAL)
6. Remove the engine cowl.

7. Remove the strut tower support.

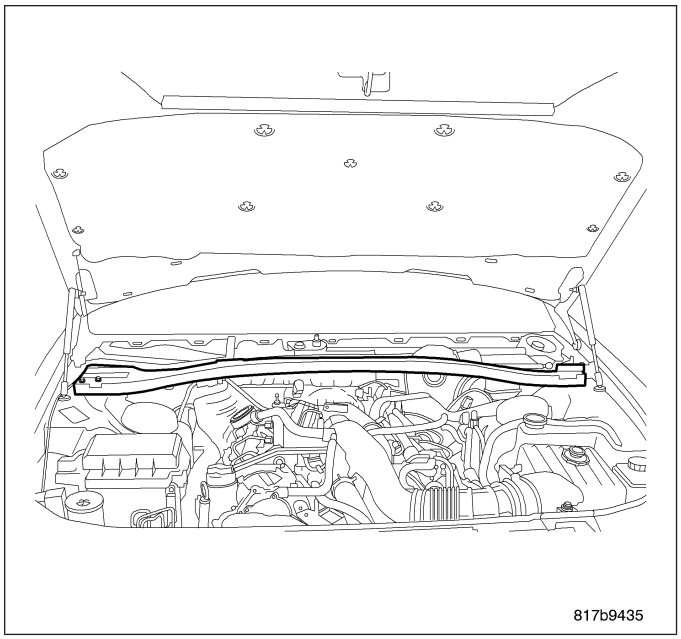

8. Remove the turbocharger heat shield.
9. Remove the exhaust pipe from the turbocharger (2).
10. Remove the EGR air tube (3) at the EGR housing.
11. Remove the clamp (1) from the exhaust elbow.

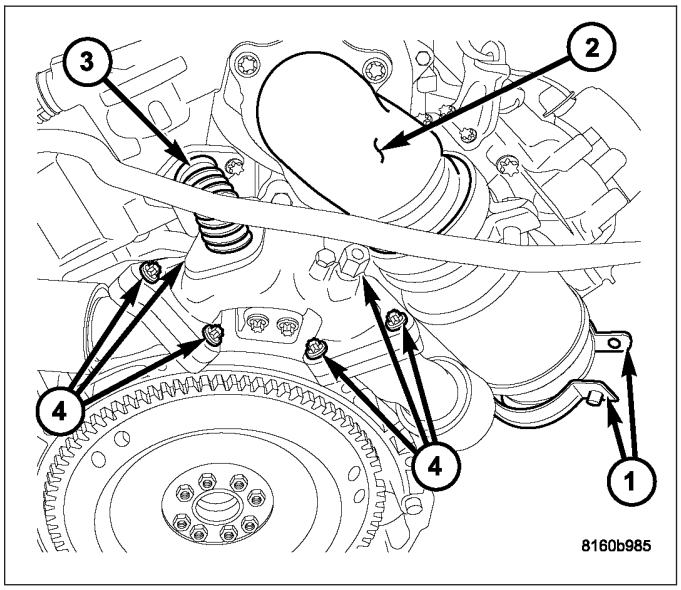

12. Remove the EGR valve (1).

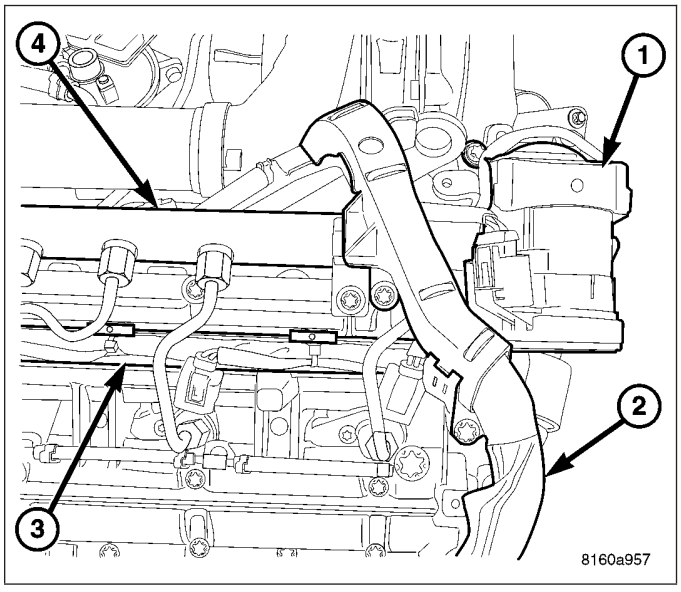

13. Remove the upper radiator hose.
14. Remove the coolant bypass hose.

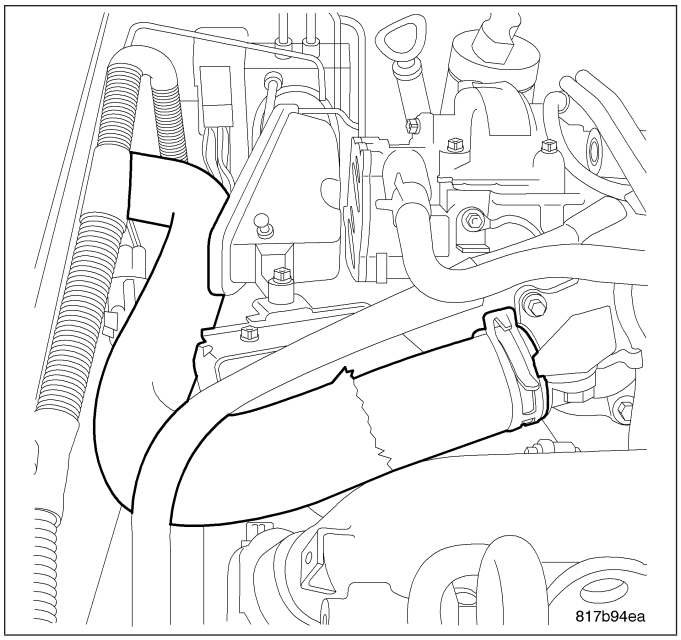

15. Remove the charge air resonator (3) and hose (1).

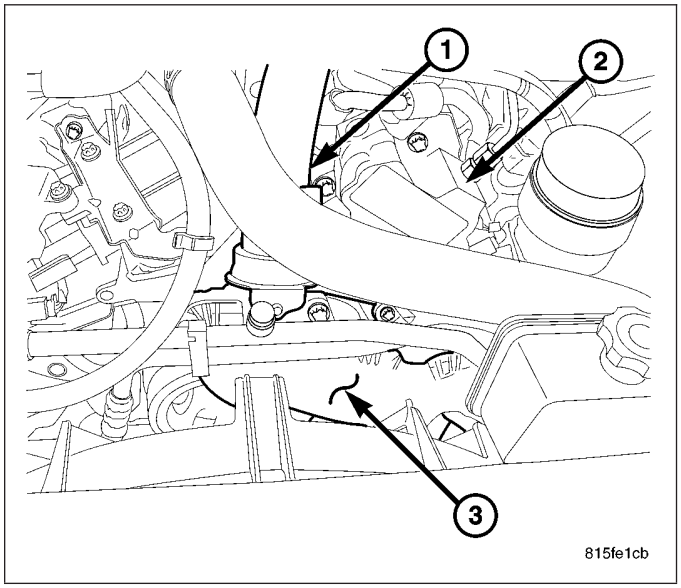

16. Remove the accessory belt.
17. Remove the oil dipstick tube and position aside.
18. Remove the power steering pump and position aside. (Refer to 19 - STEERING/PUMP - REMOVAL)

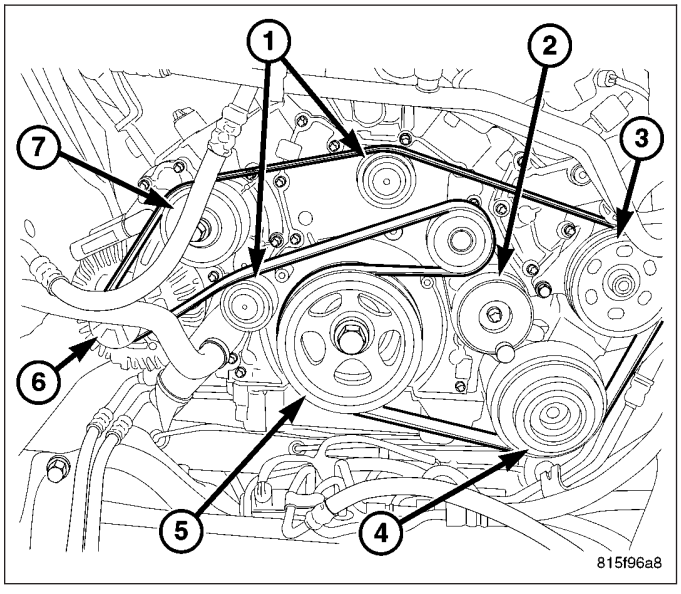

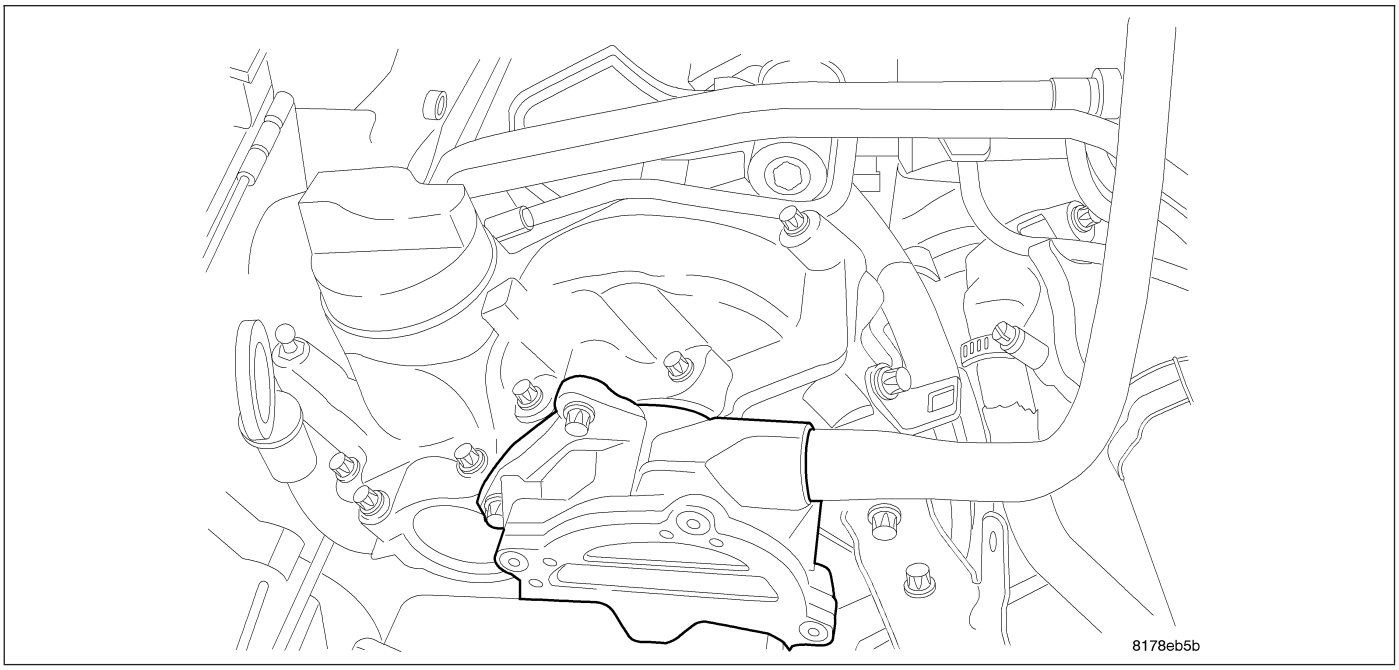

19. Remove the vacuum hose from the vacuum pump.
20. Remove the engine harness at the ECM.
21. Remove the dash panel heat shield.
22. Remove the engine harness from the right side of the engine.

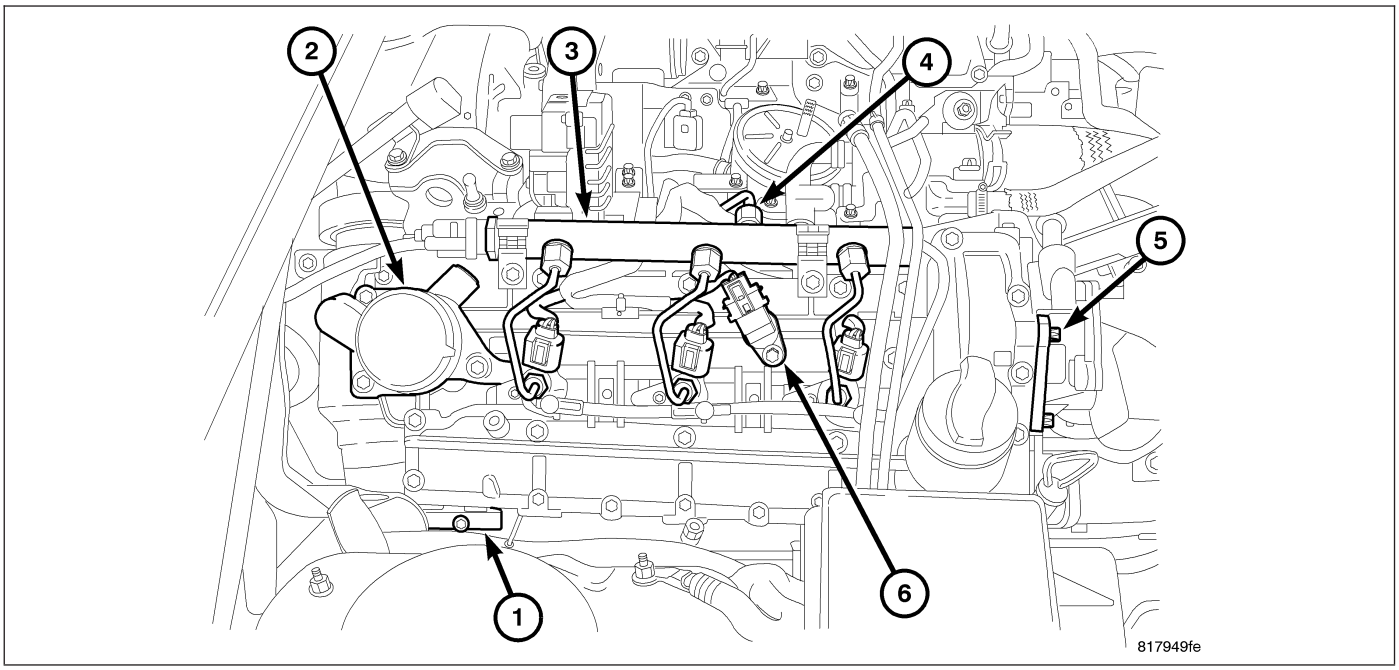

23. Remove the fuel lines.
24. Remove the exhaust bracket (1) from the cylinder head.
25. Remove the transmission oil tube.
26. Disconnect the Oxygen Sensor wiring connector.
27. Remove the catalytic converter pressure line.
28. Remove the starter. (Refer to 8 - ELECTRICAL/STARTING/STARTER MOTOR - REMOVAL)

29. Remove the CKP sensor shield (1).
30. Disconnect the CKP sensor (2).
31. Remove the CKP sensor.
32. Remove the lower heater hose.
33. Remove the lower coolant transfer hose.
34. Remove the AC compressor and position aside. (Refer to 24 - HEATING & AIR CONDITIONING/ PLUMBING/A/C COMPRESSOR - REMOVAL)

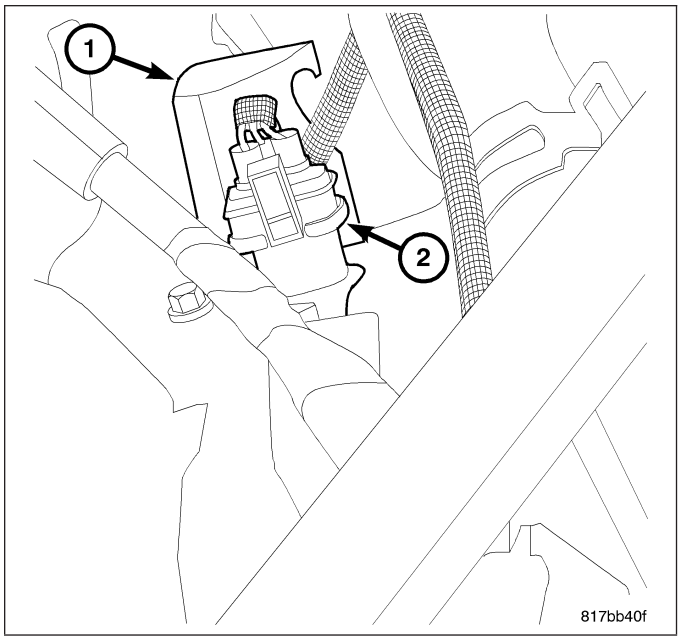

35. Paint mark the flex plate to torque converter relation and remove the torque converter bolts through the access hole.
36. Remove the torque converter bolts.
37. Support the transmission with a transmission jack.
38. Remove the transmission case to engine bolts.
39. Support the engine by placing a piece of wood between the engine and the sway bar.

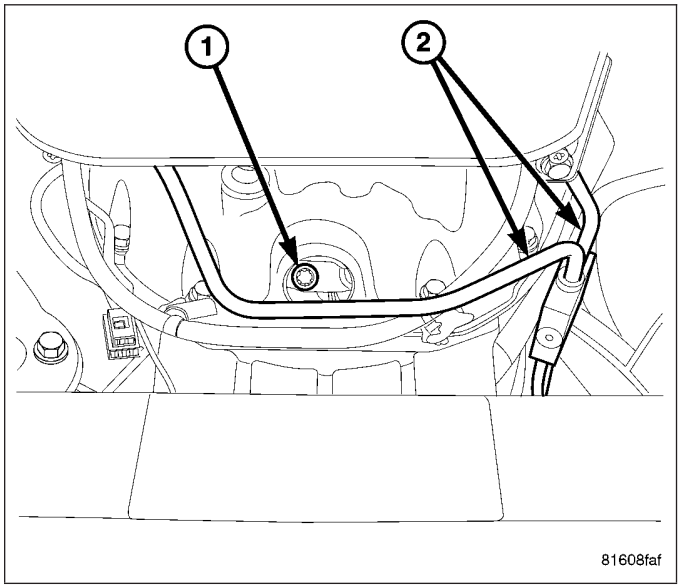

40. Remove the left engine mount shield.
41. Remove the left engine mount from the vehicle frame.
42. Remove the right engine mount shield.
43. Remove the right engine mount from the vehicle frame.
44. Lower the vehicle.
45. Connect the engine lift chain to the engine lift fixtures.
46. Remove the hood struts and position the hood aside.
47. Remove the engine from the vehicle.

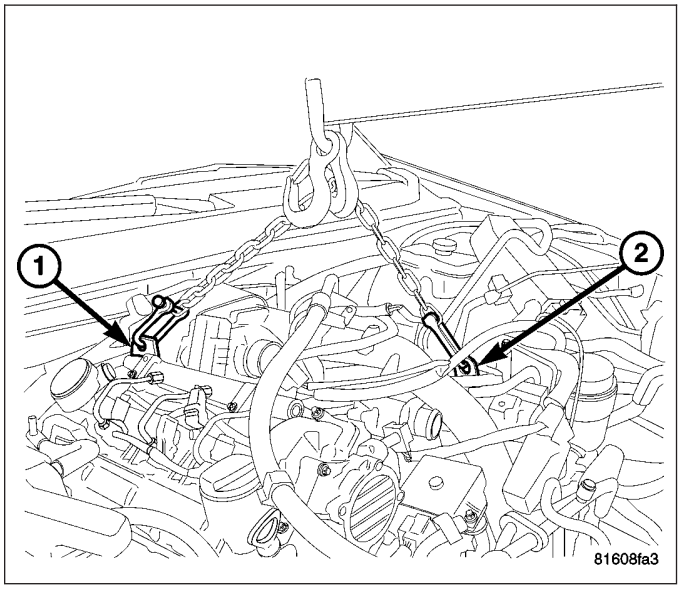

ENGINE COVER

1. Remove the engine oil cap.
2. Remove the fasteners.
3. Pull the cover (1) forward and away from the rear mounting brackets.

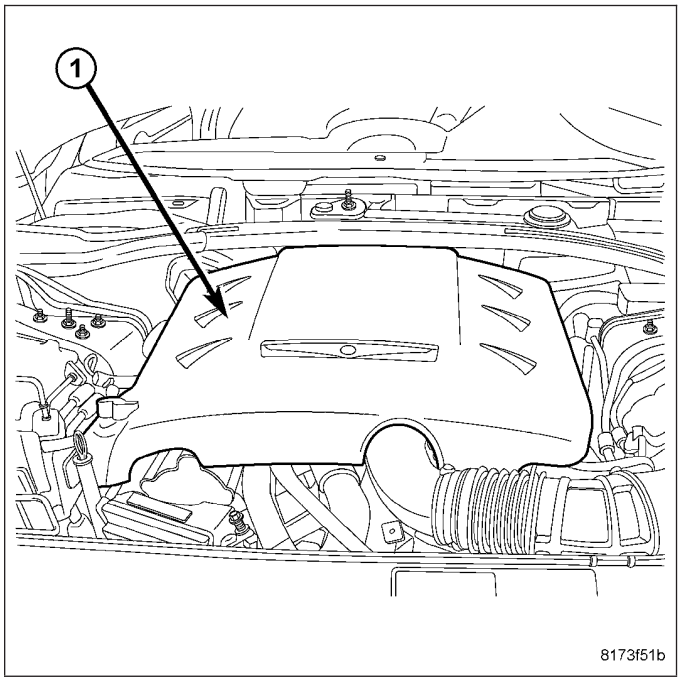

INSTALLATION

3.0L COMMON RAIL DIESEL ENGINE

1. Carefully align the engine assembly in the engine bay area and align with the transmission, **Do Not** lower the engine.
2. Align the engine to transmission, and lower the engine mounts into position.
3. Install left engine mount to the engine. Tighten bolts to 45 N.m (33 ft. lbs.).
4. Install the left engine mount shield.
5. Install right engine mount to the engine. Tighten bolts to 45 N.m (33 ft. lbs.).
6. Install the right engine mount shield.
7. Remove engine lifting device.
8. Install the hood support rods.
9. Raise and support the vehicle.

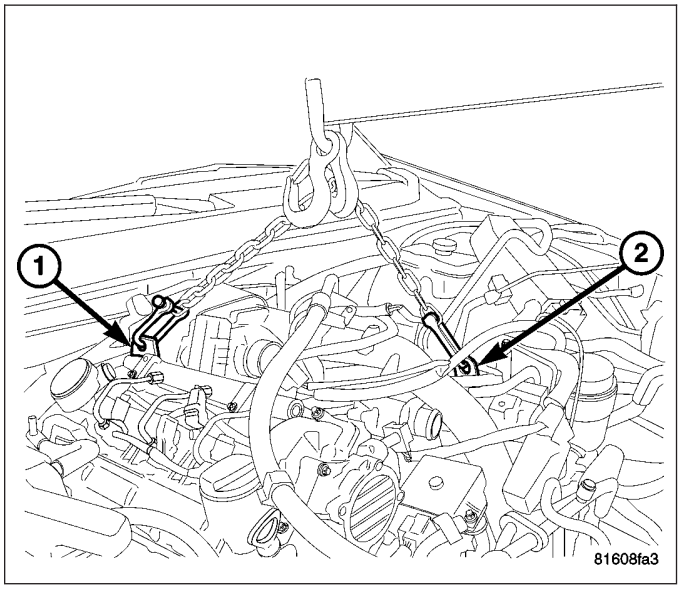

10. Align the flex plate to the torque converter as marked in the disassembly procedure.
11. Tighten the flex plate bolts to 45 N·m (33 ft. lbs.).
12. Install accessible engine to transmission housing bolts. Tighten bolts to 83 N·m (62 ft. lbs.).
13. Install the AC compressor. (Refer to 24 - HEATING & AIR CONDITIONING/PLUMBING/A/C COMPRESSOR - INSTALLATION)

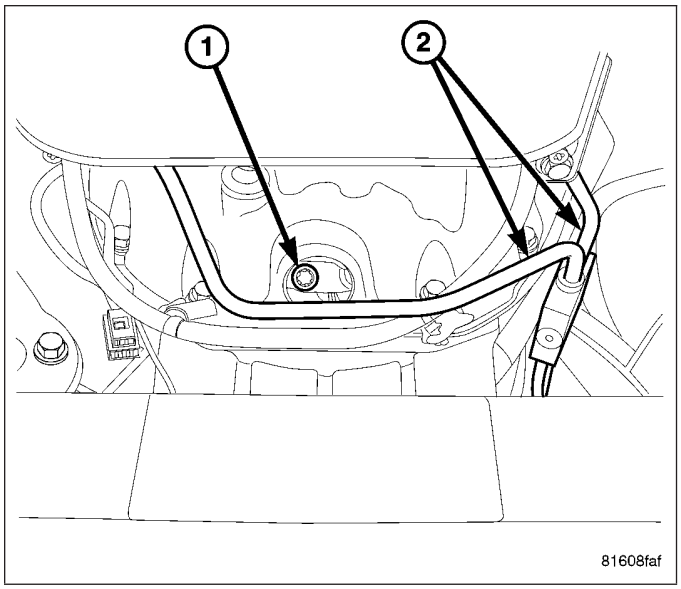

14. Install the lower coolant transfer hose.
15. Install the lower heater hose.
16. Install the CKP sensor and tighten bolt to 9 N·m (79 in. lbs.).
17. Connect the CKP sensor.
18. Install the starter. (Refer to 8 - ELECTRICAL/STARTING/STARTER MOTOR - INSTALLATION)
19. Install the catalytic converter pressure line.
20. Connect the oxygen sensor connector.
21. Install the transmission oil tube and tighten the bolt to 25 N·m (18 ft. lbs.)
22. Install the fuel lines.
23. lower the vehicle.

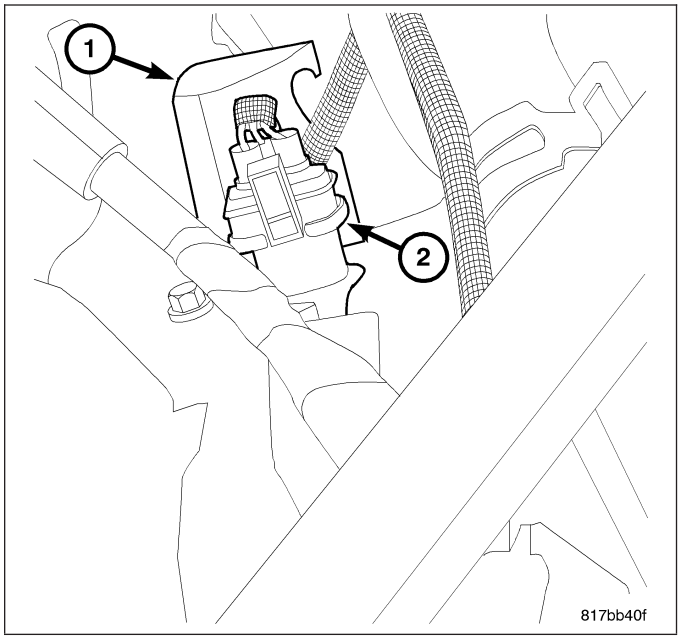

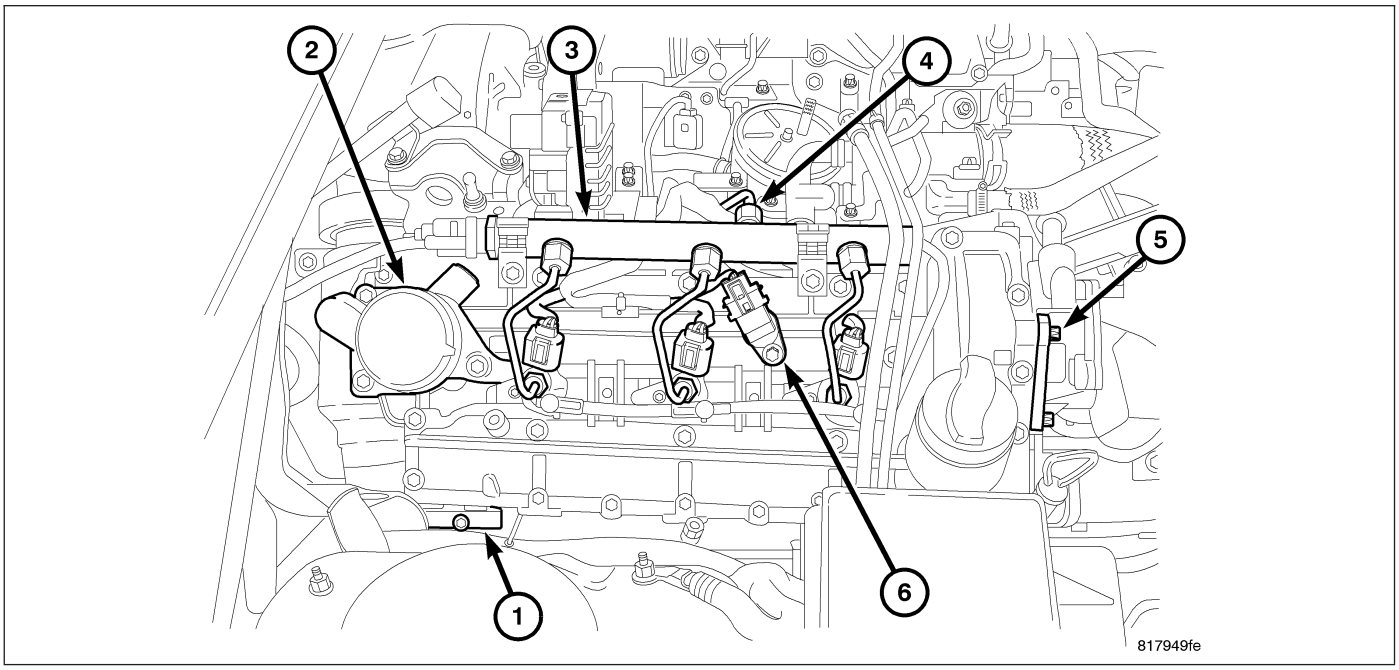

24. Install the exhaust bracket (1) to the cylinder head and tighten to 14 N·m (143 in. lbs.).
25. Install the dash panel heat shield.
26. Connect the ECM harness.

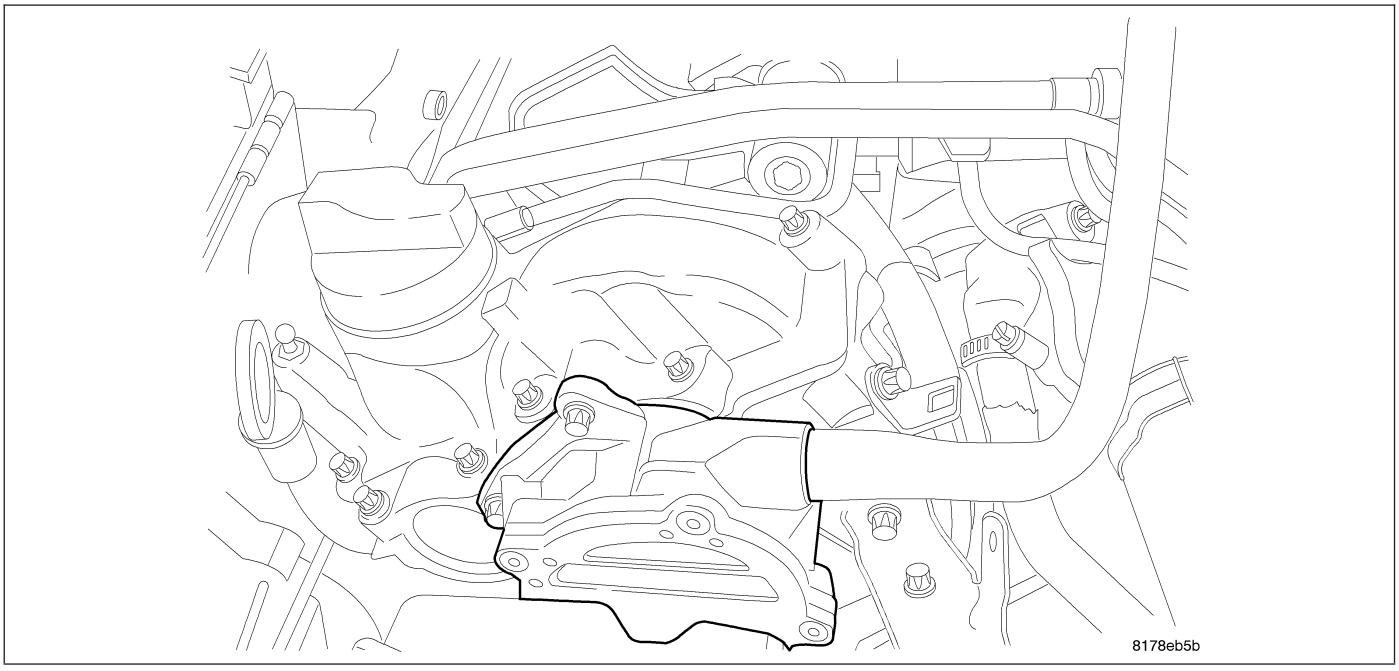

27. Install the vacuum hose to the vacuum pump.
28. Install the power steering pump. (Refer to 19 - STEERING/PUMP - INSTALLATION)
29. Install the oil dipstick tube.

30. Install the accessory belt.

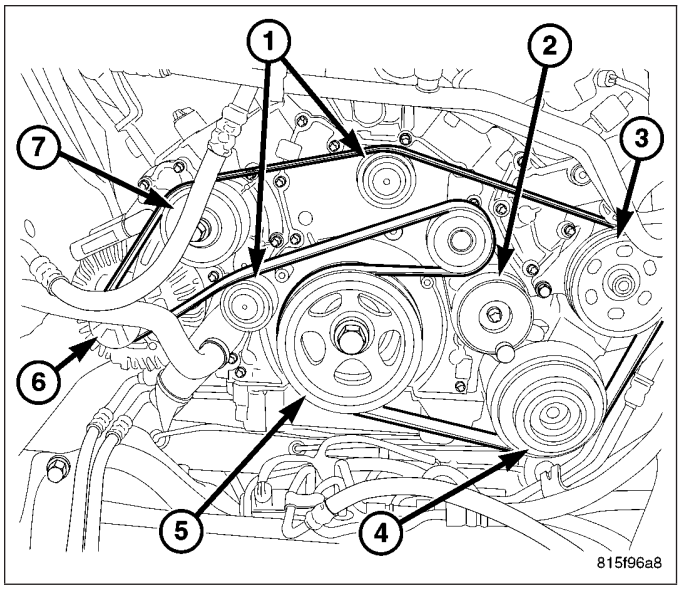

31. Install the charge air resonator.
32. Install the coolant bypass hose.

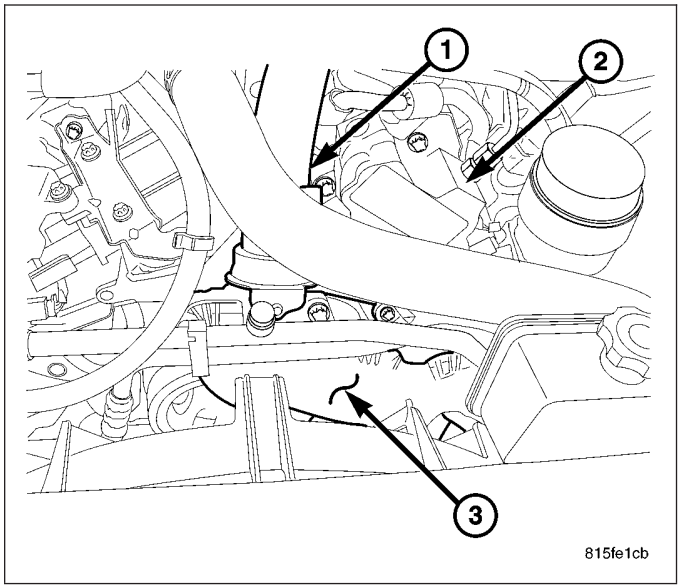

33. Install the upper radiator hose.

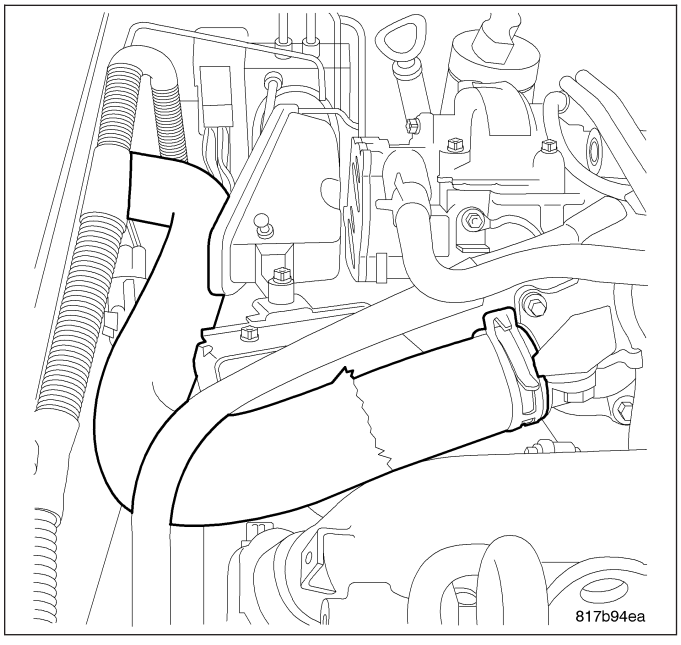

34. Connect the EGR valve connector.

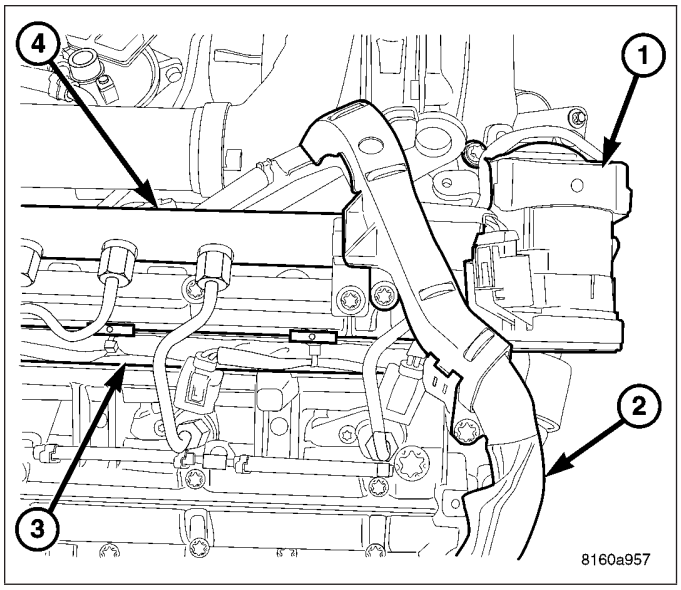

35. Install the clamp (1) on the exhaust elbow. Tighten the clamp to 20 N·m (15 in. lbs.).
36. Discard the old gasket and clean the EGR tube sealing surfaces.
37. Install a new gasket on the EGR tube (3).
38. Install the EGR tube (3) and tighten the bolts to 9 N·m (79 in. lbs.)
39. Discard the old gasket and clean the exhaust pipe and turbocharger sealing surfaces.
40. Install a new gasket between the exhaust pipe and turbocharger.
41. Install the exhaust pipe (2) to the turbocharger and tighten the bolts to 20 N·m (15 in. lbs.) and then an additional 90°.
42. Install the turbocharger heat shield.

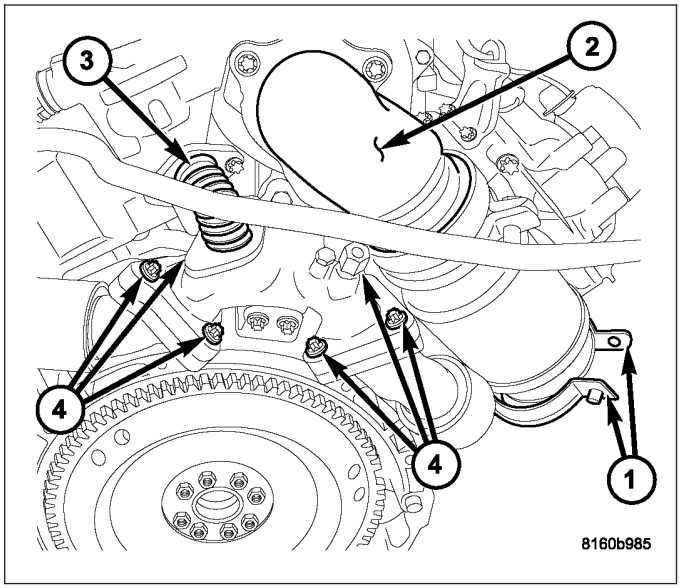

43. Install the strut tower support.
44. Install the engine cowl. (Refer to 23 - BODY/EXTERIOR/COWL GRILLE - INSTALLATION)

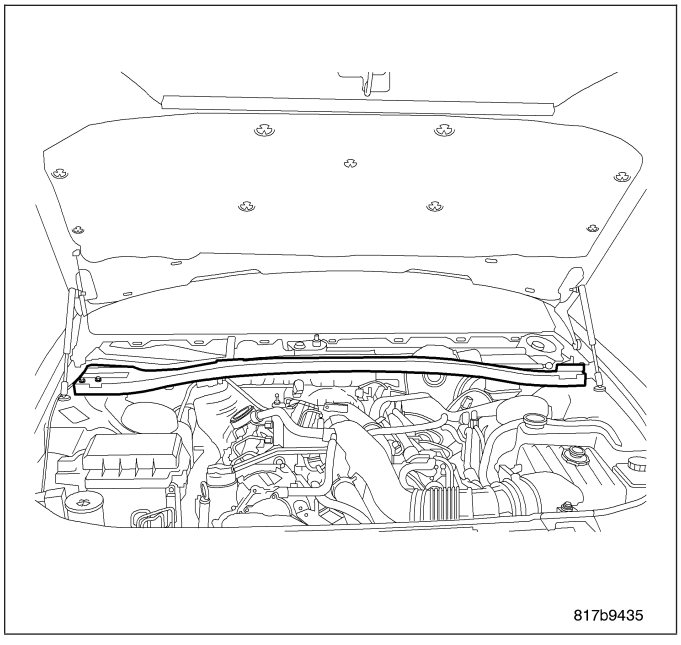

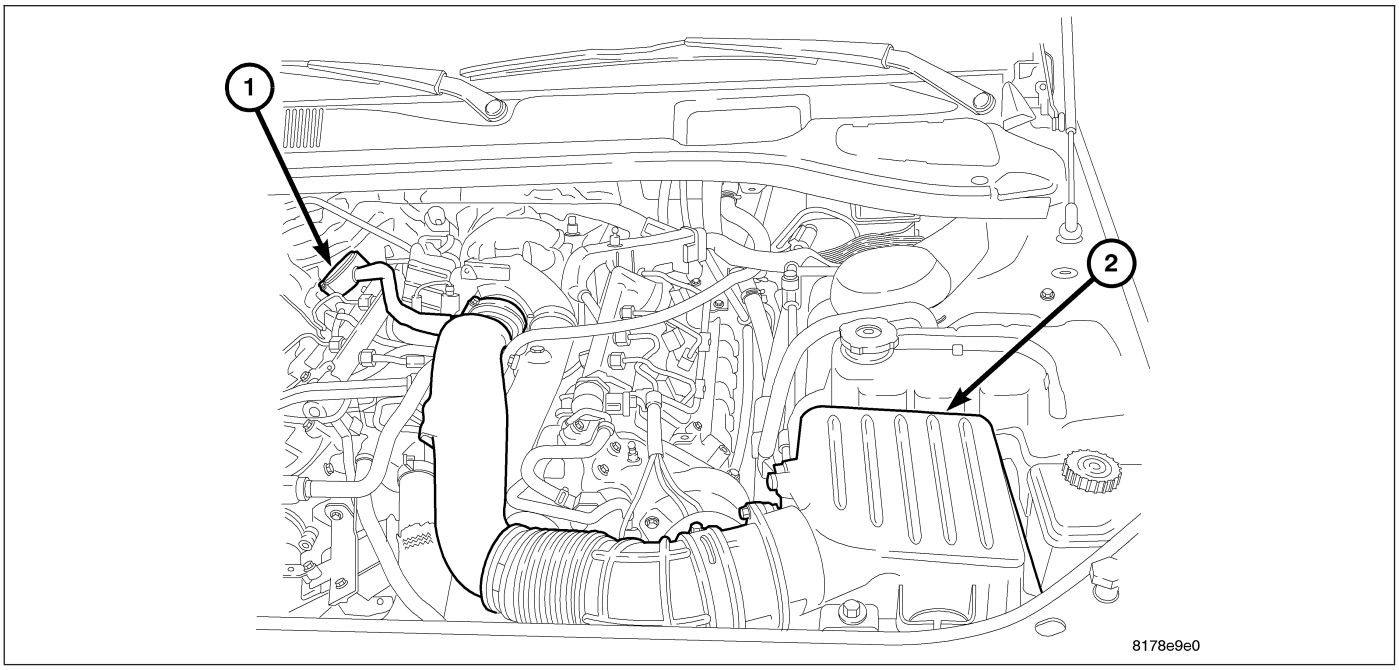

45. Install the air cleaner housing.
46. Install the engine cover.
47. Fill the cooling system. (Refer to 7 - COOLING - STANDARD PROCEDURE)
48. Connect the negative battery cable. (Refer to 8 - ELECTRICAL/BATTERY SYSTEM/CABLES - INSTALLATION)

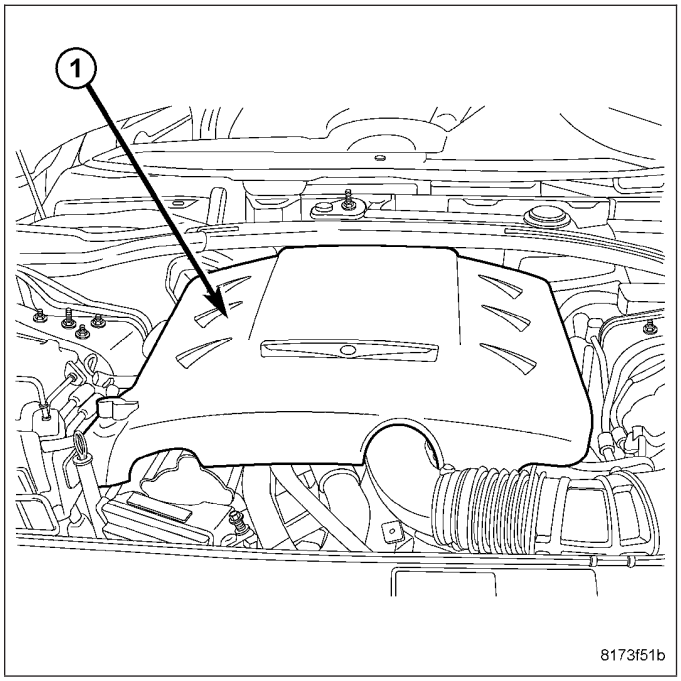

ENGINE COVER

1. Align the rear of the engine cover (1) with the rear mounting bracket slots and seat the cover into the bracket.
2. Push down on the cover (1) and install the fasteners.
3. Tighten fasteners to 5 N·m (44 in. lbs.).
4. Install the oil cap.

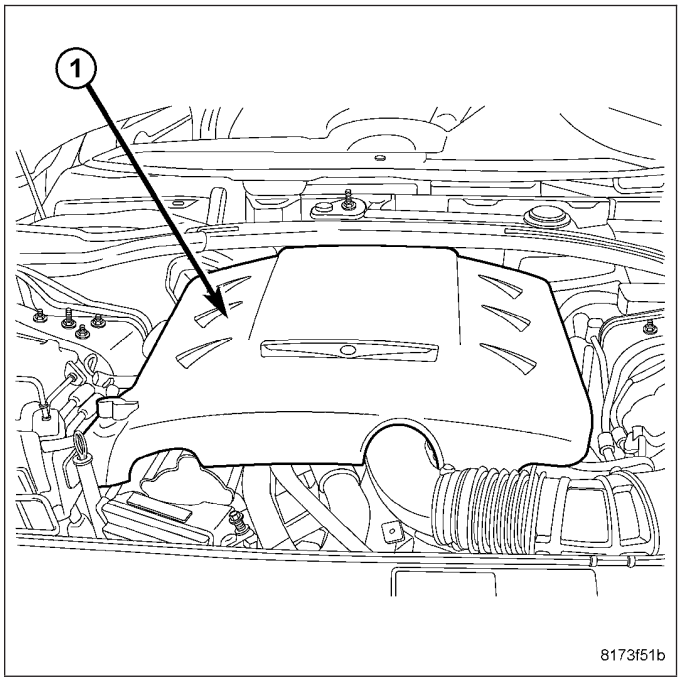

SPECIFICATIONS

ENGINE SPECIFICATIONS

GENERAL DESCRIPTION

DESCRIPTION	SPECIFICATION
Displacement 3.0L	3.0L (2985 cc) (182 CID)
Bore	83 mm
Stroke	92 mm
Compression Ratio	18 :1
Weight	215Kg (474 Lbs.)
Power	160Kw (215 HP) @ 4200 RPM
Torque	510 N·m (376 Ft. Lbs.) @ 1800 RPM
Idle Speed - Warm	620 RPM
Belt Tension	Automatic Belt Tensioner
Thermostat Opening	80°C ± 2°C
Cooling System Capacity	13.3 Liters (14 qts.)
Engine Oil Capacity	9.5L (10 Qt.) W/Filter Change
Timing System	Chain Driven Dual Overhead Camshafts
Air Intake	Dry Filter With Turbocharger and Charge Air Cooler
Fuel Supply	Electric Pump In The Fuel Tank
Fuel System	Direct Fuel Injection Common Rail System
Combustion Cycle	4 Stroke
Cylinder Compression Difference Between Cylinders	5 Bar (72.5 psi.)
Cooling System	Water Cooling
Injection Pump	CP3 2nd. Generation Common Rail System

DESCRIPTION	SPECIFICATION
Injection Order	1-4-2-5-3-6
Lubrication	Pressure Lubricated By Rotary Pump
Oil Pressure 80°C (176°F)	1.1 Bar (16 psi.) at Idle 3.6 Bar (52 psi) at 3200 rpm
Engine Rotation	Clockwise Viewed From Front Cover

CRANKSHAFT

DESCRIPTION	SPECIFICATION	
	Metric	Standard
Front Journal Diameter-Nominal	62.985-63.005 mm	2.479-2.480 in
Front Journal Diameter- minus 0.25	62.735-62.755 mm	2.469-2.470 in.
Front Bearing Diameter-Nominal	63.005-63.034 mm	2.480-2.481 in.
Front Bearing Diameter-minus 0.25	62.755-62.784 mm	2.471-2.478 in
Clearance Between the Journal and Bearing	0.00-0.049 mm	0.000-0.001 in.
Center Journal Diameter-Nominal	63.005-63.020 mm	0.001-0.003 in.
Center Journal Diameter-minus 0.25	62.775-62.770 mm	2.470-2.471
Center Bearing Diameter-Nominal	63.005-63.020 mm	2.480-2.481 in.
Center Bearing Diameter-minus 0.25	62.775-62.770 mm	2.470-2.471 in.
Clearance Between Journal and Bearing	0.008-0.051 mm	0.0003-0.0002 in
Rear Journal Diameter-Nominal	89.980-90.000 mm	3.542-3.543 in
Rear Journal Diameter- minus 0.25	89.730-99.750 mm	3.532-3.927 in.
Rear Bearing Diameter-Nominal	90.045-90.065 mm	3.545-3.546 in.
Rear Bearing Diameter- minus 0.25	89.795-89.815 mm	3.535-3.536 in.
Clearance Between Journal and Bearing	0.045-0.080 mm	0.001-0.003 in.
Connecting Rod Journal-Nominal	53.940-53.955 mm	2.123-2.124 in.
Connecting Rod Journal- minus 0.25	53.690-53.705 mm	2.113-2.114 in.
Connecting Rod Bearing-Nominal	53.997-54.016 mm	2.125-2.126 in.
Connecting Rod Bearing- minus 0.25	53.727-53.766 mm	2.115-2.116 in.
Clearance Between Journal and Bearing	0.022-0.076 mm	0.0008-0.0029 in.
Crankshaft End Play	0.080-0.280 mm	0.003-0.011 in.
Adjustment	Thrust Washers	Thrust Washers
Thrust Washers Available	2.31-2.36 mm	0.090-0.092 in.
	2.41-2.46 mm	0.094-0.096 in.
	2.51-2.56 mm	0.098-0.100
Carrier with Thrush Washers Installed	27.670-27.820 mm	1.089-1.095 in.

MAIN BEARING CARRIERS

DESCRIPTION	SPECIFICATION	
	Metric	Standard
Internal Diameter-Front	67.025-67.050 mm	2.638-2.639 in.
Internal Diameter-Center	66.670-66.690 mm	2.624-2.624 in.
Internal Diameter-Rear	85.985-86.005 mm	3.385-3.386 in.

LINERS

DESCRIPTION	SPECIFICATION	
	Metric	Standard
Internal Diameter	091.997-92.015 mm.	3.621-3.622 in.
Protrusion	0.00-0.05 mm	0.00-0.001 in.
Available Adjustment Shims	0.15 mm	0.005 in.
	0.17 mm	0.006 in.
	0.20 mm	0.007 in.
	0.23 mm	0.009
	0.25 mm	0.0098

CYLINDER HEAD

DESCRIPTION	SPECIFICATION	
	Metric	Standard
Minimum Thickness	94.95-95.05 mm.	3.738-3.742 in.
Gasket Thickness	1.32 mm ± 0.08, 0 notches	0.0051 in. ± 0.003, 0 notches
	1.42 mm ± 0.08, 1 notch	0.051 in. ± 0.003, 1 notch
	1.52 mm ± 0.08, 2 notches	0.059 in. ± 0.003, 1 notches

CONNECTING RODS

DESCRIPTION	SPECIFICATION	
	Metric	Standard
Small end Bearing Internal Diameter	32.035-32.050 mm	1.2612-1.2618 in.
Large End Internal Diameter	53.997-54.016 mm	2.125-2.126 in.

PISTONS

DESCRIPTION	SPECIFICATION	
	Metric	Standard
Skirt Diameter (measured at approximately 10 mm above the bottom of the skirt)	93.912-93.928 mm.	3.6973-3.6979 in.
Piston Clearance	0.010-0.22 mm	0.0003-0.0008 in.
Top of Piston to Cylinder Head	0.69-0.83 mm	0.027-0.032 in.

Piston Protrusion	0.460-0.609 mm Fit Gasket, Number (1.32mm), 0 hole	0.018-0.023 in. Fit Gasket, Number (0.051 in.), 0 notches
	0.610-0.709 Fit Gasket, Number (1.42 mm) 1 hole	0.024-0.027 in. Fit Gasket, Number (0.055 in.) 1 notch or hole
	0.710-0.810 Fit Gasket, Number (1.52 mm), 2 holes	0.027-0.031 in. Number (0.059 in) 2 notches or holes

PISTON PINS

DESCRIPTION	SPECIFICATION	
	Metric	**Standard**
Type	Full Floating	
Pin Diameter	32.004-32.010 mm	1.259-1.260 in.
Clearance	0.010-0.020 mm	0.0003-0.0007 in.

PISTON RINGS

DESCRIPTION	SPECIFICATION	
	Metric	**Standard**
Clearance in Groove		
Top Compression Ring	0.12-0.16 mm	0.0048-0.0063 in.
Second Compression Ring	0.065-0.11 mm	0.0026-0.0044 in.
Oil Control (Steel Rails)	0.03-0.07 mm	0.0012 - 0.0028 in.
Fitted Gap		
Top Compression Ring	0.40-0.55 mm	0.0158-0.0217 in.
Second Compression Ring	0.25 - 0.50 mm	0.0099 - 0.0197 in.
Oil Ring (Steel Ring)	0.20 - 0.40 mm	0.0079 -0 .0158 in.

CAMSHAFT

DESCRIPTION	SPECIFICATION	
	Metric	**Standard**
Journal Diameter-Front	29.960-29.980 mm	1.179-1.180 in.
Bearing Clearance	0.03-0.08 mm	0.001-0.003 in.
Journal Diameter-Center	39.250-39.270 mm	1.545-1.546 in.
Bearing Clearance	0.03-0.08 mm	0.001-0.003 in
Journal Diameter-Rear	39.250-39.270 mm	1.545-1.546 in.
Bearing Clearance	0.03-0.08 mm	0.001-0.003 in.
Camshaft End Play	0.10-0.55mm	0.004-0.021 in.

HYDRAULIC LIFTER

DESCRIPTION	SPECIFICATION	
	Metric	**Standard**
Outside Diameter	11.994 ± 0.006 mm	0.472 ± 0.0002 in.

VALVES

DESCRIPTION	SPECIFICATION	
	Metric	Standard
Face Angle-Intake	45° 25'-55° 35' mm	-
Face Angle-Exhaust	45° 25'-45° 35' mm	-
Intake Valve Opens	15.6° ± 2° A.T.D.C.	-
Intake Valve Closes	64.4° ± 2° A.B.D.C.	-
Exhaust Valve Opens	66° ± 2° B.B.D.C.	-
Exhaust Valve Closes	32° ± 2° A.T.D.C.	-
Head Diameter-Intake	32.30-32.50 mm	1.271-1.279 in.
Head Diameter-Exhaust	30.80-31.00 mm	1.212-1.220 in.
Stem Diameter-Intake	5.952-5.970 mm	0.234-0.235 in.
Stem Diameter-Exhaust	5.942-5.960 mm	0.233-0.234 in.
Clearance in Guide-Intake	0.030-0.060 mm	0.001-0.002 in.
Clearance in Guide-Exhaust	0.040-0.070 mm	0.001-0.002 in.

VALVE GUIDE

DESCRIPTION	SPECIFICATION	
	Metric	Standard
Inside Diameter	6.00-6.012 mm	0.2362-0.2366 in.
Fitted Height-Intake	14.5-15.0 mm	0.570-0.590 in.
Fitted Height-Exhaust	16.5-17.0 mm	0.649-0.669 in.

VALVE SPRING

DESCRIPTION	SPECIFICATION	
	Metric	Standard
Free Length	45.26 mm	1.781 in.
Fitted Length	38.0 mm	1.496 in.
Load at Fitted Length	182 ± 5-10% Kg	-
Load at Top of Lift	395 ± 5% Kg	-
Number of Coils	8	-

LUBRICATION

DESCRIPTION	SPECIFICATION	
	Metric	Standard
Pressure Relief Valve Opens	6.50 bar	94 psi
Pressure Relief Valve Spring-Free Length	51.5 mm	2.02 in.

OIL PUMP

DESCRIPTION	SPECIFICATION	
	Metric	Standard
Outer Rotor End Float	0.060-0.160 mm	0.002-0.006 in.
Inner Rotor End Float	0.060-0.160	0.002-0.006 in.
Outer Rotor to Body Diameter Clearance	0.130-0.240 mm	0.005-0.009 in.
Rotor Body to Drive Gear Clearance (pump not fitted)	0.90-1.50 mm	0.035-0.059 in.

TORQUE

3.0L DIESEL TORQUE SPECIFICATIONS

DESCRIPTION	N·m	Ft. Lbs.	In. Lbs.
Bolts, Oil Pump	11	8	96
Bolts, Vacuum Pump	14	10	124
Vacuum Pump Pipe to Block	57	42	-
Bolts, Crankshaft Gear	11	8	96
Bolts, Crankshaft Position Sensor	11	8	96
Flex Plate Bolts - Refer to the Service Procedure			
Cylinder Head Bolts - Refer to the Service Procedure			
Bolts, Reluctor Wheel	15	11	130
Bolts, Rear Main Bearing Support	28	21	240
Bolt, Oil Cooler to Engine Block	47	35	-
Engine Block Plug In Front Of Oil Cooler	58	43	-
Stud, Oil Cooler Mounting	50	37	-
Bolt, Oil Level Indicator to Cylinder Head Cover	11	-	96
Bolt, Oil Level Indicator Tube to Pan	11	-	96
Fasteners, Water Pump Housing	24	18	212
Bolts, Connecting Rod - Refer to the Service Procedure			
Bolts, Balance Shaft	32	24	-
Bolts, Oil Jet	11	8	96
Bolt, Oil Pump Pick-up Tube	32	24	-
Bolts, Oil Pan — Refer to the Service Procedure			
Structural Support to Engine and Transmission Bolts	45	33	-
Bolt, Crankshaft Hub	303+90°	224+90°	-
Bolts, Crankshaft Pulley	32	24	-
Bolts, Front Engine Cover	9	7	-
Bolts, Transmission to Engine	83	62	-
Bolts, Cylinder Head Cover / Intake Manifold — Refer to the Service Procedure			
Bolts, Camshaft Timing Access	25	18	-
Camshaft Access Plugs	80	59	-
Bolts, Oil Separator	11	8	96
Bolt, Camshaft Position Sensor	11	8	96
Bolts, Boost Pressure / Intake Air Temperature. Sensor	5	-	48
Glow Plug	13	-	110
Bolts, Accessory Drive Bracket	45	33	-
Bolt, Accessory Drive Belt Idler Pulley	53	39	-
Bolt, Vacuum Line Fitting	57	42	-
Fasteners, Fuel Pump	28	21	-
Fittings, Fuel Line at Pump	28	21	-
Bolts, Fuel Rail Retaining	25	18	217
Bolts, Inner Timing Belt Cover			

DESCRIPTION	N·m	Ft. Lbs.	In. Lbs.
8mm	11	8	96
10mm	45	33	-
Bolts, Outer Timing Belt Cover			
3mm	6	-	54
8mm	11	8	96
Bolts, Engine Mount Bracket to Cylinder Head	45	33	-
Bolts, Structural Support to Engine and Transmission	45	33	-
Bolts, Intake Inlet Tube	10	8	89
Bolts, Camshaft Sprocket	108	80	-
Bolts, Camshaft Timing Access	25	18	212
Bolt, Timing Belt Idler Pulley	47	35	-
Bolt, Timing Belt Tensioner	29	22	-
Nut, Fuel Injection Pump Gear	88	65	-
Nuts, Fuel Injection Pump Retaining	24	18	212
Bolts, Engine Lift Hook	45	33	-
Bolts, Thermostat Housing	25	18	-
Fitting, Turbocharger Oil Supply Line	25	18	217
Bolts, Turbocharger Oil Return Line	11	-	96
Nuts, Engine Cover	5	-	44
Nuts, Exhaust Manifold	36	27	-
Bolts, Turbocharger Heat Shield	25	18	217
Bolts, Exhaust Manifold Heat shield	28	21	-
Bolts, EGR Valve	25	18	-
EGR Air Control Valve to Cylinder Head Cover	11	-	96
Bolts, Coolant Pipe to EGR Valve	25	18	-
Nuts, Turbocharger Down pipe	32	24	-
Bolts, Turbocharger Support Bracket	25	18	-
Bolts, Vibration Damper to Crankshaft Hub	28	21	-
Bolts, Crankshaft Support	44	33	-
Nuts, Turbocharger to Exhaust Manifold	32	24	-

SPECIAL TOOLS - 3.0L TURBODIESEL

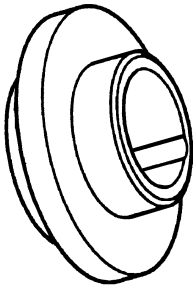

80e49185

INSTALLER, FRONT CRANKSHAFT SEAL - 8936A

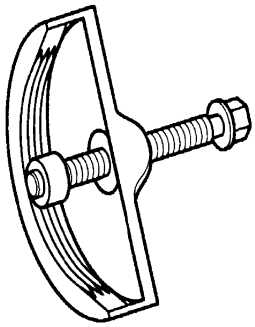

80e492e4

REMOVER, VIBRATION DAMPER - 8940

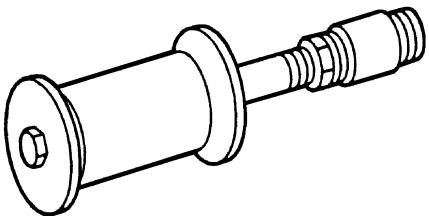

80e492f2

HAMMER, SLIDE - 8937

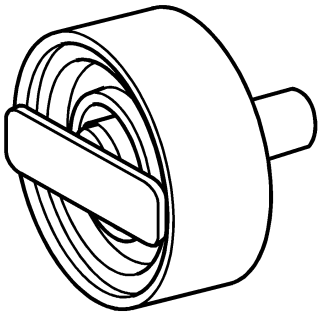

80e49274

INSTALLER, REAR MAIN SEAL - 8944

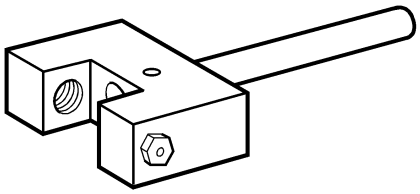

80e49289

TOOL, CHAIN SEPARATOR - 8948

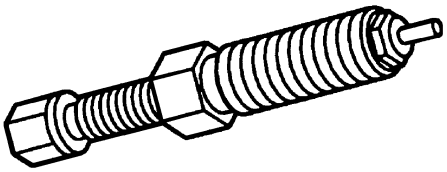

80e492b0

SCREW, PRESSING - 8950

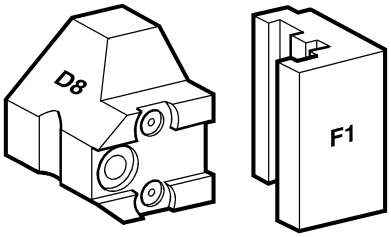

80e492bd

PIECE, THRUST - 8949A

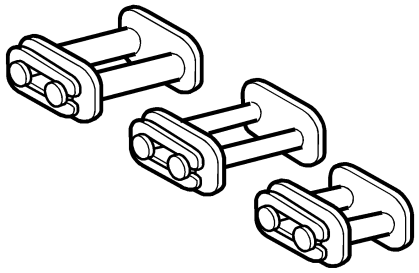

80e492a7

LINKS, ASSEMBLY - 8951

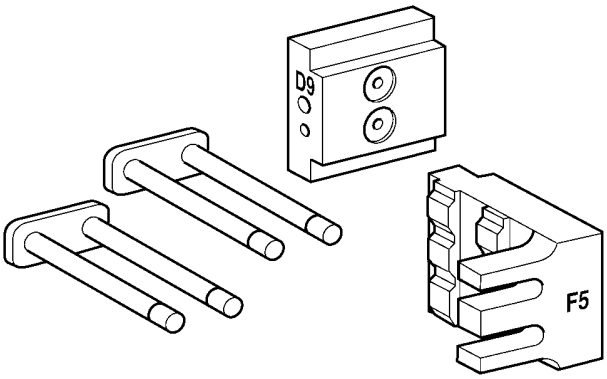

811aa8d1

INSERTS, ASSEMBLY - 8952A

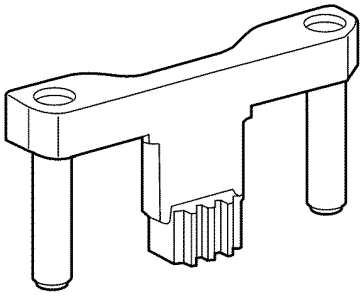

810db0a2

TOOL, FLYWHEEL LOCKING - 9102

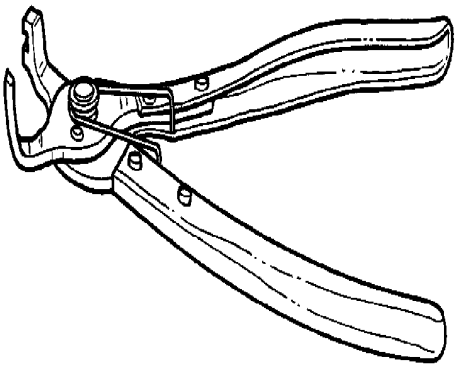

PLIERS, FUEL LINE - 9539

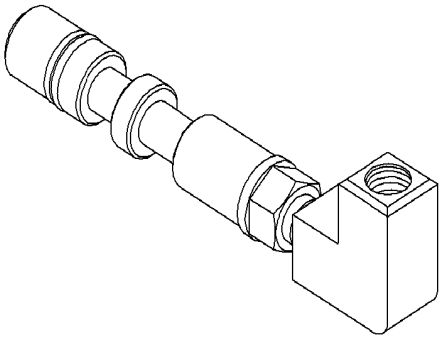

ADAPTOR - 9543

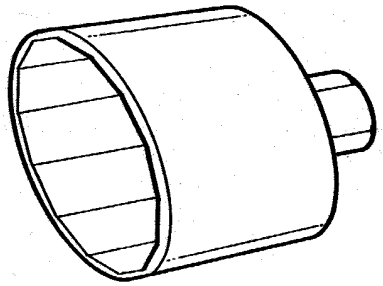

Wrench, Oil Filter Cap - 9551

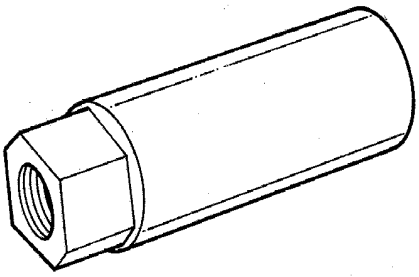

Remover, Fuel Injector - 9552

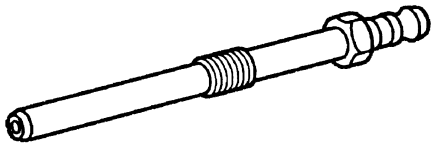

80e492e9

ADAPTER, COMPRESSION TESTER - 9553

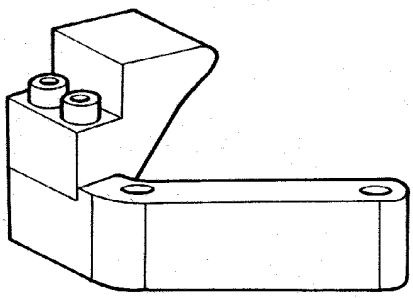

GUIDE, TIMING CHAIN - 9554

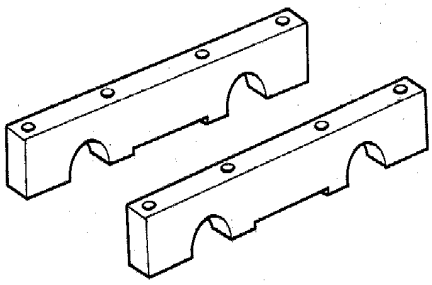

Retainer, Camshafts - 9555

ELEMENT-AIR CLEANER

REMOVAL

NOTE: Housing removal is not necessary for element (filter) replacement.

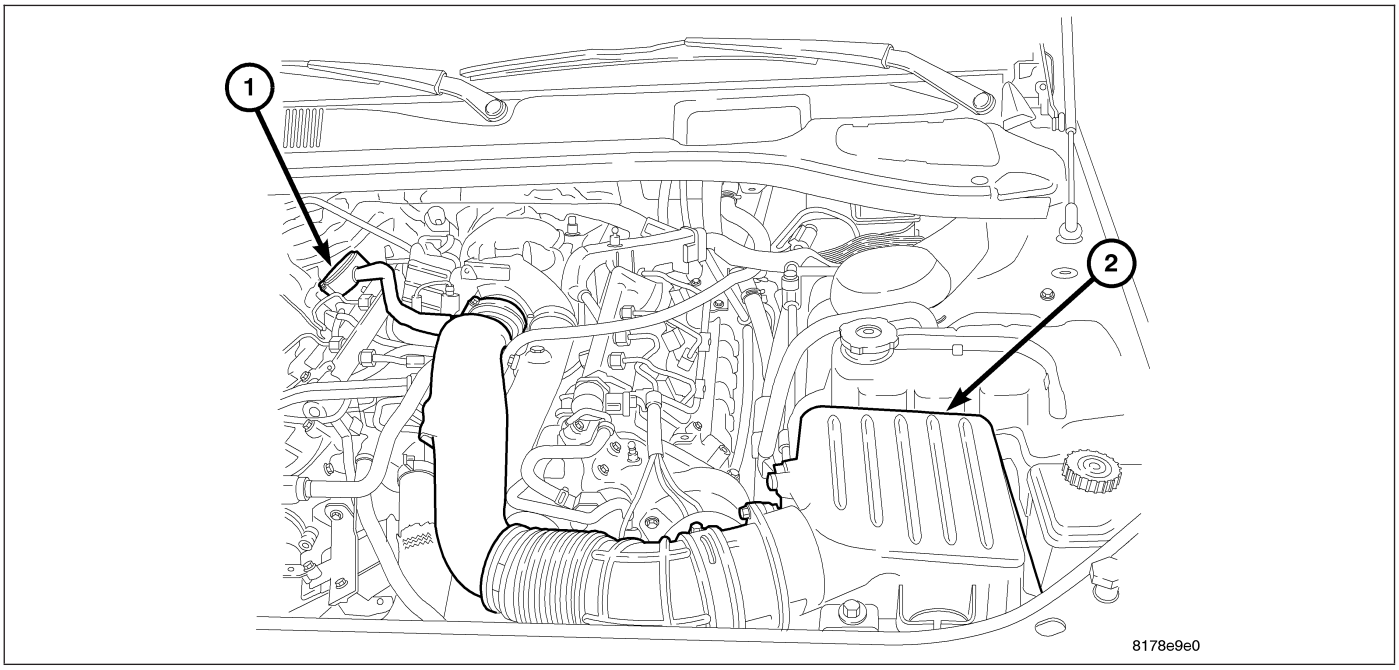

1. Disconnect the negative battery cable. (Refer to 8 - ELECTRICAL/BATTERY SYSTEM/BATTERY - REMOVAL)
2. Disconnect the mass air flow (MAF) and air pressure sensor electrical connectors.
3. Pry up both spring clips from front of housing cover, (spring clips retain cover to housing).
4. Release housing cover from locating tabs located on rear of housing, and lift cover.
5. Remove air cleaner element from the housing.

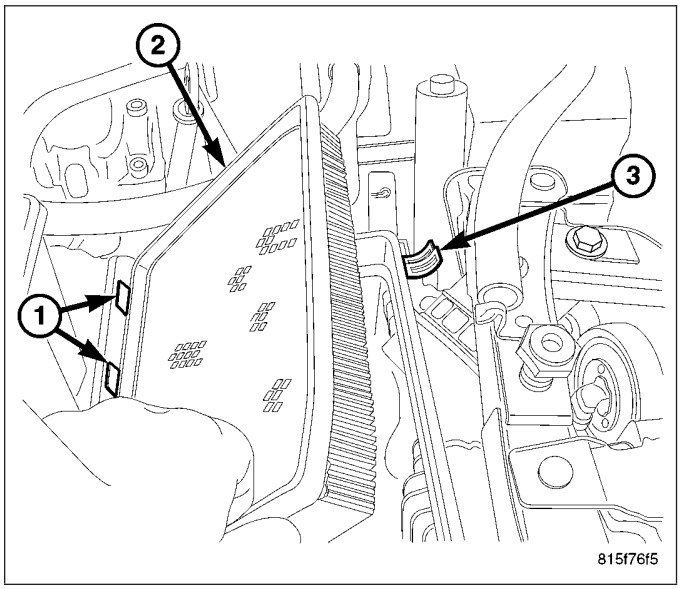

INSTALLATION

NOTE: Clean housing and inspect the gasket for damage before installing a clean filter. Replace as necessary.

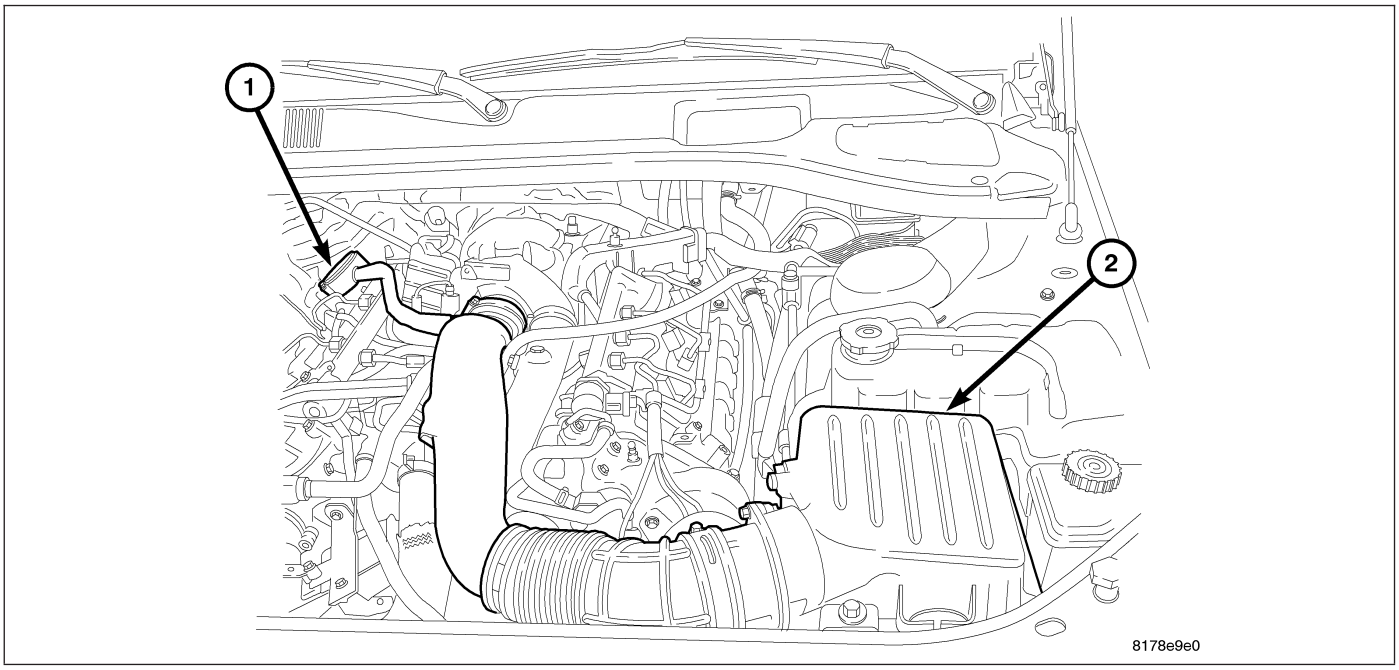

1. Install element into housing.
2. Position housing cover into rear housing locating tabs and seat cover onto housing.
3. Pry up spring clips and lock cover to housing.
4. Connect air intake duct and tighten clamp to 5 N.m (44 in. lbs.).
5. Connect the MAF and air pressure sensor electrical connectors.
6. Connect the negative battery cable.

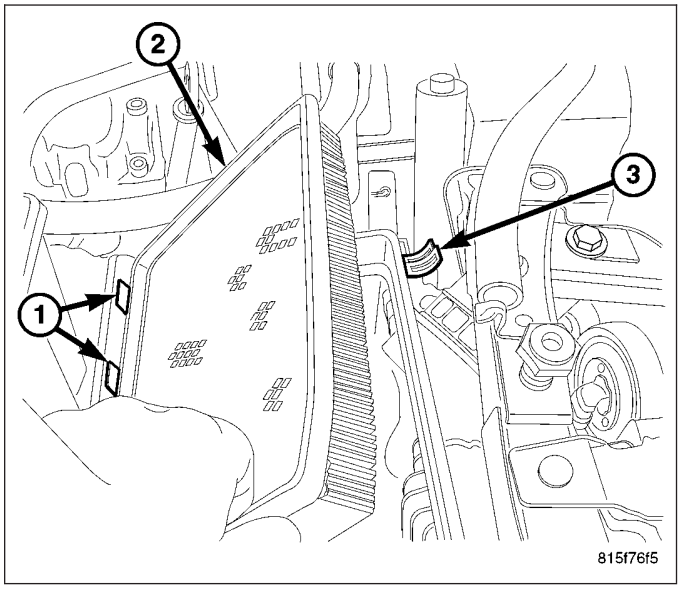

HOUSING-AIR CLEANER

REMOVAL

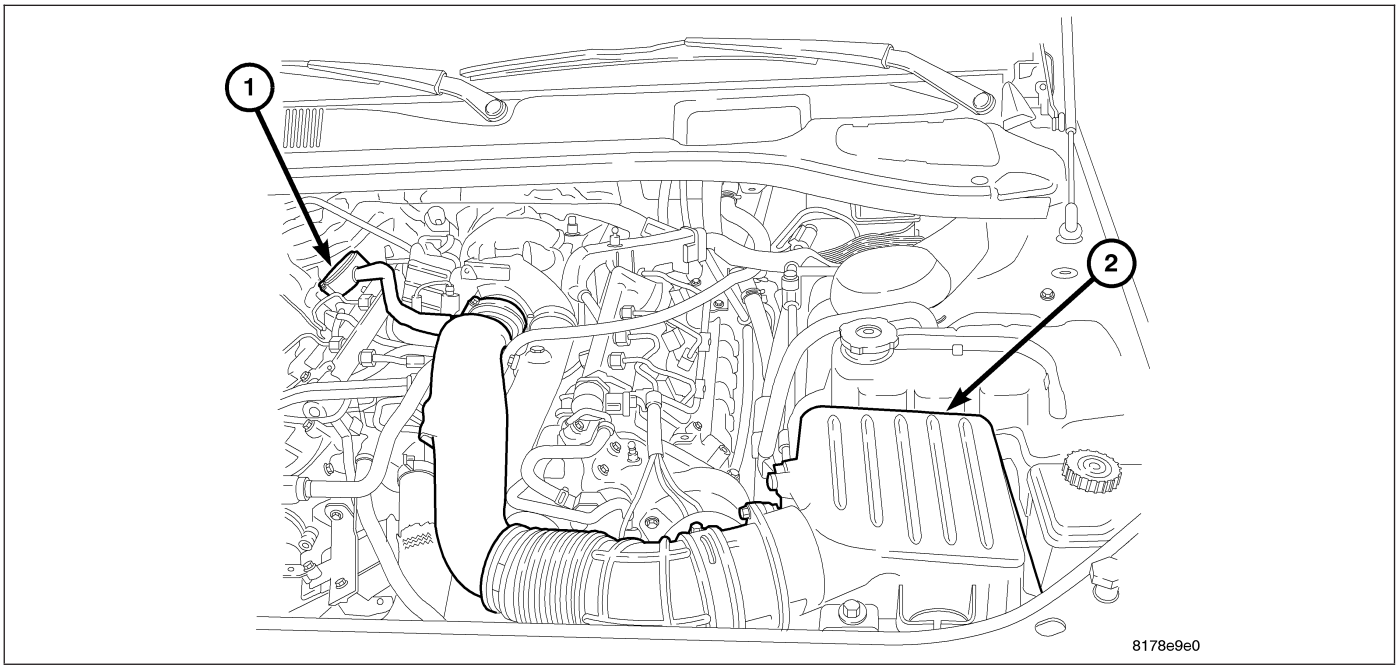

1. Disconnect the negative battery cable. (Refer to 8 - ELECTRICAL/BATTERY SYSTEM/CABLES - REMOVAL)
2. Disconnect the MAF and air pressure sensor electrical connectors.
3. Remove the air outlet hose from the air cleaner assembly.
4. Remove the tube from the PCV valve.
5. Pry up both spring clips from front of housing cover (spring clips retain cover to housing).
6. Release housing cover from locating tabs located on rear of housing, and remove cover.
7. Remove the rear lower housing to fender well fastener.
8. Remove the air inlet duct.
9. Pulling upward, remove the air cleaner housing.

INSTALLATION

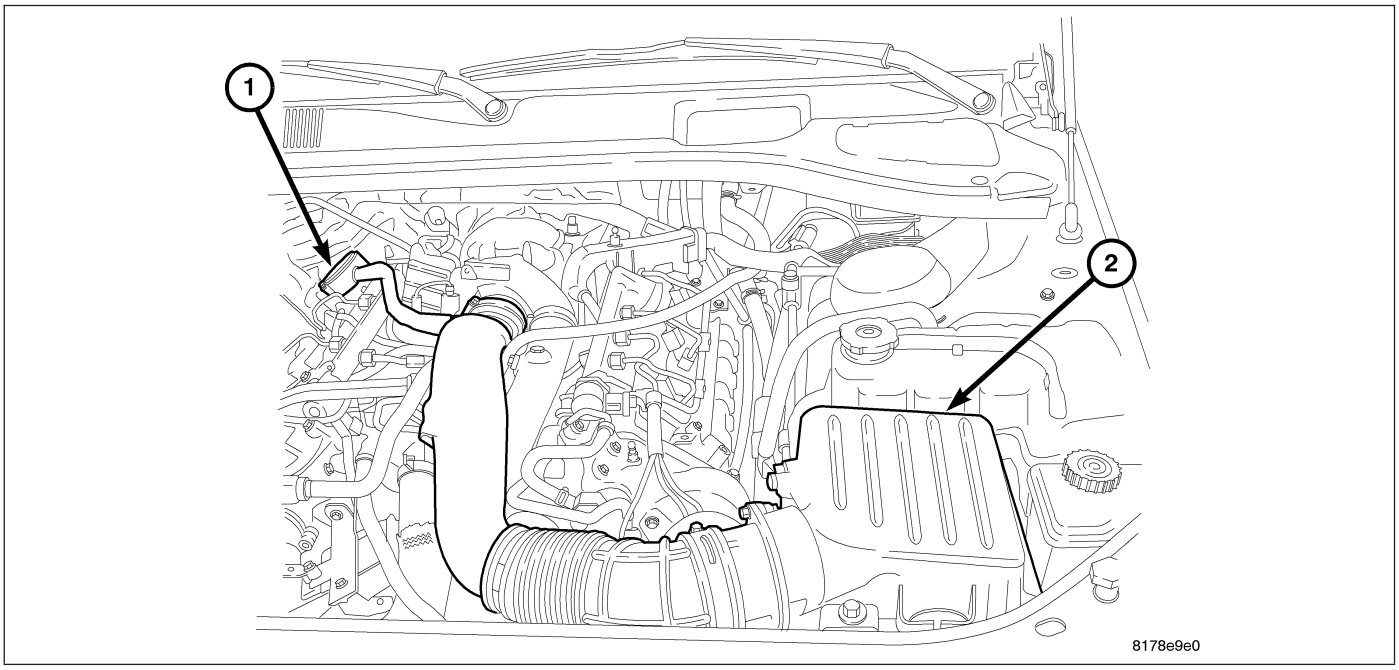

1. Position the lower housing and attach the air inlet duct.
2. Install the lower housing to fender well fastener. Tighten fastener to 5 N·m (44 in. lbs.).
3. Install the air cleaner element.
4. Position housing cover into housing locating tabs.
5. Pry up spring clips and lock cover to housing.
6. Install the air outlet tube. Tighten clamp to 5 N·m (44 in. lbs.).
7. Install the PCV valve (1).
8. Connect the MAF and air pressure senso wire harness connectors.
9. Connect the negative battery cable. (Refer to 8 - ELECTRICAL/BATTERY SYSTEM/CABLES - INSTALLATION)

CYLINDER HEAD

DESCRIPTION

The 3.0L aluminum, overhead valve cylinder heads are made of high strength aluminum alloy and are each equipped with two camshafts, roller finger followers/lifter assemblies and four valve technology. The cylinder head itself is not resurfacable. The cylinder head uses a Multi-layered Steel gasket for sealing.

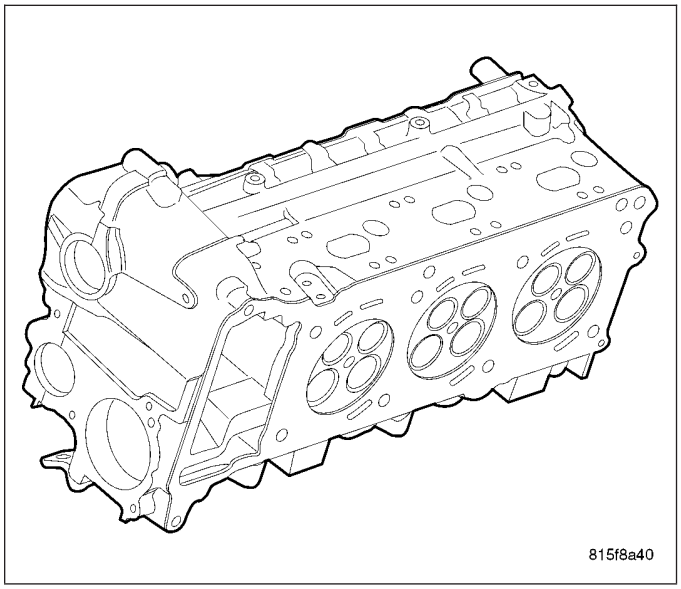

STANDARD PROCEDURE

CYLINDER HEAD BOLT INSPECTION

1. Measure cylinder head bolts between points shown.

Cylinder Head Bolts	Thread Diameter	12 mm
	Length When New	205 mm
	Maximum Length	207 mm

2. If the cylinder head bolt length is greater than the maximum allowable measurement, replace the cylinder head bolts.

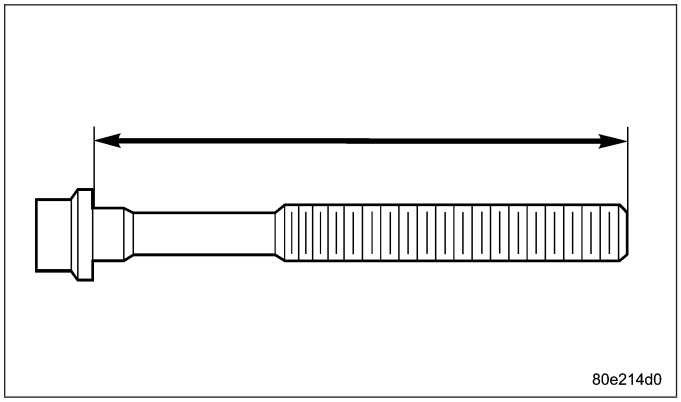

VALVE SEALS - IN VEHICLE

1. Disconnect the negative battery cable.
2. Remove the intake manifold/cylinder head cover (Refer to 9 - ENGINE/CYLINDER HEAD/CYLINDER HEAD COVER(S) - REMOVAL).

NOTE: Rocker arms and lifters must be kept in order of removal and stored in the up right position.

3. Position the rocker arms aside. (Refer to 9 - ENGINE/CYLINDER HEAD/ROCKER ARM / ADJUSTER ASSY - REMOVAL).

4. Install special tool VM.1072A, compression tester adaptor, into the injector hole and retain with an injector hold down bolt.

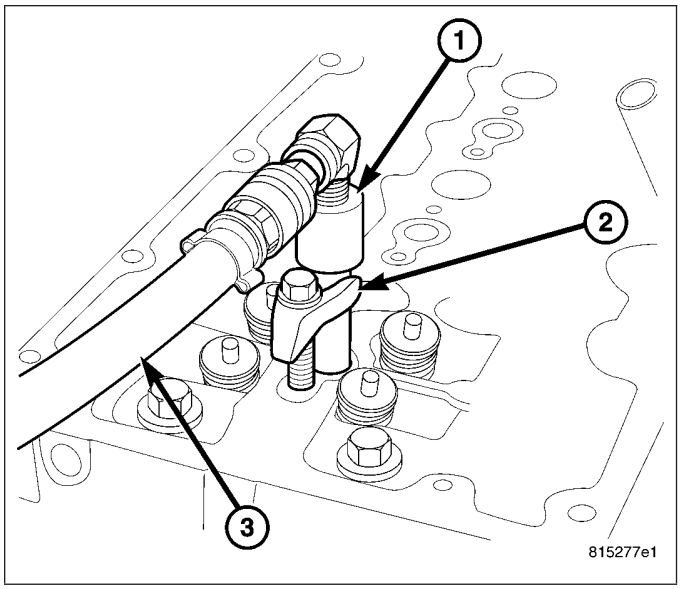

5. Prepare special tool MD998772A for usage by inverting the tool to cylinder head holding screws so that the thread size matches the cylinder head.
6. Install special tool MD998772A onto cylinder head and using adaptor MD998772A-15, place the adaptor over the valve spring.
7. Connect a regulated shop air supply to VM.1072A, and pressurize the cylinder.
8. Place shop towels around the working area of the cylinder head to prevent valve locks from accidently entering the engine.

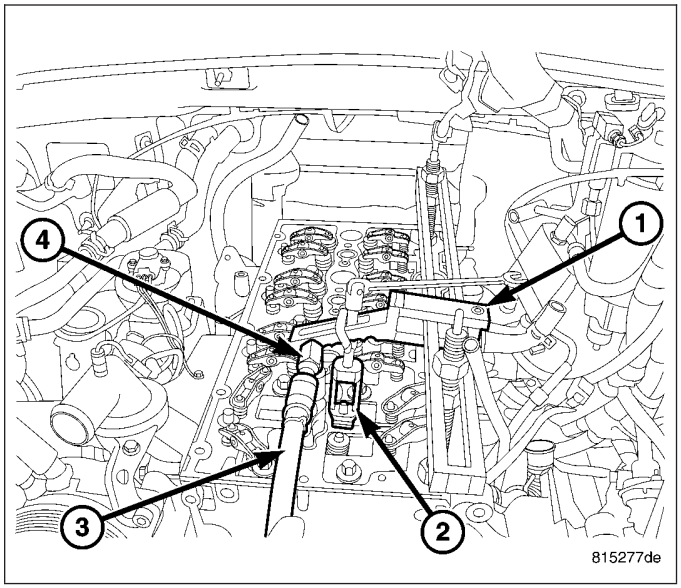

9. Using adaptor MD998772A-15 adaptor, collapse the valve spring and remove the locks.
10. Remove the valve spring assembly.

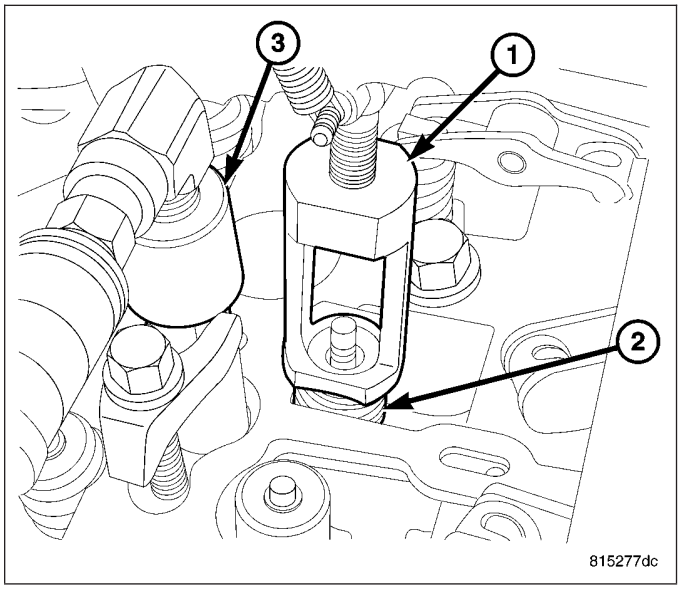

11. Remove the valve seal.
12. Repeat this procedure for all cylinders.

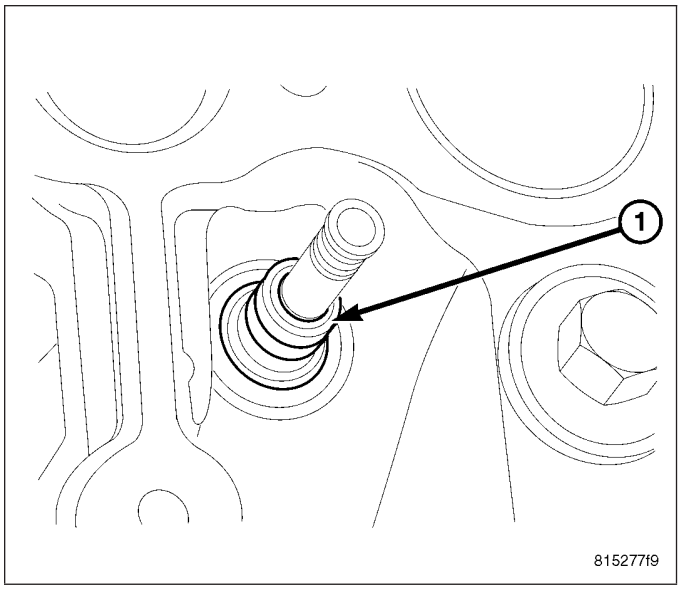

VALVE SERVICE

This procedure is done with the engine cylinder head removed from the block.

DISASSEMBLY

1. Remove the engine cylinder head from the cylinder block (Refer to 9 - ENGINE/CYLINDER HEAD - REMOVAL).
2. Use Valve Spring Compressor Tool and compress each valve spring.
3. Remove the valve locks, retainers, and springs.
4. Use a smooth stone or a jewelers file to remove any burrs on the top of the valve stem, especially around the groove for the locks.
5. Remove the valves, and place them in a rack in the same order as removed.

VALVE CLEANING

1. Clean all carbon deposits from the combustion chambers, valve ports, valve stems, valve stem guides and head.
2. Clean all residue and gasket material from the engine cylinder head machined gasket surface.

INSPECTION

1. Inspect for cracks in the combustion chambers and valve ports.
2. Inspect for cracks on the exhaust seat.
3. Inspect for cracks in the gasket surface at each coolant passage.
4. Inspect valves for burned, cracked or warped heads.
5. Inspect for scuffed or bent valve stems.
6. Replace valves displaying any damage.
7. Check valve spring height.

VALVE SEAT REFACING

1. Install a pilot of the correct size in the valve guide bore. Reface the valve seat to the specified angle with a good dressing stone. Remove only enough metal to provide a smooth finish.
2. Use tapered stones to obtain the specified seat width when required.

VALVE GUIDES

1. Valve Guides height requirement.
2. Measurement A : 16.50 - 17.00 mm. Measurment B : 14.50 - 15.00 mm.

VALVE STEM-TO-GUIDE CLEARANCE MEASUREMENT

1. Measure and record internal diameter of valve guides. Valve guide internal diameter is 6.0 to 6.012 mm (0.2362 to 0.2366 in.).
2. Measure valve stems and record diameters. Intake valve stem diameter 5.952 to 5.97 mm (0.2343 to 0.2350 in). Exhaust valve stem diameter 5.942 to 5.96 mm (0.2339 to 0.2346 in).
3. Subtract diameter of valve stem from internal diameter of its respective valve guide to obtain valve stem clearance in valve guide. Clearance of inlet valve stem in valve guide is 0.03 to 0.06 mm (.0011 to .0023 in). Clearance of exhaust valve stem in valve guide is 0.04 to 0.07 mm (.0015 to .0027 in).
4. If valve stem clearance in valve guide exceeds tolerances, new valve guides must be installed.

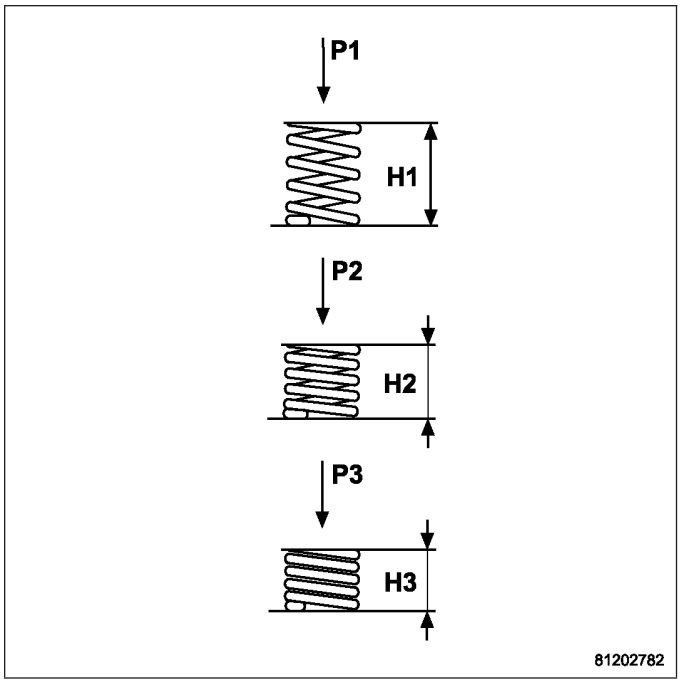

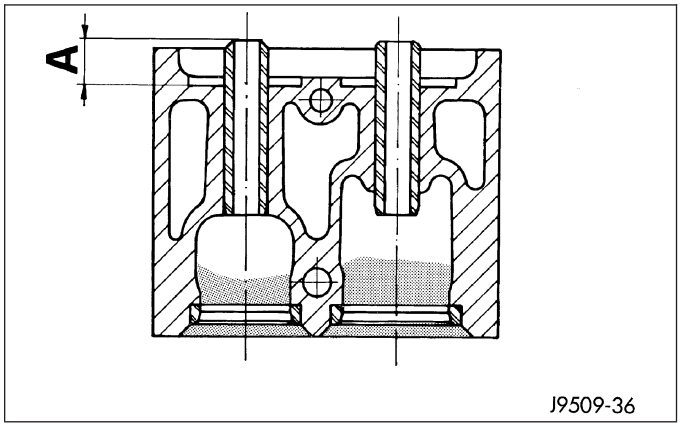

REMOVAL

LEFT

1. Disconnect negative battery cable. (Refer to 8 - ELECTRICAL/BATTERY SYSTEM/CABLES - REMOVAL)
2. Remove engine cover (1).

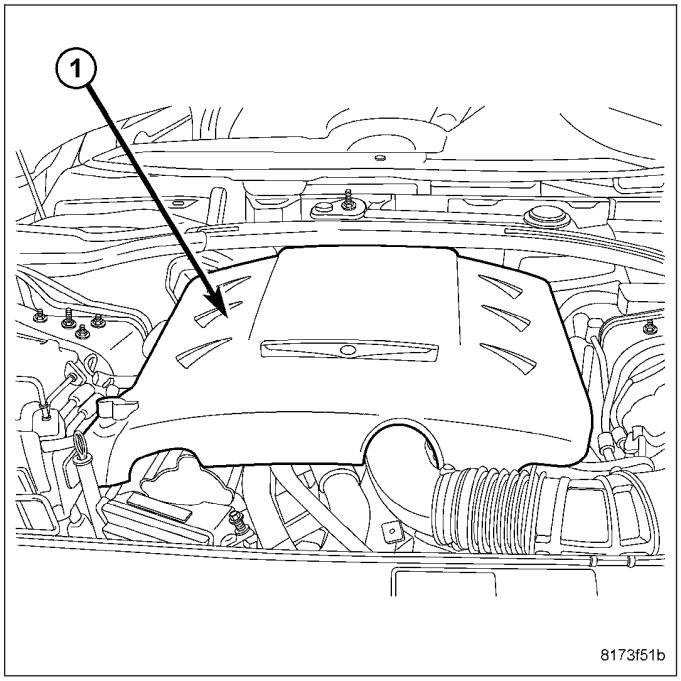

3. Remove the air cleaner outlet tube.
4. Remove the charge air inlet tube.
5. Drain cooling system. (Refer to 7 - COOLING - STANDARD PROCEDURE)
6. Disconnect the vacuum hose at the vacuum pump and set aside.
7. Remove upper radiator hose.
8. Disconnect the coolant reservoir hose at thermostat housing and set aside.
9. Disconnect the fuel supply and return hose quick connects at the left cylinder head cover. (Refer to 14 - FUEL SYSTEM/FUEL DELIVERY/FUEL LINES - REMOVAL)
10. Loosen the high pressure fuel pipes at the fuel rail (2) and disconnect the high pressure fuel pipes at the left injectors.
11. Disconnect the high pressure fuel line at the high pressure pump.
12. Disconnect the fuel rail solenoid (3) wiring harness connector and remove the left fuel rail (2) along with the fuel rail transfer pipe (1).
13. Remove the low pressure fuel supply and return pipe bundle (4) fasteners.

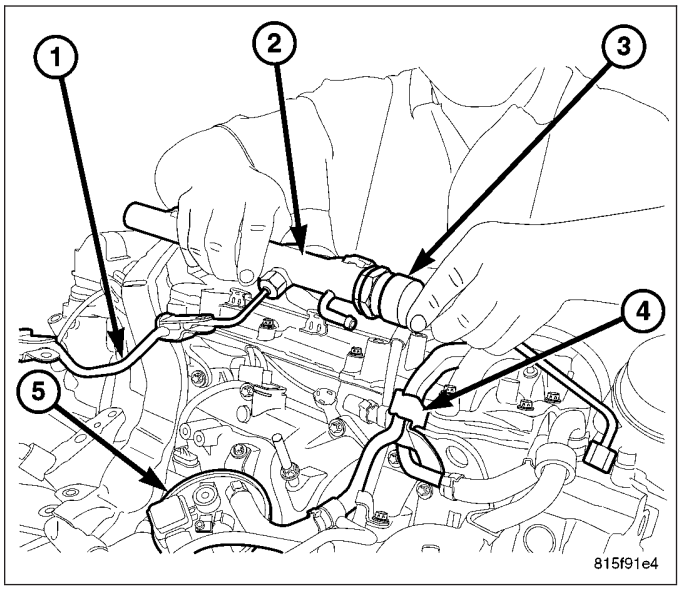

14. Disconnect the right fuel rail pressure sensor and remove the fuel rail.
15. Disconnect the camshaft position sensor (CMP) (6), the right fuel injector wiring harness connectors, and the right return fuel hoses from the injectors.
16. Remove the return fuel bundle fasteners (5).
17. Disconnect the water in fuel (WIF) sensor (3) and the turbocharger servo motor (2) harness connectors.
18. Remove the fuel filter (4) bracket fasteners.
19. Disconnect the fuel return hose bundle (5), and the engine ground strap at the right front of the intake manifold.

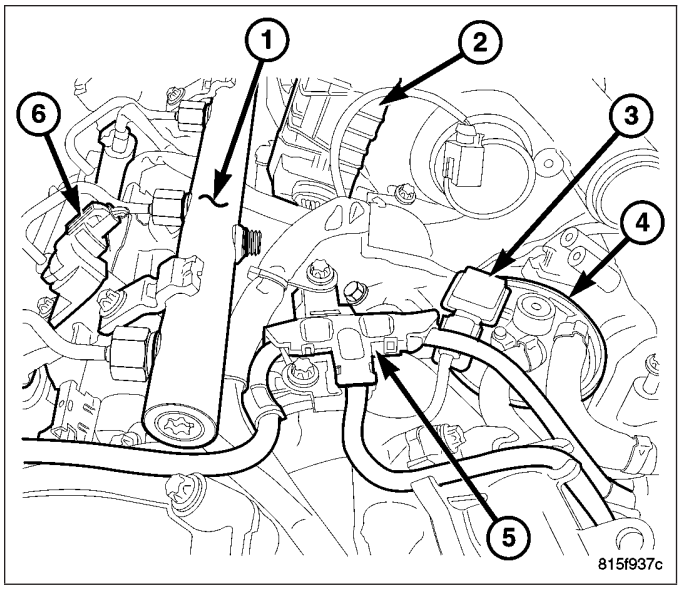

NOTE: Fuel filter assembly, hoses and lines may seep fuel. Capture any fuel spillage and store in appropriately marked containers.

20. Remove the fuel filter (2), hose (1) and pipe (3) assemblies and position aside.

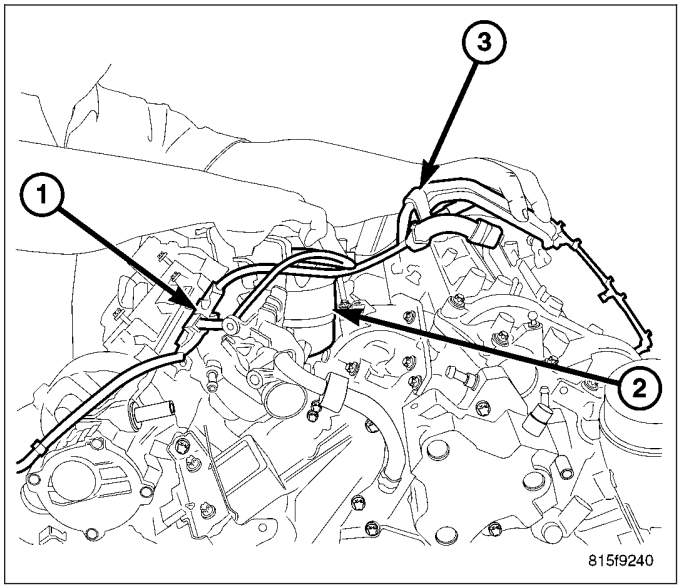

21. Remove the turbocharger (Refer to 11 - EXHAUST SYSTEM/TURBOCHARGER SYSTEM/ TURBOCHARGER - REMOVAL).

NOTE: Observe the way the engine oil supply and return ports in the turbocharger adaptor housing align to the engine block for oil flow through the turbocharger. Failure to do so will result in immediate turbocharger failure.

22. Remove turbocharger oil housing adaptor (1).
23. Disconnect the swirl valve actuator (3), glow plugs, EGR pressure sensor and coolant temperature sensor (4) wiring harness connector.
24. Remove the main engine wiring harness (2) fasteners and position the harness aside.

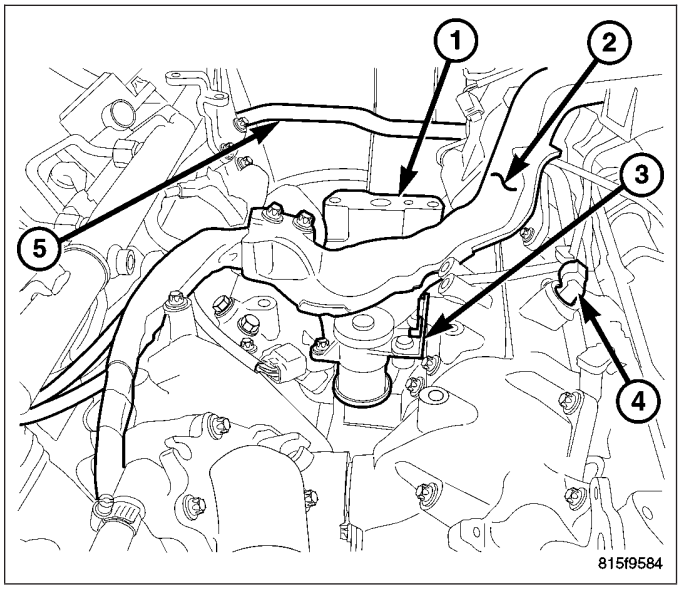

25. Disconnect the EGR coolant pipe (1) from the rear of the EGR housing.
26. Remove the EGR valve.

NOTE: The intake manifold is of the split design meaning that there are two halves. Whenever the intake manifold is removed, inspect the shared coolant passage (3) in the front of the intake manifold for leaks, repair as necessary.

27. Remove the intake manifold.

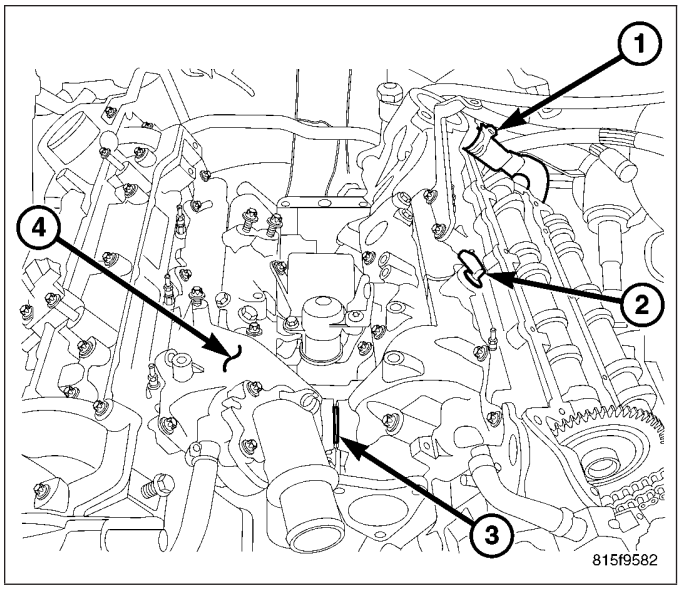

28. Remove the accessory drive belt.

CAUTION: The idler pulley retaining bolts are L.H. thread.

29. Remove the two idler pulleys (1).
30. Remove the belt tensioner (2).

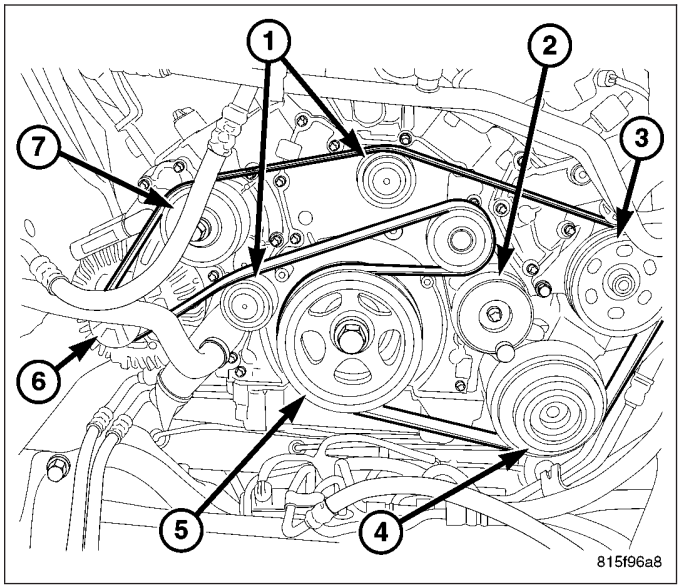

31. Rotate the engine by the vibration damper bolt, to TDC.
32. Raise and support the vehicle.
33. Remove right side starter blank.
34. Disconnect the hydraulic cooling fan lines and capture the fluid in a approved and clearly marked container.

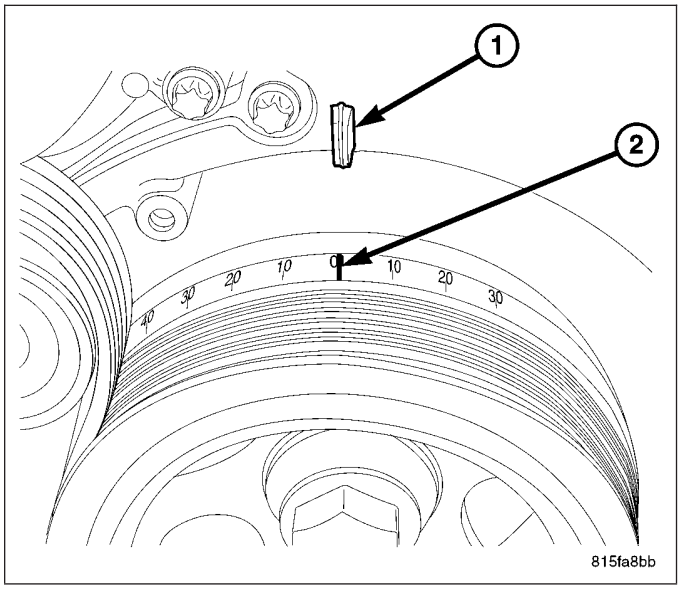

35. Remove the front oil pan retaining bolts (2).
36. Lower the vehicle.

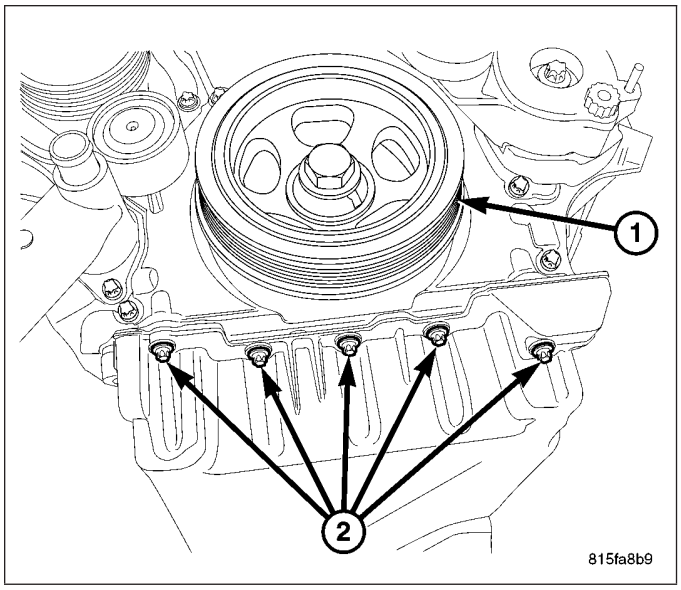

37. Remove the left rear heater hose retainer.
38. Remove the left fuel injectors (1).
39. Disconnect the vacuum supply hose.
40. Remove the oil filter housing bracket.

CAUTION: The timing cover is sealed with Mopar sealant that may be difficult when separating components. If the component are difficult to separate heat the sealed edges or area with a heat gun. DO NOT use any heat source that works with flame.

41. Remove the left cylinder head cover (2).

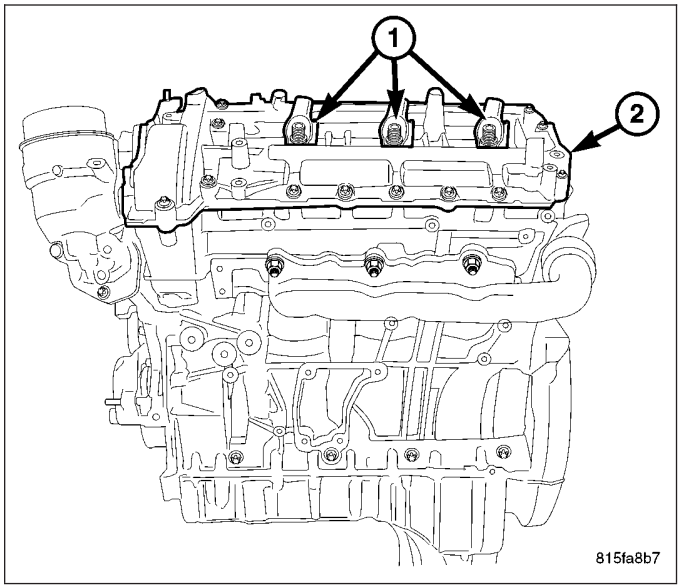

42. Observe the left camshaft gear alignment marks (2) on the rear of the camshaft gears (1,3). If they are together, continue with the next step. If the left camshaft alignment marks (2) are separated, rotate the engine by the vibration damper another 360°, until camshaft marks (2) align together and the vibration damper reaches TDC.

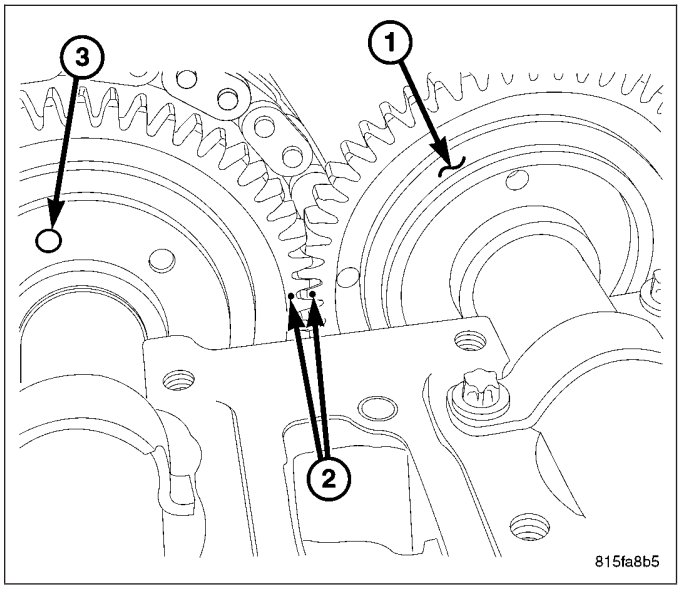

.

43. Raise and support the vehicle.
44. Install #9102 crankshaft lock into the starter access blank (2).
45. Lower the vehicle.

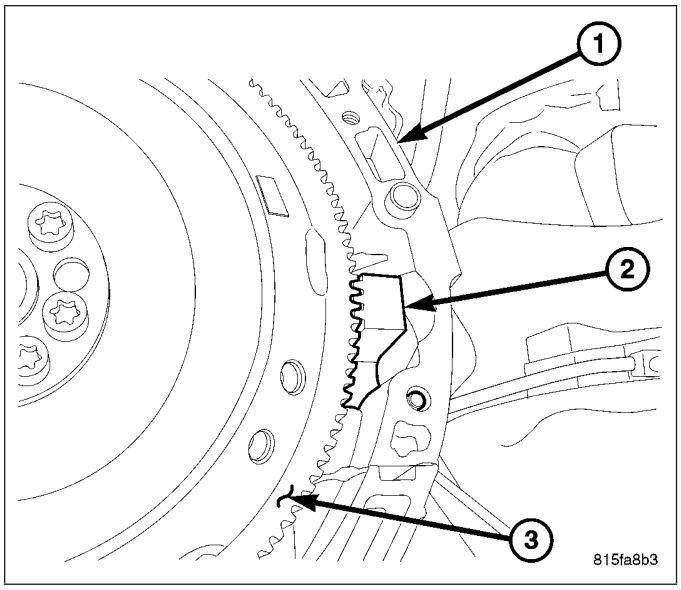

46. Remove the cooling fan module.
47. Remove the vibration damper.

CAUTION: The timing cover is sealed with Mopar sealant that may be difficult when separating components. If the component are difficult to separate heat the sealed edges or area with a heat gun. DO NOT use any heat source that works with flame.

48. Remove front timing chain cover (1).

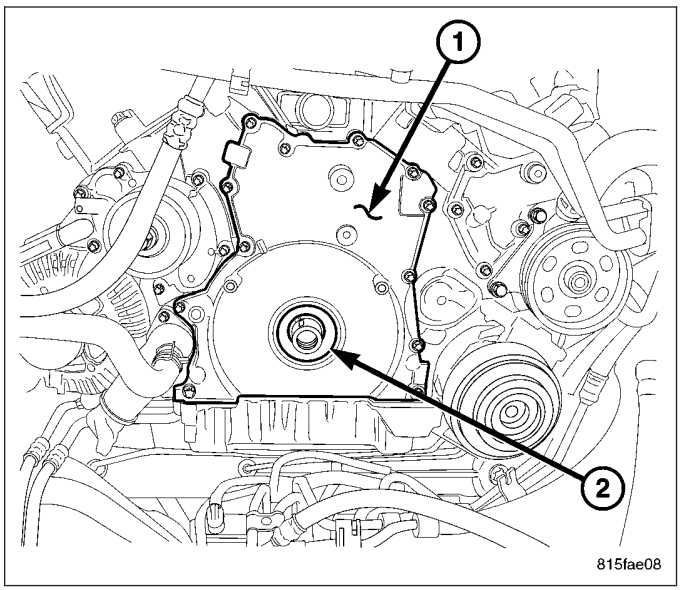

49. Paint mark or scribe the balance shaft (2) position to the engine block (1) and timing chain.
50. Paint mark or scribe the timing chain to crankshaft gear and camshaft drive gear relation.
51. Raise and support the vehicle.
52. Remove #9102 crankshaft locking tool.
53. Lower the vehicle.

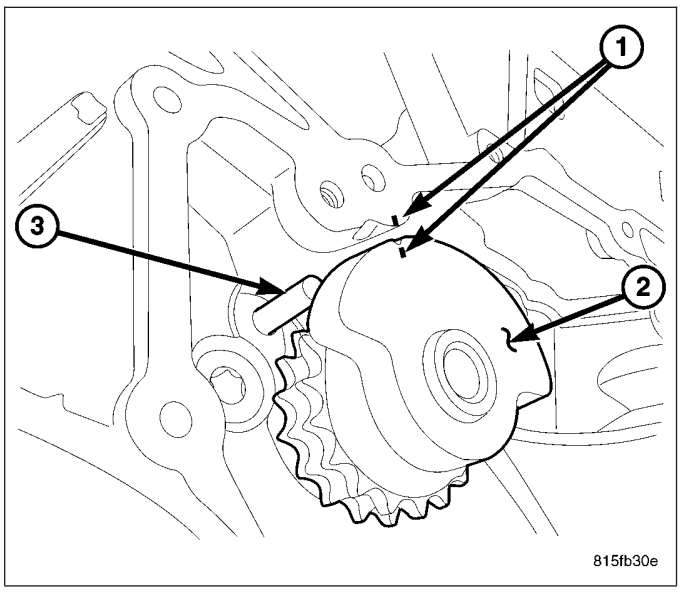

54. Remove the high pressure fuel pump (4) (Refer to 14 - FUEL SYSTEM/FUEL DELIVERY/FUEL INJECTION PUMP - REMOVAL).
55. Rotate the engine and remove the left camshaft drive gear (3) lower bolt.

NOTE: The left exhaust camshaft drive gear (3) dowel pin should align at approximately the 12 O'clock position when viewing through the camshaft seal access hole.

56. Rotate the engine back to TDC and check the alignment marks at the balance shaft, camshaft gear and crankshaft gear.

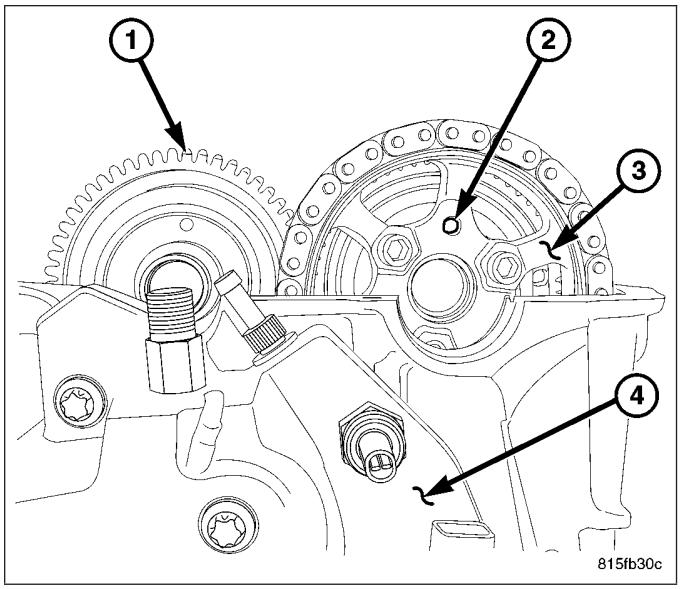

57. Remove the timing chain tensioner (3).

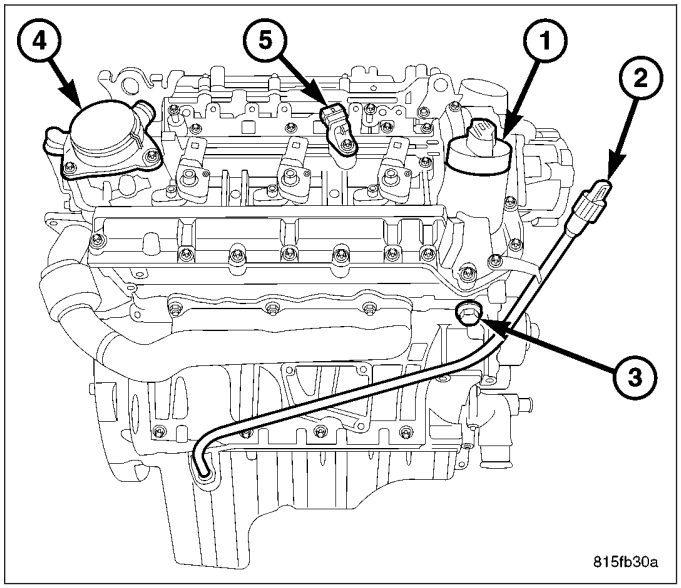

58. Remove the remaining left camshaft drive gear (3) retaining bolts.
59. Separate the left camshaft drive gear (3) and chain from camshaft.

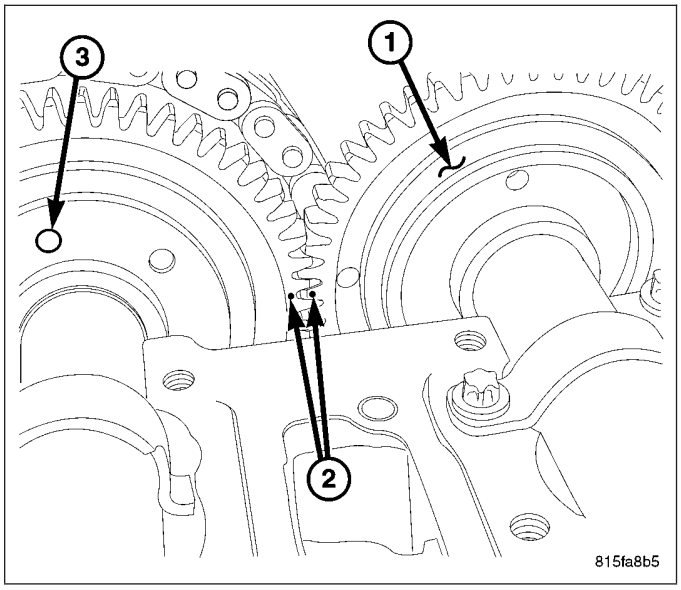

60. Remove the left camshaft retainers (1 and 2) and camshafts.
61. Remove the left camshaft drive gear.

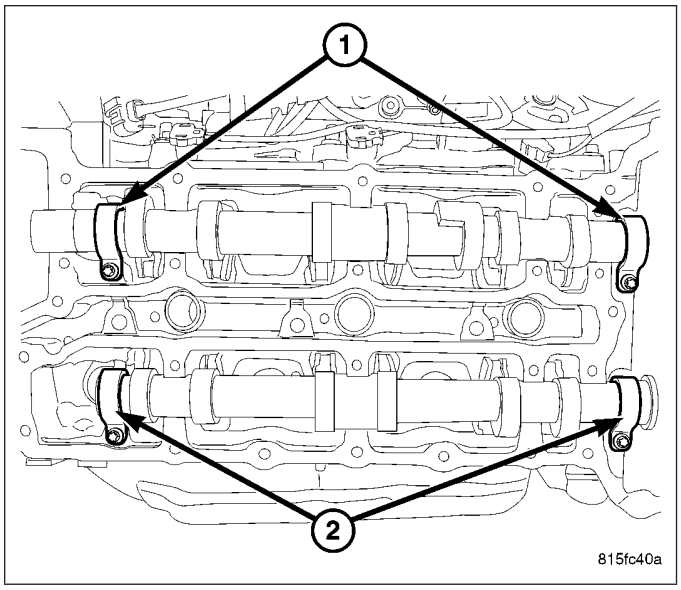

62. Using a slide hammer (2) and a screw, remove the left upper timing chain guide (4) retaining pin (1).
63. Using a slide hammer and a screw, remove the left lower timing chain guide retaining pin (1).

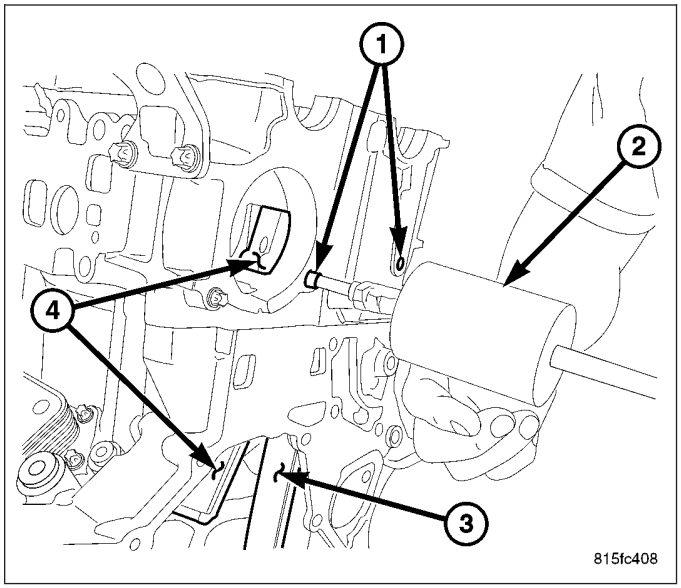

64. Remove the left lower timing chain guide fastener (2) and guide (1).

NOTE: Do Not store the cylinder head on the sealing surface. The cylinder surface area may be damaged.

65. Remove the left cylinder head glow plugs.
66. Remove cylinder head and gasket from engine block.

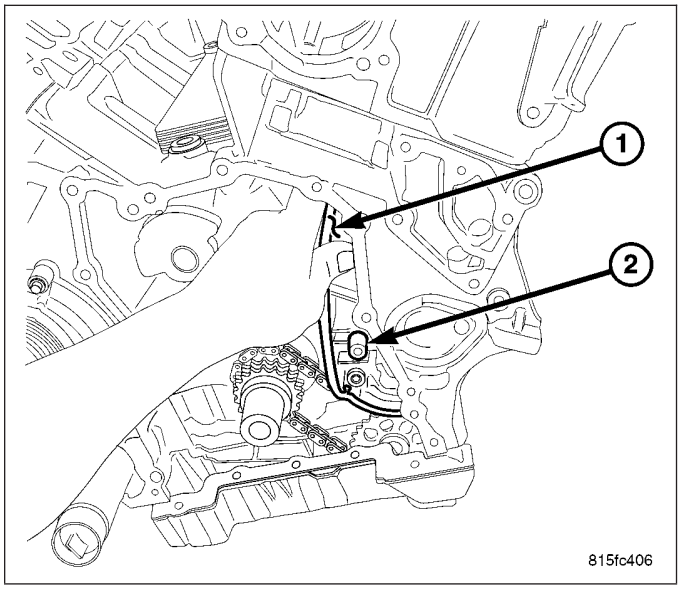

RIGHT

1. Disconnect negative battery cable.
2. Remove engine cover (1) and brackets.
3. Drain cooling system.

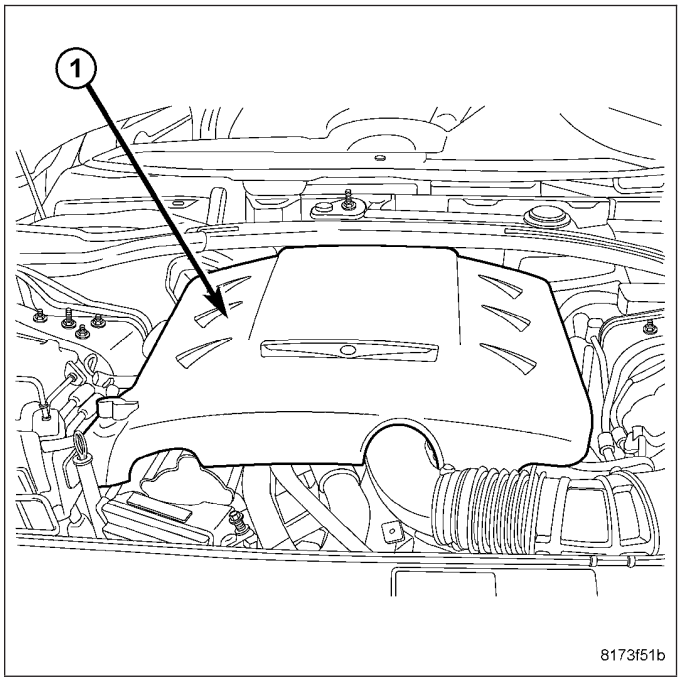

4. Remove the turbocharger (Refer to 11 - EXHAUST SYSTEM/TURBOCHARGER SYSTEM/TURBOCHARGER - REMOVAL).

NOTE: Observe the way the engine oil supply and return ports in the turbocharger adaptor align to the engine block for oil flow through the turbocharger. Failure to do so will result in immediate turbocharger failure.

5. Remove turbocharger oil housing adaptor (1).

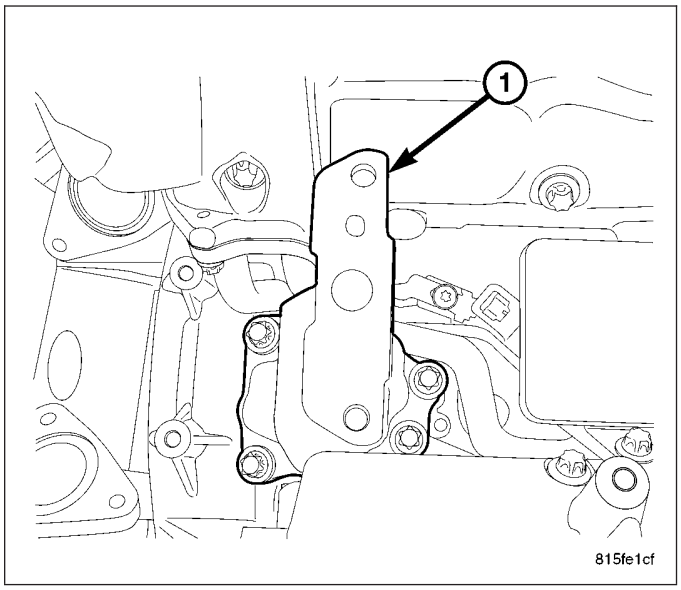

6. Remove the intake manifold.

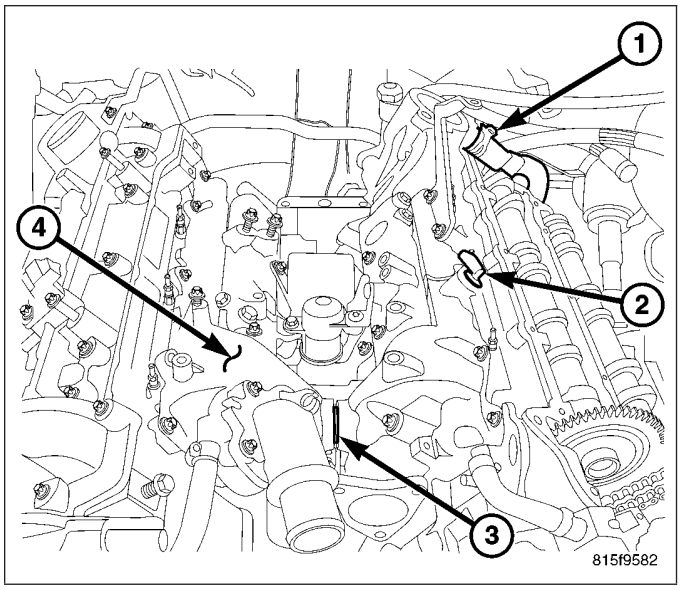

7. Remove the accessory drive belt.

CAUTION: The idler pulley retaining bolts are L.H. thread.

8. Remove the two idler pulleys (1).
9. Remove the belt tensioner (2).

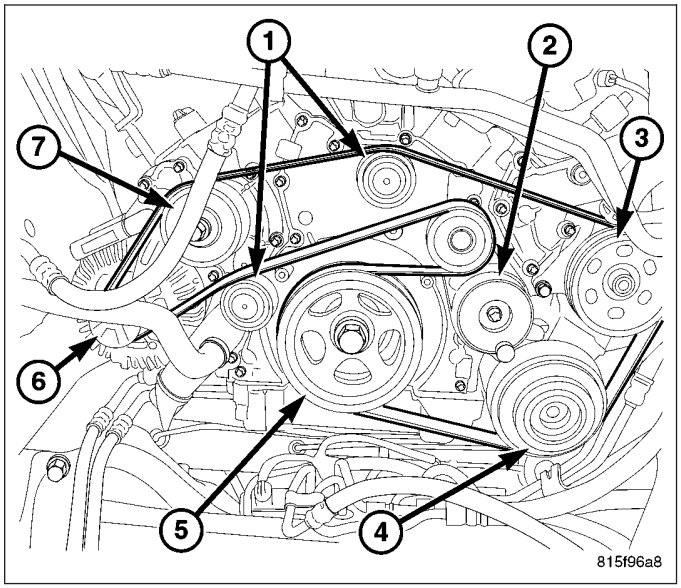

10. Rotate the engine by the vibration damper bolt, to TDC.
11. Raise and support the vehicle.
12. Remove right side starter blank.
13. Disconnect the hydraulic cooling fan lines and capture the fluid in a approved and clearly marked container.

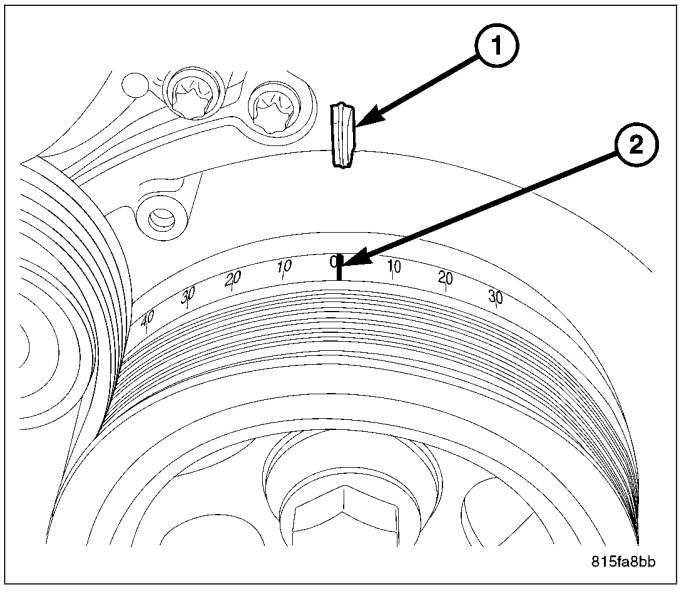

14. Remove the front oil pan retaining bolts.
15. Lower the vehicle.

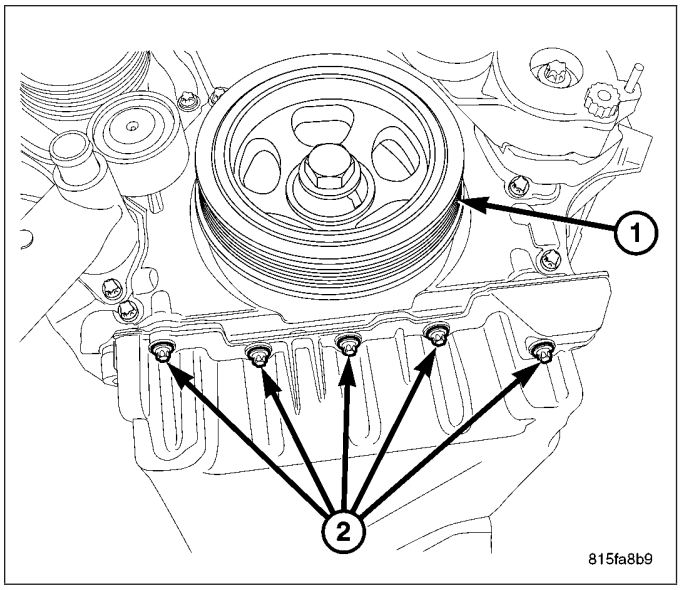

16. Remove the breather / oil separator (1) assembly from the right cylinder head cover.
17. Remove the right fuel injectors (6).
18. Remove the fuel rail (3).
19. Disconnect the vacuum supply hose from the vacuum pump (4).
20. Remove the vacuum pump (4).

NOTE: If the cylinder head cover is difficult to remove, DO NOT PRY or damage the cover. Use a heat gun to warm the sealing surface until the cover can be removed.

21. Remove the right cylinder head cover.

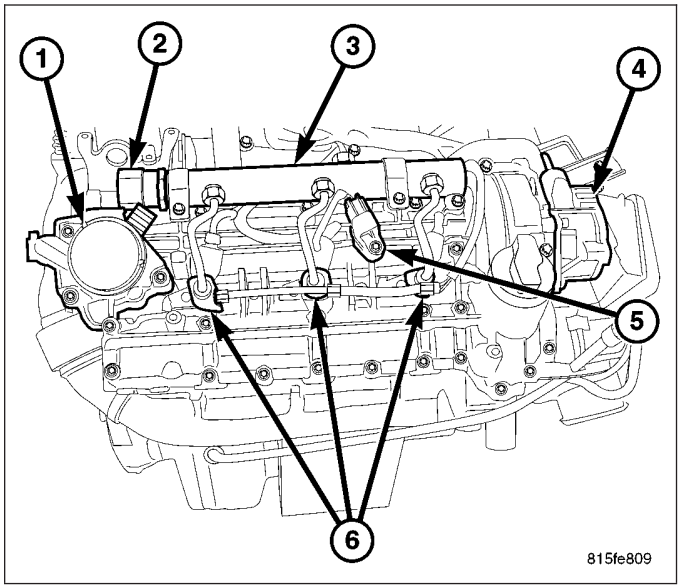

22. Observe the right camshaft gear alignment marks (2). If they are together, continue with the next step. If the right camshaft alignment marks are separated, rotate the engine by the vibration damper until camshaft marks align together and the vibration damper reaches TDC.

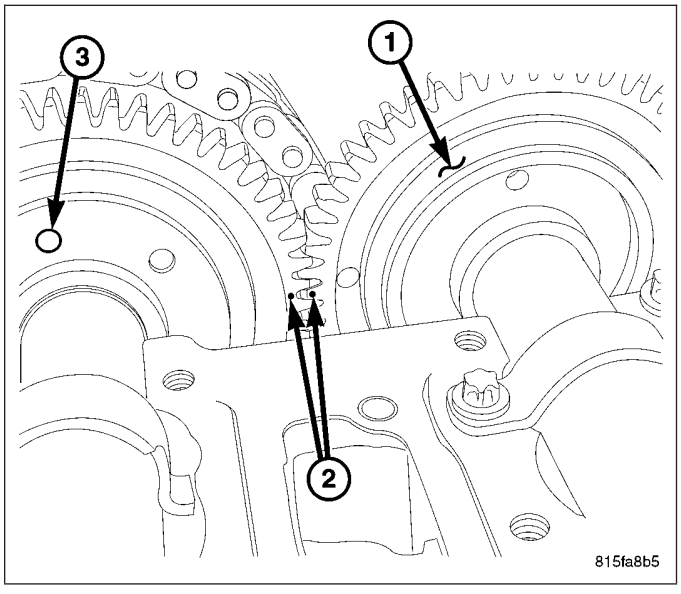

23. Raise and support the vehicle.
24. Install #9102 crankshaft lock (2).

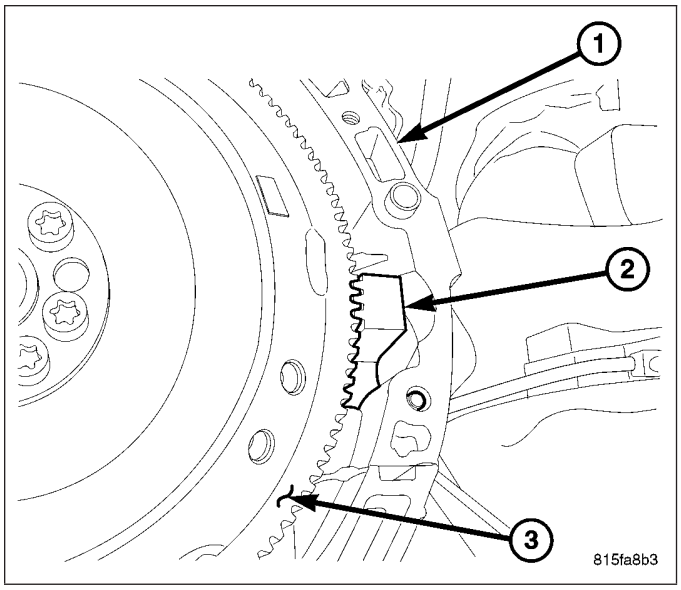

25. Lower the vehicle.
26. Remove the cooling fan module.
27. Remove the vibration damper using 8940 Puller.

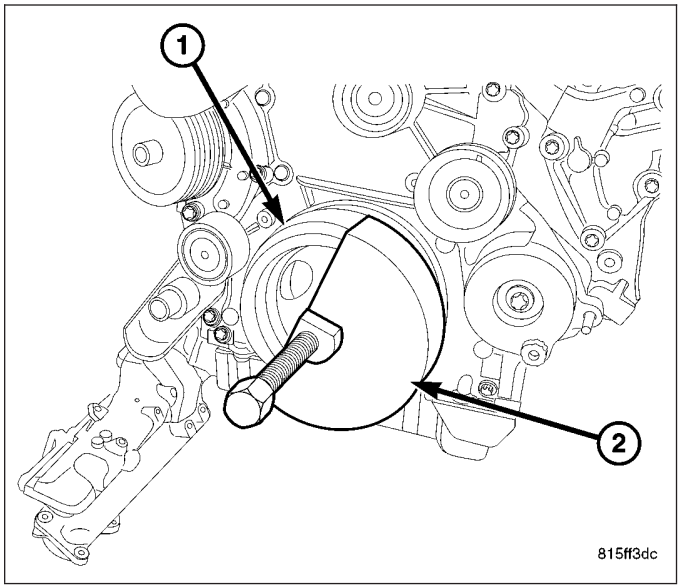

28. Remove front timing chain cover (1).

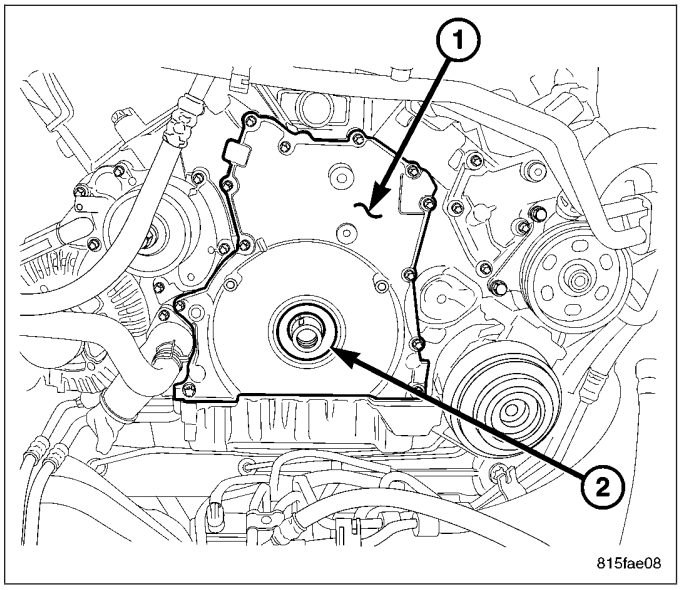

29. Paint mark or scribe the balance shaft (2) position to the engine block and timing chain.
30. Paint mark or scribe the timing chain to crankshaft gear and camshaft drive gear relation.

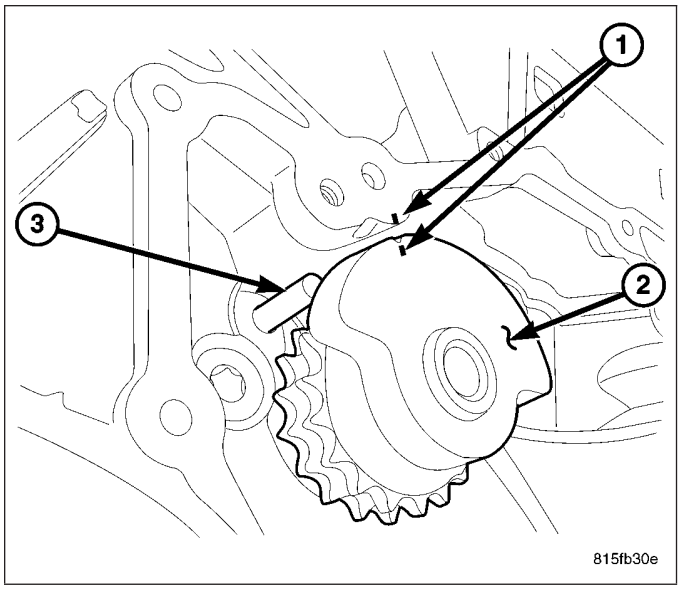

31. Raise and support the vehicle.
32. Remove #9102 crankshaft locking tool (2).
33. Lower the vehicle.

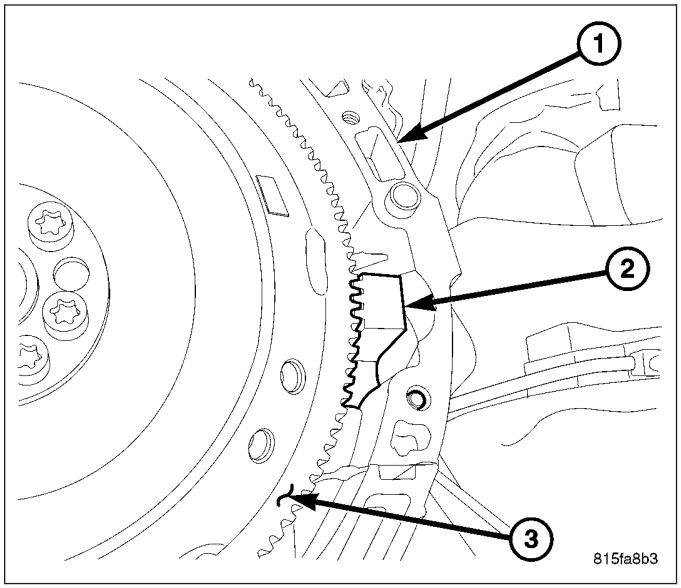

34. Rotate the engine and remove the right camshaft drive gear (1) lower bolt.
35. Rotate the engine back to TDC and check the alignment marks at the balance shaft, camshaft gear and crankshaft gear.

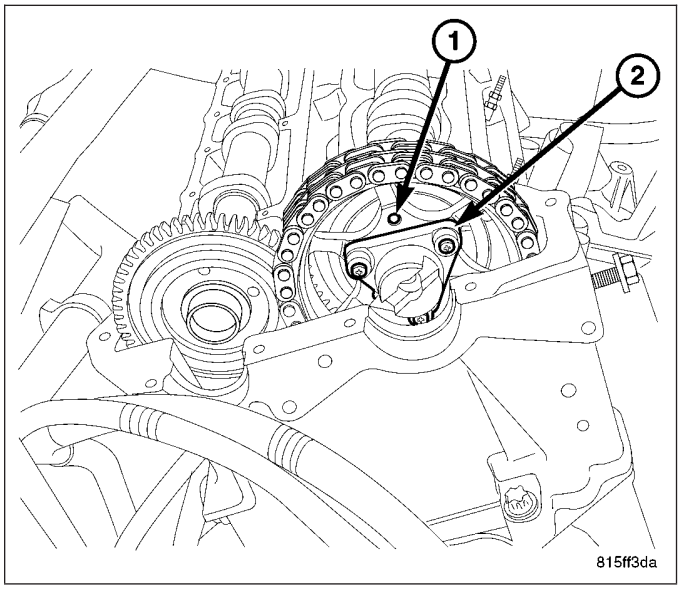

36. Remove the timing chain tensioner (3).

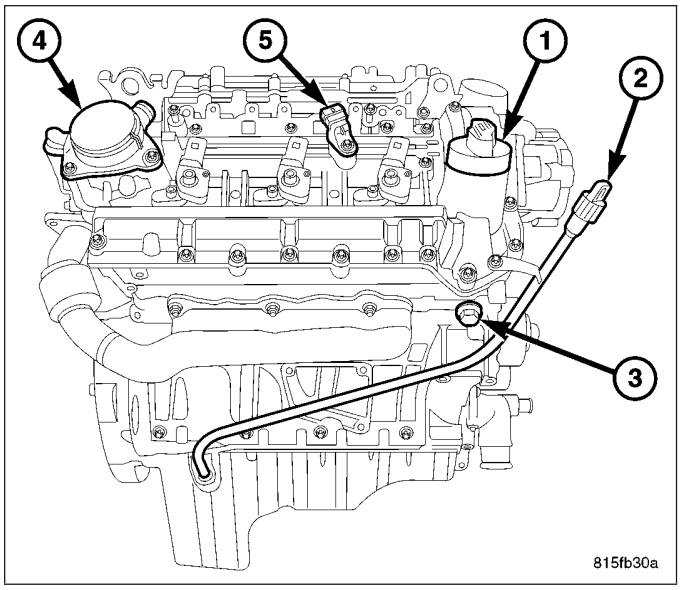

37. Remove the remaining right camshaft drive gear (2) retaining bolts.
38. Separate the right camshaft drive gear (2) and chain from camshaft.
39. Remove the right camshaft drive gear (2).

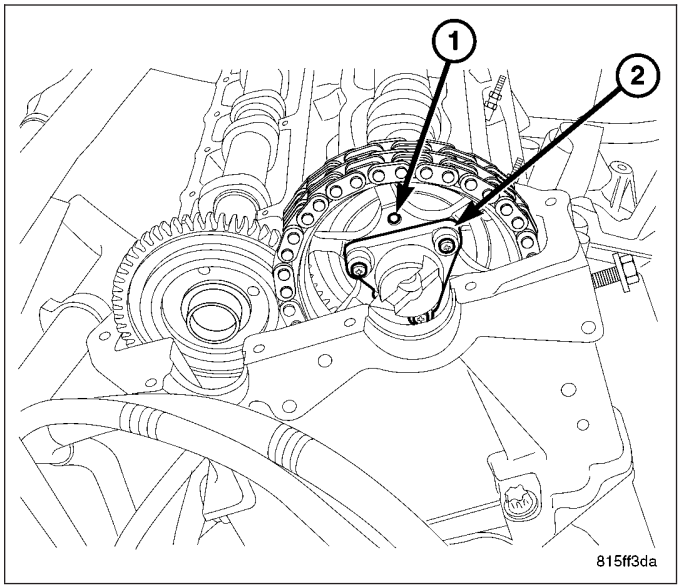

40. Remove the right camshafts retainers (1,2) and camshafts.

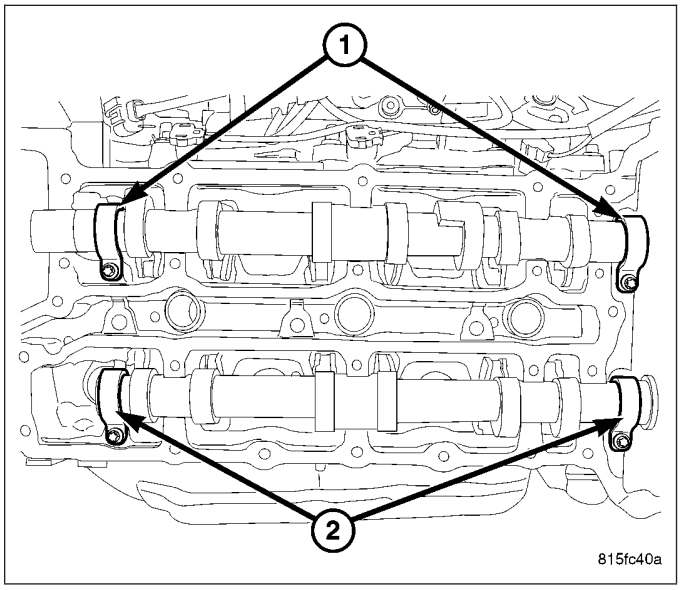

41. Remove the right upper timing chain upper guide (3).

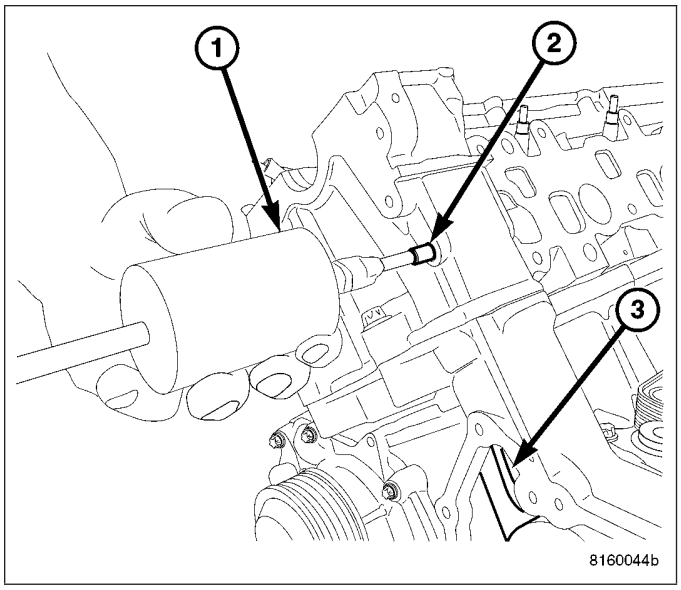

42. Remove the right lower timing chain guide (1).

NOTE: Do Not store the cylinder head on the sealing surface. The cylinder surface area and may be damaged.

43. Remove the right cylinder head glow plugs.
44. Remove cylinder head and gasket from engine block.

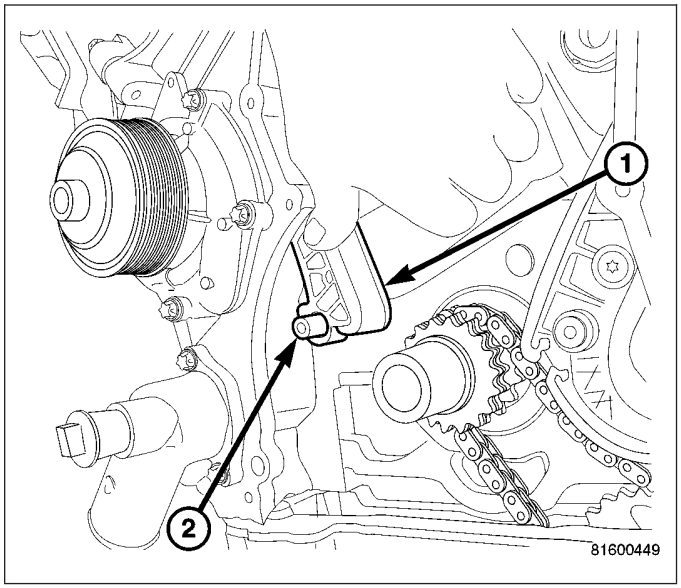

CLEANING

Thoroughly clean the engine cylinder head and cylinder block mating surfaces. Clean the intake and exhaust manifold and engine cylinder head mating surfaces. Clean the injector bores. Remove all gasket material and carbon.

Check to ensure that no fuel injector washer seals are left in the injector bores.

Check to ensure that no coolant or foreign material has fallen into the tappet bore area.

Remove the carbon deposits from the combustion chambers and top of the pistons.

INSPECTION

Use a straightedge and feeler gauge to check the flatness of the engine cylinder head and engine block mating surfaces.

The minimum cylinder head thickness is 128.35 mm (5.0532 in.).

INSTALLATION

LEFT

CAUTION: Inspect and measure all cylinder head bolt lengths. If out of specification, replace as necessary (Refer to 9 - ENGINE/CYLINDER HEAD - STANDARD PROCEDURE).

1. Clean and inspect gasket mating surfaces (Refer to 9 - ENGINE/CYLINDER HEAD - CLEANING).
2. Position correct head gasket on engine block.
3. Place cylinder head on engine block.

CAUTION: If new cylinder head bolts are used, do not lubricate the new cylinder head bolts. They already are coated with an anti scuff treatment.

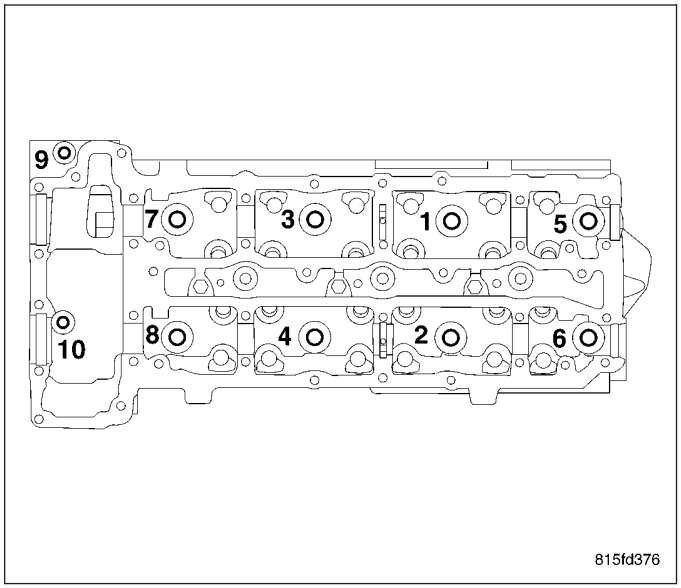

4. Tighten cylinder head bolts following procedure below.
   a. Tighten M12 cylinder head bolts 1 through 8, in the sequence shown to 60 N·m (44 ft. lbs.).
   b. Tighten M8 bolts 9 and 10 to 20 N·m (177 in. lbs.).
   c. Tighten M12 cylinder head bolts 1 through 8, in the sequence shown an additional 90°.
   d. Recheck and tighten M8 bolts 9 and 10 to 20 N·m (177 in. lbs.).
   e. And then again, Tighten M12 cylinder head bolts 1 through 8, in the sequence shown an additional 90°.

NOTE: Followers and tappets assemblies must be installed in same location as removed.

5. Install the followers (2) and tappets (2) into their original positions.
6. Install the glow plugs (1). Tighten glow plugs (1) to 15 N·m (133 in. lbs.).

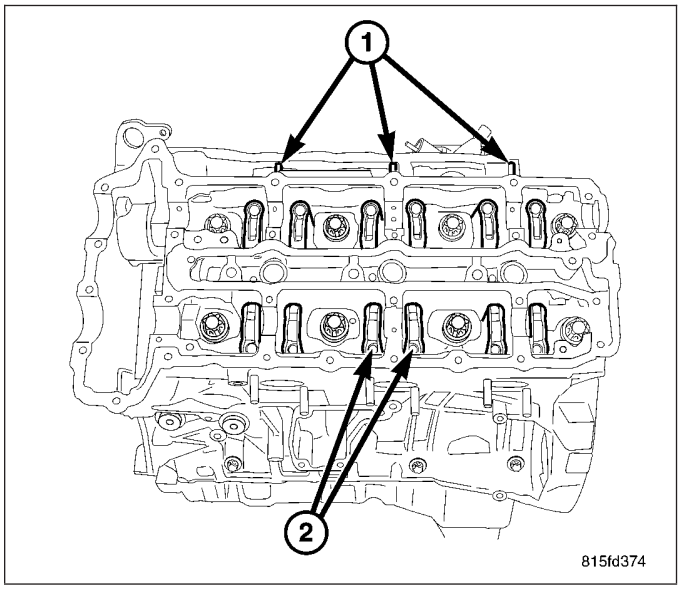

7. Install the left exhaust camshaft. Tighten the retaining (2) fasteners to 8 N·m (71 in. lbs.).
8. Install the left intake camshaft. Tighten the retaining (1) fasteners to 8 N·m (71 in. lbs.).

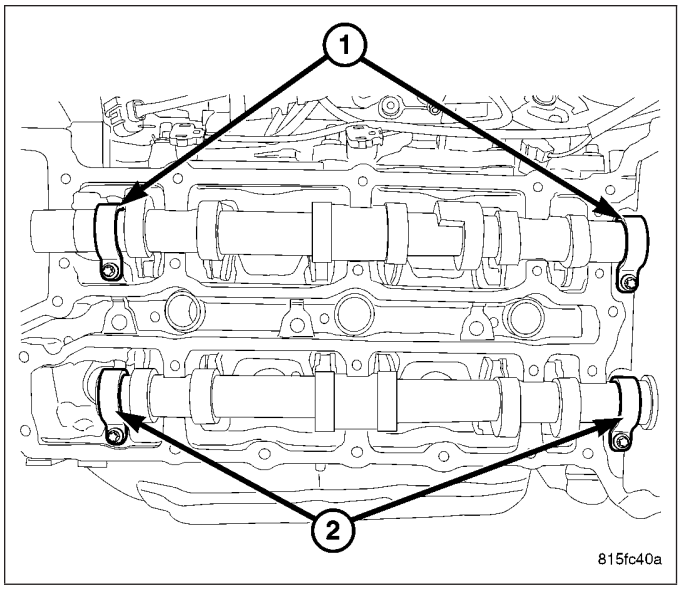

NOTE: Care must be taken to assure the proper exhaust camshaft to intake camshaft alignment is maintained. Before mating the drive gear to the camshaft gear a quick check will find the exhaust camshaft drive gear dowel (3) in the 12 O'clock position when viewed through the camshaft seal access hole.

9. Align the camshaft marks (2) so the alignment marks are facing each other.
10. Insert the timing chain, through the cylinder head, and on to the camshaft drive gear.

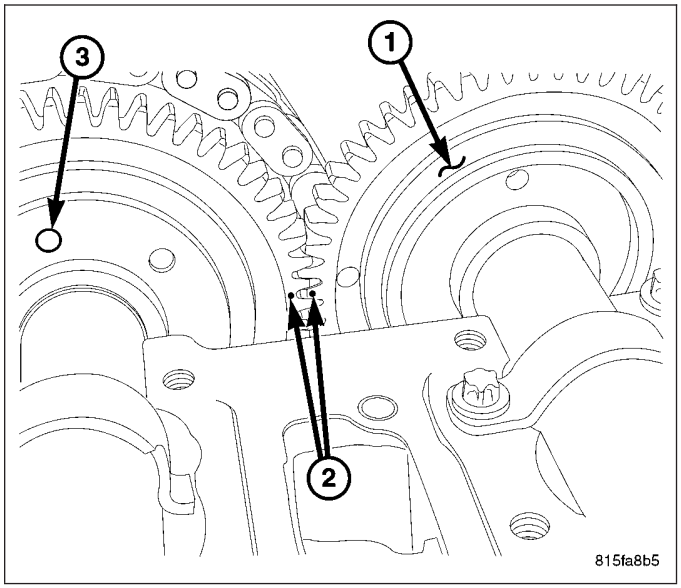

11. Align the balance shaft (2) with the scribe or paint mark.
12. Once the camshaft drive gear is mated with the timing chain, install the camshaft drive gear on to the camshaft and assure the balance shaft is aligned properly.

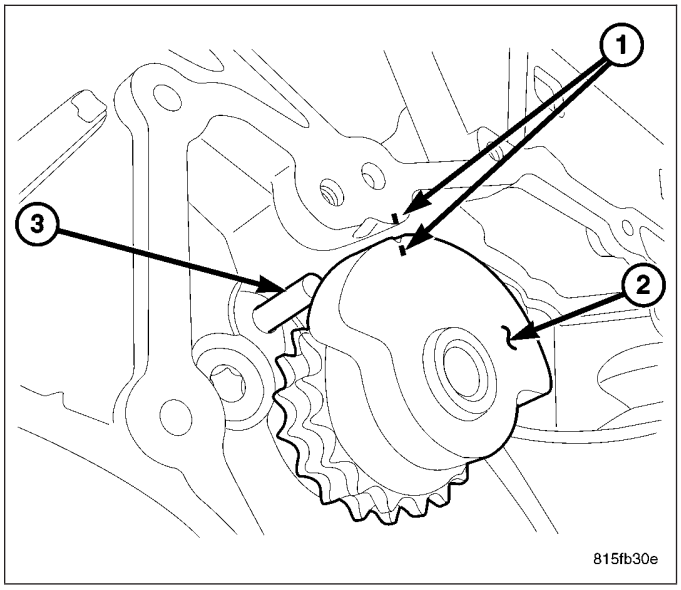

13. Install the upper two of the three camshaft drive gear bolts.

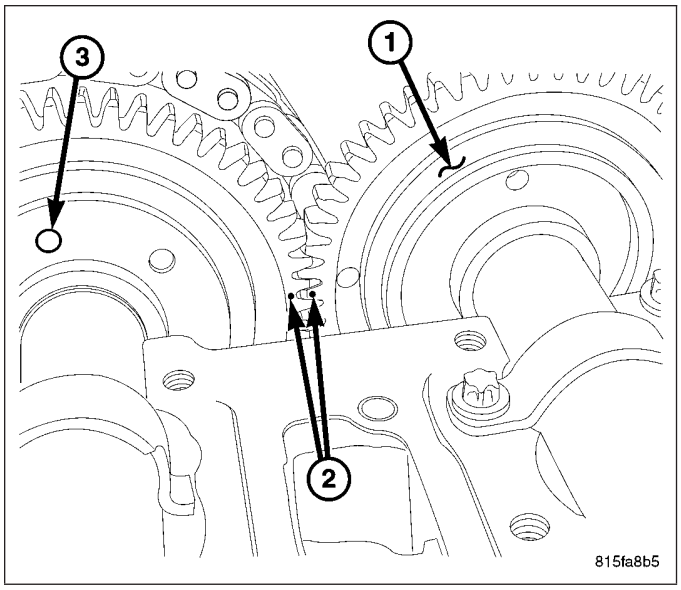

14. Install the left lower timing chain guide (1).

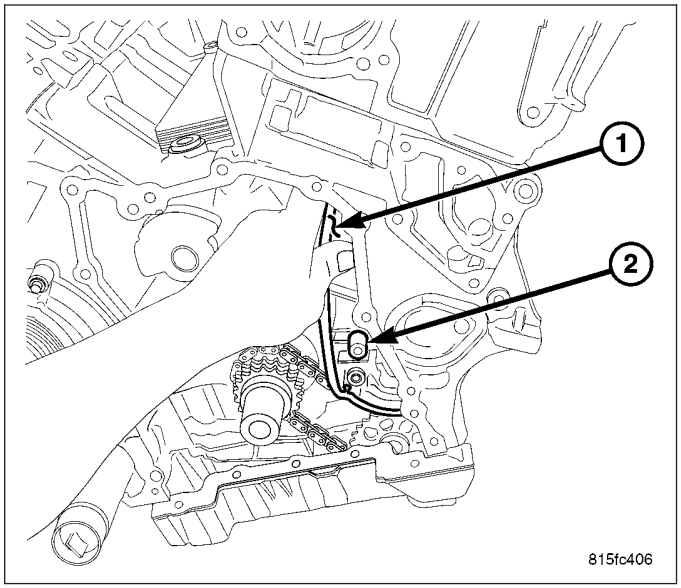

15. Install the left upper timing chain guide (4).

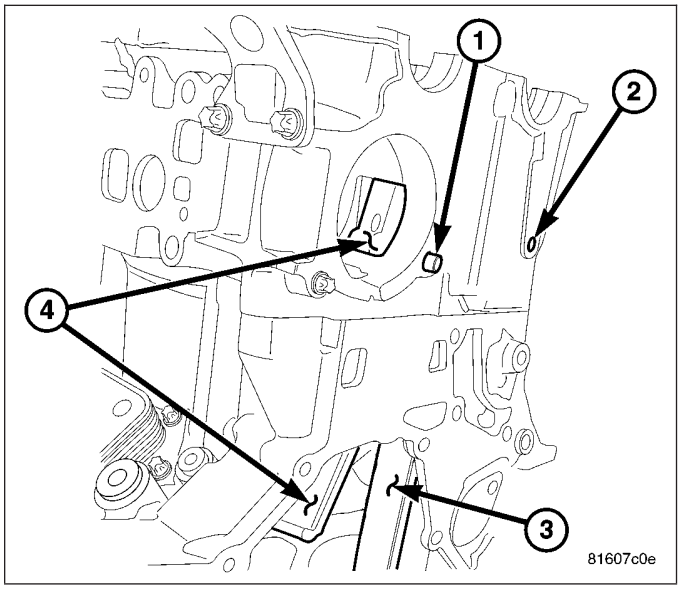

16. Install the timing chain tensioner (3).

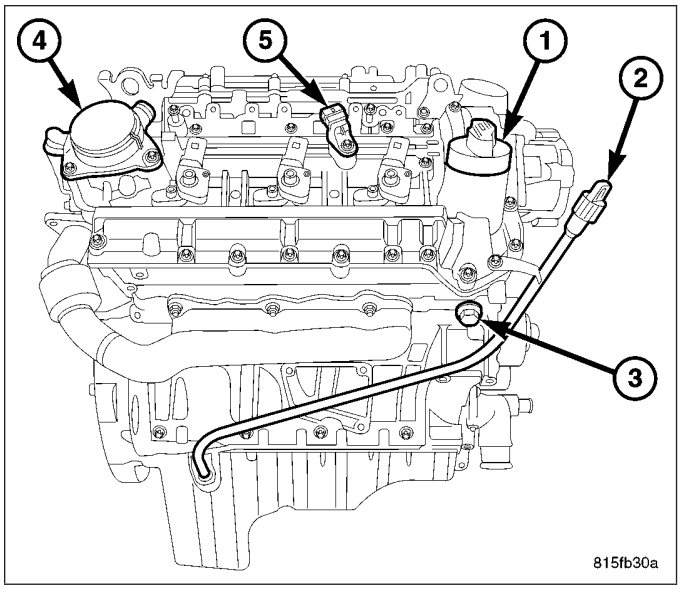

17. Rotate the engine by the vibration damper bolt enough to gain access to the third camshaft drive gear bolt hole.
18. Install the third camshaft drive gear retaining bolt and tighten the bolt to 18 N·m (13 ft. lbs.).

WARNING: If the camshaft, balance shaft and or crankshaft alignment marks are not aligned properly immediate damage to the engine will occur. If the camshafts, balance shaft and or crankshaft do not align properly after rotating the engine to the original starting point, STOP and begin the alignment procedure again.

19. Rotate the engine back to TDC by the vibration damper bolt until the crankshaft, camshaft and balance shaft align TDC again.

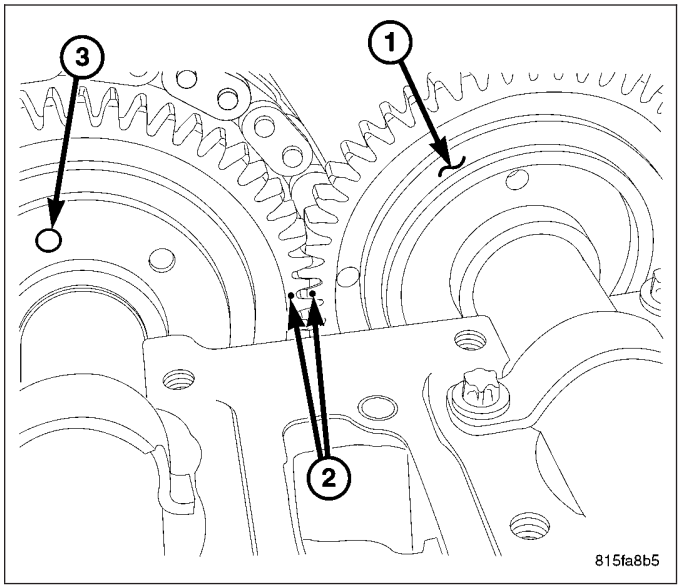

WARNING: Check that all the timing chain fits properly on all the timing gears. Failure to do so will result in immediate engine damage.

20. Apply a 1.5mm continuous bead of Mopar Engine Sealant RTV around the diameter of the timing chain cover (1) and Install the cover (1). Tighten the bolts to 8.4 N·m (74 in. lbs.).
21. Raise and support the vehicle.

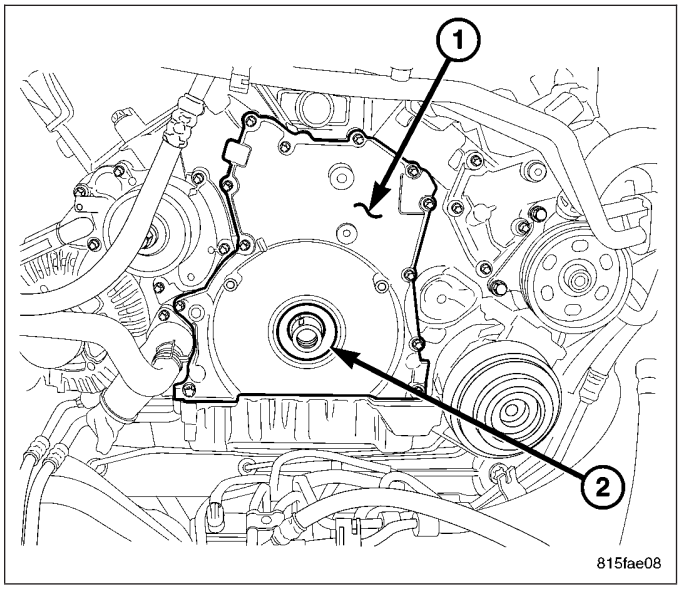

22. Install the 5 front oil pan to timing cover bolts. Tighten the bolts to 20 N·m (177 in. lbs.).

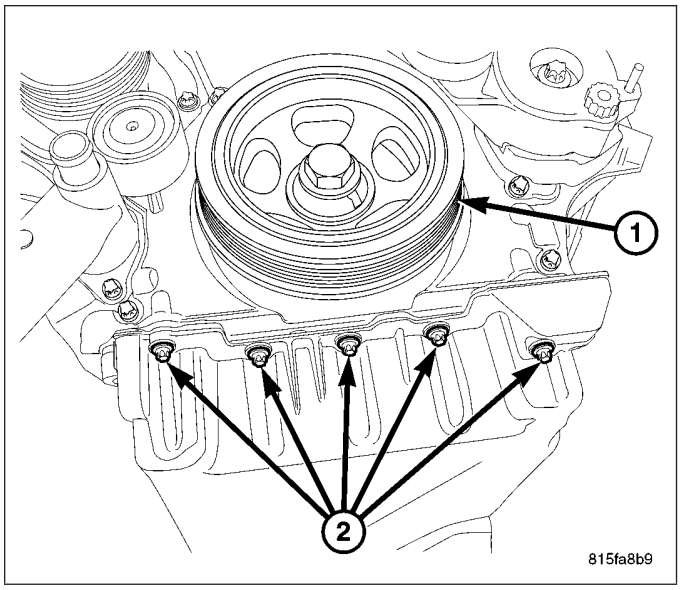

23. Install #9102 crankshaft lock (2) into the starter access blank.
24. Lower the vehicle.

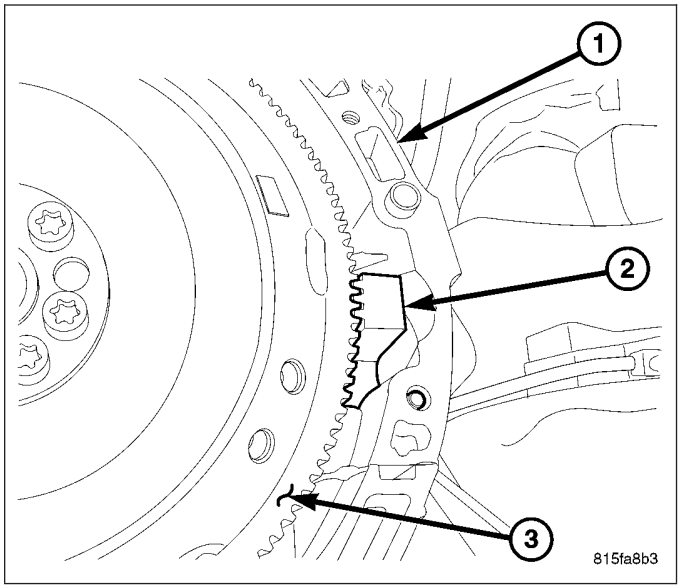

25. Install the vibration damper. Tighten the bolts to 200 N·m (148 ft. lbs.) and then an additional 90°.

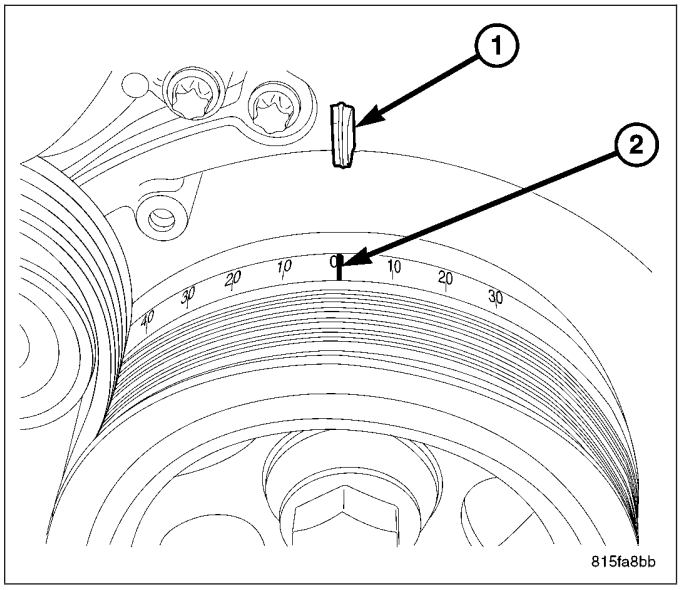

NOTE: Care must be taken not to get any engine sealer on the camshaft journals.

26. Apply a 1.5mm continuous bead of Mopar Engine Sealant RTV (1) around the diameter of the left cylinder head cover, and install the cover with new camshaft seals.

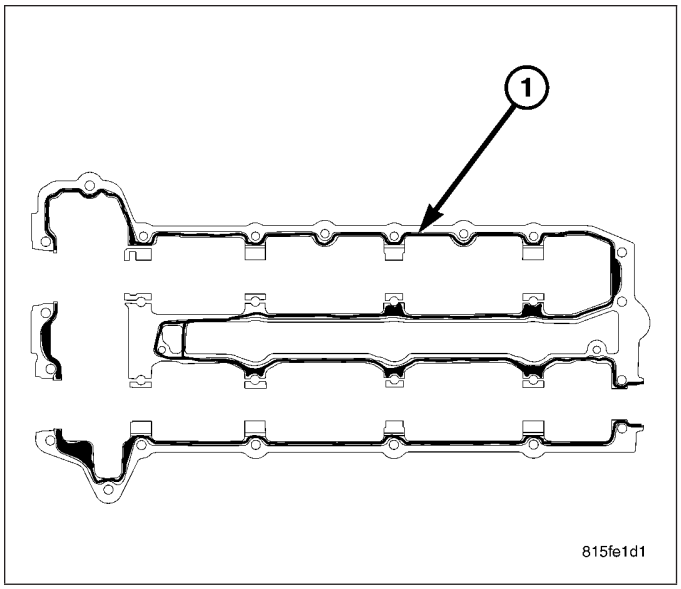

27. Tighten the bolts in three stages following the sequence provided. First to 4 N·m (35 in. lbs.), then to 6 N·m (53 in. lbs.), and then to 8.4 N·m (75 in. lbs.).

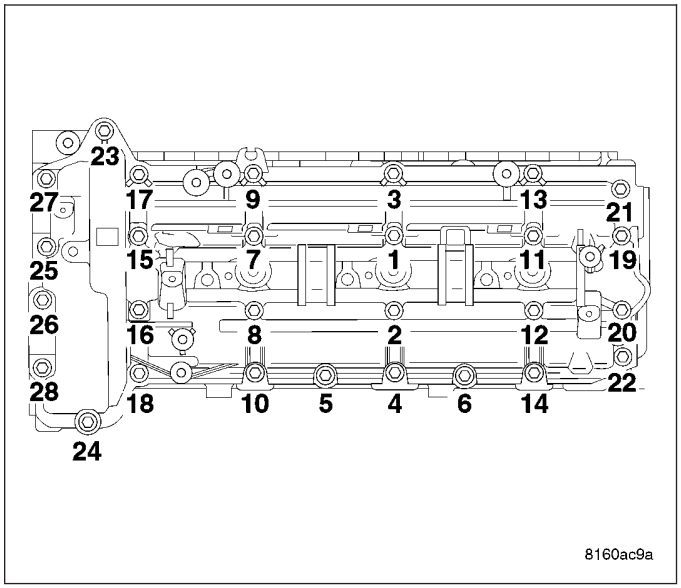

28. Install the oil filter housing bracket. Tighten the bolts to 13.8 N·m (122 in. lbs.).
29. Install the high pressure pump. Tighten bolts to 13.5 N·m (120 in. lbs.).

NOTE: Idler pulley bolts are L.H. thread.

30. Install the belt idler pulleys (1). Tighten the bolts to 58 N·m (43 ft. lbs.).
31. Install the drive belt tensioner (2). Tighten the bolts to 58 N·m (43 ft. lbs.).
32. Install the drive belt.

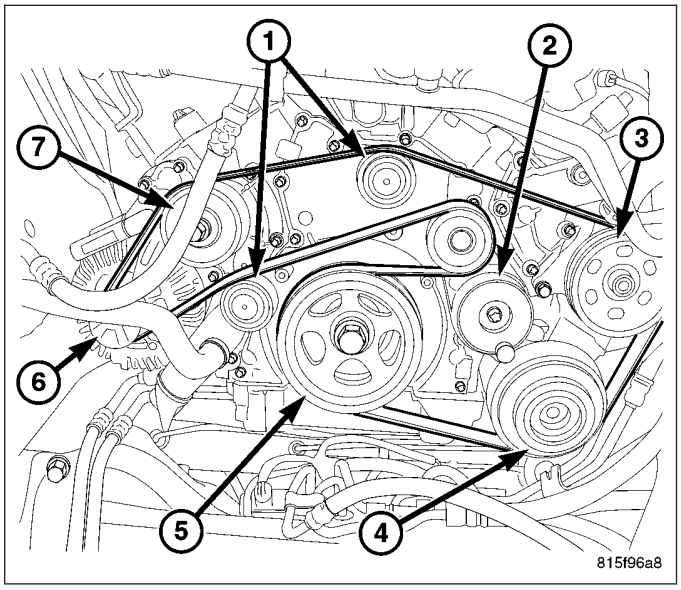

CAUTION: The right intake manifold upper thermostat housing bolts should be tightened to 8.4 N·m (74 in. lbs.).

33. Install the intake manifold (4). Tighten bolts to 16 N·m (142 in. lbs.), starting in the middle and tightening in a cross pattern outward until reaching the upper thermostat bolts on the right front manifold.
34. Tighten the upper thermostat bolts on the right cylinder head to 8.4 N·m (74 in.lbs.).

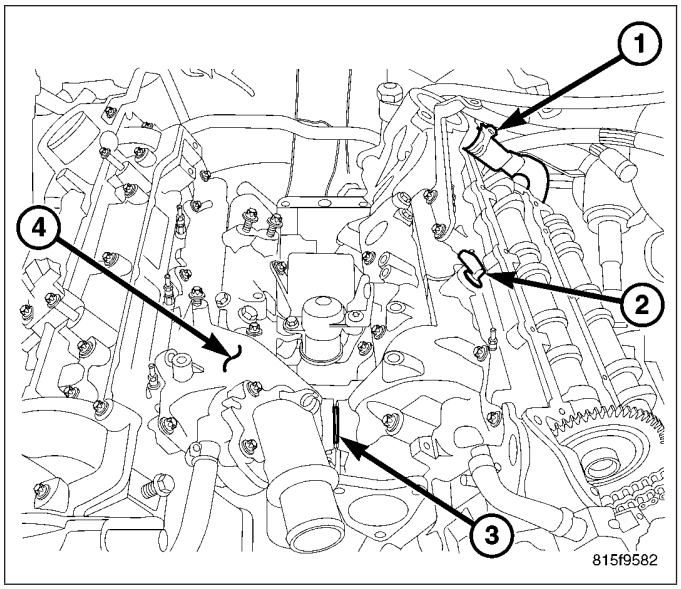

CAUTION: The fuel injector sealing washers MUST be replaced. DO NOT use the old sealing washers or double the sealing washers.

35. Lubricate the fuel injector body (1), install the left fuel injectors (1) and new lower sealing washers.
36. Install the injector retaining claws and tighten the bolts to 7 N·m plus 180 °(62 in. lbs. plus 180°).

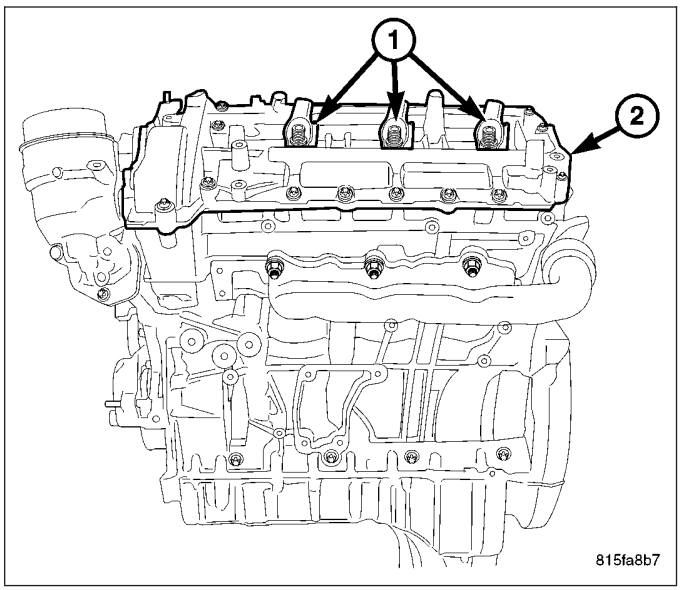

37. Properly route and install the fuel return hoses (5) and connect them to the injectors.

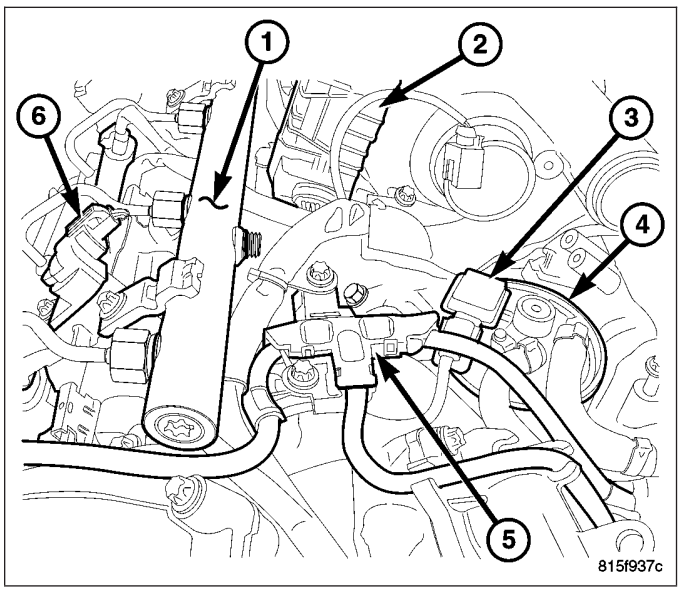

38. Properly route and connect the engine harness.

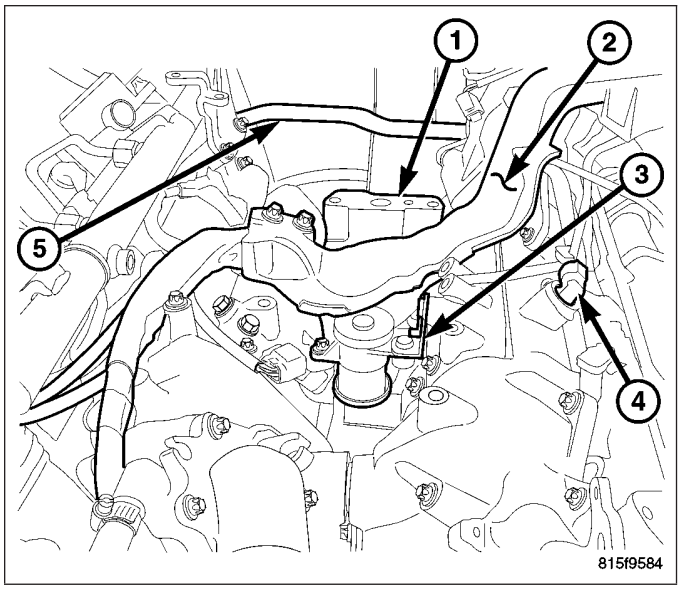

39. Install the fuel rail (2). Tighten the bolts to 33 N·m (24 ft. lbs.).

CAUTION: Inspect the fuel lines for wear or damage, look closely around the flange area. Replace as necessary. DO NOT over tighten.

40. Install the high pressure fuel lines, including the fuel rail equalizing line. Tighten the line nuts to 27 N·m (20 ft. lbs.)

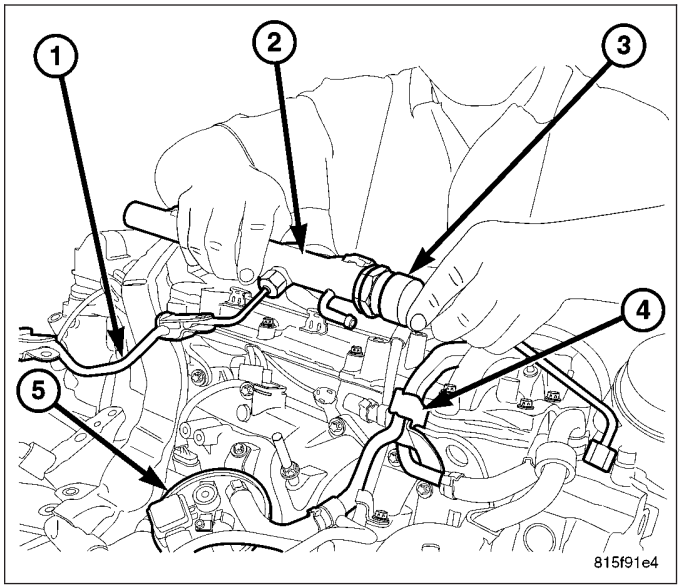

41. Install the fuel filter (2) and connect the harnesses (1) and hoses (3).

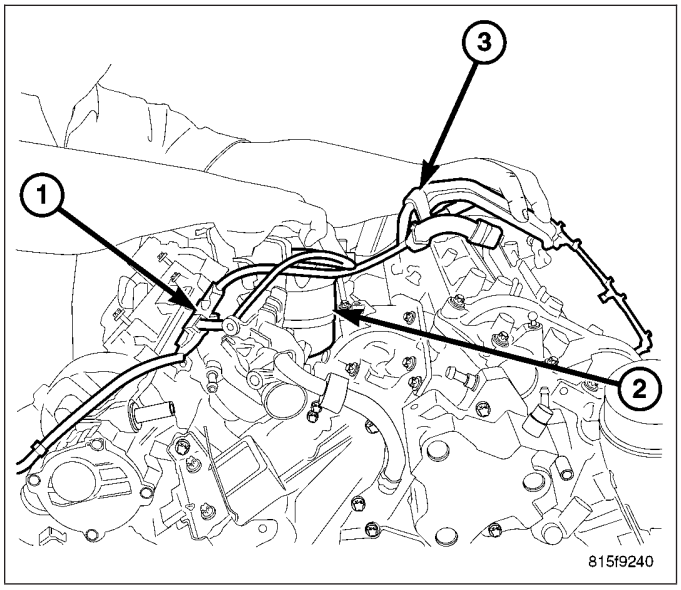

CAUTION: Care must be taken when installing the turbocharger oil housing adaptor (1). The gasket MUST be aligned properly with the oil housing passages or immediate damage to the turbocharger will occur.

42. Install the turbocharger oil housing adaptor (1) with the gasket tabs secured to the adaptor (1) Tighten bolts to 12 N·m (9 ft. lbs.).
43. Install the turbocharger (Refer to 11 - EXHAUST SYSTEM/TURBOCHARGER SYSTEM/TURBOCHARGER - INSTALLATION).

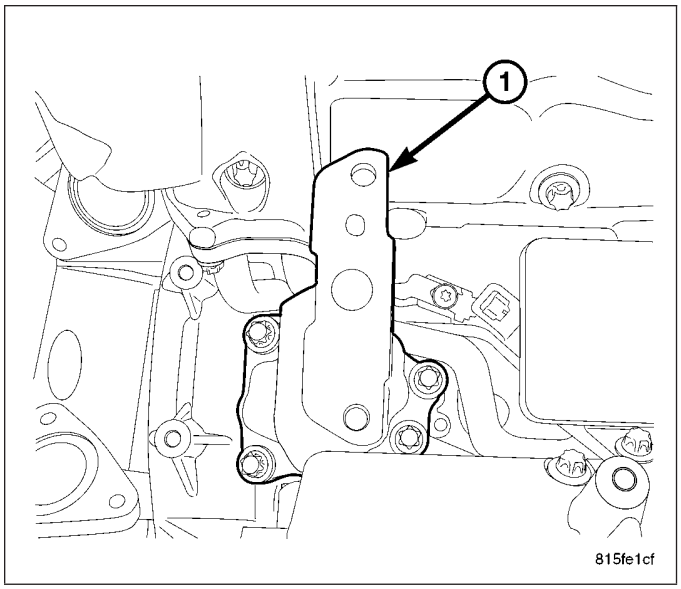

44. Install the air control valve and resonator.

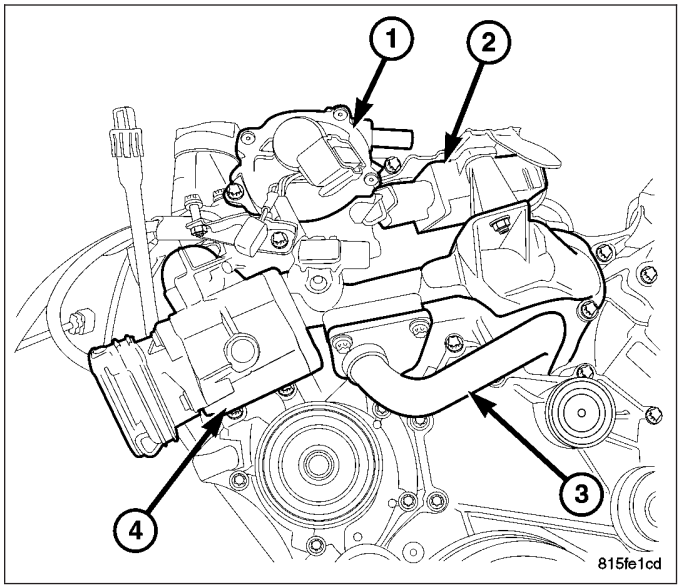

45. Install the charge air cooler inlet pipe and resonator.

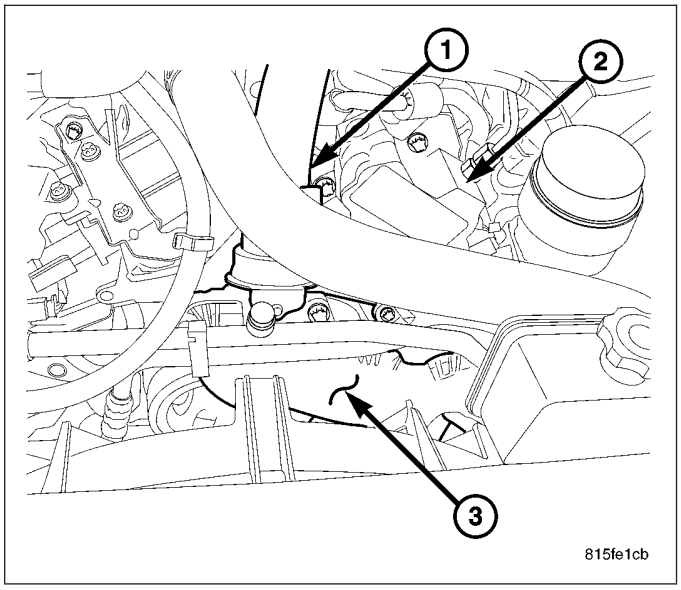

46. Install the cooling fan module.
47. Install the heater hose bracket and secure hoses.
48. Connect the vacuum pump supply hose.
49. Raise and support the vehicle.
50. Remove #9102 crankshaft lock (2).
51. Install the starter blank.
52. Connect the cooling fan hydraulic lines.
53. Lower the vehicle.
54. Fill the cooling system.
55. Fill power steering system.
56. Connect the negative battery cable.

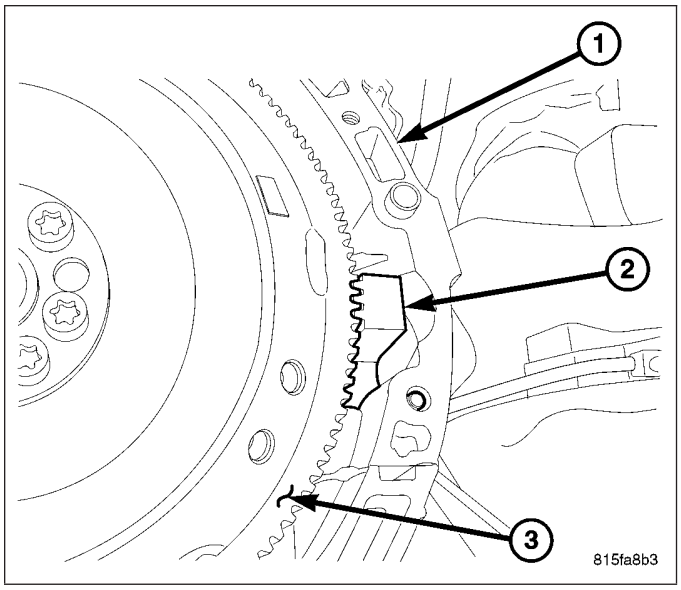

57. Start engine, allow to warm, turn engine off and inspect for leaks (Refer to 14 - FUEL SYSTEM - WARNING).
58. Purge the air from the power steering system using the scan tool.
59. Install the engine cover brackets and engine cover (1).

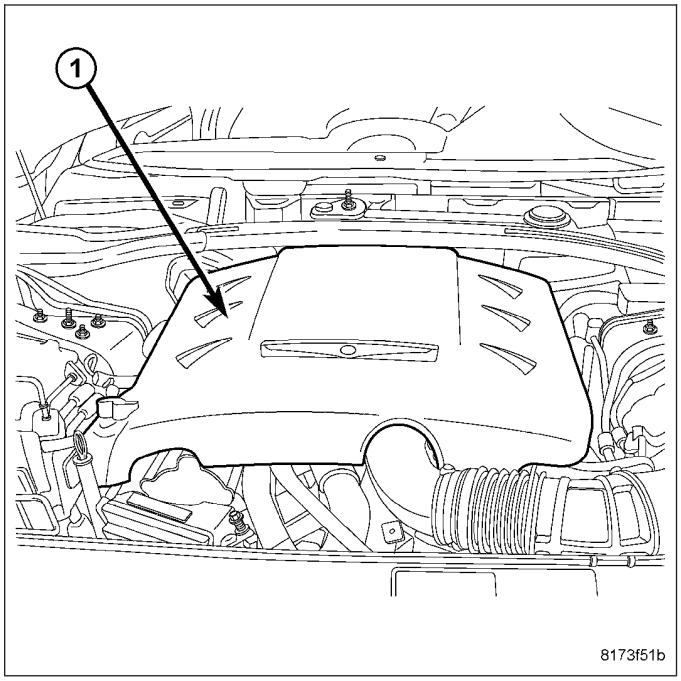

RIGHT

1. Clean and inspect gasket mating surfaces.
2. Position head gasket on engine block. Be sure the coolant passages align (part number should be facing up).
3. Place cylinder head on engine block.

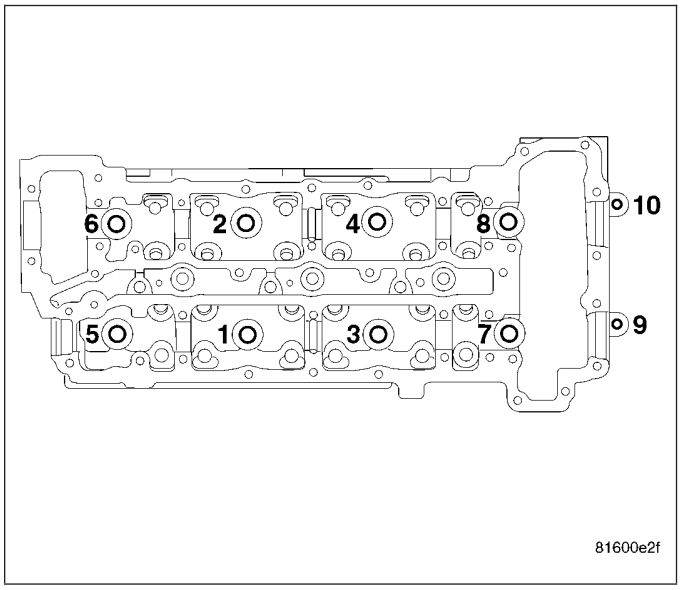

CAUTION: Inspect and measure all cylinder head bolt lengths. If out of specification, replace as necessary (Refer to 9 - ENGINE/CYLINDER HEAD - STANDARD PROCEDURE). Do Not lubricate new cylinder head bolts. They already are coated with an anti scuff treatment.

4. Tighten cylinder head bolts following procedure below.
   a. Tighten M12 cylinder head bolts 1 through 8, in the sequence shown to 60 N·m (44 ft. lbs.).
   b. Tighten bolts 9 and 10 to 20 N·m (177 in. lbs.).
   c. Tighten 12 mm cylinder head bolts, 1 through 8, in sequence shown, an additional 90 degrees.
   d. Recheck and tighten M8 bolts 9 and 10 to 20 N·m (177 in. lbs.).
   e. And then again, tighten M12 cylinder head bolts, 1 through 8, in sequence an additional 90°.

NOTE: Followers and tappets assemblies must be installed in same location as removed.

5. Install the followers (2) and tappets (2) into their original positions.
6. Install the glow plugs (1). Tighten glow plugs to 12.5 N·m (100 in. lbs.).

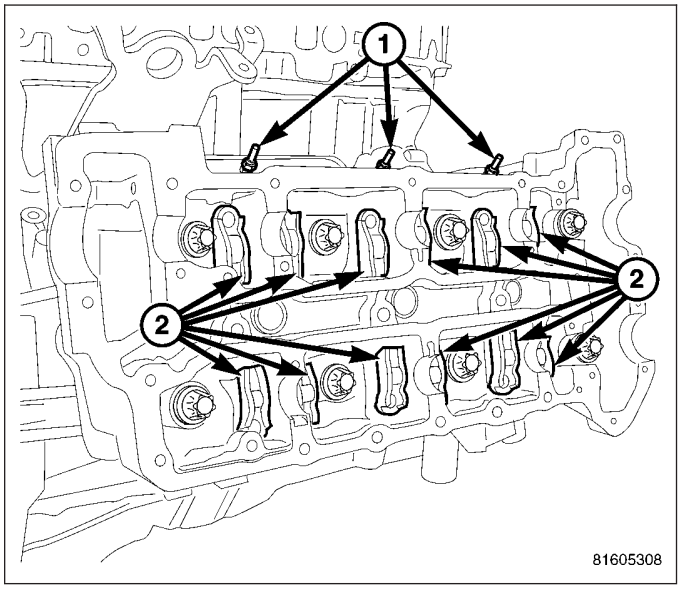

7. Install the right exhaust camshaft. Tighten the retaining fasteners to 8 N·m (71 in. lbs.).
8. Install the right intake camshaft. Tighten the retaining fasteners to 8 N·m (71 in. lbs.).

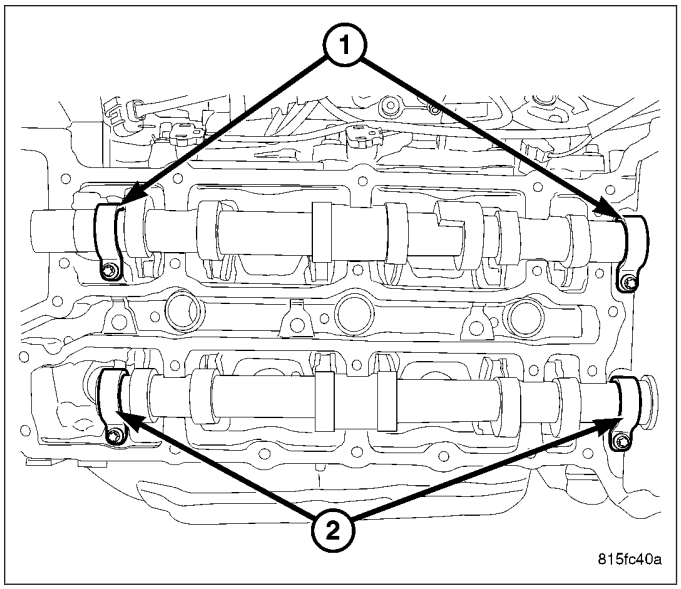

NOTE: Care must be taken to assure the proper exhaust camshaft to intake camshaft alignment.

9. Align the camshaft marks so the alignment marks are facing each other.
10. Insert the timing chain, through the cylinder head, and on to the camshaft drive gear.

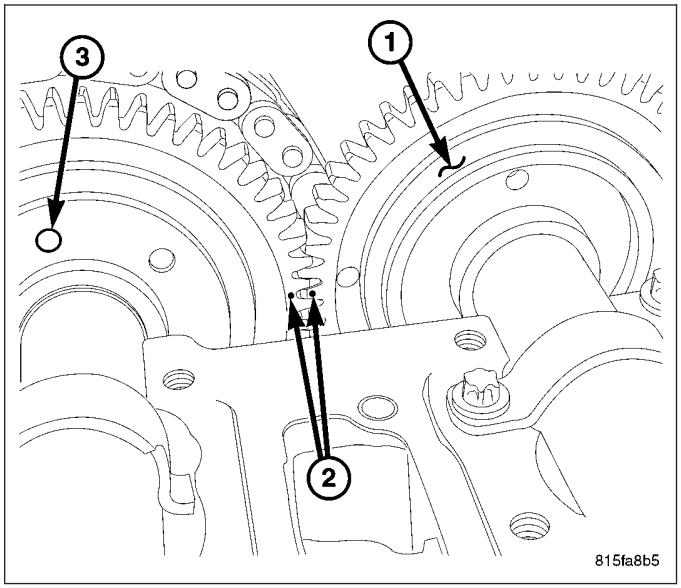

11. Align the balance shaft with the scribe or paint mark.
12. Once the camshaft drive gear is mated with the timing chain, install the camshaft drive gear on to the camshaft and assure the balance shaft is aligned properly.

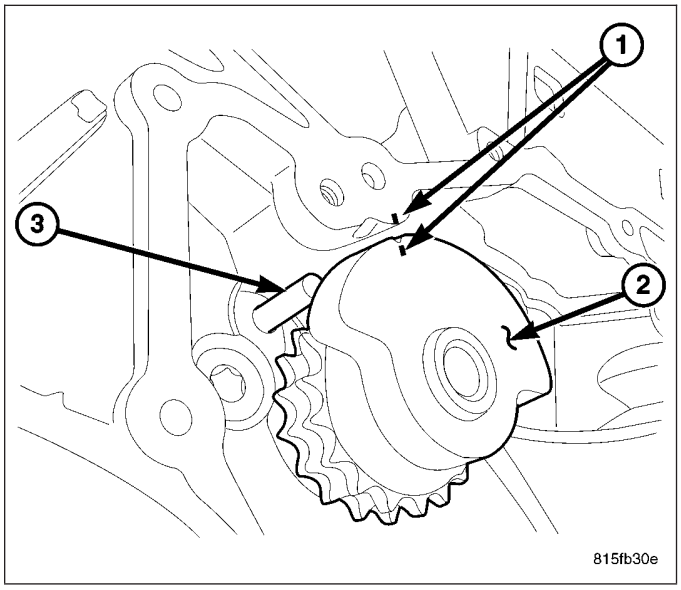

13. Install the upper two of the three camshaft drive gear bolts.

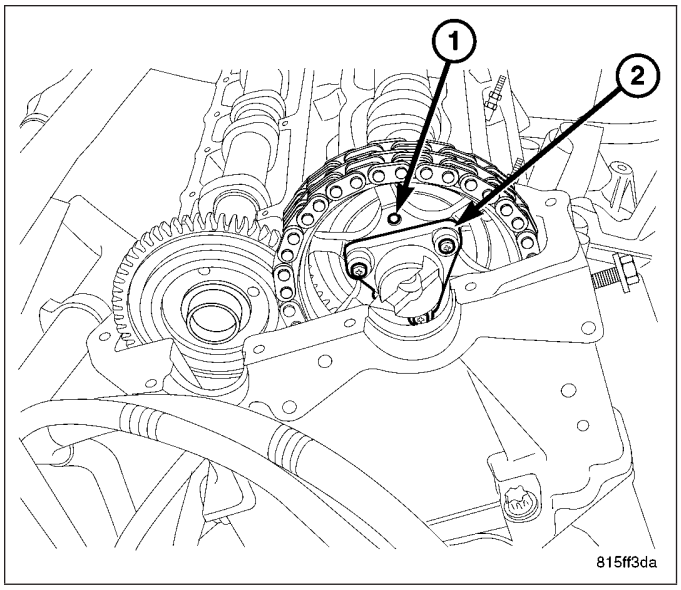

14. Install the right lower timing chain guide (2), seat the guide pin at the top, and tighten the guide bolt to 12 N·m (9 ft. lbs.).
15. Install the right upper timing chain guide (1), seat the guide pin at the top, and tighten the guide bolt to 12 N·m (9 ft. lbs.).

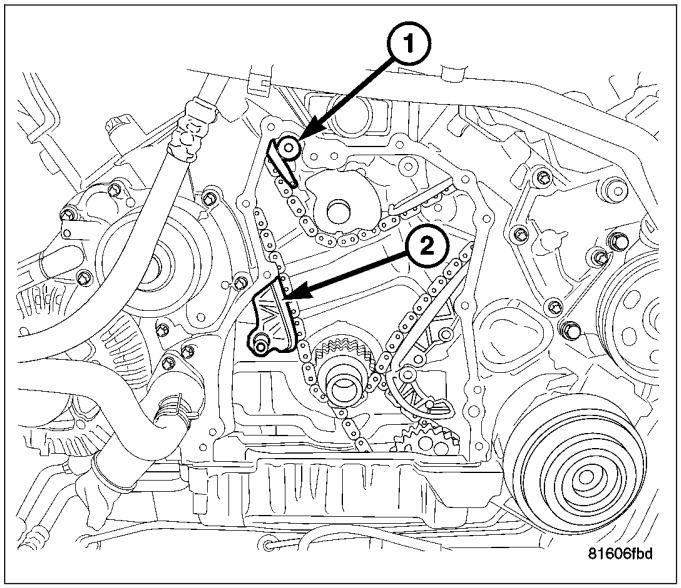

16. Install the timing chain tensioner (3).

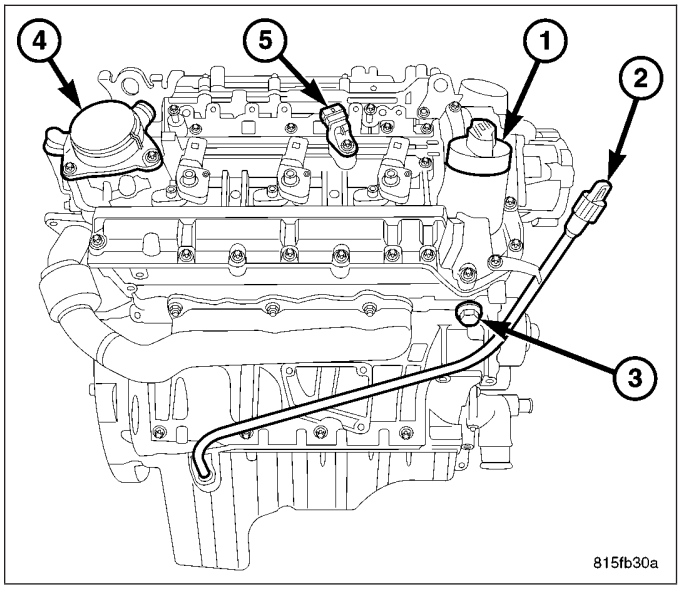

17. Rotate the engine by the vibration damper bolt enough to gain access to the third camshaft bolt hole.
18. Install the third camshaft drive gear retaining bolt and tighten the bolt to 18 N·m (13 ft. lbs.).

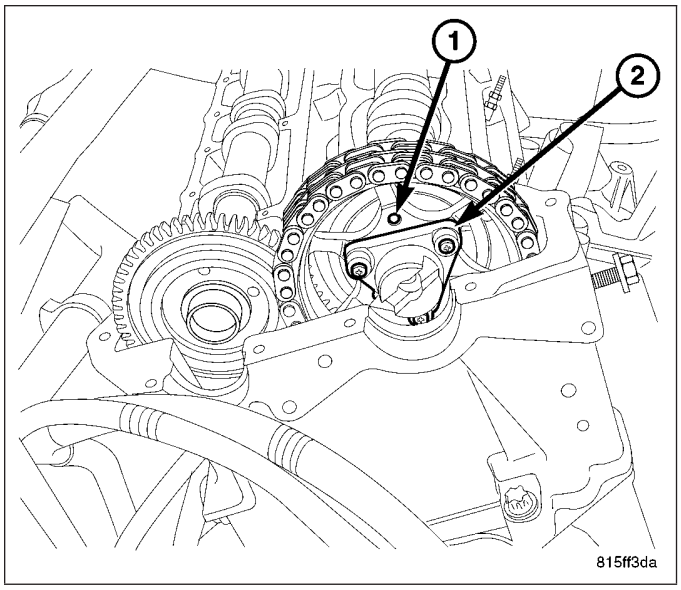

WARNING: If the camshaft, balance shaft and or crankshaft alignment marks are not aligned properly, immediate damage to the engine will occur. If the camshafts, balance shaft and or crankshaft do not align properly after rotating the engine to the original starting point, STOP and begin the alignment procedure again.

19. Rotate the engine back to TDC by the vibration damper bolt until the crankshaft, camshaft and balance shaft align TDC again.
20. Tighten the two remaining camshaft drive gear bolts to 18 N·m (13 ft. lbs.).

WARNING: Check that all the timing chain fits properly on all the timing gears. Failure to do so will result in immediate engine damage.

21. Add a 1.5 mm continuous bead of Mopar Engine Sealant RTV (1) to the timing chain cover and the front portion of the oil pan, then install the timing chain cover. Tighten the bolts to 8.5 N·m (74 in. lbs.).
22. Raise and support the vehicle.

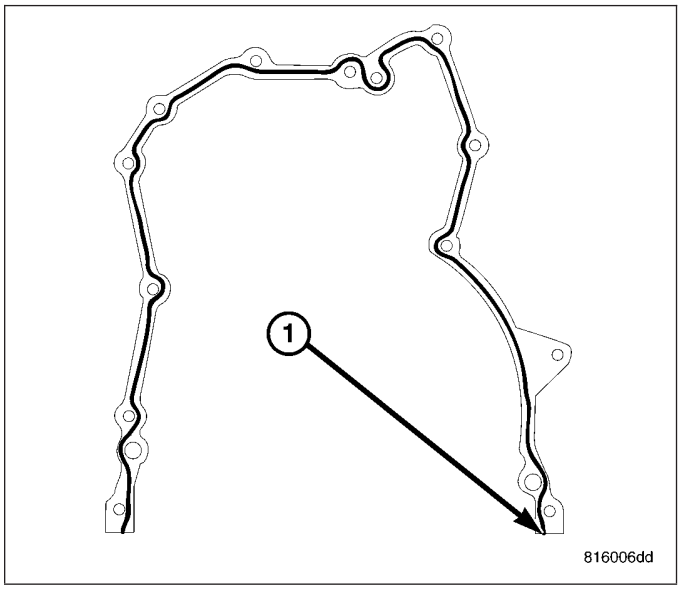

23. Install the 5 front oil pan (2) to timing cover bolts. Tighten the bolts to 20 N·m (177 in. lbs.).

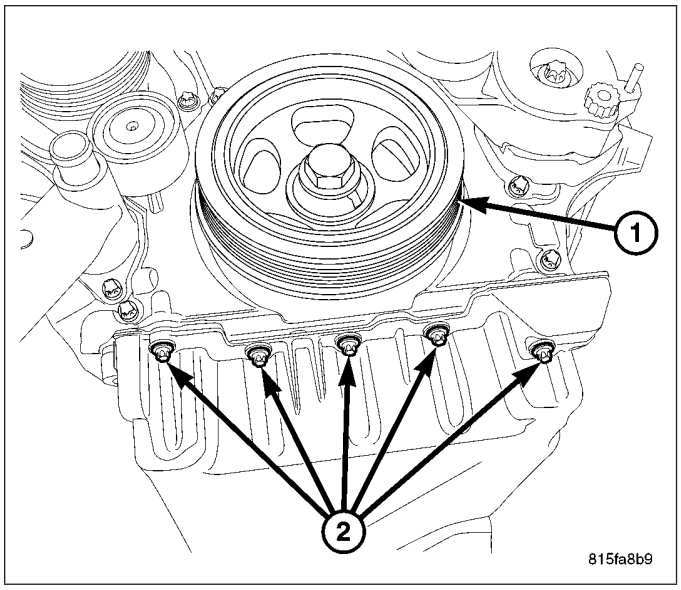

24. Install # 9102 crankshaft lock (2).
25. Lower the vehicle.
26. Install the vibration damper. Tighten the bolts to 200 N·m (148 ft. lbs.). and then an additional 90°.

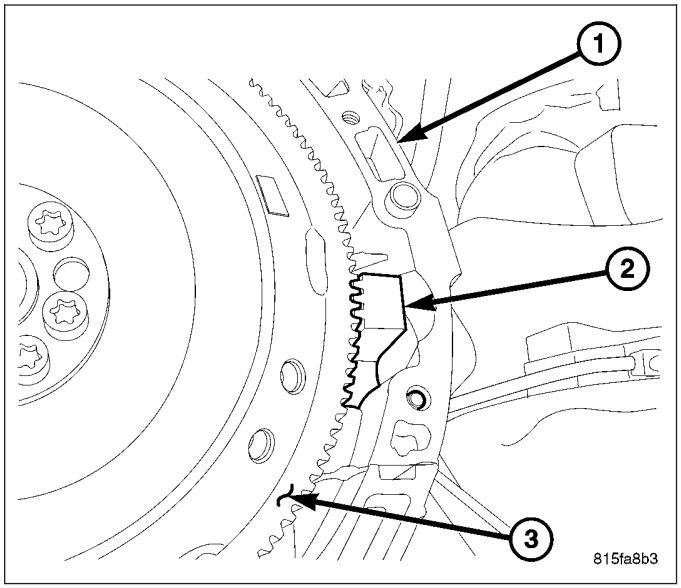

NOTE: Care must be taken not to get any engine sealer on the camshaft journals.

27. Add a 1.5 mm continuous bead of Mopar Engine Sealant RTV (1) to the cylinder head cover, then install the right cylinder head cover along with a new camshaft seal.

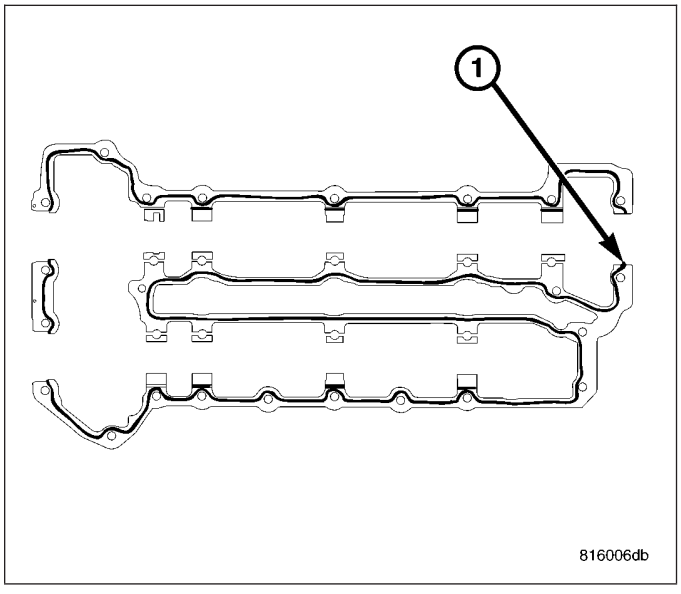

28. Tighten the bolts in three stages following the sequence provided. First to 4 N·m (35 in. lbs.), then to 6 N·M (53 in. lbs.) and then to 8.5 N·m (75 in. lbs.).

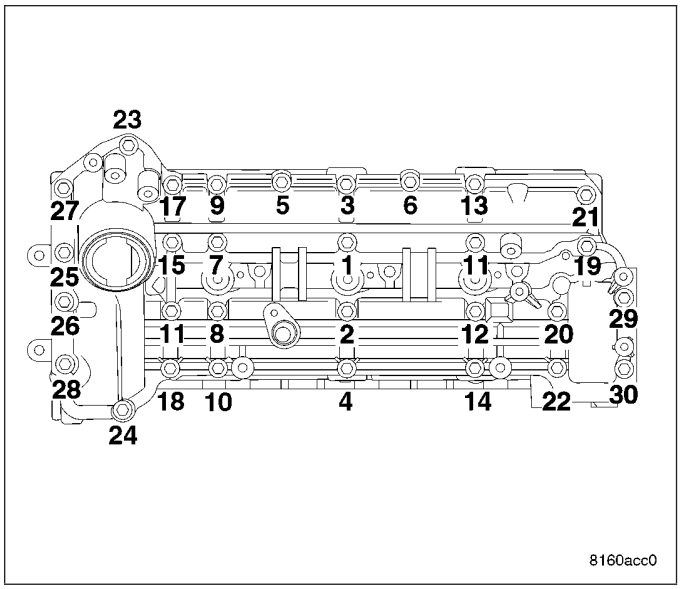

29. Install the oil separator (1) and housing adaptor (2) with new camshaft seal. Tighten the bolts to 11 N·m (97 in. lbs.).

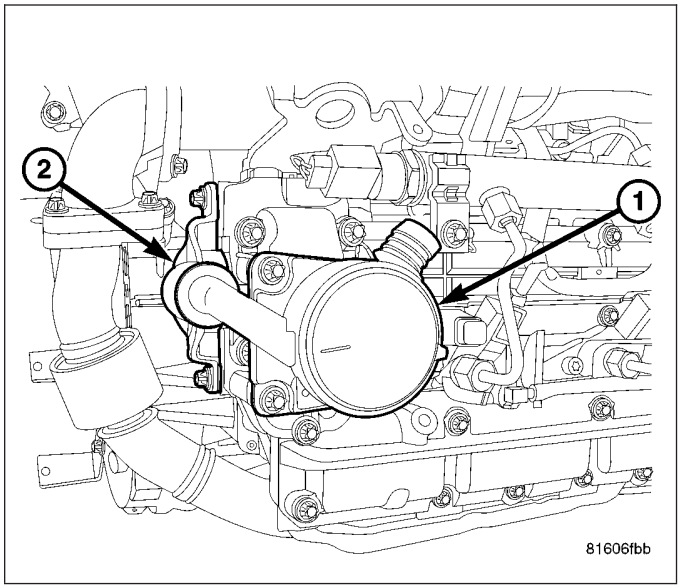

30. Align the pump drive gear (1) with the camshaft drive gear (3) and install the vacuum pump (2) with new gasket. Tighten bolts to 9 N·m (7 ft. lbs.).

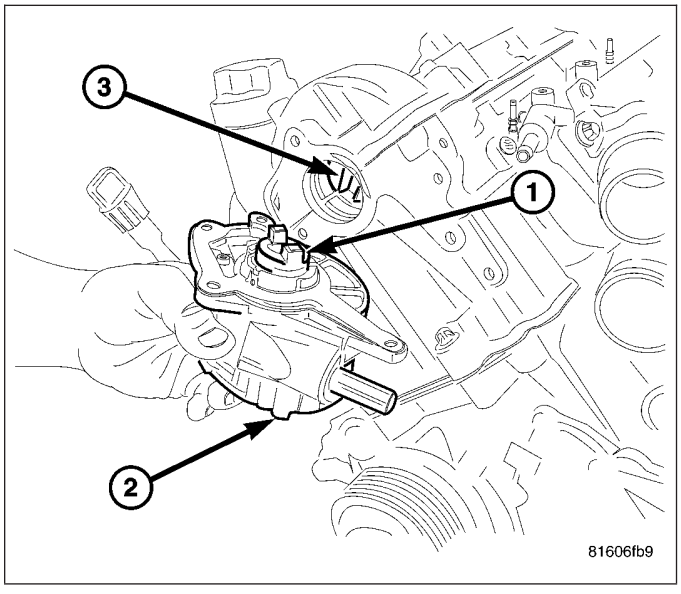

NOTE: Idler pulley bolts are L.H. thread.

31. Install the belt idler pulleys (1) Tighten the bolts to 58 N·m (43 ft. lbs.).
32. Install the accessory drive belt tensioner (2). Tighten the bolts to 58 N·m (43 ft. lbs.).
33. Install the accessory drive belt.

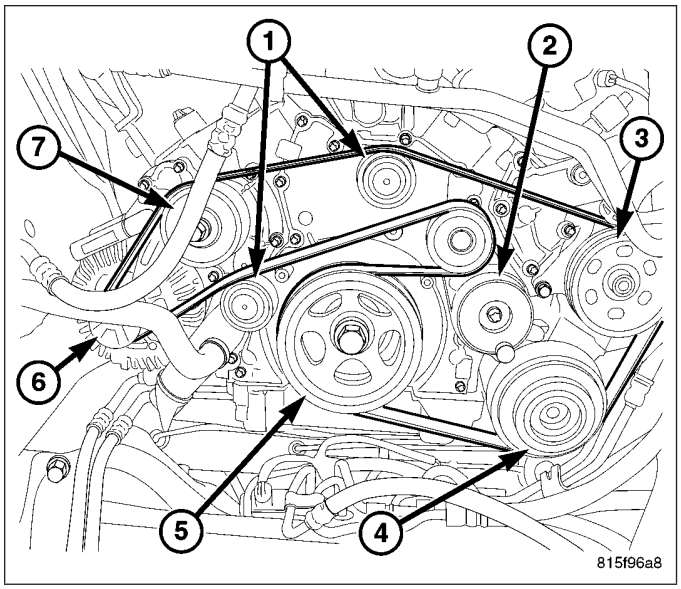

CAUTION: The right intake manifold upper thermostat housing bolts should be tightened to 8.5 N·m (74 in. lbs.).

34. Install the intake manifold (4). Tighten bolts to 16 N·m (142 in. lbs.), starting in the middle and tightening in a cross pattern outward until reaching the upper thermostat bolts on the right front manifold.
35. Tighten the upper thermostat bolts on the right cylinder head to 8.5 N·m (74 in.lbs.).

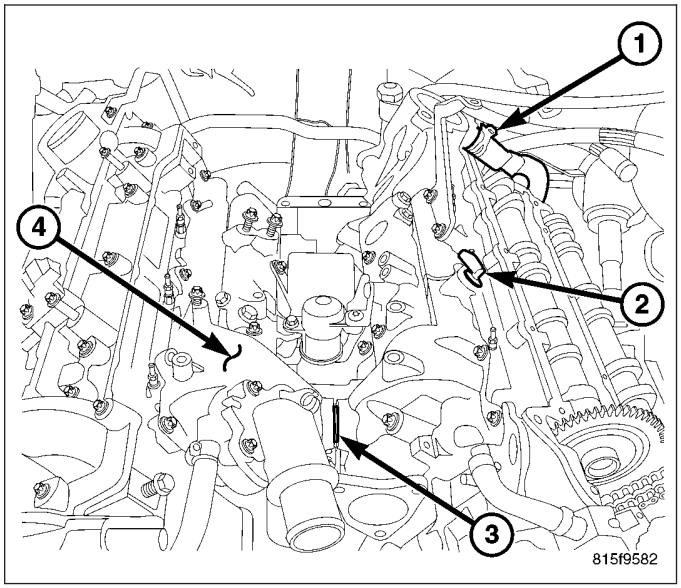

CAUTION: The fuel injector sealing washers MUST be replaced. DO NOT use the old sealing washers or double the sealing washers. DO NOT apply injector body lubricant near the injector nozzles.

36. Lubricate the fuel injector body, install the right fuel injectors and new sealing washers.
37. Install the injector retaining claws (3) and tighten the bolts to 7 N·m, plus 180° (62 in. lbs., plus 180°).
38. Properly route and install the fuel return hoses (2) and connect them to the injectors.
39. Properly route and connect the engine harness (1).

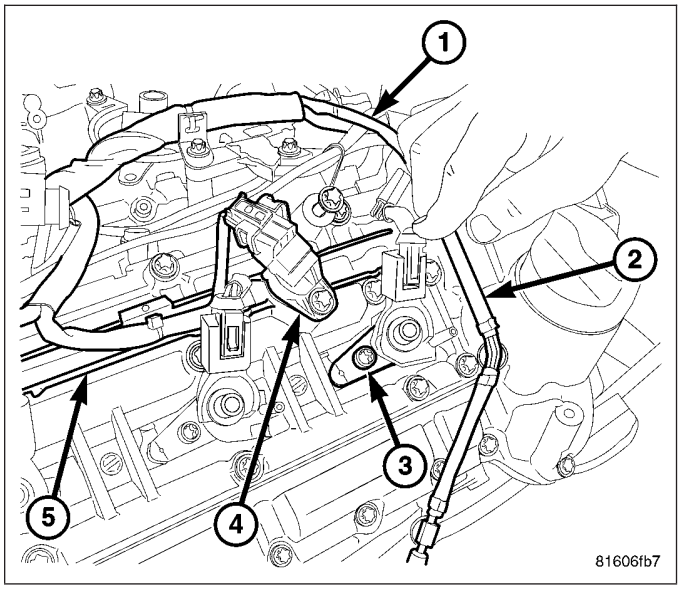

40. Install the fuel rail (2). Tighten the bolts to 27 N·m (20 ft. lbs.).

CAUTION: Inspect the fuel lines for wear or damage, look closely around the flange area. Replace as necessary. DO NOT over tighten.

41. Install the high pressure fuel lines (3), including the fuel rail transfer line (1). Tighten the line nuts to 33 N·m (24 ft. lbs.).

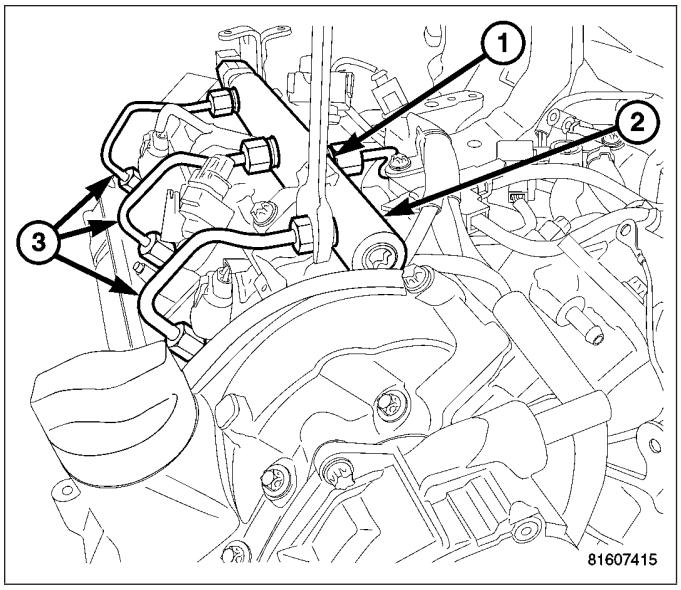

42. Install the fuel filter and connect the harnesses and hoses using Fuel Line Pliers 9539 Hose Clamp pliers.

CAUTION: Care must be taken when installing the turbocharger oil housing adaptor. The gasket MUST be aligned properly with the oil housing passages or immediate damage to the turbocharger will occur.

43. Install the turbocharger oil housing adaptor with the gasket tabs secured to the adaptor. Tighten bolts to 12 N·m (9 ft. lbs.).
44. Install the turbocharger (Refer to 11 - EXHAUST SYSTEM/TURBOCHARGER SYSTEM/TURBOCHARGER - INSTALLATION).

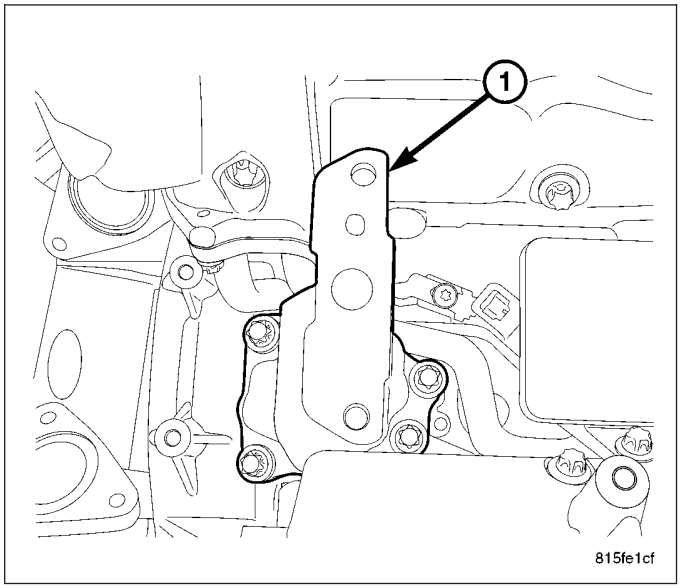

45. Install the charge air inlet pipe (1) and resonator (3).

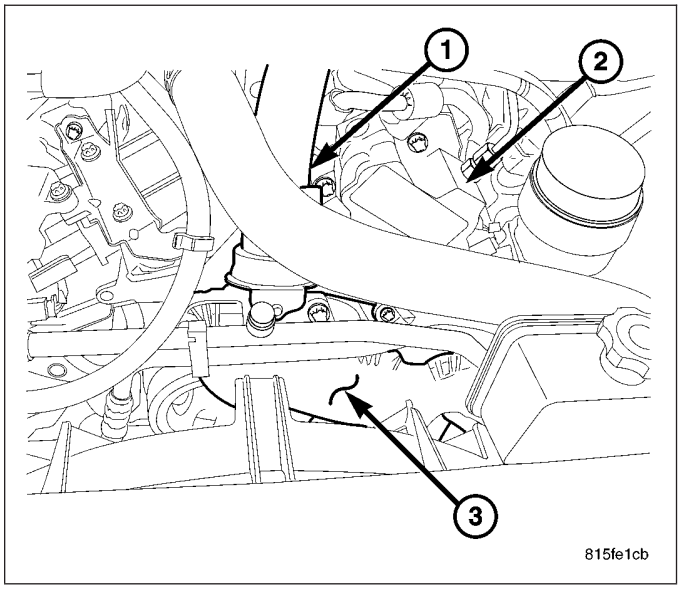

46. Install the air control valve and resonator (4).

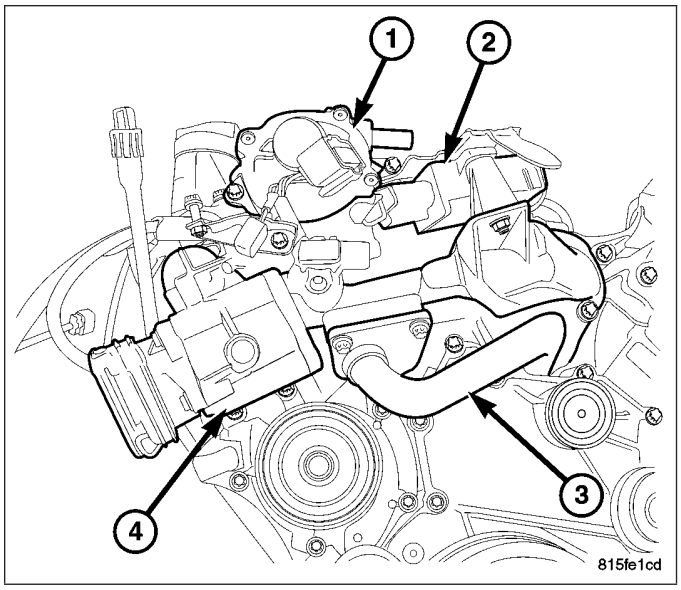

47. Install the cooling fan module.
48. Connect the vacuum pump supply hose.
49. Raise and support the vehicle.
50. Remove #9102 crankshaft lock (2).
51. Install the starter blank.
52. Connect the cooling fan hydraulic lines.
53. Lower the vehicle.
54. Fill the cooling system.
55. Fill power steering system.
56. Install the strut tower support (2).
57. Connect the negative battery cable.
58. Start engine, allow to warm, turn engine off and inspect for leaks (Refer to 14 - FUEL SYSTEM - WARNING).
59. Purge the air from the power steering system using the scan tool.

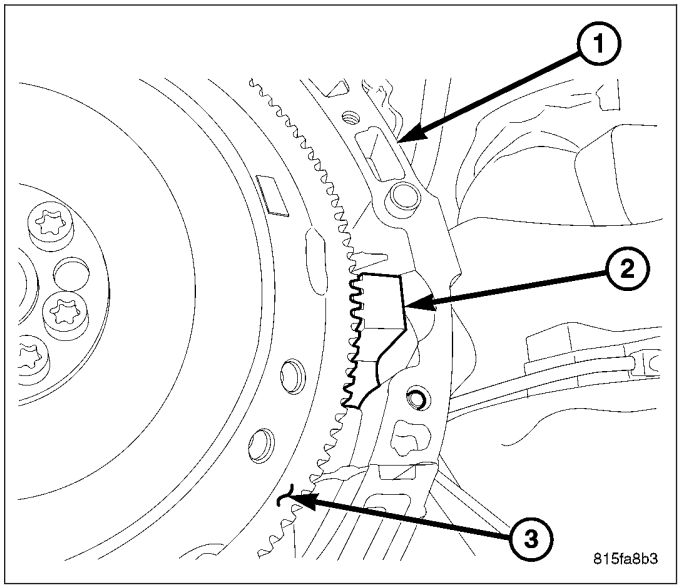

60. Install the engine cover brackets and engine cover (1).

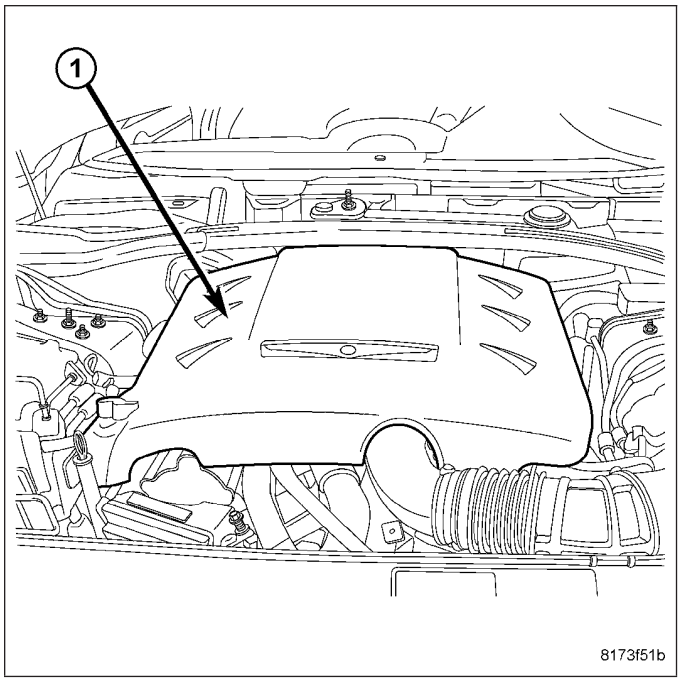

CAMSHAFT OIL SEAL(S)

REMOVAL

LEFT

1. Disconnect negative battery cable. (Refer to 8 - ELECTRICAL/BATTERY SYSTEM/CABLES - REMOVAL)
2. Remove engine cover and bracket.

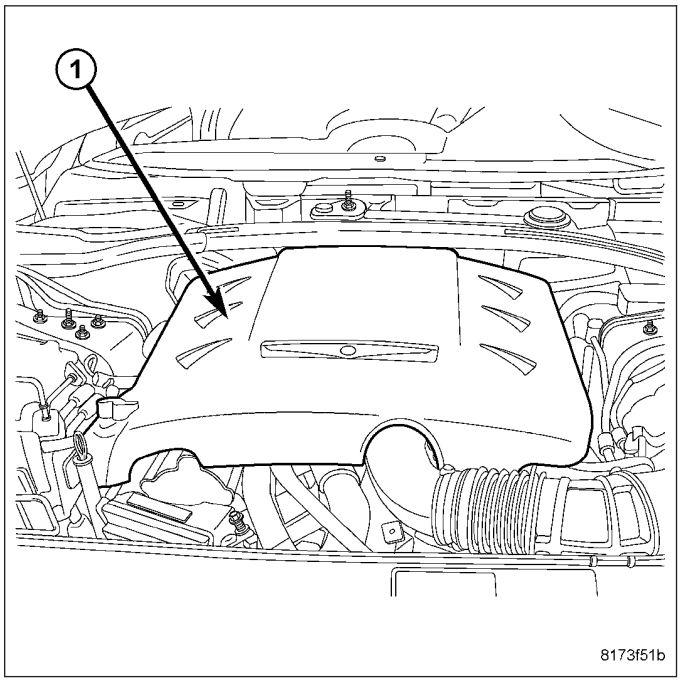

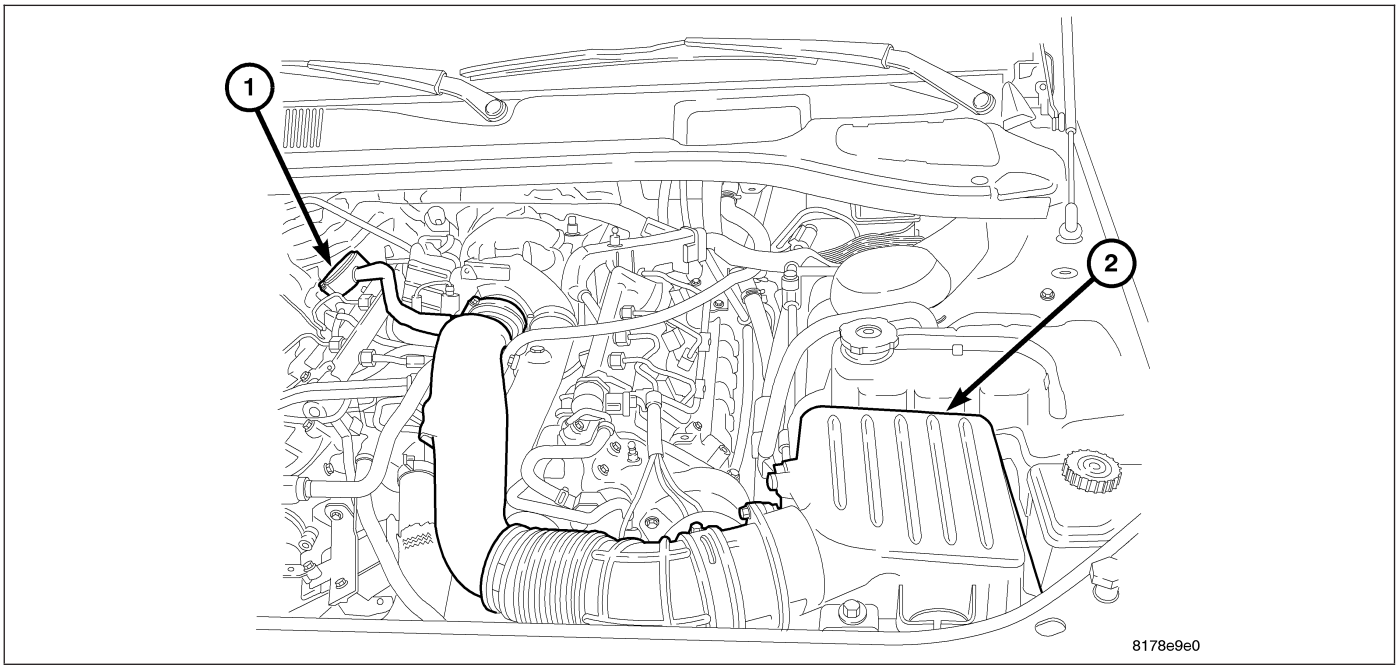

3. Remove air cleaner cover and inlet tube to turbocharger.

4. Remove the high pressure line from the fuel pump and the fuel rail.
5. Remove the bracket from the oil filter housing.
6. Disconnect the fuel temperature sensor connector.
7. Disconnect the fuel quantity solenoid connector.
8. Remove the wiring harness retaining bolts and position the engine harness aside.
9. Remove the bolts from the intercooler air chamber.
10. Remove the turbo outlet to intercooler inlet air tube.

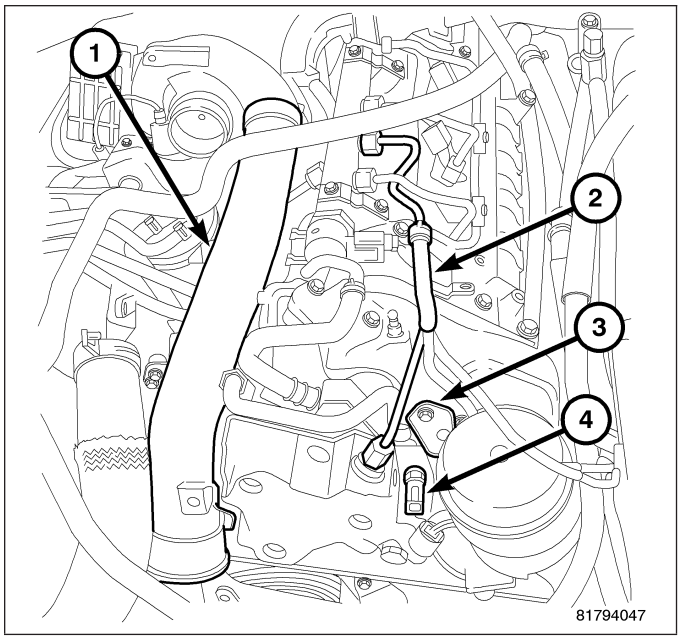

11. Remove the power brake booster vacuum line from the vacuum pump and position aside.
12. Disconnect the power feed line from the alternator and position aside.
13. Remove the supply and return fuel lines.

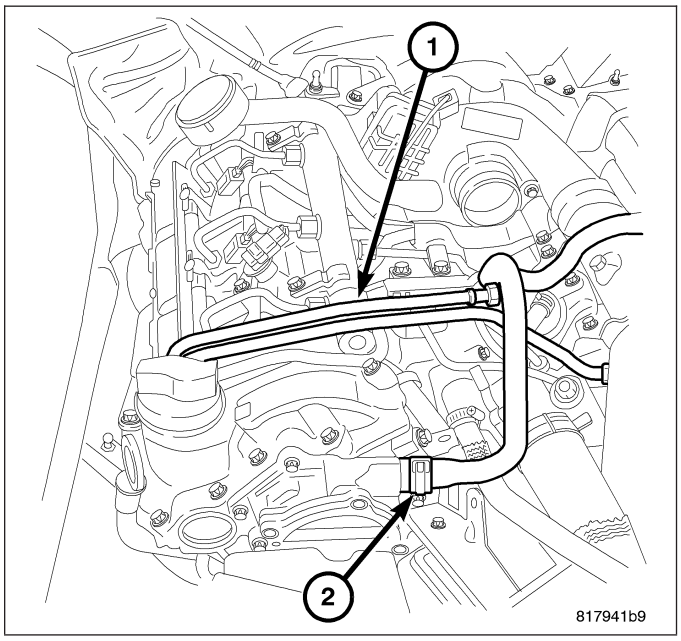

14. Disconnect the EGR solenoid connector.
15. Remove the EGR valve.
16. Disconnect the fuel injector electrical connectors.
17. Remove the fuel injector wiring harness from the cylinder head cover and position aside.
18. Remove the left cylinder head fuel return line.
19. Remove the high pressure fuel lines from the fuel injectors.
20. Remove the fuel injectors.

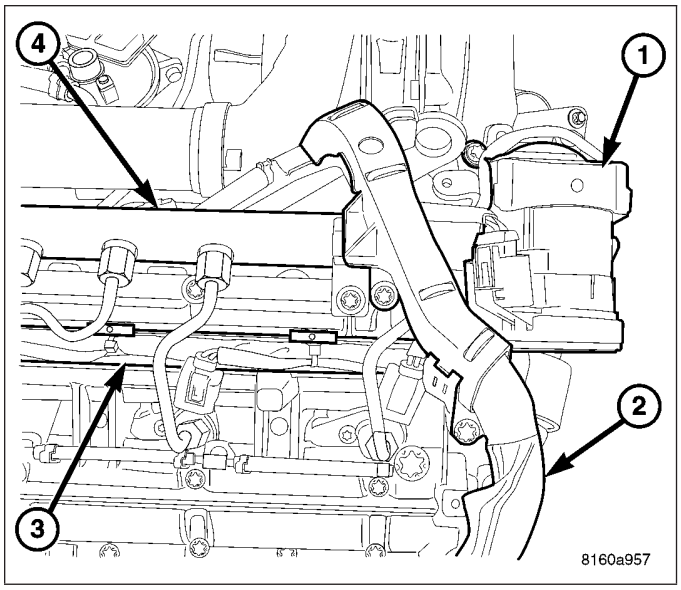

CAUTION: Care must be taken when removing the cylinder head cover. The cover is the camshaft retainer and end play interface. Do not pry on the cylinder head cover tabs.

NOTE: Note the different length cylinder head cover bolts and their position for assembly purposes.

21. Remove the cylinder head cover (2) fasteners and cover.

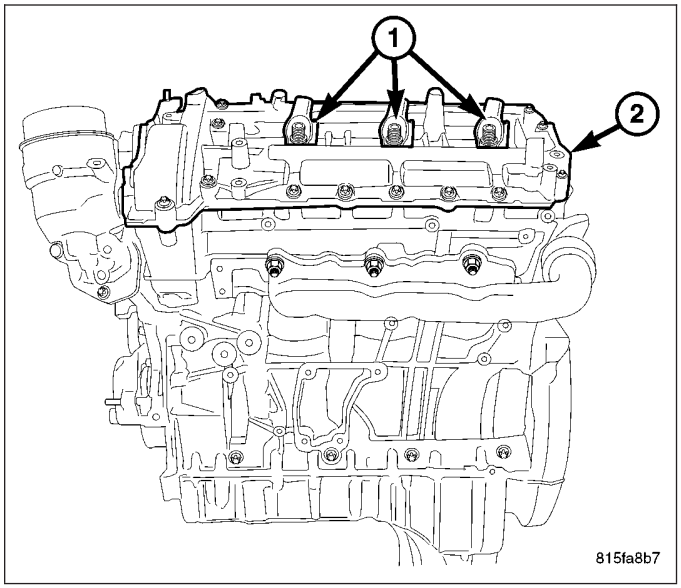

22. Remove the left front camshaft oil seal (2).

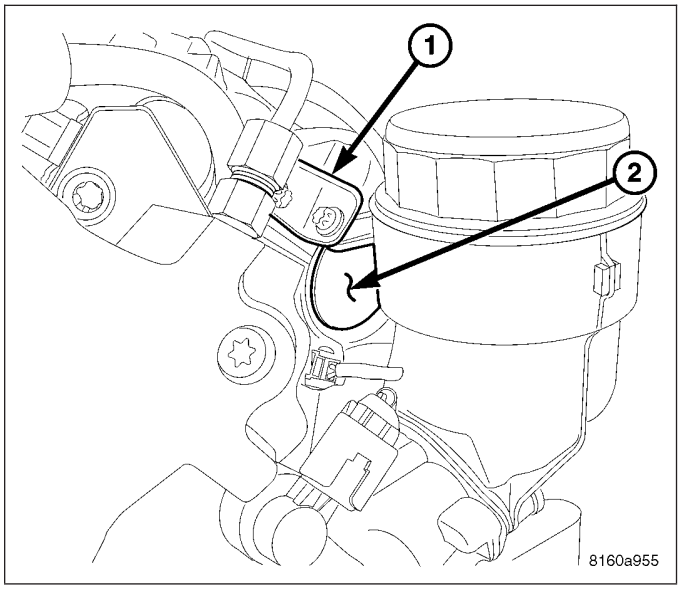

23. Remove the left rear camshaft oil seal (2).

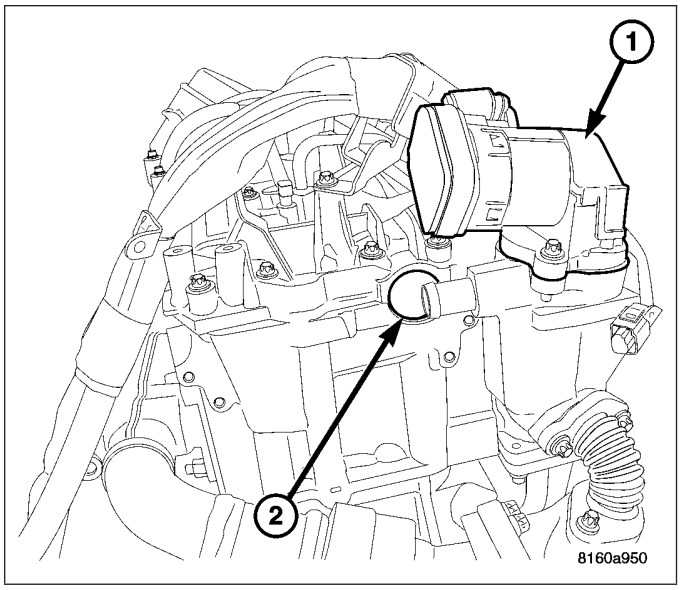

RIGHT

1. Disconnect the negative battery cable.
2. Remove the engine cover.

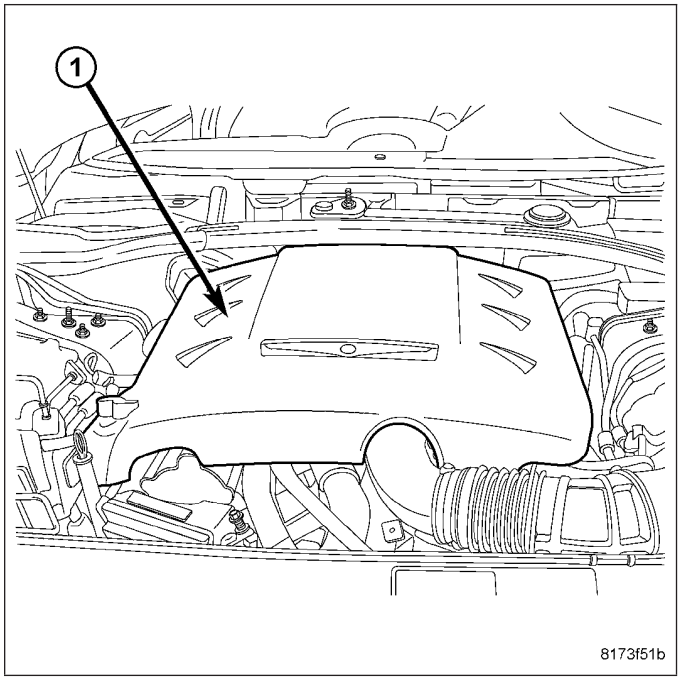

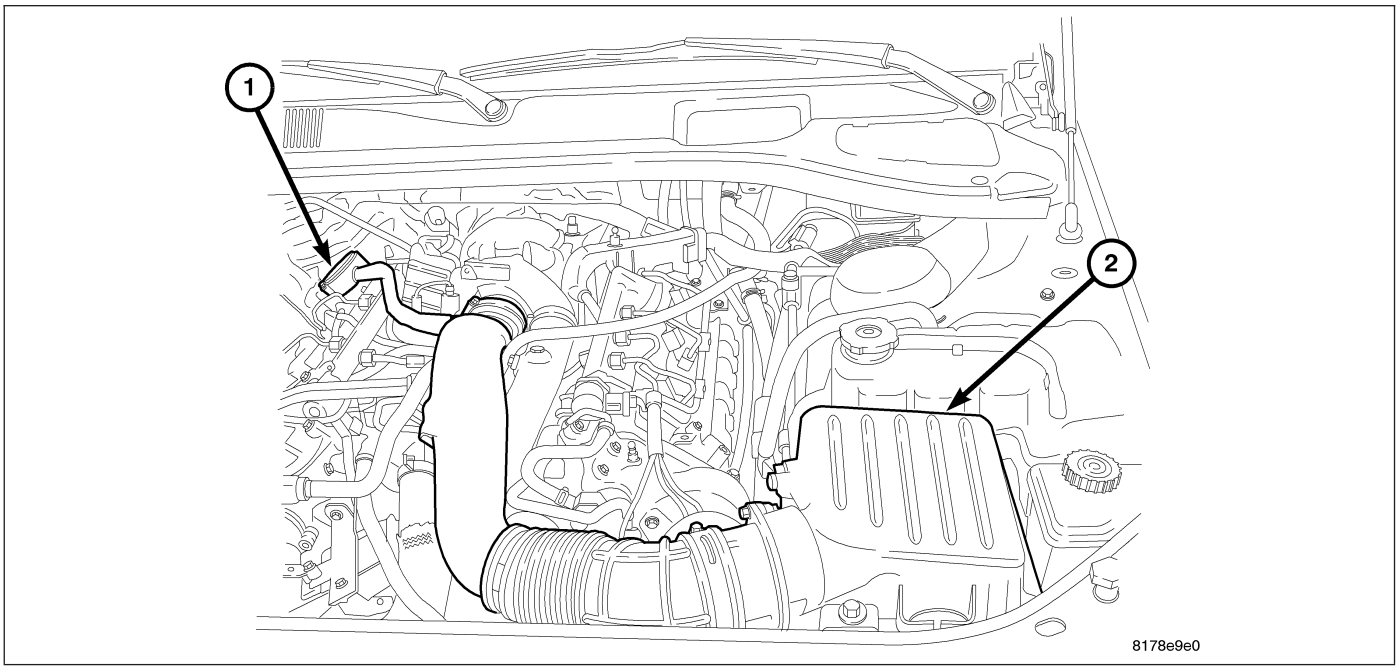

3. Remove the air inlet tube to the turbocharger along with the air cleaner cover (2).
4. Remove the air control valve resonator (2).
5. Remove the vacuum pump (1).
6. Remove the oil level indicator fastener (4).

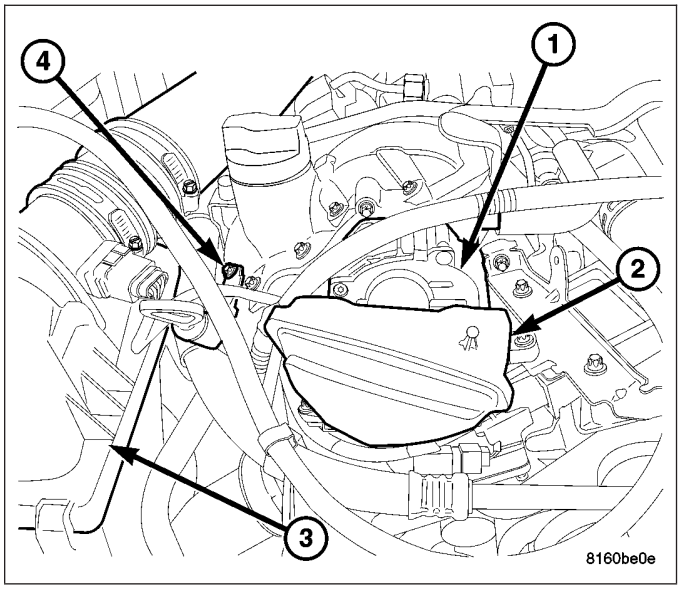

7. Remove the PCV (1) and rear housing adaptor (2).

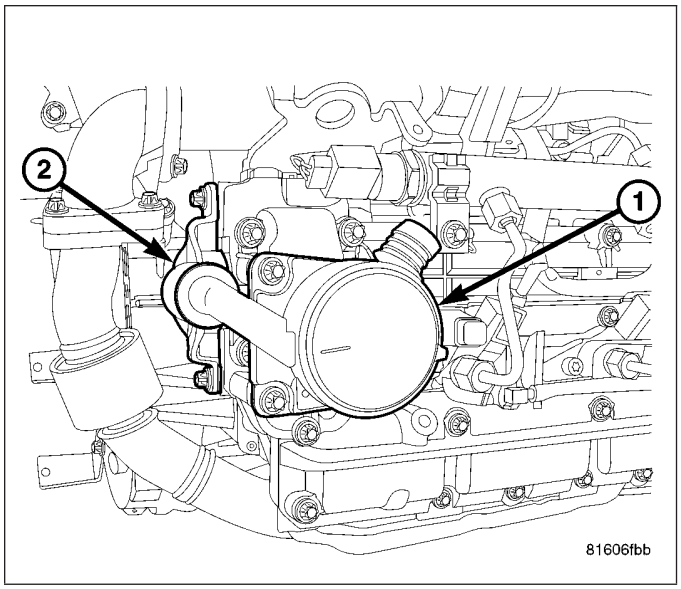

8. Remove the injector cover.
9. Remove the fuel rail (2).
10. Remove the high pressure fuel lines at the injectors (3).
11. Disconnect the return fuel hose from the injectors.
12. Disconnect the fuel injector and camshaft position sensor wiring harness connectors and set aside.
13. Remove the injectors.

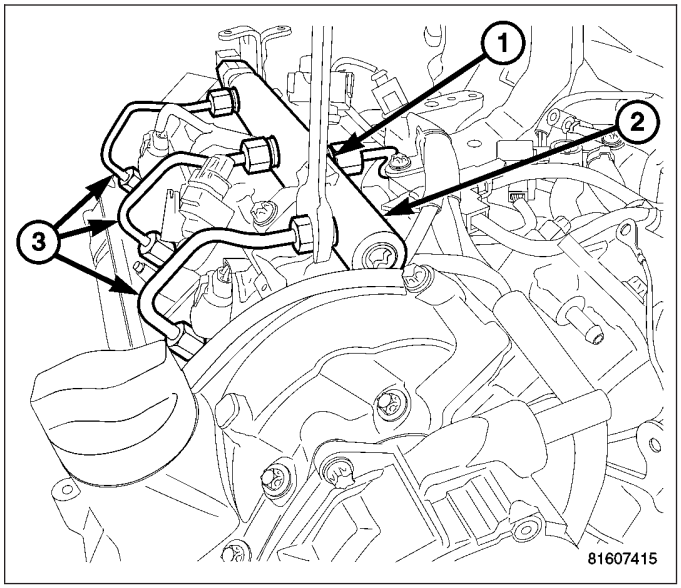

14. Disconnect the heater hose bracket from the cylinder head cover.

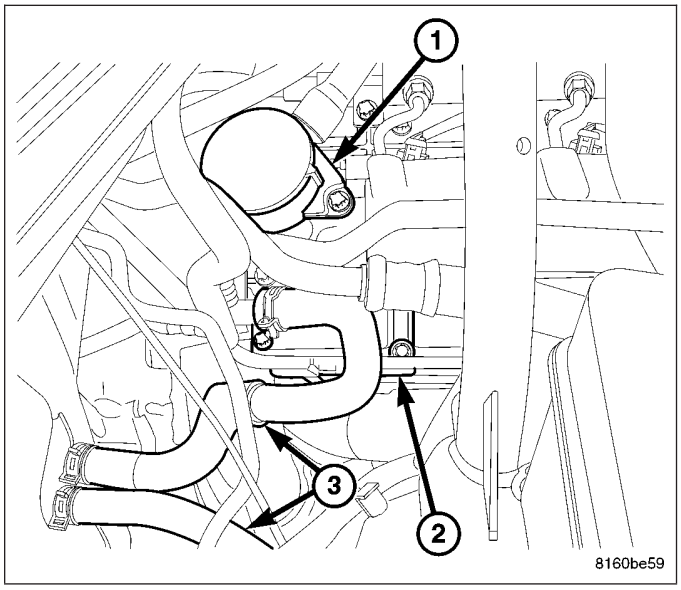

CAUTION: Care must be taken not to damage the cylinder head cover. If the sealant is difficult to separate, use a hand held heat gun and warm the area thoroughly along the sealer bead.

NOTE: The rear camshaft seal is located inside the PCV housing adaptor assembly.

15. Remove the cylinder head cover (3) and front seal (4).

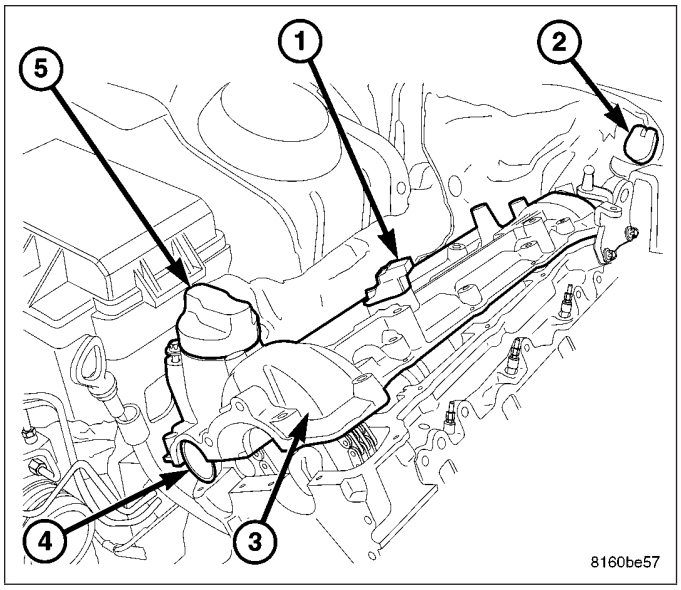

INSTALLATION

LEFT

1. Install the left front camshaft oil seal (2).

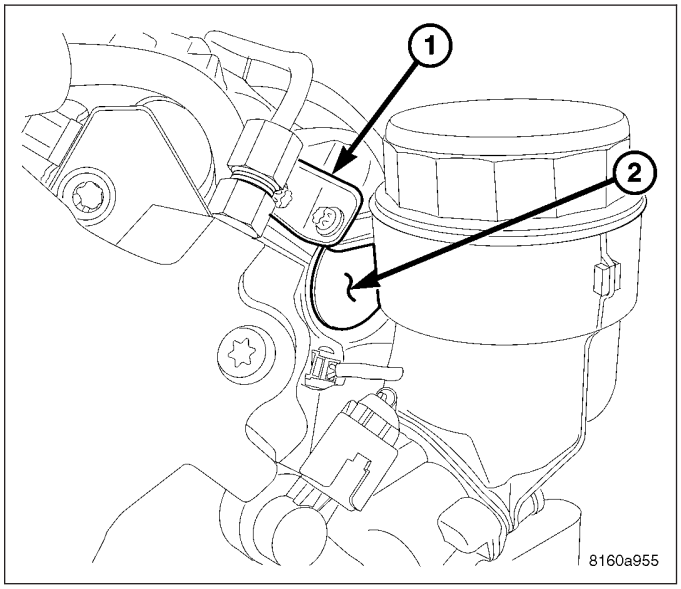

2. Install the left rear camshaft oil seal (2).

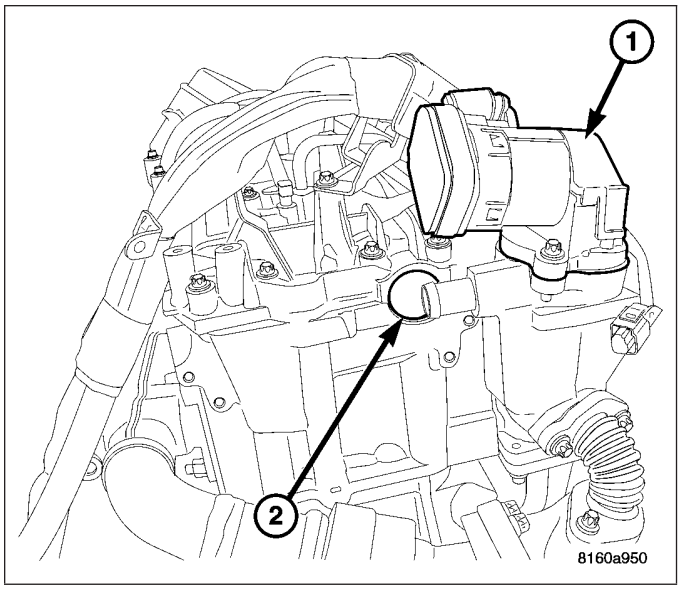

3. Clean and inspect all sealing surfaces.

NOTE: Care must be taken not to get any engine sealant on the camshaft journals of the cylinder head cover.

4. Install a 1/8 in bead of Mopar Engine RTV Gen II sealant to the underside of the cylinder head cover (Refer to 9 - ENGINE - STANDARD PROCEDURE).

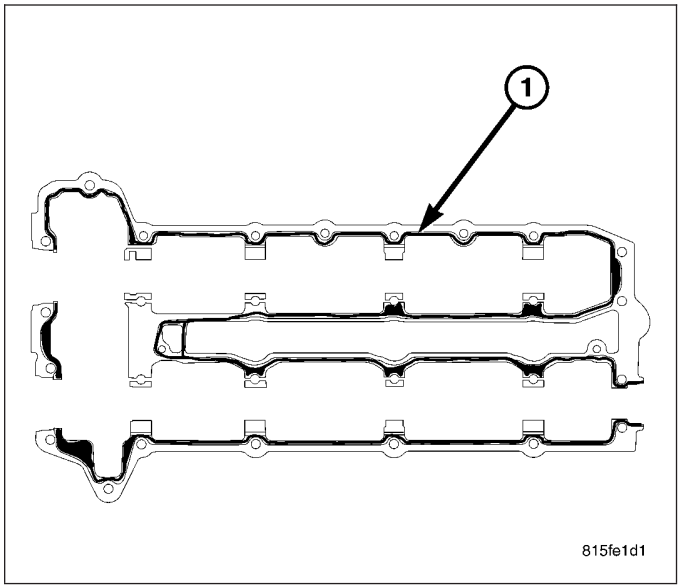

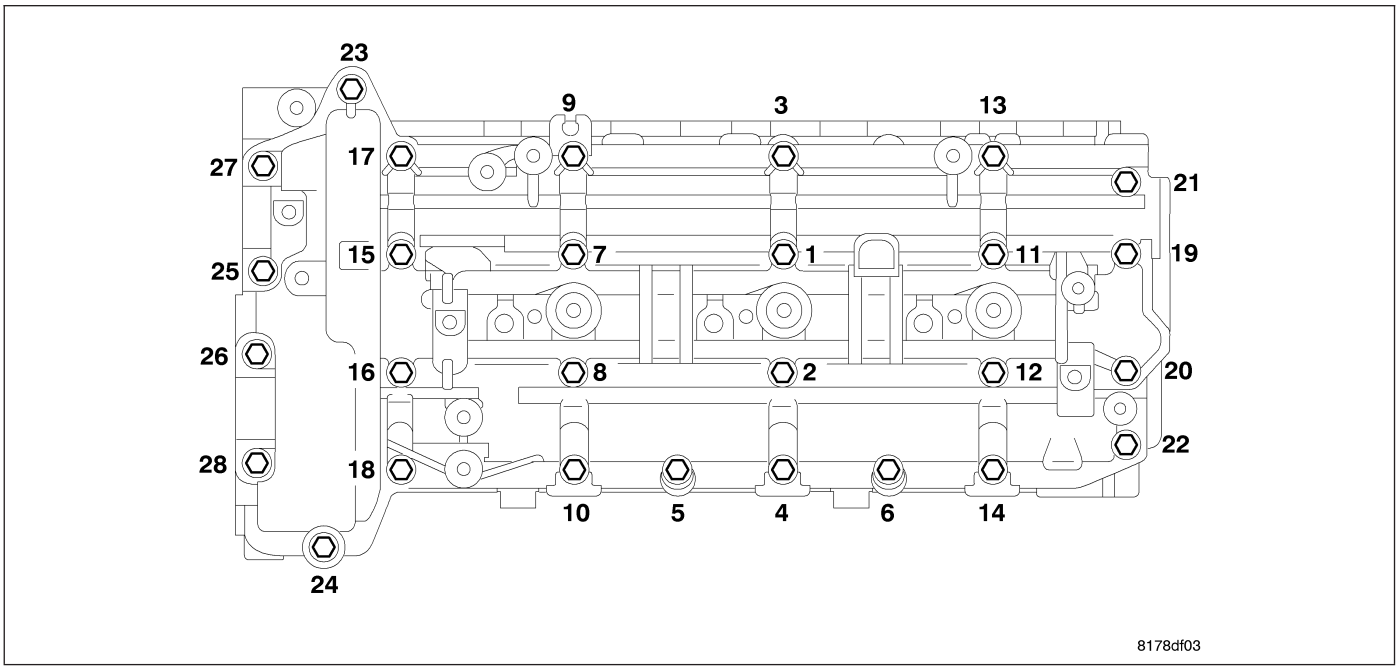

5. Carefully position the cylinder head cover and install the bolts into their original position.

CAUTION: The cylinder head cover bolts are different lengths. Do not use the wrong length bolts or engine damage may result.

6. Tighten cylinder head cover bolts in sequence, first to 4 N·m (35 in. lbs.), and then repeat the sequence to 8.4 N·m (75 in. lbs).
7. Install the EGR valve.

CAUTION: The fuel injector sealing washers MUST be replaced. DO NOT use the old sealing washers or double the sealing washers.

NOTE: Care must be taken not to apply any lubricant to the fuel injector nozzles.

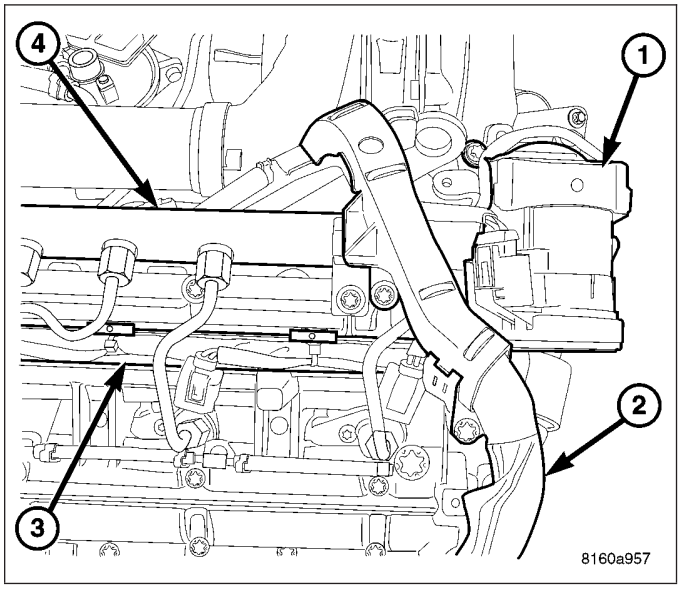

8. Install the fuel injectors (1). Tighten the injector retaining claw bolt to 7 N·m (5 ft. lbs.) and then an additional 180°.
9. Re-position and secure the engine harness.
10. Install the left fuel rail. Tighten the fuel rail bolts to 11 N·m (8 in. lbs.).
11. Position the return fuel lines and secure to the injectors. Push down on the release lock tab to secure.
12. Connect the fuel injector electrical connectors.
13. Install the left rear engine cover bracket.

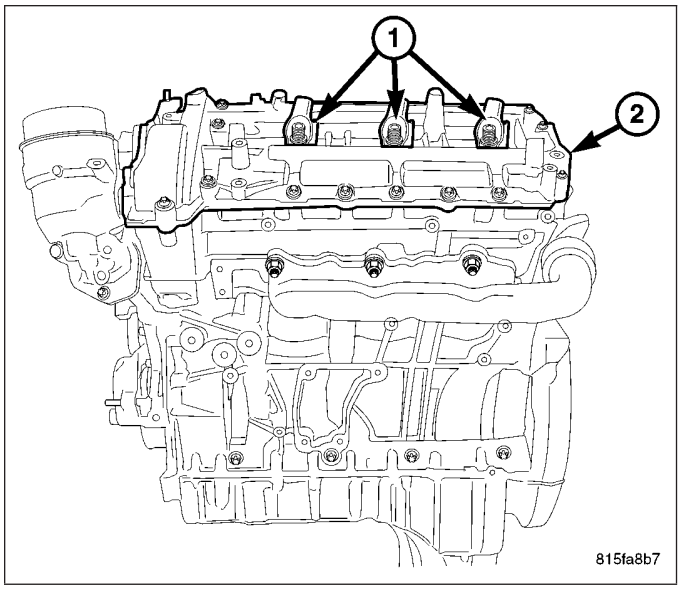

14. Install the high pressure fuel lines from the fuel rail to injectors. Tighten the line connections to 27 N·m (20 ft. lbs.).
15. Install the fuel line from the high pressure pump to the left fuel rail. Tighten the retaining bolt to 30 N·m (22 ft. lbs.).
16. Install the fuel supply line to the fuel filter and high pressure pump.
17. Connect both fuel lines at the high pressure pump.

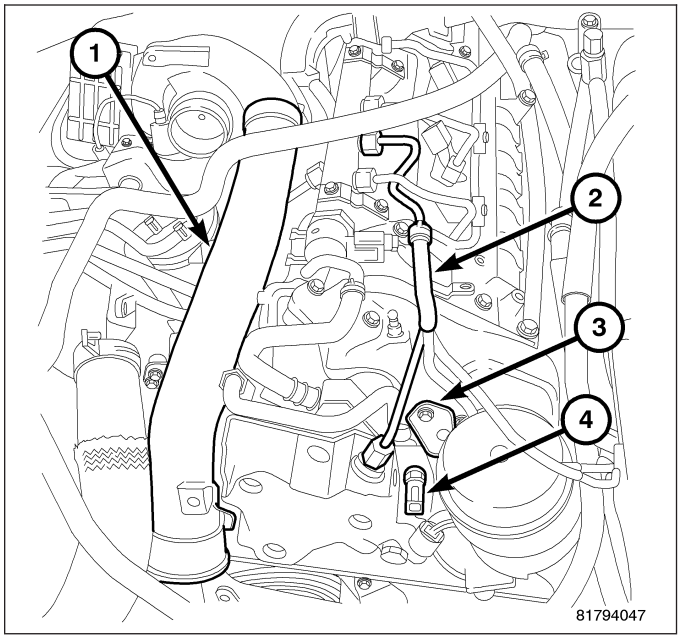

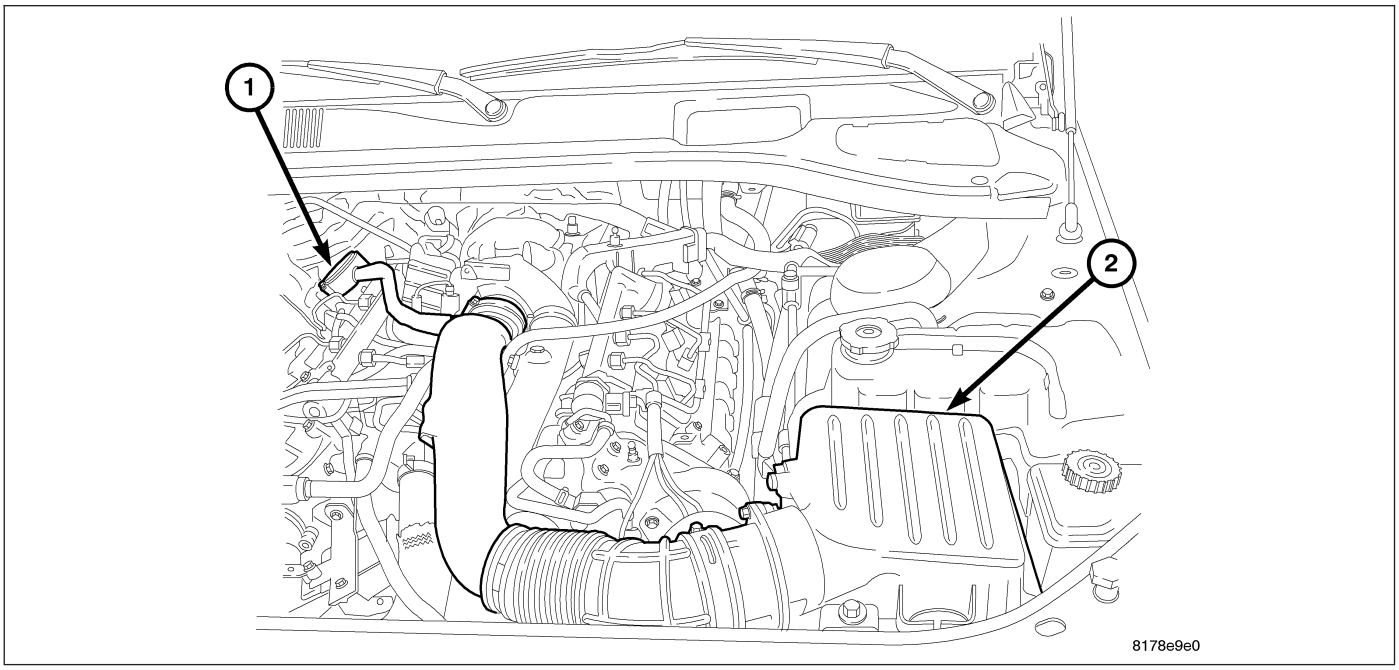

18. Install the air filter housing and tube.
19. Connect the negative battery cable.
20. Start the engine, run until warm, turn engine off and inspect for leaks (Refer to 14 - FUEL SYSTEM - WARNING).
21. Install the engine cover (1).

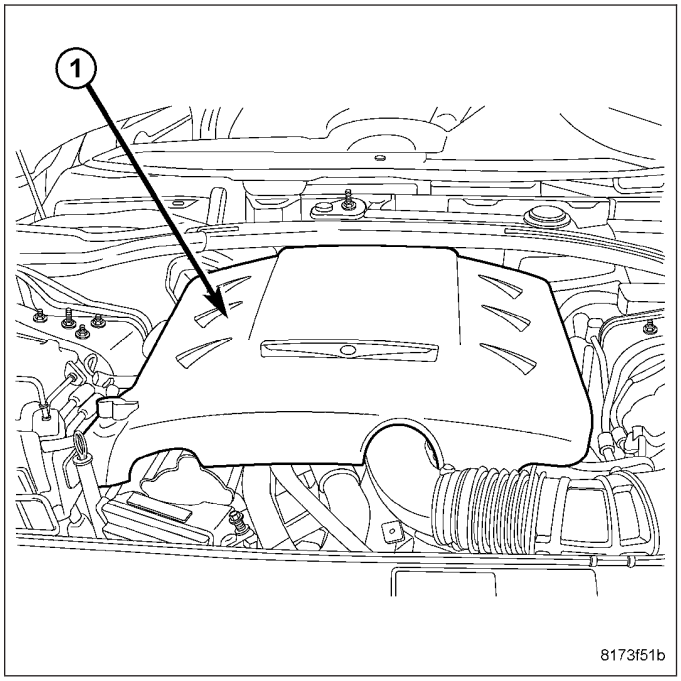

RIGHT

1. Clean all mating surfaces.

NOTE: Care must be taken not to get any engine sealer on the camshaft journals.

2. Apply a 1.5MM bead of Mopar ® Engine RTV Sealant (1) to the cylinder head cover.

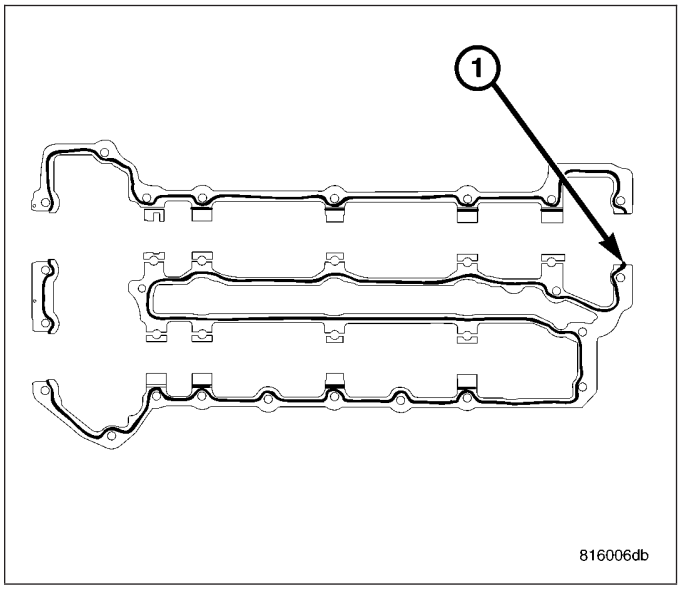

3. Place the camshaft seal into position.
4. Install the cylinder head cover. Tighten the bolts in three stages following the sequence provided. First to 4 N·M (35 in. lbs.), then to 6 N·M (53 in. lbs.), and then to 8.4 N·M (75 in. lbs.).

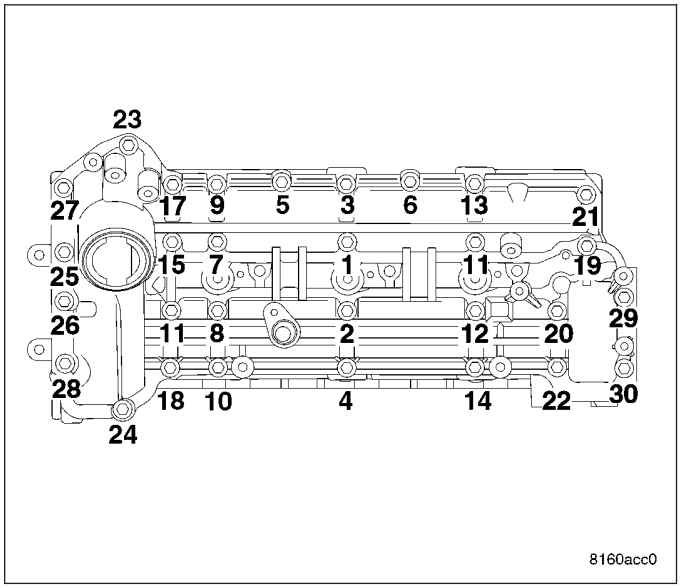

5. Install the oil separator housing adaptor (2) with new camshaft seal. Tighten fasteners to 9 N·m (7 ft. lbs.).
6. Install the oil separator (1). Tighten fasteners to 9 N·m (7 ft. lbs.).

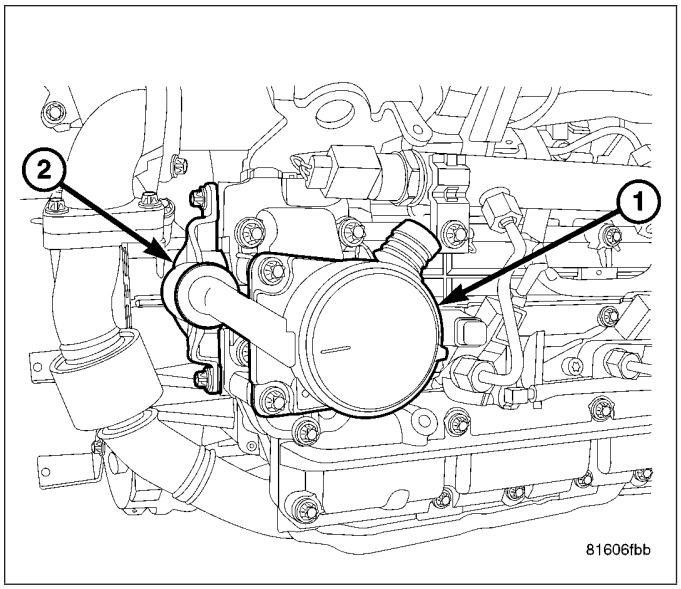

7. Secure the transmission tube fastener to the engine cover bracket.
8. Secure the heater hose bracket (2) to the cylinder head cover.

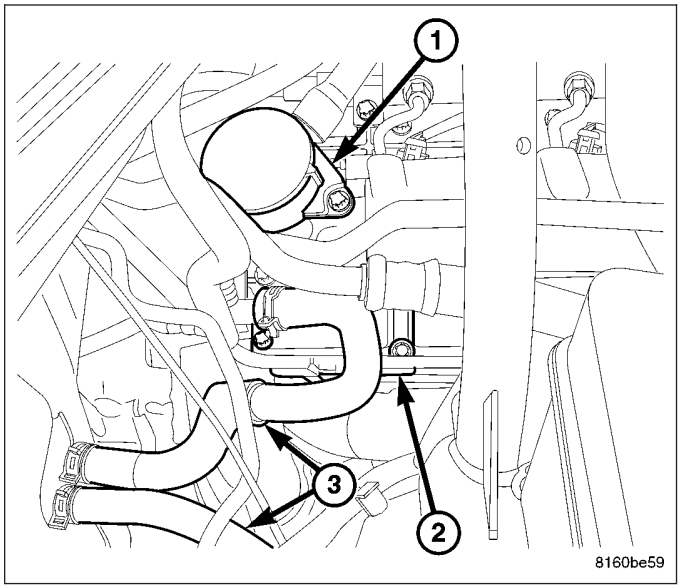

9. Secure the vacuum pump hose pipe to the cylinder head cover.
10. Install the fuel injectors. Tighten hold down fasteners (3) to 7 N·m, plus 180° (62 in. lbs., plus 180°).
11. Connect the camshaft position sensor (4) and fuel injector wiring harness connectors.
12. Connect the return fuel hose (2) to each injector.
13. Install the fuel rail, high pressure fuel lines and injector cover.

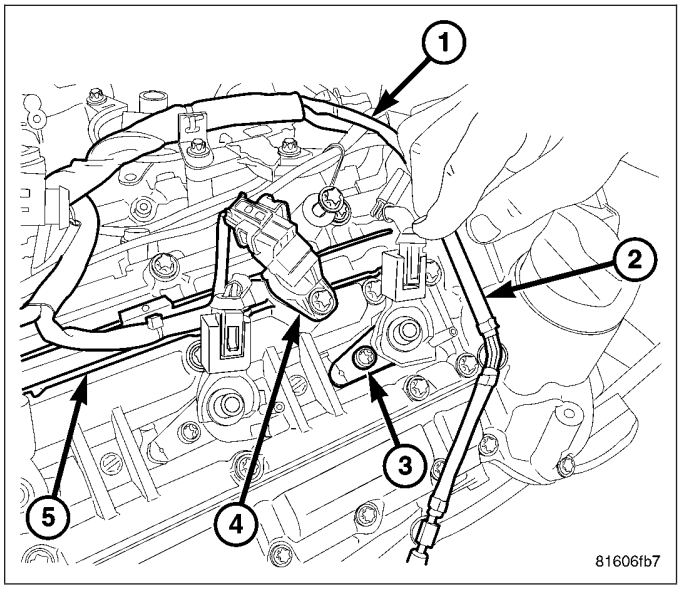

14. Secure the engine oil indicator tube (4) to the cylinder head. Tighten fastener to 11 N·m (8 in. lbs.).
15. Install the vacuum pump (1).
16. Install the air control valve resonator (2).

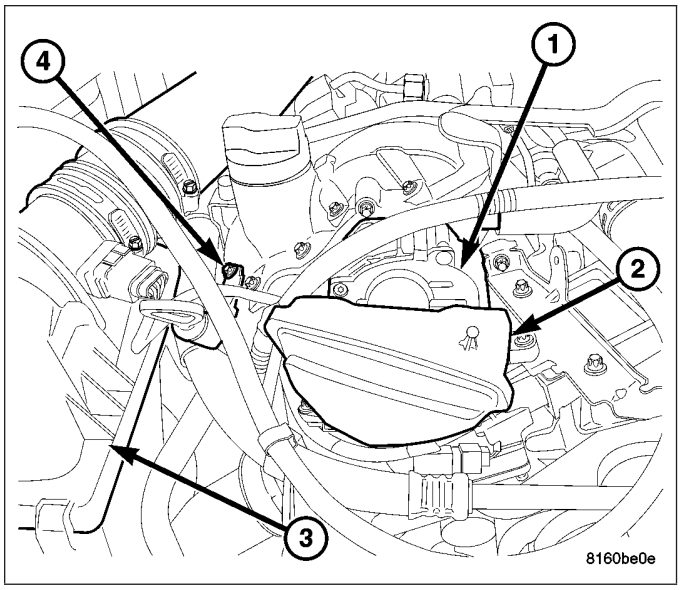

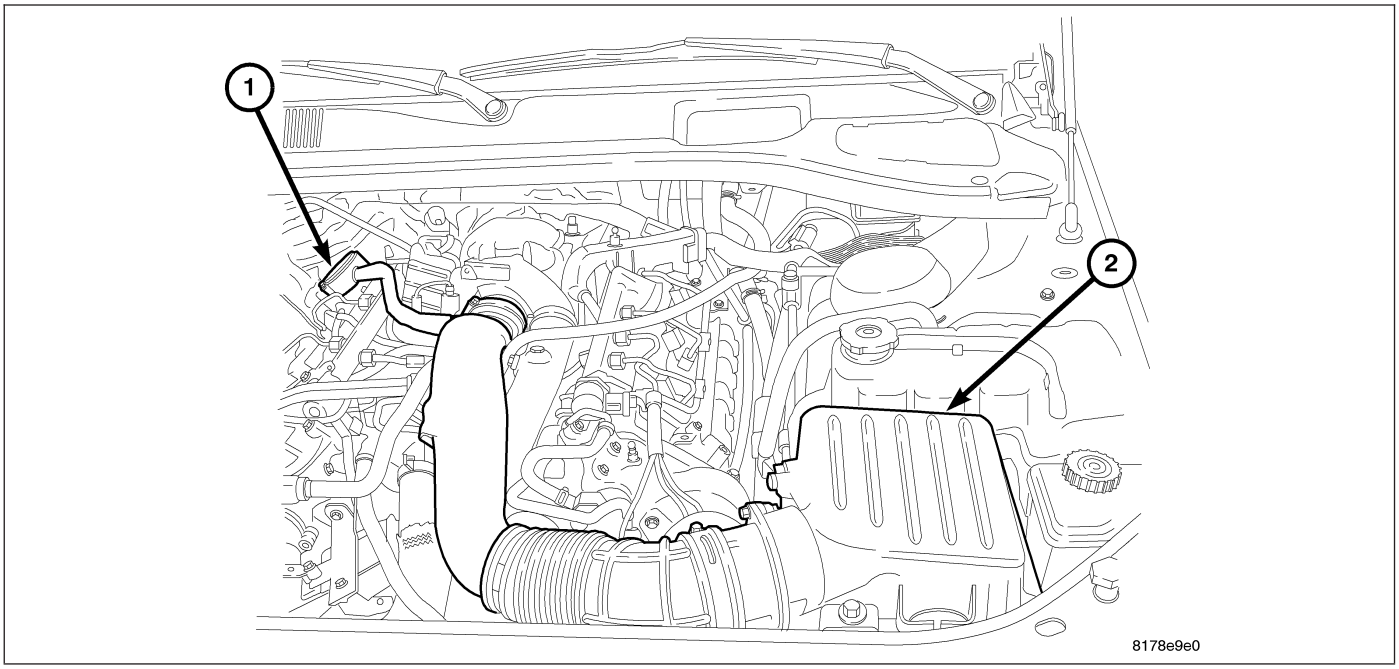

17. Install the air cleaner outlet tube to the turbocharger and secure the air cleaner housing cover (2)

18. Connect the negative battery cable.

NOTE: (Refer to 14 - FUEL SYSTEM - WARNING).

19. Start engine, allow to warm, turn engine off and inspect for leaks.
20. Install the engine cover.

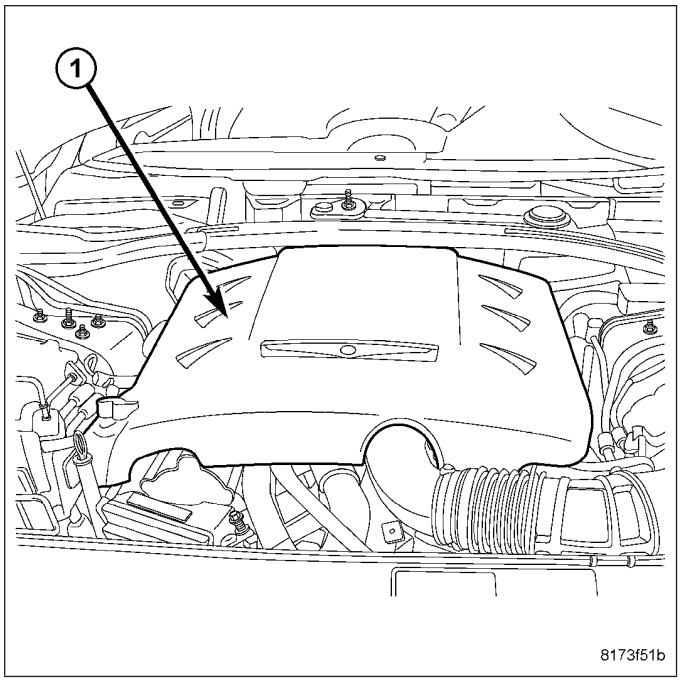

CAMSHAFT(S)

DESCRIPTION

The camshafts are made of gray cast iron with three bearing journals. Each camshaft has a pressed gear with alignment mark that is used during base engine timing procedures. The camshafts are retained in place by not only the front and rear hold downs mounted to the cylinder head, but the cylinder head cover has journals as well. This design aids in lubrication and also has acoustic advantages. The camshafts are chain driven by a drive gear mounted to the intake camshaft on the right cylinder head, and a drive gear mounted to the exhaust camshaft on the left cylinder head. With four valves per cylinder, there is a camshaft for each cylinder bank that drives two intake and two exhaust valves. The camshafts accomplish this by way of tappets and finger followers that operate the valves.

OPERATION

When the camshaft rotates the lobes actuate the hydraulic tappets and finger followers. Forcing downward on the finger followers opens the valves.

REMOVAL

LEFT

1. Disconnect negative battery cable. (Refer to 8 - ELECTRICAL/BATTERY SYSTEM/CABLES - REMOVAL)
2. Remove engine cover.

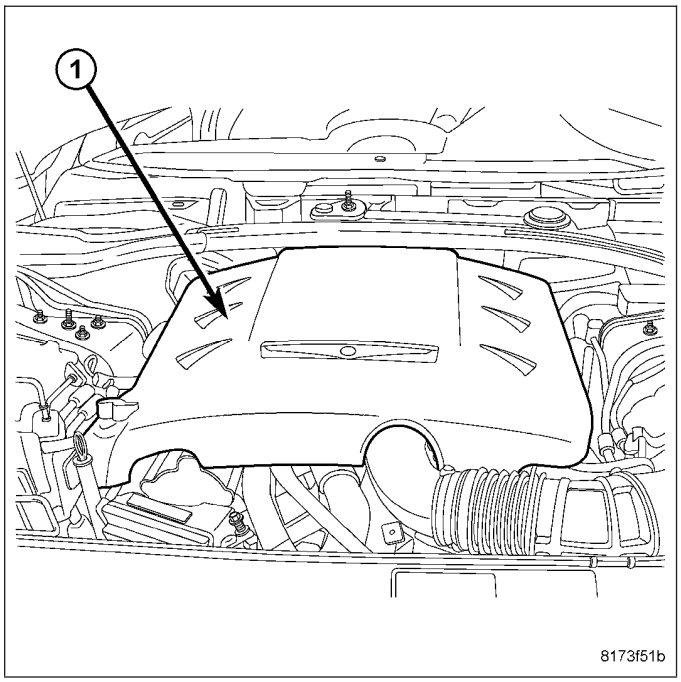

3. Rotate the engine to TDC using the vibration damper bolt.
4. Remove the main engine wiring harness retainers at the rear of the cylinder head cover.
5. Remove the EGR valve.
6. Remove the charge air inlet tube.
7. Disconnect the fuel line hoses at the fuel rail, high pressure pump using 9539 Pliers.
8. Disconnect the fuel lines at the left cylinder head.

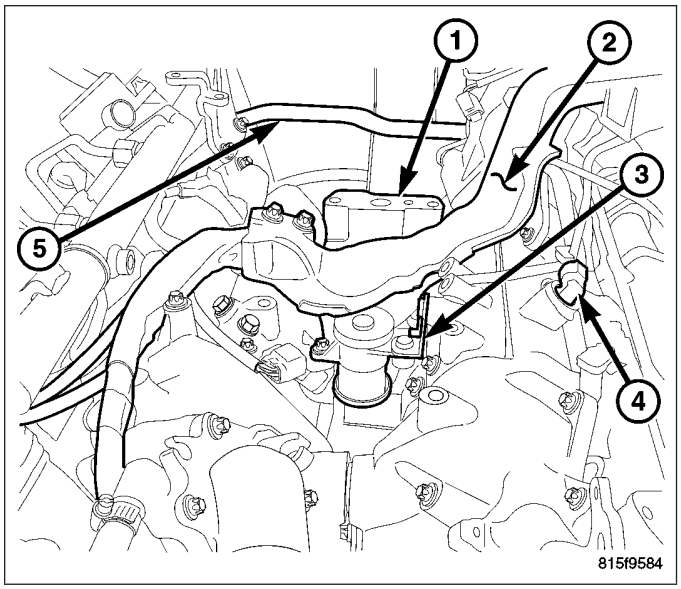

9. Remove the fuel pipe bundle and set aside.
10. Remove the oil filter housing support bracket.
11. Remove the cylinder head cover.

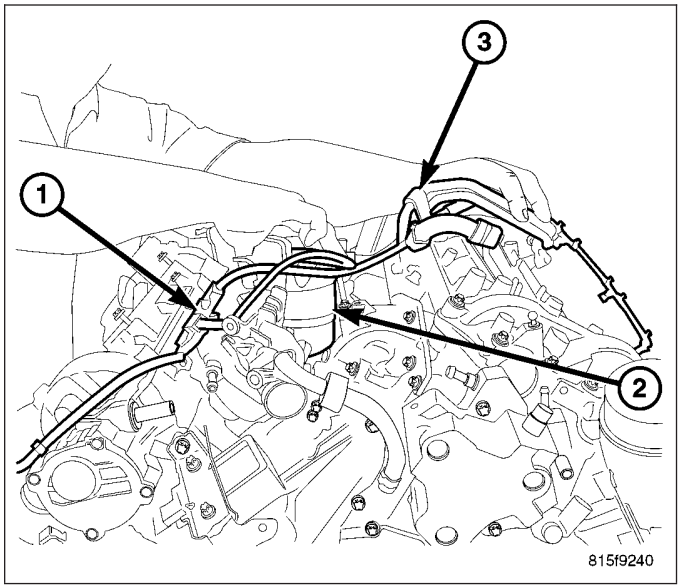

NOTE: The left exhaust camshaft gear alignment mark is located in the gear tooth valley. The left intake camshaft gear mark is located on the outside of the tooth.

12. Check the camshaft timing gears for alignment. The alignment marks should be touching and the exhaust camshaft drive gear alignment pin should be located at approximately 12 o'clock, when viewed from the front camshaft seal.
13. Rotate the engine by the vibration damper bolt, past TDC to gain access to the lower camshaft drive gear bolt, and remove the bolt.
14. Rotate the engine back to TDC and check camshaft gear alignment.

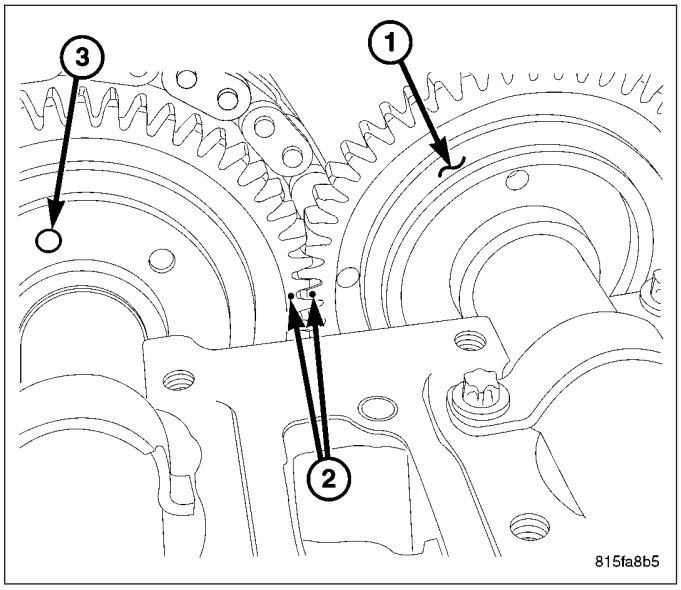

15. Remove the timing chain tensioner (3).
16. Paint mark or scribe the timing chain to drive gear relation.
17. Tie strap the timing chain to drive gear.
18. Remove the remaining camshaft drive gear bolts and separate the drive gear from camshaft gear.

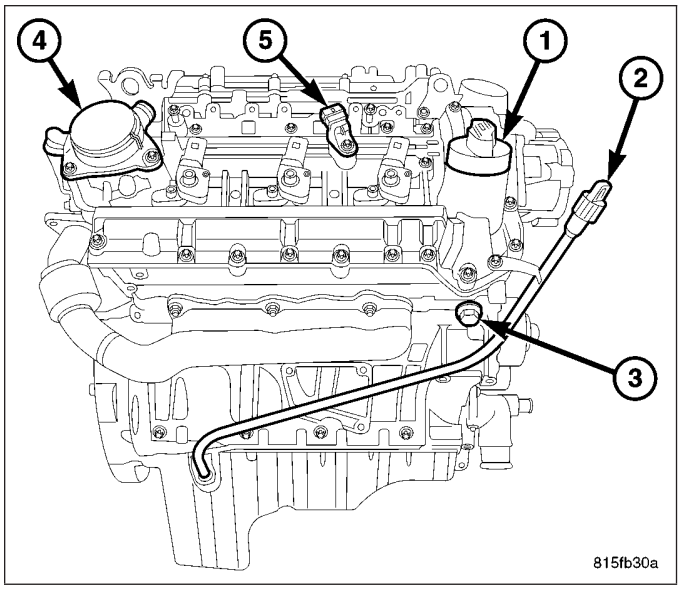

19. Remove the intake and exhaust camshaft retainers.
20. Remove the left cylinder head camshafts.

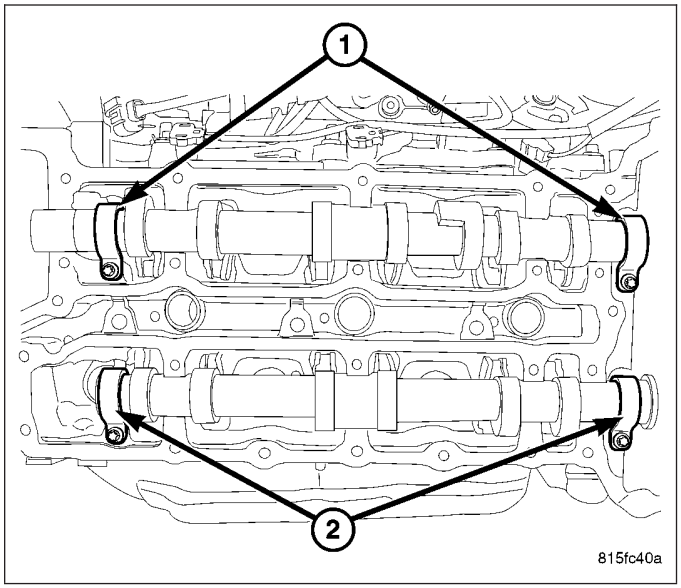

RIGHT

1. Disconnect negative battery cable. (Refer to 8 - ELECTRICAL/BATTERY SYSTEM/CABLES - REMOVAL)
2. Remove engine cover.
3. Rotate the engine to TDC using the vibration damper bolt.

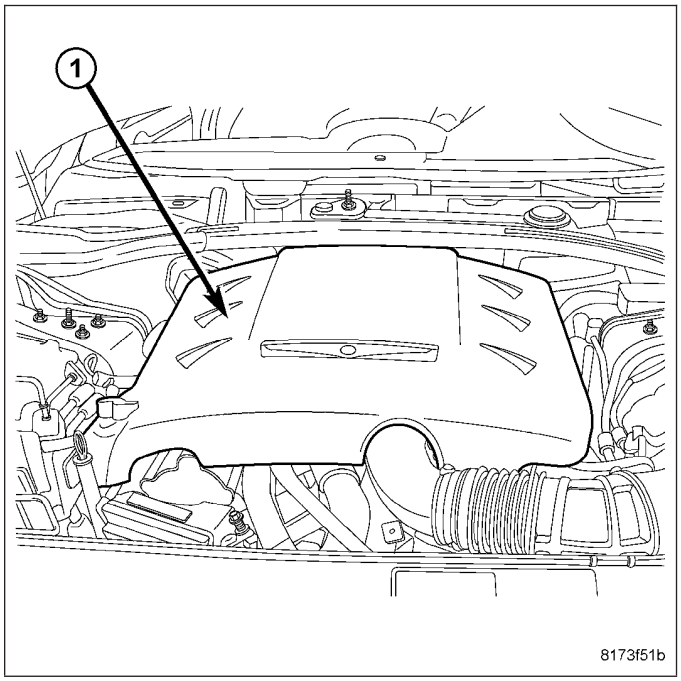

4. Remove the intake air resonator.
5. Remove the vacuum pump.
6. Remove the oil level indicator tube (2) retaining bolt at the right cylinder head cover.
7. Remove the crankcase breather assembly (4) from the right cylinder head cover.
8. Remove the cylinder head cover. (Refer to 9 - ENGINE/CYLINDER HEAD/CYLINDER HEAD COVER(S) - REMOVAL)

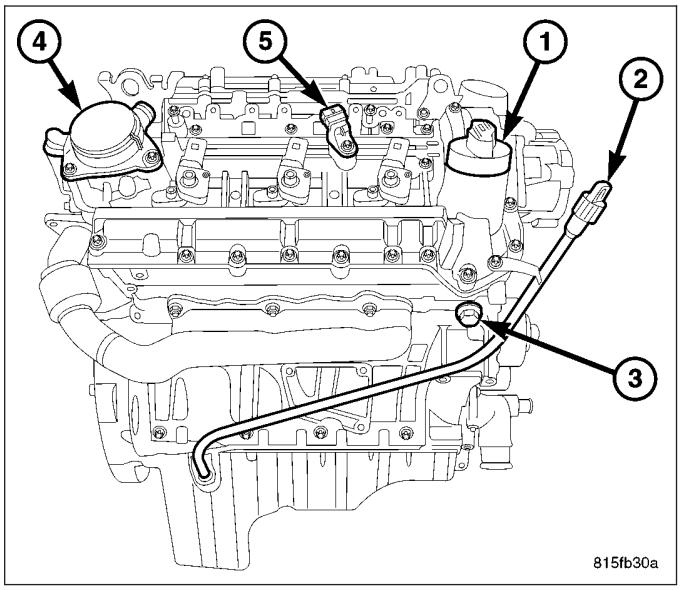

NOTE: The right exhaust camshaft gear alignment mark is located in the gear tooth valley. The left intake camshaft gear mark is located on the outside of the tooth.

9. Check the camshaft timing gears for alignment. The alignment marks should be touching and the exhaust camshaft drive gear alignment pin should be located at approximately 12 o'clock, when viewed from the front camshaft seal.
10. Rotate the engine by the vibration damper bolt, past TDC to gain access to the lower camshaft drive gear bolt, and remove the bolt.
11. Rotate the engine back to TDC and check camshaft gear alignment.

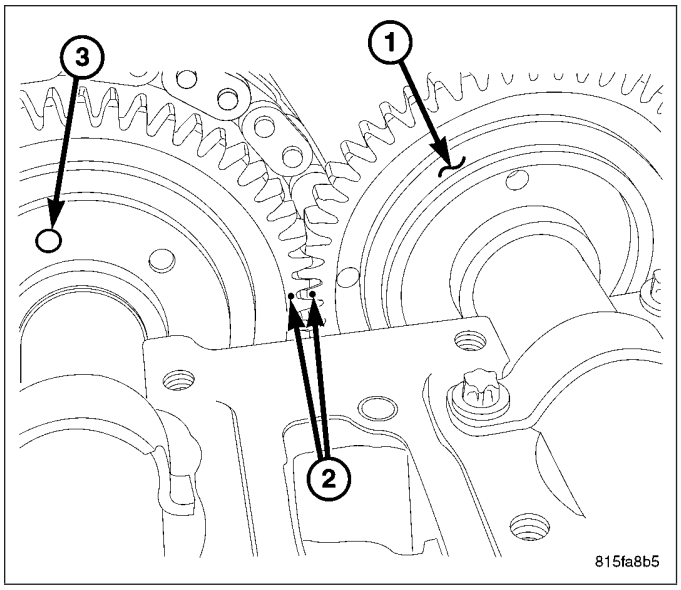

12. Remove the timing chain tensioner (3).

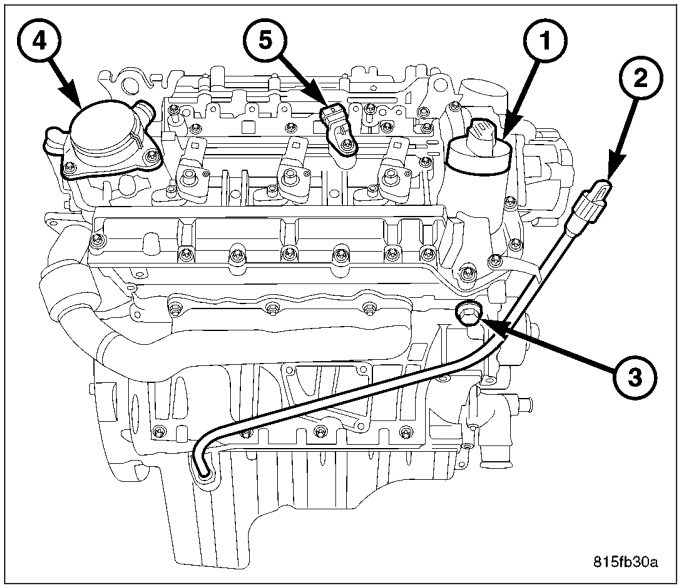

13. Paint mark or scribe the timing chain to drive gear relation.
14. Tie strap the timing chain to drive gear.
15. Remove the remaining camshaft drive gear bolts and separate the drive gear from camshaft gear.
16. Remove the intake and exhaust camshaft retainers.
17. Remove the left cylinder head camshafts.

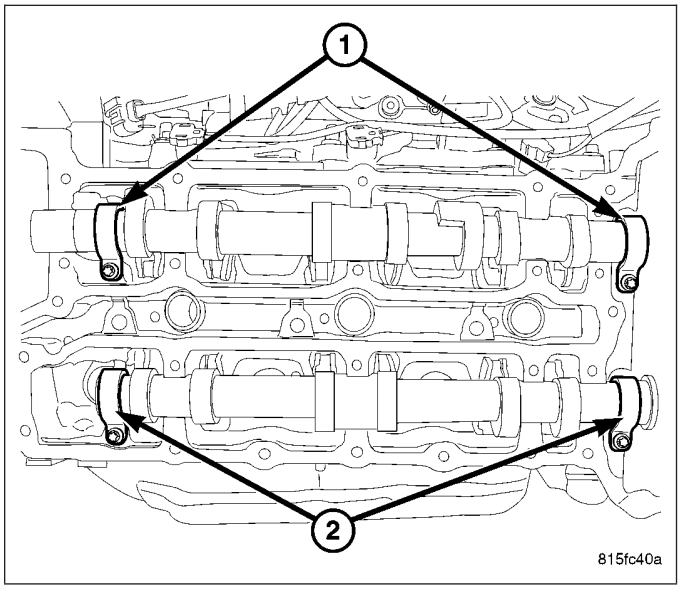

INSTALLATION

LEFT

1. Clean all mating surfaces.
2. Lubricate camshafts with Mopar® Engine Oil Supplement, or equivalent.
3. Carefully install camshafts onto cylinder head journals and align the camshaft gear timing marks.
4. Install the camshaft retainers and tighten each retaining bolt to 9 N·m (80 in. lbs.).
5. After camshafts are properly installed in cylinder head cover check end play of camshafts with a dial indicator.

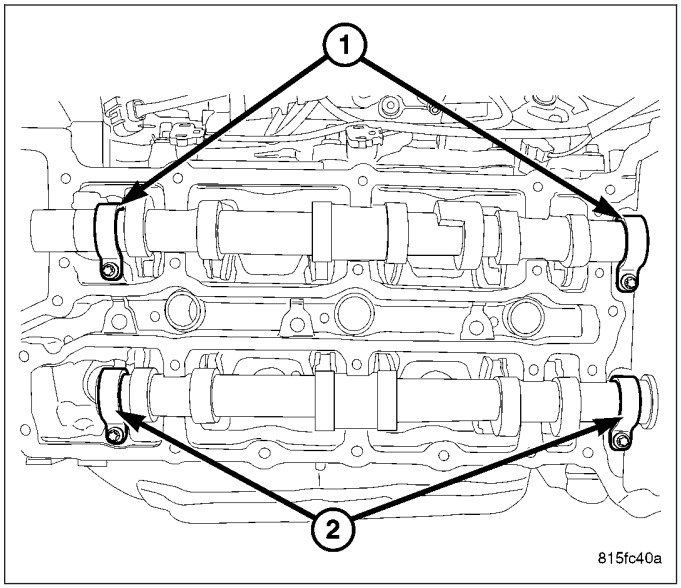

CHECKING CAMSHAFT ENDPLAY

•

NOTE: If the camshaft endplay is not within specification, replace the cylinder head cover.

NOTE: The left exhaust camshaft gear alignment mark is located in the gear tooth valley. The left intake camshaft gear mark is located on the outside of the tooth. The alignment marks should be touching and the exhaust camshaft drive gear alignment pin should be located at approximately 12 o'clock, when viewed from the front camshaft seal.

6. Assure the proper positioning of the camshaft gear alignment marks and install the camshaft driven gear onto the exhaust camshaft alignment dowel.
7. Install two of the drive gear bolts. Tighten the bolts to 18 N·m (13 ft. lbs.).
8. Assure proper positioning of the timing chain to drive gear paint or scribe marks and remove the tie strap.
9. Rotate the engine by the vibration damper bolt enough to install the third camshaft drive gear bolt. Tighten the bolt to 18 N·m (13 ft. lbs.).
10. Rotate the engine back to TDC and check camshaft gear alignment.

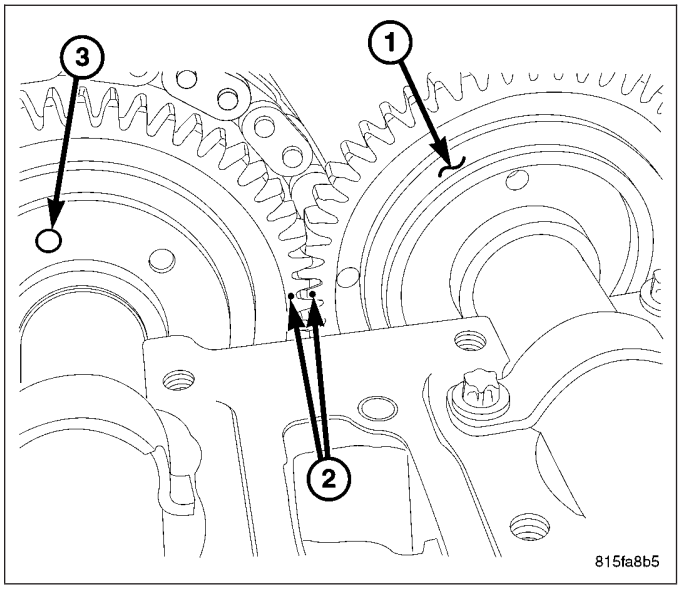

11. Install the timing chain tensioner.

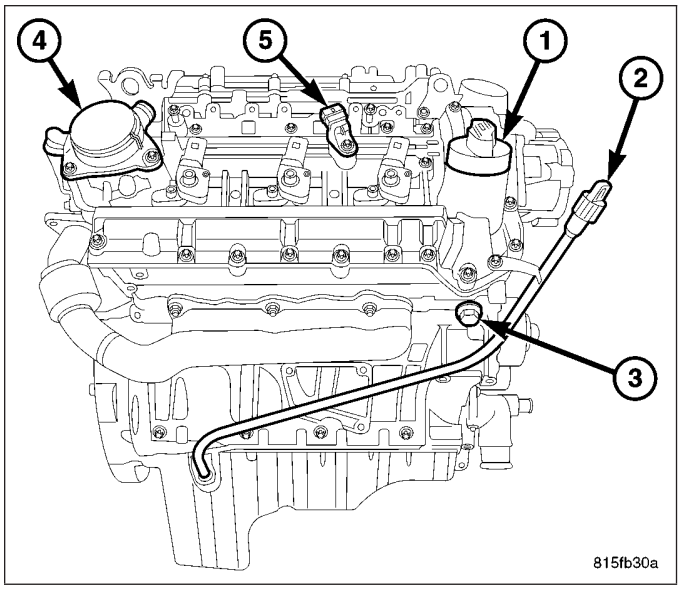

12. Install the camshaft seals into the cylinder head.
13. Install the cylinder head cover. Torque the cylinder head cover bolts in the sequence shown. Torque in three stages: 4 N·m (35 in. lbs.). then 6 N·m (53 in. lbs.) then 8 N·m (70 in. lbs.).

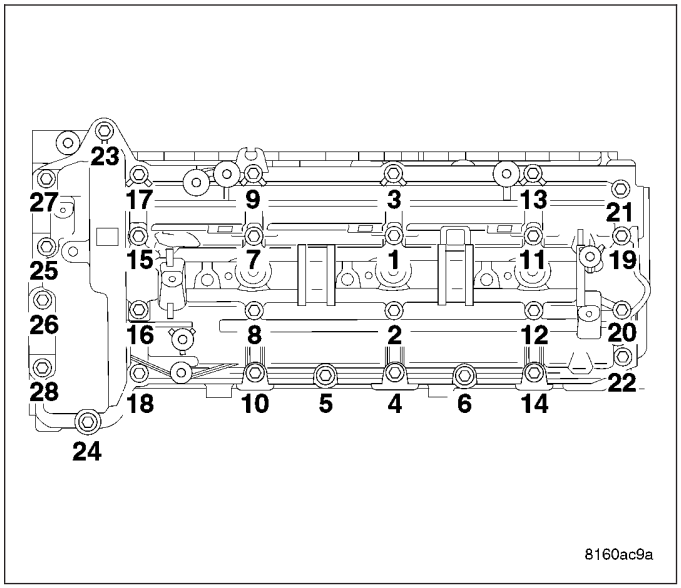

14. Install the oil filter housing bracket. Tighten bolts to 9 N·m (80 in. lbs.).
15. Install the fuel pipe bundle. Tighten bolts to 11 N·m (97 in. lbs.).
16. Connect the fuel line hoses at the high pressure pump and fuel rail. Secure the hose clamps with 9539 Pliers.
17. Connect the fuel lines at the left cylinder head.
18. Install the EGR valve.
19. Position and secure the main engine wiring harness. Tighten bolts to 11 N·m (97 in. lbs.).
20. Install the charge air inlet tube. Tighten bolts to 11 N·m (97 in. lbs.).

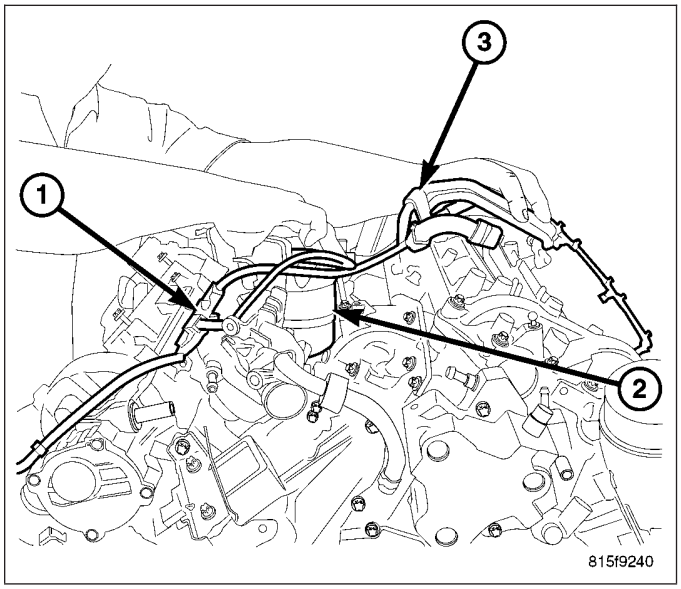

21. Install the engine cover.
22. Connect negative battery cable.
23. Start engine, allow to warm, turn engine off and inspect for leaks (Refer to 14 - FUEL SYSTEM - WARNING).

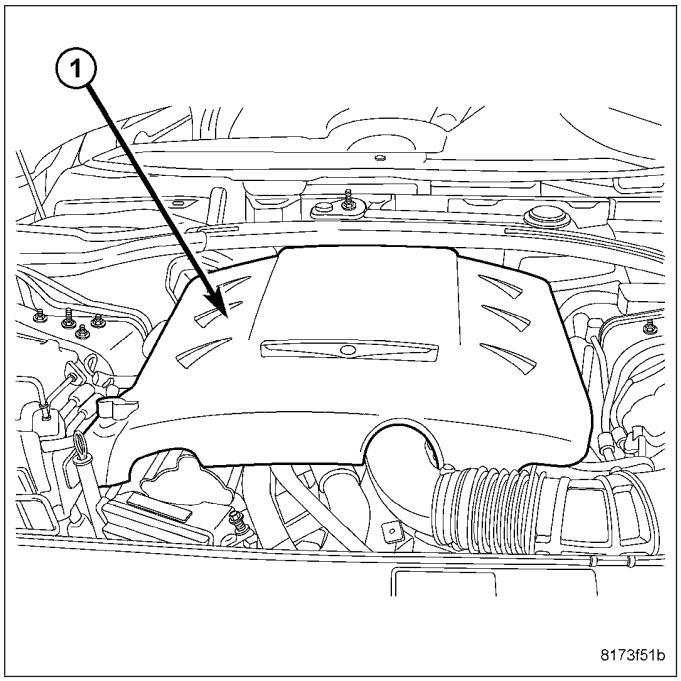

RIGHT

1. Clean all mating surfaces.
2. Lubricate camshafts with Mopar® Engine Oil Supplement, or equivalent.
3. Carefully install camshafts onto cylinder head journals and align the camshaft gear timing marks.

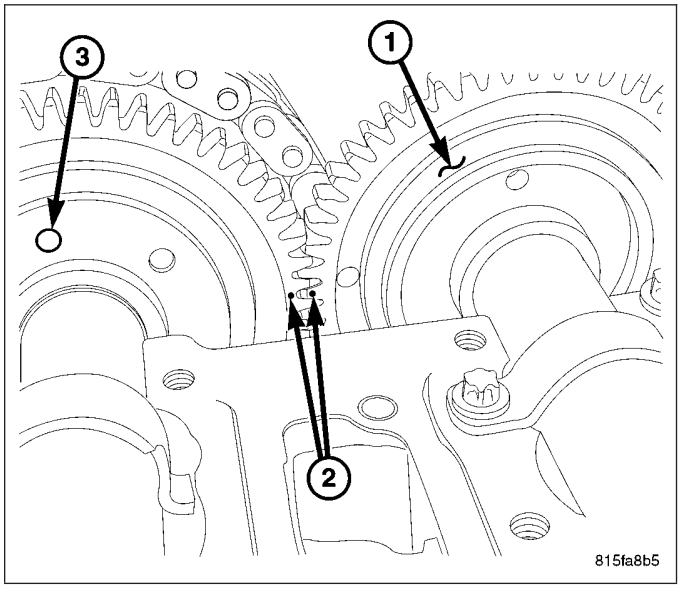

4. Install the camshaft retainers and tighten each retaining bolt to 9 N·m (7 in. lbs.).

NOTE: The right exhaust camshaft gear alignment mark is located in the gear tooth valley. The right intake camshaft gear mark is located on the outside of the tooth. The alignment marks should be touching and the exhaust camshaft drive gear alignment pin should be located at approximately 12 o'clock, when viewed from the front camshaft seal.

5. Assure the proper positioning of the camshaft gear alignment marks and install the camshaft driven gear onto the exhaust camshaft alignment dowel.

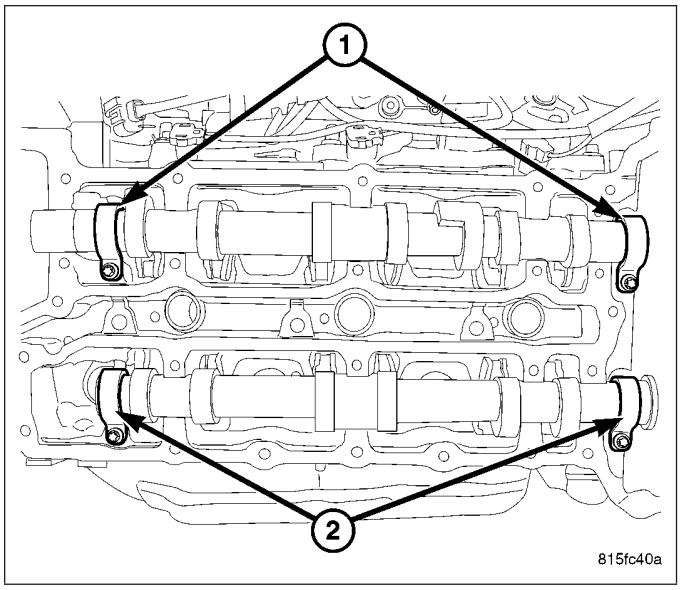

6. Install two of the drive gear bolts. Tighten the bolts to 18 N·m (13 ft. lbs.).
7. Assure proper positioning of the timing chain to drive gear paint or scribe marks and remove the tie strap.
8. Rotate the engine by the vibration damper bolt enough to install the third camshaft drive gear bolt. Tighten the bolt to 18 N·m (13 ft. lbs.).
9. Rotate the engine back to TDC and check camshaft gear alignment.

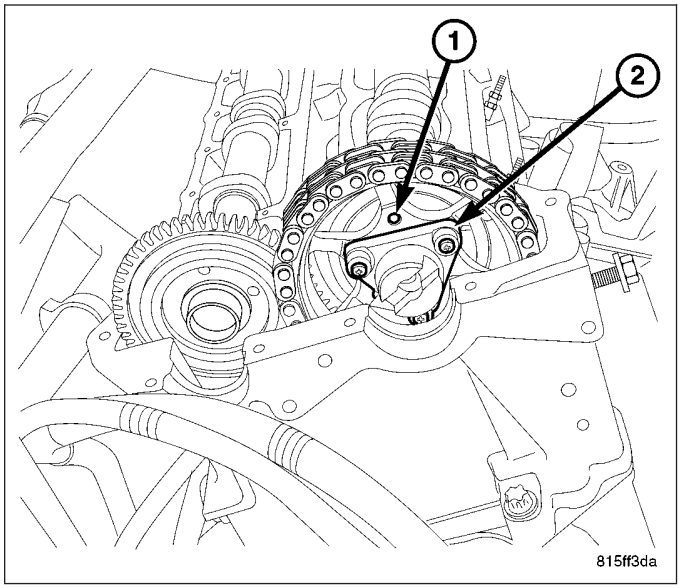

10. Install the timing chain tensioner (3).
11. Install the camshaft seals into the cylinder head.
12. Install the cylinder head cover. (Refer to 9 - ENGINE/CYLINDER HEAD/CYLINDER HEAD COVER(S) - INSTALLATION)

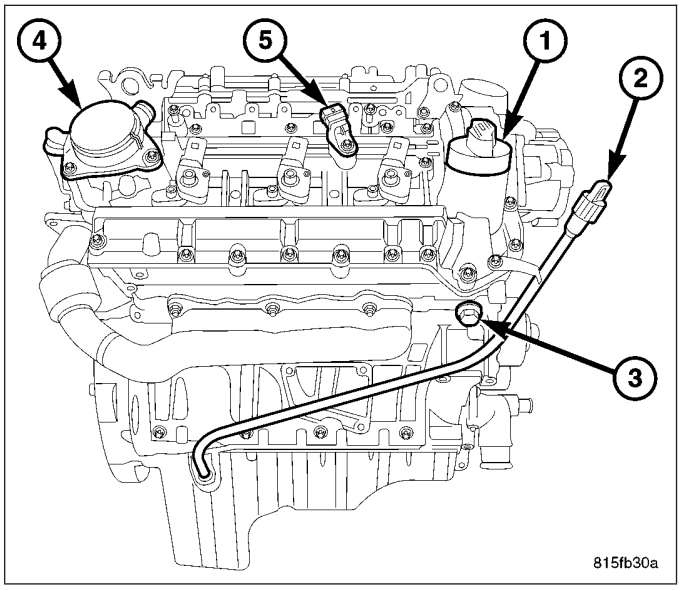

13. Install the engine cover.
14. Connect negative battery cable. (Refer to 8 - ELECTRICAL/BATTERY SYSTEM/CABLES - REMOVAL)
15. Start engine, allow to warm, turn engine off and inspect for leaks (Refer to 14 - FUEL SYSTEM - WARNING).

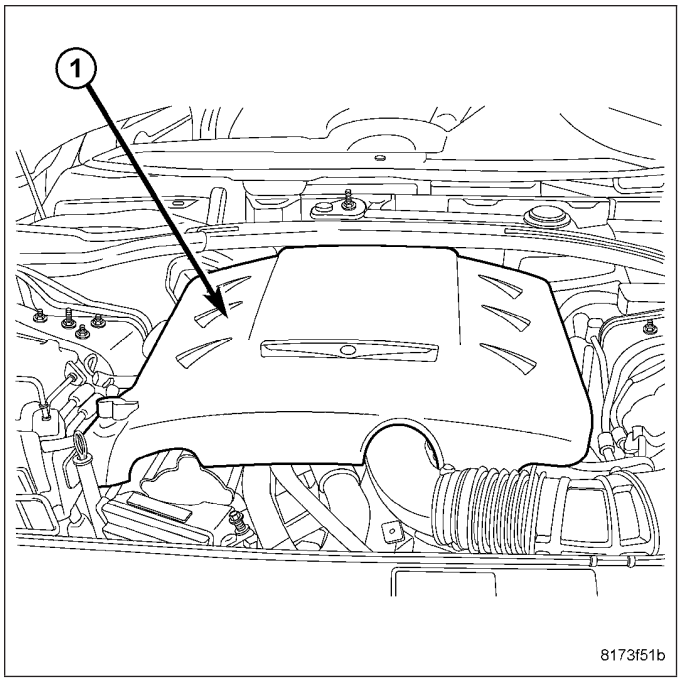

CYLINDER HEAD COVER

DESCRIPTION

The 3.0L cylinder head covers are made of cast aluminum and incorporate a oil drain back hole for the crankcase ventilation (CCV) system. The covers serve as engine noise inhibitors and are specifically designed to act as camshaft main caps and thrust washers. Care must be taken when sealing the cover as too much sealant, or sealant installed improperly may effect camshaft main cap clearances.

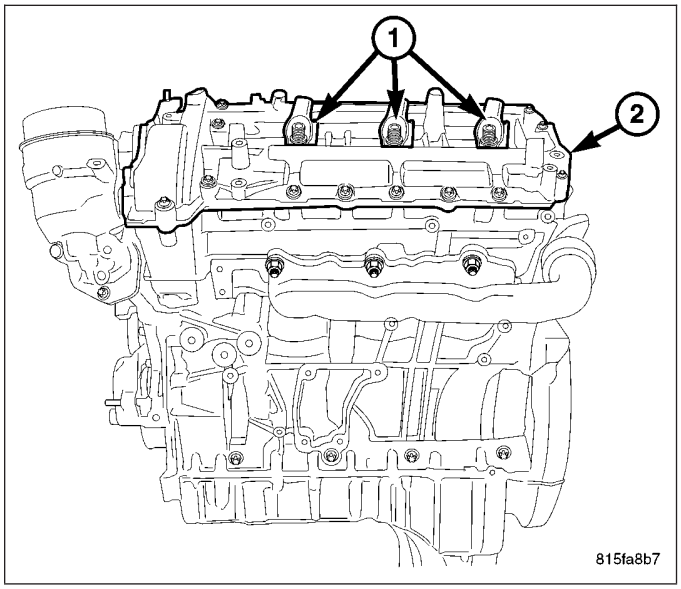

REMOVAL

LEFT

1. Disconnect negative battery cable. (Refer to 8 - ELECTRICAL/BATTERY SYSTEM/CABLES - REMOVAL)
2. Remove engine cover and bracket.

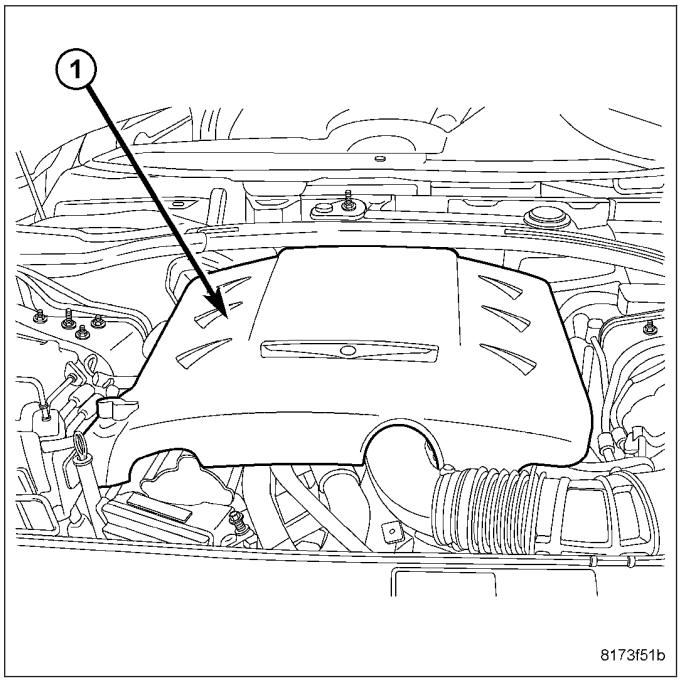

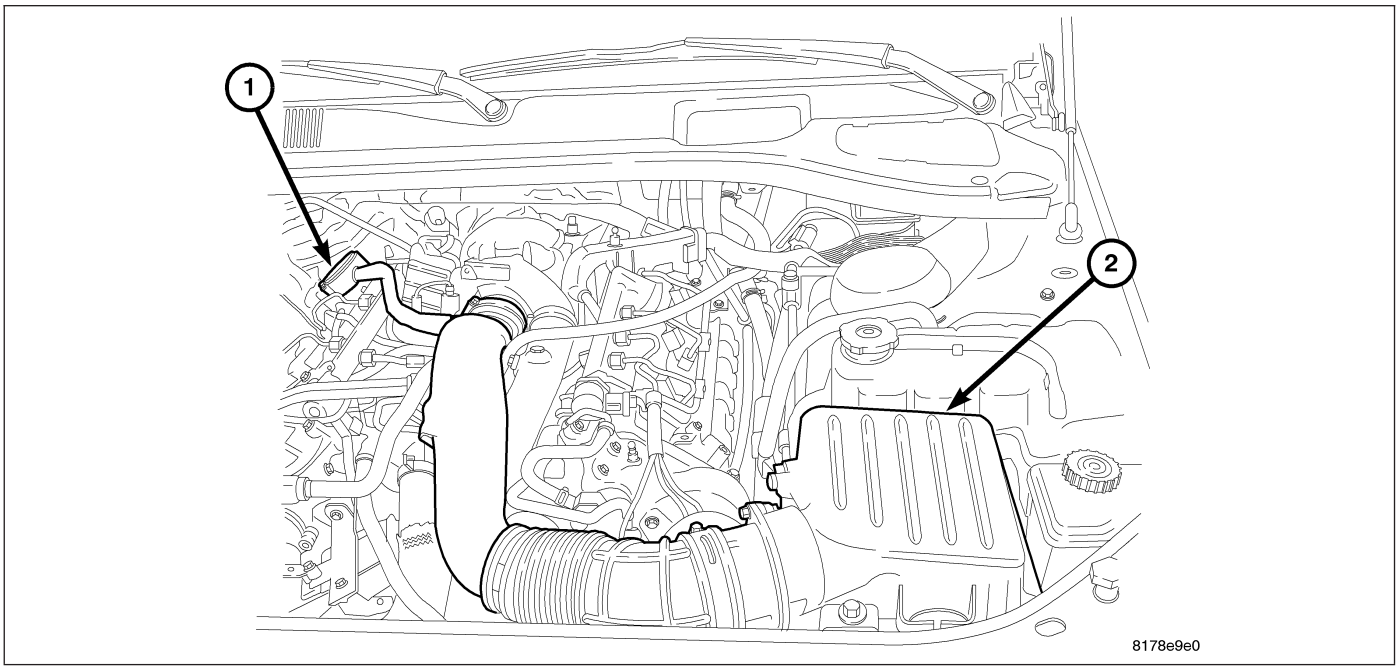

3. Remove air cleaner cover and inlet tube to turbocharger.
4. Remove the high pressure line from the fuel pump and the fuel rail.
5. Remove the bracket from the oil filter housing.
6. Disconnect the fuel temperature sensor connector.
7. Disconnect the fuel quantity solenoid connector.
8. Remove the wiring harness retaining bolts and position the engine harness aside.
9. Remove the bolts from the intercooler air chamber.
10. Remove the turbo outlet to intercooler inlet air tube.

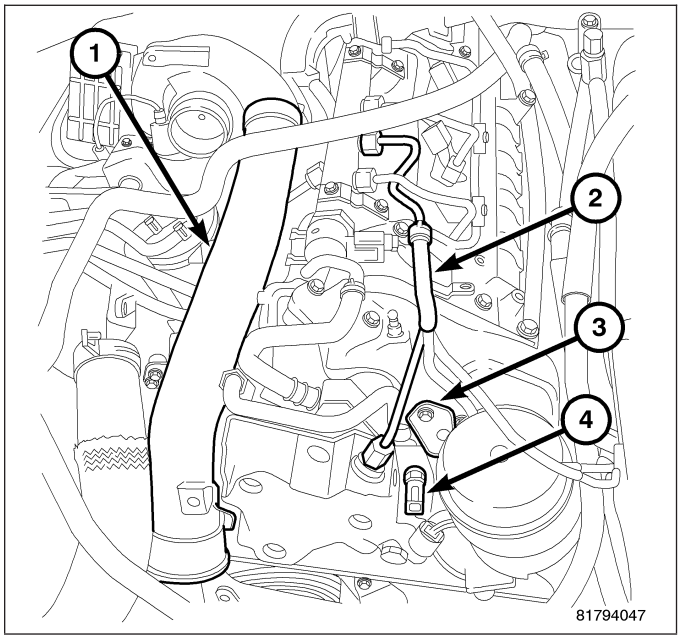

11. Remove the power brake booster vacuum line from the vacuum pump and position aside.
12. Disconnect the power feed line from the alternator and position aside.
13. Remove the supply and return fuel lines.

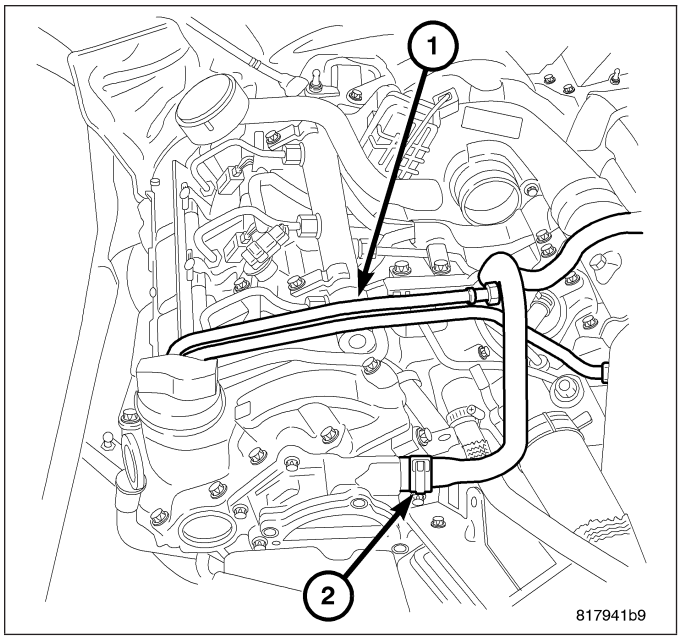

14. Disconnect the EGR solenoid connector.
15. Remove the EGR valve.
16. Disconnect the fuel injector electrical connectors.
17. Remove the fuel injector wiring harness from the cylinder head cover and position aside.
18. Remove the left cylinder head fuel return line.
19. Remove the high pressure fuel lines from the fuel injectors.
20. Remove the fuel injectors.

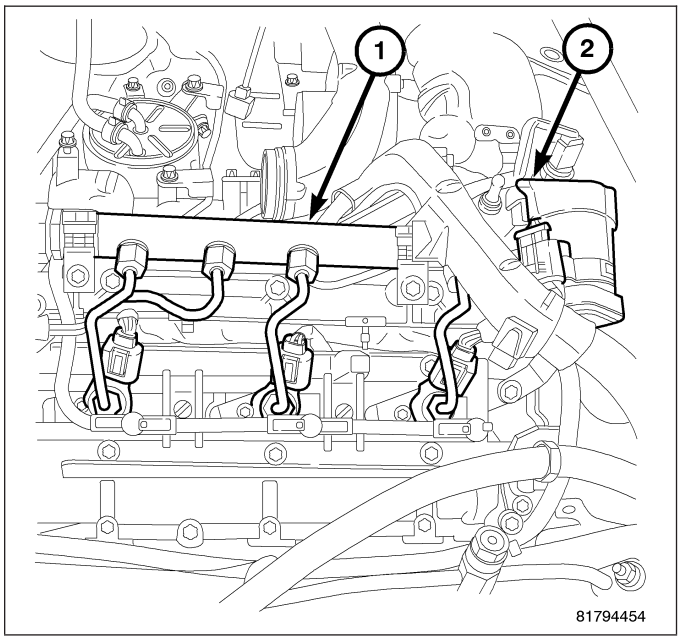

CAUTION: Care must be taken when removing the cylinder head cover. The cover is the camshaft retainer and end play interface. Do not pry on the cylinder head cover tabs.

NOTE: Note the different length cylinder head cover bolts and their position for assembly purposes.

21. Remove the cylinder head cover (2) fasteners and cover.

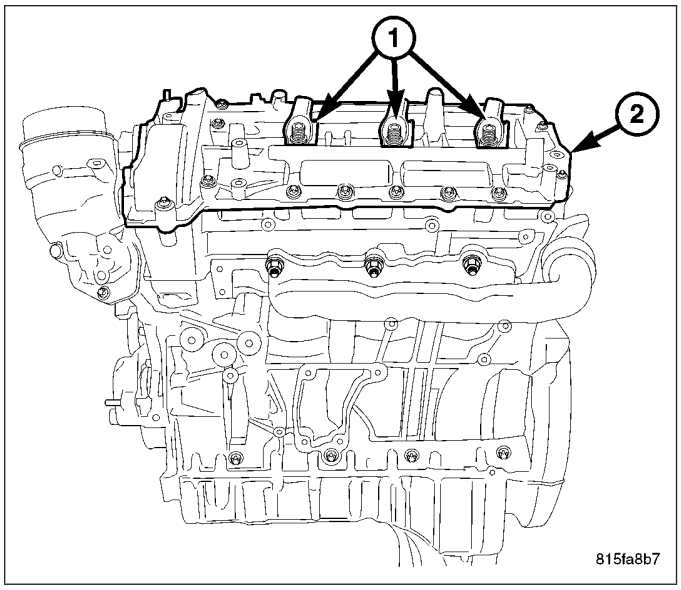

RIGHT

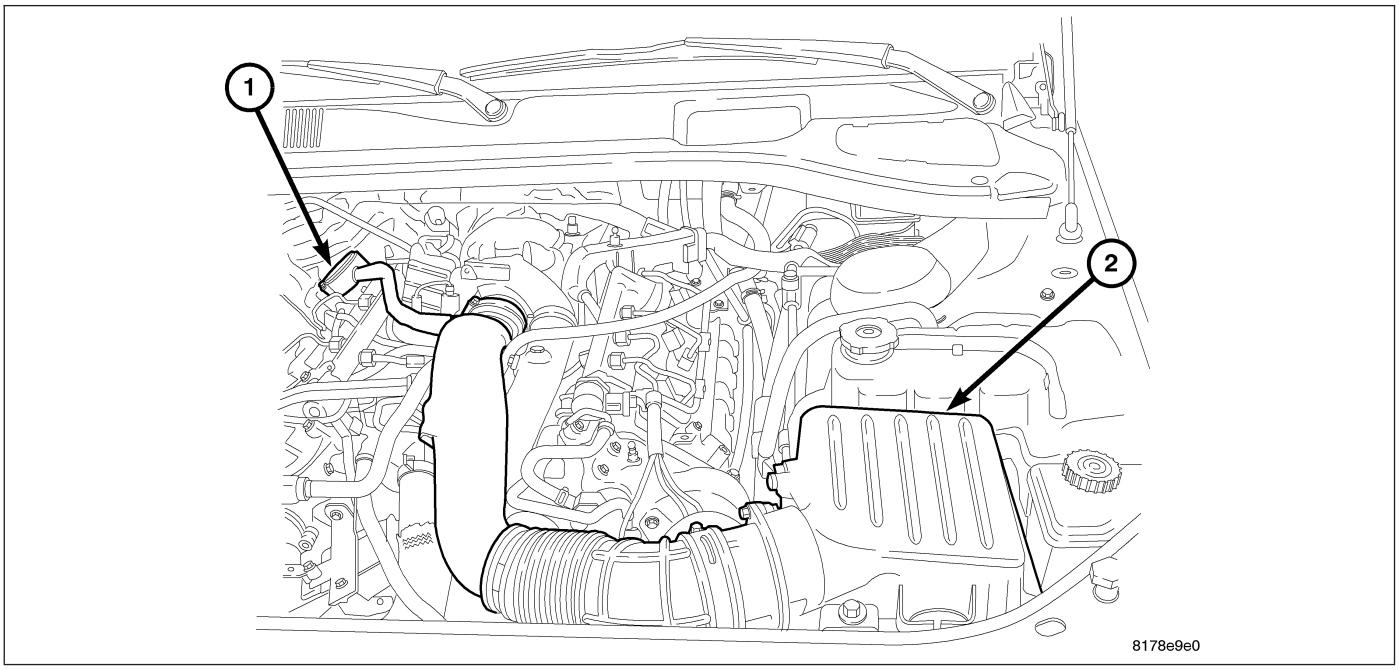

1. Disconnect negative battery cable. (Refer to 8 - ELECTRICAL/BATTERY SYSTEM/CABLES - REMOVAL)
2. Remove engine cover and bracket.
3. Remove air cleaner cover and inlet tube to turbocharger.

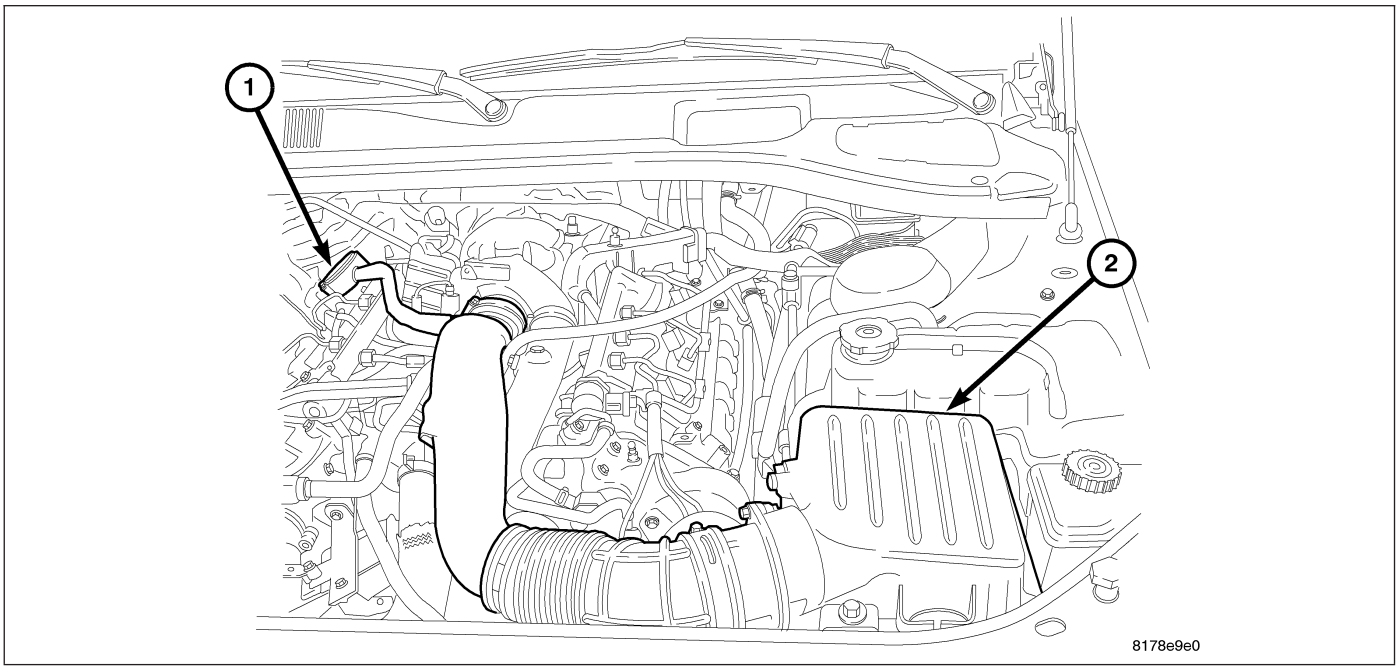

4. Remove the wiring harness retaining bolts and position the engine harness aside.
5. Remove the bolts from the intercooler air chamber.
6. Remove the turbo outlet to intercooler inlet air tube (1).
7. Remove the power brake booster vacuum line from the vacuum pump and position aside.

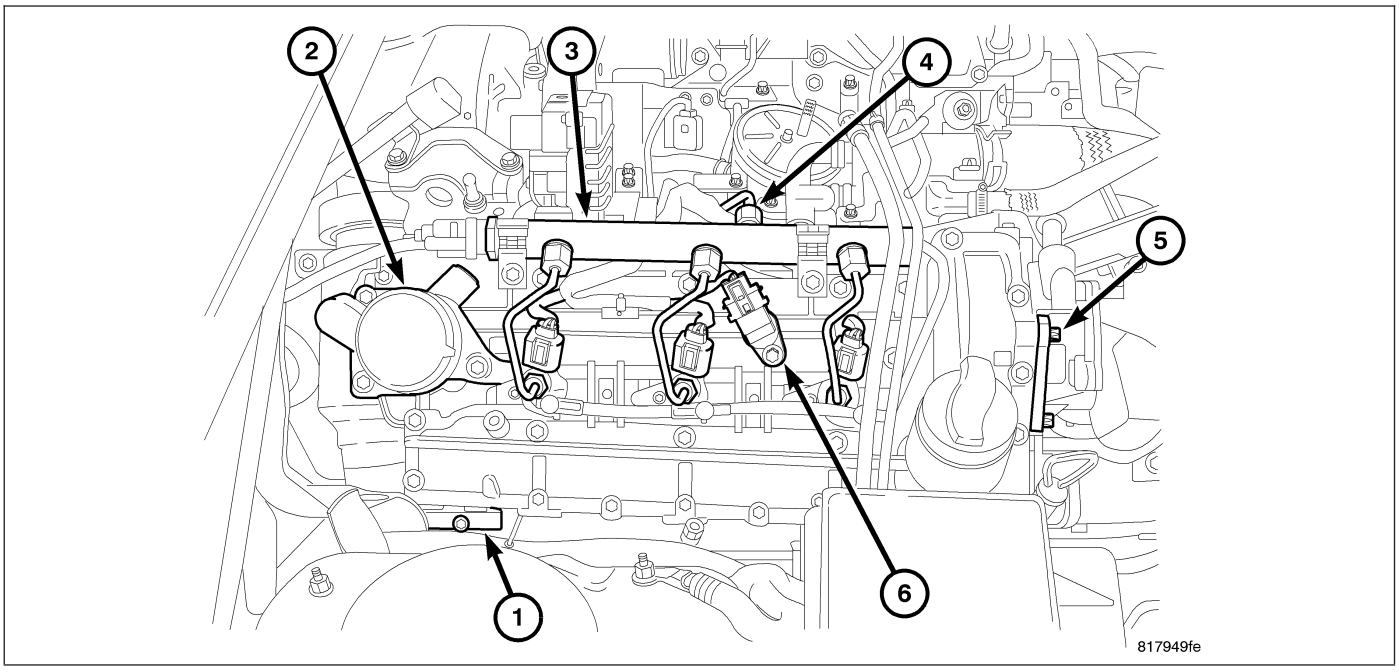

8. Remove the top two bolts (5) from the vacuum pump.
9. Remove the PCV (2).
10. Remove the exhaust system bracket (1) from the right cylinder head.
11. Remove the bolt from the oil level indicator tube and position aside.
12. Disconnect the power feed line from the alternator and position aside.
13. Remove the high pressure line (4) from the right fuel rail.
14. Remove the supply and return fuel lines.
15. Disconnect the camshaft position sensor (CMP).
16. Remove the CMP (6).

17. Disconnect the fuel injector electrical connectors.
18. Remove the fuel injector wiring harness from the cylinder head cover and position aside.
19. Remove the left cylinder head fuel return line.
20. Remove the high pressure fuel lines from the fuel injectors.
21. Remove the fuel injectors.

CAUTION: Care must be taken when removing the cylinder head cover. The cover is the camshaft retainer and end play interface. Do not pry on the cylinder head cover tabs.

NOTE: Note the different length cylinder head cover bolts and their position for assembly purposes.

22. Remove the cylinder head cover fasteners and cover.

INSTALLATION

LEFT

1. Clean and inspect all sealing surfaces.

NOTE: Care must be taken not to get any engine sealant on the camshaft journals of the cylinder head cover.

2. Install a 1/8 in bead of Mopar Engine RTV Gen II sealant to the underside of the cylinder head cover (Refer to 9 - ENGINE - STANDARD PROCEDURE).

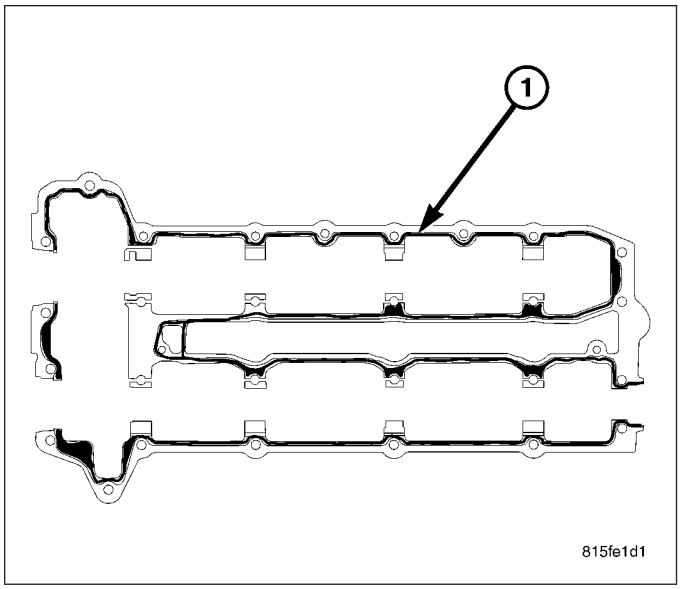

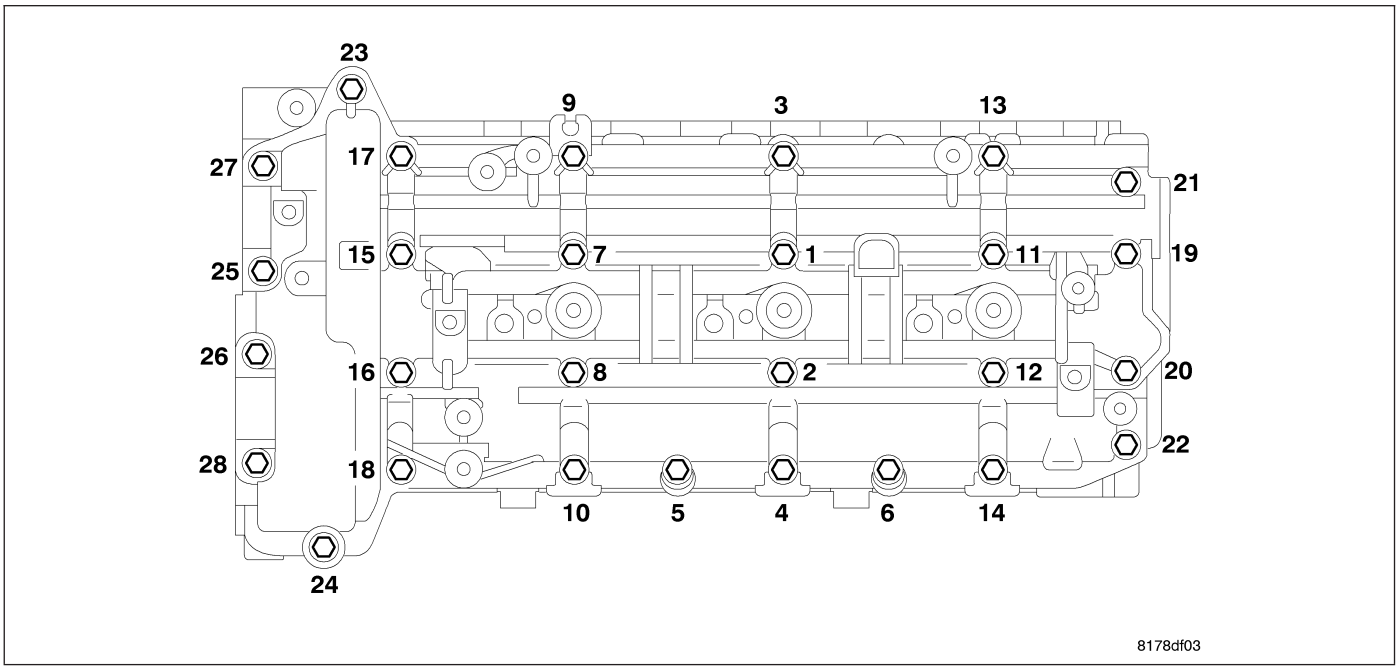

3. Carefully position the cylinder head cover and install the bolts into their original position.

CAUTION: The cylinder head cover bolts are different lengths. Do not use the wrong length bolts or engine damage may result.

4. Tighten cylinder head cover bolts in sequence, first to 4 N·m (35 in. lbs.), and then repeat the sequence to 8.4 N·m (75 in. lbs).
5. Install the EGR valve.

CAUTION: The fuel injector sealing washers MUST be replaced. DO NOT use the old sealing washers or double the sealing washers.

NOTE: Care must be taken not to apply any lubricant to the fuel injector nozzles.

6. Install the fuel injectors. Tighten the injector retaining claw bolt to 7 N·m (5 ft. lbs.) and then an additional 180°.
7. Re-position and secure the engine harness.
8. Install the left fuel rail. Tighten the fuel rail bolts to 11 N·m (8 in. lbs.).
9. Position the return fuel lines and secure to the injectors. Push down on the release lock tab to secure.
10. Connect the fuel injector electrical connectors.
11. Install the left rear engine cover bracket.

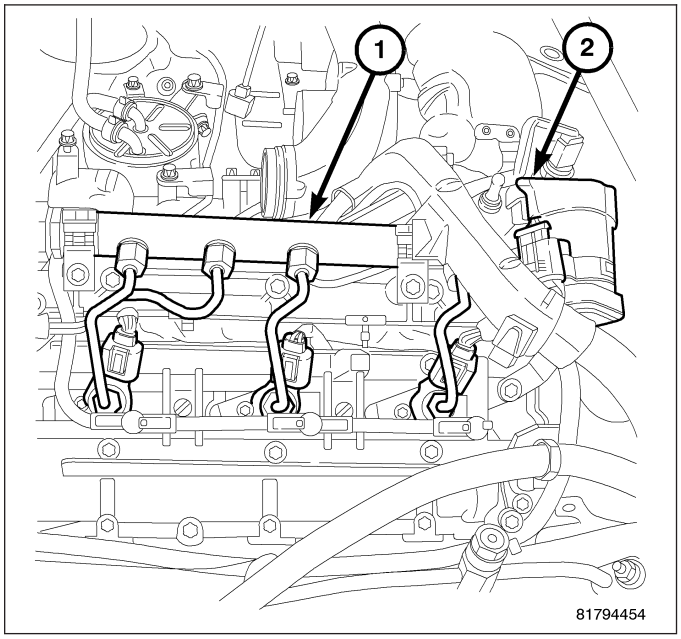

12. Install the high pressure fuel lines from the fuel rail to injectors. Tighten the line connections to 27 N·m (20 ft. lbs.).
13. Install the fuel line from the high pressure pump to the left fuel rail. Tighten the retaining bolt to 30 N·m (22 ft. lbs.).
14. Install the fuel supply line to the fuel filter and high pressure pump.
15. Connect both fuel lines at the high pressure pump.

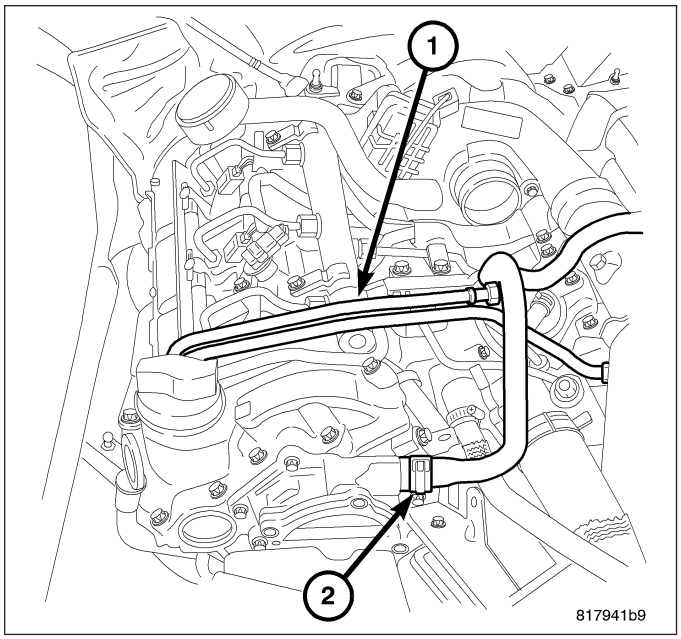

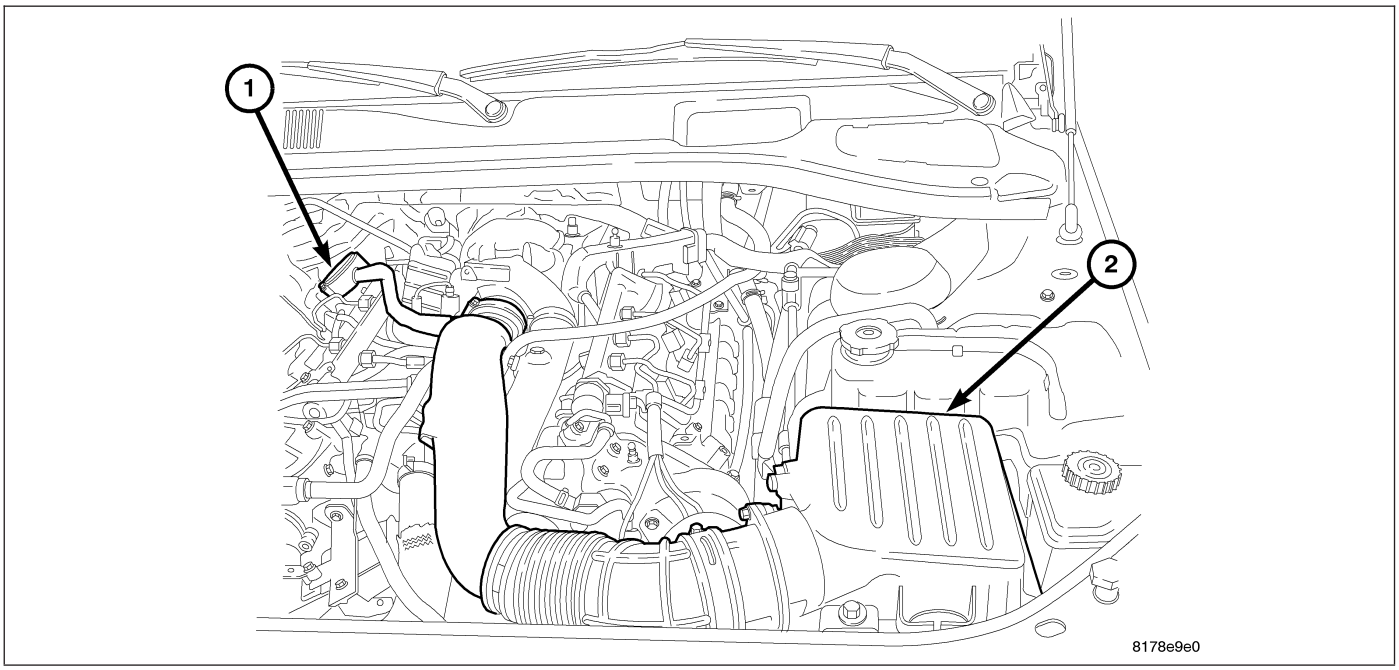

16. Install the air filter housing and tube.
17. Connect the negative battery cable.
18. Start the engine, run until warm, turn engine off and inspect for leaks (Refer to 14 - FUEL SYSTEM - WARNING).

RIGHT

1. Clean and inspect all sealing surfaces.

NOTE: Care must be taken not to get any engine sealant on the camshaft journals of the cylinder head cover.

2. Install a 1/8 in bead of Mopar Engine RTV Gen II sealant to the underside of the cylinder head cover (Refer to 9 - ENGINE - STANDARD PROCEDURE).

CAUTION: The cylinder head cover bolts are different lengths. Make sure to install the bolts into their original position.

3. Carefully position the cylinder head cover and install the bolts into their original position.
4. Tighten cylinder head cover bolts in sequence, first to 4 N·m (35 in. lbs.), and then repeat the sequence to 8.4 N·m (75 in. lbs).

CAUTION: Make sure to replace the lower copper washer seal on the injector. DO NOT re-use the old seal, DO NOT double the seals.

5. Install the fuel injectors. Tighten the retaining claw bolts to 7 N·m (5 ft. lbs.) and then an additional 180°.
6. Install the CCV housing. Tighten the fasteners to 9 N·m (80 in. lbs.).

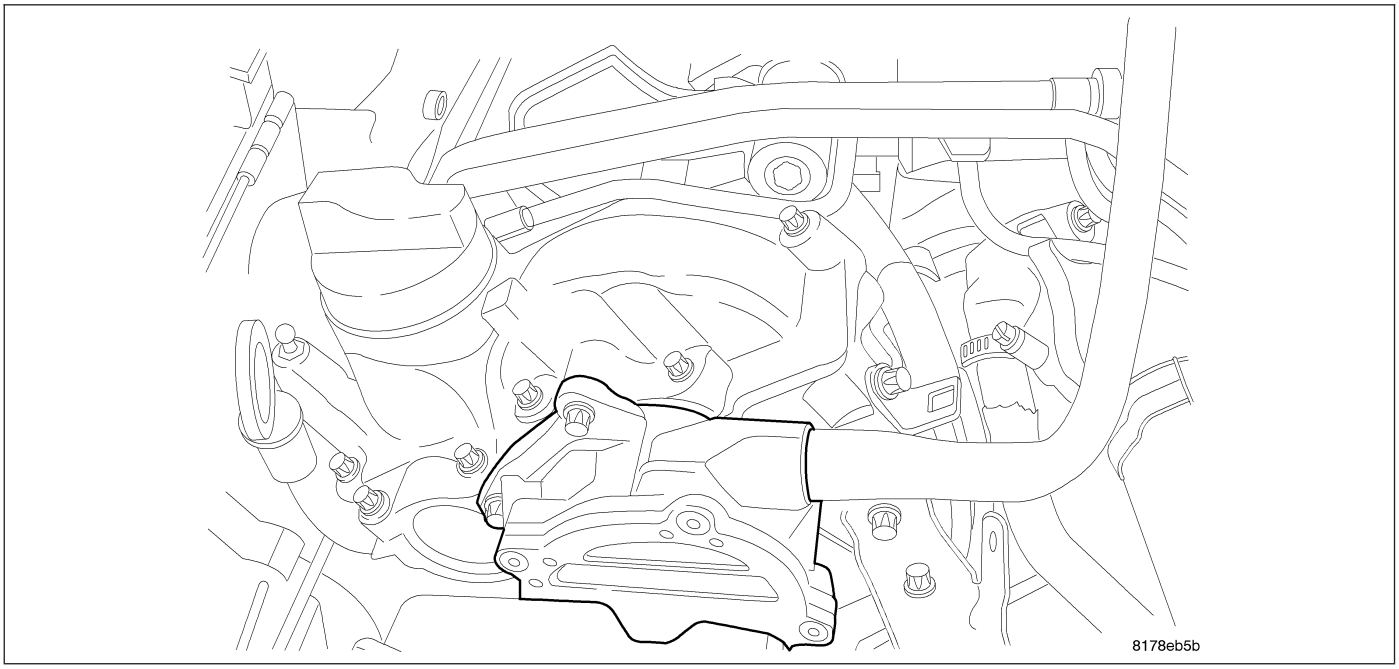

7. Install the vacuum pump. Tighten the fasteners to 9 N·m (80 in. lbs.).
8. Install the EGR air control valve resonator. Tighten the fasteners to 9 N·m (80 in. lbs.).
9. Install the oil level indicator tube fastener. Tighten the bolt to 11 N·m (97 in. lbs.).
10. Install the AC / heater hose bracket. Tighten the bolts to 9 N·m (80 in. lbs.).
11. Install the fuel rail. Tighten bolts to 9 N·m (80 ft. lbs.).

NOTE: Inspect all fuel lines for damage or wear. Replace as necessary. DO NOT over tighten the fuel line nuts.

12. Install the fuel injector high pressure lines. Tighten line nuts to 33 N·m (24 ft. lbs.).
13. Position the engine wiring harness and connect the CMP, fuel rail pressure sensor and fuel injectors.
14. Connect the fuel return hoses to fuel injectors, pushing down on the hose retainers.
15. Install the air cleaner cover and inlet tube.
16. Install the rear engine cover bracket.
17. Connect the CCV hose to air inlet tube and connect the CCV heater wiring harness connector.
18. Install the engine cover.
19. Install the strut tower support.
20. Install the coolant reservoir.
21. Connect the negative battery cable.
22. Start engine, allow to warm, turn engine off and inspect for leaks (Refer to 14 - FUEL SYSTEM - WARNING).

ROCKER ARMS

DESCRIPTION

The rocker arms (1) are located on the top of the hydraulic lifters (2) and the valves. The rocker arms are not held rigidly into position; instead they are held in position by resting on top of the valve and the hydraulic lifter pivoting ball. A holding clip (3) secures the rocker arm to the hydraulic lifter.

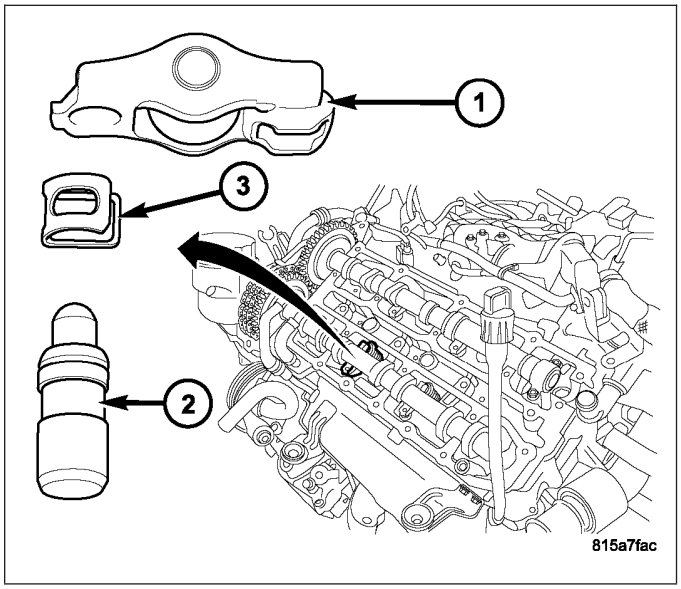

OPERATION

The rocker arms are used as a link between the camshaft and valves. As the camshaft rotates, the lobes of the camshafts apply downward pressure on the rocker arms. This pressure is then transmitted to the valves which causes the valves to open.

REMOVAL

1. Remove the appropriate camshafts. (Refer to 9 - ENGINE/CYLINDER HEAD/CAMSHAFT(S) - LEFT - REMOVAL) or (Refer to 9 - ENGINE/CYLINDER HEAD/CAMSHAFT(S) - RIGHT - REMOVAL).
2. Remove the rocker arm (1) and lifter (2) assembly.

NOTE: When the hydraulic lifters are removed from the engine, they must be stored upright and in clean conditions.

3. Separate the rocker arm from the lifter.

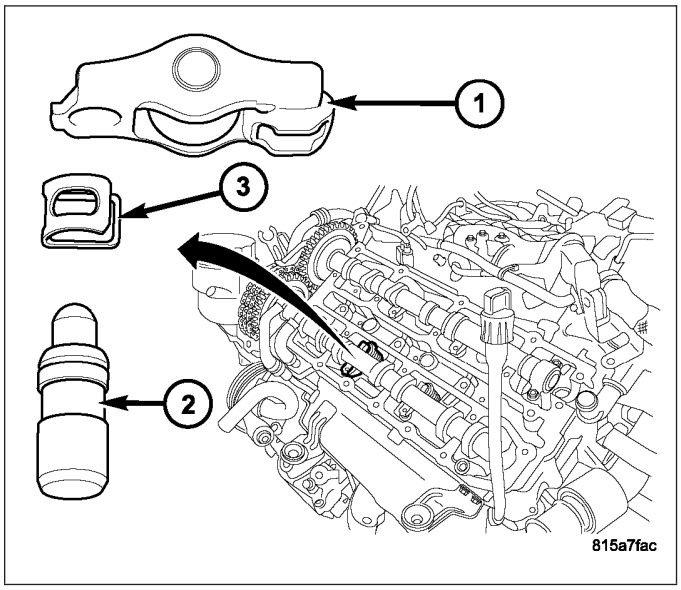

INSTALLATION

1. Assemble the rocker arm (1) to the hydraulic lifter (2) with the retaining clip (3).
2. Install the rocker arm and lifter assembly onto the cylinder head.
3. Install the camshaft(s). (Refer to 9 - ENGINE/CYLINDER HEAD/CAMSHAFT(S) - LEFT - INSTALLATION) or (Refer to 9 - ENGINE/CYLINDER HEAD/CAMSHAFT(S) - RIGHT - INSTALLATION).

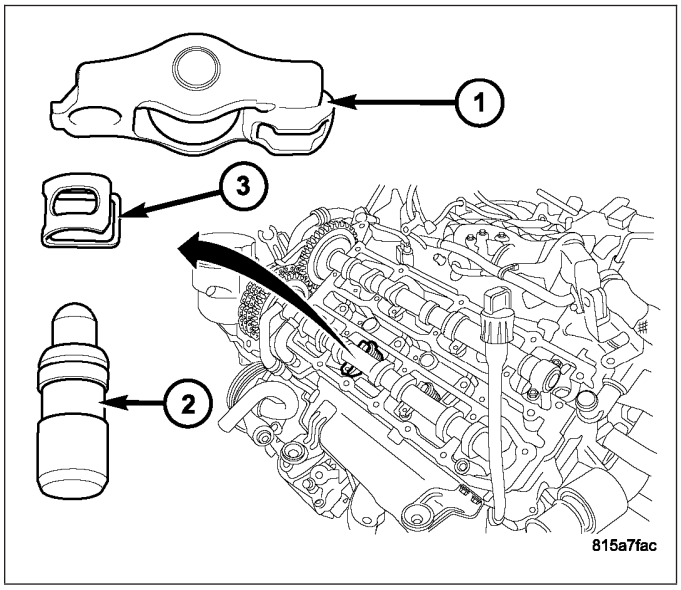

HYDRAULIC LIFTERS

DESCRIPTION

Valve lash is controlled by hydraulic lifters (2) located inside the cylinder head, in tappet bores below the camshafts.

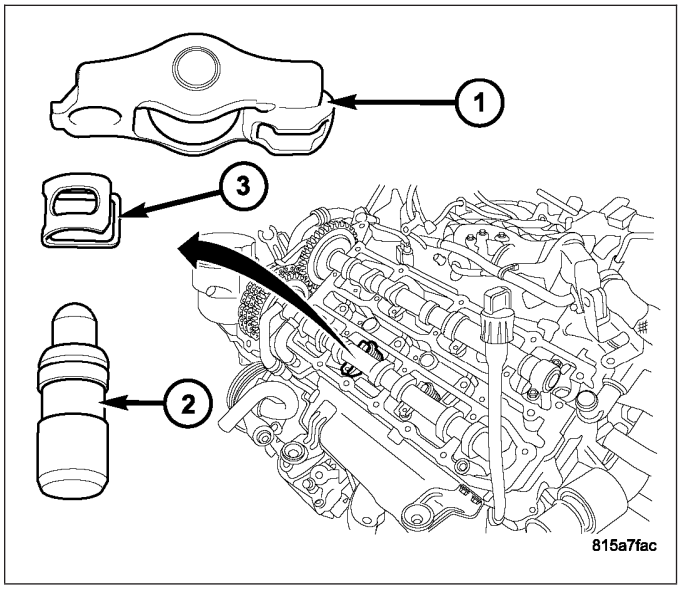

REMOVAL

1. Remove the appropriate camshafts. (Refer to 9 - ENGINE/CYLINDER HEAD/CAMSHAFT(S) - LEFT - REMOVAL) or (Refer to 9 - ENGINE/CYLINDER HEAD/CAMSHAFT(S) - RIGHT - REMOVAL).
2. Remove the rocker arm (1) and lifter (2) assembly.

NOTE: When the hydraulic lifters are removed from the engine, they must be stored upright and in clean conditions.

3. Separate the lifter from the rocker arm.

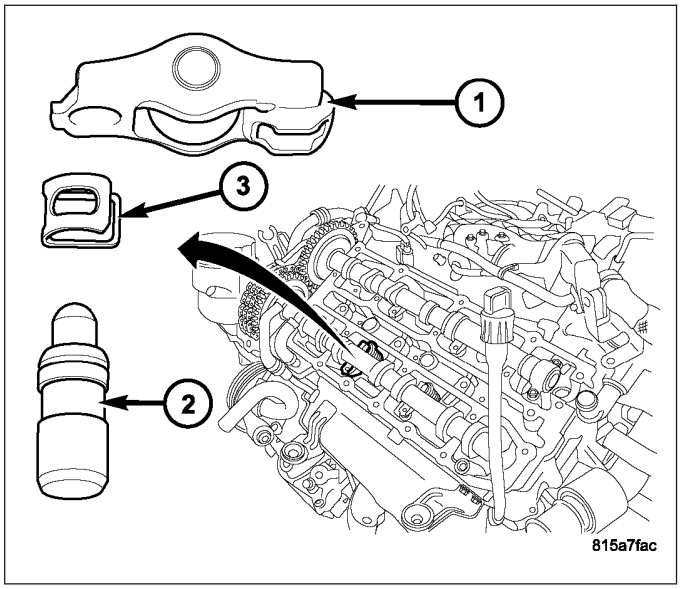

INSPECTION

Clean each lifter assembly in cleaning solvent to remove all varnish and sludge deposits. Inspect for indications of scuffing on the side and base of each lifter body.

INSTALLATION

1. Assemble the hydraulic lifter (2) to the rocker arm (1) with the retaining clip (3).
2. Install the rocker arm and lifter assembly onto the cylinder head.
3. Install the camshaft(s). (Refer to 9 - ENGINE/CYLINDER HEAD/CAMSHAFT(S) - LEFT - INSTALLATION) or (Refer to 9 - ENGINE/CYLINDER HEAD/CAMSHAFT(S) - RIGHT - INSTALLATION).

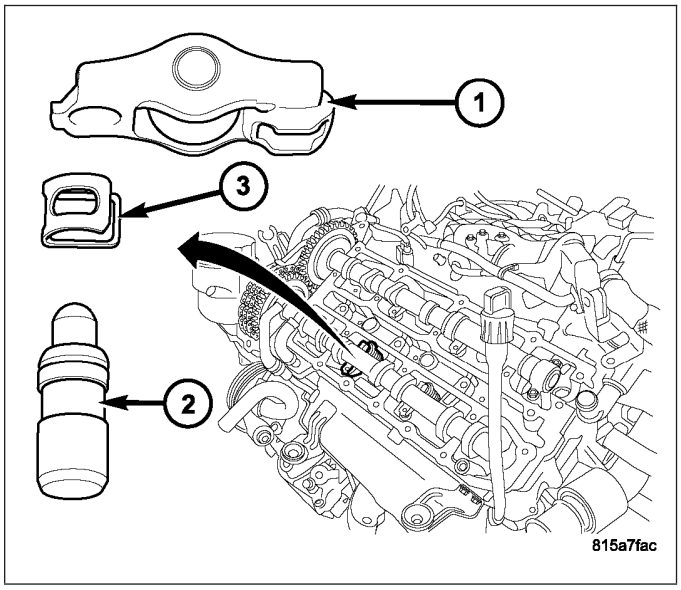

ENGINE BLOCK

DESCRIPTION

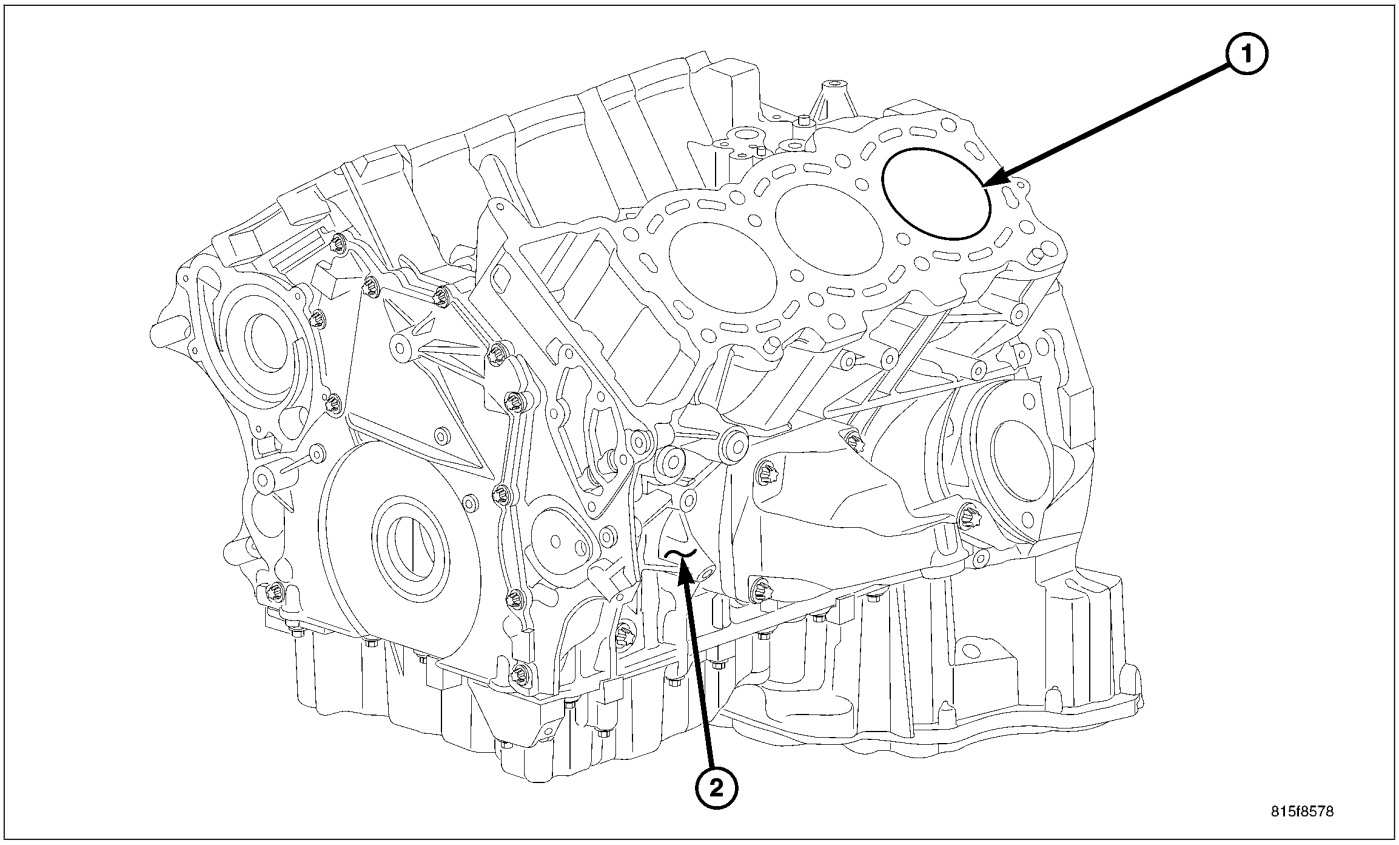

The 3.0L engine utilizes a cast aluminum cylinder block (2) molded around cast iron piston sleeves (1). The cylinder angle is 72 degrees with cylinder spacing at 106 mm (4.173 in.). The cylinder block (2) has increased rigidity that reduces structural flexing, plus a fractured connecting rod cap design that can not distort connecting rod cap fit. The liner (1) surface is honed to a cross hatch angle between 40°-60°.

There is a stamped cylinder liner grading identification number located on the left front of the engine block, below the high pressure pump location. This identification mark (A, X, or B) is used for piston selection. For example, an “X” cylinder liner can use an “A”, “X” or “B” piston. An “A” cylinder liner can only use an “A” or an “X” piston, and a “B” cylinder liner can only use a “X” or a “B” cylinder liner.

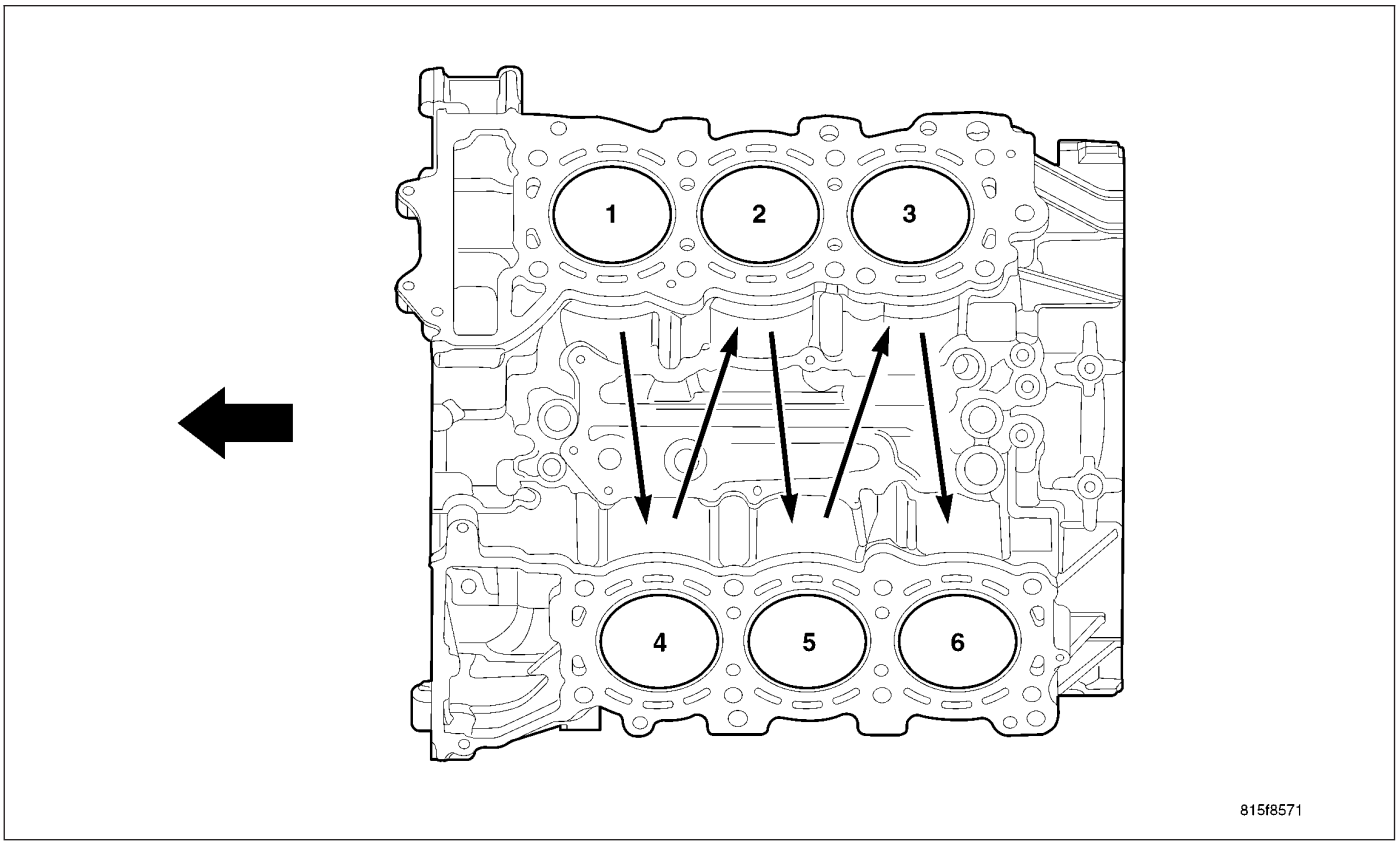

Cylinders are numbered front to back, beginning with the right bank. The right bank cylinders are numbered 1, 2, 3. The left bank cylinders 4, 5, 6. The injection order of the engine is 1–4–2–5–3–6.

CRANKSHAFT

DESCRIPTION

The crankshaft (1) for the 3.0L is a forged steel type design with four main bearing journals. The third crankshaft support controls crankshaft thrust. The bearing identification for the upper crankshaft main journals is etched into the engine block below the high pressure pump and the proper lower bearing selection can be found etched in the front of the crankshaft.

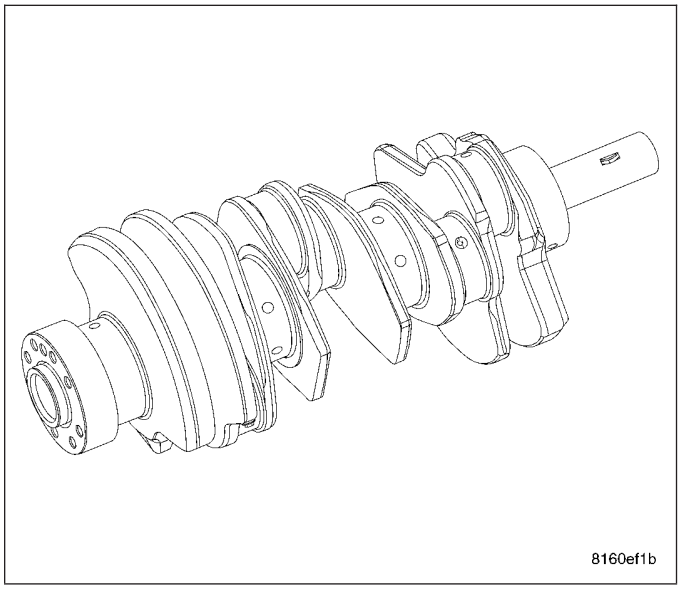

OPERATION

The crankshaft transfers force generated by combustion within the cylinder bores to the flexibility. The crankshaft has six separate throws arranged at different angles (splayed) to reduce second order free movements of inertia. Following the injection order 1-4-2-5-3-6, the crankshaft throw angles alternate between 48° and 192°.

In the injection order, together with the splayed throws and the 72° V-block, produce injection intervals of 120° (even fire). After ignition TDC of cylinder number 1, the crankshaft turns 120° to reach TDC of cylinder number 4. The 120° angle (even fire) is the result of the 48° throw angle plus the 72° cylinder block angle.

STANDARD PROCEDURE

MEASURE CRANKSHAFT AND BLOCK JOURNALS

NOTE: After any bearing damage occurred, remove all debris which is present in the main oil gallery, connecting rod bores, and in the crankshaft and oil galleries. Include removal of the inserting steel ball of the main oil gallery before cleaning.

1. Remove crankshaft.
2. Clean all engine parts thoroughly.

CAUTION: Replace all of the connecting rods when ever any of the rod cap bolts are loosened or bearing caps are removed

3. Inspect crankshaft, replace as necessary.
4. Inspect crankcase for damage.
5. Inspect crankshaft main bearing caps for damage.
6. Install the crankshaft main bearing caps and check for out of round. Replace as necessary.
7. Remove the main bearing caps and install the crankshaft with the correct selected bearings.

NOTE: Radial mounting of the main bearings of standard size crankshaft is possible by assigning the color-coded bearing shells. The upper main bearings can be identified by the four digit mark etched on the engine block below the high pressure pump. The lower main bearings can be identified by the code etched on the front of the crankshaft hub.

ASSIGNING CRANKSHAFT MAIN BEARING SHELLS

The upper main bearings can be identified by the four digit mark etched in the block below the high pressure pump. The lower main bearings can be identified by the code etched on the front of the crankshaft hub. This color code indicates which bearing shell halves are to be used.

8. Select the correct bearing shells based upon the crankcase and crankshaft identification marks.
9. Mount crankshaft axially using the thinnest thrust washer.
10. Inspect crankshaft end play. If the crankshaft end play is out of specification, remove the crankshaft and install the larger thrust shim. repeat the procedure until crankshaft end play is within specification.
11. Mount the crankshaft axially again and check each main bearing oil clearance with plasti-gauge. For bearing clearance specifications, (Refer to 9 - ENGINE - SPECIFICATIONS).

CHECKING CRANKSHAFT END PLAY

1. Mount a dial indicator to a stationary point at rear of engine. Locate the probe perpendicular against the rear of the crankshaft.
2. Move the crankshaft all the way to the front of its travel.
3. Zero the dial indicator.
4. Move the crankshaft all the way to the rear of it's travel and record the reading on the dial indicator. For crankshaft end play clearances refer to the engine specification chart (Refer to 9 - ENGINE - SPECIFICATIONS).

REMOVAL - CRANKSHAFT

NOTE: The crankshaft is removed from the rear of the engine. Make sure to use an appropriate engine stand.

1. Remove engine from vehicle (Refer to 9 - ENGINE - REMOVAL).
2. Mount engine on an engine stand.
3. Drain engine oil and remove oil filter.
4. Remove timing belt outer cover (Refer to 9 - ENGINE/VALVE TIMING/TIMING BELT / CHAIN COVER(S) - REMOVAL).
5. Remove timing belt (Refer to 9 - ENGINE/VALVE TIMING/TIMING BELT/CHAIN AND SPROCKETS - REMOVAL).
6. Remove timing belt inner cover (Refer to 9 - ENGINE/VALVE TIMING/TIMING BELT / CHAIN COVER(S) - REMOVAL).
7. Remove cylinder head cover/intake manifold (Refer to 9 - ENGINE/CYLINDER HEAD/CYLINDER HEAD COVER(S) - REMOVAL).
8. Remove cylinder head (Refer to 9 - ENGINE/CYLINDER HEAD - REMOVAL).
9. Remove flex plate.

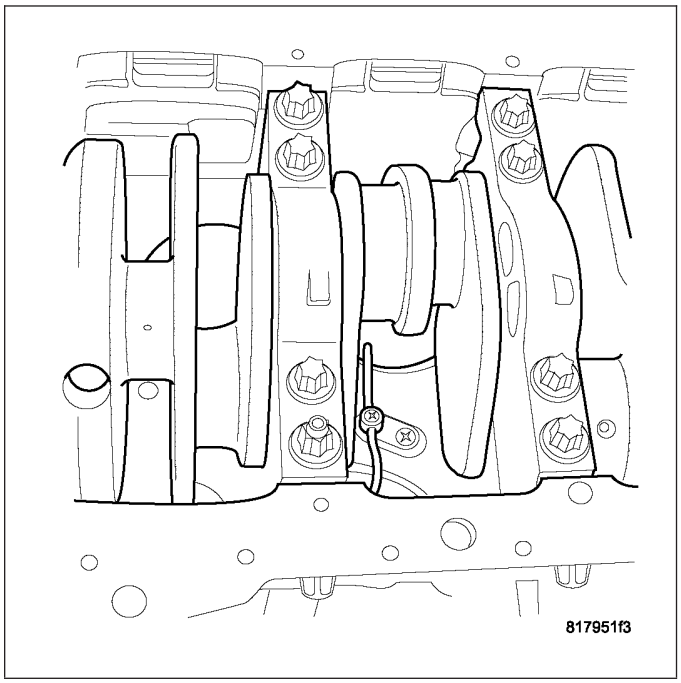

NOTE: Paint marking or scribing will assist in properly assembling and aligning oil passage ports in the crankshaft supports and engine block.

10. Paint mark or scribe the relation of the rear main bearing support and adaptor plate.

NOTE: One of the crankshaft position sensor heat shield fasteners will have to be removed to free the adaptor plate for removal.

11. Remove rear main bearing support/adapter plate retaining bolts and remove adapter plate.
12. Paint mark or scribe the rear main bearing support to engine block relation once the adaptor plate is removed.

NOTE: Keep the rear main bearing support and rear crankshaft seal together as an assembly (Refer to 9 - ENGINE/ENGINE BLOCK/CRANKSHAFT OIL SEAL - REAR - DESCRIPTION).

13. Remove rear main bearing support by threading two retaining bolts in holes provided. Tighten bolts equally to push main bearing support out of block.
14. Remove front engine cover (Refer to 9 - ENGINE/ENGINE BLOCK/ENGINE COVER - REMOVAL).
15. Paint mark or scribe the crankshaft gear to vacuum pump and oil pump drive gears.
16. Remove crankshaft sprocket.
17. Remove oil pan (Refer to 9 - ENGINE/LUBRICATION/OIL PAN - REMOVAL).
18. Remove oil pump pickup tube (Refer to 9 - ENGINE/LUBRICATION/OIL PUMP - REMOVAL).
19. Remove balance shaft assembly (Refer to 9 - ENGINE/VALVE TIMING/BALANCE SHAFT - REMOVAL).
20. Remove oil jets (Refer to 9 - ENGINE/LUBRICATION/OIL JET - REMOVAL).
21. Remove piston and connecting rod assemblies (Refer to 9 - ENGINE/ENGINE BLOCK/PISTON & CONNECTING ROD - REMOVAL).
22. Slide special tool VM.1069 on the front of the crankshaft.

CAUTION: Failure to properly identify and align each crankshaft support will result in improperly aligned engine oil passages which will lead to engine failure.

23. Paint mark or scribe each crankshaft support to engine block relation.
24. Using special tool VM.1054, remove crankshaft support retainers and o-rings, discard o-rings.
25. Paint mark or scribe the relation between the crankshaft sensor tone ring and the crankshaft and remove the tone ring.
26. While holding crankshaft guide VM 1069, carefully guide crankshaft out of the rear of engine block.

INSTALLATION - CRANKSHAFT

CAUTION: IT IS CRITICAL THAT BOTH HALVES OF THE CRANKSHAFT SUPPORT ARE ALIGNED PROPERLY WITH THE ENGINE TO SUPPORT ENGINE OIL MANAGEMENT.

1. Assure that all crankshaft support witness marks are pointing toward the front of the engine and install special tool VM.1069 onto the front of the crankshaft (Refer to 9 - ENGINE/ENGINE BLOCK/CRANKSHAFT MAIN BEARINGS - INSTALLATION).

CAUTION: If installing a new crankshaft support retainer, there are two oil passages in the crankshaft carrier. One of the passages has an internal shoulder, that once aligned properly, is used for installing the crankshaft support retainer/balance shaft oil supply.

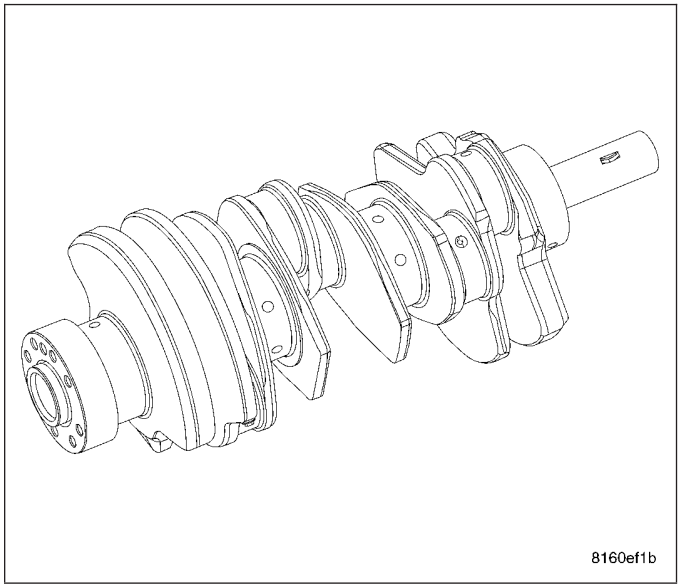

2. Identify the correct positioning of the crankshaft support oil passage. The bolt heads for the crankshaft support retainers should be facing toward the balance shaft.
3. Carefully guide the crankshaft into the engine block, aligning the crankshaft support(s) to engine block witness marks. This will align the crankshaft support oil passages with the crankshaft support retainer access hole(s).
4. Insert and seat the crankshaft support retainers with new o-rings.
5. Remove special tool VM.1069 from crankshaft.
6. Align the crankshaft sensor tone ring witness marks with the crankshaft and install the crankshaft sensor tone ring. Tighten fasteners to 14.6N·m (124 in. lbs.).

7. Install crankshaft gear
8. Install front engine cover (Refer to 9 - ENGINE/ENGINE BLOCK/ENGINE COVER - INSTALLATION).
9. Install rear main bearing support in engine block aligning witness marks with the engine block. **Be sure to align oil hole in rear main bearing support with the lubrication port in the engine block.**
10. Install adapter plate and retaining bolts. Torque bolts to 45.1 N·m (33 ft. lbs.) and screws to 78.5 N·m (58 ft. lbs.).
11. Install flex plate (Refer to 9 - ENGINE/ENGINE BLOCK/FLEX PLATE - INSTALLATION).
12. Install piston and connecting rod assemblies (Refer to 9 - ENGINE/ENGINE BLOCK/PISTON & CONNECTING ROD - INSTALLATION).
13. Install oil jets (Refer to 9 - ENGINE/LUBRICATION/OIL JET - INSTALLATION).
14. Install balance shaft assembly (Refer to 9 - ENGINE/VALVE TIMING/BALANCE SHAFT - INSTALLATION).
15. Install oil pump pickup tube (Refer to 9 - ENGINE/LUBRICATION/OIL PUMP - INSTALLATION).
16. Install oil pan (Refer to 9 - ENGINE/LUBRICATION/OIL PAN - INSTALLATION).
17. Install cylinder head (Refer to 9 - ENGINE/CYLINDER HEAD - INSTALLATION).
18. Install cylinder head cover/intake manifold (Refer to 9 - ENGINE/CYLINDER HEAD/CYLINDER HEAD COVER(S) - INSTALLATION).
19. Install timing belt inner cover (Refer to 9 - ENGINE/VALVE TIMING/TIMING BELT / CHAIN COVER(S) - INSTALLATION).
20. Install timing belt (Refer to 9 - ENGINE/VALVE TIMING/TIMING BELT/CHAIN AND SPROCKETS - INSTALLATION).
21. Connect special tool 6958 to the crankshaft hub. Tighten fastener to 304 N·m (203 ft. lbs.).
22. Install timing belt outer cover (Refer to 9 - ENGINE/VALVE TIMING/TIMING BELT / CHAIN COVER(S) - INSTALLATION).
23. Install engine in vehicle.
24. Fill engine oil with proper oil to correct level (Refer to LUBRICATION & MAINTENANCE/FLUID TYPES - SPECIFICATIONS).

CRANKSHAFT MAIN BEARINGS

DESCRIPTION

The crankshaft is supported by four main bearing caps (1) made of cast iron. Each main cap (1) is fastened to the cylinder block with four bottom bolts (2) and two cross horizontal bolts (3) to increase the rigidity of the lower block. The number three main bearing cap serves as the thrust washer (5) location.

The upper main bearings have a bi-metal construction and feature oil supply holes and center grooves for lubrication of the main journals. The lower main bearings have tri-metal construction to provide strength where it is needed.

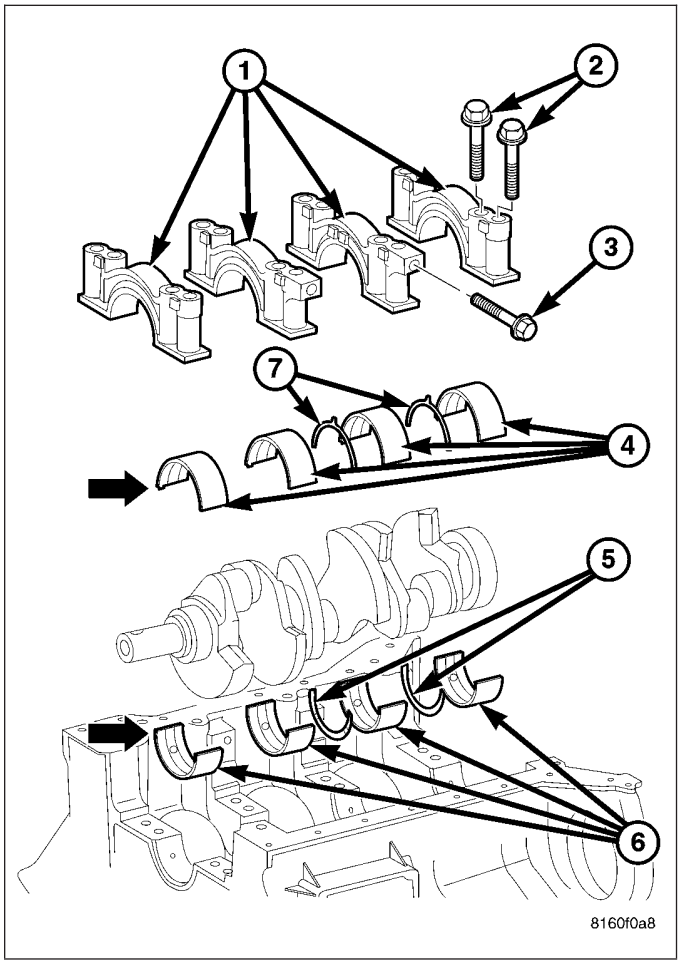

MAIN BEARING SELECTION

Stage	Color	Bearing Thickness	Applies To
1	Blue	2.250mm-2.255mm (0.0886-0.0888 in.)	Upper and Lower Bearings
2	Yellow	2.255mm-2.260mm (0.0888-0.0890 in.)	Upper and Lower Bearings
3	Red	2.260mm-2.265mm (0.0890-0.0892 in.)	Upper and Lower Bearings
4	White	2.265mm-2.270mm (0.0892-0.0894 in.)	Lower Bearings
5	Violet	2.270mm-2.275mm (0.0894-0.0896 in.)	Lower Bearings

The upper main bearings are available in three different thicknesses and the lower bearings in five. A color coded mark on the side of the bearing is used to identify it's thickness. Each color coded bearing is matched to it's respective journal. The select fit is obtained by matching the color coded bearings to grade identification marks on the cylinder block and crankshaft. Letters marked on the cylinder block identify the color of each upper-half main bearing, while letters marked on the front end of the crankshaft indicate the color of each lower half main bearing.

SEAL - CRANKSHAFT OIL - FRONT

REMOVAL

1. Disconnect negative battery cable.
2. Raise and support the vehicle.
3. Remove both front lower splash shields.
4. Remove the transmission thermal bypass valve and the cooler lines between the block and transmission.

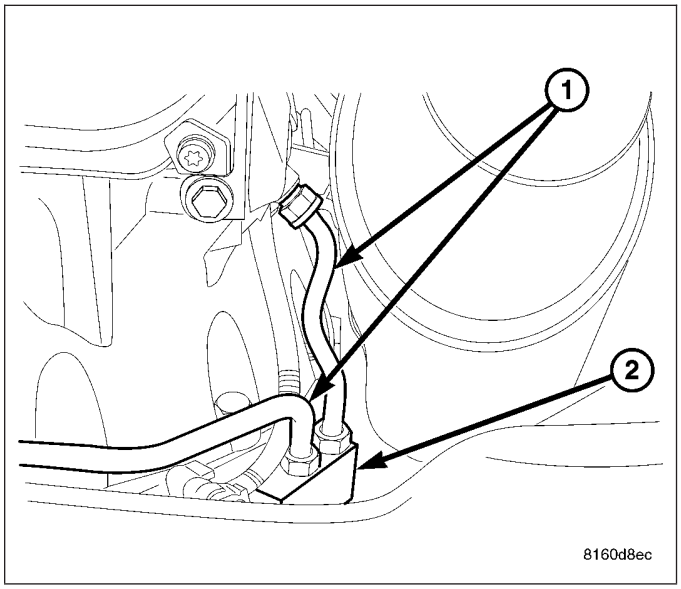

5. Remove the starter blank.
6. Install # 9102 crankshaft lock (1).

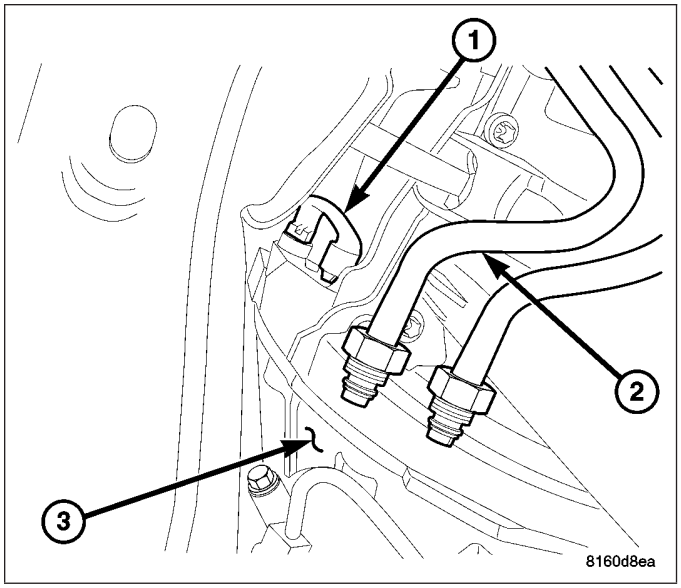

7. Release the accessory drive belt tension by resetting the drive belt tensioner and installing a retaining pin.

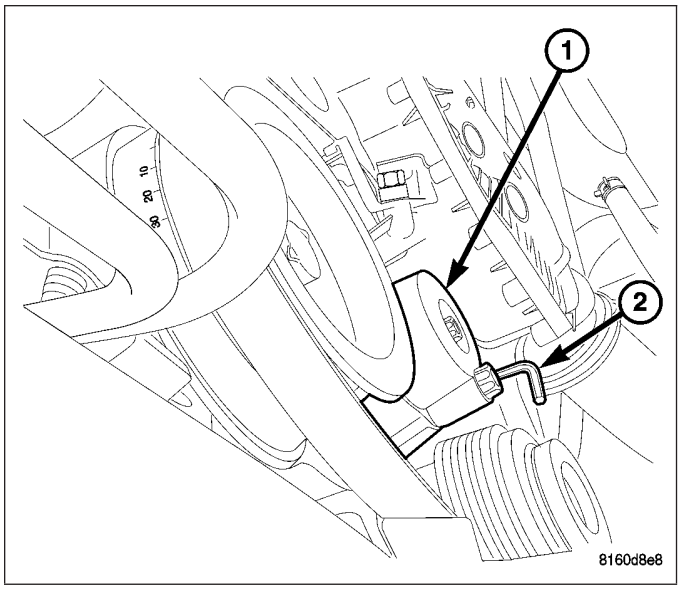

8. Remove the vibration damper bolt.
9. Install #9544 (1) vibration damper puller.
10. Remove the vibration damper (2).

CAUTION: Care must be taken when removing the crankshaft seal. DO NOT damage or gouge the timing chain cover.

11. Using suitable seal puller, remove the front crankshaft seal.

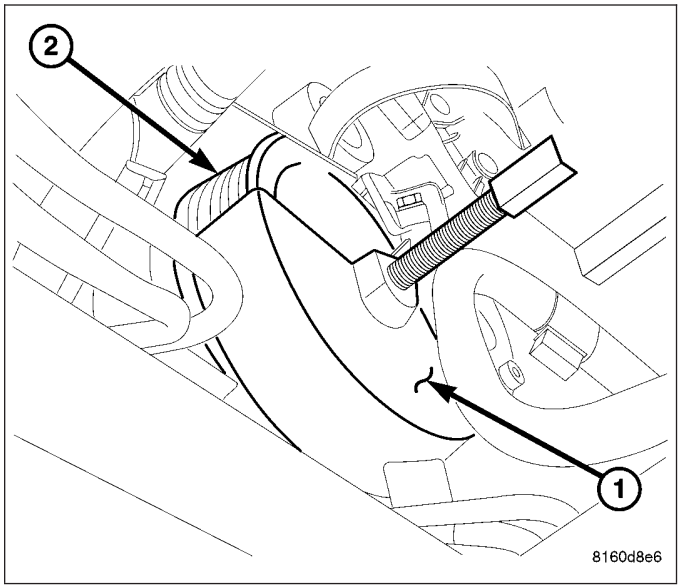

INSTALLATION

NOTE: To prevent potential oil leaks, DO NOT touch the front crankshaft inner seal. Always handle the seal from the outer diameter.

1. Clean timing chain cover (1) seal surface.

NOTE: Keep seal centered in the timing chain cover at all times.

2. Install crankshaft oil seal (2) using Installer 8936A.
3. Align the alignment key in the crankshaft with the key way in the damper and install the vibration damper. Torque bolt to 304 N·m, plus 90° (224 ft.lbs., plus 90°).

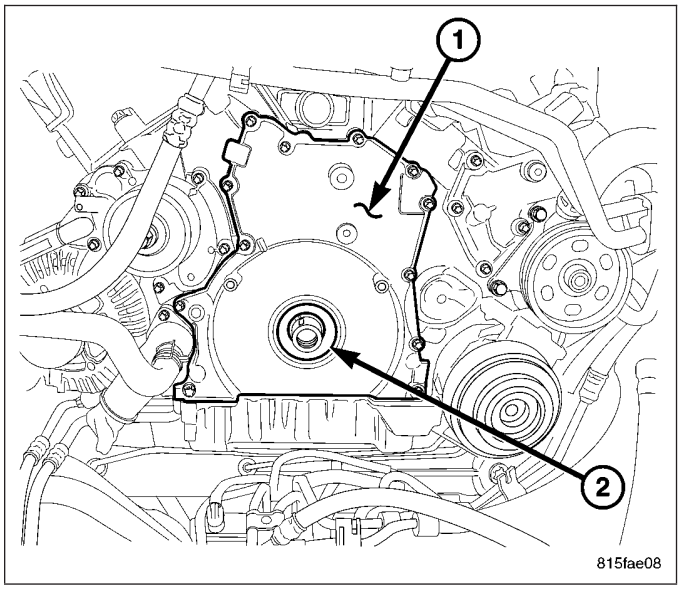

4. Position the drive belt back onto the pulleys and release the belt tensioner.

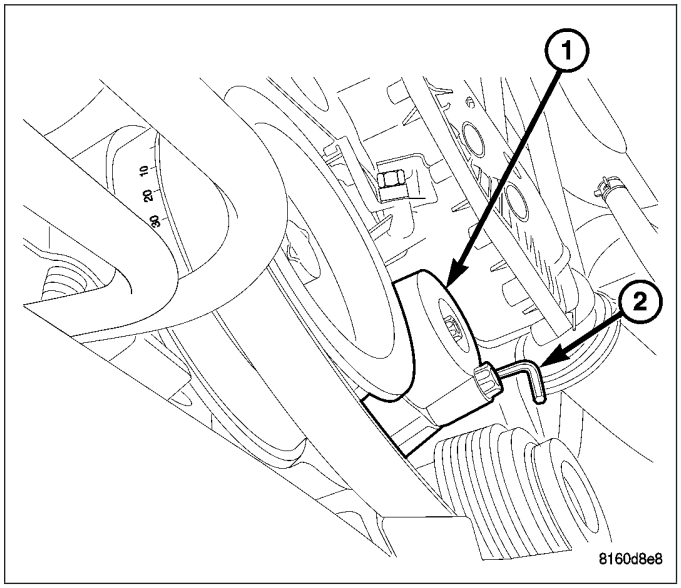

5. Remove #9102 crankshaft lock (1).

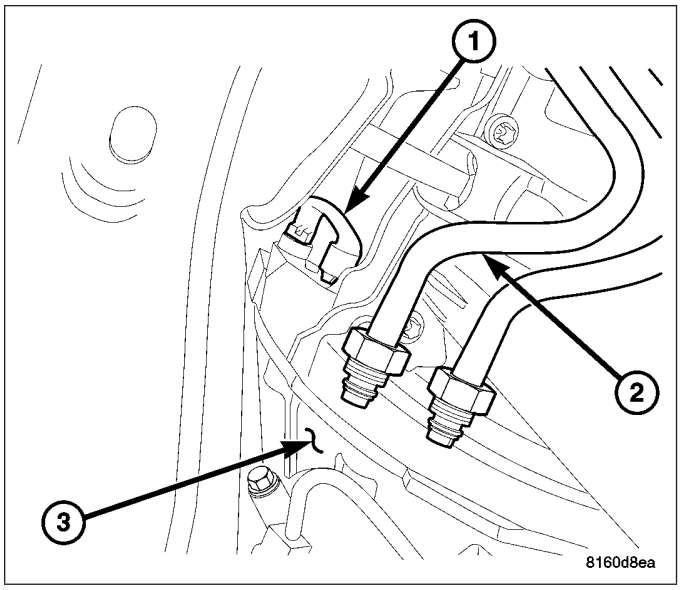

6. Install the transmission thermal bypass valve (2) and transmission cooler lines (1).
7. Install the intermediate and front underbody splash shields.
8. Lower the vehicle.
9. Connect negative battery cable.

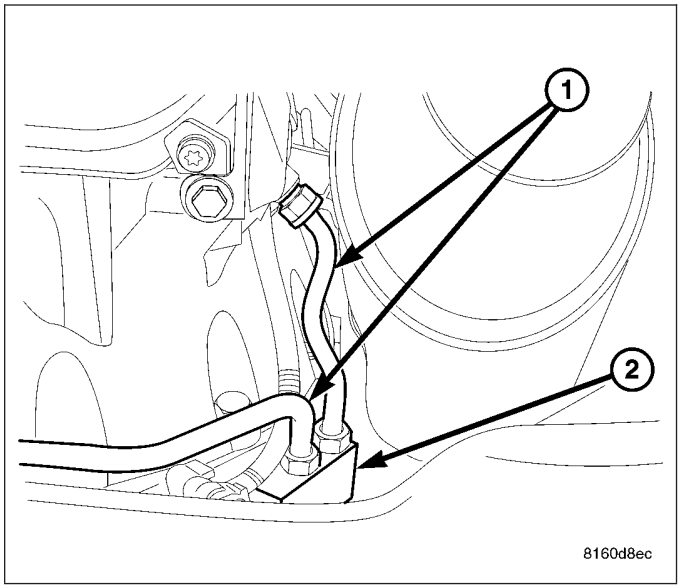

CRANKSHAFT OIL SEAL - REAR

DESCRIPTION

The rear main seal carrier (1) is located behind the flex plate. The rear main seal carrier is bolted to the cylinder block and oil pan. The rear main seal (2) is molded to the carrier and is not serviceable. The rear main seal carrier must be replaced if an oil leak or seepage occurs.

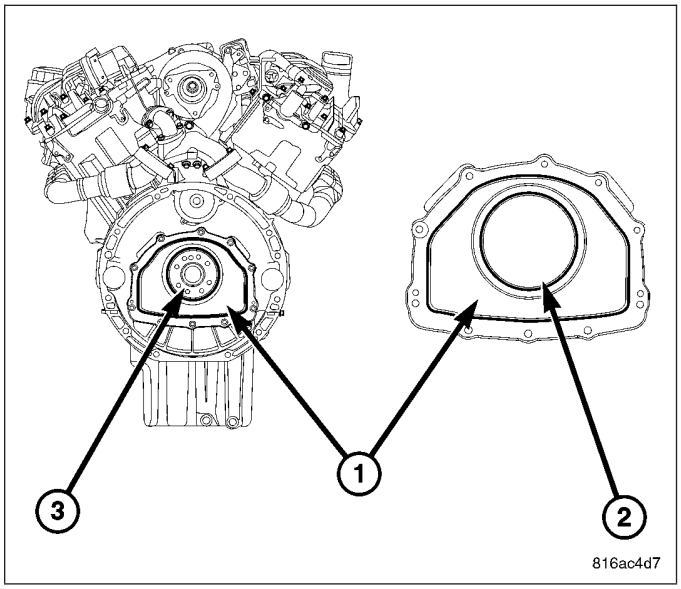

REMOVAL

1. Remove the transmission. (Refer to 21 - TRANSMISSION/AUTOMATIC - NAG1 - REMOVAL)
2. Remove the bolts holding the driveplate to the crankshaft (3).
3. Remove the driveplate.
4. Remove the bolts holding the rear main seal carrier (1) to the engine block and oil pan.
5. Remove the rear main seal carrier (1) from the engine block and oil pan.
6. Clean sealant residue from the engine block and oil pan.

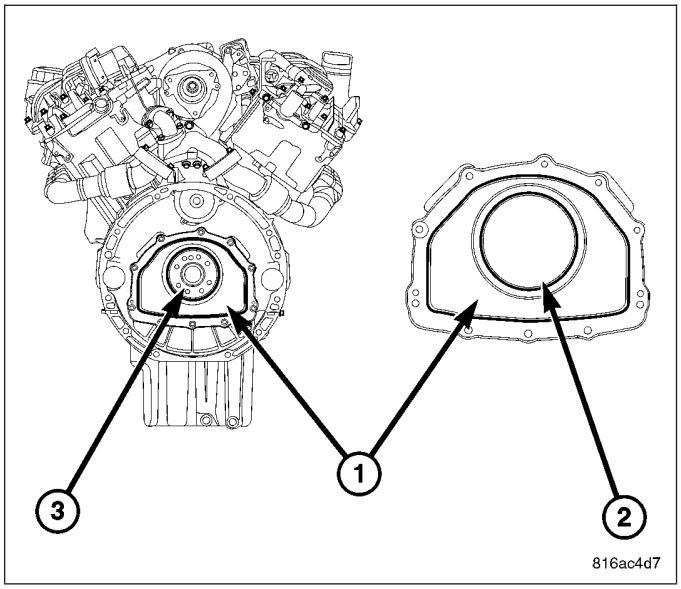

INSTALLATION

1. Apply sealant 1.5 mm (.059 in) wide, MOPAR Engine Sealant / RTV Silicone Rubber Adhesive (2) to the rear main seal carrier (1).

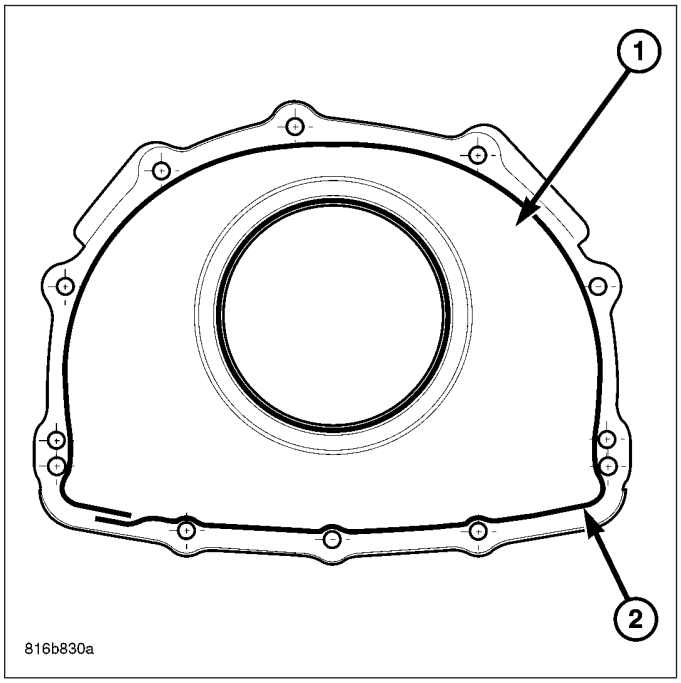

2. Install the rear main seal carrier (1) to the engine block and oil pan.
3. Install the bolts holding the rear main seal carrier (1) to the engine block and oil pan. Torque the bolts to 9 N·m (7 ft. lbs.).
4. Install the driveplate. Torque bolts to 45 N·m (33 ft. lbs.) plus an addition 90°.
5. Install the transmission. (Refer to 21 - TRANSMISSION/AUTOMATIC - NAG1 - INSTALLATION).

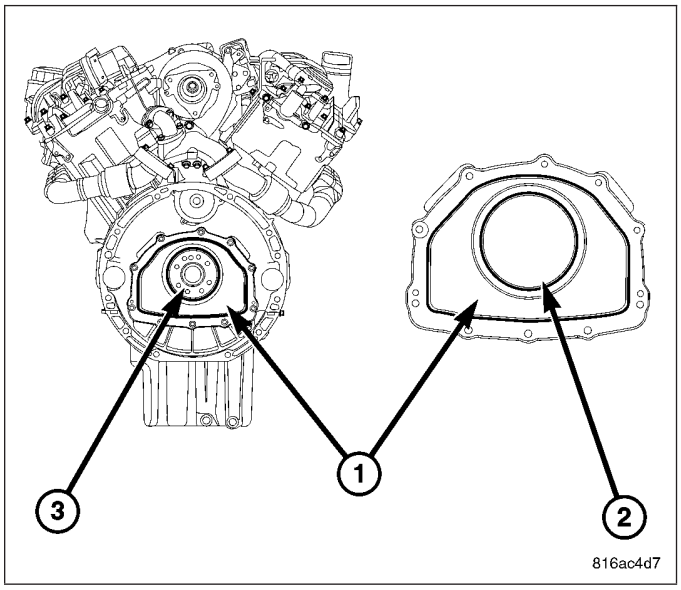

FLEX PLATE

REMOVAL

1. Remove the transmission (Refer to 21 - TRANSMISSION/AUTOMATIC - NAG1 - REMOVAL).
2. Paint mark the flex plate hub to flex plate relation.
3. Remove the flex plate bolts and flex plate.
4. Inspect flex plate for damage.

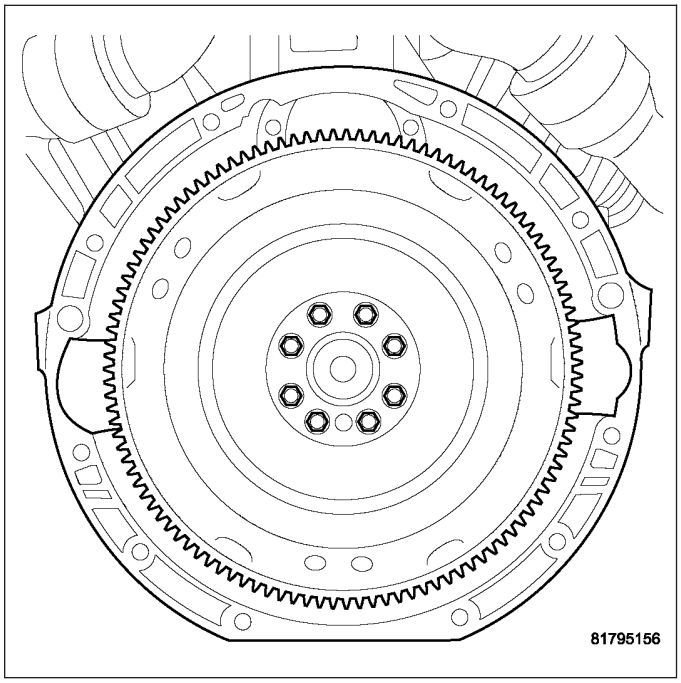

INSTALLATION

NOTE: Do Not lubricate new bolts as they are already coated with an anti-scuff treatment. Align the flex plate to hub paint marks, where applicable.

1. Install the flex plate hub and hand tighten the fasteners.
2. Tighten each flex plate hub fastener to 50 N·m (37 lbs. ft.) in a clockwise cross sequence.
3. At this point, loosen one flex plate adaptor fastener, and with a torque wrench and angle gauge, tighten the fastener to 25 N·m (19 lbs. ft.), plus 60°.
4. Perform the above procedure for the remaining flex plate adaptor bolts in a clockwise cross sequence.
5. Install the flex plate locating pin.
6. Install the flex plate to the hub and install the fasteners. Tighten the flex plate fasteners in a cross sequence to 44 N·m (32.5 ft. lbs.).
7. Install the transmission (Refer to 21 - TRANSMISSION/AUTOMATIC - NAG1 - REMOVAL).

CYLINDER LINERS

DESCRIPTION

The cylinder liners used in the 3.0L engine are made of cast iron and molded into the aluminum engine block. There are three size cylinder liners used and they are identified by the markings “A”, “X”, or “B” on the engine block below the high pressure pump. These markings are used to match piston size with cylinder bore size.

INSPECTION

The cylinder walls should be checked for out-of-round and taper with a dial bore gauge. If the cylinder walls are badly scuffed or scored, replace the engine block.

Measure the cylinder bore at three levels in directions A and B. Top measurement should be 10 mm (3/8 in.) down and bottom measurement should be 10 mm (3/8 in.) up from the bottom bore.

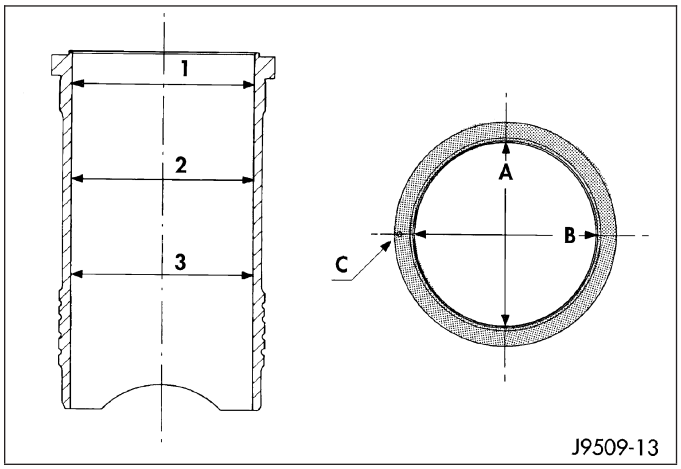

PISTON & CONNECTING ROD

DESCRIPTION

CAUTION: If the connecting rod bolts are ever loosened, replace all of the connecting rods.

NOTE: Slight bluing or heat transfer witness marks around the connecting rod caps and crankshaft journal is normal. This is part of the heat treating process from the factory and Does Not indicate premature bearing failure.

The pistons are of a free floating design. Oil jets in the engine block lubricate and cool the piston and pin assembly. The connecting rods have a pressed in place wrist pin bushing which is lubricated by the oil jets. Piston rod and bearing caps have cracked mating surfaces and are not interchangeable.

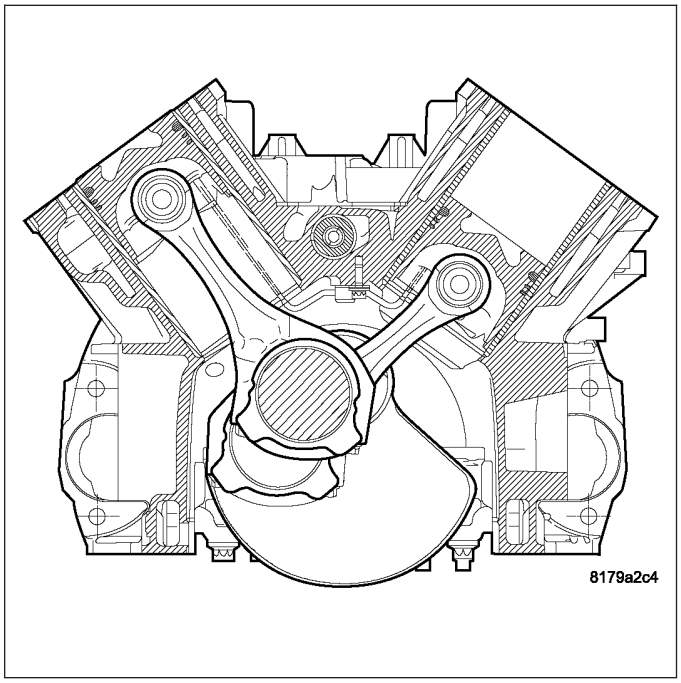

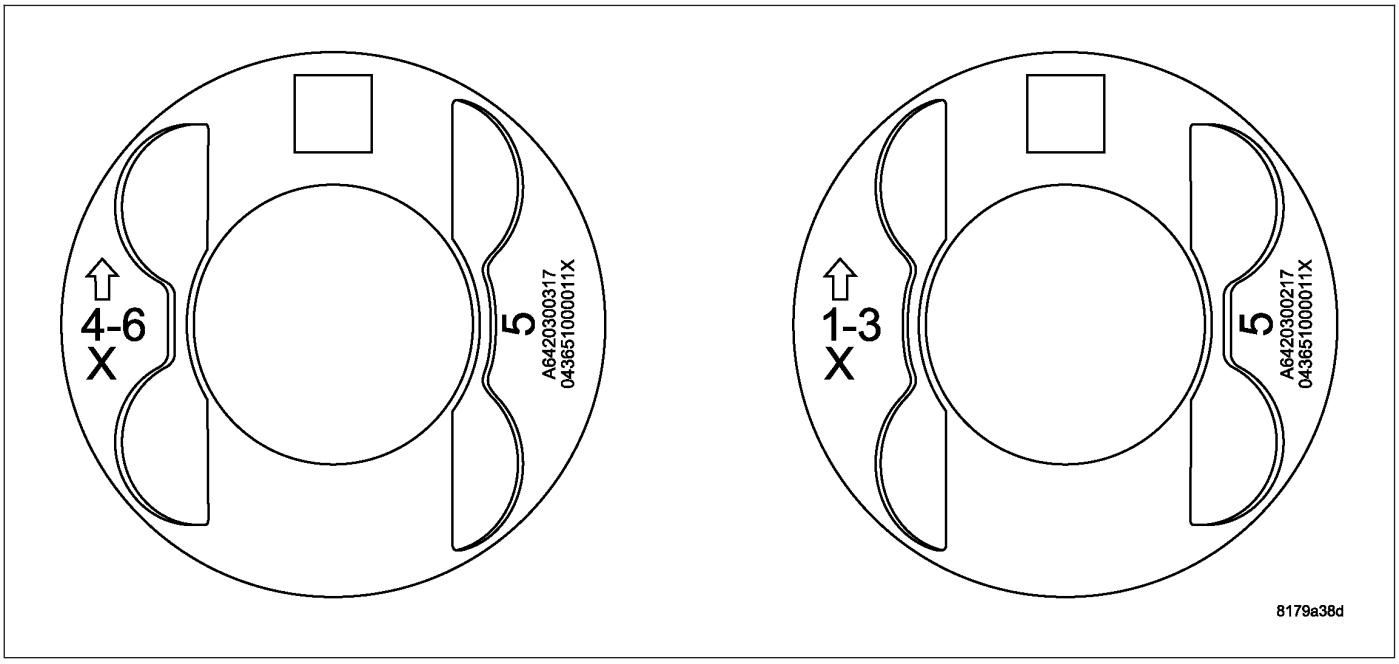

Piston numbers are etched on the piston crown for cylinder bank identification. Left cylinder bank pistons are identified as numbers four through six. Right cylinder bank pistons are identified as numbers one through three. An orientation arrow points toward the front of the engine.

STANDARD PROCEDURE - PISTON RING FITTING

1. Wipe cylinder bore clean. Insert ring and push down with piston to ensure it is square in bore. The ring gap measurement must be made with the ring positioning at least 12 mm (0.50 in.) from bottom of cylinder bore. Check gap with feeler gauge (1). Top compression ring gap .40 to .55mm (.015in to .0217 in.). Second compression ring gap .25mm to .50mm (.0099 to .0197 in.). Oil control ring gap .20 to .40mm (.0079 to .0158 in.).
2. If ring gaps exceed dimension given, new rings, piston and cylinder boring may be necessary. Keep piston rings in piston sets.

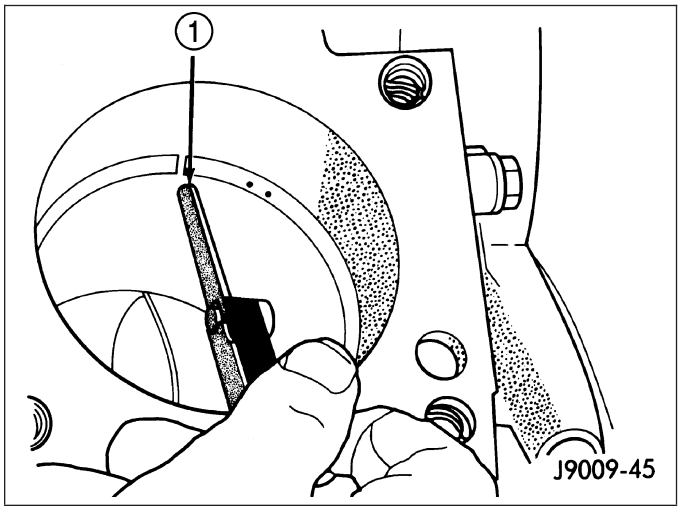

3. Check piston ring to groove clearance. Top compression ring gap 0.12 to 0.16 mm (.0048 to .0063 in.) (A). Second compression ring gap 0.065 to 0.110 mm (.0026 to .0044 in.) (B). Oil control ring gap 0.03 to 0.07 mm (.0012 to .0028 in.) (C).

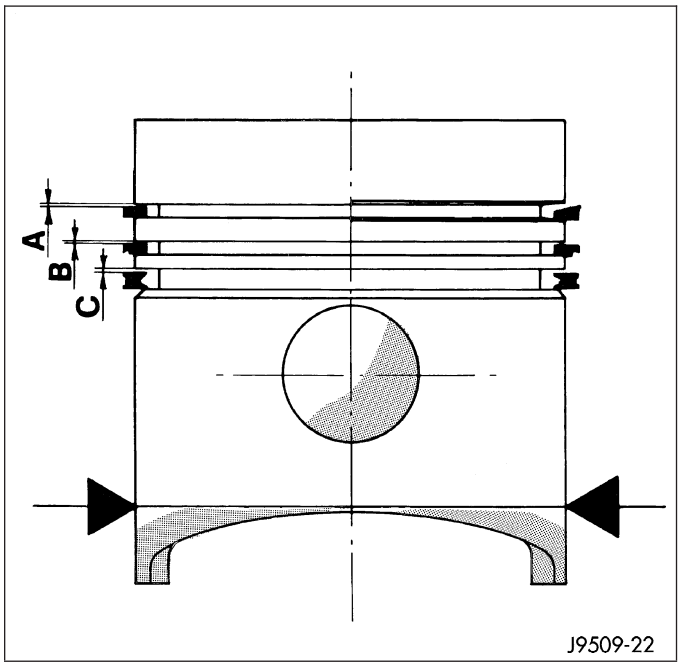

REMOVAL

NOTE: Both the connecting rod and the connecting rod cap are paint marked to aid during assembly. Paint marks disappear after time. If the rod and the cap are not marked with paint, paint mark or scribe them before disassembly.

1. Disconnect negative battery cable.
2. Remove cylinder head (Refer to 9 - ENGINE/CYLINDER HEAD - REMOVAL).
3. Raise vehicle on hoist.
4. Remove oil pan (Refer to 9 - ENGINE/LUBRICATION/OIL PAN - REMOVAL).
5. Remove oil pump pickup tube. (Refer to 9 - ENGINE/LUBRICATION/OIL PUMP - REMOVAL)
6. Remove balance shaft assembly (Refer to 9 - ENGINE/VALVE TIMING/BALANCE SHAFT - REMOVAL).
7. Remove top ridge of cylinder bores with a ridge reamer before removing pistons from cylinder block. **Be sure to keep top of pistons covered during this operation.**
8. Piston and connecting rods must be removed from top of cylinder block. Rotate crankshaft so that each connecting rod is centered in cylinder bore.

NOTE: Be careful not to nick or scratch crankshaft journals

9. After removal, install bearing cap on the mating rod and mark pistons with matching cylinder number when removed from engine block.

PISTON PIN - REMOVAL

1. Secure connecting rods in a soft jawed vice.
2. Remove 2 snap rings securing piston pin.
3. Push piston pin out of piston and connecting rod.

PISTON RING - REMOVAL

1. ID mark on face of top and second piston rings must point toward piston crown.
2. Using a suitable ring expander, remove top and second piston rings.
3. Remove upper oil ring side rail, lower oil ring side rail and then the oil expander from piston.
4. Carefully clean carbon from piston crowns, skirts and ring grooves ensuring the 4 oil holes in the oil control ring groove are clear.

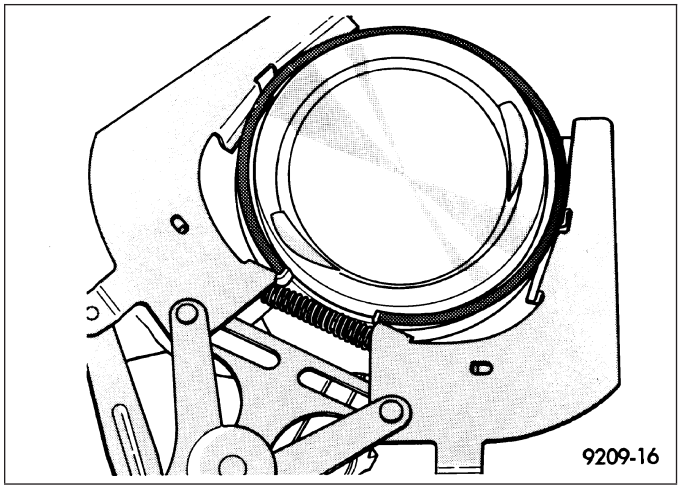

INSPECTION

PISTONS

1. Check piston pin bores in piston for roundness. Make 3 checks at 120° intervals. Maximum out of roundness .020 mm (.0008 in.).
2. The piston diameter should be measured approximately 10mm (.394 in.) up from the base.
3. Skirt wear should not exceed 0.1 mm (.00039 in.).
4. The clearance between the cylinder liner and piston should not exceed 0.010-0.022 mm (.0003 -.0008 in.).

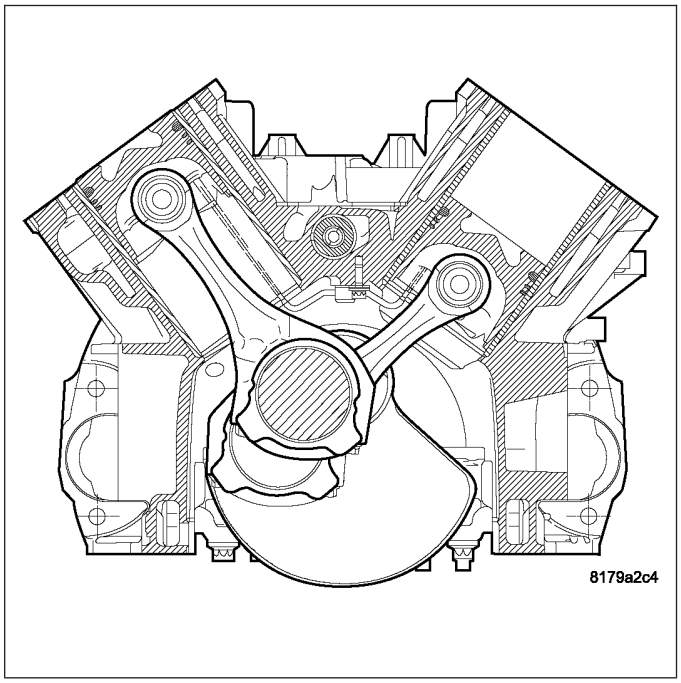

PISTON PINS

1. Measure the diameter of piston pin in the center and both ends. Refer to the engine specification chart (Refer to 9 - ENGINE - SPECIFICATIONS).

CONNECTING RODS

CAUTION: Connecting rods must be replaced once the end caps are loosened. All six must have the same weight and the same number. Replacement connecting rods will only be supplied in sets of six. When assembling the connecting rod, be sure to paint mark or scribe mark each of the connecting rods and caps before installation, for alignment purposes later.

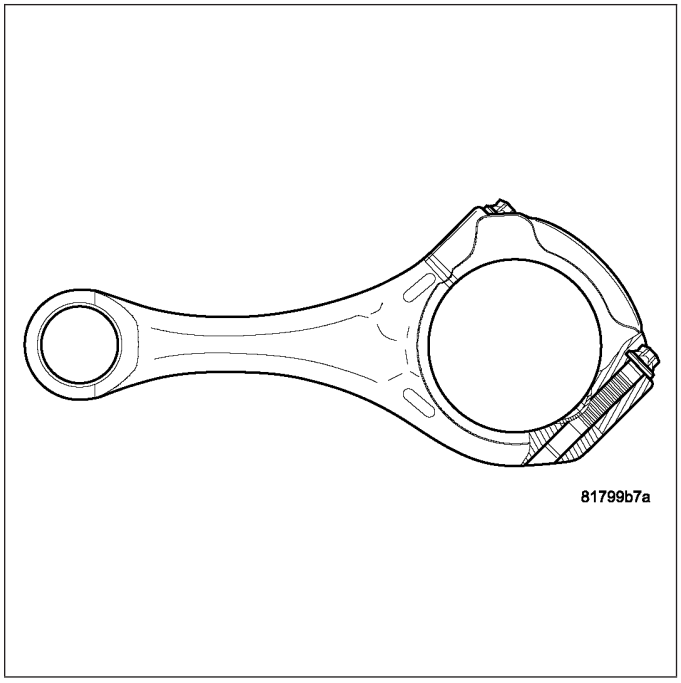

NOTE: Do Not lubricate the new connecting rod bolts. They are already coated with a anti scuff treatment.

Connecting rods are supplied in sets of six since they all must be of the same weight category. Max allowable weight difference is 5 gr.

1. Assemble bearing shells and bearing caps to their respective connecting rods ensuring that the serrations on the cap and reference marks are aligned.
2. Tighten connecting cap bolts to 20 N·m (15 ft. lbs.).
3. Without loosening connecting rod bolts, tighten all bolts to 40 N·m (30 ft.lbs.).
4. Using a torque angle gauge, tighten each bolt an additional 90°.

INSTALLATION

PISTON PIN INSTALLATION

1. Secure connecting rod in soft jawed vice.
2. Lubricate piston pin and piston with clean engine oil.
3. Position piston on connecting rod.

CAUTION: Ensure arrow on piston crown and the bearing cap numbers on the connecting rod are on the opposite side.

4. Install piston pin.
5. Install clips in piston to retain piston pin.

6. Remove connecting rod from vice.

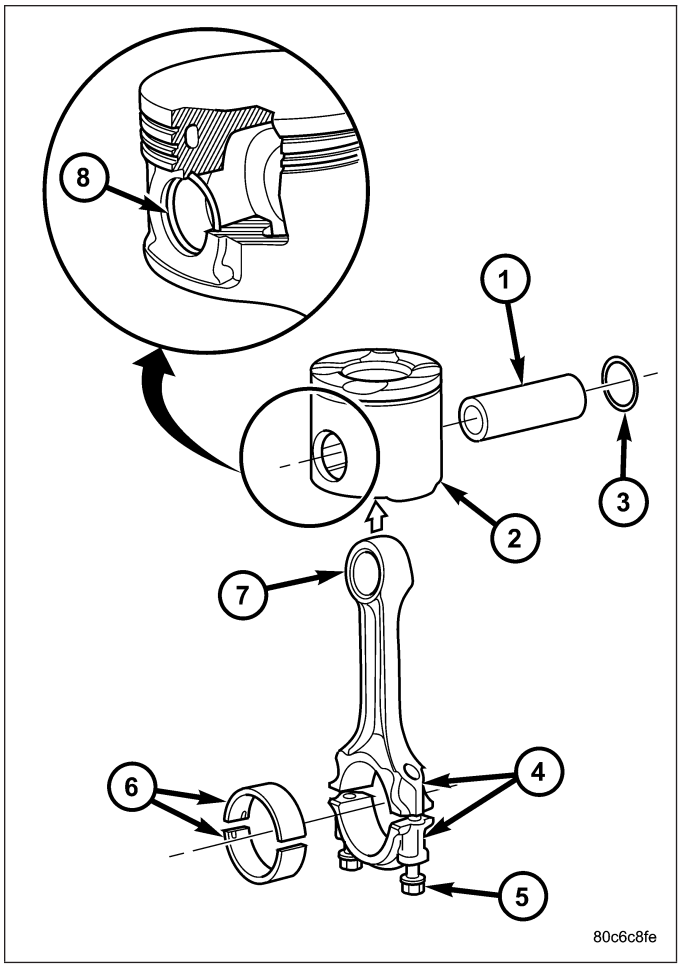

PISTON RINGS - INSTALLATION

1. Install rings on the pistons using a suitable ring expander.
2. Top compression ring is tapered and chromium plated. The second ring is of the scraper type and must be installed with scraping edge facing bottom of the piston. The third is an oil control ring. Ring gaps must be positioned, before inserting piston into the liners, as follows.
3. Top ring gap must be positioned at the #3 position (looking at the piston crown from above).
4. Second piston ring gap should be positioned at the #1 position.
5. Oil control ring gap should be positioned at the #2 position.

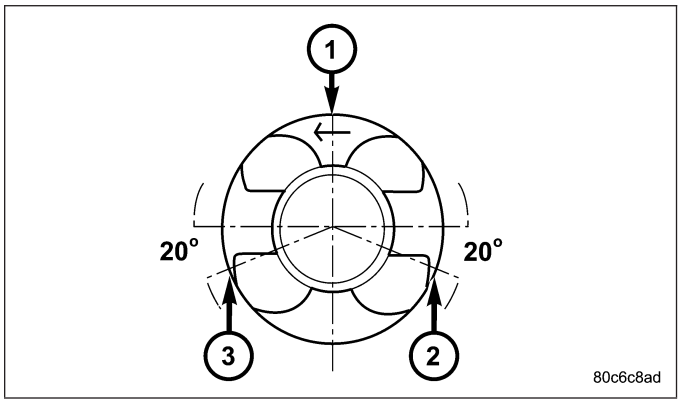

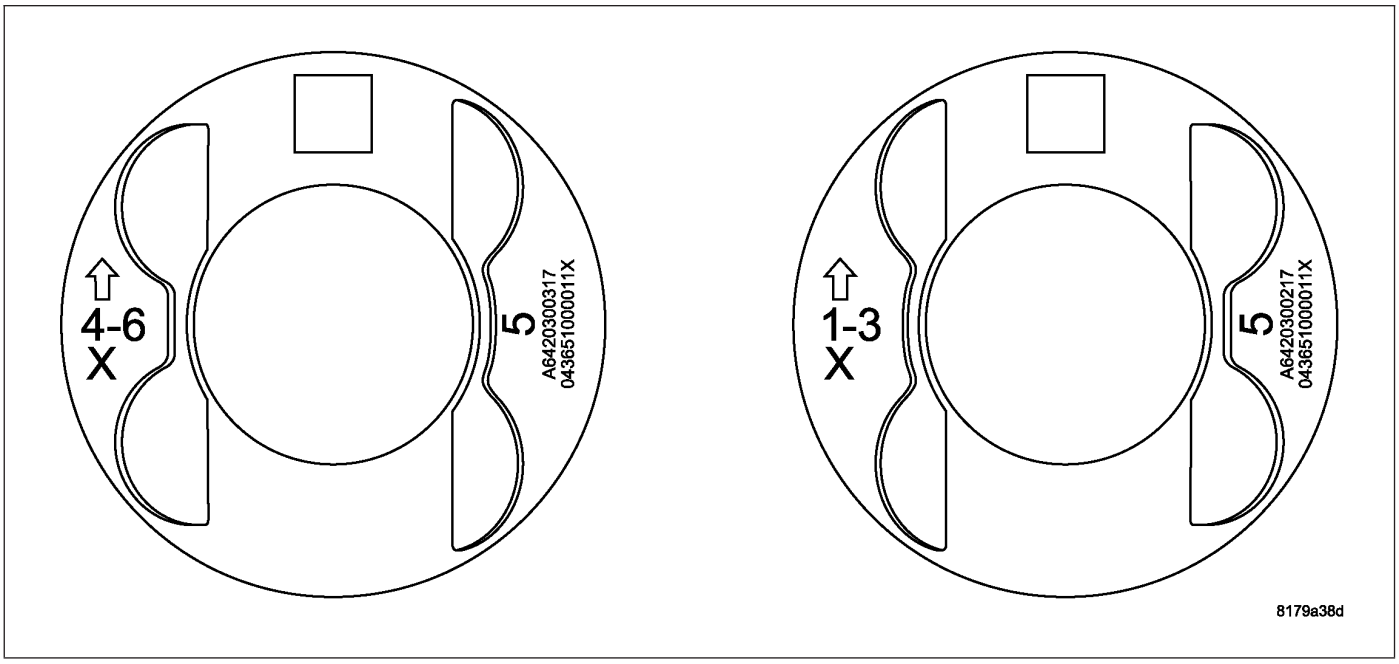

6. When assembling pistons check that components are installed in the same position as before disassembly, determined by the numbers stamped on the crown of individual pistons. Engine cylinders are numbered starting from gear train end of the engine. **Face arrow on top of piston toward front of engine**. Therefore, the numbers stamped on connecting rod big end should face toward the injection pump side of engine. To insert piston into cylinder use a ring compressor.

INSTALLATION

1. Before installing pistons, and connecting rod assemblies into the bore, be sure that compression ring gaps are staggered so that neither is in line with oil ring rail gap.
2. Before installing the ring compressor, make sure the oil ring expander ends are butted together.
3. Immerse the piston head and rings in clean engine oil, slide the piston ring compressor, over the piston and tighten. **Ensure position of rings does not change during this operation**.
4. Face arrow on piston towards front of engine.

CAUTION: Care must be taken not to nick crankshaft journal when installing pistons.

5. Rotate crankshaft so that the connecting rod journal is on the center of the cylinder bore. Insert rod and piston into cylinder bore and guide rod over the crankshaft journal.
6. Guide the piston down in cylinder bore, using a hammer handle. At the same time, guide connecting rod into position on connecting rod journal.

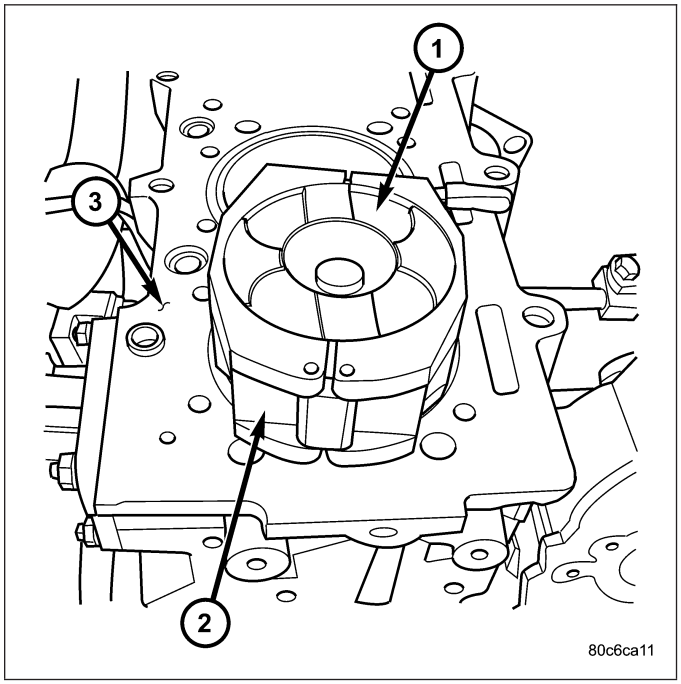

7. Install connecting rod caps. Install rod bolts and torque to 10N·m (88 lbs. in.). Torque bolts the next stage to 30N·m (22 ft.lb.) plus 60°. Then with a torque wrench set at torque to 88N·m (65 ft.lb), make a tightening check.
8. Install cylinder head (Refer to 9 - ENGINE/CYLINDER HEAD - INSTALLATION).
9. Install balance shaft assembly (Refer to 9 - ENGINE/VALVE TIMING/BALANCE SHAFT - INSTALLATION).
10. Install oil pump pickup tube (Refer to 9 - ENGINE/LUBRICATION/OIL PUMP - INSTALLATION).
11. Install oil pan (Refer to 9 - ENGINE/LUBRICATION/OIL PAN - INSTALLATION).

12. Connect negative battery cable.

DAMPER - VIBRATION

REMOVAL

1. Disconnect negative battery cable.
2. Raise and support the vehicle.
3. Remove both front lower splash shields.
4. Remove the transmission thermo-block (2), and the cooler lines (1) between the block (2) and transmission.

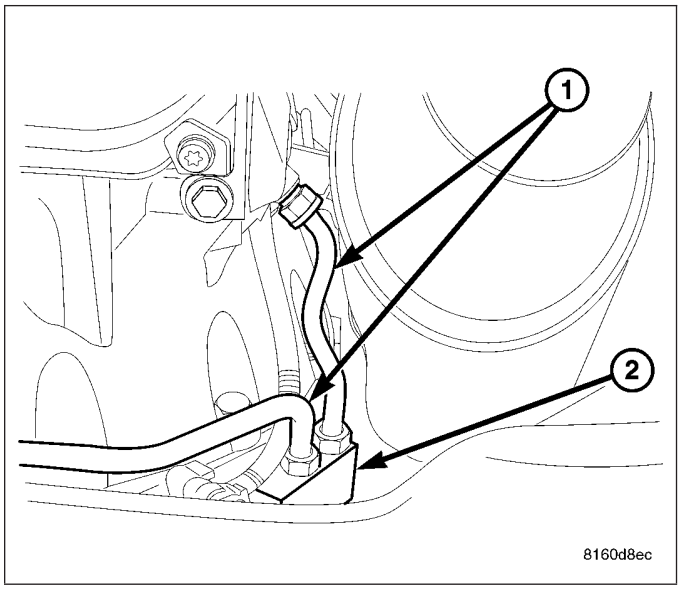

5. Remove the starter blank.
6. Install # 9102 crankshaft lock (1).

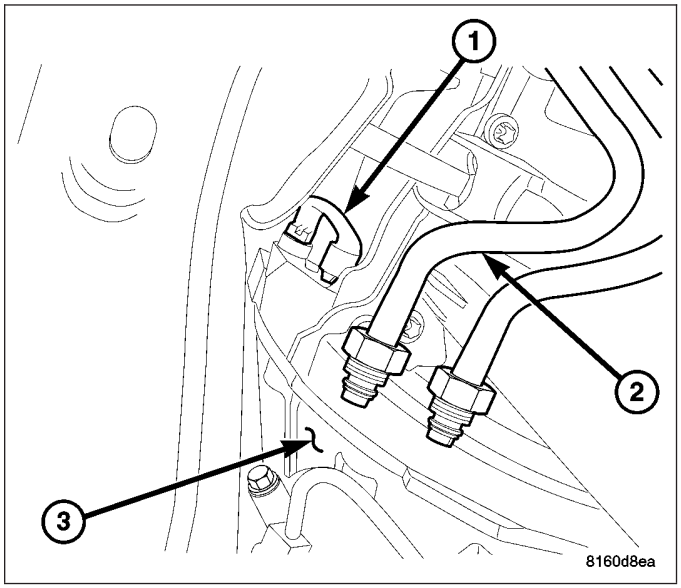

7. Release the accessory drive belt tension by resetting the drive belt tensioner (1) and installing a retaining pin.

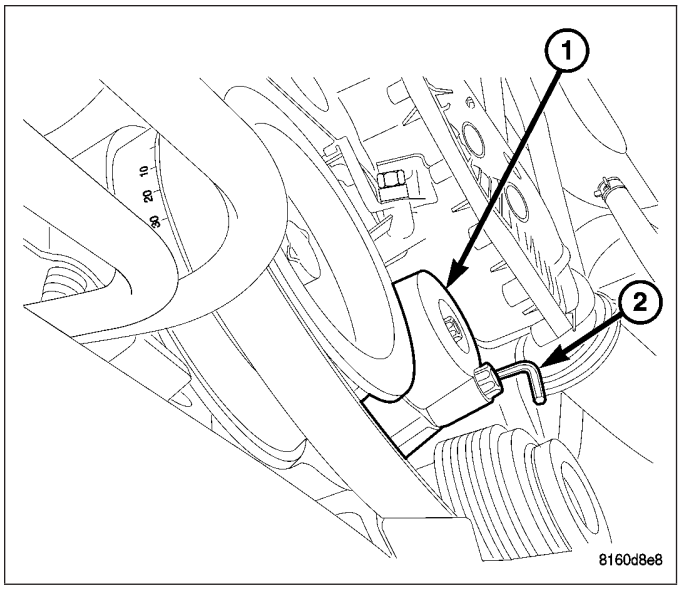

8. Remove the vibration damper (2) bolt.
9. Install #9544 vibration damper puller (1)

CAUTION: Care must be taken when removing the damper. DO NOT damage or gouge the front crankshaft seal

10. Remove the vibration damper (2).

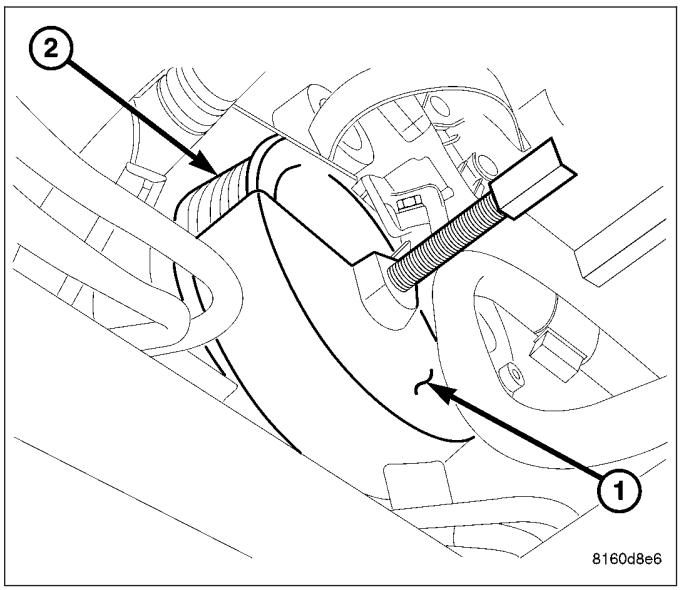

INSTALLATION

NOTE: To prevent potential oil leaks, DO NOT touch the front crankshaft inner seal.

1. Align the alignment key in the crankshaft with the key way in the damper and install the vibration damper. Torque bolt to 304 N·m, plus 90° (224 ft. lbs., plus 90°).
2. Position the drive belt back onto the pulleys and release the belt tensioner.

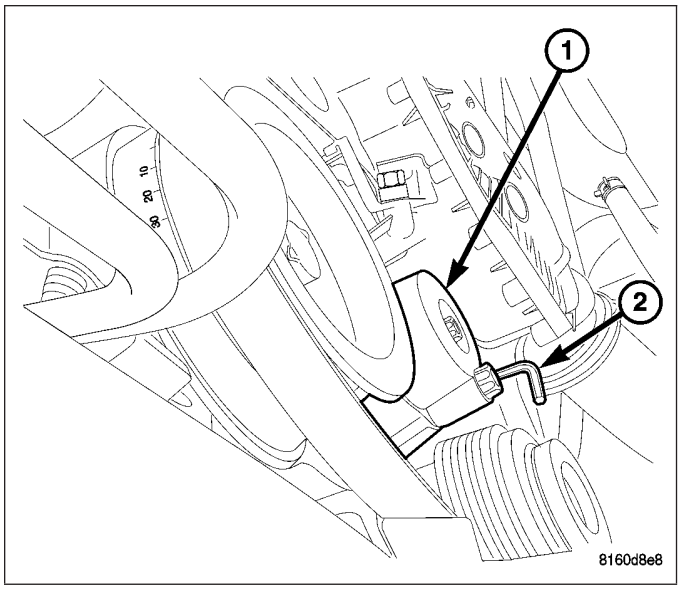

3. Remove #9102 crankshaft lock.
4. Install the transmission thermal bypass valve and transmission cooler lines.

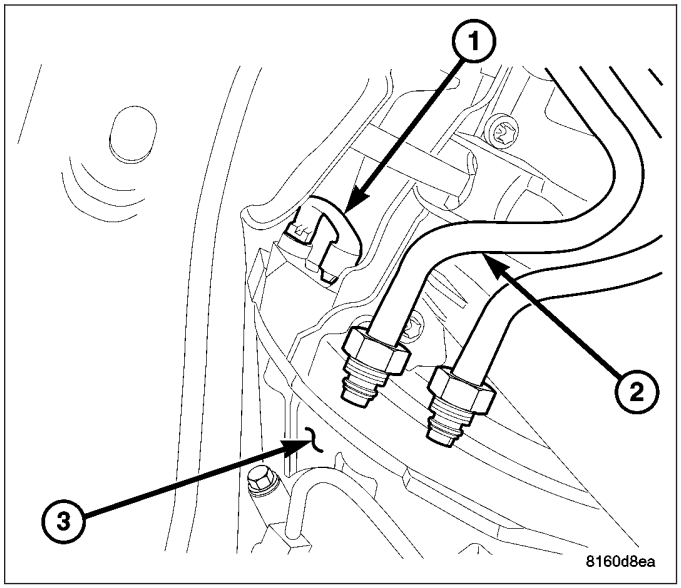

5. Install the intermediate and front underbody splash shields.
6. Lower the vehicle.
7. Connect negative battery cable.

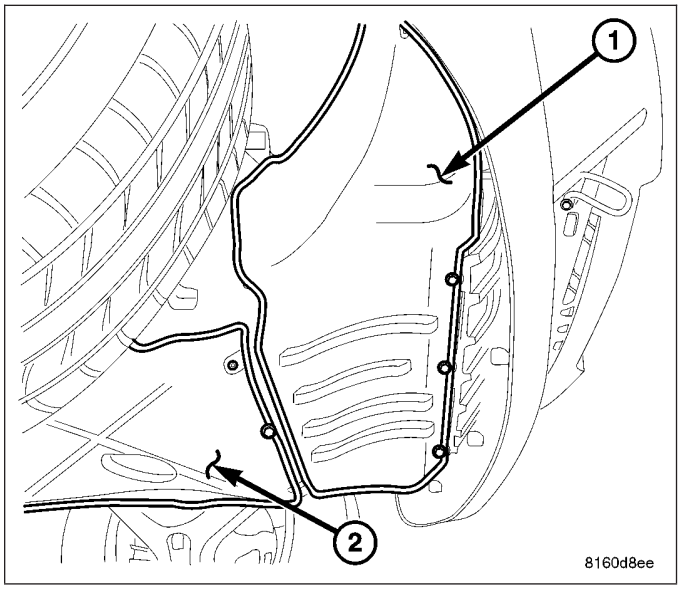

VACUUM PUMP

DESCRIPTION

The vacuum pump is a constant displacement, vane-type pump. Vacuum is generated by vanes mounted in the pump rotor. The rotor is located in the pump housing and is pressed onto the pump shaft.

The vacuum pump operates by a slotted extension attached to the vacuum pump shaft. The vacuum pump shaft slotted extension fits into, and is driven by, the exhaust camshaft gear.

The vacuum pump rotating components are internally lubricated and the vacuum pump has no serviceable parts. Do not disassemble or attempt to repair the pump.

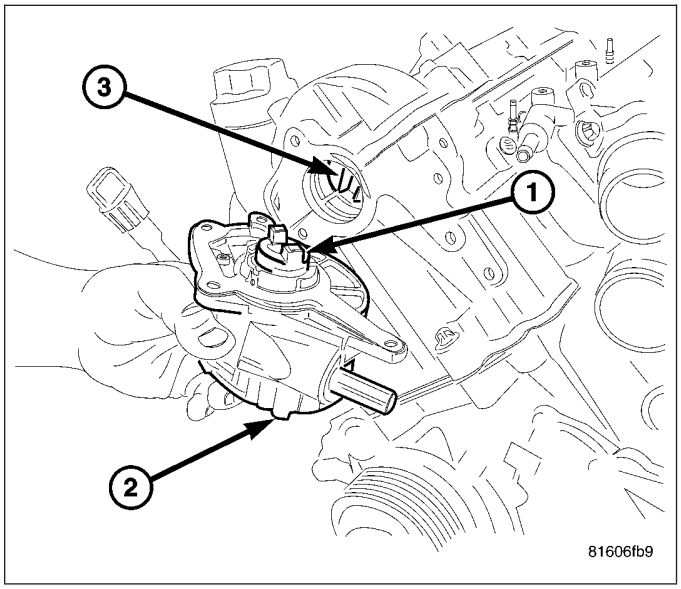

OPERATION

Vacuum pump output is transmitted to the Heater, Electronic, Vacuum, Air Conditioner (HEVAC) and brake vacuum booster, systems through a supply hose. The hose is connected to an outlet port on the pump housing and uses an in-line check valve to retain system vacuum when vehicle is not running.

Pump output ranges from a minimum of 8.5 to 25 inches vacuum.

The pump rotor and vanes are rotated by the slotted pump drive gear which fits into the camshaft drive gear.

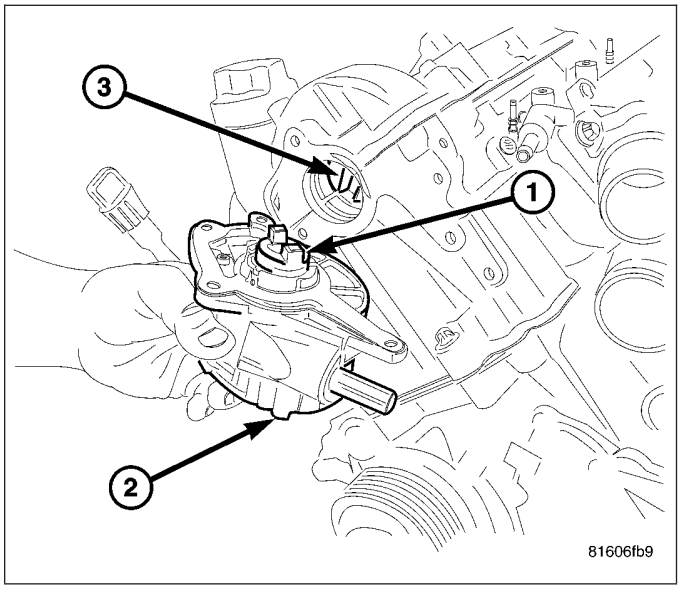

REMOVAL

1. Disconnect negative battery cable.
2. Remove vacuum line at vacuum pump.

NOTE: Observe position of driver on rear of pump.

3. Remove vacuum pump and seals.
4. Clean all sealing surfaces.

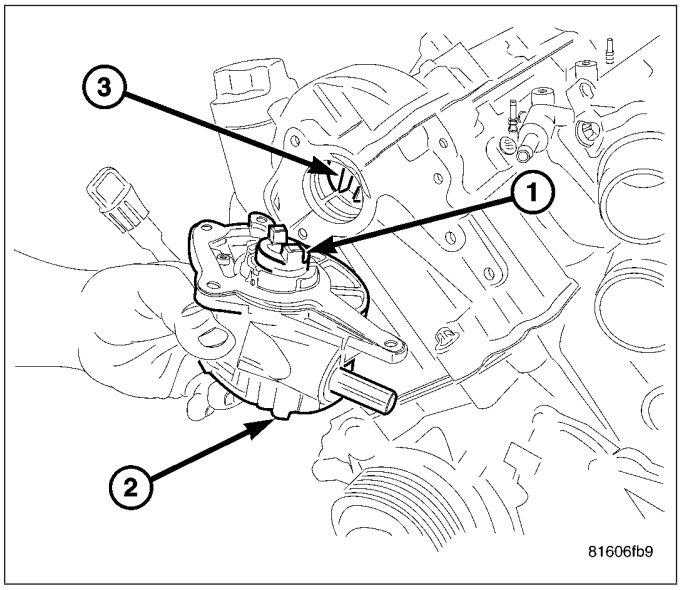

INSTALLATION

1. Clean all sealing surfaces.
2. Position driver on rear of pump and install vacuum pump with new seals. Tighten bolts to 14 N·m (124 lbs. in.).
3. Install vacuum line to vacuum pump.
4. Connect negative battery cable.

WARNING: Use Extreme Caution When The Engine Is Operating. Do Not Stand In A Direct Line With The Fan. Do Not Put Your Hands Near The Pulleys, Belts Or Fan. Do Not Wear Loose Clothes.

5. Start the engine and inspect for leaks.

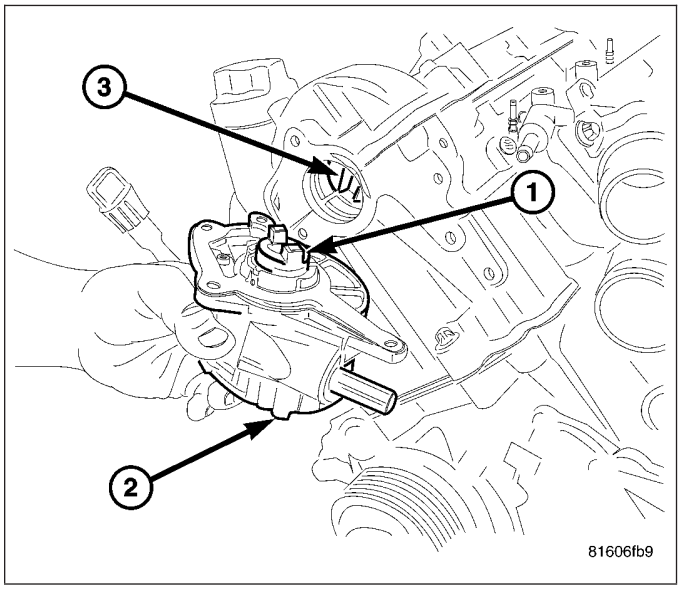

LEFT MOUNT

REMOVAL

1. Disconnect the negative battery cable. (Refer to 8 - ELECTRICAL/BATTERY SYSTEM/CABLES - REMOVAL)
2. Remove the engine cover. (Refer to 9 - ENGINE - REMOVAL)
3. Remove the engine cover brackets and transmission tube retainer.
4. Remove the battery and battery tray.
5. Remove power distribution center (PDC) from bracket and set aside.
6. Remove PDC bracket.
7. Reposition engine wiring harness.
8. Raise and support the vehicle.
9. Loosen both right and left engine mount through bolts.
10. Lower the vehicle.
11. Install clevis brackets through engine lifting fixtures.
12. Install engine lifting chain to clevis brackets.
13. Install engine lift and hoist engine.
14. Remove the left engine mount retaining bolts
15. Remove the engine mount.

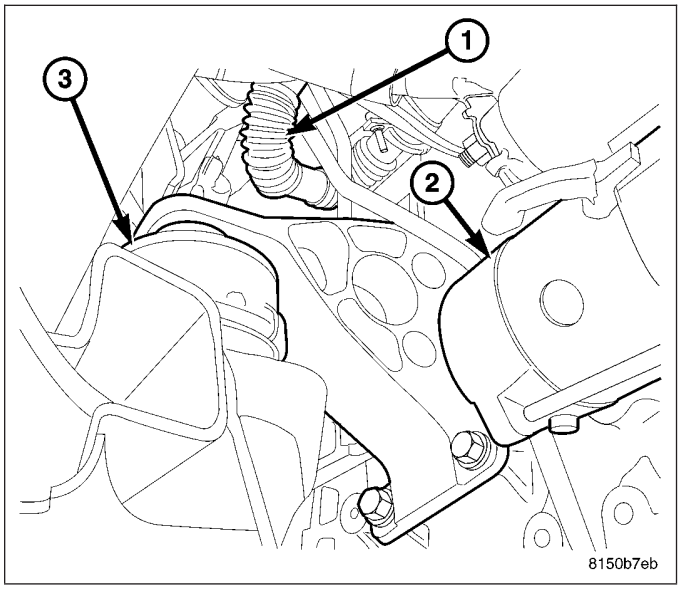

INSTALLATION

1. Position the engine mount, install the bolts and tighten the retaining bolts to 20 N·m (15 ft. lbs.) and then an additional 90°.
2. Lower the engine and remove the engine hoist with chain.
3. Raise and support the vehicle.
4. Install the engine mount through bolts. Tighten bolts to 110 N·m (82 lbs. ft.).
5. Install the splash shield.
6. Lower the vehicle.
7. Install the power distribution center (PDC) bracket and PDC.
8. Install the battery tray and battery.
9. Install the engine cover bracket and secure the transmission tube.
10. Install the engine cover front bracket.
11. Install the engine cover.
12. Install the front structural bracket.
13. Install the coolant recovery container.
14. Connect the negative battery cable.

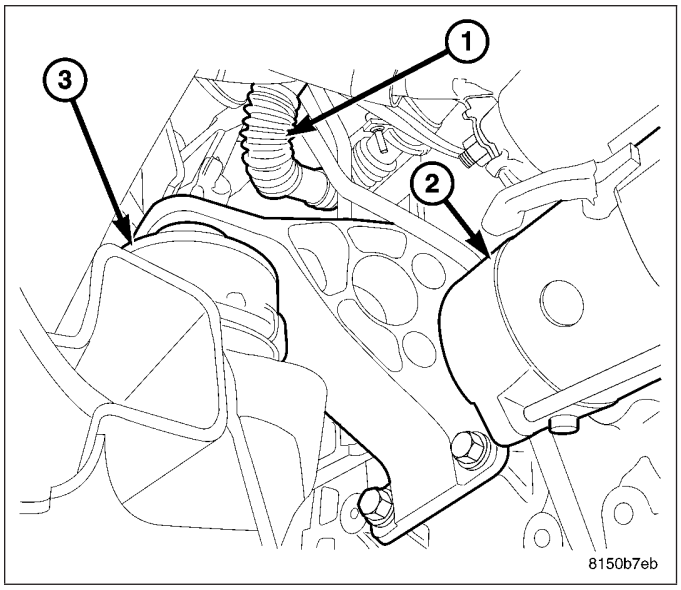

RIGHT MOUNT

REMOVAL

1. Disconnect the negative battery cable.
2. Remove the engine cover.
3. Remove the front engine cover bracket.
4. Separate the transmission level indicator tube from bracket and remove the rear engine cover bracket.
5. Install clevis bracket to engine lift brackets.
6. Install engine lifting chain through clevis brackets.
7. Raise and support the vehicle.
8. Remove the skid plate.
9. Drain engine oil.
10. Loosen both engine mount through bolts.
11. Lower the vehicle.
12. Remove the oil level indicator tube.

NOTE: Care must be taken not to crush the turbocharger against the windshield cowl when raising and supporting the engine.

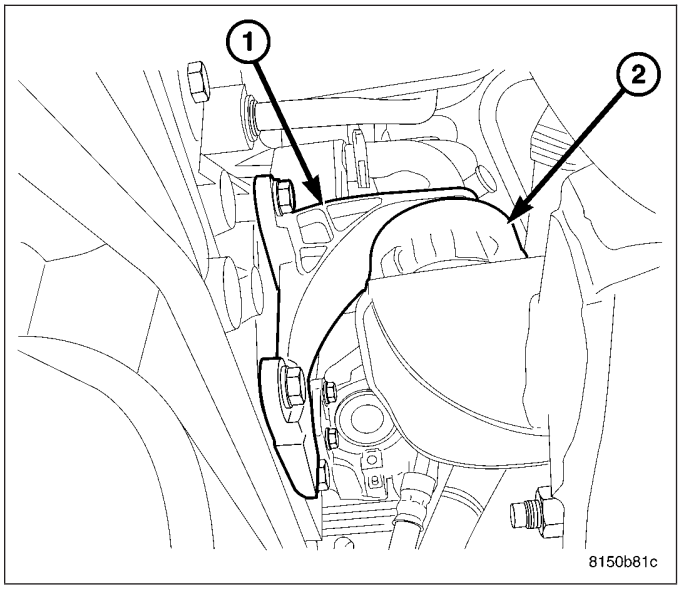

13. Connect an engine lift and support the engine.
14. Remove the engine mount retaining bolts.
15. Remove the engine mount.

INSTALLATION

1. Position and install the engine mount to engine bolts. Tighten bolts to 45N·m (33 lbs. ft.).
2. Lower the engine and remove the lifting fixtures.
3. Install the oil level indicator tube.
4. Raise and support the vehicle.
5. Tighten the engine mount through bolts to 110 N·m (81 ft. lbs.).
6. Install the skid plate.
7. Lower the vehicle.
8. Install the rear engine cover bracket and secure the transmission level indicator tube.
9. Install the front engine cover bracket.
10. Fill the engine with the correct viscosity oil to the proper level.
11. Connect the negative battery cable.
12. Install the engine cover.

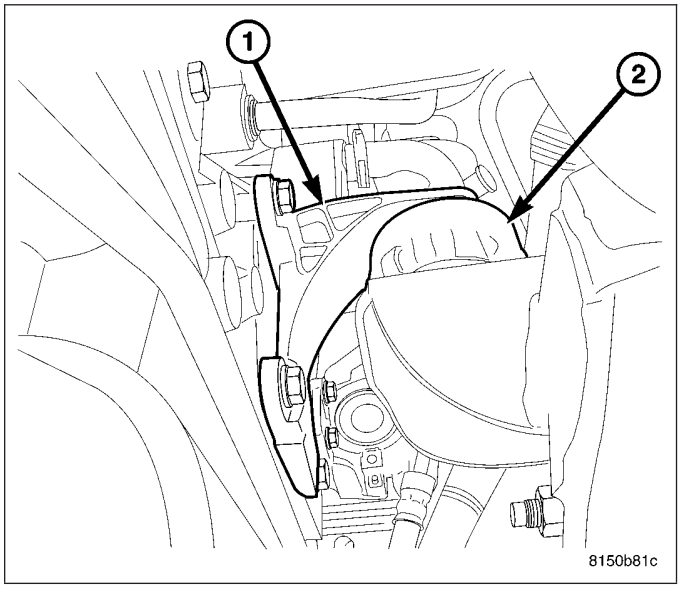

LUBRICATION

DESCRIPTION

An efficient and acoustically optimized chain drive external gear pump is used for supply.

Oil is circulated through a high volume primary oil filter on the engine to one of the oil/water coolers in the “V” of the engine. The oil cooler maintains a maximum oil temperature of 140° C (284°F).

After the oil cooler, the oil is directed into the balance shaft tunnel that at the same time is the primary oil duct of the crankcase. Short passages lead to the crankshaft main bearings. The inlet pressurized piston oil injectors are located directly on the main oil channel and are supplied there.

Front mounted passages supply the cylinder heads. The hydraulically loaded chain tensioner is supplied via the right cylinder head in the direction of travel.

The oil supply and return of the turbo charger is integrated in the cast steel turbo charger carrier.

OIL

DESCRIPTION

Refer to the Lube and Maintenance section for oil specifications (Refer to LUBRICATION & MAINTENANCE/FLUID TYPES - DESCRIPTION).

OIL FILTER

REMOVAL

1. Using 9551 Oil Filter Socket, unscrew the oil filter cap.
2. Remove clean and inspect cap gasket, replace as necessary.
3. Remove and discard the oil filter.

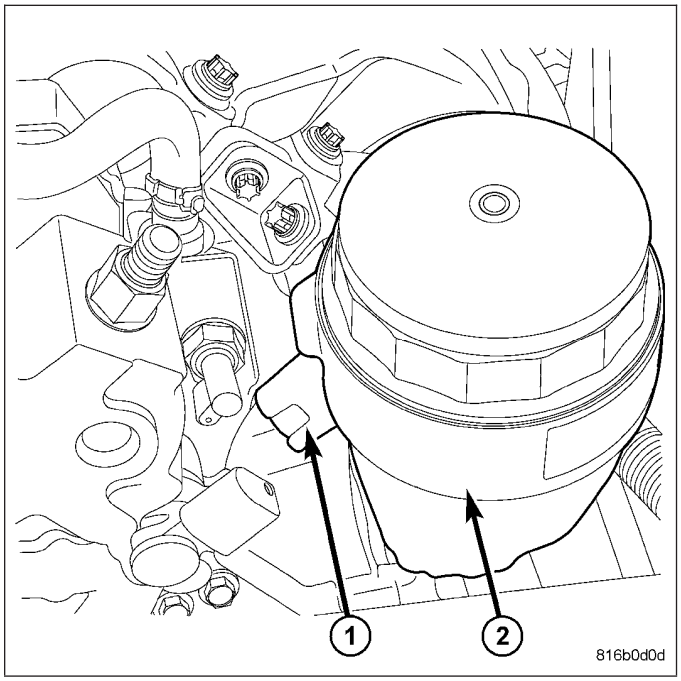

INSTALLATION

1. Inspect oil filter cap gasket, lubricate with clean engine oil.
2. Install oil filter.
3. Screw oil filter cap to housing and tighten to 25 N·m (18 lbs. ft.) using 9551 Oil Filter Socket. Adjust oil level as necessary.

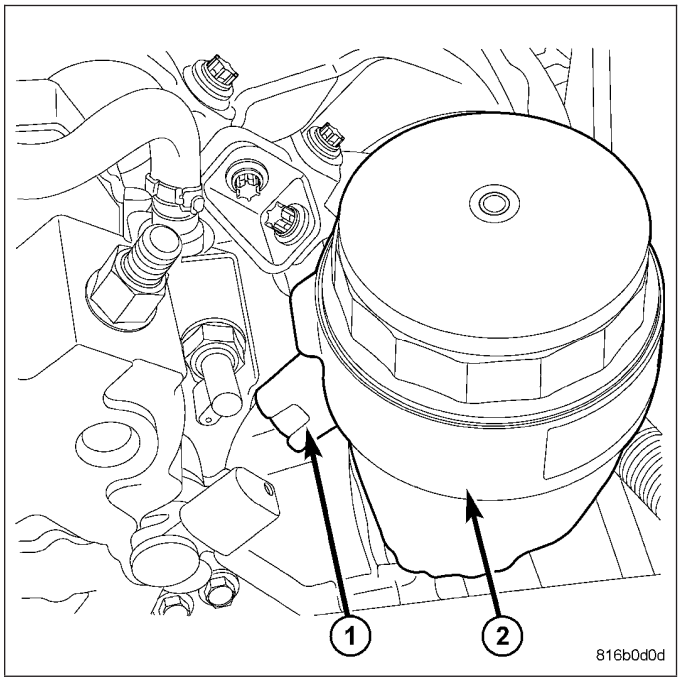

OIL PAN

REMOVAL

REMOVAL

1. Disconnect negative battery cable. (Refer to 8 - ELECTRICAL/BATTERY SYSTEM/CABLES - REMOVAL)
2. Remove the accessory belt.
3. Remove the A/C compressor and position aside.

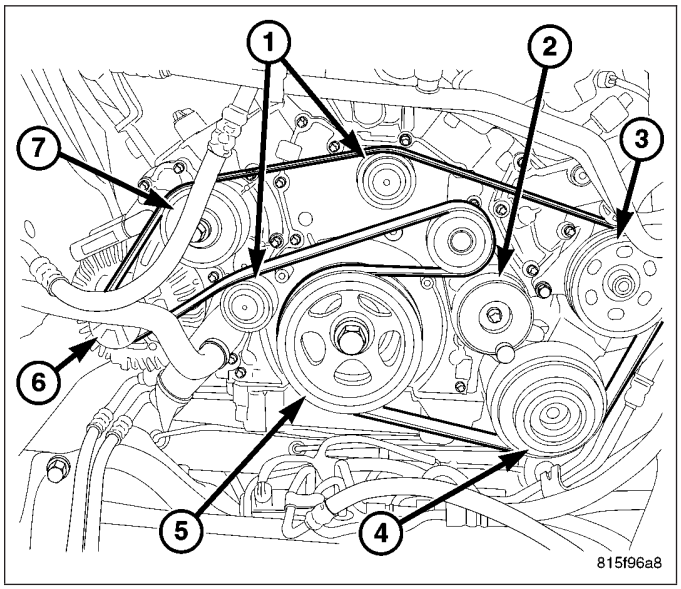

4. Remove the lower oil pan. (Refer to 9 - ENGINE/ LUBRICATION/OIL PAN - REMOVAL)
5. Remove the transmission. (Refer to 21 - TRANSMISSION/TRANSAXLE/AUTOMATIC - NAG1 - REMOVAL)
6. Remove the flex plate. (Refer to 9 - ENGINE/ENGINE BLOCK/FLEX PLATE - REMOVAL)
7. Remove the 5 bolts on the bottom of the rear main seal carrier.

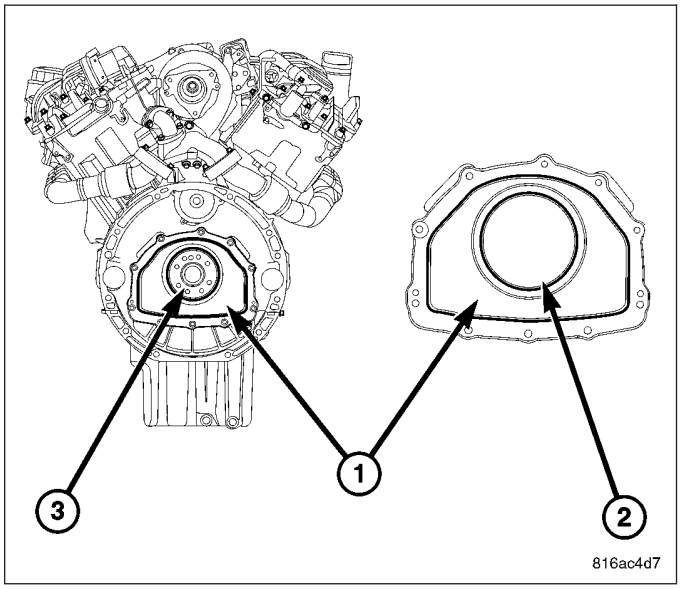

8. Disconnect the oil level sensor wiring harness connector.
9. Remove the oil pickup tube.
10. Remove oil pan bolts.
11. Remove the oil pan.

OIL PAN - LOWER

1. Disconnect negative battery cable. (Refer to 8 - ELECTRICAL/BATTERY SYSTEM/CABLES - REMOVAL)
2. Remove the oil level indicator tube (2) bolt, and position the oil level indicator aside.
3. Raise and support the vehicle.
4. Remove the skid plate
5. Drain the oil.

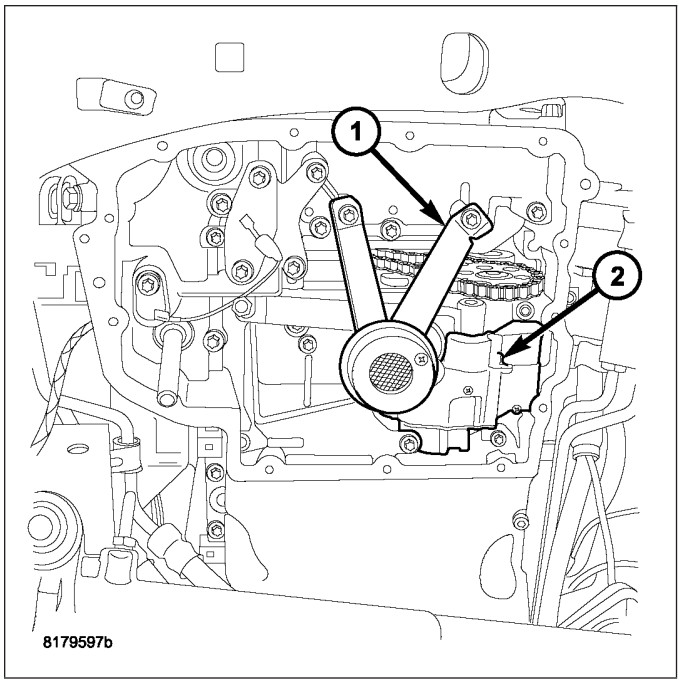

6. Remove the steering gear mounting bolts (1).

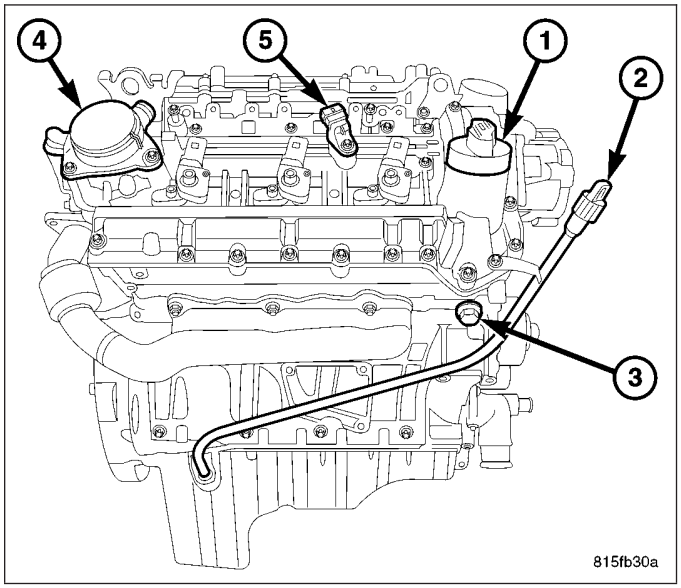

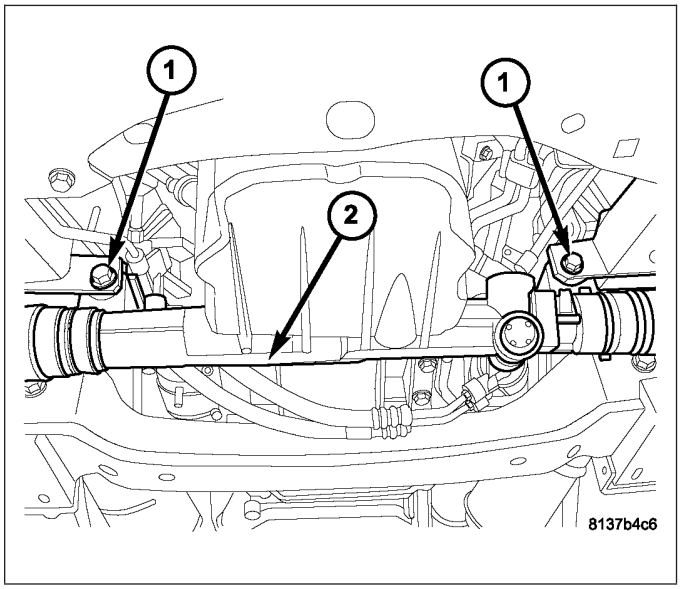

7. Remove the steering coupling, and position the steering gear aside.

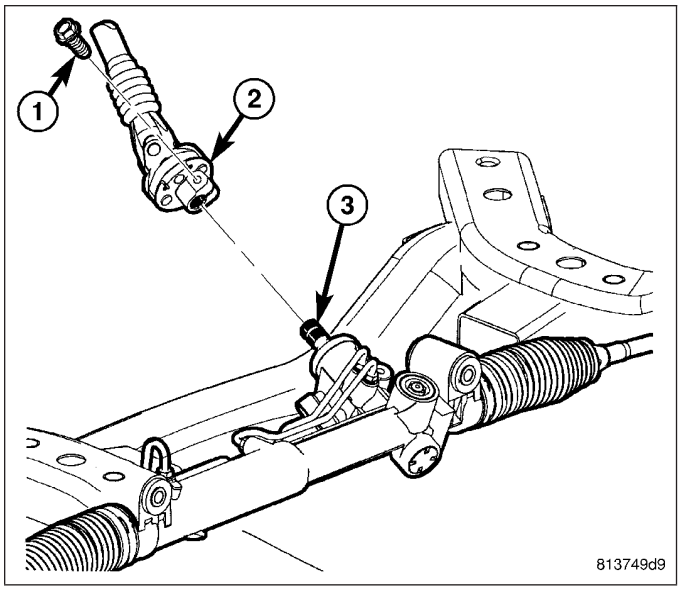

8. Disconnect the oil temperature sensor.
9. Remove the lower oil pan.

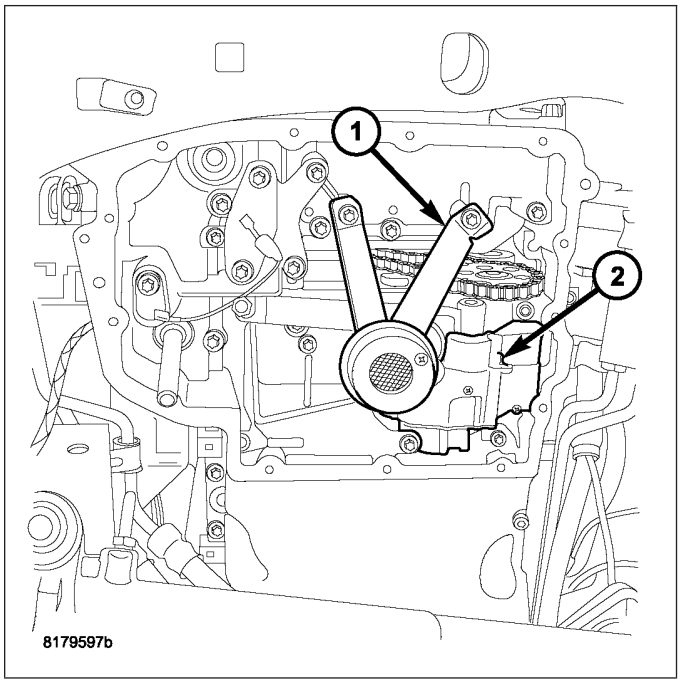

INSTALLATION

INSTALLATION

NOTE: Sealing surfaces must be free of a gasket material and oil residue.

1. Clean the lower and upper oil pan and sealing surfaces. Inspect oil pan sealing surfaces and engine block.

NOTE: If installing a new oil pan, exchange the oil temperature sensor and the oil level sensor.

2. Install the upper oil pan, sealant, oil pan retaining bolts, hand tight.

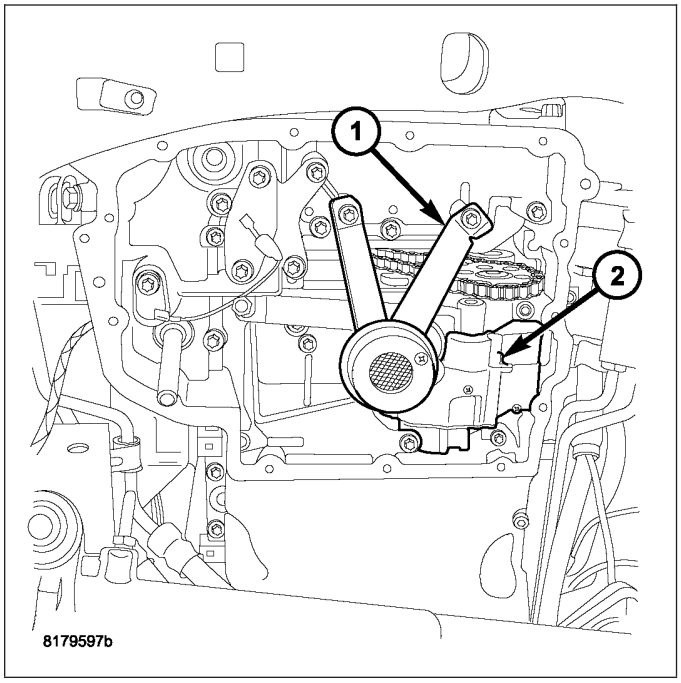

3. Install the bolts holding the rear main seal carrier (1) to the oil pan. Torque the bolts to 9 N·m (7 ft. lbs.).

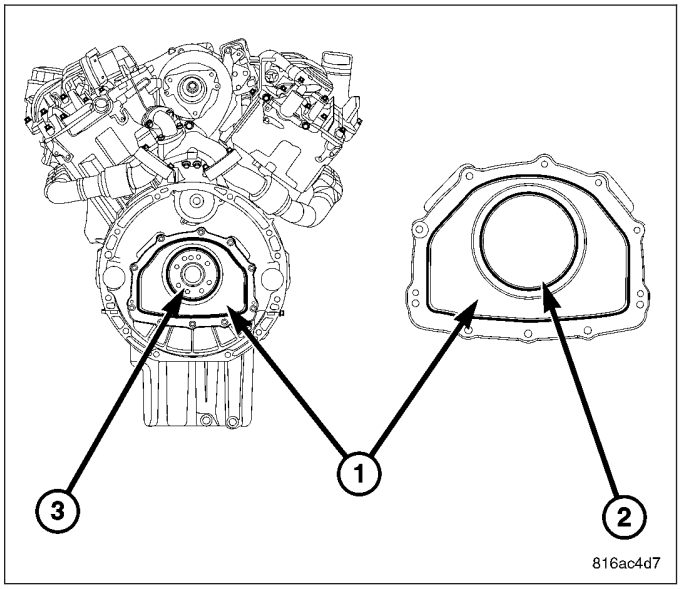

4. Install the flex plate.
5. Install the transmission.
6. Push the oil pan against the transmission and tighten transmission to oil pan bolts first, including the rear main seal carrier bolts.
7. Tighten the upper oil pan bolts to 12 N·m (106 lbs.in.) in the sequence provided. Tighten bolts 15 and 16 to 20 N·m (177 in. lbs.).

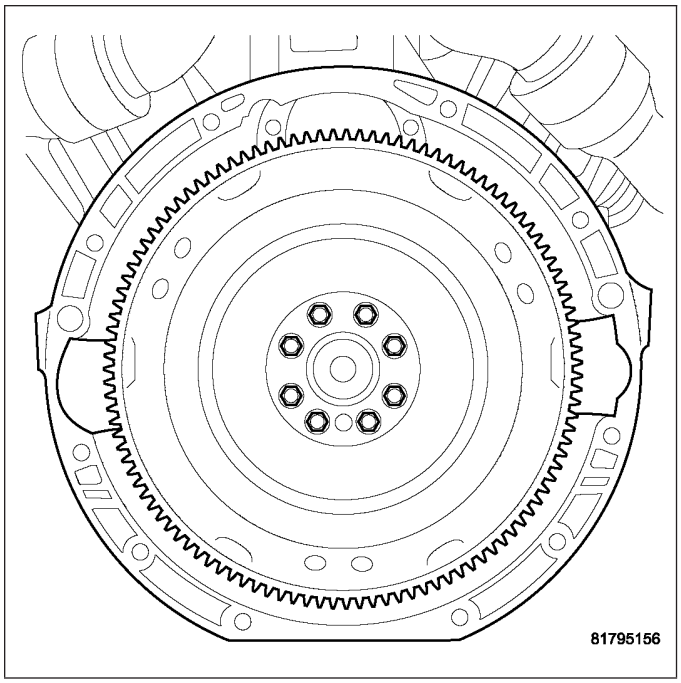

8. Install the oil pickup tube bolts.
9. Install the oil level sensor.
10. Install the lower oil pan, sealant, lower oil pan retaining bolts, hand tight.
11. Tighten the bottom oil pan bolts to 12 N·m (106 in. lbs.) in the sequence provided.
12. Connect the oil temperature and oil level sensor wiring harness connectors.
13. Lower the vehicle and install the oil level indicator tube.
14. Fill the oil pan to the appropriate level with the correct viscosity engine oil.
15. Connect the negative battery cable.
16. Start the engine, allow to warm.
17. Turn engine off and inspect for leaks.
18. Install the skid plate.

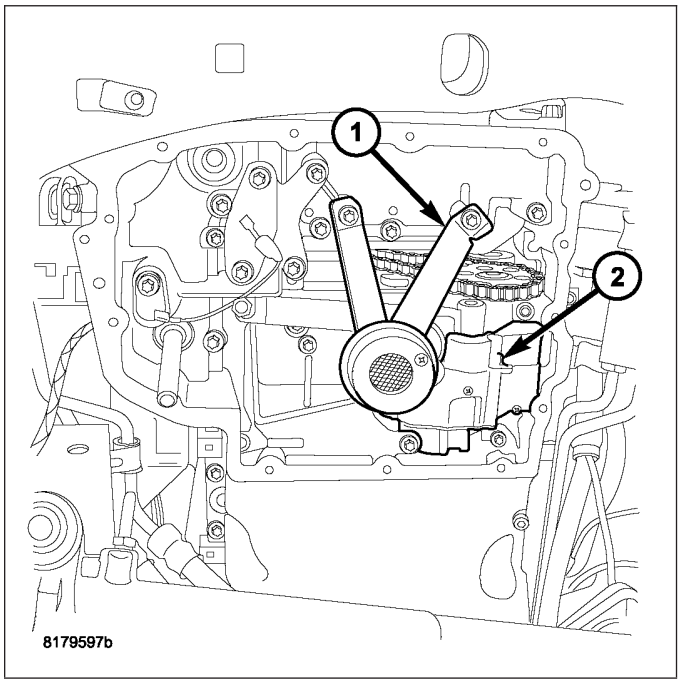

OIL PAN - INSTALLATION

NOTE: Sealing surfaces must be free of a gasket material and oil residue.

1. Clean oil pan and sealing surfaces. Inspect the oil pan sealing surfaces.

NOTE: If installing a new oil pan, exchange the oil temperature sensor and the oil level sensor.

2. Install oil pan, sealant, oil pan retaining bolts, hand tight.
3. Tighten the bottom oil pan bolts to 12 N·m (106 in. lbs.).
4. Connect the oil temperature and sensor wiring harness connector.

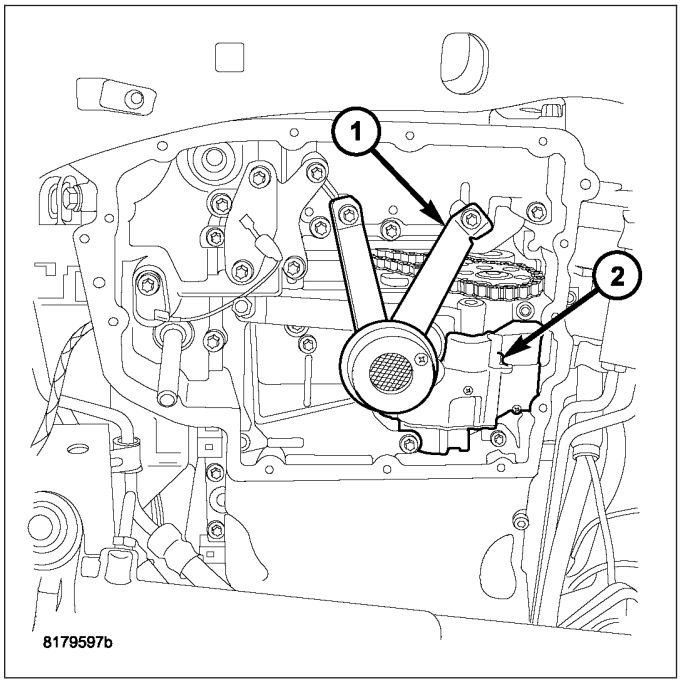

CAUTION: Prior to coupling installation, make sure gear is centered in its travel to match clockspring centering in steering column.

5. Align coupling (2) with input shaft (3) and install steering coupling. Install NEW pinch bolt. Tighten bolt to 54 N·m (40 ft. lbs.) torque.

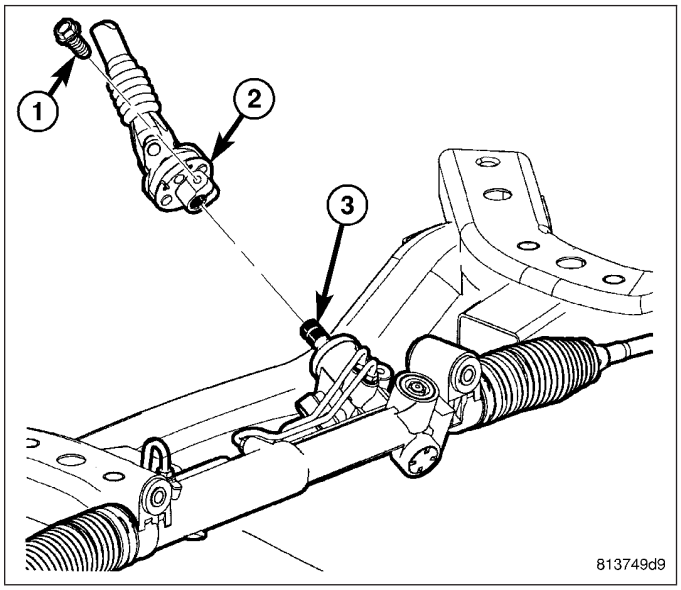

6. Lower the vehicle and install the oil level indicator tube.
7. Fill the oil pan to the appropriate level with the correct viscosity engine oil.
8. Connect the negative battery cable.
9. Start the engine, allow to warm.
10. Turn engine off and inspect for leaks.
11. Install the skid plate.

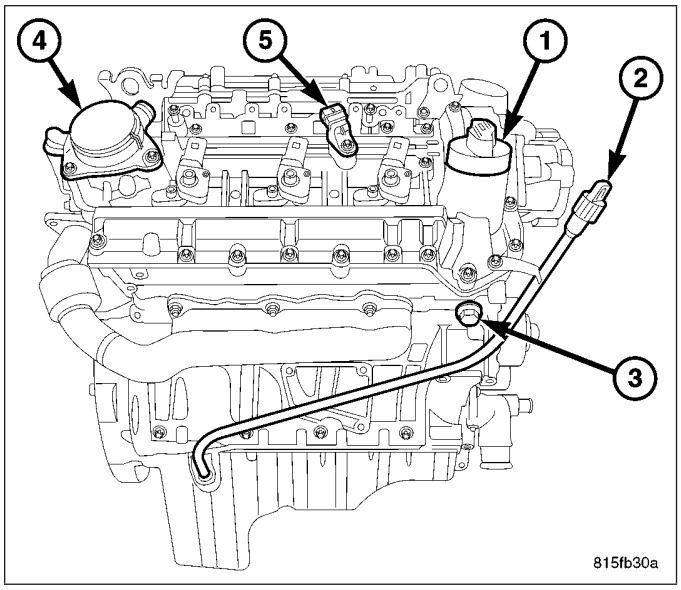

OIL PRESSURE RELIEF VALVE

DESCRIPTION

The oil pressure relief valve is integral to the oil pump and is not serviceable.

OIL PRESSURE SENDING UNIT

DESCRIPTION

The engine oil pressure sensor is mounted on the front of the oil filter housing. The sensor provides an output voltage to the ECM that corresponds to the engine oil pressure. Under certain operating conditions, for example low oil pressure, it may be necessary for the ECM to increase the engine idle speed to ensue adequate engine lubrication.

The engine oil pressure sensor is a three wire sensor with a threaded pressure port. The pressure port is mounted to the oil filter housing through an access hole. An aluminium seal ring seals the engine oil pressure sensor to the oil filter housing.

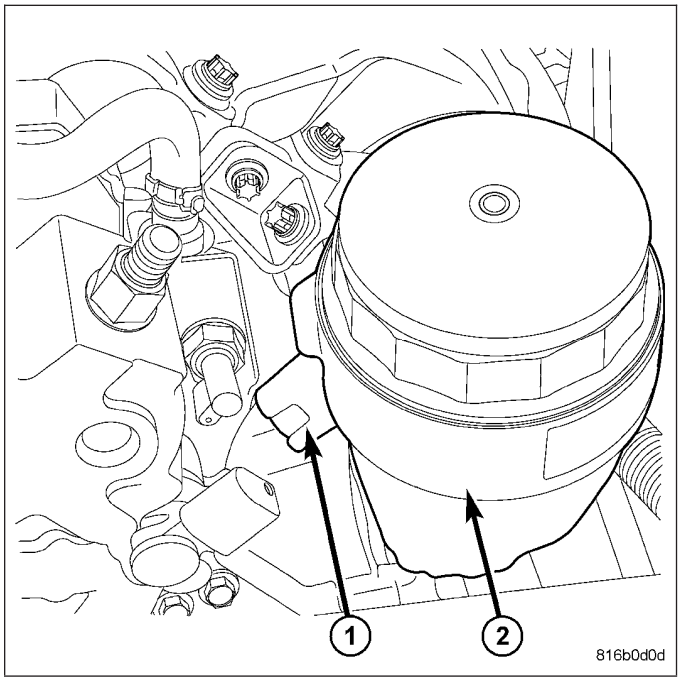

OPERATION

The engine oil pressure sensor receives a 5- volt reference from the ECM. The sensor ground is also provided by the ECM. The sensor output voltage varies from 0.5 to 4.5 volts depending on engine oil pressure.

REMOVAL

1. Open hood and disconnect negative battery cable.
2. Disconnect engine oil pressure sensor connector.
3. Remove engine oil pressure sensor from the engine.

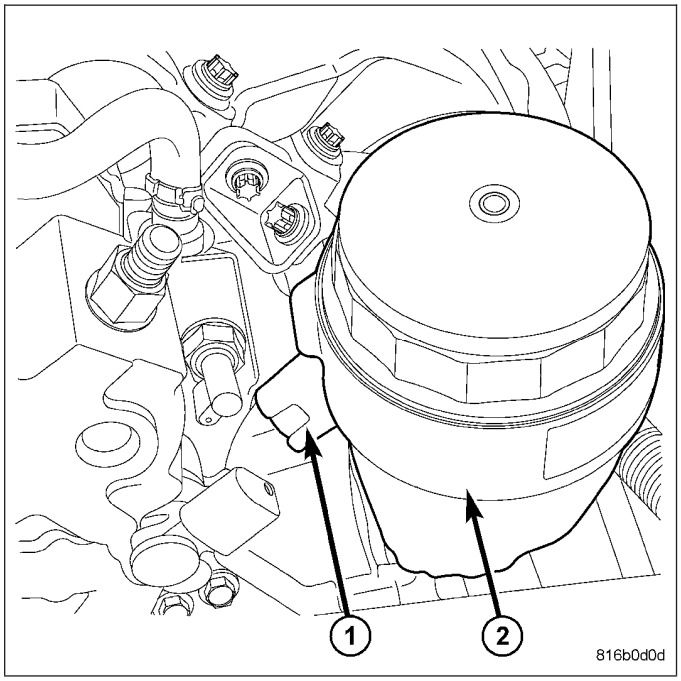

INSTALLATION

1. Install the engine oil pressure sensor to the engine. Torque sensor to 15 N·m (11 ft. lbs.).
2. Connect engine oil pressure sensor electrical connector to the sensor.
3. Add engine oil and check engine oil level as needed.
4. Connect the negative battery cable.
5. Start vehicle and inspect for leaks.

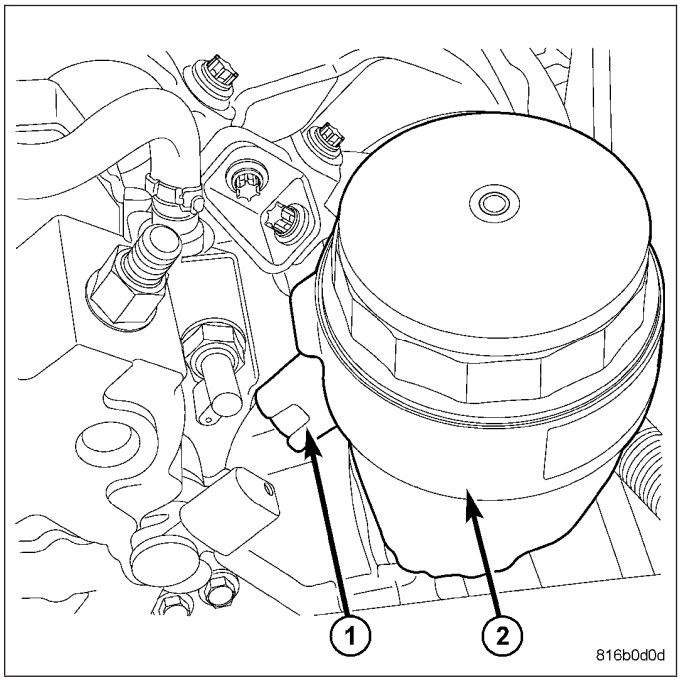

OIL PUMP

REMOVAL

OIL PUMP PICKUP TUBE

1. Disconnect negative battery cable.
2. Raise vehicle on hoist.
3. Remove oil pan (Refer to 9 - ENGINE/LUBRICATION/OIL PAN - REMOVAL).
4. Remove oil pump pickup tube retaining bolt and pull pickup tube from engine block. Discard O-rings.

REMOVAL

1. Remove oil pan. (Refer to 9 - ENGINE/LUBRICATION/OIL PAN - REMOVAL)
2. Remove fasteners at the oil pump cover.
3. Remove oil pump fasteners (1).
4. Remove oil pump from the crankcase.

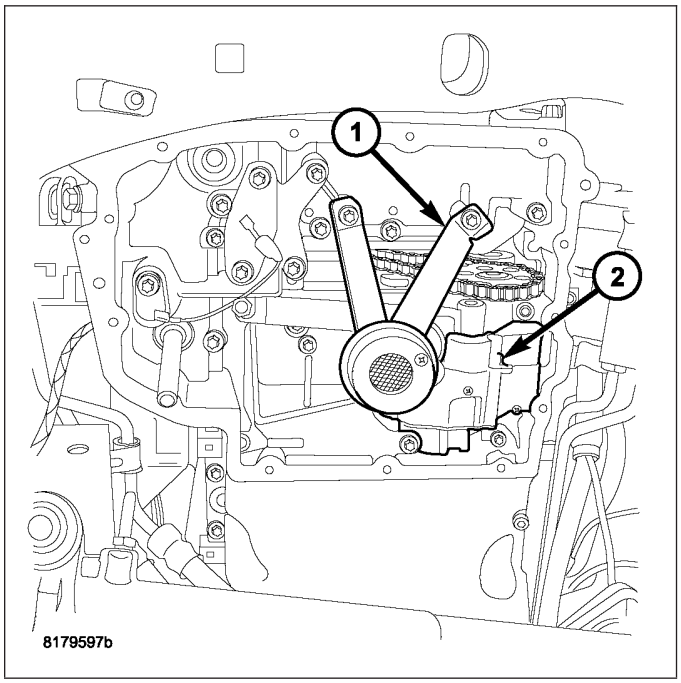

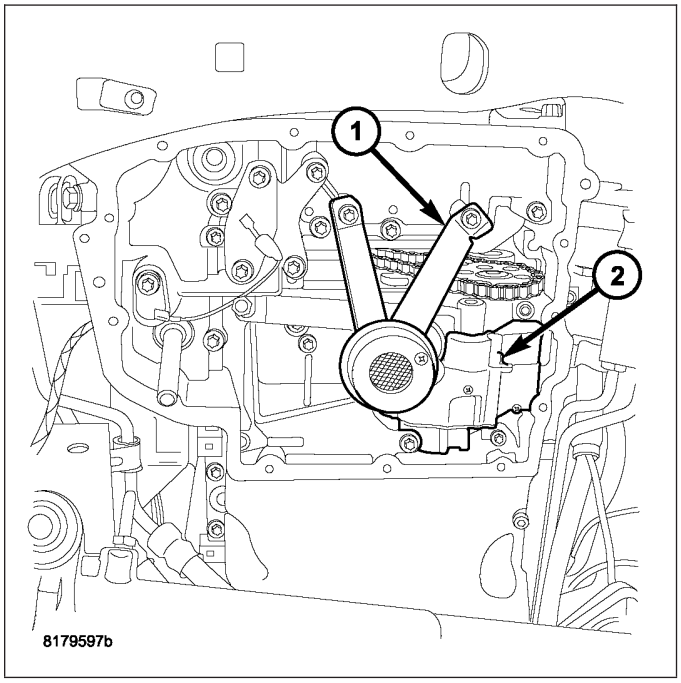

INSTALLATION

OIL PUMP PICKUP TUBE

1. Lubricate o-rings on oil pump pickup tube with engine oil.
2. Install pickup tube in engine block and install retaining bolt. Torque bolt to 32.4 N·m. (24 ft.lbs.).
3. Install oil pan (Refer to 9 - ENGINE/LUBRICATION/OIL PAN - INSTALLATION).
4. Refill engine oil to proper level.
5. Connect negative battery cable.

INSTALLATION

1. Clean the strainer of the oil pump and replace sealing ring. Fill oil pump with engine oil so that oil is delivered when first starting engine.
2. Install the oil pump.
3. Install fastener for oil pump. Torque fastener to 19 N·m (14 ft. lbs.).
4. Install fastener for oil pump cover (1) with oil pipe (2) to oil pump. Torque fastener to 12 N·m (9 ft. lbs.).
5. Install bracket to the oil pump. Torque fastener to 9 N·m (7 ft. lbs.).
6. Install oil pan. (Refer to 9 - ENGINE/LUBRICATION/OIL PAN - INSTALLATION).

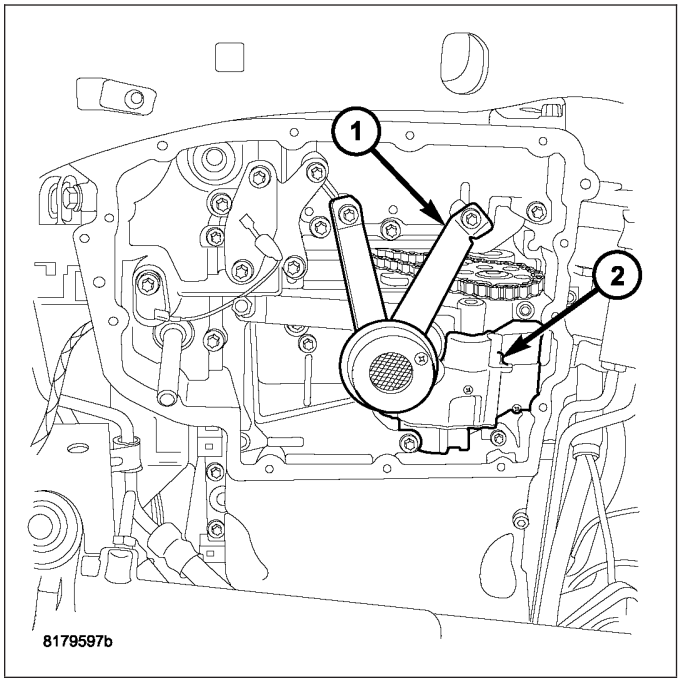

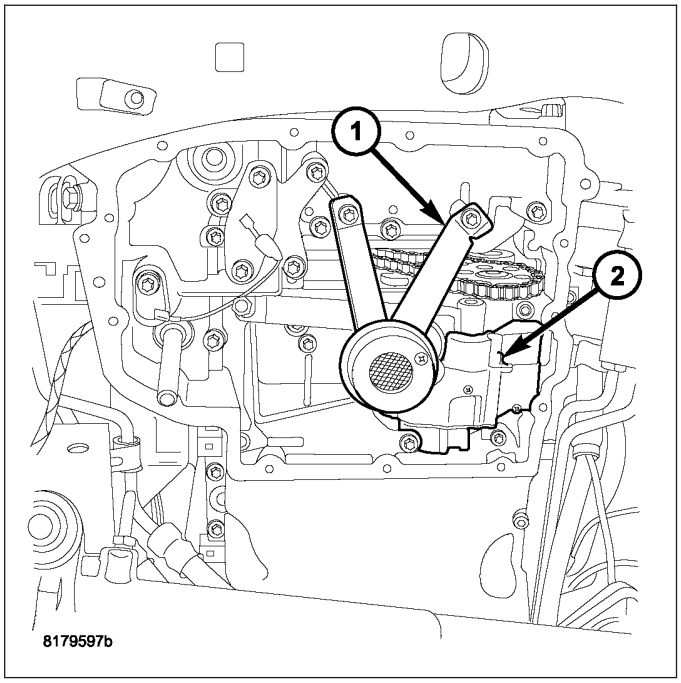

OIL JET

DESCRIPTION

Three dual-nozzle oil jets are bolted to the cylinder block underneath the main oil gallery. The jets connect with an oil-tight fit to the main gallery through lubrication passages. Each oil jet helps cool two opposite pistons. Proper oil jet alignment is important. Each nozzle is designed to alternatively spray oil through both cooling galleries within the piston. The oil spray is aimed at one of the cooling galleries as the piston approaches TDC. As the piston approaches BDC, the oil spray is aimed at the adjacent cooling gallery.

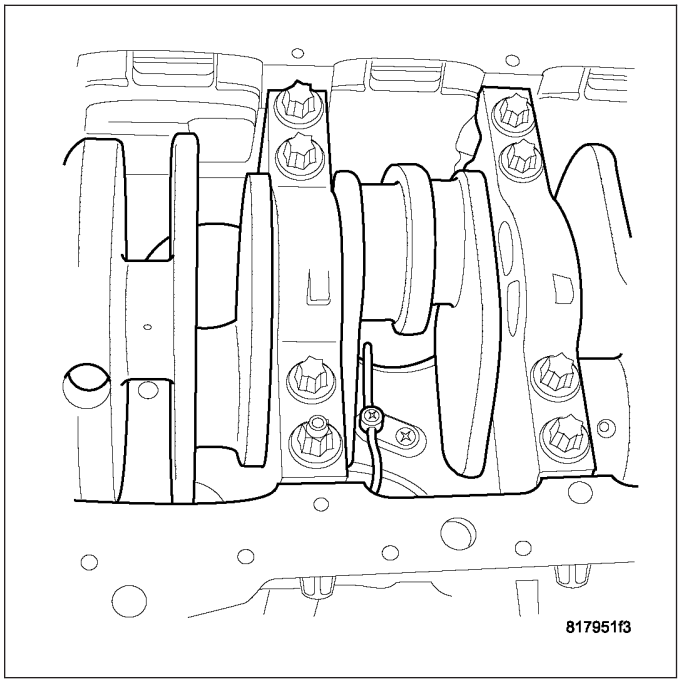

REMOVAL

CAUTION: Use caution when removing and installing oil jets. Damage to oil jet nozzle could cause severe engine damage. Care must be taken not to damage the crankshaft tone ring when removing cylinder number four oil jet.

1. Disconnect negative battery cable.
2. Raise vehicle on hoist.
3. Remove oil pan.
4. Remove oil jet retaining bolt and remove oil jet from engine block.

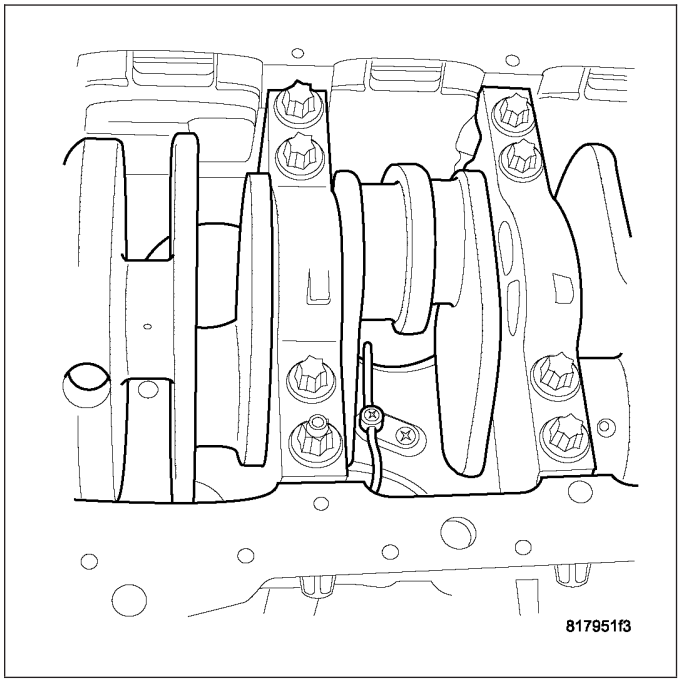

INSTALLATION

CAUTION: Use caution when removing and installing oil jets. Damage to oil jet nozzle could cause severe engine damage.

1. Lubricate o-ring on oil jet.
2. Install oil jet in engine block
3. Install oil jet retaining bolt. Torque bolt to 11N·m.(96 in.lbs.).
4. Install oil pan.
5. Fill engine oil to proper level.
6. Connect negative battery cable.

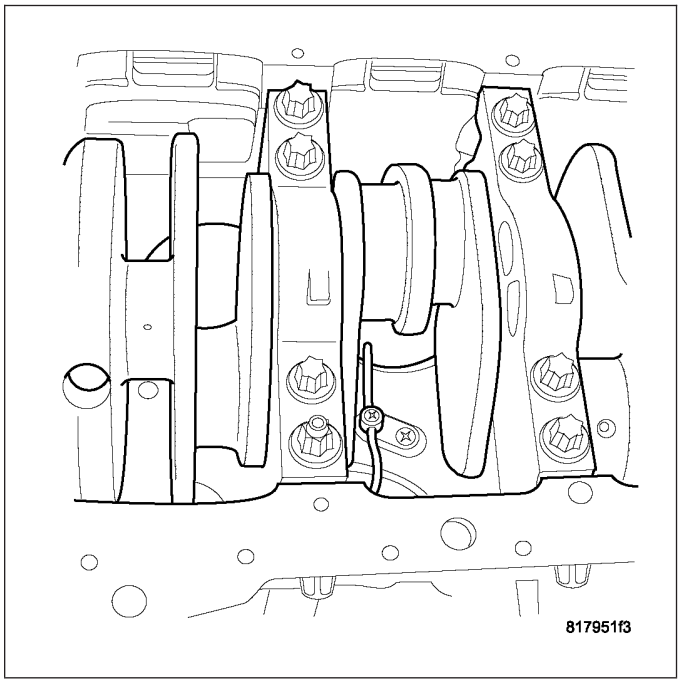

PCV

DESCRIPTION

Located on the rear of the right cylinder head cover is a positive crankcase ventilation (PCV) valve (1). Internal engine vapor is captured, the solid particulates are separated by a diffuser located on the right exhaust camshaft, and the vapor is reused during the combustion process.

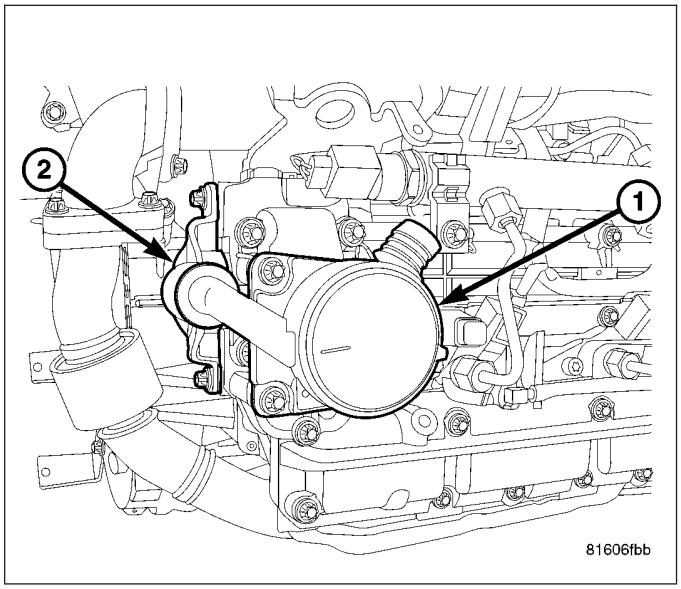

REMOVAL

1. Remove the engine cover.

NOTE: Inspect the oil drain back access hole in the intake manifold/cylinder head cover to assure that it is free of obstruction.

2. Remove the oil separator fasteners and oil separator.

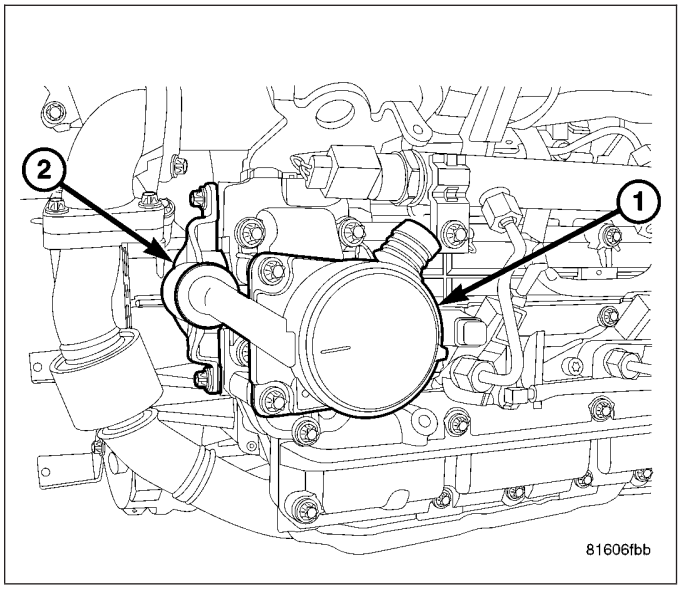

INSTALLATION

NOTE: Inspect the oil drain back access hole in the intake manifold/cylinder head cover to assure that it is free of obstruction.

1. Lubricate the Positive Crankcase Ventilation (PCV) o-rings with clean engine oil.
2. Carefully position and push down on the PCV to seat.
3. Install thePCV retaining fasteners. Tighten fasteners to 10.8 N·m (96 lbs. in.).

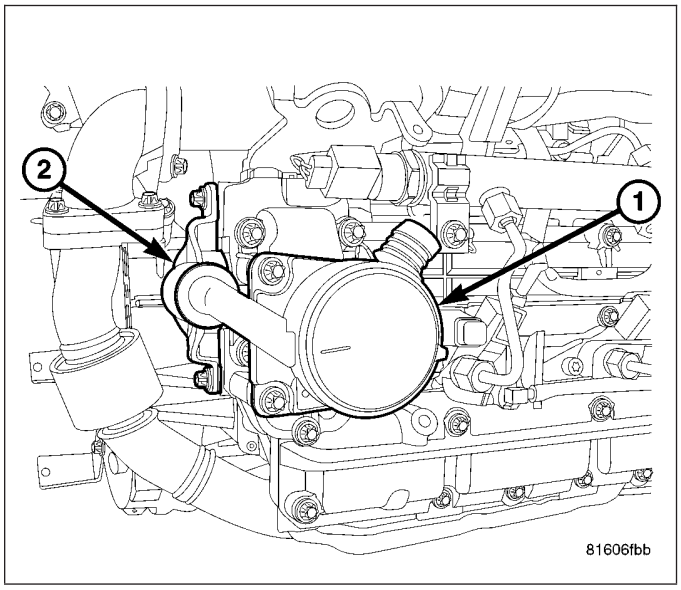

OIL COOLER

DESCRIPTION

A plate style external oil cooler is mounted in the “V” of the engine block. Engine coolant is used to cool the oil. The gasket should be replaced anytime you are servicing the oil cooler. When replacing the engine block, inspect the oil cooler for damage or restrictions. If the oil cooler is not damaged or restricted, it can be reused.

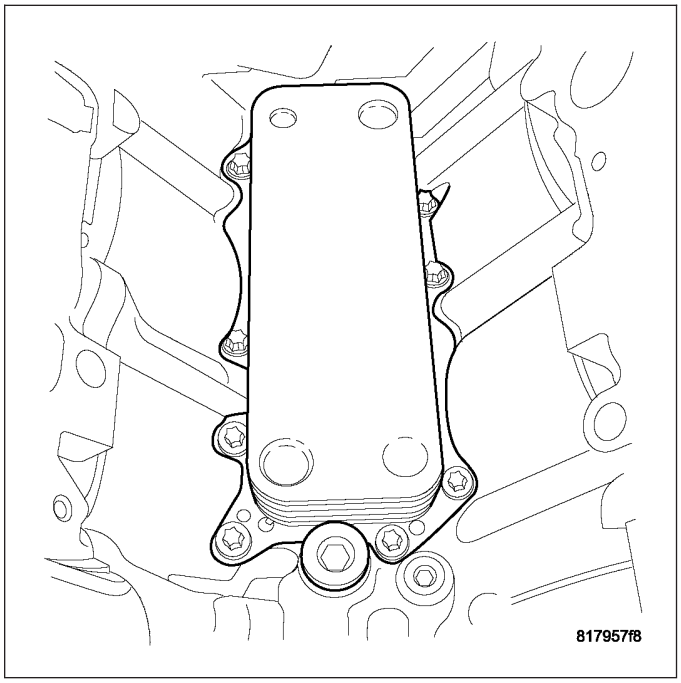

REMOVAL

1. Disconnect the negative battery cable.
2. Drain the cooling system.
3. Remove the air cleaner assembly (Refer to 9 - ENGINE/AIR INTAKE SYSTEM/AIR CLEANER HOUSING - REMOVAL).
4. Remove the coolant reservoir and hoses.
5. Remove the charge air cooler hose between turbo-charger and cooler.
6. Remove the lower radiator hose at the water pump housing assembly.
7. Remove the water pump housing assembly.
8. Remove the engine oil cooler.

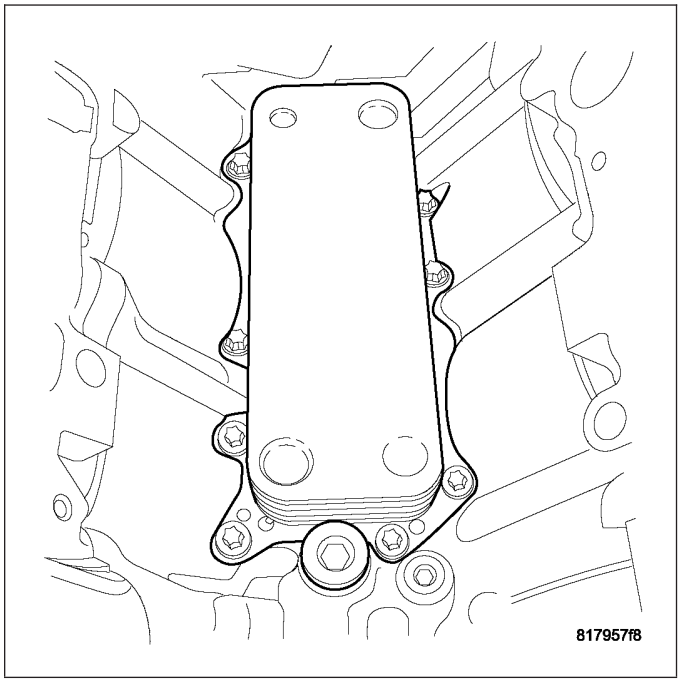

INSTALLATION

1. Clean all engine mating surfaces.
2. Position the oil cooler and gasket. Install the fasteners and tighten to 10.8 N·m (96 in. lbs.).
3. Install the water pump housing assembly with new gasket. Tighten fasteners to 24.5 N·m (18 ft. lbs.).
4. Install the oil cooler coolant hose.
5. Install the power steering reservoir.
6. Install heater hoses at housing.
7. Install lower radiator hose at housing.
8. Install the charge air hose.
9. Install coolant reservoir and hoses.
10. Install air cleaner assembly (Refer to 9 - ENGINE/ AIR INTAKE SYSTEM/AIR CLEANER HOUSING - INSTALLATION).
11. Fill the coolant system
12. Connect the negative battery cable
13. Start engine, run until warm, turn the engine off, and inspect for leaks.

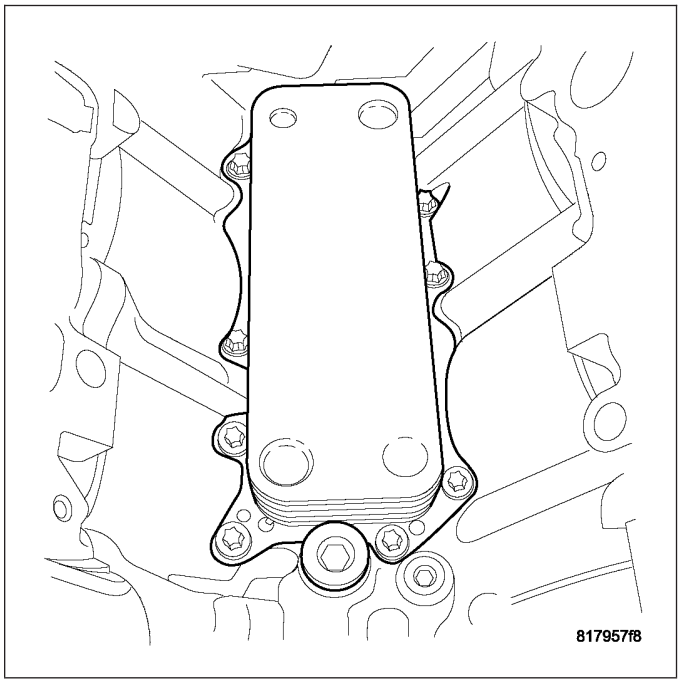

INTAKE MANIFOLD

DESCRIPTION

The aluminum intake manifold is a two piece design joined by a frontal cross coolant passage. Incorporated into the intake manifold assemblies are swirl and charge air channels. The swirl channels have blades that are electronically controlled by PWM signals from the ECM via a swirl valve actuator. In their normal resting position the swirl valves are open. Charge air and cooled EGR exhaust gasses are combined within the intake manifold. The swirl valve assembly assists in the mixing of these inlet airs within the cylinder. The swirl valves themselves are not serviceable separately, should a failure occur, the intake manifold must be replaced.

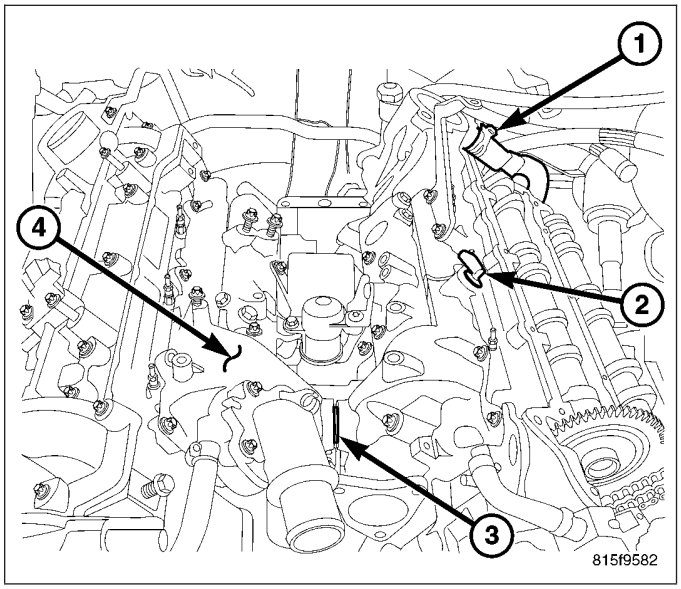

REMOVAL

1. Disconnect negative battery cable. (Refer to 8 - ELECTRICAL/BATTERY SYSTEM/CABLES - REMOVAL)
2. Remove the engine cover. (Refer to 9 - ENGINE - REMOVAL)
3. Drain the cooling system.
4. Remove the coolant reservoir an position aside.
5. Remove the strut tower support.

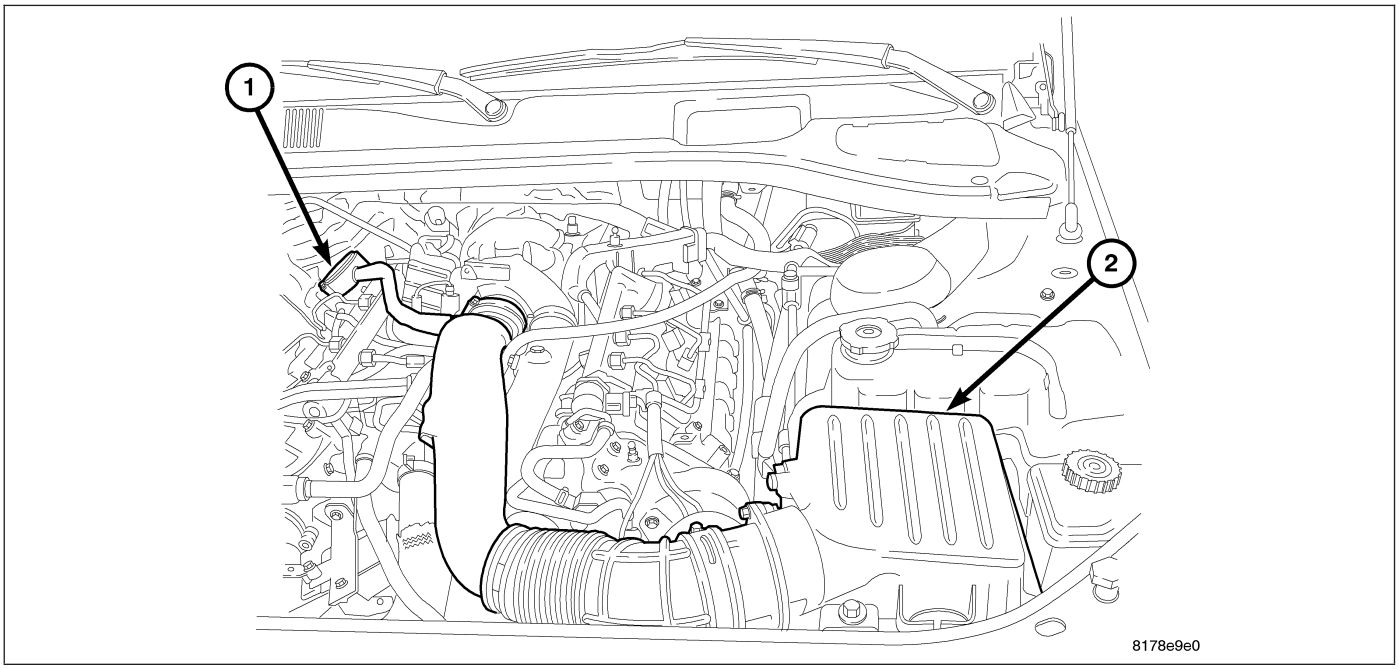

6. Remove the air cleaner housing cover and air inlet tube.
7. Remove the charge air outlet tube.
8. Remove the right rear engine cover bracket and disconnect the transmission oil level indicator tube retaining bolt.

9. Remove the turbo charger. (Refer to 11 - EXHAUST SYSTEM/TURBOCHARGER SYSTEM/TURBOCHARGER - REMOVAL)

CAUTION: Observe the position of the turbocharger oil passage housing and gasket. Failure to properly position the gasket during assembly will result in immediate turbocharger failure after assembly.

10. Remove the turbocharger oil housing adaptor (1) and gasket.

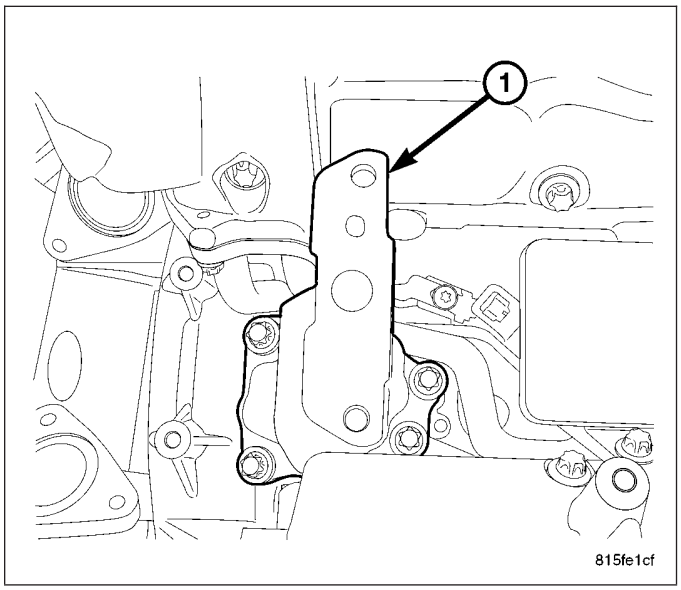

11. Disconnect the EGR (1) and EGR temperature sensor wiring harness connectors.
12. Remove the EGR tube to the left cylinder head.
13. Disconnect the coolant hose at the EGR housing.
14. Remove the EGR air control valve assembly.

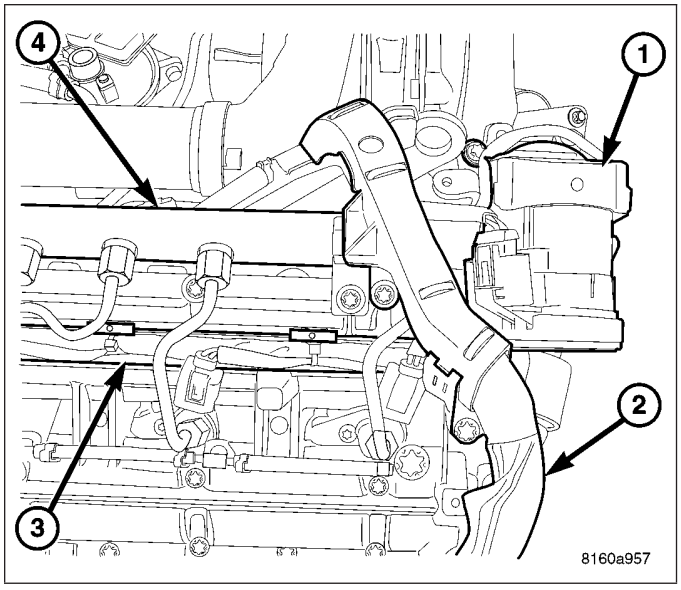

15. Disconnect the swirl valve module wiring harness connector.

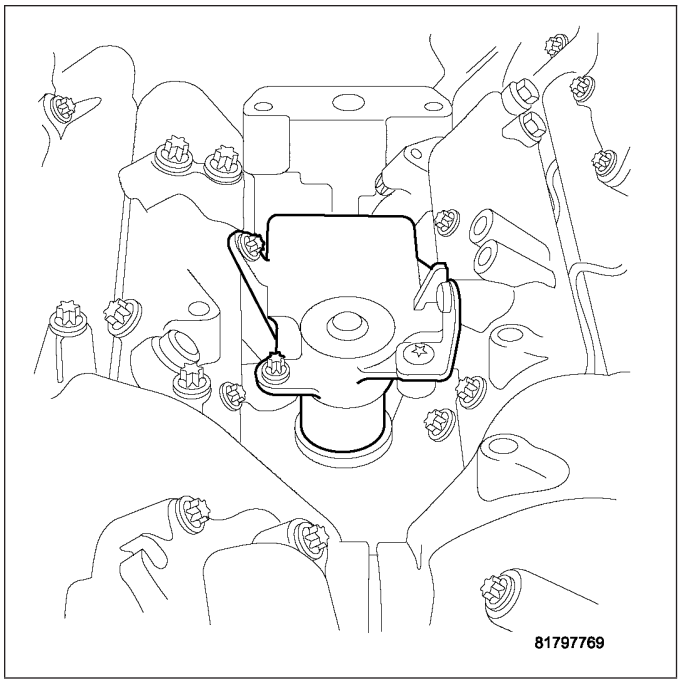

16. Remove the left fuel rail and high pressure lines.
17. Remove the right fuel rail and high pressure lines.
18. Disconnect the fuel return hoses at the injectors.
19. Disconnect the return fuel hose harness and position aside.
20. Remove fuel rail transfer line.
21. Remove the fuel filter assembly.
22. Remove the fuel filter supply and return pipe harness and position aside.
23. Remove the glow plug module.

CAUTION: Do Not rest the intake manifold on the swirl valve actuator. Care must be taken when handling the swirl valve assembly.

24. Remove the intake manifold and gasket.

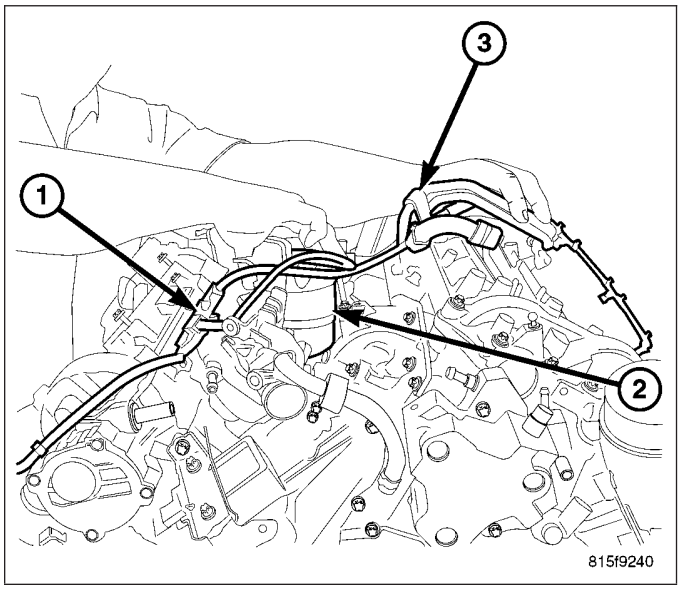

INSTALLATION

NOTE: Before installation, clean cylinder heads and intake manifold surfaces. DO NOT allow oil or solvents to contact sealing surfaces.

1. Properly position the intake manifold gasket and install the intake manifold.

CAUTION: The right intake manifold upper thermostat housing bolts should be tightened to 8.4 N·m (74 in. lbs.).

2. Tighten bolts to 16 N·m (142 in. lbs.), starting in the middle and tightening in a cross pattern outward until reaching the upper thermostat bolts on the right front manifold.
3. Tighten the upper thermostat bolts on the right cylinder head to 8.4 N·m (74 in.lbs.).
4. Install the fuel filter.
5. Position and install the fuel filter supply and return pipe harness.
6. Position and install the fuel injector return fuel hose harness.
7. Position and properly route the engine wiring harness.
8. Install the left fuel rail. Tighten bolts to 27 N·m (20 ft. lbs.).

NOTE: Inspect the fuel lines, especially around the barrel ends for damage. Replace as necessary.

9. Install the fuel rail transfer line along with the right fuel rail. Tighten fuel rail bolts to 27 N·m (20 ft. lbs.), and fuel pipe to 33N·m (24 ft. lbs.).
10. Install the fuel injector high pressure lines. Tighten lines to 27 N·m (20 ft. lbs.).

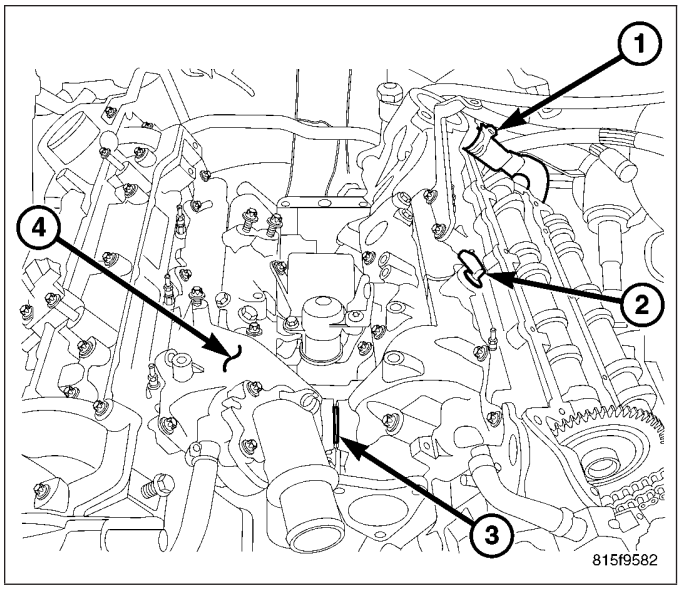

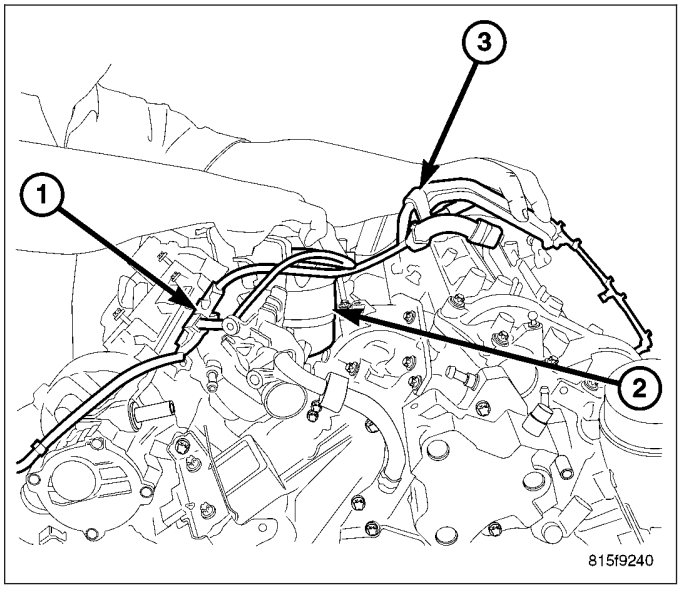

11. Connect the swirl valve motor electrical connector.

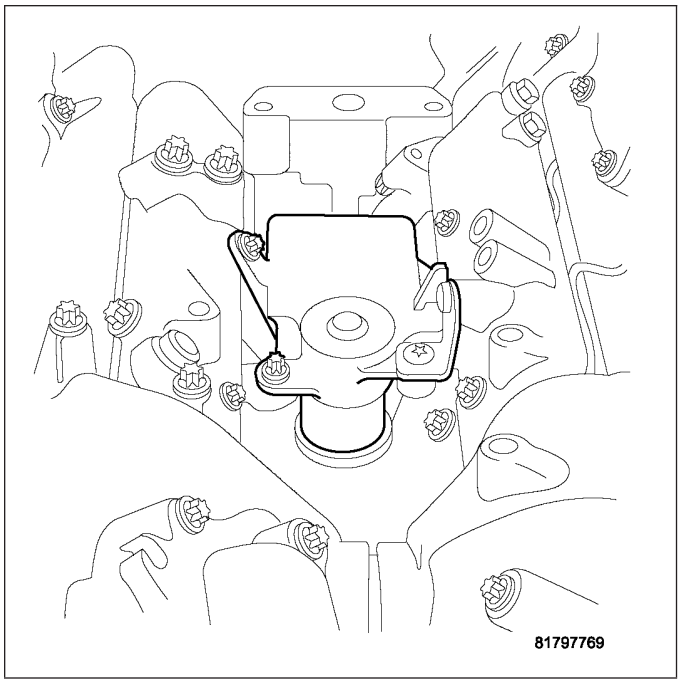

12. Connect the EGR and EGR temperature sensor wiring harness connectors.
13. Connect the coolant hose at the EGR housing.
14. Install the EGR tube to the EGR housing.

CAUTION: Observe the positioning of the oil housing to block gasket. This gasket must be attached to the housing and both oil passages aligned properly. Failure to do so will result in immediate turbocharger damage upon start up.

15. Install the turbocharger oil housing adaptor.
16. Install the turbocharger.
17. Install the right rear engine cover bracket and connect the transmission oil level indicator tube.
18. Install the change air outlet tube.
19. Install the EGR air control valve assembly.
20. Install the glow plug module.

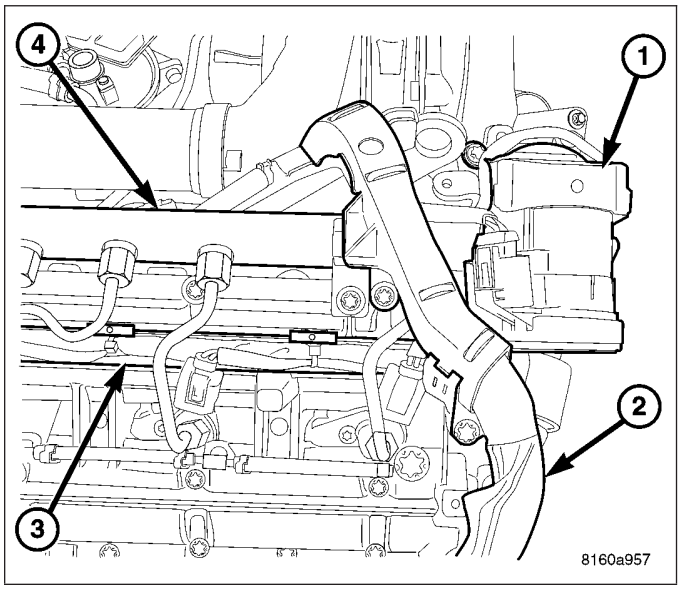

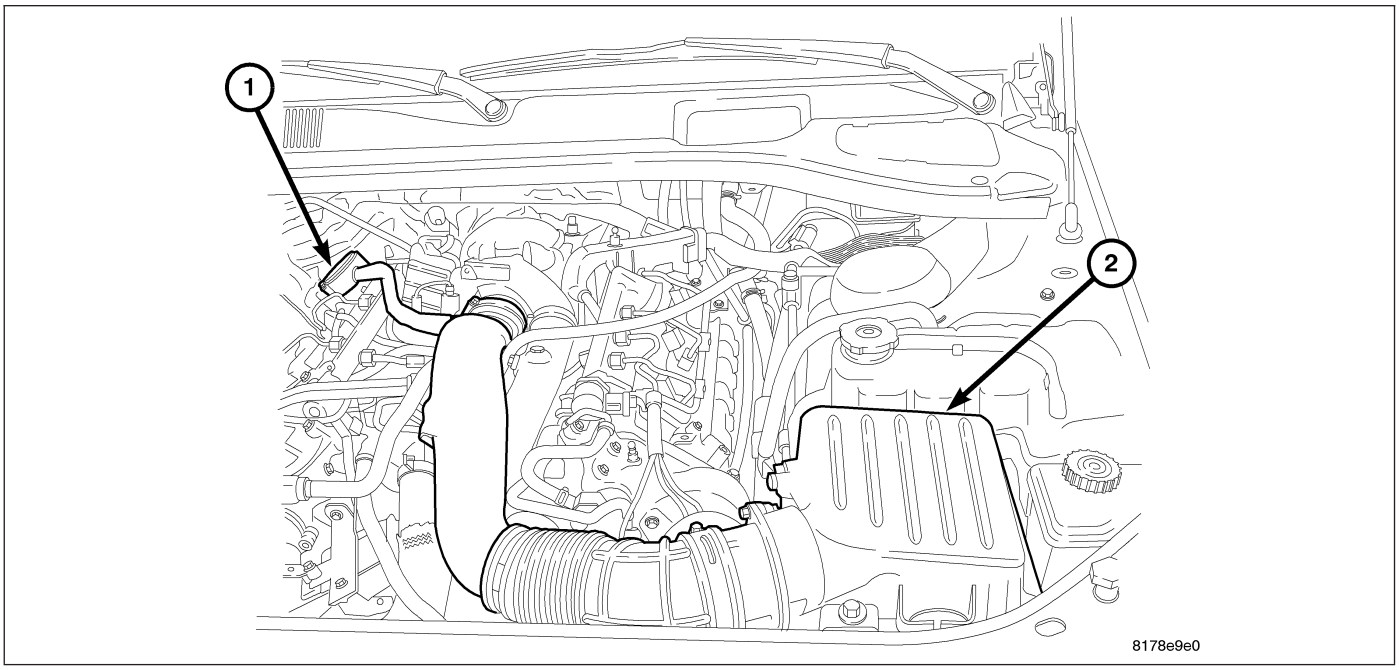

21. Install the air cleaner cover and air inlet tube.
22. Install the engine cover.
23. Install the strut tower support.
24. Fill the engine with coolant.
25. Connect the negative battery cable.

NOTE: Observe the fuel system warning (Refer to 14 - FUEL SYSTEM - WARNING).

26. Start the engine, allow to warm, turn the engine off and inspect for leaks.

EXHAUST MANIFOLD

REMOVAL

RIGHT

1. Disconnect negative battery cable. (Refer to 8 - ELECTRICAL/BATTERY SYSTEM/CABLES - REMOVAL)
2. Remove the engine cover. (Refer to 9 - ENGINE - REMOVAL)
3. Remove the turbo heat shield.
4. Remove the exhaust elbow (4) at the turbo.

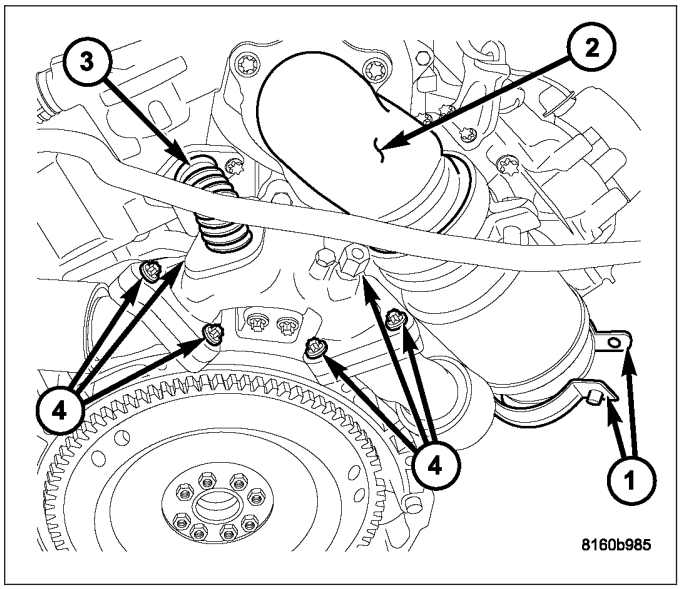

5. Remove the right exhaust manifold.

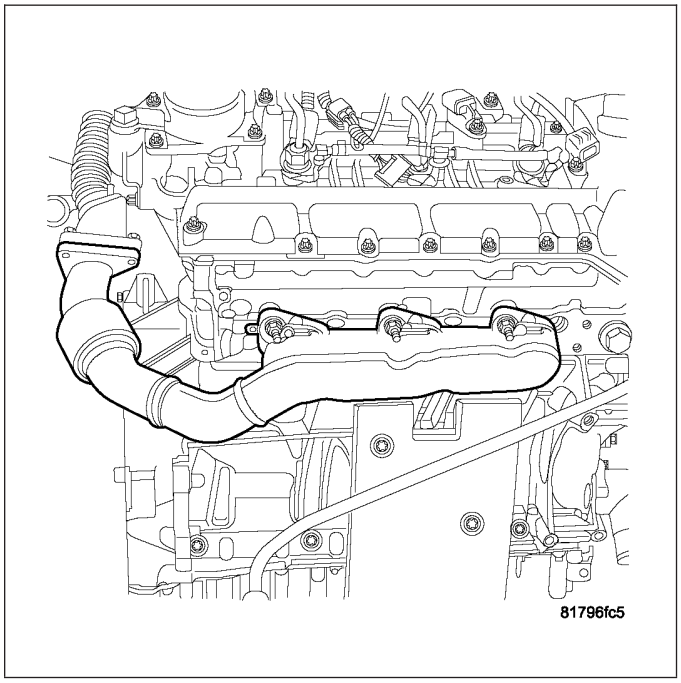

LEFT

1. Disconnect negative battery cable. (Refer to 8 - ELECTRICAL/BATTERY SYSTEM/CABLES - REMOVAL)
2. Remove the engine cover. (Refer to 9 - ENGINE - REMOVAL)
3. Remove the turbo heat shield.
4. Remove the EGR tube (3).
5. Remove the exhaust elbow (4) at the turbo.

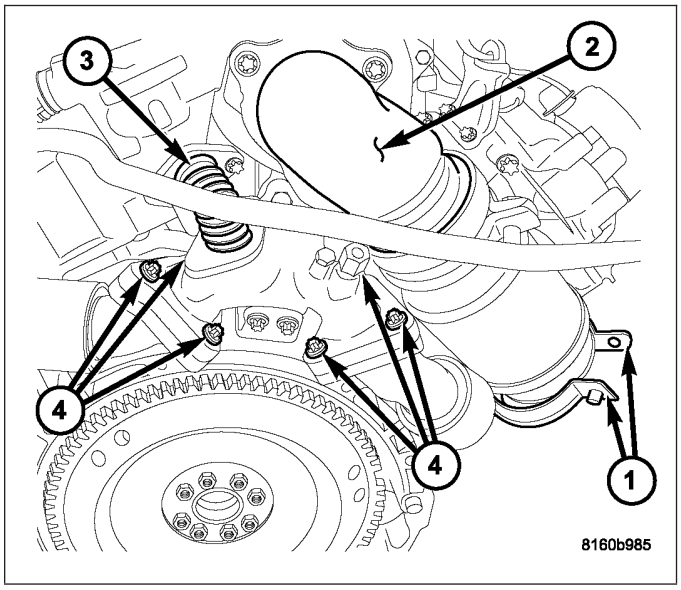

6. Remove the left exhaust manifold.

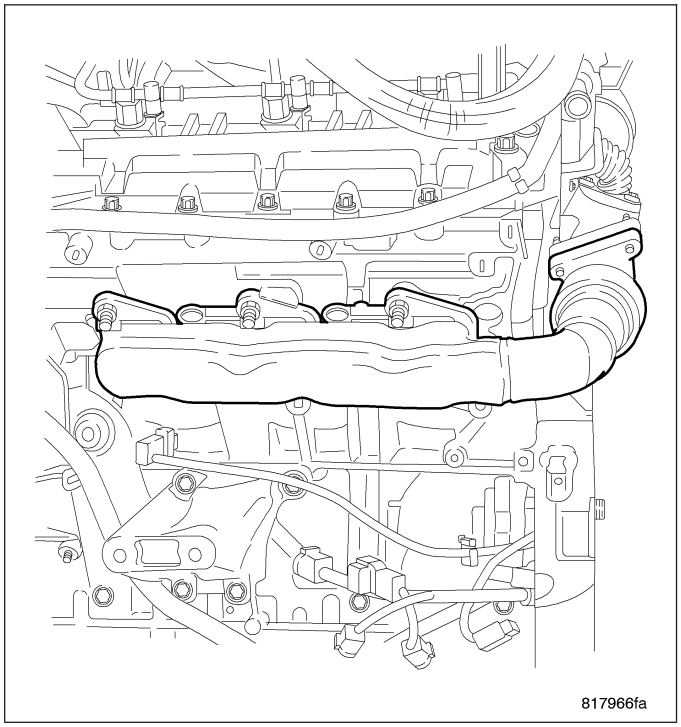

INSTALLATION

RIGHT

1. Discard the old gasket and clean the cylinder head and manifold sealing surfaces.
2. Install a new exhaust manifold gasket.
3. Install the right exhaust manifold to cylinder head nuts. Torque the nuts to 25 Nm (222 in. lbs.)

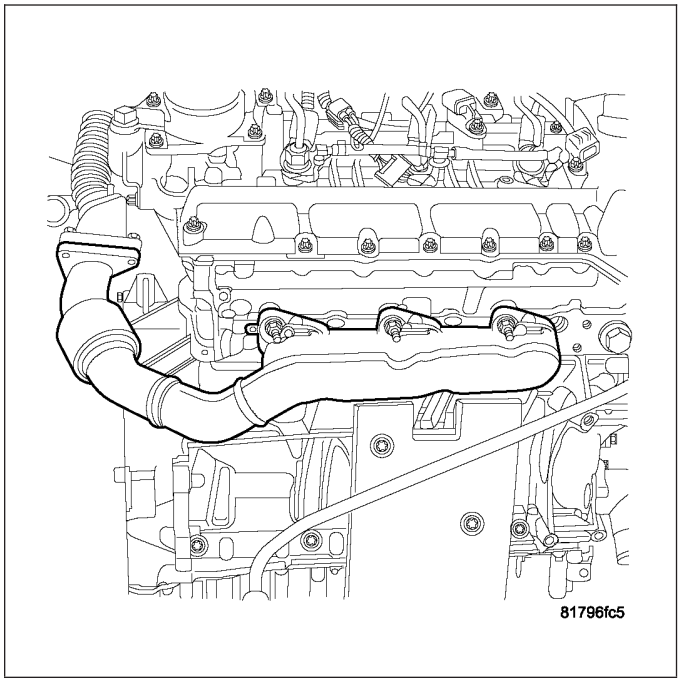

4. Install the exhaust elbow to turbocharger bolts. Torque to 20 Nm (177 in. lbs.). and then add another 90° of rotation.
5. Install the strut tower brace.
6. Install the engine cowl. (Refer to 23 - BODY/EXTERIOR/COWL GRILLE - INSTALLATION)
7. Install the engine cover. (Refer to 9 - ENGINE - INSTALLATION)
8. Connect the negative battery cable. (Refer to 8 - ELECTRICAL/BATTERY SYSTEM/CABLES - INSTALLATION)

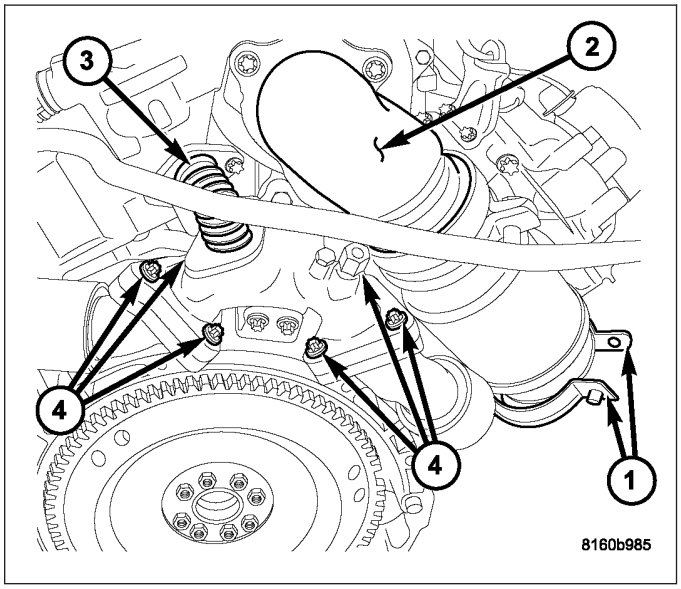

LEFT

1. Discard the old gasket and clean the cylinder head and manifold sealing surfaces.
2. Install a new exhaust manifold gasket.
3. Install the left exhaust manifold to cylinder head nuts. Torque the nuts to 25 Nm (222 in. lbs.)

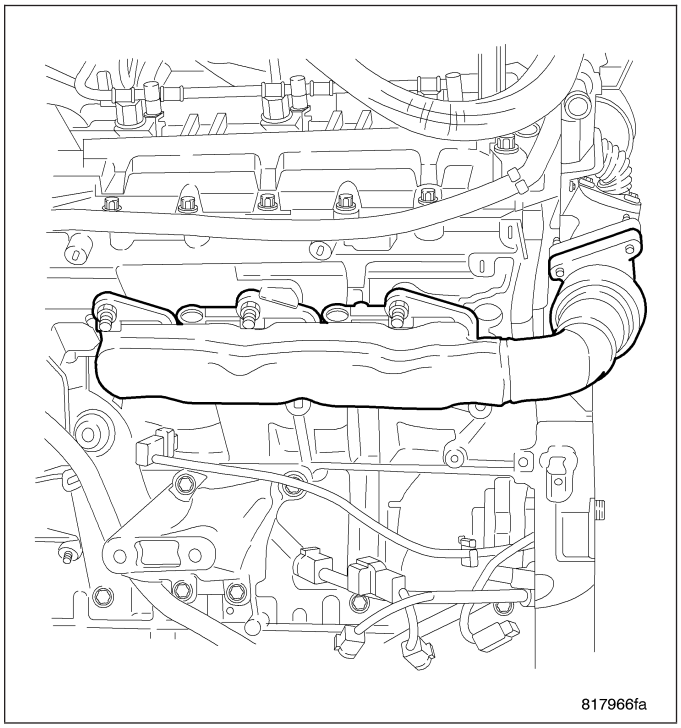

4. Install the exhaust elbow to turbocharger bolts. Torque to 20 Nm (177 in. lbs.). and then add another 90° of rotation.
5. Install the turbocharger heat shield. Torque to 25 Nm (222 in. lbs.).
6. Install the engine cover. (Refer to 9 - ENGINE - INSTALLATION)
7. Connect the negative battery cable. (Refer to 8 - ELECTRICAL/BATTERY SYSTEM/CABLES - INSTALLATION)

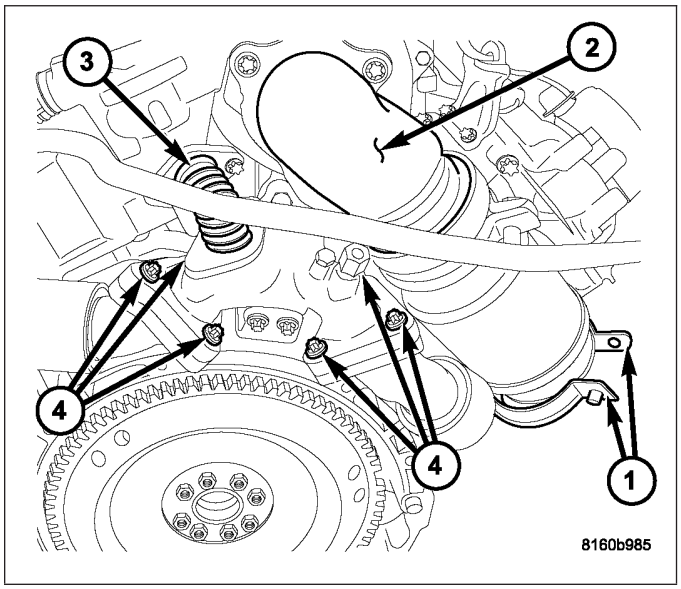

TIMING CHAIN COVER

REMOVAL

1. Disconnect negative battery cable. (Refer to 8 - ELECTRICAL/BATTERY SYSTEM/CABLES - REMOVAL)
2. Remove the engine cover.
3. Remove the front engine cover bracket.
4. Raise and support the vehicle.
5. Drain the power steering into a suitable and appropriately marked container.
6. Remove the power steering hose between the pump and cooling fan.
7. Remove the power steering hose between the cooling fan and suspension.
8. Remove the lower cooling fan module retaining bolts.
9. Disconnect the cooling fan wiring harness connector.
10. Remove the power steering line between the retainer and cooling fan module.
11. Remove the front splash shield.

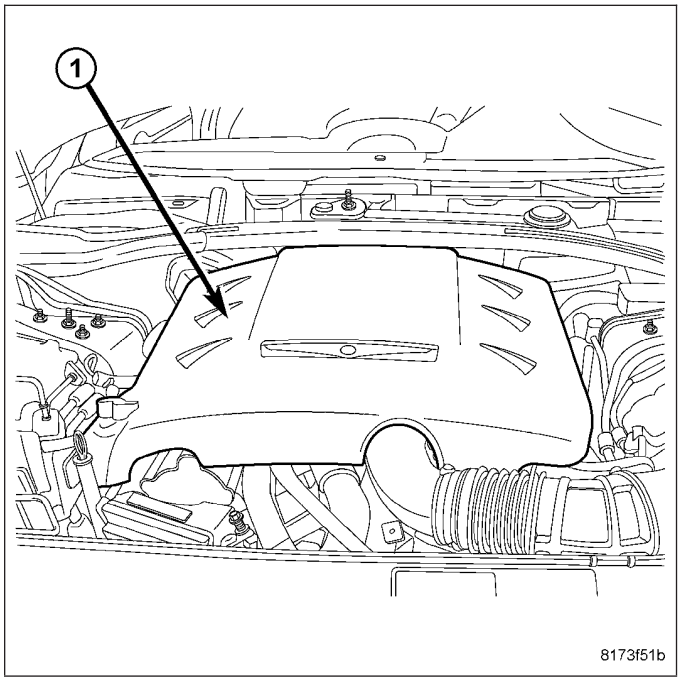

12. Remove the front oil pan to timing cover bolts.
13. Lower the vehicle.
14. Remove the hoses at the power steering reservoir.
15. Remove the cooling fan module upper bolts and remove the fan assembly.
16. Remove the charge air outlet tube.

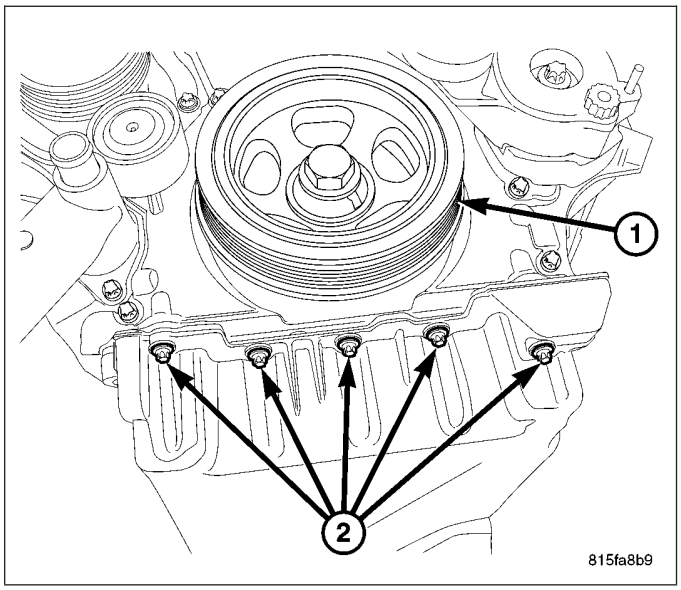

17. Remove the accessory drive belt.
18. Disconnect the charge air inlet hose at the EGR air control valve.
19. Remove the glow plug module.

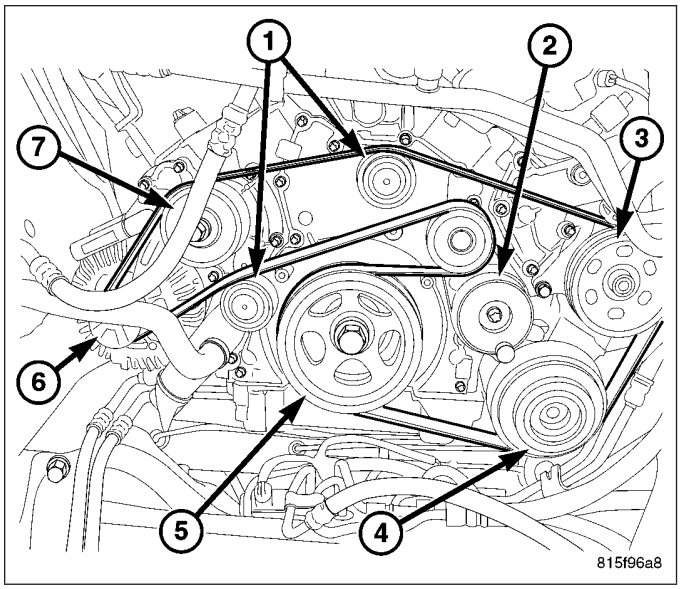

20. Remove the EGR air control valve.

NOTE: Idler pulley fasteners are L. H. thread.

21. Remove both accessory drive belt idler pulleys.
22. Remove the accessory drive belt tensioner.
23. Rotate the engine to TDC by the crankshaft bolt.

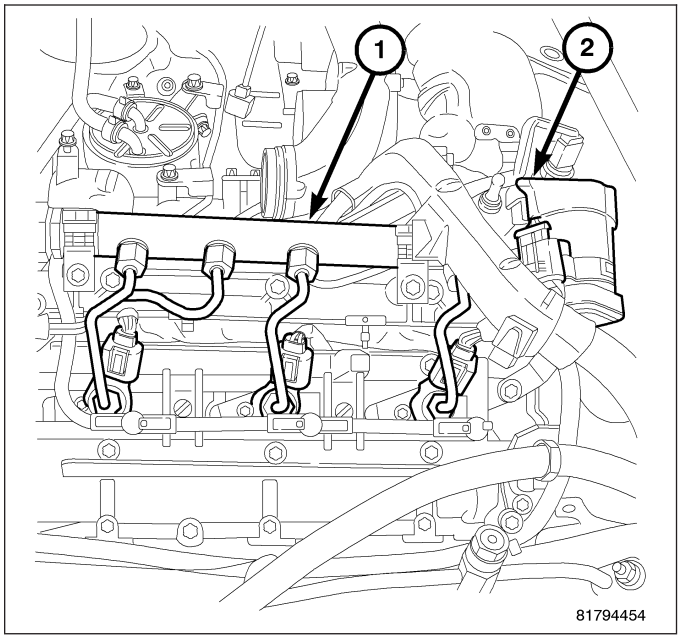

24. Raise and support the vehicle.
25. Remove the starter blank.
26. Install special tool 9102 crankshaft lock.
27. Lower the vehicle.

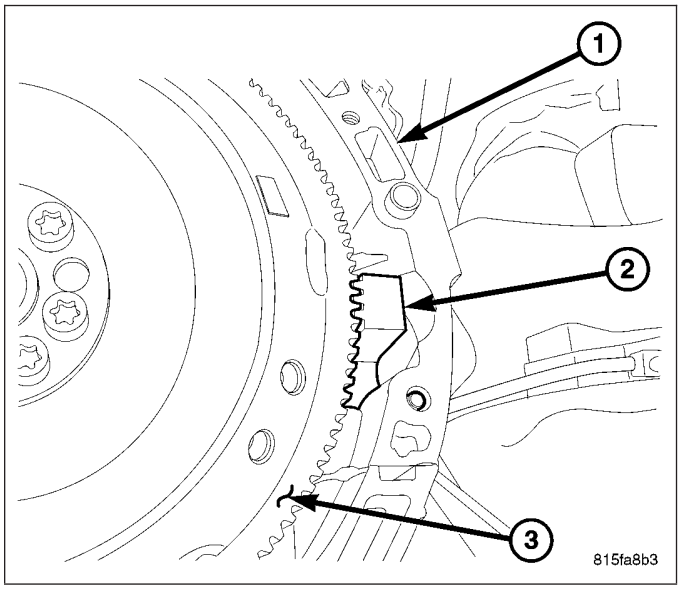

28. Remove the vibration damper and pulley.
29. Remove the front timing cover seal.
30. Remove the front timing cover bolts and cover.

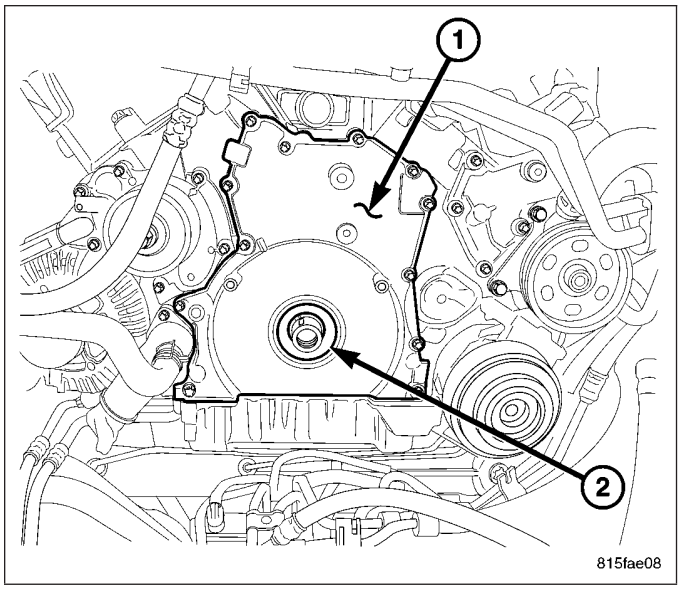

INSTALLATION

NOTE: Component mating surfaces must be clean and free of all oil residue.

1. Install the front crankshaft seal in the timing cover (1).
2. Install the timing cover (1). Tighten bolts to 9 N·m (7 ft. lbs.).
3. Raise and support the vehicle.

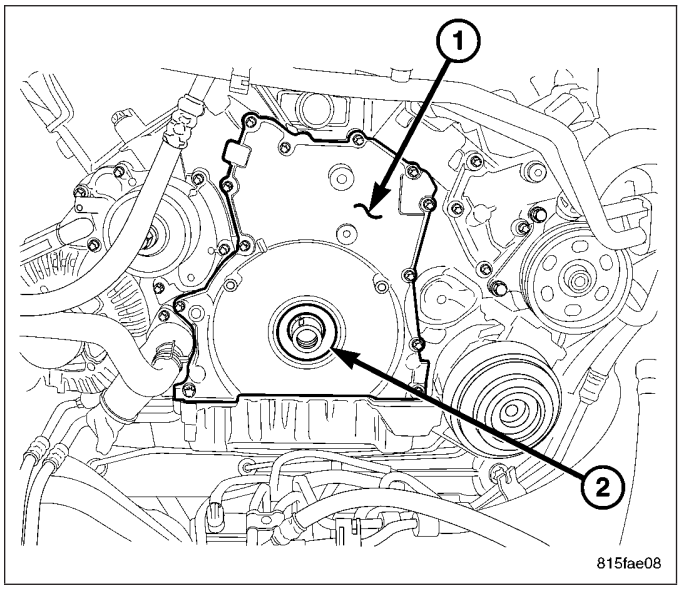

4. Install the front oil pan bolts. Tighten bolts to 14 N·m (10 ft. lbs.).
5. Lower the vehicle.

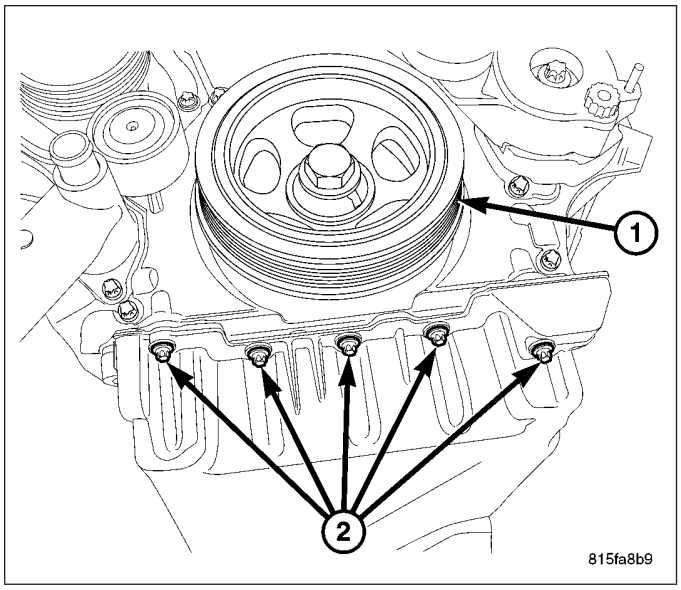

6. Install the vibration damper and pulley. Tighten bolt to 200 N·m (148 ft. lbs.), and then an additional 90°
7. Install the accessory drive belt tensioner. Tighten bolt to 58 N·m (43 ft. lbs.).

NOTE: Idler pulley bolts are L. H. thread.

8. Install the idler pulleys. Tighten bolts to 58 N·m (43 ft. lbs.).
9. Install the accessory drive belt.

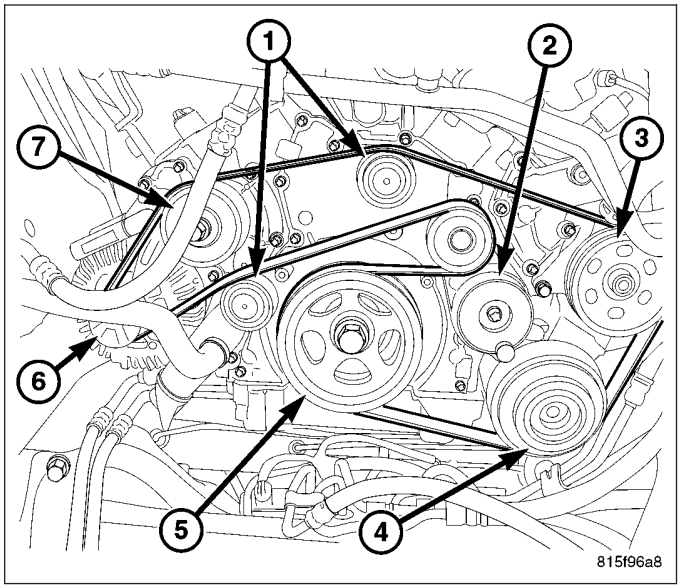

10. Install the EGR air control valve assembly.
11. Install the glow plug module.

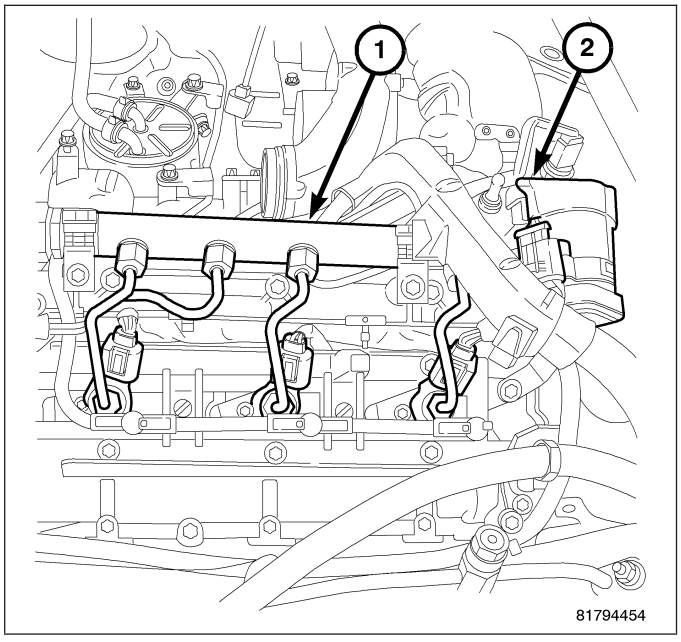

12. Install the charge air outlet tube.
13. Install the cooling fan module. Tighten upper bolts to 14 N·m (10 ft. lbs.).
14. Raise and support the vehicle.

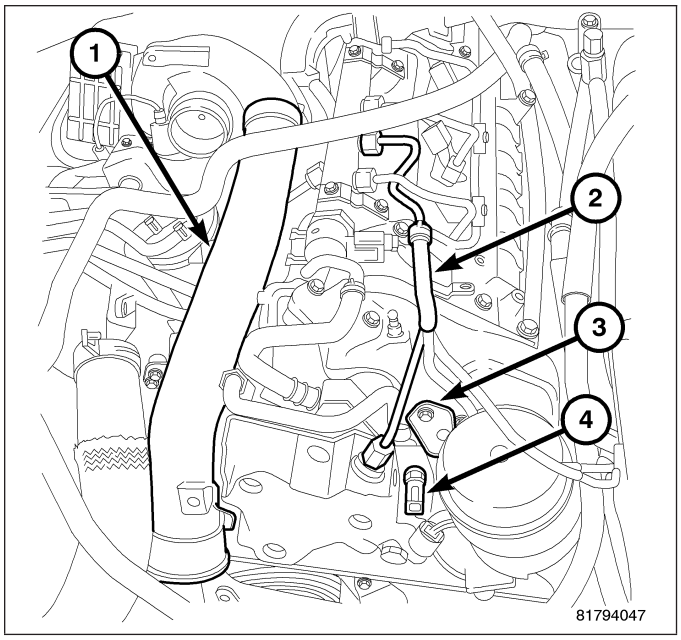

15. Remove special tool 9102 crankshaft lock.
16. Install the starter blank.
17. Install the lower cooling fan module bolts. Tighten lower bolts to 14 N·m (10 ft. lbs.).
18. Install the power steering line between the retainer and cooling fan module.
19. Connect the cooling fan wiring harness connector.
20. Install the power steering hose between the cooling fan and suspension.
21. Install the power steering hose between the pump and cooling fan.
22. Install the front splash shield.
23. Lower the vehicle.
24. Install the hoses at the power steering reservoir.
25. Fill the power steering reservoir.

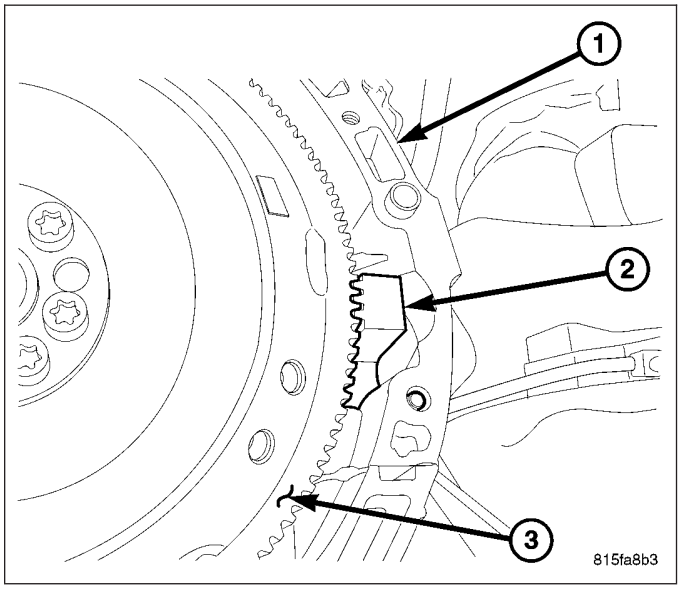

26. Install the front engine cover bracket.
27. Install the engine cover.
28. Connect the negative battery cable.
29. Purge the air from the power steering system before starting by raising the vehicle and rotating the steering wheel back and forth 20 times.
30. Start the engine and follow the bleed procedure with the scan tool.
31. Turn engine off and inspect for leaks.

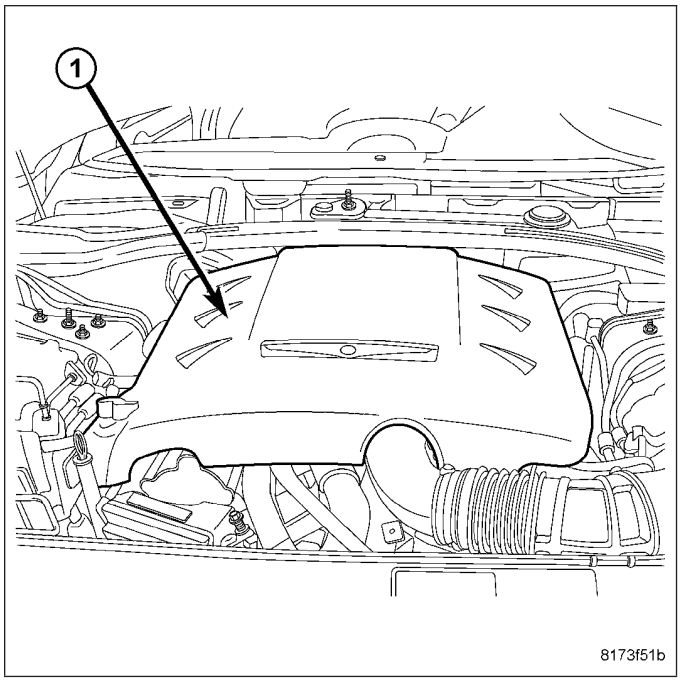

TIMING CHAIN AND SPROCKETS

REMOVAL

REMOVAL - TIMING CHAIN GUIDE - UPPER

NOTE: When servicing the timing chain guides, both the upper and the lower guide should be replaced in pairs.

1. Disconnect negative battery cable.
2. Remove the cylinder head cover.
3. Remove the timing chain cover.
4. Remove the upper timing chain guide.

REMOVAL - TIMING CHAIN TENSIONING RAIL

1. Disconnect negative battery cable.
2. Remove cylinder head (Refer to 9 - ENGINE/CYLINDER HEAD - REMOVAL).

NOTE: Remove timing case cover carefully. Care must be taken not to damage oil pan gasket.

3. Remove timing chain cover (Refer to 9 - ENGINE/VALVE TIMING/TIMING BELT / CHAIN COVER(S) - REMOVAL).
4. Remove tensioning rail from bearing pin

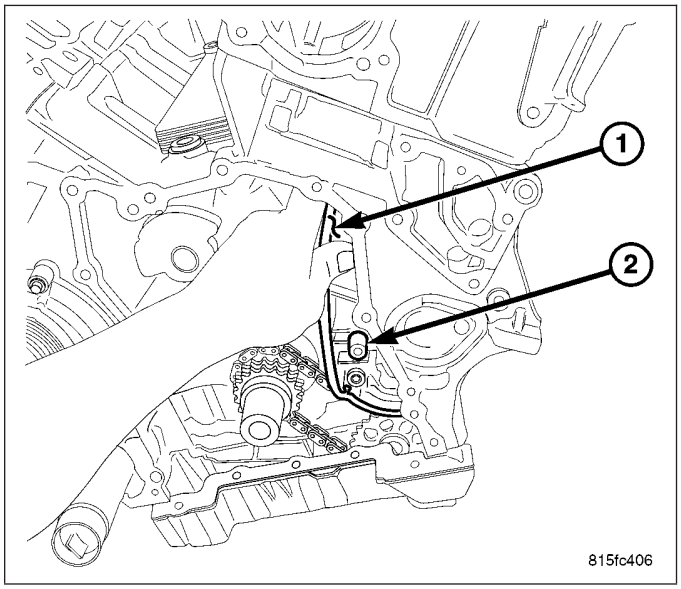

.

REMOVAL - TIMING CHAIN

1. Remove cylinder head cover (Refer to 9 - ENGINE/CYLINDER HEAD/CYLINDER HEAD COVER(S) - REMOVAL).

NOTE: Cover the timing chain area. Care must be taken not to drop any repair debris or pieces into the engine when separating the timing chain links.

2. Install special tool # 9525 using two of the cylinder head cover bolts.

3. Assemble special tool #9312–1 using 9312– 3 and 9312–4. Install insert #9312–13 and retain with screw provided..

CAUTION: Care must be taken not to drop the timing chain plates into the engine once the timing chain is separated.

NOTE: When installing special tool #9312–1 onto timing chain link, be sure to back off the smaller nut of the thrust pin #9312–3 until the pin is recessed inside of the spindle, #9312–4. Screw the thrust spindle #9312–4 in until it is seated and aligned properly over the rivet of the timing chain.

NOTE: When fitting the thrust spindle, ensure that the thrust pin is positioned at the left timing chain pin of a chain link.

4. Install special tool #9312 onto timing chain link
.

NOTE: Cover the timing chain area. Care must be taken not to drop any repair debris or pieces into the engine when separating the timing chain links.

5. Carefully turn the thrust pin #9312–3 of special tool #9312–1 clockwise while holding the handle until the rivet is pressed out and the chain is separated. Discard the loose link and plates.

NOTE: One whole timing chain link must be removed.

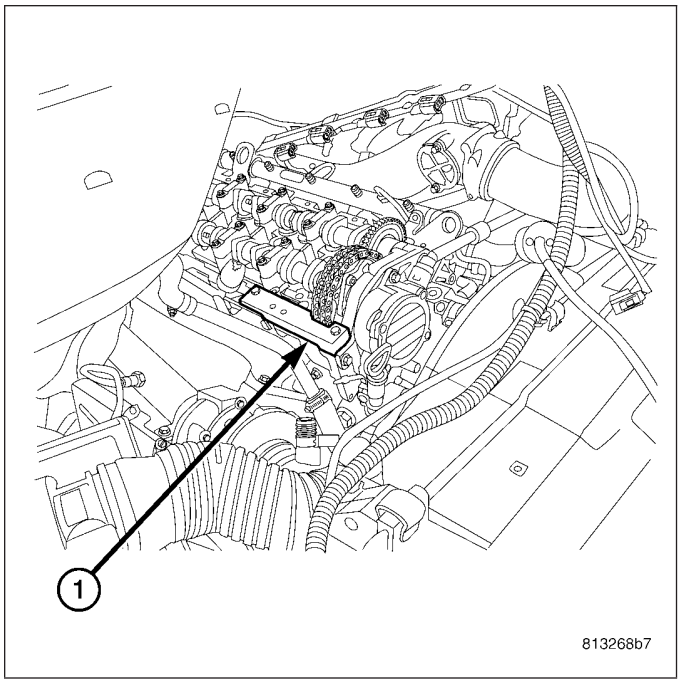

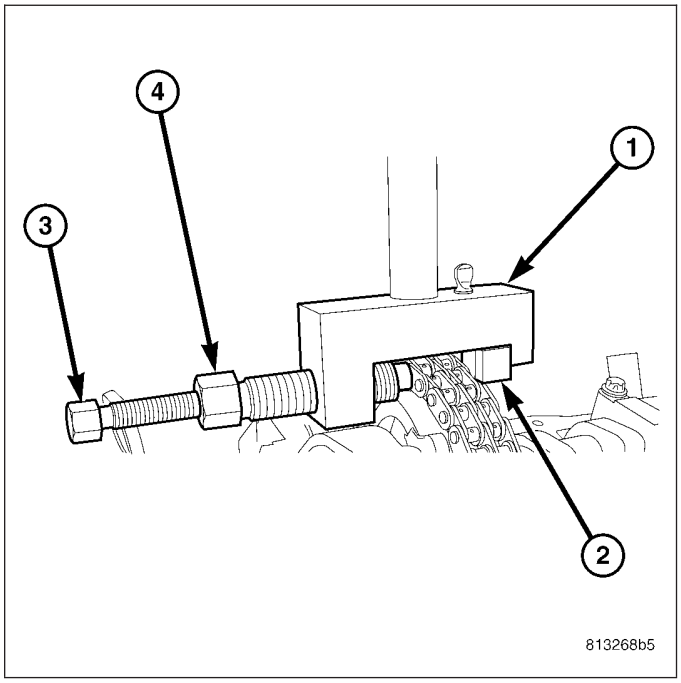

NOTE: Care must be taken not to drop any repair debris or pieces into the engine when separating the timing chain links.

6. Connect new timing chain with the oil holes facing up, and old timing chain with the assembly link, assembly plate and locking element, and secure.

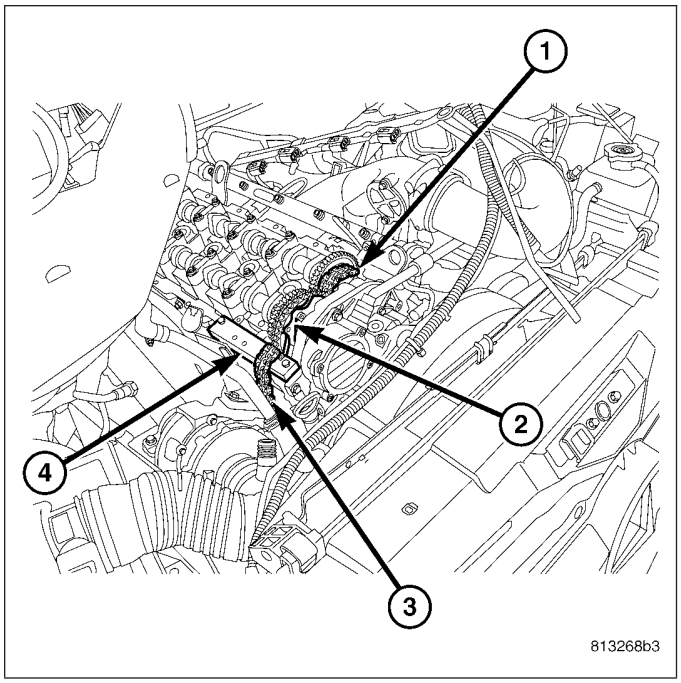

CAUTION: IT IS ESSENTIAL that the installation procedure for the timing chain is followed exactly. Failure to do so will result in severe engine damage.

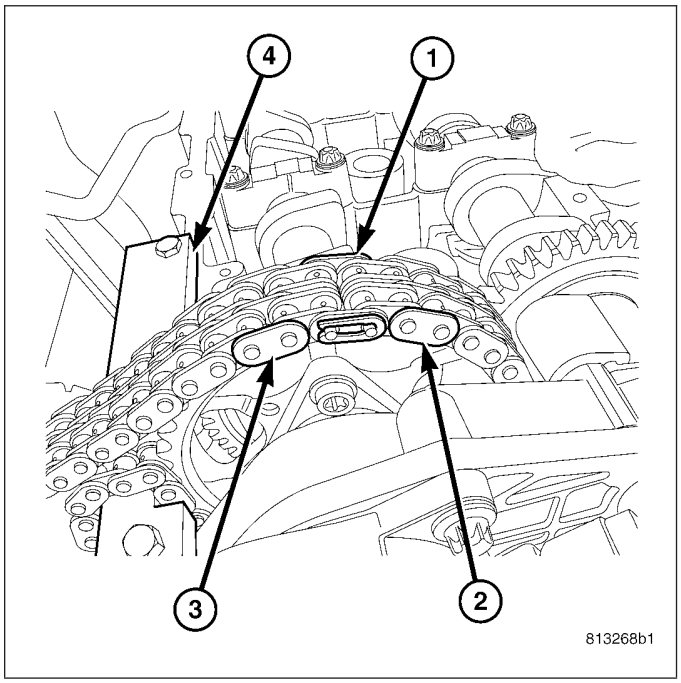

INSTALLATION

INSTALLATION - TENSIONING AND SLIDE RAIL

NOTE: Carefully clean all mating surfaces with appropriate solvents to assure that no grease or oil is present during reassembly.

CAUTION: ENSURE THAT THE SPRING IS CORRECTLY INSTALLED ON THE TENSIONING CLAMP AND SLIDE RAIL.

1. Install rail on bearing pin.
2. Install timing cover (Refer to 9 - ENGINE/VALVE TIMING/TIMING BELT / CHAIN COVER(S) - INSTALLATION).

3. Install oil pan bolts. Tighten M6 bolts to 9N·m (80 lbs.in.) and M8 bolts to 20N·m (15 lbs. ft.).
4. Install cylinder head (Refer to 9 - ENGINE/CYLINDER HEAD - INSTALLATION).
5. Reconnect negative battery cable.

WARNING: USE EXTREME CAUTION WHEN THE ENGINE IS OPERATING. DO NOT STAND IN A DIRECT LINE WITH THE FAN. DO NOT PUT YOUR HANDS NEAR THE PULLEYS, BELTS OR FAN. DO NOT WEAR LOOSE CLOTHES.

6. Start the engine, allow to warm, turn engine off and inspect for leaks. Care must be take to observe the fuel system warning (Refer to 14 - FUEL SYSTEM - WARNING).

INSTALLATION - TIMING CHAIN TENSIONING RAIL

NOTE: Carefully clean all mating surfaces with appropriate solvents to assure that no grease or oil is present during reassembly.

1. Install tensioning rail on bearing pin
2. Install timing cover (Refer to 9 - ENGINE/VALVE TIMING/TIMING BELT / CHAIN COVER(S) - INSTALLATION).
3. Install oil pan and bolts. Tighten M6 bolts to 9N·m (80 lbs.in.) and M8 bolts to 20N·m (15 lbs. ft.).
4. Install cylinder head (Refer to 9 - ENGINE/CYLINDER HEAD - INSTALLATION).
5. Reconnect negative battery cable.

WARNING: USE EXTREME CAUTION WHEN THE ENGINE IS OPERATING. DO NOT PUT YOUR HANDS NEAR THE PULLEYS, BELTS OR FAN. DO NOT WEAR LOOSE CLOTHES.

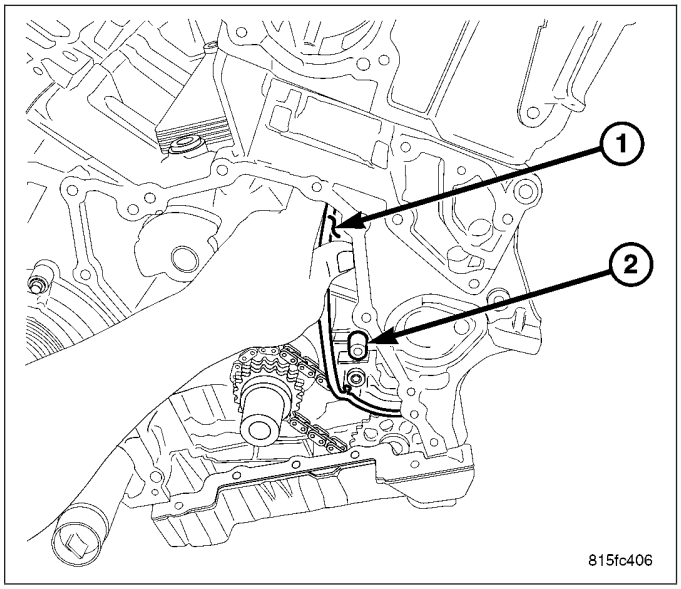

6. Start the engine and inspect for leaks. Care must be taken to observe the fuel system warning (Refer to 14 - FUEL SYSTEM - WARNING).

ADJUSTMENTS

INSTALLATION - TIMING CHAIN

CAUTION: IT IS ESSENTIAL that the installation procedure is followed exactly. Failure to do so will result in severe engine damage.

CAUTION: Cover timing case recesses to prevent foreign material from entering engine.

1. Connect new timing chain, oil hole side up and old timing chain with the assembly link, the assembly plate and the assembly locking element, and secure.

CAUTION: Always install the new timing chain with the oil holes pointing up. Failure to do so will result in severe engine damage.

NOTE: Always keep new timing chain meshed with camshaft sprocket.

CAUTION: DO NOT CRANK ENGINE and DO NOT ROTATE ENGINE BACKWARD. Engine rotation is clockwise, as you are looking at the engine. Rotate engine at crankshaft only.

NOTE: Draw out the end of old timing chain evenly as it becomes free, to the same extent that new timing chain is drawn in.

2. Draw in new timing chain with the oil holes facing up, by rotating the crankshaft slowly in direction of rotation of engine.
   .
3. Rotate the engine until the ends of the new timing chain meet and can be connected.

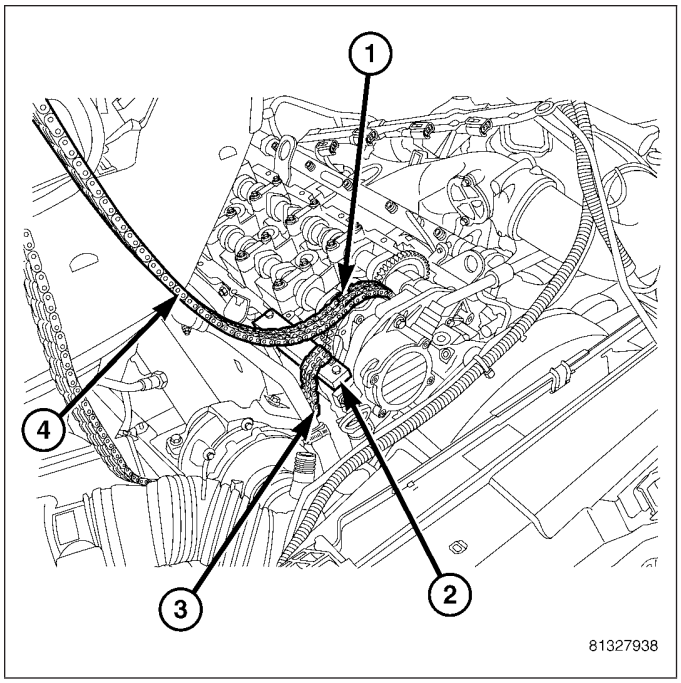

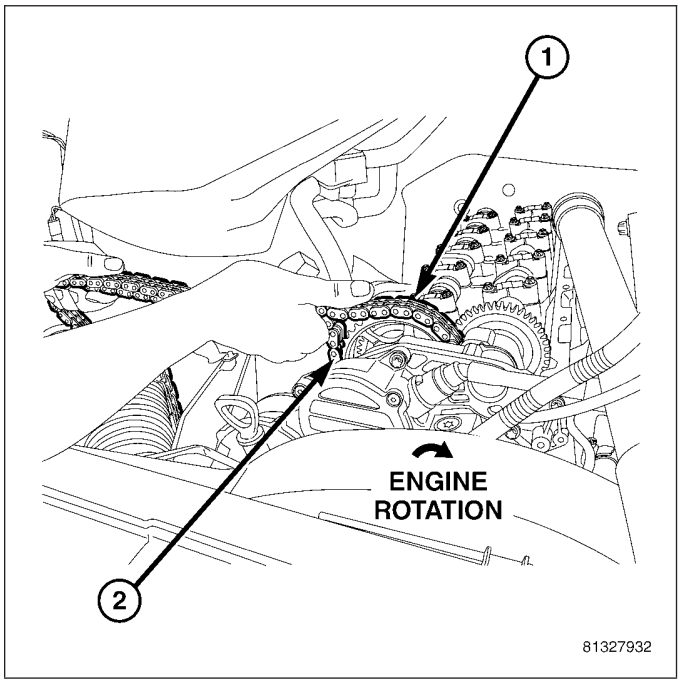

NOTE: Assembly link is only an assembly aid and NOT designed for engine running.

4. Remove assembly locking element, assembly outer plate and assembly link.

CAUTION: Cover timing case recesses to prevent foreign material from entering engine.

5. Insert new riveted link with the oil hole up, and new middle plate into ends of timing chain using the guide link to hold the middle plate in position.

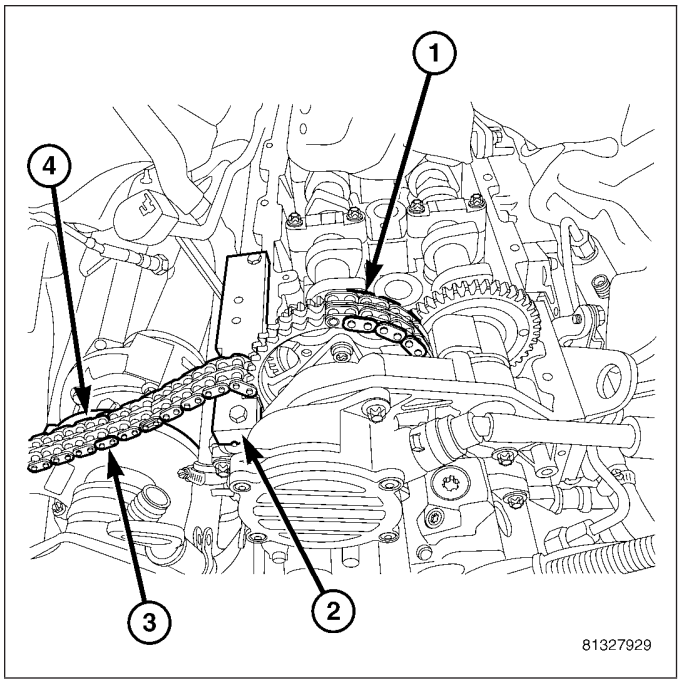

NOTE: When assembling riveting tool, piece #9312–7 is secured by a screw and #9312–10 can move loosely on thrust spindle

6. Assemble riveting tool by inserting pieces #9312–7 and #9312–10.

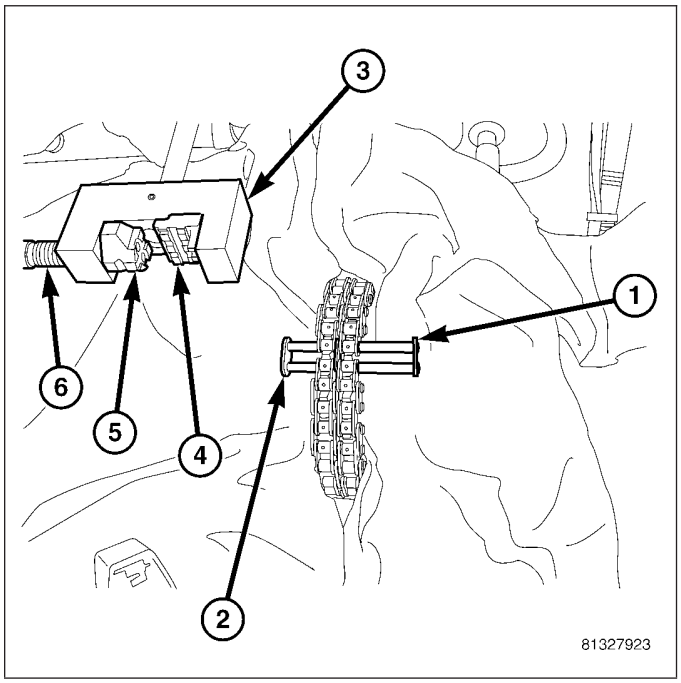

NOTE: Ensure that the riveted link and riveting tool are aligned.

7. Press in new riveted link as far as the stop.

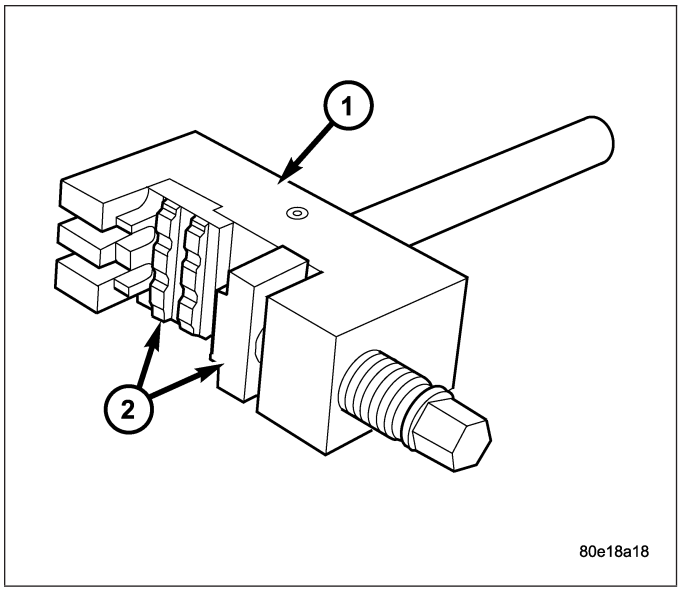

8. Remove guide link and riveting tool to change inserts.
9. Install insert #9312–6 on riveting tool and secure with screw.
10. Install insert 9312–8 on riveting tool.

NOTE: The outer plate is held magnetically by riveting tool.

11. Insert new outer plate into the moving assembly insert.
12. Position riveting tool so that spacer webs of the guide are side by side.
13. Ensure that riveted link and outer plate are aligned.

NOTE: When turning spindle of riveting tool, be sure that pins of riveted link are inserted into holes of outer plate

14. Screw in spindle of riveting tool until firm resistance is felt.

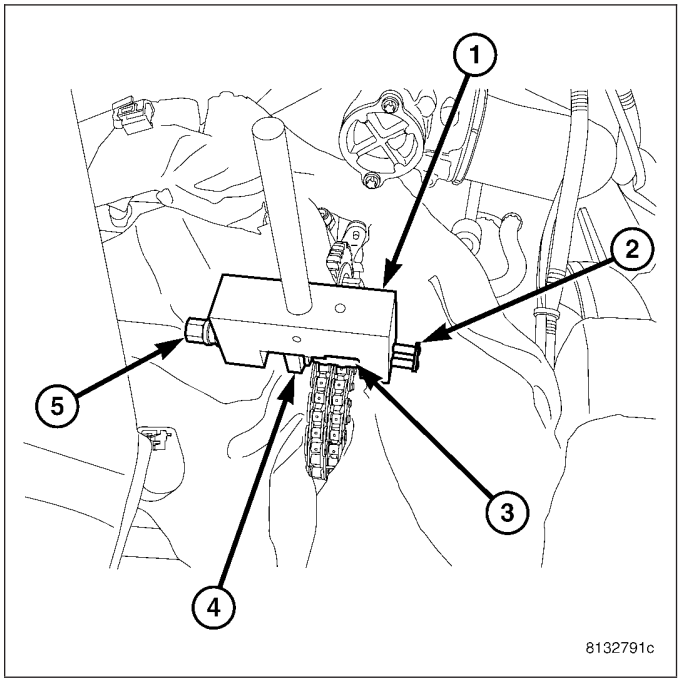

15. Remove riveting tool.
16. Install moving assembly insert #9312–11 to #9312–1.
17. Position riveting tool exactly over middle of pin.
18. Tighten riveting tool spindle to end of travel.
19. Repeat procedure for both riveting pins.

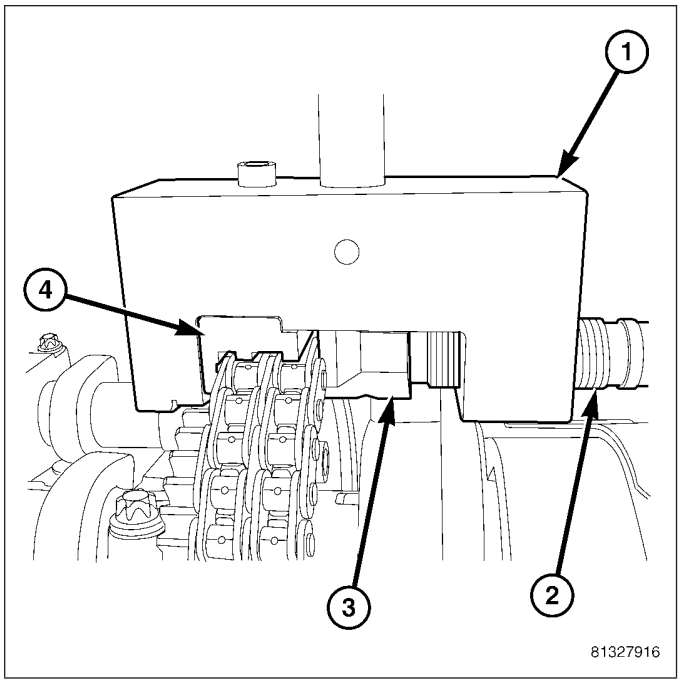

20. Inspect riveting, re-rivet if required.

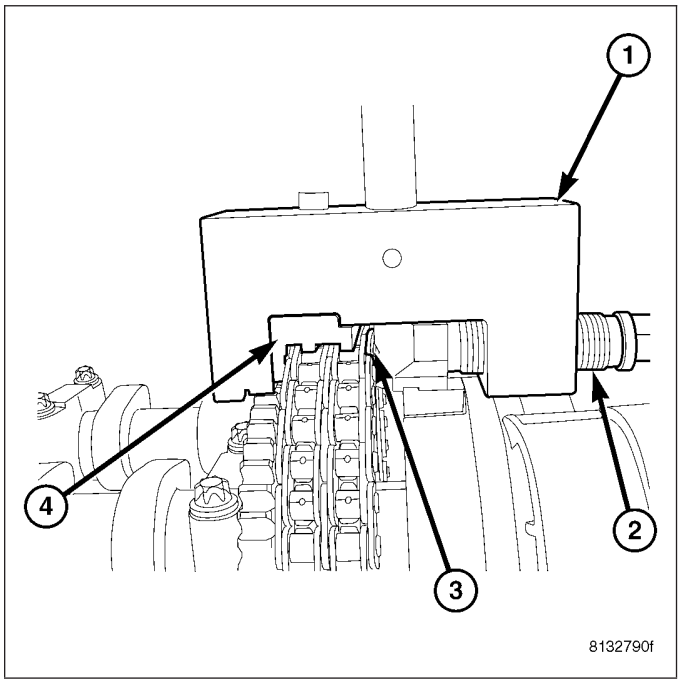

21. Install cylinder head cover (Refer to 9 - ENGINE/ CYLINDER HEAD/CYLINDER HEAD COVER(S) - INSTALLATION).
22. Install engine cover (Refer to 9 - ENGINE - INSTALLATION).
23. Connect negative battery cable.
24. Start engine and inspect for leaks. Care must be taken to observe the fuel system warning (Refer to 14 - FUEL SYSTEM - WARNING).

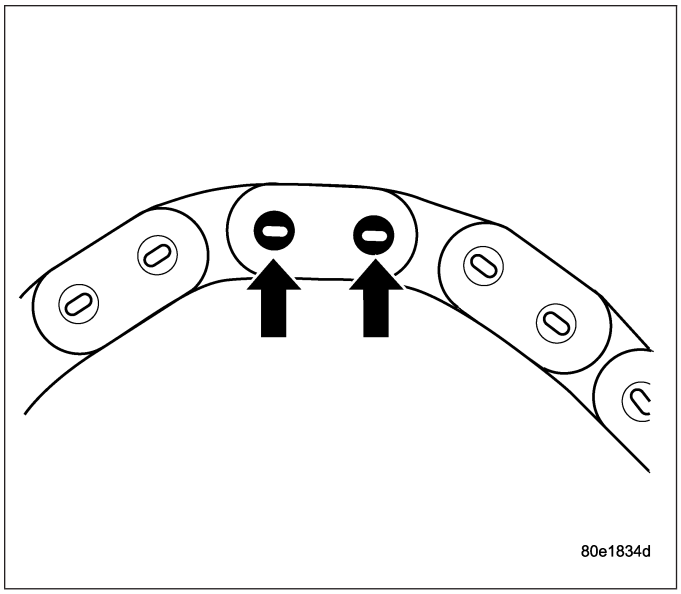

TIMING CHAIN TENSIONER

DESCRIPTION

The timing chain tensioner is located on the right cylinder head. The tensioner is hydraulically operated with the adjusting portion riding on the right timing chain guide. Hydraulic support for the tensioner is supplied by forward oil passages in the right cylinder head.

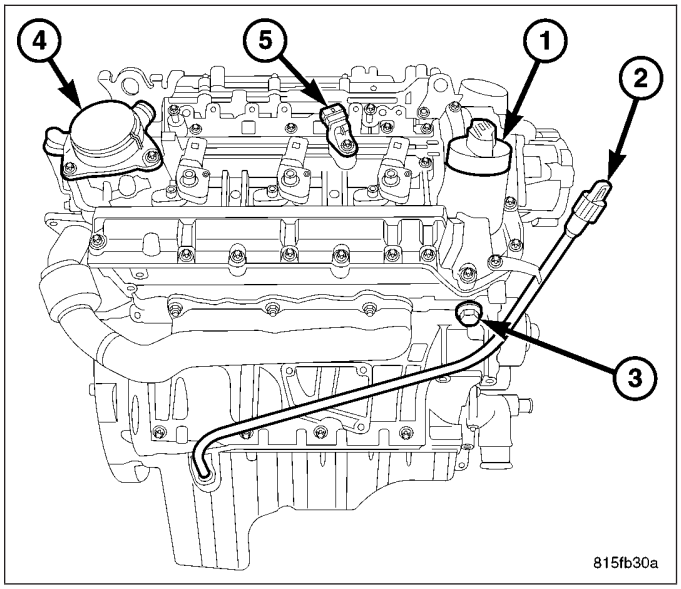

REMOVAL

1. Disconnect negative battery cable. (Refer to 8 - ELECTRICAL/BATTERY SYSTEM/CABLES - REMOVAL)
2. Open hood.
3. Remove engine cover (Refer to 9 - ENGINE - REMOVAL)
4. Remove the engine intake air duct.
5. Remove air cleaner housing (Refer to 9 - ENGINE/AIR INTAKE SYSTEM/AIR CLEANER HOUSING - REMOVAL).
6. Remove the cable strap from the engine wiring harness.
7. Remove the timing chain tensioner.

INSTALLATION

NOTE: Carefully clean all mating surfaces with appropriate solvents to assure that no grease or oil is present during reassembly.

1. Install timing chain tensioner with new gasket. Tighten to 80N·m (59 lbs.ft.).
2. Install cable strap on the engine wiring harness.
3. Install air cleaner housing.
4. Install intake air duct.
5. Reconnect negative battery cable.

WARNING: Use extreme caution when the engine is operating. Do not put your hands near the pulleys, belts or fan. Do not wear loose clothes.

6. Start the engine and inspect for leaks.

EXHAUST SYSTEM

TABLE OF CONTENTS

page

EXHAUST SYSTEM
DESCRIPTION 2
DIAGNOSIS AND TESTING
EXHAUST SYSTEM 3
INSPECTION 4
ADJUSTMENTS 4
SPECIFICATIONS
TORQUE 5
SPECIAL TOOLS 6
CATALYTIC CONVERTER
DESCRIPTION 7
REMOVAL
RIGHT HAND CATALYTIC CONVERTER 7
LEFT HAND CATALYTIC CONVERTER 8
REMOVAL - DIESEL 9
INSTALLATION - DIESEL 10
INSPECTION 10
INSTALLATION
RIGHT HAND CATALYTIC CONVERTER 11
LEFT HAND CATALYTIC CONVERTER 12
HEAT SHIELDS
REMOVAL 13
INSTALLATION 13
MUFFLER
DESCRIPTION 14
REMOVAL 16
INSTALLATION 17
RESONATOR - 5.7L
REMOVAL 19
INSTALLATION 19
RESONATOR - 6.1L
REMOVAL 20

page

INSTALLATION 20
PARTICULATE FILTER
DESCRIPTION 21
OPERATION 21
REMOVAL 22
INSTALLATION 22
TURBOCHARGER SYSTEM
DESCRIPTION 23
OPERATION 23
TURBOCHARGER
DIAGNOSIS AND TESTING -
TURBOCHARGER 24
REMOVAL - TURBOCHARGER 24
INSPECTION 26
INSTALLATION 28
CHARGE AIR COOLER AND PLUMBING
DESCRIPTION 30
OPERATION 30
DIAGNOSIS AND TESTING - CHARGE AIR
COOLER SYSTEM - LEAKS 30
REMOVAL - CHARGE AIR COOLER 30
INSPECTION 31
INSTALLATION - CHARGE AIR COOLER 31
MOTOR-BOOST PRESSURE SERVO
DESCRIPTION 32
OPERATION 32
REMOVAL
SERVOMOTOR 32
INSTALLATION
SERVOMOTOR 33

EXHAUST SYSTEM

DESCRIPTION

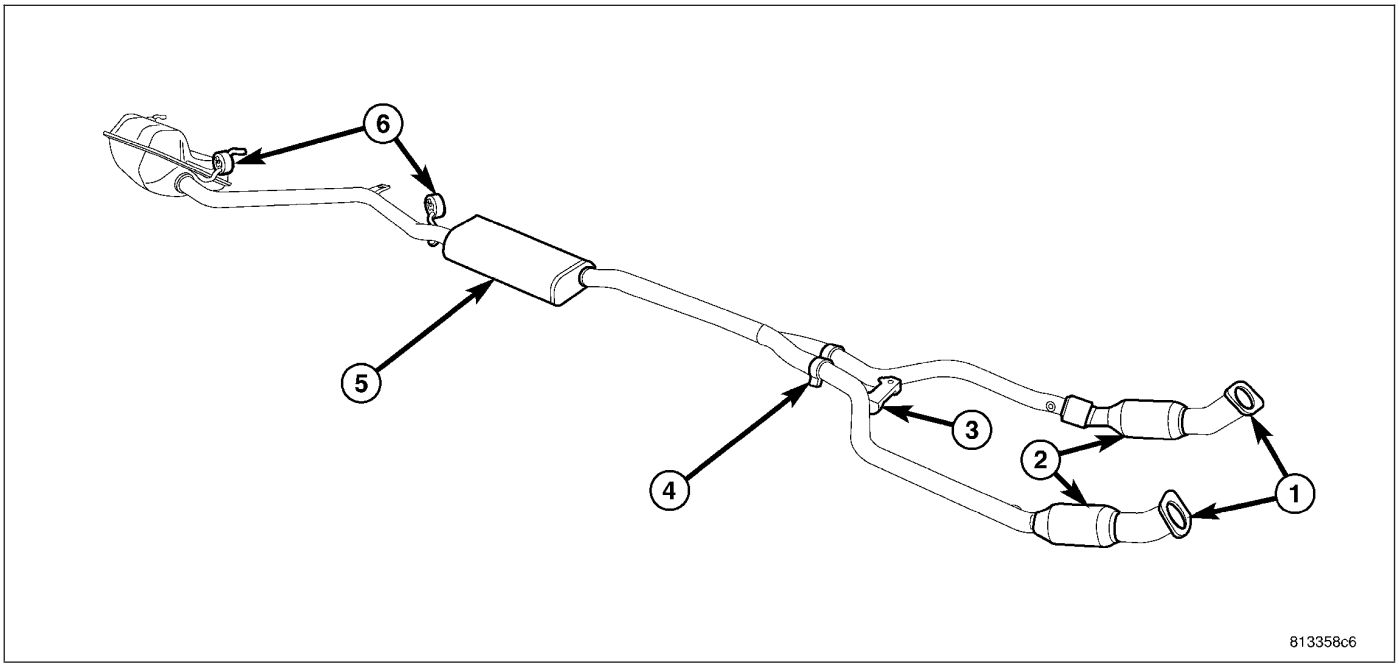

EXHAUST SYSTEM - V6 SINGLE SYSTEM

1 - BALL FLANGE
2 - CATALYTIC CONVERTER ASSEMBLY
3 - CROSS BRACE
4 - BAND CLAMPS
5 - RH REAR MUFFLER AND RESONATOR
6 - ISOLATORS

The exhaust system consists of two front close coupled catalytic converters, a RH rear muffler and resonator assembly (5), and on vehicles equipped with dual exhaust, LH resonator and tailpipe assembly (4).

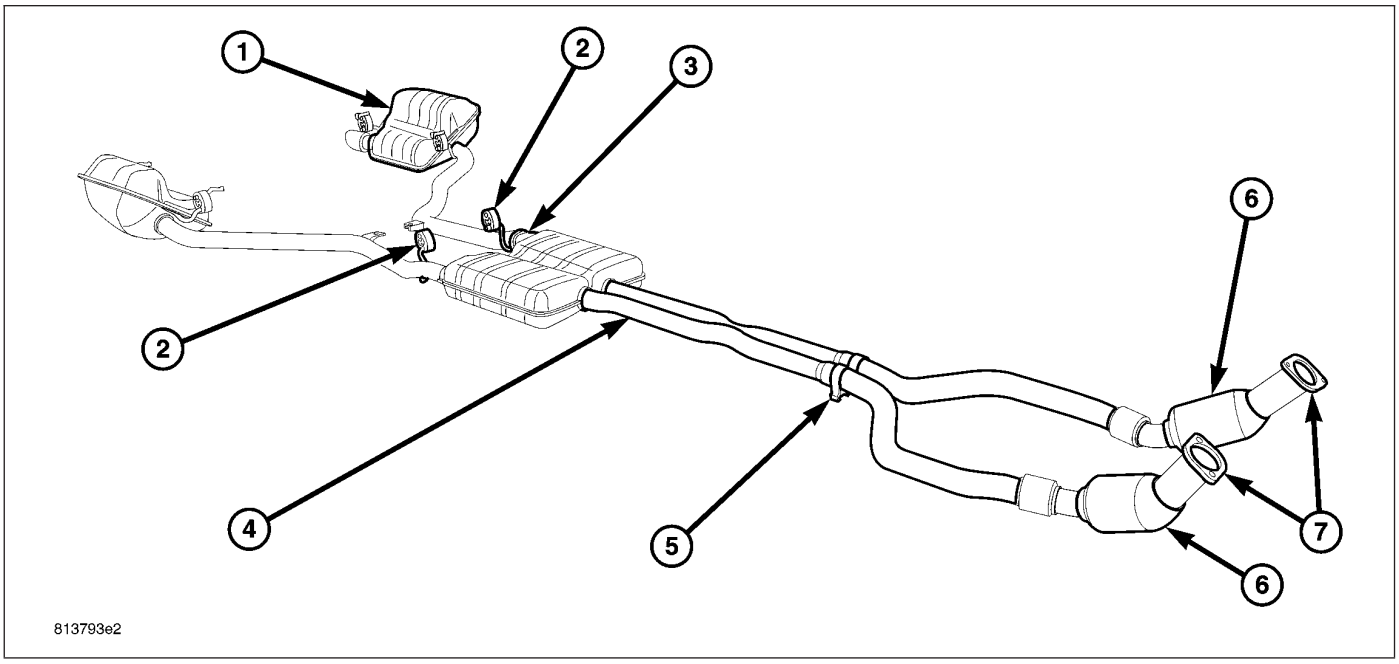

EXHAUST SYSTEM - V8 DUAL SYSTEM

1 - LH REAR RESONATOR AND TAIL PIPE
2 - ISOLATOR
3 - BALL FLARE FLANGE 5.7L / BALL FLARE BAND CLAMP 6.1L
4 - RH REAR MUFFLER AND RESONATOR
5 - BAND CLAMPS
6 - CATALYTIC CONVERTER ASSEMBLY
7 - BALL FLANGE

Both catalytic converters attach directly to the exhaust manifold using studs and nuts. The exhaust down pipes exit the converters and connect into the rear muffler and resonator (1 and 4). On the 2.7L/3.5L equipped vehicles, there is a flex coupler directly behind the LH catalytic converter. The upstream oxygen sensors are located in each exhaust manifold. On 5.7L equipped vehicles there is a flex coupler behind both LH and RH catalytic converters. The downstream oxygen sensors are located behind the flex couplers. The 6.1L does not use flex couplers. The downstream oxygen sensors are located behind the catalytic converters.

For the single exhaust systems, the RH muffler, resonator and tailpipe (4) are one single unit.

DIAGNOSIS AND TESTING

EXHAUST SYSTEM

CONDITION	POSSIBLE CAUSES	CORRECTION
EXCESSIVE EXHAUST NOISE (UNDER HOOD)	1. Exhaust manifold cracked or broken.	1. Replace manifold.
	2. Manifold to cylinder head leak.	2. Tighten manifold and/or replace gasket.
	3. EGR tube to manifold gasket leakage.	3. Tighten fasteners or replace gasket.
	4. EGR Valve to EGR tube gasket leakage.	4. Tighten fasteners or replace gasket.
	5. Exhaust to manifold leak.	5. Tighten or replace nuts
	6. Pipe and shell noise from front exhaust pipe.	6. Characteristic of single wall pipe.
EXCESSIVE EXHAUST NOISE	1. Leak at exhaust pipe joints.	1. Tighten clamps at leaking joints.

CONDITION	POSSIBLE CAUSES	CORRECTION
	2. Burned or rusted out muffler assembly or exhaust pipe.	2. Replace muffler and resonator assembly and/or LH rear resonator and tailpipe assembly as necessary.
	3. Burned or rusted out resonator(s).	3. Replace replace RH muffler and resonator assembly and/or RH resonator and tailpipe as necessary.
	4. Restriction in exhaust system.	4. Remove restriction if possible, or replace components as necessary.
	5. Converter material in muffler or resonators.	5. Replace replace RH muffler and resonator assembly and/or RH resonator and tailpipe as necessary. Check fuel injection and ignition systems for proper operation.

INSPECTION

Inspect the exhaust pipes, catalytic converters, muffler, and resonators for cracked joints, broken welds and corrosion damage that would result in a leaking exhaust system. Inspect the clamps, support brackets, and insulators for cracks and corrosion damage.

NOTE: Slip joint band clamps are spot/tack welded to exhaust system. If a band clamp must be replaced, the spot/tack weld must be ground off.

ADJUSTMENTS

A misaligned exhaust system is usually indicated by a vibration, rattling noise, or binding of exhaust system components. These noises are sometimes hard to distinguish from other chassis noises. Inspect exhaust system for broken or loose clamps, heat shields, isolators, and brackets. Replace or tighten as necessary. It is important that exhaust system clearances and alignment be maintained.

Perform the following procedures to align the exhaust system:

1. Loosen clamps and support brackets.
2. Align the exhaust system starting at the front, working rearward.
3. Tighten all clamps and brackets once alignment and clearances are achieved.

SPECIFICATIONS

TORQUE

DESCRIPTION	N·m	Ft. Lbs.	In. Lbs.
Nut - Catalytic Converter to Ball Flange Snug fit	12	-	106
Nut - Catalytic Converter to Ball Flange	34	25	-
Band Clamp	50	36	-
Nut - Catalytic Converter to Support Bracket	55	40	-
Fasteners - Exhaust Support Bracket	25	-	215
Retainers - Heat Shield	10	-	98
Nuts - Tunnel Reinforcement	25	-	215

SPECIAL TOOLS

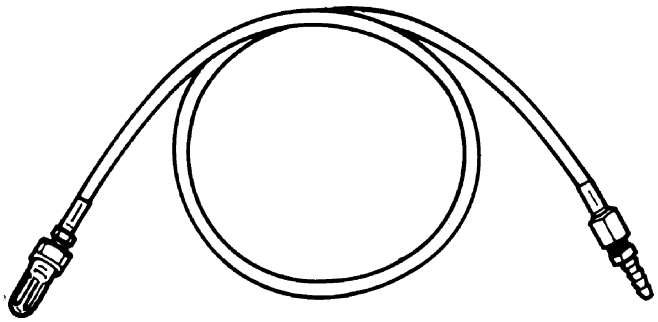

Back Pressure Test Adapter - CH8519

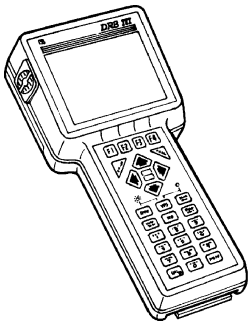

DRB III & PEP Module - OT-CH6010A

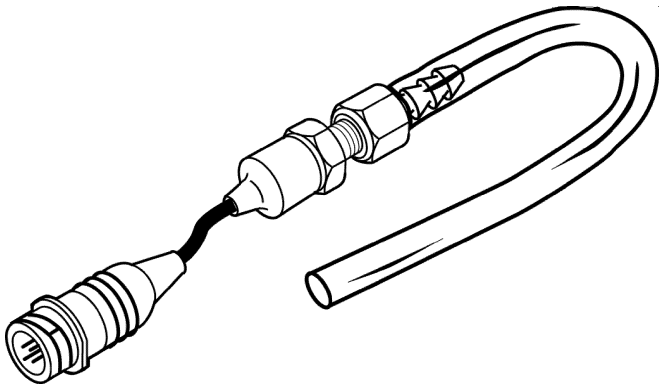

Pressure Transducer CH7063

CATALYTIC CONVERTER

DESCRIPTION

The close coupled, three-way catalytic converter inlets are connected to the exhaust manifolds by the use of ball flange (1). The 2.7L and 3.5L RWD vehicles incorporate a flex joint downstream of the LH catalytic converter to improve NVH. The 5.7L equipped RWD vehicles incorprate a flex joint downstream of the LH and RH catalytic converters. The 6.1L equipped RWD vehicles do use a flex joint downstream of the LH and RH catalytic converters.The left (4) and right (2) side converter outlet pipe connects to the exhaust system.

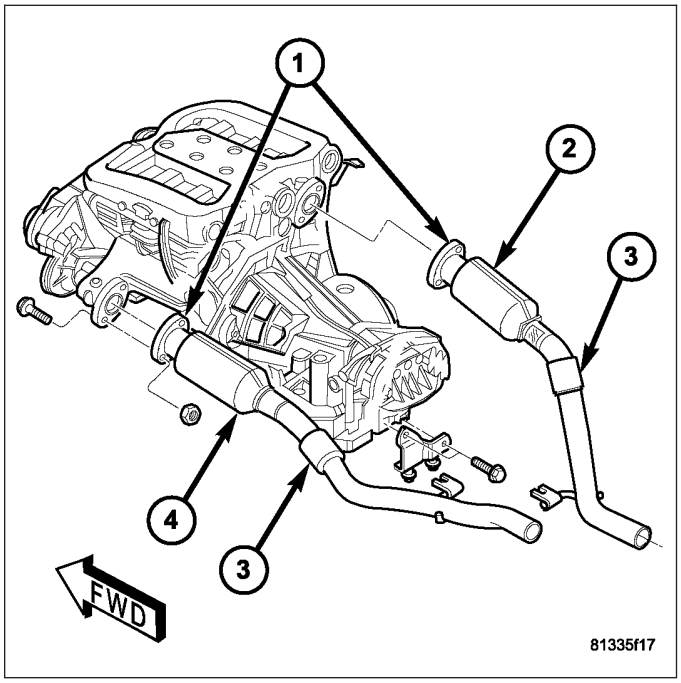

REMOVAL

RIGHT HAND CATALYTIC CONVERTER

WARNING: The normal operating temperature of the exhaust system is very high. therefore, never work around or attempt to service any part of the exhaust system until it is cooled. special care should be taken when working near the catalytic converter. The temperature of the converter rises to a high level after a short period of engine operation time.

1. Disconnect negative battery cable.
2. Raise vehicle on hoist.
3. Disconnect downstream oxygen sensor (2) connectors.
4. Remove muffler and resonator (Refer to 11 - EXHAUST SYSTEM/MUFFLER - REMOVAL).

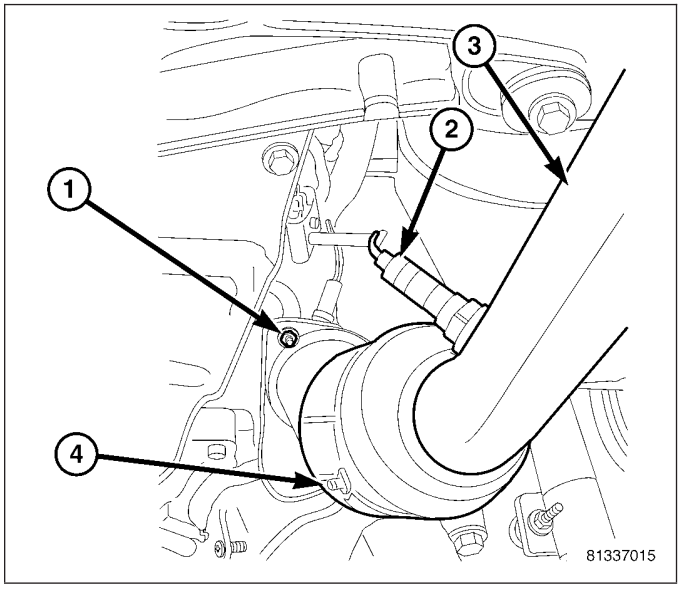

5. 2.7L/3.5L Only - Remove nuts and cross-brace (2).
6. Remove catalytic converter to ball flange nuts (1).
7. Remove catalytic converter (3).

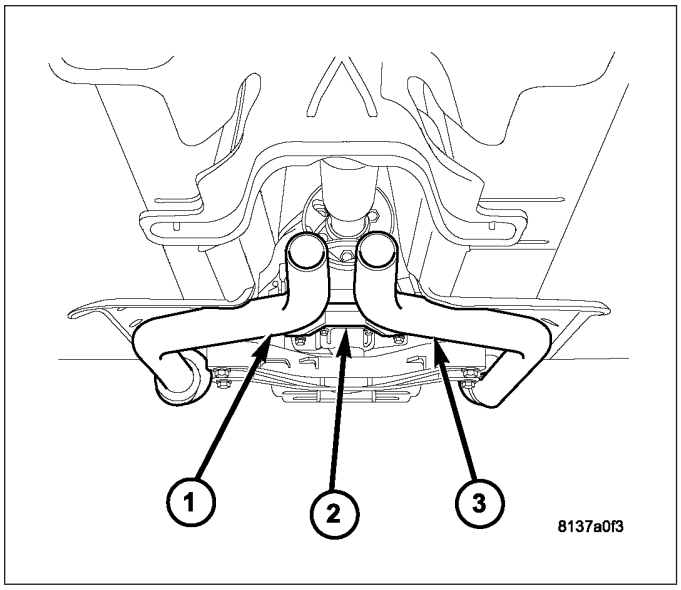

LEFT HAND CATALYTIC CONVERTER

1. Raise vehicle on hoist.
2. Hoist vehicle.

WARNING: The normal operating temperature of the exhaust system is very high. therefore, never work around or attempt to service any part of the exhaust system until it is cooled. special care should be taken when working near the catalytic converter. The temperature of the converter rises to a high level after a short period of engine operation time.

3. Disconnect downstream oxygen sensor electrical connectors.
4. Remove muffler and resonator assembly (Refer to 11 - EXHAUST SYSTEM/MUFFLER - REMOVAL).
5. Remove ball flange nuts.
6. Remove catalytic converter ball fange nut.
7. Remove catalytic converter.

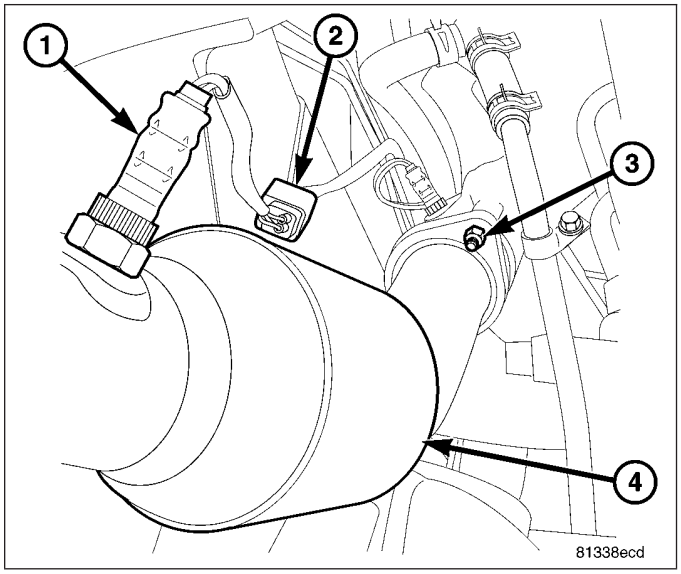

REMOVAL - DIESEL

WARNING: The normal operating temperature of the exhaust system is very high. therefore, never work around or attempt to service any part of the exhaust system until it is cooled. Special care should be taken when working near the catalytic converter. The temperature of the converter rises to a high level after a short period of engine operation time.

1. Disconnect negative battery cable.
2. Raise vehicle on hoist.
3. Disconnect differential pressure ports (2).
4. Disconnect exhaust temperature sensors (3).
5. Disconnect downstream oxygen sensor connectors (4).

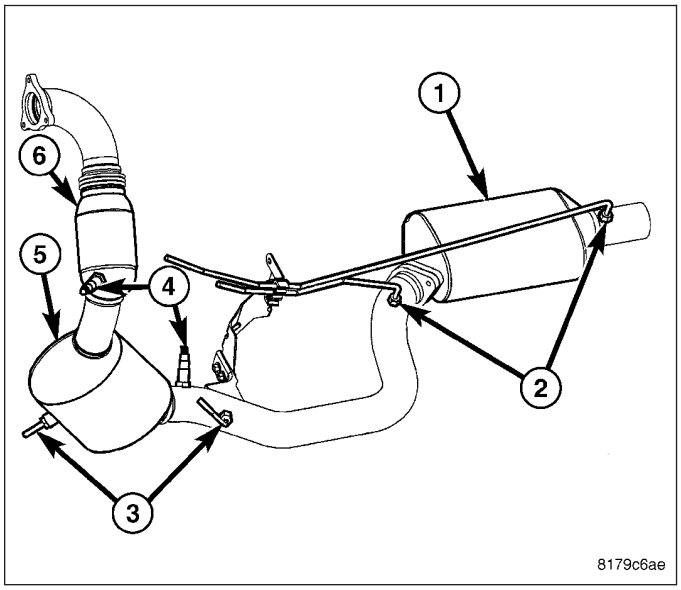

6. Remove exhaust from the diesel particulate filter (5).
7. Remove mounting bolts (4) and (7).
8. Remove the nuts from the down pipe (2).
9. Remove the catalyst assembly.

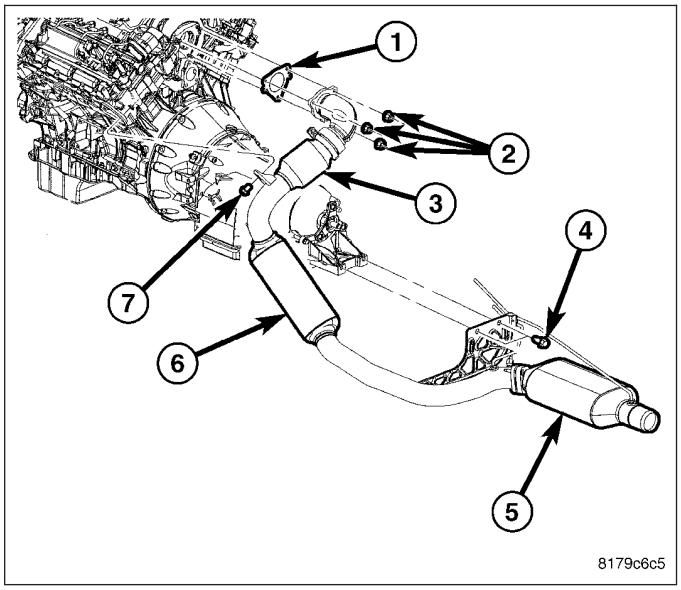

INSTALLATION - DIESEL

WARNING: The normal operating temperature of the exhaust system is very high. therefore, never work around or attempt to service any part of the exhaust system until it is cooled. Special care should be taken when working near the catalytic converter. The temperature of the converter rises to a high level after a short period of engine operation time.

1. Install the catalyst assembly.
2. Install the nuts to the down pipe (2).
3. Install mounting bolts (4) and (7).
4. Install exhaust onto the diesel particulate filter (5).

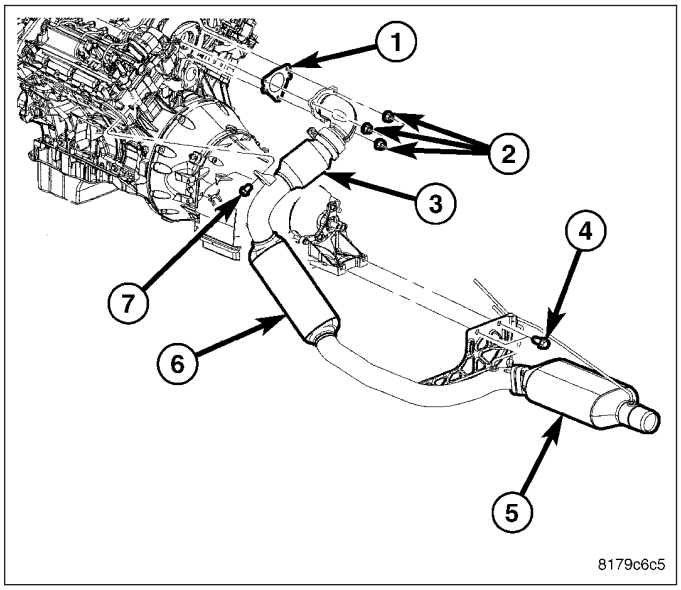

5. Connect downstream oxygen sensor connectors (4).
6. Connect exhaust temperature sensors (3).
7. Connect differential pressure ports (2).
8. Connect negative battery cable.

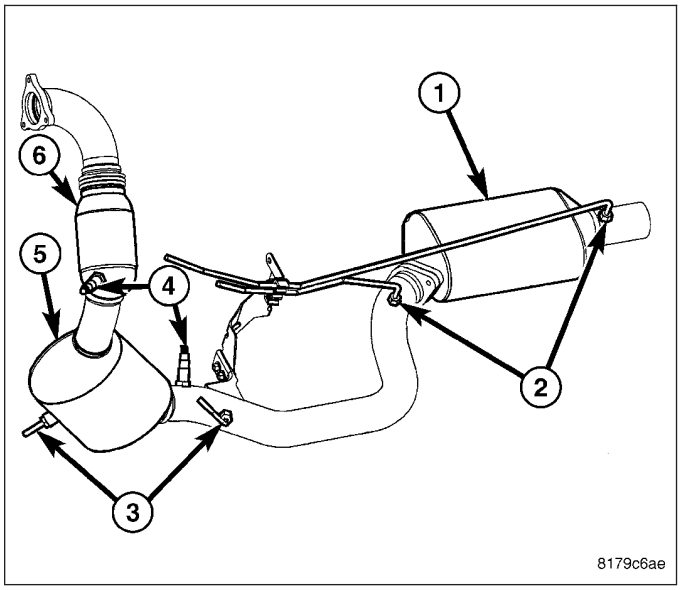

INSPECTION

WARNING: THE NORMAL OPERATING TEMPERATURE OF THE EXHAUST SYSTEM IS VERY HIGH. THEREFORE, NEVER ATTEMPT TO SERVICE ANY PART OF THE EXHAUST SYSTEM UNTIL IT IS COOLED. SPECIAL CARE SHOULD BE TAKEN WHEN WORKING NEAR THE CATALYTIC CONVERTER. THE TEMPERATURE OF THE CONVERTER RISES TO A HIGH LEVEL AFTER A SHORT PERIOD OF ENGINE OPERATION TIME.

Check catalytic converter for a flow restriction. (Refer to 11 - EXHAUST SYSTEM - DIAGNOSIS AND TESTING) Exhaust System Restriction Check for procedure.

Visually inspect the catalytic converter element by using a borescope or equivalent. Remove oxygen sensor(s) and insert borescope. If borescope is not available, remove converter and inspect element using a flashlight. Inspect element for cracked or melted substrate.

NOTE: Before replacing a catalytic converter, determine the root cause of failure. Most catalytic converter failures are caused by air, fuel or ignition problems. (Refer to Appropriate Diagnostic Information) for test procedures.

INSTALLATION

RIGHT HAND CATALYTIC CONVERTER

1. Install catalytic converter (3) onto exhaust manifold ball flange. Only finger tighten nuts at this time.
2. Install muffler and resonator assembly (Refer to 11 - EXHAUST SYSTEM/MUFFLER - REMOVAL).

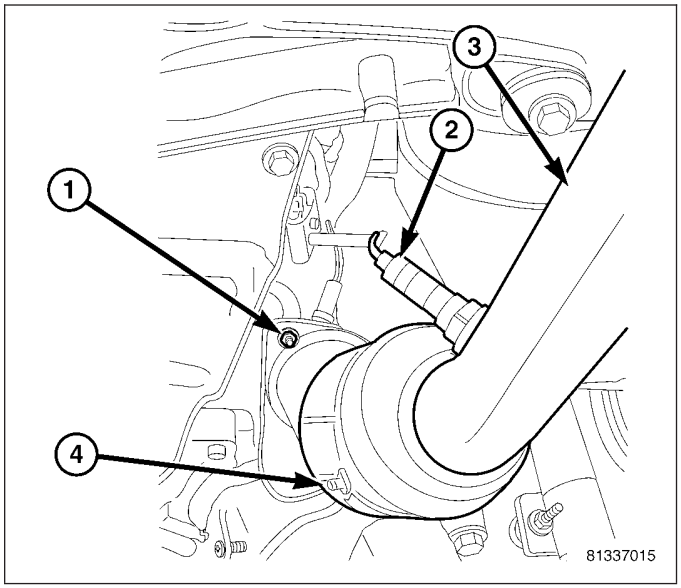

3. Install bolts and cross brace (3). Tighten bolts to 55 N·m (40 ft. lbs.).
4. TIghten manifold ball flange nut to 12 N·m (106 in. lbs.).
5. Check clearance between exhaust module and fuel tank. Clearance is 14mm (.55 in.) for V8 engine and 16mm (.62 in.) for V6 engine.
6. Check clearance at rear tunnel reinforcement. Clearance is 15 - 20mm (.59 - .78 in.).
7. Adjust clearance as necessary.
8. Tighten ball flange nuts to 34 N·m (25 ft. lbs.).
9. Connect oxygen sensor (2) connectors.
10. Lower vehicle.
11. Connect negative battery cable.
12. Start the engine and inspect for exhaust leaks. Repair exhaust leaks as necessary.

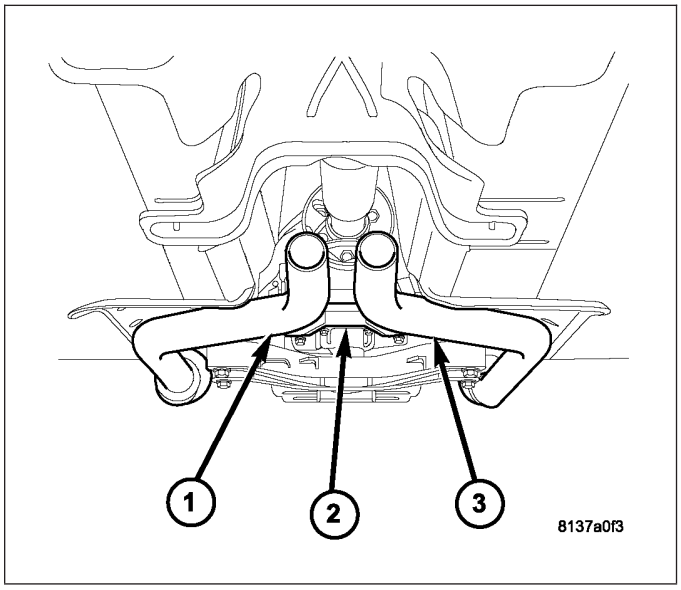

LEFT HAND CATALYTIC CONVERTER

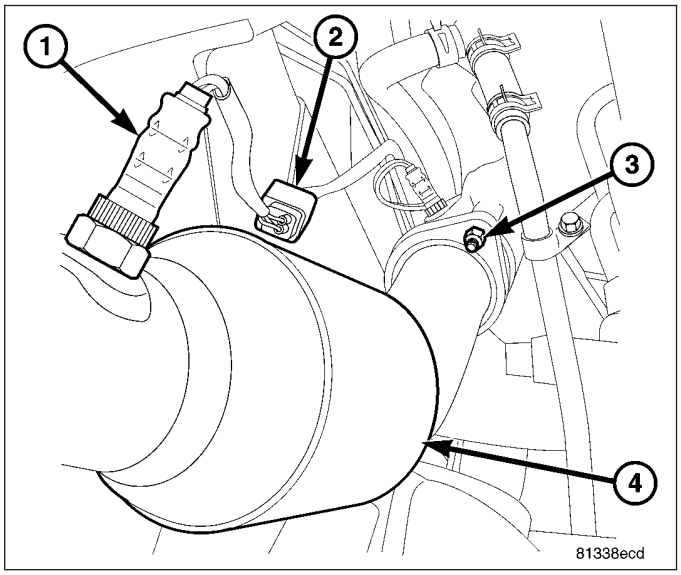

1. Install catalytic converter (3) onto exhaust manifold ball flange. Only finger tighten nuts at this time.
2. Install muffler and resonator assembly (Refer to 11 - EXHAUST SYSTEM/MUFFLER - INSTALLATION).
3. Install bolts and cross brace. Tighten bolts to 55 N·m (40 ft. lbs.).
4. Tighten manifold ball flange nut to 12 N·m (106 in. lbs.).
5. Check clearance between exhaust module and fuel tank. Clearance is 14mm (.55 in.) for V8 engine and 16mm (.62 in.) for V6 engine.
6. Check clearance at rear tunnel reinforcement. Clearance is 15 - 20mm (.59 - .78 in.).
7. Adjust clearance as necessary.
8. Tighten ball flange nuts to 34 N·m (25 ft. lbs.).
9. Lower vehicle.
10. Connect negative battery cable.
11. Start the engine and inspect for exhaust leaks. Repair exhaust leaks as necessary.

HEAT SHIELDS

REMOVAL

WARNING: THE NORMAL OPERATING TEMPERATURE OF THE EXHAUST SYSTEM IS VERY HIGH. THEREFORE, NEVER WORK AROUND OR ATTEMPT TO SERVICE ANY PART OF THE EXHAUST SYSTEM UNTIL IT IS COOLED. SPECIAL CARE SHOULD BE TAKEN WHEN WORKING NEAR THE CATALYTIC CONVERTER. THE TEMPERATURE OF THE CONVERTER RISES TO A HIGH LEVEL AFTER A SHORT PERIOD OF ENGINE OPERATION TIME.

1. Raise vehicle.
2. Remove nuts (2).
3. Remove heat shields (1).

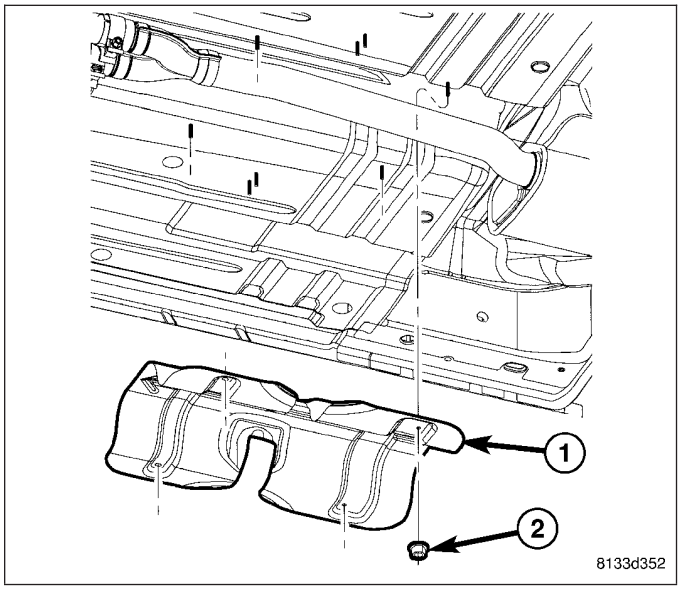

INSTALLATION

1. Position heat shields (1).
2. Install nuts (2). Tighten nuts to 10 N·m (98 in. lbs.).

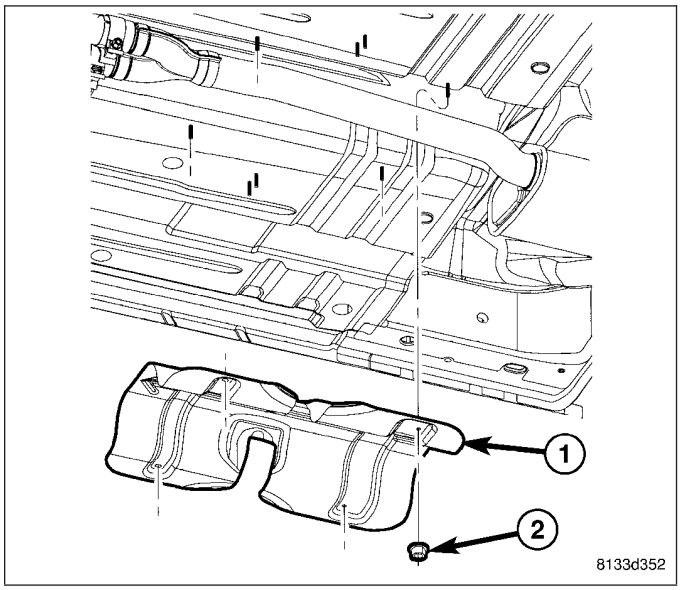

MUFFLER

DESCRIPTION

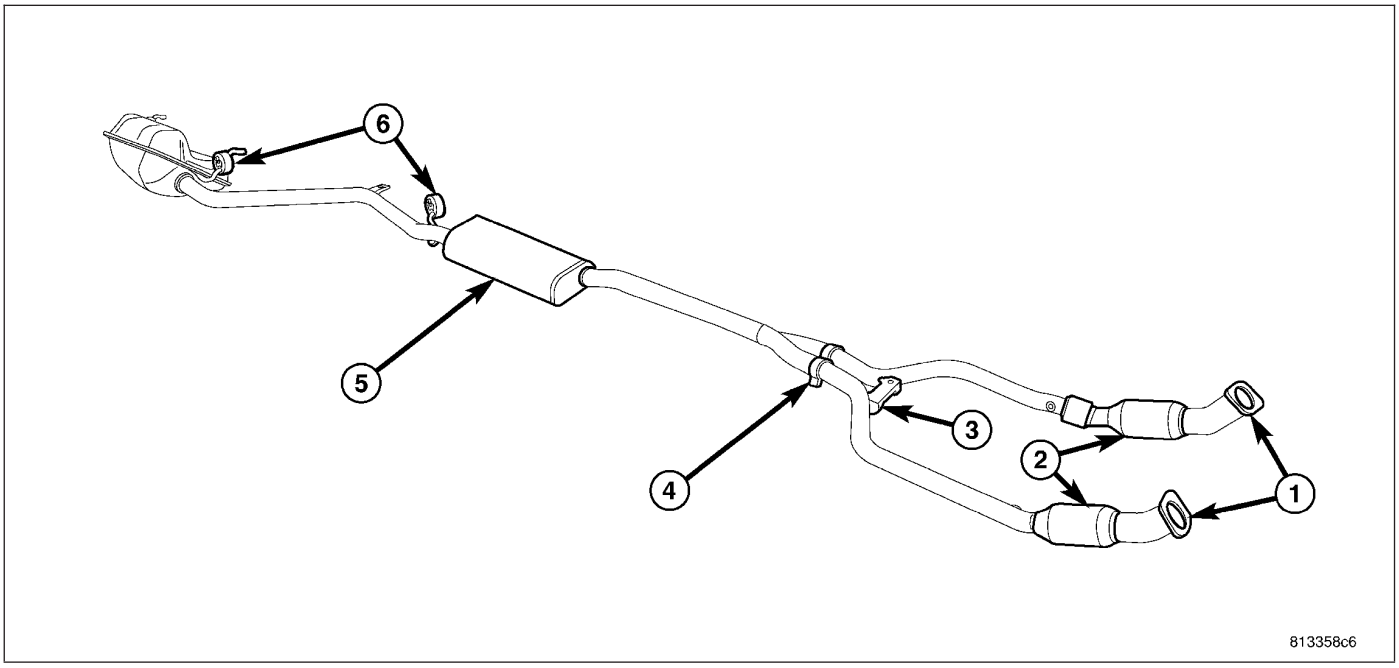

EXHAUST PIPE ASSEMBLY V6

1 - BALL FLANGE
2 - CATALYTIC CONVERTER ASSEMBLY
3 - CROSS BRACE
4 - BAND CLAMPS
5 - RH REAR MUFFLER AND RESONATOR
6 - ISOLATORS

The 2.7L/3.5L exhaust pipe assembly consists of:

- Muffler and resonator assembly module (5)
- Isolators (6)

The muffler and resonator assembly is serviced as an assembly.

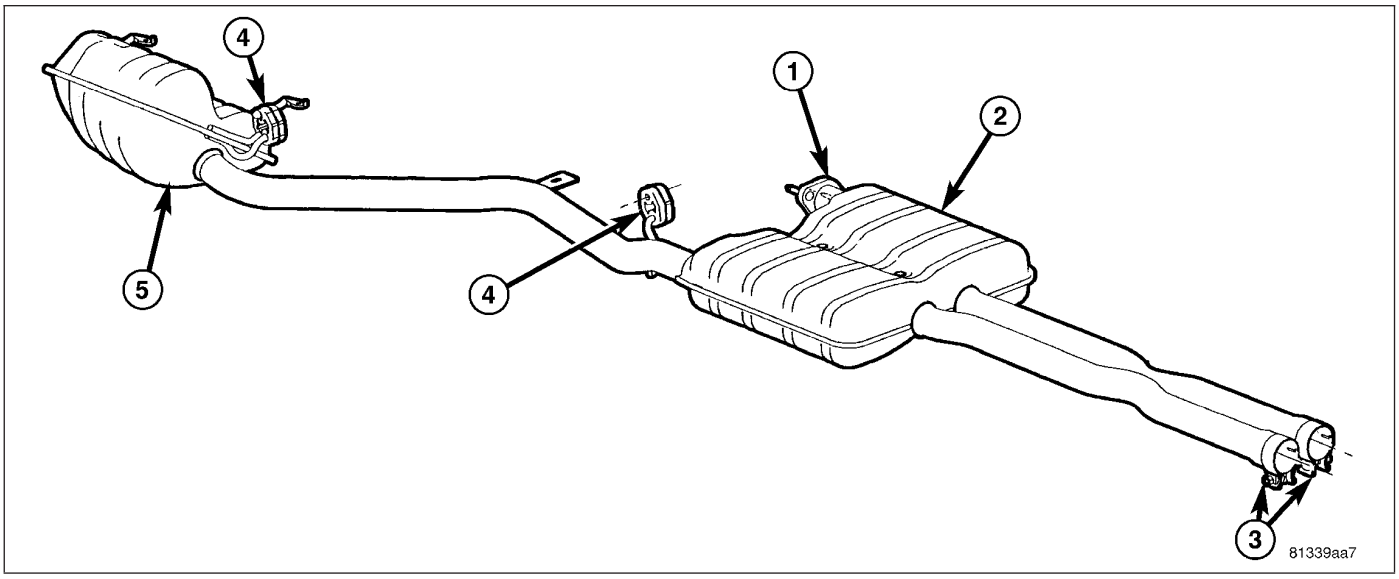

1 - BALL FLANGE
2 - FRONT EXHAUST PIPE MUFFLER AND RESONATOR ASSEMBLY
3 - BAND CLAMPS
4 - ISOLATOR
5 - RH REAR RESONATOR AND TAILPIPE ASSEMBLY

The 5.7L RH muffler and tailpipe assembly consists of:

- Front exhaust pipe and muffler (2) and resonator (5)
- Ball flange (1)
- Isolators (4)
- Band clamps (3)

The muffler and resonator assembly is serviced as an assembly.

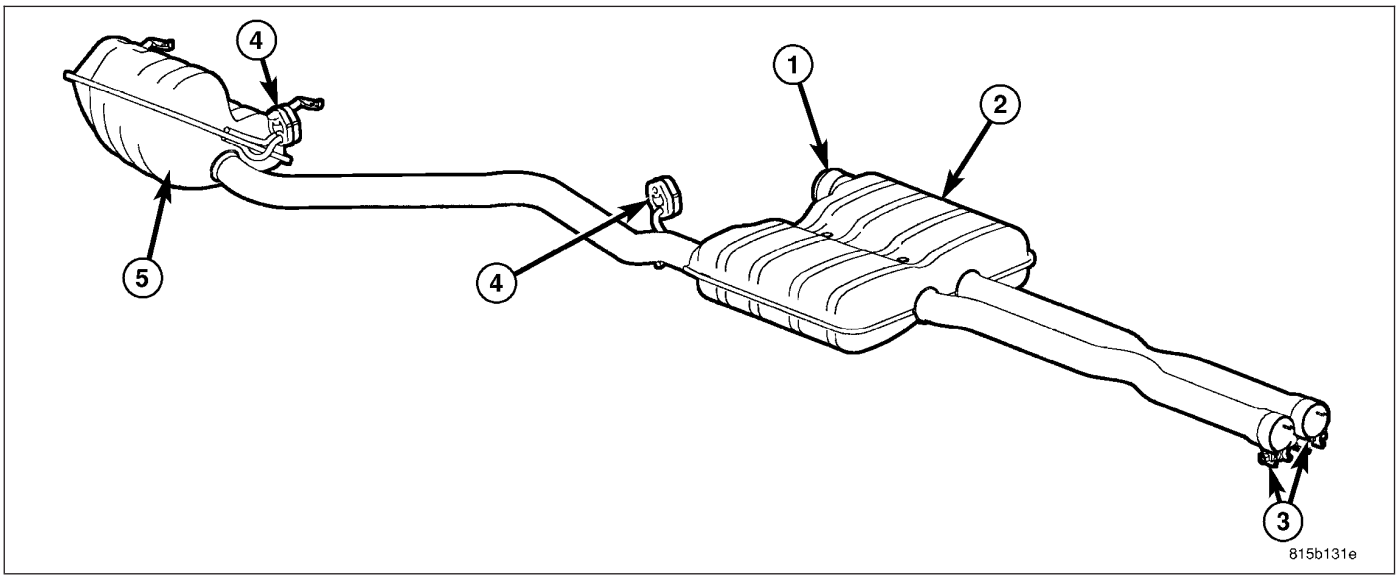

1 - BALL FLARE BAND CLAMP
2 - FRONT EXHAUST PIPE MUFFLER AND RESONATOR ASSEMBLY
3 - BAND CLAMPS
4 - ISOLATOR
5 - RH REAR RESONATOR AND TAILPIPE ASSEMBLY

The 6.1L RH muffler and tailpipe assembly consists of:

- Front exhaust pipe and muffler (2) and resonator (5)

- Band clamp(1)
- Isolators (4)
- Band clamps (3)

The muffler and resonator assembly is serviced as an assembly.

REMOVAL

1. Raise vehicle.
2. Remove catalytic converter to muffler and resonator clamps (2).

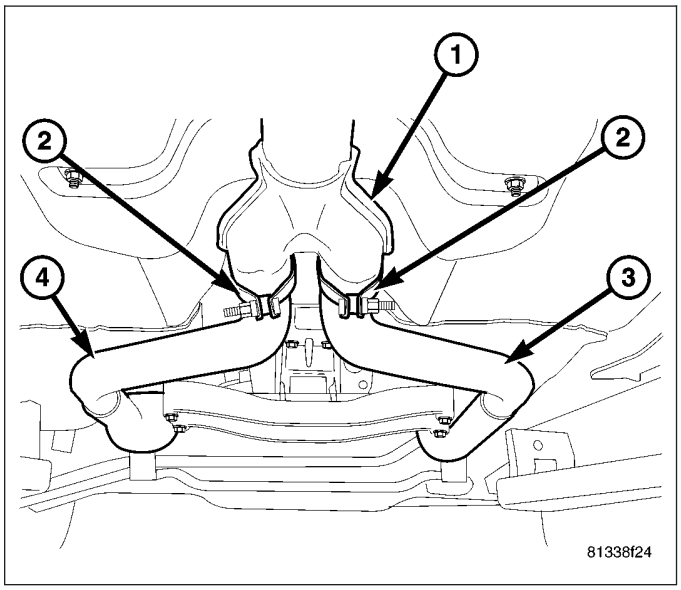

3. Remove nuts (1) and tunnel reinforcement (2).

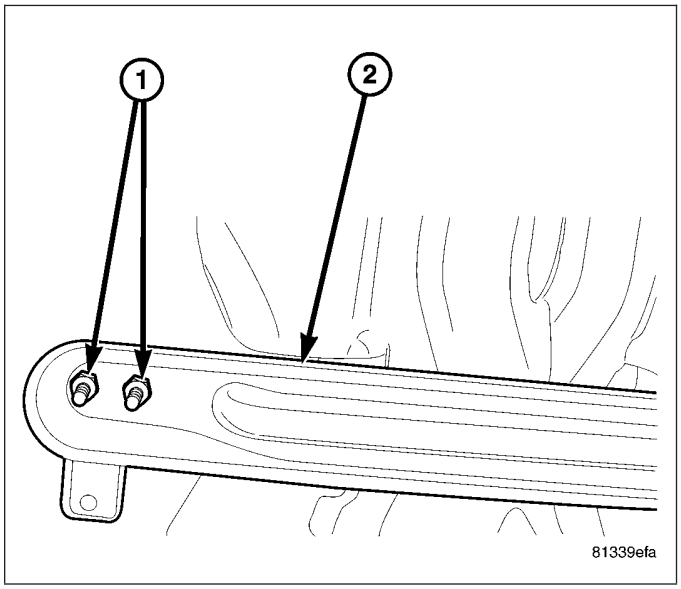

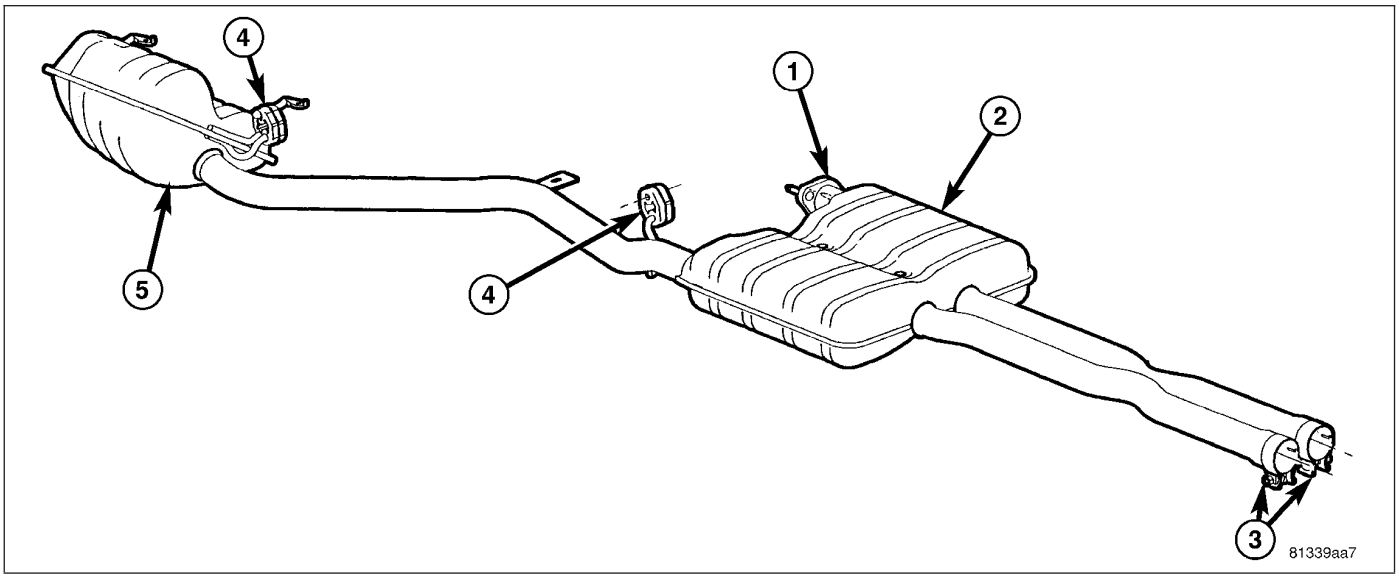

4. 5.7L/6.1L Engine - Remove LH resonator and tailpipe assembly (Refer to 11 - EXHAUST SYSTEM/RESONATOR - REMOVAL).
5. Remove isolators (4).
6. Remove muffler and tailpipe assembly (5) by twisting/turning while pulling assembly out of catalytic converters.

INSTALLATION

1. Position front exhaust pipe module clamps (2) on exhaust pipe assembly.
2. Install exhaust pipe assembly into catalytic converters (3 and 4).

NOTE: Isolators will have an approximately 10° forward angle when installed.

3. Install isolators.

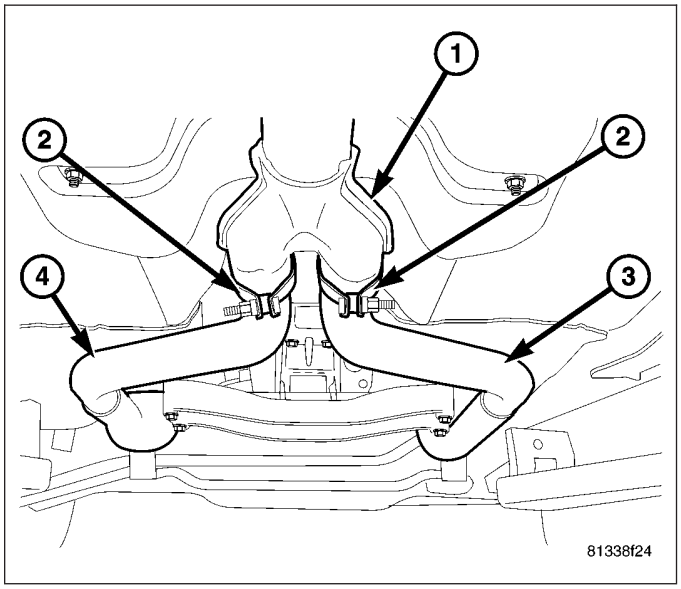

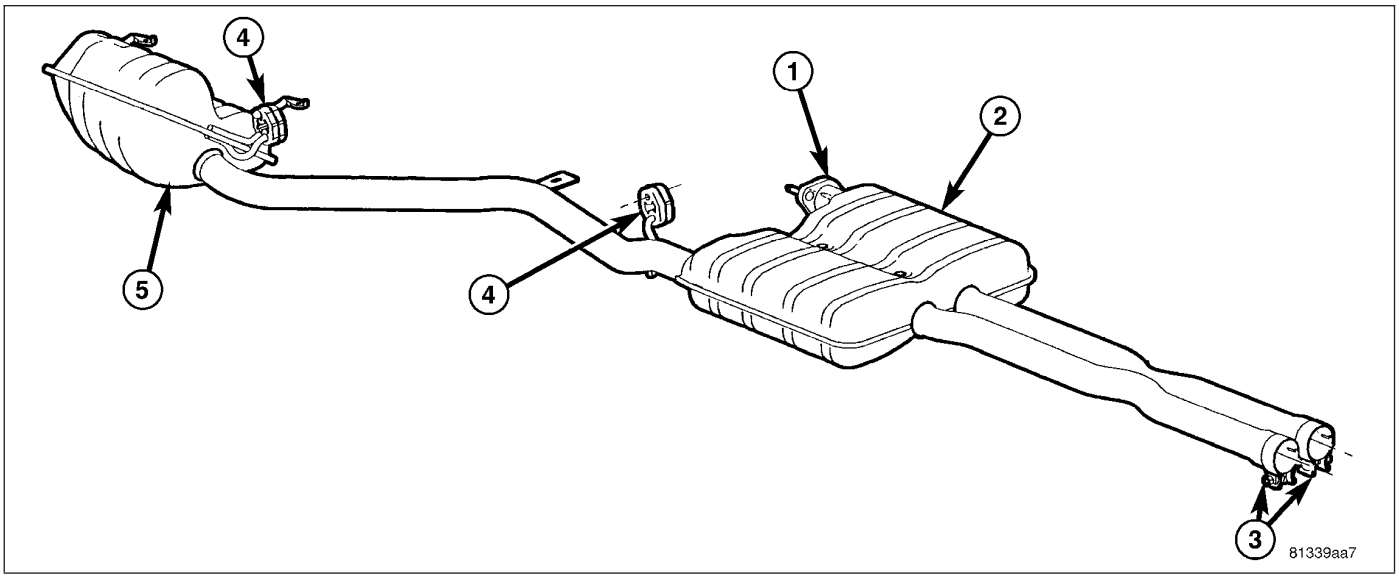

4. 5.7L/6.1L Engine - Install LH rear resonator and tailpipe assembly (Refer to 11 - EXHAUST SYSTEM/RESONATOR - INSTALLATION).

NOTE: Check for proper alignment and clearance to underbody and engine compartment components before tightening clamps.

5. Tighten band clamps to 61 N·m (45 ft. lbs.).
6. Install tunnel reinforcement (2) and nuts (1). Tighten nuts to 25 N·m (215 in. lbs.)
7. Check clearance between muffler and resonator assembly and fuel tank. Clearance is 14mm (.55 in.) for V8 engine and 16mm (.62 in.) for V6 engine.
8. Check clearance at rear tunnel reinforcement. Clearance is 15 - 20mm (.59 - .78 in.).
9. The tailpipe should be centered in the rear fascia opening.
10. Adjust clearance as necessary.
11. Lower vehicle.
12. Start the engine and inspect for exhaust leaks. Repair exhaust leaks as necessary.

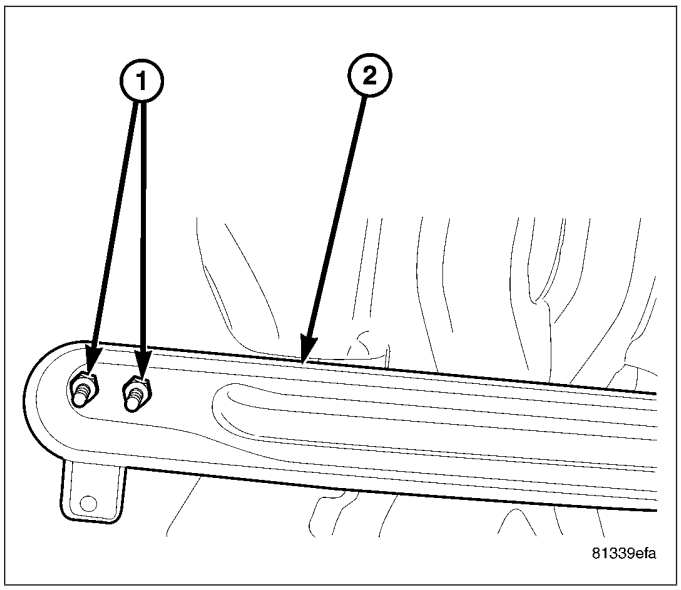

RESONATOR - 5.7L

REMOVAL

WARNING: THE NORMAL OPERATING TEMPERATURE OF THE EXHAUST SYSTEM IS VERY HIGH. THEREFORE, NEVER WORK AROUND OR ATTEMPT TO SERVICE ANY PART OF THE EXHAUST SYSTEM UNTIL IT IS COOLED. SPECIAL CARE SHOULD BE TAKEN WHEN WORKING NEAR THE CATALYTIC CONVERTER. THE TEMPERATURE OF THE CONVERTER RISES TO A HIGH LEVEL AFTER A SHORT PERIOD OF ENGINE OPERATION TIME.

1. Raise vehicle.
2. Remove two nuts (2).
3. Remove isolators (1).
4. Remove LH resonator and tailpipe assembly (5).

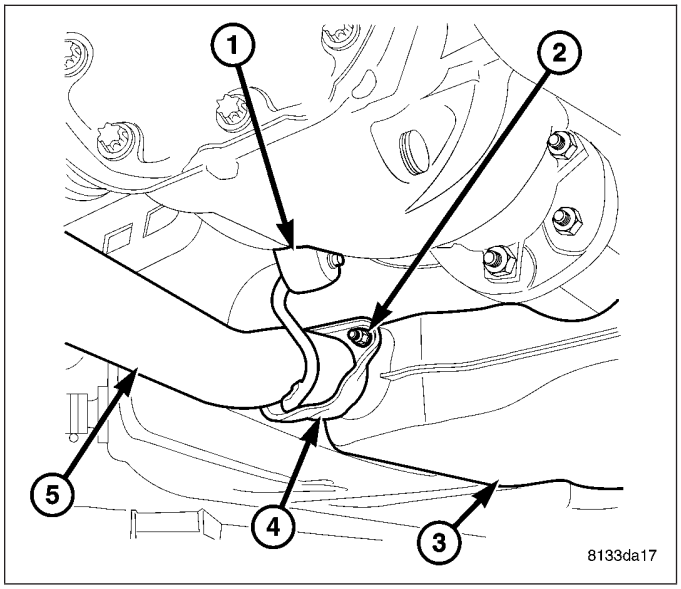

INSTALLATION

1. Position LH resonator and tailpipe assembly (5) in vehicle.
2. Install isolators (1).
3. install ball flange nuts (2). Tighten nuts finger tight.
4. Check clearance between muffler and tailpipe assembly and fuel tank. Clearance is 14mm (.55 in.) for V8 engine and 16mm (.62 in.) for V6 engine.
5. Check clearance at rear tunnel reinforcement. Clearance is 15 - 20mm (.59 - .78 in.).
6. The tailpipe should be centered in the rear fascia opening.
7. Tighten ball flange nuts (2) to 47 N·m (35 ft. lbs.).
8. Lower vehicle.
9. Start the engine and inspect for exhaust leaks. Repair exhaust leaks as necessary.

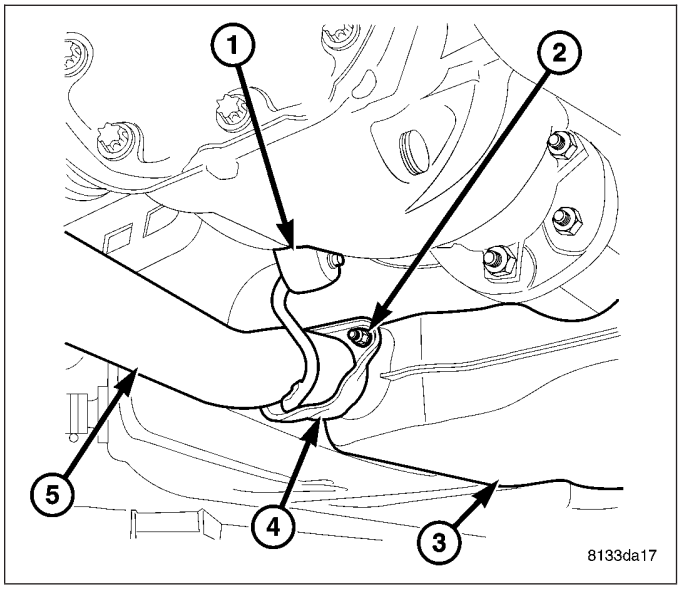

RESONATOR - 6.1L

REMOVAL

WARNING: THE NORMAL OPERATING TEMPERATURE OF THE EXHAUST SYSTEM IS VERY HIGH. THEREFORE, NEVER WORK AROUND OR ATTEMPT TO SERVICE ANY PART OF THE EXHAUST SYSTEM UNTIL IT IS COOLED. SPECIAL CARE SHOULD BE TAKEN WHEN WORKING NEAR THE CATALYTIC CONVERTER. THE TEMPERATURE OF THE CONVERTER RISES TO A HIGH LEVEL AFTER A SHORT PERIOD OF ENGINE OPERATION TIME.

1. Raise vehicle.
2. Remove the bolt (2).
3. Remove isolators (1).
4. Remove LH resonator and tailpipe assembly (5).

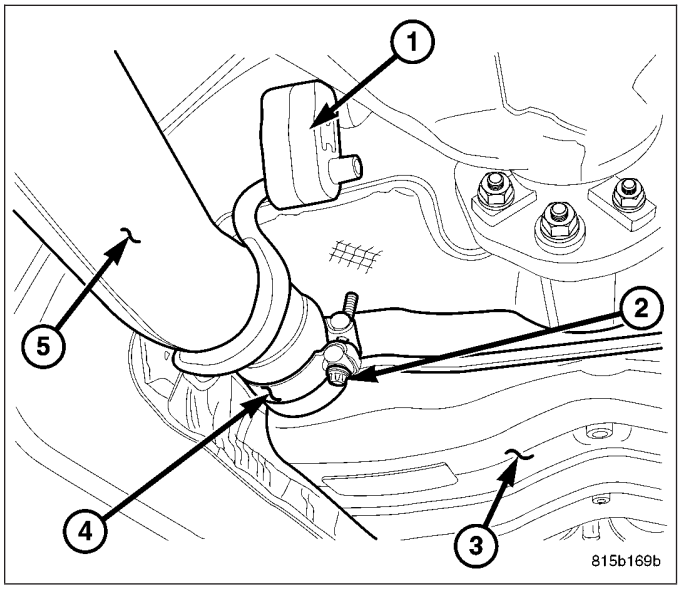

INSTALLATION

1. Position LH resonator and tailpipe assembly (5) in vehicle.
2. Install isolators (1).
3. install ball clamp bolt (2). Tighten bolt finger tight.
4. Check clearance between muffler and tailpipe assembly and fuel tank. Clearance is 14mm (.55 in.) for V8 engine.
5. Check clearance at rear tunnel reinforcement. Clearance is 15 - 20mm (.59 - .78 in.).
6. The tailpipe should be centered in the rear fascia opening.
7. Tighten ball clamp bolt (2) to 47 N·m (35 ft. lbs.).
8. Lower vehicle.
9. Start the engine and inspect for exhaust leaks. Repair exhaust leaks as necessary.

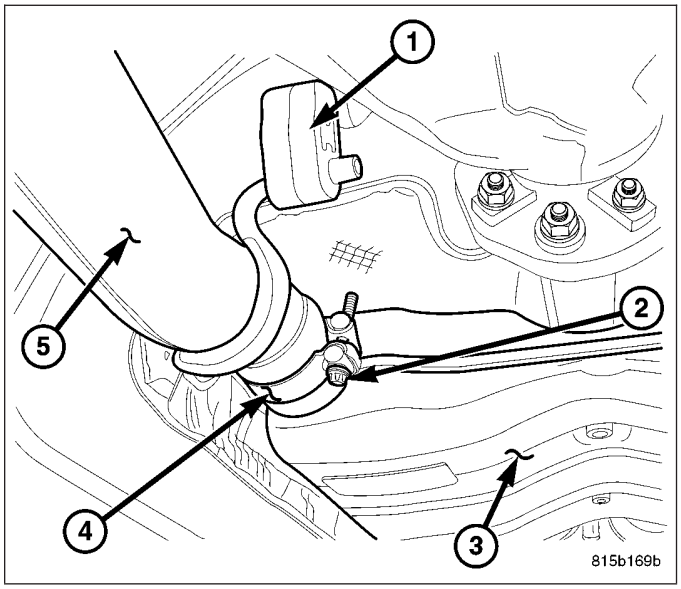

PARTICULATE FILTER

DESCRIPTION

A diesel particulate filter (1) DPF is installed for exhaust gas after-treatment. The DPF is located downstream of the main oxidation catalyst (5). The DPF filters, stores and burns particulate matter (soot) that is generated during the combustion process. The soot is oxidized to carbon dioxide CO2 at exhaust temperatures over 600º C (1,112º F).

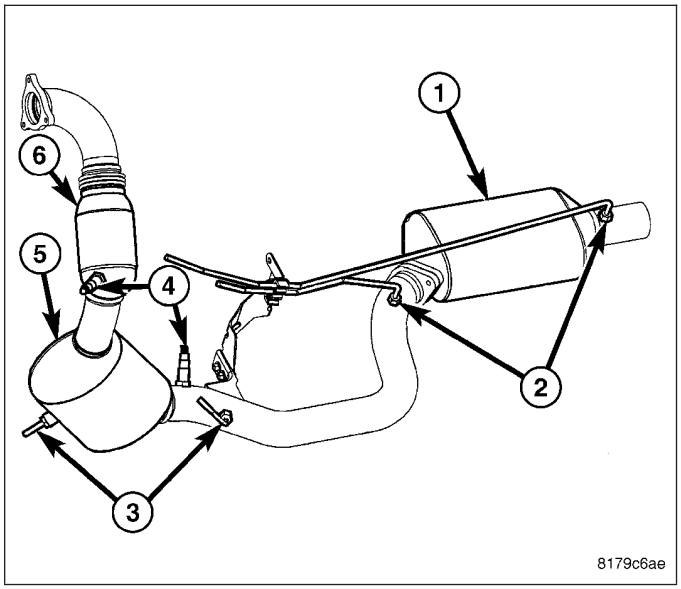

OPERATION

The oxidation catalysts raise the exhaust gas temperatures to regenerate the DPF (1), which is passive regeneration. If the passive regeneration cannot keep up with the build up of soot in the DPF, the ECM will actively regenerate the DPF to burn off the soot. Residue remains inside the DPF in the form of non burnable ash. Ash comes from the oils and other materials that are trapped in the oils and are present in the soot. Ash is not eliminated by the regeneration cycle. Excessive ash accumulation requires the replacement of the DPF. The DPF uses a silicon carbide wall-flow monolith with a platinum coating to trap particulates. The monolith contains a large number of square parallel channels, which run in the axial direction and are separated by thin porous walls. The channels are alternatively open at one end, but plugged at the other. The exhaust gases flow through the walls and escape through the pores in the wall material. Particulates, however, are too large to escape and are trapped in the monolith walls. The ECM starts the regeneration of the DPF if the soot load exceeds a performance map value. The ECM determines the load condition of the DPF based upon the exhaust gas pressure upstream (2) and downstream (2) of the DPF. A pressure differential sensor (2) provides the pressure input to the ECM. During the regeneration process, the ECM raises the temperature in the DPF to burn off the soot accumulated. Under normal operation, the engine does not produce enough heat to oxidize the soot inside the DPF. This process requires temperatures above 550 ºC (1,022 ºF). After regeneration, the ECM reads the actual pressure difference at the DPF and compares it with a reference value. From this comparison, the ECM determines the ash quantity inside the DPF.

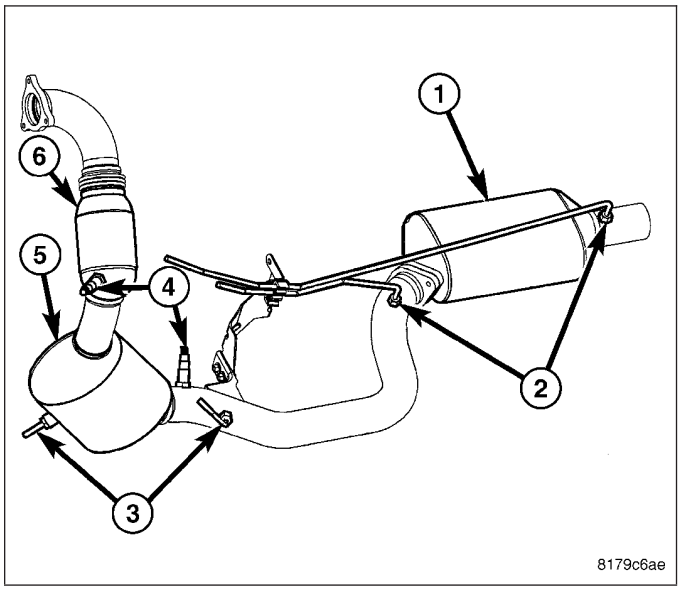

REMOVAL

WARNING: The normal operating temperature of the exhaust system is very high. therefore, never work around or attempt to service any part of the exhaust system until it is cooled. special care should be taken when working near the catalytic converter. The temperature of the converter rises to a high level after a short period of engine operation time.

1. Disconnect negative battery cable.
2. Disconnect differential pressure ports (2).
3. Remove exhaust from the diesel particulate filter (1).
4. Remove the catalyst to diesel particulate filter fasteners.
5. Remove the diesel particulate filter assembly.

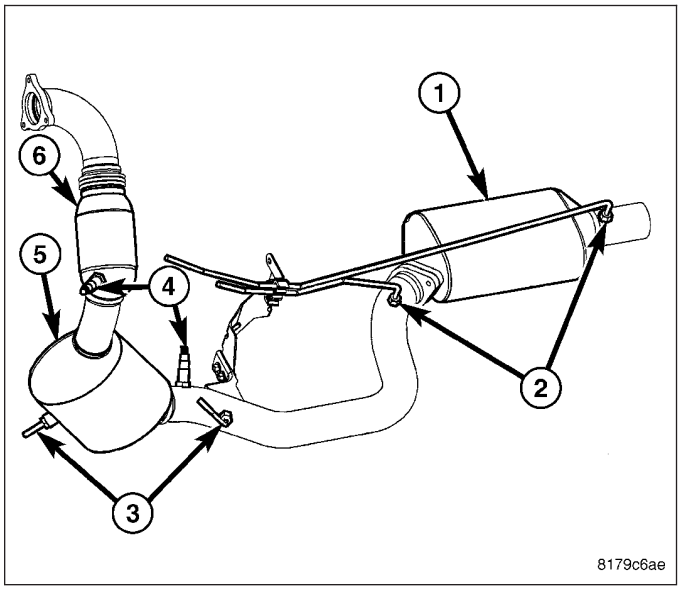

INSTALLATION

WARNING: The normal operating temperature of the exhaust system is very high. therefore, never work around or attempt to service any part of the exhaust system until it is cooled. special care should be taken when working near the catalytic converter. The temperature of the converter rises to a high level after a short period of engine operation time.

1. Install the diesel particulate filter assembly (1).
2. Install the catalyst to diesel particulate filter fasteners.
3. Reconnect the exhaust to the diesel particulate filter (1).
4. Connect differential pressure ports (2).
5. Connect negative battery cable.

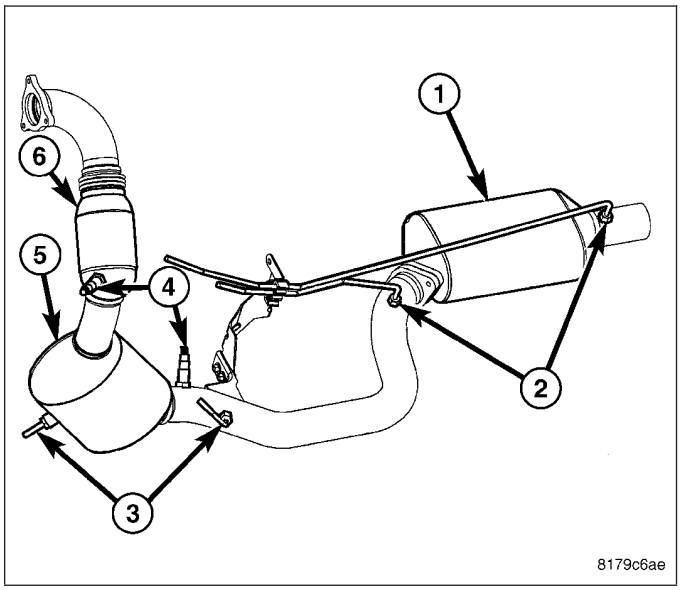

TURBOCHARGER SYSTEM

DESCRIPTION

CAUTION: The turbocharger is a performance part and must not be tampered with. The actuator bracket is an integral part of the turbocharger. Tampering with the actuator or other components can reduce durability by increasing cylinder pressure and thermal loading due to incorrect inlet and exhaust manifold pressure. Poor fuel economy and failure to meet regulatory emissions laws may result. Increasing the turbocharger boost WILL NOT increase engine power.

The turbocharger used on this vehicle is of the variable turbine type. These turbochargers use the entire exhaust energy to boost efficiency of the turbocharger and the engine.

The advantages of a turbocharger with variable turbine geometry are:

- Higher charge pressure already in the lower and in upper engine speed ranges.
- Higher torque as a result of improved cylinder charge.
- Reduction in exhaust emissions as a result of an improvement in the air supply of the engine.
- Increased power output as a result of the higher charge pressure combined with a reduced exhaust back pressure and thus improved charge cycle.

OPERATION

The exhaust gases of the engine are directed through the exhaust manifold into the turbine housing (6) onto the turbine wheel (7). The flow energy of the exhaust gases cause the turbine wheel (7) to rotate. Consequently, the compressor wheel, which is connected through the turbine shaft with the turbine wheel (7), is driven at the same speed. The fresh air (A) inducted by the compressor wheel is compressed and passed to the engine.

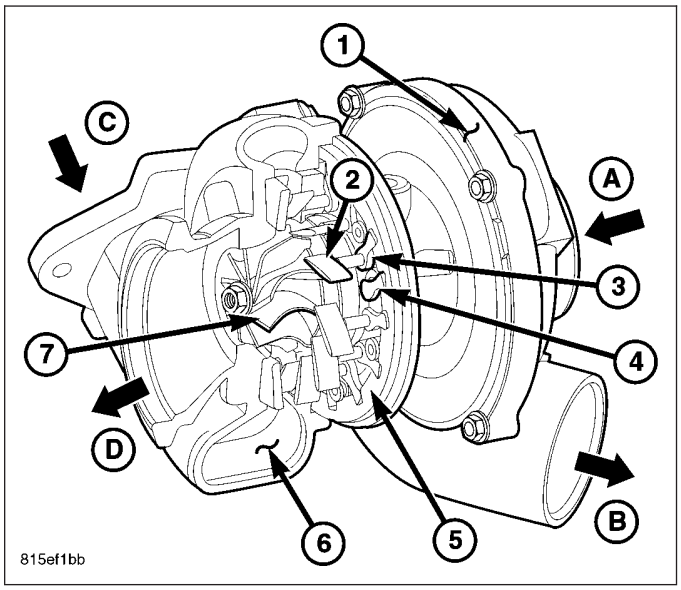

The charge pressure is controlled by varying the position of the guide vanes (2). The guide stud (3) of the control linkage of the boost pressure actuator turns the adjusting ring (5) in the turbine housing (6). As a result, all the guide vanes (3) whose guide studs (4) likewise mesh into the adjusting ring (5), are also turned.

At low speeds, the flow cross-section is reduced by closing the guide vanes (2). Consequently the speed at which the exhaust gas impacts on the turbine wheel (7) is increased, as a result of which the speed of the turbocharger and thus the charge pressure rises.

At high engine speeds the guide vanes (2) are increasingly opened and the flow cross-section is thus enlarged, as a result of which the speed of the turbocharger reduces and the charge pressure drops.

The turbocharger guide veins are controlled by the electronic actuator. The ECM monitors the boost and charge air changes to the turbocharger system during operation. The ECM sends a PWM signal to the actuator. The actuator will then respond to the signal adjusting the guide veins.

TURBOCHARGER

DIAGNOSIS AND TESTING - TURBOCHARGER

NOTE: Some horizontal and lateral movement of the turbine wheel is normal operation and should not be confused with premature turbocharger bearing failure.

The turbocharger is not adjustable and has no replacable internal components. If a failure is determined, replace the turbocharger.

CONDITION	POSSIBLE CAUSES	CORRECTION
CONDITION A	Possible Cause 1	Correction 1
	Possible Cause 2	Correction 2
CONDITION B	Possible Cause 1	Correction 1
	Possible Cause 2	Correction 2

REMOVAL - TURBOCHARGER

WARNING: THE NORMAL OPERATING TEMPERATURE OF THE EXHAUST SYSTEM IS VERY HIGH. NEVER WORK AROUND OR ATTEMPT TO SERVICE ANY PART OF THE EXHAUST SYSTEM UNTIL IT IS COOL. CARE SHOULD BE TAKEN WHEN WORKING NEAR THE TURBOCHARGER. THE TEMPERATURE OF THE TURBOCHARGER RISES TO A HIGH LEVEL AFTER A SHORT PERIOD OF ENGINE OPERATION TIME.

NOTE: THERE IS NO PROCEDURE FOR REPAIRING THE TURBOCHARGER. IF DAMAGE IS FOUND DURING INSPECTION, THE TURBOCHARGER MUST BE REPLACED.

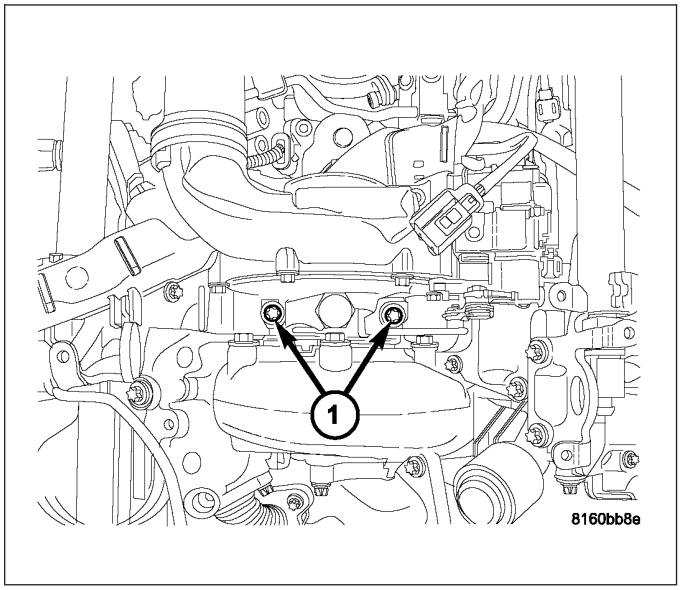

1. Disconnect negative battery cable.
2. Remove the engine trim cover.
3. Remove air intake tube (air cleaner to turbo) (1).
4. Remove engine cover front bracket (2).
5. Remove air tube (turbo to cooler) (3).
6. Remove the turbo heat shield (4).

7. Remove the exhaust clamp (elbow to converter) (1).

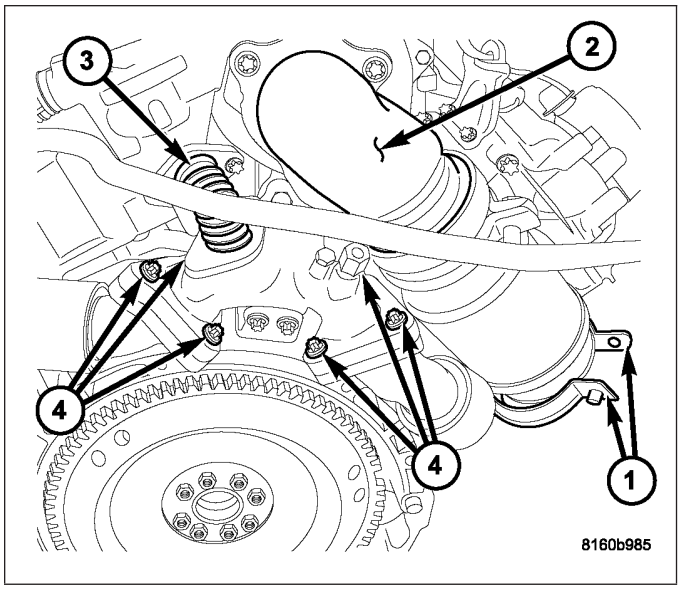

8. Remove the turbo front bracket retaining bolts (1).
9. Drain cooling system (Refer to 7 - COOLING/ENGINE/COOLANT - STANDARD PROCEDURE).
10. Disconnect the downstream catalytic converter at the extension pipe.
11. Disconnect the extension pipe to muffler.
12. Disconnect O2 sensor wire connector.
13. Reposition extension pipe and catalytic converter.
14. Lower vehicle and disconnect catalytic converter to downstream catalytic converter clamp.
15. Remove upstream catalytic converter.
16. Disconnect transmission fill tube and trim cover bracket and set aside.

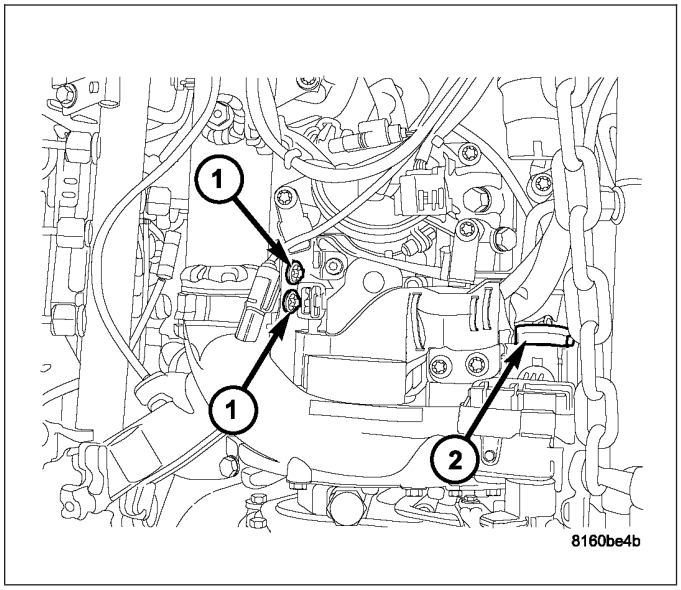

17. Disconnect exhaust elbow at turbo (2).
18. Disconnect EGR tube at manifold to left cylinder head (3).
19. Remove left and right exhaust manifold retaining bolts and gaskets (4).

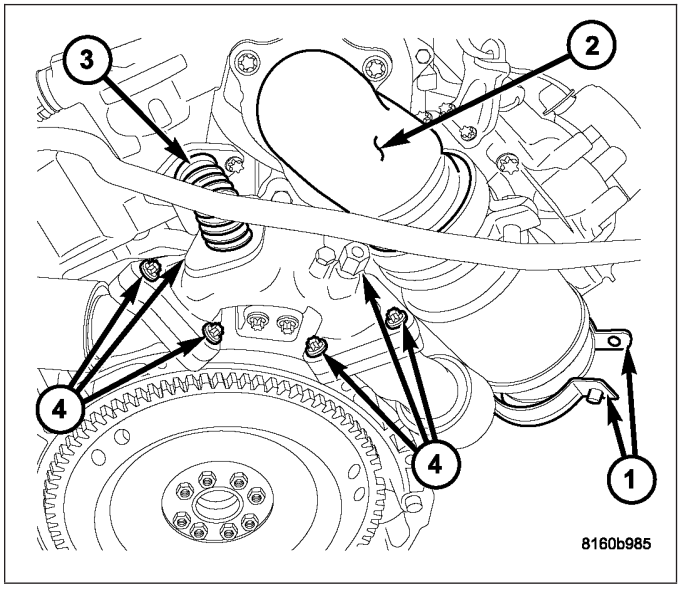

20. Remove front turbo retaining bolts (1).
21. Remove turbo mount retaining bolts.
22. Remove turbo.
23. Disconnect turbo boost pressure servo connector (2).

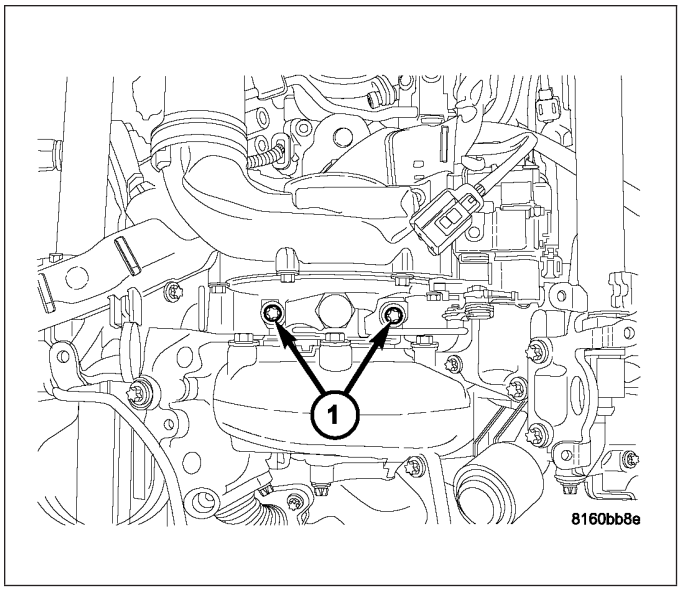

INSPECTION

Visually inspect the turbocharger and exhaust manifold gasket surfaces. Replace stripped or eroded mounting studs.

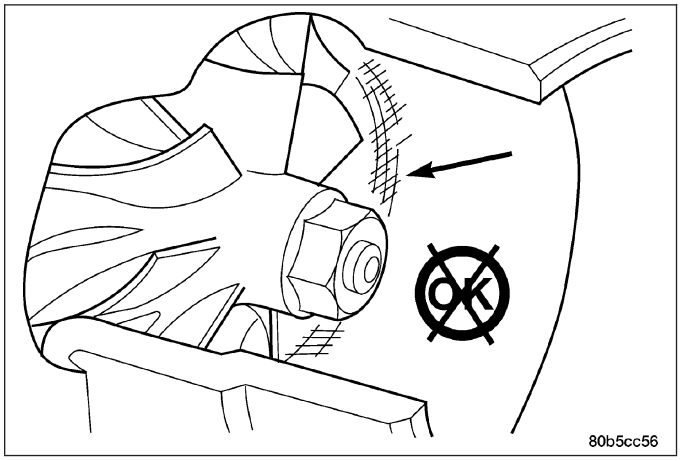

1. Visually inspect the turbocharger for cracks. The following cracks are NOT acceptable:
   - Cracks in the turbine and compressor housing that go completely through.
   - Cracks in the mounting flange that are longer than 15 mm (0.6 in.).
   - Cracks in the mounting flange that intersect bolt through-holes.
   - Two (2) Cracks in the mounting flange that are closer than 6.4 mm (0.25 in.) together.
2. Visually inspect the impeller and compressor wheel fins for nicks, cracks, or chips. Note: Some impellers may have a factory placed paint mark which, after normal operation, appears to be a crack. Remove this mark with a suitable solvent to verify that it is not a crack.
3. Visually inspect the turbocharger compressor housing for an impeller rubbing condition. Replace the turbocharger if the condition exists.

4. Measure the turbocharger end play:
   a. Install a dial indicator (1) as shown. Zero the indicator at one end of travel.
   b. Move the impeller shaft fore and aft and record the measurement. Allowable end play is 0.026 mm (0.0001 in.) MIN. and 0.127 mm (0.005 in.) MAX. If the recorded measurement falls outside these parameters, replace the turbocharger assembly.

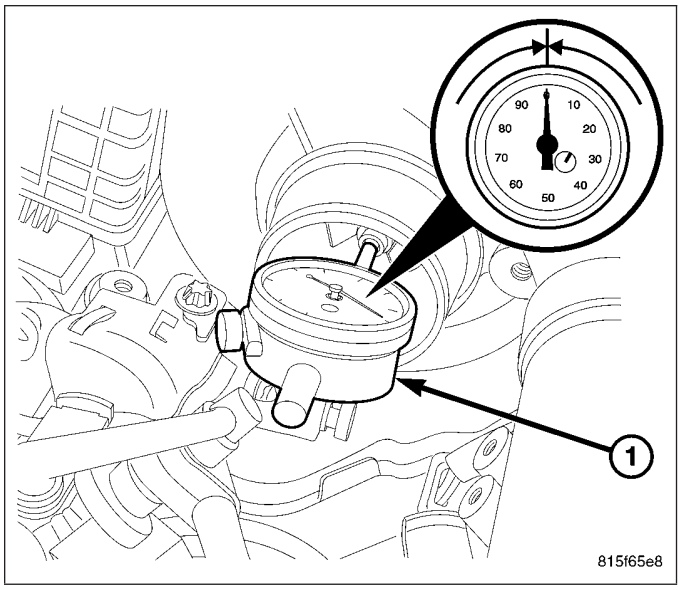

5. Measure the turbocharger bearing radial clearance:
   a. Insert a narrow blade or wire style feeler gauge (1) between the compressor wheel and the housing.
   b. Gently push the compressor wheel toward the housing and record the clearance.
   c. With the feeler gauge in the same location, gently push the compressor wheel away from the housing and again record the clearance.
   d. Subtract the smaller clearance from the larger clearance. This is the radial bearing clearance.
   e. Allowable radial bearing clearance is 0.076 mm (0.003 in.) MIN. and 0.102 mm (0.040 in.) MAX. If the recorded measurement falls outside these specifications, replace the turbocharger assembly.

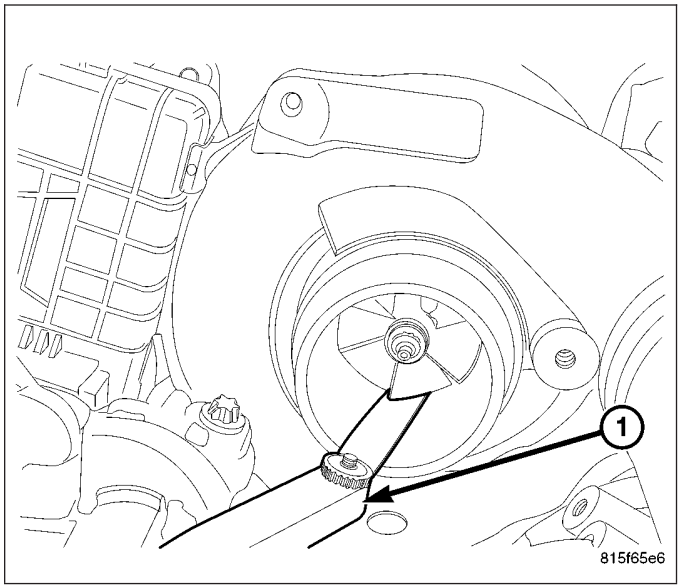

INSTALLATION

1. Reconnect turbo boost pressure servo connector (2).
2. Position and install the turbocharger on the exhaust manifold, tighten the retainers to 30N.m (22 lbs.ft.).

CAUTION: Make sure the gasket is installed properly or the turbo oil feed hole will be blocket.

3. Install front turbo retaining bolts and gasket and install turbo (1).

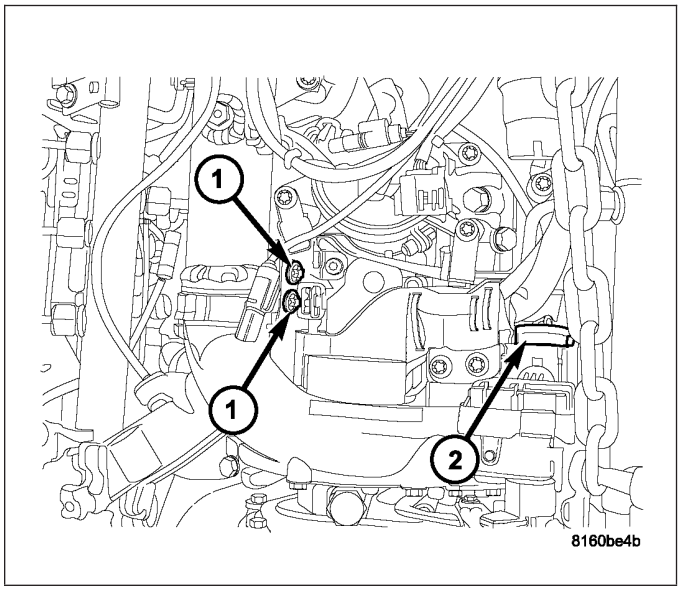

4. Install left and right exhaust manifold retaining bolts and gaskets (4).
5. Reconnect EGR tube at manifold to left cylinder head (3).
6. Reconnect EGR tube at manifold to left cylinder head (3).
7. Reconnect transmission fill tube and trim cover bracket and set aside.
8. Install upstream catalytic converter.
9. Raise vehicle and reconnect catalytic converter to downstream catalytic converter clamp.
10. Install extension pipe and catalytic converter.
11. Reconnect O2 sensor wire connector.
12. Reconnect the extension pipe to muffler.
13. Reconnect the downstream catalytic converter at the extension pipe.
14. Refill cooling system (Refer to 7 - COOLING/ENGINE/COOLANT - STANDARD PROCEDURE).

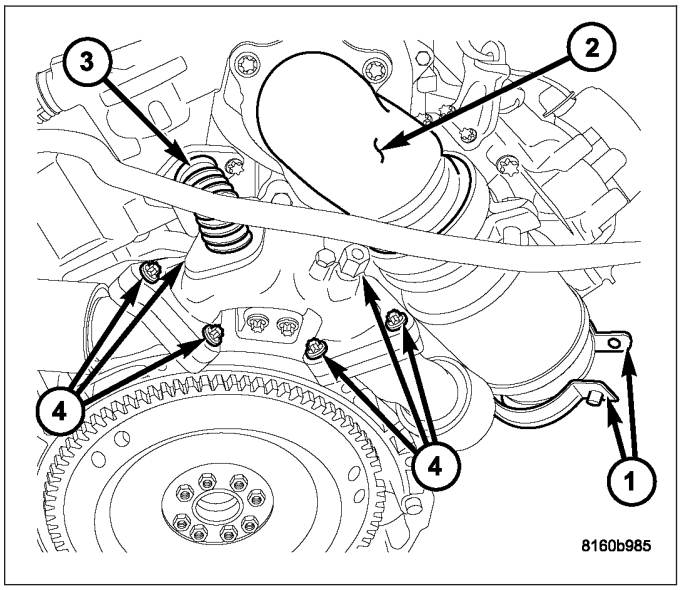

15. Lower vehicle, install the turbo front bracket retaining bolts (2).

16. Install the exhaust clamp (elbow to converter) (1).

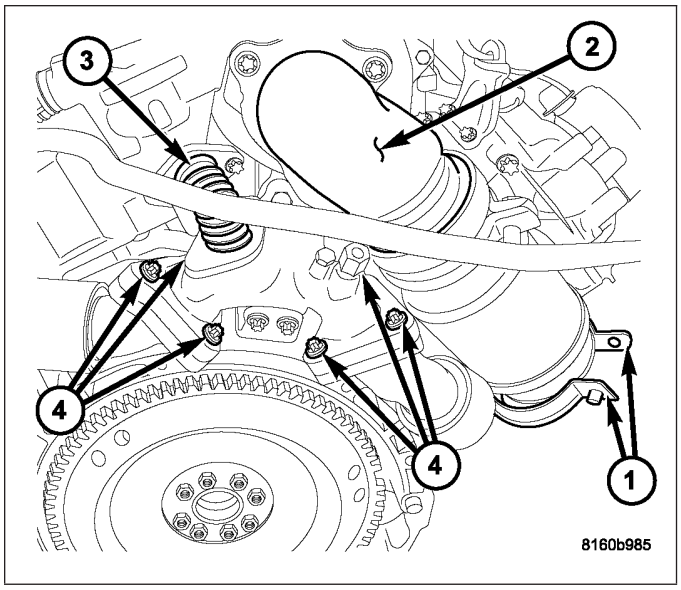

17. Install the turbo heat shield (4).
18. Install air tube (turbo to cooler) (3).
19. Install engine cover front bracket (2).
20. Install air intake tube (air cleaner to turbo) (1).
21. Install the engine trim cover.
22. Reconnect negative battery cable.

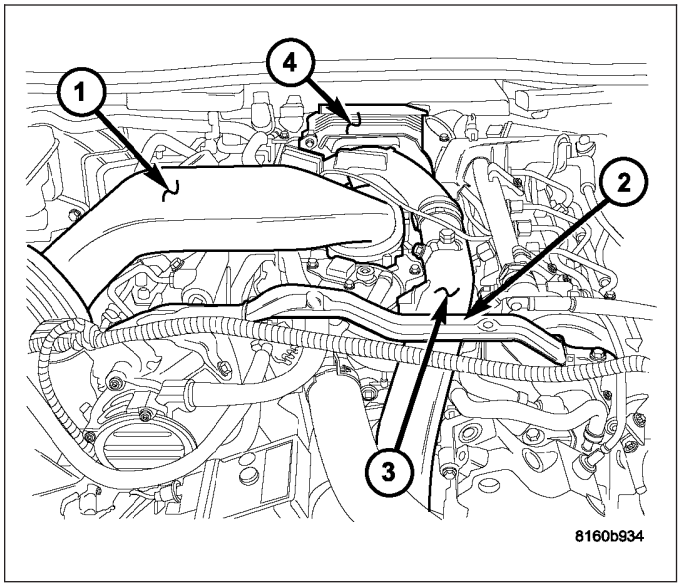

CHARGE AIR COOLER AND PLUMBING

DESCRIPTION

The charge air system consists of a inlet air compressor which is part of the turbocharger housing, charge air cooler locate in front of the radiator, and charge air cooler plumbing. The is also a electronic control valve placed after the charge air cooler, inline, that assists with air flow during the EGR operating mode.

The charge air cooler is a heat exchanger that uses air flow from vehicle motion to dissipate heat from the intake air. As the turbocharger increases air pressure, the air temperature increases. Lowering the intake air temperature increases engine efficiency and power. Refer to (Refer to 11 - EXHAUST SYSTEM/TURBOCHARGER SYSTEM - OPERATION).

OPERATION

Intake air is drawn through the air cleaner and into the turbocharger compressor housing. Once inside the housing the air is compressed by the rotation of the turbine wheel. The turbine wheel is driven by exhaust gasses, Refer to (Refer to 11 - EXHAUST SYSTEM/TURBOCHARGER SYSTEM - OPERATION) to understand the turbine speed operation.

This air compression process causes heat. Pressurized air (charge air) from the turbocharger then flows forward through the charge air cooler, located in front of the radiator, to be cooled by the air flow from vehicle motion rushing past the cooler fins. From the charge air cooler the air flows back into the intake manifold, past an air control valve that assists in EGR mode. There are also resonators located in the charge air stream that assist with air flow and noise suppression.

DIAGNOSIS AND TESTING - CHARGE AIR COOLER SYSTEM - LEAKS

NOTE: Slight engine oil pooling in the charge air inlet hose IS NOT premature turbocharger failure. Slight pooling is the normal result of the breather system. Test the air breather tube for normal operation by referring to the appropriate diagnostic manual.

Low turbocharger boost pressure and low engine performance can be caused by leaks in the charge air cooler or it's plumbing. The following procedure outlines how to check for leaks in the charge air cooler system.

1. Loosen clamp and remove turbocharger to air inlet duct rubber sleeve from turbocharger.
2. Insert Special Tool 9556 Adapter into the rubber sleeve. Tighten existing clamp to 8 N·m (72 in. lbs.).
3. Separate the breather hose at the breather heater and block off.
4. Remove the oil level indicator and block off tube.

CAUTION: Do not apply more then 0.6 bar (10 psi) air pressure to the charge air cooler system, sever damage to the charge air cooler system may occur.

5. Connect regulated air supply to air fitting on Special Tool 9556 Adapter. Set air pressure to approximately 0.6 bar (10 psi).
6. Using soapy water check the air inlet ducts, rubber sleeves, charge air cooler and intake manifold for leaks.

REMOVAL - CHARGE AIR COOLER

WARNING: IF THE ENGINE WAS JUST TURNED OFF, THE AIR INTAKE SYSTEM TUBES MAY BE HOT.

NOTE: Note the location of the rubber air charge cooler to A/C condenser and air charger cooler to radiator air seals. The seals are use to prevent overheating and improve charge air and A/C efficiency.

1. Disconnect the battery negative cables.
2. Remove cooling module (Refer to 7 - COOLING/ENGINE/RADIATOR - REMOVAL).
3. Remove the front grill.
4. Mark the position of the radiator upper cross member and remove cross member.
5. Unbolt the transmission auxiliary cooler and power steering cooler from the charge air cooler and set aside.

6. Remove the boost tubes from the charge air cooler.
7. Remove power steering reservoir retaining bolt, and set reservoir aside.
8. Remove the charge air cooler bolts.

NOTE: Care must be taken not to damage the charge air cooler fins and the fins of other ancillary cooler components.

9. Pivot the charge air cooler rearward and up to remove.

INSPECTION

Visually inspect the charge air cooler and plumbing for cracks, holes, loose clamps, or damage. Inspect the tubes, fins, and welds for tears, breaks, or other damage. Replace the charge air cooler if damage is found.

Pressure test the charge air cooler, using Charge Air Cooler Tester Kit.

INSTALLATION - CHARGE AIR COOLER

1. Position the power steering reservoir along with charge air cooler. Install the bolts and tighten to 2 N·m (17 in. lbs.).
2. Install cooling module (Refer to 7 - COOLING/ENGINE/RADIATOR - INSTALLATION) (Refer to 7 - COOLING/ENGINE/RADIATOR FAN - INSTALLATION).
3. Install the transmission auxiliary cooler (if equipped) (Refer to 7 - COOLING/TRANSMISSION/TRANS COOLER - INSTALLATION).
4. Install the power steering cooler.
5. Install the boost tubes to the charge air cooler. With the clamps in position, tighten the clamps to 11 N·m (95 in. lbs.)
6. Align and install upper cross member.
7. Install the front grill (Refer to 23 - BODY/EXTERIOR/GRILLE - INSTALLATION).
8. Connect the battery negative cable.
9. Start engine and check for leaks.

MOTOR-BOOST PRESSURE SERVO

DESCRIPTION

The turbocharger boost pressure servomotor is bolted to the side of the turbocharger housing and is responsible for controlling turbocharger boost pressure. It controls the boost pressure by varying the position of the guide vanes. The servomotor operates in response to a PWM signal from the ECM.

OPERATION

The turbocharger boost pressure servomotor receives a PWM signal from the ECM.

At low speed, the turbocharger boost pressure servomotor reduces the flow cross section of the guide vanes(2). The speed at which the exhaust gas impacts on the turbine wheel is increased, as a result of which the speed of the turbocharger and thus the charge pressure rises.

At high engine speed, the turbocharger servomotor increases the flow cross section of the guide vanes(2). The speed at which the exhaust gas impacts on the turbine wheel is reduced, as a result of which the speed of the turbocharger reduces and the charge pressure drops.

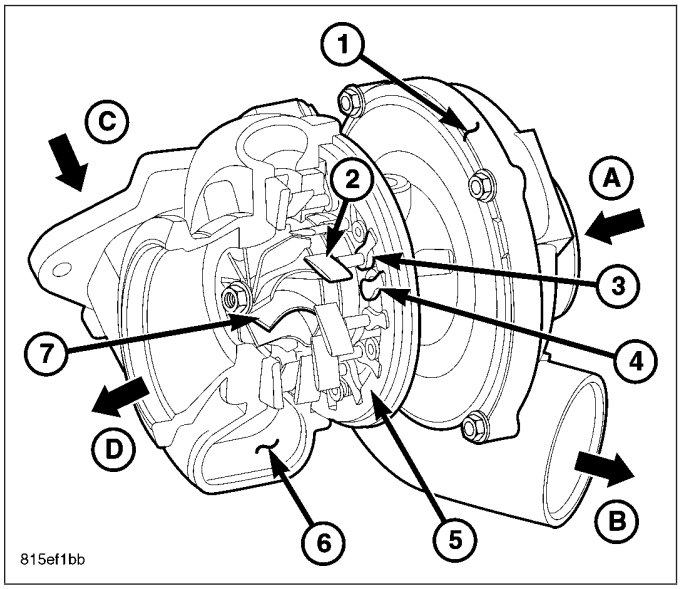

REMOVAL

SERVOMOTOR

1. Disconnect the negative battery cable.
2. Remove the air cleaner housing.
3. Remove the turbo heat shield.
4. Remove circlip from actuator rod at turbocharger end (2).
5. Remove mounting bolts and remove servomotor and actuator rod(3).
6. Remove circlip and actuator rod from servomotor(1).

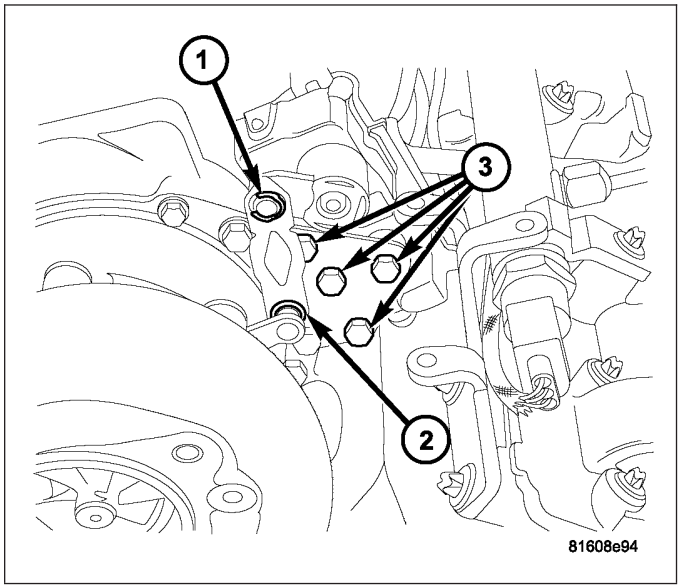

INSTALLATION

SERVOMOTOR

1. Install actuator rod onto servomotor (4).
2. Install circlip (1).
3. Position servomotor and actuator rod onto turbocharger (5).
4. Install mounting bolts (3). Tighten bolts to 8 N·m (70 lbs.in).
5. Install circlip on the actuator rod at the turbocharger end (2).
6. Connect electrical connector (6).
7. Install the turbo heat shield.
8. Connect negative battery cable.
9. Install air cleaner housing.
10. Connect negative battery cable.

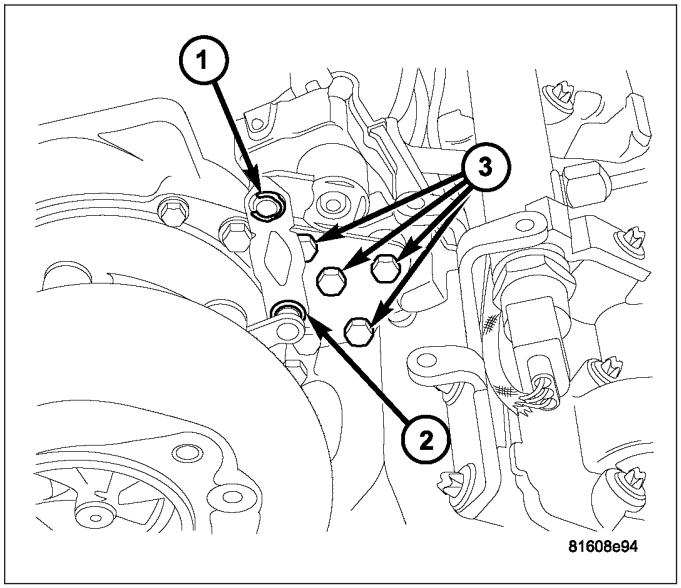

FRAME & BUMPERS

TABLE OF CONTENTS

page

BUMPERS
SPECIFICATIONS - TIGHTENING 2
BUMPER-FRONT
REMOVAL 3
INSTALLATION 3
BUMPER-REAR
REMOVAL 4
INSTALLATION 4
FASCIA-FRONT
REMOVAL 5
INSTALLATION 8
FASCIA-REAR
REMOVAL 11
INSTALLATION 13
FRAME
SPECIFICATIONS
FRAME DIMENSIONS 15
FASTENER TORQUE 18
SPECIAL TOOLS
FRAME 19
BUSHING-DIFFERENTIAL MOUNT
REMOVAL 20
INSTALLATION 28
BUSHING-REAR CROSSMEMBER FRONT MOUNT
REMOVAL 40
INSTALLATION 51
BUSHING-REAR CROSSMEMBER REAR MOUNT
REMOVAL 64
INSTALLATION 74
BUSHING-REAR CROSSMEMBER SPRING LINK
REMOVAL 85
INSTALLATION 86
CROSSMEMBER-ENGINE CRADLE
REMOVAL 88
INSTALLATION 93
CROSSMEMBER-REAR
REMOVAL 98
INSTALLATION 109

BUMPERS

SPECIFICATIONS - TIGHTENING

DESCRIPTION	N·m	Ft. Lbs.	In. Lbs.
Front bumper bolts	28	21	—
Rear bumper bolts	28	21	—

BUMPER-FRONT

REMOVAL

NOTE: 300 Shown. Magnum and Charger similar.

1. Remove fascia assembly. (Refer to 13 - FRAME & BUMPERS/BUMPERS/FASCIA-FRONT - REMOVAL)
2. Drill out the four spot welds (2 per side) between the bumper bracket and rail end cap (1).
3. Remove the eight screws (4 per side) and remove the bumper.

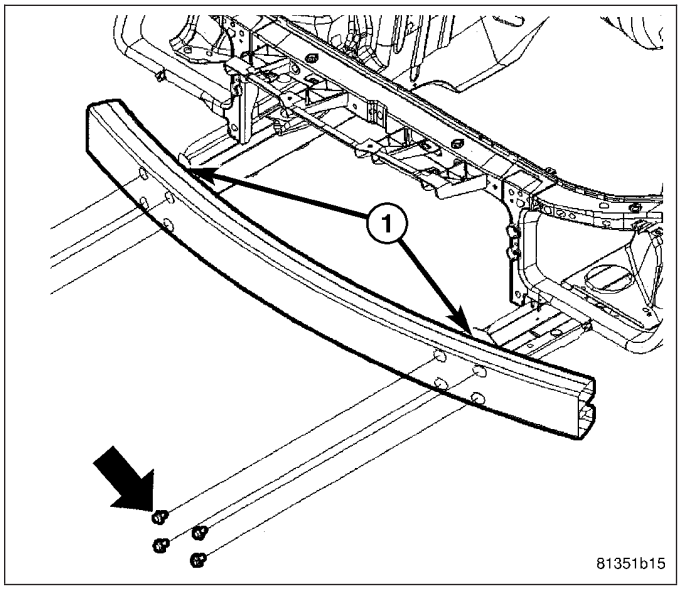

INSTALLATION

NOTE: 300 Shown. Magnum and Charger similar.

1. Position the bumper.

NOTE: It is not necessary to spot weld the bumper back into place.

2. Install the bolts and tighten to 28 N·m (21 ft. lbs.).
3. Install the fascia. (Refer to 13 - FRAME & BUMPERS/BUMPERS/FASCIA-FRONT - INSTALLATION)

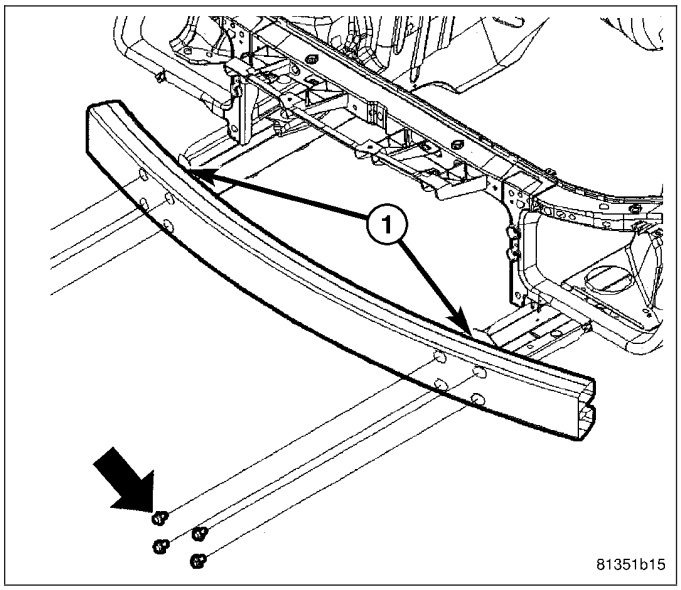

BUMPER-REAR

REMOVAL

NOTE: 300 Shown. Magnum and Charger similar.

1. Remove the fascia assembly. (Refer to 13 - FRAME & BUMPERS/BUMPERS/FASCIA-REAR - REMOVAL)
2. Remove the six nuts and washers and remove the bumper.

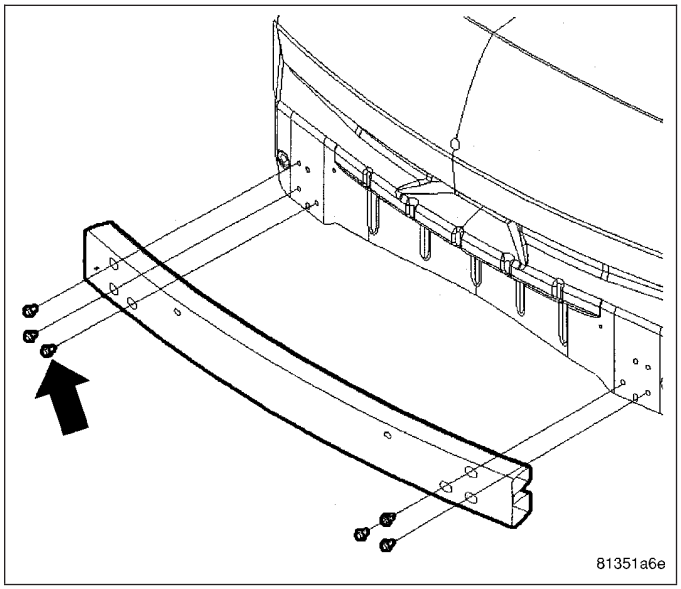

INSTALLATION

1. Position the bumper.
2. Install the nuts and washers and tighten to 28 N·m (21 ft. lbs.).
3. Install the fascia assembly. (Refer to 13 - FRAME & BUMPERS/BUMPERS/FASCIA-REAR - INSTALLATION)

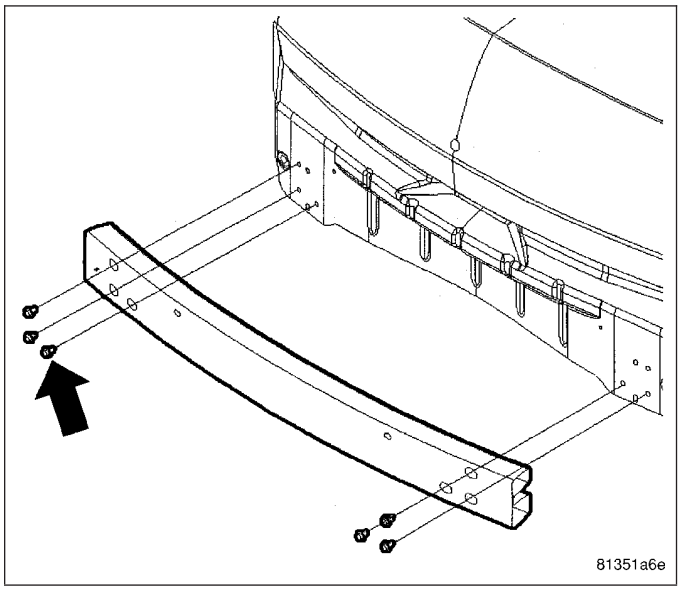

FASCIA-FRONT

REMOVAL

1. Raise and support the vehicle.
2. Remove the three push-pin retainers (1) that secure each front wheel house splash shield (2) to the front fascia assembly (3).

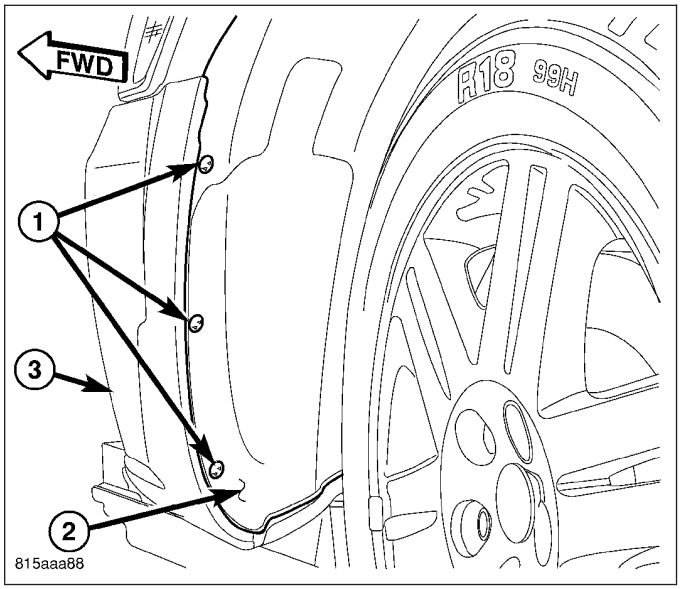

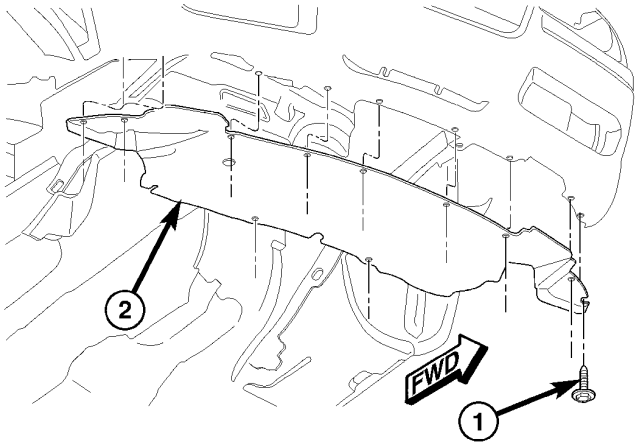

3. Remove the nine screws (1) that secure the belly pan (2) to the underbody.

NOTE: 300 Shown. Magnum and SRT8 similar

4. Remove the screw (5) that secures the front fascia assembly (4) to the nut insert (1) in each front fender.
5. Partially lower the vehicle and remove the push-pin retainers (2) (four-sedan, six-wagon, eight-Charger) that secure the front fascia assembly to the upper radiator support.
6. If equipped, disconnect the headlamp washer system hose from washer reservoir. (Refer to 8 - ELECTRICAL/WIPERS/WASHERS/HEADLAMP WASHER - REMOVAL)
7. On all three SRT8 models, disconnect the Tire Pressure Monitoring System connector. (Refer to 22 - TIRES/WHEELS/TIRE PRESSURE MONITORING/TRANSPONDER - REMOVAL)
8. Carefully pull the front fascia assembly forward to disengage the push-pin retainer (6) from the slot in each side the fascia and position the fascia to gain access to the fog lamp wire harness connectors (3), if equipped.

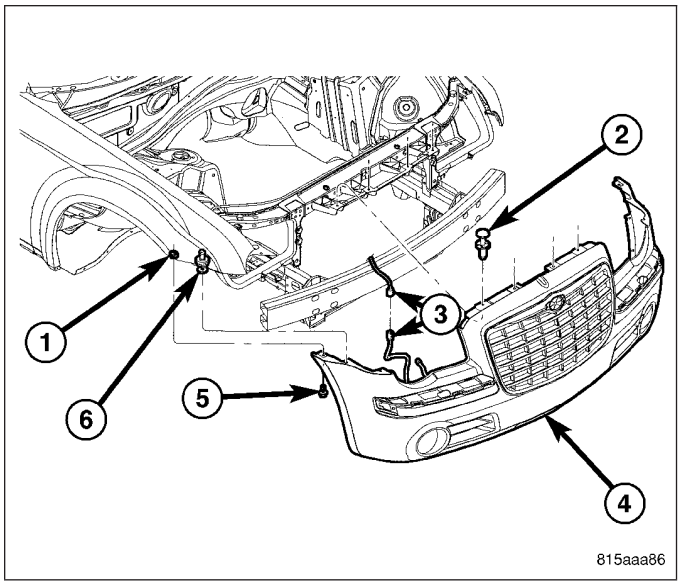

Charger

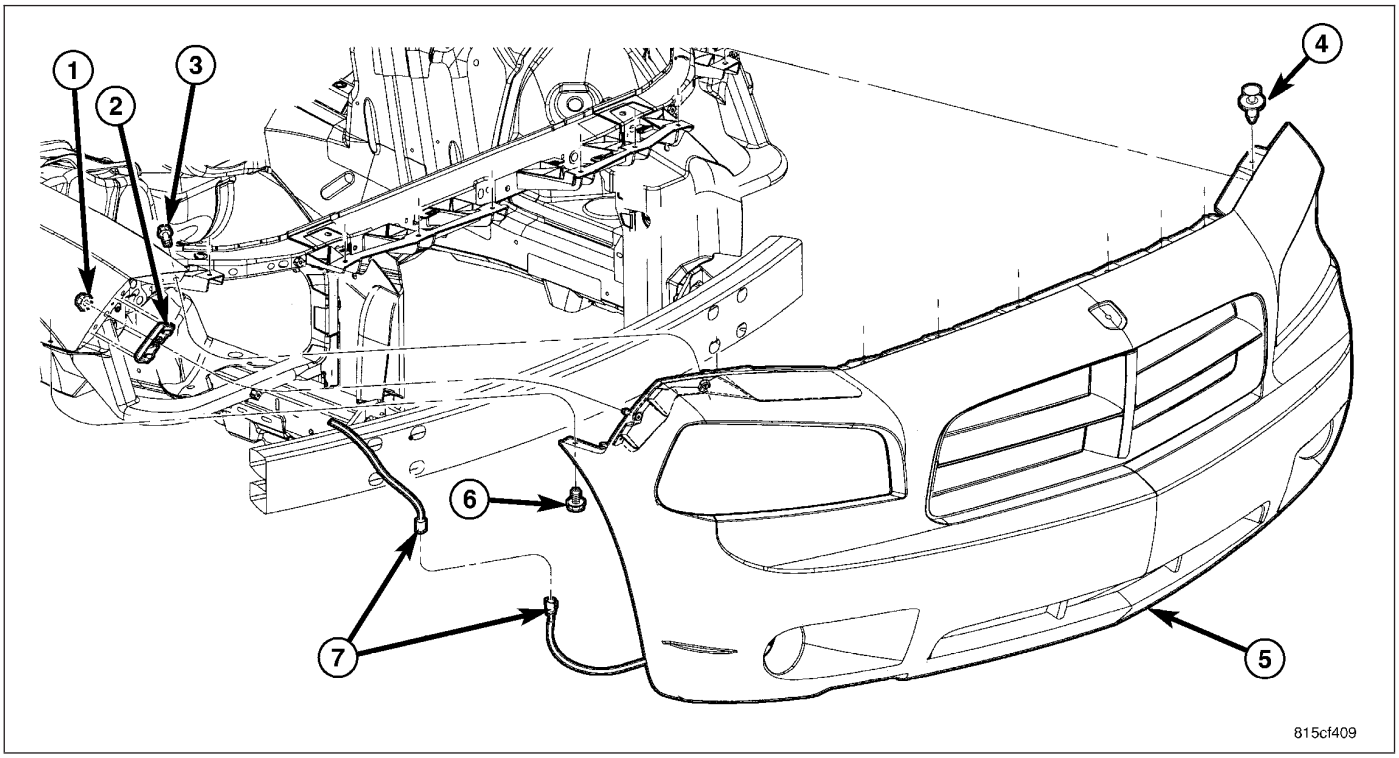

1. Remove the screw (6) that secures the front fascia assembly (5) to the nut insert (1) in each front fender.
2. Partially lower the vehicle and remove the push-pin retainers (4) (four-sedan, six-wagon, eight-Charger) that secure the front fascia assembly to the upper radiator support.
3. Carefully pull the front fascia assembly forward to disengage the push-pin retainer (6) from the slot in each side the fascia and position the fascia to gain access to the fog lamp wire harness connectors (7), if equipped.

9. If equipped, disconnect each fog lamp wire harness connector (1) from the headlamp wire harness (2) and remove the front fascia assembly (3) from the vehicle.
10. If equipped and if required, remove the fog lamps from the front fascia assembly (Refer to 8 - ELECTRICAL/LAMPS/LIGHTING - EXTERIOR/ LAMP-FOG - REMOVAL).
11. If required on SRT8 models, remove the lower fascia from the front fascia assembly and discard the metal retaining clips.

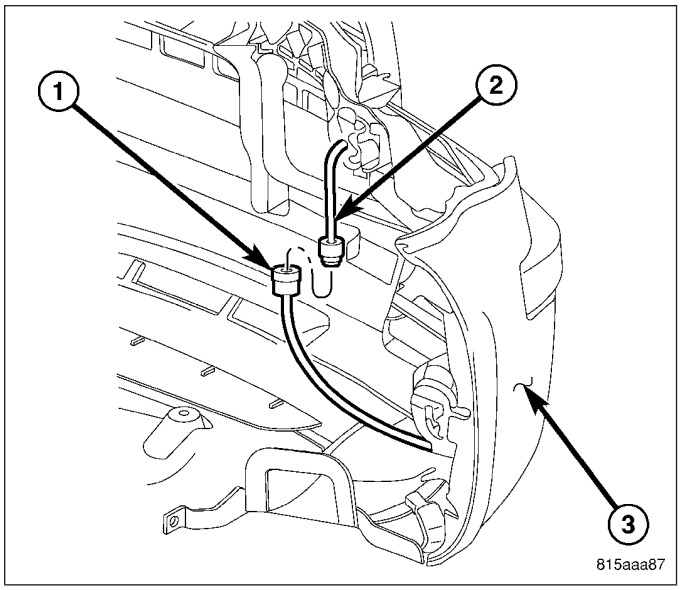

12. If required, remove and discard the nut insert (1) from each front fender and remove the push-pin retainer (2).

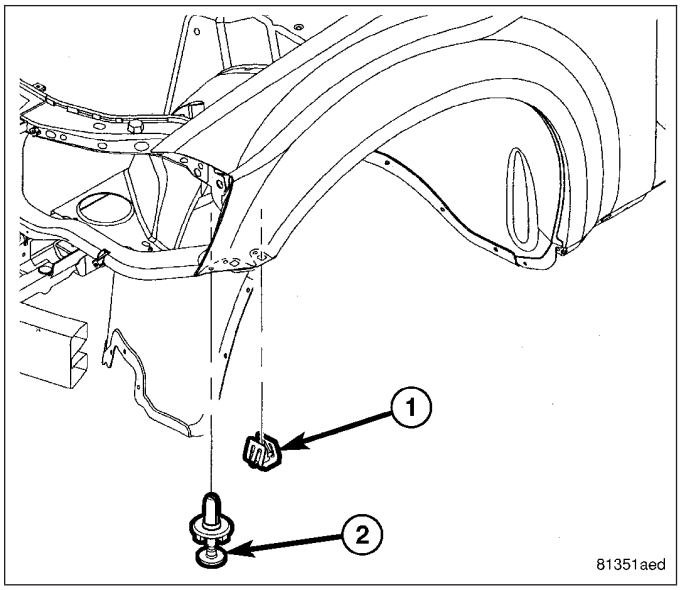

INSTALLATION

1. If removed, install the push-pin retainer (2) and a new nut insert (1) into each front fender.

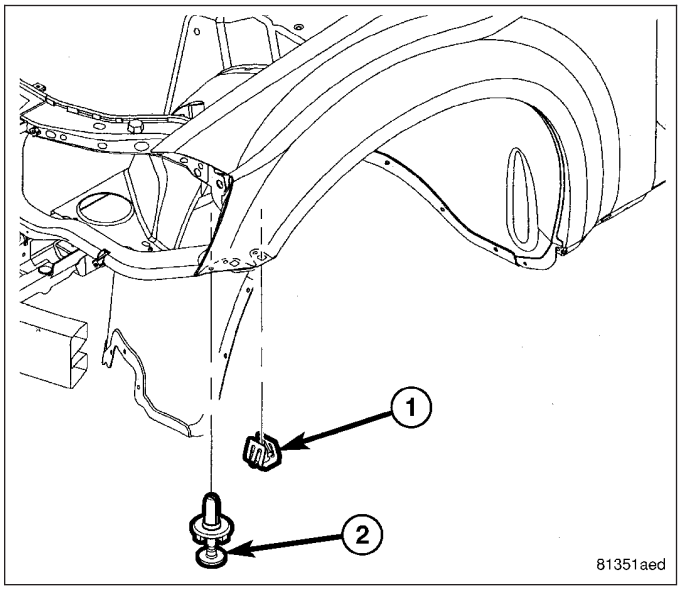

NOTE: 300 Shown. Magnum and SRT8 similar.

2. If removed on SRT8 models, install the lower fascia onto the front fascia assembly (4) using new metal retaining clips.
3. If equipped and removed, install the fog lamps onto the front fascia assembly (Refer to 8 - ELECTRICAL/LAMPS/LIGHTING - EXTERIOR/LAMP-FOG - INSTALLATION).
4. Position the front fascia assembly to the vehicle and connect each fog lamp wire harness connector (3), if equipped.
5. If equipped, connect the headlamp washer system hose to washer reservoir. (Refer to 8 - ELECTRICAL/WIPERS/WASHERS/HEADLAMP WASHER - INSTALLATION)
6. On all three SRT8 models, connect the Tire Pressure Monitoring connector. (Refer to 22 - TIRES/WHEELS/TIRE PRESSURE MONITORING/TRANSPONDER - REMOVAL)

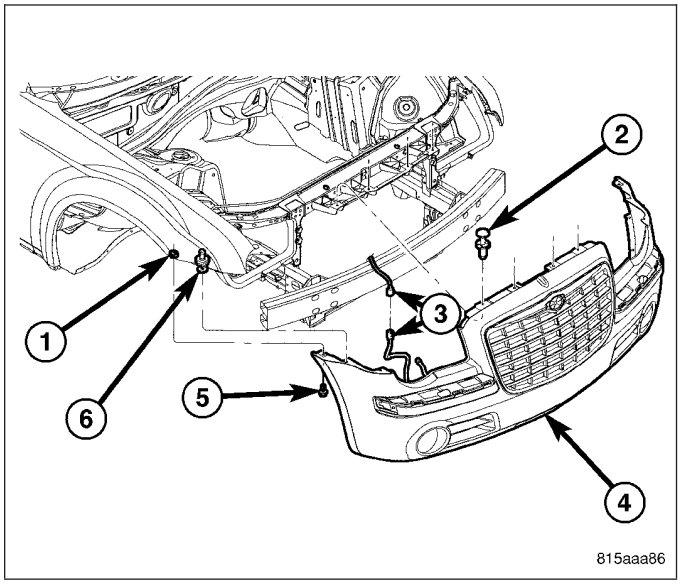

7. Engage the push-pin retainer (6) into the slot in each side of the front fascia assembly by pushing the fascia rearward.
8. Install the push-pin retainers (2) (four-sedan, six-wagon, eight Charger) that secure the front fascia assembly to the upper radiator support.
9. Raise and support the vehicle.
10. Install the screw (5) that secures the front fascia assembly to the nut insert (1) in each front fender. Tighten the screws securely.
11. Position belly pan to front of vehicle. Install and tighten screws.

Charger

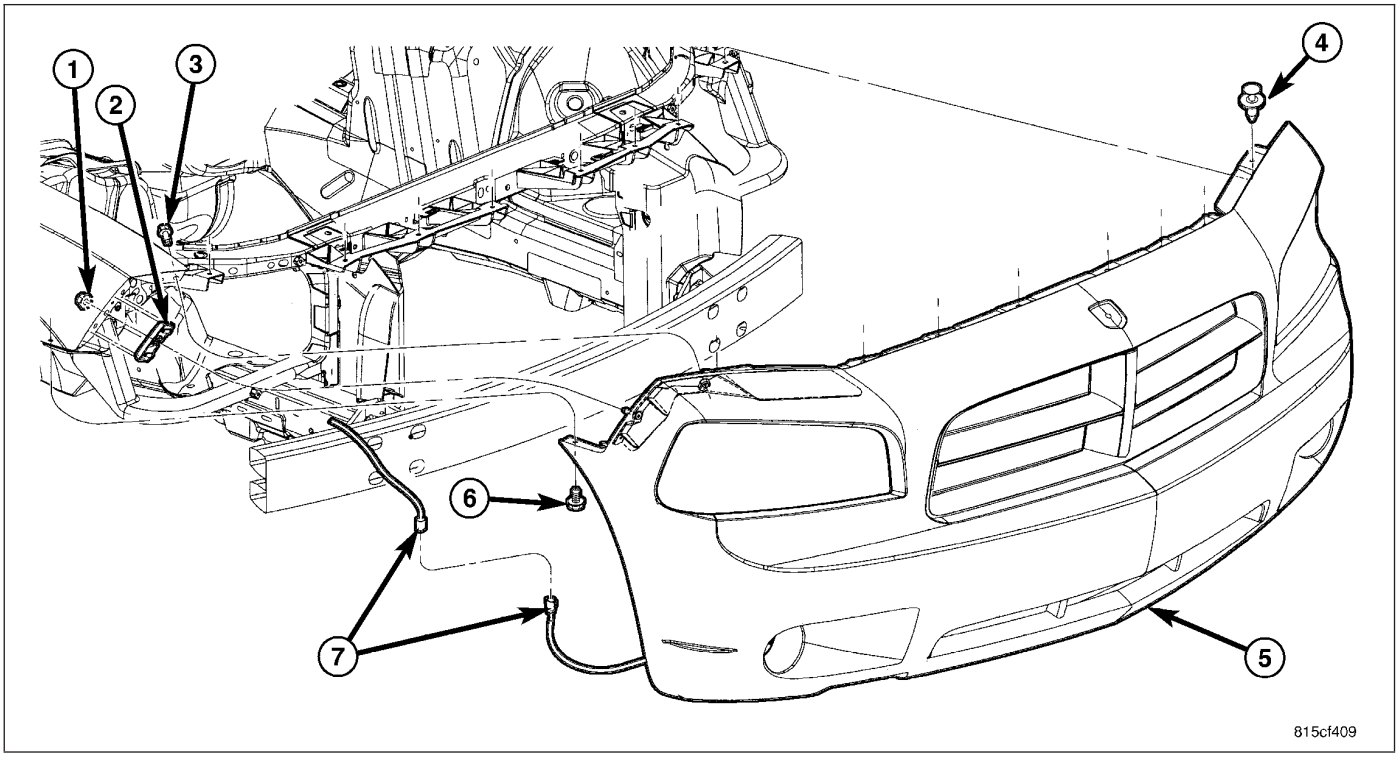

1. Install the screw (6) that secures the front fascia assembly (5) to the nut insert (1) in each front fender.
2. Partially lower the vehicle and install the push-pin retainers (4) (four-sedan, six-wagon, eight-Charger) that secure the front fascia assembly to the upper radiator support.
3. Carefully pull the front fascia assembly rearward to engage the push-pin retainer (6) from the slot in each side the fascia and position the fascia to gain access to the fog lamp wire harness connectors (7), if equipped.

12. Position the belly pan (1) to the front of the vehicle underbody and install the nine screws (1). Tighten the screws securely.

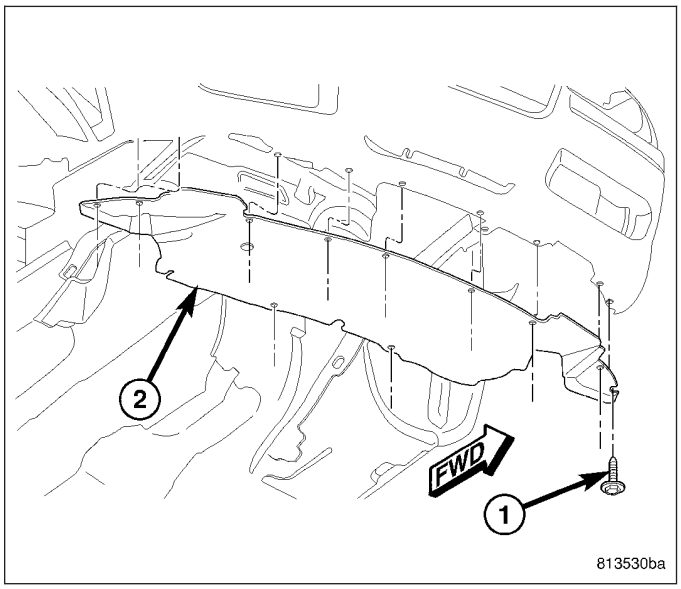

13. Position each front wheel house splash shield (2) to the front fascia assembly (3) and install the push-pin retainers (1).
14. Lower the vehicle.

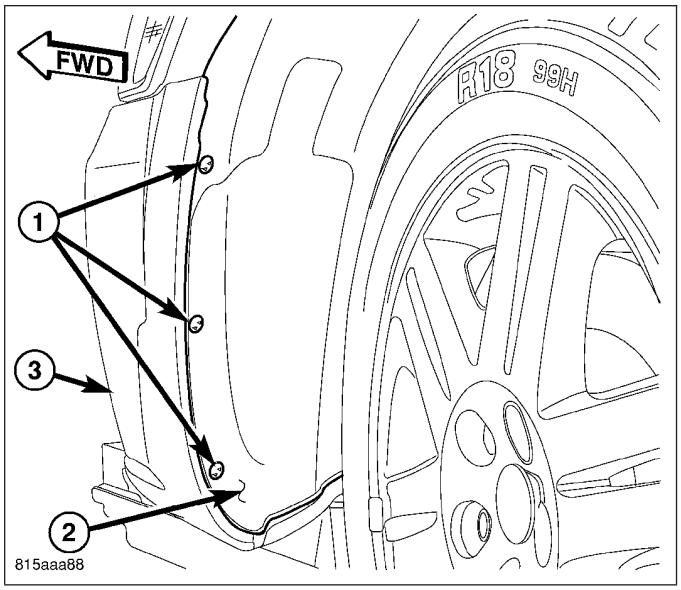

FASCIA-REAR

REMOVAL

1. Raise and support the vehicle.
2. Remove the three push-pin retainers (1) that secure each rear wheel house splash shield (2) to the rear fascia assembly (3).

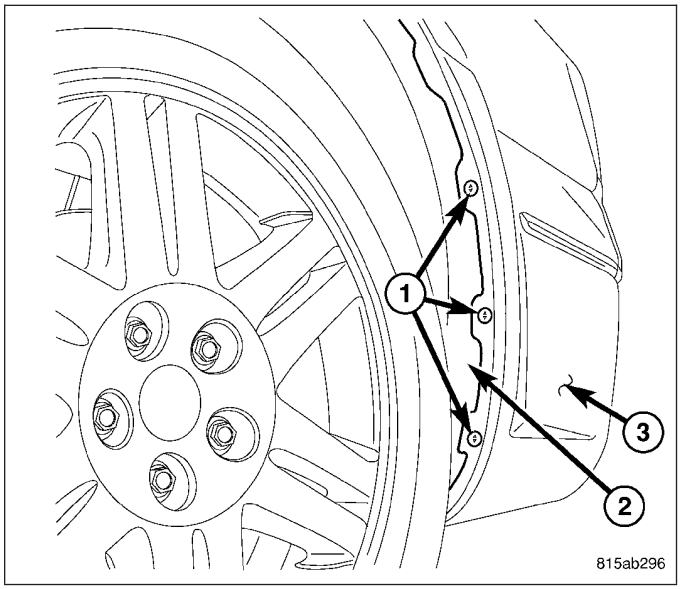

3. Remove the screw (2) that secures the rear fascia assembly (3) to the nut insert (1) in each quarter panel.

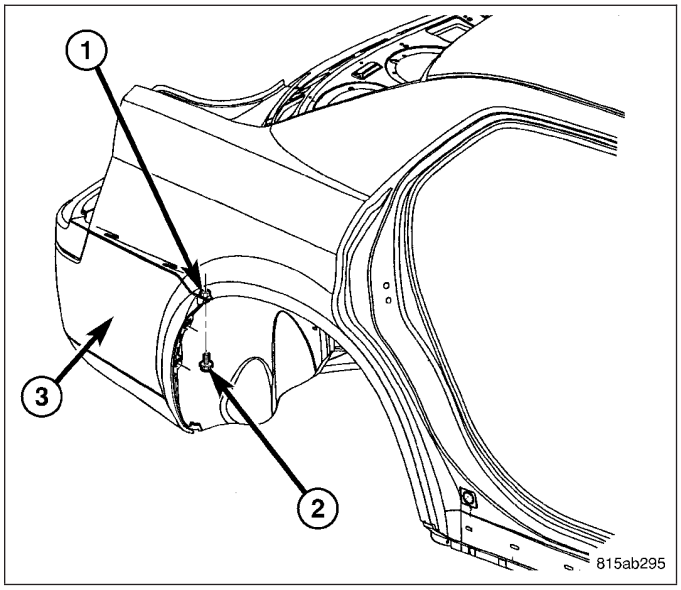

NOTE: 300 Shown. Magnum and Charger similar.

4. Partially lower the vehicle and remove the push-pin retainers (5) (three-sedan, three-wagon, one-Charger) that secure the rear fascia assembly (6) to the decklid sill.
5. On all models, remove the two deck lid bumper stops (1).
6. Carefully pull the rear fascia assembly rearward to disengage the two push-pin retainers (2) from the slots (3) in each side of fascia and position the fascia to gain access to the license lamp and park assist.

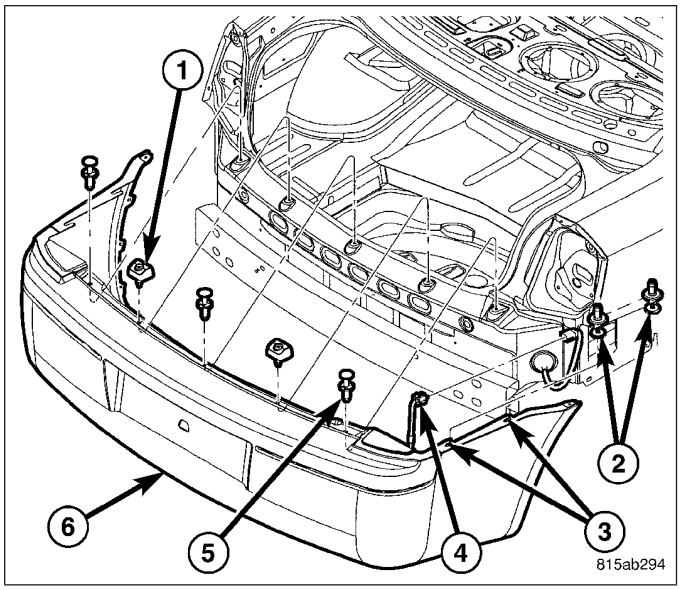

7. If equipped, disconnect the park assist sensor wire harness connector (2) from the tail lamp wire harness connector (1) and remove the rear fascia assembly (3) from the vehicle.
8. If equipped and if required, remove the park assist senors from the rear fascia assembly. (Refer to 8 - ELECTRICAL/CHIME/BUZZER/SENSOR-PARK ASSIST - REMOVAL).
9. If required on SRT8 models, remove the lower fascia from the rear fascia assembly and discard the metal retaining clips.

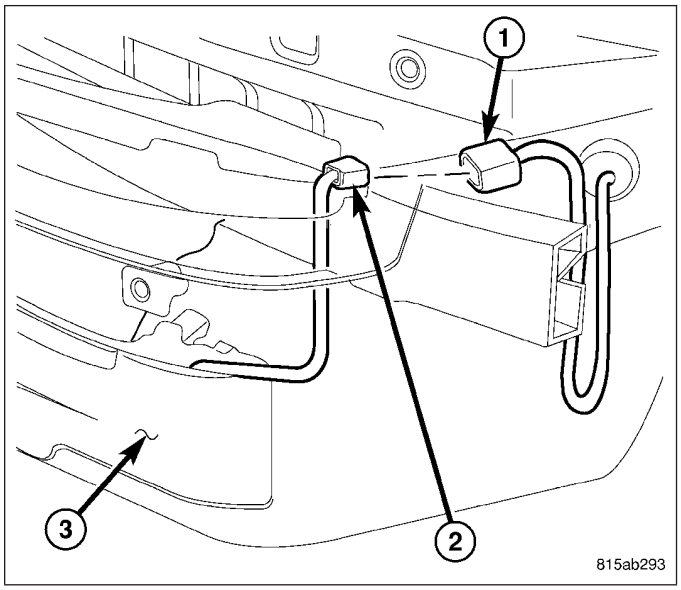

10. If required, remove and discard the nut insert (1) from each quarter panel and remove the two push-pin retainers (2).

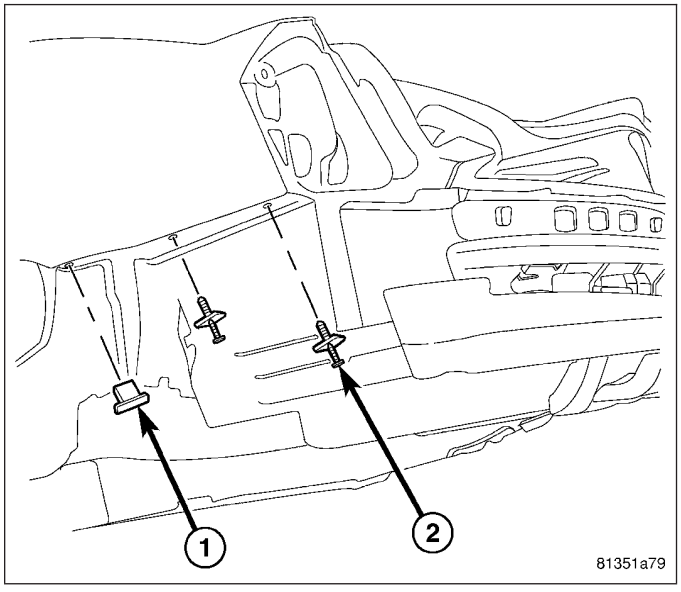

INSTALLATION

1. If removed, install the two push-pin retainers (2) and a new nut insert (1) into each quarter panel.

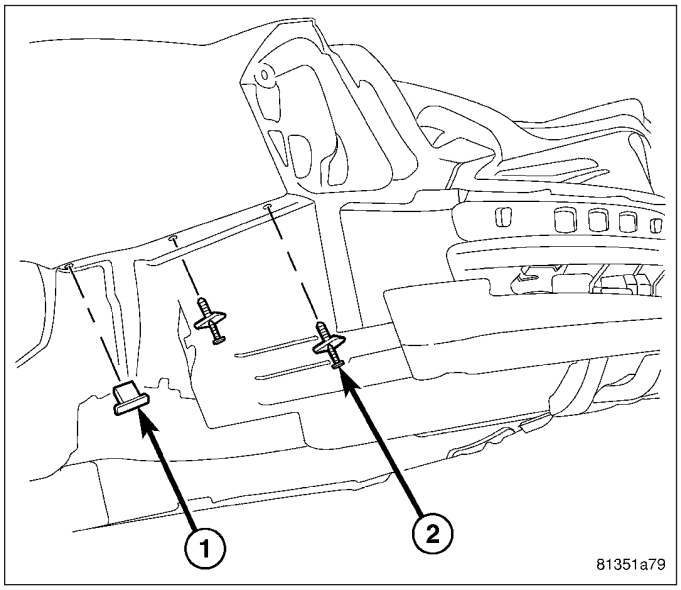

NOTE: 300 Shown. Magnum and Charger similar.

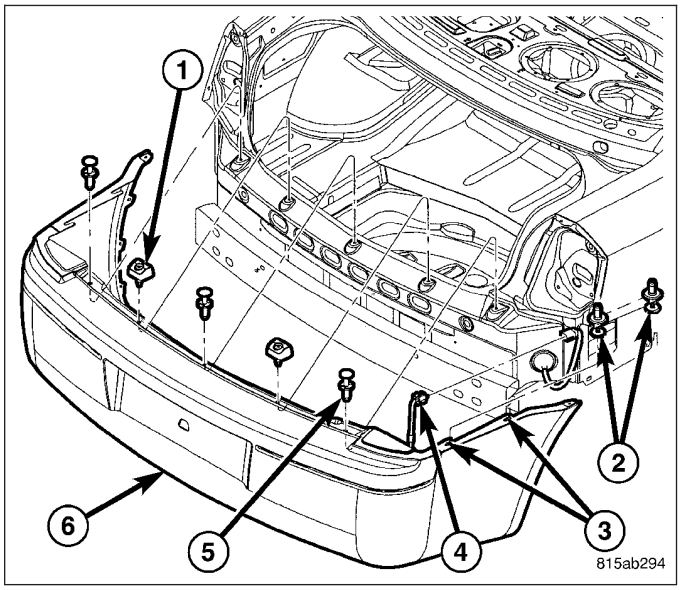

2. If removed on SRT8 models, install the lower fascia onto the rear fascia assembly (6) using new metal retaining clips.
3. If equipped and removed, install the park assist sensors into the rear fascia assembly (Refer to 8 - ELECTRICAL/CHIME/BUZZER/SENSOR-PARK ASSIST - INSTALLATION).
4. Position the rear fascia assembly to the vehicle and connect the license plate lamp and park assist wire harness connector (4), if equipped.
5. Engage the two push-pin retainers (2) into the two slots (3) in each side of the rear fascia assembly by pushing the fascia forward.
6. Install the push-pin retainers (5) (three-sedan, three-wagon, one-charger) that secure the rear fascia assembly to the decklid sill.
7. On sedan models, install the two bumper stops (1).

8. Raise and support the vehicle.
9. Install the screw (2) that secures the rear fascia assembly to the nut insert (1) in each quarter panel. Tighten the screws securely.

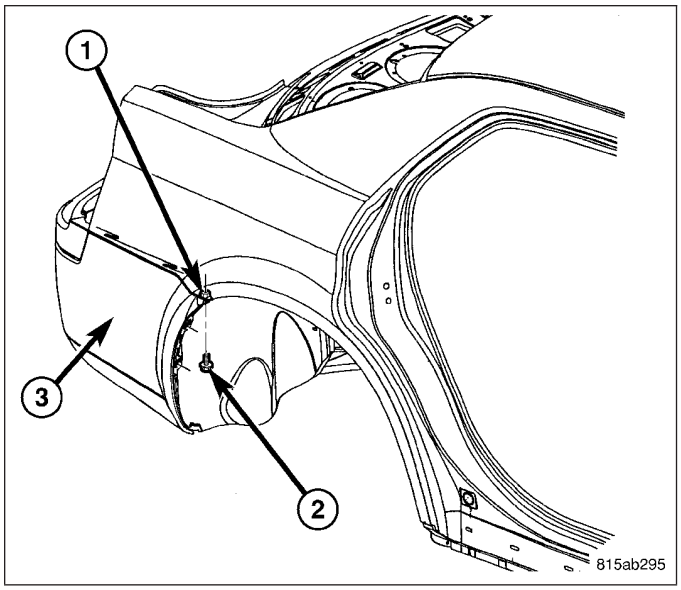

10. Position each rear wheel house splash shield (2) to the rear fascia assembly (3) and install the push-pin retainers (1).
11. Lower the vehicle.

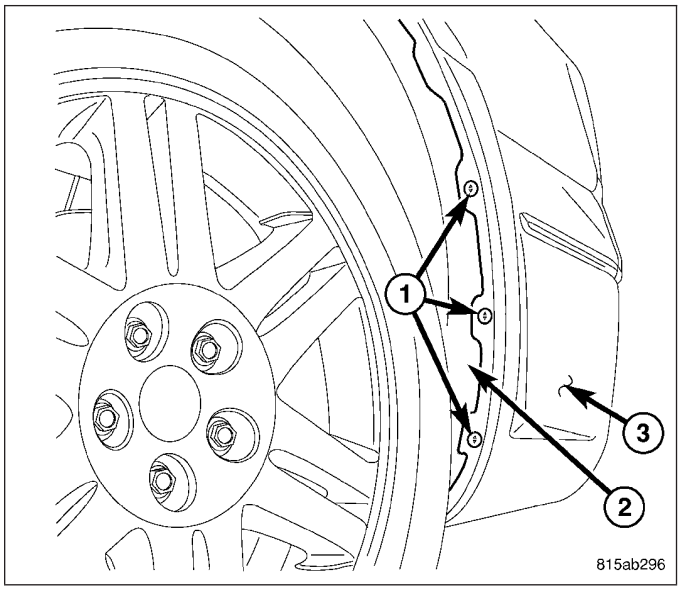

FRAME

SPECIFICATIONS

FRAME DIMENSIONS

Frame dimensions are listed in metric scale then converted to inch scale listed in parenthesis. All dimensions are from center to center of Principal Locating Point (PLP), or from center to center of PLP and fastener location. Vertical dimensions can be taken from the work surface to the locations indicated.

INDEX

DESCRIPTION	FIGURE
FRAME DIMENSIONS	1
ENGINE BOX DIMENSIONS	2

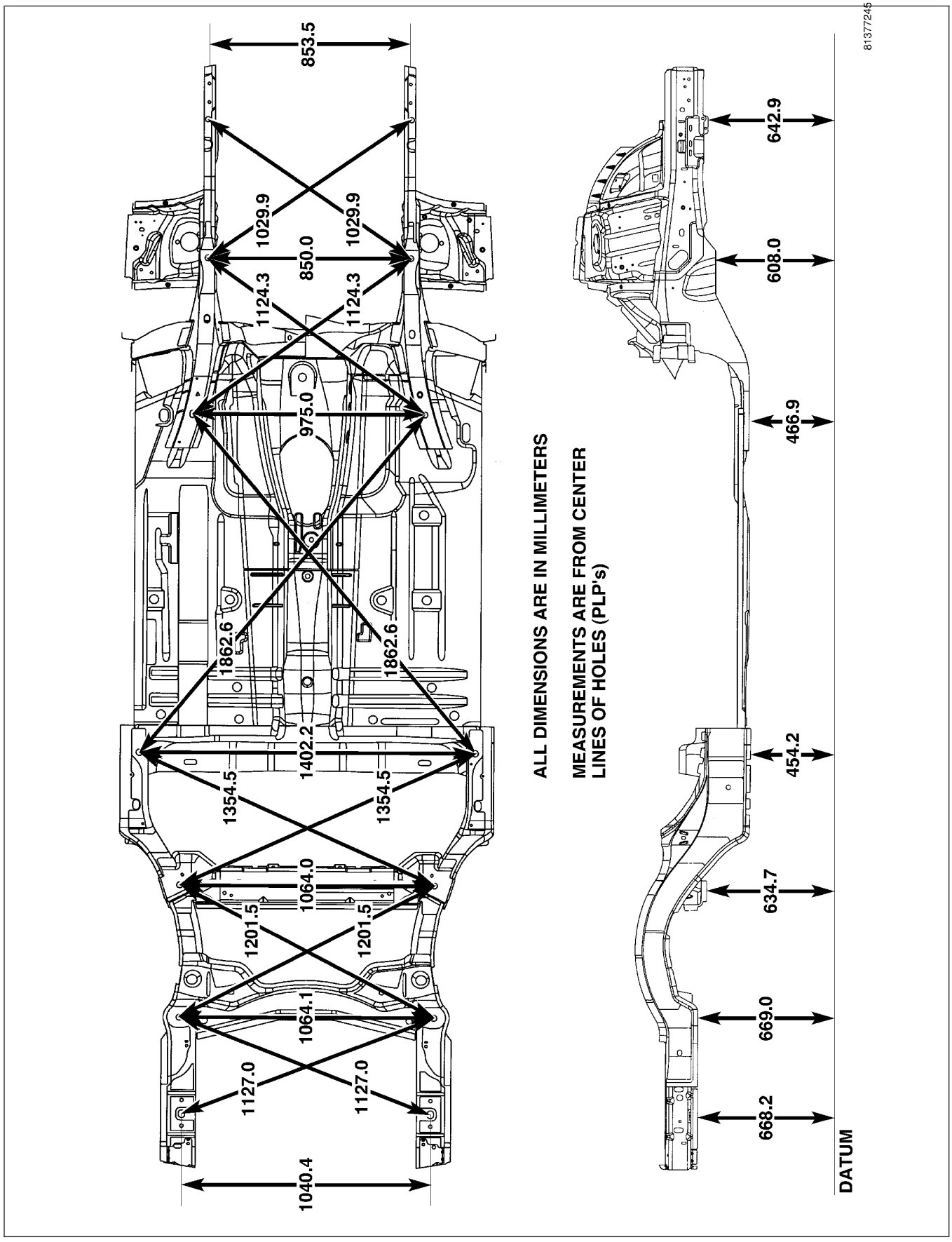

Fig. 1 FRAME DIMENSIONS

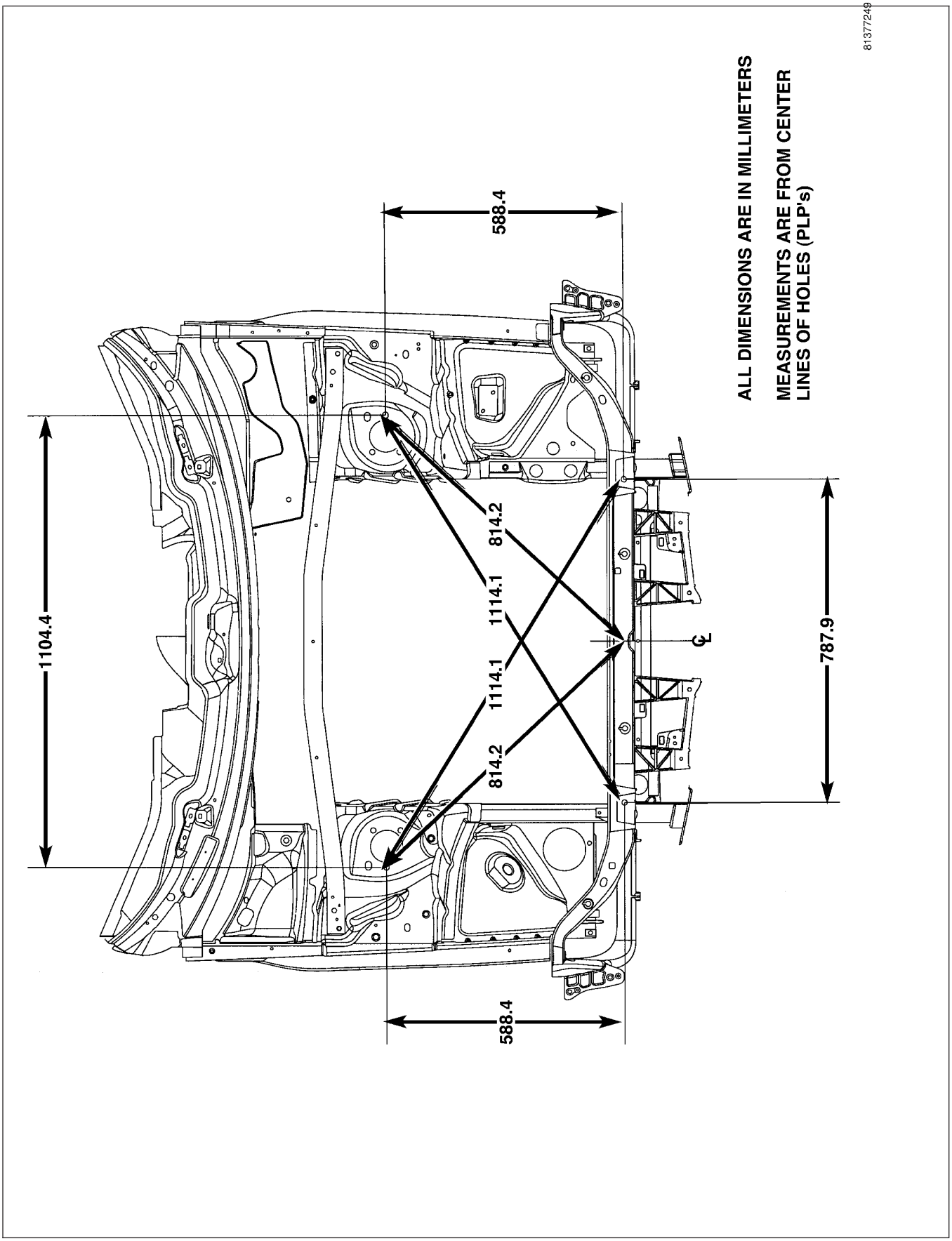

Fig. 2 ENGINE BOX DIMENSIONS

FASTENER TORQUE

DESCRIPTION	N·m	Ft. Lbs.	In. Lbs.
Front Suspension Crossmember Front Attaching Bolts	109	80	—
Front Suspension Crossmember Rear Attaching Bolts	102	75	—
Radiator Support Crossmember Attaching Bolts	51	45	—
Rear Bumper Reinforcement Attaching Nuts	28	21	—
Rear Crossmember Mounting Bolts	180	133	—

SPECIAL TOOLS

FRAME

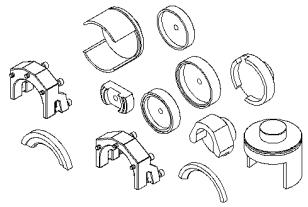

Remover/Installer, Bushing 9031A

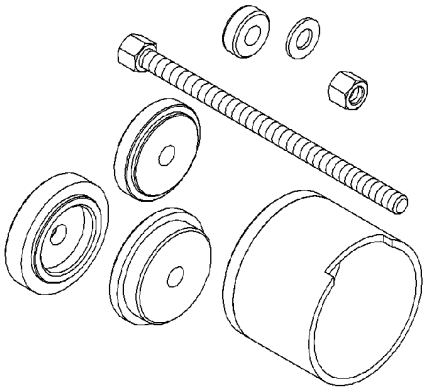

Remover/Installer, Bushing 9520

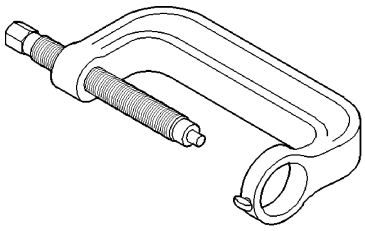

c-4212f-8011d4af

BUSHING-DIFFERENTIAL MOUNT

REMOVAL

1. Disconnect and isolate battery negative cable (2) from battery post. (Refer to 8 - ELECTRICAL/BATTERY SYSTEM - STANDARD PROCEDURE)
2. Raise and support vehicle. (Refer to LUBRICATION & MAINTENANCE/HOISTING - STANDARD PROCEDURE)

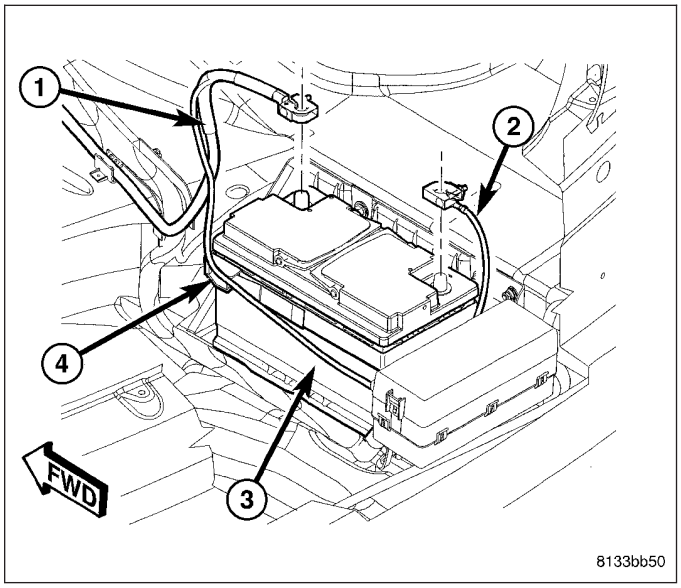

3. On each side of vehicle rear, remove wheel mounting nuts (3), then tire and wheel assembly (1).

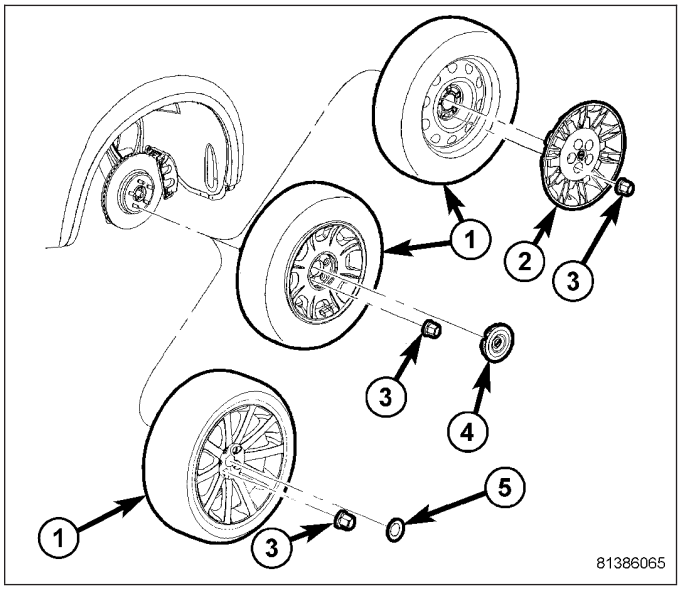

4. On each side of vehicle rear, while a helper applies brakes to keep hub from rotating, remove hub nut (1) from half shaft (2).

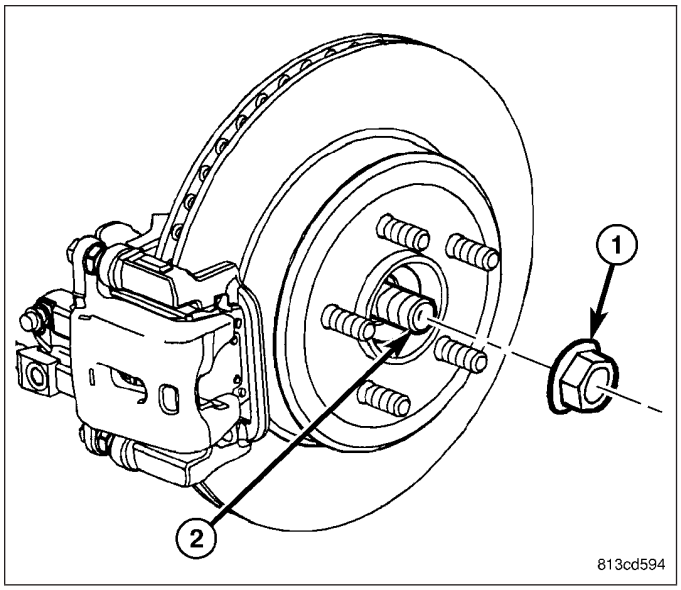

5. Remove rear exhaust system (2) (dual-outlet exhaust shown in figure). (Refer to 11 - EXHAUST SYSTEM - REMOVAL)
6. Remove rear axle differential. (Refer to 3 - DIFFERENTIAL & DRIVELINE/REAR AXLE - 198 MM - REMOVAL) (Refer to 3 - DIFFERENTIAL & DRIVELINE/REAR AXLE - 210 MM - REMOVAL) (Refer to 3 - DIFFERENTIAL & DRIVELINE/REAR AXLE - 215RII - REMOVAL)
7. Slide each axle half shaft from hub and bearing and remove from vehicle.

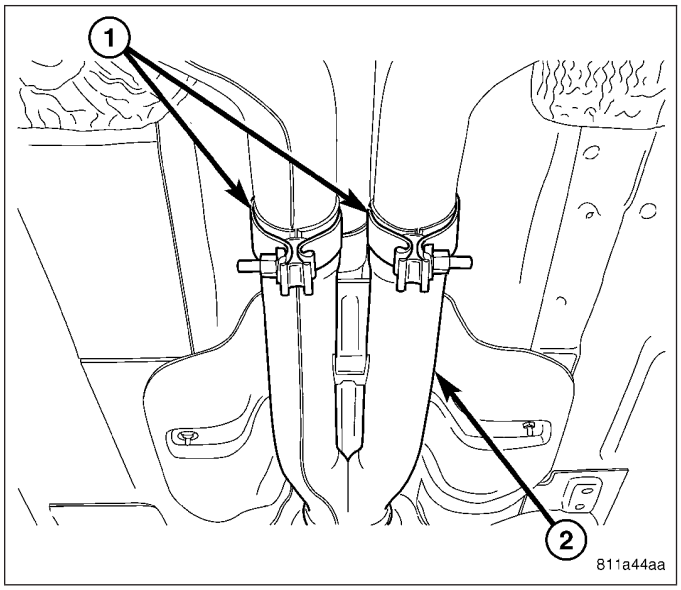

NOTE: Due to short travel and low spring tension, it is not necessary to lock-out parking brake lever to service parking brake components.

8. Disconnect front parking brake cable (5) at connector (3) to right rear parking brake cable (4) above axle differential.

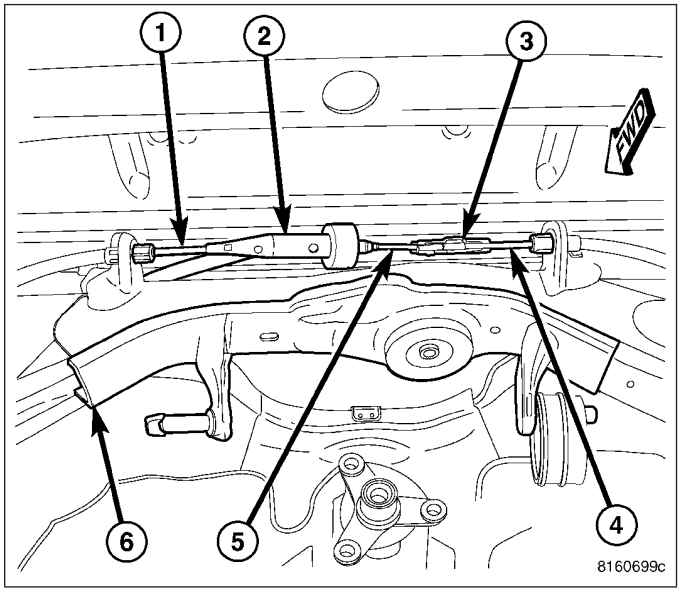

9. Remove front parking brake cable (3) from equalizer (2).

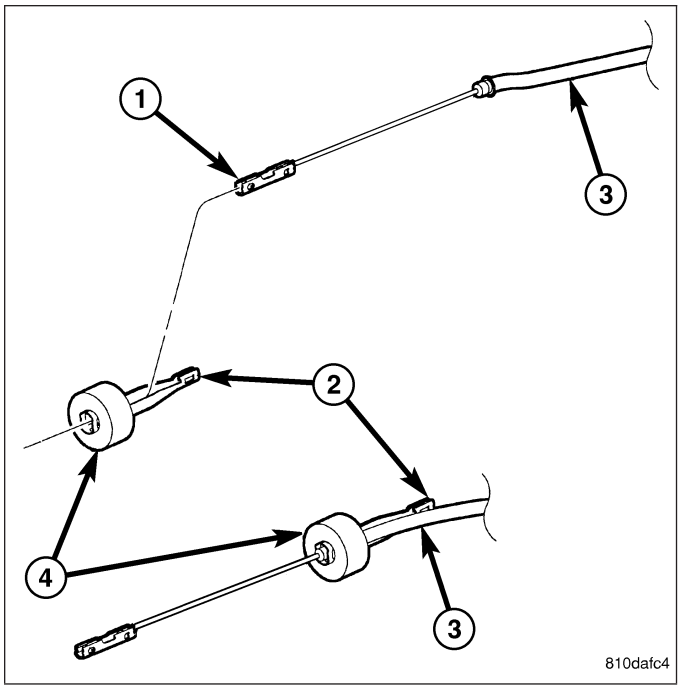

10. Remove screw (2) fastening front parking brake cable (1) routing bracket to rear crossmember front flange (3).

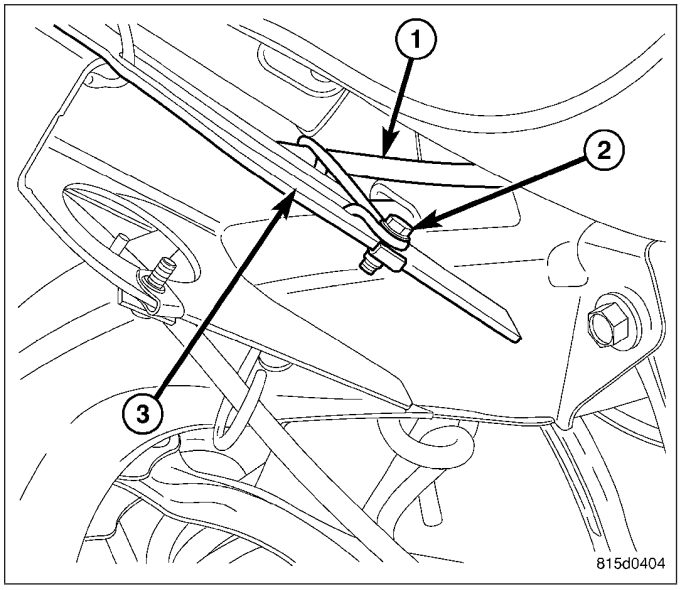

11. If equipped with standard or premium disc brakes, on each rear disc brake:
    a. While holding guide pins from turning, remove disc brake caliper guide pin bolts (2).
    b. Remove brake caliper (1) from brake adapter (3) and pads.
    c. Guide brake caliper up through suspension, following brake hose path. Support caliper above rear suspension using with bungee cord or wire to keep caliper from overextending brake hose when crossmember is lowered.

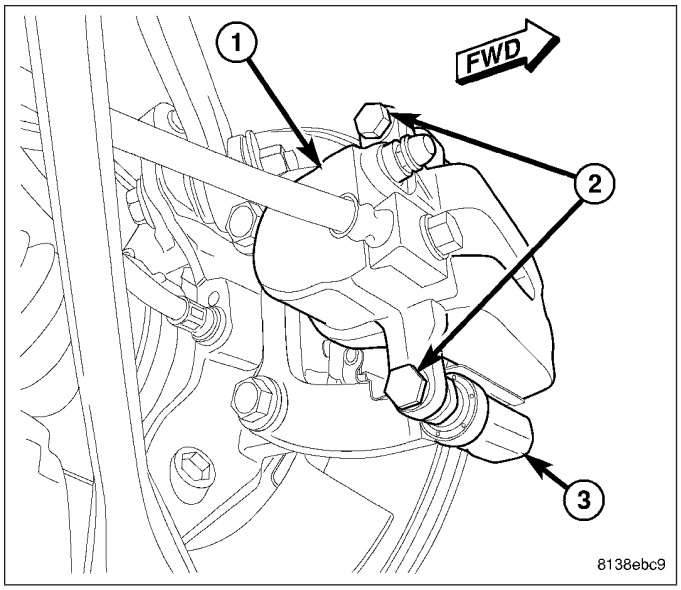

CAUTION: When pushing pistons back into caliper bores, use only a trim stick as shown or other suitable soft tool. Never use a screwdriver or other metal pry bar due to potential damage to braking surface of rotor, caliper, pistons or dust boots.

12. If equipped with SRT8 disc brakes, on each rear disc brake, place trim stick (4) between brake pad (2) and outer edge of rotor (3).
13. If equipped with SRT8 disc brakes, on each rear disc brake, using trim stick, slowly apply pressure against brake pad (2) until both pistons (on that side of caliper) are completely bottomed in bores of caliper half.

NOTE: Repeat above procedure to opposite brake pad (1) and pistons as necessary.

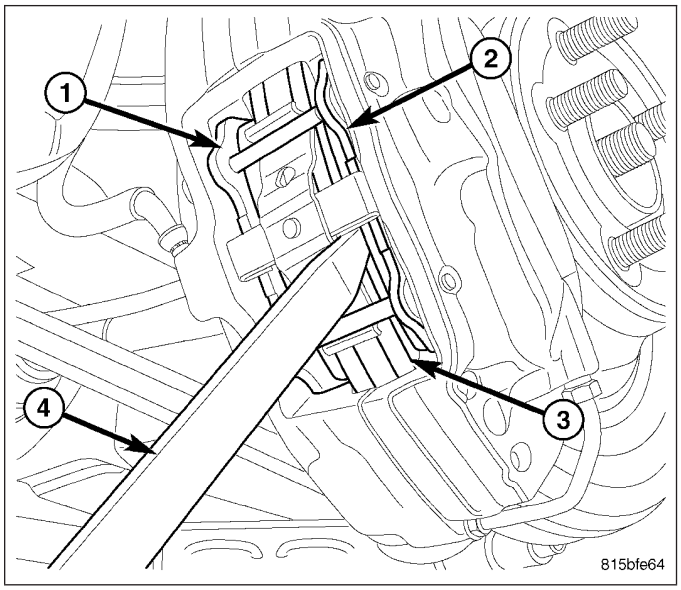

14. If equipped with SRT8 disc brakes, on each rear disc brake, support spring link (1) using a transmission jack (5) or other appropriate jack. Raise spring link just enough to access brake caliper lower mounting bolt (4) from above compression link (2).

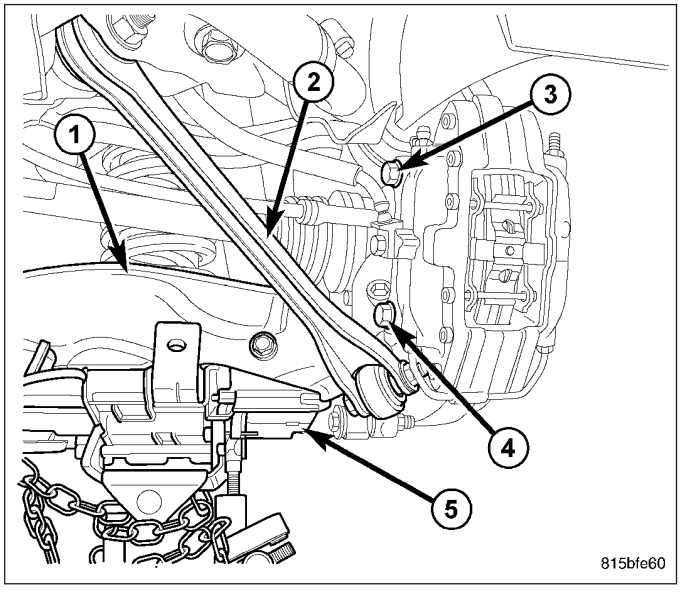

15. If equipped with SRT8 disc brakes, on each rear disc brake, remove the lower and upper caliper mounting bolts (1).
16. If equipped with SRT8 disc brakes, on each rear disc brake, remove brake caliper (2) with pads from knuckle and brake rotor. Hang assembly out of way using wire or a bungee cord. Use care not to overextend brake hose when doing this.
17. If equipped with SRT8 disc brakes, remove jack from under spring link.

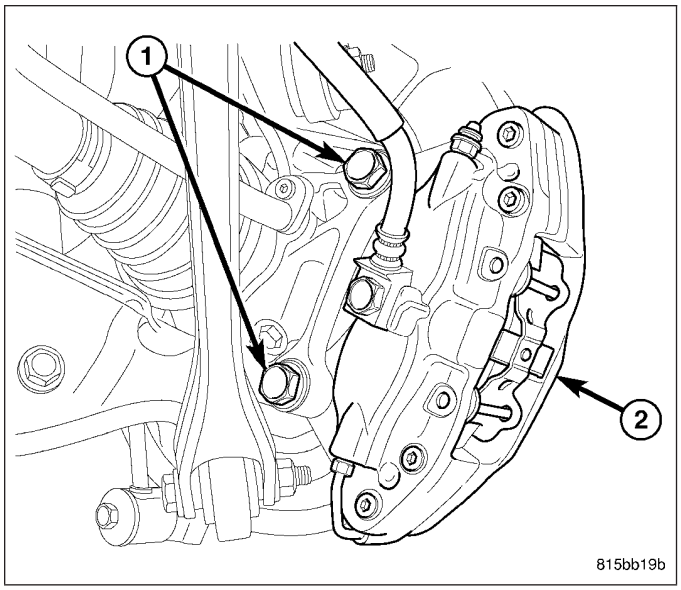

NOTE: To remove wheel speed sensor connector from body wiring harness connector, move retaining clip (2) and pull sensor connector outward.

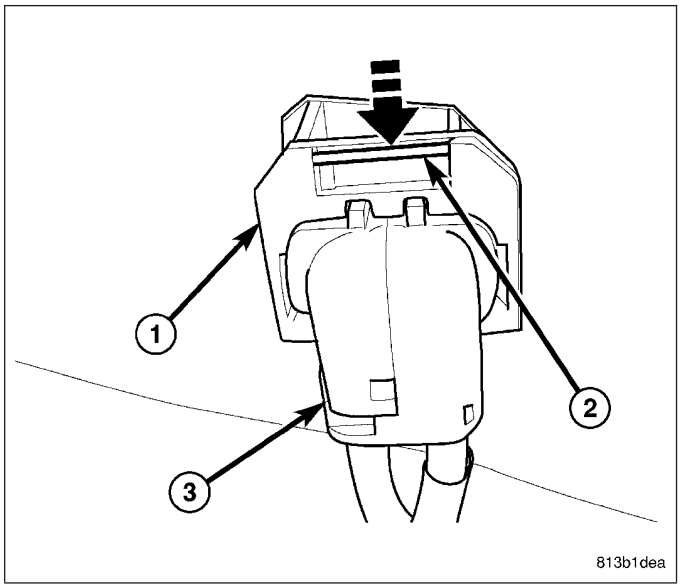

18. Remove wheel speed sensor connectors (3 and 4) from body wiring harness connector (1) located in luggage compartment floor pan (2).

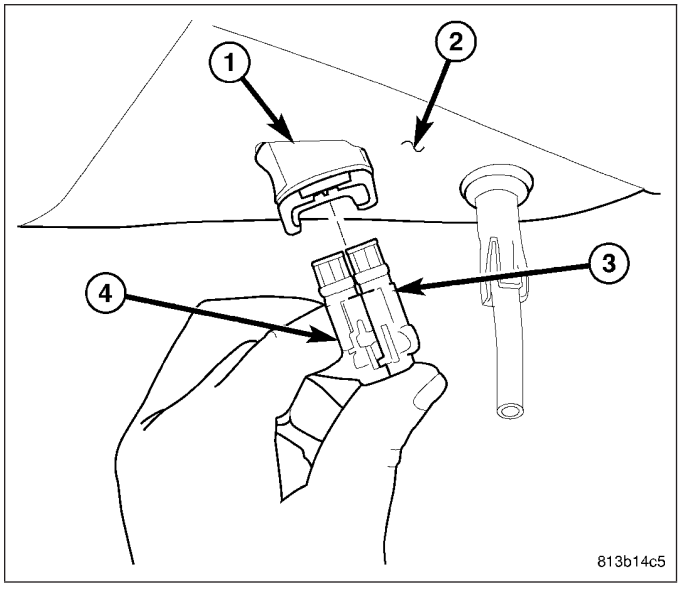

19. Unclip left wheel speed sensor cable (3) from routing clip (1) near body connector.

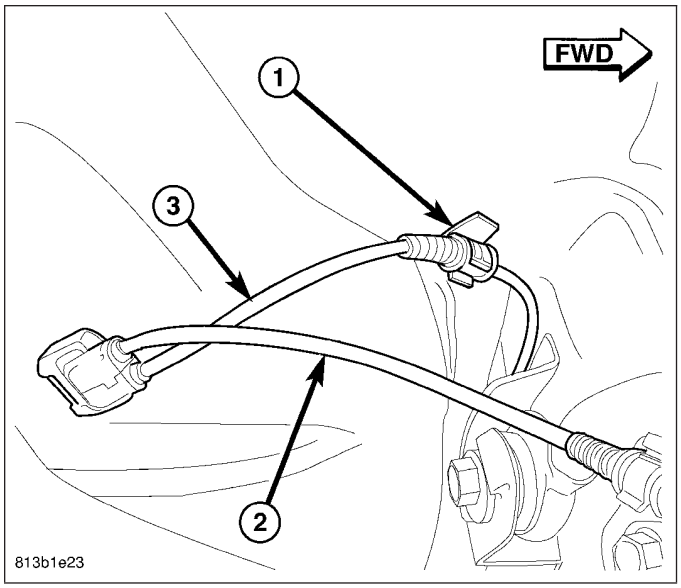

20. On each side of vehicle, remove shock absorber (1) lower mounting bolt (2) and nut (4).

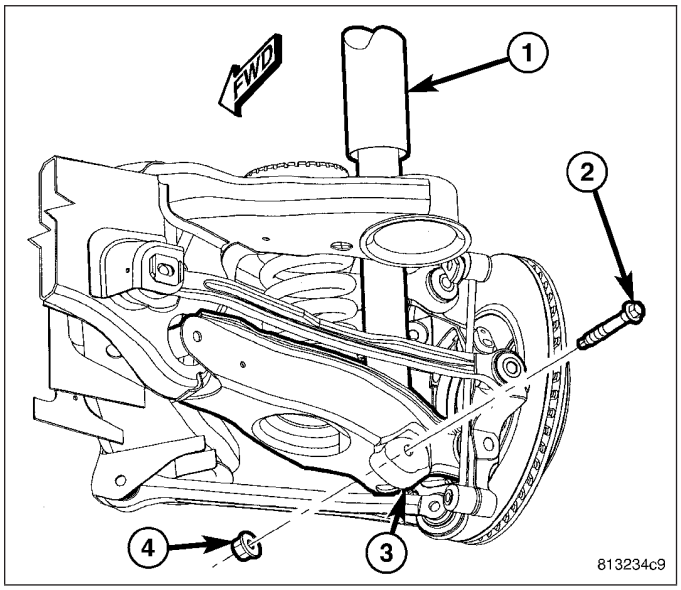

21. Carefully mark location of rear crossmember on body at all four mount (bushing) locations using a marker or crayon. **Do not use a scratch awl to mark location.**
22. Position an extra pair of jack stands under and support forward end of engine cradle to help stabilize vehicle during rear suspension removal/installation.

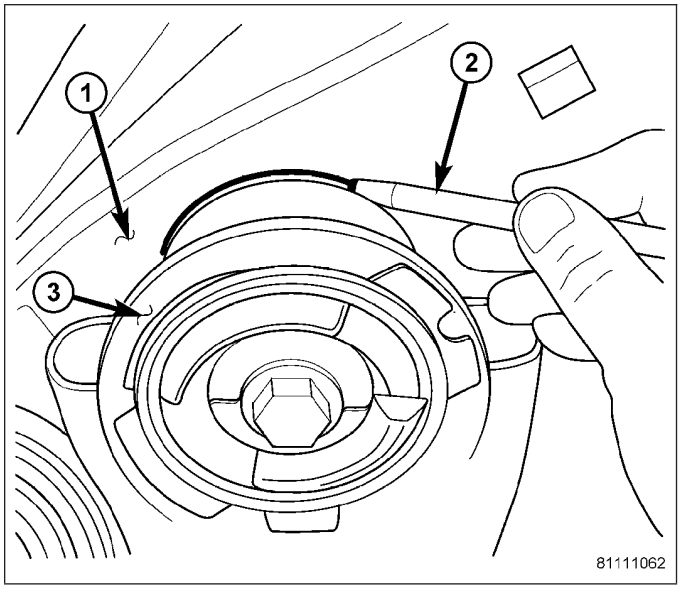

23. Position under-hoist utility jack or transmission jack (2) under center of rear crossmember (1). Raise jack head to contact crossmember and secure in place.

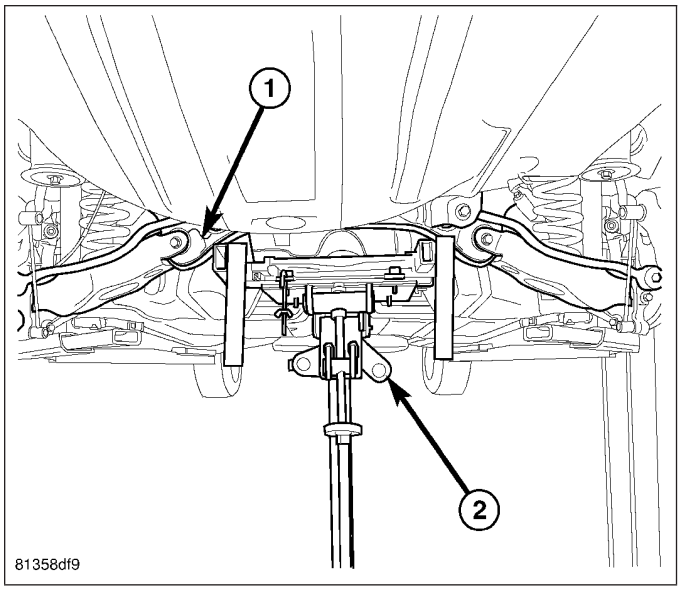

WARNING: Before opening fuel system, review all Warnings and Cautions.

24. Remove fuel filler tube. (Refer to 14 - FUEL SYSTEM/FUEL DELIVERY/FUEL TANK FILLER TUBE - REMOVAL)

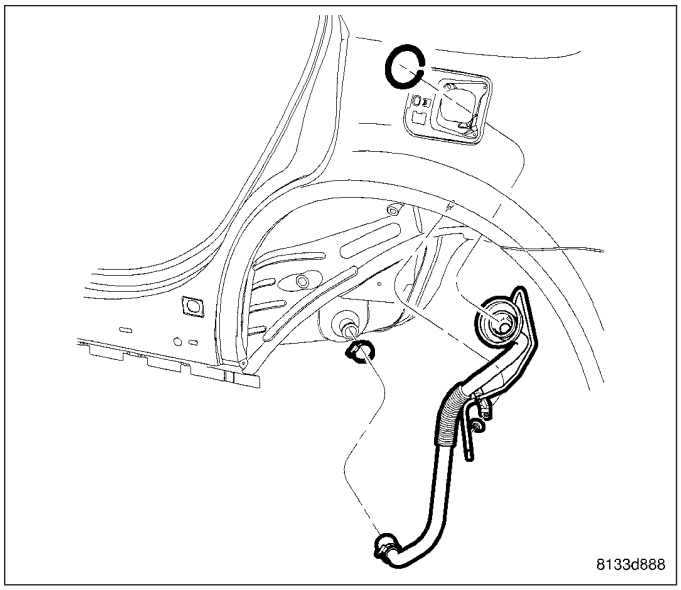

NOTE: If equipped with AWD, when removing crossmember mounting bolts in following step, be sure to not to misplace spacers (1) between crossmember mounts (2) and body.

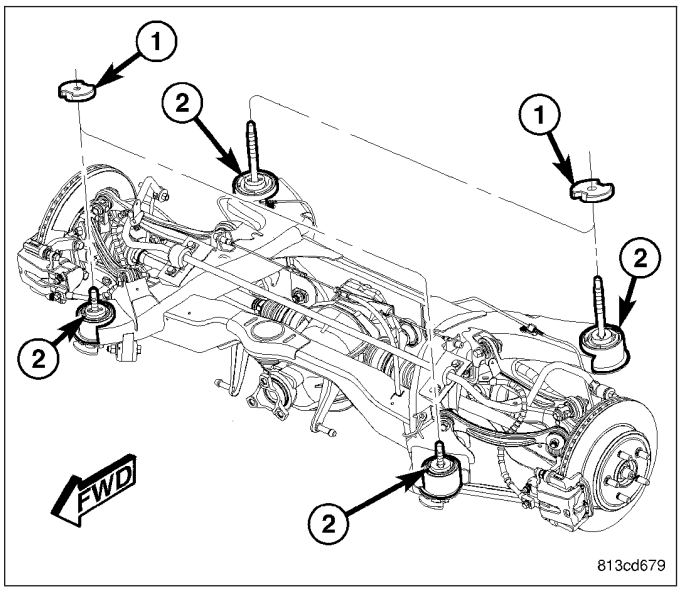

25. Remove both front (3) and both rear (2) mounting bolts fastening crossmember (1) in place.

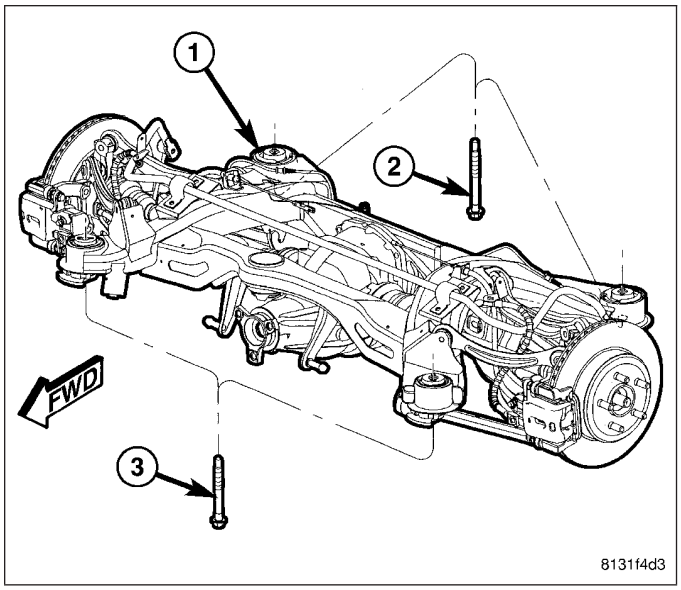

26. **Slowly** lower crossmember using jack until crossmember is at a comfortable working level.
27. Remove coil springs and isolators (1, 2 and 5) from spring links.

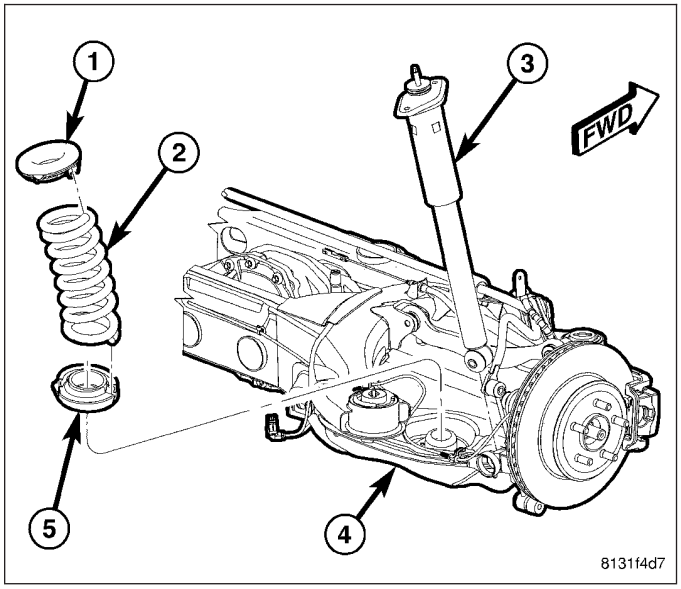

28. Remove bolt (1) from bushing prior to removal.

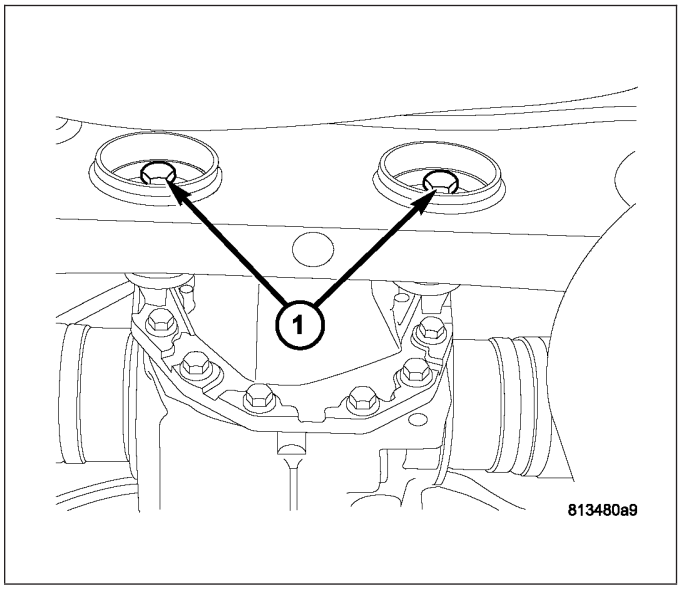

NOTE: Prior to using Special Tool 9520, lubricate Bolt (1) threads to provide ease of use and promote tool longevity.

NOTE: When installing Thrust Bearing (6), be sure to place hardened side toward Bolt head.

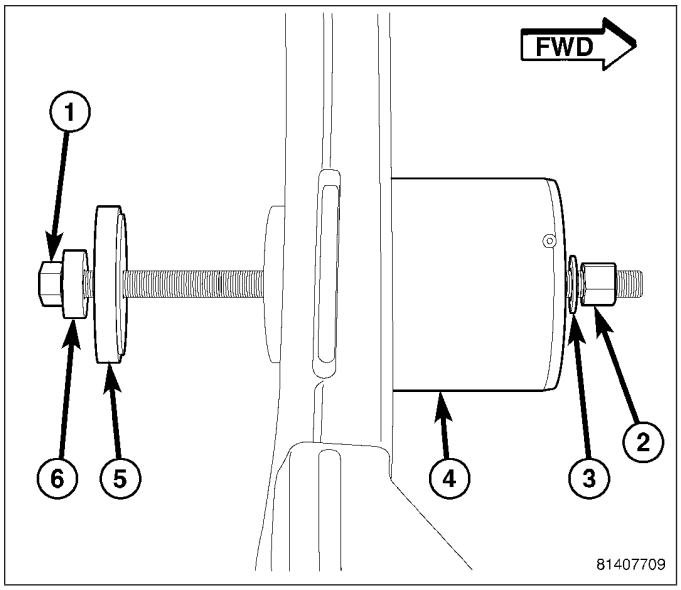

29. Assemble tools (See following list) over bushing as shown.
    - (1) Bolt
    - (2) Nut
    - (3) Washer
    - (4) Receiver 9520-4
    - (5) Remover 9520-3
    - (6) Thrust Bearing
30. While holding Nut (2) from rotating, **using hand tools**, tighten Bolt (1) until Remover (5) comes in contact with bushing and Receiver (4) sets squarely against crossmember.
31. Continue to tighten Bolt (1), pressing bushing out of crossmember.
32. Remove tools with bushing.

INSTALLATION

NOTE: It is important that tapered end (3) of bushing be installed first into forward end of crossmember to ease installation.

NOTE: When installing Thrust Bearing (7), be sure to place hardened side toward Bolt head.

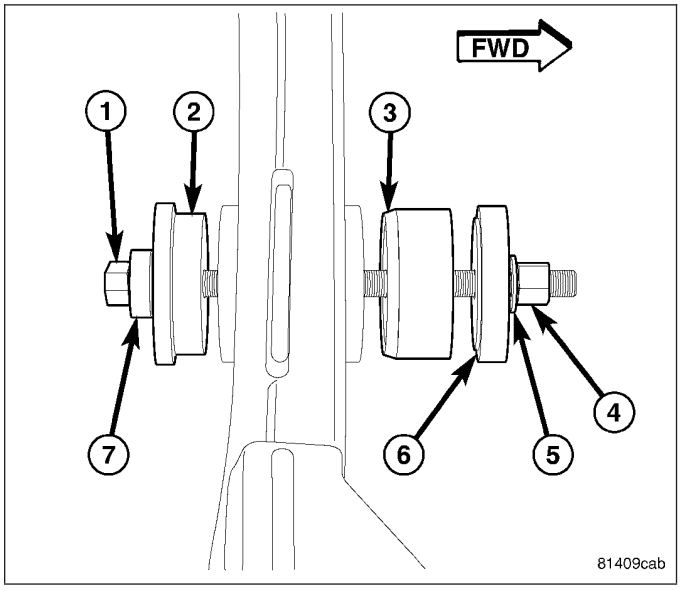

1. Insert tapered end of NEW bushing (3) into forward end of crossmember bushing bore.
2. Assemble tools (See following list) through crossmember and bushing as shown.
    - (1) Bolt
    - (2) Disc 9520-1
    - (3) Bushing
    - (4) Nut
    - (5) Washer
    - (6) Installer 9520-2
    - (7) Thrust Bearing
3. Insert Installer (6) into end of bushing and Disc (2) into opposite end of crossmember bushing bore.
4. While holding Nut (4) from rotating, tighten Bolt (1) **using hand tools**, pressing bushing into crossmember. Stop when Installer (6) bottoms against bushing bore.
5. Remove tools.

CAUTION: Differential mounting bolts (1) must be installed through bushings prior to crossmember installation in vehicle. Bolts cannot be inserted through bushings once crossmember is installed.

6. Insert differential mounting bolt (1) through mount bushing from rear (198 mm axle differential shown in figure. Other axles differ, but similar).

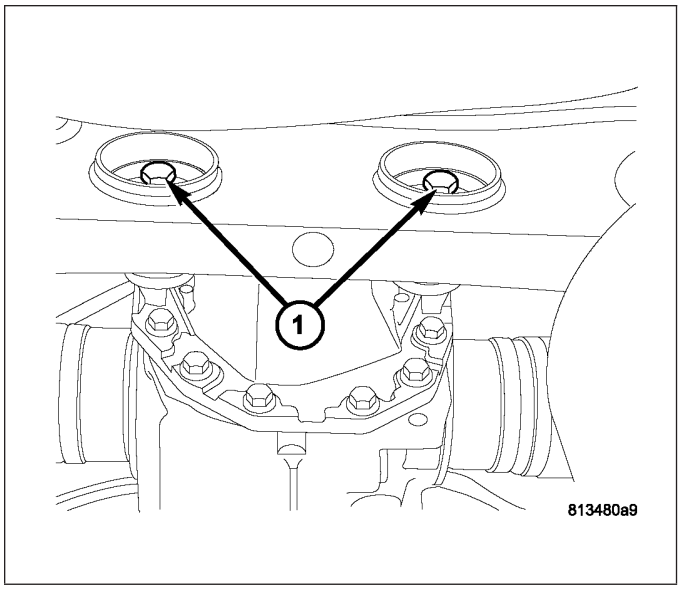

NOTE: Do not install coil springs on spring links at this time.

7. Raise crossmember to body mounting points. As crossmember is raised, align shocks (3) with pockets in spring links. **Do not install bolts at this time.**

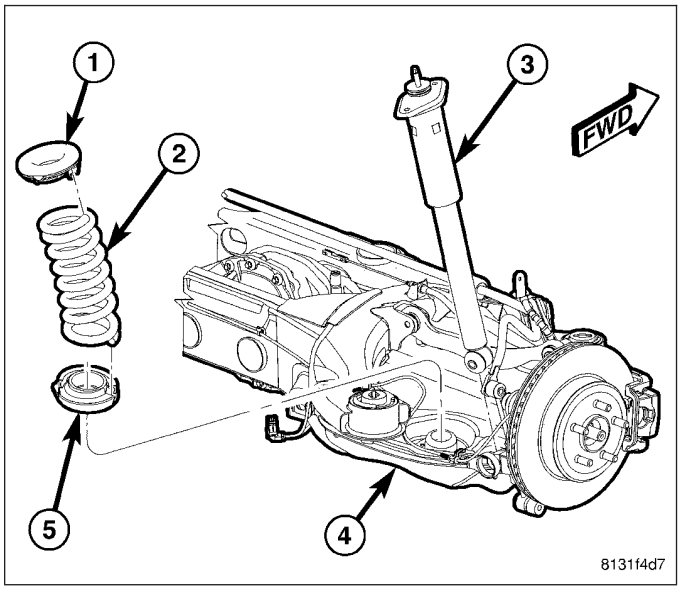

NOTE: There are four crossmember mounting bolts. Rear mounting bolts (2) are longer than front mounting bolts (3). Do not interchange mounting bolts.

8. Continue to raise crossmember (1) with jack until crossmember mounting bolts (2 and 3) can be installed. Install left side crossmember mounting bolts, but not the right side bolts. It is not necessary to tighten bolts at this point.

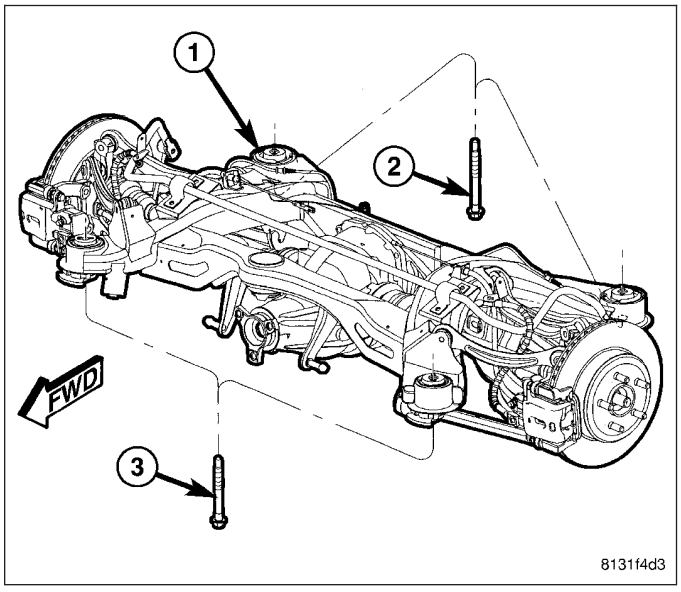

CAUTION: To avoid damaging other components of vehicle, do not lower crossmember any further than necessary to install coil spring (2).

9. **Slowly** lower jack allowing right side of crossmember to drop. **Do not lower jack at a fast rate.** Lower jack just enough to allow spring (2) Installation. **Do not lower jack any further than necessary.**

NOTE: Before installing coil spring, make sure isolators (1 and 5) are completely installed on ends of spring.

10. Install coil spring (2) with isolators into spring pocket of spring link fitting the lower isolator to the shape of the pocket, then align top of spring with body mount.

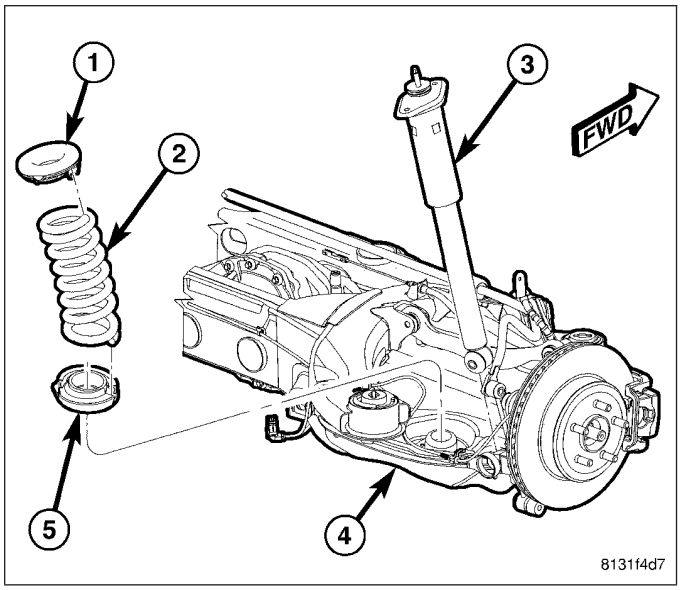

11. Carefully raise jack, guiding coil spring and lower end of shock absorber (1) into mounted positions. Once shock absorber (1) lower mounting hole lines up with hole in spring link (3), stop jacking.
12. Install lower shock mounting bolt (2) and nut (4). **Do not tighten at this time.**

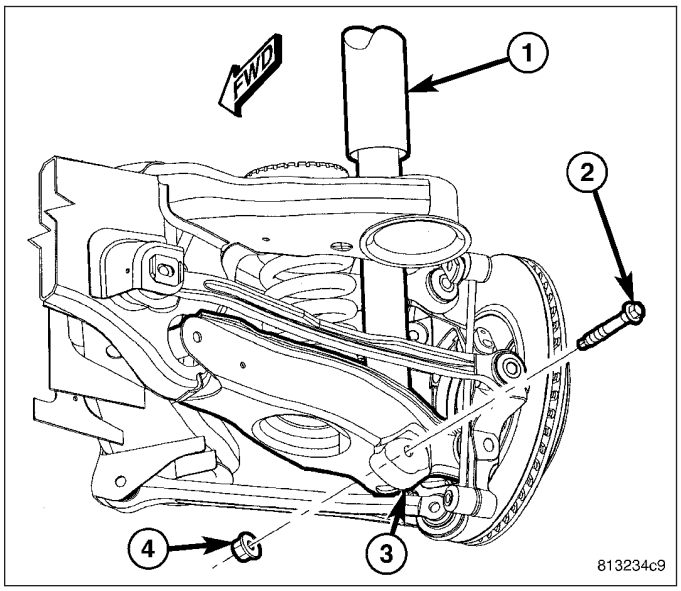

13. If vehicle is equipped with AWD, insert spacers (1) on top of right crossmember mount bushings (2) before crossmember is raised into place.

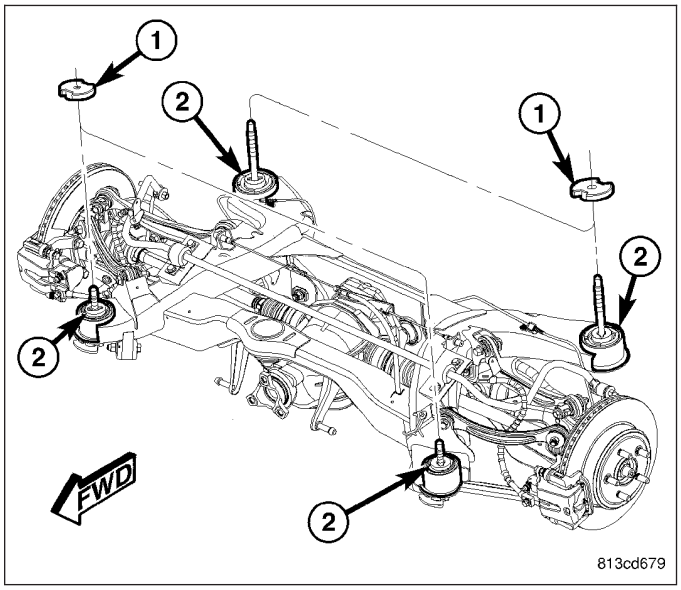

NOTE: There are four crossmember mounting bolts. Rear mounting bolts (2) are longer than front mounting bolts (3). Do not interchange mounting bolts.

14. Raise right side of crossmember (1) into mounted position. Install right side crossmember mounting bolts (2 and 3). **Snug, but do not fully tighten bolts at this time.**
15. Remove both front and rear crossmember mounting bolts (2 and 3) on **left** side of vehicle.

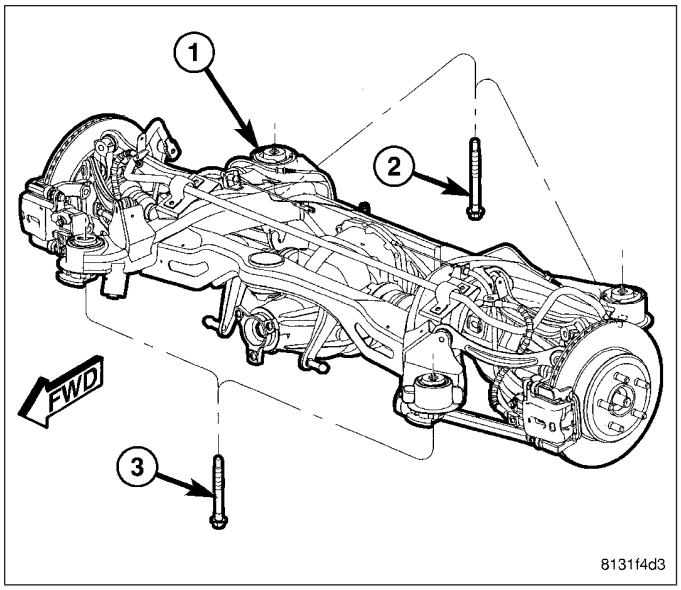

CAUTION: To avoid damaging other components of vehicle, do not lower crossmember any further than necessary to install coil spring (2).

16. **Slowly** lower jack allowing left side of crossmember to drop. **Do not lower jack at a fast rate.** Lower jack just enough to allow spring (2) Installation. **Do not lower jack any further than necessary.**

NOTE: Before installing coil spring, make sure isolators (1 and 5) are completely installed on ends of spring.

17. Install coil spring (2) with isolators into spring pocket of spring link fitting the lower isolator to the shape of the pocket, then align top of spring with body mount.

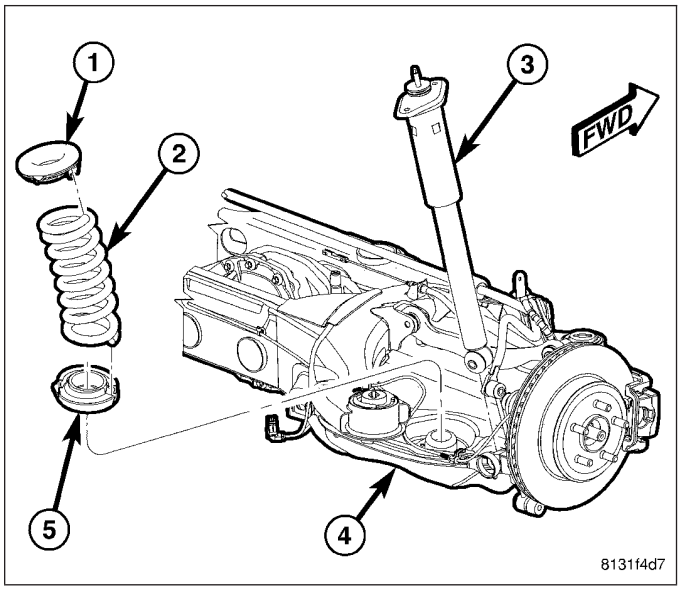

18. Carefully raise jack, guiding coil spring and lower end of shock absorber (1) into mounted positions. Once shock absorber (1) lower mounting hole lines up with hole in spring link (3), stop jacking.
19. Install lower shock mounting bolt (2) and nut (4). **Do not tighten at this time.**

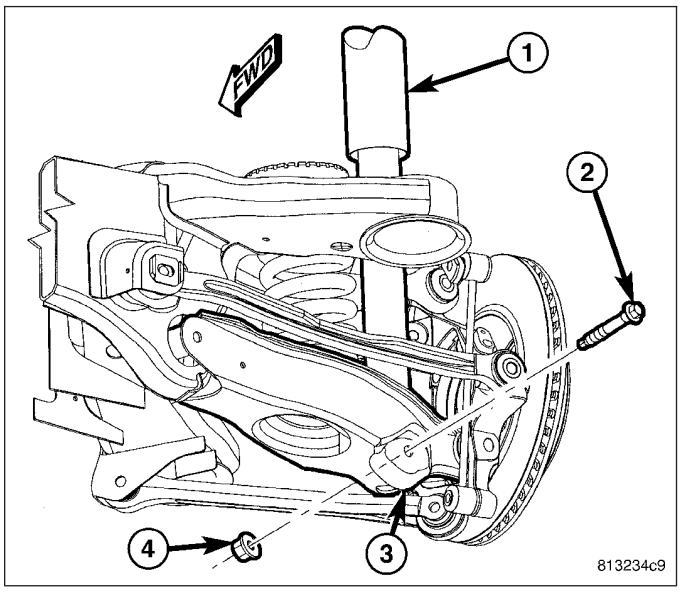

20. If vehicle is equipped with AWD, insert spacers (1) on top of left crossmember mount bushings (2) before crossmember is raised into place.

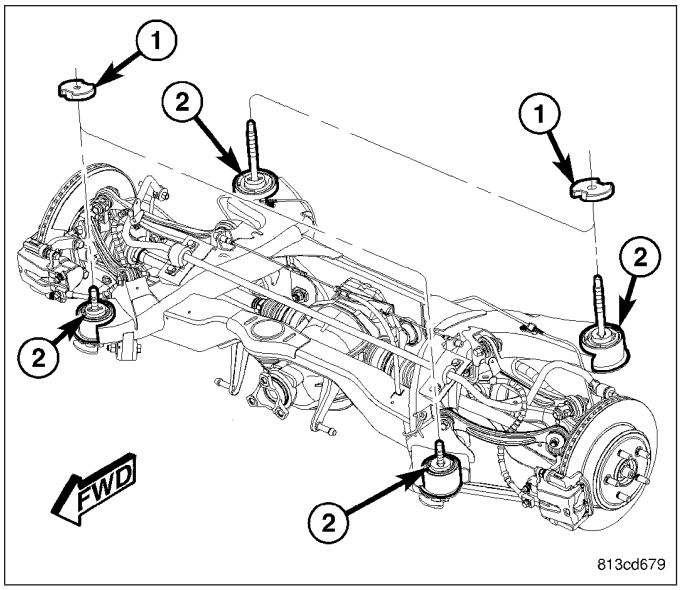

NOTE: There are four crossmember mounting bolts. Rear mounting bolts (2) are longer than front mounting bolts (3). Do not interchange mounting bolts.

21. Raise left side of crossmember (1) into mounted position. Install left side crossmember mounting bolts (2 and 3). **Snug, but do not fully tighten bolts at this time.**

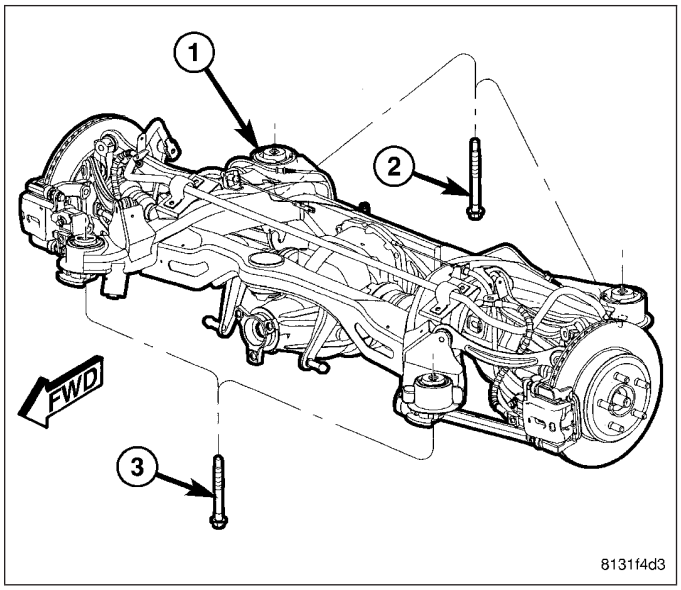

22. Shift crossmember as necessary to line up mounts (3) with location marks drawn on body (1) before removal.

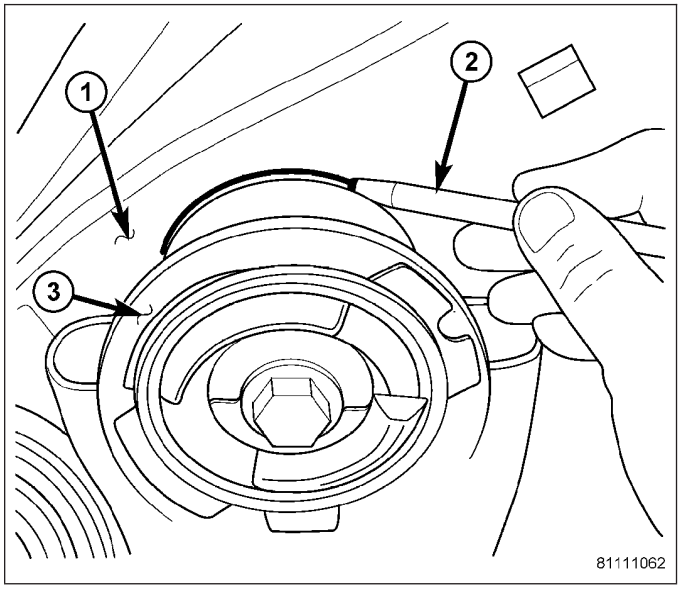

23. Once mounts are lined up with location marks, on both sides of vehicle, measure distance (1) between the tension link (2) and weld flange (3) on body directly in front of it, just outboard of the front mount bushing (4). **This distance must be at least 12 mm to allow proper clearance for suspension movement.** If distance is less than 12 mm on either side of vehicle, shift that side of rear crossmember directly rearward until distance is 12 mm or greater. To do so, loosen 3 mounting bolts slightly, leaving one on opposite side of shift snugged to pivot off of. Shift crossmember rearward and snug loosened bolts. Remeasure opposite side to be sure it still maintains minimum 12 mm distance.

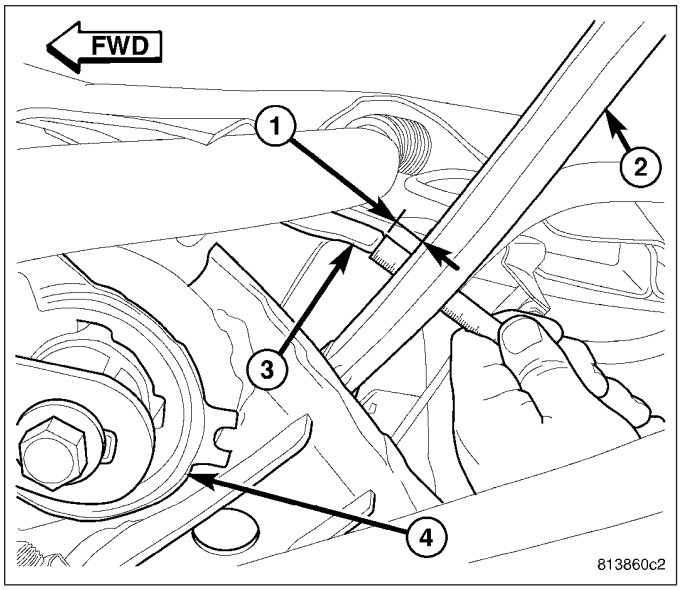

24. Tighten all four crossmember mounting bolts (2 and 3) to 180 N·m (133 ft. lbs.).

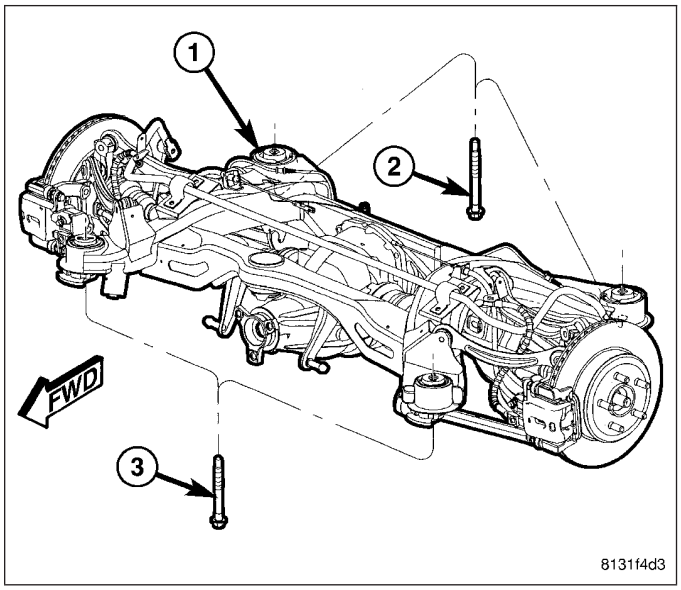

25. Remove jack (3) from under rear crossmember.

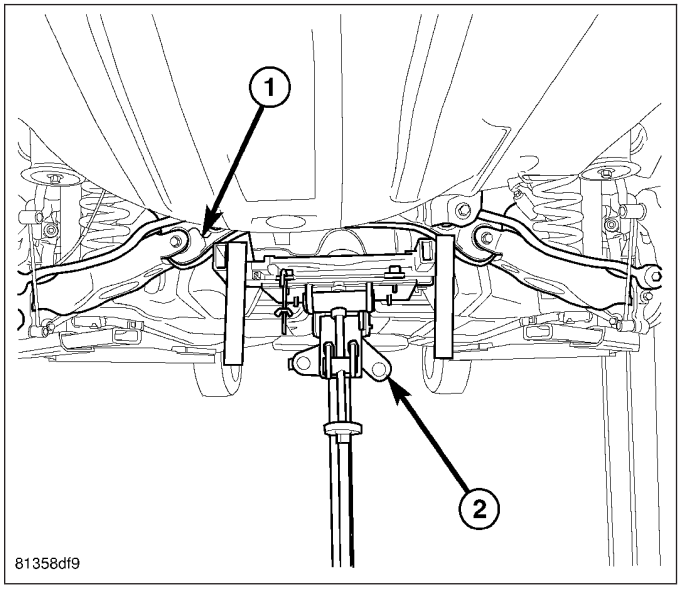

26. Install fuel filler tube. (Refer to 14 - FUEL SYSTEM/FUEL DELIVERY/FUEL TANK FILLER TUBE - INSTALLATION)

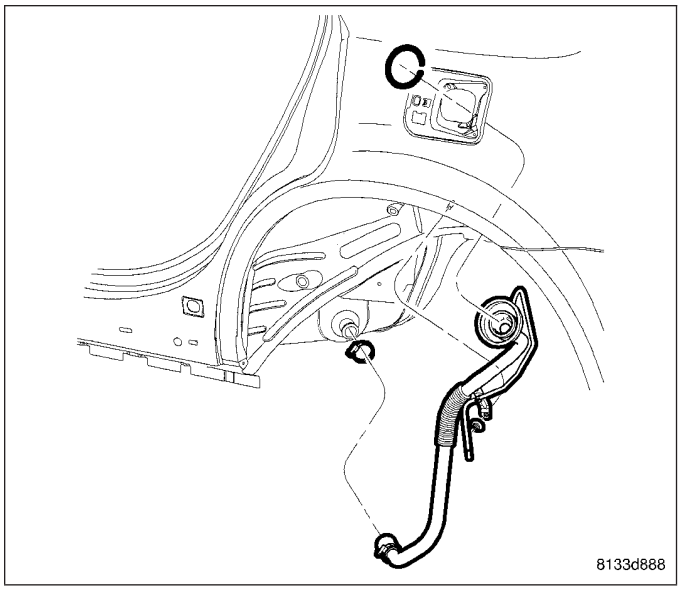

27. Clip left rear wheel speed sensor cable (3) to routing clip (1) near body connector.

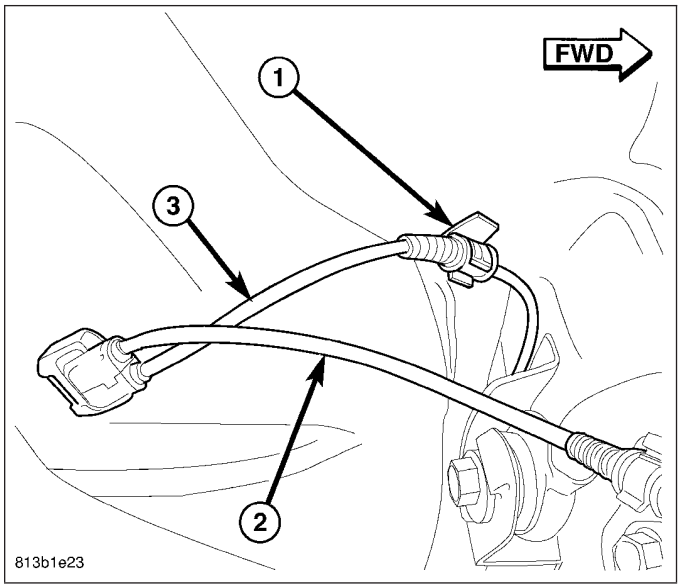

28. Match left rear wheel speed sensor connector (4) to right sensor connector (3) to make one connector.
29. Insert speed sensor connectors (3 and 4) into body wiring harness connector (1) located in luggage compartment floor pan (2). When installing connector, make sure retaining clip on body connector is properly in place and sensor connector cannot be pulled out.

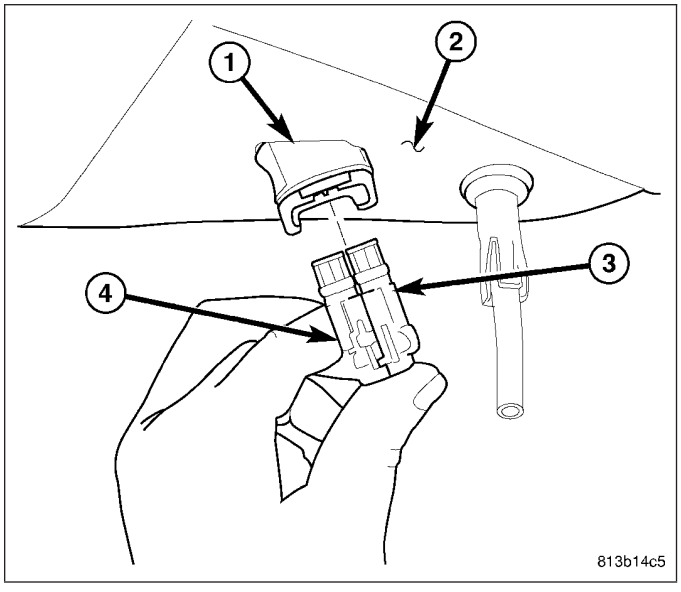

CAUTION: Extreme caution should be taken not to cross-thread caliper guide pin bolts (2) when they are installed.

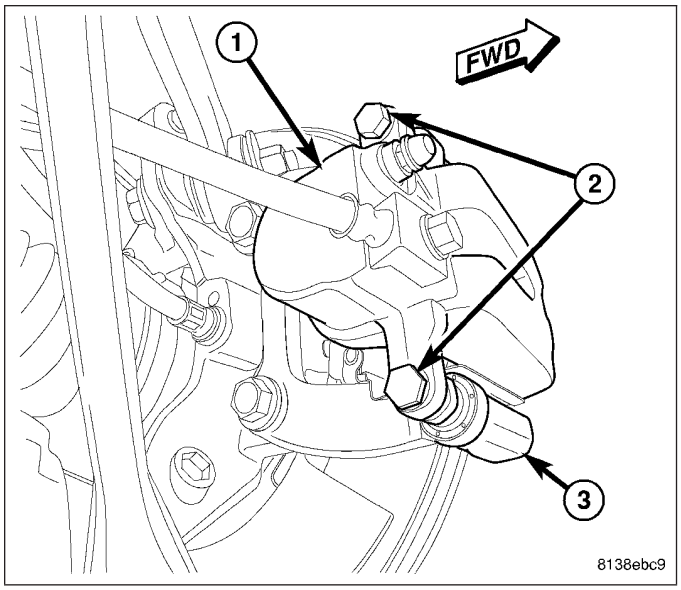

30. If equipped with standard or premium disc brakes, on each rear disc brake:
    a. Push caliper guide pins into caliper adapter to clear caliper mounting bosses when installing.
    b. Guide caliper and brake hose down through rear suspension, then slide caliper over brake pads and onto caliper adapter (3).
    c. Align caliper mounting holes with guide pins, then install guide pin bolts (2). While holding guide pins from turning, tighten bolts to 31 N·m (23 ft. lbs.) torque.
    d. Make sure brake hose is properly routed and will not come in contact with suspension components.
31. If equipped with SRT8 disc brakes, at each rear disc brake, support spring link using a transmission jack or other appropriate jack as indicated in removal procedure. (Refer to 13 - FRAME & BUMPERS/FRAME/BUSHING - REMOVAL)
32. If equipped with SRT8 disc brakes, on each rear disc brake, slide caliper with pads (2) over brake rotor and align with knuckle.
33. If equipped with SRT8 disc brakes, on each rear disc brake, install caliper mounting bolts (1). Tighten bolts to 130 N·m (96 ft. lbs.) torque.
34. If equipped with SRT8 disc brakes, on each rear disc brake, remove jack from under spring link.

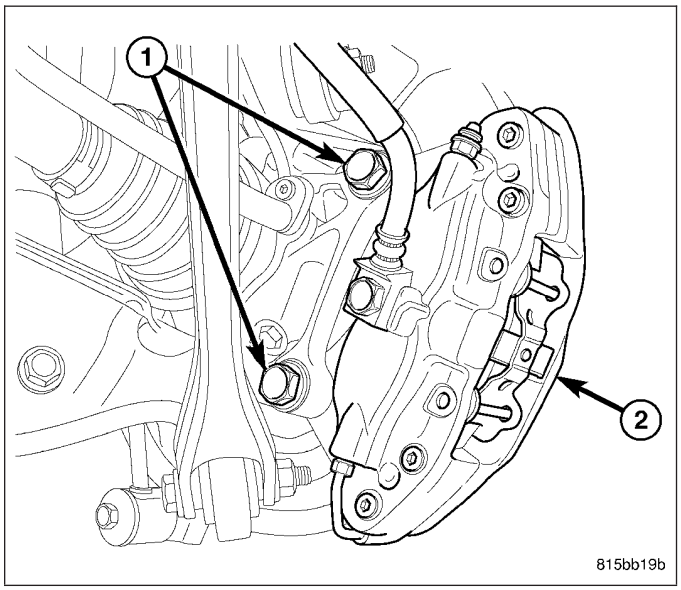

35. Route parking brake cable above rear crossmember, then slide cable (1, 3) through equalizer (2) above rear axle differential (once installed).

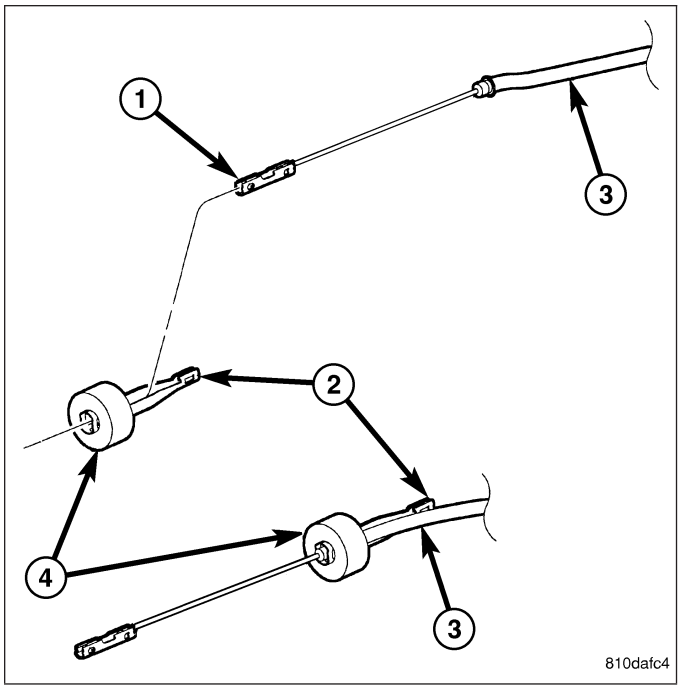

NOTE: Due to short travel and low spring tension, it is not necessary to lock-out parking brake lever to service parking brake components.

36. Connect front parking brake cable (5) at connector (3) to right rear parking brake cable (4).

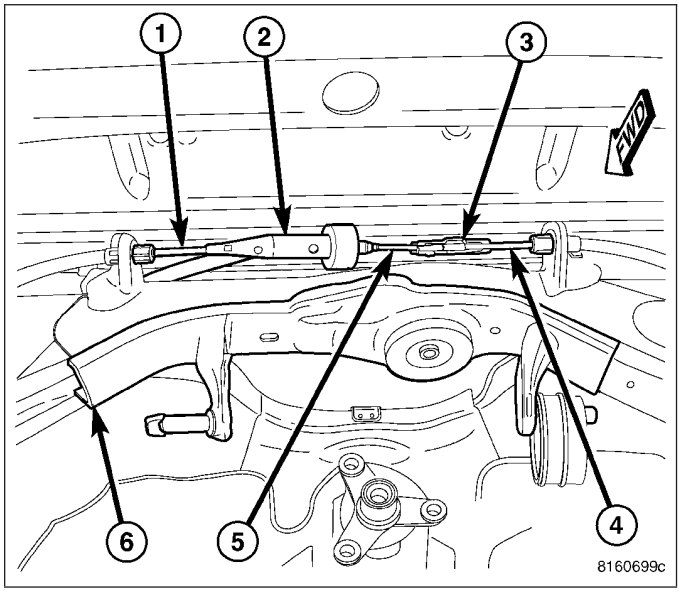

37. Insert front parking brake cable routing bracket locating pin into front flange of crossmember (3), then install screw (2) fastening cable (1) routing bracket to rear crossmember.

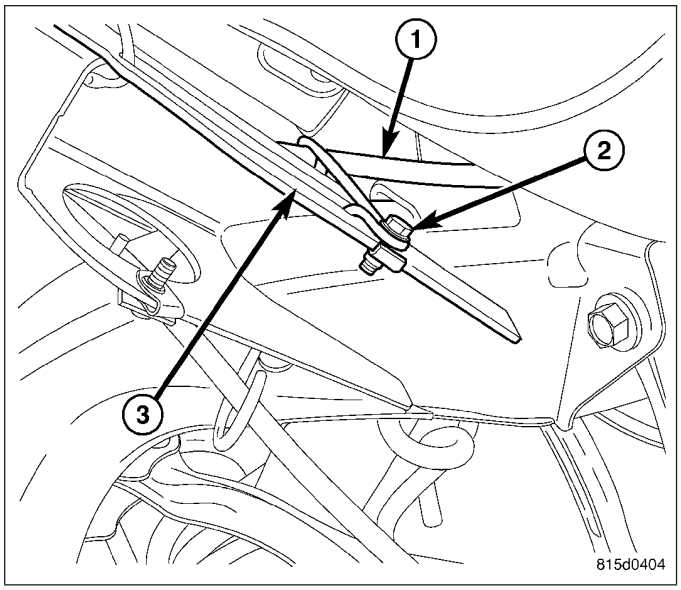

38. On each side of vehicle, slide an axle half shaft (2) through hub and bearing and install hub nut (1). **Do not tighten hub nuts at this time.**
39. Install rear axle differential. (Refer to 3 - DIFFERENTIAL & DRIVELINE/REAR AXLE - 198 MM - INSTALLATION) (Refer to 3 - DIFFERENTIAL & DRIVELINE/REAR AXLE - 210 MM - INSTALLATION) (Refer to 3 - DIFFERENTIAL & DRIVELINE/REAR AXLE - 215RII - INSTALLATION)

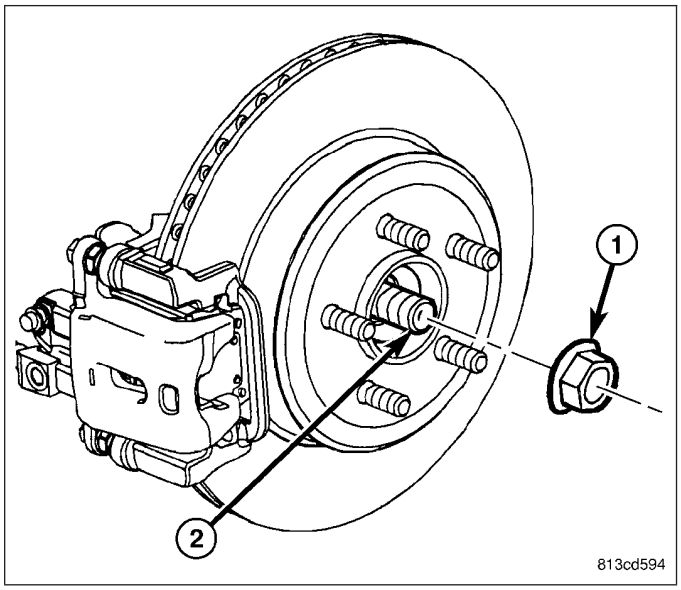

40. While a helper applies brakes to keep hub from turning, tighten hub nut to 213 N·m (157 ft. lbs.).

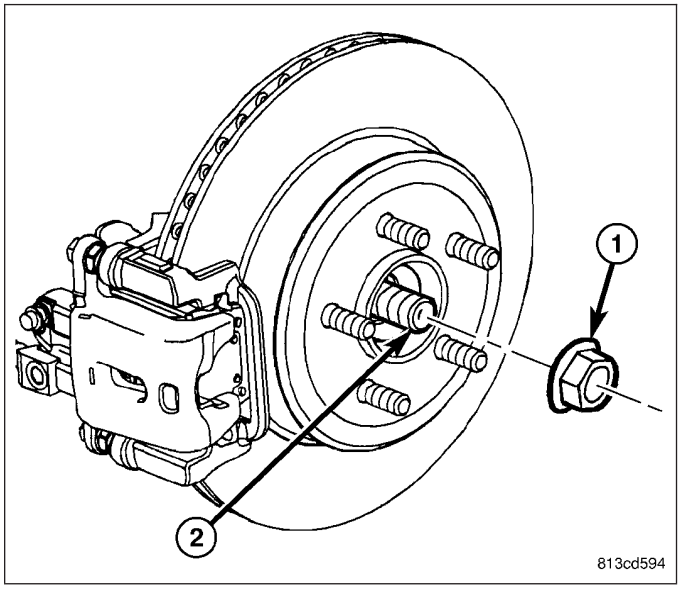

41. Install rear exhaust system (2) (dual-outlet exhaust shown in figure). (Refer to 11 - EXHAUST SYSTEM - INSTALLATION)

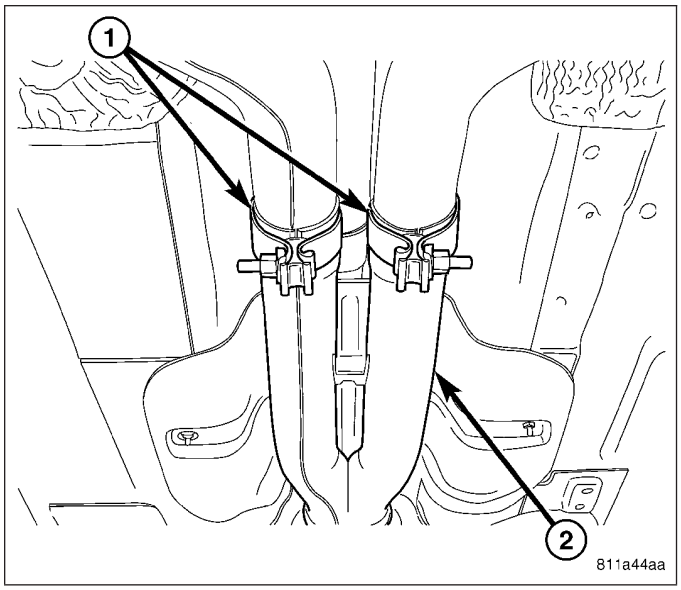

42. Install tire and wheel assemblies (1). Tighten wheel mounting nuts (3) to 150 N·m (110 ft. lbs.). (Refer to 22 - TIRES/WHEELS - INSTALLATION)
43. Lower vehicle.

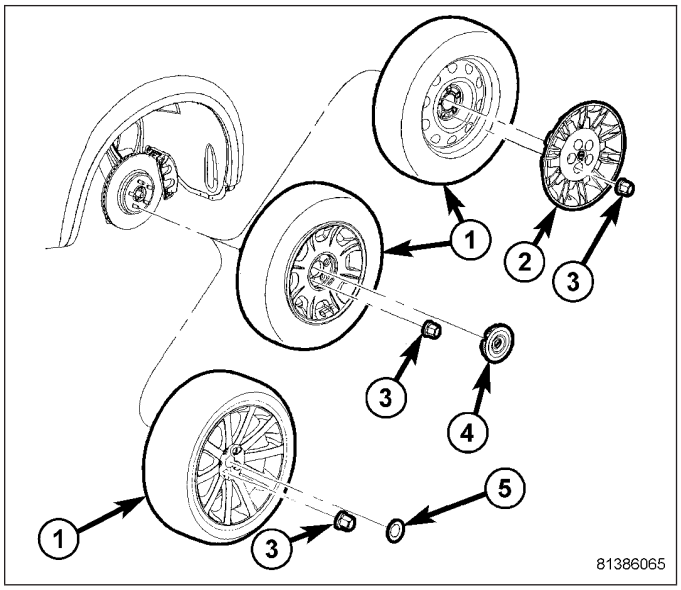

44. Connect battery negative cable (2) to battery post. It is important that this is performed properly. (Refer to 8 - ELECTRICAL/BATTERY SYSTEM - STANDARD PROCEDURE)
45. Pump brake pedal several times to ensure vehicle has a firm brake pedal before moving vehicle.
46. Position vehicle on alignment rack/drive-on lift. Raise vehicle as necessary to access mounting bolts.

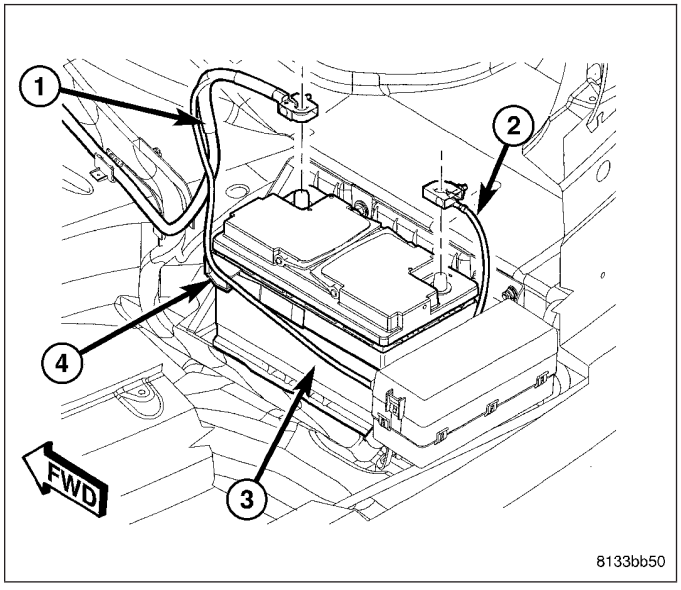

47. Tighten shock absorber lower mounting bolt nuts (4) to 72 N·m (53 ft. lbs.).
48. Perform wheel alignment, paying special attention to thrust angle. If rear crossmember needs to be shifted to align thrust angle, try to avoid compromising tension link clearance (Refer to Step 23). (Refer to 2 - SUSPENSION/WHEEL ALIGNMENT - STANDARD PROCEDURE)

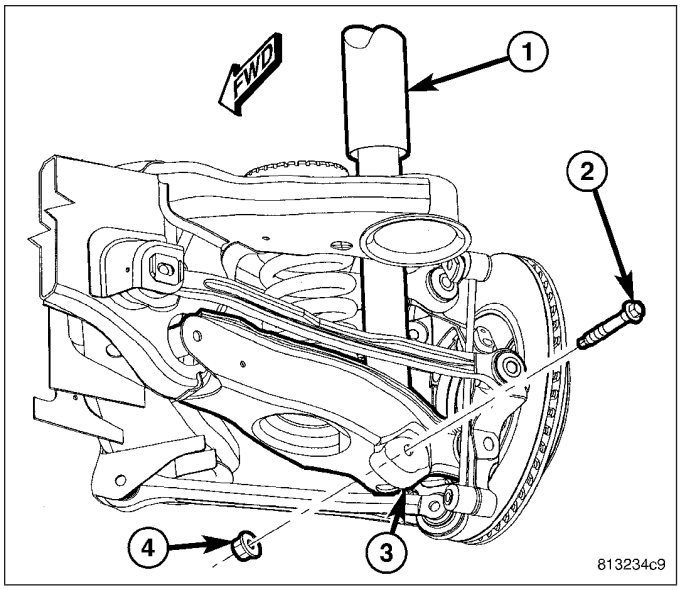

BUSHING-REAR CROSSMEMBER FRONT MOUNT

REMOVAL

1. Disconnect and isolate battery negative cable (2) from battery post.
2. Raise and support vehicle. (Refer to LUBRICATION & MAINTENANCE/HOISTING - STANDARD PROCEDURE)

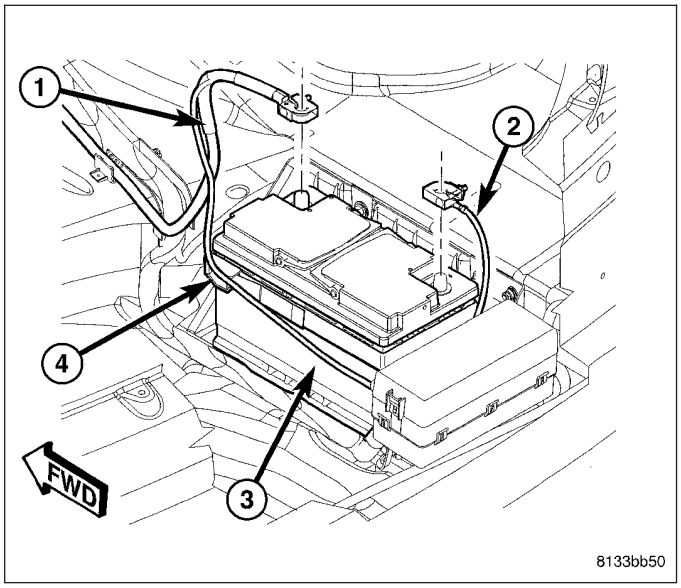

3. On each side of vehicle rear, remove wheel mounting nuts (3), then tire and wheel assembly (1).

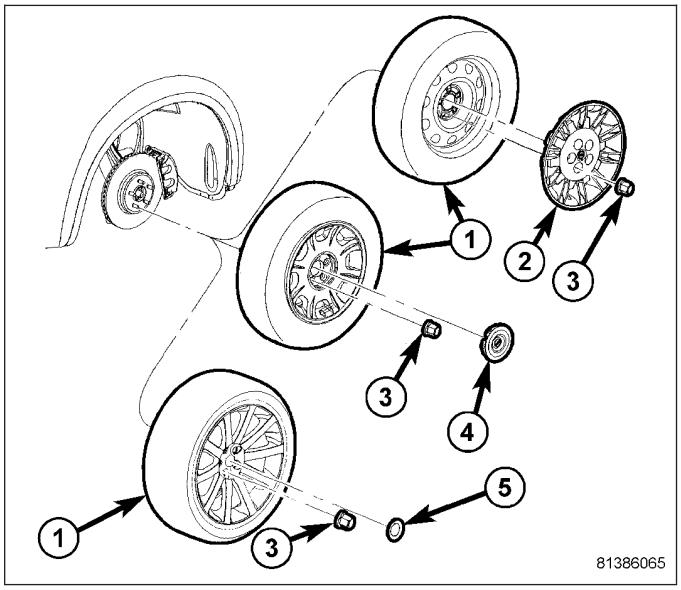

4. Remove rear exhaust system (2) (dual-outlet exhaust shown in figure). (Refer to 11 - EXHAUST SYSTEM - REMOVAL)

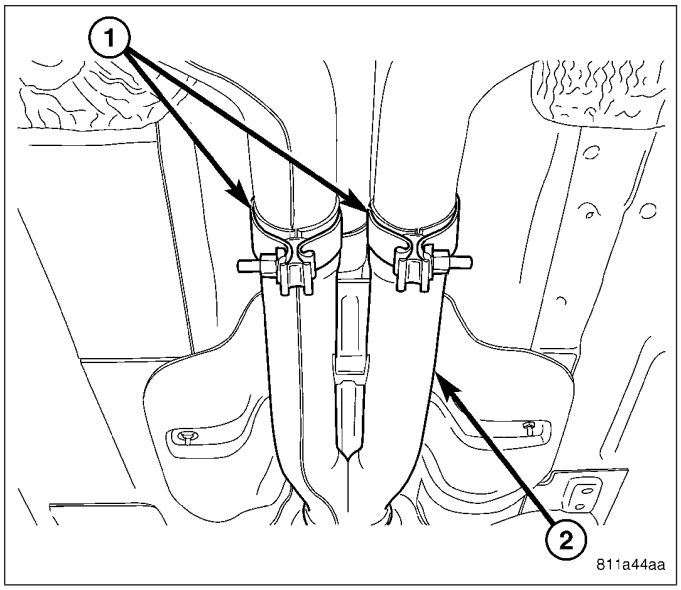

5. Apply alignment index marks (3) to the propeller shaft rubber coupler (1) and axle flange (2).

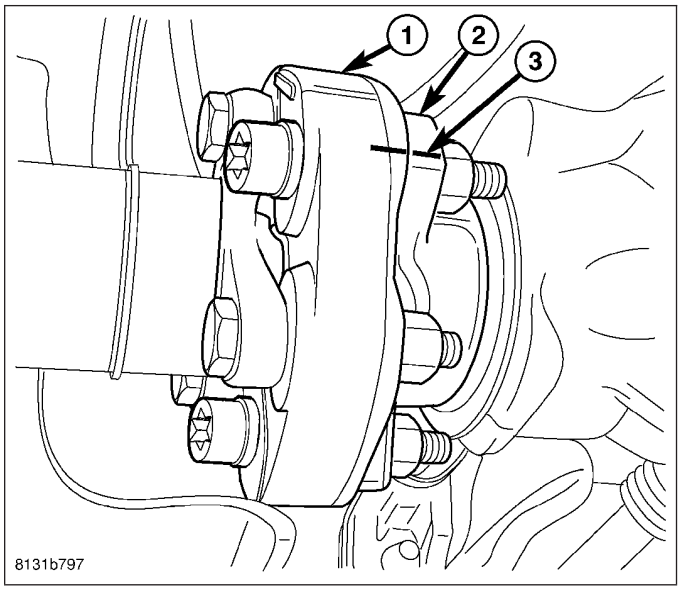

6. Remove three (four if equipped with 215 MM axle) propeller shaft coupler-to-axle flange bolts and nuts.

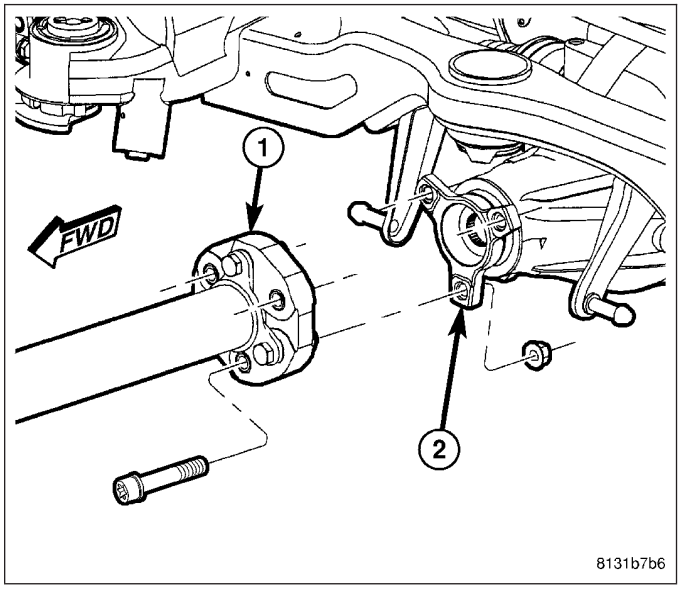

7. Support propeller shaft (2) using a bungee cord (1). Attach ends of cord to fuel tank straps as shown.

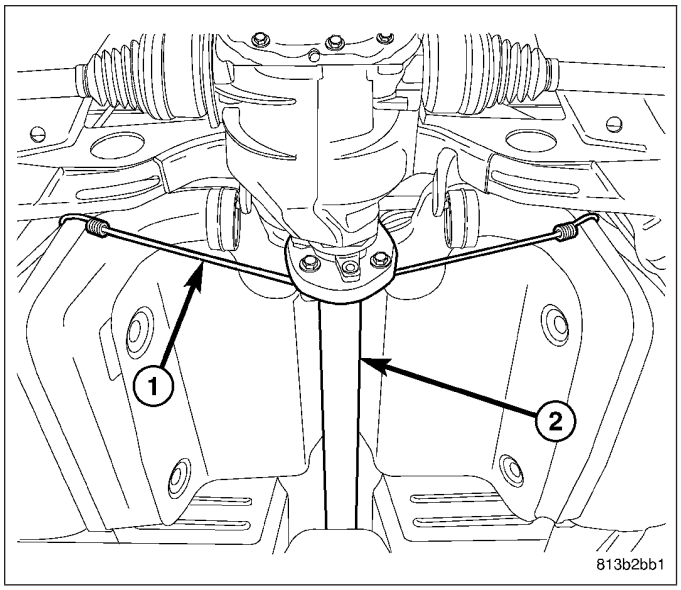

NOTE: Due to short travel and low spring tension, it is not necessary to lock-out parking brake lever to service parking brake components.

8. Disconnect front parking brake cable (5) at connector (3) to right rear parking brake cable (4) above axle differential.

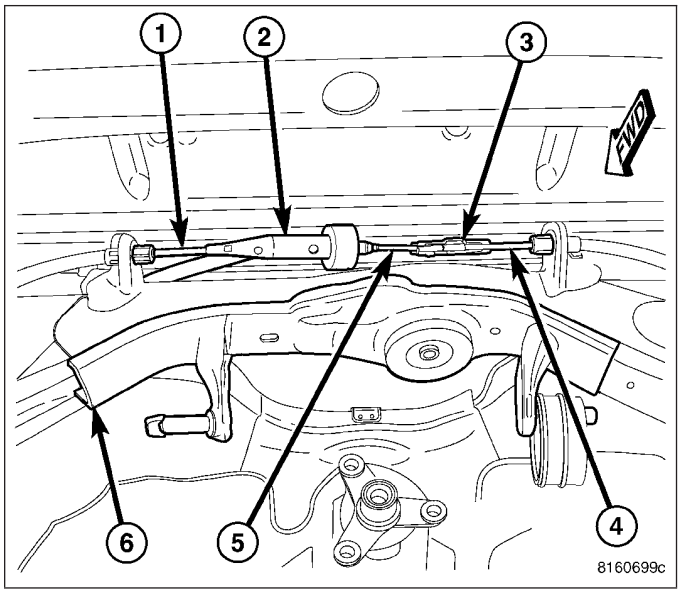

9. Remove front parking brake cable (3) from equalizer (2).

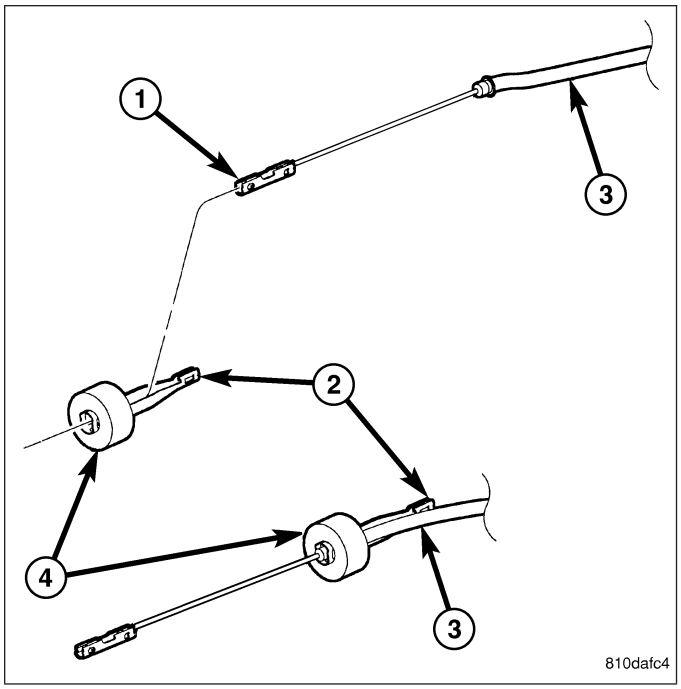

10. Remove screw (2) fastening front parking brake cable (1) routing bracket to rear crossmember front flange (3).

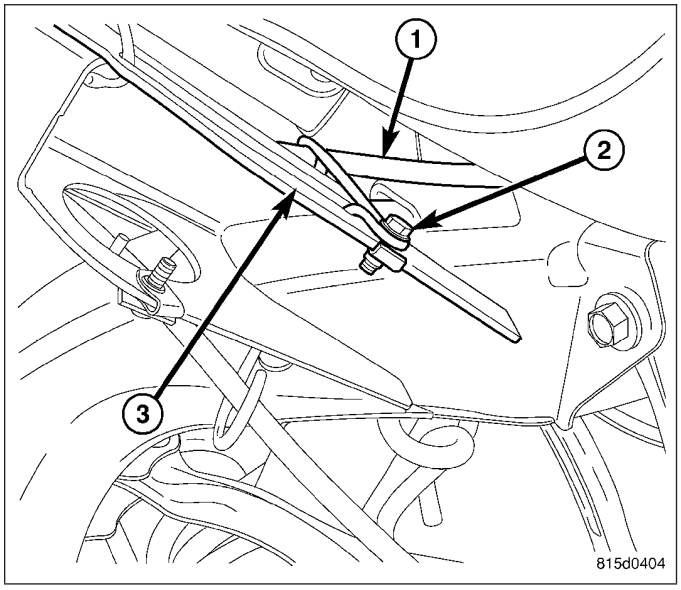

11. If equipped with standard or premium disc brakes, on each rear disc brake:
    a. While holding guide pins from turning, remove disc brake caliper guide pin bolts (2).
    b. Remove brake caliper (1) from brake adapter (3) and pads.
    c. Guide brake caliper up through suspension, following brake hose path. Support caliper above rear suspension using with bungee cord or wire to keep caliper from overextending brake hose when crossmember is lowered.

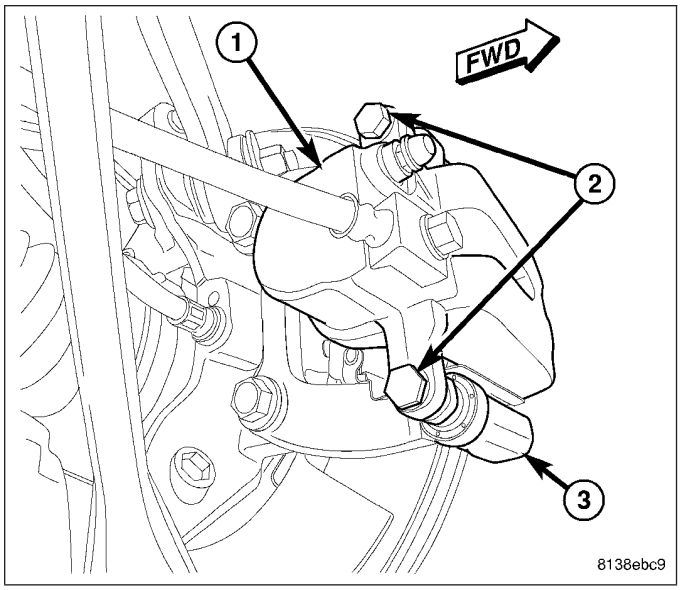

CAUTION: When pushing pistons back into caliper bores, use only a trim stick as shown or other suitable soft tool. Never use a screwdriver or other metal pry bar due to potential damage to braking surface of rotor, caliper, pistons or dust boots.

12. If equipped with SRT8 disc brakes, on each rear disc brake, place trim stick (4) between brake pad (2) and outer edge of rotor (3).
13. If equipped with SRT8 disc brakes, on each rear disc brake, using trim stick, slowly apply pressure against brake pad (2) until both pistons (on that side of caliper) are completely bottomed in bores of caliper half.

NOTE: Repeat above procedure to opposite brake pad (1) and pistons as necessary.

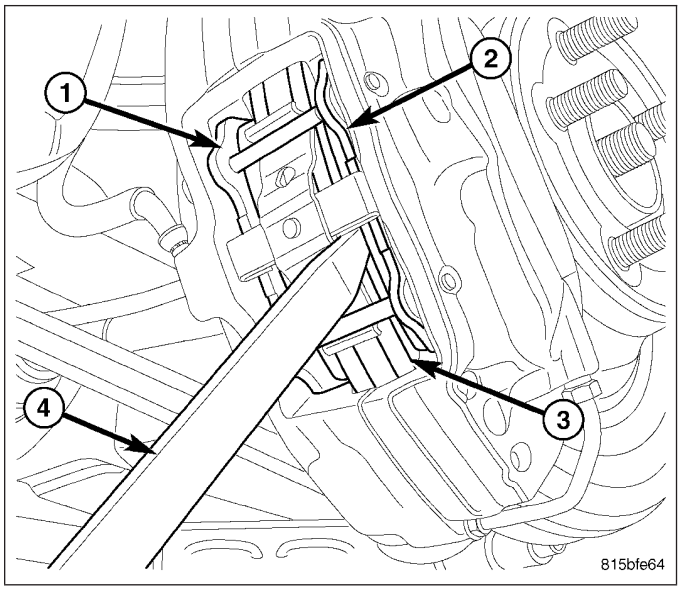

14. If equipped with SRT8 disc brakes, on each rear disc brake, support spring link (1) using a transmission jack (5) or other appropriate jack. Raise spring link just enough to access brake caliper lower mounting bolt (4) from above compression link (2).

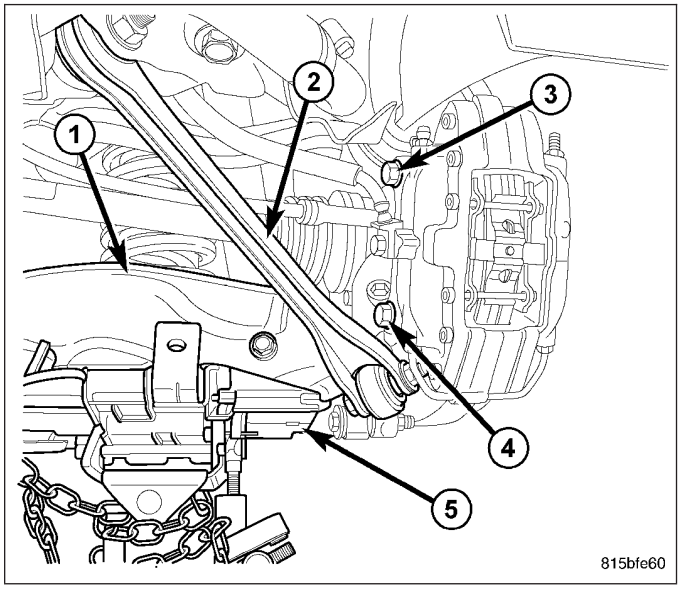

15. If equipped with SRT8 disc brakes, on each rear disc brake, remove the lower and upper caliper mounting bolts (1).
16. If equipped with SRT8 disc brakes, on each rear disc brake, remove brake caliper (2) with pads from knuckle and brake rotor. Hang assembly out of way using wire or a bungee cord. Use care not to overextend brake hose when doing this.
17. If equipped with SRT8 disc brakes, remove jack from under spring link.

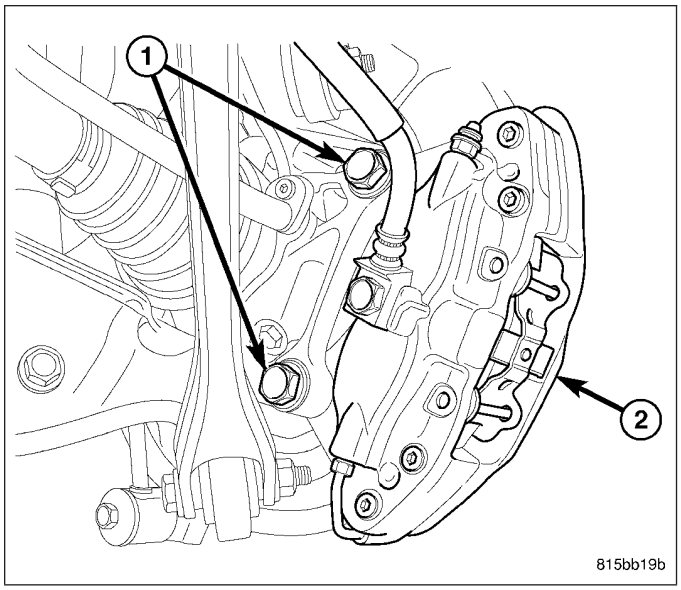

NOTE: To remove wheel speed sensor connector from body wiring harness connector, move retaining clip (2) and pull sensor connector outward.

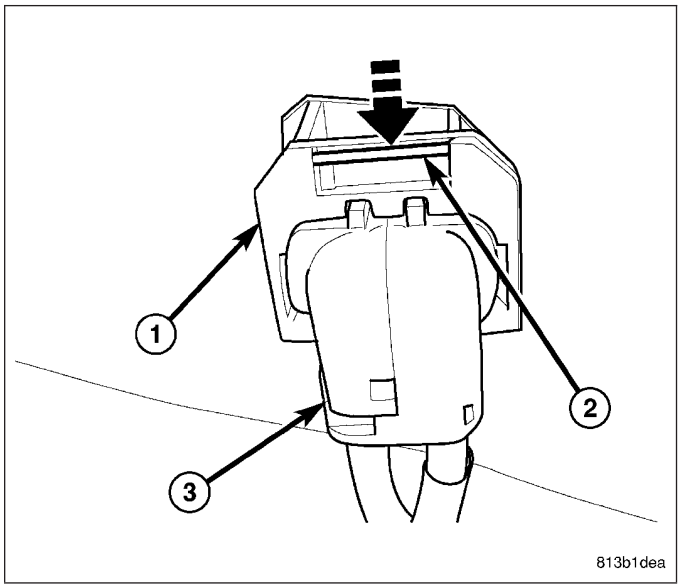

18. Remove wheel speed sensor connectors (3 and 4) from body wiring harness connector (1) located in luggage compartment floor pan (2).

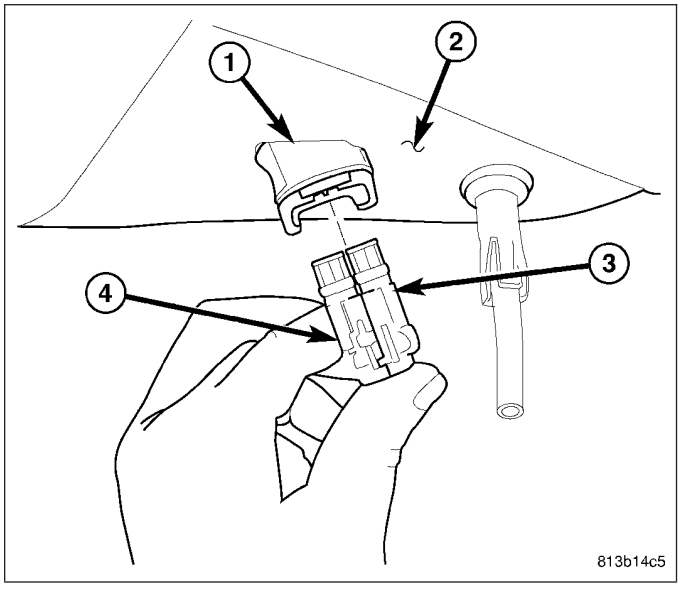

19. Unclip left wheel speed sensor cable (3) from routing clip (1) near body connector.

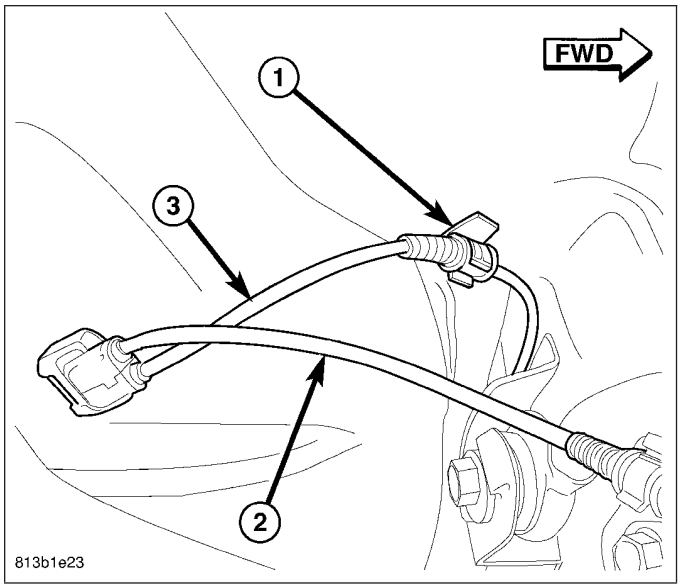

20. On each side of vehicle, remove shock absorber (1) lower mounting bolt (2) and nut (4).

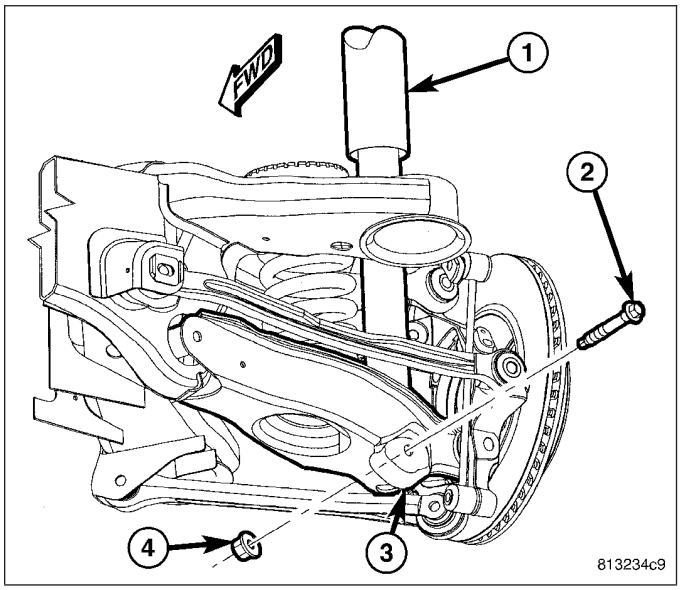

21. Carefully mark location of rear crossmember on body at all four mount (bushing) locations using a marker or crayon. **Do not use a scratch awl to mark location.**
22. Position an extra pair of jack stands under and support forward end of engine cradle to help stabilize vehicle during rear suspension removal/installation.

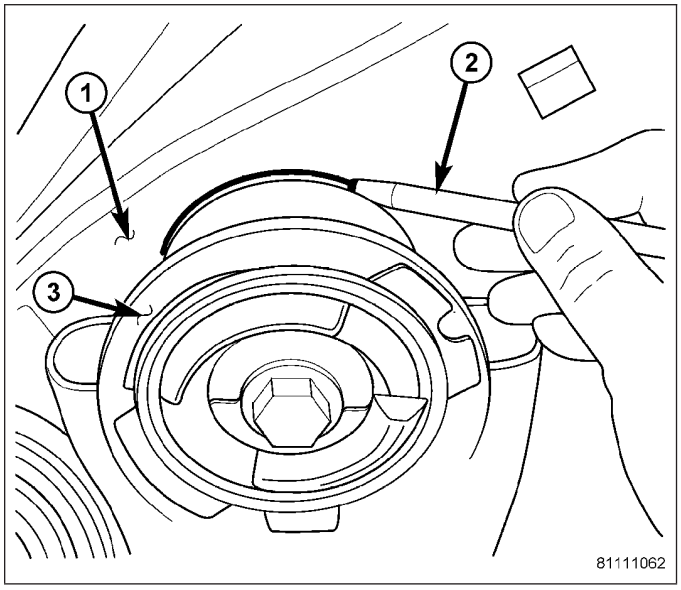

23. Position under-hoist utility jack or transmission jack (3) under center of rear axle differential (1). Raise jack head to contact differential and secure in place. **When securing crossmember to jack, be sure not to secure stabilizer bar.**

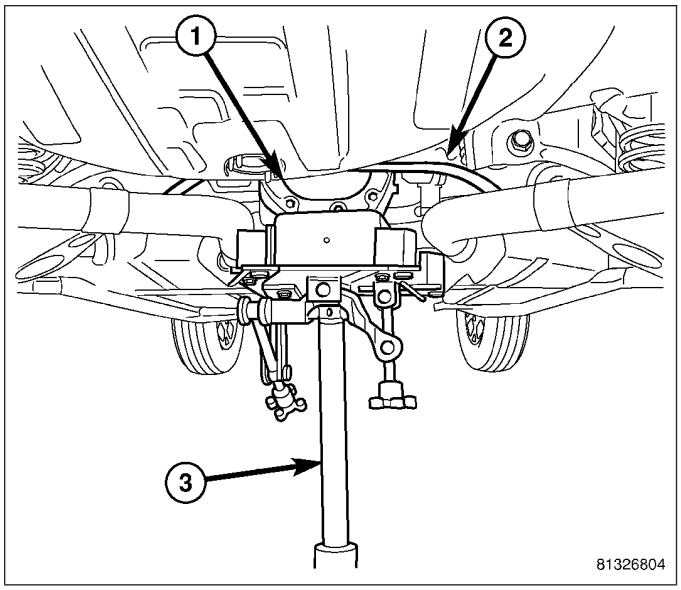

WARNING: Before opening fuel system, review all Warnings and Cautions.

24. Remove fuel filler tube. (Refer to 14 - FUEL SYSTEM/FUEL DELIVERY/FUEL TANK FILLER TUBE - REMOVAL)

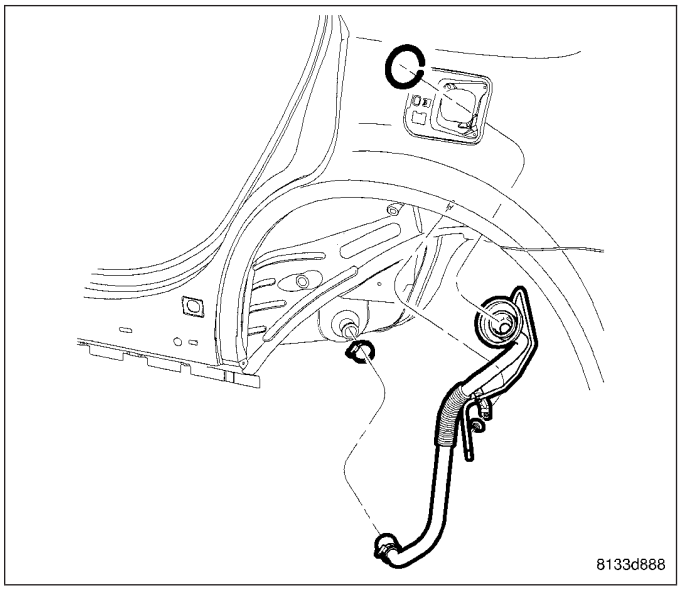

NOTE: If equipped with AWD, when removing crossmember mounting bolts in following step, be sure to not to misplace spacers (1) between crossmember mounts (2) and body.

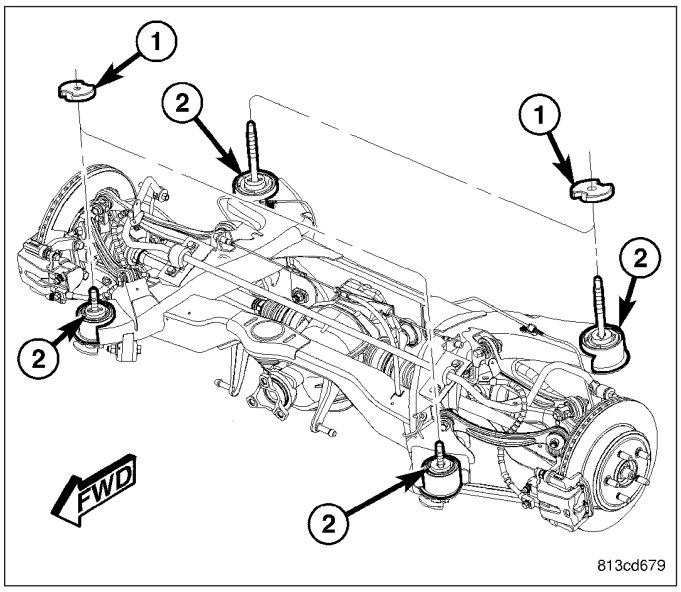

25. Remove both front (3) and both rear (2) mounting bolts fastening crossmember (1) in place.

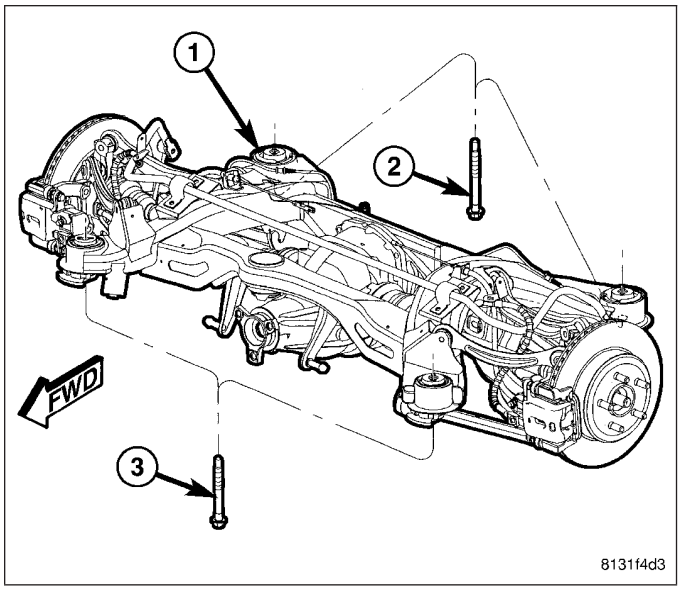

26. **Slowly** lower crossmember using jack. **Do not lower jack at a fast rate.** Lower just enough to allow propeller shaft removal from rear axle differential. **Do not lower jack any further than necessary.** Slide propeller shaft out of rear axle differential and allow bungee cord previously installed to support.
27. Lower crossmember until crossmember is at a comfortable working level to access bushings. Support rear suspension assembly using jack stands to help stabilize assembly during bushing service.
28. Remove coil springs (2) with isolators (1 and 5) from spring links (4).

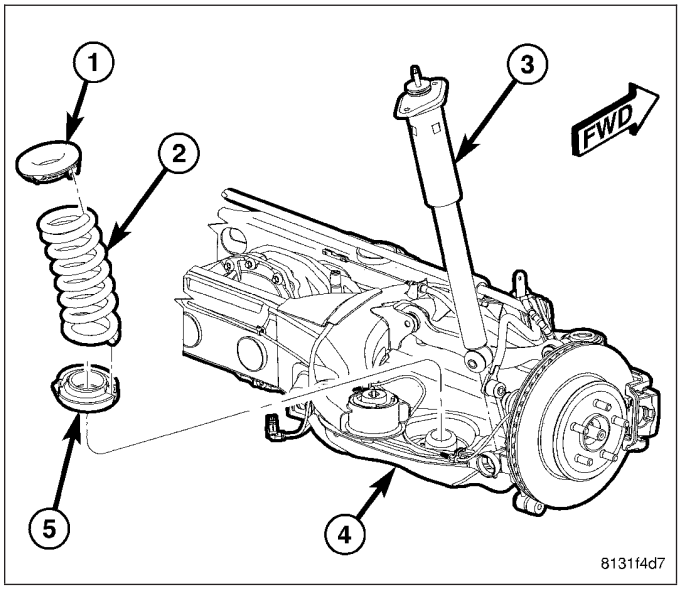

29. As an installation reference, carefully mark location of bushing requiring removal on crossmember (around bushing can flange) using a marker or crayon. **Do not use a scratch awl to mark location.**

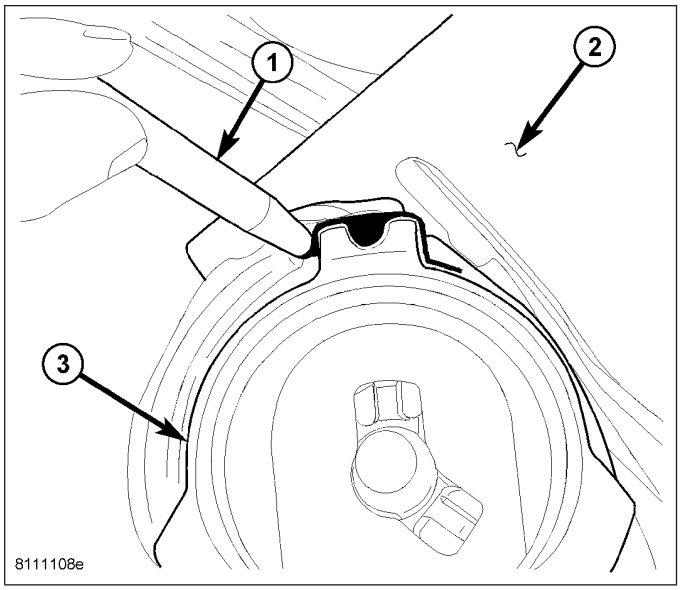

30. Remove nut and bolt (1) fastening compression link (3) to crossmember.

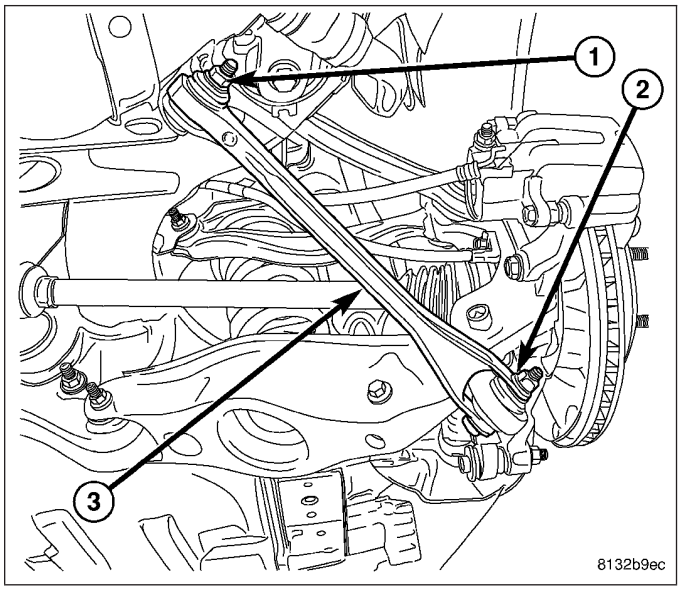

31. Remove travel limiter (2) from bushing inner metal sleeve (1). To do so, use an appropriate grinding tool to remove inner metal sleeve material until limiter can be safely removed.

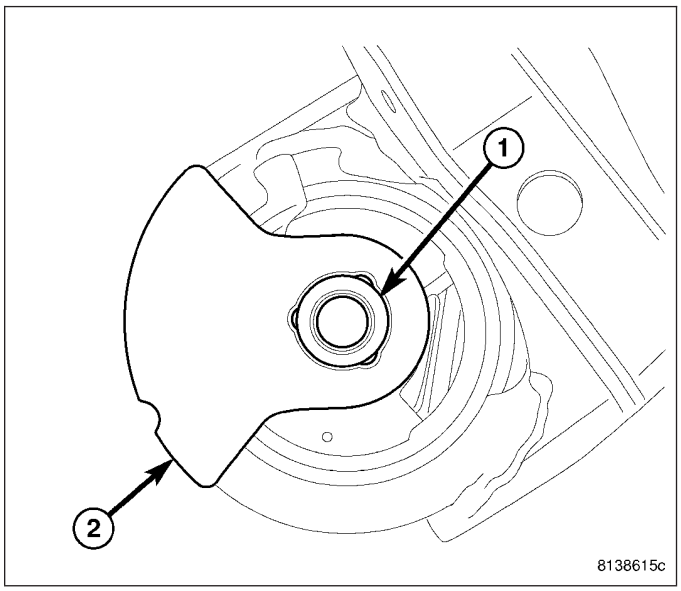

32. Slide Support (2), Special Tool 9031-9, into end of crossmember (3) surrounding bushing bore as shown.
33. Snug set-screws (1) securing Support (2) to crossmember.

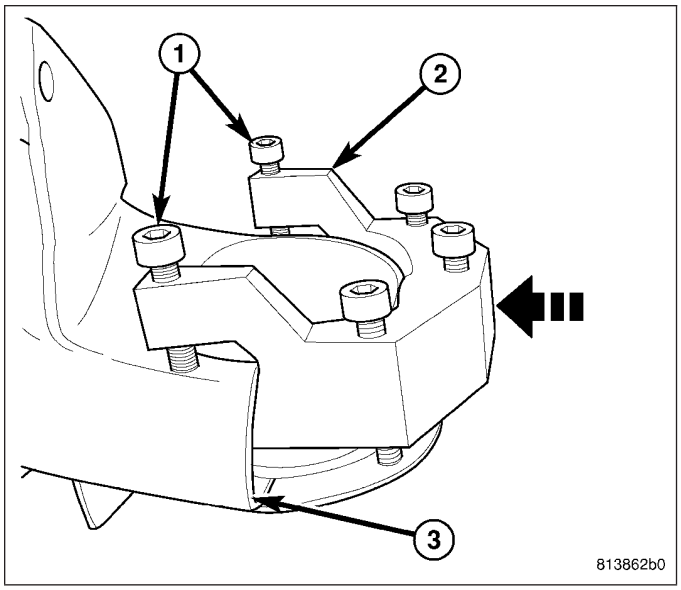

34. Insert Brace (1), Special Tool 9031-10, between Support 9031-9 (3) and bushing bore flange (2) matching step in Brace to bore flange.

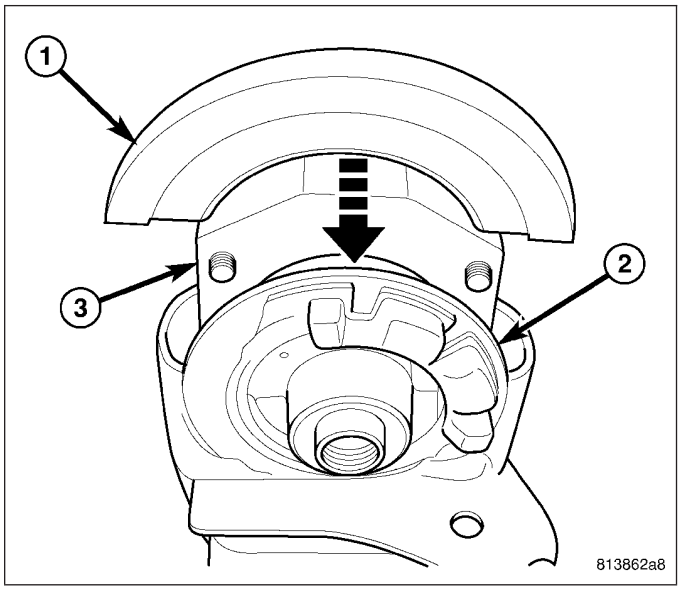

35. Snug set-screws (2) against Brace 9031-10. **Do not overtighten set-screws as they will distort and bend bushing bore flange.**

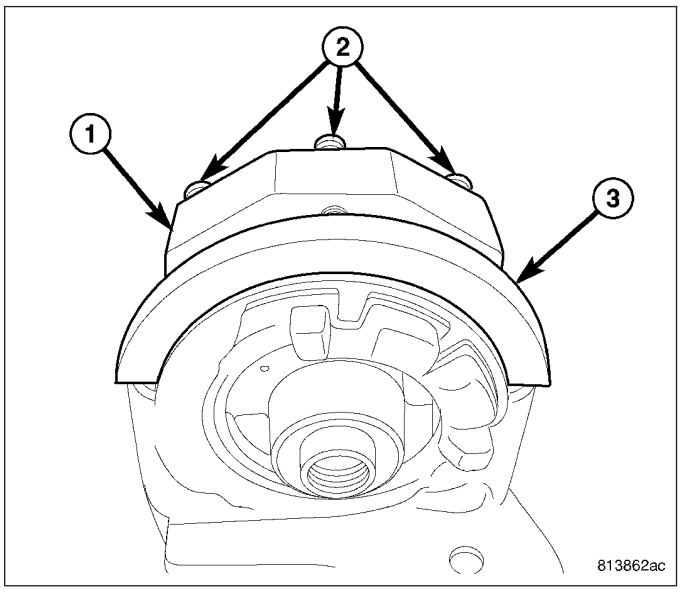

NOTE: Prior to using Press (1), Special Tool C-4212F, lubricate screw-drive threads to provide ease of use and promote tool longevity.

36. Assemble tools (See following list) over bushing as shown. Ensure Remover lies between ridges (3) on bushing to properly contact bushing can.
    - (1) Press C-4212F
    - (2) Remover 9031-5A
    - (4) Receiver 9031-8A
37. Tighten Press (1) screw-drive, pressing bushing out of crossmember.
38. Remove all tools.

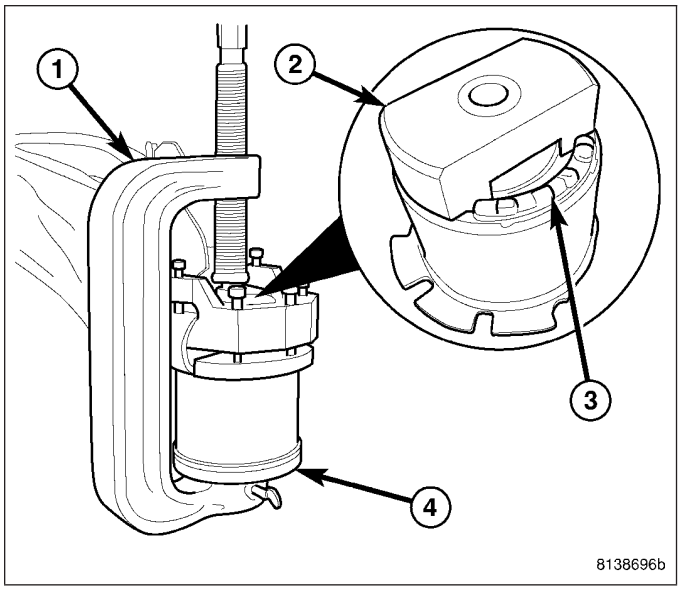

INSTALLATION

CAUTION: Prior to bushing installation, inspect the bushing to make sure it is the correct side bushing for the job. Left side bushings have the travel limiter (1) tipped to the right in relationship to the bushing (4) can flange as shown. Right side bushings have the travel limiter (2) tipped to the left in relationship to the bushing (3) can flange as shown. Once installed, the travel limiters with face slightly outward from straight-ahead position.

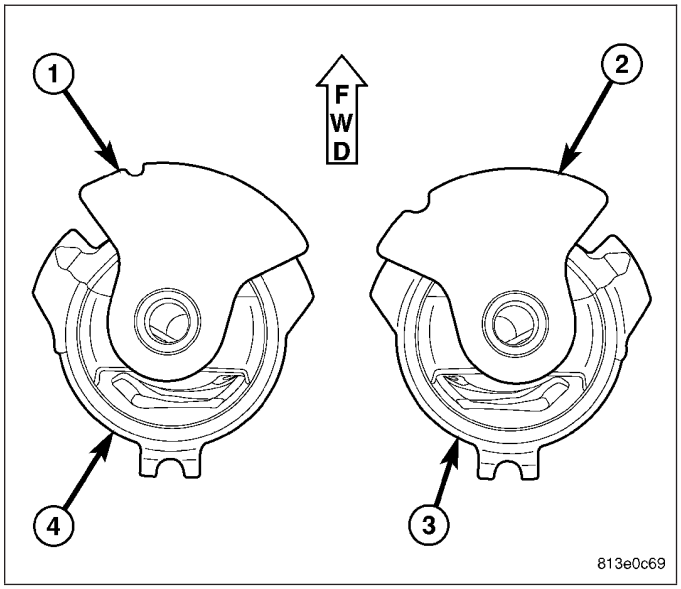

CAUTION: It is very important that bushing be installed in same position as original to maintain vehicle ride quality and bushing longevity. That is why bushing, once installed, needs to closely match reference marks applied upon removal of original bushing.

1. Position bushing on crossmember bushing bore aligning bushing can flange with reference marks applied during removal.

2. Assemble tools (See following list) over bushing and crossmember as shown.
   - (2) Receiver 9031-6
   - (3) Press C-4212F
   - (4) Installer 9031-7A

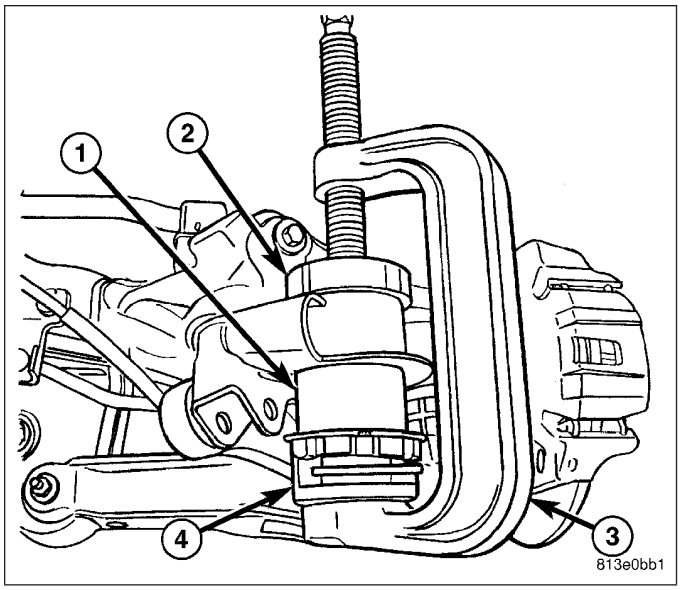

NOTE: Ensure Installer (3), Special Tool 9031-7, is positioned that it will clear compression link bracket (1) while bushing is being installed.

3. Tighten Press (2) screw-drive, pressing bushing into crossmember. Install bushing until bushing can flange contacts surface of crossmember.
4. Remove tools.
5. Verify bushing closely lines up with reference marks applied during removal.

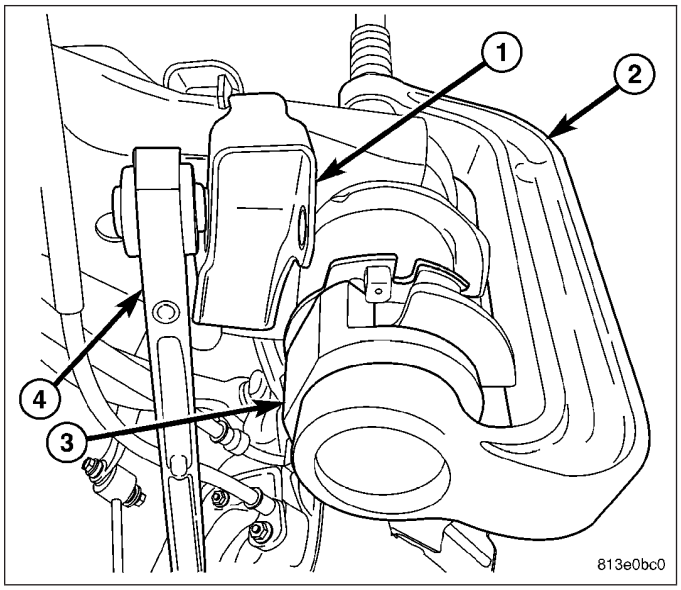

6. Install bolt and nut as shown (1) fastening compression link (3) to crossmember. **Do not tighten bolt at this time.**

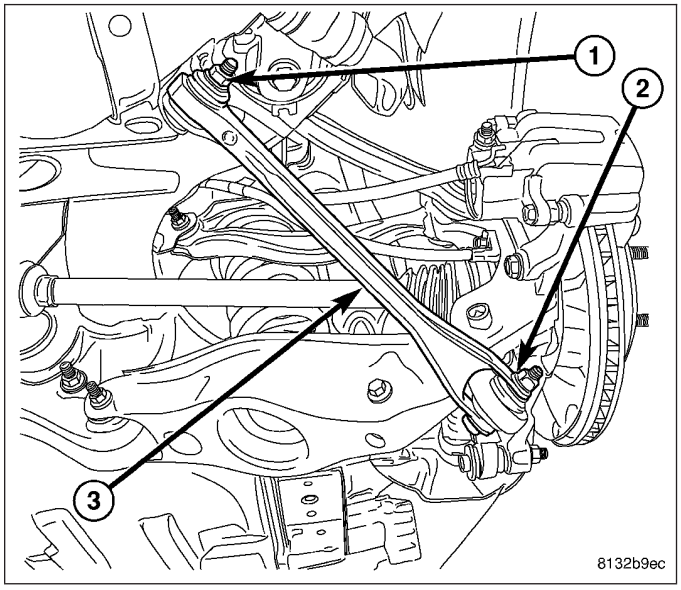

NOTE: Do not reinstall coil springs on spring links at this time. Install as directed in later steps.

7. Raise crossmember to body mounting points. As crossmember is raised, slide propeller shaft (1) onto rear axle differential flange (2) and align shock absorbers with pockets in spring links.

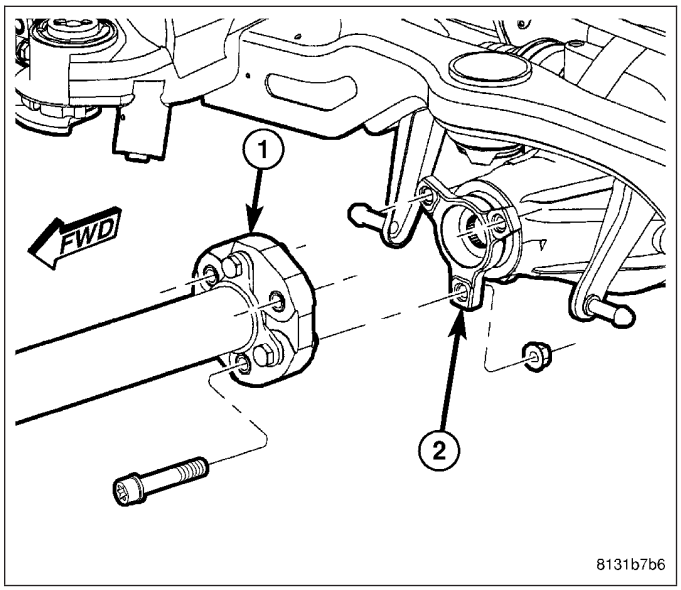

NOTE: There are four crossmember mounting bolts. Rear mounting bolts (2) are longer than front mounting bolts (3). Do not interchange mounting bolts.

8. Continue to raise crossmember (1) with jack until crossmember mounting bolts (2 and 3) can be installed. Install left side crossmember mounting bolts, but not the right side bolts. It is not necessary to tighten bolts at this point.

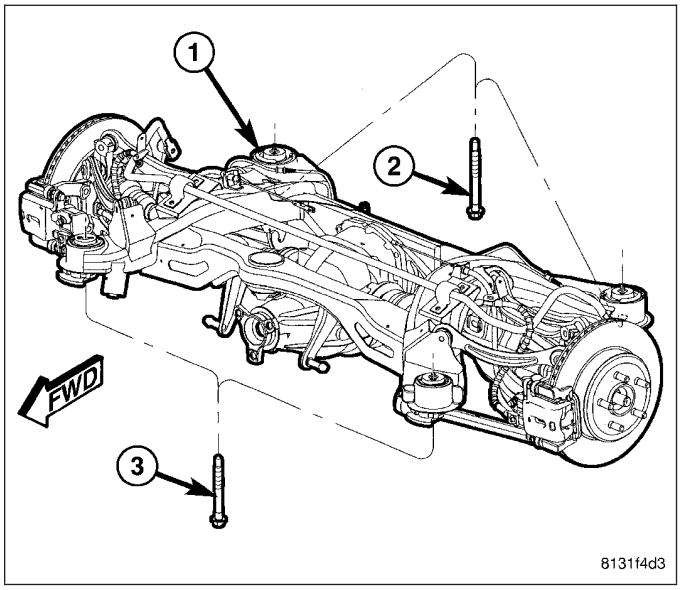

CAUTION: To avoid damaging other components of vehicle, do not lower crossmember any further than necessary to install coil spring (2).

9. **Slowly** lower jack allowing right side of crossmember to drop. **Do not lower jack at a fast rate.** Lower jack just enough to allow spring (2) Installation. **Do not lower jack any further than necessary.**

NOTE: Before installing coil spring, make sure isolators (1 and 5) are completely installed on ends of spring.

10. Install coil spring (2) with isolators into spring pocket of spring link fitting the lower isolator to the shape of the pocket, then align top of spring with body mount.

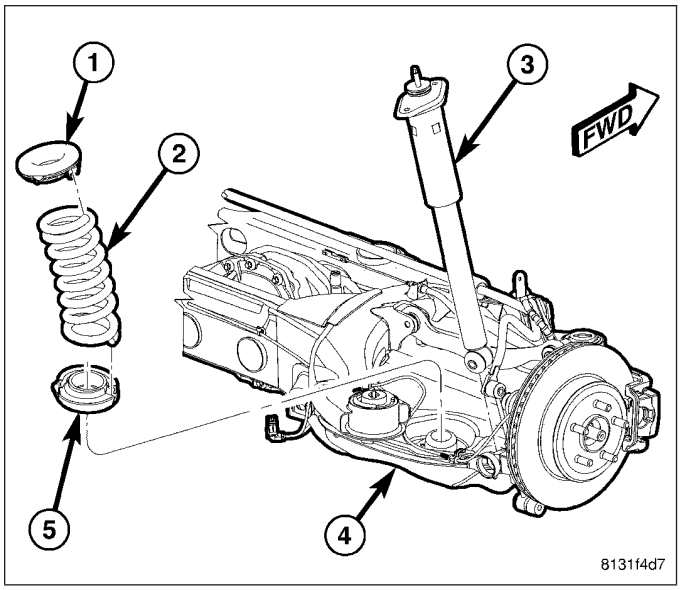

11. Carefully raise jack, guiding coil spring and lower end of shock absorber (1) into mounted positions. Once shock absorber (1) lower mounting hole lines up with hole in spring link (3), stop jacking.
12. Install lower shock mounting bolt (2) and nut (4). **Do not tighten at this time.**

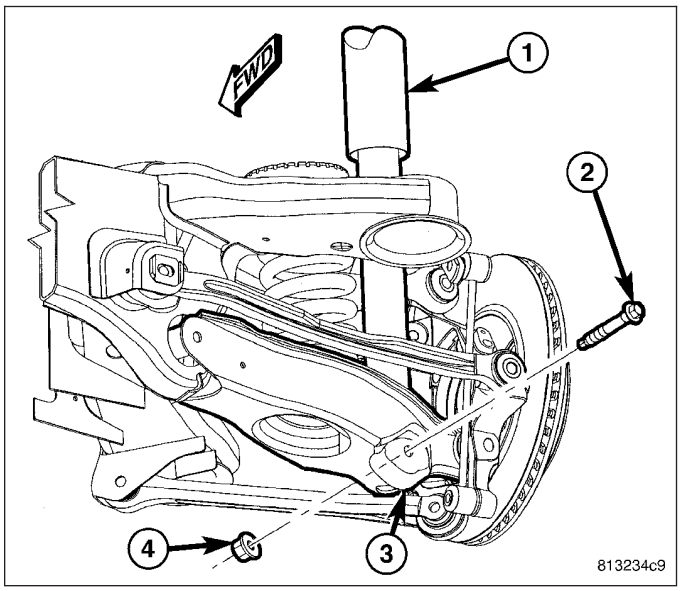

13. If vehicle is equipped with AWD, insert spacers (1) on top of right crossmember mount bushings (2) before crossmember is raised into place.

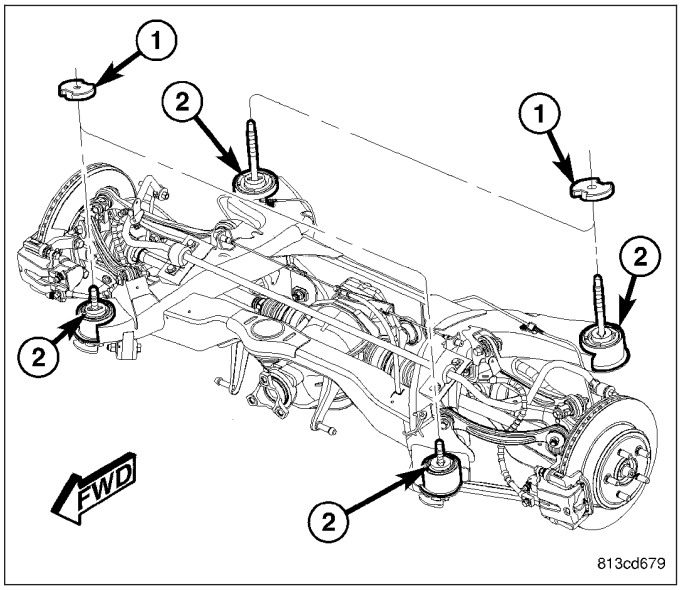

NOTE: There are four crossmember mounting bolts. Rear mounting bolts (2) are longer than front mounting bolts (3). Do not interchange mounting bolts.

14. Raise right side of crossmember (1) into mounted position. Install right side crossmember mounting bolts (2 and 3). **Snug, but do not fully tighten bolts at this time.**
15. Remove both front and rear crossmember mounting bolts (2 and 3) on **left** side of vehicle.

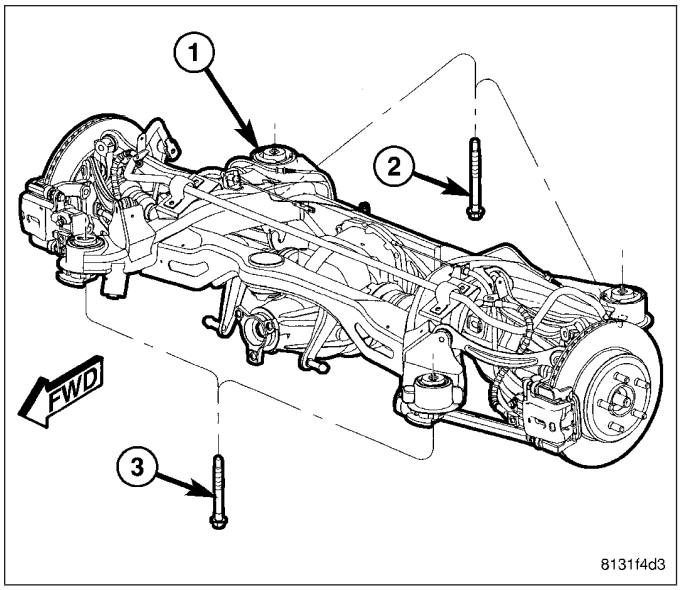

CAUTION: To avoid damaging other components of vehicle, do not lower crossmember any further than necessary to install coil spring (2).

16. **Slowly** lower jack allowing left side of crossmember to drop. **Do not lower jack at a fast rate.** Lower jack just enough to allow spring (2) Installation. **Do not lower jack any further than necessary.**

NOTE: Before installing coil spring, make sure isolators (1 and 5) are completely installed on ends of spring.

17. Install coil spring (2) with isolators into spring pocket of spring link fitting the lower isolator to the shape of the pocket, then align top of spring with body mount.

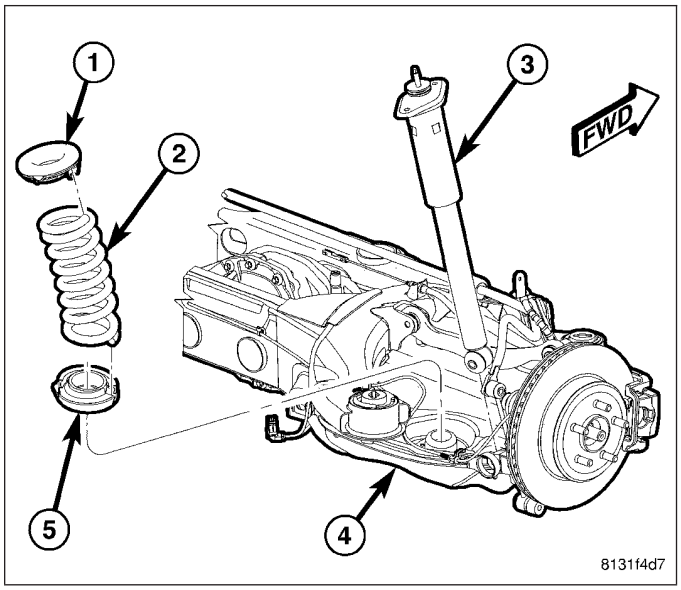

18. Carefully raise jack, guiding coil spring and lower end of shock absorber (1) into mounted positions. Once shock absorber (1) lower mounting hole lines up with hole in spring link (3), stop jacking.
19. Install lower shock mounting bolt (2) and nut (4). **Do not tighten at this time.**

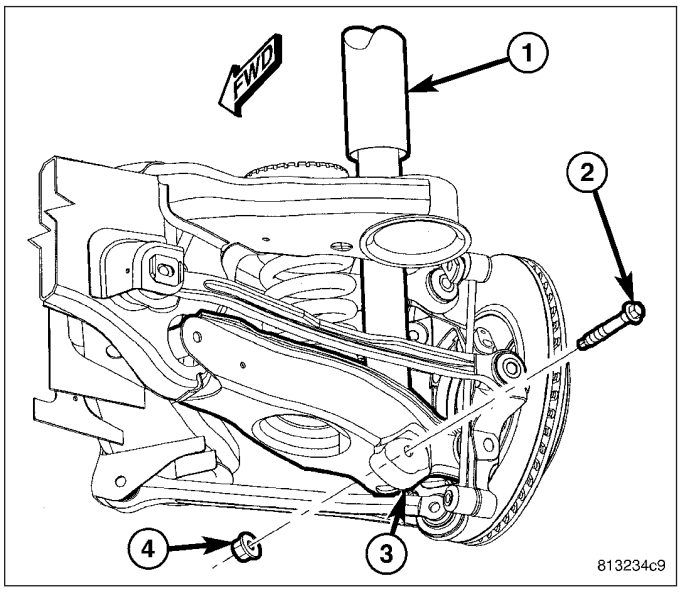

20. If vehicle is equipped with AWD, insert spacers (1) on top of left crossmember mount bushings (2) before crossmember is raised into place.

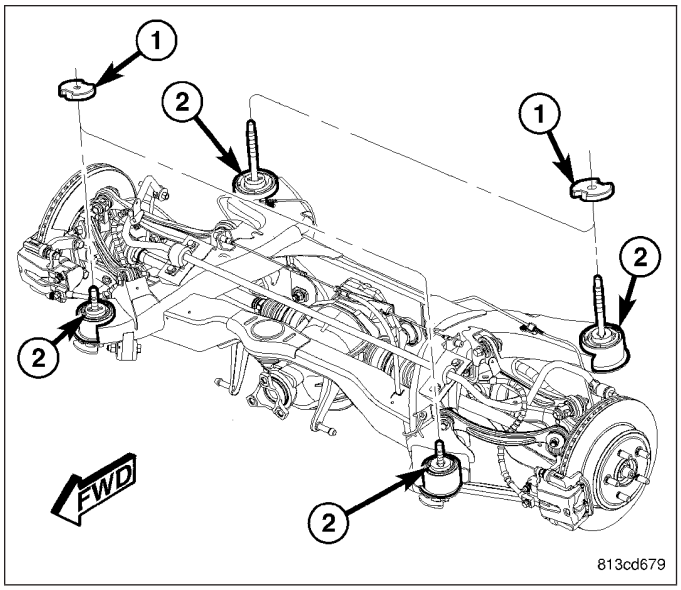

NOTE: There are four crossmember mounting bolts. Rear mounting bolts (2) are longer than front mounting bolts (3). Do not interchange mounting bolts.

21. Raise left side of crossmember (1) into mounted position. Install left side crossmember mounting bolts (2 and 3). **Snug, but do not fully tighten bolts at this time.**

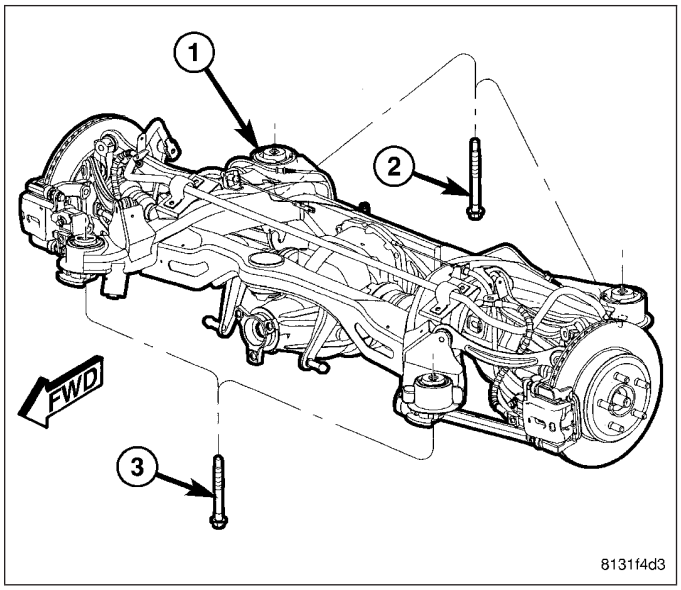

22. Shift crossmember as necessary to line up mounts (3) with location marks drawn on body (1) before removal.

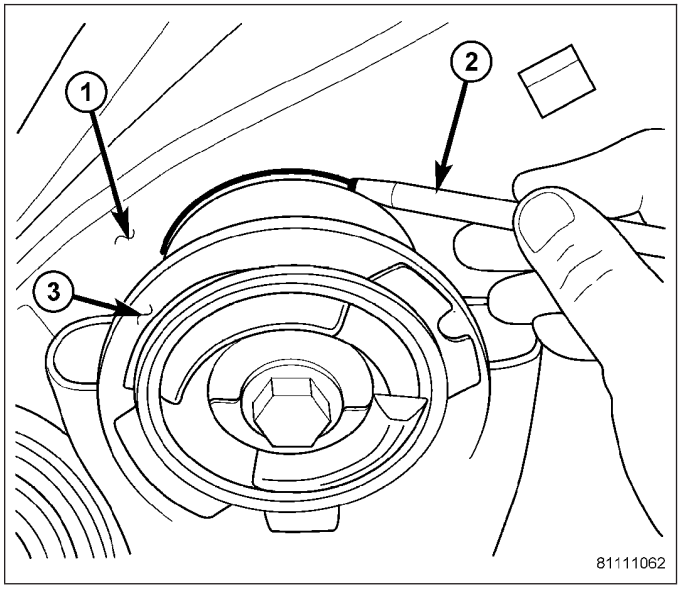

23. Once mounts are lined up with location marks, on both sides of vehicle, measure distance (1) between the tension link (2) and weld flange (3) on body directly in front of it, just outboard of the front mount bushing (4). **This distance must be at least 12 mm to allow proper clearance for suspension movement.** If distance is less than 12 mm on either side of vehicle, shift that side of rear crossmember directly rearward until distance is 12 mm or greater. To do so, loosen 3 mounting bolts slightly, leaving one on opposite side of shift snugged to pivot off of. Shift crossmember rearward and snug loosened bolts. Remeasure opposite side to be sure it still maintains minimum 12 mm distance.

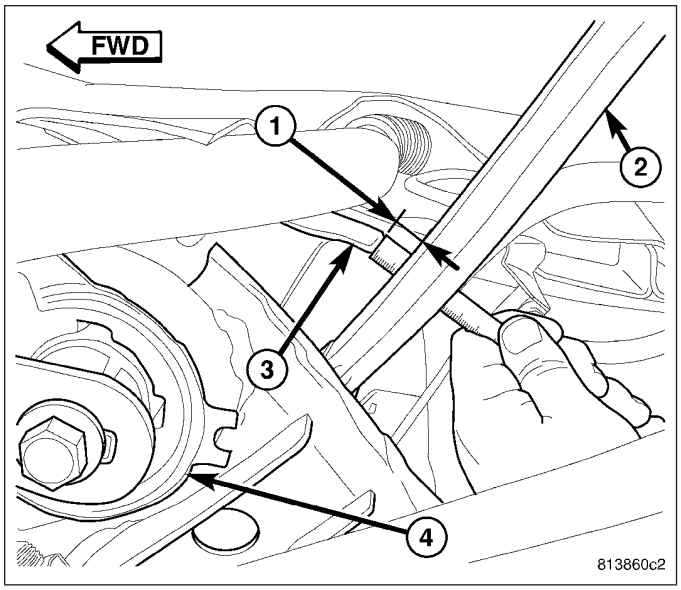

24. Tighten all four crossmember mounting bolts (2 and 3) to 180 N·m (133 ft. lbs.).

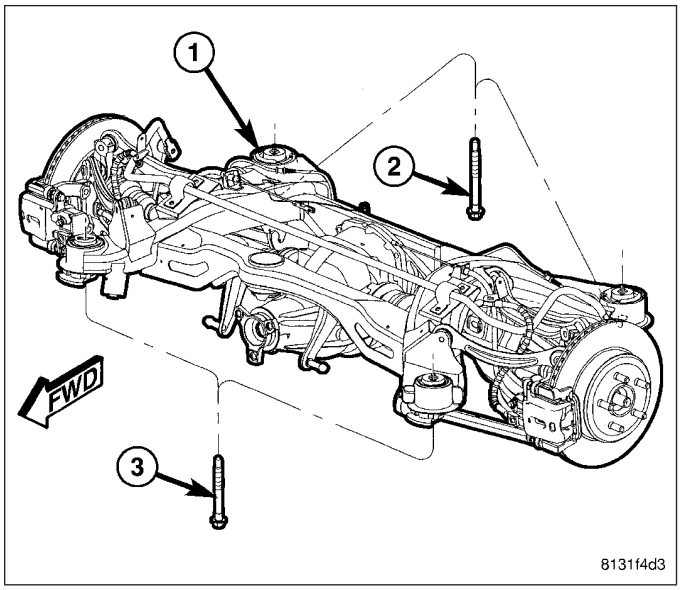

25. Remove jack (3) from under rear axle differential.

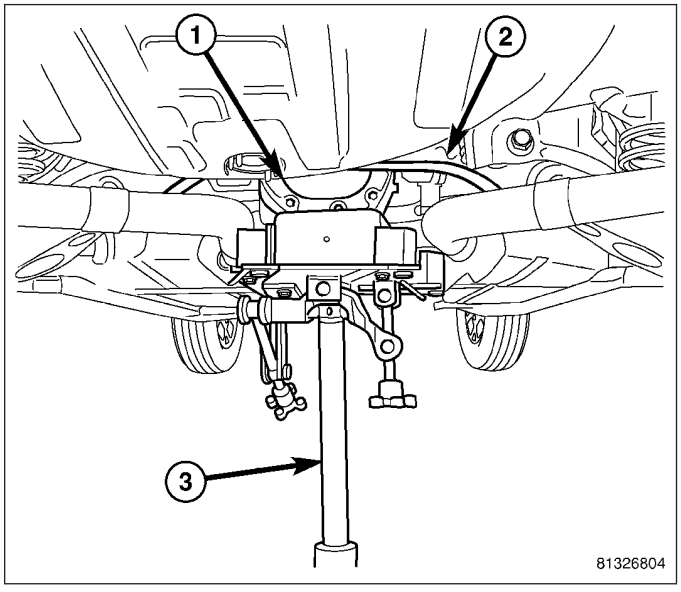

26. Remove bungee cord (1) supporting propeller shaft (2).

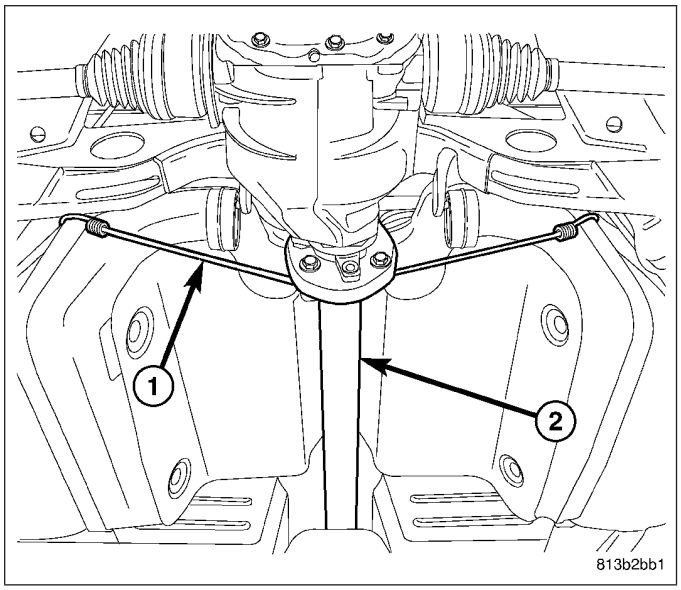

27. Align propeller shaft index marks (3) placed upon removal. Install propeller shaft rear coupler-to-axle flange bolts and nuts by hand. Tighten propeller shaft rear coupler-to-axle flange bolts to 81 N·m (60 ft. lbs.).

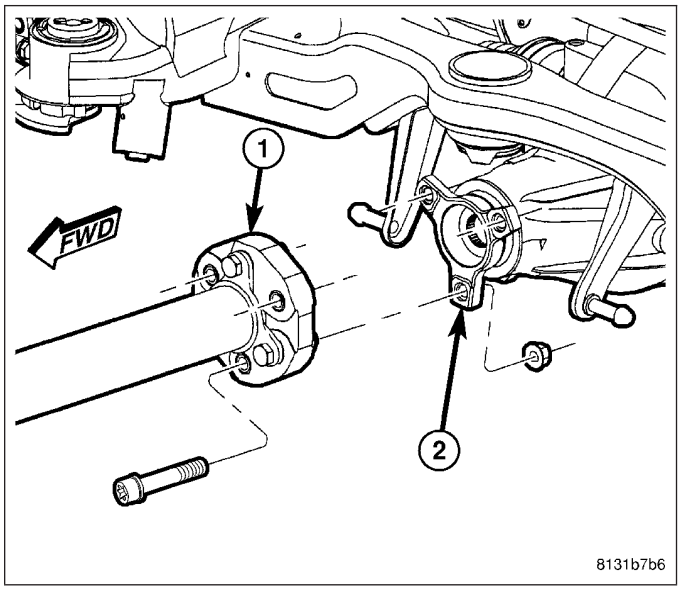

28. Install fuel filler tube. (Refer to 14 - FUEL SYSTEM/FUEL DELIVERY/FUEL TANK FILLER TUBE - INSTALLATION)

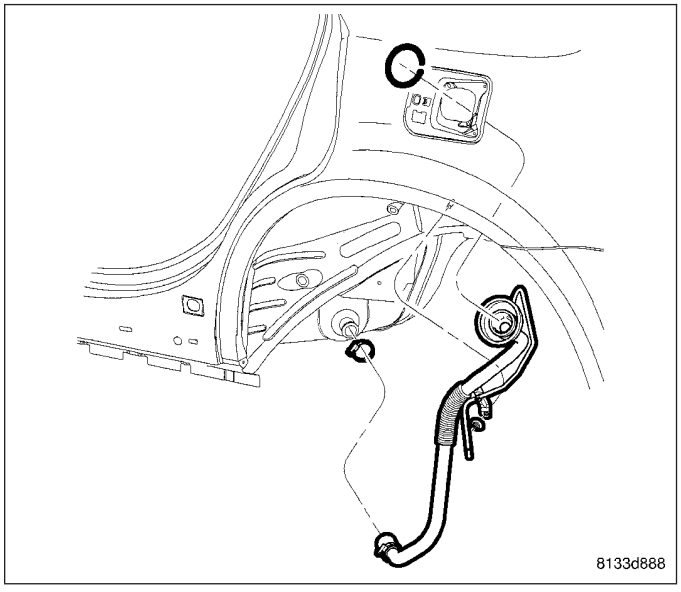

29. Clip left rear wheel speed sensor cable (3) to routing clip (1) near body connector.

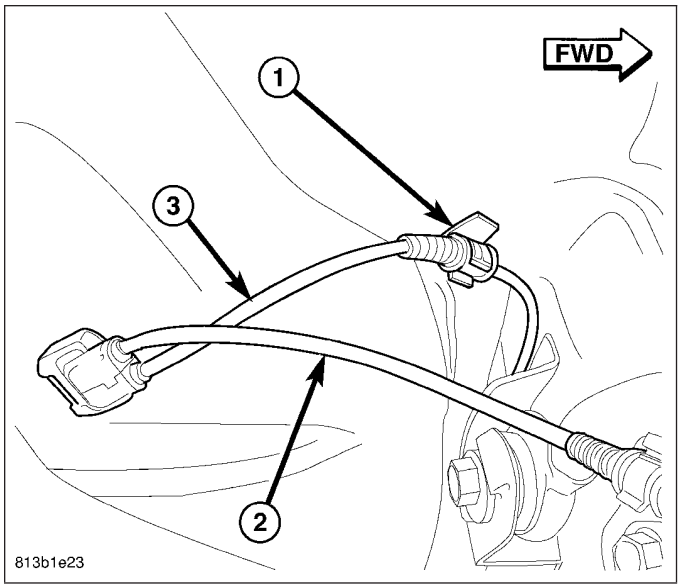

30. Match left rear wheel speed sensor connector (4) to right sensor connector (3) to make one connector.
31. Insert speed sensor connectors (3 and 4) into body wiring harness connector (1) located in luggage compartment floor pan (2). When installing connector, make sure retaining clip on body connector is properly in place and sensor connector cannot be pulled out.

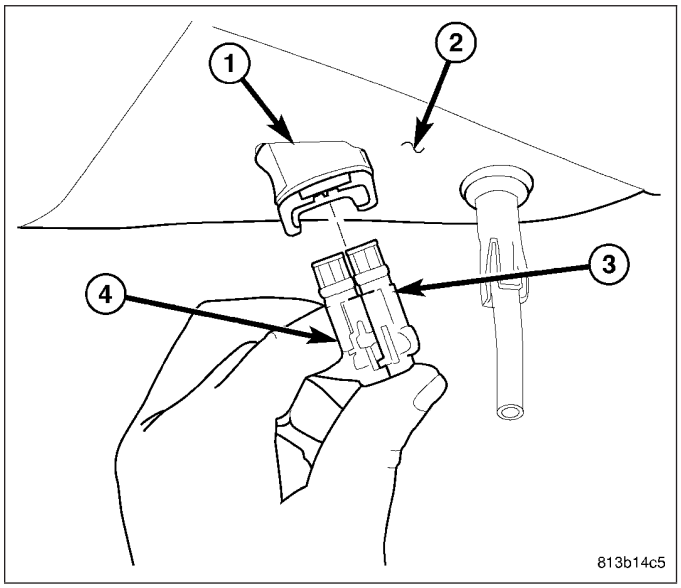

32. If equipped with standard or premium disc brakes, on each rear disc brake:
    a. Push caliper guide pins into caliper adapter to clear caliper mounting bosses when installing.
    b. Guide caliper and brake hose down through rear suspension, then slide caliper over brake pads and onto caliper adapter (3).
    c.

CAUTION: Extreme caution should be taken not to cross-thread caliper guide pin bolts (2) when they are installed.Align caliper mounting holes with guide pins, then install guide pin bolts (2). While holding guide pins from turning, tighten bolts to 31 N·m (23 ft. lbs.) torque.

    d. Make sure brake hose is properly routed and will not come in contact with suspension components.

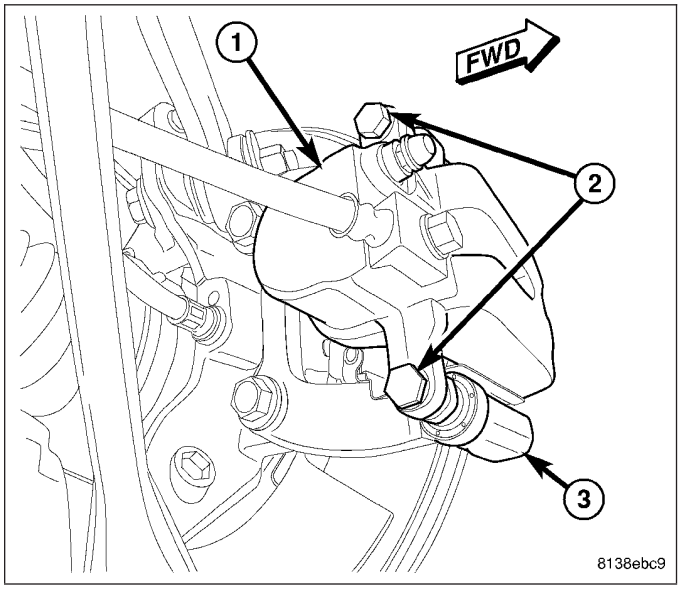

33. If equipped with SRT8 disc brakes, at each rear disc brake, support spring link using a transmission jack or other appropriate jack as indicated in removal procedure. (Refer to 13 - FRAME & BUMPERS/FRAME/BUSHING - REMOVAL)
34. If equipped with SRT8 disc brakes, on each rear disc brake, slide caliper with pads (2) over brake rotor and align with knuckle.
35. If equipped with SRT8 disc brakes, on each rear disc brake, install caliper mounting bolts (1). Tighten bolts to 130 N·m (96 ft. lbs.) torque.
36. If equipped with SRT8 disc brakes, on each rear disc brake, remove jack from under spring link.

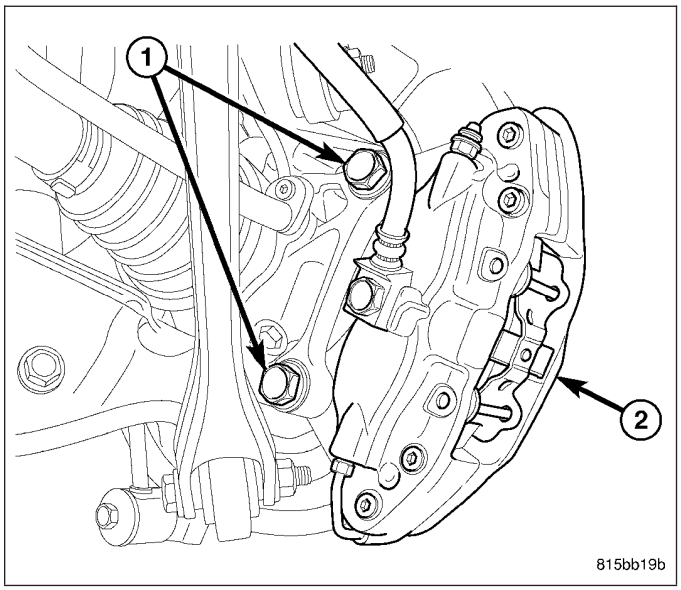

37. Route parking brake cable above rear crossmember, then slide cable (1, 3) through equalizer (2) above rear axle differential (once installed).

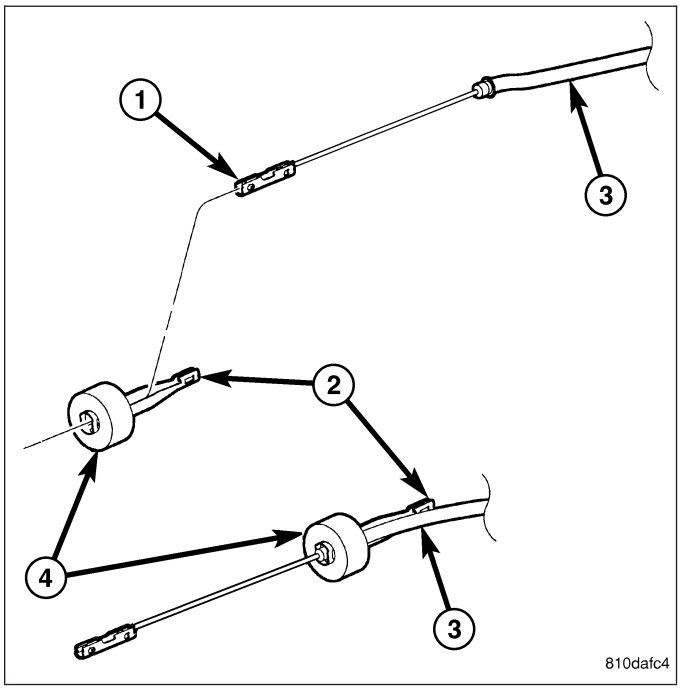

NOTE: Due to short travel and low spring tension, it is not necessary to lock-out parking brake lever to service parking brake components.

38. Connect front parking brake cable (5) at connector (3) to right rear parking brake cable (4).

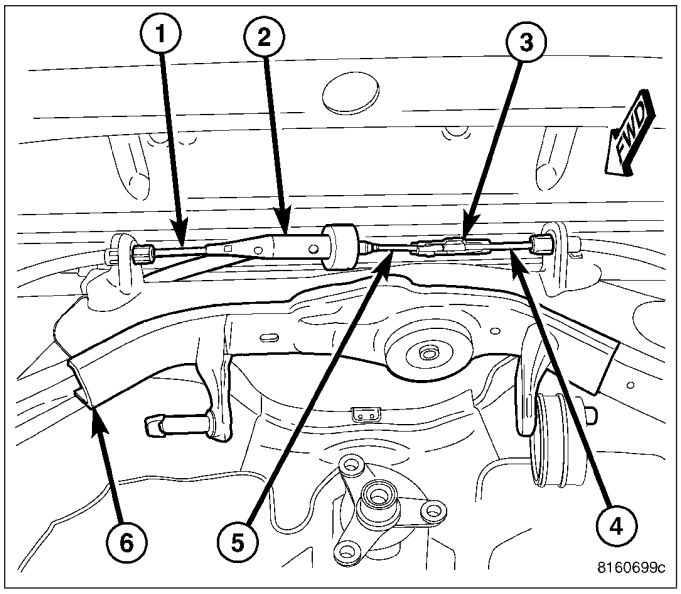

39. Insert front parking brake cable routing bracket locating pin into front flange of crossmember (3), then install screw (2) fastening cable (1) routing bracket to rear crossmember.

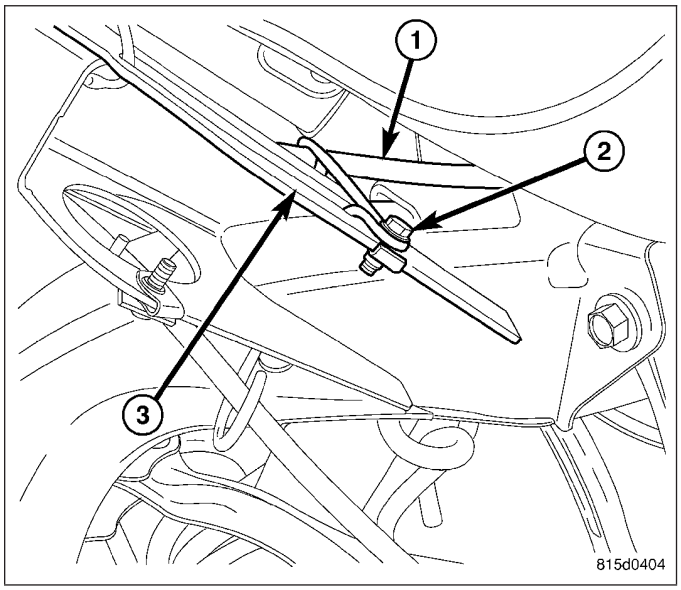

40. Install rear exhaust system (2) (dual-outlet exhaust shown in figure). (Refer to 11 - EXHAUST SYSTEM - INSTALLATION)

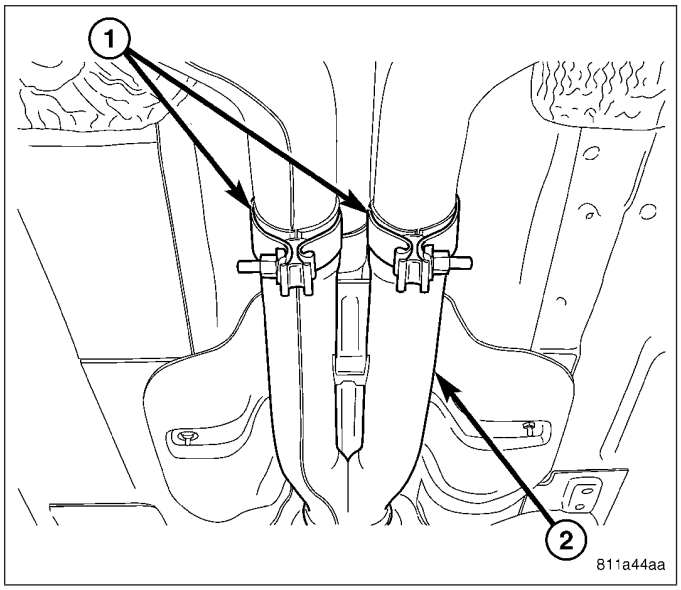

41. Install tire and wheel assemblies (1). Tighten wheel mounting nuts (3) to 150 N·m (110 ft. lbs.). (Refer to 22 - TIRES/WHEELS - INSTALLATION)
42. Lower vehicle until rear wheels are just above floor level.
43. Apply parking brake lever. Release lever, then reapply.
44. Check to make sure rear wheels will not rotate with lever applied.
45. Lower vehicle.

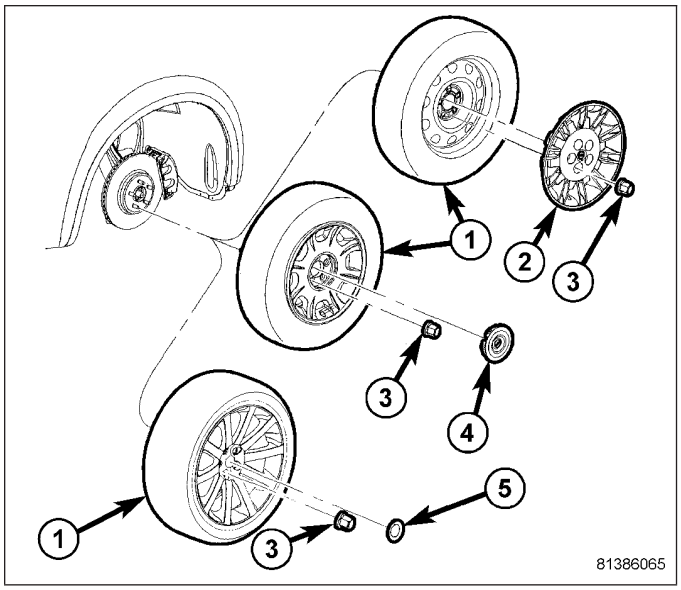

46. Connect battery negative cable (2) to battery post. It is important that this is performed properly. (Refer to 8 - ELECTRICAL/BATTERY SYSTEM - STANDARD PROCEDURE)
47. Pump brake pedal several times to ensure vehicle has a firm brake pedal before moving vehicle.
48. Position vehicle on alignment rack/drive-on lift. Raise vehicle as necessary to access mounting bolts.

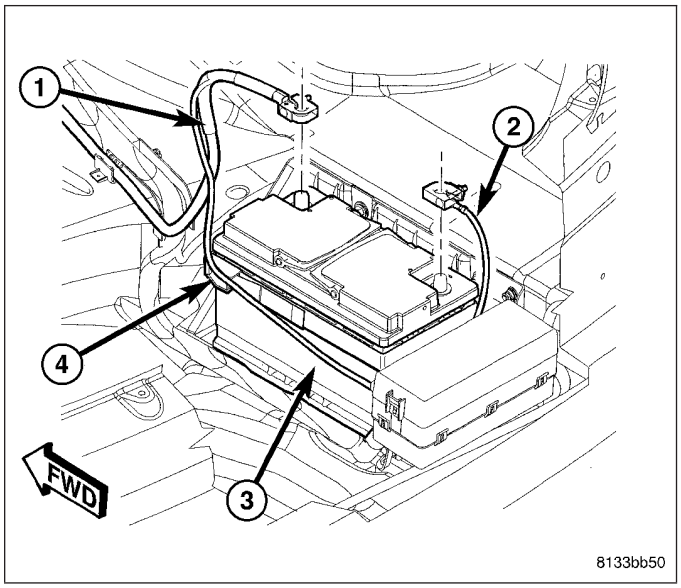

49. Tighten shock absorber lower mounting bolt nuts (4) to 72 N·m (53 ft. lbs.).

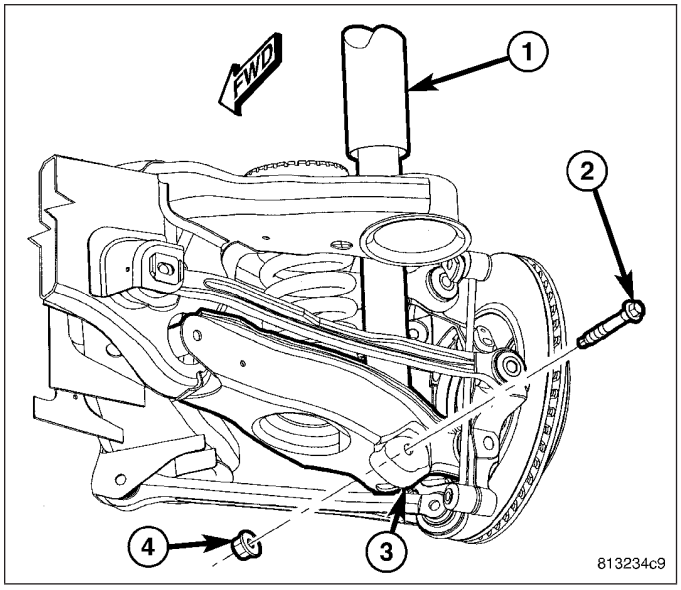

50. Tighten compression link bolt and nut (1) at crossmember to 85 N·m (63 ft. lbs.).
51. Perform wheel alignment, paying special attention to thrust angle. If rear crossmember needs to be shifted to align thrust angle, try to avoid compromising tension link clearance (Refer to Step 23). (Refer to 2 - SUSPENSION/WHEEL ALIGNMENT - STANDARD PROCEDURE)

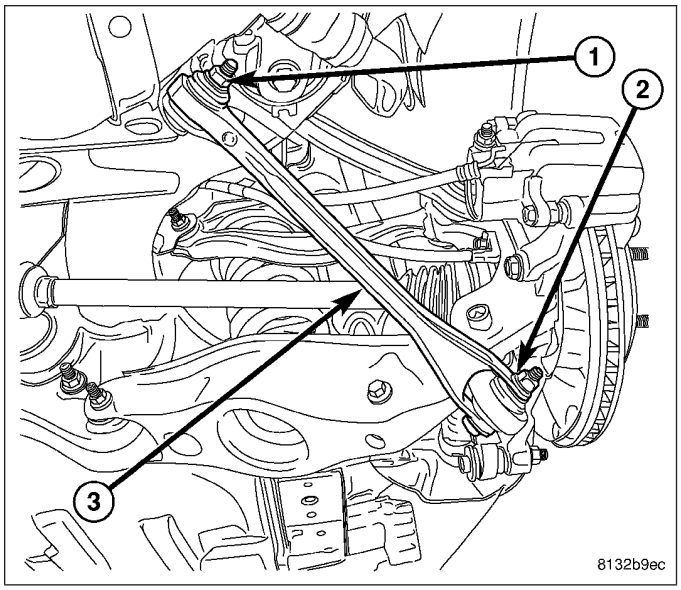

BUSHING-REAR CROSSMEMBER REAR MOUNT

REMOVAL

1. Disconnect and isolate battery negative cable (2) from battery post.
2. Raise and support vehicle. (Refer to LUBRICATION & MAINTENANCE/HOISTING - STANDARD PROCEDURE)

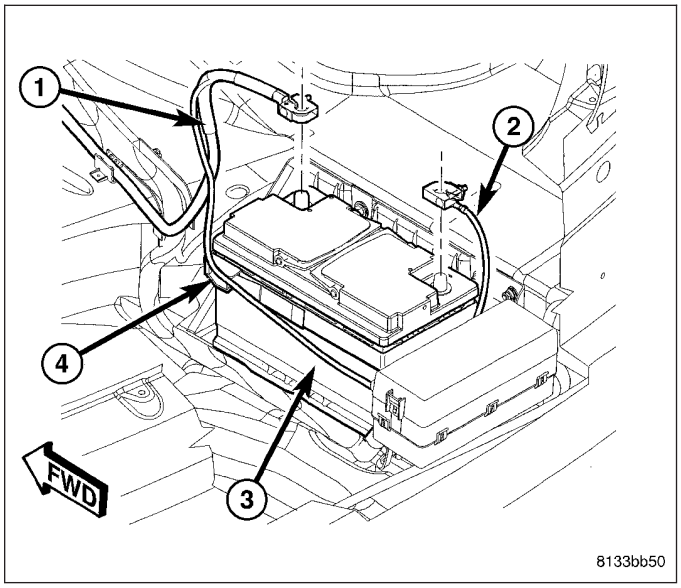

3. On each side of vehicle rear, remove wheel mounting nuts (3), then tire and wheel assembly (1).

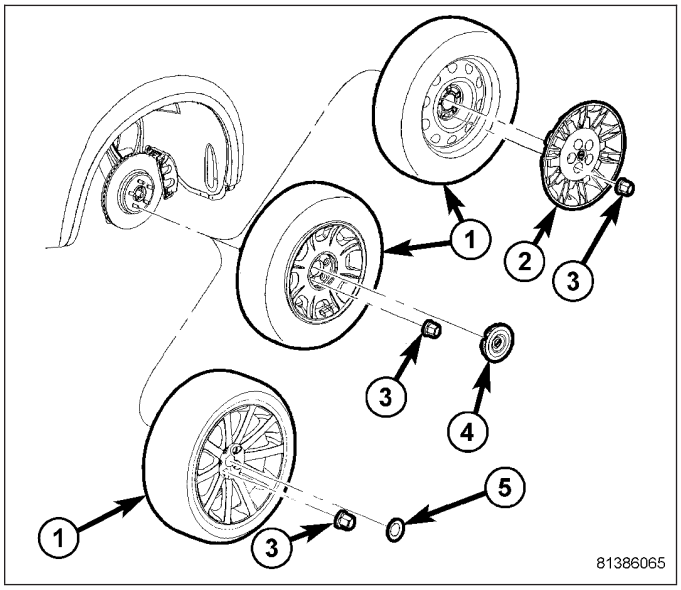

4. Remove rear exhaust system (2) (dual-outlet exhaust shown in figure). (Refer to 11 - EXHAUST SYSTEM - REMOVAL)

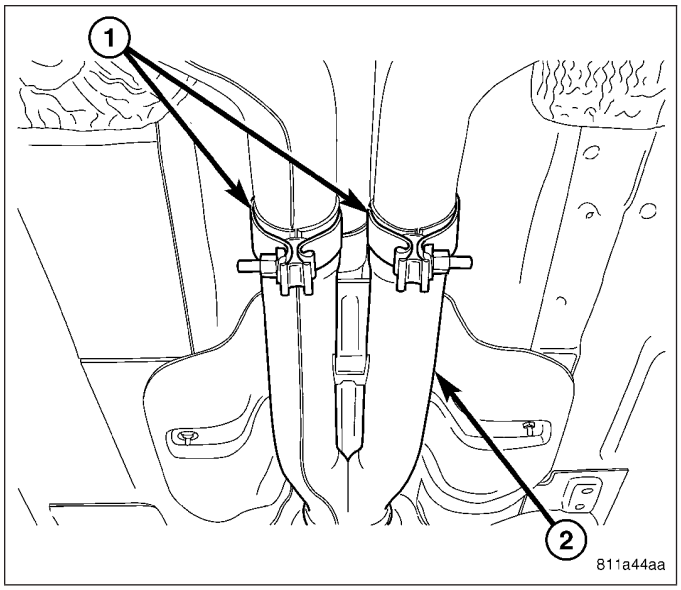

5. Apply alignment index marks (3) to the propeller shaft rubber coupler (1) and axle flange (2).

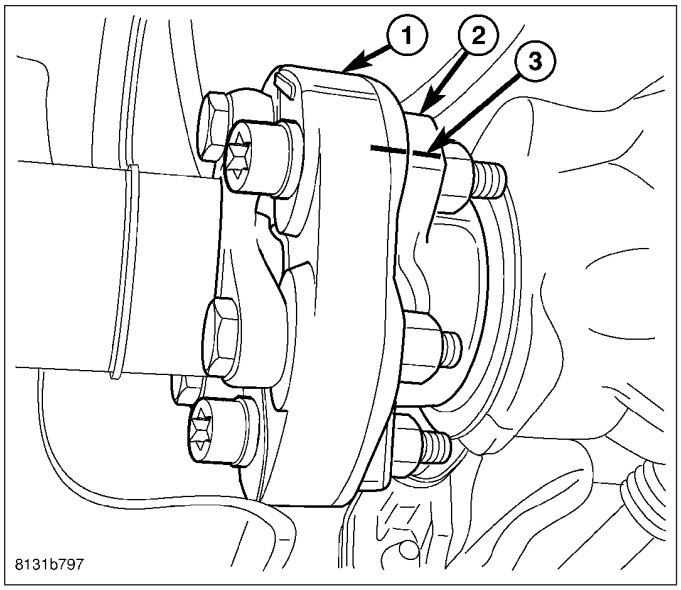

6. Remove three (four if equipped with 215MM axle) propeller shaft coupler-to-axle flange bolts and nuts.

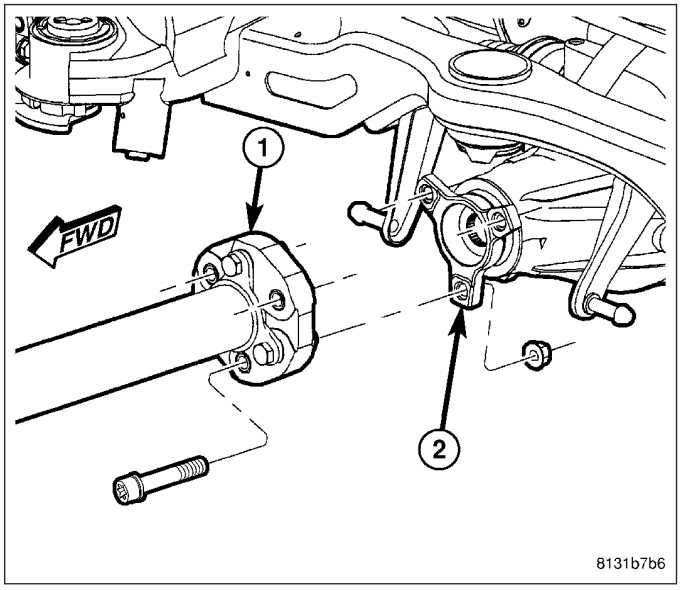

7. Support propeller shaft (2) using a bungee cord (1). Attach ends of cord to fuel tank straps as shown.

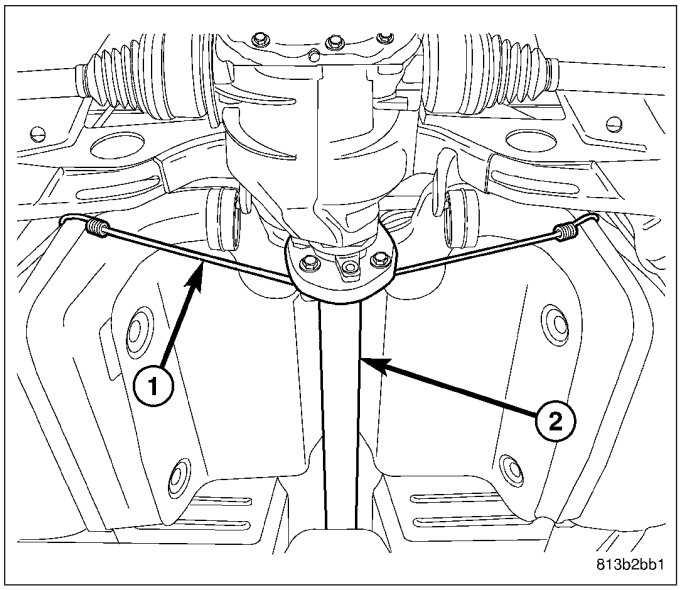

NOTE: Due to short travel and low spring tension, it is not necessary to lock-out parking brake lever to service parking brake components.

8. Disconnect front parking brake cable (5) at connector (3) to right rear parking brake cable (4) above axle differential.

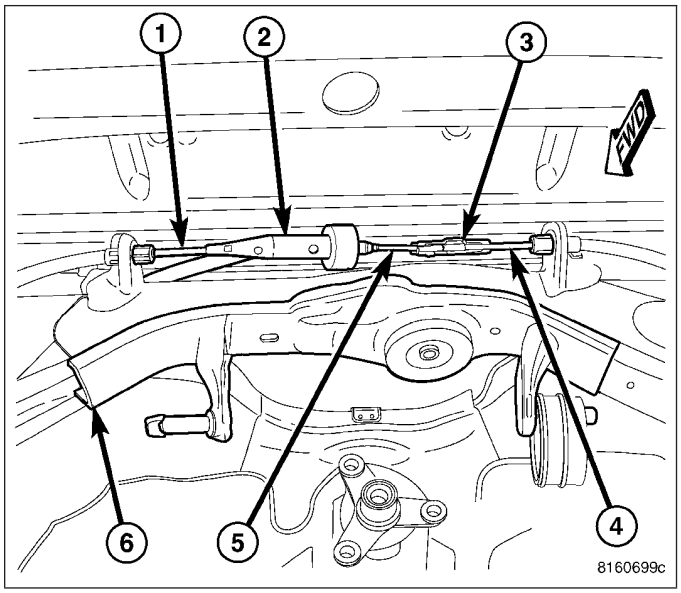

9. Remove front parking brake cable (3) from equalizer (2).

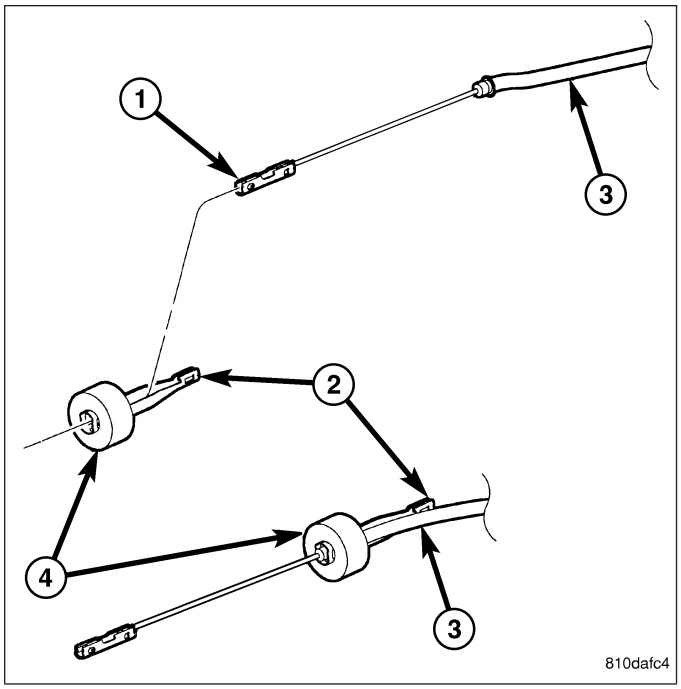

10. Remove screw (2) fastening front parking brake cable (1) routing bracket to rear crossmember front flange (3).

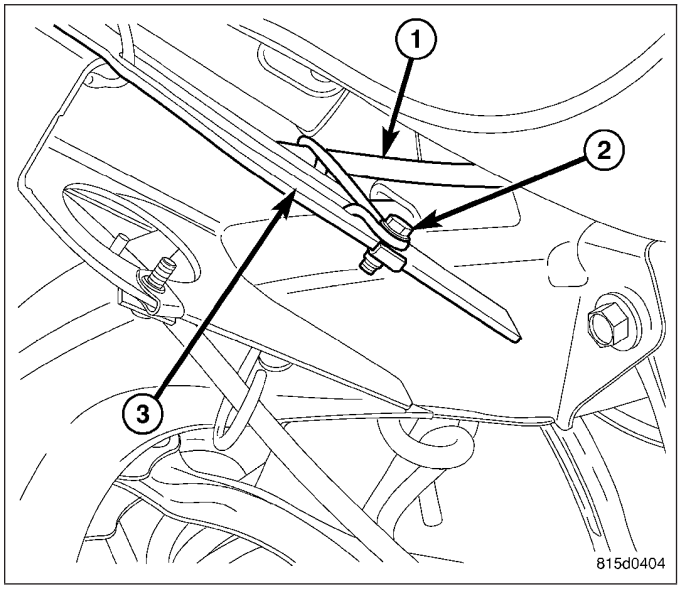

11. If equipped with standard or premium disc brakes, on each rear disc brake:
    a. While holding guide pins from turning, remove disc brake caliper guide pin bolts (2).
    b. Remove brake caliper (1) from brake adapter (3) and pads.
    c. Guide brake caliper up through suspension, following brake hose path. Support caliper above rear suspension using with bungee cord or wire to keep caliper from overextending brake hose when crossmember is lowered.

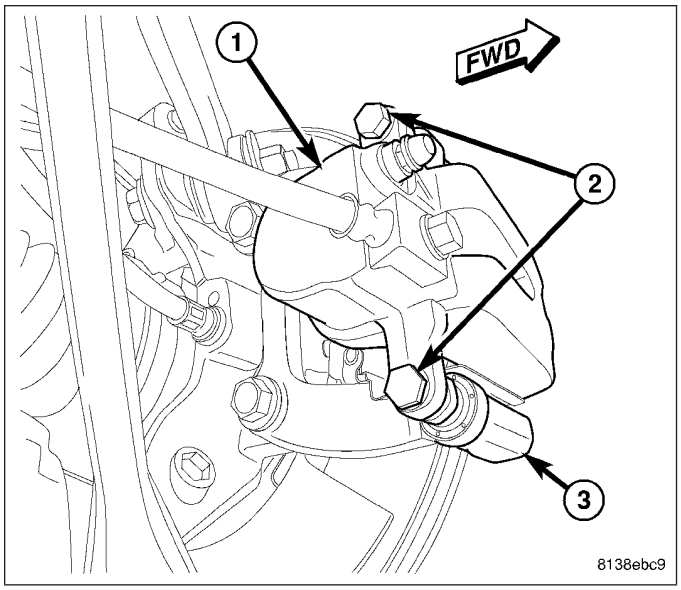

CAUTION: When pushing pistons back into caliper bores, use only a trim stick as shown or other suitable soft tool. Never use a screwdriver or other metal pry bar due to potential damage to braking surface of rotor, caliper, pistons or dust boots.

12. If equipped with SRT8 disc brakes, on each rear disc brake, place trim stick (4) between brake pad (2) and outer edge of rotor (3).
13. If equipped with SRT8 disc brakes, on each rear disc brake, using trim stick, slowly apply pressure against brake pad (2) until both pistons (on that side of caliper) are completely bottomed in bores of caliper half.

NOTE: Repeat above procedure to opposite brake pad (1) and pistons as necessary.

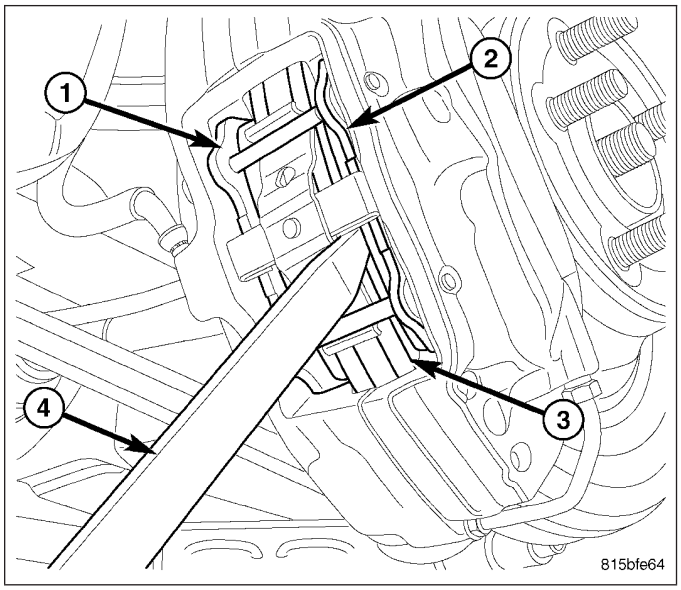

14. If equipped with SRT8 disc brakes, on each rear disc brake, support spring link (1) using a transmission jack (5) or other appropriate jack. Raise spring link just enough to access brake caliper lower mounting bolt (4) from above compression link (2).

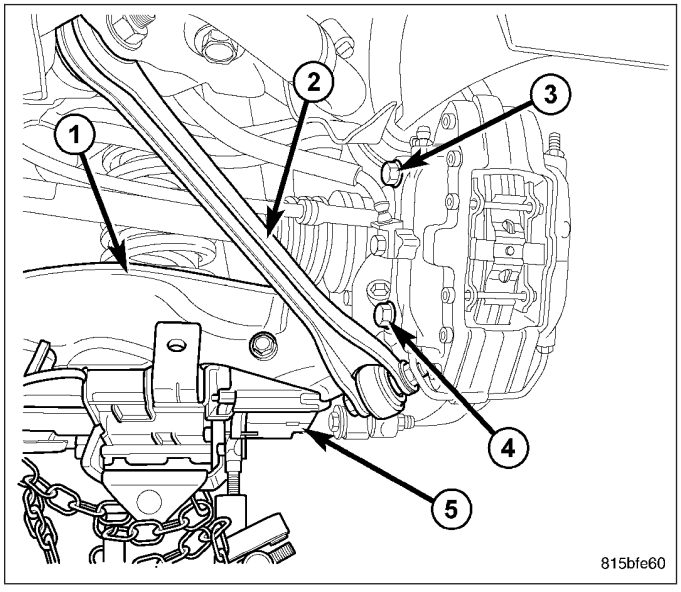

15. If equipped with SRT8 disc brakes, on each rear disc brake, remove the lower and upper caliper mounting bolts (1).
16. If equipped with SRT8 disc brakes, on each rear disc brake, remove brake caliper (2) with pads from knuckle and brake rotor. Hang assembly out of way using wire or a bungee cord. Use care not to overextend brake hose when doing this.
17. If equipped with SRT8 disc brakes, remove jack from under spring link.

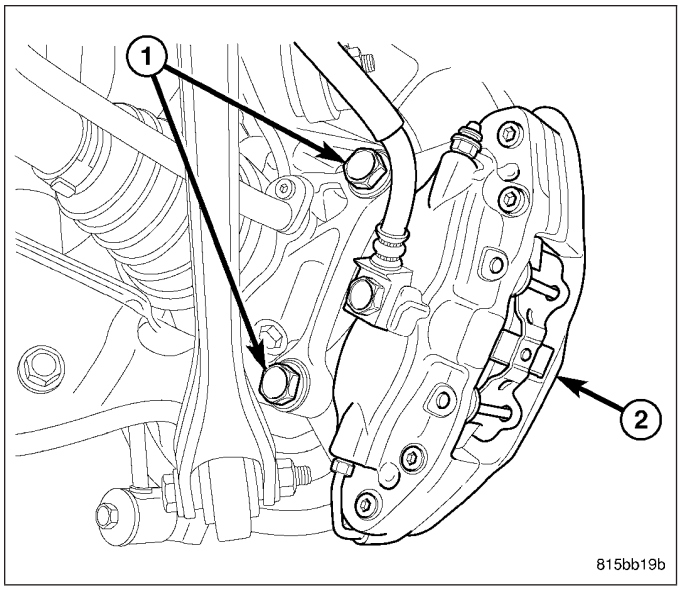

NOTE: To remove wheel speed sensor connector from body wiring harness connector, move retaining clip (2) and pull sensor connector outward.

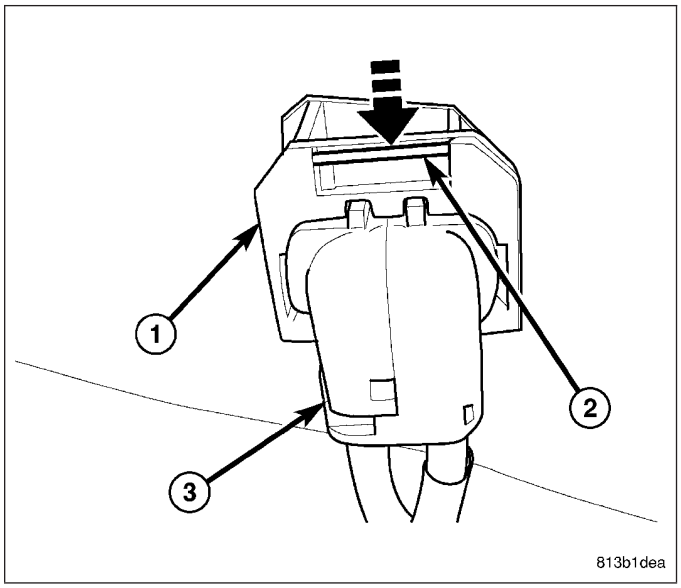

18. Remove wheel speed sensor connectors (3 and 4) from body wiring harness connector (1) located in luggage compartment floor pan (2).

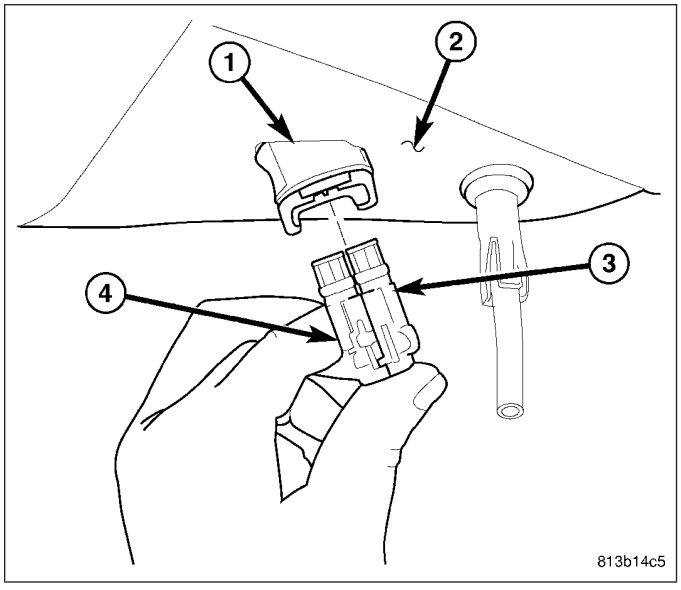

19. Unclip left wheel speed sensor cable (3) from routing clip (1) near body connector.

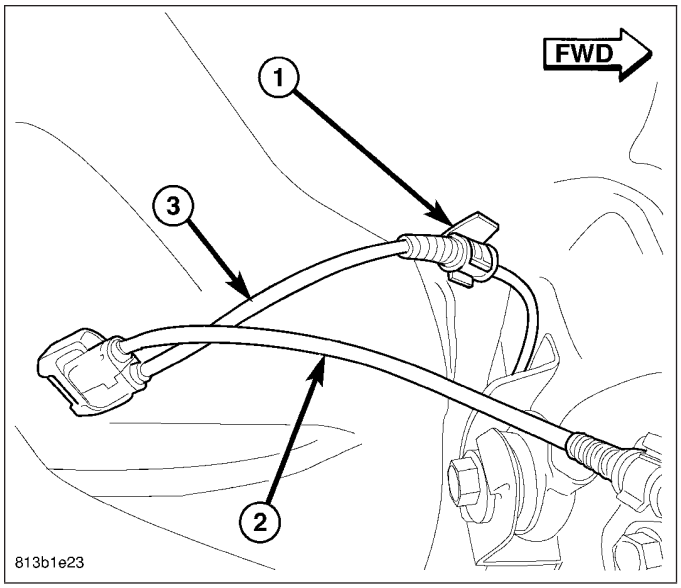

20. On each side of vehicle, remove shock absorber (1) lower mounting bolt (2) and nut (4).

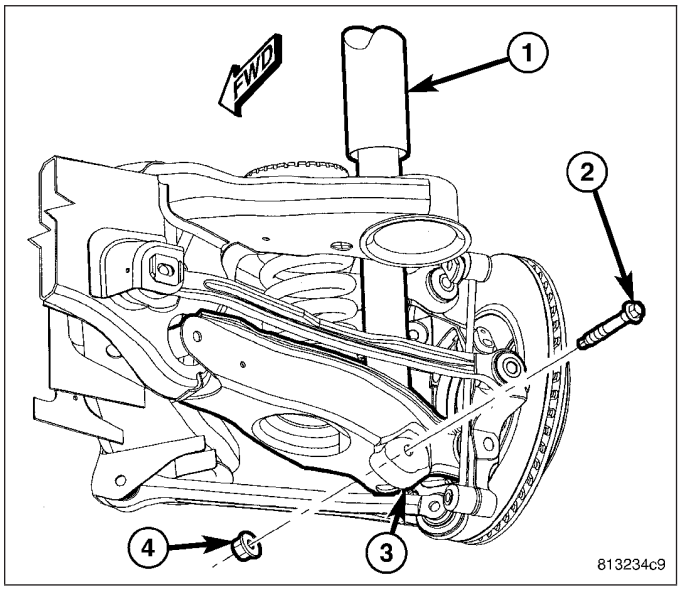

21. Carefully mark location of rear crossmember on body at all four mount (bushing) locations using a marker or crayon. **Do not use a scratch awl to mark location.**
22. Position an extra pair of jack stands under and support forward end of engine cradle to help stabilize vehicle during rear suspension removal/installation.

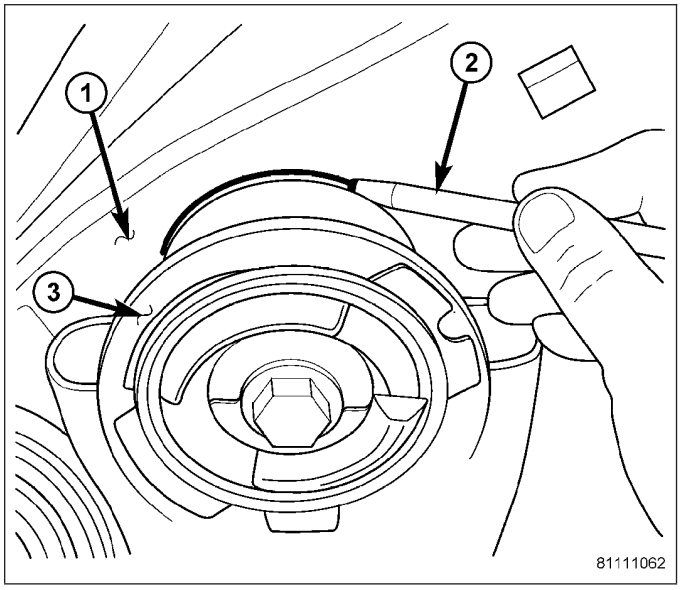

23. Position under-hoist utility jack or transmission jack (3) under center of rear axle differential (1). Raise jack head to contact differential and secure in place. **When securing crossmember to jack, be sure not to secure stabilizer bar.**

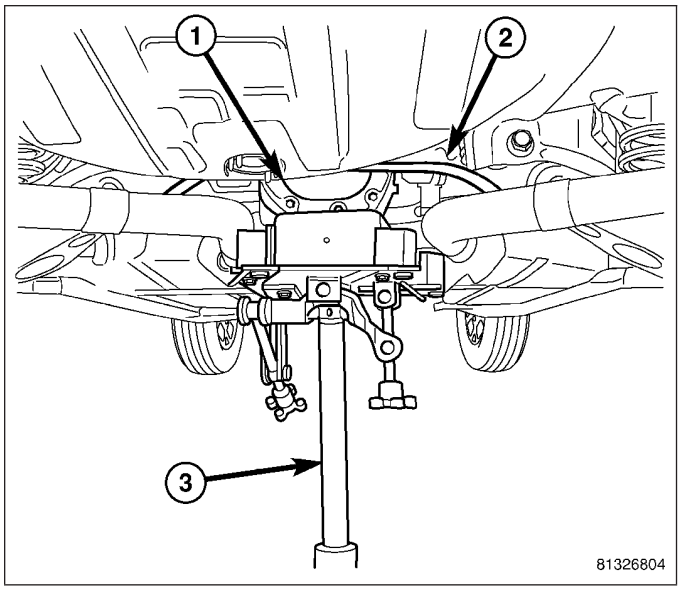

WARNING: Before opening fuel system, review all Warnings and Cautions.

24. Remove fuel filler tube. (Refer to 14 - FUEL SYSTEM/FUEL DELIVERY/FUEL TANK FILLER TUBE - REMOVAL)

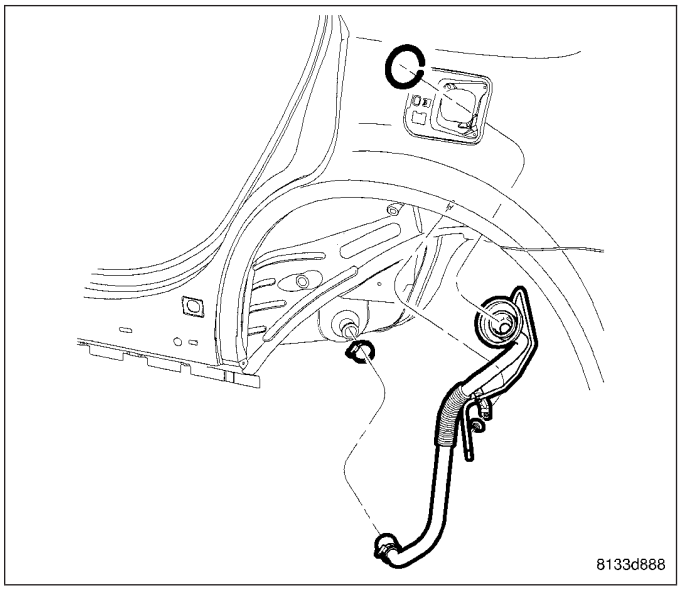

NOTE: If equipped with AWD, when removing crossmember mounting bolts in following step, be sure to not to misplace spacers (1) between crossmember mounts (2) and body.

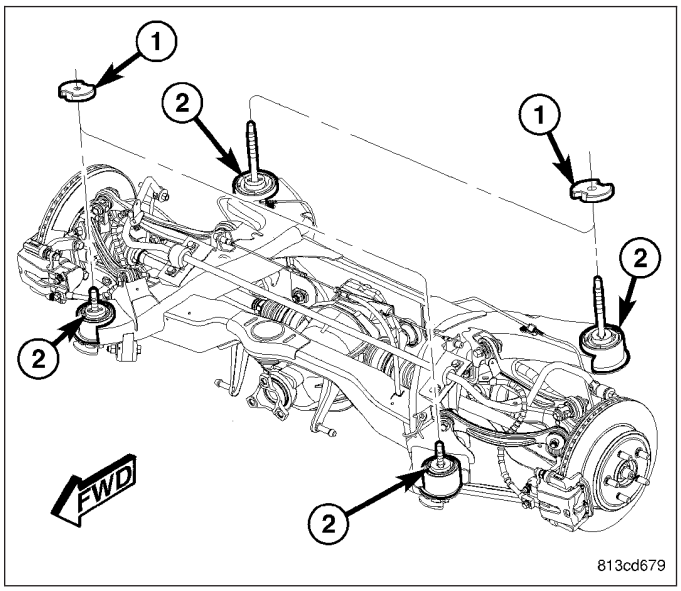

25. Remove both front (3) and both rear (2) mounting bolts fastening crossmember (1) in place.

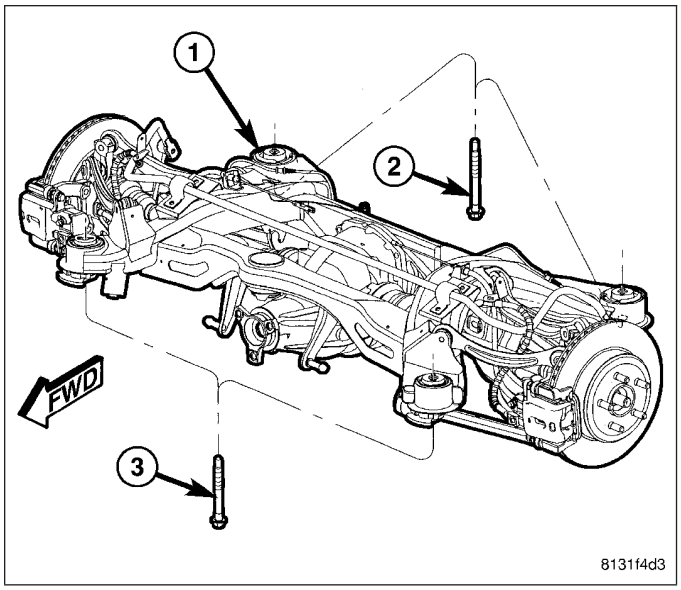

26. **Slowly** lower crossmember using jack. **Do not lower jack at a fast rate.** Lower just enough to allow propeller shaft removal from rear axle differential. **Do not lower jack any further than necessary.** Slide propeller shaft out of rear axle differential and allow bungee cord previously installed to support.
27. Lower crossmember until crossmember is at a comfortable working level to access bushings. Support rear suspension assembly using jack stands to help stabilize assembly during bushing service.
28. Remove coil springs (2) with isolators (1 and 5) from spring links (4).

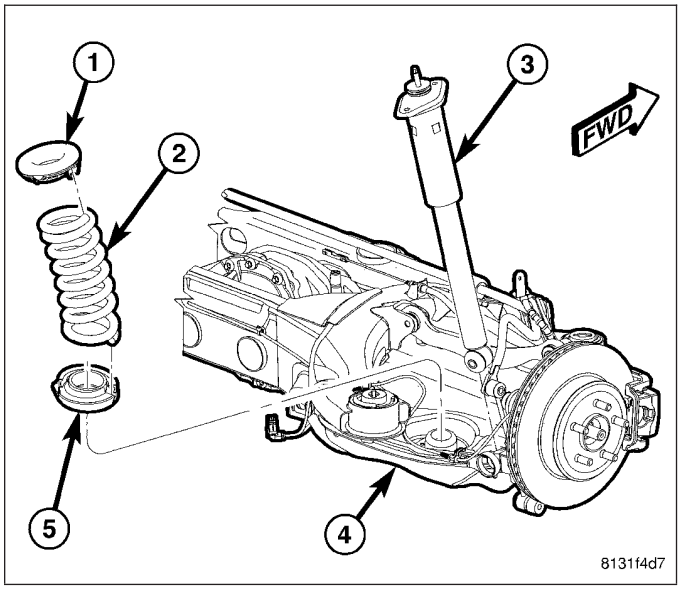

29. As an installation reference, carefully mark location of bushing requiring removal on crossmember (around bushing can flange) using a marker or crayon. **Do not use a scratch awl to mark location.**

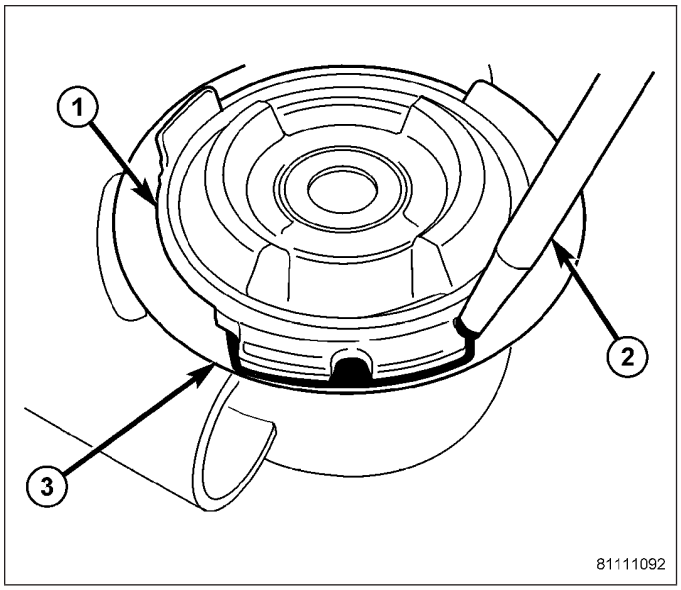

30. Slide Support (2), Special Tool 9031-11, into end of crossmember (3) surrounding bushing bore as shown.
31. Snug set-screws (1) securing Support (2) to crossmember.

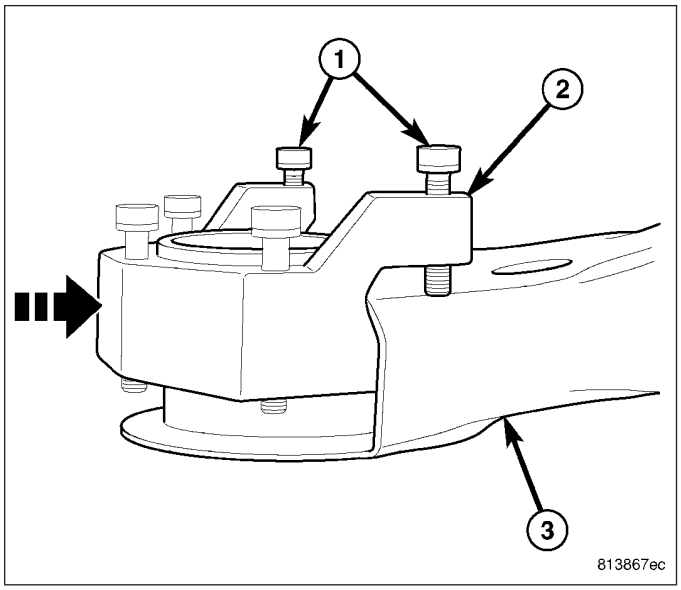

32. Insert Brace (1), Special Tool 9031-12, between Support 9031-11 (3) and bushing bore flange (2) matching angle cut in Brace to bore flange.

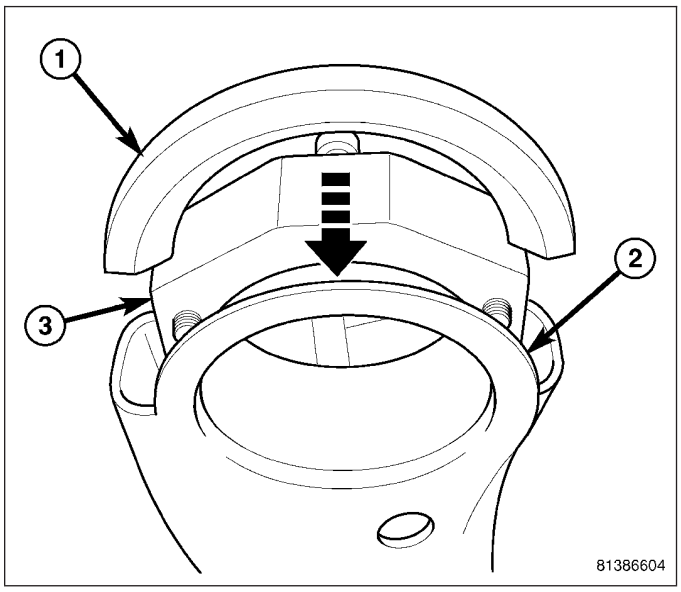

33. Snug set-screws (1) against Brace 9031-12. **Do not overtighten set-screws as they will distort and bend bushing bore flange.**

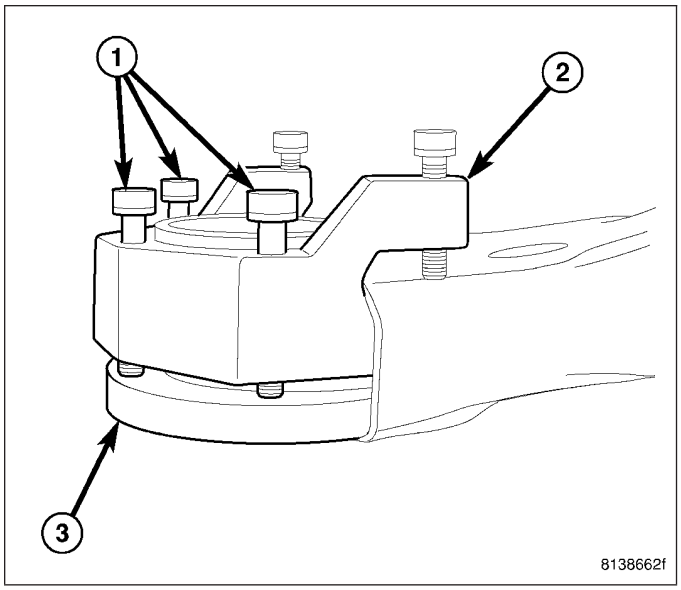

NOTE: Prior to using Press (1), Special Tool C-4212F, lubricate screw-drive threads to provide ease of use and promote tool longevity.

34. Assemble tools (See following list) over bushing as shown.
    - (1) Press C-4212F
    - (2) Remover 9031-2
    - (3) Receiver 9031-1
35. Tighten Press (1) screw-drive, pressing bushing out of crossmember.
36. Remove all tools.

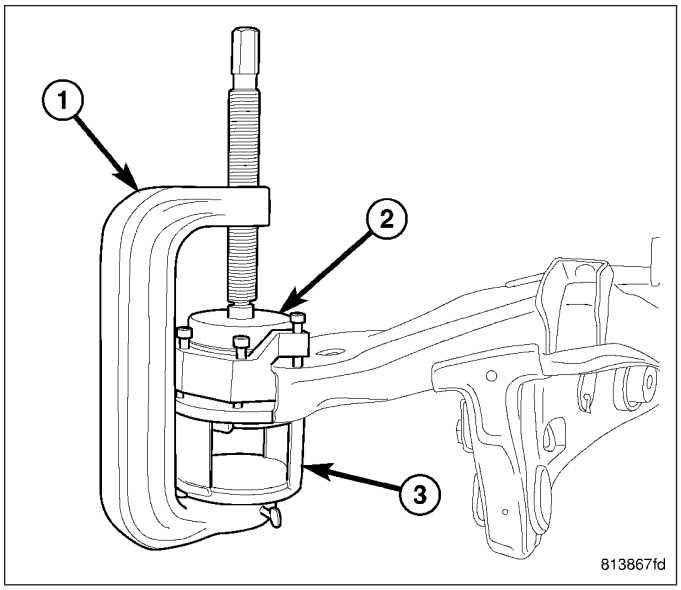

INSTALLATION

CAUTION: It is very important that bushing be installed in same position as original to maintain vehicle ride quality and bushing longevity. That is why bushing, once installed, needs to closely match reference marks applied upon removal of original bushing.

1. Position bushing on crossmember bushing bore aligning bushing can flange (3) with reference marks applied during removal.
2. Assemble tools (See following list) over bushing (3) and crossmember as shown.
   - (1) Press C-4212F
   - (2) Receiver 9031-3
   - (4) Installer 9031-4
3. Tighten Press (1) screw-drive, pressing bushing into crossmember. Install bushing until bushing can flange contacts surface of crossmember.
4. Remove tools.
5. Verify bushing closely lines up with reference marks applied during removal.

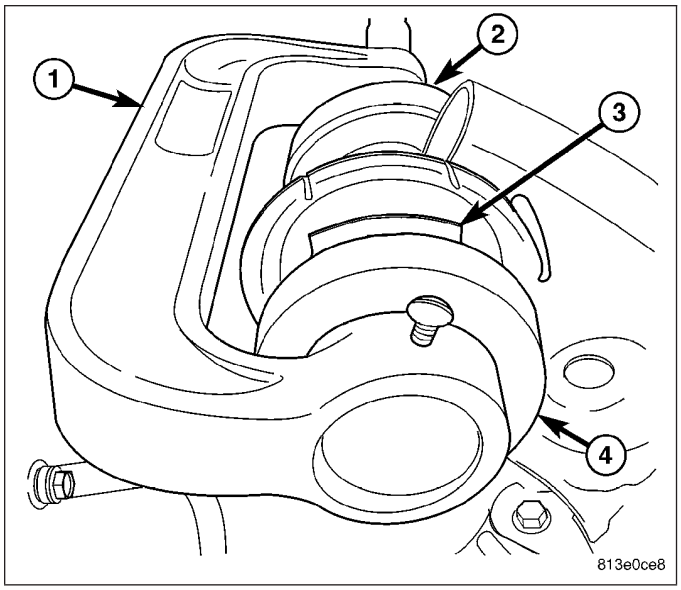

NOTE: Do not reinstall coil springs on spring links at this time. Install as directed in later steps.

6. Raise crossmember to body mounting points. As crossmember is raised, slide propeller shaft (1) onto rear axle differential flange (2) and align shock absorbers with pockets in spring links.

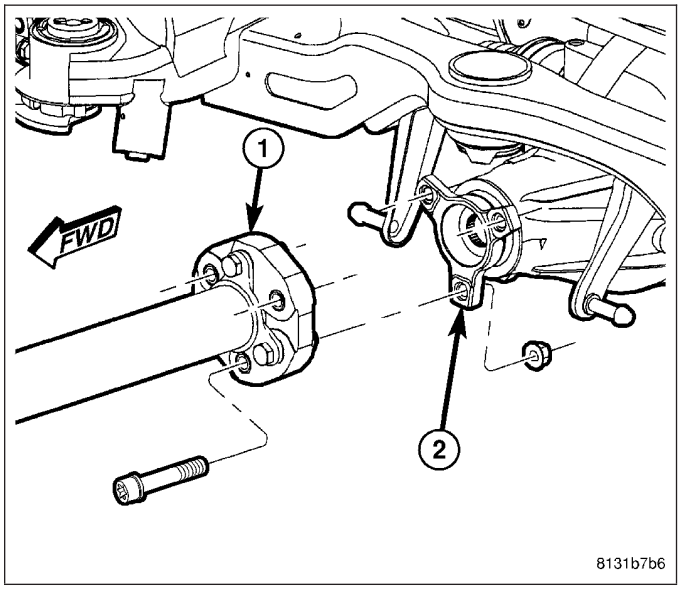

NOTE: There are four crossmember mounting bolts. Rear mounting bolts (2) are longer than front mounting bolts (3). Do not interchange mounting bolts.

7. Continue to raise crossmember (1) with jack until crossmember mounting bolts (2 and 3) can be installed. Install left side crossmember mounting bolts, but not the right side bolts. It is not necessary to tighten bolts at this point.

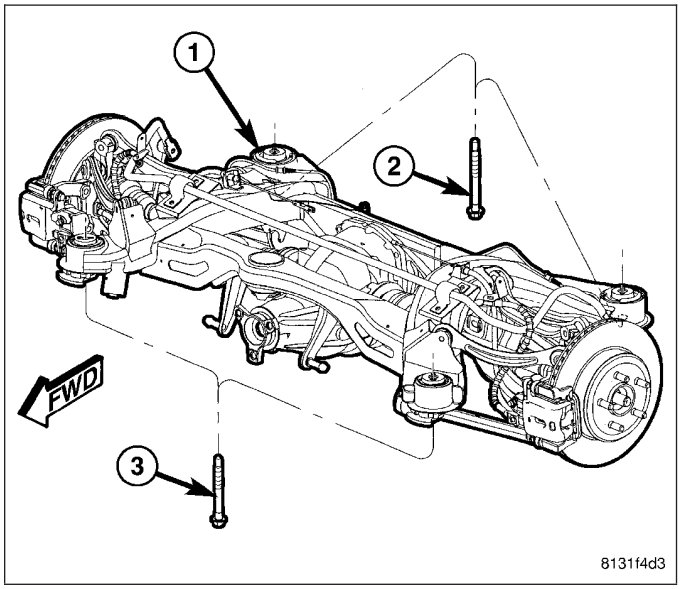

CAUTION: To avoid damaging other components of vehicle, do not lower crossmember any further than necessary to install coil spring (2).

8. **Slowly** lower jack allowing right side of crossmember to drop. **Do not lower jack at a fast rate.** Lower jack just enough to allow spring (2) Installation. **Do not lower jack any further than necessary.**

NOTE: Before installing coil spring, make sure isolators (1 and 5) are completely installed on ends of spring.

9. Install coil spring (2) with isolators into spring pocket of spring link fitting the lower isolator to the shape of the pocket, then align top of spring with body mount.

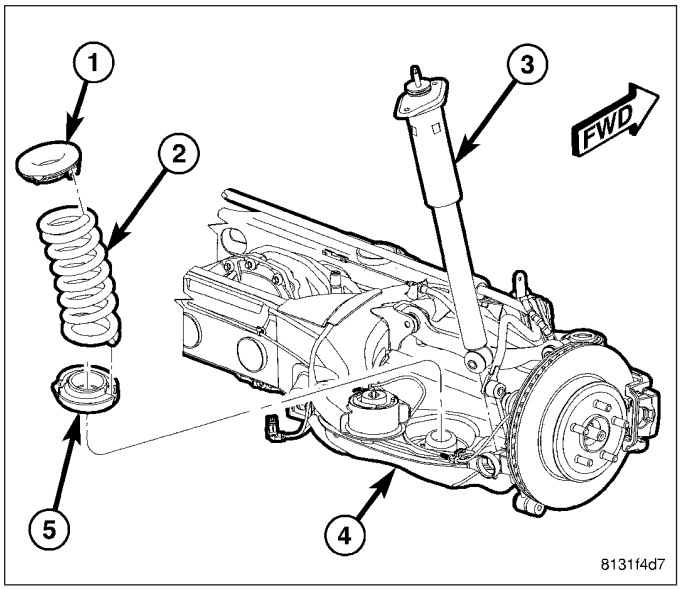

10. Carefully raise jack, guiding coil spring and lower end of shock absorber (1) into mounted positions. Once shock absorber (1) lower mounting hole lines up with hole in spring link (3), stop jacking.
11. Install lower shock mounting bolt (2) and nut (4). **Do not tighten at this time.**

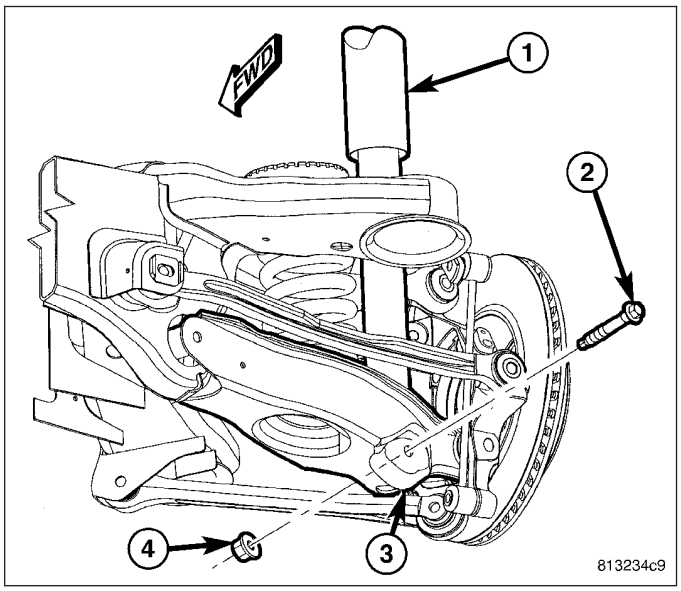

12. If vehicle is equipped with AWD, insert spacers (1) on top of right crossmember mount bushings (2) before crossmember is raised into place.

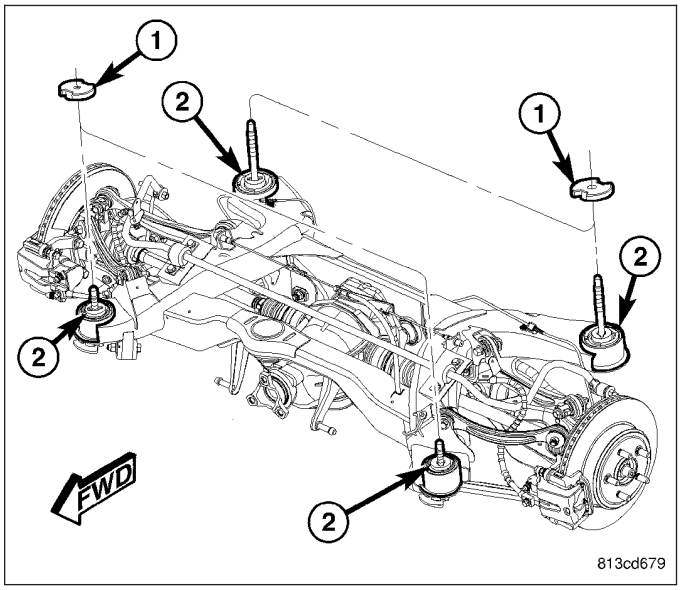

NOTE: There are four crossmember mounting bolts. Rear mounting bolts (2) are longer than front mounting bolts (3). Do not interchange mounting bolts.

13. Raise right side of crossmember (1) into mounted position. Install right side crossmember mounting bolts (2 and 3). **Snug, but do not fully tighten bolts at this time.**
14. Remove both front and rear crossmember mounting bolts (2 and 3) on **left** side of vehicle.

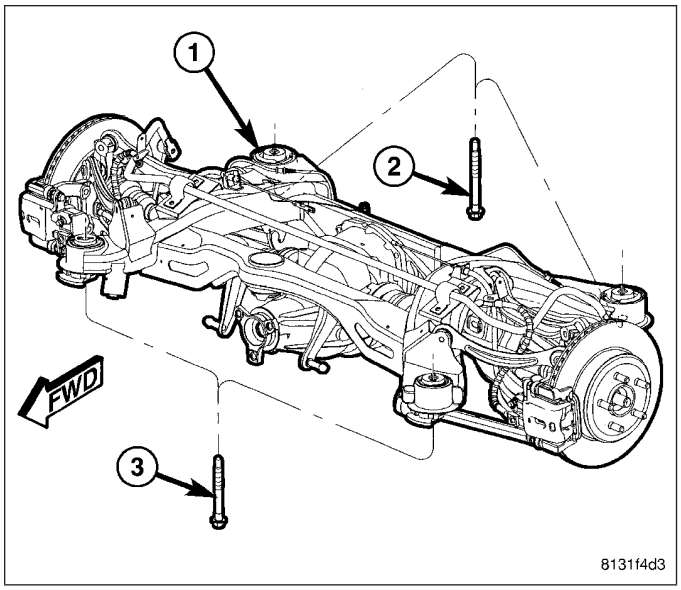

CAUTION: To avoid damaging other components of vehicle, do not lower crossmember any further than necessary to install coil spring (2).

15. **Slowly** lower jack allowing left side of crossmember to drop. **Do not lower jack at a fast rate.** Lower jack just enough to allow spring (2) Installation. **Do not lower jack any further than necessary.**

NOTE: Before installing coil spring, make sure isolators (1 and 5) are completely installed on ends of spring.

16. Install coil spring (2) with isolators into spring pocket of spring link fitting the lower isolator to the shape of the pocket, then align top of spring with body mount.

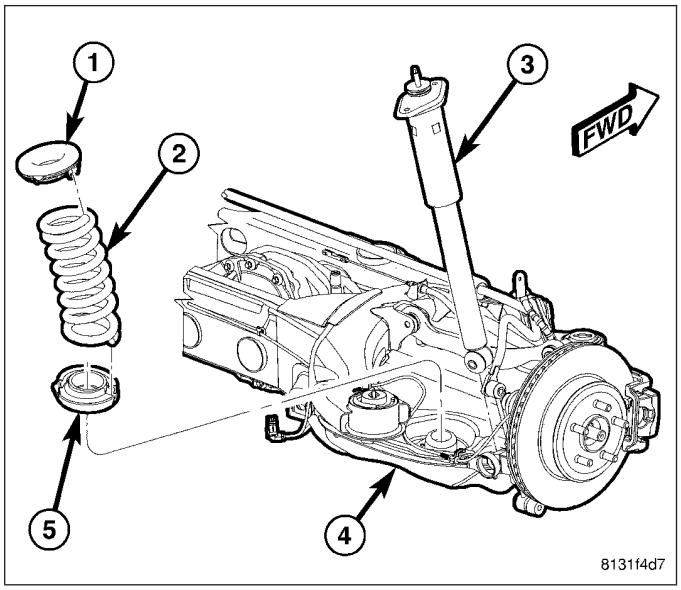

17. Carefully raise jack, guiding coil spring and lower end of shock absorber (1) into mounted positions. Once shock absorber (1) lower mounting hole lines up with hole in spring link (3), stop jacking.
18. Install lower shock mounting bolt (2) and nut (4). **Do not tighten at this time.**

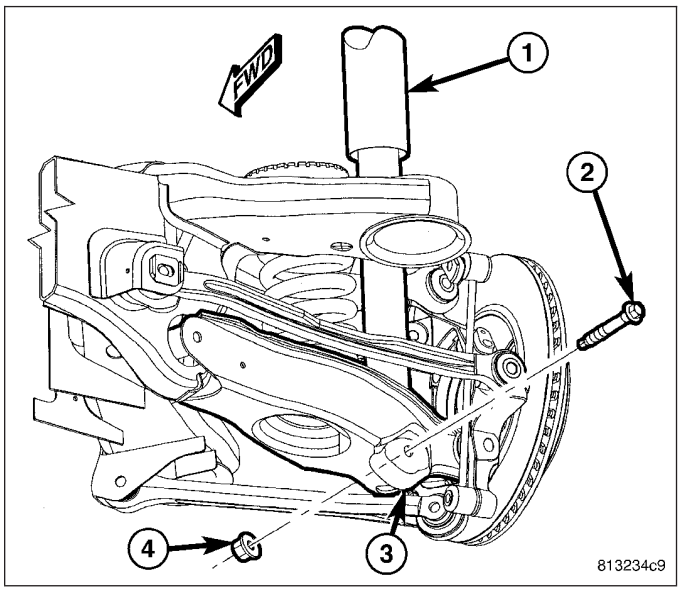

19. If vehicle is equipped with AWD, insert spacers (1) on top of left crossmember mount bushings (2) before crossmember is raised into place.

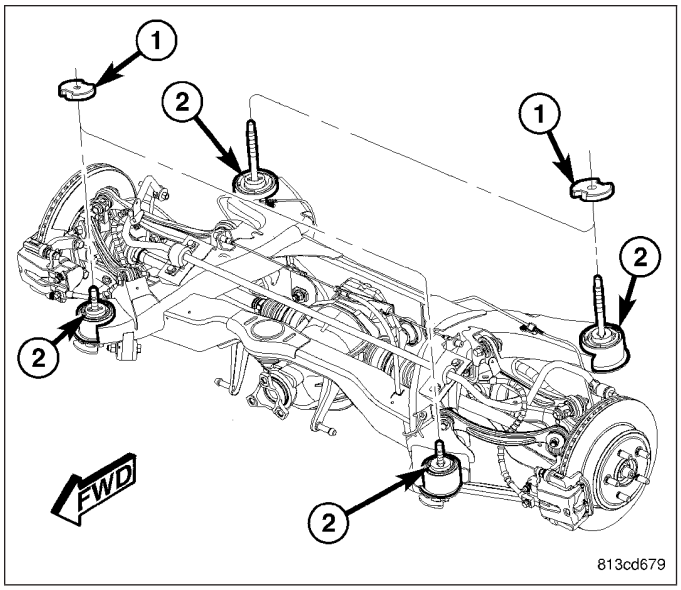

NOTE: There are four crossmember mounting bolts. Rear mounting bolts (2) are longer than front mounting bolts (3). Do not interchange mounting bolts.

20. Raise left side of crossmember (1) into mounted position. Install left side crossmember mounting bolts (2 and 3). **Snug, but do not fully tighten bolts at this time.**

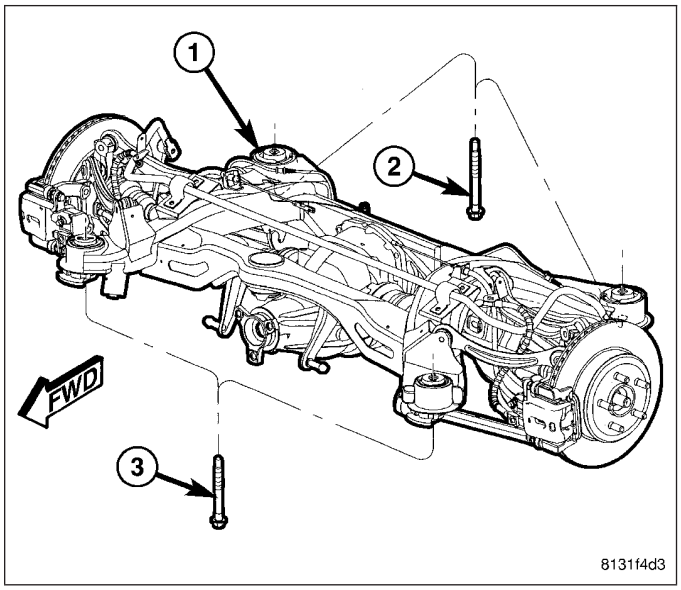

21. Shift crossmember as necessary to line up mounts (3) with location marks drawn on body (1) before removal.

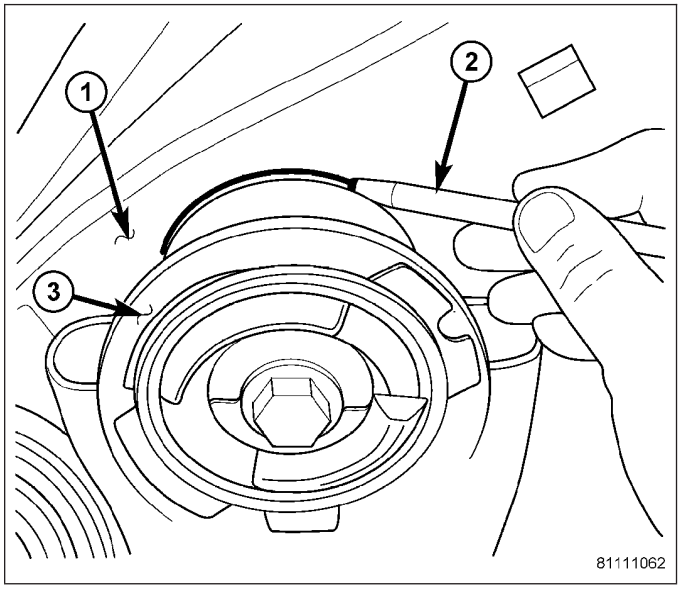

22. Once mounts are lined up with location marks, on both sides of vehicle, measure distance (1) between the tension link (2) and weld flange (3) on body directly in front of it, just outboard of the front mount bushing (4). **This distance must be at least 12 mm to allow proper clearance for suspension movement.** If distance is less than 12 mm on either side of vehicle, shift that side of rear crossmember directly rearward until distance is 12 mm or greater. To do so, loosen 3 mounting bolts slightly, leaving one on opposite side of shift snugged to pivot off of. Shift crossmember rearward and snug loosened bolts. Remeasure opposite side to be sure it still maintains minimum 12 mm distance.

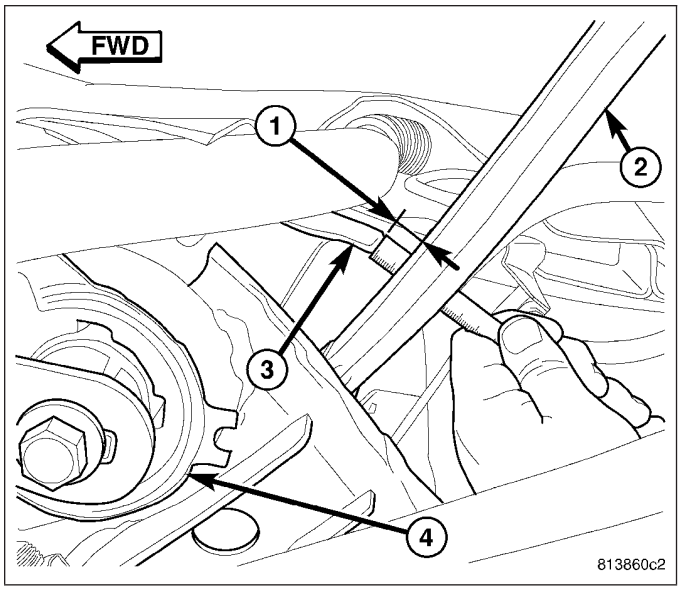

23. Tighten all four crossmember mounting bolts (2 and 3) to 180 N·m (133 ft. lbs.).

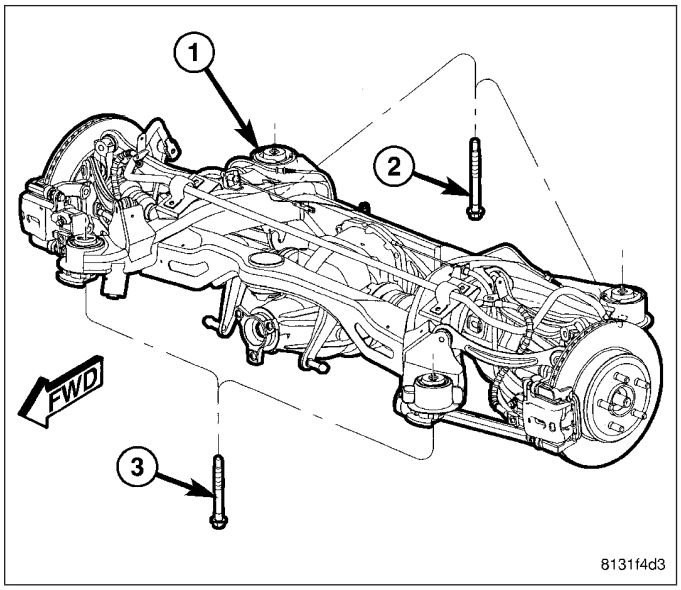

24. Remove jack (3) from under rear axle differential.

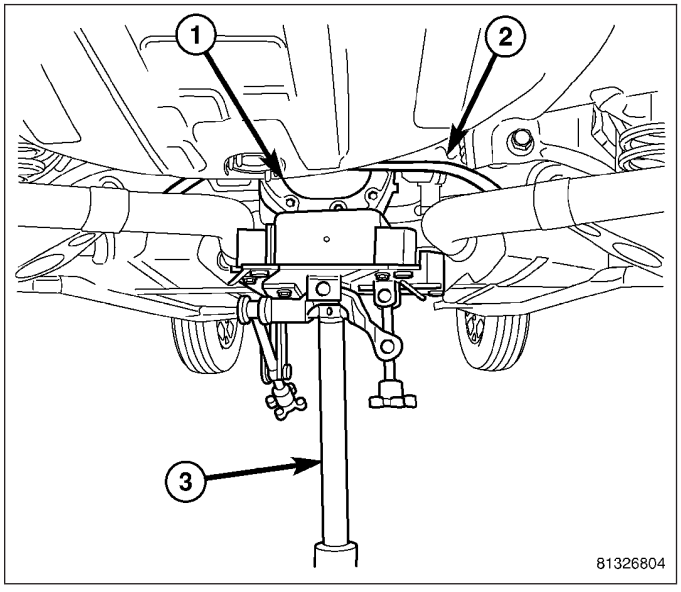

25. Remove bungee cord (1) supporting propeller shaft (2).

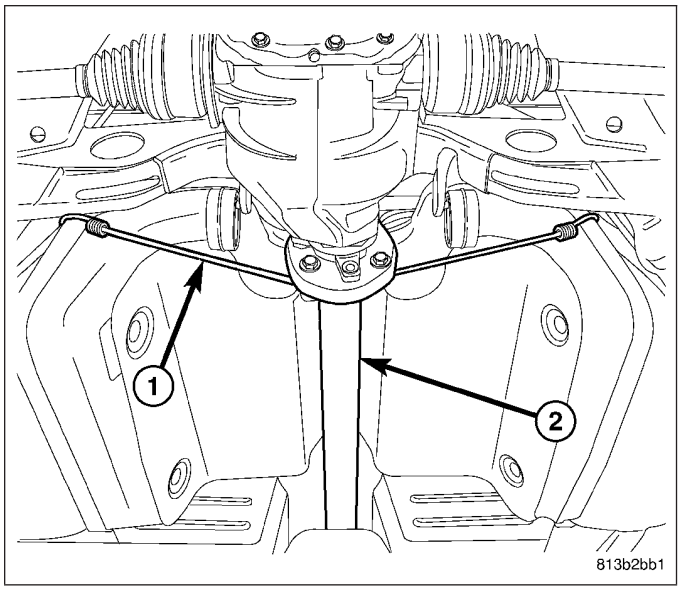

26. Align propeller shaft index marks (3) placed upon removal. Install propeller shaft rear coupler-to-axle flange bolts and nuts by hand. Tighten propeller shaft rear coupler-to-axle flange bolts to 81 N·m (60 ft. lbs.).

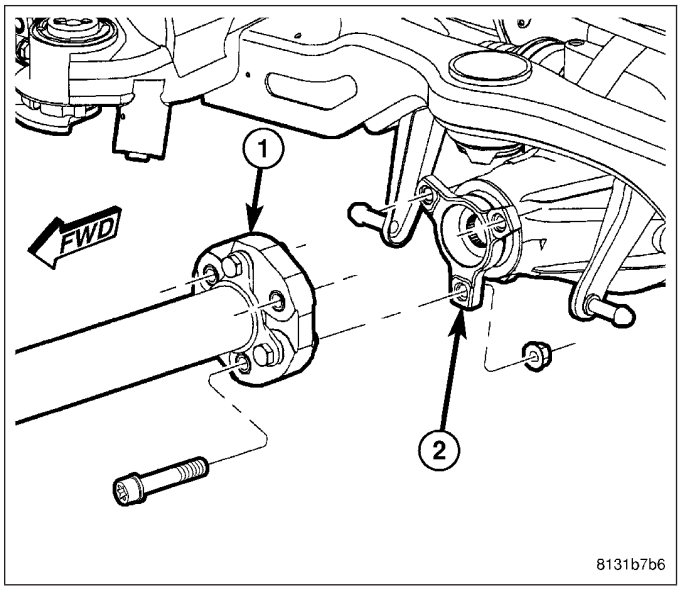

27. Install fuel filler tube. (Refer to 14 - FUEL SYSTEM/FUEL DELIVERY/FUEL TANK FILLER TUBE - INSTALLATION)

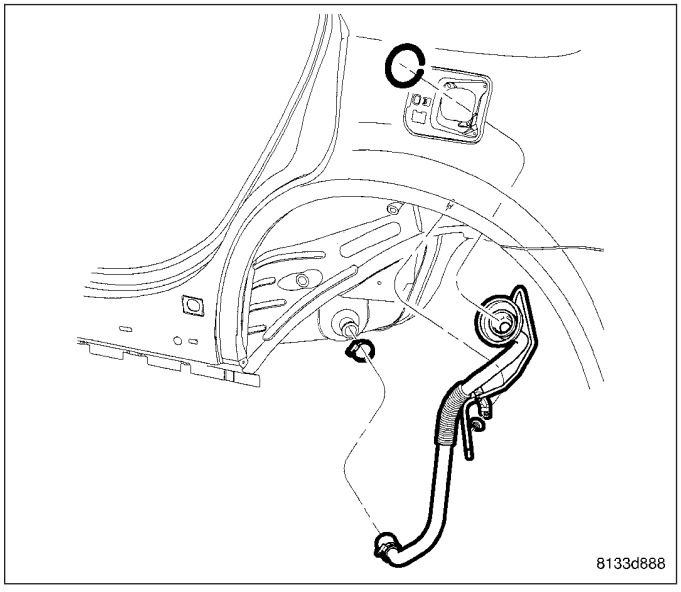

28. Clip left rear wheel speed sensor cable (3) to routing clip (1) near body connector.

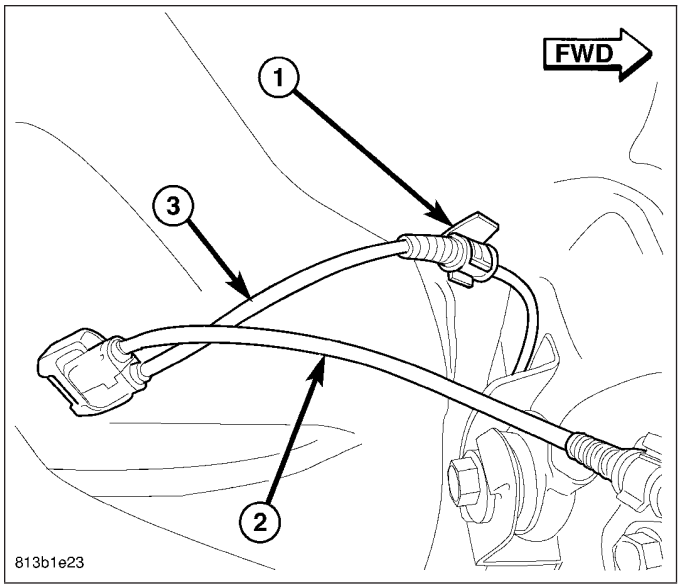

29. Match left rear wheel speed sensor connector (4) to right sensor connector (3) to make one connector.
30. Insert speed sensor connectors (3 and 4) into body wiring harness connector (1) located in luggage compartment floor pan (2). When installing connector, make sure retaining clip on body connector is properly in place and sensor connector cannot be pulled out.

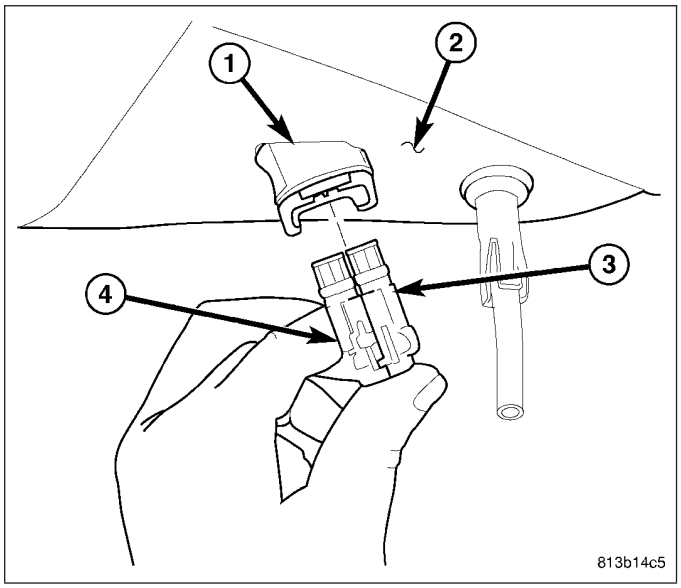

31. If equipped with standard or premium disc brakes, on each rear disc brake:
    a. Push caliper guide pins into caliper adapter to clear caliper mounting bosses when installing.
    b. Guide caliper and brake hose down through rear suspension, then slide caliper over brake pads and onto caliper adapter (3).
    c.

CAUTION: Extreme caution should be taken not to cross-thread caliper guide pin bolts (2) when they are installed.Align caliper mounting holes with guide pins, then install guide pin bolts (2). While holding guide pins from turning, tighten bolts to 31 N·m (23 ft. lbs.) torque.

    d. Make sure brake hose is properly routed and will not come in contact with suspension components.

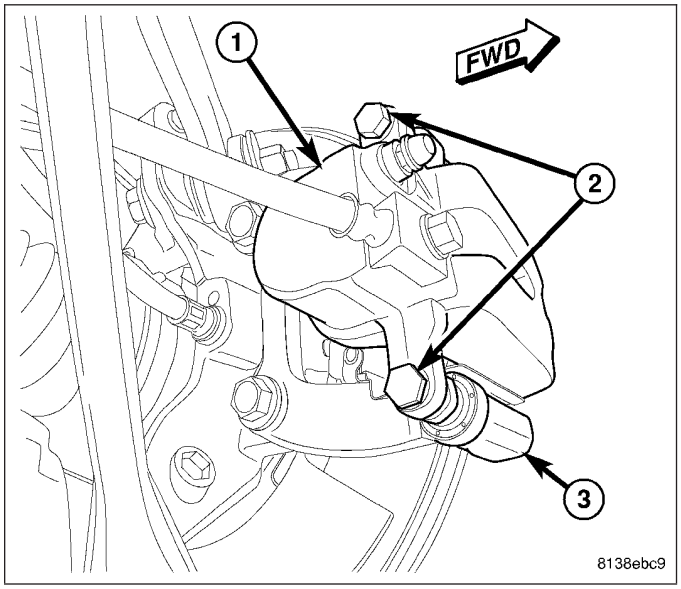

32. If equipped with SRT8 disc brakes, at each rear disc brake, support spring link using a transmission jack or other appropriate jack as indicated in removal procedure. (Refer to 13 - FRAME & BUMPERS/FRAME/BUSHING - REMOVAL)
33. If equipped with SRT8 disc brakes, on each rear disc brake, slide caliper with pads (2) over brake rotor and align with knuckle.
34. If equipped with SRT8 disc brakes, on each rear disc brake, install caliper mounting bolts (1). Tighten bolts to 130 N·m (96 ft. lbs.) torque.
35. If equipped with SRT8 disc brakes, on each rear disc brake, remove jack from under spring link.

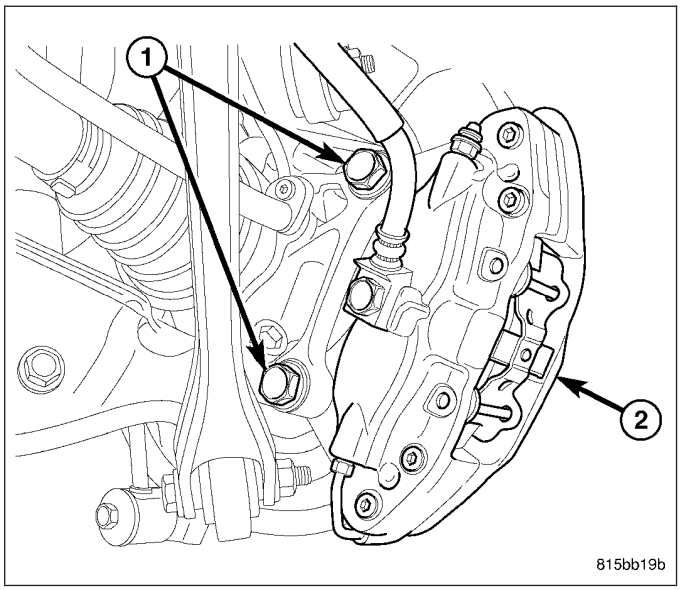

36. Route parking brake cable above rear crossmember, then slide cable (1, 3) through equalizer (2) above rear axle differential (once installed).

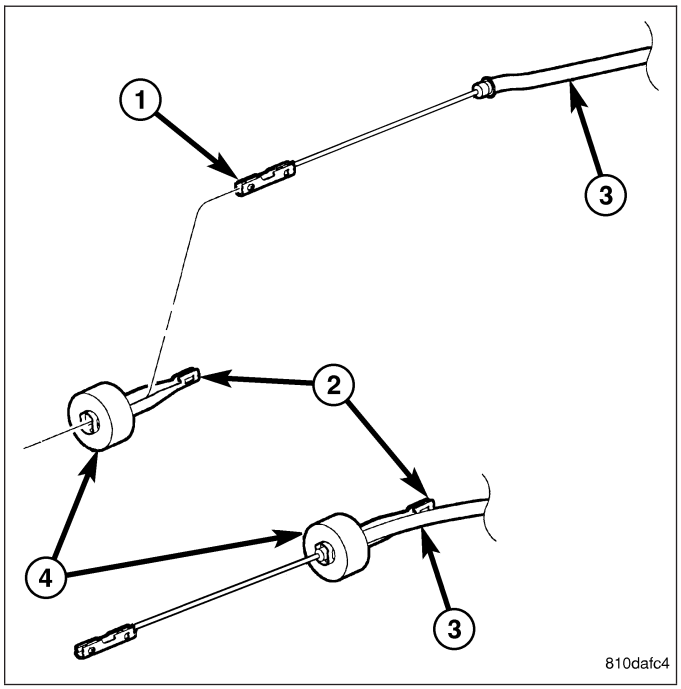

NOTE: Due to short travel and low spring tension, it is not necessary to lock-out parking brake lever to service parking brake components.

37. Connect front parking brake cable (5) at connector (3) to right rear parking brake cable (4).

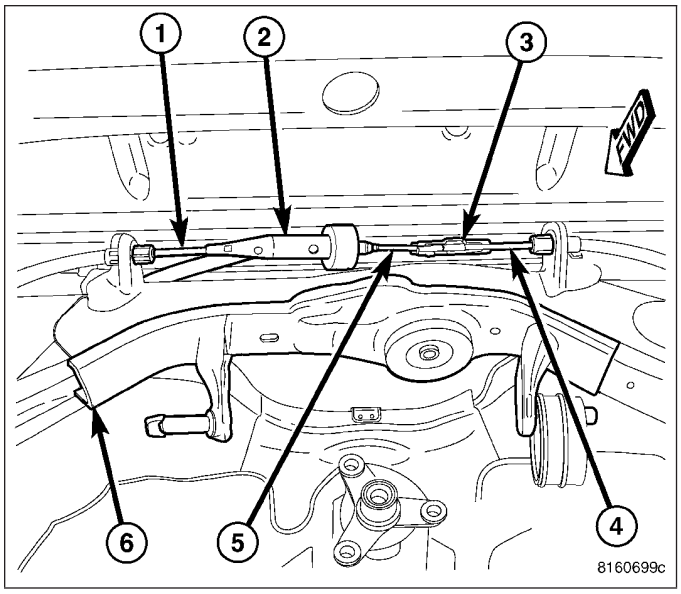

38. Insert front parking brake cable routing bracket locating pin into front flange of crossmember (3), then install screw (2) fastening cable (1) routing bracket to rear crossmember.

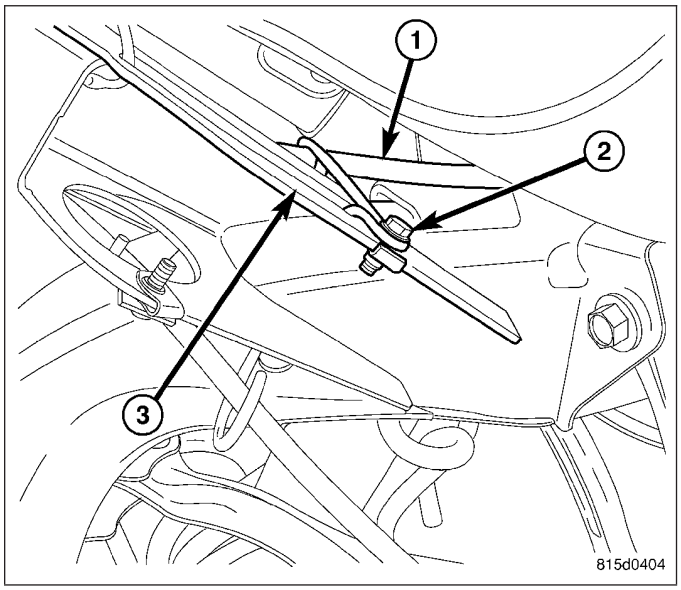

39. Install rear exhaust system (2) (dual-outlet exhaust shown in figure). (Refer to 11 - EXHAUST SYSTEM - INSTALLATION)

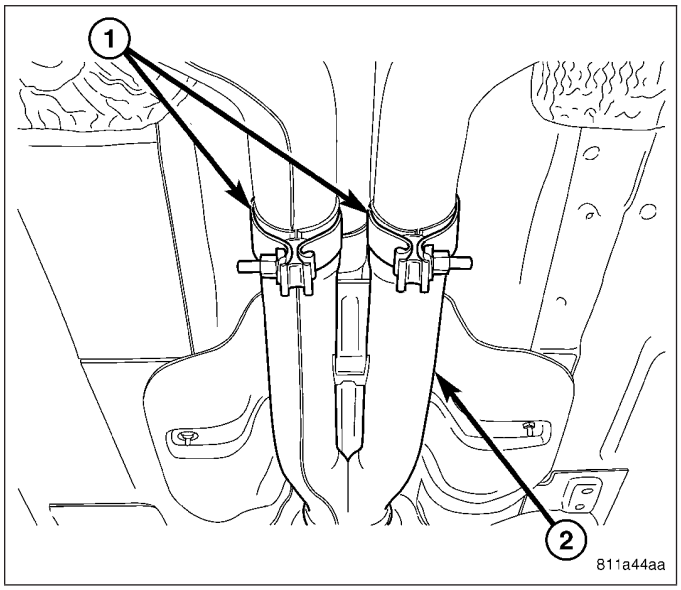

40. Install tire and wheel assemblies (1). Tighten wheel mounting nuts (3) to 150 N·m (110 ft. lbs.). (Refer to 22 - TIRES/WHEELS - INSTALLATION)
41. Lower vehicle until rear wheels are just above floor level.
42. Apply parking brake lever. Release lever, then reapply.
43. Check to make sure rear wheels will not rotate with lever applied.
44. Lower vehicle.

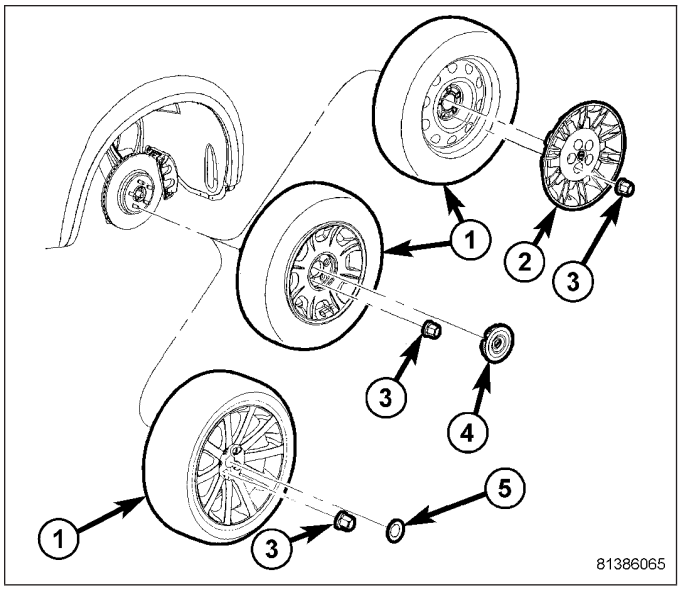

45. Connect battery negative cable (2) to battery post. It is important that this is performed properly. (Refer to 8 - ELECTRICAL/BATTERY SYSTEM - STANDARD PROCEDURE)
46. Pump brake pedal several times to ensure vehicle has a firm brake pedal before moving vehicle.
47. Position vehicle on alignment rack/drive-on lift. Raise vehicle as necessary to access mounting bolts.

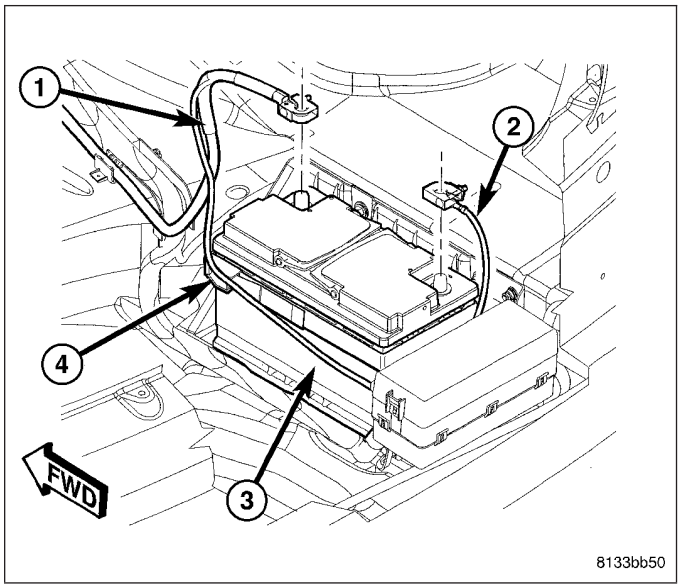

48. Tighten shock absorber lower mounting bolt nuts (4) to 72 N·m (53 ft. lbs.).
49. Perform wheel alignment, paying special attention to thrust angle. If rear crossmember needs to be shifted to align thrust angle, try to avoid compromising tension link clearance (Refer to Step 22). (Refer to 2 - SUSPENSION/WHEEL ALIGNMENT - STANDARD PROCEDURE)

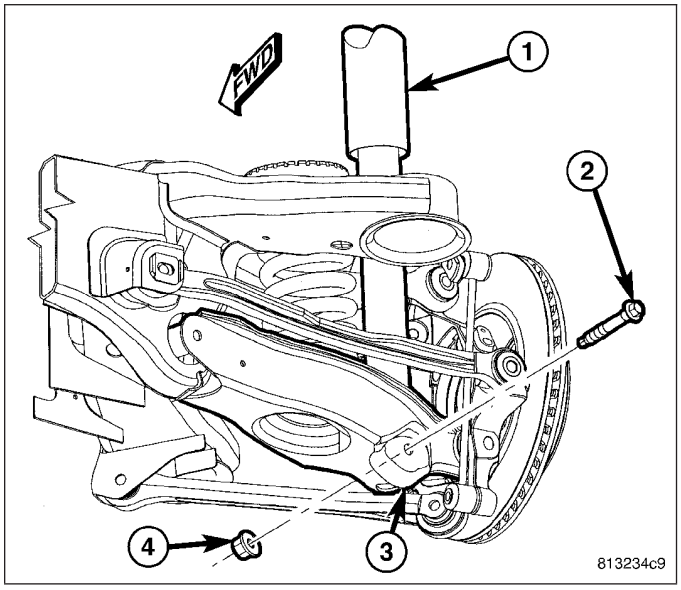

BUSHING-REAR CROSSMEMBER SPRING LINK

REMOVAL

1. Raise and support vehicle. (Refer to LUBRICATION & MAINTENANCE/HOISTING - STANDARD PROCEDURE)
2. Access and remove rear spring on side of repair. (Refer to 2 - SUSPENSION/REAR/SPRING - REMOVAL)
3. Export Only – If servicing right side bushing, disconnect headlamp leveling sensor (1) link at spring link (3).

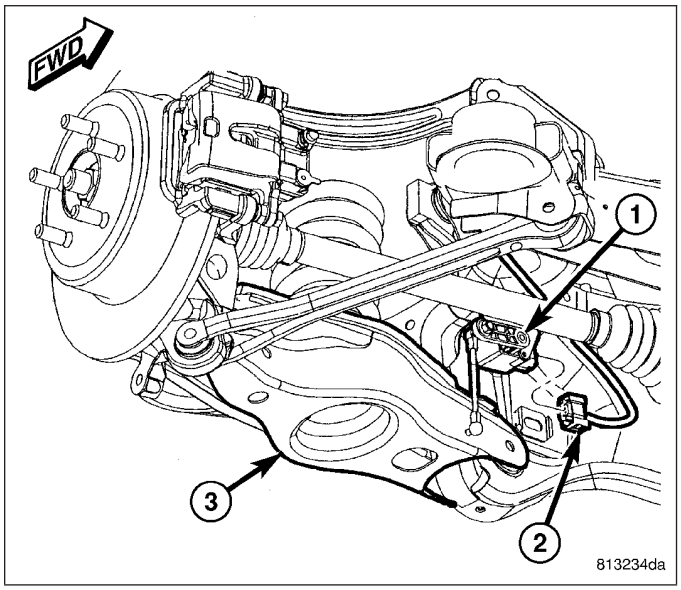

4. Remove bolt and nut (1) fastening spring link (4) to crossmember.
5. Position spring link downward, away from bushing in crossmember.

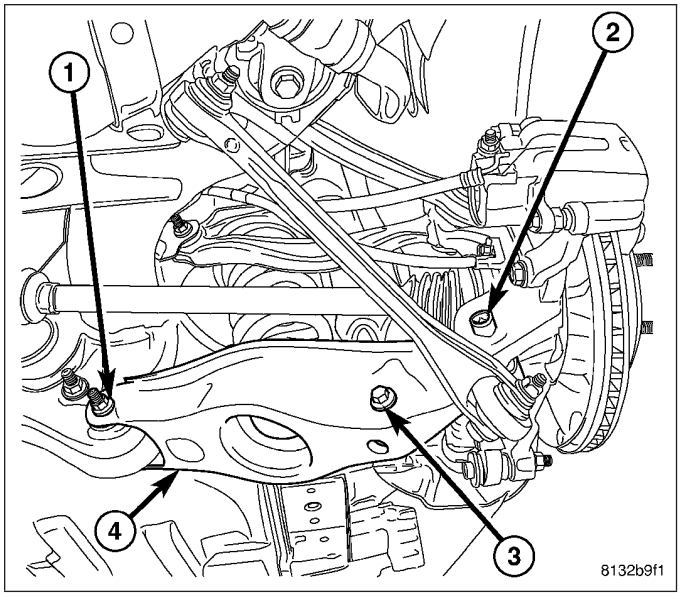

NOTE: Prior to using Press (3), Special Tool C-4212F, lubricate screw-drive threads to provide ease of use and promote tool longevity.

6. Assemble tools over bushing as shown (See list). Ensure Receiver, Special Tool 9032-1, sets against crossmember and not welds.
   - (2) Remover 9032-2
   - (3) Press C-4212F
   - (4) Receiver 9032-1
7. Tighten Press screw-drive, pressing bushing out of crossmember.

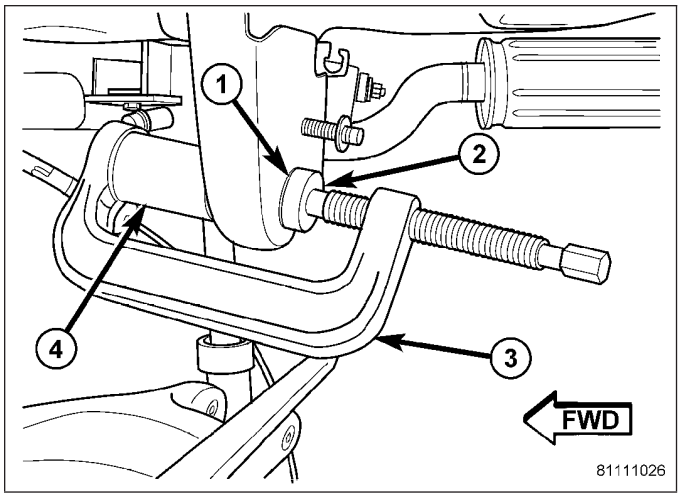

INSTALLATION

1. Position bushing (1) over rear of crossmember bushing bore.
2. Assemble tools over bushing and crossmember as shown (See list). Ensure Receiver, Special Tool 9032-3, is positioned to avoid welds on rear of crossmember bushing bore.
   - (2) Remover/Installer 9032-2
   - (3) Press C-4212F
   - (4) Receiver 9032-3
3. Tighten Press screw-drive, pressing bushing into crossmember. Install bushing until screw-drive stops, when bushing contacts Receiver on opposite side of crossmember.
4. Remove tools.

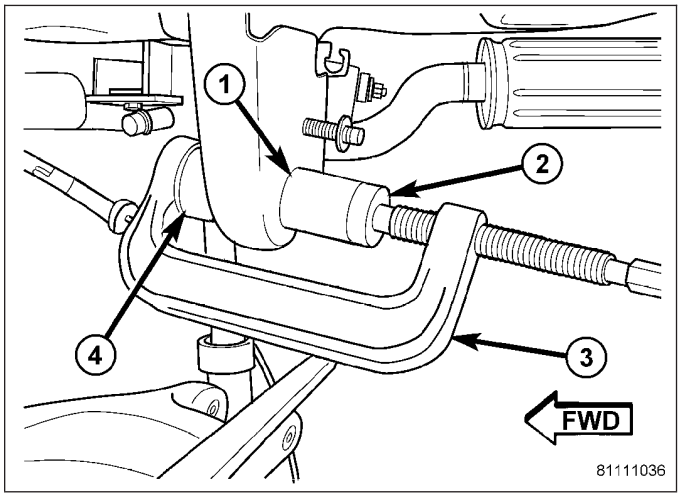

5. Swing spring link up to bushing in crossmember and install bolt and nut (1) fastening spring link (4) to crossmember. **Do not tighten bolt at this time.**

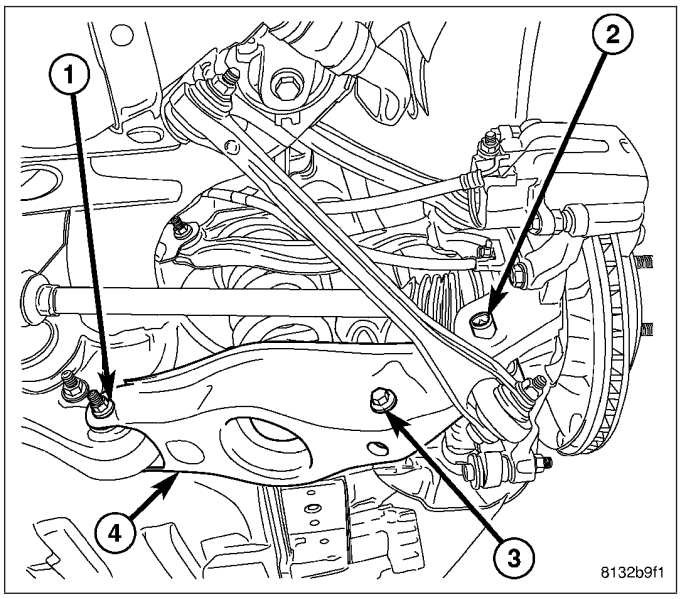

6. Export Only – If servicing right side bushing, connect headlamp leveling sensor (1) link at spring link (3).
7. Install rear spring as well as all components necessary to access it. (Refer to 2 - SUSPENSION/ REAR/SPRING - INSTALLATION)
8. Lower vehicle.
9. Position vehicle on alignment rack/drive-on lift. Raise vehicle as necessary to access mounting bolt.

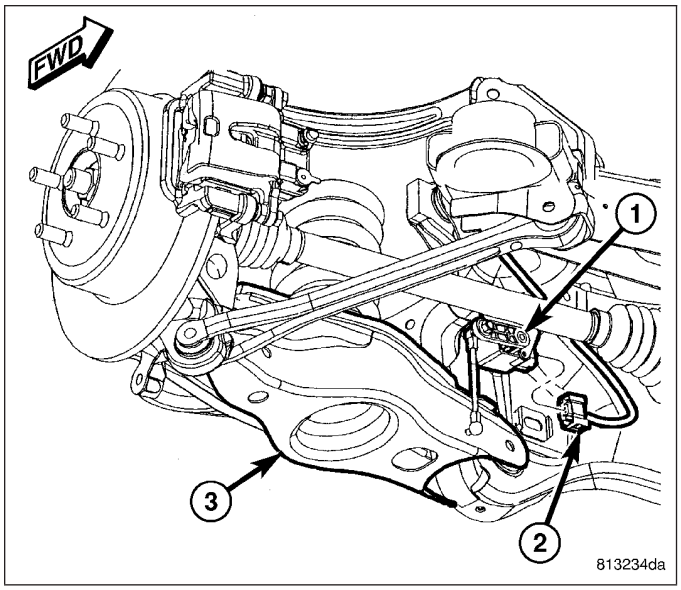

10. Tighten spring link bolt (1) at crossmember to 108 N·m (80 ft. lbs.).
11. Perform wheel alignment. (Refer to 2 - SUSPENSION/WHEEL ALIGNMENT - STANDARD PROCEDURE)

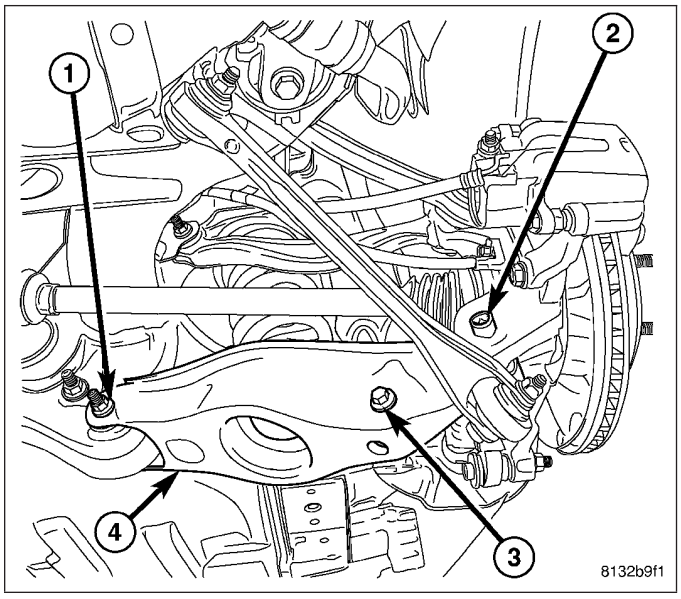

CROSSMEMBER-ENGINE CRADLE

REMOVAL

1. Disconnect and isolate battery negative cable (2) from battery post. (Refer to 8 - ELECTRICAL/BATTERY SYSTEM - STANDARD PROCEDURE).
2. Siphon power steering fluid from pump reservoir.

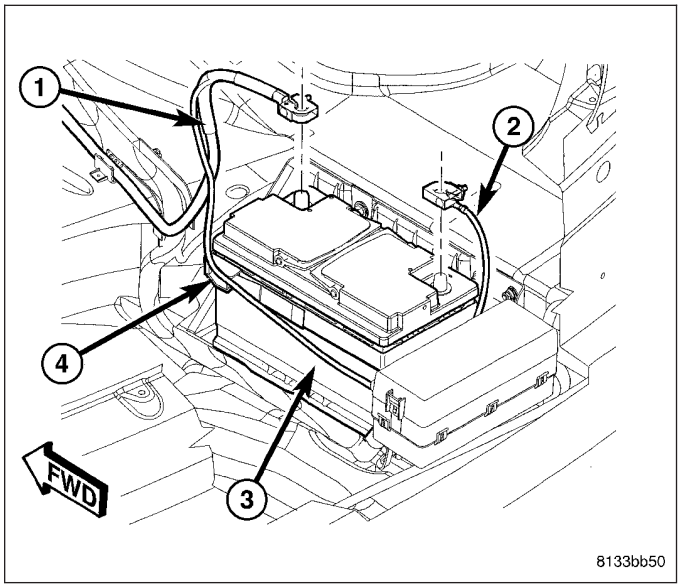

3. Raise and support the vehicle. (Refer to LUBRICATION & MAINTENANCE/HOISTING - STANDARD PROCEDURE)

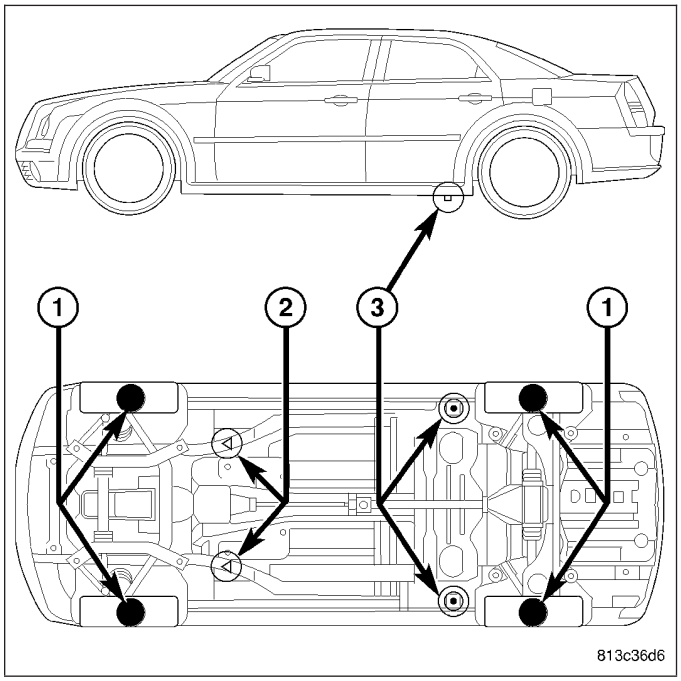

1 - DRIVE ON LIFT
2 - SAE HOISTING SYMBOLS
2 - FRAME CONTACT LIFT (SINGLE POST)
2 - CHASSIS LIFT (DUAL LIFT)
2 - OUTBOARD LIFT (DUAL LIFT)
2 - FLOOR JACK
3 - HOISTING PADS
3 - FRAME CONTACT LIFT (SINGLE POST)
3 - CHASSIS LIFT (DUAL LIFT)
3 - OUTBOARD LIFT (DUAL LIFT)
3 - FLOOR JACK

4. Remove the left and right front wheels (1). (Refer to 22 - TIRES/WHEELS - REMOVAL)

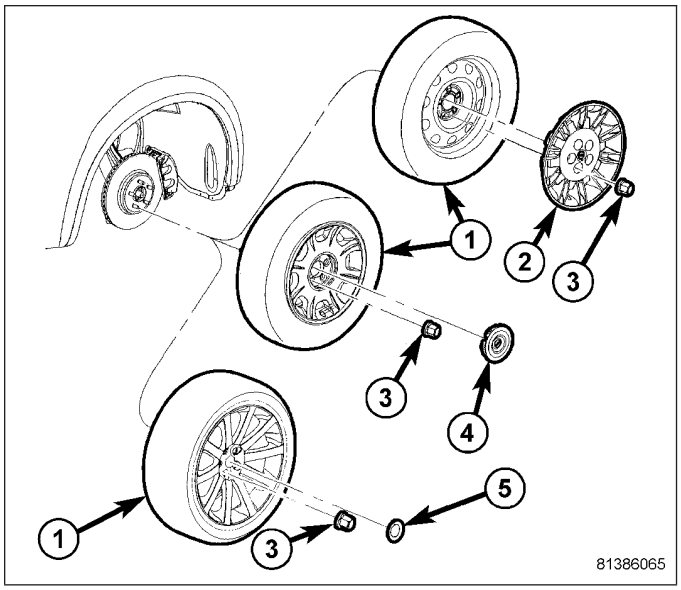

5. Remove outer tie rod (2) end nut (1) at each knuckle (3).

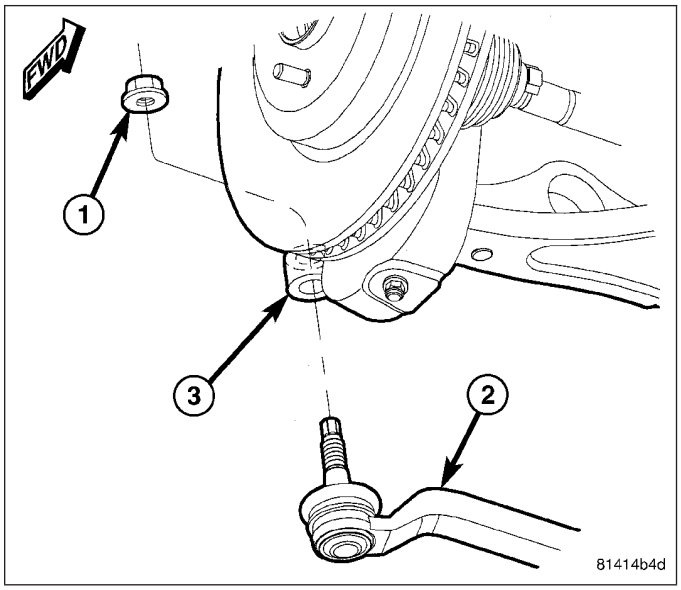

6. Using Remover (2), Special Tool 9630, separate outer tie rod (1) from each knuckle.

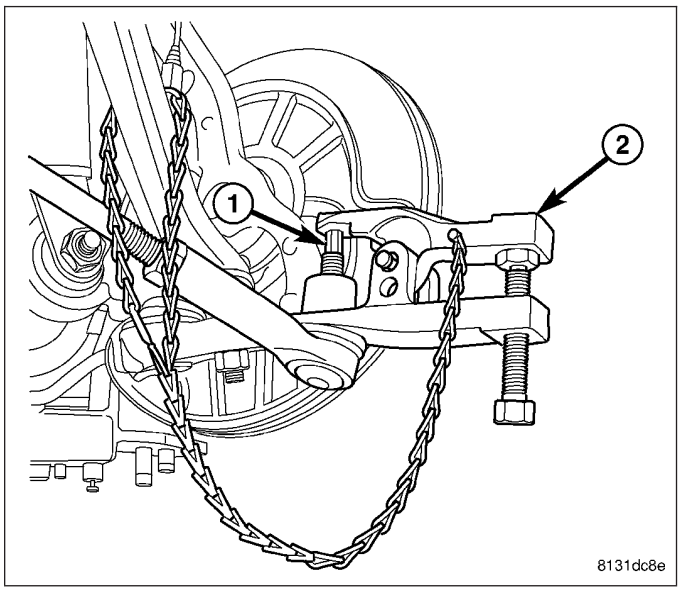

7. On each side of vehicle, remove nut (5) fastening stabilizer link (3) to stabilizer bar (4). Slide link ball joint stem (1) from bar.

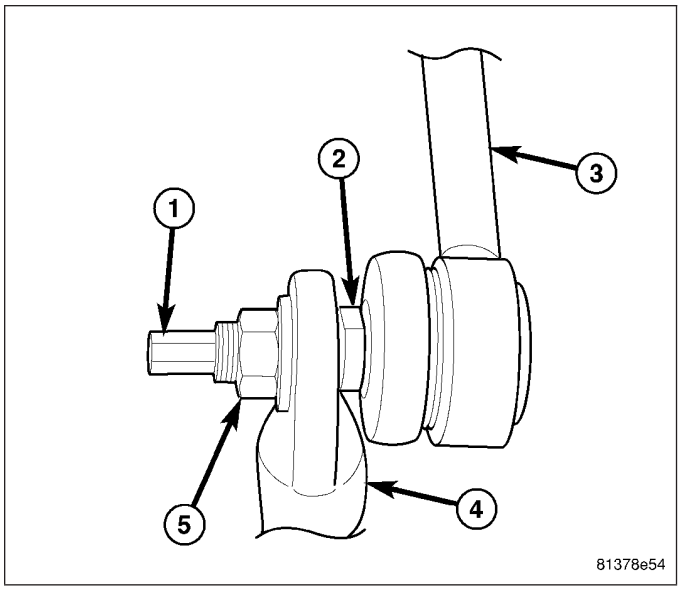

8. Back off nut (3) from bolt (1) attaching shock clevis bracket (2) to lower control arm (7) until it is flush with end of bolt.
9. Using a brass drift punch, tap the bolt out of the clevis bracket until bolt serrations clear bracket.
10. Remove nut (3) and bolt (1) for clevis bracket and control arm.
11. Install engine support tool #8534.
12. Remove upper airbox inlet tube.
13. Install left and right engine lift bracket to cylinder head.

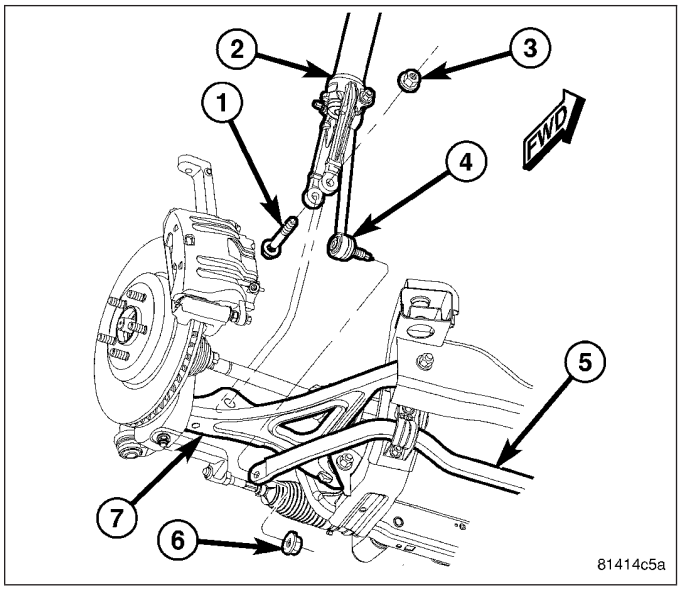

14. Remove the front belly pan. (Refer to 23 - BODY/ EXTERIOR/BELLY PAN - REMOVAL)

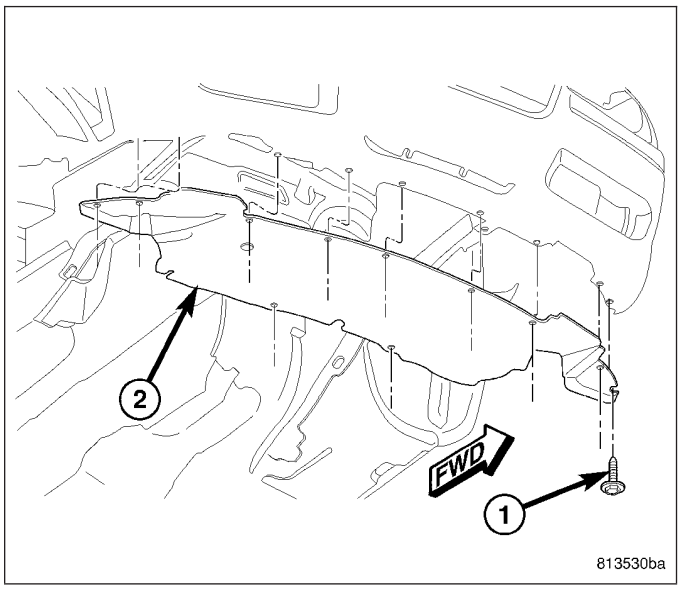

15. Remove two pressure line retainer bolts (1) from cradle (2).

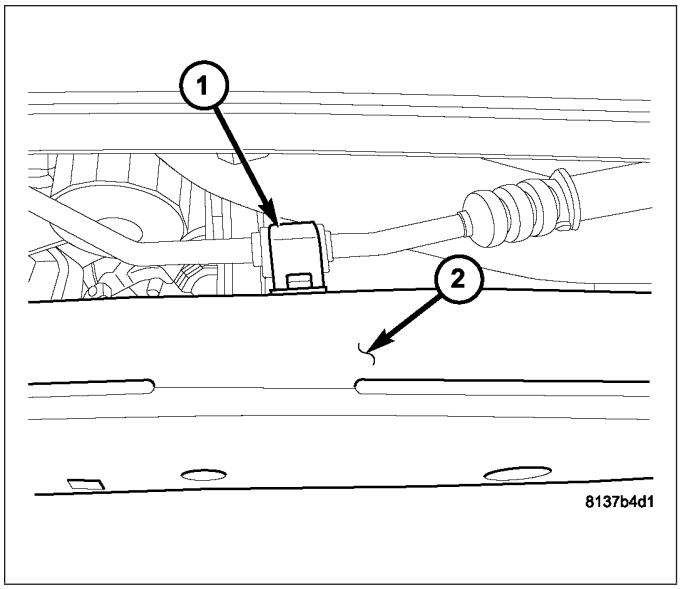

16. Remove mounting screws, then heat shield (3) above each inner tie rod bellows (2).

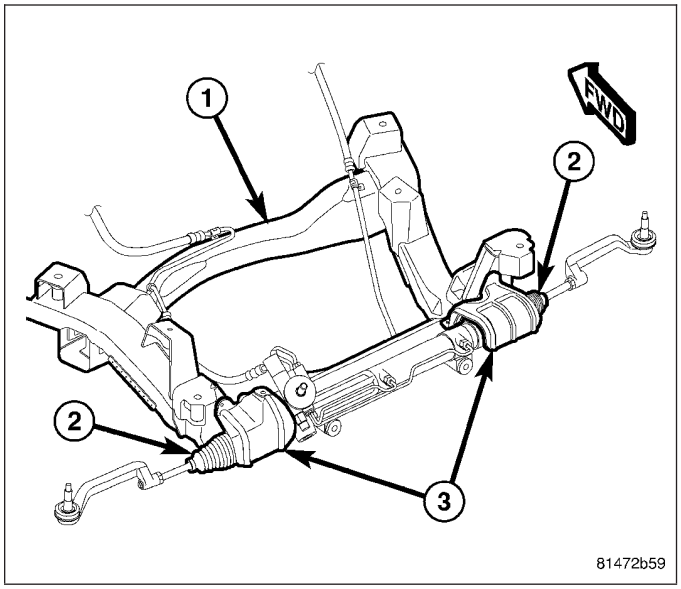

17. Remove steering gear upper mounting bolt (4) and nut.
18. Remove steering gear lower mounting bolts (2 and 3).
19. Remove steering gear (1) and support from the exhaust system.

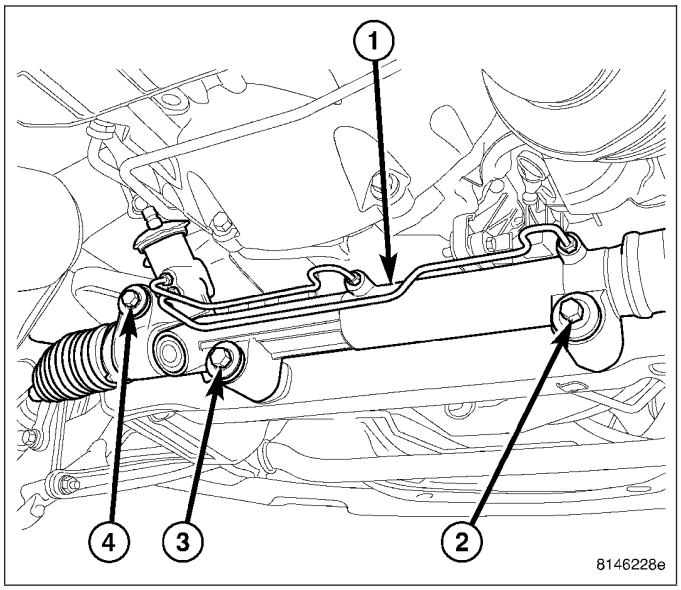

20. Loosen nut (4) attaching lower control arm ball joint stud to knuckle (3). Back nut off until nut is even with end of stud. **Keeping nut on at this location will help keep end of stud from distorting while using Puller in next step.**

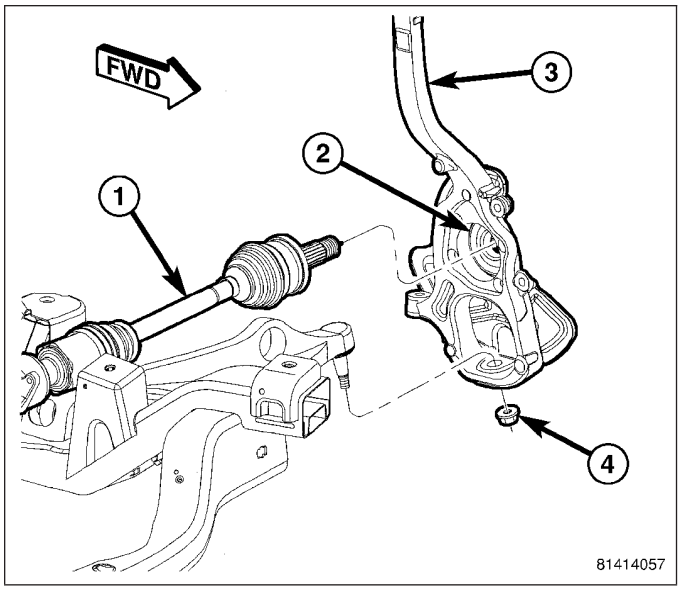

CAUTION: In following step, use care not to damage ball joint seal boot while sliding Puller, Special Tool 9360, into place past seal boot.

21. Using Puller (2), Special Tool 9360, separate ball joint stud from knuckle.
22. Remove tool.
23. Remove left and right engine mount nut.
24. Remove nut (1) from end of ball joint stud.

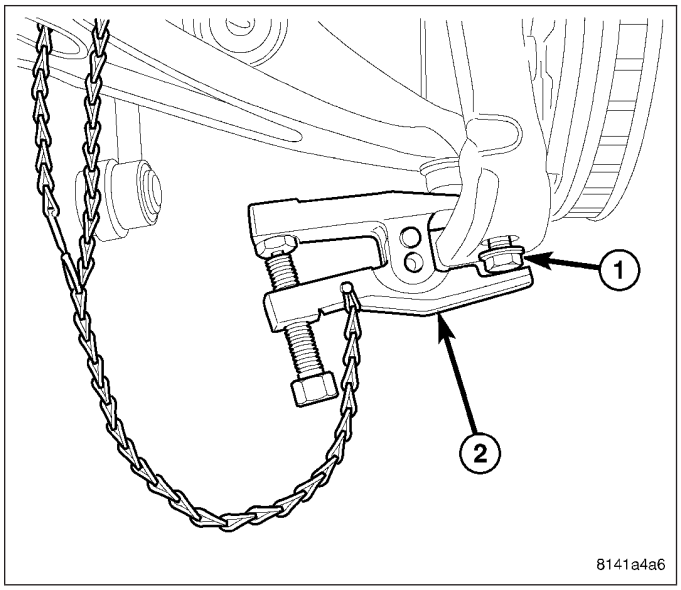

25. On each side of vehicle, remove bolts (2) fastening stabilizer bar isolator retainer (3) in place.
26. Remove stabilizer bar with isolators and retainers from vehicle.
27. Support the engine cradle (special tool #8534) with a suitable lifting device.
28. Using a grease pencil or equivalent, mark the position of the engine cradle to aid installation.
29. Remove the four engine cradle bolts and lower the cradle.
30. Remove the control arms, if required.

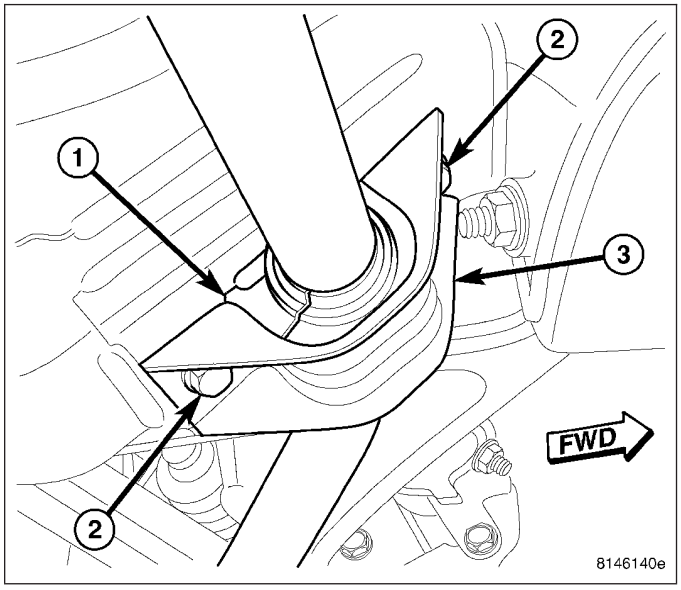

INSTALLATION

NOTE: Although AWD and RWD upper control arms are similar in appearance, they are not interchangeable.

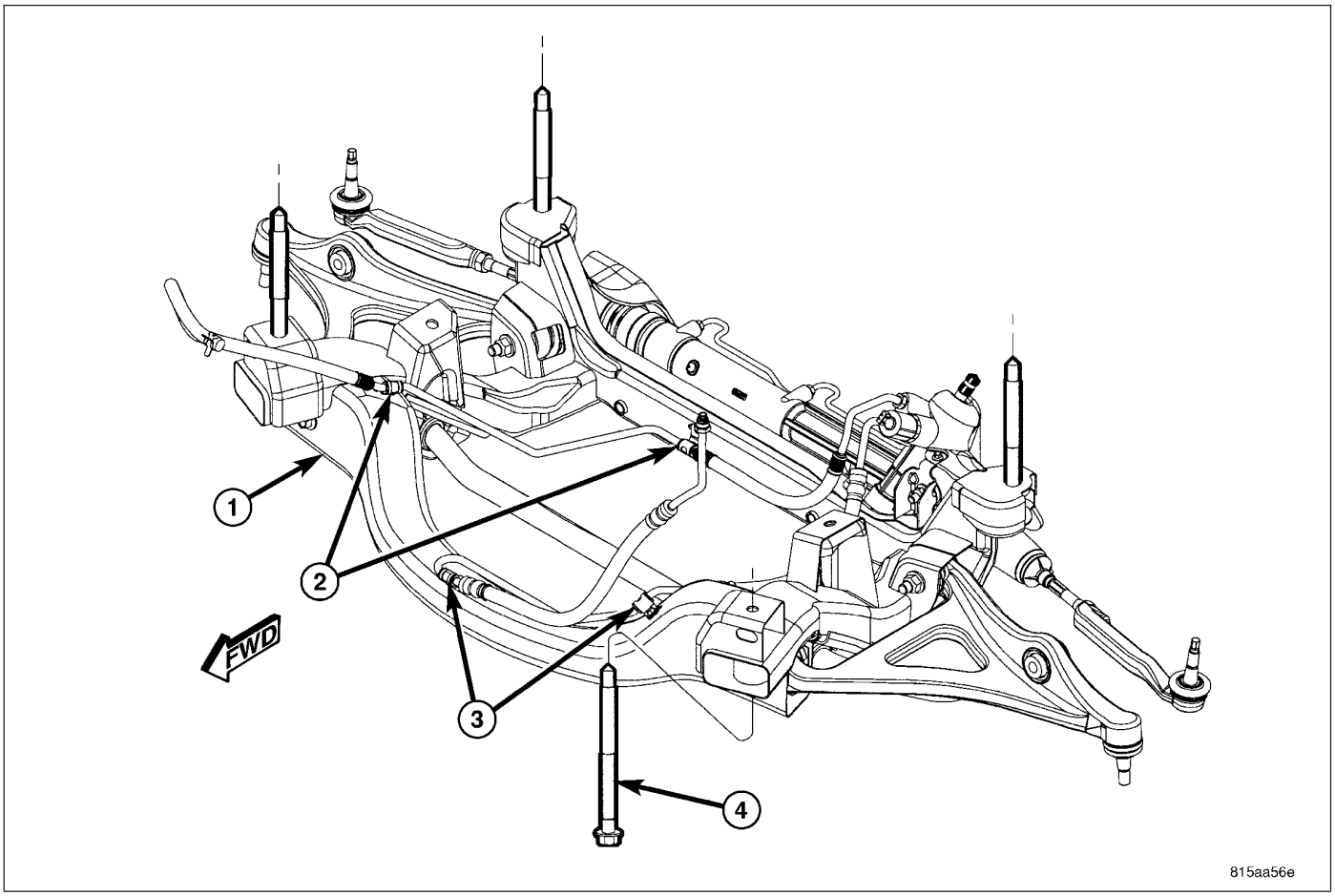

1. Install control arms. (Refer to 2 - SUSPENSION/FRONT/LOWER CONTROL ARM - INSTALLATION)
2. To aid installation, raise engine cradle to marked location.
3. Install four engine cradle bolts (4) and raise cradle. Tighten cradle bolts to 185 N·m (136 ft. lbs.).
4. Install stablizer with isolators and retainers onto cradle. (Refer to 2 - SUSPENSION/FRONT/STABILIZER BAR - INSTALLATION)

5. On each side of vehicle, install bolts (2) fastening stablizer bar isolator retainer (3) in place. Tighten bolts to 60 N·m (44 ft. lbs.).

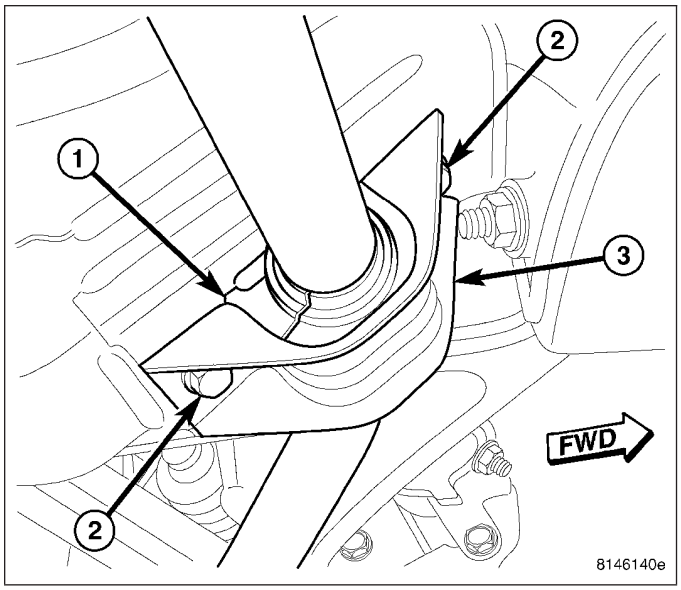

6. Tighten engine mount nuts to 60 N·m (44 ft. lbs.).

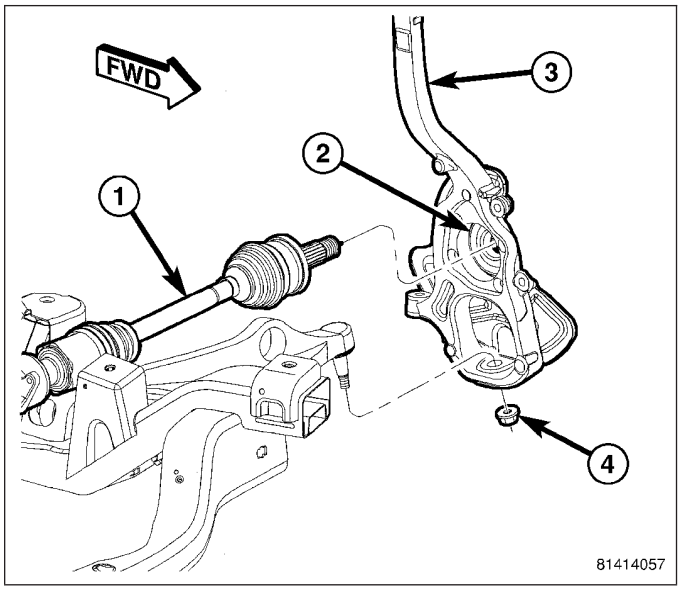

7. Tighten left and right ball joint nut (4) to 122 N·m (90 ft. lbs.) attatching lower control arm ball joint stud to knuckle (3).

8. Install steering gear (1) and support from the exhaust system. (Refer to 19 - STEERING/GEAR - INSTALLATION)
9. Install steering gear lower mounting bolts (2 and 3). Tighten to 142 N·m (105 ft. lbs.).
10. Install steering gear upper mounting bolt (4) and nut.

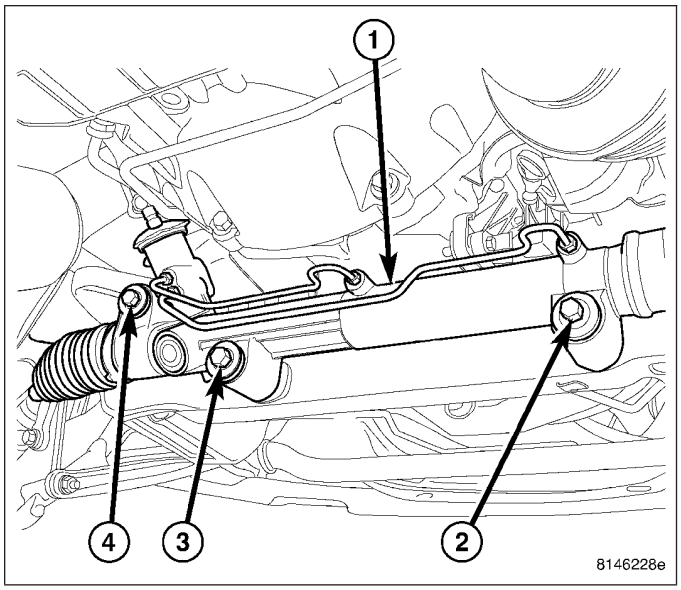

11. Install heat shield (3) and mounting screws above each inner tie rod bellow.

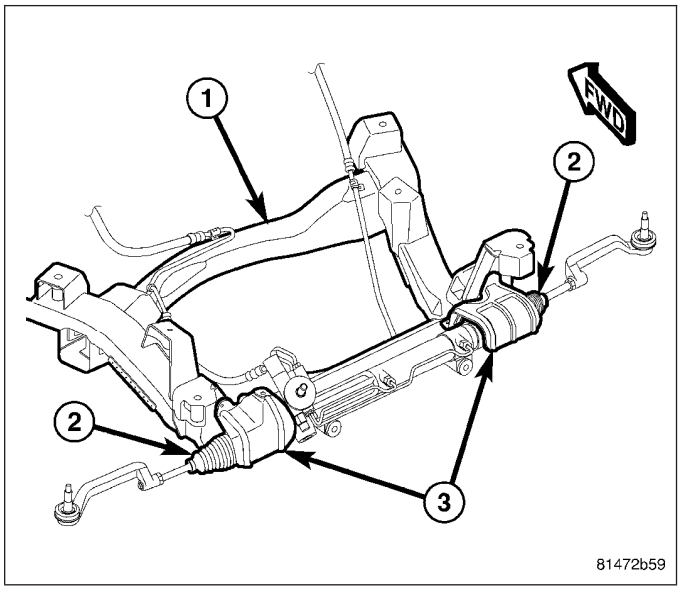

12. Install two pressure line retainer bolts (1) on cradle (2).

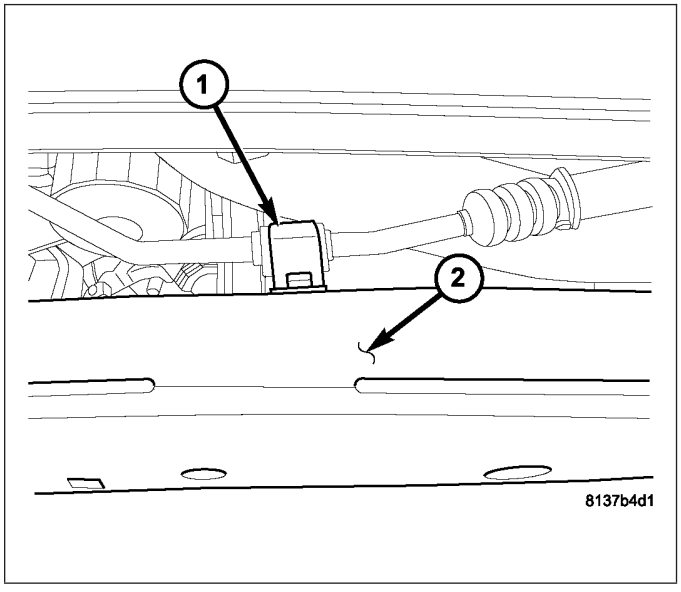

13. Install front belly pan. (Refer to 23 - BODY/EXTERIOR/BELLY PAN - INSTALLATION)

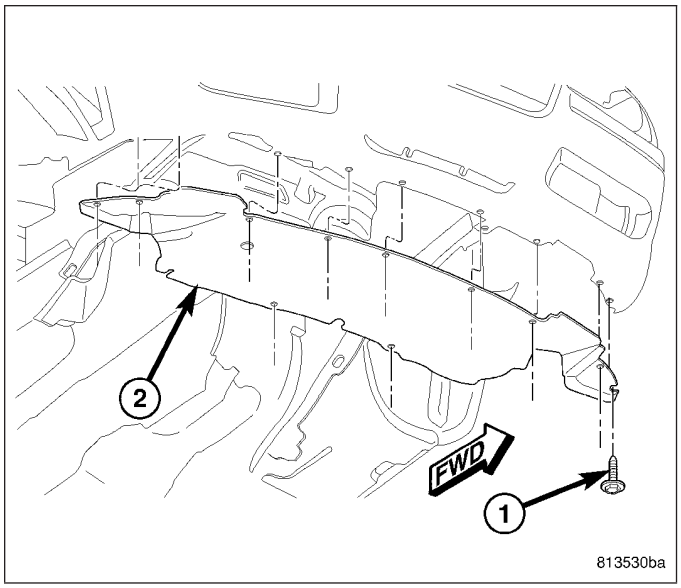

14. Install nut (3) and bolt (1) attatching shock clevis bracket (2) to lower control arm (7). Tighten to 174 N·m (128 ft. lbs.).
15. On each side of vehicle, install nut (5) fastening stablizer link (3) to stablizer bar (4). Slide link ball joint stem on to bar. Tighten link nut to 81N·m (60 ft. lbs.).

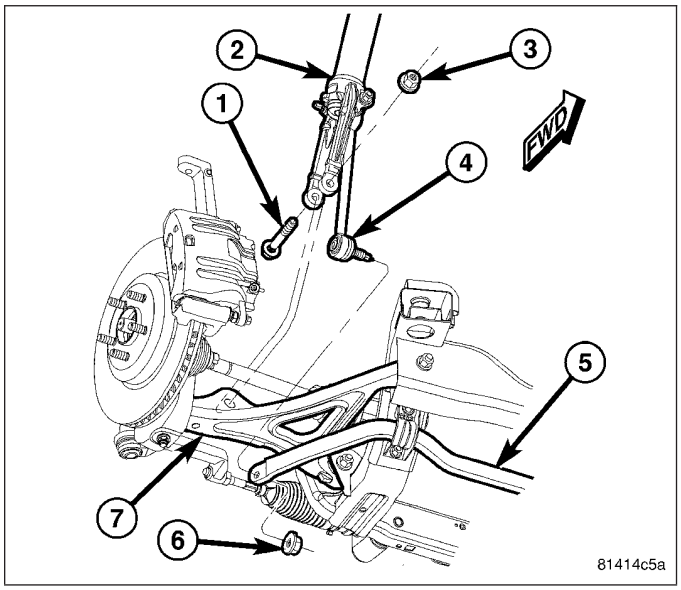

16. Install outer tie rod (2) end nut (1) at each knuckle (3). Tighten end nut to 86 N·m (63 ft. lbs.).

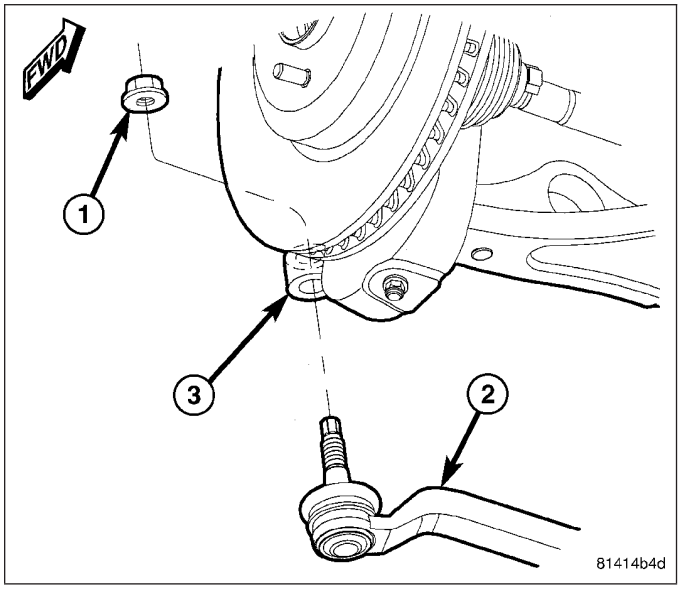

17. Install tire and wheel assembly (1). (Refer to 22 - TIRES/WHEELS - INSTALLATION).
18. Lower vehicle from hoist.
19. Install power steering fluid into pump reservoir. (Refer to 19 - STEERING/PUMP/FLUID - STANDARD PROCEDURE)

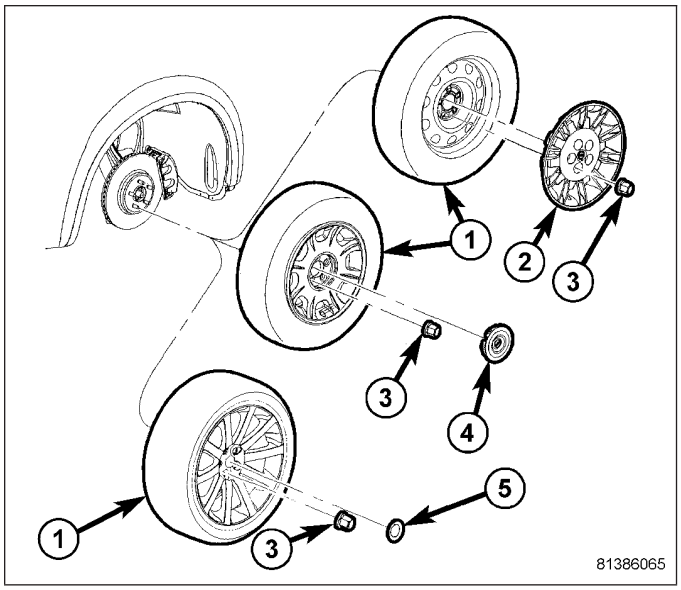

20. Connect negative battery cable (2) to battery post. (Refer to 8 - ELECTRICAL/BATTERY SYSTEM - STANDARD PROCEDURE)
21. Perform vehicle alignment. (Refer to 2 - SUSPENSION/WHEEL ALIGNMENT - STANDARD PROCEDURE)

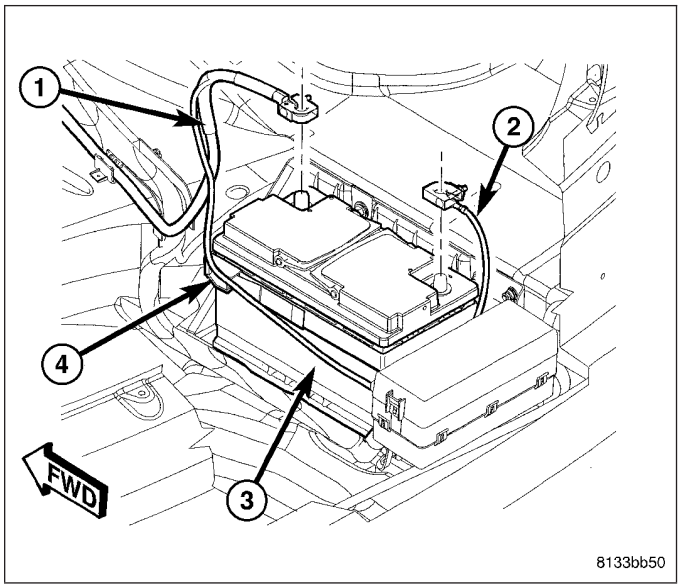

CROSSMEMBER-REAR

REMOVAL

1. Disconnect and isolate battery negative cable (2) from battery post.
2. Raise and support vehicle. (Refer to LUBRICATION & MAINTENANCE/HOISTING - STANDARD PROCEDURE)

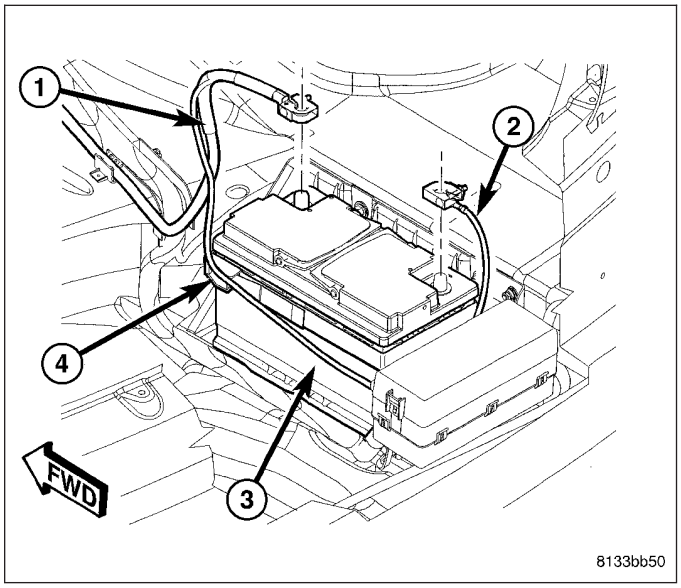

3. On each side of vehicle rear, remove wheel mounting nuts (3), then tire and wheel assembly (1).

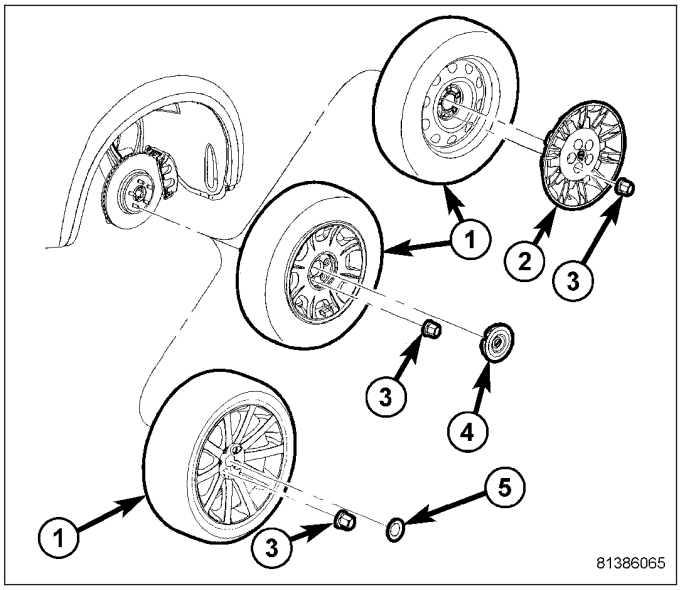

4. On each side of vehicle rear, while a helper applies brakes to keep hub from rotating, remove hub nut (1) from half shaft (2).

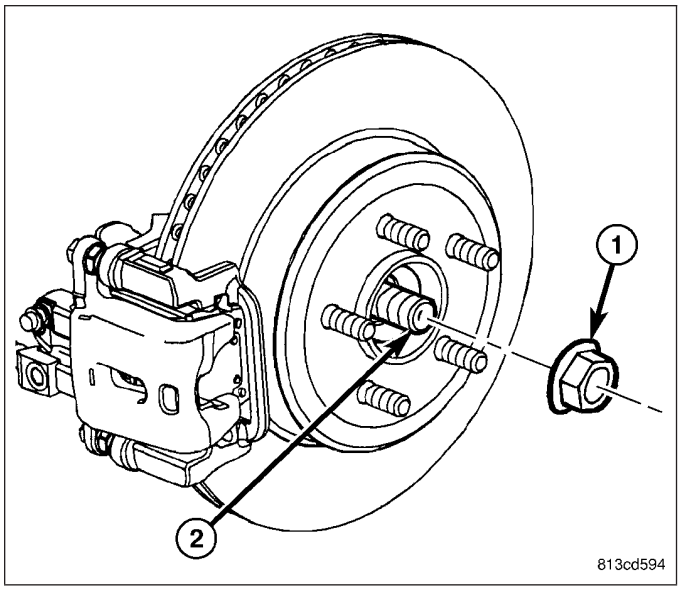

5. Remove rear exhaust system (2) (dual-outlet exhaust shown in figure). (Refer to 11 - EXHAUST SYSTEM - REMOVAL)
6. Remove rear axle differential. (Refer to 3 - DIFFERENTIAL & DRIVELINE/REAR AXLE - 198MM - REMOVAL) (Refer to 3 - DIFFERENTIAL & DRIVELINE/REAR AXLE - 210MM - REMOVAL) (Refer to 3 - DIFFERENTIAL & DRIVELINE/REAR AXLE - 215RII - REMOVAL)
7. Slide each axle half shaft from hub and bearing and remove from vehicle.

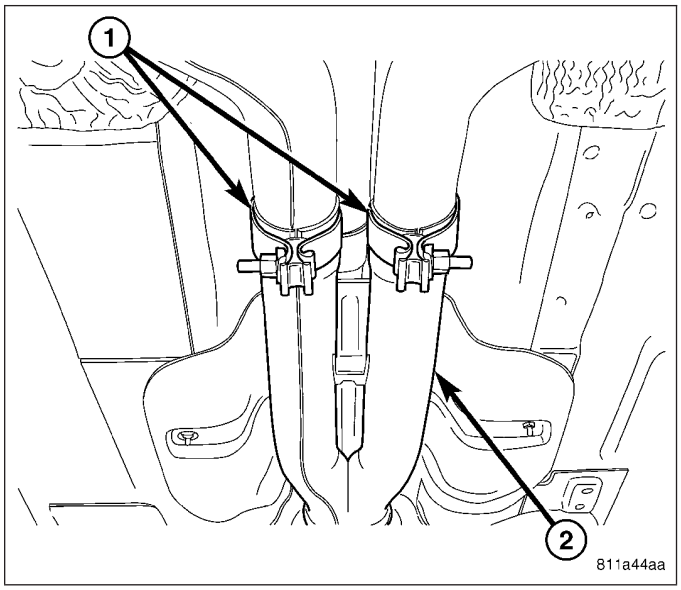

NOTE: Due to short travel and low spring tension, it is not necessary to lock-out parking brake lever to service parking brake components.

8. Disconnect right rear parking brake cable (4) at connector (3) to front parking brake cable (4).
9. Disconnect left rear parking brake cable (1) at equalizer (2). **Leave equalizer on front cable.**

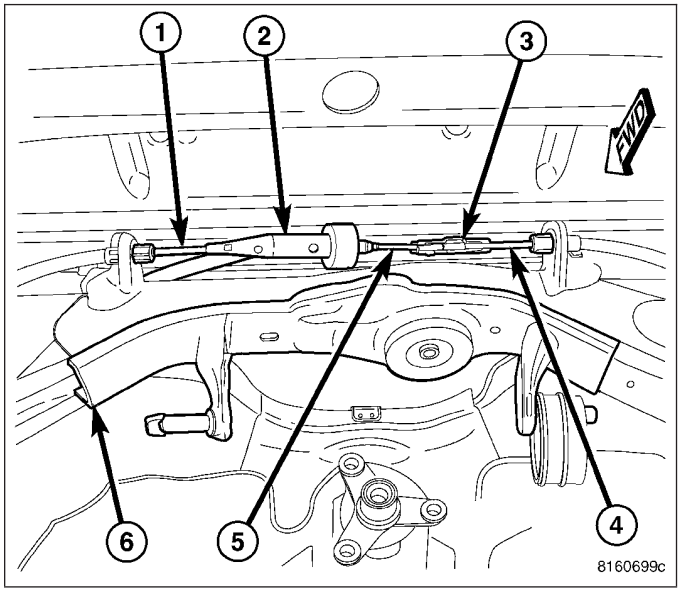

10. Remove screw (2) fastening front parking brake cable (1) routing bracket to rear crossmember front flange (3). Remove J-nut from crossmember.

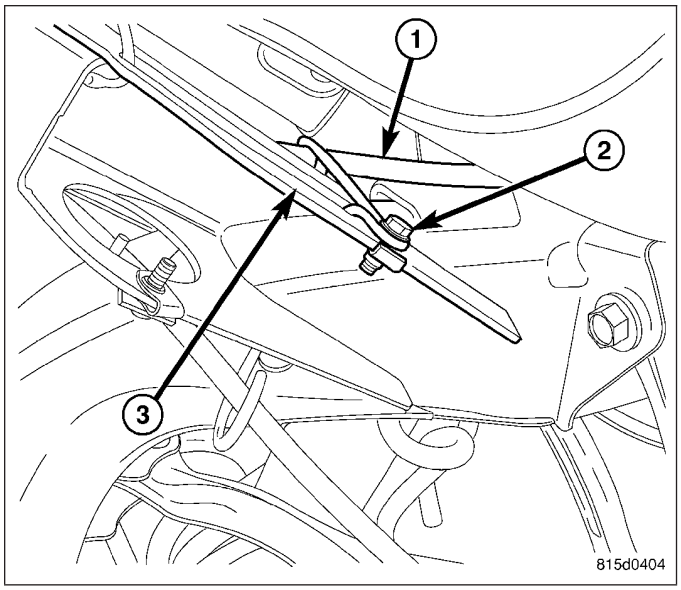

11. If equipped with standard or premium disc brakes, on each rear disc brake:
    a. While holding guide pins from turning, remove disc brake caliper guide pin bolts (2).
    b. Remove brake caliper (1) from brake adapter (3) and pads.
    c. Guide brake caliper up through suspension, following brake hose path. Support caliper above rear suspension using with bungee cord or wire to keep caliper from overextending brake hose when crossmember is lowered.

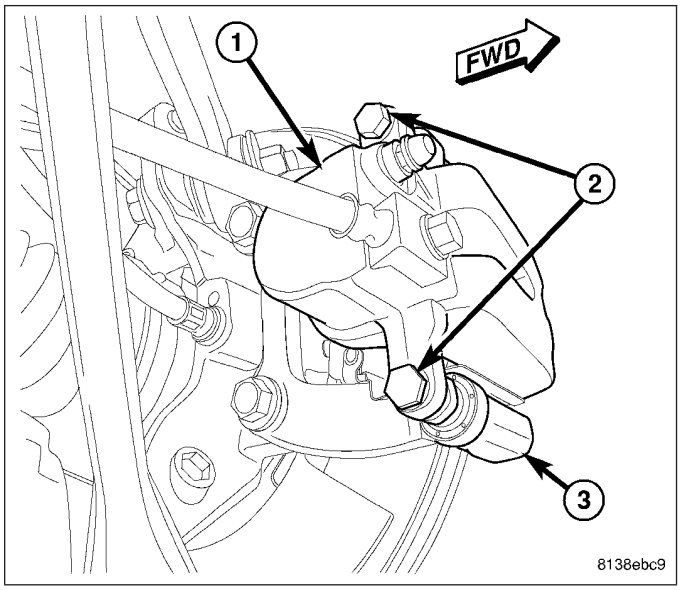

CAUTION: When pushing pistons back into caliper bores, use only a trim stick as shown or other suitable soft tool. Never use a screwdriver or other metal pry bar due to potential damage to braking surface of rotor, caliper, pistons or dust boots.

12. If equipped with SRT8 disc brakes, on each rear disc brake, place trim stick (4) between brake pad (2) and outer edge of rotor (3).
13. If equipped with SRT8 disc brakes, on each rear disc brake, using trim stick, slowly apply pressure against brake pad (2) until both pistons (on that side of caliper) are completely bottomed in bores of caliper half.

NOTE: Repeat above procedure to opposite brake pad (1) and pistons as necessary.

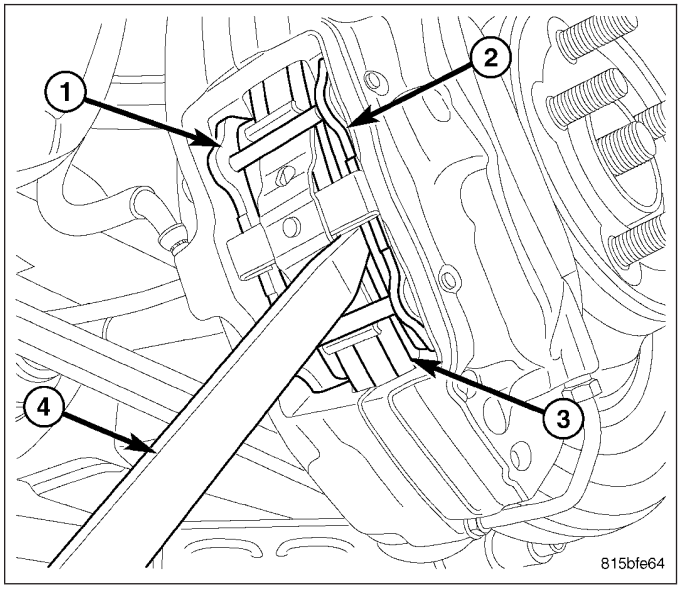

14. If equipped with SRT8 disc brakes, on each rear disc brake, support spring link (1) using a transmission jack (5) or other appropriate jack. Raise spring link just enough to access brake caliper lower mounting bolt (4) from above compression link (2).

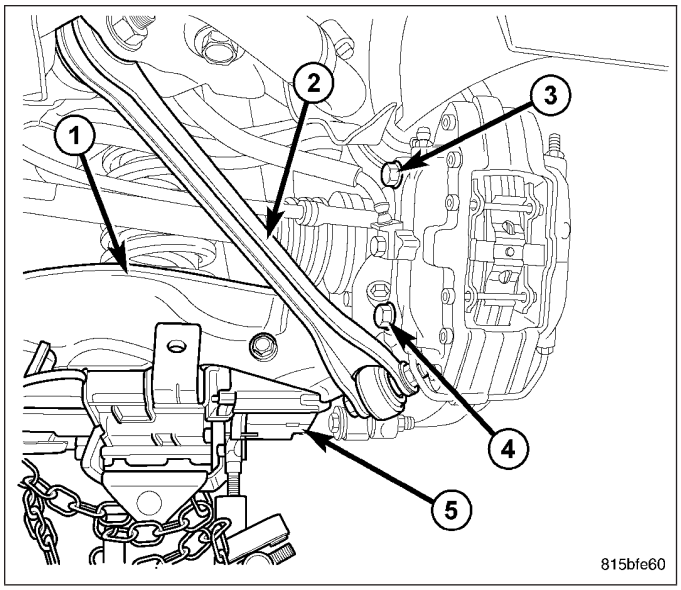

15. If equipped with SRT8 disc brakes, on each rear disc brake, remove the lower and upper caliper mounting bolts (1).
16. If equipped with SRT8 disc brakes, on each rear disc brake, remove brake caliper (2) with pads from knuckle and brake rotor. Hang assembly out of way using wire or a bungee cord. Use care not to overextend brake hose when doing this.
17. If equipped with SRT8 disc brakes, remove jack from under spring link.

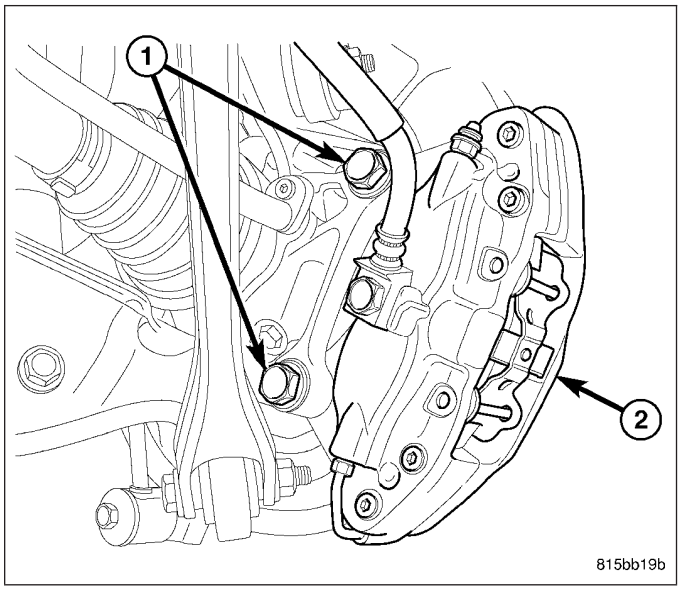

NOTE: To remove wheel speed sensor connector from body wiring harness connector, move retaining clip (2) and pull sensor connector outward.

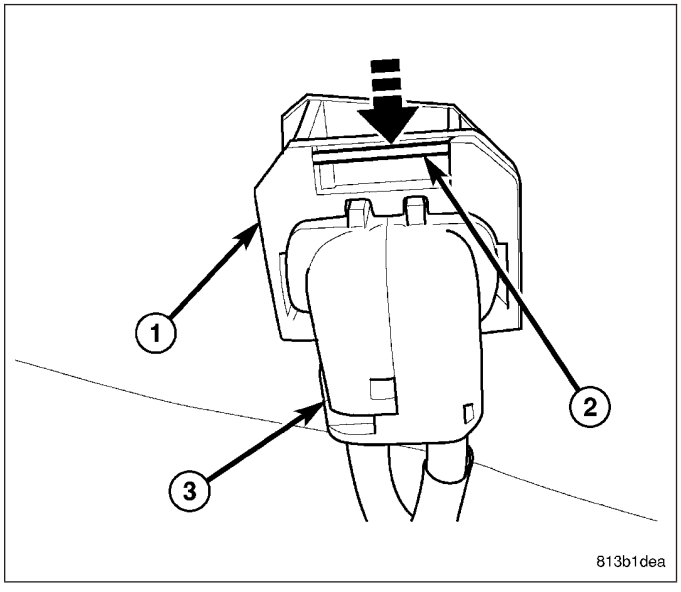

18. Remove wheel speed sensor connectors (3 and 4) from body wiring harness connector (1) located in luggage compartment floor pan (2).

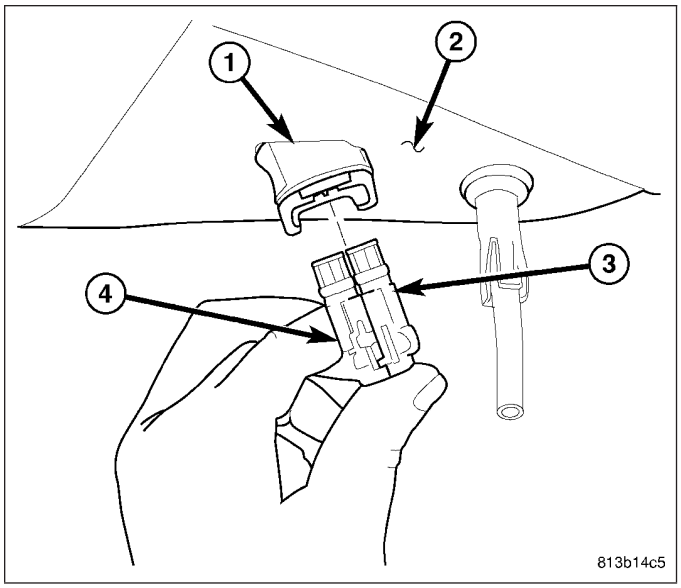

19. Unclip left wheel speed sensor cable (3) from routing clip (1) near body connector.

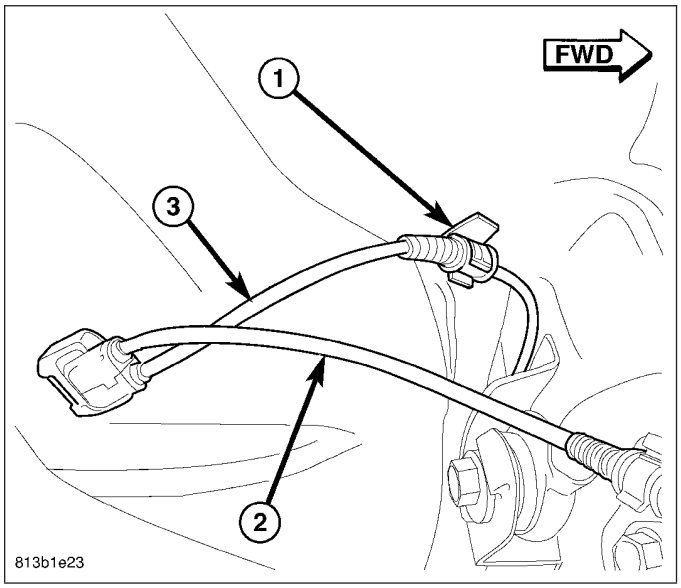

20. Unclip left sensor cable (1) from routing clips (2) along rear of crossmember near rear differential (3).

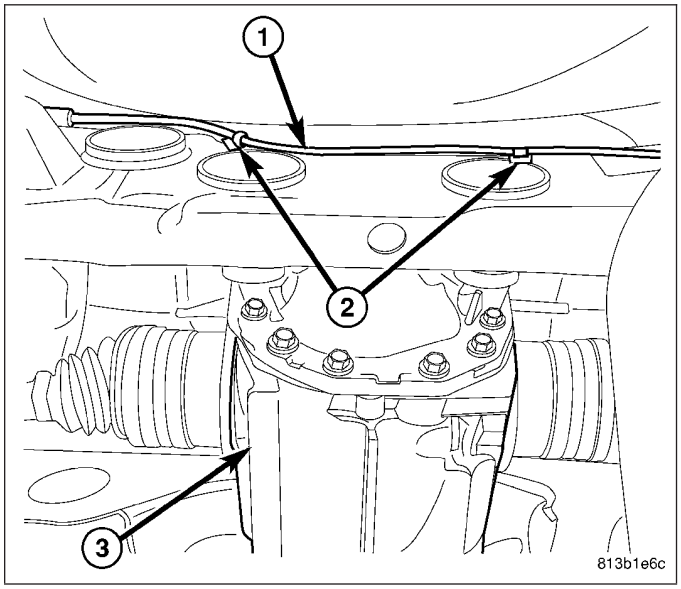

21. Unclip left sensor cable (2) from routing clip (1) above toe link mount on rear crossmember.

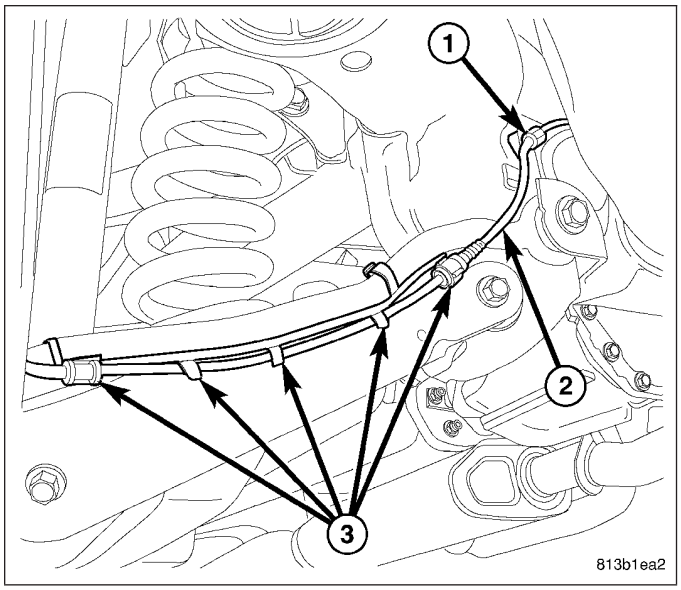

22. On each side of vehicle, remove shock absorber (1) lower mounting bolt (2) and nut (4).

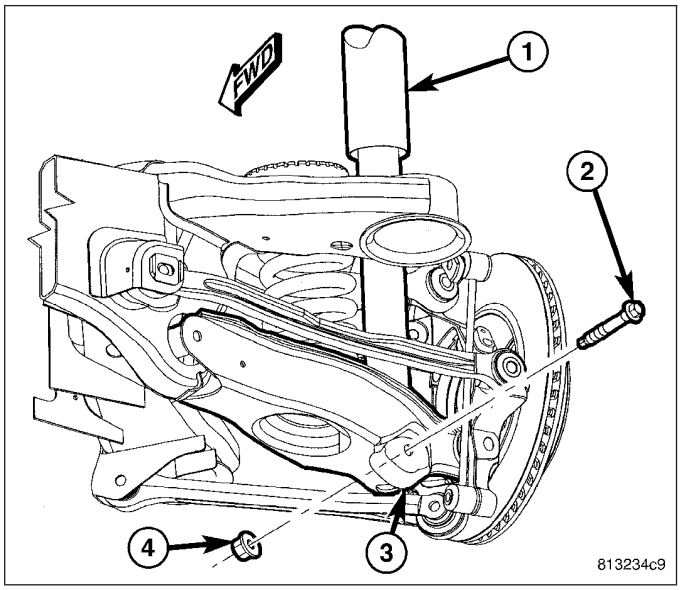

23. Carefully mark location of rear crossmember on body at all four mount (bushing) locations using a marker or crayon. **Do not use a scratch awl to mark location.**
24. Position an extra pair of jack stands under and support forward end of engine cradle to help stabilize vehicle during rear suspension removal/installation.

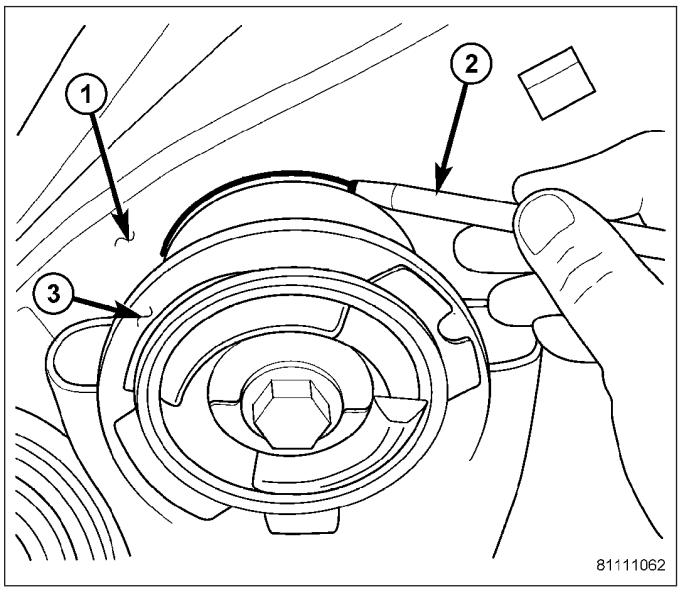

25. Position under-hoist utility jack or transmission jack (2) under center of rear crossmember (1). Raise jack head to contact crossmember and secure in place. **When securing crossmember to jack, be sure not to secure stabilizer bar.**

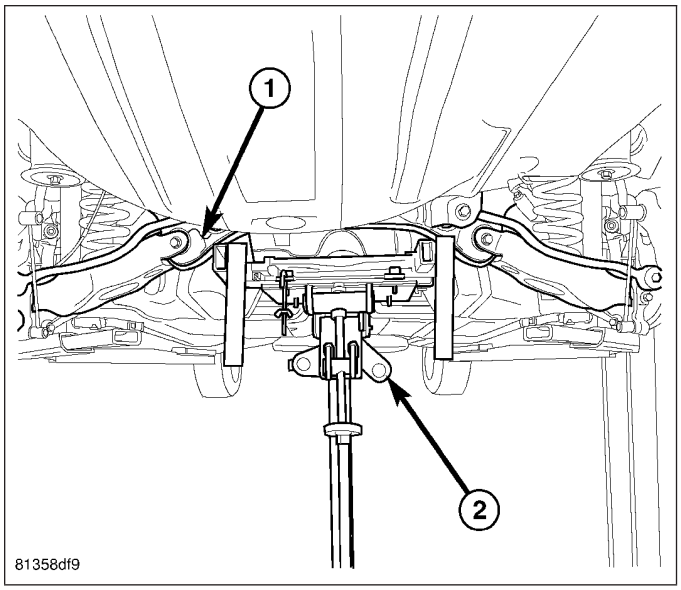

WARNING: Before opening fuel system, review all Warnings and Cautions.

26. Remove fuel filler tube. (Refer to 14 - FUEL SYSTEM/FUEL DELIVERY/FUEL TANK FILLER TUBE - REMOVAL)

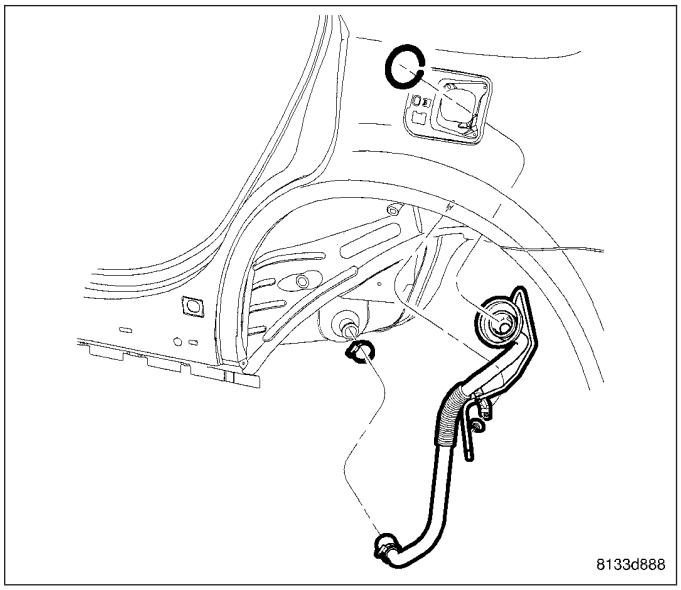

NOTE: If equipped with AWD, when removing crossmember mounting bolts in following step, be sure to not to misplace spacers (1) between crossmember mounts (2) and body.

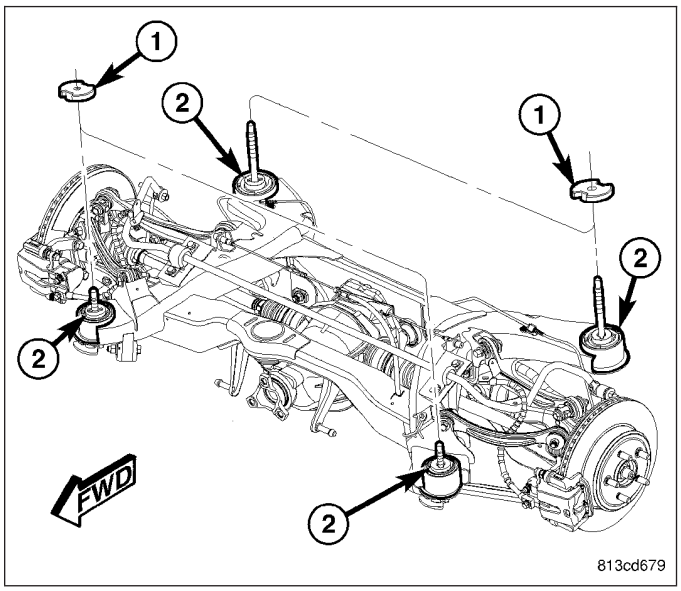

27. Remove both front (3) and both rear (2) mounting bolts fastening crossmember (1) in place.

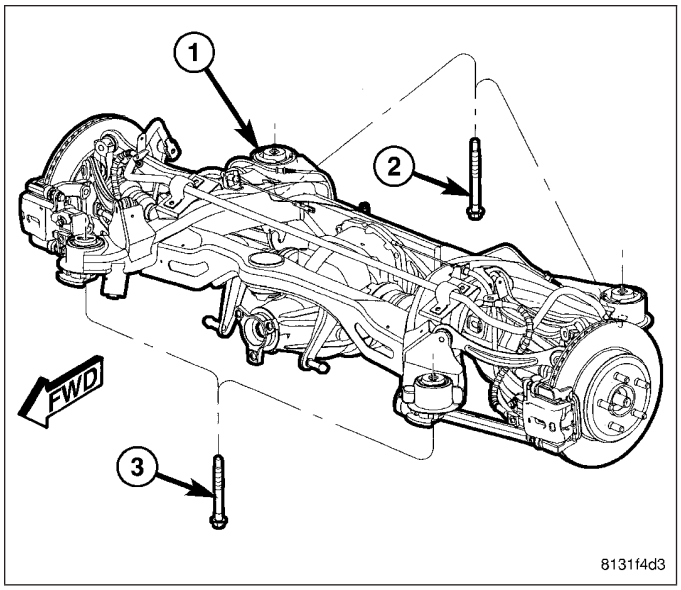

28. **Slowly** lower crossmember using jack until crossmember is at a comfortable working level to access link and stabilizer bar fasteners.
29. On each end, remove bolt (3) and nut fastening stabilizer bar (4) to stabilizer link (2).
30. Remove bolts (1) fastening each stabilizer bar cushion retainer to crossmember.
31. Remove stabilizer bar (4) with cushions and retainers.

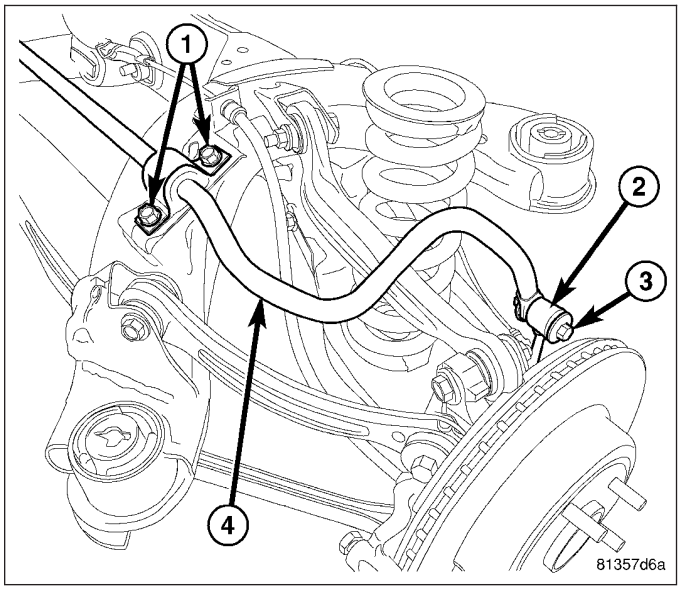

32. Remove coil springs and isolators (1, 2 and 5) from spring links.

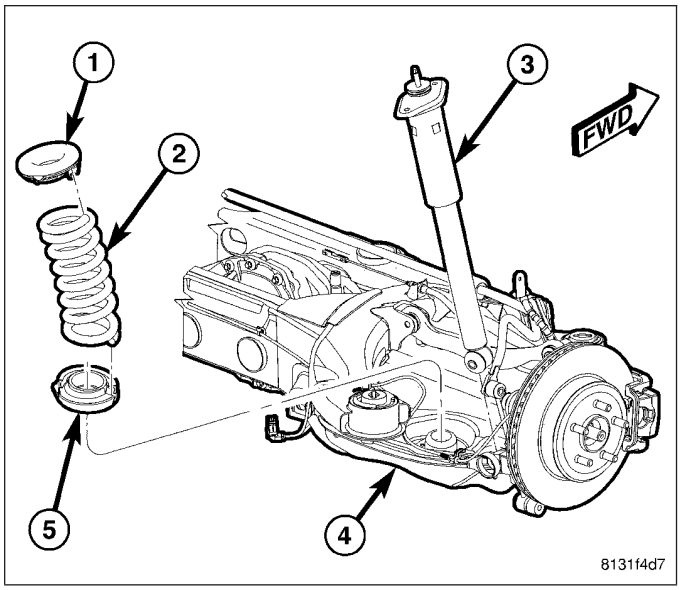

33. For each parking brake cable, place 13 mm 12-point box wrench (4) over cable strand and completely onto cable retainer (3) as shown at crossmember bracket (1 - left)(2 - right). It may be necessary to wiggle wrench around somewhat to collapse retainer fingers. With wrench in place, pull cable from bracket.

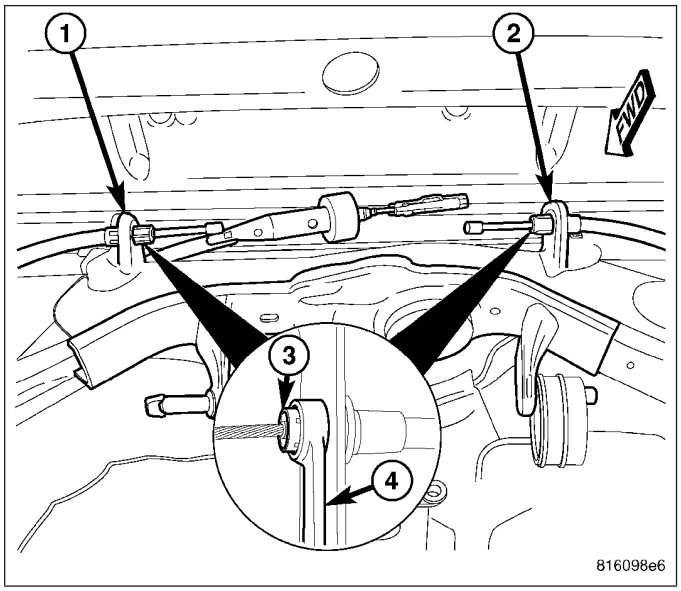

34. On each side, remove screw fastening parking brake cable routing guide (1) to crossmember. Remove J-nuts from crossmember.

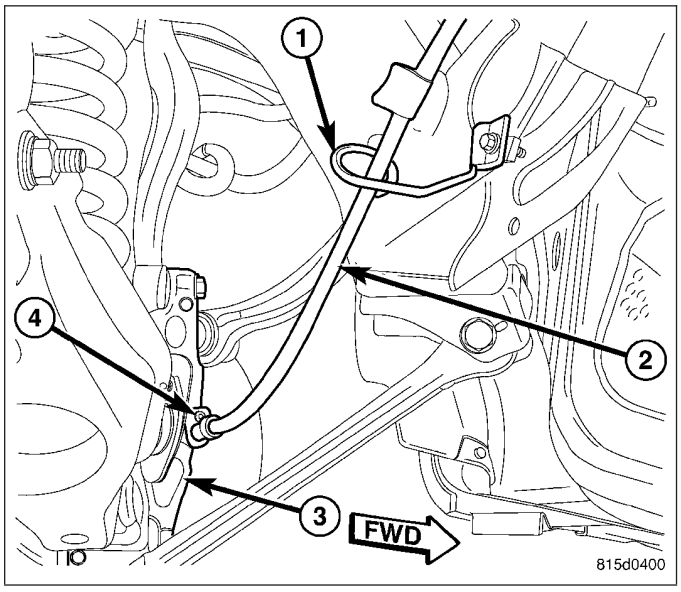

NOTE: For installation purposes, when removing fasteners for any rear suspension links, it is important to note which bolt fastens what component and in what direction it is installed in.

35. On each side of crossmember, remove bolt and nut (1) fastening spring link (4) to crossmember.

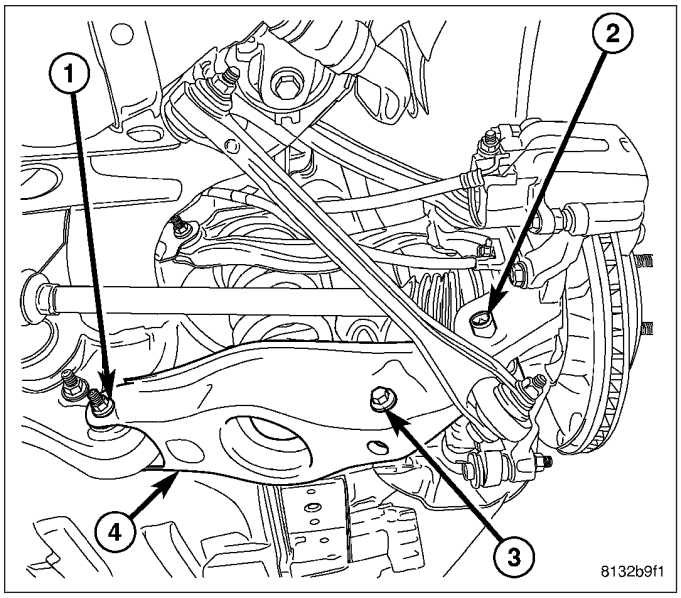

36. On each side of crossmember, while holding toe adjustment cam bolt from rotating, remove nut (3) securing toe link at crossmember (1).

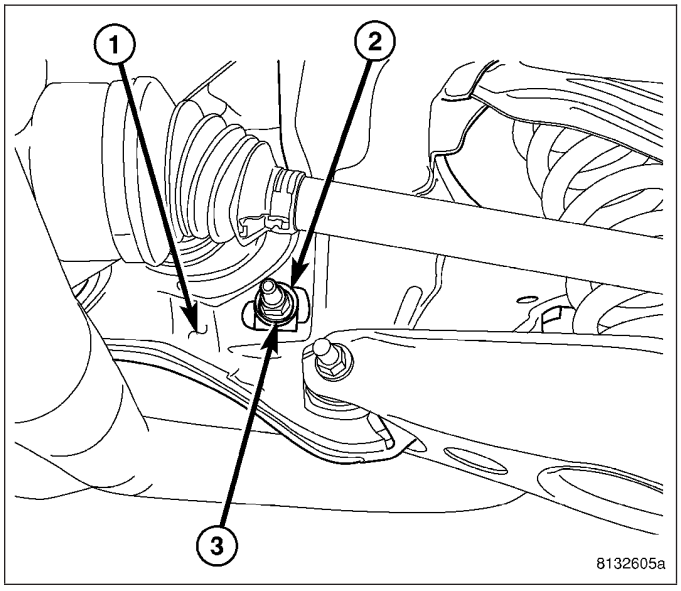

37. On each side of crossmember, slide cam bolt (2) attaching toe link rearward, out of crossmember and link (1).

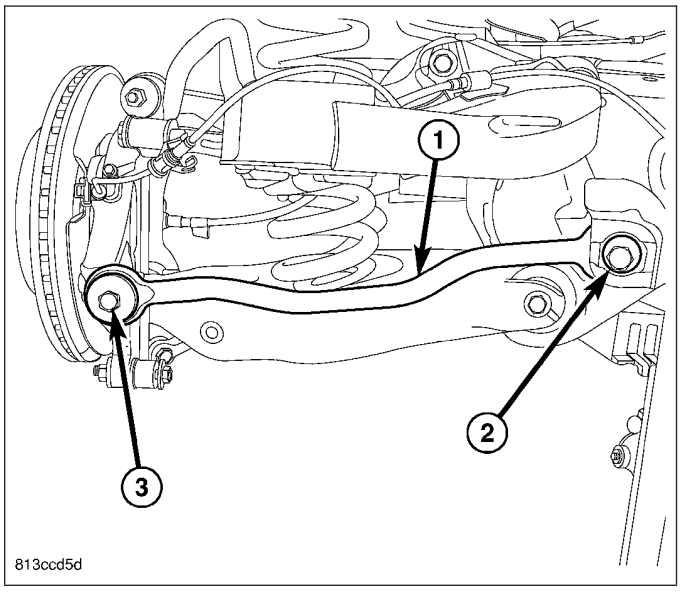

38. On each side of crossmember, remove bolt and nut (1) mounting link (3) at crossmember.

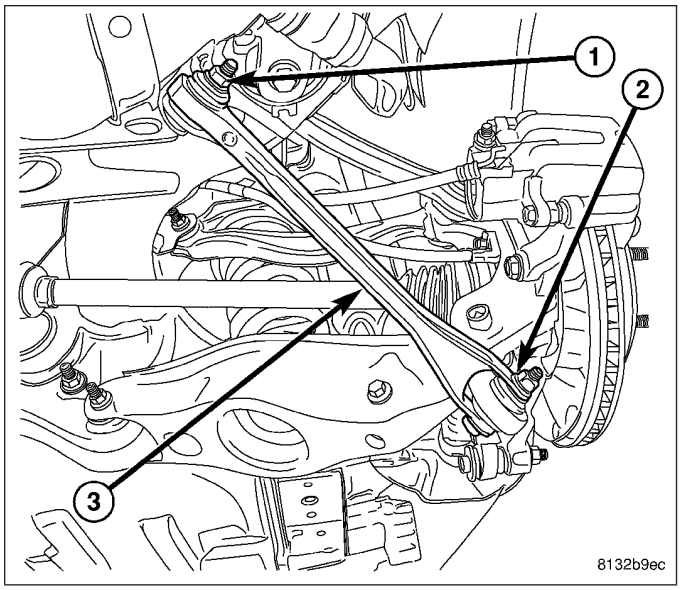

39. On each side of crossmember, remove nut and bolt (4) mounting tension link to crossmember (1).
40. On each side of crossmember, remove nut and bolt (2) mounting camber link to crossmember (1).
41. Carefully lift knuckle with links and parking brake cable attached from rear suspension crossmember.
42. Remove crossmember from jack.

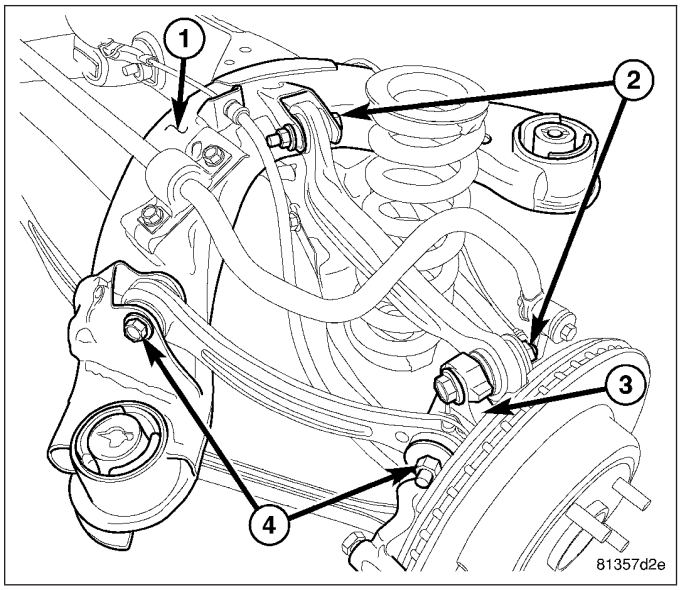

INSTALLATION

1. Install rear crossmember (1) on jack (2) head in same position in which it was removed and secure in place.

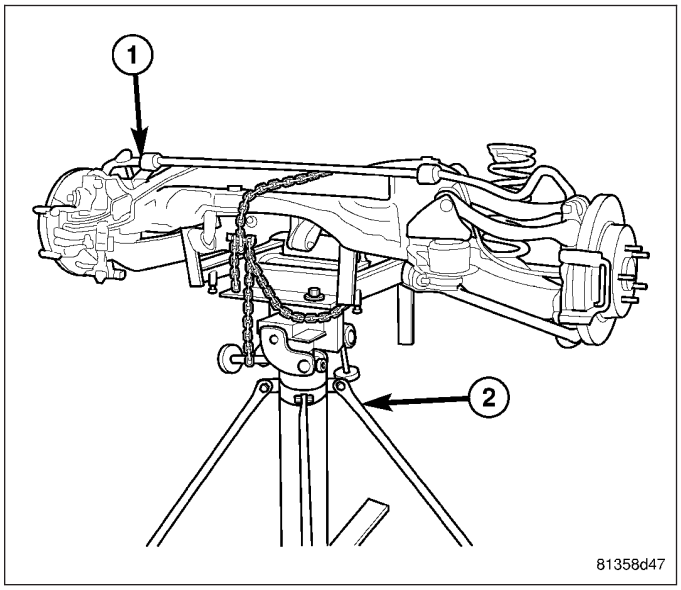

2. Carefully place one side knuckle with links and parking brake cable attached as an assembly into mounted position on rear suspension crossmember. Install nut and bolt (2) mounting camber link to crossmember (1) to hold assembly in place. **Do not tighten at this time.**
3. Carefully place opposite side knuckle with links and parking brake cable attached as an assembly into mounted position on rear suspension crossmember. Install nut and bolt (2) mounting camber link to crossmember (1) to hold assembly in place. **Do not tighten at this time.**
4. On each side of crossmember, install nut and bolt (4) mounting each tension link to crossmember (1). **Do not tighten at this time.**

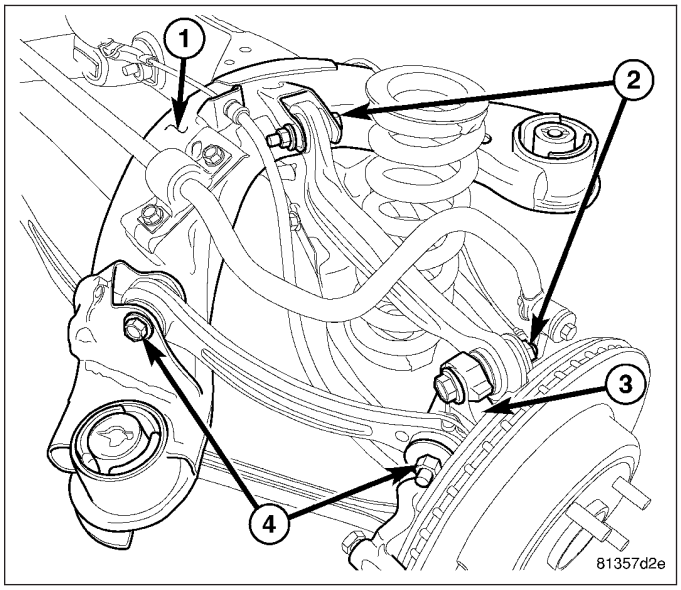

5. On each side of crossmember, Install bolt and nut (1) mounting each compression link (3) at crossmember. **Do not tighten at this time.**

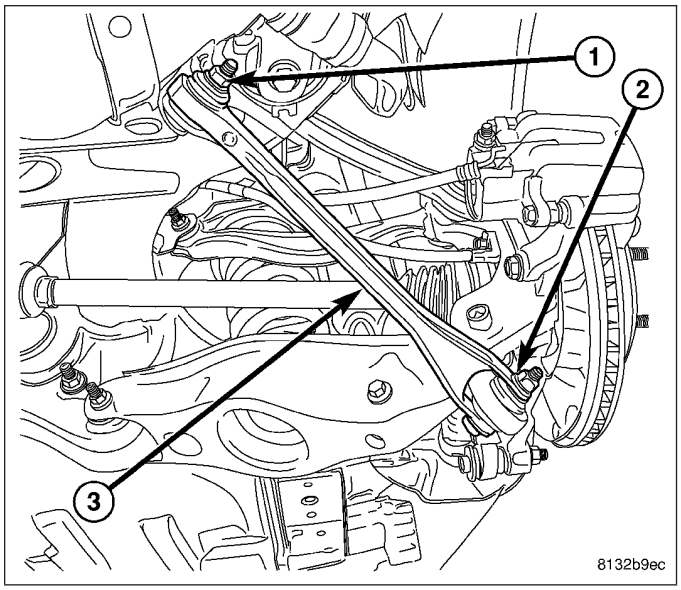

6. On each side of crossmember, slide cam bolt (2) attaching toe link through crossmember and link (1) from rear.

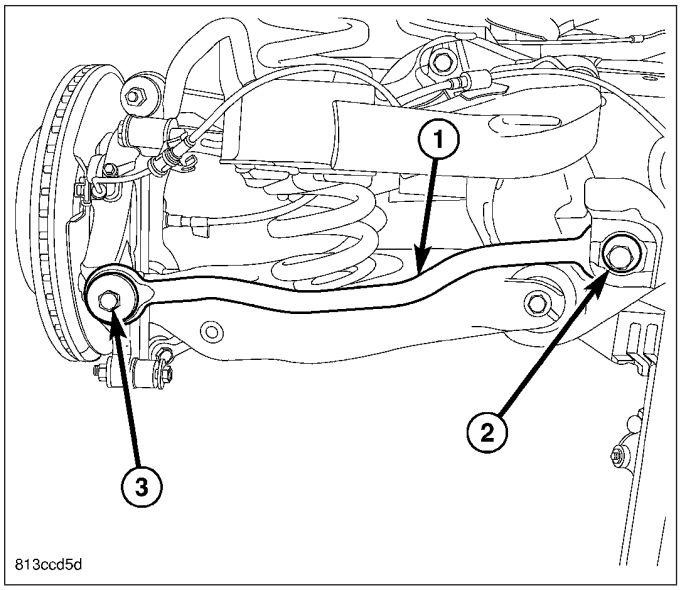

7. On each side of crossmember, while holding toe adjustment cam bolt from rotating, install cam washer (2) and nut (3) securing toe link at crossmember (1). **Do not tighten at this time.**

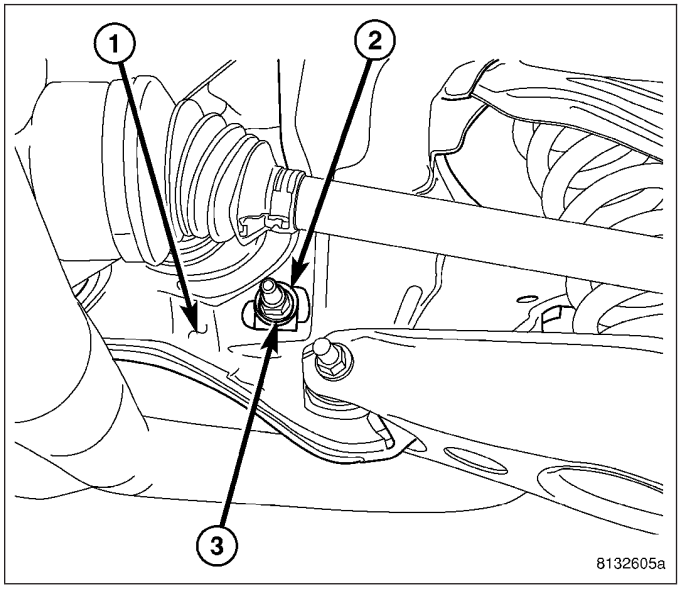

8. On each side of crossmember, install bolt and nut (1) fastening spring link (4) to crossmember. **Do not tighten at this time.**

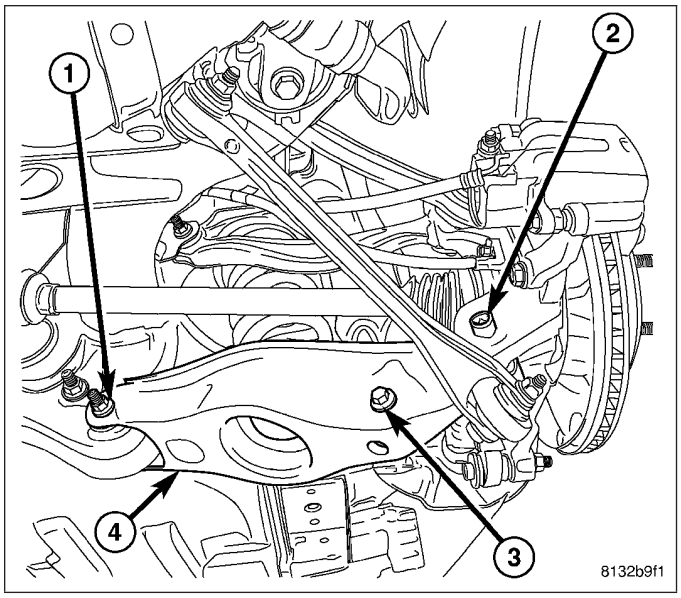

9. On each side of crossmember rear, guide leading end of rear parking brake through crossmember bracket (1 - left)(2 - right) near equalizer and press cable housing retainer into bracket allowing retainer fingers to lock cable in place.

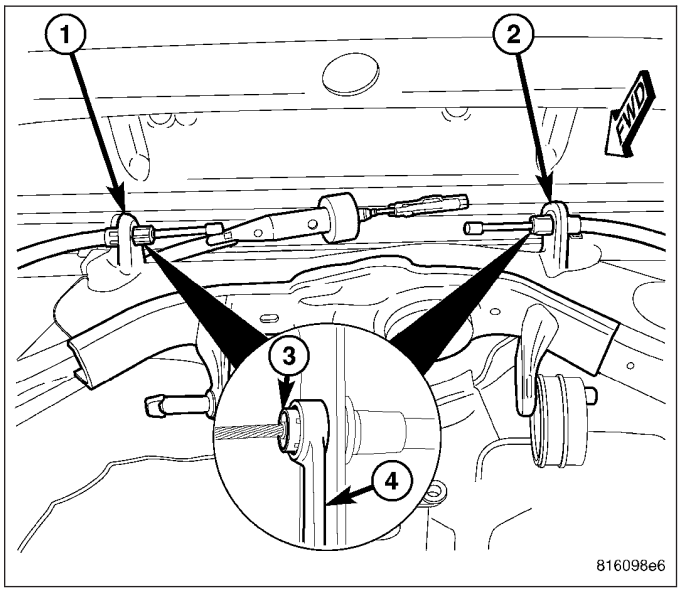

10. On each side of crossmember rear, install J-nut for parking brake cable guide.
11. On each side, install screw fastening parking brake cable routing guide (1) to crossmember.

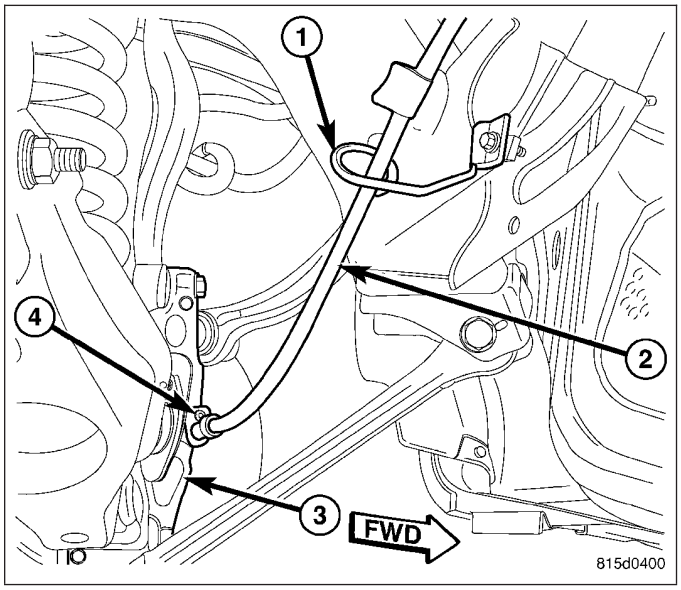

12. Install stabilizer bar (4) with cushions and retainers on crossmember.
13. Install cushion retainer mounting bolts (1). **Do not tighten at this time.**
14. Install bolt (3) and nut fastening stabilizer bar ends to each stabilizer link (2). **Do not tighten at this time.**
15. Tighten cushion retainer mounting bolts (1) to 60 N·m (44 ft. lbs.).

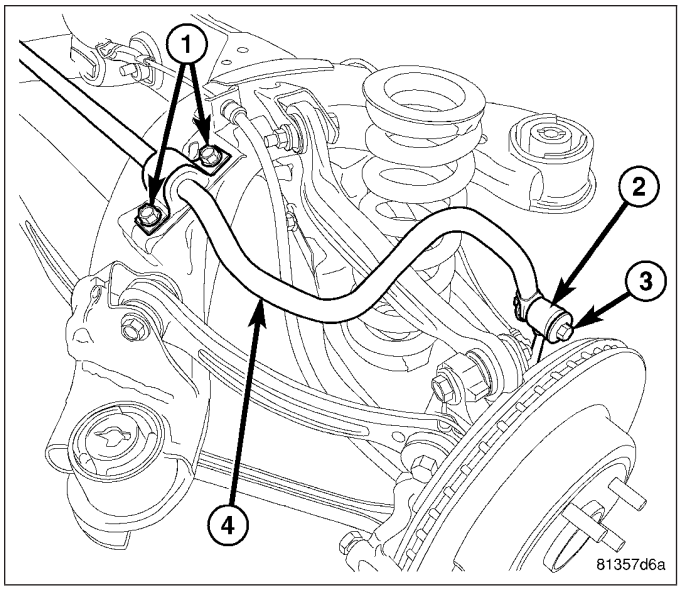

CAUTION: Differential mounting bolts (1) must be installed through bushings prior to crossmember installation in vehicle. Bolts cannot be inserted through bushings once crossmember is installed.

16. Transfer differential mounting bolts (1) from original crossmember differential mount bushings to bushings in replacement crossmember. Install bolts from rear. Be sure to insert bolts through correct mount bushings in crossmember depending on rear axle differential (198 mm axle differential shown in figure).

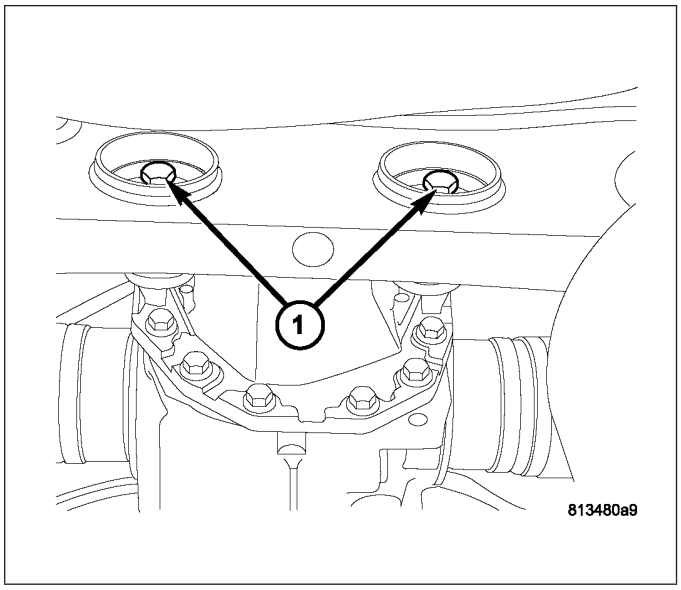

NOTE: Do not install coil springs on spring links at this time.

17. Raise crossmember to body mounting points. As crossmember is raised, align shocks (3) with pockets in spring links. **Do not install bolts at this time.**

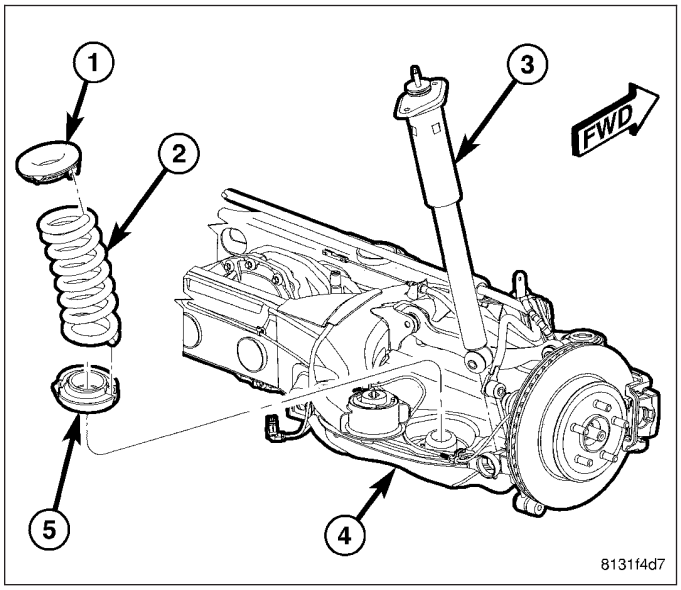

NOTE: There are four crossmember mounting bolts. Rear mounting bolts (2) are longer than front mounting bolts (3). Do not interchange mounting bolts.

18. Continue to raise crossmember (1) with jack until crossmember mounting bolts (2 and 3) can be installed. Install left side crossmember mounting bolts, but not the right side bolts. It is not necessary to tighten bolts at this point.

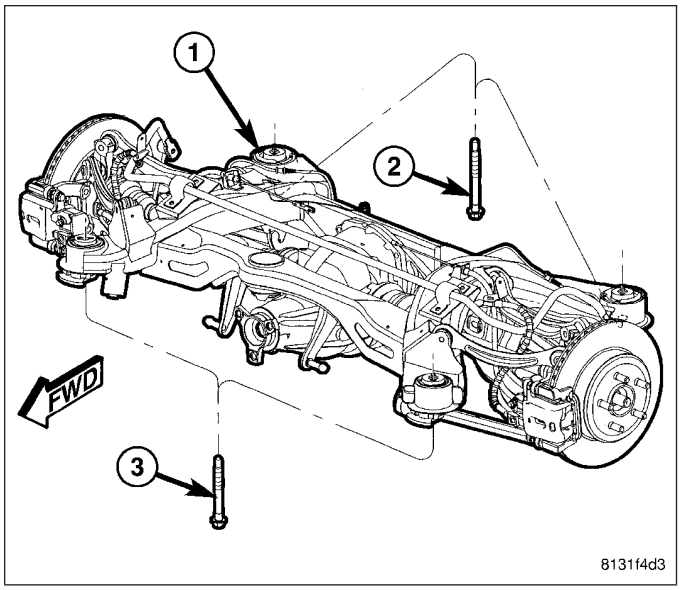

CAUTION: To avoid damaging other components of vehicle, do not lower crossmember any further than necessary to install coil spring (2).

19. **Slowly** lower jack allowing right side of crossmember to drop. **Do not lower jack at a fast rate.** Lower jack just enough to allow spring (2) Installation. **Do not lower jack any further than necessary.**

NOTE: Before installing coil spring, make sure isolators (1 and 5) are completely installed on ends of spring.

20. Install coil spring (2) with isolators into spring pocket of spring link fitting the lower isolator to the shape of the pocket, then align top of spring with body mount.

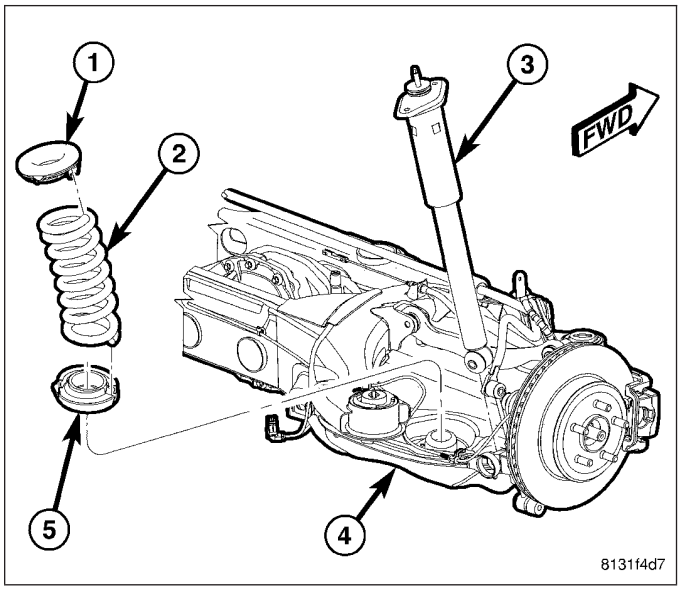

21. Carefully raise jack, guiding coil spring and lower end of shock absorber (1) into mounted positions. Once shock absorber (1) lower mounting hole lines up with hole in spring link (3), stop jacking.
22. Install lower shock mounting bolt (2) and nut (4). **Do not tighten at this time.**

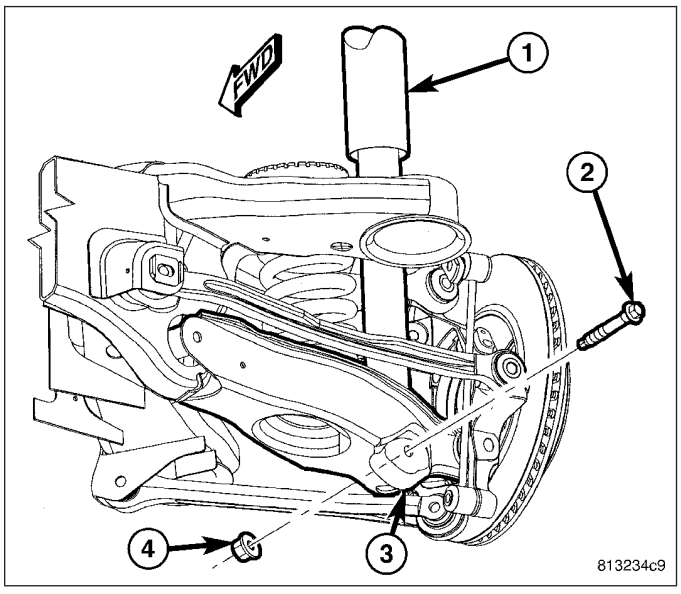

23. If vehicle is equipped with AWD, insert spacers (1) on top of right crossmember mount bushings (2) before crossmember is raised into place.

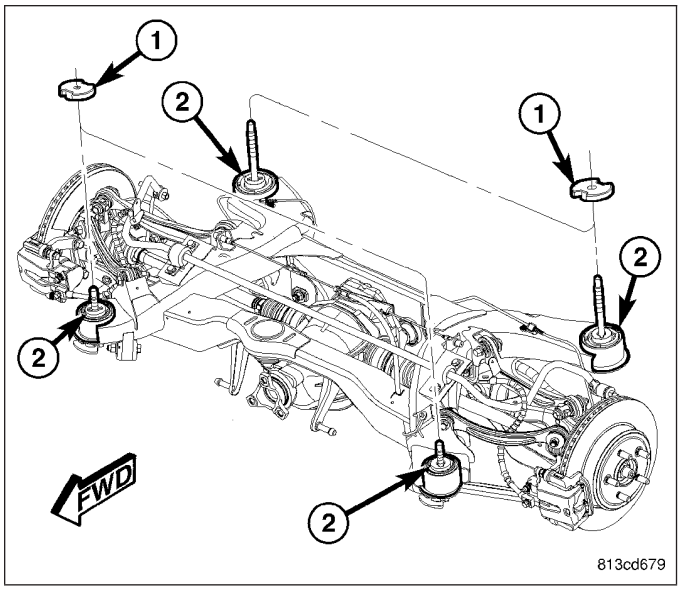

NOTE: There are four crossmember mounting bolts. Rear mounting bolts (2) are longer than front mounting bolts (3). Do not interchange mounting bolts.

24. Raise right side of crossmember (1) into mounted position. Install right side crossmember mounting bolts (2 and 3). **Snug, but do not fully tighten bolts at this time.**
25. Remove both front and rear crossmember mounting bolts (2 and 3) on **left** side of vehicle.

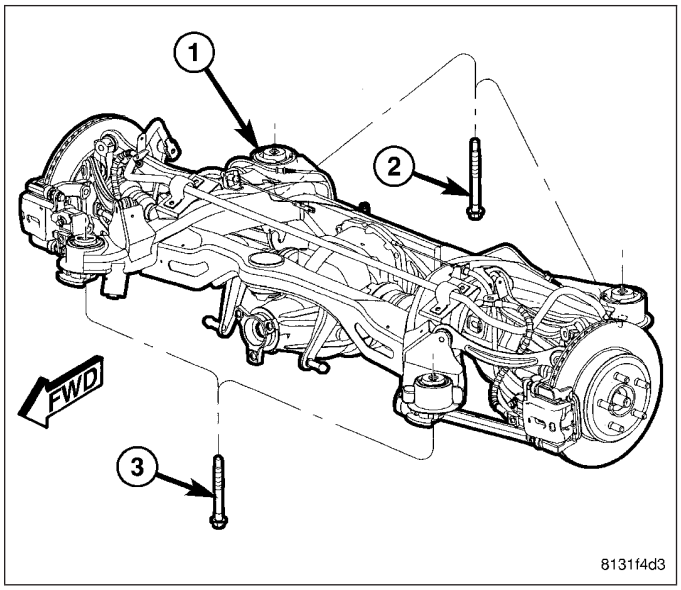

CAUTION: To avoid damaging other components of vehicle, do not lower crossmember any further than necessary to install coil spring (2).

26. **Slowly** lower jack allowing left side of crossmember to drop. **Do not lower jack at a fast rate.** Lower jack just enough to allow spring (2) Installation. **Do not lower jack any further than necessary.**

NOTE: Before installing coil spring, make sure isolators (1 and 5) are completely installed on ends of spring.

27. Install coil spring (2) with isolators into spring pocket of spring link fitting the lower isolator to the shape of the pocket, then align top of spring with body mount.

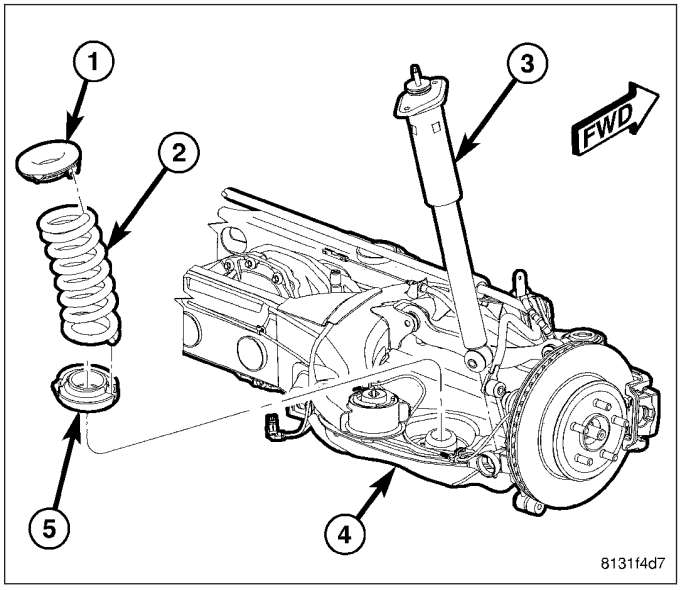

28. Carefully raise jack, guiding coil spring and lower end of shock absorber (1) into mounted positions. Once shock absorber (1) lower mounting hole lines up with hole in spring link (3), stop jacking.
29. Install lower shock mounting bolt (2) and nut (4). **Do not tighten at this time.**

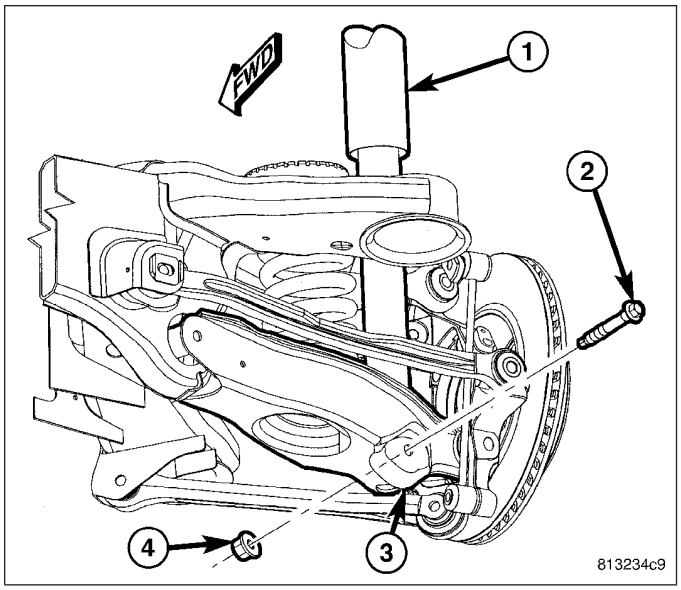

30. If vehicle is equipped with AWD, insert spacers (1) on top of left crossmember mount bushings (2) before crossmember is raised into place.

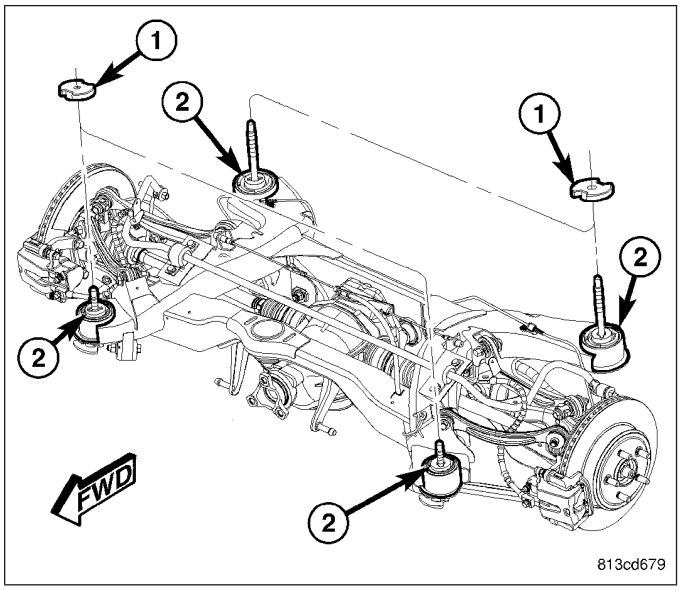

NOTE: There are four crossmember mounting bolts. Rear mounting bolts (2) are longer than front mounting bolts (3). Do not interchange mounting bolts.

31. Raise left side of crossmember (1) into mounted position. Install left side crossmember mounting bolts (2 and 3). **Snug, but do not fully tighten bolts at this time.**

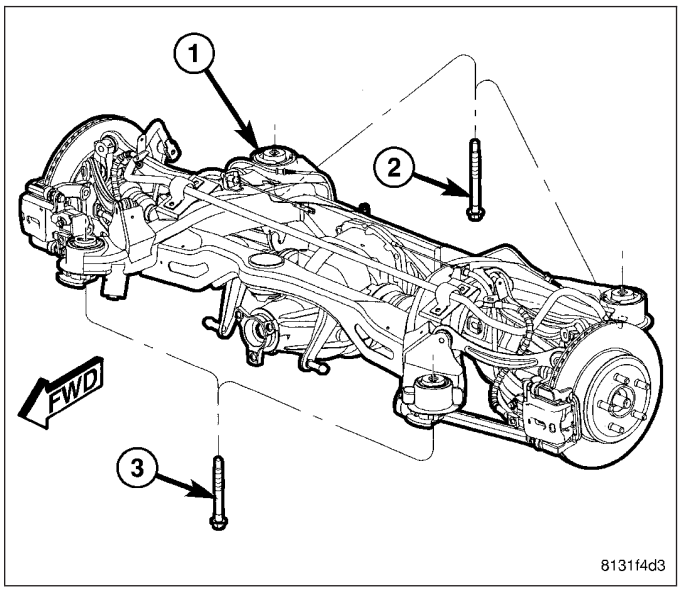

32. Shift crossmember as necessary to line up mounts (3) with location marks drawn on body (1) before removal.

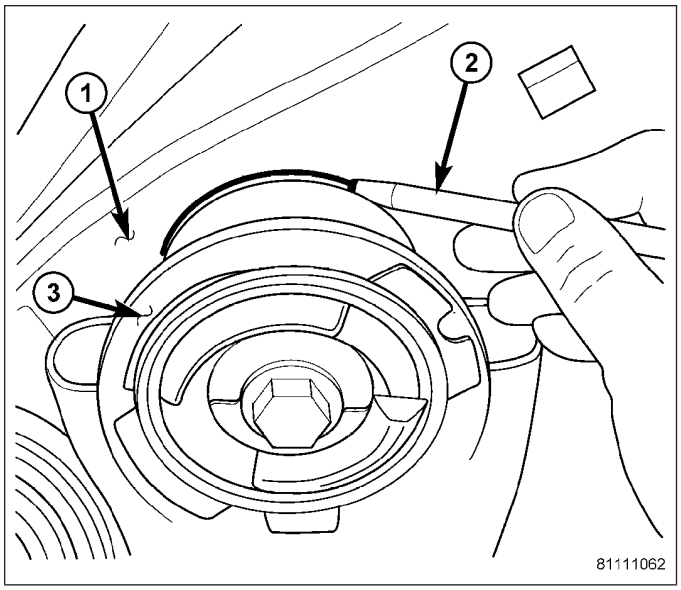

33. Once mounts are lined up with location marks, on both sides of vehicle, measure distance (1) between the tension link (2) and weld flange (3) on body directly in front of it, just outboard of the front mount bushing (4). **This distance must be at least 12 mm to allow proper clearance for suspension movement.** If distance is less than 12 mm on either side of vehicle, shift that side of rear crossmember directly rearward until distance is 12 mm or greater. To do so, loosen 3 mounting bolts slightly, leaving one on opposite side of shift snugged to pivot off of. Shift crossmember rearward and snug loosened bolts. Remeasure opposite side to be sure it still maintains minimum 12 mm distance.

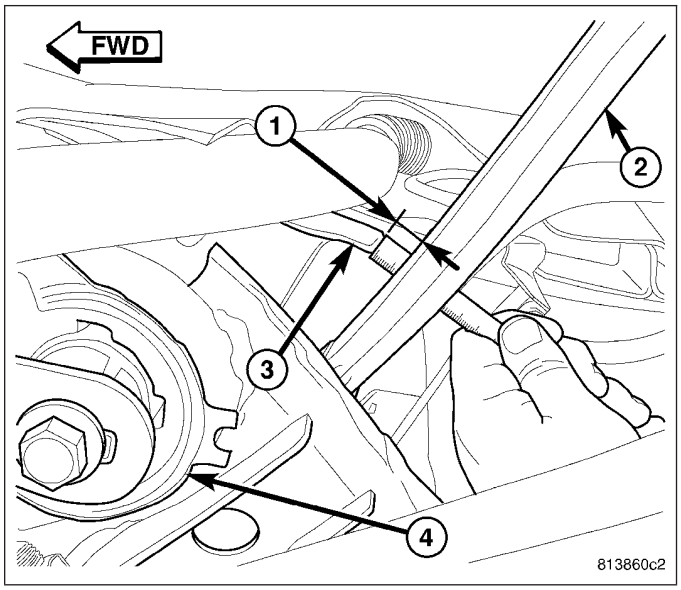

34. Tighten all four crossmember mounting bolts (2 and 3) to 180 N·m (133 ft. lbs.).

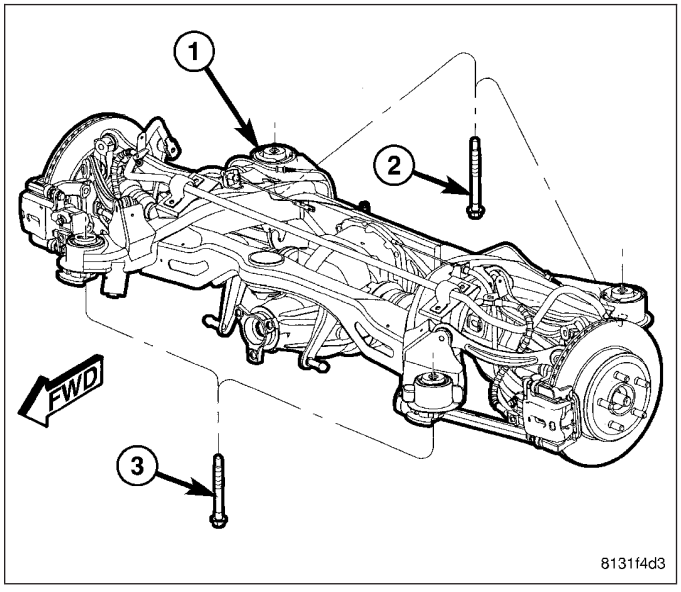

35. Remove jack (3) from under rear crossmember.

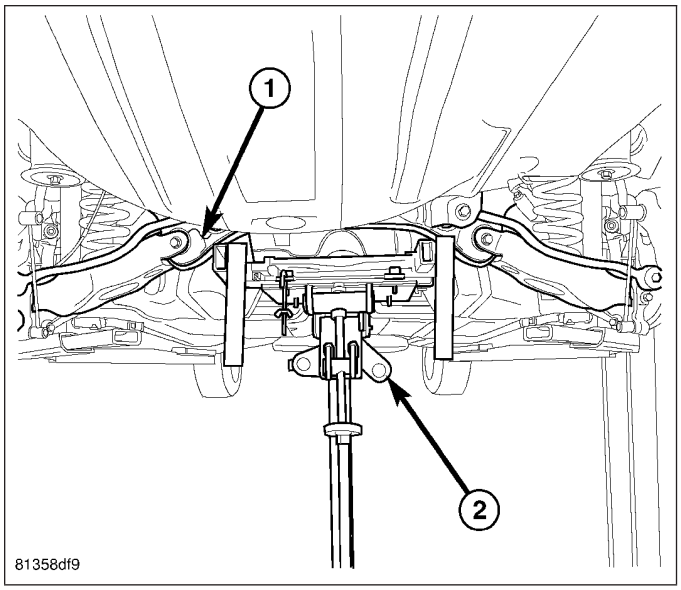

36. Install fuel filler tube. (Refer to 14 - FUEL SYSTEM/FUEL DELIVERY/FUEL TANK FILLER TUBE - INSTALLATION)

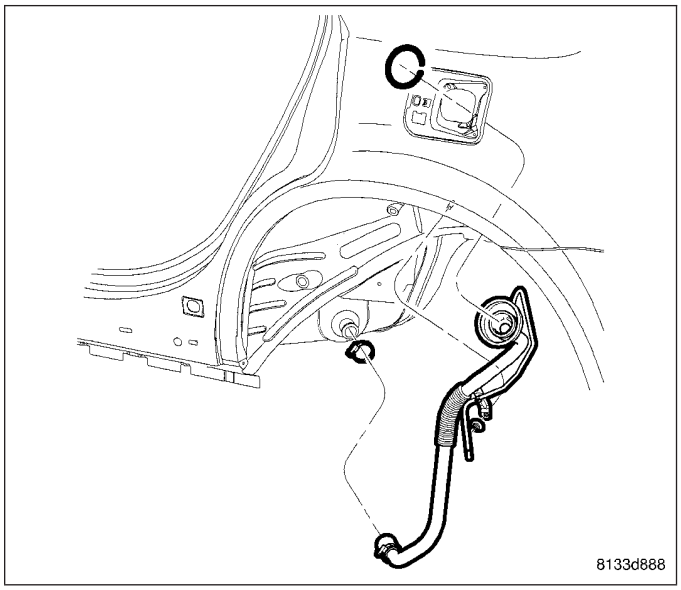

37. Clip left rear wheel speed sensor cable (2) to routing clip (1) above toe link mount on rear crossmember.

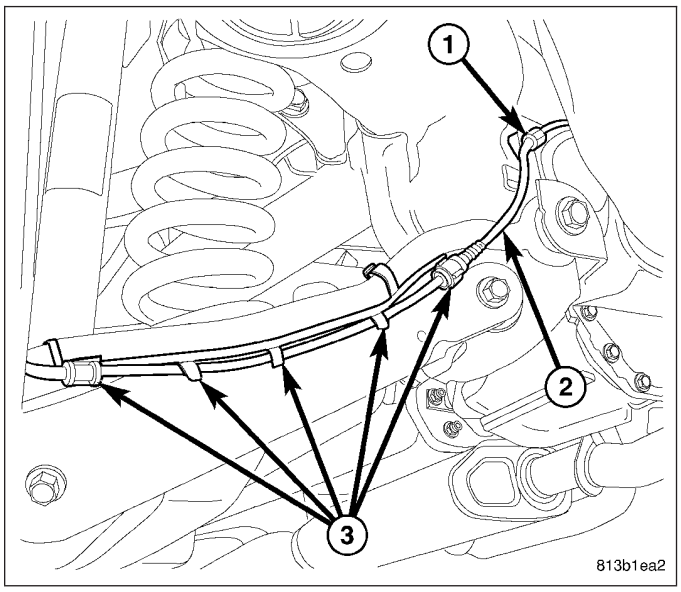

38. Clip left rear wheel speed sensor cable (1) to routing clips (2) along rear of crossmember near rear differential (3).

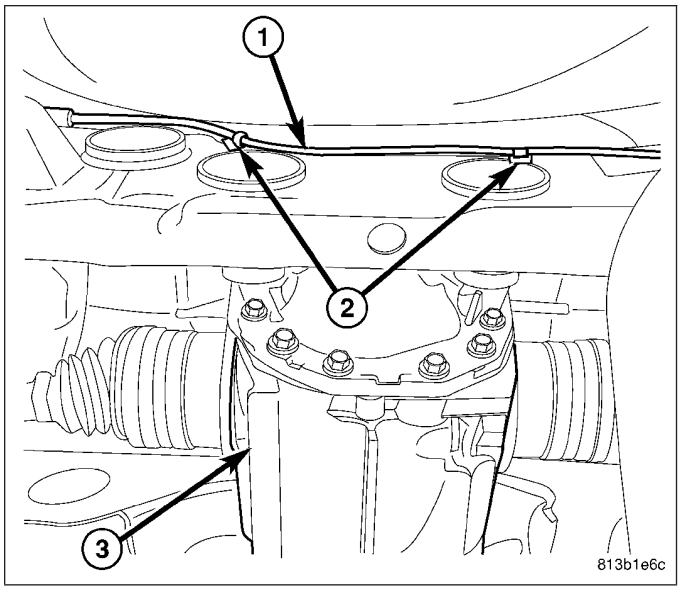

39. Clip left rear wheel speed sensor cable (3) to routing clip (1) near body connector.

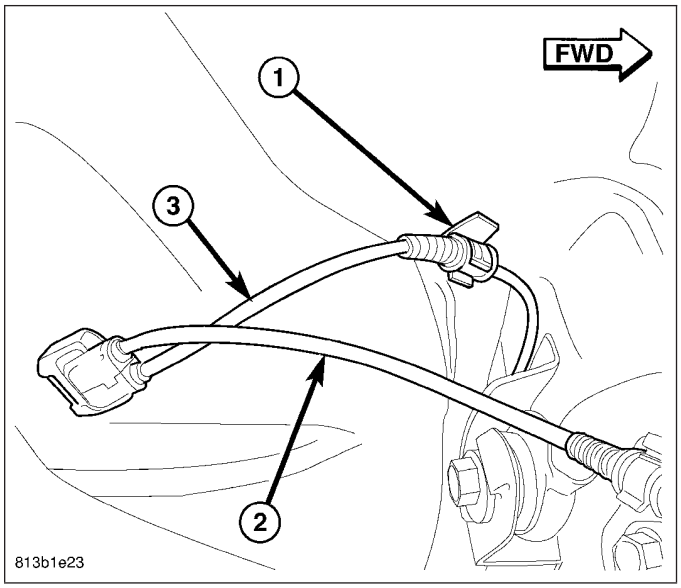

40. Match left rear wheel speed sensor connector (4) to right sensor connector (3) to make one connector.
41. Insert speed sensor connectors (3 and 4) into body wiring harness connector (1) located in luggage compartment floor pan (2). When installing connector, make sure retaining clip on body connector is properly in place and sensor connector cannot be pulled out.

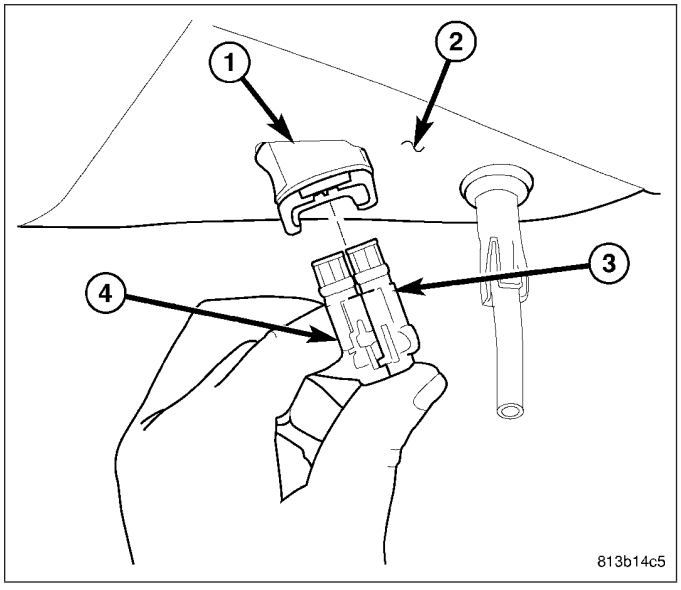

42. If equipped with standard or premium disc brakes, on each rear disc brake:
    a. Push caliper guide pins into caliper adapter to clear caliper mounting bosses when installing.
    b. Guide caliper and brake hose down through rear suspension, then slide caliper over brake pads and onto caliper adapter (3).
    c.

CAUTION: Extreme caution should be taken not to cross-thread caliper guide pin bolts (2) when they are installed.Align caliper mounting holes with guide pins, then install guide pin bolts (2). While holding guide pins from turning, tighten bolts to 31 N·m (23 ft. lbs.) torque.

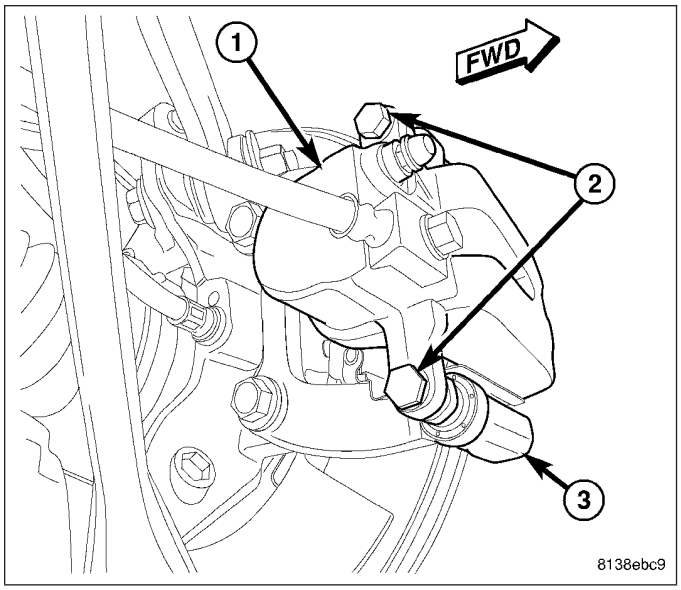

    d. Make sure brake hose is properly routed and will not come in contact with suspension components.
43. If equipped with SRT8 disc brakes, at each rear disc brake, support spring link using a transmission jack or other appropriate jack as indicated in removal procedure. (Refer to 13 - FRAME & BUMPERS/FRAME/REAR CROSSMEMBER - REMOVAL)
44. If equipped with SRT8 disc brakes, on each rear disc brake, slide caliper with pads (2) over brake rotor and align with knuckle.
45. If equipped with SRT8 disc brakes, on each rear disc brake, install caliper mounting bolts (1). Tighten bolts to 130 N·m (96 ft. lbs.).
46. If equipped with SRT8 disc brakes, on each rear disc brake, remove jack from under spring link.

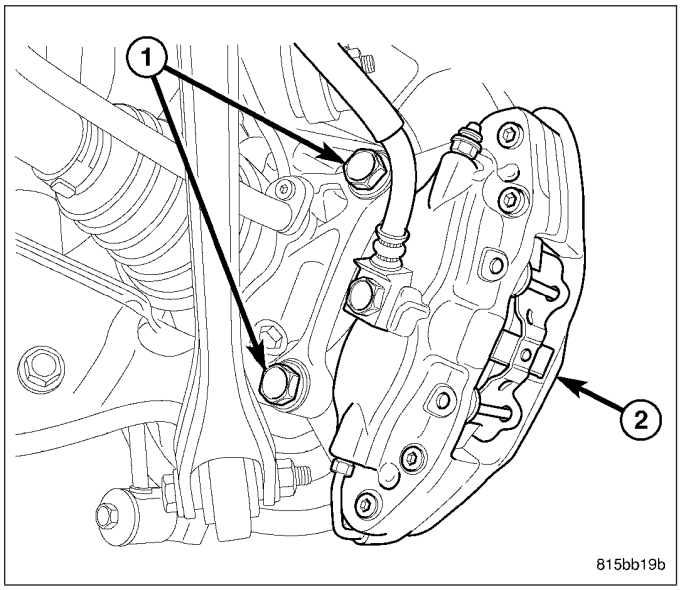

47. Route front parking brake cable with equalizer above rear crossmember.

NOTE: Due to short travel and low spring tension, it is not necessary to lock-out parking brake lever to service parking brake components.

48. Connect left rear parking brake cable (1) to equalizer (2).
49. Connect right rear parking brake cable (4) to connector (3) already attached to front parking brake cable (5).

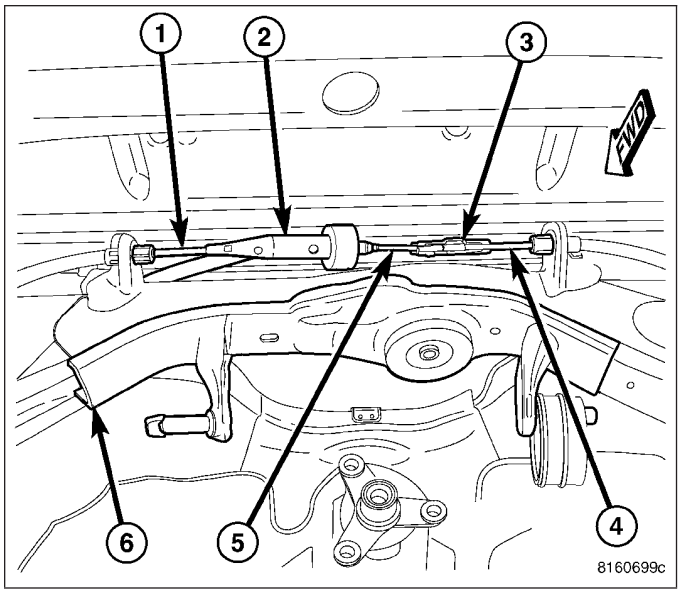

50. Install J-nut for mounting parking brake cable routing bracket to crossmember.
51. Insert front parking brake cable routing bracket locating pin into front flange of crossmember (3), then install screw (2) fastening cable (1) routing bracket to rear crossmember.

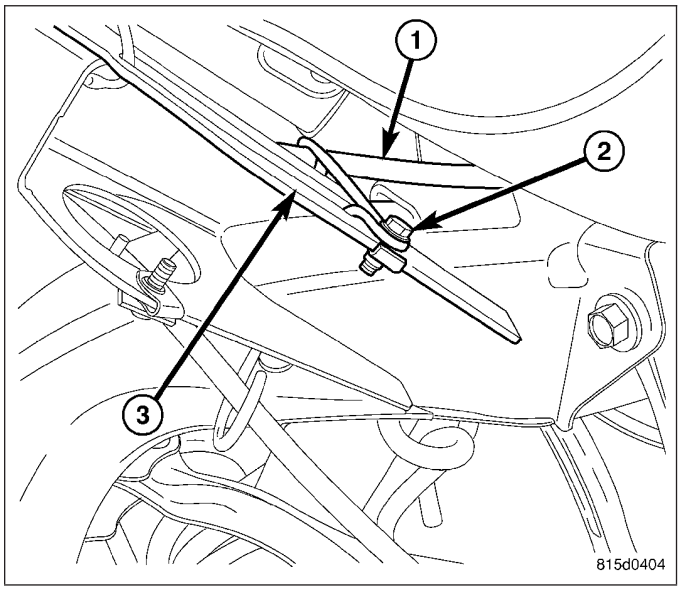

52. On each side of vehicle, slide an axle half shaft (2) through hub and bearing and install hub nut (1). **Do not tighten hub nuts at this time.**

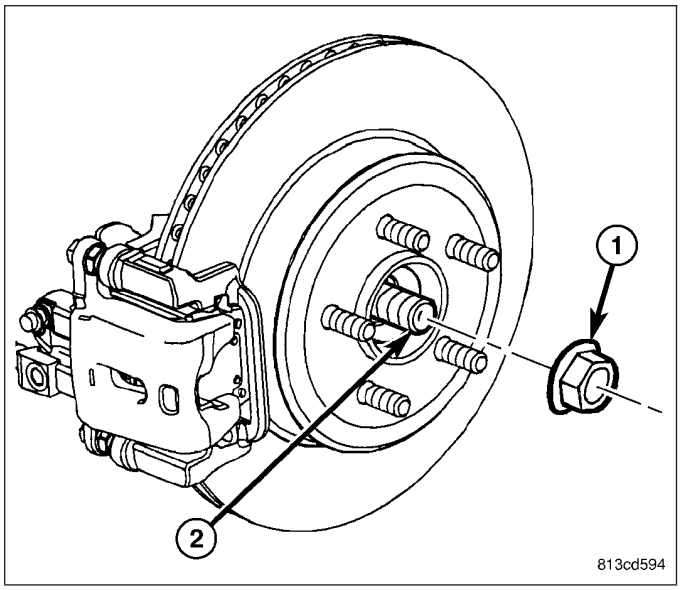

53. Install rear axle differential. (Refer to 3 - DIFFERENTIAL & DRIVELINE/REAR AXLE - 198MM - INSTALLATION) (Refer to 3 - DIFFERENTIAL & DRIVELINE/REAR AXLE - 210MM - INSTALLATION) (Refer to 3 - DIFFERENTIAL & DRIVELINE/REAR AXLE - 215RII - INSTALLATION)
54. While a helper applies brakes to keep hub from turning, tighten hub nut to 213 N·m (157 ft. lbs.).

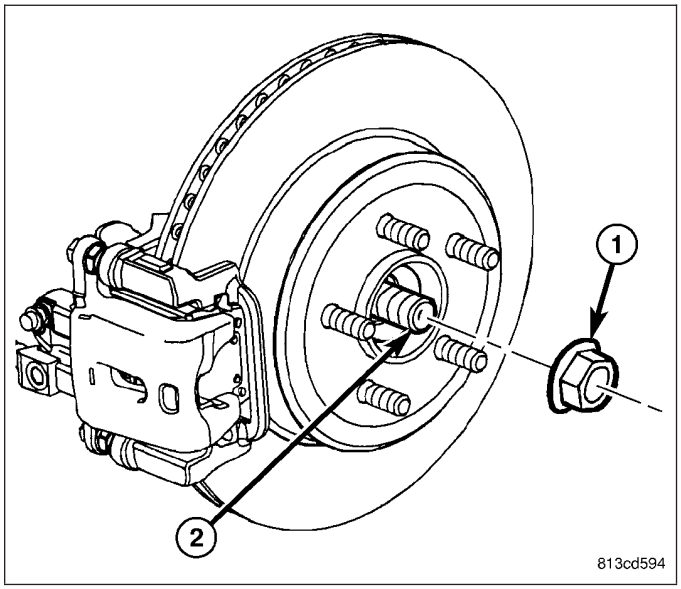

55. Install rear exhaust system (2) (dual-outlet exhaust shown in figure). (Refer to 11 - EXHAUST SYSTEM - INSTALLATION)

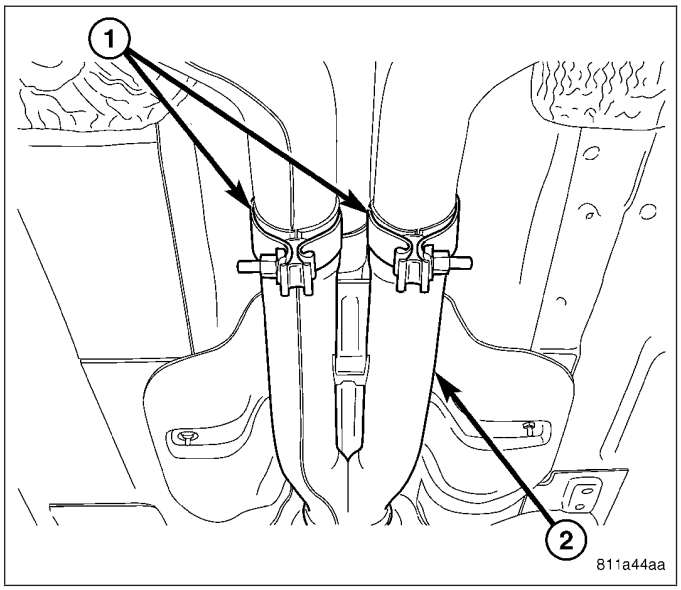

56. Lower vehicle until front tires contact floor but rear is still suspended. Place jack stands under each rear suspension spring link. Place an appropriate wooden block between stand and link to avoid damaging spring link, then lower vehicle until full vehicle weight is supported by suspension.

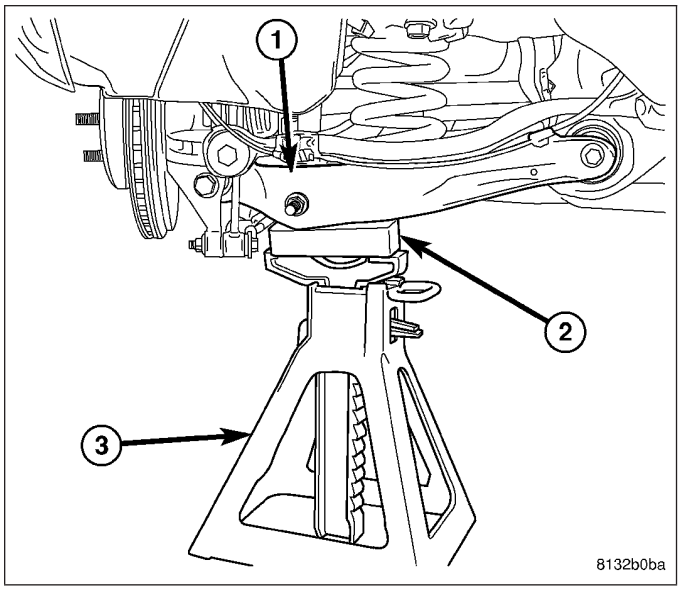

57. Tighten camber link bolt (2) at crossmember to 85 N·m (63 ft. lbs.).
58. Tighten tension link bolt nut (2) at crossmember to 85 N·m (63 ft. lbs.).

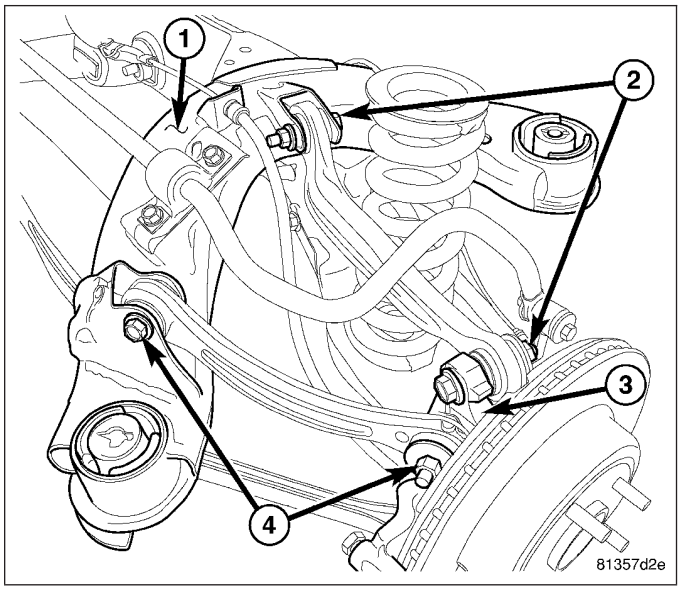

59. Tighten compression link bolt (2) at crossmember to 85 N·m (63 ft. lbs.) torque.

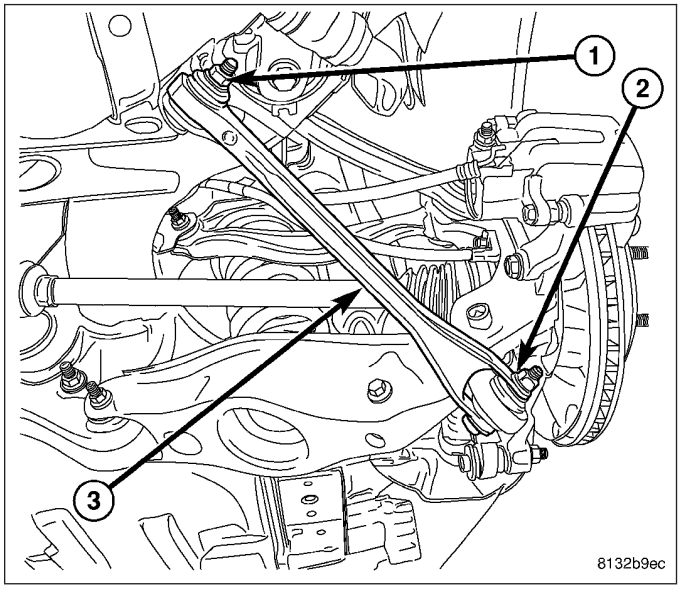

60. Tighten spring link bolt (1) at crossmember to 108 N·m (80 ft. lbs.).

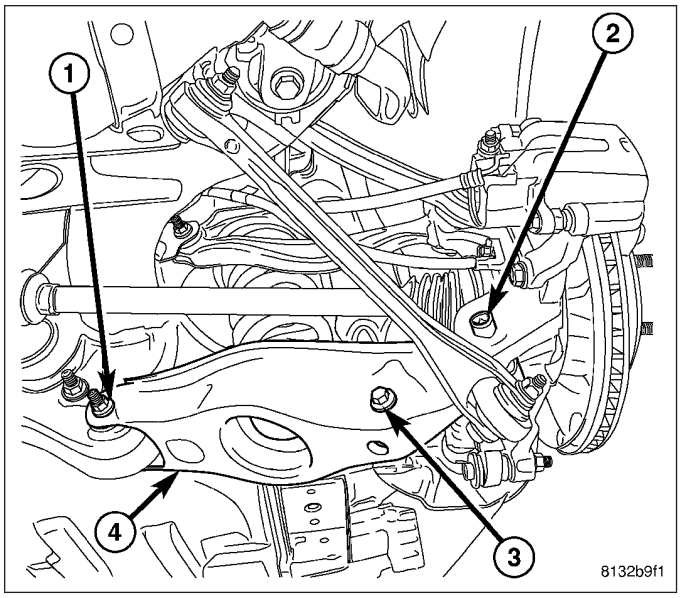

61. Tighten shock absorber lower mounting bolt nut (4) to 72 N·m (53 ft. lbs.).

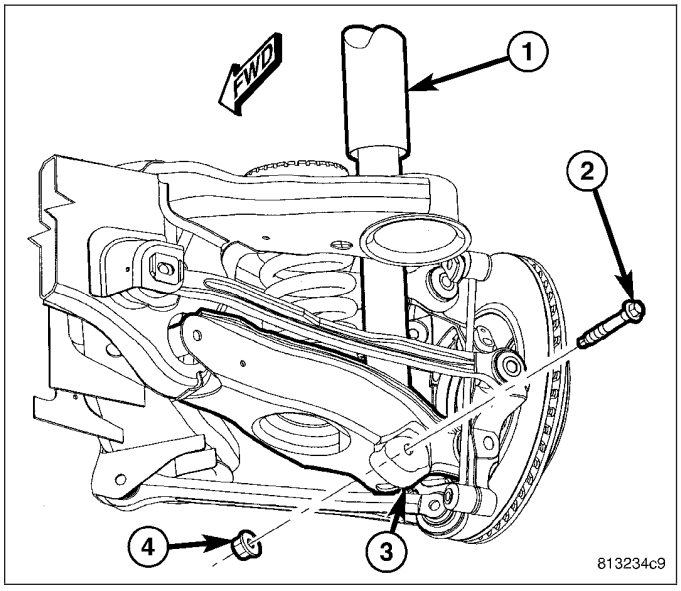

62. Tighten stabilizer link bolts (3) to 61 N·m (45 ft. lbs.).

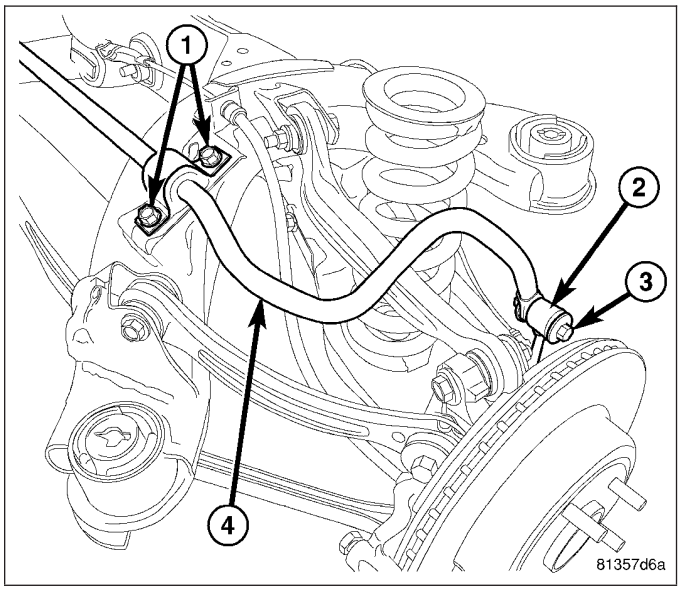

63. Raise vehicle and remove jack stands (3).

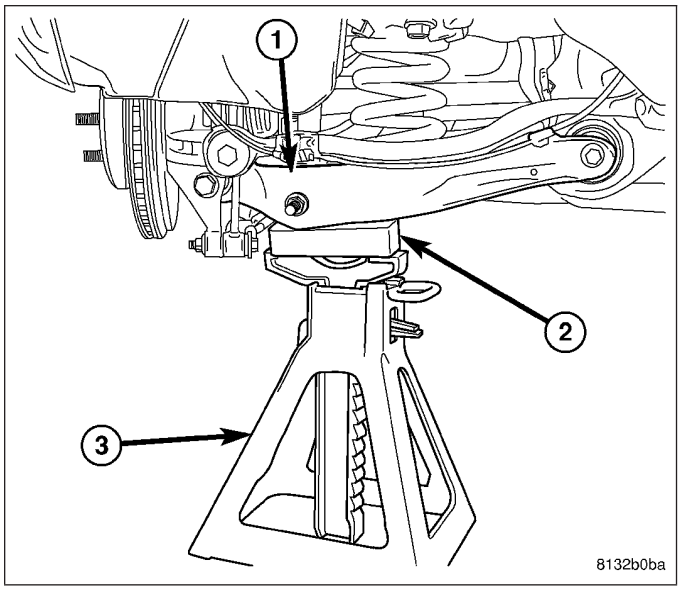

64. Install tire and wheel assemblies (1). Tighten wheel mounting nuts (3) to 150 N·m (110 ft. lbs.). (Refer to 22 - TIRES/WHEELS - INSTALLATION)
65. Lower vehicle.

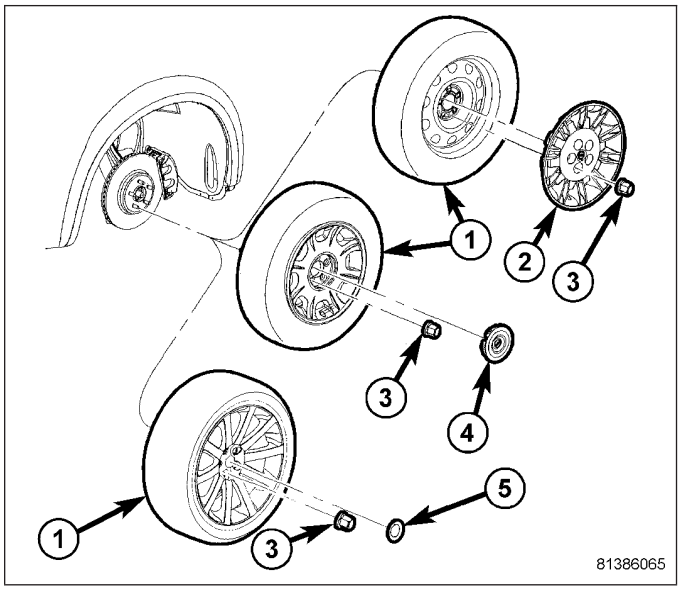

66. Connect battery negative cable (2) to battery post. It is important that this is performed properly. (Refer to 8 - ELECTRICAL/BATTERY SYSTEM - STANDARD PROCEDURE)
67. Pump brake pedal several times to ensure vehicle has a firm brake pedal before moving vehicle.
68. Perform wheel alignment, paying special attention to thrust angle. If rear crossmember needs to be shifted to align thrust angle, try to avoid compromising tension link clearance (Refer to Step 33). (Refer to 2 - SUSPENSION/WHEEL ALIGNMENT - STANDARD PROCEDURE)

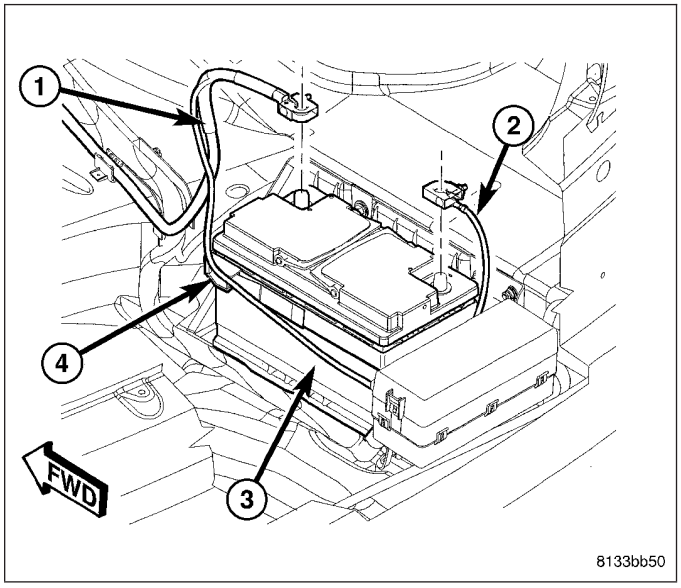

69. On each side of crossmember, while holding cam bolt from turning, tighten toe link cam bolt nut (2) to 108 N·m (80 ft. lbs.) torque.

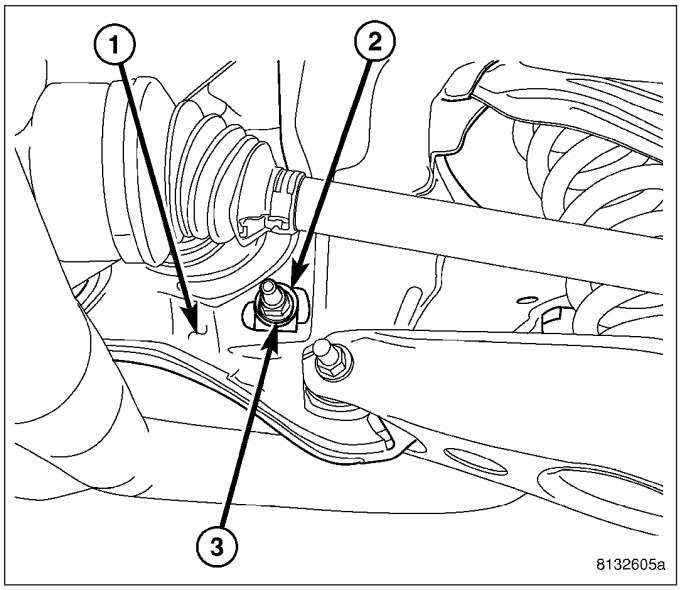

FUEL SYSTEM

TABLE OF CONTENTS

page

FUEL DELIVERY 1
FUEL DELIVERY - DIESEL 99
FUEL INJECTION 168
FUEL INJECTION - DIESEL 228

FUEL DELIVERY

TABLE OF CONTENTS

page

FUEL DELIVERY
DESCRIPTION 2
OPERATION 2
DIAGNOSIS AND TESTING - FUEL DELIVERY SYSTEM 2
STANDARD PROCEDURE
STANDARD PROCEDURE - FUEL SYSTEM PRESSURE RELEASE PROCEDURE 2
STANDARD PROCEDURE - DRAINING FUEL TANK 2
SPECIFICATIONS
TORQUE 8
FUEL SYSTEM PRESSURE 8
FUEL TANK CAPACITY 8
SPECIAL TOOLS
FUEL 9
SENSOR-FUEL LEVEL
REMOVAL
LEFT SIDE MODULE 10
RIGHT SIDE MODULE 14
INSTALLATION
LEFT SIDE MODULE 23
RIGHT SIDE MODULE 27
REGULATOR-FUEL PRESSURE
REMOVAL 34
INSTALLATION 40
MODULE-FUEL PUMP
REMOVAL 46
INSTALLATION 51
RAIL-FUEL
REMOVAL
2.7L 56
3.5L 57
5.7L 58
6.1L 59
INSTALLATION
2.7L 62
3.5L 63
5.7L 63
6.1L 64
TANK-FUEL
REMOVAL 66
INSTALLATION 76
FUEL TANK FILLER TUBE
REMOVAL 85
INSTALLATION 90
QUICK CONNECT FITTING
STANDARD PROCEDURE - QUICK-CONNECT FITTINGS 95
FUEL LINES
DESCRIPTION - FUEL LINES/HOSES AND CLAMPS 98
STANDARD PROCEDURE - HOSES AND CLAMP 98

FUEL DELIVERY

DESCRIPTION

The front wheel drive car uses a plastic fuel tank located rear center of the vehicle.

The Fuel Delivery System consists of: the following items:

- Electric fuel pump module
- Fuel filter
- Tubes/lines/hoses
- Fuel injectors

The in-tank fuel pump module contains the fuel pump. The pump is serviced as part of the fuel pump module. Refer to Fuel Pump Module.

The fuel filter is replaceable only as part of the fuel pump module.

OPERATION

The fuel system provides fuel pressure by an in-tank pump module. The Powertrain Control Module (PCM) controls the operation of the fuel system by providing battery voltage to the fuel pump through the fuel pump relay. The PCM requires only three inputs and a good ground to operate the fuel pump relay. The three inputs are:

- Ignition voltage
- Crankshaft Position (CKP) sensor
- Camshaft Position (CMP) sensor

DIAGNOSIS AND TESTING - FUEL DELIVERY SYSTEM

(Refer to Group 9 Engine for all Powertrain Diagnostic Information)

STANDARD PROCEDURE

STANDARD PROCEDURE - FUEL SYSTEM PRESSURE RELEASE PROCEDURE

1. Remove Fuel Pump relay from Power Distribution Center (PDC). For location of relay, refer to label on underside of PDC cover.
2. Start and run engine until it stalls.
3. Attempt restarting engine until it will no longer run.
4. Turn ignition key to OFF position.
5. Return fuel pump relay to PDC.
6. One or more Diagnostic Trouble Codes (DTC's) may have been stored in PCM memory due to fuel pump relay removal. The scan tool must be used to erase a DTC.

STANDARD PROCEDURE - DRAINING FUEL TANK

1. Release the fuel pressure, refer to the Fuel Pressure Release Procedure in this section.
2. Disconnect negative battery cable.

NOTE: The fuel level of the vehicle must be below 5/8 of a tank before you remove the module lock-rings. If it is above that you can spill fuel in the vehicle.

3. Drain partial fuel from fuel tank through the filler tube. Use a hard nylon tube, with a 30° cut on the end, to push the check valve open to drain fuel from tank.

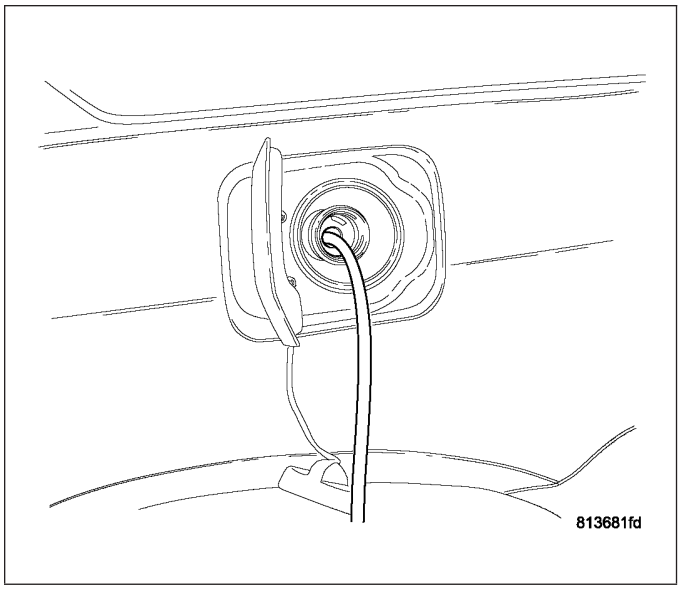

4. Remove the rear lower seat cushion.

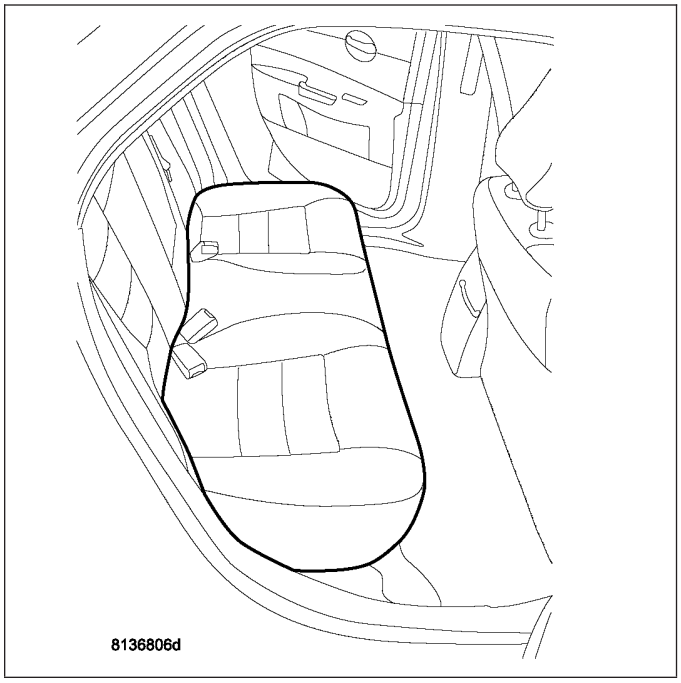

5. Push seat back and up to remove seat cushion.

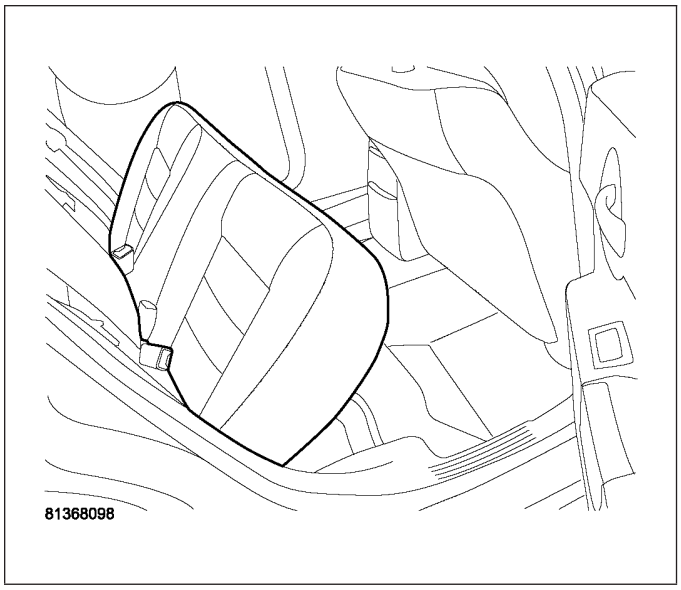

6. Fold back the foam pad covering access cover for modules.

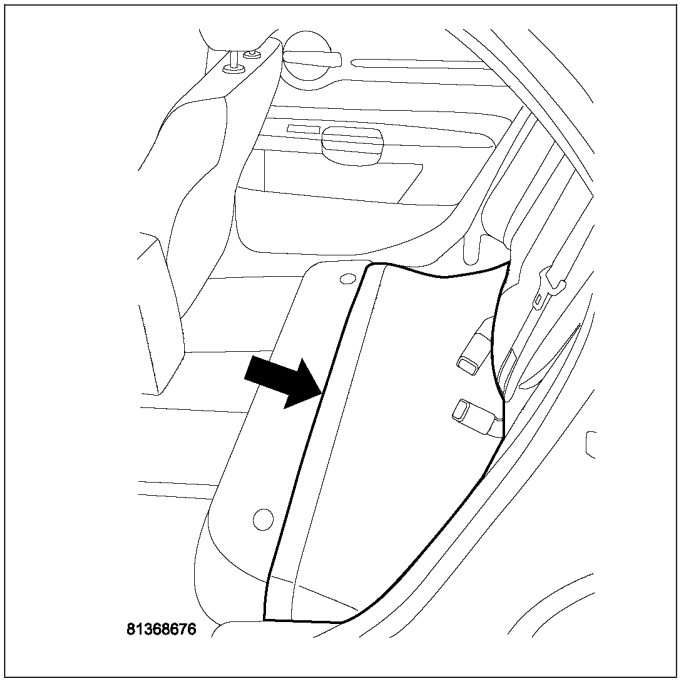

7. Remove plastic access covers from floor pan left side.

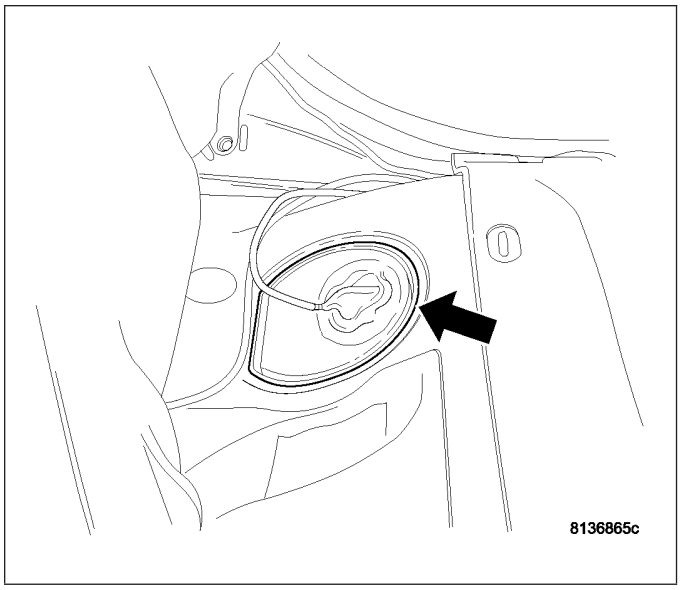

8. Disconnect the electrical connector from left side module.
9. Mark the module orientation.

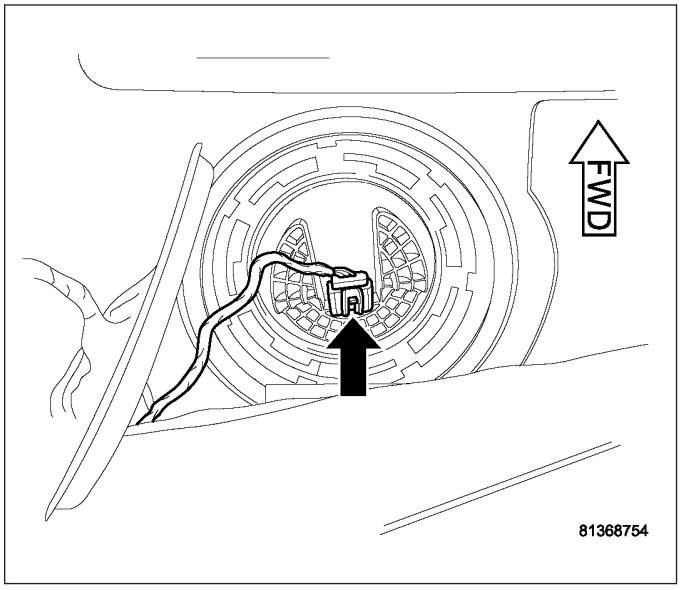

10. Use special tool #9340 to remove left side module lock ring.

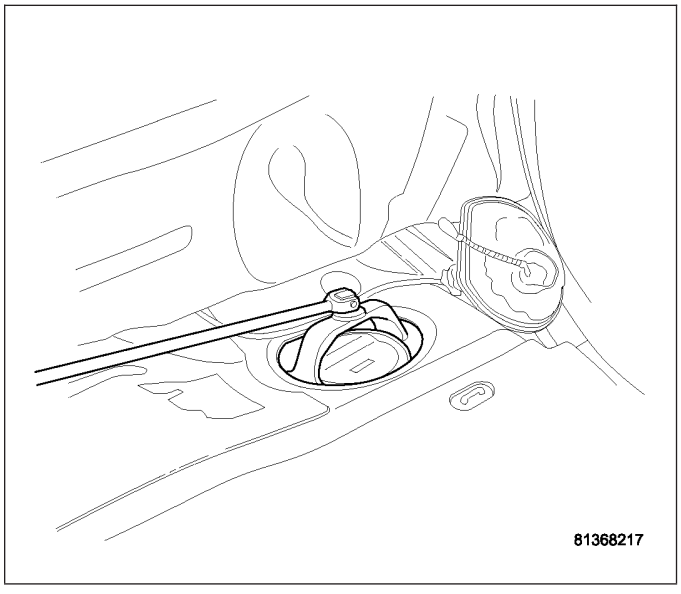

11. Drain fuel from left side of fuel tank. Lift module up enough to push hose into tank and drain. Do not spill fuel in interior of vehicle.

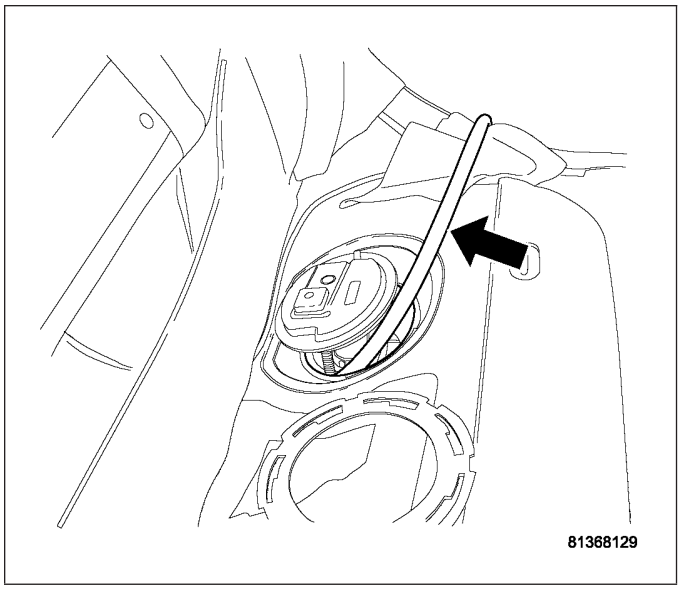

NOTE: Push drain hose through opening inside of tank to right side to drain fuel from right side of tank. This will not drain all the fuel from this side of tank.

12. Push drain tube over center hump of fuel tank into the right side of tank and drain fuel from right side of tank.
13. Remove plastic access covers from floor pan right side.

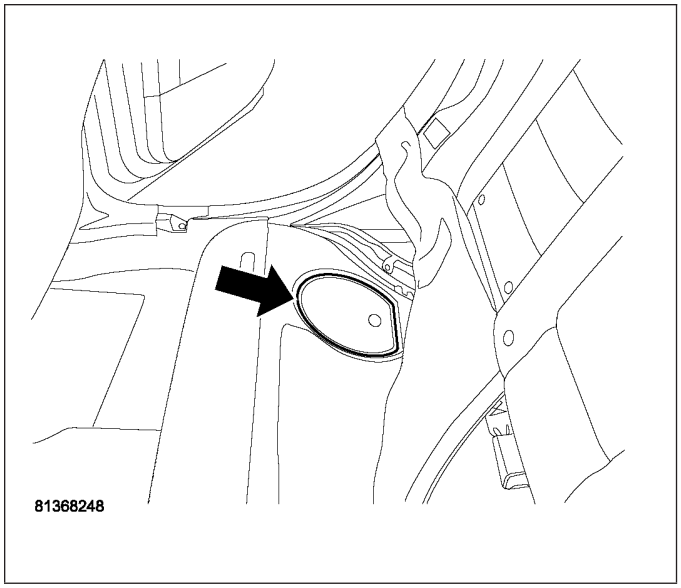

14. Disconnect the fuel supply line from module.
15. Mark the module orientation.

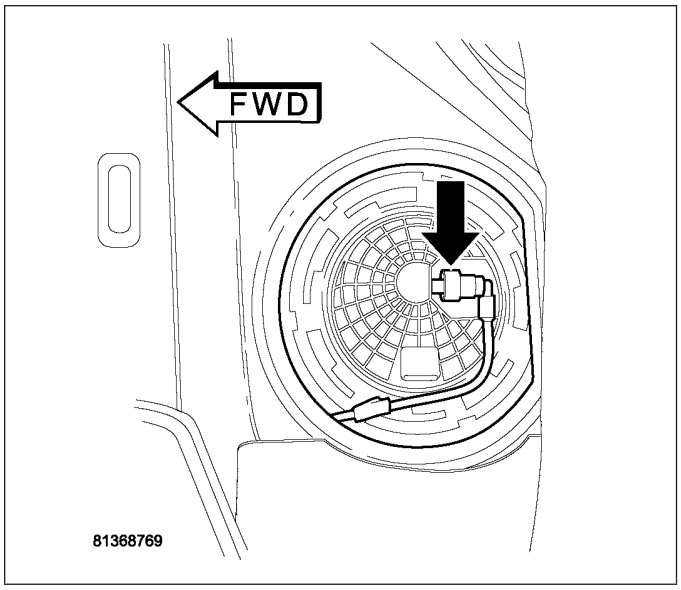

16. Use special tool #9340 to remove right side module lock ring.

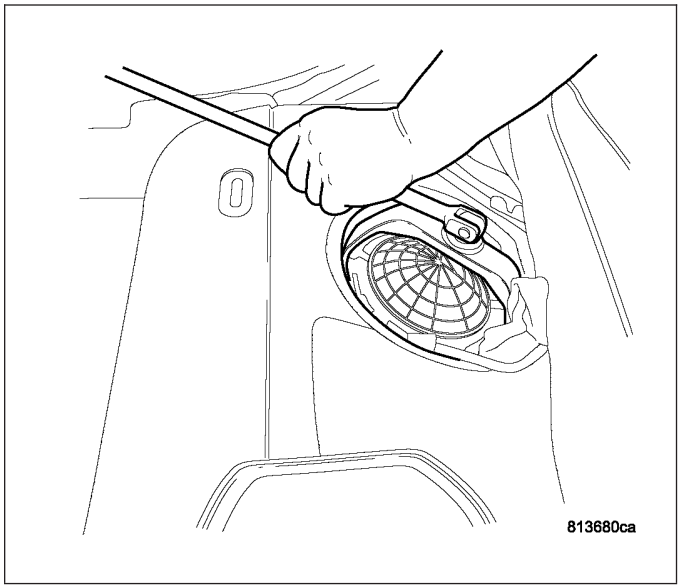

17. Drain fuel from right side of fuel tank. Lift module up enough to push hose into tank and drain. Do not spill fuel in interior of vehicle.

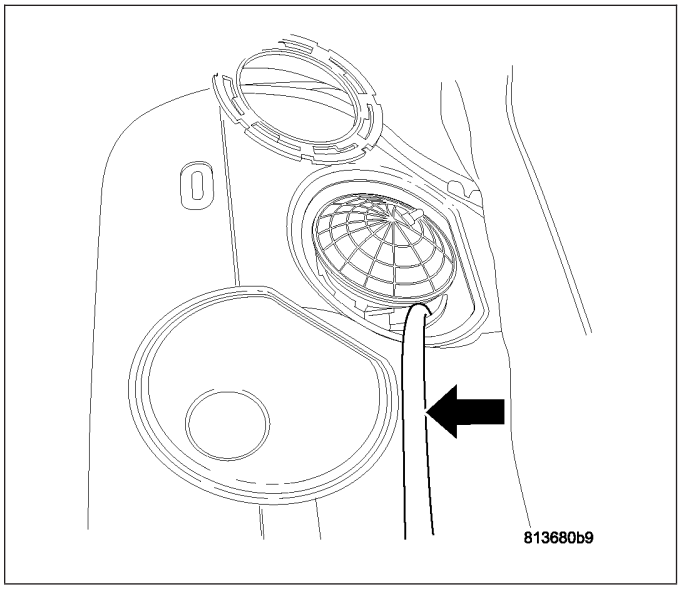

SPECIFICATIONS

TORQUE

DESCRIPTION	N·m	Ft. Lbs.	In. Lbs.
Accelerator Pedal to Dash Nuts	12	8.8	106
Fuel Tank Strap Bolts	27	20	
Hose Clamps	3.5		31
Fuel Rail Mounting Bolts-5.7L	11	-	100

FUEL SYSTEM PRESSURE

400 kpa ±34 kpa (58 psi ± 5 psi)

FUEL TANK CAPACITY

Vehicle	Liters	U.S. Gallons
LX V-6 Engine RWD	68	18
LX V-6 Engine AWD	72	19
LX V-8 Engine	72	19
Nominal refill capacities are shown. A variation may be observed from vehicle to vehicle due to manufacturing tolerance and refill procedure.		

SPECIAL TOOLS

FUEL

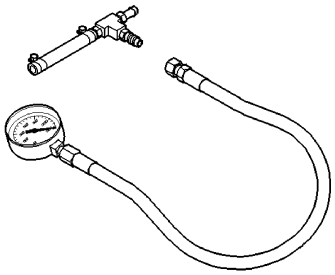

Test Kit, Fuel

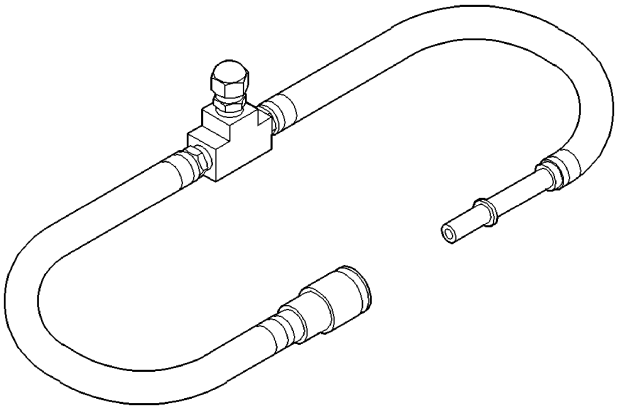

Adapters, Fuel Pressure Test - 6539 and/or 6631

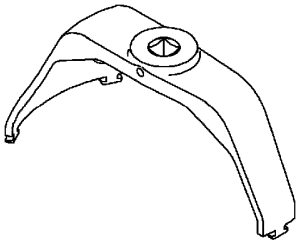

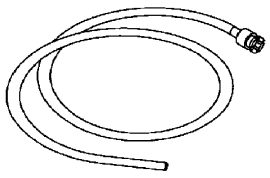

Fuel Line Adapter 1/4

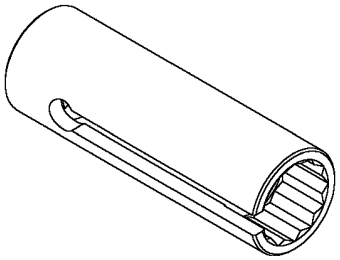

O2S (OXYGEN SENSOR) REMOVAL/INSTALLER-C4907

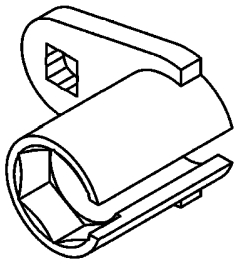

Oxygen sensor tool

SENSOR-FUEL LEVEL

REMOVAL

LEFT SIDE MODULE

1. Release the fuel pressure, refer to the Fuel Pressure Release Procedure in this section.
2. Disconnect negative battery cable.

NOTE: The fuel level of the vehicle must be below 5/8 of a tank before you remove the module lock-rings. If it is above that you can spill fuel in the vehicle.

3. Drain partial fuel from fuel tank through the filler tube. Use a hard nylon tube, with a 30° cut on the end, to push the check valve open to drain fuel from tank.

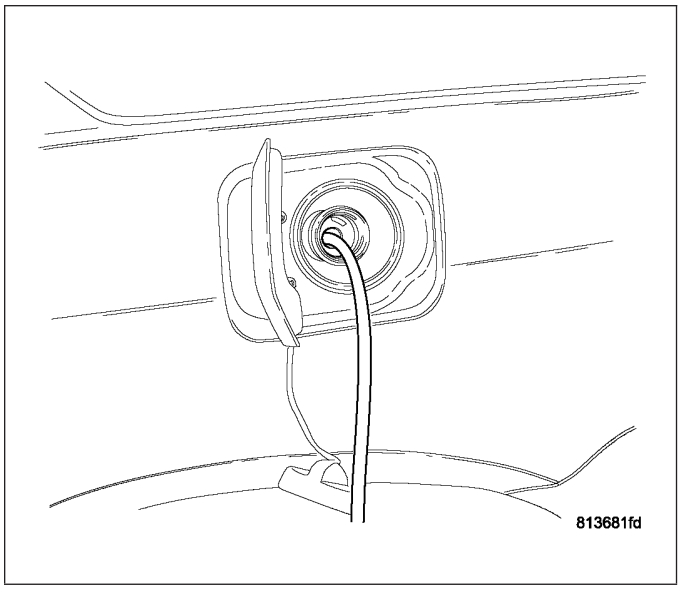

4. Remove the rear lower seat cushion.

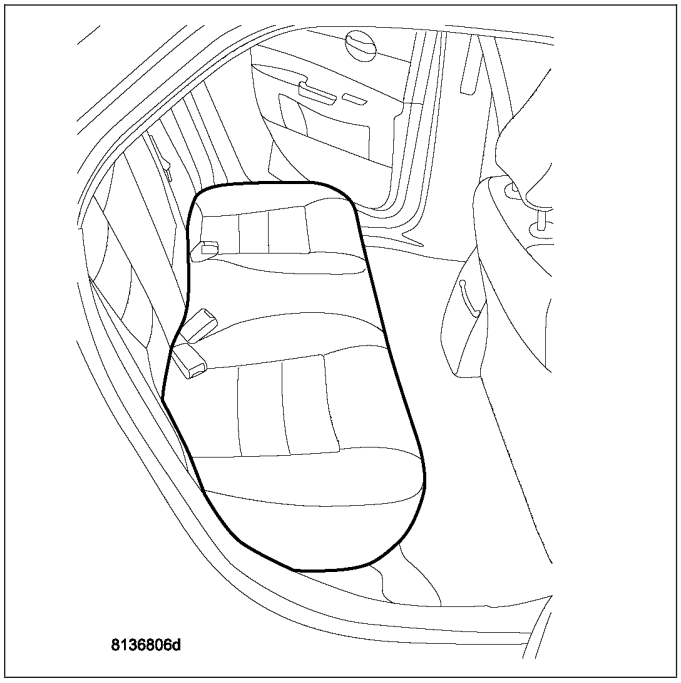

5. Push seat back and up to remove seat cushion.

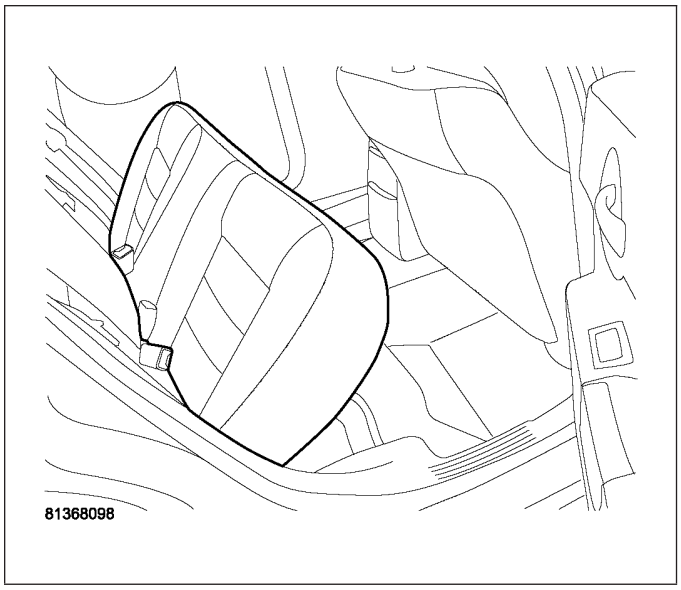

6. Fold back the foam pad covering access cover for modules.

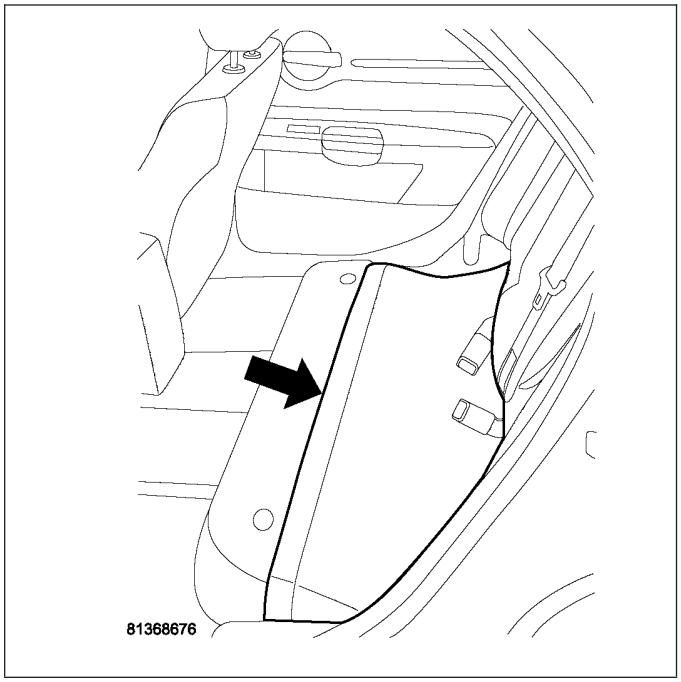

7. Disconnect the electrical connector from left side module.
8. Mark the module orientation.

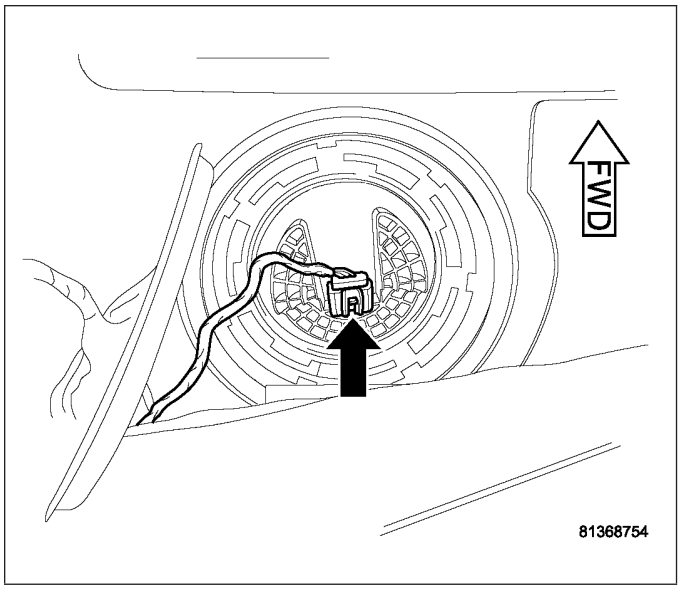

9. Use special tool #9340 to remove left side module lock ring.

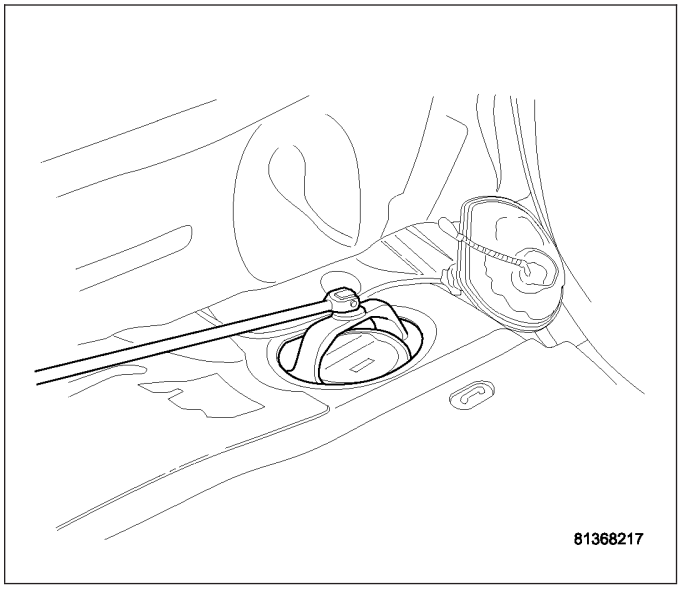

10. Drain fuel from left side of fuel tank. Lift module up enough to push hose into tank and drain. Do not spill fuel in interior of vehicle.

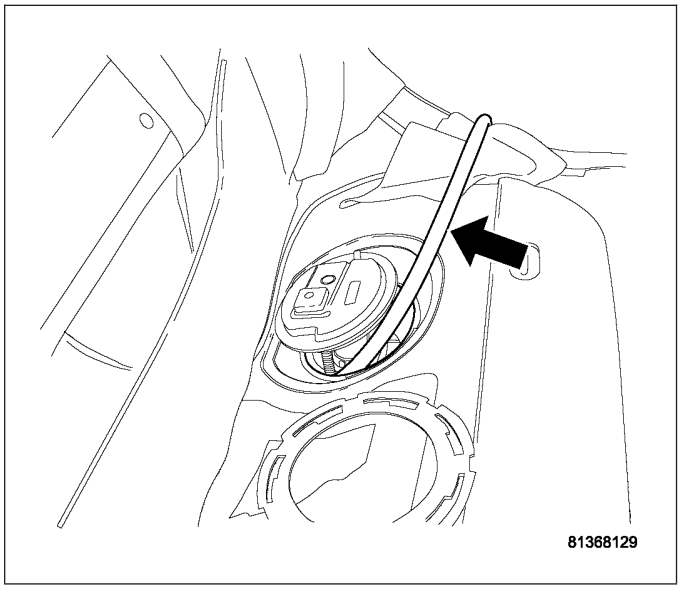

11. Disconnect the electrical connector for the left side fuel level card from bottom of the module top.
12. Disconnect the electrical connector for the right side fuel level sending card.
13. Lift module top half off and tip lower half on its side to drain remaining fuel from the reservoir.

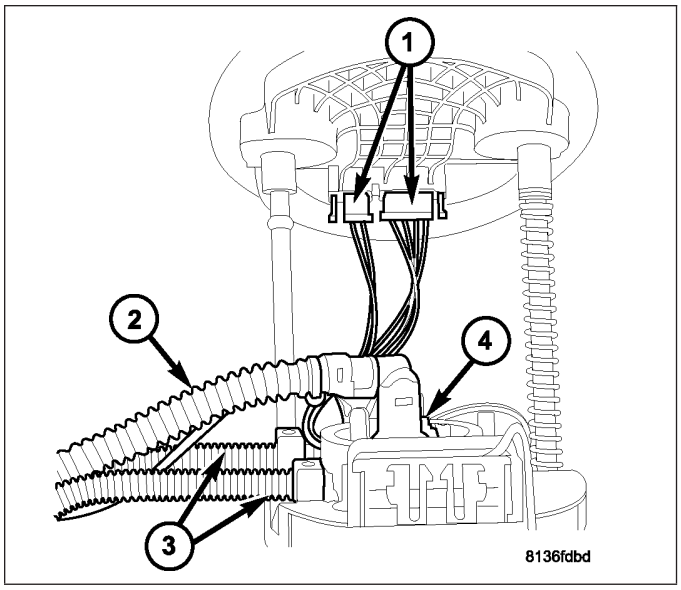

14. Remove wire from module.

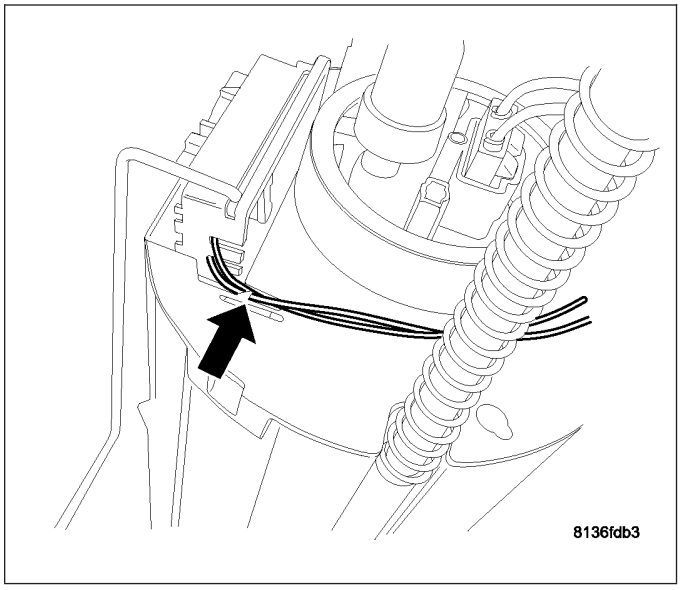

15. Use a screwdriver to separate the locking tabs on the level sending card.

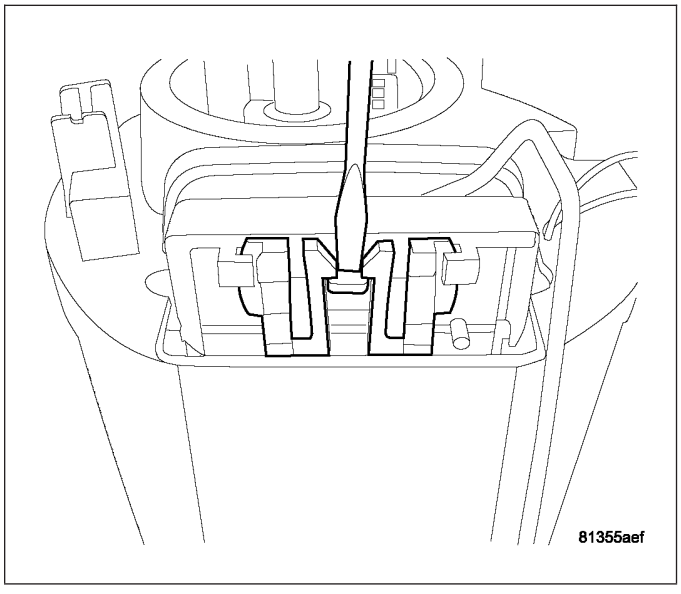

16. Lift level sending card straight up and out of module.

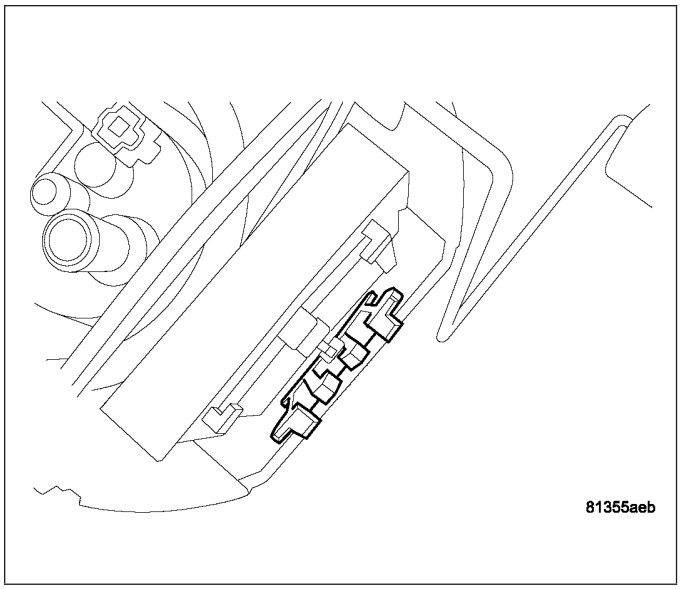

17. Disconnect the electrical wiring from module.
18. Remove level sending card.

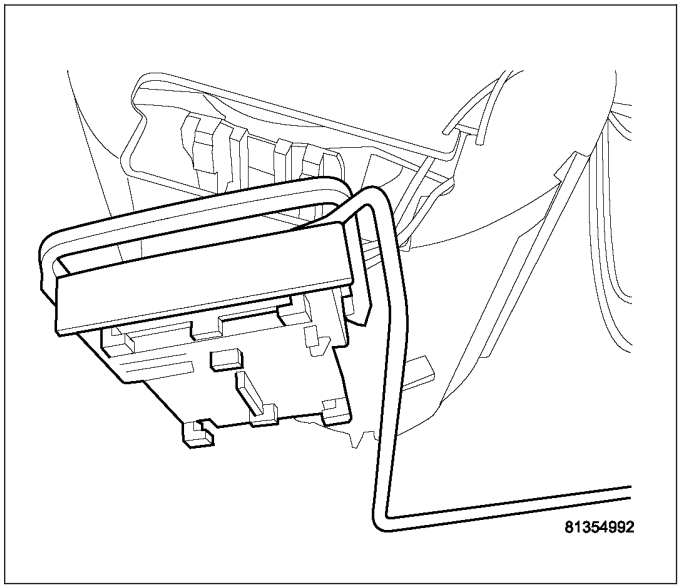

RIGHT SIDE MODULE

1. Release the fuel pressure, refer to the Fuel Pressure Release Procedure in this section.
2. Disconnect negative battery cable.

NOTE: The fuel level of the vehicle must be below 5/8 of a tank before you remove the module lock-rings. If it is above that you can spill fuel in the vehicle.

3. Drain partial fuel from fuel tank through the filler tube. Use a hard nylon tube, with a 30° cut on the end, to push the check valve open to drain fuel from tank.

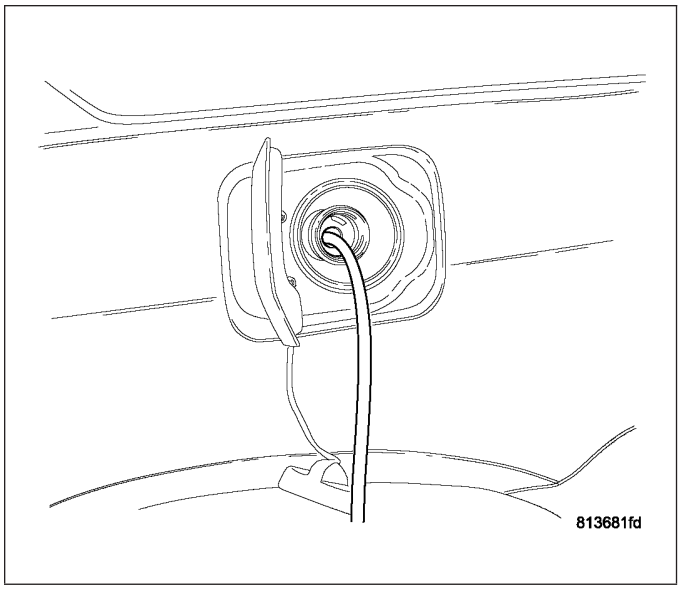

4. Remove the rear lower seat cushion.

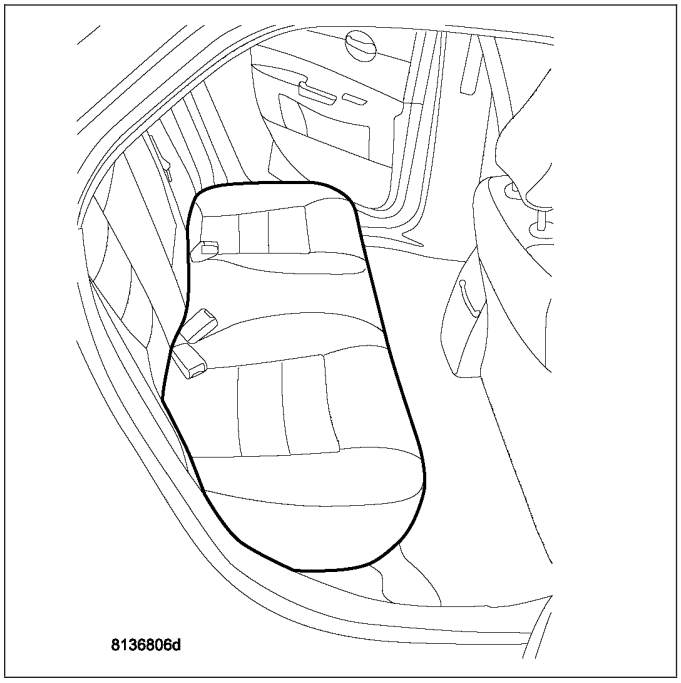

5. Push seat back and up to remove seat cushion.

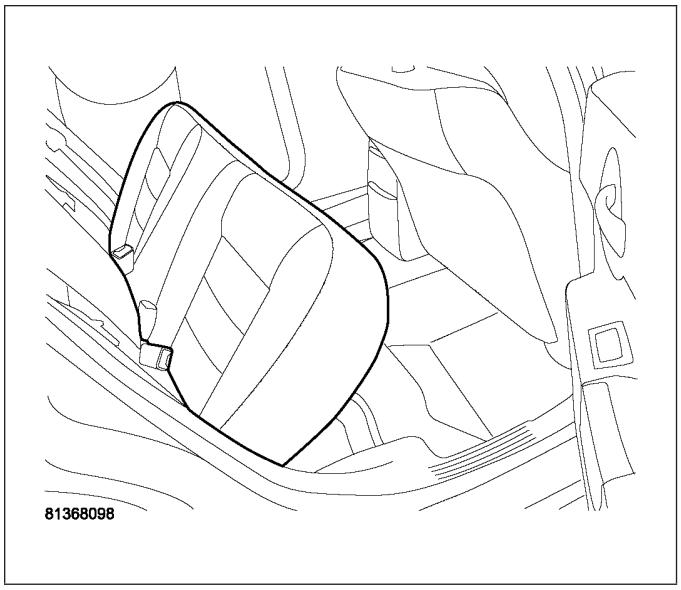

6. Fold back the foam pad covering access cover for modules.

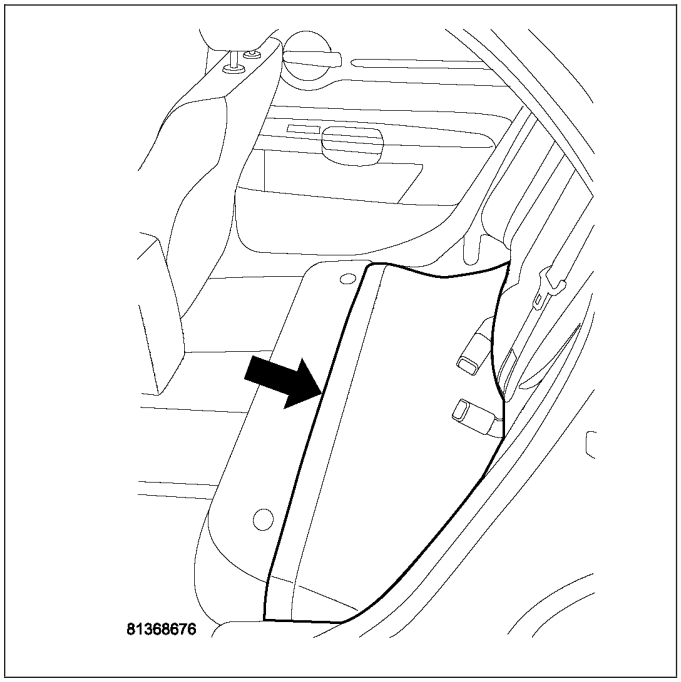

7. Disconnect the electrical connector from left side module.
8. Mark the module orientation.

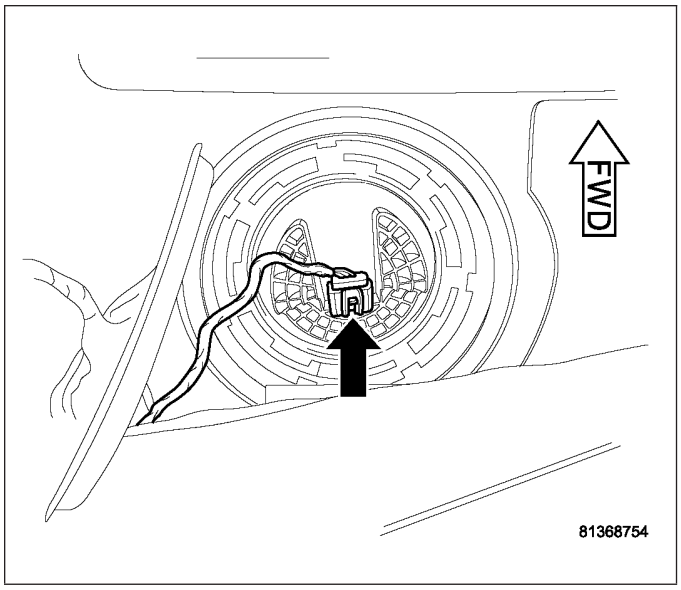

9. Use special tool #9340 to remove left side module lock ring.

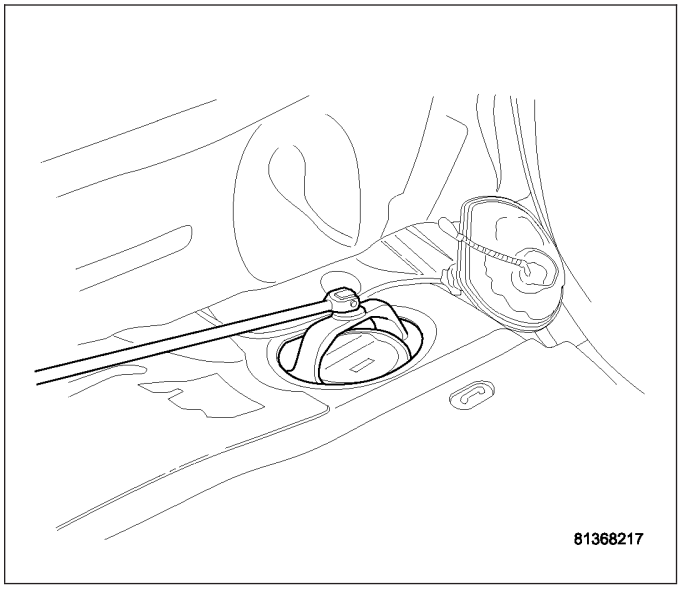

10. Drain fuel from left side of fuel tank. Lift module up enough to push hose into tank and drain. Do not spill fuel in interior of vehicle.

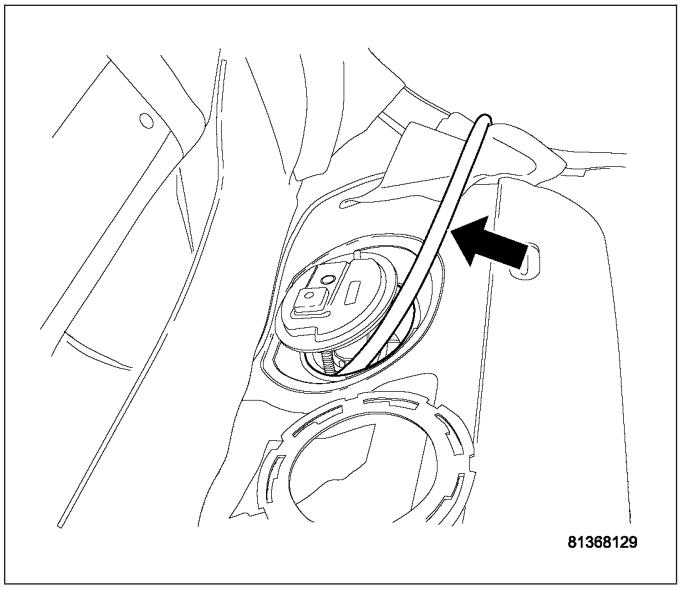

11. Lift module up and out of tank as far as possible.
12. Disconnect the electrical connector from the bottom of the left side module.

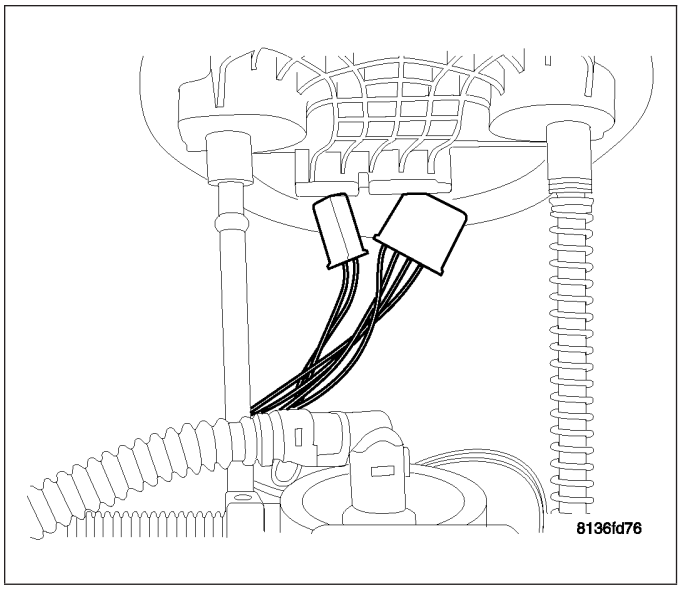

13. Pump module left side.
14. Lift module top half off and tip lower half on its side to drain remaining fuel from the reservoir.

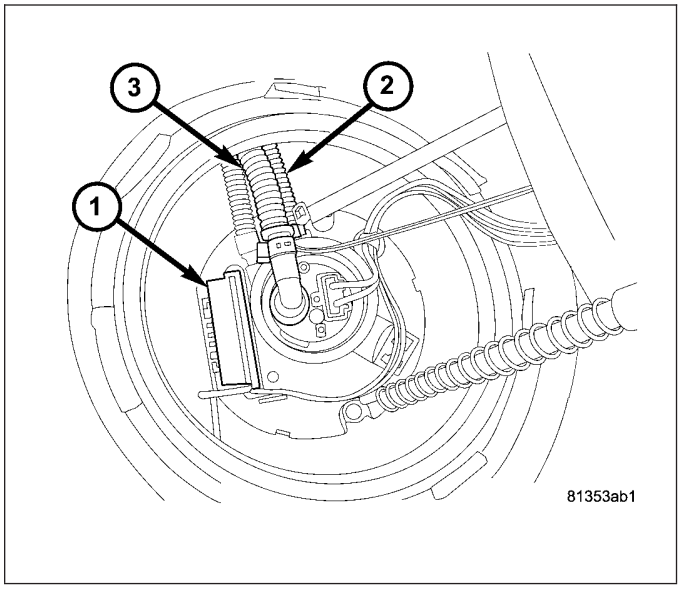

15. Push in on the release tab on the fuel line fitting to release the fuel line from the fuel pump fitting.

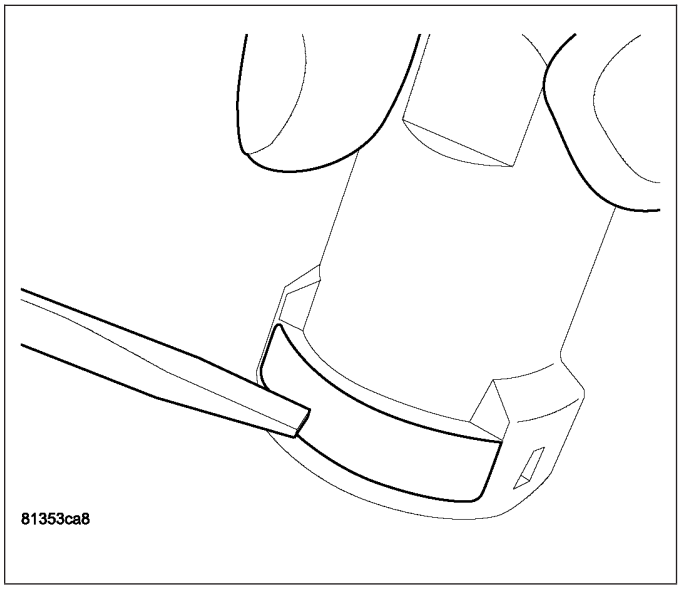

16. Remove the Fuel supply line from the top of the bottom half of the module.

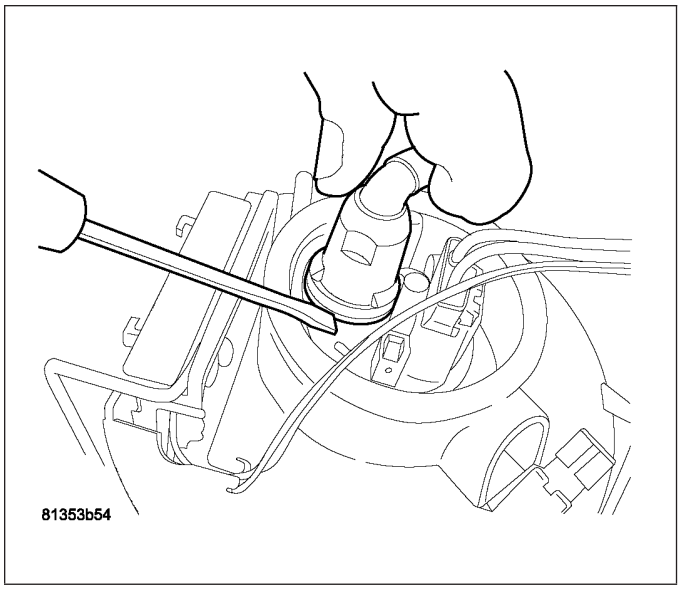

17. Fuel return line (1) and Saipan return line (2). Just pull tube up to release from module.

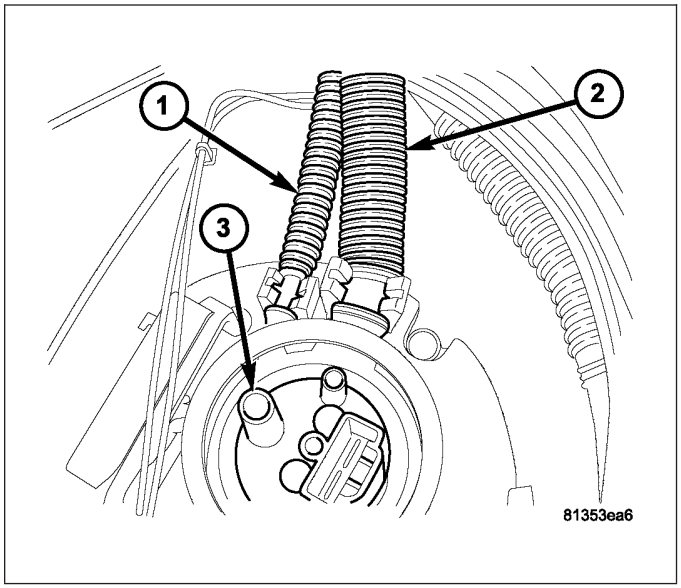

18. Remove the fuel return and Siphon return hoses from the bottom module.

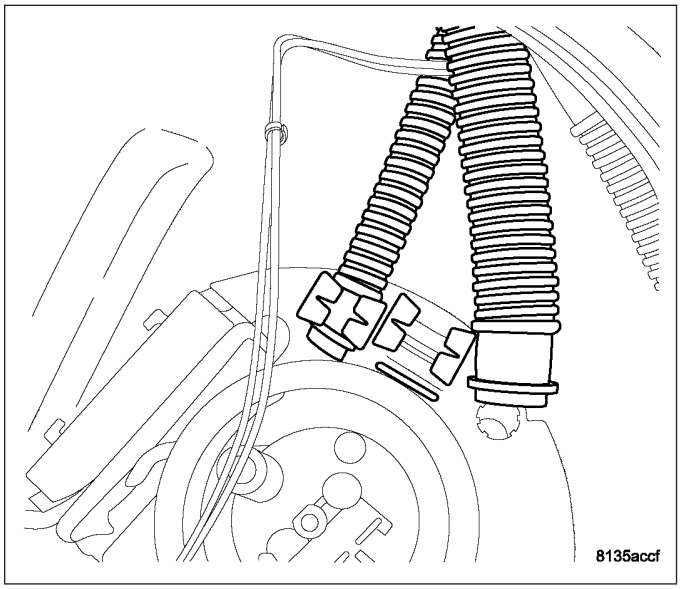

19. Remove plastic access covers from floor pan right side.

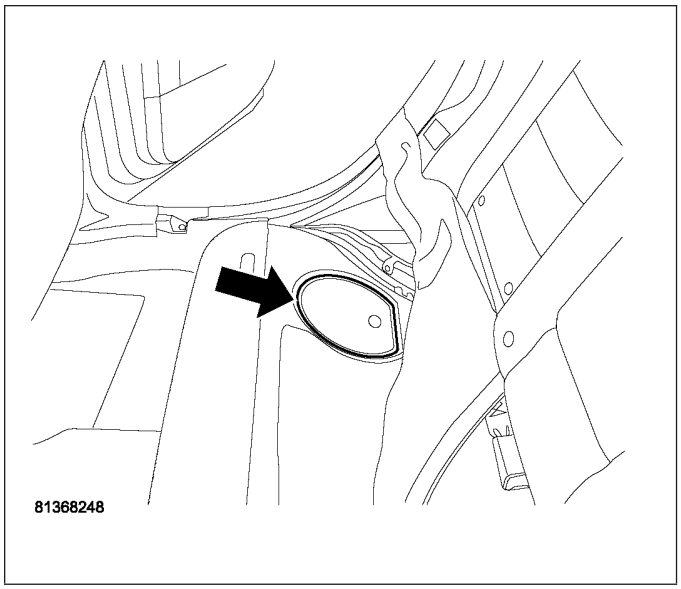

20. Disconnect the fuel supply line from module.
21. Mark the module orientation.

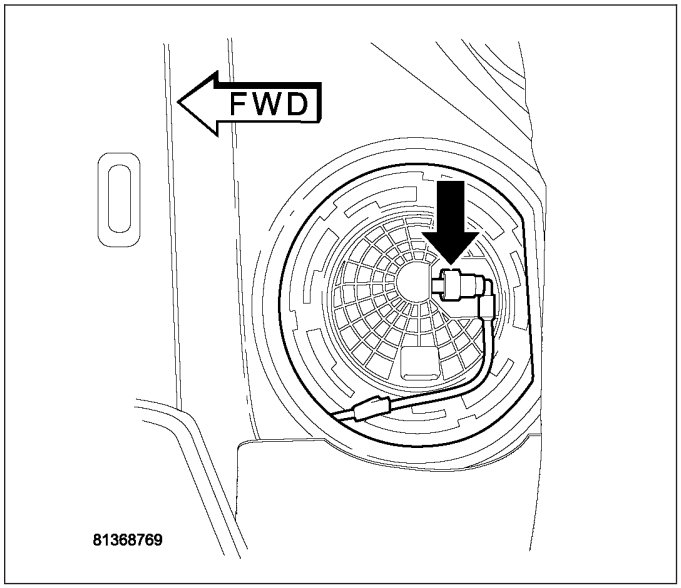

22. Use special tool #9340 to remove right side module lock ring.

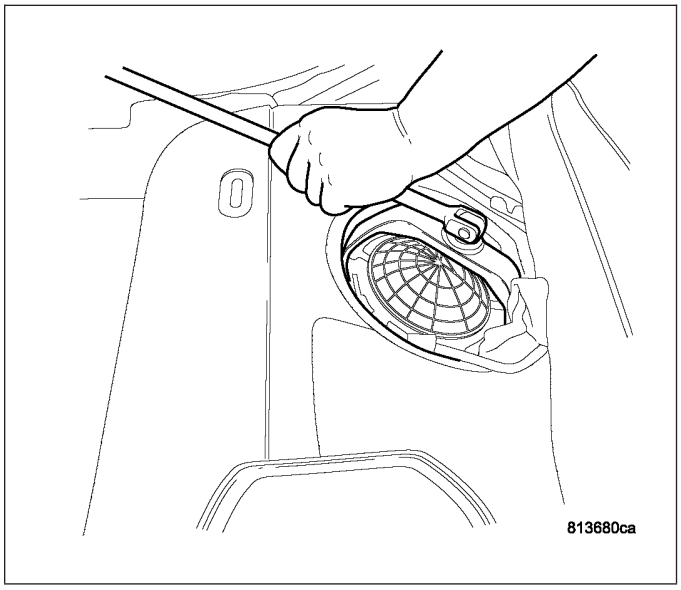

23. Drain fuel from right side of fuel tank. Lift module up enough to push hose into tank and drain. Do not spill fuel in interior of vehicle.

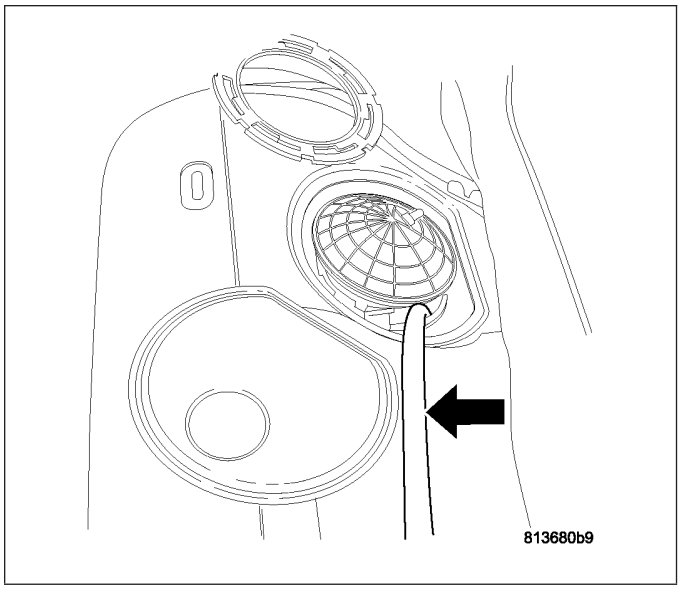

24. Pull module up and out of fuel tank.

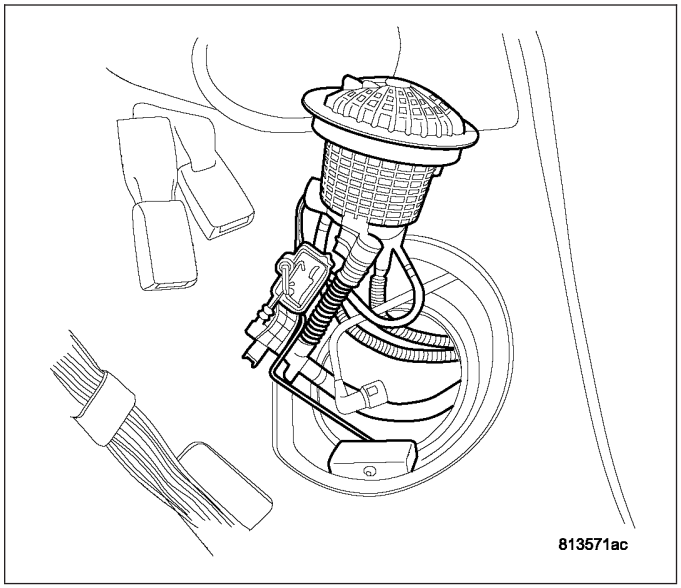

25. Unlatch the fuel level sending card from module.

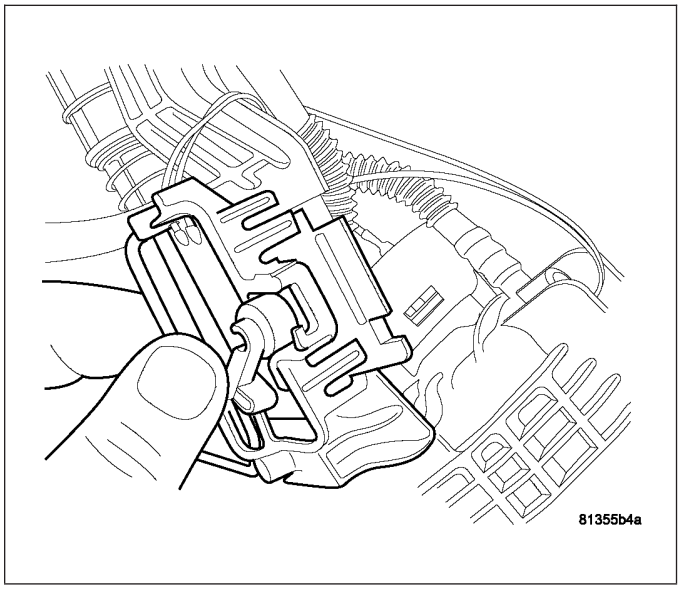

26. Fuel level sending card released.

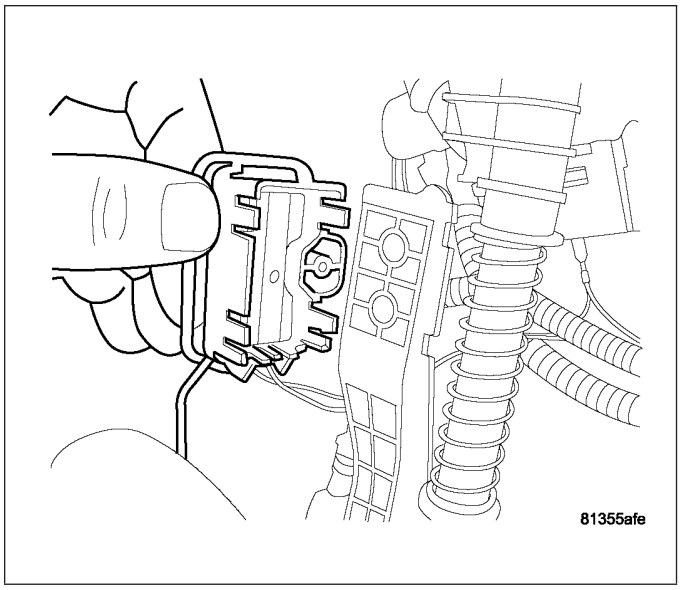

27. Remove the ground wire from the check valve and fuel pressure regulator.

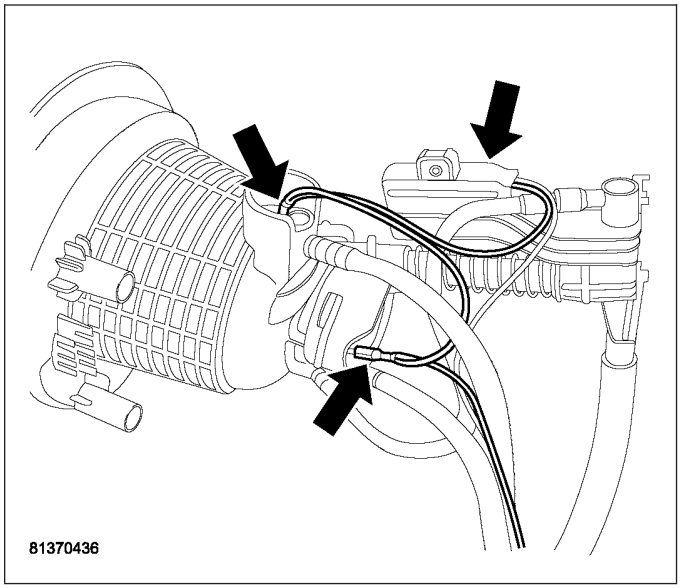

28. Remove fuel level sending card from module.
29. Cut tie straps from hoses to remove wiring harness for fuel level card.

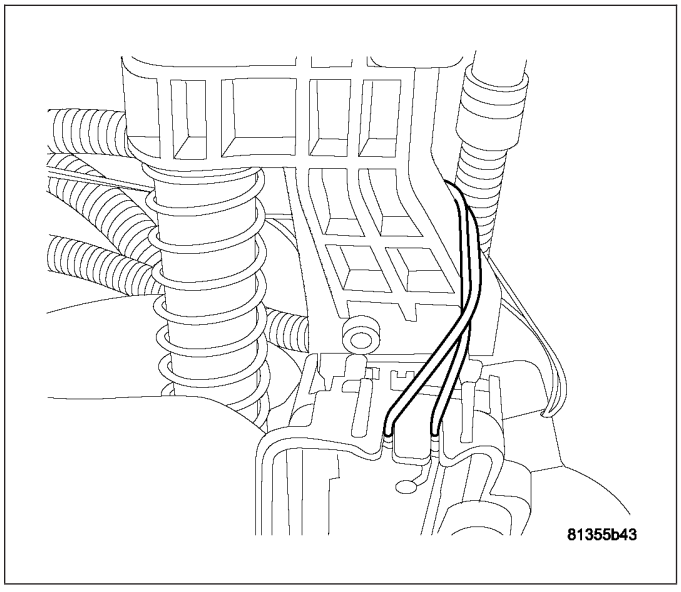

INSTALLATION

LEFT SIDE MODULE

1. Install level sending card, make sure that the locking tabs are locked on the card.

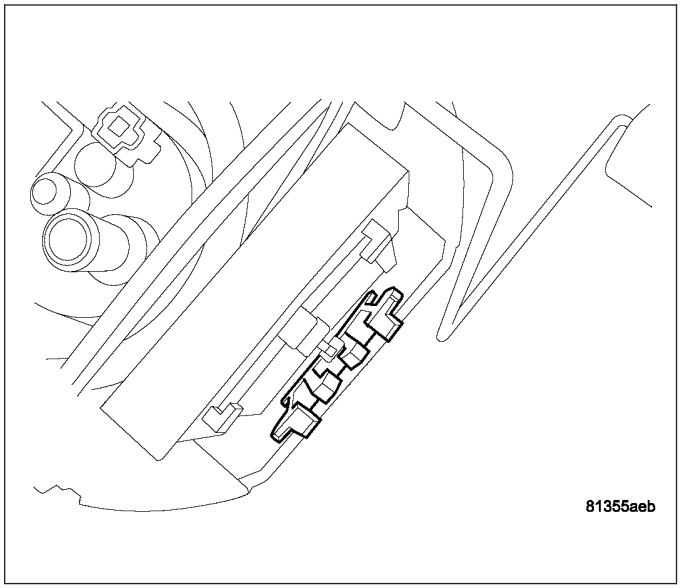

2. Route wires in the proper location.

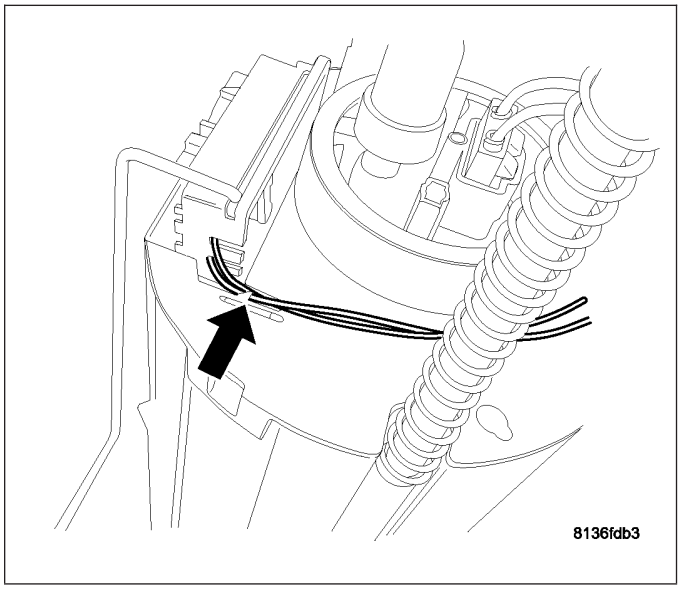

3. Install module top to module bottom.

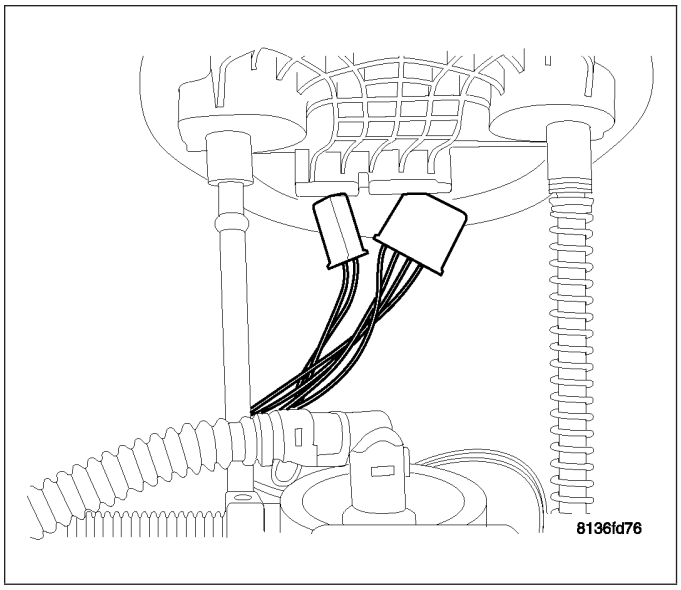

4. Connect the electrical connectors for right side fuel level sending card, left side module card and fuel pump.

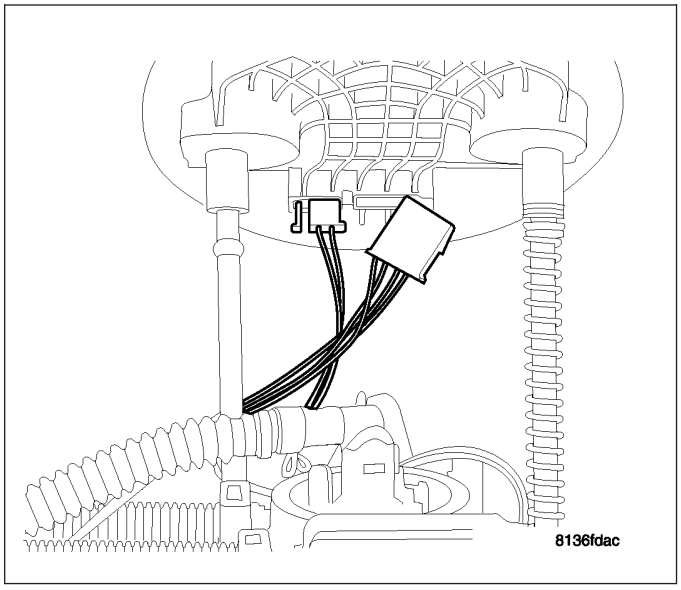

5. Install module and align marks on the module for proper orientation.

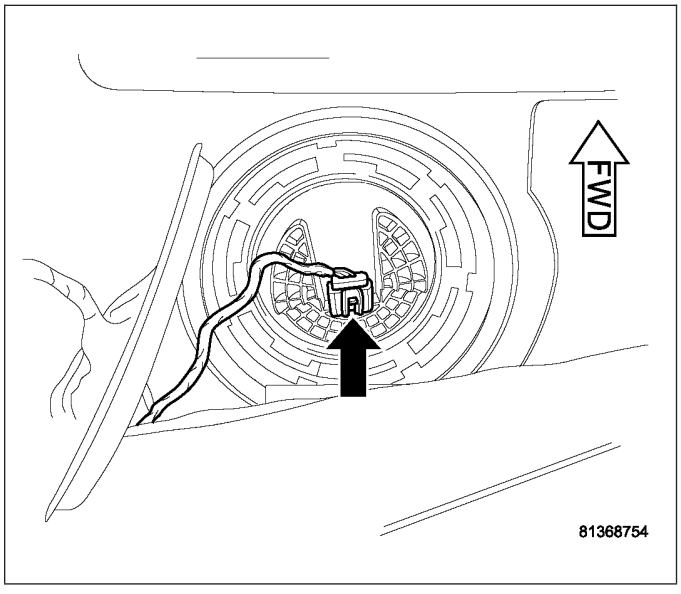

6. Install module lock-ring.
7. Use special tool #9340 to tighten left side module lock ring.
8. Connect the electrical connector to left side module and install plastic access cover.

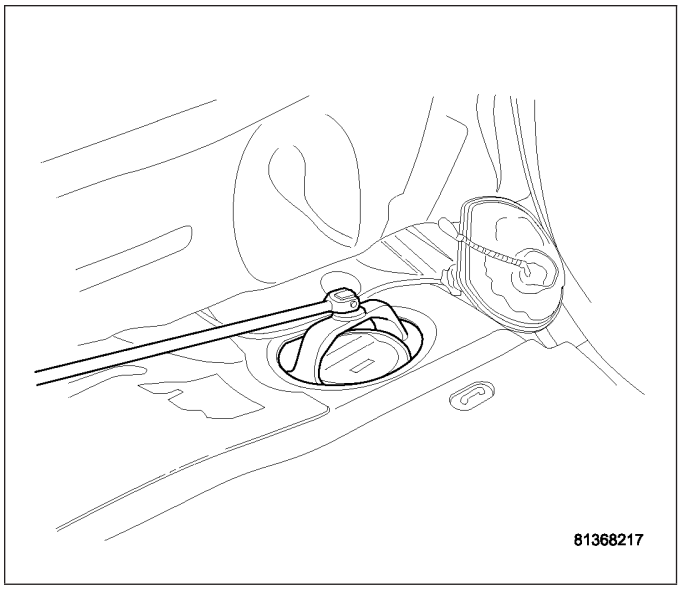

9. Fold the foam pad covering access cover for modules back into place.

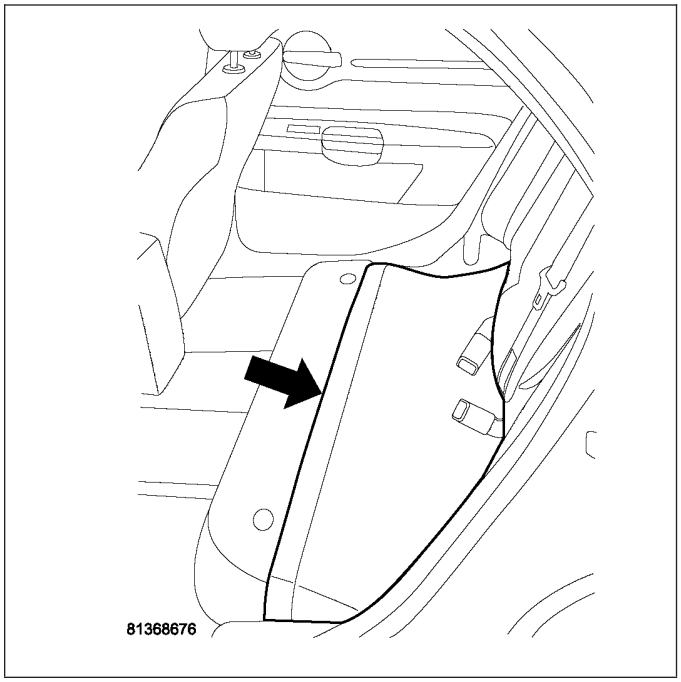

10. Install rear lower seat cushion

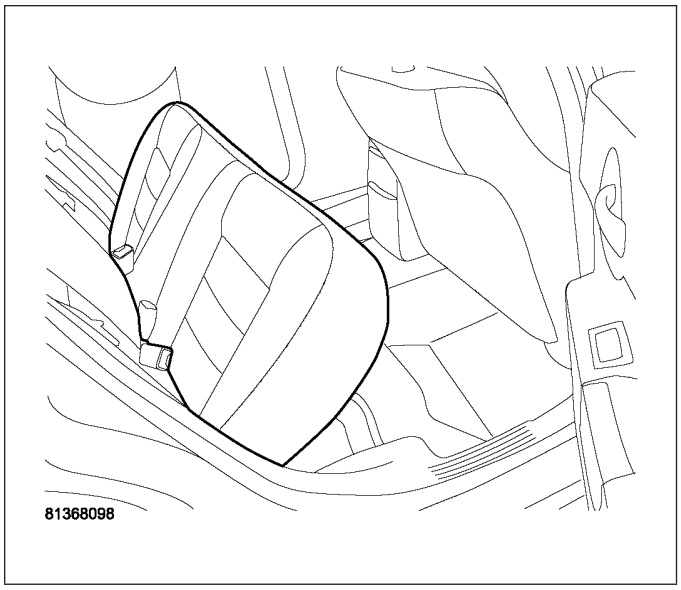

11. Rear lower seat cushion installed.

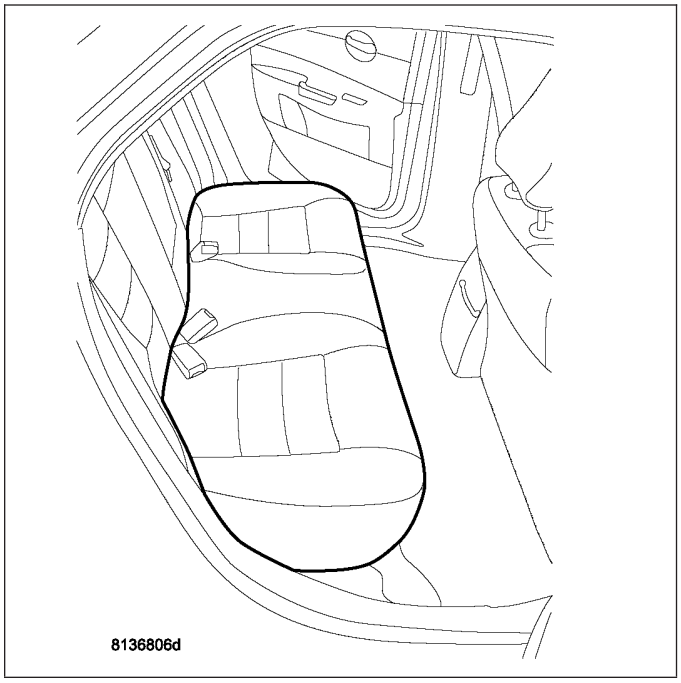

12. Fill fuel tank.
13. Connect negative battery cable.
14. Fill fuel tank. Use the scan tool to pressurize the fuel system. Check for leaks.

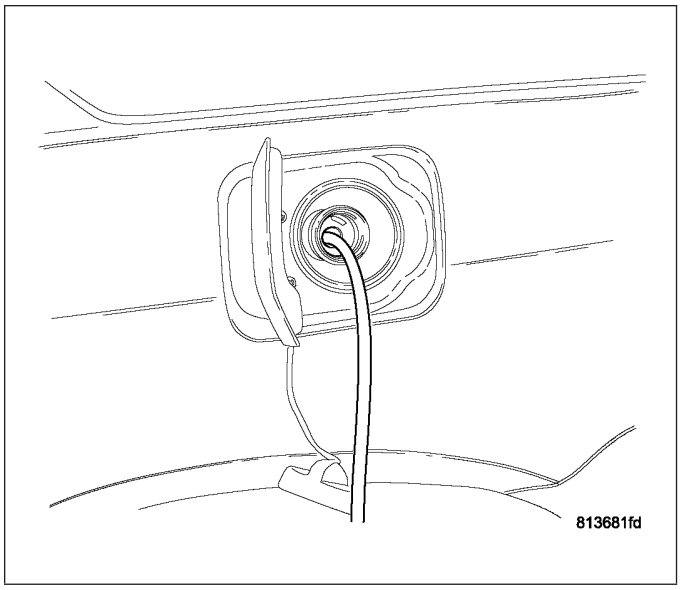

RIGHT SIDE MODULE

1. Install level sending card, make sure that the locking tabs are locked on the card.

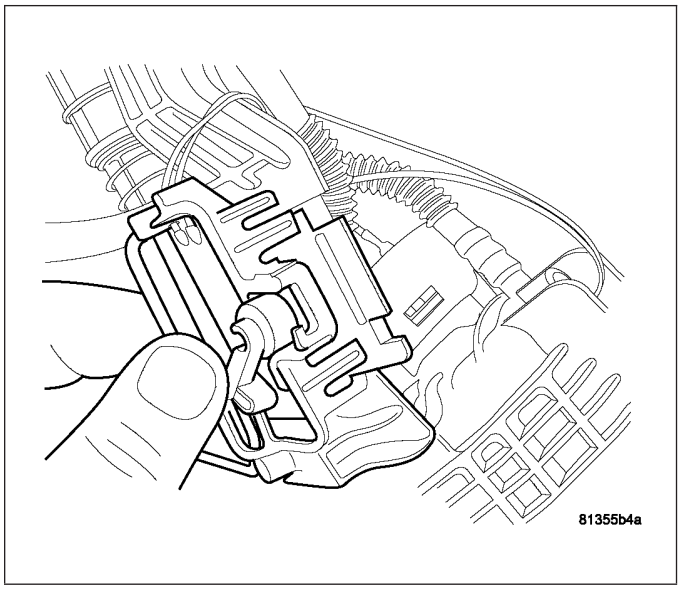

2. Route wires in the proper location.
3. Tie strap the wires harness to the hoses.

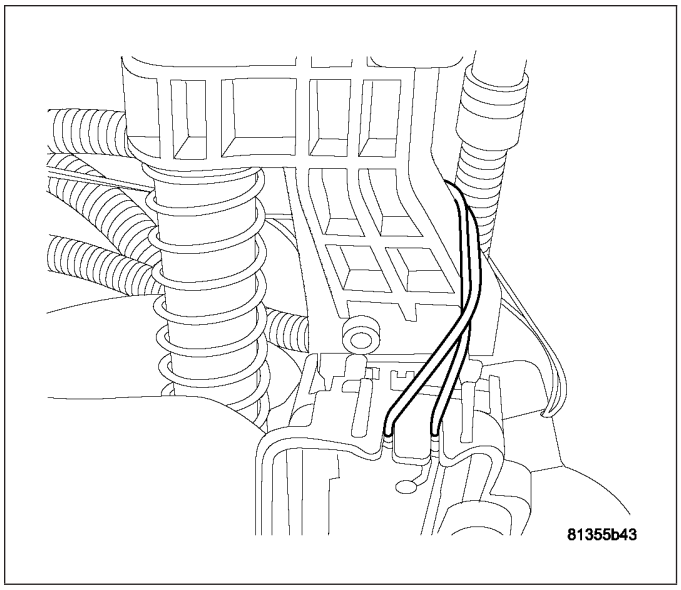

4. Feed hoses and wiring harness into fuel tank and over the center hump in tank.

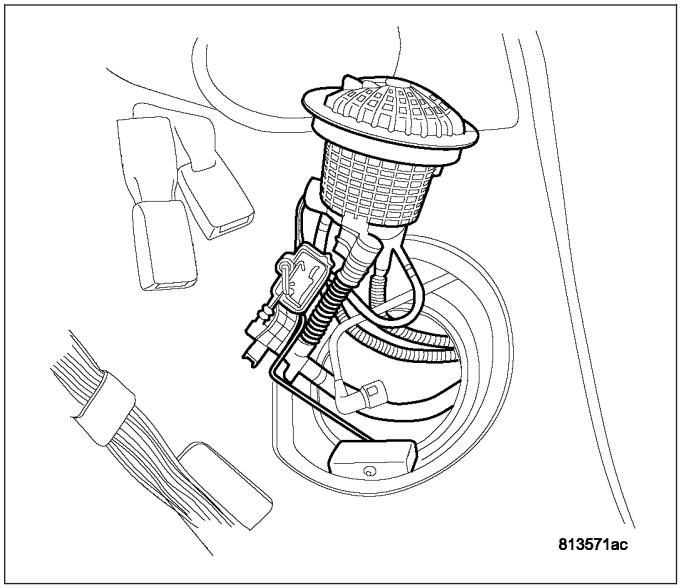

5. Install module and align marks on the module for proper orientation.

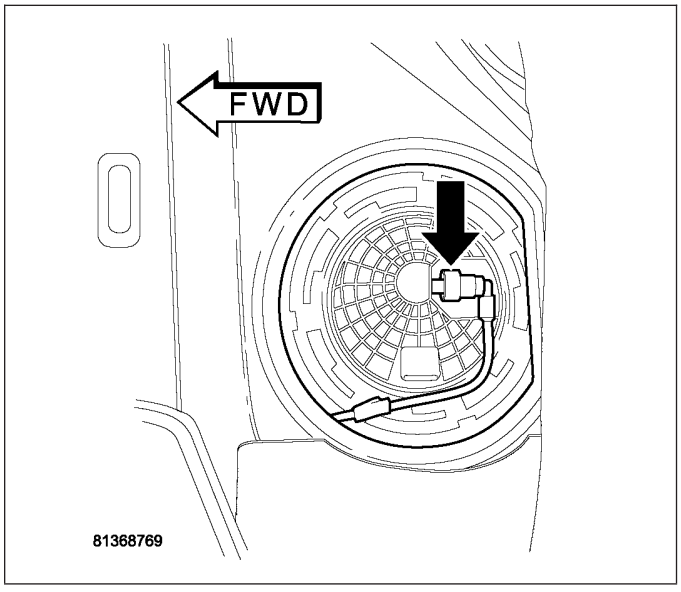

6. Install module lock-ring.
7. Use special tool #9340 to tighten right side module lock ring.
8. Connect the fuel supply line to module.

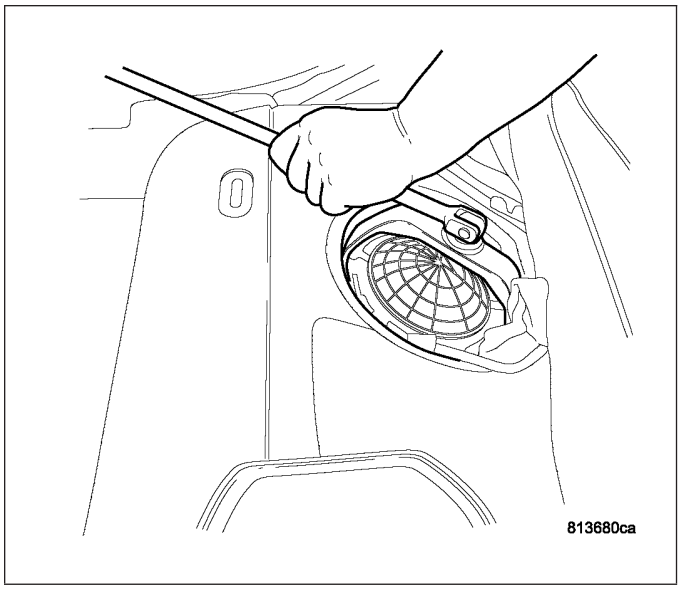

9. Install plastic access covers to floor pan right side.

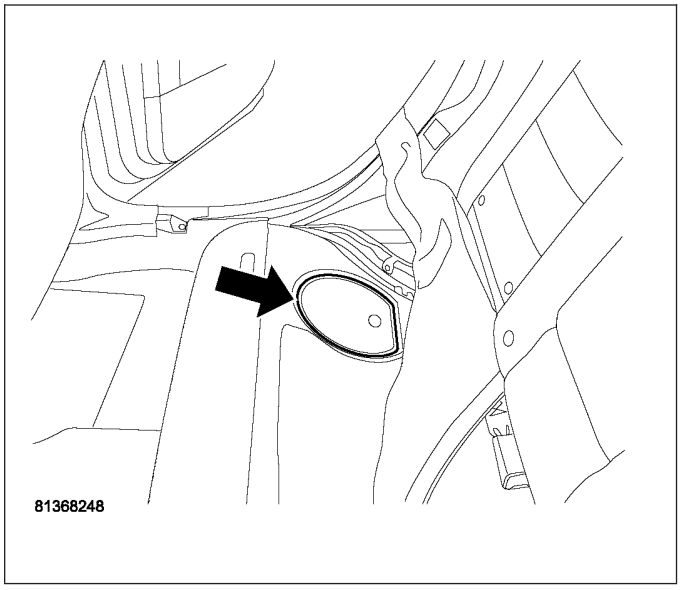

10. Install the fuel return hoses to module.
11. Install fuel supply line to module.

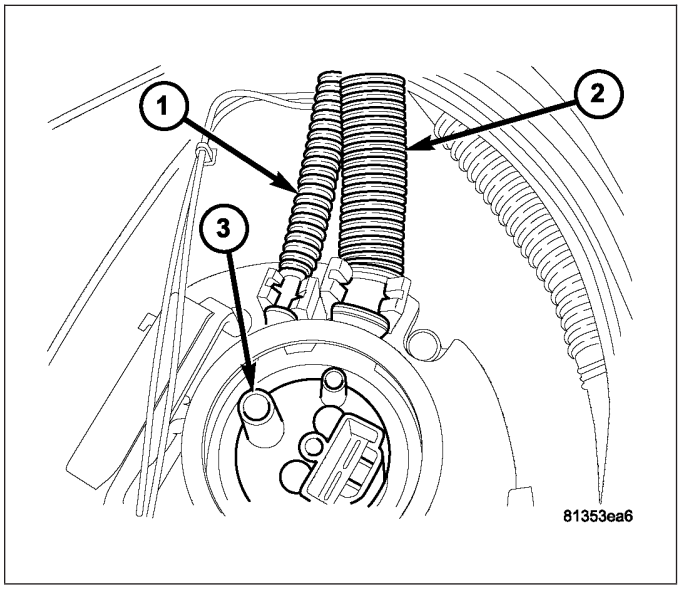

12. Make sure that wires are routed properly.

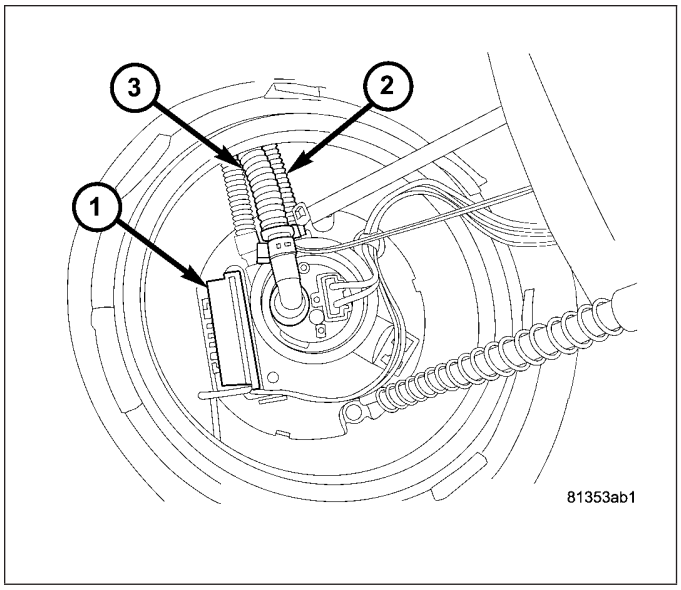

13. Make sure that the level sending card wire is tie straped to the fuel supply line at the module.

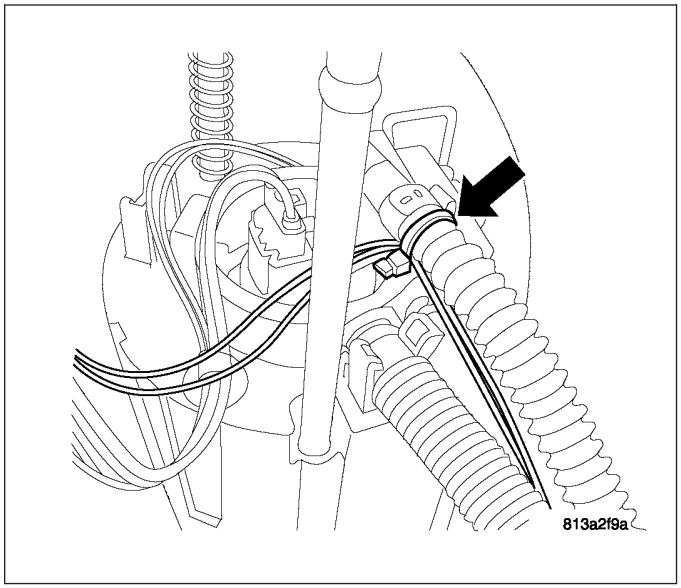

14. Install left side module top to module bottom.

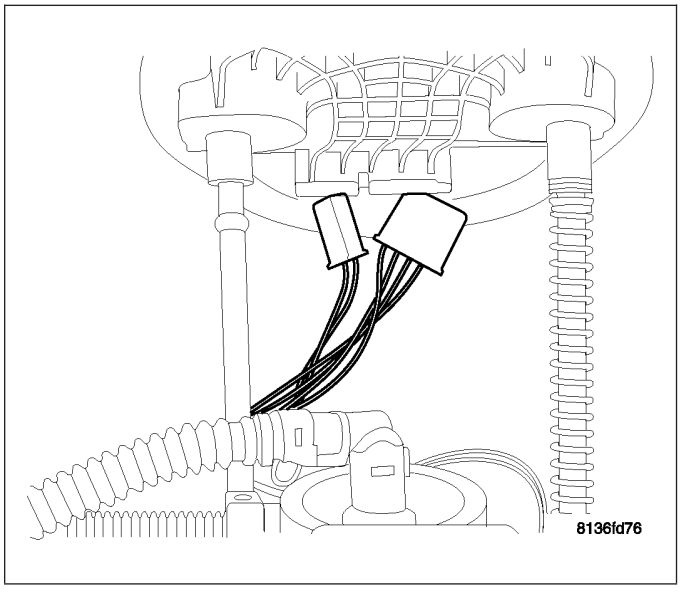

15. Connect the electrical connectors for right side fuel level sending card, left side module card. Make sure that wires are routed properly.

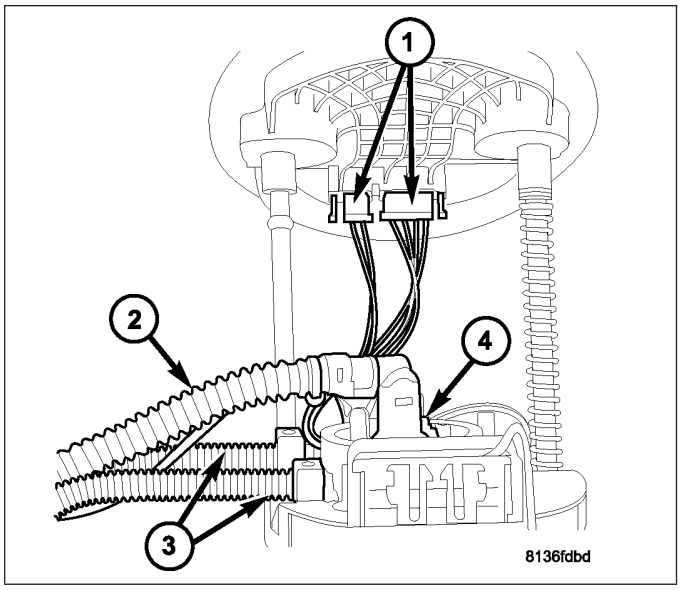

16. Install module and align marks on the module for proper orientation.

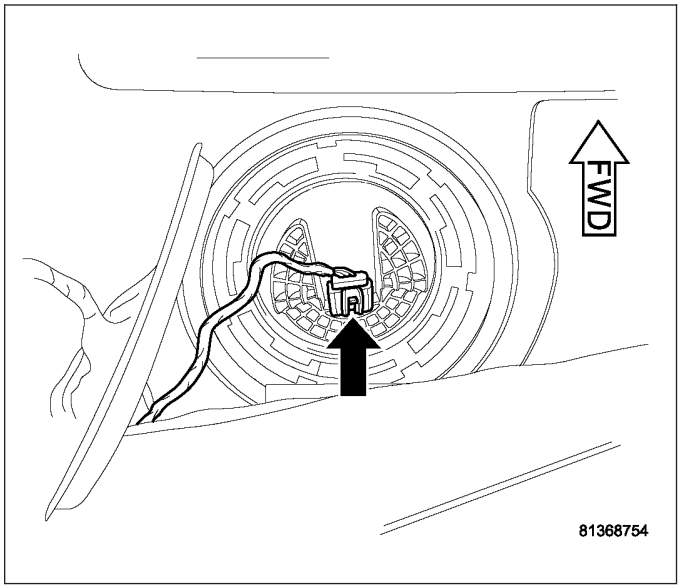

17. Install module lock-ring.
18. Use special tool #9340 to tighten left side module lock ring.
19. Connect the electrical connector to left side module and install plastic access cover.

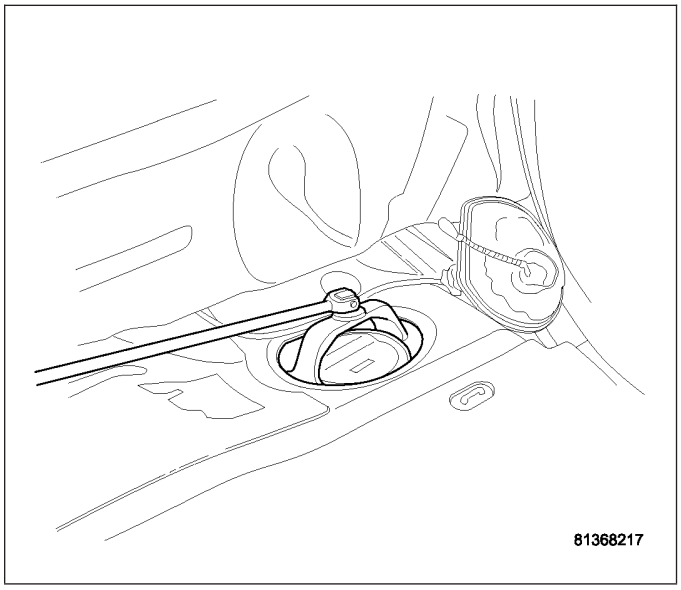

20. Fold the foam pad covering access cover for modules back into place.

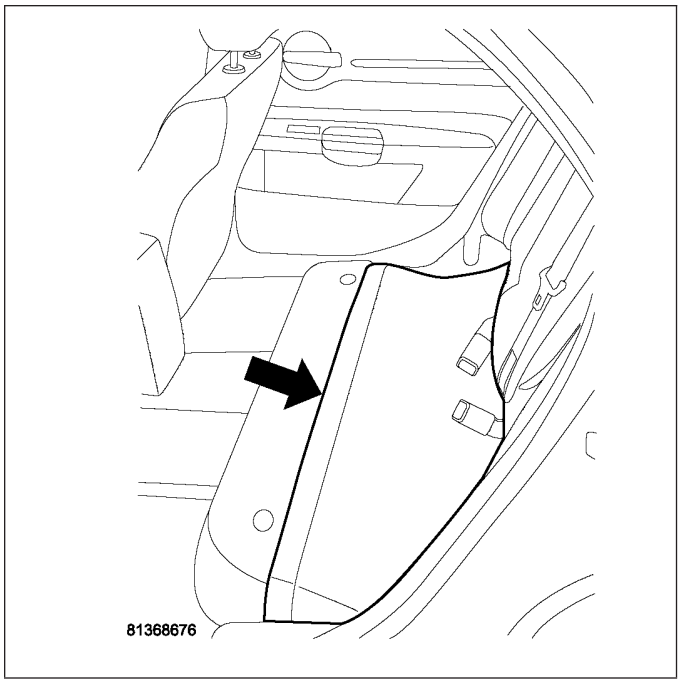

21. Install rear lower seat cushion

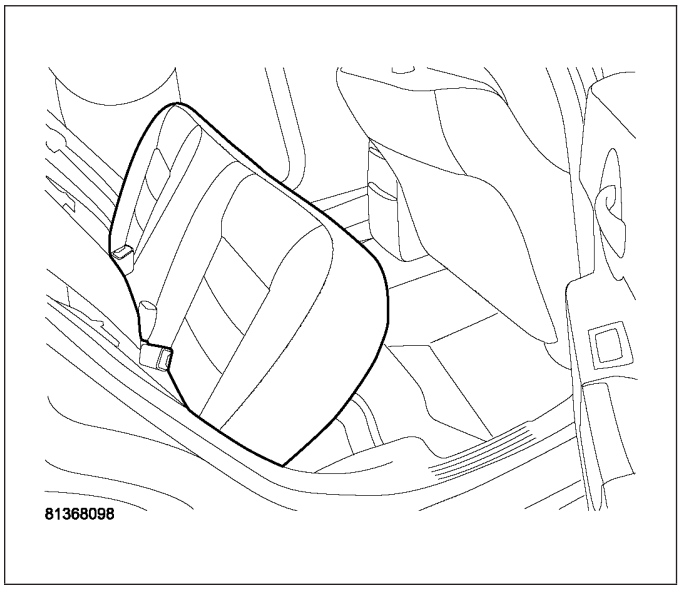

22. Rear lower seat cushion installed.

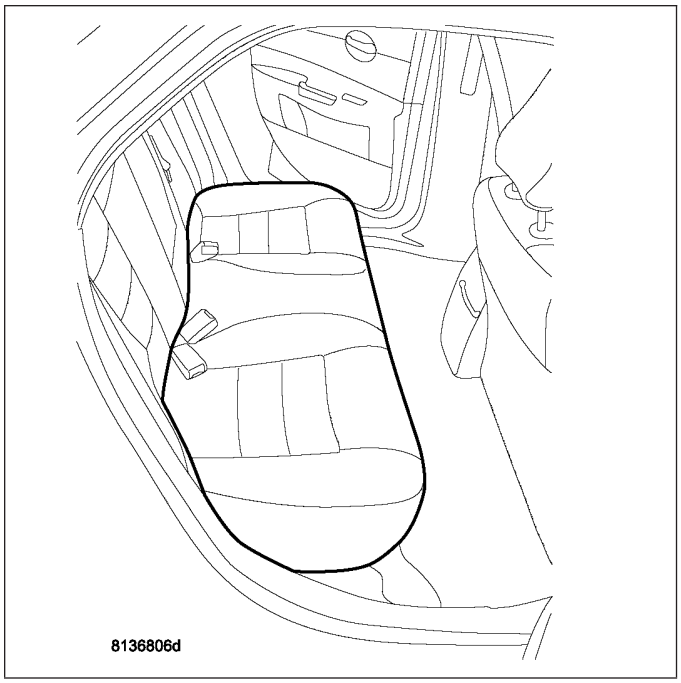

23. Fill fuel tank.
24. Connect negative battery cable.
25. Fill fuel tank. Use the scan tool to pressurize the fuel system. Check for leaks.

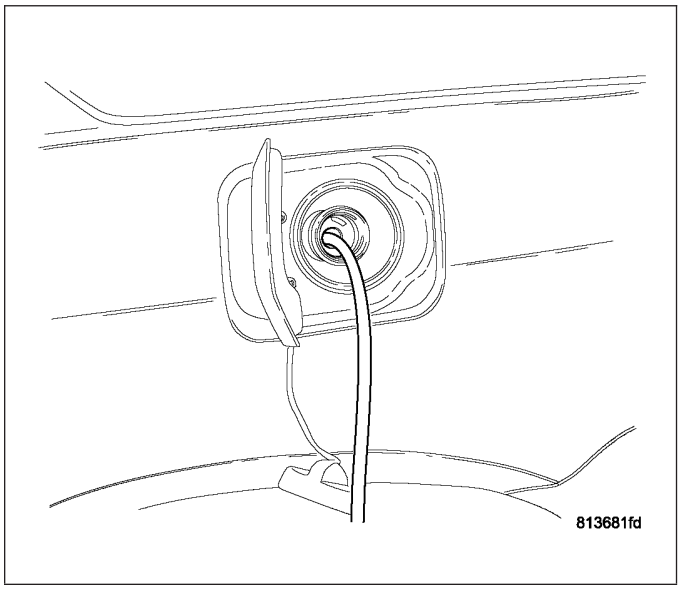

REGULATOR-FUEL PRESSURE

REMOVAL

1. Release the fuel pressure, refer to the Fuel Pressure Release Procedure in this section.
2. Disconnect negative battery cable.

NOTE: The fuel level of the vehicle must be below 5/8 of a tank before you remove the module lock-rings. If it is above that you can spill fuel in the vehicle.

3. Drain partial fuel from fuel tank through the filler tube. Use a hard nylon tube, with a 30° cut on the end, to push the check valve open to drain fuel from tank.

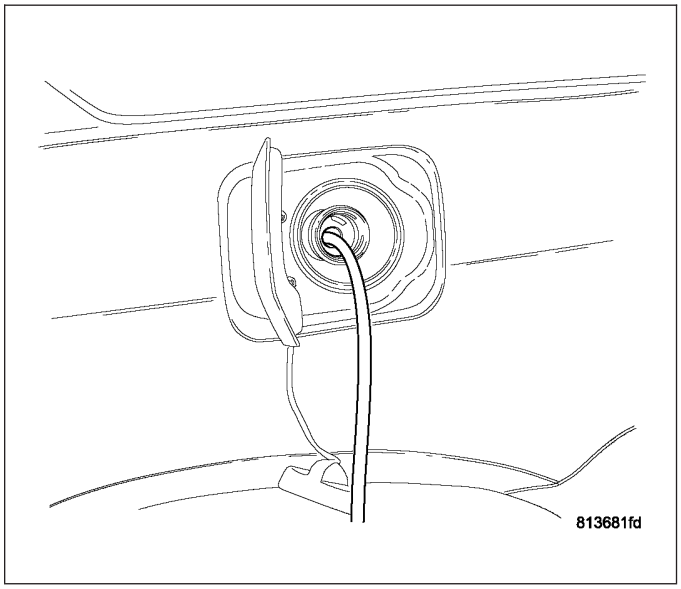

4. Remove the rear lower seat cushion.

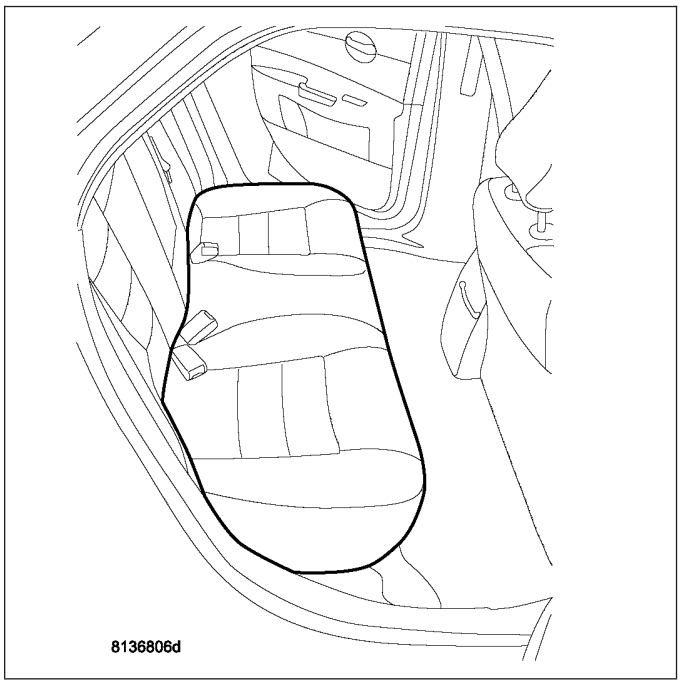

5. Push seat back and up to remove seat cushion.

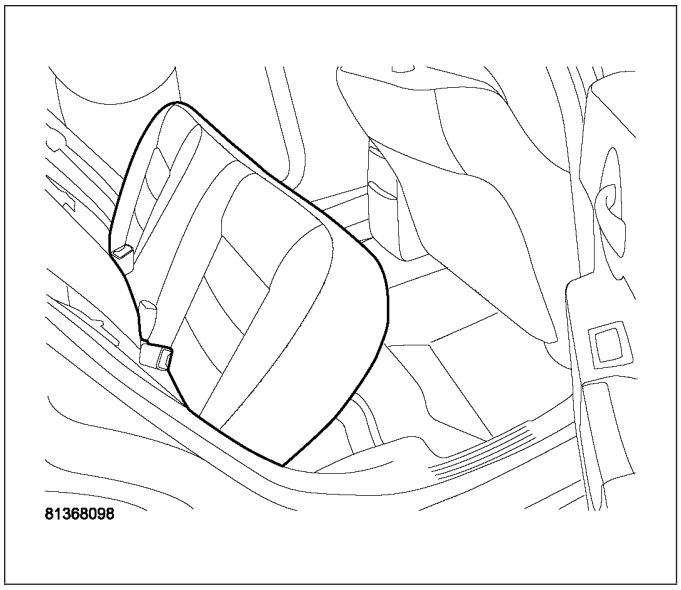

6. Fold back the foam pad covering access cover for modules.

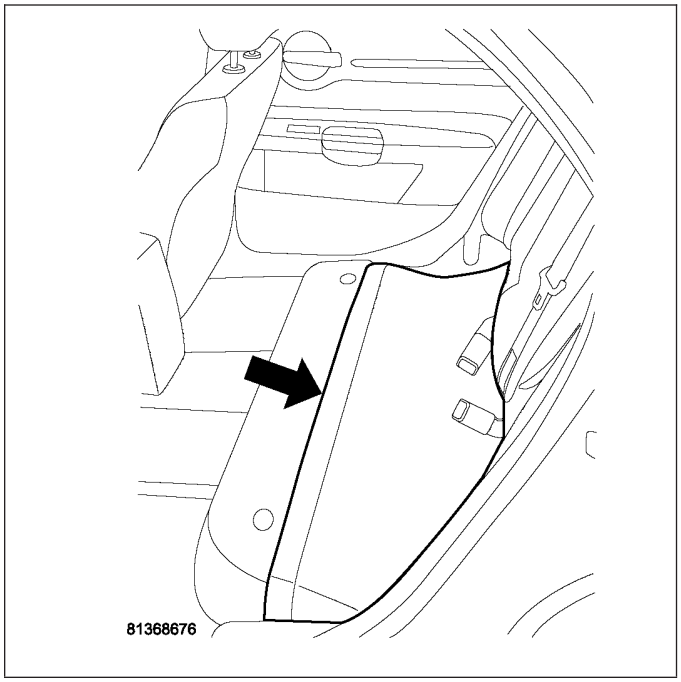

7. Remove plastic access covers from floor pan right side.

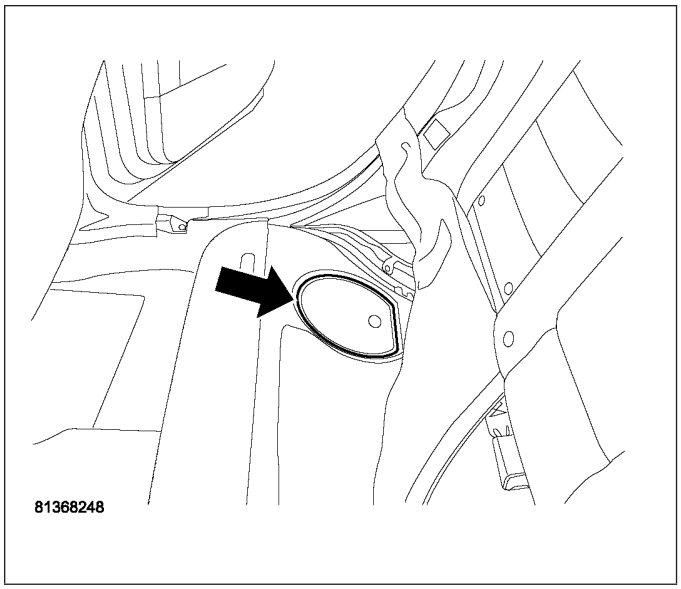

8. Disconnect the fuel supply line from module.
9. Mark the module orientation.

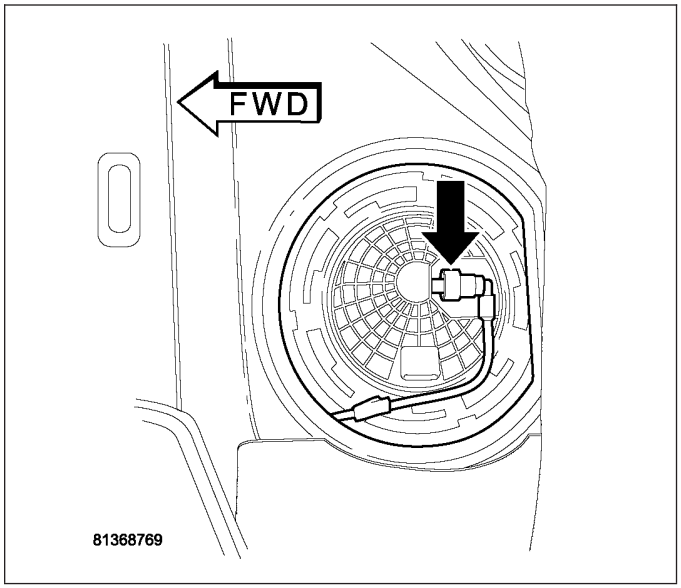

10. Use special tool #9340 to remove right side module lock ring.

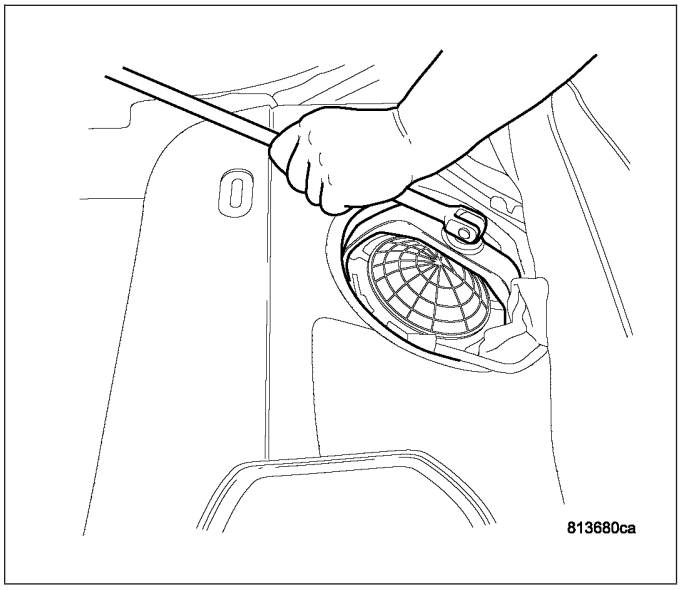

11. Drain fuel from right side of fuel tank. Lift module up enough to push hose into tank and drain. Do not spill fuel in interior of vehicle.

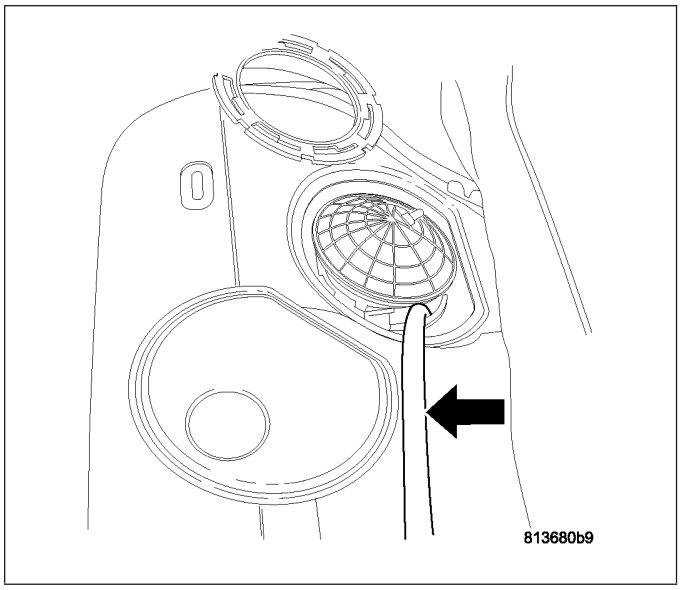

12. Pull module up and out of fuel tank.

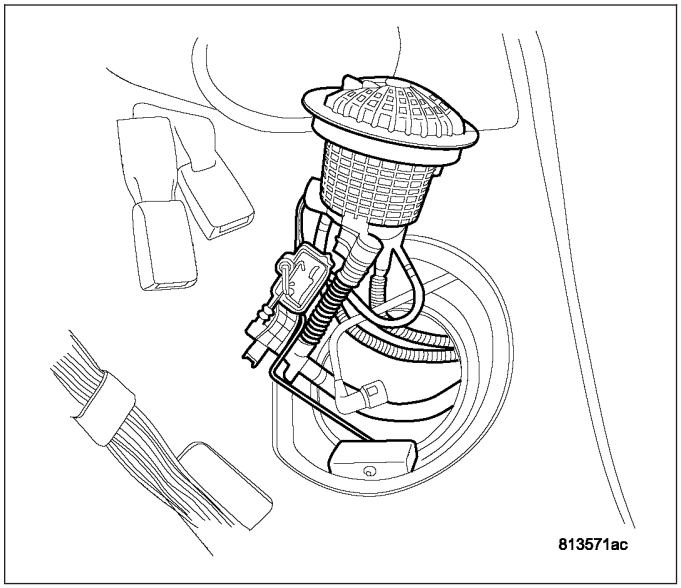

13. Fuel Pressure regulator location.

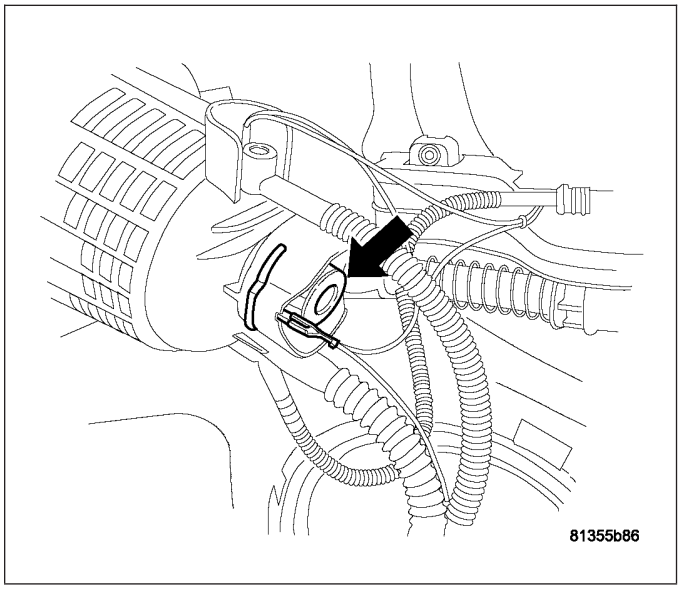

14. Note location of ground wire tab location.

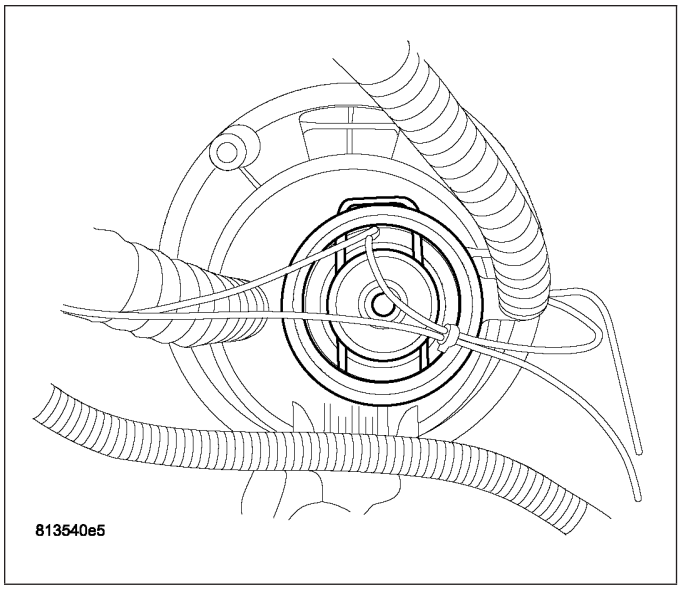

15. Remove ground wire.

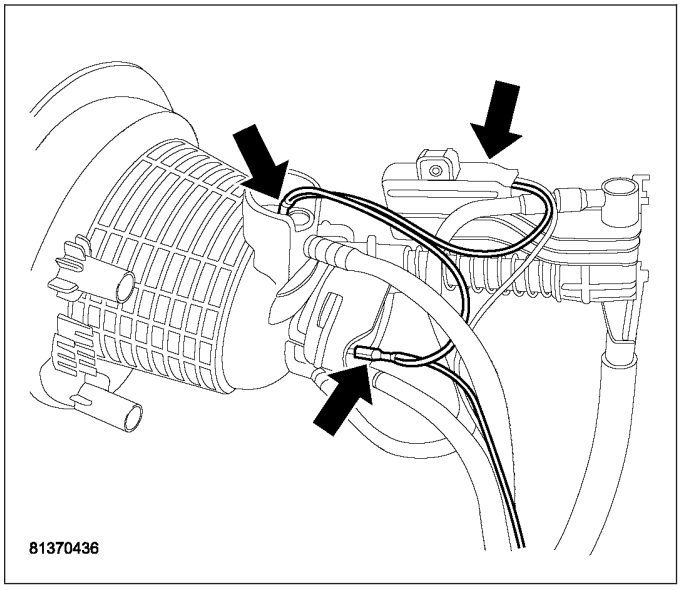

16. Use a screwdriver and pry up on retaining clip.

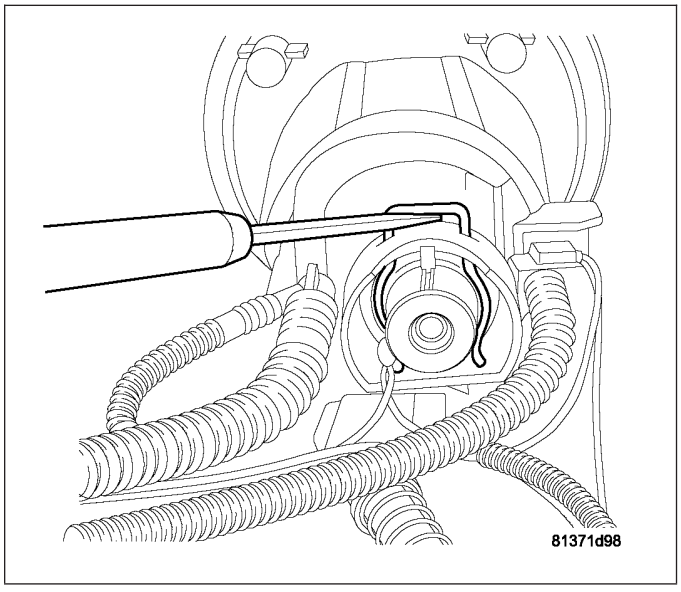

17. Clip in the off position.

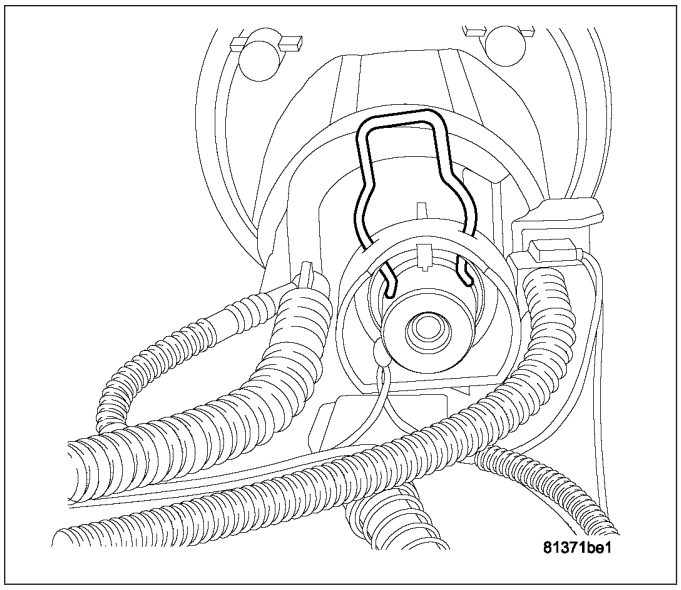

18. Fuel pressure regulator removed.

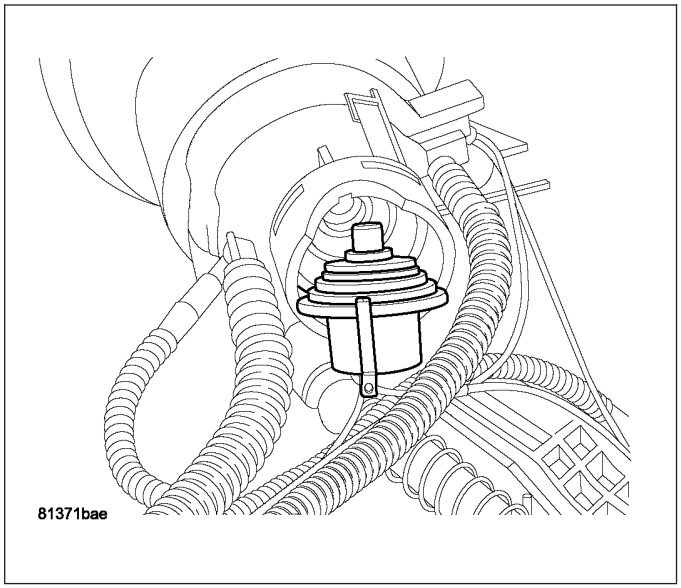

19. Remove o-ring from module.

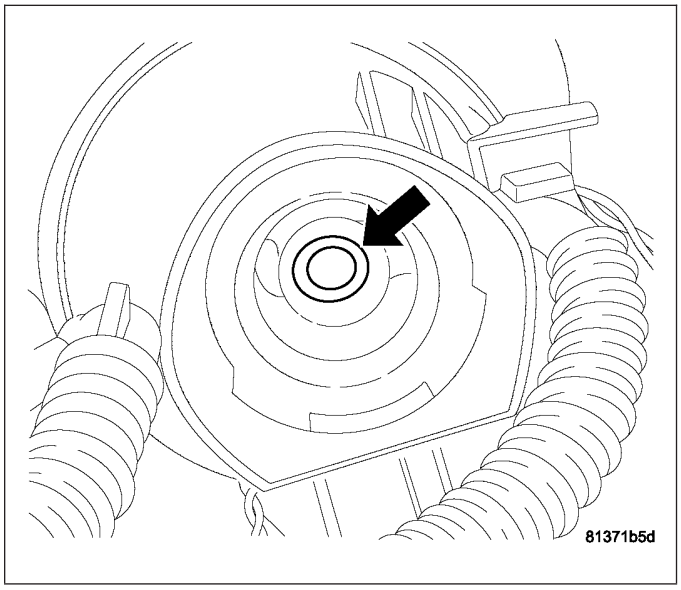

INSTALLATION

1. Install o-ring.

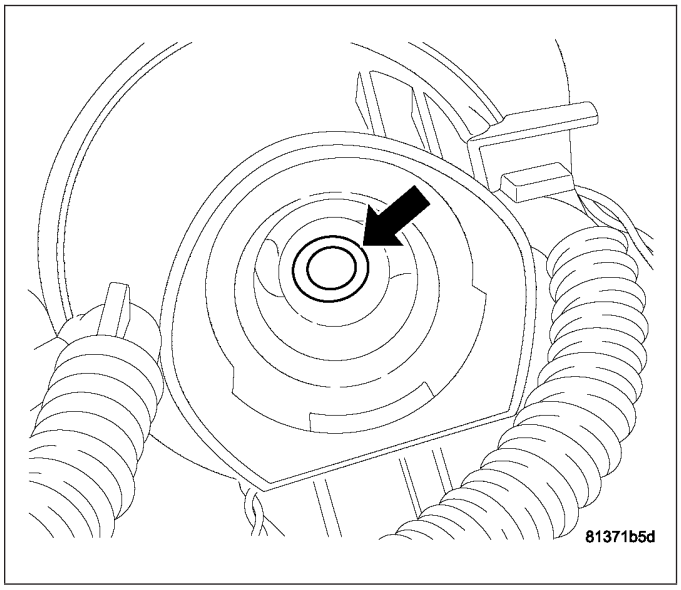

2. Install ground ring.

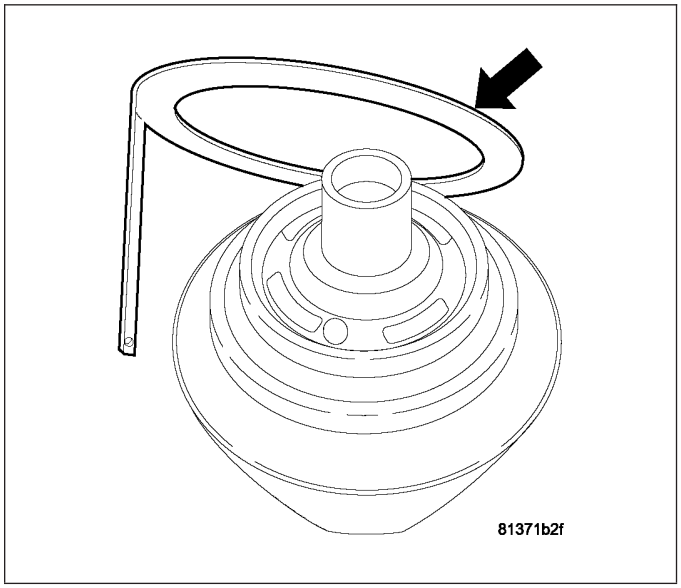

3. Install Fuel Regulator and ground ring. Note location of ground ring.

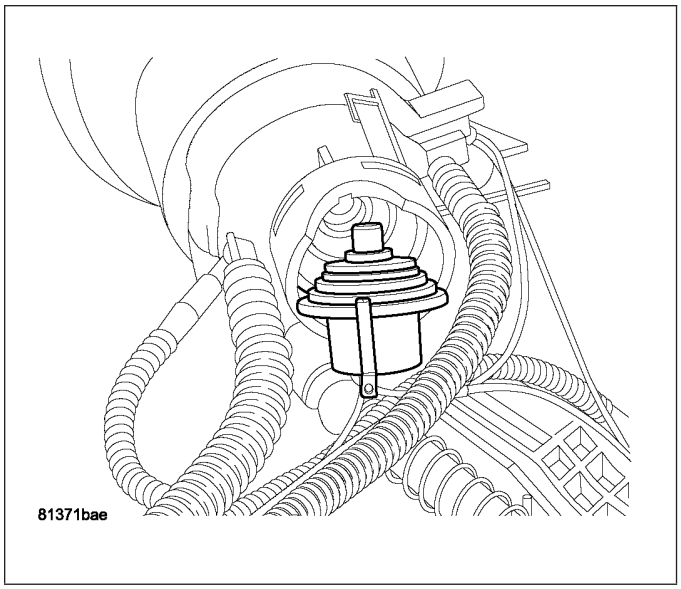

4. Install ground wire.

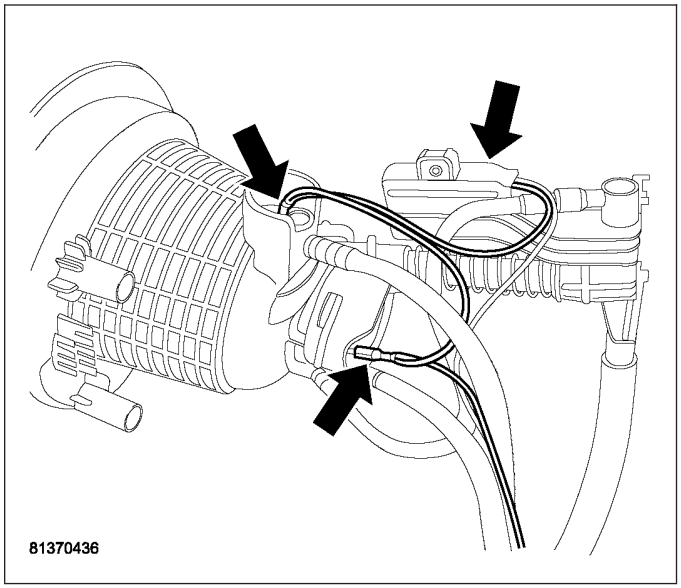

5. Install Fuel Pressure Regulator retaining clip.

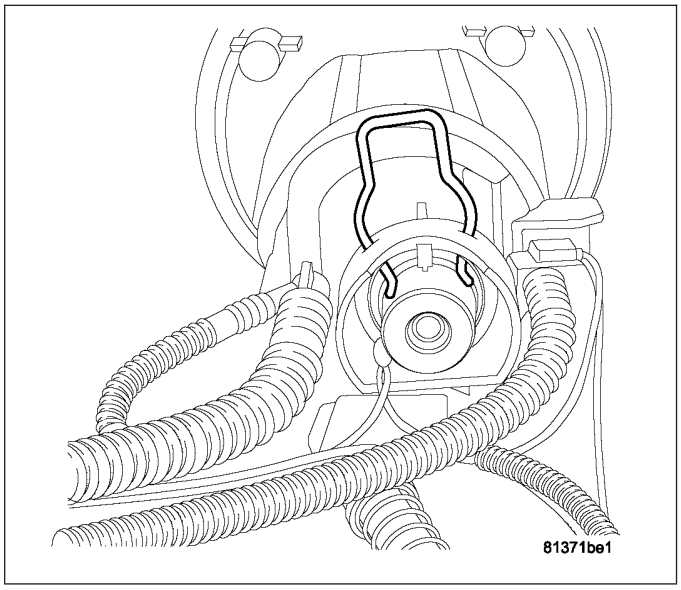

6. Install module into tank.

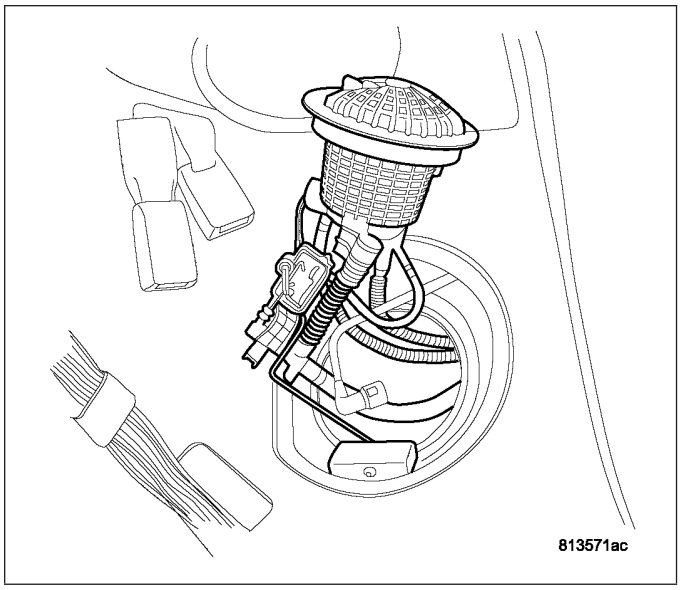

7. Align marks on the module for proper orientation.

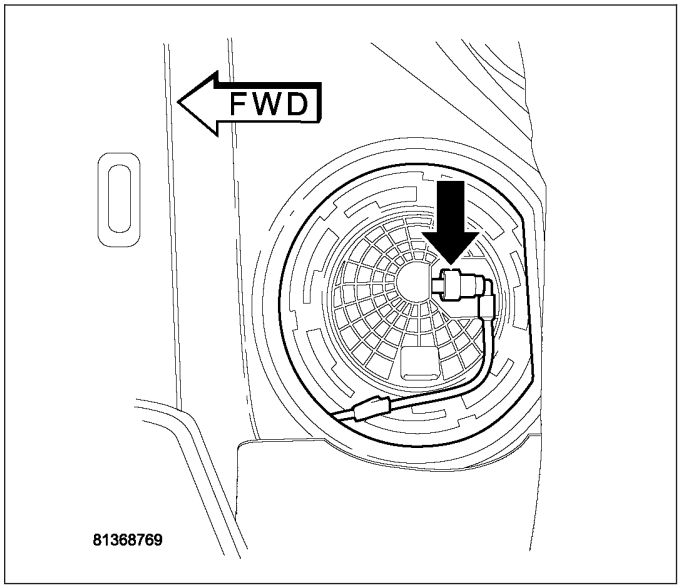

8. Install module lock-ring.
9. Use special tool #9340 to tighten right side module lock ring.
10. Connect the fuel supply line to module.

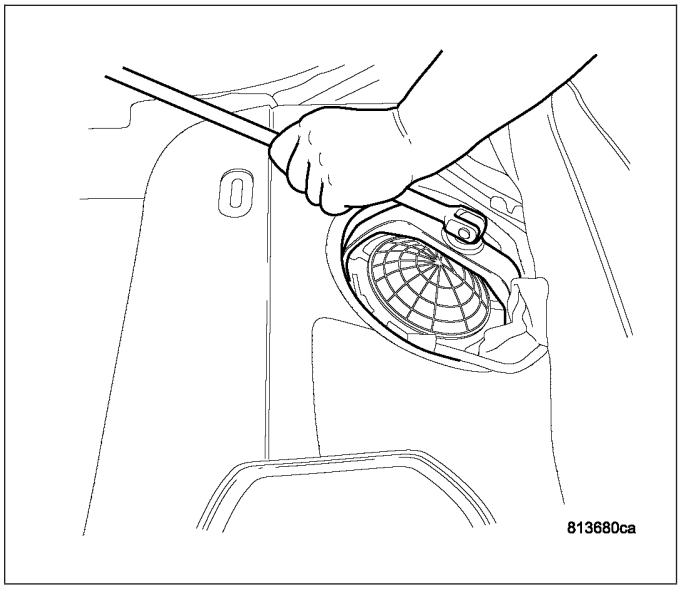

11. Install plastic access covers to floor pan right side.

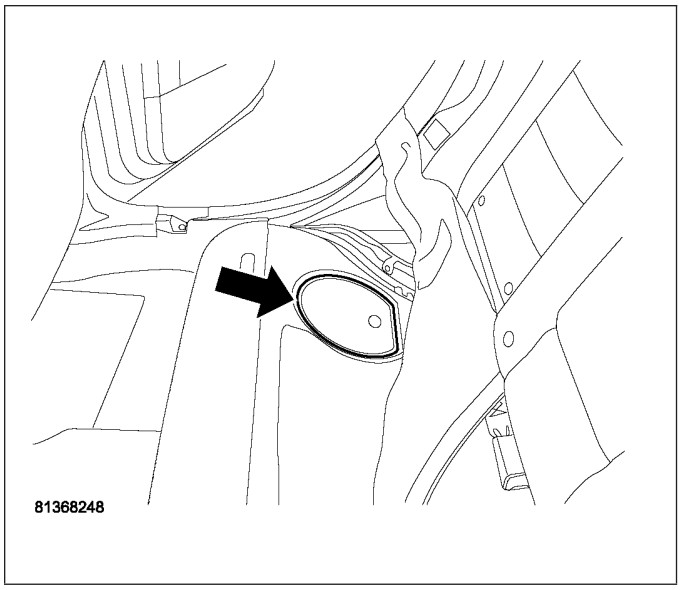

12. Fold the foam pad covering access cover for modules back into place.

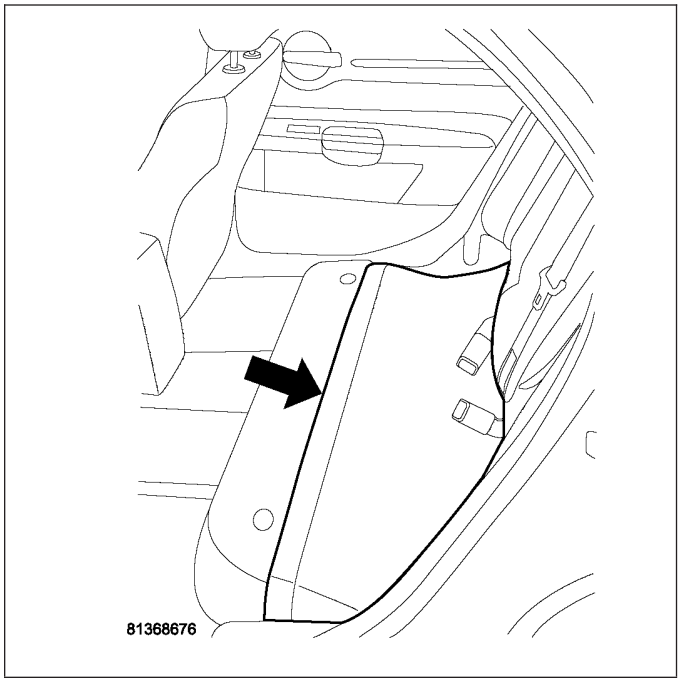

13. Install rear lower seat cushion

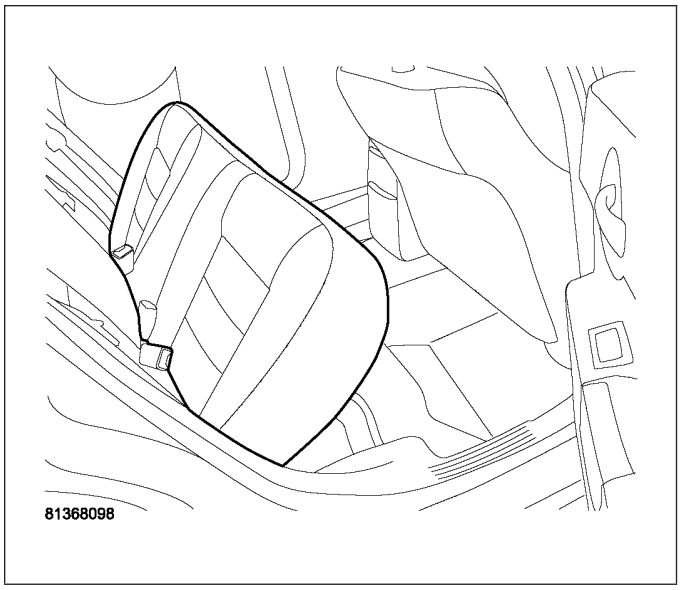

14. Rear lower seat cushion installed.

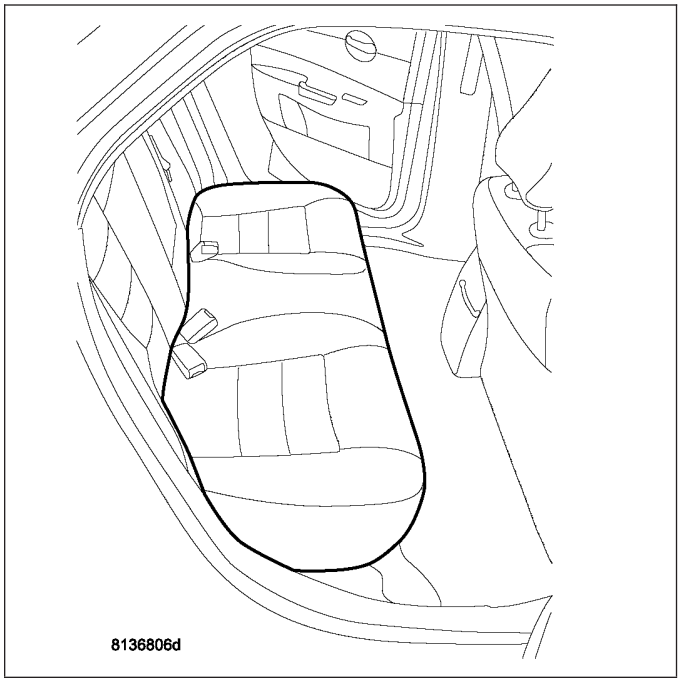

15. Fill fuel tank.
16. Connect negative battery cable.
17. Fill fuel tank. Use the scan tool to pressurize the fuel system. Check for leaks.

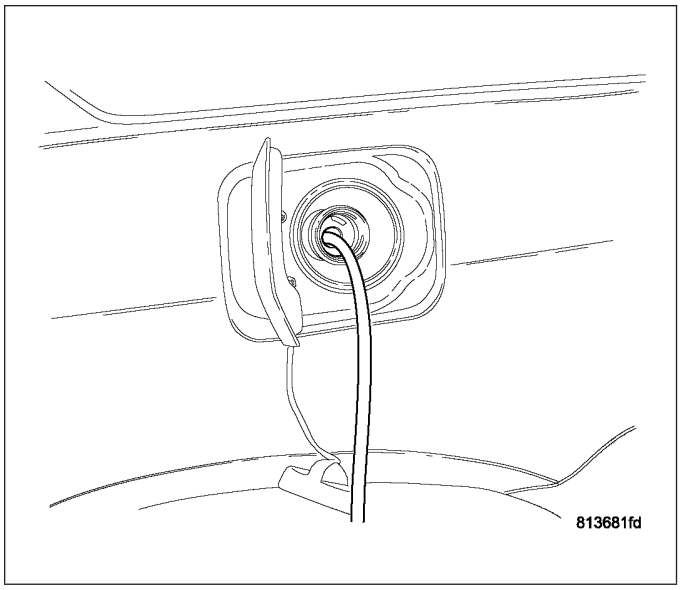

MODULE-FUEL PUMP

REMOVAL

1. Release the fuel pressure, refer to the Fuel Pressure Release Procedure in this section.
2. Disconnect negative battery cable.

NOTE: The fuel level of the vehicle must be below 5/8 of a tank before you remove the module lock-rings. If it is above that you can spill fuel in the vehicle.

3. Drain partial fuel from fuel tank through the filler tube. Use a hard nylon tube, with a 30° cut on the end, to push the check valve open to drain fuel from tank.

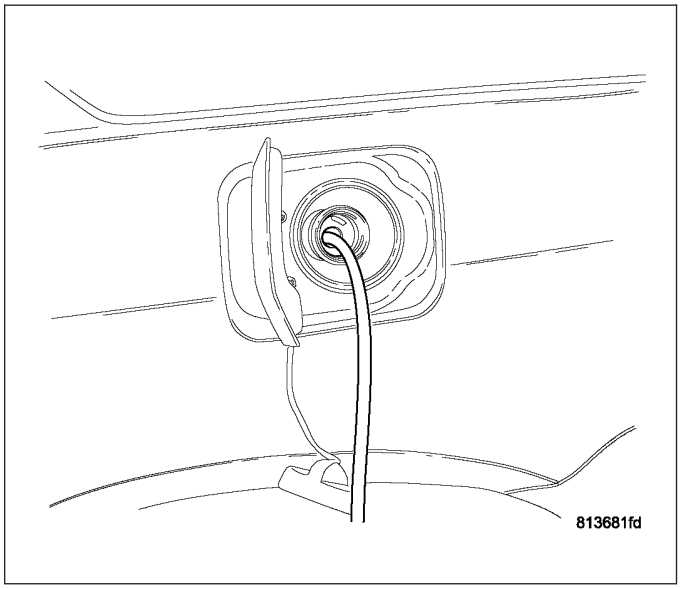

4. Remove the rear lower seat cushion.

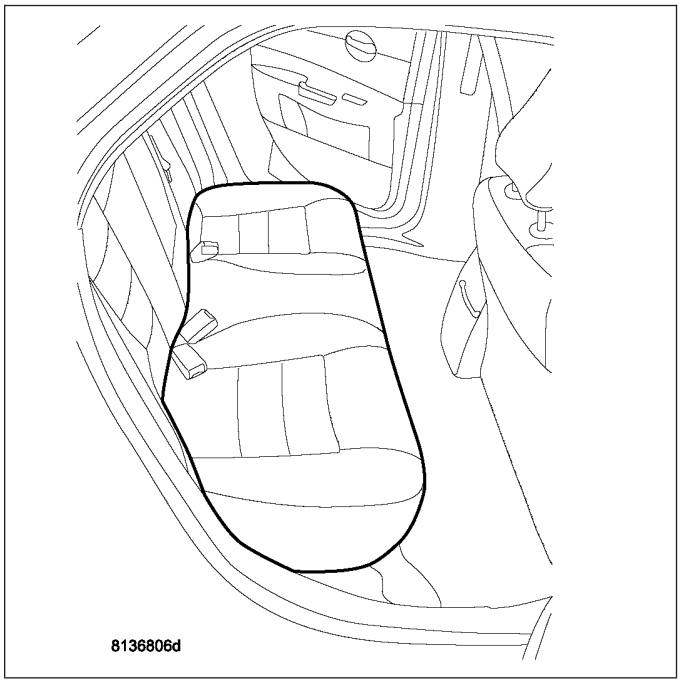

5. Push seat back and up to remove seat cushion.

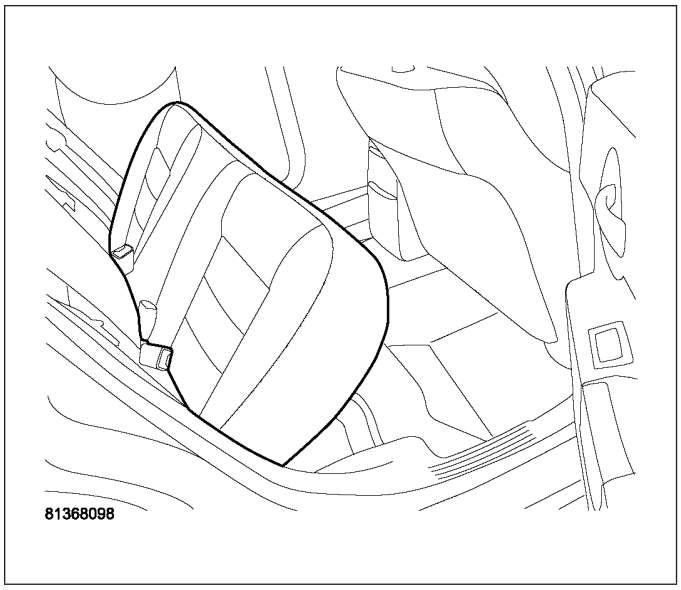

6. Fold back the foam pad covering access cover for modules.

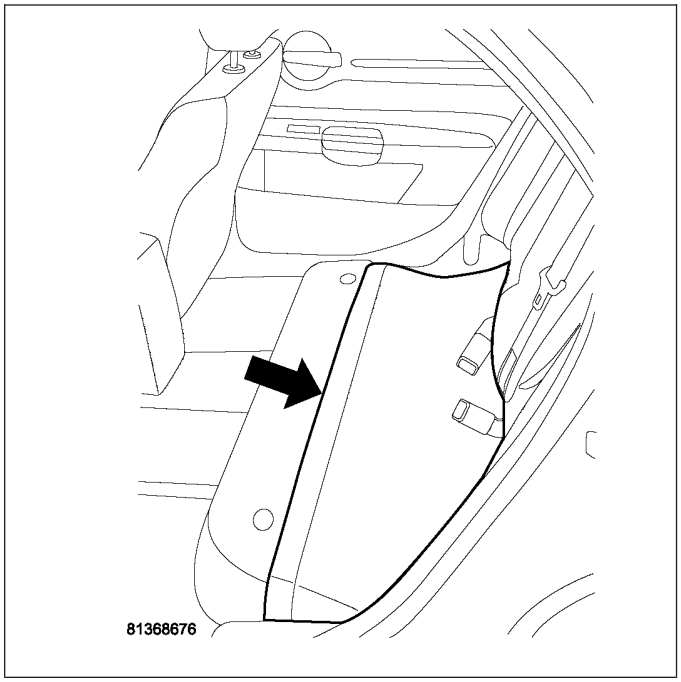

7. Disconnect the electrical connector from left side module.
8. Mark the module orientation.

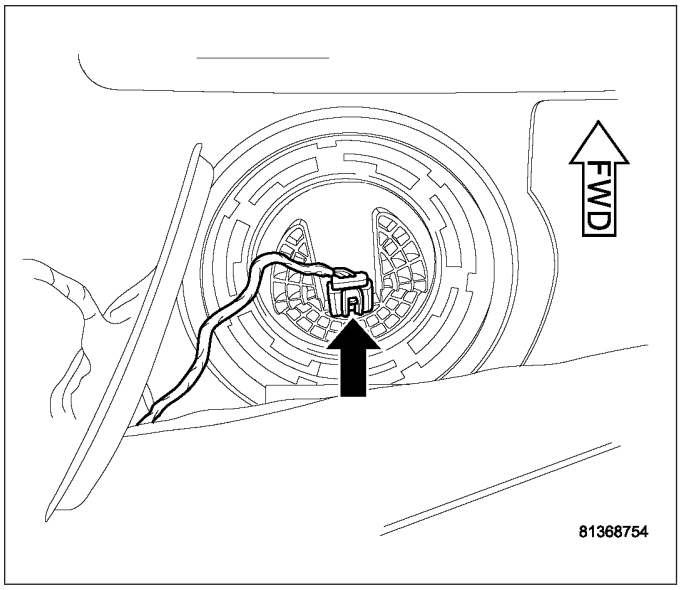

9. Use special tool #9340 to remove left side module lock ring.

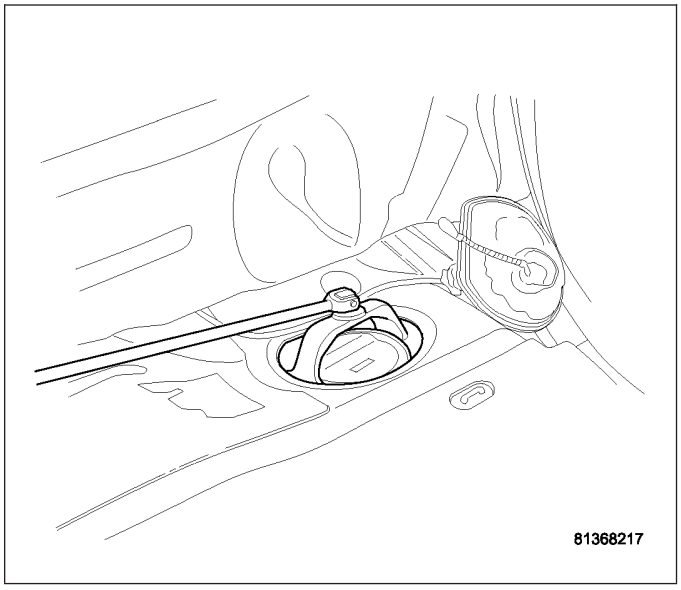

10. Drain fuel from left side of fuel tank. Lift module up enough to push hose into tank and drain. Do not spill fuel in interior of vehicle.

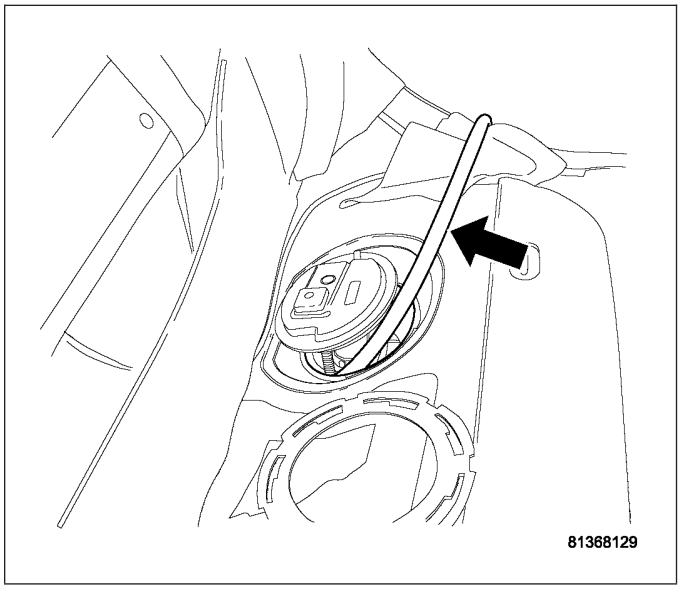

11. Disconnect the electrical connectors from the module top.
12. Remove the module top half.

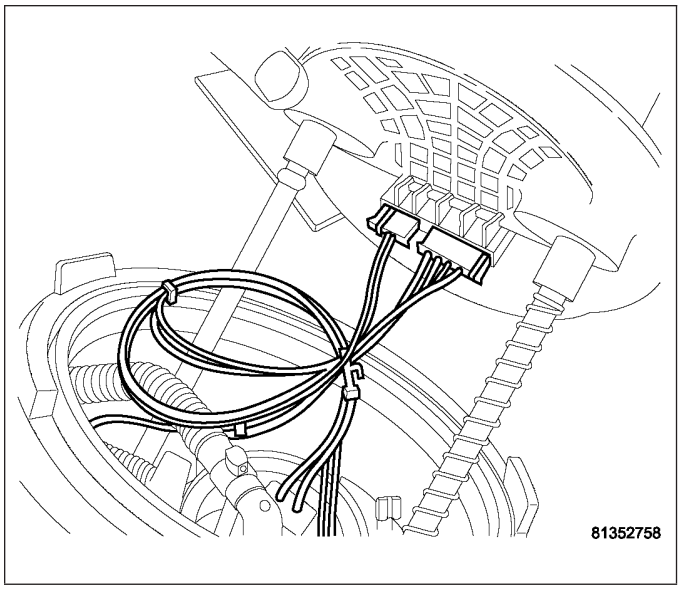

13. The module fuel level sending card (1). The fuel return lines (2). The fuel supply line (3).

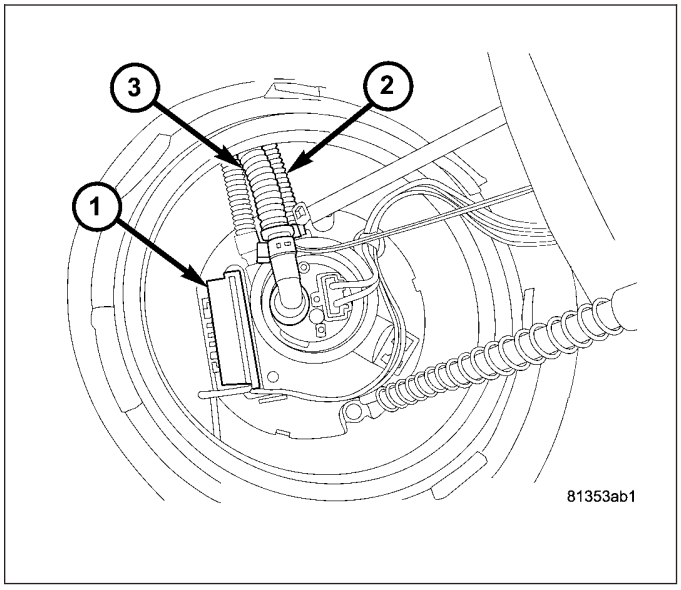

14. Fuel line release tab, press in the tab and pull up on fuel line.

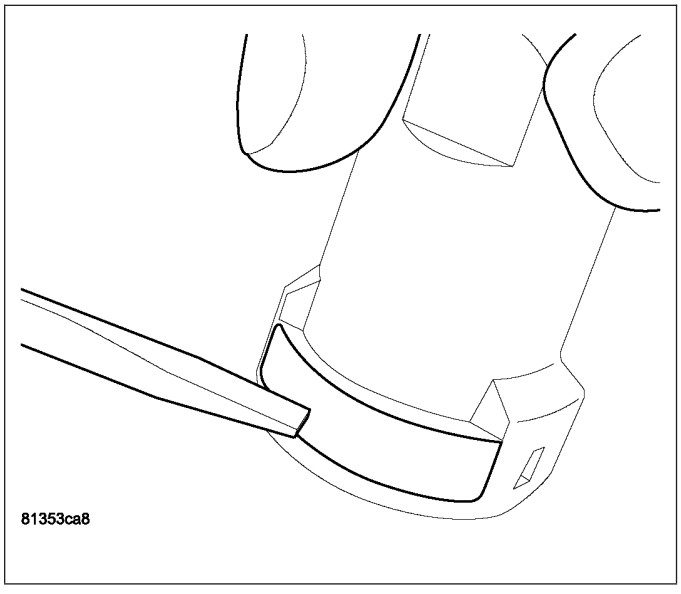

15. Remove fuel line.

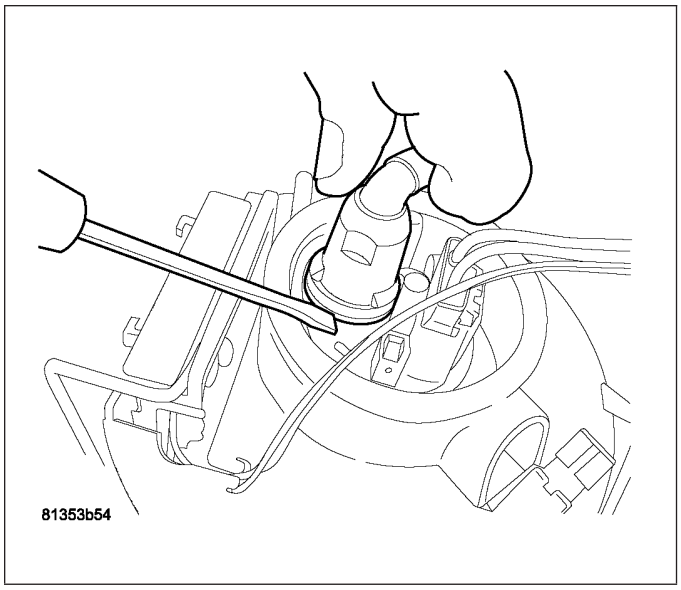

16. Remove fuel return line from lower module. Line unsnap from module.

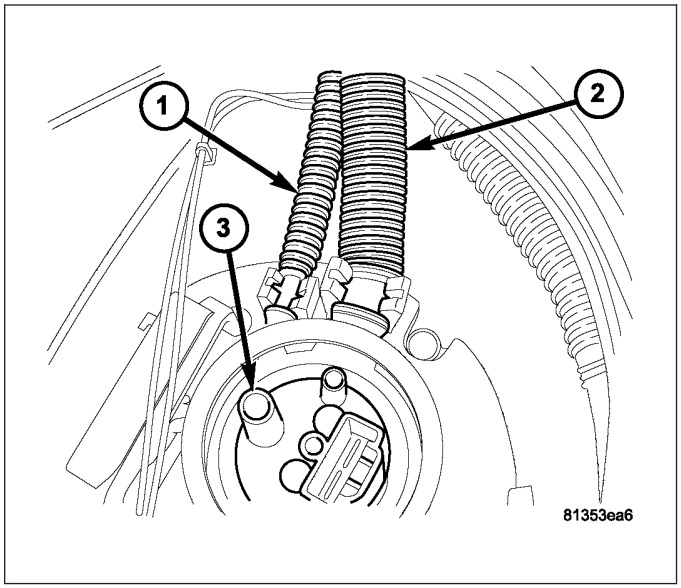

17. Return line removed.

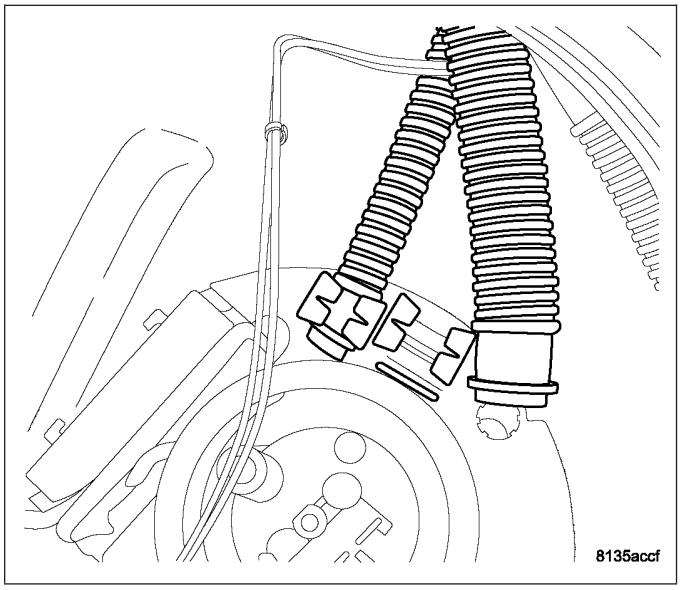

18. Tip module on its side to drain remaining fuel from reservoir and remove module from vehicle.

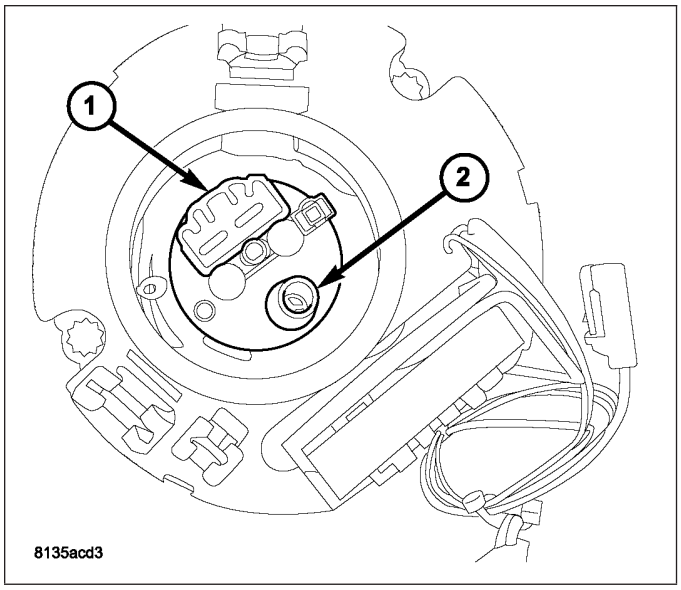

INSTALLATION

1. Install pump module into tank.
2. Connect fuel return lines to module.

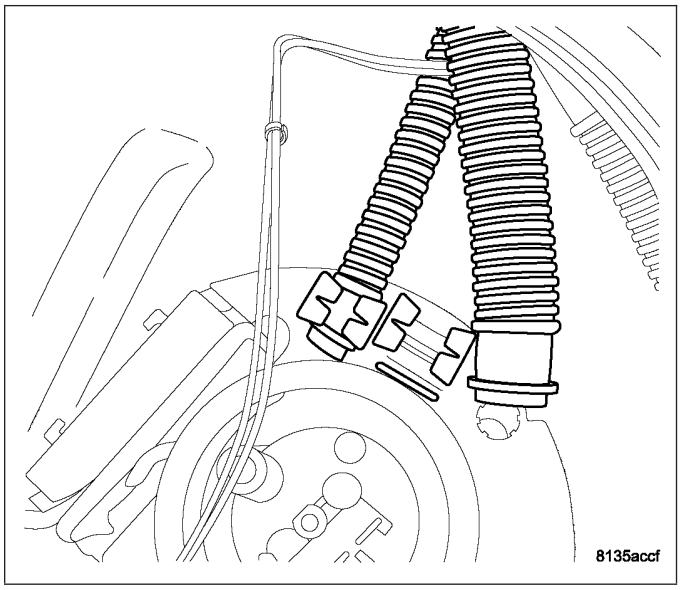

3. Lines connected.

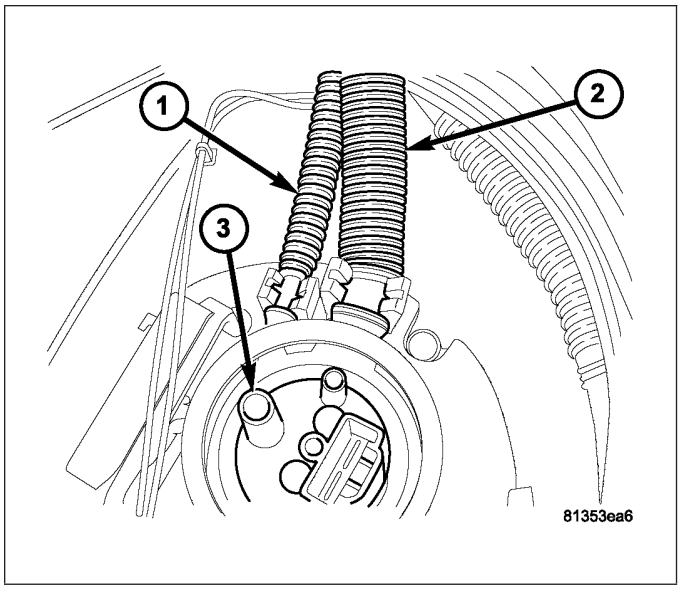

4. Connect fuel supply line to module and make sure it is locked in place.

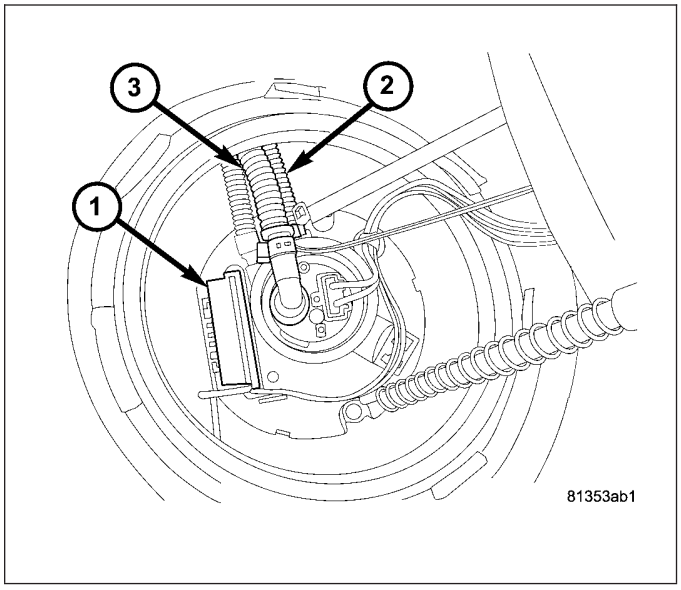

5. Connect electrical connectors to bottom of module top, Install module top to module bottom.

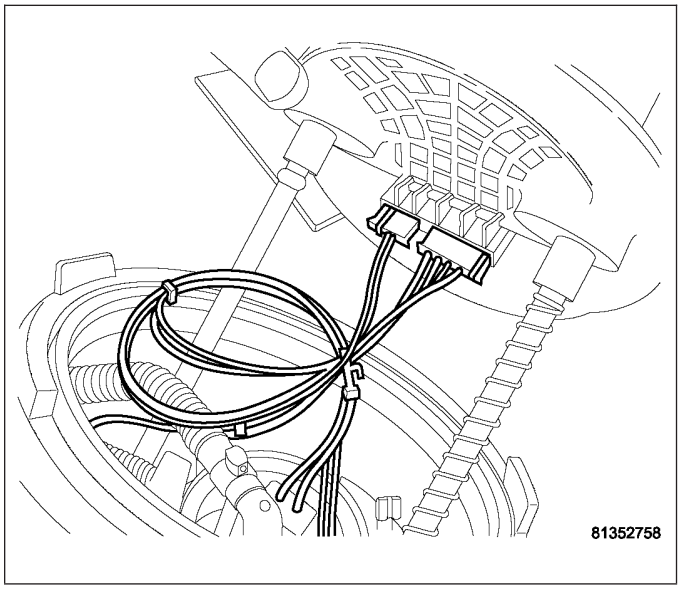

6. Install module and align marks on the module for proper orientation.

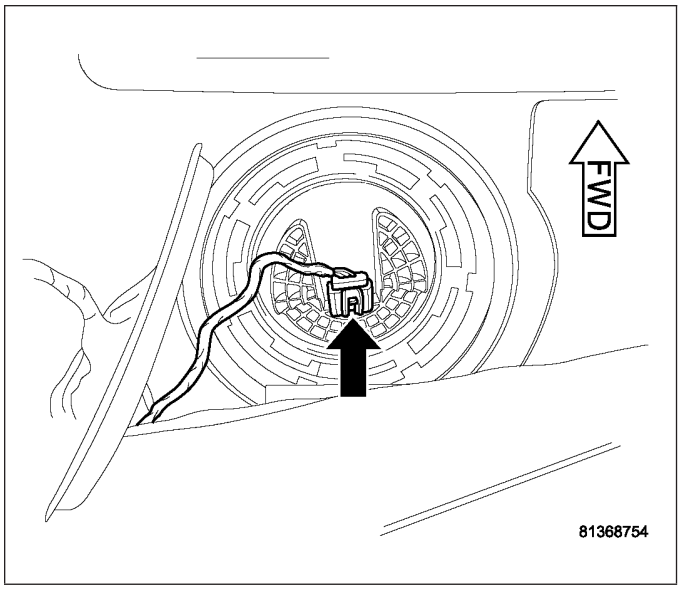

7. Install module lock-ring.
8. Use special tool #9340 to tighten left side module lock ring.
9. Connect the electrical connector to left side module.

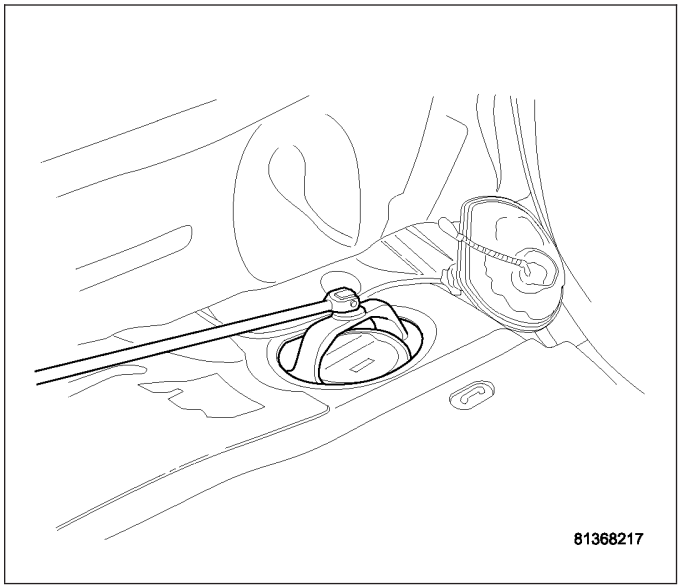

10. Install plastic access cover.

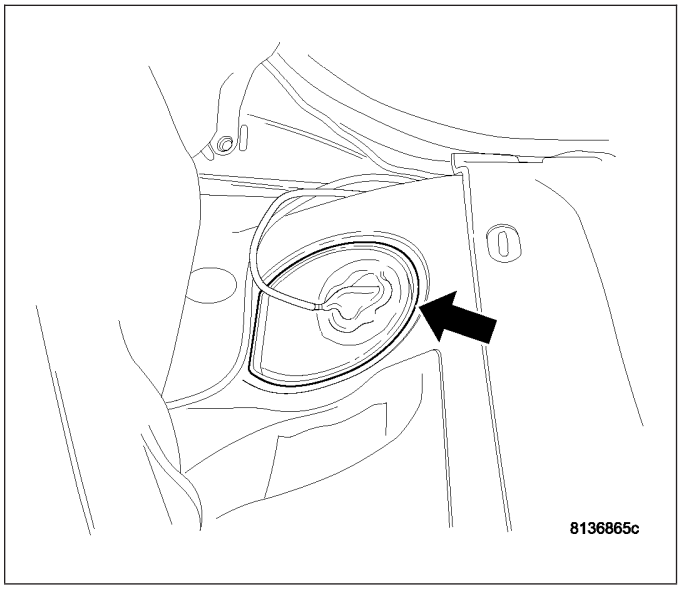

11. Fold the foam pad covering access cover for modules back into place.

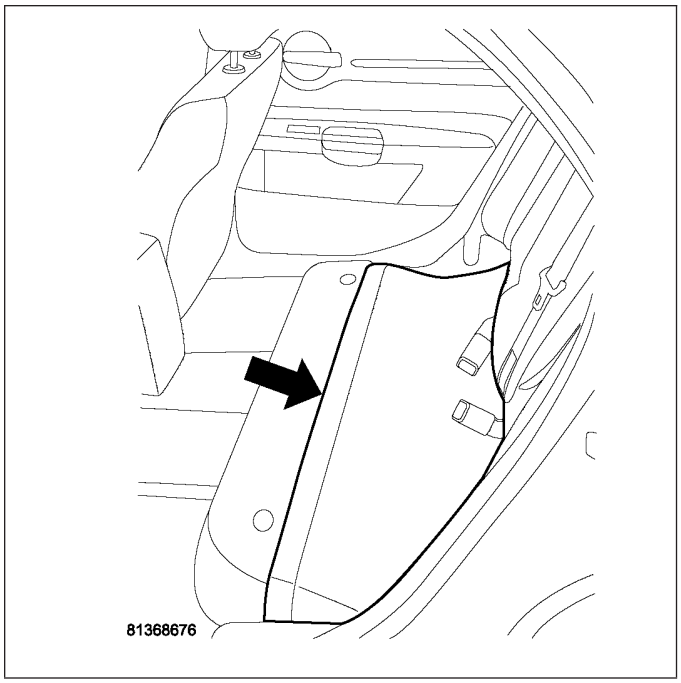

12. Install rear lower seat cushion

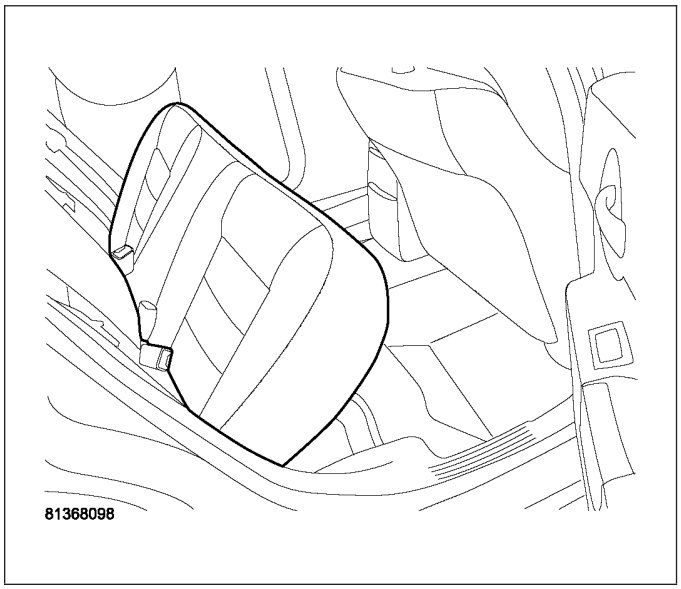

13. Rear lower seat cushion installed.

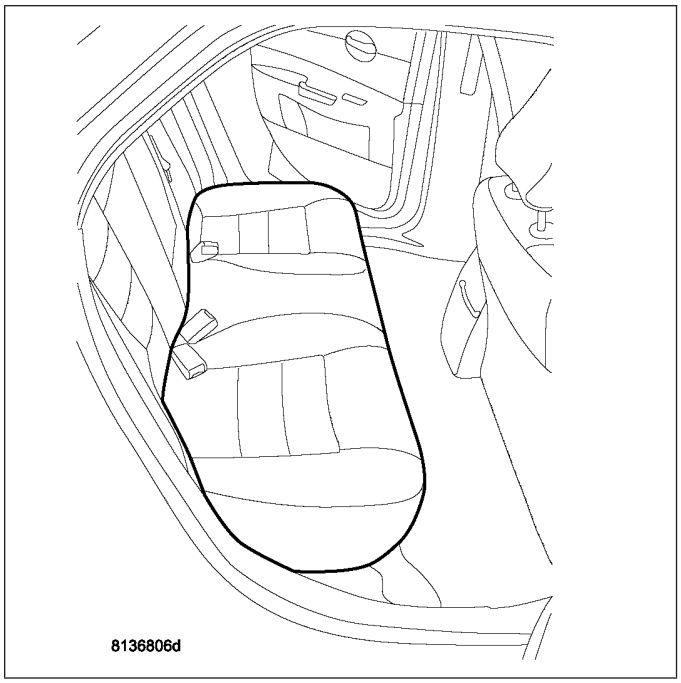

14. Fill fuel tank.
15. Connect negative battery cable.
16. Fill fuel tank. Use the scan tool to pressurize the fuel system. Check for leaks.

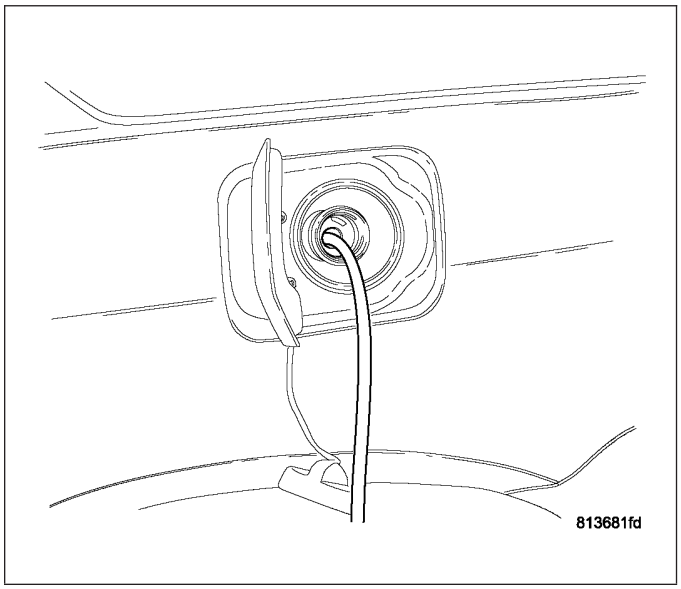

RAIL-FUEL

REMOVAL

2.7L

WARNING: RELEASE FUEL SYSTEM PRESSURE BEFORE SERVICING FUEL RAIL. SERVICE VEHICLES IN WELL VENTILATED AREAS AND AVOID IGNITION SOURCES. NEVER SMOKE WHILE SERVICING THE VEHICLE.

1. Release fuel system pressure. Refer to Fuel System Pressure Release Procedure in this section.
2. Disconnect the negative battery cable.
3. Remove intake manifold plenum. (Refer to 9 - ENGINE/MANIFOLDS/INTAKE MANIFOLD - REMOVAL).
4. Cover intake manifold to prevent foreign material from entering engine.
5. Disconnect fuel supply tube quick connect fitting at the rear of the fuel rail, (Refer to 14 - FUEL SYSTEM/FUEL DELIVERY/QUICK CONNECT FITTING - STANDARD PROCEDURE).
6. Disconnect electrical connectors at fuel injectors. Refer to graphic. Push red colored slider away from injector (1). While pushing slider, depress tab (2) and remove connector (3) from injector. The factory fuel injection wiring harness is numerically tagged (INJ 1, INJ 2, etc.) for injector position identification. If harness is not tagged, note wiring location before removal.

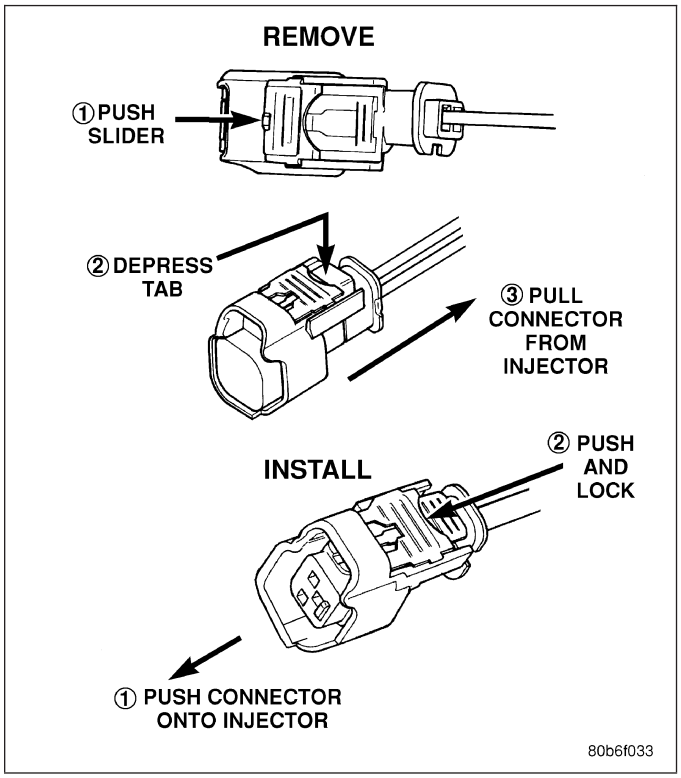

7. Remove mounting bolts on both sides of fuel rail.
8. Lift fuel rail straight up off of cylinder head.
9. Remove retaining clips from fuel injectors at fuel rail.
10. Remove fuel injector from fuel rail.

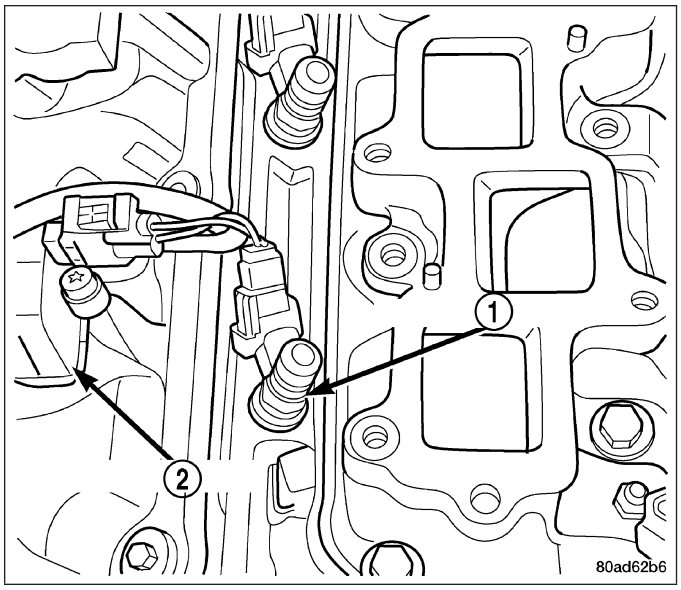

3.5L

WARNING: Release fuel system pressure before servicing fuel rail. Service vehicles in well ventilated areas and avoid ignition sources. Never smoke while servicing the vehicle.

1. Release fuel system pressure. Refer to Fuel System Pressure Release Procedure in this section.
2. Disconnect the negative battery cable.
3. Remove intake manifold plenum. (Refer to 9 - ENGINE/MANIFOLDS/INTAKE MANIFOLD - REMOVAL).
4. Cover intake manifold to prevent foreign material from entering engine.
5. Disconnect fuel supply tube quick connect fitting at the rear of the fuel rail, (Refer to 14 - FUEL SYSTEM/FUEL DELIVERY/QUICK CONNECT FITTING - STANDARD PROCEDURE).
6. Disconnect electrical connectors at fuel injectors. Refer to graphic. Push red colored slider away from injector (1). While pushing slider, depress tab (2) and remove connector (3) from injector. The factory fuel injection wiring harness is numerically tagged (INJ 1, INJ 2, etc.) for injector position identification. If harness is not tagged, note wiring location before removal.

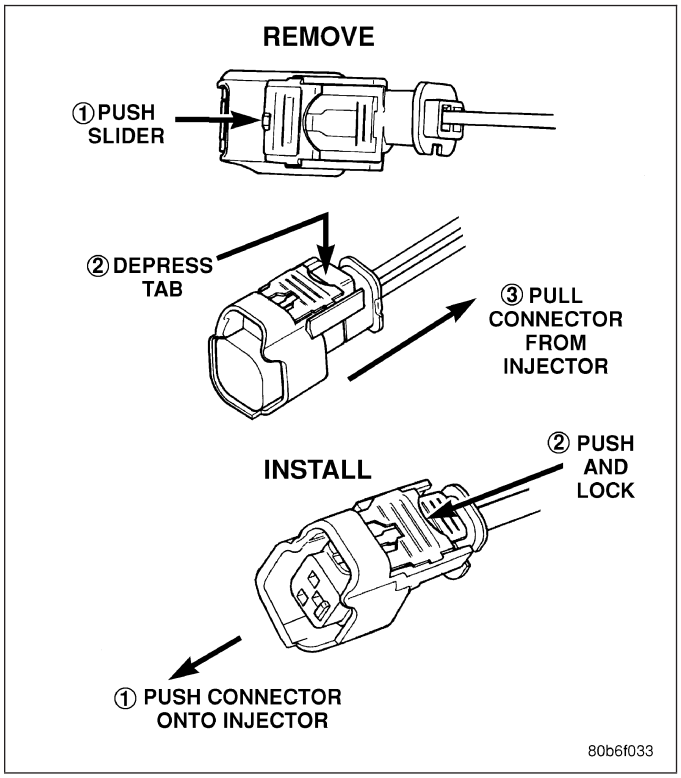

7. Remove mounting bolts on both sides of fuel rail.
8. Lift fuel rail straight up off of cylinder head.
9. Remove retaining clips from fuel injectors at fuel rail.
10. Remove fuel injector from fuel rail.

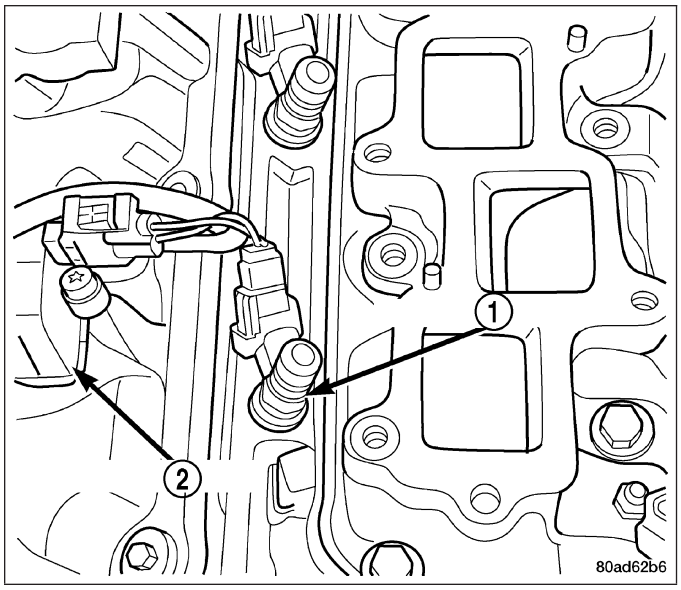

5.7L

1. Disconnect electrical connectors at all 8 fuel injectors. Push red colored slider away from injector (1). While pushing slider, depress tab (2) and remove connector (3) from injector. The factory fuel injection wiring harness is numerically tagged (INJ 1, INJ 2, etc.) for injector position identification. If harness is not tagged, note wiring location before removal.
2. Disconnect electrical connectors at all throttle body sensors.

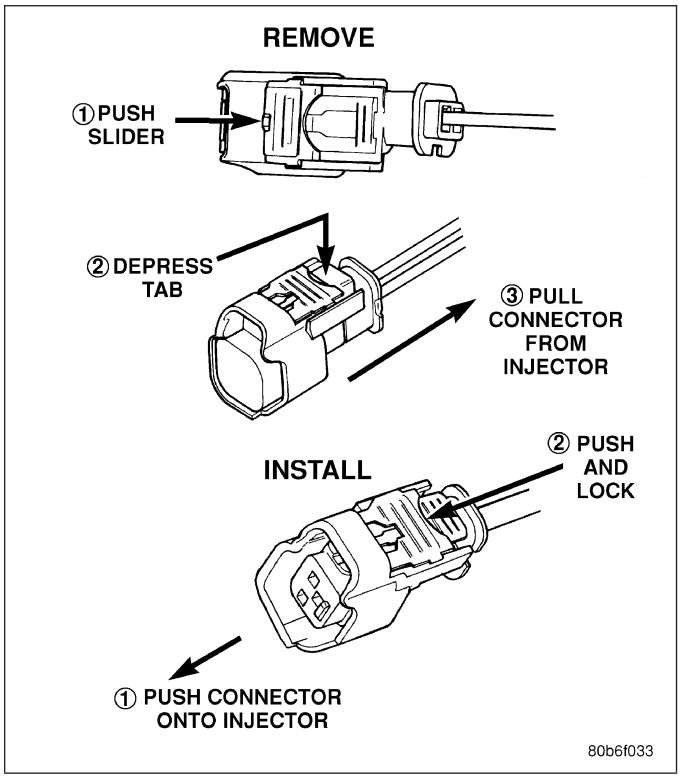

3. Remove four fuel rail mounting bolts (1) and hold-down clamps.
4. Gently rock and pull **left** side of fuel rail until fuel injectors just start to clear machined holes in intake manifold. Gently rock and pull **right** side of rail until injectors just start to clear intake manifold head holes. Repeat this procedure (left/right) until all injectors have cleared machined holes.
5. Remove fuel rail (with injectors attached) from engine.
6. If fuel injectors are to be removed, (Refer to 14 - FUEL SYSTEM/FUEL INJECTION/FUEL INJECTOR - REMOVAL).

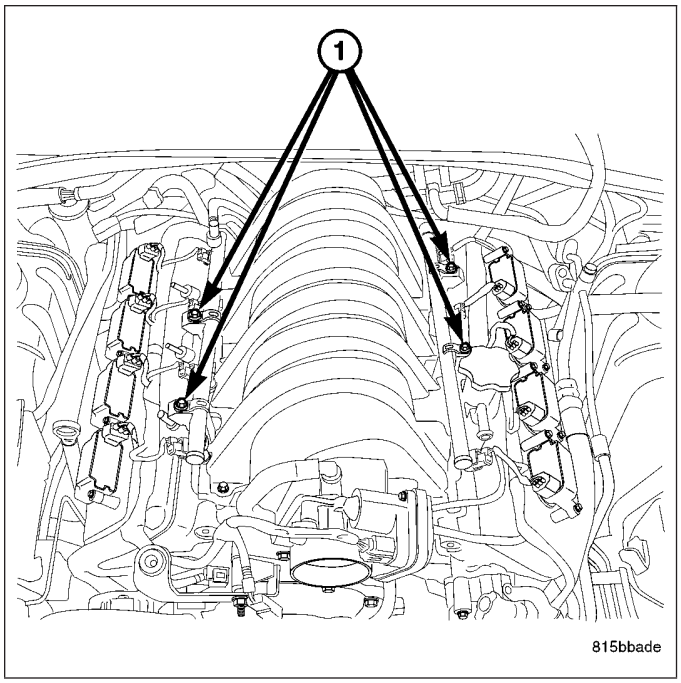

6.1L

WARNING: THE FUEL SYSTEM IS UNDER CONSTANT PRESSURE EVEN WITH ENGINE OFF. BEFORE SERVICING FUEL RAIL, FUEL SYSTEM PRESSURE MUST BE RELEASED.

CAUTION: The left (3) and right (1) fuel rails are replaced as an assembly. Do not attempt to separate rail halves at connector tube (2). Due to design of tube, it does not use any clamps. Never attempt to install a clamping device of any kind to tube. When removing fuel rail assembly for any reason, be careful not to bend or kink tube.

1. Remove fuel tank filler tube cap.
2. Perform Fuel System Pressure Release Procedure.
3. Remove negative battery cable at battery.
4. Remove flex tube (air cleaner housing to engine).

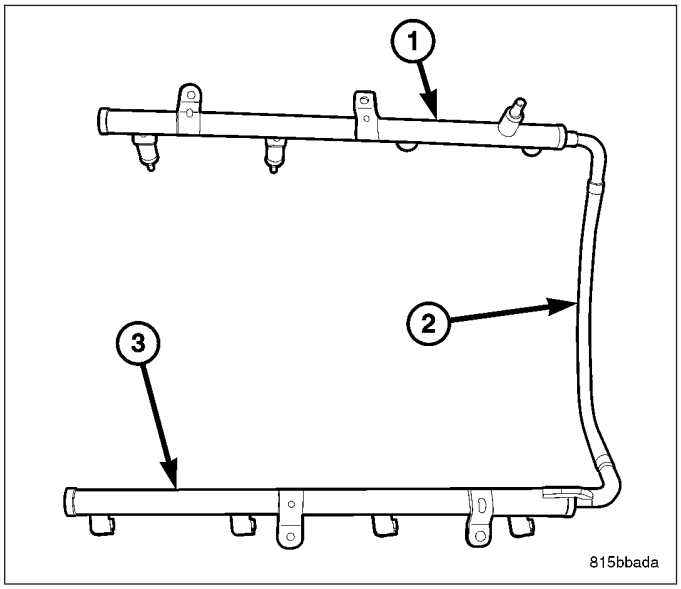

5. Remove electrical connector from MAP sensor (2) at rear of intake manifold (1).
6. Disconnect vacuum hose from fitting (3) at rear of intake manifold (1).

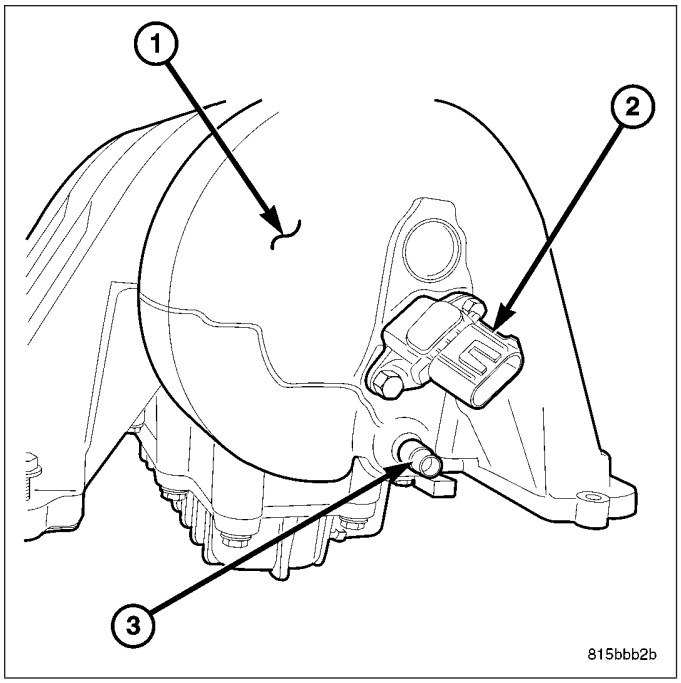

7. Disconnect fuel line (1) at fuel rail fitting. Refer to Quick-Connect Fittings for procedures.

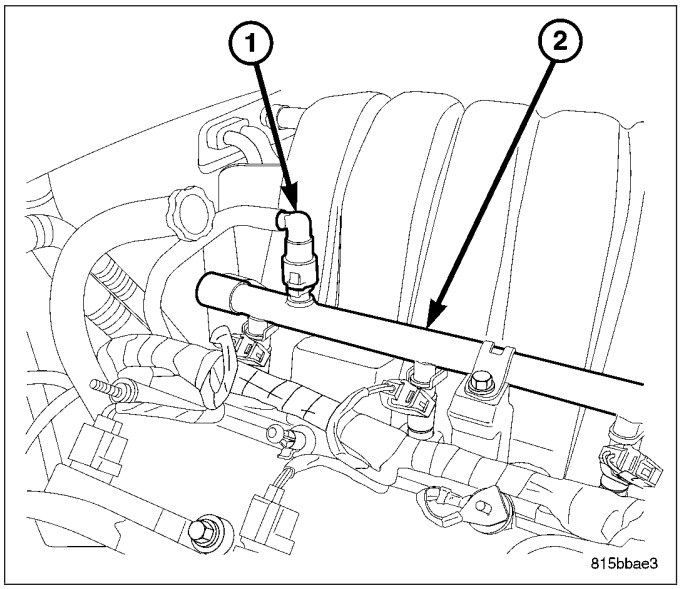

8. Disconnect electrical connectors at all 8 fuel injectors. First, pry up on red colored tab (2).....

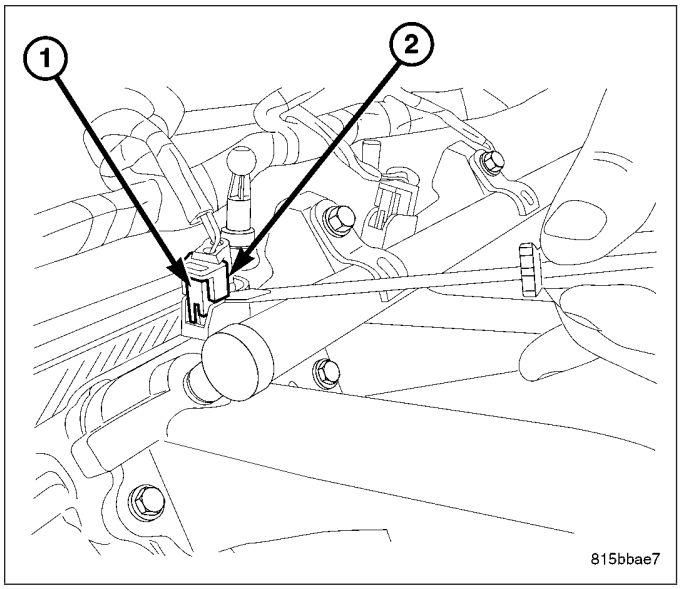

9. .....then press on black colored tab (1) while removing connector (2) from fuel injector (3).

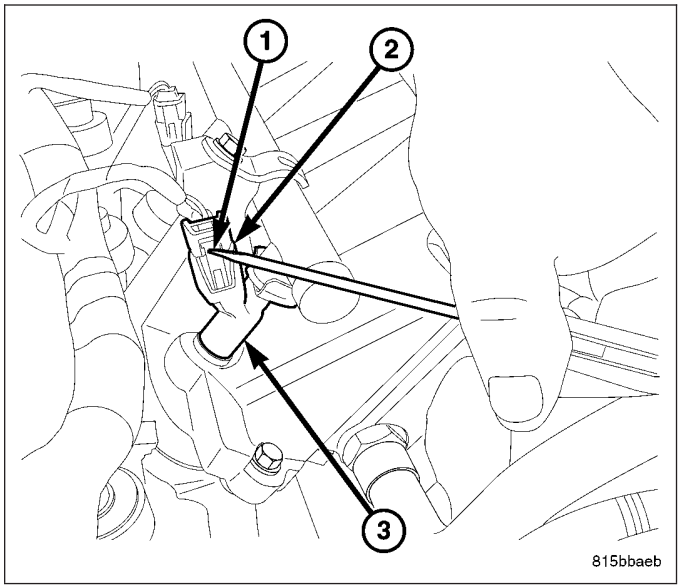

10. Remove four fuel rail mounting bolts (1).
11. Gently rock and pull **left** side of fuel rail until fuel injectors just start to clear machined holes in intake manifold. Gently rock and pull **right** side of rail until injectors just start to clear intake manifold head holes. Repeat this procedure (left/right) until all injectors have cleared machined holes.
12. Remove fuel rail (with injectors attached) from engine.
13. If fuel injectors are to be removed, refer to Fuel Injector Removal/Installation.

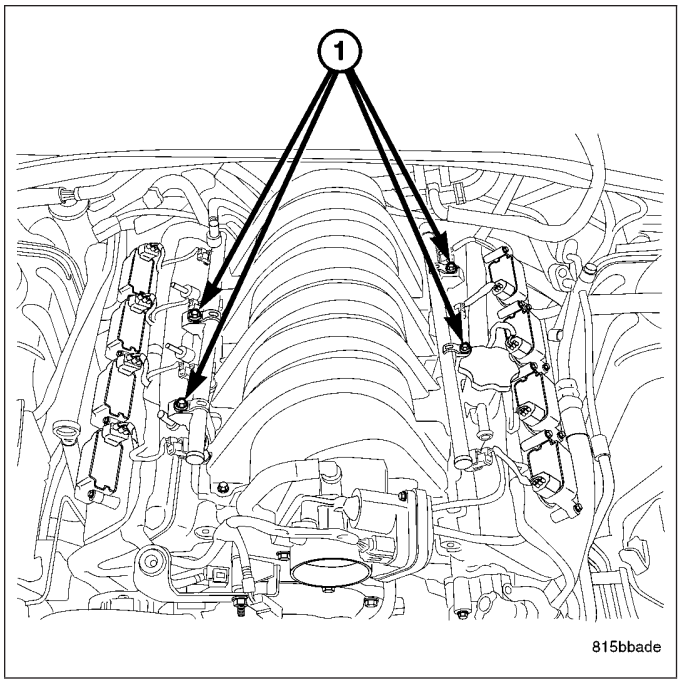

INSTALLATION

2.7L

1. Lightly lubricate the fuel injector O-rings with a couple drops of clean engine oil.
2. Install retaining clips on fuel injectors.
3. Push injectors into fuel injector rail until clips are in the correct position.
4. Position fuel rail over cylinder heads, and push rail into place. Tighten fuel rail mounting bolts to 11 N·m (100 in. lbs.) torque.

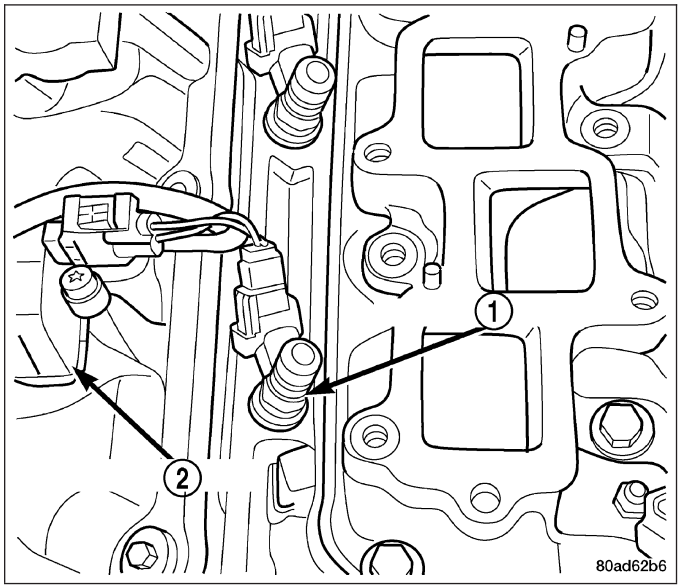

5. Connect the fuel supply tube quick connect fitting to the fuel rail, (Refer to 14 - FUEL SYSTEM/FUEL DELIVERY/ QUICK CONNECT FITTING - STANDARD PROCEDURE).
6. Connect the electrical connectors to the fuel injectors.
7. Install intake manifold plenum, (Refer to 9 - ENGINE/MANIFOLDS/INTAKE MANIFOLD - INSTALLATION).
8. Connect negative cable to battery.
9. Use the scan tool to pressurize the fuel system. Check for leaks.

3.5L

1. Lightly lubricate the fuel injector O-rings with a couple drops of clean engine oil.
2. Install retaining clips on fuel injectors.
3. Push injectors into fuel injector rail until clips are in the correct position.
4. Position fuel rail over cylinder heads, and push rail into place. Tighten fuel rail mounting bolts to 28 N·m (250 in. lbs.) torque.

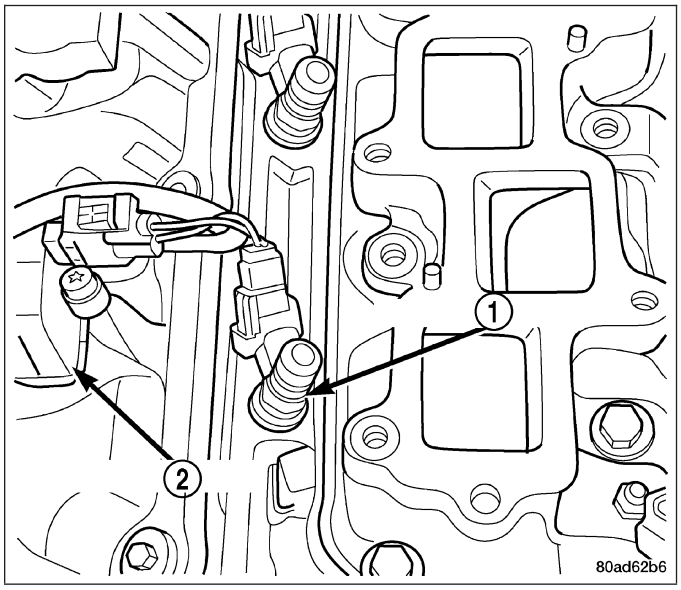

5. Connect the fuel supply tube quick connect fitting to the fuel rail, (Refer to 14 - FUEL SYSTEM/FUEL DELIVERY/ QUICK CONNECT FITTING - STANDARD PROCEDURE).
6. Connect the electrical connectors to the fuel injectors.
7. Install intake manifold plenum, (Refer to 9 - ENGINE/MANIFOLDS/INTAKE MANIFOLD - INSTALLATION).
8. Connect negative cable to battery.
9. Use the scan tool to pressurize the fuel system. Check for leaks.

5.7L

1. If fuel injectors are to be installed, (Refer to 14 - FUEL SYSTEM/FUEL INJECTION/FUEL INJECTOR - INSTALLATION).
2. Clean out fuel injector machined bores in intake manifold.
3. Apply a small amount of engine oil to each fuel injector O-ring. This will help in fuel rail installation.
4. Position fuel rail/fuel injector assembly to machined injector openings in intake manifold.
5. Guide each injector into intake manifold. Be careful not to tear injector O-rings.
6. Push **right** side of fuel rail down until fuel injectors have bottomed on shoulders. Push **left** fuel rail down until injectors have bottomed on shoulders.
7. Install 4 fuel rail holddown clamps and 4 mounting bolts (1) (Refer to 14 - FUEL SYSTEM/FUEL DELIVERY - SPECIFICATIONS).
8. Connect electrical connector to throttle body.

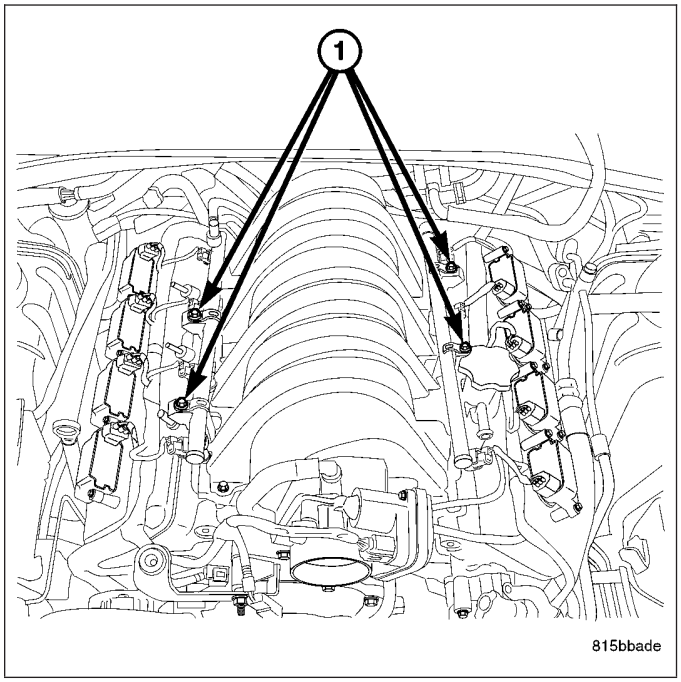

9. Connect electrical connectors at all fuel injectors. Push connector onto injector (1) and then push and lock red colored slider (2). Verify connector is locked to injector by lightly tugging on connector.
10. Connect fuel line latch clip and fuel line to fuel rail. (Refer to 14 - FUEL SYSTEM/FUEL DELIVERY/QUICK CONNECT FITTING - STANDARD PROCEDURE).
11. Install air resonator to throttle body (2 bolts).
12. Install flexible air duct to air box.
13. Connect battery cable to battery.
14. Start engine and check for leaks.

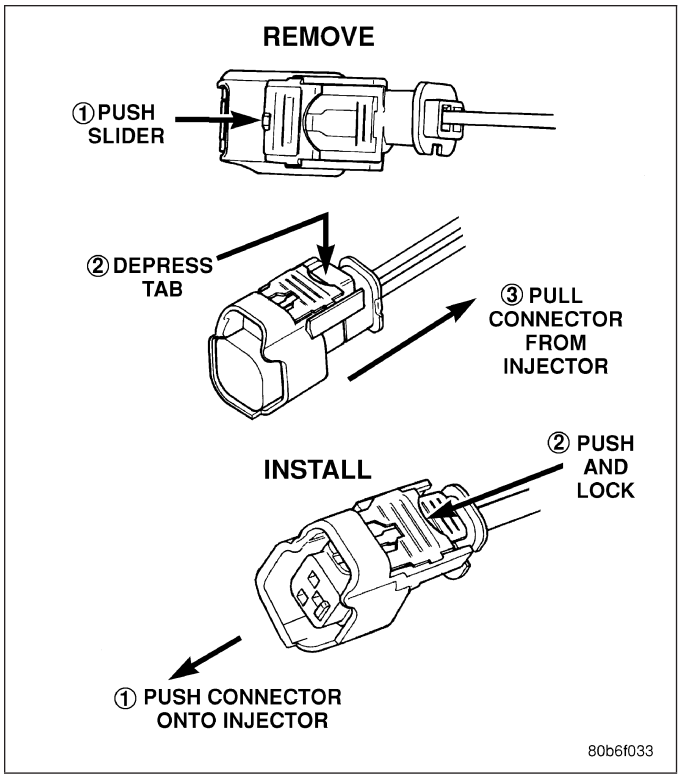

6.1L

1. If fuel injectors are to be installed, refer to Fuel Injector Removal/Installation.
2. Clean out fuel injector machined bores in intake manifold.
3. Apply a small amount of engine oil to each fuel injector o-ring. This will help in fuel rail installation.
4. Position fuel rail/fuel injector assembly to machined injector openings in intake manifold.
5. Guide each injector into intake manifold. Be careful not to tear injector o-rings.
6. Push **right** side of fuel rail down until fuel injectors have bottomed on shoulders. Push **left** fuel rail down until injectors have bottomed on shoulders.
7. Install and tighten four fuel rail mounting bolts (1). Refer to Torque Specifications.

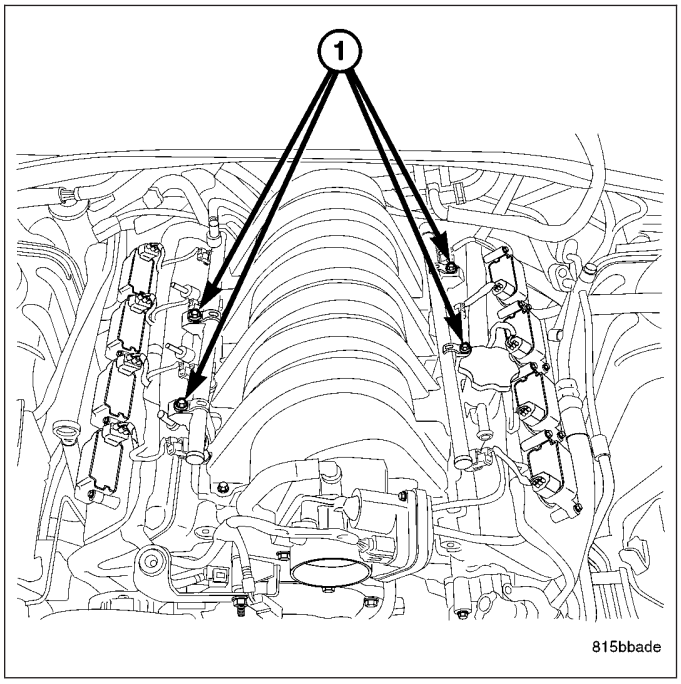

8. Connect electrical connectors at all fuel injectors. Push electrical connector onto injector. After connection has been made, lock connector by pushing red colored slider tab downward. Verify connector is locked to injector by lightly tugging on connector.
9. Connect fuel line (1) to fuel rail. Refer to Quick-Connect Fittings for procedures.

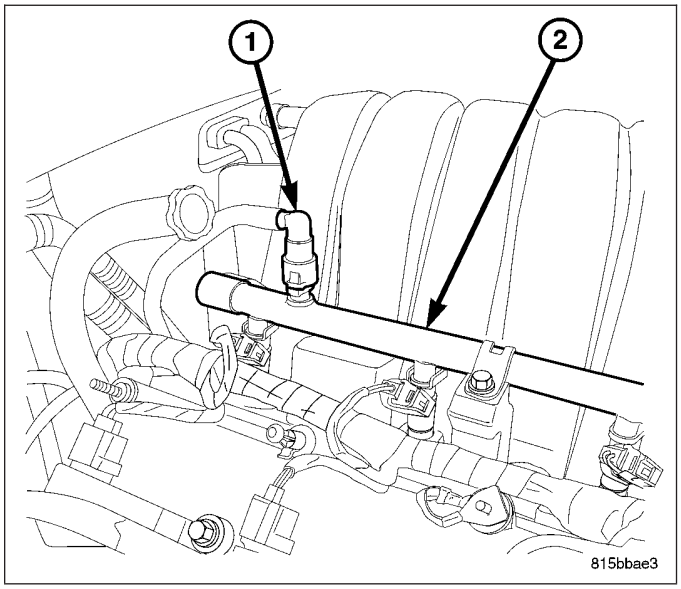

10. Connect vacuum hose to fitting (3).
11. Connect electrical connector to MAP sensor (2).
12. Install air resonator to throttle body.
13. Connect battery cable to battery.
14. Start engine and check for leaks.

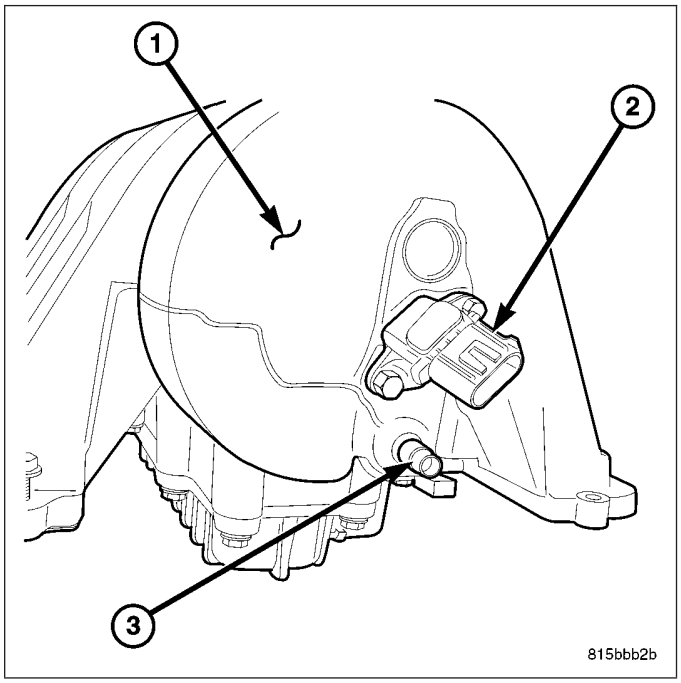

TANK-FUEL

REMOVAL

1. Release the fuel pressure, refer to the Fuel Pressure Release Procedure in this section.
2. Disconnect negative battery cable.

NOTE: The fuel level of the vehicle must be below 5/8 of a tank before you remove the module lock-rings. If it is above that you can spill fuel in the vehicle.

3. Drain partial fuel from fuel tank through the filler tube. Use a hard nylon tube, with a 30° cut on the end, to push the check valve open to drain fuel from tank.

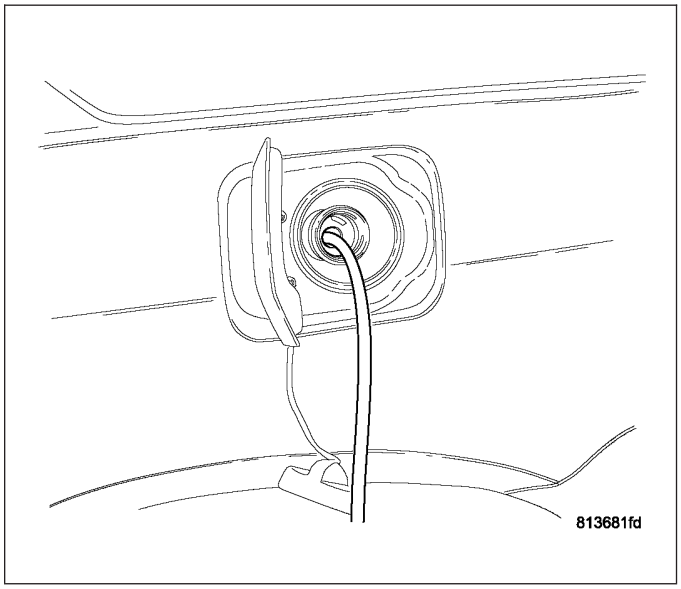

4. Remove the rear lower seat cushion.

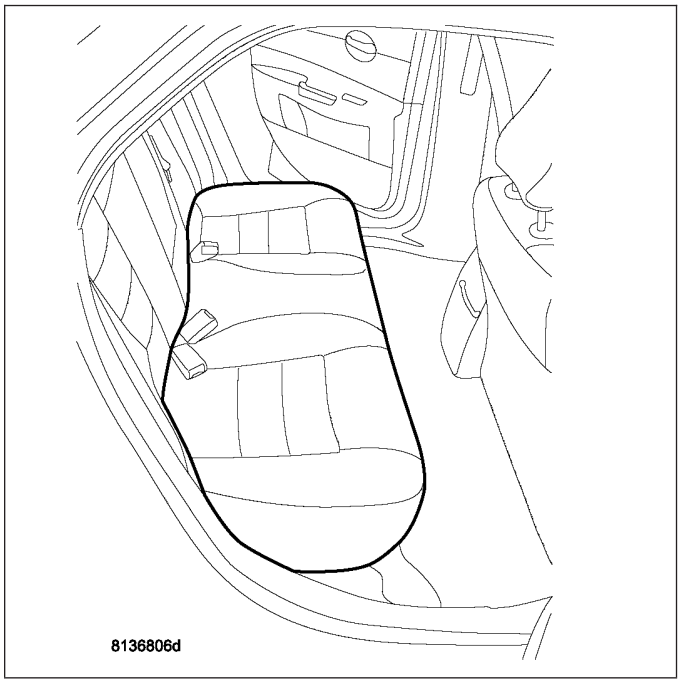

5. Push seat back and up to remove seat cushion.

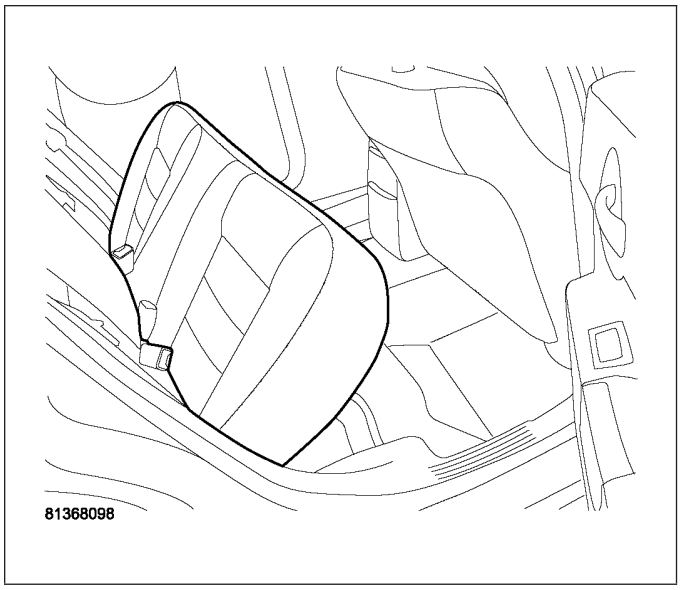

6. Fold back the foam pad covering access cover for modules.

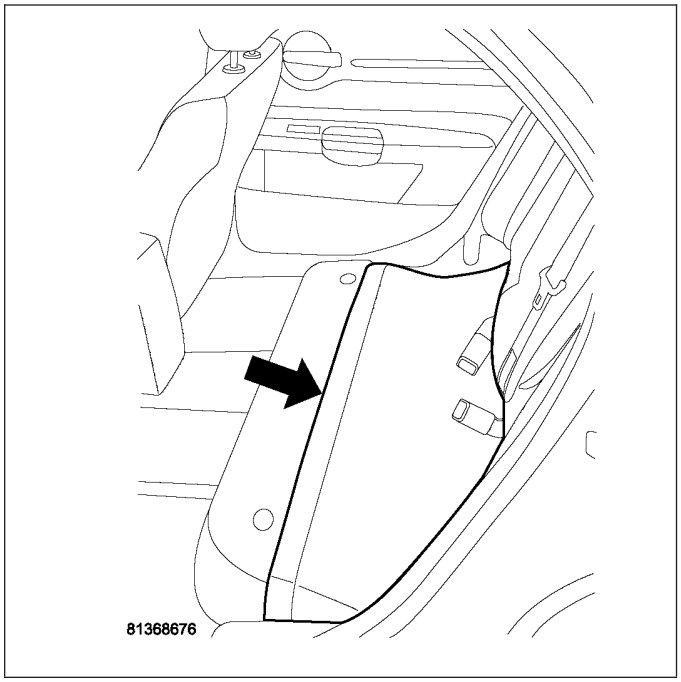

7. Remove plastic access covers from floor pan right side.

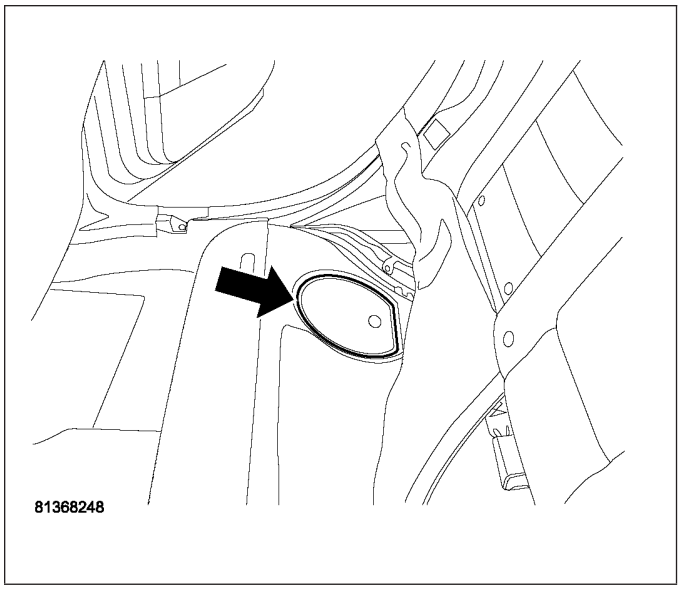

8. Disconnect the fuel supply line from module.
9. Mark the module orientation.

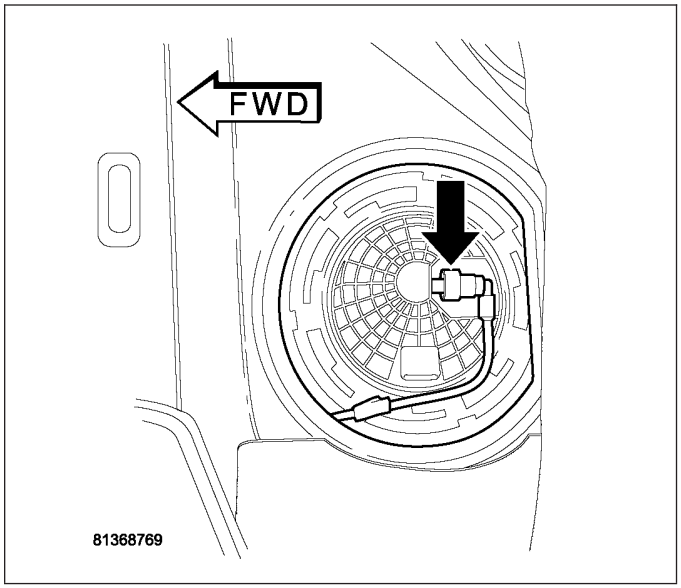

10. Use special tool #9340 to remove right side module lock ring.

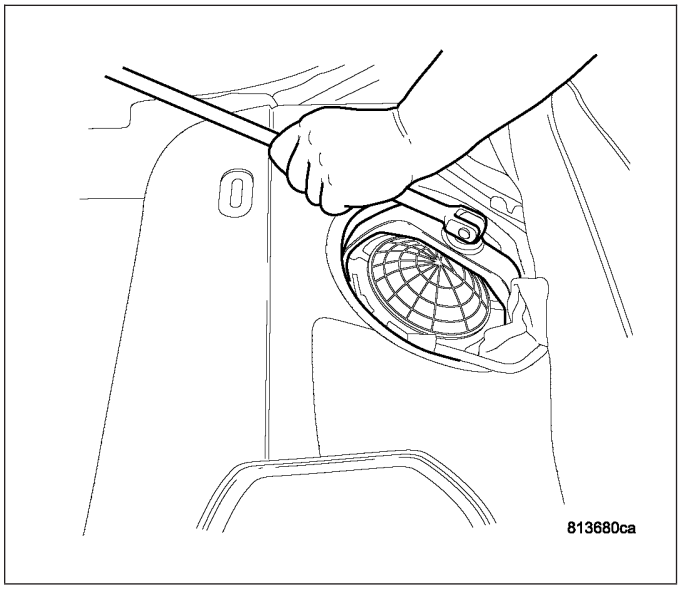

11. Drain fuel from right side of fuel tank. Lift module up enough to push hose into tank and drain. Do not spill fuel in interior of vehicle.

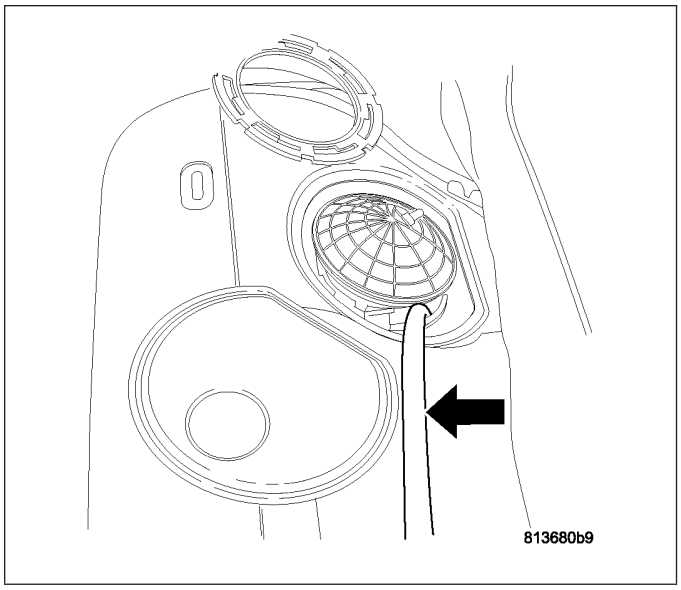

12. Disconnect the electrical connector from left side module.
13. Mark the module orientation.

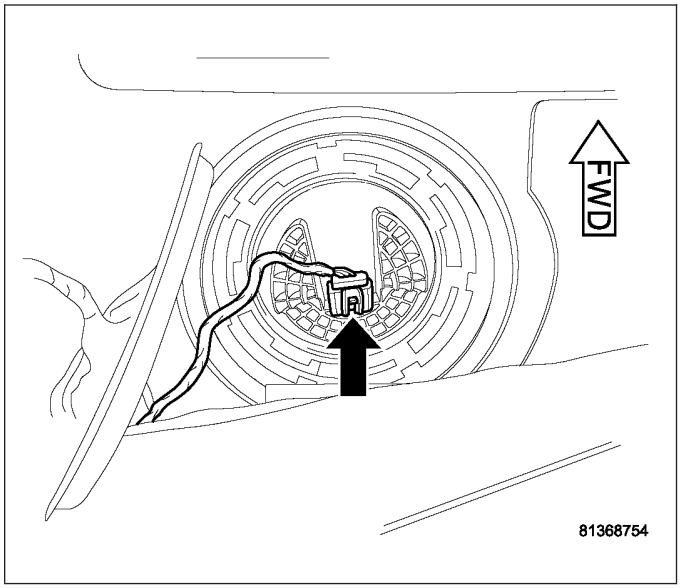

14. Use special tool #9340 to remove left side module lock ring.

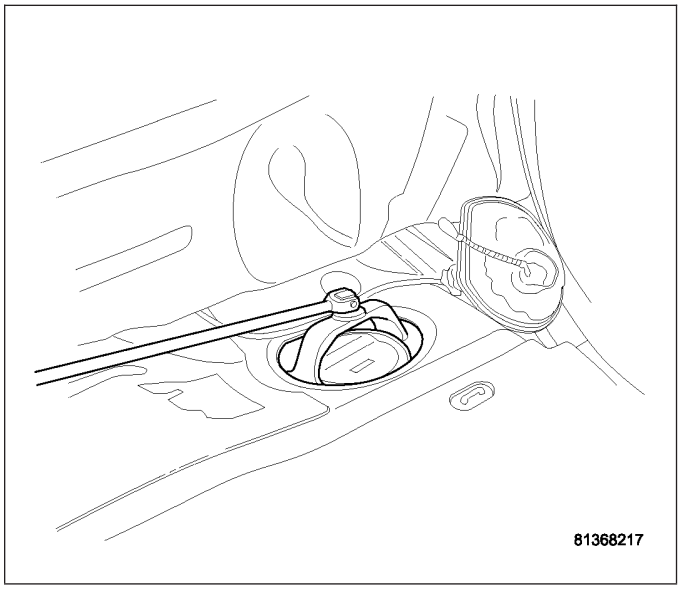

15. Drain fuel from left side of fuel tank. Lift module up enough to push hose into tank and drain. Do not spill fuel in interior of vehicle.
16. Install both module temporally, hand tighten the lock ring to hold modules in place.
17. Raise vehicle and support.
18. Remove left rear tire.

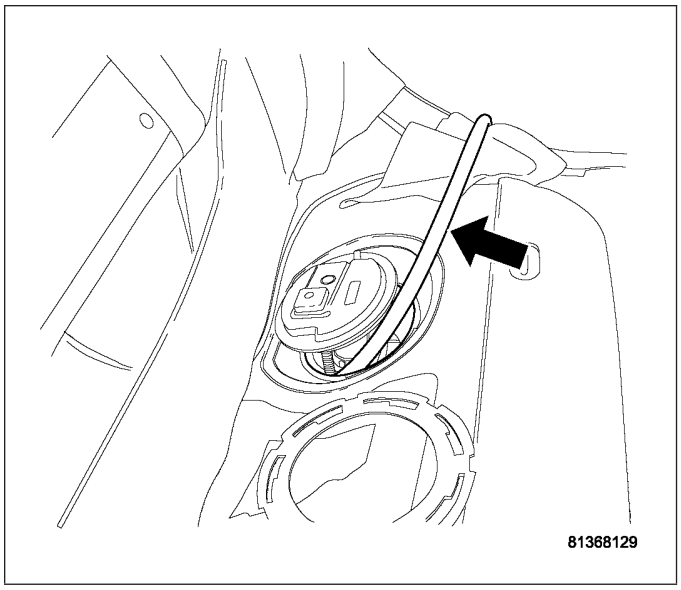

19. Remove the inner splash shield.

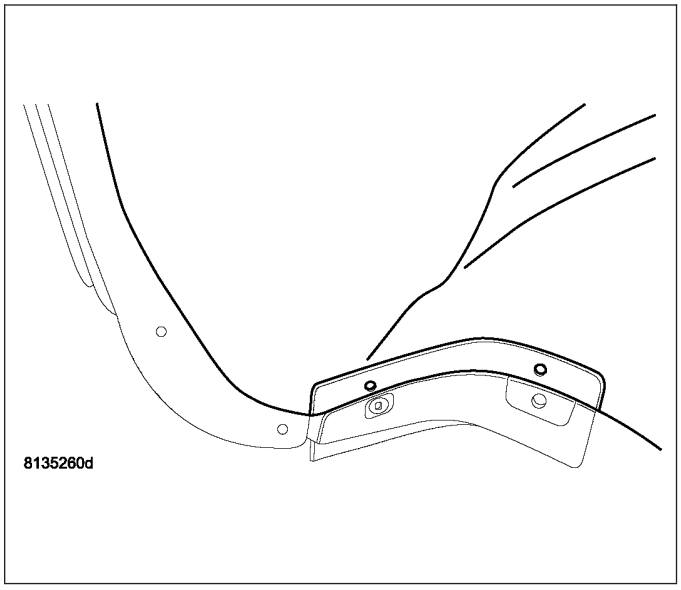

20. Disconnect the filler tube vent line.

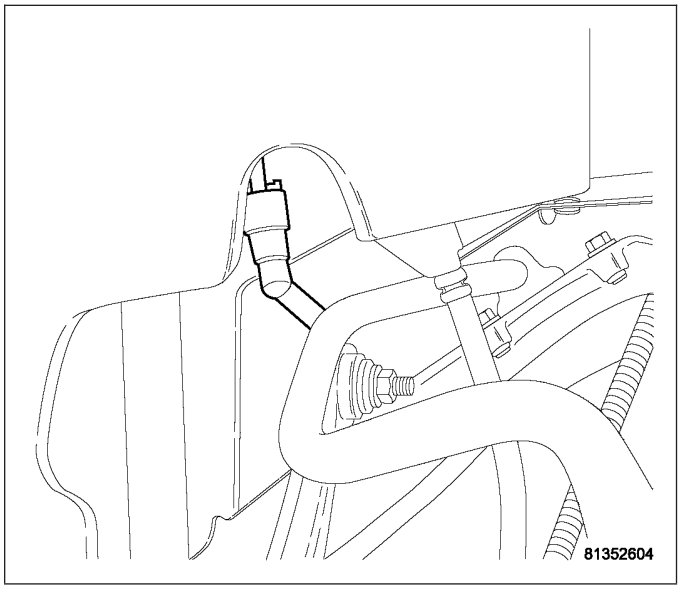

21. Remove clamp from filler tube.

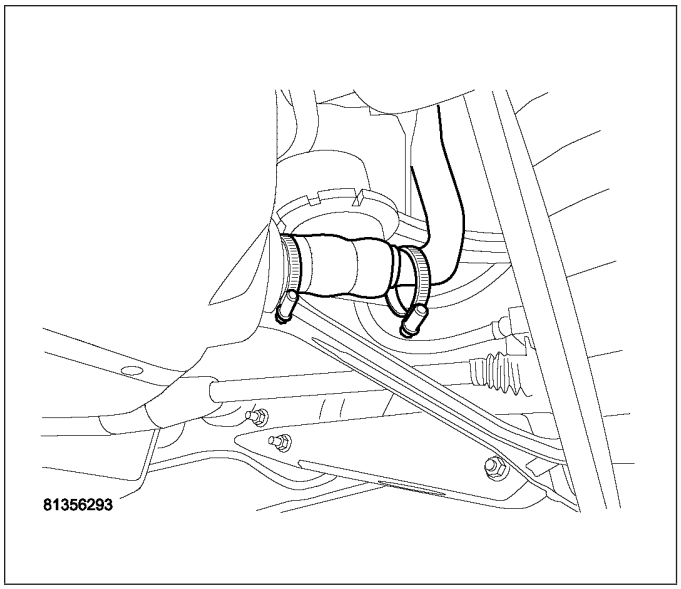

22. Remove metal filler tube from rubber tube on fuel tank.
23. Remove the exhaust system, (Refer to 11 - EXHAUST SYSTEM/EXHAUST PIPE - REMOVAL)
24. Remove the drive shaft, (Refer to 3 - DIFFERENTIAL & DRIVELINE/PROPELLER SHAFT - REMOVAL)

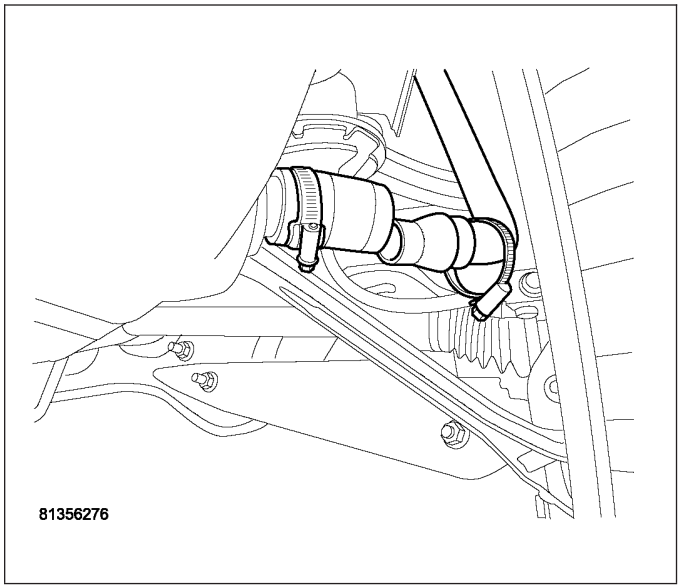

25. Remove the left underbody splash shield.

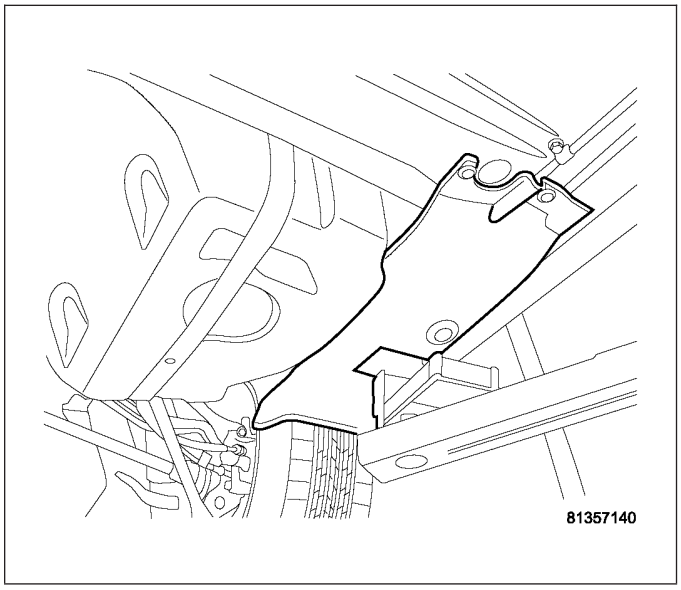

26. Remove the right underbody splash shield.

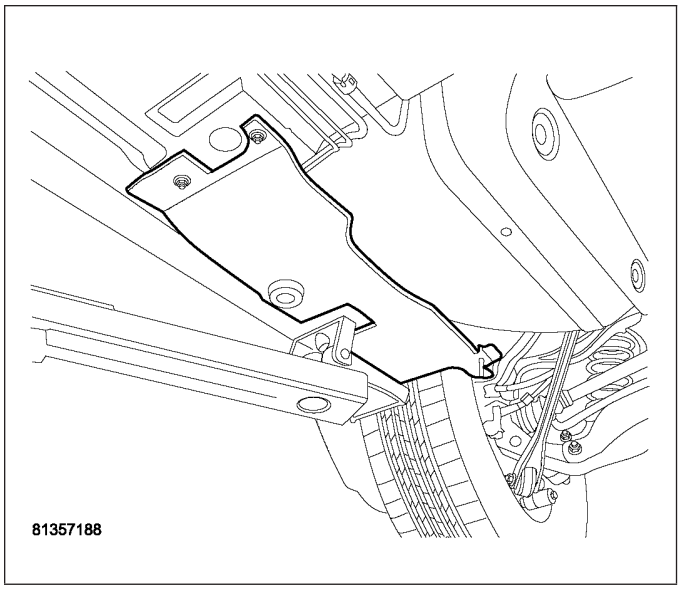

27. Disconnect the EVAP line in the right rear wheel well.

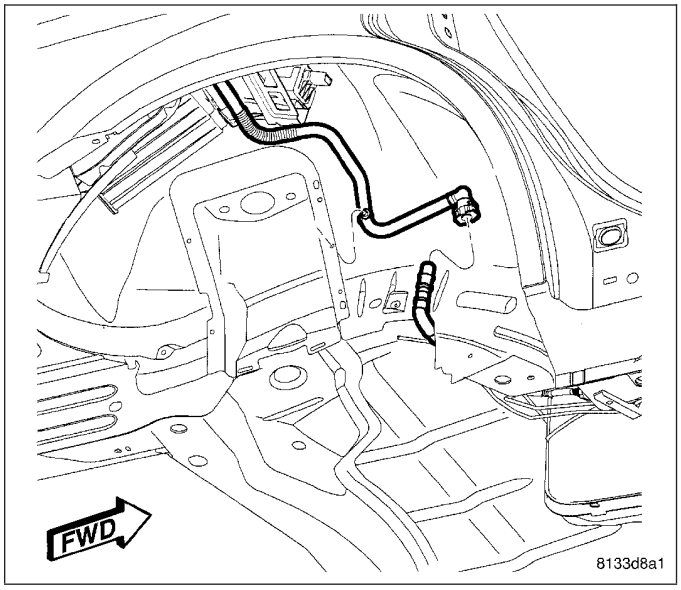

28. Disconnect vapor line.

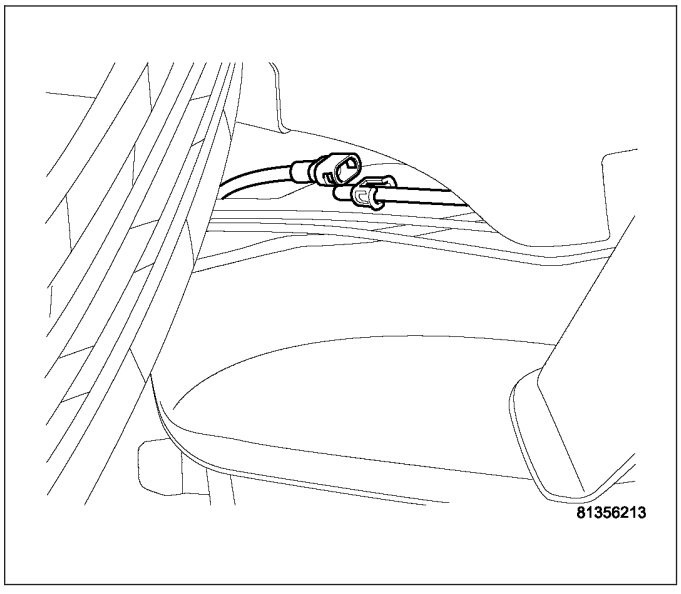

29. Disconnect the fuel supply line.

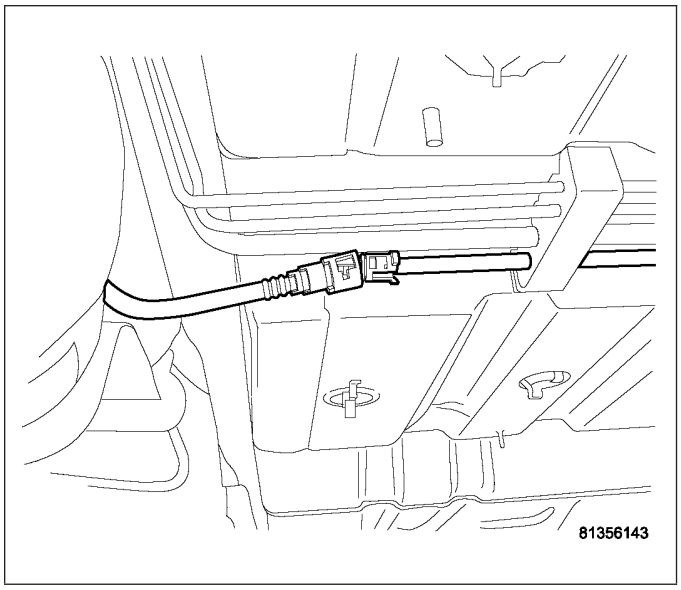

30. Support fuel tank with transmission jack.
31. Fuel tank strap bolt locations.

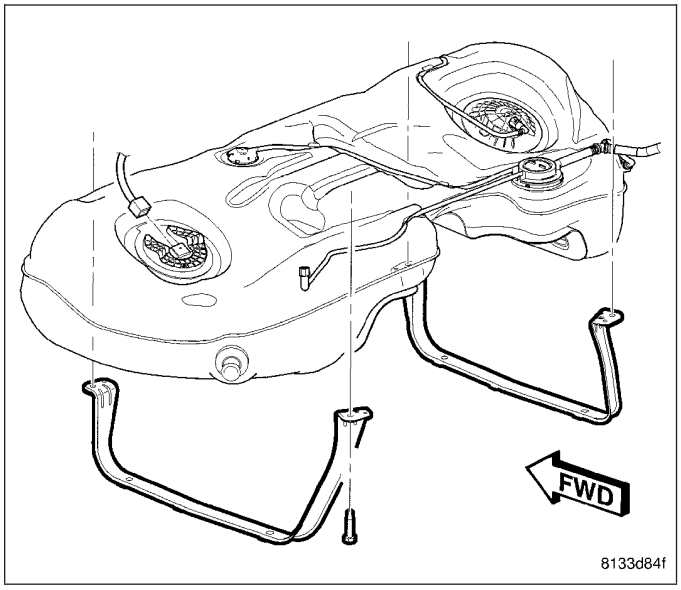

32. Remove bolt for fuel tank strap.

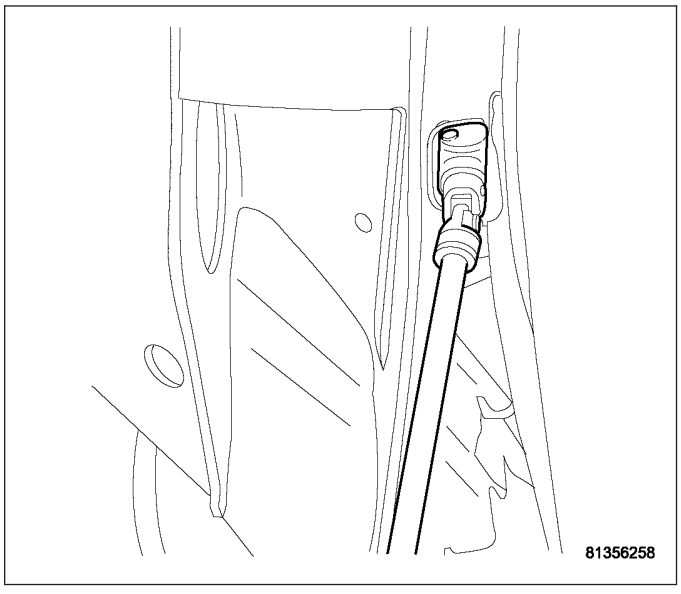

33. Remove bolt for fuel tank strap.

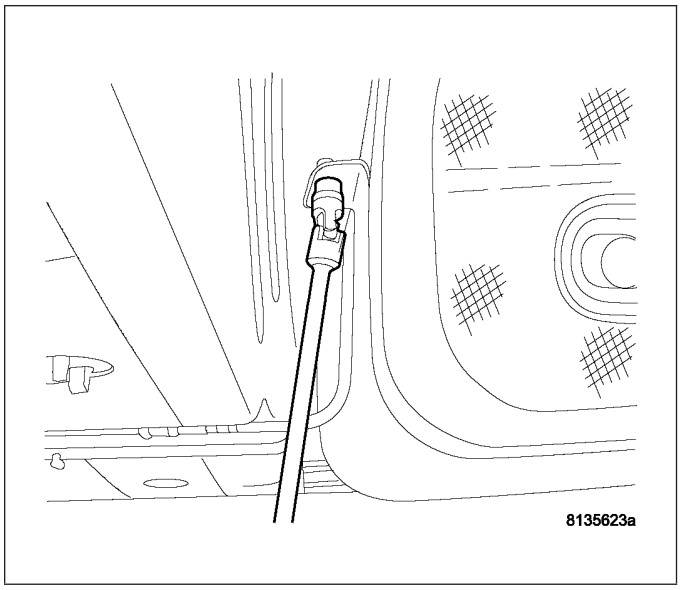

34. Lower tank and pull filler tube vent line through bracket.

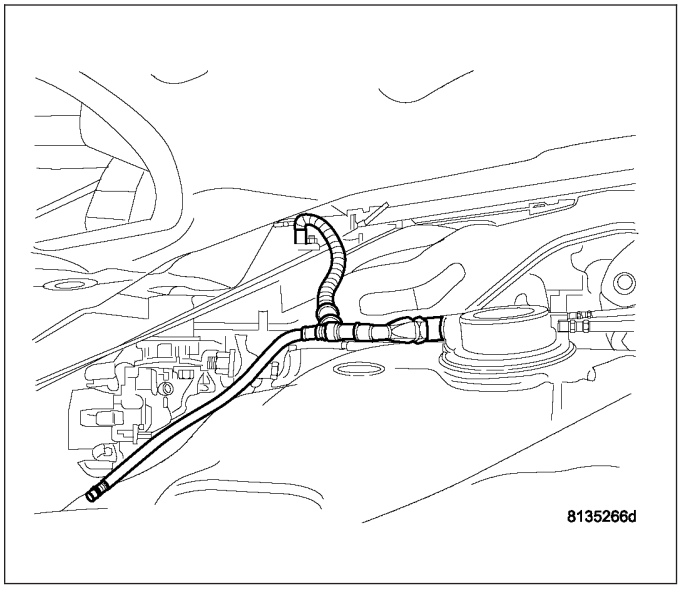

35. Lower Fuel tank and remove from vehicle.

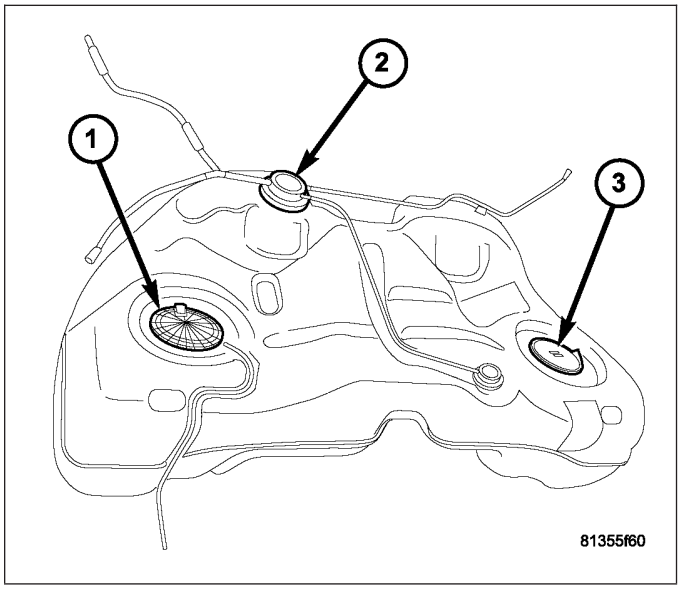

36. Left Side Module (Fuel Pump Module).

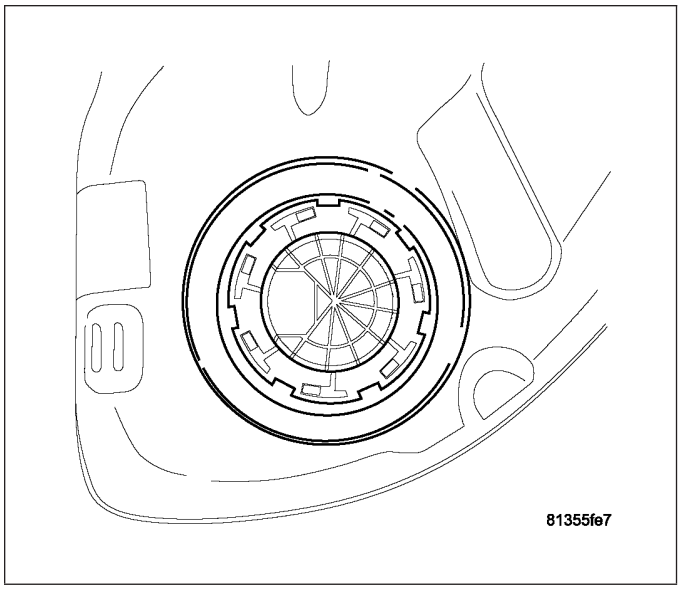

37. Right Side Module.

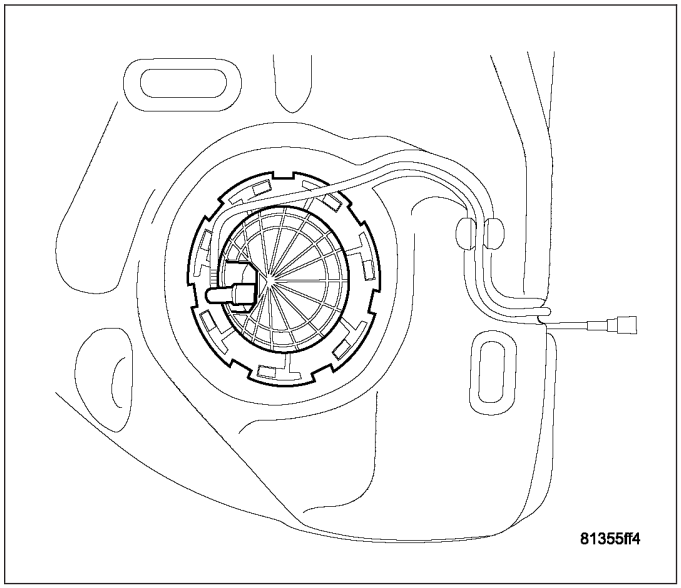

38. Control Valve and lines.

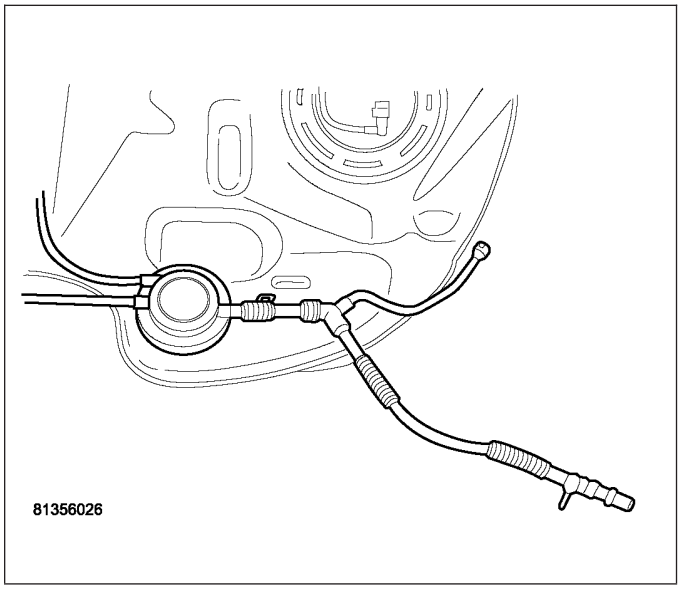

INSTALLATION

1. Support fuel tank with transmission jack.

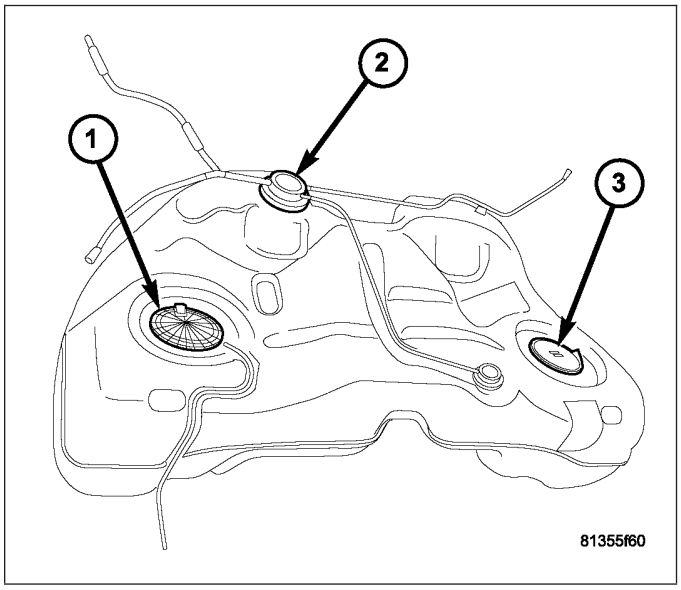

2. Raise tank and push filler tube vent line through bracket.

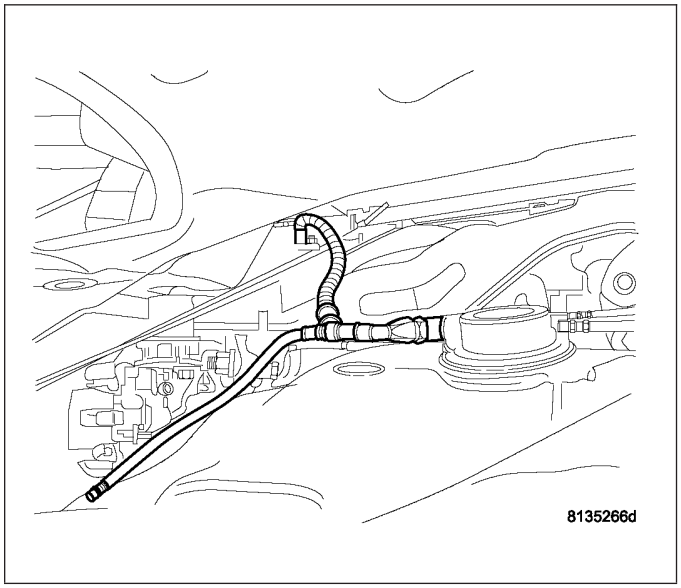

3. Fuel tank strap bolt locations.

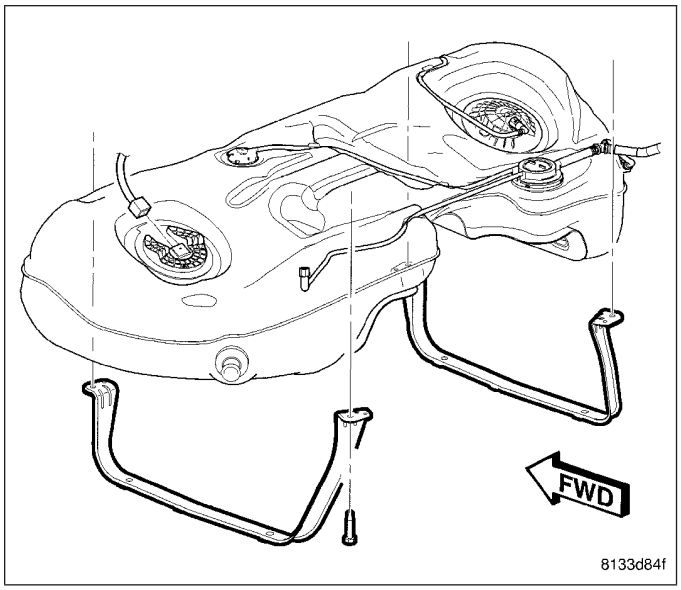

4. Install bolt for fuel tank strap and tighten.

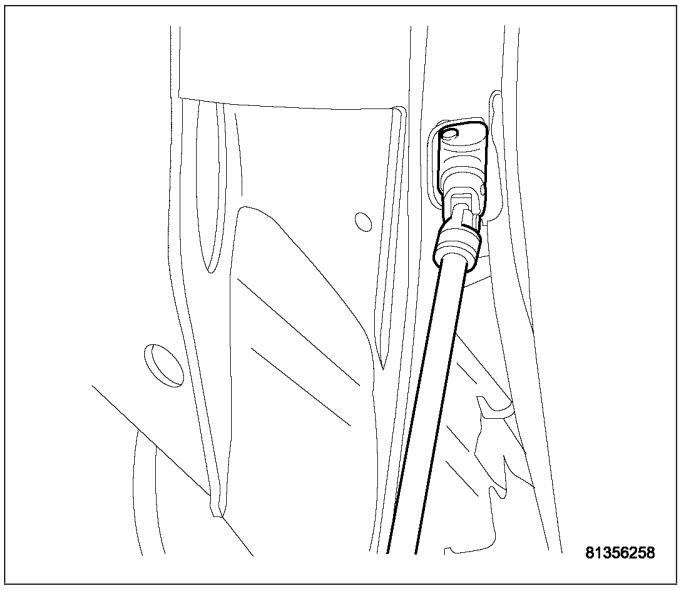

5. Install bolt for fuel tank strap and tighten.

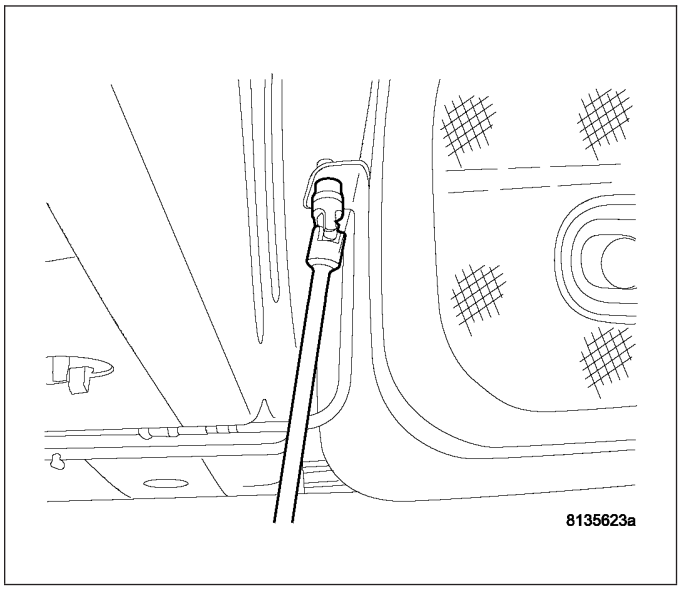

6. Connect vapor line.

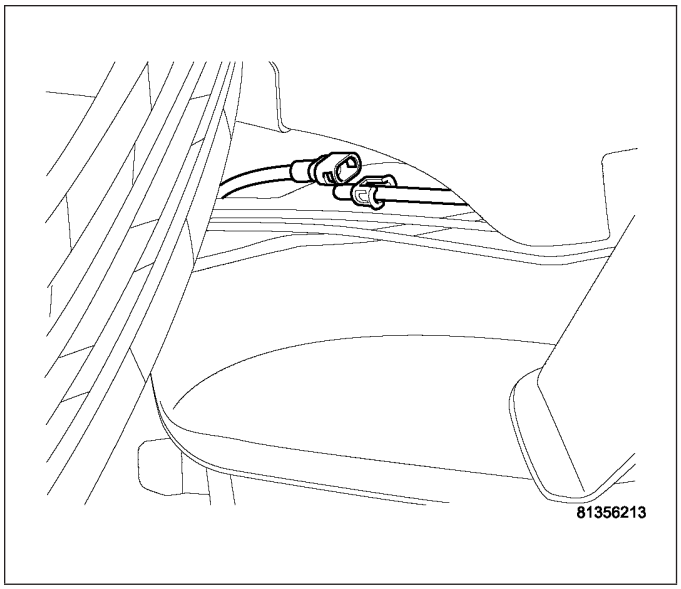

7. Connect the fuel supply line.

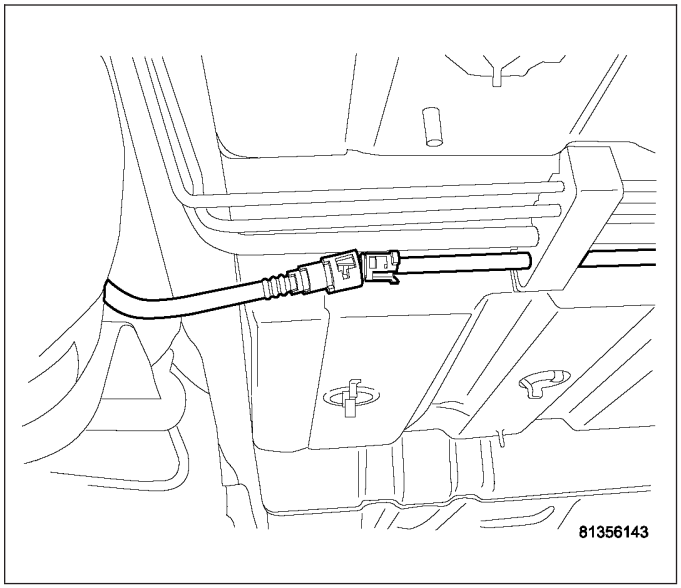

8. Connect the EVAP line in the right rear wheel well.
9. Install the drive shaft, (Refer to 3 - DIFFERENTIAL & DRIVELINE/PROPELLER SHAFT - INSTALLATION)
10. Install the exhaust system, (Refer to 11 - EXHAUST SYSTEM/EXHAUST PIPE - INSTALLATION)

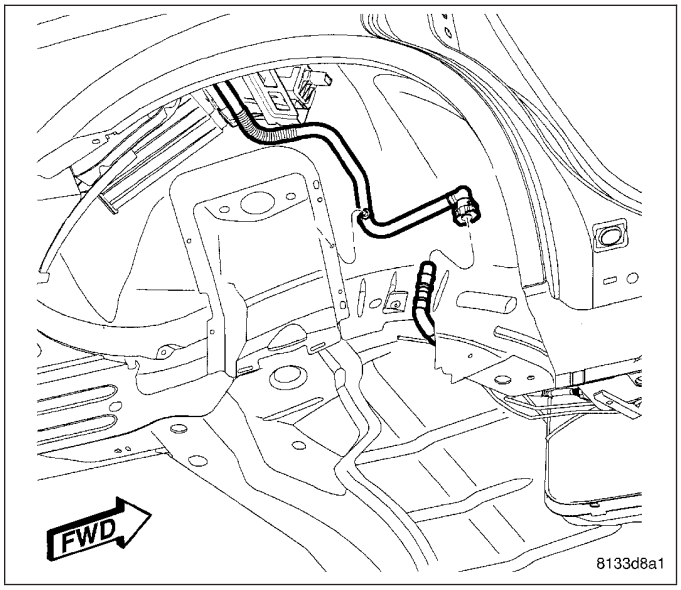

11. Install metal filler tube to rubber tube on fuel tank.

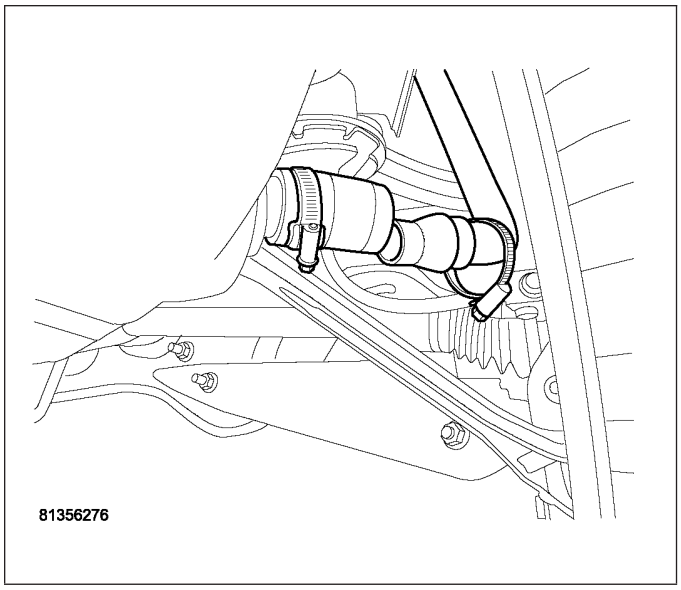

12. Install clamp to filler tube and tighten

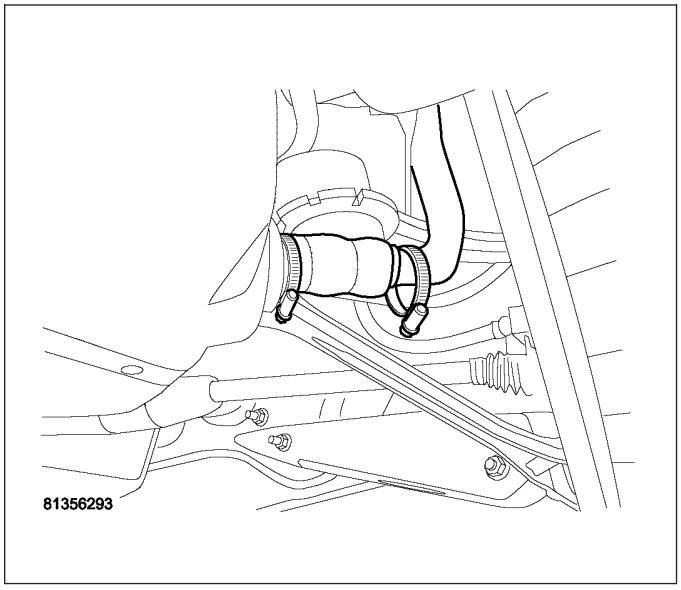

13. Connect the filler tube vent line.

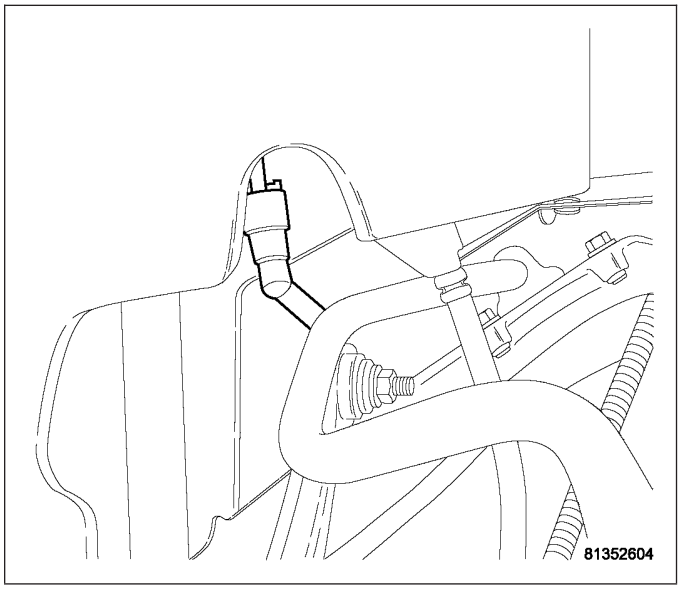

14. Install the inner splash shield.

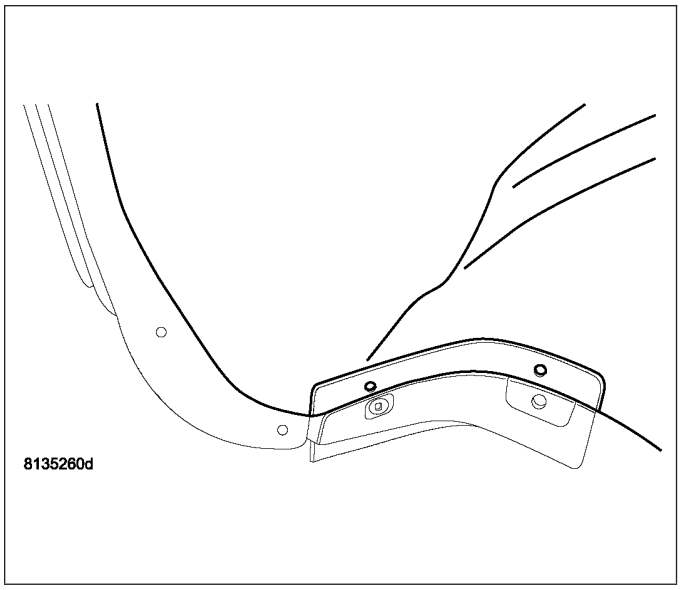

15. Install the left underbody splash shield.

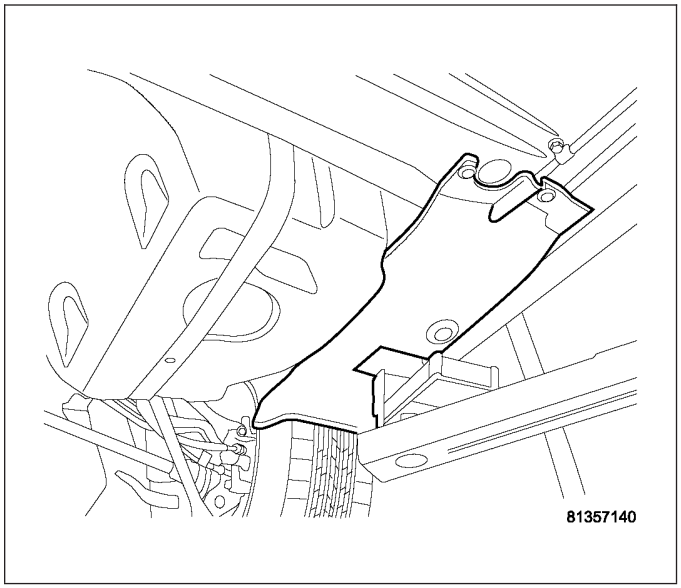

16. Install the right underbody splash shield.
17. Install left rear tire.
18. Lower vehicle.

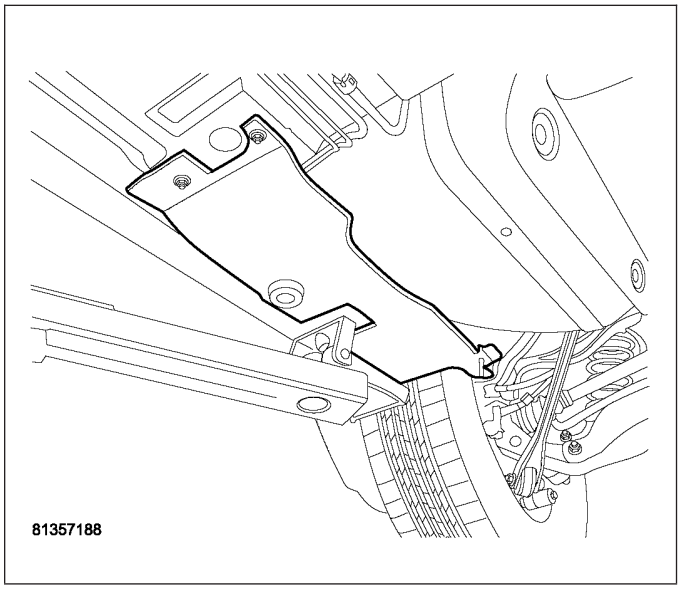

19. Install module and align marks on the module for proper orientation.

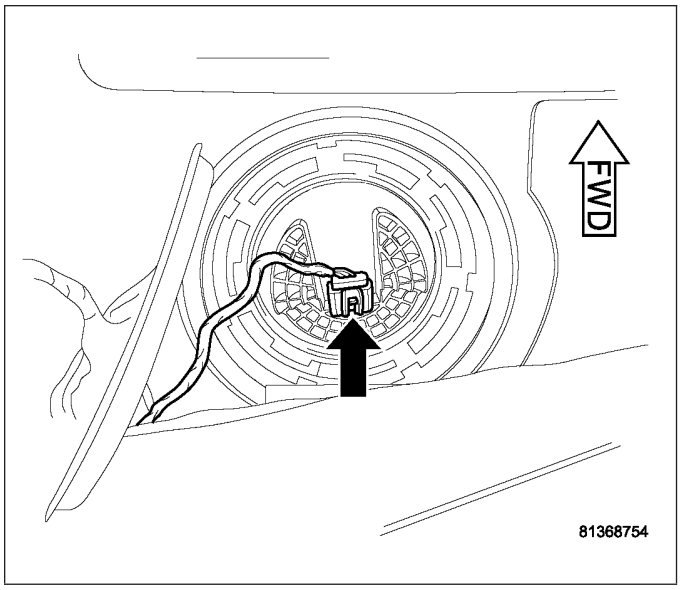

20. Install module lock-ring.
21. Use special tool #9340 to tighten left side module lock ring.
22. Connect the electrical connector to left side module and install plastic access cover.

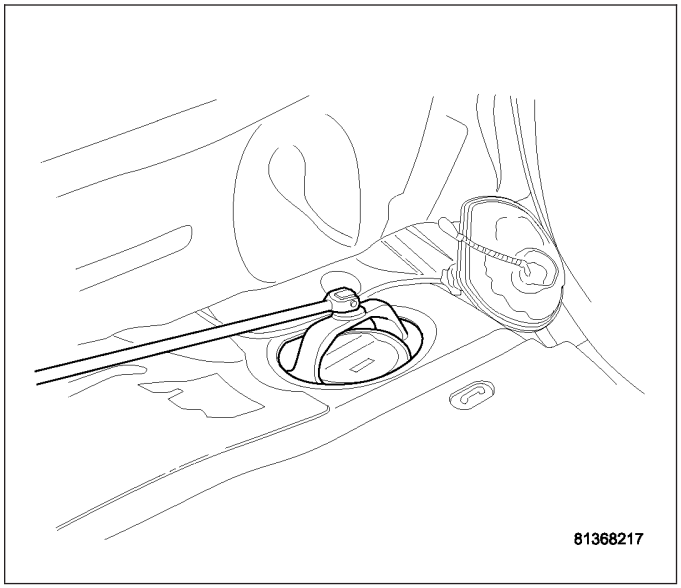

23. Install module and align marks on the module for proper orientation.

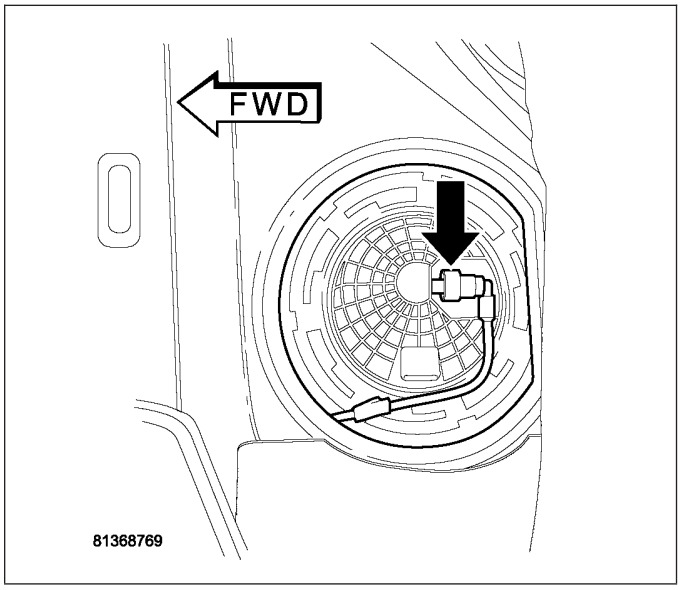

24. Install module lock-ring.
25. Use special tool #9340 to tighten right side module lock ring.
26. Connect the fuel supply line to module.

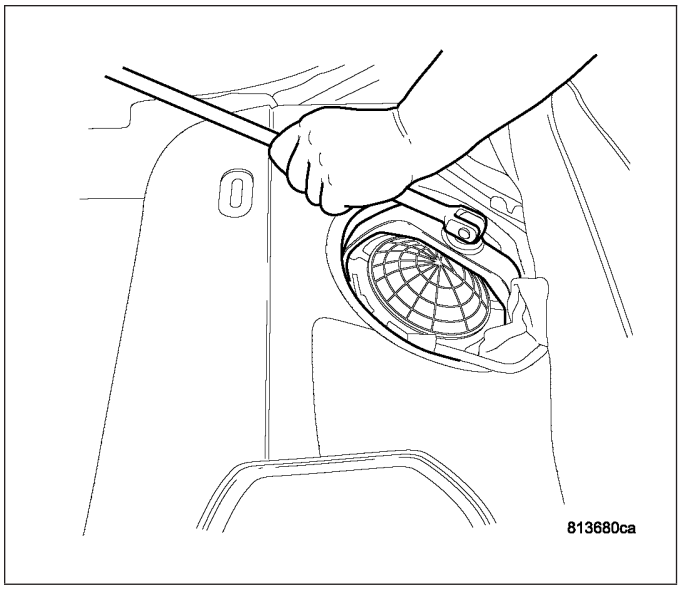

27. Install plastic access covers to floor pan right side.

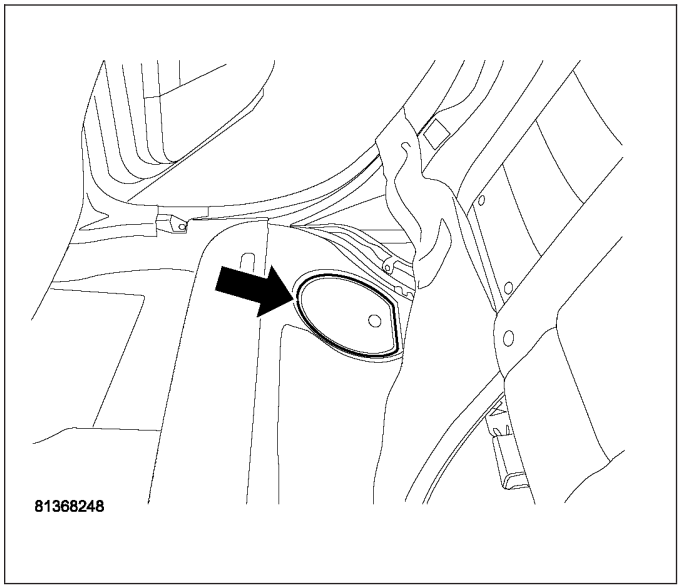

28. Fold the foam pad covering access cover for modules back into place.

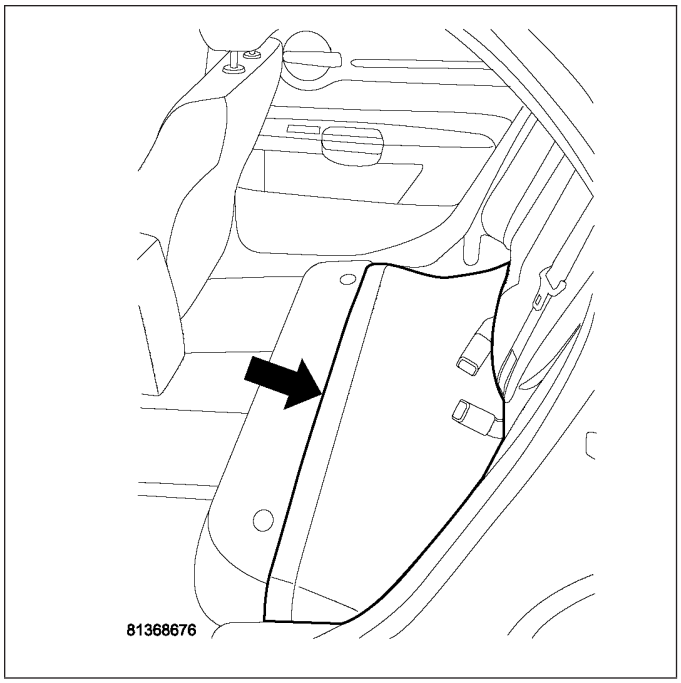

29. Install rear lower seat cushion

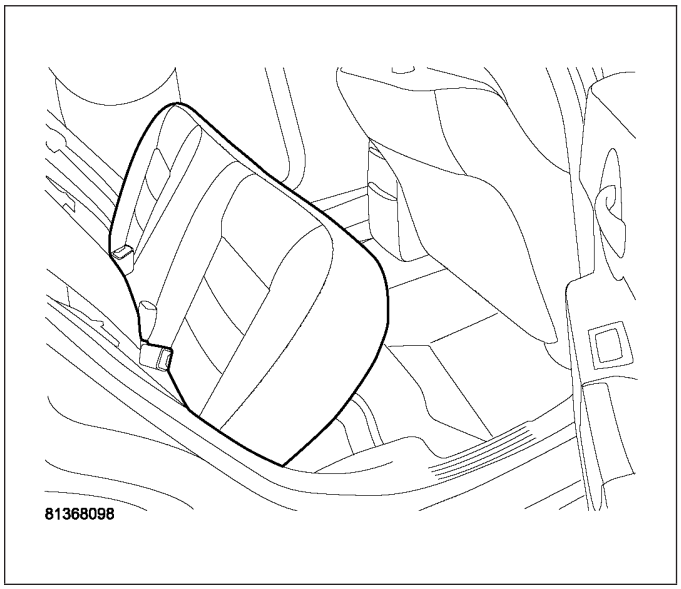

30. Rear lower seat cushion installed.

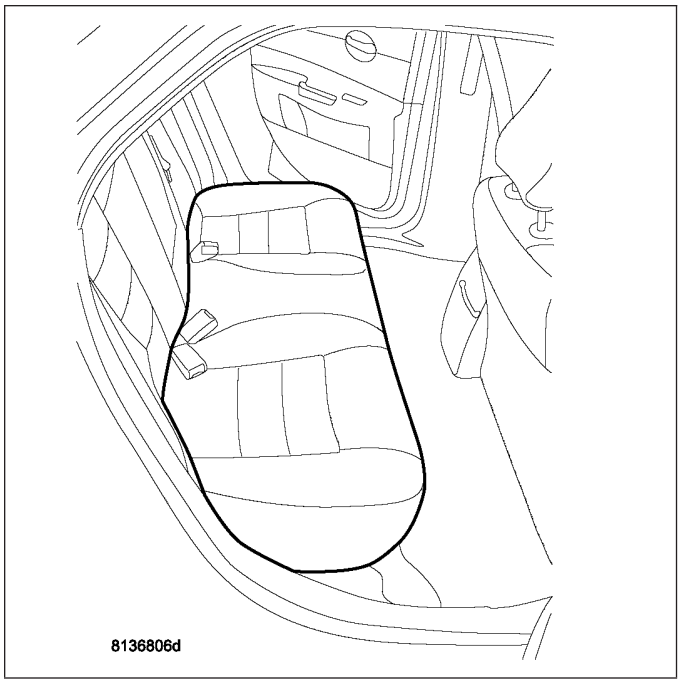

31. Fill fuel tank.
32. Connect negative battery cable.
33. Fill fuel tank. Use the scan tool to pressurize the fuel system. Check for leaks.

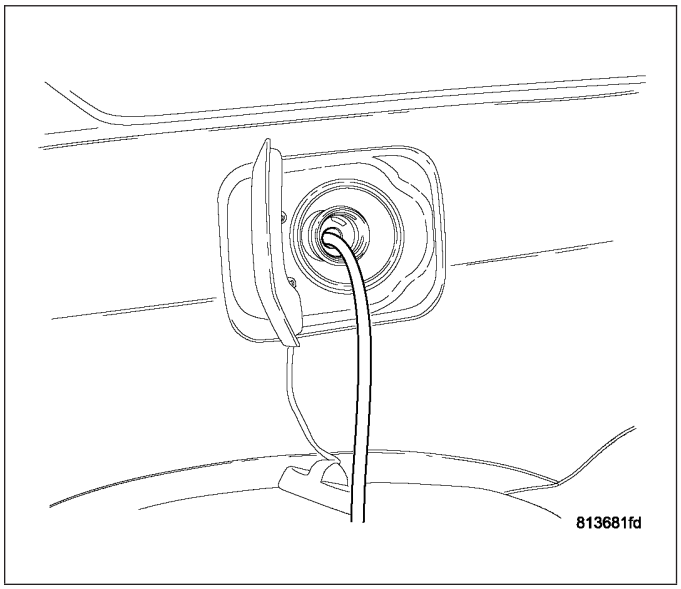

FUEL TANK FILLER TUBE

REMOVAL

1. Disconnect negative battery cable.
2. Drain fuel from tank.
3. Fuel filler tube assembly.

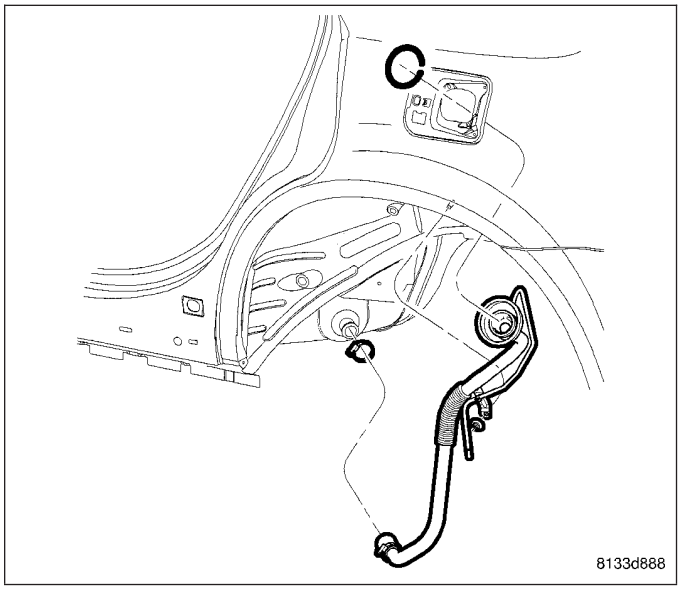

4. Open filler tube door.

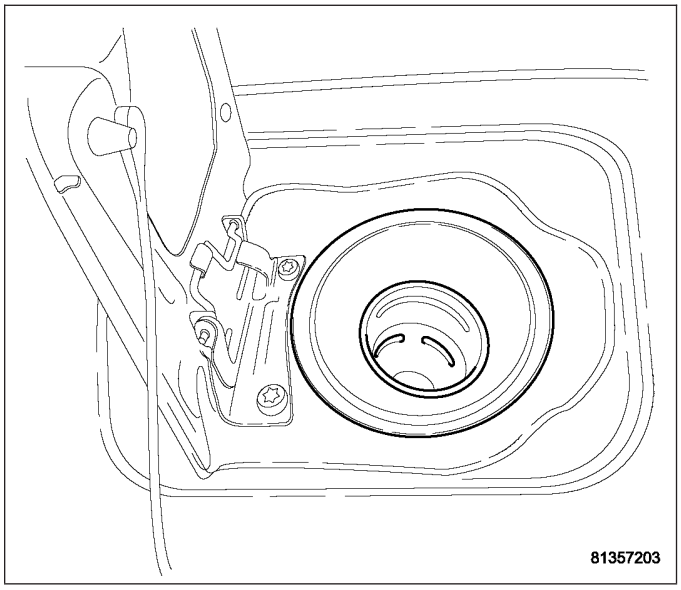

5. Remove retaining wire from inside filler tube rubber.

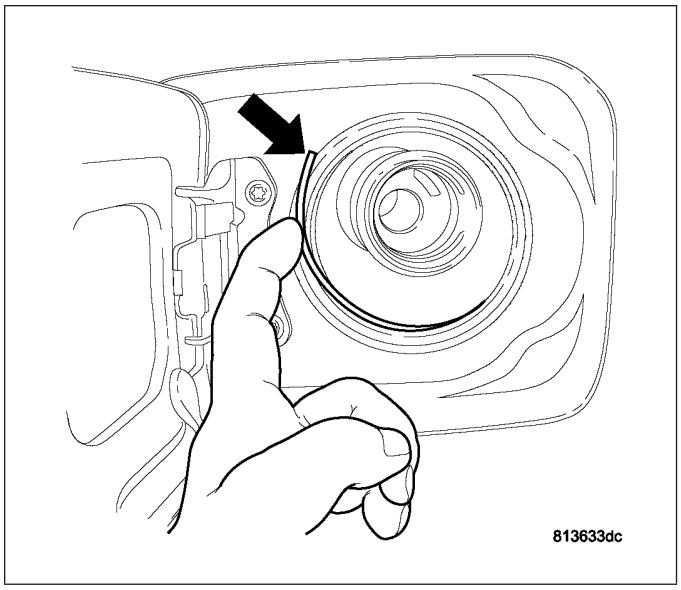

6. Start removing rubber from body sheet metal.

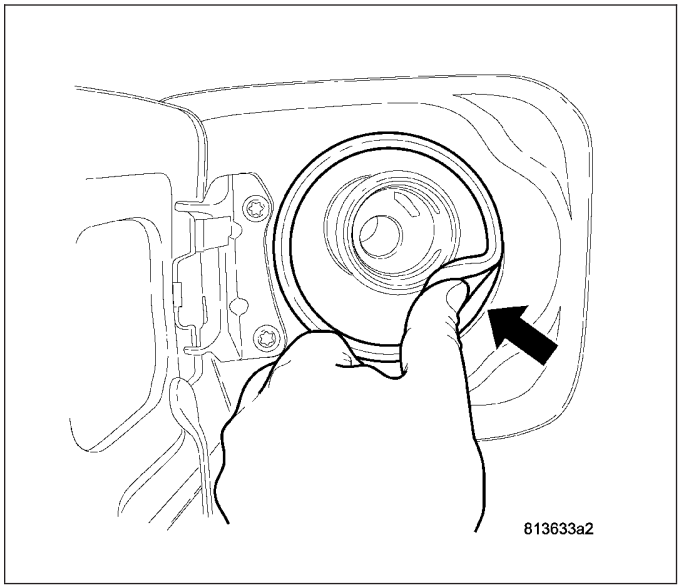

7. Squeeze rubber and push in.

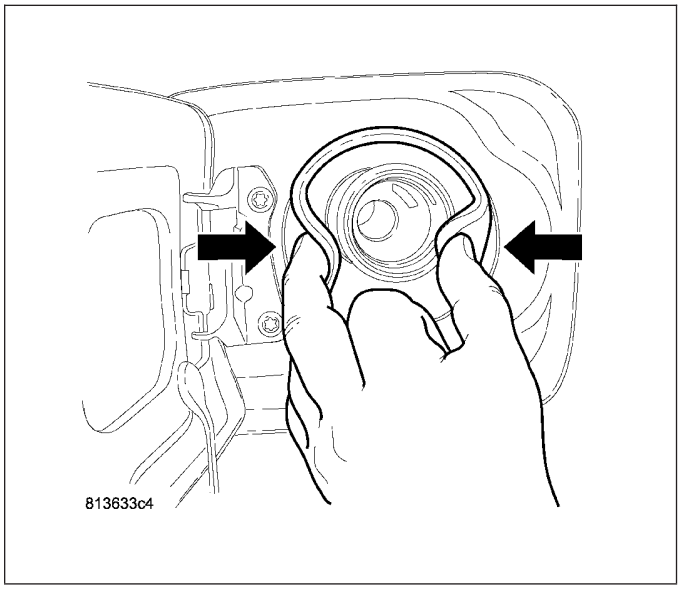

8. Filler tube and rubber removed from body sheet metal.

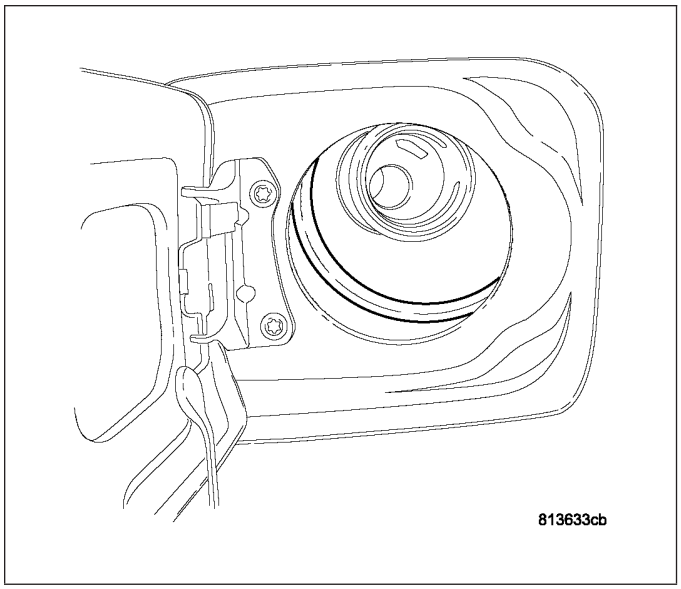

9. Raise vehicle and support.
10. Remove the left rear tire.
11. Remove the left inner splash shield.

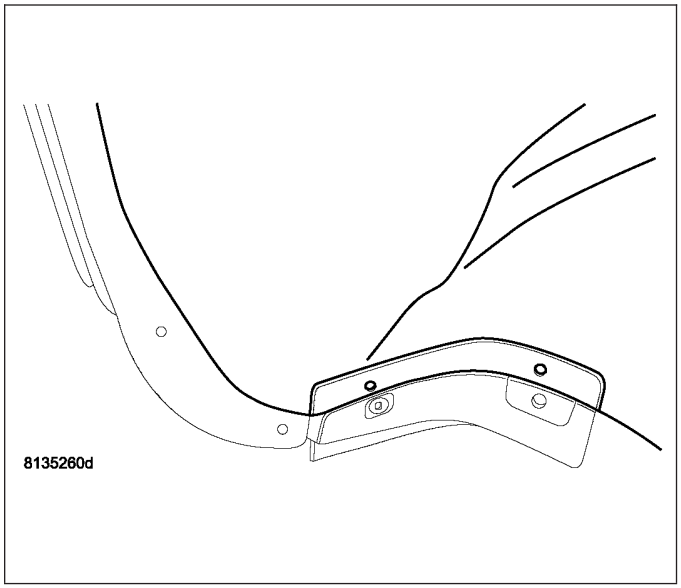

12. Disconnect the filler tube vent line.

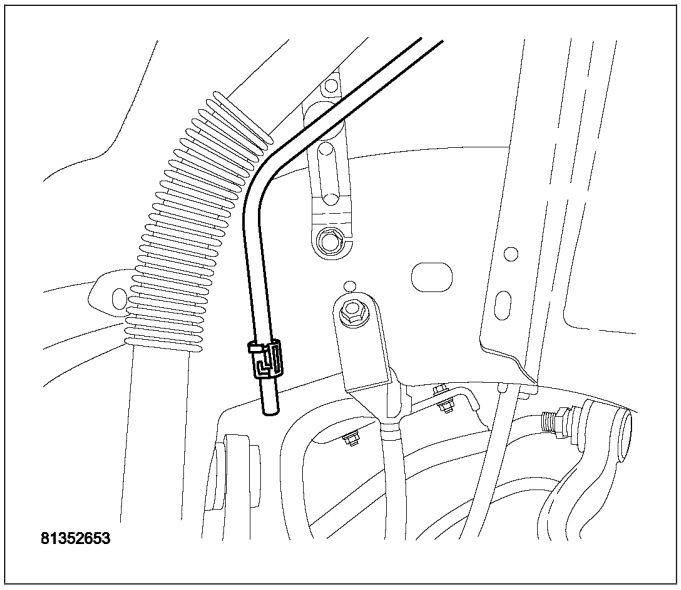

13. Remove the filler tube mounting bolt.

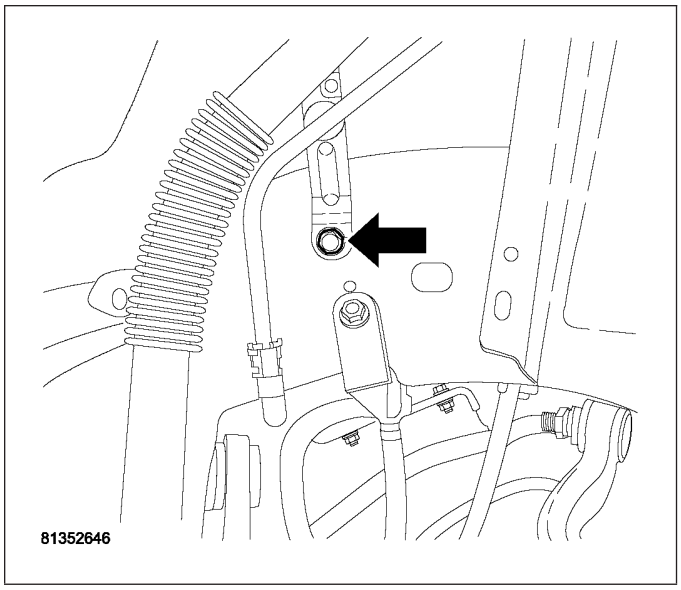

14. Remove the under body splash shield.

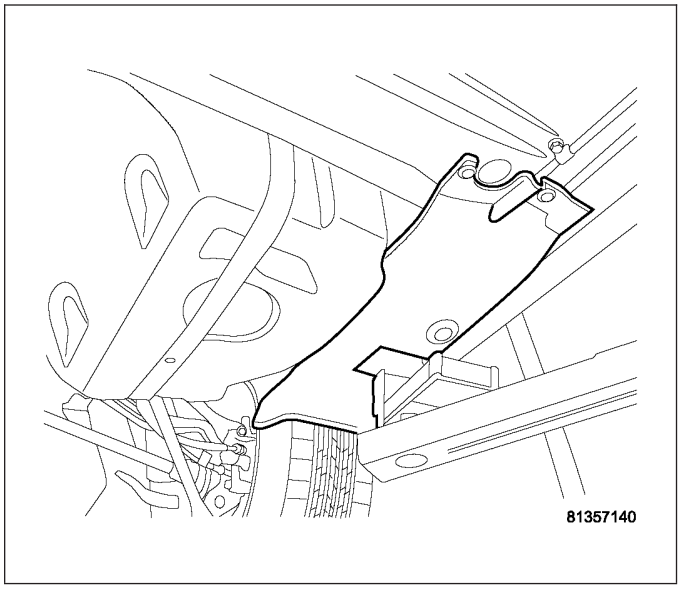

15. Loosen the filler tube hose clamp. Leave the clamp tight on the hose and fuel tank location.

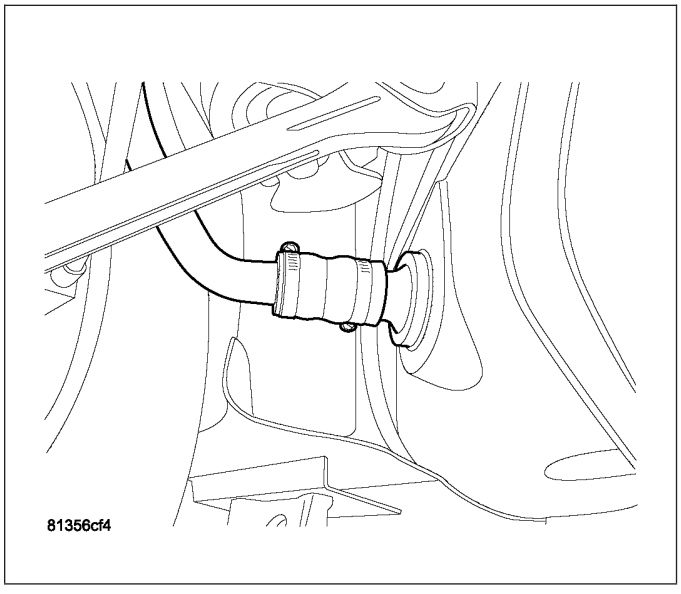

16. Move clamp toward the fuel tank.

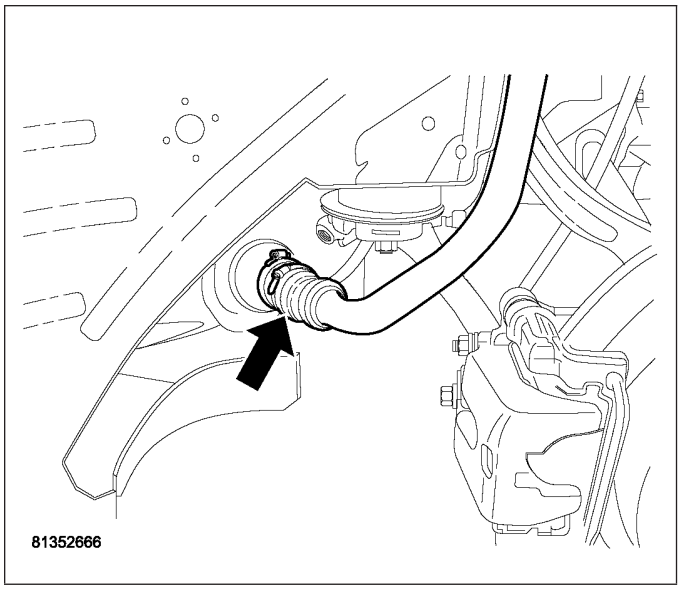

17. Remove the filler tube assembly from the vehicle.

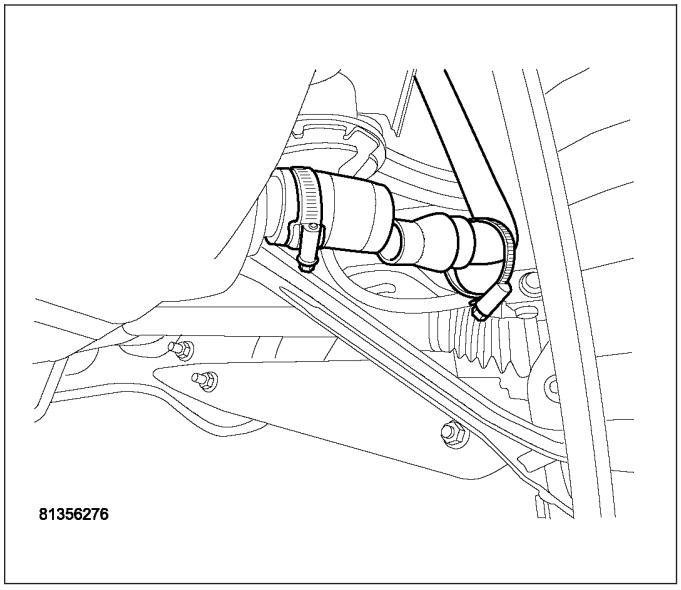

INSTALLATION

1. Filler tube assembly.

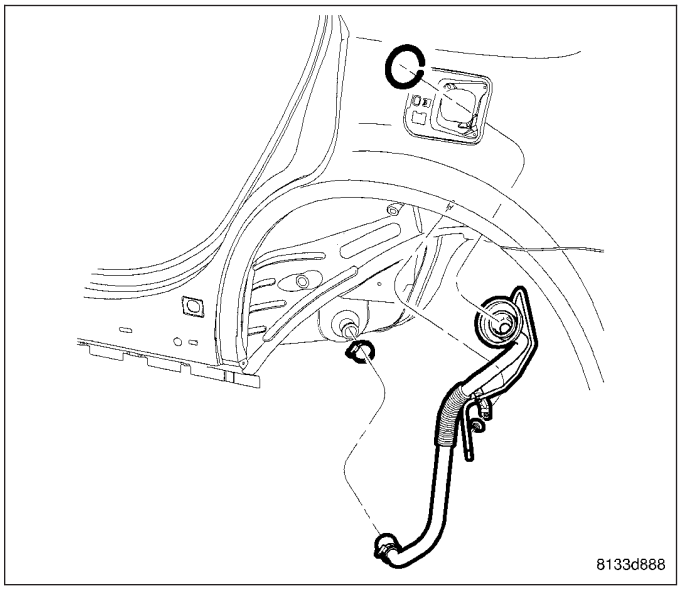

2. Groove in filler tube rubber is for the body sheet metal.

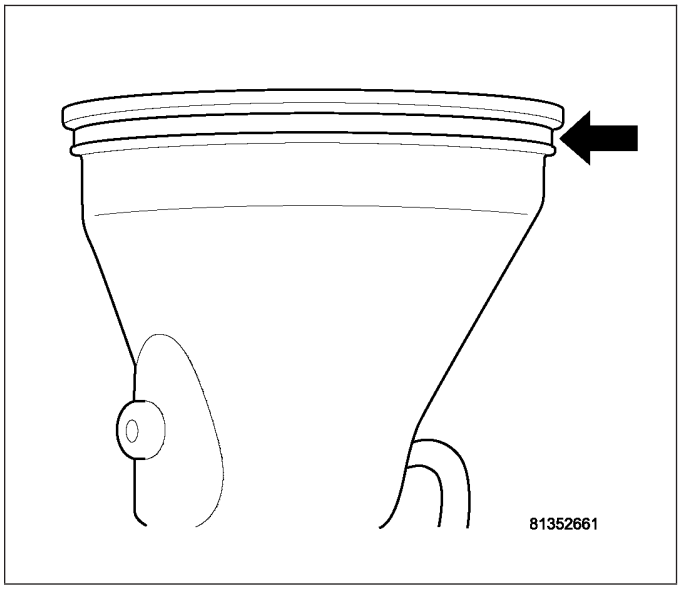

3. Insert filler tube into the fuel tank rubber hose.

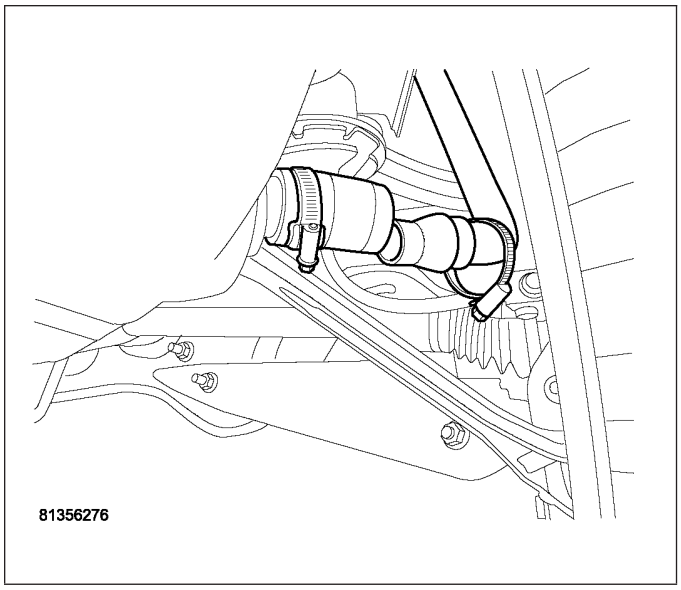

4. Slide hose clamp into place and tighten.

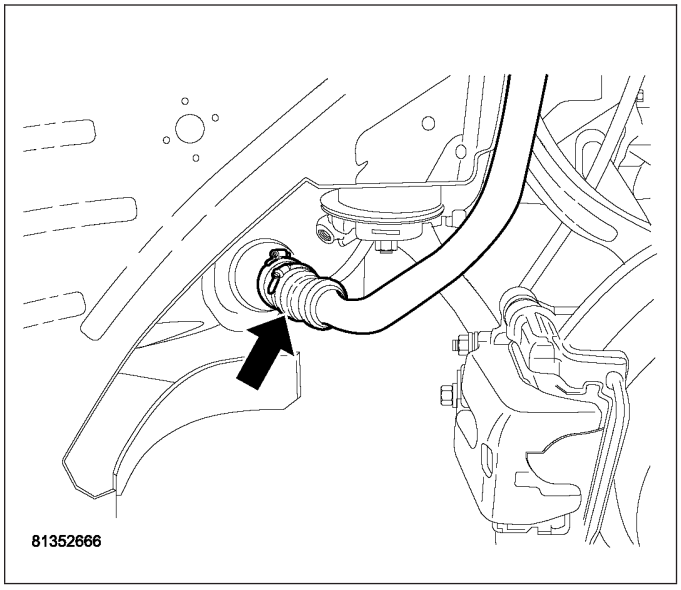

5. Hose clamp in place and tighen.

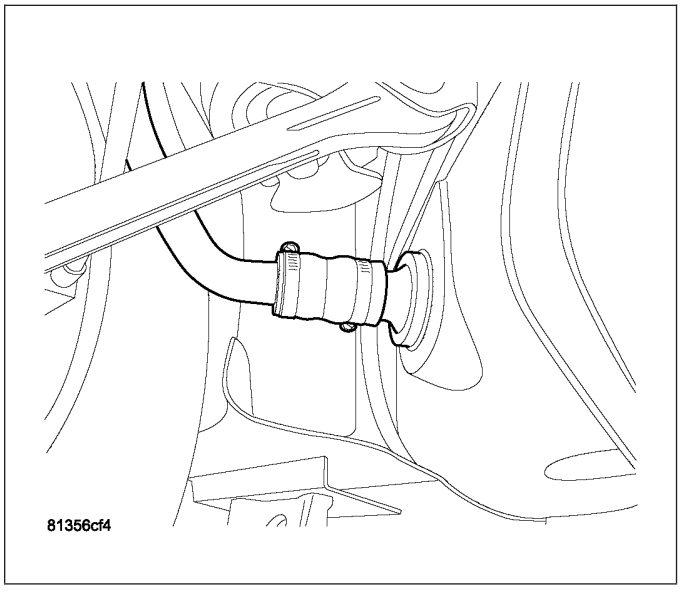

6. Install filler tube mounting bolt.

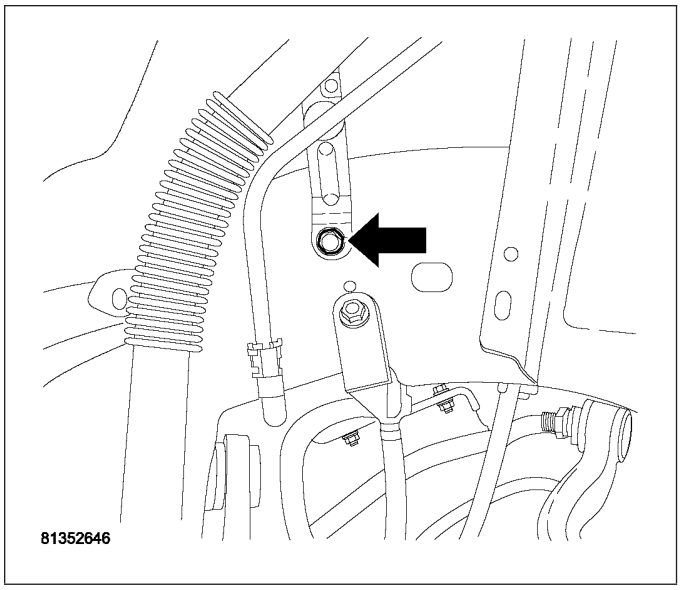

7. Install Filler tube vent line.

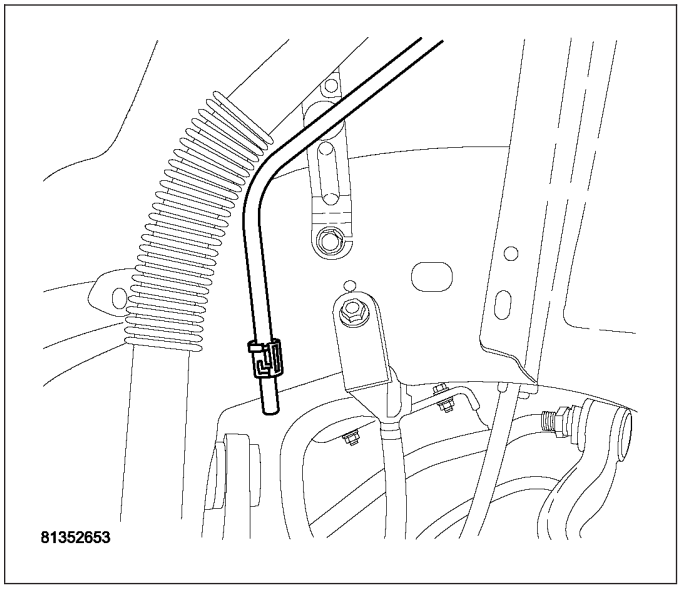

8. Install the underbody splash shield.

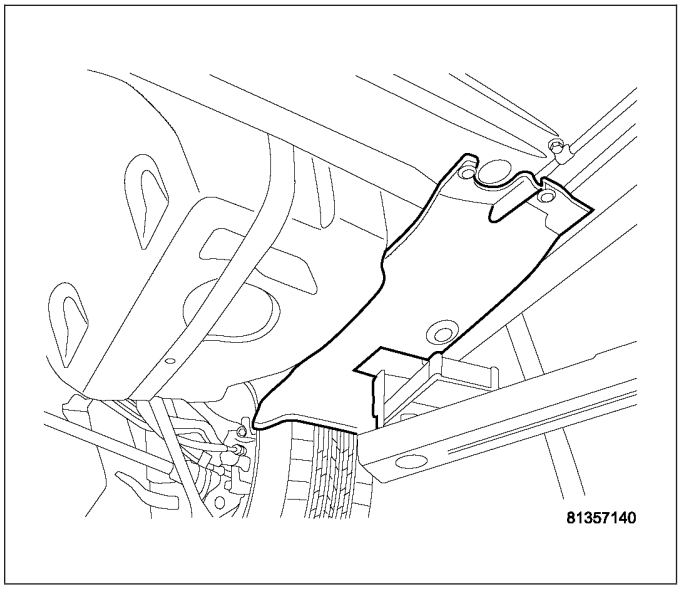

9. Install the left inner splash shield.
10. Install the left rear tire.
11. Lower vehicle.

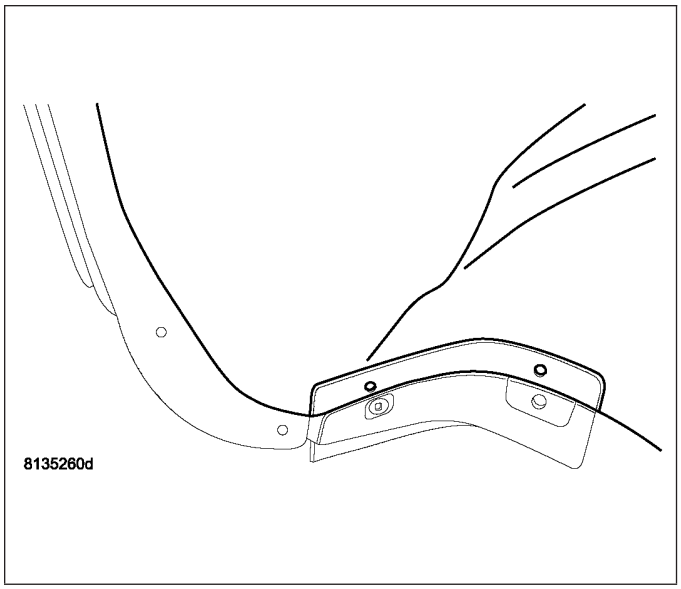

12. Filler tube rubber at body opening.
13. Pull rubber through opening and install to body. Make sure that the sheet metal is in the groove in the rubber.

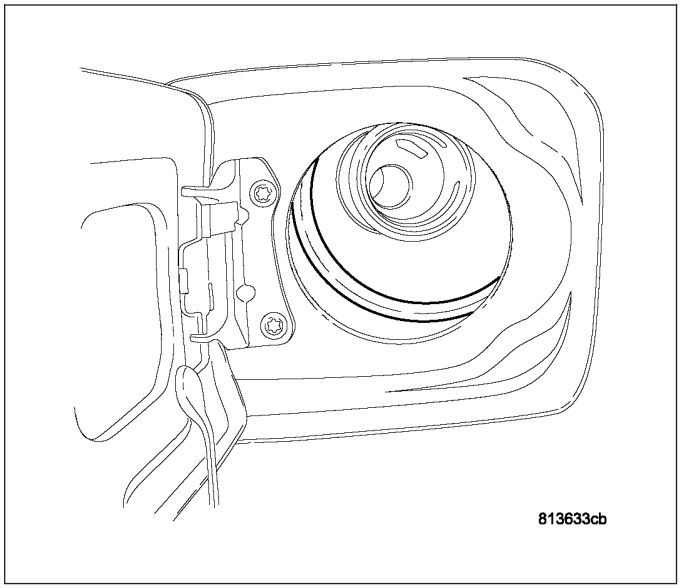

14. Start the metal wire retaining wire in the groove on the inside of the filler tube rubber.

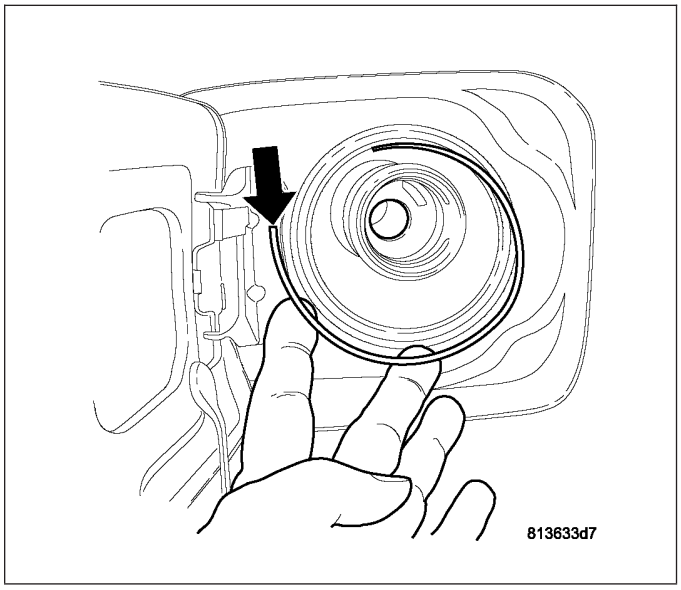

15. Work wire retaining wire around the rubber.

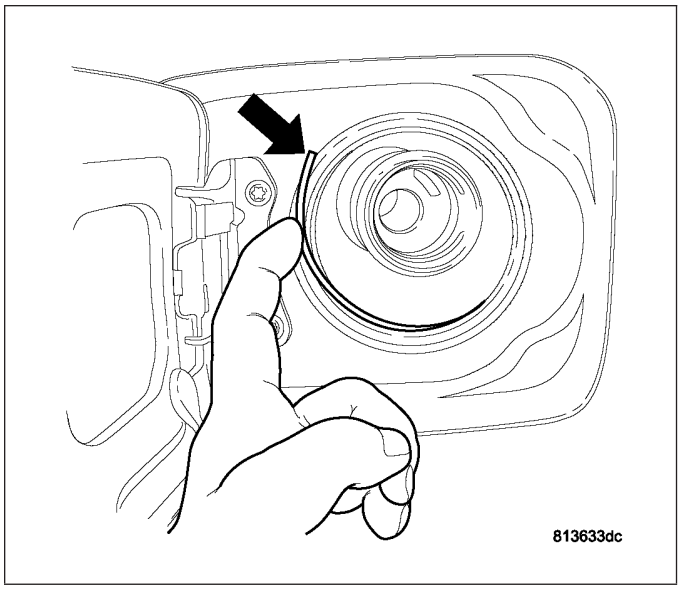

16. Wire retainer install.
17. Connect negative battery cable.
18. Fill fuel tank.

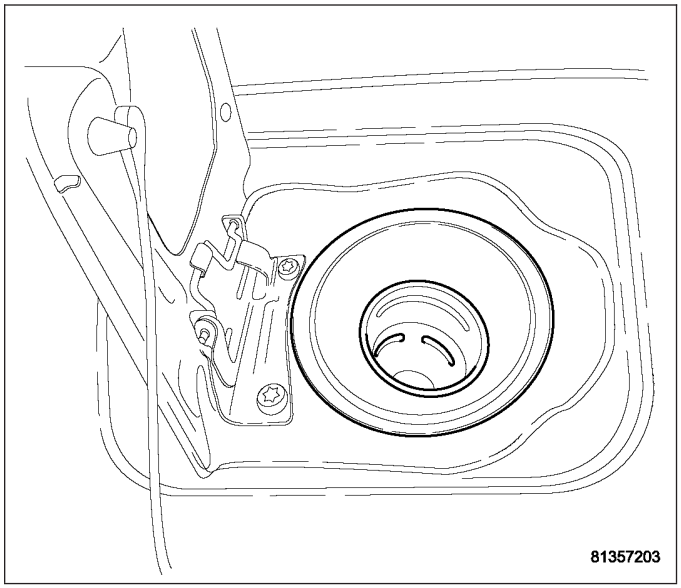

QUICK CONNECT FITTING

STANDARD PROCEDURE - QUICK-CONNECT FITTINGS

REMOVAL

When disconnecting a quick-connect fitting, the retainer will remain on the fuel tube nipple.

WARNING: RELEASE FUEL SYSTEM PRESSURE BEFORE DISCONNECTING A QUICK-CONNECT FITTINGS. REFER TO THE FUEL PRESSURE RELEASE PROCEDURE. THIS MAY RESULT IN PERSONAL INJURY OR DEATH.

1. Perform Fuel Pressure Release Procedure. Refer to the Fuel Pressure Release Procedure in this section.
2. Disconnect negative cable from battery or auxiliary jumper terminal.
3. Squeeze retainer tabs together and pull fuel tube/quick-connect fitting assembly off of fuel tube nipple. The retainer will remain on fuel tube.

INSTALLATION

CAUTION: Make sure that the o-ring in installed in fitting. Never install a quick-connect fitting without the retainer being either on the fuel tube or already in the quick-connect fitting. In either case, ensure the retainer locks securely into the quick-connect fitting by firmly push-pulling-push on fuel tube and fitting to ensure it is secured.

1. Using a clean lint free cloth, clean the fuel tube nipple and retainer.
2. Prior to connecting the fitting to the fuel tube, coat the fuel tube nipple with clean engine oil.
3. Push the quick-connect fitting over the fuel tube until the **retainer seats and a click is heard.**
4. The plastic quick-connect fitting has windows in the sides of the casing. When the fitting completely attaches to the fuel tube, the retainer locking ears and the fuel tube shoulder are visible in the windows. If they are not visible, the retainer was not properly installed. **Do not rely upon the audible click to confirm a secure connection.**
5. Connect negative cable to battery or auxiliary jumper terminal.

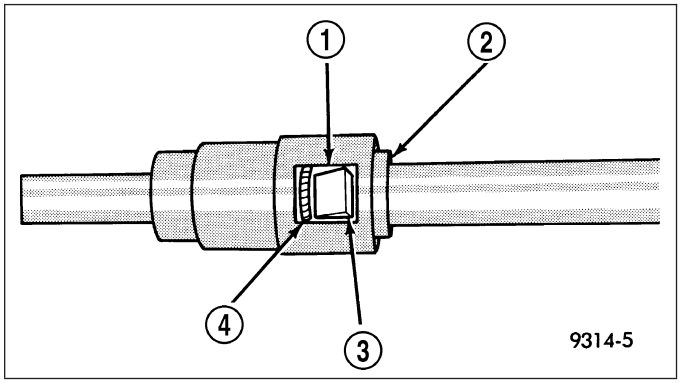

CAUTION: When using the ASD Fuel System Test, the Auto Shutdown (ASD) Relay remains energized for several minutes, until the test is stopped, or until the ignition switch is turned to the Off position.

6. Use the DRB III® scan tool ASD Fuel System Test to pressurize the fuel system. Check for leaks.

Single–Button Type Fitting

1. This type of fitting is equipped with a single push-button located on the quick-connect fitting. The push-button is attached to two internal latches. To disconnect, press on button with your thumb and unlatch fitting from fuel line. Special tools are not required for disconnection. **DO NOT ATTEMPT TO PRY OR PULL UP ON PUSH-BUTTON. LATCHES WILL BE BROKEN.**

TWO-TAB TYPE FITTING

This type of fitting is equipped with tabs located on both sides of the fitting. These tabs are supplied for disconnecting the quick-connect fitting from component being serviced.

CAUTION: The interior components (O-rings, spacers) of this type of quick-connect fitting are not serviced separately, but new plastic retainers are available. Do not attempt to repair damaged fittings or fuel lines/tubes. If repair is necessary, replace the complete fuel tube assembly.

WARNING: THE FUEL SYSTEM IS UNDER A CONSTANT PRESSURE (EVEN WITH THE ENGINE OFF). BEFORE SERVICING ANY FUEL SYSTEM HOSES, FITTINGS OR LINES, THE FUEL SYSTEM PRESSURE MUST BE RELEASED. REFER TO THE FUEL PRESSURE RELEASE PROCEDURE IN THIS GROUP. THIS MAY RESULT IN PERSONAL INJURY OR DEATH.

DISCONNECTION/CONNECTION

1. Perform fuel pressure release procedure. Refer to Fuel Pressure Release Procedure in this group.
2. Disconnect negative battery cable from battery or auxiliary jumper terminal.
3. Clean fitting of any foreign material before disassembly.
4. To disconnect quick-connect fitting, squeeze plastic retainer tabs against sides of quick-connect fitting with your fingers. Tool use is not required for removal and may damage plastic retainer. Pull fitting from fuel system component being serviced. The plastic retainer will remain on component being serviced after fitting is disconnected. The O-rings and spacer will remain in quick-connect fitting connector body.
5. Inspect quick-connect fitting body and component for damage. Replace as necessary.

CAUTION: When the quick-connect fitting was disconnected, the plastic retainer will remain on the component being serviced. If this retainer must be removed, very carefully release the retainer from the component with two small screwdrivers. After removal, inspect the retainer for cracks or any damage.

6. Prior to connecting quick-connect fitting to component being serviced, check condition of fitting and component. Clean parts with a lint-free cloth. Lubricate with clean engine oil.
7. Insert quick-connect fitting to component being serviced and into plastic retainer. When a connection is made, a click will be heard.
8. Verify a locked condition by firmly push-pulling-push on fuel tube and fitting (15-30 lbs.).

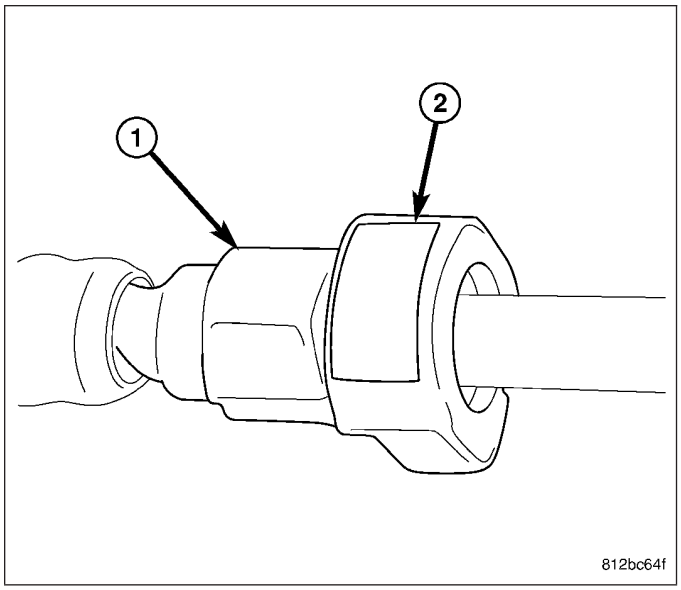

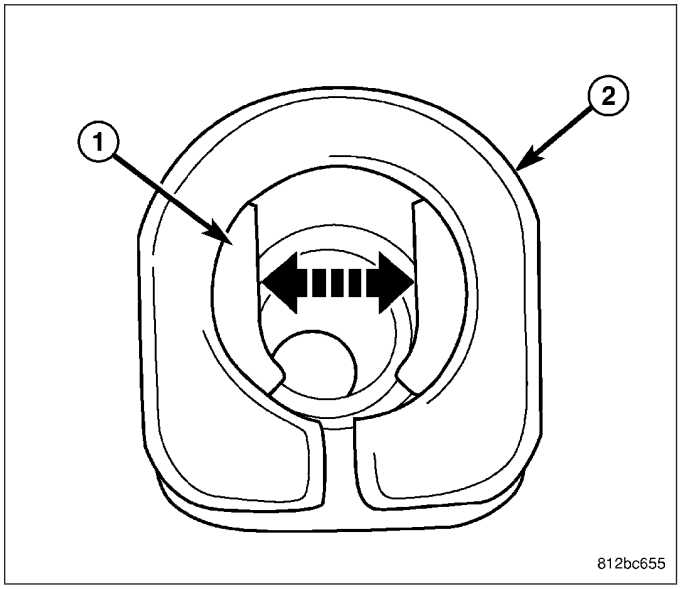

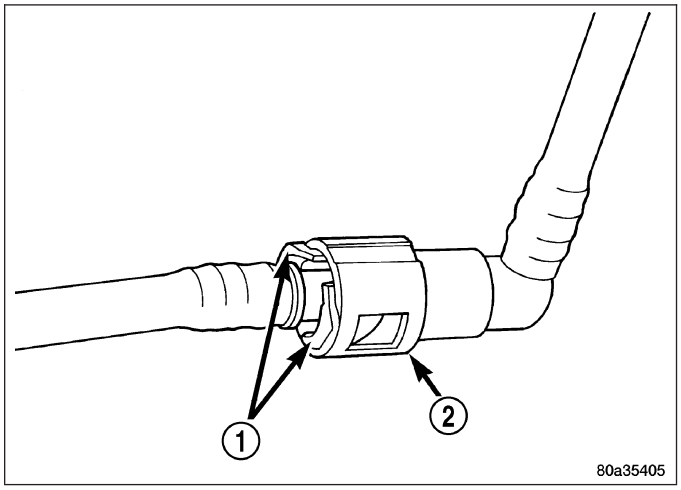

9. Connect negative cable to battery or auxiliary jumper terminal.
10. Use the DRB III® scan tool ASD Fuel System Test to pressurize the fuel system. Check for leaks.

PLASTIC RETAINER RING TYPE FITTING

This type of fitting can be identified by the use of a full-round plastic retainer ring usually black in color.

CAUTION: The interior components (O-rings, spacers, retainers) of this type of quick-connect fitting are not serviced separately. Do not attempt to repair damaged fittings or fuel lines/tubes. If repair is necessary, replace the complete fuel tube assembly.

WARNING: THE FUEL SYSTEM IS UNDER A CONSTANT PRESSURE (EVEN WITH THE ENGINE OFF). BEFORE SERVICING ANY FUEL SYSTEM HOSES, FITTINGS OR LINES, THE FUEL SYSTEM PRESSURE MUST BE RELEASED. REFER TO THE FUEL SYSTEM PRESSURE RELEASE PROCEDURE IN THIS GROUP. THIS MAY RESULT IN PERSONAL INJURY OR DEATH.

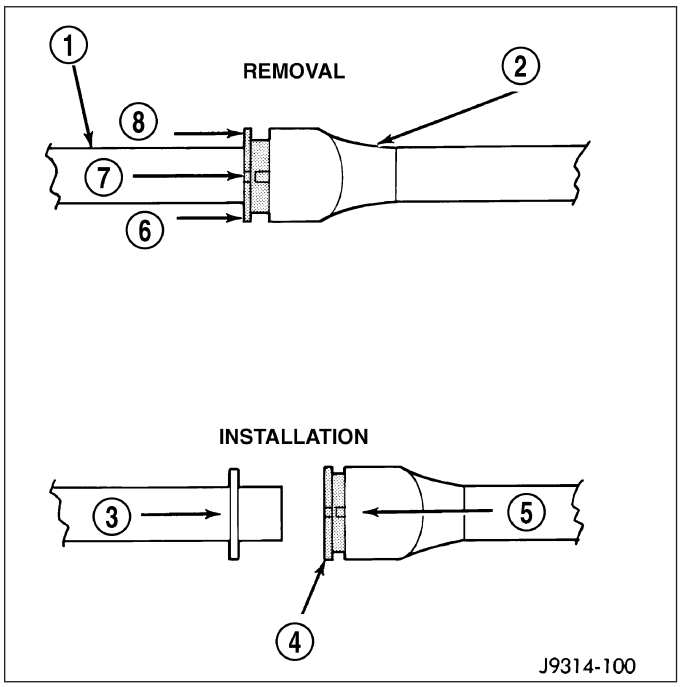

DISCONNECTION/CONNECTION

1. Perform fuel pressure release procedure. Refer to Fuel Pressure Release Procedure in this section.
2. Disconnect negative battery cable from battery or auxiliary jumper terminal.
3. Clean fitting of any foreign material before disassembly.
4. To release fuel system component from quick-connect fitting, firmly push fitting towards component being serviced while firmly pushing plastic retainer ring into fitting. With plastic ring depressed, pull fitting from component. **The plastic retainer ring must be pressed squarely into fitting body. If this retainer is cocked during removal, it may be difficult to disconnect fitting. Use an open-end wrench on shoulder of plastic retainer ring to aid in disconnection.**
5. After disconnection, plastic retainer ring will remain with quick-connect fitting connector body.
6. Inspect fitting connector body, plastic retainer ring and fuel system component for damage. Replace as necessary.
7. Prior to connecting quick-connect fitting to component being serviced, check condition of fitting and component. Clean parts with a lint-free cloth. Lubricate with clean engine oil.
8. Insert quick-connect fitting into component being serviced until a click is felt.
9. Verify a locked condition by firmly push-pulling-push on fuel tube and fitting (15-30 lbs.).
10. Connect negative battery cable to battery or auxiliary jumper terminal.
11. Use the DRB III® scan tool ASD Fuel System Test to pressurize the fuel system. Check for leaks.

FUEL LINES

DESCRIPTION - FUEL LINES/HOSES AND CLAMPS

Also refer to Quick-Connect Fittings.

WARNING: THE FUEL SYSTEM IS UNDER A CONSTANT PRESSURE (EVEN WITH THE ENGINE OFF). BEFORE SERVICING ANY FUEL SYSTEM HOSES, FITTINGS OR LINES, THE FUEL SYSTEM PRESSURE MUST BE RELEASED. REFER TO THE FUEL SYSTEM PRESSURE RELEASE PROCEDURE IN THIS GROUP. THIS MAY RESULT IN PERSONAL INJURY OR DEATH.

The lines/tubes/hoses used on fuel injected vehicles are of a special construction. This is due to the higher fuel pressures and the possibility of contaminated fuel in this system. If it is necessary to replace these lines/tubes/hoses, use new original equipment lines/tubes/hoses.

If equipped: The hose clamps used to secure rubber hoses on vehicles are of a special rolled edge construction. This construction is used to prevent the edge of the clamp from cutting into the hose. Only these rolled edge type clamps may be used in this system. All other types of clamps may cut into the hoses and cause leaks.

Use new original equipment type hose clamps.

STANDARD PROCEDURE - HOSES AND CLAMP

Inspect all hose connections (clamps and quick connect fittings) for completeness and leaks. Replace cracked, scuffed, or swelled hoses. Replace hoses that rub against other vehicle components or show sign of wear.

Fuel injected vehicles use specially constructed hoses. When replacing hoses, only use hoses marked EFM/EFI.

When installing hoses, ensure that they are routed away from contact with other vehicle components that could rub against them and cause failure. Avoid contact with clamps or other components that cause abrasions or scuffing. Ensure that rubber hoses are properly routed and avoid heat sources.

The hose clamps have rolled edges to prevent the clamp from cutting into the hose. Only use clamps that are original equipment or equivalent. Other types of clamps may cut into the hoses and cause high pressure fuel leaks. Tighten hose clamps to 1 N·m (9 in. lbs.) torque.

Inspect all hose connections such as clamps, couplings and fittings to make sure they are secure and leaks are not present. The component should be replaced immediately if there is any evidence of degradation that could result in failure.

Never attempt to repair a plastic fuel line/tube. Replace as necessary.

Avoid contact of any fuel tubes/hoses with other vehicle components that could cause abrasions or scuffing. Be sure that the plastic fuel lines/tubes are properly routed to prevent pinching and to avoid heat sources.

FUEL DELIVERY - DIESEL

TABLE OF CONTENTS

page

FUEL DELIVERY - DIESEL
- STANDARD PROCEDURE
  - FUEL CONTAMINATION 100
  - BLEEDING AIR FROM FUEL SYSTEM 100
  - DRAINING FUEL TANK - DIESEL 101
- SPECIFICATIONS
  - TORQUE - DIESEL 101

SEPARATOR-FILTER FUEL AND WATER
- DESCRIPTION 102
- REMOVAL 102
- INSTALLATION 102

PUMP-HIGH PRESSURE FUEL
- DESCRIPTION 103
- OPERATION 103
- REMOVAL 104
- INSTALLATION 105

SENSOR-WATER IN FUEL
- DESCRIPTION 107
- OPERATION 107
- REMOVAL 107
- INSTALLATION 107

page

FITTING-QUICK CONNECT
- DESCRIPTION 108
- STANDARD PROCEDURE - QUICK-CONNECT FITTINGS 108

LINES-HIGH PRESSURE
- REMOVAL 114
- INSTALLATION 114

TANK-FUEL
- REMOVAL 115
- INSTALLATION 125

MODULE-FUEL PUMP
- REMOVAL 134
- INSTALLATION 139

SENSOR-FUEL LEVEL SENDING UNIT
- REMOVAL
  - LEFT SIDE MODULE 144
  - RIGHT SIDE MODULE 148
- INSTALLATION
  - LEFT SIDE MODULE 157
  - RIGHT SIDE MODULE 161

FUEL DELIVERY - DIESEL

STANDARD PROCEDURE

FUEL CONTAMINATION

If a diesel engine's fuel supply has been contaminated with gasoline, the following procedure must be followed:

1. Remove all fuel from the fuel tank. (Refer to 14 - FUEL SYSTEM/FUEL DELIVERY - STANDARD PROCEDURE-DRAINING FUEL TANK) Use an appropriate fuel container. Dispose of the contaminated fuel using the proper procedures.

CAUTION: Dispose of petroleum based products in a manner consistent with all applicable Local, State, Federal, and Provincial regulations.

2. Remove and clean fuel tank. (Refer to 14 - FUEL SYSTEM/FUEL DELIVERY/FUEL TANK - REMOVAL)
3. Install the fuel tank. (Refer to 14 - FUEL SYSTEM/FUEL DELIVERY/FUEL TANK - INSTALLATION)
4. Fill fuel tank with fresh diesel fuel.
5. Drain and remove the fuel filter. (Refer to 14 - FUEL SYSTEM/FUEL DELIVERY/FUEL FILTER / WATER SEPARATOR - REMOVAL)
6. Install a new fuel filter. (Refer to 14 - FUEL SYSTEM/FUEL DELIVERY/FUEL FILTER / WATER SEPARATOR - INSTALLATION)
7. Check the engine control module for any diagnostic trouble codes (DTCs). Record and clear any DTCs that are present.
8. Start and run the engine. Run the engine for up to 15 minutes to allow time for any DTCs to reset and shut off the engine.
9. Check the engine control module for any diagnostic trouble codes (DTCs). Record any DTCs that are present. Refer to the appropriate engine electrical diagnostics to diagnose any DTCs that were set.

CAUTION: With the high pressure fuel system in this vehicle, any residual contaminated fuel will be removed very quickly. Shut off the engine immediately if signs of engine damage are noted.

The engine should then be evaluated to determine if the contaminated fuel has caused any damage to the fuel system and/or engine. Indicators that the fuel system has been damaged include the following:

- Unstable fuel rail pressure. This can manifest itself as instability of idle speeds, excessive undershoot/overshoot at engine start-up, or excessive undershoot/overshoot when the engine operating conditions change. A typical engine response to a large rail pressure undershoot would be a decrease in engine speed or engine stall.
- Excessive noise from the engine. This could indicate poor rail pressure control or the inability of the injection system to inject the proper amount of fuel.
- Excessive smoke (black or white). This could indicate the inability of the fuel system to inject the proper amount of fuel.

NOTE: If any of these conditions are exhibited after cleaning the fuel system, proceed to the appropriate engine electrical diagnostic information. Repair the fuel system and/or engine as necessary.

BLEEDING AIR FROM FUEL SYSTEM

WARNING: No sparks, open flames or smoking. Risk of poisoning from inhaling and swallowing fuel. Risk of injury to eyes and skin from contact with fuel. Pour fuels only into suitable and appropriately marked containers. Wear protective clothing.

1. Turn the ignition off.
2. Remove engine cover.
3. Connect a hose to the fuel filter air bleed port and insert the remaining end into a approved and appropriately marked container.

4. Turn the air bleed counterclockwise to open the air bleed.

CAUTION: Turning the ignition to the on position will engage the in tank fuel pump. Be sure that the bleed hose and the fuel capture container is secure.

5. Turn the ignition to the on position and observe the container until fuel flows free of bubbles.
6. Turn the ignition off.
7. Tighten the bleed valve on the fuel filter.
8. Remove the bleed hose and container.
9. Install engine cover.

DRAINING FUEL TANK - DIESEL

A one-way check valve is located within the fuel fill fitting on the fuel tank. Because of this valve, the tank cannot be drained the conventional way through the fuel fill opening.

To drain the tank, the fuel pump module must be removed.

1. Remove fuel tank (Refer to 14 - FUEL SYSTEM/FUEL DELIVERY/FUEL TANK - REMOVAL).
2. Remove fuel pump module (Refer to 14 - FUEL SYSTEM/FUEL DELIVERY/FUEL PUMP MODULE - REMOVAL).
3. After fuel pump module has been removed, drain fuel into an approved diesel fuel oil draining station.

SPECIFICATIONS

TORQUE - DIESEL

DESCRIPTION	N·m	Ft. Lbs.	In. Lbs.
Screw, Water in Fuel Sensor	1.5	-	13
Nut, High Pressure Fuel Line	22	-	195
Bolt, Fuel Rail	14	-	124

SEPARATOR-FILTER FUEL AND WATER

DESCRIPTION

The fuel filter has a 5 micron element and was designed for improved high altitude operation. Another design feature is better re-start after the fuel tank has been completely emptied. The water drain and water in fuel (WIF) sensor are located on the top of the filter. Water is drained by using the in-tank electric fuel pump to generate flow (attach a hose to the drain and capture fuel in appropriately marked containers). The filter has a pressure differential of 200–300 mbar (2.9 psi.) when new. When dirty, the pressure differential rises to 800 mbar (11.6 psi.)

REMOVAL

WARNING: No sparks, open flames or smoking. Risk of poisoning from inhaling and swallowing fuel. Risk of injury to eyes and skin from contact with fuel. Pour fuels only into suitable and appropriately marked containers. Wear protective clothing.

1. Disconnect negative battery cable.
2. Insert a suitable hose into the fuel drain port in rear of filter, turn drain port counterclockwise and drain fuel into a suitable and appropriately marked container.
3. Disconnect fuel feed and return lines at fuel filter and set aside.
4. Disconnect fuel heater electrical connector at fuel filter.
5. Remove fuel filter retaining bracket bolt and remove fuel filter.

INSTALLATION

WARNING: No sparks, open flames or smoking. Risk of poisoning from inhaling and swallowing fuel. Risk of injury to eyes and skin from contact with fuel. Pour fuels only into suitable and appropriately marked containers. Wear protective clothing.

NOTE: Assure fuel filter drain port is closed.

1. Connect fuel heater electrical connector.
2. Position fuel filter in bracket and tighten retaining bolt.
3. Connect fuel feed and return lines.
4. Connect negative battery cable.
5. Start engine and inspect for leaks.

PUMP-HIGH PRESSURE FUEL

DESCRIPTION

WARNING: High pressure fuel lines deliver diesel fuel under extreme pressure from the injection pump to the fuel injectors. This may be as high as 1600 bar (23,200 psi). Use extreme caution when inspecting for high pressure fuel leaks. Fuel under this amount of pressure can penetrate skin causing personal injury or death. Inspect for high pressure fuel leaks with a sheet of cardboard. Wear safety goggles and adequate protective clothing when servicing fuel system.

The high pressure pump (1) is mounted to the front of the left bank cylinder head.

NOTE: The high pressure pump must not be disassembled or opened. The only serviceable items are the temperature sensor and the fuel quantity solenoid.

CAUTION: Cranking the engine for an extended time without a fuel supply may damage the high pressure pump.

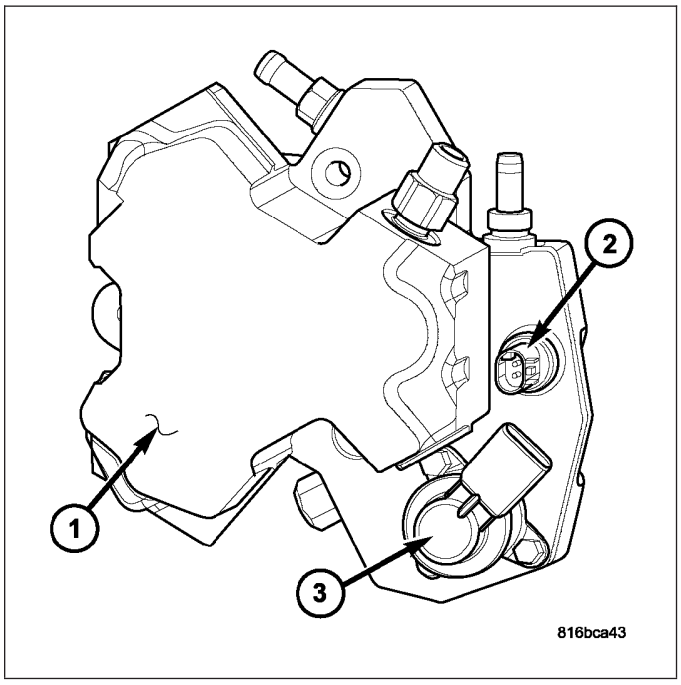

OPERATION

WARNING: High pressure fuel lines deliver diesel fuel under extreme pressure from the injection pump to the fuel injectors. This may be as high as 1600 bar (23,200 psi). Use extreme caution when inspecting for high pressure fuel leaks. Fuel under this amount of pressure can penetrate skin causing personal injury or death. Inspect for high pressure fuel leaks with a sheet of cardboard. Wear safety goggles and adequate protective clothing when servicing fuel system.

The high pressure pump (1) is driven by the camshaft and requires no timing. Fuel that enters the high pressure pump (1) is pressurized between 200-1600 bar (2,900 - 23,205 psi). The pressurized fuel is then supplied to the fuel rail. The high pressure pump (1) and flange located behind the pump are supplied as an assembly. Fuel passages and control elements in the flange regulate the flow of fuel to the high pressure pumping chambers, and control the lubrication of the pump.

NOTE: The high pressure pump must not be disassembled or opened. The only serviceable items are the temperature sensor and the fuel quantity solenoid.

CAUTION: Cranking the engine for an extended time without a fuel supply may damage the high pressure pump.

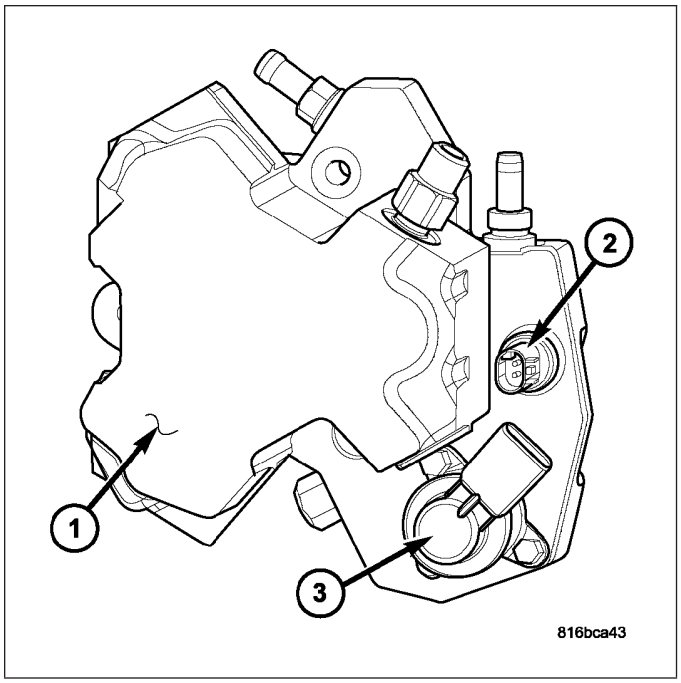

REMOVAL

WARNING: High pressure fuel lines deliver diesel fuel under extreme pressure from the injection pump to the fuel injectors. This may be as high as 1600 bar (23,200 psi). Use extreme caution when inspecting for high pressure fuel leaks. Fuel under this amount of pressure can penetrate skin causing personal injury or death. Inspect for high pressure fuel leaks with a sheet of cardboard. Wear safety goggles and adequate protective clothing when servicing fuel system.

1. Remove engine cover.
2. Remove negative battery cable.
3. Release fuel pressure.
4. Remove high pressure line support bracket.
5. Remove high pressure line retaining nut.

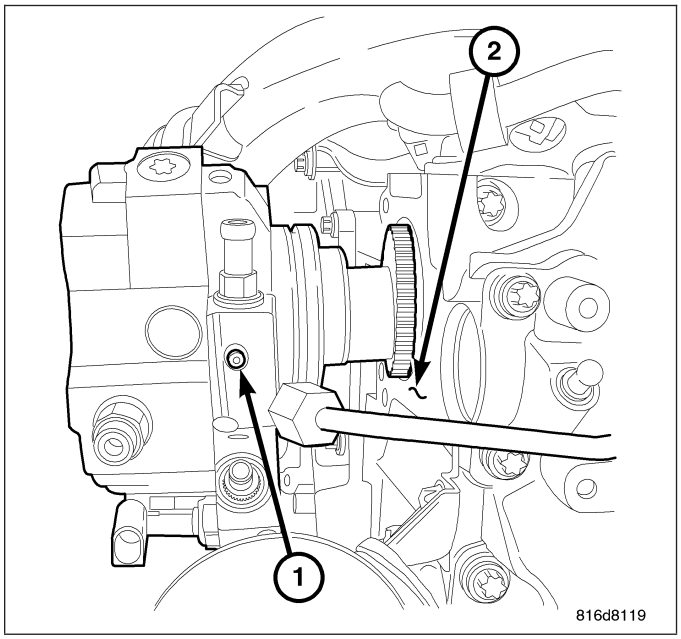

6. Remove the return line clamp using Fuel Line Pliers 9539.
7. Remove the inlet supply clamp using Fuel Line Pliers 9539.
8. Remove both rubber lines at the pump.
9. Disconnect the pump electrical connectors.
10. Remove the pump mounting bolts.
11. Remove the pump assembly.

CAUTION: Do not crimp or bend fuel line. Capture all fluids that flow out of connections.

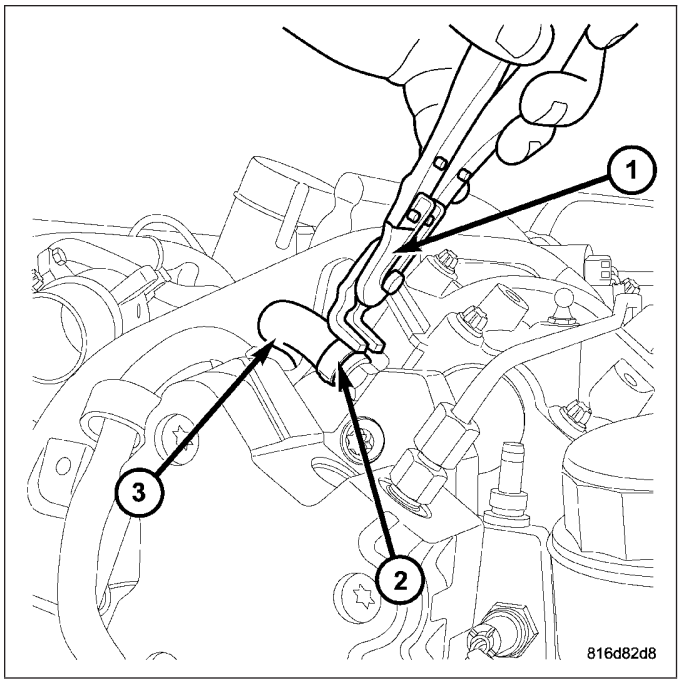

INSTALLATION

WARNING: High pressure fuel lines deliver diesel fuel under extreme pressure from the injection pump to the fuel injectors. This may be as high as 1600 bar (23,200 psi). use extreme caution when inspecting for high pressure fuel leaks. Fuel under this amount of pressure can penetrate skin causing personal injury or death. Inspect for high pressure fuel leaks with a sheet of cardboard. Wear safety goggles and adequate protective clothing when servicing fuel system.

1. Install high pressure pump to the left cylinder head. Torque mounting bolts to 14 N·m (10 ft. lbs.).
2. Connect the pump electrical connectors.
3. Install fuel lines at pump.

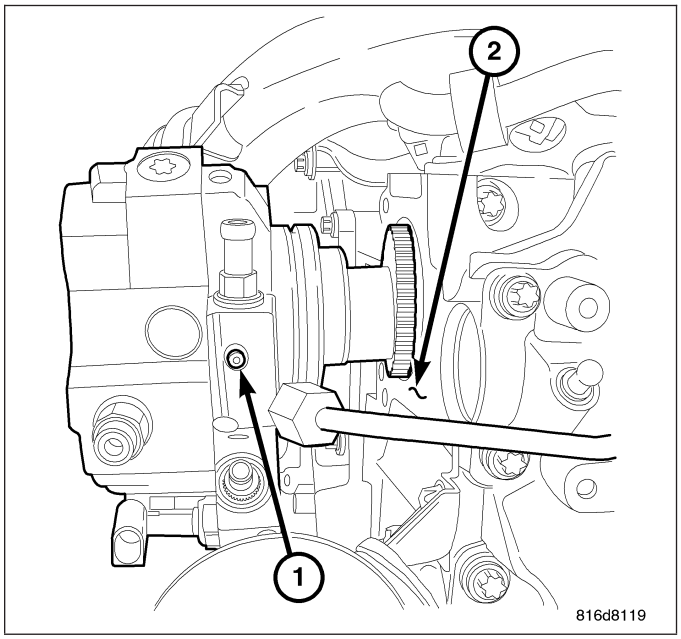

4. Install inlet supply line clamp using Fuel Line Pliers 9539.
5. Install return line clamp using Fuel Line Pliers 9539.

CAUTION: Do not crimp or bend fuel line. Inspect sealing cone at line; replace line if compression exists.

6. Install high pressure fuel line retaining nuts. Torque nuts to 33 N·m (24 ft.lbs.).
7. Install high pressure line support bracket.
8. Install negative battery cable.
9. Install the engine cover.
10. Start engine and check for leaks.

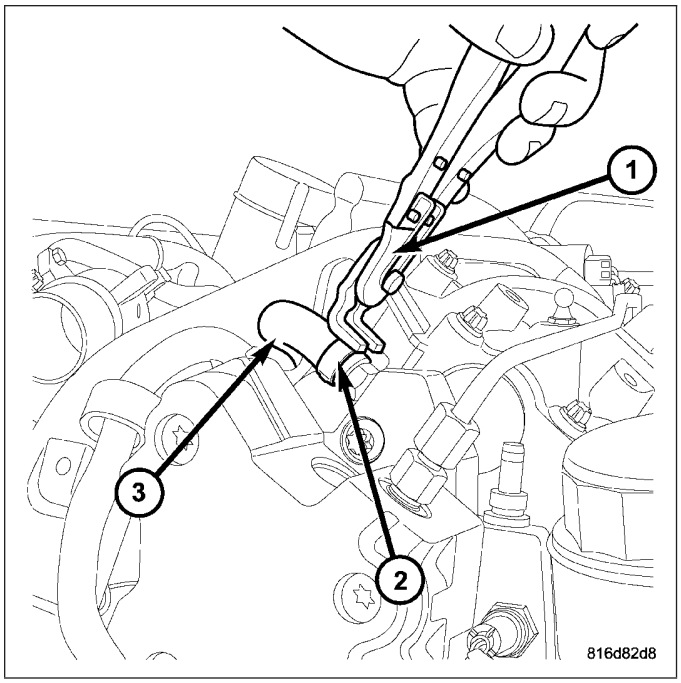

SENSOR-WATER IN FUEL

DESCRIPTION

The water in fuel sensor (WIF) is located in the fuel filter housing The sensor detects the presence of water in the fuel. If water is present in the fuel, a signal is sent to the ECM and the ECM signals the instrument cluster, over the CAN bus, to illuminate the water in fuel warning.

OPERATION

The non-dielectric properties of the water allow the sensors probes to close the electronic circuit when water is present in the system. When diesel fuel is present in the system, it's dielectric (does not conduct electricity well) properties do not allow any electrical contact between the probes. A 12V power signal is always present in order to illuminate the indicator on the instrument cluster.

REMOVAL

1. Disconnect the negative battery cable.
2. Remove the engine cover.

NOTE: Capture and store any fuel spillage in appropriate containers

3. Disconnect the water in fuel (WIF) electrical connector.
4. Remove the WIF sensor retaining screws.
5. Twist the WIF sensor so the tabs clear the retaining bracket.
6. Gently pry up on the sensor and remove.

INSTALLATION

NOTE: Remove any dirt and debris around the fuel filter assembly using a suitable solvent or compressed air. Area around the fuel filter assembly must be clean and dry.

1. Lubricate the water in fuel (WIF) sensor Orings with clean diesel fuel.
2. Insert the WIF sensor into the fuel filter assembly and twist the sensor until the retaining holes align with the retaining bracket on the fuel filter assembly.
3. Install the retaining screws. Tighten to 1.5 N·m (13 in. lbs.).
4. Connect the WIF wiring harness connector.
5. Connect the negative battery cable.
6. Start the engine, allow to warm, turn engine off and inspect for leaks.
7. Install engine cover.

FITTING-QUICK CONNECT

DESCRIPTION

Different types of quick-connect fittings are used to attach the various fuel system components, lines and tubes. These are: a single-button type shown above. a two-button type, a pinch type, a single-tab type, a two-tab type or a plastic retainer ring type. Some are equipped with safety latch clips. Some may require the use of a special tool for disconnection and removal. Refer to Quick-Connect Fittings Removal/Installation for more information.

CAUTION: Before separating a quick-connect fitting, pay attention to what type of fitting is being used by referring to Quick-Connect Fitting Removal. This will prevent unnecessary fitting or fitting latch breakage.

CAUTION: The interior components (o-rings, clips) of quick-connect fittings are not serviced separately, but new plastic spacers and latches are available for some types. If service parts are not available, do not attempt to repair the damaged fitting or fuel line (tube). If repair is necessary, replace the complete fuel line (tube) assembly.

STANDARD PROCEDURE - QUICK-CONNECT FITTINGS

Different types of quick-connect fittings are used to attach the various fuel system components, lines and tubes. These are: a single-button type, a two-button type, a pinch type, a single-tab type, a two-tab type or a plastic retainer ring type. Some are equipped with safety latch clips. Some may require the use of a special tool for disconnection and removal.

DISCONNECTING

WARNING: The fuel system is under a constant pressure (even with engine off). Before servicing any fuel system hose, fitting or line, fuel system pressure must be released. Refer to fuel system pressure release procedure.

CAUTION: Before separating a quick-connect fitting, pay attention to what type of fitting is being used by referring to Quick-Connect Fitting Removal. This will prevent unnecessary fitting or fitting latch breakage.

CAUTION: The interior components (o-rings, clips) of quick-connect fittings are not serviced separately, but new plastic spacers and latches are available for some types. If service parts are not available, do not attempt to repair the damaged fitting or fuel line (tube). If repair is necessary, replace the complete fuel line (tube) assembly.

1. Perform fuel pressure release procedure. (Refer to 14 - FUEL SYSTEM/FUEL DELIVERY - STANDARD PROCEDURE).
2. Disconnect negative battery cable from battery.
3. Clean fitting of any foreign material before disassembly.

4. **Single-Button Type Fitting:** This type of fitting is equipped with a single push-button (2) located on the quick-connect fitting.

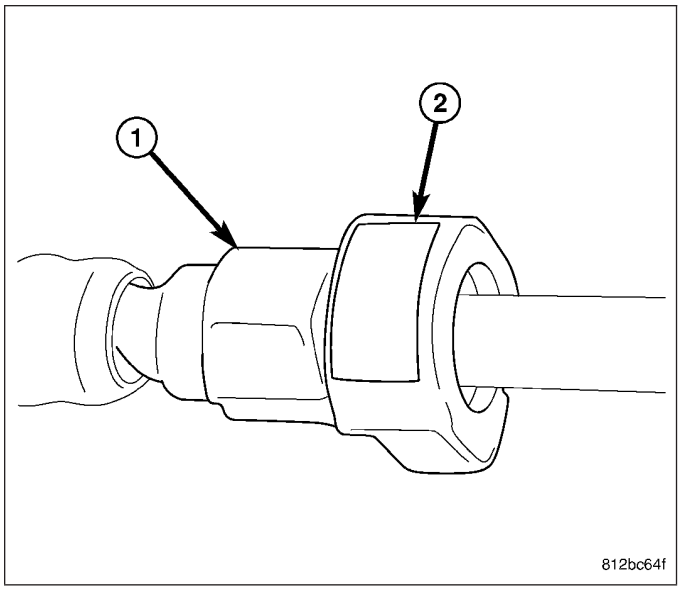

5. The push-button is attached to two internal latches (1). To disconnect, press on push-button with your thumb and unlatch fitting from fuel line. Tools are not required for disconnection. **DO NOT ATTEMPT TO PRY OR PULL UP ON PUSH-BUTTON. LATCHES WILL BE BROKEN.**

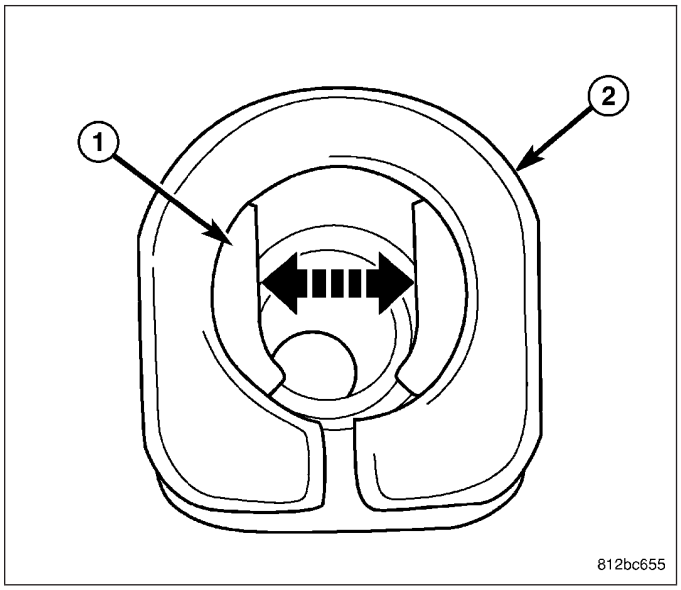

6. Perform fuel pressure release procedure. (Refer to 14 - FUEL SYSTEM/FUEL DELIVERY - STANDARD PROCEDURE).
7. Disconnect negative battery cable from battery.
8. Clean fitting of any foreign material before disassembly.
9. **2-Button Type Fitting:** This type of fitting (1) is equipped with a push-button located on each side of quick-connect fitting (2). Press on both buttons simultaneously for removal. Tools are not required for disconnection.

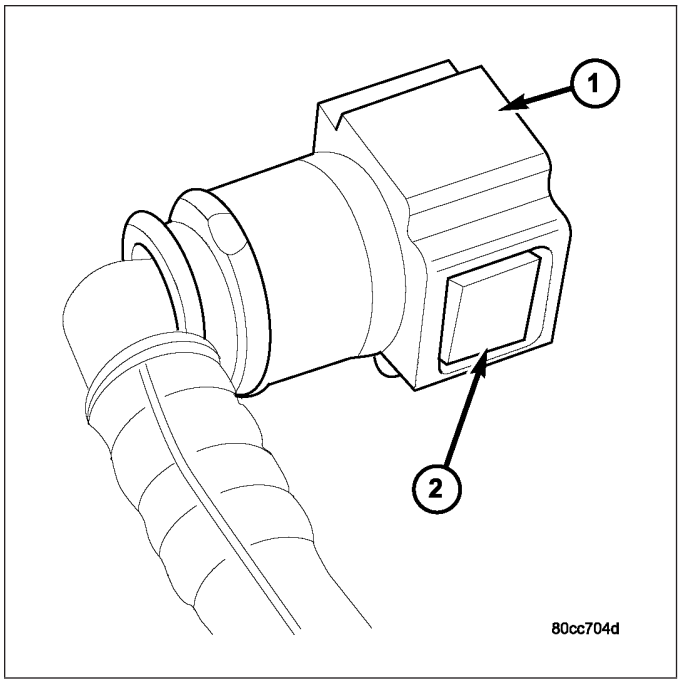

10. **Pinch-Type Fitting:** This fitting (1) is equipped with two finger tabs (2). Pinch both tabs together while removing fitting. Tools are not required for disconnection.

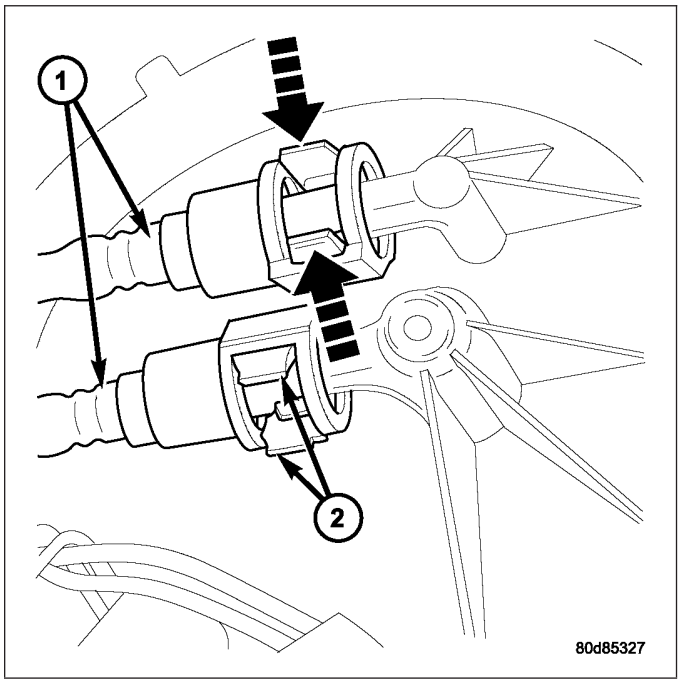

11. **Single-Tab Type Fitting:** This type of fitting (3) is equipped with a single pull tab (1). The tab is removable. After tab is removed, quick-connect fitting can be separated from fuel system component. Tools are not required for disconnection.

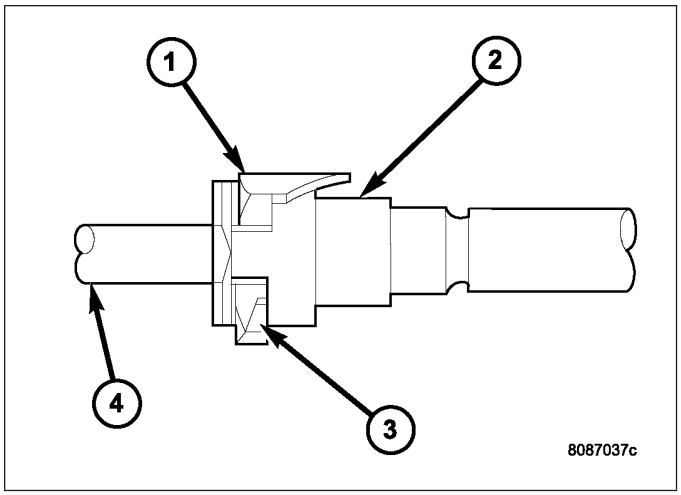

12. Press release tab on side of fitting to release pull tab (1). **If release tab is not pressed prior to releasing pull tab, pull tab will be damaged.**
13. While pressing release tab on side of fitting, use screwdriver (2) to pry up pull tab.
14. Raise pull tab until it separates from quick-connect fitting.

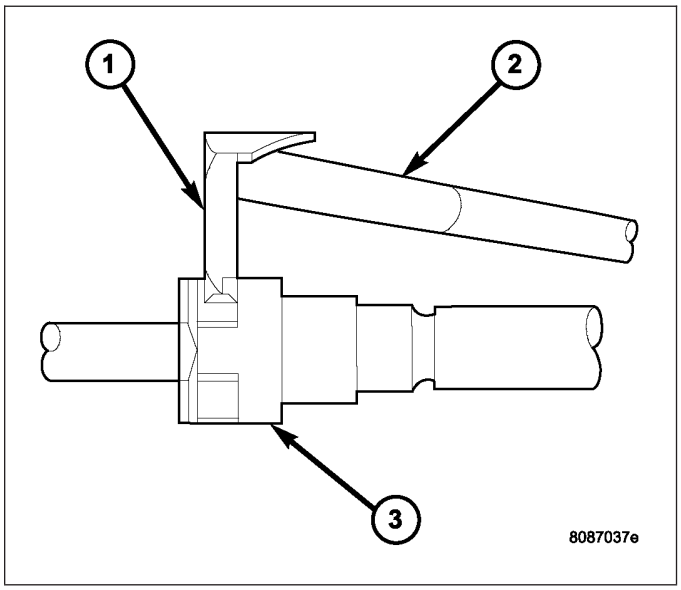

15. **Two-Tab Type Fitting:** This type of fitting (2) is equipped with tabs located on both sides of fitting (1). The tabs are supplied for disconnecting quick-connect fitting from component being serviced.
    a. To disconnect quick-connect fitting, squeeze plastic retainer tabs (1) against sides of quick-connect fitting with your fingers. Tool use is not required for removal and may damage plastic retainer.
    b. Pull fitting from fuel system component being serviced.
    c. The plastic retainer will remain on component being serviced after fitting is disconnected. The o-rings and spacer will remain in quick-connect fitting connector body.

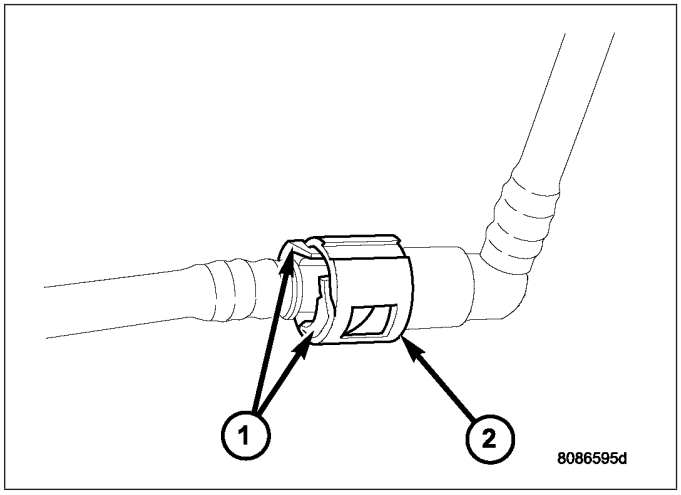

16. **Plastic Retainer Ring Type Fitting:** This type of fitting can be identified by the use of a full-round plastic retainer ring (4) usually black in color.
    a. To release fuel system component from quick-connect fitting, firmly push fitting towards component being serviced while firmly pushing plastic retainer ring into fitting (6). With plastic ring depressed, pull fitting from component. **The plastic retainer ring must be pressed squarely into fitting body. If this retainer is cocked during removal, it may be difficult to disconnect fitting. Use an open-end wrench on shoulder of plastic retainer ring to aid in disconnection.**
    b. After disconnection, plastic retainer ring will remain with quick-connect fitting connector body.
    c. Inspect fitting connector body, plastic retainer ring and fuel system component for damage. Replace as necessary.

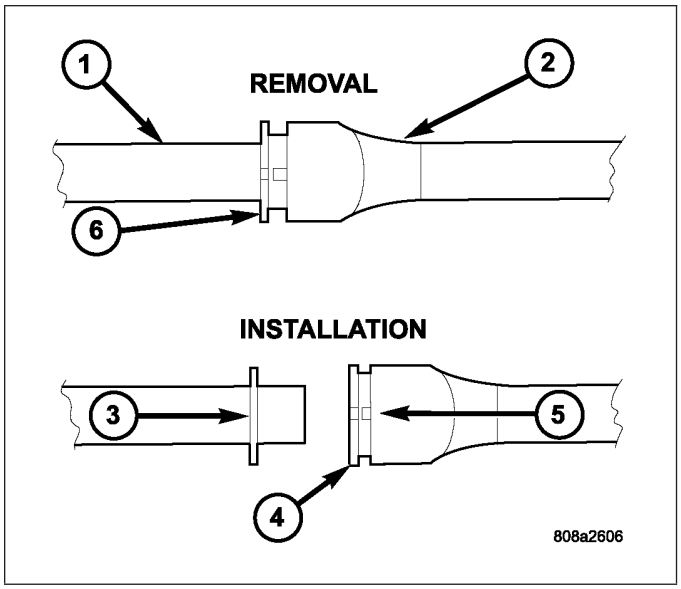

17. **Latch Clips - Type 1:** Depending on vehicle model and engine, 2 different types of safety latch clips are used. Type-1 (4) is tethered to fuel line and type-2 is not. A special tool will be necessary to disconnect fuel line after latch clip is removed. The latch clip may be used on certain fuel line/fuel rail connection, or to join fuel lines together.
18. Pry up on latch clip with a screwdriver (3).
19. Slide latch clip toward fuel rail while lifting with screwdriver.

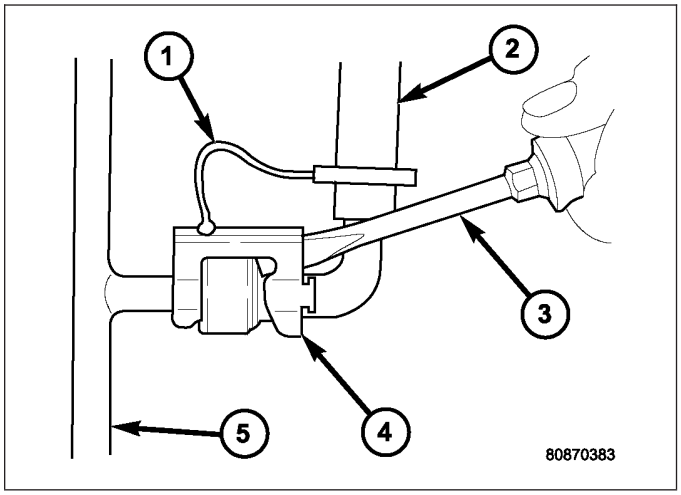

20. Insert fuel line removal tool (Snap-On number FIH 9055-1 or equivalent) into fuel line (1). Use tool to release locking fingers in end of line.
21. With tool still inserted, pull fuel line from fuel rail.
22. After disconnection, locking fingers will remain within quick-connect fitting at end of fuel line.
23. Disconnect quick-connect fitting from fuel system component being serviced.

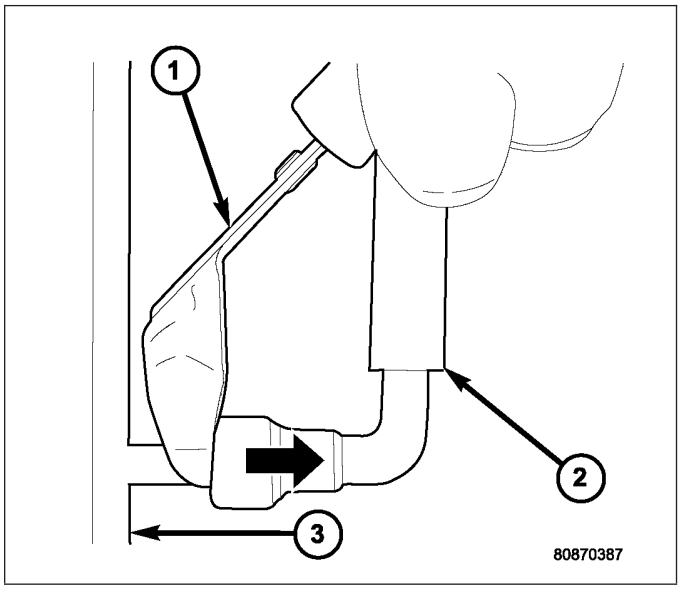

24. **Latch Clips - Type 2:** Depending on vehicle model and engine, 2 different types of safety latch clips are used. Type-1 is tethered to fuel line and type-2 is not. A tool will be necessary to disconnect fuel line after latch clip is removed. The latch clip may be used on certain fuel line/fuel rail connection, or to join fuel lines together.
25. Type 2: Separate and unlatch 2 small arms (1) on end of clip and swing away from fuel line.
26. Slide latch clip toward fuel rail while lifting with screwdriver.

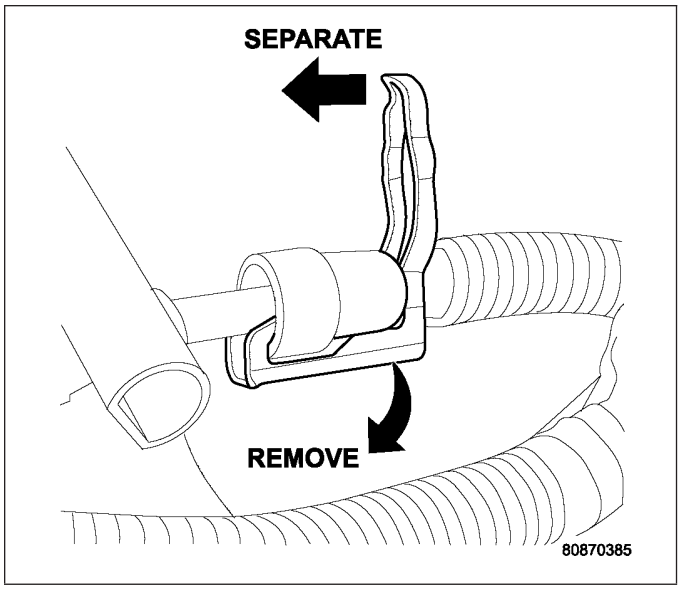

27. Insert fuel line removal tool (Snap-On number FIH 9055-1 or equivalent) into fuel line (1). Use tool to release locking fingers in end of line.
28. With tool still inserted, pull fuel line from fuel rail.
29. After disconnection, locking fingers will remain within quick-connect fitting at end of fuel line.
30. Disconnect quick-connect fitting from fuel system component being serviced.

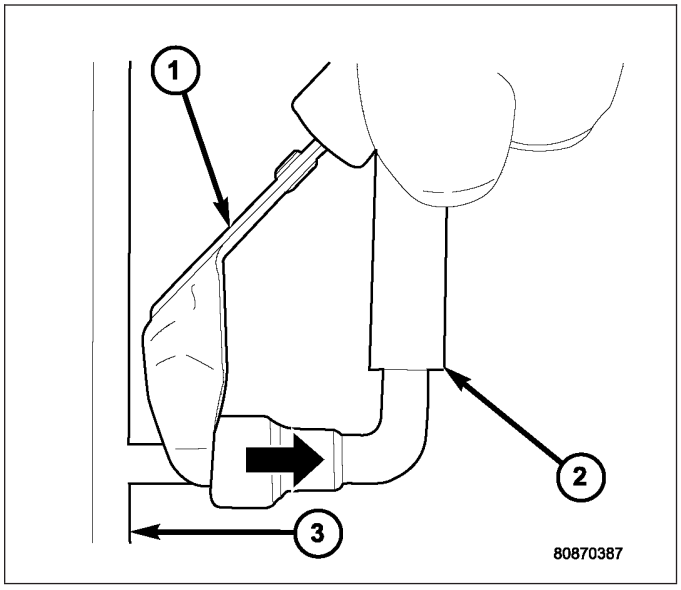

CONNECTING

1. Inspect quick-connect fitting body and fuel system component for damage. Replace as necessary.
2. Prior to connecting quick-connect fitting to component being serviced, check condition of fitting and component. Clean parts with a lint-free cloth. Lubricate with clean engine oil.
3. Insert quick-connect fitting into fuel tube or fuel system component until built-on stop on fuel tube or component rests against back of fitting.
4. Continue pushing until a click is felt.
5. Single-tab type fitting: Push new tab down until it locks into place in quick-connect fitting.
6. Verify a locked condition by firmly pulling on fuel tube and fitting with 67-133 N (15-30 lbs. force).
7. Latch Clip Equipped: Install latch clip (snaps into position). **If latch clip will not fit, this indicates fuel line is not properly installed to fuel rail (or other fuel line). Recheck fuel line connection.**
8. Connect negative cable to battery.
9. Start engine and check for leaks.

LINES-HIGH PRESSURE

REMOVAL

WARNING: High-pressure fuel lines deliver diesel fuel under extreme pressure from the injection pump to the fuel injectors. This may be as high as 1600 bar (23,200 psi). Use extreme caution when inspecting for high-pressure fuel leaks. Fuel under this amount of pressure can penetrate skin causing personal injury or death. Inspect for high-pressure leaks with a sheet of card board. Wear safety goggles and adequate protective clothing when servicing fuel system.

WARNING: No sparks, open flames or smoking. Risk of poisoning from inhaling and swallowing fuel. Risk of injury to eyes and skin from contact with fuel. Pour fuels only into suitable and appropriately marked containers. Wear protective clothing.

1. Disconnect negative battery cable.
2. Remove engine cover (Refer to 9 - ENGINE - REMOVAL).

CAUTION: Counterhold with wrench at threaded connections of injectors. DO NOT EXCEED the tightening torque in order to avoid damaging the threaded connection.

CAUTION: Do not crimp or bend lines.

NOTE: After removing injection lines, seal connections and ensure cleanliness.

3. Unscrew union nuts of injection lines.
4. Remove injection lines.

INSTALLATION

WARNING: (Refer to 14 - Fuel System - Warning). No sparks, open flames or smoking. Risk of poisoning from inhaling and swallowing fuel. Risk of injury to eyes and skin from contact with fuel. Pour fuels only into suitable and appropriately marked containers. Wear protective clothing.

1. Loosen the fuel rail mounting bolts to install lines free of stress.

CAUTION: Inspect sealing cone at lines. Replace if compression points exist. Ensure lines are exactly located.

2. Position and install fuel lines. Tighten to 22 N·m (195 lbs. in.).
3. Tighten fuel rail to 14 N·m (124 lbs. in.).
4. Install engine cover.
5. Connect negative battery cable.
6. Start engine, allow to warm, turn engine off and inspect for leaks.

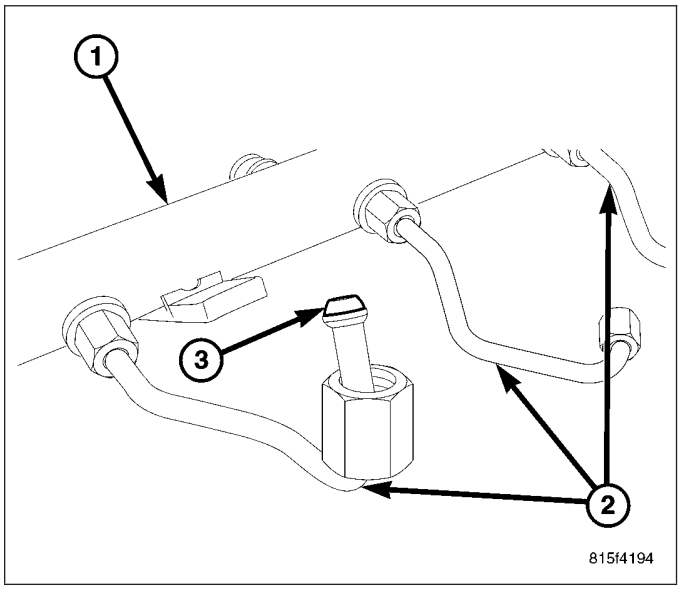

TANK-FUEL

REMOVAL

1. Release the fuel pressure, refer to the Fuel Pressure Release Procedure in this section.
2. Disconnect negative battery cable.

NOTE: The fuel level of the vehicle must be below 5/8 of a tank before you remove the module lock-rings. If it is above that you can spill fuel in the vehicle.

3. Drain partial fuel from fuel tank through the filler tube. Use a hard nylon tube, with a 30° cut on the end, to push the check valve open to drain fuel from tank.

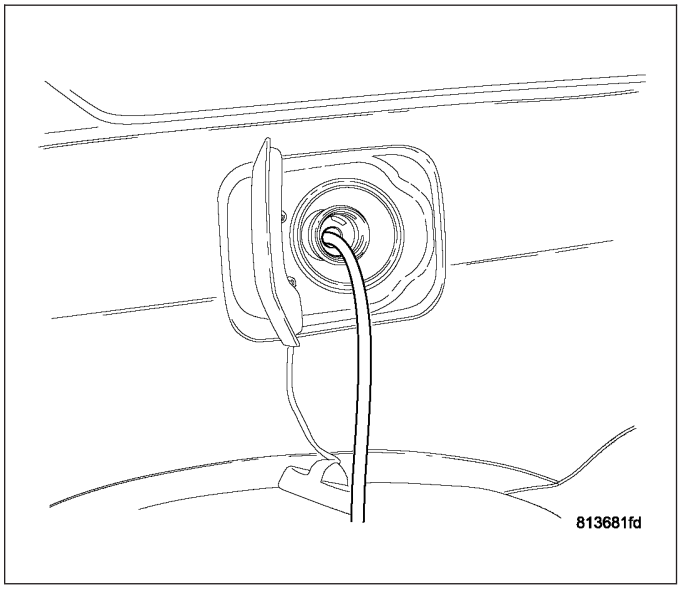

4. Remove the rear lower seat cushion.

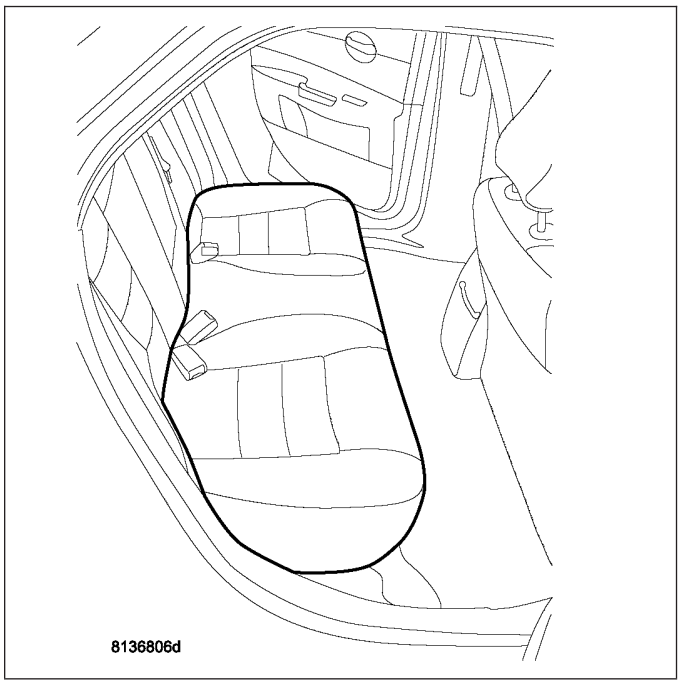

5. Push seat back and up to remove seat cushion.

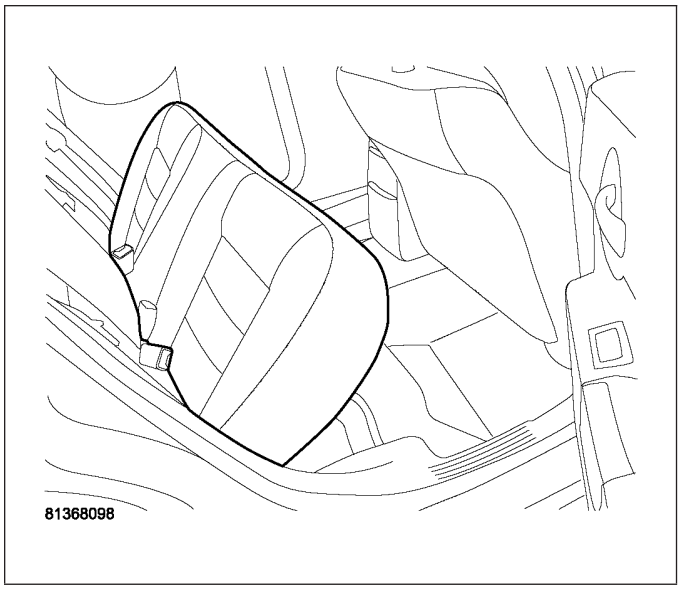

6. Fold back the foam pad covering access cover for modules.

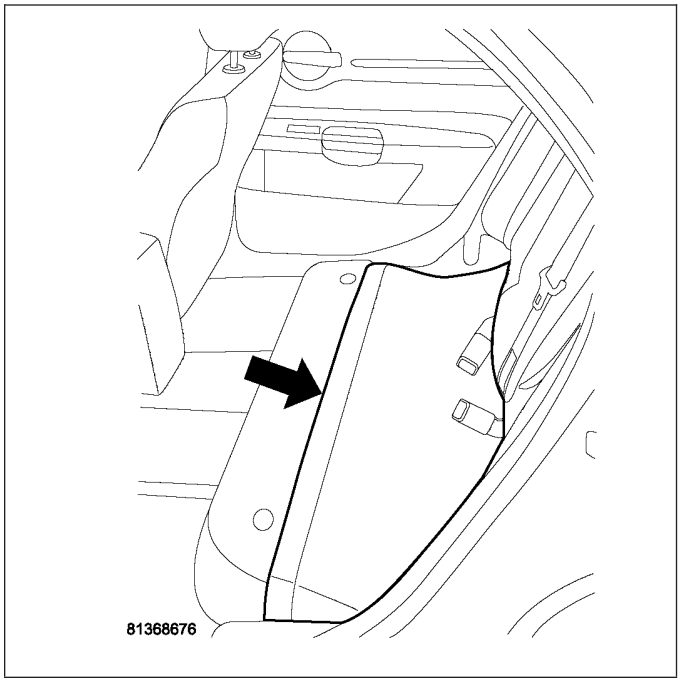

7. Remove plastic access covers from floor pan right side.

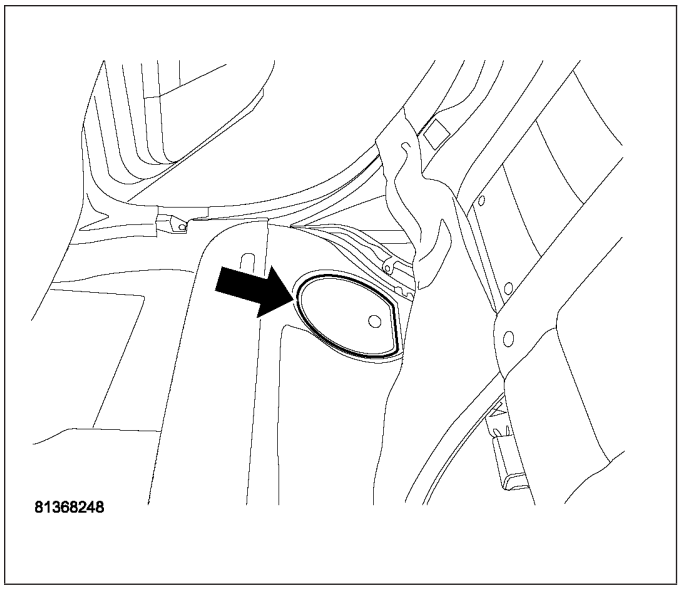

8. Disconnect the fuel supply line from module.
9. Mark the module orientation.

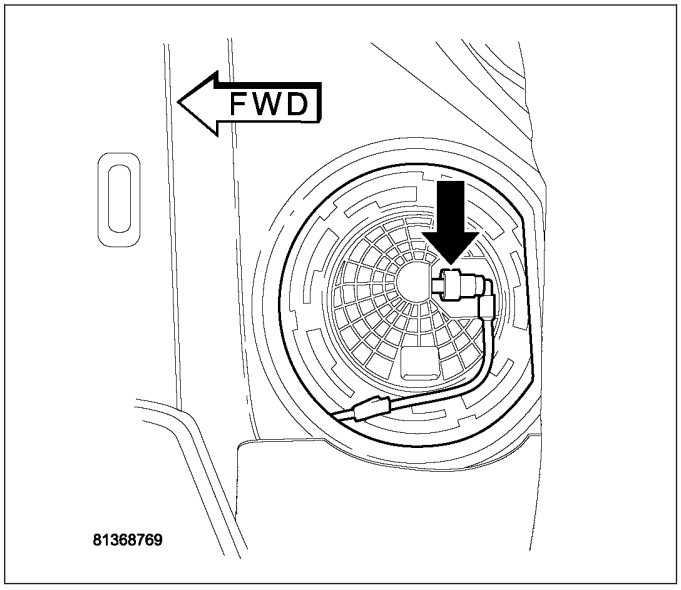

10. Use special tool #9340 to remove right side module lock ring.

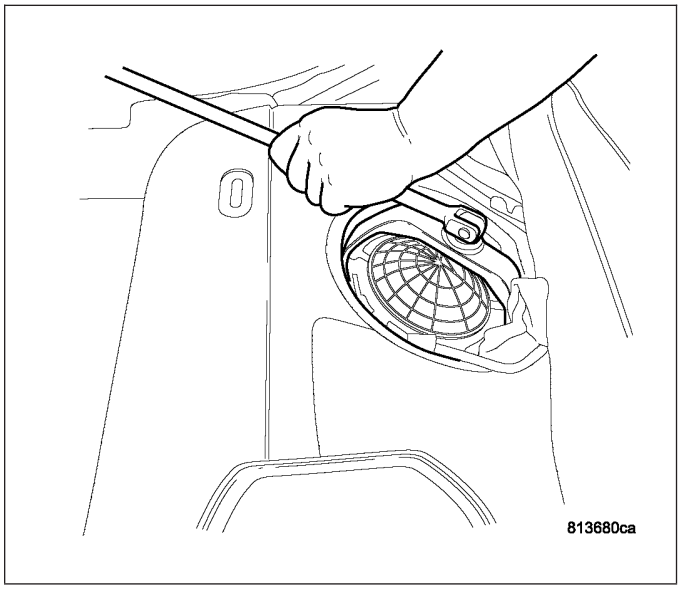

11. Drain fuel from right side of fuel tank. Lift module up enough to push hose into tank and drain. Do not spill fuel in interior of vehicle.

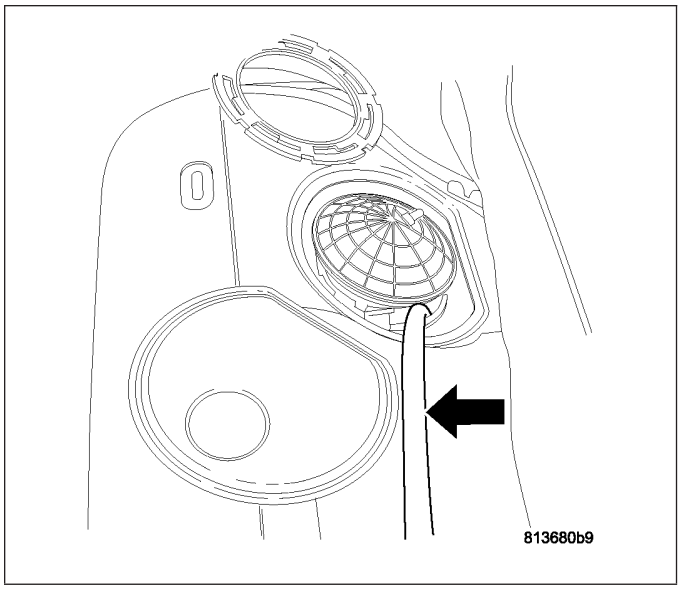

12. Disconnect the electrical connector from left side module.
13. Mark the module orientation.

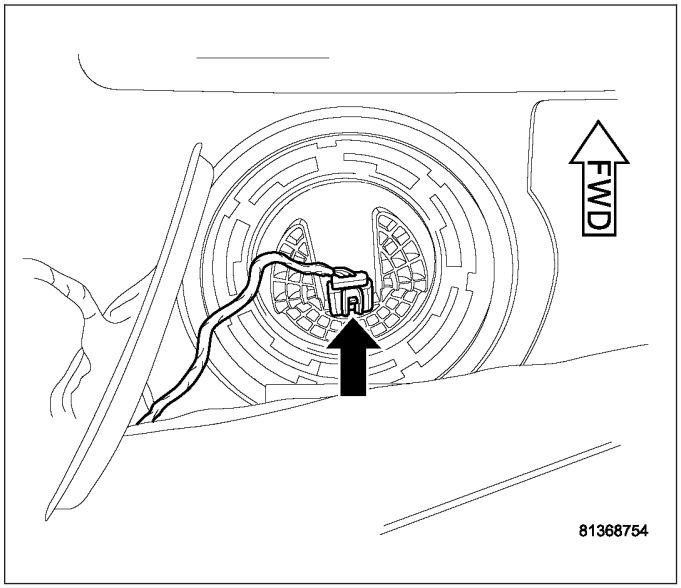

14. Use special tool #9340 to remove left side module lock ring.

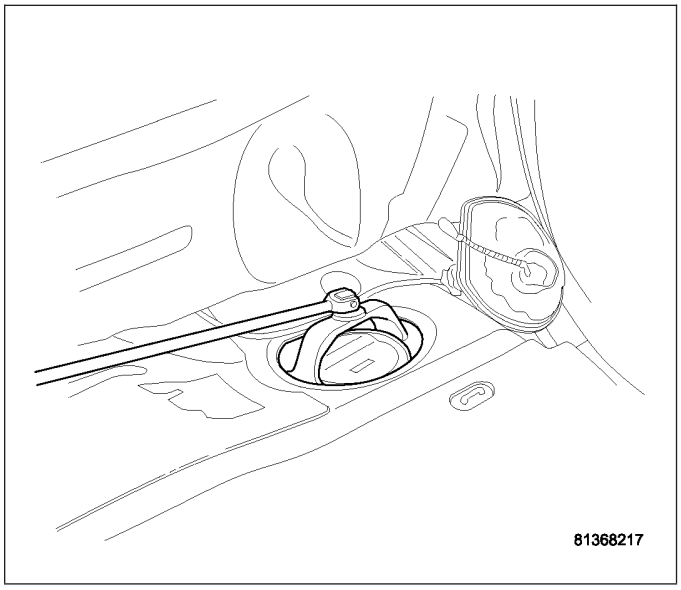

15. Drain fuel from left side of fuel tank. Lift module up enough to push hose into tank and drain. Do not spill fuel in interior of vehicle.
16. Install both module temporally, hand tighten the lock ring to hold modules in place.
17. Raise vehicle and support.
18. Remove left rear tire.

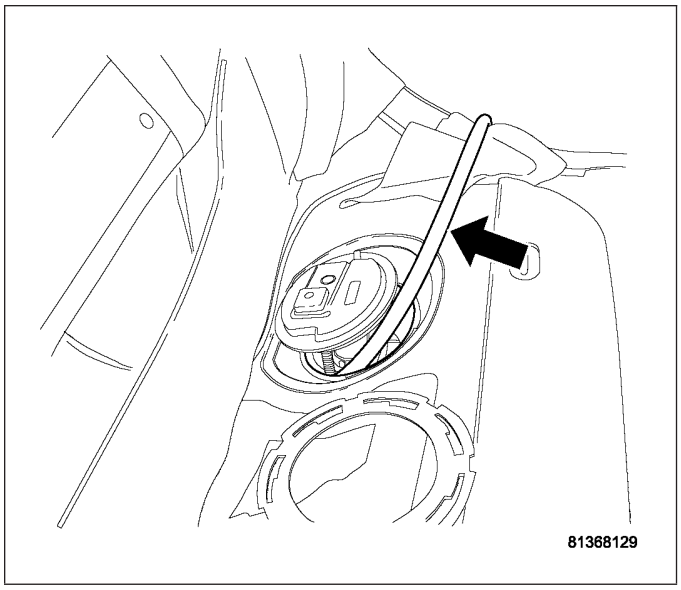

19. Remove the inner splash shield.

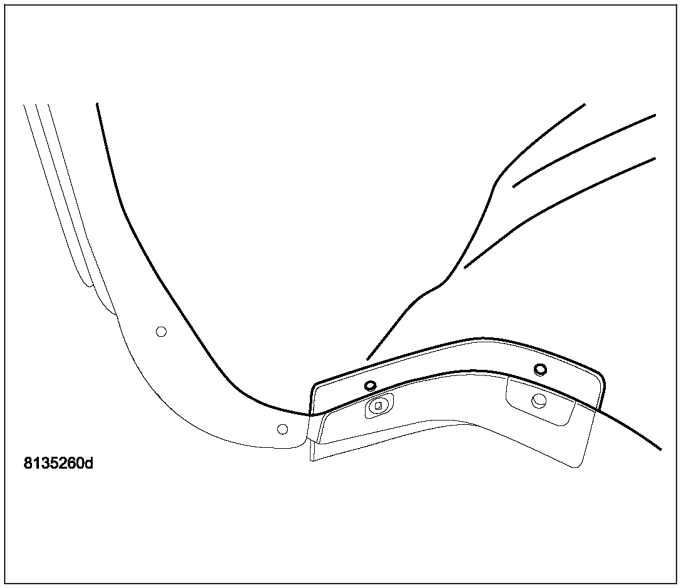

20. Disconnect the filler tube vent line.

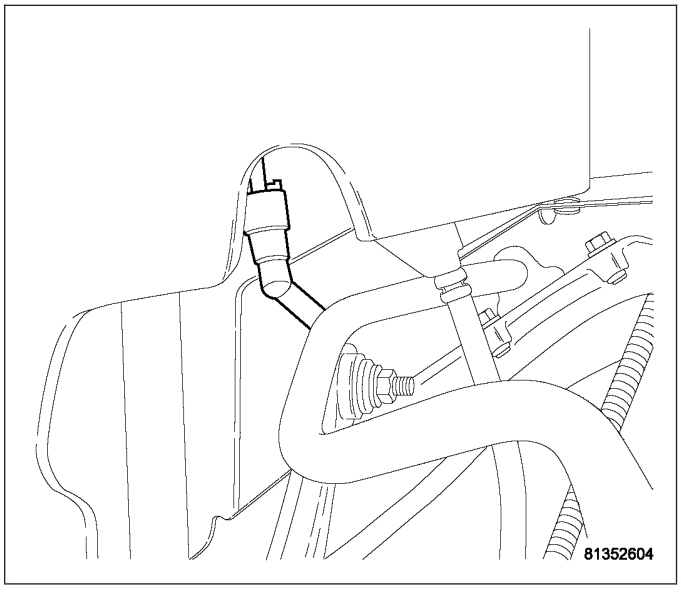

21. Remove clamp from filler tube.

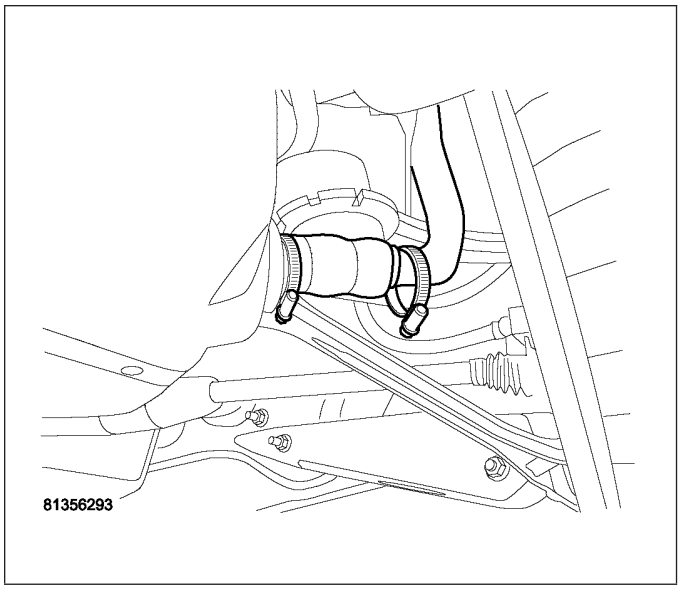

22. Remove metal filler tube from rubber tube on fuel tank.
23. Remove the exhaust system, (Refer to 11 - EXHAUST SYSTEM/EXHAUST PIPE - REMOVAL)
24. Remove the drive shaft, (Refer to 3 - DIFFERENTIAL & DRIVELINE/PROPELLER SHAFT - REMOVAL)

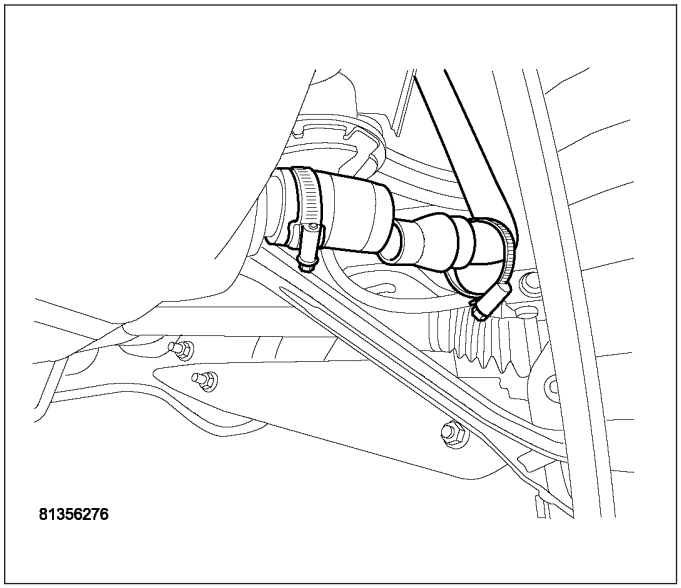

25. Remove the left underbody splash shield.

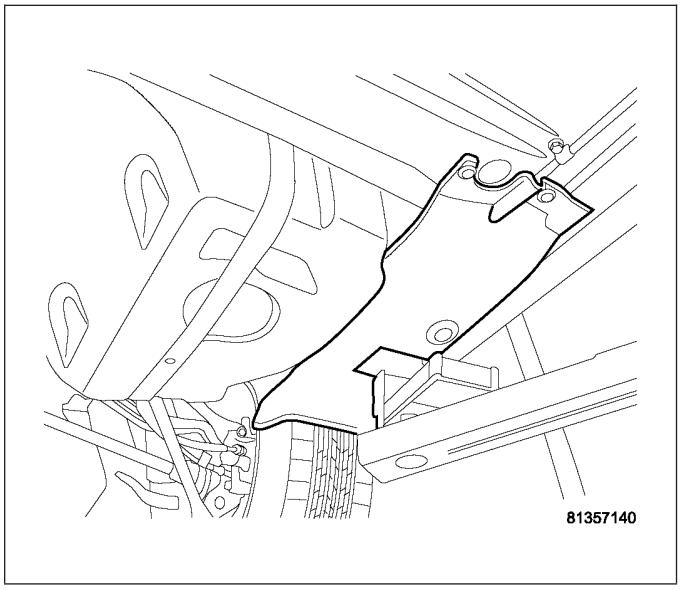

26. Remove the right underbody splash shield.

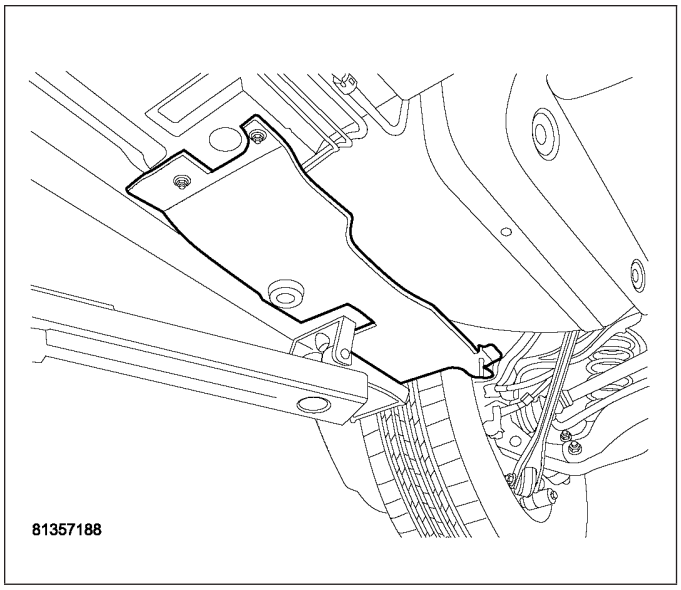

27. Disconnect the EVAP line in the right rear wheel well.

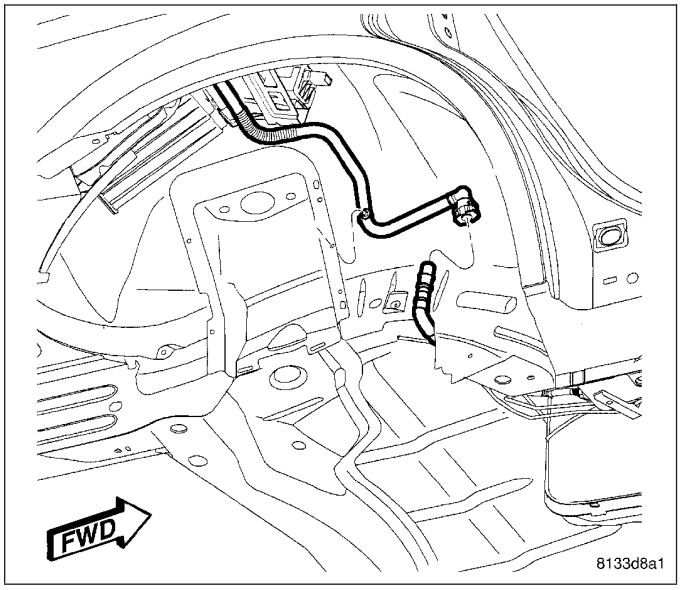

28. Disconnect vapor line.

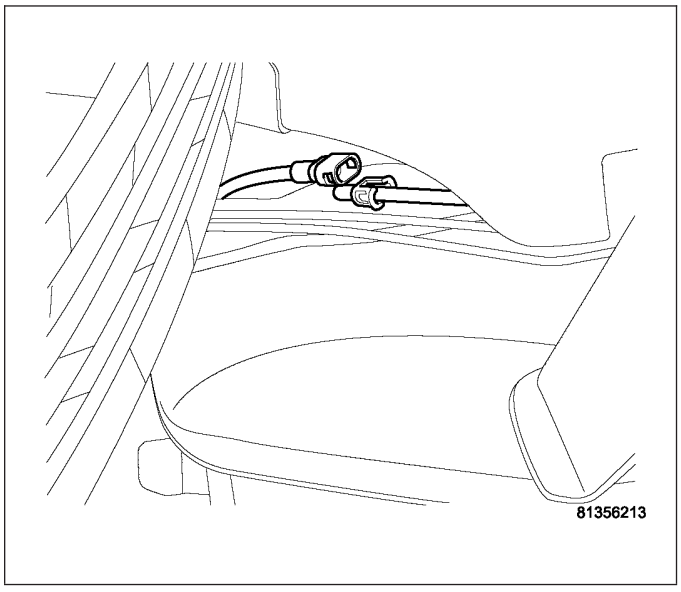

29. Disconnect the fuel supply line.

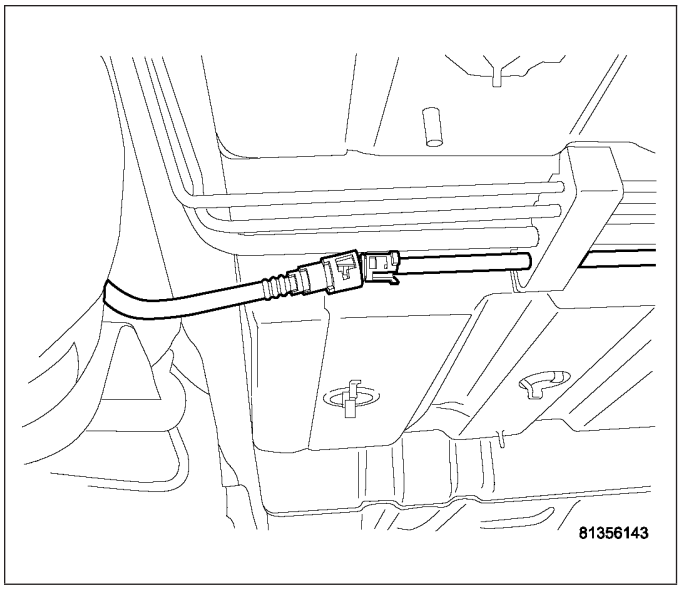

30. Support fuel tank with transmission jack.
31. Fuel tank strap bolt locations.

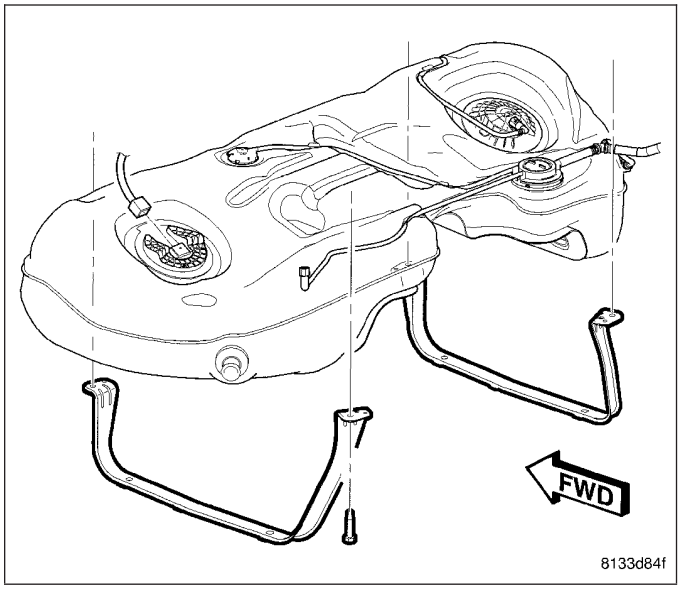

32. Remove bolt for fuel tank strap.

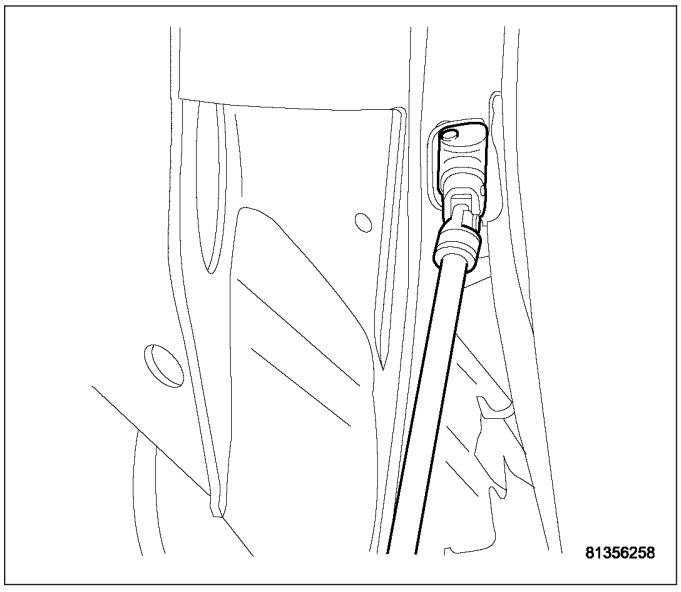

33. Remove bolt for fuel tank strap.

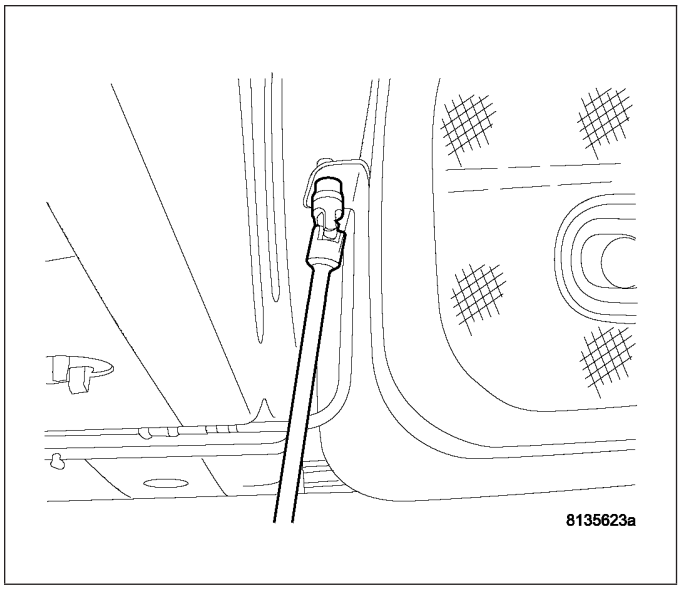

34. Lower tank and pull filler tube vent line through bracket.

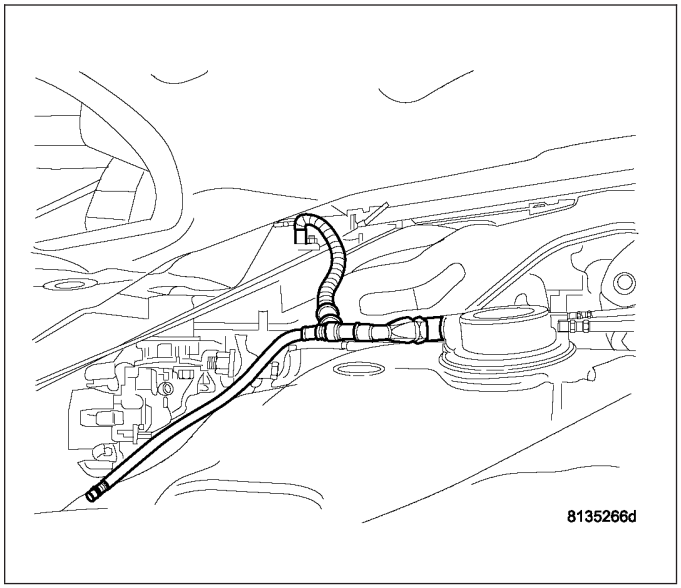

35. Lower Fuel tank and remove from vehicle.

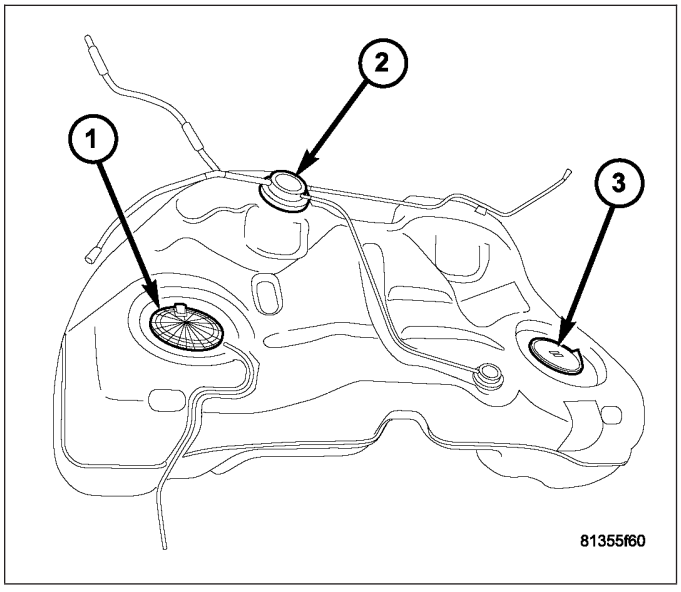

36. Left Side Module (Fuel Pump Module).

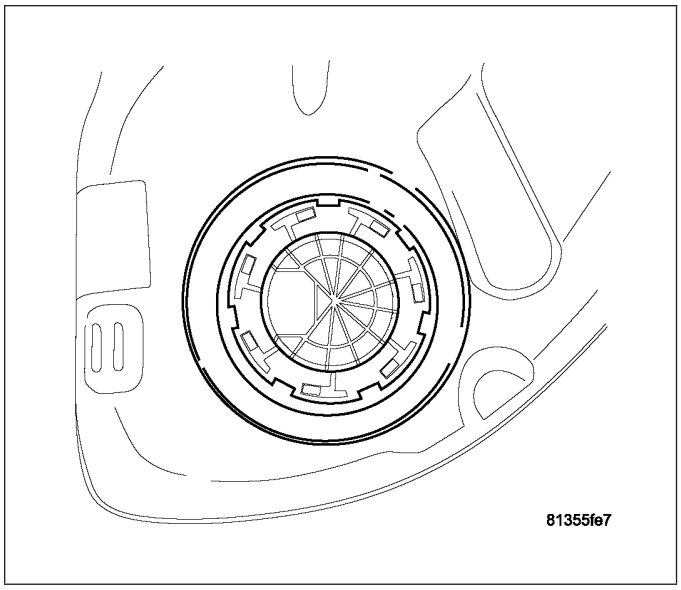

37. Right Side Module.

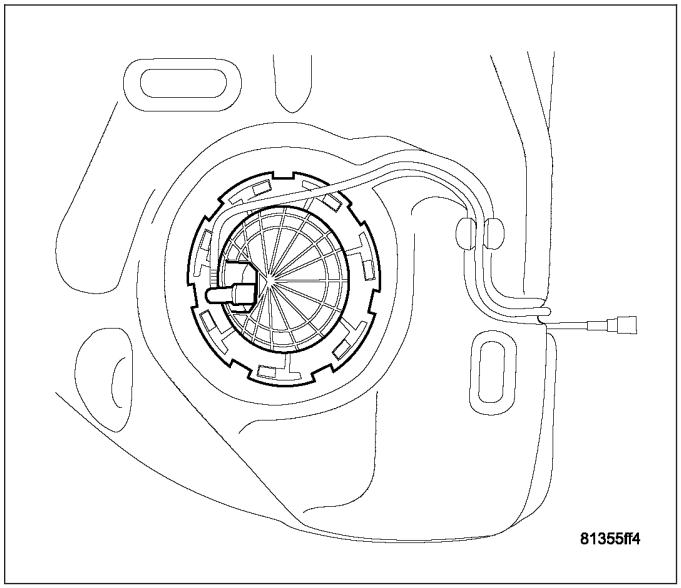

38. Control Valve and lines.

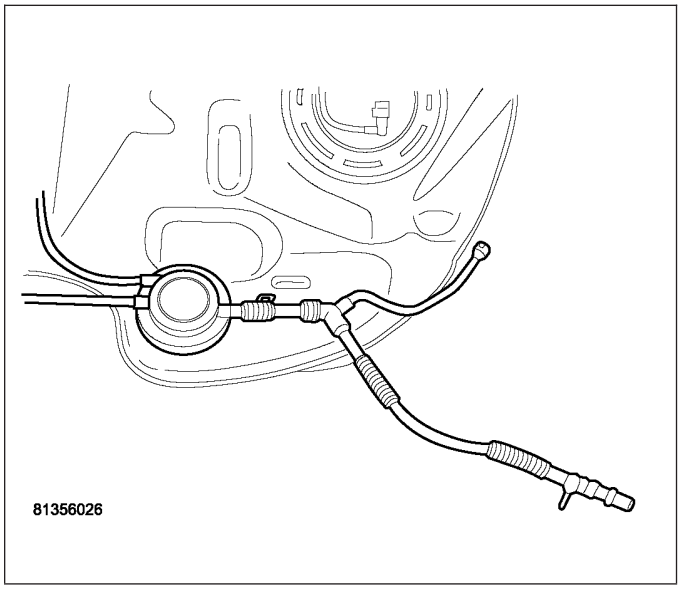

INSTALLATION

1. Support fuel tank with transmission jack.

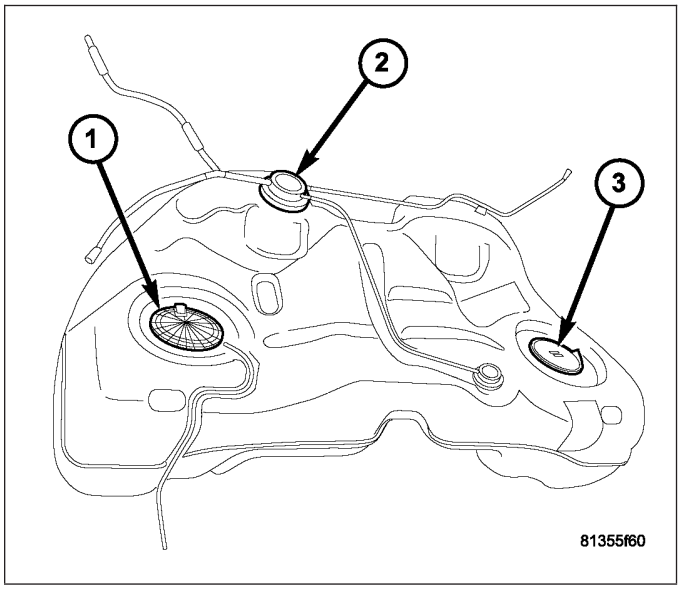

2. Raise tank and push filler tube vent line through bracket.

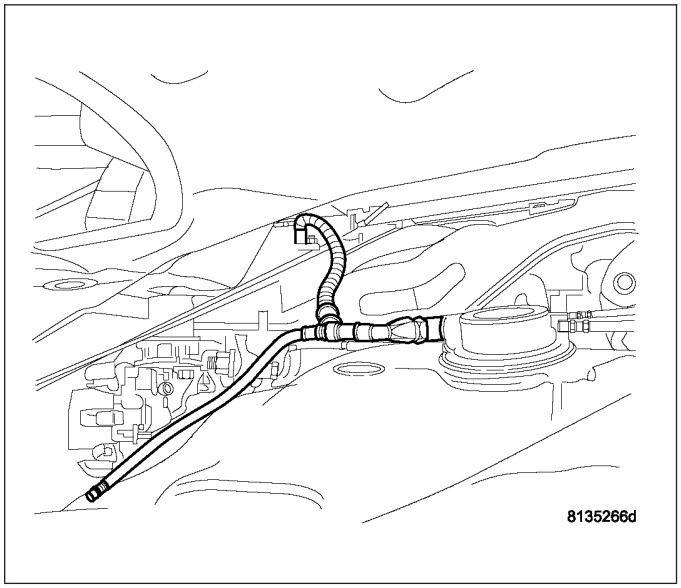

3. Fuel tank strap bolt locations.

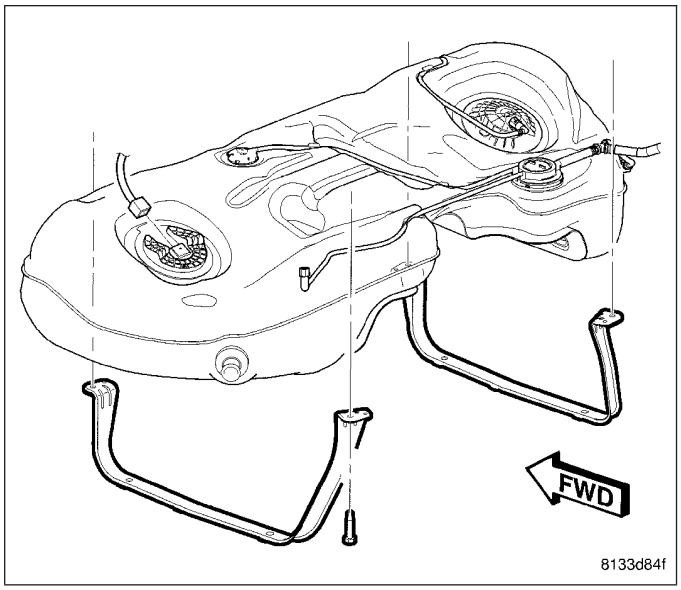

4. Install bolt for fuel tank strap and tighten.

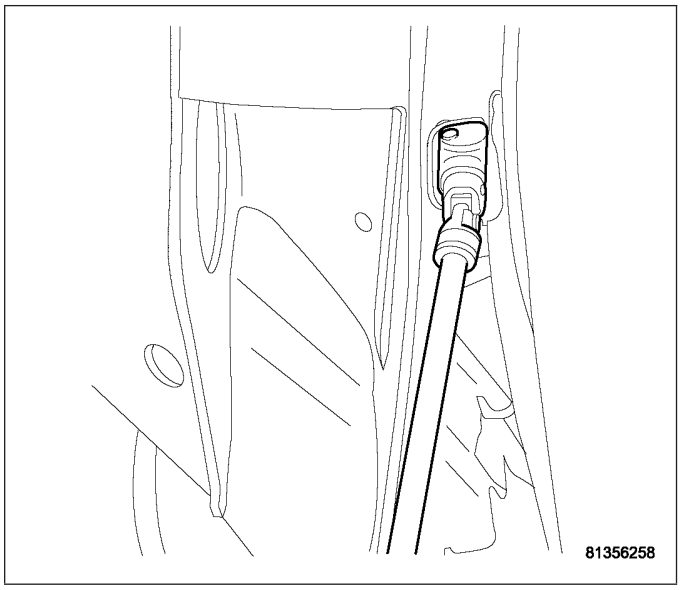

5. Install bolt for fuel tank strap and tighten.

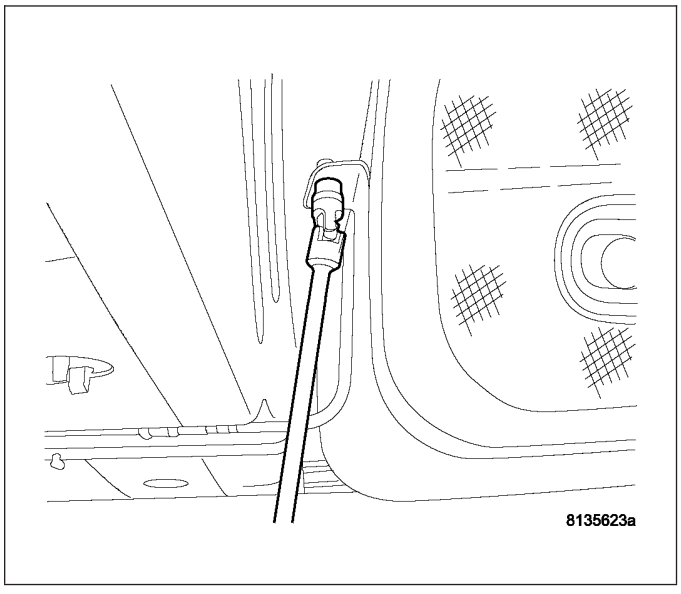

6. Connect vapor line.

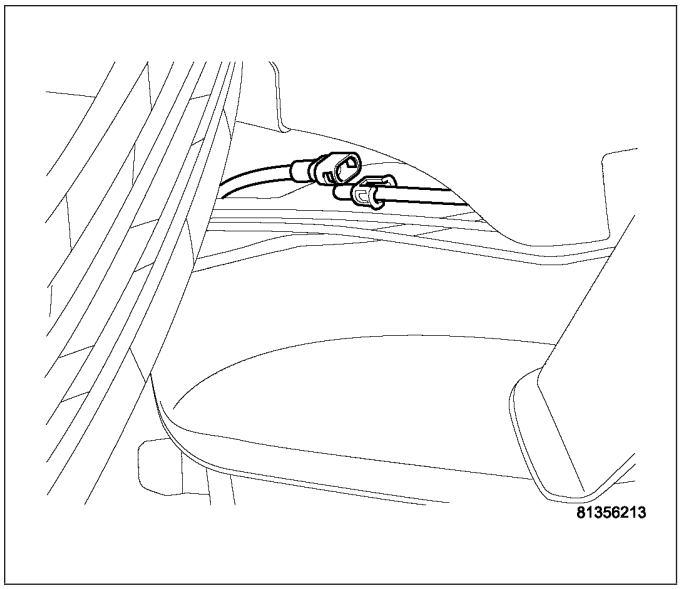

7. Connect the fuel supply line.

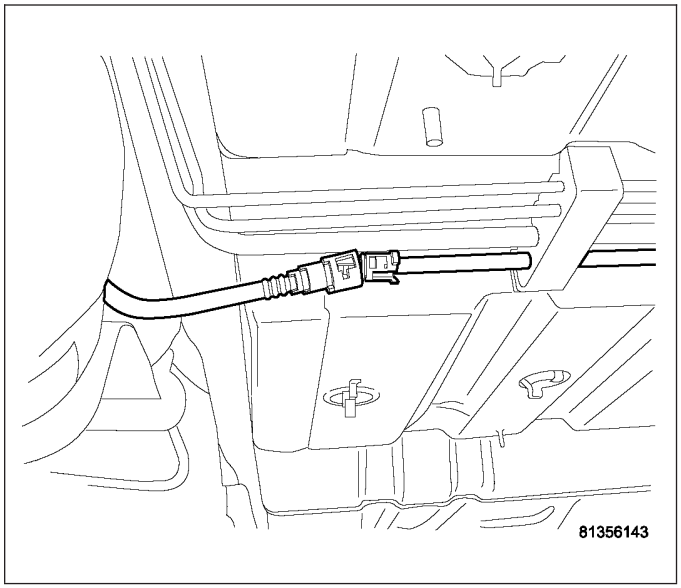

8. Connect the EVAP line in the right rear wheel well.
9. Install the drive shaft, (Refer to 3 - DIFFERENTIAL & DRIVELINE/PROPELLER SHAFT - INSTALLATION)
10. Install the exhaust system, (Refer to 11 - EXHAUST SYSTEM/EXHAUST PIPE - INSTALLATION)

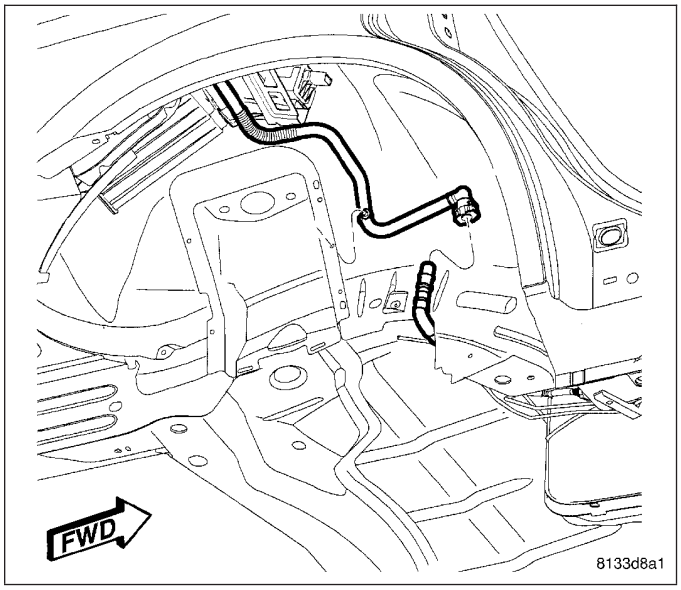

11. Install metal filler tube to rubber tube on fuel tank.

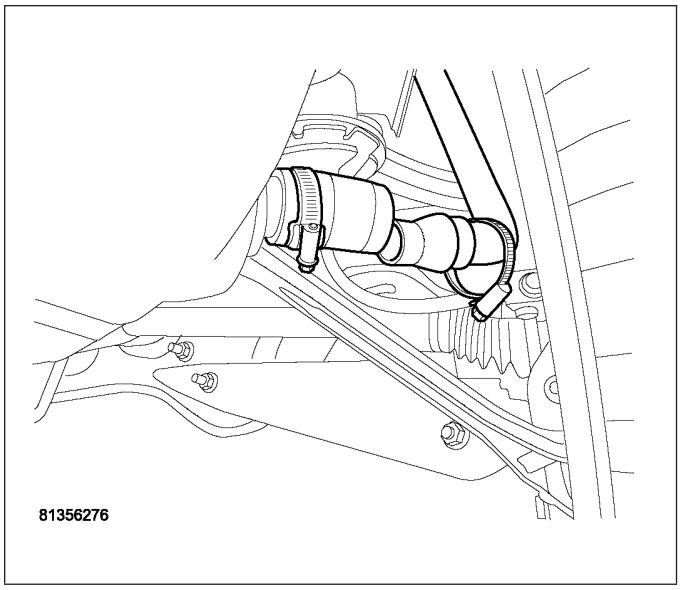

12. Install clamp to filler tube and tighten

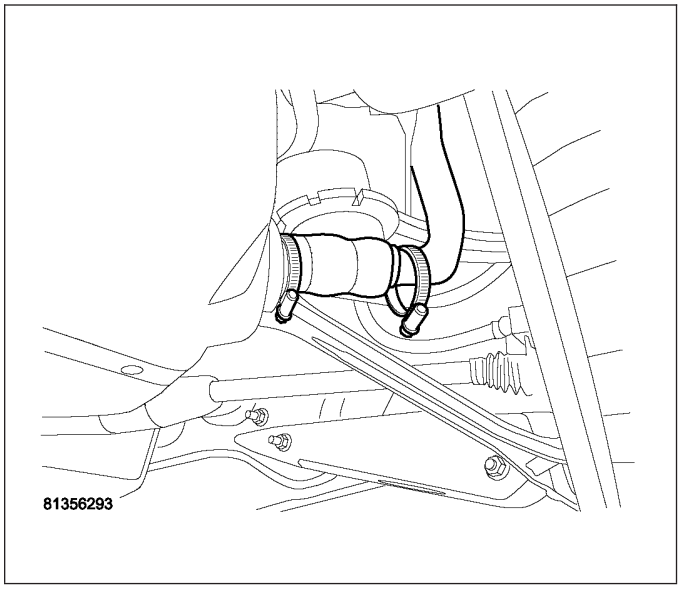

13. Connect the filler tube vent line.

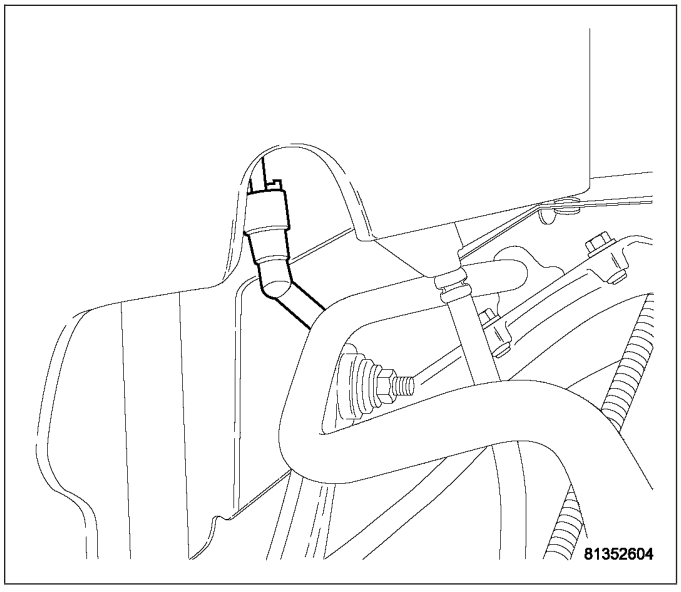

14. Install the inner splash shield.

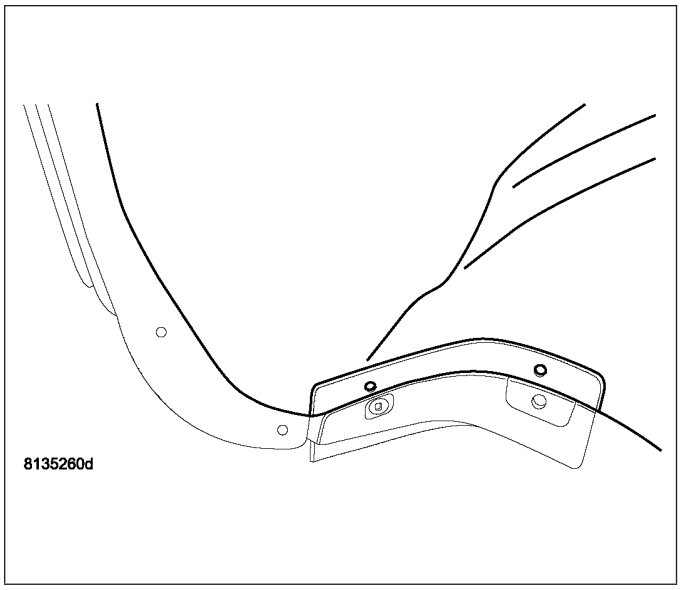

15. Install the left underbody splash shield.

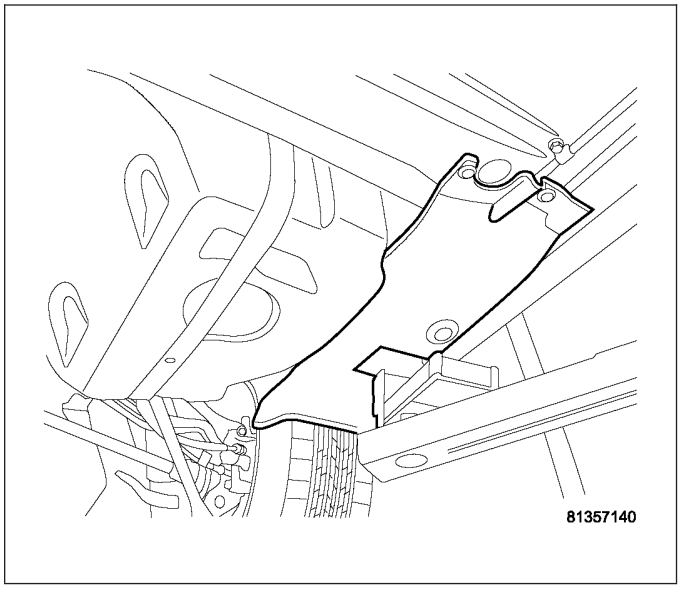

16. Install the right underbody splash shield.
17. Install left rear tire.
18. Lower vehicle.

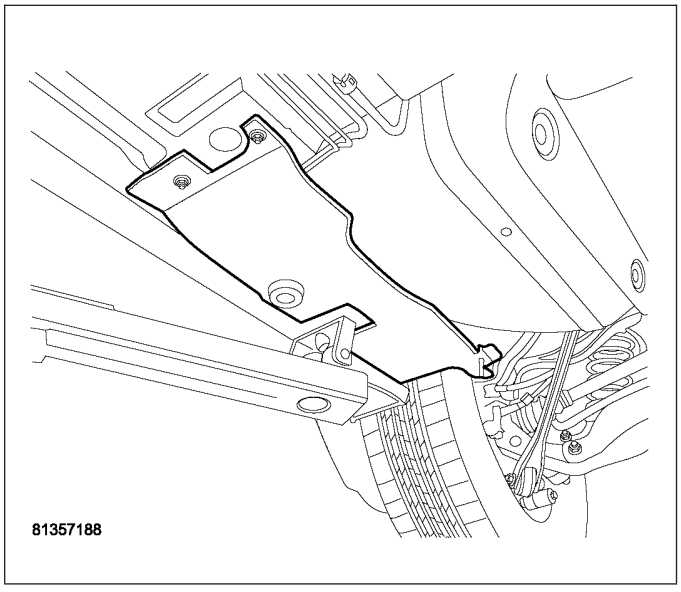

19. Install module and align marks on the module for proper orientation.

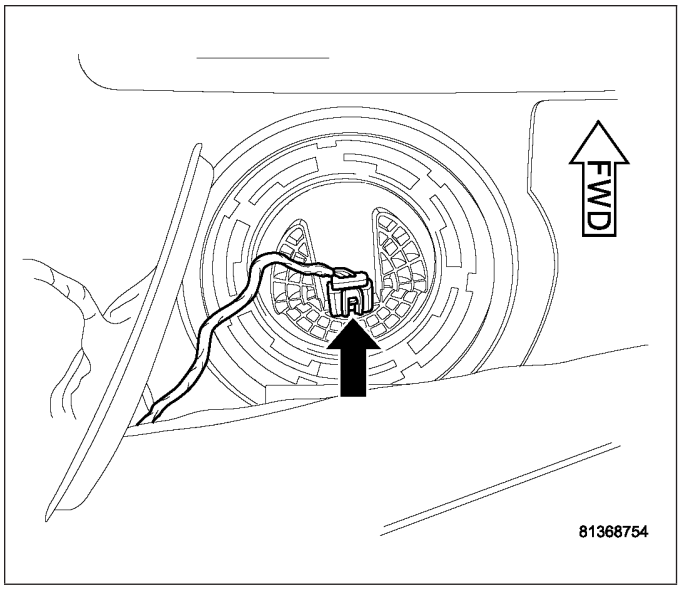

20. Install module lock-ring.
21. Use special tool #9340 to tighten left side module lock ring.
22. Connect the electrical connector to left side module and install plastic access cover.

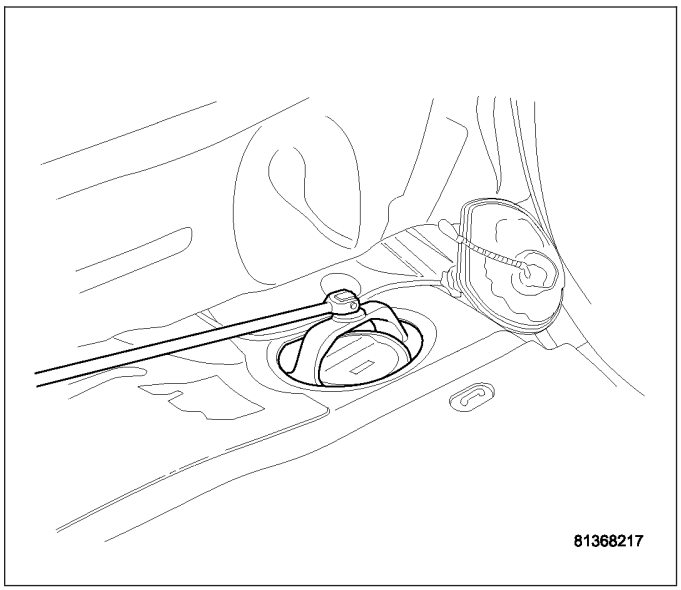

23. Install module and align marks on the module for proper orientation.

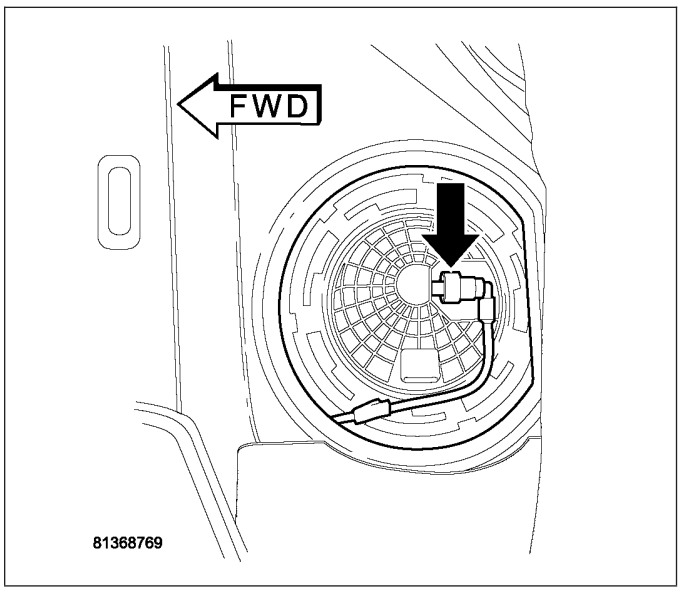

24. Install module lock-ring.
25. Use special tool #9340 to tighten right side module lock ring.
26. Connect the fuel supply line to module.

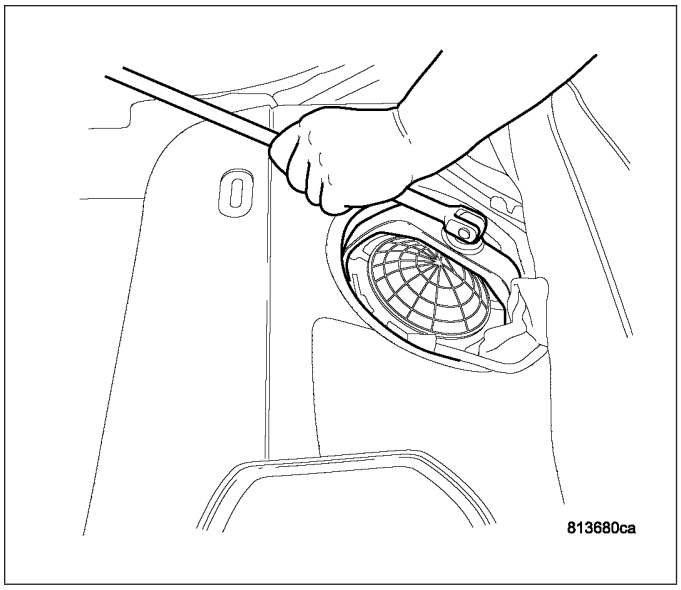

27. Install plastic access covers to floor pan right side.

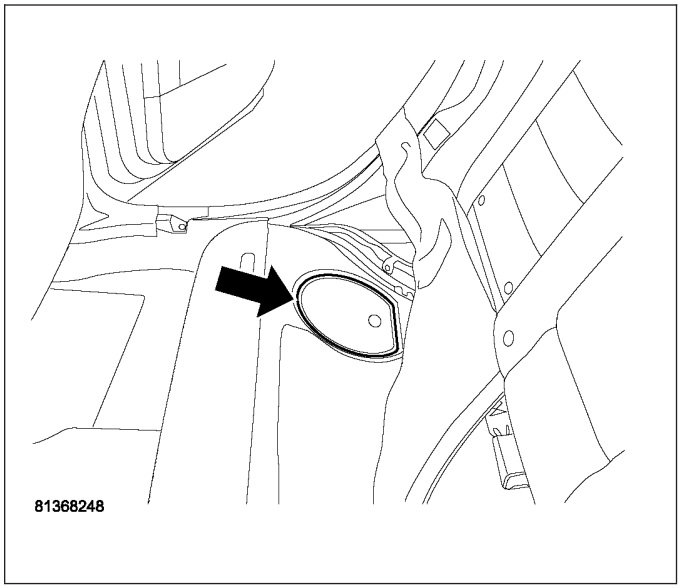

28. Fold the foam pad covering access cover for modules back into place.

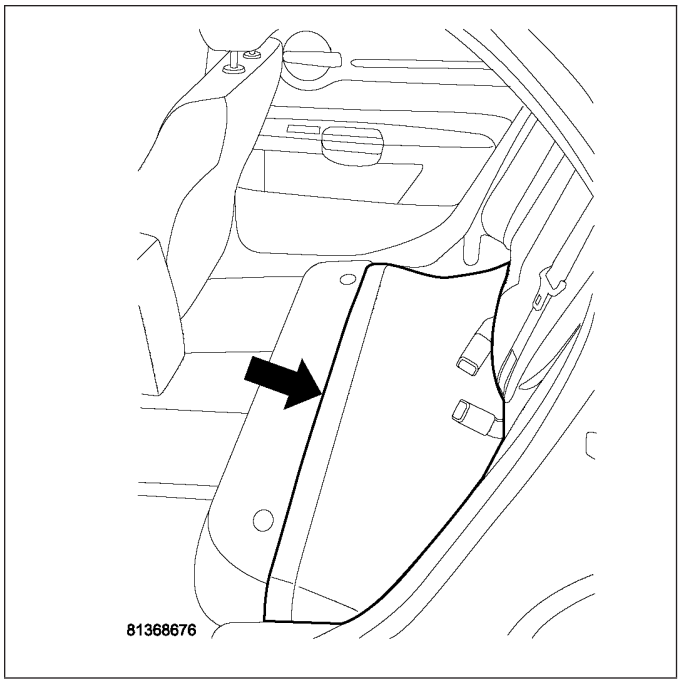

29. Install rear lower seat cushion

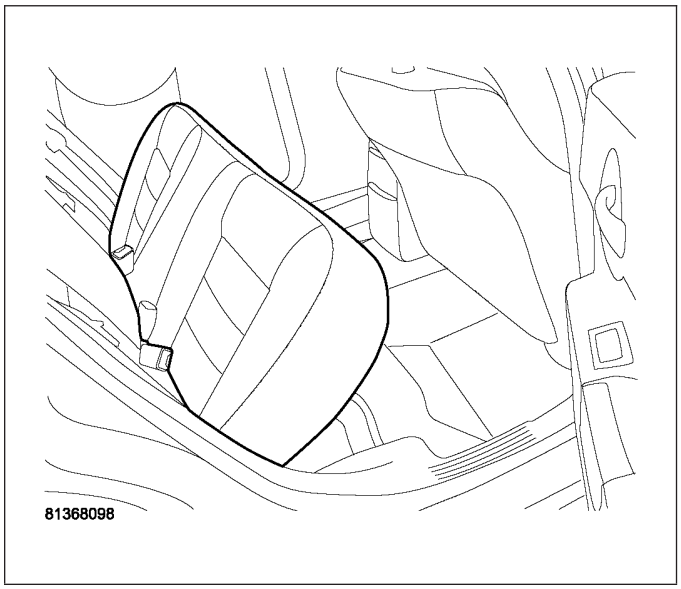

30. Rear lower seat cushion installed.

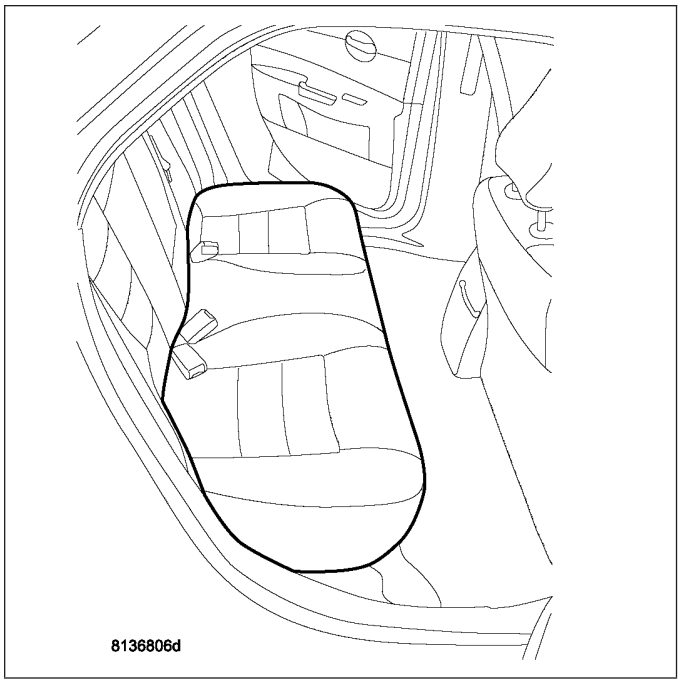

31. Fill fuel tank.
32. Connect negative battery cable.
33. Fill fuel tank. Use the scan tool to pressurize the fuel system. Check for leaks.

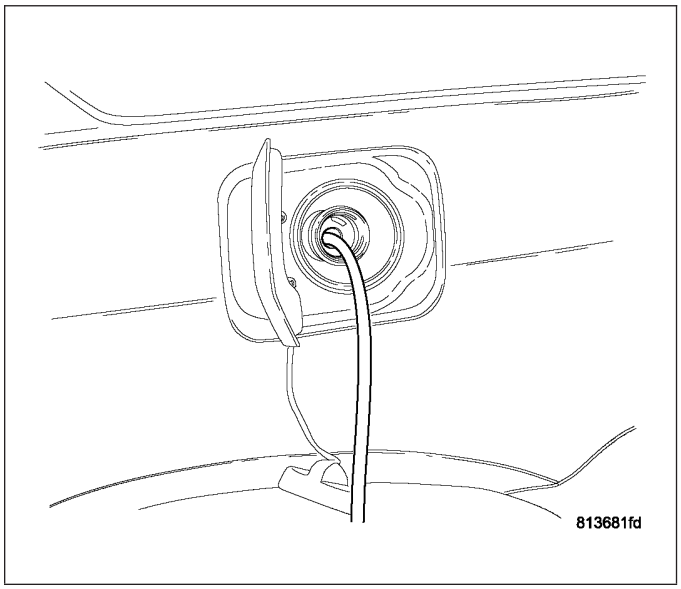

MODULE-FUEL PUMP

REMOVAL

1. Release the fuel pressure, refer to the Fuel Pressure Release Procedure in this section.
2. Disconnect negative battery cable.

NOTE: The fuel level of the vehicle must be below 5/8 of a tank before you remove the module lock-rings. If it is above that you can spill fuel in the vehicle.

3. Drain partial fuel from fuel tank through the filler tube. Use a hard nylon tube, with a 30° cut on the end, to push the check valve open to drain fuel from tank.

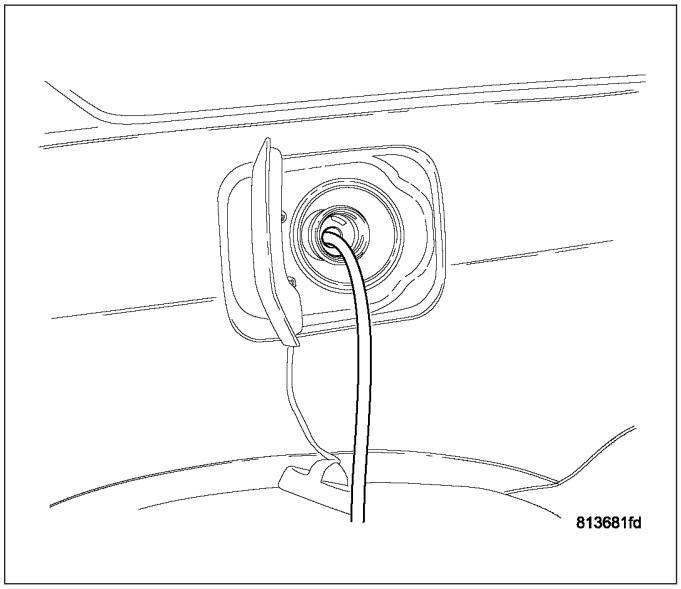

4. Remove the rear lower seat cushion.

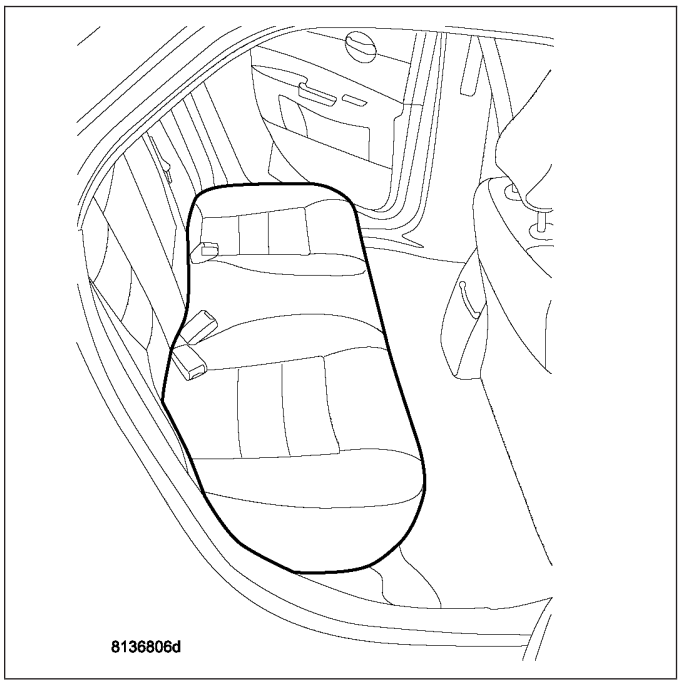

5. Push seat back and up to remove seat cushion.

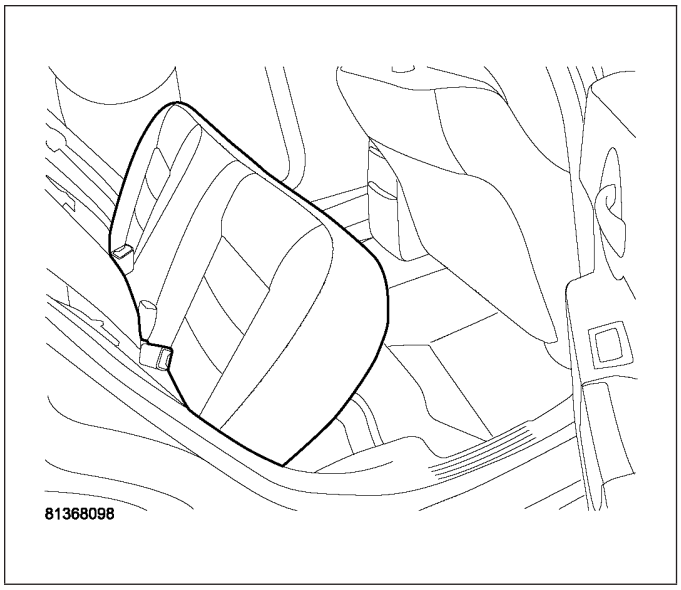

6. Fold back the foam pad covering access cover for modules.

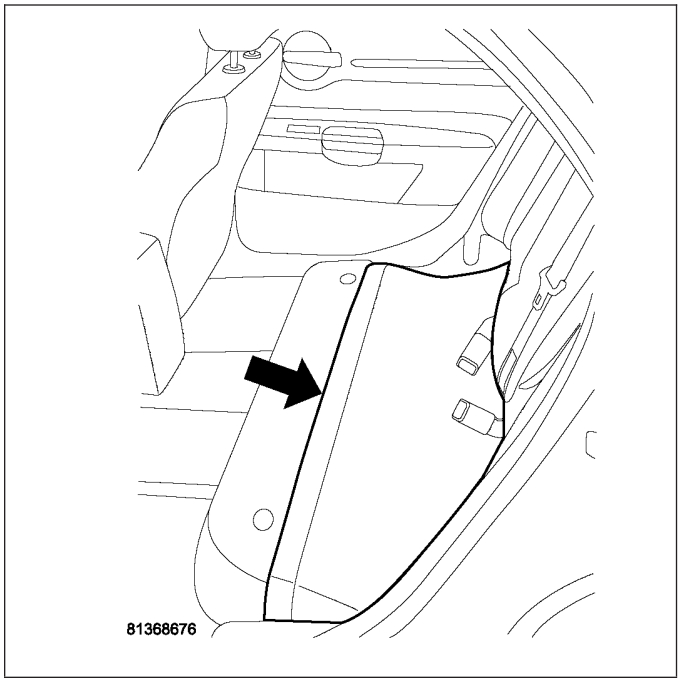

7. Disconnect the electrical connector from left side module.
8. Mark the module orientation.

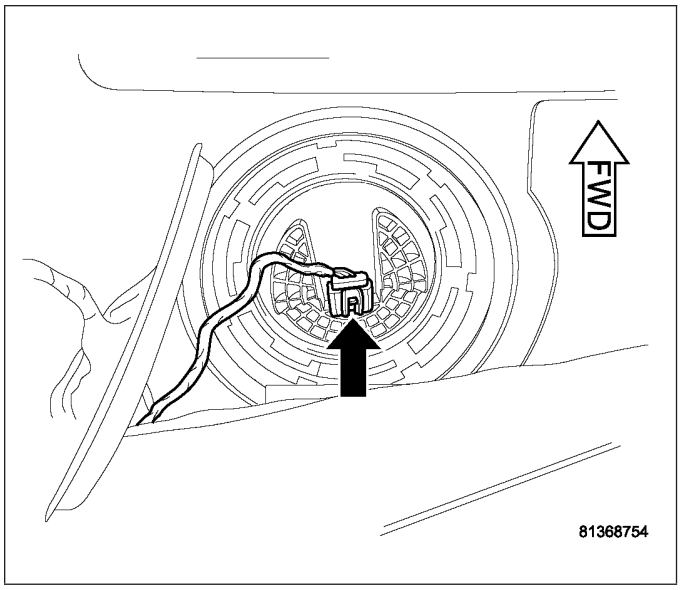

9. Use special tool #9340 to remove left side module lock ring.

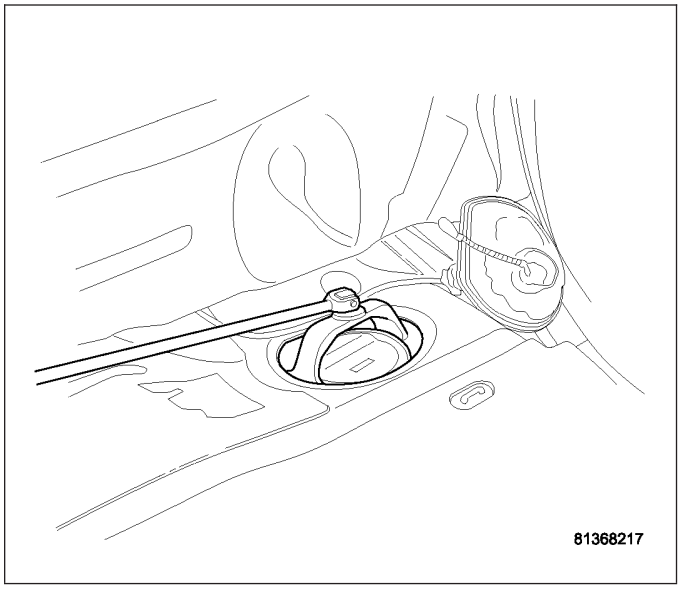

10. Drain fuel from left side of fuel tank. Lift module up enough to push hose into tank and drain. Do not spill fuel in interior of vehicle.

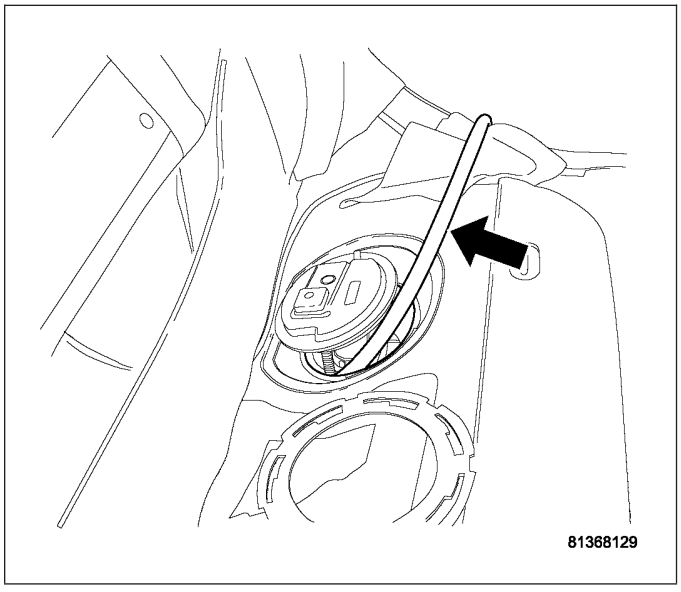

11. Disconnect the electrical connectors from the module top.
12. Remove the module top half.

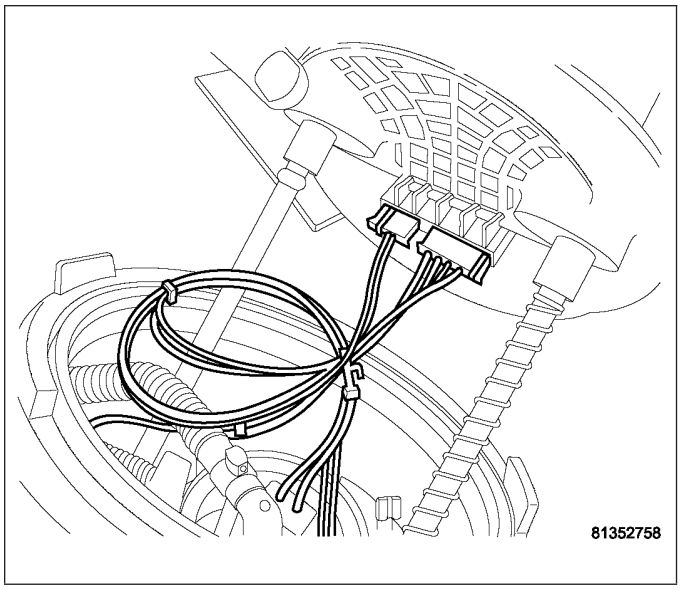

13. The module fuel level sending card (1). The fuel return lines (2). The fuel supply line (3).

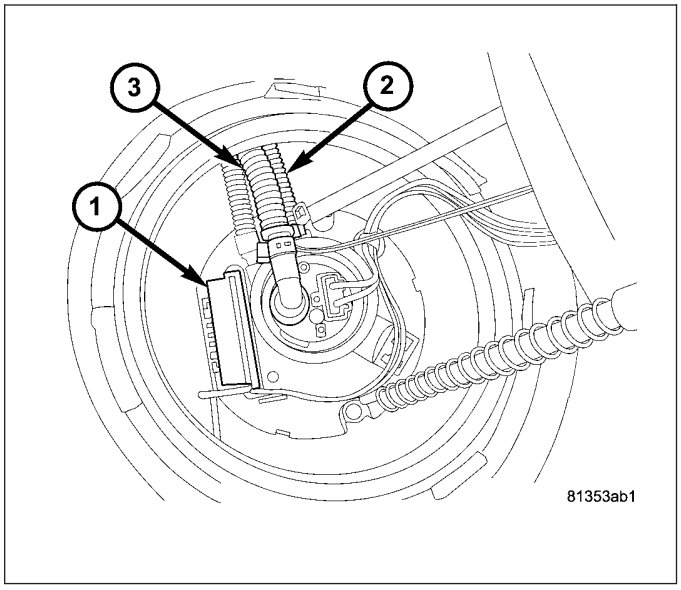

14. Fuel line release tab, press in the tab and pull up on fuel line.

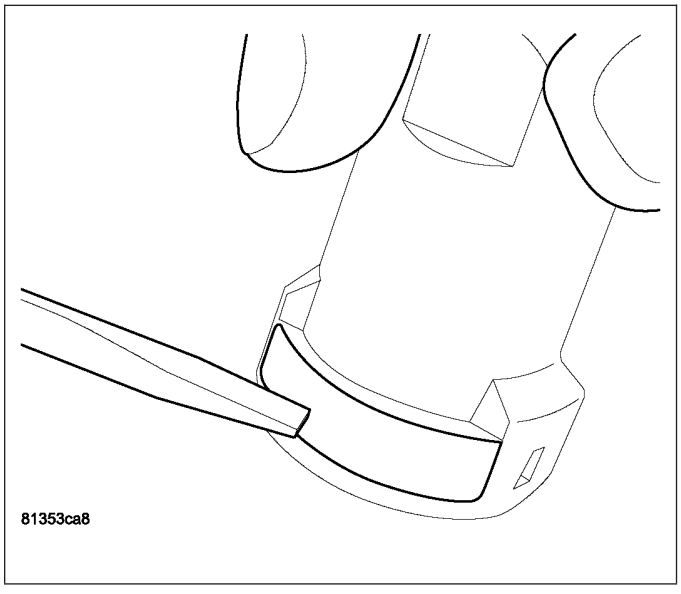

15. Remove fuel line.

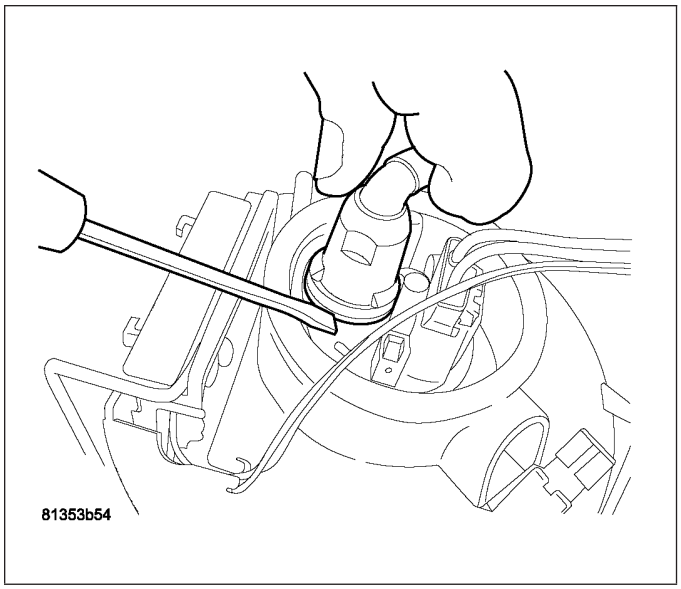

16. Remove fuel return line from lower module. Line unsnap from module.

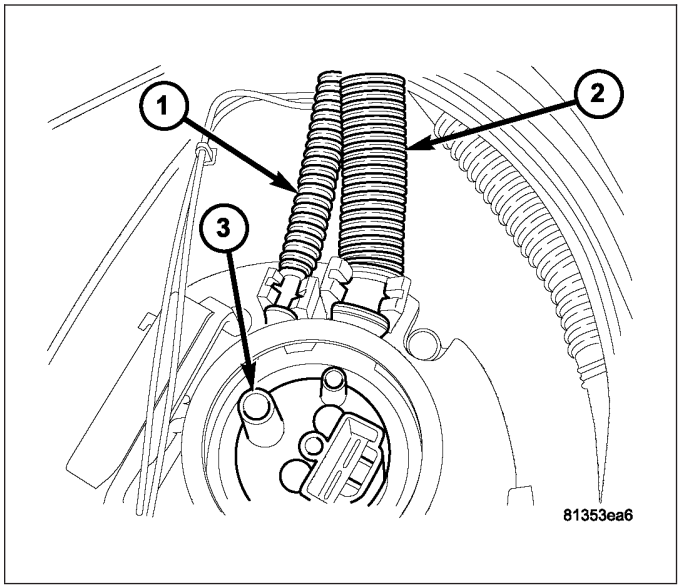

17. Return line removed.

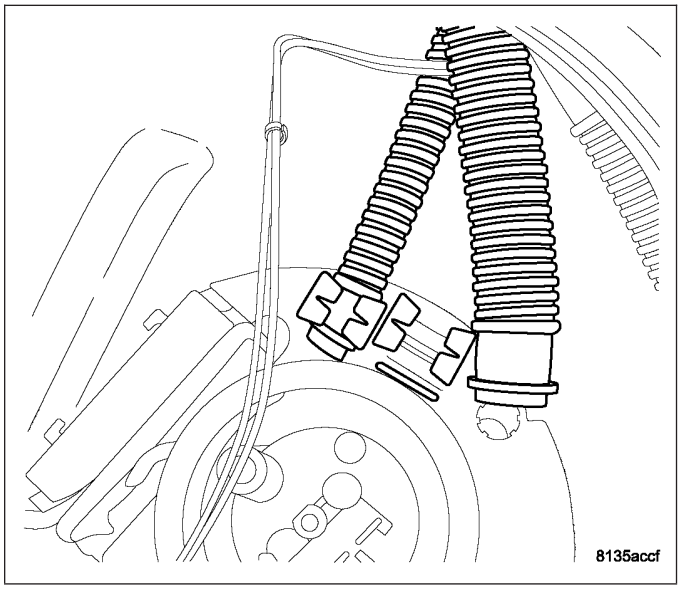

18. Tip module on its side to drain remaining fuel from reservoir and remove module from vehicle.

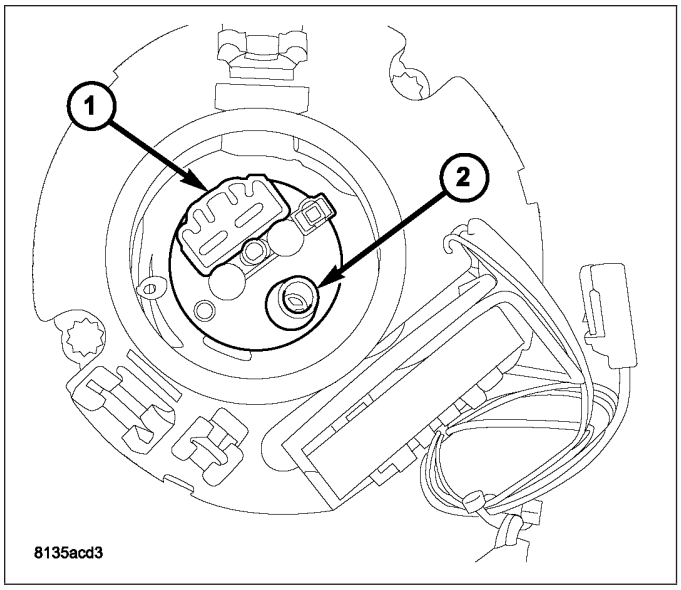

INSTALLATION

1. Install pump module into tank.
2. Connect fuel return lines to module.

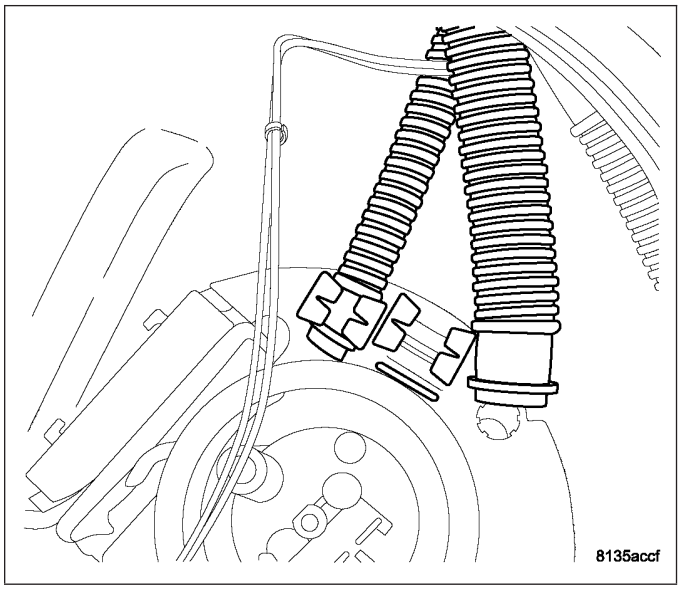

3. Lines connected.

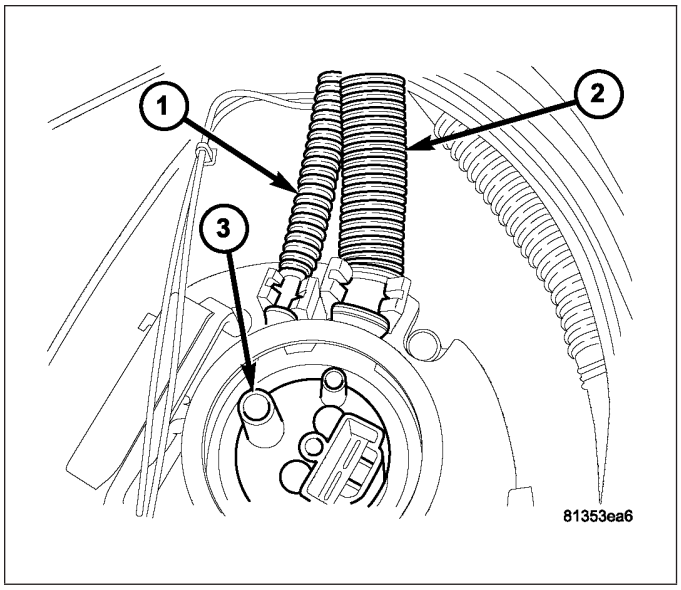

4. Connect fuel supply line to module and make sure it is locked in place.

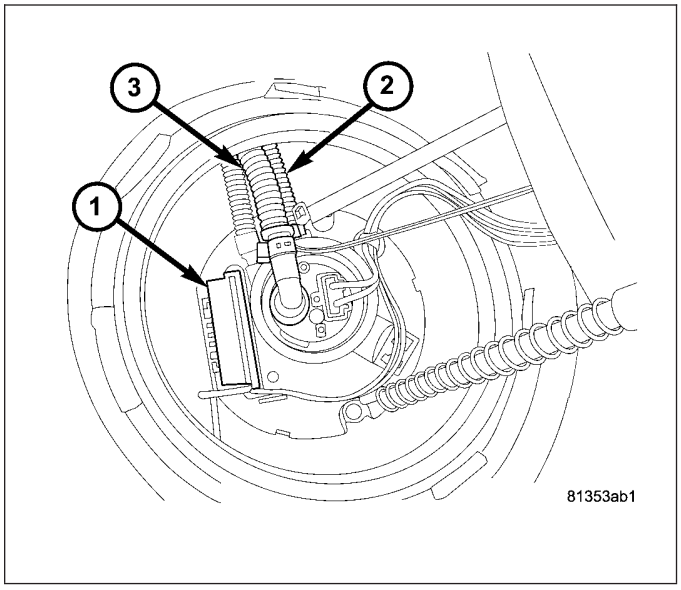

5. Connect electrical connectors to bottom of module top, Install module top to module bottom.

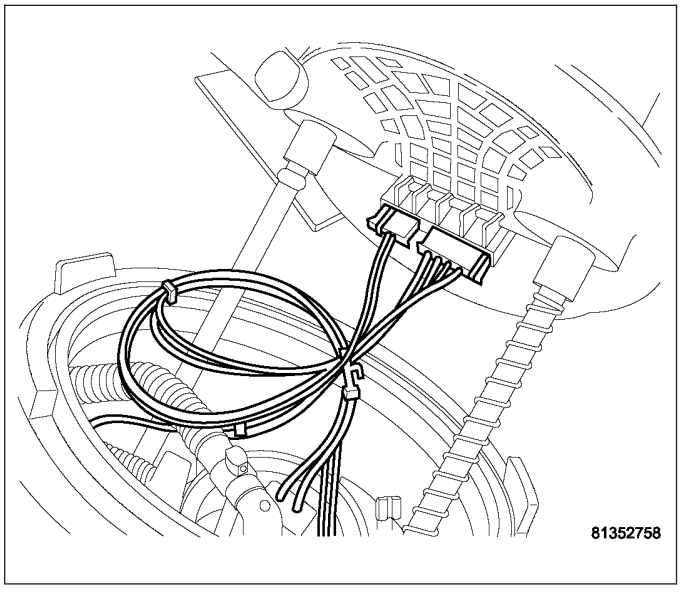

6. Install module and align marks on the module for proper orientation.

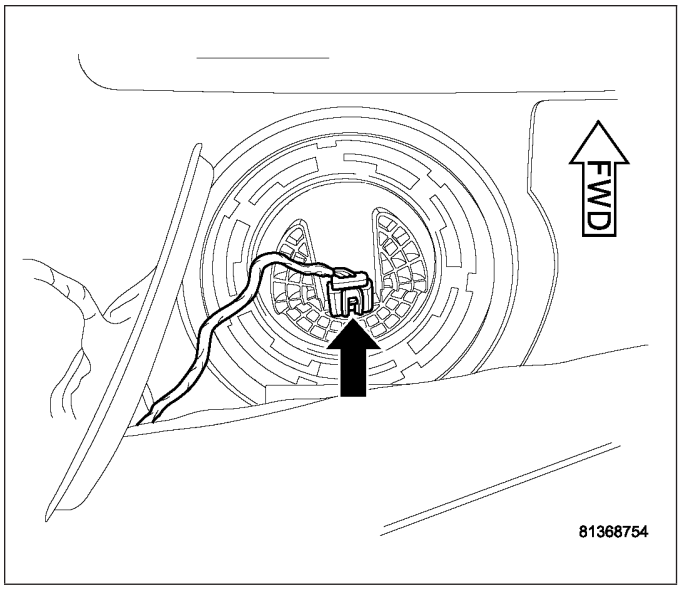

7. Install module lock-ring.
8. Use special tool #9340 to tighten left side module lock ring.
9. Connect the electrical connector to left side module.

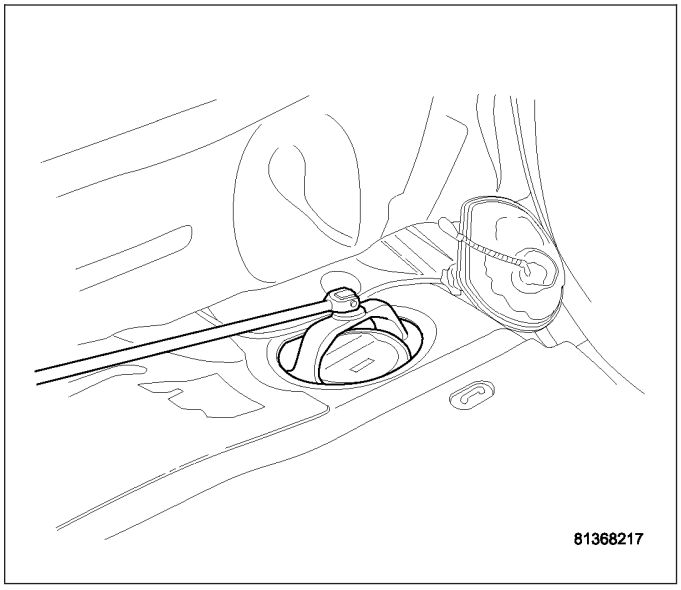

10. Install plastic access cover.

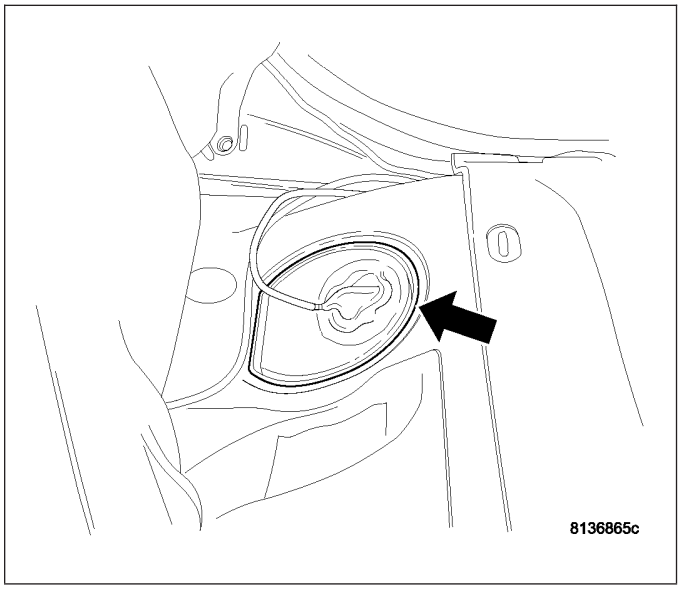

11. Fold the foam pad covering access cover for modules back into place.

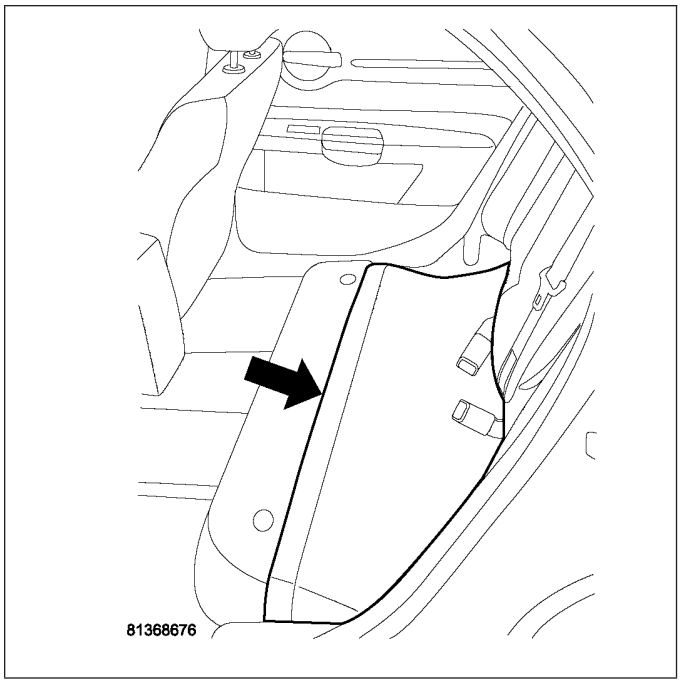

12. Install rear lower seat cushion

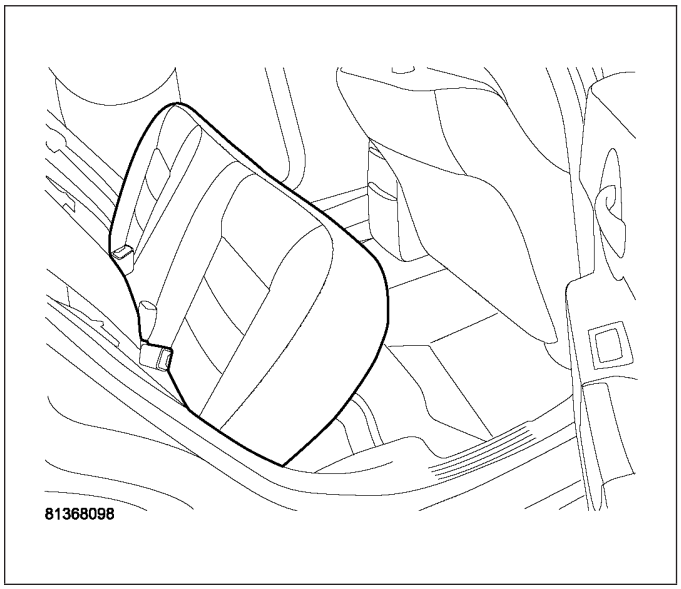

13. Rear lower seat cushion installed.

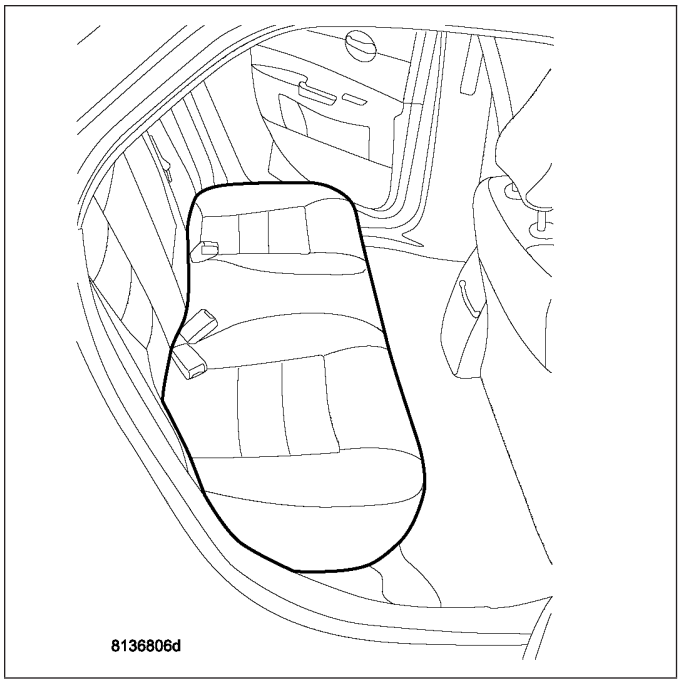

14. Fill fuel tank.
15. Connect negative battery cable.
16. Fill fuel tank. Use the scan tool to pressurize the fuel system. Check for leaks.

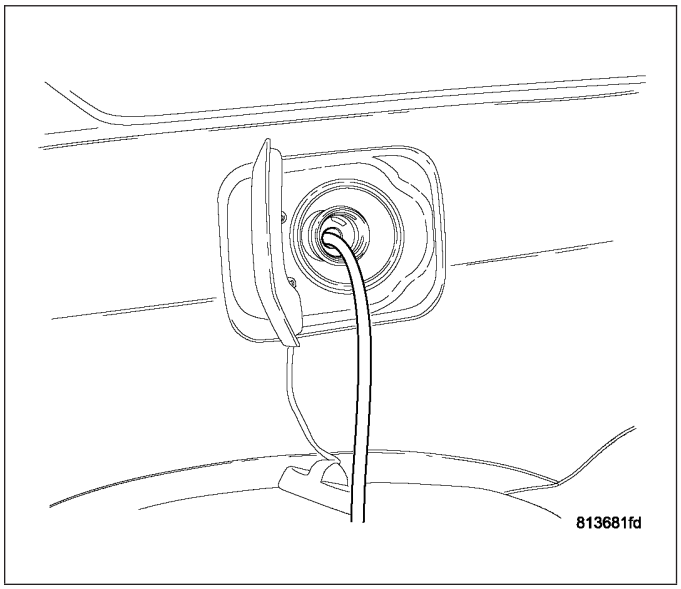

SENSOR-FUEL LEVEL SENDING UNIT

REMOVAL

LEFT SIDE MODULE

1. Release the fuel pressure, refer to the Fuel Pressure Release Procedure in this section.
2. Disconnect negative battery cable.

NOTE: The fuel level of the vehicle must be below 5/8 of a tank before you remove the module lock-rings. If it is above that you can spill fuel in the vehicle.

3. Drain partial fuel from fuel tank through the filler tube. Use a hard nylon tube, with a 30° cut on the end, to push the check valve open to drain fuel from tank.

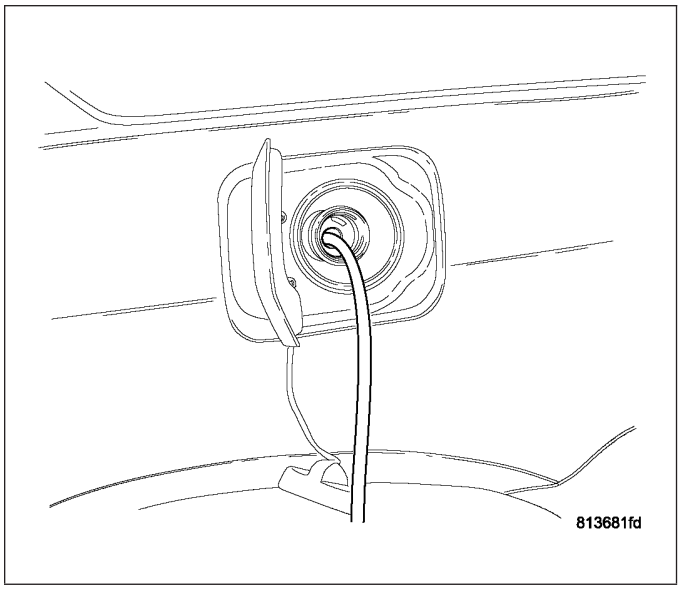

4. Remove the rear lower seat cushion.

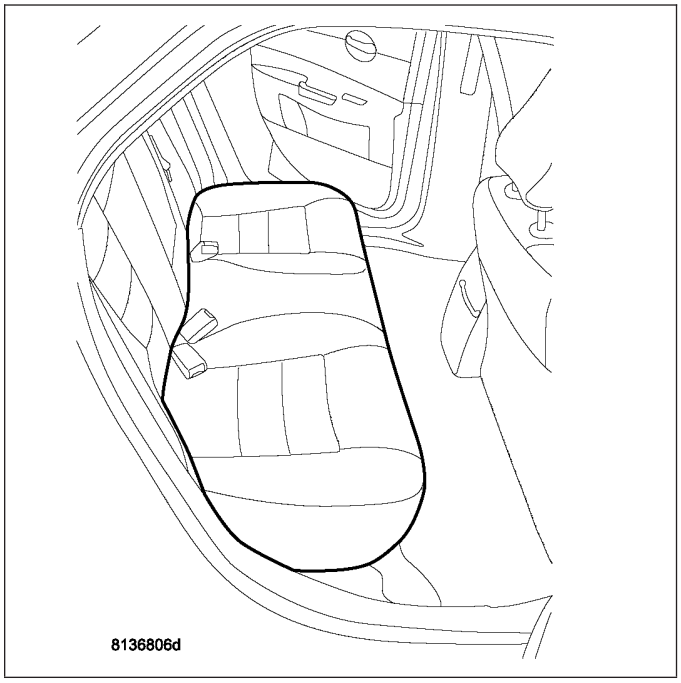

5. Push seat back and up to remove seat cushion.

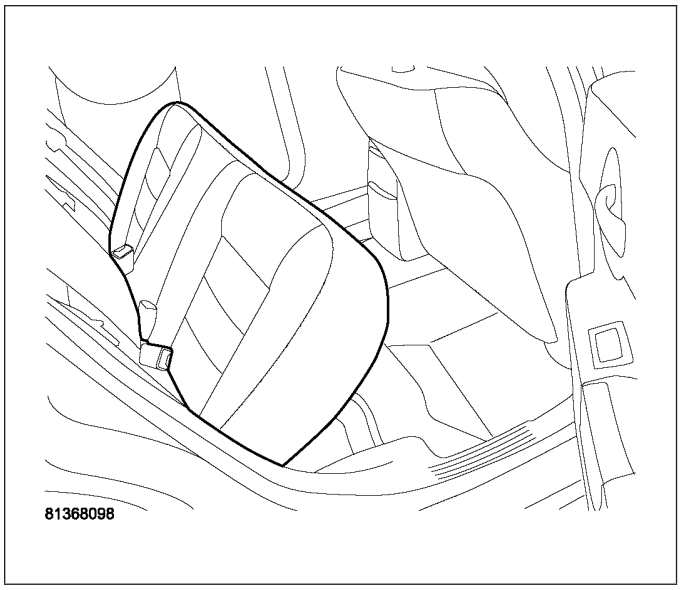

6. Fold back the foam pad covering access cover for modules.

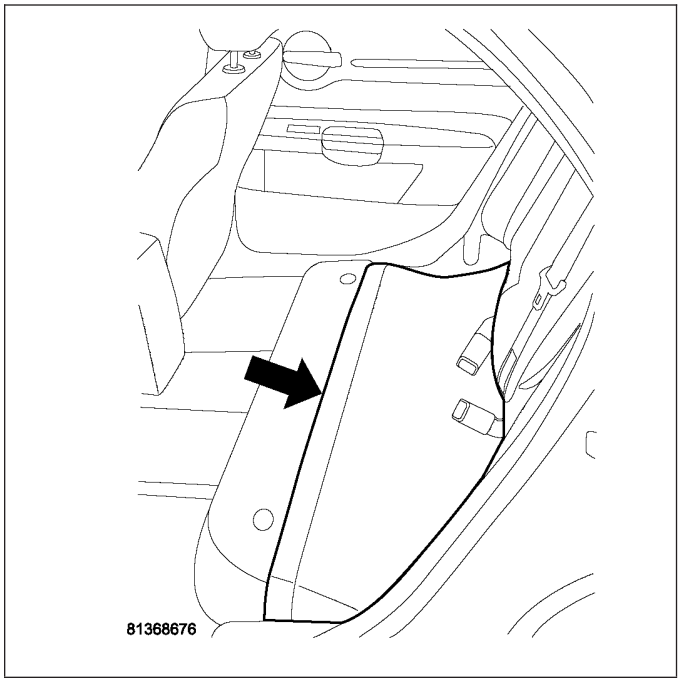

7. Disconnect the electrical connector from left side module.
8. Mark the module orientation.

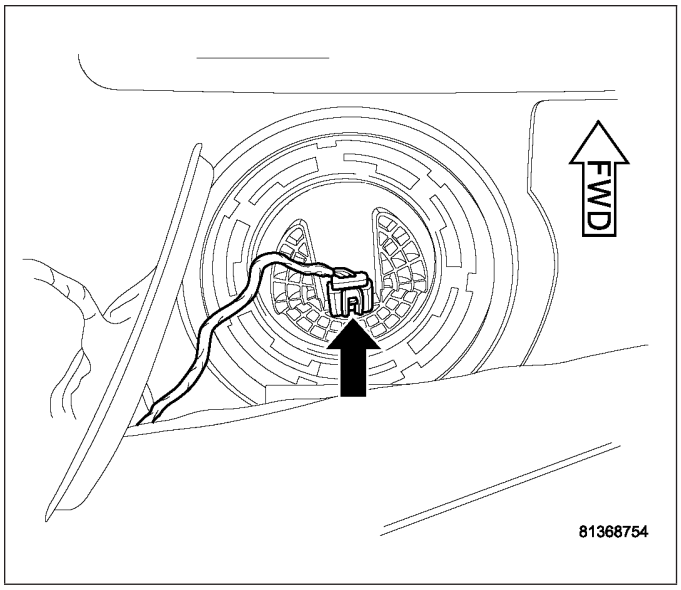

9. Use special tool #9340 to remove left side module lock ring.

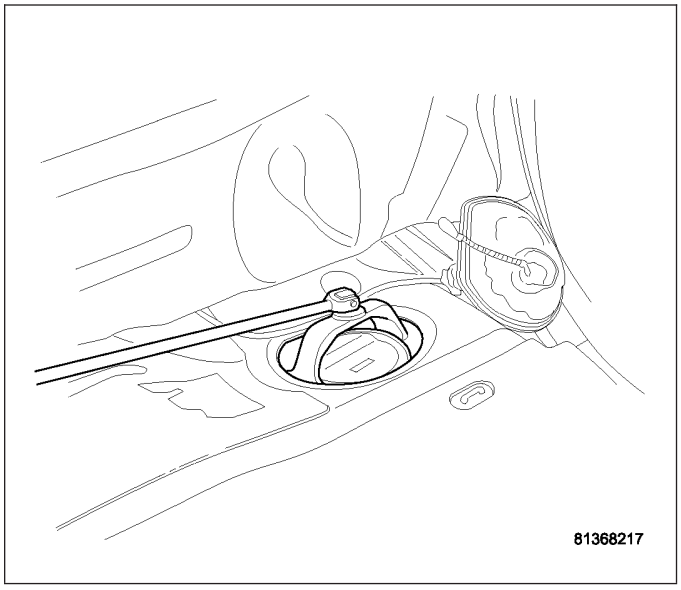

10. Drain fuel from left side of fuel tank. Lift module up enough to push hose into tank and drain. Do not spill fuel in interior of vehicle.

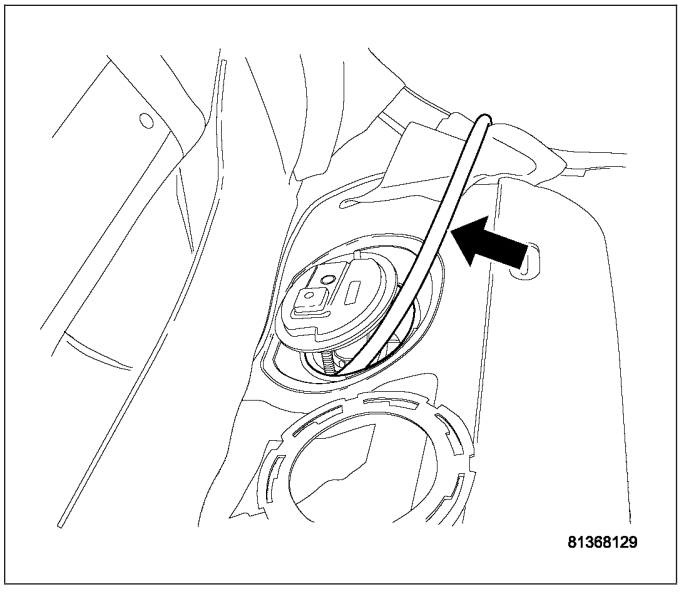

11. Disconnect the electrical connector for the left side fuel level card from bottom of the module top.
12. Disconnect the electrical connector for the right side fuel level sending card.
13. Lift module top half off and tip lower half on its side to drain remaining fuel from the reservoir.

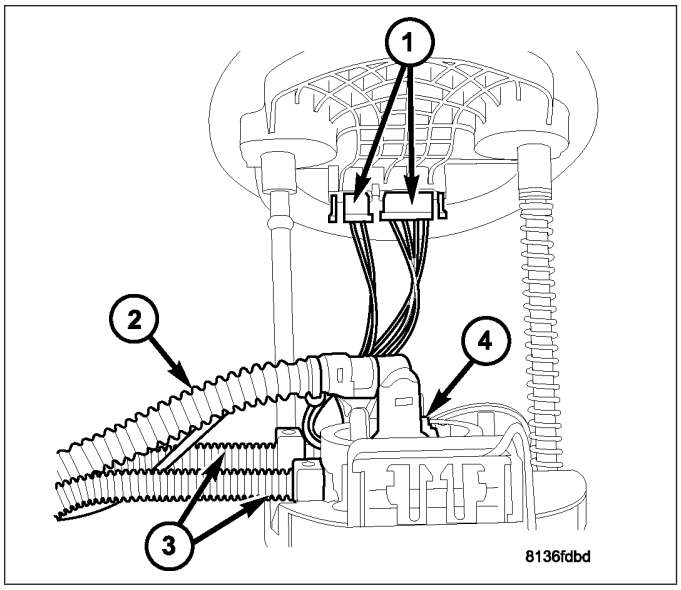

14. Remove wire from module.

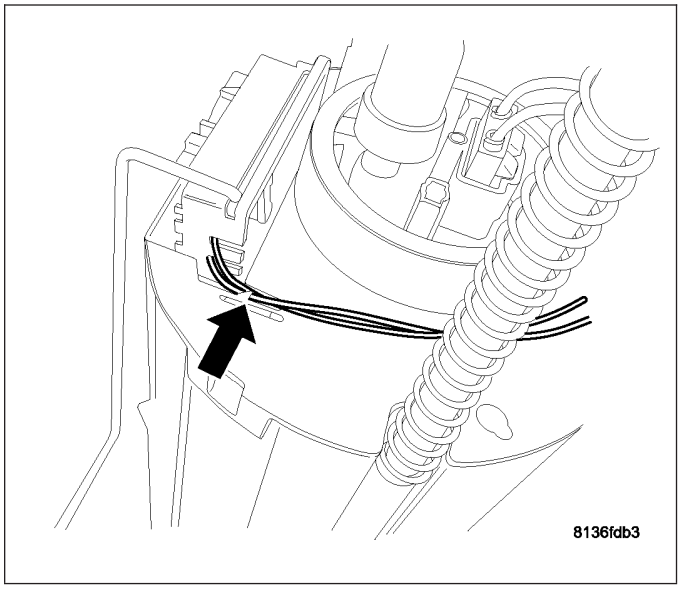

15. Use a screwdriver to separate the locking tabs on the level sending card.

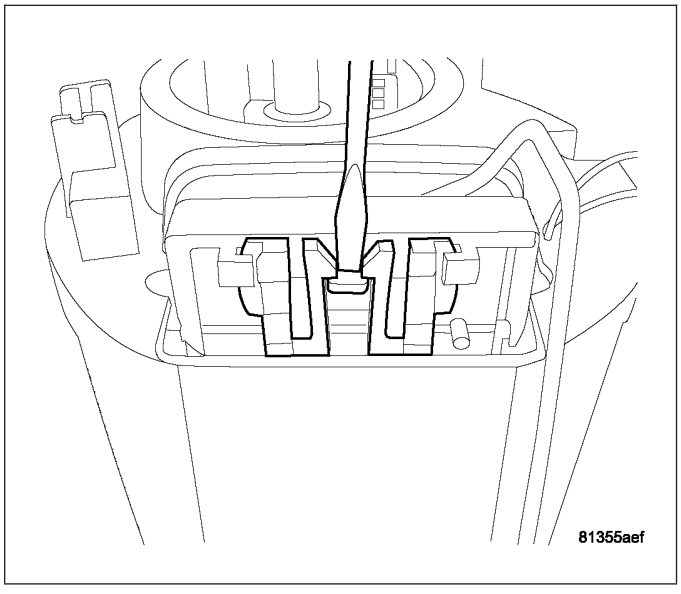

16. Lift level sending card straight up and out of module.

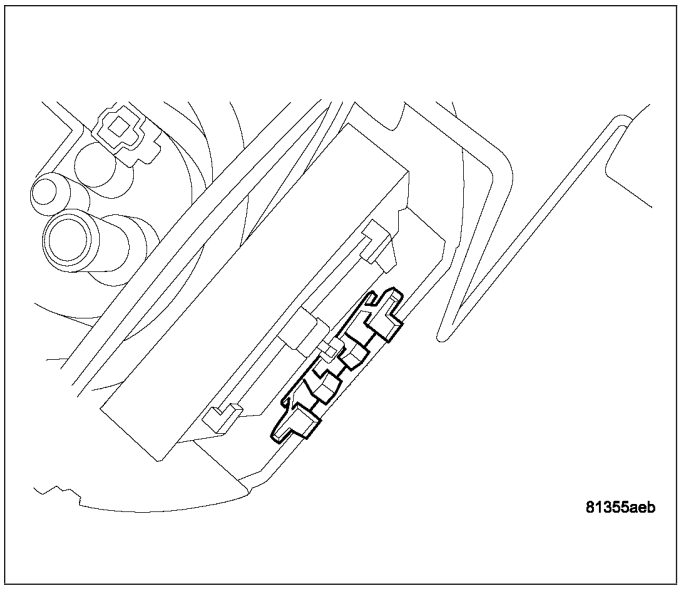

17. Disconnect the electrical wiring from module.
18. Remove level sending card.

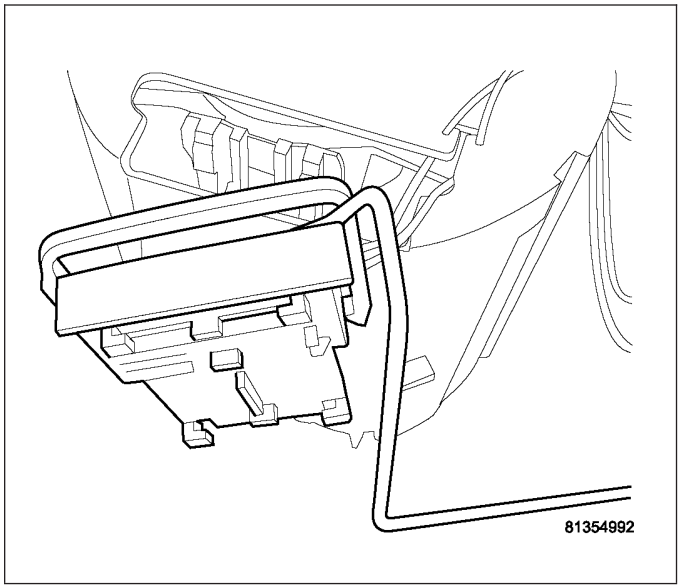

RIGHT SIDE MODULE

1. Release the fuel pressure, refer to the Fuel Pressure Release Procedure in this section.
2. Disconnect negative battery cable.

NOTE: The fuel level of the vehicle must be below 5/8 of a tank before you remove the module lock-rings. If it is above that you can spill fuel in the vehicle.

3. Drain partial fuel from fuel tank through the filler tube. Use a hard nylon tube, with a 30° cut on the end, to push the check valve open to drain fuel from tank.

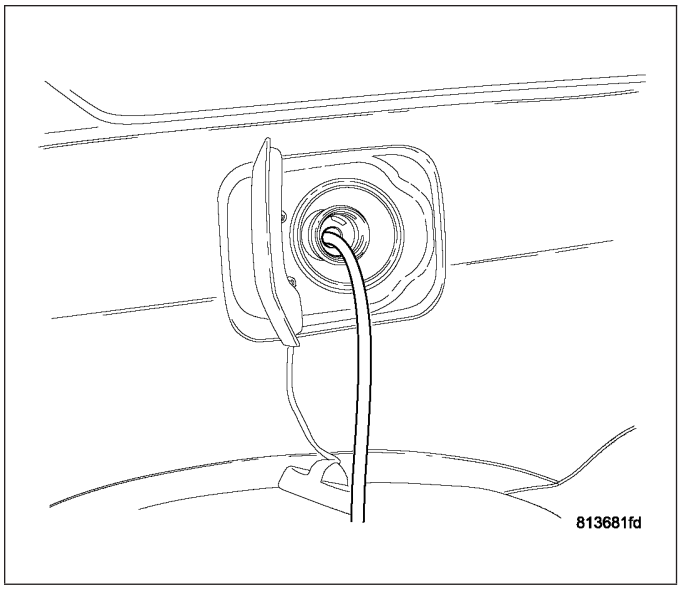

4. Remove the rear lower seat cushion.

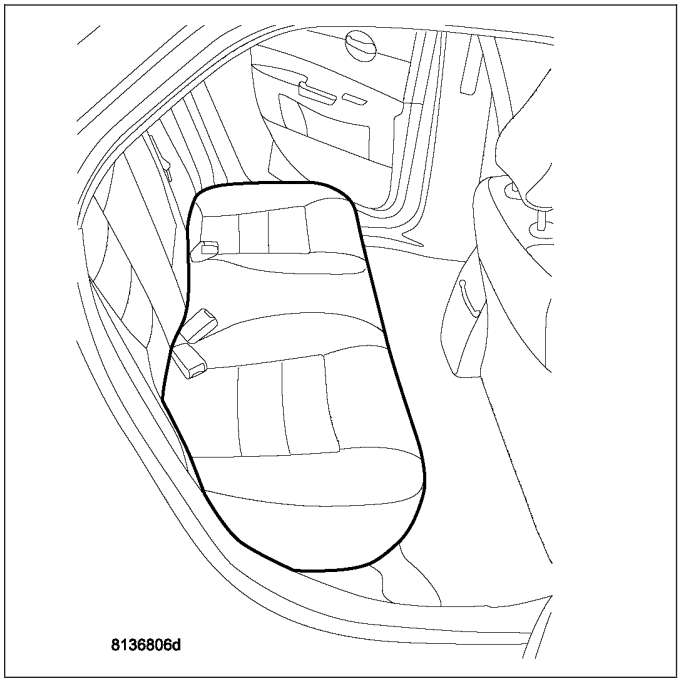

5. Push seat back and up to remove seat cushion.

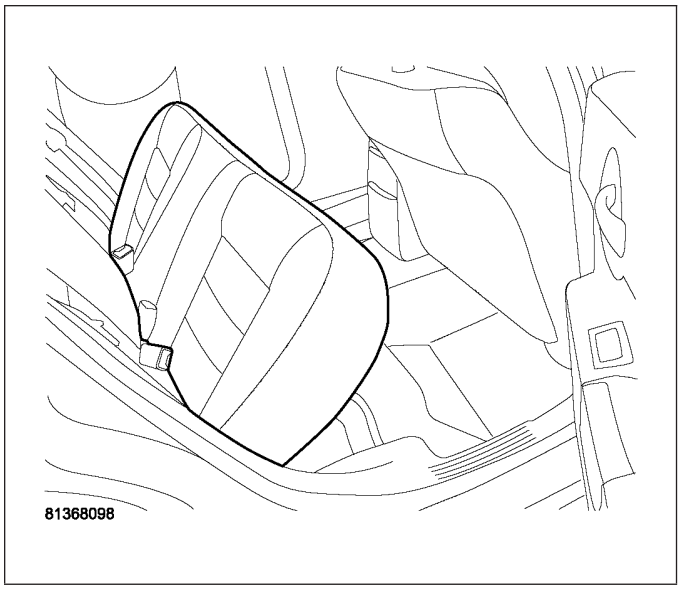

6. Fold back the foam pad covering access cover for modules.

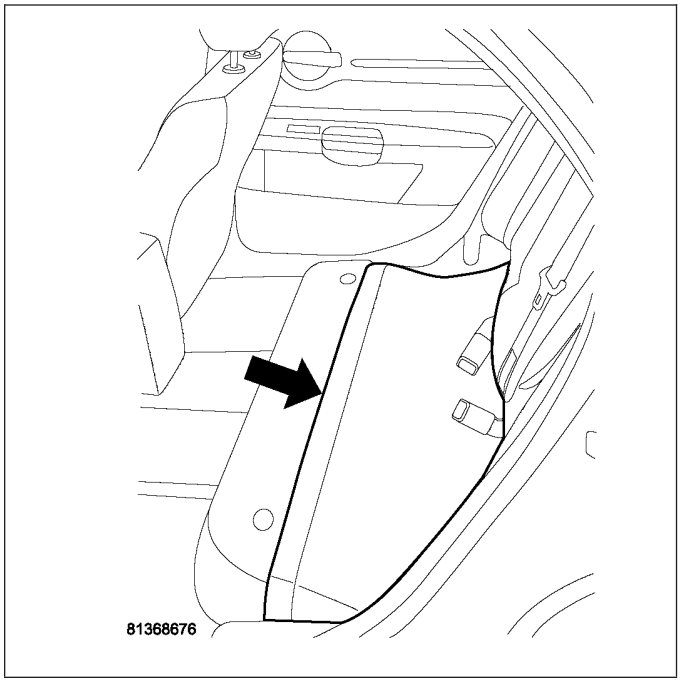

7. Disconnect the electrical connector from left side module.
8. Mark the module orientation.

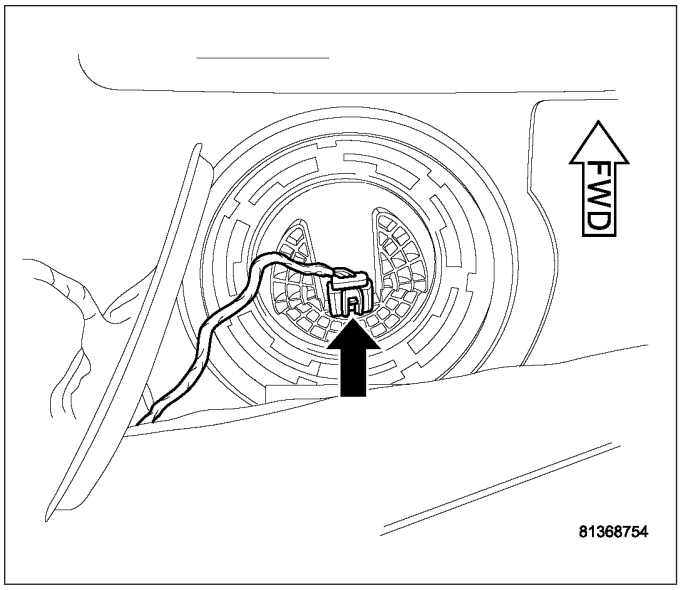

9. Use special tool #9340 to remove left side module lock ring.

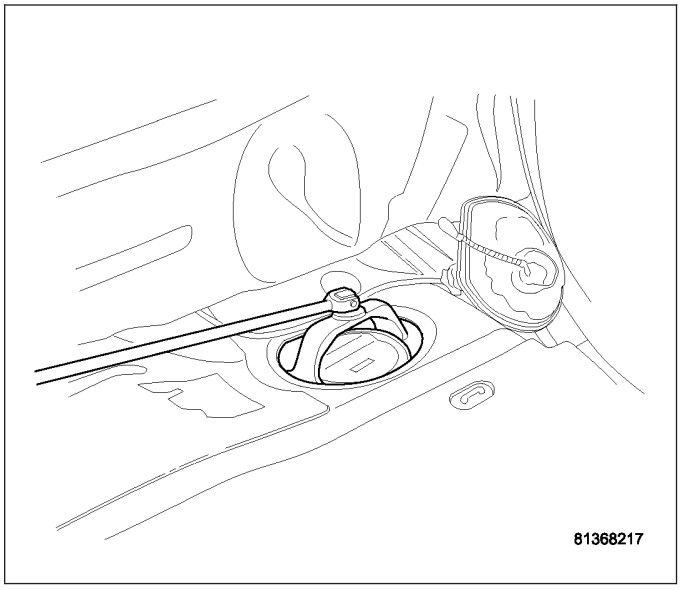

10. Drain fuel from left side of fuel tank. Lift module up enough to push hose into tank and drain. Do not spill fuel in interior of vehicle.

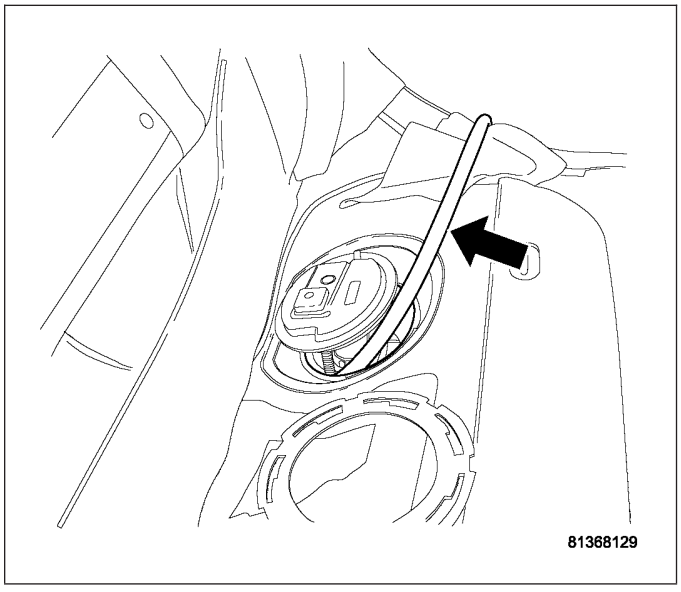

11. Lift module up and out of tank as far as possible.
12. Disconnect the electrical connector from the bottom of the left side module.

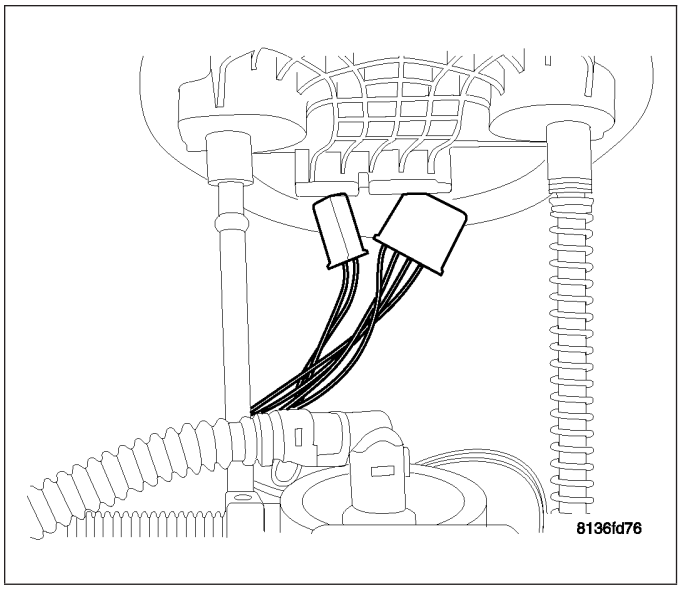

13. Pump module left side.
14. Lift module top half off and tip lower half on its side to drain remaining fuel from the reservoir.

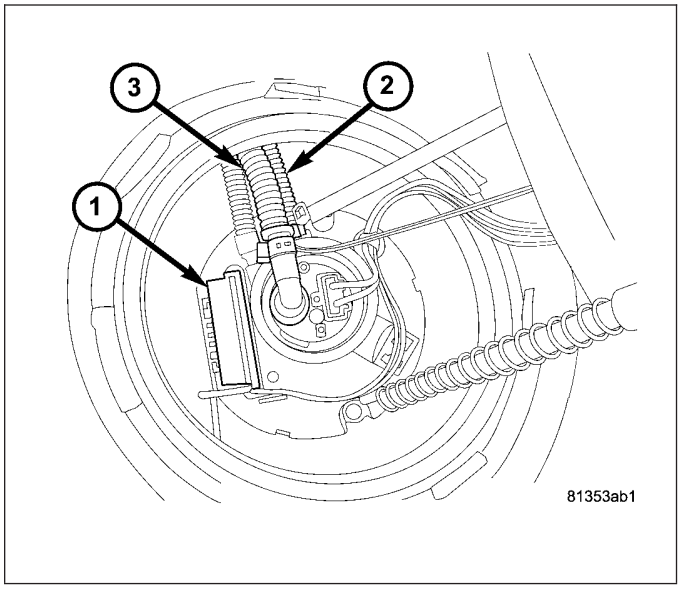

15. Push in on the release tab on the fuel line fitting to release the fuel line from the fuel pump fitting.

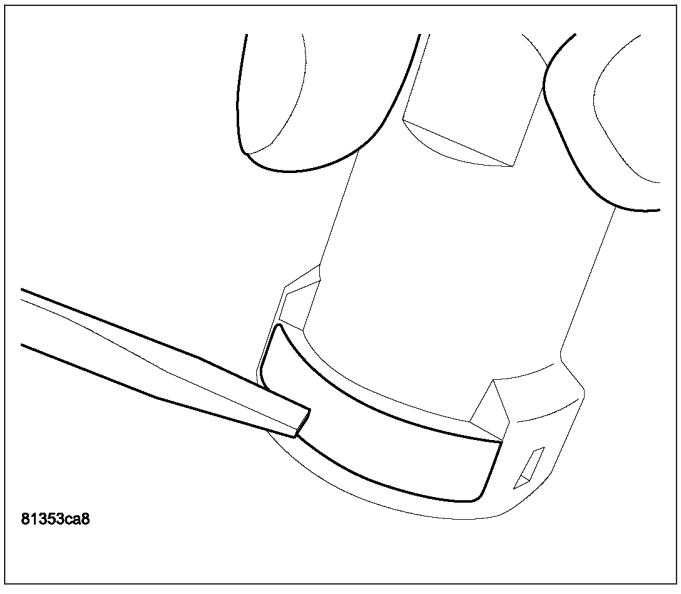

16. Remove the Fuel supply line from the top of the bottom half of the module.

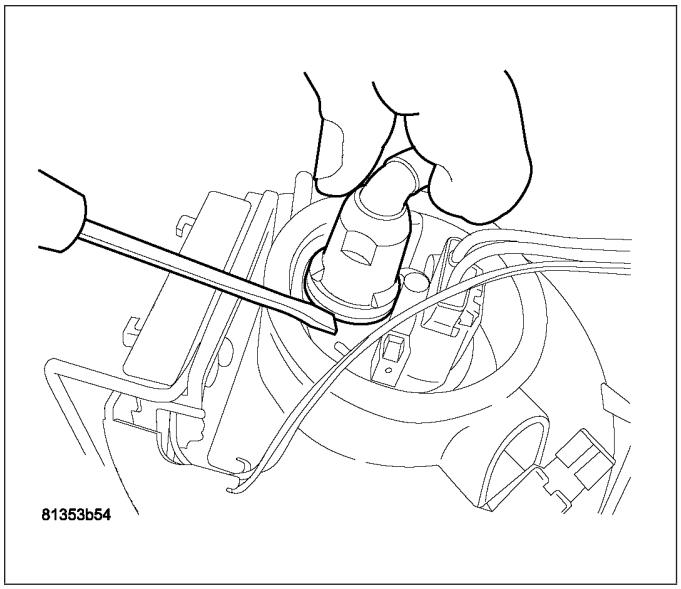

17. Fuel return line (1) and Saipan return line (2). Just pull tube up to release from module.

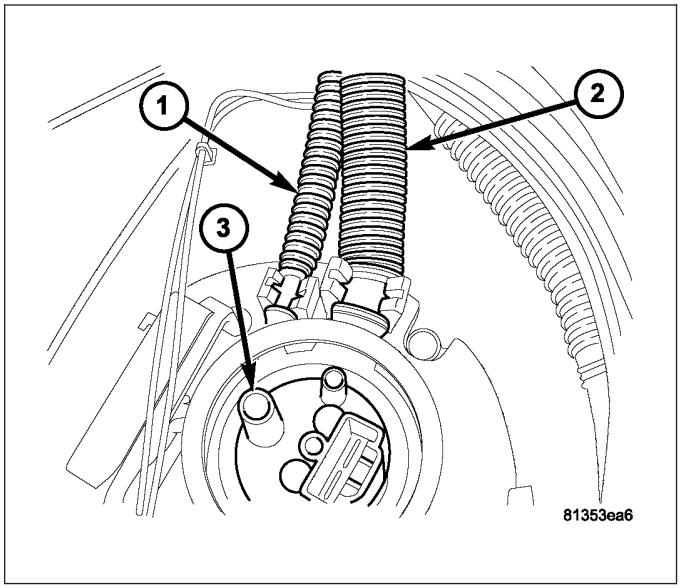

18. Remove the fuel return and Siphon return hoses from the bottom module.

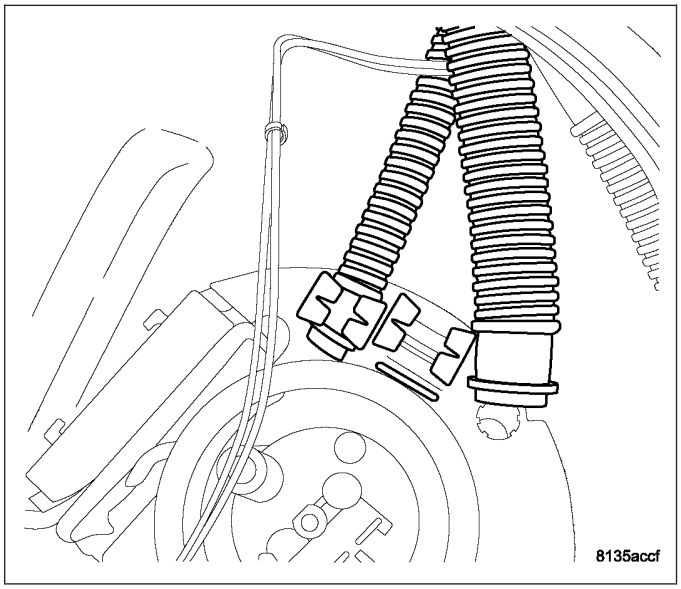

19. Remove plastic access covers from floor pan right side.

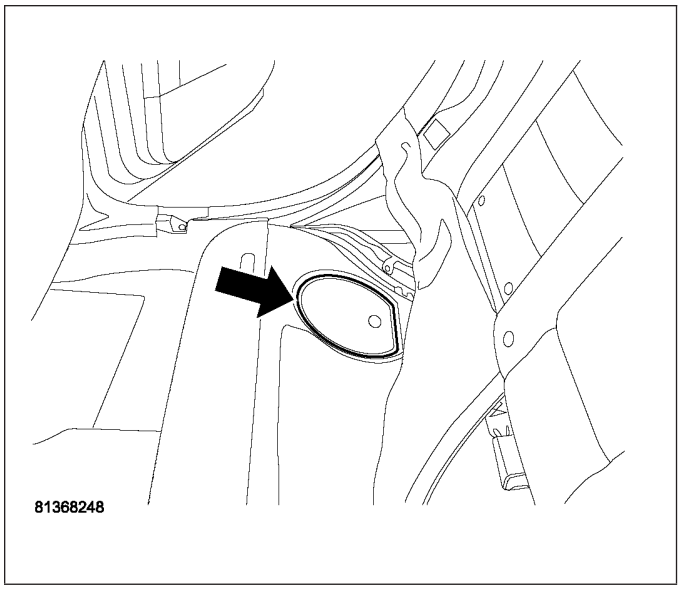

20. Disconnect the fuel supply line from module.
21. Mark the module orientation.

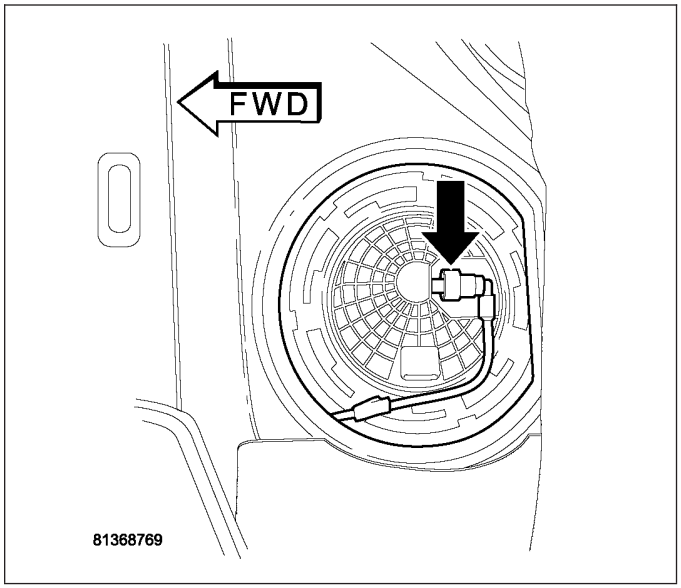

22. Use special tool #9340 to remove right side module lock ring.

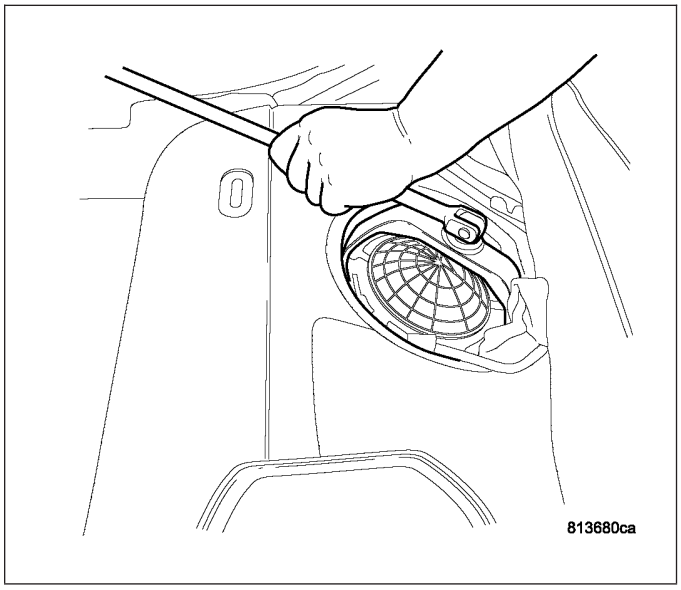

23. Drain fuel from right side of fuel tank. Lift module up enough to push hose into tank and drain. Do not spill fuel in interior of vehicle.

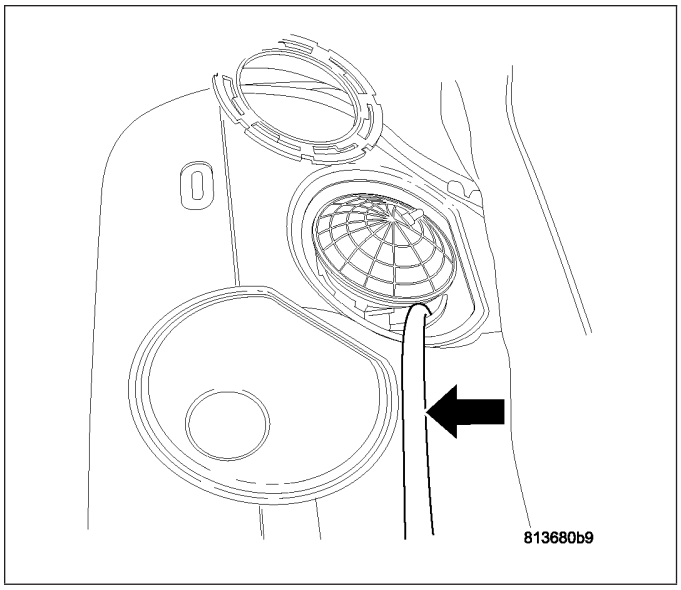

24. Pull module up and out of fuel tank.

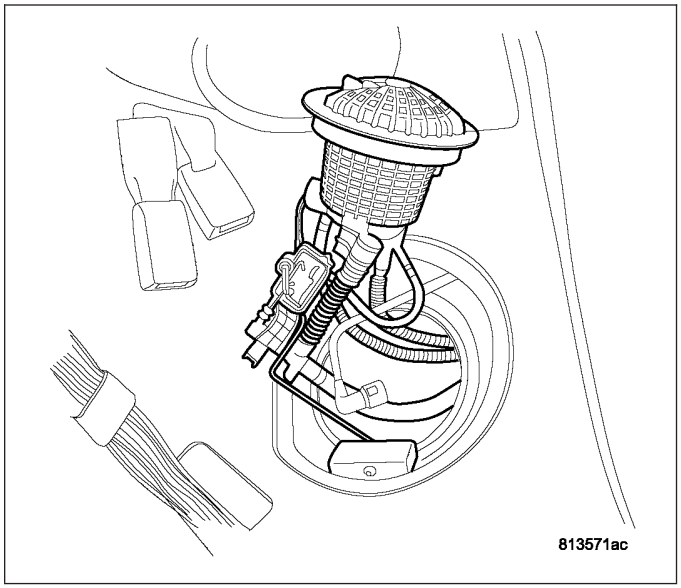

25. Unlatch the fuel level sending card from module.

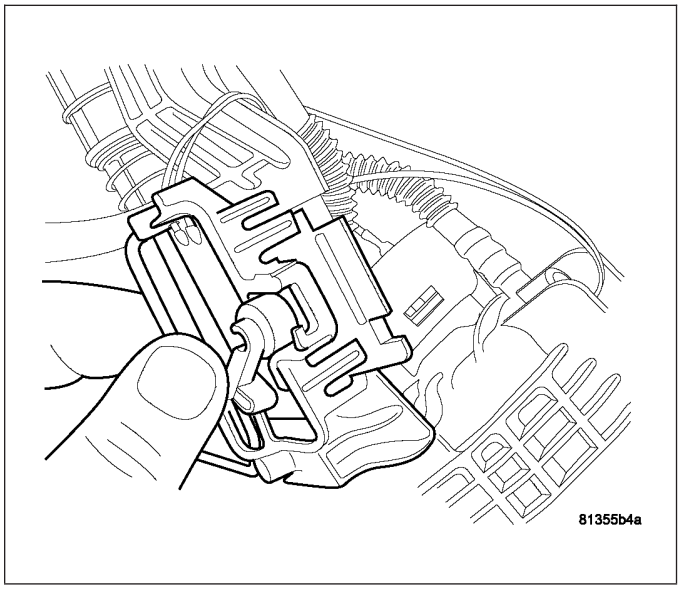

26. Fuel level sending card released.

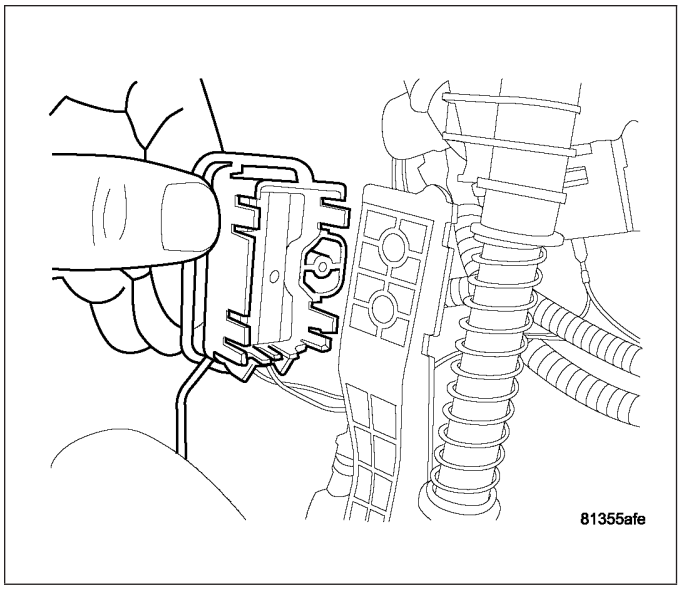

27. Remove the ground wire from the check valve and fuel pressure regulator.

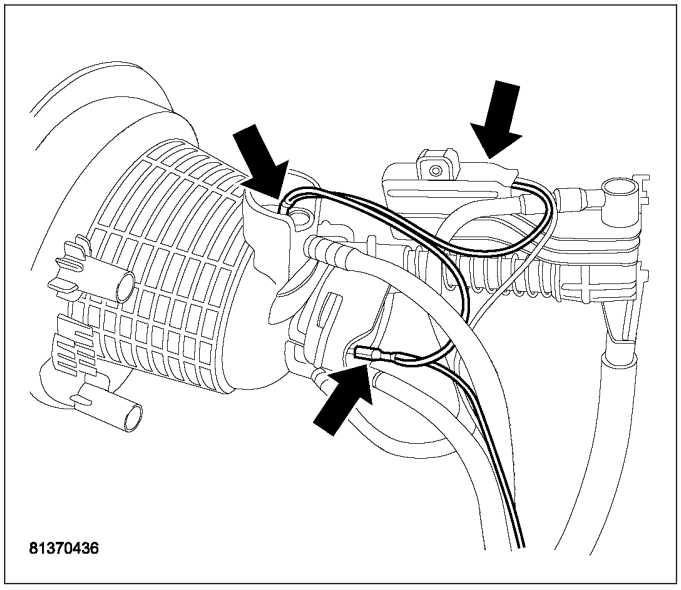

28. Remove fuel level sending card from module.
29. Cut tie straps from hoses to remove wiring harness for fuel level card.

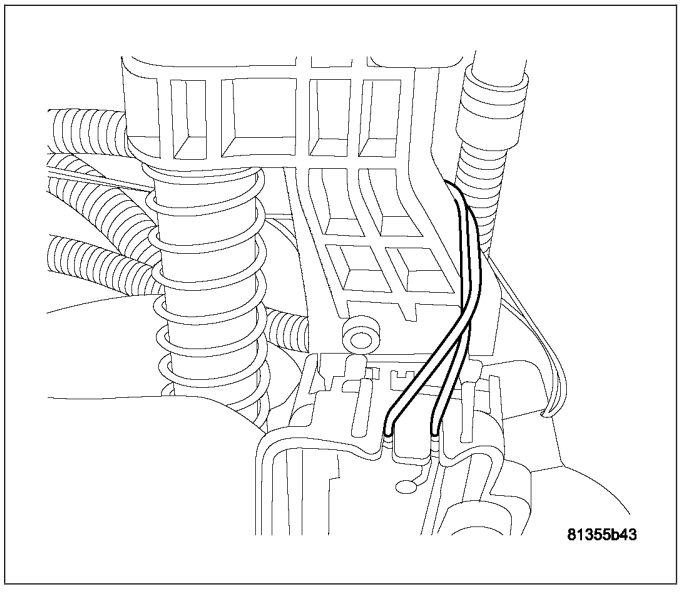

INSTALLATION

LEFT SIDE MODULE

1. Install level sending card, make sure that the locking tabs are locked on the card.

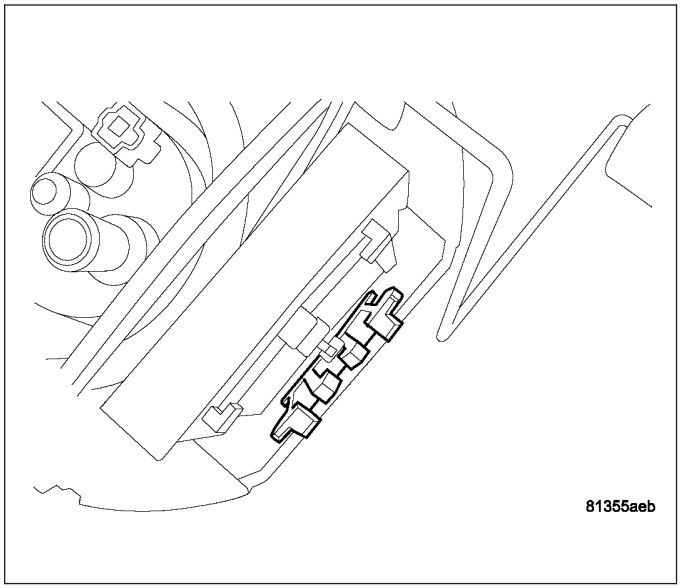

2. Route wires in the proper location.

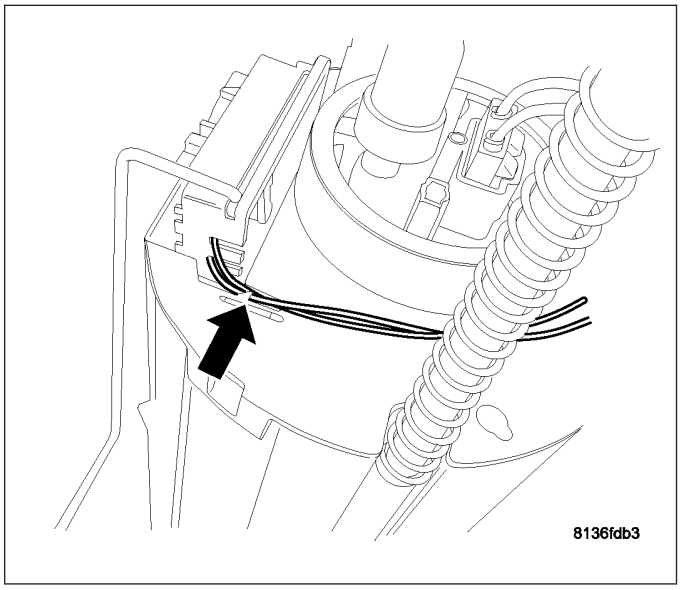

3. Install module top to module bottom.

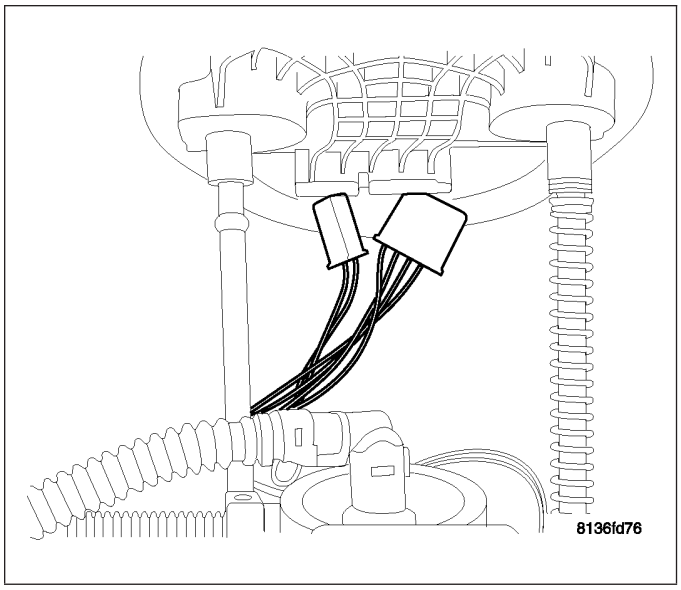

4. Connect the electrical connectors for right side fuel level sending card, left side module card and fuel pump.

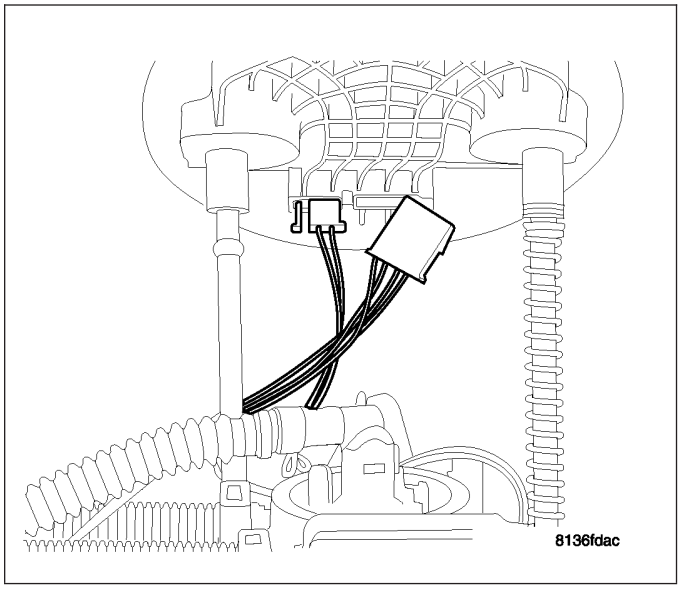

5. Install module and align marks on the module for proper orientation.

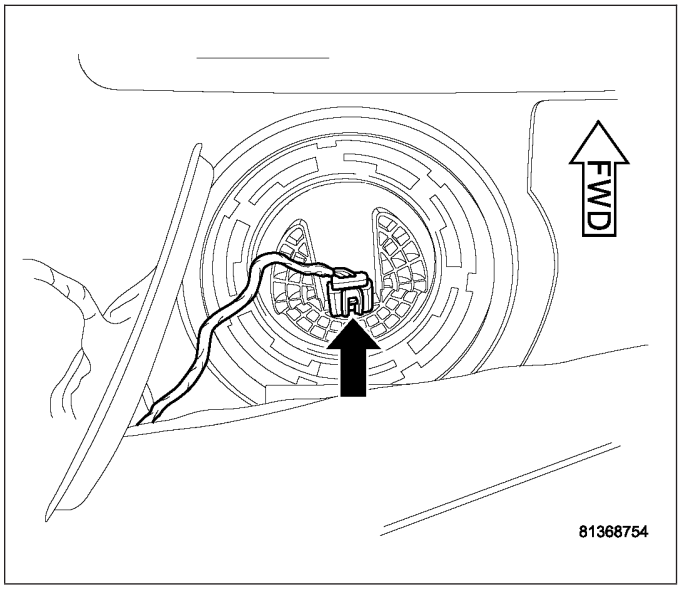

6. Install module lock-ring.
7. Use special tool #9340 to tighten left side module lock ring.
8. Connect the electrical connector to left side module and install plastic access cover.

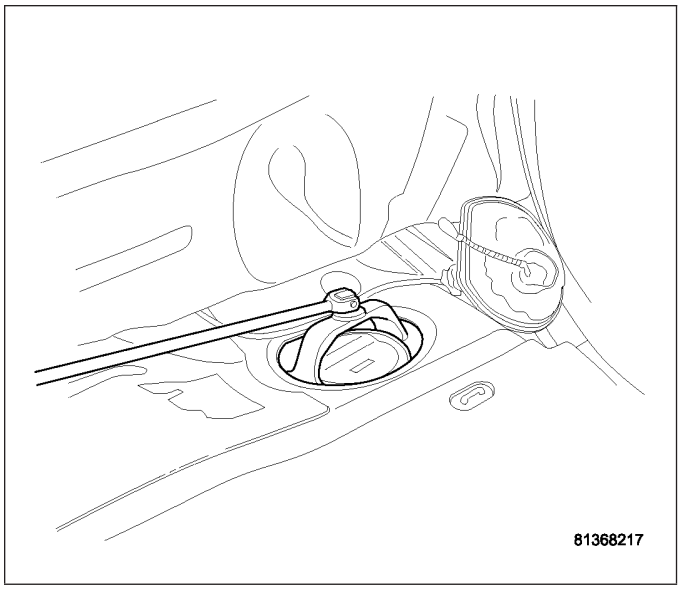

9. Fold the foam pad covering access cover for modules back into place.

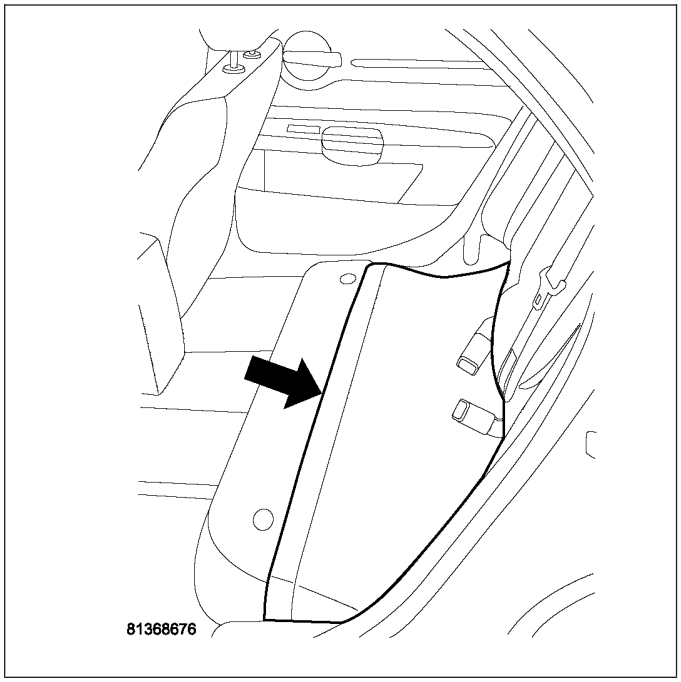

10. Install rear lower seat cushion

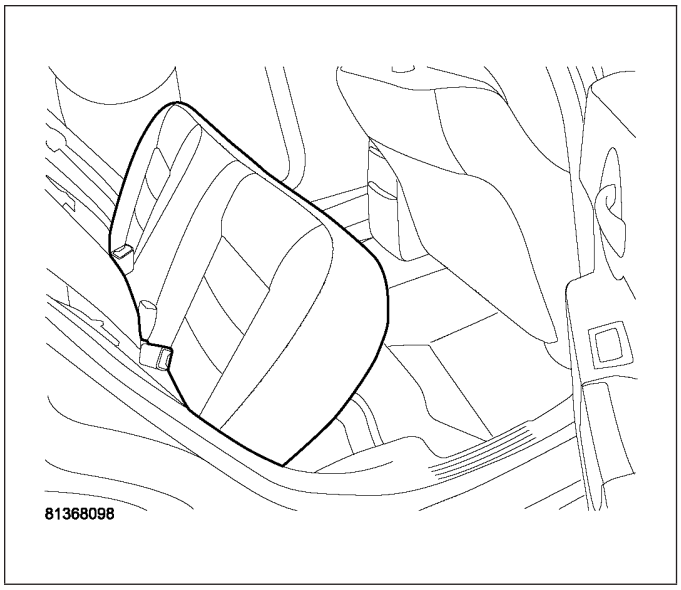

11. Rear lower seat cushion installed.

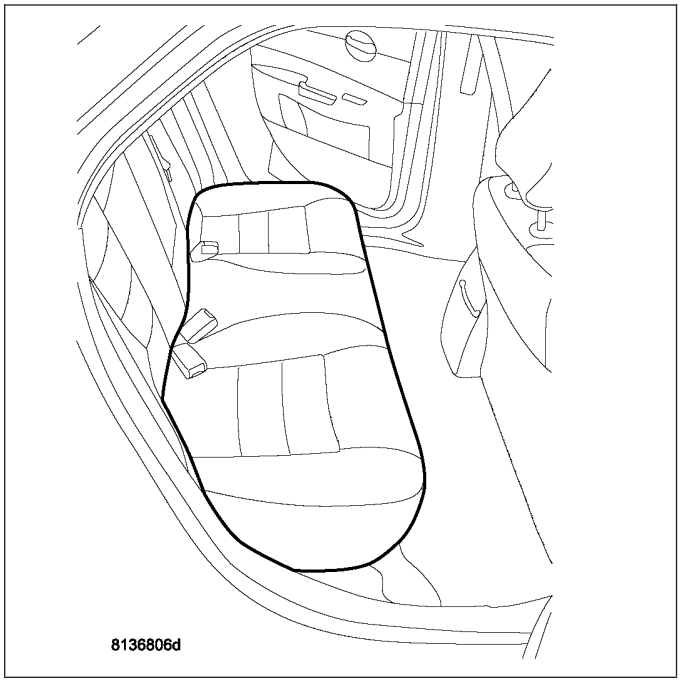

12. Fill fuel tank.
13. Connect negative battery cable.
14. Fill fuel tank. Use the scan tool to pressurize the fuel system. Check for leaks.

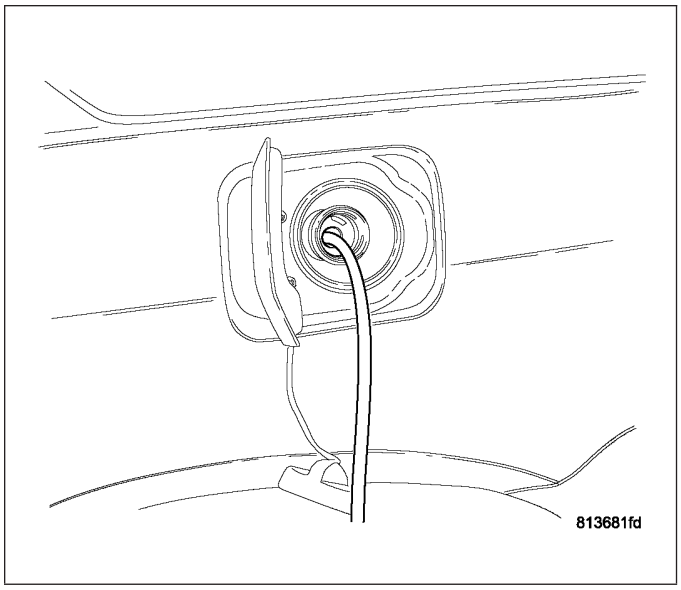

RIGHT SIDE MODULE

1. Install level sending card, make sure that the locking tabs are locked on the card.

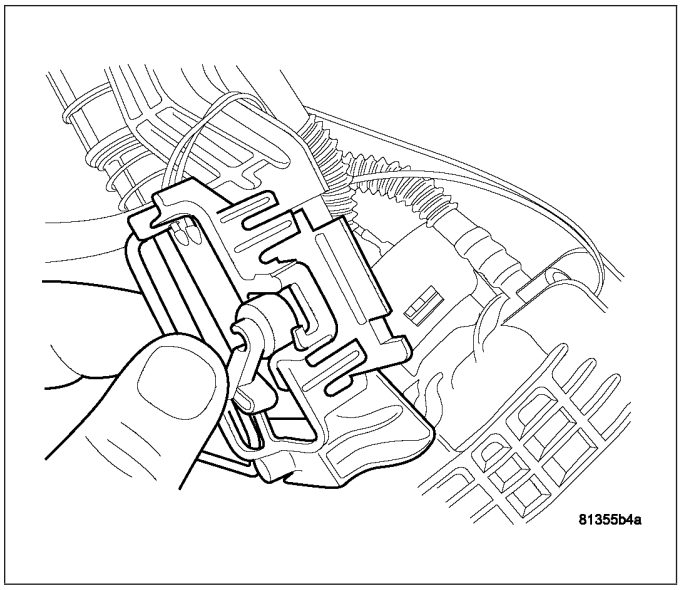

2. Route wires in the proper location.
3. Tie strap the wires harness to the hoses.

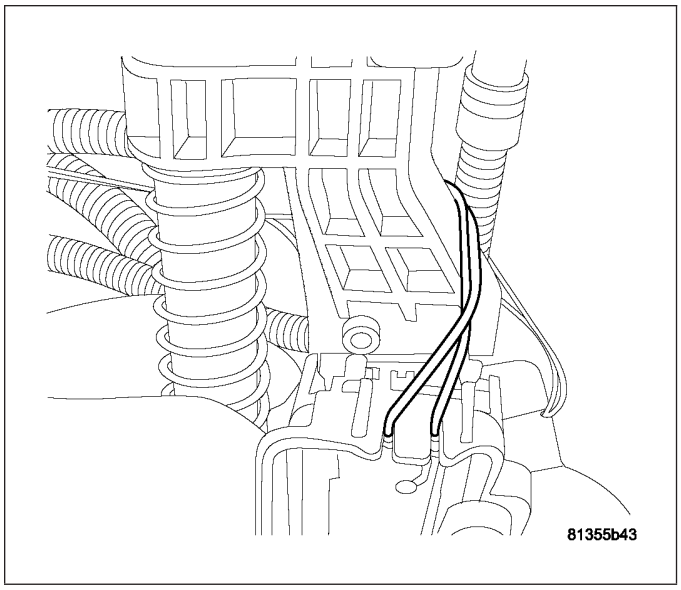

4. Feed hoses and wiring harness into fuel tank and over the center hump in tank.

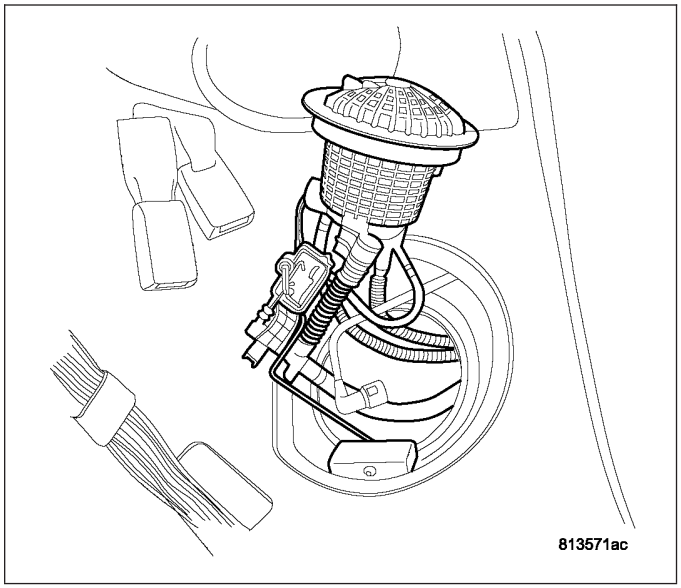

5. Install module and align marks on the module for proper orientation.

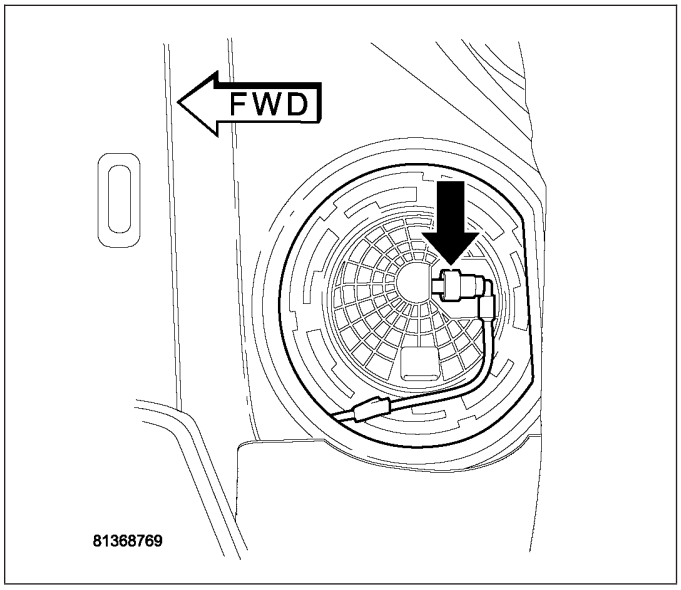

6. Install module lock-ring.
7. Use special tool #9340 to tighten right side module lock ring.
8. Connect the fuel supply line to module.

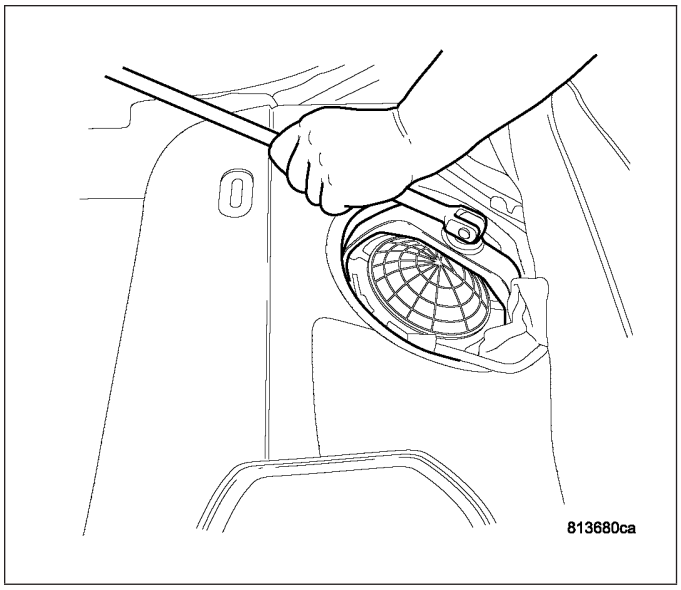

9. Install plastic access covers to floor pan right side.

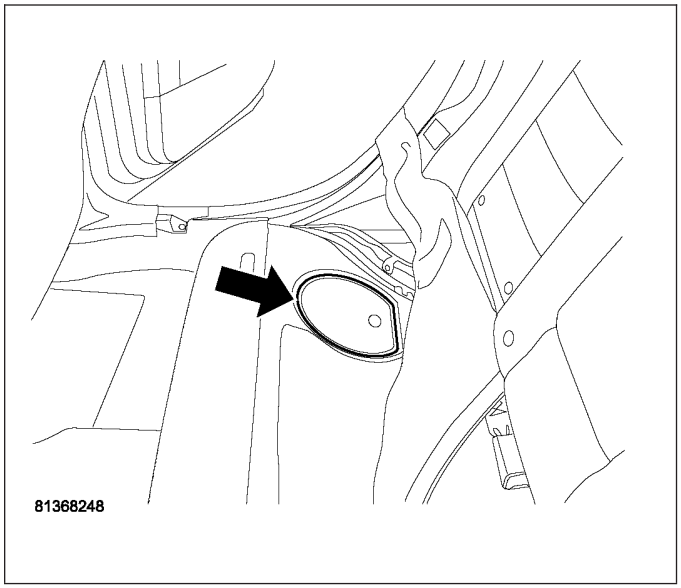

10. Install the fuel return hoses to module.
11. Install fuel supply line to module.

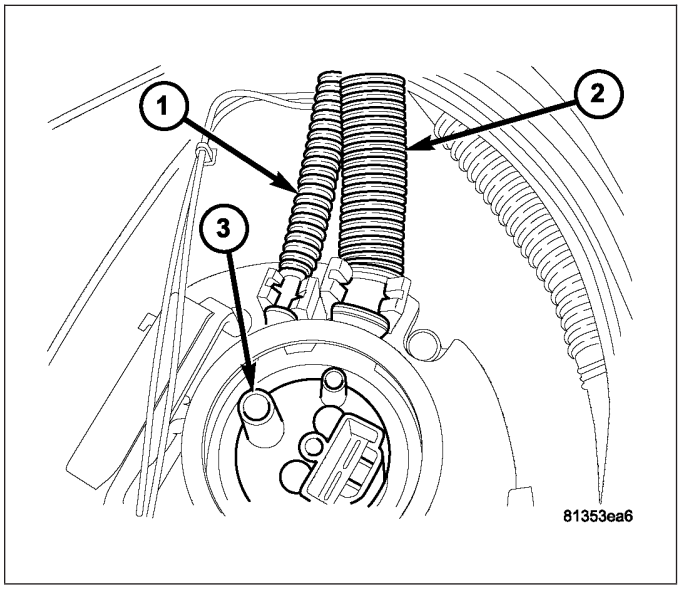

12. Make sure that wires are routed properly.

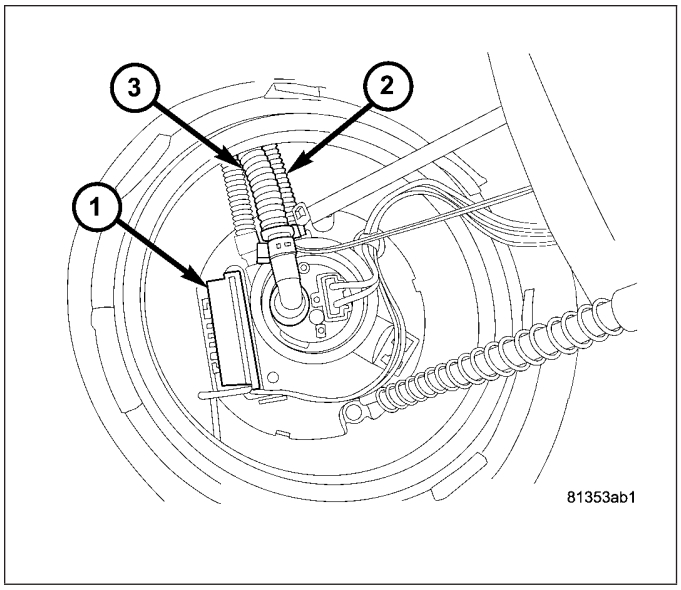

13. Make sure that the level sending card wire is tie straped to the fuel supply line at the module.

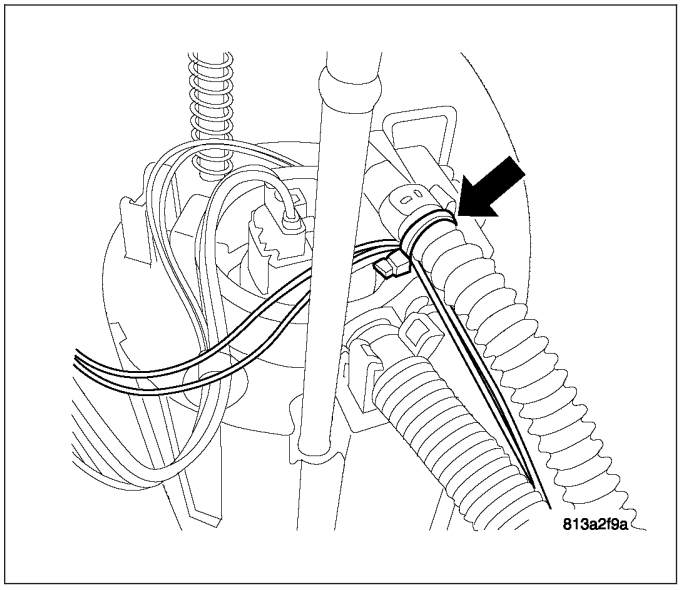

14. Install left side module top to module bottom.

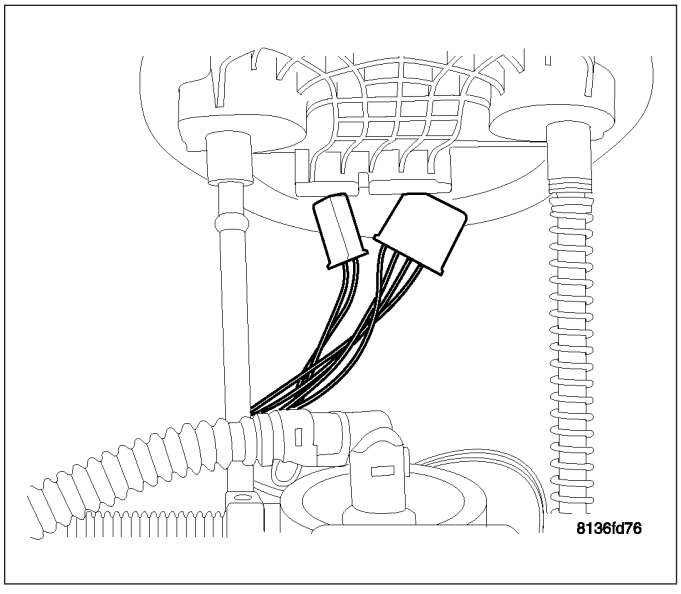

15. Connect the electrical connectors for right side fuel level sending card, left side module card. Make sure that wires are routed properly.

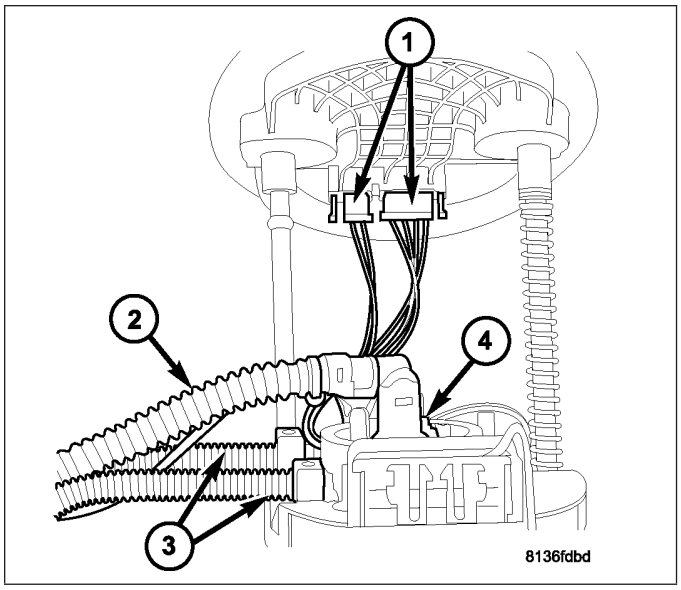

16. Install module and align marks on the module for proper orientation.

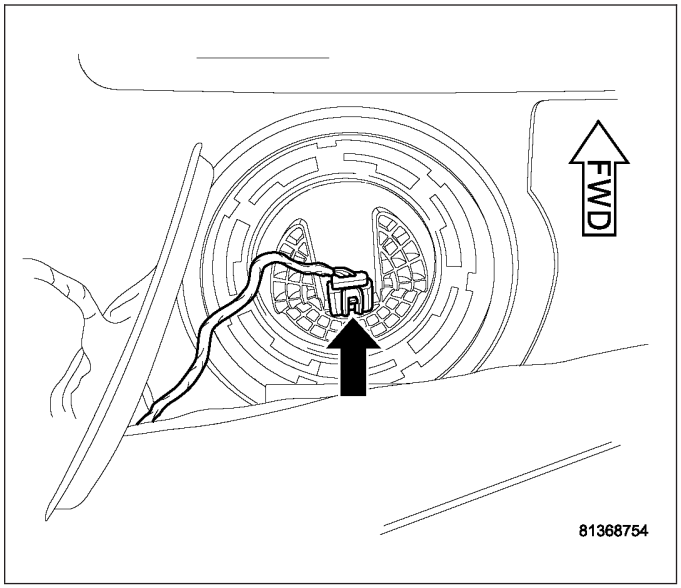

17. Install module lock-ring.
18. Use special tool #9340 to tighten left side module lock ring.
19. Connect the electrical connector to left side module and install plastic access cover.

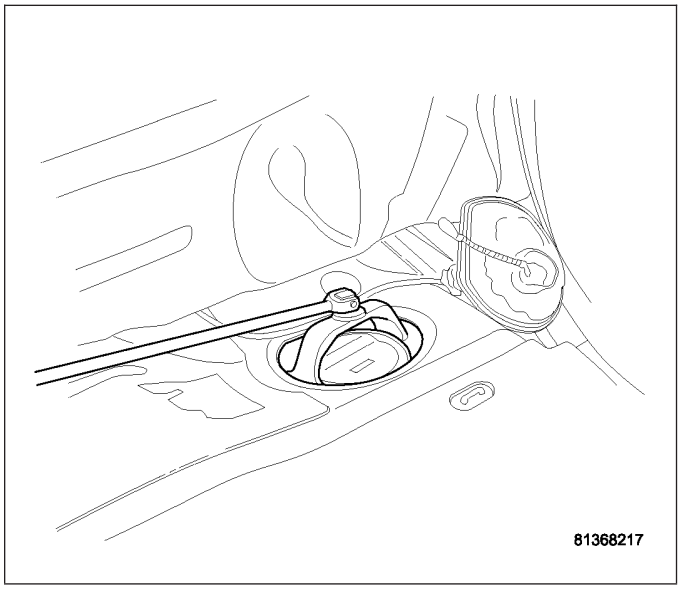

20. Fold the foam pad covering access cover for modules back into place.

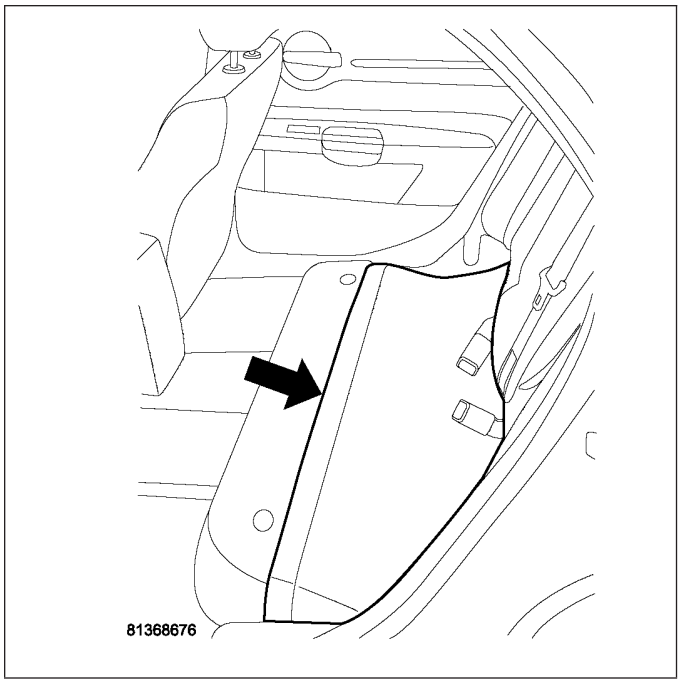

21. Install rear lower seat cushion

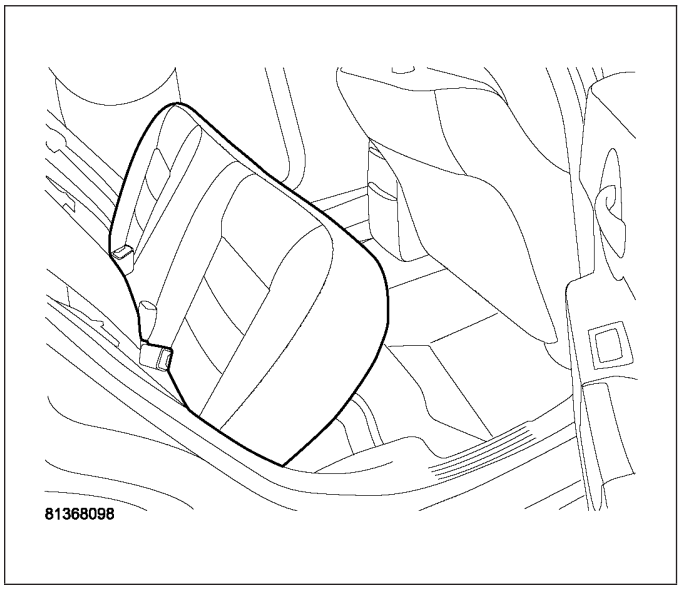

22. Rear lower seat cushion installed.

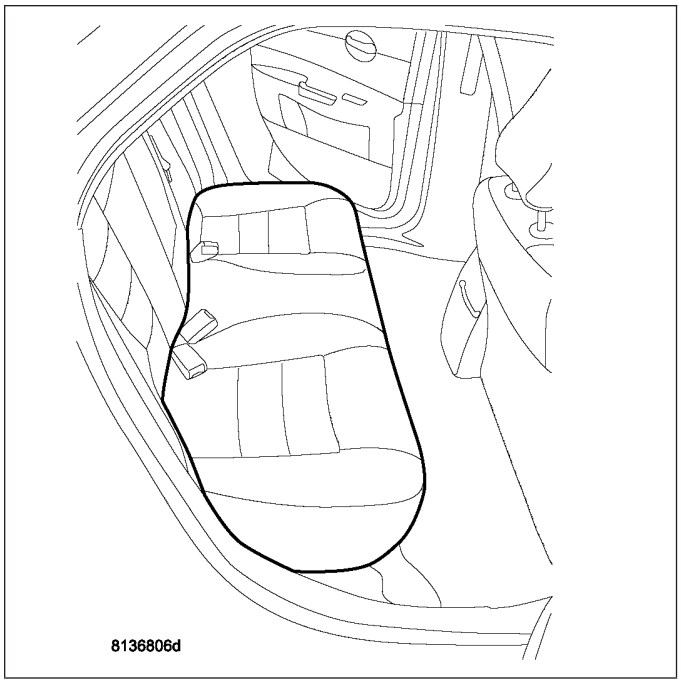

23. Fill fuel tank.
24. Connect negative battery cable.
25. Fill fuel tank. Use the scan tool to pressurize the fuel system. Check for leaks.

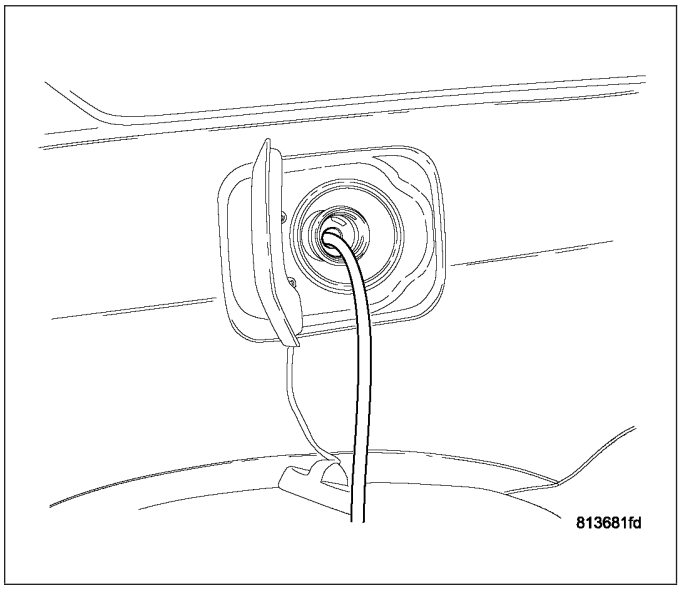

FUEL INJECTION

TABLE OF CONTENTS

page

FUEL INJECTION
OPERATION
INJECTION SYSTEM 169
MODES OF OPERATION 169
FUEL CORRECTION or ADAPTIVE MEMORIES 172
SYSTEM DIAGNOSIS 174
SPECIFICATIONS
TORQUE 174
SPECIAL TOOLS
FUEL 175
PEDAL-ACCELERATOR
REMOVAL 176
INSTALLATION 177
SENSOR-CRANKSHAFT POSITION
REMOVAL
2.7L 178
3.5L 179
5.7L 180
6.1L 180
INSTALLATION
2.7L 181
3.5L 181
5.7L 182
6.1L 182
INJECTOR-FUEL
REMOVAL
2.7L 183
3.5L 183
5.7L/6.1L 184
INSTALLATION
2.7L 185
3.5L 185
5.7L/6.1L 186
SENSOR-INLET AIR TEMPERATURE
REMOVAL
2.7L 187
3.5L 188
5.7L 190
6.1L 190
INSTALLATION
2.7L 191
3.5L 193
5.7L 194
6.1L 195

page

ACTUATOR-MANIFOLD TUNE VALVE
REMOVAL
2.7L 196
3.5L 197
INSTALLATION
2.7L 199
3.5L 200
SENSOR-MANIFOLD ABSOLUTE PRESSURE
REMOVAL
2.7L 201
3.5L 203
5.7L 205
6.1L 206
INSTALLATION
2.7L 207
3.5L 209
5.7L 211
6.1L 211
SENSOR-OXYGEN
REMOVAL
2.7L 212
3.5L 212
5.7L 213
6.1L 213
INSTALLATION
2.7L 214
3.5L 214
5.7L 215
6.1L 215
SHORT RUNNER VALVE
OPERATION 216
REMOVAL - 3.5L 216
INSTALLATION - 3.5L 217
THROTTLE BODY
REMOVAL
2.7L 218
3.5L 219
5.7L 221
6.1L 222
INSTALLATION
2.7L 222
3.5L 224
5.7L 225
6.1L 226

FUEL INJECTION

OPERATION

INJECTION SYSTEM

All engines used in this section have a sequential Multi-Port Electronic Fuel Injection system. The MPI system is computer regulated and provides precise air/fuel ratios for all driving conditions. The Powertrain Control Module (PCM) operates the fuel injection system.

The PCM regulates:

- Ignition timing
- Air/fuel ratio
- Emission control devices
- Cooling fan
- Charging system
- Idle speed
- Vehicle speed control

Various sensors provide the inputs necessary for the PCM to correctly operate these systems. In addition to the sensors, various switches also provide inputs to the PCM.

The PCM can adapt its programming to meet changing operating conditions.

Fuel is injected into the intake port above the intake valve in precise metered amounts through electrically operated injectors. The PCM fires the injectors in a specific sequence. Under most operating conditions, the PCM maintains an air fuel ratio of 14.7 parts air to 1 part fuel by constantly adjusting injector pulse width. Injector pulse width is the length of time the injector is open.

The PCM adjusts injector pulse width by opening and closing the ground path to the injector. Engine RPM (speed) and manifold absolute pressure (air density) are the **primary** inputs that determine injector pulse width.

MODES OF OPERATION

As input signals to the PCM change, the PCM adjusts its response to output devices. For example, the PCM must calculate a different injector pulse width and ignition timing for idle than it does for Wide Open Throttle (WOT). There are several different modes of operation that determine how the PCM responds to the various input signals.

There are two different areas of operation, OPEN LOOP and CLOSED LOOP.

During OPEN LOOP modes the PCM receives input signals and responds according to preset PCM programming. Inputs from the upstream and downstream heated oxygen sensors are not monitored during OPEN LOOP modes, except for heated oxygen sensor diagnostics (they are checked for shorted conditions at all times).

During CLOSED LOOP modes the PCM monitors the inputs from the upstream and downstream heated oxygen sensors. The upstream heated oxygen sensor input tells the PCM if the calculated injector pulse width resulted in the ideal air-fuel ratio of 14.7 to one. By monitoring the exhaust oxygen content through the upstream heated oxygen sensor, the PCM can fine tune injector pulse width. Fine tuning injector pulse width allows the PCM to achieve optimum fuel economy combined with low emissions.

For the PCM to enter CLOSED LOOP operation, the following must occur:

1. Engine coolant temperature must be over 35°F.
   - If the coolant is over 35°F the PCM will wait 38 seconds.
   - If the coolant is over 50°F the PCM will wait 15 seconds.
   - If the coolant is over 167°F the PCM will wait 3 seconds.
2. For other temperatures the PCM will interpolate the correct waiting time.
3. O2 sensor must read either greater than 0.745 volts or less than 0.29 volt.
4. The multi-port fuel injection systems has the following modes of operation:
   - Ignition switch ON (Zero RPM)
   - Engine start-up
   - Engine warm-up
   - Cruise

- Idle
- Acceleration
- Deceleration
- Wide Open Throttle
- Ignition switch OFF

5. The engine start-up (crank), engine warm-up, deceleration with fuel shutoff and wide open throttle modes are OPEN LOOP modes. Under most operating conditions, the acceleration, deceleration (with A/C on), idle and cruise modes, **with the engine at operating temperature** are CLOSED LOOP modes.

IGNITION SWITCH ON (ZERO RPM) MODE

When the ignition switch activates the fuel injection system, the following actions occur:

- The PCM monitors the engine coolant temperature sensor and throttle position sensor input. The PCM determines basic fuel injector pulse width from this input.
- The PCM determines atmospheric air pressure from the MAP sensor input to modify injector pulse width.

When the key is in the ON position and the engine is not running (zero rpm), the Auto Shutdown (ASD) and fuel pump relays de-energize after approximately 1 second. Therefore, battery voltage is not supplied to the fuel pump, ignition coil, fuel injectors and heated oxygen sensors.

ENGINE START-UP MODE

This is an OPEN LOOP mode. If the vehicle is in park or neutral (automatic transaxles) or the clutch pedal is depressed (manual transaxles) the ignition switch energizes the starter relay when the engine is not running. The following actions occur when the starter motor is engaged.

- If the PCM receives the camshaft position sensor and crankshaft position sensor signals, it energizes the Auto Shutdown (ASD) relay and fuel pump relay. If the PCM does not receive both signals within approximately one second, it will not energize the ASD relay and fuel pump relay. The ASD and fuel pump relays supply battery voltage to the fuel pump, fuel injectors, ignition coil, (EGR solenoid and PCV heater if equipped) and heated oxygen sensors.
- The PCM energizes the injectors (on the 69° degree falling edge) for a calculated pulse width until it determines crankshaft position from the camshaft position sensor and crankshaft position sensor signals. The PCM determines crankshaft position within 1 engine revolution.
- After determining crankshaft position, the PCM begins energizing the injectors in sequence. It adjusts injector pulse width and controls injector synchronization by turning the individual ground paths to the injectors On and Off.
- When the engine idles within ±64 RPM of its target RPM, the PCM compares current MAP sensor value with the atmospheric pressure value received during the Ignition Switch On (zero RPM) mode.

Once the ASD and fuel pump relays have been energized, the PCM determines injector pulse width based on the following:

- MAP
- Engine RPM
- Battery voltage
- Engine coolant temperature
- Inlet/Intake air temperature (IAT)
- Throttle position
- The number of engine revolutions since cranking was initiated

During Start-up the PCM maintains ignition timing at 9° BTDC.

ENGINE WARM-UP MODE

This is an OPEN LOOP mode. The following inputs are received by the PCM:

- Manifold Absolute Pressure (MAP)
- Crankshaft position (engine speed)
- Engine coolant temperature
- Inlet/Intake air temperature (IAT)
- Camshaft position

- Knock sensor
- Throttle position
- A/C switch status
- Battery voltage
- Vehicle speed
- Speed control
- O2 sensors

The PCM adjusts injector pulse width and controls injector synchronization by turning the individual ground paths to the injectors On and Off.

The PCM adjusts ignition timing and engine idle speed. Engine idle speed is adjusted through the idle air control motor.

CRUISE OR IDLE MODE

When the engine is at operating temperature this is a CLOSED LOOP mode. During cruising or idle the following inputs are received by the PCM:

- Manifold absolute pressure
- Crankshaft position (engine speed)
- Inlet/Intake air temperature
- Engine coolant temperature
- Camshaft position
- Knock sensor
- Throttle position
- Exhaust gas oxygen content (O2 sensors)
- A/C switch status
- Battery voltage
- Vehicle speed

The PCM adjusts injector pulse width and controls injector synchronization by turning the individual ground paths to the injectors On and Off.

The PCM adjusts engine idle speed and ignition timing. The PCM adjusts the air/fuel ratio according to the oxygen content in the exhaust gas (measured by the upstream and downstream heated oxygen sensor).

The PCM monitors for engine misfire. During active misfire and depending on the severity, the PCM either continuously illuminates or flashes the malfunction indicator lamp (Check Engine light on instrument panel). Also, the PCM stores an engine misfire DTC in memory, if 2nd trip with fault.

The PCM performs several diagnostic routines. They include:

- Oxygen sensor monitor
- Downstream heated oxygen sensor diagnostics during open loop operation (except for shorted)
- Fuel system monitor
- EGR monitor (if equipped)
- Purge system monitor
- Catalyst efficiency monitor
- All inputs monitored for proper voltage range, rationality.
- All monitored components (refer to the Emission section for On-Board Diagnostics).

The PCM compares the upstream and downstream heated oxygen sensor inputs to measure catalytic convertor efficiency. If the catalyst efficiency drops below the minimum acceptable percentage, the PCM stores a diagnostic trouble code in memory, after 2 trips.

During certain idle conditions, the PCM may enter a variable idle speed strategy. During variable idle speed strategy the PCM adjusts engine speed based on the following inputs.

- A/C status
- Battery voltage
- Battery temperature or Calculated Battery Temperature
- Engine coolant temperature

- Engine run time
- Inlet/Intake air temperature
- Vehicle mileage

ACCELERATION MODE

This is a CLOSED LOOP mode. The PCM recognizes an abrupt increase in Throttle Position sensor output voltage or MAP sensor output voltage as a demand for increased engine output and vehicle acceleration. The PCM increases injector pulse width in response to increased fuel demand.

- Wide Open Throttle-open loop

DECELERATION MODE

This is a CLOSED LOOP mode. During deceleration the following inputs are received by the PCM:

- A/C status
- Battery voltage
- Inlet/Intake air temperature
- Engine coolant temperature
- Crankshaft position (engine speed)
- Exhaust gas oxygen content (upstream heated oxygen sensor)
- Knock sensor
- Manifold absolute pressure
- Throttle position sensor
- IAC motor (solenoid) control changes in response to MAP sensor feedback

The PCM may receive a closed throttle input from the Throttle Position Sensor (TPS) when it senses an abrupt decrease in manifold pressure. This indicates a hard deceleration (Open Loop). In response, the PCM may momentarily turn off the injectors. This helps improve fuel economy, emissions and engine braking.

WIDE-OPEN-THROTTLE MODE

This is an OPEN LOOP mode. During wide-open-throttle operation, the following inputs are used by the PCM:

- Inlet/Intake air temperature
- Engine coolant temperature
- Engine speed
- Knock sensor
- Manifold absolute pressure
- Throttle position

When the PCM senses a wide-open-throttle condition through the Throttle Position Sensor (TPS) it de-energizes the A/C compressor clutch relay. This disables the air conditioning system and disables EGR (if equipped).

The PCM adjusts injector pulse width to supply a predetermined amount of additional fuel, based on MAP and RPM.

IGNITION SWITCH OFF MODE

When the operator turns the ignition switch to the OFF position, the following occurs:

- All outputs are turned off, unless 02 Heater Monitor test is being run. Refer to the Emission section for On-Board Diagnostics.
- No inputs are monitored except for the heated oxygen sensors. The PCM monitors the heating elements in the oxygen sensors and then shuts down.

FUEL CORRECTION or ADAPTIVE MEMORIES

DESCRIPTION

In Open Loop, the PCM changes pulse width without feedback from the O2 Sensors. Once the engine warms up to approximately 30 to 35° F, the PCM goes into closed loop **Short Term Correction** and utilizes feedback from the O2 Sensors. Closed loop **Long Term Adaptive Memory** is maintained above 170° to 190° F unless the PCM senses wide open throttle. At that time the PCM returns to Open Loop operation.

OPERATION

Short Term

The first fuel correction program that begins functioning is the short term fuel correction. This system corrects fuel delivery in direct proportion to the readings from the Upstream O2 Sensor.

The PCM monitors the air/fuel ratio by using the input voltage from the O2 Sensor. When the voltage reaches its preset high or low limit, the PCM begins to add or remove fuel until the sensor reaches its switch point. The short term corrections then begin.

The PCM makes a series of quick changes in the injector pulse-width until the O2 Sensor reaches its opposite preset limit or switch point. The process then repeats itself in the opposite direction.

Short term fuel correction will keep increasing or decreasing injector pulse-width based upon the upstream O2 Sensor input. The maximum range of authority for short term memory is 25% (+/-) of base pulse-width. Short term is violated and is lost when ignition is turned OFF.

Long Term

The second fuel correction program is the long term adaptive memory. In order to maintain correct emission throughout all operating ranges of the engine, a cell structure based on engine rpm and load (MAP) is used.

Ther number of cells varies upon the driving conditions. Two cells are used only during idle, based upon TPS and Park/Neutral switch inputs. There may be two other cells used for deceleration, based on TPS, engine rpm, and vehicle speed. The other twelve cells represent a manifold pressure and an rpm range. Six of the cells are high rpm and the other six are low rpm. Each of these cells has a specific MAP voltage range Typical Adaptive Memory Fuel Cells .

As the engine enters one of these cells the PCM looks at the amount of short term correction being used. Because the goal is to keep short term at 0 (O2 Sensor switching at 0.5 volt), long term will update in the same direction as short term correction was moving to bring the short term back to 0. Once short term is back at 0, this long term correction factor is stored in memory.

The values stored in long term adaptive memory are used for all operating conditions, including open loop and cold starting. However, the updating of the long term memory occurs after the engine has exceeded approximately 170°-190° F, with fuel control in closed loop and two minutes of engine run time. This is done to prevent any transitional temperature or start-up compensations from corrupting long term fuel correction.

Long term adaptive memory can change the pulse-width by as much as 25%, which means it can correct for all of short term. It is possible to have a problem that would drive long term to 25% and short term to another 25% for a total change of 50% away from base pulse-width calculation.

Typical Adaptive Memory Fuel Cells

	Open Throttle	Open Throttle	Open Throttle	Open Throttle	Open Throttle	Open Throttle	Idle	Decel
Vacuum	20	17	13	9	5	0		
Above 1,984 rpm	1	3	5	7	9	11	13 Drive	15
Below 1,984 rpm	0	2	4	6	8	10	12 Neutral	14
MAP volt =	0	1.4	2.0	2.6	3.3	3.9		

Fuel Correction Diagnostics

There are two fuel correction diagnostic routines:

- Fuel System Rich
- Fuel System Lean

A DTC is set and the MIL is illuminated if the PCM detects either of these conditions. This is determined based on total fuel correction, short term times long term.

SYSTEM DIAGNOSIS

OPERATION

The PCM can test many of its own input and output circuits. If the PCM senses a fault in a major system, the PCM stores a Diagnostic Trouble Code (DTC) in memory.

For DTC information see On-Board Diagnostics (Refer to 8 - ELECTRICAL/ELECTRONIC CONTROL MODULES/ POWERTRAIN CONTROL MODULE - DESCRIPTION) .

SPECIFICATIONS

TORQUE

DESCRIPTION	N·m	Ft. Lbs.	In. Lbs.
Camshaft Position Sensor Mounting Bolts	12	8.8	105
Crankshaft Position Sensor Mounting Bolts	12	8.8	105
Engine Coolant Temperature Sensor	28	20	-
Idle Air Control Motor—2.7L	5.5	-	49
Idle Air Control Motor—3.5L	7.3	-	65
Knock Sensor bolt—2.7L	10	7	88.5
Knock Sensor bolt—3.5L	10	7	88.5
Manifold Tuning Valve—2.7L	2.8	-	25
Manifold Tuning Valve—3.5L	2.8	-	25
Oxygen Sensor	28	20	
Powertrain Control Module	4	-	35
Throttle Body Mounting—2.7L	11.9	-	105
Throttle Body Mounting—3.5L	11.9	-	105
Throttle Body Mounting—5.7L	11.9	-	105
Throttle Position Sensor—2.7L	6.2	-	55
Throttle Position Sensor—3.5L	6.2	-	55
Short Runner Valve	6.7	-	60
Fuel Rail Bolts—2.7L	11	-	100
Fuel Rail Bolts—3.5L	28	-	250
Fuel Rail Bolts—5.7L	28	-	250

SPECIAL TOOLS

FUEL

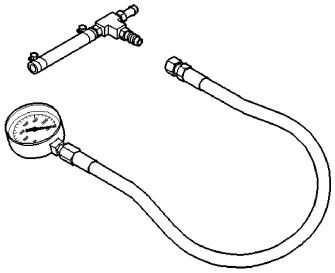

TEST KIT, FUEL

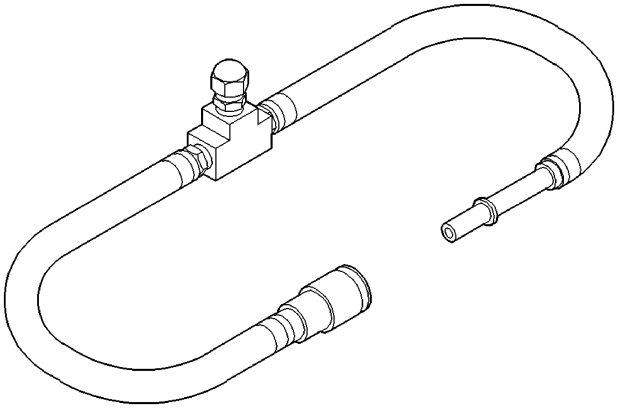

ADAPTERS, FUEL PRESSURE TEST - 6539 AND/OR 6631

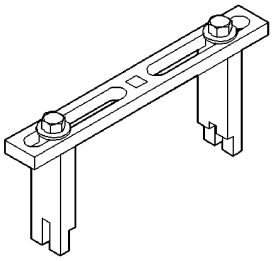

SPANNER WRENCH; 6856

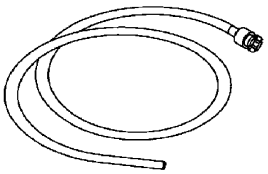

FUEL LINE ADAPTER 1/4

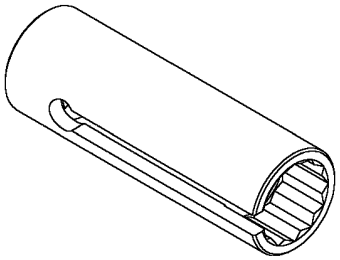

O2S (OXYGEN SENSOR) REMOVAL/INSTALL

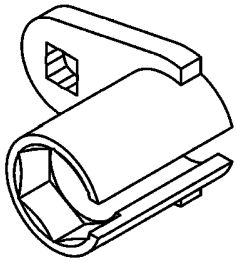

OXYGEN SENSOR TOOL

PEDAL-ACCELERATOR

REMOVAL

1. Disconnect negative battery cable.
2. Disconnect electrical connectors, if equipped with adjustable pedals remove the adjuster cable (1) at accelerator adjuster motor (2).
3. Remove 3 mounting nuts.
4. Remove pedal assembly.

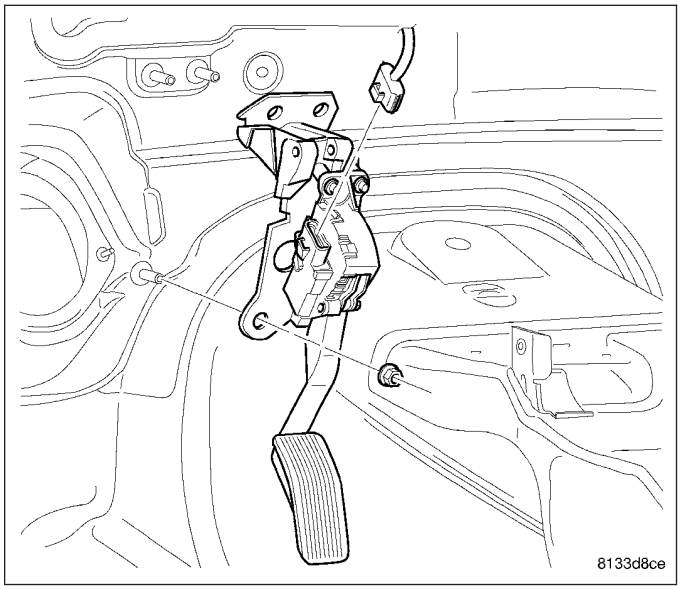

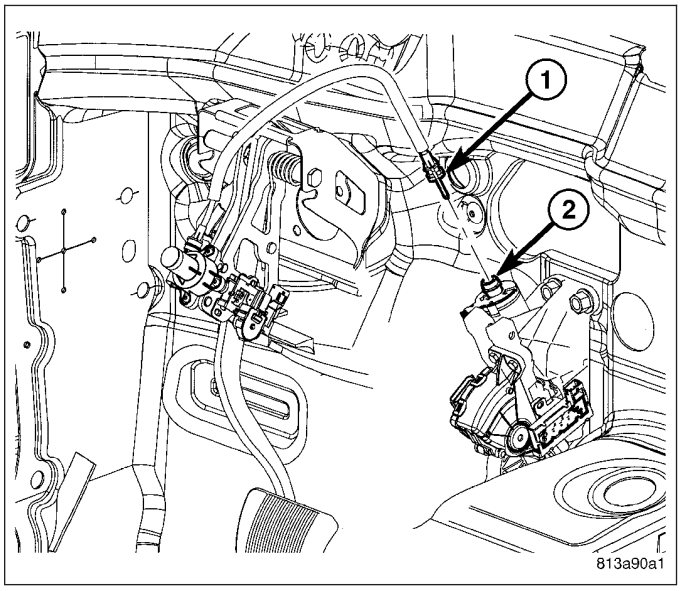

INSTALLATION

1. Install pedal assembly to mounting studs.
2. Install nuts.
3. Tighten mounting nuts to 34 N·m (25 ft. lbs.).

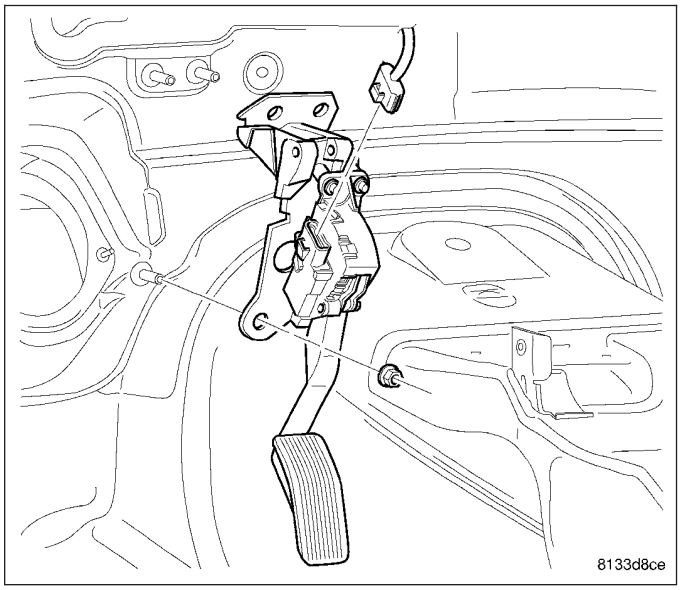

4. Connect electrical connector to assembly, if equipped with adjustable pedals perform the Synchronization of brake pedal to accelerator pedal.
5. Connect negative battery cable.
6. Synchronize brake pedal to accelerator pedal, then connect adjuster cable (1) to adjuster motor (2). (Refer to 5 - BRAKES/HYDRAULIC/MECHANICAL/PEDAL - STANDARD PROCEDURE).

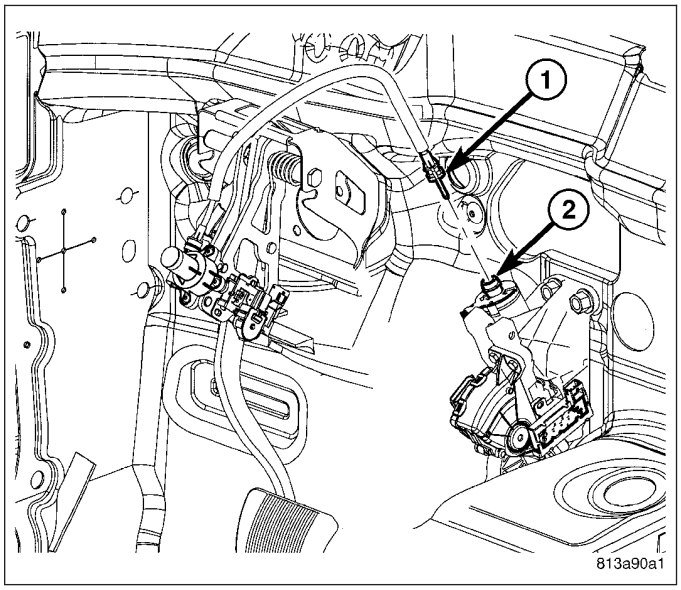

SENSOR-CRANKSHAFT POSITION

REMOVAL

2.7L

1. Disconnect negative battery cable.
2. Raise vehicle and support.

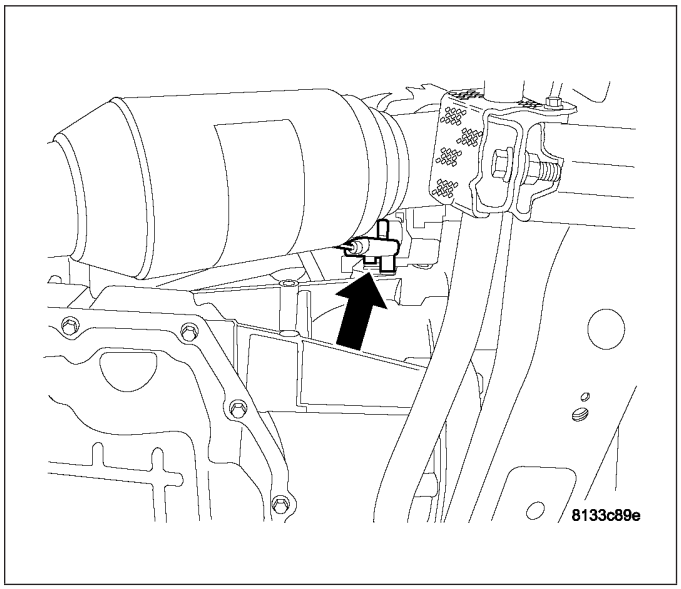

3. Unlock and disconnect the electrical connector.
4. Remove mounting bolt.
5. Remove sensor.

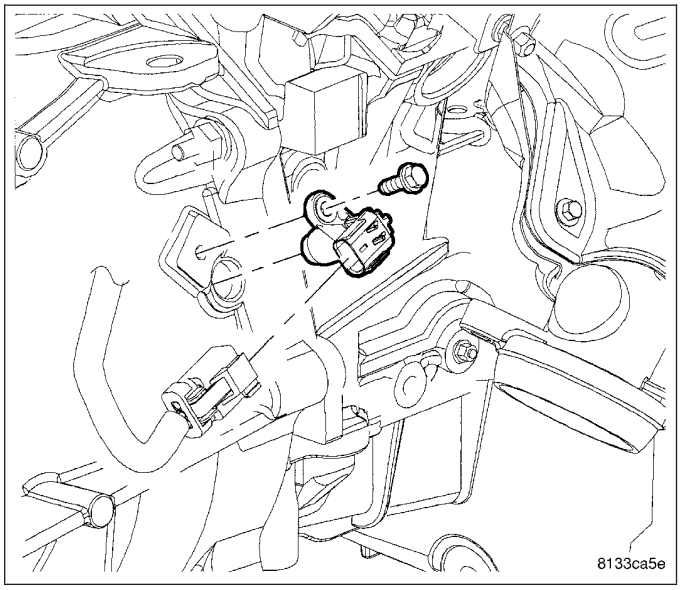

3.5L

1. Disconnect negative battery cable.
2. Raise vehicle and support.

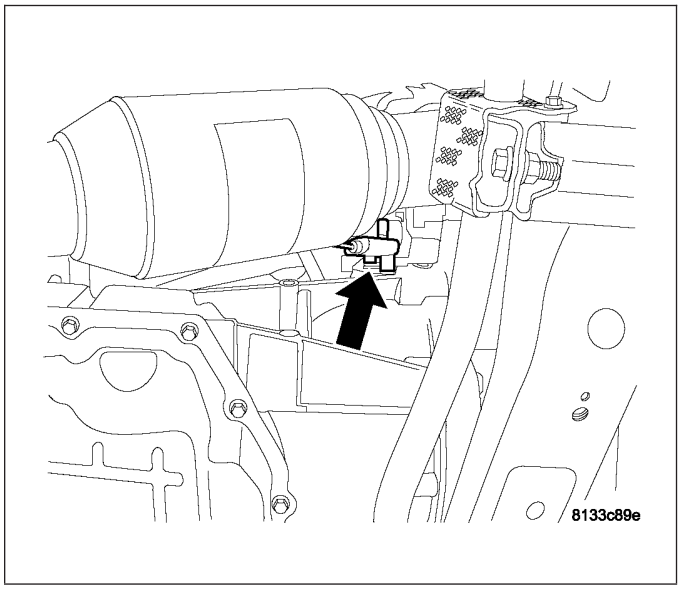

3. Unlock and disconnect the electrical connector.
4. Remove mounting bolt.
5. Remove sensor.

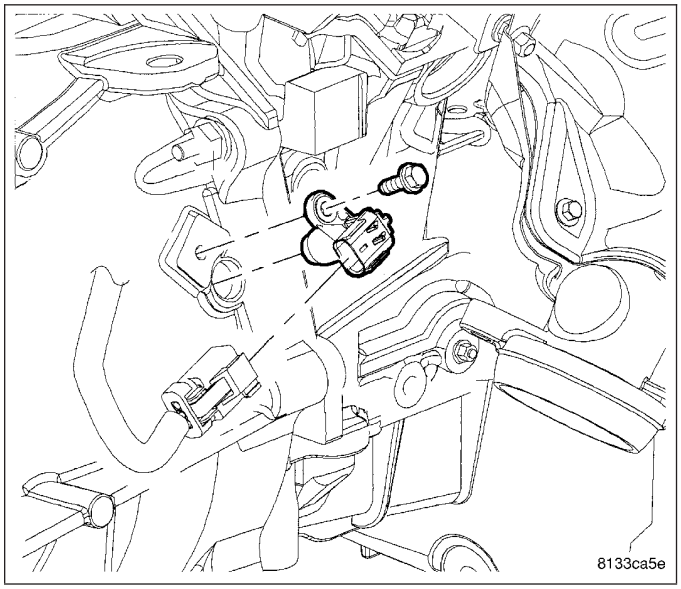

5.7L

The Crankshaft Position (CKP) sensor (4) is located at the right-rear side of the engine cylinder block (1). It is positioned and bolted into a machined hole in the engine block.

1. If equipped with AWD (All Wheel Drive) disconnect and isolate negative battery cable.
2. Raise vehicle.
3. If equipped with AWD (All Wheel Drive) remove starter motor.
4. Disconnect CKP electrical connector (2) at sensor.
5. Remove CKP mounting bolt (3).
6. Carefully twist sensor from cylinder block.
7. Remove sensor from vehicle.
8. Check condition of sensor o-ring.

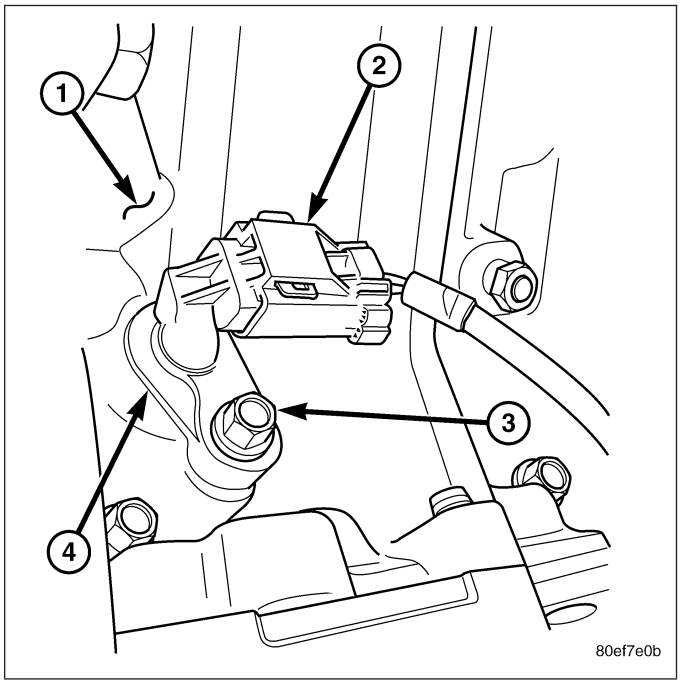

6.1L

The Crankshaft Position (CKP) sensor (4) is located at the right-rear side of the engine cylinder block (1). It is positioned and bolted into a machined hole in the engine block.

1. **IF STARTER IS MOUNTED TO RIGHT SIDE OF ENGINE:** Disconnect and isolate negative battery cable.
2. Raise vehicle.
3. **IF STARTER IS MOUNTED TO RIGHT SIDE OF ENGINE:** Remove starter motor.
4. Disconnect CKP electrical connector (2) at sensor.
5. Remove CKP mounting bolt (3).
6. Carefully twist sensor from cylinder block.
7. Remove sensor from vehicle.
8. Check condition of sensor o-ring.

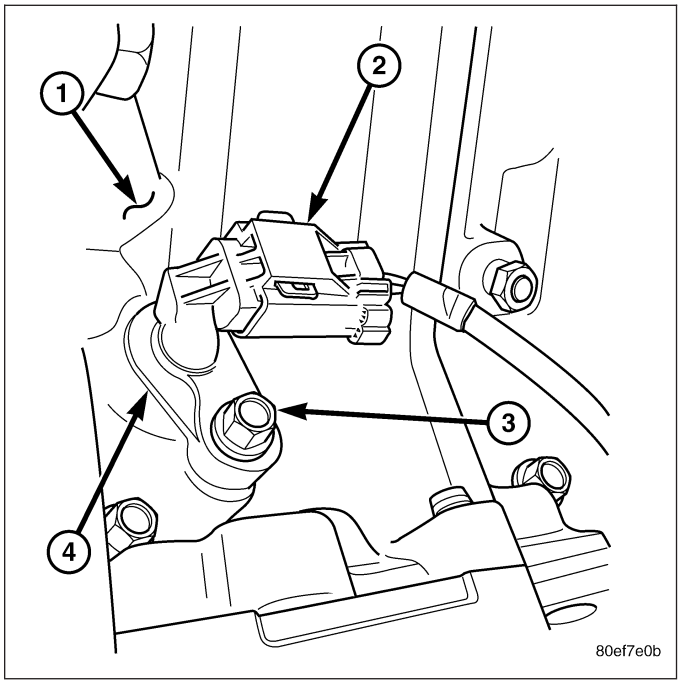

INSTALLATION

2.7L

1. Install sensor.
2. Install mounting bolt and tighen to 12 N·m (105 in. lbs.).
3. Connect the electrical connector and lock.
4. Lower vehicle.
5. Connect negative battery cable.

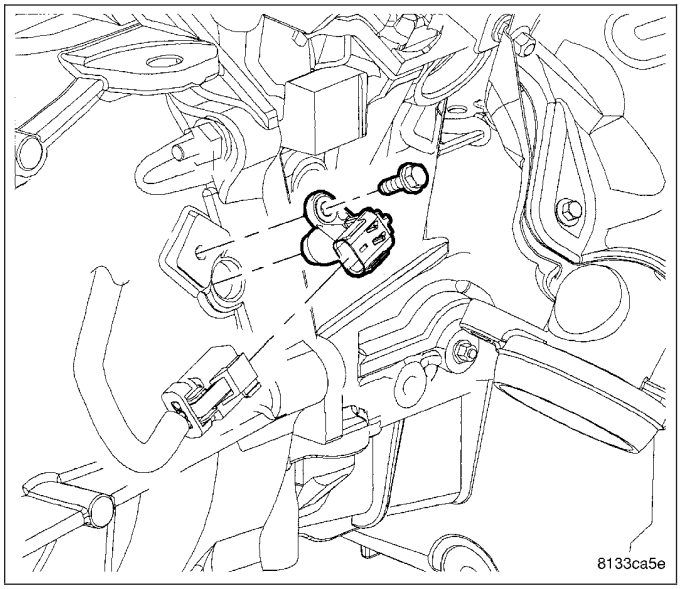

3.5L

1. Install sensor.
2. Install mounting bolt and tighen to 12 N·m (105 in. lbs.).
3. Connect the electrical connector and lock.
4. Lower vehicle.
5. Connect negative battery cable.

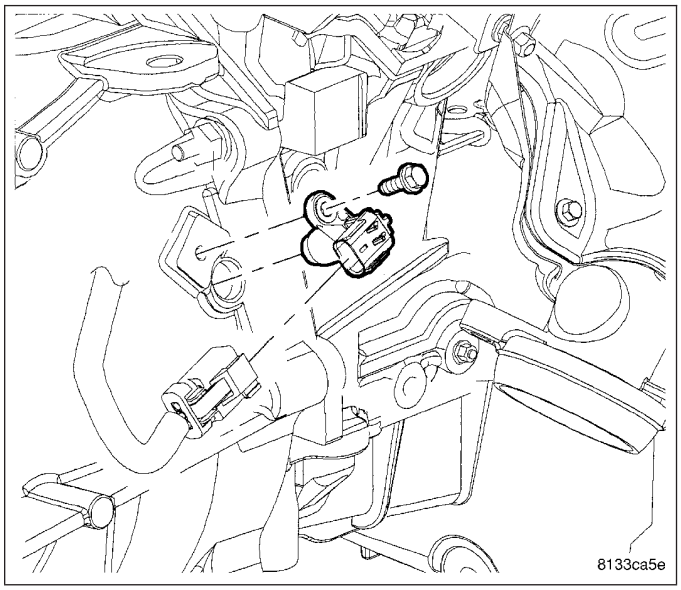

5.7L

1. Clean out machined hole in engine block.
2. Apply a small amount of engine oil to sensor o-ring.
3. Install sensor (4) into engine block with a slight rocking and twisting action.

CAUTION: Before tightening sensor mounting bolt (3) , be sure sensor is completely flush to cylinder block. If sensor is not flush, damage to sensor mounting tang may result.

4. Install mounting bolt (3) and tighten to 12 N·m (106 in. lbs.) torque.
5. Connect electrical connector (2) to sensor.
6. Lower vehicle.

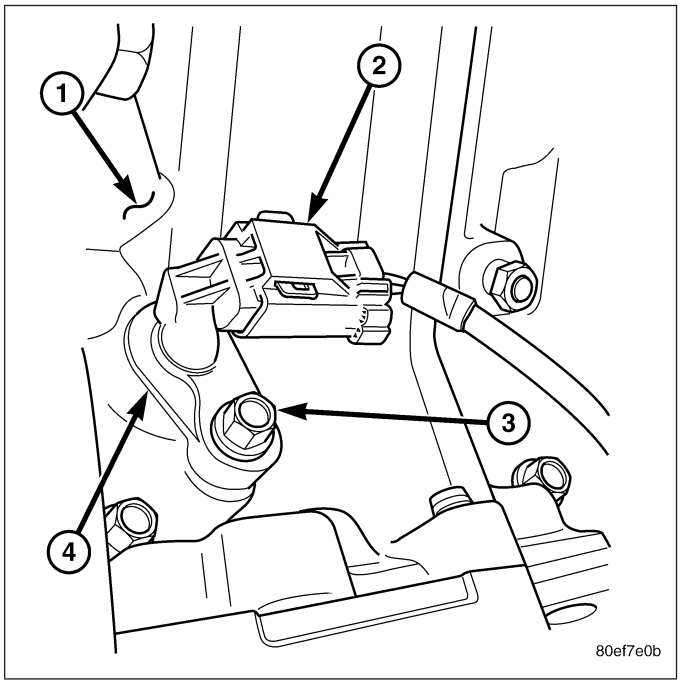

6.1L

1. Clean out machined hole in engine block.
2. Apply a small amount of engine oil to sensor o-ring.
3. Install sensor (4) into engine block with a slight rocking and twisting action.

CAUTION: Before tightening sensor mounting bolt (3) , be sure sensor is completely flush to cylinder block. If sensor is not flush, damage to sensor mounting tang may result.

4. Install mounting bolt (3) and tighten to 12 N·m (106 in. lbs.) torque.
5. Connect electrical connector (2) to sensor.
6. **IF STARTER IS MOUNTED TO RIGHT SIDE OF ENGINE:** Install starter motor.
7. Lower vehicle.
8. **IF STARTER IS MOUNTED TO RIGHT SIDE OF ENGINE:** Install negative battery cable.

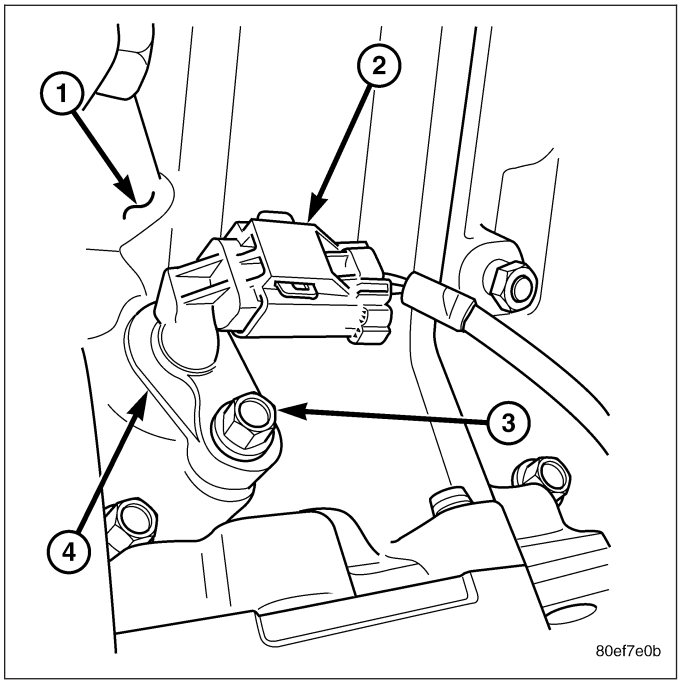

INJECTOR-FUEL

REMOVAL

2.7L

WARNING: THE FUEL SYSTEM IS UNDER CONSTANT PRESSURE EVEN WITH ENGINE OFF. BEFORE SERVICING FUEL INJECTOR(S), FUEL SYSTEM PRESSURE MUST BE RELEASED.

To remove one or more fuel injectors, the fuel rail assembly must be removed from engine.

1. Release fuel system pressure. Refer to Fuel System Pressure Release Procedure in this section.
2. Disconnect negative cable to battery.
3. Remove intake manifold plenum, (Refer to 9 - ENGINE/MANIFOLDS/INTAKE MANIFOLD - REMOVAL).
4. Lift Plenum up off of engine. Cover intake manifold to prevent foreign material from entering engine.
5. Disconnect fuel supply tube quick connect fittings at the rear of intake manifold, (Refer to 14 - FUEL SYSTEM/ FUEL DELIVERY/QUICK CONNECT FITTING - STANDARD PROCEDURE).
6. If the injector connectors are not tagged with their cylinder number, tag them to identify the correct cylinder
7. Remove electrical connectors from the fuel injectors.
8. Remove fuel rail (1) mounting bolts.
9. Lift fuel rail straight up off of the cylinder head.

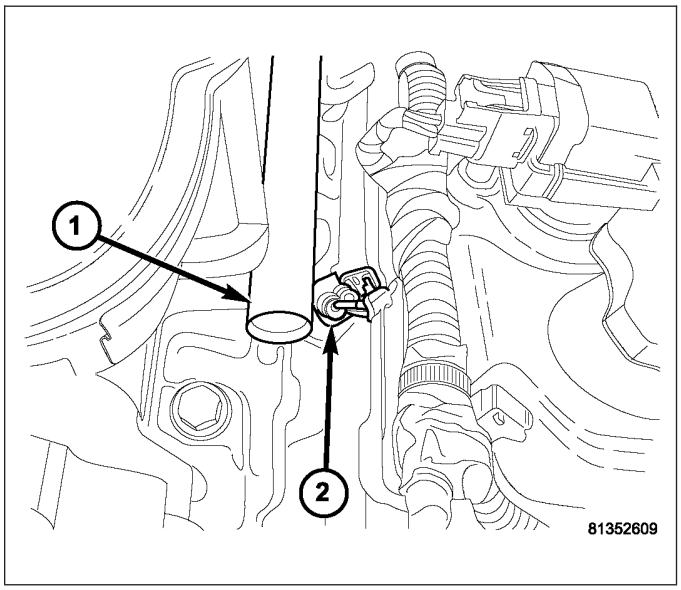

10. Remove retaining clips from fuel injectors (2) at fuel rail.
11. Remove fuel injectors (2).
12. Repeat for remaining injectors.
13. Check injector O-ring for damage. If O-ring is damaged, it must be replaced. Replace the injector clip if it is damaged.

3.5L

WARNING: THE FUEL SYSTEM IS UNDER CONSTANT PRESSURE EVEN WITH ENGINE OFF. BEFORE SERVICING FUEL INJECTOR(S), FUEL SYSTEM PRESSURE MUST BE RELEASED.

To remove one or more fuel injectors, the fuel rail assembly must be removed from engine.

1. Release fuel system pressure. Refer to Fuel System Pressure Release Procedure in this section.
2. Disconnect negative cable to battery.
3. Remove intake manifold plenum, (Refer to 9 - ENGINE/MANIFOLDS/INTAKE MANIFOLD - REMOVAL).
4. Cover intake manifold to prevent foreign material from entering engine.
5. Disconnect fuel supply tube quick connect fittings at the rear of intake manifold, (Refer to 14 - FUEL SYSTEM/ FUEL DELIVERY/QUICK CONNECT FITTING - STANDARD PROCEDURE).

6. If the injector connectors are not tagged with their cylinder number, tag them to identify the correct cylinder
7. Remove electrical connectors from the fuel injectors.
8. Remove fuel rail mounting bolts.
9. Lift fuel rail straight up off of the cylinder head.
10. Remove retaining clips from fuel injectors at fuel rail.
11. Remove fuel injectors.
12. Repeat for remaining injectors.
13. Check injector O-ring for damage. If O-ring is damaged, it must be replaced. Replace the injector clip if it is damaged.

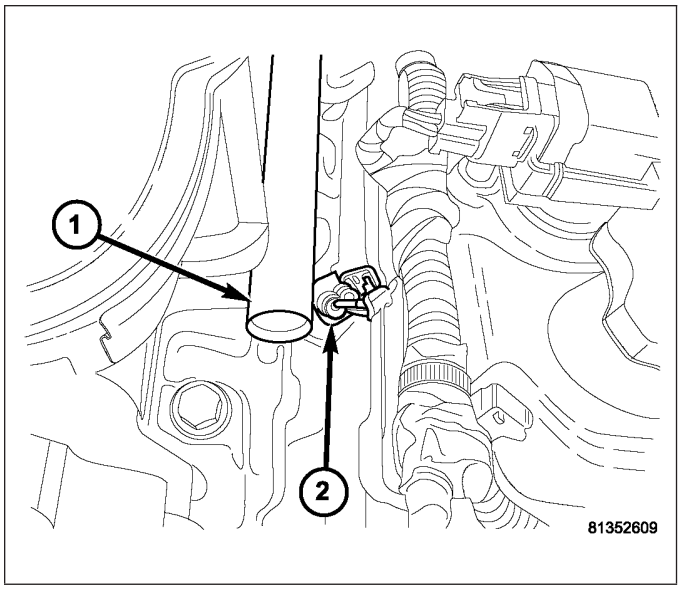

5.7L/6.1L

WARNING: THE FUEL SYSTEM IS UNDER CONSTANT PRESSURE EVEN WITH ENGINE OFF. BEFORE SERVICING FUEL INJECTOR(S), FUEL SYSTEM PRESSURE MUST BE RELEASED.

To remove one or more fuel injectors, the fuel rail assembly must be removed from engine.

1. Perform Fuel System Pressure Release Procedure.
2. Remove fuel injector rail (Refer to 14 - FUEL SYSTEM/FUEL DELIVERY/FUEL RAIL - REMOVAL) .
3. Remove clip(s) (3) retaining injector(s) (4) to fuel rail.
4. Remove injector(s) from fuel rail.

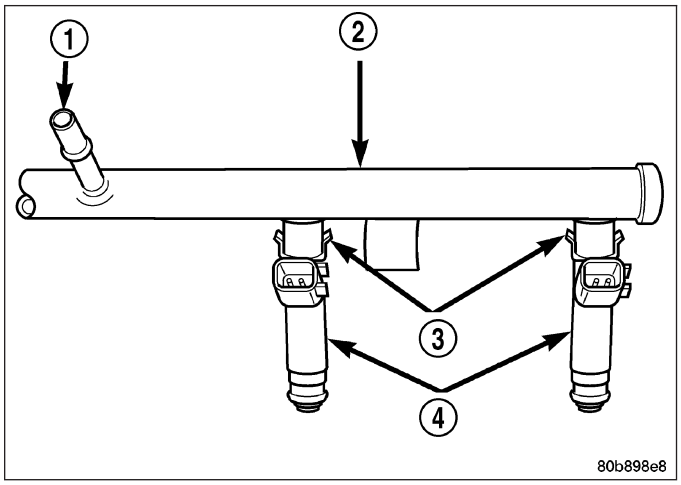

INSTALLATION

2.7L

1. Lightly lubricate the fuel injector O-rings with a couple drops of clean engine oil.
2. Install retaining clips on fuel injectors.
3. Push injectors into fuel injector rail until clips are in the correct position.
4. Position fuel rail over cylinder head, and push rail into place. Tighten fuel rail mounting bolts to 11 N·m (100 in. lbs.) torque.
5. Connect fuel supply tube quick connect fittings at the rear of intake manifold, (Refer to 14 - FUEL SYSTEM/FUEL DELIVERY/QUICK CONNECT FITTING - STANDARD PROCEDURE).
6. Connect electrical connectors to fuel injectors.
7. Install intake manifold plenum, (Refer to 9 - ENGINE/MANIFOLDS/INTAKE MANIFOLD - INSTALLATION).
8. Connect negative cable to battery.
9. Use the scan tool to pressurize the fuel system. Check for leaks.

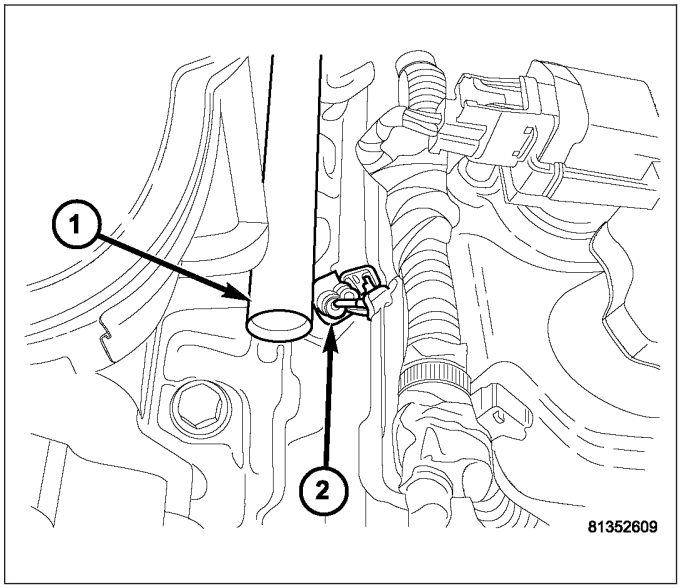

3.5L

1. Lightly lubricate the fuel injector O-rings with a couple drops of clean engine oil.
2. Install retaining clips on fuel injectors.
3. Push injectors into fuel injector rail until clips are in the correct position.
4. Position fuel rail over cylinder head, and push rail into place. Tighten fuel rail mounting bolts to 11 N·m (100 in. lbs.) torque.
5. Connect fuel supply tube quick connect fittings at the rear of intake manifold, (Refer to 14 - FUEL SYSTEM/FUEL DELIVERY/QUICK CONNECT FITTING - STANDARD PROCEDURE).
6. Connect electrical connectors to fuel injectors.
7. Install intake manifold plenum, (Refer to 9 - ENGINE/MANIFOLDS/INTAKE MANIFOLD - INSTALLATION).
8. Connect negative cable to battery.
9. Use the scan tool to pressurize the fuel system. Check for leaks.

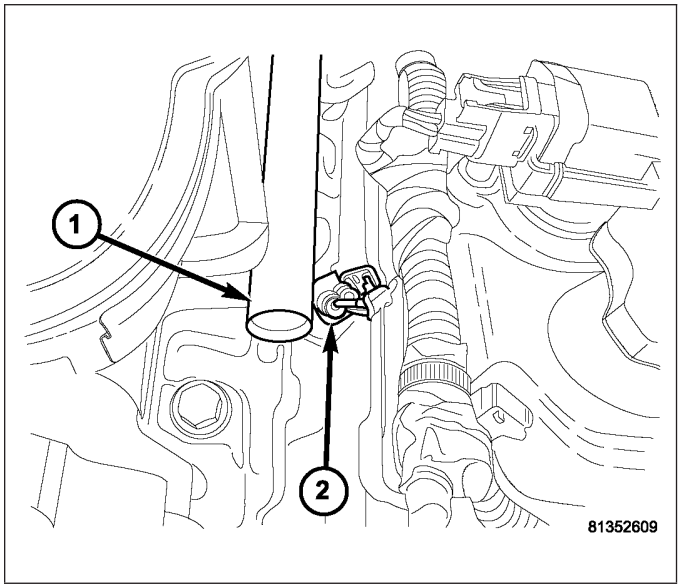

5.7L/6.1L

1. Apply a small amount of engine oil to each fuel injector o-ring. This will help in fuel rail installation.
2. Install injector(s) (4) and injector clip(s) (3) to fuel rail.
3. Install fuel rail assembly (Refer to 14 - FUEL SYSTEM/FUEL DELIVERY/FUEL RAIL - INSTALLATION) .
4. Start engine and check for leaks.

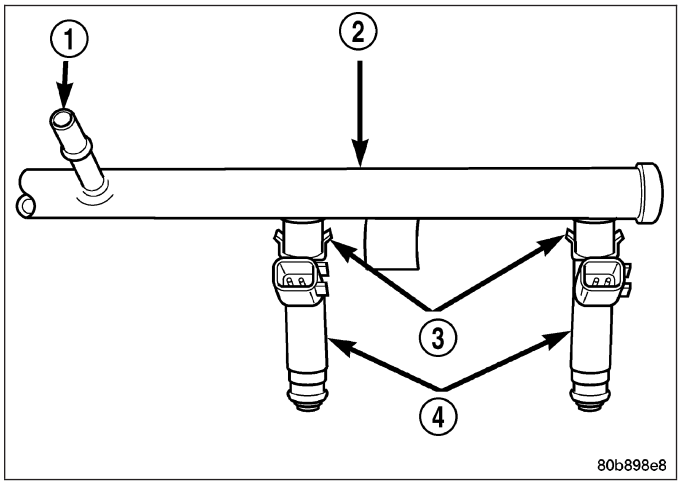

SENSOR-INLET AIR TEMPERATURE

REMOVAL

2.7L

1. Sensor location.
2. Disconnect negative battery cable.

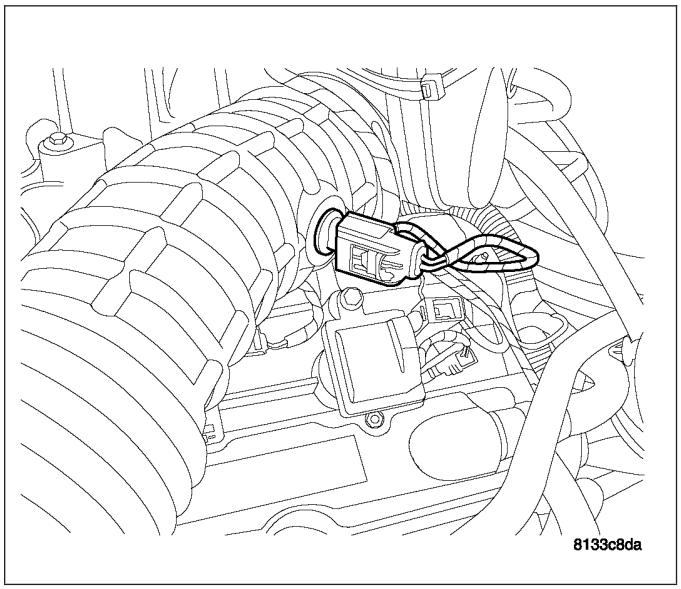

3. Unlock electrical connector.
4. Remove electrical connector from sensor.
5. Note the orientation of the sensor.

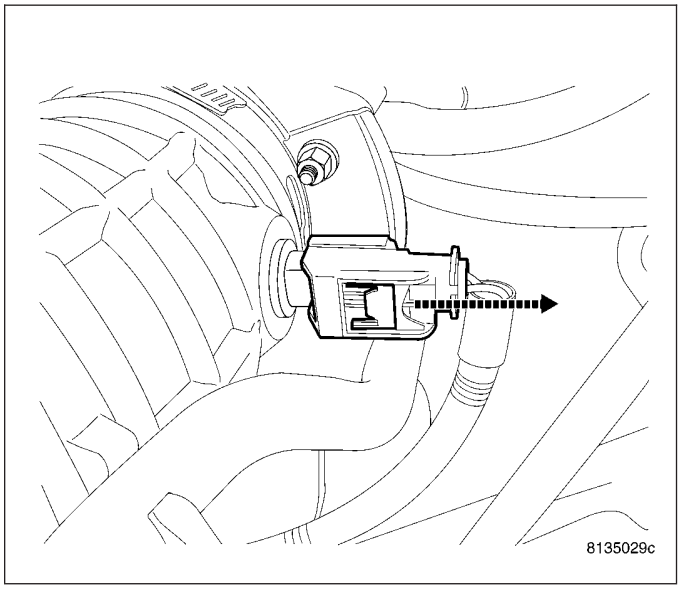

6. Remove sensor from air inlet hose.

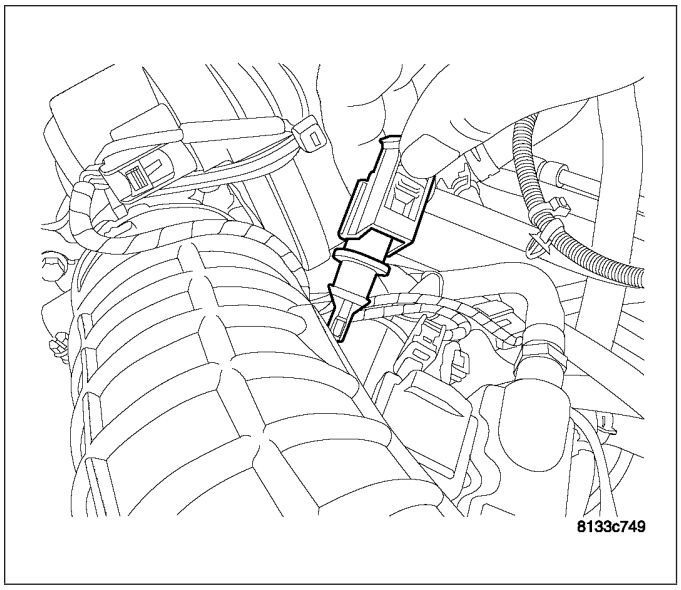

3.5L

1. Sensor location.
2. Disconnect negative battery cable.

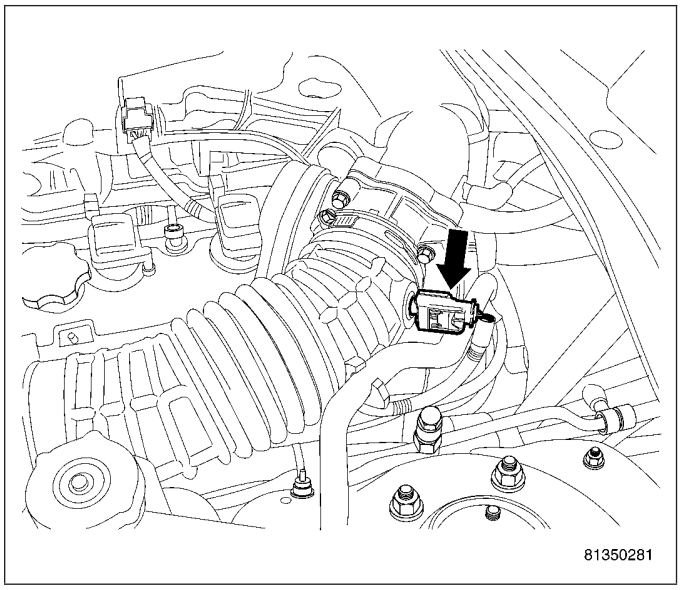

3. Unlock the electrical connector.
4. Remove electrical connector from sensor.

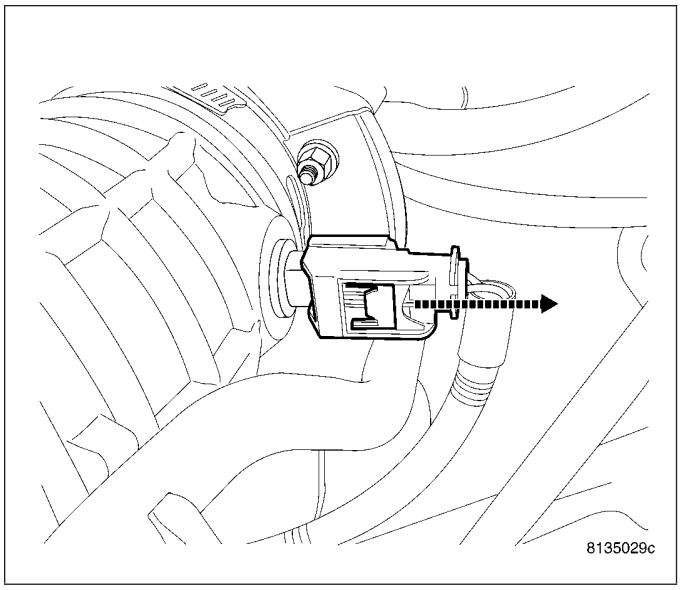

5. Note sensor orientation.
6. Remove sensor.

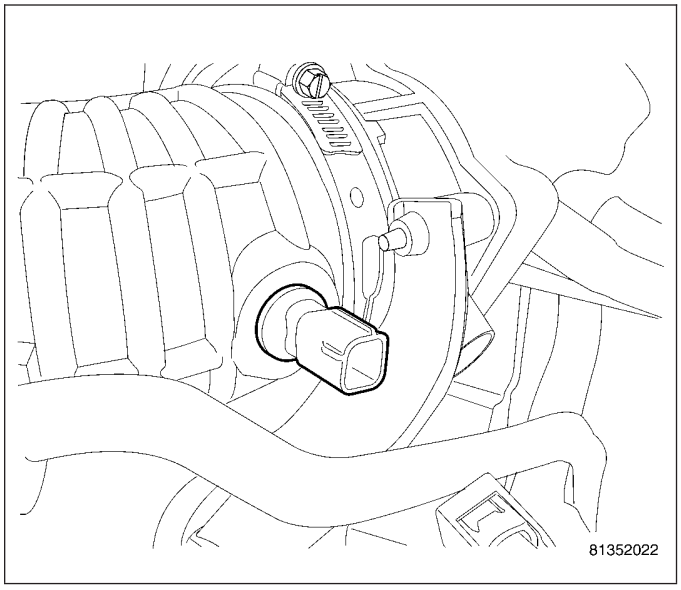

5.7L

The Inlet Manifold Air Temperature (IAT) sensor is installed into the rubber air intake hose near front of throttle body.

1. Disconnect electrical connector from IAT sensor.
2. Clean dirt from sensor base.
3. Pull sensor from rubber hose.

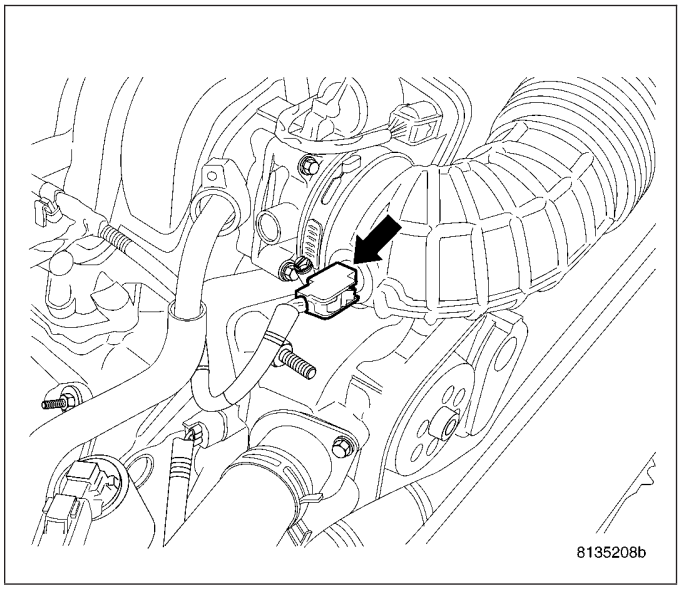

6.1L

The Inlet Manifold Air Temperature (IAT) sensor (1) is installed into the rubber air intake hose (2) near front of throttle body.

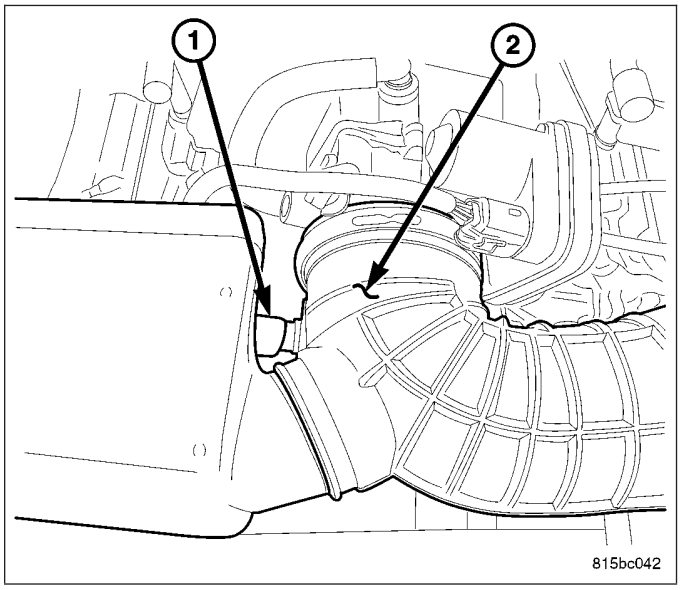

1. Pull sensor from rubber hose.
2. Disconnect electrical connector (1) from IAT sensor (2).
3. Check sensor probe (3) for damage.
4. Clean dirt from sensor base.

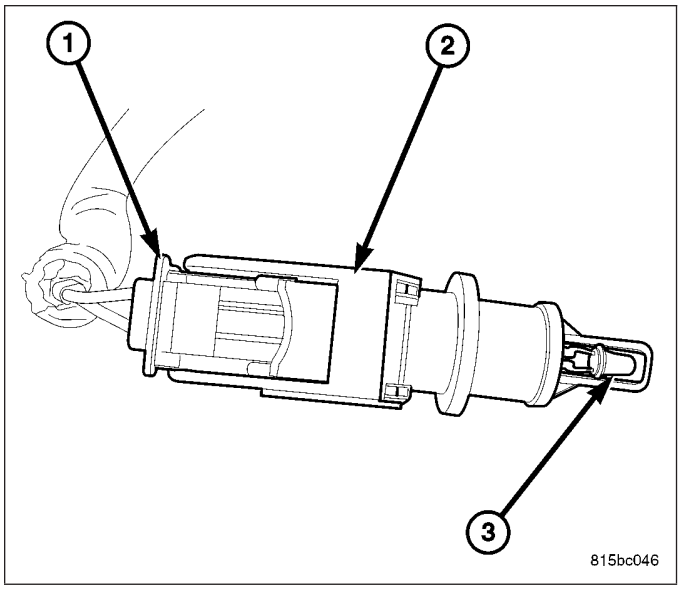

INSTALLATION

2.7L

1. Install sensor. Rotate for proper orientation.

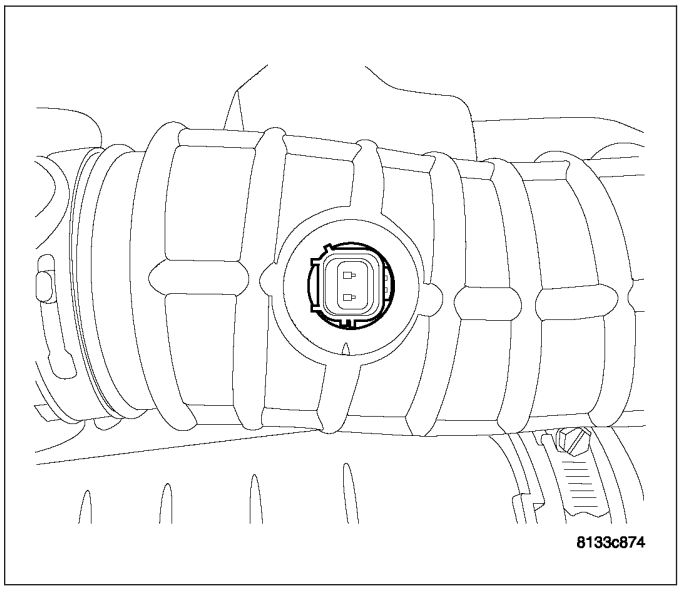

2. Proper orientation of sensor.

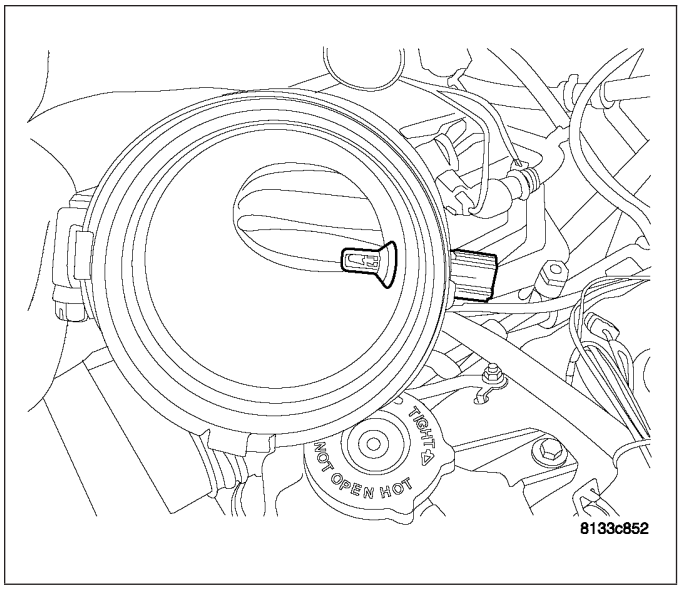

3. Install electrical connector and lock.
4. Connect negative battery cable.

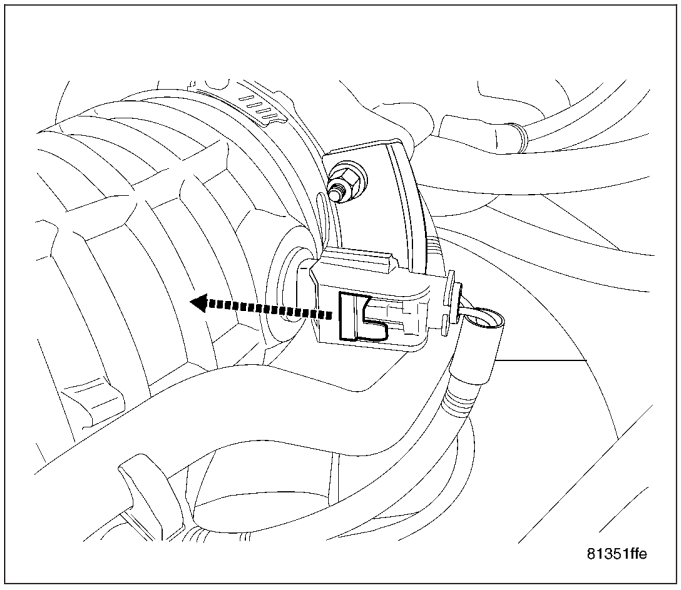

3.5L

1. Install sensor. Rotate for proper orientation

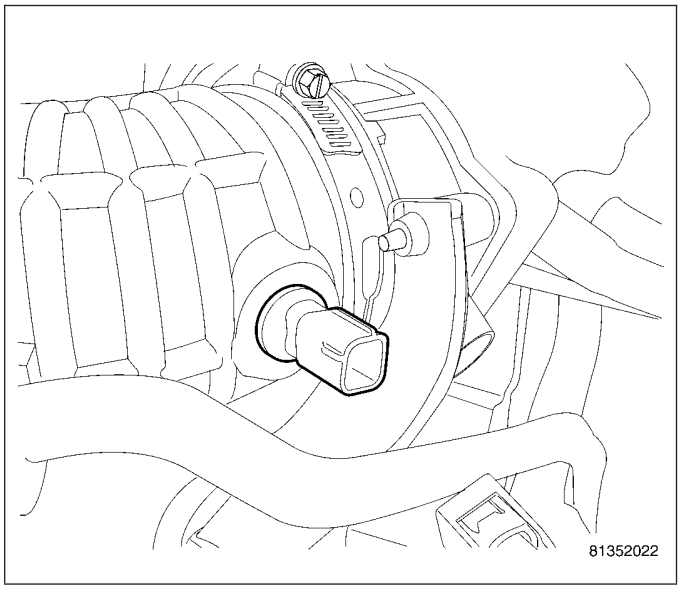

2. Proper orientation of sensor.

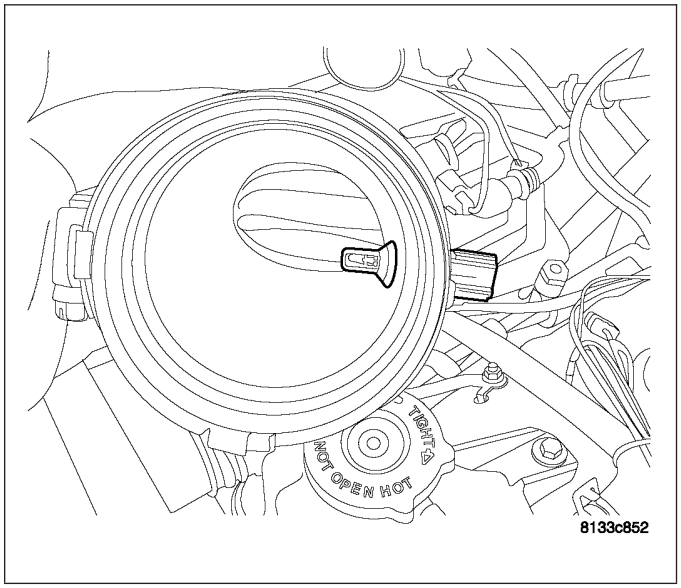

3. Install electrical connector and lock.
4. Connect negative battery cable.

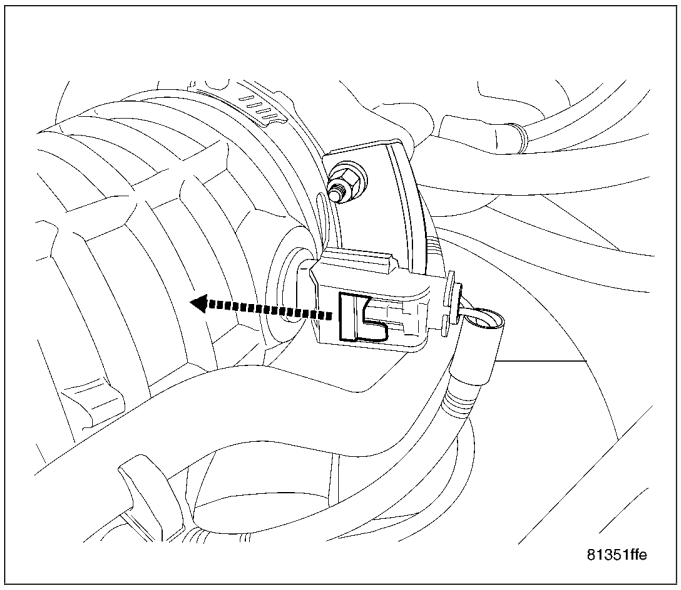

5.7L

1. Press sensor into rubber air hose.
2. Rotate sensor into position as shown in illustration. **For proper system operation, sensor must be positioned as shown in illustration.**

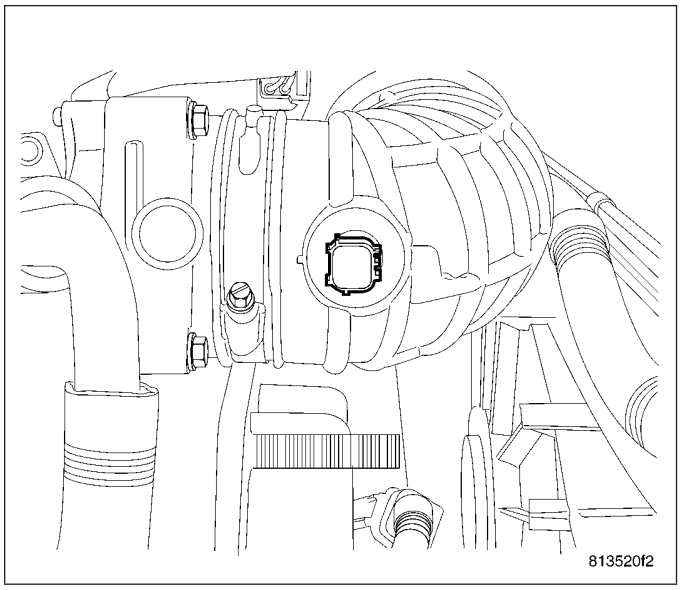

3. Connect electrical connector to sensor.

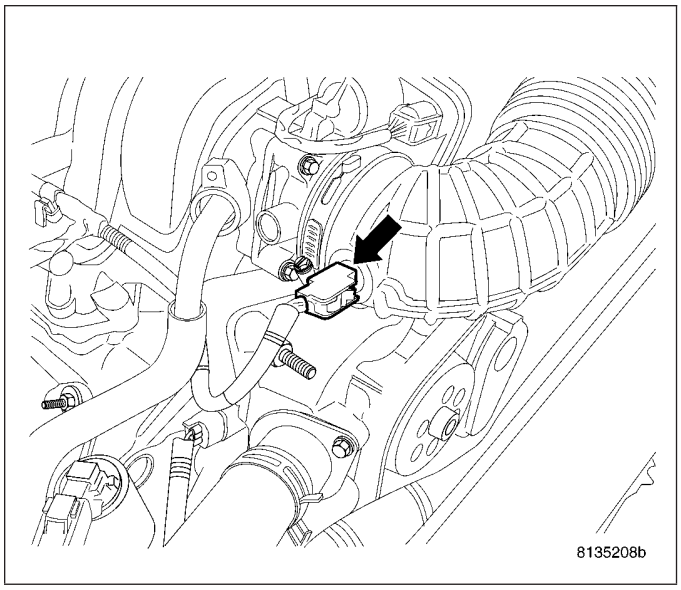

6.1L

1. Connect electrical connector (1) to sensor (2).
2. Press sensor into rubber air hose. Mate the notches. Be careful not to bend or damage probe (3).

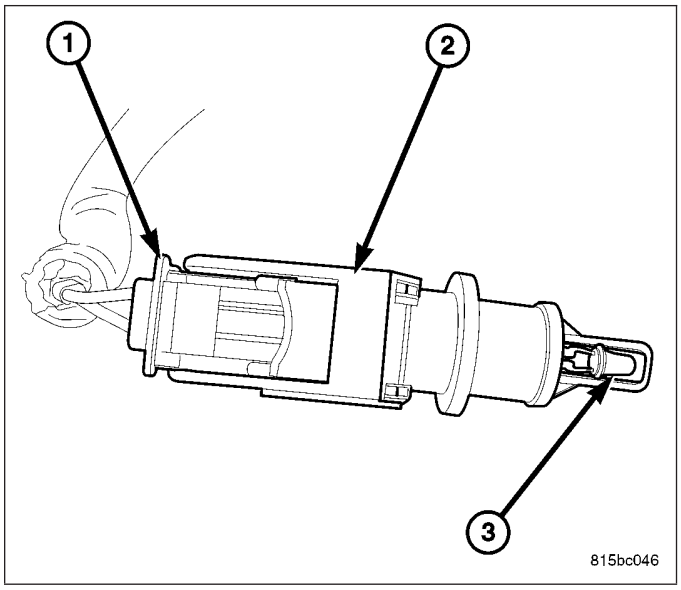

ACTUATOR-MANIFOLD TUNE VALVE

REMOVAL

2.7L

1. Disconnect negative battery cable.
2. Unlock and remove the electrical connector.
3. Remove the 2 mounting bolts.

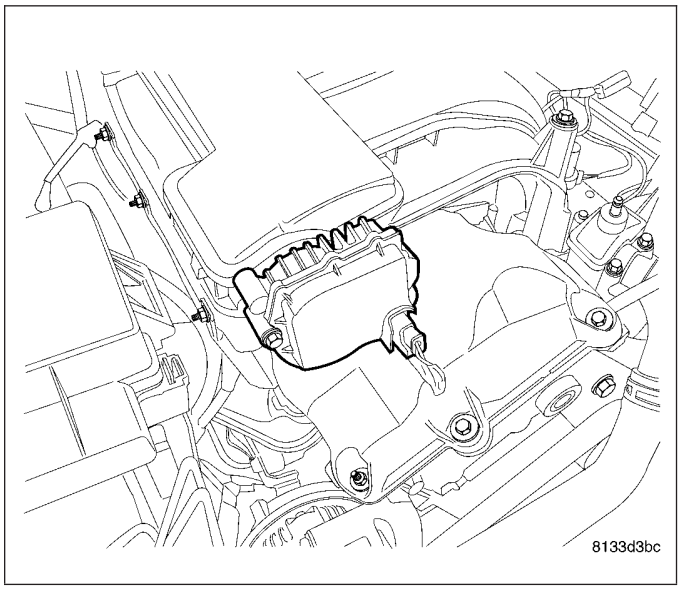

4. Remove the Short Runner Valve.

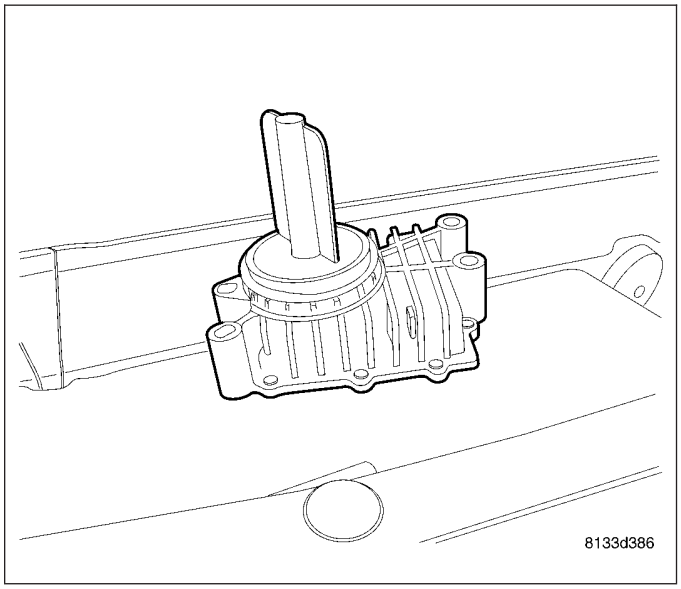

3.5L

1. Manifold Tuning Valve location.

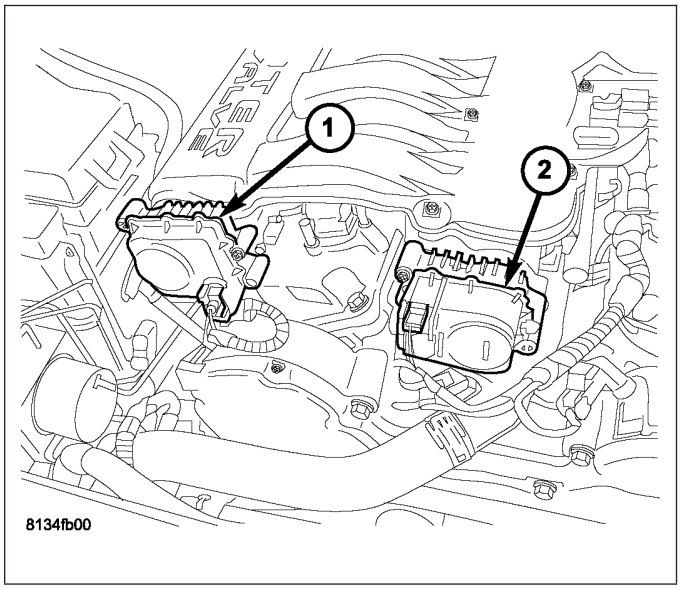

2. Disconnect negative battery cable.

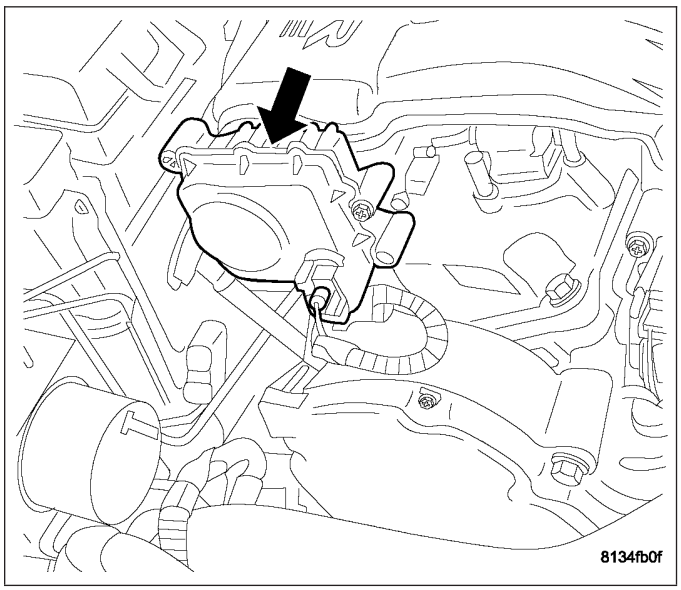

3. Remove the electrical connector.
4. Remove the 2 mounting bolts.

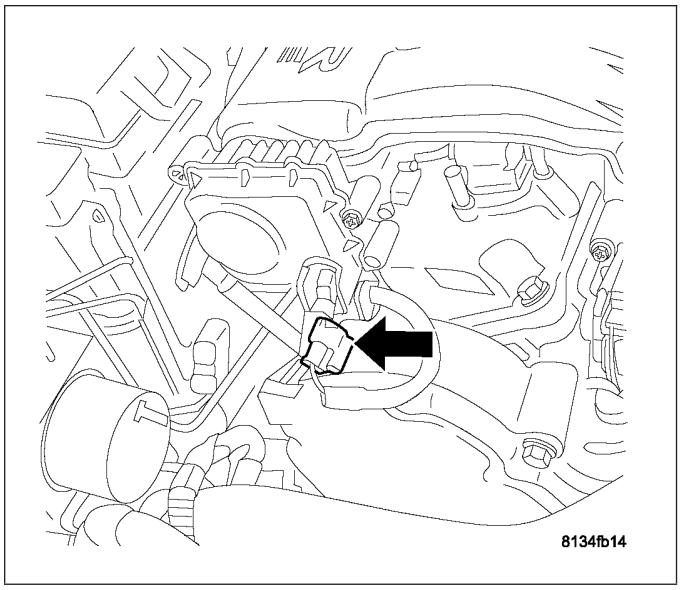

5. Remove the Manifold Tuning Valve.

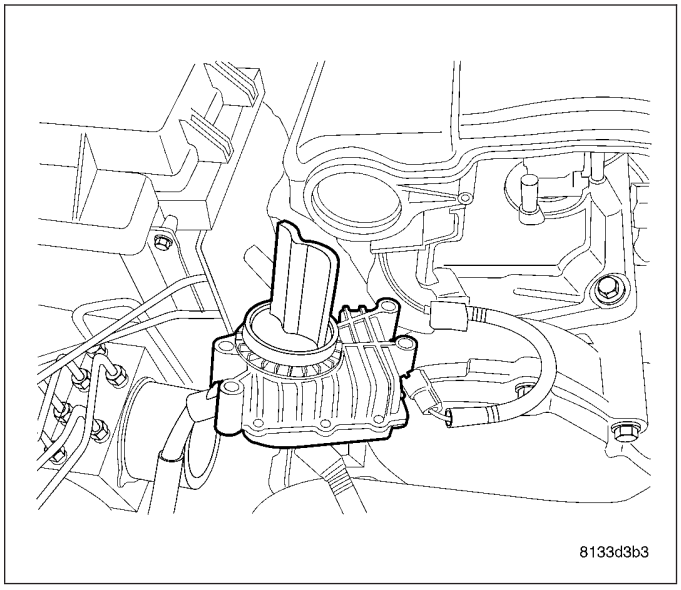

INSTALLATION

2.7L

1. Install the Manifold Tuning Valve.
2. Install the 2 mounting bolts.
3. Tighten bolts to 2.8 N·m (25 in. lbs.).

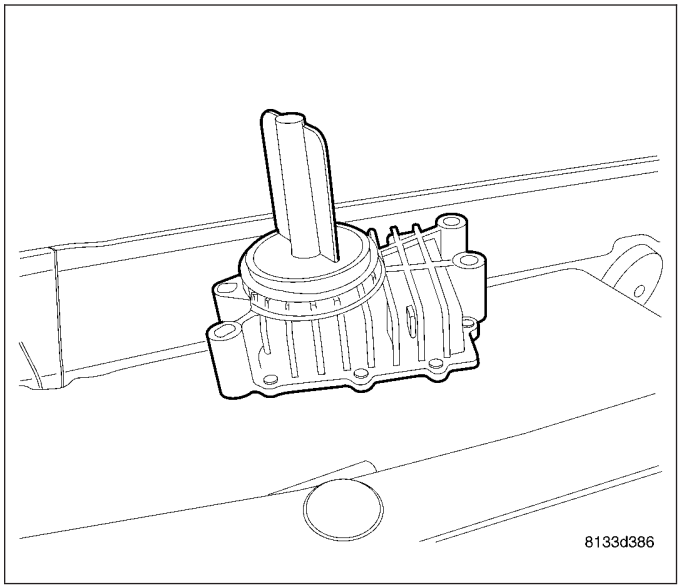

4. Connect the electrical connector and lock connector.
5. Connect negative battery cable.

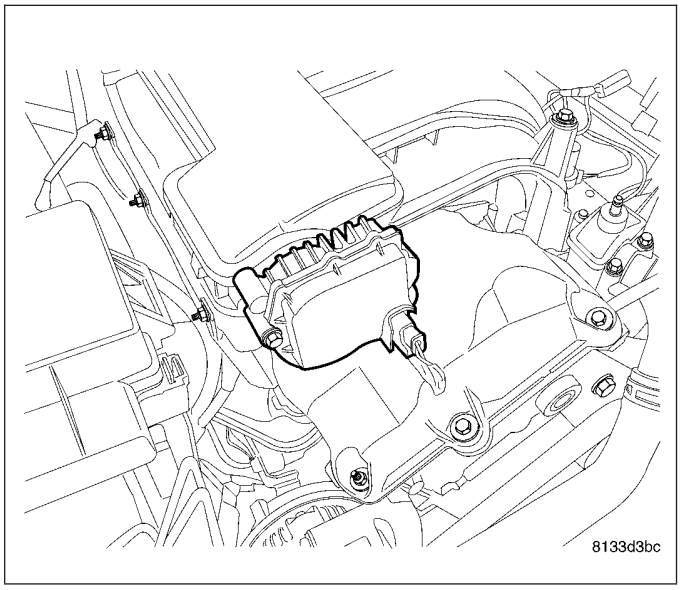

3.5L

1. Install the Manifold Tuning Valve.
2. Install the 2 mounting bolts.
3. Tighten bolts to 2.8 N·m (25 in. lbs.).

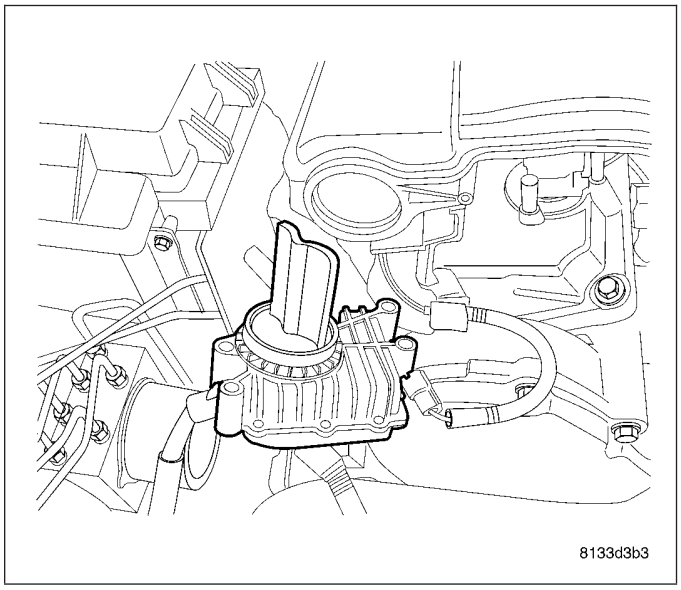

4. Connect the electrical connector.
5. Connect negative battery cable.

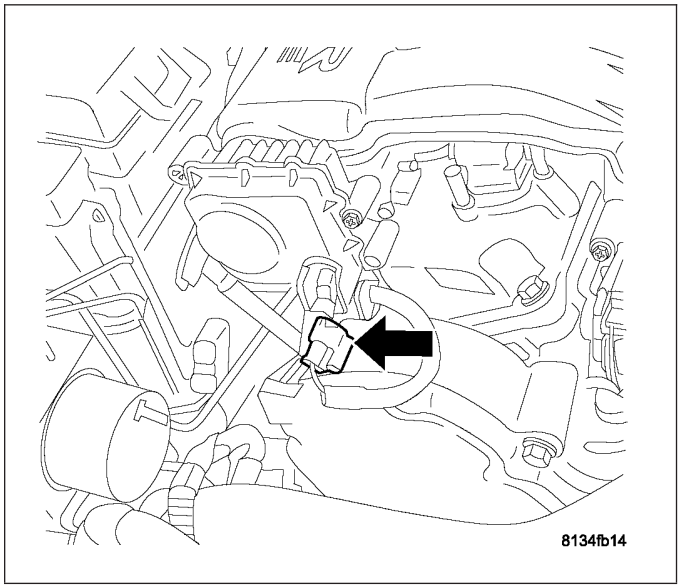

SENSOR-MANIFOLD ABSOLUTE PRESSURE

REMOVAL

2.7L

1. Sensor location.
2. Unlock the electrical connector.

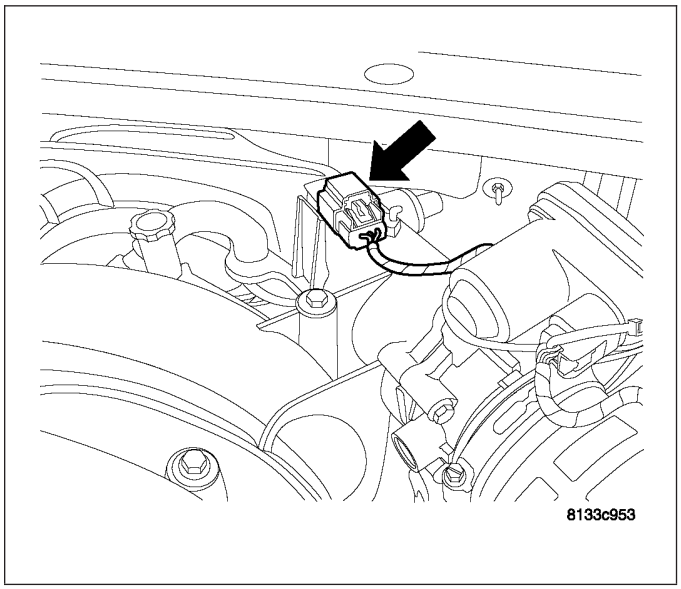

3. Remove electrical connector.

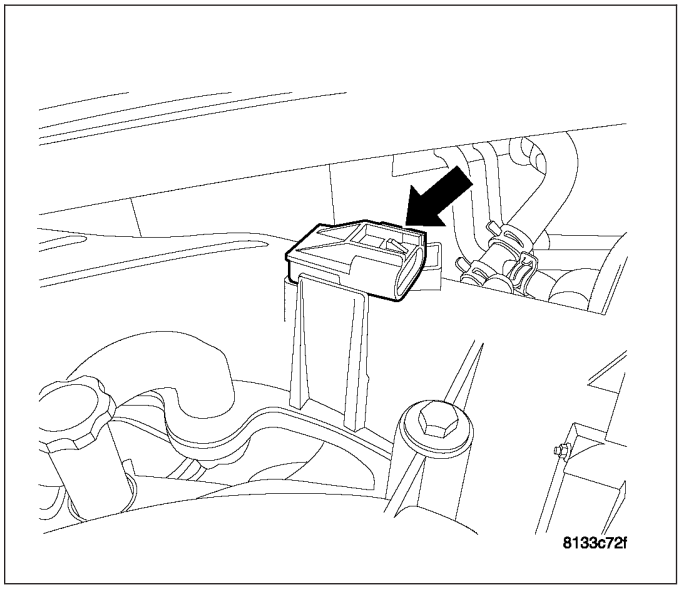

4. Turn sensor 1/4 turn counterclockwise.
5. Pull sensor straight up.

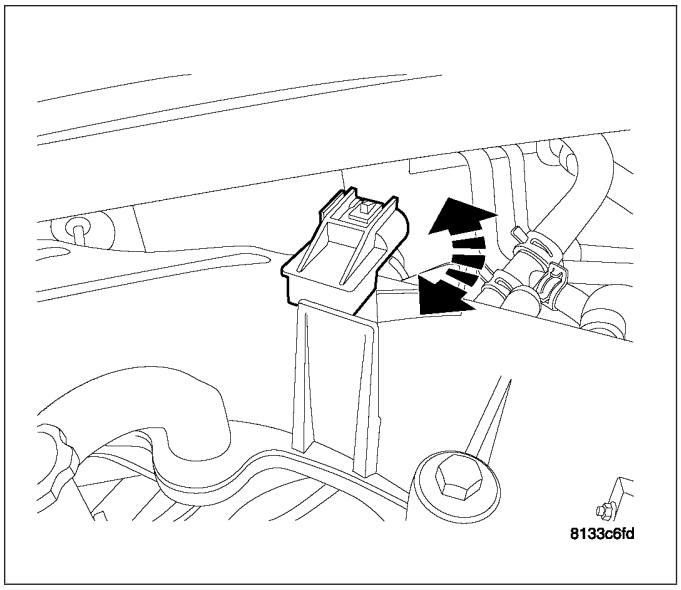

6. Remove sensor.
7. Inspect o-ring.

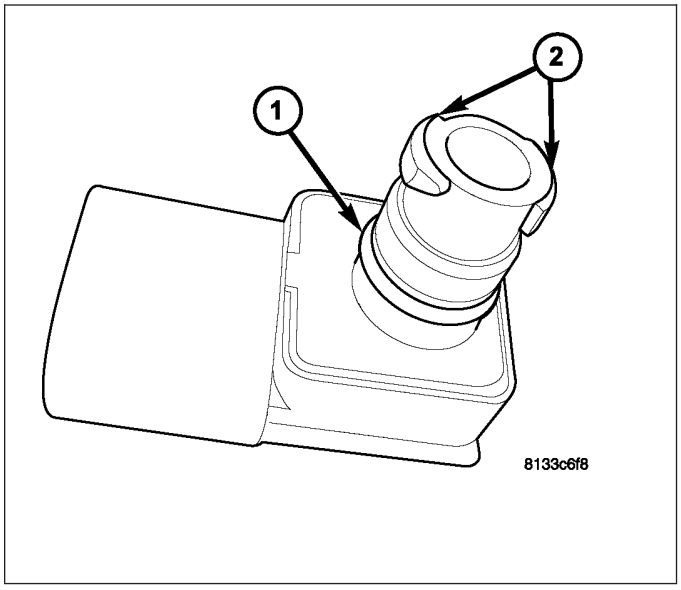

3.5L

1. Sensor location.
2. Disconnect negative battery cable.

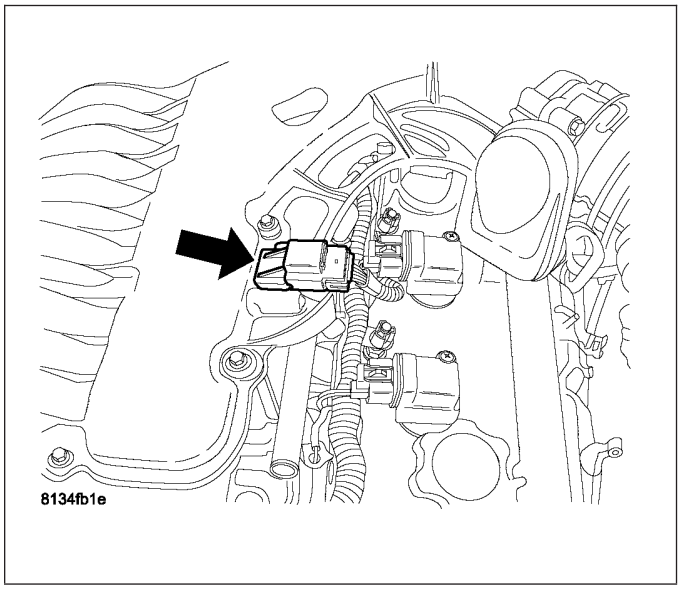

3. Unlock the electrical connector.

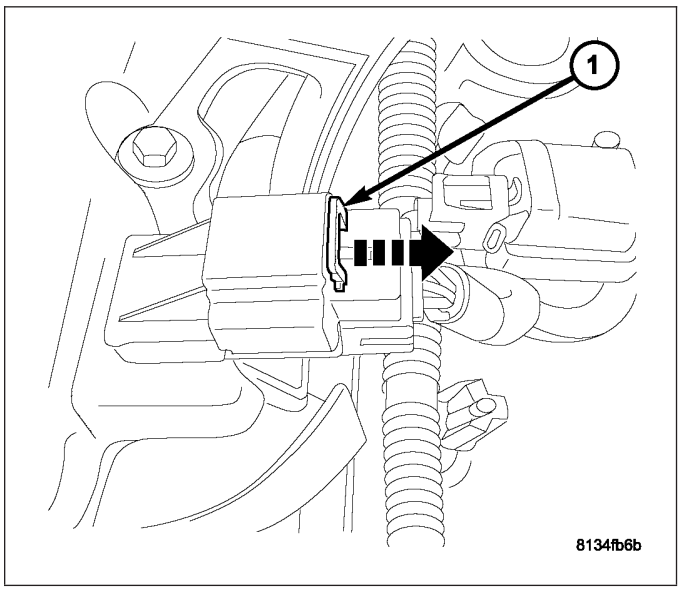

4. Disconnect the electrical connector.

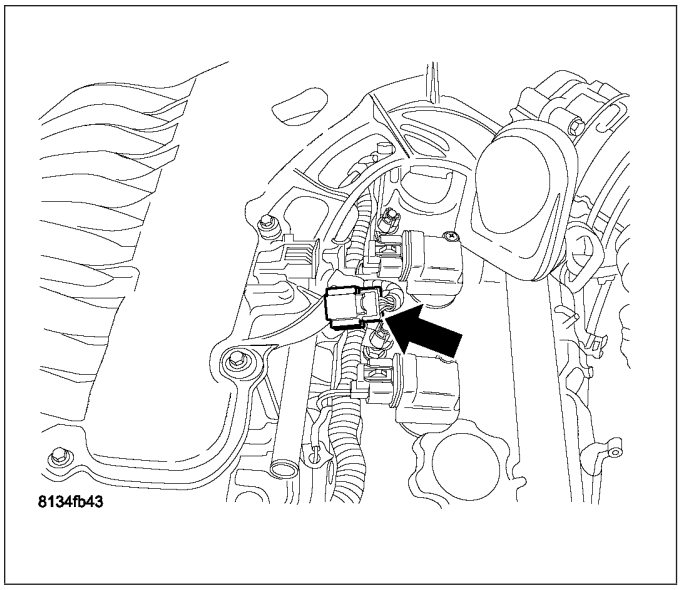

5. Rotate sensor 1/4 turn clockwise.
6. Pull up on sensor.

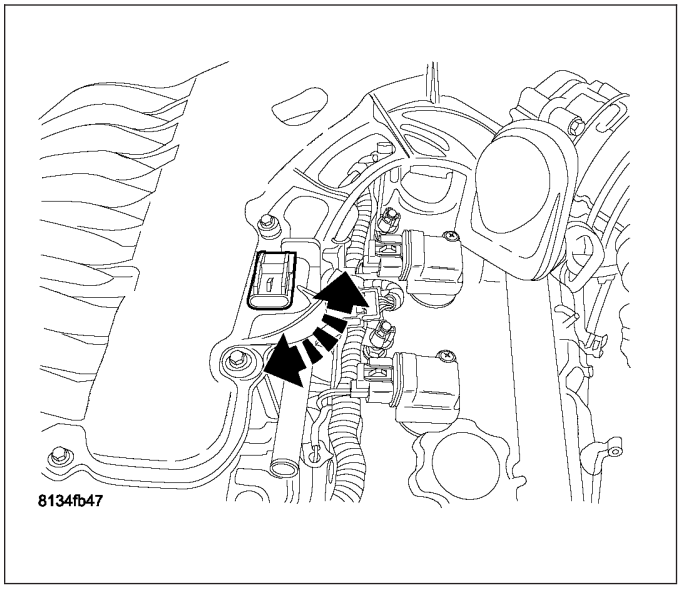

7. Remove sensor.

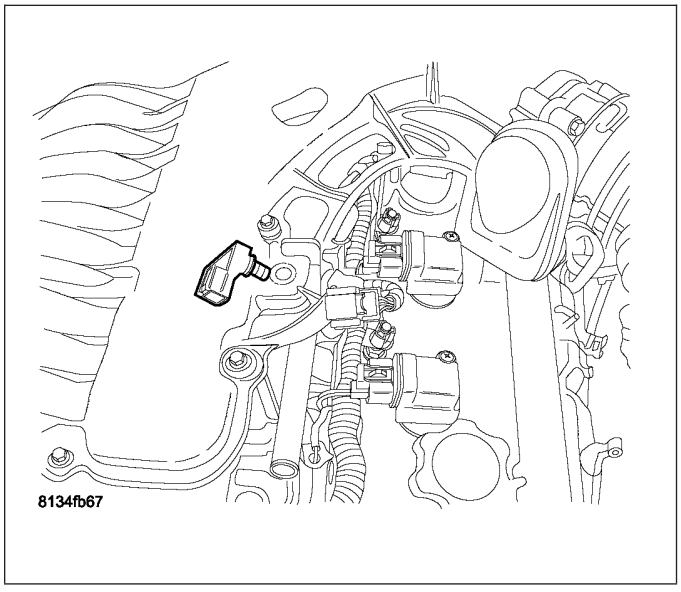

5.7L

The Manifold Absolute Pressure (MAP) sensor (3) is mounted into the top/rear of the intake manifold (4) near the cowl/hood seal (1).

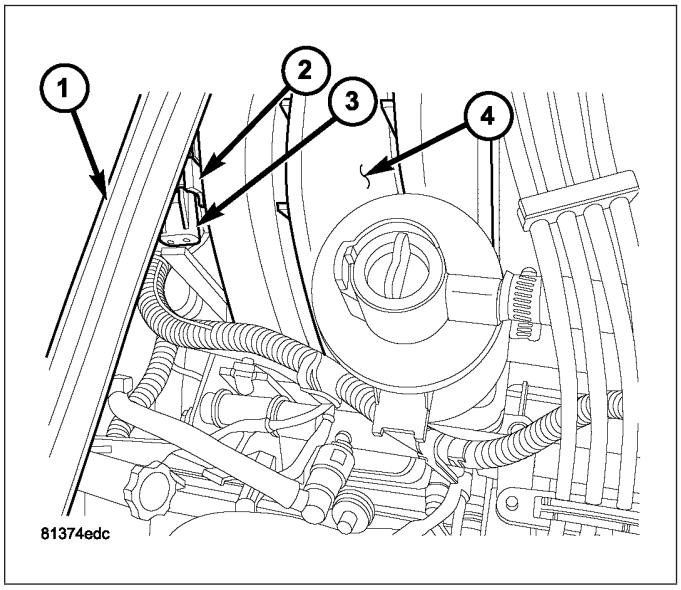

1. Disconnect electrical connector at sensor by sliding release lock out (1). Press down on lock tab (2) for removal.
2. Rotate sensor 1/4 turn counter-clockwise for removal.
3. Check condition of sensor o-ring.

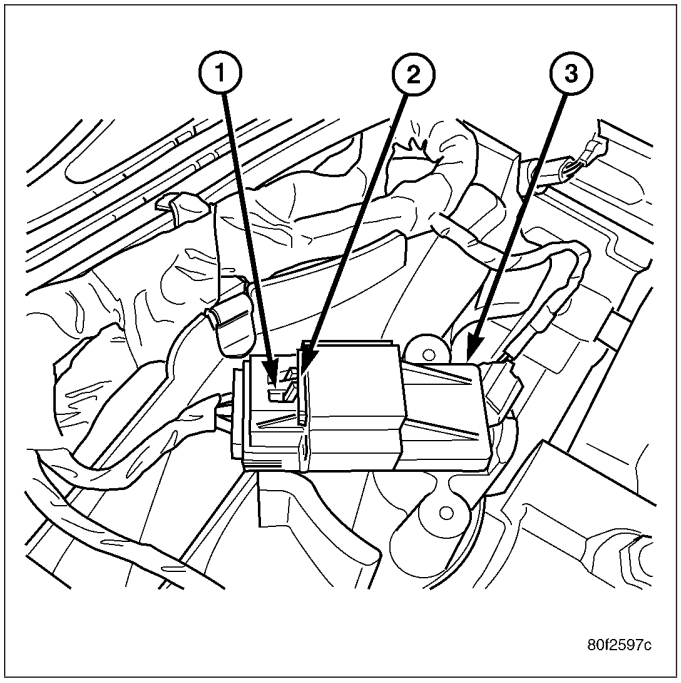

6.1L

The Manifold Absolute Pressure (MAP) sensor (2) is located at the rear of the intake manifold (1).

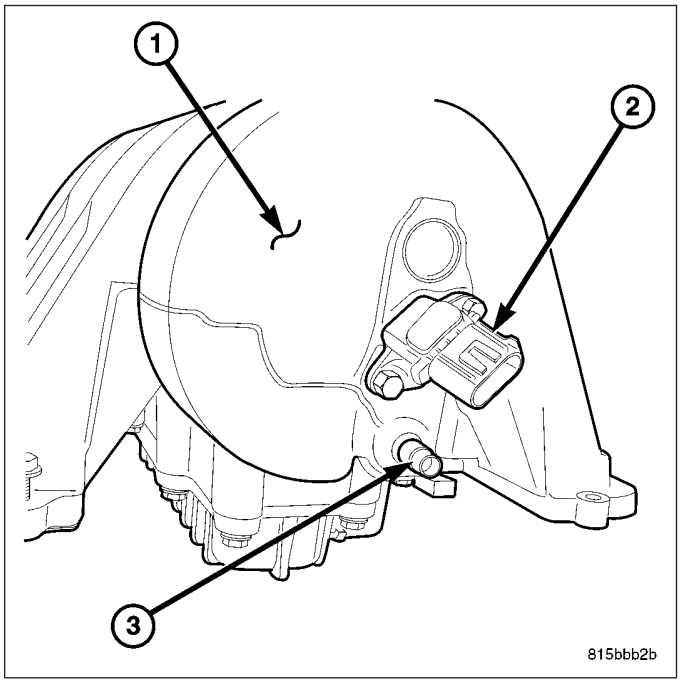

1. Disconnect electrical connector at sensor.
2. Remove two sensor mounting bolts (3).
3. Check condition of sensor o-ring (2).

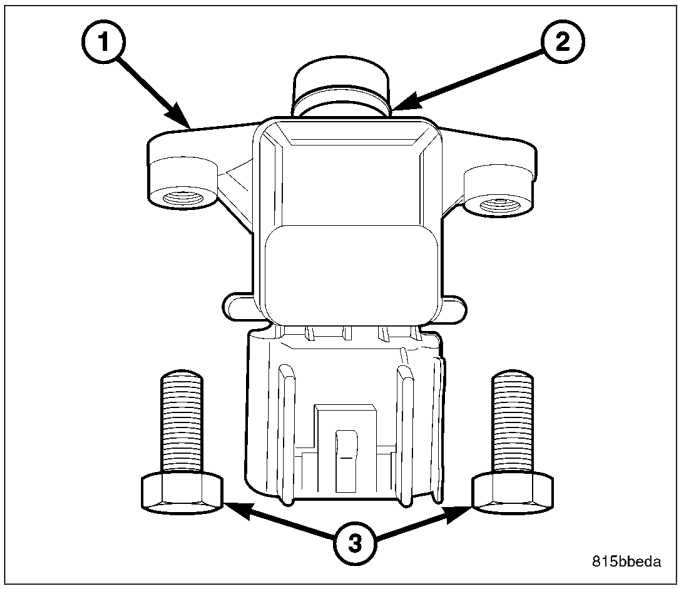

INSTALLATION

2.7L

1. Clean MAP sensor mounting hole at intake manifold.
2. Check MAP sensor o-ring seal for cuts or tears.

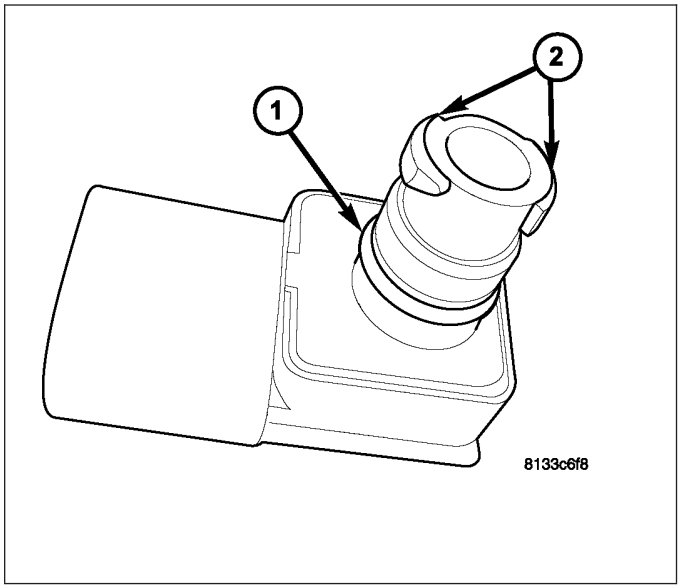

3. Position sensor into intake manifold.

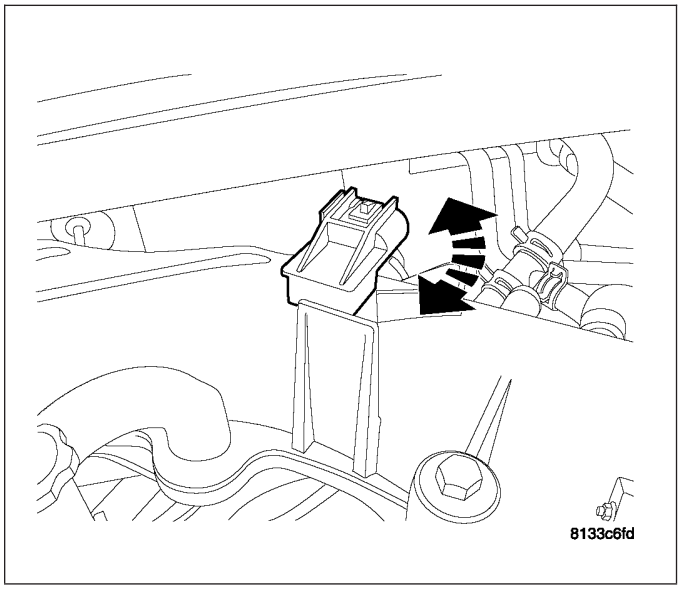

4. Rotate sensor 1/4 turn clockwise for installation.

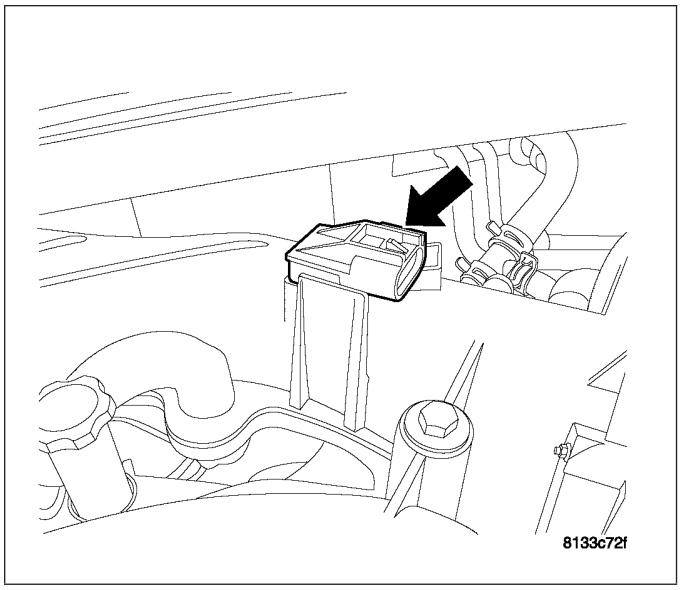

5. Connect electrical connector to sensor.
6. Lock electrical connector.
7. Connect negative battery cable.

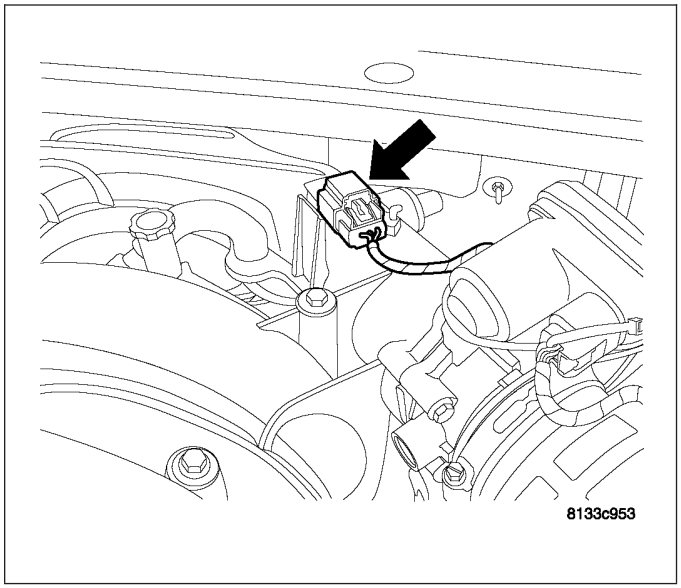

3.5L

1. Clean MAP sensor mounting hole at intake manifold.
2. Check MAP sensor o-ring seal for cuts or tears.

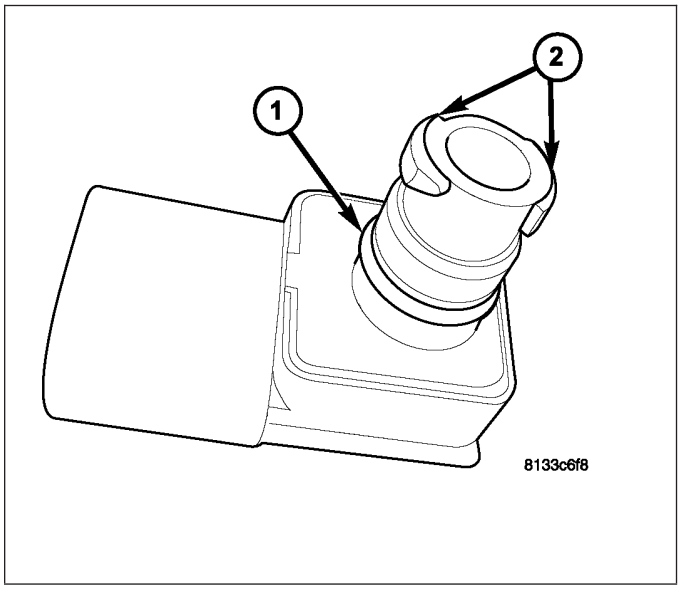

3. Position sensor into intake manifold.

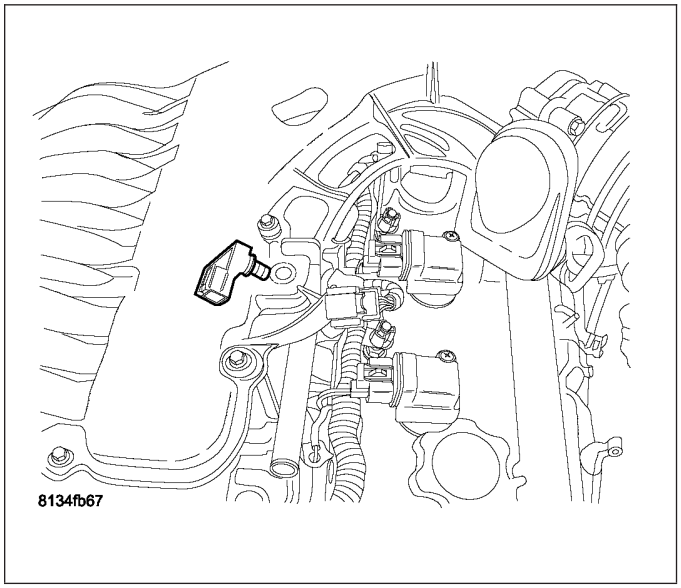

4. Rotate sensor 1/4 turn clockwise for installation.

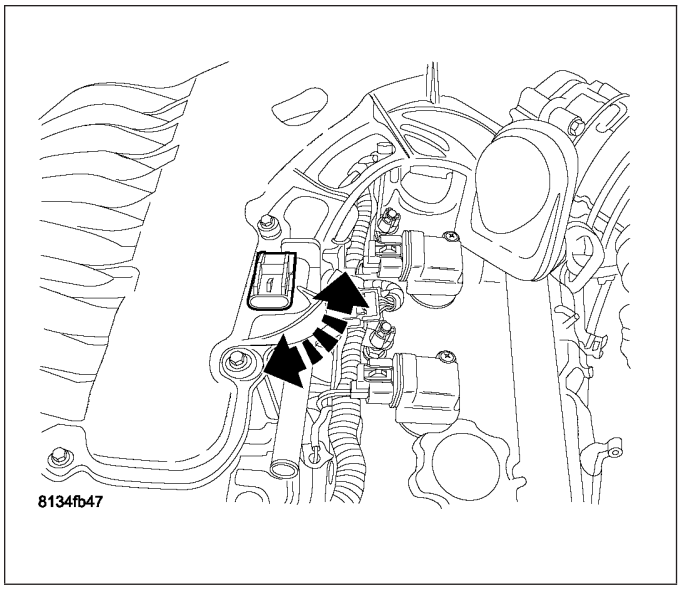

5. Connect electrical connector to sensor.
6. Lock electrical connector.
7. Connect negative battery cable.

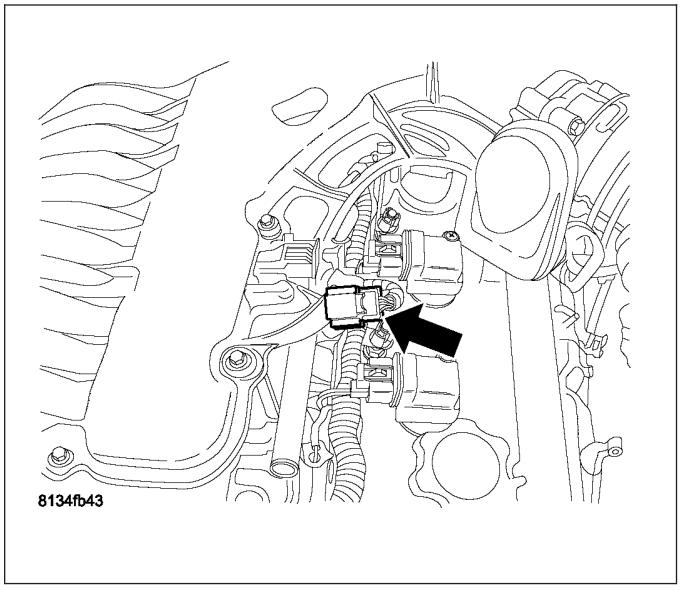

5.7L

1. Clean MAP sensor mounting hole at intake manifold.
2. Check MAP sensor o-ring seal for cuts or tears.
3. Position sensor (3) into intake manifold.
4. Rotate sensor 1/4 turn clockwise for installation.
5. Connect electrical connector (2) to sensor (3).

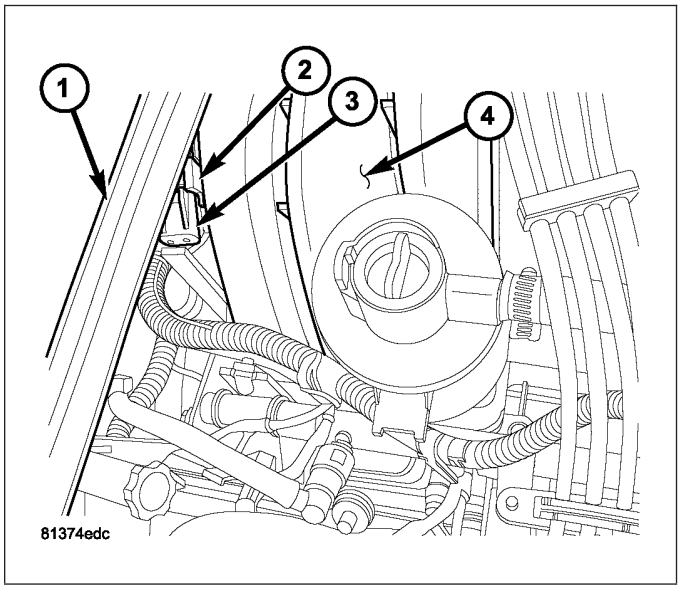

6.1L

1. Clean MAP sensor mounting hole at rear of intake manifold.
2. Check MAP sensor o-ring seal (2) for cuts or tears.
3. Position sensor (1) into intake manifold.
4. Install two sensor mounting bolts (3).
5. Connect electrical connector to sensor.

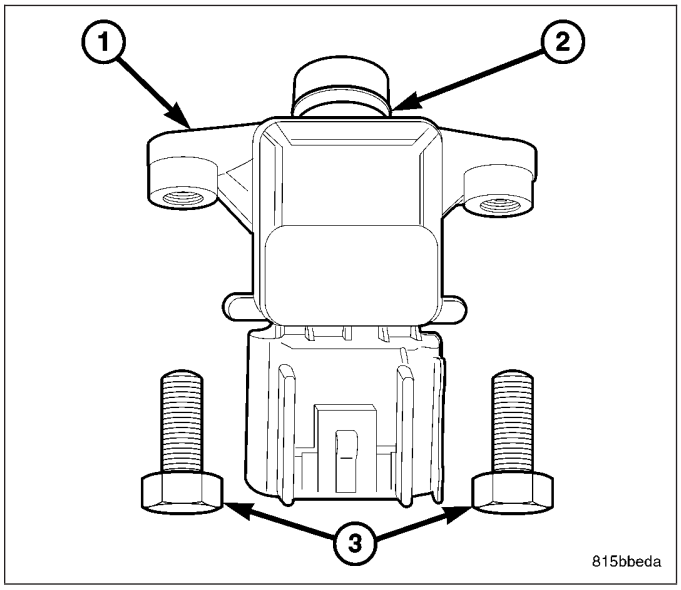

SENSOR-OXYGEN

REMOVAL

2.7L

The engines uses two heated oxygen sensors, one in each exhaust manifold.

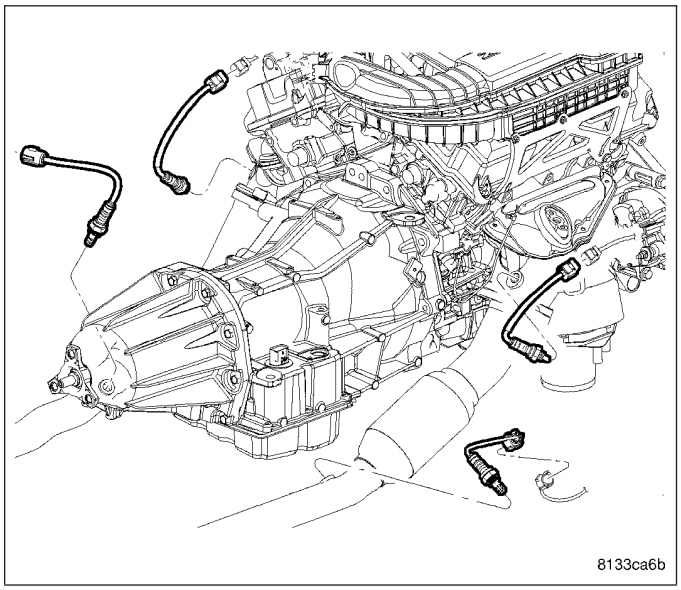

CAUTION: Never apply any type of grease to the oxygen sensor electrical connector, or attempt any soldering of the sensor wiring harness.

WARNING: THE EXHAUST MANIFOLD, EXHAUST PIPES AND CATALYTIC CONVERTER BECOME VERY HOT DURING ENGINE OPERATION. ALLOW ENGINE TO COOL BEFORE REMOVING OXYGEN SENSOR.

CAUTION: When disconnecting sensor electrical connector, do not pull directly on wire going into sensor.

1. Remove the negative battery cable.
2. Raise vehicle and support.
3. Disconnect the heated oxygen sensor electrical connector.
4. Use a socket such as Snap-On YA8875 or a crow foot wrench to remove oxygen sensor.

3.5L

The engines uses two heated oxygen sensors, one in each exhaust manifold.

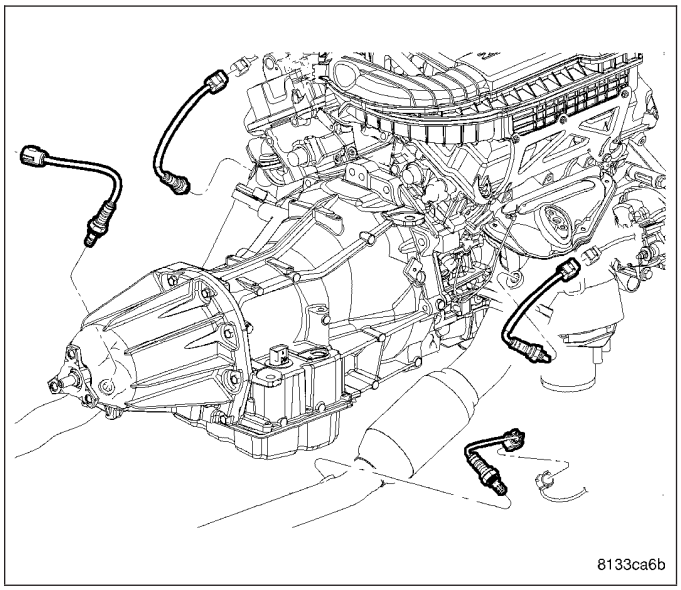

CAUTION: Never apply any type of grease to the oxygen sensor electrical connector, or attempt any soldering of the sensor wiring harness.

WARNING: THE EXHAUST MANIFOLD, EXHAUST PIPES AND CATALYTIC CONVERTER BECOME VERY HOT DURING ENGINE OPERATION. ALLOW ENGINE TO COOL BEFORE REMOVING OXYGEN SENSOR.

CAUTION: When disconnecting sensor electrical connector, do not pull directly on wire going into sensor.

1. Remove the negative battery cable.
2. Raise vehicle and support.
3. Disconnect the heated oxygen sensor electrical connector.
4. Use a socket such as Snap-On YA8875 or a crow foot wrench to remove oxygen sensor.

5.7L

Refer to graphic for typical O2S (oxygen sensor) locations if equipped with four oxygen sensors.

CAUTION: Never apply any type of grease to the oxygen sensor electrical connector, or attempt any soldering of the sensor wiring harness.

WARNING: THE EXHAUST MANIFOLD, EXHAUST PIPES AND CATALYTIC CONVERTER BECOME VERY HOT DURING ENGINE OPERATION. ALLOW ENGINE TO COOL BEFORE REMOVING OXYGEN SENSOR.

1. Raise and support vehicle.
2. Disconnect wire connector from O2S sensor.

CAUTION: When disconnecting sensor electrical connector, do not pull directly on wire going into sensor.

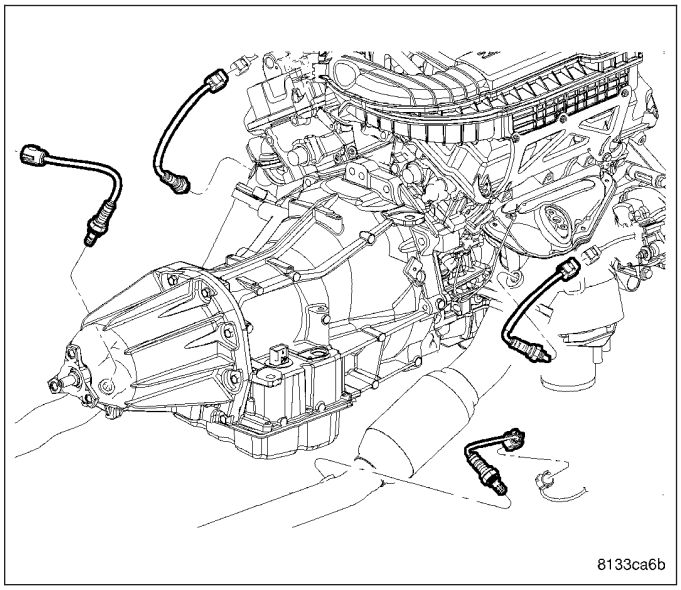

3. Remove O2S sensor with an oxygen sensor removal and installation tool.
4. Clean threads in exhaust pipe using appropriate tap.

6.1L

Refer to graphic for typical O2S (oxygen sensor) locations if equipped with four oxygen sensors.

CAUTION: Never apply any type of grease to the oxygen sensor electrical connector, or attempt any soldering of the sensor wiring harness.

WARNING: THE EXHAUST MANIFOLD, EXHAUST PIPES AND CATALYTIC CONVERTER BECOME VERY HOT DURING ENGINE OPERATION. ALLOW ENGINE TO COOL BEFORE REMOVING OXYGEN SENSOR.

1. Raise and support vehicle.
2. Disconnect wire connector from O2S sensor.

CAUTION: When disconnecting sensor electrical connector, do not pull directly on wire going into sensor.

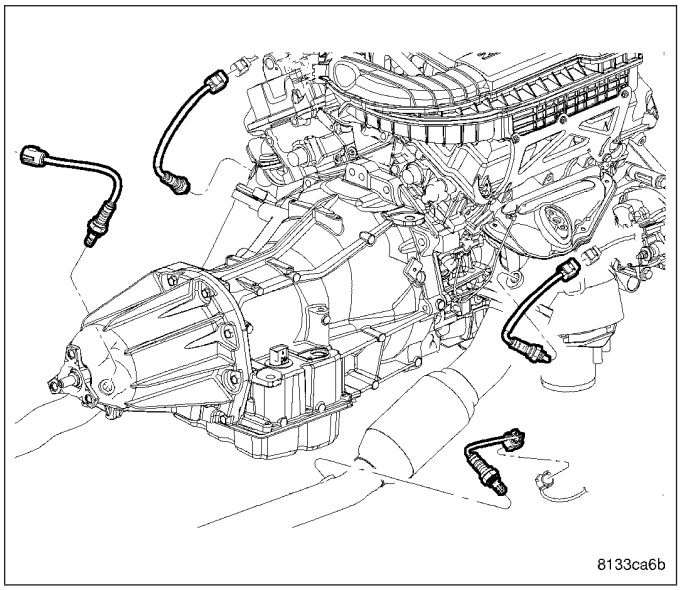

3. Remove O2S sensor with an oxygen sensor removal and installation tool.
4. Clean threads in exhaust pipe using appropriate tap.

INSTALLATION

2.7L

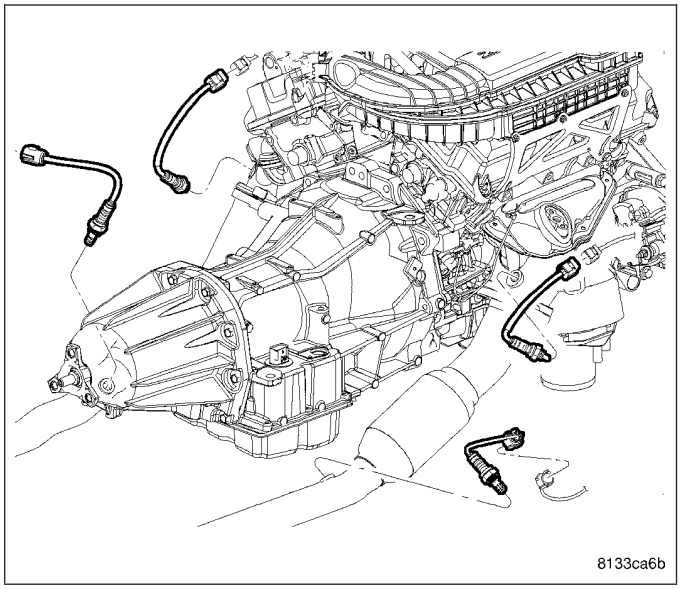

NOTE: When replacing an O2 Sensor, the PCM RAM memory must be cleared, either by disconnecting the PCM C-1 connector or momentarily disconnecting the Battery negative terminal. The NGC learns the characteristics of each O2 heater element and these old values should be cleared when installing a new O2 sensor. The customer may experience driveability issues if this is not performed.

CAUTION: Never apply any type of grease to the oxygen sensor electrical connector, or attempt any soldering of the sensor wiring harness.

The engines uses two heated oxygen sensors, one in each exhaust manifold.

1. After removing the sensor, the exhaust manifold threads must be cleaned with an 18 mm X 1.5 + 6E tap. If reusing the original sensor, coat the sensor threads with an anti-seize compound such as Loctite 771- 64 or equivalent. New sensors have compound on the threads and do not require an additional coating. Tighten the sensor to 28 N·m (20 ft. lbs.) torque.
2. Connect the heated oxygen sensor electrical connector.
3. Lower vehicle.
4. Install the negative battery cable.

3.5L

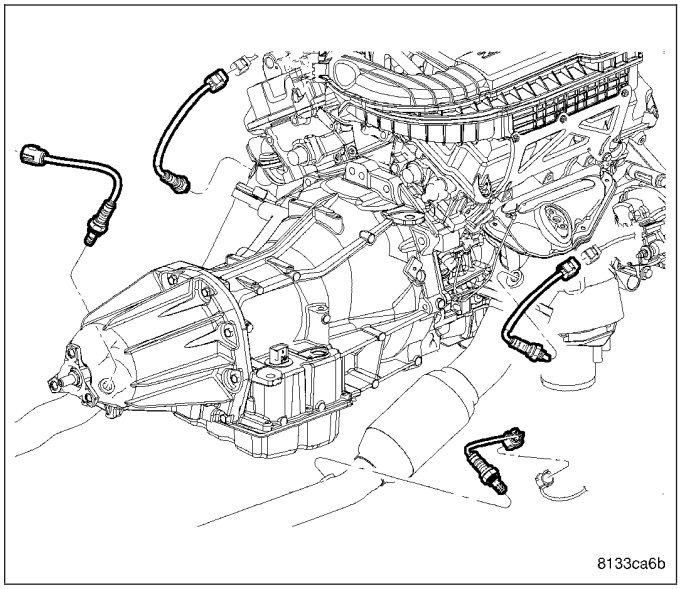

NOTE: When replacing an O2 Sensor, the PCM RAM memory must be cleared, either by disconnecting the PCM C-1 connector or momentarily disconnecting the Battery negative terminal. The NGC learns the characteristics of each O2 heater element and these old values should be cleared when installing a new O2 sensor. The customer may experience driveability issues if this is not performed.

CAUTION: Never apply any type of grease to the oxygen sensor electrical connector, or attempt any soldering of the sensor wiring harness.

The engines uses two heated oxygen sensors, one in each exhaust manifold.

1. After removing the sensor, the exhaust manifold threads must be cleaned with an 18 mm X 1.5 + 6E tap. If reusing the original sensor, coat the sensor threads with an anti-seize compound such as Loctite 771- 64 or equivalent. New sensors have compound on the threads and do not require an additional coating. Tighten the sensor to 28 N·m (20 ft. lbs.) torque.
2. Connect the heated oxygen sensor electrical connector.
3. Lower vehicle.
4. Install the negative battery cable.

5.7L

NOTE: When replacing an O2 Sensor, the PCM's RAM memory must be cleared. This can be done by either by disconnecting the PCM's C-1 connector, or by momentarily disconnecting the negative battery cable. The PCM learns the characteristics of each O2 heater element, and these old values should be cleared when installing a new O2 sensor. Driveability problems may be experienced if this step is not performed.

CAUTION: Never apply any type of grease to the oxygen sensor electrical connector, or attempt any soldering of the sensor wiring harness.

Threads of new oxygen sensors are factory coated with anti-seize compound to aid in removal. **DO NOT add any additional anti-seize compound to threads of a new oxygen sensor.**

1. Install O2S sensor. Tighten to 30 N·m (22 ft. lbs.) torque.
2. Connect O2S sensor wire connector.
3. Lower vehicle.

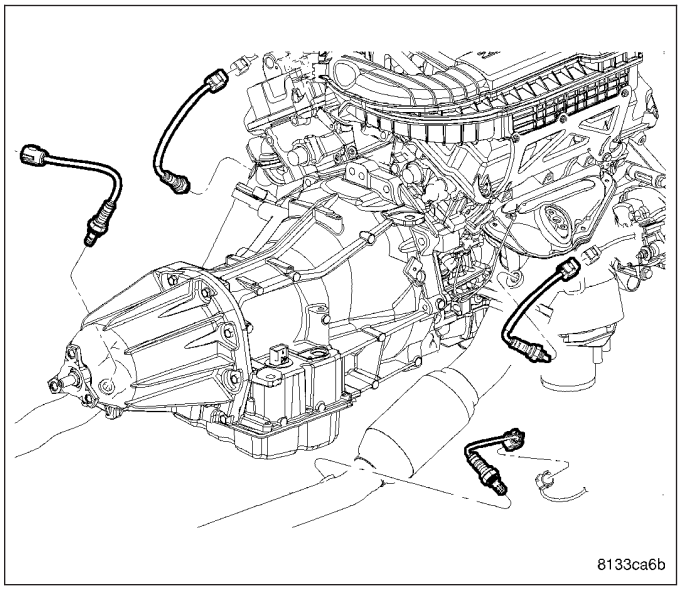

6.1L

NOTE: When replacing an O2 Sensor, the PCM's RAM memory must be cleared. This can be done by either by disconnecting the PCM's C-1 connector, or by momentarily disconnecting the negative battery cable. The PCM learns the characteristics of each O2 heater element, and these old values should be cleared when installing a new O2 sensor. Driveability problems may be experienced if this step is not performed.

CAUTION: Never apply any type of grease to the oxygen sensor electrical connector, or attempt any soldering of the sensor wiring harness.

Threads of new oxygen sensors are factory coated with anti-seize compound to aid in removal. **DO NOT add any additional anti-seize compound to threads of a new oxygen sensor.**

1. Install O2S sensor. Tighten to 30 N·m (22 ft. lbs.) torque.
2. Connect O2S sensor wire connector.
3. Lower vehicle.

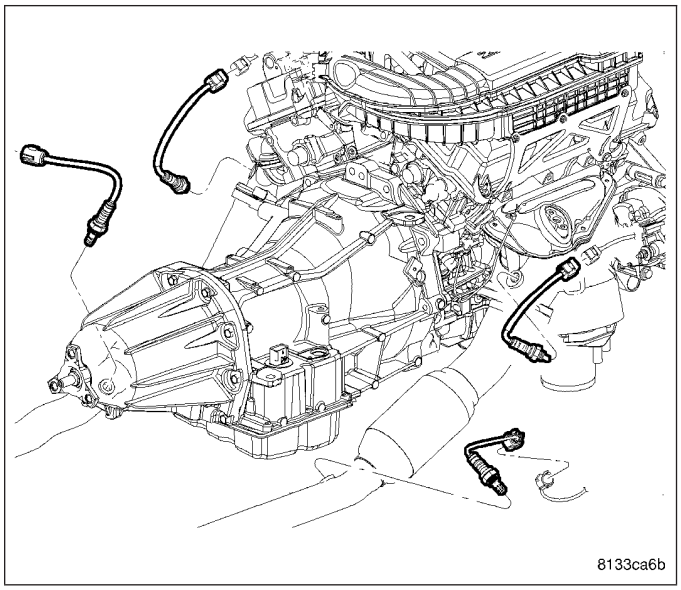

SHORT RUNNER VALVE

OPERATION

The SRV system operates under WOT conditions above 5000 rpm to maximize engine performance. When actuated by the PCM, the SRV solenoid energizes, allowing mechanical linkage to redirect the intake air flow to six short runners. The PCM looks for a current spike when actuating the solenoid. If the spike is not present, the PCM sets the DTC.

REMOVAL - 3.5L

1. Disconnect negative battery cable.
2. Remove the electrical connector.

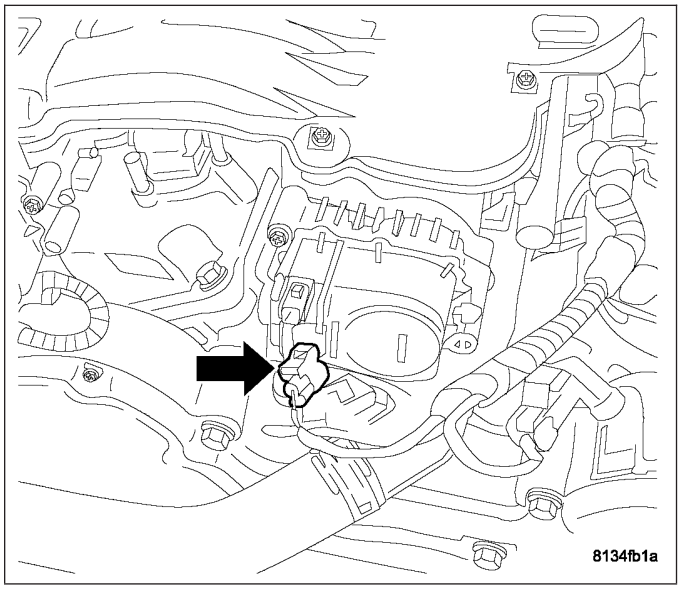

3. Remove the 2 mounting bolts.
4. Remove the Short Runner Valve.

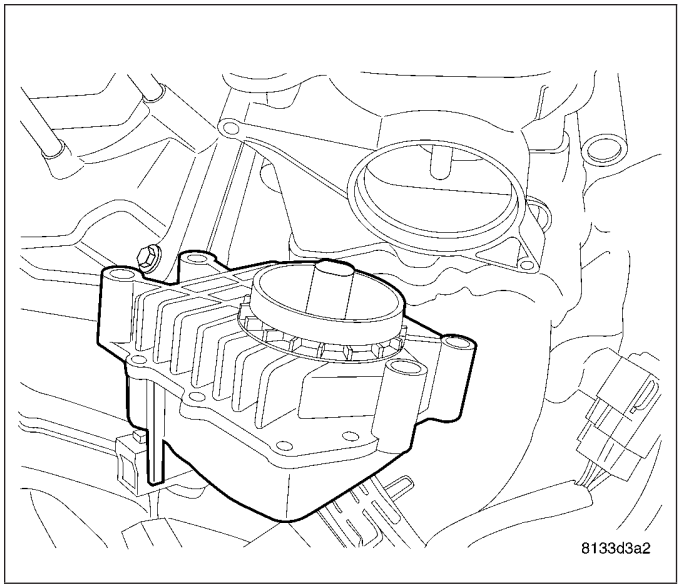

INSTALLATION - 3.5L

1. Install the Sort Runner Valve. Align the slot in the valve with the tab on the intake manifold shaft.
2. Install the 2 mounting bolts.
3. Tighten bolts to 2.8 N·m (25 in. lbs.).

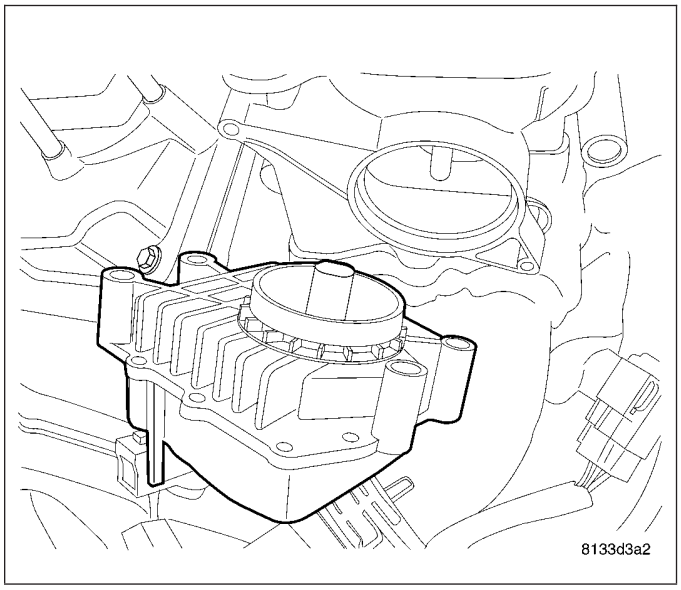

4. Connect the electrical connector.
5. Connect negative battery cable.

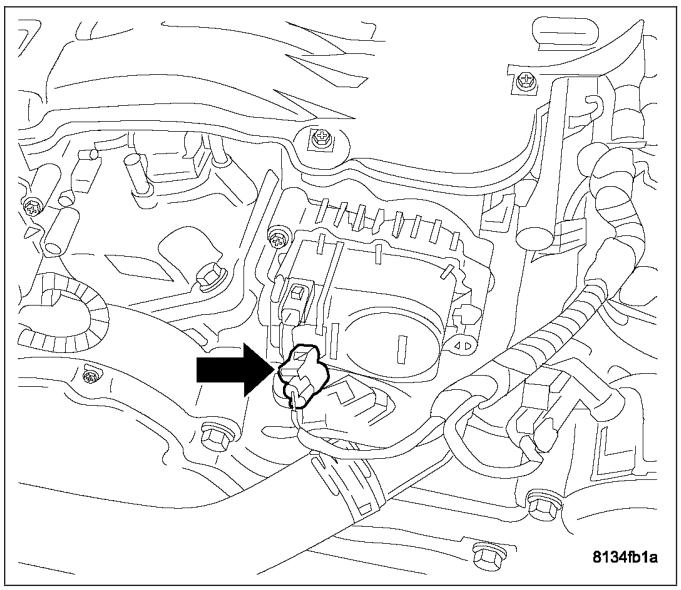

THROTTLE BODY

REMOVAL

2.7L

1. Disconnect negative cable from battery
2. Disconnect inlet hose from from throttle body.

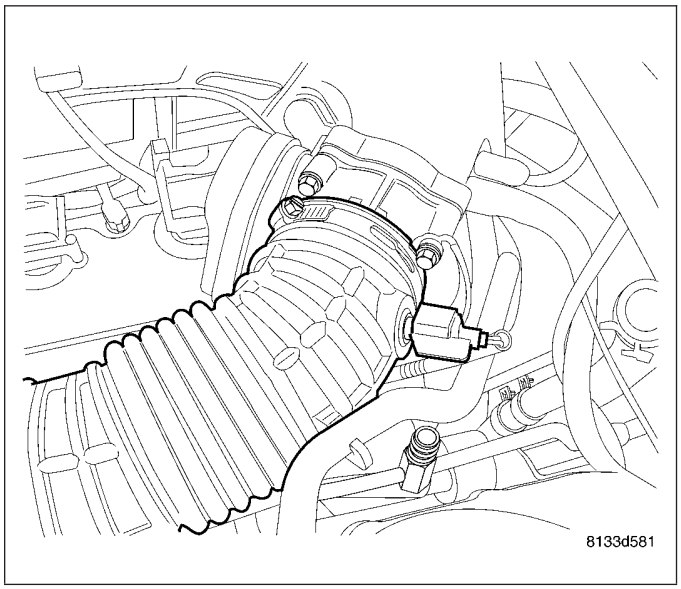

3. Disconnect electrical connectors.
4. Disconnect vacuum hose.
5. Remove 3 throttle body bolts.
6. Remove throttle body.

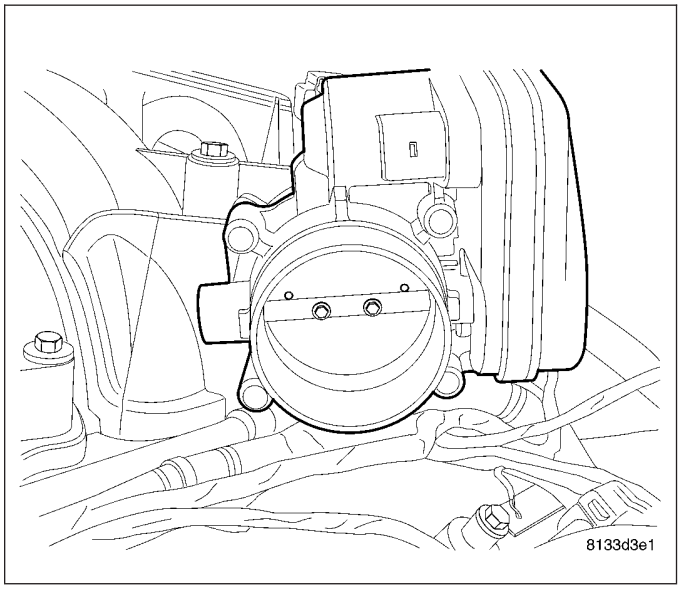

7. Clean mating surfaces.

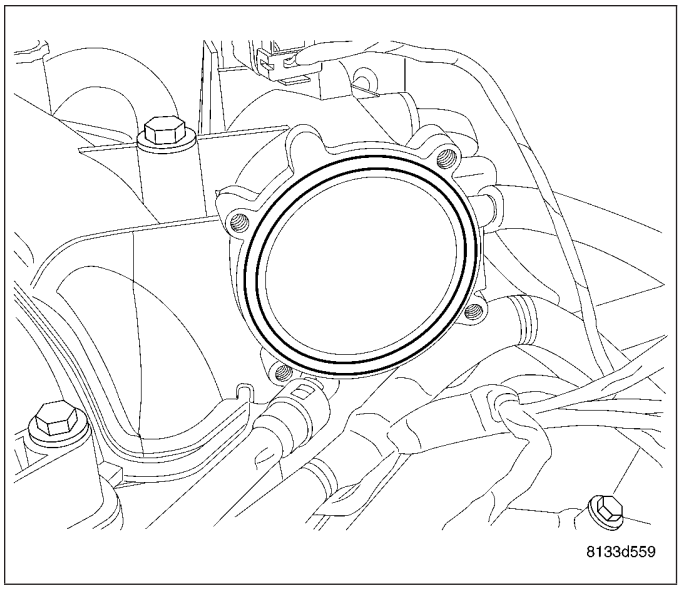

3.5L

1. Disconnect negative cable from battery
2. Remove the inlet hose from throttle body.

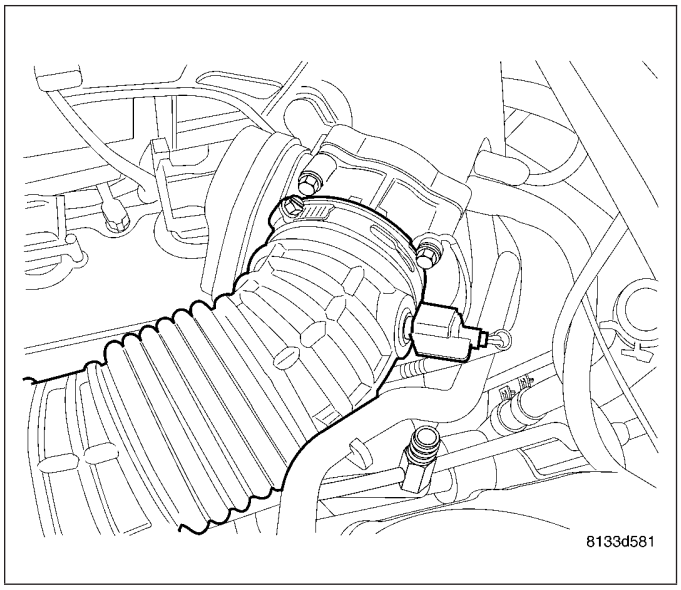

3. Disconnect electrical connectors.
4. Disconnect vacuum hose.
5. Remove the throttle body support bracket.
6. Remove throttle body bolts.

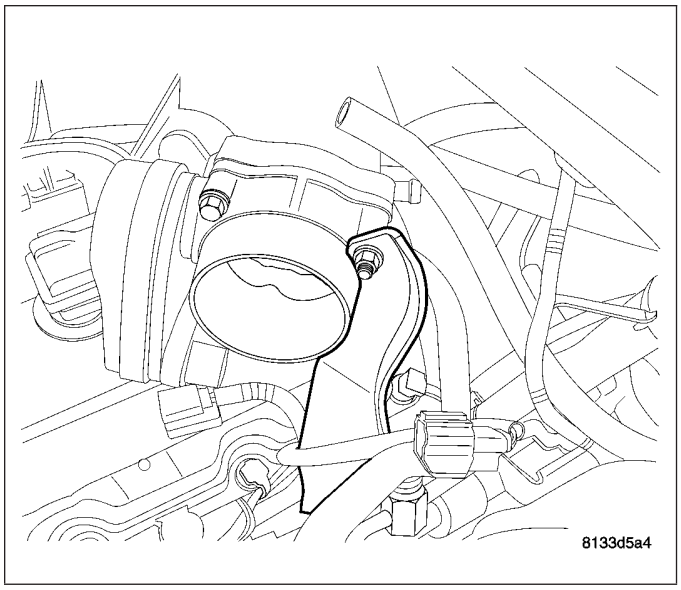

7. Clean mating surfaces.

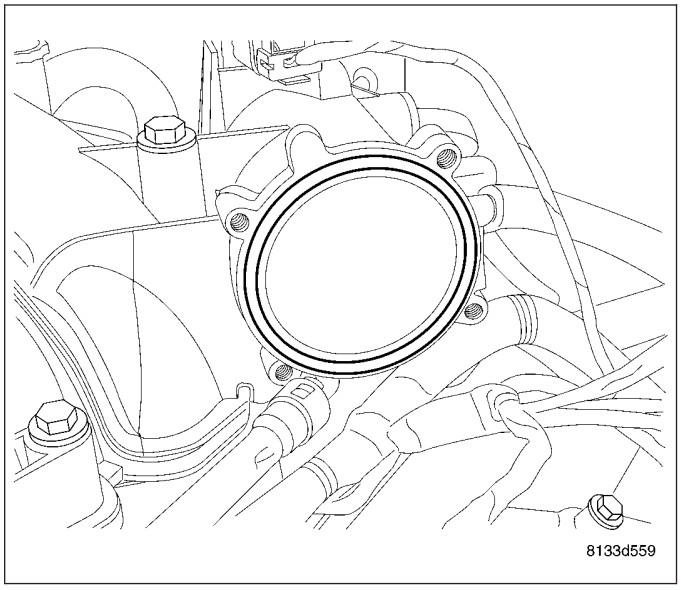

5.7L

CAUTION: Do not use spray (carb) cleaners on any part of the throttle body. Do not apply silicone lubricants to any part of the throttle body.

1. Remove rubber air duct at front of throttle body.
2. Disconnect electrical connector (3) at throttle body (1).
3. Remove four throttle body mounting bolts (2).
4. Remove throttle body from intake manifold.

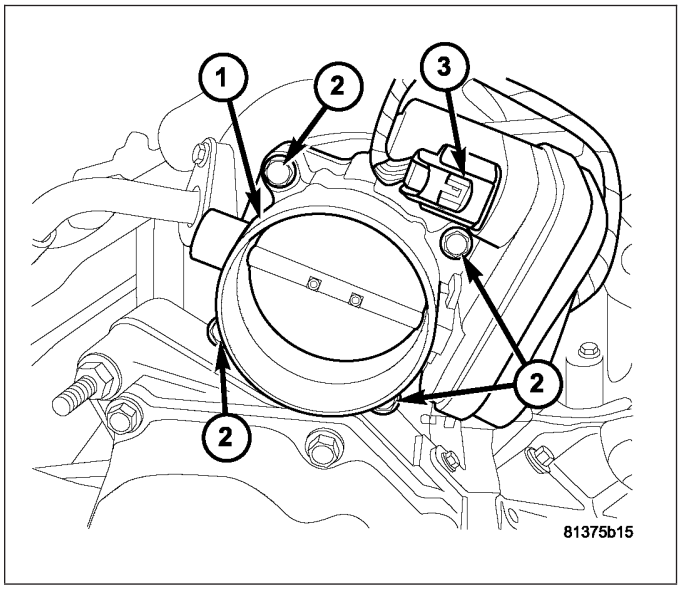

5. Check condition of throttle body o-ring (2) at front of intake manifold (1).

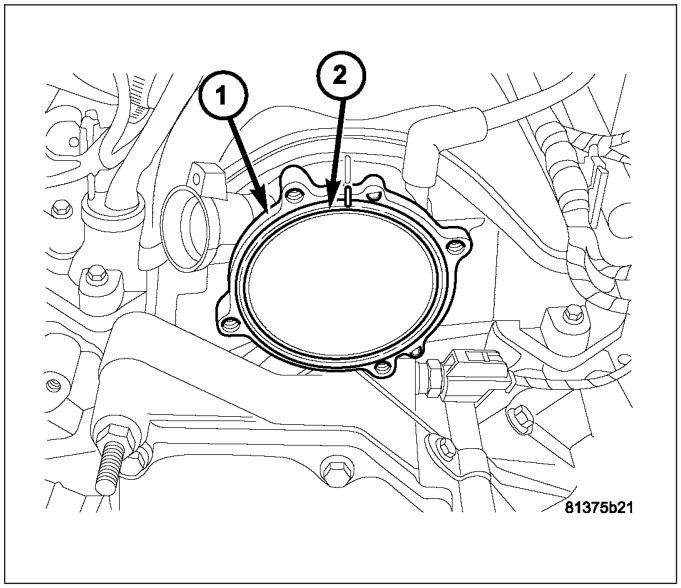

6.1L

CAUTION: Do not use spray (carb) cleaners on any part of the throttle body. Do not apply silicone lubricants to any part of the throttle body.

1. Remove rubber air duct at front of throttle body.
2. Disconnect electrical connector (2) at throttle body (1).
3. Remove four throttle body mounting bolts (3).
4. Remove throttle body from intake manifold.

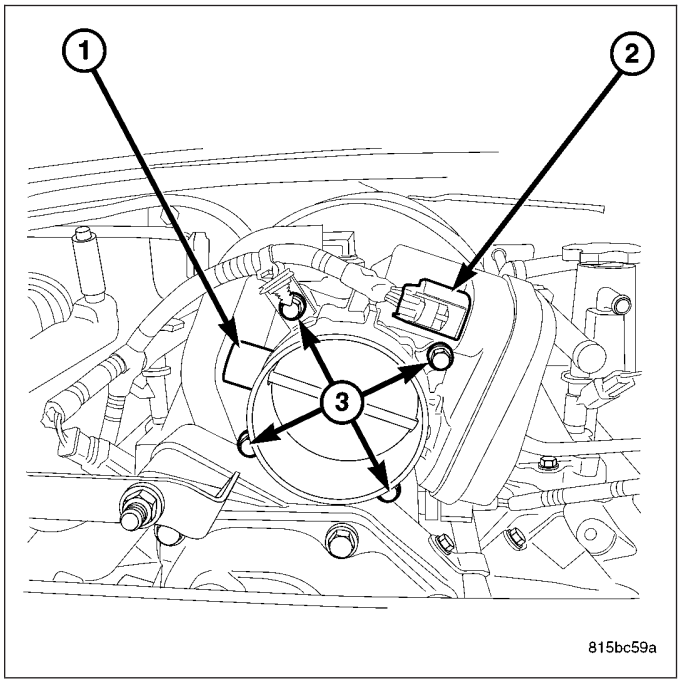

5. Check condition of throttle body o-ring (2) at front of intake manifold (1).

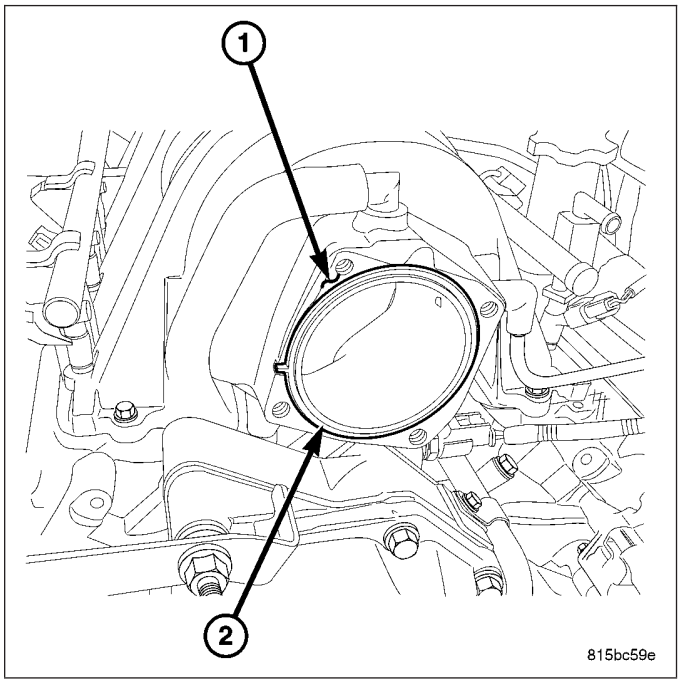

INSTALLATION

2.7L

CAUTION: Do not use spray (carb) cleaners on any part of the throttle body. Do not apply silicone lubricants to any part of the throttle body.

1. Install throttle body gasket.

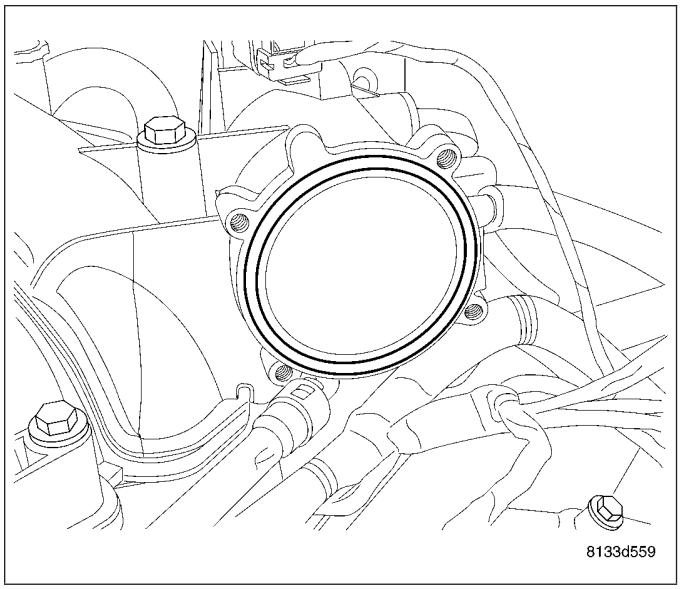

2. Install throttle body and bolts.
3. Tighten bolts to 11.9 N·m (105 in. lbs.) torque.
4. Connect electrical connectors.
5. Connect vacuum hoses.

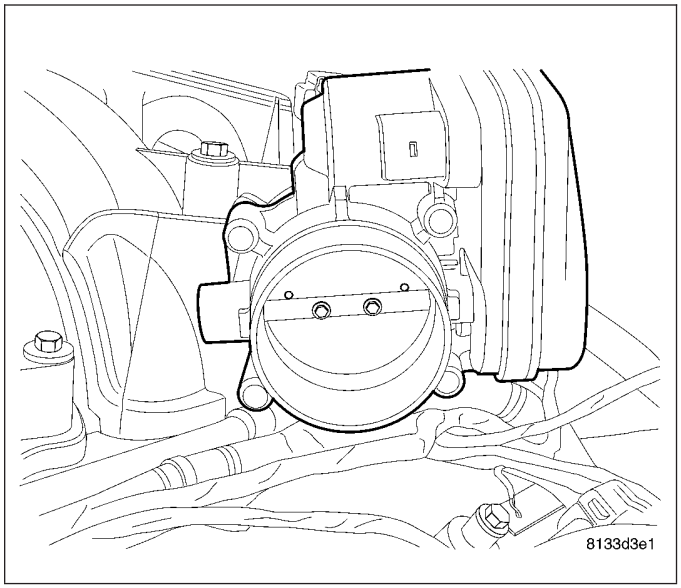

6. Install inlet hose and tighten clamp.
7. Connect negative cable to battery.
8. A Scan Tool may be used to learn electrical parameters. Go to the Miscellaneous menu, and then select ETC Relearn. If the relearn is not preformed, a Diagnostic Trouble Code (DTC) will be set. If necessary, use a scan tool to erase any Diagnostic Trouble Codes (DTC's) from PCM.

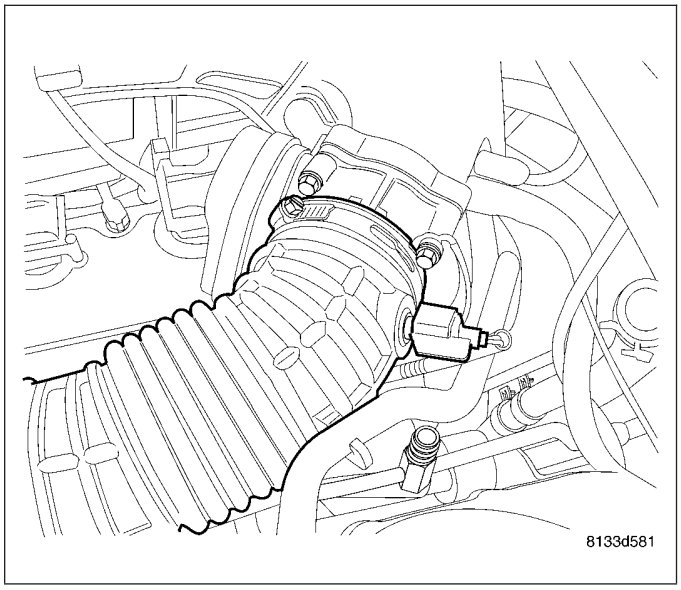

3.5L

CAUTION: Do not use spray (carb) cleaners on any part of the throttle body. Do not apply silicone lubricants to any part of the throttle body.

1. Install throttle gasket.

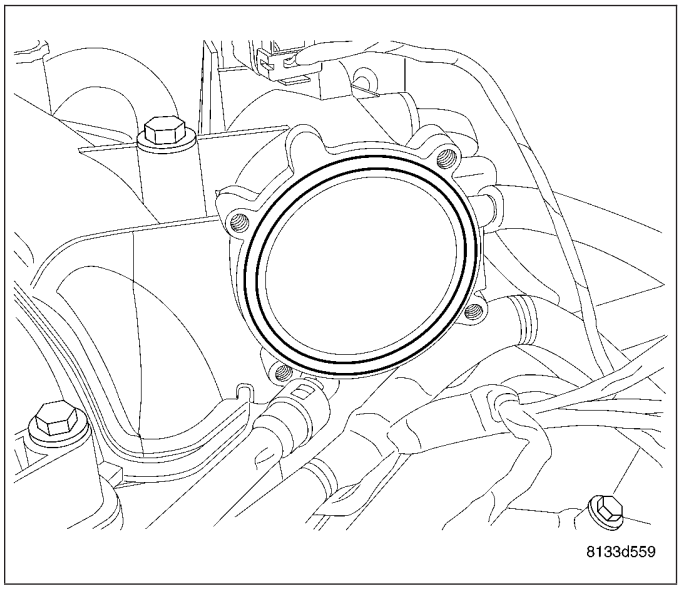

2. Install throttle body and bolts.
3. Tighten bolts to 11.9 N·m (105 in. lbs.) torque.
4. Install the throttle body support bracket to the bottom of the throttle body. Tighten the bolts to 27.1 N·m (20 ft. lbs.) torque.

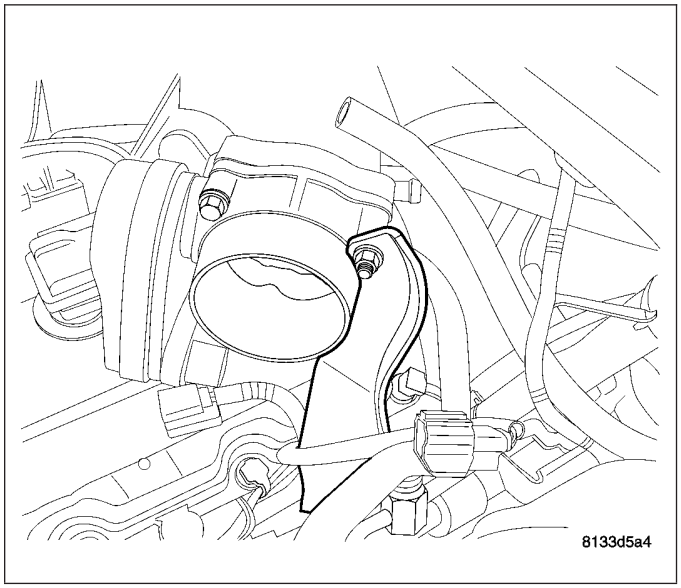

5. Install inlet hose and tighten clamp.
6. Connect negative cable to battery.
7. A Scan Tool may be used to learn electrical parameters. Go to the Miscellaneous menu, and then select ETC Relearn. If the relearn is not preformed, a Diagnostic Trouble Code (DTC) will be set. If necessary, use a scan tool to erase any Diagnostic Trouble Codes (DTC's) from PCM.

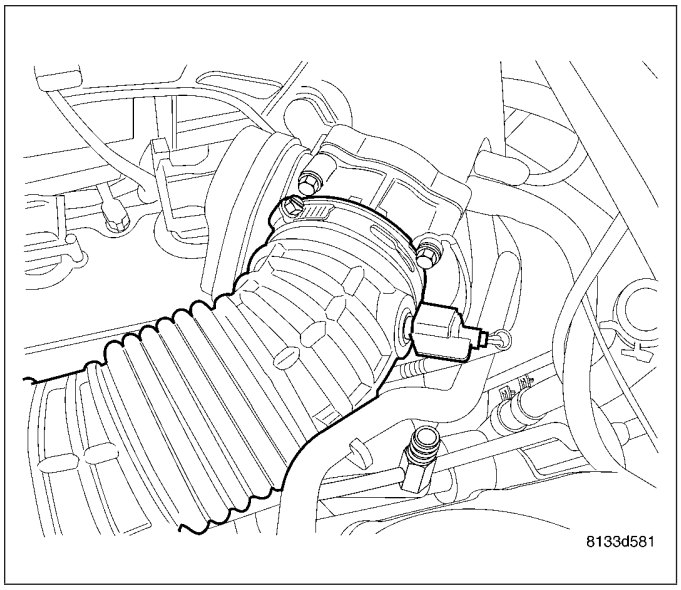

5.7L

1. Clean and check condition of throttle body-to-intake manifold o-ring (2).
2. Clean mating surfaces of throttle body and intake manifold (1).

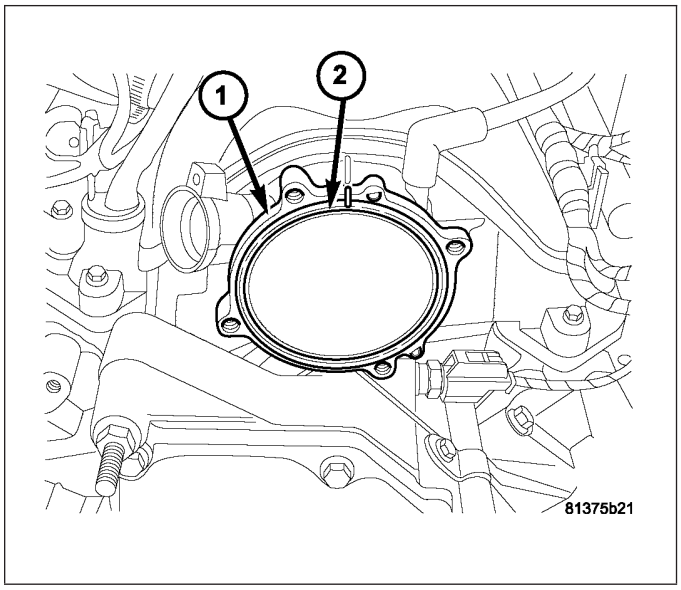

CAUTION: Do not use spray (carb) cleaners on any part of the throttle body. Do not apply silicone lubricants to any part of the throttle body.

3. Install throttle body to intake manifold by positioning throttle body to manifold alignment pins.
4. Install and tighten four mounting bolts (2). Refer to Torque Specifications.
5. Install electrical connector (3).
6. Install rubber air hose to throttle body.
7. A Scan Tool may be used to learn electrical parameters. Go to the Miscellaneous menu, and then select ETC Relearn. If the relearn is not preformed, a Diagnostic Trouble Code (DTC) will be set. If necessary, use a scan tool to erase any Diagnostic Trouble Codes (DTC's) from PCM.

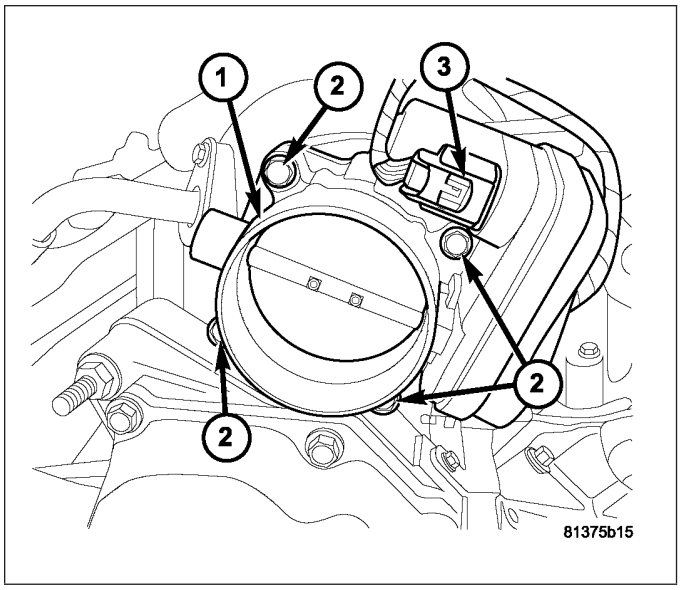

6.1L

1. Clean and check condition of throttle body-to-intake manifold o-ring (2).
2. Clean mating surfaces of throttle body and intake manifold (1).

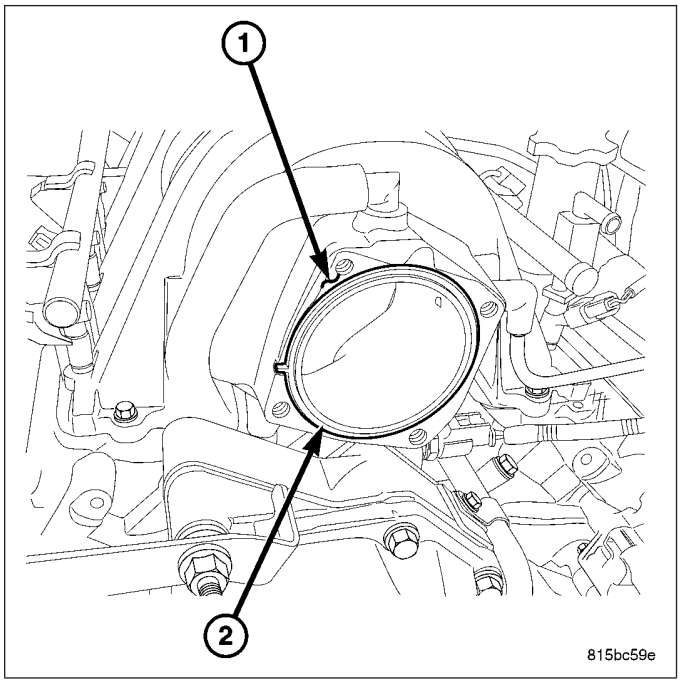

CAUTION: Do not use spray (carb) cleaners on any part of the throttle body. Do not apply silicone lubricants to any part of the throttle body.

3. Install throttle body to intake manifold by positioning throttle body to manifold alignment pins.
4. Install and tighten four mounting bolts (3). Refer to Torque Specifications.
5. Install electrical connector (2). To lock connector, slide the red colored tab towards throttle body. Pull firmly on connector to verify a good lock.
6. Install rubber air hose to throttle body.
7. A Scan Tool may be used to learn electrical parameters. Go to the Miscellaneous menu, and then select ETC Relearn. If the relearn is not preformed, a Diagnostic Trouble Code (DTC) will be set. If necessary, use a scan tool to erase any Diagnostic Trouble Codes (DTC's) from PCM.

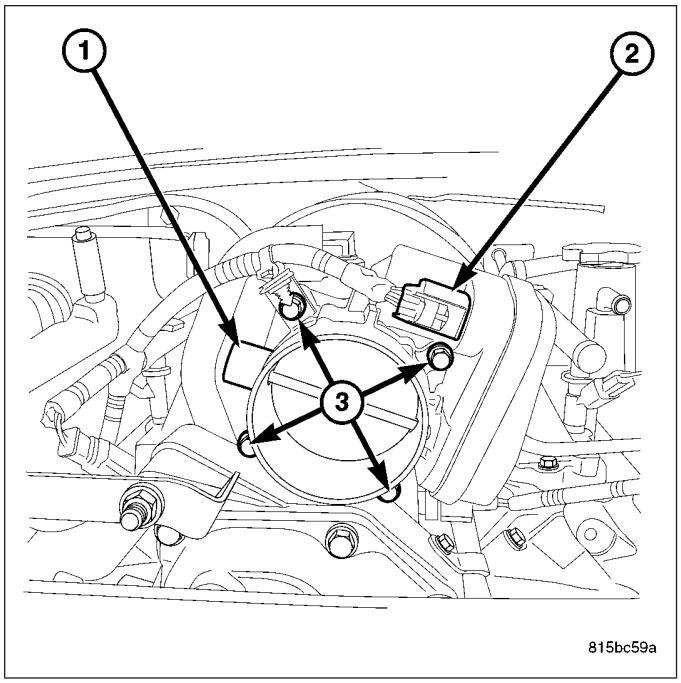

FUEL INJECTION - DIESEL

TABLE OF CONTENTS

page

FUEL INJECTION - DIESEL
SPECIFICATIONS
TORQUE 229
SPECIAL TOOLS
3.0L DIESEL 229
ACTUATOR-INTAKE PORT SWIRL
DESCRIPTION 230
OPERATION 231
REMOVAL 231
INSTALLATION 232
INJECTOR-FUEL
DESCRIPTION 233
OPERATION 233
STANDARD PROCEDURE
CLEANING FUEL INJECTORS 234
INJECTOR CLASSIFICATION 235
REMOVAL
LEFT CYLINDER HEAD 235
RIGHT CYLINDER HEAD 235
INSTALLATION
LEFT CYLINDER HEAD 236
RIGHT CYLINDER HEAD 236
SENSOR-ACCELERATOR PEDAL POSITION
DESCRIPTION 238
REMOVAL 238
INSTALLATION 239
SENSOR-CAMSHAFT POSITION
DESCRIPTION 240
OPERATION 240
REMOVAL 241
INSTALLATION 241
SENSOR-CRANKSHAFT POSITION
DESCRIPTION 242
OPERATION 242
REMOVAL 242
INSTALLATION 243
SENSOR-FUEL PRESSURE
DESCRIPTION 244
OPERATION 244
REMOVAL 244
INSTALLATION 244

page

SENSOR-MASS AIR FLOW (MAF)
DESCRIPTION 245
OPERATION 245
REMOVAL 245
INSTALLATION 246
SENSOR-BOOST PRESSURE
DESCRIPTION 247
OPERATION 247
DIAGNOSIS AND TESTING - BOOST PRESSURE SENSOR 247
REMOVAL 247
INSTALLATION 248
SENSOR-INTAKE AIR TEMPERATURE
DESCRIPTION 249
OPERATION 249
REMOVAL 249
INSTALLATION 250
SENSOR-FUEL TEMPERATURE
DESCRIPTION 251
OPERATION 251
REMOVAL 251
INSTALLATION 251
SOLENOID-FUEL PRESSURE
DESCRIPTION 252
OPERATION 252
REMOVAL 252
INSTALLATION 252
SOLENOID - FUEL QUANTITY
DESCRIPTION 253
OPERATION 253
REMOVAL 254
INSTALLATION 254
RAIL-FUEL
DESCRIPTION 255
OPERATION 255
REMOVAL
LEFT FUEL RAIL 255
RIGHT FUEL RAIL 255
INSTALLATION
LEFT FUEL RAIL 256
RIGHT FUEL RAIL 256

FUEL INJECTION - DIESEL

SPECIFICATIONS

TORQUE

DESCRIPTION	N·m	Ft. Lbs.	In. Lbs.
Bolt, Intake Swirl Port Actuator	12	-	106
Bolt, Fuel Injector Tensioning Claw	7+180°	-	62+180°
Nut, High Pressure Fuel Line	27	20	-
Bolt, Camshaft Position Sensor	8	-	71
Bolt, Crankshaft Position Sensor	9	-	80
Bolt, Fuel Pressure Sensor	22	-	194
Bolt, Boost Pressure Sensor	9	-	80
Sensor, Fuel Temperature	25	18	-
Bolt, Fuel Rail	11	-	97
Nut, High Pressure Line to Fuel Rail	33	24	-
Nut, High Pressure Fuel Rail Transfer Pipe	27	19	-
Nut, High Pressure Line from Injector to Fuel Rail	27	20	-
Bolt, Wiring Harness Hold Down	11	-	97

SPECIAL TOOLS

3.0L DIESEL

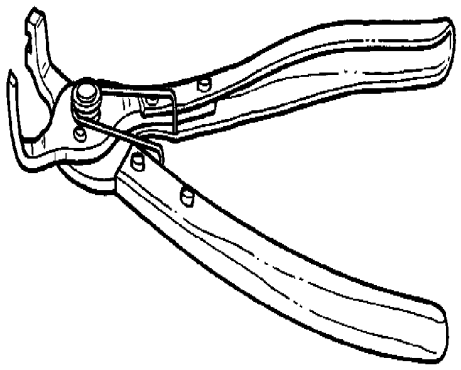

Pliers, Fuel Line - 9539

ACTUATOR-INTAKE PORT SWIRL

DESCRIPTION

The intake manifold swirl actuator is located between the two intake manifolds.

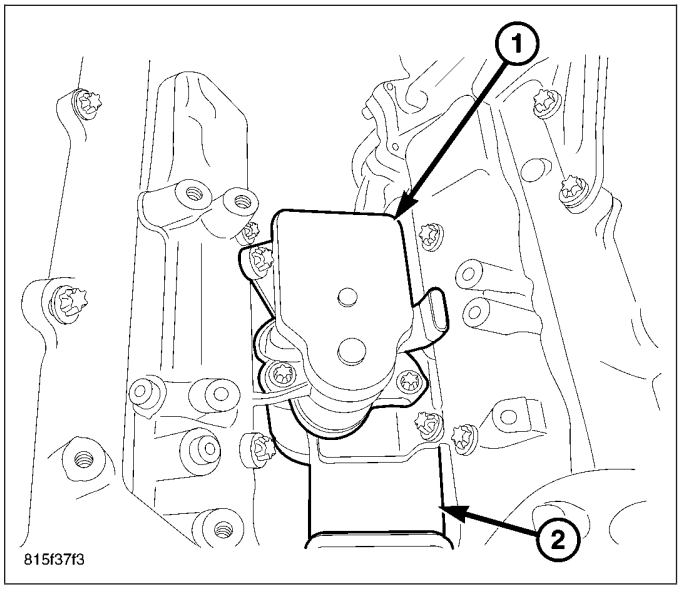

The intake manifolds have a charge air passage (3) which are ovate, and swirl passage (2) which are round, for each cylinder. The swirl blades (2) are mounted in each intake manifold swirl passage (2) and are not serviceable. The actuator (5) is PWM controlled by the ECM and is constantly adjusting while the engine is running to optimize the air/fuel mixture and create the best possible air turbulence. The result is Improved combustion, improved engine performance and a reduction in exhaust particulates. The swirl blades (2) in the intake manifold are held in the open position by an internal spring in an un-powered state.

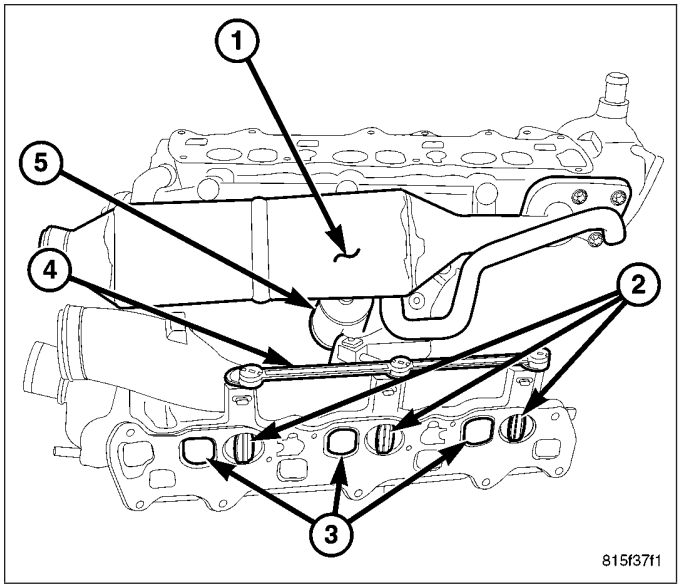

OPERATION

There are two channels in each intake manifold for each cylinder. A charge air intake passage (3) and a swirl intake passage (2). The swirl passage (2) incorporates a blade (2) that is continually adjusted through linkage (4) and an actuator (5) when ever the engine is running. The actuator (5) is controlled by the ECM through a PWM signal. As engine speed and load increase the swirl channels adjust for optimized air turbulence and air mass requirements. When the engine is not running, the swirl channel blades (2) are held open by and integrated spring.

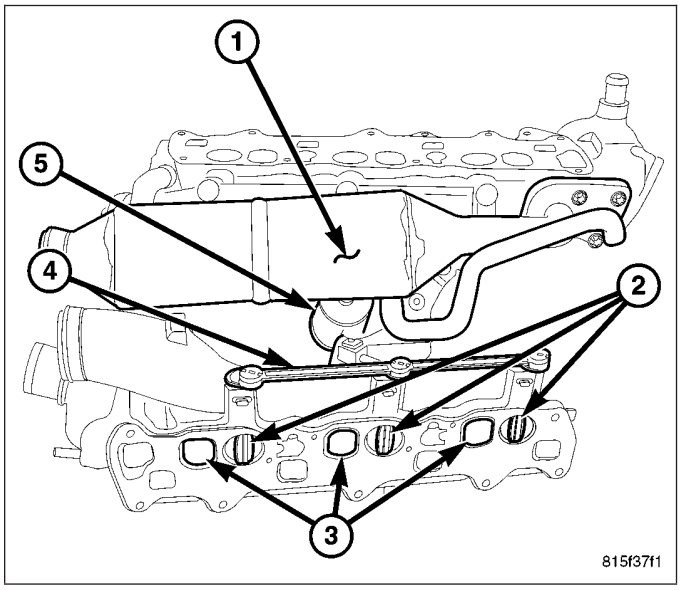

REMOVAL

1. Disconnect the negative battery cable.
2. Remove the engine cover.
3. Remove the strut tower support.
4. Drain the cooling system.
5. Remove the intake manifold (Refer to 9 - ENGINE/ MANIFOLDS/INTAKE MANIFOLD - REMOVAL).
6. Position the intake manifolds on a work bench.

CAUTION: Care must be taken when disconnecting the actuator and rod assembly. Failure to do so will result in poor connections during assembly or intake manifold replacement.

7. Pinch together the actuating rod retaining clip and carefully separate the rod from the actuator.
8. Remove the actuator fasteners and actuator (1) from the intake manifold.

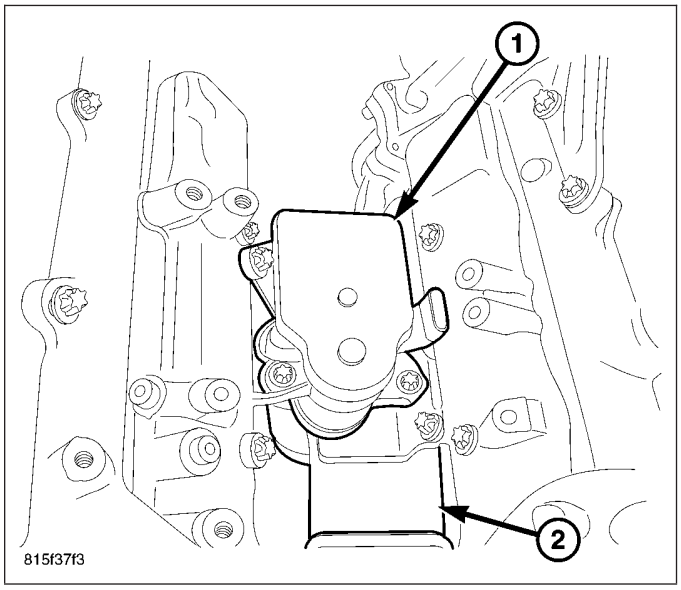

INSTALLATION

1. Position the actuator (1) on the intake manifold and tighten fasteners to 12N·m (106 in. lbs.).

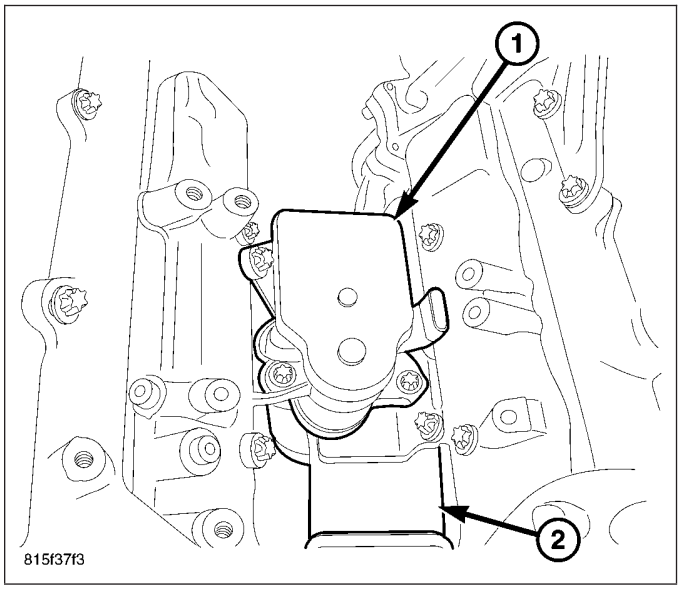

CAUTION: Care must be taken when connecting the actuator and rod assembly. Failure to do so will result in poor connections during assembly or intake manifold replacement.

2. Carefully connect the relationship rod to the actuator. **Do Not Force**.
3. Install the intake manifold (Refer to 9 - ENGINE/ MANIFOLDS/INTAKE MANIFOLD - INSTALLATION).
4. Install the turbocharger (Refer to 11 - EXHAUST SYSTEM/TURBOCHARGER SYSTEM - INSTALLATION).
5. Fill the cooling system using the appropriate H.O.A.T. coolant.

WARNING: (Refer to 14 - FUEL SYSTEM - WARNING)

6. Start the engine, allow to warm, turn engine off and inspect for leaks.
7. Install the engine cover.
8. Install the strut tower support.

INJECTOR-FUEL

DESCRIPTION

There are individual fuel injectors for all six cylinders. These fuel injectors are used to spray fuel into the combustion chamber. The injectors are indirectly controlled by piezo actuators that allow precise timing of up to five injections with minimal drift values and stable minimum amounts. The injector nozzles have eight injection orifices which allows for optimum fuel atomization. Each injector has a six digit alphanumeric code on the injector top which must be entered into to ECM using the scan tool. Specific moving parts inside the injector are graphite coated to assist with the lubrication process.

OPERATION

The injector operation can be subdivided into four operating states with the engine running and the high-pressure pump generating pressure:

- Injector closed (with high pressure applied)
- Injector opens (start of injection)
- Injector opened fully
- Injector closes (end of injection)

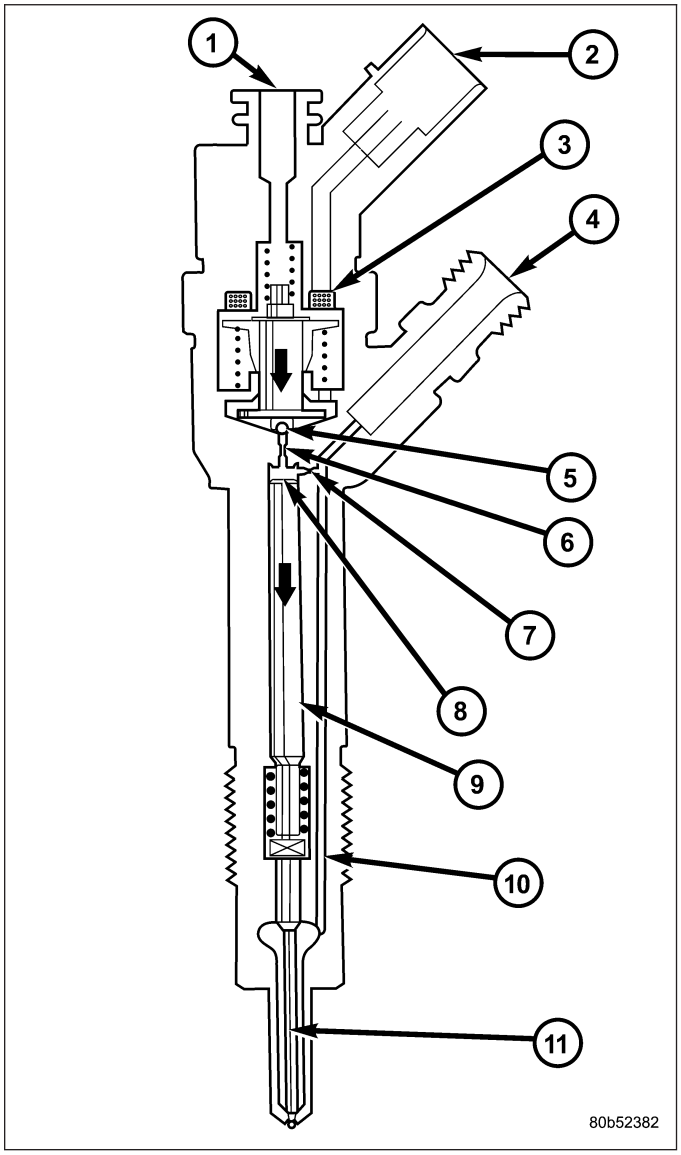

Injector closed (with high pressure applied)

With the injector closed (at-rest state), the solenoid valve is not energized and is therefore closed. With the bleed orifice closed, the valve spring forces the armature's ball onto the bleed-orifice seat. The rail's high pressure build up in the valve control chamber, and the same pressure is also present in the nozzle's chamber volume. The rail pressure applied at the control plunger's end face, together with the force of the nozzle spring, maintain the nozzle in the closed position against the opening forces applied to its pressure stage.

Injector opens (start of injection)

The solenoid valve is energized with the pickup current which serves to ensure that it open quickly. The force exerted by the triggered solenoid now exceeds that of the valve spring and the armature opens the bleed orifice. Almost immediately, the high-level pick-up current is reduced to the lower holding current required for the electro-magnet. This is possible due to the magnetic circuit's air gap now being smaller. When the bleed orifice opens, fuel can flow from the valve control chamber into the cavity situated above it, and from there via the fuel return to the tank. The bleed orifice prevents complete pressure balance, and the pressure in the valve control chamber sinks as a result. This leads to the pressure in the valve-control chamber being lower than that in the nozzle's chamber volume which is still at the same pressure level as the rail. The reduced pressure in the valve-control chamber causes a reduction in the force exerted on the control plunger, the nozzle needle open as a result, and injection starts.

Injector opens fully

The control plunger reaches its upper stop where it remains supported by a cushion of fuel which is generated by the flow of fuel between the bleed and feed orifices. The injector nozzle has now opened fully, and the fuel is injected into the combustion chamber at a pressure almost equal to that in the fuel rail.

Injector closes (end of injection)

As soon as the solenoid valve is no longer triggered, the valve spring forces the armature downwards and the ball closes the bleed orifice. The armature is a 2–piece design. Here, although the armature plate is guided by a driver shoulder in its downward movement, it can "overspring" with the return spring so that it exerts no downwards-acting forces on the armature and the ball. The closing of the bleed orifice lead to pressure build up in the control chamber via the input from the feed orifice. This pressure is the same as that in the rail and exerts an increased force on the control plunger through its end face. This force, together with that of the spring, now exceeds the force exerted by the chamber volume and the nozzle needle closes. Injection ceases as soon as the nozzle needle comes up against its bottom stop again .

STANDARD PROCEDURE

CLEANING FUEL INJECTORS

NOTE: Before cleaning the injector recesses, seal the injector holes in the injector recesses with the appropriate pin to prevent debris from falling into the recesses and entering the motor.

1. Using a lint-free rag, wipe the cylinder head around the fuel injector.
2. Wipe out injector recesses with a lint-free cloth, then clean with a cylinder brush.
3. Clean the bottom of the cylinder recess with a round brush.
4. Blow out the recess and clean again with a lint-free cloth and cover over.
5. Perform these steps for each injector recess.

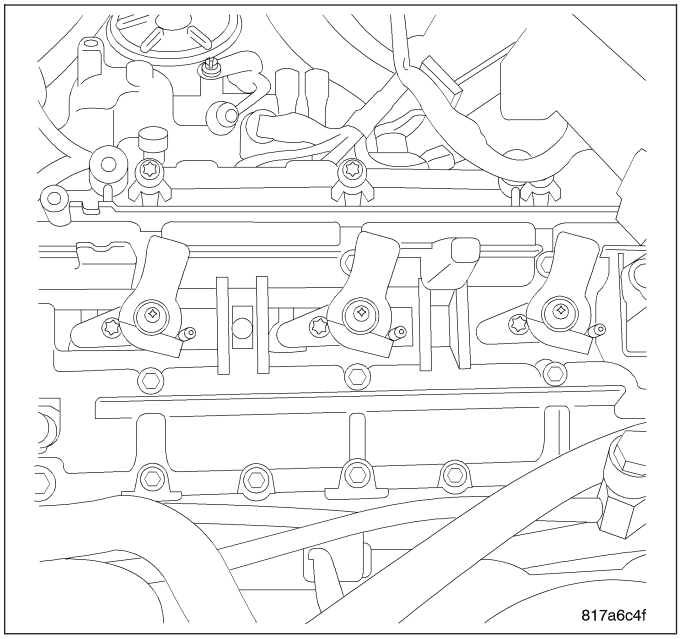

NOTE: DO NOT clean the tip of the injector with a wire brush. Use a lint—free cloth.

6. Clean injector body with a wire brush.
7. Clean injector tips with a lint-free cloth.

NOTE: Do Not apply antiseize lubricant to the injector nozzle, apply only to the injector body.

8. Grease injector body with antiseize lubricant.

NOTE: Always replace the seals that seal off the injectors at the cylinder head to the combustion chamber.

INJECTOR CLASSIFICATION

The classification of injectors describes the quantity characteristic of the injector. This will make it possible to match the engine software to the tolerances of the injector within a more narrowly graduated range. Classification can be clearly recognized, and assigned only by means of a scantool.

Classified injectors can be recognized by the six-digit alphanumeric code or part number and identification on the magnetic head. The number corresponds to the classification stage.

These general conditions equally apply if, as a result of replacing an engine, carrying out repairs to the cylinder head etc., the cylinder selective assignment of the injectors or the engine control module assignment may have changed. If proper attention is not paid to the classification on these vehicles driveability and smoking concerns could result.

If an injector(s) is replaced, or if there is any concern that an injector may not be installed in its original location, it is then necessary to assign the classification number to the corresponding cylinder with the scantool in the control module.

INJECTOR CLASSIFICATION PROCEDURE

1. Turn ignition switch “ON”.
2. Using a scantool, select ENGINE then MISCELLANEOUS.
3. Select LEARN INJECTORS.
4. Using the up and down arrows, scroll to the appropriate injector.
5. Using the right and left arrows, set injector to proper classification.
6. Once injectors are classified, cycle ignition to complete.

REMOVAL

LEFT CYLINDER HEAD

WARNING: (Refer to 14 - FUEL SYSTEM - WARNING). No sparks, open flames or smoking. Risk of poisoning from inhaling and swallowing fuel. Risk of injury to eyes and skin from contact with fuel. Pour fuels only into suitable and appropriately marked containers. Wear protective clothing.

1. Disconnect negative battery cable.
2. Remove engine cover.
3. Disconnect the fuel return hose at the injector by lifting up on retaining tab and wiggling hose free.
4. Loosen the high pressure fuel lines at the fuel rail.
5. Disconnect the high pressure line at the fuel injector.
6. Disconnect the fuel injector electrical connector.
7. Remove the fuel injector hold down.

NOTE: If injectors are tight, remove with special tool 9552.

8. Remove injectors and discard lower sealing washer.
9. Clean injectors and recesses.

RIGHT CYLINDER HEAD

WARNING: (Refer to 14 - FUEL SYSTEM - WARNING). No sparks, open flames or smoking. Risk of poisoning from inhaling and swallowing fuel. Risk of injury to eyes and skin from contact with fuel. Pour fuels only into suitable and appropriately marked containers. Wear protective clothing.

1. Disconnect negative battery cable.
2. Remove engine cover.
3. Disconnect the fuel return hose at the injector by lifting up on retaining tab and wiggling hose free.

4. Loosen the high pressure fuel lines at the fuel rail.
5. Disconnect the high pressure fuel lines at the fuel injector.
6. Disconnect the fuel injector electrical connector.
7. Remove the fuel injector hold down.

NOTE: If injectors are tight, remove with special tool 9552.

8. Remove injectors and discard lower sealing washer.
9. Clean injectors and recesses.

INSTALLATION

LEFT CYLINDER HEAD

WARNING: (Refer to 14 - FUEL SYSTEM - WARNING). No sparks, open flames or smoking. Risk of poisoning from inhaling and swallowing fuel. Risk of injury to eyes and skin from contact with fuel. Pour fuels only into suitable and appropriately marked containers. Wear protective clothing.

1. Clean injectors and recesses.

NOTE: Do Not apply any lubricant to the fuel injector nozzle. Care must be taken not to restrict the discharge orifices in the nozzle.

2. Coat injector body with anti seize lubricant then install injectors with new sealing washers.
3. Install tensioning claws. Tighten fasteners in two stages, 7 N·m (62 lbs. in.) then 180°.

CAUTION: Inspect both ends of the fuel line and fittings. If there is any damage to the sealing surface, replace the fuel line.

4. Position fuel return line at injectors, hand tighten the high pressure fuel line at the fuel rail and at the injector.
5. Tighten the fuel line fitting at the fuel rail to 27 N·m (20ft. lbs.), and tighten the fuel line at the injector to 27 N·m (20 ft. lbs.).
6. Reconnect the fuel injector electrical connector.

NOTE: For the left rear injector, position the engine wiring harness and tighten the harness fasteners to 8.5 N·m (75 in. lbs.).

7. Install the return fuel hose on the injector and push down on the retaining ring.
8. Connect negative battery cable.
9. Install engine cover.
10. Start engine, allow to warm, turn engine off and inspect for leaks.

RIGHT CYLINDER HEAD

WARNING: (Refer to 14 - FUEL SYSTEM - WARNING). No sparks, open flames or smoking. Risk of poisoning from inhaling and swallowing fuel. Risk of injury to eyes and skin from contact with fuel. Pour fuels only into suitable and appropriately marked containers. Wear protective clothing.

1. Clean injectors and recesses.

NOTE: Do Not apply any lubricant to the fuel injector nozzle. Care must be taken not to restrict the discharge orifices in the nozzle.

2. Coat injector body with anti seize lubricant then install injectors with new sealing washers.
3. Install tensioning claws. Tighten fasteners in two stages, 7 N·m (62 lbs. in.) then 180°.

CAUTION: Inspect both ends of the fuel line and fittings. If there is any damage to the sealing surface, replace the fuel line.

4. Position fuel return line at injectors, hand tighten the high pressure fuel line at the fuel rail and at the injector.
5. Tighten the fuel line fitting at the fuel rail to 27 N·m (20 ft. lbs.), and tighten the fuel line at the injector to 27 N·m (20 ft. lbs.).
6. Reconnect the fuel injector electrical connector.
7. Install the return fuel hose on the injector and push down on the retaining ring
8. Connect negative battery cable.
9. Install engine cover.
10. Start engine, allow to warm, turn engine off and inspect for leaks.

SENSOR-ACCELERATOR PEDAL POSITION

DESCRIPTION

The accelerator pedal position sensor (1) is located on the accelerator pedal assembly (2). The driver supplies the torque requirements for the engine by operating the accelerator pedal in accordance with the desired speed or acceleration. The pedal sensor converts the mechanical operation of the pedal into an electrical signal and sends the information to the ECM. The ECM adjusts the quantity of the fuel that is injected into the engine.

The accelerator pedal position sensor (1) is serviced as an assembly with the accelerator pedal assembly (2).

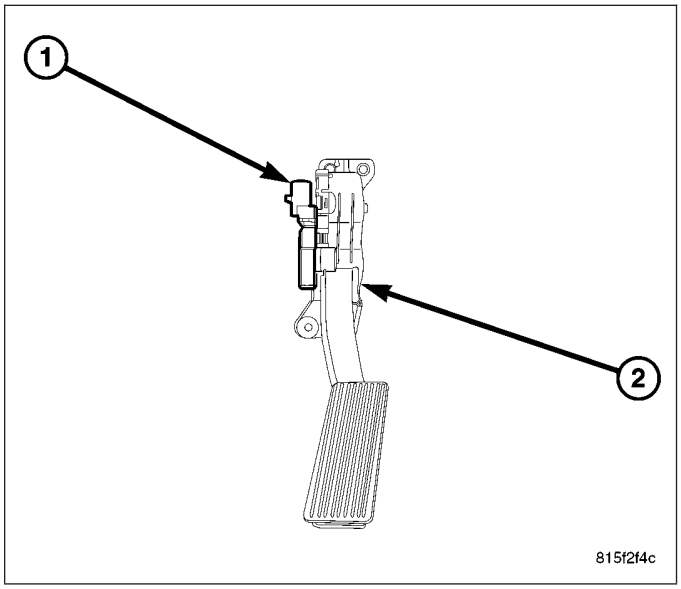

REMOVAL

1. Disconnect the negative battery cable.
2. Remove the drivers side lower dash board close out panel.
3. Disconnect the APP sensor electrical connector (1).
4. Remove the accelerator pedal assembly fasteners (2) and the accelerator pedal assembly (3).

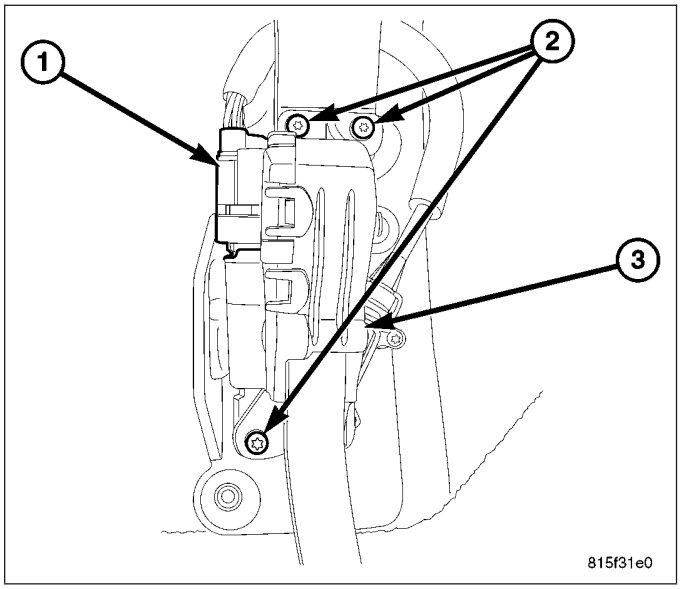

INSTALLATION

1. Connect the accelerator pedal position sensor wiring harness connector (1) to the sensor.
2. Position the accelerator pedal assembly (3) and install the fasteners (2).
3. Install the drivers lower dash board close out panel.
4. Connect the negative battery cable.

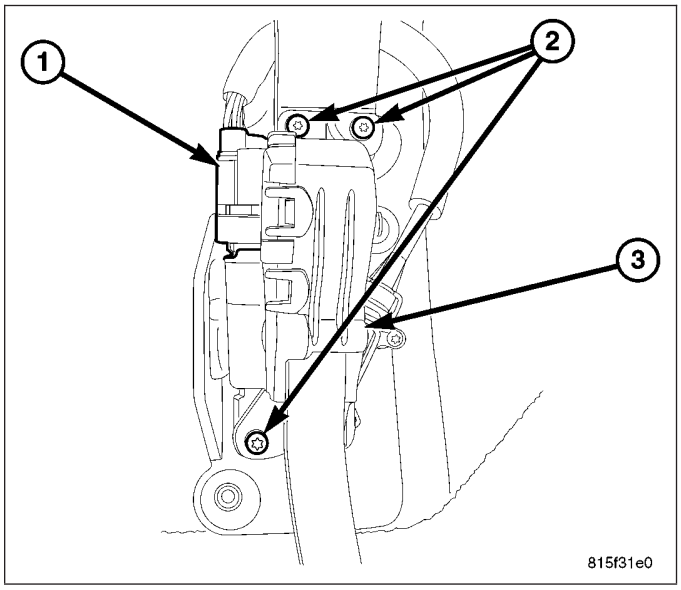

SENSOR-CAMSHAFT POSITION

DESCRIPTION

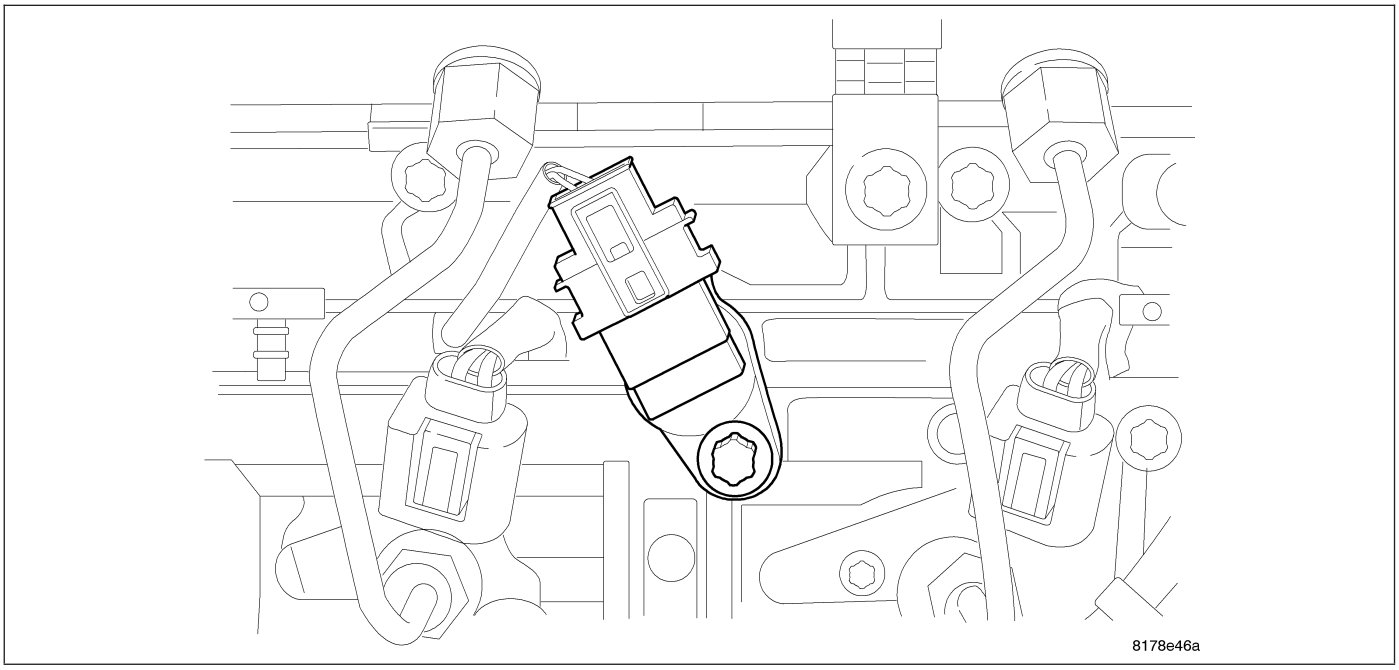

The camshaft position sensor is mounted on the right cylinder head cover (1). The hall effect sensor supplies a signal to the Electronic Control Module (ECM). The ECM uses the signals sent by the CMP and the crankshaft sensor to determine injection timing.

OPERATION

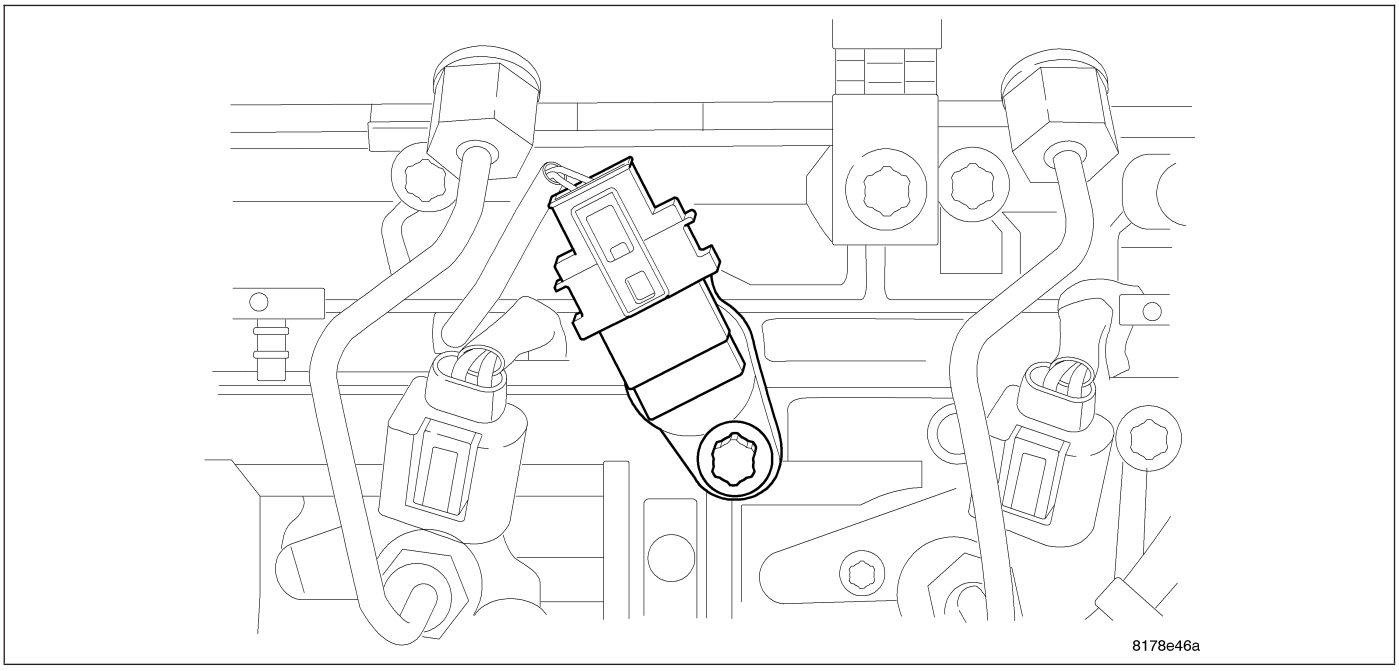

The signal circuit of the camshaft sensor has a voltage of approximately 5V. If the segment machined into the intake camshaft sprocket is positioned opposite the camshaft sensor, the camshaft signal is approximately 0V. This 0V to 5V signal is used by the engine control module (ECM) for detecting ignition TDC of cylinder 1 as the engine rotates. If no signal is supplied by the camshaft position sensor, the vehicle will not start.

REMOVAL

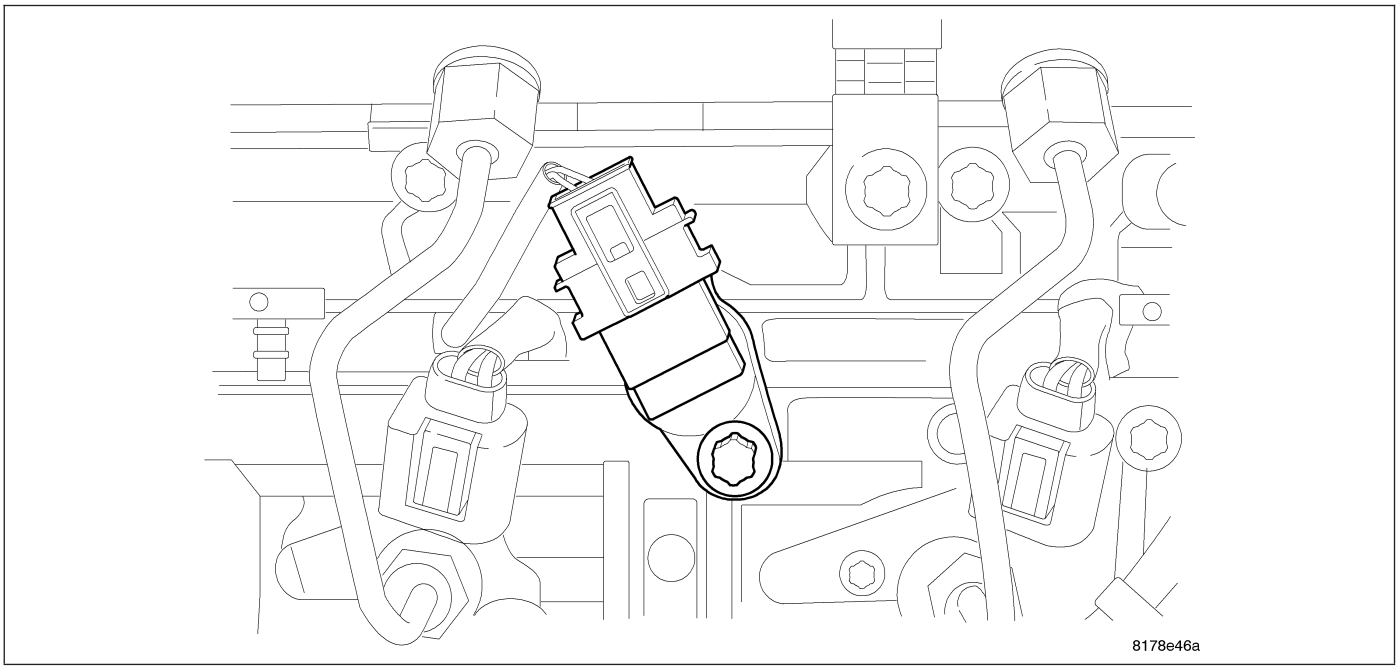

1. Disconnect negative battery cable. (Refer to 8 - ELECTRICAL/BATTERY SYSTEM/BATTERY - REMOVAL)
2. Remove engine cover. (Refer to 9 - ENGINE - REMOVAL)
3. Disconnect camshaft position sensor electrical connector.
4. Remove retaining bolt and remove sensor.

INSTALLATION

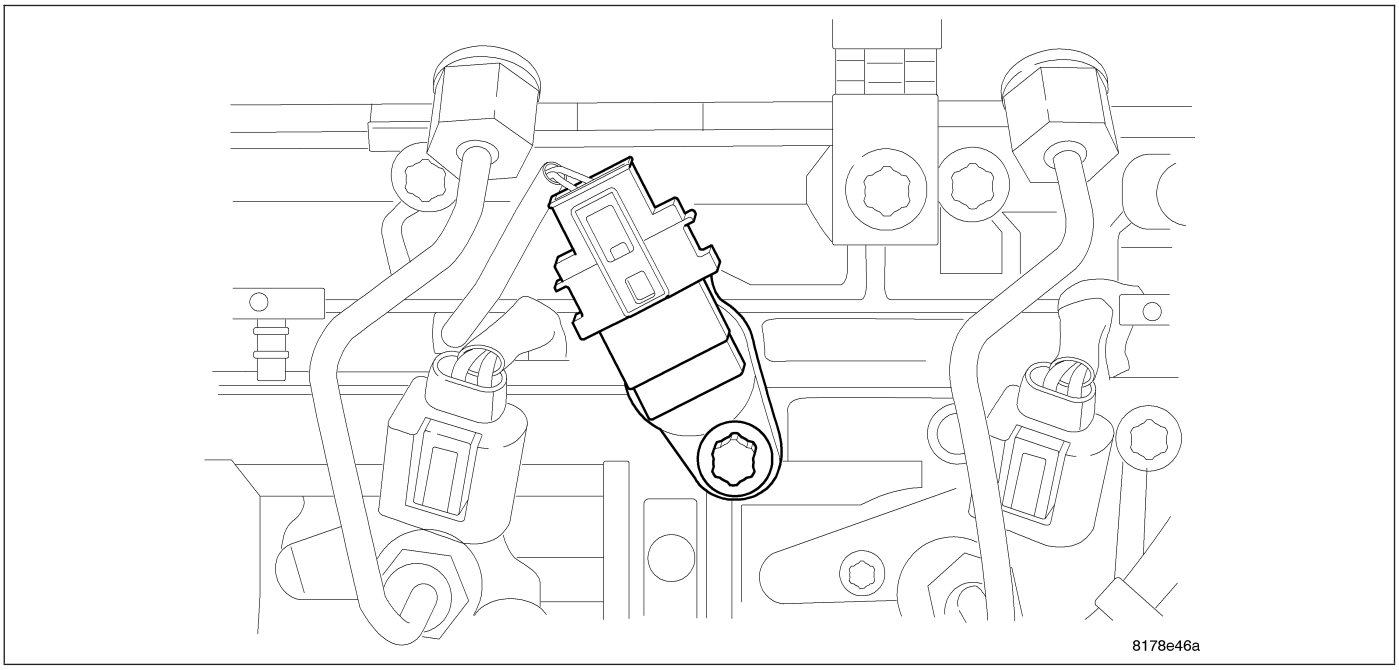

1. Install camshaft position sensor and tighten bolt to 8 N·m (71 in.lbs.).
2. Reconnect electrical connector.
3. Install engine cover.
4. Reconnect negative battery cable.

SENSOR-CRANKSHAFT POSITION

DESCRIPTION

The crankshaft position sensor is located at the left rear of the engine just above the starter motor. The sensor detects the crankshaft position contactlessly (hall effect) by means of missing segments on thetone wheel behind flex plate. The electronic control module (ECM) detects TDC position of cylinder 1 by means of the signal supplied by the sensor. Injection timing is synchronized by means of the camshaft signal and the crankshaft signal. This sensor is used to detect engine speed.

OPERATION

The crankshaft position and engine speed are detected contactless signal (hall effect). The distance between the crankshaft position sensor and the gaps of the tone wheel is fixed by the installation position.

When the crankshaft rotates, an alternating voltage is generated in the crankshaft position sensor by the gaps of the tone wheel located behind the flex plate.

In this case, the metal portion of the tone wheel generates a positive voltage pulse and the gap in the tone wheel a negative voltage pulse. The distance from the positive to the negative voltage peak equals the length of the gap.

The gap created by 3 missing teeth has the effect that no voltage is generated in the crankshaft position sensor. This gap, or time without a signal from the crankshaft sensor, is analyzed by the ECM in order to detect the TDC position of cylinder 1

REMOVAL

1. Disconnect the negative battery cable.
2. Raise and support the vehicle.
3. Remove the crankshaft position sensor heat shield (1).
4. Disconnect the crankshaft sensor wiring harness connector.
5. Remove the bolt and sensor (2).

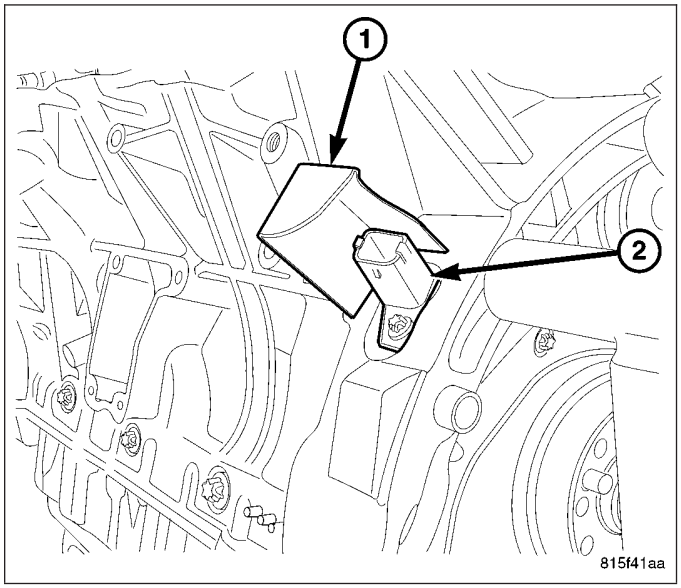

INSTALLATION

1. Clean the crankshaft sensor bore and install the sensor (2). Tighten the bolt to 9 N·m (80 in. lbs.).
2. Connect the engine harness connector.
3. Install the heat shield (1).
4. Lower the vehicle.
5. Connect the negative battery cable.

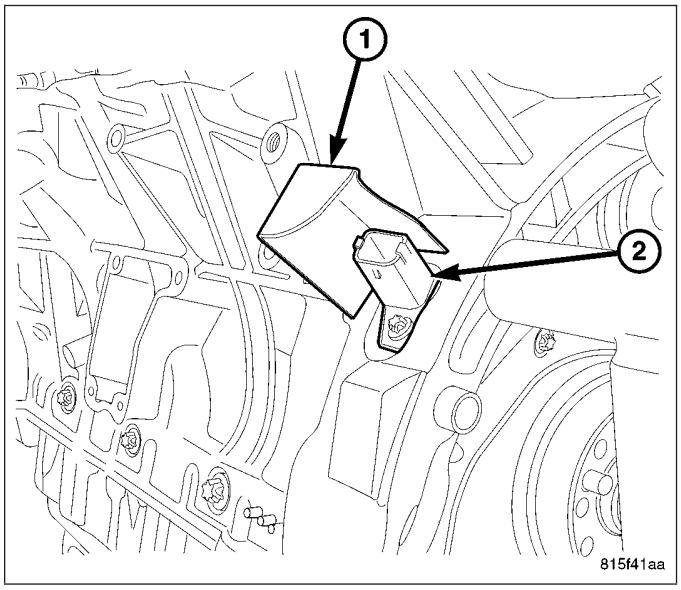

SENSOR-FUEL PRESSURE

DESCRIPTION

The fuel rail pressure sensor monitors and passes on the current fuel rail pressure to the ECM. The non-constant system pressure influences the position of the sensor diaphragm which alters the sensors electrical resistance.

OPERATION

The fuel rail pressure sensor measures the current fuel rail pressure and supplies an appropriate voltage signal to the Engine Control Module (ECM). A fuel pressure solenoid is then actuated by the ECM through a control loop until the desired rail pressure is reached.

REMOVAL

WARNING: (Refer To 14 - Fuel System - Warning). No sparks, open flames or smoking. Risk of poisoning from inhaling and swallowing fuel. Risk of injury to eyes and skin from contact with fuel. Pour fuels only into suitable and appropriately marked containers. Wear protective clothing.

NOTE: To avoid leakage problems, the rail pressure sensor should not be removed unless it is to be replaced.

1. Disconnect negative battery cable.
2. Remove engine cover.
3. Unplug electrical connector at fuel rail pressure sensor.
4. Remove the right fuel rail.
5. Position the fuel rail in a soft jawed vise.
6. Remove rail pressure sensor.

INSTALLATION

WARNING: (Refer to 14 - FUEL SYSTEM - WARNING). No sparks, open flames or smoking. Risk of poisoning from inhaling and swallowing fuel. Risk of injury to eyes and skin from contact with fuel. Pour fuels only into suitable and appropriately marked containers. Wear protective clothing.

NOTE: The installation of the pressure sensor must be performed out of vehicle so that the sensor can be tightened properly.

1. Install the fuel rail pressure sensor and new seal. Tighten to 22 N·m (194 lbs. in.).
2. Install the fuel rail.
3. Connect rail sensor electrical connector.
4. Connect negative battery cable.
5. Start engine, allow to warm, turn engine off and inspect for leaks.
6. Install engine cover.

SENSOR-MASS AIR FLOW (MAF)

DESCRIPTION

The Mass Air Flow (MAF) Sensor is located in the air intake port between the air filter and the turbocharger. The MAF sensor uses semiconductor technology throughout, and is used to calculate the air mass flowing past it per time unit. This mass is important for determining the exhaust gas recirculation rate. The MAF sensor sends a corresponding signal to the ECM, which evaluates the signal to adjust the exhaust gas recirculation valve.

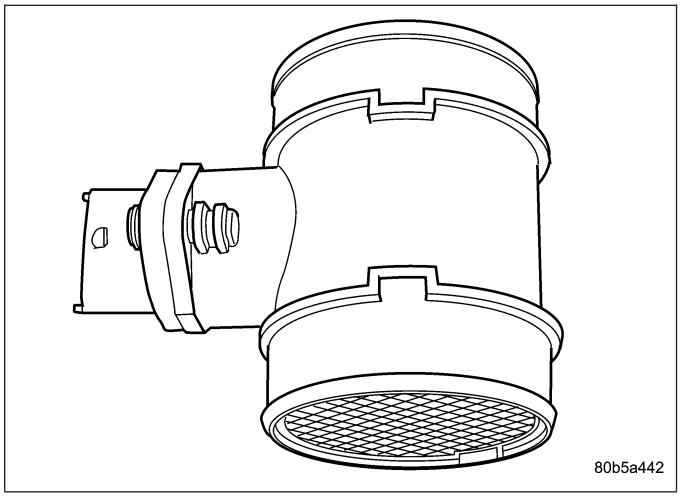

OPERATION

The ECM uses the mass air flow (MAF) sensor to measure air density. The temperature resistor located at the front of the MAF sensor measures the temperature of the inlet air. By varying the voltage, the electronic circuit regulates the temperature of the heating resistor in the rear so that it is 320° F (160°C) higher than the temperature of the intake air. The temperature at the heating resistor is measured by a sensor resistor in-between.

Because the incoming air has a cooling effect, the greater the amount of air that flows in, then the higher the voltage of the heating resistor. The heating resistor is therefore a measure of mass of air flowing past. If a temperature change occurs as a result of a increase or reduction of air flow, the ECM corrects the voltage at the heating resistor until the temperature difference is again achieved. This control voltage is use by the ECM as a unit measure for metered air mass.

REMOVAL

1. Disconnect the negative battery cable.
2. Detach the air hose at the Mass Air Flow (MAF) sensor
3. Unplug the MAF wiring harness connector.
4. Remove the screws retaining the MAF sensor to the air cleaner housing, and remove MAF sensor.

INSTALLATION

1. Position the MAF sensor (4) to air cleaner housing (5) and install the retaining screws.
2. Connect the air intake hose (2) to the MAF sensor and tighten clamp (3).
3. Connect the MAF wiring harness connector (1).
4. Connect negative battery cable.

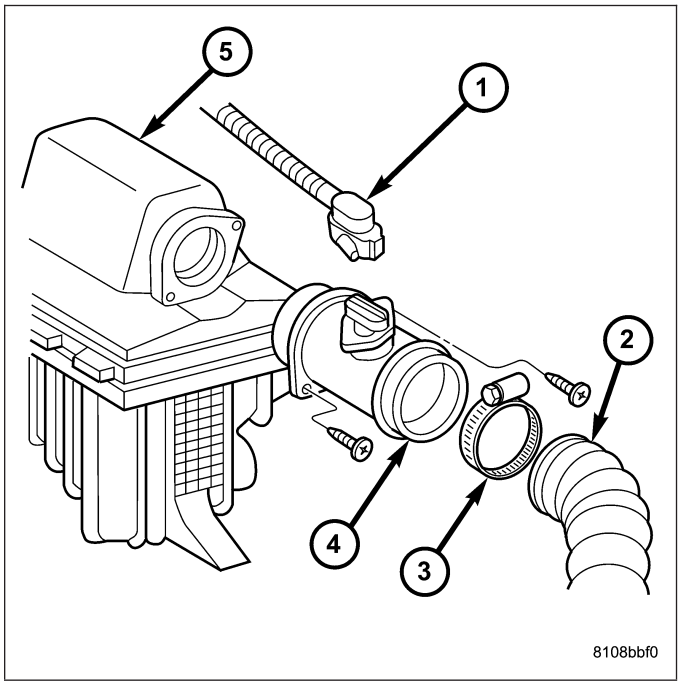

SENSOR-BOOST PRESSURE

DESCRIPTION

The boost pressure sensor is mounted in the charge air cross over air tube, just past the air control valve. The sensor allows the ECM to monitor air pressure down stream of the turbocharger.

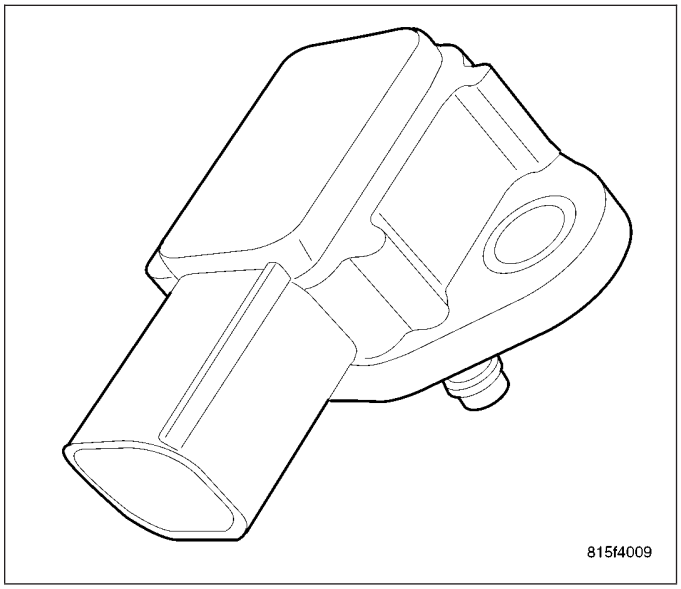

OPERATION

When the intake manifold pressure is low (high vacuum) sensor voltage output is 0.25-1.8 volts at the ECM. When the intake manifold pressure is high due to turbo boost, sensor voltage output is 2.0-4.7 volts. The sensor receives a 5-volts reference from the ECM. Sensor ground is also provides by the ECM. The ECM uses boost pressure combined with intake air temerature to determine the volume of air entering the engine.

DIAGNOSIS AND TESTING - BOOST PRESSURE SENSOR

If the boost pressure sensor fails, the ECM records a DTC into memory and continues to operate the engine in one of the three limp-in modes. When the ECM is operating in this mode, a loss of power will be present, as if the turbocharger was not operating. The best method for diagnosing faults with the boost pressure sensor is with the scan tool. Refer to the Diesel Powertrain Diagnostic Manual for more information.

REMOVAL

1. Disconnect the negative battery cable.
2. Disconnect the boost pressure sensor (2) electrical connector.
3. Remove the sensor (2) fasteners from the charge air cross over tube (3), and remove sensor (2).

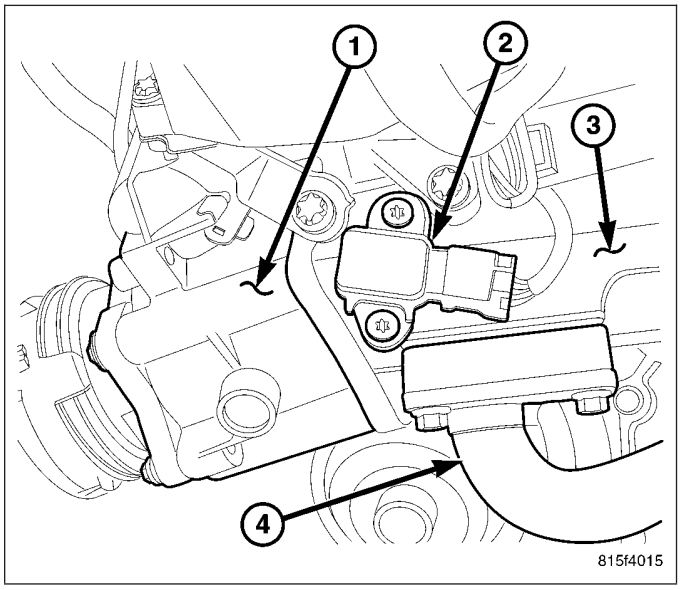

INSTALLATION

1. Position the boost pressure sensor onto the charge air cross over tube and install the fasteners. Tighten the fasteners to 9 N·m (80 in. lbs.).
2. Connect the sensor wiring harness connector.
3. Connect the negative battery cable.

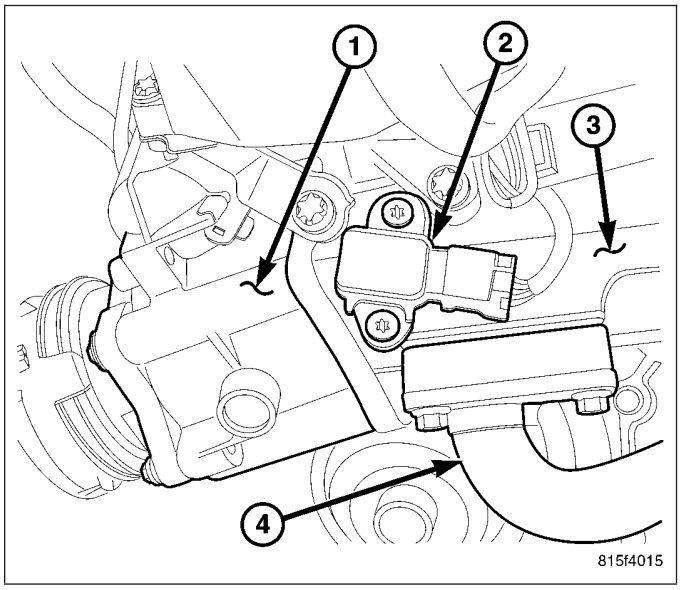

SENSOR-INTAKE AIR TEMPERATURE

DESCRIPTION

The intake air temperature sensor (1) is located before the air flow control valve in the rear of the air inlet tube. The intake air temperature sensor (1) measures the temperature of the air as it is supplied to the cylinders and transmits the value to the ECM. This is required in order to determine the density of the air being supplied for the combustion process. The value range is from minus 40°F up to 302°F (minus 40°C to 150°C).

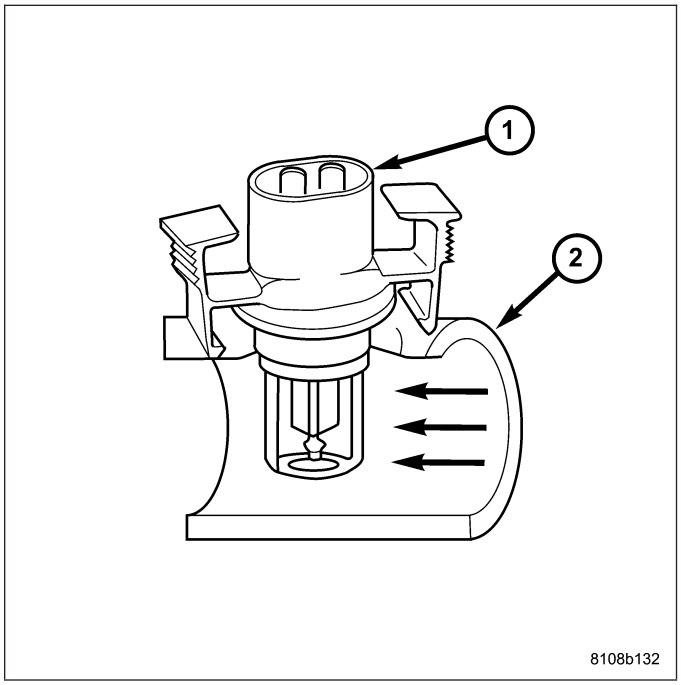

OPERATION

The Negative Temperature Coefficient (NTC) resister located within the intake air temperature sensor alters it's resistance in line with the charge air temperature. If the engine is cold, the value equals ambient temperature. For a temperature of 68°F (20°C) the resistance is approximately 6000 ohms. For a temperature of 104°F (40°C) the resistance is approximately 3300 ohms.

REMOVAL

1. Disconnect the negative battery cable.
2. Unplug the wiring harness connector at the intake air temperature sensor (1).
3. Press together the sensor locking arms and remove the sensor (1) from the air control valve extention (3).

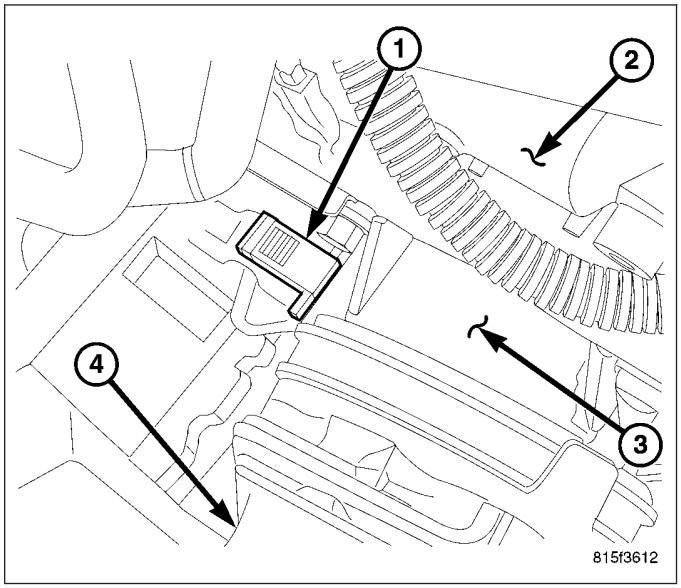

INSTALLATION

1. Position the intake air temperature sensor along side of the air control valve extention (3) access hole.
2. Press together the sensor (1) locking tabs, seat the sensor (1) to the extention (3) and release tabs.
3. Connect negative battery cable.

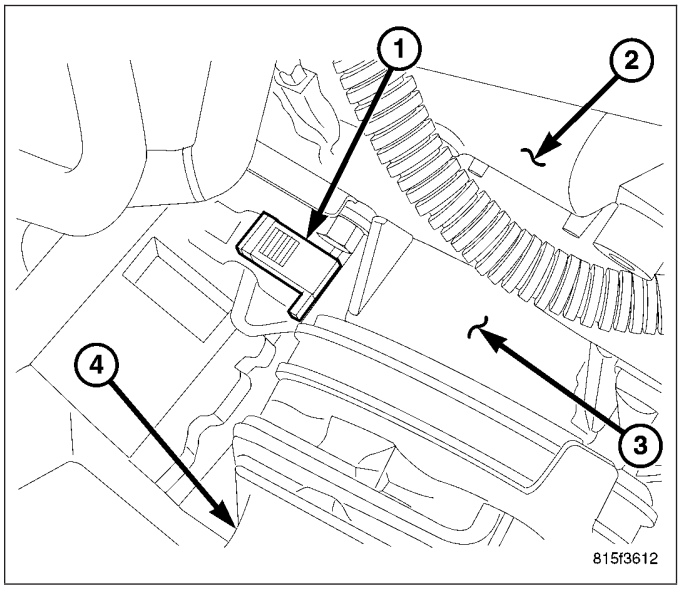

SENSOR-FUEL TEMPERATURE

DESCRIPTION

The fuel temperature sensor is integrated in the high pressure fuel pump next to the fuel quantity valve. The sensor detects the temperature of the fuel and supplies that information to the ECM. The sensor ranges from - 40°F (- 40C) to 284°F (140°C). If the engine is cold, the actual value sent will read ambient temperature. The value rises after the engine has been started.

OPERATION

An negative temperature coefficient (NTC) resistor integrated in the fuel temperature sensor alters it's electrical resistance in line with the fuel temperature (the resistance drops as the temperature rises). The ECM uses this reading to calculate optimum engine performance under all driving conditions. If the fuel is to warm, the rail pressure in the system is lowered. The controller quantity of the pressure regulating valve is reduced and the fuel temperature is lowered.

REMOVAL

NOTE: Capture and properly store all fluid seepage in appropriately marked containers.

1. Disconnect the negative battery cable.
2. Disconnect the fuel quantity solenoid wiring harness connector.
3. Disconnect the temperature sensor wiring harness connector.
4. Remove the fuel temperature sensor from the high pressure pump.

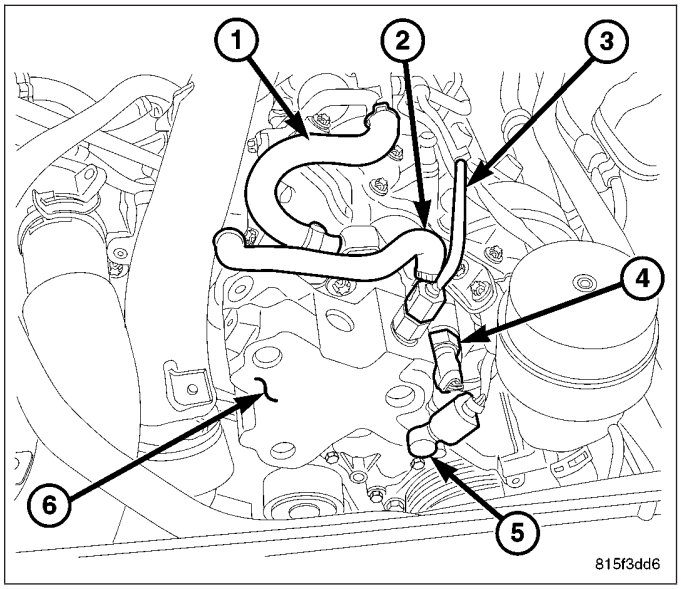

INSTALLATION

1. Clean sealing surfaces.
2. Install new seal on sensor.
3. Screw the sensor into the high pressure pump and tighten to 25 N·m (18 lbs.ft.).
4. Connect the temperature sensor wiring harness connector.
5. Connect the fuel quantity solenoid wiring harness connector.
6. Connect negative battery cable.
7. Start engine, allow to warm, shut engine off and inspect for leaks (Refer to 14 - FUEL SYSTEM/ FUEL INJECTION - WARNING).

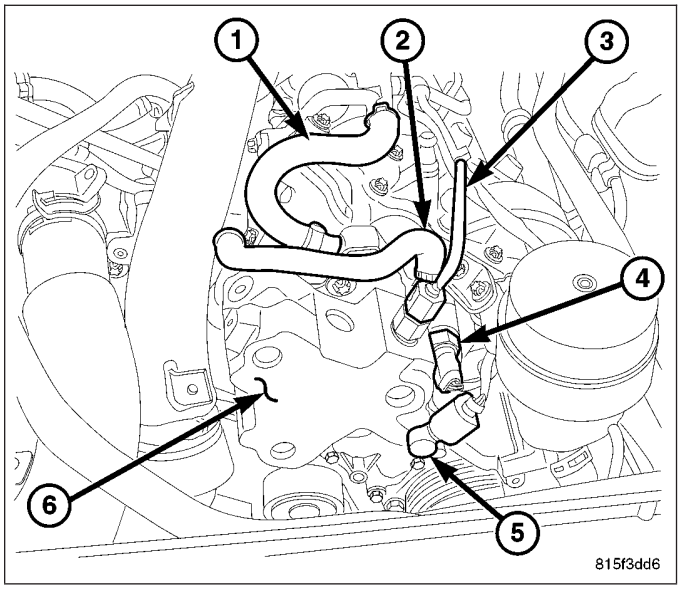

SOLENOID-FUEL PRESSURE

DESCRIPTION

The fuel pressure solenoid is attached to the rear of the left fuel rail. The solenoid controls and maintains the rail pressure constant along with a control current transmitted by the engine control module (ECM).

OPERATION

High pressure which is present in the fuel rail flows to the ball seat of the solenoid (5). The specified pressure required by the system is built up in the rail by the fuel pressure solenoid building up a magnetic force which corresponds to this specific pressure by means of a control current from the electronic control module (ECM). This magnetic force equals a certain outlet cross section at the ball seat of the solenoid. The rail pressure is altered as a result of the quantity of fuel which flows off. The current fuel pressure is signaled by the fuel pressure sensor to the engine control module (ECM). The controlled fuel flows back along the return fuel line, into the tank.

In a de-energized state, the fuel pressure solenoid is closed as the spring force presses the ball into the ball seat. When driving, the fuel pressure solenoid is constantly open. When engine is started, the fuel pressure solenoid is held closed by magnetic force. When driving, the pressure of the fluid counteracts the magnetic force of the coil and the slight spring force.

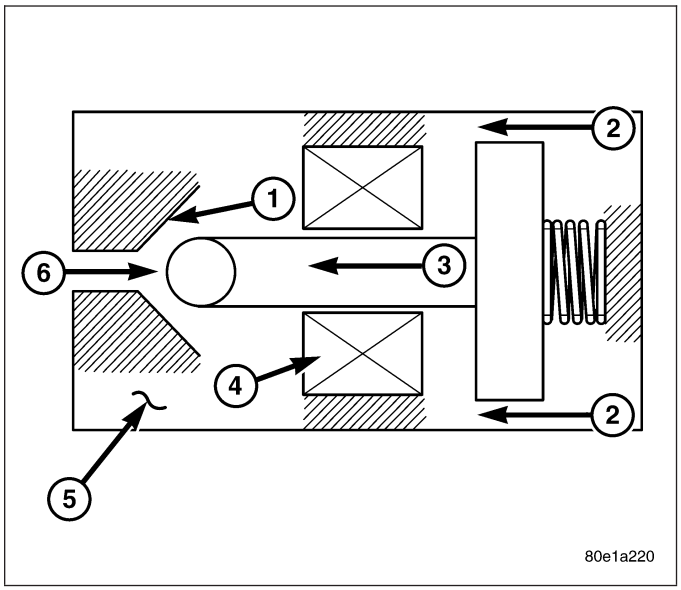

REMOVAL

WARNING: (Refer To 14 - Fuel System - Warning). No sparks, open flames or smoking. Risk of poisoning from inhaling and swallowing fuel. Risk of injury to eyes and skin from contact with fuel. Pour fuels only into suitable and appropriately marked containers. Wear protective clothing.

NOTE: The fuel pressure solenoid is serviced with the left fuel rail only.

1. Disconnect negative battery cable.
2. Remove engine cover.
3. Remove the left fuel rail (Refer to 14 - FUEL SYSTEM/FUEL INJECTION/FUEL INJECTOR - REMOVAL).

INSTALLATION

WARNING: (Refer to 14 - Fuel System - Warning). No sparks, open flames or smoking. Risk of poisoning from inhaling and swallowing fuel. Risk of injury to eyes and skin from contact with fuel. Pour fuels only into suitable and appropriately marked containers. Wear protective clothing.

NOTE: The fuel pressure solenoid is serviced with the left fuel rail only.

SOLENOID - FUEL QUANTITY

DESCRIPTION

The fuel quantity solenoid mounts to front of the high pressure pump and is controlled by the ECM. The solenoid assists in maintaining proper fuel quantity in all three of the pumping elements, inside the high pressure pump, under all operating conditions. Fuel tank heat protection is also provided by the fuel quantity solenoid. The solenoid meters the exact amount of fuel to prevent excess heated fuel from returning to the tank.

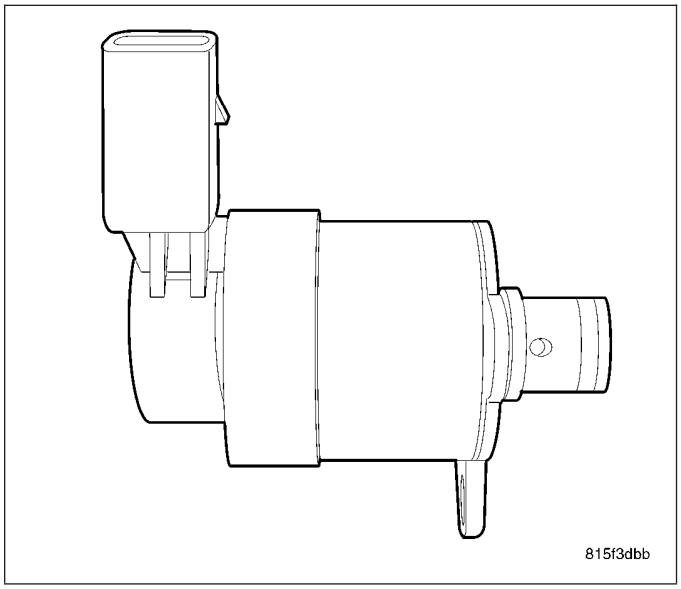

OPERATION

The ECM monitors the fuel system and measures for pressure vibrations. The ECM will then send a pulse width signal to the fuel quantity solenoid to regulate the amount of fuel to the high pressure pump plunger and barrel assemblies. The valve then adjusts the injection correction quantity for each individual cylinder in line with the firing order, there by eliminating the pressure resonance in the fuel rail and improving each independent injectors operation. The fuel quantity solenoid also interrupts the fuel supply to the high pressure pump plunger and barrel assemblies when the engine is switched off.

The ECM detects the operating state which exists at the engine by means of the sensors. In order to adapt the quantity injected, either the rail pressure can be adjusted by way of the fuel pressure solenoid and the fuel quantity solenoid, or the actuation time of the piezo actuators in the fuel injectors can be extended or shortened.

Fuel quantity control is performed under the following operating conditions:

- Engine temperature above 10°C (50°F)
- Approximately 30 seconds after the engine has started
- Fuel temperature > 20°C (68°F)
- Engine not in deceleration mode

REMOVAL

1. Disconnect the negative battery cable.
2. Disconnect the fuel quantity solenoid wiring harness connector.
3. Remove the solenoid fasteners and remove the solenoid.

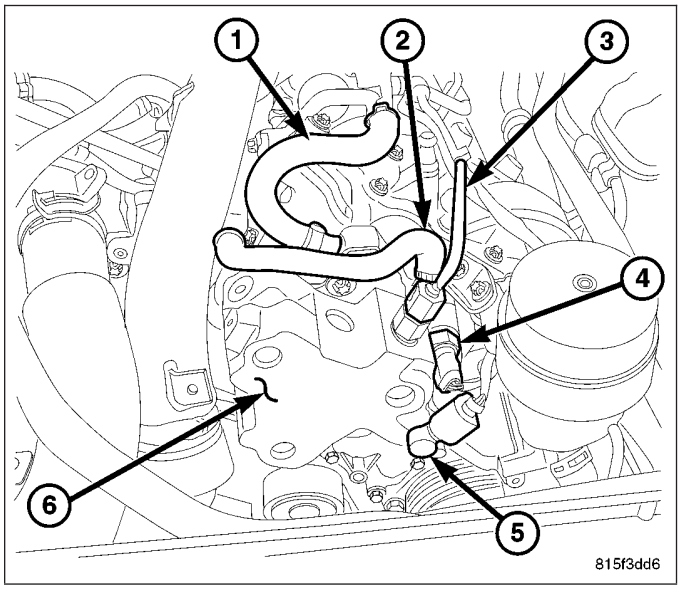

INSTALLATION

1. Clean sealing surfaces.
2. Install new seal on sensor.
3. Position the solenoid on to the high pressure pump and install fasteners.
4. Connect wiring harness connector to the solenoid.
5. Connect negative battery cable.
6. Start the engine, allow to run, turn engine off and inspect for leaks (Refer to 14 - FUEL SYSTEM/ FUEL INJECTION - WARNING).

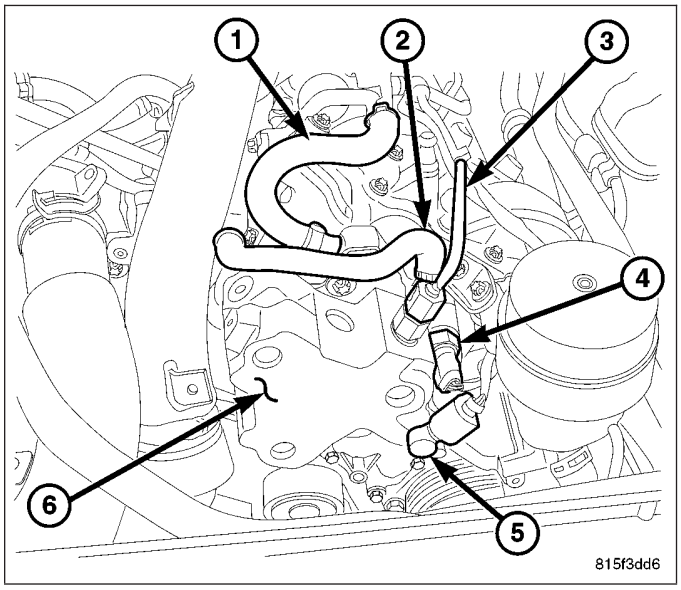

RAIL-FUEL

DESCRIPTION

The fuel rail acts like a high pressure store. It is available to all injectors for drawing fuel which has been compressed by the injection pump. The rail pressure sensor, rail pressure solenoid, high pressure line, and the return flow line are attached to the fuel rail.

OPERATION

The stored fuel volume inside the rail acts as a damper for pressure fluctuations which result because of pulsating supply and brief large extractions of fuel during injector firing. The rail primarily influences the atomization of fuel at the injector nozzle, and the accuracy of injected quantity during injection.

REMOVAL

LEFT FUEL RAIL

WARNING: (Refer to 14 - FUEL SYSTEM - WARNING). No sparks, open flames or smoking. Risk of poisoning from inhaling and swallowing fuel. Risk of injury to eyes and skin from contact with fuel. Pour fuels only into suitable and appropriately marked containers. Wear protective clothing.

1. Disconnect negative battery cable.
2. Remove engine cover.
3. Disconnect the fuel rail solenoid.
4. Remove the charge air cooler inlet tube.
5. Unfasten the fuel supply and return hose clamps at the high pressure pump, fuel filter and fuel rail using Fuel Line Pliers 9539.
6. Remove the fuel supply and return pipe bundle and position aside.
7. Remove the main engine wiring harness fasteners at the left rear cylinder head.
8. Loosen the high pressure lines at the left fuel injectors.
9. Disconnect the high pressure lines at the fuel rail.
10. Remove the left fuel rail.

RIGHT FUEL RAIL

WARNING: (Refer to 14 - FUEL SYSTEM - WARNING). No sparks, open flames or smoking. Risk of poisoning from inhaling and swallowing fuel. Risk of injury to eyes and skin from contact with fuel. Pour fuels only into suitable and appropriately marked containers. Wear protective clothing.

1. Disconnect negative battery cable.
2. Remove engine cover.
3. Remove the strut tower support.
4. Loosen the high pressure lines at the fuel injectors.
5. Disconnect the high pressure lines at the fuel rail.
6. Disconnect the fuel rail pressure sensor.
7. Remove the right fuel rail.

INSTALLATION

LEFT FUEL RAIL

WARNING: (Refer to 14 - FUEL SYSTEM - WARNING). No sparks, open flames or smoking. Risk of poisoning from inhaling and swallowing fuel. Risk of injury to eyes and skin from contact with fuel. Pour fuels only into suitable and appropriately marked containers. Wear protective clothing.

CAUTION: Inspect sealing cones at the lines. Replace as necessary. Ensure that all fuel pressure lines are exactly located in original position.

1. Carefully position the fuel rail and hand tighten all of the high pressure fuel lines.
2. Install the fuel rail fasteners and tighten to 11 N·m (97 in. lbs.).
3. Tighten the high pressure line to the fuel rail to 33 N-m (24 ft. lbs.)
4. Tighten the high pressure fuel rail transfer pipe to 27 N·m (19 ft. lbs.).
5. Tighten the high pressure fuel lines at the fuel rail to 27 N·m (19 ft. lbs.).
6. Tighten the high pressure fuel lines at the fuel injectors to 27 N·m (19 ft. lbs.).
7. Reposition the main engine wiring harness and install the fasteners. Tighten fasteners to 11 N·m (97 in. lbs.).
8. Connect the fuel supply and return pipe bundle, connect the fuel hoses to the high pressure pump, fuel filter, fuel rail and clamp with Fuel Line Pliers 9539.
9. Connect the fuel rail pressure solenoid.
10. Install the charge cooler inlet air pipe.
11. Connect the negative battery cable.
12. Start engine, allow to warm, turn engine off and inspect for leaks.
13. Install the strut tower support.
14. Install engine cover.

RIGHT FUEL RAIL

WARNING: (Refer to 14 - FUEL SYSTEM - WARNING). No sparks, open flames or smoking. Risk of poisoning from inhaling and swallowing fuel. Risk of injury to eyes and skin from contact with fuel. Pour fuels only into suitable and appropriately marked containers. Wear protective clothing.

CAUTION: Inspect sealing cones at the lines. Replace as necessary. Ensure that all fuel pressure lines are exactly located in original position.

1. Carefully position the fuel rail and hand tighten all of the high pressure fuel lines.
2. Install the fuel rail fasteners and tighten to 11 N·m (97 in. lbs.).
3. Tighten the high pressure line to the fuel rail to 33 N·m (24 ft. lbs.)
4. Tighten the high pressure fuel rail transfer pipe to 27 N·m (19 ft. lbs.).
5. Tighten the high pressure fuel lines at the fuel rail to 27 N·m (19 ft. lbs.).
6. Tighten the high pressure fuel lines at the fuel injectors to 27 N·m (19 ft. lbs.).
7. Connect the fuel rail pressure sensor.
8. Connect the negative battery cable.
9. Start engine, allow to warm, turn engine off and inspect for leaks.
10. Install the strut tower support.
11. Install engine cover.

STEERING

TABLE OF CONTENTS

page

STEERING
DESCRIPTION
STEERING SYSTEMS 2
WARNING 3
CAUTION 4
DIAGNOSIS AND TESTING
HYDRAULIC FLOW AND PRESSURE TEST 4
STEERING DIAGNOSIS CHARTS 5

page

SPECIFICATIONS
POWER STEERING FASTENER TORQUE 12
SPECIAL TOOLS
STEERING 13
COLUMN ELECTRICAL DIAGNOSIS 14
COLUMN SERVICE INFORMATION 111
GEAR 197
PUMP 218

STEERING

DESCRIPTION

STEERING SYSTEMS

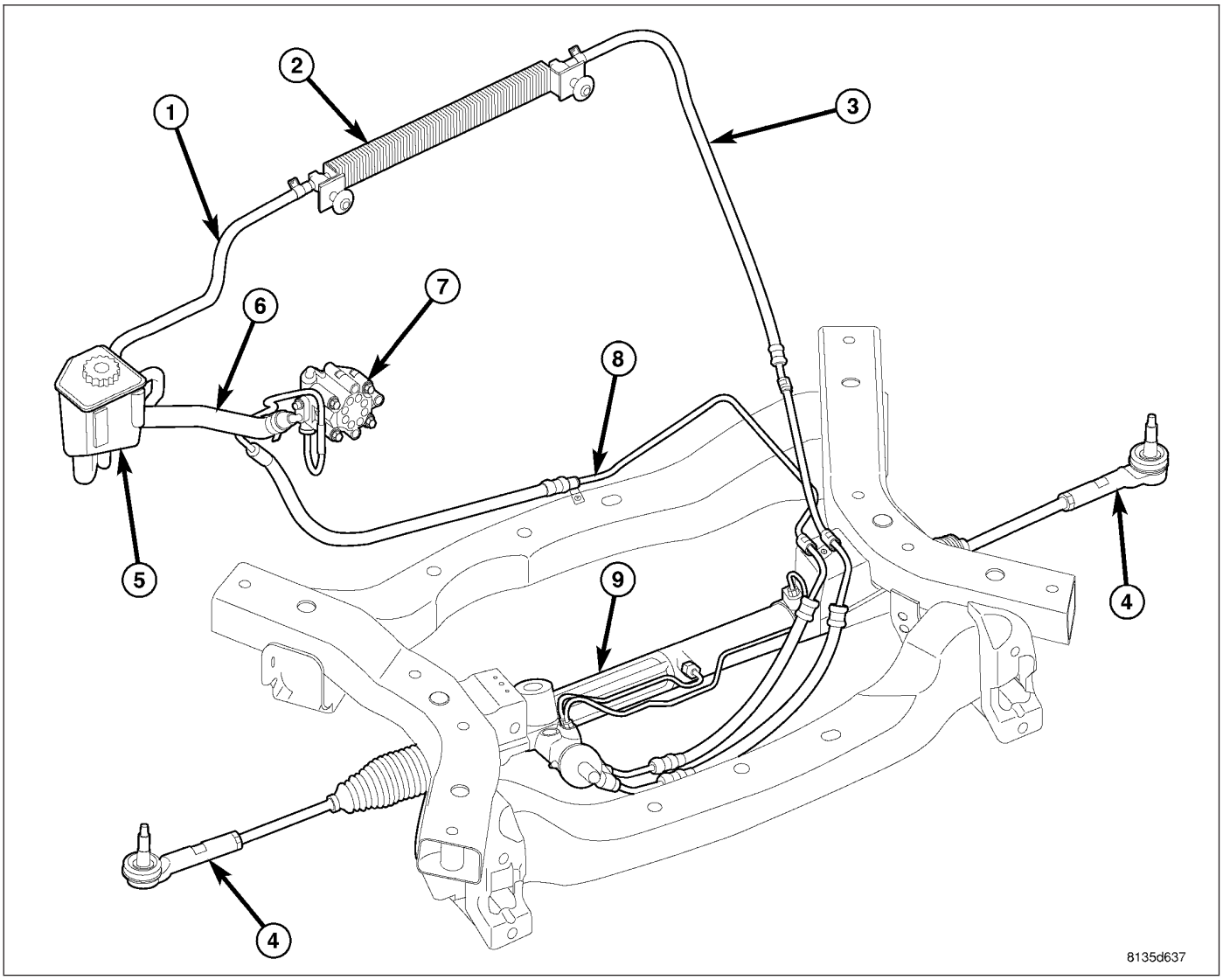

RWD Power steering systems consist of:

- Steering column
- Rack and pinion steering gear (9)
- Belt driven hydraulic steering pump (7)
- Pump pressure (8), return (1&3) and supply (6) hoses
- Oil Cooler (2)
- Remote Reservoir (5)
- Inner & Outer tie rod ends (4)

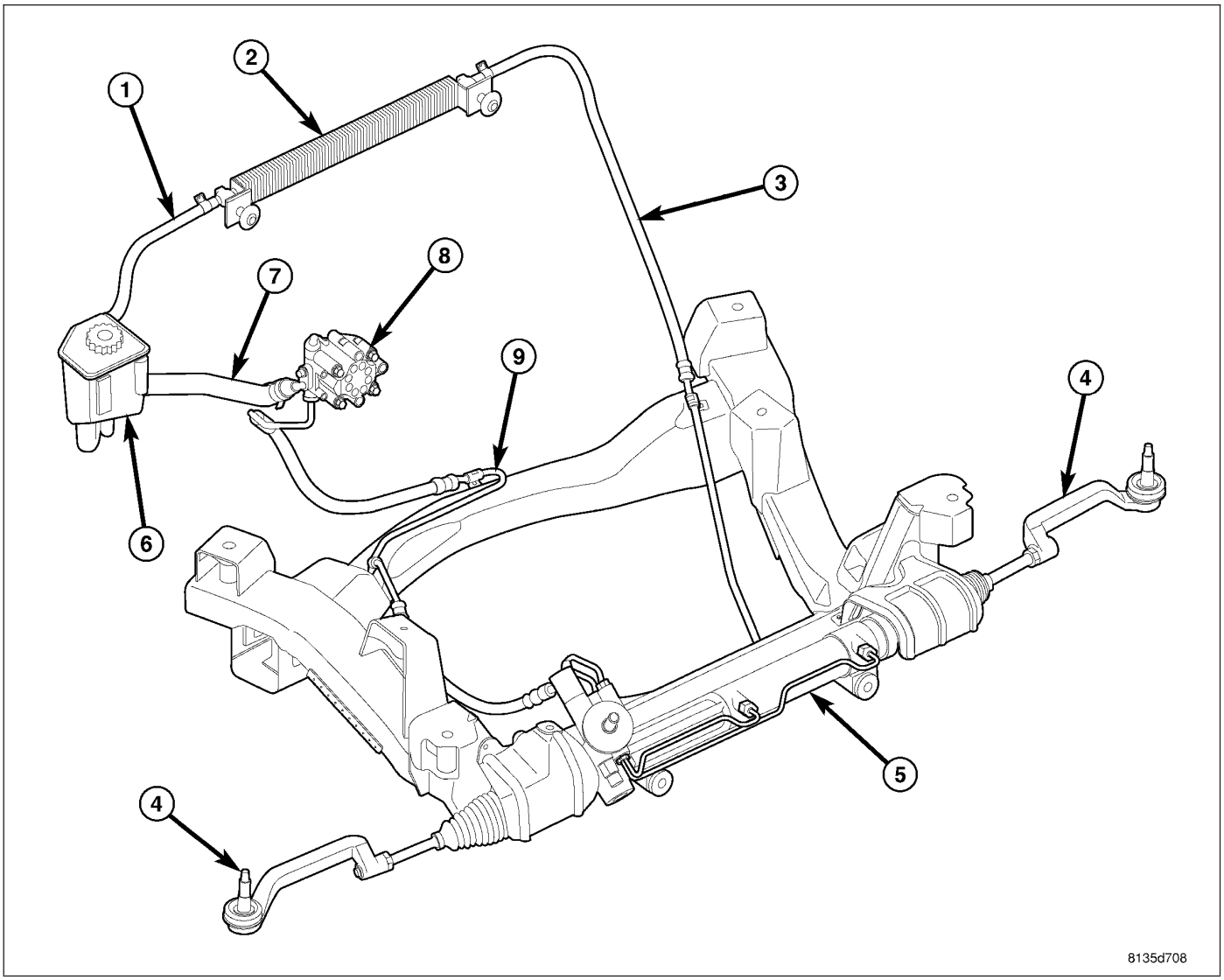

AWD Power steering systems consist of:

- Steering column
- Rack and pinion steering gear (5)
- Belt driven hydraulic steering pump (8)
- Pump pressure (9), return (1&3) and supply (7) hoses
- Oil Cooler (2)
- Remote Reservoir (6)
- Inner & Outer tie rod ends (4)

WARNING

WARNING: Power steering fluid, engine parts and exhaust system may be extremely hot if engine has been running. Do not start engine with any loose or disconnected hoses. Do not allow hoses to touch hot exhaust manifold or catalyst.

WARNING: Fluid level should be checked with the engine off to prevent personal injury from moving parts.

CAUTION

CAUTION: Anytime the battery has been disconnected and is reconnected it is important that this be performed properly. The vehicle may be equipped with systems that require special calibration processes. (Refer to 8 - ELECTRICAL/BATTERY SYSTEM - STANDARD PROCEDURE)

CAUTION: When the power steering system is open, cap all open ends of the hoses, power steering pump fittings or power steering gear ports to prevent entry of foreign material into the components.

CAUTION: When servicing power steering components, do not pinch off power steering hoses in any way to stop fluid flow. Damage to hoses may result.

CAUTION: If the steering wheel is excessively off-center, outside of Chassis specifications, inadvertent ESP activations may occur on a vehicle so equipped.

DIAGNOSIS AND TESTING

HYDRAULIC FLOW AND PRESSURE TEST

The following procedure is used to test the operation of the power steering system on this vehicle. This test will provide the gallons per minute (GPM) or flow rate of the power steering pump along with the maximum relief pressure. Perform this test anytime a power steering system problem is present. This test will determine if the power steering pump or power steering gear is not functioning properly. The following test is performed using the Power Steering Analyzer Kit 6815 (with appropriate hoses) and Adapters from Power Steering Analyzer Adapter Kit 6893. (Refer to 19 - STEERING - SPECIAL TOOLS)

1. Check power steering belt to ensure it is in good condition and adjusted properly.
2. Assemble Power Steering Analyzer as follows:
   a. Gauge end (inlet) of Flow Meter And Gauge 6800 (3) – Hose 6905 (6), Hose 6713 (4), Adapter Tube 6844 (5)
   b. Valve end (outlet) of Flow Meter And Gauge 6800 (3) – Hose 6959 (1), Adapter Fitting 6826 (2)
3. Unthread pressure hose tube nut at power steering pump.
4. Connect Adapter Tube 6844 to pressure fitting on power steering pump. Tighten tube nut to specifications. (Refer to 19 - STEERING - SPECIFICATIONS)
5. Connect power steering pressure hose to Adapter Fitting 6826. Tighten tube nut to specifications. (Refer to 19 - STEERING - SPECIFICATIONS)

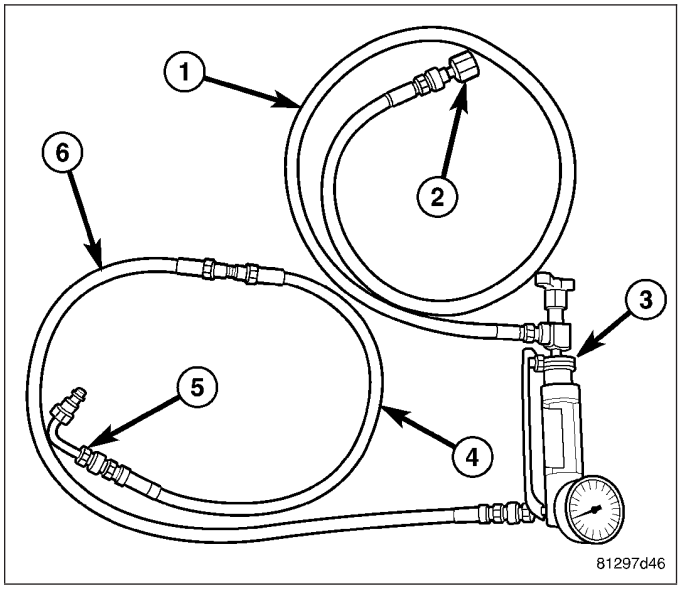

6. Open Analyzer test valve completely.
7. Start engine and allow to idle long enough to circulate power steering fluid through Analyzer flow meter and hoses.
8. Shut off engine and check fluid level; add fluid as necessary. Repeat Step 7 and Step 8 until air is bled from system.
9. Start engine and allow to idle.
10. Check Analyzer gauge (3) pressure. Initial pressure reading should be 50-125 psi (345-862 kPa). If pressure is higher, inspect hoses for restrictions and repair as necessary.
11. Increase engine speed to 1,100 rpm (1,200 rpm for SRT8) and read Analyzer Flow Meter. The reading should be 2.2 GPM (8.2 LPM) minimum. If flow reading is below specification, replace power steering pump.

CAUTION: The following test procedure involves testing maximum pump pressure output and flow control valve operation. Do not leave valve closed for more than five seconds as the pump could be damaged.

12. Close valve fully three times and record highest pressure indicated each time. **All three readings must be above specifications and within 50 psi (345 kPa) of each other.**

NOTE: Power steering pump maximum relief pressure is 1640-1740 psi (11307 to 11997 kPa).

- Power steering pump pressures above specifications but not within 50 psi (345 kPa) of each other, replace pump.
- Pressures within 50 psi (345 kPa) of each other but below specifications, replace pump.

CAUTION: Do not force the pump to operate against the stops for more than 2 to 4 seconds at a time because, pump damage will result.

13. Completely open the valve on the Power Steering Analyzer. Turn the steering wheel to the extreme left until the stop in the steering gear is met, then turn the steering wheel to the right until the right stop is met. Record the highest indicated pressure at each position. Compare the recorded readings to the specifications. If the highest recorded output pressure reading against one stop is not within 50 psi (345 kPa) of the highest recorded reading at the other stop, the steering gear is leaking internally and must be replaced.

STEERING DIAGNOSIS CHARTS

NOTE: There are three diagnosis charts following that cover POWER STEERING NOISE, STEERING WHEEL FEEL, and POWER STEERING FLUID.

POWER STEERING NOISE

CONDITION	POSSIBLE CAUSES	CORRECTION
OBJECTIONABLE HISS OR WHISTLE*	1. Damaged or mis-positioned steering column shaft/coupling dash panel seal.	1. Reposition or replace steering column shaft/coupling dash panel seal.
	2. Noisy valve in power steering gear.	2. Replace power steering gear.

CONDITION	POSSIBLE CAUSES	CORRECTION
RATTLE OR CLUNK	1. Power steering gear loose on front suspension crossmember.	1. Inspect power steering gear mounting bolts. Replace as necessary. Tighten bolts to specified torque. (Refer to 19 - STEERING - SPECIFICATIONS)
	2. Front suspension crossmember mounting fasteners loose at frame.	2. Tighten front suspension crossmember mounting fasteners to specified torque. (Refer to 2 - SUSPENSION/FRONT - SPECIFICATIONS)
	3. Loose tie rod (outer or inner).	3. Check tie rod pivot points for wear. Replace worn/loose parts as required.
	4. Loose lower control arm mounting bolts at front suspension crossmember.	4. Tighten control arm mounting bolts to specified torque. (Refer to 2 - SUSPENSION/FRONT - SPECIFICATIONS)
	5. Lower control arm pivot bushing worn.	5. Replace lower control arm pivot bushing.
	6. Lower control arm tension strut bushing worn.	6. Replace lower control arm tension strut bushing.
	7. Loose strut assembly mounting fasteners at tower.	7. Tighten strut assembly fasteners to specified torque. (Refer to 2 - SUSPENSION/FRONT - SPECIFICATIONS)
	8. Power steering fluid pressure hose touching the body of the vehicle.	8. Adjust hose to proper position by loosening, repositioning, and tightening fitting to specified torque (Do not bend tubing). (Refer to 19 - STEERING - SPECIFICATIONS)
	9. Internal power steering gear noise.	9. Replace power steering gear.
	10. Damaged front suspension crossmember.	10. Replace front suspension crossmember.
	11. Stabilizer bar link ball joints worn.	11. Replace stabilizer bar link.
POPPING NOISE	1. Worn outer tie rod.	1. Replace outer tie rod.
CHIRP OR SQUEAL (POWER STEERING PUMP)	1. Loose power steering pump drive belt.	1. Check and adjust power steering pump drive belt to specifications. Replace belt if worn or glazed.

CONDITION	POSSIBLE CAUSES	CORRECTION
WHINE OR GROWL (POWER STEERING PUMP)**	1. Low fluid level.	1. Fill power steering fluid reservoir to proper level and check for leaks (make sure all air is bled from the system fluid).
	2. Power steering hose touching vehicle body or frame.	2. Adjust hose to proper position by loosening, repositioning, and tightening fitting to specified torque. Do not bend tubing. Replace hose if damaged.
	3. Extreme wear of power steering pump internal components.	3. Replace power steering pump and flush system as necessary.
	4. Loose power steering pump drive belt.	4. Check and adjust power steering pump drive belt to specifications. Replace belt if worn or glazed.
	5. Extremely cold temperatures below -18°C (0°F).	5. Noise is typical when starting vehicle in extremely cold temperature. Normal duration of noise at start-up is less than one minute. If noise persists for extended time, verify proper fluid level. If fluid is low, inspect for leaks.
SUCKING AIR SOUND	1. Loose clamp on power steering fluid return hose.	1. Tighten or replace hose clamp.
	2. Missing O-Ring on power steering hose connection.	2. Inspect connection and replace O-Ring as required.
	3. Low power steering fluid level.	3. Fill power steering fluid reservoir to proper level and check for leaks.
	4. Air leak between power steering fluid reservoir and power steering pump.	4. Replace power steering pump (with reservoir).
SQUEAK OR RUBBING SOUND	1. Steering column shaft rubbing.	1. Move or realign item rubbing shaft.
	2. Clockspring noisy.	2. Remove clockspring. Reinstall wheel. If noise is gone, replace clockspring.
	3. Steering gear internally noisy.	3. Replace steering gear.
SCRUBBING OR KNOCKING NOISE	1. Incorrect tire or wheel size.	1. Replace incorrect size tire or wheel with size used as original equipment.
	2. Interference between steering gear and other vehicle components.	2. Check for bent or misaligned components and correct as necessary.
	3. Steering gear internal stops worn excessively allowing tires to be steered excessively far.	3. Replace steering gear.

*** NOTE: There is some noise in all power steering systems. One of the most common is a hissing sound evident when turning the steering wheel when at a standstill or when parking and the steering wheel is at the end of its travel. Hiss is a very high frequency noise similar to that experienced while slowly closing a water tap. The noise is present in every valve and results when high velocity fluid passes valve orifice edges. There is no relationship between this noise and the performance of the steering system.**

**** NOTE: Power steering pump growl results from the development of high pressure fluid flow. Normally this noise level should not be high enough to be objectionable.**

STEERING WHEEL FEEL

CONDITION	POSSIBLE CAUSES	CORRECTION
STEERING WHEEL/ COLUMN CLICKING, CLUNKING OR RATTLING	1. Loose steering coupling pinch bolt.	1. Replace pinch bolt and tighten to specified torque. (Refer to 19 - STEERING/ COLUMN - SPECIFICATIONS)
	2. Steering column bearings.	2. Replace steering column.
STEERING WHEEL HAS FORE AND AFT MOVEMENT	1. Steering wheel retaining bolt not properly tightened/torqued.	1. Tighten steering wheel retainer bolt to specified torque. (Refer to 19 - STEERING/ COLUMN - SPECIFICATIONS)
STEERING WHEEL OR DASH VIBRATES DURING LOW SPEED OR STANDSTILL STEERING MANEUVERS	1. Air in the fluid of the power steering system.	1. Bleed air from system following the power steering pump initial operation service procedure.*
	2. Tires not properly inflated.	2. Inflate tires to the specified pressure.
	3. Excessive engine vibration.	3. Ensure that the engine is running properly.
	4. Loose tie rod end jam nut.	4. Tighten the inner to outer tie rod jam nut to the specified torque. (Refer to 19 - STEERING - SPECIFICATIONS)
	5. Overcharged air conditioning system.	5. Check air conditioning pump head pressure and correct as necessary.

CONDITION	POSSIBLE CAUSES	CORRECTION
STEERING CATCHES, STICKS IN CERTAIN POSITIONS OR IS DIFFICULT TO TURN	1. Low power steering fluid level.	1. Fill power steering fluid reservoir to specified level and check for leaks.
	2. Tires not inflated to specified pressure.	2. Inflate tires to the specified pressure.
	3. Lack of lubrication in front suspension control arm ball joints.	3. Lubricate ball joints if ball joints are not a lubricated-for-life type ball joint. If ball joint is a lubricated-for-life ball joint, replace ball joint or control arm.
	4. Worn lower control arm ball joint.	4. Replace lower control arm.
	5. Lack of lubrication in steering gear outer tie rod ends.	5. Lubricate tie rod ends if they are not a lubricated-for-life type. If tie rod end is a lubricated-for-life type, replace tie rod end.
	6. Loose power steering pump drive belt.	6. Tighten the power steering pump drive belt to specifications. If drive belt is worn or glazed, replace belt.
	7. Faulty power steering pump flow control. (Refer to 19 - STEERING - DIAGNOSIS AND TESTING)	7. Replace power steering pump.
	8. Excessive friction in steering column or intermediate shaft/coupler.	8. Isolate and replace defective component.
	9. Binding lower control arm ball joint.	9. Replace the lower control arm.
	10. Excessive friction in power steering gear.	10. Replace power steering gear.
	11. Worn/binding seat and bearing in front strut assembly.	11. Replace seat and bearing in front strut assembly.
STIFF, HARD TO TURN, SURGE, MOMENTARY INCREASE IN EFFORT WHEN TURNING	1. Tires not properly inflated.	1. Inflate tires to specified pressure.
	2. Low power steering fluid level.	2. Add power steering fluid as required to power steering fluid reservoir to obtain proper level. Check for leaks.
	3. Loose power steering pump drive belt.	3. Tighten the power steering pump drive belt to specifications. If drive belt is worn or glazed, replace belt.
	4. Lack of lubrication in lower control arm ball joints.	4. Lubricate ball joints if ball joints are not a lubricated-for-life type ball joint. If ball joint is a lubricated-for-life ball joint, replace lower control arm.
	5. Low power steering pump pressure. (Refer to 19 - STEERING - DIAGNOSIS AND TESTING)	5. Replace the power steering pump as necessary.
	6. High internal leak in power steering gear. (Refer to 19 - STEERING - DIAGNOSIS AND TESTING)	6. Replace power steering gear.

CONDITION	POSSIBLE CAUSES	CORRECTION
STEERING WHEEL DOES NOT RETURN TO CENTER POSITION	1. Tires not inflated properly.	1. Inflate tires to specified pressure.
	2. Improper front wheel alignment.	2. Check and adjust wheel alignment as necessary.
	3. Lack of lubrication/binding in front lower control arm ball joints.	3. Lubricate ball joints if ball joints are not a lubricated-for-life type of ball joint, then inspect ball joint for wear, replace lower control arm as necessary. If ball joint is a lubricated-for-life ball joint, replace lower control arm.
	4. Damaged, mis-positioned or un-lubricated steering column coupler to dash seal.**	4. Replace, reposition, or lubricate dash seal.
	5. Binding seat and bearing in front strut assembly.	5. Replace seat and bearing in front strut assembly.
	6. Tight shaft bearing in steering column.	6. Replace the steering column.
	7. Excessive friction in steering column coupling.	7. Replace steering column coupling.
	8. Excessive friction in power steering gear.	8. Replace power steering gear.
EXCESSIVE STEERING WHEEL KICKBACK OR TOO MUCH STEERING WHEEL FREE PLAY	1. Air in the fluid of the power steering system.	1. Bleed air from system following power steering pump initial operation service procedure.*
	2. Power steering gear loose on crossmember.	2. Inspect power steering gear mounting bolts. Replace as necessary. Tighten to specified torque. (Refer to 19 - STEERING - SPECIFICATIONS)
	3. Power steering gear housing isolator bushings worn.	3. Replace power steering gear housing isolator bushings.
	4. Steering column coupling or intermediate shaft worn, broken or loose.	4. Replace steering column or intermediate shaft.
	5. Free play in steering column.	5. Check steering column and steering column mounting fasteners. Secure or replace steering column.
	6. Worn lower control arm ball joints.	6. Replace lower control arm as required.
	7. Loose steering knuckle-to-ball joint stud pinch bolt.	7. Inspect pinch bolt, replace as necessary, and tighten to specified torque. (Refer to 2 - SUSPENSION/FRONT - SPECIFICATIONS)
	8. Front wheel bearing loose or worn.	8. Replace hub and bearing or knuckle as necessary.
	9. Loose outer tie rod end.	9. Replace outer tie rod end that has excessive free play.
	10. Worn inner tie rod bushing.	10. Replace inner tie rod.
	11. Defective steering gear rotary valve.	11. Replace power steering gear.

*** NOTE: Steering shudder can be expected in new vehicles and vehicles with recent steering system repairs. Shudder should dissipate after the vehicle has been driven several weeks.**

**** NOTE: To evaluate this condition, it may be necessary to disconnect the steering coupling. While disconnected, turn the steering wheel and feel or listen for internal rubbing in steering column. To avoid damaging the column clockspring, note the following: Before disconnecting coupling, place tires in the straight-ahead position and center steering wheel. Once disconnected, DO NOT rotate steering wheel more than one revolution in either direction and place steering wheel in original location before reconnecting coupling. If this position is lost the clockspring will need to be centered. (Refer to 8 - ELECTRICAL/RESTRAINTS/ CLOCKSPRING - STANDARD PROCEDURE)**

POWER STEERING FLUID

CONDITION	POSSIBLE CAUSES	CORRECTION
LOW FLUID LEVEL WITH VISIBLE LEAK	1. Loose power steering hose fittings.	1. Tighten fitting to specified torque. (Refer to 19 - STEERING - SPECIFICATIONS)
	2. Damaged or missing fitting seal, gasket, or O-ring.	2. Replace as necessary.
	3. Power steering fluid cooler leaking.	3. Replace power steering fluid cooler.
	4. Power steering pump or power steering gear leaking.	4. Repair or replace the leaking component as required.
AERATED FLUID	1. Low fluid level.*	1. Fill power steering fluid reservoir to proper level.
	2. Air leak between power steering fluid reservoir and pump.	2. Inspect for proper sealing. Replace the power steering pump (with reservoir).
	3. Cracked power steering pump housing.	3. Replace the power steering pump.
RESERVOIR FLUID OVERFLOW AND FLUID THAT IS MILKY IN COLOR	1. Water contamination.	1. Drain the power steering fluid from the system. Flush the system with fresh clean power steering fluid, drain, then refill to the proper level.

**** NOTE: Extremely cold temperatures may cause power steering fluid aeration if the power steering fluid level is low.**

SPECIFICATIONS

POWER STEERING FASTENER TORQUE

DESCRIPTION	N·m	Ft. Lbs.	In. Lbs.
DASH SEAL MOUNTING NUTS	7	—	62
GEAR MOUNTING BOLTS - AWD	102	75	—
GEAR MOUNTING BOLTS - RWD	95	70	—
HOSE TUBE NUTS	47	35	—
OUTER TIE ROD BALL JOINT NUT	85	63	—
PUMP MOUNTING BOLTS - 2.7L/3.5L/ 5.7L	28	21	—
PUMP MOUNTING BOLTS - 3.0L DIESEL	24	17	212
PUMP MOUNTING BRACKET BOLTS - 3.0L DIESEL	24	17	212
STEERING COUPLING PINCH BOLT - AT GEAR	54	40	—
STEERING COUPLING PINCH BOLT - AT UPPER COUPLING/INTERMEDIATE SHAFT	31	23	—
STEERING INTERMEDIATE SHAFT PINCH BOLT - AT RHD COLUMN	31	23	—
TIE ROD HEAT SHIELD - AWD	10	7	89
TIE ROD JAM NUT	75	55	—

SPECIAL TOOLS

STEERING

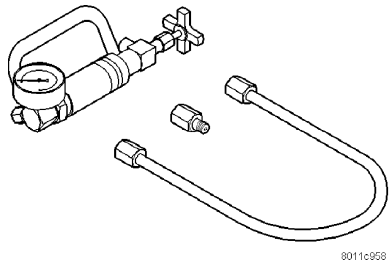

Kit, Power Steering Analyzer 6815

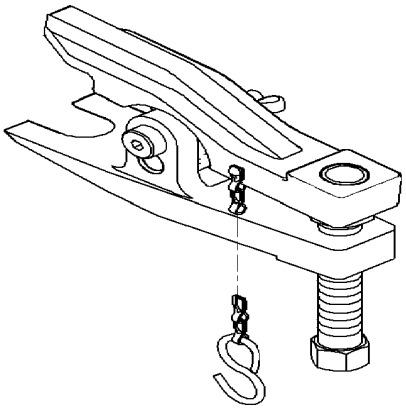

Remover, Ball Stud 9360

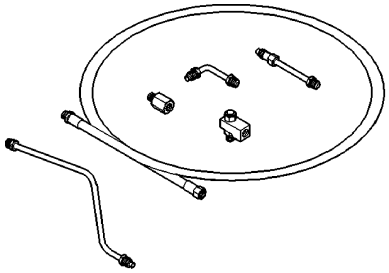

Kit, Power Steering Analyzer Adapter 6893

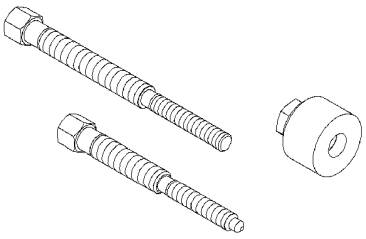

Installer, Power Steering Pulley C-4063C

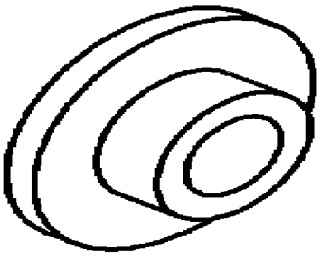

Spacer 6936

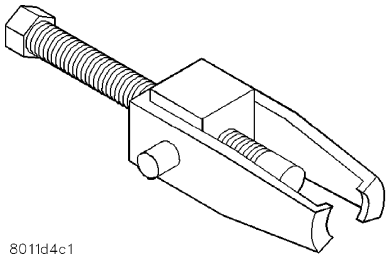

Puller, Pulley C-4333

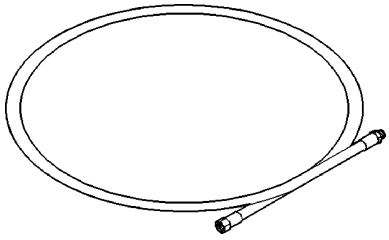

Hose, Power Steering Analyzer 6959

COLUMN ELECTRICAL DIAGNOSIS

TABLE OF CONTENTS

page

COLUMN ELECTRICAL DIAGNOSIS
DIAGNOSIS AND TESTING
P0562-BATTERY VOLTAGE LOW 16
P0563-BATTERY VOLTAGE HIGH 19
P0585-SPEED CONTROL MULTIPLEXED SWITCH 1/2 CORRELATION 22
P1593–SPEED CONTROL SWITCH 1/2 STUCK. 24
C1219-STEERING ANGLE SENSOR ERRATIC PERFORMANCE 27
B1489-STEERING WHEEL CONTROL AUDIO SWITCH CIRCUIT. 29
B148A-STEERING WHEEL CONTROL MENU SWITCH CIRCUIT. 33
B148B-STEERING WHEEL CONTROL UP SWITCH CIRCUIT. 36
B148C-STEERING WHEEL CONTROL DOWN SWITCH CIRCUIT. 40
B148D-STEERING WHEEL CONTROL SIDE SWITCH CIRCUIT. 44
B148E-STEERING WHEEL CONTROL [+] SWITCH CIRCUIT. 48
B148F-STEERING WHEEL CONTROL [-] SWITCH CIRCUIT. 51
B1490-STEERING WHEEL CONTROL C/T SWITCH CIRCUIT. 54
B1DA0–STEERING COLUMN TILT SWITCH CIRCUIT STUCK. 57
B1DA5–STEERING COLUMN TELESCOPE SWITCH CIRCUIT STUCK 60

page

B1D8D-STEERING COLUMN TELESCOPE POSITION SENSOR CIRCUIT LOW. 63
B1D8E–STEERING COLUMN TELESCOPE POSITION SENSOR CIRCUIT HIGH 66
B1D91-STEERING COLUMN TILT POSITION SENSOR CIRCUIT LOW. 71
B1D92–STEERING COLUMN TILT POSITION SENSOR CIRCUIT HIGH 74
B1D93–STEERING COLUMN TELESCOPE MOTOR CONTROL CIRCUIT PERFORMANCE. 79
B1D97–STEERING COLUMN TILT MOTOR CONTROL CIRCUIT PERFORMANCE. 86
B2225–Steering Control Module INTERNAL 93
B2332–HORN SWITCH INPUT CIRCUIT/ PERFORMANCE. 94
U0002–CAN C BUS OFF PERFORMANCE 98
U0019–CAN B BUS CIRCUIT 101
U0121–LOST COMMUNICATION WITH ANTI-LOCK BRAKE SYSTEM (ABS) CONTROL MODULE 104
U0141–LOST COMMUNICATION WITH FRONT CONTROL MODULE. 105
U0155–LOST COMMUNICATION WITH CLUSTER / CCN. 106
U0212–LOST COMMUNICATION WITH STEERING COLUMN CONTROL MODULE . . 107
U1109–LOST COMMUNICATION WITH LIN STEERING WHEEL CONTROLS 108

COLUMN ELECTRICAL DIAGNOSIS

DIAGNOSIS AND TESTING

P0562-BATTERY VOLTAGE LOW

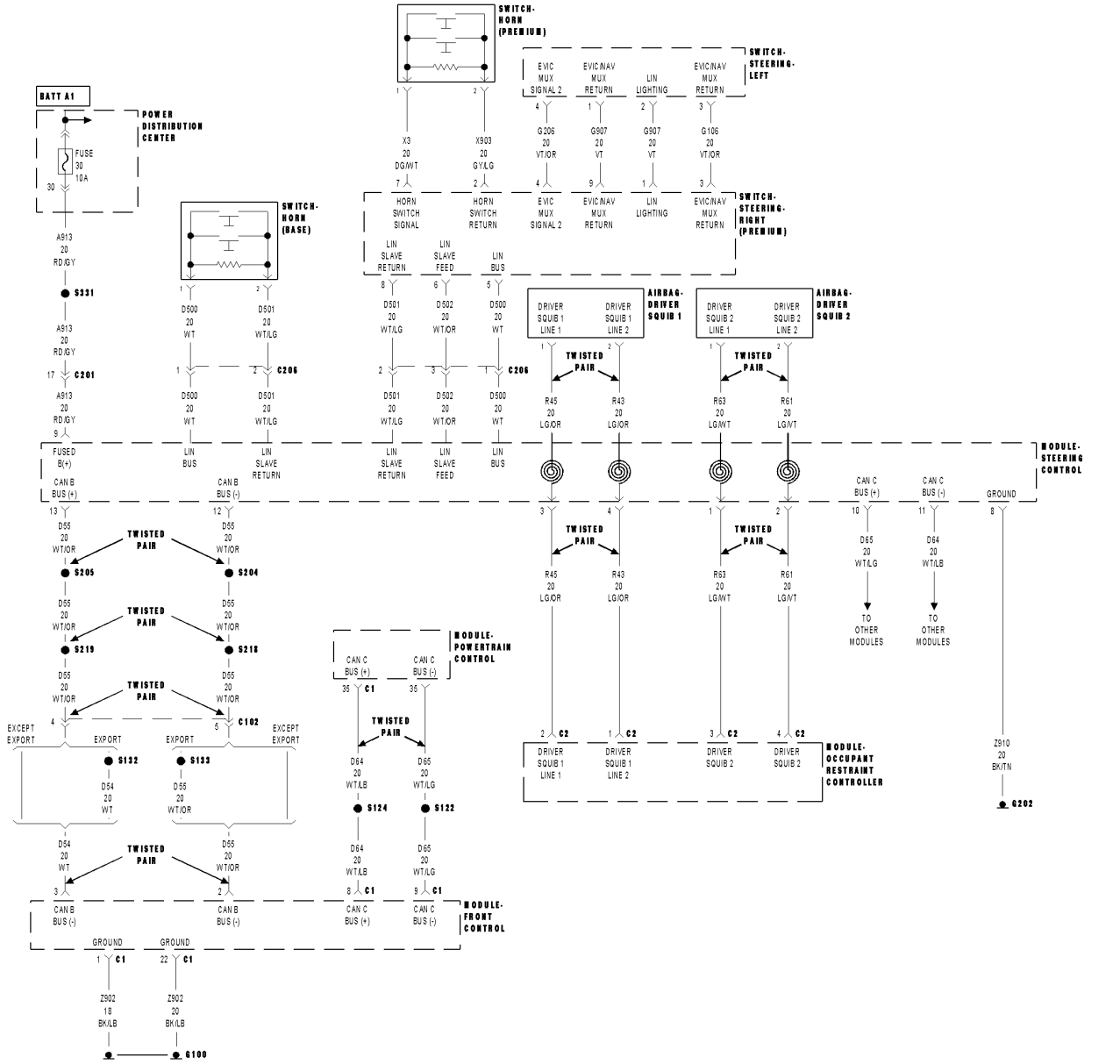

For a complete wiring diagram **Refer to Section 8W**

- **When Monitored:**
  Continuously.
- **Set Condition:**
  If the voltage to the Steering Control Module (SCCM) is below 8.5 volts for more than one minute.

Possible Causes
RELATED DTC(S) PRESENT IN PCM
INTERMITTENT BATTERY VOLTAGE LOW DTC
(A913) FUSED B(+) CIRCUIT HIGH RESISTANCE
(Z910) GROUND CIRCUIT HIGH RESISTANCE
STEERING CONTROL MODULE (SCM)

Diagnostic Test

1. RELATED DTC(S) PRESENT IN PCM

Ignition on, engine not running.
With the scan tool, select View DTCs in the Powertrain Control Module.

Are there any charging system or related battery voltage DTCs present in the PCM?

Yes >> Refer to the appropriate symptom in the Driveability category.

No >> Go to 2

2. DTC STATUS IS ACTIVE

With the scan tool, select View DTCs in the Steering Control Module.

Is the DTC status Active at this time?

Yes >> Go to 3

No >> Go to 5

3. (A913) FUSED B(+) CIRCUIT HIGH RESISTANCE

Turn the ignition off.
Remove the Steering Control Module in accordance with the Service Information.
Turn the ignition on.
Using a 12–volt test light connected to ground, check the (A913) Fused B(+) circuit in the Steering Control Module harness connector.

NOTE: The test light must illuminate brightly. Compare the brightness to that of a direct connection to the battery.

Does the test light illuminate brightly?

Yes >> Go to 4

No >> Repair the (A913) Fused B(+) circuit.

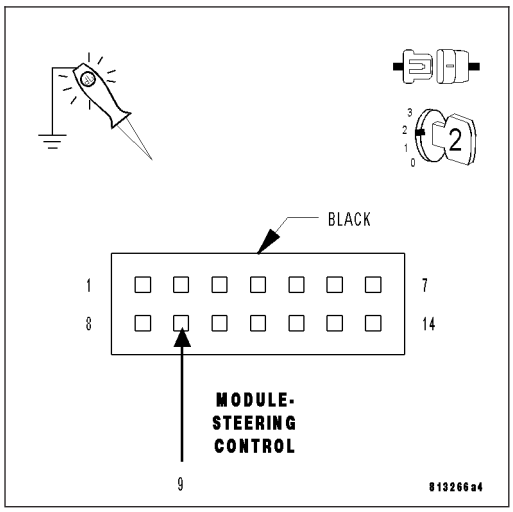

4. (Z910) GROUND CIRCUIT HIGH RESISTANCE

Using a 12–volt test light connected to 12–volts, check the (Z910) Ground circuit in the Steering Control Module harness connector.

NOTE: The test light must illuminate brightly. Compare the brightness to that of a direct connection to the battery.

Does the test light illuminate brightly?

Yes >> Replace the Steering Control Module in accordance with the Service Information.

No >> Repair the (Z910) Ground circuit.

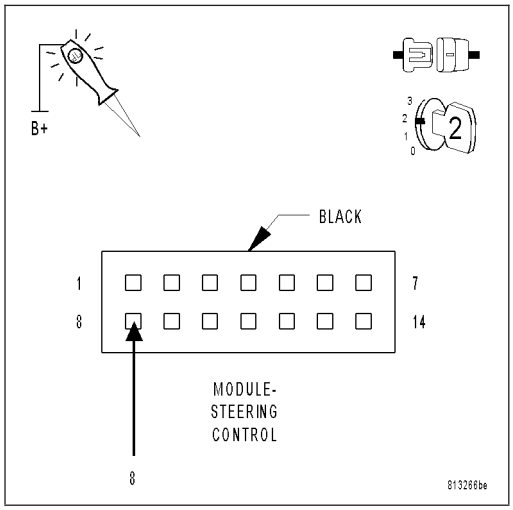

5. INTERMITTENT BATTERY VOLTAGE LOW DTC

The conditions necessary to set this DTC are not present at this time.

Using the wiring diagram/schematic as a guide, inspect the wiring and connectors.

While monitoring the scan tool data relative to this circuit, wiggle test the wiring and connectors.

Look for the data to change or for the DTC to reset during the wiggle test.

Were any problems found?

Yes >> Repair as necessary.

No >> Test complete.

P0563-BATTERY VOLTAGE HIGH

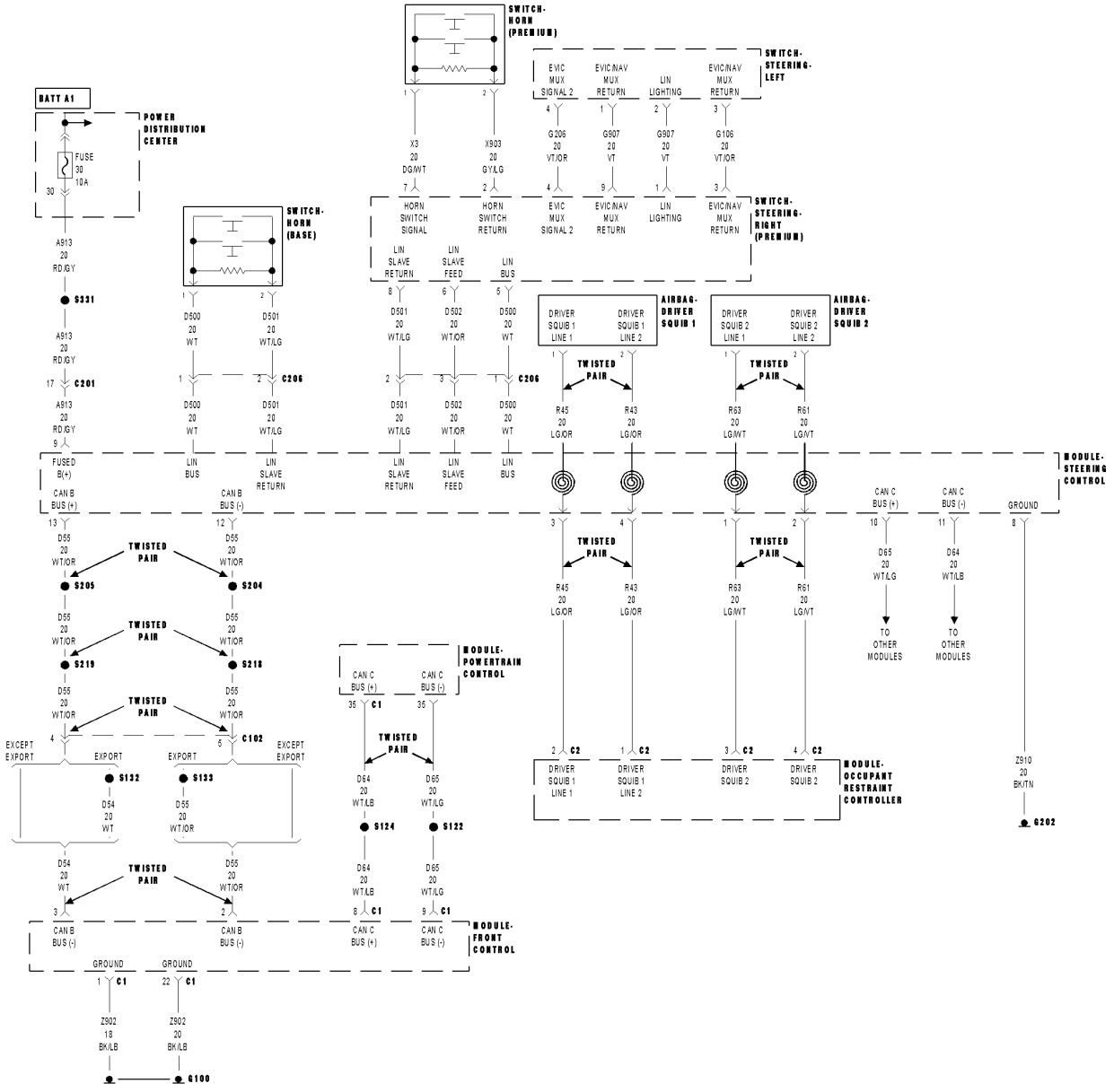

For a complete wiring diagram **Refer to Section 8W**

- **When Monitored:**
  Continuously.
- **Set Condition:**
  If the voltage to the Steering Control Module (SCM) is above 16 volts for more than one minute.

Possible Causes
RELATED DTC(S) PRESENT IN THE PCM
INTERMITTENT BATTERY VOLTAGE HIGH DTC
(A913) FUSED B(+) CIRCUIT HIGH RESISTANCE
(Z910) GROUND CIRCUIT HIGH RESISTANCE
STEERING CONTROL MODULE (SCM)

Diagnostic Test

1. RELATED DTC(S) PRESENT IN THE PCM

Ignition on, engine not running.

With the scan tool, select View DTCs in the Powertrain Control Module.

Are there any charging system or related battery voltage DTCs present in the PCM?

Yes >> Refer to the appropriate symptom in the Driveability category.

No >> Go to 2

2. DTC IS ACTIVE

Start the engine. Allow the engine to idle for 2 minutes.

With the scan tool, select View DTCs in the Steering Control Module.

Is the DTC status Active at this time?

Yes >> Go to 3

No >> Go to 5

3. (A913) FUSED B(+) CIRCUIT HIGH RESISTANCE

Turn the ignition off.

Remove the Steering Control Module in accordance with the Service Information.

Start the engine. Allow the engine to idle.

Using a 12–volt test light connected to ground, check the (A913) Fused B(+) circuit in the Steering Control Module harness connector.

NOTE: The test light must illuminate brightly. Compare the brightness to that of a direct connection to the battery.

Does the test light illuminate brightly?

Yes >> Go to 4

No >> Repair the (A913) Fused B(+) circuit.

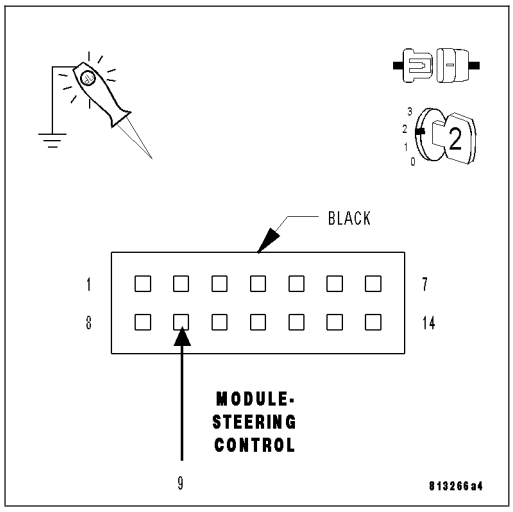

4. (Z910) GROUND CIRCUIT HIGH RESISTANCE

Using a 12–volt test light connected to 12–volts, check the (Z910) Ground circuit in the Steering Control Module harness connector.

NOTE: The test light must illuminate brightly. Compare the brightness to that of a direct connection to the battery.

Does the test light illuminate brightly?

Yes >> Replace the Steering Control Module (SCM) in accordance with the Service Information.

No >> Repair the (Z910) Ground circuit.

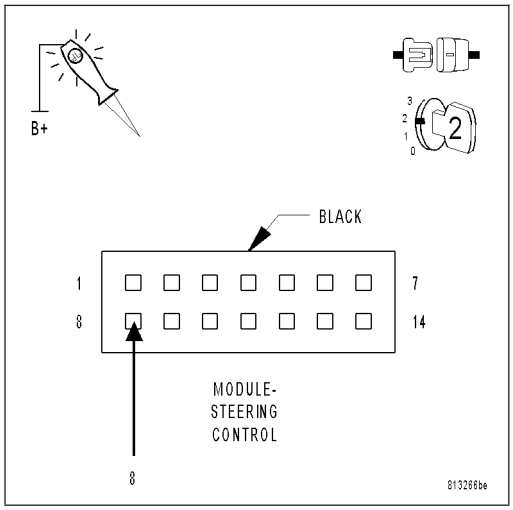

5. INTERMITTENT BATTERY VOLTAGE HIGH DTC

The conditions necessary to set this DTC are not present at this time.

Using the wiring diagram/schematic as a guide, inspect the wiring and connectors.

While monitoring the scan tool data relative to this circuit, wiggle test the wiring and connectors.

Look for the data to change or for the DTC to reset during the wiggle test.

Were any problems found?

Yes >> Repair as necessary.

No >> Test complete.

P0585-SPEED CONTROL MULTIPLEXED SWITCH 1/2 CORRELATION

For a complete wiring diagram **Refer to Section 8W**.

- **When Monitored:**
  Continuously with the ignition on.
- **Set Condition:**
  The Steering Control Module (SCM) has detected that a non-permissable combination has occurred in the Speed Control Switch.

Possible Causes
INTERMITTENT SPEED CONTROL MULTIPLEXED SWITCH 1/2 CORRELATION DTC
SPEED CONTROL SWITCH
STEERING CONTROL MODULE (SCM)

Diagnostic Test

1. DTC IS ACTIVE

NOTE: If P0562–BATTERY VOLTAGE LOW or P0563–BATTERY VOLTAGE HIGH is set along with this DTC, diagnose the battery voltage DTC first.
Ignition on, engine not running.
With the Scan Tool, select View DTCs in the Steering Control Module.

Is the DTC status Active at this time?

Yes >> Go to 2

No >> Go to 4

2. SPEED CONTROL SWITCH

Turn the ignition off.
Replace the Speed Control Switch in accordance with the Service Information.
Turn the ignition on.
Move the Speed Control Switch to each position several times.
With the Scan Tool, Clear Stored DTCs in the Steering Control Module.
With the Scan Tool, select View DTCs in the Steering Control Module.
Move the Speed Control Switch to each position several times while monitoring the Scan Tool.

Does this DTC reset?

Yes >> Go To 3

No >> Test Complete.

3. Steering Control Module (SCM)

View repair.

Repair

Replace the Steering Control Module (SCM) in accordance with the Service Information.

4. INTERMITTENT SPEED CONTROL MULTIPLEXED SWITCH 1/2 CORRELATION DTC

The conditions necessary to set this DTC are not present at this time.

While monitoring the scan tool data relative to this circuit, move the Speed Control Switch to each position several times.

Look for the DTC to reset while the switch is being moved to each position.

Were any problems found?

Yes >> Repair as necessary.

No >> Test complete.

P1593–SPEED CONTROL SWITCH 1/2 STUCK

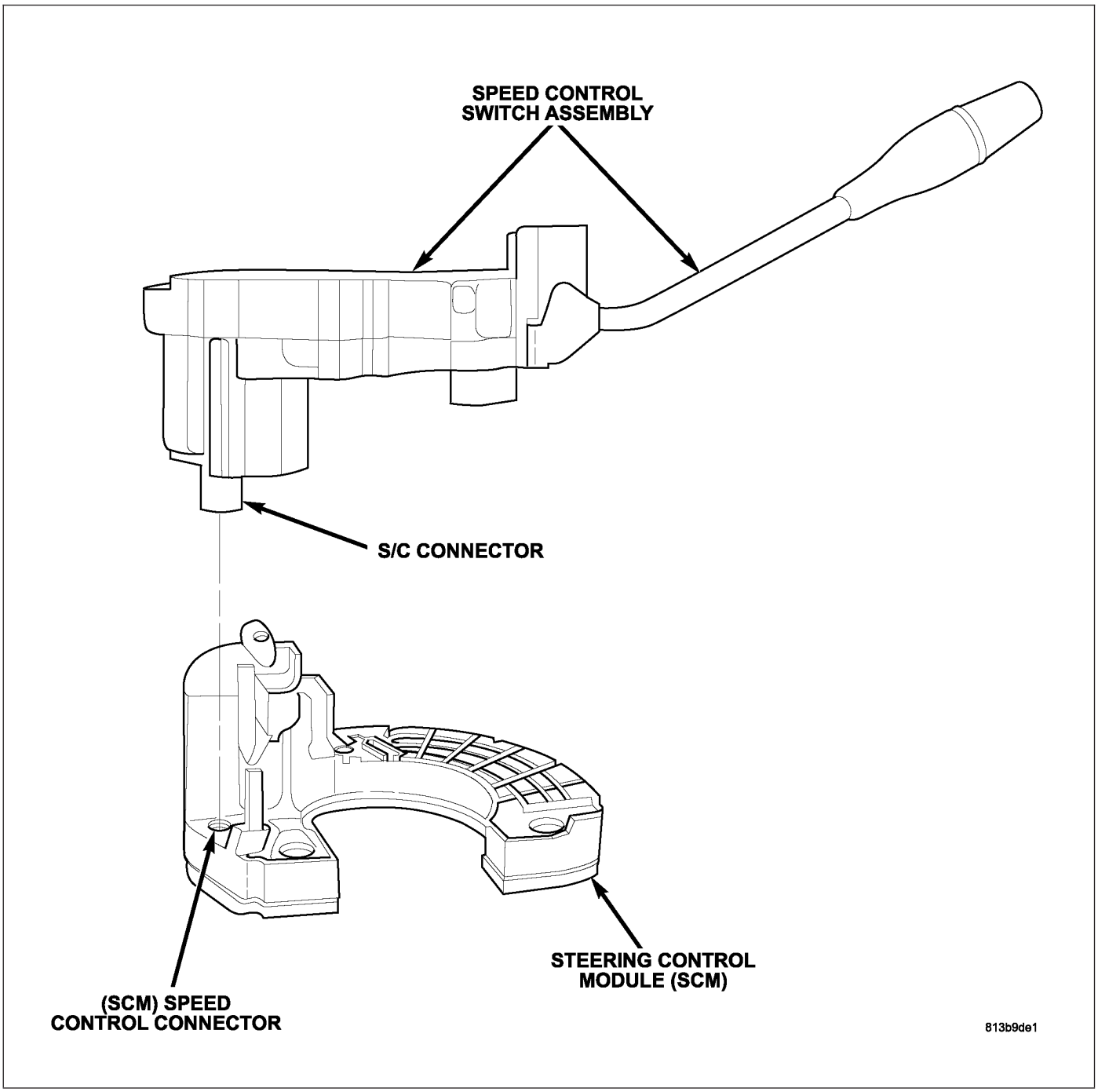

For a complete wiring diagram **Refer to Section 8W**.

- **When Monitored:**
  Continuously with the ignition on.
- **Set Condition:**
  The Steering Control Module (SCM) has detected that the Speed Control Switches are not operating properly.

Possible Causes
INTERMITTENT SPEED CONTROL SWITCH 1/2 STUCK DTC
SPEED CONTROL SWITCH
STEERING CONTROL MODULE (SCM)

Diagnostic Test

1. DTC IS ACTIVE

NOTE: If P0562–BATTERY VOLTAGE LOW or P0563–BATTERY VOLTAGE HIGH is set along with this DTC, diagnose the battery voltage DTC first.
Ignition on, engine not running.
With the Scan Tool, select View DTCs in the Steering Control Module.

Is the DTC status Active at this time?

Yes >> Go to 2

No >> Go to 4

2. SPEED CONTROL SWITCH

Turn the ignition off.
Replace the Speed Control Switch in accordance with the Service Information.
Turn the ignition on.
Move the Speed Control Switch to each position several times.
With the Scan Tool, Clear Stored DTCs in the Steering Control Module.
With the Scan Tool, select View DTCs in the Steering Control Module.
Move the Speed Control Switch to each position several times while monitoring the Scan Tool.

Does this DTC reset?

Yes >> Go To 3

No >> Test Complete.

3. STEERING CONTROL MODULE (SCM)

View repair.

Repair

Replace the Steering Control Module (SCM) in accordance with the Service Information.

4. INTERMITTENT SPEED CONTROL SWITCH 1/2 STUCK DTC

The conditions necessary to set this DTC are not present at this time.

While monitoring the scan tool data relative to this circuit, move the Speed Control Switch to each position several times.

Look for the DTC to reset while the switch is being moved to each position.

Were any problems found?

Yes >> Repair as necessary.

No >> Test complete.

C1219-STEERING ANGLE SENSOR ERRATIC PERFORMANCE

For a complete wiring diagram **Refer to Section 8W**.

- **When Monitored:**
  Continuously.
- **Set Condition:**
  The Steering Control Module (SCM) has detected a code error from the Steering Angle Sensor.

Possible Causes
INTERMITTENT STEERING ANGLE SENSOR ERRATIC PERFORMANCE DTC
STEERING ANGLE SENSOR TONE WHEEL
STEERING ANGLE SENSOR
STEERING CONTROL MODULE (SCM)

Diagnostic Test

1. DTC IS ACTIVE

NOTE: If P0562–BATTERY VOLTAGE LOW or P0563–BATTERY VOLTAGE HIGH is set along with this DTC, diagnose the battery voltage DTC first.

Ignition on, engine not running.

Turn the steering wheel from stop to stop at least three times.

With the Scan Tool, select View DTCs in the Steering Control Module.

Is the DTC status Active at this time?

Yes >> Go to 2

No >> Go to 5

2. STEERING ANGLE SENSOR TONE WHEEL

Turn the ignition off.

Remove the steering wheel in accordance with the Service Information.

Inspect the clockspring for loose mounting screws or damage.

Remove the clockspring in accordance with the Service Information.

Inspect the Steering Angle Sensor and Tone Wheel for damage, loose or missing mounting screws, etc.

Were any problems found?

Yes >> Repair or replace Sensor and/or Tone Wheel as necessary.

No >> Go To 3

3. STEERING ANGLE SENSOR

Replace the Steering Angle Sensor in accordance with the Service Information.

Ignition on, engine not running.

Turn the steering wheel from stop to stop at least three times.

With the Scan Tool, Clear Stored DTCs in the Steering Control Module.

Turn the steering wheel from stop to stop at least three times.

With the Scan Tool, select View DTCs in the Steering Control Module.

Is the DTC status Active at this time?

Yes >> Go To 4

No >> Test Complete.

4. STEERING CONTROL MODULE (SCM)

View repair.

Repair

Replace the Steering Control Module (SCM) in accordance with the Service Information.

5. INTERMITTENT STEERING ANGLE SENSOR ERRATIC PERFORMANCE DTC

The conditions necessary to set this DTC are not present at this time.
Using the wiring diagram/schematic as a guide, inspect the wiring and connectors.
While monitoring the scan tool data relative to this circuit, wiggle test the wiring and connectors.
Look for the data to change or for the DTC to reset during the wiggle test.

Were any problems found?

Yes >> Repair as necessary.

No >> Test complete.

B1489-STEERING WHEEL CONTROL AUDIO SWITCH CIRCUIT

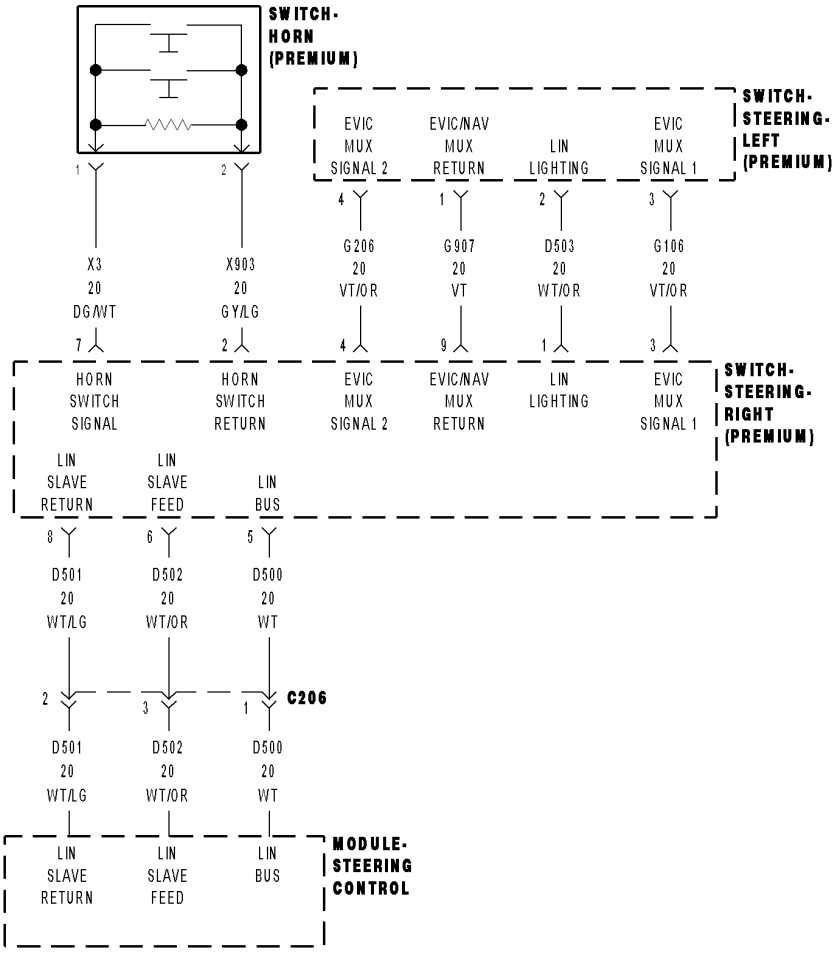

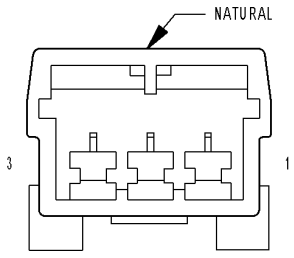

C206

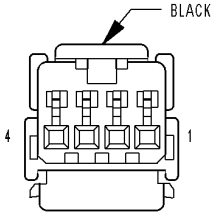

SWITCH-
STEERING-
LEFT
(PREMIUM)

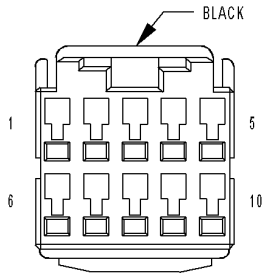

SWITCH-
STEERING-
RIGHT
(PREMIUM)

81329165

For a complete wiring diagram **Refer to Section 8W**.

Theory of Operation

The Steering Wheel Control Audio Switch, when pressed, sends a multiplexed signal to the Right Steering Switch. The switching status is transferred to the Steering Control Module (SCM) by way of the LIN bus, a serial sub-bus. The SCM converts the data to CAN(B) and sends the message to the corresponding module on the bus.

- **When Monitored:**
  Continuously with the ignition on.
- **Set Condition:**
  The Steering Control Module senses that the Steering Wheel Control Audio Switch is in the Set position for greater than 50 seconds.

Possible Causes
INTERMITTENT STEERING WHEEL CONTROL AUDIO SWITCH CIRCUIT DTC
(G206) EVIC MUX SIGNAL 2 CIRCUIT SHORT TO GROUND
(G206) EVIC MUX SIGNAL 2 CIRCUIT SHORT TO (G907) EVIC/NAV MUX RETURN CIRCUIT
LEFT STEERING SWITCH
RIGHT STEERING SWITCH
STEERING CONTROL MODULE (SCM)

Diagnostic Test

1. DTC STATUS IS ACTIVE

NOTE: If U1109–LOST COMMUNICATION WITH LIN STEERING WHEEL CONTROLS is set along with this DTC, diagnose the communication DTC first.

NOTE: If P0562–BATTERY VOLTAGE LOW or P0563–BATTERY VOLTAGE HIGH is set along with this DTC, diagnose the battery voltage DTC first.

Ignition on, engine not running.

With the Scan Tool, select View DTCs in the Steering Control Module.

Is the DTC status Active at this time?

Yes >> Go to 2

No >> Go to 7

2. (G206) EVIC MUX SIGNAL 2 CIRCUIT SHORT TO (G907) EVIC/NAV MUX RETURN CIRCUIT

Turn the ignition off.

Remove the Driver Airbag in accordance with the Service Information to gain access to the Steering Wheel Control Switches.

Disconnect the Left Steering Switch harness connector.

Disconnect the Right Steering Switch harness connector.

NOTE: Before proceeding, thoroughly inspect the wiring harness and connectors between the Left Steering Switch and the Right Steering Switch for a short to ground or to any other circuit.

Measure the resistance between the (G206) EVIC Mux Signal 2 circuit and the (G907) EVIC/NAV Mux Return circuit.

Is the resistance below 5.0 ohms?

Yes >> Repair the (G206) EVIC Mux Signal 2 circuit for a short to the (G907) EVIC/NAV Mux Return circuit.

No >> Go to 3

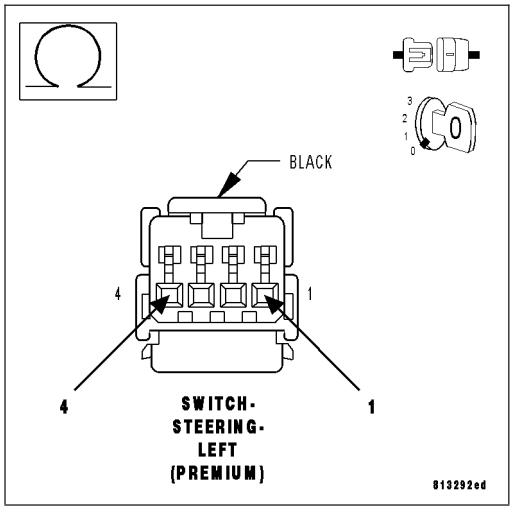

3. (G206) EVIC MUX SIGNAL 2 CIRCUIT SHORT TO GROUND

NOTE: Before proceeding, thoroughly inspect the wiring harness and connectors between the Left Steering Switch and the Right Steering Switch for a short to ground or to any other circuit.

Measure the resistance between the (G206) EVIC Mux Signal 2 circuit and ground.

Is the resistance below 5.0 ohms?

Yes >> Repair the (G206) EVIC Mux Signal 2 circuit for a short to ground.

No >> Go to 4

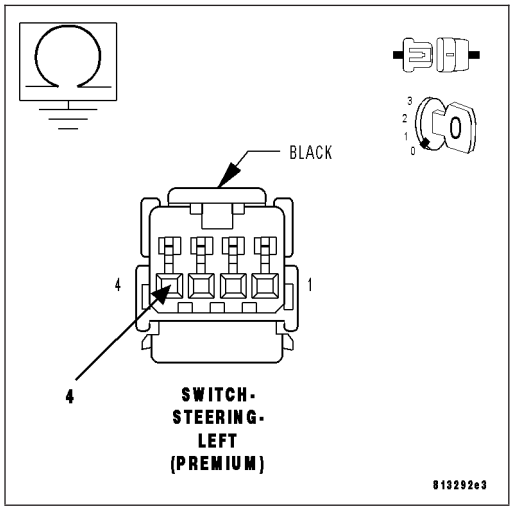

4. LEFT STEERING SWITCH

Reconnect the Left Steering Switch harness connector.

Measure the resistance between the (G206) EVIC Mux Signal 2 circuit and the (G907) EVIC/NAV Mux Return circuit at the Right Steering Switch harness connector.

Is the resistance approximately 10.00 K ohms (+/- 10%)?

Yes >> Replace the Left Steering Switch in accordance with the Service Information.

No >> Go to 5

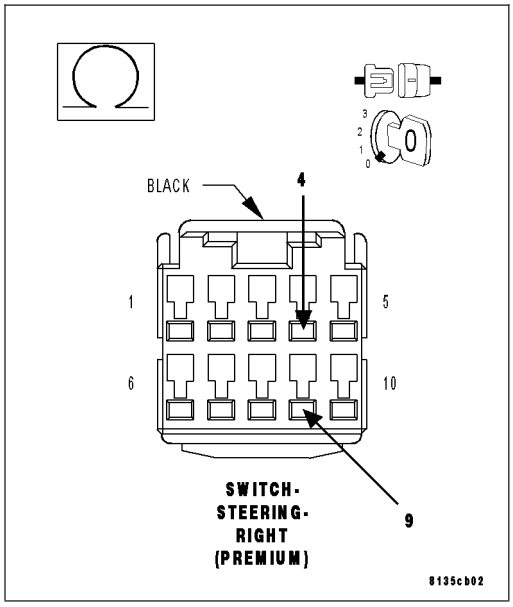

5. RIGHT STEERING SWITCH

Replace the Right Steering Switch in accordance with the Service Information.

Reconnect the C206 (LIN Bus) connector.

Turn the ignition on.

Press and release the Audio Switch several times.

With the scan tool, Clear Stored DTCs in the Steering Control Module.

With the scan tool, select Data Display and view the Audio switch data.

While monitoring the Audio switch data, press and release the Audio Switch several times.

Does the Audio switch data change from Set to Not Set as the switch is pressed and released?

Yes >> Test Complete.

No >> Go to 6

6. STEERING CONTROL MODULE (SCM)

View repair.

Repair

Replace the Steering Control Module (SCM) in accordance with the Service Information.

7. INTERMITTENT STEERING WHEEL CONTROL AUDIO SWITCH CIRCUIT DTC

The conditions necessary to set this DTC are not present at this time.
Using the wiring diagram/schematic as a guide, inspect the wiring and connectors.
While monitoring the scan tool data relative to this circuit, wiggle test the wiring and connectors.
Look for the data to change or for the DTC to reset during the wiggle test.

Were any problems found?

Yes >> Repair as necessary.

No >> Test complete.

B148A-STEERING WHEEL CONTROL MENU SWITCH CIRCUIT

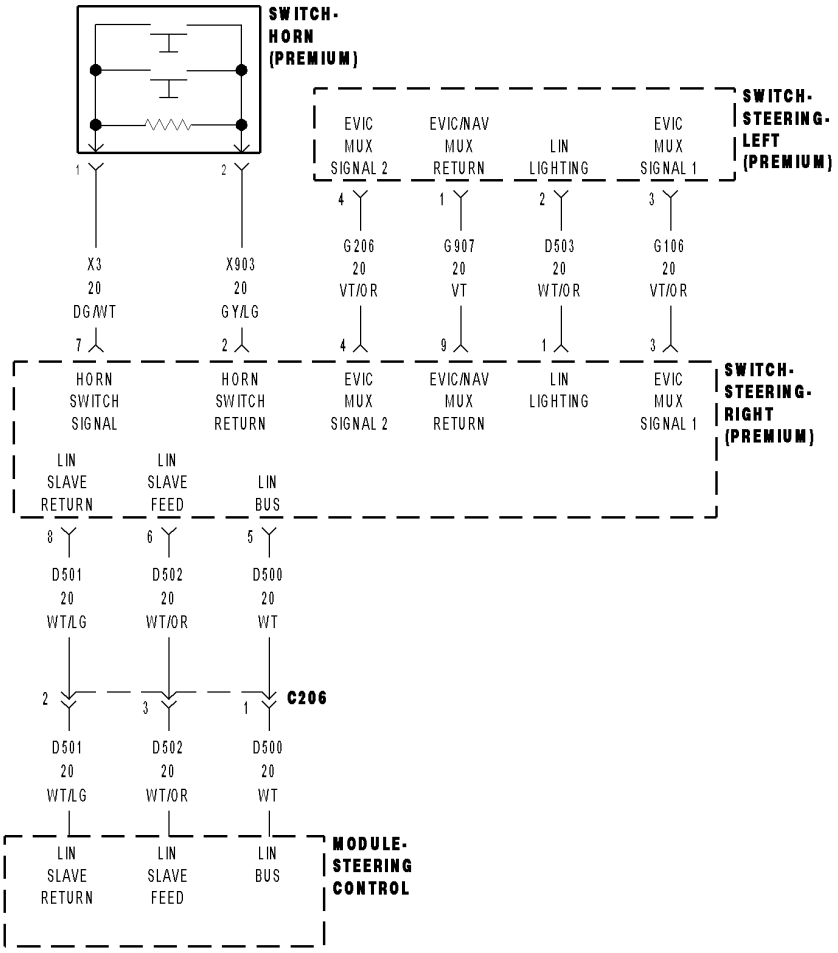

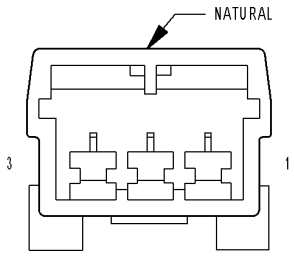

C206

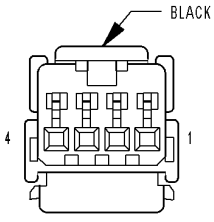

SWITCH-
STEERING-
LEFT
(PREMIUM)

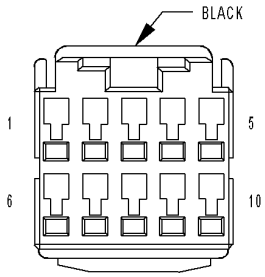

SWITCH-
STEERING-
RIGHT
(PREMIUM)

81329165

For a complete wiring diagram **Refer to Section 8W**.

Theory of Operation

The Steering Wheel Control Menu Switch is part of the Right Steering Switch. The switching status is transferred to the Steering Control Module (SCM) by way of the LIN bus, a serial sub-bus. The SCM converts the data to CAN(B) and sends the message to the corresponding module on the bus.

- **When Monitored:**
  Continuously with the ignition on.
- **Set Condition:**
  The Steering Control Module senses that the Steering Wheel Control Menu Switch is in the Set position for greater than 50 seconds.

Possible Causes
INTERMITTENT STEERING WHEEL CONTROL MENU SWITCH CIRCUIT DTC
RIGHT STEERING SWITCH
STEERING CONTROL MODULE (SCM)

Diagnostic Test

1. DTC IS ACTIVE

NOTE: If U1109–LOST COMMUNICATION WITH LIN STEERING WHEEL CONTROLS is set along with this DTC, diagnose the communication DTC first.

NOTE: If P0562–BATTERY VOLTAGE LOW or P0563–BATTERY VOLTAGE HIGH is set along with this DTC, diagnose the battery voltage DTC first.

Ignition on, engine not running.

With the Scan Tool, select View DTCs in the Steering Control Module.

Is the DTC status Active at this time?

Yes >> Go to 2

No >> Go to 4

2. RIGHT STEERING SWITCH

Turn the ignition off.

Replace the Right Steering Switch in accordance with the Service Information.

Turn the ignition on.

Press and release the Menu Switch several times.

With the Scan Tool, Clear Stored DTCs in the Steering Control Module.

With the Scan Tool, select Data Display and view the Menu switch data.

While monitoring the Menu switch data, press and release the Menu Switch several times.

Does the Menu switch data change from Set to Not Set when the switch is pressed and released?

Yes >> Test complete.

No >> Go to 3

3. STEERING CONTROL MODULE (SCM)

View repair.

Repair

Replace the Steering Control Module (SCM) in accordance with the Service Information.

4. INTERMITTENT STEERING WHEEL CONTROL MENU SWITCH CIRCUIT DTC

The conditions necessary to set this DTC are not present at this time.
Using the wiring diagram/schematic as a guide, inspect the wiring and connectors.
While monitoring the scan tool data relative to this circuit, wiggle test the wiring and connectors.
Look for the data to change or for the DTC to reset during the wiggle test.

Were any problems found?

Yes >> Repair as necessary.

No >> Test complete.

B148B-STEERING WHEEL CONTROL UP SWITCH CIRCUIT

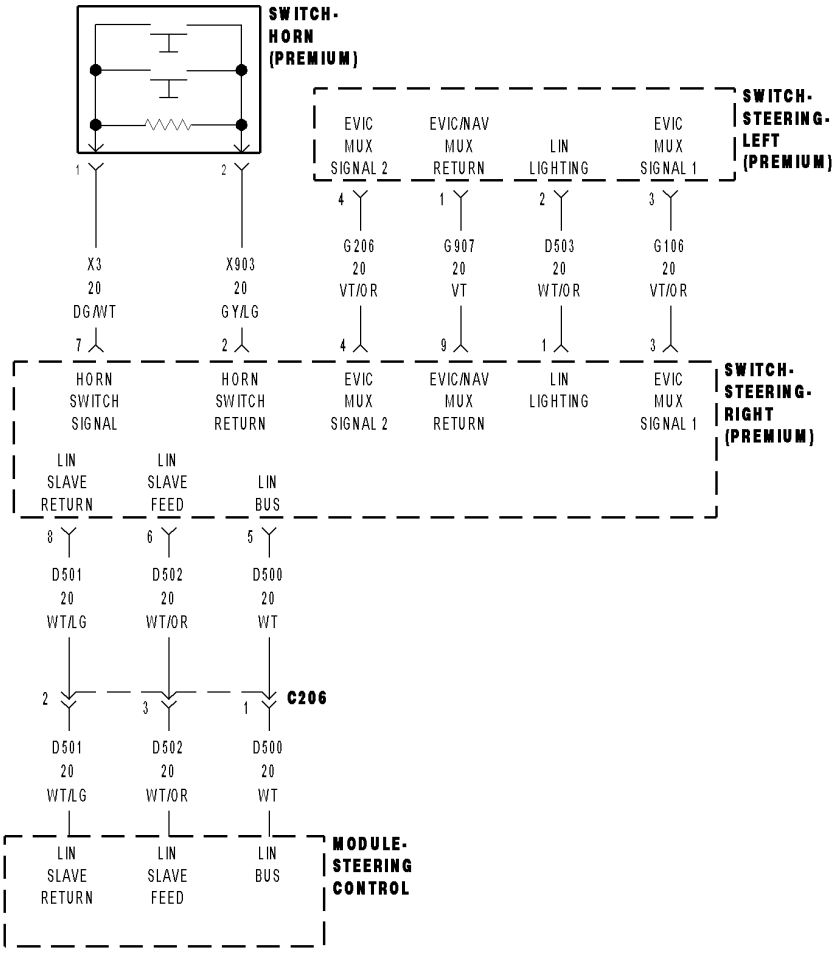

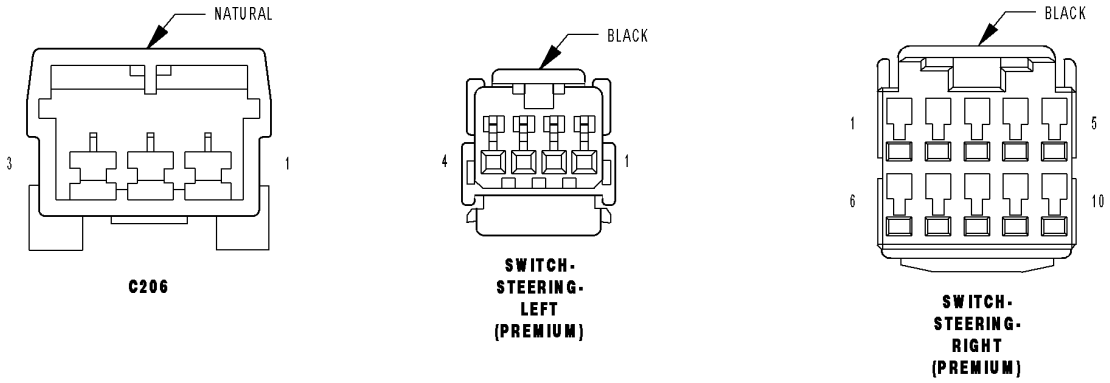

81329165

For a complete wiring diagram **Refer to Section 8W**.

Theory of Operation

The Steering Wheel Control Up Switch, when pressed, sends a multiplexed signal to the Right Steering Switch. The switching status is transferred to the Steering Column Control Module (SCCM) by way of the LIN bus, a serial sub-bus. The SCCM converts the data to CAN(B) and sends the message to the corresponding module on the bus.

- **When Monitored:**
  Continuously with the ignition on.
- **Set Condition:**
  The Steering Column Control Module senses that the Steering Wheel Control Up Switch is in the Set position for greater than 50 seconds.

Possible Causes
INTERMITTENT STEERING WHEEL CONTROL UP SWITCH CIRCUIT DTC
(G106) EVIC MUX SIGNAL 1 CIRCUIT SHORT TO (G907) EVIC/NAV MUX RETURN CIRCUIT
(G106) EVIC MUX SIGNAL 1 CIRCUIT SHORT TO GROUND
LEFT STEERING SWITCH
RIGHT STEERING SWITCH
STEERING COLUMN CONTROL MODULE (SCCM)

Diagnostic Test

1. DTC STATUS IS ACTIVE

NOTE: If U1109–LOST COMMUNICATION WITH LIN STEERING WHEEL CONTROLS is set along with this DTC, diagnose the communication DTC first.

NOTE: If P0562–BATTERY VOLTAGE LOW or P0563–BATTERY VOLTAGE HIGH is set along with this DTC, diagnose the battery voltage DTC first.

Ignition on, engine not running.

With the Scan Tool, select View DTCs in the Steering Column Control Module.

Is the DTC status Active at this time?

Yes >> Go to 2

No >> Go to 7

2. (G106) EVIC MUX SIGNAL 1 CIRCUIT SHORT TO (G907) EVIC/NAV MUX RETURN CIRCUIT

Turn the ignition off.

Remove the Driver Airbag in accordance with the Service Information.

Disconnect the Left Steering Switch harness connector.

Disconnect the Right Steering Switch harness connector.

NOTE: Before proceeding, thoroughly inspect the wiring harness and connectors between the Left Steering Switch and the Right Steering Switch for a short to ground or any other circuit.

Measure the resistance between the (G106) EVIC Mux Signal 1 circuit and the (G907) EVIC/NAV Mux Return circuit.

Is the resistance below 5.0 ohms?

Yes >> Repair the (G106) EVIC Mux Signal 1 circuit for a short to the (G907) EVIC/NAV Mux Return circuit.

No >> Go to 3

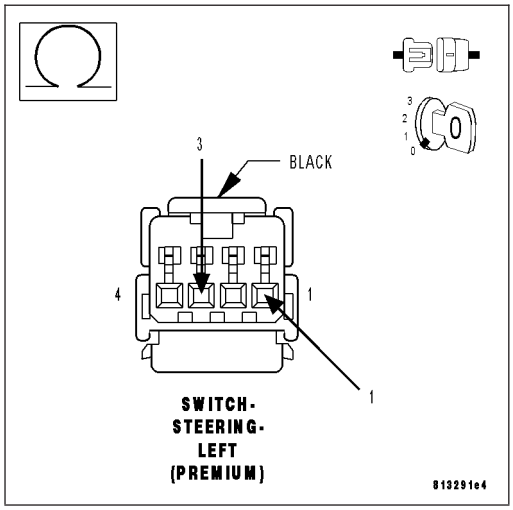

3. (G106) EVIC MUX SIGNAL 1 CIRCUIT SHORT TO GROUND

NOTE: Before proceeding, thoroughly inspect the wiring harness and connectors between the Left Steering Switch and the Right Steering Switch for a short to ground or any other circuit.

Measure the resistance between the (G106) EVIC Mux Signal 1 circuit and ground.

Is the resistance below 5.0 ohms?

Yes >> Repair the (G106) EVIC Mux Signal 1 circuit for a short to ground.

No >> Go to 4

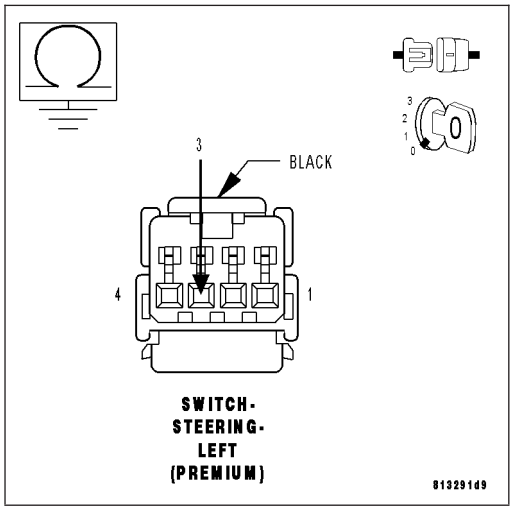

4. LEFT STEERING SWITCH

Reconnect the Left Steering Switch harness connector.

Measure the resistance between the (G106) EVIC Mux Signal 1 circuit and the (G907) EVIC/NAV Mux Return circuit at the Right Steering Switch harness connector.

Is the resistance approximately .5 ohms (+/- 1 ohm)?

Yes >> Replace the Left Steering Switch in accordance with the Service Information.

No >> Go to 5

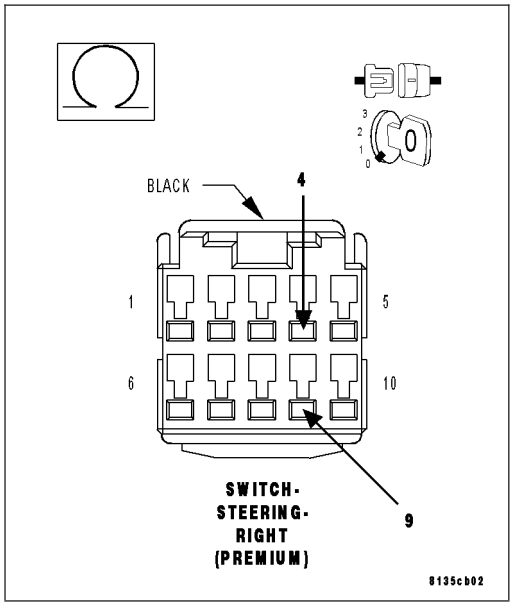

5. RIGHT STEERING SWITCH

Replace the Right Steering Switch in accordance with the Service Information.

Reconnect the C206 (LIN Bus) connector.

Turn the ignition on.

Press and release the Up Switch several times.

With the scan tool, Clear Stored DTCs in the Steering Column Control Module.

With the scan tool, select Data Display and view the Up switch data.

While monitoring the Up switch data, press and release the Up Switch several times.

Does the Up switch data change from Set to Not Set as the switch is pressed and released?

Yes >> Test complete.

No >> Go to 6

6. STEERING COLUMN CONTROL MODULE (SCCM)

View repair.

Repair

Replace the Steering Column Control Module (SCCM) in accordance with the Service Information.

7. INTERMITTENT STEERING WHEEL CONTROL UP SWITCH CIRCUIT DTC

The conditions necessary to set this DTC are not present at this time.
Using the wiring diagram/schematic as a guide, inspect the wiring and connectors.
While monitoring the scan tool data relative to this circuit, wiggle test the wiring and connectors.
Look for the data to change or for the DTC to reset during the wiggle test.

Were any problems found?

Yes >> Repair as necessary.

No >> Test complete.

B148C-STEERING WHEEL CONTROL DOWN SWITCH CIRCUIT

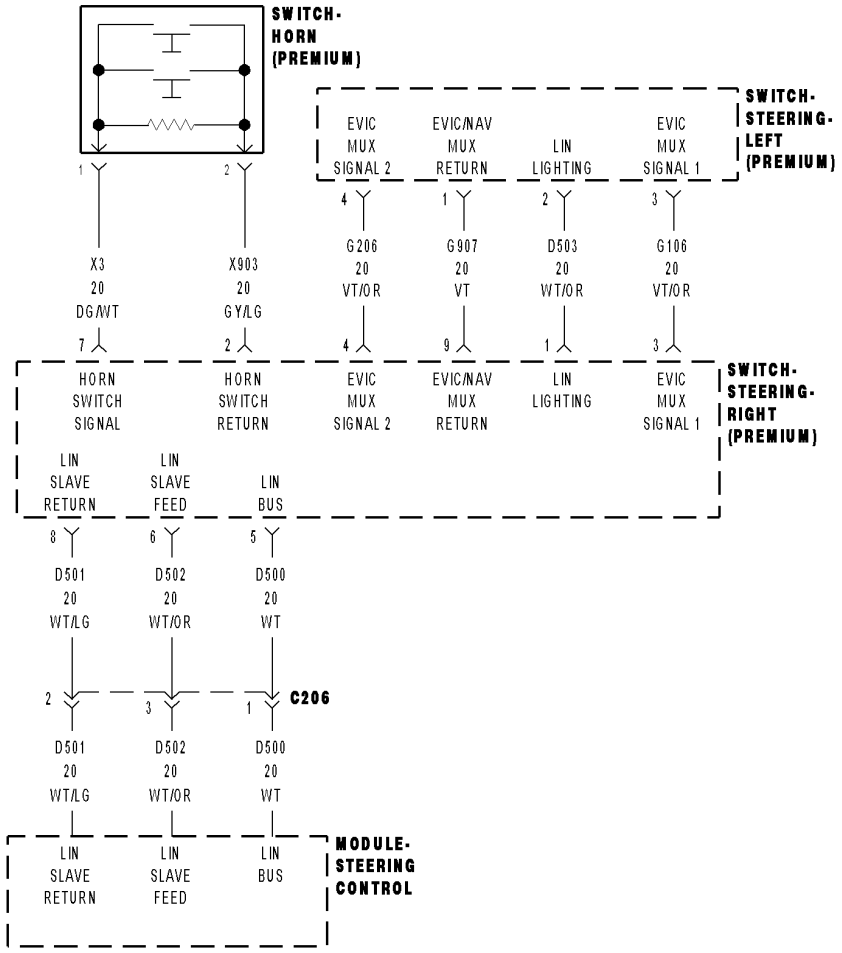

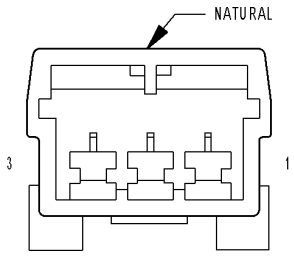

C206

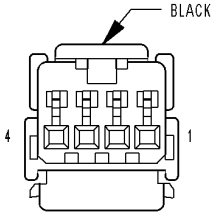

SWITCH-
STEERING-
LEFT
(PREMIUM)

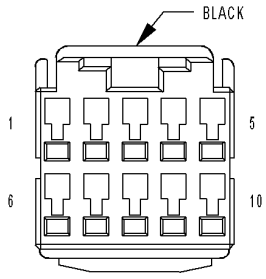

SWITCH-
STEERING-
RIGHT
(PREMIUM)

81329165

For a complete wiring diagram **Refer to Section 8W**.

Theory of Operation

The Steering Wheel Control Down Switch, when pressed, sends a multiplexed signal to the Right Steering Switch. The switching status is transferred to the Steering Control Module (SCM) by way of the LIN bus, a serial sub-bus. The SCM converts the data to CAN(B) and sends the message to the corresponding module on the bus.

- **When Monitored:**
  Continuously with the ignition on.
- **Set Condition:**
  The Steering Control Module senses that the Steering Wheel Control Down Switch is in the Set position for greater than 50 seconds.

Possible Causes
INTERMITTENT STEERING WHEEL CONTROL DOWN SWITCH CIRCUIT DTC
(G106) EVIC MUX SIGNAL 1 CIRCUIT SHORT TO (G907) EVIC/NAV MUX RETURN CIRCUIT
(G106) EVIC MUX SIGNAL 1 CIRCUIT SHORT TO GROUND
LEFT STEERING SWITCH
RIGHT STEERING SWITCH
STEERING CONTROL MODULE (SCM)

Diagnostic Test

1. DTC STATUS IS ACTIVE

NOTE: If U1109–LOST COMMUNICATION WITH LIN STEERING WHEEL CONTROLS is set along with this DTC, diagnose the communication DTC first.

NOTE: If P0562–BATTERY VOLTAGE LOW or P0563–BATTERY VOLTAGE HIGH is set along with this DTC, diagnose the battery voltage DTC first.

Ignition on, engine not running.

With the Scan Tool, select View DTCs in the Steering Control Module.

Is the DTC status Active at this time?

Yes >> Go to 2

No >> Go to 7

2. (G106) EVIC MUX SIGNAL 1 CIRCUIT SHORT TO (G907) EVIC/NAV MUX RETURN CIRCUIT

Turn the ignition off.

Remove the Driver Airbag in accordance with the Service Information.

Disconnect the Left Steering Switch harness connector.

Disconnect the Right Steering Switch harness connector.

NOTE: Before proceeding, thoroughly inspect the wiring harness and connectors between the Left Steering Switch and the Right Steering Switch for a short to ground or any other circuit.

Measure the resistance between the (G106) EVIC Mux Signal 1 circuit and the (G907) EVIC/NAV Mux Return circuit.

Is the resistance below 5.0 ohms?

Yes >> Repair the (G106) EVIC Mux Signal 1 circuit for a short to the (G907) EVIC/NAV Mux Return circuit.

No >> Go to 3

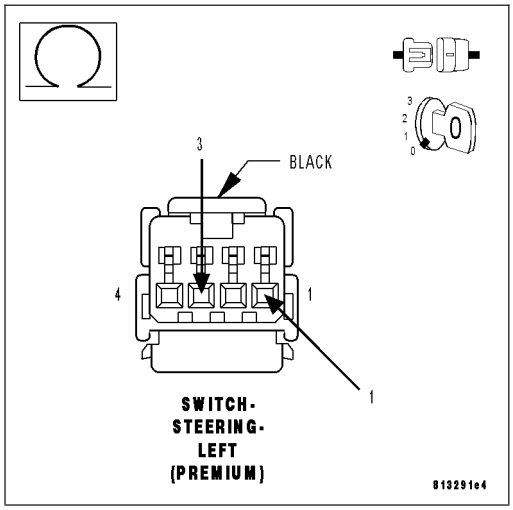

3. (G106) EVIC MUX SIGNAL 1 CIRCUIT SHORT TO GROUND

NOTE: Before proceeding, thoroughly inspect the wiring harness and connectors between the Left Steering Switch and the Right Steering Switch for a short to ground or any other circuit.

Measure the resistance between the (G106) EVIC Mux Signal 1 circuit and ground.

Is the resistance below 5.0 ohms?

Yes >> Repair the (G106) EVIC Mux Signal 1 circuit for a short to ground.

No >> Go to 4

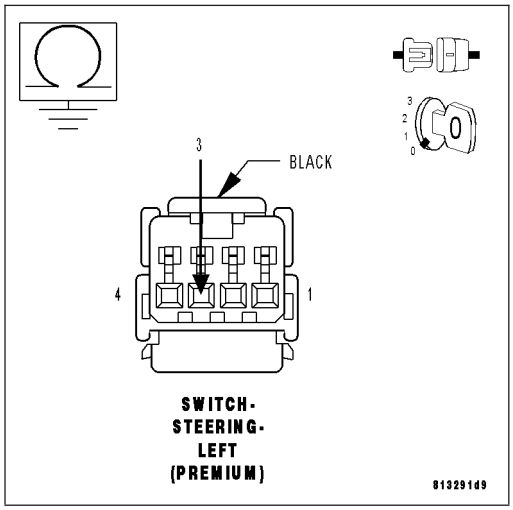

4. LEFT STEERING SWITCH

Reconnect the Left Steering Switch harness connector.

Measure the resistance between the (G106) EVIC Mux Signal 1 circuit and the (G907) EVIC/NAV Mux Return circuit at the Right Steering Switch harness connector.

Is the resistance approximately 10 K ohms (+/- 10%)?

Yes >> Replace the Left Steering Switch in accordance with the Service Information.

No >> Go to 5

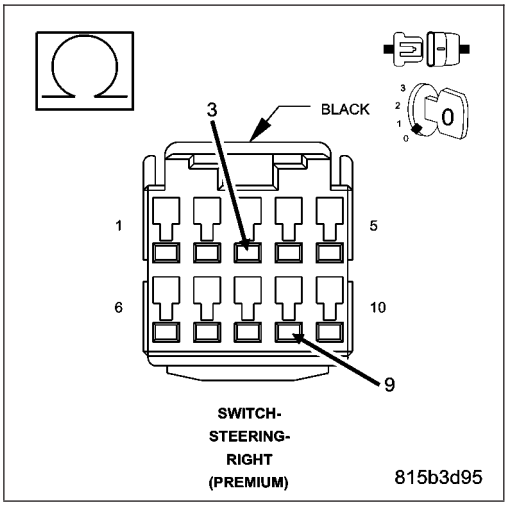

5. RIGHT STEERING SWITCH

Replace the Right Steering Switch in accordance with the Service Information.

Reconnect the C206 (LIN Bus) connector.

Turn the ignition on.

Press and release the Down Switch several times.

With the scan tool, Clear Stored DTCs in the Steering Control Module.

With the scan tool, select Data Display and view the Down switch data.

While monitoring the Down switch data, press and release the Down Switch several times.

Does the Down switch data change from Set to Not Set as the switch is pressed and released?

Yes >> Test complete.

No >> Go to 6

6. STEERING CONTROL MODULE (SCM)

View repair.

Repair

Replace the Steering Control Module (SCM) in accordance with the Service Information.

7. INTERMITTENT STEERING WHEEL CONTROL DOWN SWITCH CIRCUIT DTC

The conditions necessary to set this DTC are not present at this time.
Using the wiring diagram/schematic as a guide, inspect the wiring and connectors.
While monitoring the scan tool data relative to this circuit, wiggle test the wiring and connectors.
Look for the data to change or for the DTC to reset during the wiggle test.

Were any problems found?

Yes >> Repair as necessary.

No >> Test complete.

B148D-STEERING WHEEL CONTROL SIDE SWITCH CIRCUIT

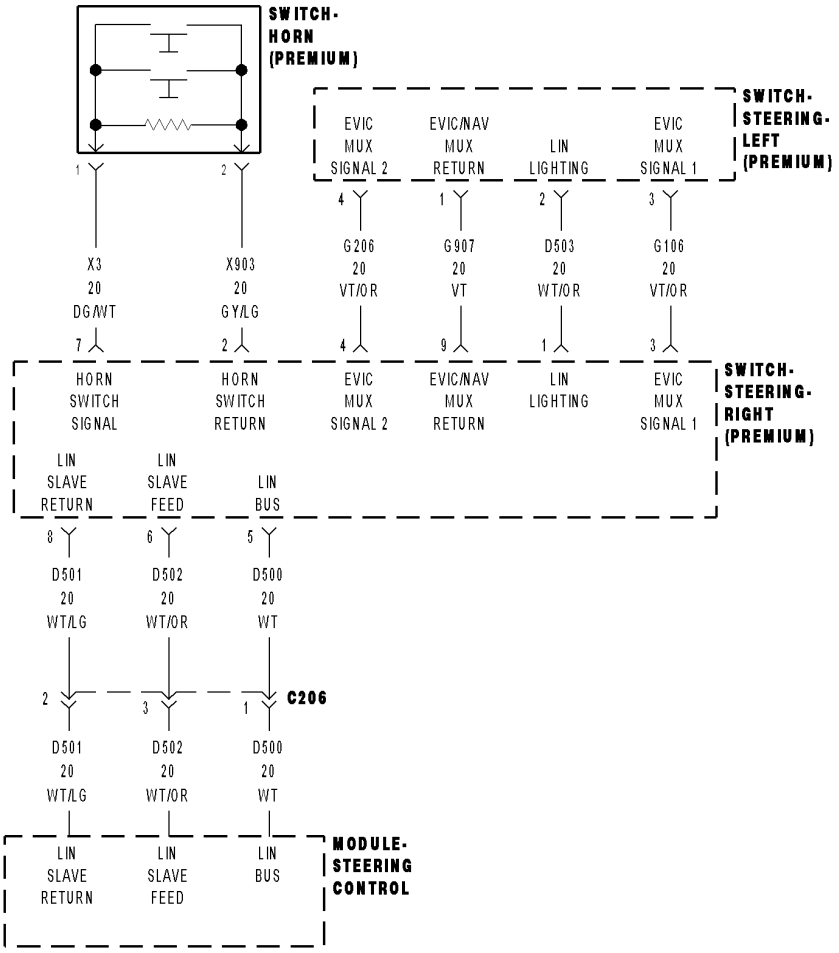

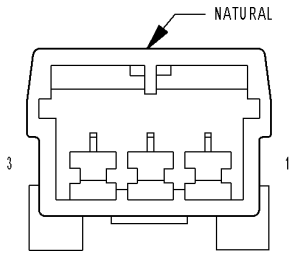

C206

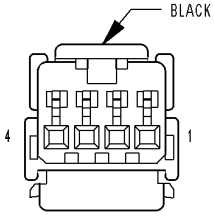

SWITCH-
STEERING-
LEFT
(PREMIUM)

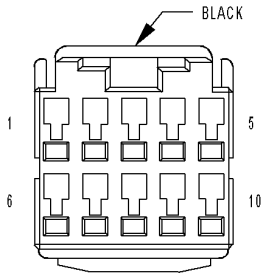

SWITCH-
STEERING-
RIGHT
(PREMIUM)

81329165

For a complete wiring diagram **Refer to Section 8W**.

Theory of Operation

The Steering Wheel Control Side Switch, when pressed, sends a multiplexed signal to the Right Steering Switch. The switching status is transferred to the Steering Control Module (SCM) by way of the LIN bus, a serial sub-bus. The SCM converts the data to CAN(B) and sends the message to the corresponding module on the bus.

- **When Monitored:**
  Continuously with the ignition on.
- **Set Condition:**
  The Steering Control Module senses that the Steering Wheel Control Side Switch is in the Set position for greater than 50 seconds.

Possible Causes
INTERMITTENT STEERING WHEEL CONTROL SIDE SWITCH CIRCUIT DTC
(G206) EVIC MUX SIGNAL 2 CIRCUIT SHORT TO (G907) EVIC/NAV MUX RETURN CIRCUIT
(G206) EVIC MUX SIGNAL 2 CIRCUIT SHORT TO GROUND
LEFT STEERING SWITCH
RIGHT STEERING SWITCH
STEERING CONTROL MODULE (SCM)

Diagnostic Test

1. DTC STATUS IS ACTIVE

NOTE: If U1109–LOST COMMUNICATION WITH LIN STEERING WHEEL CONTROLS is set along with this DTC, diagnose the communication DTC first.

NOTE: If P0562–BATTERY VOLTAGE LOW or P0563–BATTERY VOLTAGE HIGH is set along with this DTC, diagnose the battery voltage DTC first.

Ignition on, engine not running.

With the Scan Tool, select View DTCs in the Steering Control Module.

Is the DTC status Active at this time?

Yes >> Go to 2

No >> Go to 7

2. (G206) EVIC MUX SIGNAL 1 CIRCUIT SHORT TO (G907) EVIC/NAV MUX RETURN CIRCUIT

Turn the ignition off.

Remove the Driver Airbag in accordance with the Service Information.

Disconnect the Left Steering Switch harness connector.

Disconnect the Right Steering Switch harness connector.

NOTE: Before proceeding, thoroughly inspect the wiring harness and connectors between the Left Steering Switch and the Right Steering Switch for a short to ground or any other circuit.

Measure the resistance between the (G206) EVIC Mux Signal 1 circuit and the (G907) EVIC/NAV Mux Return circuit.

Is the resistance below 5.0 ohms?

Yes >> Repair the (G206) EVIC Mux Signal 1 circuit for a short to the (G907) EVIC/NAV Mux Return circuit.

No >> Go to 3

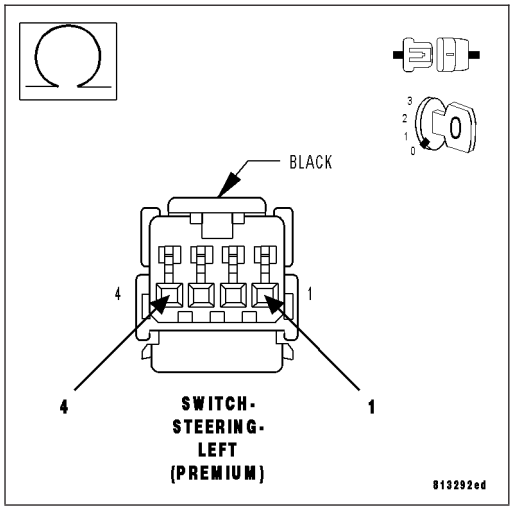

3. (G206) EVIC MUX SIGNAL 1 CIRCUIT SHORT TO GROUND

NOTE: Before proceeding, thoroughly inspect the wiring harness and connectors between the Left Steering Switch and the Right Steering Switch for a short to ground or any other circuit.

Measure the resistance between the (G206) EVIC Mux Signal 1 circuit and ground.

Is the resistance below 5.0 ohms?

Yes >> Repair the (G206) EVIC Mux Signal 1 circuit for a short to ground.

No >> Go to 4

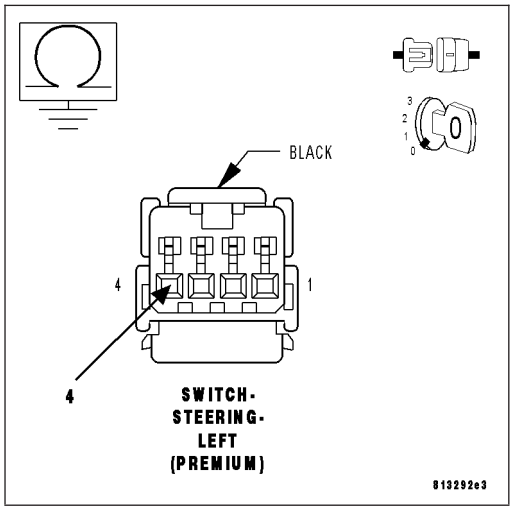

4. LEFT STEERING SWITCH

Reconnect the Left Steering Switch harness connector.

Measure the resistance between the (G206) EVIC Mux Signal 1 circuit and the (G907) EVIC/NAV Mux Return circuit at the Right Steering Switch harness connector.

Is the resistance approximately .5 ohms (+/- 1 ohm)?

Yes >> Replace the Left Steering Switch in accordance with the Service Information.

No >> Go to 5

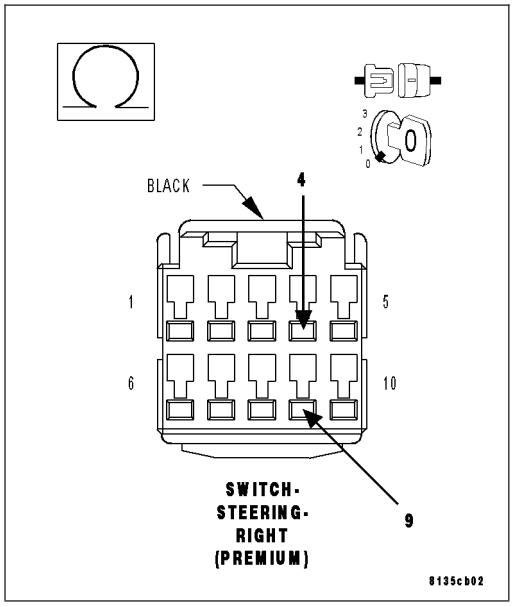

5. RIGHT STEERING SWITCH

Replace the Right Steering Switch in accordance with the Service Information.

Reconnect the C206 (LIN Bus) connector.

Turn the ignition on.

Press and release the Side Switch several times.

With the scan tool, Clear Stored DTCs in the Steering Control Module.

With the scan tool, select Data Display and view the Side switch data.

While monitoring the Side switch data, press and release the Side Switch several times.

Does the Side switch data change from Set to Not Set as the switch is pressed and released?

Yes >> Test complete.

No >> Go to 6

6. STEERING CONTROL MODULE (SCM)

View repair.

Repair

Replace the Steering Control Module (SCM) in accordance with the Service Information.

7. INTERMITTENT STEERING WHEEL CONTROL SIDE SWITCH CIRCUIT DTC

The conditions necessary to set this DTC are not present at this time.
Using the wiring diagram/schematic as a guide, inspect the wiring and connectors.
While monitoring the scan tool data relative to this circuit, wiggle test the wiring and connectors.
Look for the data to change or for the DTC to reset during the wiggle test.

Were any problems found?

Yes >> Repair as necessary.

No >> Test complete.

B148E-STEERING WHEEL CONTROL [+] SWITCH CIRCUIT

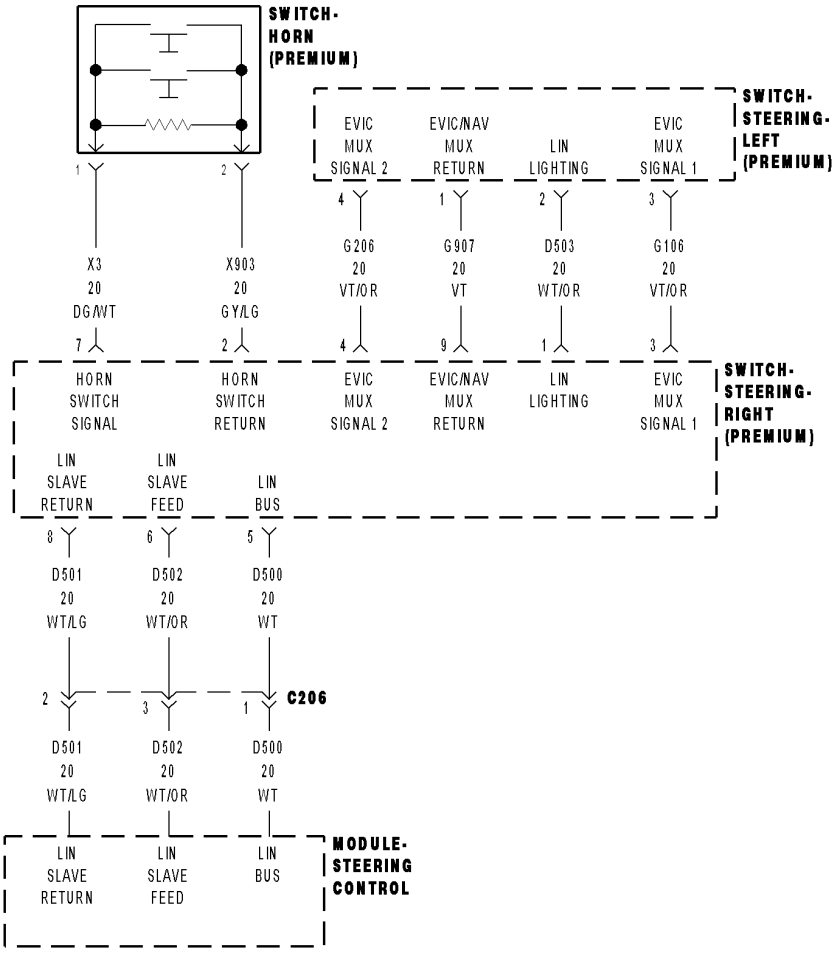

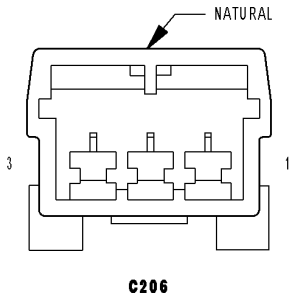

C206

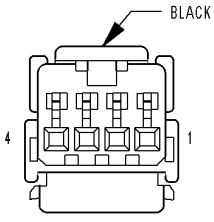

SWITCH-
STEERING-
LEFT
(PREMIUM)

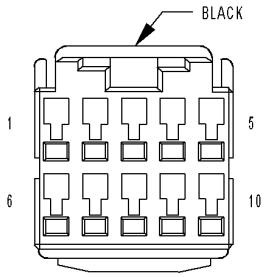

SWITCH-
STEERING-
RIGHT
(PREMIUM)

81329165

For a complete wiring diagram **Refer to Section 8W**.

Theory of Operation

The Steering Wheel Control Plus (+) Switch is part of the Right Steering Switch. The switching status is transferred to the Steering Control Module (SCM) by way of the LIN bus, a serial sub-bus. The SCM converts the data to CAN(B) and sends the message to the corresponding module on the bus.

- **When Monitored:**
  Continuously with the ignition on.
- **Set Condition:**
  The Steering Control Module senses that the Steering Wheel Control Plus (+) Switch is in the Set position for greater than 50 seconds.

Possible Causes
INTERMITTENT STEERING WHEEL CONTROL [+] SWITCH CIRCUIT DTC
RIGHT STEERING SWITCH
STEERING CONTROL MODULE (SCM)

Diagnostic Test

1. DTC IS ACTIVE

NOTE: If U1109–LOST COMMUNICATION WITH LIN STEERING WHEEL CONTROLS is set along with this DTC, diagnose the communication DTC first.

NOTE: If P0562–BATTERY VOLTAGE LOW or P0563–BATTERY VOLTAGE HIGH is set along with this DTC, diagnose the battery voltage DTC first.

Ignition on, engine not running.

With the Scan Tool, select View DTCs in the Steering Control Module.

Is the DTC status Active at this time?

Yes >> Go to 2

No >> Go to 4

2. RIGHT STEERING SWITCH

Turn the ignition off.

Replace the Right Steering Switch in accordance with the Service Information.

Turn the ignition on.

Press and release the Plus (+) Switch several times.

With the Scan Tool, Clear Stored DTCs in the Steering Control Module.

With the Scan Tool, select Data Display and view the Plus (+) switch data.

While monitoring the Plus (+) switch data, press and release the Plus (+) Switch several times.

Does the Plus (+) switch data change from Set to Not Set when the switch is pressed and released?

Yes >> Test complete.

No >> Go to 3

3. STEERING CONTROL MODULE (SCM)

View repair.

Repair

Replace the Steering Control Module (SCM) in accordance with the Service Information.

4. INTERMITTENT STEERING WHEEL CONTROL [+] SWITCH CIRCUIT DTC

The conditions necessary to set this DTC are not present at this time.
Using the wiring diagram/schematic as a guide, inspect the wiring and connectors.
While monitoring the scan tool data relative to this circuit, wiggle test the wiring and connectors.
Look for the data to change or for the DTC to reset during the wiggle test.

Were any problems found?

Yes >> Repair as necessary.

No >> Test complete.

B148F-STEERING WHEEL CONTROL [-] SWITCH CIRCUIT

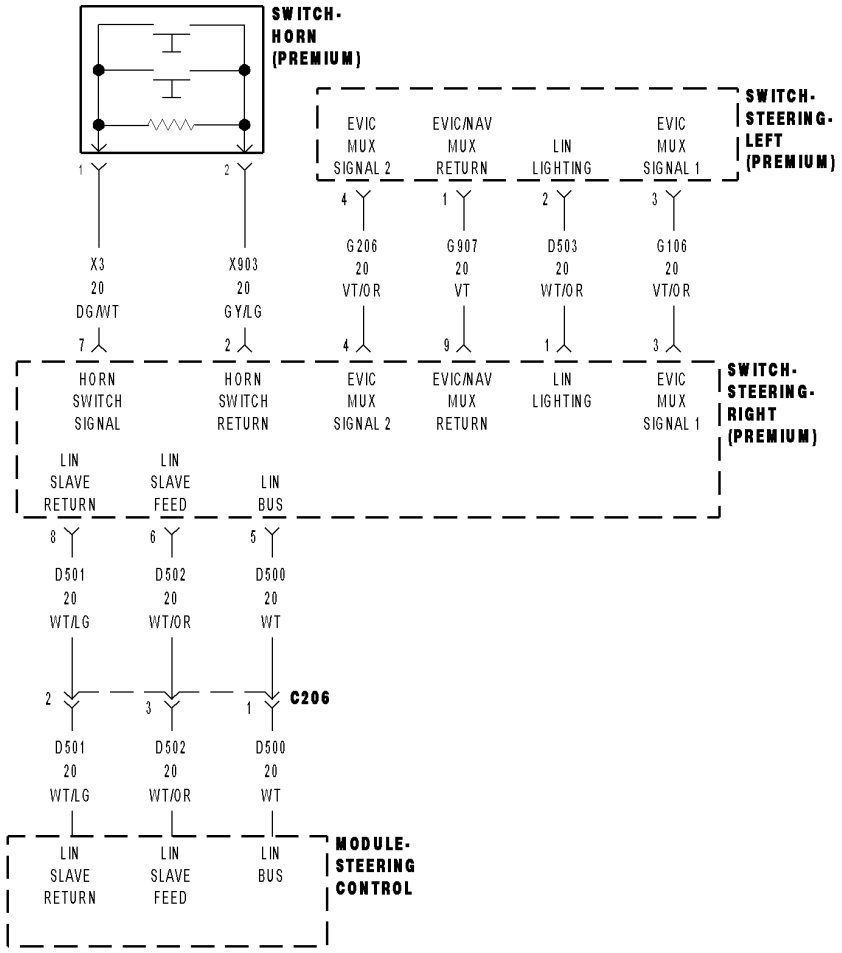

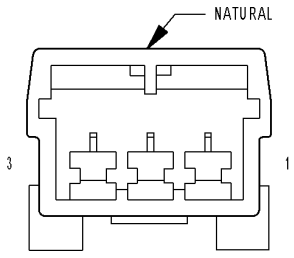

C206

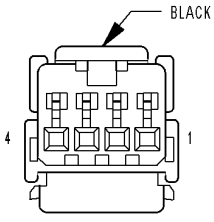

SWITCH-
STEERING-
LEFT
(PREMIUM)

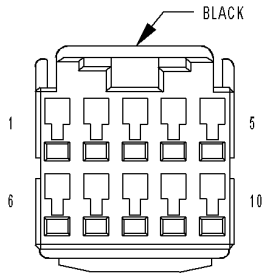

SWITCH-
STEERING-
RIGHT
(PREMIUM)

81329165

For a complete wiring diagram **Refer to Section 8W**.

Theory of Operation

The Steering Wheel Control Minus (-) Switch is part of the Right Steering Switch. The switching status is transferred to the Steering Control Module (SCM) by way of the LIN bus, a serial sub-bus. The SCM converts the data to CAN(B) and sends the message to the corresponding module on the bus.

- **When Monitored:**
  Continuously with the ignition on.
- **Set Condition:**
  The Steering Control Module senses that the Steering Wheel Control Minus (-) Switch is in the Set position for greater than 50 seconds.

Possible Causes
INTERMITTENT STEERING WHEEL CONTROL [-] SWITCH CIRCUIT DTC
RIGHT STEERING SWITCH
STEERING CONTROL MODULE (SCM)

Diagnostic Test

1. DTC IS ACTIVE

NOTE: If U1109–LOST COMMUNICATION WITH LIN STEERING WHEEL CONTROLS is set along with this DTC, diagnose the communication DTC first.

NOTE: If P0562–BATTERY VOLTAGE LOW or P0563–BATTERY VOLTAGE HIGH is set along with this DTC, diagnose the battery voltage DTC first.

Ignition on, engine not running.

With the Scan Tool, select View DTCs in the Steering Control Module.

Is the DTC status Active at this time?

Yes >> Go to 2

No >> Go to 4

2. RIGHT STEERING SWITCH

Turn the ignition off.

Replace the Right Steering Switch in accordance with the Service Information.

Turn the ignition on.

Press and release the Minus (-) Switch several times.

With the Scan Tool, Clear Stored DTCs in the Steering Control Module.

With the Scan Tool, select Data Display and view the Minus (-) switch data.

While monitoring the Minus (-) switch data, press and release the Minus (-) Switch several times.

Does the Minus (-) switch data change from Set to Not Set when the switch is pressed and released?

Yes >> Test complete.

No >> Go to 3

3. STEERING CONTROL MODULE (SCM)

View repair.

Repair

Replace the Steering Control Module (SCM) in accordance with the Service Information.

4. INTERMITTENT STEERING WHEEL CONTROL [-] SWITCH CIRCUIT DTC

The conditions necessary to set this DTC are not present at this time.
Using the wiring diagram/schematic as a guide, inspect the wiring and connectors.
While monitoring the scan tool data relative to this circuit, wiggle test the wiring and connectors.
Look for the data to change or for the DTC to reset during the wiggle test.

Were any problems found?

Yes >> Repair as necessary.

No >> Test complete.

B1490-STEERING WHEEL CONTROL C/T SWITCH CIRCUIT

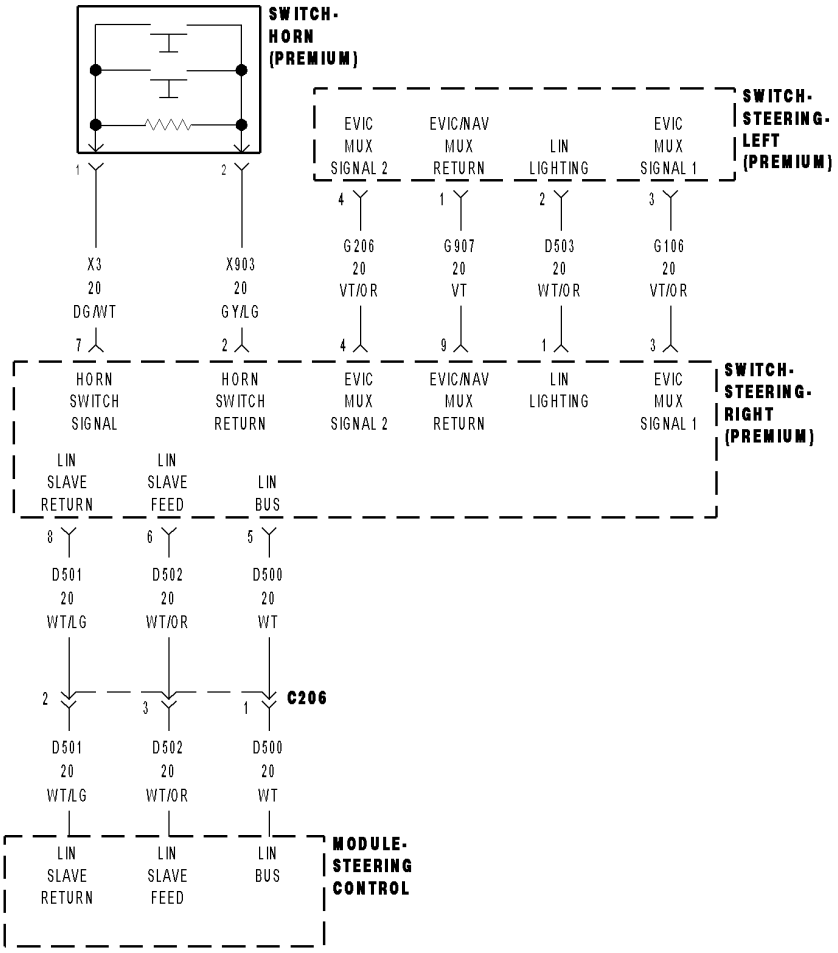

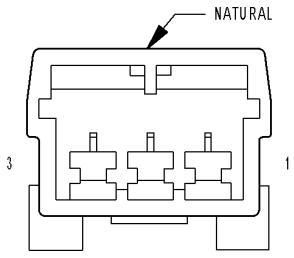

C206

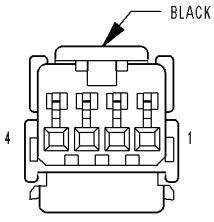

SWITCH-
STEERING-
LEFT
(PREMIUM)

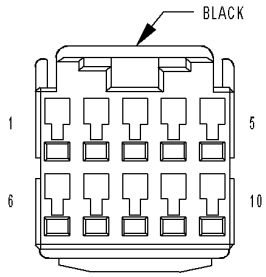

SWITCH-
STEERING-
RIGHT
(PREMIUM)

81329165

For a complete wiring diagram **Refer to Section 8W**.

Theory of Operation

The Steering Wheel Control Compass/Temperature Switch is part of the Right Steering Switch. The switching status is transferred to the Steering Control Module (SCM) by way of the LIN bus, a serial sub-bus. The SCM converts the data to CAN(B) and sends the message to the corresponding module on the bus.

- **When Monitored:**
  Continuously with the ignition on.
- **Set Condition:**
  The Steering Control Module senses that the Steering Wheel Control Compass/Temperature Switch is in the Set position for greater than 50 seconds.

Possible Causes
INTERMITTENT STEERING WHEEL CONTROL C/T SWITCH CIRCUIT DTC
RIGHT STEERING SWITCH
STEERING CONTROL MODULE (SCM)

Diagnostic Test

1. DTC IS ACTIVE

NOTE: If U1109–LOST COMMUNICATION WITH LIN STEERING WHEEL CONTROLS is set along with this DTC, diagnose the communication DTC first.

NOTE: If P0562–BATTERY VOLTAGE LOW or P0563–BATTERY VOLTAGE HIGH is set along with this DTC, diagnose the battery voltage DTC first.

Ignition on, engine not running.

With the Scan Tool, select View DTCs in the Steering Control Module.

Is the DTC status Active at this time?

Yes >> Go to 2

No >> Go to 4

2. RIGHT STEERING SWITCH

Turn the ignition off.

Replace the Right Steering Switch in accordance with the Service Information.

Turn the ignition on.

With the Scan Tool, Clear Stored DTCs in the Steering Control Module.

With the Scan Tool, select Data Display and view the Compass/Temperature switch data.

While monitoring the Compass/Temperature switch data, press and release the Compass/Temperature Switch several times.

Does the Compass/Temperature switch data change from Set to Not Set when the switch is pressed and released?

Yes >> Test complete.

No >> Go to 3

3. STEERING CONTROL MODULE (SCM)

View repair.

Repair

Replace the Steering Control Module (SCM) in accordance with the Service Information.

4. INTERMITTENT STEERING WHEEL CONTROL C/T SWITCH CIRCUIT DTC

The conditions necessary to set this DTC are not present at this time.
Using the wiring diagram/schematic as a guide, inspect the wiring and connectors.
While monitoring the scan tool data relative to this circuit, wiggle test the wiring and connectors.
Look for the data to change or for the DTC to reset during the wiggle test.

Were any problems found?

Yes >> Repair as necessary.

No >> Test complete.

B1DA0–STEERING COLUMN TILT SWITCH CIRCUIT STUCK

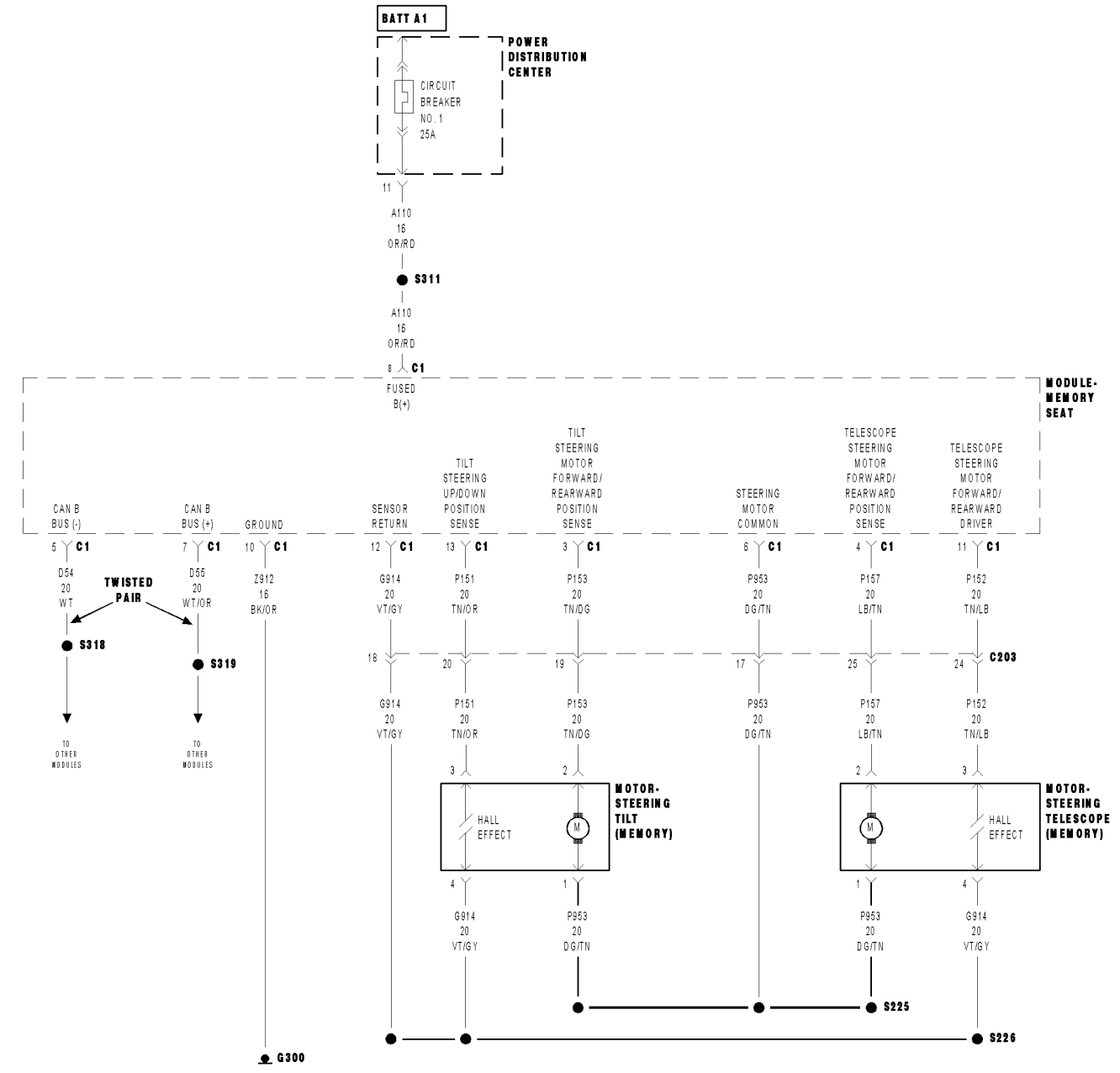

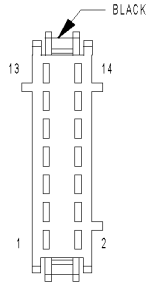

MODULE-MEMORY SEAT C1

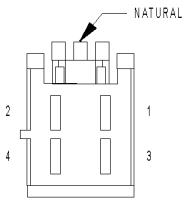

MOTOR-STEERING TELESCOPE (MEMORY)

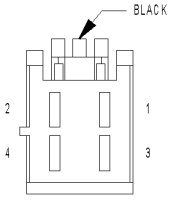

MOTOR-STEERING TILT (MEMORY)

81365b2f

For a complete wiring diagram **Refer to Section 8W**.

- **When Monitored:**
  Continuously with the ignition on.
- **Set Condition:**
  The Steering Control Module senses that the Steering Column Tilt Switch is in the Set position for greater than 50 seconds.

Possible Causes
INTERMITTENT STEERING COLUMN TILT SWITCH CIRCUIT STUCK DTC
STEERING COLUMN TILT/TELESCOPE SWITCH
STEERING CONTROL MODULE (SCM)

Diagnostic Test

1. DTC IS ACTIVE

NOTE: If P0562–BATTERY VOLTAGE LOW or P0563–BATTERY VOLTAGE HIGH is set along with this DTC, diagnose the battery voltage DTC first.
Ignition on, engine not running.
With the Scan Tool, select View DTCs in the Steering Control Module.

Is the DTC status Active at this time?

Yes >> Go to 2
No >> Go to 4

2. STEERING COLUMN TILT/TELESCOPE SWITCH

Turn the ignition off.
Replace the Steering Column Tilt/Telescope Switch in accordance with the Service Information.
Turn the ignition on.
Move the Steering column tilt switch to the up and down positions several times.
With the Scan Tool, Clear Stored DTCs in the Steering Control Module.
With the Scan Tool, select Data Display and view the Steering column up and the Steering column down switch data.
While monitoring the Steering column up and the Steering column down switch data, move the Steering column tilt switch to the up and down positions several times.

Does the Steering column switch data change from Set to Not Set as the switch is moved to each position?

Yes >> Test complete.
No >> Go to 3

3. STEERING CONTROL MODULE (SCM)

View repair.

Repair

Replace the Steering Control Module (SCM) in accordance with the Service Information.

4. INTERMITTENT STEERING COLUMN TILT SWITCH CIRCUIT STUCK DTC

The conditions necessary to set this DTC are not present at this time.

While monitoring the scan tool data relative to this circuit, wiggle test the component and connectors and move the switch to each position.

Look for the data to change other than as expected or for the DTC to reset during the test.

Were any problems found?

Yes >> Repair as necessary.

No >> Test complete.

B1DA5–STEERING COLUMN TELESCOPE SWITCH CIRCUIT STUCK

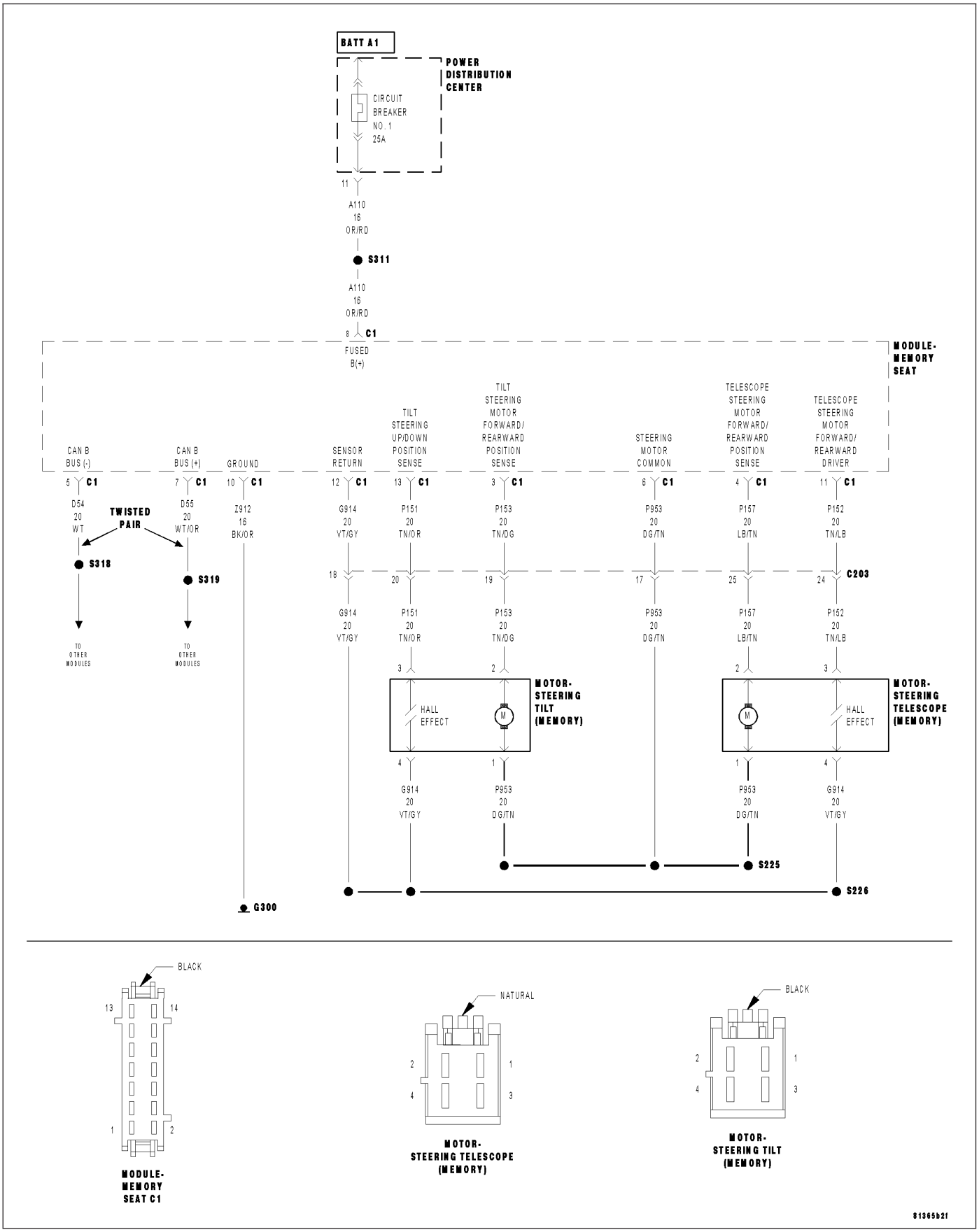

For a complete wiring diagram **Refer to Section 8W**.

- **When Monitored:**
  Continuously with the ignition on.
- **Set Condition:**
  The Steering Control Module senses that the Steering Column Telescope Switch is in the Set position for greater than 50 seconds.

Possible Causes
INTERMITTENT STEERING COLUMN TELESCOPE SWITCH CIRCUIT STUCK DTC
STEERING COLUMN TILT/TELESCOPE SWITCH
STEERING CONTROL MODULE (SCM)

Diagnostic Test

1. DTC IS ACTIVE

NOTE: If P0562–BATTERY VOLTAGE LOW or P0563–BATTERY VOLTAGE HIGH is set along with this DTC, diagnose the battery voltage DTC first.
Ignition on, engine not running.
With the Scan Tool, select View DTCs in the Steering Control Module.

Is the DTC status Active at this time?

Yes >> Go to 2
No >> Go to 4

2. STEERING COLUMN TILT/TELESCOPE SWITCH

Turn the ignition off.
Replace the Steering Column Tilt/Telescope Switch in accordance with the Service Information.
Turn the ignition on.
Move the Steering column telescope switch forward and back several times.
With the Scan Tool, Clear Stored DTCs in the Steering Control Module.
With the Scan Tool, select Data Display and view the Steering column forward and Steering column back switch data.
While monitoring the Steering column forward and Steering column back switch data, move the Steering column telescope switch forward and back several times.

Does the Steering column switch data change from Set to Not Set as the switch is moved to each position?

Yes >> Test complete.
No >> Go to 3

3. STEERING CONTROL MODULE

View repair.

Repair

Replace the Steering Control Module (SCM) in accordance with the Service Information.

4. INTERMITTENT STEERING COLUMN TELESCOPE SWITCH CIRCUIT STUCK DTC

The conditions necessary to set this DTC are not present at this time.

While monitoring the scan tool data relative to this circuit, wiggle test the component and connectors and move the switch to each position.

Look for the data to change other than as expected or for the DTC to reset during the test.

Were any problems found?

Yes >> Repair as necessary.

No >> Test complete.

B1D8D-STEERING COLUMN TELESCOPE POSITION SENSOR CIRCUIT LOW

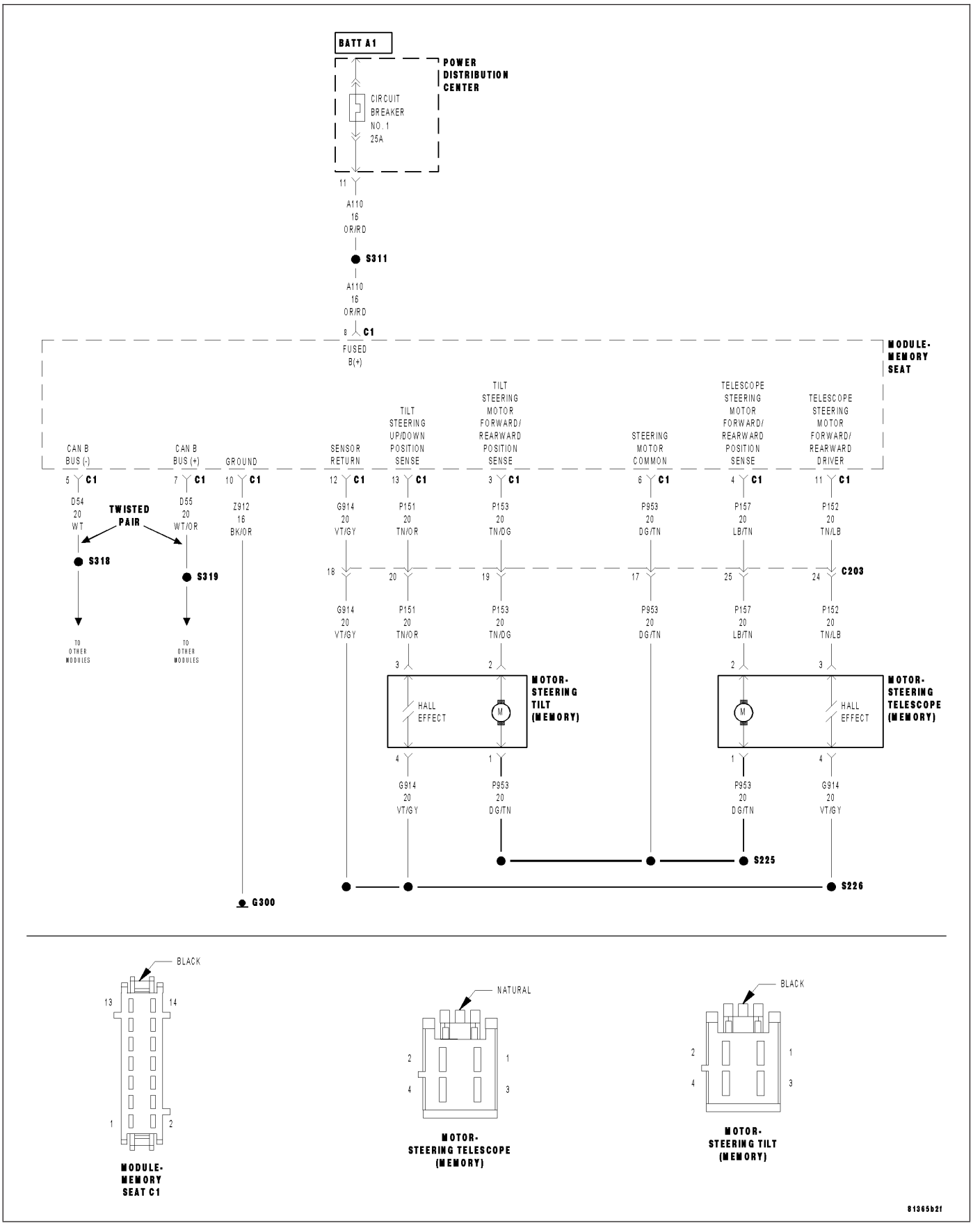

For a complete wiring diagram **Refer to Section 8W**.

Theory of Operation

The MSM input signal from the Steering Column Telescope Sensor is recognized in a specified voltage area. The input channel is an analog to digital converter input and the sensor is a hall sensor.

- **When Monitored:**
  The hall supply voltage is switched on when the motor becomes activated.
- **Set Condition:**
  The sensed input is less than 1.7 volts (at the controller input, not at the module input) for more than 14 mS

Possible Causes
INTERMITTENT STEERING COLUMN TELESCOPE POSITION SENSOR CIRCUIT LOW DTC
(P152) TELESCOPE STEERING FORWARD/REARWARD POSITION SENSE CIRCUIT SHORT TO GROUND
STEERING COLUMN TELESCOPE MOTOR
MEMORY SEAT MODULE (MSM)

Diagnostic Test

1. DTC IS ACTIVE

Ignition on, engine not running.

With the Scan Tool, select Clear Stored DTCs in the Memory Seat Module.

Move the Steering Column Telescope Switch to the Forward and Rearward positions several times, holding the switch in position for at least 2 seconds each time.

With the Scan Tool, select View DTCs in the Memory Seat Module.

Does the DTC reset and/or remain active?

Yes >> Go to 2

No >> Go to 6

2. CHECK DTC WITH HARNESS DISCONNECTED

Turn the ignition off.

Disconnect the Steering Column Telescope Motor connector.

Turn the ignition on.

Move the Steering Column Telescope Switch to the Forward and Rearward positions several times.

With the Scan Tool, select Clear Stored DTCs in the Memory Seat Module.

Move the Steering Column Telescope Switch to the Forward and Rearward positions several times, holding the switch in position for at least 2 seconds each time.

With the Scan Tool, select View DTCs in the Memory Seat Module.

Does the DTC reset and/or remain active?

Yes >> Go to 4

No >> Go to 3

3. STEERING COLUMN TELESCOPE MOTOR

View repair.

Repair

Inspect the wiring between the Steering Column Telescope Motor and the harness connector (on the motor side) for a short to ground or to any other circuit. If any problems are found, repair as necessary. If no problems are found, replace the Steering Column Telescope Motor in accordance with the Service Information.

4. (P152) TELESCOPE STEERING FORWARD/REARWARD POSITION SENSE CIRCUIT SHORT TO GROUND

Turn the ignition off.

Disconnect the Memory Seat Module (MSM) C1 connector.

Measure the resistance between ground and the (P152) Telescope Steering Forward/Rearward Position Sense circuit at the Steering Column Telescope Motor connector (harness side).

Is the resistance below 5.0 ohms?

Yes >> Repair the (P152) Telescope Steering Forward/Rearward Position Sense circuit for a short to ground.

No >> Go to 5

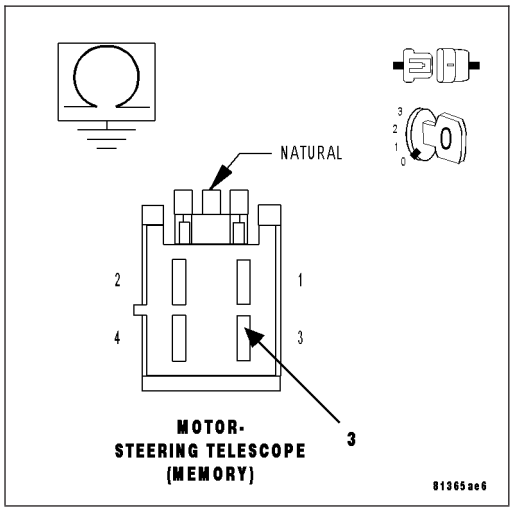

5. MEMORY SEAT MODULE (MSM)

Inspect the wiring between the Memory Seat Module harness connector and the Steering Column Telescope Motor harness connector for a short to ground or to any other circuit. If any problems are found, repair as necessary. If no problems are found, view repair.

Repair

Replace the Memory Seat Module (MSM) in accordance with the Service Information.

6. INTERMITTENT STEERING COLUMN TELESCOPE POSITION SENSOR CIRCUIT LOW DTC

The conditions necessary to set this DTC are not present at this time.

While monitoring the scan tool data relative to this circuit, wiggle test the component and connectors and move the switch to each position.

Look for the data to change other than as expected or for the DTC to reset during the wiggle test.

Were any problems found?

Yes >> Repair as necessary.

No >> Test complete.

B1D8E–STEERING COLUMN TELESCOPE POSITION SENSOR CIRCUIT HIGH

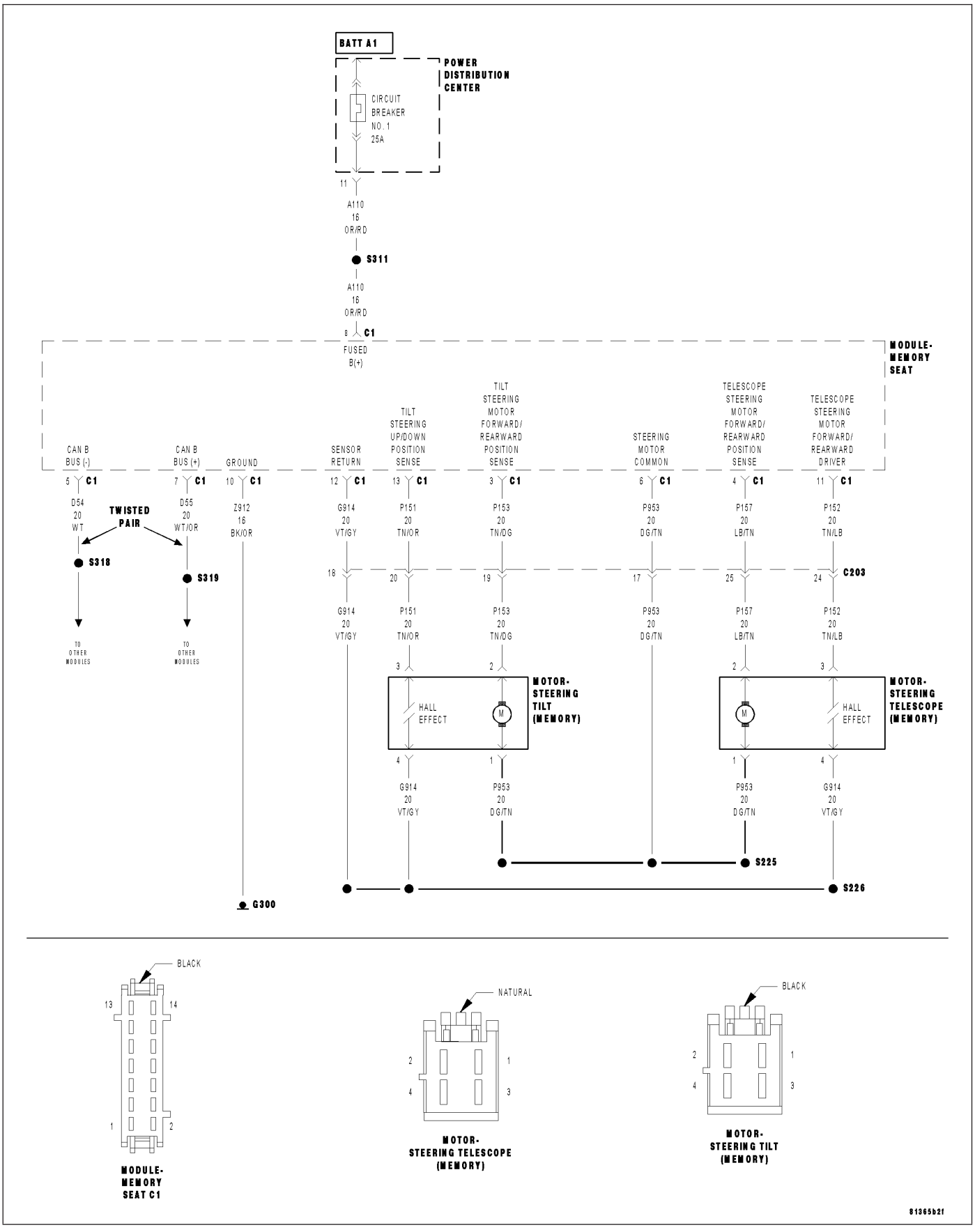

For a complete wiring diagram **Refer to Section 8W**.

Theory of Operation

The MSM input signal from the Steering Column Telescope Sensor is recognized in a specified voltage area. The input channel is an analog to digital converter input and the sensor is a hall sensor.

- **When Monitored:**
  The hall supply voltage is switched on when the motor becomes activated.
- **Set Condition:**
  The sensed input is recognized in a defined voltage area (between 3.7 and 5.0 volts at the controller input, not at the module input) for more than 14 mS

Possible Causes
INTERMITTENT STEERING COLUMN TELESCOPE POSITION SENSOR CIRCUIT HIGH DTC
(P152) TELESCOPE STEERING FORWARD/REARWARD POSITION SENSE CIRCUIT OPEN
(P152) TELESCOPE STEERING FORWARD/REARWARD POSITION SENSE CIRCUIT SHORT TO VOLTAGE
(P152) TELESCOPE STEERING FORWARD/REARWARD POSITION SENSE CIRCUIT SHORT TO TILT/ TELESCOPE MOTOR CIRCUIT(S)
(G914) SENSOR RETURN CIRCUIT OPEN
(G914) SENSOR RETURN CIRCUIT SHORT TO VOLTAGE
STEERING COLUMN TELESCOPE MOTOR
MEMORY SEAT MODULE (MSM)

Diagnostic Test

1. DTC IS ACTIVE

Ignition on, engine not running.

With the Scan Tool, select Clear Stored DTCs in the Memory Seat Module.

Move the Steering Column Telescope Switch to the Forward and Rearward positions several times, holding the switch in position for at least 2 seconds each time.

With the Scan Tool, select View DTCs in the Memory Seat Module.

Does this DTC reset and/or remain active?

Yes >> Go to 2

No >> Go to 10

2. CHECK DTC WITH HARNESS DISCONNECTED

Turn the ignition off.

Disconnect the Steering Telescope Motor harness connector.

Ignition on, engine not running.

Move the Steering Column Telescope Switch to the Forward and Rearward positions several times.

With the Scan Tool, select Clear Stored DTCs in the Memory Seat Module.

Move the Steering Column Telescope Switch to the Forward and Rearward positions several times, holding the switch in position for at least 2 seconds each time.

With the Scan Tool, select View DTCs in the Memory Seat Module.

Does this DTC reset and/or remain active?

Yes >> Go to 3

No >> Go to 8

3. (P152) TELESCOPE STEERING FORWARD/REARWARD POSITION SENSE CIRCUIT OPEN

Turn the ignition off.

Disconnect the Memory Seat Module (MSM) C1 connector.

Measure the resistance of the (P152) Telescope Steering Forward/Rearward Position Sense circuit.

Is the resistance above 5.0 ohms?

Yes >> Repair the (P152) Telescope Steering Forward/Rearward Position Sense circuit for an open.

No >> Go to 4

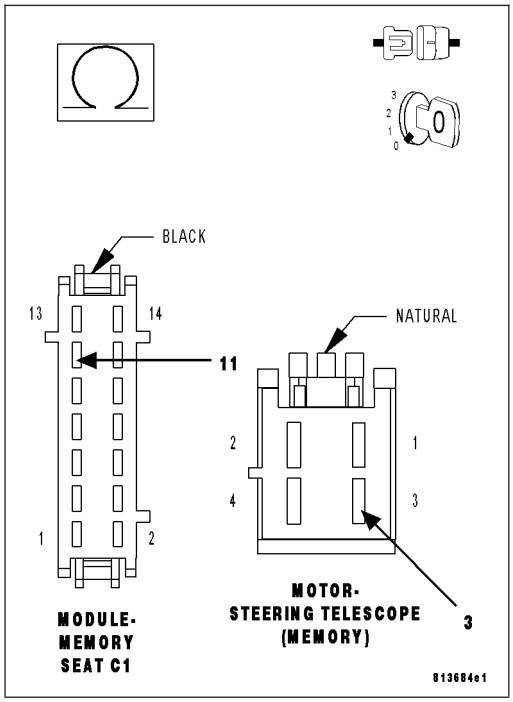

4. (P152) TELESCOPE STEERING FORWARD/REARWARD POSITION SENSE CIRCUIT SHORT TO VOLTAGE

Turn the ignition on.

Measure the voltage of the (P152) Telescope Steering Forward/Rearward Position Sense circuit.

Is there any voltage present?

Yes >> Repair the (P152) Telescope Steering Forward/Rearward Position Sense circuit for a short to voltage.

No >> Go to 5

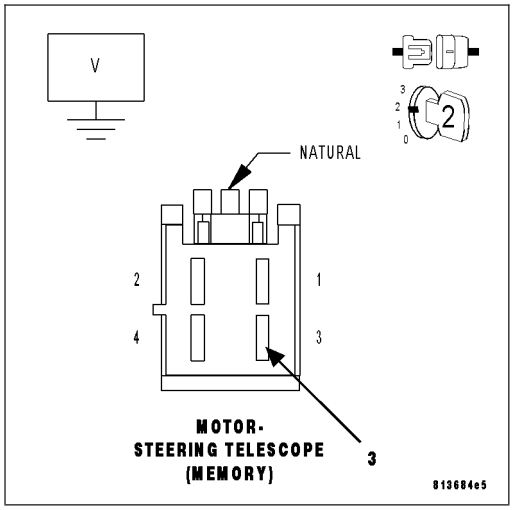

5. (P152) TELESCOPE STEERING FORWARD/REARWARD POSITION SENSE CIRCUIT SHORT TO TILT/ TELESCOPE MOTOR CIRCUIT(S)

Turn the ignition off.

Measure the resistance between the following circuits at the Memory Seat Module (MSM) C1 connector :

- The (P152) Telescope Steering Forward/Rearward Position Sense circuit and the (P157) Telescope Steering Motor Forward/Rearward Driver circuit.
- The (P152) Telescope Steering Forward/Rearward Position Sense circuit and the (P153) Tilt Steering Motor Up/Down Driver circuit.
- The (P152) Telescope Steering Forward/Rearward Position Sense circuit and the (P953) Steering Motor Common circuit.

Is the resistance below 5.0 ohms for any of the circuit tests?

Yes >> Repair the (P152) Telescope Steering Forward/Rearward Position Sense circuit for a short to the motor circuit(s).

No >> Go to 6

6. (G914) SENSOR RETURN CIRCUIT OPEN

Measure the resistance of the (G914) Sensor Return circuit.

Is the resistance above 5.0 ohms?

Yes >> Repair the (G914) Sensor Return circuit for an open.

No >> Go to 7

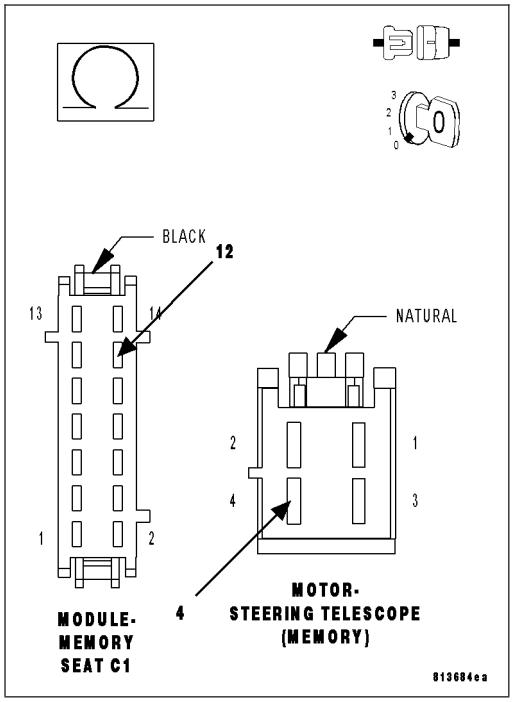

7. (G914) SENSOR RETURN CIRCUIT SHORT TO VOLTAGE

Turn the ignition on.

Measure the voltage of the (G914) Sensor Return circuit.

Is there any voltage present?

Yes >> Repair the (G914) Sensor Return circuit for a short to voltage.

No >> Go to 9

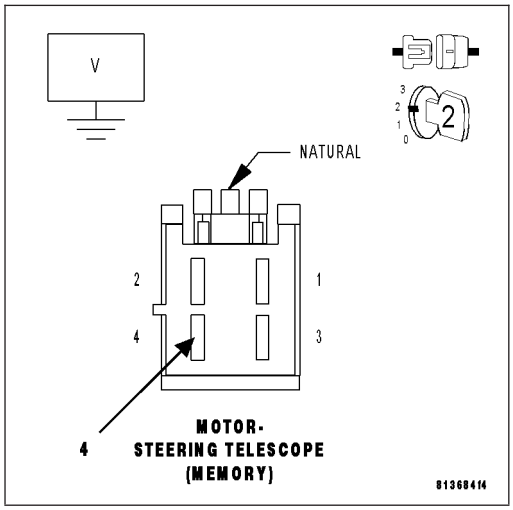

8. STEERING COLUMN TELESCOPE MOTOR

Thoroughly inspect the wiring and connectors between the Memory Seat Module harness connector and the Steering Telescope Motor for a short to voltage or to any other circuit. If any problems are found, repair as necessary. If no other problems are found, view repair.

Repair

Replace the Steering Column Telescope Motor in accordance with the Service Information.

9. MEMORY SEAT MODULE (MSM)

Thoroughly inspect the wiring and connectors between the Memory Seat Module harness connector and the Steering Telescope Motor harness connector for a short to voltage or to any other circuit. If any problems are found, repair as necessary. If no other problems are found, view repair.

Repair

Replace the Memory Seat Module (MSM) in accordance with the Service Information.

10. INTERMITTENT STEERING COLUMN TELESCOPE POSITION SENSOR CIRCUIT HIGH DTC

The conditions necessary to set this DTC are not present at this time.

While monitoring the scan tool data relative to this circuit, wiggle test the component and connectors and move the switch to each position.

Look for the data to change other than as expected or for the DTC to reset during the wiggle test.

Were any problems found?

Yes >> Repair as necessary.

No >> Test complete.

B1D91-STEERING COLUMN TILT POSITION SENSOR CIRCUIT LOW

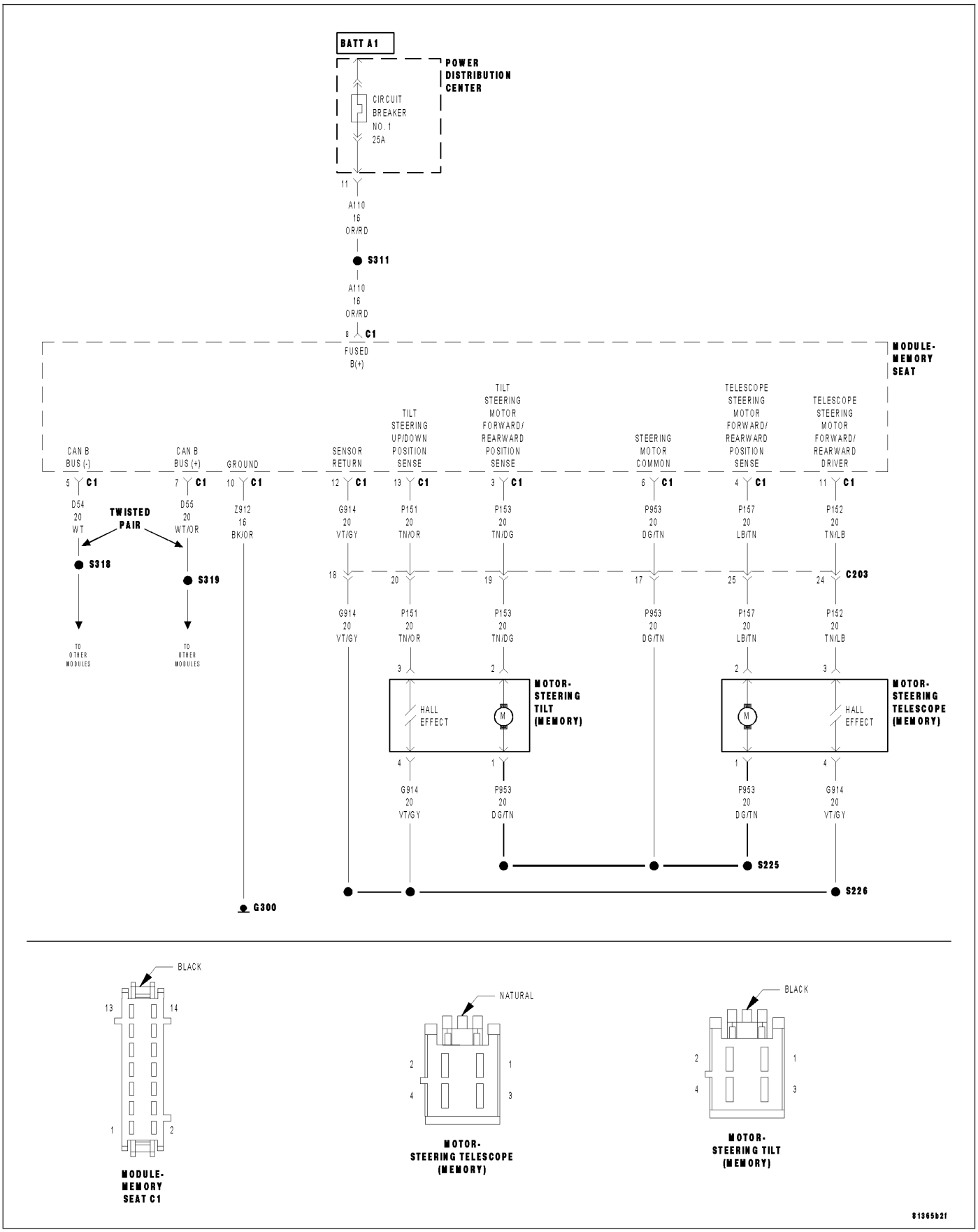

For a complete wiring diagram **Refer to Section 8W**.

Theory of Operation

The MSM input signal from the Steering Column Tilt Sensor is recognized in a specified voltage area. The input channel is an analog to digital converter input and the sensor is a hall sensor.

- **When Monitored:**
  The hall supply voltage is switched on when the motor becomes activated.
- **Set Condition:**
  The sensed input is less than 1.7 volts (at the controller input, not at the module input) for more than 14 mS

Possible Causes
INTERMITTENT STEERING COLUMN TILT POSITION SENSOR CIRCUIT LOW DTC
(P151) TILT STEERING UP/DOWN POSITION SENSE CIRCUIT SHORT TO GROUND
STEERING COLUMN TILT MOTOR
MEMORY SEAT MODULE (MSM)

Diagnostic Test

1. DTC IS ACTIVE

Ignition on, engine not running.

With the Scan Tool, select Clear Stored DTCs in the Memory Seat Module.

Move the Steering Column Tilt Switch to the Up and Down positions several times, holding the switch in position for at least 2 seconds each time.

With the Scan Tool, select View DTCs in the Memory Seat Module.

Does the DTC reset and/or remain active?

Yes >> Go to 2

No >> Go to 6

2. CHECK DTC WITH HARNESS DISCONNECTED

Turn the ignition off.

Disconnect the Steering Column Tilt Motor connector.

Turn the ignition on.

Move the Steering Column Tilt Switch to the Up and Down positions several times.

With the Scan Tool, select Clear Stored DTCs in the Memory Seat Module.

Move the Steering Column Tilt Switch to the Up and Down positions several times, holding the switch in position for at least 2 seconds each time.

With the Scan Tool, select View DTCs in the Memory Seat Module.

Does the DTC reset and/or remain active?

Yes >> Go to 4

No >> Go to 3

3. STEERING COLUMN TILT MOTOR

View repair.

Repair

Inspect the wiring between the Steering Column Tilt Motor and the harness connector (on the motor side) for a short to ground or to any other circuit. If any problems are found, repair as necessary. If no problems are found, replace the Steering Column Tilt Motor in accordance with the Service Information.

4. (P151) TILT STEERING UP/DOWN POSITION SENSE CIRCUIT SHORT TO GROUND

Turn the ignition off.

Disconnect the Memory Seat Module (MSM) C1 connector.

Measure the resistance between ground and the (P151) Tilt Steering Up/Down Position Sense circuit at the Steering Column Tilt Motor connector (harness side).

Is the resistance below 5.0 ohms?

Yes >> Repair the (P151) Tilt Steering Up/Down Position Sense circuit for a short to ground.

No >> Go to 5

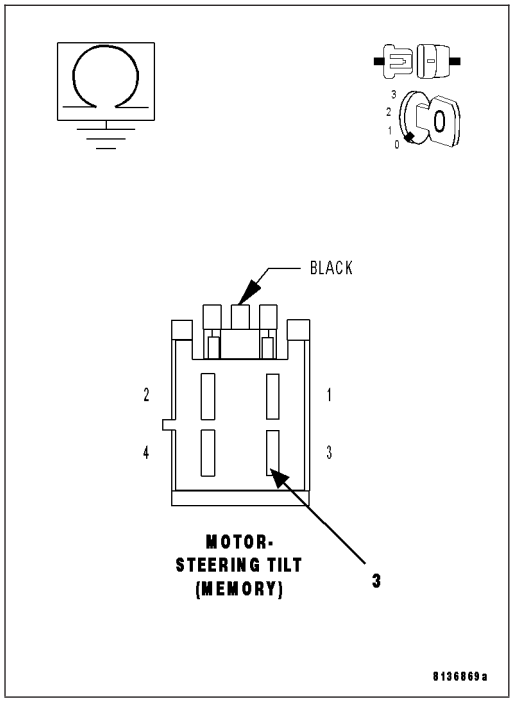

5. MEMORY SEAT MODULE (MSM)

Inspect the wiring between the Memory Seat Module harness connector and the Steering Column Tilt Motor harness connector for a short to ground or to any other circuit. If any problems are found, repair as necessary. If no problems are found, view repair.

Repair

Replace the Memory Seat Module (MSM) in accordance with the Service Information.

6. INTERMITTENT STEERING COLUMN TILT POSITION SENSOR CIRCUIT LOW DTC

The conditions necessary to set this DTC are not present at this time.

While monitoring the scan tool data relative to this circuit, wiggle test the component and connectors and move the switch to each position.

Look for the data to change other than as expected or for the DTC to reset during the wiggle test.

Were any problems found?

Yes >> Repair as necessary.

No >> Test complete.

B1D92–STEERING COLUMN TILT POSITION SENSOR CIRCUIT HIGH

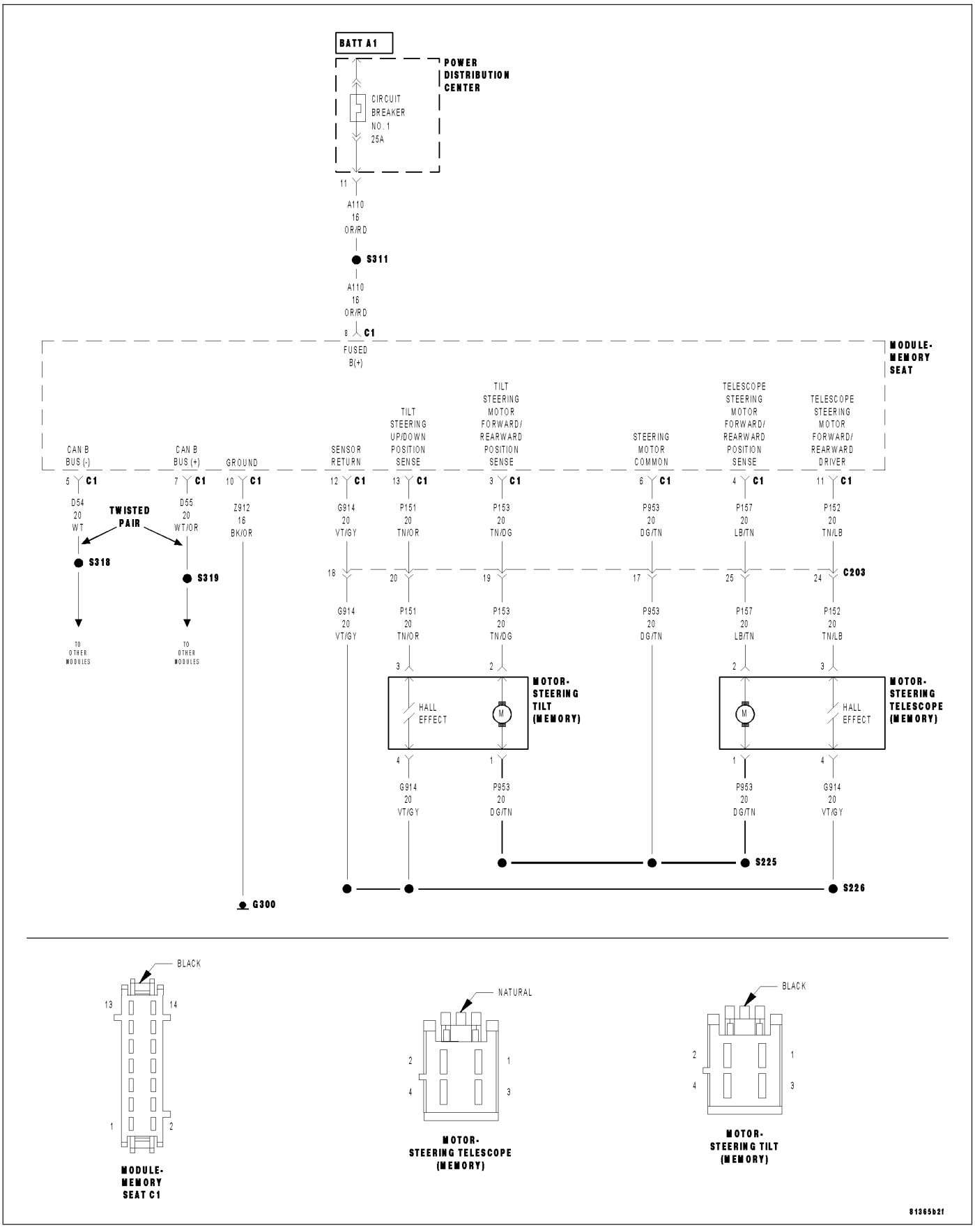

For a complete wiring diagram **Refer to Section 8W**.

Theory of Operation

The MSM input signal from the Steering Column Tilt Sensor is recognized in a specified voltage area. The input channel is an analog to digital converter input and the sensor is a hall sensor.

- **When Monitored:**
  The hall supply voltage is switched on when the motor becomes activated.
- **Set Condition:**
  The sensed input is recognized in a defined voltage area (between 3.7 and 5.0 volts at the controller input, not at the module input) for more than 14 mS

Possible Causes
INTERMITTENT STEERING COLUMN TILT POSITION SENSOR CIRCUIT HIGH DTC
(P151) TILT STEERING UP/DOWN POSITION SENSE CIRCUIT OPEN
(P151) TILT STEERING UP/DOWN POSITION SENSE CIRCUIT SHORT TO VOLTAGE
(P151) TILT STEERING UP/DOWN POSITION SENSE CIRCUIT SHORT TO TILT/TELESCOPE MOTOR CIRCUIT(S)
(G914) SENSOR RETURN CIRCUIT OPEN
(G914) SENSOR RETURN CIRCUIT SHORT TO VOLTAGE
STEERING COLUMN TELESCOPE MOTOR
MEMORY SEAT MODULE (MSM)

Diagnostic Test

1. DTC IS ACTIVE

Ignition on, engine not running.

With the Scan Tool, select Clear Stored DTCs in the Memory Seat Module.

Move the Steering Column Tilt Switch to the Up and Down positions several times, holding the switch in position for at least 2 seconds each time.

With the Scan Tool, select View DTCs in the Memory Seat Module.

Does this DTC reset and/or remain active?

Yes >> Go to 2

No >> Go to 10

2. CHECK DTC WITH HARNESS DISCONNECTED

Turn the ignition off.

Disconnect the Steering Tilt Motor harness connector.

Ignition on, engine not running.

Move the Steering Column Tilt Switch to the Up and Down positions several times.

With the Scan Tool, select Clear Stored DTCs in the Memory Seat Module.

Move the Steering Column Tilt Switch to the Up and Down positions several times, holding the switch in position for at least 2 seconds each time.

With the Scan Tool, select View DTCs in the Memory Seat Module.

Does this DTC reset and/or remain active?

Yes >> Go to 3

No >> Go to 8

3. (P151) TILT STEERING UP/DOWN POSITION SENSE CIRCUIT OPEN

Turn the ignition off.

Disconnect the Memory Seat Module (MSM) C1 connector.

Measure the resistance of the (P151) Tilt Steering Up/Down Position Sense circuit.

Is the resistance above 5.0 ohms?

Yes >> Repair the (P151) Tilt Steering Up/Down Position Sense circuit for an open.

No >> Go to 4

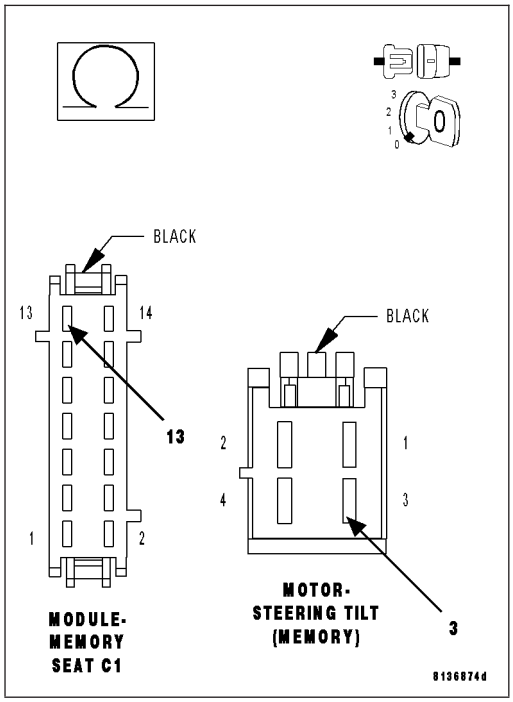

4. (P151) TILT STEERING UP/DOWN POSITION SENSE CIRCUIT SHORT TO VOLTAGE

Turn the ignition on.

Measure the voltage of the (P151) Tilt Steering Up/Down Position Sense circuit.

Is there any voltage present?

Yes >> Repair the (P151) Tilt Steering Up/Down Position Sense circuit for a short to voltage.

No >> Go to 5

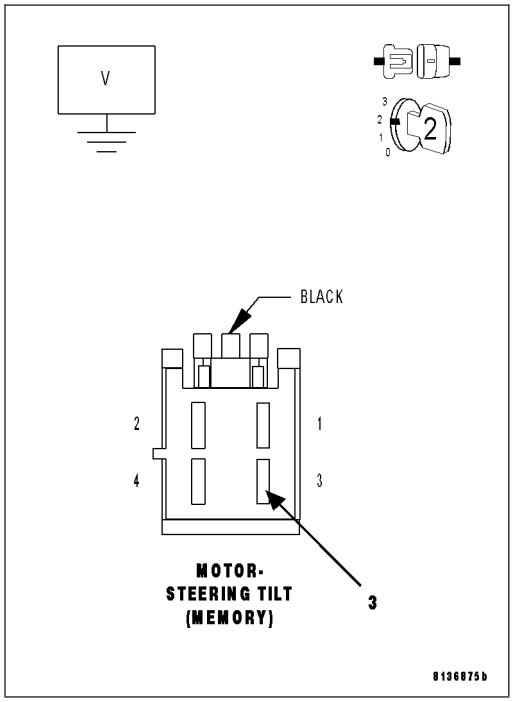

5. (P151) TILT STEERING UP/DOWN POSITION SENSE CIRCUIT SHORT TO TILT/TELESCOPE MOTOR CIRCUIT(S)

Turn the ignition off.

Measure the resistance between the following circuits at the Memory Seat Module (MSM) C1 connector :

- The (P151) Tilt Steering Up/Down Position Sense circuit and the (P157) Telescope Steering Motor Forward/Rearward Driver circuit.
- The (P151) Tilt Steering Up/Down Position Sense circuit and the (P153) Tilt Steering Motor Up/Down Driver circuit.
- The (P151) Tilt Steering Up/Down Position Sense circuit and the (P953) Steering Motor Common circuit.

Is the resistance below 5.0 ohms for any of the circuit tests?

Yes >> Repair the (P151) Tilt Steering Up/Down Position Sense circuit for a short to the motor circuit(s).

No >> Go to 6

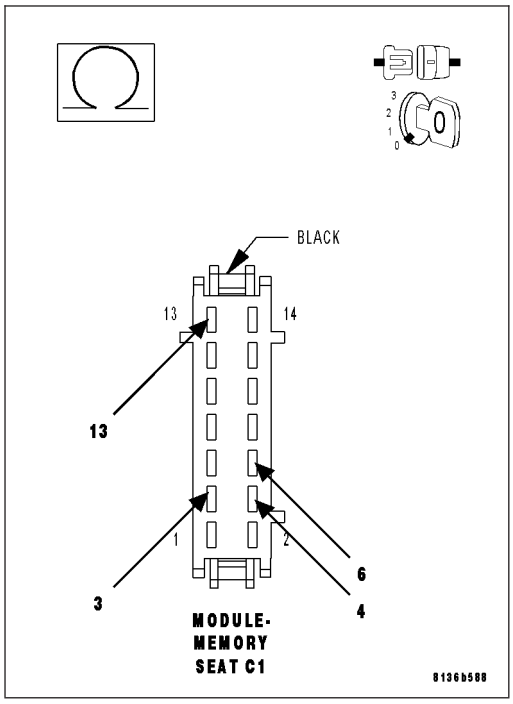

6. (G914) SENSOR RETURN CIRCUIT OPEN

Measure the resistance of the (G914) Sensor Return circuit.

Is the resistance above 5.0 ohms?

Yes >> Repair the (G914) Sensor Return circuit for an open.

No >> Go to 7

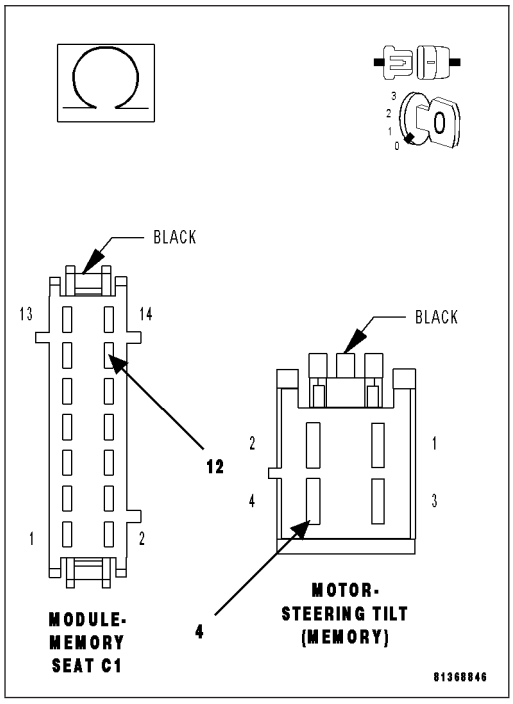

7. (G914) SENSOR RETURN CIRCUIT SHORT TO VOLTAGE

Turn the ignition on.

Measure the voltage of the (G914) Sensor Return circuit.

Is there any voltage present?

Yes >> Repair the (G914) Sensor Return circuit for a short to voltage.

No >> Go to 9

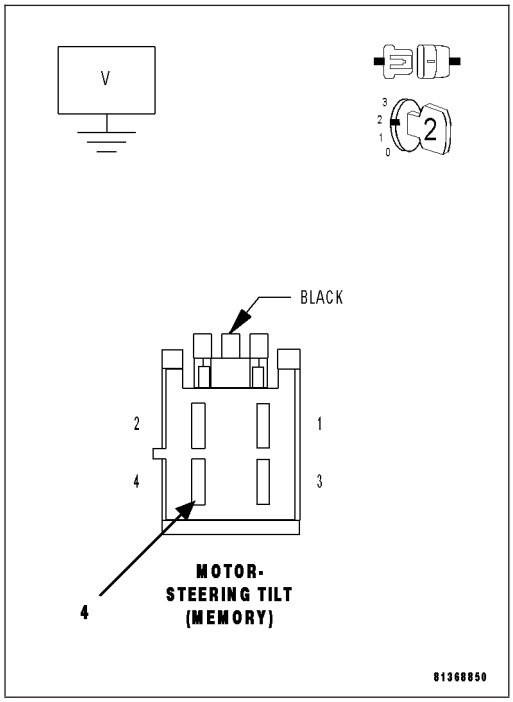

8. STEERING COLUMN TILT MOTOR

Thoroughly inspect the wiring and connectors between the Memory Seat Module harness connector and the Steering Tilt Motor for a short to voltage or to any other circuit. If any problems are found, repair as necessary. If no other problems are found, view repair.

Repair

Replace the Steering Column Tilt Motor in accordance with the Service Information.

9. MEMORY SEAT MODULE (MSM)

Thoroughly inspect the wiring and connectors between the Memory Seat Module harness connector and the Steering Tilt Motor harness connector for a short to voltage or to any other circuit. If any problems are found, repair as necessary. If no other problems are found, view repair.

Repair

Replace the Memory Seat Module (MSM) in accordance with the Service Information.

10. INTERMITTENT STEERING COLUMN TILT POSITION SENSOR CIRCUIT HIGH DTC

The conditions necessary to set this DTC are not present at this time.

While monitoring the scan tool data relative to this circuit, wiggle test the component and connectors and move the switch to each position.

Look for the data to change other than as expected or for the DTC to reset during the wiggle test.

Were any problems found?

Yes >> Repair as necessary.

No >> Test complete.

B1D93–STEERING COLUMN TELESCOPE MOTOR CONTROL CIRCUIT PERFORMANCE

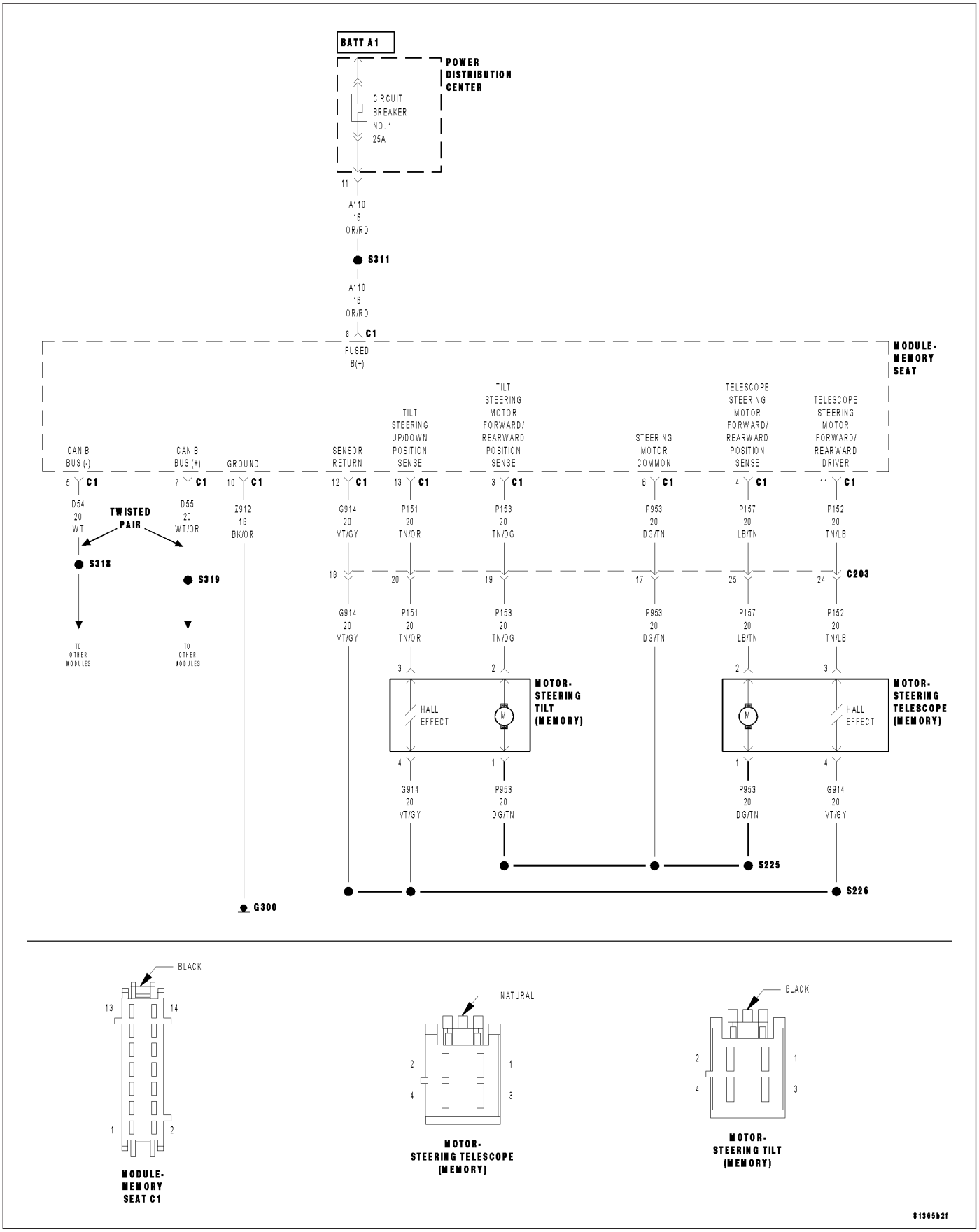

For a complete wiring diagram **Refer to Section 8W**.

Theory of Operation

This DTC will set if movement in the Telescope Motor is requested and no motor movement is detected and only if failure counters are matured for both motor directions (forward/rearward). If the motor becomes energized and there are no hall pulses recognized after motor activation, the MSM will de-energize the motor after 2 seconds.

- **When Monitored:**
  When the motor is activated in either direction, until de-energized by the MSM.
- **Set Condition:**
  No movement is detected in an activated motor for more than 2000 ms.

Possible Causes
INTERMITTENT STEERING COLUMN TELESCOPE MOTOR CONTROL CIRCUIT PERFORMANCE DTC
(P157) TELESCOPE STEERING FORWARD/REARWARD DRIVER CIRCUIT OPEN
(P157) TELESCOPE STEERING FORWARD/REARWARD DRIVER CIRCUIT SHORT TO GROUND
(P157) TELESCOPE STEERING FORWARD/REARWARD DRIVER CIRCUIT SHORT TO VOLTAGE
(P953) STEERING MOTOR COMMON CIRCUIT OPEN
(P953) STEERING MOTOR COMMON CIRCUIT SHORT TO GROUND
(P953) STEERING MOTOR COMMON CIRCUIT SHORT TO VOLTAGE
STEERING COLUMN TELESCOPE MOTOR
MEMORY SEAT MODULE (MSM)

Diagnostic Test

1. DTC IS ACTIVE

Ignition on, engine not running.

NOTE: If a DTC is set for B1D8D and/or B1D8E, perform the diagnostic procedure(s) before continuing.
With the Scan Tool, select Clear Stored DTCs in the Memory Seat Module.

Move the Steering Column Telescope Switch to the Forward and Rearward positions several times, holding the switch in position for at least 2 seconds each time.

With the Scan Tool, select View DTCs in the Memory Seat Module.

Does the DTC reset and/or remain active?

Yes >> Go to 2

No >> Go to 14

2. (P157) TELESCOPE STEERING MOTOR FORWARD/REARWARD DRIVER CIRCUIT — TEST TO GROUND

Turn the ignition off.

Disconnect the Steering Telescope Motor harness connector.

Turn the ignition on.

Using a 12–volt test light connected to 12–volts, check the (P157) Telescope Steering Motor Forward/Rearward Driver circuit.

Monitor the test light with the Steering Column Telescope Switch in the Forward position, the Rearward position and with the switch at rest.

The test light should be illuminated and bright only when the switch is in the Rearward position.

Does the test light illuminate as described?

Yes >> Go to 3

No >> Go to 6

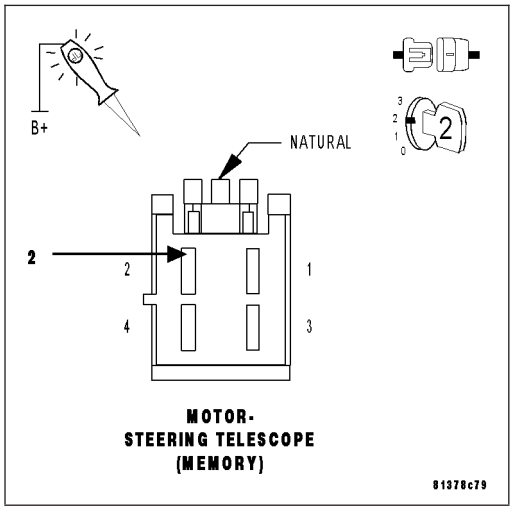

3. (P953) TELESCOPE STEERING MOTOR COMMON CIRCUIT — TEST TO GROUND

Using a 12–volt test light connected to 12–volts, check the (P953) Telescope Steering Motor Common circuit.

Monitor the test light with the Steering Column Telescope Switch in the Forward position, the Rearward position and with the switch at rest.

The test light should be illuminated and bright when the switch is in the Forward position and when the switch is at rest.

Does the test light illuminate as described?

Yes >> Go to 4

No >> Go to 9

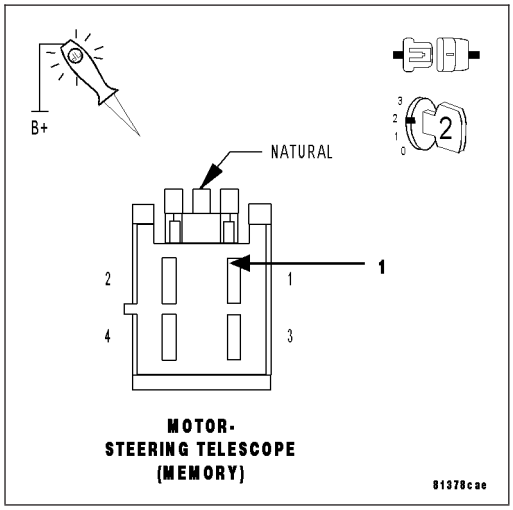

4. (P157) TELESCOPE STEERING MOTOR FORWARD/REARWARD DRIVER CIRCUIT- TEST TO VOLTAGE

Using a 12–volt test light connected to ground, check the (P157) Telescope Steering Motor Forward/Rearward Driver circuit.

Monitor the test light with the Steering Column Telescope Switch in the Forward position, the Rearward position and with the switch at rest.

The test light should be illuminated and bright only when the switch is in the Forward position.

Does the test light illuminate as described?

Yes >> Go to 5

No >> Go to 6

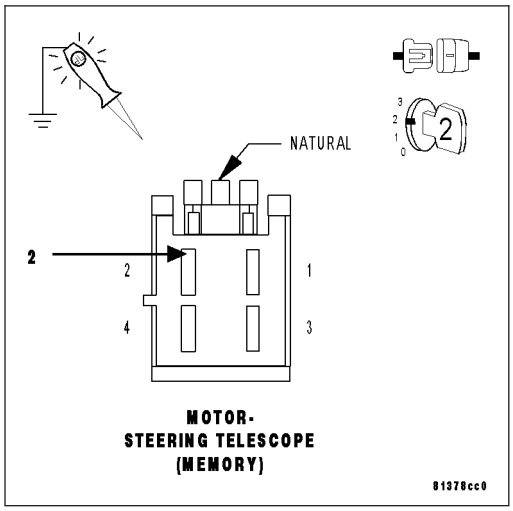

5. (P953) TELESCOPE STEERING MOTOR COMMON CIRCUIT — TEST TO VOLTAGE

Using a 12–volt test light connected to ground, check the (P953) Telescope Steering Motor Common circuit.

Monitor the test light with the Steering Column Telescope Switch in the Forward position, the Rearward position and with the switch at rest.

The test light should be illuminated and bright only when the switch is in the Rearward position.

Does the test light illuminate as described?

Yes >> Go to 12

No >> Go to 9

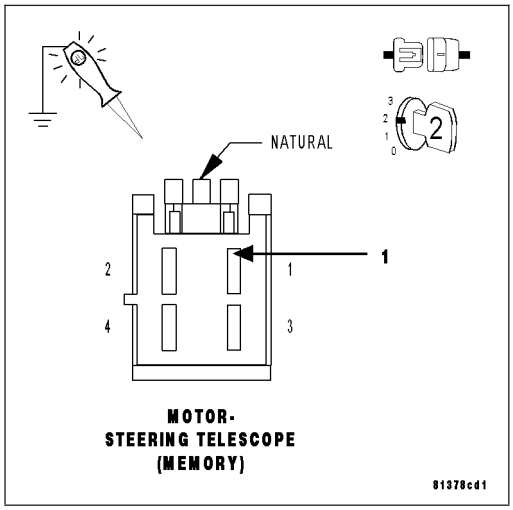

6. (P157) TELESCOPE STEERING MOTOR FORWARD/REARWARD DRIVER CIRCUIT SHORT TO GROUND

Turn the ignition off.

Disconnect the Memory Seat Module (MSM) C1 connector.

Turn the ignition on.

Using a 12–volt test light connected to 12–volts, check the (P157) Telescope Steering Motor Forward/Rearward Driver circuit.

Does the test light illuminate?

Yes >> Repair the (P157) Telescope Steering Motor Forward/Rearward Driver circuit for a short to ground.

No >> Go to 7

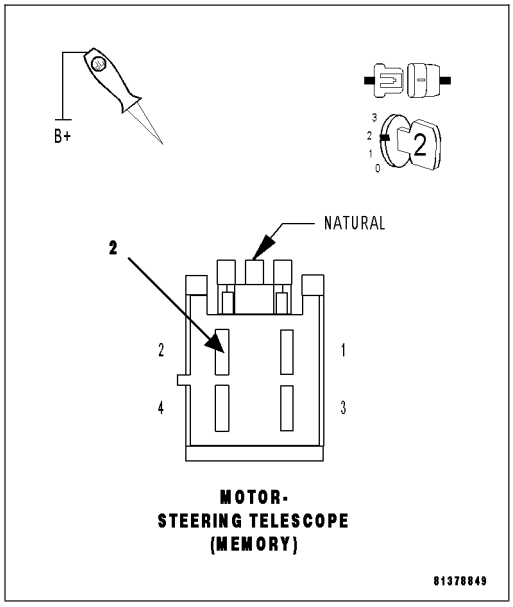

7. (P157) TELESCOPE STEERING MOTOR FORWARD/REARWARD DRIVER CIRCUIT OPEN

Turn the ignition off.

Measure the resistance of the (P157) Telescope Steering Motor Forward/Rearward Driver circuit.

Is the resistance above 5.0 ohms?

Yes >> Repair the (P157) Telescope Steering Motor Forward/Rearward Driver circuit for an open.

No >> Go to 8

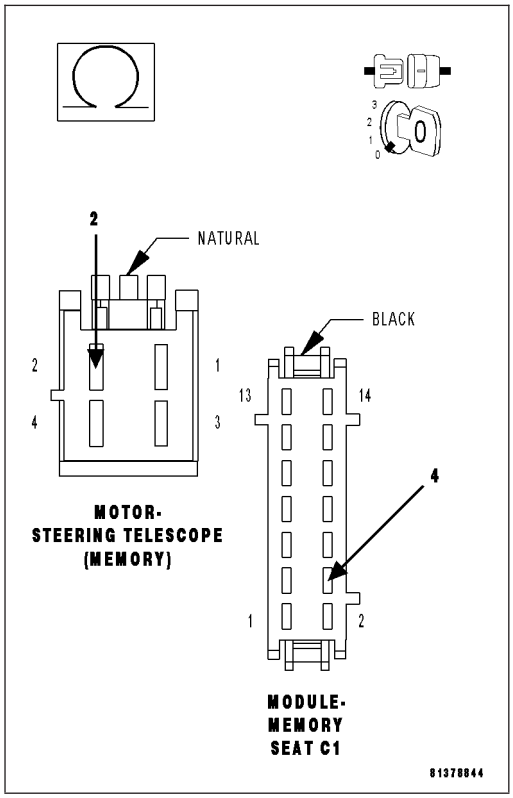

8. (P157) TELESCOPE STEERING MOTOR FORWARD/REARWARD DRIVER CIRCUIT SHORT TO VOLTAGE

Turn the ignition on.

Measure the voltage of the (P157) Telescope Steering Motor Forward/Rearward Driver circuit.

Is there any voltage present?

Yes >> Repair the (P157) Telescope Steering Motor Forward/Rearward Driver circuit for a short to voltage.

No >> Go to 13

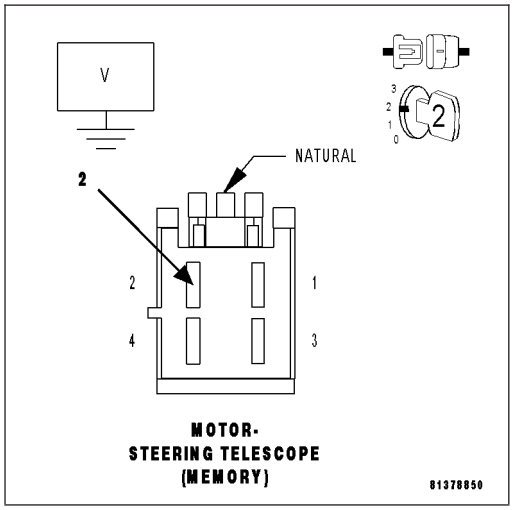

9. (P953) TELESCOPE STEERING MOTOR COMMON CIRCUIT SHORT TO GROUND

Turn the ignition off.

Disconnect the Memory Seat Module (MSM) C1 connector.

Turn the ignition on.

Using a 12–volt test light connected to 12–volts, check the (P953) Telescope Steering Motor Common circuit.

Does the test light illuminate?

Yes >> Repair the (P953) Telescope Steering Motor Common circuit for a short to ground.

No >> Go to 10

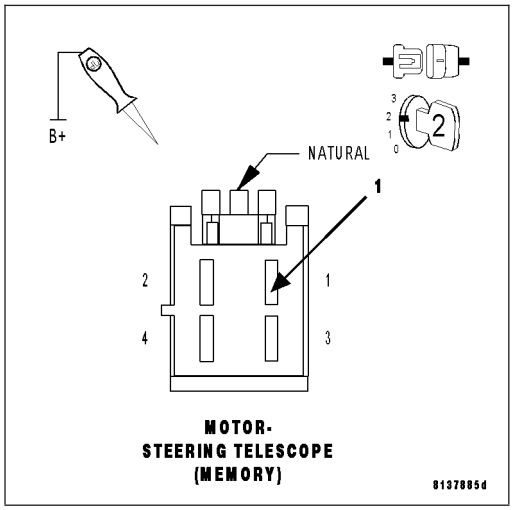

10. (P953) TELESCOPE STEERING MOTOR COMMON CIRCUIT OPEN

Turn the ignition off.

Measure the resistance of the (P953) Telescope Steering Motor Common circuit.

Is the resistance above 5.0 ohms?

Yes >> Repair the (P953) Telescope Steering Motor Common circuit for an open.

No >> Go to 11

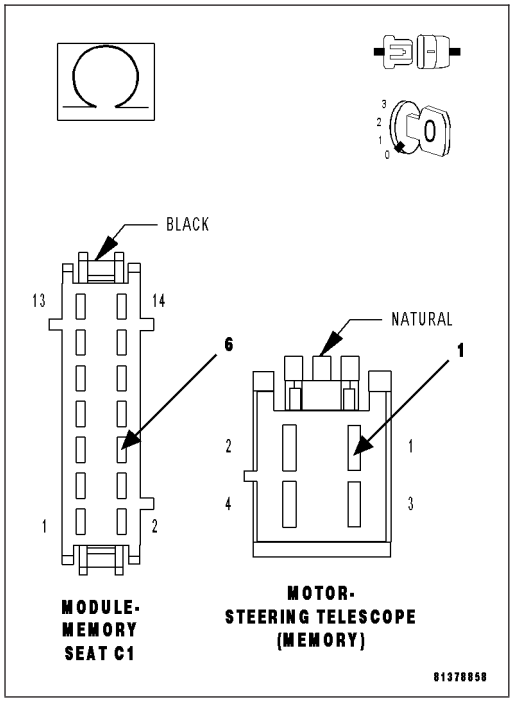

11. (P953) TELESCOPE STEERING MOTOR COMMON CIRCUIT SHORT TO VOLTAGE

Turn the ignition on.

Measure the voltage of the (P953) Telescope Steering Motor Common circuit.

Is there any voltage present?

Yes >> Repair the (P953) Telescope Steering Motor Common circuit for a short to voltage.

No >> Go to 13

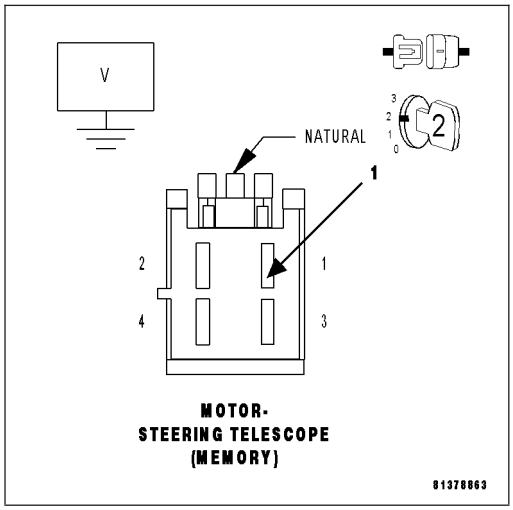

12. STEERING COLUMN TELESCOPE MOTOR

Inspect the wiring between the Memory Seat Module harness connector and the Steering Column Telescope Motor harness connector for a short to ground or to any other circuit. If any problems are found, repair as necessary. If no problems are found, view repair.

Repair

Replace the Steering Column Telescope Motor in accordance with the Service Information.

13. MEMORY SEAT MODULE (MSM)

Inspect the wiring between the Memory Seat Module harness connector and the Steering Column Telescope Motor harness connector for a short to ground or to any other circuit. If any problems are found, repair as necessary. If no problems are found, view repair.

Repair

Replace the Memory Seat Module (MSM) in accordance with the Service Information.

14. INTERMITTENT STEERING COLUMN TELESCOPE MOTOR CONTROL CIRCUIT PERFORMANCE DTC

The conditions necessary to set this DTC are not present at this time.

While monitoring the scan tool data relative to this circuit, wiggle test the component and connectors and move the switch to each position.

Look for the data to change other than as expected or for the DTC to reset during the wiggle test.

Were any problems found?

Yes >> Repair as necessary.

No >> Test complete.

B1D97–STEERING COLUMN TILT MOTOR CONTROL CIRCUIT PERFORMANCE

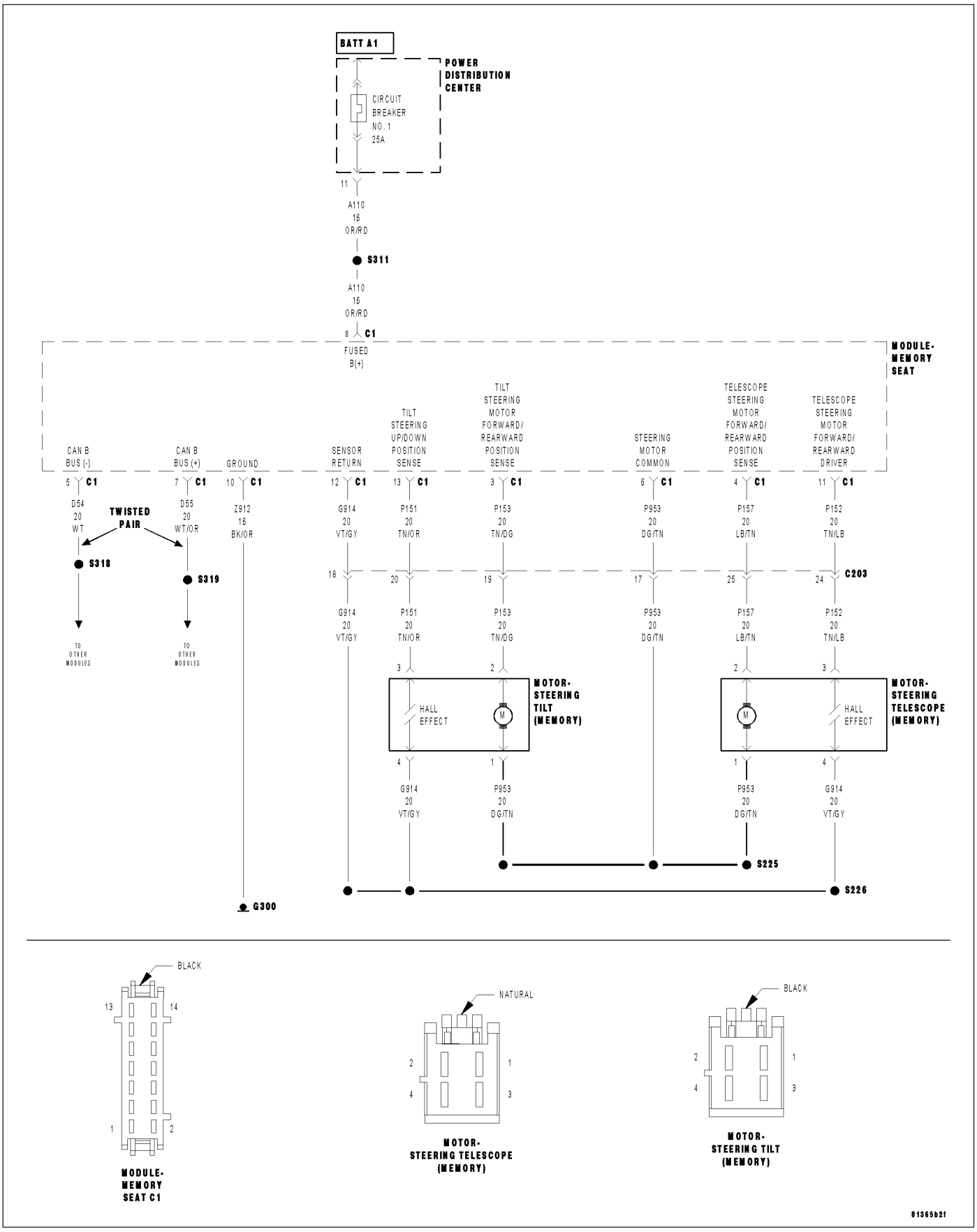

For a complete wiring diagram **Refer to Section 8W**.

Theory of Operation

This DTC will set if movement in the Tilt Motor is requested and no motor movement is detected and only if failure counters are matured for both motor directions (up/down). If the motor becomes energized and there are no hall pulses recognized after motor activation, the MSM will de-energize the motor after 2 seconds.

- **When Monitored:**
  When the motor is activated in either direction, until de-energized by the MSM.
- **Set Condition:**
  No movement is detected in an activated motor for more than 2000 ms.

Possible Causes
INTERMITTENT STEERING COLUMN TILT MOTOR CONTROL CIRCUIT PERFORMANCE DTC
(P153) TILT STEERING UP/DOWN DRIVER CIRCUIT OPEN
(P153) TILT STEERING UP/DOWN DRIVER CIRCUIT SHORT TO GROUND
(P153) TILT STEERING UP/DOWN DRIVER CIRCUIT SHORT TO VOLTAGE
(P953) STEERING MOTOR COMMON CIRCUIT OPEN
(P953) STEERING MOTOR COMMON CIRCUIT SHORT TO GROUND
(P953) STEERING MOTOR COMMON CIRCUIT SHORT TO VOLTAGE
STEERING COLUMN TELESCOPE MOTOR
MEMORY SEAT MODULE (MSM)

Diagnostic Test

1. DTC IS ACTIVE

Ignition on, engine not running.

NOTE: If a DTC is set for B1D8D and/or B1D8E, perform the diagnostic procedure(s) before continuing.
With the Scan Tool, select Clear Stored DTCs in the Memory Seat Module.

Move the Steering Column Tilt Switch to the Forward and Rearward positions several times, holding the switch in position for at least 2 seconds each time.

With the Scan Tool, select View DTCs in the Memory Seat Module.

Does the DTC reset and/or remain active?

Yes >> Go to 2

No >> Go to 14

2. (P153) TILT STEERING MOTOR UP/DOWN DRIVER CIRCUIT — TEST TO GROUND

Turn the ignition off.

Disconnect the Steering Tilt Motor harness connector.

Turn the ignition on.

Using a 12–volt test light connected to 12–volts, check the (P153) Tilt Steering Motor Up/Down Driver circuit.

Monitor the test light with the Steering Column Tilt Switch in the Up position, the Down position and with the switch at rest.

The test light should be illuminated and bright only when the switch is in the Down position.

Does the test light illuminate as described?

Yes >> Go to 3

No >> Go to 6

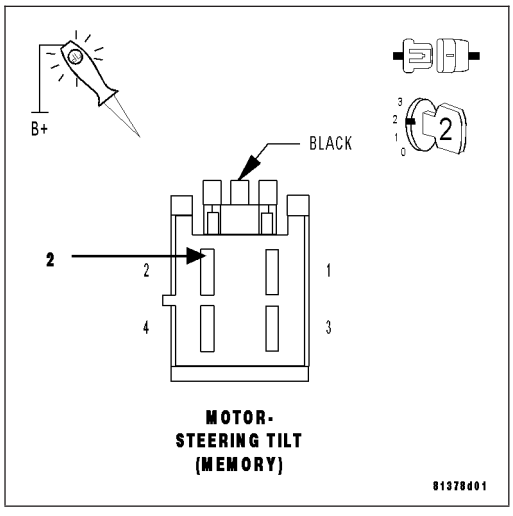

3. (P953) TILT STEERING MOTOR COMMON CIRCUIT — TEST TO GROUND

Using a 12–volt test light connected to 12–volts, check the (P953) Tilt Steering Motor Common circuit.

Monitor the test light with the Steering Column Tilt Switch in the Up position, the Down position and with the switch at rest.

The test light should be illuminated and bright when the switch is in the Up position and when the switch is at rest.

Does the test light illuminate as described?

Yes >> Go to 4

No >> Go to 9

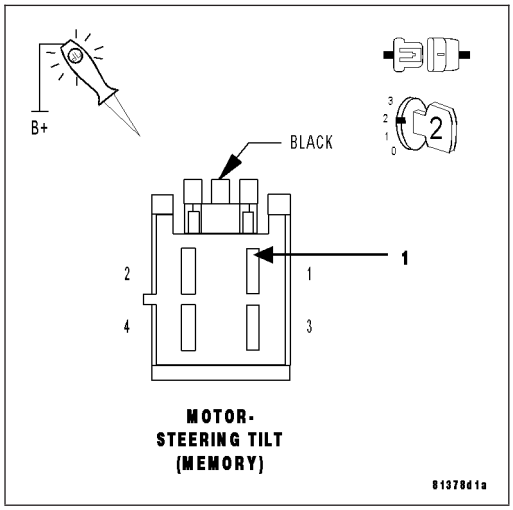

4. (P153) TILT STEERING MOTOR UP/DOWN DRIVER CIRCUIT- TEST TO VOLTAGE

Using a 12–volt test light connected to ground, check the (P153) Tilt Steering Motor Up/Down Driver circuit.

Monitor the test light with the Steering Column Tilt Switch in the Up position, the Down position and with the switch at rest.

The test light should be illuminated and bright only when the switch is in the Up position.

Does the test light illuminate as described?

Yes >> Go to 5

No >> Go to 6

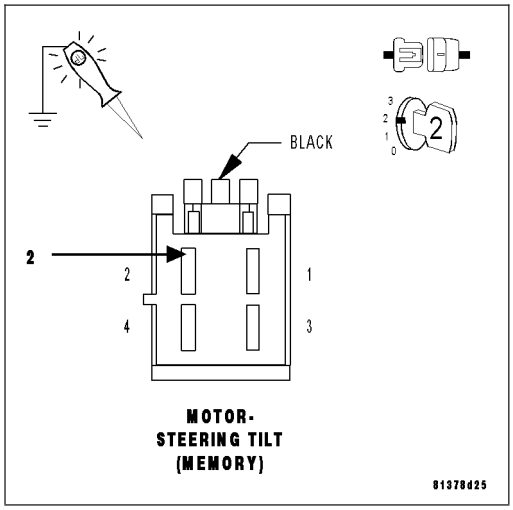

5. (P953) TILT STEERING MOTOR COMMON CIRCUIT — TEST TO VOLTAGE

Using a 12–volt test light connected to ground, check the (P953) Tilt Steering Motor Common circuit.

Monitor the test light with the Steering Column Tilt Switch in the Up position, the Down position and with the switch at rest.

The test light should be illuminated and bright only when the switch is in the Down position.

Does the test light illuminate as described?

Yes >> Go to 12

No >> Go to 9

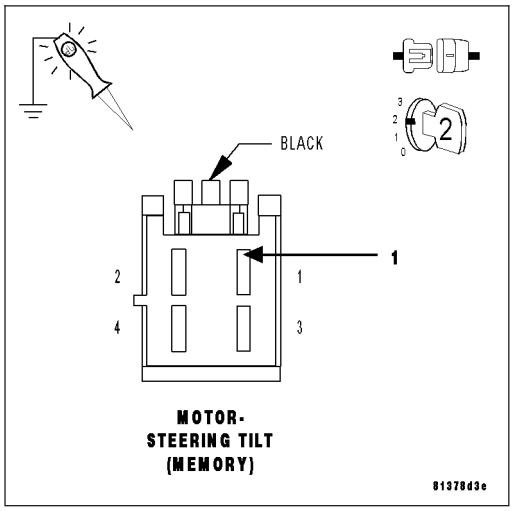

6. (P153) TILT STEERING MOTOR UP/DOWN DRIVER CIRCUIT SHORT TO GROUND

Turn the ignition off.

Disconnect the Memory Seat Module (MSM) C1 connector.

Turn the ignition on.

Using a 12–volt test light connected to 12–volts, check the (P153) Tilt Steering Motor Up/Down Driver circuit.

Does the test light illuminate?

Yes >> Repair the (P153) Tilt Steering Motor Up/Down Driver circuit for a short to ground.

No >> Go to 7

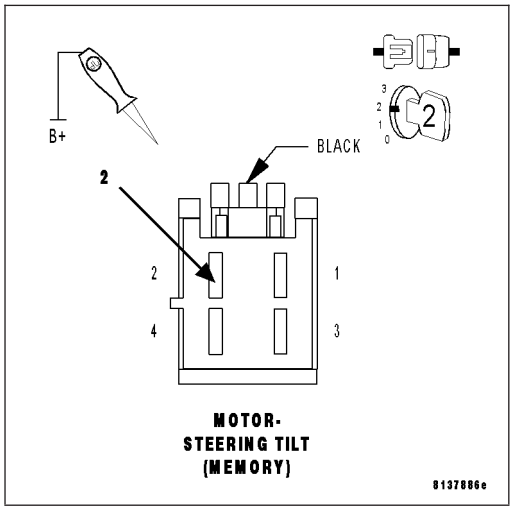

7. (P153) TILT STEERING MOTOR UP/DOWN DRIVER CIRCUIT OPEN

Turn the ignition off.

Measure the resistance of the (P153) Tilt Steering Motor Up/Down Driver circuit.

Is the resistance above 5.0 ohms?

Yes >> Repair the (P153) Tilt Steering Motor Up/Down Driver circuit for an open.

No >> Go to 8

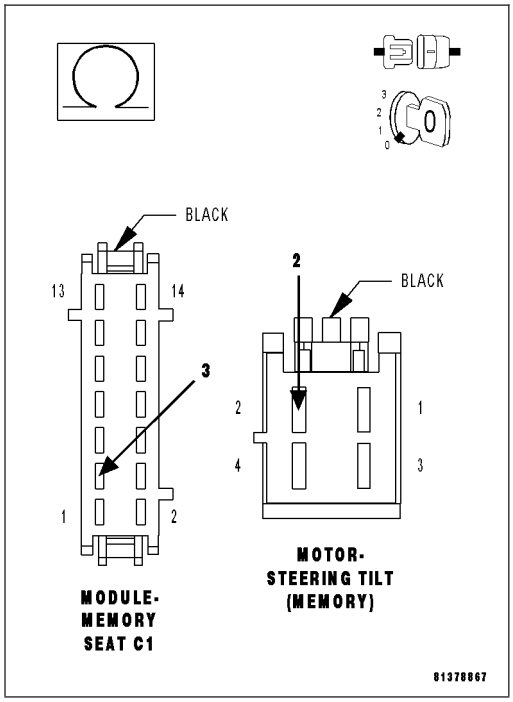

8. (P153) TILT STEERING MOTOR UP/DOWN DRIVER CIRCUIT SHORT TO VOLTAGE

Turn the ignition on.

Measure the voltage of the (P153) Tilt Steering Motor Up/Down Driver circuit.

Is there any voltage present?

Yes >> Repair the (P153) Tilt Steering Motor Up/Down Driver circuit for a short to voltage.

No >> Go to 13

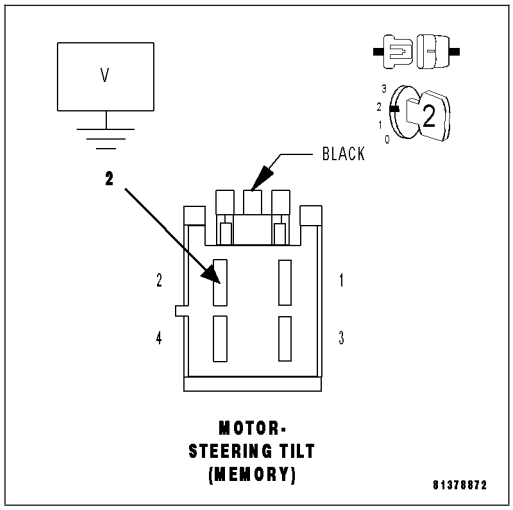

9. (P953) TILT STEERING MOTOR COMMON CIRCUIT SHORT TO GROUND

Turn the ignition off.

Disconnect the Memory Seat Module (MSM) C1 connector.

Turn the ignition on.

Using a 12–volt test light connected to 12–volts, check the (P953) Tilt Steering Motor Common circuit.

Does the test light illuminate?

Yes >> Repair the (P953) Tilt Steering Motor Common circuit for a short to ground.

No >> Go to 10

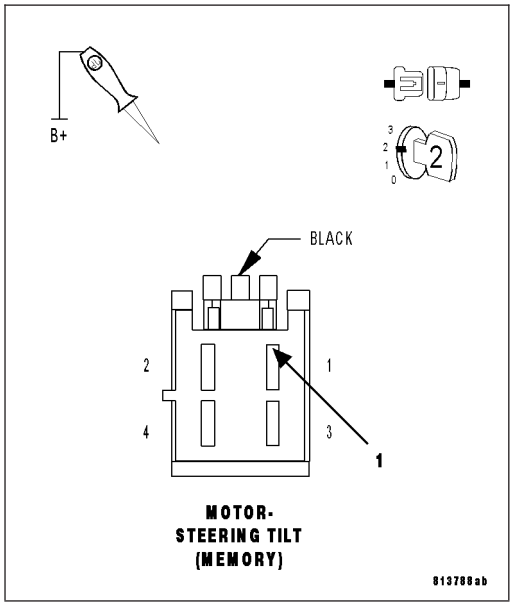

10. (P953) TILT STEERING MOTOR COMMON CIRCUIT OPEN

Turn the ignition off.

Measure the resistance of the (P953) Tilt Steering Motor Common circuit.

Is the resistance above 5.0 ohms?

Yes >> Repair the (P953) Tilt Steering Motor Common circuit for an open.

No >> Go to 11

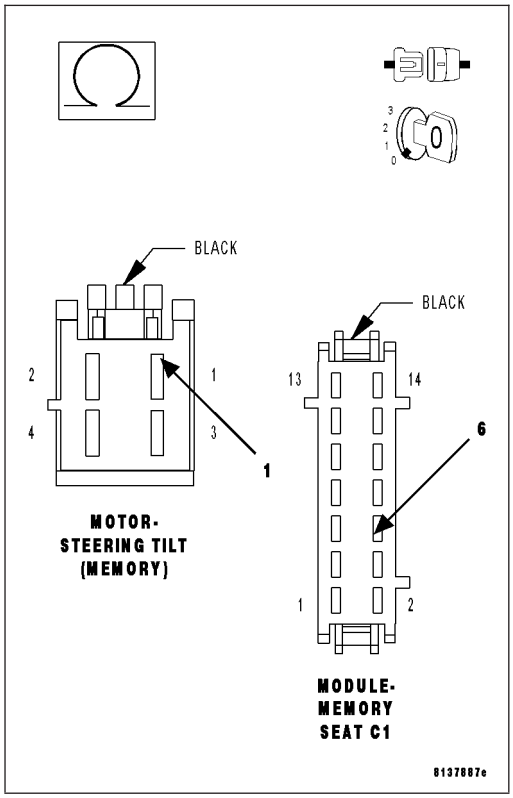

11. (P953) TILT STEERING MOTOR COMMON CIRCUIT SHORT TO VOLTAGE

Turn the ignition on.

Measure the voltage of the (P953) Tilt Steering Motor Common circuit.

Is there any voltage present?

Yes >> Repair the (P953) Tilt Steering Motor Common circuit for a short to voltage.

No >> Go to 13

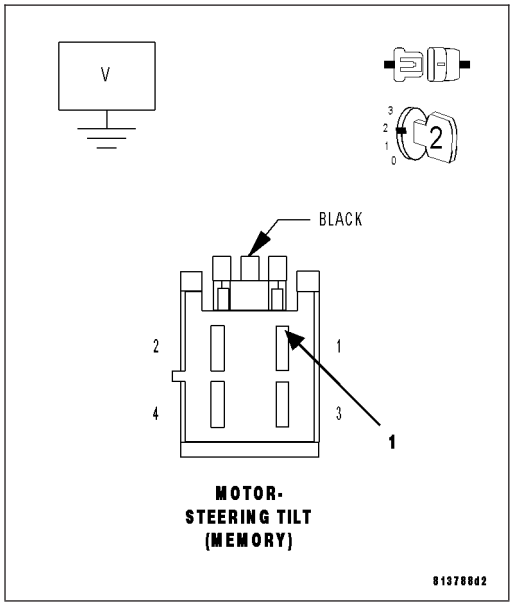

12. STEERING COLUMN TILT MOTOR

Inspect the wiring between the Memory Seat Module harness connector and the Steering Column Tilt Motor harness connector for a short to ground or to any other circuit. If any problems are found, repair as necessary. If no problems are found, view repair.

Repair

Replace the Steering Column Tilt Motor in accordance with the Service Information.

13. MEMORY SEAT MODULE (MSM)

Inspect the wiring between the Memory Seat Module harness connector and the Steering Column Tilt Motor harness connector for a short to ground or to any other circuit. If any problems are found, repair as necessary. If no problems are found, view repair.

Repair

Replace the Memory Seat Module (MSM) in accordance with the Service Information.

14. INTERMITTENT STEERING COLUMN TILT MOTOR CONTROL CIRCUIT PERFORMANCE DTC

The conditions necessary to set this DTC are not present at this time.

While monitoring the scan tool data relative to this circuit, wiggle test the component and connectors and move the switch to each position.

Look for the data to change other than as expected or for the DTC to reset during the wiggle test.

Were any problems found?

Yes >> Repair as necessary.

No >> Test complete.

B2225–Steering Control Module INTERNAL

For a complete wiring diagram **Refer to Section 8W**.

- **When Monitored:**
  Continuously.
- **Set Condition:**
  The Steering Control Module (SCM) detects an internal failure.

Possible Causes
STEERING CONTROL MODULE (SCM)

Diagnostic Test

1. STEERING CONTROL MODULE (SCM)

The Steering Control Module (SCM) is reporting internal errors.

View repair.

Repair

Replace the Steering Control Module (SCM) in accordance with the Service Information.

B2332–HORN SWITCH INPUT CIRCUIT/PERFORMANCE

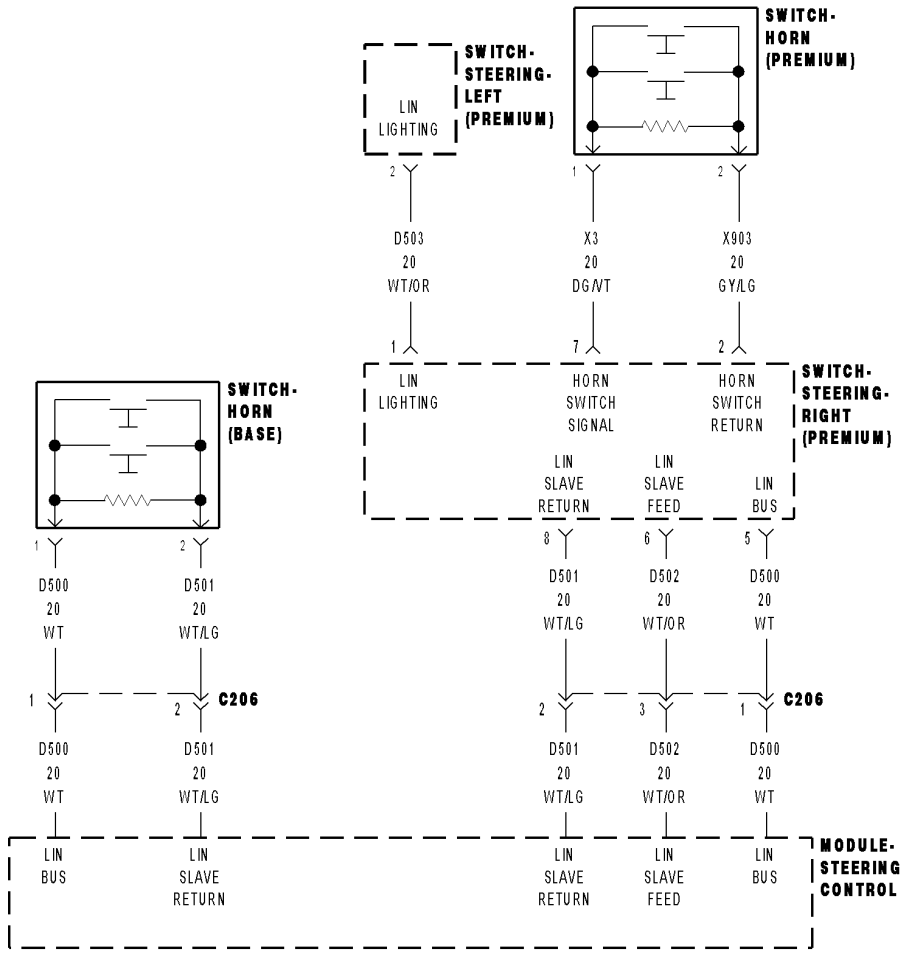

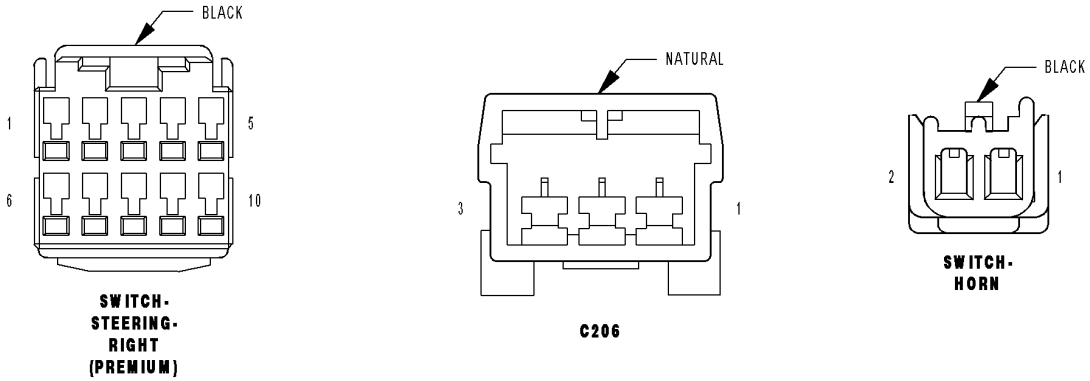

8132ab1c

For a complete wiring diagram **Refer to Section 8W**.

Theory of Operation

The Horn Switch is connected to the Right Steering Switch. The switching status is transferred to the Steering Control Module (SCM) by way of the LIN bus, a serial sub-bus. The SCM converts the data to CAN(B) and sends the message to the corresponding module on the bus.

- **When Monitored:**
  Continuously with the ignition on.
- **Set Condition:**
  The Steering Control Module senses that the Horn Switch is in the Set position for greater than 50 seconds.

Possible Causes
INTERMITTENT HORN SWITCH INPUT CIRCUIT/PERFORMANCE DTC
(X3) HORN SWITCH SIGNAL CIRCUIT SHORT TO (X903) HORN SWITCH RETURN CIRCUIT
(X3) HORN SWITCH SIGNAL CIRCUIT SHORT TO GROUND
HORN SWITCH
RIGHT STEERING SWITCH
STEERING CONTROL MODULE (SCM)

Diagnostic Test

1. DTC IS ACTIVE

NOTE: If P0562–BATTERY VOLTAGE LOW or P0563–BATTERY VOLTAGE HIGH is set along with this DTC, diagnose the battery voltage DTC first.
Ignition on, engine not running.
With the Scan Tool, select View DTCs in the Steering Control Module.

Is the DTC status Active at this time?

Yes >> Go to 2

No >> Go to 7

2. (X3) HORN SWITCH SIGNAL CIRCUIT SHORT TO (X903) HORN SWITCH RETURN CIRCUIT

Turn the ignition off.
Remove the Driver Airbag in accordance with the Service information.
Disconnect the Horn Switch harness connector.
Disconnect the Right Steering Switch harness connector.

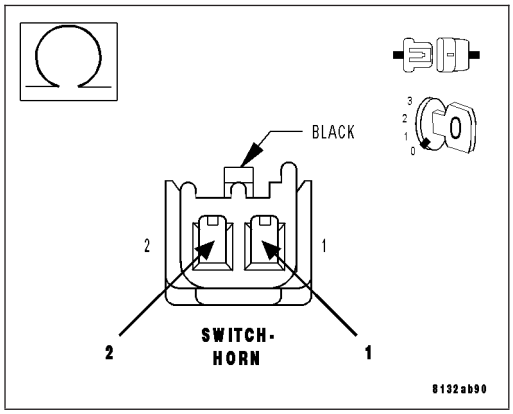

NOTE: Before proceeding, thoroughly inspect the wiring harness and connectors between the Horn Switch and the Right Steering Switch for a short to ground or any other circuit.
Measure the resistance between the (X3) Horn Switch circuit and the (X903) Horn Switch Return circuit.

Is the resistance below 5.0 ohms?

Yes >> Repair the (X3) Horn Switch circuit for a short to the (X903) Horn Switch Return circuit.
Perform the VERIFICATION TEST-VER 1.

No >> Go to 3

3. (X3) HORN SWITCH SIGNAL CIRCUIT SHORT TO GROUND

NOTE: Before proceeding, thoroughly inspect the wiring harness and connectors between the Horn Switch and the Right Steering Switch for a short to ground or to any other circuit.
Measure the resistance between the (X3) Horn Switch circuit at the harness connector to the Right Switch and ground (include the metal casing at the back side of the Airbag).

Is the resistance below 5.0 ohms?

Yes >> Repair the (X3) Horn Switch circuit for a short to ground.

No >> Go to 4

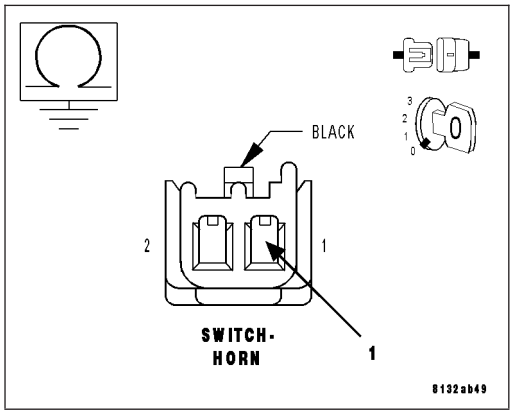

4. HORN SWITCH

Measure the resistance between the (X3) Horn Switch circuit and the (X903) Horn Switch Return circuit at the harness connector to the horn switch.

Is the resistance below 5.0 ohms?

Yes >> Replace the Horn Switch in accordance with the Service Information.

No >> Go to 5

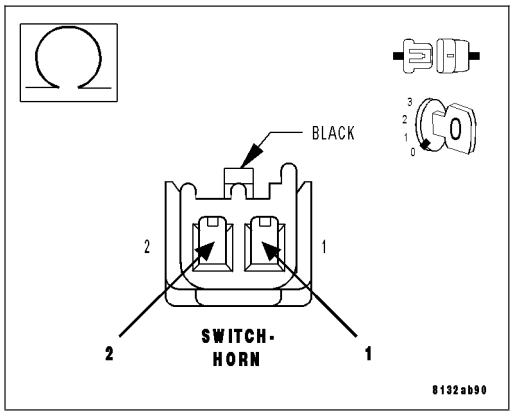

5. RIGHT STEERING SWITCH

Turn the ignition off.
Replace the Right Steering Switch in accordance with the Service Information.
Turn the ignition on.

NOTE: The C206 (LIN bus) connector must be connected for this test.
Press and release the Horn Switch several times.
With the Scan Tool, Clear Stored DTCs in the Steering Control Module.
With the Scan Tool, select Data Display and view the Horn switch data.
While monitoring the Horn switch data, press and release the Horn Switch several times.

Does the Horn switch data change from Set to Not Set when the switch is pressed and released?

Yes >> Test Complete.

No >> Go to 6

6. STEERING CONTROL MODULE (SCM)

View repair.

Repair

Replace the Steering Control Module (SCM) in accordance with the Service Information.

7. INTERMITTENT HORN SWITCH INPUT CIRCUIT/PERFORMANCE DTC

The conditions necessary to set this DTC are not present at this time.
Using the wiring diagram/schematic as a guide, inspect the wiring and connectors.
While monitoring the scan tool data relative to this circuit, wiggle test the wiring and connectors.
Look for the data to change or for the DTC to reset during the wiggle test.

Were any problems found?

Yes >> Repair as necessary.

No >> Test complete.

U0002–CAN C BUS OFF PERFORMANCE

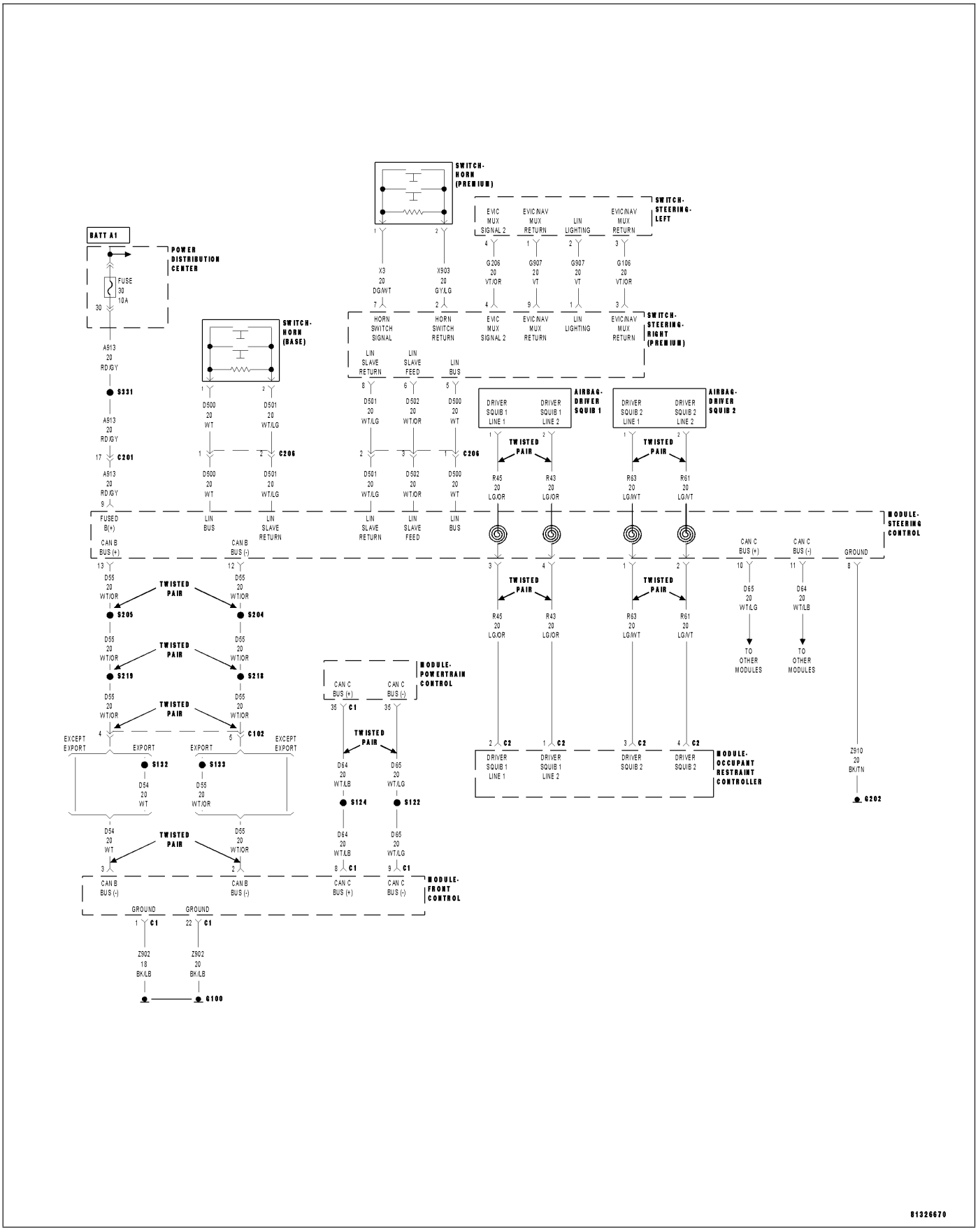

For a complete wiring diagram **Refer to Section 8W**.

- **When Monitored:**
  Continuously.
- **Set Condition:**
  Whenever the CAN C Bus (+) or CAN C Bus (-) is open, shorted to voltage or shorted to ground.

Possible Causes
INTERMITTENT CAN C BUS OFF PERFORMANCE DTC
CAN C BUS DTCs SET IN FRONT CONTROL MODULE
(D65) CAN C BUS (+) CIRCUIT OPEN
(D64) CAN C BUS (-) CIRCUIT OPEN
STEERING CONTROL MODULE (SCM)

Diagnostic Test

1. DTC IS ACTIVE

Ignition on, engine not running.
With the scan tool, select Clear Stored DTCs in the Steering Control Module.
Cycle the ignition from off to on at least 5 times, leaving the ignition on for a minimum of 90 seconds per cycle.
With the Scan Tool, select View DTCs in the Steering Control Module.

Does the DTC reset and/or remain active?

Yes >> Go to 2

No >> Go to 6

2. CAN C BUS DTCs SET IN FRONT CONTROL MODULE

With the Scan Tool, select View DTCs in the Front Control Module (FCM).

Are there any active CAN C Bus DTCs?

Yes >> Refer to 8 — ELECTRICAL/ELECTRONIC CONTROL MODULES — DIAGNOSIS AND TESTING for diagnostic procedures and for further possible causes.

No >> Go to 3

3. (D65) CAN C BUS (+) CIRCUIT OPEN

Turn the ignition off.
Disconnect the Steering Control Module harness connector.
Disconnect the Front Control Module C1 harness connector.
Measure the resistance of the (D65) CAN C Bus (+) circuit between the Steering Control Module harness connector and the Front Control Module C1 harness connector.

Is the resistance above 2.0 ohms?

Yes >> Repair the (D65) CAN C Bus (+) circuit for an open.

No >> Go to 4

4. (D64) CAN C BUS (-) CIRCUIT OPEN

Measure the resistance of the (D64) CAN C Bus (-) circuit between the Steering Control Module harness connector and the Front Control Module C1 harness connector.

Is the resistance above 2.0 ohms?

Yes >> Repair the (D64) CAN C Bus (-) circuit for an open.

No >> Go to 5

5. STEERING CONTROL MODULE (SCM)

Inspect the wiring between the Steering Control Module harness connector and the Front Control Module harness connector. If any problems are found, repair as necessary. If no problems are found, view repair.

Repair

Replace the Steering Control Module (SCM) in accordance with the Service Information.

6. INTERMITTENT CAN C BUS OFF PERFORMANCE DTC

The conditions necessary to set this DTC are not present at this time.

Using the wiring diagram/schematic as a guide, inspect the wiring and connectors.

While monitoring the scan tool data relative to this circuit, wiggle test the wiring and connectors.

Look for the data to change or for the DTC to reset during the wiggle test.

Were any problems found?

Yes >> Repair as necessary.

No >> Test complete.

U0019–CAN B BUS CIRCUIT

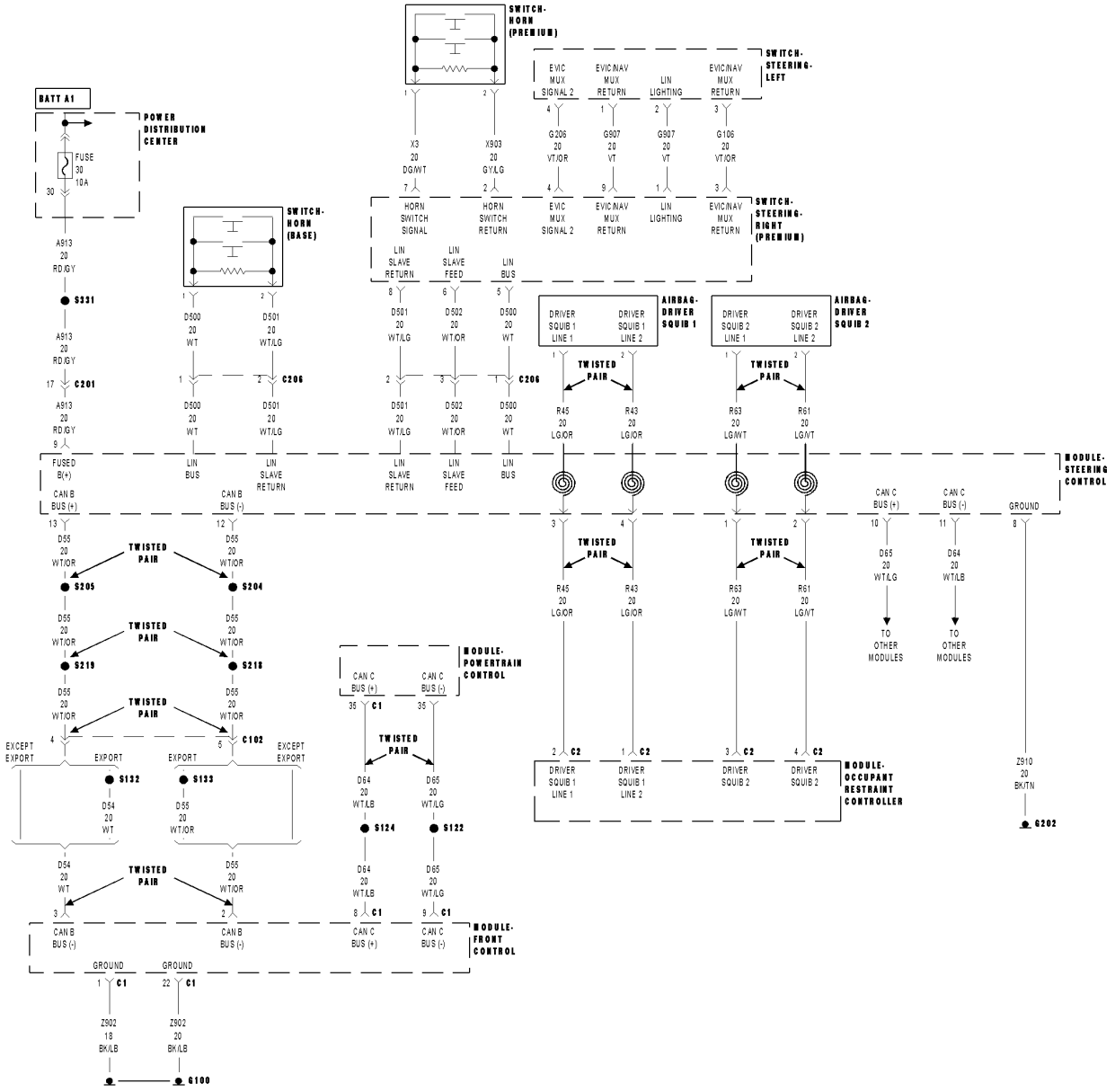

For a complete wiring diagram **Refer to Section 8W**.

- **When Monitored:**
  Continuously.
- **Set Condition:**
  Whenever the CAN B Bus (+) or CAN B Bus (-) is open, shorted to voltage or shorted to ground.

Possible Causes
INTERMITTENT CAN B BUS CIRCUIT DTC
CAN B BUS DTCs SET IN FRONT CONTROL MODULE
(D55) CAN B BUS (+) CIRCUIT OPEN
(D54) CAN B BUS (-) CIRCUIT OPEN
STEERING CONTROL MODULE (SCM)

Diagnostic Test

1. DTC IS ACTIVE

Ignition on, engine not running.
With the scan tool, select Clear Stored DTCs in the Steering Control Module.
Cycle the ignition from off to on at least 5 times, leaving the ignition on for a minimum of 90 seconds per cycle.
With the Scan Tool, select View DTCs in the Steering Control Module.

Does the DTC reset and/or remain active?

Yes >> Go to 2

No >> Go to 6

2. CAN B BUS DTCs SET IN FRONT CONTROL MODULE

With the Scan Tool, select View DTCs in the Front Control Module (FCM).

Are there any active CAN B Bus DTCs?

Yes >> Refer to 8 — ELECTRICAL/ELECTRONIC CONTROL MODULES — DIAGNOSIS AND TESTING for diagnostic procedures and for further possible causes.

No >> Go to 3

3. (D55) CAN B BUS (+) CIRCUIT OPEN

Turn the ignition off.
Disconnect the Steering Control Module harness connector.
Disconnect the Front Control Module C1 harness connector.
Measure the resistance of the (D55) CAN B Bus (+) circuit between the Steering Control Module harness connector and the Front Control Module C1 harness connector.

Is the resistance above 2.0 ohms?

Yes >> Repair the (D55) CAN B Bus (+) circuit for an open.

No >> Go to 4

4. (D54) CAN B BUS (-) CIRCUIT OPEN

Measure the resistance of the (D54) CAN B Bus (-) circuit between the Steering Control Module harness connector and the Front Control Module C1 harness connector.

Is the resistance above 2.0 ohms?

Yes >> Repair the (D54) CAN B Bus (-) circuit for an open.

No >> Go to 5

5. STEERING CONTROL MODULE (SCM)

Inspect the wiring between the Steering Control Module harness connector and the Front Control Module harness connector. If any problems are found, repair as necessary. If no problems are found, view repair.

Repair

Replace the Steering Control Module (SCM) in accordance with the Service Information.

6. INTERMITTENT CAN B BUS CIRCUIT DTC

The conditions necessary to set this DTC are not present at this time.

Using the wiring diagram/schematic as a guide, inspect the wiring and connectors.

While monitoring the scan tool data relative to this circuit, wiggle test the wiring and connectors.

Look for the data to change or for the DTC to reset during the wiggle test.

Were any problems found?

Yes >> Repair as necessary.

No >> Test complete.

U0121–LOST COMMUNICATION WITH ANTI-LOCK BRAKE SYSTEM (ABS) CONTROL MODULE

For a complete wiring diagram **Refer to Section 8W**.

Diagnostic Test

1. LOST COMMUNICATION WITH ANTI-LOCK BRAKE SYSTEM (ABS) CONTROL MODULE

The Steering Control Module (SCM) is reporting that network communication has been lost with the ABS Control module.

View repair.

Repair

Refer to 8 — ELECTRICAL/ELECTRONIC CONTROL MODULES — DIAGNOSIS AND TESTING for diagnostic procedures and for further possible causes.

U0141–LOST COMMUNICATION WITH FRONT CONTROL MODULE

For a complete wiring diagram **Refer to Section 8W**.

Diagnostic Test

1. LOST COMMUNICATION WITH FRONT CONTROL MODULE (FCM)

The Steering Control Module (SCM) is reporting that network communication has been lost with the Front Control Module (FCM).

View repair.

Repair

Refer to 8 — ELECTRICAL/ELECTRONIC CONTROL MODULES — DIAGNOSIS AND TESTING for diagnostic procedures and for further possible causes.

U0155–LOST COMMUNICATION WITH CLUSTER / CCN

For a complete wiring diagram **Refer to Section 8W**.

Diagnostic Test

1. LOST COMMUNICATION WITH INSTRUMENT CLUSTER (CCN)

The Steering Control Module (SCM) is reporting that network communication has been lost with the Instrument Cluster (CCN).

View repair.

Repair

Refer to 8 — ELECTRICAL/ELECTRONIC CONTROL MODULES — DIAGNOSIS AND TESTING for diagnostic procedures and for further possible causes.

U0212–LOST COMMUNICATION WITH STEERING COLUMN CONTROL MODULE

For a complete wiring diagram **Refer to Section 8W**.

Diagnostic Test

1. LOST COMMUNICATION WITH STEERING COLUMN CONTROL MODULE

The Memory Seat Module (MSM) is reporting that network communication has been lost with the Steering Control Module (SCM).

View repair.

Repair

Refer to 8 — ELECTRICAL/ELECTRONIC CONTROL MODULES — DIAGNOSIS AND TESTING for diagnostic procedures and for further possible causes.

U1109–LOST COMMUNICATION WITH LIN STEERING WHEEL CONTROLS

For a complete wiring diagram **Refer to Section 8W**.

Theory of Operation

The Steering Wheel Control Switch status is transferred to the Steering Control Module (SCM) by way of the LIN bus, a serial sub-bus. The SCM converts the data to CAN and sends the messages to the corresponding module(s) on the bus.

- **When Monitored:**
  Continuously with the ignition on.
- **Set Condition:**
  There is no response from the Steering Column Control (LIN) Switch for 10 ms.

Possible Causes
INTERMITTENT LOST COMMUNICATION WITH LIN STEERING WHEEL CONTROLS DTC
LIN BUS WIRING AND CONNECTORS
CLOCKSPRING
RIGHT STEERING SWITCH
STEERING CONTROL MODULE (SCM)

Diagnostic Test

1. DTC IS ACTIVE

NOTE: If P0562–BATTERY VOLTAGE LOW or P0563–BATTERY VOLTAGE HIGH is set along with this DTC, diagnose the battery voltage DTC first.

Ignition on, engine not running.

With the Scan Tool, select View DTCs in the Steering Control Module.

Is the DTC status Active at this time?

Yes >> Go to 2

No >> Go to 6

2. LIN BUS WIRING AND CONNECTORS

Turn the ignition off.

Remove the Driver Airbag in accordance with the Service Information.

NOTE: Before proceeding, thoroughly inspect the wiring harness and connectors between the Clockspring and the Right Steering Switch for a short to ground or any other circuit.

Disconnect the Right Steering Switch harness connector.

Disconnect the C206 harness connector.

Measure the resistance of the following LIN Bus circuits:

- The (D500) LIN Bus circuit between the Right Steering Switch harness connector and the C206 harness connector (Steering Pad side).
- The (D501) LIN Bus Slave Return circuit between the Right Steering Switch harness connector and the C206 harness connector (Steering Pad side).
- The (D502) LIN Bus Slave Feed circuit between the Right Steering Switch harness connector and the C206 harness connector (Steering Pad side).

Is the resistance above 5.0 ohms for any of the LIN Bus circuits?

Yes >> Repair the LIN Bus circuit(s) for an open.

No >> Go to 3

3. CLOCKSPRING

Remove the Clockspring in accordance with the Service Information.

Measure the resistance of the following LIN Bus circuits:

- The (D500) LIN Bus circuit between the Clockspring connector to the SCM and the C206 harness connector (Clockspring side).
- The (D501) LIN Bus Slave Return circuit between the Clockspring connector to the SCM and the C206 harness connector (Clockspring side).
- The (D502) LIN Bus Slave Feed circuit between the Clockspring connector to the SCM and the C206 harness connector (Clockspring side).

Is the resistance above 5.0 ohms for any of the LIN Bus circuits?

Yes >> Repair the LIN Bus circuit(s) for an open.

No >> Go to 4

4. RIGHT STEERING SWITCH

Replace the Right Steering Switch in accordance with the Service Information.

Reconnect the Clockspring.

Reconnect the C206 (LIN Bus) connector.

Turn the ignition on.

With the scan tool, select Clear Stored DTCs in the Steering Control Module.

With the scan tool, select View DTCs in the Steering Control Module.

Does the DTC reset?

Yes >> Go to 5

No >> Test complete.

5. STEERING CONTROL MODULE (SCM)

View repair.

Repair

Replace the Steering Control Module (SCM) in accordance with the Service Information.

6. INTERMITTENT LOST COMMUNICATION WITH LIN STEERING WHEEL CONTROLS DTC

The conditions necessary to set this DTC are not present at this time.

Using the wiring diagram/schematic as a guide, inspect the wiring and connectors.

While monitoring the scan tool data relative to this circuit, wiggle test the wiring and connectors.

Look for the data to change or for the DTC to reset during the wiggle test.

Were any problems found?

Yes >> Repair as necessary.

No >> Test complete.

COLUMN SERVICE INFORMATION

TABLE OF CONTENTS

page

COLUMN SERVICE INFORMATION
DESCRIPTION 112
DIAGNOSIS AND TESTING
STEERING COLUMN 113
REMOVAL
COLUMN 113
COLUMN - COLUMN SHIFT 119
COLUMN - RHD 127
INSTALLATION
COLUMN 132
COLUMN - COLUMN SHIFT 140
COLUMN - RHD 148
SPECIFICATIONS
STEERING COLUMN FASTENER TORQUE . . 156
COUPLING-STEERING
REMOVAL 157
INSTALLATION 158
SHAFT-INTERMEDIATE
REMOVAL 160
INSTALLATION 161
LEVER-ELECTRONIC TELESCOPING
REMOVAL 164

page

INSTALLATION 166
LEVER-GEAR SHIFT
REMOVAL 169
INSTALLATION 171
MODULE-STEERING COLUMN CONTROL
DESCRIPTION 173
REMOVAL 173
DISASSEMBLY 176
ASSEMBLY 179
INSTALLATION 183
SHROUD
REMOVAL 185
INSTALLATION 185
SHROUD-ROLL TOP
REMOVAL 186
INSTALLATION 190
WHEEL-STEERING
REMOVAL 195
INSTALLATION 195

COLUMN SERVICE INFORMATION

DESCRIPTION

The tilt, telescoping and electronic telescoping steering column (5) has been designed to be serviced as an assembly (including the intermediate shaft (10)); less wiring, switches, shroud, steering wheel, etc. Most steering column components can be serviced without removing the steering column from the vehicle.

The steering column used on rear-wheel-drive (RWD) vehicles is not interchangeable with the steering column used on all-wheel-drive (AWD) vehicles.

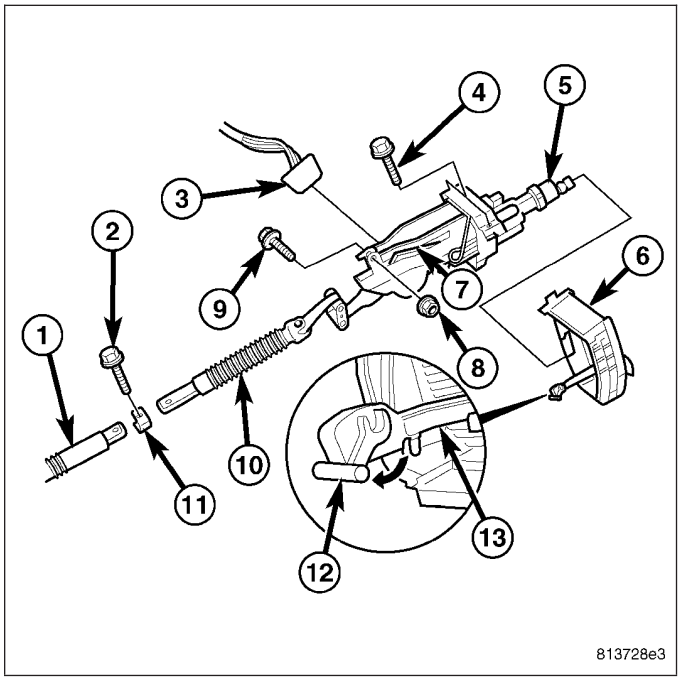

The steering column (1) for right-hand drive (RHD) models is similar to the left-hand drive column, except that it has a separate, serviceable intermediate shaft (3) and a shaft lock module (2).

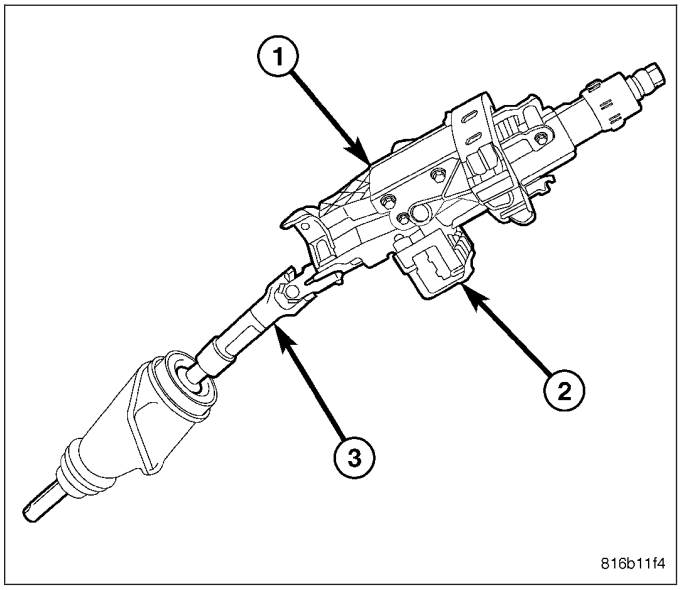

A column shift type steering column is available on RWD fleet vehicles for police use only. This steering column (1) has an add-on type gear shift mechanism (3) attached to the right side of the steering column. Beside the components serviced on the standard RWD steering column, the serviceable components on this column also include the gear shift lever. All other components are serviced as part of the steering column. Do not attempt disassembly of the gear shift mechanism.

The gear shift lever on the column shift steering column includes switches for autostick. These switches are not replaceable. They are serviced with the gear shift lever.

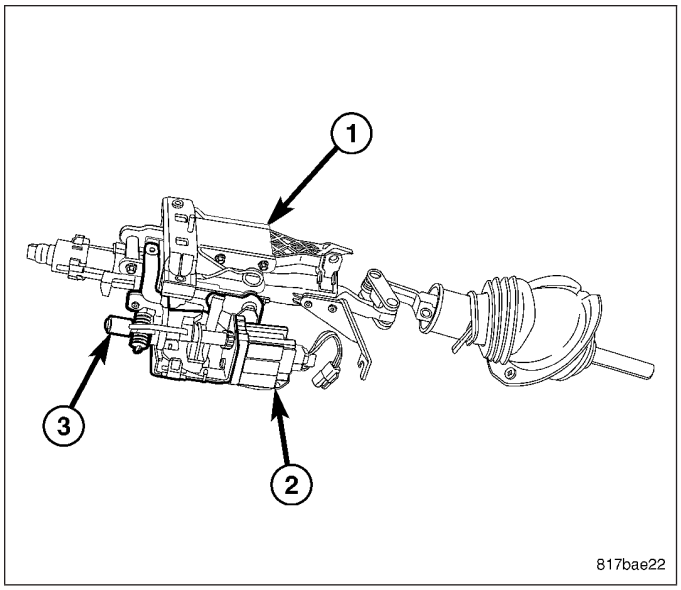

When servicing any component of the steering column, refer to Restraints and observe all WARNINGS and CAUTIONS. (Refer to 8 - ELECTRICAL/RESTRAINTS - WARNING)

WARNING: The airbag system is a sensitive, complex electro-mechanical unit. Before attempting to diagnose, remove or install the airbag system components you must first disconnect and isolate the battery negative (ground) cable. Then wait two minutes for the system capacitor to discharge. Failure to do so could result in accidental deployment of the airbag and possible personal injury. The fasteners, screws, and bolts, originally used for the airbag components, have special coatings and are specifically designed for the airbag system. They must never be replaced with any substitutes. Anytime a new fastener is needed, replace with the correct fasteners provided in the service package or fasteners listed in the parts books.

CAUTION: Do not hammer on steering column shaft. This may cause damage to the column internally.

CAUTION: Do not attempt to remove or modify any part of the column.

NOTE: When servicing the steering wheel after removing the old bolt, a NEW bolt must be used when installing.

NOTE: When servicing the steering coupler a NEW bolt must be used when installing.

DIAGNOSIS AND TESTING

STEERING COLUMN

If the vehicle is involved in a front end collision and/or the air bag has deployed, the steering column must be replaced.

REMOVAL

COLUMN

WARNING: Before servicing the steering column the airbag system must be disarmed. Refer to electrical restraint system for service procedures. Failure to do so may result in accidental deployment of the airbag and possible personal injury.

NOTE: If steering column being removed is an electric telescoping column and it is being reused, place column in mid-tilt position before removal to ease installation.

1. Position the front wheels **straight-ahead**.
2. Fully extend or pull out adjustable steering column.
3. Disconnect the negative (ground) cable from the battery.
4. Remove the airbag (3). (Refer to 8 - ELECTRICAL/ RESTRAINTS/DRIVER AIRBAG - REMOVAL).

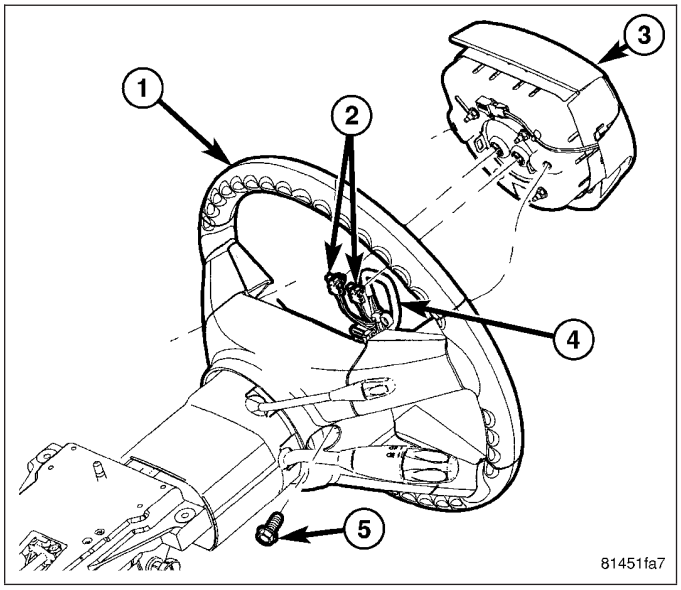

5. Remove the steering wheel retainer bolt (2), then slide the steering wheel (1) off the shaft.

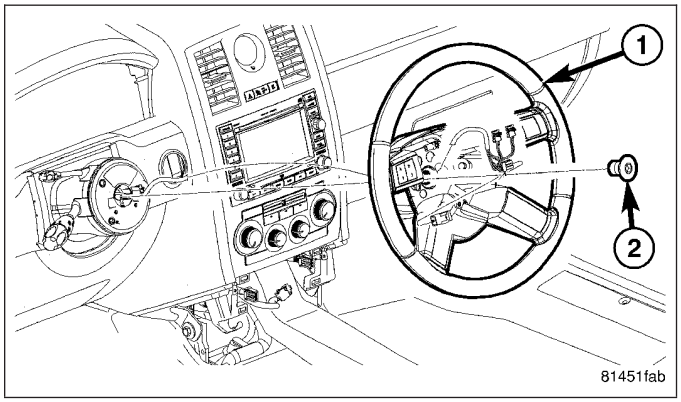

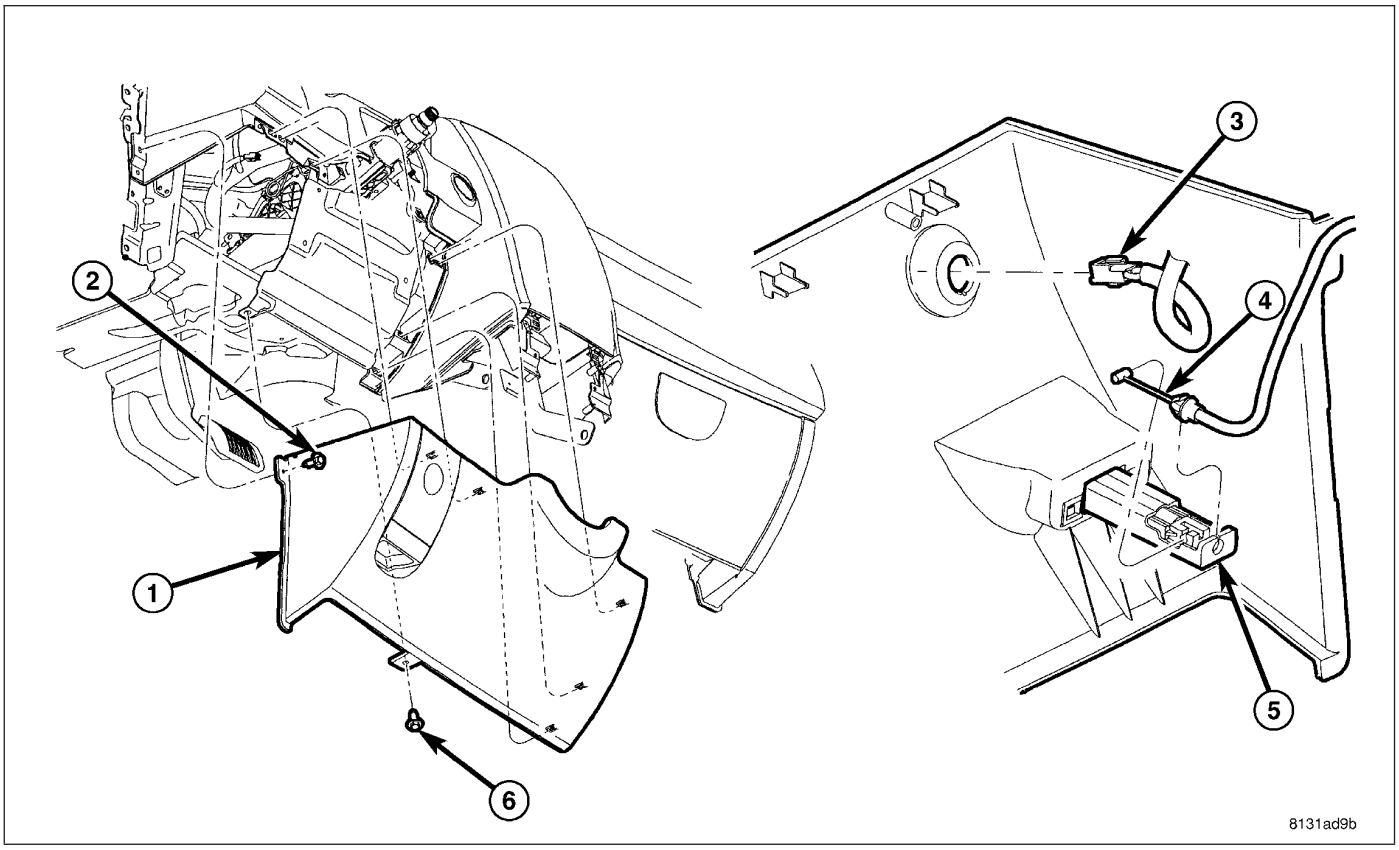

6. Remove the steering column opening cover (1) (Refer to 23 - BODY/INSTRUMENT PANEL/STEERING COLUMN OPENING COVER - REMOVAL).
7. Remove the steering column opening reinforcement (1).

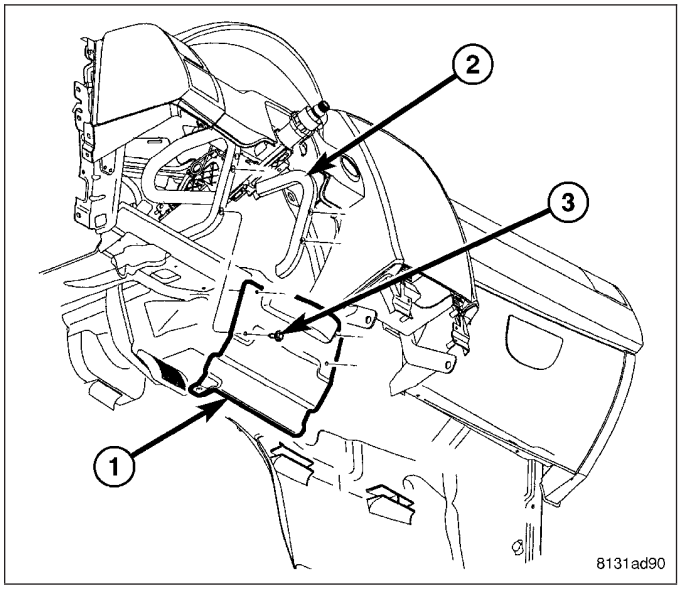

8. Loosen at least one clockspring screw (1) to prevent the clockspring from unwinding.

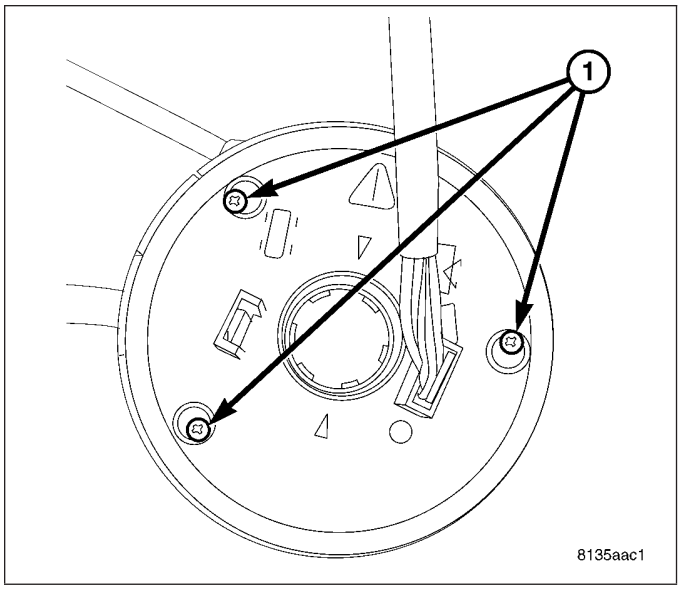

9. Back out the set screw (1) through the access hole (3) in the steering column control module (SCCM) (2) securing the multi-function SCCM assembly.

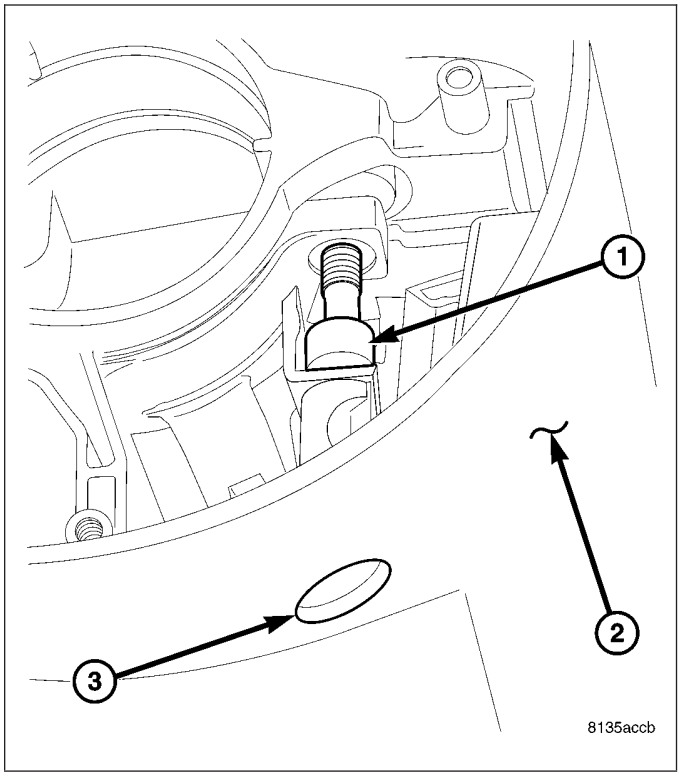

10. Pull the SCCM assembly (1) off the steering column shaft.

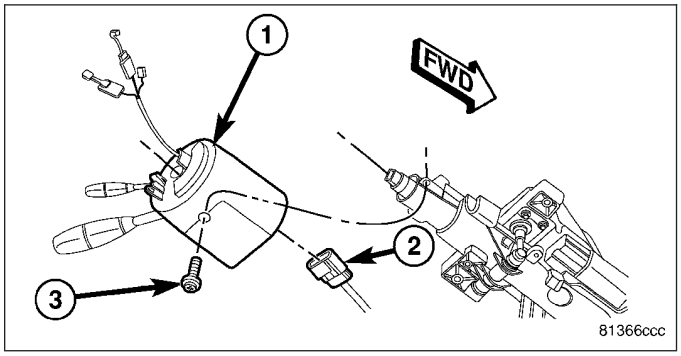

11. Manual tilt and telescoping columns – Unsnap and move the adjustment handle locking tab (3) forward as shown unlatching the handle (2) from the column.

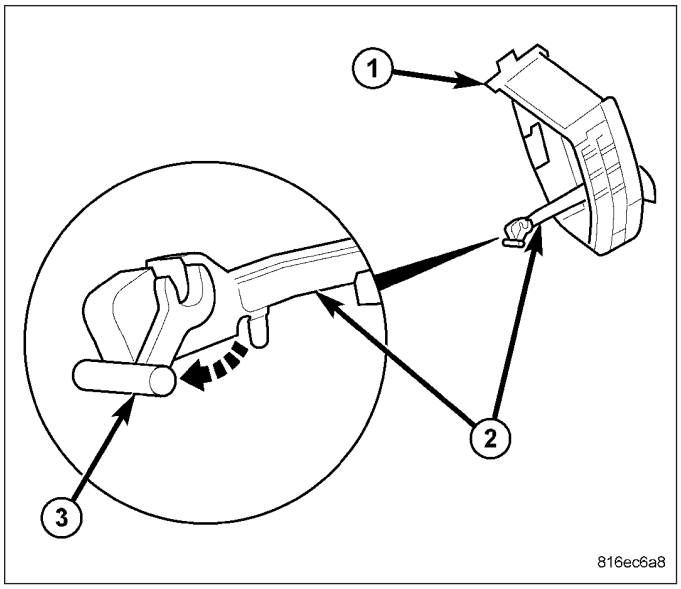

12. Remove four roll top shroud mounting screws and remove roll top shroud (1) along with manual tilt/telescope handle (3) (if equipped).

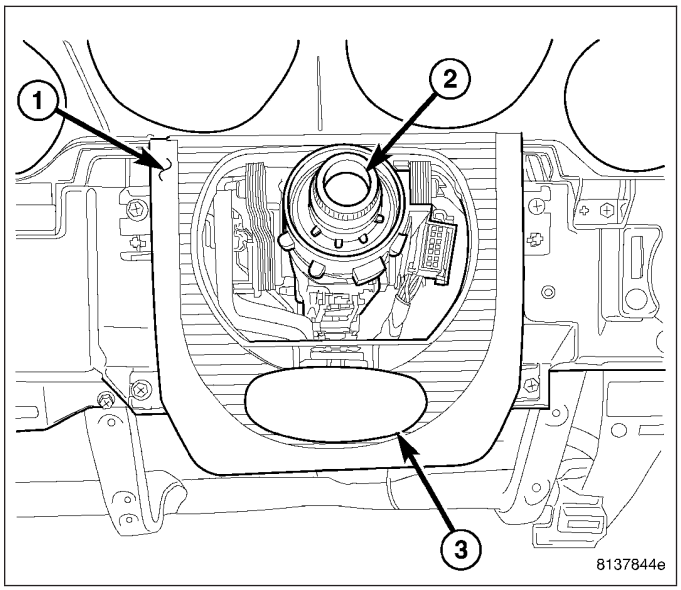

13. Remove the two retaining nuts (1) at the bulkhead (2) for the steering column.
14. Remove the instrument cluster assembly. (Refer to 8 - ELECTRICAL/INSTRUMENT CLUSTER - REMOVAL)

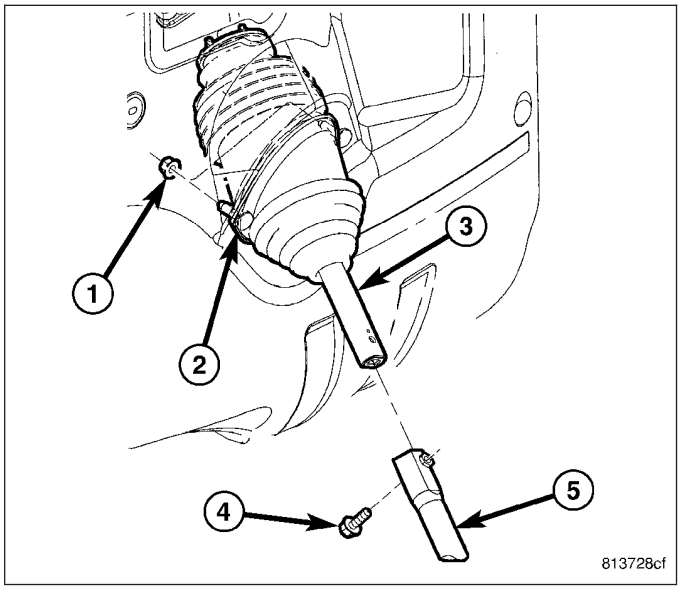

15. Depress the tabs on the rear of the column wiring harness connector and remove the connector from the steering column.
16. Raise and support vehicle. (Refer to LUBRICATION & MAINTENANCE/HOISTING - STANDARD PROCEDURE)

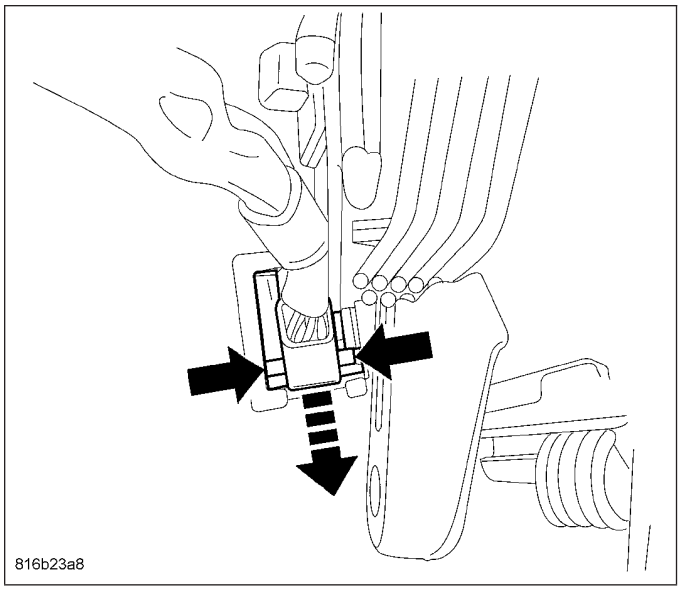

17. Remove the pinch bolt (4) at the lower coupling shaft (5).
18. Slide the steering shaft (3) out of the lower coupling shaft (5).
19. Lower vehicle.

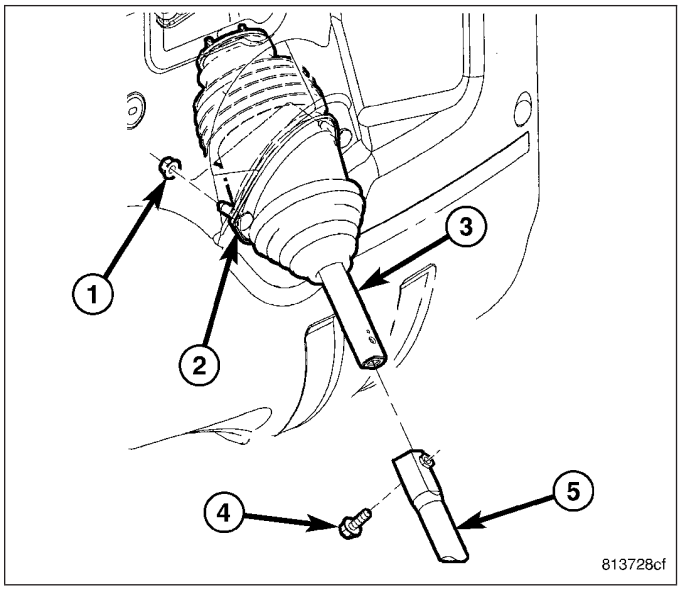

20. If equipped with electronic telescoping column, remove the screws (3) mounting the brace (1) to the steering column (2) and support beam bracket.

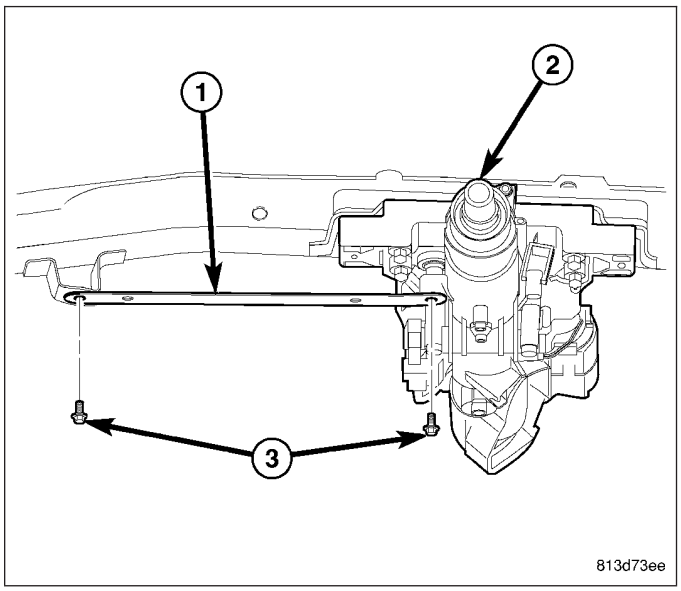

21. Remove the lower steering column mounting pivot bolt and nut (2).

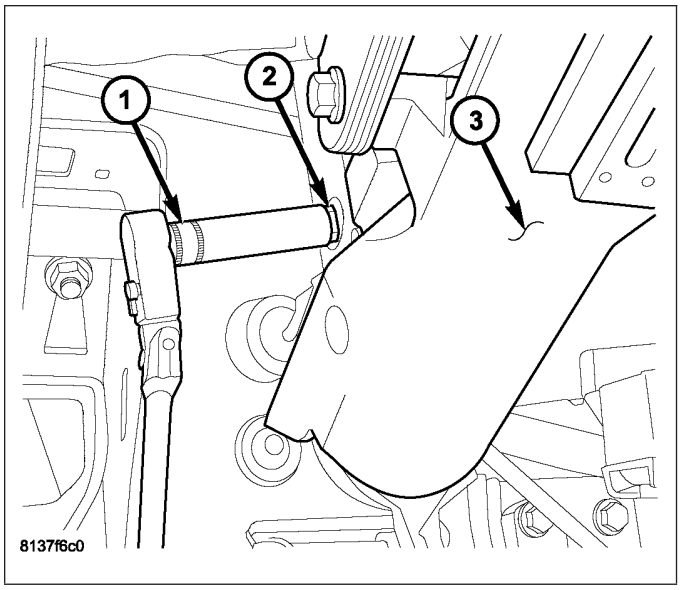

CAUTION: When handling the steering column use care to avoid holding the column by any part of the tilt/telescope mechanism or by the shaft boot. The column should be held by its mounting bracket and the shaft by the exposed portions.

22. Remove the two upper mounting screws (1) from the steering column (2).
23. Remove the steering column assembly from the vehicle.
24. Transfer remaining parts if necessary to the new column.

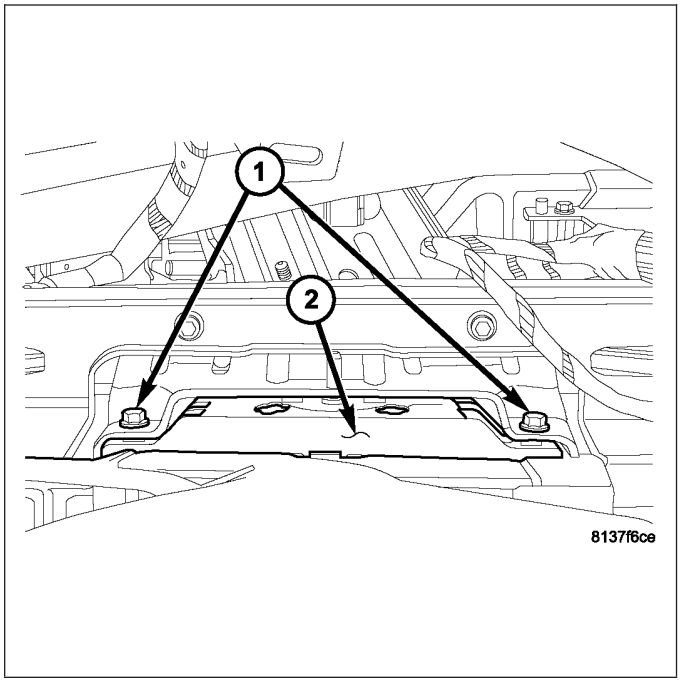

COLUMN - COLUMN SHIFT

WARNING: Before servicing the steering column the airbag system must be disarmed. Refer to electrical restraint system for service procedures. Failure to do so may result in accidental deployment of the airbag and possible personal injury.

CAUTION: All fasteners must be torqued to specification to ensure proper operation of the steering column.

1. Position the front wheels **straight-ahead**.
2. Fully extend or pull out the adjustable steering column.
3. Disconnect the negative (ground) cable from the battery.

4. Remove the airbag (3). (Refer to 8 - ELECTRICAL/ RESTRAINTS/DRIVER AIRBAG - REMOVAL).

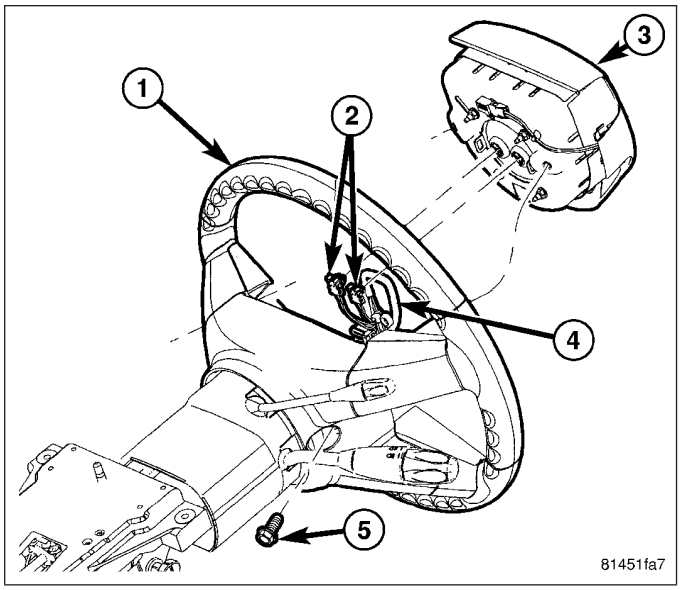

5. Remove the steering wheel retainer bolt (2), then slide the steering wheel (3) off the steering column (1) shaft.

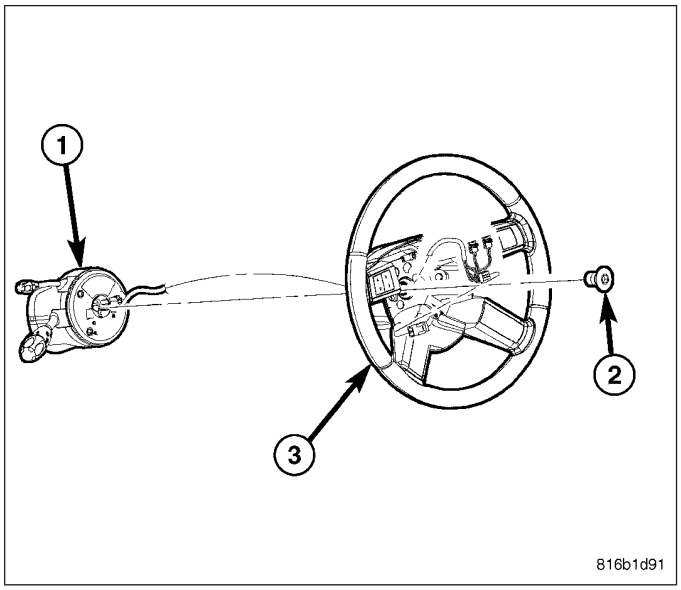

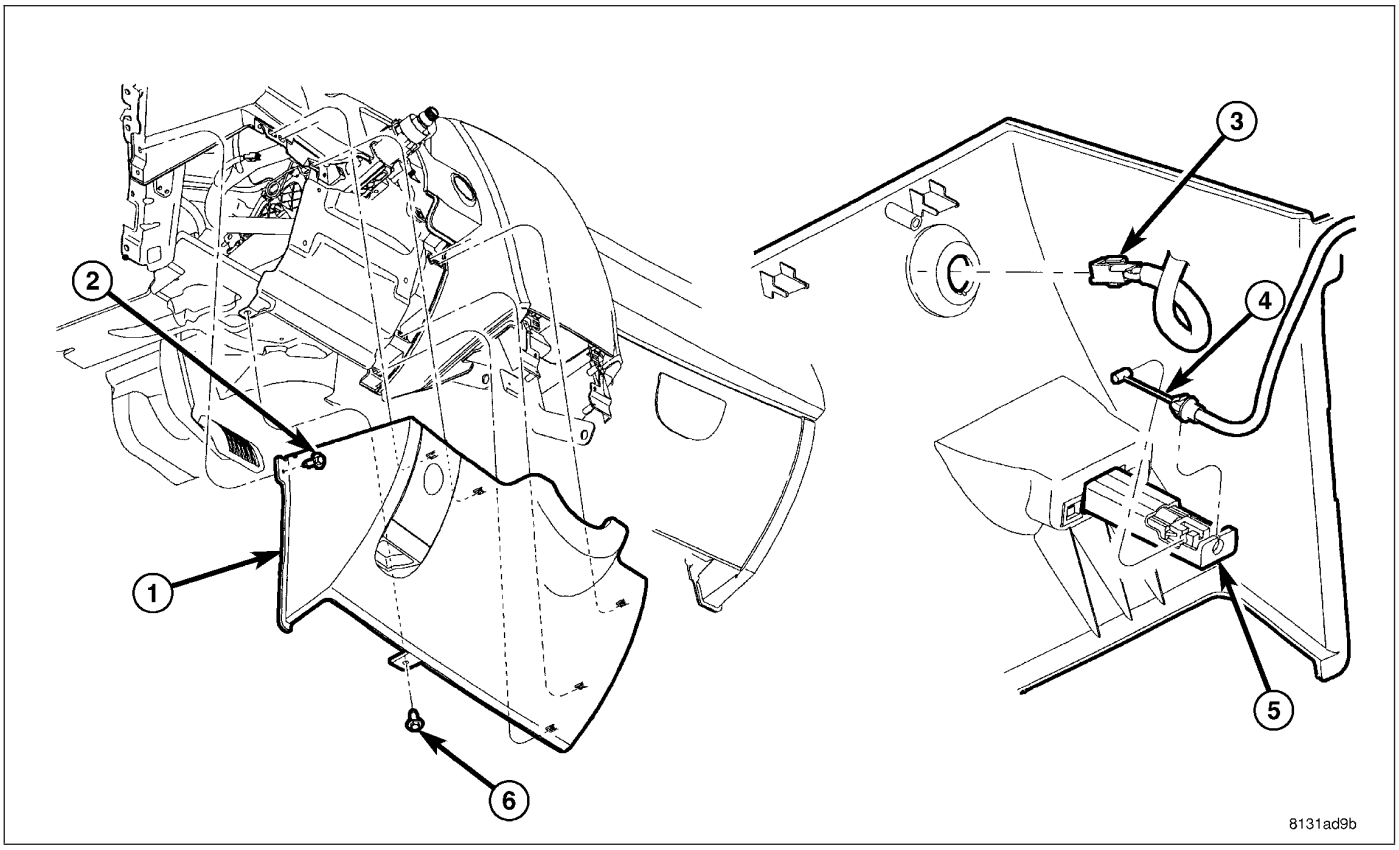

6. Remove the steering column opening cover (1) (Refer to 23 - BODY/INSTRUMENT PANEL/STEERING COLUMN OPENING COVER - REMOVAL).
7. Remove the steering column opening reinforcement (1).

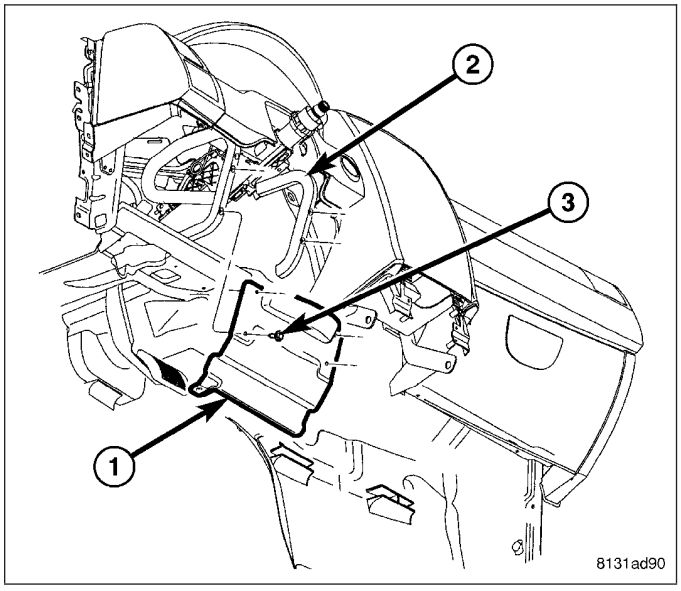

8. Loosen at least one clockspring screw (1) to prevent the clockspring from unwinding.

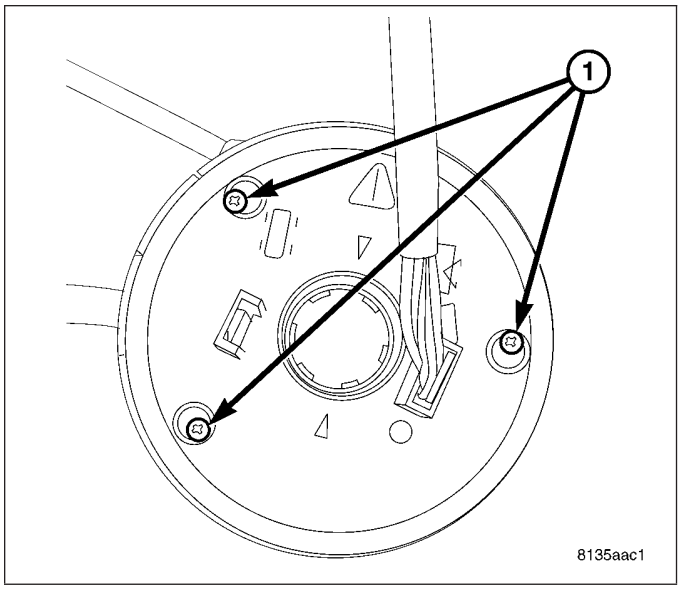

9. Back out the set screw (1) through the access hole (3) in the steering column control module (SCCM) (2) securing the multi-function SCCM assembly.

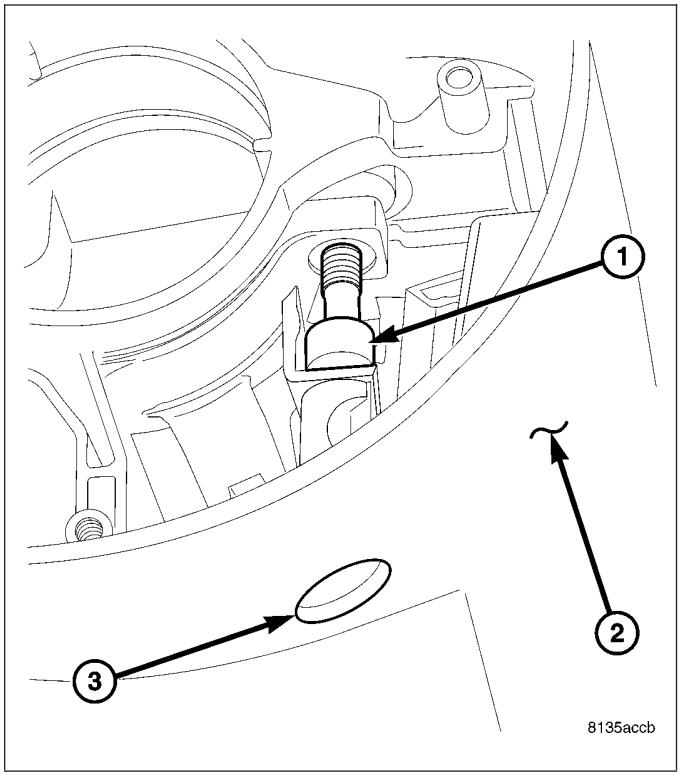

10. Pull the SCCM assembly (1) off the steering column shaft.

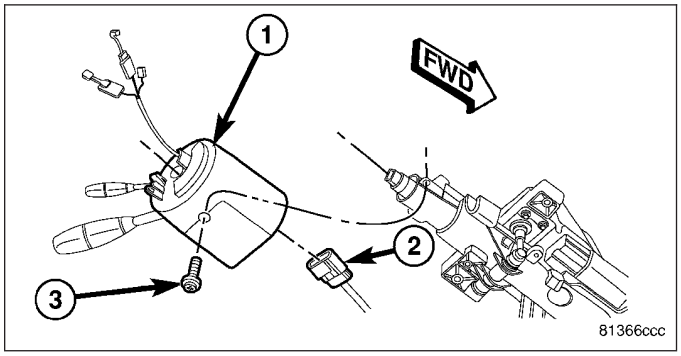

11. Disconnect the 6-Way electronic shift module wiring connector (4).
12. Disconnect the autostick wiring connector (1).
13. Remove the wiring tie strap (2) securing the autostick wiring to the column.

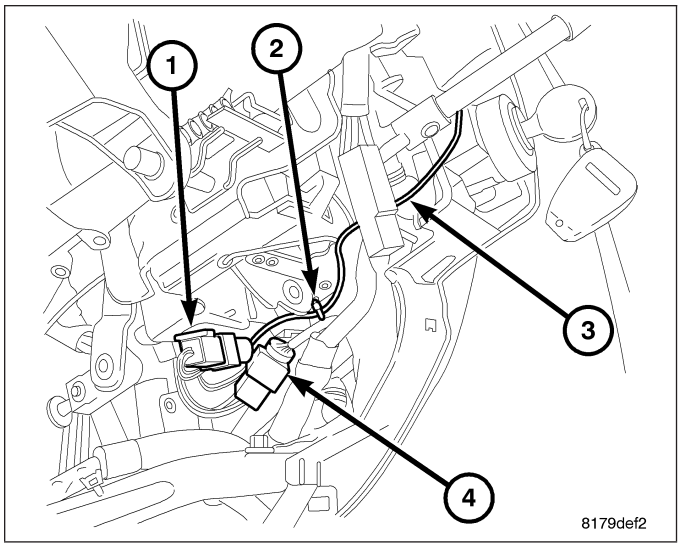

14. Unsnap the gear shift lever boot (2) from the cluster bezel (3). Slide the boot up the gear shift lever (1), away from the bezel.

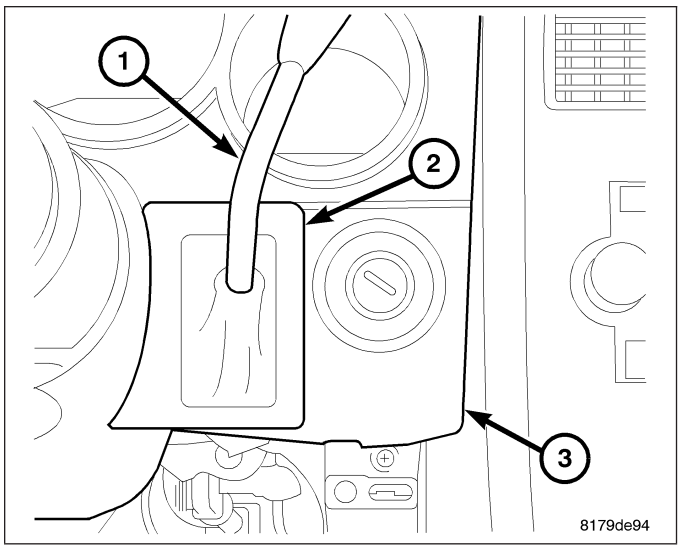

15. Remove the gear shift lever mounting screw (1).
16. Slide the gear shift lever (2) out of the column shift mechanism.
17. Remove the cluster bezel. (Refer to 23 - BODY/ INSTRUMENT PANEL/CLUSTER BEZEL - REMOVAL)

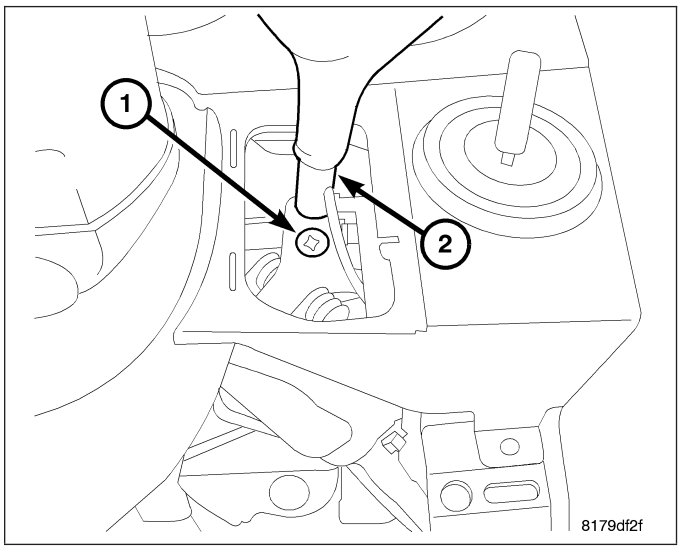

18. Unsnap and move the adjustment handle locking tab (3) forward as shown unlatching the handle (2) from the column.

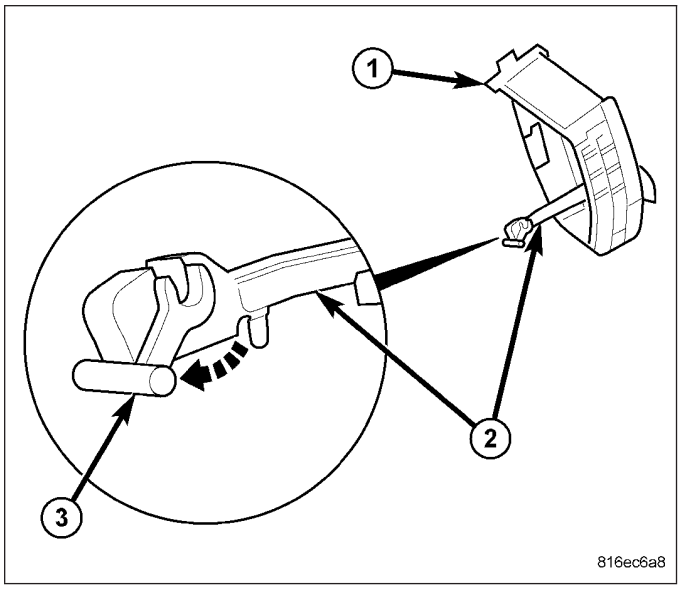

19. Remove the three roll top shroud mounting screws and remove the roll top shroud (1) along with the manual tilt/telescope handle (3).

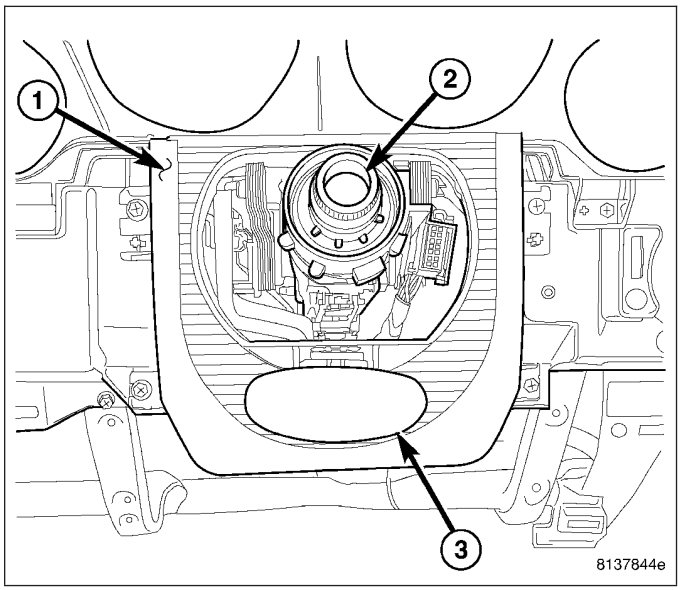

20. Remove the two retaining nuts (1) at the bulkhead (2) for the steering column.
21. Remove the instrument cluster assembly. (Refer to 8 - ELECTRICAL/INSTRUMENT CLUSTER - REMOVAL)

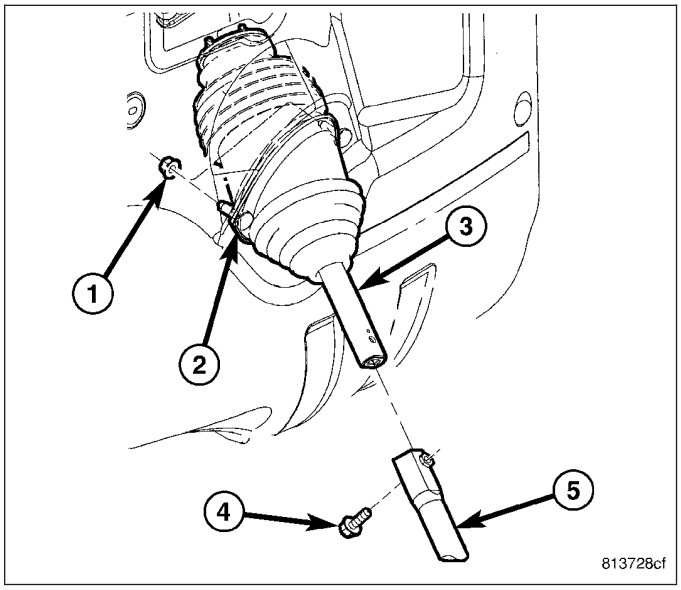

22. Depress the tabs on the rear of the column wiring harness connector and remove the connector from the steering column.

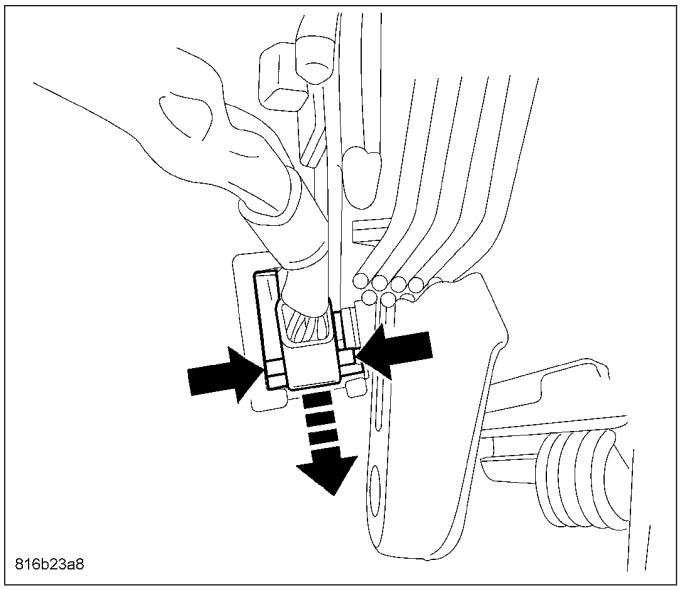

23. Disconnect the shift cable (2) at the shift mechanism (1).
24. Remove the shift cable (2) from the mounting bracket (3).
25. Raise and support the vehicle. (Refer to LUBRICATION & MAINTENANCE/HOISTING - STANDARD PROCEDURE)

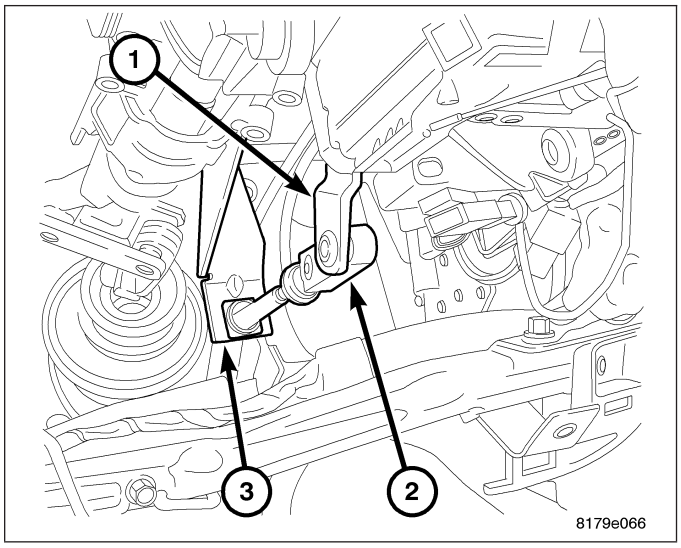

26. Remove the pinch bolt (4) at the lower coupling shaft (5).
27. Slide the steering shaft (3) out of the lower coupling shaft (5).
28. Lower vehicle.

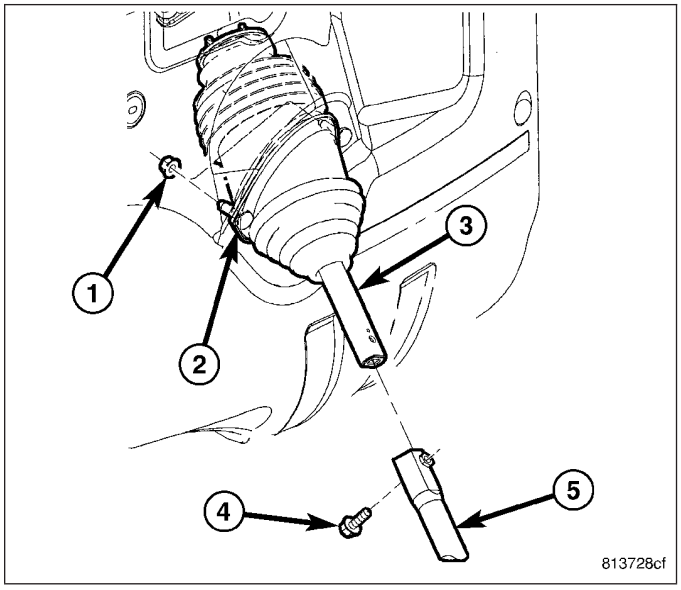

29. Remove the lower steering column mounting pivot bolt and nut (2).

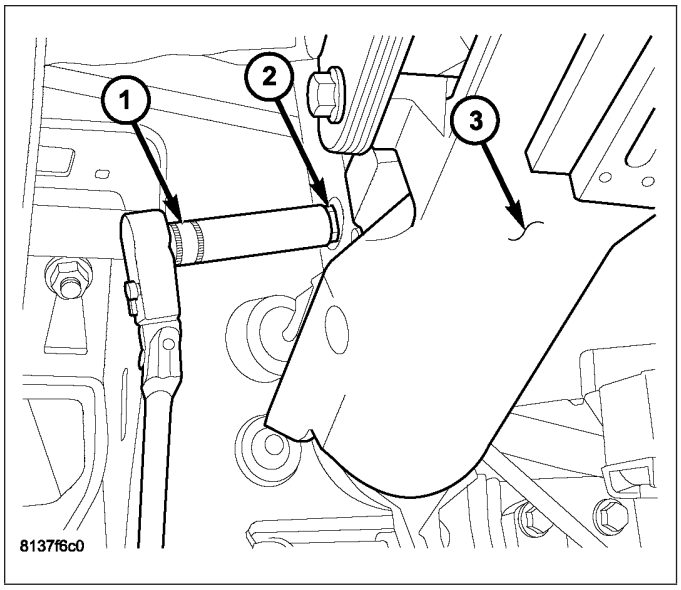

CAUTION: When handling the steering column use care to avoid holding the column by any part of the tilt/telescope mechanism or by the shaft boot. The column should be held by its mounting bracket and the shaft by the exposed portions.

30. Remove the two upper mounting screws (1) from the steering column (2).

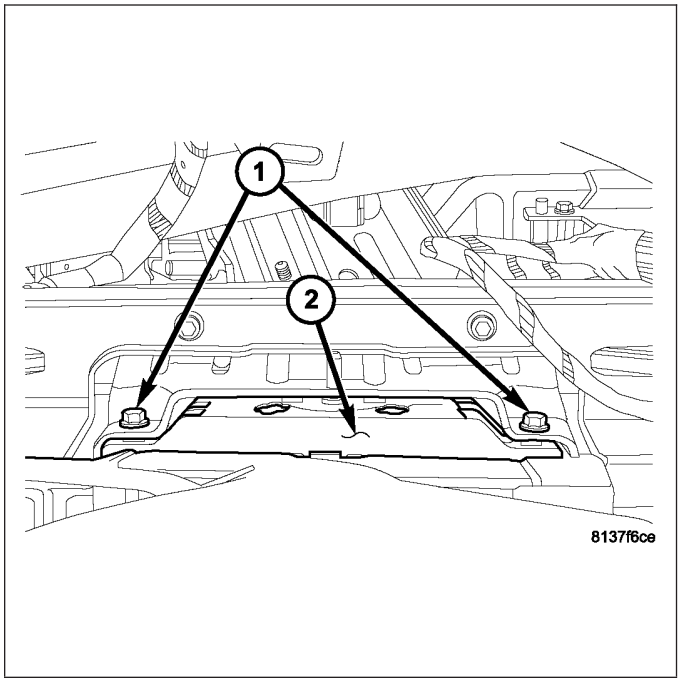

31. Lower the steering column assembly to access the park lock cable.

CAUTION: Before removing the park lock (interlock) cable, make sure the ignition key is removed or placed in LOCK position. If otherwise, damage to the park lock system may occur.

32. Remove the park lock (interlock) cable housing (1) from the column.
33. Remove the park lock cable button (2) from the lever.
34. Remove the steering column assembly from the vehicle.
35. If necessary, transfer any parts to the new column.

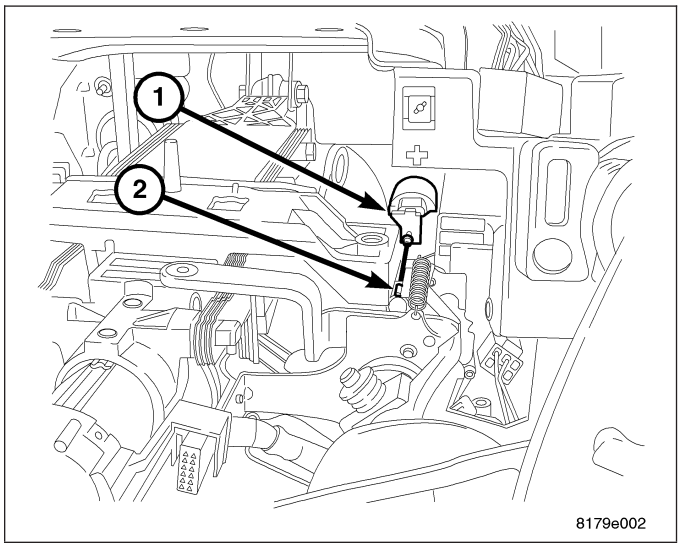

COLUMN - RHD

WARNING: Before servicing the steering column the airbag system must be disarmed. Refer to electrical restraint system for service procedures. Failure to do so may result in accidental deployment of the airbag and possible personal injury.

CAUTION: All fasteners must be torqued to specification to ensure proper operation of the steering column.

1. Position the front wheels **straight-ahead**.
2. Disconnect the negative (ground) cable from the battery.
3. Remove the airbag (3). (Refer to 8 - ELECTRICAL/ RESTRAINTS/DRIVER AIRBAG - REMOVAL).

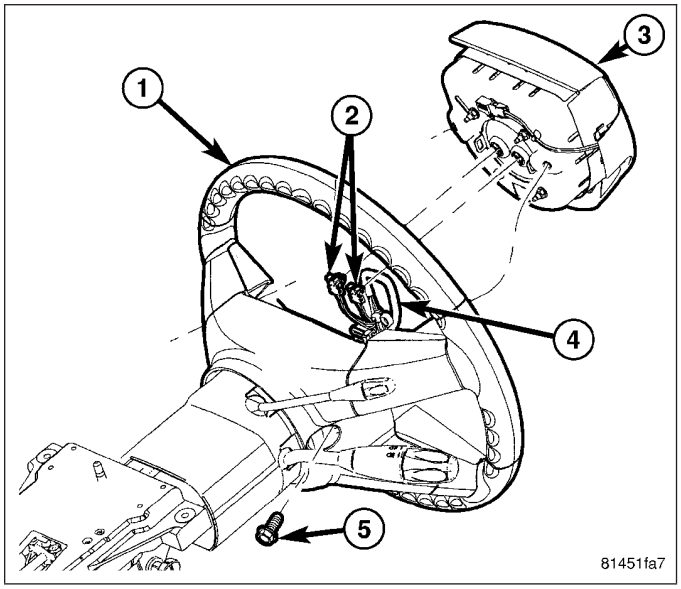

4. Remove the steering wheel retainer bolt (2), then slide the steering wheel (3) off the steering column (1) shaft.

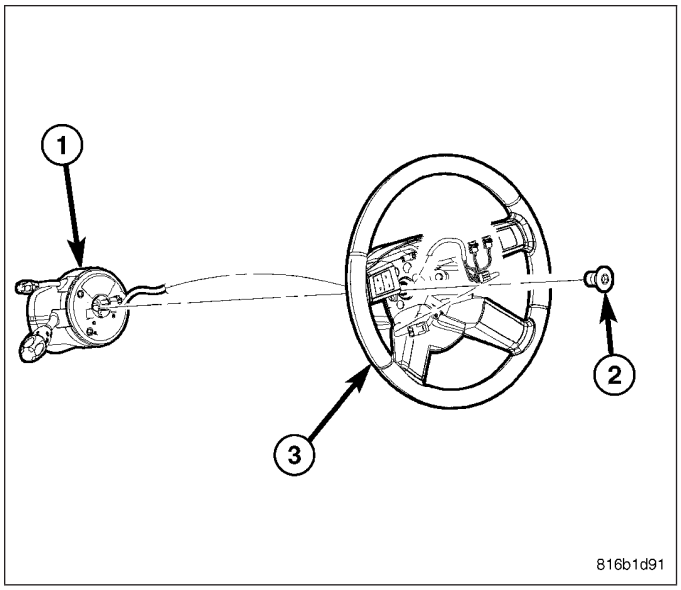

5. Remove the steering column opening cover (1). (Refer to 23 - BODY/INSTRUMENT PANEL/ STEERING COLUMN OPENING COVER - REMOVAL)

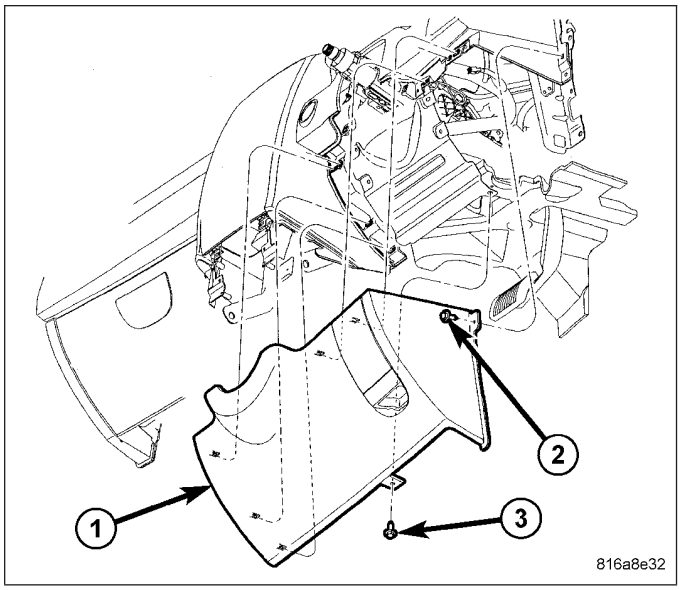

6. Remove the steering column opening reinforcement (3).

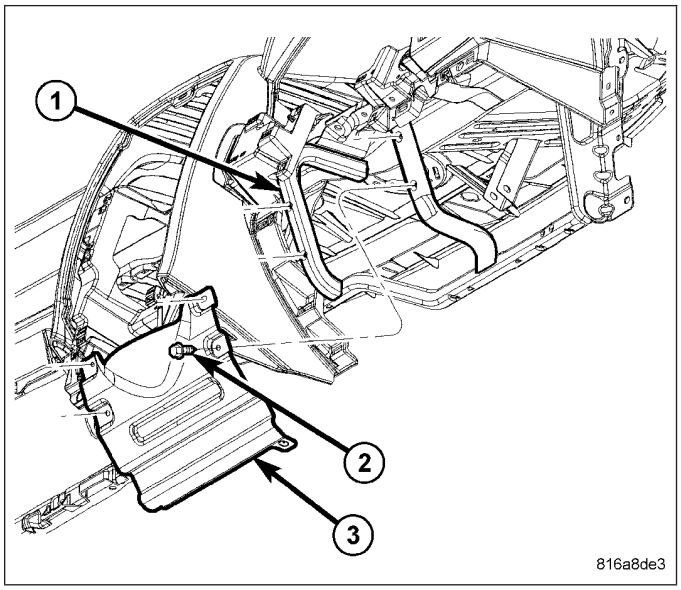

7. Remove two left side parking brake lever mounting nuts (8) and loosen the right lower mounting nut (5). Remove the lever from the studs (2, 3) and move it down, away from the column.

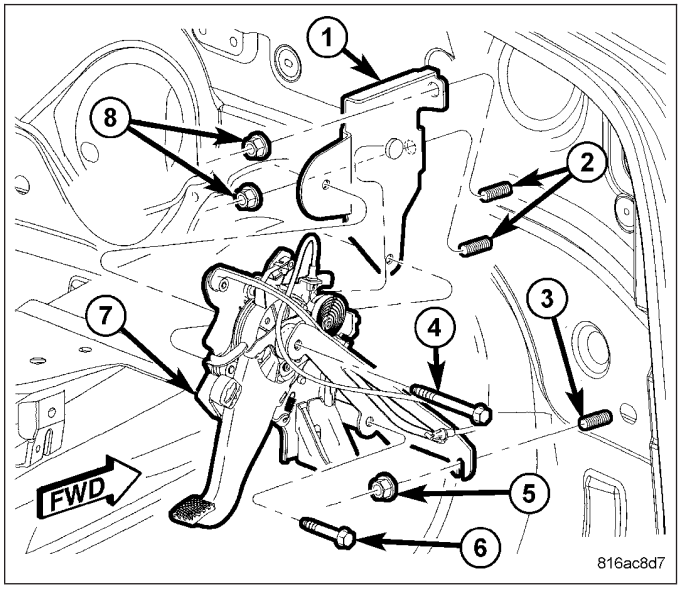

8. Loosen any one of the three clockspring screws (1). The others may be left in.

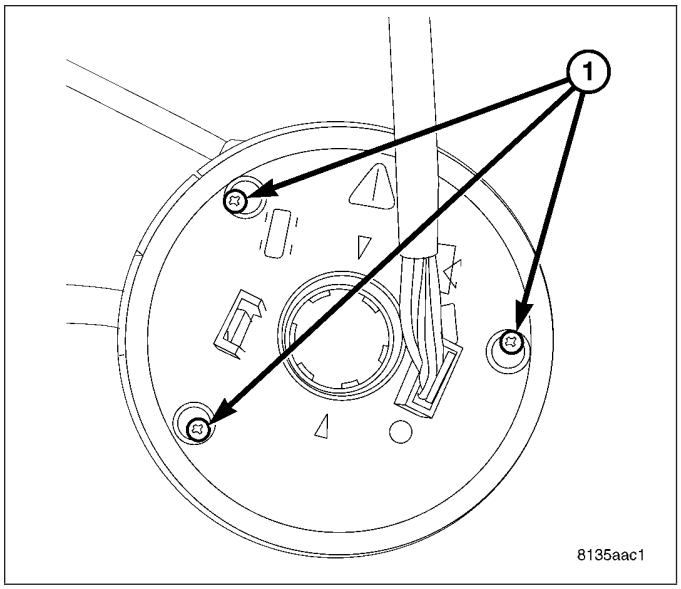

9. Back out the set screw (1) through the access hole (3) in the steering column control module (SCCM) (2) securing the multi-function SCCM assembly.

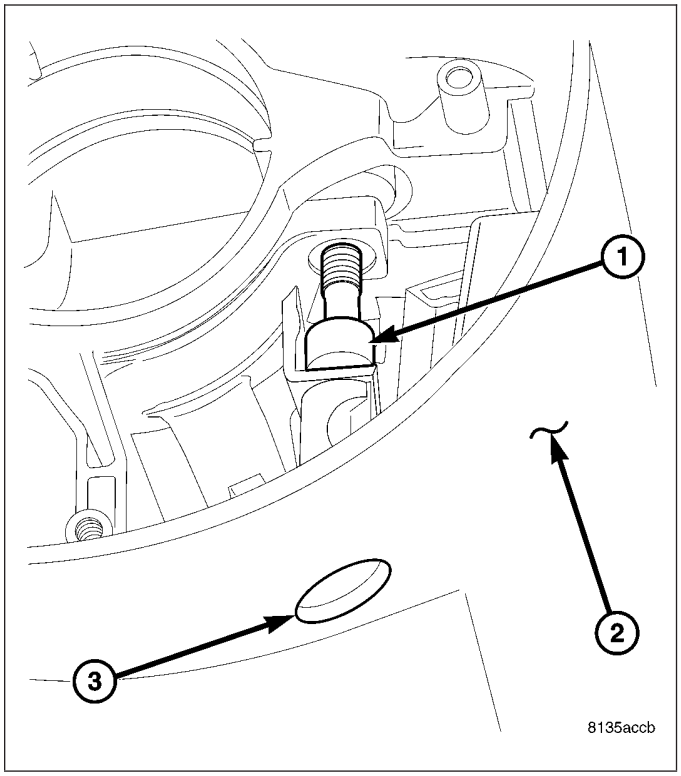

10. Pull the SCCM assembly (1) off the steering column shaft.

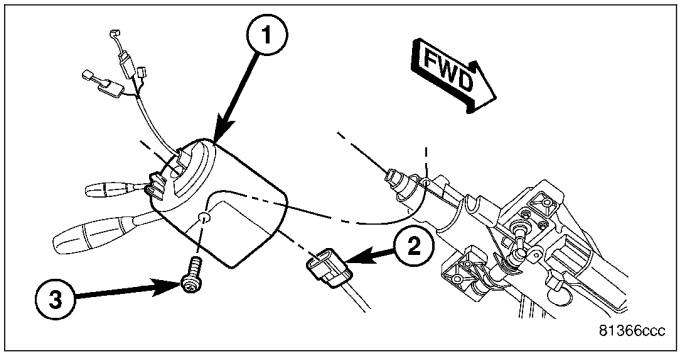

11. Remove the instrument cluster bezel. (Refer to 23 - BODY/INSTRUMENT PANEL/CLUSTER BEZEL - REMOVAL)

12. Unsnap and move the adjustment handle locking tab (3) forward as shown unlatching the handle (2) from the column.

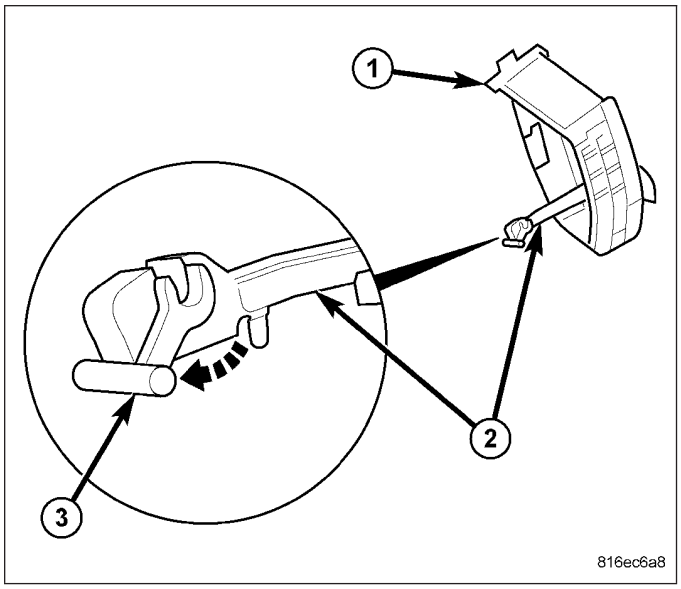

13. Remove the four roll top shroud mounting screws and remove the shroud (1).

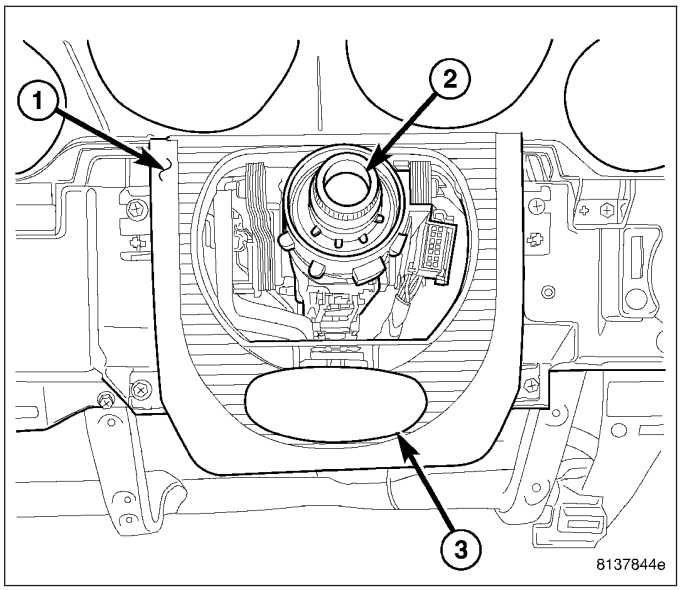

14. Remove the instrument cluster assembly. (Refer to 8 - ELECTRICAL/INSTRUMENT CLUSTER - REMOVAL)
15. Depress the tabs on the rear of the column wiring harness connector and remove the connector from the steering column.

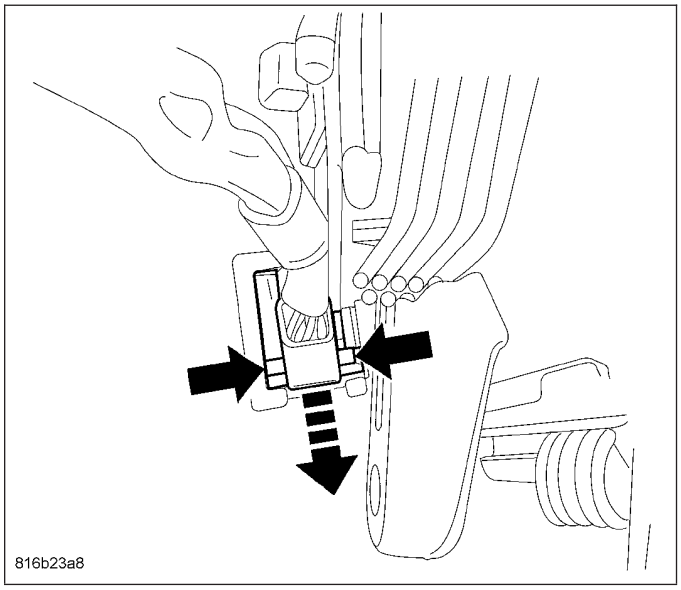

16. Remove the pinch bolt (3) securing the intermediate shaft to the steering column shaft (1).
17. Slide the intermediate shaft (2) off the steering column shaft (1).

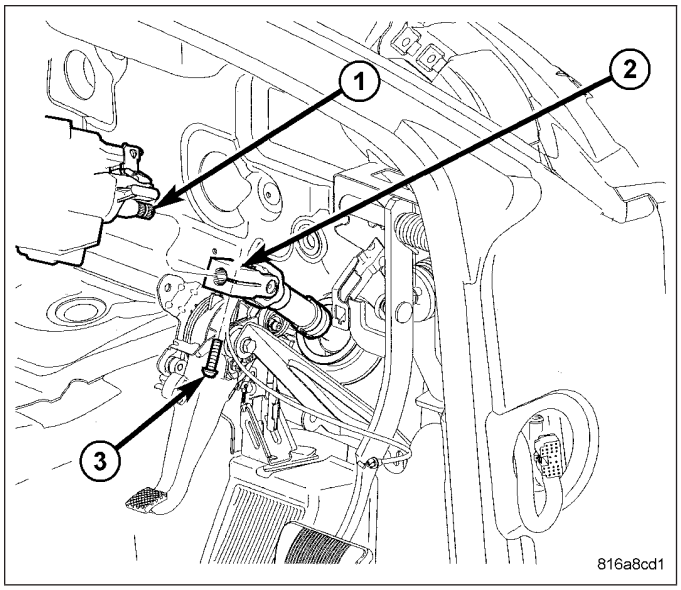

18. Remove the lower steering column mounting pivot bolt and nut (2).

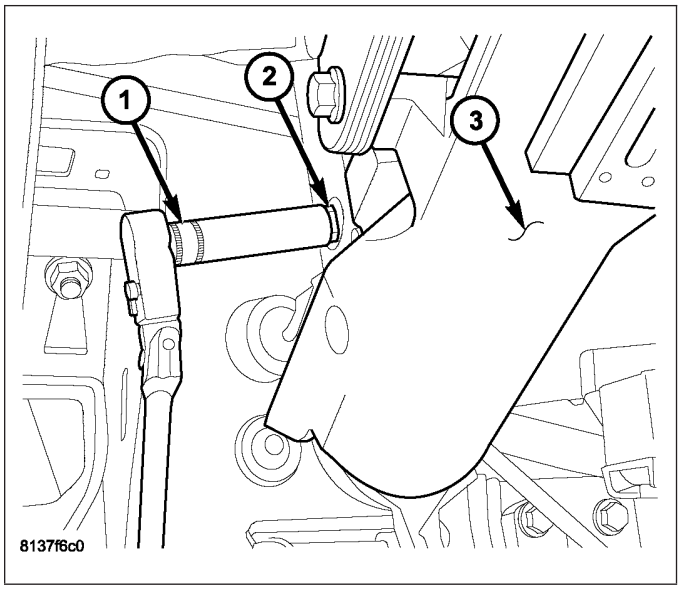

CAUTION: When handling the steering column use care to avoid holding the column by any part of the tilt/telescope mechanism. The column should be held by its mounting bracket.

19. Remove the two upper mounting screws (1) from the steering column (2).
20. Remove the steering column assembly from the vehicle.
21. Transfer any remaining parts if necessary to the new column.

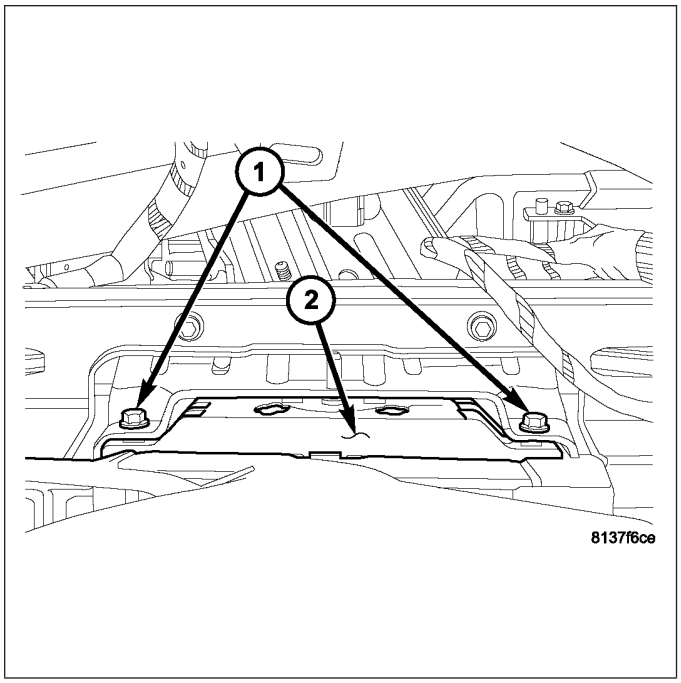

INSTALLATION

COLUMN

WARNING: Before servicing the steering column the airbag system must be disarmed. Refer to electrical restraint system for service procedures. Failure to do so may result in accidental deployment of the airbag and possible personal injury.

CAUTION: When handling the steering column use care to avoid holding the column by any part of the tilt/telescope mechanism or by the shaft boot. The column should be held by its mounting bracket and the shaft by the exposed portions.

CAUTION: All fasteners must be torqued to specification to ensure proper operation of the steering column.

NOTE: New bolts must be used for installation.

1. Position the steering column (2) on the instrument panel and loosely install the upper mounting screws (1).

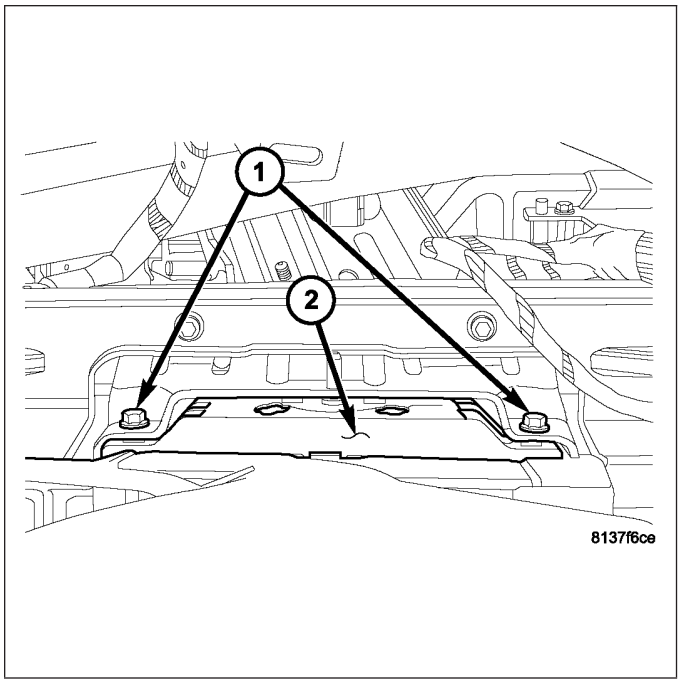

2. Firmly slide the steering column upward against the instrument panel and loosely install the pivot bolt and nut (2).

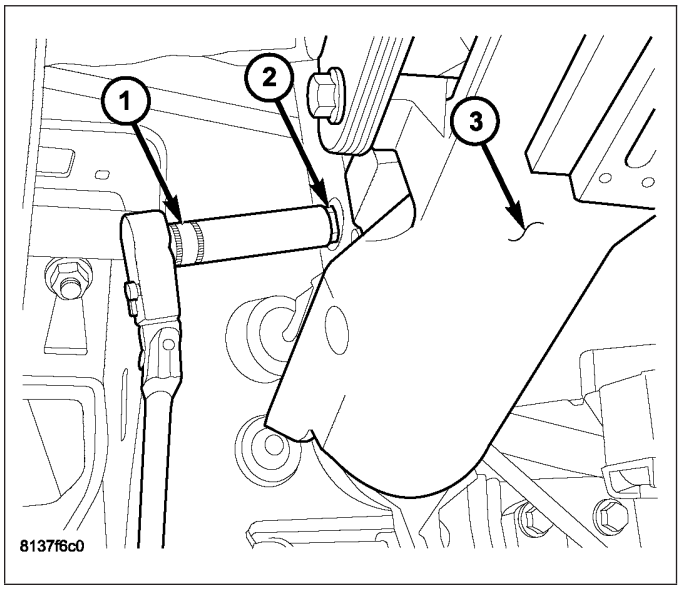

3. Tighten the steering column upper mounting screws (1) to 30 N·m (22 ft. lbs.).

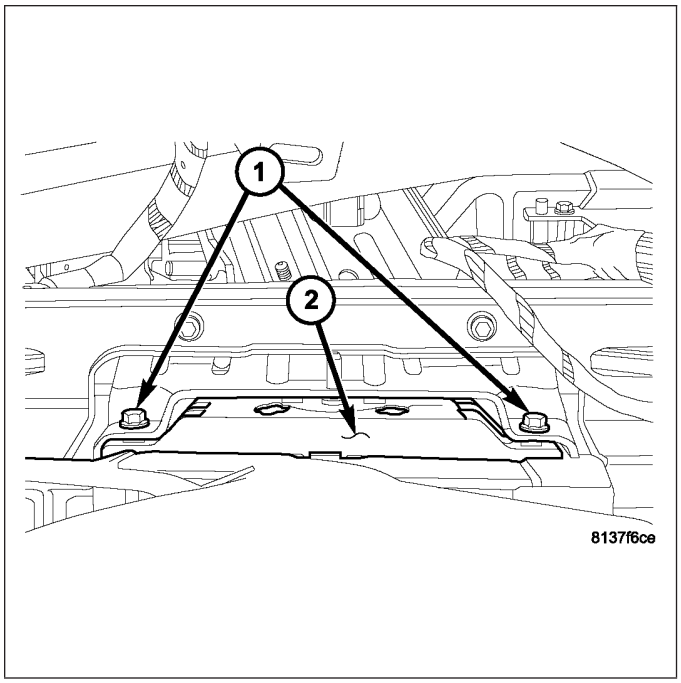

4. Tighten the pivot bolt (2) to 30 N·m (22 ft. lbs.).

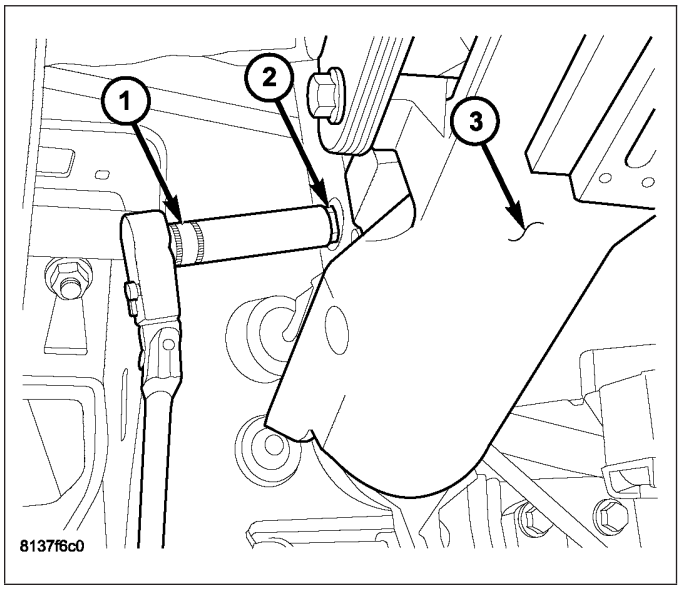

5. If equipped with electronic telescoping column, Install the screws (3) fastening the brace (1) to the steering column (2) and support beam bracket. First, tighten mounting screw at the column to 29 N·m (21 ft. lbs.). Then, tighten mounting screw at the support beam to 12 N·m (106 in. lbs.).

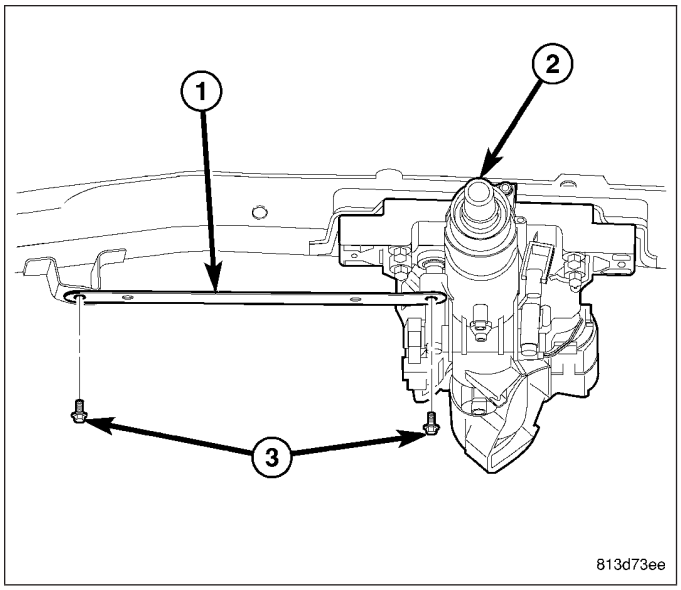

CAUTION: When handling the steering column, care must be taken not to squeeze the boot or distort the seal to the body.

6. Center the boot for the steering column at the bulkhead (2). Install and tighten the two mounting nuts (1) to 7 N·m (62 in. lbs.).
7. Raise and support vehicle.

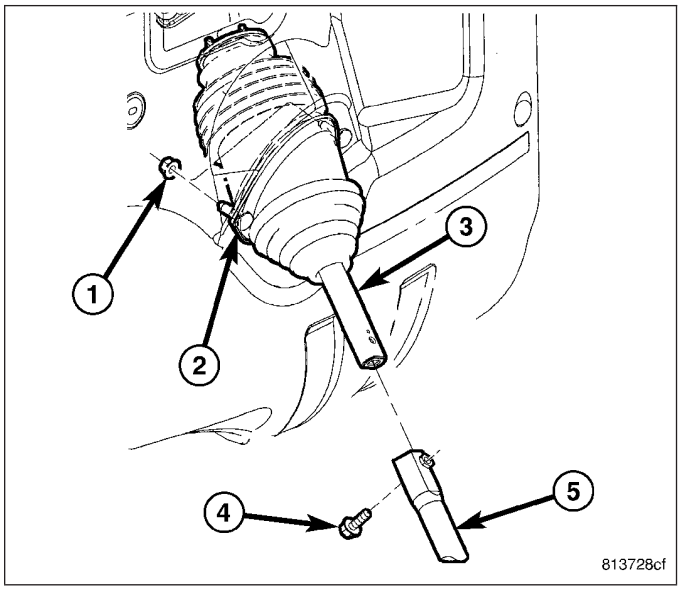

8. Check and make sure plastic collar (2) on column shaft is engaged in groove within boot (1).

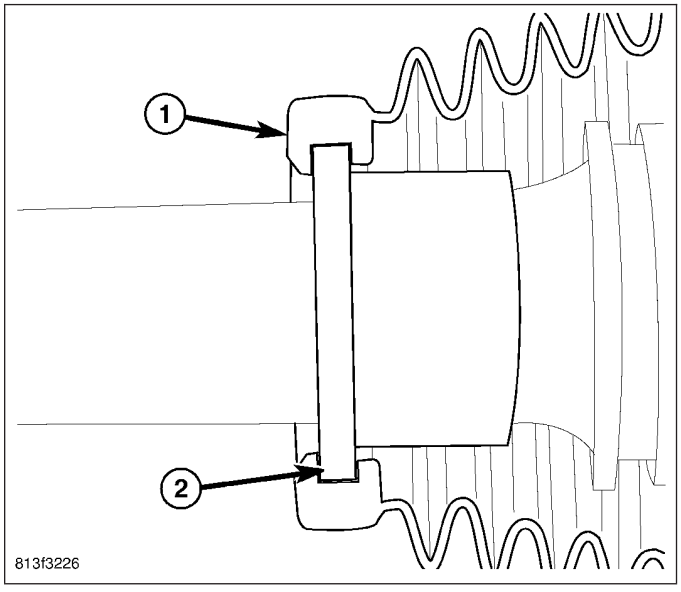

9. Align the pin on the steering shaft with the nut in the lower coupling shaft and slide the steering shaft (3) into the lower coupling (5).
10. Install a **NEW** pinch bolt (4). Tighten pinch bolt to 31 N·m (23 ft. lbs.).
11. Lower the vehicle.

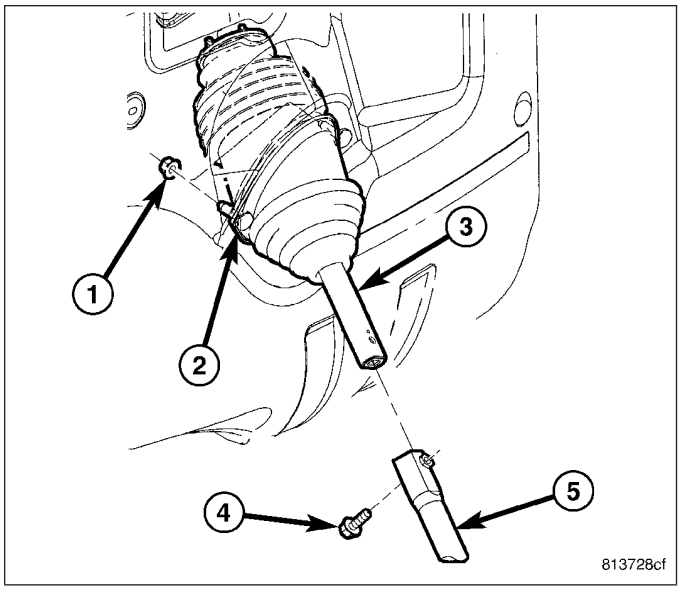

12. Install the steering column wiring harness connector into the holder on the steering column. Make sure the connector is captured in the holder.
13. Install the instrument cluster. (Refer to 8 - ELECTRICAL/INSTRUMENT CLUSTER - INSTALLATION)
14. Position the roll top shroud (1) and install the four mounting screws.

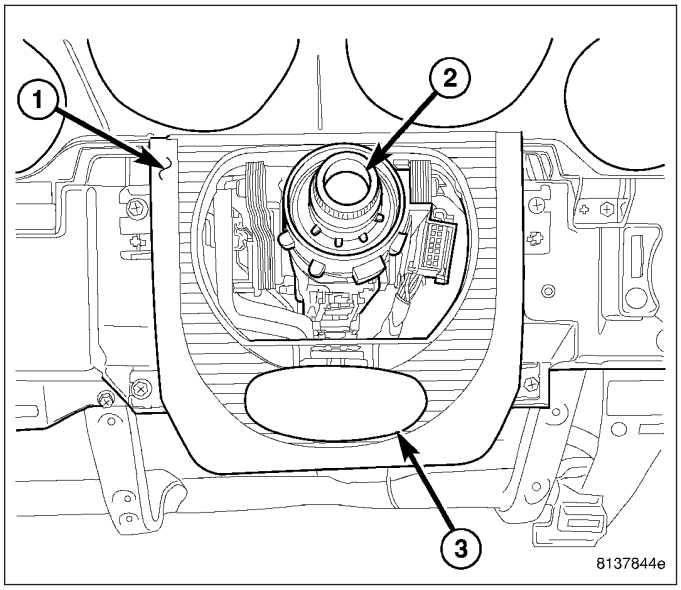

15. Manual tilt and telescoping columns – Position the manual adjustment handle (2) over the column adjustment pin and rotate the locking tab (3) rearward as shown latching the handle to the column. Make sure the tab snaps into locked position.

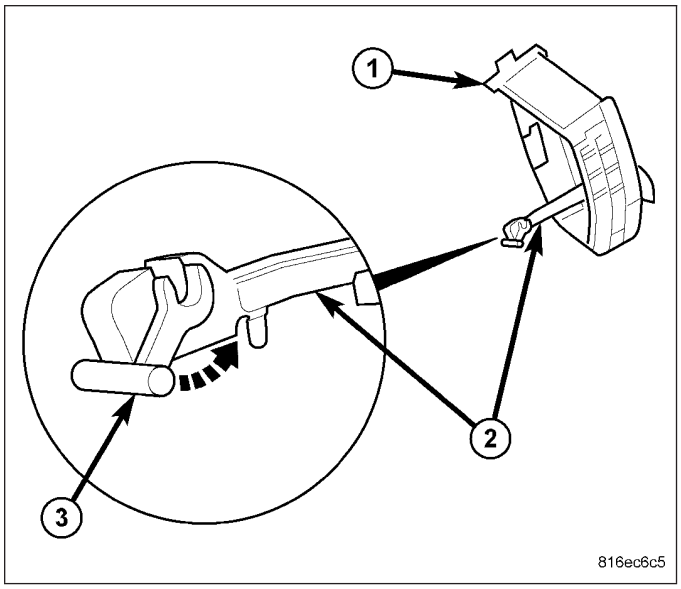

16. Install the SCCM assembly (1) onto the steering column.

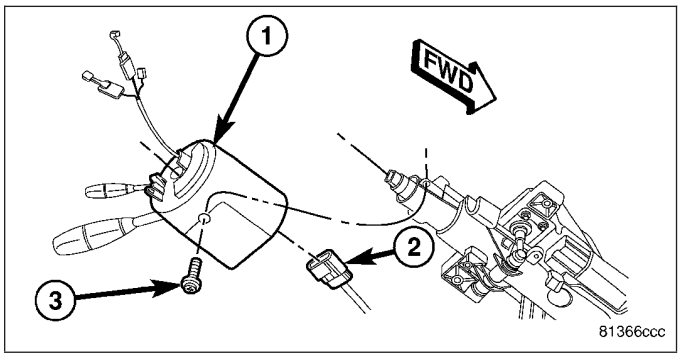

17. Tighten the set screw (1) securing the SCCM assembly (2).

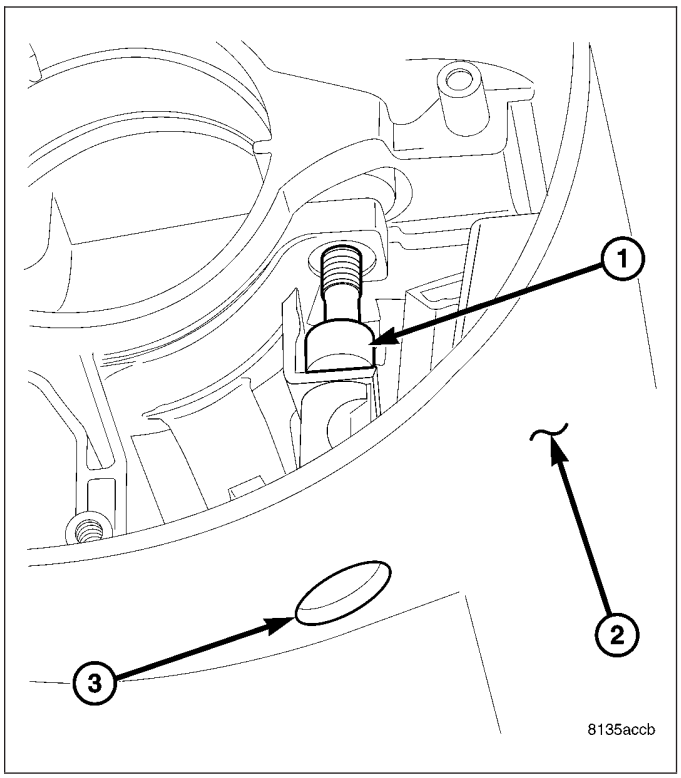

18. Tighten clockspring screw(s) (1) that were backed out to keep the clockspring from unwinding.

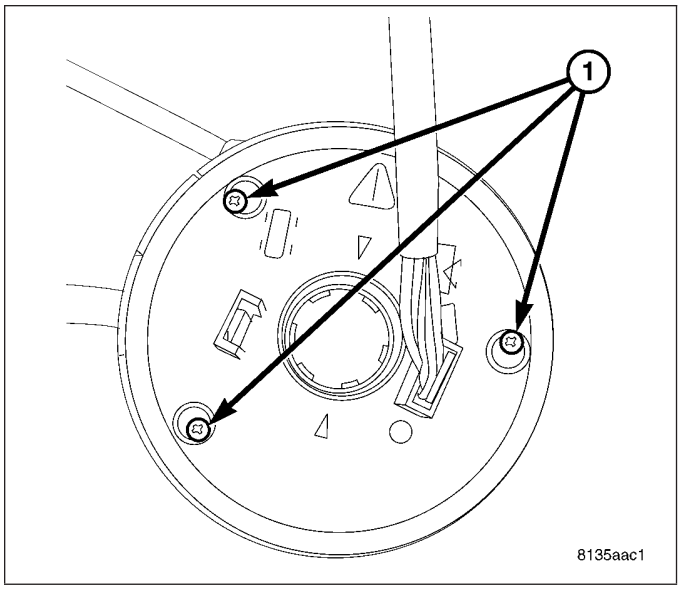

19. Install the steering column opening reinforcement (1).

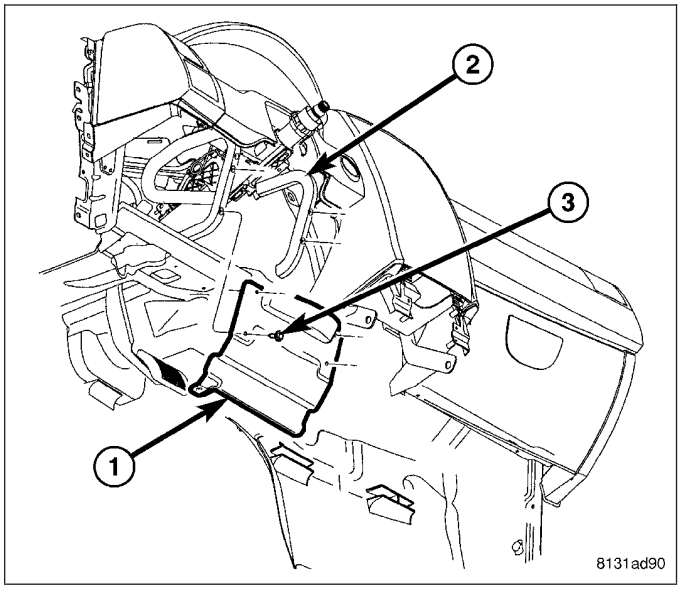

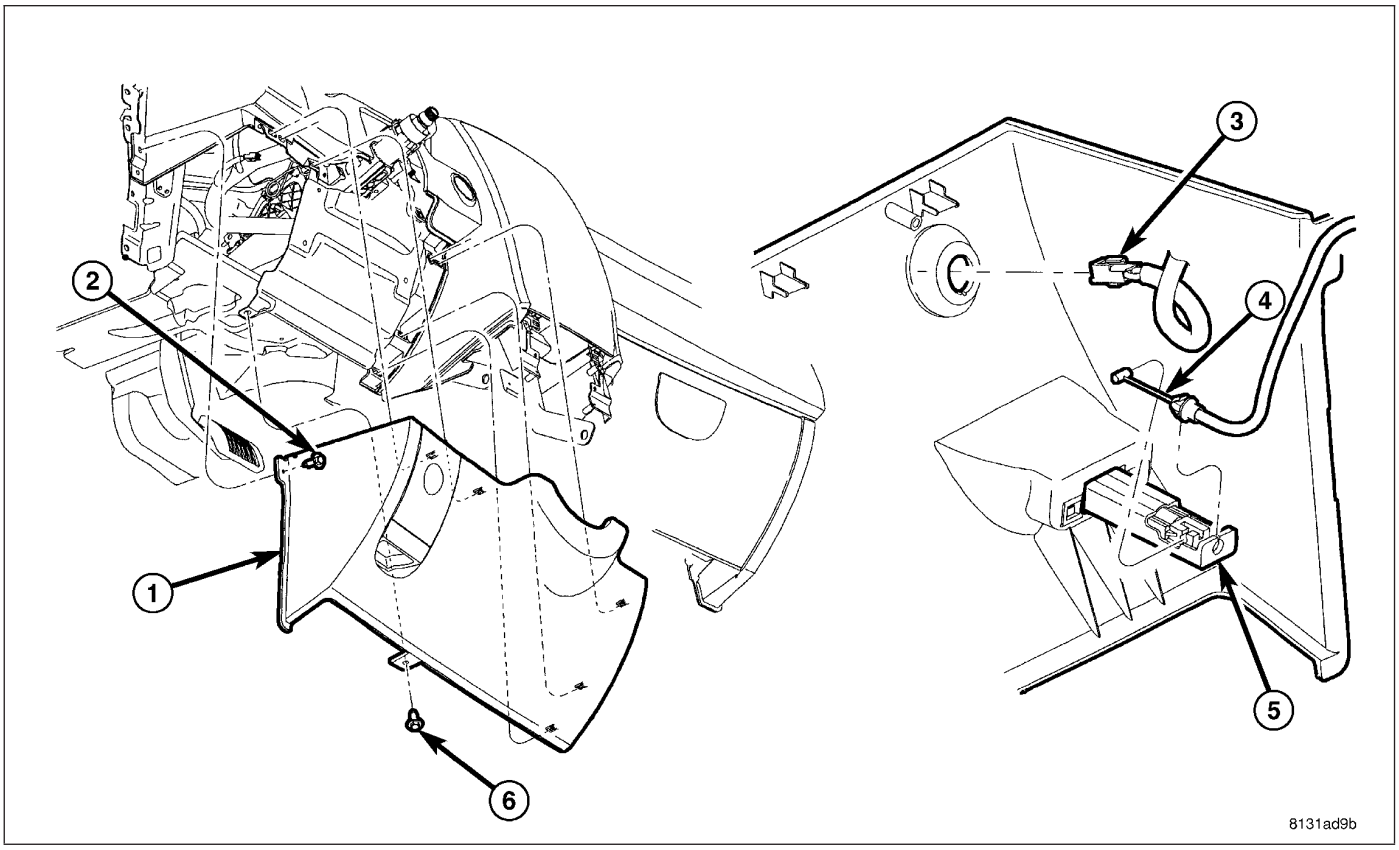

20. Install the steering column opening cover (1).
21. Align the spline on the steering wheel hub to shaft.
22. Install the steering wheel (1) and install a **NEW** retainer bolt (2). Tighten the bolt to 70 N·m (52 ft. lbs.).

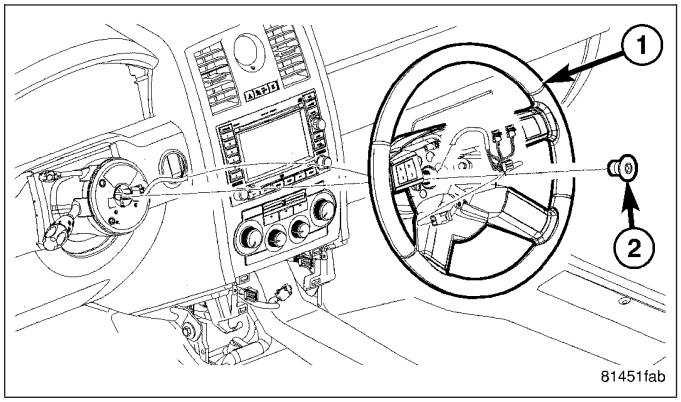

23. Install the airbag (3). (Refer to 8 - ELECTRICAL/ RESTRAINTS/DRIVER AIRBAG - INSTALLATION)
24. Install the negative battery terminal on the battery. It is important that this is performed properly (including calibration of steering angle sensor if equipped with ESP). (Refer to 8 - ELECTRICAL/ BATTERY SYSTEM - STANDARD PROCEDURE)

CAUTION: If the steering wheel is excessively off-center while driving, outside of Chassis specifications, inadvertent ESP activations may occur on a vehicle so equipped.

25. Test the operation of the horn, lights and any other functions that are steering column operated.

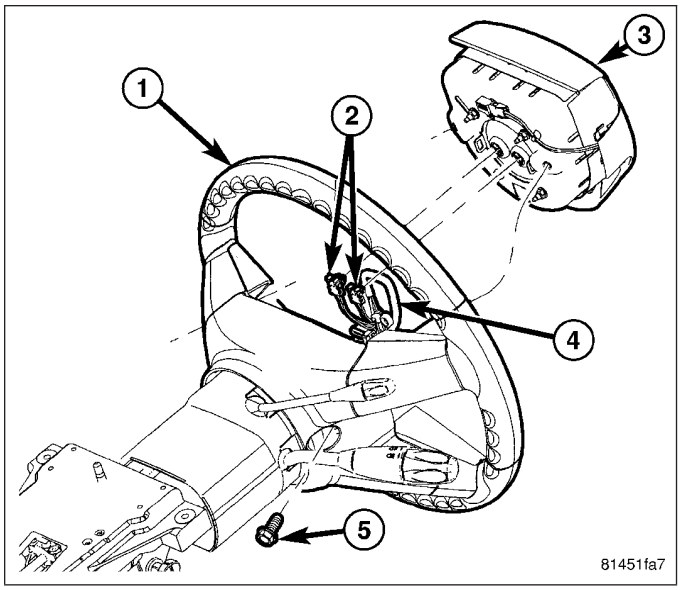

COLUMN - COLUMN SHIFT

WARNING: Before servicing the steering column the airbag system must be disarmed. Refer to electrical restraint system for service procedures. Failure to do so may result in accidental deployment of the airbag and possible personal injury.

CAUTION: When handling the steering column use care to avoid holding the column by any part of the tilt/telescope mechanism or by the shaft boot. The column should be held by its mounting bracket and the shaft by the exposed portions.

CAUTION: All fasteners must be torqued to specification to ensure proper operation of the steering column.

NOTE: New bolts must be used for installation.

1. Firmly slide the steering column upward against the instrument panel and loosely install the pivot bolt and nut (2).

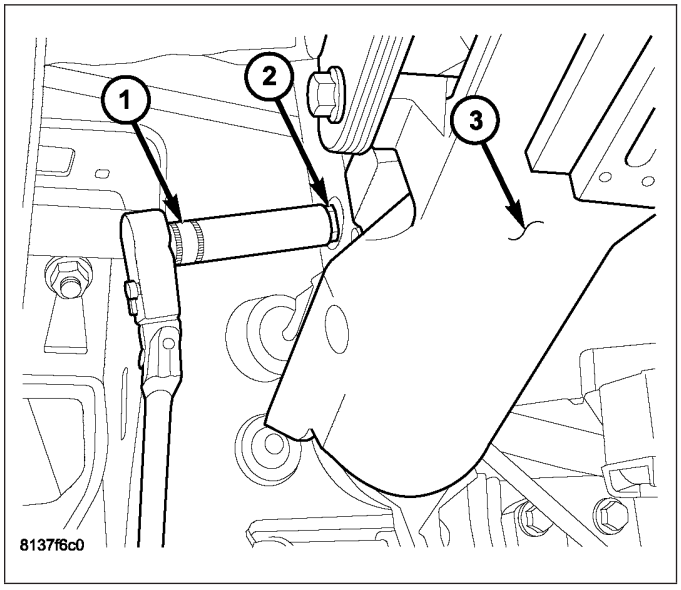

2. install the park lock (interlock) cable end button (2) on the lever.
3. Install the park lock cable (1) on the column.

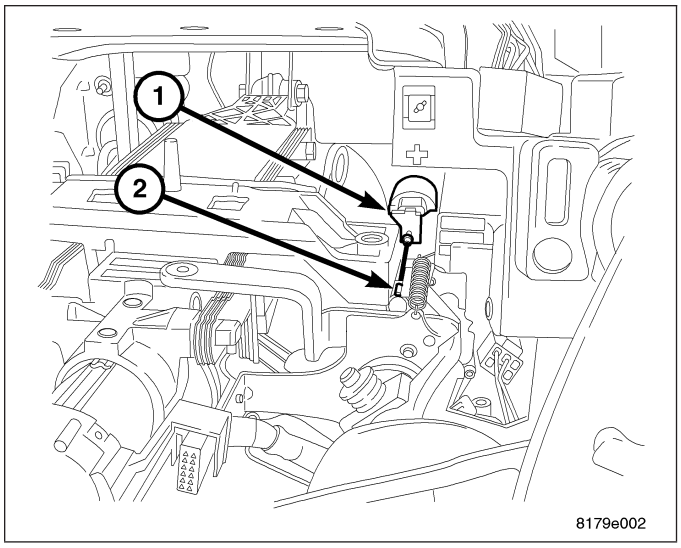

4. Raise the steering column assembly (2) into place on the instrument panel and install the upper mounting screws (1). Tighten the steering column upper mounting screws (1) to 30 N·m (22 ft. lbs.).

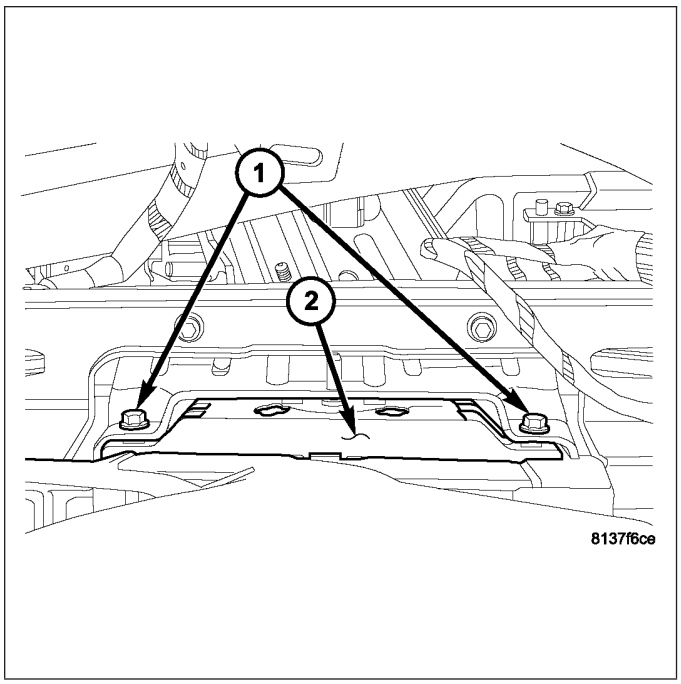

5. Tighten the pivot bolt (2) to 30 N·m (22 ft. lbs.).

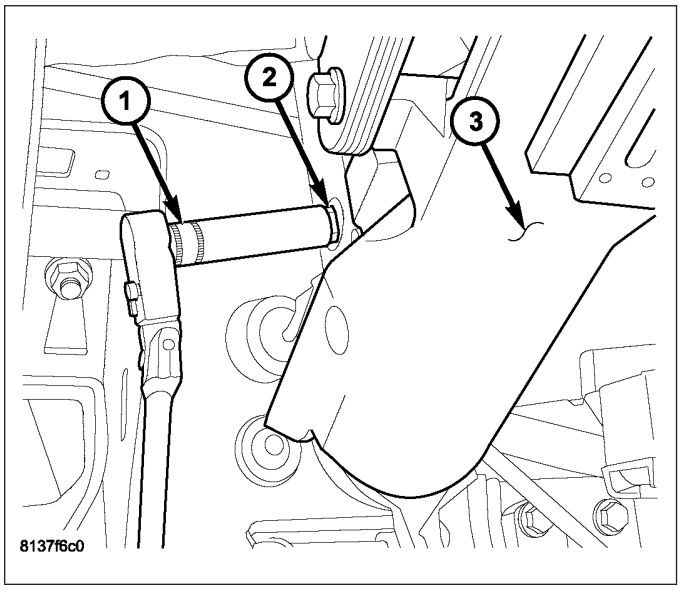

CAUTION: When handling the steering column, care must be taken not to squeeze the boot or distort the seal to the body.

6. Center the boot for the steering column at the bulkhead (2). Install and tighten the two mounting nuts (1) to 7 N·m (62 in. lbs.).
7. Raise and support the vehicle.

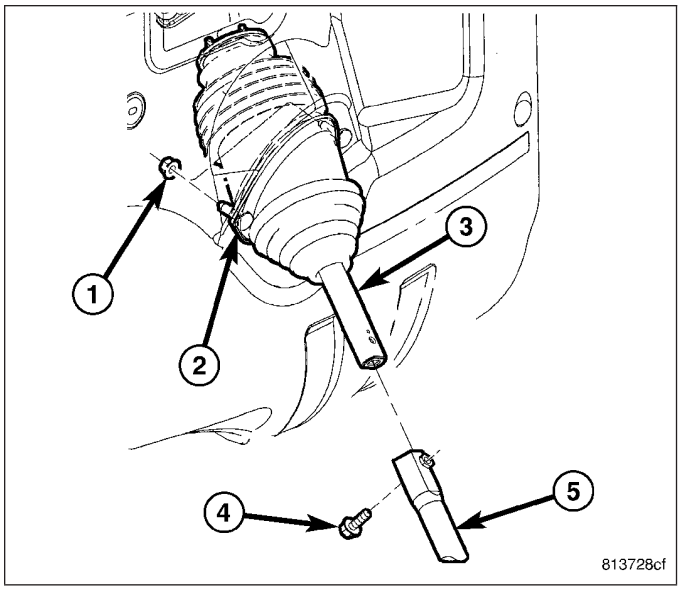

8. Check and make sure the plastic collar (2) on the column shaft is engaged in the groove within the boot (1).

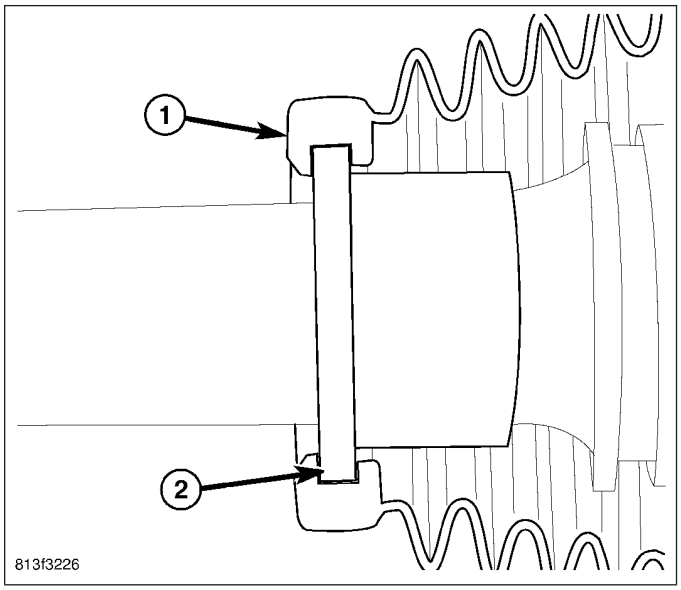

9. Align the pin on the steering shaft with the nut in the lower coupling shaft and slide the steering shaft (3) into the lower coupling (5).
10. Install a **NEW** pinch bolt (4). Tighten pinch bolt to 31 N·m (23 ft. lbs.).
11. Lower the vehicle.

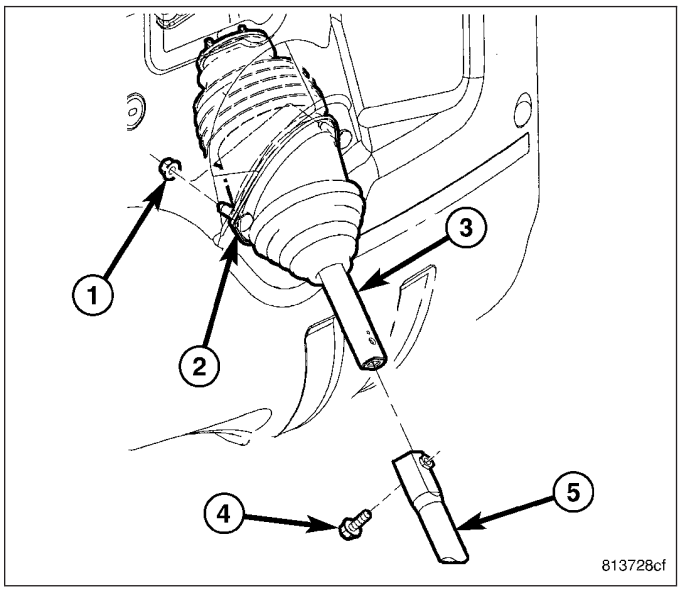

12. Install the shift cable (2) in the mounting bracket (3).
13. Connect the shift cable (2) to the shift mechanism (1).

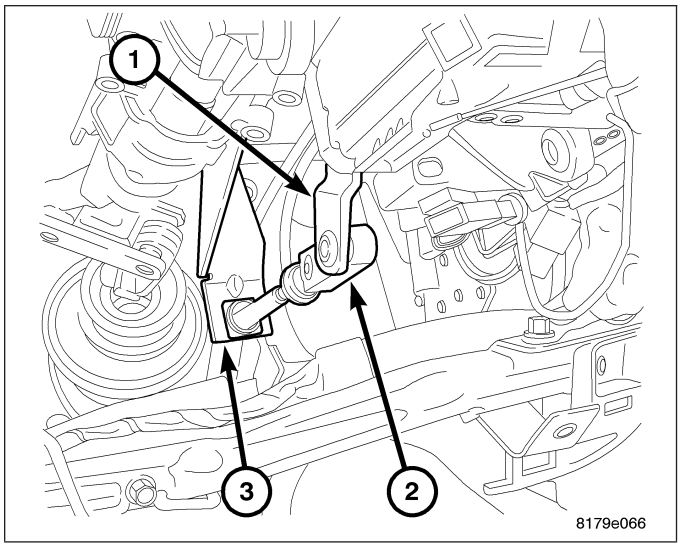

14. Install the steering column wiring harness connector into the holder on the steering column. Make sure the connector is captured in the holder.
15. Install the instrument cluster (but not cluster bezel). (Refer to 8 - ELECTRICAL/INSTRUMENT CLUSTER - INSTALLATION)
16. Position the roll top shroud (1) and install the three mounting screws.

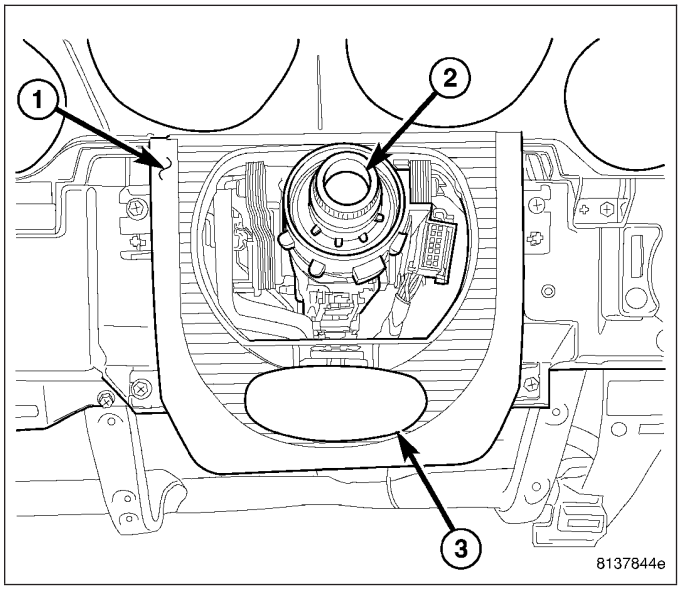

17. Position the manual adjustment handle (2) over the column adjustment pin and rotate the locking tab (3) rearward as shown latching the handle to the column. Make sure the tab snaps into locked position.
18. Install the cluster bezel (3). (Refer to 23 - BODY/ INSTRUMENT PANEL/CLUSTER BEZEL - INSTALLATION)

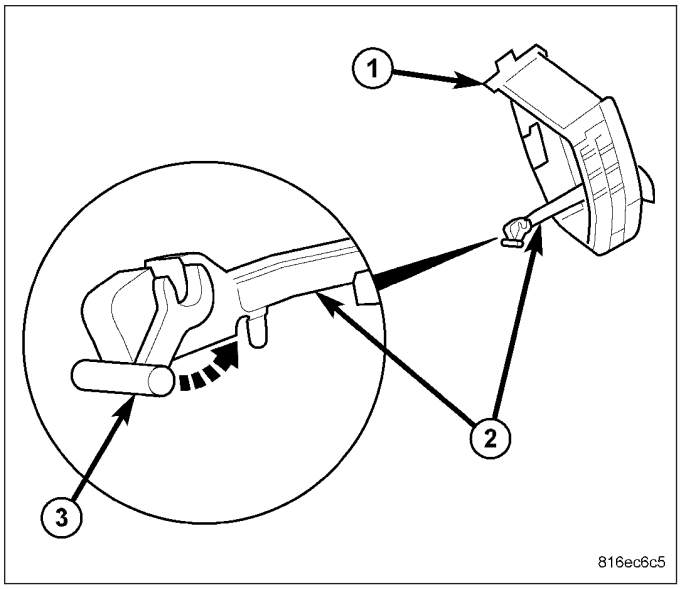

19. Slide the gear shift lever (2) into the column shift mechanism.
20. Line up the threaded hole in the lever with the hole in the shift mechanism and install the gear shift lever mounting screw (1). Tighten the screw to 12 N·m (106 in. lbs.).

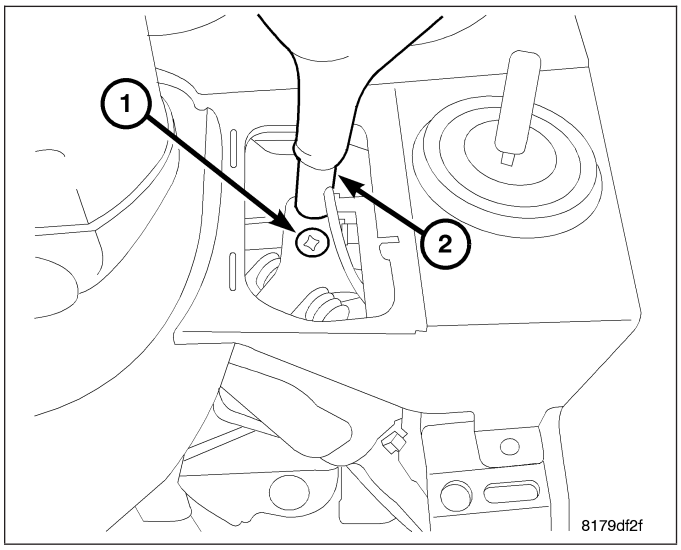

21. Route the autostick wiring down the right side of the column and secure to the column using a wiring tie strap (2).
22. Connect the autostick wiring connector (1).
23. Connect the 6-Way electronic shift module wiring connector (4).

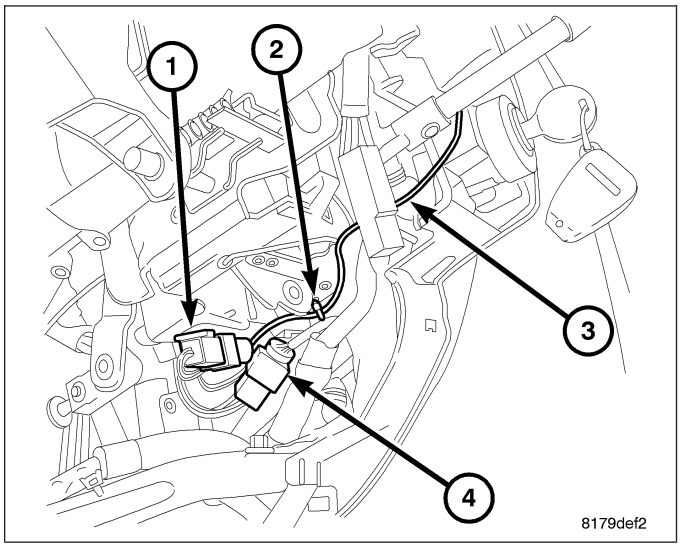

24. Slide the gear shift lever boot down gear shift lever (1) and snap it into place on the cluster bezel (3).

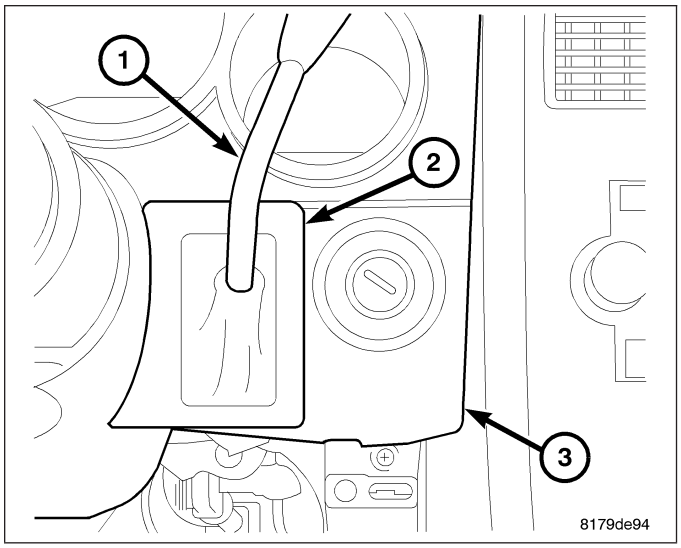

25. Install the SCCM assembly (1) onto the steering column.

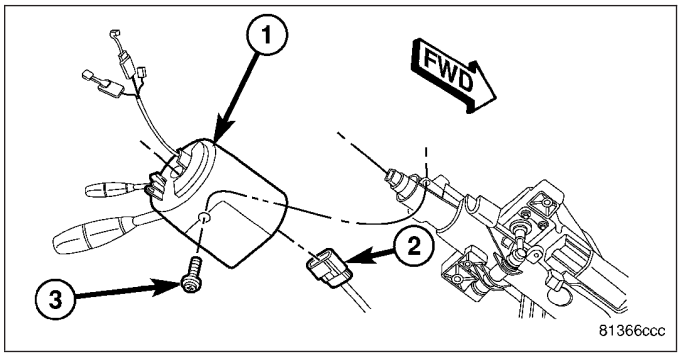

26. Tighten the set screw (1) securing the SCCM assembly (2).

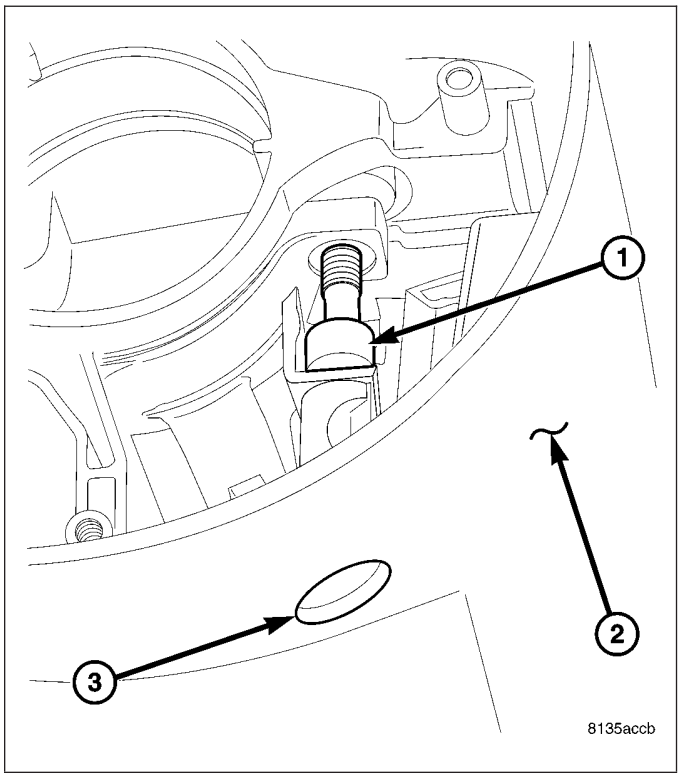

27. Tighten clockspring screw(s) (1) that were backed out to keep the clockspring from unwinding.

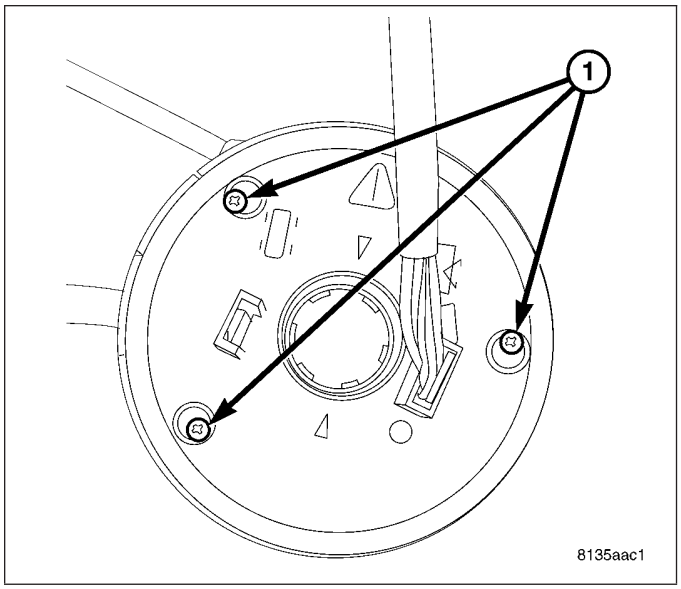

28. Install the steering column opening reinforcement (1).

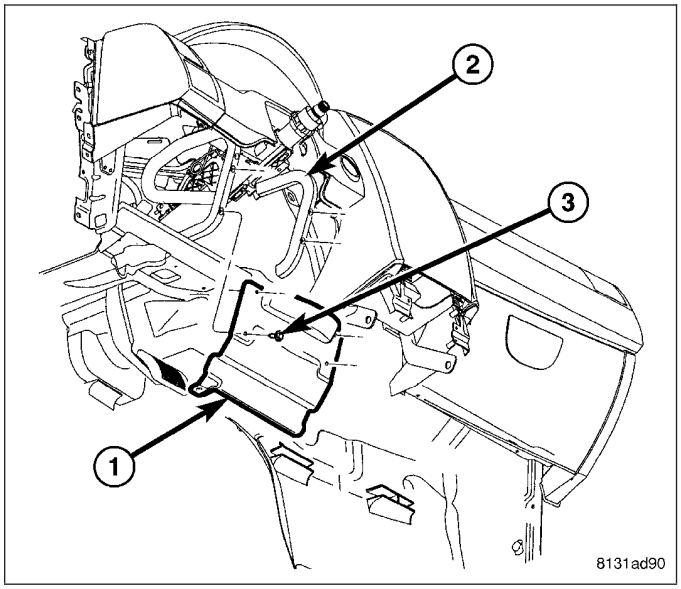

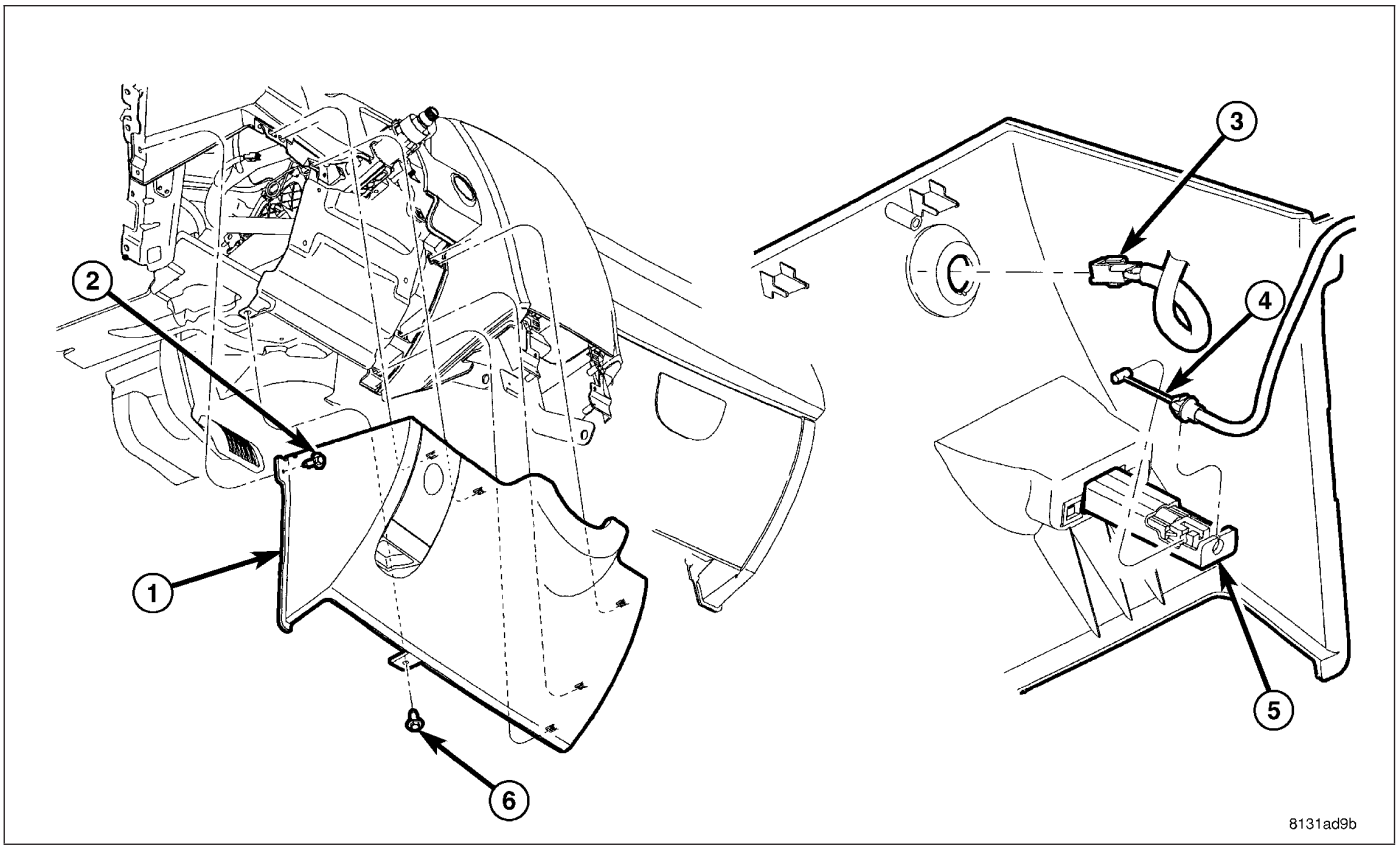

29. Install the steering column opening cover (1).
30. Align the spline on the steering wheel hub to the shaft.
31. Install the steering wheel (3) and install a **NEW** retainer bolt (2). Tighten the bolt to 70 N·m (52 ft. lbs.).

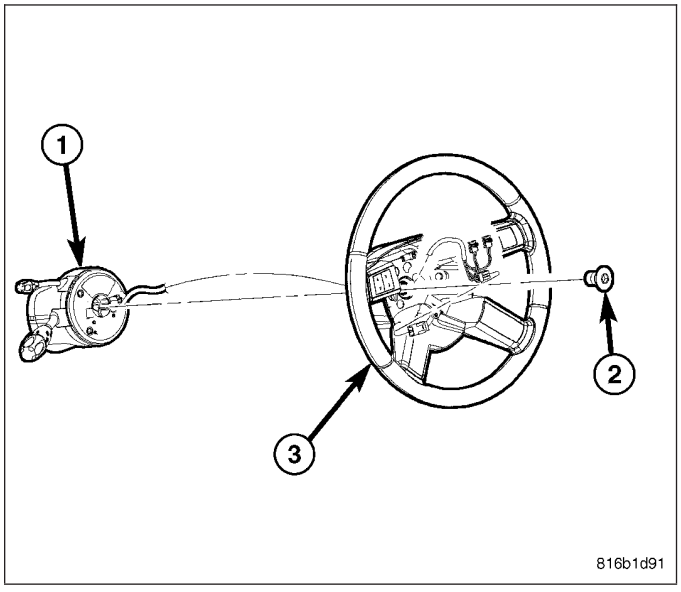

32. Install the airbag (3). (Refer to 8 - ELECTRICAL/ RESTRAINTS/DRIVER AIRBAG - INSTALLATION)
33. Install the negative battery terminal on the battery. It is important that this is performed properly (including calibration of steering angle sensor if equipped with ESP). (Refer to 8 - ELECTRICAL/ BATTERY SYSTEM - STANDARD PROCEDURE)

CAUTION: If the steering wheel is excessively off-center while driving, outside of Chassis specifications, inadvertent ESP activations may occur on a vehicle so equipped.

34. Test the operation of the gear shift lever, switches, horn, lights and any other functions that are steering column operated.

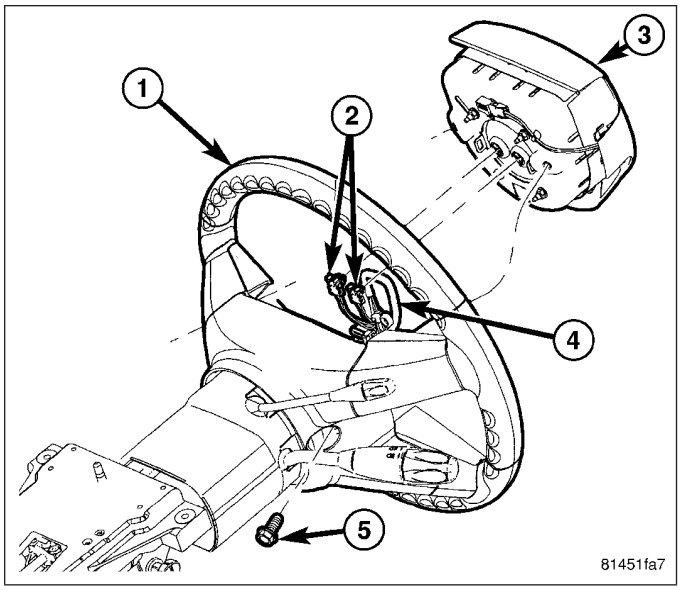

COLUMN - RHD

CAUTION: When handling the steering column use care to avoid holding the column by any part of the tilt/telescope mechanism. The column should be held by its mounting bracket.

CAUTION: All fasteners must be torqued to specification to ensure proper operation of the steering column.

NOTE: New bolts must be used for column installation.

CAUTION: Do not attempt to transfer the shaft lock module from one steering column to another.

1. If the steering column being installed is a NEW column, a NEW shaft lock module must be installed on the bottom of the column. To install the shaft lock module perform the following:
   a. Align the engagement and slide tabs integral to the housing of the shaft lock module (1) with the slots and channels in the mounting bracket (3) on the steering column (2).
   b. Slide the module toward the top of the column far enough for the spring clips on the module to engage the bracket.

NOTE: Once the column has been installed, the new module MUST be initialized using a diagnostic scan tool before the vehicle can be operated.

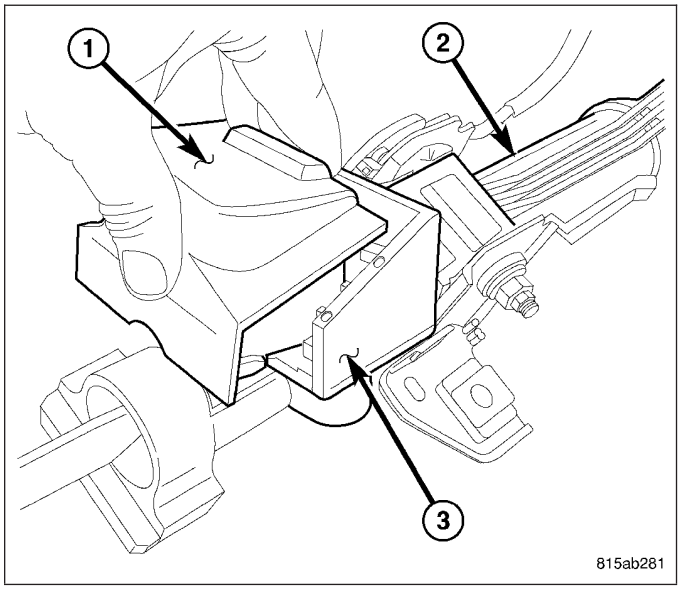

2. Position the steering column (2) on the instrument panel and loosely install the upper mounting screws (1).

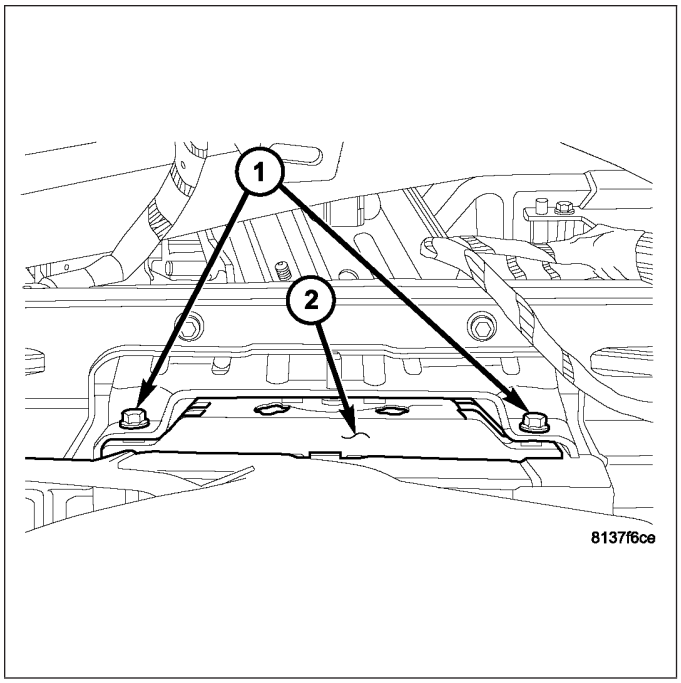

3. Firmly slide the steering column upward against the instrument panel and loosely install the pivot bolt and nut (2).

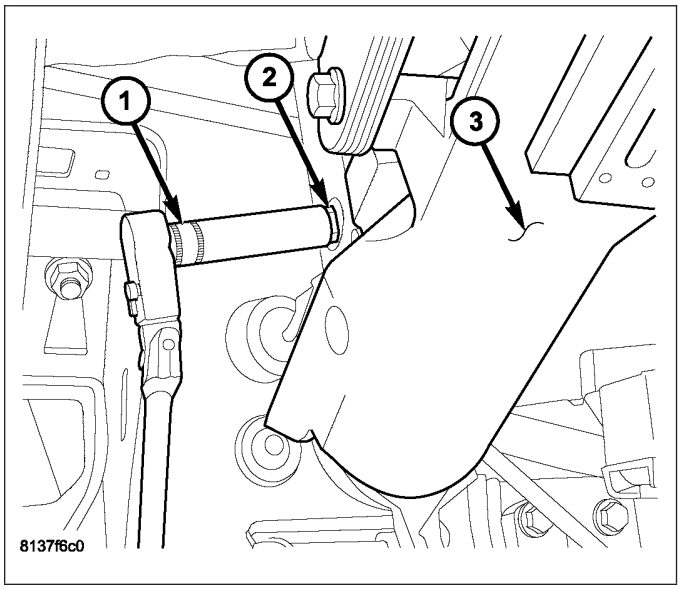

4. Tighten the steering column upper mounting screws (1) to 30 N·m (22 ft. lbs.).

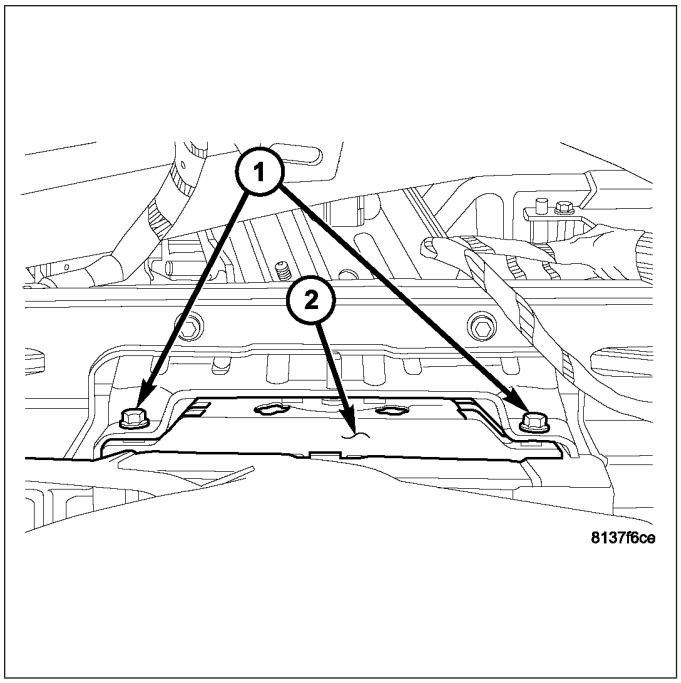

5. Tighten the pivot bolt (2) to 30 N·m (22 ft. lbs.).

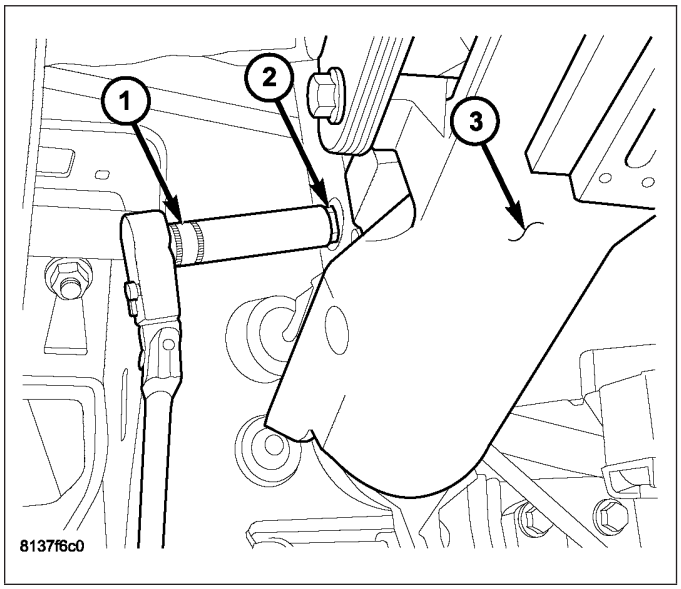

6. Align the intermediate shaft upper coupling (3) with the steering column shaft plastic alignment fin (2), then carefully slide the intermediate shaft onto the column shaft (1).

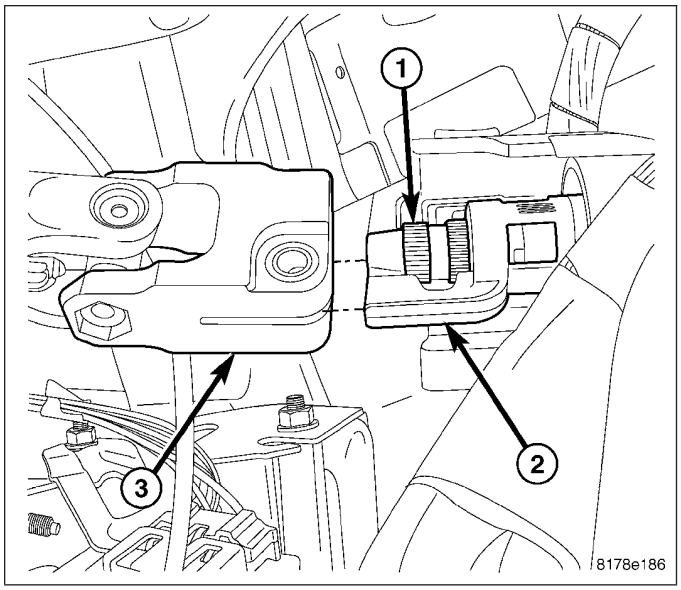

7. Install a **NEW** steering intermediate shaft pinch bolt (3). Tighten the pinch bolt to 31 N·m (23 ft. lbs.).
8. Install the steering column wiring harness connector into the holder on the steering column. Make sure the connector is captured in the holder.
9. Install the instrument cluster assembly. (Refer to 8 - ELECTRICAL/INSTRUMENT CLUSTER - INSTALLATION)

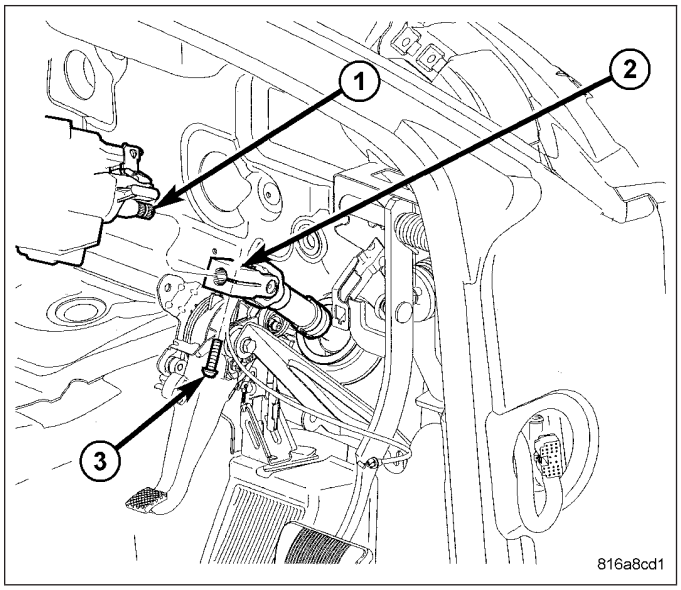

10. Place the roll top shroud (1) over the steering column (2).

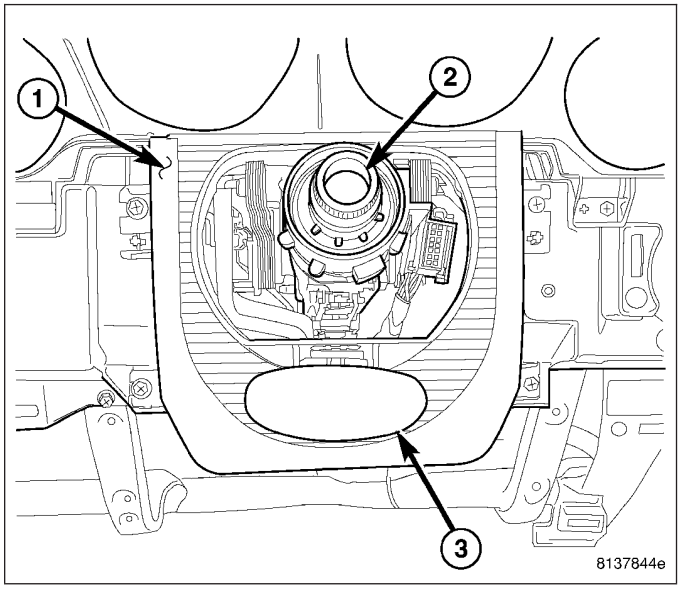

11. Install the four shroud mounting screws (2) (two screws each side).

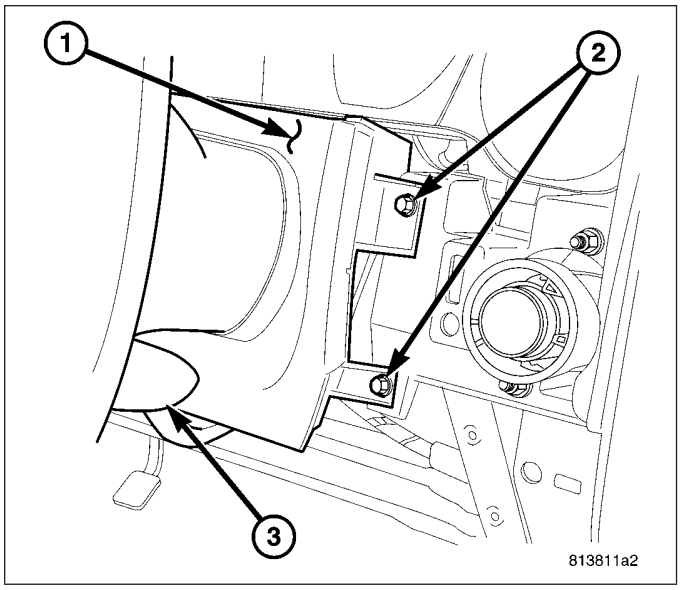

12. Position the manual adjustment handle (2) over the column adjustment pin and rotate the locking tab (3) rearward as shown latching the handle to the column. Make sure the tab snaps into locked position.

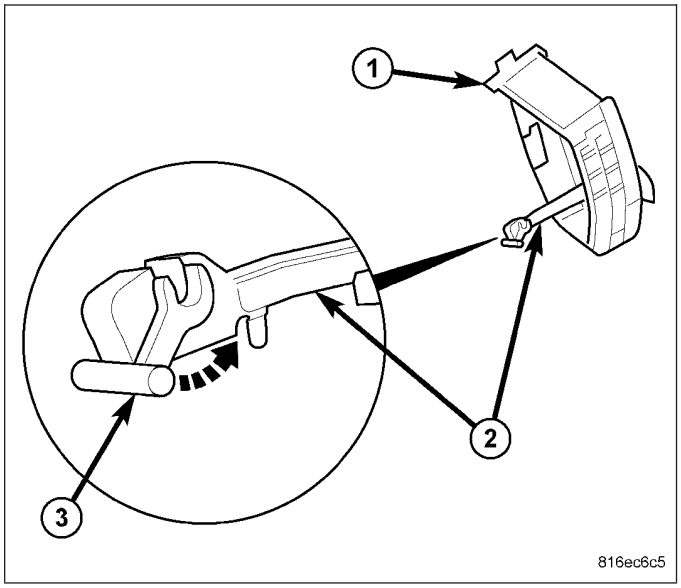

13. Install the instrument cluster bezel. (Refer to 23 - BODY/INSTRUMENT PANEL/CLUSTER BEZEL - INSTALLATION)
14. Slide the SCCM assembly (1) onto the steering column.

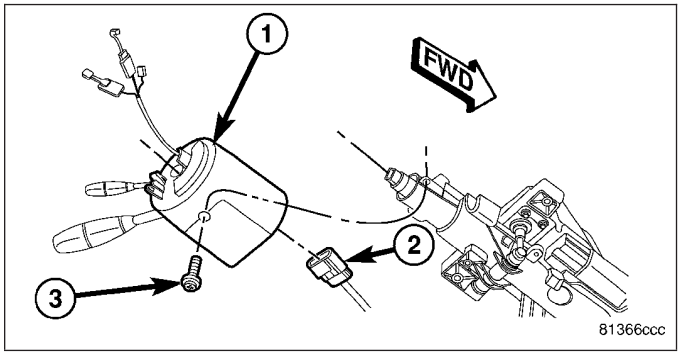

15. Tighten the set screw (1) securing the SCCM assembly (2).

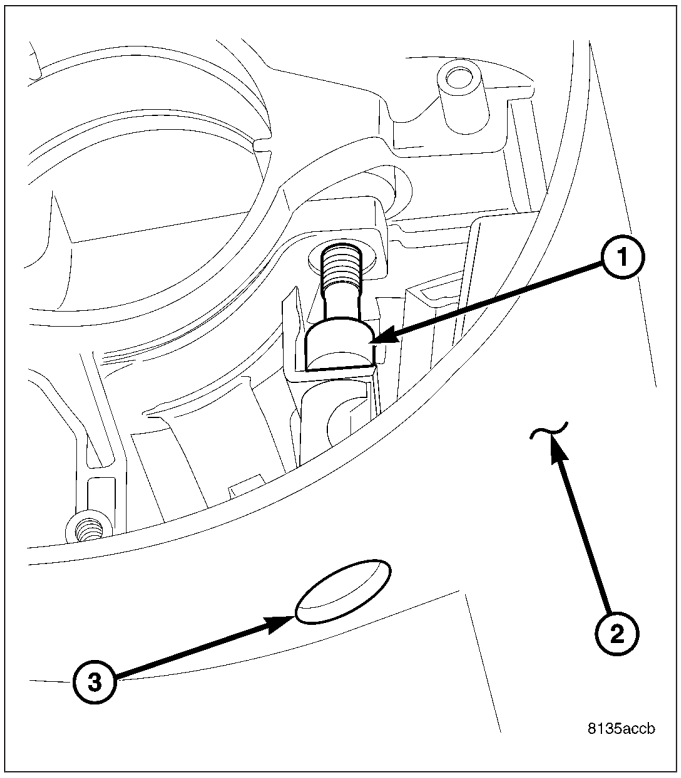

16. Tighten the clockspring screw(s) (1) that were backed out to keep the clockspring from unwinding.

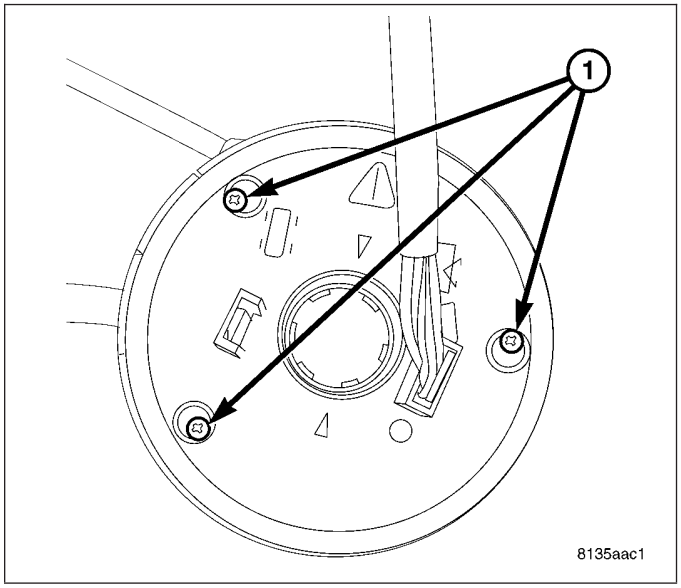

17. Position the parking brake lever over the mounting studs (2, 3) and install the two left side parking brake lever mounting nuts (8) and the right lower mounting nut (5). Tighten the mounting nuts to 26 N·m (19 ft. lbs.).

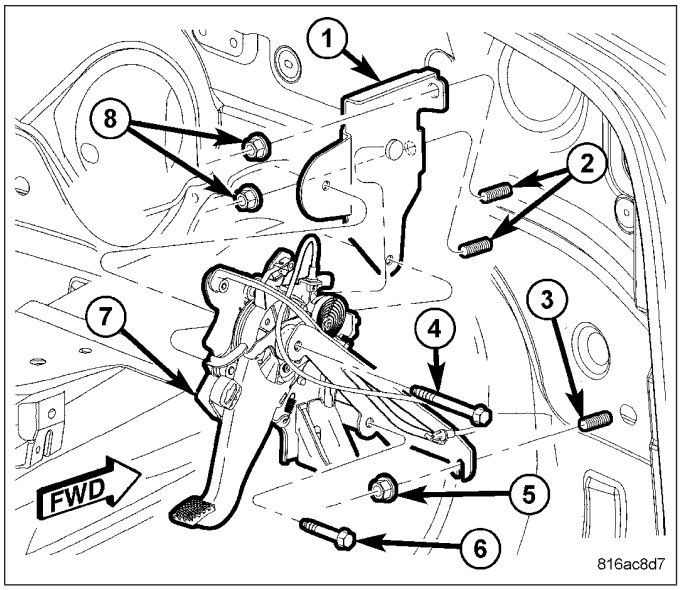

18. Install the steering column opening reinforcement (3). Tighten the bolts to 8 N·m (71 in. lbs.).

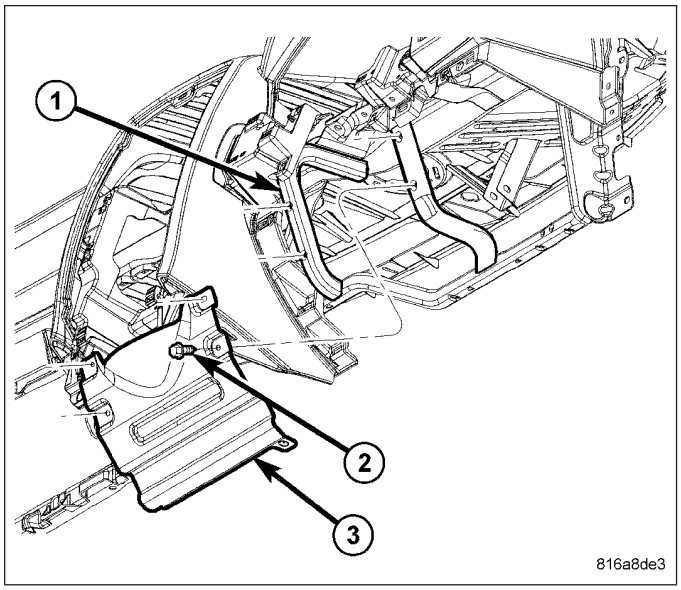

19. Install the steering column opening cover (1). (Refer to 23 - BODY/INSTRUMENT PANEL/ STEERING COLUMN OPENING COVER - INSTALLATION)

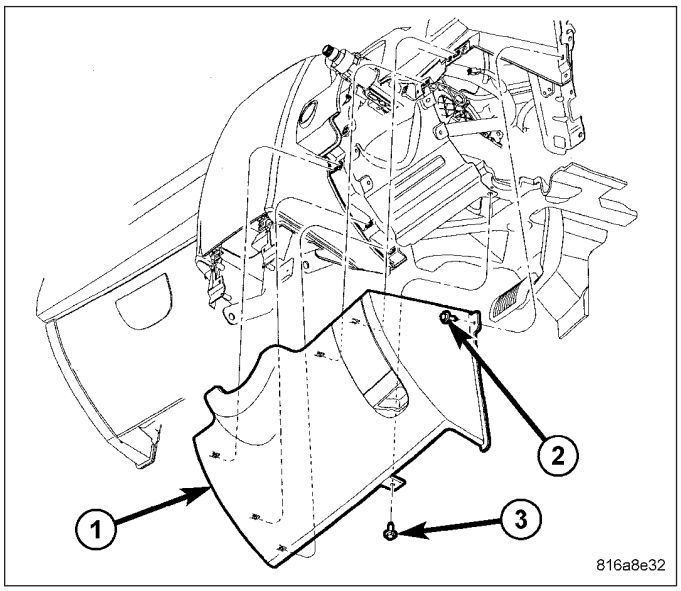

20. Align the spline on the steering wheel (3) hub to the steering column (1) shaft.
21. Install the steering wheel (3) and install a **NEW** retainer bolt (2). Tighten the bolt to 70 N·m (52 ft. lbs.).

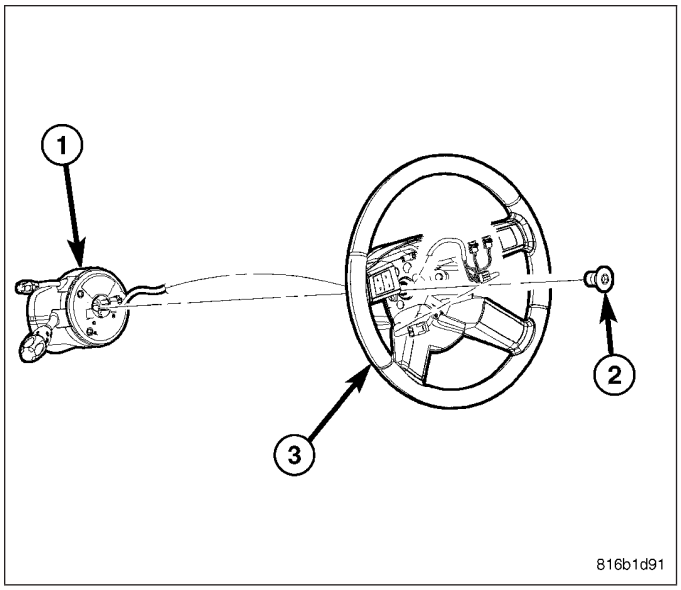

22. Install the airbag (3). (Refer to 8 - ELECTRICAL/ RESTRAINTS/DRIVER AIRBAG - INSTALLATION)
23. Install the negative battery terminal on the battery. It is important that this is performed properly (including calibration of steering angle sensor if equipped with ESP). (Refer to 8 - ELECTRICAL/ BATTERY SYSTEM - STANDARD PROCEDURE)
24. If new, initialize the shaft lock module using a scan tool.

CAUTION: If the steering wheel is excessively off-center while driving, outside of Chassis specifications, inadvertent ESP activations may occur.

25. Test the operation of the horn, lights and any other functions that are steering column operated.

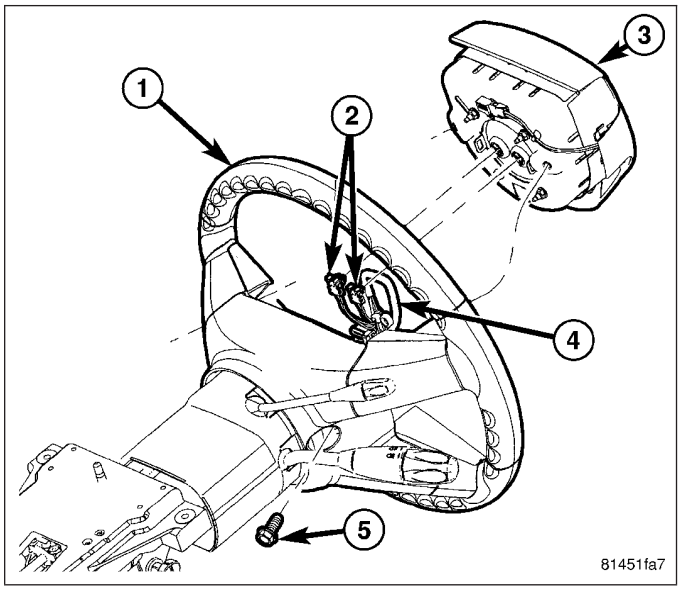

SPECIFICATIONS

STEERING COLUMN FASTENER TORQUE

DESCRIPTION	N·m	Ft. Lbs.	In. Lbs.
DASH SEAL MOUNTING NUTS	7	—	62
GEAR SHIFT LEVER MOUNTING SCREW	12	9	106
STEERING COLUMN BRACE MOUNTING SCREW - AT COLUMN	29	21	255
STEERING COLUMN BRACE MOUNTING SCREW - AT SUPPORT BEAM	12	9	106
STEERING COLUMN LOWER PIVOT BOLT	30	22	265
STEERING COLUMN UPPER MOUNTING SCREWS	30	22	265
STEERING COUPLING PINCH BOLT - AT GEAR	54	40	—
STEERING COUPLING PINCH BOLT - AT UPPER COUPLING/INTERMEDIATE SHAFT	31	23	—
STEERING INTERMEDIATE SHAFT PINCH BOLT - AT RHD COLUMN	31	23	—
STEERING WHEEL RETAINER BOLT	70	52	—

COUPLING-STEERING

REMOVAL

1. Fully extend or pull out adjustable steering column.
2. Center the steering wheel and lock the steering wheel with a steering wheel holder.
3. Raise and support vehicle. (Refer to LUBRICATION & MAINTENANCE/HOISTING - STANDARD PROCEDURE)

4. Remove the pinch bolt (4) connecting the steering shaft (3) to the lower steering coupling shaft (5).
5. Separate the lower coupling (5) from the steering shaft (3).

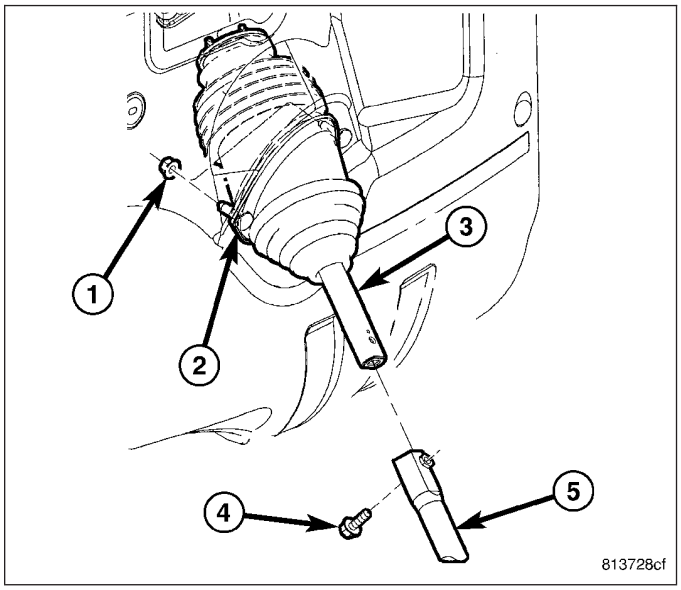

6. Remove the pinch bolt (1) from the steering coupling (2) at the steering gear (3).
7. Carefully slide the coupling (2) from the steering gear (3).
8. Remove the steering coupling (2) from the vehicle.

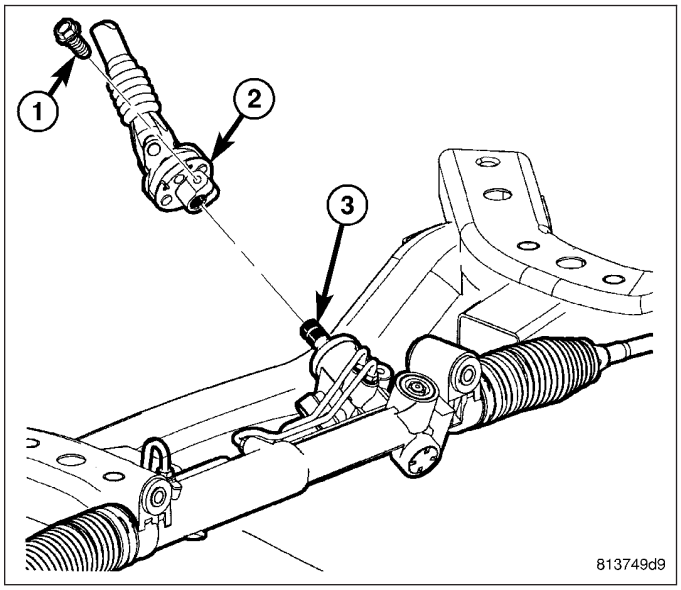

INSTALLATION

1. Align the lower coupling (2), then carefully slide it onto steering gear input shaft (3).
2. Install a **NEW** pinch bolt (1) to the steering coupling (2) at the steering gear (3). Tighten the pinch bolt to 54 N·m (40 ft. lbs).

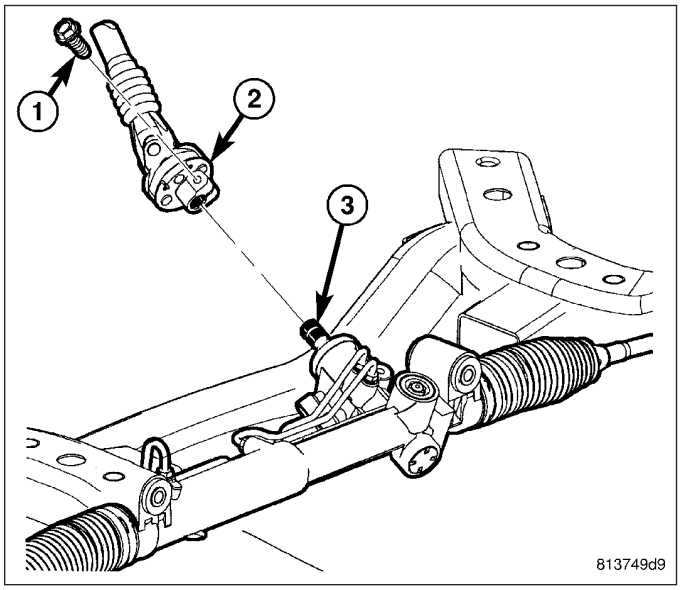

3. Align the pin on the steering shaft with the nut in the lower coupling shaft and slide the shaft (3) into the lower coupling (5).
4. Install a **NEW** steering coupling pinch bolt (4). Tighten the pinch bolt to 31 N·m (23 ft. lbs.).

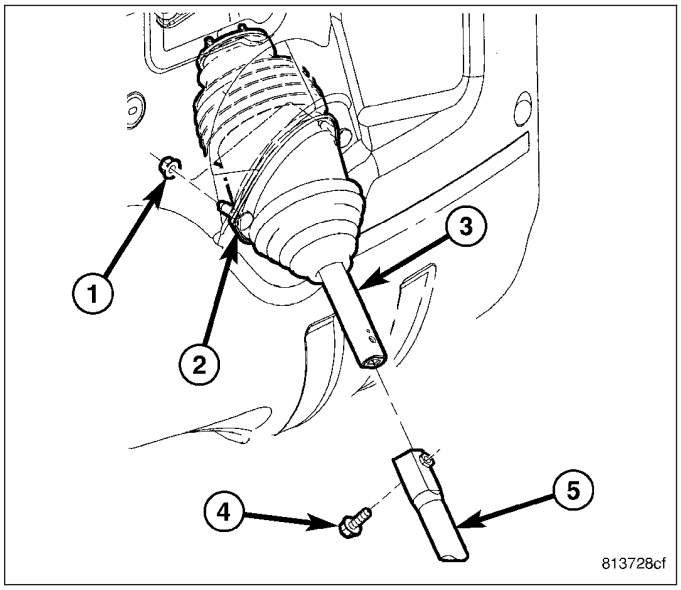

5. Check and make sure the plastic collar (2) on the column shaft is engaged in the groove within the boot (1).
6. Lower the vehicle.
7. Remove the steering wheel holder.
8. Check the operation of the steering column for binding or noises.

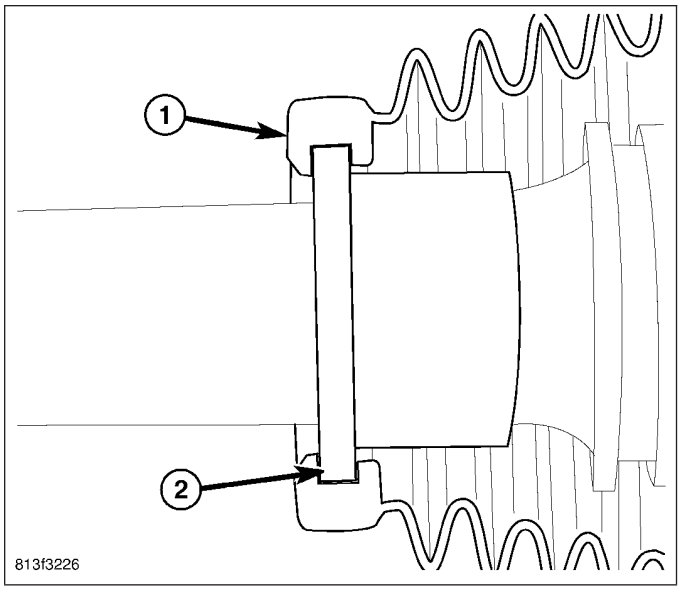

SHAFT-INTERMEDIATE

REMOVAL

NOTE: This procedure applies to RHD vehicles only. The intermediate shaft (Z-coupling) on the LHD column is not serviceable.

1. Fully extend or pull out adjustable steering column.
2. Position the front wheels **straight-ahead**. Center the steering wheel and lock it in place with a steering wheel holder.
3. Raise and support the vehicle. (Refer to LUBRICATION & MAINTENANCE/HOISTING - STANDARD PROCEDURE)
4. Remove the pinch bolt (3) connecting the intermediate shaft (1) to the steering coupling shaft (2).
5. Separate the intermediate shaft (1) from the steering coupling (2).
6. Lower the vehicle.

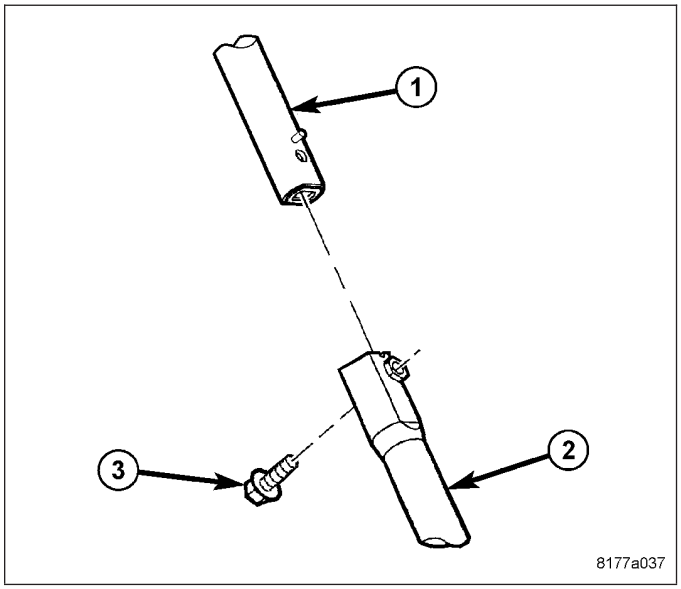

7. Remove the two retaining nuts (3) securing the intermediate shaft to the dash panel.
8. Loosen the shaft seal at the dash panel.

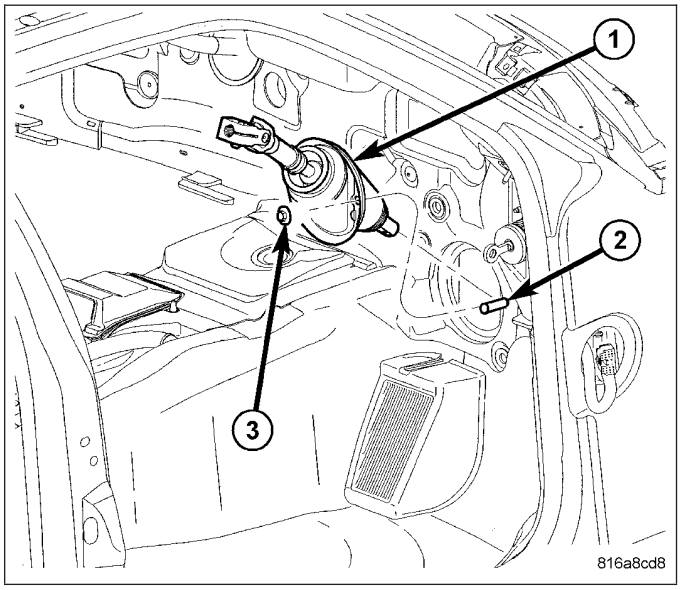

9. Remove the pinch bolt (3) securing the intermediate shaft to the steering column shaft (1).
10. Slide the intermediate shaft (2) off the steering column shaft (1) and remove it from the vehicle.

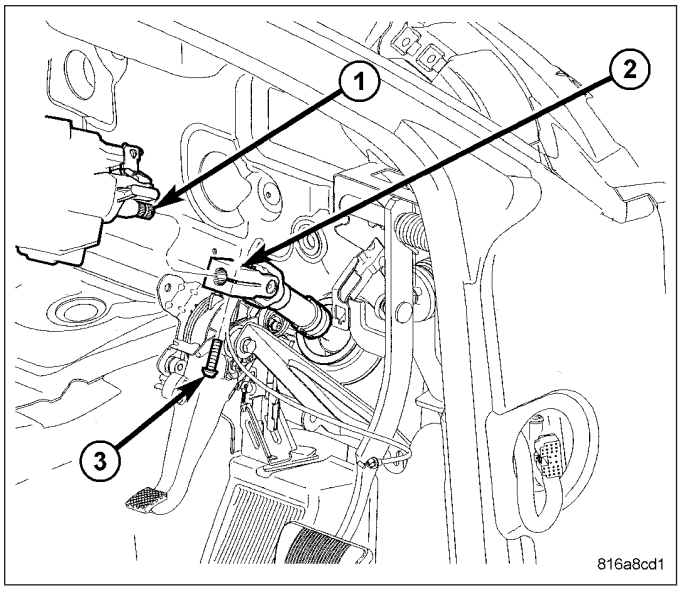

INSTALLATION

1. Guide the gear end of the intermediate shaft (1) through the hole in the dash panel from the passenger compartment side.
2. Push the seal over the studs on the dash panel.

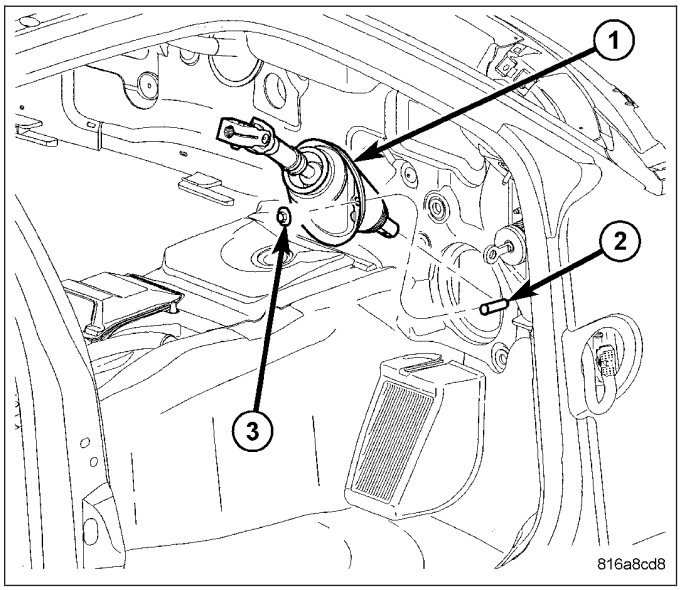

3. Align the intermediate shaft upper coupling (3) with the steering column shaft plastic alignment fin (2), then carefully slide the intermediate shaft onto the column shaft (1).

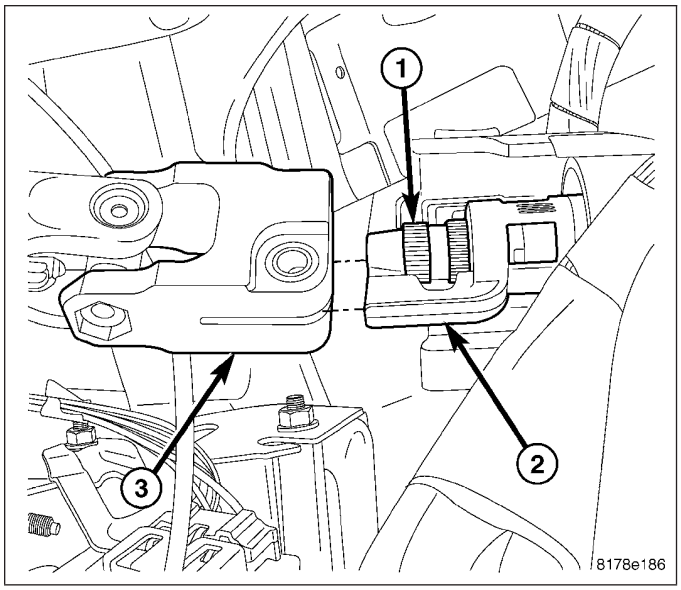

4. Install a **NEW** steering intermediate shaft pinch bolt (3). Tighten the pinch bolt to 31 N·m (23 ft. lbs.).

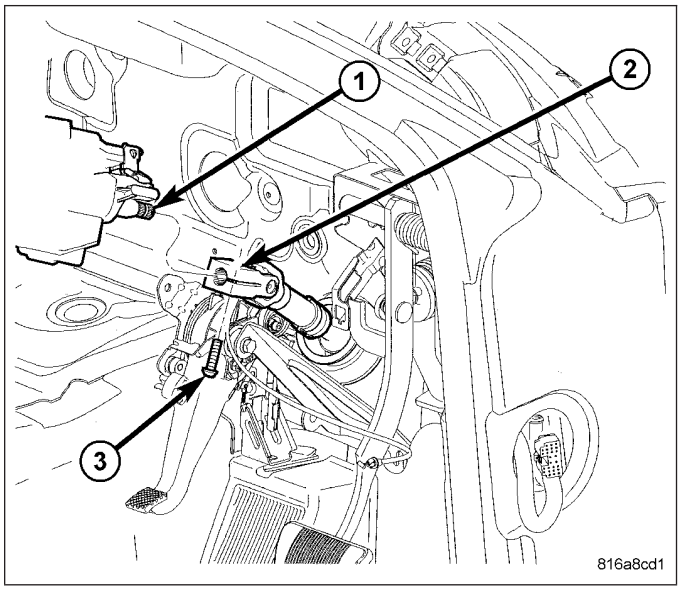

5. Install the two intermediate shaft dash seal mounting nuts and tighten to 7 N·m (62 in. lbs.).
6. Raise and support the vehicle. (Refer to LUBRICATION & MAINTENANCE/HOISTING - STANDARD PROCEDURE)

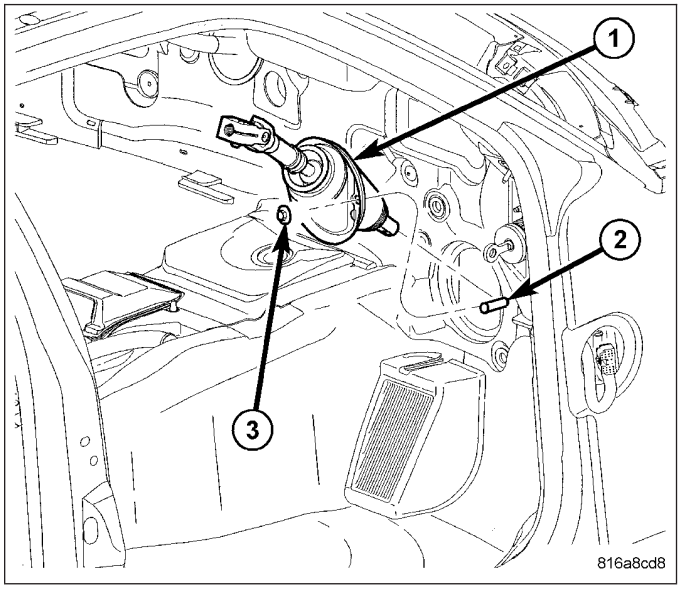

7. Align the pin on the intermediate shaft (1) with the nut in the lower coupling shaft (2) and slide the intermediate shaft into the lower coupling.
8. Install a **NEW** steering coupling pinch bolt (3) at the intermediate shaft. Tighten the pinch bolt to 31 N·m (23 ft. lbs.).
9. Lower the vehicle.

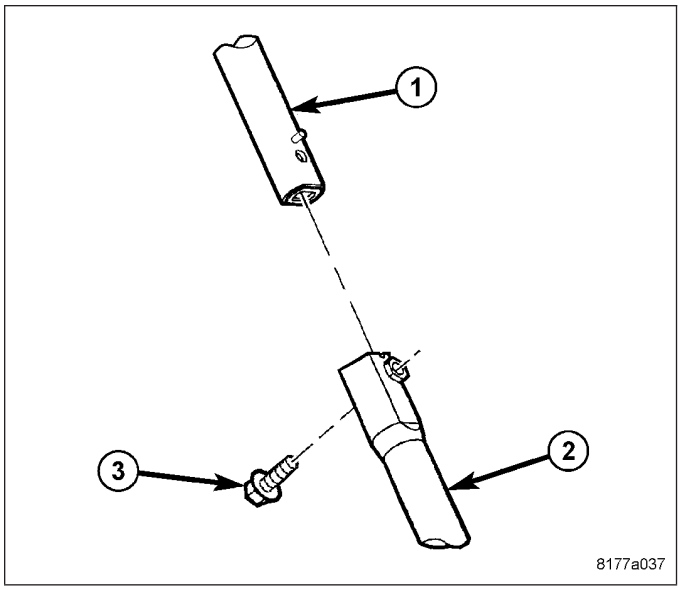

10. Remove the steering wheel holder.
11. Check operation of the steering column for binding or noises.

LEVER-ELECTRONIC TELESCOPING

REMOVAL

WARNING: Before servicing the steering column the airbag system must be disarmed. Refer to electrical restraint system for service procedures. Failure to do so may result in accidental deployment of the airbag and possible personal injury.

CAUTION: All fasteners must be torqued to specification to ensure proper operation of the steering column.

1. Position the front wheels **straight-ahead**.
2. Fully extend or pull out adjustable steering column.
3. Disconnect the negative (ground) cable from the battery.
4. Remove the airbag (3). (Refer to 8 - ELECTRICAL/ RESTRAINTS/DRIVER AIRBAG - REMOVAL).

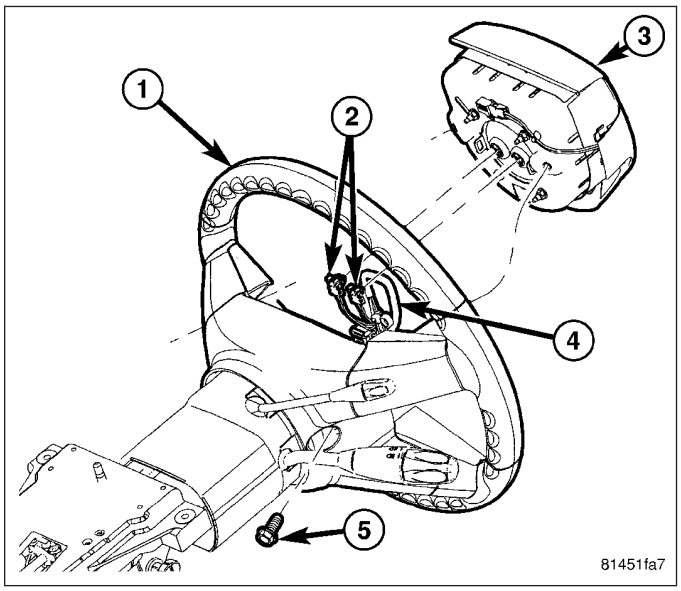

5. Remove the steering wheel retainer bolt (2) then slide the steering wheel (1) off the column shaft.

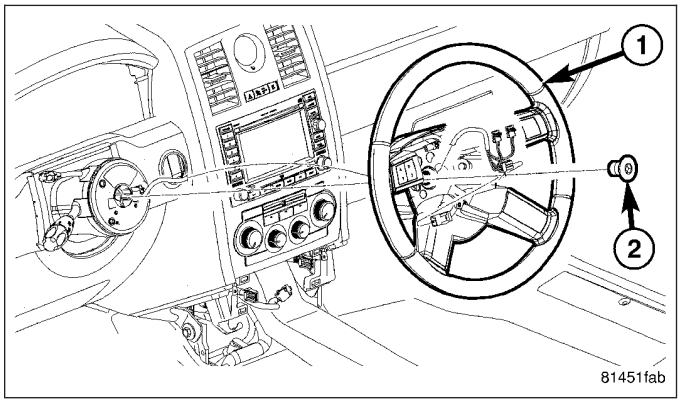

6. Remove the clockspring screws (1), (Refer to 8 - ELECTRICAL/RESTRAINTS/CLOCKSPRING - REMOVAL).

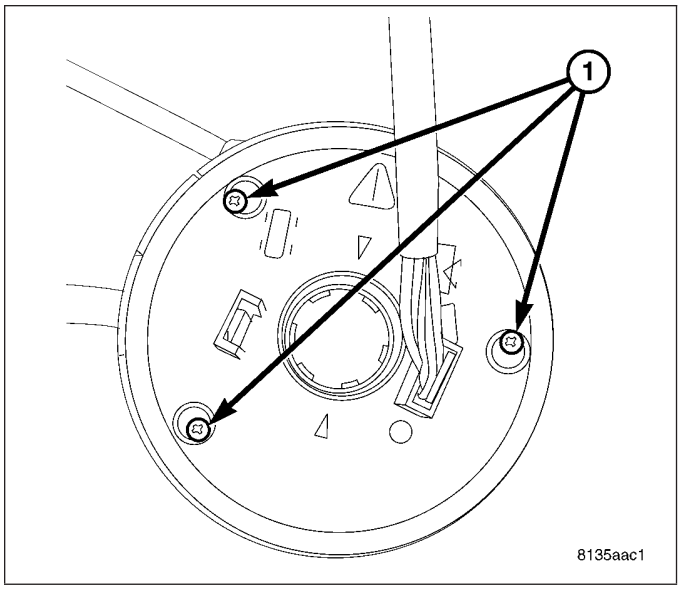

7. **If equipped with ESP**, remove the steering angle sensor (1) from the SCCM (2).

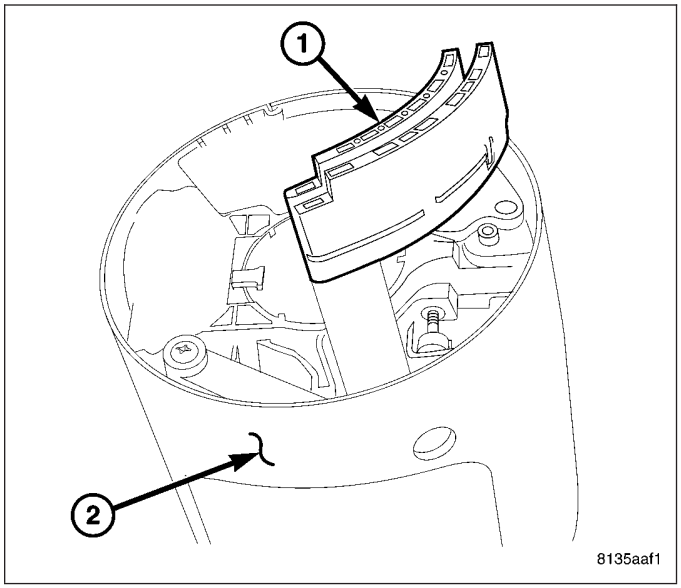

8. Remove the telescoping steering lever screws (4) from the SCCM (5).

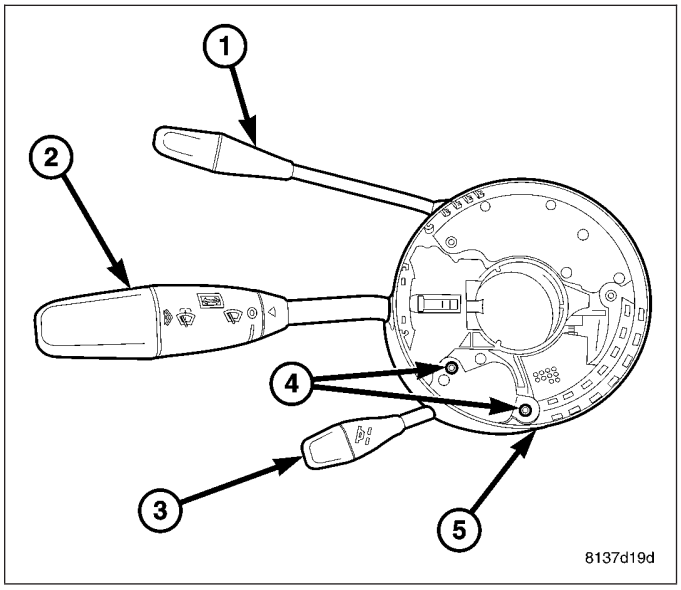

9. Remove the telescoping lever from the SCCM.

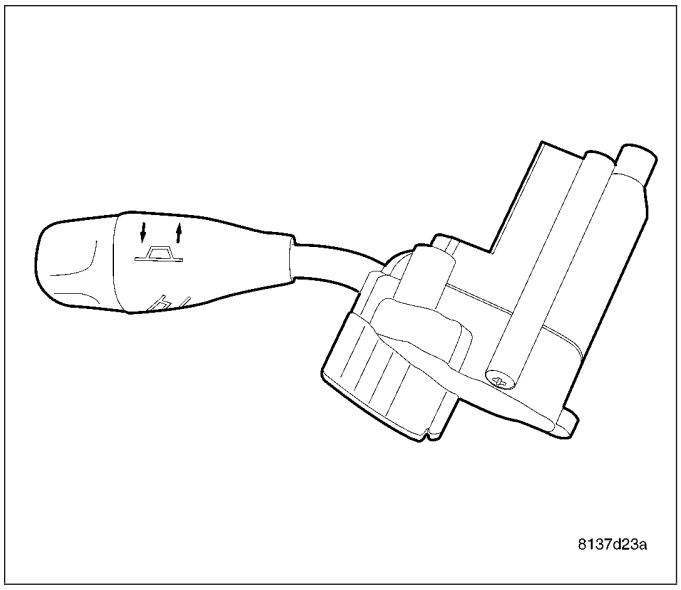

INSTALLATION

1. Install the telescoping lever to the SCCM.

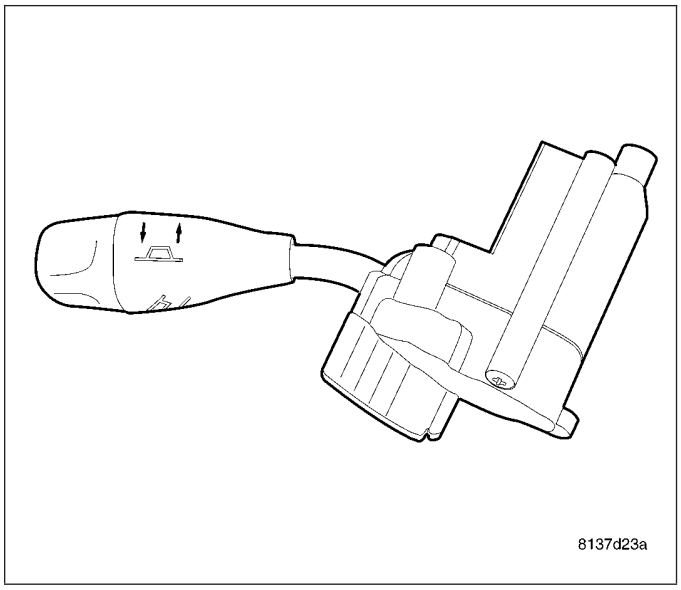

2. Install the screws (4) fastening the telescoping steering lever to the SCCM (5).

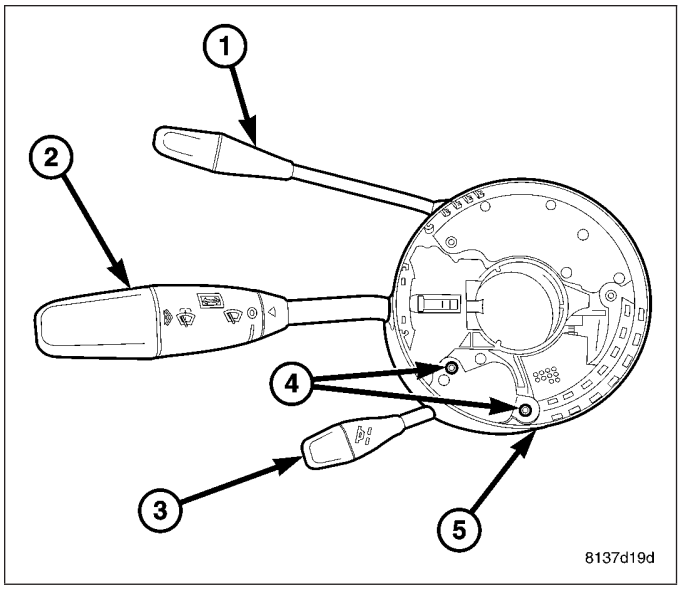

3. **If equipped with ESP**, install the steering angle sensor (1) to the SCCM (2).

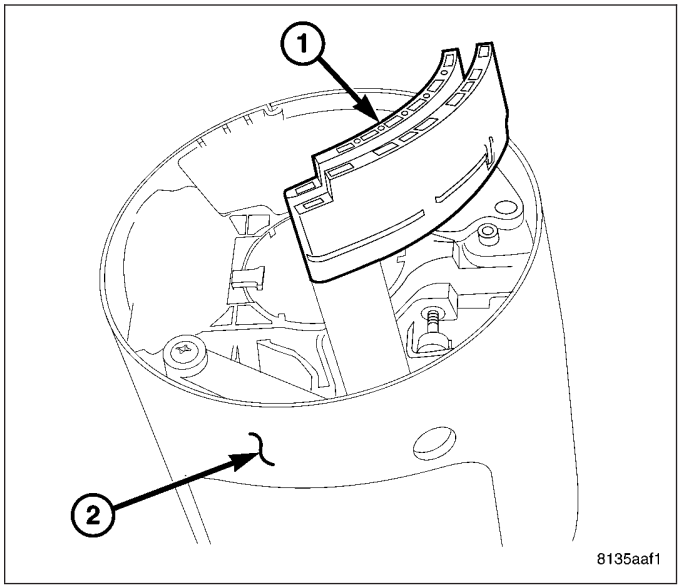

4. Install the clockspring screws (1). (Refer to 8 - ELECTRICAL/RESTRAINTS/CLOCKSPRING - REMOVAL).

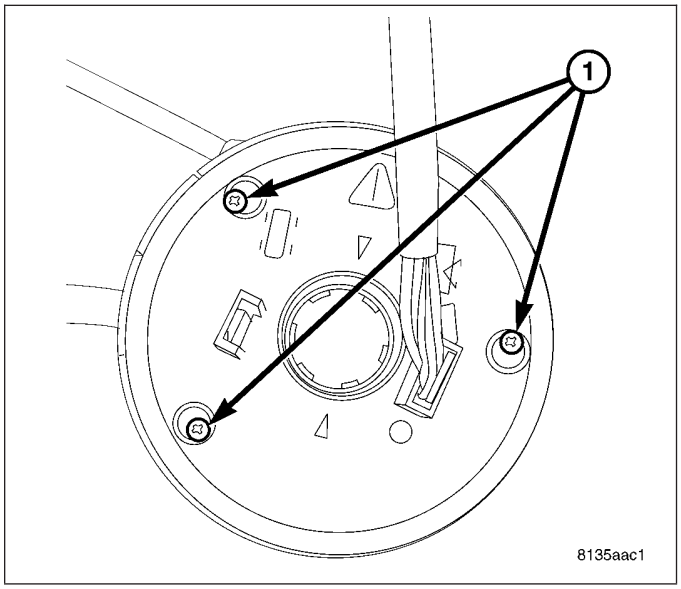

5. Align the spline on the steering wheel hub to shaft.
6. Then install the steering wheel (1) and install a **NEW** retainer bolt (2). Tighten the bolt to 70 N·m (52 ft. lbs.).

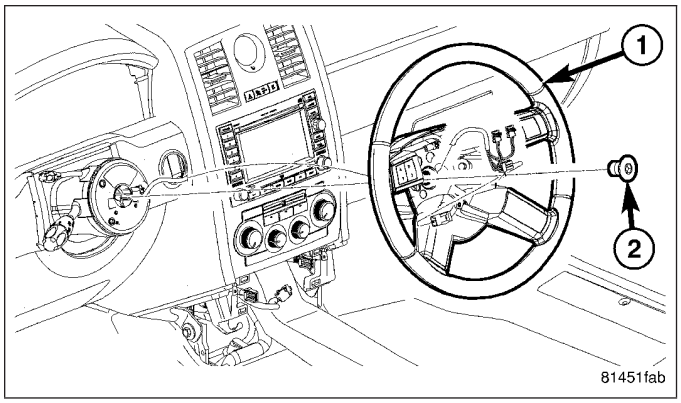

7. Install the airbag (3). (Refer to 8 - ELECTRICAL/ RESTRAINTS/DRIVER AIRBAG - REMOVAL)
8. Install the negative battery terminal on the battery. It is important that this is performed properly (including calibration of steering angle sensor if equipped with ESP). (Refer to 8 - ELECTRICAL/ BATTERY SYSTEM - STANDARD PROCEDURE)
9. Test the operation of the horn, lights and any other functions that are steering column operated.

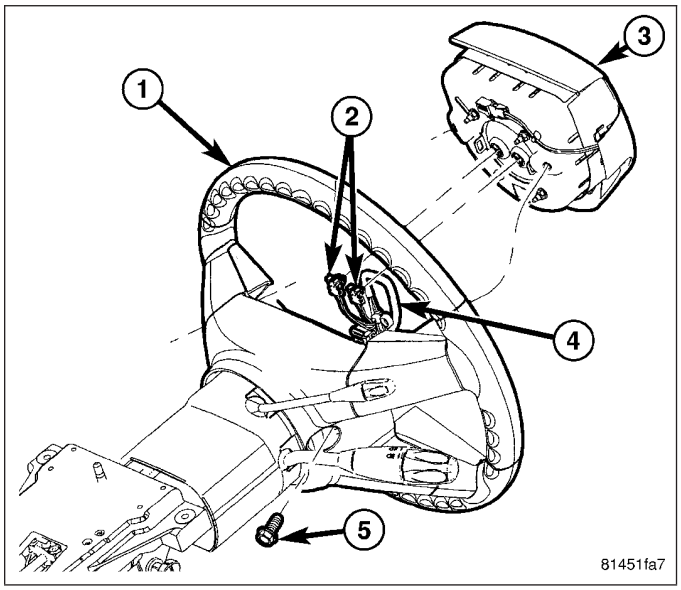

LEVER-GEAR SHIFT

REMOVAL

WARNING: Before servicing the steering column the airbag system must be disarmed. Refer to electrical restraint system for service procedures. Failure to do so may result in accidental deployment of the airbag and possible personal injury.

1. Disconnect the negative (ground) cable from the battery.

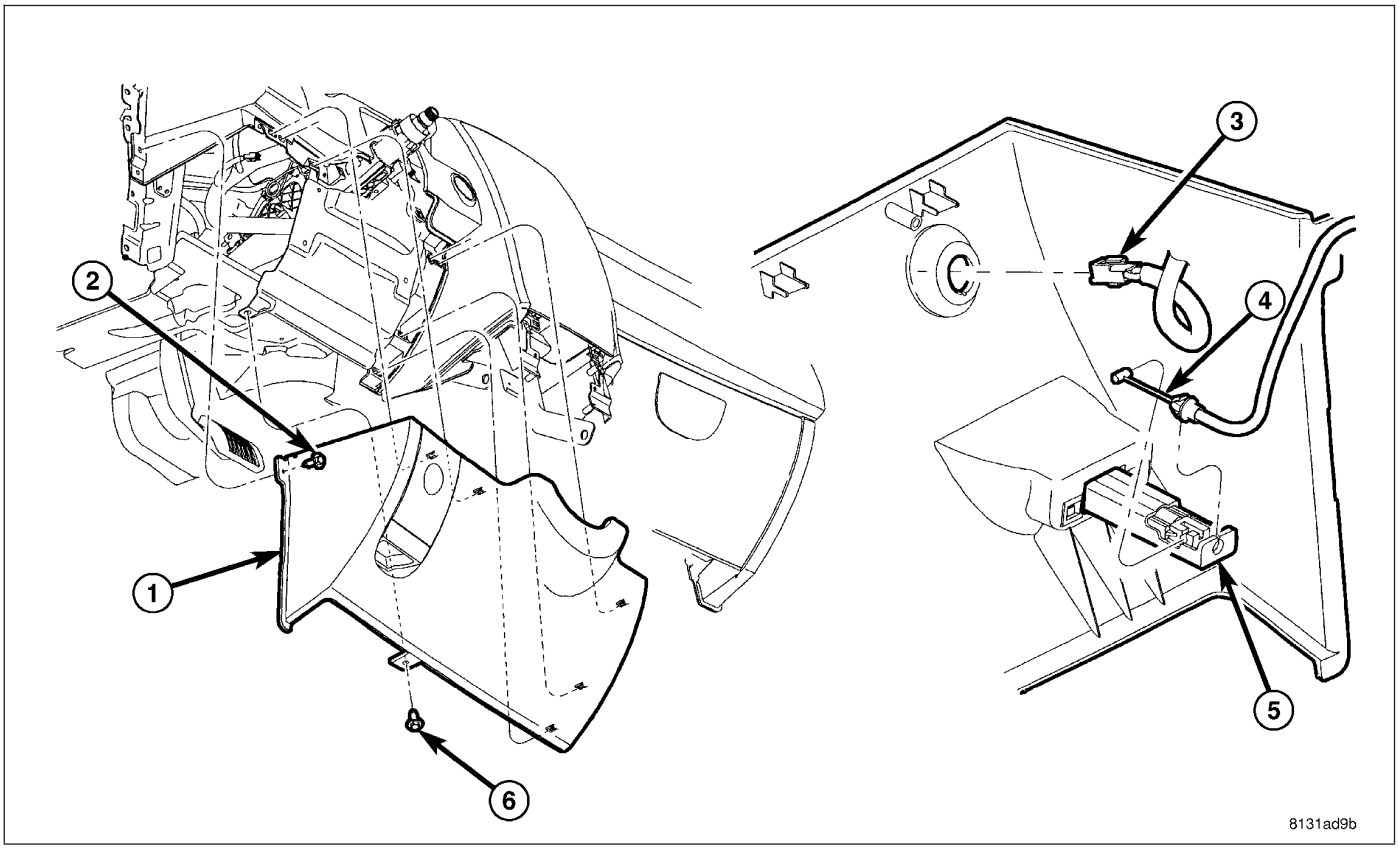

2. Remove the steering column opening cover (1) (Refer to 23 - BODY/INSTRUMENT PANEL/STEERING COLUMN OPENING COVER - REMOVAL).
3. Remove the steering column opening reinforcement (1).

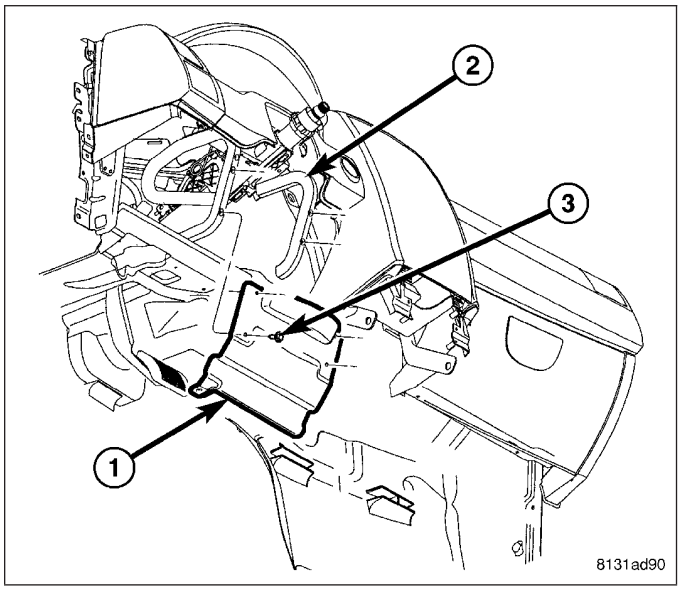

4. Disconnect the autostick wiring connector (1).
5. Remove the wiring tie strap (2) securing the autostick wiring to the column.

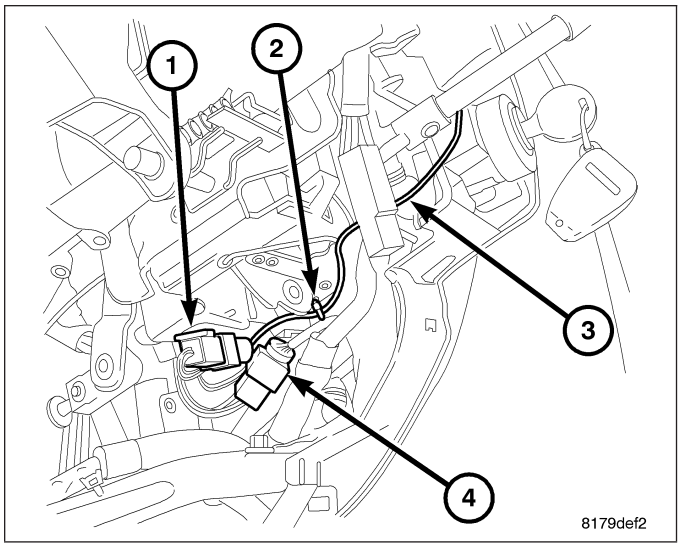

6. Unsnap the gear shift lever boot (2) from the cluster bezel (3). Slide the boot up the gear shift lever (1), away from the bezel.

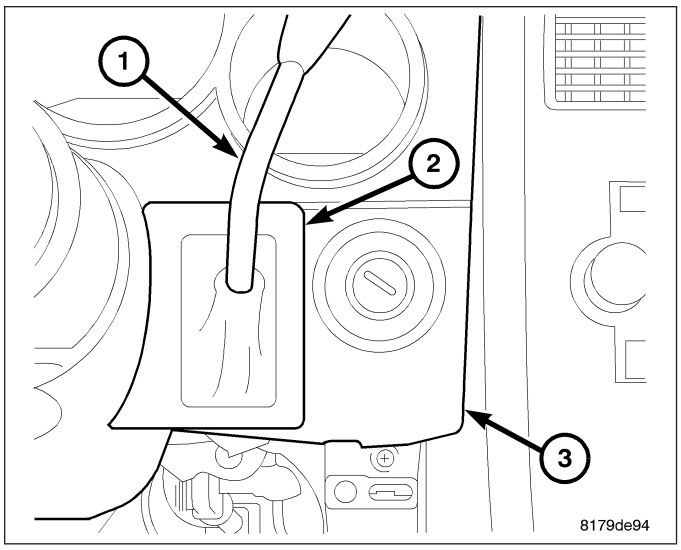

7. Remove the gear shift lever mounting screw (1).
8. Slide the gear shift lever (2) out of the column shift mechanism and remove the lever with autostick wiring.

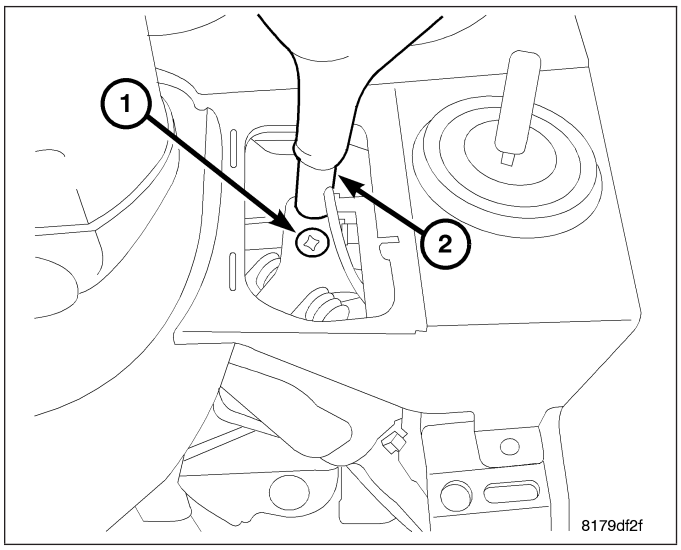

INSTALLATION

1. Feed the autostick wiring through the hole in the cluster bezel and slide the gear shift lever (2) into the column shift mechanism.
2. Line up the threaded hole in the lever with the hole in the shift mechanism and install the gear shift lever mounting screw (1). Tighten the screw to 12 N·m (106 in. lbs.).

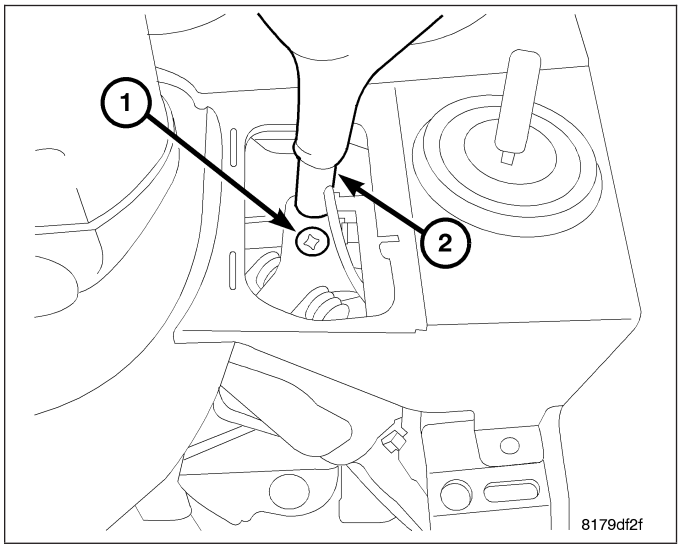

3. Slide the gear shift lever boot down gear shift lever (1) and snap it into place on the cluster bezel (3).

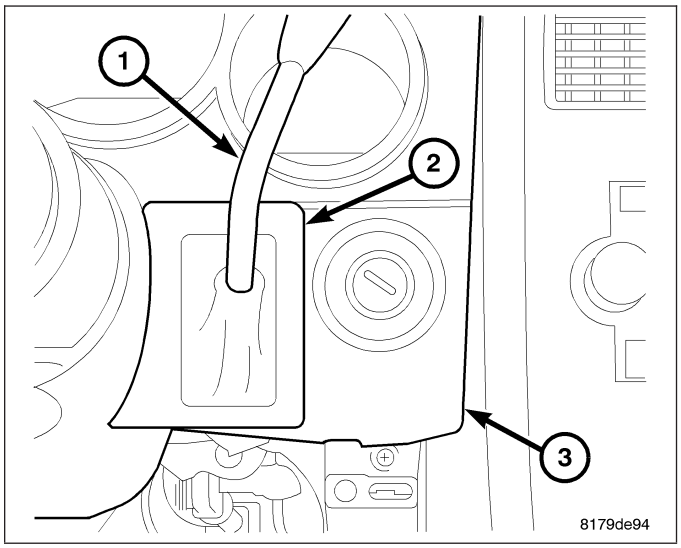

4. Route the autostick wiring (3) along the right side of the column gear shift mechanism and install a wiring tie strap (2) securing the autostick wiring to the column.
5. Connect the autostick wiring connector (1).
6. Check autostick wiring (3), making sure it is routed away from movable portions of shift mechanism.

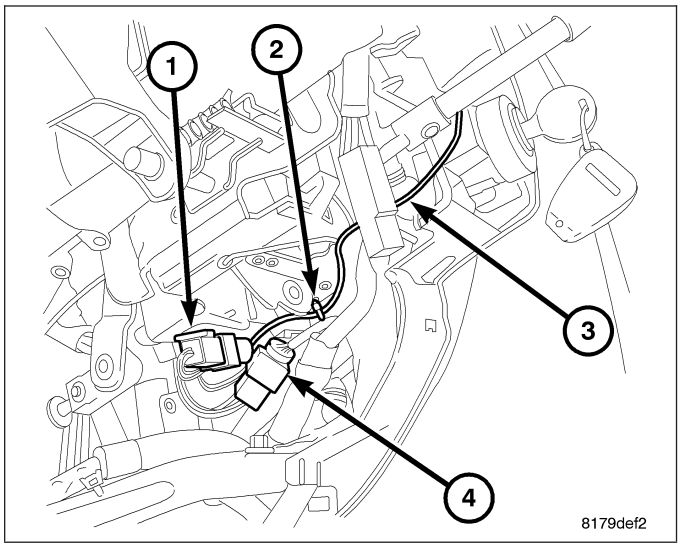

7. Install the steering column opening reinforcement (1).

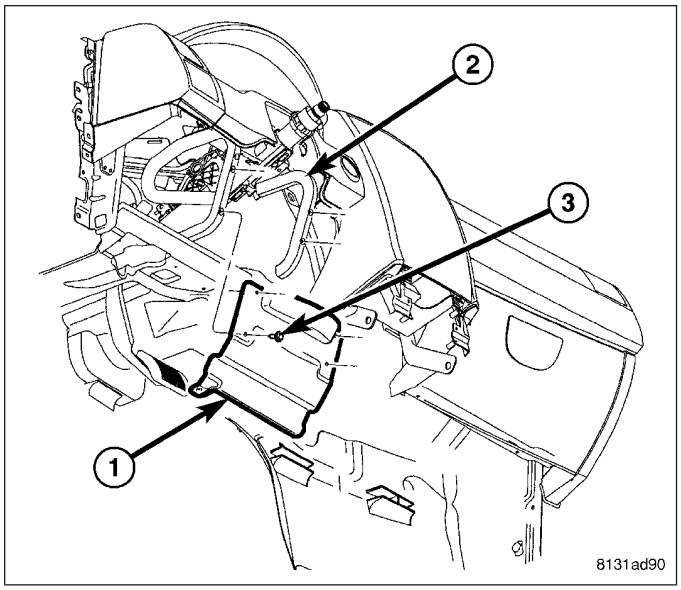

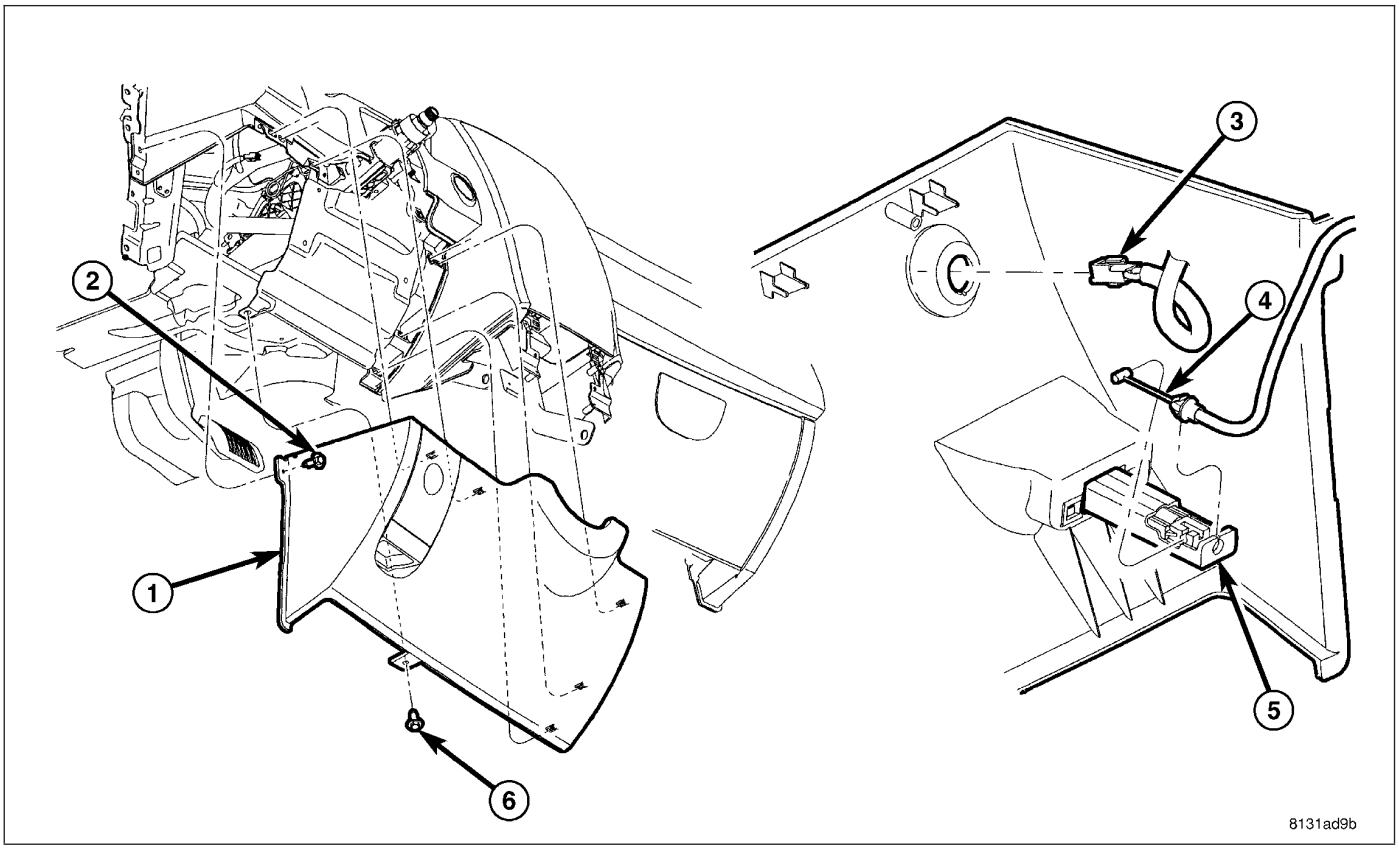

8. Install the steering column opening cover (1).
9. Install the negative battery terminal on the battery. It is important that this is performed properly (including calibration of steering angle sensor if equipped with ESP). (Refer to 8 - ELECTRICAL/BATTERY SYSTEM - STANDARD PROCEDURE)

CAUTION: If the steering wheel is excessively off-center while driving, outside of Chassis specifications, inadvertent ESP activations may occur on a vehicle so equipped.

10. Test the operation of the gear shift lever and autostick functions.

MODULE-STEERING COLUMN CONTROL

DESCRIPTION

Tilt and telescope steering columns are standard on all models. On 300 Hemi C and international 300C models the tilt and telescope functions are powered and are also included in the standard Memory System settings. Combined with available power seats and optional power adjustable pedals, the tilt and telescope steering column gives the driver every known adjustment to obtain a comfortable driving position. Both columns provide 2.36 inches (60 mm) of telescoping adjustment and 5.2 degrees of tilt. The adjustments are continuously variable for maximum adaptability.

A lever on the left side of the column controls powered adjustment. Fore and aft motion of the lever operates the telescoping mechanism. Up and down motion operates the tilt mechanism. Two electric motors turning threaded actuators move the column. The mechanisms lock in place when movement stops.

The Steering Column Control Module (SCCM) is mounted on the steering column and is removed as a complete unit. The components that are contained within this unit are:

- **Clockspring** - is attached to the top of the SCCM with three screws. The clockspring connector passes through the body of the SCCM and its terminals slide into the male side of the self docking connector within the Steering Column Module (SCM). (Refer to 8 - ELECTRICAL/RESTRAINTS - DESCRIPTION).
- **Multi-Function Switch** - is the middle left lever, and is plugged into, and mounting pins pass through, the SCM secured to the SCCM housing by three screws (Refer to 8 - ELECTRICAL/LAMPS/LIGHTING - EXTERIOR/MULTI-FUNCTION SWITCH - DESCRIPTION).
- **Speed Control Switch** - is the top left lever and is plugged into the SCM and held in place by the three screws of the clockspring (Refer to 8 - ELECTRICAL/SPEED CONTROL - DESCRIPTION).
- **Steering Angle Sensor (if equipped with Electronic Stability Program (ESP)** - is mounted on the right side of the SCCM, below the clockspring and is responsible for informing the ESP of steering angle.
- **Steering Control Module (SCM)** - is the module located in the bottom of the SCCM, retained by three screws, and is the mating point for all the switches and clockspring located in the SCCM.
- **Tilt/Telescopic Lever/Switch (if equipped)** - is the bottom left lever and is used for steering wheel tilt and telescoping. It is plugged into the SCM and if not equipped, will be replaced by a support bar. It is held in place by one the three clockspring screws and one of its own retaining screws.
- **Shroud** - is the outer housing or shell of the SCCM.

The SCCM communicates via the Local Interconnect Network (LIN) serial data bus. This is an ultra-low voltage serial data bus that allows the following components to communicate with the Controller Area Network (CAN) B and C data buses.

- Steering Wheel Switches
- Horn
- Speed Control Switch
- Multi-function Switch
- Tilt/Telescoping Switch (if equipped)
- Steering Angle Sensor (if equipped with Electronic Stability Program (ESP)
- Steering Column Module (SCM)

REMOVAL

WARNING: Before servicing the steering column the airbag system must be disarmed. Refer to electrical restraint system for service procedures. Failure to do so may result in accidental deployment of the airbag and possible personal injury or death.

CAUTION: All fasteners must be torqued to specification to ensure proper operation of the steering column.

1. Position the front wheels **straight-ahead**.
2. Fully extend or pull out adjustable steering column.
3. Disconnect the negative (ground) cable from the battery.
4. Remove the driver airbag (3). (Refer to 8 - ELECTRICAL/RESTRAINTS/DRIVER AIRBAG - REMOVAL)

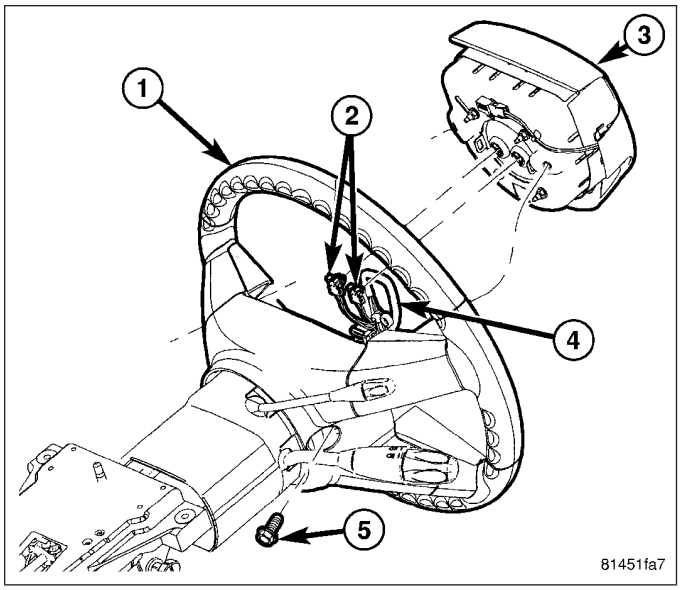

5. Remove the steering wheel retaining bolt (2), then slide the steering wheel (1) off the shaft.

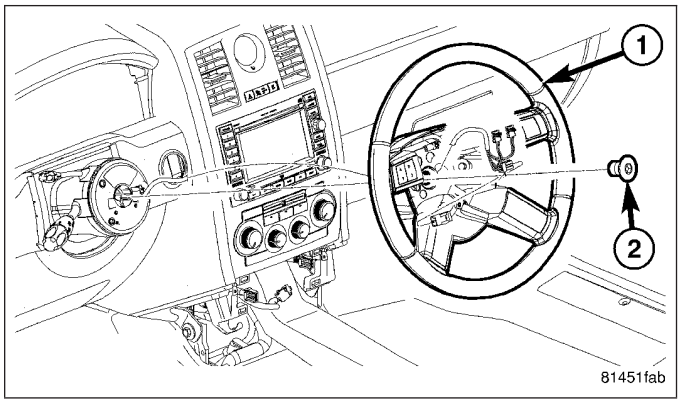

6. Unscrew at least one clockspring screw (1) but don't take it all the way out, This will help keep the clockspring from uncentering itself.

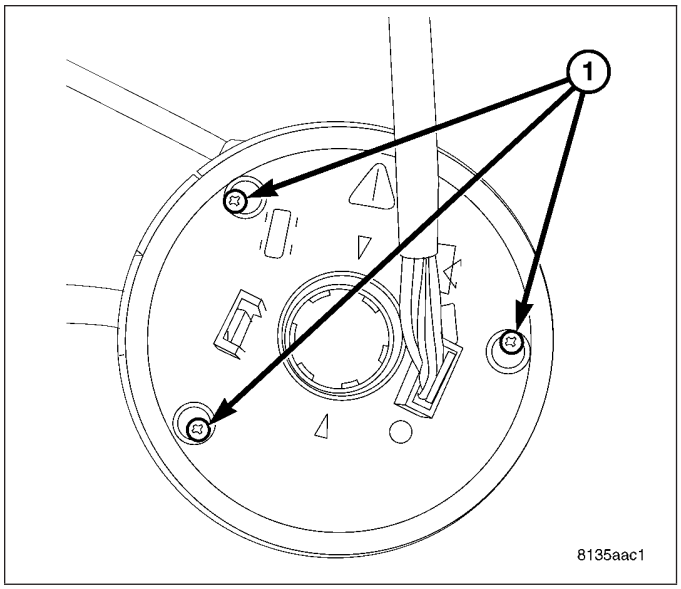

7. Back out the set screw (1) through the access hole (3) in the bottom of the Steering Column Control Module (SCCM) (2).

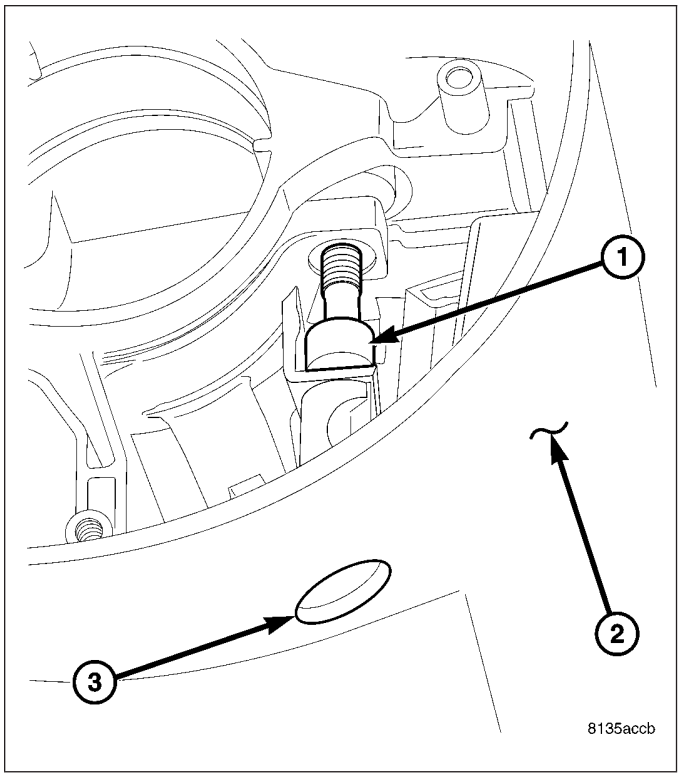

8. Pull the SCCM (1) off the steering column shaft.

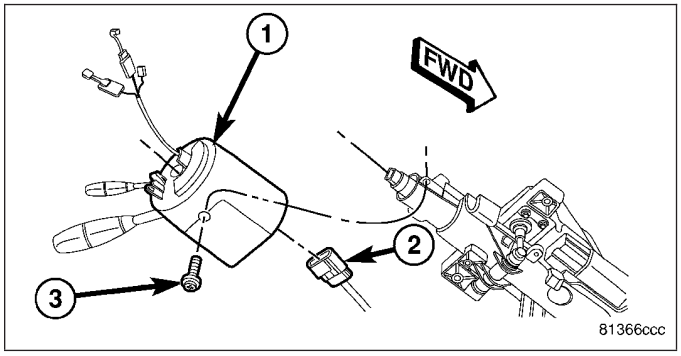

9. To service the individual components contained within the SCCM, (Refer to 19 - STEERING/COLUMN/STEERING COLUMN CONTROL MODULE - DISASSEMBLY).

DISASSEMBLY

1. Loosen the three clockspring screws (1) just far enough to release the clockspring from the SCCM. Leave them in the clockspring so it won't unwind.

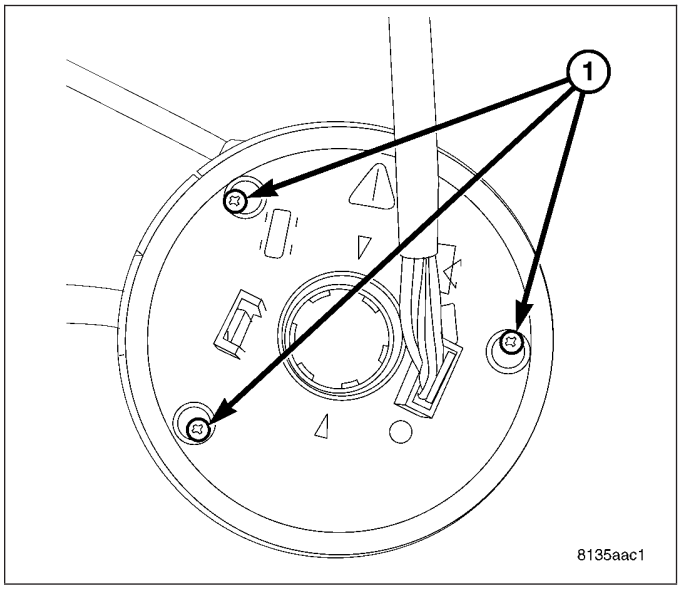

2. Carefully pull straight up on clockspring to remove.

NOTE: After the clockspring is removed, there is only one more screw on the top side of the SCCM that needs to be removed and is located at approximately the six o'clock position on the SCCM. It holds the lower side of the steering angle sensor, the lower side of the electric tilt lever assembly, or the strengthening strut if not equipped with electric tilt.

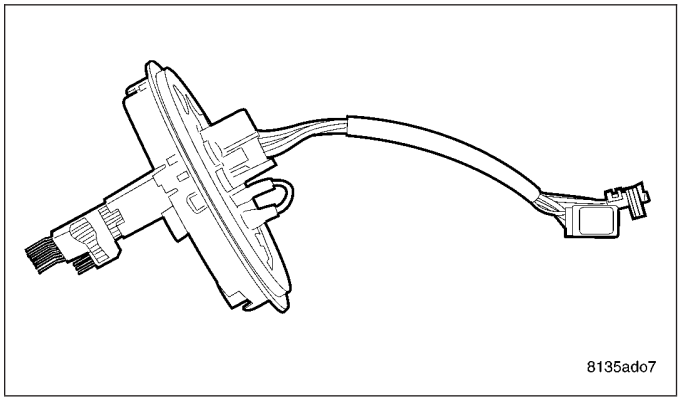

3. **If equipped with ESP**, remove the steering angle sensor screw located at the six o'clock position on the SCCM and remove the steering angle sensor (1) from the SCCM (2). **If not equipped with ESP**, there will be a plastic insert there for strengthening of the SCCM that will lift right out.

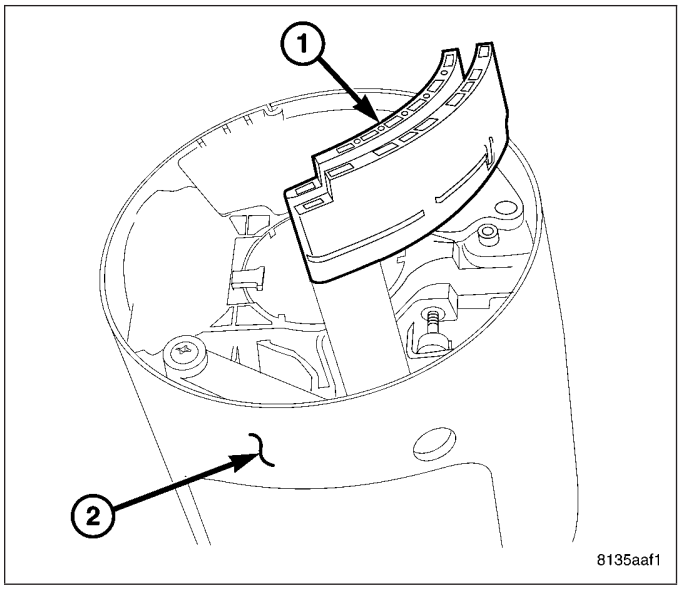

4. **If equipped with manual telescoping column**, remove the strut screw, located at the six o'clock position, and strut (1).

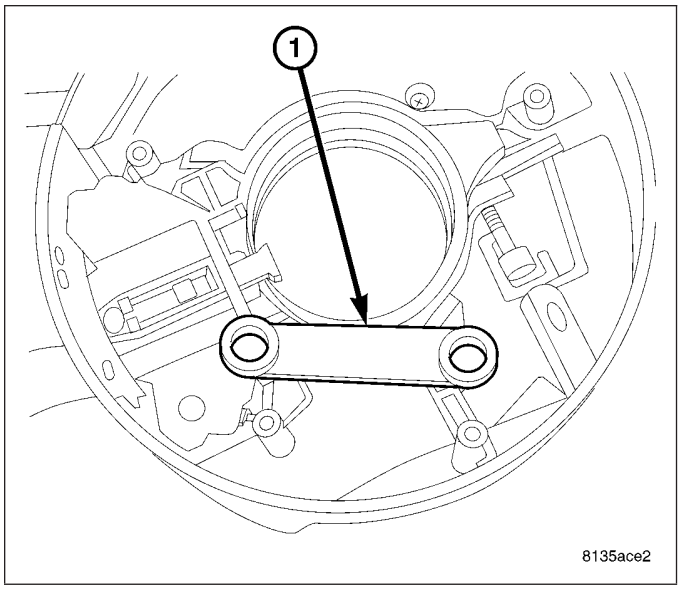

5. **If equipped with electronic telescoping column**, remove the one remaining screw (4) to electric tilt located at the six o'clock position, and remove stalk and switch (3).

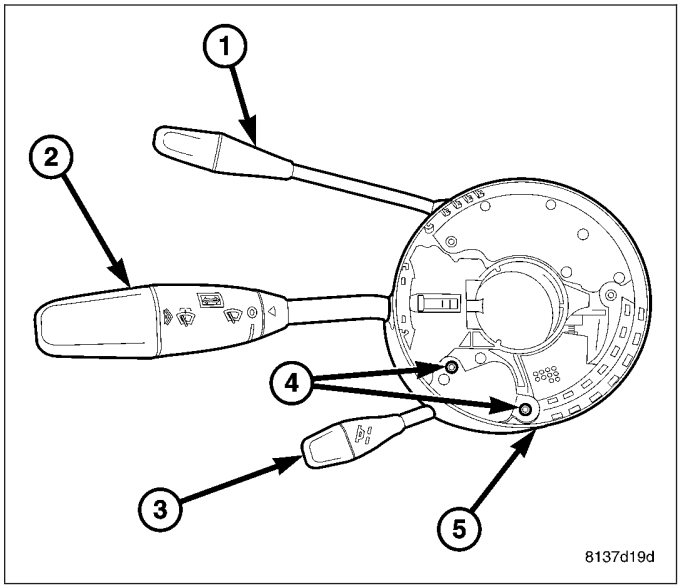

6. Remove the speed control switch (1).

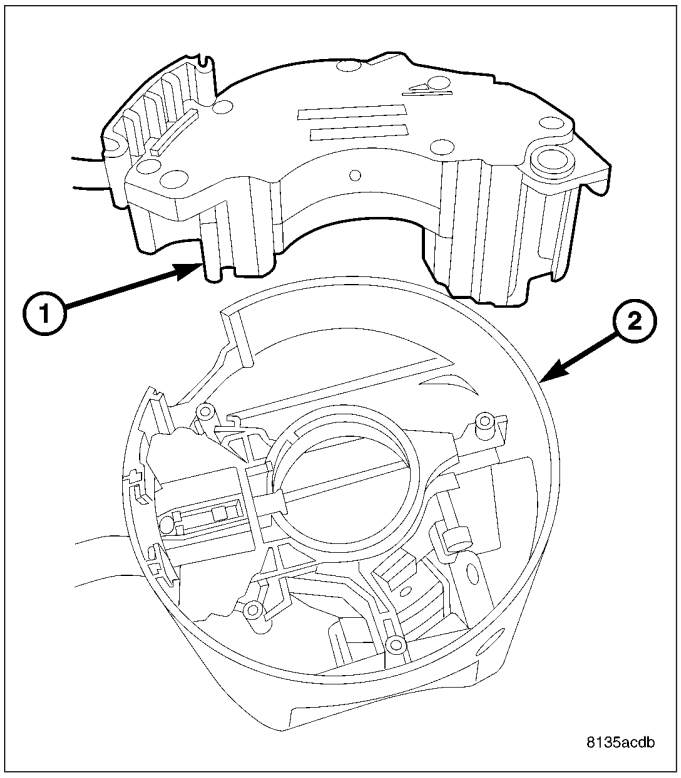

7. Remove the steering column tilt/telescoping lever (3) screw (4) located at the six o'clock position.

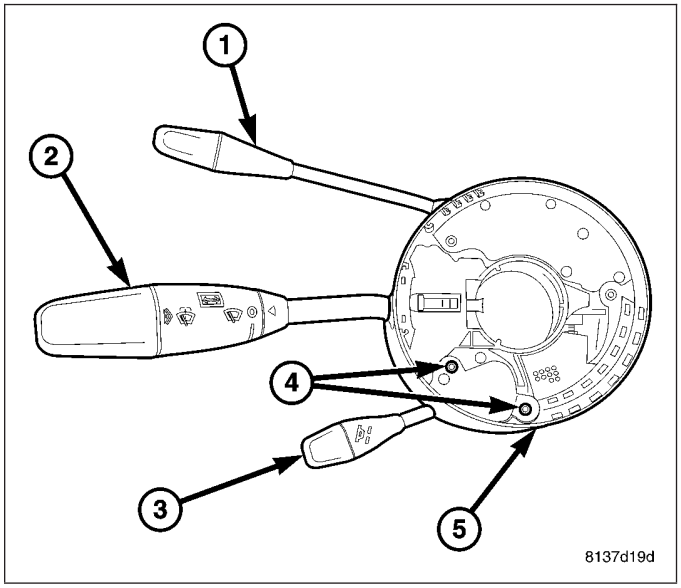

8. Remove the three screws (1) at the bottom of the SCCM Shroud for the multi-function switch and Steering Control Module (SCM).

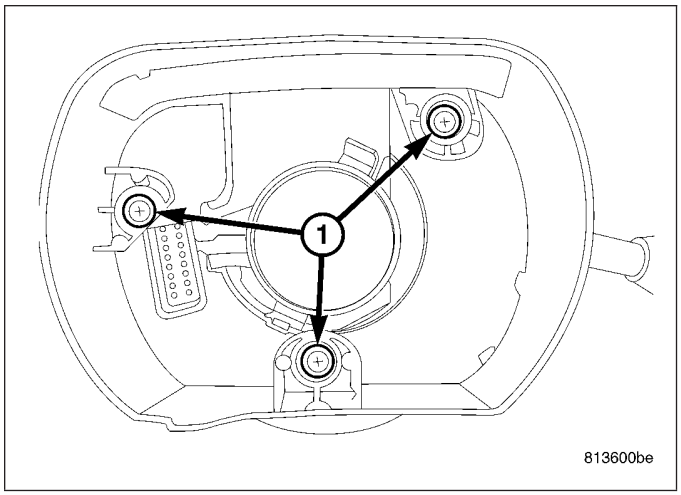

9. Separate the multi-function switch from the SCM.

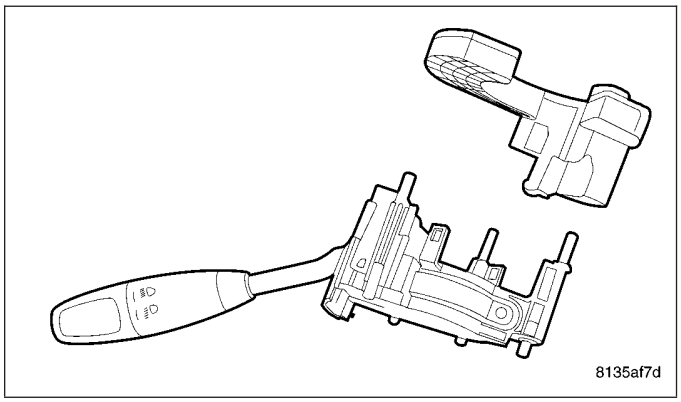

ASSEMBLY

1. Position the Steering Control Module (SCM) onto the multi-function switch.

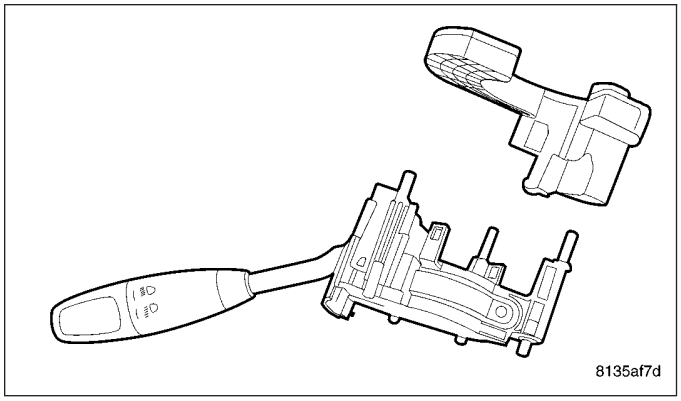

2. Install the multi-function switch and SCM in the SCCM Shroud and tighten the three screws (1) from the bottom.

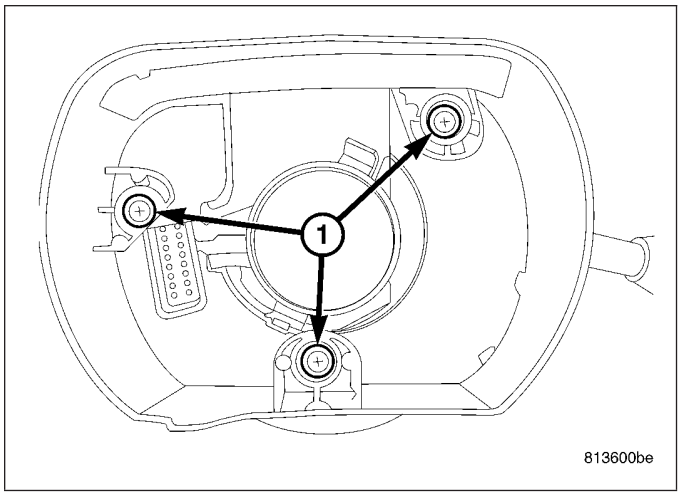

3. Install the steering column telescoping lever (3).

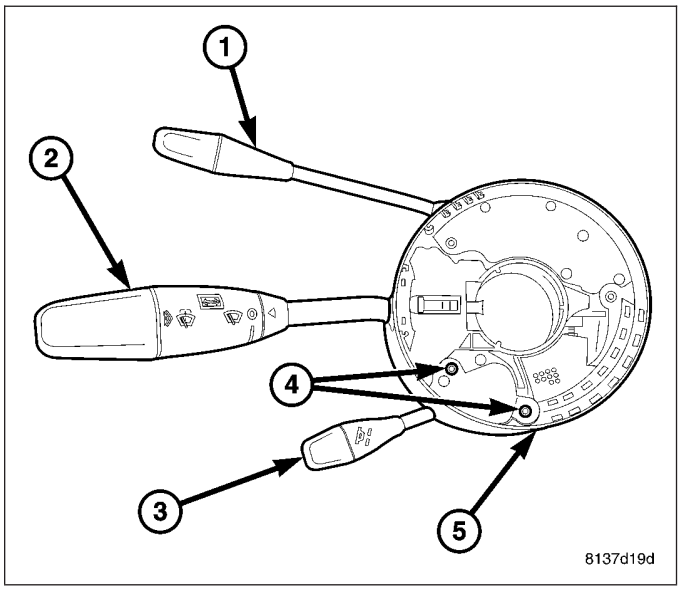

4. Install the speed control switch (1).

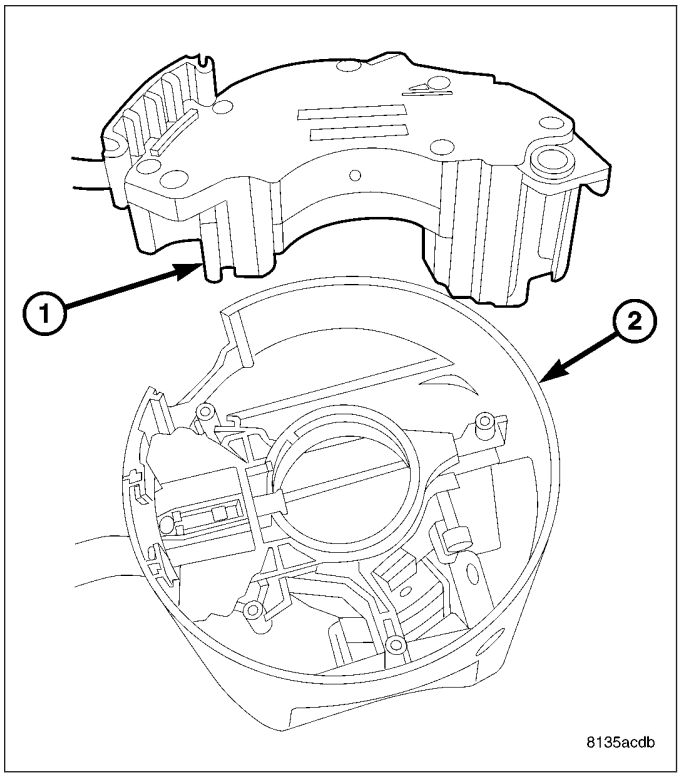

5. **If equipped with manual telescoping column**, install the strut (1).

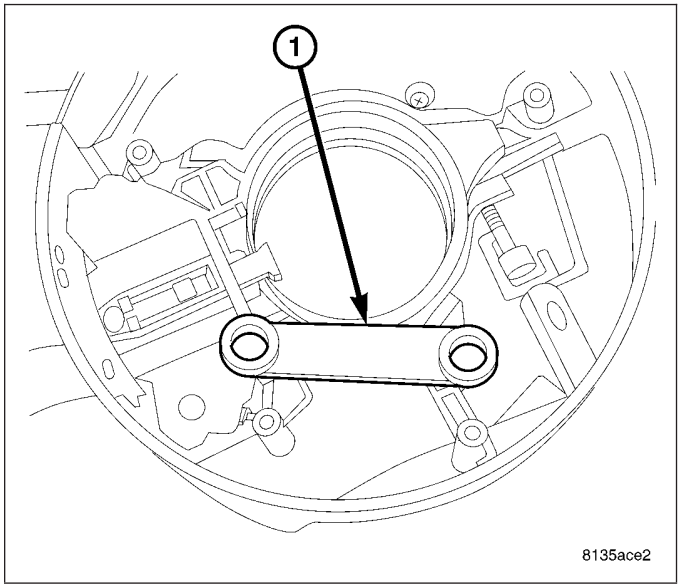

6. **If equipped with electronic telescoping column**, install the electric tilt lever and switch (3).

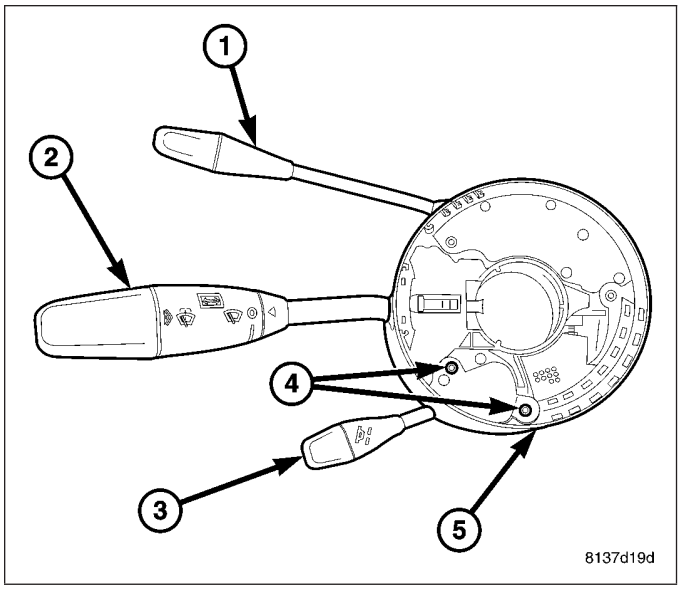

7. **If equipped with ESP**, install the steering angle sensor and screw (3) located at the six o'clock position.

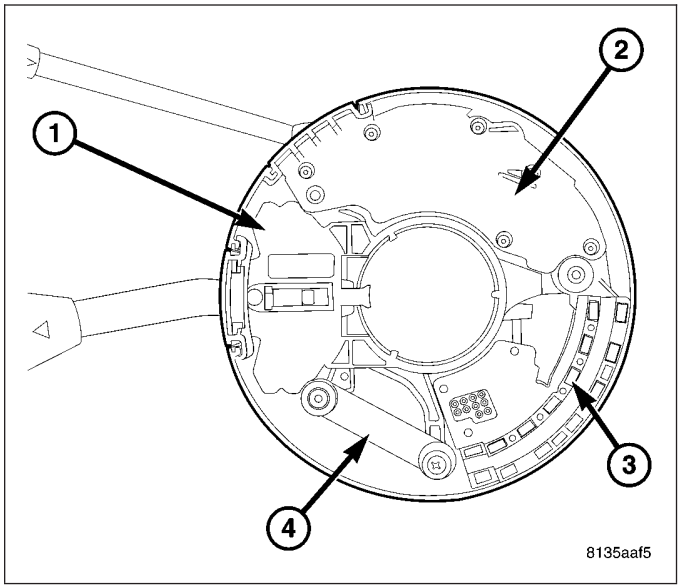

8. Install the clockspring and screws (1) leaving one out so it will not unwind.
9. Install the SCCM on the steering column, (Refer to 19 - STEERING/COLUMN/STEERING COLUMN CONTROL MODULE - INSTALLATION) and tighten the one clockspring screw (1) that was left loose.

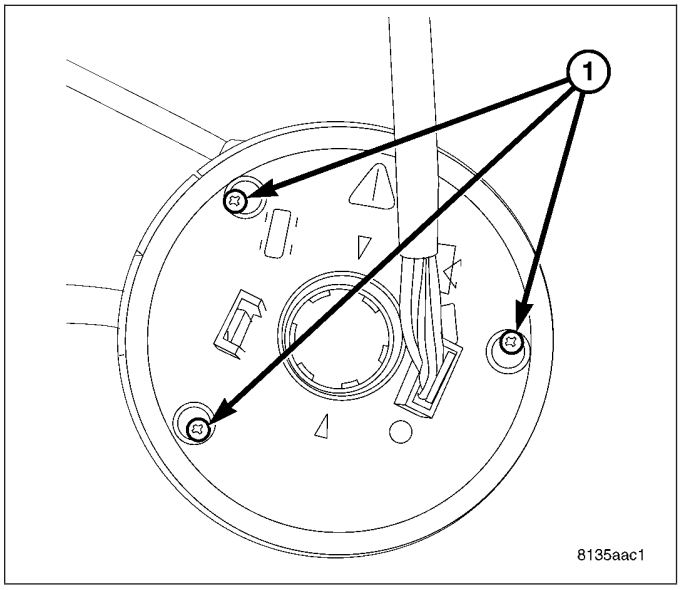

INSTALLATION

1. Install the SCCM (1) onto the steering column.

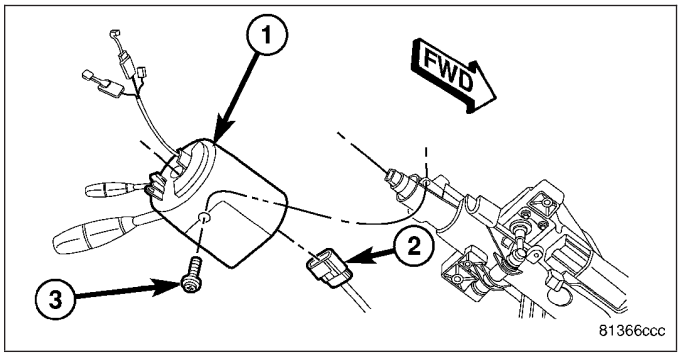

2. Tighten the set screw (1) securing the SCCM (2).

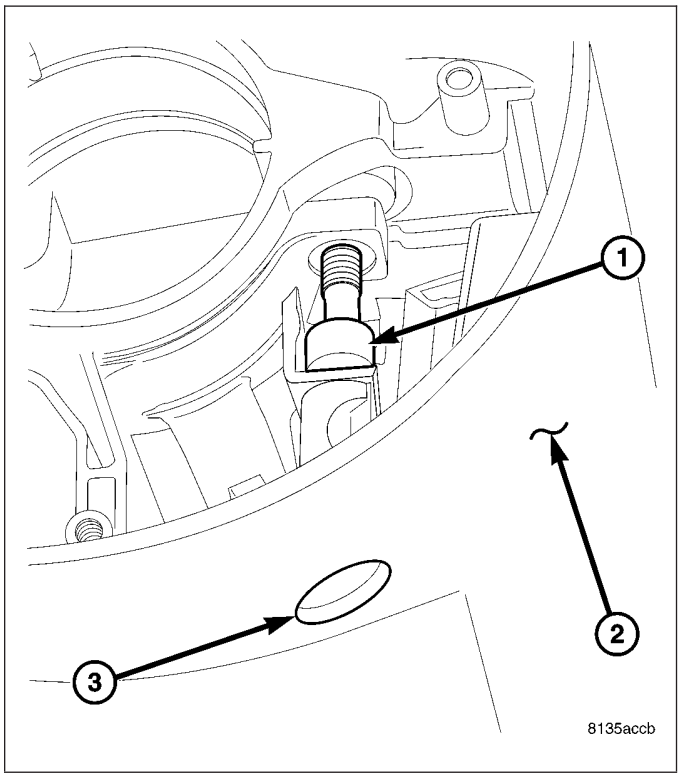

3. Tighten clockspring screw(s) (1) that were backed out to keep the clockspring from unwinding.

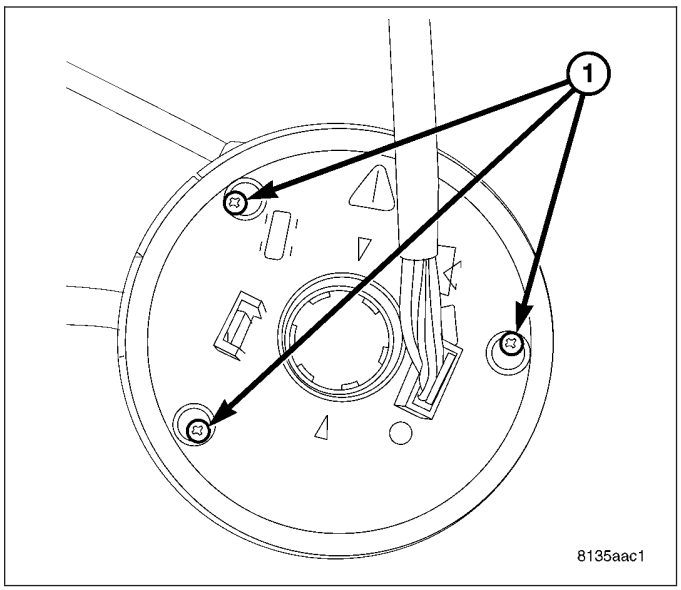

4. Align the spline on the steering wheel hub to shaft and install the steering wheel (1).
5. Install a **NEW** retaining bolt (2). Torque the bolt to 70 N·m (52 ft. lbs.).

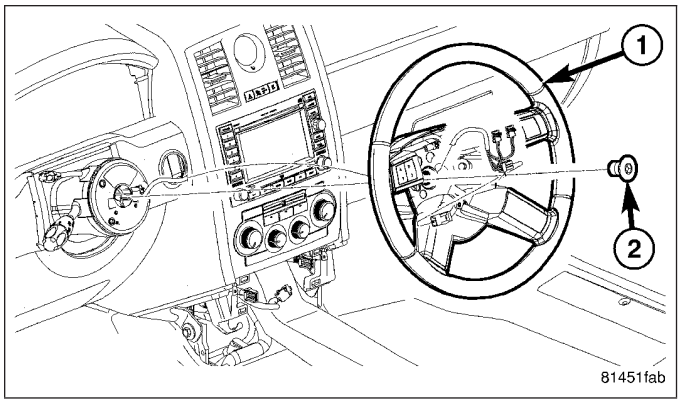

6. Install the driver airbag (3) (Refer to 8 - ELECTRICAL/RESTRAINTS/DRIVER AIRBAG - INSTALLATION).
7. Connect the battery negative cable. If equipped with Electronic Stability Program (ESP), the steering angle sensor must be calibrated (Refer to 8 - ELECTRICAL/BATTERY SYSTEM - STANDARD PROCEDURE).

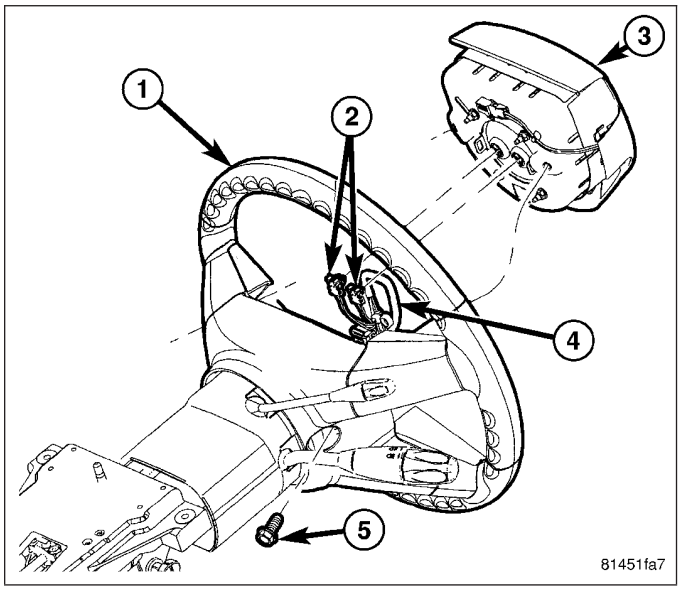

SHROUD

REMOVAL

The steering column shroud is part of the steering column control module (SCCM). Remove and disassemble the SCCM. (Refer to 19 - STEERING/COLUMN/STEERING COLUMN CONTROL MODULE - REMOVAL) (Refer to 19 - STEERING/COLUMN/STEERING COLUMN CONTROL MODULE - DISASSEMBLY)

INSTALLATION

The steering column shroud is part of the steering column control module (SCCM). (Refer to 19 - STEERING/COLUMN/STEERING COLUMN CONTROL MODULE - ASSEMBLY)

SHROUD-ROLL TOP

REMOVAL

WARNING: Before servicing the steering column the airbag system must be disarmed. Refer to electrical restraint system for service procedures. Failure to do so may result in accidental deployment of the airbag and possible personal injury or death.

CAUTION: All fasteners must be torqued to specification to ensure proper operation of the steering column.

1. Position the front wheels **straight-ahead**.
2. Fully extend or pull out adjustable steering column.
3. Disconnect the negative (ground) cable from the battery.
4. Remove the driver airbag (3). (Refer to 8 - ELECTRICAL/RESTRAINTS/DRIVER AIRBAG - REMOVAL)

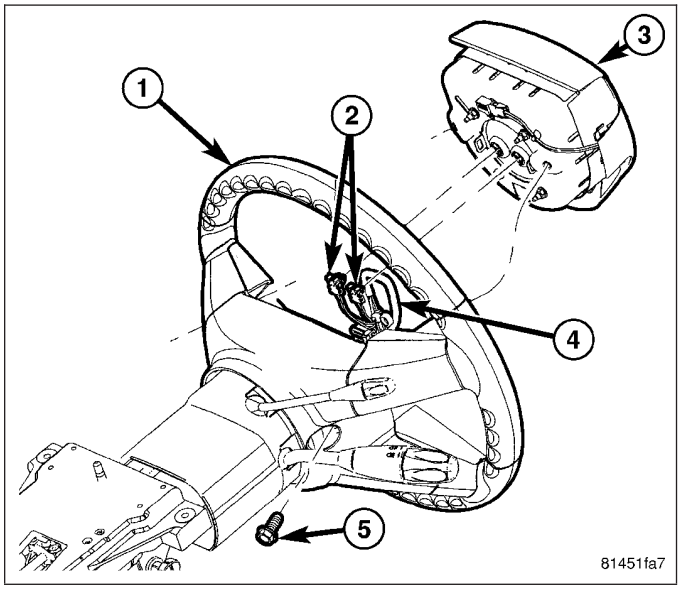

5. Remove the steering wheel retainer bolt (2), then slide the steering wheel (1) off the column shaft.

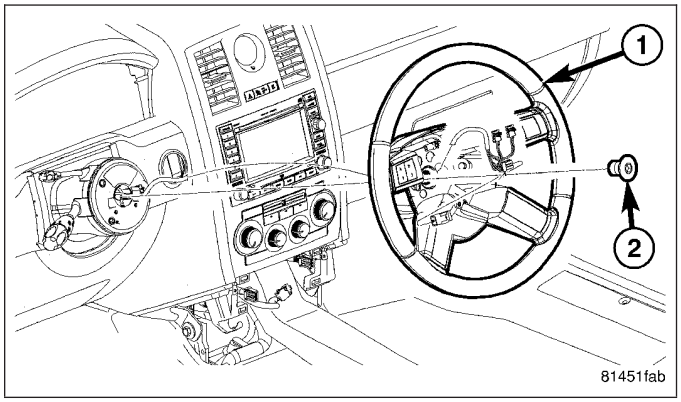

6. Remove at least one clockspring screw (1), (Refer to 8 - ELECTRICAL/RESTRAINTS/CLOCKSPRING - REMOVAL). This will help keep the clockspring from becoming uncentered.

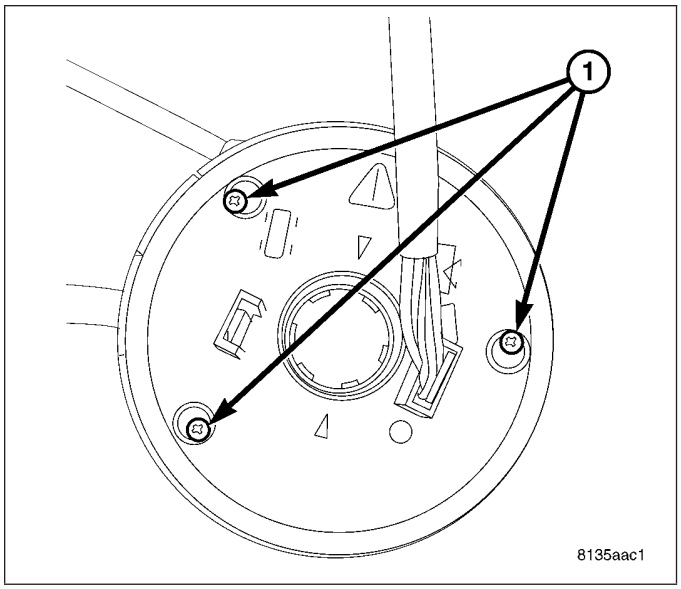

7. Back out the set screw (1) through the access hole (3) in the bottom of the Steering Column Control Module (SCCM) (2).

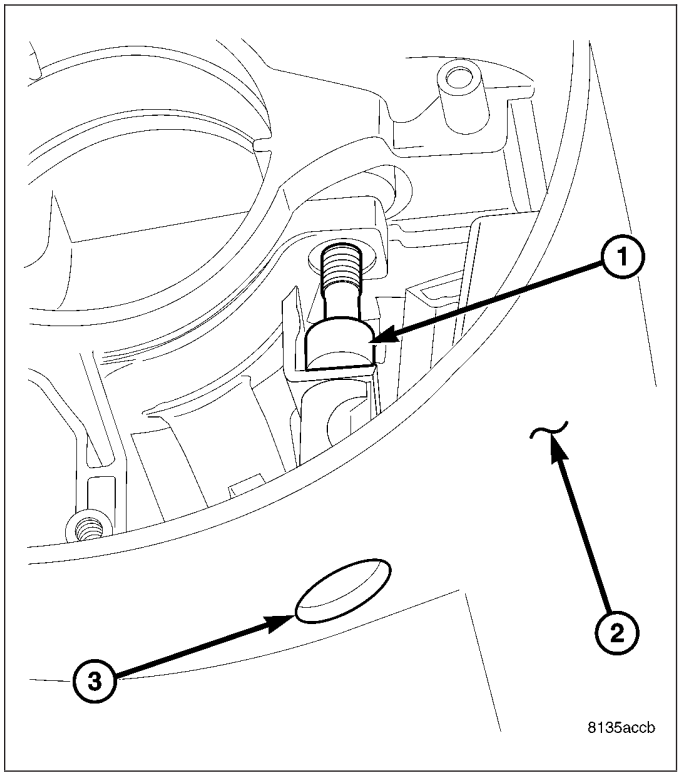

8. Pull the SCCM (1) off the steering column shaft.

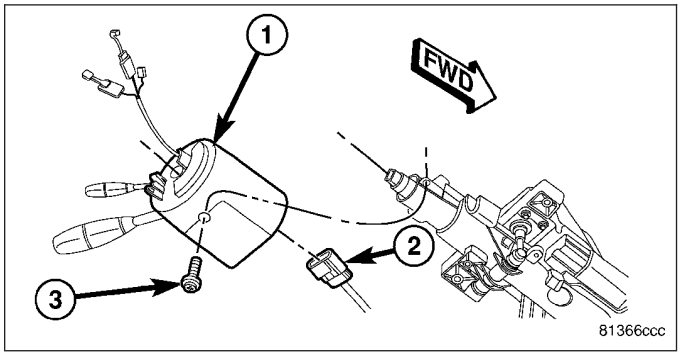

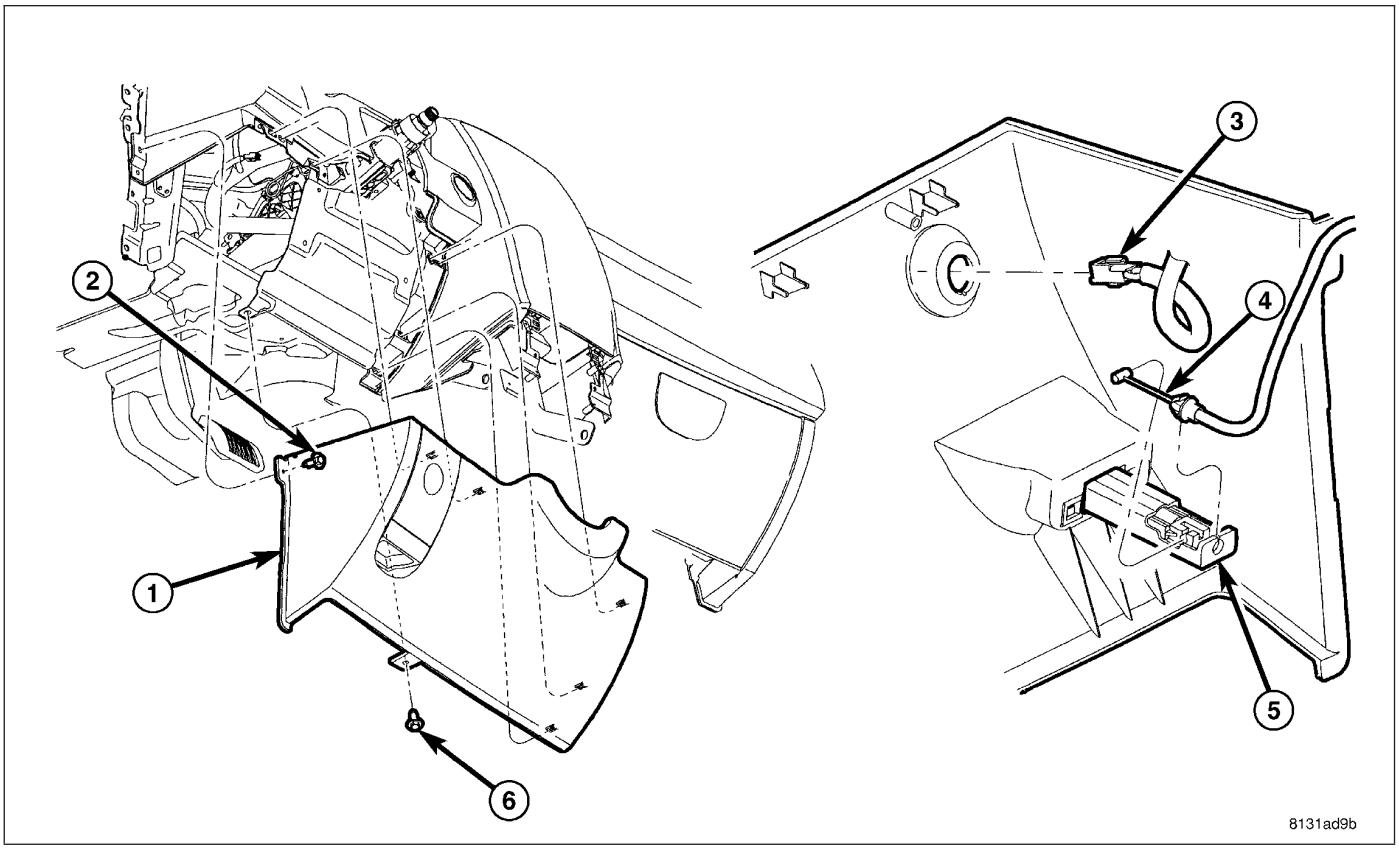

9. Remove the steering column opening cover (1) (Refer to 23 - BODY/INSTRUMENT PANEL/STEERING COLUMN OPENING COVER - REMOVAL).
10. Remove the steering column opening reinforcement (1).
11. Remove the cluster bezel. (Refer to 23 - BODY/INSTRUMENT PANEL/CLUSTER BEZEL - REMOVAL)

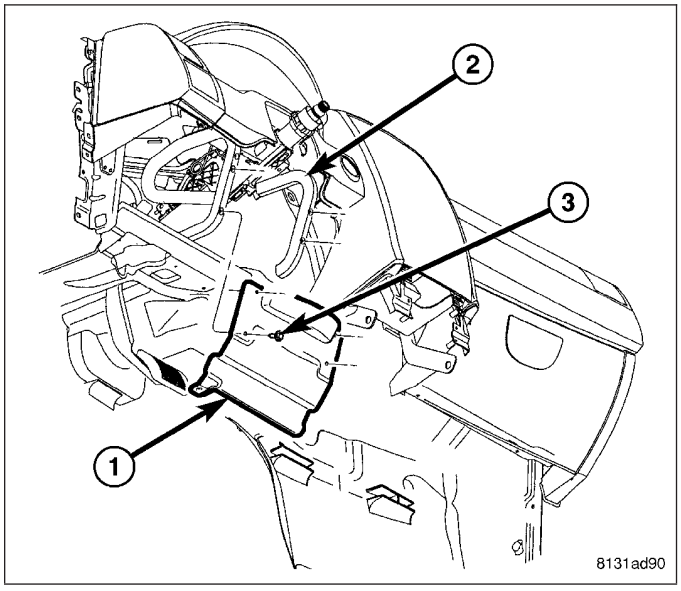

12. Manual tilt and telescoping columns – Unsnap and move the adjustment handle locking tab (3) forward as shown unlatching the handle (2) from the column.

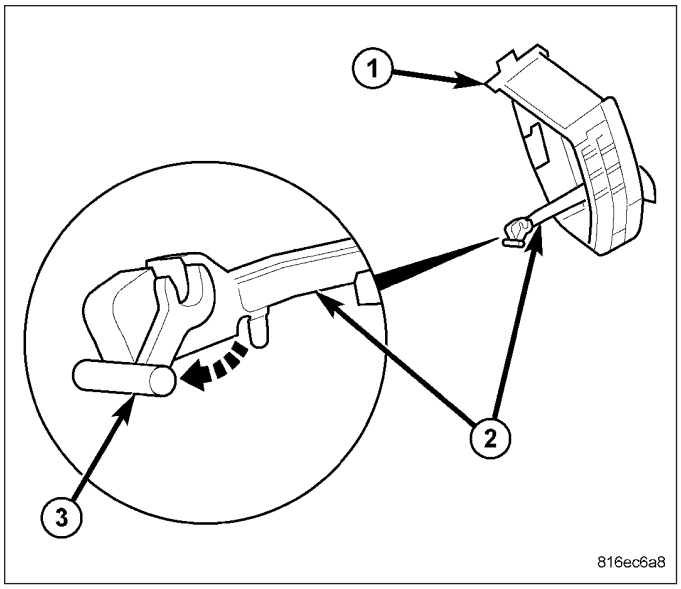

13. Remove the four (three for column shift column) shroud mounting screws (2).

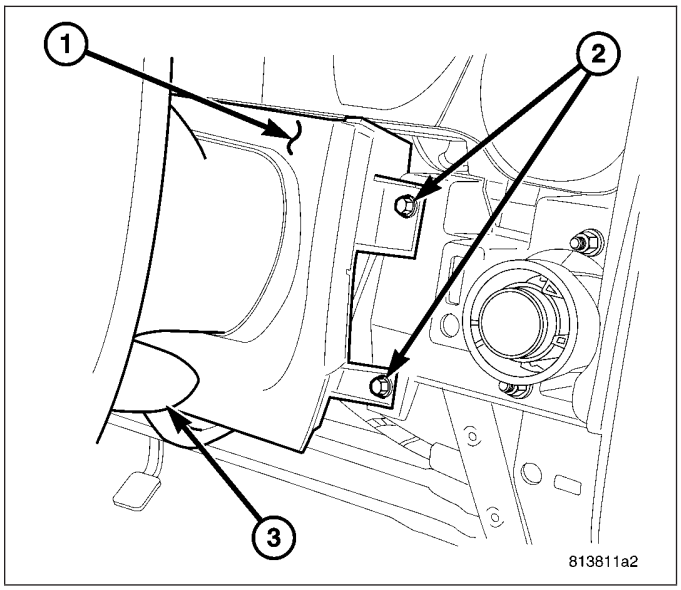

14. Remove the roll top shroud (1) along with manual tilt/telescope handle (3) (if equipped).

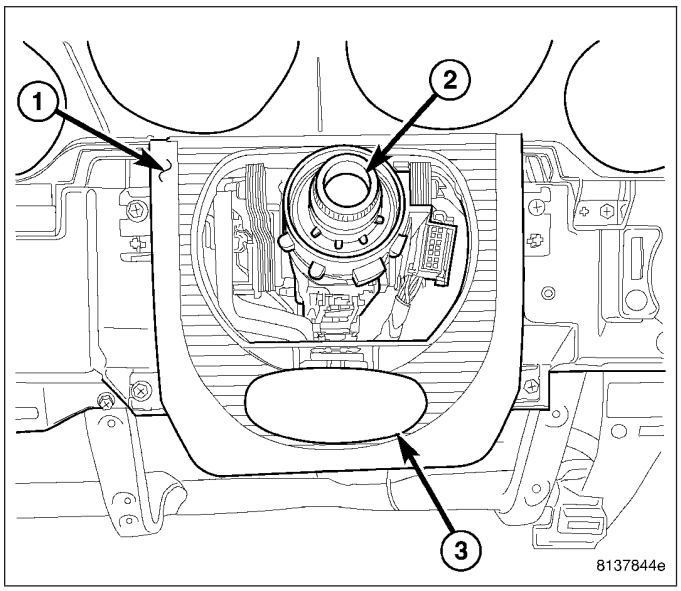

INSTALLATION

1. Install the roll top shroud (1) over the steering column (2).

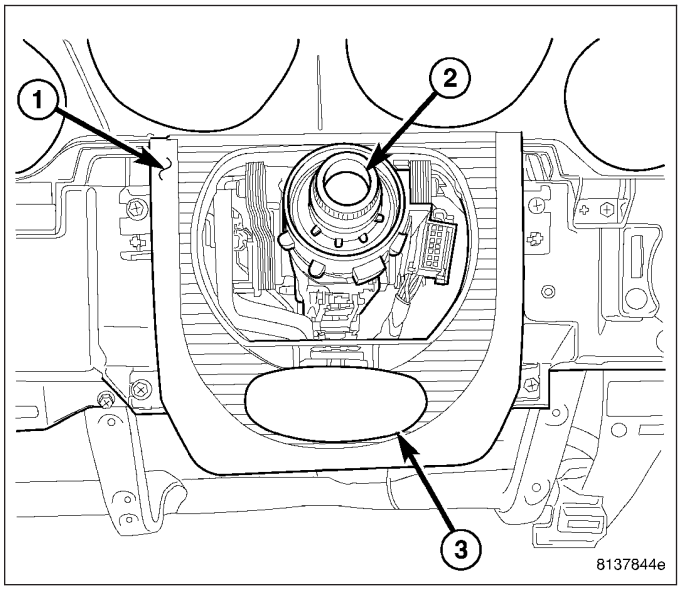

2. Install the four (three for column shift column) shroud mounting screws (2).

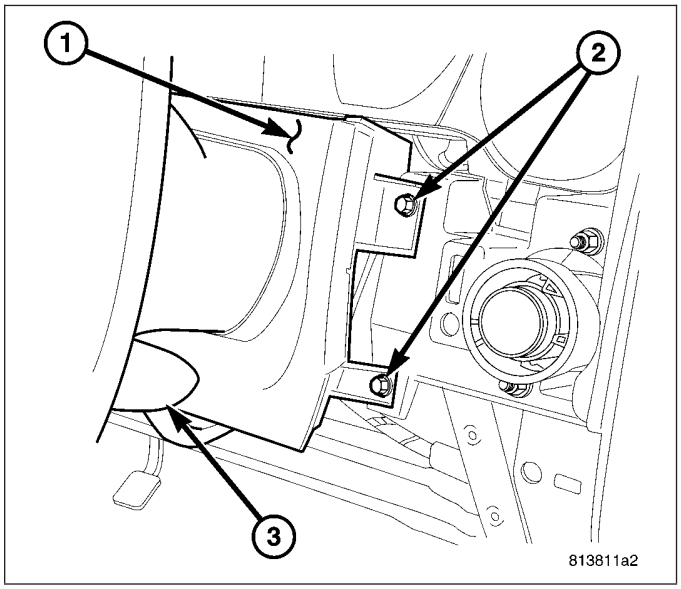

3. Manual tilt and telescoping columns – Position the manual adjustment handle (2) over the column adjustment pin and rotate the locking tab (3) rearward as shown latching the handle to the column. Make sure the tab snaps into locked position.
4. Install the cluster bezel (3). (Refer to 23 - BODY/ INSTRUMENT PANEL/CLUSTER BEZEL - INSTALLATION)

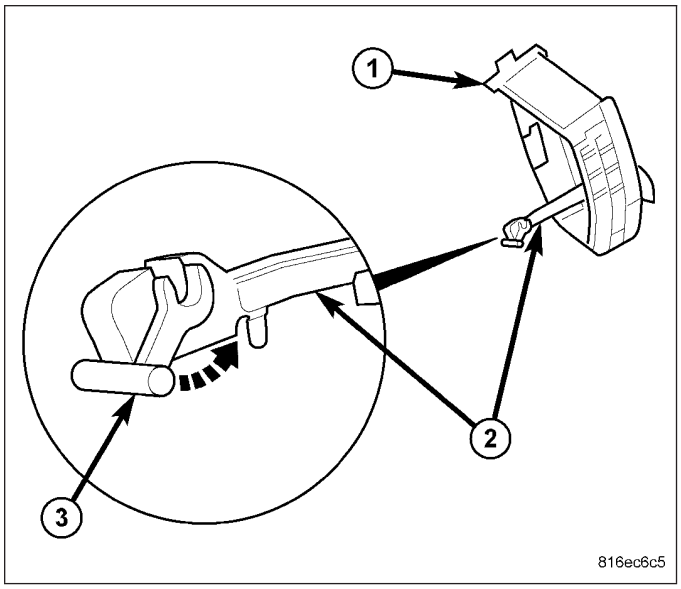

5. Install the steering column opening reinforcement (1).

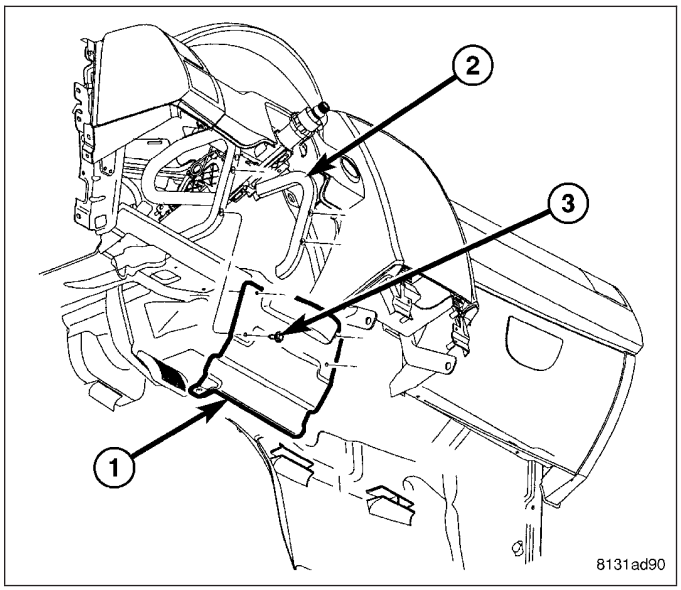

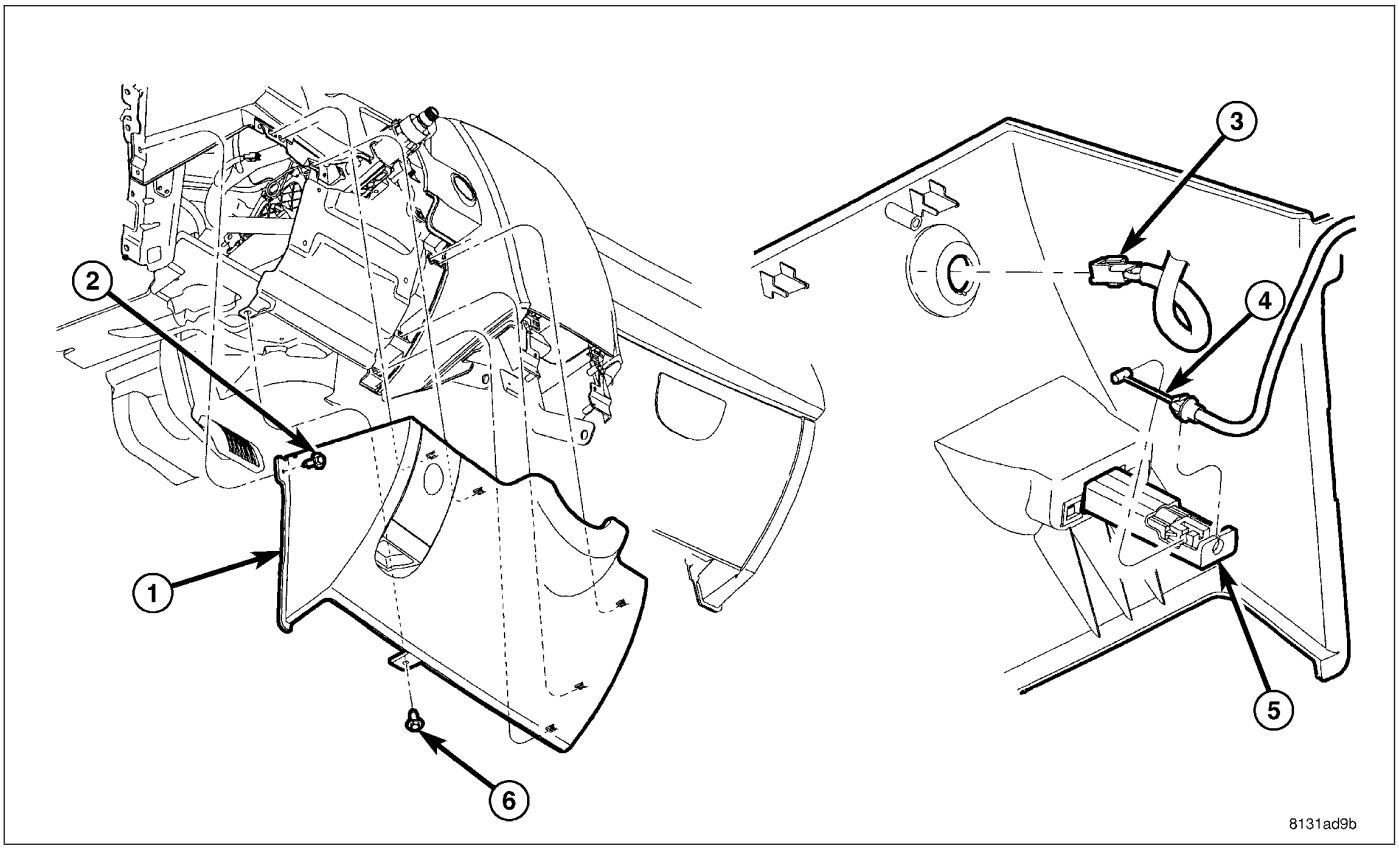

6. Install the steering column opening cover (1).
7. Install the SCCM (1) onto the steering column.

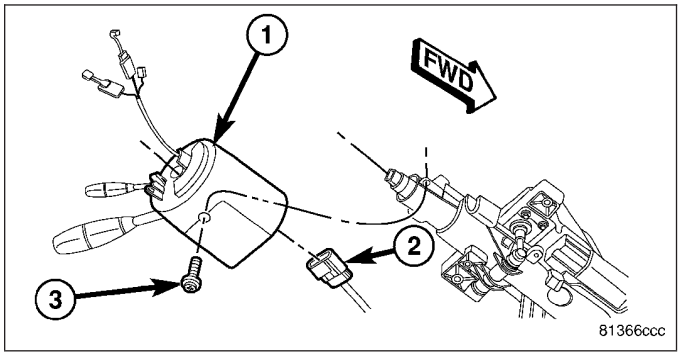

8. Tighten the set screw (1) securing the SCCM (2).

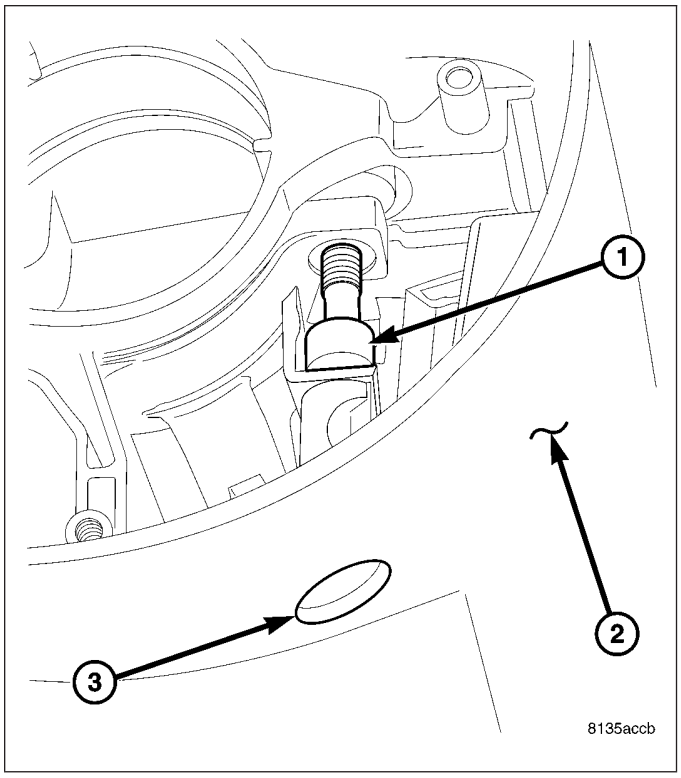

9. Tighten clockspring screws (1) that were backed out to keep the clockspring from unwinding (Refer to 8 - ELECTRICAL/RESTRAINTS/CLOCKSPRING - REMOVAL).

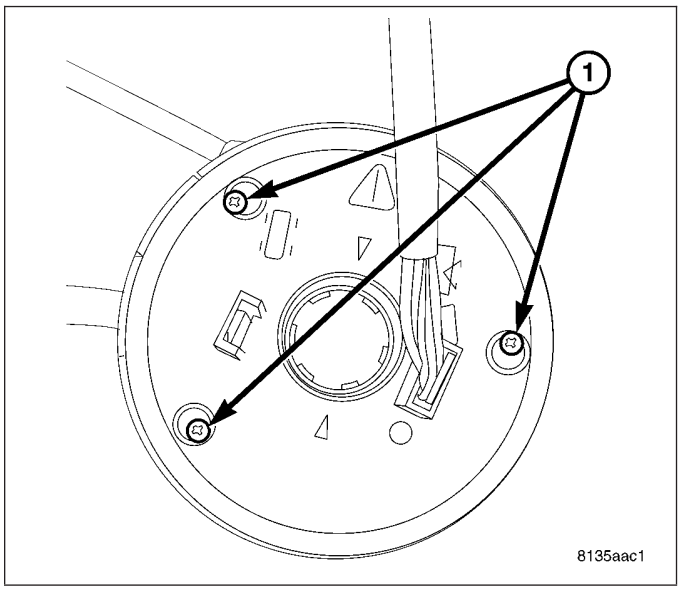

10. Align the spline on the steering wheel hub to the column shaft, then install the steering wheel (1).
11. Install a **NEW** retainer bolt (2). Tighten the bolt to 70 N·m (52 ft. lbs.).

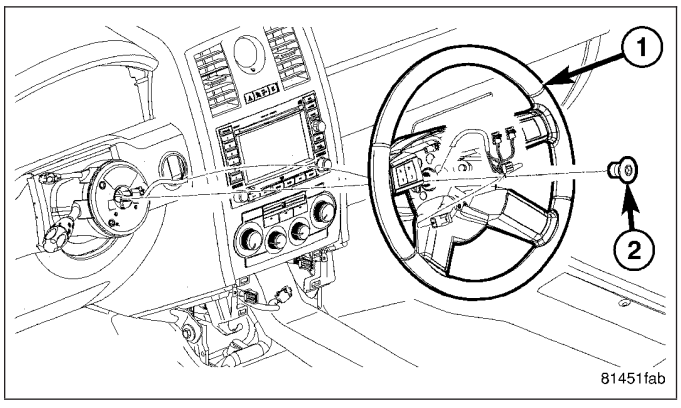

12. Install the driver airbag (3). (Refer to 8 - ELECTRICAL/RESTRAINTS/DRIVER AIRBAG - INSTALLATION)
13. Install the negative battery terminal on the battery. It is important that this is performed properly (including calibration of steering angle sensor if equipped with ESP). (Refer to 8 - ELECTRICAL/ BATTERY SYSTEM - STANDARD PROCEDURE)
14. Test the operation of the horn, lights and any other functions that are steering column operated.

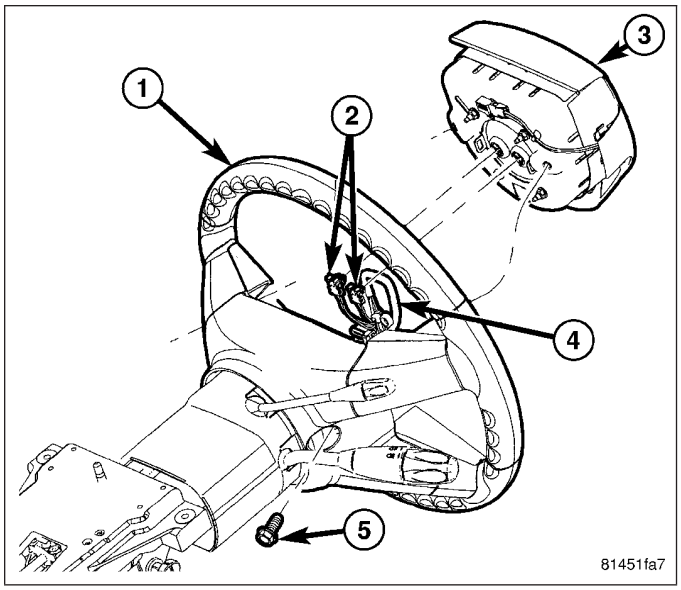

WHEEL-STEERING

REMOVAL

WARNING: Before servicing the steering column the airbag system must be disarmed. Refer to electrical restraint system for service procedures. Failure to do so may result in accidental deployment of the airbag and possible personal injury.

CAUTION: All fasteners must be torqued to specification to ensure proper operation of the steering column.

1. Position the front wheels **straight-ahead**.
2. Fully extend or pull out adjustable steering column.
3. Disconnect the negative (ground) cable from the battery.
4. Remove the airbag (3). (Refer to 8 - ELECTRICAL/ RESTRAINTS/DRIVER AIRBAG - REMOVAL).

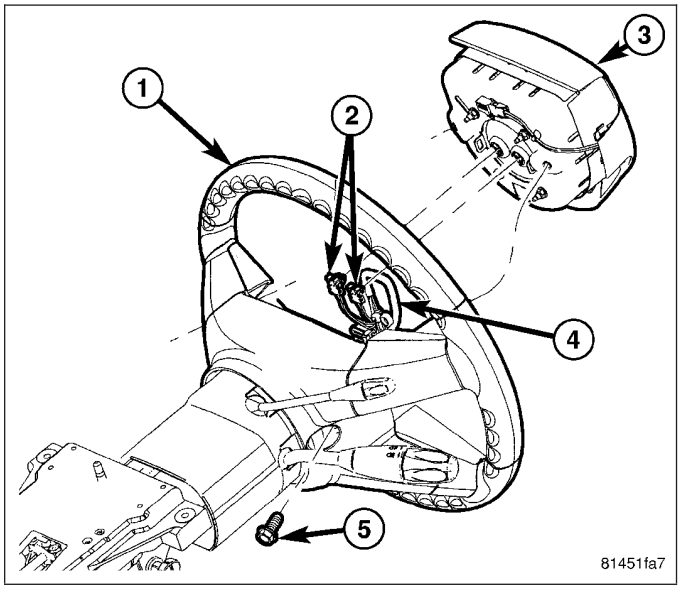

5. Remove the steering wheel retainer bolt (2), then slide the steering wheel (1) off the shaft.
6. If wheel is being replaced, transfer attached components as necessary.

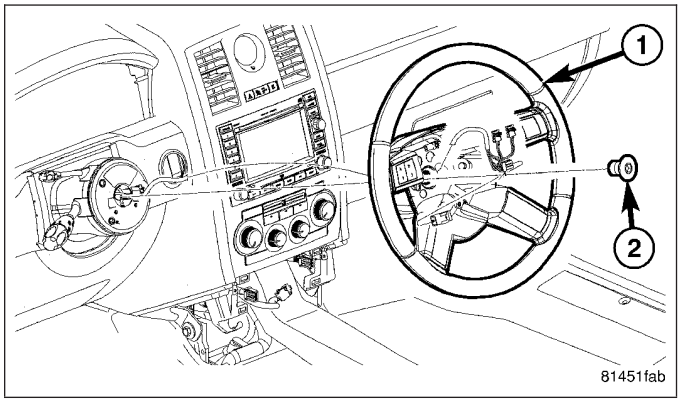

INSTALLATION

1. Align the spline on the steering wheel hub to the column shaft, then install the steering wheel (1).
2. Install a **NEW** retainer bolt (2). Tighten the bolt to 70 N·m (52 ft. lbs.).

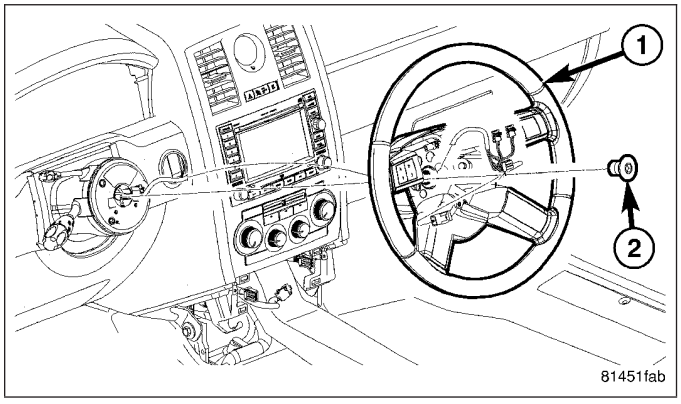

3. Install the airbag (3). (Refer to 8 - ELECTRICAL/ RESTRAINTS/DRIVER AIRBAG - INSTALLATION)
4. Install the negative battery terminal on the battery. It is important that this is performed properly (including calibration of steering angle sensor if equipped with ESP). (Refer to 8 - ELECTRICAL/ BATTERY SYSTEM - STANDARD PROCEDURE)

CAUTION: If the steering wheel is excessively off-center while driving, outside of Chassis specifications, inadvertent ESP activations may occur on a vehicle so equipped.

5. Test the operation of the horn, lights and any other functions that are steering column operated.

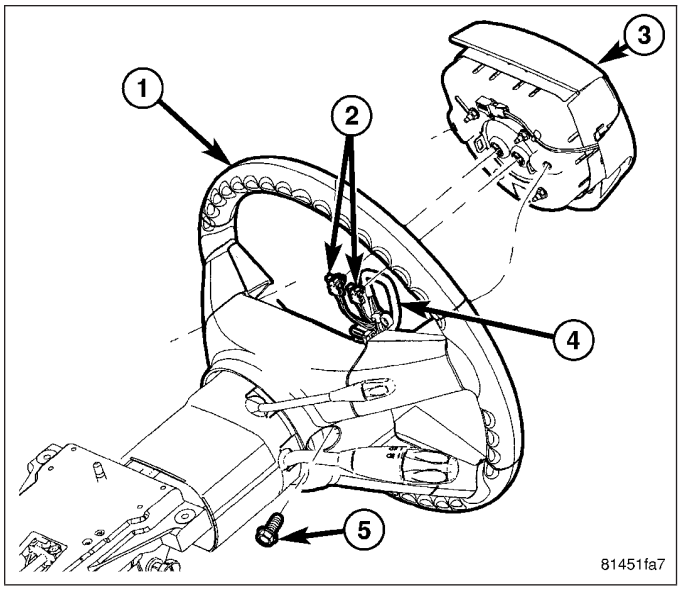

GEAR

TABLE OF CONTENTS

page

GEAR
- DESCRIPTION 198
- REMOVAL
  - AWD 198
  - RWD 202
- INSTALLATION
  - AWD 205
  - RWD 208

TIE ROD - OUTER
- DIAGNOSIS AND TESTING
  - OUTER TIE ROD END 211

page

- REMOVAL
  - AWD 211
  - RWD 213
- INSTALLATION
  - AWD 214
  - RWD 216

GEAR

DESCRIPTION

A power rack and pinion steering gear is used on both AWD and RWD (shown) vehicles. Components of the power steering gear are as follows:

- (1) Outer tie rods
- (2) Inner tie rods
- (3) Bellows
- (4) Mount Bushings
- (5) Housing

The gear cannot be adjusted or internally serviced. If a malfunction or a fluid leak occurs, the gear must be replaced as an assembly. The only serviceable component on the steering gear is the outer tie rod (1).

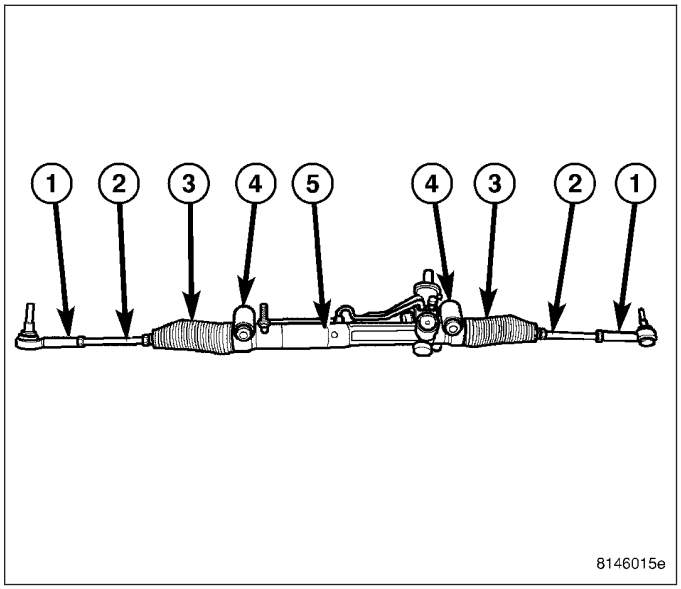

REMOVAL

AWD

1. Disconnect and isolate battery negative cable (2) from battery post.
2. Siphon power steering fluid from pump reservoir.
3. Raise and support vehicle. (Refer to LUBRICATION & MAINTENANCE/HOISTING - STANDARD PROCEDURE)

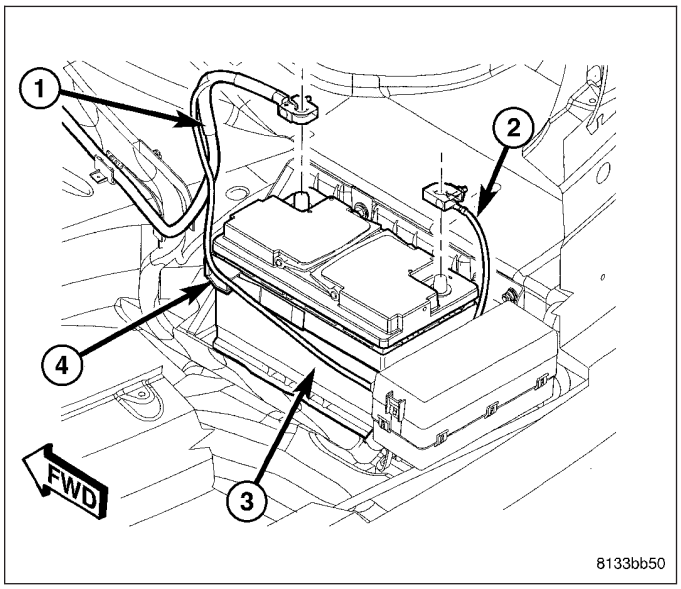

4. Remove wheel mounting nuts (3), then both front tire and wheel assemblies (1).

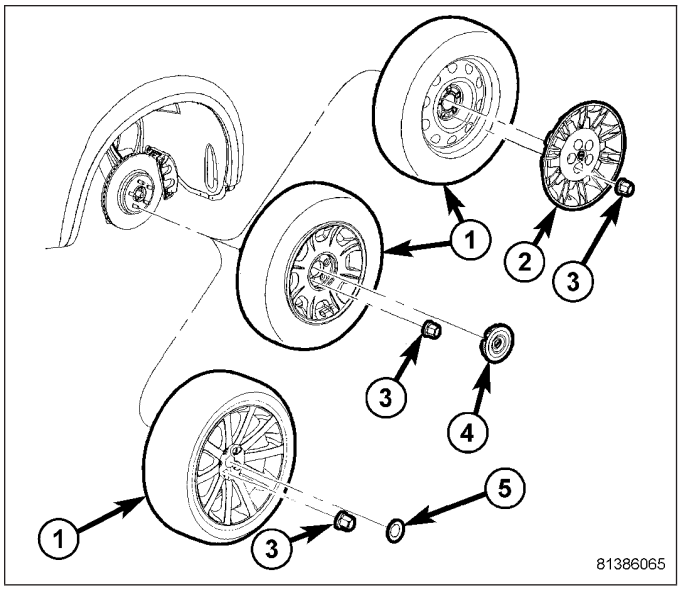

CAUTION: When loosening jam nut and rotating inner tie rod, use care not to twist bellows at inner tie rod. Remove clamp (2) at inner tie rod and make sure bellows moves freely before rotating inner tie rod.

5. Loosen tie rod jam nut (1) at each outer tie rod (4).

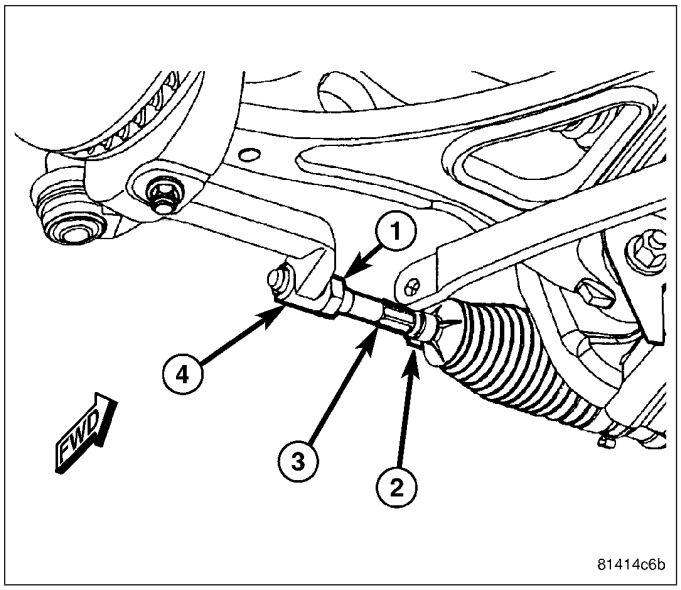

6. Remove outer tie rod (2) end nut (1) at each knuckle (3).

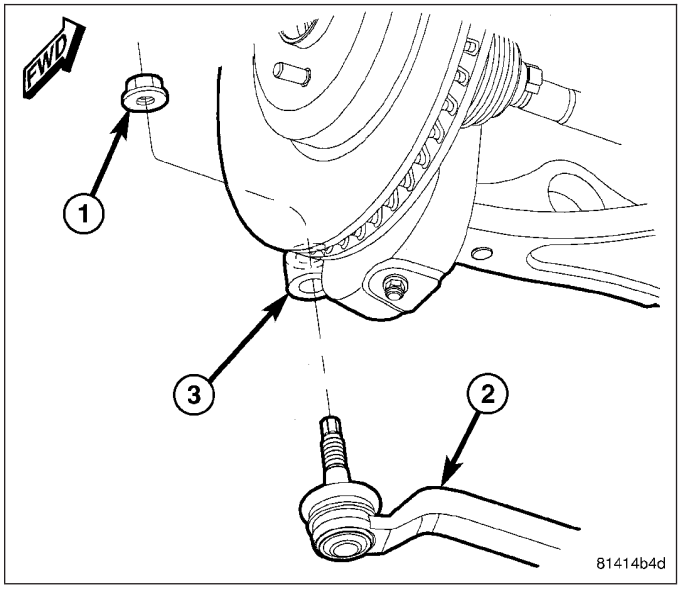

7. Using Remover (2), Special Tool 9360, separate outer tie rod (1) from each knuckle.

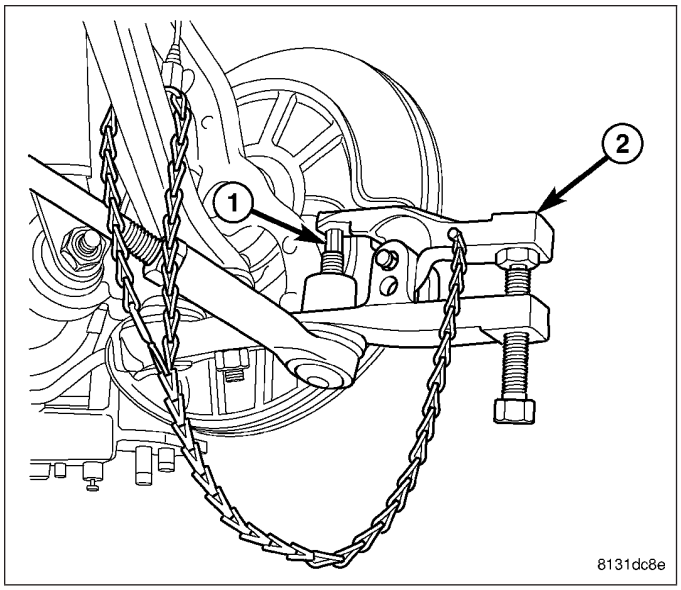

8. Remove steering coupling pinch bolt at steering gear. (Refer to 19 - STEERING/COLUMN/STEERING COUPLING - REMOVAL)
9. Unthread return hose tube nut (1) from steering gear (2). Remove return hose from steering gear.
10. Unthread pressure hose tube nut (3) from steering gear (2). Remove pressure hose from steering gear.

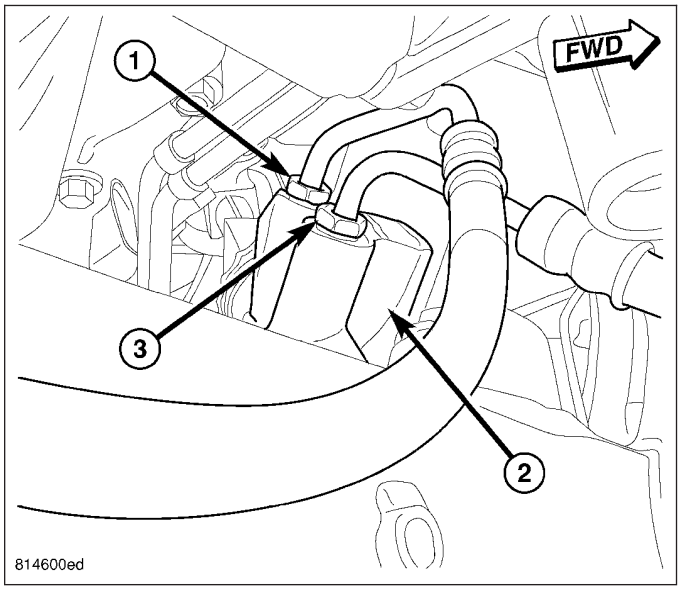

11. Remove mounting screws, then heat shield (3) above each inner tie rod bellows (2).

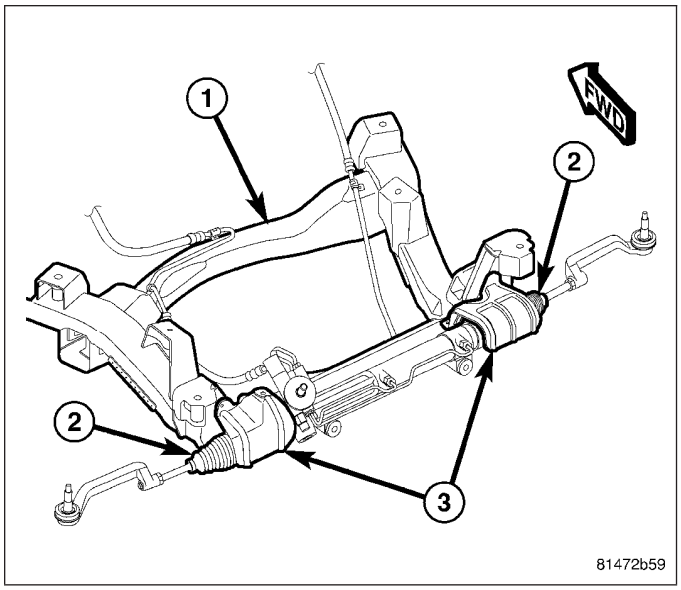

12. Remove steering gear upper mounting bolt (4) and nut.
13. Remove steering gear lower mounting bolts (2 and 3).
14. Remove steering gear (1).
15. If necessary, remove outer tie rods from gear. Count number of revolutions off for each tie rod for reference upon installation to replacement gear.

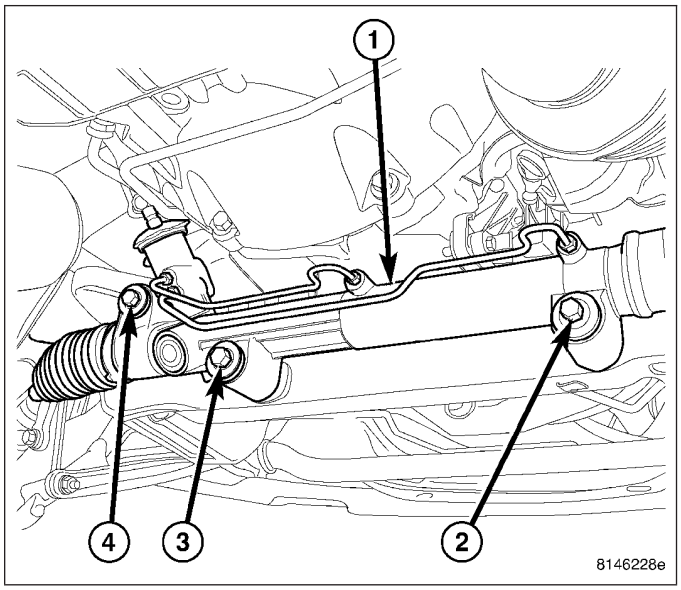

RWD

1. Disconnect and isolate battery negative cable (2) from battery post.
2. Siphon power steering fluid from pump reservoir.
3. Raise and support vehicle. (Refer to LUBRICATION & MAINTENANCE/HOISTING - STANDARD PROCEDURE)

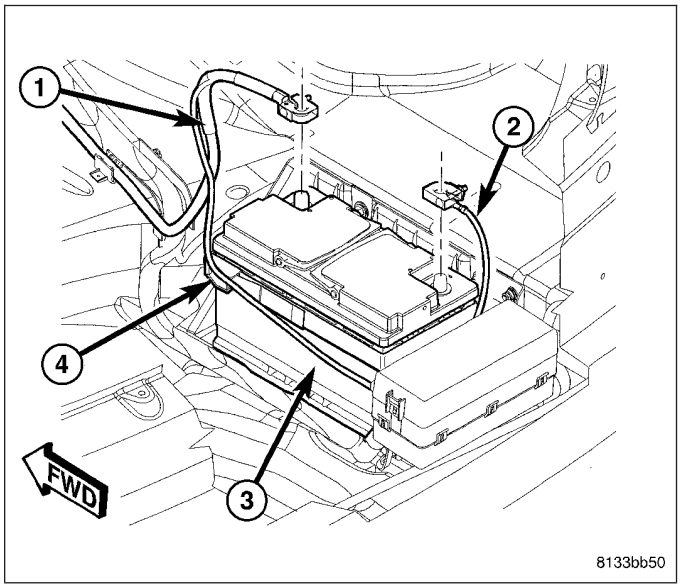

4. Remove wheel mounting nuts (3), then both front tire and wheel assemblies (1).

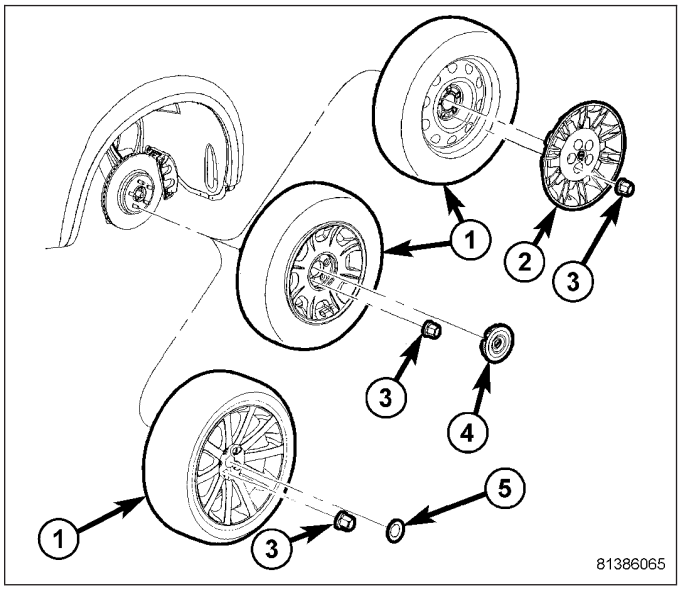

CAUTION: When loosening jam nut and rotating inner tie rod, use care not to twist bellows at inner tie rod. Remove clamp at inner tie rod and make sure bellows moves freely before rotating inner tie rod.

5. Loosen tie rod jam nut (3) at each outer tie rod (5).
6. Remove outer tie rod nut (1) at each knuckle (2).

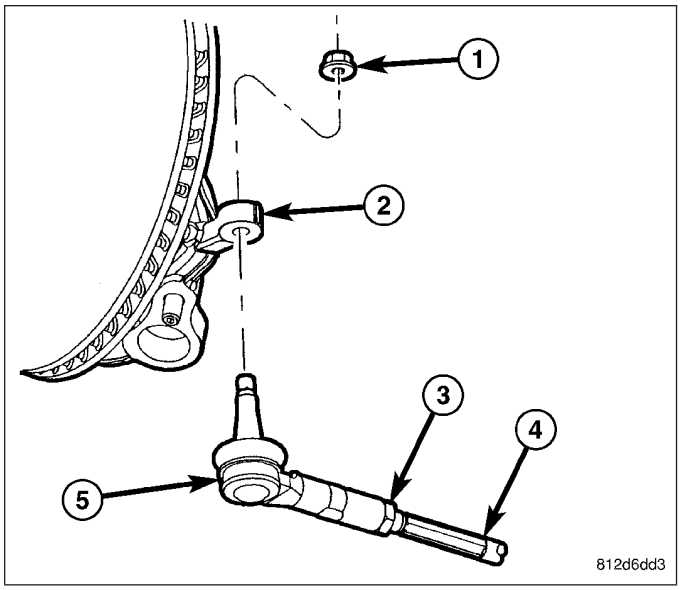

7. Using Remover (2), Special Tool 9360, separate outer tie rod (1) from each knuckle.

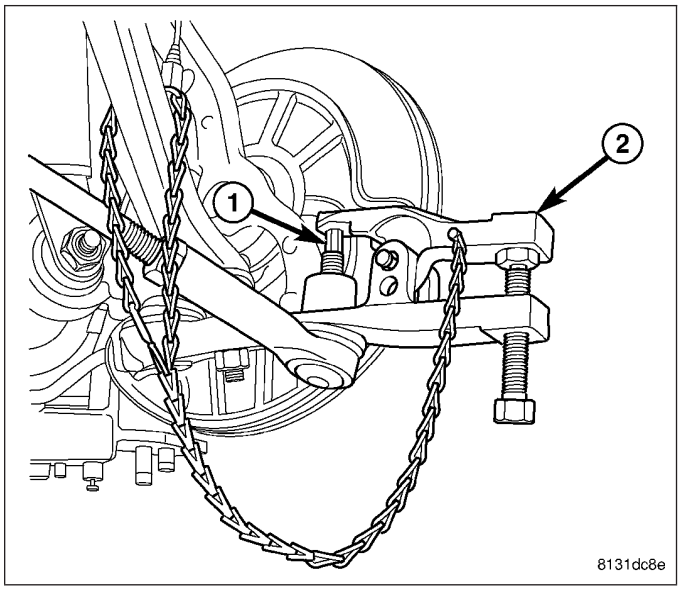

8. Remove steering coupling (2) pinch bolt (1) at steering gear (3). (Refer to 19 - STEERING/COLUMN/STEERING COUPLING - REMOVAL)

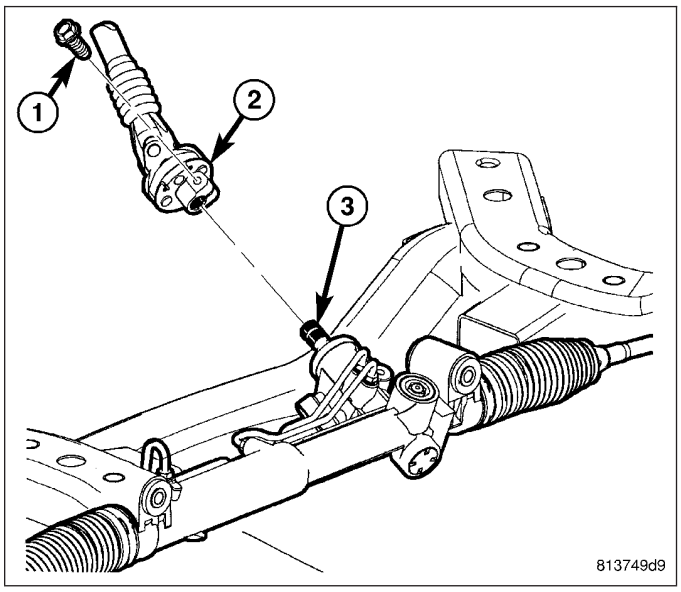

9. Unthread pressure hose tube nut (2) from steering gear (1). Remove pressure hose from steering gear.
10. Unthread return hose tube nut (3) from steering gear (1). Remove return hose from steering gear.

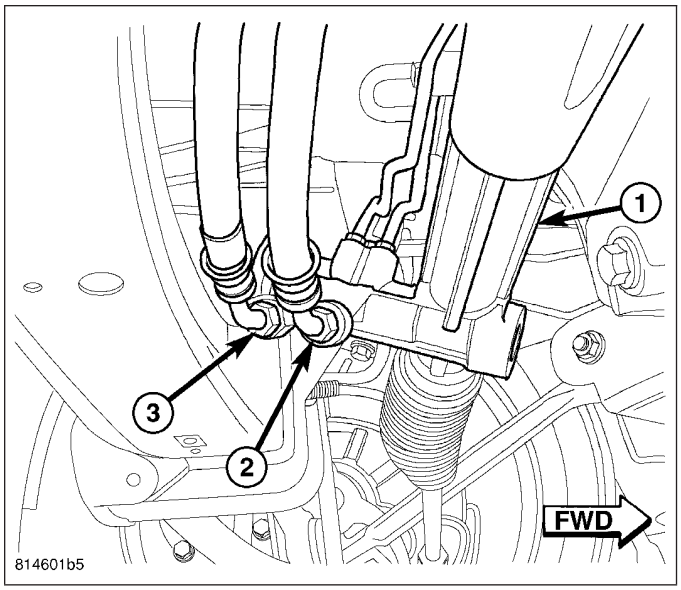

11. Remove steering gear mounting bolts (1).
12. If necessary, remove outer tie rods from gear. Count number of revolutions off for each tie rod for reference upon installation to replacement gear.

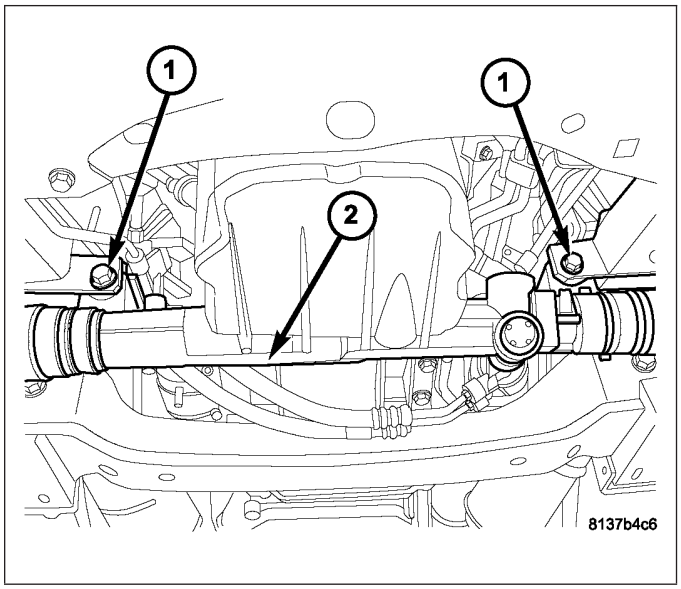

INSTALLATION

AWD

1. If necessary, install outer tie rods from original gear to replacement inner tie rods. Install each outer tie rod same amount of threads as it was installed on original gear. This will get toe setting close, saving some time when toe is set later in this procedure.
2. Lift steering gear (1) into mounted position and install steering gear lower mounting bolts (2 and 3). Install upper mounting bolt (4) and nut. Tighten all bolts to 102 N·m (75 ft. lbs.) torque.

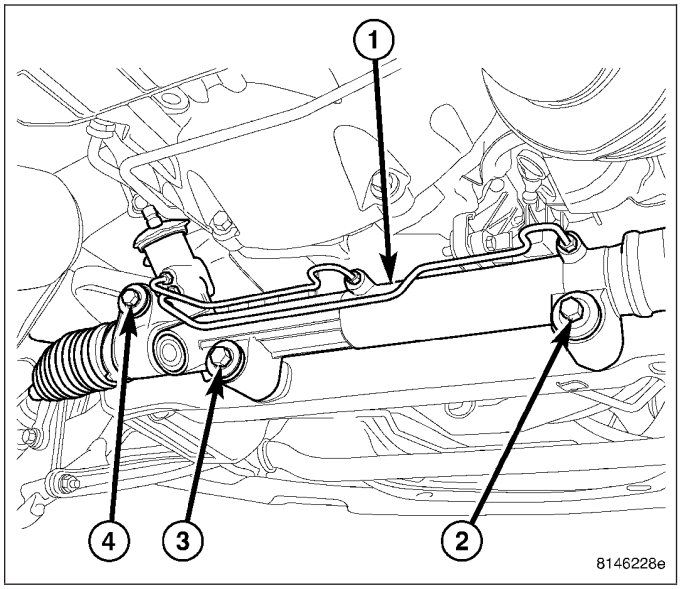

3. Install heat shield (3) above each inner tie rod bellows (2). Tighten screws to 10 N·m (89 in. lbs.) torque.

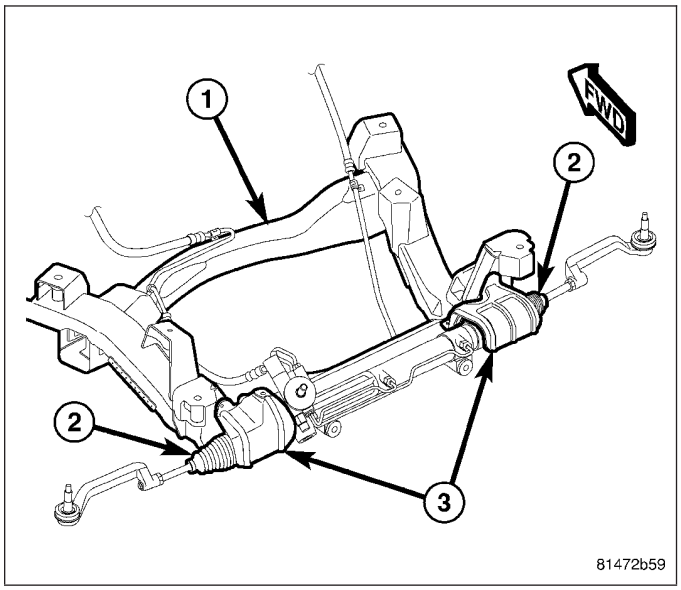

NOTE: Always use a NEW O-ring on the ends of the steering hoses.

4. Lubricate NEW O-ring on end of pressure hose with clean power steering fluid.
5. Install pressure hose (3) to steering gear (2). Tighten tube nut to 47 N·m (35 ft. lbs.) torque.
6. Lubricate NEW O-ring on end of return hose with clean power steering fluid.
7. Install return hose (1) to steering gear (2). Tighten tube nut to 47 N·m (35 ft. lbs.) torque.

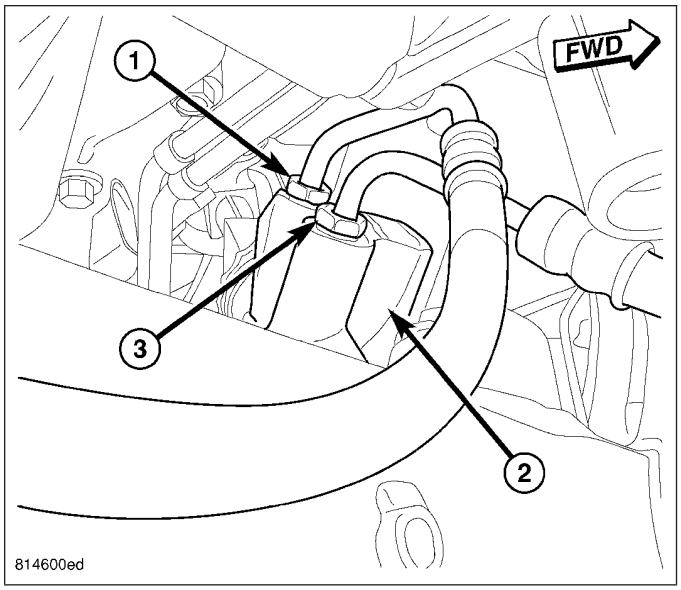

8. Align splines and install steering coupling to steering gear shaft. Install NEW pinch bolt. Tighten bolt to 54 N·m (40 ft. lbs.) torque.
9. Install each outer tie rod (2) end to its knuckle (3). Install nut (1) and tighten to 85 N·m (63 ft. lbs.) torque.

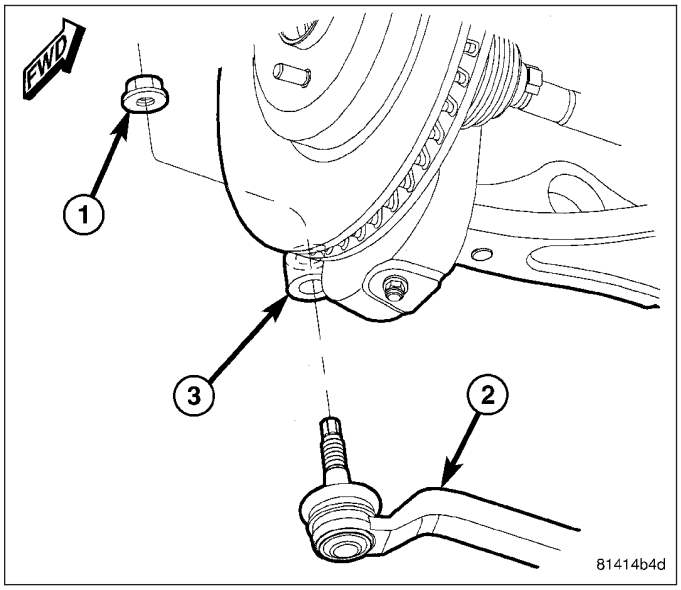

10. Install tire and wheel assemblies (1). Tighten wheel mounting nuts (3) to 150 N·m (110 ft. lbs.) torque. (Refer to 22 - TIRES/WHEELS - INSTALLATION)
11. Lower vehicle.

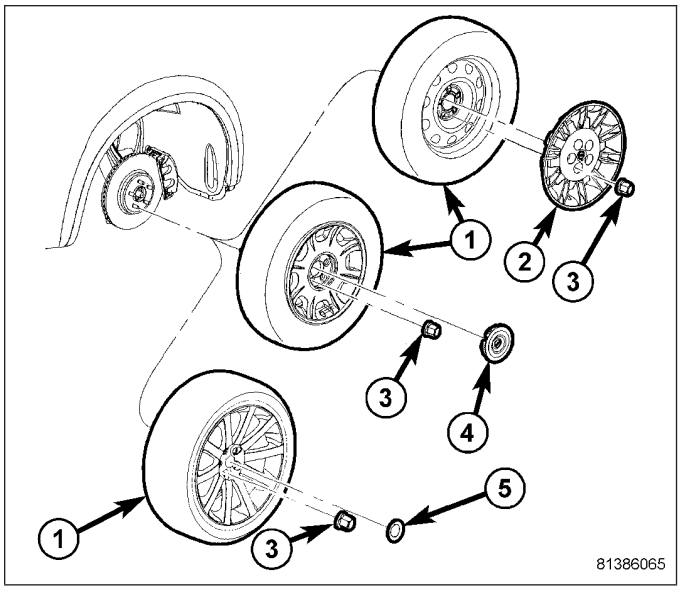

12. Connect battery negative cable (2) to battery post. It is important that this is performed properly. (Refer to 8 - ELECTRICAL/BATTERY SYSTEM - STANDARD PROCEDURE)
13. Fill pump reservoir with fluid and perform pump initial operation procedure. (Refer to 19 - STEERING/PUMP - STANDARD PROCEDURE)
14. Perform wheel alignment setting toe to specifications. (Refer to 2 - SUSPENSION/WHEEL ALIGNMENT - STANDARD PROCEDURE)

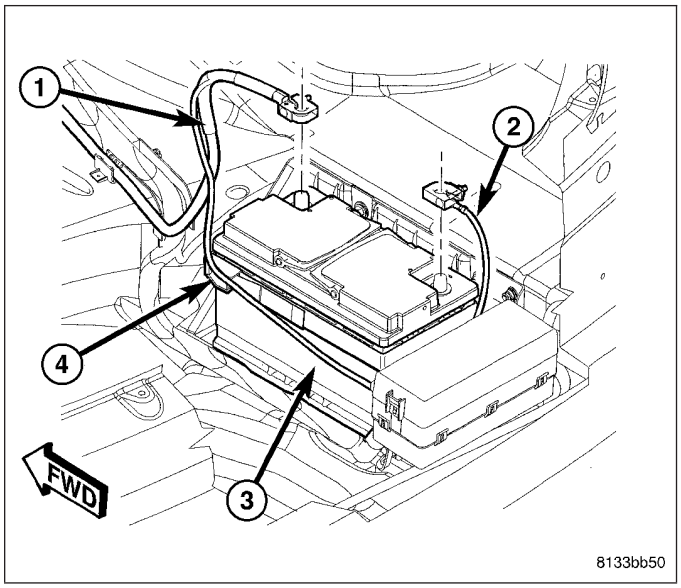

15. Tighten tie rod jam nuts (1) to 75 N·m (55 ft. lbs.) torque.

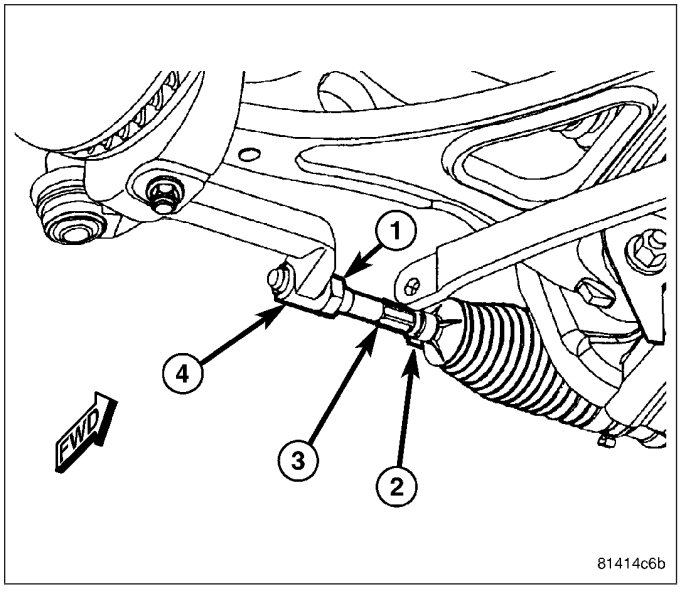

RWD

1. If necessary, install outer tie rods from original gear to replacement inner tie rods. Install each outer tie rod same amount of threads as it was installed on original gear. This will get toe setting close, saving some time when toe is set later in this procedure.
2. Lift steering gear (2) into mounted position and install steering gear mounting bolts (1). Tighten bolts to 95 N·m (70 ft. lbs.) torque.

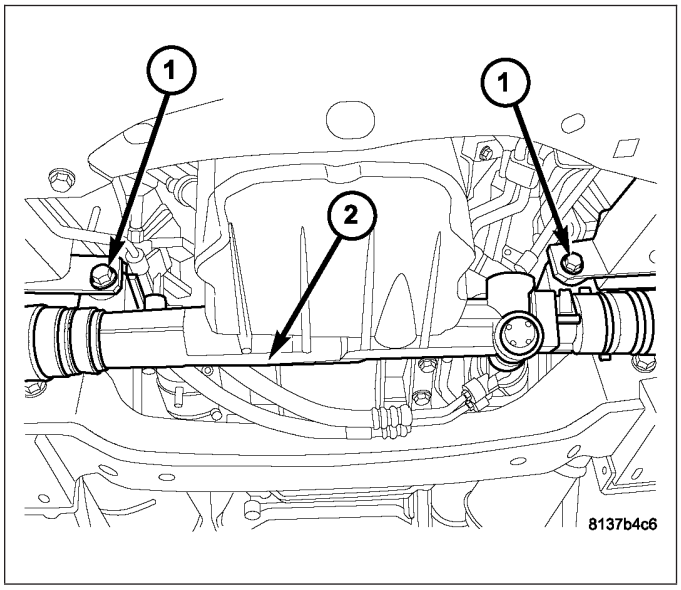

NOTE: Always use a NEW O-ring on the ends of the steering hoses.

3. Lubricate NEW O-ring on end of return hose with clean power steering fluid.
4. Install return hose (3) to steering gear (1). Tighten tube nut to 47 N·m (35 ft. lbs.) torque.
5. Lubricate NEW O-ring on end of pressure hose with clean power steering fluid.
6. Install pressure hose (2) to steering gear (1). Tighten tube nut to 47 N·m (35 ft. lbs.) torque.

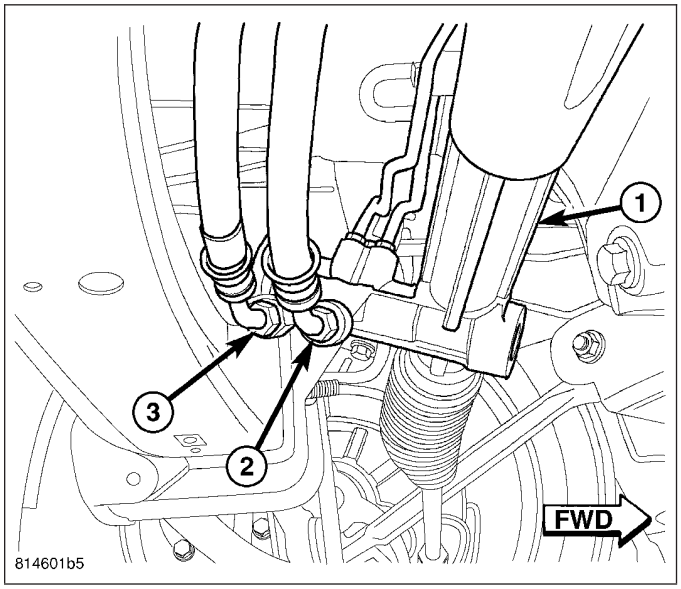

CAUTION: Prior to coupling installation, make sure gear is centered in its travel to match clockspring centering in steering column.

7. Align coupling (2) with input shaft (3) and install steering coupling. Install NEW pinch bolt. Tighten bolt to 54 N·m (40 ft. lbs.) torque.

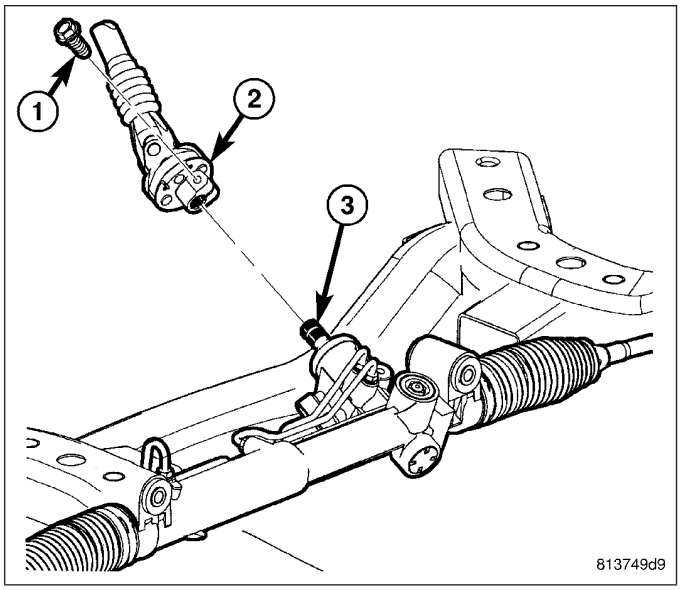

8. Install each outer tie rod end (5) to its knuckle (2). Install nuts (1) and tighten to 85 N·m (63 ft. lbs.) torque.

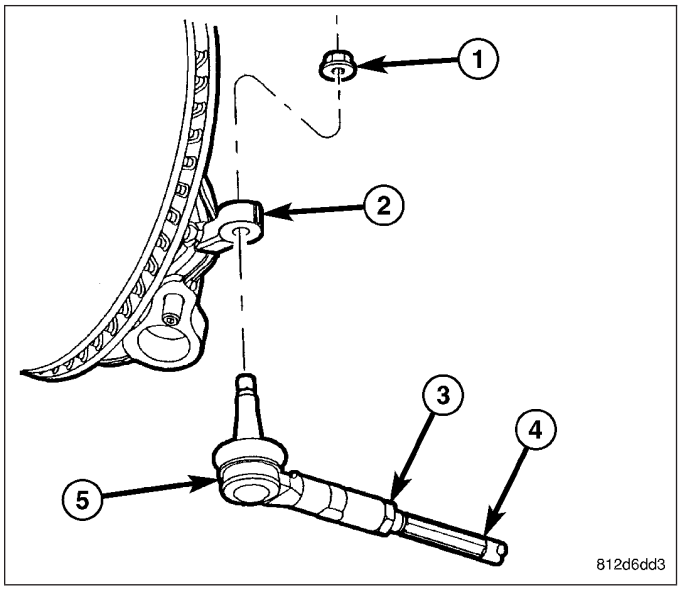

9. Install tire and wheel assemblies (1). Tighten wheel mounting nuts (3) to 150 N·m (110 ft. lbs.) torque. (Refer to 22 - TIRES/WHEELS - INSTALLATION)
10. Lower vehicle.

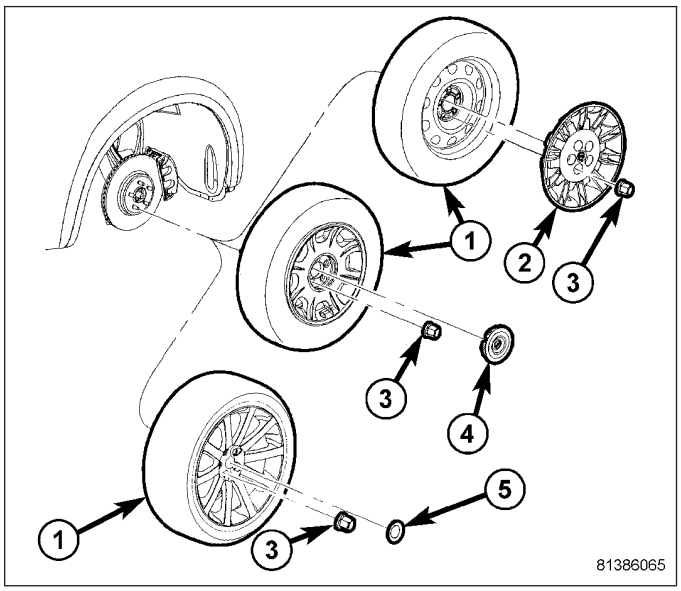

11. Connect battery negative cable (2) to battery post. It is important that this is performed properly. (Refer to 8 - ELECTRICAL/BATTERY SYSTEM - STANDARD PROCEDURE)
12. Fill pump reservoir with fluid and perform pump initial operation procedure. (Refer to 19 - STEERING/PUMP - STANDARD PROCEDURE)
13. Perform wheel alignment setting toe to specifications. (Refer to 2 - SUSPENSION/WHEEL ALIGNMENT - STANDARD PROCEDURE)

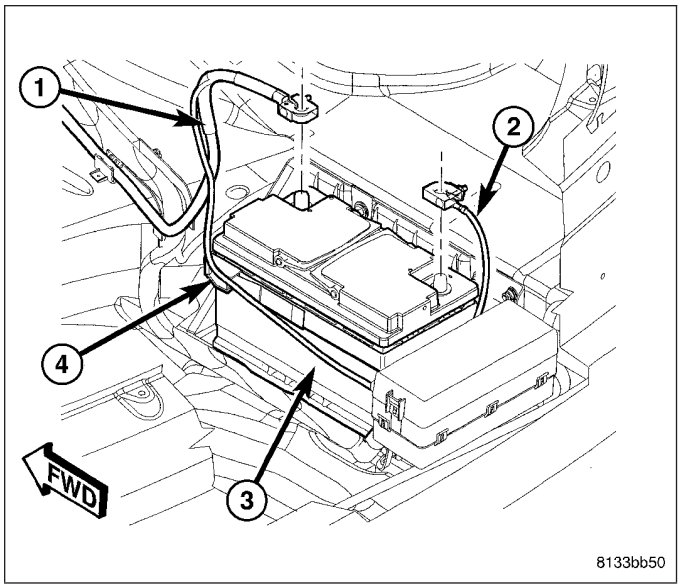

14. Tighten both tie rod jam nuts (3) to 75 N·m (55 ft. lbs.) torque.

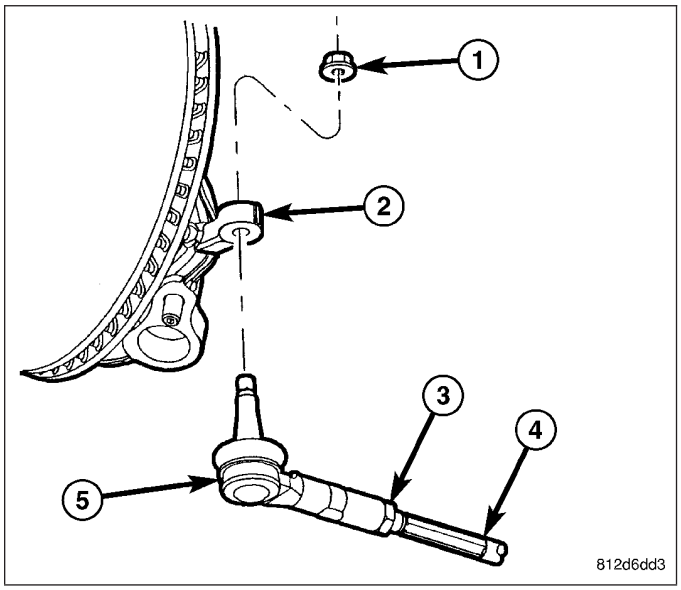

TIE ROD - OUTER

DIAGNOSIS AND TESTING

OUTER TIE ROD END

NOTE: If the outer tie rod end is equipped with a lubrication fitting, grease the joint, then road test the vehicle before performing test.

1. Raise the front of the vehicle. Place safety floor stands under both lower control arms as far outboard as possible. Lower the vehicle to allow the stands to support some or all of the vehicle weight.
2. Remove the front tire and wheel assemblies. (Refer to 22 - TIRES/WHEELS - REMOVAL)
3. Mount a dial indicator solidly to the vehicle steering knuckle and then zero the dial indicator.
4. Position indicator plunger on the head of the outer tie rod end.

NOTE: The dial indicator plunger must be perpendicular to the machined surface of the outer tie rod end.

5. Position a pry bar in order to pry downwards on the outer tie rod end.
6. If the travel exceeds 0.5 mm (0.020 in.), replace the outer tie rod end. (Refer to 19 - STEERING/GEAR/TIE ROD - REMOVAL)
7. If the outer tie rod end is within specs reinstall the front tire and wheels. (Refer to 22 - TIRES/WHEELS - INSTALLATION)

REMOVAL

AWD

1. Raise and support vehicle. (Refer to LUBRICATION & MAINTENANCE/HOISTING - STANDARD PROCEDURE)
2. Remove wheel mounting nuts (3), then front tire and wheel assembly (1).

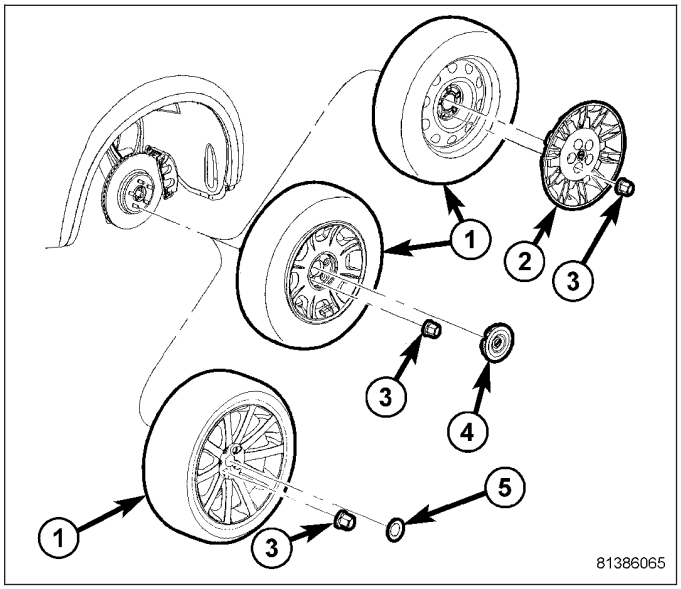

CAUTION: When loosening jam nut and rotating inner tie rod, use care not to twist bellows at inner tie rod. Remove clamp (2) at inner tie rod and make sure bellows moves freely before rotating inner tie rod.

3. Loosen tie rod jam nut (1) at outer tie rod (4).

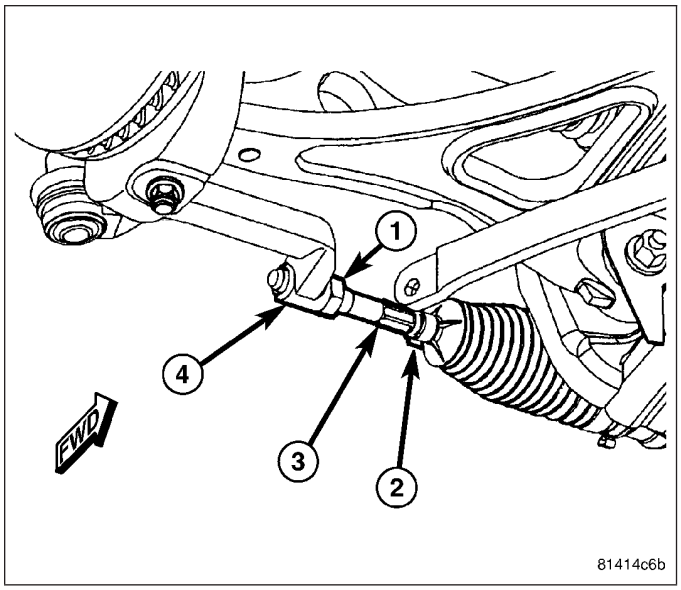

4. Remove outer tie rod end nut (1) at knuckle (3).

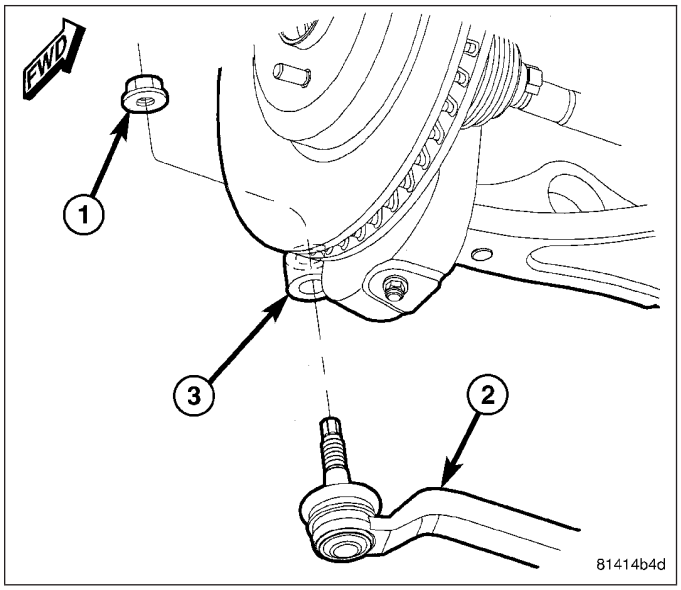

5. Using Remover (2), Special Tool 9360, separate outer tie rod end (1) from knuckle.
6. Unthread outer tie rod from inner tie rod. **Count number of turns when removing outer tie rod. This will give a good starting point when reassembling and when setting toe.**

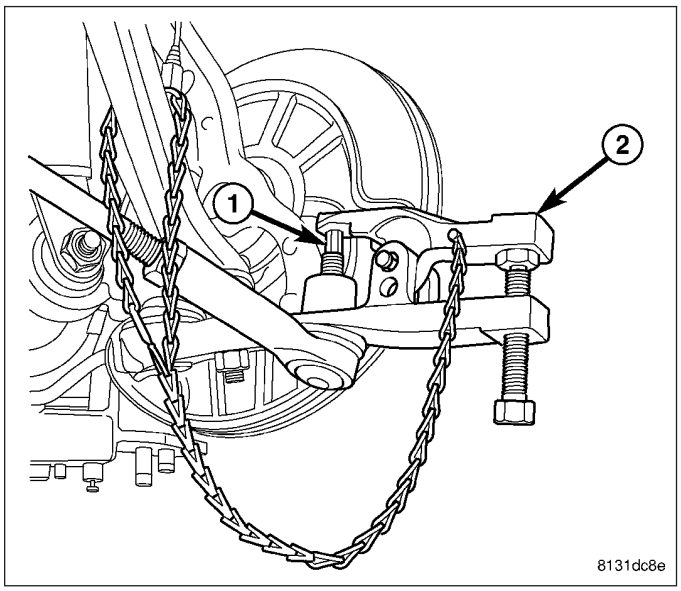

RWD

1. Raise and support vehicle. (Refer to LUBRICATION & MAINTENANCE/HOISTING - STANDARD PROCEDURE)

2. Remove wheel mounting nuts (3), then front tire and wheel assembly (1).

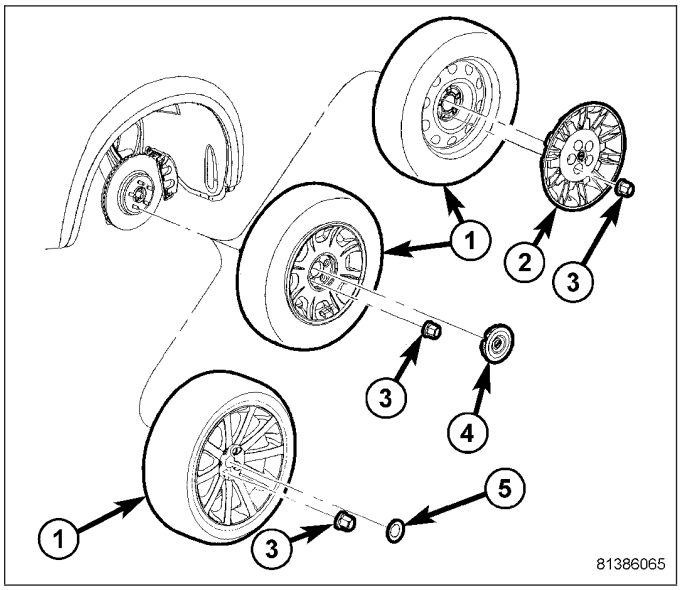

CAUTION: When loosening jam nut and rotating inner tie rod, use care not to twist bellows at inner tie rod. Remove clamp at inner tie rod and make sure bellows moves freely before rotating inner tie rod.

3. Loosen tie rod jam nut (3) at outer tie rod (5).
4. Remove outer tie rod end nut (1) at knuckle (2).

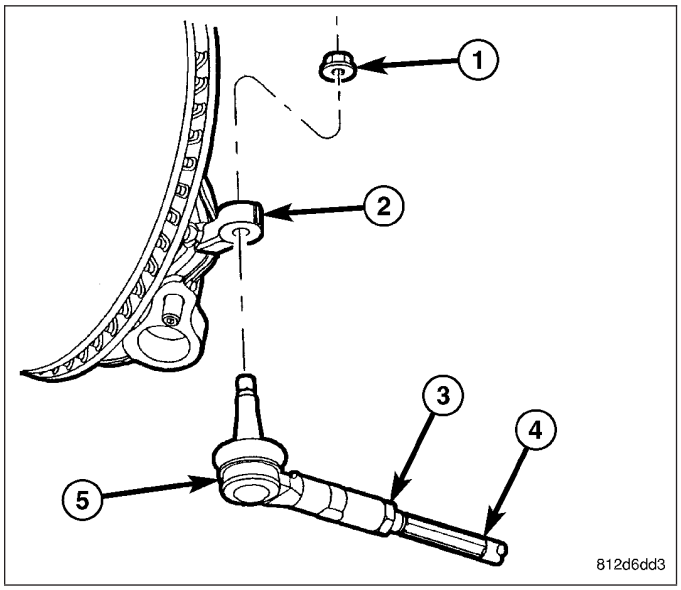

5. Using Remover (2), Special Tool 9360, separate outer tie rod end (1) from knuckle.
6. Unthread outer tie rod from inner tie rod. **Count number of turns when removing outer tie rod. This will give a good starting point when reassembling and when setting toe.**

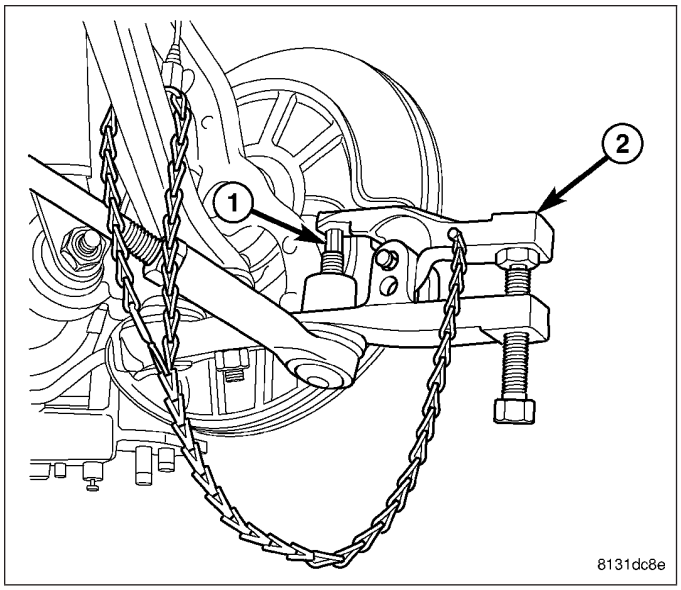

INSTALLATION

AWD

CAUTION: When rotating inner tie rod, use care not to twist bellows at inner tie rod. Remove clamp (2) at inner tie rod and make sure bellows moves freely before rotating inner tie rod.

1. Thread outer tie rod (4) onto inner tie rod (3), Install outer tie rod same number of turns as when removed.

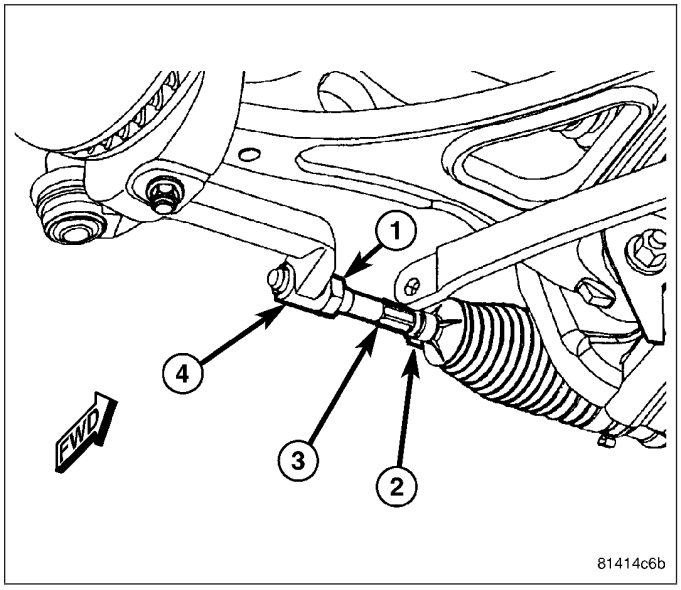

2. Install outer tie rod end (2) into steering knuckle (3). Install and tighten nut (1) to 85 N·m (63 ft. lbs.) torque.

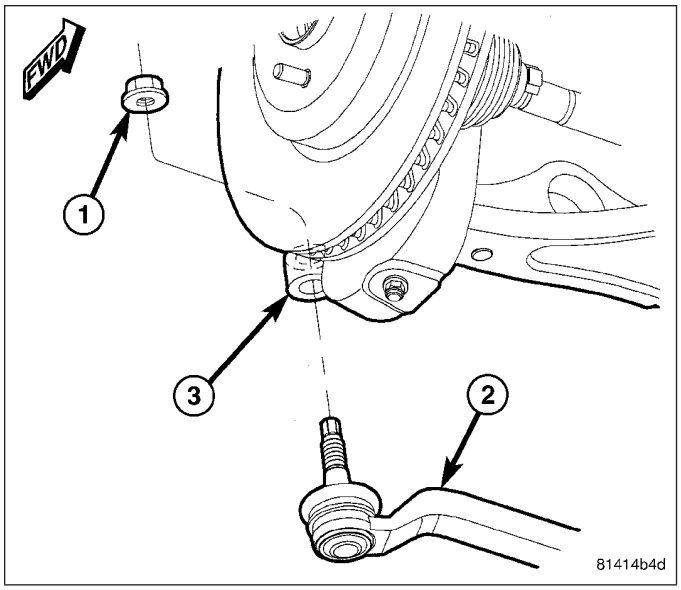

3. Install tire and wheel assemblies (1). Tighten wheel mounting nuts (3) to 150 N·m (110 ft. lbs.) torque. (Refer to 22 - TIRES/WHEELS - INSTALLATION)
4. Lower vehicle.
5. Perform wheel alignment setting toe to specifications. (Refer to 2 - SUSPENSION/WHEEL ALIGNMENT - STANDARD PROCEDURE)

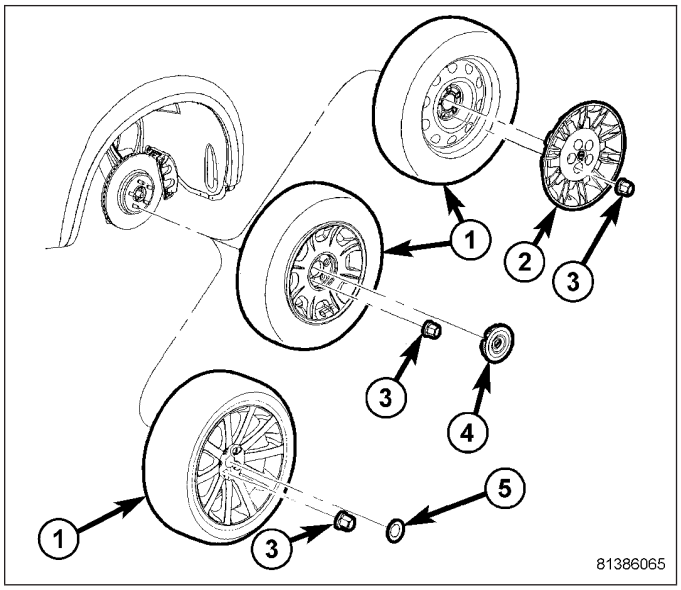

6. Tighten tie rod jam nut (1) to 75 N·m (55 ft. lbs.) torque.

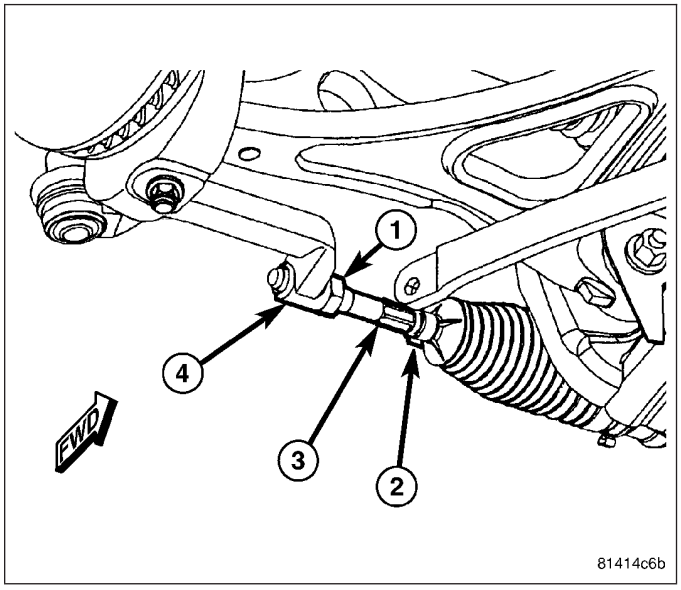

RWD

CAUTION: When rotating inner tie rod, use care not to twist bellows at inner tie rod. Remove clamp at inner tie rod and make sure bellows moves freely before rotating inner tie rod.

1. Thread outer tie rod (5) onto inner tie rod (4), Install outer tie rod same number of turns as when removed.
2. Install outer tie rod end (5) into steering knuckle (2). Install and tighten nut (1) to 85 N·m (63 ft. lbs.) torque.

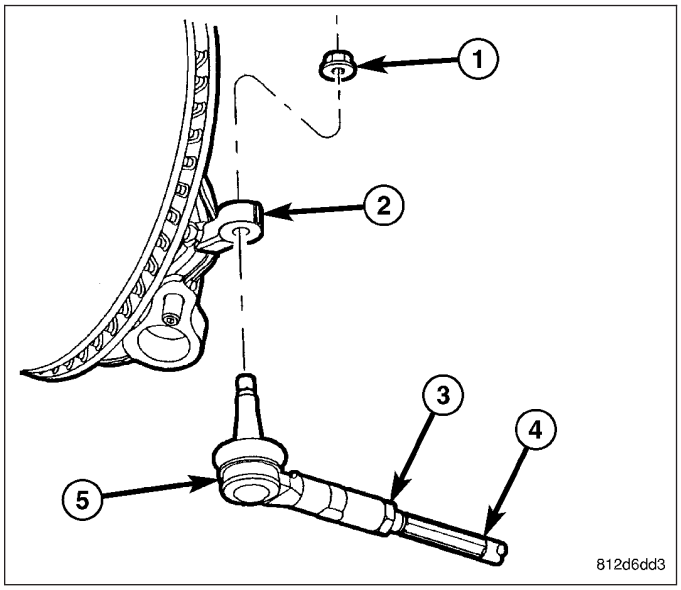

3. Install tire and wheel assemblies (1). Tighten wheel mounting nuts (3) to 150 N·m (110 ft. lbs.) torque. (Refer to 22 - TIRES/WHEELS - INSTALLATION)
4. Lower vehicle.
5. Perform wheel alignment setting toe to specifications. (Refer to 2 - SUSPENSION/WHEEL ALIGNMENT - STANDARD PROCEDURE)

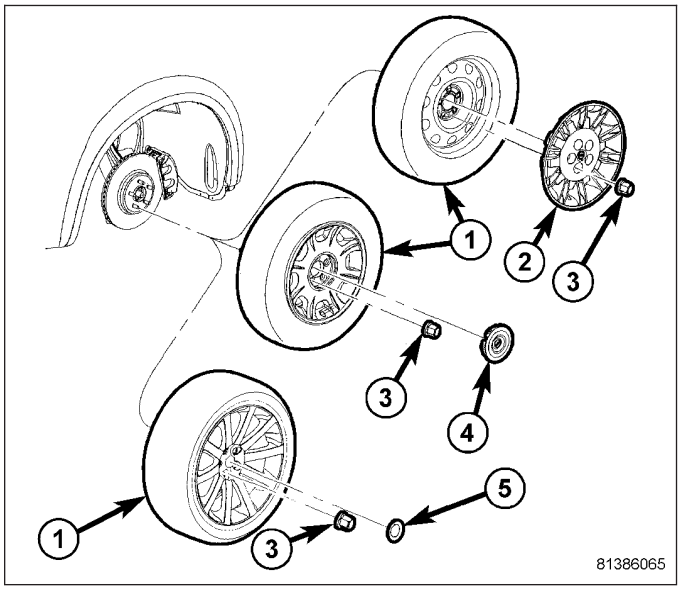

6. Tighten tie rod jam nut (3) to 75 N·m (55 ft. lbs.) torque.

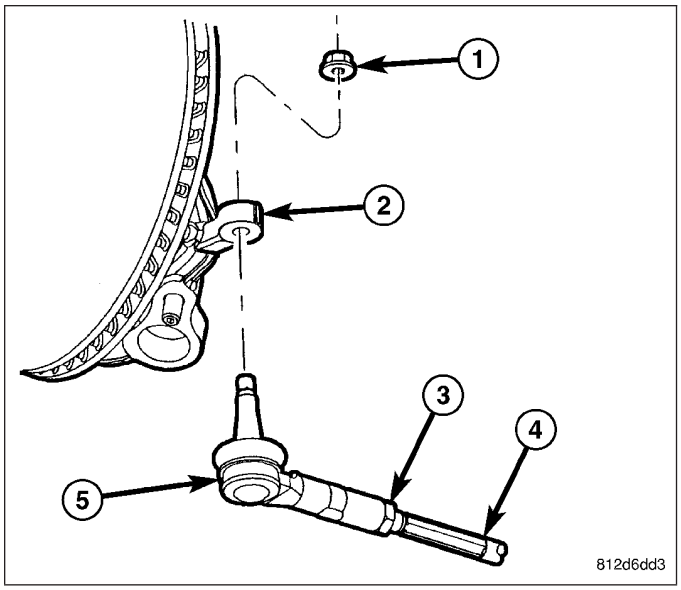

PUMP

TABLE OF CONTENTS

page

PUMP
DESCRIPTION 219
DIAGNOSIS AND TESTING
PUMP LEAKAGE 219
STANDARD PROCEDURE
POWER STEERING PUMP INITIAL OPERATION. 219
REMOVAL
2.7L/3.5L 220
5.7L/6.1L 222
3.0L DIESEL 224
INSTALLATION
2.7L/3.5L 226
5.7L/6.1L 228
3.0L DIESEL 230
FLUID
DESCRIPTION 233
STANDARD PROCEDURE
POWER STEERING FLUID LEVEL CHECKING. 233
FLUID COOLER
DESCRIPTION 234
REMOVAL
FLUID COOLER 235
FLUID COOLER - SRT8/POLICE PACKAGE . . 236
INSTALLATION
FLUID COOLER 238
FLUID COOLER - SRT8/POLICE PACKAGE . . 239
HOSE - PRESSURE
REMOVAL
AWD 241
RWD 243
RHD 246
INSTALLATION
AWD 248
RWD 251
RHD 254
HOSE - RETURN
REMOVAL
COOLER TO RESERVOIR 257
GEAR TO COOLER - AWD 259
GEAR TO COOLER - RWD 261
GEAR TO COOLER - RHD 263
INSTALLATION
COOLER TO RESERVOIR 265
GEAR TO COOLER - AWD 267
GEAR TO COOLER - RWD 270
GEAR TO COOLER - RHD 273
HOSE - SUPPLY
REMOVAL 275
INSTALLATION 277
PULLEY
REMOVAL 280
INSTALLATION 280
RESERVOIR
REMOVAL 282
INSTALLATION 283

PUMP

DESCRIPTION

Hydraulic pressure for operation of the power steering gear is provided by a belt-driven all-aluminum power steering pump. Most vehicles use a common droop flow rate and constant displacement type pump that is mounted in a common location (left front of engine). The SRT8 power steering pump is a constant-flow type, but appears the same externally and is mounted in the same location as others.

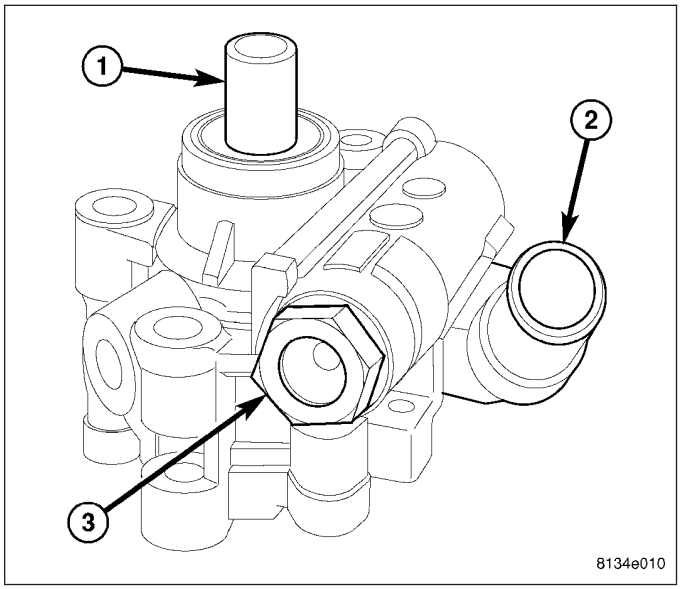

DIAGNOSIS AND TESTING

PUMP LEAKAGE

The pump is serviced as an assembly and should not be disassembled.

Check for leaks in the following areas:

- Pump shaft seal behind the pulley
- Pressure and return lines
- Flow control valve fitting

STANDARD PROCEDURE

POWER STEERING PUMP INITIAL OPERATION

WARNING: The fluid level should be checked with engine off to prevent injury from moving components.

CAUTION: Mopar® Power Steering fluid + 4 or Mopar® ATF+4 Automatic Transmission Fluid is to be used in the power steering system. No other power steering or automatic transmission fluid is to be used in the system. Damage may result to the power steering pump and system if any other fluid is used, and do not overfill.

Wipe filler cap clean, then check the fluid level. The dipstick should indicate **COLD** when the fluid is at normal temperature.

1. Turn steering wheel all the way to the left.
2. Fill the pump fluid reservoir to the proper level and let the fluid settle for at least two (2) minutes.
3. Raise the front wheels off the ground.
4. Slowly turn the steering wheel lock-to-lock 20 times with the engine off while checking the fluid level.

NOTE: Vehicles with long return lines or oil coolers turn wheel 40 times.

5. Start the engine. With the engine idling maintain the fluid level.
6. Lower the front wheels and let the engine idle for two minutes.

7. Turn the steering wheel in both direction and verify power assist and quiet operation of the pump.

If the fluid is extremely foamy or milky looking, allow the vehicle to stand a few minutes and repeat the procedure.

CAUTION: Do not run a vehicle with foamy fluid for an extended period. This may cause pump damage.

REMOVAL

2.7L/3.5L

1. Disconnect and isolate battery negative cable (2) from battery post.
2. Siphon power steering fluid from pump reservoir.
3. Remove air cleaner housing and inlet tube to throttle body. (Refer to 9 - ENGINE/AIR INTAKE SYSTEM/AIR CLEANER HOUSING - REMOVAL)
4. Remove serpentine drive belt. (Refer to 7 - COOLING/ACCESSORY DRIVE/DRIVE BELTS - REMOVAL)

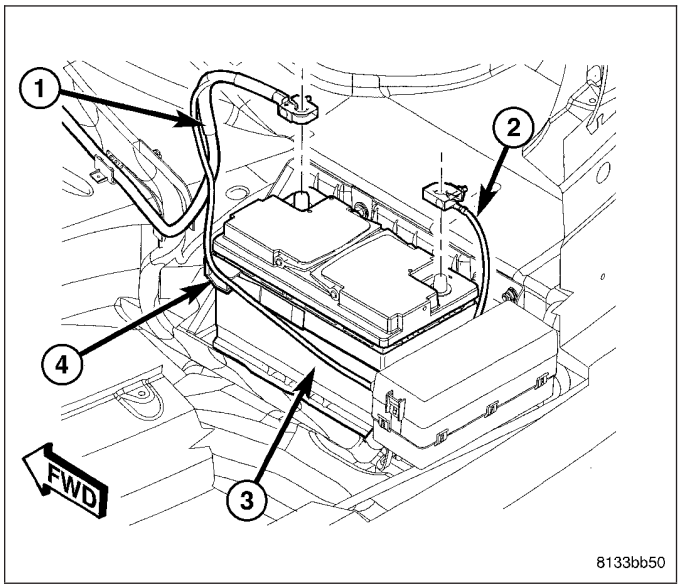

5. Remove hose clamp (2), then supply hose (3) from pump (1).

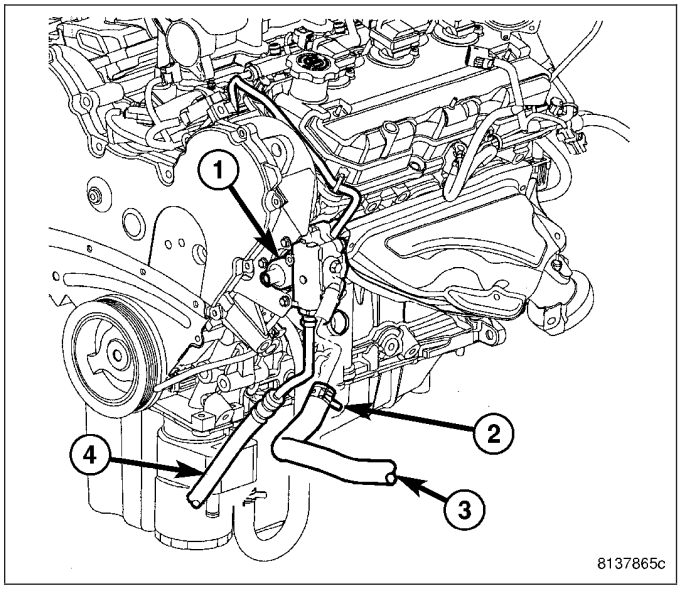

6. Unthread tube nut, then remove pressure hose (2) from pump (1).

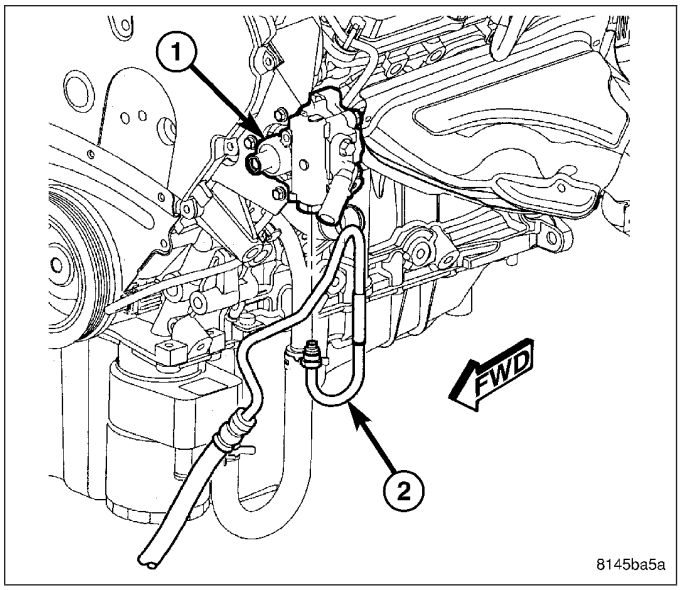

7. Remove three pump mounting bolts (1) through access holes in pulley.
8. Remove pump (3) from engine bracket (2).
9. If pulley needs removal, (Refer to 19 - STEERING/ PUMP/PULLEY - REMOVAL).

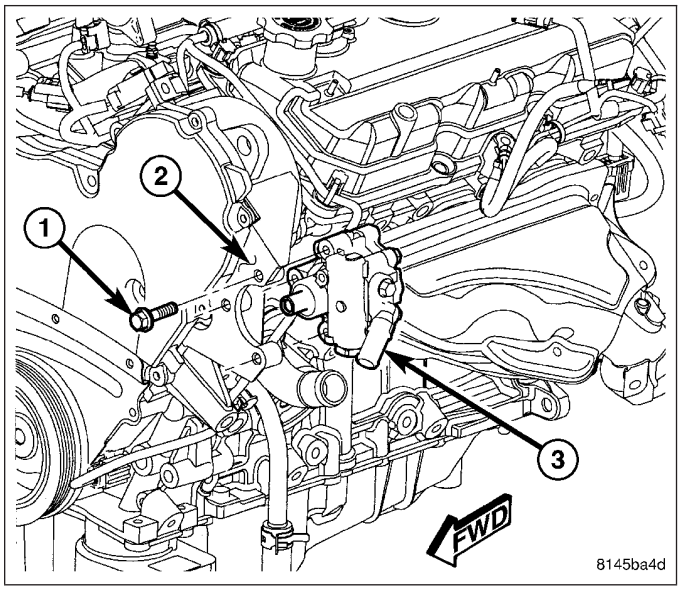

5.7L/6.1L

1. Disconnect and isolate battery negative cable (2) from battery post.
2. Siphon power steering fluid from pump reservoir.
3. Remove air cleaner housing and inlet tube to throttle body. (Refer to 9 - ENGINE/AIR INTAKE SYSTEM/AIR CLEANER HOUSING - REMOVAL)
4. Remove serpentine drive belt. (Refer to 7 - COOLING/ACCESSORY DRIVE/DRIVE BELTS - REMOVAL)

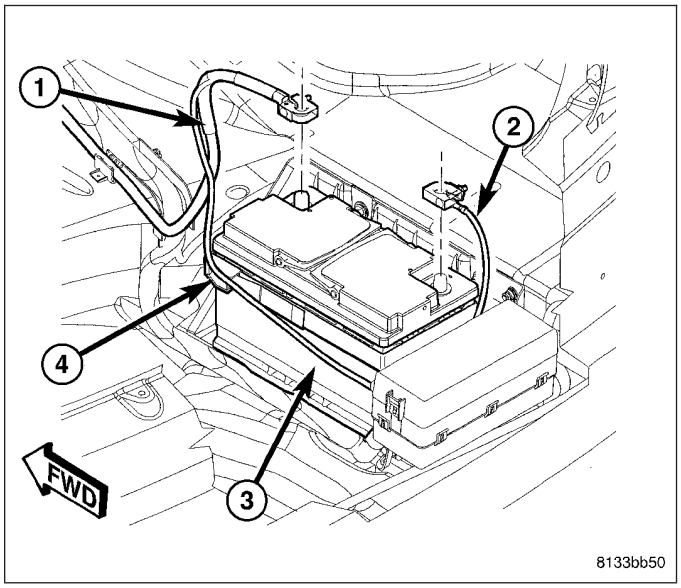

5. Remove hose clamp, then supply hose (3) from pump (1).

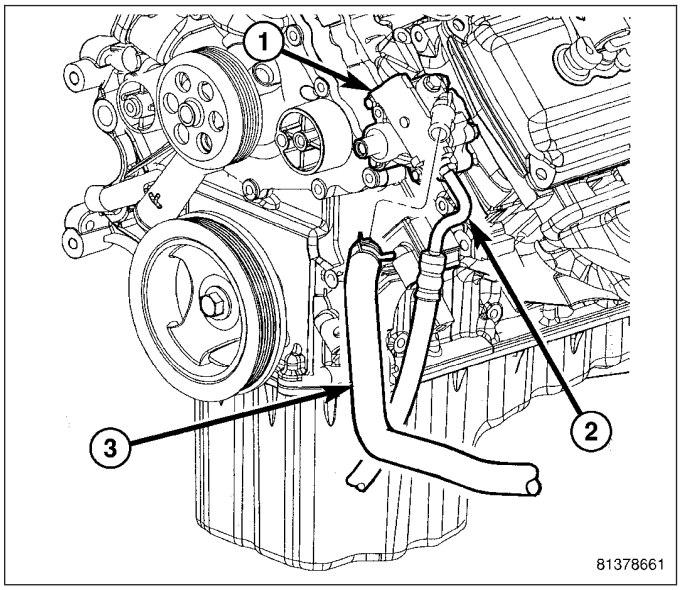

6. Unthread tube nut, then remove pressure hose (2) from pump (1).

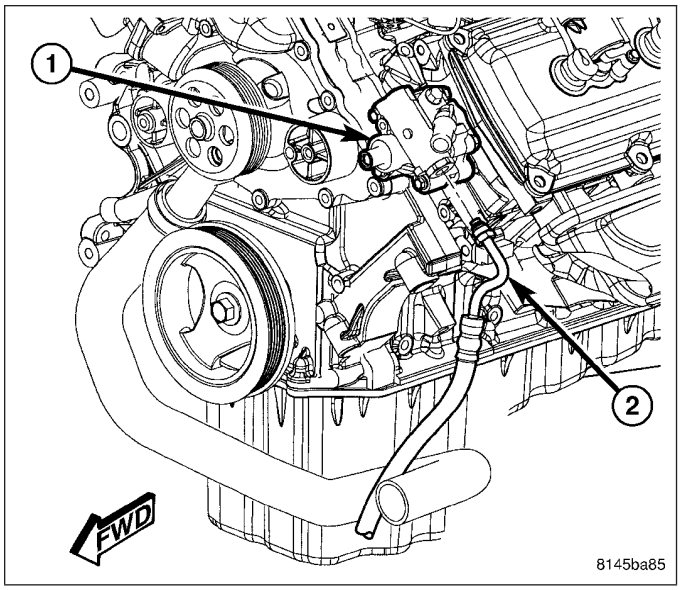

7. Remove three pump mounting bolts (2) through access holes in pulley.
8. Remove pump (1) from engine.
9. If pulley needs removal, (Refer to 19 - STEERING/ PUMP/PULLEY - REMOVAL).

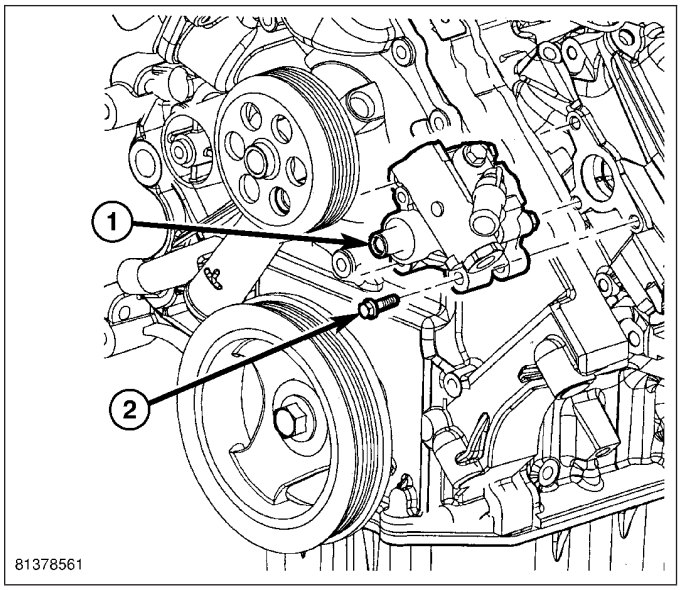

3.0L DIESEL

1. Disconnect and isolate battery negative cable (2) from battery post.

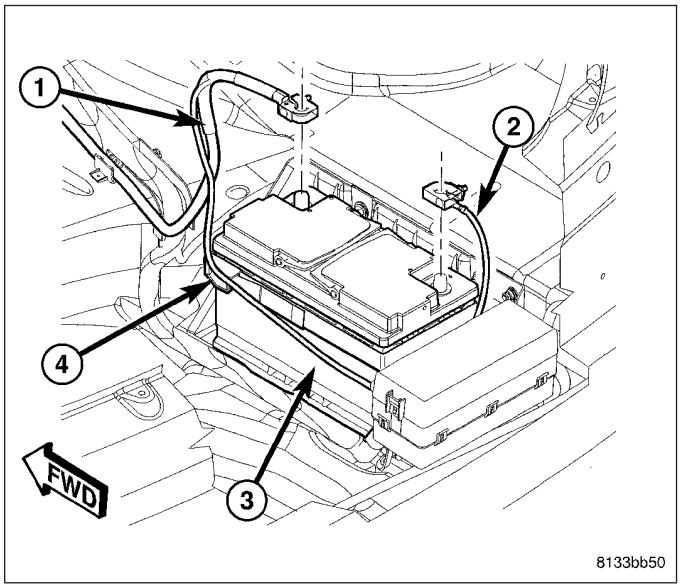

2. Remove engine cover.
3. Remove air cleaner housing and inlet tube to throttle body. (Refer to 9 - ENGINE/AIR INTAKE SYSTEM/AIR CLEANER HOUSING - REMOVAL)
4. Remove turbocharger inlet tube.
5. Remove intercooler tube resonator.
6. Remove serpentine drive belt. (Refer to 7 - COOLING/ACCESSORY DRIVE/DRIVE BELTS - REMOVAL)
7. Siphon power steering fluid from pump reservoir. Place something below pump on belly pan to catch any fluid that spills during removal.
8. Remove hose clamp (2), then supply hose (3) from pump (1).

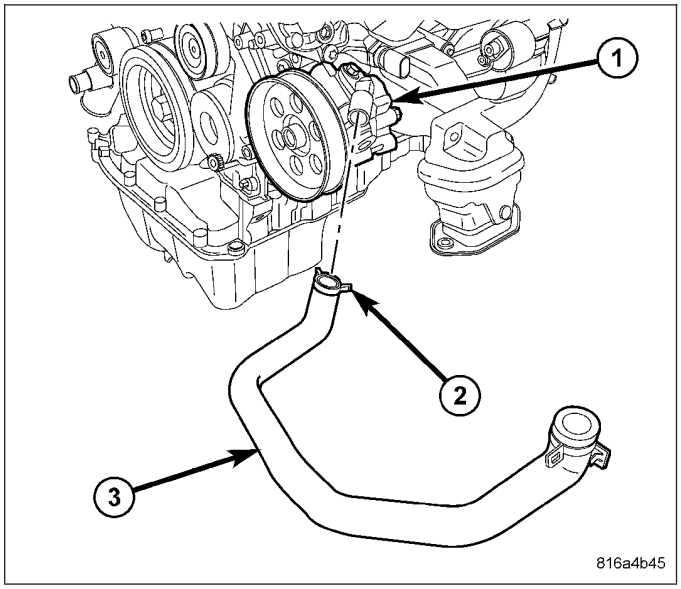

9. Unthread tube nut (2), then remove pressure hose from pump (1).

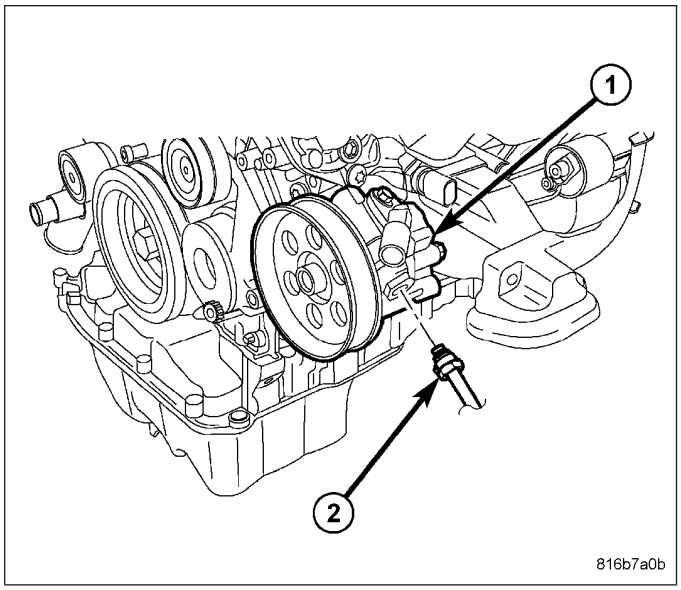

10. Loosen, but do not remove, two pump mounting bolts (1) through access holes in pulley.

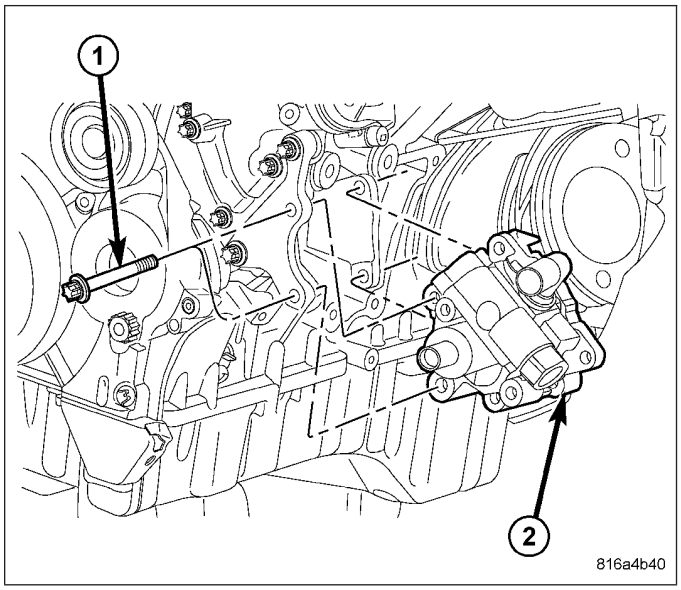

11. Loosen, but do not remove, two mounting bolts (4) fastening front pump mounting bracket (1) to engine.

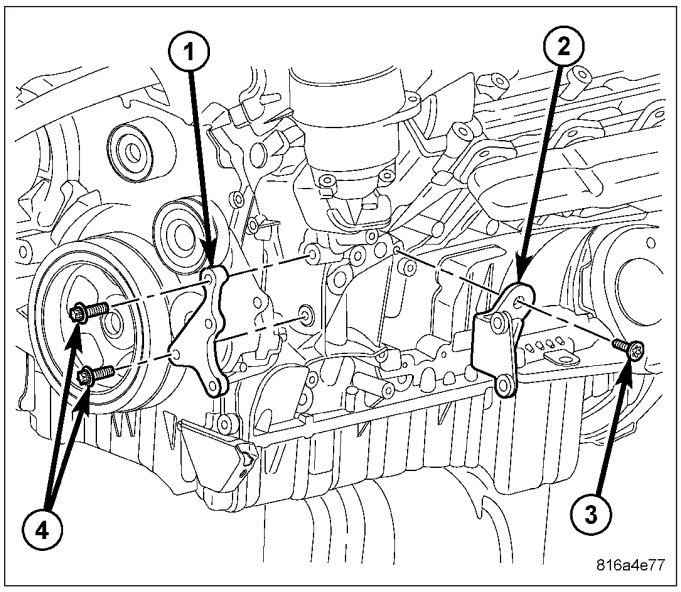

12. Remove two previously loosened pump mounting bolts (1) and remove power steering pump (2) from engine.

NOTE: The drive pulley is not serviced separately from the power steering pump.

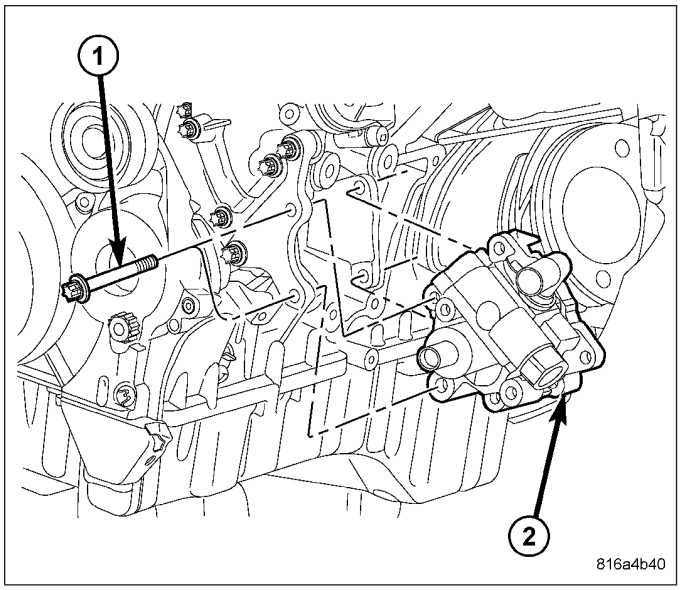

INSTALLATION

2.7L/3.5L

1. Align pump (3) with mounting holes on engine bracket (2).
2. Install three pump mounting bolts (1) through access holes in pulley and engine bracket. Tighten bolts to 28 N·m (21 ft. lbs.) torque.

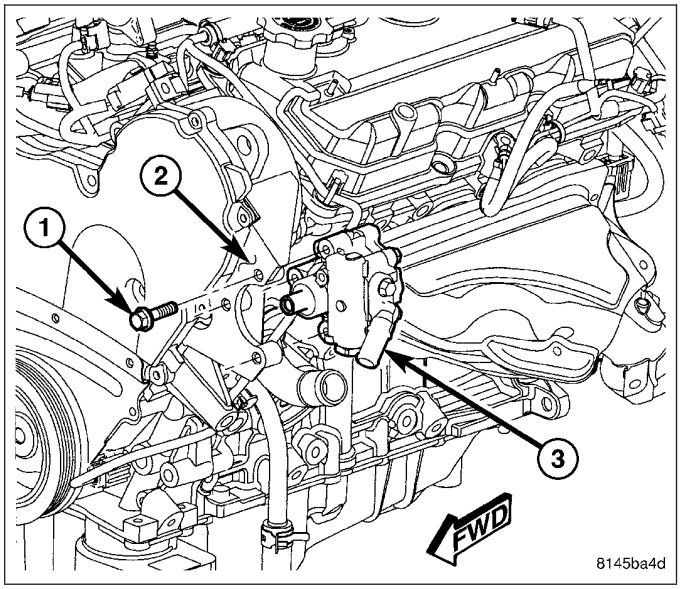

NOTE: Always use a NEW O-ring on the end of the pressure hose.

3. Lubricate NEW O-ring on end of pressure hose with clean power steering fluid.
4. Install pressure hose (2) to pump (1). Tighten pressure hose tube nut to 47 N·m (35 ft. lbs.) torque.

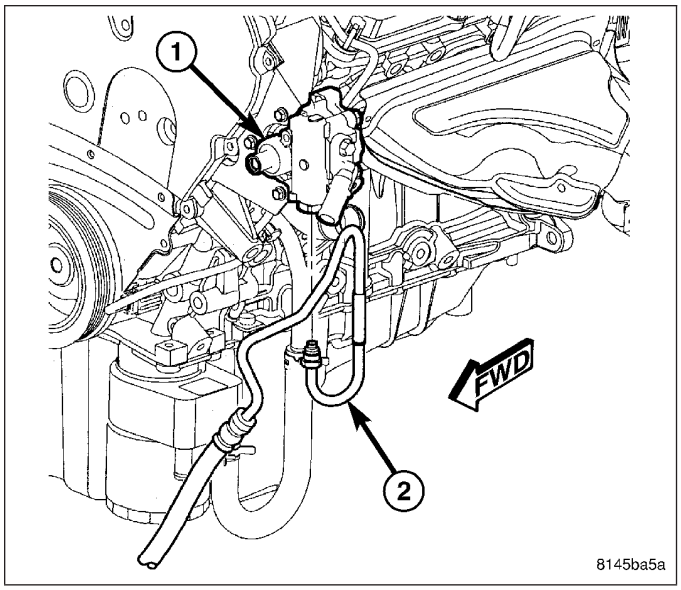

5. Install supply hose (3) on pump. Install clamp (2) securing hose in place.
6. Install serpentine drive belt. (Refer to 7 - COOLING/ACCESSORY DRIVE/DRIVE BELTS - INSTALLATION)
7. Install air cleaner housing and inlet tube. (Refer to 9 - ENGINE/AIR INTAKE SYSTEM/AIR CLEANER HOUSING - INSTALLATION)

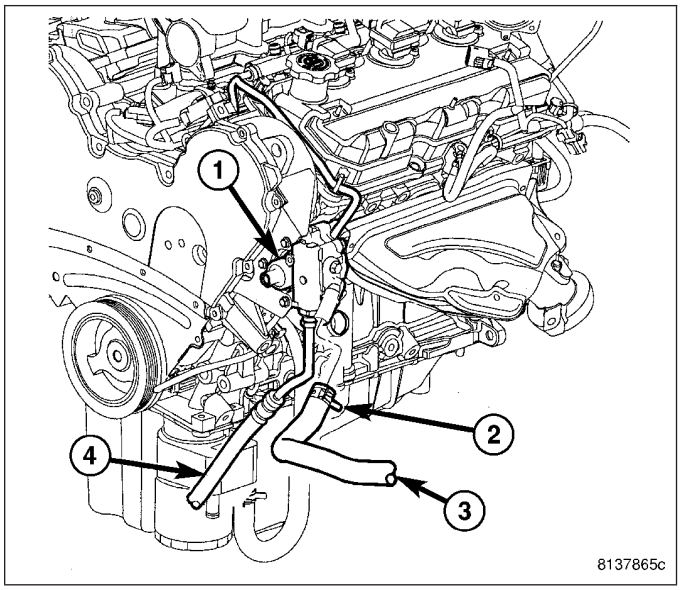

8. Connect battery negative cable (2) to battery post. It is important that this is performed properly. (Refer to 8 - ELECTRICAL/BATTERY SYSTEM - STANDARD PROCEDURE)
9. Fill pump reservoir with fluid and perform pump initial operation procedure. (Refer to 19 - STEERING/PUMP - STANDARD PROCEDURE)

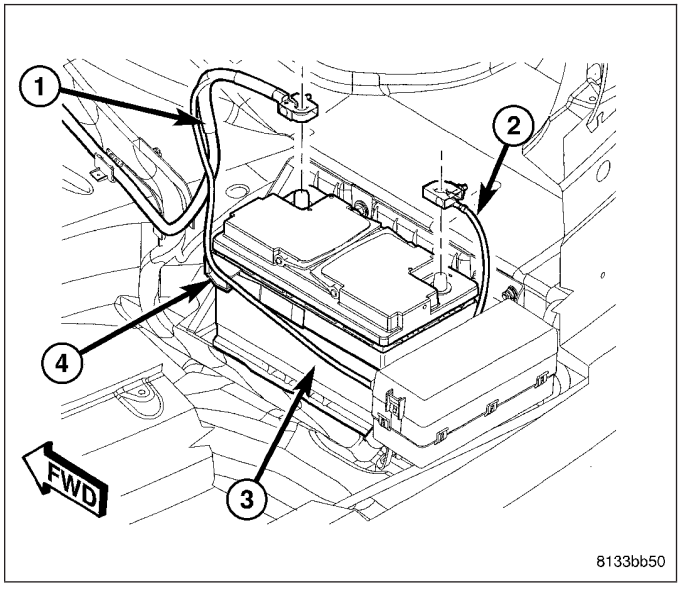

5.7L/6.1L

1. Align pump (1) with mounting holes on engine.
2. Install three pump mounting bolts (2) through access holes in pulley. Tighten bolts to 28 N·m (21 ft. lbs.) torque.

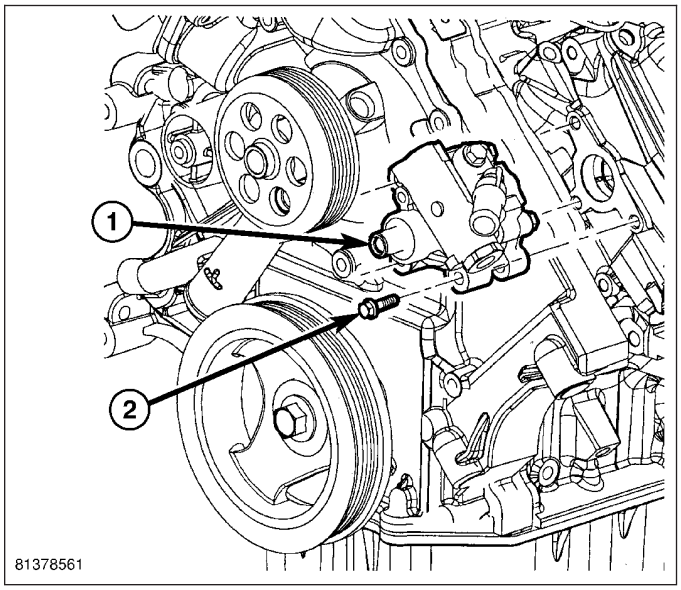

NOTE: Always use a NEW O-ring on the end of the pressure hose.

3. Lubricate NEW O-ring on end of pressure hose with clean power steering fluid.
4. Install pressure hose (2) to pump (1). Tighten pressure hose tube nut to 47 N·m (35 ft. lbs.) torque.

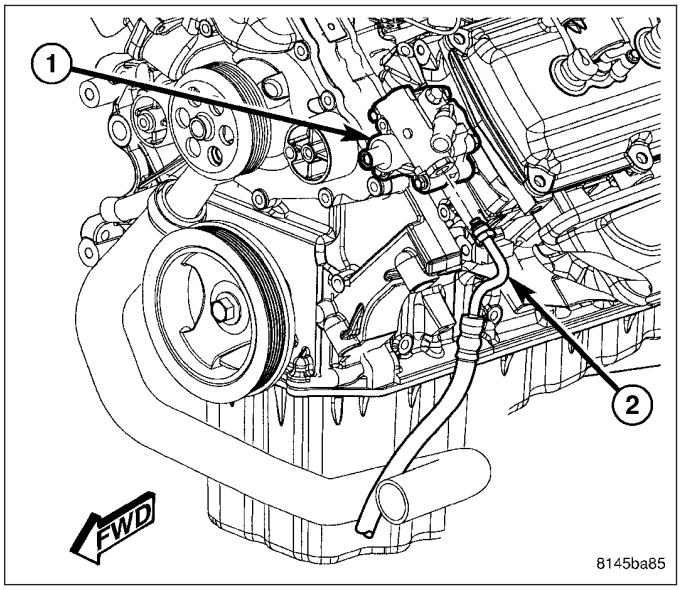

5. Install supply hose (3) on pump (1). Install clamp securing hose in place.
6. Install serpentine drive belt. (Refer to 7 - COOLING/ACCESSORY DRIVE/DRIVE BELTS - INSTALLATION)
7. Install air cleaner housing and inlet tube. (Refer to 9 - ENGINE/AIR INTAKE SYSTEM/AIR CLEANER HOUSING - INSTALLATION)

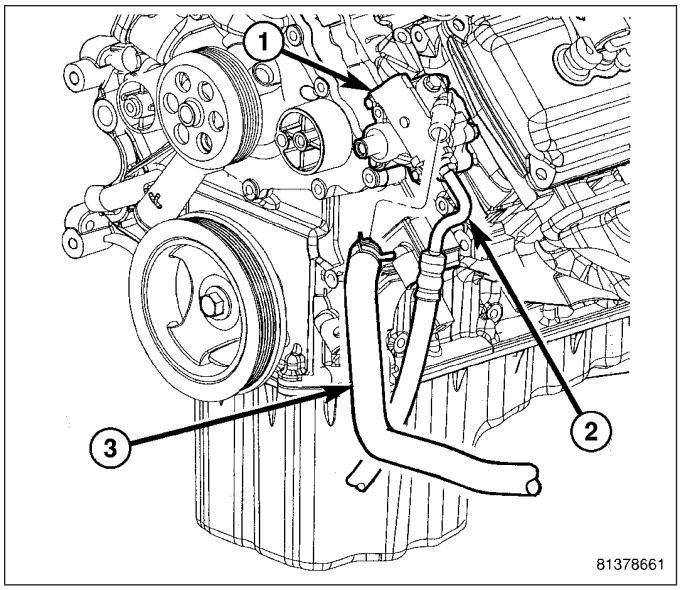

8. Connect battery negative cable (2) to battery post. It is important that this is performed properly. (Refer to 8 - ELECTRICAL/BATTERY SYSTEM - STANDARD PROCEDURE)
9. Fill pump reservoir with fluid and perform pump initial operation procedure. (Refer to 19 - STEERING/PUMP - STANDARD PROCEDURE)

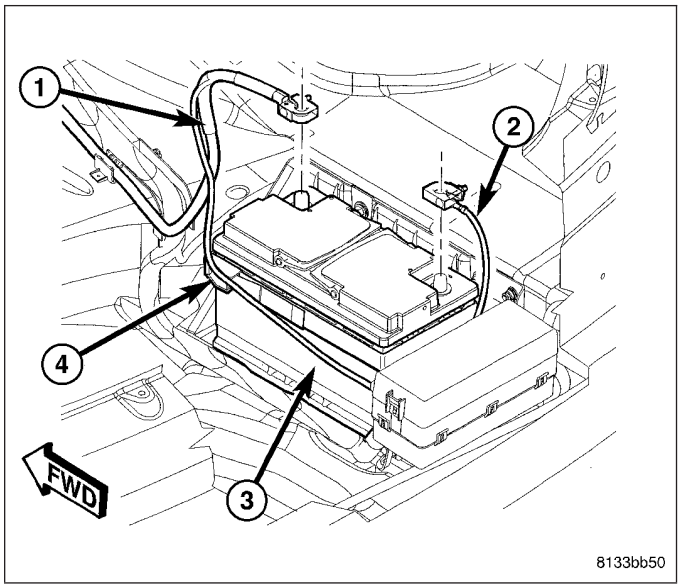

3.0L DIESEL

1. Align pump (2) with mounting holes in pump mounting brackets on engine.
2. Install, but do not tighten, two pump mounting bolts (1) through access holes in pulley.

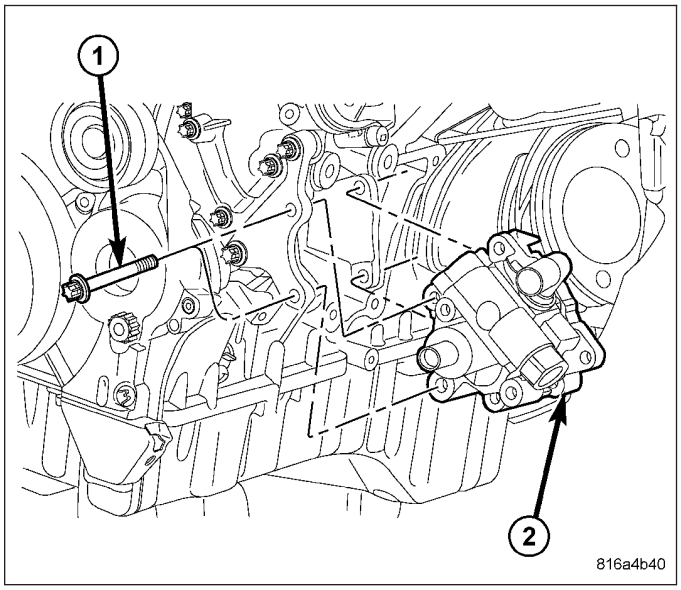

3. Install two mounting bolts (4) fastening front pump mounting bracket (1) to engine. Tighten bolts to 24 N·m (17 ft. lbs.).

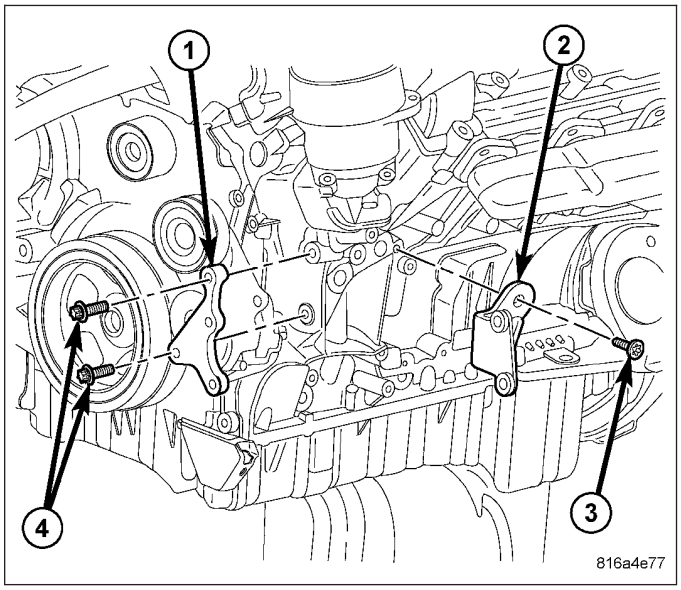

4. Tighten two pump mounting bolts (1) to 24 N·m (17 ft. lbs.).

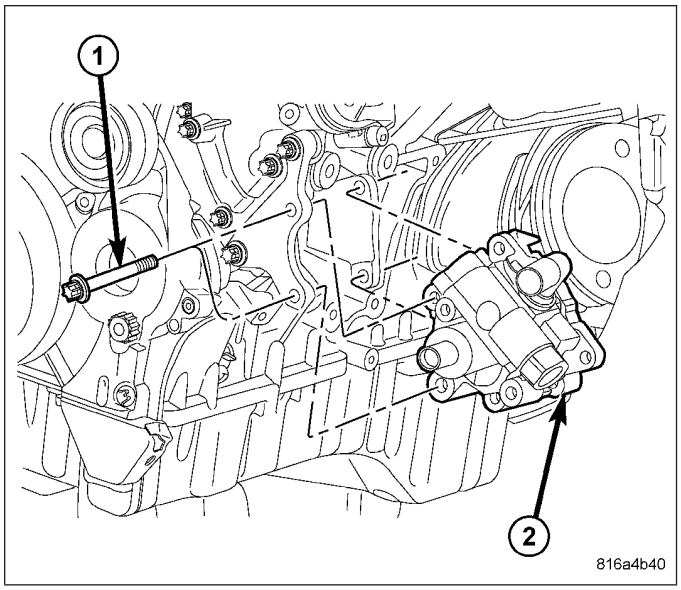

NOTE: Always use a NEW O-ring on the end of the pressure hose.

5. Lubricate NEW O-ring on end of pressure hose with clean power steering fluid.
6. Install pressure hose to pump (1). Tighten pressure hose tube nut (2) to 47 N·m (35 ft. lbs.).

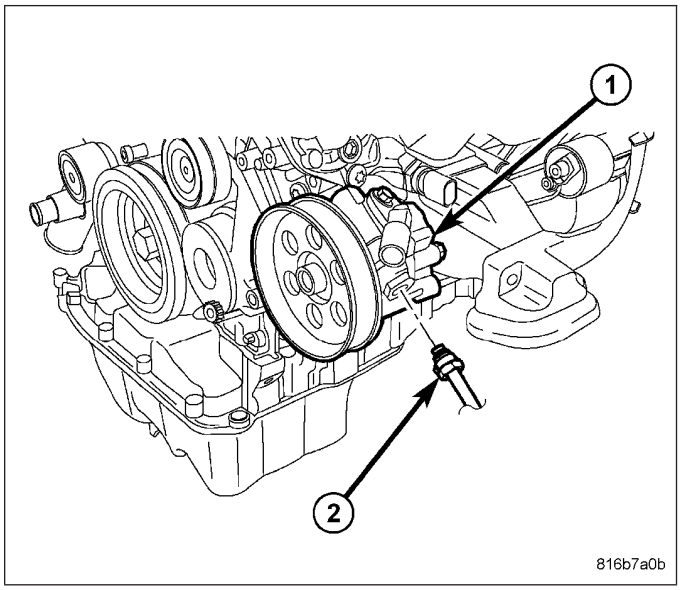

7. Install supply hose (3) on pump (1). Install clamp (2) securing hose in place.
8. Install serpentine drive belt. (Refer to 7 - COOLING/ACCESSORY DRIVE/DRIVE BELTS - INSTALLATION)
9. Install intercooler tube resonator.
10. Install turbocharger inlet tube.
11. Install air cleaner housing. (Refer to 9 - ENGINE/ AIR INTAKE SYSTEM/AIR CLEANER HOUSING - INSTALLATION)

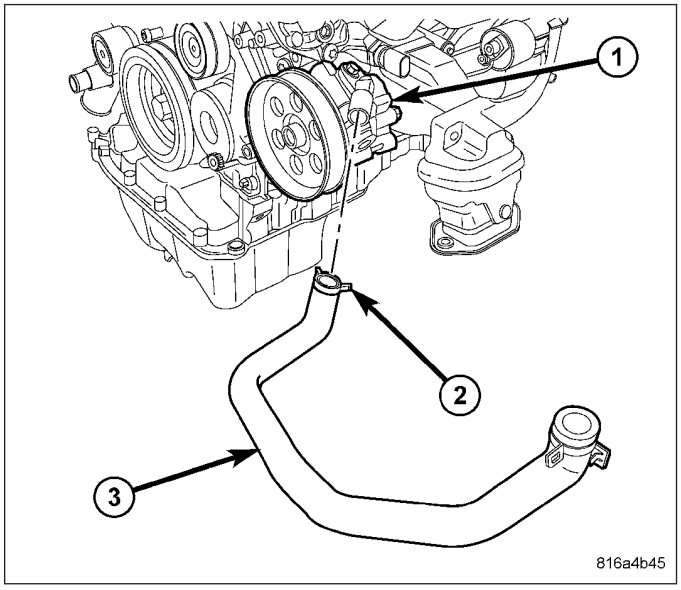

12. Install engine cover.

13. Connect battery negative cable (2) to battery post. It is important that this is performed properly. (Refer to 8 - ELECTRICAL/BATTERY SYSTEM - STANDARD PROCEDURE)
14. Fill pump reservoir with fluid and perform pump initial operation procedure. (Refer to 19 - STEERING/PUMP - STANDARD PROCEDURE)

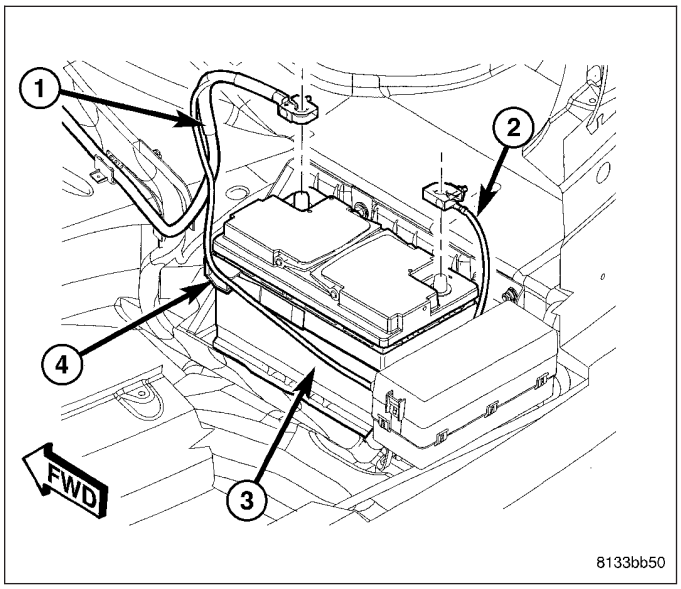

FLUID

DESCRIPTION

The recommended fluid for the power steering system is Mopar® Power Steering fluid + 4 or Mopar® ATF+4 Automatic Transmission Fluid. Both Fluids have the same material standard specifications (MS-9602).

Mopar® ATF+4 (and Mopar® Power Steering fluid + 4), when new, is red in color. ATF+4 is dyed red so it can be identified from other fluids used in the vehicle such as engine oil or antifreeze. The red color is not permanent and is not an indicator of fluid condition. As the vehicle is driven, ATF+4 will begin to look darker in color and may eventually become brown. **THIS IS NORMAL.** ATF+4 also has a unique odor that may change with age. Consequently, odor and color cannot be used to indicate the fluid condition or the need for a fluid change.

STANDARD PROCEDURE

POWER STEERING FLUID LEVEL CHECKING

WARNING: Fluid level should be checked with the engine OFF to prevent personal injury from moving parts and to assure an accurate fluid level reading.

CAUTION: Mopar® Power Steering Fluid + 4 or Mopar® ATF+4 Automatic Transmission Fluid is to be used in the power steering system. Both Fluids have the same material standard specifications (MS-9602). No other power steering or automatic transmission fluid is to be used in the system. Damage may result to the power steering pump and system if another fluid is used. Do not overfill the system.

NOTE: Although not required at specific intervals, the fluid level may be checked periodically. Check the fluid level anytime there is a system noise or fluid leak suspected.

The power steering fluid level can be viewed on the dipstick attached to the filler cap. There are two sides to the dipstick, one is for checking the fluid when it is cold, the other is for checking the fluid when it is hot. Before opening the power steering system, wipe the reservoir filler cap free of dirt and debris. Remove the cap and check the fluid level on its dipstick.

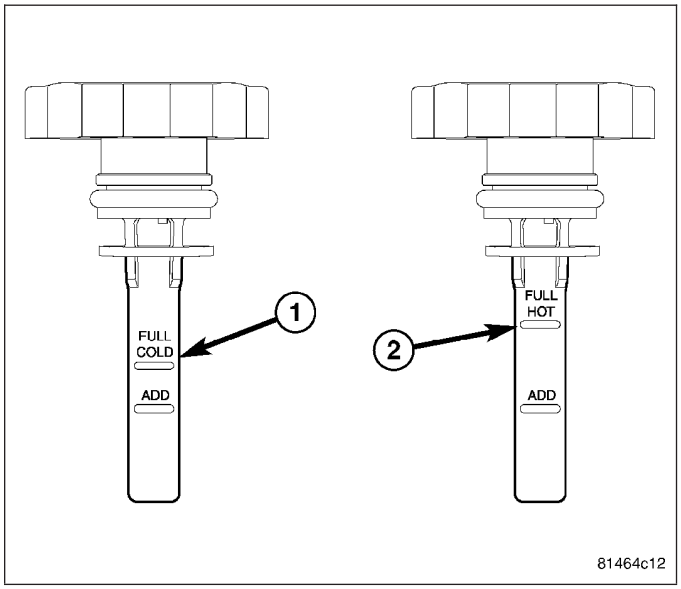

Use the COLD side of the dipstick (1) to measure when the fluid is at normal ambient temperature, approximately 21°C to 27°C (70°F to 80°F). The fluid level should read between the ADD and FULL COLD lines.

Use the HOT side of the dipstick (2) to measure when the vehicle has been running and the fluid is hot. When the fluid is hot, the fluid level is allowed to read up to the FULL HOT line. **Only add fluid to the system when the vehicle is cold.**

Use only Mopar® Power Steering Fluid + 4 or Mopar® ATF+4 Automatic Transmission Fluid in the power steering system. Do not overfill the power steering system.

FLUID COOLER

DESCRIPTION

This vehicle uses a fluid-to-air type power steering fluid cooler (2) with external cooling fins. The cooler mounts to clips attached to the front of the cooling module.

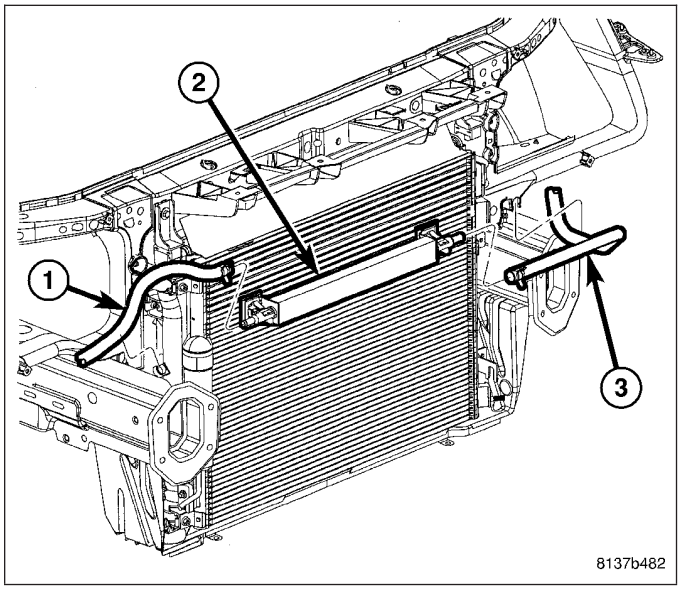

Unlike the standard power steering fluid cooler which makes one pass across the cooling module, the SRT8 (and Police Package) cooler (2) makes three passes across the front of the cooling module.

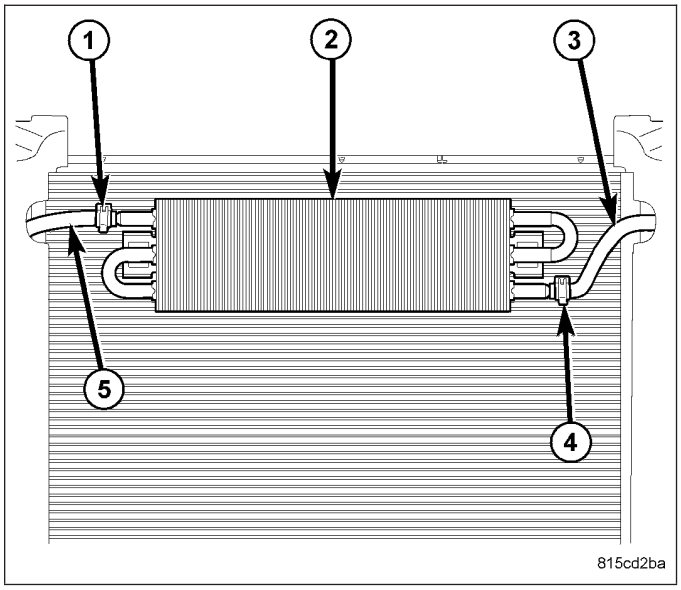

REMOVAL

FLUID COOLER

1. Disconnect and isolate battery negative cable (2) from battery post.
2. Siphon power steering fluid from pump reservoir.
3. Raise and support vehicle. (Refer to LUBRICATION & MAINTENANCE/HOISTING - STANDARD PROCEDURE)
4. Remove belly pan. (Refer to 23 - BODY/EXTERIOR/BELLY PAN - REMOVAL)

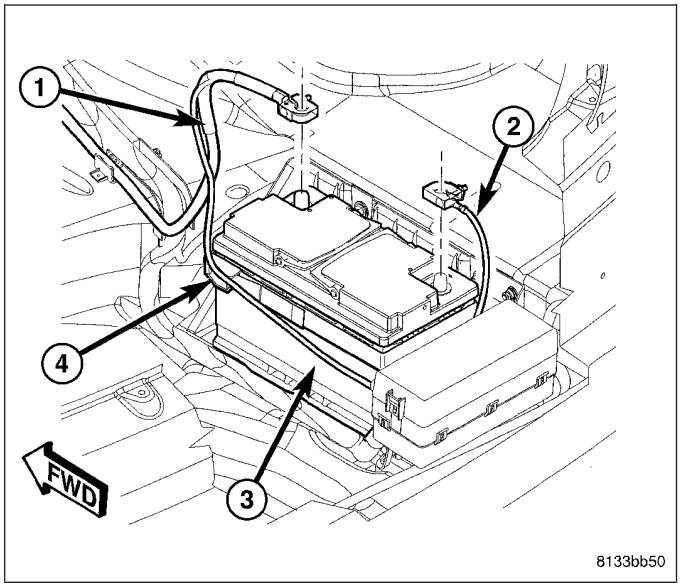

5. Remove hose clamp, then return hose (1) from steering gear at cooler (2).
6. Remove hose clamp, then return hose (3) to reservoir at cooler (2).

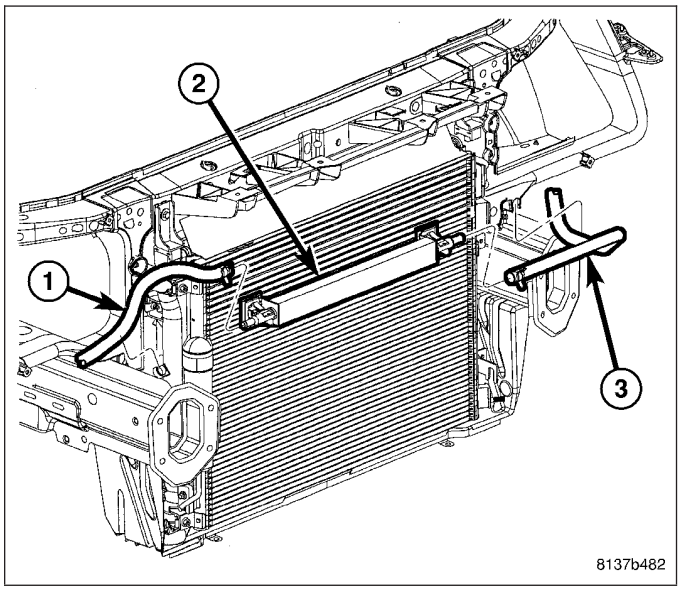

7. Push in on cooler mounting clip tabs.
8. Remove cooler from clips mounted to cooling module.

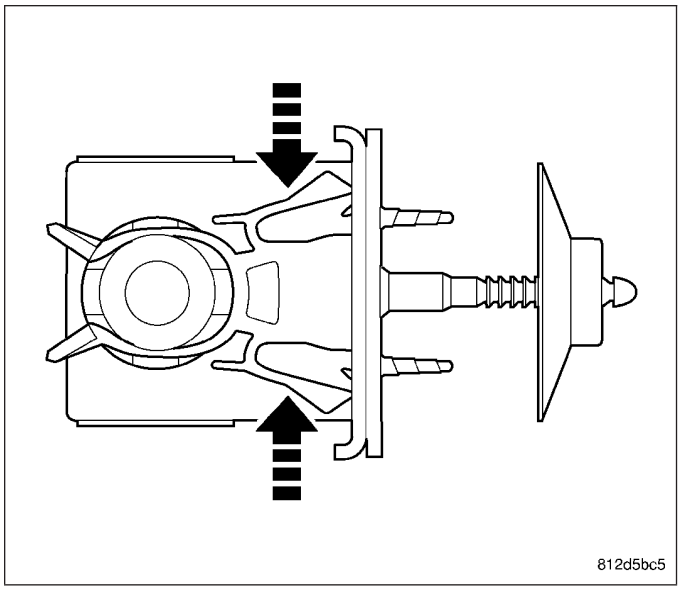

FLUID COOLER - SRT8/POLICE PACKAGE

1. Disconnect and isolate battery negative cable (2) from battery post.
2. Siphon power steering fluid from pump reservoir.
3. Raise and support vehicle. (Refer to LUBRICATION & MAINTENANCE/HOISTING - STANDARD PROCEDURE)
4. Remove belly pan. (Refer to 23 - BODY/EXTERIOR/BELLY PAN - REMOVAL)

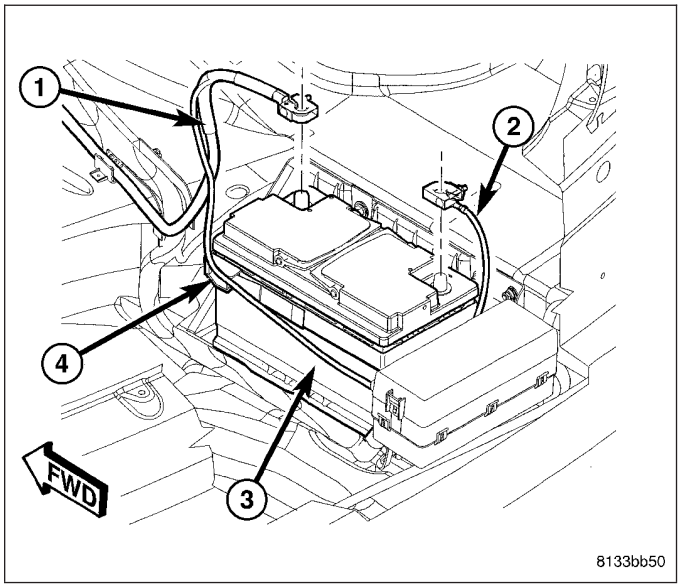

5. Remove hose clamp (1), then return hose (5) from steering gear at cooler (2).
6. Remove hose clamp (4), then return hose (3) to reservoir at cooler (2).

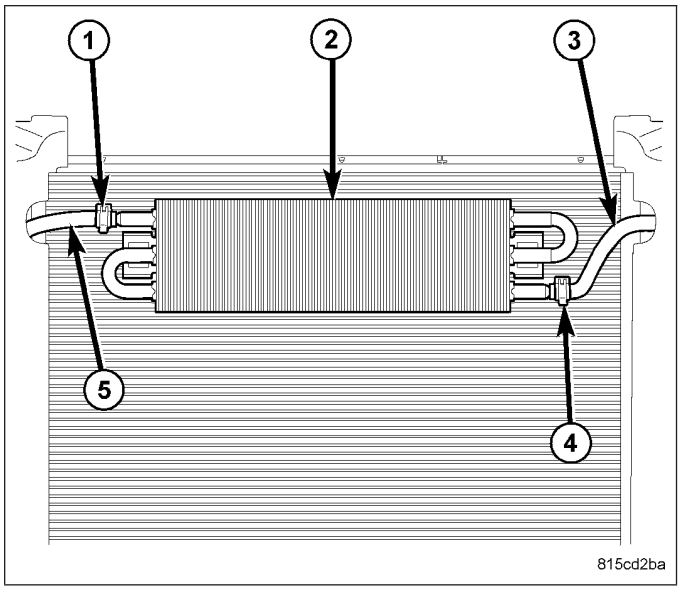

7. Push in on cooler mounting clip tabs.
8. Remove cooler from clips mounted to cooling module.

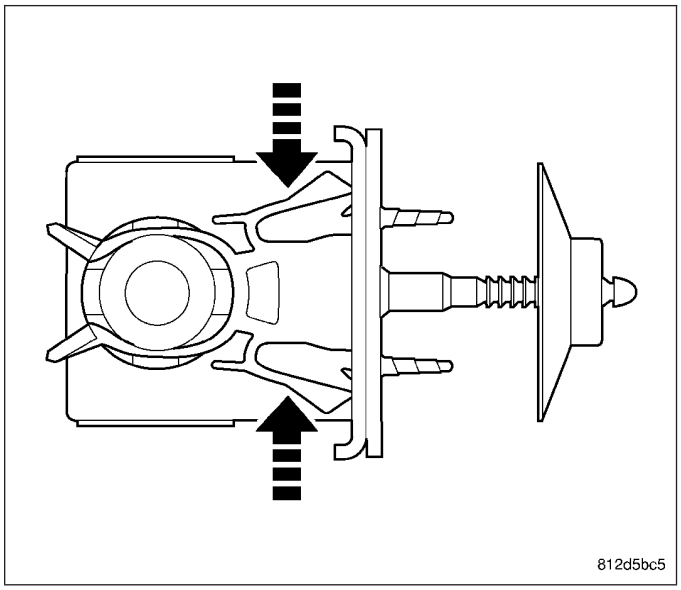

INSTALLATION

FLUID COOLER

1. Install cooler over mounting clips attached to cooling module. Push cooler past clip retaining tabs allowing it to lock into place.

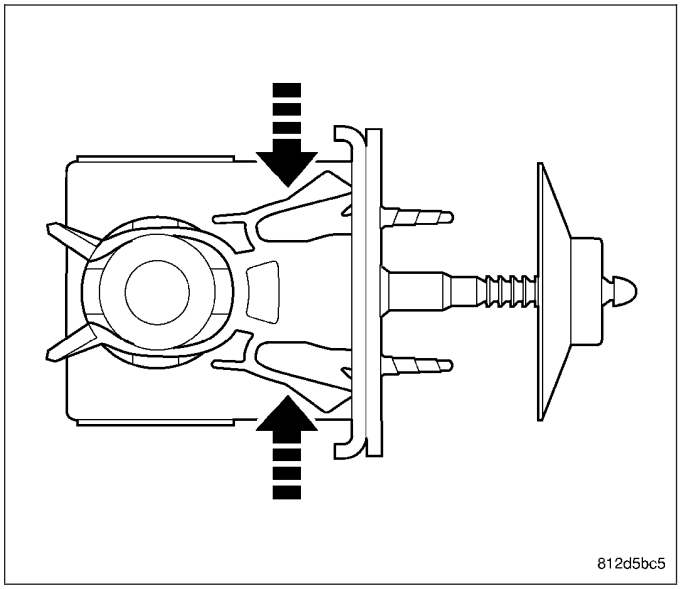

NOTE: If a lengthwise paint stripe appears on the return hose (3) near the end, position that paint stripe at the top (12 O'clock position) when installed on the cooler. This positioning must be done to ensure proper hose routing.

2. Slide return hose to reservoir (3) onto left end of cooler (2). Install clamp securing hose in place.
3. Slide return hose from gear (1) onto right end of cooler (2). Install clamp securing hose in place.
4. Install belly pan. (Refer to 23 - BODY/EXTERIOR/ BELLY PAN - INSTALLATION)
5. Lower vehicle.

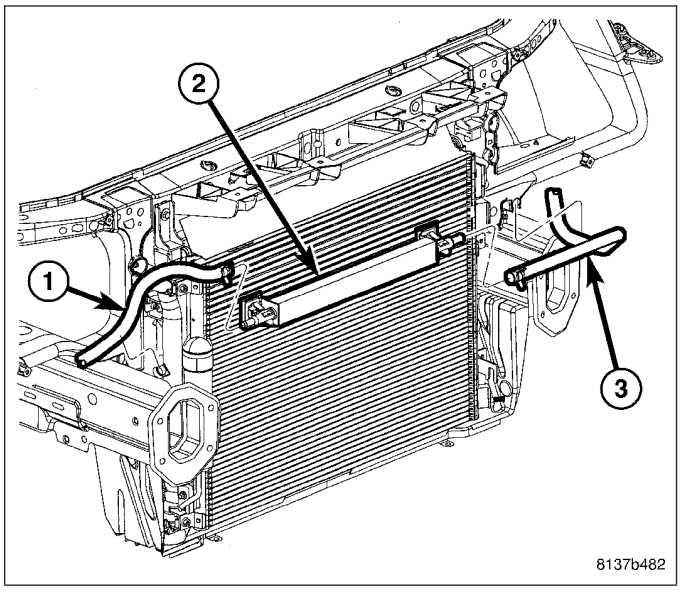

6. Connect battery negative cable (2) to battery post. It is important that this is performed properly. (Refer to 8 - ELECTRICAL/BATTERY SYSTEM - STANDARD PROCEDURE)
7. Fill pump reservoir with fluid and perform pump initial operation procedure. (Refer to 19 - STEERING/ PUMP - STANDARD PROCEDURE)

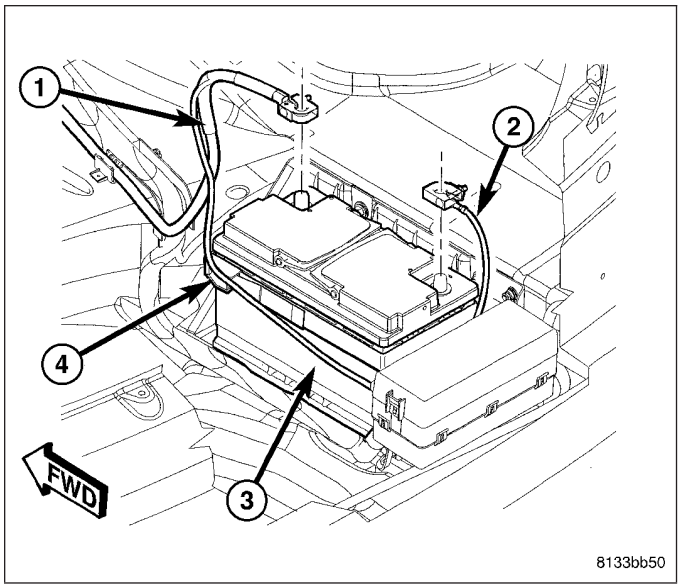

FLUID COOLER - SRT8/POLICE PACKAGE

1. Install center tube of cooler over mounting clips attached to cooling module. Push cooler past clip retaining tabs allowing it to lock into place.

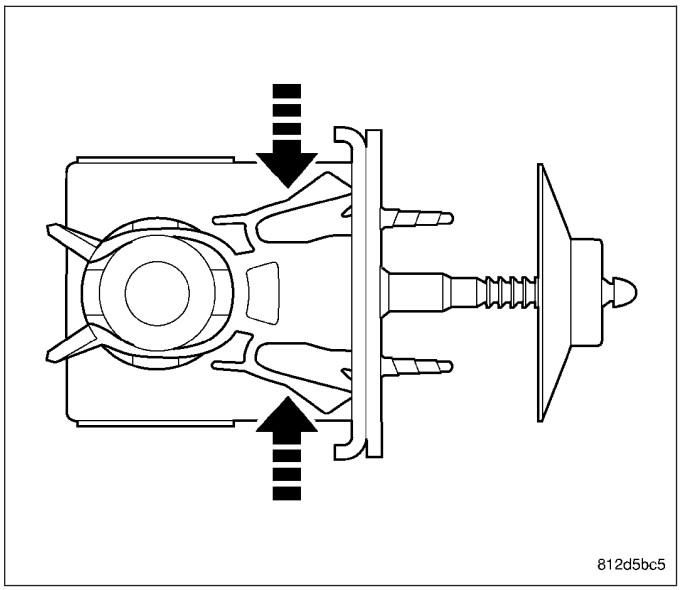

2. Slide return hose to reservoir (3) onto outlet of cooler (2). Install clamp (4) securing hose in place.
3. Slide return hose from gear (5) onto inlet of cooler (2). Install clamp (1) securing hose in place.
4. Install belly pan. (Refer to 23 - BODY/EXTERIOR/ BELLY PAN - INSTALLATION)
5. Lower vehicle.

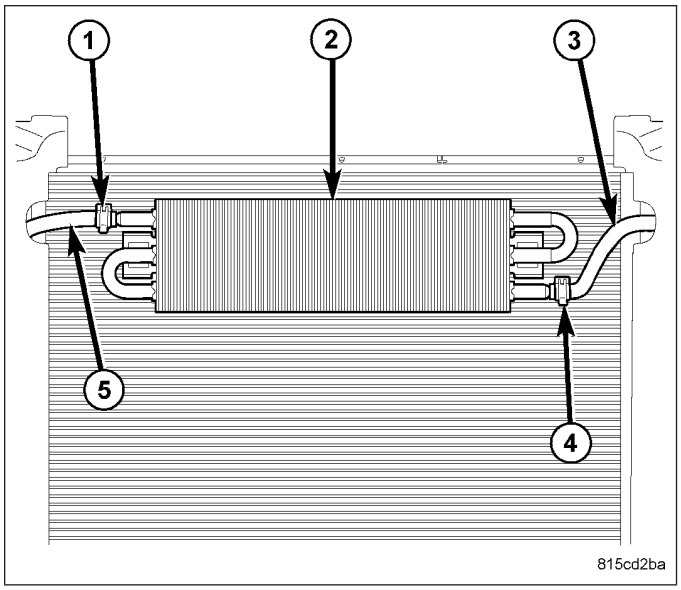

6. Connect battery negative cable (2) to battery post. It is important that this is performed properly. (Refer to 8 - ELECTRICAL/BATTERY SYSTEM - STANDARD PROCEDURE)
7. Fill pump reservoir with fluid and perform pump initial operation procedure. (Refer to 19 - STEERING/ PUMP - STANDARD PROCEDURE)

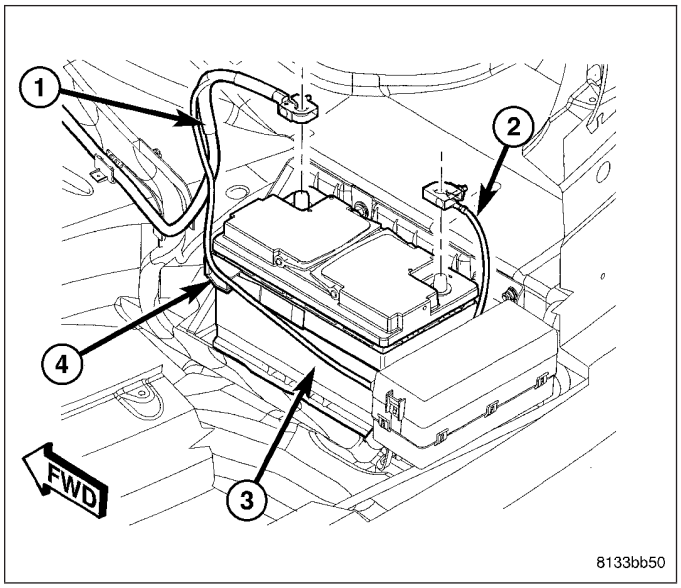

HOSE - PRESSURE

REMOVAL

AWD

1. Disconnect and isolate battery negative cable (2) from battery post.
2. Siphon power steering fluid from pump reservoir.
3. Remove air cleaner housing and inlet tube to throttle body. (Refer to 9 - ENGINE/AIR INTAKE SYSTEM/AIR CLEANER HOUSING - REMOVAL)

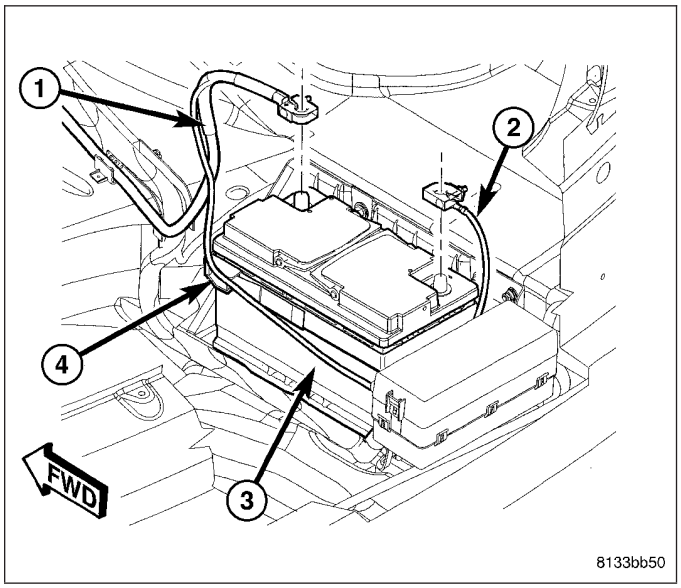

4. 3.5L Engine – Unthread tube nut, then remove pressure hose (2) from pump (1).

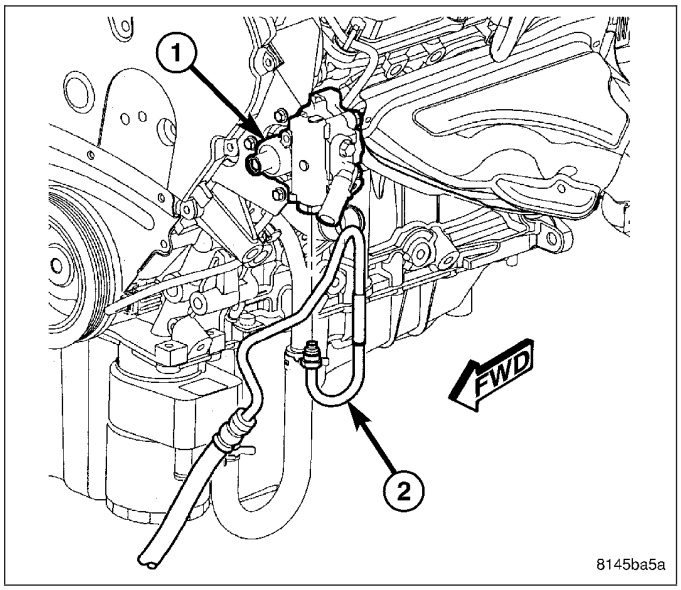

5. 5.7L/6.1L Engine – Unthread tube nut, then remove pressure hose (2) from pump (1).

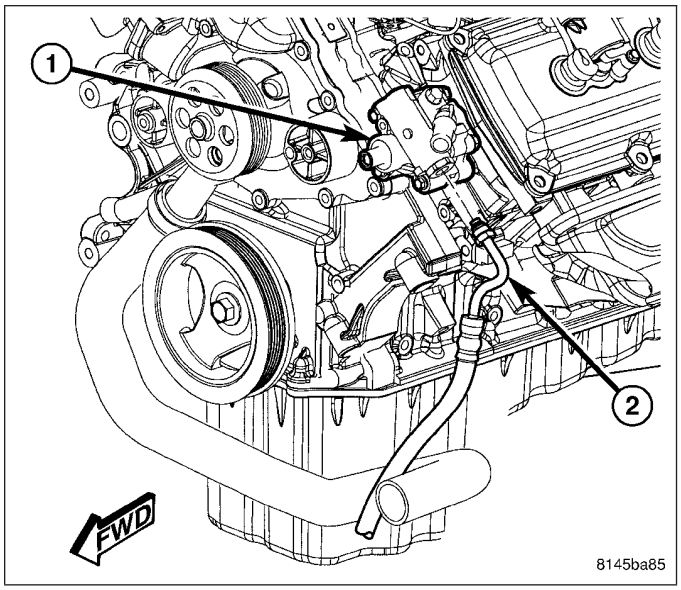

6. Raise and support vehicle. (Refer to LUBRICATION & MAINTENANCE/HOISTING - STANDARD PROCEDURE)
7. Remove belly pan. (Refer to 23 - BODY/EXTERIOR/BELLY PAN - REMOVAL)
8. Remove screw fastening pressure hose routing clamp (1) to front of engine cradle (2).
9. Remove screw fastening pressure hose routing clamp to left side of engine cradle.

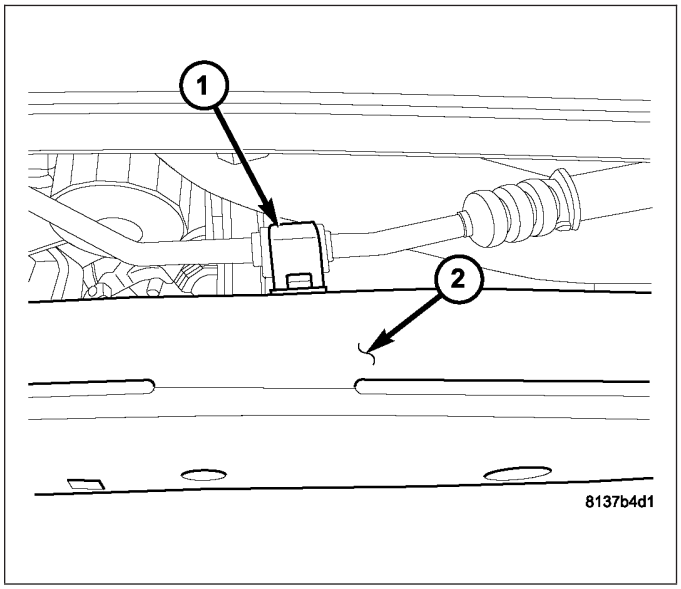

10. Unthread return hose tube nut (1), then remove return hose from steering gear (2).
11. Unthread pressure hose tube nut (3), then remove pressure hose from steering gear (2) and vehicle.

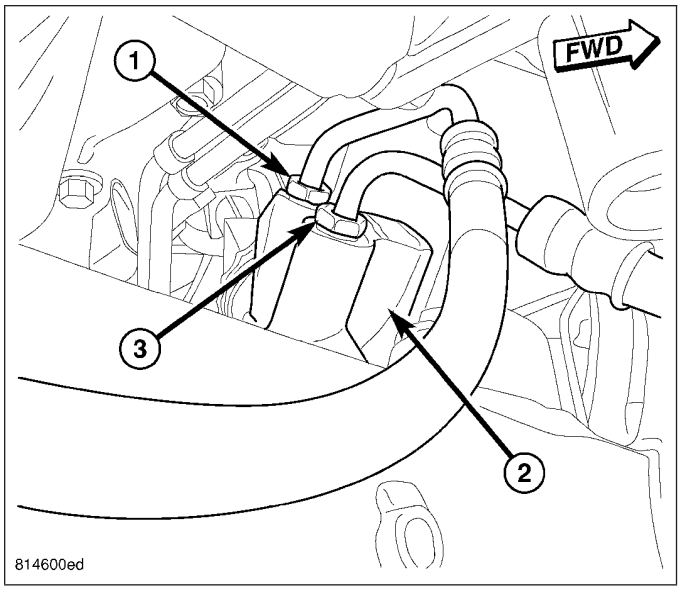

RWD

1. Disconnect and isolate battery negative cable (2) from battery post.
2. Siphon power steering fluid from pump reservoir.
3. Remove air cleaner housing and inlet tube to throttle body. (Refer to 9 - ENGINE/AIR INTAKE SYSTEM/AIR CLEANER HOUSING - REMOVAL)

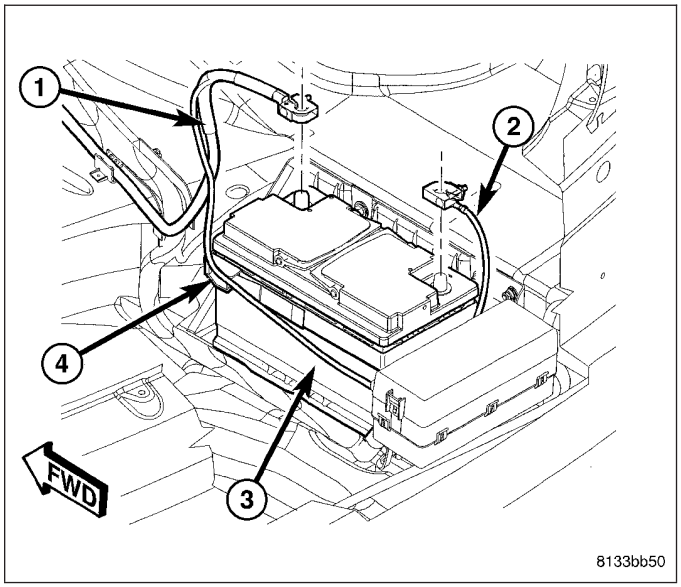

4. 2.7L/3.5L Engines – Unthread tube nut, then remove pressure hose (2) from pump (1).

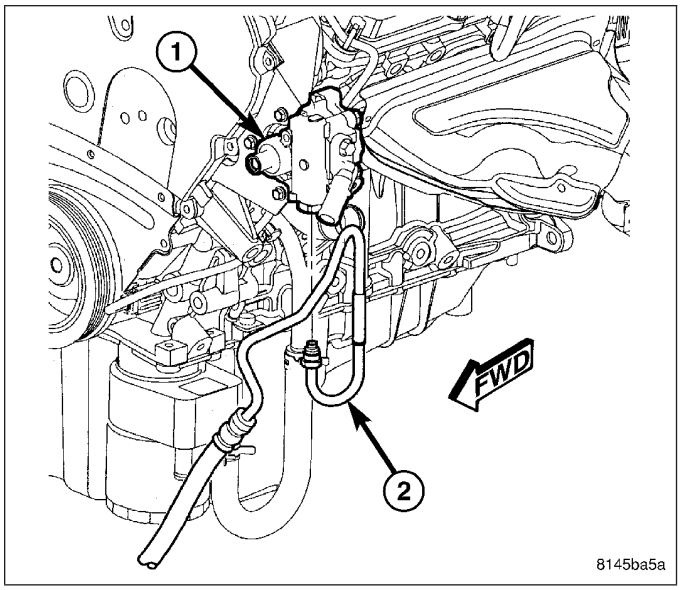

5. 5.7L/6.1L Engines – Unthread tube nut, then remove pressure hose (2) from pump (1).

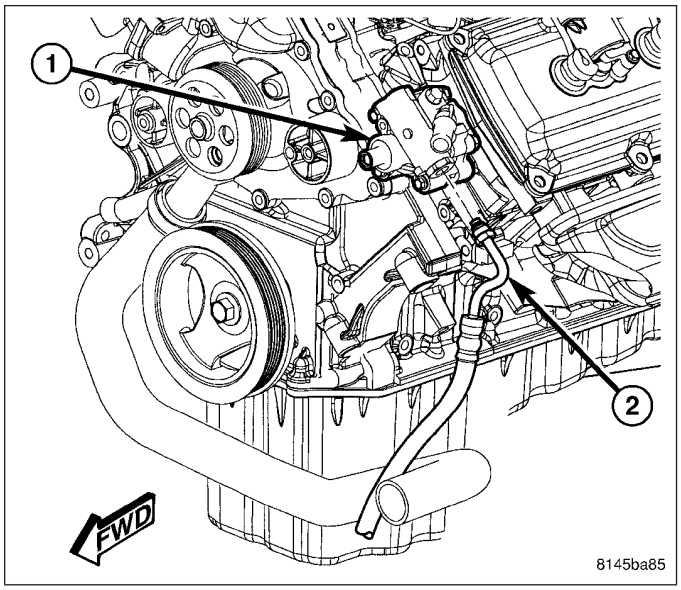

6. 3.0L Diesel Engine – Unthread tube nut, then remove pressure hose (2) from pump (1).

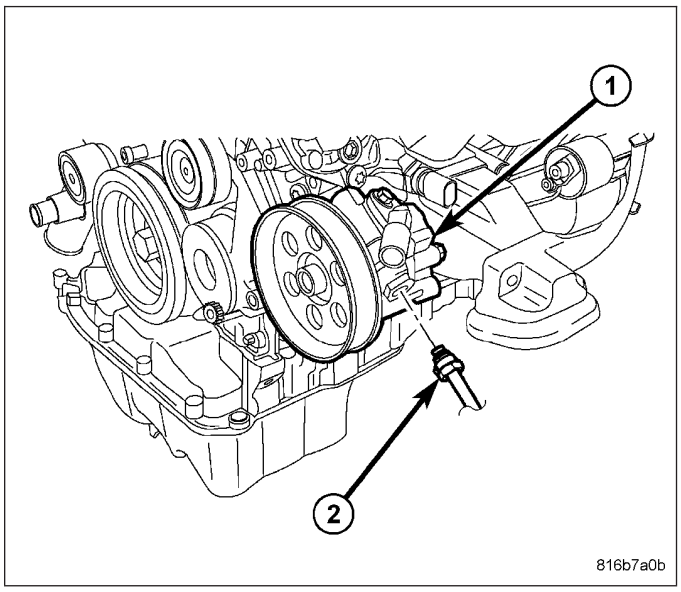

7. Raise and support vehicle. (Refer to LUBRICATION & MAINTENANCE/HOISTING - STANDARD PROCEDURE)
8. Remove belly pan. (Refer to 23 - BODY/EXTERIOR/BELLY PAN - REMOVAL)
9. Remove screw (5) securing pressure hose (1) routing clamp to front of engine cradle (3).
10. Remove screw (4) fastening routing clamps securing pressure (1) and return (2) hoses to right side of engine cradle (3).

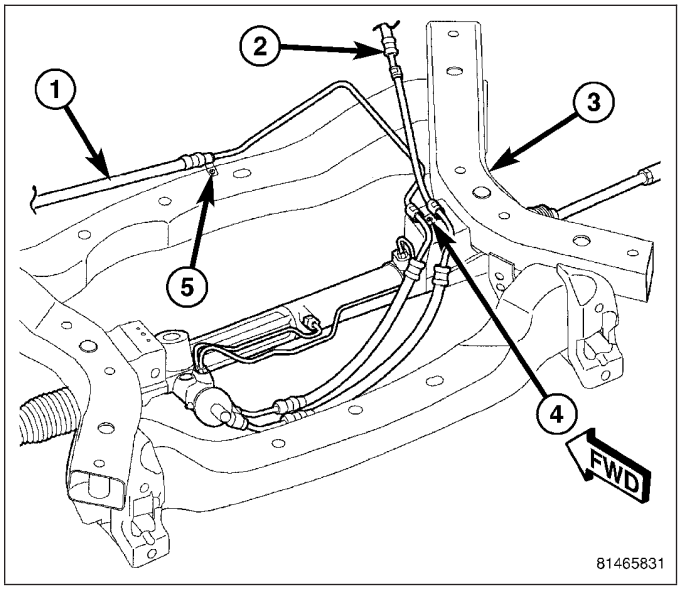

11. Unthread pressure hose tube nut (2) from steering gear (1).
12. Remove pressure hose from vehicle.

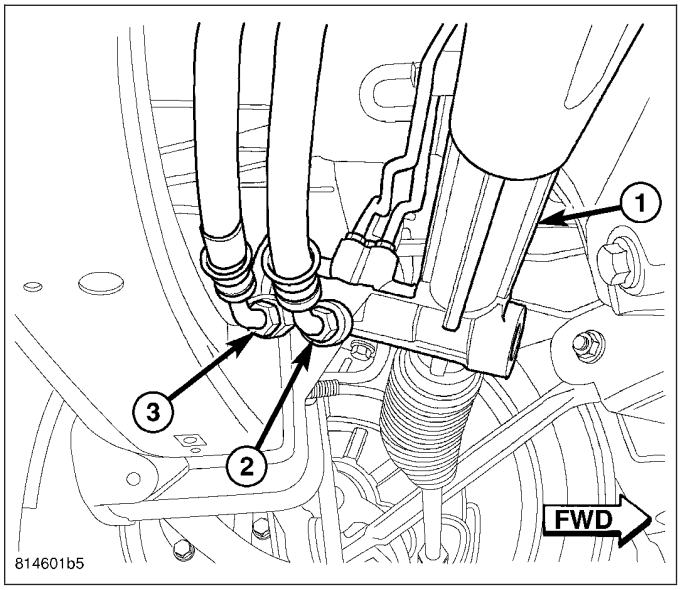

RHD

1. Disconnect and isolate battery negative cable (2) from battery post.
2. Siphon power steering fluid from pump reservoir.
3. Remove air cleaner housing and inlet tube to throttle body. (Refer to 9 - ENGINE/AIR INTAKE SYSTEM/AIR CLEANER HOUSING - REMOVAL)

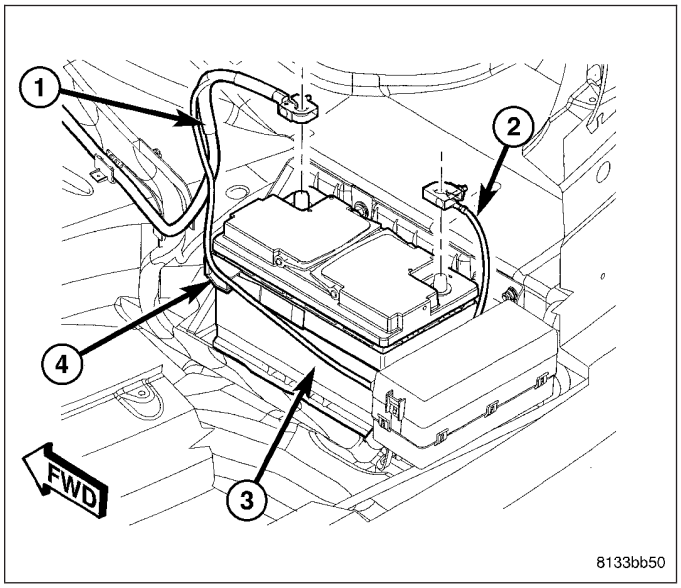

4. 2.7L/3.5L Engines – Unthread tube nut, then remove pressure hose (2) from pump (1).

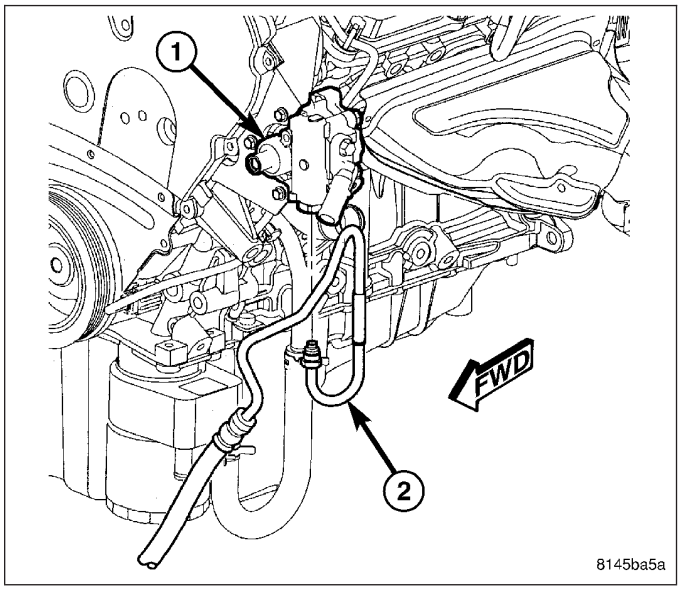

5. 5.7L/6.1L Engines – Unthread tube nut, then remove pressure hose (2) from pump (1).

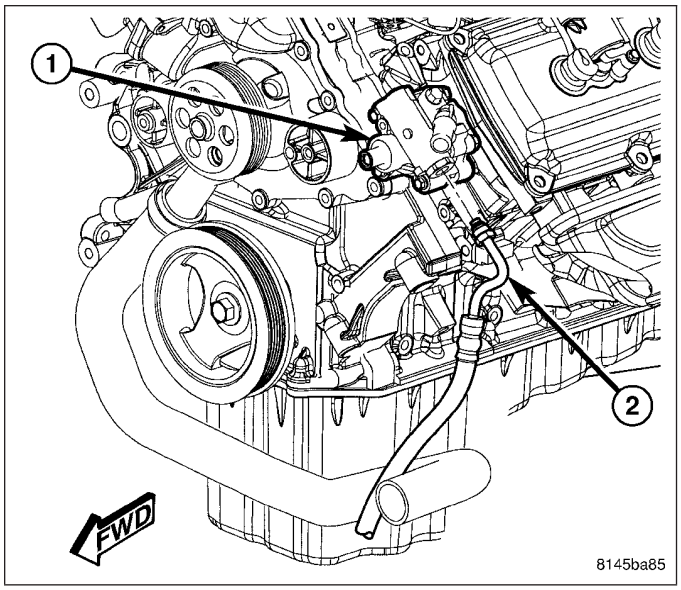

6. 3.0L Diesel Engine – Unthread tube nut, then remove pressure hose (2) from pump (1).

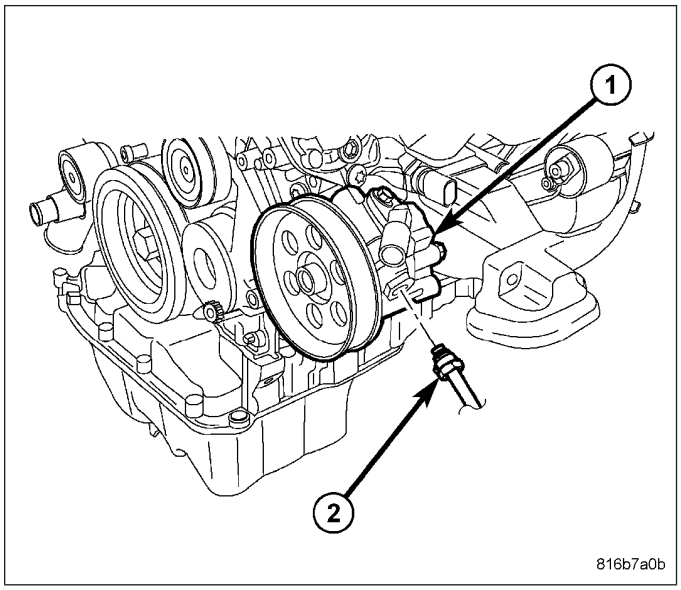

7. Raise and support vehicle. (Refer to LUBRICATION & MAINTENANCE/HOISTING - STANDARD PROCEDURE)
8. Remove belly pan. (Refer to 23 - BODY/EXTERIOR/BELLY PAN - REMOVAL)

9. Remove screws (2) securing pressure hose (1) routing clamp to engine cradle.
10. Remove screw (7) securing pressure hose (1) routing clamp to engine cradle.
11. Unthread pressure hose tube nut (5) from steering gear.
12. Remove pressure hose (1) from vehicle.

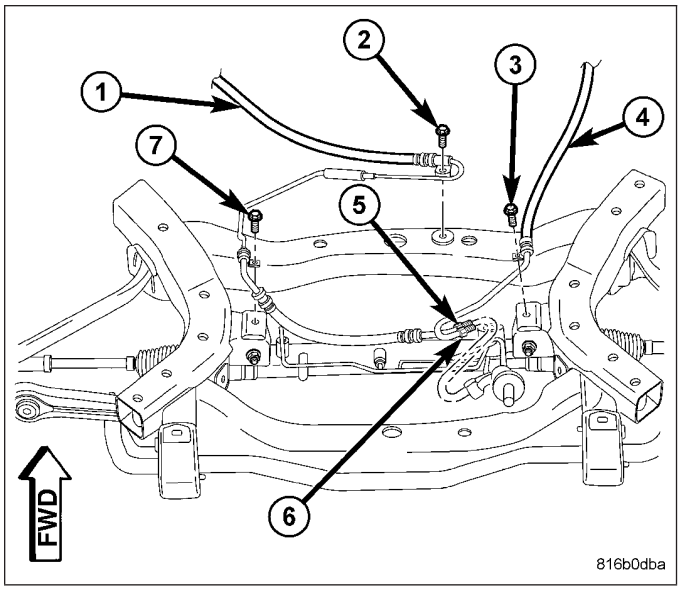

INSTALLATION

AWD

1. Install pressure hose in engine compartment from underneath.

NOTE: Always use a NEW O-ring on the end of the pressure or return hose at the gear.

2. Lubricate NEW O-ring on steering gear end of pressure hose with clean power steering fluid.
3. Insert pressure hose into steering gear (2) port and install tube nut (3). **Do not tighten tube nut at this time.**
4. Lubricate NEW O-ring on steering gear end of return hose with clean power steering fluid.
5. Insert return hose into steering gear (2) port and install tube nut (1). **Do not tighten tube nut at this time.**

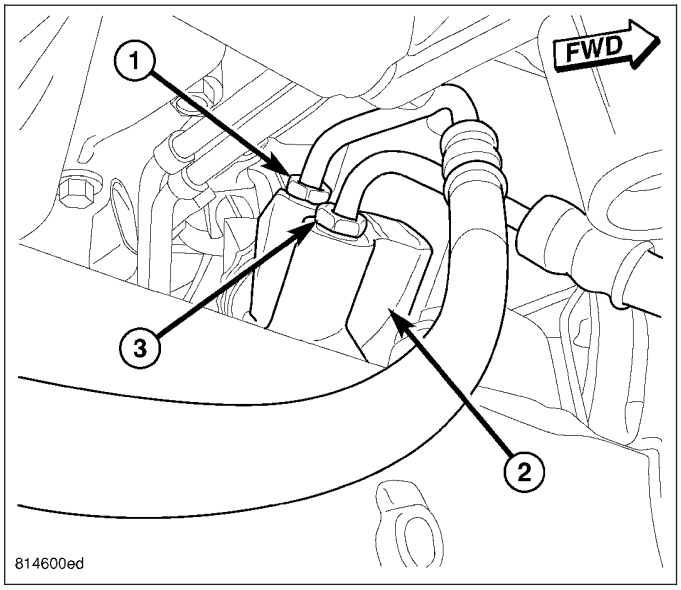

6. Route pressure hose along left side of engine cradle. Install screw through routing clamp and secure hose to left side of engine cradle.
7. Route pressure hose along front of engine cradle. Install screw through routing clamp (1) and secure hose to front of engine cradle (2).

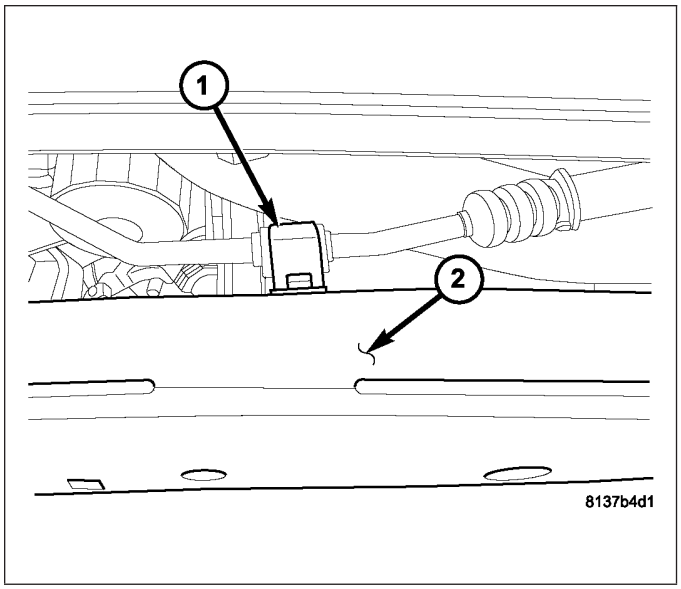

8. Tighten pressure (3) and return (1) hose tube nuts at steering gear (2) to 47 N·m (35 ft. lbs.).
9. Install belly pan. (Refer to 23 - BODY/EXTERIOR/ BELLY PAN - INSTALLATION)
10. Lower vehicle.

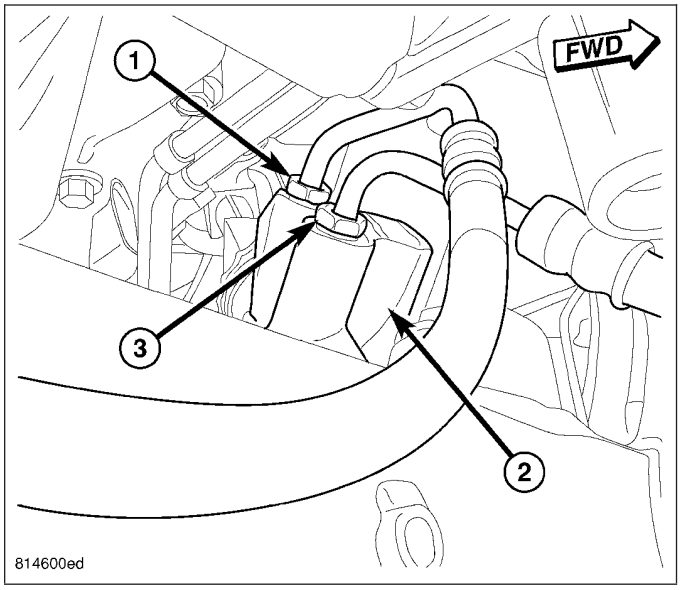

NOTE: Always use a NEW O-ring on the end of the pressure hose.

11. Lubricate NEW O-ring on power steering pump end of pressure hose with clean power steering fluid.

12. 3.5L Engine – Install pressure hose (2) to pump (1). Tighten pressure hose tube nut to 47 N·m (35 ft. lbs.).

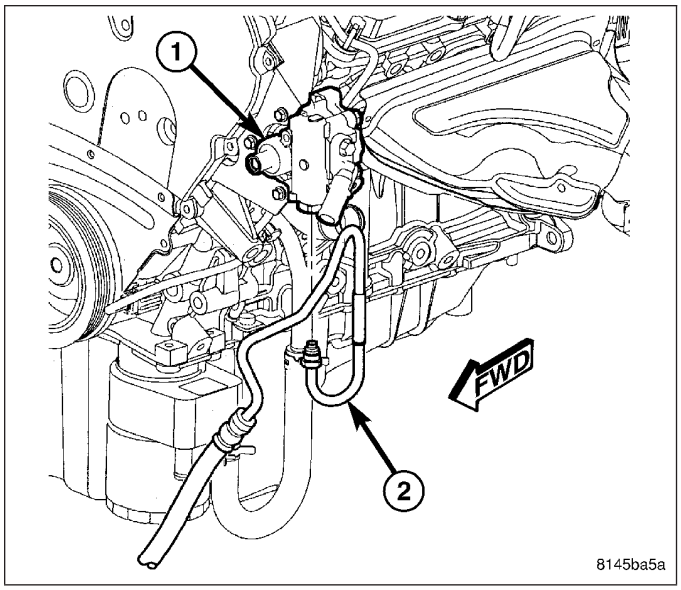

13. 5.7L/6.1L Engine – Install pressure hose (2) to pump (1). Tighten pressure hose tube nut to 47 N·m (35 ft. lbs.).

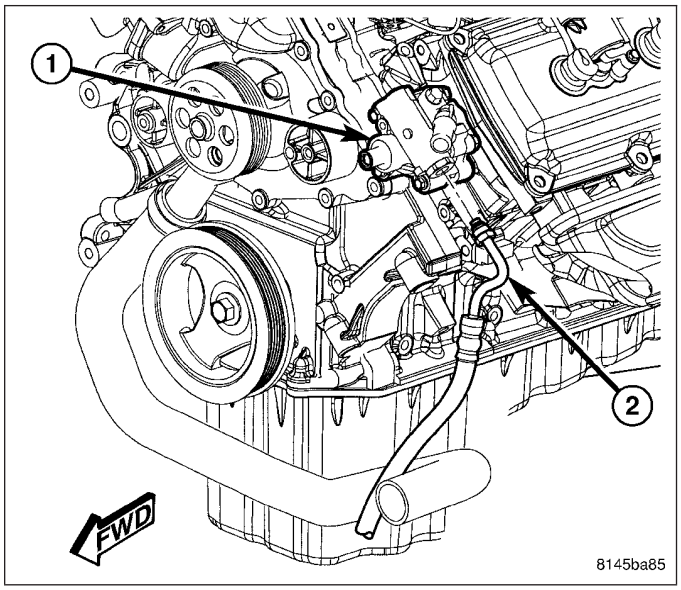

14. Install air cleaner housing and inlet tube. (Refer to 9 - ENGINE/AIR INTAKE SYSTEM/AIR CLEANER HOUSING - INSTALLATION)

15. Connect battery negative cable (2) to battery post. It is important that this is performed properly. (Refer to 8 - ELECTRICAL/BATTERY SYSTEM - STANDARD PROCEDURE)
16. Fill pump reservoir with fluid and perform pump initial operation procedure. (Refer to 19 - STEERING/PUMP - STANDARD PROCEDURE)

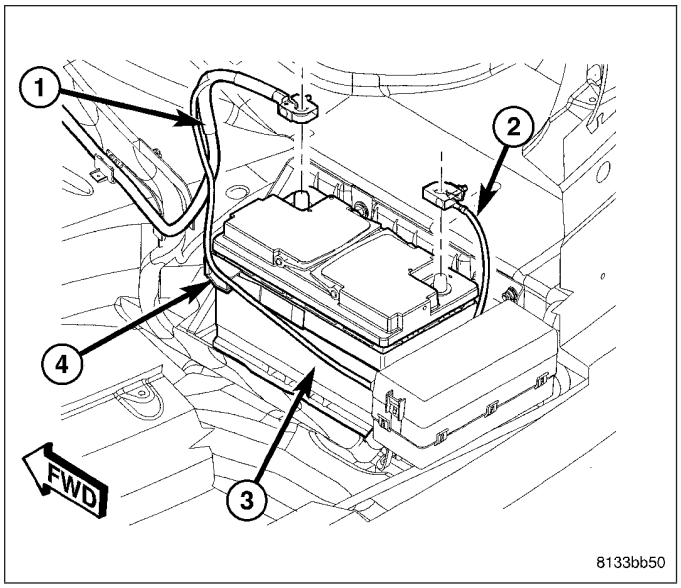

RWD

1. Install pressure hose in engine compartment from underneath.

NOTE: Always use a NEW O-ring on the end of the pressure hose.

2. Lubricate NEW O-ring on steering gear end of pressure hose with clean power steering fluid.
3. Install pressure hose (2) to steering gear (1). **Do not tighten tube nut at this time.**

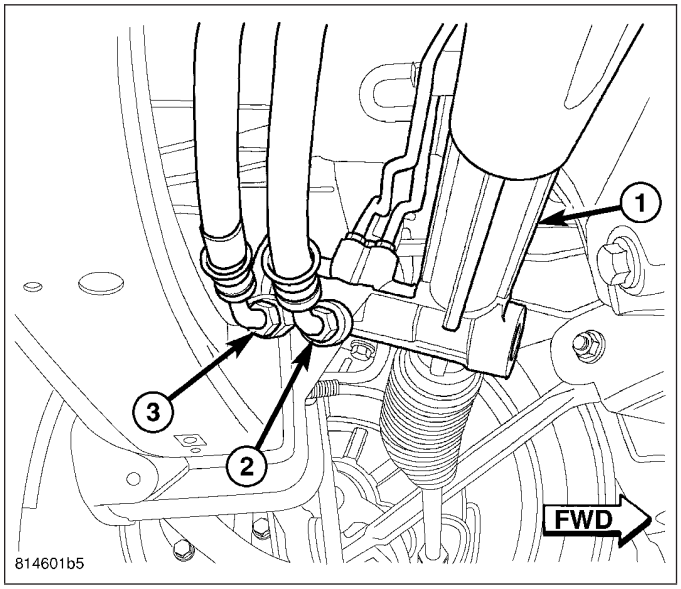

4. Route pressure hose along right side of engine cradle. Position pressure hose (1) routing clamp over return hose (2) routing clamp, then install screw (4) securing hoses to right side of engine cradle (3).
5. Route pressure hose along front of engine cradle. Install screw (5) through routing clamp securing hose to front of engine cradle (3).

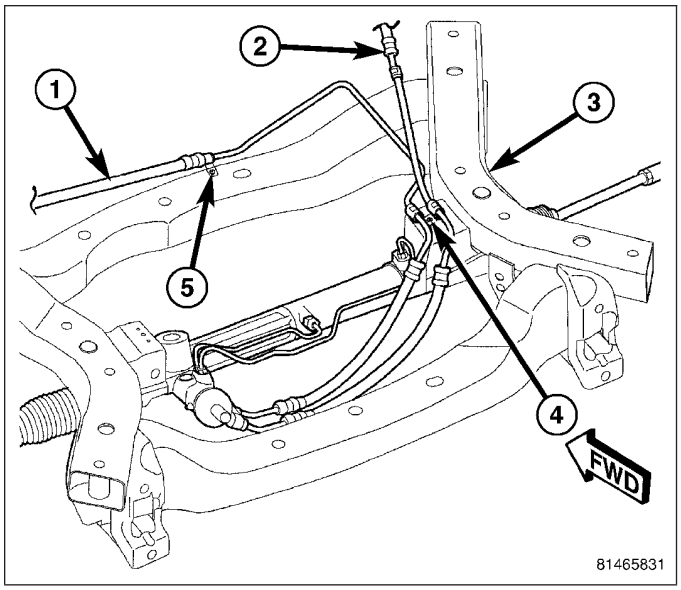

6. Tighten pressure hose tube nut at steering gear to 47 N·m (35 ft. lbs.).
7. Install belly pan. (Refer to 23 - BODY/EXTERIOR/ BELLY PAN - INSTALLATION)
8. Lower vehicle.

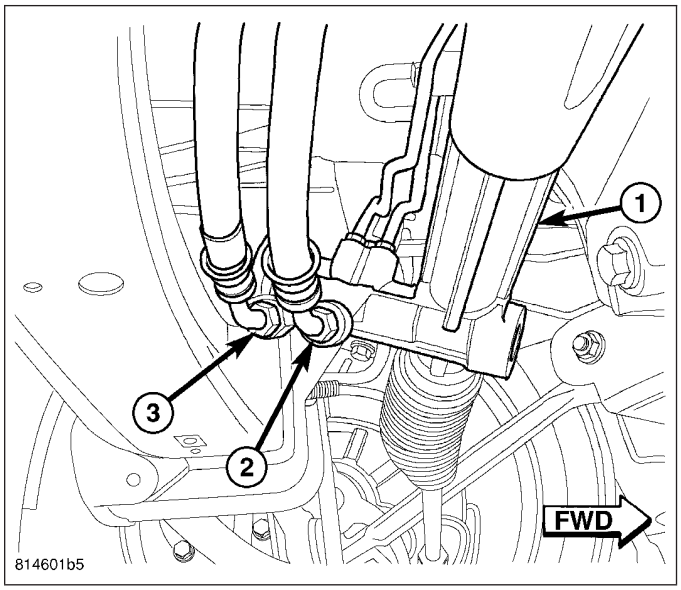

NOTE: Always use a NEW O-ring on the end of the pressure hose.

9. Lubricate NEW O-ring on power steering pump end of pressure hose with clean power steering fluid.

10. 2.7L/3.5L Engines – Install pressure hose (2) to pump (1). Tighten pressure hose tube nut to 47 N·m (35 ft. lbs.).

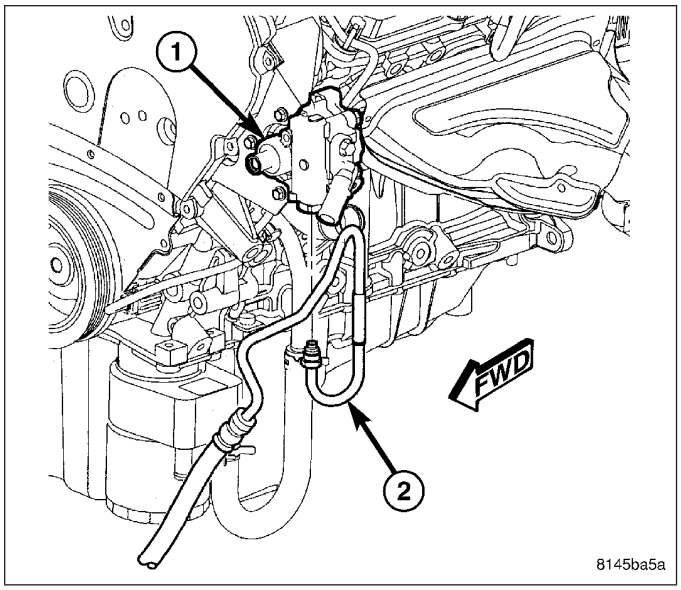

11. 5.7L/6.1L Engines – Install pressure hose (2) to pump (1). Tighten pressure hose tube nut to 47 N·m (35 ft. lbs.).

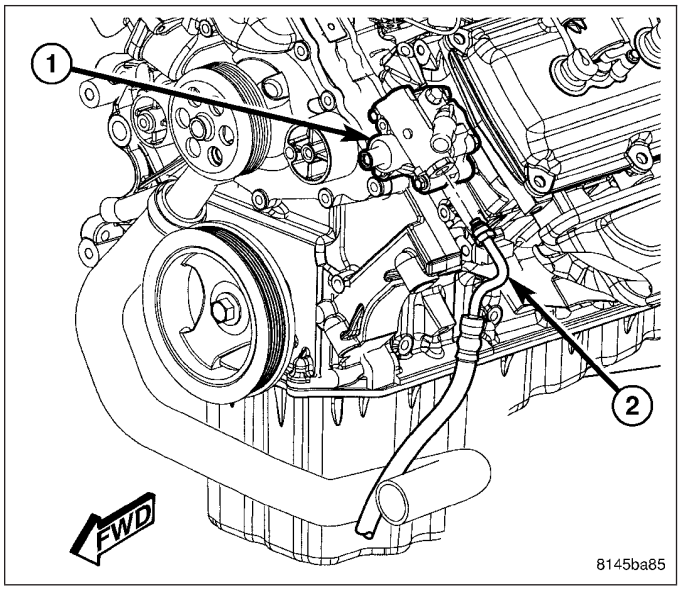

12. 3.0L Diesel Engine – Install pressure hose (2) to pump (1). Tighten pressure hose tube nut to 47 N·m (35 ft. lbs.).

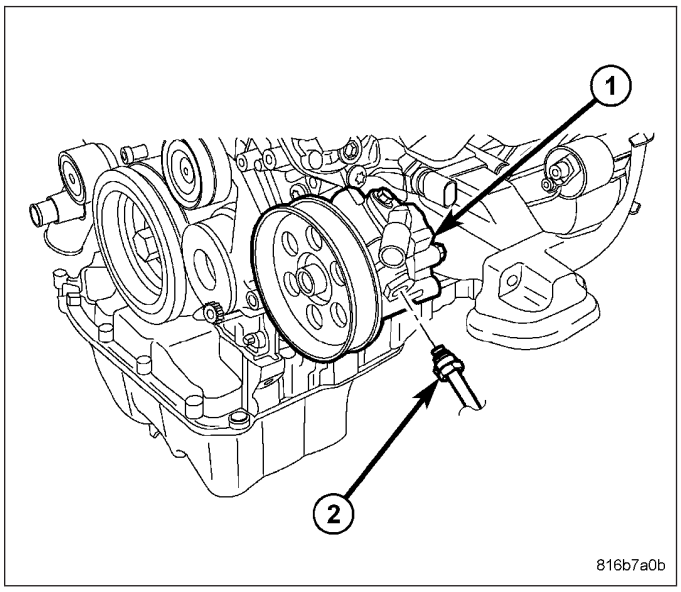

13. Install air cleaner housing and inlet tube. (Refer to 9 - ENGINE/AIR INTAKE SYSTEM/AIR CLEANER HOUSING - INSTALLATION)
14. Connect battery negative cable (2) to battery post. It is important that this is performed properly. (Refer to 8 - ELECTRICAL/BATTERY SYSTEM - STANDARD PROCEDURE)
15. Fill pump reservoir with fluid and perform pump initial operation procedure. (Refer to 19 - STEERING/PUMP - STANDARD PROCEDURE)

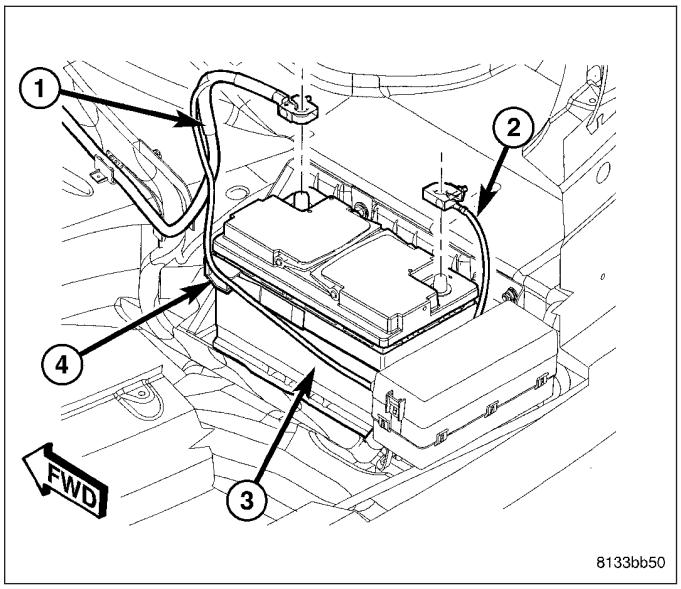

RHD

1. Install pressure hose in engine compartment from underneath.

NOTE: Always use a NEW O-ring on the end of the pressure hose.

2. Lubricate NEW O-ring on steering gear end of pressure hose with clean power steering fluid.
3. Install gear end of pressure hose (5) into steering gear port. **Do not tighten tube nut at this time.**
4. Route pressure hose along left side of engine cradle. Position pressure hose routing clamp, then install screw (7) through clamp, securing hose to left side of engine cradle.
5. Route pressure hose along front of engine cradle. Install screw (2) through routing clamp securing hose to front of engine cradle.
6. Tighten pressure hose tube nut (5) at steering gear to 47 N·m (35 ft. lbs.).

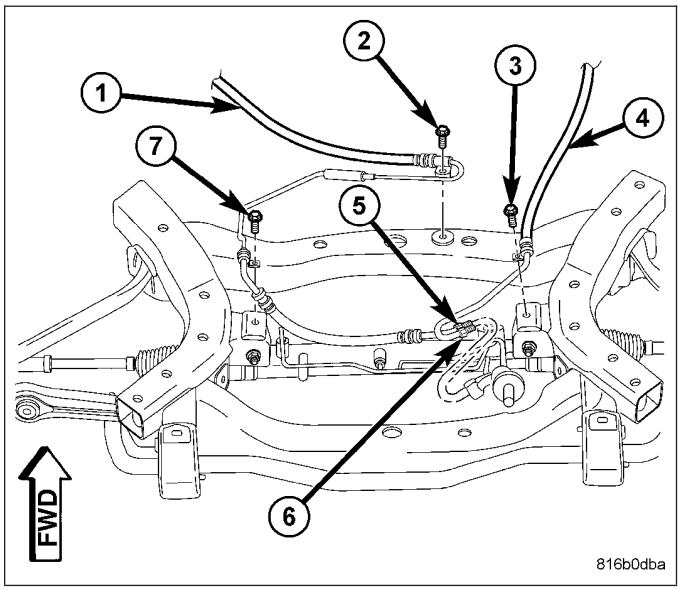

7. Install belly pan. (Refer to 23 - BODY/EXTERIOR/BELLY PAN - INSTALLATION)
8. Lower vehicle.

NOTE: Always use a NEW O-ring on the end of the pressure hose.

9. Lubricate NEW O-ring on power steering pump end of pressure hose with clean power steering fluid.

10. 2.7L/3.5L Engines – Install pressure hose (2) to pump (1). Tighten pressure hose tube nut to 47 N·m (35 ft. lbs.).

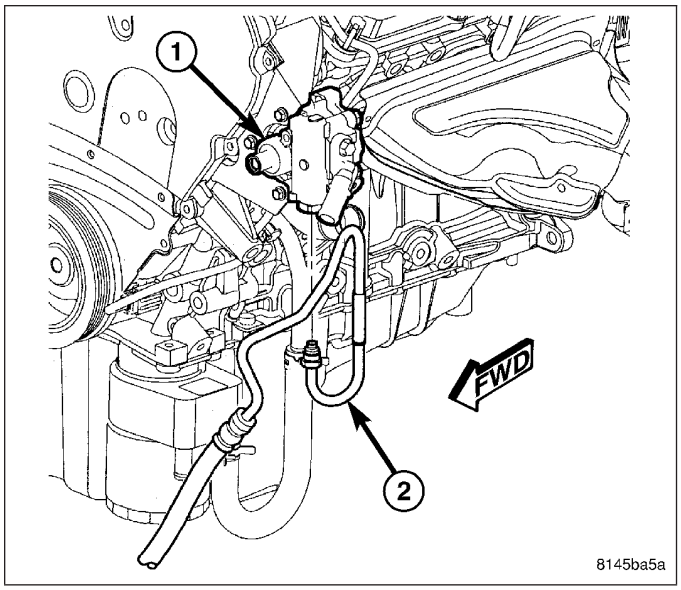

11. 5.7L/6.1L Engines – Install pressure hose (2) to pump (1). Tighten pressure hose tube nut to 47 N·m (35 ft. lbs.).

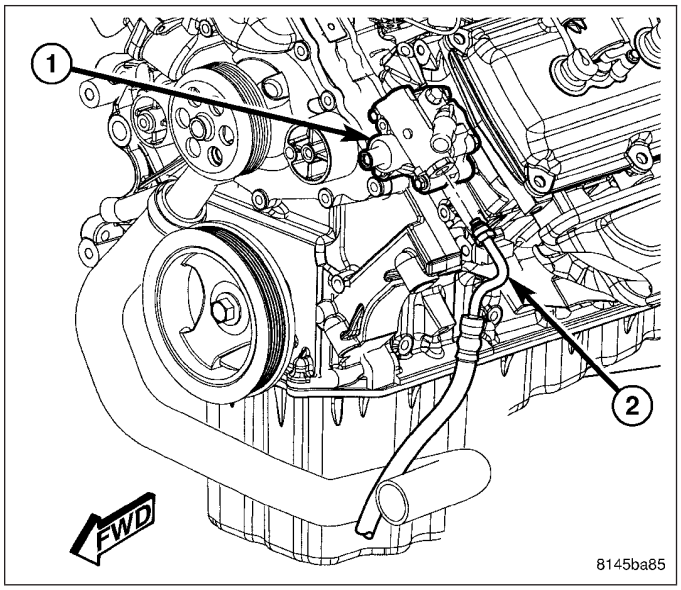

12. 3.0L Diesel Engine – Install pressure hose (2) to pump (1). Tighten pressure hose tube nut to 47 N·m (35 ft. lbs.).

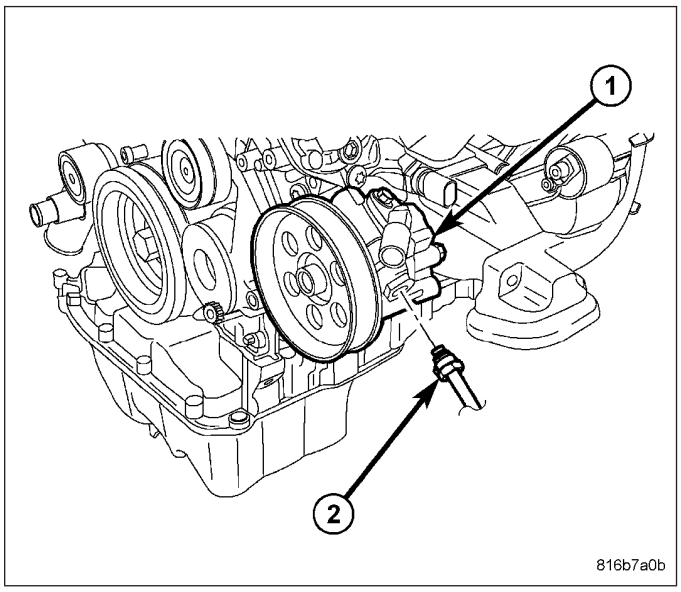

13. Install air cleaner housing and inlet tube. (Refer to 9 - ENGINE/AIR INTAKE SYSTEM/AIR CLEANER HOUSING - INSTALLATION)
14. Connect battery negative cable (2) to battery post. It is important that this is performed properly. (Refer to 8 - ELECTRICAL/BATTERY SYSTEM - STANDARD PROCEDURE)
15. Fill pump reservoir with fluid and perform pump initial operation procedure. (Refer to 19 - STEERING/PUMP - STANDARD PROCEDURE)

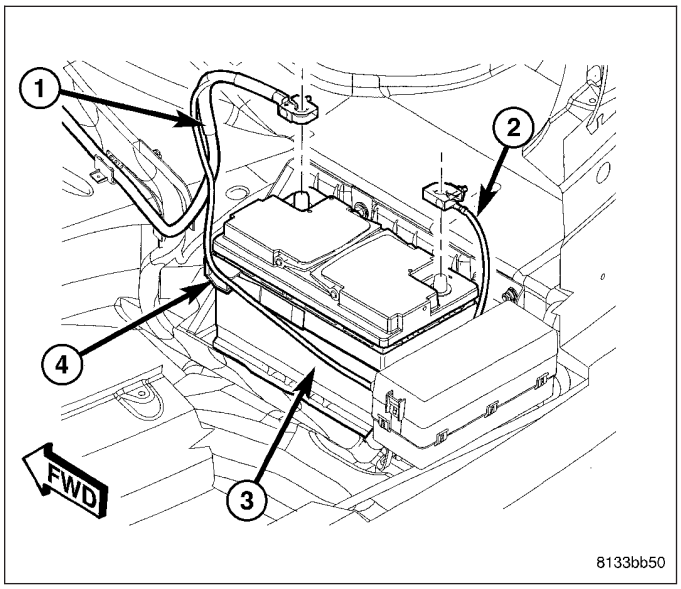

HOSE - RETURN

REMOVAL

COOLER TO RESERVOIR

1. Disconnect and isolate battery negative cable (2) from battery post.
2. Siphon power steering fluid from pump reservoir.
3. Remove air cleaner housing and inlet tube to throttle body. (Refer to 9 - ENGINE/AIR INTAKE SYSTEM/AIR CLEANER HOUSING - REMOVAL)

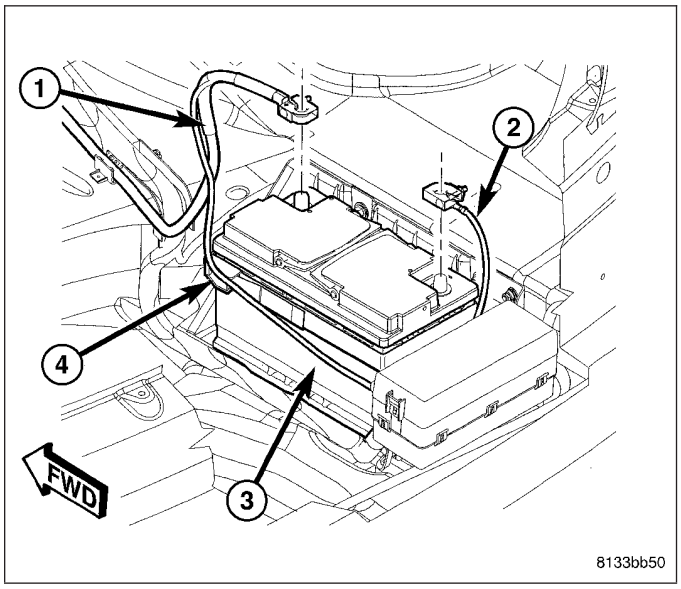

4. Remove hose clamp, then return hose (1) at reservoir (2).
5. Remove upper radiator closer panels.

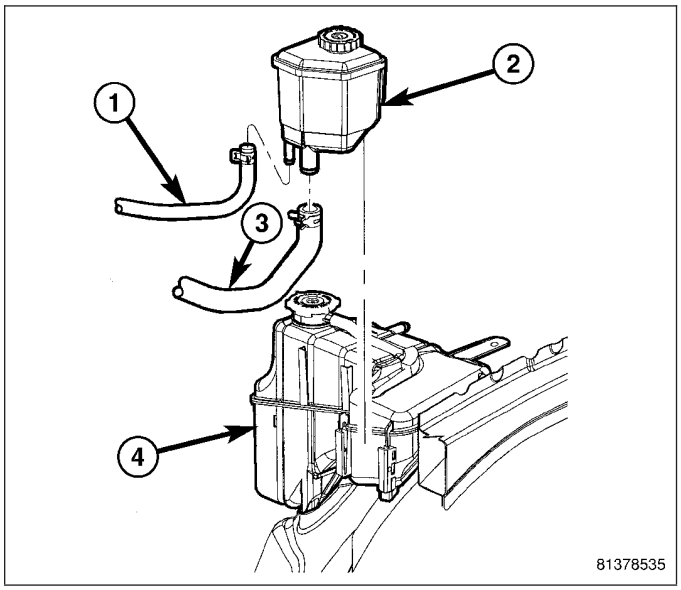

6. Remove hose clamp, then cooler end of return hose (1) at cooler (2).

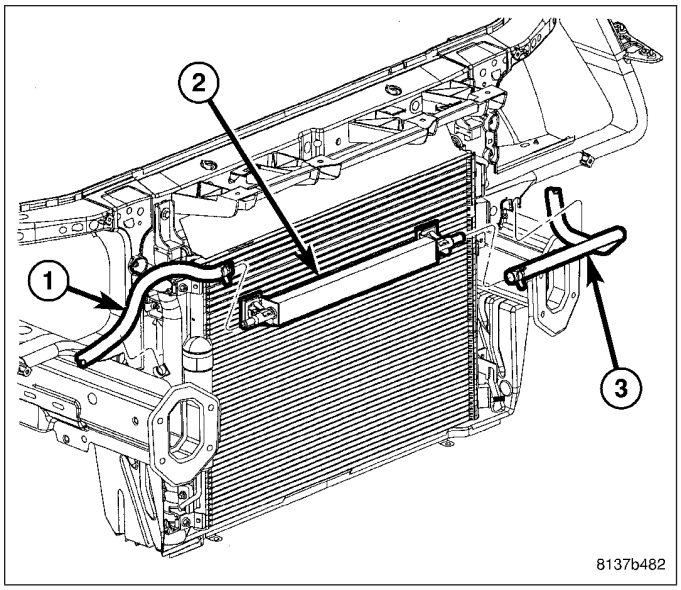

7. Remove return hose from routing clip (4) on headlamp mounting crossmember.
8. Pull cooler end of return hose into engine compartment and remove hose from vehicle.

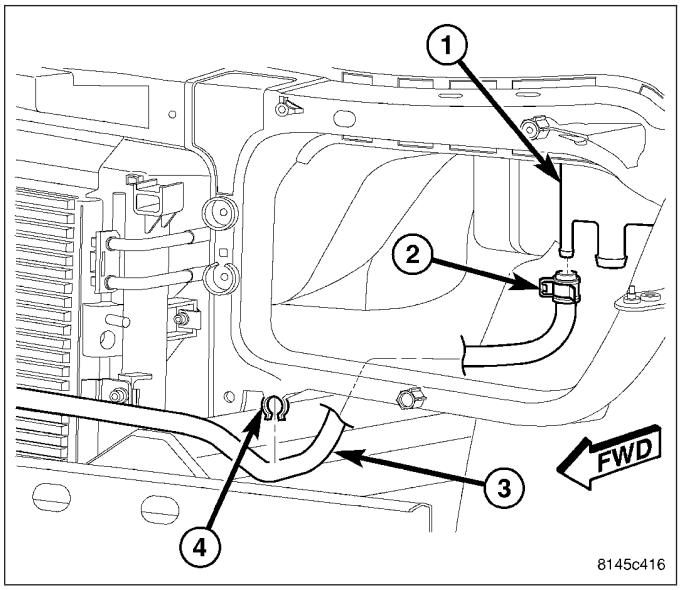

GEAR TO COOLER - AWD

1. Disconnect and isolate battery negative cable (2) from battery post.
2. Siphon power steering fluid from pump reservoir.
3. Raise and support vehicle. (Refer to LUBRICATION & MAINTENANCE/HOISTING - STANDARD PROCEDURE)
4. Remove belly pan. (Refer to 23 - BODY/EXTERIOR/BELLY PAN - REMOVAL)

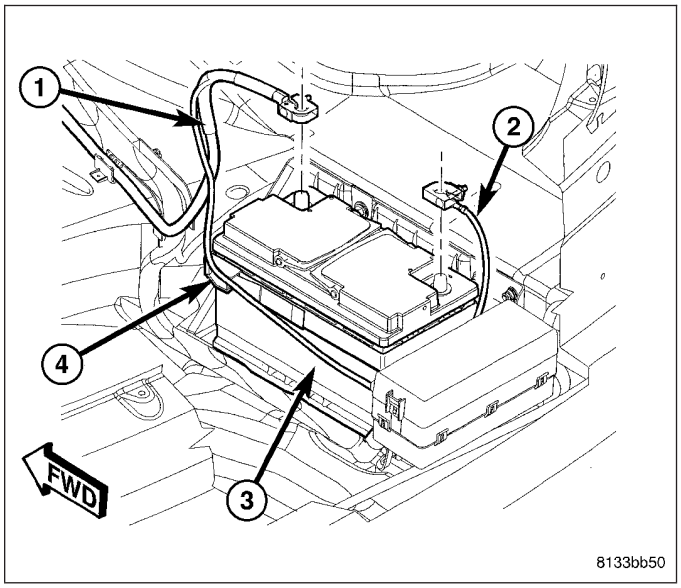

5. Remove hose clamp, then return hose (1) at cooler (2).

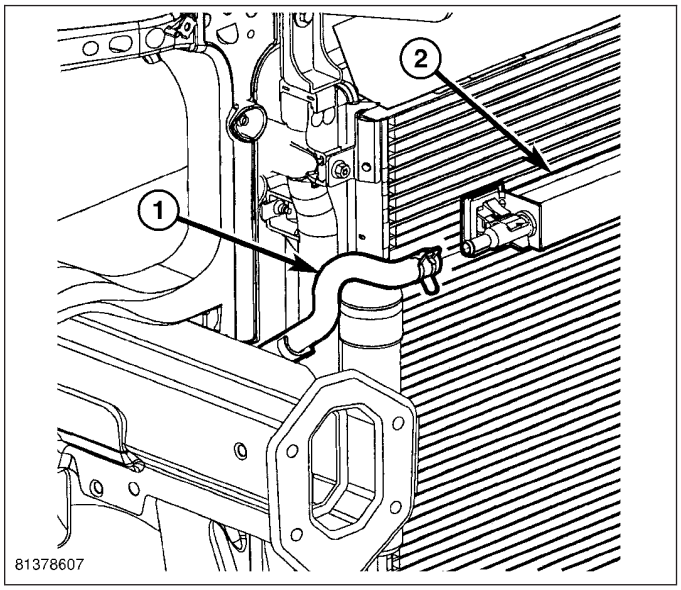

6. Remove return hose (1) from routing clip (2) on cooling module.

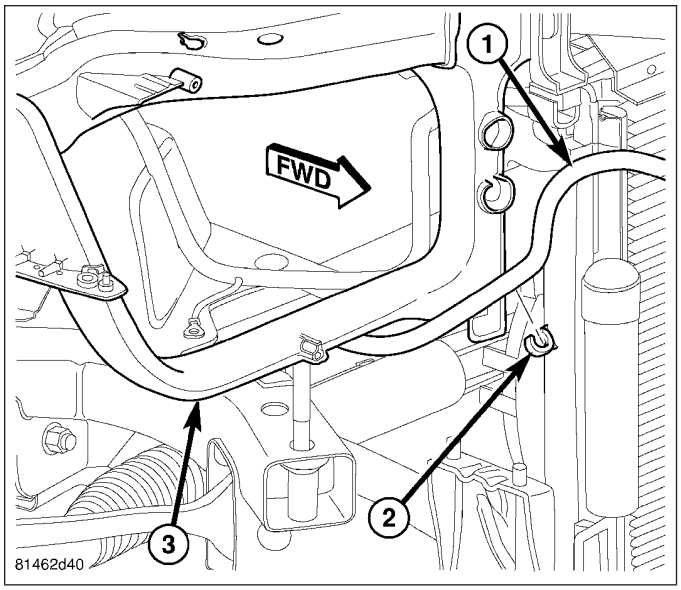

7. Unthread return hose tube nut (1) from steering gear (2).

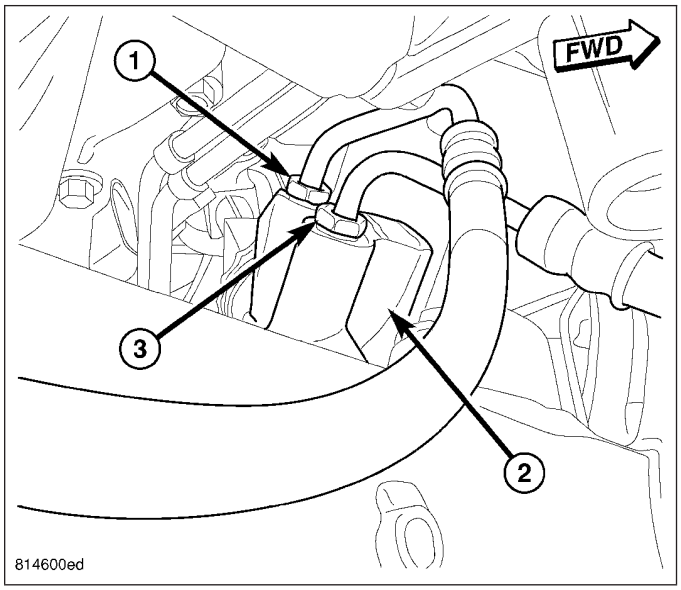

8. Remove screws (1) fastening routing clamps securing return hose (3) to right side of engine cradle (2).
9. Remove return hose from vehicle.

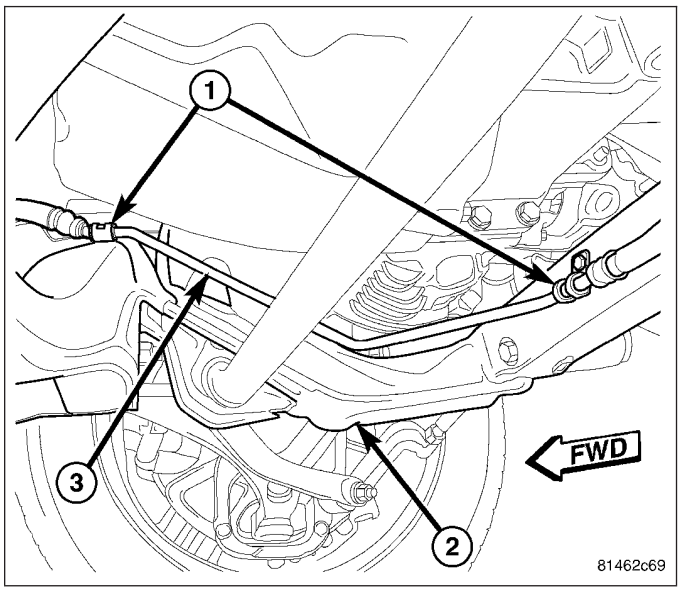

GEAR TO COOLER - RWD

1. Disconnect and isolate battery negative cable (2) from battery post.
2. Siphon power steering fluid from pump reservoir.
3. Raise and support vehicle. (Refer to LUBRICATION & MAINTENANCE/HOISTING - STANDARD PROCEDURE)
4. Remove belly pan. (Refer to 23 - BODY/EXTERIOR/BELLY PAN - REMOVAL)

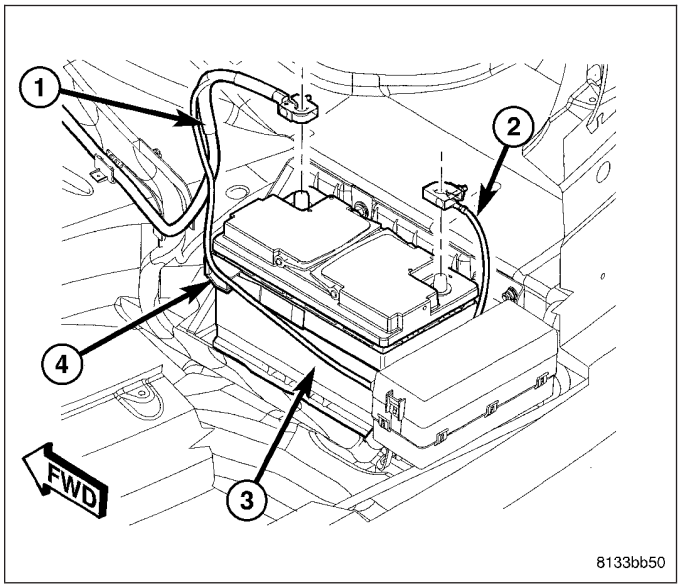

5. Remove hose clamp, then return hose (1) at cooler (2).

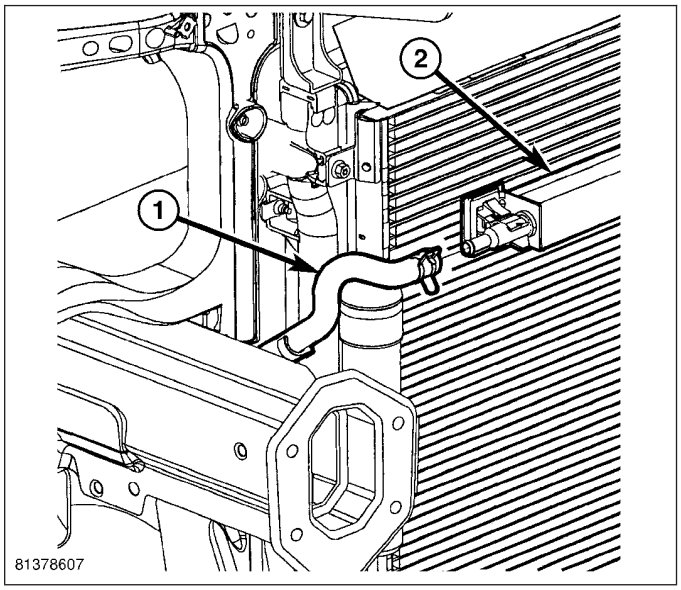

6. Remove screw (4) fastening routing clamps securing pressure (1) and return (2) hoses to right side of engine cradle (3).

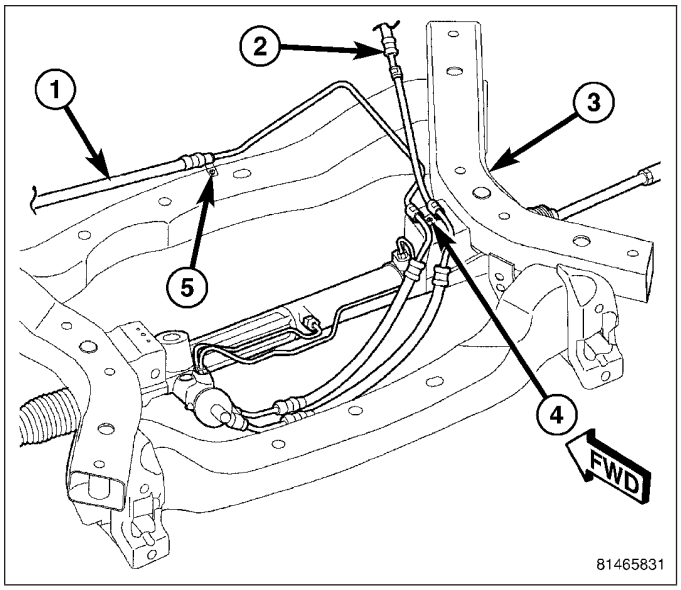

7. Unthread return hose tube nut (3) from steering gear (1).

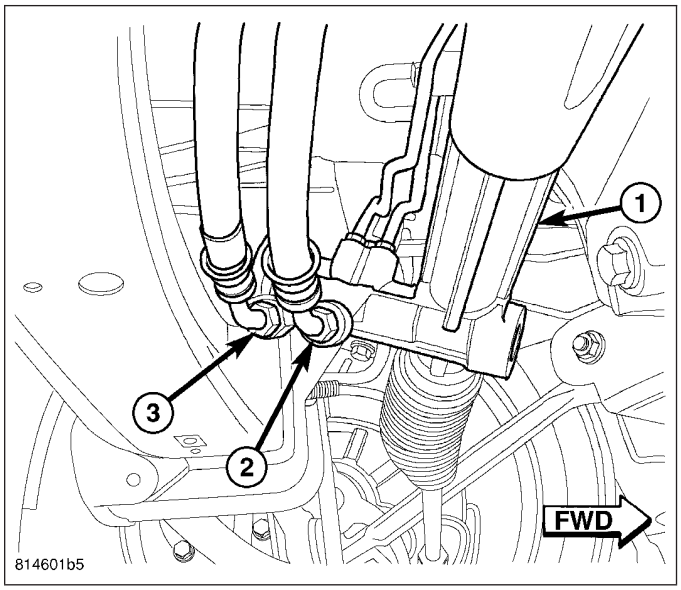

8. Remove return hose (1) from routing clip (2) on cooling module.
9. Remove return hose from vehicle.

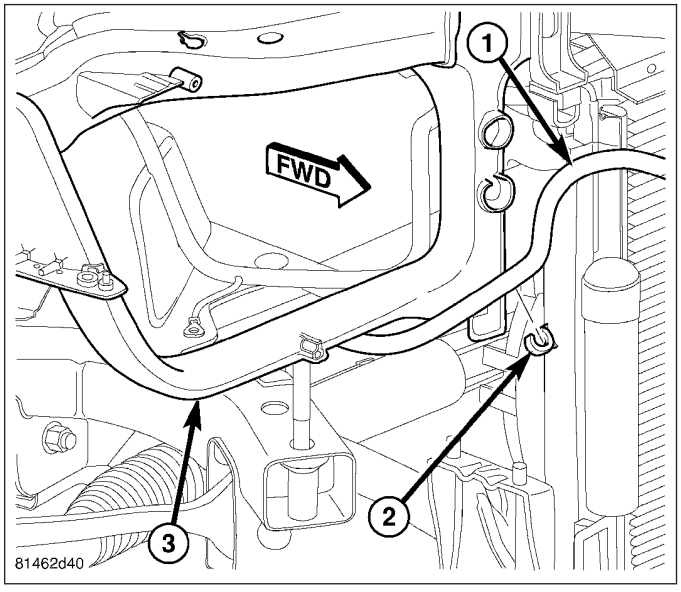

GEAR TO COOLER - RHD

1. Disconnect and isolate battery negative cable (2) from battery post.
2. Siphon power steering fluid from pump reservoir.
3. Raise and support vehicle. (Refer to LUBRICATION & MAINTENANCE/HOISTING - STANDARD PROCEDURE)
4. Remove belly pan. (Refer to 23 - BODY/EXTERIOR/BELLY PAN - REMOVAL)

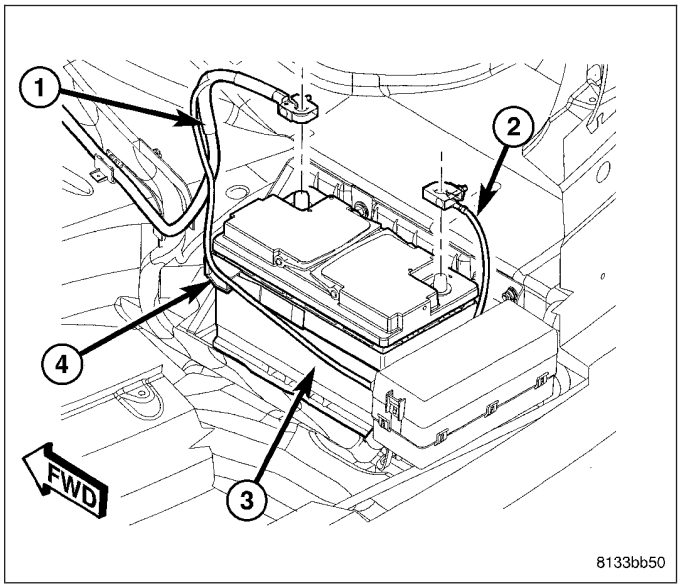

5. Remove hose clamp, then return hose (1) at cooler (2).

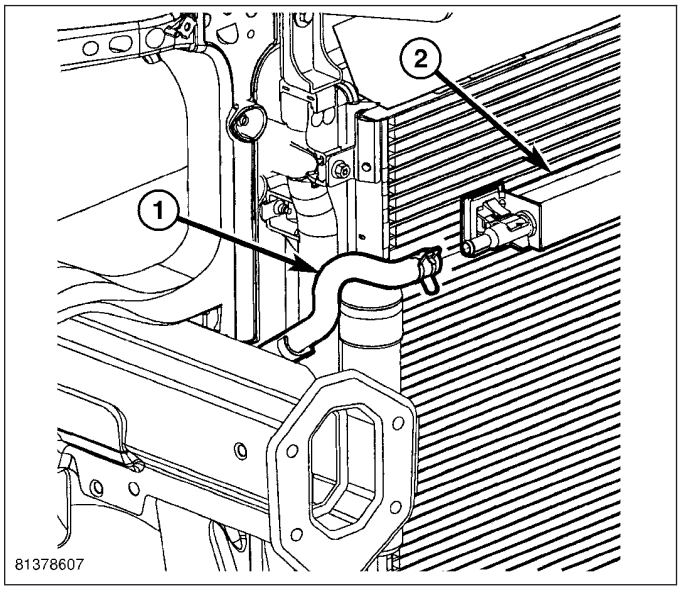

6. Remove screw (3) fastening return hose (4) routing clamp to right side of engine cradle.
7. Unthread return hose tube nut (6) from steering gear.

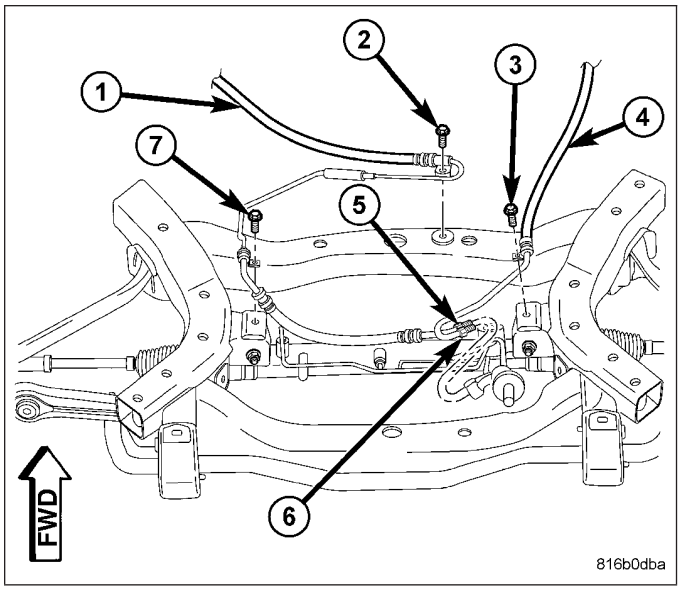

8. Remove return hose (1) from routing clip (2) on cooling module.
9. Remove return hose from vehicle.

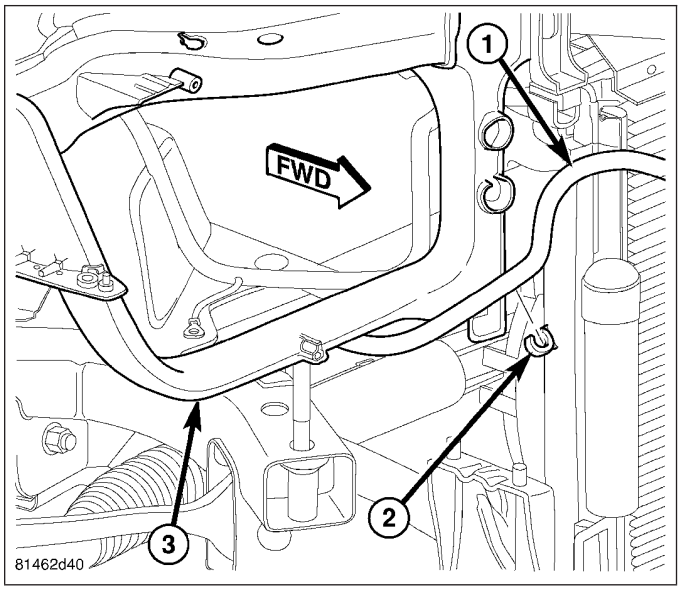

INSTALLATION

COOLER TO RESERVOIR

1. Install cooler end of return hose (3) from engine compartment side, under headlamp mounting crossmember as shown.
2. Place hose in routing clip (4) on headlamp mounting crossmember.

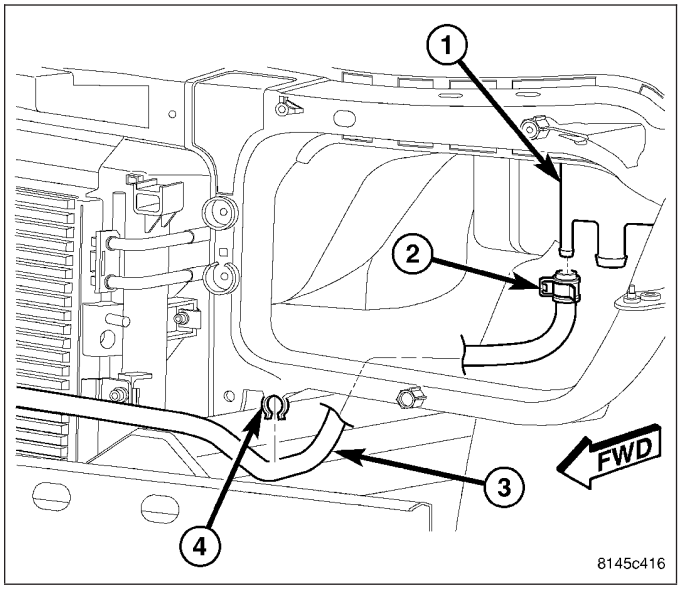

NOTE: If a lengthwise paint stripe appears on the return hose (3) near the end, position that paint stripe at the top (12 O'clock position) when installed on the cooler. This positioning must be done to ensure proper hose routing.

3. Slide return hose (3) onto end of cooler (1). Install clamp securing hose in place.

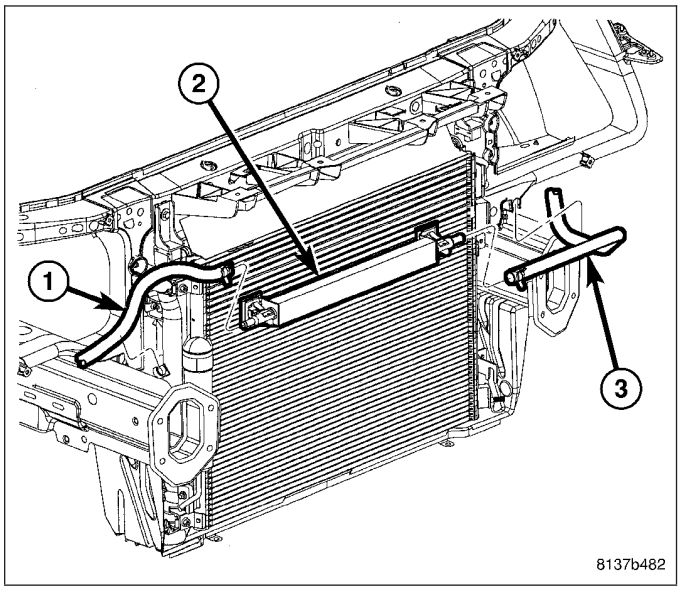

4. Slide return hose (1) onto reservoir (2). Install clamp securing hose in place.
5. Install upper radiator closure panels.
6. Install air cleaner housing and inlet tube. (Refer to 9 - ENGINE/AIR INTAKE SYSTEM/AIR CLEANER HOUSING - INSTALLATION)

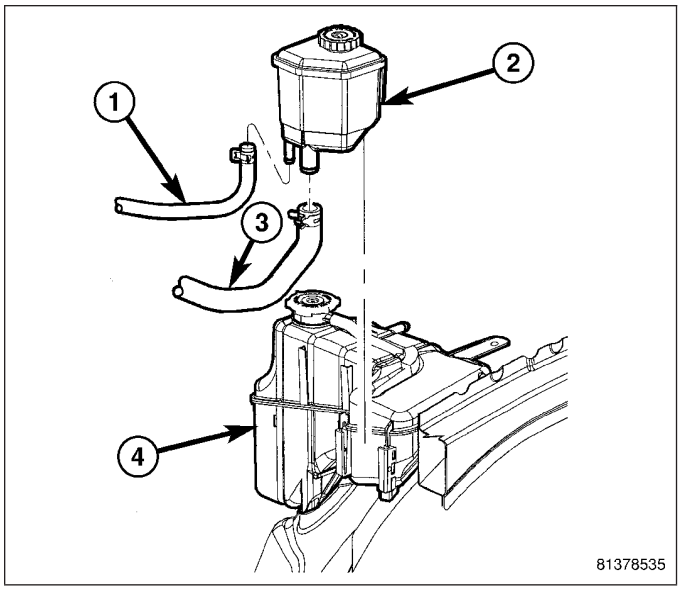

7. Connect battery negative cable (2) to battery post. It is important that this is performed properly. (Refer to 8 - ELECTRICAL/BATTERY SYSTEM - STANDARD PROCEDURE)
8. Fill pump reservoir with fluid and perform pump initial operation procedure. (Refer to 19 - STEERING/ PUMP - STANDARD PROCEDURE)

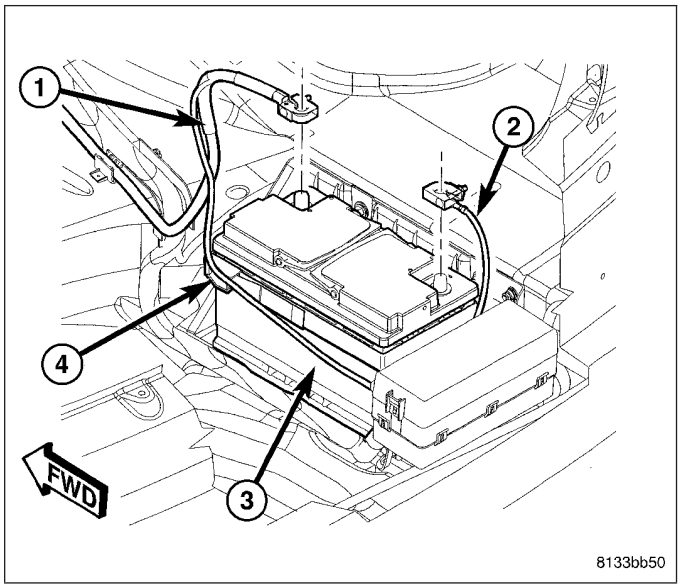

GEAR TO COOLER - AWD

1. Route cooler end of return hose (3) over stabilizer bar from rear using the reverse of how it was removed.

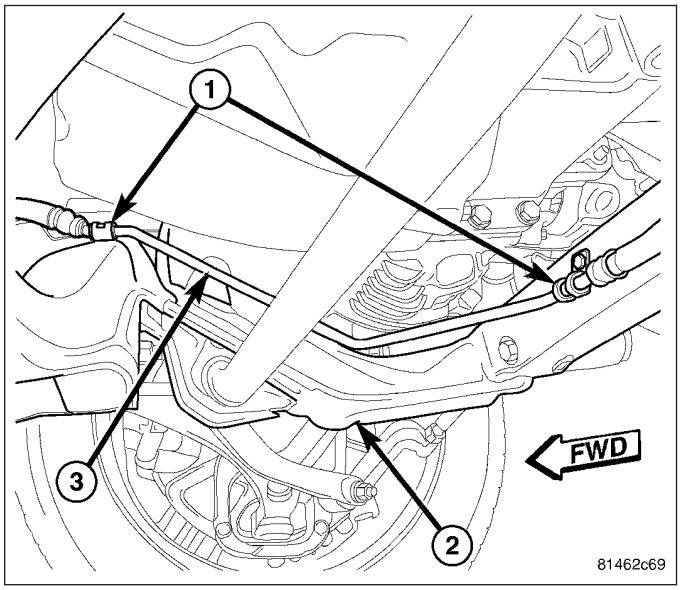

NOTE: Always use a NEW O-ring on the end of the return hose at the steering gear.

2. Lubricate NEW O-ring on steering gear end of return hose with clean power steering fluid.
3. Lift gear end of return hose and insert into return port on steering gear (2). Install return hose tube nut (1). **Do not tighten tube nut at this time.**

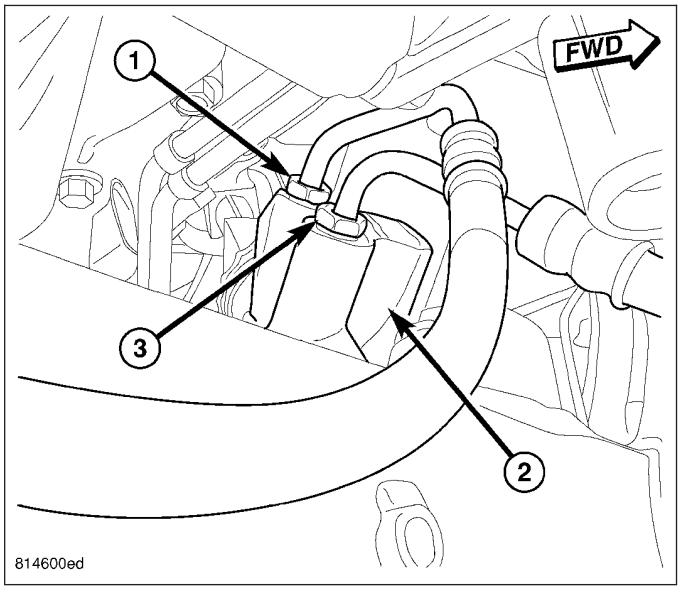

4. Position return hose routing clamps on right side of engine cradle (2) and install screws (1) securing hose (3) in place.

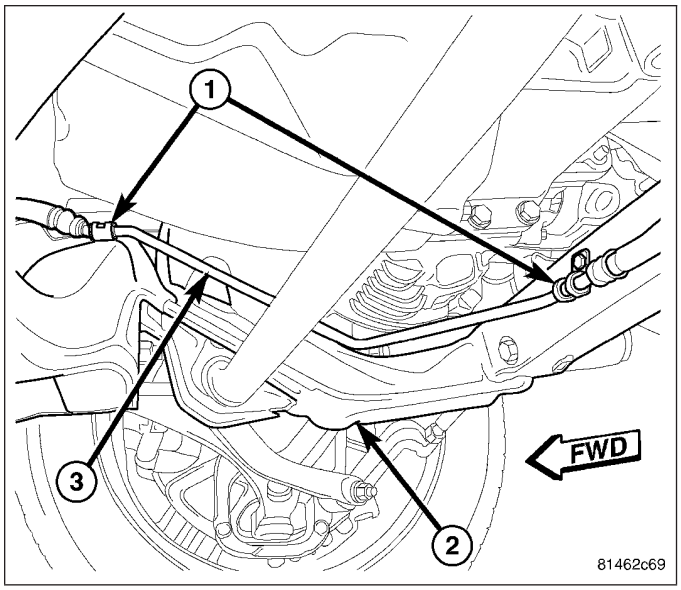

5. Tighten return hose tube nut (1) at steering gear to 47 N·m (35 ft. lbs.).

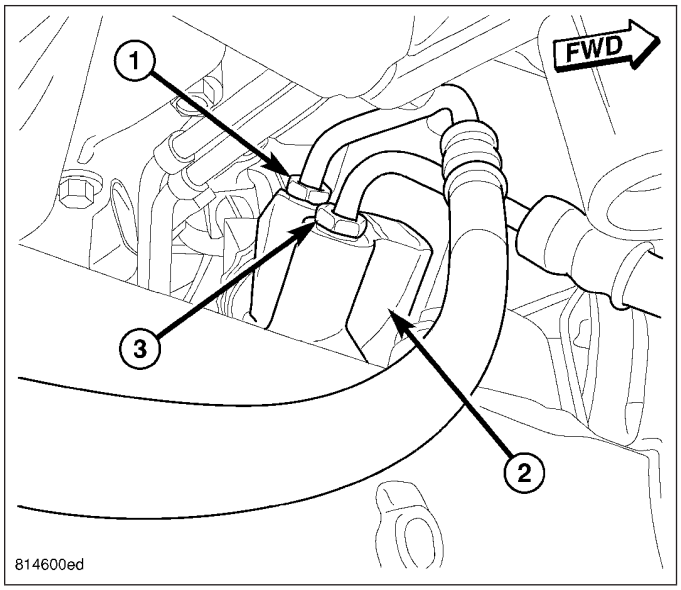

6. Route cooler end of return hose (1) under headlamp mounting crossmember (3) as shown.
7. Place hose in routing clip (2) on cooling module.

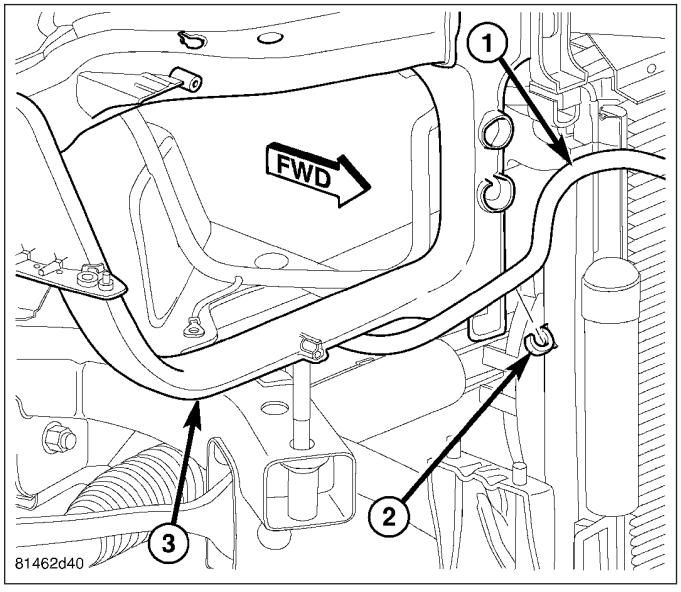

8. Slide return hose (1) onto end of cooler (2). Install clamp securing hose in place.
9. Install belly pan. (Refer to 23 - BODY/EXTERIOR/ BELLY PAN - INSTALLATION)
10. Lower vehicle.

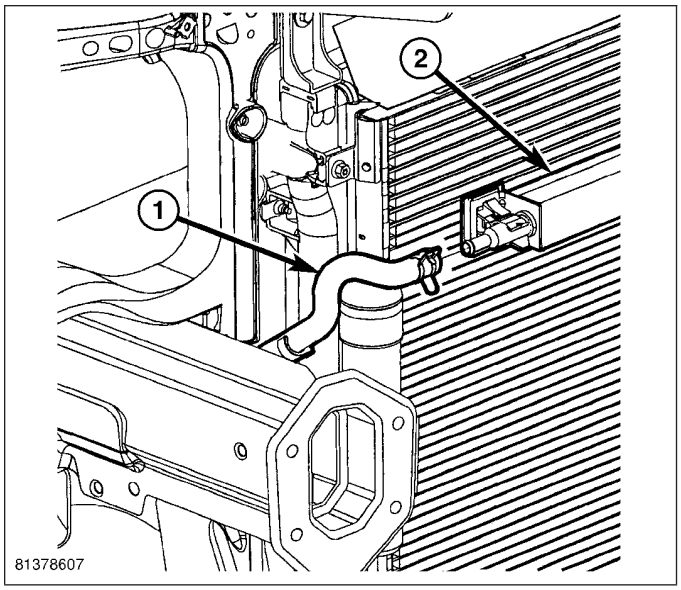

11. Connect battery negative cable (2) to battery post. It is important that this is performed properly. (Refer to 8 - ELECTRICAL/BATTERY SYSTEM - STANDARD PROCEDURE)
12. Fill pump reservoir with fluid and perform pump initial operation procedure. (Refer to 19 - STEERING/PUMP - STANDARD PROCEDURE)

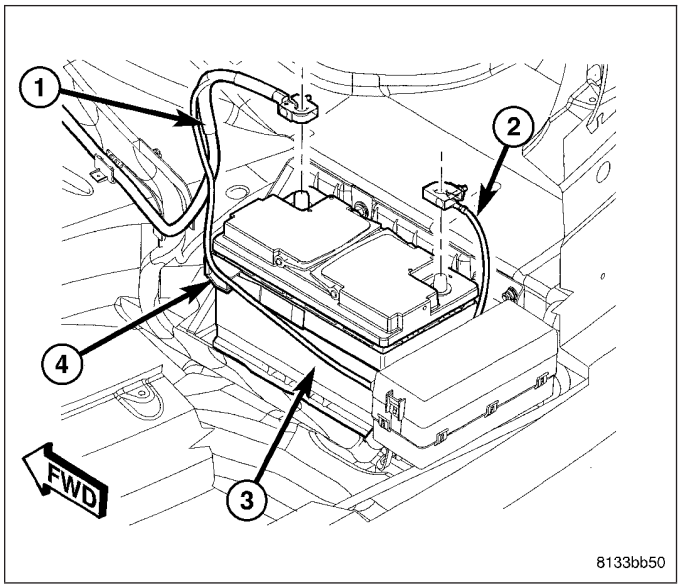

GEAR TO COOLER - RWD

1. Route cooler end of return hose (2) over steering gear from rear using the reverse of how it was removed.

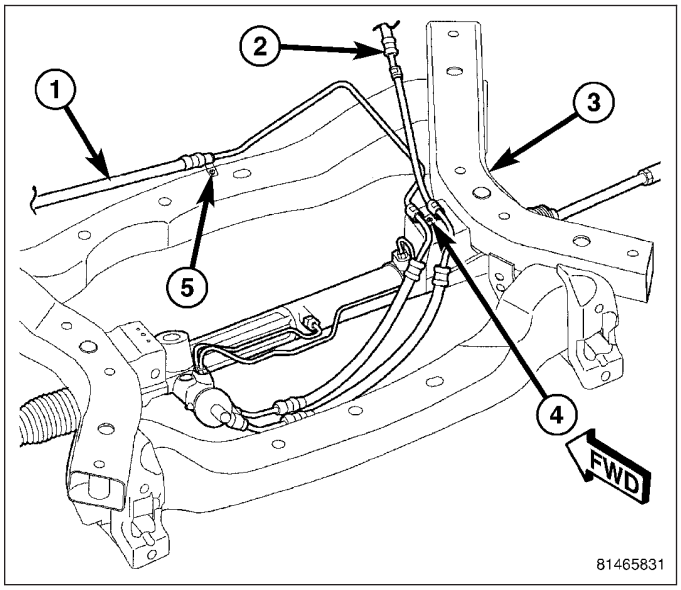

NOTE: Always use a NEW O-ring on the end of the return hose at the steering gear.

2. Lubricate NEW O-ring on steering gear end of return hose with clean power steering fluid.
3. Lift gear end of return hose to return port on steering gear. Install return hose (2) to steering gear (1). **Do not tighten tube nut at this time.**

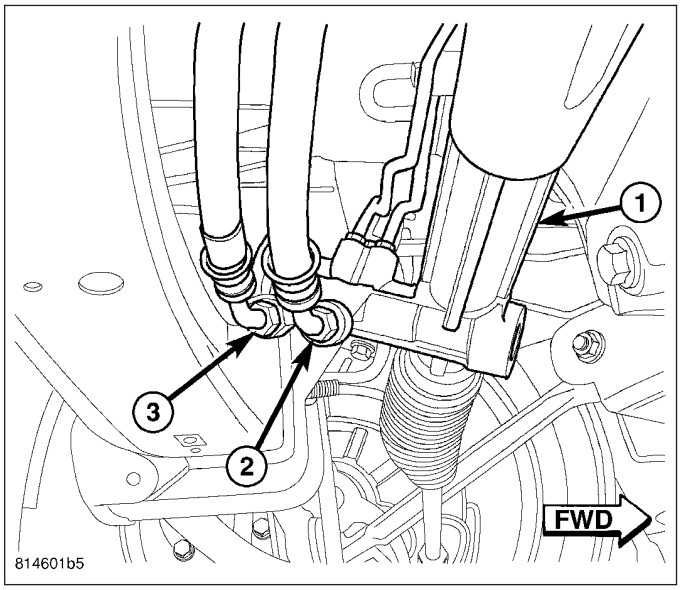

4. Route return hose along right side of engine cradle as shown. Position pressure hose (1) routing clamp over return hose (2) routing clamp, then install screw (4) securing hoses to right side of engine cradle (3).

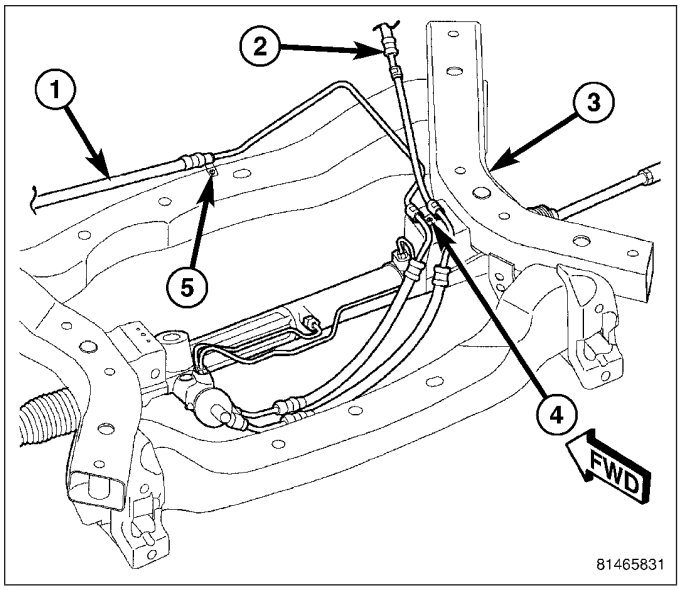

5. Tighten return hose tube nut at steering gear to 47 N·m (35 ft. lbs.) torque.

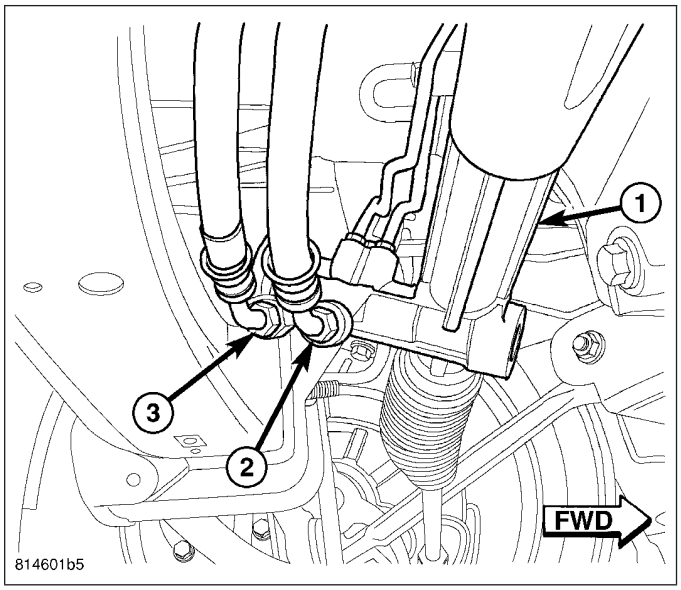

6. Route cooler end of return hose (1) under headlamp mounting crossmember (3) as shown.
7. Place hose in routing clip (2) on cooling module.

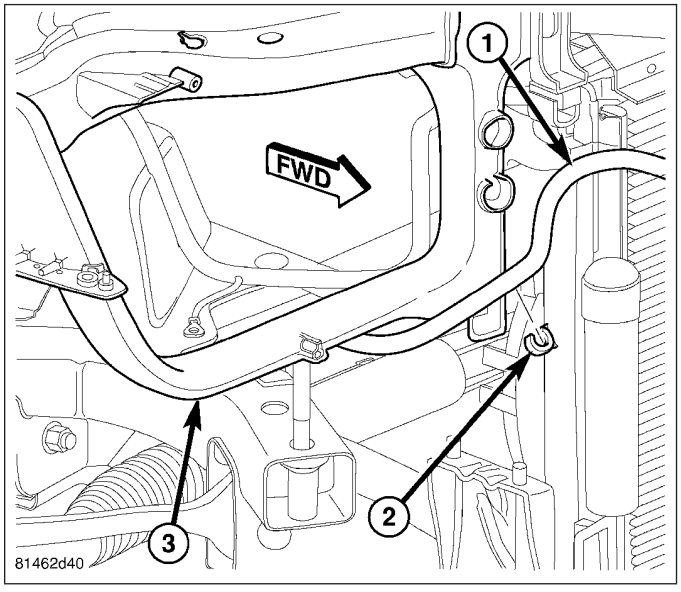

8. Slide return hose (1) onto end of cooler (2). Install clamp securing hose in place.
9. Install belly pan. (Refer to 23 - BODY/EXTERIOR/ BELLY PAN - INSTALLATION)
10. Lower vehicle.

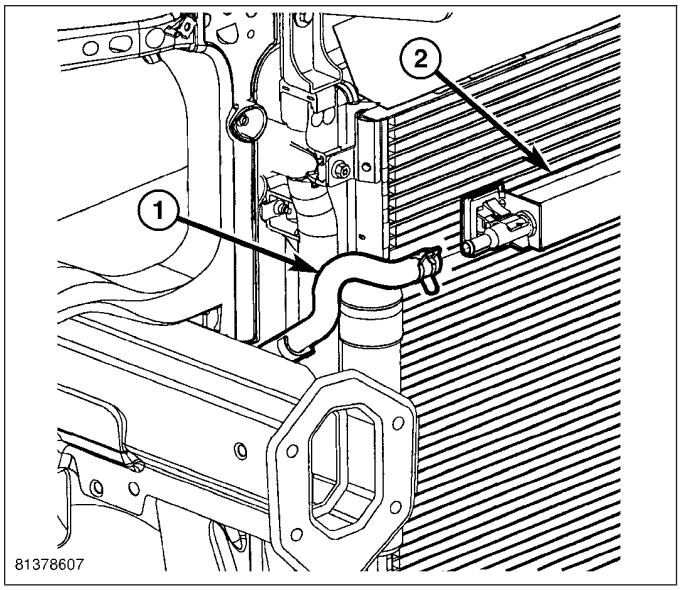

11. Connect battery negative cable (2) to battery post. It is important that this is performed properly. (Refer to 8 - ELECTRICAL/BATTERY SYSTEM - STANDARD PROCEDURE)
12. Fill pump reservoir with fluid and perform pump initial operation procedure. (Refer to 19 - STEERING/PUMP - STANDARD PROCEDURE)

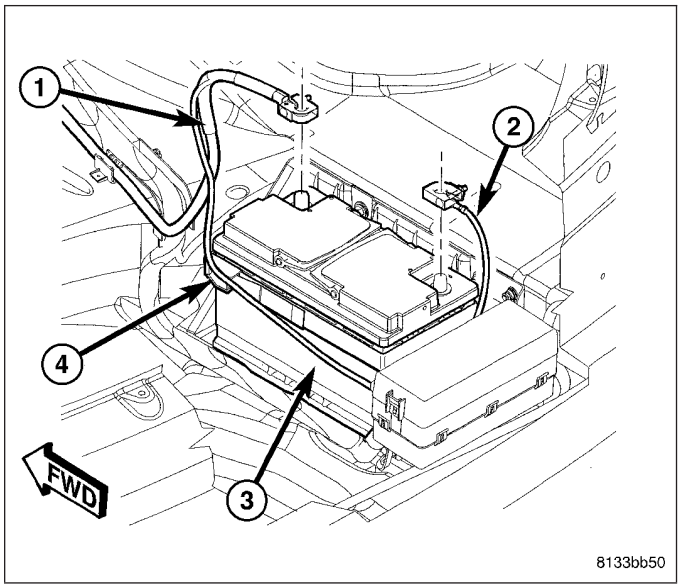

GEAR TO COOLER - RHD

1. Route cooler end of return hose (4) over steering gear from rear using the reverse of how it was removed.

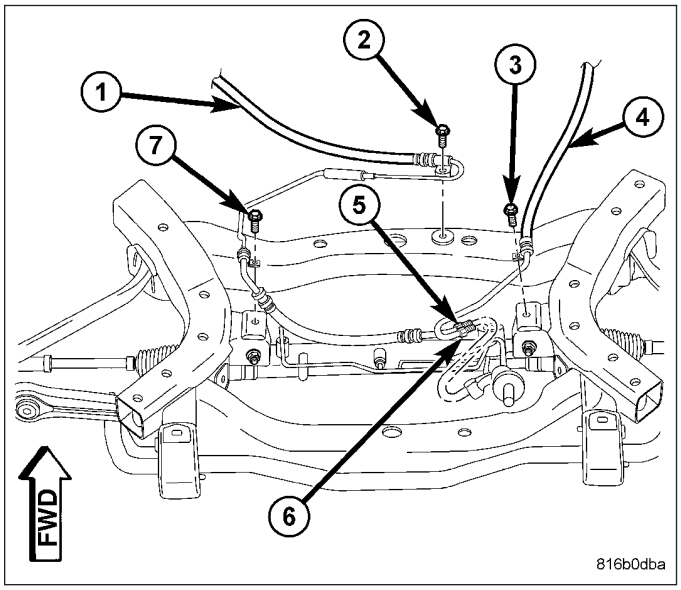

NOTE: Always use a NEW O-ring on the end of the return hose at the steering gear.

2. Lubricate NEW O-ring on steering gear end of return hose with clean power steering fluid.
3. Insert gear end of return hose into return port on steering gear and hand start tube nut (6). **Do not tighten tube nut at this time.**
4. Route return hose along right side of engine cradle as shown. Position return hose (4) routing clamp, then install screw (3) securing hose to right side of engine cradle.
5. Tighten return hose tube nut at steering gear to 47 N·m (35 ft. lbs.).

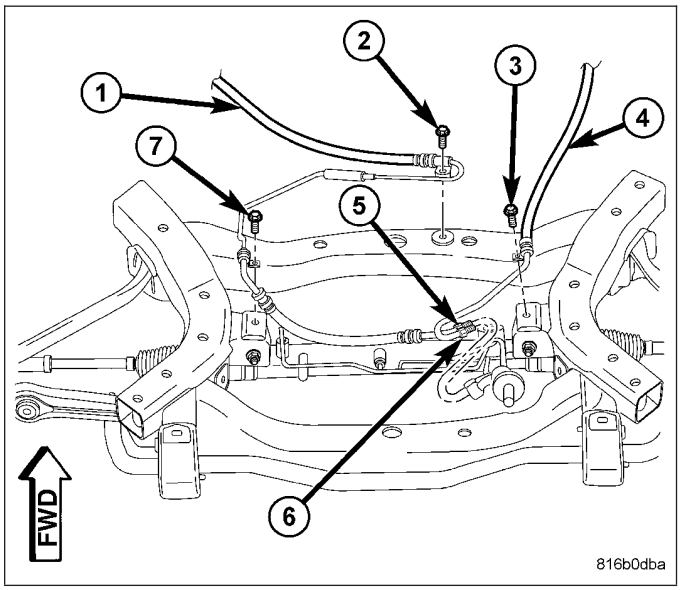

6. Route cooler end of return hose (1) under headlamp mounting crossmember (3) as shown.
7. Place hose in routing clip (2) on cooling module.

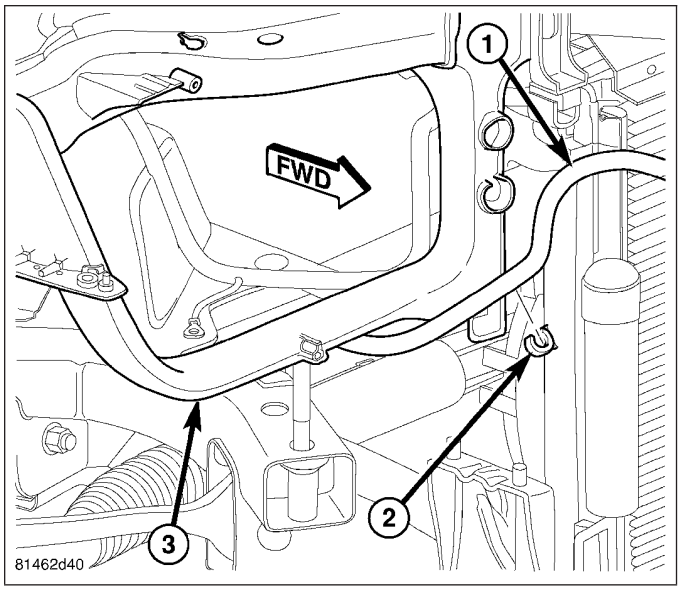

8. Slide return hose (1) onto end of cooler (2). Install clamp securing hose in place.
9. Install belly pan. (Refer to 23 - BODY/EXTERIOR/BELLY PAN - INSTALLATION)
10. Lower vehicle.

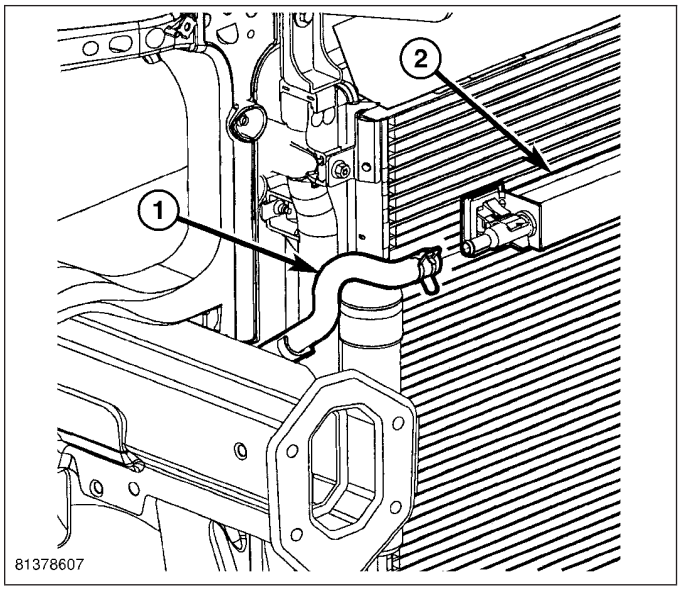

11. Connect battery negative cable (2) to battery post. It is important that this is performed properly. (Refer to 8 - ELECTRICAL/BATTERY SYSTEM - STANDARD PROCEDURE)
12. Fill pump reservoir with fluid and perform pump initial operation procedure. (Refer to 19 - STEERING/PUMP - STANDARD PROCEDURE)

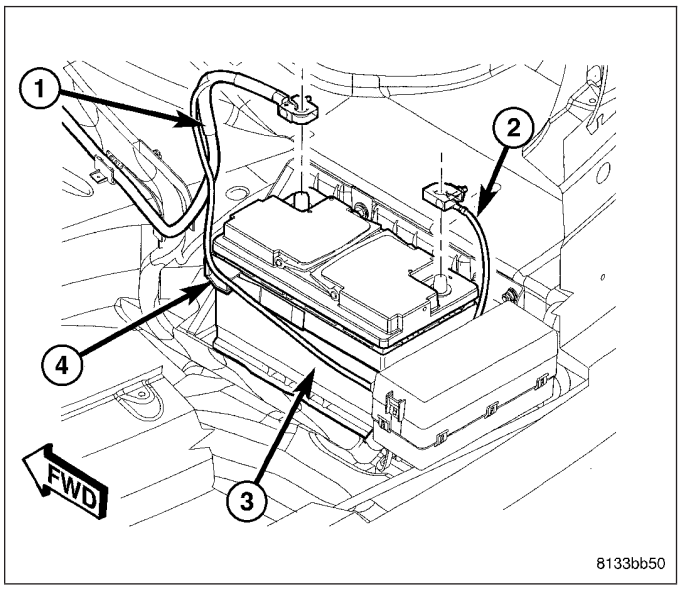

HOSE - SUPPLY

REMOVAL

1. Disconnect and isolate battery negative cable (2) from battery post.
2. Siphon power steering fluid from pump reservoir.
3. Remove air cleaner housing and inlet tube to throttle body. (Refer to 9 - ENGINE/AIR INTAKE SYSTEM/AIR CLEANER HOUSING - REMOVAL)

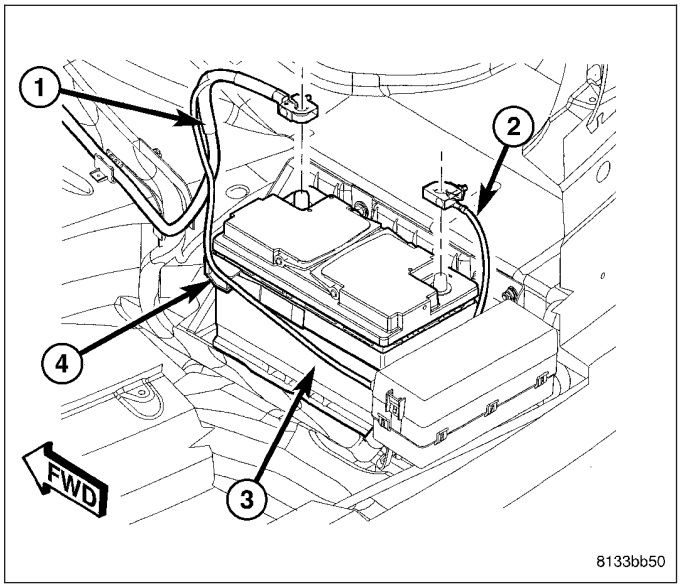

4. 2.7L/3.5L Engines – Remove hose clamp (2), then supply hose (3) from pump (1).

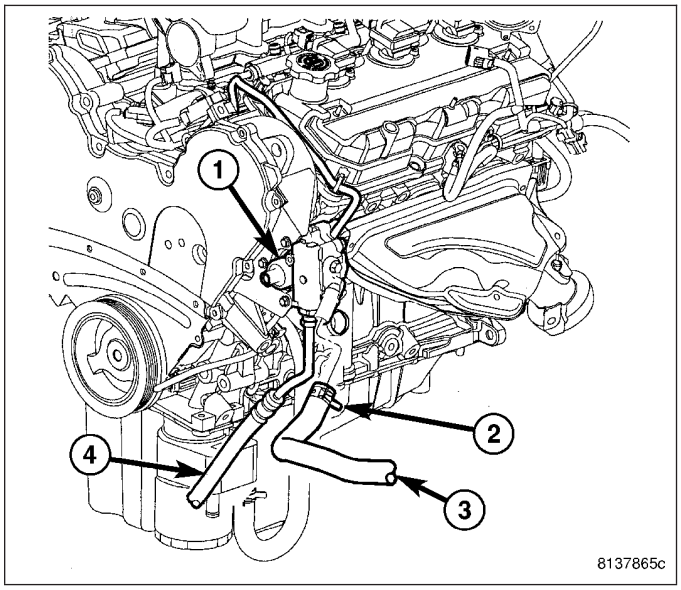

5. 5.7L/6.1L Engines – Remove hose clamp, then supply hose (3) from pump (1).

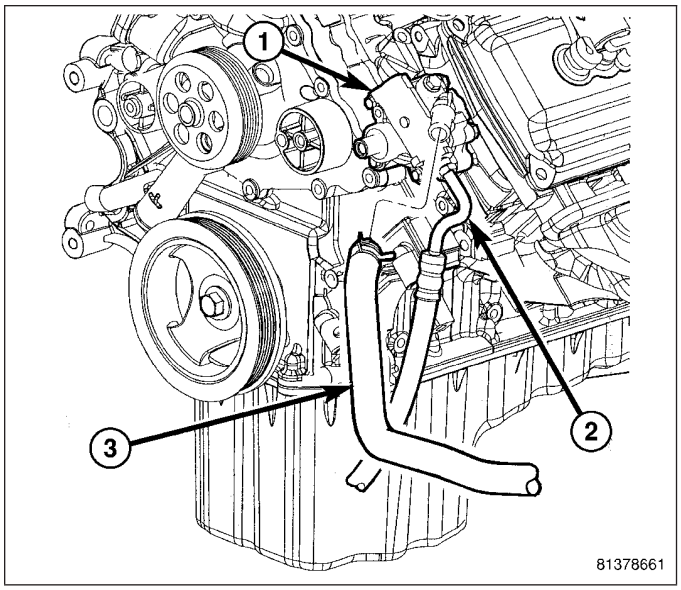

6. 3.0L Diesel Engine – Remove hose clamp (2), then supply hose (3) from pump (1).

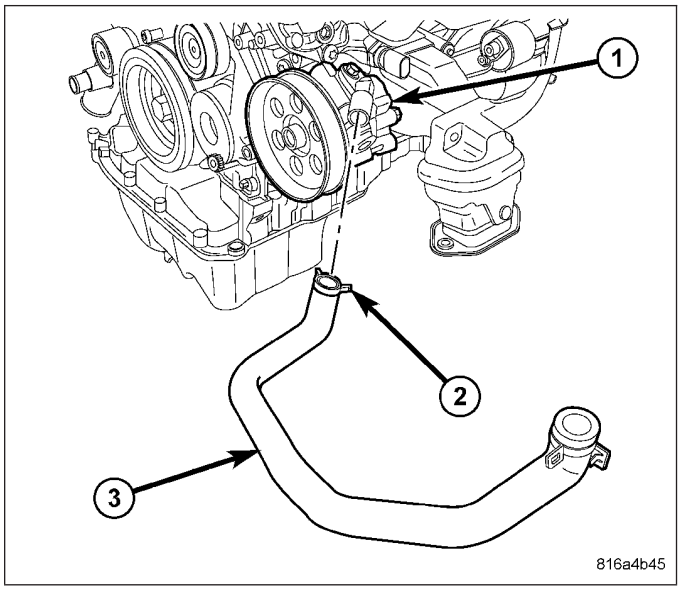

7. Remove hose clamp, then supply hose (3) at reservoir (2).
8. Remove supply hose from vehicle.

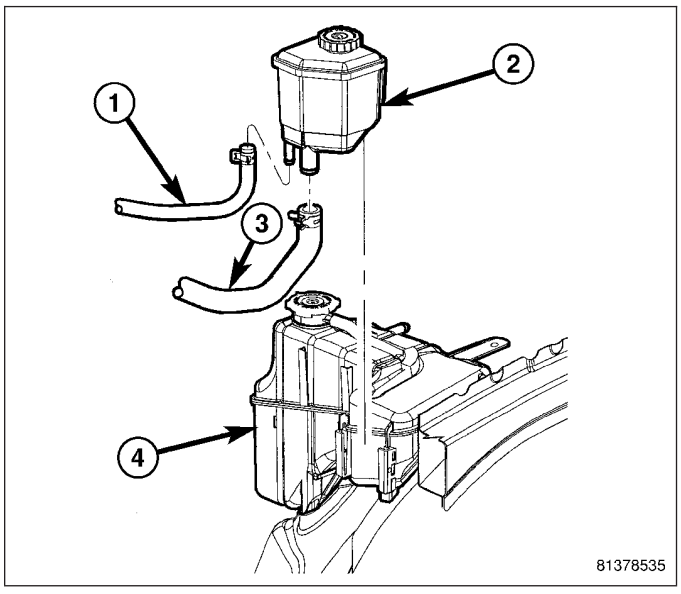

INSTALLATION

1. Install reservoir end of supply hose (3) on reservoir hose fitting. Install clamp securing hose in place.

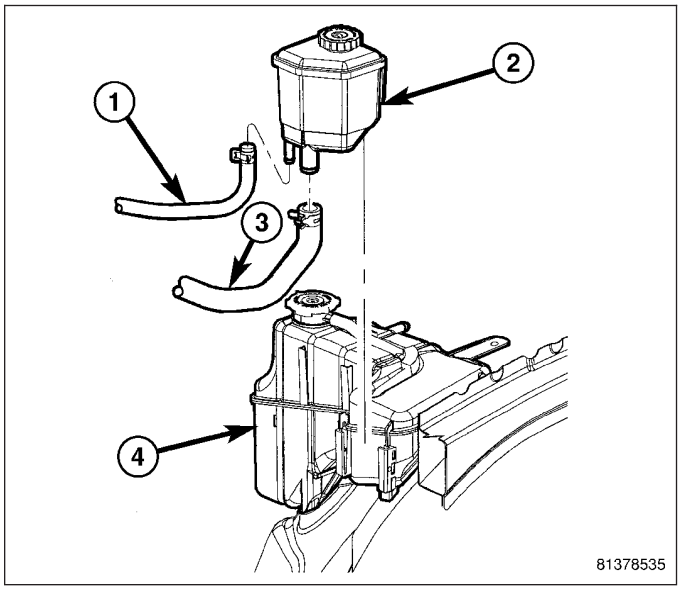

2. 2.7L/3.5L Engines – Install supply hose (3) on pump. Install clamp (2) securing hose in place.

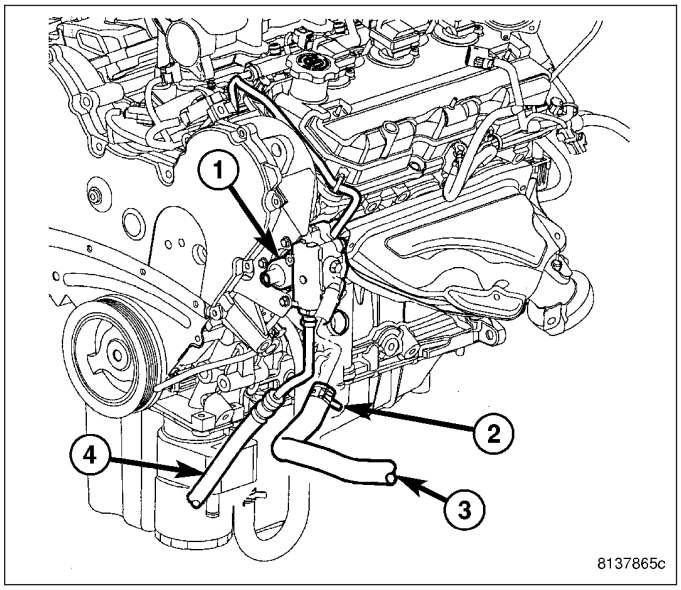

3. 5.7L/6.1L Engines – Install supply hose (3) on pump (1). Install clamp securing hose in place.

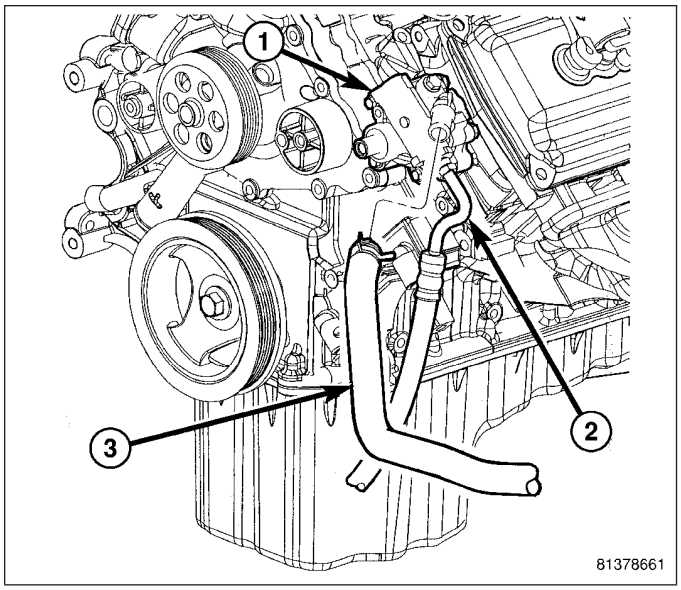

4. 3.0L Diesel Engine – Install supply hose (3) on pump (1). Install clamp (2) securing hose in place.

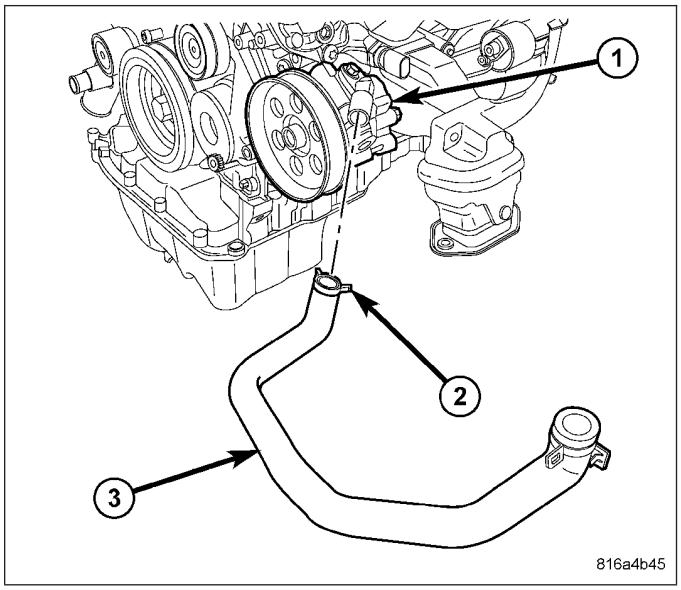

5. Install air cleaner housing and inlet tube. (Refer to 9 - ENGINE/AIR INTAKE SYSTEM/AIR CLEANER HOUSING - INSTALLATION)

6. Connect battery negative cable (2) to battery post. It is important that this is performed properly. (Refer to 8 - ELECTRICAL/BATTERY SYSTEM - STANDARD PROCEDURE)
7. Fill pump reservoir with fluid and perform pump initial operation procedure. (Refer to 19 - STEERING/ PUMP - STANDARD PROCEDURE)

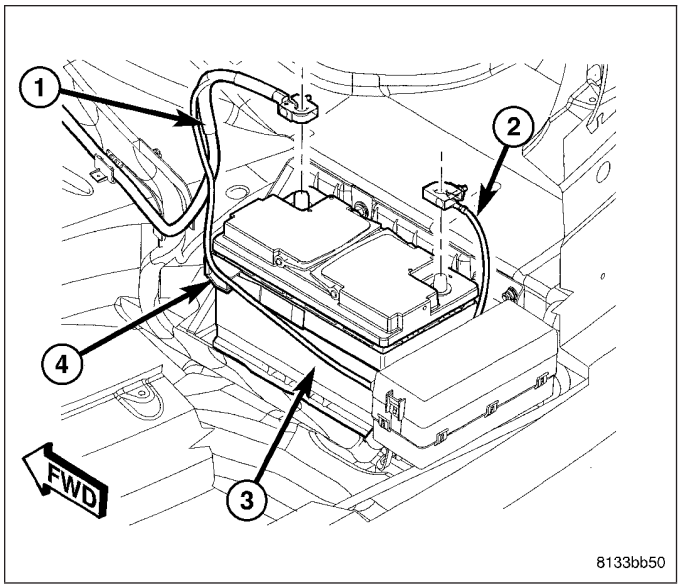

PULLEY

REMOVAL

1. Remove power steering pump from engine. (Refer to 19 - STEERING/PUMP - REMOVAL)

CAUTION: Do not hammer on power steering pump pulley or shaft to remove power steering pump pulley. This will damage pulley and power steering pump.

2. Mount Puller (2), Special Tool C-4333, on power steering pump pulley (3). Mount Puller (with power steering pump (1)) in a vise as shown; **Do not mount pump in vise**. Placing Puller in vise will keep shaft of pump from turning while removing pulley (3) and help keep tension on Puller and pulley hub.
3. Tighten Puller and remove pulley from shaft of power steering pump.

NOTE: Inspect pulley. Replace if pulley is bent, cracked, or loose.

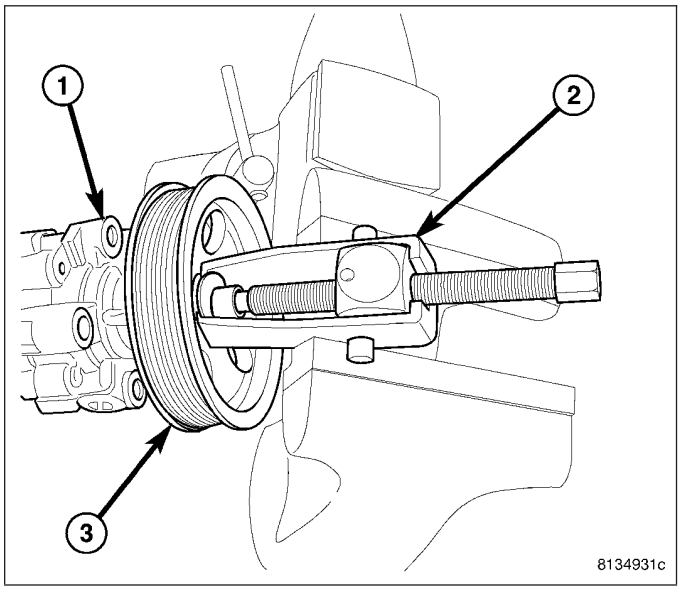

INSTALLATION

CAUTION: Do not hammer on power steering pump pulley (2) or pump shaft to install pulley. This action will damage pulley and power steering pump.

1. Place power steering pump pulley (2) squarely on end of power steering pump shaft.
2. Place Installation Spacer (1), Special Tool 6936, on top of pump pulley (2).

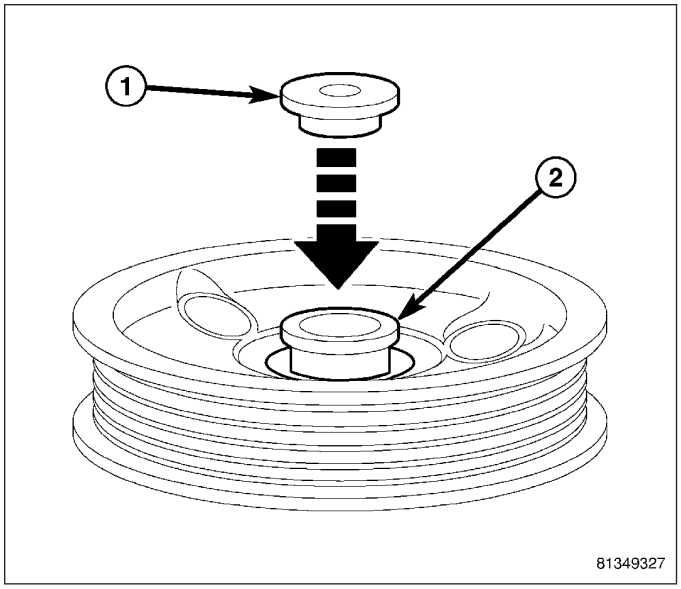

NOTE: Later build pumps feature a shaft with internal threads that are not as deep as earlier production, thus requiring a stack of washers, approximately 13 mm (0.5 in.) thickness (3), placed over Spacer 6936 (2), before mounting Installer C-4063C (1) on the pump. To know if a replacement pump requires the stack of washers, measure the depth of the shaft hole. A later build pump will have a depth of 20 mm (0.78 in.) while an earlier build pump will have a depth of 32 mm (1.25 in.).

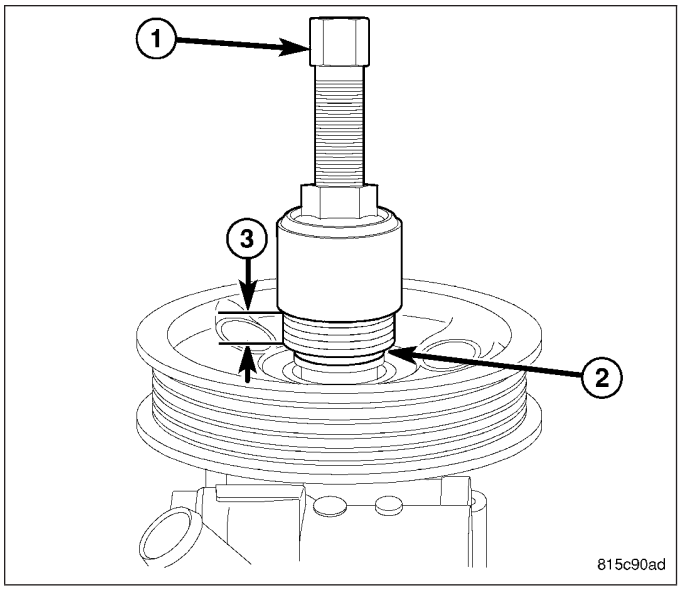

3. As necessary (see above note), place a stack of washers approximately 13 mm (0.5 in.) thickness (3) over Spacer 6936 (2).

NOTE: Installer, Special Tool C-4063C, is a combination of Installer, Special Tool C-4063B, and Forcing Screw, Special Tool C-4063-2. It is important to use Forcing Screw C-4063-2 when performing this procedure.

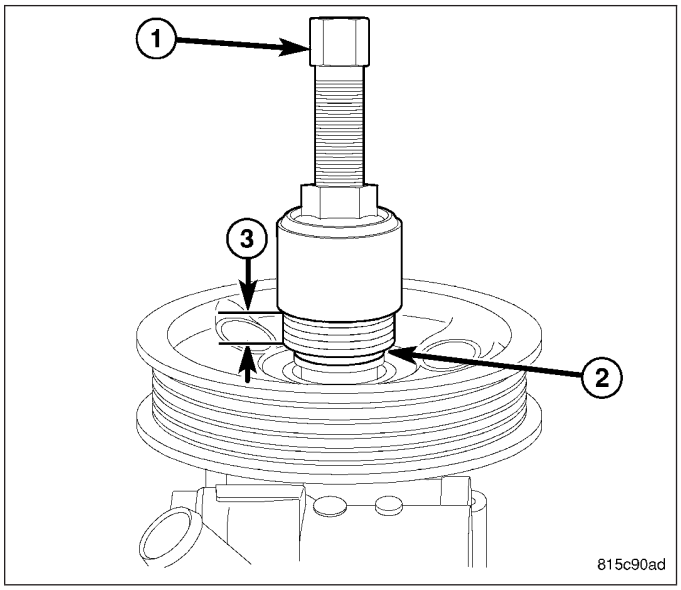

4. Thread Installer (1), Special Tool C-4063C, completely into internal threads of power steering pump shaft, then rotate Installer Nut down against washers (as necessary) and Spacer (2) on pump pulley.
5. Ensuring that special tools and pulley remain aligned with pump shaft, tighten Installer Nut, forcing pulley onto power steering pump shaft until Spacer (2) comes in contact with end of pump shaft. **When Spacer (2) is against shaft of power steering pump, Installer (1) Nut will no longer rotate.**
6. Remove special tools from power steering pump.
7. Install power steering pump on engine. (Refer to 19 - STEERING/PUMP - INSTALLATION).

RESERVOIR

REMOVAL

1. Disconnect and isolate battery negative cable (2) from battery post.
2. Siphon power steering fluid from pump reservoir.
3. Remove air cleaner housing and inlet tube to throttle body. (Refer to 9 - ENGINE/AIR INTAKE SYSTEM/AIR CLEANER HOUSING - REMOVAL)

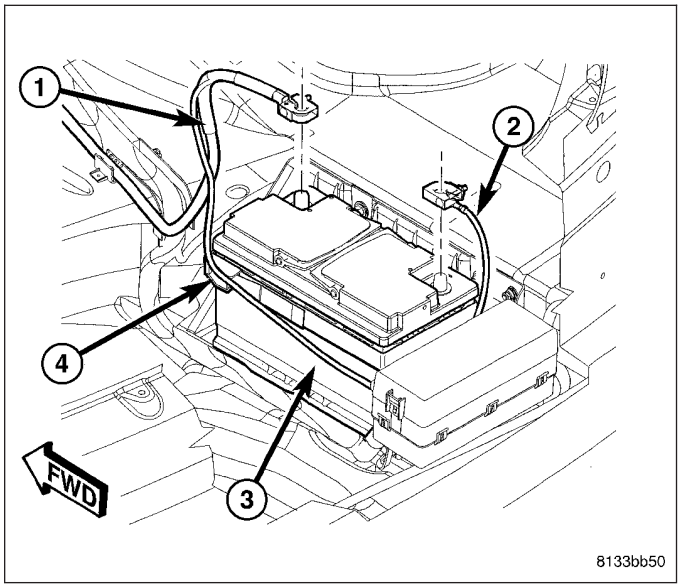

4. Remove hose clamp, then supply hose (3) at reservoir (2).
5. Remove hose clamp, then return hose (1) at reservoir (2).
6. Remove reservoir (2) from coolant bottle (4) by sliding it out of guide.

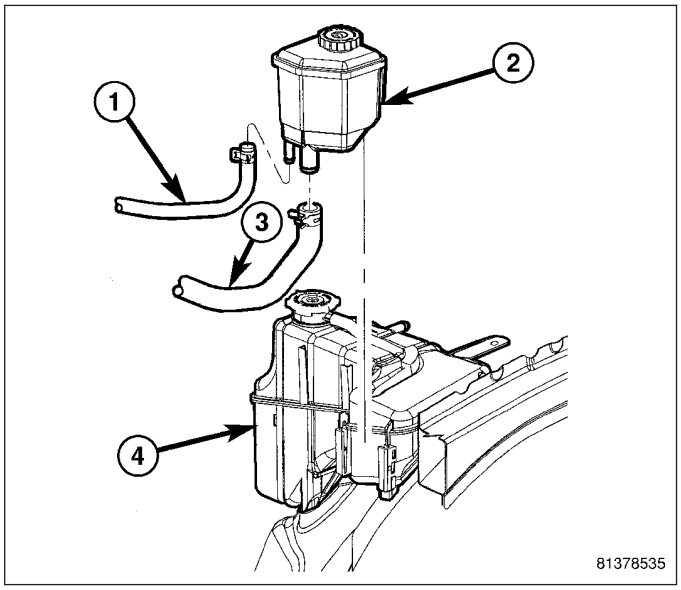

INSTALLATION

1. Install reservoir (2) on coolant bottle (4) by sliding it into guide and allowing it to lock into place.
2. Install return hose (1) on reservoir hose fitting. Install clamp securing hose in place.
3. Install supply hose (3) on reservoir hose fitting. Install clamp securing hose in place.
4. Install air cleaner housing and inlet tube. (Refer to 9 - ENGINE/AIR INTAKE SYSTEM/AIR CLEANER HOUSING - INSTALLATION)

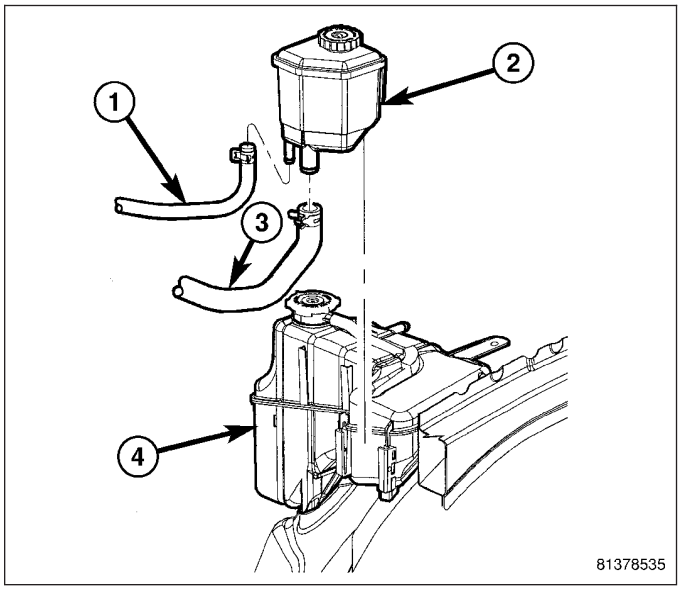

5. Connect battery negative cable (2) to battery post. It is important that this is performed properly. (Refer to 8 - ELECTRICAL/BATTERY SYSTEM - STANDARD PROCEDURE)
6. Fill pump reservoir with fluid and perform pump initial operation procedure. (Refer to 19 - STEERING/ PUMP - STANDARD PROCEDURE)

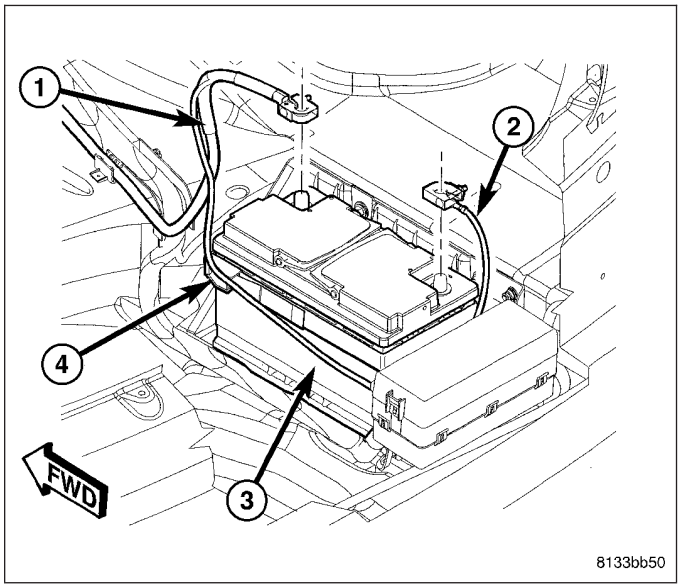

AUTOMATIC TRANSMISSION

TABLE OF CONTENTS

page

AUTOMATIC TRANSMISSION NAG1 - ELECTRICAL DIAGNOSTICS 1
AUTOMATIC TRANSMISSION NAG1 - SHIFTER DIAGNOSTICS 220
AUTOMATIC TRANSMISSION NAG1 - SERVICE INFORMATION 262

page

AUTOMATIC TRANSMISSION 42RLE - ELECTRICAL DIAGNOSTICS 462
AUTOMATIC TRANSMISSION 42RLE - SERVICE INFORMATION 653
TRANSFER CASE - MS140 - SERVICE INFORMATION 859

AUTOMATIC TRANSMISSION NAG1 - ELECTRICAL DIAGNOSTICS

TABLE OF CONTENTS

page

AUTOMATIC TRANSMISSION NAG1 - ELECTRICAL DIAGNOSTICS
DIAGNOSIS AND TESTING
P0219–ENGINE OVERSPEED 4
P0562-BATTERY VOLTAGE LOW 6
P0563-BATTERY VOLTAGE HIGH 11
P0602-CONTROL MODULE PROGRAMMING ERROR/NOT PROGRAMMED 14
P0604-INTERNAL CONTROL MODULE RAM . . 16
P0605-INTERNAL CONTROL MODULE ROM . . 18
P0613-INTERNAL TRANSMISSION PROCESSOR. 20
P0642-SENSOR REFERENCE VOLTAGE 1 CIRCUIT LOW 22
P0643-SENSOR REFERENCE VOLTAGE 1 CIRCUIT HIGH. 25
P0657-SOLENOID SUPPLY VOLTAGE CIRCUIT 28
P0710-TRANSMISSION TEMPERATURE SENSOR CIRCUIT 32
P0712-TRANSMISSION TEMPERATURE SENSOR LOW. 36
P0714-TRANSMISSION TEMPERATURE SENSOR INTERMITTENT. 39
P0717-INPUT SPEED SENSOR 1 CIRCUIT NO SIGNAL 41
P0730-INCORRECT GEAR RATIO 48
P0731-GEAR RATIO ERROR IN 1ST 49
P0732-GEAR RATIO ERROR IN 2ND 51
P0733-GEAR RATIO ERROR IN 3RD 53
P0734-GEAR RATIO ERROR IN 4TH 55

page

P0735-GEAR RATIO ERROR IN 5TH 57
P0742-TORQUE CONVERTER CLUTCH STUCK ON 59
P0743-TCC SOLENOID CIRCUIT 62
P0748-MODULATOR PRESSURE SOLENOID CIRCUIT 66
P0752-1-2/4-5 SOLENOID 70
P0753-1-2/4-5 SOLENOID CIRCUIT 74
P0758-2-3 SOLENOID 78
P0758-2-3 SOLENOID CIRCUIT 82
P0762-3-4 SOLENOID 86
P0763-3-4 SOLENOID CIRCUIT 90
P0778-SHIFT PRESSURE SOLENOID CIRCUIT 94
P1629-TCM INTERNAL - SOLENOID SUPPLY/ WATCHDOG. 98
P1631-TCM INTERNAL- PROCESSOR CLOCK PERFORMANCE 100
P1632-TCM INTERNAL - TEST INTERNAL WATCHDOG PERFORMANCE 102
P1633-TCM INTERNAL - TEST EXTERNAL WATCHDOG PERFORMANCE 104
P1634-TCM INTERNAL- INTERNAL WATCHDOG PERFORMANCE 106
P1636-TCM INTERNAL- EXTERNAL WATCHDOG PERFORMANCE 108
P1637-TCM INTERNAL-EEPROM PERFORMANCE. 110
P1638-TCM INTERNAL-CAN 1 RAM PERFORMANCE. 112

P1639-TCM INTERNAL-CAN 2 RAM PERFORMANCE 114
P1644-INCORRECT VARIANT/ CONFIGURATION 116
P1704-INPUT SPEED SENSOR 1 OVERSPEED 118
P1705-INPUT SPEED SENSOR 2 OVERSPEED 121
P1731-INCORRECT GEAR ENGAGED 124
P2638-TORQUE MANAGEMENT FEEDBACK SIGNAL PERFORMANCE 126
P2767-INPUT SPEED SENSOR 2 CIRCUIT NO SIGNAL 129
P2783-TORQUE CONVERTER TEMPERATURE TOO HIGH 136
P2784-INPUT SPEED SENSOR 1/2 CORRELATION 137
U0002-CAN C BUS OFF PERFORMANCE 140
U0100-LOST COMMUNICATION WITH ECM/PCM 143
U0103-LOST COMMUNICATION WITH ELECTRIC GEAR SHIFT MODULE 146
U0121-LOST COMMUNICATION WITH ANTI-LOCK BRAKE MODULE 149
U0141-LOST COMMUNICATION WITH FRONT CONTROL MODULE 152
U0155-LOST COMMUNICATION WITH CLUSTER/CCN 155
U0164-LOST COMMUNICATION WITH HVAC CONTROL MODULE 158
U0401-IMPLAUSIBLE DATA RECEIVED FROM ECM/PCM 161
U0404-IMPLAUSIBLE DATA RECEIVED FROM ESM 163
U0415-IMPLAUSIBLE DATA RECEIVED FROM ABS 165
U0423-IMPLAUSIBLE DATA RECEIVED FROM CLUSTER/CCN 167
U0424-IMPLAUSIBLE DATA RECEIVED FROM HVAC CONTROL MODULE 169
U0431-IMPLAUSIBLE DATA FROM FCM 171
U110B-LOST ENGINE COOLANT MESSAGE . 173
U1118-LOST ENGINE MESSAGE 176
U1119-LOST FCM MESSAGE 179
U1400-IMPLAUSIBLE TPS SIGNAL RECEIVED 182
U1401-IMPLAUSIBLE ENGINE SPEED SIGNAL RECEIVED 184
U1402-IMPLAUSIBLE ENGINE TEMPERATURE SIGNAL RECEIVED 186
U1404-IMPLAUSIBLE STATIC ENGINE TORQUE SIGNAL RECEIVED 188
U1405-IMPLAUSIBLE MINIMUM ENGINE TORQUE SIGNAL RECEIVED 190
U1406-IMPLAUSIBLE MAXIMUM ENGINE TORQUE SIGNAL RECEIVED 192
U1407-IMPLAUSIBLE ENGINE TORQUE REQUEST SIGNAL RECEIVED 194
U1408-IMPLAUSIBLE BRAKE SIGNAL RECEIVED 196
U1409-IMPLAUSIBLE LEFT FRONT WHEEL SPEED SIGNAL RECEIVED 198
U140A-IMPLAUSIBLE RIGHT FRONT WHEEL SPEED SIGNAL RECEIVED 200
U140B-IMPLAUSIBLE LEFT REAR WHEEL SPEED SIGNAL RECEIVED 202
U140C-IMPLAUSIBLE RIGHT REAR WHEEL SPEED SIGNAL RECEIVED 204
U140D-IMPLAUSIBLE WHEEL SPEED SIGNALS RECEIVED 206
U140F-IMPLAUSIBLE ENGINE VARIANT DATA 208
U1410-IMPLAUSIBLE/MISSING FCM VARIANT DATA 210
U1507-IMPLAUSIBLE ENGINE TEMPERATURE MESSAGE DATA LENGTH RECEIVED 212
U1509-IMPLAUSIBLE ENGINE VARIANT MESSAGE DATA LENGTH RECEIVED 214
U150A-IMPLAUSIBLE FCM VARIANT MESSAGE DATA LENGTH RECEIVED 216
STANDARD PROCEDURE
NAG1 PRE-DIAGNOSTIC TROUBLESHOOTING PROCEDURE 218
NAG1 TRANSMISSION VERIFICATION TEST . 219

AUTOMATIC TRANSMISSION NAG1 - ELECTRICAL DIAGNOSTICS

DIAGNOSIS AND TESTING

P0219–ENGINE OVERSPEED

For a complete wiring diagram **Refer to Section 8W**

Theory of Operation

The Transmission Control Module (TCM) monitors the engine speed over the CAN bus. If the engine speed is greater than 4100+ 800 RPM, the TCM assumes that either the information from the Powertrain Control Module (PCM) is incorrect or that a major mechanical problem exist. Once the DTC is set, the TCM will position the transmission gear into neutral to protect the engine and transmissin from damage. The transmission will remain in neutral and will not be revaluated by the TCM until the ignition is cycled.

- **When Monitored:**
  Continuously with the ignition on, engine running, with the transmission in gear with a valid Engine RPM message received at least once, and the CAN Bus Circuit and Engine CAN Message Missing are not active.
- **Set Condition:**
  Engine speed is greater than 5700 RPM + 500 RPM.

Possible Causes
MECHANICAL ENGINE PROBLEM
MECHANICAL TRANSMISSION PROBLEM
POWERTRAIN CONTROL MODULE
TRANSMISSION CONTROL MODULE

Always perform the NAG1 Pre-Diagnostic Troubleshooting procedure before proceeding. (Refer to 21 - TRANSMISSION/TRANSAXLE/AUTOMATIC - NAG1 - STANDARD PROCEDURE)

Diagnostic Test

1. CHECK FOR OTHER TRANSMISSION DTCS

With the scan tool, check for other transmission DTCs.

Are there any gear ratio and/or speed sensor DTCs present in addition to P0219?

Yes >> Refer to the Symptom Category and perform the appropriate symptom. If speed sensor DTCs are present, perform their respective test first.

No >> Go To 2

2. CHECK IF ENGINE MECHANICAL PROBLEMS ARE PRESENT

Determine if any Engine mechanical problems are present.

Are there any Engine mechanical problems present?

Yes >> Repair engine as necessary. Refer to 9 - ENGINE-SERVICE INFORMATION for the appropriate repair procedures.

Perform NAG1 TRANSMISSION VERIFICATION TEST - VER 1. (Refer to 21 - TRANSMISSION/TRANSAXLE/AUTOMATIC - NAG1 - STANDARD PROCEDURE)

No >> Go To 3

3. CHECK IF TRANSMISSION MECHANICAL PROBLEMS ARE PRESENT

Determine if any Transmission mechanical problems are present.

Turn the ignition off to the lock position.

Remove the Transmission Oil Pan and inspect for excessuve debris or a plugged Transmission Oil Filter. (Refer to 21 - TRANSMISSION/TRANSAXLE/AUTOMATIC - NAG1/FILTER - STANDARD PROCEDURE).

Is there any debris, plugged Transmission Oil Filter, or signs of an internal transmission problem?

Yes >> Repair Transmission as necessary. (Refer to 21 - TRANSMISSION/TRANSAXLE/AUTOMATIC - NAG1 - REMOVAL).

Perform NAG1 TRANSMISSION VERIFICATION TEST - VER 1. (Refer to 21 - TRANSMISSION/TRANSAXLE/AUTOMATIC - NAG1 - STANDARD PROCEDURE)

No >> Go To 4

4. TEST DRIVE VEHICLE

NOTE: The Engine and Transmission must not have mechanical problems and be operating normally before proceeding with this test.

Replace and program the Powertrain Control Module (PCM) per the Service Information. Refer to 8 - ELECTRICAL/ELECTRONIC CONTROL MODULES/POWERTRAIN CONTROL MODULE for the appropriate service procedures.

Reassemble any previously disconnected connectors and/or components.

With the scan tool, erase Transmission DTCs.

Road test the vehicle.

With the scan tool, read Transmission DTCs.

Did DTC P0219-ENGINE OVERSPEED reset?

Yes >> Using the schematics as a guide, check the Transmission Control Module (TCM) terminals for corrosion, damage, or terminal push out. Pay particular attention to all power and ground circuits. If no problems are found, replace the TCM per the Service Information. (Refer to 8 - ELECTRICAL/ELECTRONIC CONTROL MODULES/TRANSMISSION CONTROL MODULE - DESCRIPTION)

Perform NAG1 TRANSMISSION VERIFICATION TEST - VER 1. (Refer to 21 - TRANSMISSION/TRANSAXLE/AUTOMATIC - NAG1 - STANDARD PROCEDURE)

No >> Test Complete

Perform NAG1 TRANSMISSION VERIFICATION TEST - VER 1. (Refer to 21 - TRANSMISSION/TRANSAXLE/AUTOMATIC - NAG1 - STANDARD PROCEDURE)

P0562-BATTERY VOLTAGE LOW

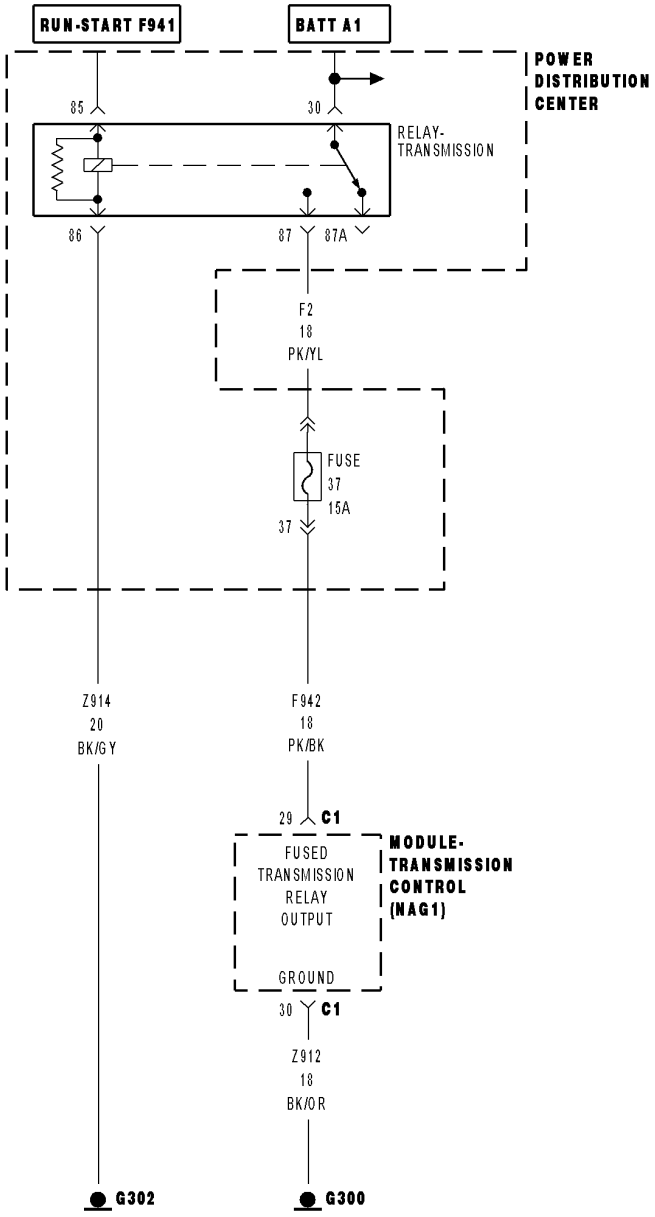

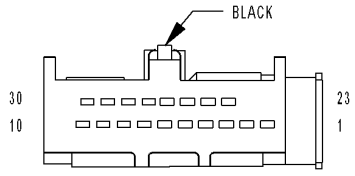

MODULE-TRANSMISSION CONTROL C1 (NAG1)

8131d9d8

For a complete wiring diagram **Refer to Section 8W**

Theory of Operation

The Transmission Control Module (TCM) monitors ignition voltage. The DTC will set if the monitored battery voltage drops below 8.5 volts and a temporary limp in will be activated. If the voltage rises above 9.0 volts, normal operations is resumed and the TCM will record the DTC as a one trip fault. The DTC will only mature to a full DTC if the voltage is less than 8.5 volts with a engine speed greater than 2000 RPM for a least 60 seconds.

- **When Monitored:**
  Continuously with the ignition on.
- **Set Condition:**
  When monitored battery voltage drops below 8.5 volts.

Possible Causes
ENGINE CHARGING SYSTEM DTCS
LOW BATTERY VOLTAGE
(A1) B (+) CIRCUIT HIGH RESISTANCE
(Z912) GROUND CIRCUIT HIGH RESISTANCE
(F942) FUSED TRANSMISSION RELAY OUTPUT CIRCUIT HIGH RESISTANCE
TRANSMISSION RELAY
TRANSMISSION CONTROL MODULE

Always perform the NAG1 Pre-Diagnostic Troubleshooting procedure before proceeding. (Refer to 21 - TRANSMISSION/TRANSAXLE/AUTOMATIC - NAG1 - STANDARD PROCEDURE)

Diagnostic Test

1. CHECK FOR ENGINE CHARGING SYSTEM DTCS

With the scan tool, read Engine DTCs.

Are there any Engine Charging System DTCs present?

Yes >> Refer to the 9 - ENGINE ELECTRICAL DIAGNOSTICS and perform the appropriate symptom.

No >> Go To 2

2. CHECK SYSTEM VOLTAGE

Start the engine.

With the scan tool, under transmission, check system voltage.

Is the transmission system voltage above 9.0 volts?

Yes >> Go To 7

No >> Go To 3

3. CHECK THE (A1) B (+) CIRCUIT

Turn the ignition off to the lock position.

Remove the Transmission Control relay.

Ignition on, engine not running.

Using a 12-volt test light connected to ground, check the (A1) B (+) circuit in the Transmission Relay connector.

NOTE: The test light must illuminate brightly. Compare the brightness to that of a direct connection to the battery.

Does the test light illuminate brightly?

Yes >> Go To 4

No >> Repair the (A1) B (+) circuit for high resistance.
Perform NAG1 TRANSMISSION VERIFICATION TEST - VER 1. (Refer to 21 - TRANSMISSION/TRANSAXLE/AUTOMATIC - NAG1 - STANDARD PROCEDURE)

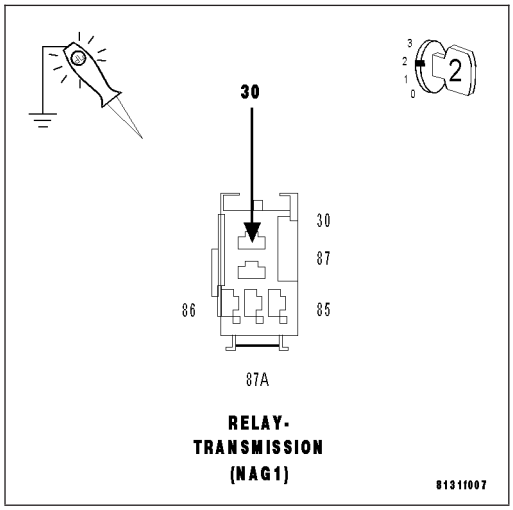

4. CHECK THE (F942) TRANSMISSION RELAY OUTPUT CIRCUIT

Turn the ignition off to the lock position.

Remove the Transmission Relay.

Connect a jumper wire between the (A1) B (+) circuit and the (F2) Transmission Relay Output circuit in the Transmission Relay connector.

Start the engine.

With the scan tool, under transmission, check system voltage.

Is the transmission system voltage above 9.0 volts?

Yes >> Replace the Transmission Relay.
Perform NAG1 TRANSMISSION VERIFICATION TEST - VER 1. (Refer to 21 - TRANSMISSION/TRANSAXLE/AUTOMATIC - NAG1 - STANDARD PROCEDURE)

No >> Go To 5

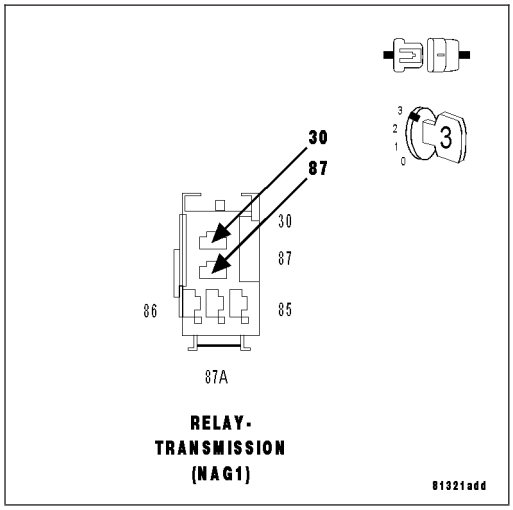

5. CHECK THE (F942)FUSED TRANSMISSION RELAY OUTPUT CIRCUIT

Turn the ignition off to the lock position.

Disconnect the TCM C1 harness connector.

Ignition on, engine not running..

Using a 12-volt test light connected to ground, check the (F942) Fused Transmission Relay Output circuit in the TCM C1 harness connector.

NOTE: The test light must illuminate brightly. Compare the brightness to that of a direct connection to the battery.

Does the test light illuminate brightly?

Yes >> Go To 6

No >> Repair the (F942) Fused Transmission Relay Output circuit for high resistance. Make sure the check the fuze cavities.

Perform NAG1 TRANSMISSION VERIFICATION TEST - VER 1. (Refer to 21 - TRANSMISSION/TRANSAXLE/AUTOMATIC - NAG1 - STANDARD PROCEDURE)

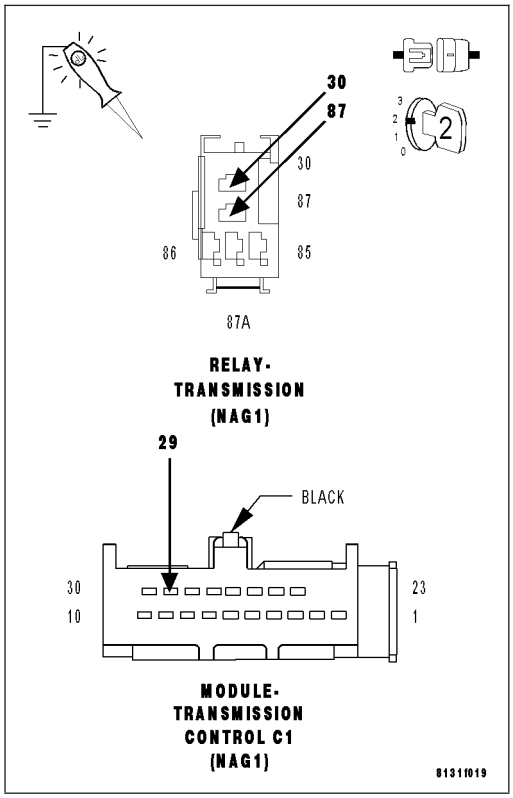

6. CHECK (Z912) GROUND CIRCUIT

Turn the ignition off to the lock position.

Using a 12-volt test light connected to 12-volts, check the (Z912) Ground circuit in the TCM C1 harness connector.

Does the test light illuminate brightly?

Yes >> Using the schematics as a guide, check the Transmission Control Module (TCM) terminals for corrosion, damage, or terminal push out. Pay particular attention to all power and ground circuits. If no problems are found, replace the TCM per the Service Information. (Refer to 8 - ELECTRICAL/ELECTRONIC CONTROL MODULES/TRANSMISSION CONTROL MODULE - DESCRIPTION)

Perform NAG1 TRANSMISSION VERIFICATION TEST - VER 1. (Refer to 21 - TRANSMISSION/TRANSAXLE/AUTOMATIC - NAG1 - STANDARD PROCEDURE)

No >> Repair the (Z912) Ground circuit for high resistance.

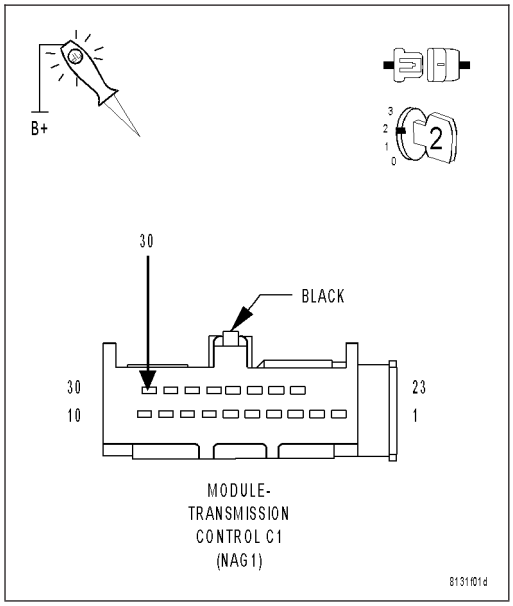

7. INTERMITTENT WIRING AND CONNECTORS

The conditions necessary to set this DTC are not present at this time.

Using the schematics as a guide, inspect the wiring and connectors specific to this circuit.

Wiggle the wires while checking for shorted and open circuits.

Where there any problems found?

Yes >> Repair as necessary.
Perform NAG1 TRANSMISSION VERIFICATION TEST - VER 1. (Refer to 21 - TRANSMISSION/ TRANSAXLE/AUTOMATIC - NAG1 - STANDARD PROCEDURE)

No >> Test Complete.

P0563-BATTERY VOLTAGE HIGH

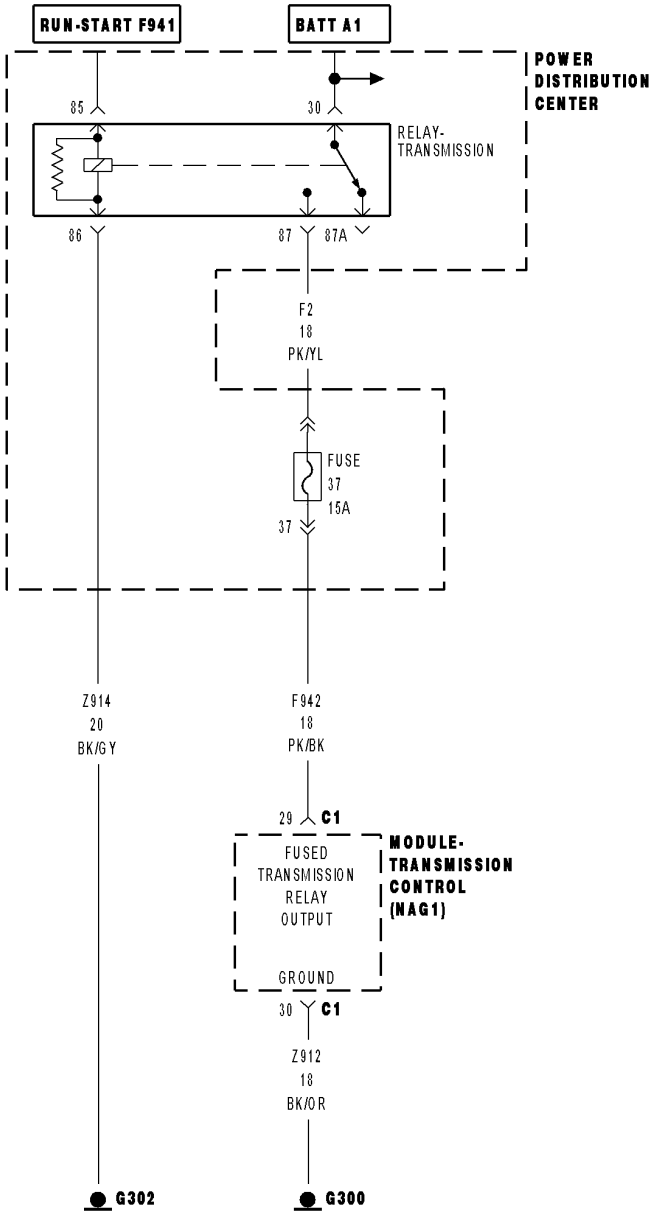

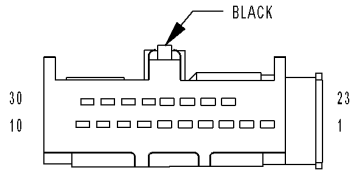

MODULE-TRANSMISSION CONTROL C1 (NAG1)

8131d9d8

For a complete wiring diagram **Refer to Section 8W**

Theory of Operation

The Transmission Control Module (TCM) monitors ignition voltage. The DTC will set and temporary limp-in will be activated, if the monitored battery voltage rises above 16.9 volts. If the voltage drops below 16.4 volts, normal operations is resumed and the TCM will record the DTC as a one trip fault. The DTC will only mature to a full DTC if the voltage rises above 16.9 volts with a engine speed greater than 2000 RPM for a least 60 seconds.

- **When Monitored:**
  Continuously with the ignition on.
- **Set Condition:**
  When the monitored battery voltage rises above 16.9 volts.

Possible Causes
CHARGING SYSTEM OVERCHARGE CONDITION
JUMP START OFF A 24 VOLT SYSTEM
TRANSMISSION CONTROL MODULE

Always perform the NAG1 Pre-Diagnostic Troubleshooting procedure before proceeding. (Refer to 21 - TRANSMISSION/TRANSAXLE/AUTOMATIC - NAG1 - STANDARD PROCEDURE)

Diagnostic Test

1. CHECK FOR CHARGING SYSTEM DTCS

With the scan tool, read Engine DTCs.

NOTE: This includes any one trip faults.

Are there any Engine Charging System DTCs present?

Yes >> Refer to the 9 - ENGINE ELECTRICAL DIAGNOSTICS and perform the appropriate symptom.

No >> Go To 2

2. CHECK IF VOLTAGE IS GREATER THAN 16.9 VOLTS

Start the engine and raise the engine speed to 2000 RPM.

With the scan tool, monitor the Transmission system voltage for at least 60 seconds.

Does the Transmission system voltage read above 16.9 volts for any period of time?

Yes >> Go To 4

No >> Go To 3

3. VERIFY IF VEHICLE WAS JUMP STARTED WITH 24-VOLT SYSTEM

Verify if the vehicle was jump started by another vehicle using a 24-volt charging system.

Was the vehicle jump started by another vehicle using a 24-volt charging system?

Yes >> This is the cause of the DTC. Erase the DTC and return the vehicle to the customer.
Perform NAG1 TRANSMISSION VERIFICATION TEST - VER 1. (Refer to 21 - TRANSMISSION/TRANSAXLE/AUTOMATIC - NAG1 - STANDARD PROCEDURE)

No >> Go To 5

4. CHECK BATTERY VOLTAGE

Start the engine and raise the engine speed to 2000 RPM.
With the scan tool, read the Transmission system voltage.
With a voltmeter, measure the battery voltage at the battery.
Compare the readings.

Does the voltage readings match between the Transmission scan tool reading and the battery voltmeter reading?

Yes >> Repair the charging system for an over charging condition. Refer to the 9 - ENGINE ELECTRICAL DIAGNOSTICS and diagnose the appropriate symptom as if the DTC is current.

No >> Using the schematics as a guide, check the Transmission Control Module (TCM) terminals for corrosion, damage, or terminal push out. Pay particular attention to all power and ground circuits. If no problems are found, replace the TCM per the Service Information. (Refer to 8 - ELECTRICAL/ ELECTRONIC CONTROL MODULES/TRANSMISSION CONTROL MODULE - DESCRIPTION)

Perform NAG1 TRANSMISSION VERIFICATION TEST - VER 1. (Refer to 21 - TRANSMISSION/TRANSAXLE/AUTOMATIC - NAG1 - STANDARD PROCEDURE)

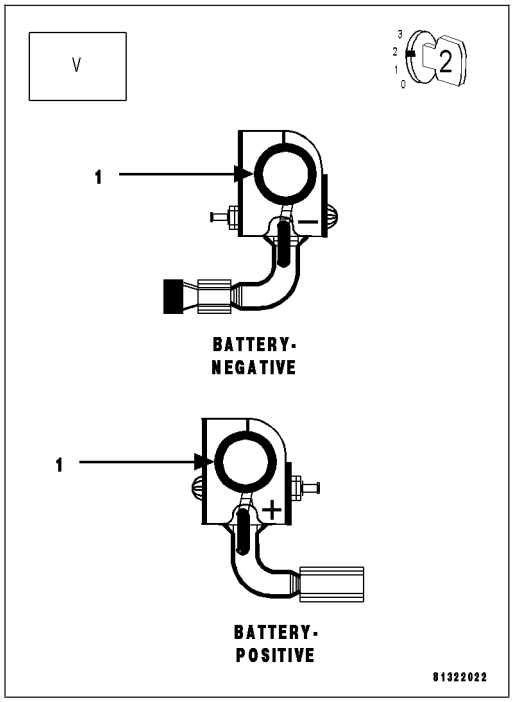

5. INTERMITTENT WIRING AND CONNECTORS

The conditions necessary to set this DTC are not present at this time.
Using the schematics as a guide, inspect the wiring and connectors specific to this circuit.
Wiggle the wires while checking for shorted and open circuits.

Were there any problems found?

Yes >> Repair as necessary.

Perform NAG1 TRANSMISSION VERIFICATION TEST - VER 1. (Refer to 21 - TRANSMISSION/ TRANSAXLE/AUTOMATIC - NAG1 - STANDARD PROCEDURE)

No >> Test Complete.

P0602-CONTROL MODULE PROGRAMMING ERROR/NOT PROGRAMMED

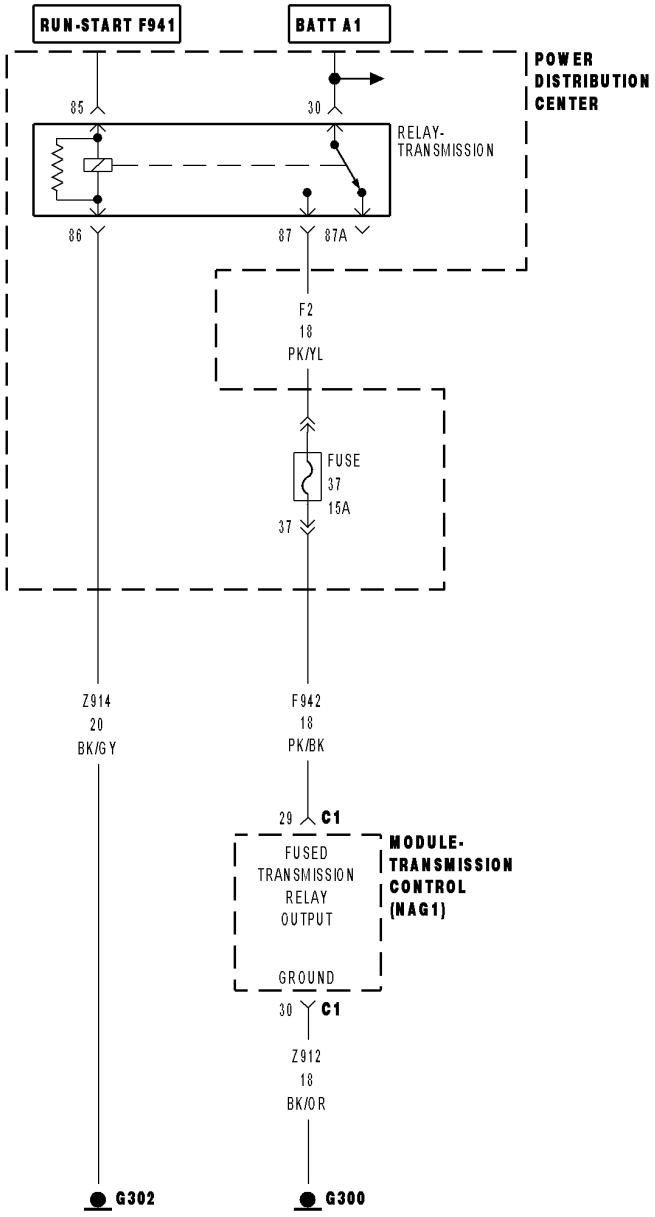

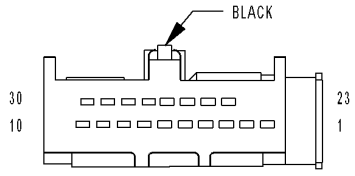

MODULE-TRANSMISSION CONTROL C1 (NAG1)

8131d9d8

For a complete wiring diagram **Refer to Section 8W**

Theory of Operation

The Transmission Control Module (TCM) performs various internal tests to verify proper controller operation. If the TCM detects that the variables that dictate the vehicle application are not present, the controller will enter Limp-in mode and illuminate the MIL.

- **When Monitored:**
  Continuously with the ignition on.
- **Set Condition:**
  If the TCM detects that the variables that dictate the vehicle application are not present.

Possible Causes
CONTROLLER NOT CODED
TRANSMISSION CONTROL MODULE

Always perform the NAG1 Pre-Diagnostic Troubleshooting procedure before proceeding. (Refer to 21 - TRANSMISSION/TRANSAXLE/AUTOMATIC - NAG1 - STANDARD PROCEDURE)

Diagnostic Test

1. CHECK IF TCM IS FLASHABLE

NOTE: Controller is programmed with generic software and will not allow the correct vehicle Powertrain management.

With the scan tool, record the vehicles controller part number.

Select Use Controller Part Number under the Flash Tab.

Flash the controller with the correct software.

Were you able to update (flash) the controller successfully?

Yes >> Test Complete.
Perform NAG1 TRANSMISSION VERIFICATION TEST - VER 1.

No >> Using the schematics as a guide, check the Transmission Control Module (TCM) terminals for corrosion, damage, or terminal push out. Pay particular attention to all power and ground circuits. If no problems are found, replace the TCM per the Service Information. (Refer to 8 - ELECTRICAL/ELECTRONIC CONTROL MODULES/TRANSMISSION CONTROL MODULE - DESCRIPTION)
Perform NAG1 TRANSMISSION VERIFICATION TEST - VER 1. (Refer to 21 - TRANSMISSION/TRANSAXLE/AUTOMATIC - NAG1 - STANDARD PROCEDURE)

P0604-INTERNAL CONTROL MODULE RAM

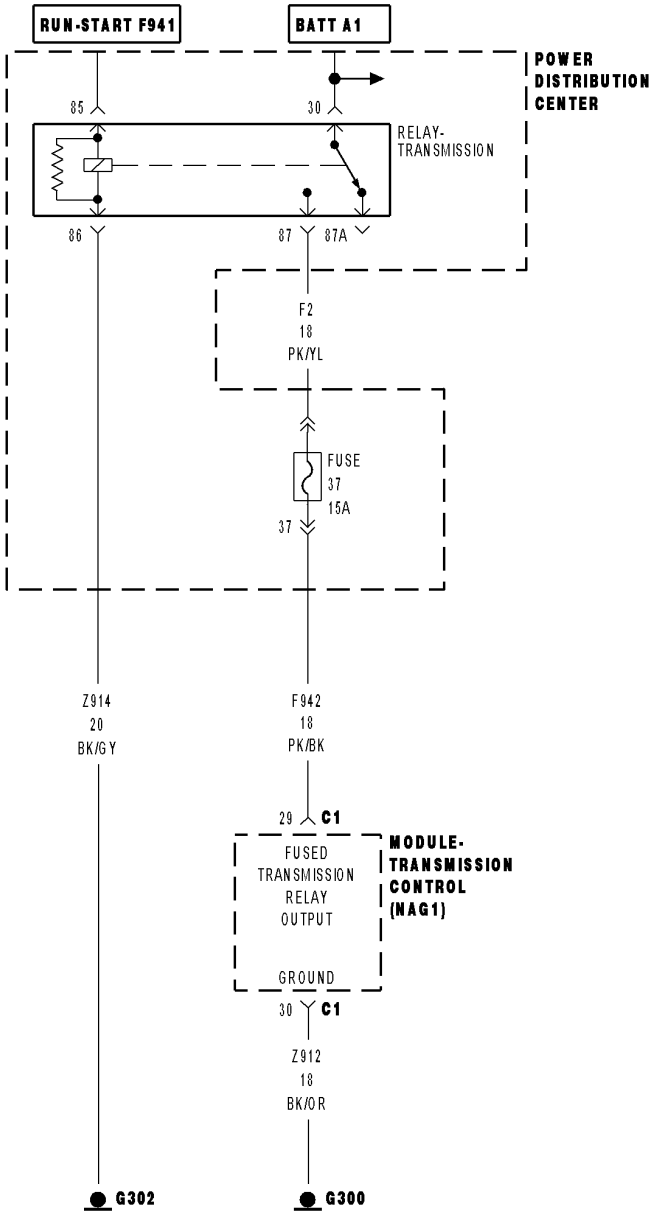

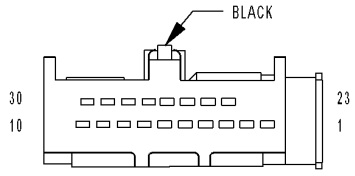

MODULE-TRANSMISSION CONTROL C1 (NAG1)

8131d9d8

For a complete wiring diagram **Refer to Section 8W**

Theory of Operation

The Transmission Control Module (TCM) performs various internal tests to verify proper controller operation. If the TCM detects an error with the controllers Random Access Memory (RAM), the controller will enter Limp-in mode and illuminate the MIL.

- **When Monitored:**
  Continuously with the ignition on.
- **Set Condition:**
  If the TCM detects an error with the controllers Random Access Memory (RAM).

Possible Causes
TRANSMISSION CONTROL MODULE

Always perform the NAG1 Pre-Diagnostic Troubleshooting procedure before proceeding. (Refer to 21 - TRANSMISSION/TRANSAXLE/AUTOMATIC - NAG1 - STANDARD PROCEDURE)

Diagnostic Test

1. TRANSMISSION CONTROL MODULE

View repair

Repair

Using the schematics as a guide, check the Transmission Control Module (TCM) terminals for corrosion, damage, or terminal push out. Pay particular attention to all power and ground circuits. If no problems are found, replace the TCM per the Service Information. (Refer to 8 - ELECTRICAL/ELECTRONIC CONTROL MODULES/TRANSMISSION CONTROL MODULE - DESCRIPTION)

Perform NAG1 TRANSMISSION VERIFICATION TEST - VER 1. (Refer to 21 - TRANSMISSION/TRANSAXLE/AUTOMATIC - NAG1 - STANDARD PROCEDURE)

P0605-INTERNAL CONTROL MODULE ROM

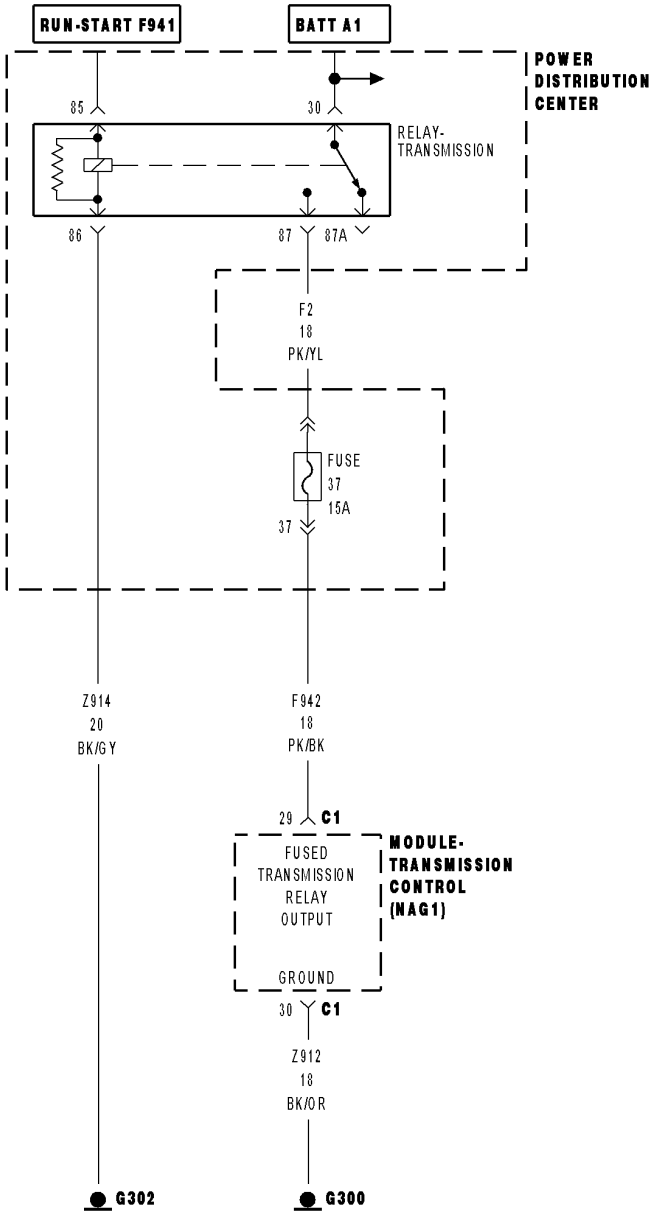

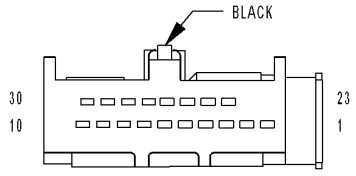

MODULE-TRANSMISSION CONTROL C1 (NAG1)

8131d9d8

For a complete wiring diagram **Refer to Section 8W**

Theory of Operation

The Transmission Control Module (TCM) performs various internal tests to verify proper controller operation. If the TCM detects an error with the controllers Read Only Memory (ROM), the controller will enter Limp-in mode and illuminate the MIL.

- **When Monitored:**
  Continuously with the ignition on.
- **Set Condition:**
  If the TCM detects an error with the controllers Read Only Memory (ROM).

Possible Causes
TRANSMISSION CONTROL MODULE

Always perform the NAG1 Pre-Diagnostic Troubleshooting procedure before proceeding. (Refer to 21 - TRANSMISSION/TRANSAXLE/AUTOMATIC - NAG1 - STANDARD PROCEDURE)

Diagnostic Test

1. TRANSMISSION CONTROL MODULE

View repair

Repair

Using the schematics as a guide, check the Transmission Control Module (TCM) terminals for corrosion, damage, or terminal push out. Pay particular attention to all power and ground circuits. If no problems are found, replace the TCM per the Service Information. (Refer to 8 - ELECTRICAL/ELECTRONIC CONTROL MODULES/TRANSMISSION CONTROL MODULE - DESCRIPTION)

Perform NAG1 TRANSMISSION VERIFICATION TEST - VER 1. (Refer to 21 - TRANSMISSION/TRANSAXLE/AUTOMATIC - NAG1 - STANDARD PROCEDURE)

P0613-INTERNAL TRANSMISSION PROCESSOR

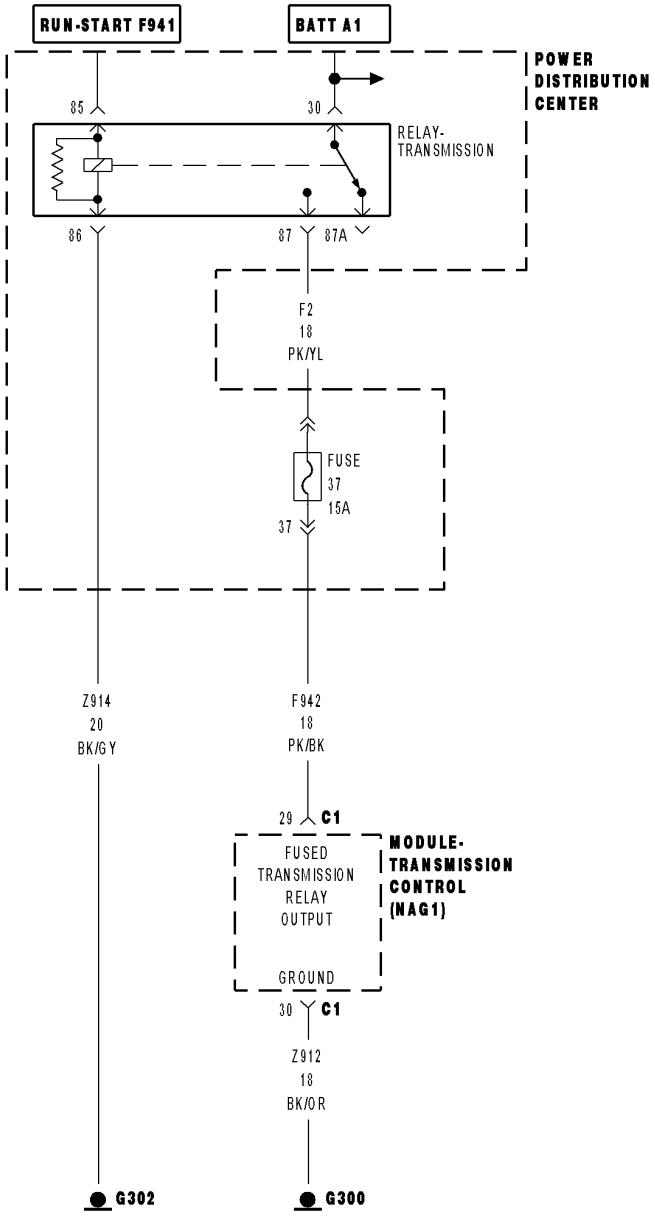

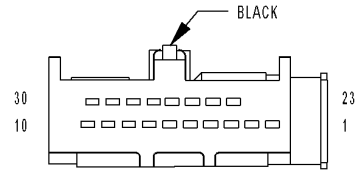

MODULE-TRANSMISSION CONTROL C1 (NAG1)

8131d9d8

For a complete wiring diagram **Refer to Section 8W**

Theory of Operation

The Transmission Control Module (TCM) performs various internal tests to verify proper controller operation. If the TCM detects an error with the controllers processor, the controller will enter Limp-in mode and illuminate the MIL.

- **When Monitored:**
  Continuously with the ignition on.
- **Set Condition:**
  If the TCM detects an error with the controllers processor.

Possible Causes
TRANSMISSION CONTROL MODULE

Always perform the NAG1 Pre-Diagnostic Troubleshooting procedure before proceeding. (Refer to 21 - TRANSMISSION/TRANSAXLE/AUTOMATIC - NAG1 - STANDARD PROCEDURE)

Diagnostic Test

1. TRANSMISSION CONTROL MODULE

View repair

Repair

Using the schematics as a guide, check the Transmission Control Module (TCM) terminals for corrosion, damage, or terminal push out. Pay particular attention to all power and ground circuits. If no problems are found, replace the TCM per the Service Information. (Refer to 8 - ELECTRICAL/ELECTRONIC CONTROL MODULES/TRANSMISSION CONTROL MODULE - DESCRIPTION)

Perform NAG1 TRANSMISSION VERIFICATION TEST - VER 1. (Refer to 21 - TRANSMISSION/TRANSAXLE/AUTOMATIC - NAG1 - STANDARD PROCEDURE)

P0642-SENSOR REFERENCE VOLTAGE 1 CIRCUIT LOW

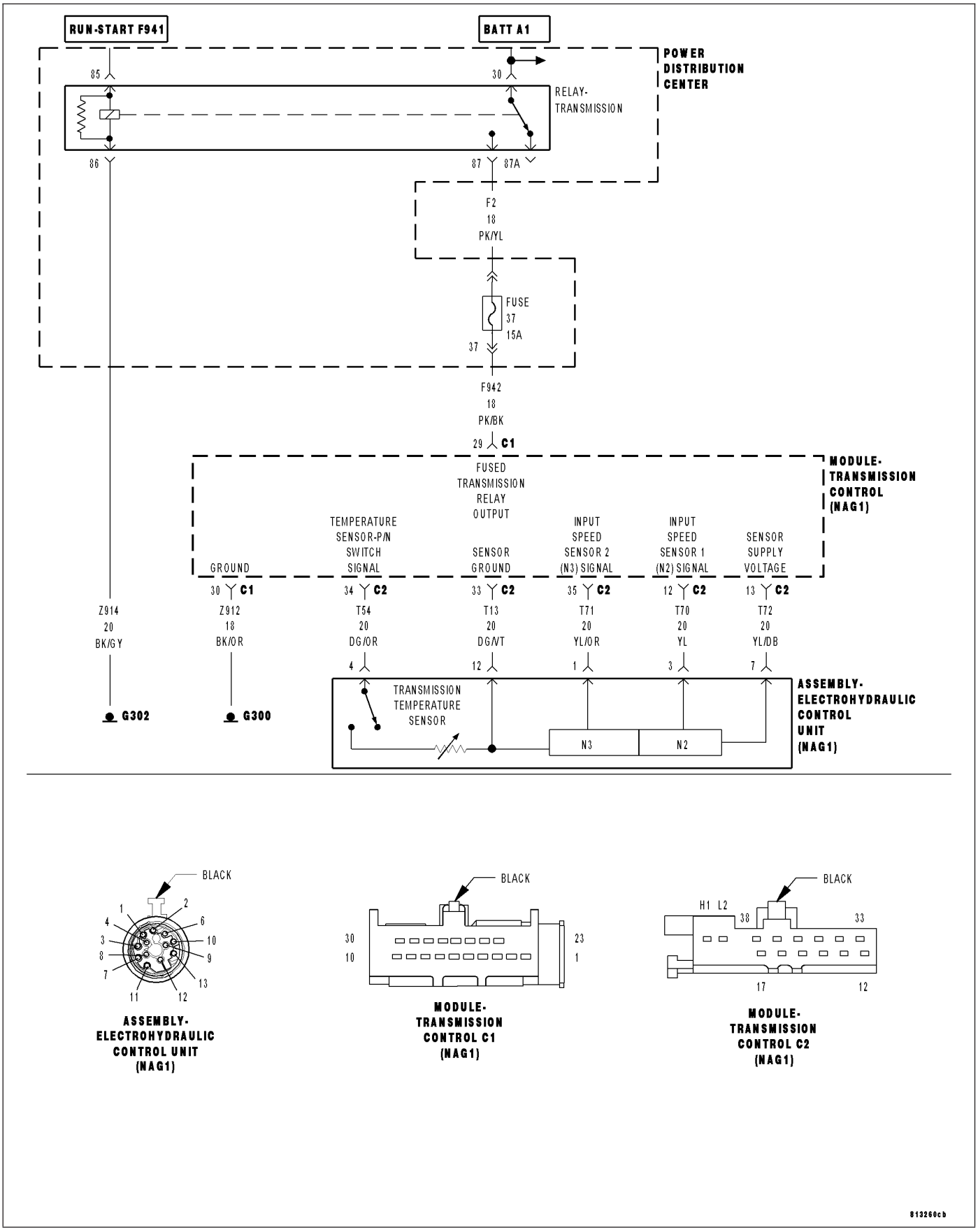

For a complete wiring diagram **Refer to Section 8W**

Theory of Operation

The Sensor Supply Voltage circuit supplies a 6-volt power supply to the two input speed sensors. The Sensor Supply Voltage circuit is constantly monitored for correct voltage between 4.8 to 7.2 volts. If the voltage does not stay within the 4.8 to 7.2 volt range, the appropriate DTC will set.

- **When Monitored:**
  Continuously with the ignition on and no undervoltage condition exist.
- **Set Condition:**
  When the monitored sensor voltage is not within specified limits drops below 4.8 volts.

Possible Causes
SPEED SENSOR DTCS PRESENT
(T72) SENSOR SUPPLY VOLTAGE SHORT TO GROUND
INTERNAL SHORT IN THE ELECTROHYDRAULIC CONTROL UNIT ASSEMBLY
TRANSMISSION CONTROL MODULE

Always perform the NAG1 Pre-Diagnostic Troubleshooting procedure before proceeding. (Refer to 21 - TRANSMISSION/TRANSAXLE/AUTOMATIC - NAG1 - STANDARD PROCEDURE)

Diagnostic Test

1. CHECK FOR SPEED SENSOR DTCS

With the scan tool, check for other transmission DTCs.

Are there any speed sensor DTCs present?

Yes >> Refer to the Transmission category and perform the appropriate symptom(s). (Refer to 21 - TRANSMISSION/TRANSAXLE/AUTOMATIC - NAG1 - DIAGNOSIS AND TESTING)

No >> Go To 2

2. CHECK FOR (T72) SENSOR SUPPLY VOLTAGE SHORT TO GROUND

Turn the ignition off to the lock position.

Disconnect the Electrohydraulic Control Unit Assembly harness connector.

Disconnect the TCM C2 harness connectors.

Measure the resistance between ground and the (T72) Sensor Supply Voltage circuit in the TCM harness connector.

Is the resistance below 5.0 ohms?

Yes >> Repair the (T72) Sensor Supply Voltage circuit for a short to ground
Perform NAG1 TRANSMISSION VERIFICATION TEST - VER 1. (Refer to 21 - TRANSMISSION/TRANSAXLE/AUTOMATIC - NAG1 - STANDARD PROCEDURE)

No >> Go To 3

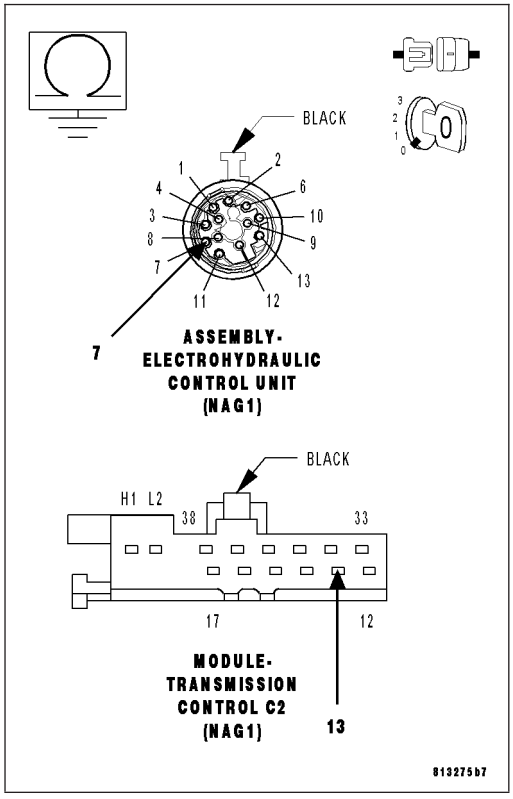

3. CHECK FOR A SHORT IN THE ELECTOHYDRAULIC CONTROL UNIT

Reconnect the Electrohydraulic Control Unit Assembly harness connector.

Measure the resistance between ground and the (T72) Sensor Supply Voltage circuit in the TCM harness connector.

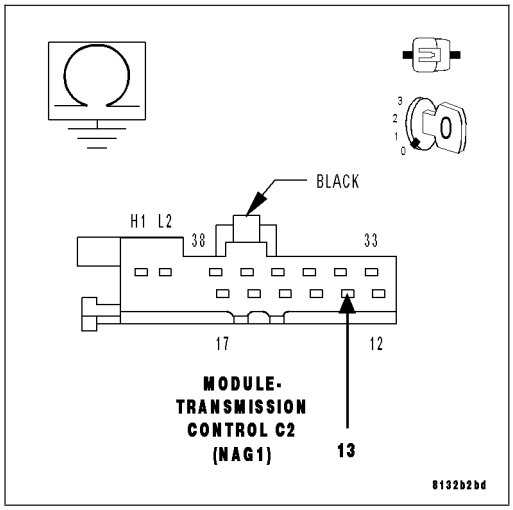

Is the resistance below 5.0 ohms?

Yes >> Repair the Electrohydraulic Control Unit Assembly for a short to ground. Refer to 21- AUTOMATIC TRANSMISSION-AUTOMATIC TRANSMISSION NAG1/SERVICE INFORMATION for proper service procedures.

Perform NAG1 TRANSMISSION VERIFICATION TEST - VER 1. (Refer to 21 - TRANSMISSION/TRANSAXLE/AUTOMATIC - NAG1 - STANDARD PROCEDURE)

No >> Using the schematics as a guide, check the Transmission Control Module (TCM) terminals for corrosion, damage, or terminal push out. Pay particular attention to all power and ground circuits. If no problems are found, replace the TCM per the Service Information. (Refer to 8 - ELECTRICAL/ELECTRONIC CONTROL MODULES/TRANSMISSION CONTROL MODULE - DESCRIPTION)

Perform NAG1 TRANSMISSION VERIFICATION TEST - VER 1. (Refer to 21 - TRANSMISSION/TRANSAXLE/AUTOMATIC - NAG1 - STANDARD PROCEDURE)

P0643-SENSOR REFERENCE VOLTAGE 1 CIRCUIT HIGH

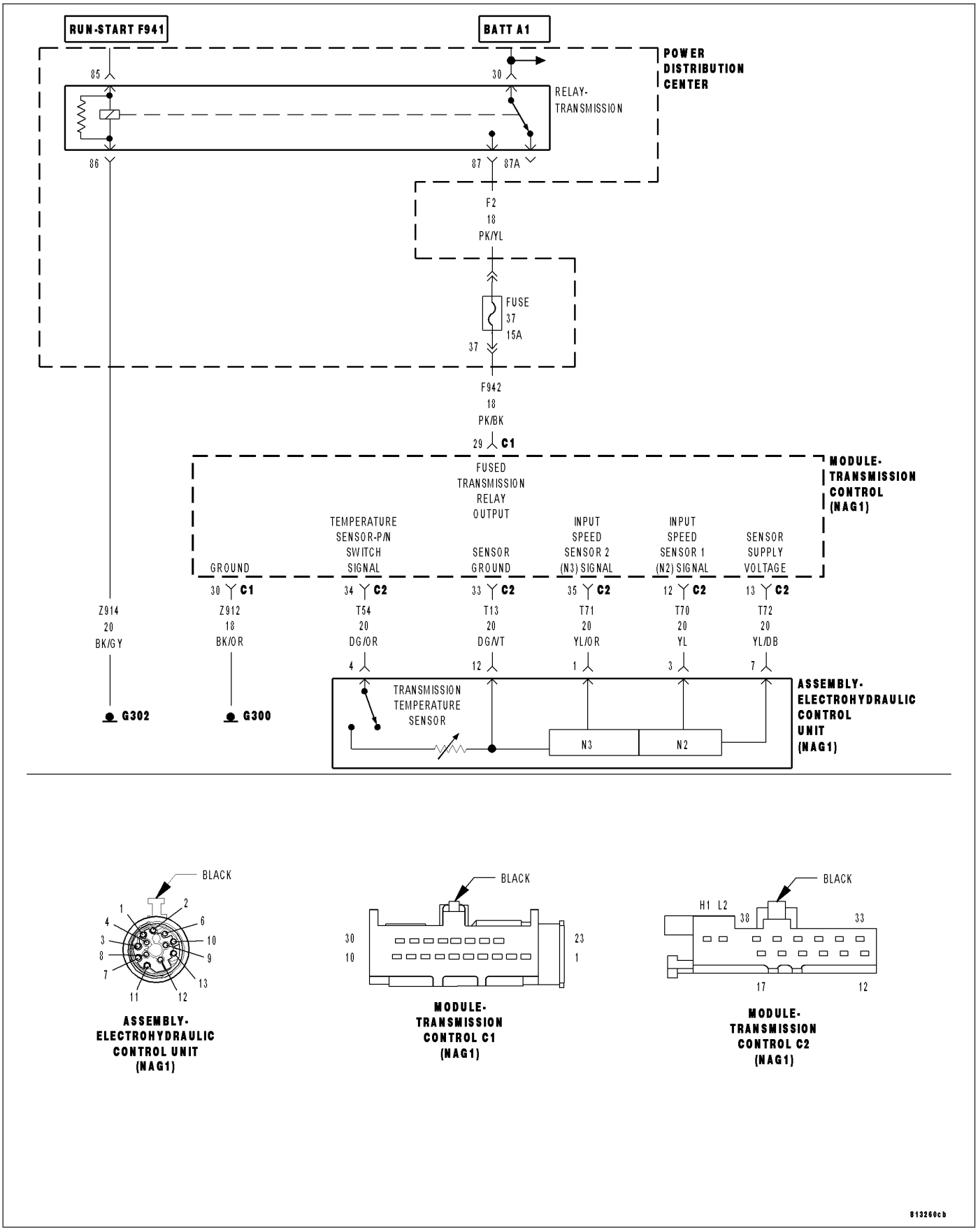

For a complete wiring diagram **Refer to Section 8W**

Theory of Operation

The Sensor Supply Voltage circuit supplies a 6 volt power supply for the two input speed sensors. The Sensor Supply Voltage circuit is constantly monitored for correct voltage between 4.8 to 7.2 volts. If the voltage does not stay within the 4.8 to 7.2 volt range, the appropriate DTC will set.

- **When Monitored:**
  Continuously with the ignition on and no overvoltage condition exist.
- **Set Condition:**
  When the monitored sensor voltage is not within specified limits and rises above 7.2 volts.

Possible Causes
(T72) SENSOR SUPPLY VOLTAGE CIRCUIT SHORT TO VOLTAGE
(T72) SENSOR SUPPLY VOLTAGE CIRCUIT SHORT TO OTHER CIRCUITS
TRANSMISSION CONTROL MODULE

Always perform the NAG1 Pre-Diagnostic Troubleshooting procedure before proceeding. (Refer to 21 - TRANSMISSION/TRANSAXLE/AUTOMATIC - NAG1 - STANDARD PROCEDURE)

Diagnostic Test

1. CHECK FOR SPEED SENSOR DTCS

With the scan tool, check for other transmission DTCs.

Are there any speed sensor and/or temperature sensor DTCs present?

Yes >> Refer to the Transmission category and perform the appropriate symptom(s). (Refer to 21 - TRANSMISSION/TRANSAXLE/AUTOMATIC - NAG1 - DIAGNOSIS AND TESTING)

No >> Go To 2

2. CHECK SOLENOID SUPPLY VOLTAGE ON THE SCAN TOOL

Start the engine.

With the scan tool, check the Transmission Solenoid Supply Voltage.

Is the Transmission Solenoid Supply Voltage above 7.2 volts?

Yes >> Go To 3

No >> Go To 5

3. CHECK (T72) SENSOR SUPPLY CIRCUIT VOLTAGE

While back probing, measure the voltage of the (T72) Solenoid Supply Voltage circuit in the TCM harness connector.

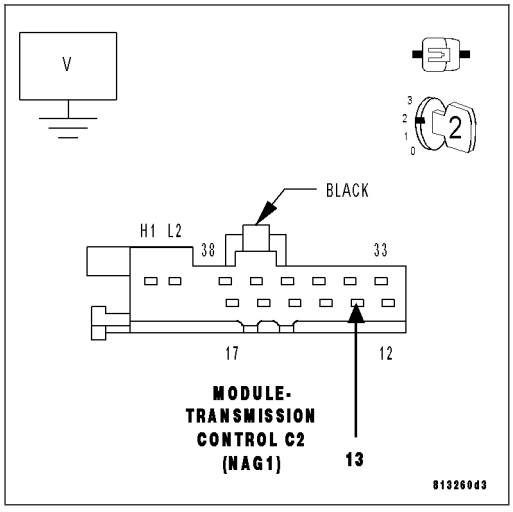

Does the measured voltage match the voltage reading on the scan tool ± 0.2 volts?

Yes >> Go To 4

No >> Using the schematics as a guide, check the Transmission Control Module (TCM) terminals for corrosion, damage, or terminal push out. Pay particular attention to all power and ground circuits. If no problems are found, replace the TCM per the Service Information. (Refer to 8 - ELECTRICAL/ELECTRONIC CONTROL MODULES/TRANSMISSION CONTROL MODULE - DESCRIPTION)

Perform NAG1 TRANSMISSION VERIFICATION TEST - VER 1. (Refer to 21 - TRANSMISSION/TRANSAXLE/AUTOMATIC - NAG1 - STANDARD PROCEDURE)

4. (T72) SENSOR SUPPLY VOLTAGE CIRCUIT SHORT TO ANOTHER CIRCUIT

Turn the ignition off to the lock position.

Disconnect the Transmission Electrohydraulic Control Unit Assembly harness connector.

Disconnect all TCM harness connectors.

Measure the resistance between the (T72) Solenoid Supply Voltage circuit and all other circuits in the Transmission Electrohydraulic Control Unit harness connector.

Is the resistance below 5.0 ohms between the (T72) Solenoid Supply Voltage circuit and all other circuits in the Transmission Electrohydraulic Control Unit Assembly harness connector?

Yes >> Repair the (T72) Solenoid Supply Voltage circuit for a short to another circuit(s).

Perform NAG1 TRANSMISSION VERIFICATION TEST - VER 1. (Refer to 21 - TRANSMISSION/TRANSAXLE/AUTOMATIC - NAG1 - STANDARD PROCEDURE)

No >> Using the schematics as a guide, check the Transmission Control Module (TCM) terminals for corrosion, damage, or terminal push out. Pay particular attention to all power and ground circuits. If no problems are found, replace the TCM per the Service Information. (Refer to 8 - ELECTRICAL/ELECTRONIC CONTROL MODULES/TRANSMISSION CONTROL MODULE - DESCRIPTION)

Perform NAG1 TRANSMISSION VERIFICATION TEST - VER 1. (Refer to 21 - TRANSMISSION/TRANSAXLE/AUTOMATIC - NAG1 - STANDARD PROCEDURE)

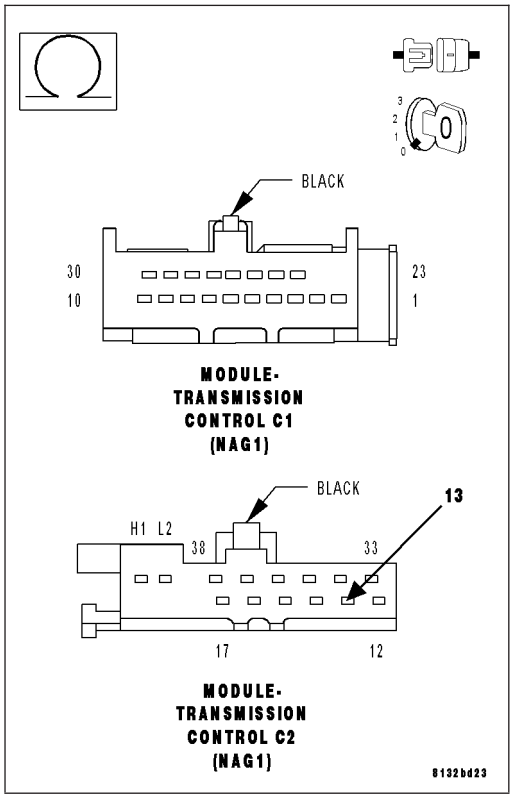

5. INTERMITTENT WIRING AND CONNECTORS

The conditions necessary to set this DTC are not present at this time.

Using the schematics as a guide, inspect the wiring and connectors specific to this circuit.

Wiggle the wires while checking for shorted and open circuits.

Were there any problems found?

Yes >> Repair as necessary.

Perform NAG1 TRANSMISSION VERIFICATION TEST - VER 1.

No >> Test Complete.

P0657-SOLENOID SUPPLY VOLTAGE CIRCUIT

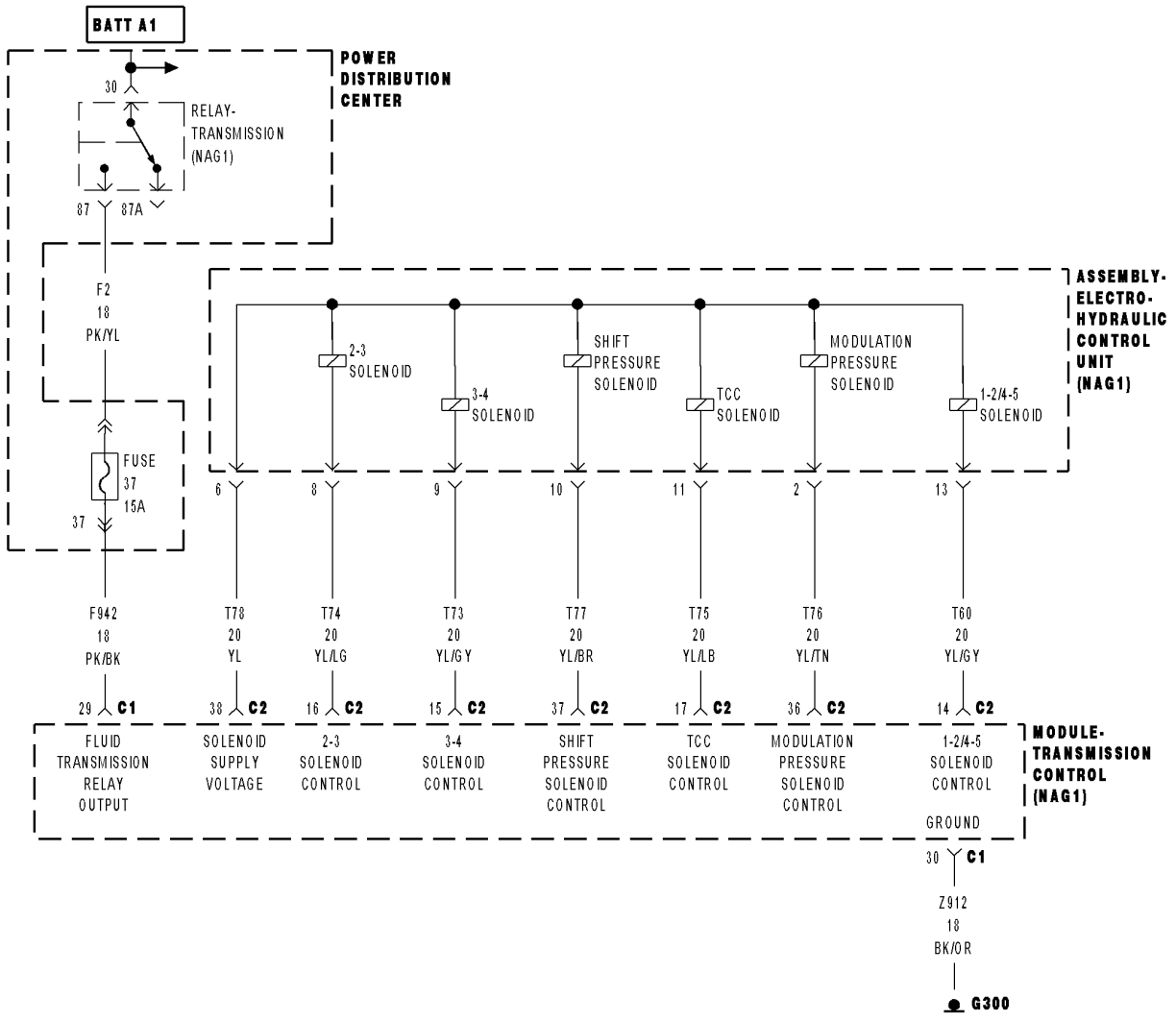

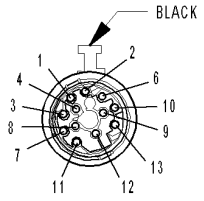

ASSEMBLY-ELECTROHYDRAULIC CONTROL UNIT (NAG1)

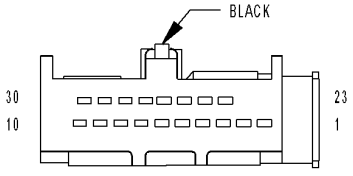

MODULE-TRANSMISSION CONTROL C1 (NAG1)

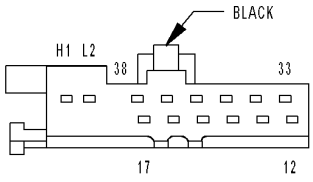

MODULE-TRANSMISSION CONTROL C2 (NAG1)

81326067

For a complete wiring diagram **Refer to Section 8W**

Theory of Operation

The Solenoid Supply Voltage output of the Transmission Control Module (TCM) provides the voltage to the three shift, two pressure and TCC solenoids. The output is active whenever the system is in normal operation. If a major system fault is detected, this output is turned off to ensure that no solenoids are active.

- **When Monitored:**
  When the output is active and no undervoltage condition exists.
- **Set Condition:**
  When the monitored supply voltage and battery voltage differ by 3.6 volts.

Possible Causes
(T78) SOLENOID SUPPLY VOLTAGE CIRCUIT OPEN
(T78) SOLENOID SUPPLY VOLTAGE CIRCUIT SHORT TO GROUND
(T78) SOLENOID SUPPLY VOLTAGE CIRCUIT SHORT TO VOLTAGE
(T78) SOLENOID SUPPLY VOLTAGE CIRCUIT SHORT TO ANOTHER CIRCUIT
TRANSMISSION CONTROL MODULE

Always perform the NAG1 Pre-Diagnostic Troubleshooting procedure before proceeding. (Refer to 21 - TRANSMISSION/TRANSAXLE/AUTOMATIC - NAG1 - STANDARD PROCEDURE)

Diagnostic Test

1. (T78) SOLENOID SUPPLY VOLTAGE CIRCUIT SHORT TO VOLTAGE

With the scan tool, check for other transmission DTCs.

Is the DTC P1629-TCM INTERNAL - SOLENOID SUPPLY/WATCHDOG also present?

Yes >> When both P0657-SOLENOID SUPPLY VOLTAGE CIRCUIT and P1629-TCM INTERNAL - SOLENOID SUPPLY/WATCHDOG DTCs set at the same time indicates that the (T78) Solenoid Supply Voltage circuit is shorted to voltage. Repair the Solenoid Supply Voltage circuit for a short to voltage. If no short to voltage is present, using the schematics as a guide, check the Transmission Control Module (TCM) terminals for corrosion, damage, or terminal push out. Pay particular attention to all power and ground circuits. If no problems are found replace the TCM per the Service Information. (Refer to 8 - ELECTRICAL/ELECTRONIC CONTROL MODULES/TRANSMISSION CONTROL MODULE - DESCRIPTION)

Perform NAG1 TRANSMISSION VERIFICATION TEST - VER 1. (Refer to 21 - TRANSMISSION/TRANSAXLE/AUTOMATIC - NAG1 - STANDARD PROCEDURE)

No >> Go To 2

2. (T78) SOLENOID SUPPLY VOLTAGE CIRCUIT OPEN

Turn the ignition off to the lock position.

Disconnect the TCM C1 and C2 harness connectors.

Disconnect the Electrohydraulic Control Unit Assembly harness connector.

Measure the resistance of the (T78) Solenoid Supply Voltage circuit between the TCM C2 harness connector and the Electrohydraulic Control Unit Assembly harness connector.

Is the resistance below 5.0 ohms?

Yes >> Repair the (T78) Solenoid Supply Voltage circuit for an open.

Perform NAG1 TRANSMISSION VERIFICATION TEST - VER 1. (Refer to 21 - TRANSMISSION/TRANSAXLE/AUTOMATIC - NAG1 - STANDARD PROCEDURE)

No >> Go To 3

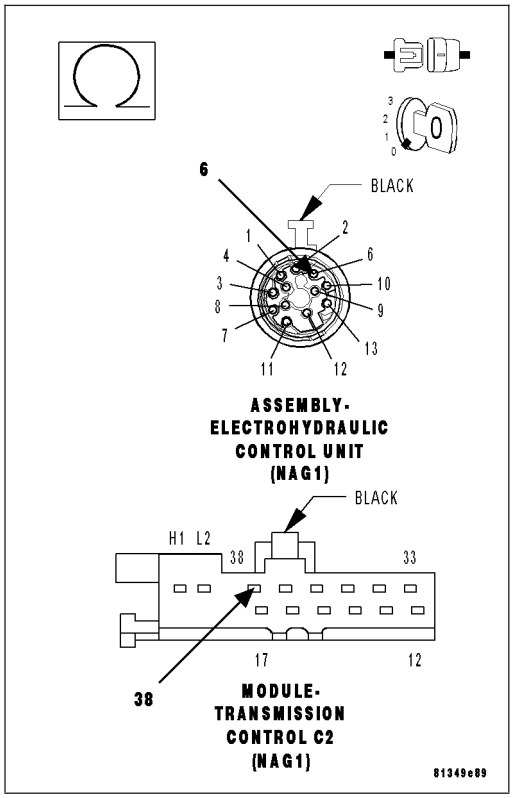

3. (T78) SOLENOID SUPPLY VOLTAGE CIRCUIT SHORT TO GROUND

Measure the resistance between ground and the (T78) Solenoid Supply Voltage circuit.

Is the resistance below 5.0 ohms?

Yes >> Repair the (T78) Solenoid Supply Voltage circuit for a short to ground.

Perform NAG1 TRANSMISSION VERIFICATION TEST - VER 1. (Refer to 21 - TRANSMISSION/TRANSAXLE/AUTOMATIC - NAG1 - STANDARD PROCEDURE)

No >> Go To 4

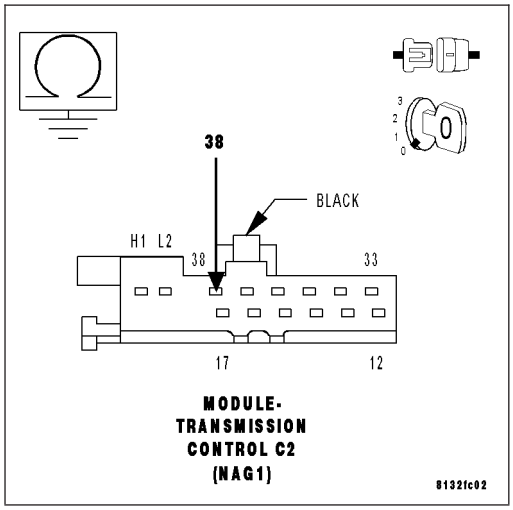

4. (T78) SOLENOID SUPPLY VOLTAGE CIRCUIT SHORT TO ANOTHER CIRCUIT

Measure the resistance between the (T78) Solenoid Supply Voltage circuit and all other circuits in the Electrohydraulic Control Unit Assembly harness connector.

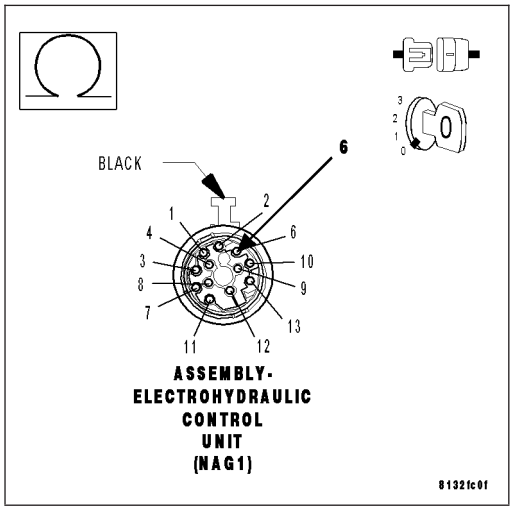

Is the resistance below 5.0 ohms between the (T78) Solenoid Supply Voltage circuit and any other circuit(s) in the Electrohydraulic Control Unit Assembly harness connector?

Yes >> Repair the (T78) Solenoid Supply Voltage circuit for a short to another circuit(s).

Perform NAG1 TRANSMISSION VERIFICATION TEST - VER 1.

No >> Using the schematics as a guide, check the Transmission Control Module (TCM) terminals for corrosion, damage, or terminal push out. Pay particular attention to all power and ground circuits. If no problems are found, replace the TCM per the Service Information. (Refer to 8 - ELECTRICAL/ ELECTRONIC CONTROL MODULES/TRANSMISSION CONTROL MODULE - DESCRIPTION)

Perform NAG1 TRANSMISSION VERIFICATION TEST - VER 1. (Refer to 21 - TRANSMISSION/ TRANSAXLE/AUTOMATIC - NAG1 - STANDARD PROCEDURE)

P0710-TRANSMISSION TEMPERATURE SENSOR CIRCUIT

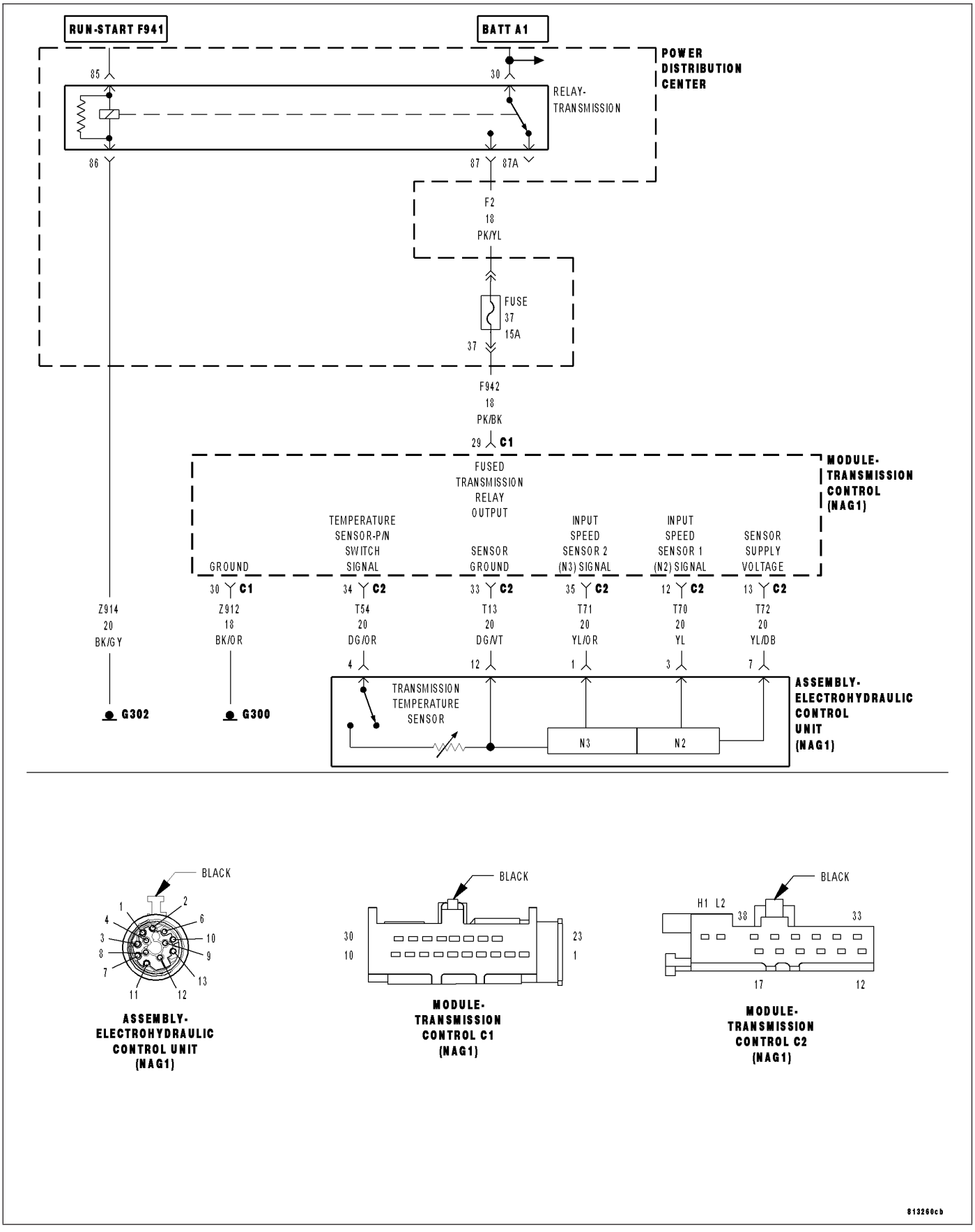

For a complete wiring diagram **Refer to Section 8W**

Theory of Operation

The Electrohydraulic Control Unit Assembly of the NAG1 transmission contains a temperature sensor to monitor the transmission oil temperature. This sensor is wired in series with the transmission Park/Neutral switch. The Transmission Control Module (TCM) expects to see a valid voltage level from the sensor when the shifter is in Reverse or any forward Drive position. The TCM also expects to see an open circuit condition when the shifter is in the Park or Neutral position. When the controller detects an open circuit when in Reverse or any forward drive position the DTC will set. Note: Due to a open circuit condition in Park or Neutral, the TCM substitutes the Transmission Temperature reading with Engine Temperature when in Park or Neutral

- **When Monitored:**
  Continuously with the ignition on.
- **Set Condition:**
  When the TCM detects an open circuit when in Reverse or any forward drive position the DTC will set.

Possible Causes
SHIFT LEVER ASSEMBLY OUT OF ADJUSTMENT
(T54) TEMPERATURE SENSOR-P/N SWITCH SIGNAL CIRCUIT OPEN
(T54) TEMPERATURE SENSOR-P/N SWITCH SIGNAL CIRCUIT SHORT TO VOLTAGE
(T54) TEMPERATURE SENSOR-P/N SWITCH SIGNAL CIRCUIT SHORT TO OTHER CIRCUITS
(T54) TEMPERATURE SENSOR-P/N SWITCH SIGNAL CIRCUIT SHORT TO ANOTHER CIRCUIT(S)
SHIFT LEVER ASSEMBLY
TRANSMISSION CONTROL MODULE

Always perform the NAG1 Pre-Diagnostic Troubleshooting procedure before proceeding. (Refer to 21 - TRANSMISSION/TRANSAXLE/AUTOMATIC - NAG1 - STANDARD PROCEDURE)

Diagnostic Test

1. CHECK IF SPEED SENSOR DTCS ARE PRESENT

With the scan tool, read Transmission DTCs.

Are there any speed sensor DTCs present also?

Yes >> Refer to the Transmission category and perform the appropriate symptom(s). (Refer to 21 - TRANSMISSION/TRANSAXLE/AUTOMATIC - NAG1 - DIAGNOSIS AND TESTING)

No >> Go To 2

2. CHECK IF SHIFT LEVER ASSEMBLY SHIFT CABLE IS OUT OF ADJUSTMENT

Check the Shift Lever Assembly shift cable for proper adjustment. Refer to 21- AUTOMATIC TRANSMISSION-AUTOMATIC TRANSMISSION NAG1/SERVICE INFORMATION for the proper service procedures.

Is the Shift Lever Assembly shift cable properly adjusted?

Yes >> Go To 3

No >> Adjust the Shift Lever Assembly shift cable per the Service Information. (Refer to 21 - TRANSMISSION/TRANSAXLE/AUTOMATIC - NAG1/GEAR SHIFT CABLE - ADJUSTMENTS)

Perform NAG1 TRANSMISSION VERIFICATION TEST - VER 1. (Refer to 21 - TRANSMISSION/TRANSAXLE/AUTOMATIC - NAG1 - STANDARD PROCEDURE)

3. CHECK IF ENGINE STARTS IN PART OR NEUTRAL

Attempt to start the engine in Park or Neutral.

Does the engine start in either Park or Neutral?

Yes >> Go To 4

No >> Go To 5

4. TRANSMISSION TEMPERATURE SENSOR-P/N SWITCH

Turn the ignition off to the lock position.

Disconnect the TCM C2 harness connector.

Place the gear selector in Drive.

Measure the resistance of the Transmission Temperature Sensor between the (T54) Temperature Sensor-P/N Switch Signal circuit and the (T13) Sensor Ground circuit in the TCM C2 harness connector.

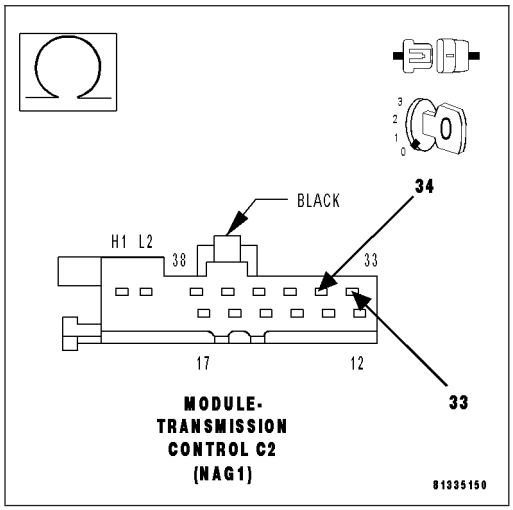

Is the resistance between 500 to 2500 ohms?

Yes >> Using the schematics as a guide, check the Transmission Control Module (TCM) terminals for corrosion, damage, or terminal push out. Pay particular attention to all power and ground circuits. If no problems are found, replace the TCM per the Service Information. (Refer to 8 - ELECTRICAL/ELECTRONIC CONTROL MODULES/TRANSMISSION CONTROL MODULE - DESCRIPTION)

Perform NAG1 TRANSMISSION VERIFICATION TEST - VER 1. (Refer to 21 - TRANSMISSION/TRANSAXLE/AUTOMATIC - NAG1 - STANDARD PROCEDURE)

No >> Using the schematics as a guide, check the Electrohydraulic Control Unit Assembly and Transmission Temperature Sensor-P/N Switch pins and connector terminals for corrosion, damage, or terminal push out. If no problems are found, replace the Transmission Temperature Sensor-P/N Switch. (Refer to 21 - TRANSMISSION/TRANSAXLE/AUTOMATIC - NAG1/ELECTROHYDRAULIC UNIT - DISASSEMBLY)

Perform NAG1 TRANSMISSION VERIFICATION TEST - VER 1. (Refer to 21 - TRANSMISSION/TRANSAXLE/AUTOMATIC - NAG1 - STANDARD PROCEDURE)

5. CHECK THE TRANSMISSION TEMPERATURE SENSOR-P/N SWITCH

Turn the ignition off to the lock position.

Reconnect the TCM C2 harness connector.

Disconnect the Electrohydraulic Control Unit Assembly harness connector.

NOTE: This procedure may set various DTCs to multiple modules connected to the CAN bus. Disregard and erase any DTCs that may set after completion of this procedure.

With the Shift Lever in the Park position, attempt to start the engine.

Does the engine start?

Yes >> Replace the Transmission Temperature Sensor-P/N Switch. (Refer to 21 - TRANSMISSION/TRANSAXLE/AUTOMATIC - NAG1/ELECTROHYDRAULIC UNIT - DISASSEMBLY)

Perform NAG1 TRANSMISSION VERIFICATION TEST - VER 1. (Refer to 21 - TRANSMISSION/TRANSAXLE/AUTOMATIC - NAG1 - STANDARD PROCEDURE)

No >> Go To 6

6. CHECK IF THE (T54) TEMPERATURE SENSOR-P/N SWITCH SIGNAL CIRCUIT IS SHORTED TO GROUND

Turn the ignition off to the lock position.

Reconnect the Electrohydraulic Control Unit Assembly harness connector.

Disconnect the TCM C1 and C2 harness connectors.

Measure the resistance between ground and the (T54) Temperature Sensor-P/N Switch Signal circuit.

Is the resistance below 5.0 ohms?

Yes >> Repair the (T54) Temperature Sensor-P/N Switch Signal circuit for a short to ground.

Perform NAG1 TRANSMISSION VERIFICATION TEST - VER 1. (Refer to 21 - TRANSMISSION/TRANSAXLE/AUTOMATIC - NAG1 - STANDARD PROCEDURE)

No >> Go To 7

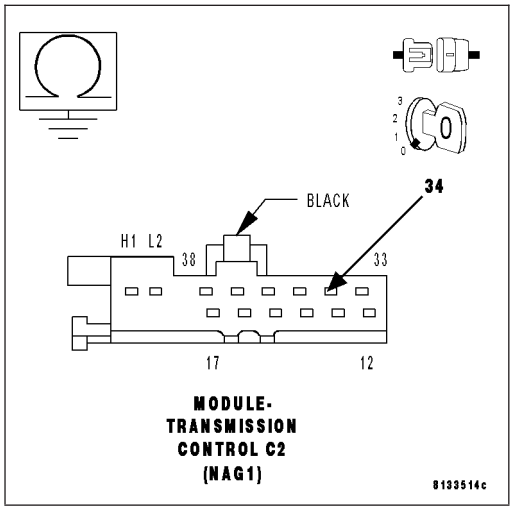

7. CHECK IF (T54) TEMPERATURE SENSOR-P/N SWITCH SIGNAL CIRCUIT IS SHORTED TO ANOTHER CIRCUIT(S)

Measure the resistance between the (T54) Temperature Sensor-P/N Switch Signal circuit and all other circuits in the TCM C1 and C2 harness connectors.

Is the resistance below 5.0 ohms between the (T54) Temperature Sensor-P/N Switch Signal circuit and any other circuit(s)?

Yes >> Repair the (T54) Temperature Sensor-P/N Switch Signal circuit for a short to another circuit(s).

Perform NAG1 TRANSMISSION VERIFICATION TEST - VER 1. (Refer to 21 - TRANSMISSION/TRANSAXLE/AUTOMATIC - NAG1 - STANDARD PROCEDURE)

No >> Using the schematics as a guide, check the Transmission Control Module (TCM) terminals for corrosion, damage, or terminal push out. Pay particular attention to all power and ground circuits. If no problems are found, replace the TCM per the Service Information. (Refer to 8 - ELECTRICAL/ELECTRONIC CONTROL MODULES/TRANSMISSION CONTROL MODULE - DESCRIPTION)

Perform NAG1 TRANSMISSION VERIFICATION TEST - VER 1. (Refer to 21 - TRANSMISSION/TRANSAXLE/AUTOMATIC - NAG1 - STANDARD PROCEDURE)

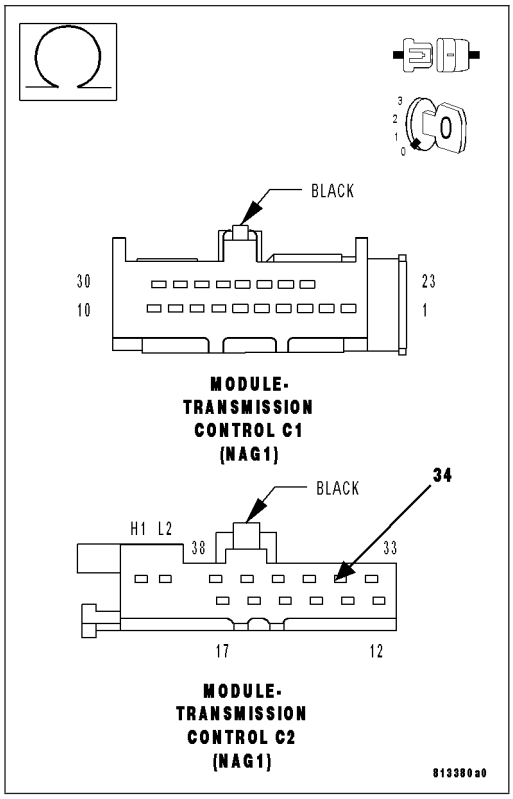

P0712-TRANSMISSION TEMPERATURE SENSOR LOW

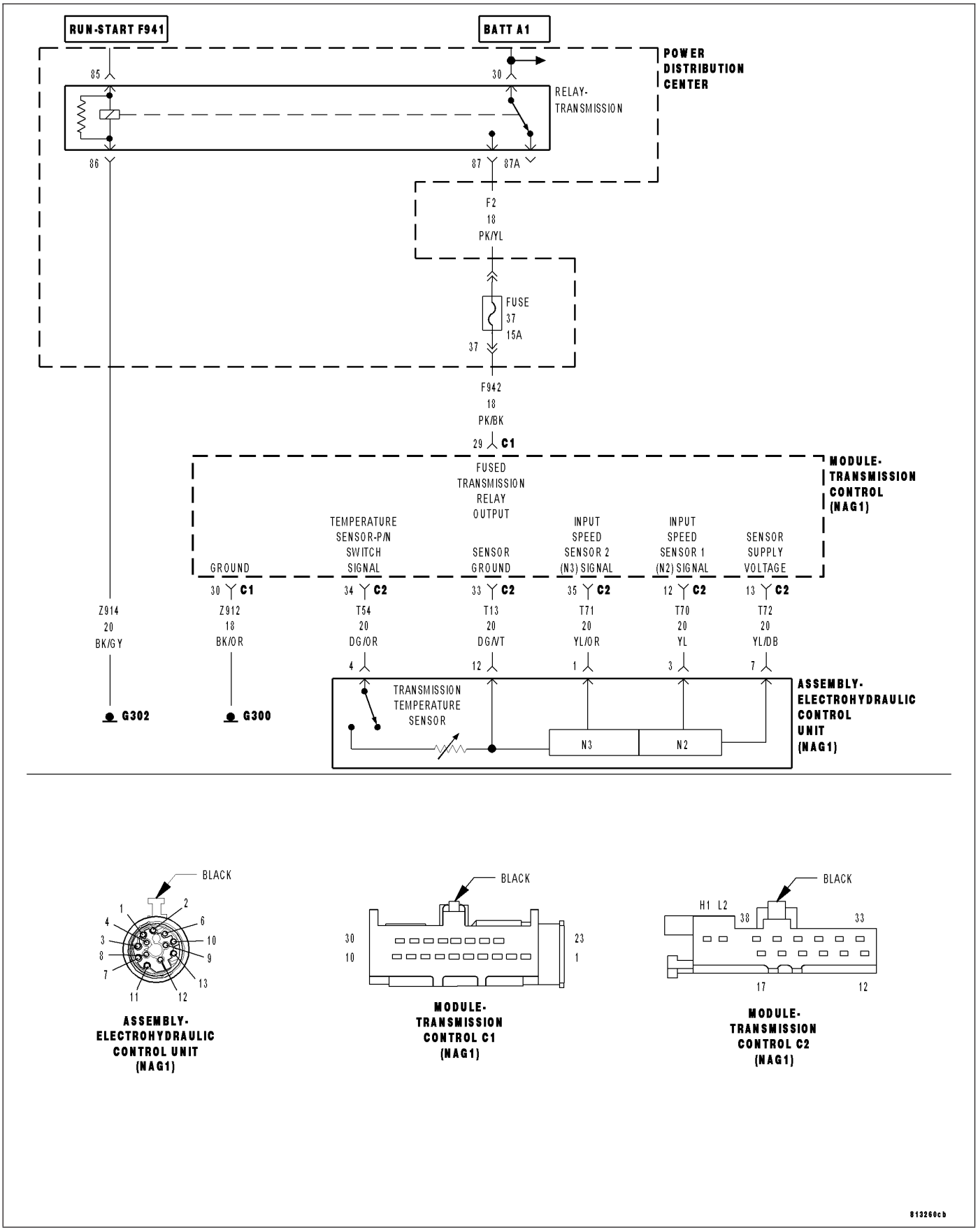

For a complete wiring diagram **Refer to Section 8W**

Theory of Operation

The Electrohydraulic Control Unit Assembly of the NAG1 transmission contains a temperature sensor to monitor the transmission oil temperature. This sensor is wired in series with the transmission Park/Neutral switch. The Transmission Control Module (TCM) expects to see a valid voltage level from the sensor when the shifter is in Reverse or any forward Drive position. The TCM also expects to see an open circuit condition when the shifter is in the Park or Neutral position. When the controller detects an open circuit when in Reverse or any forward drive position the DTC will set. Note: The TCM substitutes the Transmission Temperature reading with Engine Temperature due to a open circuit condition in Park or Neutral.

- **When Monitored:**
  Continuously with the ignition on.
- **Set Condition:**
  When the TCM detects the Temperature sensor input is below 0.5 volts.

Possible Causes
(T54) TEMPERATURE SENSOR-P/N SWITCH SIGNAL CIRCUIT SHORT TO GROUND
(T54) TEMPERATURE SENSOR-P/N SWITCH SIGNAL CIRCUIT SHORT TO ANOTHER CIRCUIT
TRANSMISSION TEMPERATURE SENSOR-P/N SWITCH
TRANSMISSION CONTROL MODULE

Always perform the NAG1 Pre-Diagnostic Troubleshooting procedure before proceeding. (Refer to 21 - TRANSMISSION/TRANSAXLE/AUTOMATIC - NAG1 - STANDARD PROCEDURE)

Diagnostic Test

1. CHECK FOR SHIFT LEVER ASSEMBLY DTCS

With the scan tool, check for Shift Lever Assembly DTCs.

Are there any Shift Lever Assembly DTCs present?

Yes >> Refer to Shift Lever Assembly symptom list and perform the appropriate symptom. (Refer to 21 - TRANSMISSION/TRANSAXLE/AUTOMATIC - NAG1 - DIAGNOSIS AND TESTING)
Perform NAG1 TRANSMISSION VERIFICATION TEST - VER 1. (Refer to 21 - TRANSMISSION/TRANSAXLE/AUTOMATIC - NAG1 - STANDARD PROCEDURE)

No >> Go To 2

2. CHECK THE SHIFT LEVER ASSEMBLY CABLE FOR PROPER ADJUSTMENT

Check the Shift Lever Assembly Cable for proper adjustment. Refer to 21- AUTOMATIC TRANSMISSION-AUTOMATIC TRANSMISSION NAG1/SERVICE INFORMATION for the appropriate service procedure.

Is the Shift Lever Assembly Cable for properly adjusted?

Yes >> Go To 3

No >> Adjust the Shift Lever Assembly Cable per the Service Information. (Refer to 21 - TRANSMISSION/TRANSAXLE/AUTOMATIC - NAG1/GEAR SHIFT CABLE - ADJUSTMENTS)
Perform NAG1 TRANSMISSION VERIFICATION TEST - VER 1. (Refer to 21 - TRANSMISSION/TRANSAXLE/AUTOMATIC - NAG1 - STANDARD PROCEDURE)

3. CHECK THE (T54) TEMPERATURE SENSOR-P/N SWITCH SIGNAL CIRCUIT FOR A SHORT TO GROUND

Turn the ignition off to the lock position.

Disconnect the TCM C2 harness connector.

Measure the resistance between ground and the (T54) Temperature Sensor-P/N Switch Signal circuit.

Is the resistance below 5.0 ohms?

Yes >> Repair the (T54) Temperature Sensor-P/N Switch Signal circuit for a short to ground.

Perform NAG1 TRANSMISSION VERIFICATION TEST - VER 1. (Refer to 21 - TRANSMISSION/TRANSAXLE/AUTOMATIC - NAG1 - STANDARD PROCEDURE)

No >> Go To 4

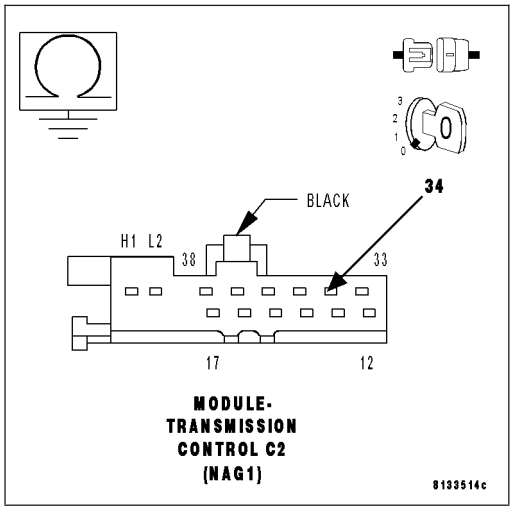

4. CHECK THE (T54) TEMPERATURE SENSOR-P/N SWITCH SIGNAL CIRCUIT FOR A SHORT TO ANOTHER CIRCUIT

Disconnect the TCM C1 harness connector.

Disconnect the Transmission Electrohydraulic Control Unit Assembly harness connector.

Measure the resistance between the (T54) Temperature Sensor-P/N Switch Signal circuit and all other circuits in the TCM C1 and C2 harness connectors.

Is the resistance below 5.0 ohms between the (T54) Temperature Sensor-P/N Switch Signal circuit and any other circuit(s)?

Yes >> Repair the (T54) Temperature Sensor-P/N Switch Signal circuit for a short to another circuit(s).

Perform NAG1 TRANSMISSION VERIFICATION TEST - VER 1. (Refer to 21 - TRANSMISSION/TRANSAXLE/AUTOMATIC - NAG1 - STANDARD PROCEDURE)

No >> Using the schematics as a guide, check the Transmission Control Module (TCM) terminals for corrosion, damage, or terminal push out. Pay particular attention to all power and ground circuits. If no problems are found, replace the TCM per the Service Information. (Refer to 8 - ELECTRICAL/ELECTRONIC CONTROL MODULES/TRANSMISSION CONTROL MODULE - DESCRIPTION)

Perform NAG1 TRANSMISSION VERIFICATION TEST - VER 1. (Refer to 21 - TRANSMISSION/TRANSAXLE/AUTOMATIC - NAG1 - STANDARD PROCEDURE)

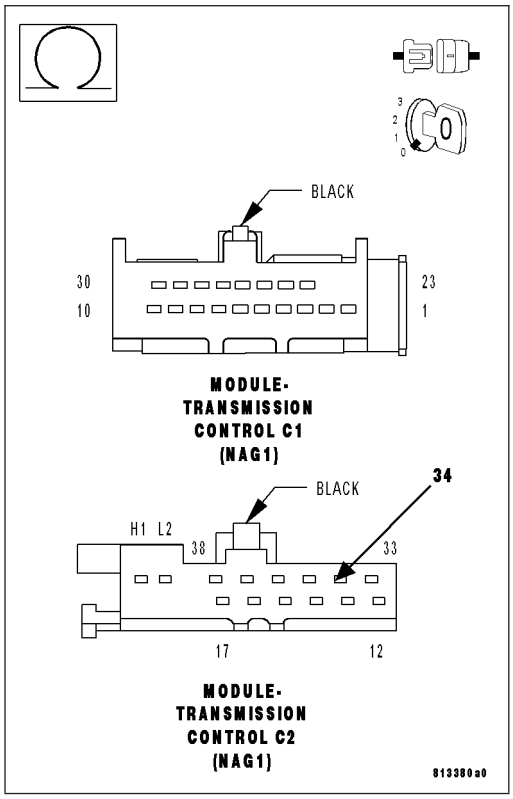

P0714-TRANSMISSION TEMPERATURE SENSOR INTERMITTENT

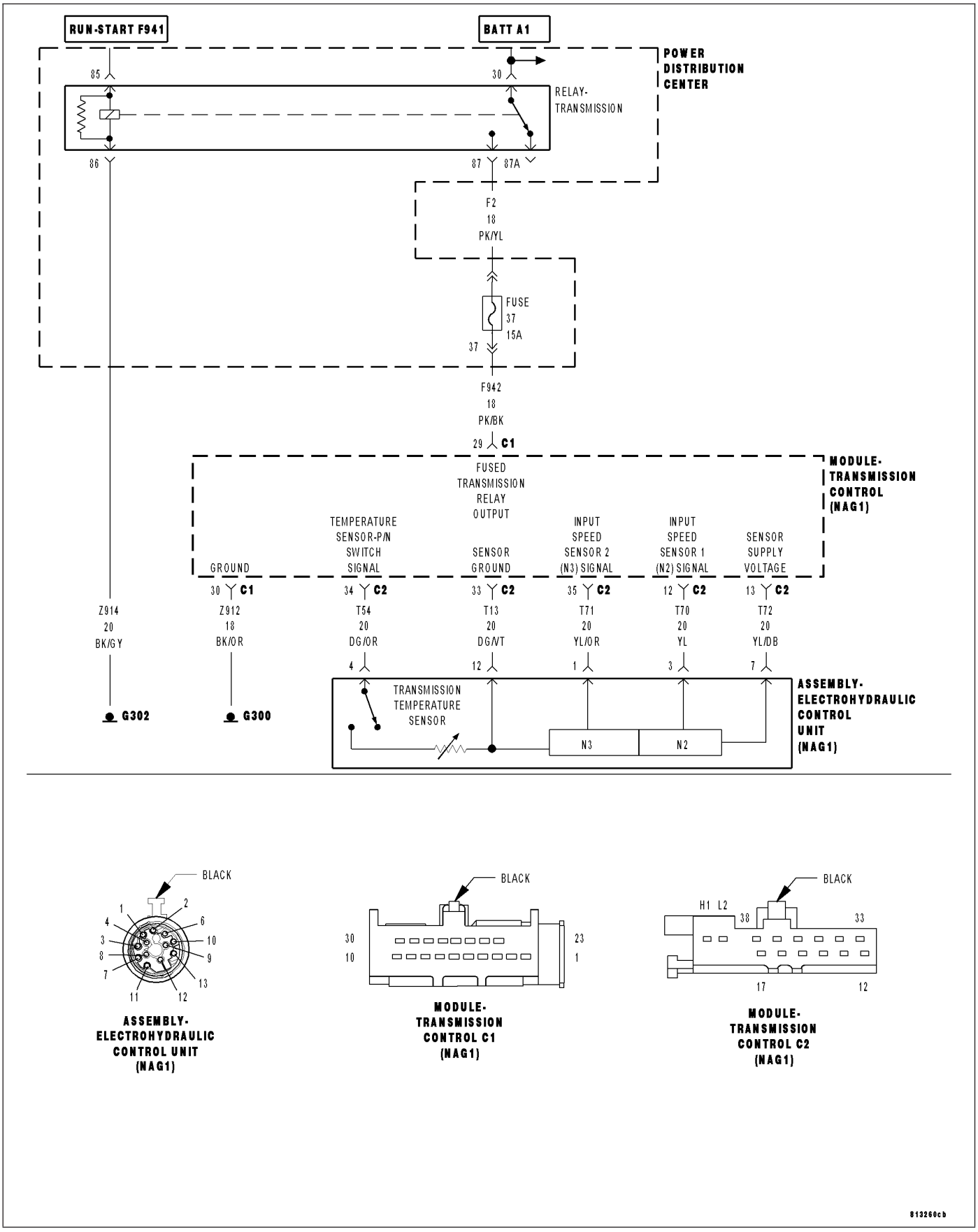

For a complete wiring diagram **Refer to Section 8W**

Theory of Operation

The Electrohydraulic Control Unit Assembly of the NAG1 transmission contains a temperature sensor to monitor the transmission oil temperature. This sensor is wired in series with the transmission Park/Neutral switch. The Transmission Control Module (TCM) expects to see a valid voltage level from the sensor when the shifter is in Reverse or any forward Drive position. The TCM also expects to see an open circuit condition when the shifter is in the Park or Neutral position. When the controller detects an open circuit when in Reverse or any forward drive position the DTC will set. Note: The TCM substitutes the Transmission Temperature reading with Engine Temperature due to a open circuit condition in Park or Neutral.

- **When Monitored:**
  Continuously with the ignition on and the Transmission Temperature below 170 °C (338 °F).
- **Set Condition:**
  When the TCM detects the Temperature sensor input changes more than 10 °C (50 °F) between each 20 mSec sensor read.

Possible Causes
WIRING AND CONNECTORS
TRANSMISSION TEMPERATURE SENSOR - P/N SWITCH
TRANSMISSION CONTROL MODULE

Always perform the NAG1 Pre-Diagnostic Troubleshooting procedure before proceeding. (Refer to 21 - TRANSMISSION/TRANSAXLE/AUTOMATIC - NAG1 - STANDARD PROCEDURE)

Diagnostic Test

1. CHECK WIRING AND CONNECTORS

Ignition on, engine not running.

With the scan tool, monitor the Transmission Temperature.

Apply the parking brake.

With the brakes firmly applied, place the gear selector in Drive.

While monitoring the scan tool, wiggle the wires and connectors from the TCM to the Electrohydraulic Control Unit.

Did the transmission temperature fluctuate while wiggling the wires?

Yes >> Repair the wiring and/or connectors as necessary.
Perform NAG1 TRANSMISSION VERIFICATION TEST - VER 1. (Refer to 21 - TRANSMISSION/TRANSAXLE/AUTOMATIC - NAG1 - STANDARD PROCEDURE)

No >> Go To 2

2. CHECK IF DTC RESETS

Replace the Transmission Temperature Sensor - P/N Switch. Refer to 21- AUTOMATIC TRANSMISSION-AUTOMATIC TRANSMISSION NAG1/SERVICE INFORMATION for proper service procedure.

Perform NAG1 TRANSMISSION VERIFICATION TEST - VER 1.

With the scan tool, read Transmission DTCs.

Did DTC P0714 reset?

Yes >> Using the schematics as a guide, check the Transmission Control Module (TCM) terminals for corrosion, damage, or terminal push out. Pay particular attention to all power and ground circuits. If no problems are found, replace the TCM per the Service Information. (Refer to 8 - ELECTRICAL/ELECTRONIC CONTROL MODULES/TRANSMISSION CONTROL MODULE - DESCRIPTION)
Perform NAG1 TRANSMISSION VERIFICATION TEST - VER 1. (Refer to 21 - TRANSMISSION/TRANSAXLE/AUTOMATIC - NAG1 - STANDARD PROCEDURE)

No >> Test Complete.

P0717-INPUT SPEED SENSOR 1 CIRCUIT NO SIGNAL

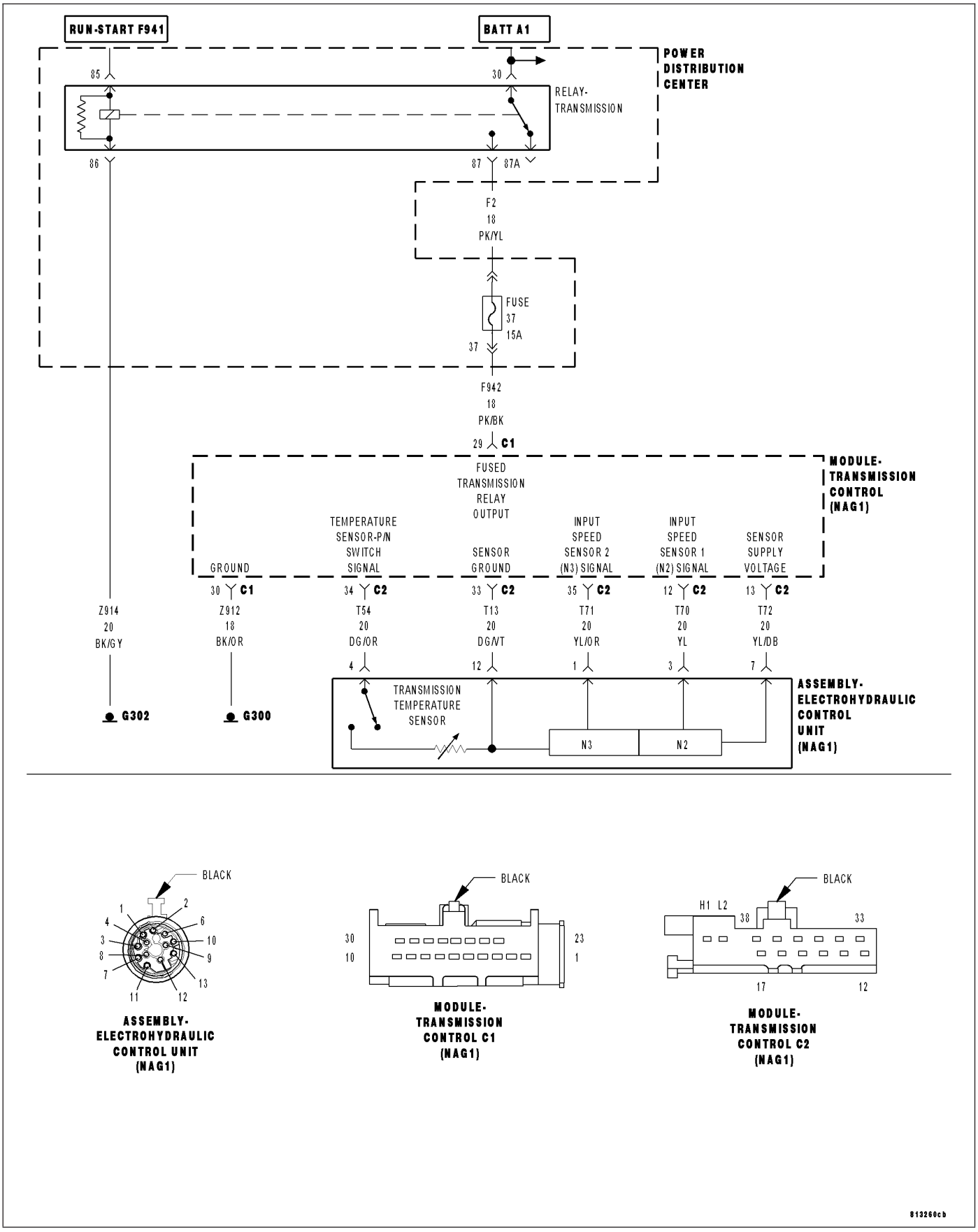

For a complete wiring diagram **Refer to Section 8W**

Theory of Operation

The Input Speed Sensor 1 (N2) is one of two hall effect speed sensors that are used by the Transmission Control Module (TCM) to calculate the transmissions turbine speed. Since the turbine speed could not be measured directly, two of the drive elements are measured. Two input speed sensors are required because both elements are not active in all gears.

- **When Monitored:**
  Engine speed greater than 450 RPM with none of the following DTCs present: engine speed, TCM undervoltage, output speed sensor, and/or rear wheel speed DTCs. Also required are all wheel speeds above 250 RPM and no wheel slip detected (signal from the ABS system).
- **Set Condition:**
  If the Input Speed Sensor 1 (N2) signal is equal to 0 RPM.

Possible Causes
(T72) SENSOR SUPPLY VOLTAGE CIRCUIT OPEN
(T70) INPUT SPEED SENSOR 1 (N2) SIGNAL CIRCUIT OPEN
(T70) SPEED SENSOR 1 (N2) SIGNAL CIRCUIT SHORT TO ANOTHER CIRCUIT
(T13) SENSOR GROUND CIRCUIT OPEN
(T13) SENSOR GROUND CIRCUIT SHORT TO ANOTHER CIRCUIT
(T70) SPEED SENSOR 1 (N2) SIGNAL CIRCUIT SHORT TO GROUND
(T13) SENSOR GROUND CIRCUIT SHORT TO GROUND
SPEED SENSOR 1 (N2)
TRANSMISSION CONTROL MODULE

Always perform the NAG1 Pre-Diagnostic Troubleshooting procedure before proceeding. (Refer to 21 - TRANSMISSION/TRANSAXLE/AUTOMATIC - NAG1 - STANDARD PROCEDURE)

Diagnostic Test

1. CHECK IF DTC IS CURRENT

NOTE: The Transmission Control Module stores under Environmental Data the transmission operating conditions when the DTC was set. Before erasure of any DTC, record all information pertaining to the DTC, even if there is more than one DTC stored.

With the scan tool, erase transmission DTCs.

Using the Environmental Data previously recorded, drive the vehicle and try to duplicate the conditions in which the DTC originally set.

Does the DTC reset?

Yes >> Go To 2

No >> Go To 10

2. CHECK THE (T72) SENSOR SUPPLY VOLTAGE CIRCUIT FOR AN OPEN

Turn the ignition off to the lock position.

Disconnect the TCM C2 harness connector.

Disconnect the Electrohydraulic Control Unit Assembly harness connector.

NOTE: Check connectors - Clean/repair as necessary.

Measure the resistance of the (T72) Sensor Supply Voltage circuit from the TCM C2 harness connector to the Electrohydraulic Control Unit Assembly harness connector.

Is the resistance below 5.0 ohms?

Yes >> Repair the (T72) Sensor Supply Voltage circuit for an open.
Perform NAG1 TRANSMISSION VERIFICATION TEST - VER 1. (Refer to 21 - TRANSMISSION/TRANSAXLE/AUTOMATIC - NAG1 - STANDARD PROCEDURE)

No >> Go To 3

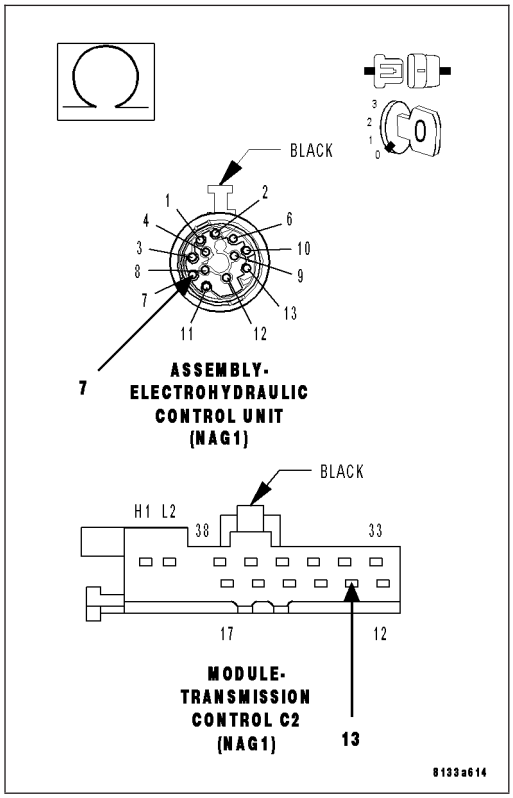

3. CHECK THE (T70) INPUT SPEED SENSOR 1 (N2) SIGNAL CIRCUIT FOR AN OPEN

Measure the resistance of the (T70) Input Speed Sensor 1 (N2) Signal circuit from the TCM C2 harness connector to the Electrohydraulic Control Unit Assembly harness connector.

Is the resistance below 5.0 ohms?

Yes >> Repair the (T70) Input Speed Sensor 1 (N2) Signal circuit for an open.
Perform NAG1 TRANSMISSION VERIFICATION TEST - VER 1. (Refer to 21 - TRANSMISSION/TRANSAXLE/AUTOMATIC - NAG1 - STANDARD PROCEDURE)

No >> Go To 4

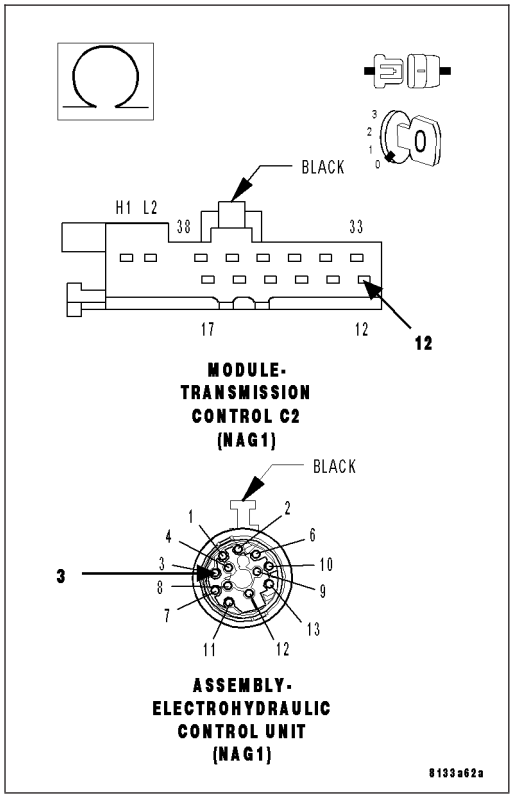

4. CHECK THE (T13) SENSOR GROUND CIRCUIT FOR AN OPEN

Measure the resistance of the (T13) Sensor Ground circuit from the TCM C2 harness connector to the Electrohydraulic Control Unit Assembly harness connector.

Is the resistance below 5.0 ohms?

Yes >> Repair the (T13) Sensor Ground circuit for an open.
Perform NAG1 TRANSMISSION VERIFICATION TEST - VER 1. (Refer to 21 - TRANSMISSION/TRANSAXLE/AUTOMATIC - NAG1 - STANDARD PROCEDURE)

No >> Go To 5

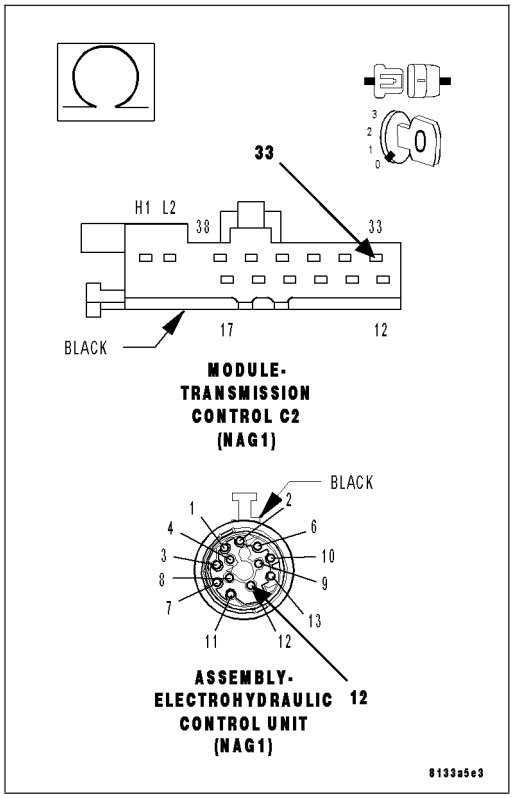

5. CHECK THE (T70) INPUT SPEED SENSOR 1 (N2) SIGNAL CIRCUIT FOR A SHORT TO ANOTHER CIRCUIT(S)

Measure the resistance of the (T70) Input Speed Sensor 1 (N2) Signal circuit to all the other circuits in the Electrohydraulic Control Unit Assembly harness connector.

Is the resistance below 5.0 ohms between the (T70) Input Speed Sensor 1 (N2) Signal circuit and any other circuit(s) in the Electrohydraulic Control Unit Assembly harness connector?

Yes >> Repair the (T70) Input Speed Sensor 1 (N2) Signal circuit for a short to another circuit(s).
Perform NAG1 TRANSMISSION VERIFICATION TEST - VER 1. (Refer to 21 - TRANSMISSION/TRANSAXLE/AUTOMATIC - NAG1 - STANDARD PROCEDURE)

No >> Go To 6

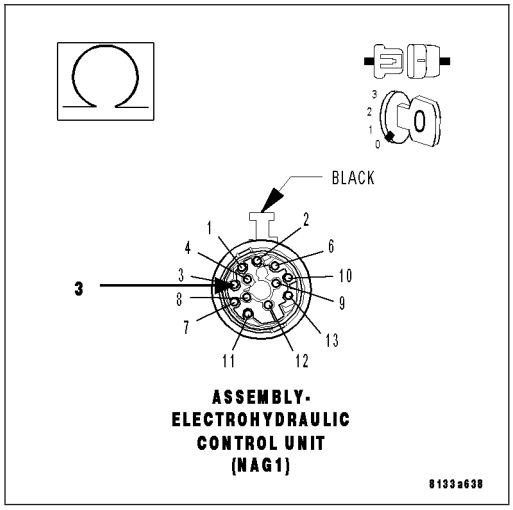

6. CHECK THE (T70) INPUT SPEED SENSOR 1 (N2) SIGNAL CIRCUIT FOR A SHORT TO GROUND

Measure the resistance between ground and the (T70) Input Speed Sensor 1 (N2) Signal circuit.

Is the resistance below 5.0 ohms?

Yes >> Repair the (T70) Input Speed Sensor 1 (N2) Signal circuit for a short to ground.

Perform NAG1 TRANSMISSION VERIFICATION TEST - VER 1. (Refer to 21 - TRANSMISSION/TRANSAXLE/AUTOMATIC - NAG1 - STANDARD PROCEDURE)

No >> Go To 7

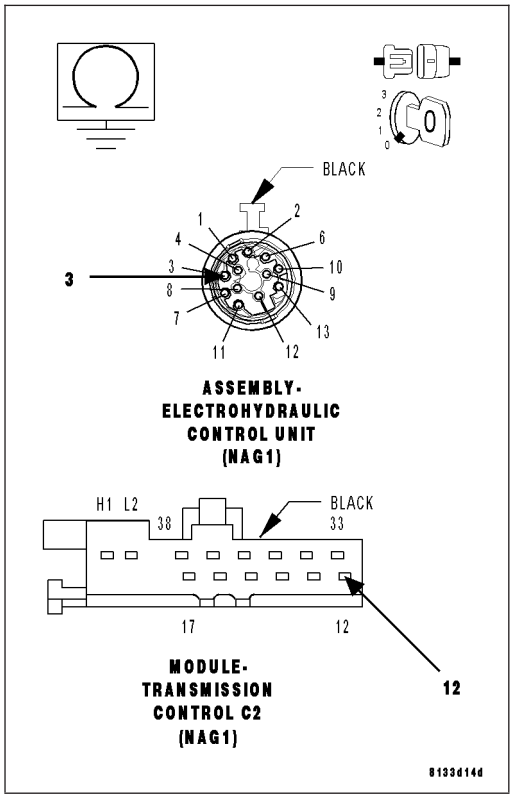

7. CHECK THE (T13) SENSOR GROUND CIRCUIT FOR A SHORT TO ANOTHER CIRCUIT(S)

Measure the resistance between the (T13) Sensor Ground circuit to all the other circuits in the Electrohydraulic Control Unit Assembly harness connector.

Is the resistance below 5.0 ohms between the (T13) Sensor Ground circuit and any other circuit(s) in the Electrohydraulic Control Unit Assembly harness connector.

Yes >> Repair the (T13) Sensor Ground circuit for a short to another circuit(s)

Perform NAG1 TRANSMISSION VERIFICATION TEST - VER 1. (Refer to 21 - TRANSMISSION/TRANSAXLE/AUTOMATIC - NAG1 - STANDARD PROCEDURE)

No >> Go To 8

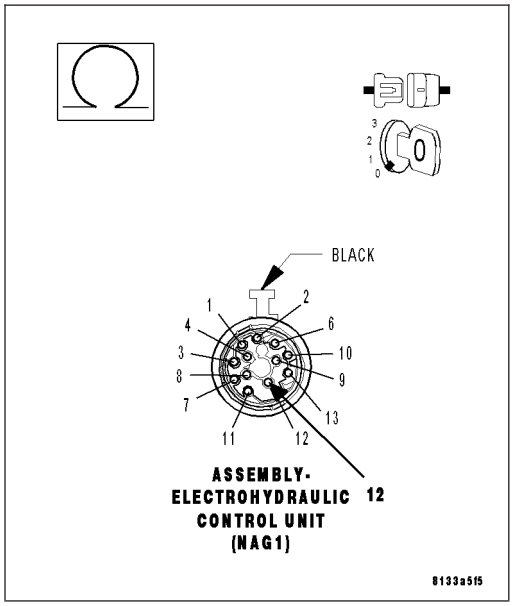

8. CHECK THE (T13) SENSOR GROUND CIRCUIT FOR A SHORT TO GROUND

Measure the resistance between ground and the (T13) Sensor Ground circuit.

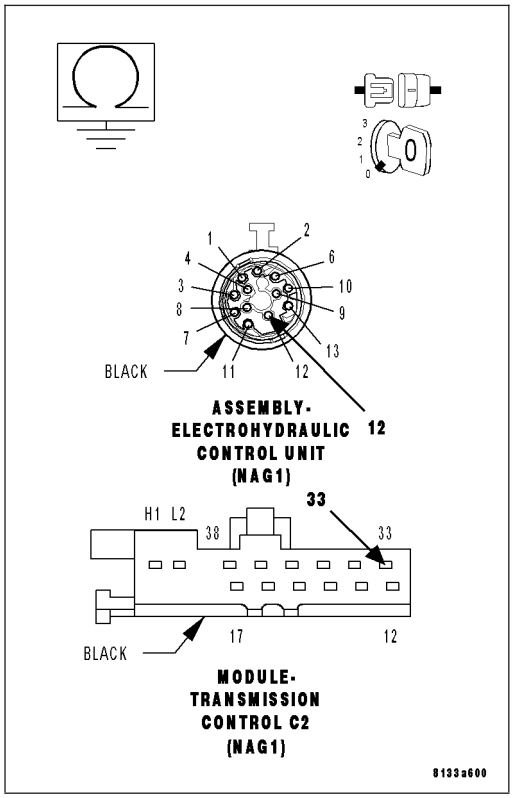

Is the resistance below 5.0 ohms?

Yes >> Repair the (T13) Sensor Ground circuit for a short to ground.

Perform NAG1 TRANSMISSION VERIFICATION TEST - VER 1. (Refer to 21 - TRANSMISSION/TRANSAXLE/AUTOMATIC - NAG1 - STANDARD PROCEDURE)

No >> Go To 9

9. CHECK THE INPUT SPEED SENSOR 1 (N2) SIGNAL

Reconnect the Electrohydraulic Control Unit Assembly harness connector.

Using a Lab Scope, backprobe the (T70) Input Speed Sensor 1 (N2) Signal circuit at the TCM C2 harness connector.

WARNING: Properly support the vehicle.
Raise all drive wheels off the ground.

Start the engine.

WARNING: To avoid personal injury or death, keep hands and feet clear of rotating wheels.
Place gear selector in drive and increase vehicle speed to engage 2nd gear.

Compare the scope pattern on the Lab Scope with a typical 5-volt square wave pattern.

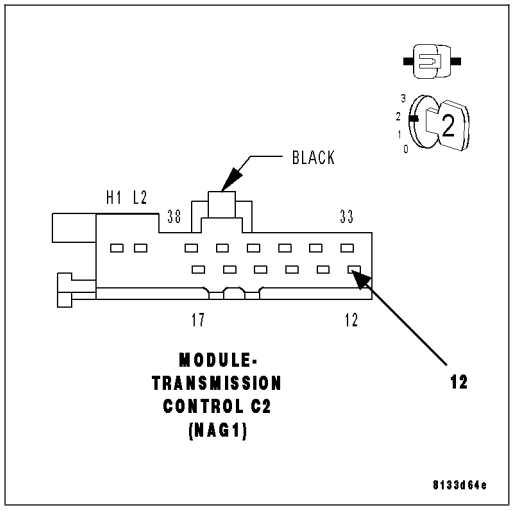

Is the scope pattern comparable to the typical 5-volt square wave signal scope pattern?

Yes >> Using the schematics as a guide, check the Transmission Control Module (TCM) terminals for corrosion, damage, or terminal push out. Pay particular attention to all power and ground circuits. If no problems are found, replace the TCM per the Service Information. (Refer to 8 - ELECTRICAL/ELECTRONIC CONTROL MODULES/TRANSMISSION CONTROL MODULE - DESCRIPTION)

Perform NAG1 TRANSMISSION VERIFICATION TEST - VER 1. (Refer to 21 - TRANSMISSION/TRANSAXLE/AUTOMATIC - NAG1 - STANDARD PROCEDURE)

No >> Replace the Input Speed Sensor 1 (N2) per the Service Information. (Refer to 21 - TRANSMISSION/TRANSAXLE/AUTOMATIC - NAG1/ELECTROHYDRAULIC UNIT - DISASSEMBLY)

Perform NAG1 TRANSMISSION VERIFICATION TEST - VER 1. (Refer to 21 - TRANSMISSION/TRANSAXLE/AUTOMATIC - NAG1 - STANDARD PROCEDURE)

10. INTERMITTENT WIRING AND CONNECTORS

The conditions necessary to set this DTC are not present at this time.

Using the schematics as a guide, inspect the wiring and connectors specific to this circuit.

Wiggle the wires while checking for shorted and open circuits.

Were there any problems found?

Yes >> Repair as necessary.
Perform NAG1 TRANSMISSION VERIFICATION TEST - VER 1. (Refer to 21 - TRANSMISSION/TRANSAXLE/AUTOMATIC - NAG1 - STANDARD PROCEDURE)

No >> Test Complete.

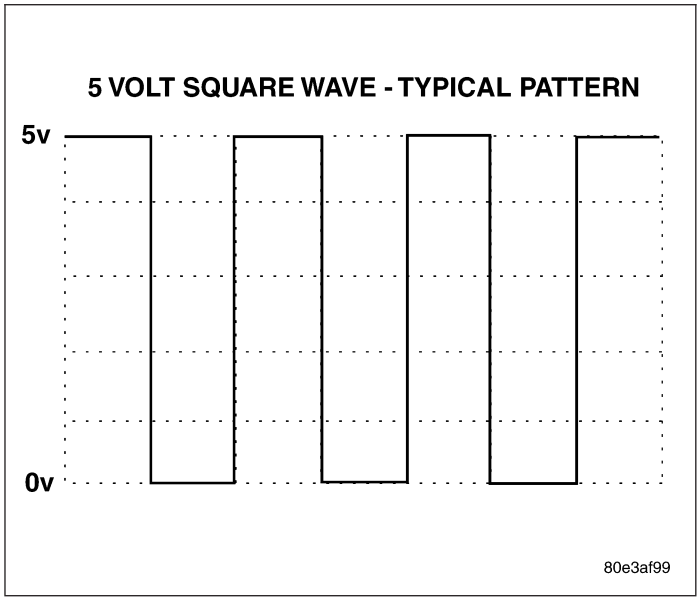

P0730-INCORRECT GEAR RATIO

For a complete wiring diagram **Refer to Section 8W**

Theory of Operation

The Transmission Control Module (TCM) constantly calculates the transmission ratio based on the input speed sensor 1 and 2 (N2-N3) signals and the calculated output shaft speed. The intent of this diagnostic is to detect if the transmission is trying to mechanically shift into a lower gear then the TCM intends.

- **When Monitored:**
  Engine RPM greater than 450 RPM, output speed greater than 180 RPM, no N2 - N3 input speed sensor errors present, no gear selector lever errors present, no ABS system errors, and all wheel speeds above 450 RPM.
- **Set Condition:**
  No shifting operation and detected gear is not the actual gear. No shifting operation - detected (calculated) gear is less than actual (expected) gear, no plausible gear is calculated, actual turbine speed - calculated turbine speed is greater than 300 RPM or calculated transmission ratio is above threshold. During an Upshift - detected (calculated) gear is less than actual (expected) gear. During Downshift - detected (calculated) gear is less than actual (expected) gear.

Possible Causes
INTERNAL TRANSMISSION PROBLEM
TRANSMISSION CONTROL MODULE

Always perform the NAG1 Pre-Diagnostic Troubleshooting procedure before proceeding. (Refer to 21 - TRANSMISSION/TRANSAXLE/AUTOMATIC - NAG1 - STANDARD PROCEDURE)

Diagnostic Test

1. CHECK FOR INTERNAL TRANSMISSION PROBLEM

Determine if there are any Transmission mechanical problems present.

Remove the Transmission Oil Pan and inspect for excessive debris or a plugged Transmission Oil Filter. (Refer to 21 - TRANSMISSION/TRANSAXLE/AUTOMATIC - NAG1/FILTER - STANDARD PROCEDURE)

Is there any Transmission mechanical problems present?

Yes >> Repair internal transmission as necessary per the Service Information. (Refer to 21 - TRANSMISSION/TRANSAXLE/AUTOMATIC - NAG1 - REMOVAL)

Perform NAG1 TRANSMISSION VERIFICATION TEST - VER 1. (Refer to 21 - TRANSMISSION/TRANSAXLE/AUTOMATIC - NAG1 - STANDARD PROCEDURE)

No >> Using the schematics as a guide, check the Transmission Control Module (TCM) terminals for corrosion, damage, or terminal push out. Pay particular attention to all power and ground circuits. If no problems are found, replace the TCM per the Service Information. (Refer to 8 - ELECTRICAL/ELECTRONIC CONTROL MODULES/TRANSMISSION CONTROL MODULE - DESCRIPTION)

Perform NAG1 TRANSMISSION VERIFICATION TEST - VER 1. (Refer to 21 - TRANSMISSION/TRANSAXLE/AUTOMATIC - NAG1 - STANDARD PROCEDURE)

P0731-GEAR RATIO ERROR IN 1ST

For a complete wiring diagram **Refer to Section 8W**

Theory of Operation

The Transmission Control Module (TCM) constantly calculates the transmission ratio based on the input speed sensor 1 and 2 (N2-N3) signals and the calculated output shaft speed. The intent of this diagnostic is to detect if the transmission is slipping or an invalid gear ratio is present.

- **When Monitored:**
  Engine RPM greater than 450 RPM, output speed greater than 180 RPM, no N2 - N3 input speed sensor errors present, no gear selector lever errors present, no ABS system errors, and all wheel speeds above 450 RPM.
- **Set Condition:**
  No shifting operation and detected gear is not the actual gear. No shifting operation - detected (calculated) gear is less than actual (expected) gear, no plausible gear is calculated, actual turbine speed - calculated turbine speed is greater than 300 RPM or calculated transmission ratio is above threshold. During an Upshift - detected (calculated) gear is less than actual (expected) gear. During Downshift - detected (calculated) gear is less than actual (expected) gear.

Possible Causes
PINION FACTOR NOT PROPERLY PROGRAMED IN THE FCM
LOW TRANSMISSION FLUID
OTHER TRANSMISSION DTCS PRESENT
INTERNAL TRANSMISSION FAILURE

Always perform the NAG1 Pre-Diagnostic Troubleshooting procedure before proceeding. (Refer to 21 - TRANSMISSION/TRANSAXLE/AUTOMATIC - NAG1 - STANDARD PROCEDURE)

Diagnostic Test

1. CHECK IF PINION FACTOR IS PROGRAMMED

With the scan tool, check if the pinion factor has been programmed in the FCM.

NOTE: If the Pinion Factor is not properly programmed, a Gear Ratio DTC may set.

Was the Pinion Factor properly programmed for the actual tire size and axle ratio of the vehicle?

Yes >> Go To 2

No >> With the scan tool, properly program the Pinion Factor in the FCM.
Perform NAG1 TRANSMISSION VERIFICATION TEST - VER 1. (Refer to 21 - TRANSMISSION/TRANSAXLE/AUTOMATIC - NAG1 - STANDARD PROCEDURE)

2. CHECK FOR OTHER TRANSMISSION DTCS

With the scan tool, check transmission DTCS

Are there any solenoid and/or solenoid supply voltage DTCs present?

Yes >> Refer to the Transmission category and perform the appropriate symptom(s). (Refer to 21 - TRANSMISSION/TRANSAXLE/AUTOMATIC - NAG1 - DIAGNOSIS AND TESTING)

No >> Go To 3

3. CHECK TRANSMISSION FLUID LEVEL

Check the transmission fluid level per the Service Information. (Refer to 21 - TRANSMISSION/TRANSAXLE/AUTOMATIC - NAG1/FILTER - STANDARD PROCEDURE)

Is the fluid level correct?

Yes >> Go To 4

No >> Properly adjust the fluid level per the Service Information. (Refer to 21 - TRANSMISSION/TRANSAXLE/AUTOMATIC - NAG1/FILTER - STANDARD PROCEDURE)

Perform NAG1 TRANSMISSION VERIFICATION TEST - VER 1. (Refer to 21 - TRANSMISSION/TRANSAXLE/AUTOMATIC - NAG1 - STANDARD PROCEDURE)

4. CHECK IF DTC IS CURRENT

With the scan tool, record the Environmental Data and erase Transmission DTCs.

NOTE: If the TCM detects and stores a DTC, the TCM also stores the vehicles operating conditions under which the DTC originally set and is located in scan tool under Environmental Data. Before erasing any stored DTCs, record any available data to assist in duplicating the conditions in which the DTC originally set.

Using the Environmental Data recorded earlier, test drive the vehicle while trying to duplicate the conditions in which the DTC originally set.

Did the DTC P0731-GEAR RATIO ERROR IN 1ST reset?

Yes >> Repair internal transmission as necessary per the Service Information. (Refer to 21 - TRANSMISSION/TRANSAXLE/AUTOMATIC - NAG1 - REMOVAL)

Perform NAG1 TRANSMISSION VERIFICATION TEST - VER 1. (Refer to 21 - TRANSMISSION/TRANSAXLE/AUTOMATIC - NAG1 - STANDARD PROCEDURE)

No >> Go To 5

5. INTERMITTENT WIRING AND CONNECTORS

The conditions necessary to set this DTC are not present at this time.

Using the schematics as a guide, inspect the wiring and connectors specific to this circuit.

Wiggle the wiring and connectors while checking for any possible open or shorted circuits.

Check for any Service Information Tune-ups or Technical Service Bulletins that may apply.

Were there any problems found?

Yes >> Repair as necessary.

Perform NAG1 TRANSMISSION VERIFICATION TEST - VER 1. (Refer to 21 - TRANSMISSION/TRANSAXLE/AUTOMATIC - NAG1 - STANDARD PROCEDURE)

No >> Test Complete.

P0732-GEAR RATIO ERROR IN 2ND

For a complete wiring diagram **Refer to Section 8W**

Theory of Operation

The Transmission Control Module (TCM) constantly calculates the transmission ratio based on the input speed sensor 1 and 2 (N2-N3) signals and the calculated output shaft speed. The intent of this diagnostic is to detect if the transmission is slipping or an invalid gear ratio is present.

- **When Monitored:**
  Engine RPM greater than 450 RPM, output speed greater than 180 RPM, no N2 - N3 input speed sensor errors present, no gear selector lever errors present, no ABS system errors, and all wheel speeds above 450 RPM.
- **Set Condition:**
  No shifting operation and detected gear is not the actual gear. No shifting operation - detected (calculated) gear is less than actual (expected) gear, no plausible gear is calculated, actual turbine speed - calculated turbine speed is greater than 300 RPM or calculated transmission ratio is above threshold. During an Upshift - detected (calculated) gear is less than actual (expected) gear. During Downshift - detected (calculated) gear is less than actual (expected) gear.

Possible Causes
PINION FACTOR NOT PROPERLY PROGRAMMED IN THE FCM
LOW TRANSMISSION FLUID
OTHER TRANSMISSION DTCS PRESENT
INTERNAL TRANSMISSION FAILURE

Always perform the NAG1 Pre-Diagnostic Troubleshooting procedure before proceeding. (Refer to 21 - TRANSMISSION/TRANSAXLE/AUTOMATIC - NAG1 - STANDARD PROCEDURE)

Diagnostic Test

1. CHECK IF THE PINION FACTOR IS PROGRAMMED

With the scan tool, check if the pinion factor has been programmed in the FCM.

NOTE: If the Pinion Factor is not properly programmed, a Gear Ratio DTC may set.

Was the Pinion Factor properly programmed for the actual tire size and axle ratio of the vehicle?

Yes >> Go To 2

No >> With the scan tool, properly program the Pinion Factor in the FCM.
Perform NAG1 TRANSMISSION VERIFICATION TEST - VER 1. (Refer to 21 - TRANSMISSION/TRANSAXLE/AUTOMATIC - NAG1 - STANDARD PROCEDURE)

2. CHECK FOR OTHER TRANSMISSION DTCS

With the scan tool, check transmission DTCS

Are there any solenoid and/or solenoid supply voltage DTCs present?

Yes >> Refer to the Transmission category and perform the appropriate symptom(s). (Refer to 21 - TRANSMISSION/TRANSAXLE/AUTOMATIC - NAG1 - DIAGNOSIS AND TESTING)

No >> Go To 3

3. CHECK TRANSMISSION FLUID LEVEL

Check the transmission fluid level per the Service Information. (Refer to 21 - TRANSMISSION/TRANSAXLE/AUTOMATIC - NAG1/FILTER - STANDARD PROCEDURE)

Is the fluid level correct?

Yes >> Go To 4

No >> Properly adjust the fluid level per the Service Information. (Refer to 21 - TRANSMISSION/TRANSAXLE/AUTOMATIC - NAG1/FILTER - STANDARD PROCEDURE)
Perform NAG1 TRANSMISSION VERIFICATION TEST - VER 1.

4. CHECK IF DTC IS CURRENT

With the scan tool, record the Environmental Data and erase Transmission DTCs.

NOTE: If the TCM detects and stores a DTC, the TCM also stores the vehicles operating conditions under which the DTC originally set and is located in scan tool under Environmental Data. Before erasing any stored DTCs, record any available data to assist in duplicating the conditions in which the DTC originally set.
Using the Environmental Data recorded earlier, test drive the vehicle while trying to duplicate the conditions in which the DTC originally set.

Did the DTC P0732-GEAR RATIO ERROR IN 2ND reset?

Yes >> Repair internal transmission as necessary per the Service Information. (Refer to 21 - TRANSMISSION/TRANSAXLE/AUTOMATIC - NAG1 - REMOVAL)
Perform NAG1 TRANSMISSION VERIFICATION TEST - VER 1. (Refer to 21 - TRANSMISSION/TRANSAXLE/AUTOMATIC - NAG1 - STANDARD PROCEDURE)

No >> Go To 5

5. INTERMITTENT WIRING AND CONNECTORS

The conditions necessary to set this DTC are not present at this time.
Using the schematics as a guide, inspect the wiring and connectors specific to this circuit.
Wiggle the wiring and connectors while checking for any possible open or shorted circuits.
Check for any Service Information Tune-ups or Technical Service Bulletins that may apply.

Were there any problems found?

Yes >> Repair as necessary.
Perform NAG1 TRANSMISSION VERIFICATION TEST - VER 1. (Refer to 21 - TRANSMISSION/TRANSAXLE/AUTOMATIC - NAG1 - STANDARD PROCEDURE)

No >> Test Complete.

P0733-GEAR RATIO ERROR IN 3RD

For a complete wiring diagram **Refer to Section 8W**

Theory of Operation

The Transmission Control Module (TCM) constantly calculates the transmission ratio based on the input speed sensor 1 and 2 (N2-N3) signals and the calculated output shaft speed. The intent of this diagnostic is to detect if the transmission is slipping or an invalid gear ratio is present.

- **When Monitored:**
  Engine RPM greater than 450 RPM, output speed greater than 180 RPM, no N2 - N3 input speed sensor errors present, no gear selector lever errors present, no ABS system errors, and all wheel speeds above 450 RPM.
- **Set Condition:**
  No shifting operation and detected gear is not the actual gear. No shifting operation - detected (calculated) gear is less than actual (expected) gear, no plausible gear is calculated, actual turbine speed - calculated turbine speed is greater than 300 RPM or calculated transmission ratio is above threshold. During an Upshift - detected (calculated) gear is less than actual (expected) gear. During Downshift - detected (calculated) gear is less than actual (expected) gear.

Possible Causes
LOW TRANSMISSION FLUID
OTHER TRANSMISSION DTCS PRESENT
INTERNAL TRANSMISSION FAILURE

Always perform the NAG1 Pre-Diagnostic Troubleshooting procedure before proceeding. (Refer to 21 - TRANSMISSION/TRANSAXLE/AUTOMATIC - NAG1 - STANDARD PROCEDURE)

Diagnostic Test

1. CHECK FOR OTHER TRANSMISSION DTCS

With the scan tool, check transmission DTCS

Are there any solenoid and/or solenoid supply voltage DTCs present?

Yes >> Refer to the Transmission category and perform the appropriate symptom(s). (Refer to 21 - TRANSMISSION/TRANSAXLE/AUTOMATIC - NAG1 - DIAGNOSIS AND TESTING)

No >> Go To 2

2. CHECK TRANSMISSION FLUID LEVEL

Check the transmission fluid level per the Service Information. (Refer to 21 - TRANSMISSION/TRANSAXLE/AUTOMATIC - NAG1/FILTER - STANDARD PROCEDURE)

Is the fluid level correct?

Yes >> Go To 3

No >> Properly adjust the fluid level per the Service Information. (Refer to 21 - TRANSMISSION/TRANSAXLE/AUTOMATIC - NAG1/FILTER - STANDARD PROCEDURE).

Perform NAG1 TRANSMISSION VERIFICATION TEST - VER 1. (Refer to 21 - TRANSMISSION/TRANSAXLE/AUTOMATIC - NAG1 - STANDARD PROCEDURE)

3. CHECK IF DTC IS CURRENT

With the scan tool, record the Environmental Data and erase Transmission DTCs.

NOTE: If the TCM detects and stores a DTC, the TCM also stores the vehicles operating conditions under which the DTC originally set and is located in scan tool under Environmental Data. Before erasing any stored DTCs, record any available data to assist in duplicating the conditions in which the DTC originally set.

Using the Environmental Data recorded earlier, test drive the vehicle while trying to duplicate the conditions in which the DTC originally set.

Did the DTC P0733-GEAR RATIO ERROR IN 3RD reset?

Yes >> Repair internal transmission as necessary per the Service Information. (Refer to 21 - TRANSMISSION/ TRANSAXLE/AUTOMATIC - NAG1 - REMOVAL)

Perform NAG1 TRANSMISSION VERIFICATION TEST - VER 1. (Refer to 21 - TRANSMISSION/ TRANSAXLE/AUTOMATIC - NAG1 - STANDARD PROCEDURE)

No >> Go To 4

4. INTERMITTENT WIRING AND CONNECTORS

The conditions necessary to set this DTC are not present at this time.

Using the schematics as a guide, inspect the wiring and connectors specific to this circuit.

Wiggle the wiring and connectors while checking for any possible open or shorted circuits.

Check for any Service Information Tune-ups or Technical Service Bulletins that may apply.

Were there any problems found?

Yes >> Repair as necessary.

Perform NAG1 TRANSMISSION VERIFICATION TEST - VER 1. (Refer to 21 - TRANSMISSION/ TRANSAXLE/AUTOMATIC - NAG1 - STANDARD PROCEDURE)

No >> Test Complete.

P0734-GEAR RATIO ERROR IN 4TH

For a complete wiring diagram **Refer to Section 8W**

Theory of Operation

The Transmission Control Module (TCM) constantly calculates the transmission ratio based on the input speed sensor 1 and 2 (N2-N3) signals and the calculated output shaft speed. The intent of this diagnostic is to detect if the transmission is slipping or an invalid gear ratio is present.

- **When Monitored:**
  Engine RPM greater than 450 RPM, output speed greater than 180 RPM, no N2 - N3 input speed sensor errors present, no gear selector lever errors present, no ABS system errors, and all wheel speeds above 450 RPM.
- **Set Condition:**
  No shifting operation and detected gear is not the actual gear. No shifting operation - detected (calculated) gear is less than actual (expected) gear, no plausible gear is calculated, actual turbine speed - calculated turbine speed is greater than 300 RPM or calculated transmission ratio is above threshold. During an Upshift - detected (calculated) gear is less than actual (expected) gear. During Downshift - detected (calculated) gear is less than actual (expected) gear.

Possible Causes
LOW TRANSMISSION FLUID
OTHER TRANSMISSION DTCS PRESENT
INTERNAL TRANSMISSION FAILURE

Always perform the NAG1 Pre-Diagnostic Troubleshooting procedure before proceeding. (Refer to 21 - TRANSMISSION/TRANSAXLE/AUTOMATIC - NAG1 - STANDARD PROCEDURE)

Diagnostic Test

1. CHECK FOR OTHER TRANSMISSION DTCS

With the scan tool, check transmission DTCS

Are there any solenoid and/or solenoid supply voltage DTCs present?

Yes >> Refer to the Transmission category and perform the appropriate symptom(s). (Refer to 21 - TRANSMISSION/TRANSAXLE/AUTOMATIC - NAG1 - DIAGNOSIS AND TESTING)

No >> Go To 2

2. CHECK TRANSMISSION FLUID LEVEL

Check the transmission fluid level per the Service Information. (Refer to 21 - TRANSMISSION/TRANSAXLE/AUTOMATIC - NAG1/FILTER - STANDARD PROCEDURE)

Is the fluid level correct?

Yes >> Go To 3

No >> Properly adjust the fluid level per the Service Information. (Refer to 21 - TRANSMISSION/TRANSAXLE/AUTOMATIC - NAG1/FILTER - STANDARD PROCEDURE)

Perform NAG1 TRANSMISSION VERIFICATION TEST - VER 1. (Refer to 21 - TRANSMISSION/TRANSAXLE/AUTOMATIC - NAG1 - STANDARD PROCEDURE)

3. CHECK IF DTC IS CURRENT

With the scan tool, record the Environmental Data and erase Transmission DTCs.

NOTE: If the TCM detects and stores a DTC, the TCM also stores the vehicles operating conditions under which the DTC originally set and is located in scan tool under Environmental Data. Before erasing any stored DTCs, record any available data to assist in duplicating the conditions in which the DTC originally set.

Using the Environmental Data recorded earlier, test drive the vehicle while trying to duplicate the conditions in which the DTC originally set.

Did the DTC P0734-GEAR RATIO ERROR IN 4TH reset?

Yes >> Repair internal transmission as necessary per the Service Information. (Refer to 21 - TRANSMISSION/ TRANSAXLE/AUTOMATIC - NAG1 - REMOVAL)

Perform NAG1 TRANSMISSION VERIFICATION TEST - VER 1. (Refer to 21 - TRANSMISSION/ TRANSAXLE/AUTOMATIC - NAG1 - STANDARD PROCEDURE)

No >> Go To 4

4. INTERMITTENT WIRING AND CONNECTORS

The conditions necessary to set this DTC are not present at this time.

Using the schematics as a guide, inspect the wiring and connectors specific to this circuit.

Wiggle the wiring and connectors while checking for any possible open or shorted circuits.

Check for any Service Information Tune-ups or Technical Service Bulletins that may apply.

Were there any problems found?

Yes >> Repair as necessary.

Perform NAG1 TRANSMISSION VERIFICATION TEST - VER 1. (Refer to 21 - TRANSMISSION/ TRANSAXLE/AUTOMATIC - NAG1 - STANDARD PROCEDURE)

No >> Test Complete.

P0735-GEAR RATIO ERROR IN 5TH

For a complete wiring diagram **Refer to Section 8W**

Theory of Operation

The Transmission Control Module (TCM) constantly calculates the transmission ratio based on the input speed sensor 1 and 2 (N2-N3) signals and the calculated output shaft speed. The intent of this diagnostic is to detect if the transmission is slipping or an invalid gear ratio is present.

- **When Monitored:**
  Engine RPM greater than 450 RPM, output speed greater than 180 RPM, no N2 - N3 input speed sensor errors present, no gear selector lever errors present, no ABS system errors, and all wheel speeds above 450 RPM.
- **Set Condition:**
  No shifting operation and detected gear is not the actual gear. No shifting operation - detected (calculated) gear is less than actual (expected) gear, no plausible gear is calculated, actual turbine speed - calculated turbine speed is greater than 300 RPM or calculated transmission ratio is above threshold. During an Upshift - detected (calculated) gear is less than actual (expected) gear. During Downshift - detected (calculated) gear is less than actual (expected) gear.

Possible Causes
LOW TRANSMISSION FLUID
OTHER TRANSMISSION DTCS PRESENT
INTERNAL TRANSMISSION FAILURE

Always perform the NAG1 Pre-Diagnostic Troubleshooting procedure before proceeding. (Refer to 21 - TRANSMISSION/TRANSAXLE/AUTOMATIC - NAG1 - STANDARD PROCEDURE)

Diagnostic Test

1. CHECK FOR OTHER TRANSMISSION DTCS

With the scan tool, check transmission DTCS

Are there any solenoid and/or solenoid supply voltage DTCs present?

Yes >> Refer to the Transmission category and perform the appropriate symptom(s). (Refer to 21 - TRANSMISSION/TRANSAXLE/AUTOMATIC - NAG1 - DIAGNOSIS AND TESTING)

No >> Go To 2

2. CHECK TRANSMISSION FLUID LEVEL

Check the transmission fluid level per the Service Information. (Refer to 21 - TRANSMISSION/TRANSAXLE/AUTOMATIC - NAG1/FILTER - STANDARD PROCEDURE)

Is the fluid level correct?

Yes >> Go To 3

No >> Properly adjust the fluid level per the Service Information. (Refer to 21 - TRANSMISSION/TRANSAXLE/AUTOMATIC - NAG1/FILTER - STANDARD PROCEDURE).

Perform NAG1 TRANSMISSION VERIFICATION TEST - VER 1. (Refer to 21 - TRANSMISSION/TRANSAXLE/AUTOMATIC - NAG1 - STANDARD PROCEDURE)

3. CHECK IF DTC IS CURRENT

With the scan tool, record the Environmental Data and erase Transmission DTCs.

NOTE: If the TCM detects and stores a DTC, the TCM also stores the vehicles operating conditions under which the DTC originally set and is located in scan tool under Environmental Data. Before erasing any stored DTCs, record any available data to assist in duplicating the conditions in which the DTC originally set.

Using the Environmental Data recorded earlier, test drive the vehicle while trying to duplicate the conditions in which the DTC originally set.

Did the DTC P0735-GEAR RATIO ERROR IN 5TH reset?

Yes >> Repair internal transmission as necessary per the Service Information. (Refer to 21 - TRANSMISSION/ TRANSAXLE/AUTOMATIC - NAG1 - REMOVAL)

Perform NAG1 TRANSMISSION VERIFICATION TEST - VER 1. (Refer to 21 - TRANSMISSION/ TRANSAXLE/AUTOMATIC - NAG1 - STANDARD PROCEDURE)

No >> Go To 4

4. INTERMITTENT WIRING AND CONNECTORS

The conditions necessary to set this DTC are not present at this time.

Using the schematics as a guide, inspect the wiring and connectors specific to this circuit.

Wiggle the wiring and connectors while checking for any possible open or shorted circuits.

Check for any Service Information Tune-ups or Technical Service Bulletins that may apply.

Were there any problems found?

Yes >> Repair as necessary.

Perform NAG1 TRANSMISSION VERIFICATION TEST - VER 1. (Refer to 21 - TRANSMISSION/ TRANSAXLE/AUTOMATIC - NAG1 - STANDARD PROCEDURE)

No >> Test Complete.

P0742-TORQUE CONVERTER CLUTCH STUCK ON

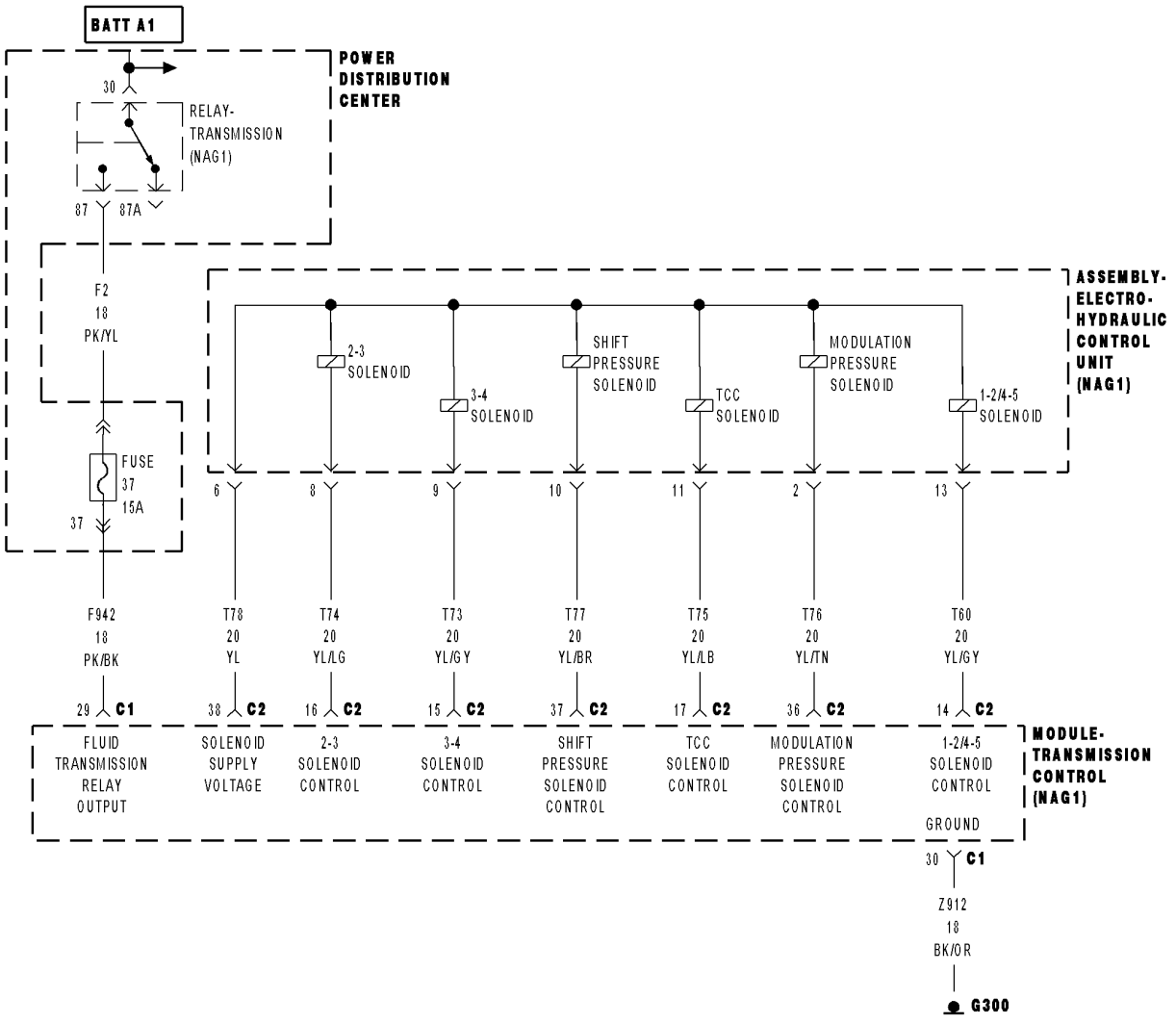

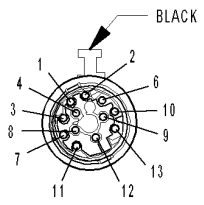

ASSEMBLY-ELECTROHYDRAULIC CONTROL UNIT (NAG1)

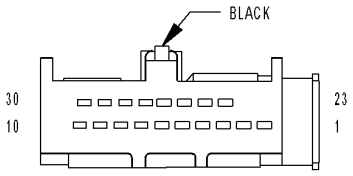

MODULE-TRANSMISSION CONTROL C1 (NAG1)

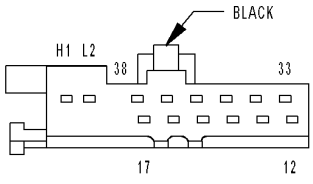

MODULE-TRANSMISSION CONTROL C2 (NAG1)

81326067

For a complete wiring diagram **Refer to Section 8W**

Theory of Operation

The Transmission Control Module (TCM) constantly monitors the amount of torque converter slippage. When the torque converter clutch (TCC) is open the slippage is expected to be above a threshold. If the slippage is less then expected when the TCC is open, the TCM assumes that the TCC is stuck on.

- **When Monitored:**
  Ignition on, TCM not in initialization phase, No input speed sensor 1 or 2 (N2–N3) DTCs, No CAN bus or ECM DTCs, No CAN engine speed signal or engine torque signal not implausible DTCs, Engine speed greater than 450 rpm, No shift in progress, Gear 1, 2, 3, 4 or 5 engaged, and the TCM torque converter status is OPEN
- **Set Condition:**
  Engine RPM (Turbine Speed) is greater than 30 RPM when engine torque less than 100 N·m (74.0 ft.lbs.) for period of 1.0 second.

Possible Causes
(T75) TCC SOLENOID CONTROL CIRCUIT SHORT TO GROUND
(T75) TCC SOLENOID CONTROL CIRCUIT SHORT TO ANOTHER CIRCUIT
INTERNAL TRANSMISSION
LOCKUP CONTROL VALVE STICKING IN ITS BORE
LEAKING TCC SOLENOID
TORQUE CONVERTER
TRANSMISSION CONTROL MODULE

Always perform the NAG1 Pre-Diagnostic Troubleshooting procedure before proceeding. (Refer to 21 - TRANSMISSION/TRANSAXLE/AUTOMATIC - NAG1 - STANDARD PROCEDURE)

Diagnostic Test

1. CHECK IF ENGINE STALLS OR STUMBLES IN GEAR

Turn the ignition off to the lock position.

Disconnect the Electrohydraulic Control Unit Assembly harness connector.

NOTE: Check connectors - Clean/repair as necessary.

Start the engine.

With the brakes firmly applied, shift the gear selector into Drive.

Did the engine stall or stumble?

Yes >> Repair internal transmission. Pay particular attention to the components related to the TCC such as the Lockup Control Valve sticking in its bore or a leaking TCC Solenoid. (Refer to 21 - TRANSMISSION/TRANSAXLE/AUTOMATIC - NAG1 - REMOVAL)

Perform NAG1 TRANSMISSION VERIFICATION TEST - VER 1. (Refer to 21 - TRANSMISSION/TRANSAXLE/AUTOMATIC - NAG1 - STANDARD PROCEDURE)

No >> Go To 2

2. (T75) TCC SOLENOID CONTROL CIRCUIT SHORT TO GROUND

Turn the ignition off to the lock position.

Disconnect the TCM C2 harness connector.

NOTE: Check connectors - Clean/repair as necessary.

Measure the resistance between ground and the (T75) TCC Solenoid Control circuit.

Is the resistance below 5.0 ohms?

Yes >> Repair the (T75) TCC Solenoid Control circuit for a short to ground.

Perform NAG1 TRANSMISSION VERIFICATION TEST - VER 1. (Refer to 21 - TRANSMISSION/TRANSAXLE/AUTOMATIC - NAG1 - STANDARD PROCEDURE)

No >> Go To 3

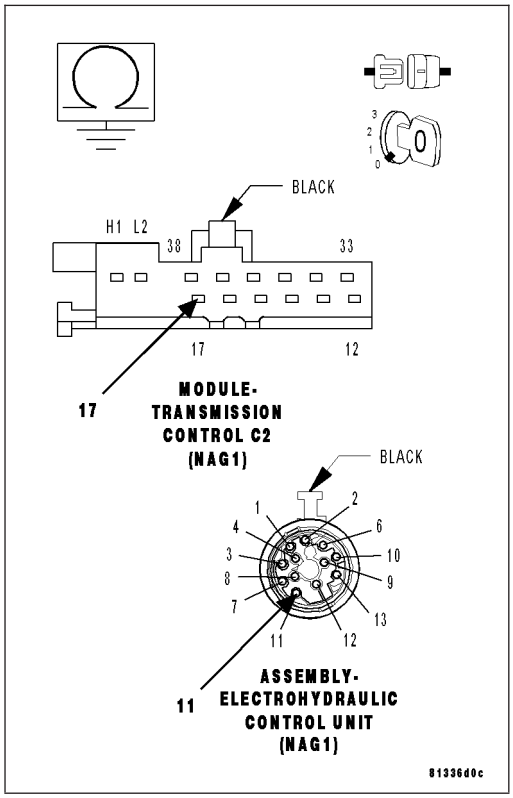

3. (T75) TCC SOLENOID CONTROL CIRCUIT SHORT TO ANOTHER CIRCUIT

Measure the resistance between the (T75) TCC Solenoid Control circuit and all other circuits in the Transmission Electrohydraulic Control Unit Assembly harness connector.

Is the resistance below 5.0 ohms between the (T75) TCC Solenoid Control circuit and all other circuits in the Transmission Electrohydraulic Control Unit Assembly harness connector?

Yes >> Repair the (T75) TCC Solenoid Control circuit for a short to another circuit(s).

Perform NAG1 TRANSMISSION VERIFICATION TEST - VER 1. (Refer to 21 - TRANSMISSION/TRANSAXLE/AUTOMATIC - NAG1 - STANDARD PROCEDURE)

No >> Using the schematics as a guide, check the Transmission Control Module (TCM) terminals for corrosion, damage, or terminal push out. Pay particular attention to all power and ground circuits. If no problems are found, replace the TCM per the Service Information. (Refer to 8 - ELECTRICAL/ELECTRONIC CONTROL MODULES/TRANSMISSION CONTROL MODULE - DESCRIPTION)

Perform NAG1 TRANSMISSION VERIFICATION TEST - VER 1. (Refer to 21 - TRANSMISSION/TRANSAXLE/AUTOMATIC - NAG1 - STANDARD PROCEDURE)

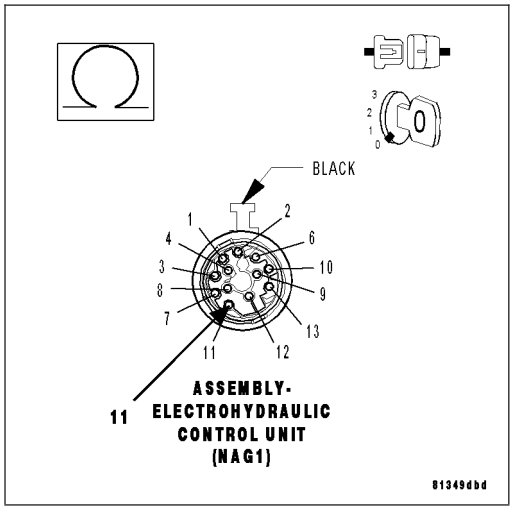

P0743-TCC SOLENOID CIRCUIT

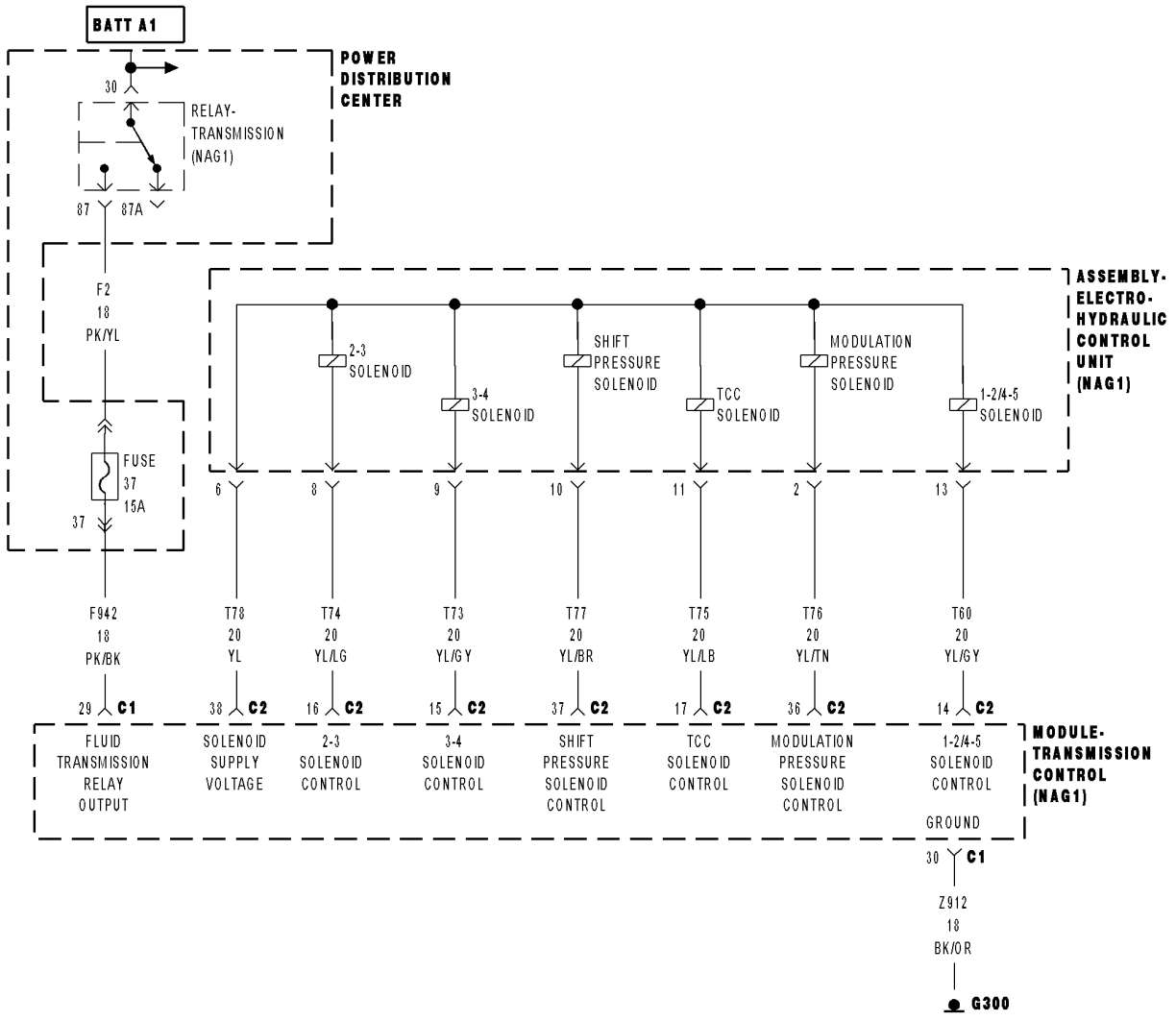

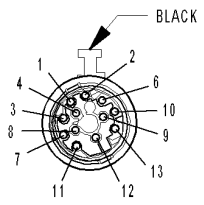

ASSEMBLY-ELECTROHYDRAULIC CONTROL UNIT (NAG1)

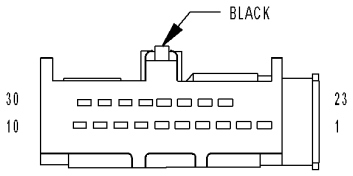

MODULE-TRANSMISSION CONTROL C1 (NAG1)

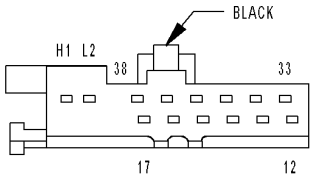

MODULE-TRANSMISSION CONTROL C2 (NAG1)

81326067

For a complete wiring diagram **Refer to Section 8W**

Theory of Operation

The TCC Solenoid is activated when the Transmission Control Module (TCM) determines that the Torque Converter Clutch should be activated. The Torque Converter Clutch is a variable slip torque clutch that allows control of the slip from 5.5% to 95.5% of lock-up. The Clutch is controlled by the TCC Solenoid which is pulse width modulated (PWM) to provide the desired amount of slip. The clutch requires both an electrical PWM of 1000Hz and an hydraulic PWM of 100Hz.

- **When Monitored:**
  Continuously with the ignition on, engine running, with the transmission in gear, the TCC Solenoid is inactive, or when the TCC Solenoid is active and controlled above 25% duty cycle, with the Solenoid Supply voltage active.
- **Set Condition:**
  If the TCM detects on the TCC Solenoid control circuit: open, short to ground, short to voltage, internal short in the TCC Solenoid or an open in the TCC Solenoid.

Possible Causes
(T75) TCC SOLENOID CONTROL CIRCUIT OPEN
(T75) TCC SOLENOID CONTROL CIRCUIT SHORT TO GROUND
TCC SOLENOID CONTROL CIRCUIT FOR A SHORT TO ANOTHER CIRCUIT
TCC SOLENOID
TRANSMISSION CONTROL MODULE

Always perform the NAG1 Pre-Diagnostic Troubleshooting procedure before proceeding. (Refer to 21 - TRANSMISSION/TRANSAXLE/AUTOMATIC - NAG1 - STANDARD PROCEDURE)

Diagnostic Test

1. CHECK IF THE DTC IS CURRENT

NOTE: If the TCM detects and stores a DTC, the TCM also stores the vehicles operating conditions under which the DTC originally set. This information is located in scan tool under Environmental Data. Before erasing any stored DTCs, record any available data to assist in duplicating the conditions in which the DTC originally set.

Turn the ignition off to the lock position.

With the scan tool, erase Transmission DTC's.

Using the Environmental Data recorded earlier, try to duplicate the conditions in which the DTC originally set. It may be necessary to test drive the vehicle.

With the scan tool, read Transmission DTC's.

Did the DTC P0743 reset?

Yes >> Go To 2

No >> Go To 6

2. CHECK THE (T75) TCC SOLENOID CONTROL CIRCUIT FOR AN OPEN

Turn the ignition off to the lock position.

Disconnect the TCM C2 harness connector.

Disconnect the Transmission Electrohydraulic Control Unit Assembly harness connector.

NOTE: Check connectors - Clean/repair as necessary.

Measure the resistance of the (T75) TCC Solenoid Control circuit from the TCM C2 harness connector to the Transmission Electrohydraulic Control Unit Assembly harness connector.

Is the resistance below 5.0 ohms?

Yes >> Repair the (T75) TCC Solenoid Control circuit for an open.
Perform NAG1 TRANSMISSION VERIFICATION TEST - VER 1. (Refer to 21 - TRANSMISSION/TRANSAXLE/AUTOMATIC - NAG1 - STANDARD PROCEDURE)

No >> Go To 3

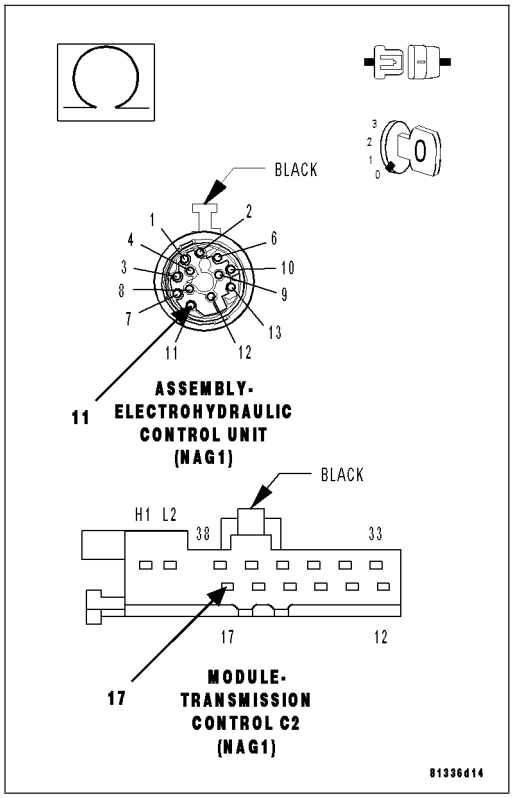

3. CHECK THE (T75) TCC SOLENOID CONTROL CIRCUIT FOR A SHORT TO GROUND

Measure the resistance between ground and the (T75) TCC Solenoid Control circuit.

Is the resistance below 5.0 ohms?

Yes >> Repair the (T75) TCC Solenoid Control circuit for a short to ground.
Perform NAG1 TRANSMISSION VERIFICATION TEST - VER 1. (Refer to 21 - TRANSMISSION/TRANSAXLE/AUTOMATIC - NAG1 - STANDARD PROCEDURE)

No >> Go To 4

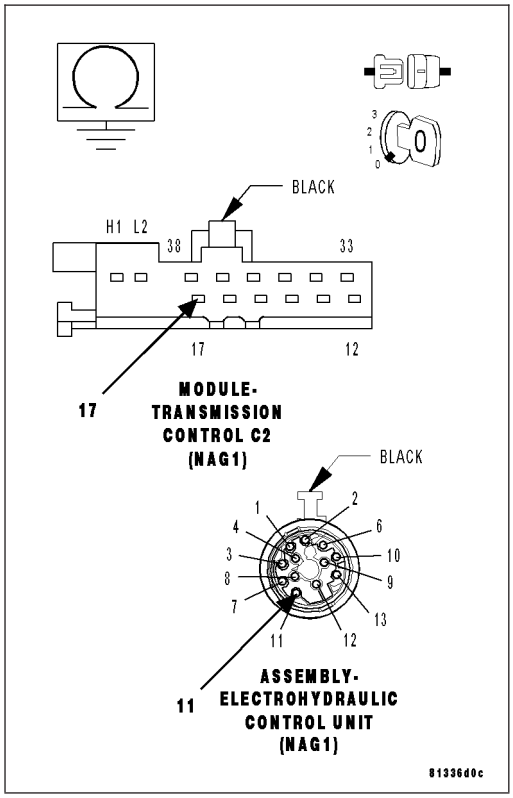

4. CHECK THE (T75) TCC SOLENOID CONTROL CIRCUIT FOR A SHORT TO ANOTHER CIRCUIT

Measure the resistance between the (T75) TCC Solenoid Control circuit and all other circuits in the Transmission Electrohydraulic Control Unit Assembly harness connector.

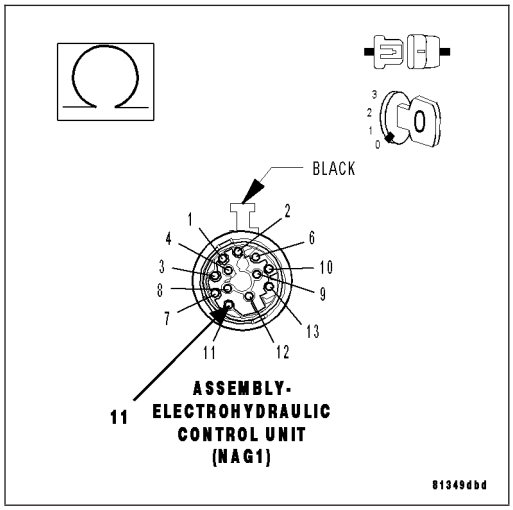

Is the resistance below 5.0 ohms between the (T75) TCC Solenoid Control circuit and any other circuit(s) in the Transmission Electrohydraulic Control Unit Assembly harness connector?

Yes >> Repair the (T75) TCC Solenoid Control circuit for a short to another circuit.

Perform NAG1 TRANSMISSION VERIFICATION TEST - VER 1. (Refer to 21 - TRANSMISSION/TRANSAXLE/AUTOMATIC - NAG1 - STANDARD PROCEDURE)

No >> Go To 5

5. CHECK THE TCC SOLENOID RESISTANCE

Disconnect the Transmission Electrohydraulic Control Unit Assembly harness connector.

Measure the resistance of the TCC Solenoid between the (T75) TCC Solenoid Control circuit and the (T78) Solenoid Supply circuit in the TCM C2 harness connector.

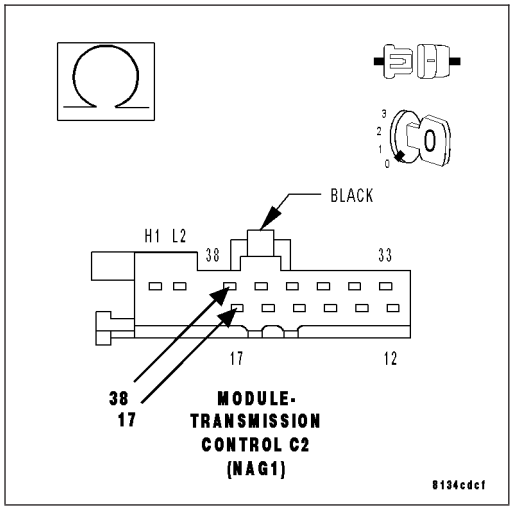

Is the resistance of the TCC Solenoid between 2.0 and 4.0 ohms?

Yes >> Using the schematics as a guide, check the Transmission Control Module (TCM) terminals for corrosion, damage, or terminal push out. Pay particular attention to all power and ground circuits. If no problems are found, replace the TCM per the Service Information. (Refer to 8 - ELECTRICAL/ELECTRONIC CONTROL MODULES/TRANSMISSION CONTROL MODULE - DESCRIPTION)

Perform NAG1 TRANSMISSION VERIFICATION TEST - VER 1. (Refer to 21 - TRANSMISSION/TRANSAXLE/AUTOMATIC - NAG1 - STANDARD PROCEDURE)

No >> Replace the TCC Solenoid per the Service Information. (Refer to 21 - TRANSMISSION/TRANSAXLE/AUTOMATIC - NAG1/ELECTROHYDRAULIC UNIT - DISASSEMBLY)

Perform NAG1 TRANSMISSION VERIFICATION TEST - VER 1. (Refer to 21 - TRANSMISSION/TRANSAXLE/AUTOMATIC - NAG1 - STANDARD PROCEDURE)

6. INTERMITTENT WIRING AND CONNECTORS

The conditions necessary to set this DTC are not present at this time.

Using the schematics as a guide, inspect the wiring and connectors specific to this circuit.

Wiggle the wiring and connectors while checking for any possible open or shorted circuits.

Check for any Service Information Tune-ups or Technical Service Bulletins that may apply.

Were there any problems found?

Yes >> Repair as necessary.

Perform NAG1 TRANSMISSION VERIFICATION TEST - VER 1. (Refer to 21 - TRANSMISSION/TRANSAXLE/AUTOMATIC - NAG1 - STANDARD PROCEDURE)

No >> Test Complete.

P0748-MODULATOR PRESSURE SOLENOID CIRCUIT

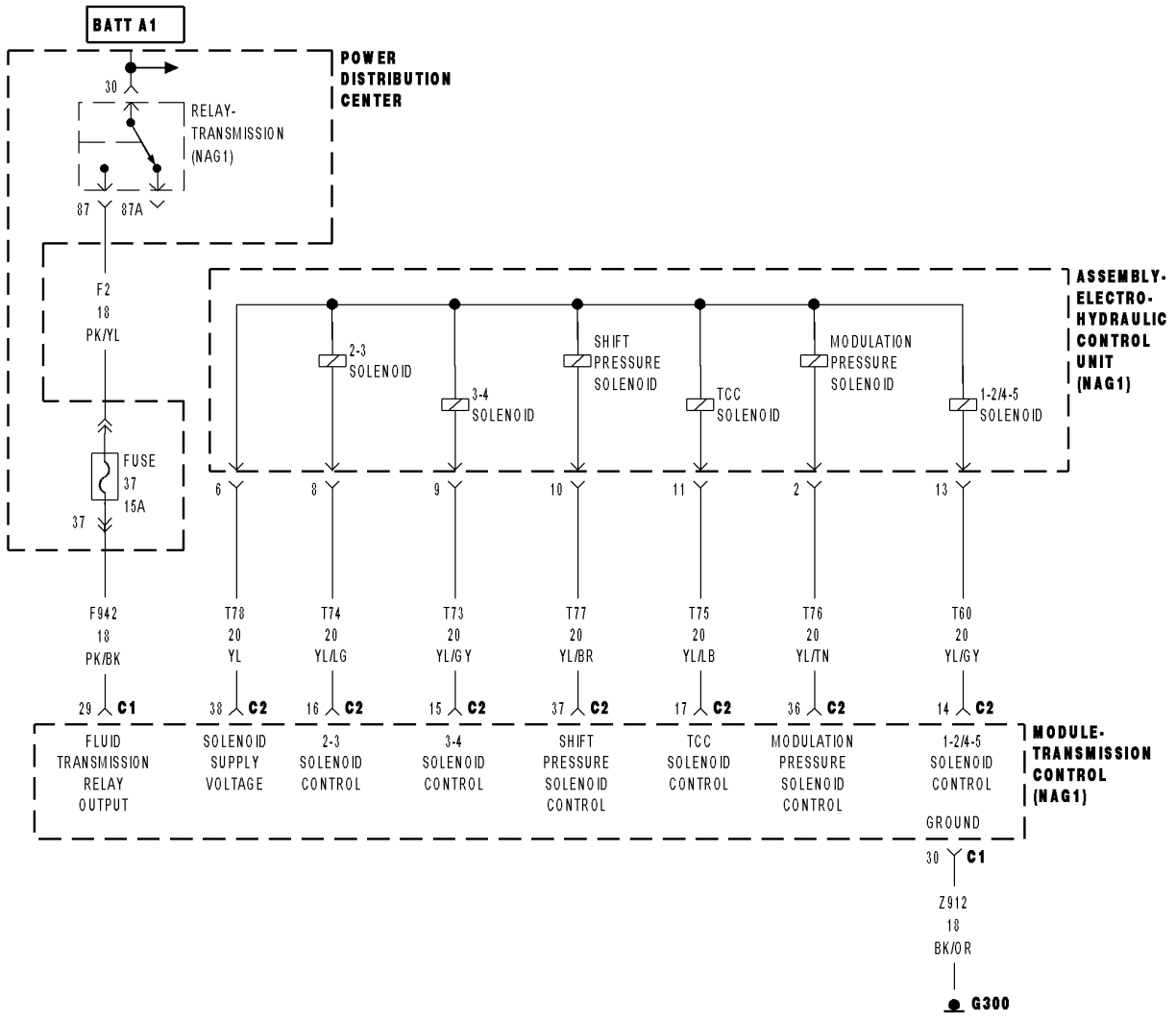

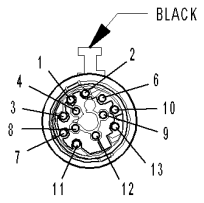

ASSEMBLY-ELECTROHYDRAULIC CONTROL UNIT (NAG1)

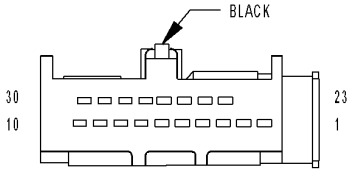

MODULE-TRANSMISSION CONTROL C1 (NAG1)

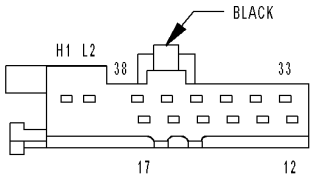

MODULE-TRANSMISSION CONTROL C2 (NAG1)

81326067

For a complete wiring diagram **Refer to Section 8W**

Theory of Operation

The Modulating Pressure Control Solenoid Valve's purpose is to control the modulating pressure depending on the continuously changing operating conditions, such as load and gear change.

The Modulating Pressure Control Solenoid Valve is always active. The solenoid uses pulse width modulation (PWM) to control the transmissions hydraulic fluid pressure that is determined by the Transmission Control Module (TCM).

- **When Monitored:**
  Continuously with the ignition on, engine running, the Modulating Pressure Control Solenoid Valve is either off, or active with 25-75% duty cycle, with no Solenoid Supply Voltage DTCs present.
- **Set Condition:**
  When the Modulating Pressure Control Solenoid Valve is turned on and the Solenoid driver detects an error (the measured current is too different then the target current) or when the solenoid is off and a short to ground is detected.

Possible Causes
(T76) MODULATION PRESSURE SOLENOID CONTROL CIRCUIT OPEN
(T76) MODULATION PRESSURE SOLENOID CONTROL CIRCUIT SHORT TO GROUND
(T76) MODULATION PRESSURE SOLENOID CONTROL CIRCUIT SHORT TO ANOTHER CIRCUIT
MODULATING PRESSURE CONTROL SOLENOID VALVE
TRANSMISSION CONTROL MODULE

Always perform the NAG1 Pre-Diagnostic Troubleshooting procedure before proceeding. (Refer to 21 - TRANSMISSION/TRANSAXLE/AUTOMATIC - NAG1 - STANDARD PROCEDURE)

Diagnostic Test

1. CHECK IF THE DTC IS CURRENT

NOTE: When the Transmission Control Module (TCM) detects and stores a DTC, the TCM also stores the vehicles operating conditions under which the DTC originally set. This information is located in scan tool under Environmental Data. Before erasing any stored DTCs, record any available data to assist in duplicating the conditions in which the DTC originally set.

Turn the ignition off to the lock position.

With the scan tool, erase Transmission DTC's.

Using the Environmental Data recorded earlier, try to duplicate the conditions in which the DTC originally set. It may be necessary to test drive the vehicle.

With the scan tool, read Transmission DTC's.

Did the DTC P0748 reset?

Yes >> Go To 2

No >> Go To 6

2. CHECK THE (T76) MODULATION PRESSURE SOLENOID CONTROL CIRCUIT FOR AN OPEN

Turn the ignition off to the lock position.

Disconnect the TCM C2 harness connector.

Disconnect the Transmission Electrohydraulic Control Unit Assembly harness connector.

NOTE: Check connectors - Clean/repair as necessary.

Measure the resistance of the (T76) Modulation Pressure Solenoid Control circuit between the TCM C2 harness connector and the Transmission Electrohydraulic Control Unit Assembly harness connector.

Is the resistance below 5.0 ohms?

Yes >> Repair the (T76) Modulation Pressure Solenoid Control circuit for an open.

Perform NAG1 TRANSMISSION VERIFICATION TEST - VER 1. (Refer to 21 - TRANSMISSION/TRANSAXLE/AUTOMATIC - NAG1 - STANDARD PROCEDURE)

No >> Go To 3

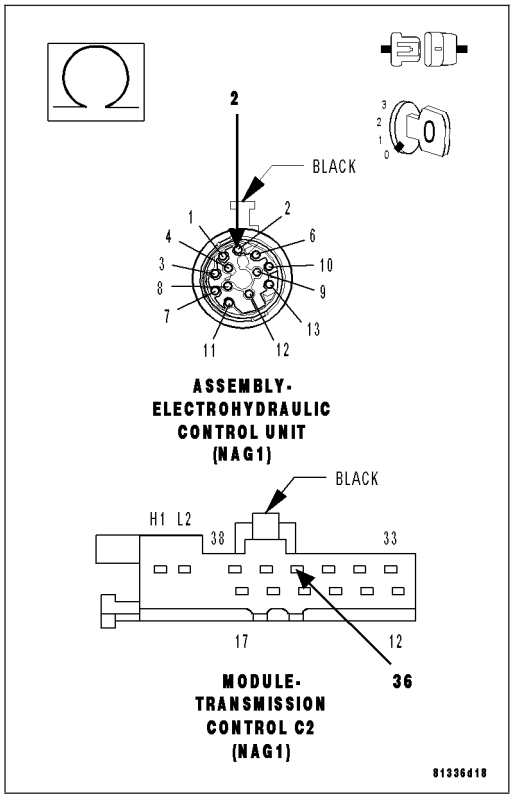

3. CHECK THE (T76) MODULATION PRESSURE SOLENOID CONTROL CIRCUIT FOR A SHORT TO GROUND

Measure the resistance between ground and the (T76) Modulation Pressure Solenoid Control circuit.

Is the resistance below 5.0 ohms?

Yes >> Repair the (T76) Modulation Pressure Solenoid Control circuit for a short to ground.

Perform NAG1 TRANSMISSION VERIFICATION TEST - VER 1. (Refer to 21 - TRANSMISSION/TRANSAXLE/AUTOMATIC - NAG1 - STANDARD PROCEDURE)

No >> Go To 4

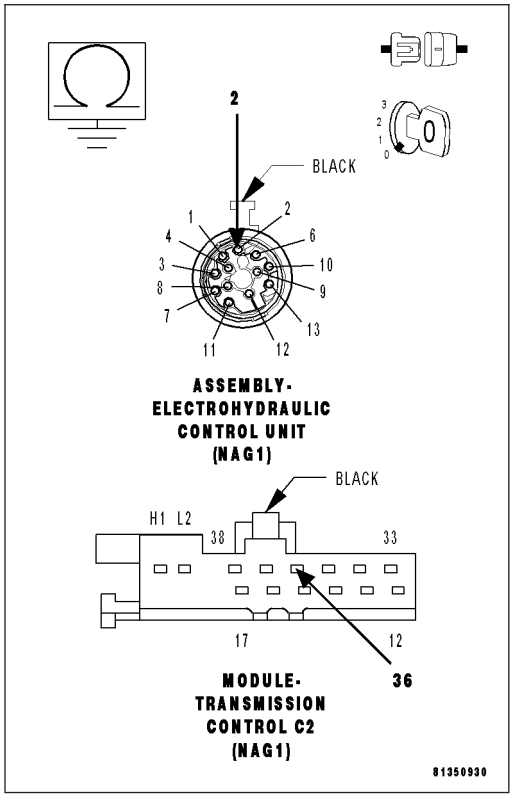

4. CHECK THE (T76) MODULATION PRESSURE SOLENOID CONTROL CIRCUIT FOR A SHORT TO ANOTHER CIRCUIT

Measure the resistance between the (T76) Modulation Pressure Solenoid Control circuit and every other circuit in the Transmission Electrohydraulic Control Unit Assembly harness connector.

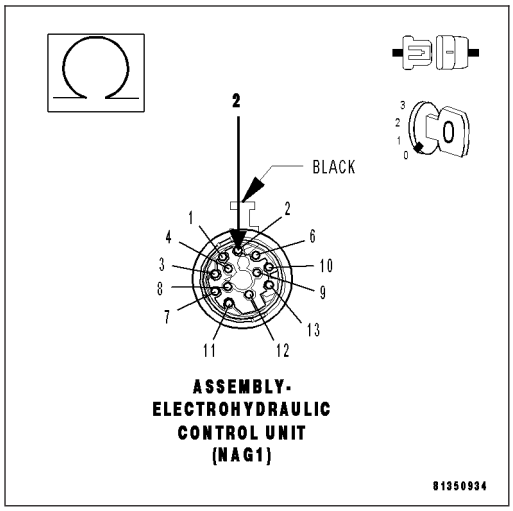

Is the resistance below 5.0 ohms?

Yes >> Repair the (T76) Modulation Pressure Solenoid Control circuit for a short to another circuit.

Perform NAG1 TRANSMISSION VERIFICATION TEST - VER 1. (Refer to 21 - TRANSMISSION/TRANSAXLE/AUTOMATIC - NAG1 - STANDARD PROCEDURE)

No >> Go To 5

5. CHECK THE MODULATING PRESSURE CONTROL SOLENOID VALVE

Reconnect the Transmission Electrohydraulic Control Unit Assembly harness connector.

Measure the resistance between the (T76) Modulation Pressure Solenoid Control circuit and the (T78) Solenoid Supply Voltage circuit in the TCM C2 harness connector.

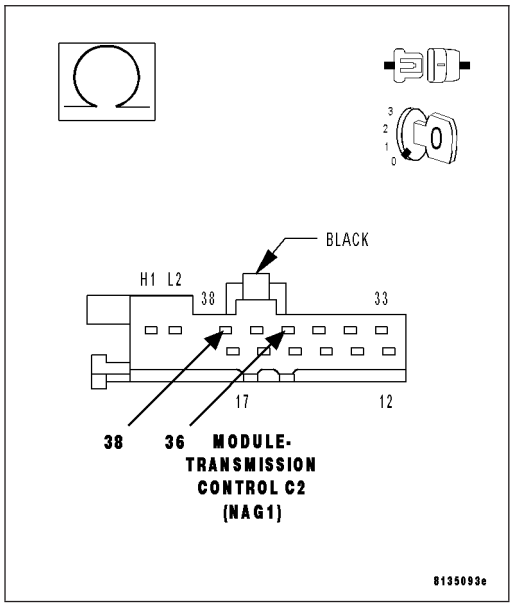

Is the resistance between 2.5 and 6.5 ohms?

Yes >> Using the schematics as a guide, check the Transmission Control Module (TCM) terminals for corrosion, damage, or terminal push out. Pay particular attention to all power and ground circuits. If no problems are found, replace the TCM per the Service Information. (Refer to 8 - ELECTRICAL/ELECTRONIC CONTROL MODULES/TRANSMISSION CONTROL MODULE - DESCRIPTION)

Perform NAG1 TRANSMISSION VERIFICATION TEST - VER 1. (Refer to 21 - TRANSMISSION/TRANSAXLE/AUTOMATIC - NAG1 - STANDARD PROCEDURE)

No >> Replace the Modulating Pressure Control Solenoid Valve per the Service Information. (Refer to 21 - TRANSMISSION/TRANSAXLE/AUTOMATIC - NAG1/ELECTROHYDRAULIC UNIT - DISASSEMBLY)

6. INTERMITTENT WIRING AND CONNECTORS

The conditions necessary to set this DTC are not present at this time.

Using the schematics as a guide, inspect the wiring and connectors specific to this circuit.

Wiggle the wiring and connectors while checking for any possible open or shorted circuits.

Check for any Service Information Tune-ups or Technical Service Bulletins that may apply.

Were there any problems found?

Yes >> Repair as necessary.

Perform NAG1 TRANSMISSION VERIFICATION TEST - VER 1. (Refer to 21 - TRANSMISSION/TRANSAXLE/AUTOMATIC - NAG1 - STANDARD PROCEDURE)

No >> Test Complete.

P0752-1-2/4-5 SOLENOID

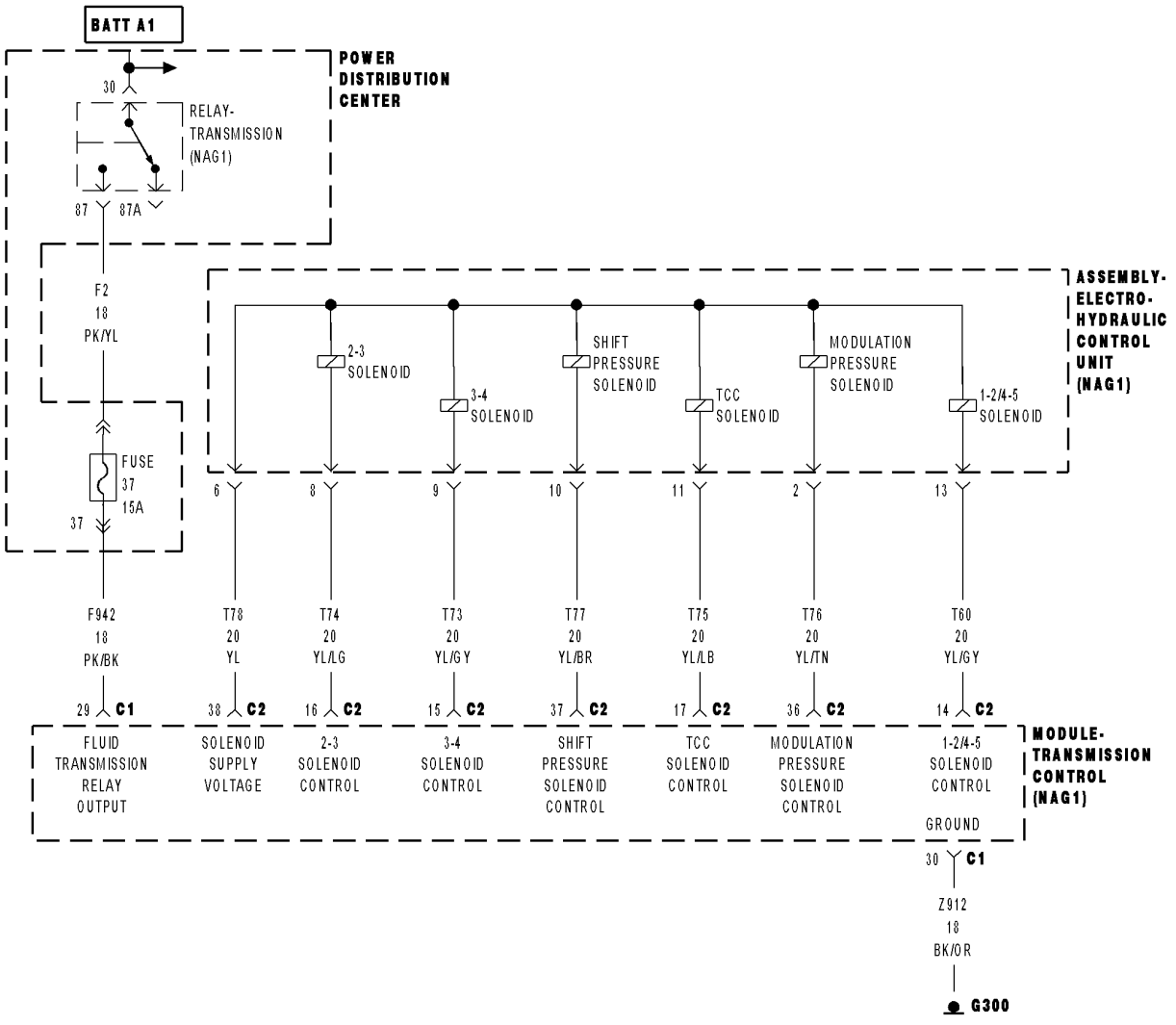

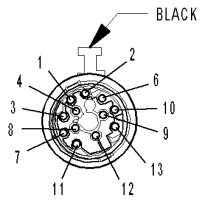

ASSEMBLY-ELECTROHYDRAULIC CONTROL UNIT (NAG1)

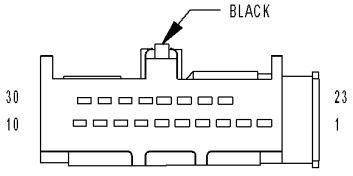

MODULE-TRANSMISSION CONTROL C1 (NAG1)

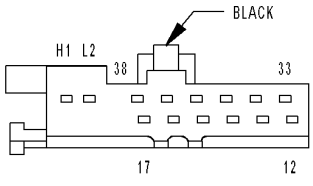

MODULE-TRANSMISSION CONTROL C2 (NAG1)

81326067

For a complete wiring diagram **Refer to Section 8W**

Theory of Operation

The 1-2/4-5 Solenoid is activated when the Transmission Control Module (TCM) determines that the transmission must shift into or out of second or fifth gear. The solenoid is only activated during the actual shift of the transmission. When the solenoid is activated, hydraulic pressure is applied to the proper shift elements in the transmission to allow the desired shift. Once the shift is completed the solenoid is turned off.

- **When Monitored:**
  When both the 1-2/4-5 Solenoid and the Solenoid Supply voltage is active.
- **Set Condition:**
  When 1-2/4-5 Solenoid is turned on and the TCM detects any of the following in the 2-3 Solenoid Control circuit: open, short to ground, short to voltage, or a faulty 1-2/4-5 Solenoid Control driver in the TCM.

Possible Causes
(T76) 1-2/4-5 SOLENOID CONTROL CIRCUIT OPEN
(T76) 1-2/4-5 SOLENOID CONTROL CIRCUIT SHORT TO GROUND
(T76) 1-2/4-5 SOLENOID CONTROL CIRCUIT SHORT TO ANOTHER CIRCUIT
1-2/4-5 SOLENOID
TRANSMISSSION CONTROL MODULE

Always perform the NAG1 Pre-Diagnostic Troubleshooting procedure before proceeding. (Refer to 21 - TRANSMISSION/TRANSAXLE/AUTOMATIC - NAG1 - STANDARD PROCEDURE)

Diagnostic Test

1. CHECK IF THE DTC IS CURRENT

NOTE: When the Transmission Control Module (TCM) detects and stores a DTC, the TCM also stores the vehicles operating conditions under which the DTC originally set. This information is located in the scan tool under Environmental Data. Before erasing any stored DTCs, record any available data to assist in duplicating the conditions in which the DTC originally set.

Turn the ignition off to the lock position.

With the scan tool, erase Transmission DTC's.

Using the Environmental Data recorded earlier, try to duplicate the conditions in which the DTC originally set. It may be necessary to test drive the vehicle.

With the scan tool, read Transmission DTC's.

Did the DTC P0752 reset?

Yes >> Go To 2

No >> Go To 6

2. CHECK THE (T76) 1-2/4-5 SOLENOID CONTROL CIRCUIT FOR AN OPEN

Turn the ignition off to the lock position.

Disconnect the TCM C2 harness connector.

Disconnect the Transmission Electrohydraulic Control Unit Assembly harness connector.

Measure the resistance of the (T76) 1-2/4-5 Solenoid Control circuit between the TCM C2 harness connector and the Transmission Electrohydraulic Control Unit Assembly harness connector.

Is the resistance below 5.0 ohms?

Yes >> Go To 3

No >> Repair the (T76) 1-2/4-5 Solenoid Control circuit for an open.

Perform NAG1 TRANSMISSION VERIFICATION TEST - VER 1. (Refer to 21 - TRANSMISSION/TRANSAXLE/AUTOMATIC - NAG1 - STANDARD PROCEDURE)

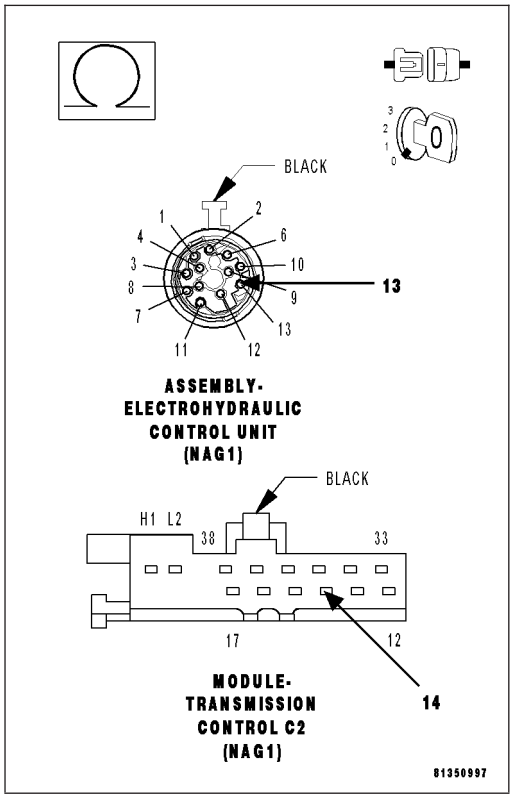

3. CHECK THE (T76) 1-2/4-5 SOLENOID CONTROL CIRCUIT FOR A SHORT TO GROUND

Measure the resistance between ground and the (T76) 1-2/4-5 Solenoid Control circuit.

Is the resistance below 5.0 ohms?

Yes >> Repair the (T76) 1-2/4-5 Solenoid Control circuit for a short to ground.

Perform NAG1 TRANSMISSION VERIFICATION TEST - VER 1. (Refer to 21 - TRANSMISSION/TRANSAXLE/AUTOMATIC - NAG1 - STANDARD PROCEDURE)

No >> Go To 4

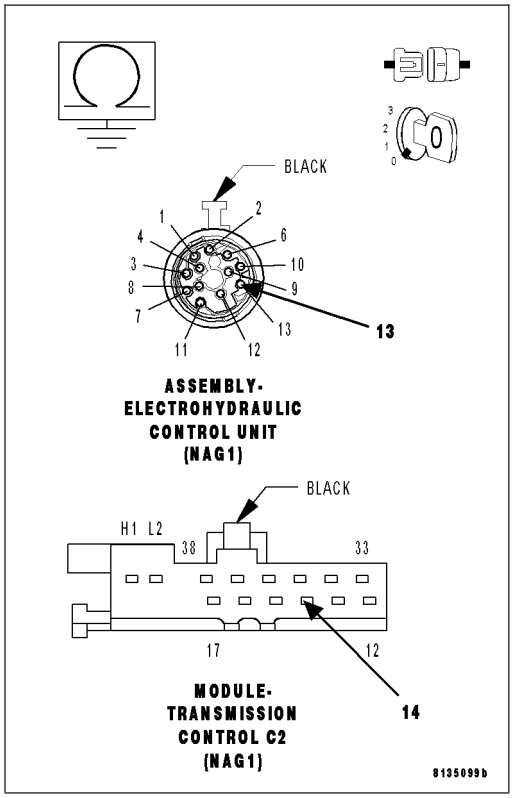

4. CHECK THE (T76) 1-2/4-5 SOLENOID CONTROL CIRCUIT FOR A TO ANOTHER CIRCUIT

Measure the resistance between the (T76) 1-2/4-5 Solenoid Control circuit and every other circuit in the Transmission Electrohydraulic Control Unit Assembly harness connector.

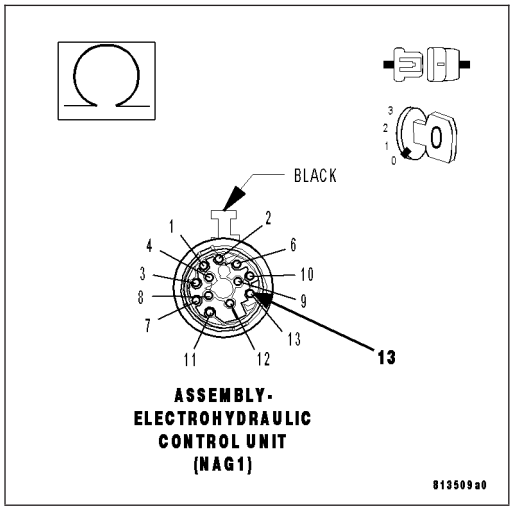

Is the resistance below 5.0 ohms between the (T76) 1-2/4-5 Solenoid Control circuit and any other circuit(s) in the Transmission Electrohydraulic Control Unit Assembly harness connector?

Yes >> Repair the (T76) 1-2/4-5 Solenoid Control circuit for a short to another circuit(s).
Perform NAG1 TRANSMISSION VERIFICATION TEST - VER 1. (Refer to 21 - TRANSMISSION/TRANSAXLE/AUTOMATIC - NAG1 - STANDARD PROCEDURE)

No >> Go To 5

5. CHECK THE 1-2/4-5 SOLENOID

Reconnect the Transmission Electrohydraulic Control Unit Assembly harness connector.

Measure the resistance of the 1-2/4-5 Solenoid between the (T76) 1-2/4-5 Solenoid Control circuit and the (T78) Solenoid Voltage Supply circuit in the TCM C2 harness connector.

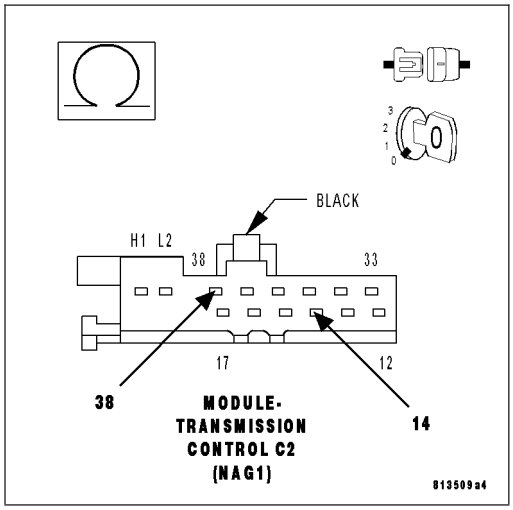

Is the resistance between 2.5 and 6.5 ohms?

Yes >> Using the schematics as a guide, check the Transmission Control Module (TCM) terminals for corrosion, damage, or terminal push out. Pay particular attention to all power and ground circuits. If no problems are found, replace the TCM per the Service Information. (Refer to 8 - ELECTRICAL/ELECTRONIC CONTROL MODULES/TRANSMISSION CONTROL MODULE - DESCRIPTION)
Perform NAG1 TRANSMISSION VERIFICATION TEST - VER 1. (Refer to 21 - TRANSMISSION/TRANSAXLE/AUTOMATIC - NAG1 - STANDARD PROCEDURE)

No >> Replace the 1-2/4-5 Solenoid per the Service Information. (Refer to 21 - TRANSMISSION/TRANSAXLE/AUTOMATIC - NAG1/ELECTROHYDRAULIC UNIT - DISASSEMBLY)
Perform NAG1 TRANSMISSION VERIFICATION TEST - VER 1. (Refer to 21 - TRANSMISSION/TRANSAXLE/AUTOMATIC - NAG1 - STANDARD PROCEDURE)

6. INTERMITTENT WIRING AND CONNECTORS

The conditions necessary to set this DTC are not present at this time.

Using the schematics as a guide, inspect the wiring and connectors specific to this circuit.

Wiggle the wiring and connectors while checking for any possible open or shorted circuits.

Check for any Service Information Tune-ups or Technical Service Bulletins that may apply.

Were there any problems found?

Yes >> Repair as necessary.
Perform NAG1 TRANSMISSION VERIFICATION TEST - VER 1. (Refer to 21 - TRANSMISSION/TRANSAXLE/AUTOMATIC - NAG1 - STANDARD PROCEDURE)

No >> Test Complete.

P0753-1-2/4-5 SOLENOID CIRCUIT

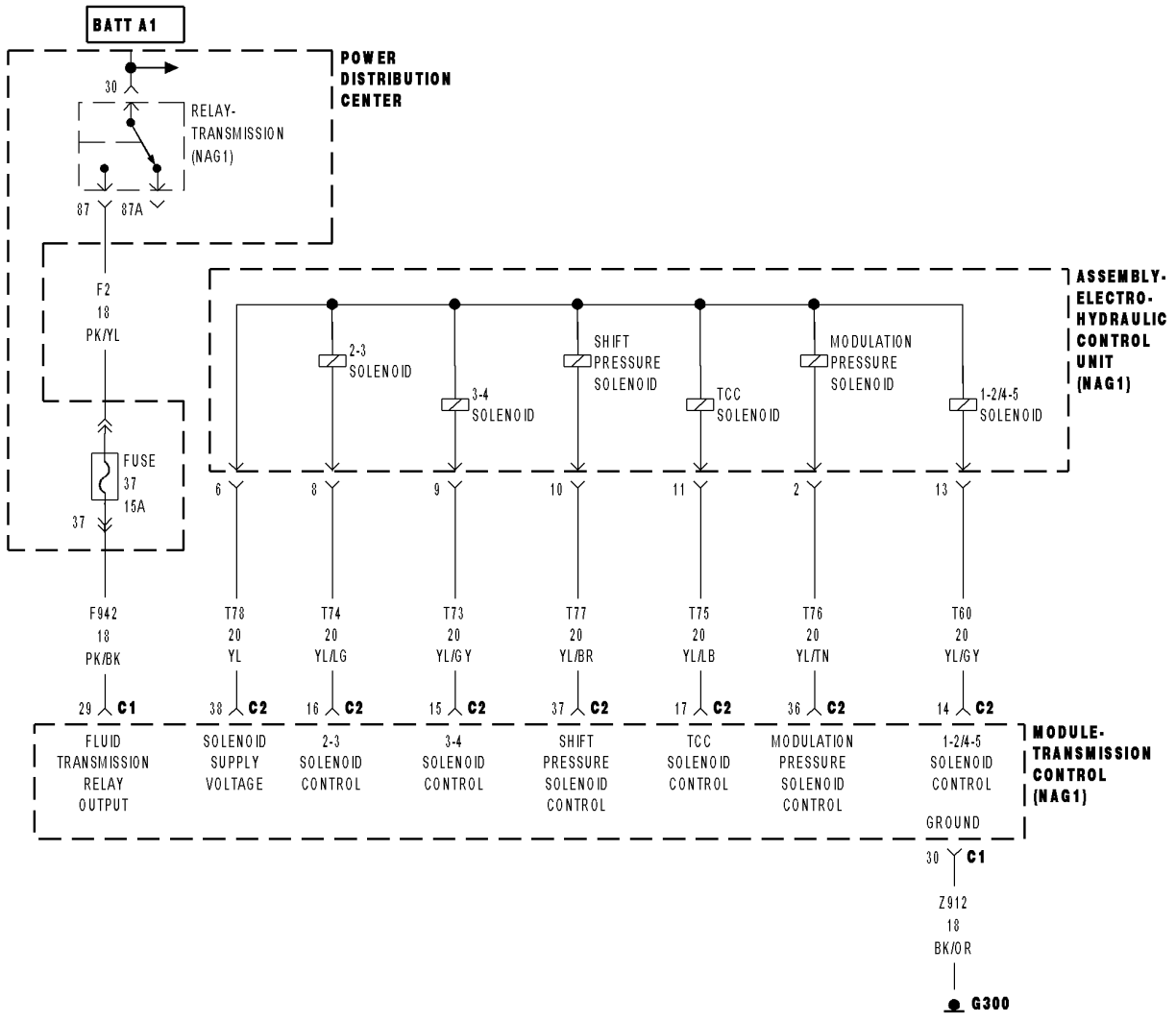

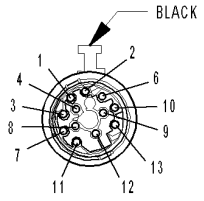

ASSEMBLY-ELECTROHYDRAULIC CONTROL UNIT (NAG1)

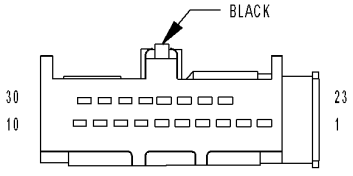

MODULE-TRANSMISSION CONTROL C1 (NAG1)

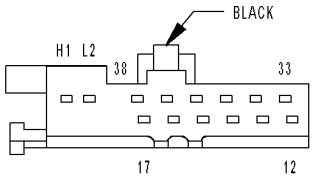

MODULE-TRANSMISSION CONTROL C2 (NAG1)

81326067

For a complete wiring diagram **Refer to Section 8W**

Theory of Operation

The 1-2/4-5 Solenoid is activated when the Transmission Control Module (TCM) determines that the transmission must shift into or out of second or fifth gear. The solenoid is only activated during the actual shift of the transmission. When the solenoid is activated, hydraulic pressure is applied to the proper shift elements in the transmission to allow the desired shift. Once the shift is completed the solenoid is turned off.

- **When Monitored:**
  When both the 1-2/4-5 Solenoid and the Solenoid Supply voltage is active.
- **Set Condition:**When 1-2/4-5 Solenoid is turned on and the TCM detects any of the following in the 2-3 Solenoid Control circuit: open, short to ground, short to voltage, or a faulty 1-2/4-5 Solenoid Control driver in the TCM.

Possible Causes
(T76) 1-2/4-5 SOLENOID CONTROL CIRCUIT OPEN
(T76) 1-2/4-5 SOLENOID CONTROL CIRCUIT SHORT TO GROUND
(T76) 1-2/4-5 SOLENOID CONTROL CIRCUIT SHORT TO ANOTHER CIRCUIT
1-2/4-5 SOLENOID
TRANSMISSSION CONTROL MODULE

Always perform the NAG1 Pre-Diagnostic Troubleshooting procedure before proceeding. (Refer to 21 - TRANSMISSION/TRANSAXLE/AUTOMATIC - NAG1 - STANDARD PROCEDURE)

Diagnostic Test

1. CHECK IF THE DTC IS CURRENT

NOTE: When the Transmission Control Module (TCM) detects and stores a DTC, the TCM also stores the vehicles operating conditions under which the DTC originally set. This information is located in the scan tool under Environmental Data. Before erasing any stored DTCs, record any available data to assist in duplicating the conditions in which the DTC originally set.

Turn the ignition off to the lock position.

With the scan tool, erase Transmission DTC's.

Using the Environmental Data recorded earlier, try to duplicate the conditions in which the DTC originally set. It may be necessary to test drive the vehicle.

With the scan tool, read Transmission DTC's.

Did the DTC P0753 reset?

Yes >> Go To 2

No >> Go To 6

2. CHECK THE (T76) 1-2/4-5 SOLENOID CONTROL CIRCUIT FOR AN OPEN

Turn the ignition off to the lock position.

Disconnect the TCM C2 harness connector.

Disconnect the Transmission Electrohydraulic Control Unit Assembly harness connector.

Measure the resistance of the (T76) 1-2/4-5 Solenoid Control circuit between the TCM C2 harness connector and the Transmission Electrohydraulic Control Unit Assembly harness connector.

Is the resistance below 5.0 ohms?

Yes >> Go To 3

No >> Repair the (T76) 1-2/4-5 Solenoid Control circuit for an open.

Perform NAG1 TRANSMISSION VERIFICATION TEST - VER 1. (Refer to 21 - TRANSMISSION/TRANSAXLE/AUTOMATIC - NAG1 - STANDARD PROCEDURE)

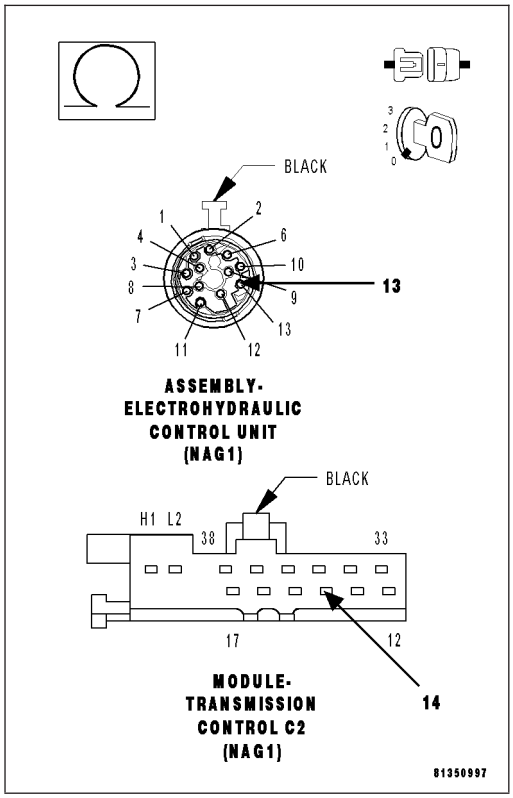

3. CHECK THE (T76) 1-2/4-5 SOLENOID CONTROL CIRCUIT FOR A SHORT TO GROUND

Measure the resistance between ground and the (T76) 1-2/4-5 Solenoid Control circuit.

Is the resistance below 5.0 ohms?

Yes >> Repair the (T76) 1-2/4-5 Solenoid Control circuit for a short to ground.

Perform NAG1 TRANSMISSION VERIFICATION TEST - VER 1. (Refer to 21 - TRANSMISSION/TRANSAXLE/AUTOMATIC - NAG1 - STANDARD PROCEDURE)

No >> Go To 4

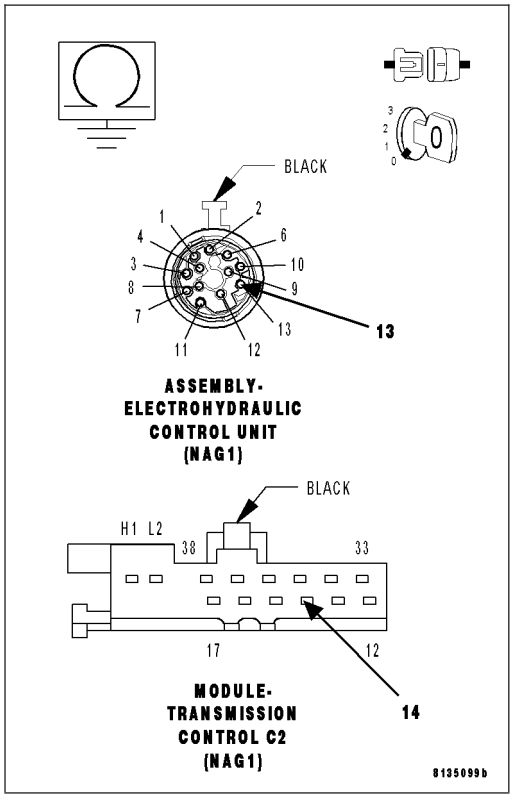

4. CHECK THE (T76) 1-2/4-5 SOLENOID CONTROL CIRCUIT FOR A SHORT TO ANOTHER CIRCUIT

Measure the resistance between the (T76) 1-2/4-5 Solenoid Control circuit and every other circuit in the Transmission Electrohydraulic Control Unit Assembly harness connector.

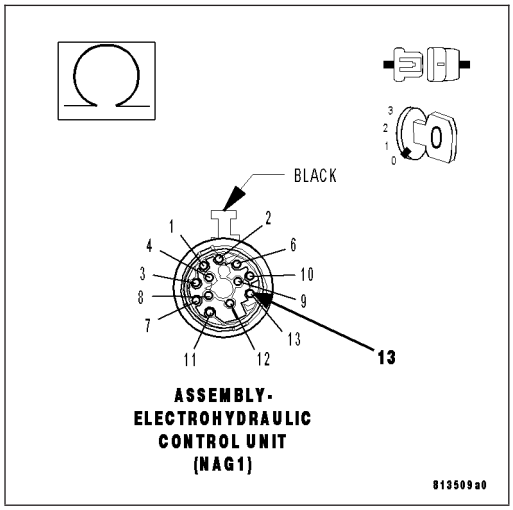

Is the resistance below 5.0 ohms between the (T76) 1-2/4-5 Solenoid Control circuit and any other circuit(s) in the Transmission Electrohydraulic Control Unit Assembly harness connector?

Yes >> Repair the (T76) 1-2/4-5 Solenoid Control circuit for a short to another circuit(s).
Perform NAG1 TRANSMISSION VERIFICATION TEST - VER 1. (Refer to 21 - TRANSMISSION/TRANSAXLE/AUTOMATIC - NAG1 - STANDARD PROCEDURE)

No >> Go To 5

5. CHECK THE 1-2/4-5 SOLENOID

Reconnect the Transmission Electrohydraulic Control Unit Assembly harness connector.

Measure the resistance of the 1-2/4-5 Solenoid between the (T76) 1-2/4-5 Solenoid Control circuit and the (T78) Solenoid Voltage Supply circuit in the TCM C2 harness connector.

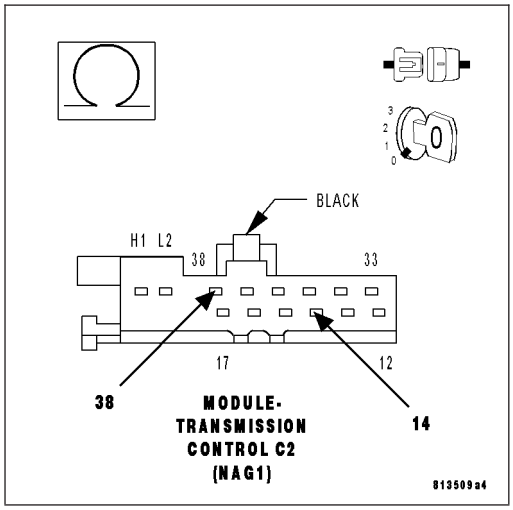

Is the resistance between 2.5 and 6.5 ohms?

Yes >> Using the schematics as a guide, check the Transmission Control Module (TCM) terminals for corrosion, damage, or terminal push out. Pay particular attention to all power and ground circuits. If no problems are found, replace the TCM per the Service Information. (Refer to 8 - ELECTRICAL/ELECTRONIC CONTROL MODULES/TRANSMISSION CONTROL MODULE - DESCRIPTION)
Perform NAG1 TRANSMISSION VERIFICATION TEST - VER 1. (Refer to 21 - TRANSMISSION/TRANSAXLE/AUTOMATIC - NAG1 - STANDARD PROCEDURE)

No >> Replace the 1-2/4-5 Solenoid per the Service Information. (Refer to 21 - TRANSMISSION/TRANSAXLE/AUTOMATIC - NAG1/ELECTROHYDRAULIC UNIT - DISASSEMBLY)

6. INTERMITTENT WIRING AND CONNECTORS

The conditions necessary to set this DTC are not present at this time.

Using the schematics as a guide, inspect the wiring and connectors specific to this circuit.

Wiggle the wiring and connectors while checking for any possible open or shorted circuits.

Check for any Service Information Tune-ups or Technical Service Bulletins that may apply.

Were there any problems found?

Yes >> Repair as necessary.
Perform NAG1 TRANSMISSION VERIFICATION TEST - VER 1. (Refer to 21 - TRANSMISSION/TRANSAXLE/AUTOMATIC - NAG1 - STANDARD PROCEDURE)

No >> Test Complete.

P0758-2-3 SOLENOID

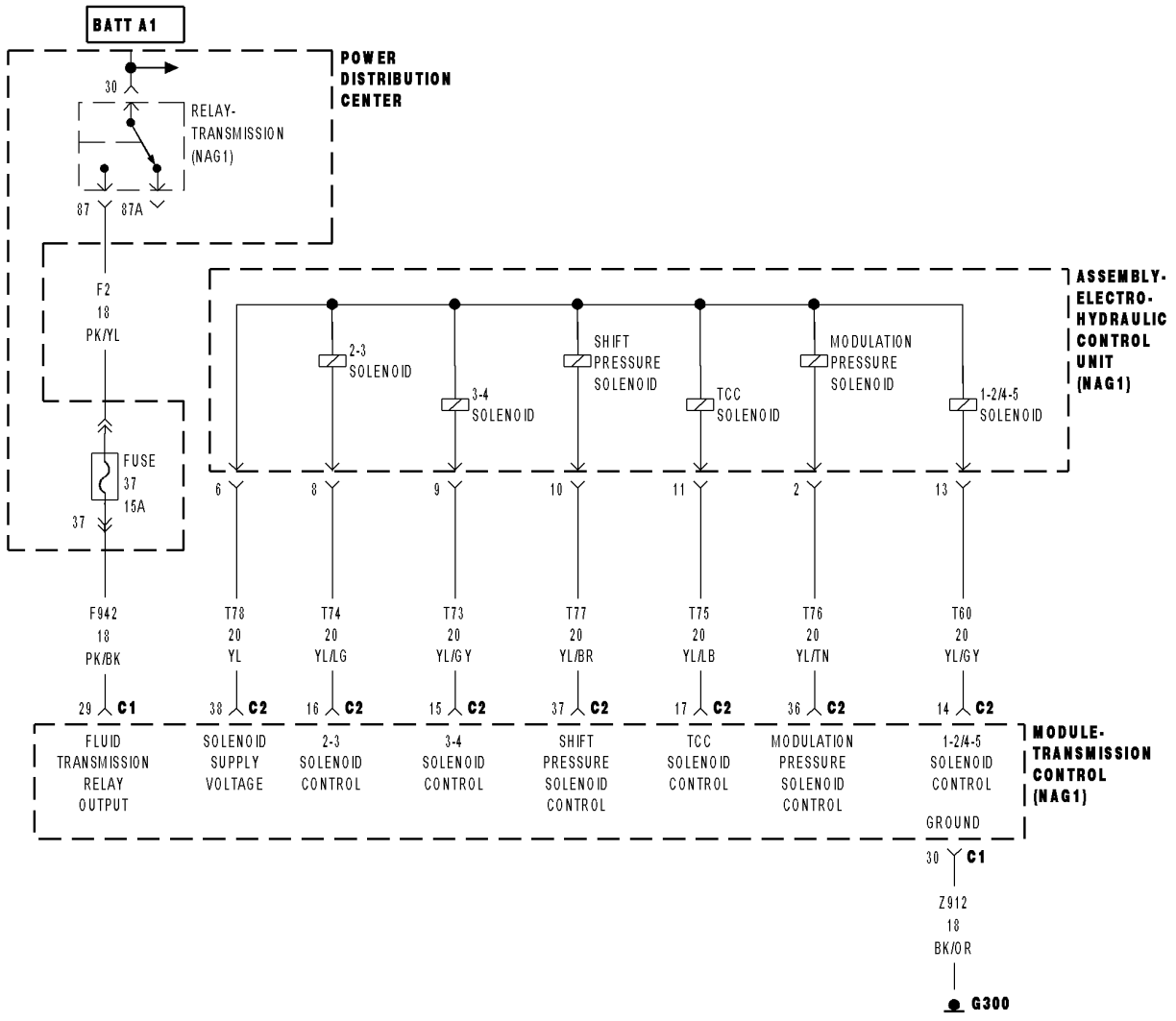

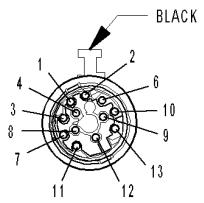

ASSEMBLY-ELECTROHYDRAULIC CONTROL UNIT (NAG1)

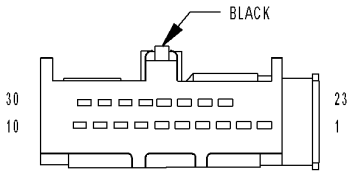

MODULE-TRANSMISSION CONTROL C1 (NAG1)

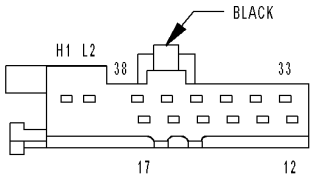

MODULE-TRANSMISSION CONTROL C2 (NAG1)

81326067

For a complete wiring diagram **Refer to Section 8W**

Theory of Operation

The 2-3 Solenoid is activated when the Transmission Control Module (TCM) determines that the transmission must shift into or out of 3rd gear. The solenoid is only activated during the shifting of the transmission. When the solenoid is activated, hydraulic pressure is applied to the proper shift elements in the transmission to allow the desired shift. Once the shift is completed the solenoid is turned off.

- **When Monitored:**
  When both the 2-3 Solenoid and the Solenoid Supply voltage is active.
- **Set Condition:**
  When 2-3 Solenoid is turned on and the TCM detects any of the following in the 2-3 Solenoid Control circuit: open, short to ground, short to voltage, or a faulty 2-3 Solenoid Control driver in the TCM.

Possible Causes
(T74) 2-3 SOLENOID CONTROL CIRCUIT OPEN
(T74) 2-3 SOLENOID CONTROL CIRCUIT SHORT TO GROUND
(T74) 2-3 SOLENOID CONTROL CIRCUIT SHORT TO ANOTHER CIRCUIT
2-3 SOLENOID
TRANSMISSSION CONTROL MODULE

Always perform the NAG1 Pre-Diagnostic Troubleshooting procedure before proceeding. (Refer to 21 - TRANSMISSION/TRANSAXLE/AUTOMATIC - NAG1 - STANDARD PROCEDURE)

Diagnostic Test

1. CHECK IF THE DTC IS CURRENT

NOTE: When the Transmission Control Module (TCM) detects and stores a DTC, the TCM also stores the vehicles operating conditions under which the DTC originally set. This information is located in the scan tool under Environmental Data. Before erasing any stored DTCs, record any available data to assist in duplicating the conditions in which the DTC originally set.

Turn the ignition off to the lock position.

With the scan tool, erase Transmission DTC's.

Using the Environmental Data recorded earlier, try to duplicate the conditions in which the DTC originally set. It may be necessary to test drive the vehicle.

With the scan tool, read Transmission DTC's.

Did the DTC P0757 reset?

Yes >> Go To 2

No >> Go To 6

2. CHECK THE (T74) 2-3 SOLENOID CONTROL CIRCUIT FOR AN OPEN

Turn the ignition off to the lock position.

Disconnect the TCM C2 harness connector.

Disconnect the Transmission Electrohydraulic Control Unit Assembly harness connector.

Measure the resistance of the (T74) 2-3 Solenoid Control circuit between the TCM C2 harness connector and the Transmission Electrohydraulic Control Unit Assembly harness connector.

Is the resistance below 5.0 ohms?

Yes >> Go To 3

No >> Repair the (T74) 2-3 Solenoid Control circuit for an open.
Perform NAG1 TRANSMISSION VERIFICATION TEST - VER 1. (Refer to 21 - TRANSMISSION/TRANSAXLE/AUTOMATIC - NAG1 - STANDARD PROCEDURE)

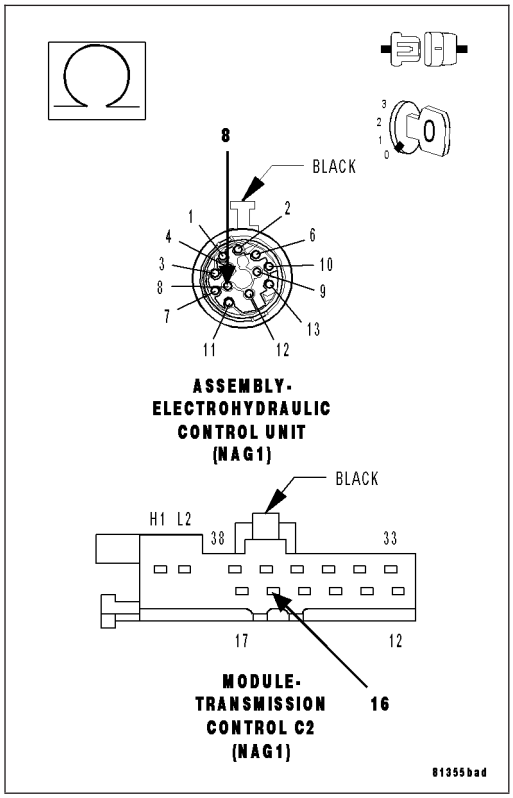

3. CHECK THE (T74) 2-3 SOLENOID CONTROL CIRCUIT FOR A SHORT TO GROUND

Measure the resistance between ground and the (T74) 2-3 Solenoid Control circuit.

Is the resistance below 5.0 ohms?

Yes >> Repair the (T74) 2-3 Solenoid Control circuit for a short to ground.
Perform NAG1 TRANSMISSION VERIFICATION TEST - VER 1. (Refer to 21 - TRANSMISSION/TRANSAXLE/AUTOMATIC - NAG1 - STANDARD PROCEDURE)

No >> Go To 4

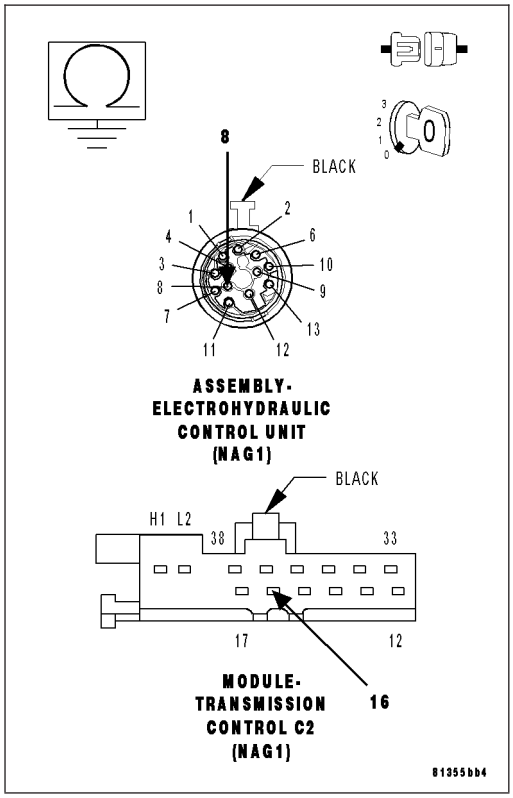

4. CHECK THE (T74) 2-3 SOLENOID CONTROL CIRCUIT FOR A SHORT TO ANOTHER CIRCUIT

Measure the resistance between the (T74) 2-3 Solenoid Control circuit and every other circuit in the Transmission Electrohydraulic Control Unit Assembly harness connector.

Is the resistance below 5.0 ohms between the (T74) 2-3 Solenoid Control circuit and any other circuit(s) in the Transmission Electrohydraulic Control Unit Assembly harness connector?

Yes >> Repair the (T74) 2-3 Solenoid Control circuit for a short to another circuit(s).
Perform NAG1 TRANSMISSION VERIFICATION TEST - VER 1. (Refer to 21 - TRANSMISSION/TRANSAXLE/AUTOMATIC - NAG1 - STANDARD PROCEDURE)

No >> Go To 5

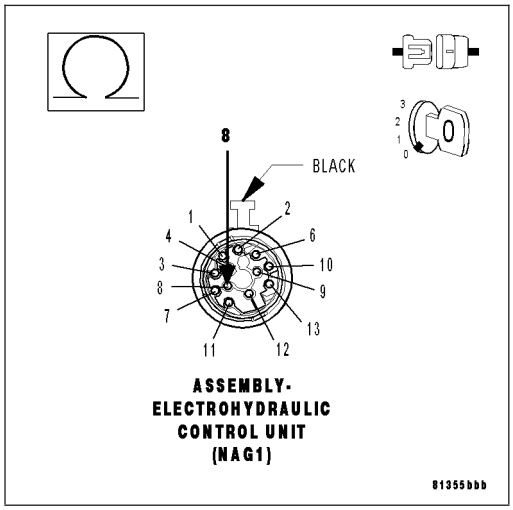

5. CHECK THE 2-3 SOLENOID

Reconnect the Transmission Electrohydraulic Control Unit Assembly harness connector.

Measure the resistance of the 2-3 Solenoid between the (T74) 2-3 Solenoid Control circuit and the (T78) Solenoid Voltage Supply circuit in the TCM C2 harness connector.

Is the resistance between 2.5 and 6.5 ohms?

Yes >> Using the schematics as a guide, check the Transmission Control Module (TCM) terminals for corrosion, damage, or terminal push out. Pay particular attention to all power and ground circuits. If no problems are found, replace the TCM per the Service Information. (Refer to 8 - ELECTRICAL/ELECTRONIC CONTROL MODULES/TRANSMISSION CONTROL MODULE - DESCRIPTION)
Perform NAG1 TRANSMISSION VERIFICATION TEST - VER 1. (Refer to 21 - TRANSMISSION/TRANSAXLE/AUTOMATIC - NAG1 - STANDARD PROCEDURE)

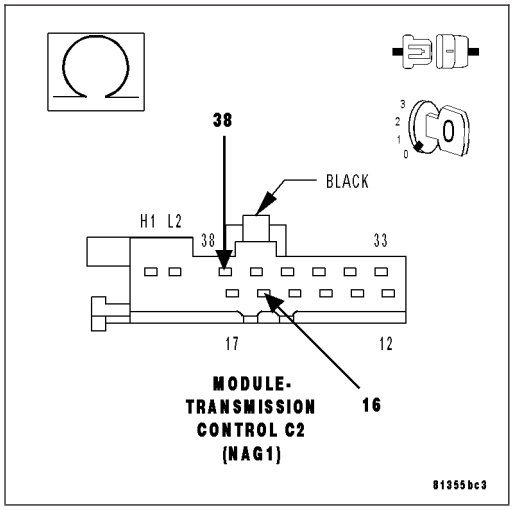

No >> Replace the 2-3 Solenoid per the Service Information. (Refer to 21 - TRANSMISSION/TRANSAXLE/AUTOMATIC - NAG1/ELECTROHYDRAULIC UNIT - DISASSEMBLY)

6. INTERMITTENT WIRING AND CONNECTORS

The conditions necessary to set this DTC are not present at this time.

Using the schematics as a guide, inspect the wiring and connectors specific to this circuit.

Wiggle the wiring and connectors while checking for any possible open or shorted circuits.

Check for any Service Information Tune-ups or Technical Service Bulletins that may apply.

Were there any problems found?

Yes >> Repair as necessary.
Perform NAG1 TRANSMISSION VERIFICATION TEST - VER 1. (Refer to 21 - TRANSMISSION/TRANSAXLE/AUTOMATIC - NAG1 - STANDARD PROCEDURE)

No >> Test Complete.

P0758-2-3 SOLENOID CIRCUIT

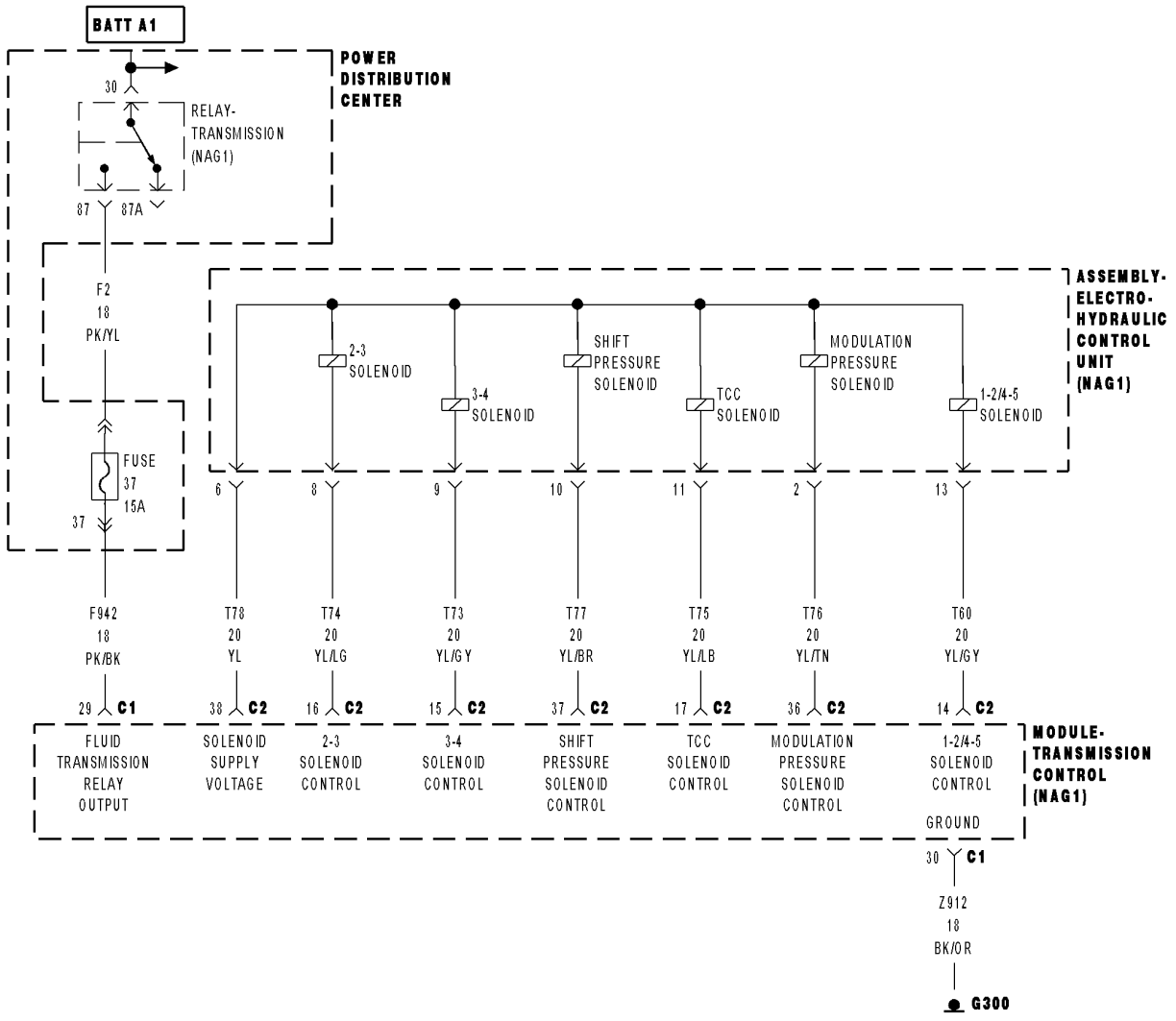

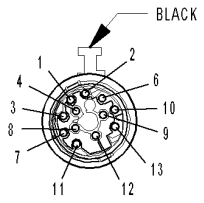

ASSEMBLY-ELECTROHYDRAULIC CONTROL UNIT (NAG1)

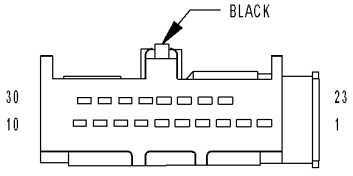

MODULE-TRANSMISSION CONTROL C1 (NAG1)

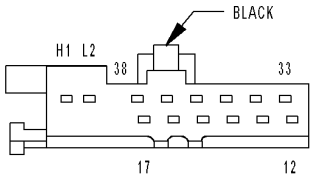

MODULE-TRANSMISSION CONTROL C2 (NAG1)

81326067

For a complete wiring diagram **Refer to Section 8W**

Theory of Operation

The 2-3 Solenoid is activated when the Transmission Control Module (TCM) determines that the transmission must shift into or out of 3rd gear. The solenoid is only activated during the shifting of the transmission. When the solenoid is activated, hydraulic pressure is applied to the proper shift elements in the transmission to allow the desired shift. Once the shift is completed the solenoid is turned off.

- **When Monitored:**
  When both the 2-3 Solenoid and the Solenoid Supply voltage is active.
- **Set Condition:**
  When 2-3 Solenoid is turned on and the TCM detects any of the following in the 2-3 Solenoid Control circuit: open, short to ground, short to voltage, or a faulty 2-3 Solenoid Control driver in the TCM.

Possible Causes
(T74) 2-3 SOLENOID CONTROL CIRCUIT OPEN
(T74) 2-3 SOLENOID CONTROL CIRCUIT SHORT TO GROUND
(T74) 2-3 SOLENOID CONTROL CIRCUIT SHORT TO ANOTHER CIRCUIT
2-3 SOLENOID
TRANSMISSSION CONTROL MODULE

Always perform the NAG1 Pre-Diagnostic Troubleshooting procedure before proceeding. (Refer to 21 - TRANSMISSION/TRANSAXLE/AUTOMATIC - NAG1 - STANDARD PROCEDURE)

Diagnostic Test

1. CHECK IF THE DTC IS CURRENT

NOTE: When the Transmission Control Module (TCM) detects and stores a DTC, the TCM also stores the vehicles operating conditions under which the DTC originally set. This information is located in the scan tool under Environmental Data. Before erasing any stored DTCs, record any available data to assist in duplicating the conditions in which the DTC originally set.

Turn the ignition off to the lock position.

With the scan tool, erase Transmission DTC's.

Using the Environmental Data recorded earlier, try to duplicate the conditions in which the DTC originally set. It may be necessary to test drive the vehicle.

With the scan tool, read Transmission DTC's.

Did the DTC P0758 reset?

Yes >> Go To 2

No >> Go To 6

2. CHECK THE (T74) 2-3 SOLENOID CONTROL CIRCUIT FOR AN OPEN

Turn the ignition off to the lock position.

Disconnect the TCM C2 harness connector.

Disconnect the Transmission Electrohydraulic Control Unit Assembly harness connector.

Measure the resistance of the (T74) 2-3 Solenoid Control circuit between the TCM C2 harness connector and the Transmission Electrohydraulic Control Unit Assembly harness connector.

Is the resistance below 5.0 ohms?

Yes >> Go To 3

No >> Repair the (T74) 2-3 Solenoid Control circuit for an open.
Perform NAG1 TRANSMISSION VERIFICATION TEST - VER 1. (Refer to 21 - TRANSMISSION/TRANSAXLE/AUTOMATIC - NAG1 - STANDARD PROCEDURE)

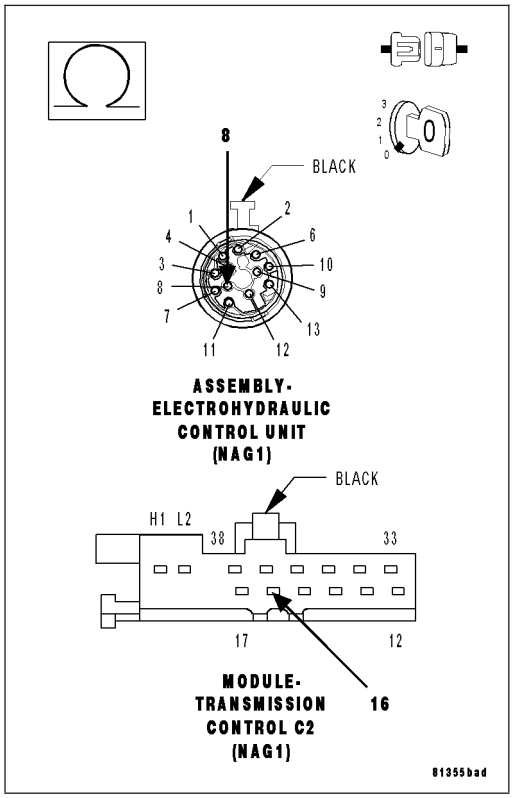

3. CHECK THE (T74) 2-3 SOLENOID CONTROL CIRCUIT FOR A SHORT TO GROUND

Measure the resistance between ground and the (T74) 2-3 Solenoid Control circuit.

Is the resistance below 5.0 ohms?

Yes >> Repair the (T74) 2-3 Solenoid Control circuit for a short to ground.
Perform NAG1 TRANSMISSION VERIFICATION TEST - VER 1. (Refer to 21 - TRANSMISSION/TRANSAXLE/AUTOMATIC - NAG1 - STANDARD PROCEDURE)

No >> Go To 4

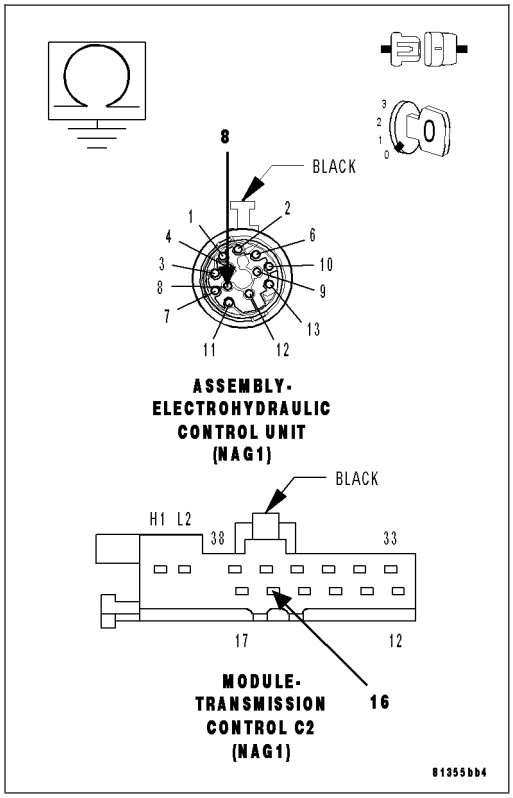

4. CHECK THE (T74) 2-3 SOLENOID CONTROL CIRCUIT FOR A SHORT TO ANOTHER CIRCUIT

Measure the resistance between the (T74) 2-3 Solenoid Control circuit and every other circuit in the Transmission Electrohydraulic Control Unit Assembly harness connector.

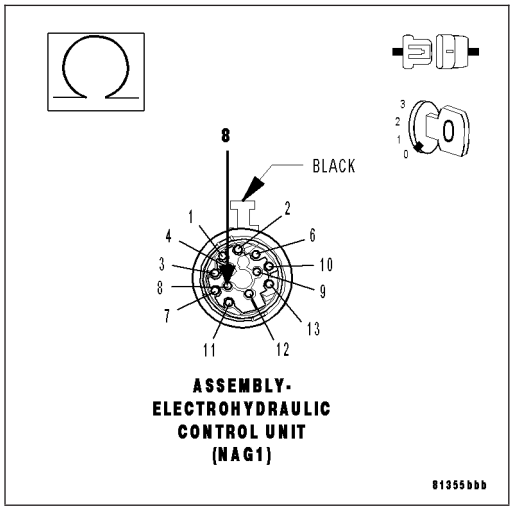

Is the resistance below 5.0 ohms between the (T74) 2-3 Solenoid Control circuit and any other circuit(s) in the Transmission Electrohydraulic Control Unit Assembly harness connector?

Yes >> Repair the (T74) 2-3 Solenoid Control circuit for a short to another circuit(s).
Perform NAG1 TRANSMISSION VERIFICATION TEST - VER 1. (Refer to 21 - TRANSMISSION/TRANSAXLE/AUTOMATIC - NAG1 - STANDARD PROCEDURE)

No >> Go To 5

5. CHECK THE 2-3 SOLENOID

Reconnect the Transmission Electrohydraulic Control Unit Assembly harness connector.

Measure the resistance of the 2-3 Solenoid between the (T74) 2-3 Solenoid Control circuit and the (T78) Solenoid Voltage Supply circuit in the TCM C2 harness connector.

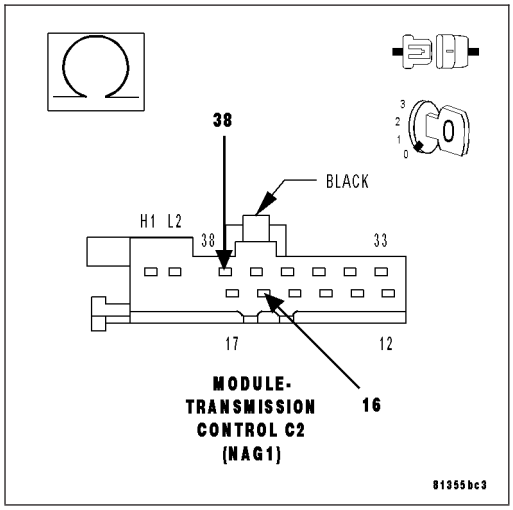

Is the resistance between 2.5 and 6.5 ohms?

Yes >> Using the schematics as a guide, check the Transmission Control Module (TCM) terminals for corrosion, damage, or terminal push out. Pay particular attention to all power and ground circuits. If no problems are found, replace the TCM per the Service Information. (Refer to 8 - ELECTRICAL/ELECTRONIC CONTROL MODULES/TRANSMISSION CONTROL MODULE - DESCRIPTION)
Perform NAG1 TRANSMISSION VERIFICATION TEST - VER 1. (Refer to 21 - TRANSMISSION/TRANSAXLE/AUTOMATIC - NAG1 - STANDARD PROCEDURE)

No >> Replace the 2-3 Solenoid per the Service Information. (Refer to 21 - TRANSMISSION/TRANSAXLE/AUTOMATIC - NAG1/ELECTROHYDRAULIC UNIT - DISASSEMBLY)
Perform NAG1 TRANSMISSION VERIFICATION TEST - VER 1. (Refer to 21 - TRANSMISSION/TRANSAXLE/AUTOMATIC - NAG1 - STANDARD PROCEDURE)

6. INTERMITTENT WIRING AND CONNECTORS

The conditions necessary to set this DTC are not present at this time.

Using the schematics as a guide, inspect the wiring and connectors specific to this circuit.

Wiggle the wiring and connectors while checking for any possible open or shorted circuits.

Check for any Service Information Tune-ups or Technical Service Bulletins that may apply.

Were there any problems found?

Yes >> Repair as necessary.
Perform NAG1 TRANSMISSION VERIFICATION TEST - VER 1. (Refer to 21 - TRANSMISSION/TRANSAXLE/AUTOMATIC - NAG1 - STANDARD PROCEDURE)

No >> Test Complete.

P0762-3-4 SOLENOID

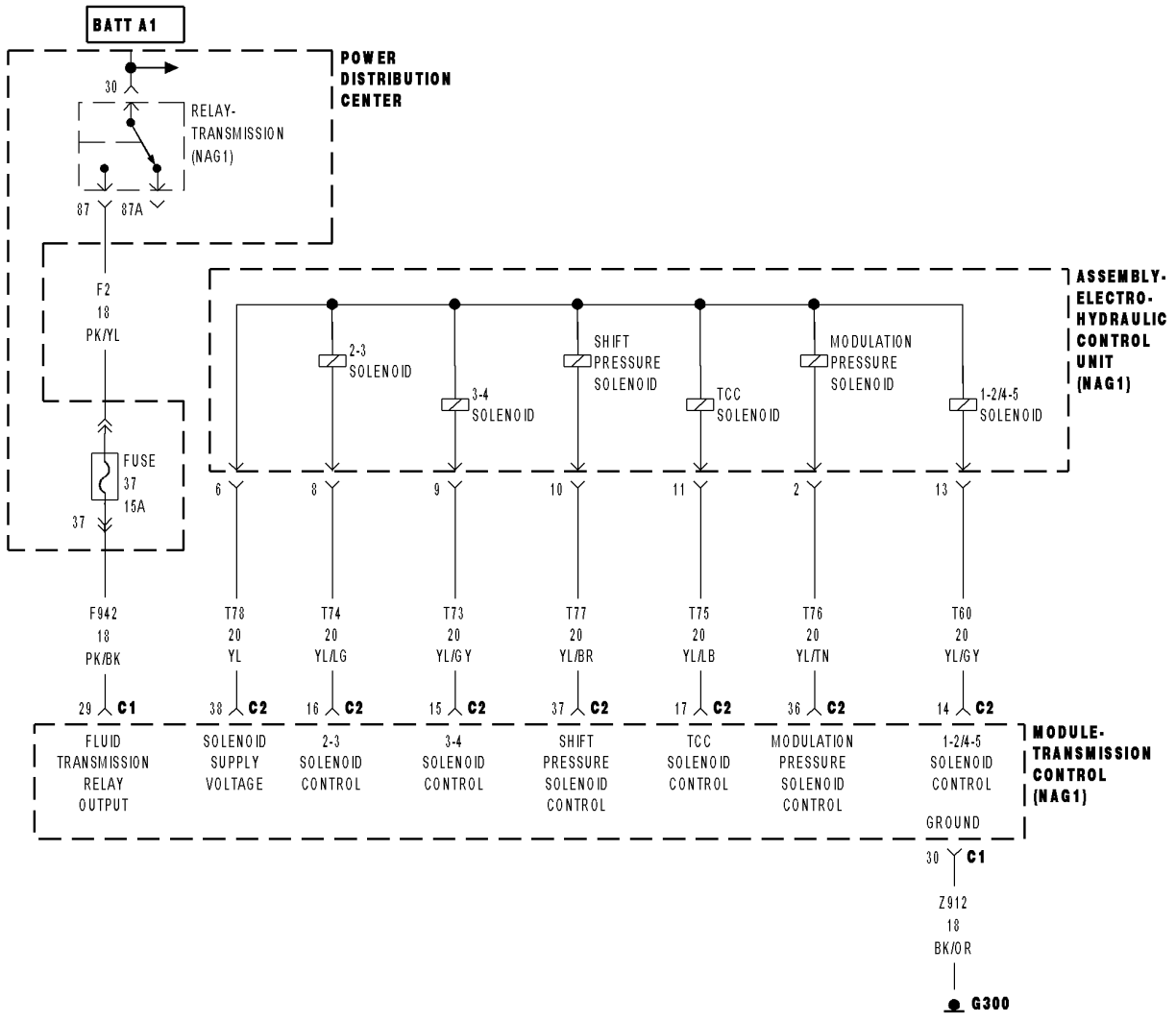

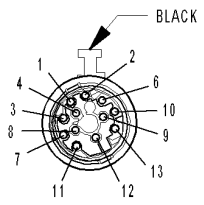

ASSEMBLY-ELECTROHYDRAULIC CONTROL UNIT (NAG1)

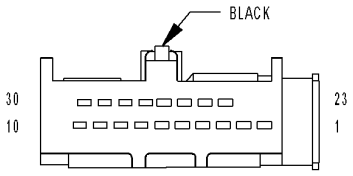

MODULE-TRANSMISSION CONTROL C1 (NAG1)

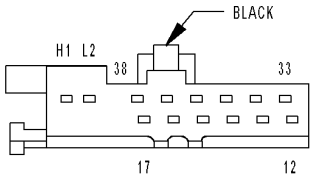

MODULE-TRANSMISSION CONTROL C2 (NAG1)

81326067

For a complete wiring diagram **Refer to Section 8W**

Theory of Operation

The 3-4 Solenoid is activated when the Transmission Control Module (TCM) determines that the transmission must shift into or out of 4th gear. The solenoid is only activated during the shifting of the transmission. When the solenoid is activated, hydraulic pressure is applied to the proper shift elements in the transmission to allow the desired shift. Once the shift is completed the solenoid is turned off.

- **When Monitored:**
  When both the 3-4 Solenoid and the Solenoid Supply voltage is active.
- **Set Condition:**
  When 3-4 Solenoid is turned on and the TCM detects any of the following in the 2-3 Solenoid Control circuit: open, short to ground, short to voltage, or a faulty 3-4 Solenoid Control driver in the TCM.

Possible Causes
(T73) 3-4 SOLENOID CONTROL CIRCUIT OPEN
(T73) 3-4 SOLENOID CONTROL CIRCUIT SHORT TO GROUND
(T73) 3-4 SOLENOID CONTROL CIRCUIT SHORT TO ANOTHER CIRCUIT
3-4 SOLENOID
TRANSMISSSION CONTROL MODULE

Always perform the NAG1 Pre-Diagnostic Troubleshooting procedure before proceeding. (Refer to 21 - TRANSMISSION/TRANSAXLE/AUTOMATIC - NAG1 - STANDARD PROCEDURE)

Diagnostic Test

1. CHECK IF THE DTC IS CURRENT

NOTE: When the Transmission Control Module (TCM) detects and stores a DTC, the TCM also stores the vehicles operating conditions under which the DTC originally set. This information is located in the scan tool under Environmental Data. Before erasing any stored DTCs, record any available data to assist in duplicating the conditions in which the DTC originally set.

Turn the ignition off to the lock position.

With the scan tool, erase Transmission DTC's.

Using the Environmental Data recorded earlier, try to duplicate the conditions in which the DTC originally set. It may be necessary to test drive the vehicle.

With the scan tool, read Transmission DTC's.

Did the DTC P0762 reset?

Yes >> Go To 2

No >> Go To 6

2. CHECK THE (T73) 3-4 SOLENOID CONTROL CIRCUIT FOR AN OPEN

Turn the ignition off to the lock position.

Disconnect the TCM C2 harness connector.

Disconnect the Transmission Electrohydraulic Control Unit Assembly harness connector.

Measure the resistance of the (T73) 3-4 Solenoid Control circuit between the TCM C2 harness connector and the Transmission Electrohydraulic Control Unit Assembly harness connector.

Is the resistance below 5.0 ohms?

Yes >> Go To 3

No >> Repair the (T73) 3-4 Solenoid Control circuit for an open.
Perform NAG1 TRANSMISSION VERIFICATION TEST - VER 1. (Refer to 21 - TRANSMISSION/TRANSAXLE/AUTOMATIC - NAG1 - STANDARD PROCEDURE)

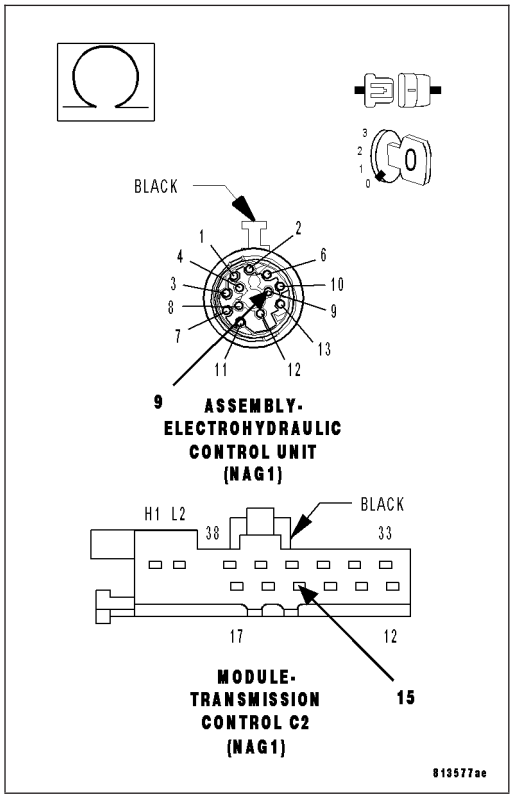

3. CHECK THE (T73) 3-4 SOLENOID CONTROL CIRCUIT FOR A SHORT TO GROUND

Measure the resistance between ground and the (T73) 3-4 Solenoid Control circuit.

Is the resistance below 5.0 ohms?

Yes >> Repair the (T73) 3-4 Solenoid Control circuit for a short to ground.
Perform NAG1 TRANSMISSION VERIFICATION TEST - VER 1. (Refer to 21 - TRANSMISSION/TRANSAXLE/AUTOMATIC - NAG1 - STANDARD PROCEDURE)

No >> Go To 4

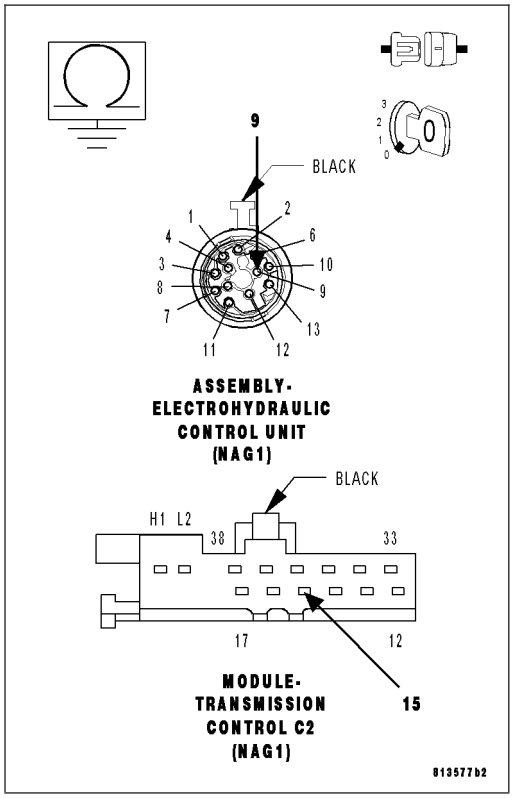

4. CHECK THE (T73) 3-4 SOLENOID CONTROL CIRCUIT FOR A SHORT TO ANOTHER CIRCUIT

Measure the resistance between the (T73) 3-4 Solenoid Control circuit and every other circuit in the Transmission Electrohydraulic Control Unit Assembly harness connector.

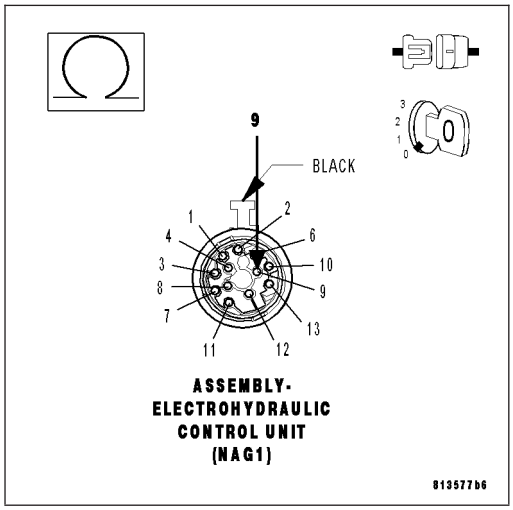

Is the resistance below 5.0 ohms between the (T73) 3-4 Solenoid Control circuit and any other circuit(s) in the Transmission Electrohydraulic Control Unit Assembly harness connector?

Yes >> Repair the (T73) 3-4 Solenoid Control circuit for a short to another circuit(s).
Perform NAG1 TRANSMISSION VERIFICATION TEST - VER 1. (Refer to 21 - TRANSMISSION/TRANSAXLE/AUTOMATIC - NAG1 - STANDARD PROCEDURE)

No >> Go To 5

5. CHECK THE 3-4 SOLENOID

Reconnect the Transmission Electrohydraulic Control Unit Assembly harness connector.

Measure the resistance of the 3-4 Solenoid between the (T73) 3-4 Solenoid Control circuit and the (T78) Solenoid Voltage Supply circuit in the TCM C2 harness connector.

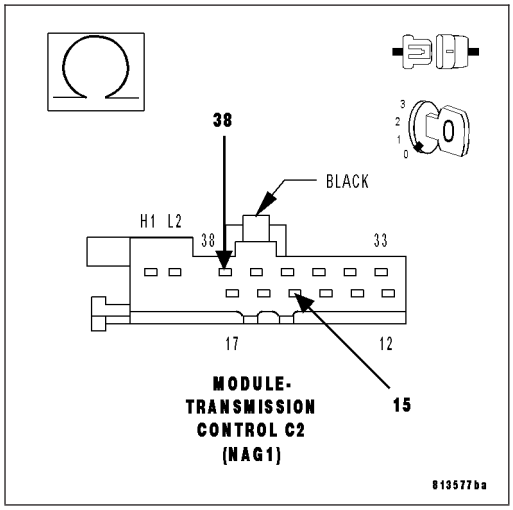

Is the resistance between 2.5 and 6.5 ohms?

Yes >> Using the schematics as a guide, check the Transmission Control Module (TCM) terminals for corrosion, damage, or terminal push out. Pay particular attention to all power and ground circuits. If no problems are found, replace the TCM per the Service Information. (Refer to 8 - ELECTRICAL/ELECTRONIC CONTROL MODULES/TRANSMISSION CONTROL MODULE - DESCRIPTION)
Perform NAG1 TRANSMISSION VERIFICATION TEST - VER 1. (Refer to 21 - TRANSMISSION/TRANSAXLE/AUTOMATIC - NAG1 - STANDARD PROCEDURE)

No >> Replace the 3-4 Solenoid per the Service Information. (Refer to 21 - TRANSMISSION/TRANSAXLE/AUTOMATIC - NAG1/ELECTROHYDRAULIC UNIT - DISASSEMBLY)
Perform NAG1 TRANSMISSION VERIFICATION TEST - VER 1. (Refer to 21 - TRANSMISSION/TRANSAXLE/AUTOMATIC - NAG1 - STANDARD PROCEDURE)

6. INTERMITTENT WIRING AND CONNECTORS

The conditions necessary to set this DTC are not present at this time.

Using the schematics as a guide, inspect the wiring and connectors specific to this circuit.

Wiggle the wiring and connectors while checking for any possible open or shorted circuits.

Check for any Service Information Tune-ups or Technical Service Bulletins that may apply.

Were there any problems found?

Yes >> Repair as necessary.
Perform NAG1 TRANSMISSION VERIFICATION TEST - VER 1. (Refer to 21 - TRANSMISSION/TRANSAXLE/AUTOMATIC - NAG1 - STANDARD PROCEDURE)

No >> Test Complete.

P0763-3-4 SOLENOID CIRCUIT

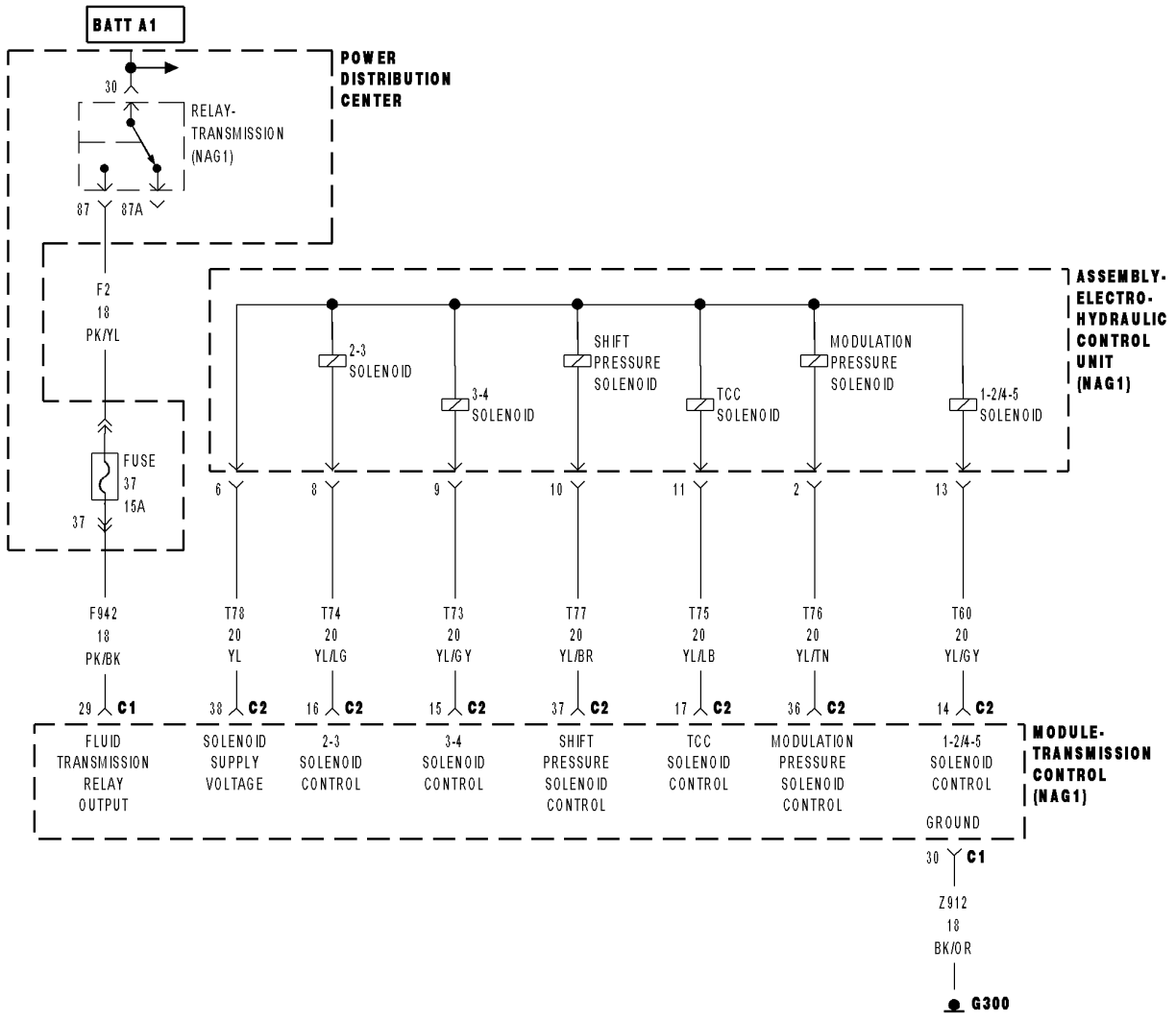

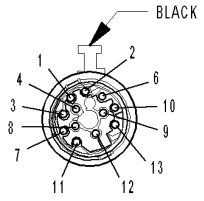

ASSEMBLY-ELECTROHYDRAULIC CONTROL UNIT (NAG1)

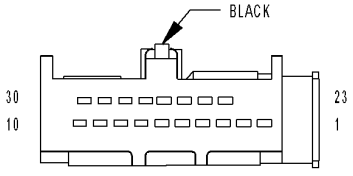

MODULE-TRANSMISSION CONTROL C1 (NAG1)

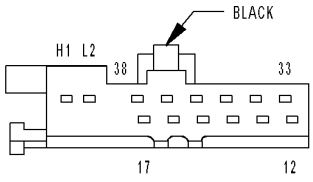

MODULE-TRANSMISSION CONTROL C2 (NAG1)

81326067

For a complete wiring diagram **Refer to Section 8W**

Theory of Operation

The 3-4 Solenoid is activated when the Transmission Control Module (TCM) determines that the transmission must shift into or out of 4th gear. The solenoid is only activated during the shifting of the transmission. When the solenoid is activated, hydraulic pressure is applied to the proper shift elements in the transmission to allow the desired shift. Once the shift is completed the solenoid is turned off.

- **When Monitored:**
  When both the 3-4 Solenoid and the Solenoid Supply voltage is active.
- **Set Condition:**
  When 3-4 Solenoid is turned on and the TCM detects any of the following in the 2-3 Solenoid Control circuit: open, short to ground, short to voltage, or a faulty 3-4 Solenoid Control driver in the TCM.

Possible Causes
(T73) 3-4 SOLENOID CONTROL CIRCUIT OPEN
(T73) 3-4 SOLENOID CONTROL CIRCUIT SHORT TO GROUND
(T73) 3-4 SOLENOID CONTROL CIRCUIT SHORT TO ANOTHER CIRCUIT
3-4 SOLENOID
TRANSMISSSION CONTROL MODULE

Always perform the NAG1 Pre-Diagnostic Troubleshooting procedure before proceeding. (Refer to 21 - TRANSMISSION/TRANSAXLE/AUTOMATIC - NAG1 - STANDARD PROCEDURE)

Diagnostic Test

1. CHECK IF THE DTC IS CURRENT

NOTE: When the Transmission Control Module (TCM) detects and stores a DTC, the TCM also stores the vehicles operating conditions under which the DTC originally set. This information is located in the scan tool under Environmental Data. Before erasing any stored DTCs, record any available data to assist in duplicating the conditions in which the DTC originally set.

Turn the ignition off to the lock position.

With the scan tool, erase Transmission DTC's.

Using the Environmental Data recorded earlier, try to duplicate the conditions in which the DTC originally set. It may be necessary to test drive the vehicle.

With the scan tool, read Transmission DTC's.

Did the DTC P0763 reset?

Yes >> Go To 2

No >> Go To 6

2. CHECK THE (T73) 3-4 SOLENOID CONTROL CIRCUIT FOR AN OPEN

Turn the ignition off to the lock position.

Disconnect the TCM C2 harness connector.

Disconnect the Transmission Electrohydraulic Control Unit Assembly harness connector.

Measure the resistance of the (T73) 3-4 Solenoid Control circuit between the TCM C2 harness connector and the Transmission Electrohydraulic Control Unit Assembly harness connector.

Is the resistance below 5.0 ohms?

Yes >> Go To 3

No >> Repair the (T73) 3-4 Solenoid Control circuit for an open.
Perform NAG1 TRANSMISSION VERIFICATION TEST - VER 1. (Refer to 21 - TRANSMISSION/TRANSAXLE/AUTOMATIC - NAG1 - STANDARD PROCEDURE)

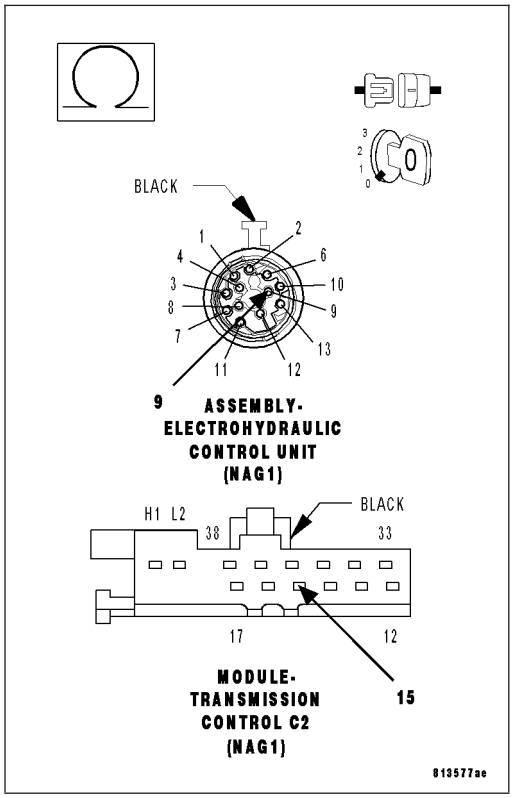

3. CHECK THE (T73) 3-4 SOLENOID CONTROL CIRCUIT FOR A SHORT TO GROUND

Measure the resistance between ground and the (T73) 3-4 Solenoid Control circuit.

Is the resistance below 5.0 ohms?

Yes >> Repair the (T73) 3-4 Solenoid Control circuit for a short to ground.
Perform NAG1 TRANSMISSION VERIFICATION TEST - VER 1. (Refer to 21 - TRANSMISSION/TRANSAXLE/AUTOMATIC - NAG1 - STANDARD PROCEDURE)

No >> Go To 4

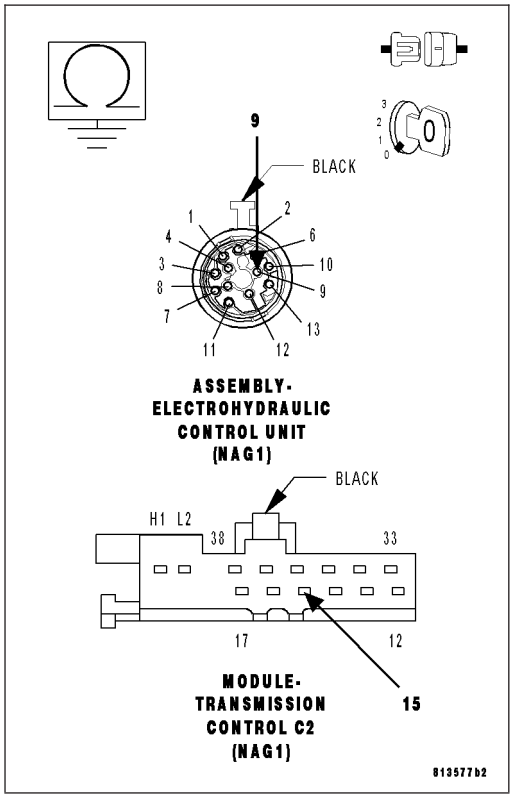

4. CHECK THE (T73) 3-4 SOLENOID CONTROL CIRCUIT FOR A SHORT TO ANOTHER CIRCUIT

Measure the resistance between the (T73) 3-4 Solenoid Control circuit and every other circuit in the Transmission Electrohydraulic Control Unit Assembly harness connector.

Is the resistance below 5.0 ohms between the (T73) 3-4 Solenoid Control circuit and any other circuit(s) in the Transmission Electrohydraulic Control Unit Assembly harness connector?

Yes >> Repair the (T73) 3-4 Solenoid Control circuit for a short to another circuit(s).
Perform NAG1 TRANSMISSION VERIFICATION TEST - VER 1. (Refer to 21 - TRANSMISSION/TRANSAXLE/AUTOMATIC - NAG1 - STANDARD PROCEDURE)

No >> Go To 5

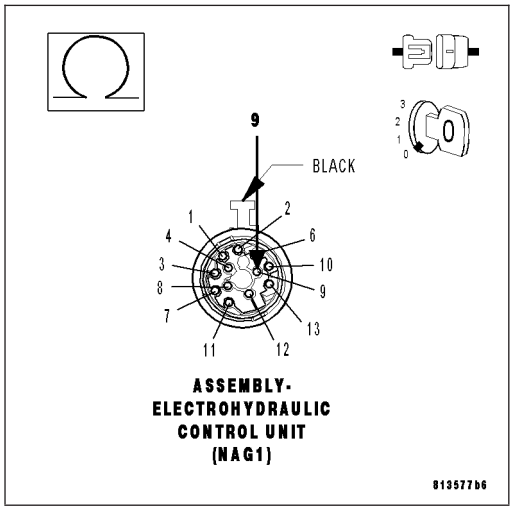

5. CHECK THE 3-4 SOLENOID

Reconnect the Transmission Electrohydraulic Control Unit Assembly harness connector.

Measure the resistance of the 3-4 Solenoid between the (T73) 3-4 Solenoid Control circuit and the (T78) Solenoid Voltage Supply circuit in the TCM C2 harness connector.

Is the resistance between 2.5 and 6.5 ohms?

Yes >> Using the schematics as a guide, check the Transmission Control Module (TCM) terminals for corrosion, damage, or terminal push out. Pay particular attention to all power and ground circuits. If no problems are found, replace the TCM per the Service Information. (Refer to 8 - ELECTRICAL/ELECTRONIC CONTROL MODULES/TRANSMISSION CONTROL MODULE - DESCRIPTION)
Perform NAG1 TRANSMISSION VERIFICATION TEST - VER 1. (Refer to 21 - TRANSMISSION/TRANSAXLE/AUTOMATIC - NAG1 - STANDARD PROCEDURE)

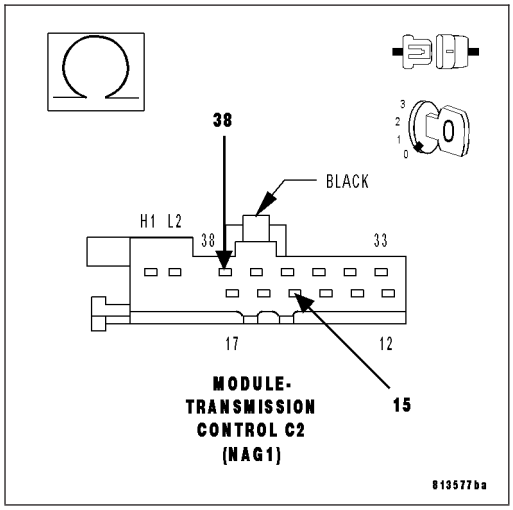

No >> Replace the 3-4 Solenoid per the Service Information. (Refer to 21 - TRANSMISSION/TRANSAXLE/AUTOMATIC - NAG1/ELECTROHYDRAULIC UNIT - DISASSEMBLY)
Perform NAG1 TRANSMISSION VERIFICATION TEST - VER 1. (Refer to 21 - TRANSMISSION/TRANSAXLE/AUTOMATIC - NAG1 - STANDARD PROCEDURE)

6. INTERMITTENT WIRING AND CONNECTORS

The conditions necessary to set this DTC are not present at this time.

Using the schematics as a guide, inspect the wiring and connectors specific to this circuit.

Wiggle the wiring and connectors while checking for any possible open or shorted circuits.

Check for any Service Information Tune-ups or Technical Service Bulletins that may apply.

Were there any problems found?

Yes >> Repair as necessary.
Perform NAG1 TRANSMISSION VERIFICATION TEST - VER 1. (Refer to 21 - TRANSMISSION/TRANSAXLE/AUTOMATIC - NAG1 - STANDARD PROCEDURE)

No >> Test Complete.

P0778-SHIFT PRESSURE SOLENOID CIRCUIT

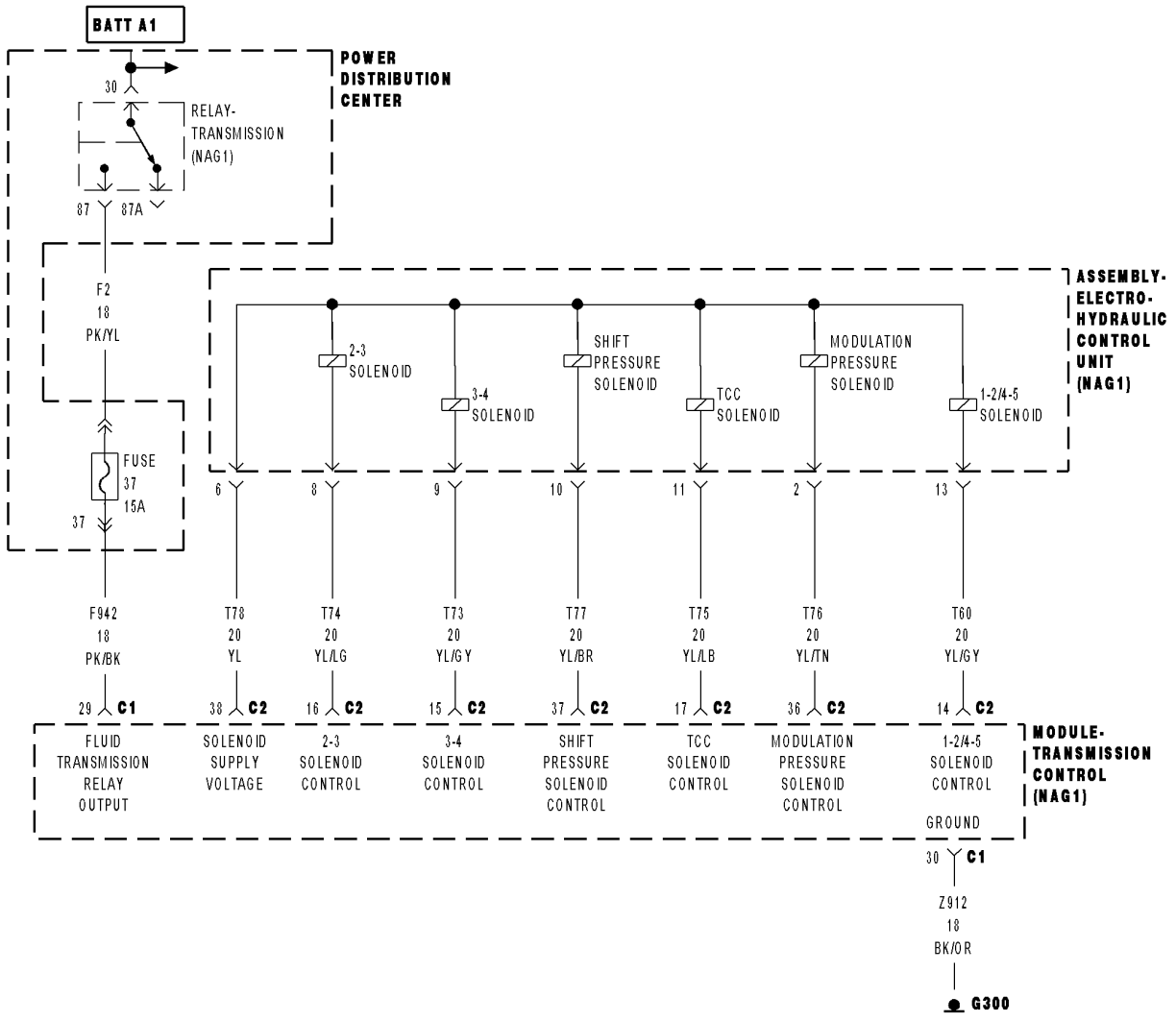

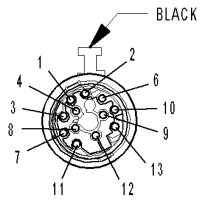

ASSEMBLY-ELECTROHYDRAULIC CONTROL UNIT (NAG1)

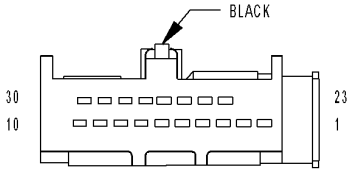

MODULE-TRANSMISSION CONTROL C1 (NAG1)

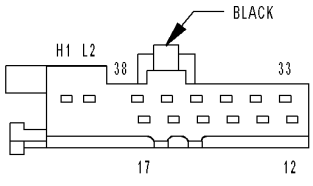

MODULE-TRANSMISSION CONTROL C2 (NAG1)

81326067

For a complete wiring diagram **Refer to Section 8W**

Theory of Operation

The Shift Pressure Solenoid is activated when the Transmission Control Module (TCM) determines that a transmission gear shift is required. The Shift Pressure Solenoid is pulse width modulated (PWM) controlled to allow the proper amount of hydraulic pressure to the shift elements. The Shift Pressure Solenoid is only activated during the shift of the transmission. When the Shift Pressure Solenoid is activated, hydraulic pressure is applied to the proper shift elements through one of the shift solenoids in the transmission to allow the desired shift. Once the shift is completed the solenoid is turned off.

- **When Monitored:**
  When the Shift Pressure Solenoid is: off, or active with 25-75% duty cycle, and the Solenoid Supply voltage is active.
- **Set Condition:**
  When Shift Pressure Solenoid is turned on and the TCM detects any of the following in the 2-3 Solenoid Control circuit: open, short to ground, short to voltage, or a faulty Shift Pressure Solenoid Control driver in the TCM.

Possible Causes
(T77) SHIFT PRESSURE SOLENOID CONTROL CIRCUIT OPEN
(T77) SHIFT PRESSURE SOLENOID CONTROL CIRCUIT SHORT TO GROUND
(T77) SHIFT PRESSURE SOLENOID CONTROL CIRCUIT SHORT TO ANOTHER CIRCUIT
SHIFT PRESSURE SOLENOID
TRANSMISSION CONTROL MODULE

Always perform the NAG1 Pre-Diagnostic Troubleshooting procedure before proceeding. (Refer to 21 - TRANSMISSION/TRANSAXLE/AUTOMATIC - NAG1 - STANDARD PROCEDURE)

Diagnostic Test

1. CHECK IF THE DTC IS CURRENT

NOTE: When the Transmission Control Module (TCM) detects and stores a DTC, the TCM also stores the vehicles operating conditions under which the DTC originally set. This information is located in the scan tool under Environmental Data. Before erasing any stored DTCs, record any available data to assist in duplicating the conditions in which the DTC originally set.

Turn the ignition off to the lock position.

With the scan tool, erase Transmission DTC's.

Using the Environmental Data recorded earlier, try to duplicate the conditions in which the DTC originally set. It may be necessary to test drive the vehicle.

With the scan tool, read Transmission DTC's.

Did the DTC P0778 reset?

Yes >> Go To 2

No >> Go To 6

2. CHECK THE (T77) SHIFT PRESSURE SOLENOID CONTROL CIRCUIT FOR AN OPEN

Turn the ignition off to the lock position.

Disconnect the TCM C2 harness connector.

Disconnect the Transmission Electrohydraulic Control Unit Assembly harness connector.

Measure the resistance of the (T77) Shift Pressure Solenoid Control circuit between the TCM C2 harness connector and the Transmission Electrohydraulic Control Unit Assembly harness connector.

Is the resistance below 5.0 ohms?

Yes >> Go To 3

No >> Repair the (T77) Shift Pressure Solenoid Control circuit for an open.

Perform NAG1 TRANSMISSION VERIFICATION TEST - VER 1. (Refer to 21 - TRANSMISSION/TRANSAXLE/AUTOMATIC - NAG1 - STANDARD PROCEDURE)

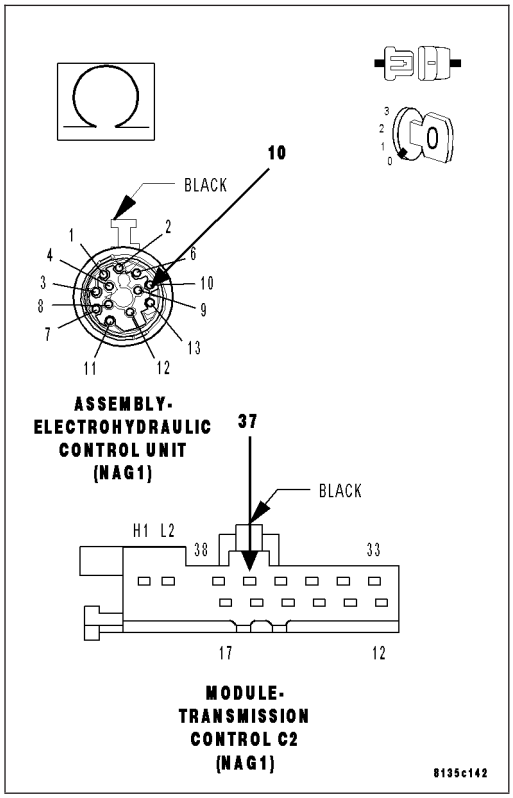

3. CHECK THE (T77) SHIFT PRESSURE SOLENOID CONTROL CIRCUIT FOR A SHORT TO GROUND

Measure the resistance between ground and the (T77) Shift Pressure Solenoid Control circuit.

Is the resistance below 5.0 ohms?

Yes >> Repair the (T77) Shift Pressure Solenoid Control circuit for a short to ground.

Perform NAG1 TRANSMISSION VERIFICATION TEST - VER 1. (Refer to 21 - TRANSMISSION/TRANSAXLE/AUTOMATIC - NAG1 - STANDARD PROCEDURE)

No >> Go To 4

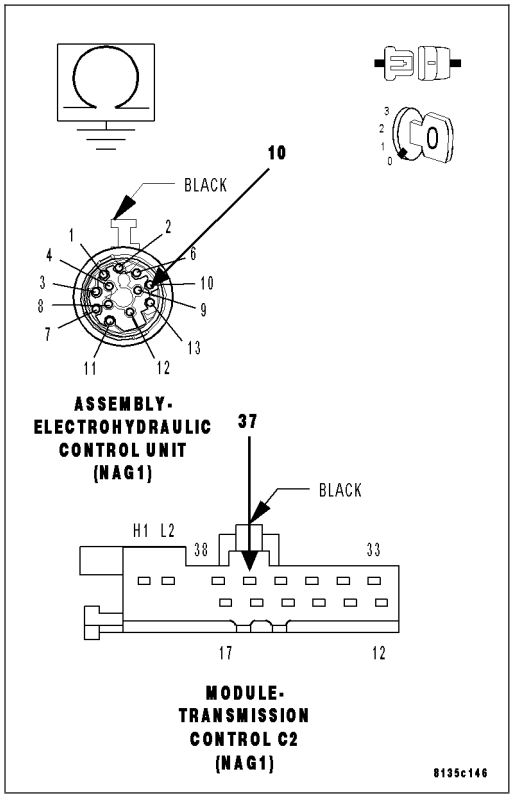

4. CHECK THE (T77) SHIFT PRESSURE SOLENOID CONTROL CIRCUIT FOR A SHORT TO ANOTHER CIRCUIT

Measure the resistance between the (T77) Shift Pressure Solenoid Control circuit and every other circuit in the Transmission Electrohydraulic Control Unit Assembly harness connector.

Is the resistance below 5.0 ohms between the (T77) Shift Pressure Solenoid Control circuit and any other circuit(s) in the Transmission Electrohydraulic Control Unit Assembly harness connector?

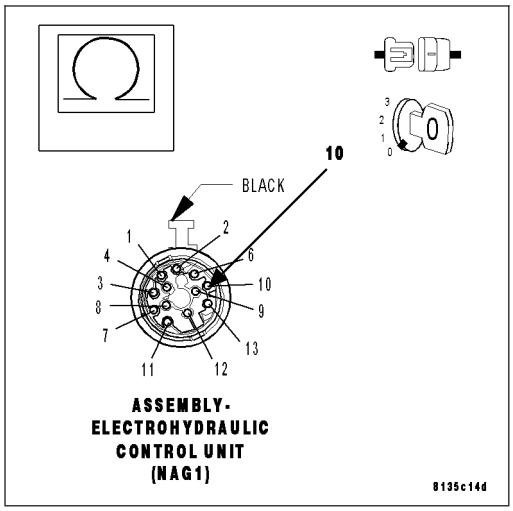

Yes >> Repair the (T77) Shift Pressure Solenoid Control circuit for a short to another circuit(s).

Perform NAG1 TRANSMISSION VERIFICATION TEST - VER 1. (Refer to 21 - TRANSMISSION/TRANSAXLE/AUTOMATIC - NAG1 - STANDARD PROCEDURE)

No >> Go To 5

5. CHECK THE SHIFT PRESSURE SOLENOID

Reconnect the Transmission Electrohydraulic Control Unit Assembly harness connector.

Measure the resistance of the Shift Pressure Solenoid between the (T77) Shift Pressure Solenoid Control circuit and the (T78) Solenoid Voltage Supply circuit in the TCM C2 harness connector.

Is the resistance between 2.5 and 6.5 ohms?

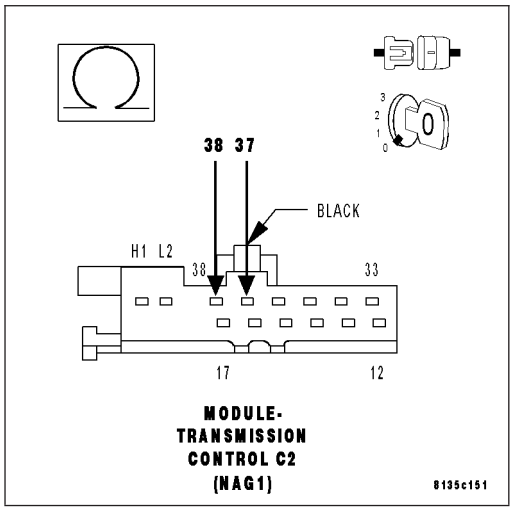

Yes >> Using the schematics as a guide, check the Transmission Control Module (TCM) terminals for corrosion, damage, or terminal push out. Pay particular attention to all power and ground circuits. If no problems are found, replace the TCM per the Service Information. (Refer to 8 - ELECTRICAL/ELECTRONIC CONTROL MODULES/TRANSMISSION CONTROL MODULE - DESCRIPTION)

Perform NAG1 TRANSMISSION VERIFICATION TEST - VER 1. (Refer to 21 - TRANSMISSION/TRANSAXLE/AUTOMATIC - NAG1 - STANDARD PROCEDURE)

No >> Replace the Shift Pressure Solenoid per the Service Information. (Refer to 21 - TRANSMISSION/TRANSAXLE/AUTOMATIC - NAG1/ELECTROHYDRAULIC UNIT - DISASSEMBLY)

Perform NAG1 TRANSMISSION VERIFICATION TEST - VER 1. (Refer to 21 - TRANSMISSION/TRANSAXLE/AUTOMATIC - NAG1 - STANDARD PROCEDURE)

6. INTERMITTENT WIRING AND CONNECTORS

The conditions necessary to set this DTC are not present at this time.

Using the schematics as a guide, inspect the wiring and connectors specific to this circuit.

Wiggle the wiring and connectors while checking for any possible open or shorted circuits.

Check for any Service Information Tune-ups or Technical Service Bulletins that may apply.

Were there any problems found?

Yes >> Repair as necessary.

Perform NAG1 TRANSMISSION VERIFICATION TEST - VER 1. (Refer to 21 - TRANSMISSION/TRANSAXLE/AUTOMATIC - NAG1 - STANDARD PROCEDURE)

No >> Test Complete.

P1629-TCM INTERNAL - SOLENOID SUPPLY/ WATCHDOG

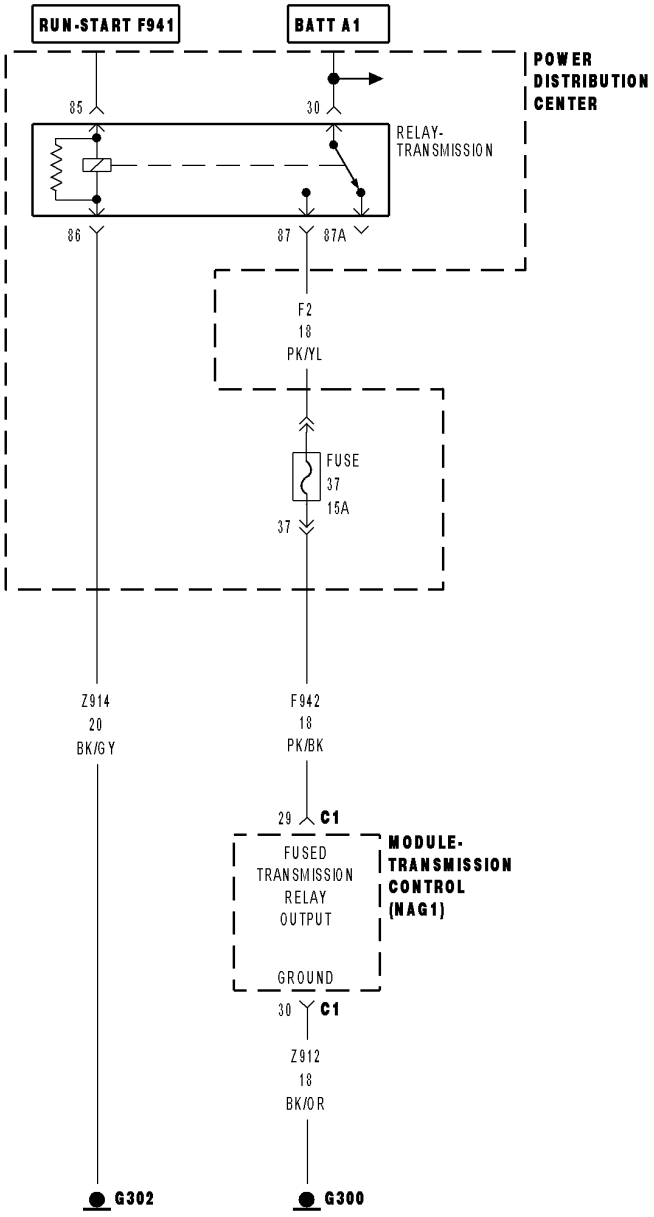

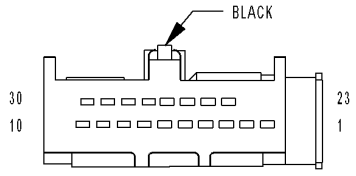

MODULE-TRANSMISSION CONTROL C1 (NAG1)

8131d9d8

For a complete wiring diagram **Refer to Section 8W**

Theory of Operation

The Transmission Control Module (TCM) performs various internal tests to verify proper controller operation. During the power up of the controller, the TCM tests the ability of the TCM to shut down the Solenoid Supply Voltage circuit. The controller monitors the A/D feedback on the Solenoid Supply driver output to ensure that battery voltage is no longer present. Note: A short to voltage on the Solenoid Supply Voltage circuit or any one of the solenoids may set this DTC.

- **When Monitored:**
  Continuously with the ignition on.
- **Set Condition:**
  If the TCM detects voltage on the Solenoid Supply Voltage circuit when the TCM request the circuit to be off.

Possible Causes
(T78) SOLENOID SUPPY VOLTAGE CIRCUIT SHORT TO VOLTAGE
TRANSMISSION CONTROL MODULE

Always perform the NAG1 Pre-Diagnostic Troubleshooting procedure before proceeding. (Refer to 21 - TRANSMISSION/TRANSAXLE/AUTOMATIC - NAG1 - STANDARD PROCEDURE)

Diagnostic Test

1. CHECK THE (T78) SOLENOID SUPPLY VOLTAGE CIRCUIT FOR A SHORT TO ANOTHER CIRCUIT

Turn the ignition off to the lock position.

Disconnect the TCM C1 and C2 harness connectors.

Disconnect the Transmission Electrohydraulic Control Unit Assembly harness connector.

Measure the resistance between the (T78) Solenoid Supply Voltage circuit and every other circuit in the Transmission Electrohydraulic Control Unit Assembly harness connector.

Is the resistance below 5.0 ohms between the (T78) Solenoid Supply Voltage circuit and any other circuit(s) in the Transmission Electrohydraulic Control Unit Assembly harness connector?

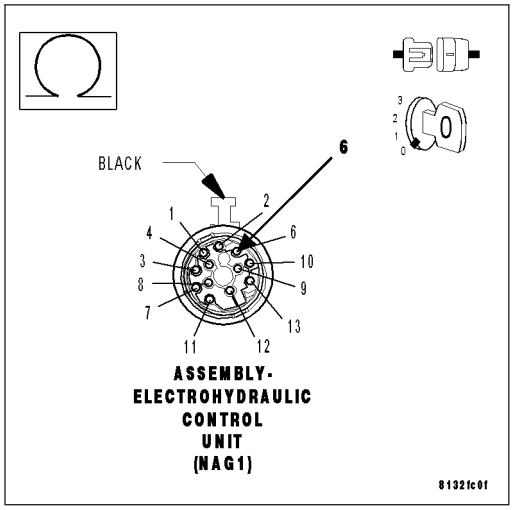

Yes >> Repair the (T78) Solenoid Supply Voltage circuit for a short to another circuit(s).
Perform NAG1 TRANSMISSION VERIFICATION TEST - VER 1. (Refer to 21 - TRANSMISSION/TRANSAXLE/AUTOMATIC - NAG1 - STANDARD PROCEDURE)

No >> Using the schematics as a guide, check the Transmission Control Module (TCM) terminals for corrosion, damage, or terminal push out. Pay particular attention to all power and ground circuits. If no problems are found, replace the TCM per the Service Information. (Refer to 8 - ELECTRICAL/ELECTRONIC CONTROL MODULES/TRANSMISSION CONTROL MODULE - DESCRIPTION)
Perform NAG1 TRANSMISSION VERIFICATION TEST - VER 1. (Refer to 21 - TRANSMISSION/TRANSAXLE/AUTOMATIC - NAG1 - STANDARD PROCEDURE)

P1631-TCM INTERNAL- PROCESSOR CLOCK PERFORMANCE

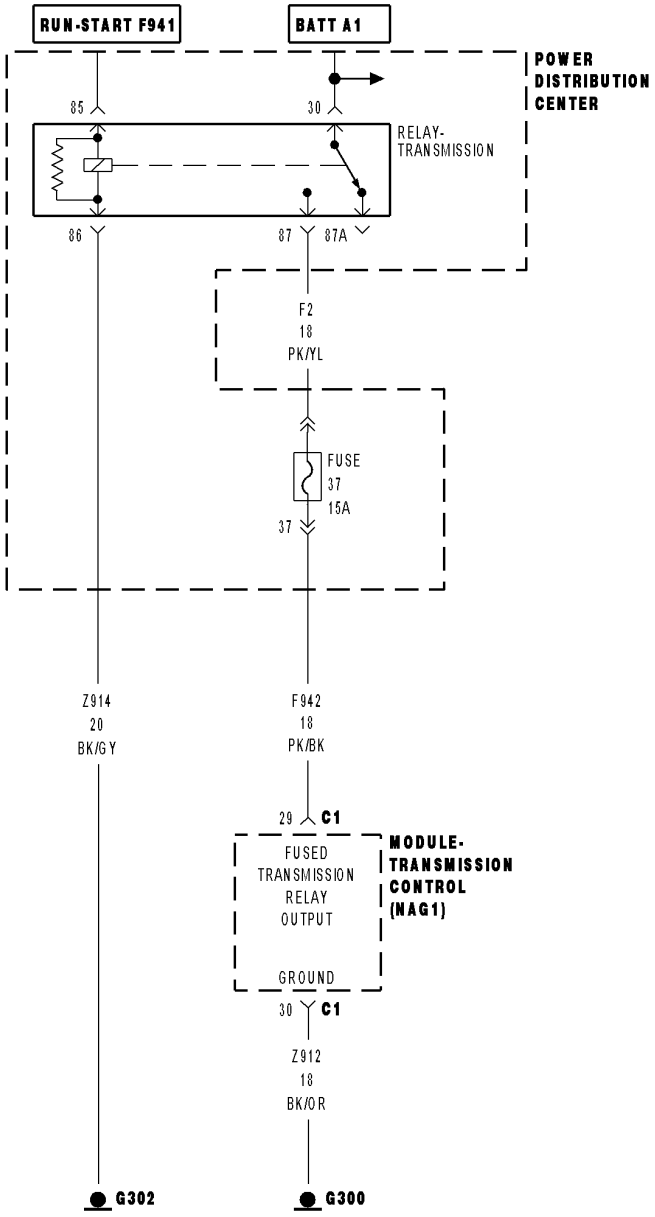

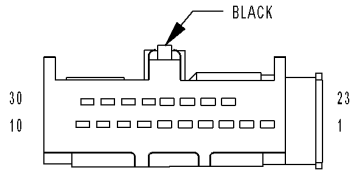

MODULE-TRANSMISSION CONTROL C1 (NAG1)

8131d9d8

For a complete wiring diagram **Refer to Section 8W**

Theory of Operation

The Transmission Control Module (TCM) performs various internal tests to verify proper controller operation. This DTC indicates that there is an issue with the TCM's internal clock. If the TCM detects an error with the controllers internal clock, the controller will enter Limp-in mode and illuminate the MIL.

- **When Monitored:**
  Continuously with the ignition on.
- **Set Condition:**
  If the TCM detects an error with the controllers internal clock.

Possible Causes
TRANSMISSION CONTROL MODULE

Always perform the NAG1 Pre-Diagnostic Troubleshooting procedure before proceeding. (Refer to 21 - TRANSMISSION/TRANSAXLE/AUTOMATIC - NAG1 - STANDARD PROCEDURE)

Diagnostic Test

1. TRANSMISSION CONTROL MODULE

View repair

Repair

Using the schematics as a guide, check the Transmission Control Module (TCM) terminals for corrosion, damage, or terminal push out. Pay particular attention to all power and ground circuits. If no problems are found, replace the TCM per the Service Information. (Refer to 8 - ELECTRICAL/ELECTRONIC CONTROL MODULES/TRANSMISSION CONTROL MODULE - DESCRIPTION)

Perform NAG1 TRANSMISSION VERIFICATION TEST - VER 1. (Refer to 21 - TRANSMISSION/TRANSAXLE/AUTOMATIC - NAG1 - STANDARD PROCEDURE)

P1632-TCM INTERNAL - TEST INTERNAL WATCHDOG PERFORMANCE

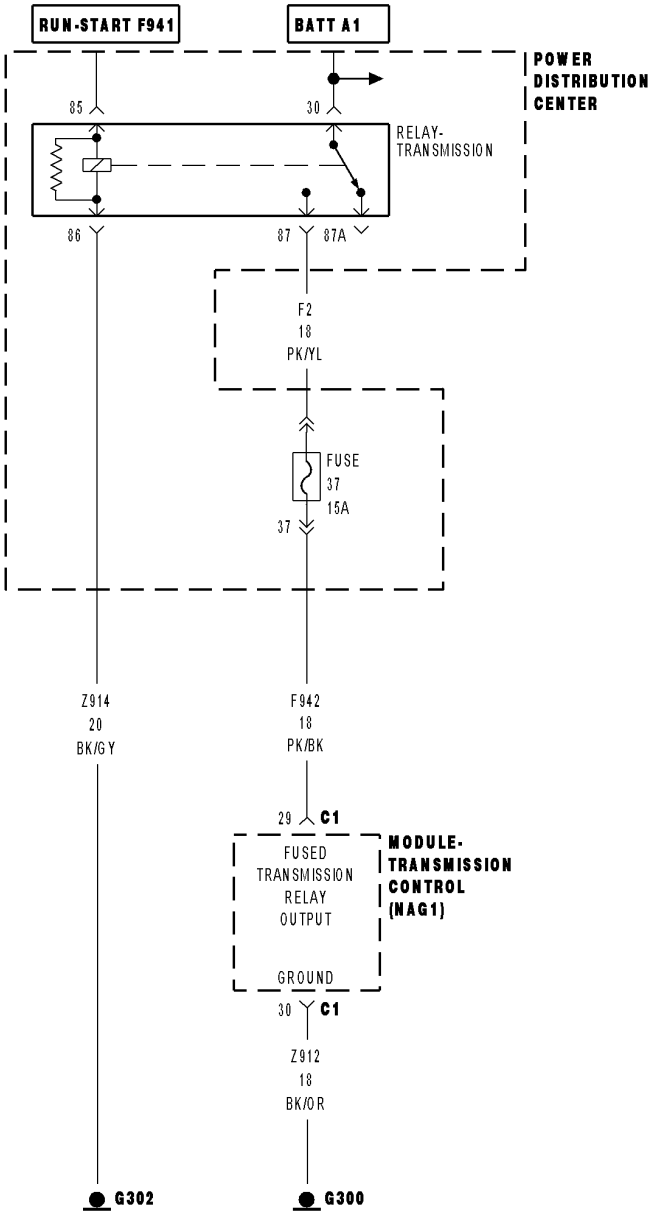

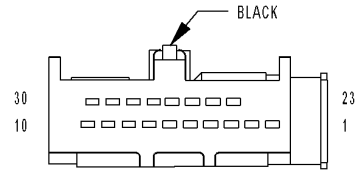

MODULE-TRANSMISSION CONTROL C1 (NAG1)

8131d9d8

For a complete wiring diagram **Refer to Section 8W**

Theory of Operation

The Transmission Control Module (TCM) performs various internal tests to verify proper controller operation. This DTC indicates that there is an issue with the TCM's internal watchdog failed. If the TCM detects an error with the controllers internal watchdog, the controller will enter Limp-in mode and illuminate the MIL.

- **When Monitored:**
  Continuously with the ignition on.
- **Set Condition:**
  If the TCM detects an error with the controllers internal watchdog.

Possible Causes
TRANSMISSION CONTROL MODULE

Always perform the NAG1 Pre-Diagnostic Troubleshooting procedure before proceeding. (Refer to 21 - TRANSMISSION/TRANSAXLE/AUTOMATIC - NAG1 - STANDARD PROCEDURE)

Diagnostic Test

1. TRANSMISSION CONTROL MODULE

View repair

Repair

Using the schematics as a guide, check the Transmission Control Module (TCM) terminals for corrosion, damage, or terminal push out. Pay particular attention to all power and ground circuits. If no problems are found, replace the TCM per the Service Information. (Refer to 8 - ELECTRICAL/ELECTRONIC CONTROL MODULES/TRANSMISSION CONTROL MODULE - DESCRIPTION)

Perform NAG1 TRANSMISSION VERIFICATION TEST - VER 1. (Refer to 21 - TRANSMISSION/TRANSAXLE/AUTOMATIC - NAG1 - STANDARD PROCEDURE)

P1633-TCM INTERNAL - TEST EXTERNAL WATCHDOG PERFORMANCE

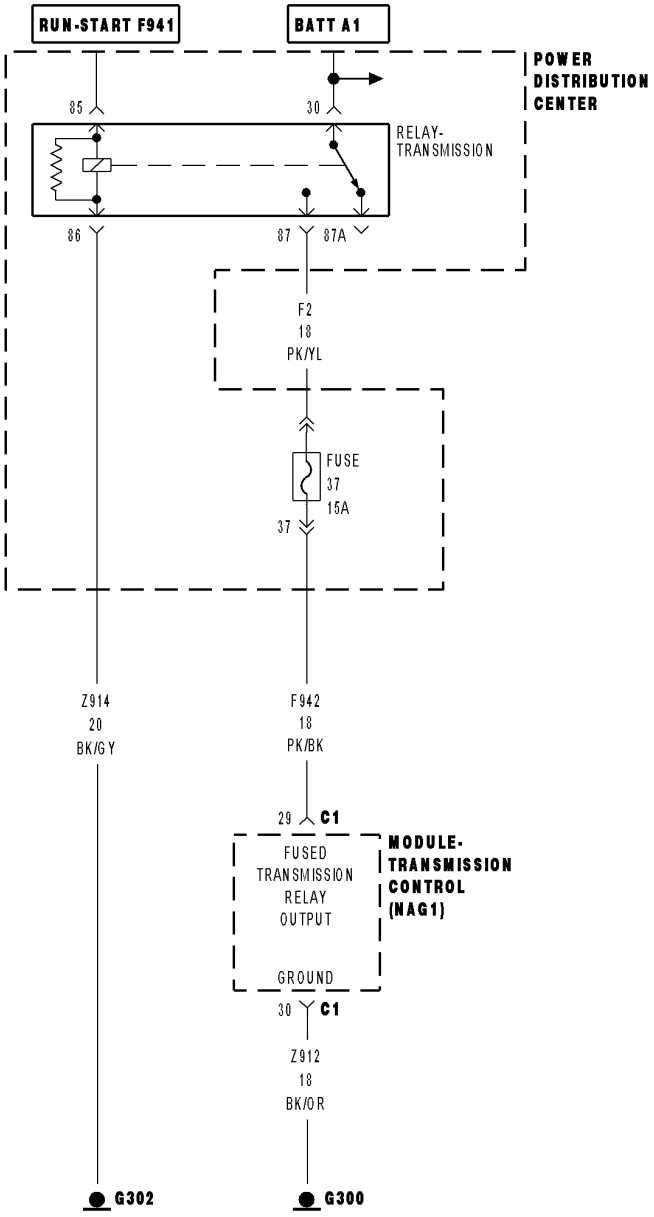

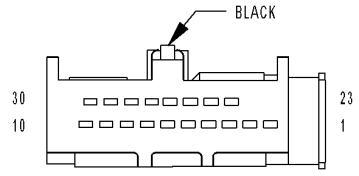

MODULE-TRANSMISSION CONTROL C1 (NAG1)

8131d9d8

For a complete wiring diagram **Refer to Section 8W**

Theory of Operation

The Transmission Control Module (TCM) performs various internal tests to verify proper controller operation. This DTC indicates that there is an issue with the TCM's external watchdog. If the TCM detects an error with the controllers external watchdog, failed the power up test, the controller will enter Limp-in mode and illuminate the MIL.

- **When Monitored:**
  Continuously with the ignition on.
- **Set Condition:**
  If the TCM detects an error with the controllers external watchdog—failed the power up test.

Possible Causes
TRANSMISSION CONTROL MODULE

Always perform the NAG1 Pre-Diagnostic Troubleshooting procedure before proceeding. (Refer to 21 - TRANSMISSION/TRANSAXLE/AUTOMATIC - NAG1 - STANDARD PROCEDURE)

Diagnostic Test

1. TRANSMISSION CONTROL MODULE

View repair

Repair

Using the schematics as a guide, check the Transmission Control Module (TCM) terminals for corrosion, damage, or terminal push out. Pay particular attention to all power and ground circuits. If no problems are found, replace the TCM per the Service Information. (Refer to 8 - ELECTRICAL/ELECTRONIC CONTROL MODULES/TRANSMISSION CONTROL MODULE - DESCRIPTION)

Perform NAG1 TRANSMISSION VERIFICATION TEST - VER 1. (Refer to 21 - TRANSMISSION/TRANSAXLE/AUTOMATIC - NAG1 - STANDARD PROCEDURE)

P1634-TCM INTERNAL- INTERNAL WATCHDOG PERFORMANCE

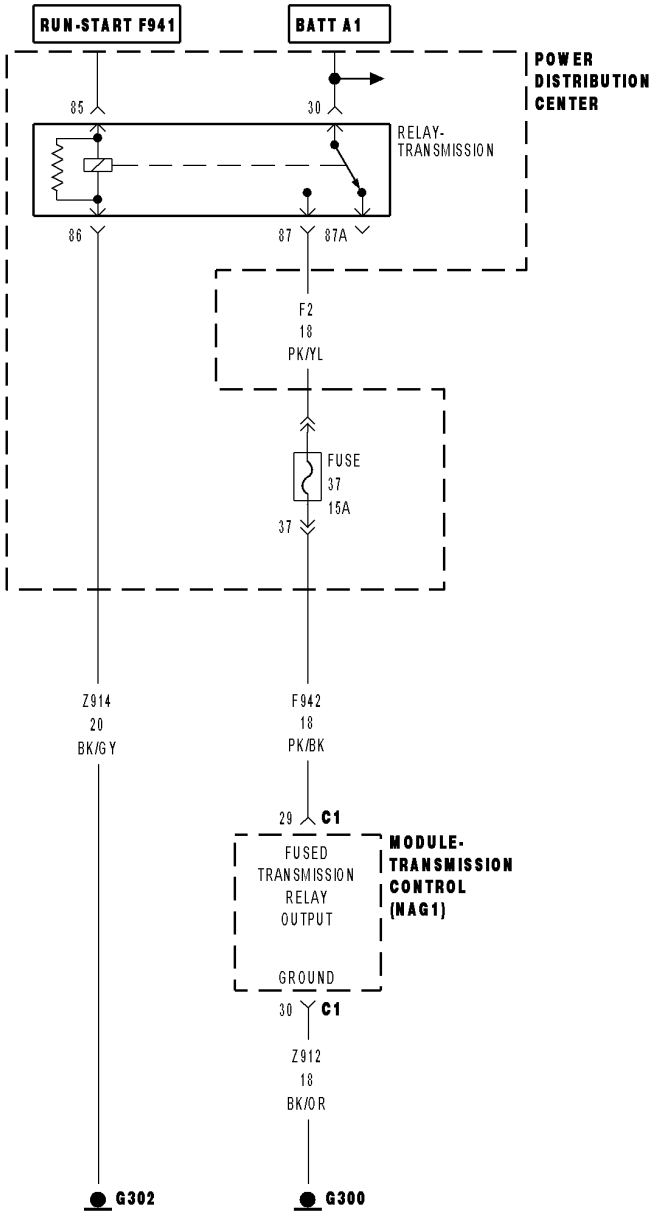

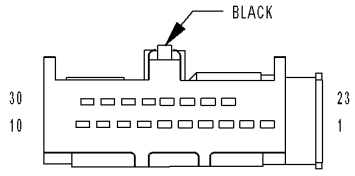

MODULE-TRANSMISSION CONTROL C1 (NAG1)

8131d9d8

For a complete wiring diagram **Refer to Section 8W**

Theory of Operation

The Transmission Control Module (TCM) performs various internal tests to verify proper controller operation. This DTC indicates that the controller's microprocessor internal watchdog has detected an error. If the TCM microprocessor detects an internal watchdog error, the controller will enter Limp-in mode and illuminate the MIL.

- **When Monitored:**
  Continuously with the ignition on.
- **Set Condition:**
  If the TCM microprocessor internal watchdog detects an error.

Possible Causes
TRANSMISSION CONTROL MODULE

Always perform the NAG1 Pre-Diagnostic Troubleshooting procedure before proceeding. (Refer to 21 - TRANSMISSION/TRANSAXLE/AUTOMATIC - NAG1 - STANDARD PROCEDURE)

Diagnostic Test

1. TRANSMISSION CONTROL MODULE

View repair

Repair

Using the schematics as a guide, check the Transmission Control Module (TCM) terminals for corrosion, damage, or terminal push out. Pay particular attention to all power and ground circuits. If no problems are found, replace the TCM per the Service Information. (Refer to 8 - ELECTRICAL/ELECTRONIC CONTROL MODULES/TRANSMISSION CONTROL MODULE - DESCRIPTION)

Perform NAG1 TRANSMISSION VERIFICATION TEST - VER 1. (Refer to 21 - TRANSMISSION/TRANSAXLE/AUTOMATIC - NAG1 - STANDARD PROCEDURE)

P1636-TCM INTERNAL- EXTERNAL WATCHDOG PERFORMANCE

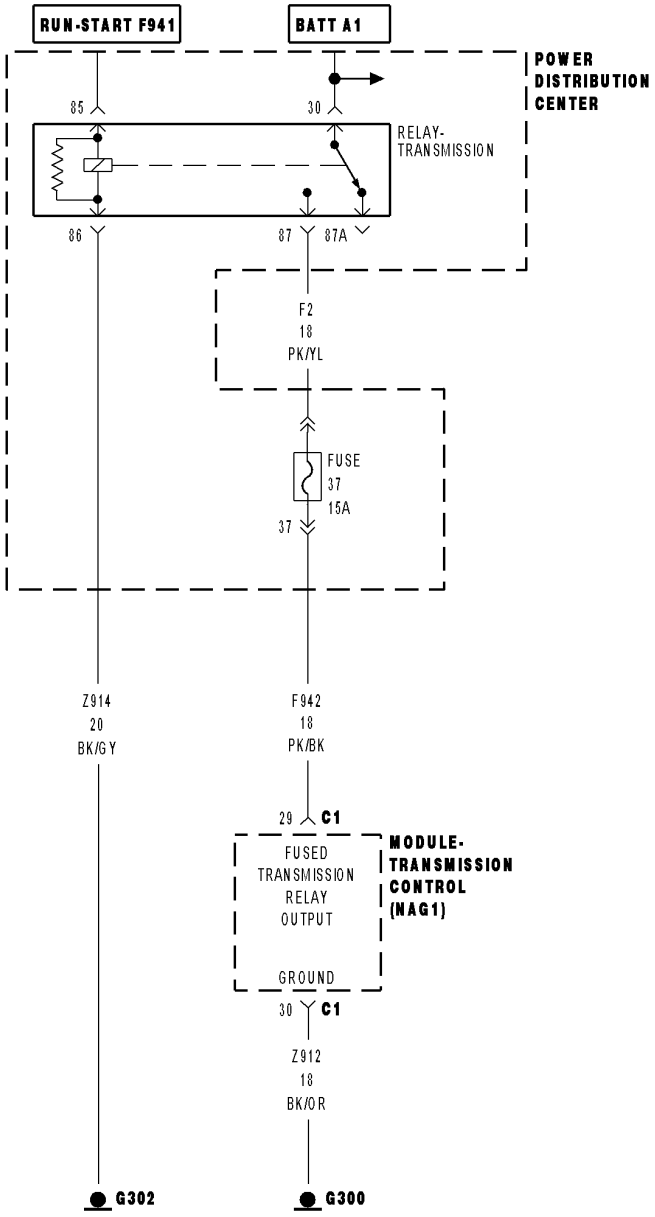

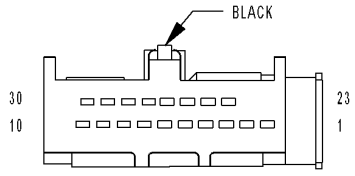

MODULE-TRANSMISSION CONTROL C1 (NAG1)

8131d9d8

For a complete wiring diagram **Refer to Section 8W**

Theory of Operation

The Transmission Control Module (TCM) performs various internal tests to verify proper controller operation. This DTC indicates that watch dog circuitry external to the microprocessor has detected an error. If the TCM watch dog circuitry external to the microprocessor detects an error, the controller will enter Limp-in mode and illuminate the MIL.

- **When Monitored:**
  Continuously with the ignition on.
- **Set Condition:**
  If the TCM watch dog circuitry external to the microprocessor detects an error.

Possible Causes
TRANSMISSION CONTROL MODULE

Always perform the Pre-Diagnostic Troubleshooting procedure before proceeding. (Refer to 21 - TRANSMISSION/TRANSAXLE/AUTOMATIC - NAG1 - DIAGNOSIS AND TESTING)

Diagnostic Test

1. TRANSMISSION CONTROL MODULE

View repair

Repair

Using the schematics as a guide, check the Transmission Control Module (TCM) terminals for corrosion, damage, or terminal push out. Pay particular attention to all power and ground circuits. If no problems are found, replace the TCM per the Service Information. (Refer to 8 - ELECTRICAL/ELECTRONIC CONTROL MODULES/TRANSMISSION CONTROL MODULE - DESCRIPTION)

Perform NAG1 TRANSMISSION VERIFICATION TEST - VER 1. (Refer to 21 - TRANSMISSION/TRANSAXLE/AUTOMATIC - NAG1 - STANDARD PROCEDURE)

P1637-TCM INTERNAL-EEPROM PERFORMANCE

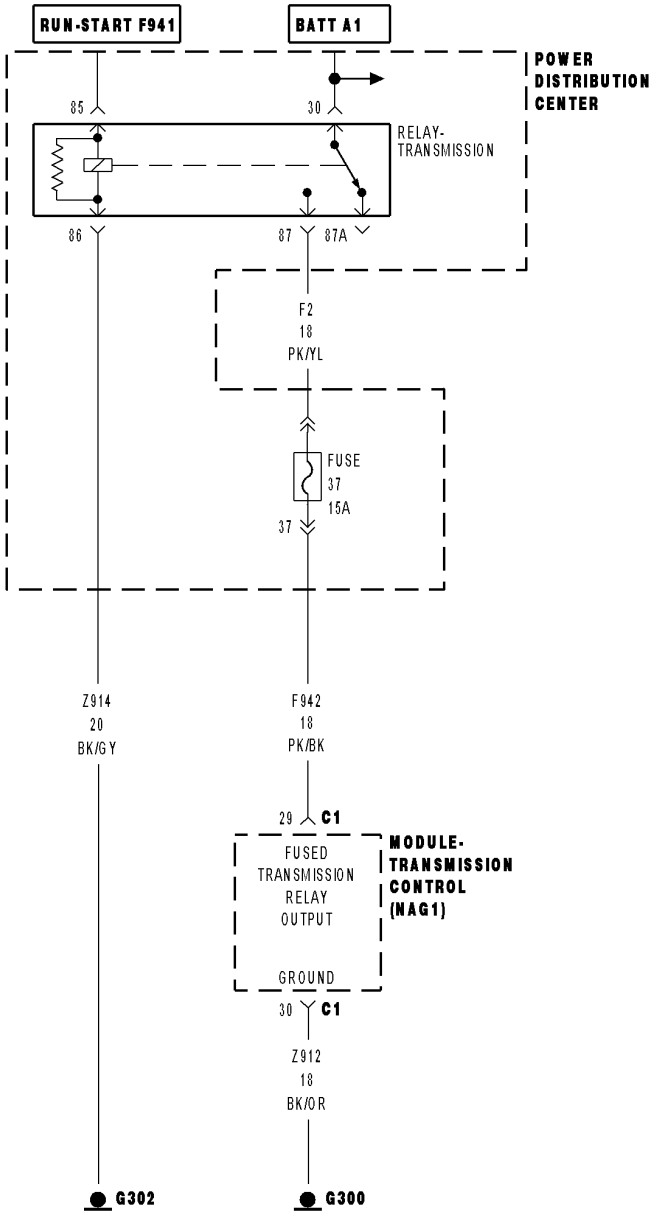

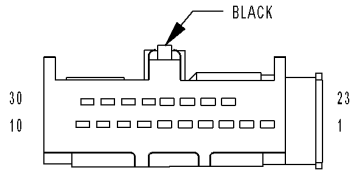

MODULE-TRANSMISSION CONTROL C1 (NAG1)

8131d9d8

For a complete wiring diagram **Refer to Section 8W**

Theory of Operation

The Transmission Control Module (TCM) performs various internal tests to verify proper controller operation. This DTC indicates that there is an internal error with the controllers Random Access Memory. If detected, the controller will enter Limp-in mode and illuminate the MIL.

- **When Monitored:**
  Continuously with the ignition on.
- **Set Condition:**
  If the TCM indicates that there is an internal error with the controllers Random Access Memory.

Possible Causes
TRANSMISSION CONTROL MODULE

Always perform the Pre-Diagnostic Troubleshooting procedure before proceeding. (Refer to 21 - TRANSMISSION/TRANSAXLE/AUTOMATIC - NAG1 - DIAGNOSIS AND TESTING)

Diagnostic Test

1. TRANSMISSION CONTROL MODULE

View repair

Repair

Using the schematics as a guide, check the Transmission Control Module (TCM) terminals for corrosion, damage, or terminal push out. Pay particular attention to all power and ground circuits. If no problems are found, replace the TCM per the Service Information. (Refer to 8 - ELECTRICAL/ELECTRONIC CONTROL MODULES/TRANSMISSION CONTROL MODULE - DESCRIPTION)

Perform NAG1 TRANSMISSION VERIFICATION TEST - VER 1. (Refer to 21 - TRANSMISSION/TRANSAXLE/AUTOMATIC - NAG1 - STANDARD PROCEDURE)

P1638-TCM INTERNAL-CAN 1 RAM PERFORMANCE

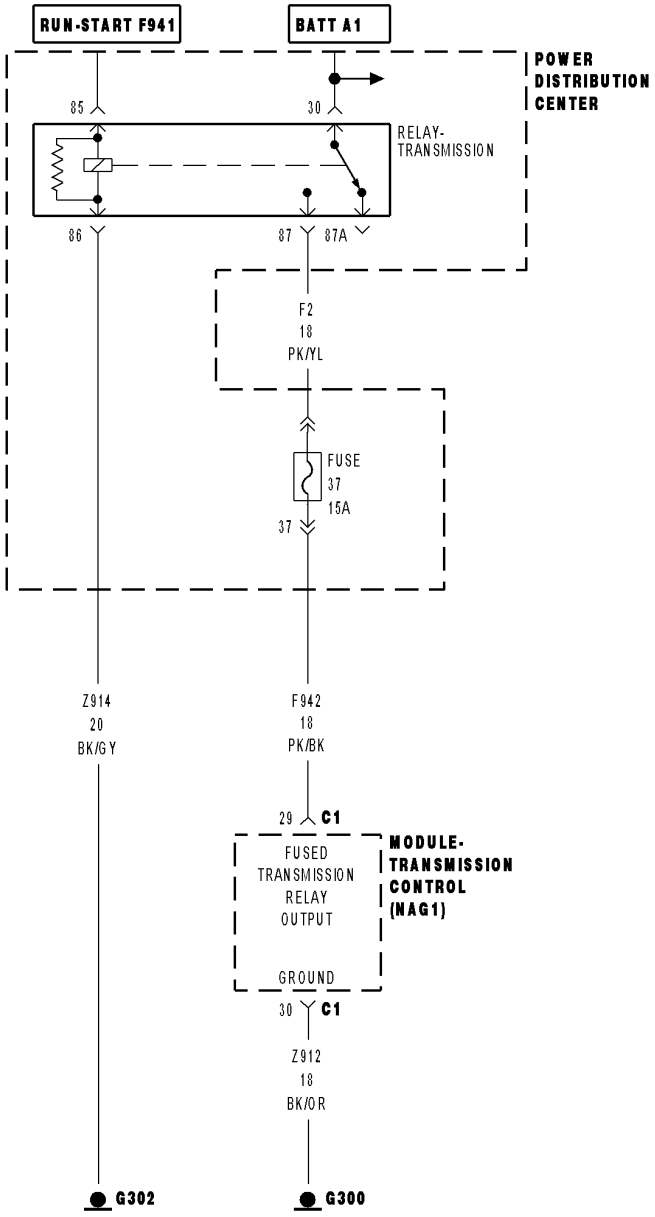

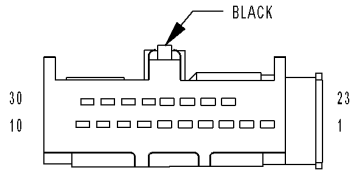

MODULE-TRANSMISSION CONTROL C1 (NAG1)

8131d9d8

For a complete wiring diagram **Refer to Section 8W**

Theory of Operation

The Transmission Control Module (TCM) performs various internal tests to verify proper controller operation. This DTC indicates that there is an internal error with the controllers Random Access Memory (RAM) on the CAN controller 1 section of the microprocessor. If detected, the controller will enter Limp-in mode and illuminate the MIL.

- **When Monitored:**
  Continuously with the ignition on.
- **Set Condition:**
  If the TCM detects an internal error with the controllers Random Access Memory (RAM) on the CAN controller 1 section of the microprocessor.

Possible Causes
TRANSMISSION CONTROL MODULE

Always perform the Pre-Diagnostic Troubleshooting procedure before proceeding. (Refer to 21 - TRANSMISSION/TRANSAXLE/AUTOMATIC - NAG1 - DIAGNOSIS AND TESTING)

Diagnostic Test

1. TRANSMISSION CONTROL MODULE

View repair

Repair

Using the schematics as a guide, check the Transmission Control Module (TCM) terminals for corrosion, damage, or terminal push out. Pay particular attention to all power and ground circuits. If no problems are found, replace the TCM per the Service Information. (Refer to 8 - ELECTRICAL/ELECTRONIC CONTROL MODULES/TRANSMISSION CONTROL MODULE - DESCRIPTION)

Perform NAG1 TRANSMISSION VERIFICATION TEST - VER 1. (Refer to 21 - TRANSMISSION/TRANSAXLE/AUTOMATIC - NAG1 - STANDARD PROCEDURE)

P1639-TCM INTERNAL-CAN 2 RAM PERFORMANCE

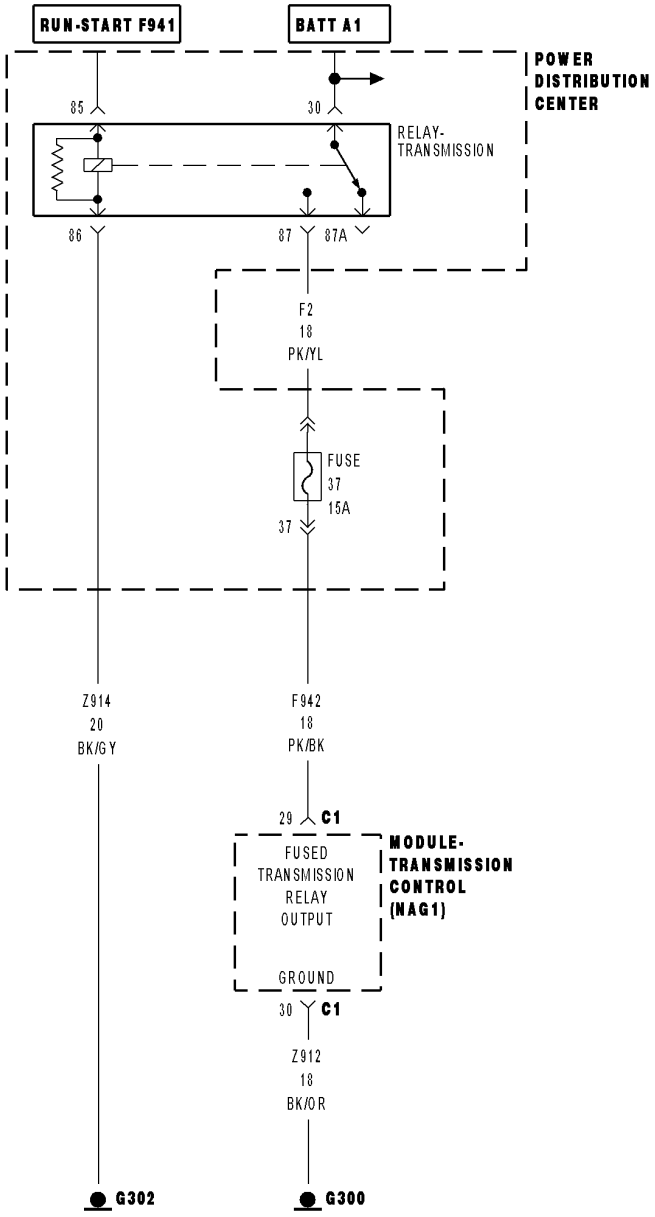

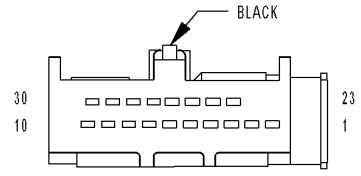

MODULE-TRANSMISSION CONTROL C1 (NAG1)

8131d9d8

For a complete wiring diagram **Refer to Section 8W**

Theory of Operation

The Transmission Control Module (TCM) performs various internal tests to verify proper controller operation. This DTC indicates that there is an internal error with the controllers Random Access Memory (RAM) on the CAN controller 2 section of the microprocessor. If detected, the controller will enter Limp-in mode and illuminate the MIL.

- **When Monitored:**
  Continuously with the ignition on.
- **Set Condition:**
  If the TCM detects an internal error with the controllers Random Access Memory (RAM) on the CAN controller 2 section of the microprocessor.

Possible Causes
TRANSMISSION CONTROL MODULE

Always perform the Pre-Diagnostic Troubleshooting procedure before proceeding. (Refer to 21 - TRANSMISSION/TRANSAXLE/AUTOMATIC - NAG1 - DIAGNOSIS AND TESTING)

Diagnostic Test

1. TRANSMISSION CONTROL MODULE

View repair

Repair

Using the schematics as a guide, check the Transmission Control Module (TCM) terminals for corrosion, damage, or terminal push out. Pay particular attention to all power and ground circuits. If no problems are found, replace the TCM per the Service Information. (Refer to 8 - ELECTRICAL/ELECTRONIC CONTROL MODULES/TRANSMISSION CONTROL MODULE - DESCRIPTION)

Perform NAG1 TRANSMISSION VERIFICATION TEST - VER 1. (Refer to 21 - TRANSMISSION/TRANSAXLE/AUTOMATIC - NAG1 - STANDARD PROCEDURE)

P1644-INCORRECT VARIANT/CONFIGURATION

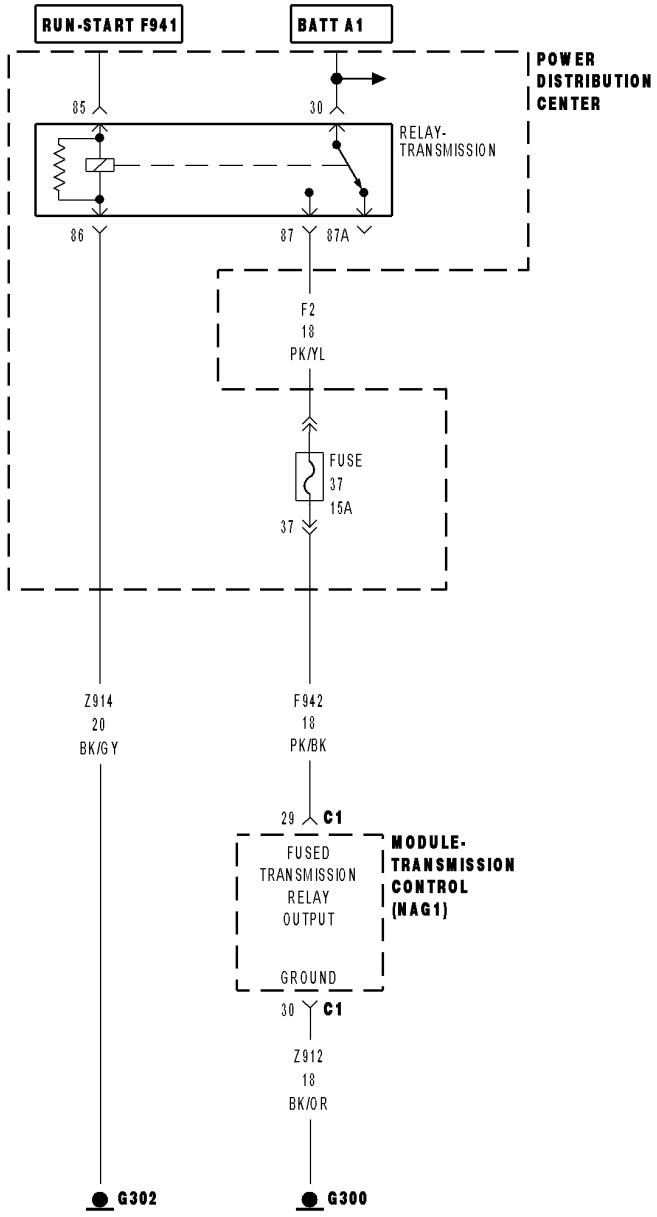

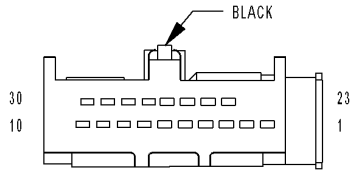

MODULE-TRANSMISSION CONTROL C1 (NAG1)

8131d9d8

For a complete wiring diagram **Refer to Section 8W**

Theory of Operation

The Transmission Control Module (TCM) performs various internal tests to verify proper controller operation. If the TCM detects that the variables that dictate the vehicle application are not present, the controller will enter Limp-in mode and illuminate the MIL.

- **When Monitored:**
  Continuously with the ignition on.
- **Set Condition:**
  If the TCM detects that the variables that dictate the vehicle application are not present.

Possible Causes
CONTROLLER NOT CODED
TRANSMISSION CONTROL MODULE

Always perform the Pre-Diagnostic Troubleshooting procedure before proceeding. (Refer to 21 - TRANSMISSION/TRANSAXLE/AUTOMATIC - NAG1 - STANDARD PROCEDURE)

Diagnostic Test

1. PERFORM TCM REPLACEMENT PROCEDURE

NOTE: Controller is programmed with generic software and will not allow the correct vehicle Powertrain management.
With the scan tool, perform the TCM replacement procedure.

Were you able to update the controller successfully?

Yes >> Test Complete.
Perform NAG1 TRANSMISSION VERIFICATION TEST - VER 1. (Refer to 21 - TRANSMISSION/TRANSAXLE/AUTOMATIC - NAG1 - STANDARD PROCEDURE)

No >> Using the schematics as a guide, check the Transmission Control Module (TCM) terminals for corrosion, damage, or terminal push out. Pay particular attention to all power and ground circuits. If no problems are found, replace the TCM per the Service Information. (Refer to 8 - ELECTRICAL/ELECTRONIC CONTROL MODULES/TRANSMISSION CONTROL MODULE - DESCRIPTION)
Perform NAG1 TRANSMISSION VERIFICATION TEST - VER 1. (Refer to 21 - TRANSMISSION/TRANSAXLE/AUTOMATIC - NAG1 - STANDARD PROCEDURE)

P1704-INPUT SPEED SENSOR 1 OVERSPEED

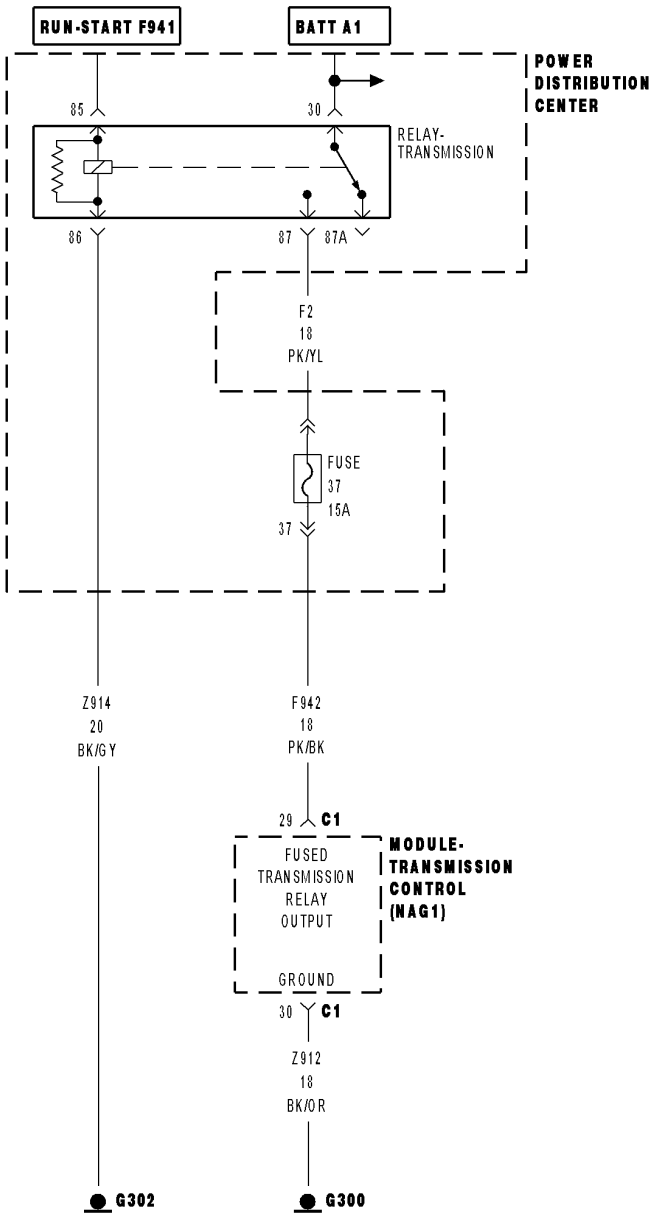

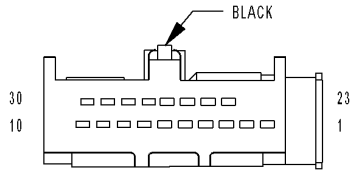

MODULE-TRANSMISSION CONTROL C1 (NAG1)

8131d9d8

For a complete wiring diagram **Refer to Section 8W**

Theory of Operation

The NAG1 transmission has two input speed sensors 1 and 2 (N2 and N3), both speed sensors are located on the valve body. The speed sensors are hall effect speed sensors that are used by the Transmission Control Module (TCM) to calculate the transmissions input speed. Since the input speed could not be measured directly, two of the drive elements are measured. Two input speed sensors were required because both drive elements are not active in all gears.

The input speed sensors 1 and 2 will report the same input speed in gears 2nd, 3rd or 4th. If the 1 and 2 input speed sensor signals are not the same in these gears, the TCM will set the DTC P2784-Input Speed Sensor 1/2 Correlation. The input speed sensor 2 is not reported in 1st and 5th gears. The input speed sensor 1 (N2) is not reported in Reverse. The P01704-Input Speed Sensor 1 Overspeed and P01705-Input Speed Sensor 2 Overspeed DTCs are rationality checks designed to detect a major transmission failure. If either DTC is detected, the TCM will place the transmission in Neutral.

- **When Monitored:**
  Continuously with the ignition on, engine running, transmission in gear, and Input Speed Sensor 1 (N2) greater than 0 RPM
- **Set Condition:**
  If the RPM of the Input Speed Sensor 1 (N2) is greater than 7700 RPM.

Possible Causes
INTERNAL TRANSMISSION
TRANSMISSION CONTROL MODULE

Always perform the NAG1 Pre-Diagnostic Troubleshooting procedure before proceeding. (Refer to 21 - TRANSMISSION/TRANSAXLE/AUTOMATIC - NAG1 - STANDARD PROCEDURE)

Diagnostic Test

1. CHECK TO SEE IF DTC IS CURRENT

Turn the ignition on.

With the scan tool, erase Transmission DTCs.

Raise the vehicle on the hoist.

Start the engine.

With the scan tool, monitor the Input Speed Sensor 1 RPM.

Firmly apply the brakes and place the gear selector in Drive.

WARNING: To avoid personal injury or death, keep hands and feet clear of rotating wheels.
Release the brakes and raise the engine RPM to allow the transmission to upshift to the 2-3 and 3-4 shift schedule.

Did the Input Speed Sensor 1 display an RPM above 7700?

Yes >> Go To 2

No >> Go To 3

2. INTERNAL TRANSMISSION

This DTC is an indication of a internal transmission failure.

Remove the Transmission Oil Pan and inspect for excessive debris such as clutch friction material or metal contamination.

Is there any indication of an internal transmission failure?

Yes >> Repair internal transmission as necessary per the Service Information. (Refer to 21 - TRANSMISSION/TRANSAXLE/AUTOMATIC - NAG1 - REMOVAL)
Perform NAG1 TRANSMISSION VERIFICATION TEST - VER 1. (Refer to 21 - TRANSMISSION/TRANSAXLE/AUTOMATIC - NAG1 - STANDARD PROCEDURE)

No >> Using the schematics as a guide, check the Transmission Control Module (TCM) terminals for corrosion, damage, or terminal push out. Pay particular attention to all power and ground circuits. If no problems

are found, replace the TCM per the Service Information. (Refer to 8 - ELECTRICAL/ELECTRONIC CONTROL MODULES/TRANSMISSION CONTROL MODULE - DESCRIPTION)

Perform NAG1 TRANSMISSION VERIFICATION TEST - VER 1. (Refer to 21 - TRANSMISSION/ TRANSAXLE/AUTOMATIC - NAG1 - STANDARD PROCEDURE)

3. INTERMITTENT WIRING AND CONNECTORS

The conditions necessary to set this DTC are not present at this time.

Using the schematics as a guide, inspect the wiring and connectors specific to this circuit.

Wiggle the wiring and connectors while checking for any possible open or shorted circuits.

Check for any Service Information Tune-ups or Technical Service Bulletins that may apply.

Were there any problems found?

Yes >> Repair as necessary.

Perform NAG1 TRANSMISSION VERIFICATION TEST - VER 1. (Refer to 21 - TRANSMISSION/ TRANSAXLE/AUTOMATIC - NAG1 - STANDARD PROCEDURE)

No >> Test Complete.

P1705-INPUT SPEED SENSOR 2 OVERSPEED

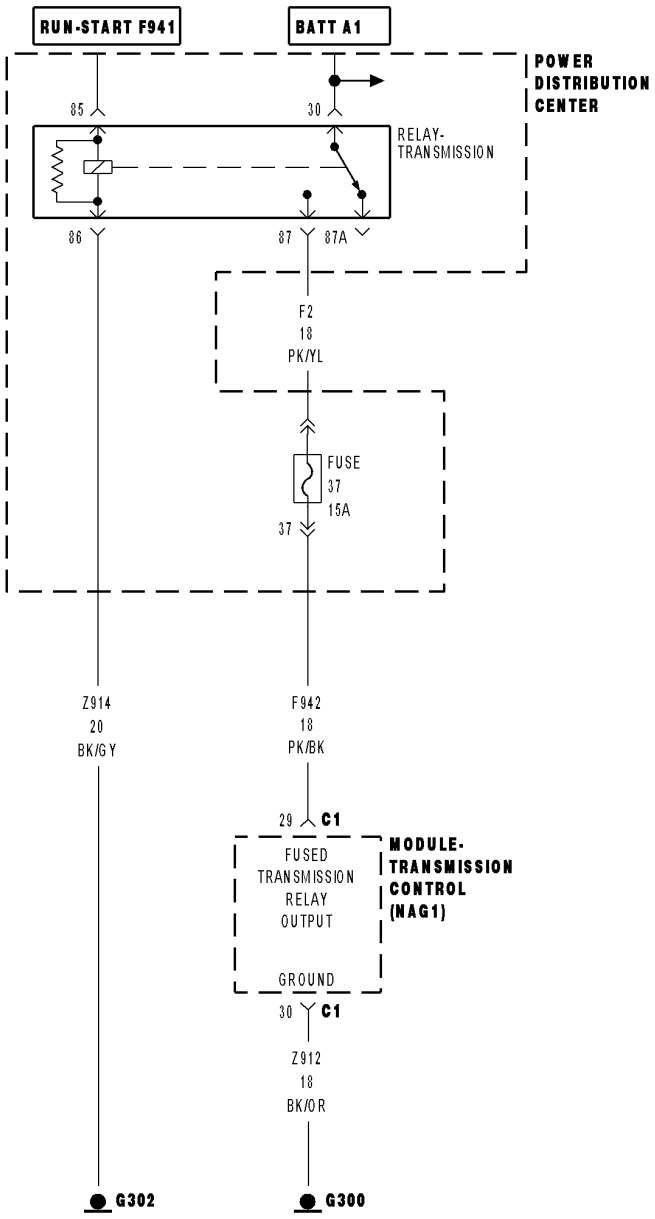

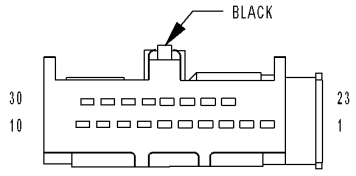

MODULE-TRANSMISSION CONTROL C1 (NAG1)

8131d9d8

For a complete wiring diagram **Refer to Section 8W**

Theory of Operation

The NAG1 transmission has two input speed sensors 1 and 2 (N2 and N3), both speed sensors are located on the valve body. The speed sensors are hall effect speed sensors that are used by the Transmission Control Module (TCM) to calculate the transmissions input speed. Since the input speed could not be measured directly, two of the drive elements are measured. Two input speed sensors were required because both drive elements are not active in all gears.

The input speed sensors 1 and 2 will report the same input speed in gears 2nd, 3rd or 4th. If the 1 and 2 input speed sensor signals are not the same in these gears, the TCM will set the DTC P2784-Input Speed Sensor 1/2 Correlation. The input speed sensor 2 is not reported in 1st and 5th gears. The input speed sensor 1 (N2) is not reported in Reverse. The P01704-Input Speed Sensor 1 Overspeed and P01705-Input Speed Sensor 2 Overspeed DTCs are rationality checks designed to detect a major transmission failure. If either DTC is detected, the TCM will place the transmission in Neutral.

- **When Monitored:**
  Continuously with the ignition on, engine running, transmission in gear, and Input Speed Sensor 2 (N3) greater than 0 RPM
- **Set Condition:**
  If the RPM of the Input Speed Sensor 2 (N3) is greater than 7700 RPM.

Possible Causes
INTERNAL TRANSMISSION
TRANSMISSION CONTROL MODULE

Always perform the NAG1 Pre-Diagnostic Troubleshooting procedure before proceeding. (Refer to 21 - TRANSMISSION/TRANSAXLE/AUTOMATIC - NAG1 - STANDARD PROCEDURE)

Diagnostic Test

1. CHECK TO SEE IF DTC IS CURRENT

Turn the ignition on.

With the scan tool, erase Transmission DTCs.

Raise the vehicle on the hoist.

Start the engine.

With the scan tool, monitor the Input Speed Sensor 2 RPM.

Firmly apply the brakes and place the gear selector in Drive.

WARNING: To avoid personal injury or death, keep hands and feet clear of rotating wheels.
Release the brakes and raise the engine RPM to allow the transmission to upshift to the 2-3 and 3-4 shift schedule.

Did the Input Speed Sensor 2 display an RPM above 7700?

Yes >> Go To 2

No >> Go To 3

2. INTERNAL TRANSMISSION

This DTC is an indication of a internal transmission failure.

Remove the Transmission Oil Pan and inspect for excessive debris such as clutch friction material or metal contamination.

Is there any indication of an internal transmission failure?

Yes >> Repair internal transmission as necessary per the Service Information. (Refer to 21 - TRANSMISSION/TRANSAXLE/AUTOMATIC - NAG1 - REMOVAL)
Perform NAG1 TRANSMISSION VERIFICATION TEST - VER 1. (Refer to 21 - TRANSMISSION/TRANSAXLE/AUTOMATIC - NAG1 - STANDARD PROCEDURE)

No >> Using the schematics as a guide, check the Transmission Control Module (TCM) terminals for corrosion, damage, or terminal push out. Pay particular attention to all power and ground circuits. If no problems

are found, replace the TCM per the Service Information. (Refer to 8 - ELECTRICAL/ELECTRONIC CONTROL MODULES/TRANSMISSION CONTROL MODULE - DESCRIPTION)

Perform NAG1 TRANSMISSION VERIFICATION TEST - VER 1. (Refer to 21 - TRANSMISSION/ TRANSAXLE/AUTOMATIC - NAG1 - STANDARD PROCEDURE)

3. INTERMITTENT WIRING AND CONNECTORS

The conditions necessary to set this DTC are not present at this time.

Using the schematics as a guide, inspect the wiring and connectors specific to this circuit.

Wiggle the wiring and connectors while checking for any possible open or shorted circuits.

Check for any Service Information Tune-ups or Technical Service Bulletins that may apply.

Were there any problems found?

Yes >> Repair as necessary.

Perform NAG1 TRANSMISSION VERIFICATION TEST - VER 1. (Refer to 21 - TRANSMISSION/ TRANSAXLE/AUTOMATIC - NAG1 - STANDARD PROCEDURE)

No >> Test Complete.

P1731-INCORRECT GEAR ENGAGED

For a complete wiring diagram **Refer to Section 8W**

Theory of Operation

The TCM compares the calculated gear with the gear the transmission has actually engaged. The actual gear is identified by verifying the signals of the two input speed sensors 1 (N2) and 2 (N3) as well as the transmission output speed (from the ABS system). If the actual gear differs from the gear calculated by the TCM, the TCM value is adjusted to the engaged gear and a counter is increased by 2 points. If after a shift the engaged gear and the calculated gear still match, the counter is decreased by 1 point. A DTC is detected as soon as the counter exceeds a threshold.

- **When Monitored:**
  The conditions for gear detection are: engine speed greater than 450 rpm, no input speed sensor failures are active, no selector lever error active, selector lever is not in intermediate position, selector lever position is not showing power-up value, no output speed error is active, no transfer case error is active, output speed (ABS system) greater than 180 rpm, no wheel speed (ABS system) overspeed detected.
- **Set Condition:**
  The detected gear calculated by the TCM is not identical to the actual gear. Exception: detected gear is 1st and actual gear is 2nd. If the problem is present for three consecutive ignition cycles, the TCM places the transmission into Limp-in mode until the DTC is cleared by the scan tool.

Possible Causes
TRANSMISSION SOLENOID DTCS PRESENT
ABS DTCS PRESENT
INTERNAL TRANSMISSION
TRANSMISSION CONTROL MODULE

Always perform the NAG1 Pre-Diagnostic Troubleshooting procedure before proceeding. (Refer to 21 - TRANSMISSION/TRANSAXLE/AUTOMATIC - NAG1 - STANDARD PROCEDURE)

Diagnostic Test

1. CHECK IF TRANSMISSION SOLENOID DTCS ARE PRESENT

With the scan tool, check for other transmission DTCs.

Are there any Transmission Solenoid DTCS present?

Yes >> Refer to the Transmission category and perform the appropriate symptom(s). (Refer to 21 - TRANSMISSION/TRANSAXLE/AUTOMATIC - NAG1 - DIAGNOSIS AND TESTING)

No >> Go To 2

2. CHECK IF ABS DTCS ARE PRESENT

With the scan tool, check for ABS DTCs.

Are there any ABS DTCs present?

Yes >> Refer to 5 - BRAKES - ABS ELECTRICAL DIAGNOSTICS category and perform the appropriate symptom.

Perform NAG1 TRANSMISSION VERIFICATION TEST - VER 1. (Refer to 21 - TRANSMISSION/TRANSAXLE/AUTOMATIC - NAG1 - STANDARD PROCEDURE)

No >> Go To 3

3. CHECK FOR INTERNAL TRANSMISSION PROBLEM

This DTC is usually set due to an internal transmission problem such as but not limited to: stuck solenoid valve and/or contamination in the valve body, broken springs, leaking clutch seals, dislodged or broken snap ring.

Inspect internal transmission. (Refer to 21 - TRANSMISSION/TRANSAXLE/AUTOMATIC - NAG1 - DIAGNOSIS AND TESTING)

Were there any problems found?

Yes >> Repair internal transmission as necessary per the Service Information. (Refer to 21 - TRANSMISSION/TRANSAXLE/AUTOMATIC - NAG1 - REMOVAL)

Perform NAG1 TRANSMISSION VERIFICATION TEST - VER 1. (Refer to 21 - TRANSMISSION/TRANSAXLE/AUTOMATIC - NAG1 - STANDARD PROCEDURE)

No >> Using the schematics as a guide, check the Transmission Control Module (TCM) terminals for corrosion, damage, or terminal push out. Pay particular attention to all power and ground circuits. If no problems are found, replace the TCM per the Service Information. (Refer to 8 - ELECTRICAL/ELECTRONIC CONTROL MODULES/TRANSMISSION CONTROL MODULE - DESCRIPTION)

Perform NAG1 TRANSMISSION VERIFICATION TEST - VER 1. (Refer to 21 - TRANSMISSION/TRANSAXLE/AUTOMATIC - NAG1 - STANDARD PROCEDURE)

P2638-TORQUE MANAGEMENT FEEDBACK SIGNAL PERFORMANCE

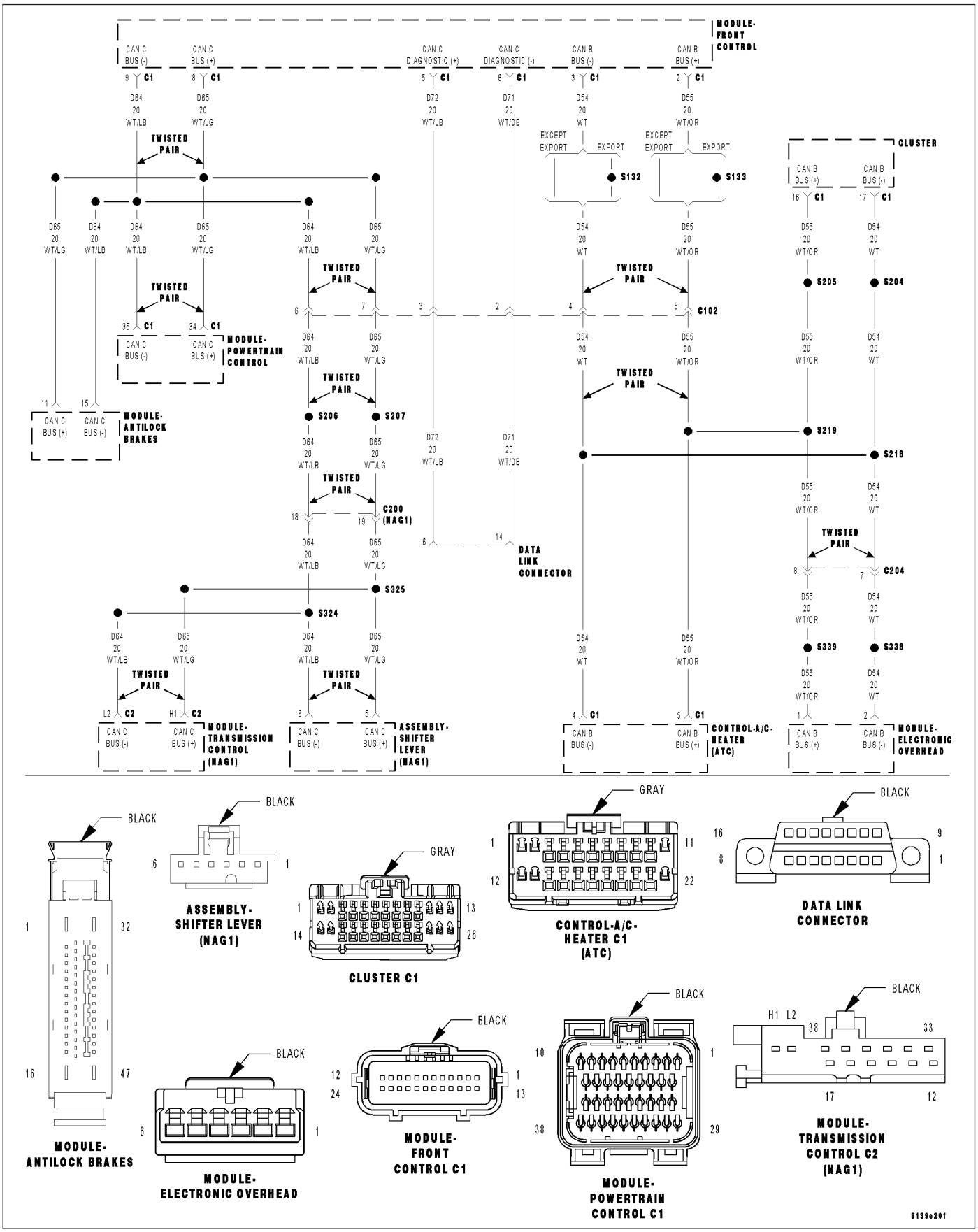

For a complete wiring diagram **Refer to Section 8W**

Theory of Operation

The Transmission Control Module (TCM) requests torque reductions over the CAN bus during a transmission shift to improve shift quality. The TCM verifies that the PCM / ECM has performed the requested torque reduction by monitoring the response to the request. If the response is not within a specified tolerance, the TCM increments a counter, and if this counter reaches a threshold, the DTC sets.

- **When Monitored:**
  Engine intervention active for at least 20 ms, no engine torque errors, engine torque demand is greater than 0.
- **Set Condition:**
  Torque Reduction acknowledge bit - not set, no shift aborts, the error flag Torque Reduction Acknowledge is not set, Powertrain controller not supporting torque requests.

Possible Causes
CAN BUS CIRCUIT DTC PRESENT
TRANSMISSION CONTROL MODULE
POWERTRAIN / ENGINE CONTROL MODULE

Always perform the NAG1 Pre-Diagnostic Troubleshooting procedure before proceeding. (Refer to 21 - TRANSMISSION/TRANSAXLE/AUTOMATIC - NAG1 - STANDARD PROCEDURE)

Diagnostic Test

1. CHECK FOR ENGINE DTC PRESENT

With the scan tool, check engine DTCs.

Are there any engine DTCs present?

Yes >> Refer to the 9 - ENGINE ELECTRICAL DIAGNOSTICS and diagnose the appropriate symptom.
Perform NAG1 TRANSMISSION VERIFICATION TEST - VER 1. (Refer to 21 - TRANSMISSION/TRANSAXLE/AUTOMATIC - NAG1 - STANDARD PROCEDURE)

No >> Go To 2

2. CHECK FOR CAN BUS DTCS

With the scan tool, check for any CAN bus DTCs or a sign of a CAN bus failure.

Are there any CAN bus DTCs present in any module other than the TCM or an overall indication of a CAN bus communication problem?

Yes >> This is an indication of a CAN bus communication problem. Depending on the DTC, either refer to the module reporting the DTC and perform diagnostics for the appropriate symptom or refer to 8 - ELECTRICAL - ELECTRONIC CONTROL MODULES - ELECTRICAL DIAGNOSTICS and perform the appropriate symptom.
Perform NAG1 TRANSMISSION VERIFICATION TEST - VER 1. (Refer to 21 - TRANSMISSION/TRANSAXLE/AUTOMATIC - NAG1 - STANDARD PROCEDURE)

No >> Go To 3

3. CHECK IF DTC RESETS

Turn the ignition off to the lock position.

Replace and program the Powertrain Control Module per the Service Information. Refer to 8 - ELECTRICAL/ELECTRONIC CONTROL MODULES/POWERTRAIN CONTROL MODULE for the appropriate service procedure.

With the scan tool, record the Environmental Data and erase Transmission DTCs.

NOTE: If the TCM detects and stores a DTC, the TCM also stores the vehicles operating conditions under which the DTC originally set and is located in scan tool under Environmental Data. Before erasing any stored DTCs, record any available data to assist in duplicating the conditions in which the DTC originally set.

Using the Environmental Data recorded earlier, test drive the vehicle while trying to duplicate the conditions in which the DTC originally set.

With the scan tool, read Transmission DTCs.

Did the DTC P2638-TORQUE MANAGEMENT FEEDBACK SIGNAL PERFORMANCE reset?

Yes >> Using the schematics as a guide, check the Transmission Control Module (TCM) terminals for corrosion, damage, or terminal push out. Pay particular attention to all power and ground circuits. If no problems are found, replace the TCM per the Service Information. (Refer to 8 - ELECTRICAL/ELECTRONIC CONTROL MODULES/TRANSMISSION CONTROL MODULE - DESCRIPTION)

Perform NAG1 TRANSMISSION VERIFICATION TEST - VER 1. (Refer to 21 - TRANSMISSION/TRANSAXLE/AUTOMATIC - NAG1 - STANDARD PROCEDURE)

No >> Test Complete.

Perform NAG1 TRANSMISSION VERIFICATION TEST - VER 1. (Refer to 21 - TRANSMISSION/TRANSAXLE/AUTOMATIC - NAG1 - STANDARD PROCEDURE)

P2767-INPUT SPEED SENSOR 2 CIRCUIT NO SIGNAL

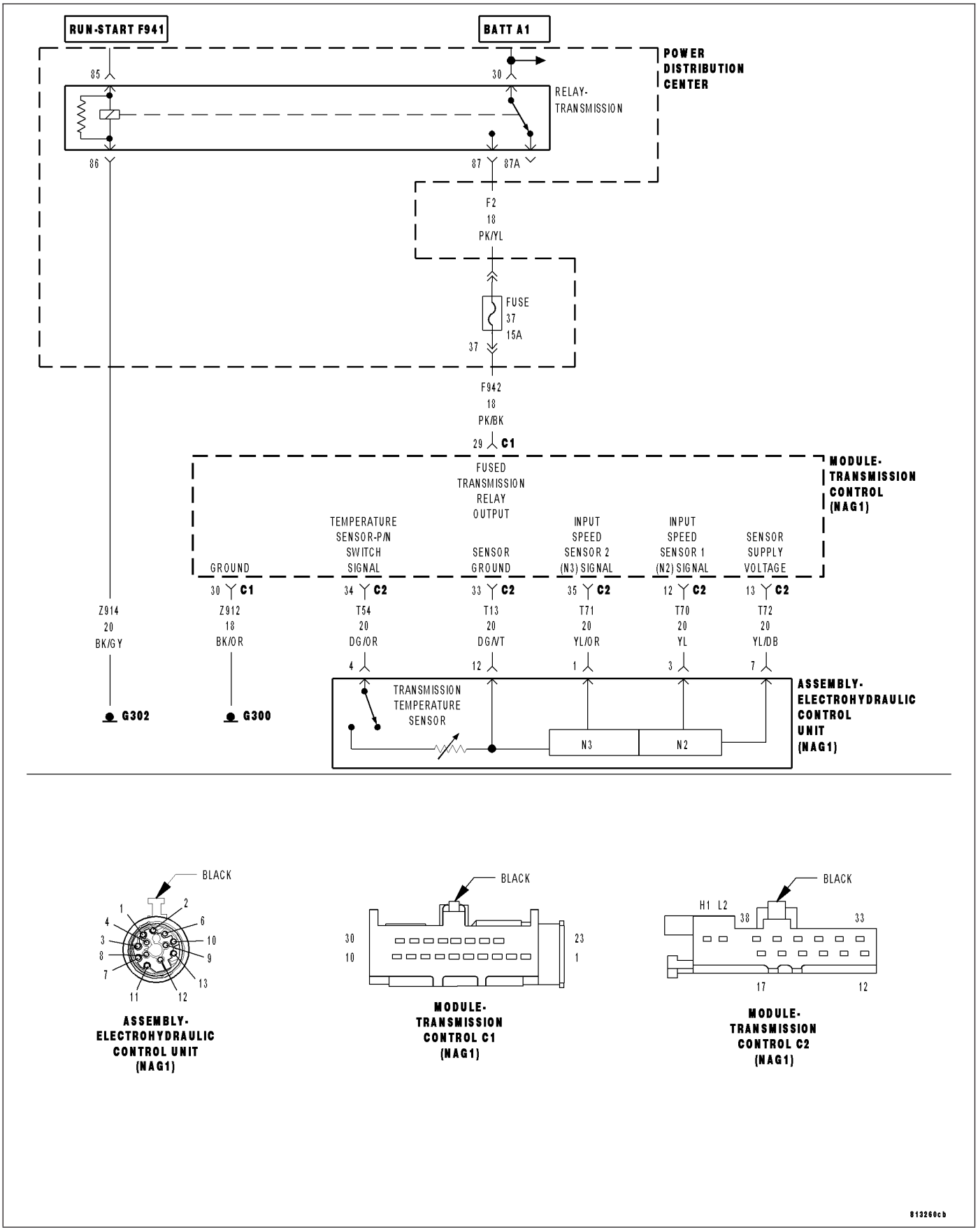

For a complete wiring diagram **Refer to Section 8W**

Theory of Operation

The Input Speed Sensor 2 (N3) is one of two hall effect speed sensors that are used by the Transmission Control Module (TCM) to calculate the transmissions turbine speed. Since the turbine speed could not be measured directly, two of the drive elements are measured. Two input speed sensors are required because both elements are not active in all gears.

- **When Monitored:**
  Engine speed greater than 450 RPM with none of the following DTCs present: engine speed, TCM undervoltage, output speed sensor, and/or rear wheel speed DTCs. Also required are all wheel speeds above 250 RPM and no wheel slip detected (signal from the ABS system).
- **Set Condition:**
  If the Input Speed Sensor 2 (N3) signal is equal to 0 RPM.

Possible Causes
(T72) SENSOR SUPPLY VOLTAGE CIRCUIT OPEN
(T71) INPUT SPEED SENSOR 2 (N3) SIGNAL CIRCUIT OPEN
(T71) SPEED SENSOR 2 (N3) SIGNAL CIRCUIT SHORT TO ANOTHER CIRCUIT
(T13) SENSOR GROUND CIRCUIT OPEN
(T13) SENSOR GROUND CIRCUIT SHORT TO ANOTHER CIRCUIT
(T71) SPEED SENSOR 2 (N3) SIGNAL CIRCUIT SHORT TO GROUND
(T13) SENSOR GROUND CIRCUIT SHORT TO GROUND
INPUT SPEED SENSOR 2 (N3)
TRANSMISSION CONTROL MODULE

Always perform the NAG1 Pre-Diagnostic Troubleshooting procedure before proceeding. (Refer to 21 - TRANSMISSION/TRANSAXLE/AUTOMATIC - NAG1 - STANDARD PROCEDURE)

Diagnostic Test

1. CHECK IF DTC IS CURRENT

NOTE: The Transmission Control Module stores under Environmental Data the transmission operating conditions when the DTC was set. Before erasure of any DTC, record all information pertaining to the DTC, even if there is more than one DTC stored.

With the scan tool, erase transmission DTCs.

Using the Environmental Data previously recorded, drive the vehicle and try to duplicate the conditions in which the DTC originally set.

Did the DTC P2767 reset?

Yes >> Go To 2

No >> Go To 10

2. CHECK THE (T72) SENSOR SUPPLY VOLTAGE CIRCUIT FOR AN OPEN

Turn the ignition off to the lock position.

Disconnect the TCM C2 harness connector.

Disconnect the Electrohydraulic Control Unit Assembly harness connector.

NOTE: Check connectors - Clean/repair as necessary.

Measure the resistance of the (T72) Sensor Supply Voltage circuit from the TCM C2 harness connector to the Electrohydraulic Control Unit Assembly harness connector.

Is the resistance below 5.0 ohms?

Yes >> Repair the (T72) Sensor Supply Voltage circuit for an open.
Perform NAG1 TRANSMISSION VERIFICATION TEST - VER 1. (Refer to 21 - TRANSMISSION/TRANSAXLE/AUTOMATIC - NAG1 - STANDARD PROCEDURE)

No >> Go To 3

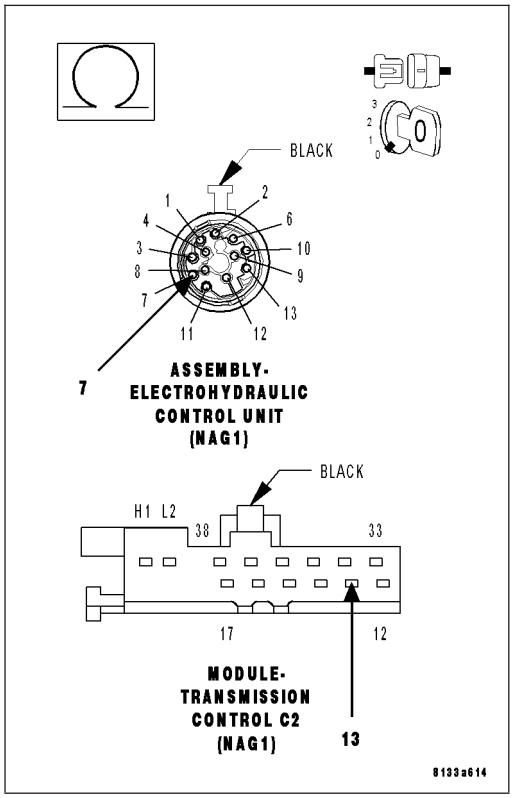

3. CHECK THE (T71) INPUT SPEED SENSOR 2 (N3) SIGNAL CIRCUIT FOR AN OPEN

Measure the resistance of the (T71) Input Speed Sensor 2 (N3) Signal circuit from the TCM C2 harness connector to the Electrohydraulic Control Unit Assembly harness connector.

Is the resistance below 5.0 ohms?

Yes >> Repair the (T71) Input Speed Sensor 2 (N3) Signal circuit for an open.
Perform NAG1 TRANSMISSION VERIFICATION TEST - VER 1. (Refer to 21 - TRANSMISSION/TRANSAXLE/AUTOMATIC - NAG1 - STANDARD PROCEDURE)

No >> Go To 4

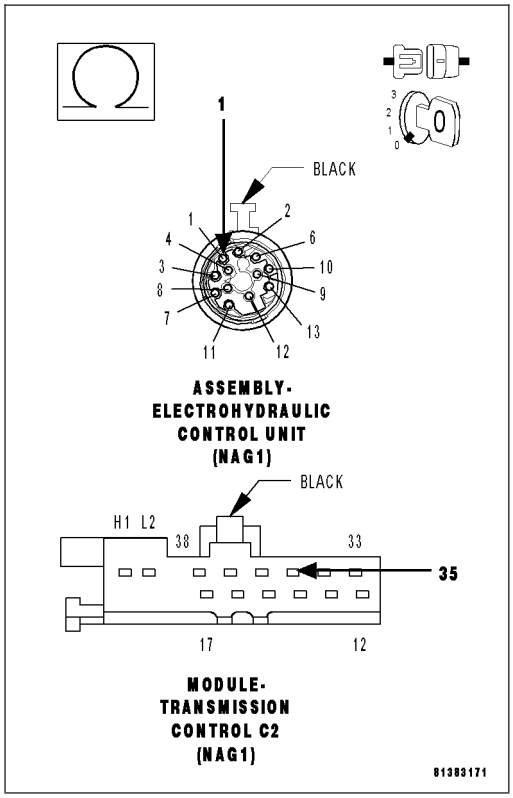

4. CHECK THE (T13) SENSOR GROUND CIRCUIT FOR AN OPEN

Measure the resistance of the (T13) Sensor Ground circuit from the TCM C2 harness connector to the Electrohydraulic Control Unit Assembly harness connector.

Is the resistance below 5.0 ohms?

Yes >> Repair the (T13) Sensor Ground circuit for an open.
Perform NAG1 TRANSMISSION VERIFICATION TEST - VER 1. (Refer to 21 - TRANSMISSION/TRANSAXLE/AUTOMATIC - NAG1 - STANDARD PROCEDURE)

No >> Go To 5

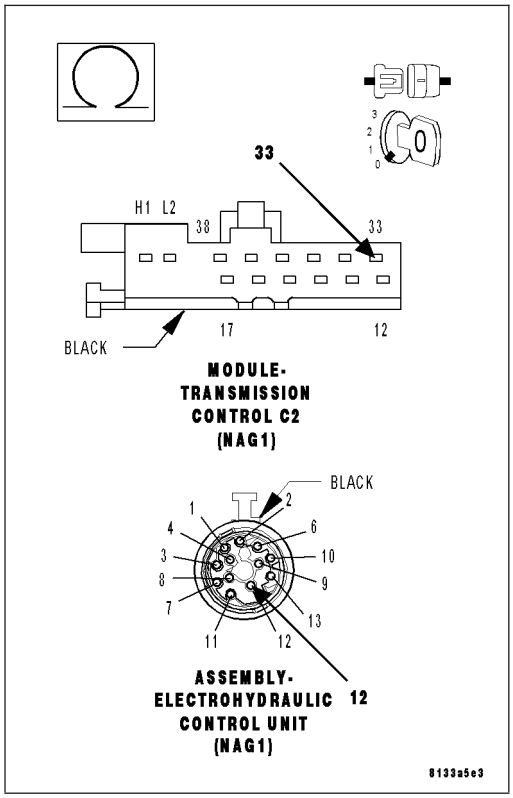

5. CHECK THE (T71) INPUT SPEED SENSOR 2 (N3) SIGNAL CIRCUIT FOR A SHORT TO ANOTHER CIRCUIT(S)

Measure the resistance of the (T71) Input Speed Sensor 2 (N3) Signal circuit to all the other circuits in the Electrohydraulic Control Unit Assembly harness connector.

Is the resistance below 5.0 ohms between the (T71) Input Speed Sensor 2 (N3) Signal circuit and any other circuit(s) in the Electrohydraulic Control Unit Assembly harness connector?

Yes >> Repair the (T71) Input Speed Sensor 2 (N3) Signal circuit for a short to another circuit(s).
Perform NAG1 TRANSMISSION VERIFICATION TEST - VER 1. (Refer to 21 - TRANSMISSION/TRANSAXLE/AUTOMATIC - NAG1 - STANDARD PROCEDURE)

No >> Go To 6

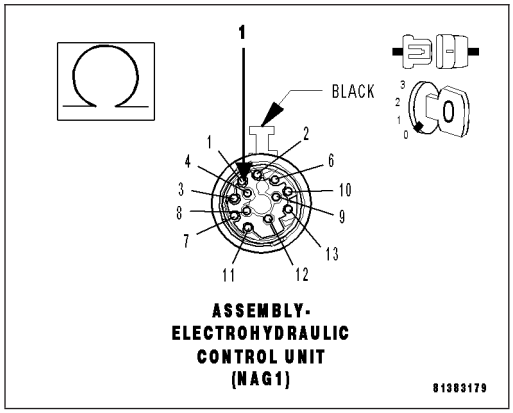

6. CHECK THE (T71) INPUT SPEED SENSOR 2 (N3) SIGNAL CIRCUIT FOR A SHORT TO GROUND

Measure the resistance between ground and the (T71) Input Speed Sensor 2 (N3) Signal circuit.

Is the resistance below 5.0 ohms?

Yes >> Repair the (T71) Input Speed Sensor 2 (N3) Signal circuit for a short to ground.

Perform NAG1 TRANSMISSION VERIFICATION TEST - VER 1. (Refer to 21 - TRANSMISSION/TRANSAXLE/AUTOMATIC - NAG1 - STANDARD PROCEDURE)

No >> Go To 7

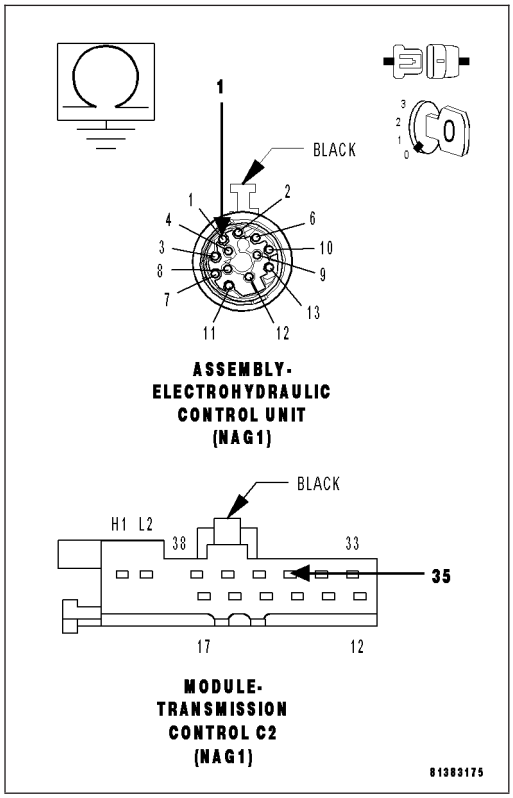

7. CHECK THE (T13) SENSOR GROUND CIRCUIT FOR A SHORT TO ANOTHER CIRCUIT(S)

Measure the resistance between the (T13) Sensor Ground circuit to all the other circuits in the Electrohydraulic Control Unit Assembly harness connector.

Is the resistance below 5.0 ohms between the (T13) Sensor Ground circuit and any other circuit(s) in the Electrohydraulic Control Unit Assembly harness connector.

Yes >> Repair the (T13) Sensor Ground circuit for a short to another circuit(s)

Perform NAG1 TRANSMISSION VERIFICATION TEST - VER 1. (Refer to 21 - TRANSMISSION/TRANSAXLE/AUTOMATIC - NAG1 - STANDARD PROCEDURE)

No >> Go To 8

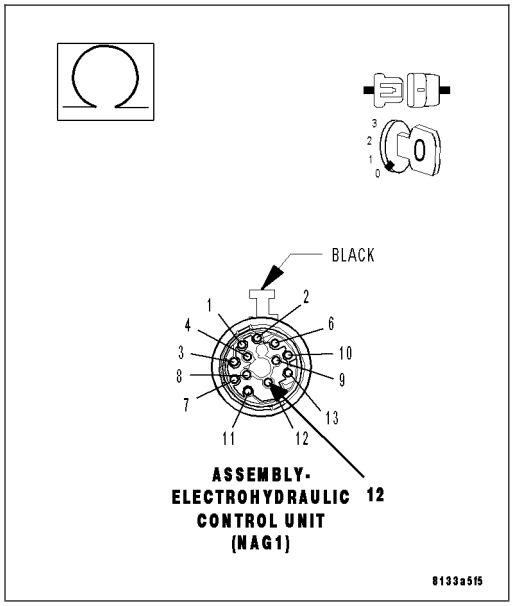

8. CHECK THE (T13) SENSOR GROUND CIRCUIT FOR A SHORT TO GROUND

Measure the resistance between ground and the (T13) Sensor Ground circuit.

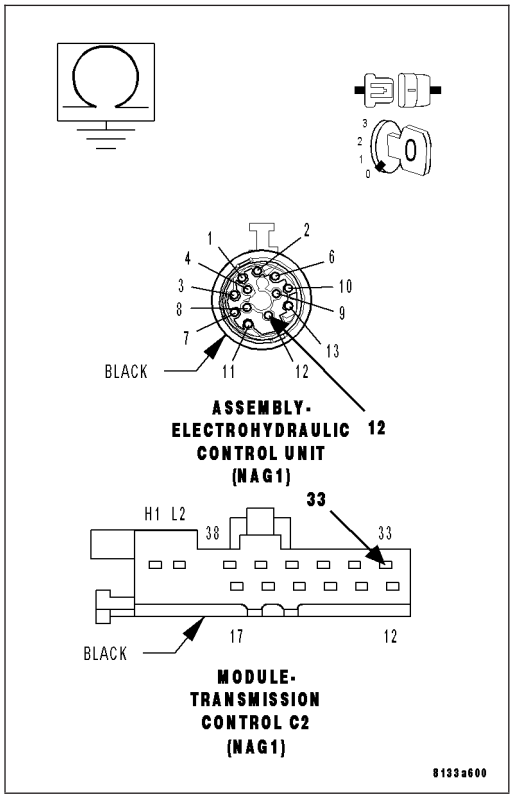

Is the resistance below 5.0 ohms?

Yes >> Repair the (T13) Sensor Ground circuit for a short to ground.

Perform NAG1 TRANSMISSION VERIFICATION TEST - VER 1. (Refer to 21 - TRANSMISSION/TRANSAXLE/AUTOMATIC - NAG1 - STANDARD PROCEDURE)

No >> Go To 9

9. CHECK THE INPUT SPEED SENSOR 2 (N3) SIGNAL

Reconnect the Electrohydraulic Control Unit Assembly harness connector.

Using a Lab Scope, backprobe the (T71) Input Speed Sensor 2 (N3) Signal circuit at the TCM C2 harness connector.

WARNING: Properly support the vehicle.
Raise all drive wheels off the ground.

Start the engine.

WARNING: To avoid personal injury or death, keep hands and feet clear of rotating wheels.
Place gear selector in drive and increase vehicle speed to engage 2nd gear.

Compare the scope pattern on the Lab Scope with a typical 5-volt square wave pattern.

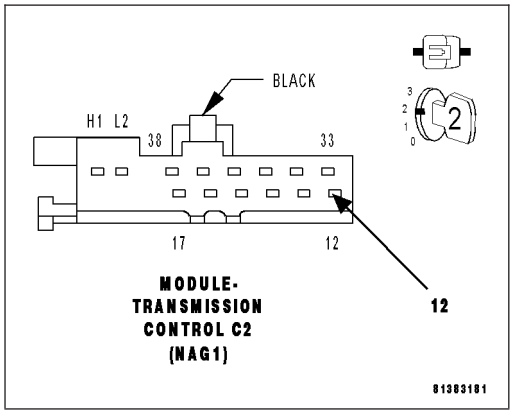

Is the scope pattern comparable to the typical 5-volt square wave signal scope pattern?

Yes >> Using the schematics as a guide, check the Transmission Control Module (TCM) terminals for corrosion, damage, or terminal push out. Pay particular attention to all power and ground circuits. If no problems are found, replace the TCM per the Service Information. (Refer to 8 - ELECTRICAL/ELECTRONIC CONTROL MODULES/TRANSMISSION CONTROL MODULE - DESCRIPTION)

Perform NAG1 TRANSMISSION VERIFICATION TEST - VER 1. (Refer to 21 - TRANSMISSION/TRANSAXLE/AUTOMATIC - NAG1 - STANDARD PROCEDURE)

No >> Replace the Input Speed Sensor 2 (N3) per the Service Information. (Refer to 21 - TRANSMISSION/TRANSAXLE/AUTOMATIC - NAG1/ELECTROHYDRAULIC UNIT - DISASSEMBLY)

Perform NAG1 TRANSMISSION VERIFICATION TEST - VER 1. (Refer to 21 - TRANSMISSION/TRANSAXLE/AUTOMATIC - NAG1 - STANDARD PROCEDURE)

10. INTERMITTENT WIRING AND CONNECTORS

The conditions necessary to set this DTC are not present at this time.

Using the schematics as a guide, inspect the wiring and connectors specific to this circuit.

Wiggle the wiring and connectors while checking for any possible open or shorted circuits.

Check for any Service Information Tune-ups or Technical Service Bulletins that may apply.

Were there any problems found?

Yes >> Repair as necessary.
Perform NAG1 TRANSMISSION VERIFICATION TEST - VER 1. (Refer to 21 - TRANSMISSION/TRANSAXLE/AUTOMATIC - NAG1 - STANDARD PROCEDURE)

No >> Test Complete.

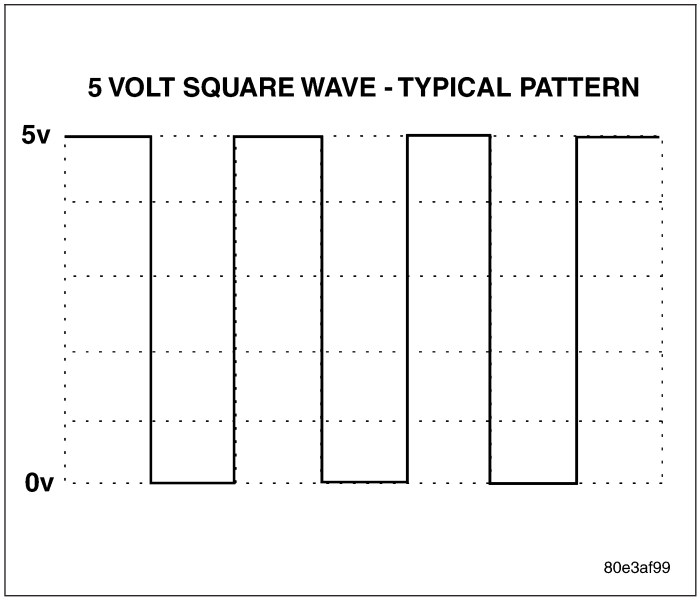

P2783-TORQUE CONVERTER TEMPERATURE TOO HIGH

For a complete wiring diagram **Refer to Section 8W**

Theory of Operation

The Transmission Control Module (TCM) monitors the friction loss of the torque converter clutch while it is in slipping mode. The TCM calculates friction loss using CAN communication signals such as, engine speed and engine torque, as well as the torque converter turbine speed computed by the TCM. Depending on the friction loss calculated in each program cycle, a corresponding value is added to a factor as long as the torque converter clutch is in slipping mode. The factor is set to 0 when the clutch is opened. If the factor reaches a specified value, a DTC is set.

- **When Monitored:**
  When the solenoid supply voltage is active. With no reporting Input Speed Sensor 1 or 2 (N2 - N3), CAN Bus, PCM, CAN Engine, and/or CAN Engine Speed DTCs present. Torque Converter Clutch in slip mode.
- **Set Condition:**
  When the friction loss factor reaches a predetermined threshold.

Possible Causes
INTERNAL TRANSMISSION OR TORQUE CONVER CLUTCH PROBLEM

Always perform the NAG1 Pre-Diagnostic Troubleshooting procedure before proceeding. (Refer to 21 - TRANSMISSION/TRANSAXLE/AUTOMATIC - NAG1 - STANDARD PROCEDURE)

Diagnostic Test

1. CHECK FOR AN INTERNAL TRANSMISSION PROBLEM

This DTC is an informational DTC.

Check for any Service Information Tune-ups or Technical Service Bulletins that may apply.

This is usually a sign of Torque Converter Clutch failure or an internal transmission problem.

Check the Engine and Transmission Cooling Systems for proper operation.

View repair.

Repair

Repair internal Transmission, Torque Converter, and/or Transmission and Engine Cooling systems as necessary. (Refer to 21 - TRANSMISSION/TRANSAXLE/AUTOMATIC - NAG1 - REMOVAL) and/or (Refer to 7 - COOLING - DIAGNOSIS AND TESTING)

Perform NAG1 TRANSMISSION VERIFICATION TEST - VER 1. (Refer to 21 - TRANSMISSION/TRANSAXLE/AUTOMATIC - NAG1 - STANDARD PROCEDURE)

P2784-INPUT SPEED SENSOR 1/2 CORRELATION

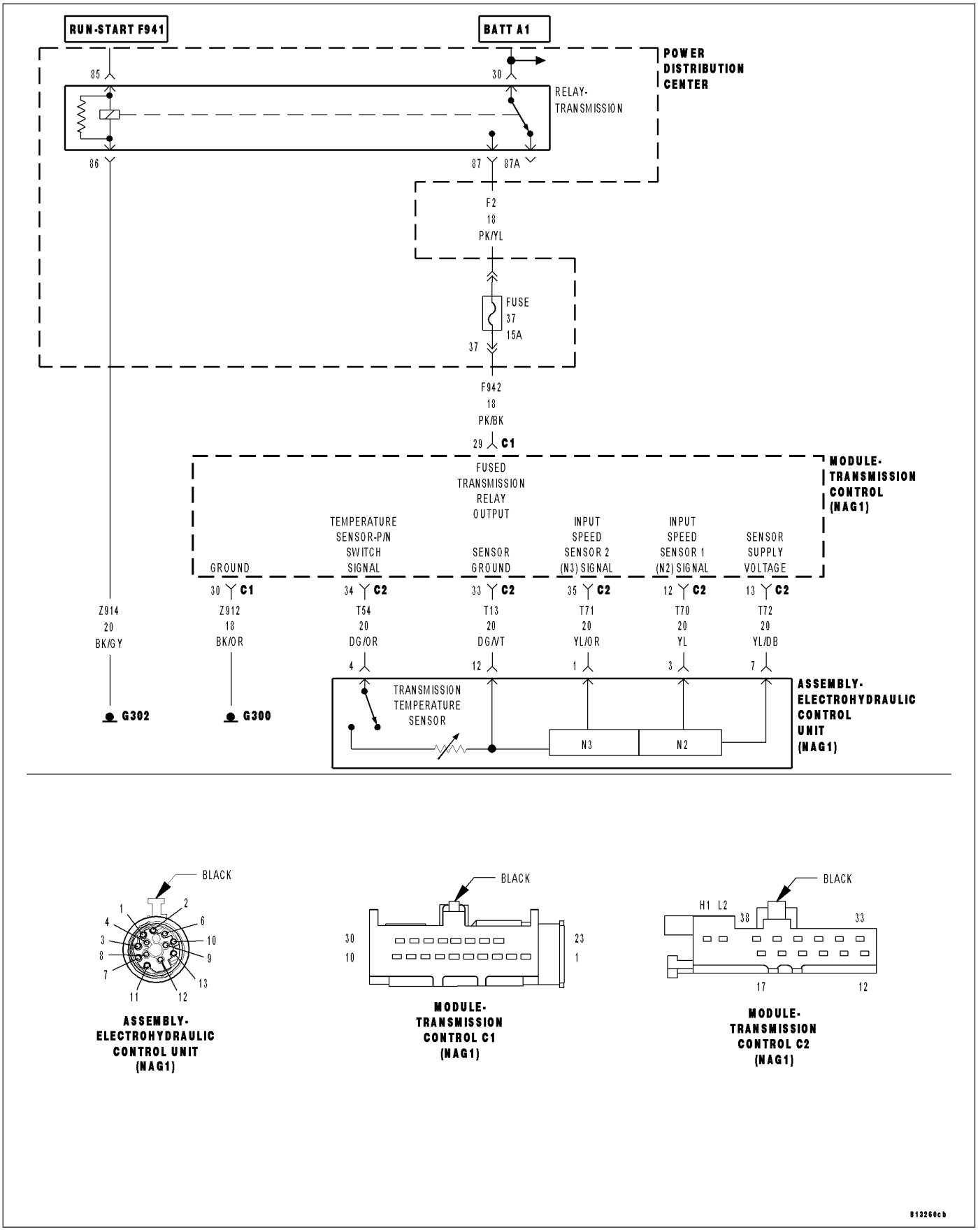

For a complete wiring diagram **Refer to Section 8W**

Theory of Operation

The Input Speed Sensors 1 and 2 (N2 - N3) will report the same speed in 2nd, 3rd and 4th gears. If the Input Speed Sensor 1 and 2 signals are not the same in these gears, the DTC will set.

- **When Monitored:**
  Engine speed greater than 450 RPM, no engine speed DTCs, no TCM undervoltage system operation, no output speed sensor DTCs (CAN signal from the ABS system), all wheel speeds above 250 RPM (CAN signal from the ABS system), no rear wheel speed DTCs (signal from the ABS system), and no wheel slip detected (CAN signal from the ABS system), no shifting operation, Input Speed Sensor 2 (N3) greater than 800 RPM and Input Speed Sensor 1 (N2) greater than 0 RPM and the TCM not in reset.
- **Set Condition:**
  If the speed difference between the Input Speed Sensors 1 and 2 (N2 - N3) is greater than 150 RPM.

Possible Causes
INTERNAL TRANSMISSION
TRANSMISSION CONTROL MODULE

Always perform the NAG1 Pre-Diagnostic Troubleshooting procedure before proceeding. (Refer to 21 - TRANSMISSION/TRANSAXLE/AUTOMATIC - NAG1 - STANDARD PROCEDURE)

Diagnostic Test

1. CHECK FOR SPEED SENSOR OR SENSOR SUPPLY VOLTAGE DTCS

With the scan tool, check for other transmission DTCs.

Are any Input Speed Sensor and/or Sensor Supply Voltage DTCs present?

Yes >> Refer to the Transmission category and perform the appropriate symptom(s). (Refer to 21 - TRANSMISSION/TRANSAXLE/AUTOMATIC - NAG1 - DIAGNOSIS AND TESTING)

No >> Go To 2

2. CHECK TO SEE IF INPUT SENSOR MISMATCH IS CURRENT

NOTE: If the TCM detects and stores a DTC, the TCM also stores the vehicles operating conditions under which the DTC originally set and is located in scan tool under Environmental Data. Before erasing any stored DTCs, record any available data to assist in duplicating the conditions in which the DTC originally set.

With the scan tool, record the Environmental Data and erase Transmission DTCs.

Using the Environmental Data recorded earlier, test drive the vehicle while trying to duplicate the conditions in which the DTC originally set.

Did the DTC P2784-INPUT SPEED SENSOR 1/2 CORRELATION reset?

Yes >> Go To 3

No >> Go To 4

3. INTERNAL TRANSMISSION

Turn the ignition off to the lock position.

Remove the Transmission Oil Pan and inspect for debris, a plugged Transmission Oil Filter, or any sign of an internal transmission problem.

Is there any debris, plugged Transmission Oil Filter, or any sign of an internal transmission problem?

Yes >> Repair as necessary. Refer to 21- AUTOMATIC TRANSMISSION-AUTOMATIC TRANSMISSION NAG1/ SERVICE INFORMATION for the appropriate service procedures.

Perform NAG1 TRANSMISSION VERIFICATION TEST - VER 1. (Refer to 21 - TRANSMISSION/ TRANSAXLE/AUTOMATIC - NAG1 - STANDARD PROCEDURE)

No >> Using the schematics as a guide, check the Transmission Control Module (TCM) terminals for corrosion, damage, or terminal push out. Pay particular attention to all power and ground circuits. If no problems

are found, replace the TCM per the Service Information. (Refer to 8 - ELECTRICAL/ELECTRONIC CONTROL MODULES/TRANSMISSION CONTROL MODULE - DESCRIPTION)

Perform NAG1 TRANSMISSION VERIFICATION TEST - VER 1. (Refer to 21 - TRANSMISSION/ TRANSAXLE/AUTOMATIC - NAG1 - STANDARD PROCEDURE)

4. INTERMITTENT WIRING AND CONNECTORS

The conditions necessary to set this DTC are not present at this time.

Using the schematics as a guide, inspect the wiring and connectors specific to this circuit.

Wiggle the wiring and connectors while checking for any possible open or shorted circuits.

Check for any Service Information Tune-ups or Technical Service Bulletins that may apply.

Were there any problems found?

Yes >> Repair as necessary.

Perform NAG1 TRANSMISSION VERIFICATION TEST - VER 1. (Refer to 21 - TRANSMISSION/ TRANSAXLE/AUTOMATIC - NAG1 - STANDARD PROCEDURE)

No >> Test Complete.

U0002-CAN C BUS OFF PERFORMANCE

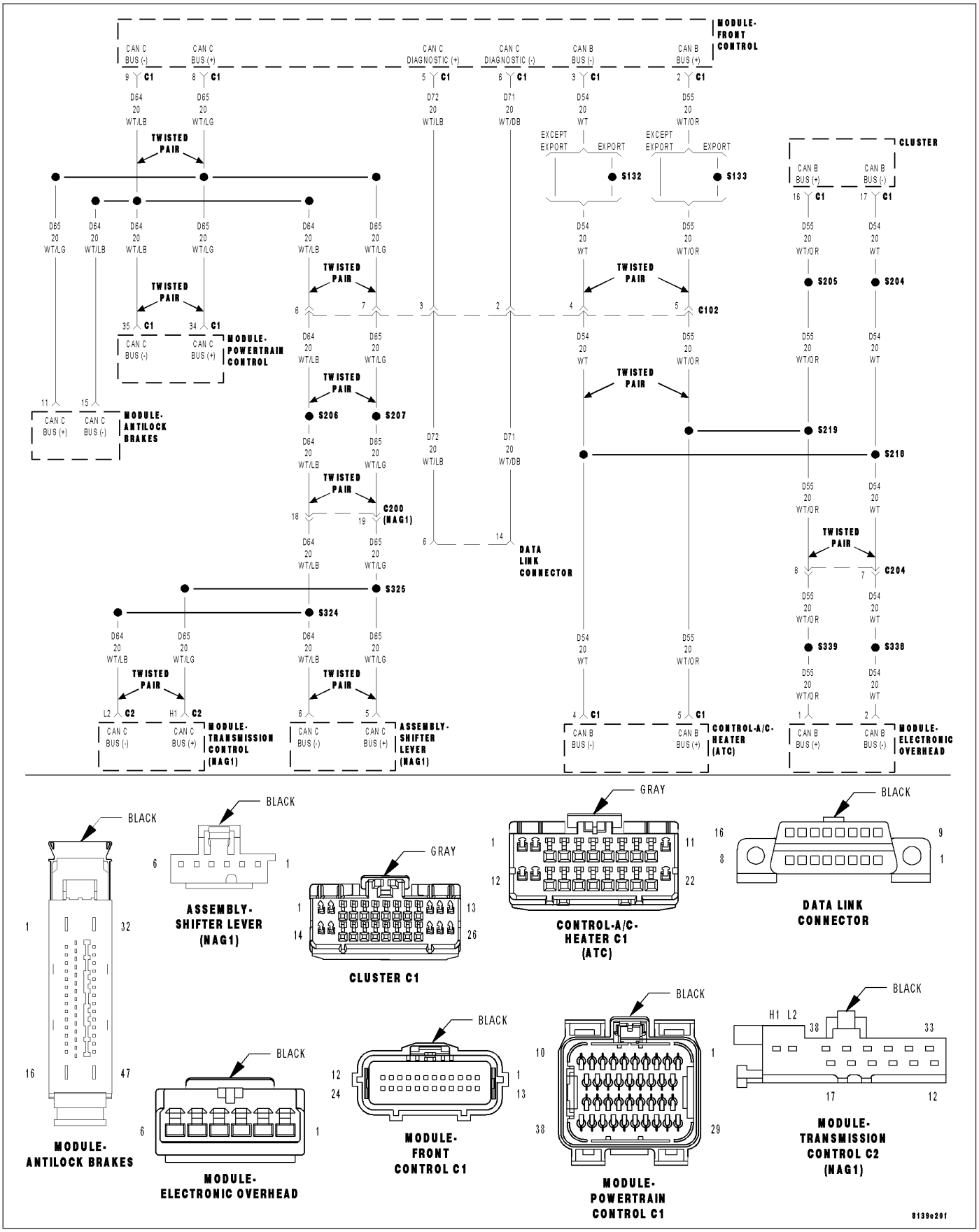

For a complete wiring diagram **Refer to Section 8W**

Theory of Operation

The Transmission Control Module (TCM) receives information from the Engine, Anti-lock Brake System, and the Electronic Gear Shift control modules over the CAN C bus. The CAN C bus is a high speed communication bus that allows real time control capability between various controllers. Most messages are sent every 20 mSec, this means critical information can be shared between controllers. The CAN C bus is a two wire bus with a CAN (+) and a CAN (-) circuit. To reduce the potential of radio and other electrical noise interference, the CAN Bus circuit wiring is manufactured in a twisted pair within the electrical harness.

- **When Monitored:**
  Continuously with the ignition on.
- **Set Condition:**
  The TCM detects an: open, short to ground, short to voltage of the CAN C (+) or CAN C (-) circuits, short between the CAN C (+) or CAN C (-) circuits.

Possible Causes
TRANSMISSION CONTROL MODULE

Always perform the NAG1 Pre-Diagnostic Troubleshooting procedure before proceeding. (Refer to 21 - TRANSMISSION/TRANSAXLE/AUTOMATIC - NAG1 - STANDARD PROCEDURE)

Diagnostic Test

1. CHECK FCM FOR AN OVERALL CAN COMMUNICATION BUS FAILURE

With the scan tool, check for FCM DTCs.

Does the FCM report a CAN C Bus failure, or one or more CAN C Bus DTCs?

Yes >> Refer to 8-ELECTRICAL - ELECTRONIC CONTROL MODULES - ELECTRICAL DIAGNOSTICS category and perform the appropriate symptom. Perform the diagnostic procedure for U0001-CAN C BUS DTC first if it is present.

Perform NAG1 TRANSMISSION VERIFICATION TEST - VER 1. (Refer to 21 - TRANSMISSION/TRANSAXLE/AUTOMATIC - NAG1 - STANDARD PROCEDURE)

No >> Go To 2

2. CHECK IF THE DTC IS CURRENT

NOTE: When the Transmission Control Module (TCM) detects and stores a DTC, the TCM also stores the vehicles operating conditions under which the DTC originally set. This information is located in the scan tool under Environmental Data. Before erasing any stored DTCs, record any available data to assist in duplicating the conditions in which the DTC originally set.

Ignition on, engine not running.

With the scan tool, erase Transmission DTC's.

Using the Environmental Data recorded earlier, try to duplicate the conditions in which the DTC originally set. It may be necessary to test drive the vehicle.

With the scan tool, read Transmission DTC's.

Did the DTC U0002-CAN C BUS OFF PERFORMANCE reset?

Yes >> Using the schematics as a guide, check the Transmission Control Module (TCM) terminals for corrosion, damage, or terminal push out. Pay particular attention to all power and ground circuits. If no problems are found, replace the TCM per the Service Information. (Refer to 8 - ELECTRICAL/ELECTRONIC CONTROL MODULES/TRANSMISSION CONTROL MODULE - DESCRIPTION)

Perform NAG1 TRANSMISSION VERIFICATION TEST - VER 1. (Refer to 21 - TRANSMISSION/TRANSAXLE/AUTOMATIC - NAG1 - STANDARD PROCEDURE)

No >> Go To 3

3. INTERMITTENT WIRING AND CONNECTORS

The conditions necessary to set this DTC are not present at this time.
Using the schematics as a guide, inspect the wiring and connectors specific to this circuit.
Wiggle the wiring and connectors while checking for any possible open or shorted circuits.
Check for any Service Information Tune-ups or Technical Service Bulletins that may apply.

Were there any problems found?

Yes >> Repair as necessary.
Perform NAG1 TRANSMISSION VERIFICATION TEST - VER 1. (Refer to 21 - TRANSMISSION/ TRANSAXLE/AUTOMATIC - NAG1 - STANDARD PROCEDURE)

No >> Test Complete.

U0100-LOST COMMUNICATION WITH ECM/PCM

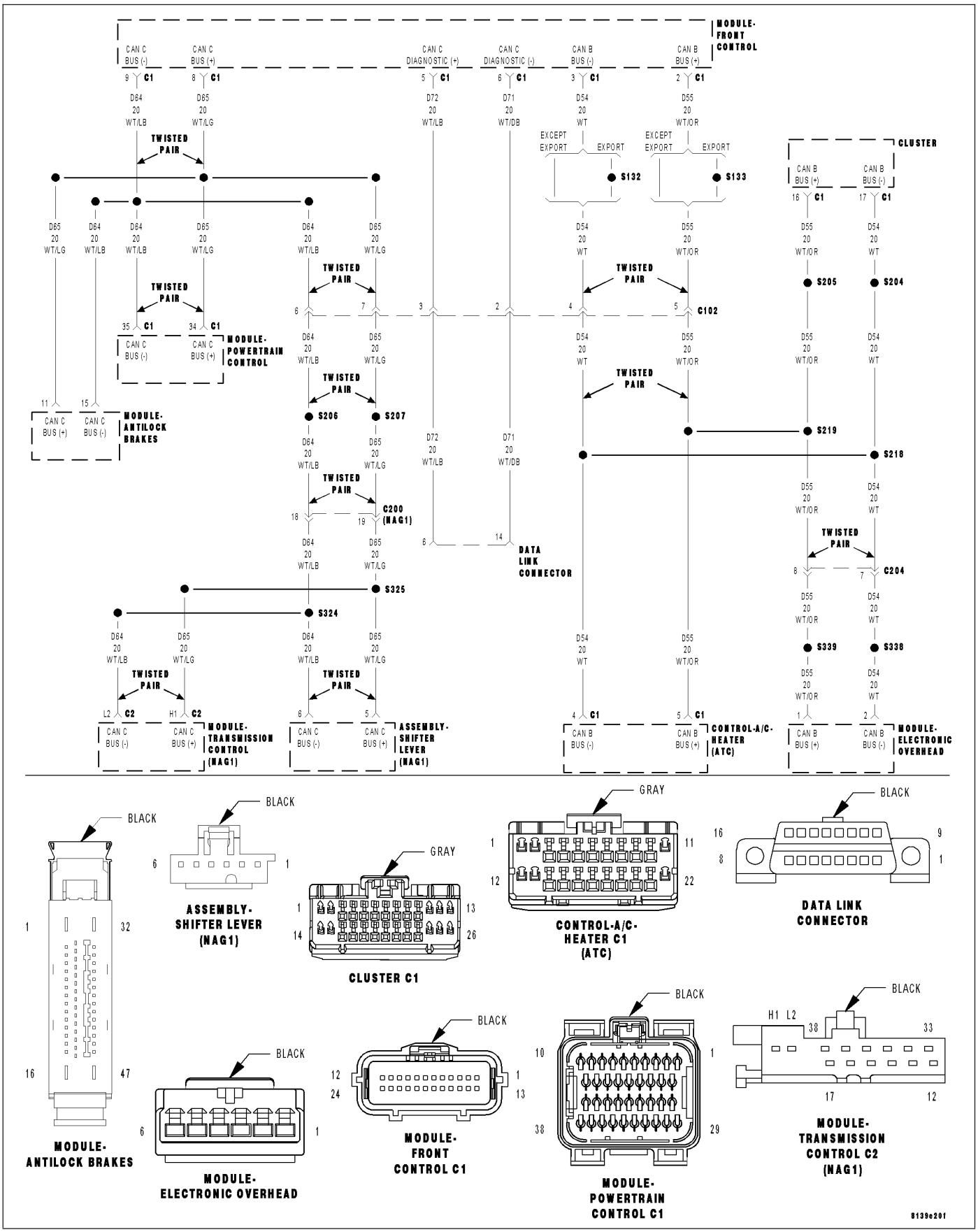

For a complete wiring diagram **Refer to Section 8W**

Theory of Operation

The Transmission Control Module (TCM) receives information from the Engine, Anti-lock Brake System, and the Electronic Gear Shift control modules over the CAN C bus. The CAN C bus is a high speed communication bus that allows real time control capability between various controllers. Most messages are sent every 20 mSec, this means critical information can be shared between multiple controllers almost instantaneously. The CAN C bus is a two wire bus with a CAN (+) and a CAN (-) circuit. To reduce the potential of radio and other electrical noise interference, the CAN Bus circuit wiring is manufactured using a twisted pair configuration within the electrical wiring harness.

- **When Monitored:**
  U0002-CAN C BUS OFF PERFORMANCE not present. One second after ignition on and not in Park or Neutral, no System Overvoltage or System Undervoltage condition present, or the transmission in Park or Neutral and engine RPM greater than 850 RPM.
- **Set Condition:**
  The DTC will set if a CAN ID was not received in the required time from the ECM or PCM.

Possible Causes
TRANSMISSION CONTROL MODULE

Always perform the NAG1 Pre-Diagnostic Troubleshooting procedure before proceeding. (Refer to 21 - TRANSMISSION/TRANSAXLE/AUTOMATIC - NAG1 - STANDARD PROCEDURE)

Diagnostic Test

1. CHECK THE FCM FOR CAN C BUS COMMUNICATION DTCS

With the scan tool, check for FCM DTCs.

Does the FCM report the DTC U0001-CAN C BUS or U0100-LOST COMMUNICATION WITH ECM/PCM?

Yes >> Refer to 8-ELECTRICAL - ELECTRONIC CONTROL MODULES - ELECTRICAL DIAGNOSTICS category and perform the appropriate symptom. Perform the diagnostic procedure for U0001-CAN C BUS first if it is present.

Perform NAG1 TRANSMISSION VERIFICATION TEST - VER 1. (Refer to 21 - TRANSMISSION/TRANSAXLE/AUTOMATIC - NAG1 - STANDARD PROCEDURE)

No >> Go To 2

2. CHECK IF THE DTC IS CURRENT

NOTE: When the Transmission Control Module (TCM) detects and stores a DTC, the TCM also stores the vehicles operating conditions under which the DTC originally set. This information is located in the scan tool under Environmental Data. Before erasing any stored DTCs, record any available data to assist in duplicating the conditions in which the DTC originally set.

Ignition on, engine not running.

With the scan tool, erase Transmission DTC's.

Using the Environmental Data recorded earlier, try to duplicate the conditions in which the DTC originally set. It may be necessary to test drive the vehicle.

With the scan tool, read Transmission DTC's.

Did the DTC U0100-LOST COMMUNICATION WITH ECM/PCM reset?

Yes >> Using the schematics as a guide, check the Transmission Control Module (TCM) terminals for corrosion, damage, or terminal push out. Pay particular attention to all power and ground circuits. If no problems are found, replace the TCM per the Service Information. (Refer to 8 - ELECTRICAL/ELECTRONIC CONTROL MODULES/TRANSMISSION CONTROL MODULE - DESCRIPTION)

Perform NAG1 TRANSMISSION VERIFICATION TEST - VER 1. (Refer to 21 - TRANSMISSION/TRANSAXLE/AUTOMATIC - NAG1 - STANDARD PROCEDURE)

No >> Go To 3

3. INTERMITTENT WIRING AND CONNECTORS

The conditions necessary to set this DTC are not present at this time.
Using the schematics as a guide, inspect the wiring and connectors specific to this circuit.
Wiggle the wiring and connectors while checking for any possible open or shorted circuits.
Check for any Service Information Tune-ups or Technical Service Bulletins that may apply.

Were there any problems found?

Yes >> Repair as necessary.
Perform NAG1 TRANSMISSION VERIFICATION TEST - VER 1. (Refer to 21 - TRANSMISSION/ TRANSAXLE/AUTOMATIC - NAG1 - STANDARD PROCEDURE)

No >> Test Complete.

U0103-LOST COMMUNICATION WITH ELECTRIC GEAR SHIFT MODULE

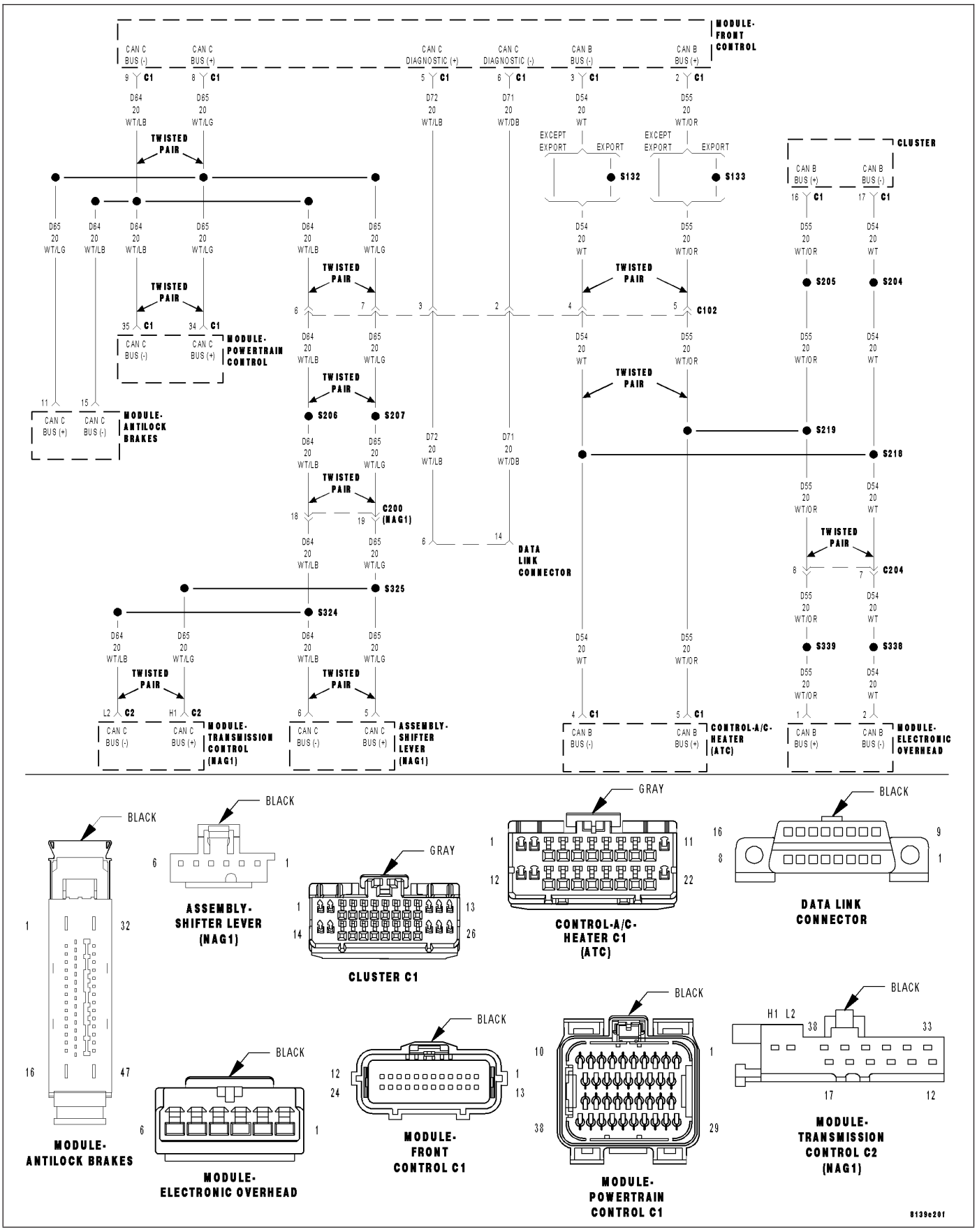

For a complete wiring diagram **Refer to Section 8W**

Theory of Operation

The Transmission Control Module (TCM) receives information from the Engine, Anti-lock Brake System, and the Electronic Gear Shift control modules over the CAN C bus. The CAN C bus is a high speed communication bus that allows real time control capability between various controllers. Most messages are sent every 20 mSec, this means critical information can be shared between multiple controllers almost instantaneously. The CAN C bus is a two wire bus with a CAN (+) and a CAN (-) circuit. To reduce the potential of radio and other electrical noise interference, the CAN Bus circuit wiring is manufactured using a twisted pair configuration within the electrical wiring harness.

- **When Monitored:**
  Continuously with the ignition on.
- **Set Condition:**
  The DTC will set if a valid CAN ID was not received in the required time from the Electronic Gear Shift Module.

Possible Causes
TRANSMISSION CONTROL MODULE

Always perform the NAG1 Pre-Diagnostic Troubleshooting procedure before proceeding. (Refer to 21 - TRANSMISSION/TRANSAXLE/AUTOMATIC - NAG1 - STANDARD PROCEDURE)

Diagnostic Test

1. CHECK THE FCM FOR CAN C BUS COMMUNICATION DTCS

With the scan tool, check for FCM DTCs.

Does the FCM report the DTC U0001-CAN C BUS DTC or U0100-LOST COMMUNICATION WITH ECM/PCM?

Yes >> Refer to 8-ELECTRICAL - ELECTRONIC CONTROL MODULES - ELECTRICAL DIAGNOSTICS category and perform the appropriate symptom. Perform the diagnostic procedure for U0001-CAN C BUS first if it is present.

Perform NAG1 TRANSMISSION VERIFICATION TEST - VER 1. (Refer to 21 - TRANSMISSION/TRANSAXLE/AUTOMATIC - NAG1 - STANDARD PROCEDURE)

No >> Go To 2

2. CHECK IF THE DTC IS CURRENT

NOTE: When the Transmission Control Module (TCM) detects and stores a DTC, the TCM also stores the vehicles operating conditions under which the DTC originally set. This information is located in the scan tool under Environmental Data. Before erasing any stored DTCs, record any available data to assist in duplicating the conditions in which the DTC originally set.

Ignition on, engine not running.

With the scan tool, erase Transmission DTC's.

Using the Environmental Data recorded earlier, try to duplicate the conditions in which the DTC originally set. It may be necessary to test drive the vehicle.

With the scan tool, read Transmission DTC's.

Did the DTC U0100-LOST COMMUNICATION WITH ECM/PCM reset?

Yes >> Using the schematics as a guide, check the Transmission Control Module (TCM) terminals for corrosion, damage, or terminal push out. Pay particular attention to all power and ground circuits. If no problems are found, replace the TCM per the Service Information. (Refer to 8 - ELECTRICAL/ELECTRONIC CONTROL MODULES/TRANSMISSION CONTROL MODULE - DESCRIPTION)

Perform NAG1 TRANSMISSION VERIFICATION TEST - VER 1. (Refer to 21 - TRANSMISSION/TRANSAXLE/AUTOMATIC - NAG1 - STANDARD PROCEDURE)

No >> Go To 3

3. INTERMITTENT WIRING AND CONNECTORS

The conditions necessary to set this DTC are not present at this time.
Using the schematics as a guide, inspect the wiring and connectors specific to this circuit.
Wiggle the wiring and connectors while checking for any possible open or shorted circuits.
Check for any Service Information Tune-ups or Technical Service Bulletins that may apply.

Were there any problems found?

Yes >> Repair as necessary.
Perform NAG1 TRANSMISSION VERIFICATION TEST - VER 1. (Refer to 21 - TRANSMISSION/ TRANSAXLE/AUTOMATIC - NAG1 - STANDARD PROCEDURE)

No >> Test Complete.

U0121-LOST COMMUNICATION WITH ANTI-LOCK BRAKE MODULE

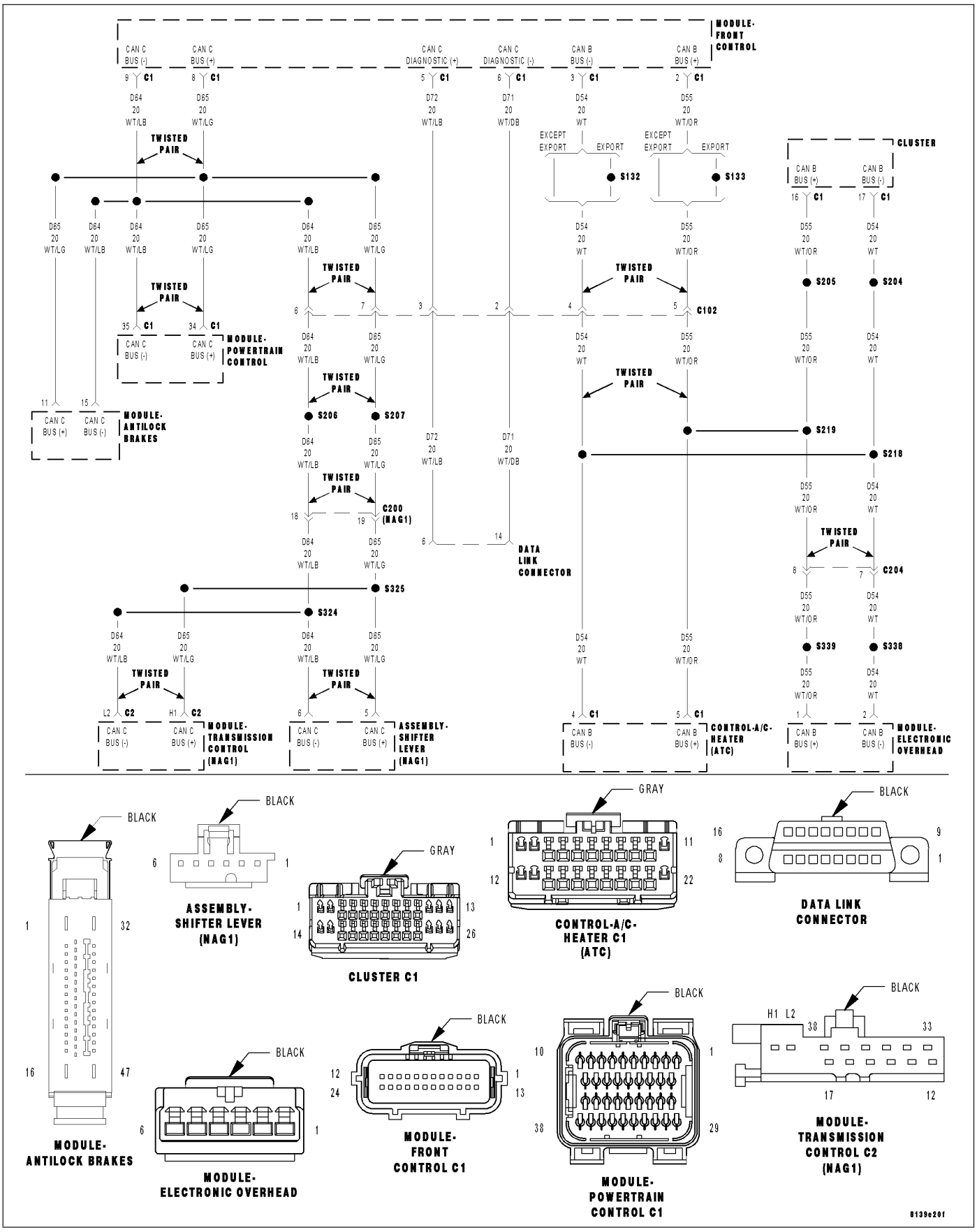

For a complete wiring diagram **Refer to Section 8W**

Theory of Operation

The Transmission Control Module (TCM) receives information from the Engine, Anti-lock Brake System, and the Electronic Gear Shift control modules over the CAN C bus. The CAN C bus is a high speed communication bus that allows real time control capability between various controllers. Most messages are sent every 20 mSec, this means critical information can be shared between multiple controllers almost instantaneously. The CAN C bus is a two wire bus with a CAN (+) and a CAN (-) circuit. To reduce the potential of radio and other electrical noise interference, the CAN Bus circuit wiring is manufactured using a twisted pair configuration within the electrical wiring harness.

- **When Monitored:**
  Continuously with the ignition on.
- **Set Condition:**
  The DTC will set if a valid CAN ID was not received in the required time from the ABS.

Possible Causes
TRANSMISSION CONTROL MODULE

Always perform the NAG1 Pre-Diagnostic Troubleshooting procedure before proceeding. (Refer to 21 - TRANSMISSION/TRANSAXLE/AUTOMATIC - NAG1 - STANDARD PROCEDURE)

Diagnostic Test

1. CHECK THE FCM FOR CAN C BUS COMMUNICATION DTCS

With the scan tool, check for FCM DTCs.

Does the FCM report the DTC U0001-CAN C BUS DTC or U0121-LOST COMMUNICATION WITH ANTI-LOCK BRAKE MODULE?

Yes >> Refer to 8-ELECTRICAL - ELECTRONIC CONTROL MODULES - ELECTRICAL DIAGNOSTICS category and perform the appropriate symptom. Perform the diagnostic procedure for U0001-CAN C BUS first if it is present.

Perform NAG1 TRANSMISSION VERIFICATION TEST - VER 1. (Refer to 21 - TRANSMISSION/TRANSAXLE/AUTOMATIC - NAG1 - STANDARD PROCEDURE)

No >> Go To 2

2. CHECK IF THE DTC IS CURRENT

NOTE: When the Transmission Control Module (TCM) detects and stores a DTC, the TCM also stores the vehicles operating conditions under which the DTC originally set. This information is located in the scan tool under Environmental Data. Before erasing any stored DTCs, record any available data to assist in duplicating the conditions in which the DTC originally set.

Ignition on, engine not running.

With the scan tool, erase Transmission DTC's.

Using the Environmental Data recorded earlier, try to duplicate the conditions in which the DTC originally set. It may be necessary to test drive the vehicle.

With the scan tool, read Transmission DTC's.

Did the DTC U0121-LOST COMMUNICATION WITH ANTILOCK BRAKE MODULE reset?

Yes >> Using the schematics as a guide, check the Transmission Control Module (TCM) terminals for corrosion, damage, or terminal push out. Pay particular attention to all power and ground circuits. If no problems are found, replace the TCM per the Service Information. (Refer to 8 - ELECTRICAL/ELECTRONIC CONTROL MODULES/TRANSMISSION CONTROL MODULE - DESCRIPTION)

Perform NAG1 TRANSMISSION VERIFICATION TEST - VER 1. (Refer to 21 - TRANSMISSION/TRANSAXLE/AUTOMATIC - NAG1 - STANDARD PROCEDURE)

No >> Go To 3

3. INTERMITTENT WIRING AND CONNECTORS

The conditions necessary to set this DTC are not present at this time.
Using the schematics as a guide, inspect the wiring and connectors specific to this circuit.
Wiggle the wiring and connectors while checking for any possible open or shorted circuits.
Check for any Service Information Tune-ups or Technical Service Bulletins that may apply.

Were there any problems found?

Yes >> Repair as necessary.
Perform NAG1 TRANSMISSION VERIFICATION TEST - VER 1. (Refer to 21 - TRANSMISSION/ TRANSAXLE/AUTOMATIC - NAG1 - STANDARD PROCEDURE)

No >> Test Complete.

U0141-LOST COMMUNICATION WITH FRONT CONTROL MODULE

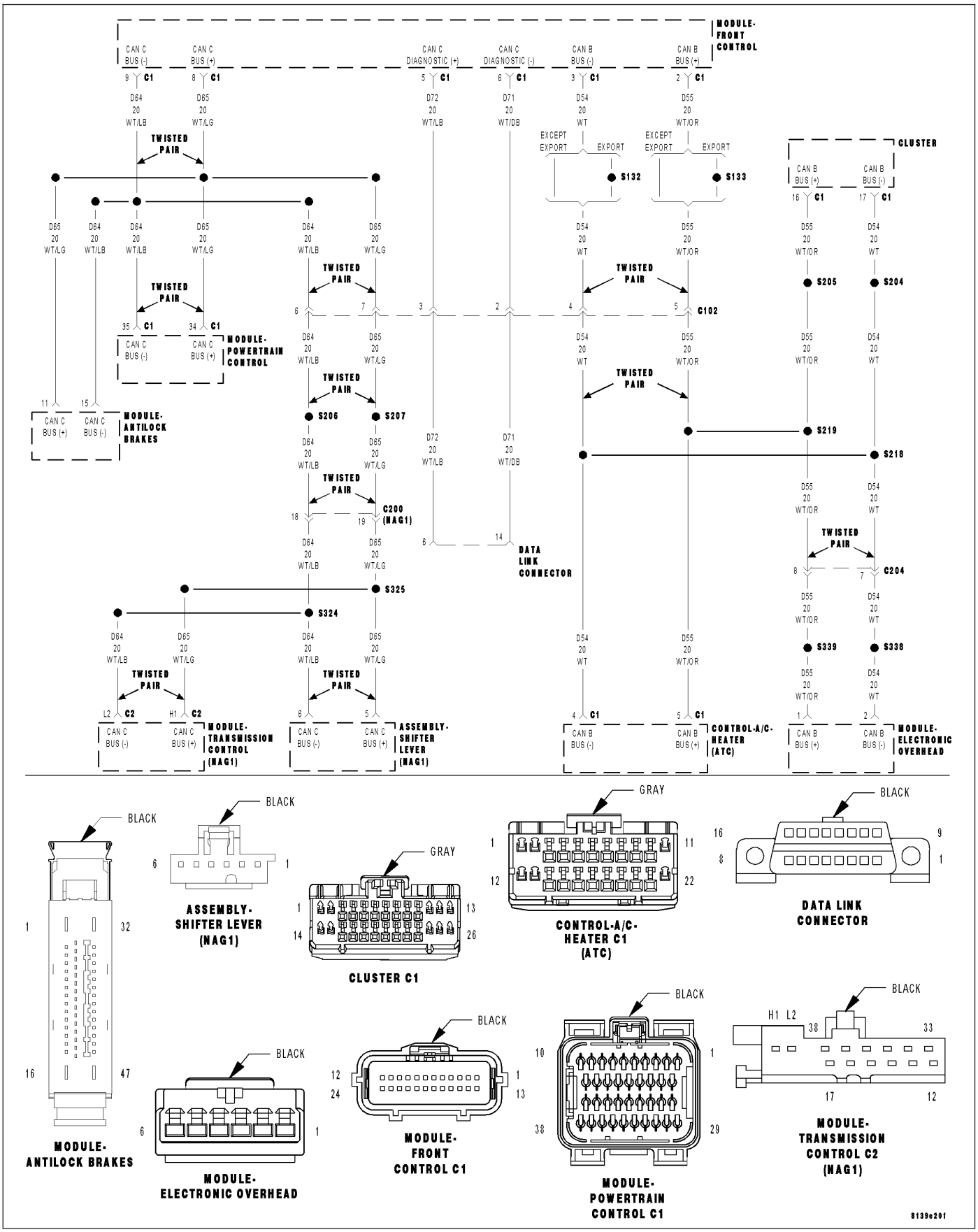

For a complete wiring diagram **Refer to Section 8W**

Theory of Operation

The Transmission Control Module (TCM) receives information from the Engine, Anti-lock Brake System, and the Electronic Gear Shift control modules over the CAN C bus. The CAN C bus is a high speed communication bus that allows real time control capability between various controllers. Most messages are sent every 20 mSec, this means critical information can be shared between multiple controllers almost instantaneously. The CAN C bus is a two wire bus with a CAN (+) and a CAN (-) circuit. To reduce the potential of radio and other electrical noise interference, the CAN Bus circuit wiring is manufactured using a twisted pair configuration within the electrical wiring harness.

- **When Monitored:**
  Continuously with the ignition on.
- **Set Condition:**
  The DTC will set if a valid CAN ID was not received in the required time from the Front Control Module (FCM).

Possible Causes
TRANSMISSION CONTROL MODULE

Always perform the NAG1 Pre-Diagnostic Troubleshooting procedure before proceeding. (Refer to 21 - TRANSMISSION/TRANSAXLE/AUTOMATIC - NAG1 - STANDARD PROCEDURE)

Diagnostic Test

1. CHECK THE FCM FOR CAN C BUS COMMUNICATION DTCS

With the scan tool, check for FCM DTCs.

Does the FCM report the DTC U0001-CAN C BUS DTC or U0101-LOST COMMUNICATION WITH TCM?

Yes >> Refer to 8-ELECTRICAL - ELECTRONIC CONTROL MODULES - ELECTRICAL DIAGNOSTICS category and perform the appropriate symptom. Perform the diagnostic procedure for U0001-CAN C BUS first if it is present.

Perform NAG1 TRANSMISSION VERIFICATION TEST - VER 1. (Refer to 21 - TRANSMISSION/TRANSAXLE/AUTOMATIC - NAG1 - STANDARD PROCEDURE)

No >> Go To 2

2. CHECK IF THE DTC IS CURRENT

NOTE: When the Transmission Control Module (TCM) detects and stores a DTC, the TCM also stores the vehicles operating conditions under which the DTC originally set. This information is located in the scan tool under Environmental Data. Before erasing any stored DTCs, record any available data to assist in duplicating the conditions in which the DTC originally set.

Ignition on, engine not running.

With the scan tool, erase Transmission DTC's.

Using the Environmental Data recorded earlier, try to duplicate the conditions in which the DTC originally set. It may be necessary to test drive the vehicle.

With the scan tool, read Transmission DTC's.

Did the DTC U0141-LOST COMMUNICATION WITH FRONT CONTROL MODULE reset?

Yes >> Using the schematics as a guide, check the Transmission Control Module (TCM) terminals for corrosion, damage, or terminal push out. Pay particular attention to all power and ground circuits. If no problems are found, replace the TCM per the Service Information. (Refer to 8 - ELECTRICAL/ELECTRONIC CONTROL MODULES/TRANSMISSION CONTROL MODULE - DESCRIPTION)

Perform NAG1 TRANSMISSION VERIFICATION TEST - VER 1. (Refer to 21 - TRANSMISSION/TRANSAXLE/AUTOMATIC - NAG1 - STANDARD PROCEDURE)

No >> Go To 3

3. INTERMITTENT WIRING AND CONNECTORS

The conditions necessary to set this DTC are not present at this time.
Using the schematics as a guide, inspect the wiring and connectors specific to this circuit.
Wiggle the wiring and connectors while checking for any possible open or shorted circuits.
Check for any Service Information Tune-ups or Technical Service Bulletins that may apply.

Were there any problems found?

Yes >> Repair as necessary.
Perform NAG1 TRANSMISSION VERIFICATION TEST - VER 1. (Refer to 21 - TRANSMISSION/ TRANSAXLE/AUTOMATIC - NAG1 - STANDARD PROCEDURE)

No >> Test Complete.

U0155-LOST COMMUNICATION WITH CLUSTER/CCN

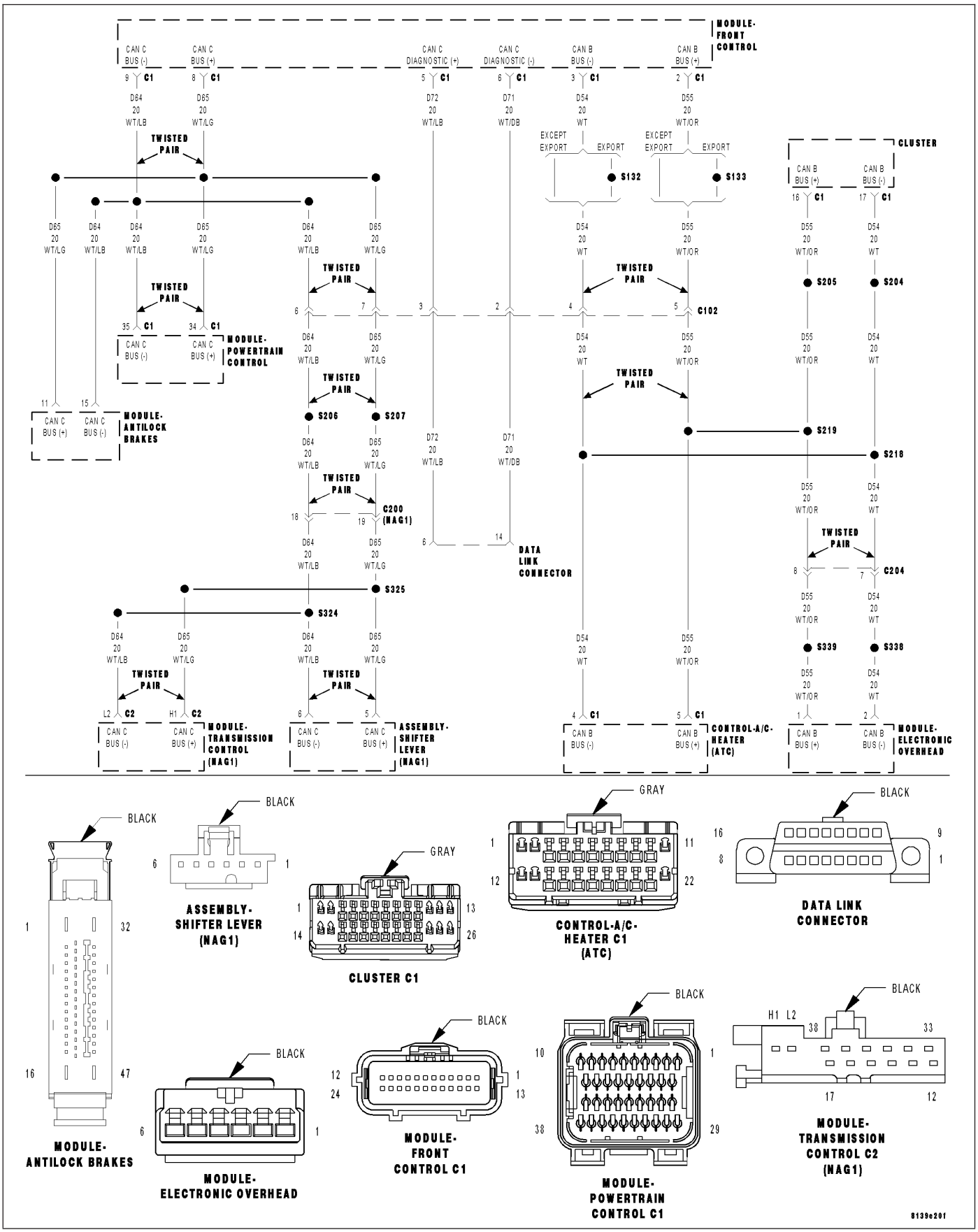

For a complete wiring diagram **Refer to Section 8W**

Theory of Operation

The Transmission Control Module (TCM) receives information from the Engine, Anti-lock Brake System, and the Electronic Gear Shift control modules over the CAN C bus. The CAN C bus is a high speed communication bus that allows real time control capability between various controllers. Most messages are sent every 20 mSec, this means critical information can be shared between multiple controllers almost instantaneously. The CAN C bus is a two wire bus with a CAN (+) and a CAN (-) circuit. To reduce the potential of radio and other electrical noise interference, the CAN Bus circuit wiring is manufactured using a twisted pair configuration within the electrical wiring harness.

- **When Monitored:**
  Continuously with the ignition on.
- **Set Condition:**
  The DTC will set if a valid CAN ID was not received in the required time from the Cluster/CCN.

Possible Causes
TRANSMISSION CONTROL MODULE

Always perform the NAG1 Pre-Diagnostic Troubleshooting procedure before proceeding. (Refer to 21 - TRANSMISSION/TRANSAXLE/AUTOMATIC - NAG1 - STANDARD PROCEDURE)

Diagnostic Test

1. CHECK THE FCM FOR CAN C BUS COMMUNICATION DTCS

With the scan tool, check for FCM DTCs.

Does the FCM report the DTC U0001-CAN C BUS DTC or U0155-LOST COMMUNICATION WITH CLUSTER/CCN?

Yes >> Refer to 8-ELECTRICAL - ELECTRONIC CONTROL MODULES - ELECTRICAL DIAGNOSTICS category and perform the appropriate symptom. Perform the diagnostic procedure for U0001-CAN C BUS first if it is present.

Perform NAG1 TRANSMISSION VERIFICATION TEST - VER 1. (Refer to 21 - TRANSMISSION/TRANSAXLE/AUTOMATIC - NAG1 - STANDARD PROCEDURE)

No >> Go To 2

2. CHECK IF THE DTC IS CURRENT

NOTE: When the Transmission Control Module (TCM) detects and stores a DTC, the TCM also stores the vehicles operating conditions under which the DTC originally set. This information is located in the scan tool under Environmental Data. Before erasing any stored DTCs, record any available data to assist in duplicating the conditions in which the DTC originally set.

Ignition on, engine not running.

With the scan tool, erase Transmission DTC's.

Using the Environmental Data recorded earlier, try to duplicate the conditions in which the DTC originally set. It may be necessary to test drive the vehicle.

With the scan tool, read Transmission DTC's.

Did the DTC U0155-LOST COMMUNICATION WITH CLUSTER/CCN reset?

Yes >> Using the schematics as a guide, check the Transmission Control Module (TCM) terminals for corrosion, damage, or terminal push out. Pay particular attention to all power and ground circuits. If no problems are found, replace the TCM per the Service Information. (Refer to 8 - ELECTRICAL/ELECTRONIC CONTROL MODULES/TRANSMISSION CONTROL MODULE - DESCRIPTION)

Perform NAG1 TRANSMISSION VERIFICATION TEST - VER 1. (Refer to 21 - TRANSMISSION/TRANSAXLE/AUTOMATIC - NAG1 - STANDARD PROCEDURE)

No >> Go To 3

3. INTERMITTENT WIRING AND CONNECTORS

The conditions necessary to set this DTC are not present at this time.
Using the schematics as a guide, inspect the wiring and connectors specific to this circuit.
Wiggle the wiring and connectors while checking for any possible open or shorted circuits.
Check for any Service Information Tune-ups or Technical Service Bulletins that may apply.

Were there any problems found?

Yes >> Repair as necessary.
Perform NAG1 TRANSMISSION VERIFICATION TEST - VER 1. (Refer to 21 - TRANSMISSION/ TRANSAXLE/AUTOMATIC - NAG1 - STANDARD PROCEDURE)

No >> Test Complete.

U0164-LOST COMMUNICATION WITH HVAC CONTROL MODULE

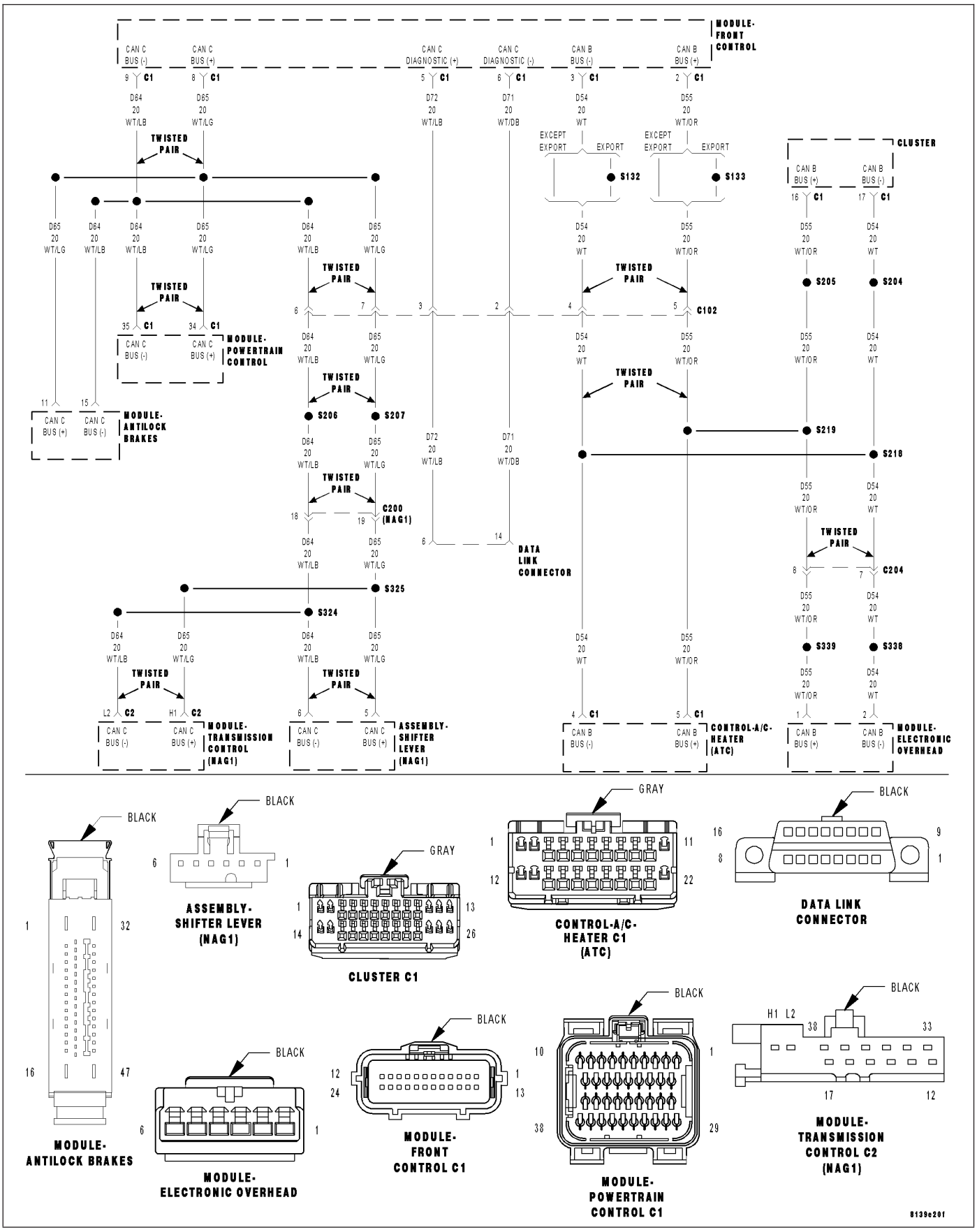

For a complete wiring diagram **Refer to Section 8W**

Theory of Operation

The Transmission Control Module (TCM) receives information from the Engine, Anti-lock Brake System, and the Electronic Gear Shift control modules over the CAN C bus. The CAN C bus is a high speed communication bus that allows real time control capability between various controllers. Most messages are sent every 20 mSec, this means critical information can be shared between multiple controllers almost instantaneously. The CAN C bus is a two wire bus with a CAN (+) and a CAN (-) circuit. To reduce the potential of radio and other electrical noise interference, the CAN Bus circuit wiring is manufactured using a twisted pair configuration within the electrical wiring harness.

- **When Monitored:**
  Continuously with the ignition on.
- **Set Condition:**
  The DTC will set if a valid CAN ID was not received in the required time from the HVAC Control Module.

Possible Causes
TRANSMISSION CONTROL MODULE

Always perform the NAG1 Pre-Diagnostic Troubleshooting procedure before proceeding. (Refer to 21 - TRANSMISSION/TRANSAXLE/AUTOMATIC - NAG1 - STANDARD PROCEDURE)

Diagnostic Test

1. CHECK THE FCM FOR CAN C BUS COMMUNICATION DTCS

With the scan tool, check for FCM DTCs.

Does the FCM report the DTC U0001-CAN C BUS DTC or U0164-LOST COMMUNICATION WITH HVAC CONTROL MODULE?

Yes >> Refer to 8-ELECTRICAL - ELECTRONIC CONTROL MODULES - ELECTRICAL DIAGNOSTICS category and perform the appropriate symptom. Perform the diagnostic procedure for U0001-CAN C BUS first if it is present.

Perform NAG1 TRANSMISSION VERIFICATION TEST - VER 1. (Refer to 21 - TRANSMISSION/TRANSAXLE/AUTOMATIC - NAG1 - STANDARD PROCEDURE)

No >> Go To 2

2. CHECK IF THE DTC IS CURRENT

NOTE: When the Transmission Control Module (TCM) detects and stores a DTC, the TCM also stores the vehicles operating conditions under which the DTC originally set. This information is located in the scan tool under Environmental Data. Before erasing any stored DTCs, record any available data to assist in duplicating the conditions in which the DTC originally set.

Ignition on, engine not running.

With the scan tool, erase Transmission DTC's.

Using the Environmental Data recorded earlier, try to duplicate the conditions in which the DTC originally set. It may be necessary to test drive the vehicle.

With the scan tool, read Transmission DTC's.

Did the DTC U0164-LOST COMMUNICATION WITH HVAC CONTROL MODULE reset?

Yes >> Using the schematics as a guide, check the Transmission Control Module (TCM) terminals for corrosion, damage, or terminal push out. Pay particular attention to all power and ground circuits. If no problems are found, replace the TCM per the Service Information. (Refer to 8 - ELECTRICAL/ELECTRONIC CONTROL MODULES/TRANSMISSION CONTROL MODULE - DESCRIPTION)

Perform NAG1 TRANSMISSION VERIFICATION TEST - VER 1. (Refer to 21 - TRANSMISSION/TRANSAXLE/AUTOMATIC - NAG1 - STANDARD PROCEDURE)

No >> Go To 3

3. INTERMITTENT WIRING AND CONNECTORS

The conditions necessary to set this DTC are not present at this time.
Using the schematics as a guide, inspect the wiring and connectors specific to this circuit.
Wiggle the wiring and connectors while checking for any possible open or shorted circuits.
Check for any Service Information Tune-ups or Technical Service Bulletins that may apply.

Were there any problems found?

Yes >> Repair as necessary.
Perform NAG1 TRANSMISSION VERIFICATION TEST - VER 1. (Refer to 21 - TRANSMISSION/ TRANSAXLE/AUTOMATIC - NAG1 - STANDARD PROCEDURE)

No >> Test Complete.

U0401-IMPLAUSIBLE DATA RECEIVED FROM ECM/PCM

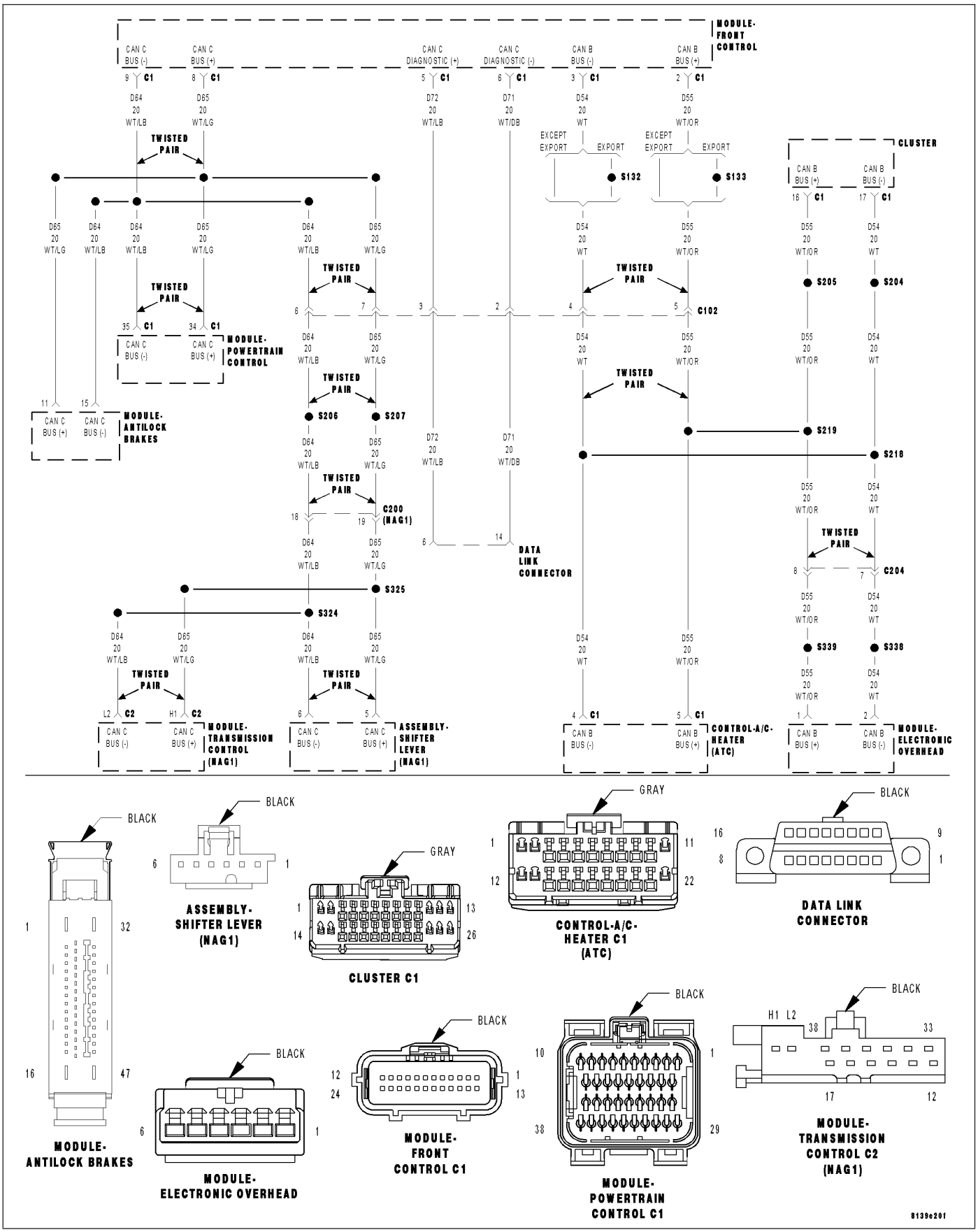

For a complete wiring diagram **Refer to Section 8W**

Theory of Operation

The messages sent on the CAN bus are distinguished by an identifier (ID). Each CAN ID is defined to contain a certain number of bytes. The Transmission Control Module (TCM) verifies that it has received the proper number of bytes for each ID.

- **When Monitored:**
  Continuously with the ignition on, one valid CAN message received at least once, and no U0002-CAN C Bus Off Performance DTC present.
- **Set Condition:**
  When the TCM detects an incorrect CAN message from the Engine Control Module (ECM).

Possible Causes
FCM CAN BUS DTCS
ENGINE DTCS
TRANSMISSION CONTROL MODULE

Always perform the NAG1 Pre-Diagnostic Troubleshooting procedure before proceeding. (Refer to 21 - TRANSMISSION/TRANSAXLE/AUTOMATIC - NAG1 - STANDARD PROCEDURE)

Diagnostic Test

1. CHECK IF FCM CAN BUS DTC'S ARE PRESENT

With the scan tool, read FCM DTCs.

Are there any FCM CAN BUS DTC's present?

Yes >> Refer to 8-ELECTRICAL/ELECTRONIC CONTROL MODULES - DIAGNOSIS AND TESTING and diagnose the appropriate symptom.
Perform NAG1 TRANSMISSION VERIFICATION TEST - VER 1. (Refer to 21 - TRANSMISSION/TRANSAXLE/AUTOMATIC - NAG1 - STANDARD PROCEDURE)

No >> Go To 2

2. CHECK IF ENGINE DTC'S ARE PRESENT

With the scan tool, read Engine DTCs.

Are there any Engine DTC's present?

Yes >> Refer to the 9 - ENGINE ELECTRICAL DIAGNOSTICS and diagnose the appropriate symptom.
Perform NAG1 TRANSMISSION VERIFICATION TEST - VER 1. (Refer to 21 - TRANSMISSION/TRANSAXLE/AUTOMATIC - NAG1 - STANDARD PROCEDURE)

No >> Using the schematics as a guide, check the Transmission Control Module (TCM) terminals for corrosion, damage, or terminal push out. Pay particular attention to all power and ground circuits. If no problems are found, replace the TCM per the Service Information. (Refer to 8 - ELECTRICAL/ELECTRONIC CONTROL MODULES/TRANSMISSION CONTROL MODULE - DESCRIPTION)
Perform NAG1 TRANSMISSION VERIFICATION TEST - VER 1. (Refer to 21 - TRANSMISSION/TRANSAXLE/AUTOMATIC - NAG1 - STANDARD PROCEDURE)

U0404-IMPLAUSIBLE DATA RECEIVED FROM ESM

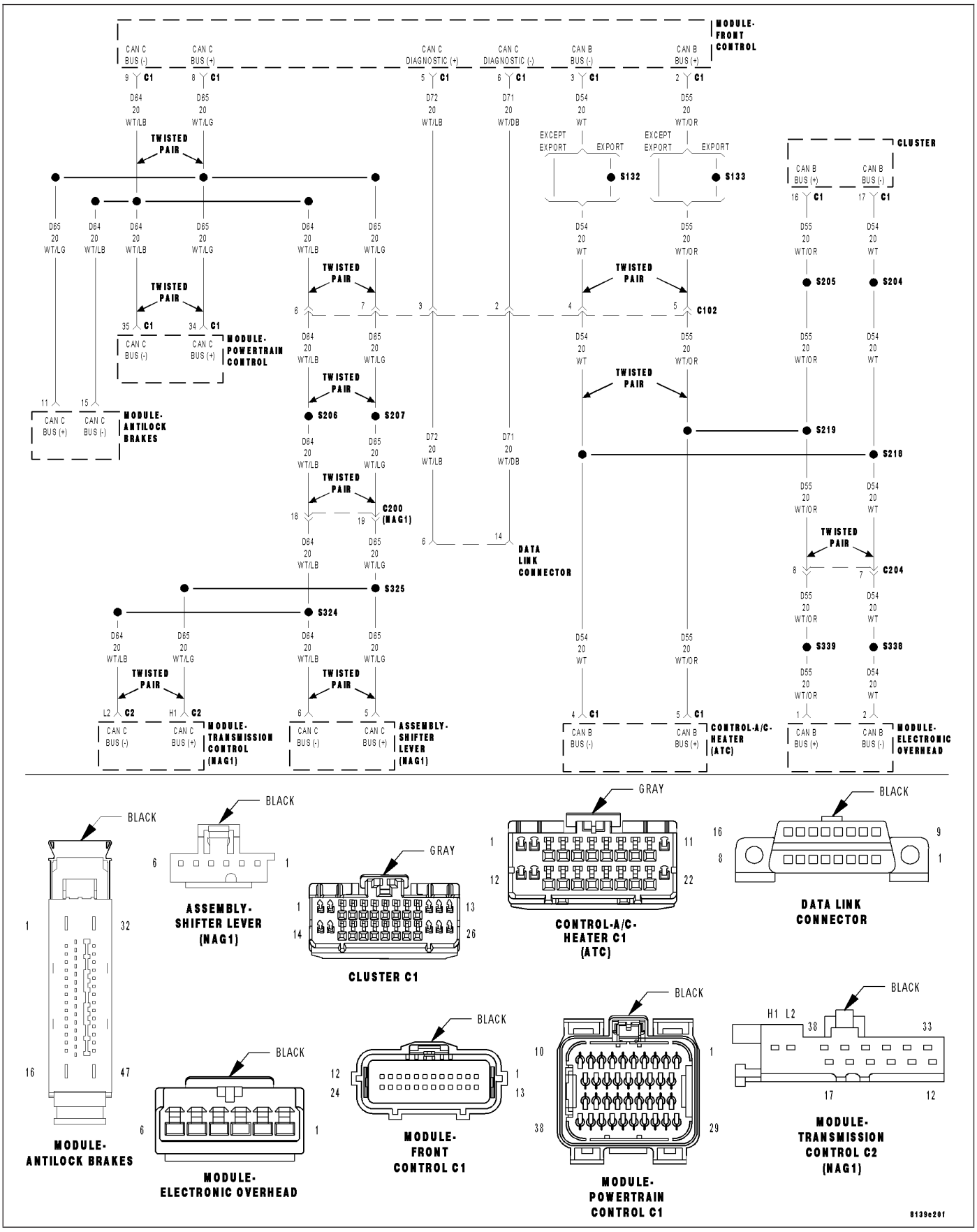

For a complete wiring diagram **Refer to Section 8W**

Theory of Operation

The messages sent on the CAN bus are distinguished by an identifier (ID). Each CAN ID is defined to contain a certain number of bytes. The Transmission Control Module (TCM) verifies that it has received the proper number of bytes for each ID.

- **When Monitored:**
  Continuously with the ignition on, one valid CAN ID received at least once, and no U0002-CAN Bus Off Performance DTC present.
- **Set Condition:**
  When the TCM detects an incorrect CAN ID from the Electronic Shift Module (ESM).

Possible Causes
FCM CAN BUS DTC'S PRESENT
ELECTRONIC SHIFT MODULE DTC'S PRESENT
TRANSMISSION CONTROL MODULE

Always perform the NAG1 Pre-Diagnostic Troubleshooting procedure before proceeding. (Refer to 21 - TRANSMISSION/TRANSAXLE/AUTOMATIC - NAG1 - STANDARD PROCEDURE)

Diagnostic Test

1. CHECK FOR FCM CAN BUS DTCS

With the scan tool, read FCM DTCs.

Are there any FCM CAN BUS DTC's present?

Yes >> Refer to 8-ELECTRICAL - ELECTRONIC CONTROL MODULES - ELECTRICAL DIAGNOSTICS category and perform the appropriate symptom.
Perform NAG1 TRANSMISSION VERIFICATION TEST - VER 1. (Refer to 21 - TRANSMISSION/TRANSAXLE/AUTOMATIC - NAG1 - STANDARD PROCEDURE)

No >> Go To 2

2. ELECTRONIC SHIFT MODULE DTC'S PRESENT

With the scan tool, read Electronic Shift Module (ESM) DTCs.

Are there any ESM DTC's present?

Yes >> Refer to Section 21 – AUTOMATIC TRANSMISSION NAG1 - SHIFTER DIAGNOSTICS and perform the appropriate diagnostic procedure.
Perform NAG1 TRANSMISSION VERIFICATION TEST - VER 1.

No >> Using the schematics as a guide, check the Transmission Control Module (TCM) terminals for corrosion, damage, or terminal push out. Pay particular attention to all power and ground circuits. If no problems are found, replace the TCM per the Service Information. (Refer to 8 - ELECTRICAL/ELECTRONIC CONTROL MODULES/TRANSMISSION CONTROL MODULE - DESCRIPTION)
Perform NAG1 TRANSMISSION VERIFICATION TEST - VER 1. (Refer to 21 - TRANSMISSION/TRANSAXLE/AUTOMATIC - NAG1 - STANDARD PROCEDURE)

U0415-IMPLAUSIBLE DATA RECEIVED FROM ABS

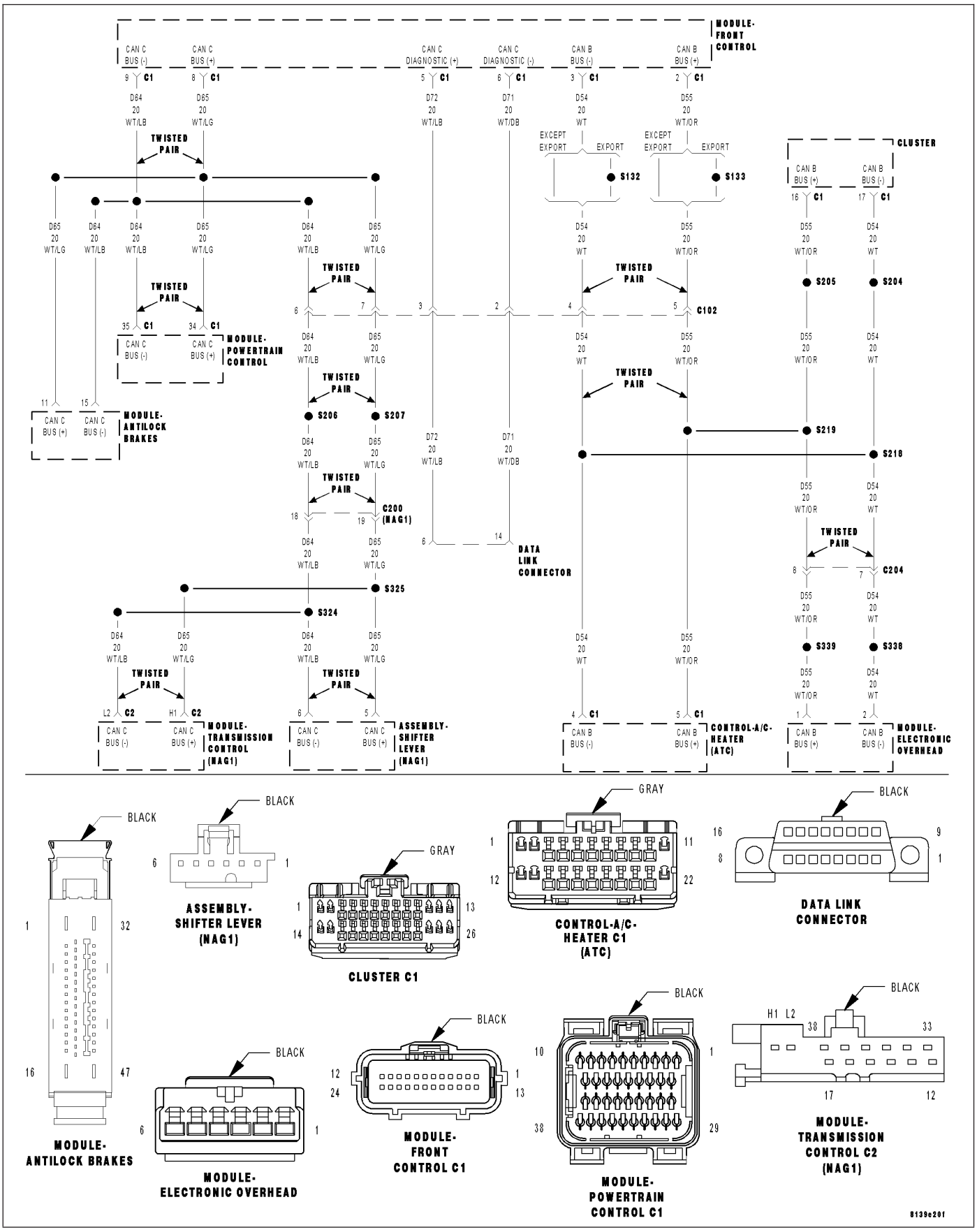

For a complete wiring diagram **Refer to Section 8W**

Theory of Operation

The messages sent on the CAN bus are distinguished by an identifier (ID). Each CAN ID is defined to contain a certain number of bytes. The Transmission Control Module (TCM) verifies that it has received the proper number of bytes for each ID.

- **When Monitored:**
  Continuously with the ignition on, one valid CAN ID received at least once, and no U0002-CAN Bus Off Performance DTC present.
- **Set Condition:**
  When the TCM detects an incorrect CAN ID from the ABS control module.

Possible Causes
FCM CAN BUS DTC'S PRESENT
ABS DTC'S PRESENT
TRANSMISSION CONTROL MODULE

Always perform the NAG1 Pre-Diagnostic Troubleshooting procedure before proceeding. (Refer to 21 - TRANSMISSION/TRANSAXLE/AUTOMATIC - NAG1 - STANDARD PROCEDURE)

Diagnostic Test

1. CHECK FOR FCM CAN BUS DTCS

With the scan tool, read FCM DTCs.

Are there any FCM CAN BUS DTC's present?

Yes >> Refer to 8-ELECTRICAL - ELECTRONIC CONTROL MODULES - ELECTRICAL DIAGNOSTICS category and perform the appropriate symptom.
Perform NAG1 TRANSMISSION VERIFICATION TEST - VER 1. (Refer to 21 - TRANSMISSION/TRANSAXLE/AUTOMATIC - NAG1 - STANDARD PROCEDURE)

No >> Go To 2

2. CHECK IF ABS DTC'S ARE PRESENT

With the scan tool, read ABS DTCs.

Are there any ABS DTC's present?

Yes >> Refer to Section 5 - BRAKES - ABS ELECTRICAL DIAGNOSTICS category and perform the appropriate symptom.
Perform NAG1 TRANSMISSION VERIFICATION TEST - VER 1. (Refer to 21 - TRANSMISSION/TRANSAXLE/AUTOMATIC - NAG1 - STANDARD PROCEDURE)

No >> Using the schematics as a guide, check the Transmission Control Module (TCM) terminals for corrosion, damage, or terminal push out. Pay particular attention to all power and ground circuits. If no problems are found, replace the TCM per the Service Information. (Refer to 8 - ELECTRICAL/ELECTRONIC CONTROL MODULES/TRANSMISSION CONTROL MODULE - DESCRIPTION)
Perform NAG1 TRANSMISSION VERIFICATION TEST - VER 1. (Refer to 21 - TRANSMISSION/TRANSAXLE/AUTOMATIC - NAG1 - STANDARD PROCEDURE)

U0423-IMPLAUSIBLE DATA RECEIVED FROM CLUSTER/CCN

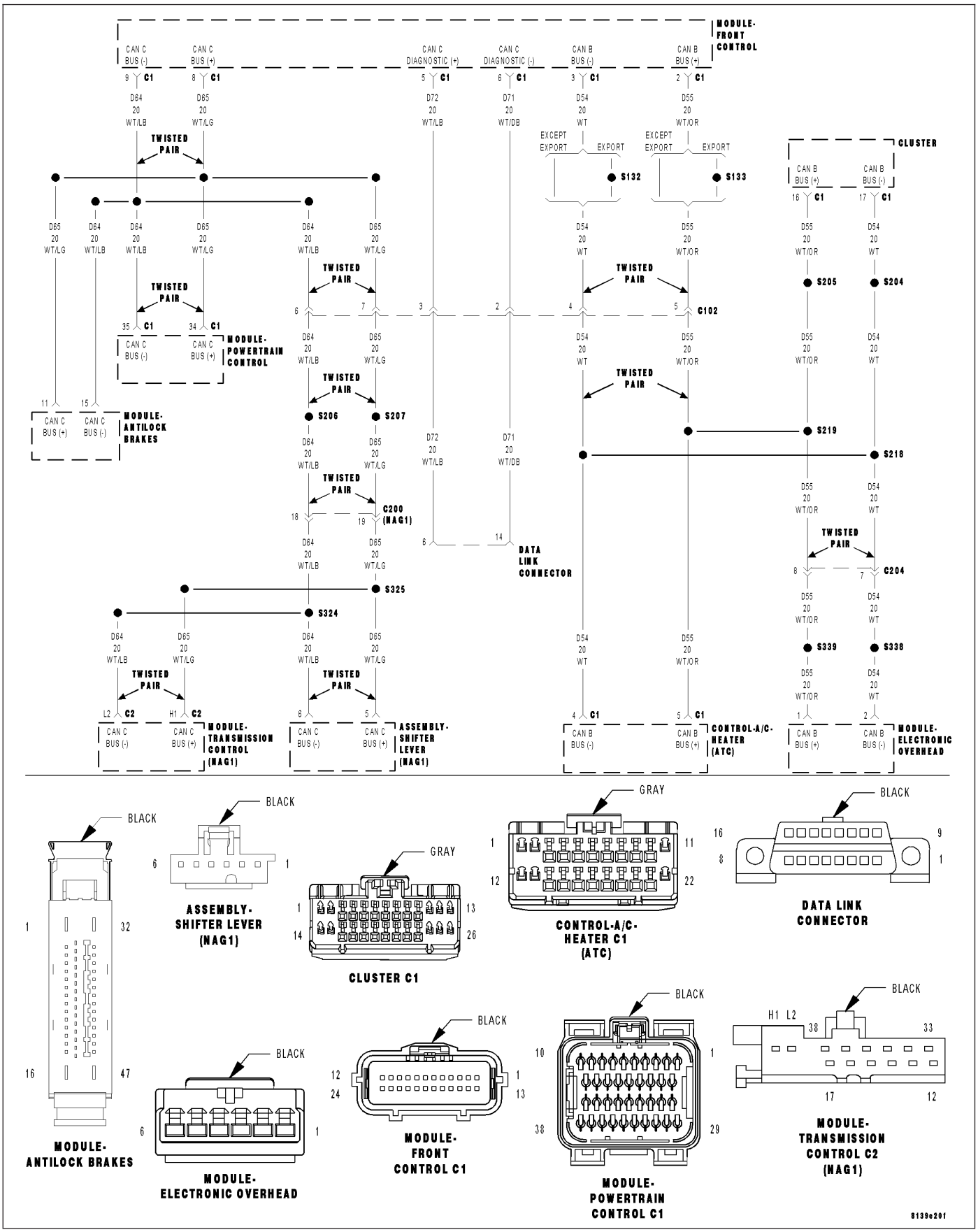

For a complete wiring diagram **Refer to Section 8W**

Theory of Operation

The messages sent on the CAN bus are distinguished by an identifier (ID). Each CAN ID is defined to contain a certain number of bytes. The Transmission Control Module (TCM) verifies that it has received the proper number of bytes for each ID.

- **When Monitored:**
  Continuously with the ignition on, one valid CAN ID received at least once, and no U0002-CAN Bus Off Performance DTC present.
- **Set Condition:**
  When the TCM detects an incorrect CAN ID from the CLUSTER/CCN.

Possible Causes
CAN BUS DTC'S PRESENT
CLUSTER/CCN MODULE DTC'S PRESENT
TRANSMISSION CONTROL MODULE

Always perform the NAG1 Pre-Diagnostic Troubleshooting procedure before proceeding. (Refer to 21 - TRANSMISSION/TRANSAXLE/AUTOMATIC - NAG1 - STANDARD PROCEDURE)

Diagnostic Test

1. CHECK FOR FCM CAN BUS DTCS

With the scan tool, read FCM DTCs.

Are there any FCM CAN BUS DTC's present?

Yes >> Refer to 8-ELECTRICAL - ELECTRONIC CONTROL MODULES - ELECTRICAL DIAGNOSTICS category and perform the appropriate symptom.
Perform NAG1 TRANSMISSION VERIFICATION TEST - VER 1. (Refer to 21 - TRANSMISSION/TRANSAXLE/AUTOMATIC - NAG1 - STANDARD PROCEDURE)

No >> Go To 2

2. CHECK IF CLUSTER/CCN DTC'S ARE PRESENT

With the scan tool, read CLUSTER/CCN DTCs.

Are there any CLUSTER/CCN DTC's present?

Yes >> Refer to Section Refer to 8 - ELECTRICAL/ELECTRONIC CONTROL MODULES/INSTRUMENT CLUSTER - ELECTRICAL DIAGNOSTICS category and perform the appropriate symptom.
Perform NAG1 TRANSMISSION VERIFICATION TEST - VER 1. (Refer to 21 - TRANSMISSION/TRANSAXLE/AUTOMATIC - NAG1 - STANDARD PROCEDURE)

No >> Using the schematics as a guide, check the Transmission Control Module (TCM) terminals for corrosion, damage, or terminal push out. Pay particular attention to all power and ground circuits. If no problems are found, replace the TCM per the Service Information. (Refer to 8 - ELECTRICAL/ELECTRONIC CONTROL MODULES/TRANSMISSION CONTROL MODULE - DESCRIPTION)
Perform NAG1 TRANSMISSION VERIFICATION TEST - VER 1. (Refer to 21 - TRANSMISSION/TRANSAXLE/AUTOMATIC - NAG1 - STANDARD PROCEDURE)

U0424-IMPLAUSIBLE DATA RECEIVED FROM HVAC CONTROL MODULE

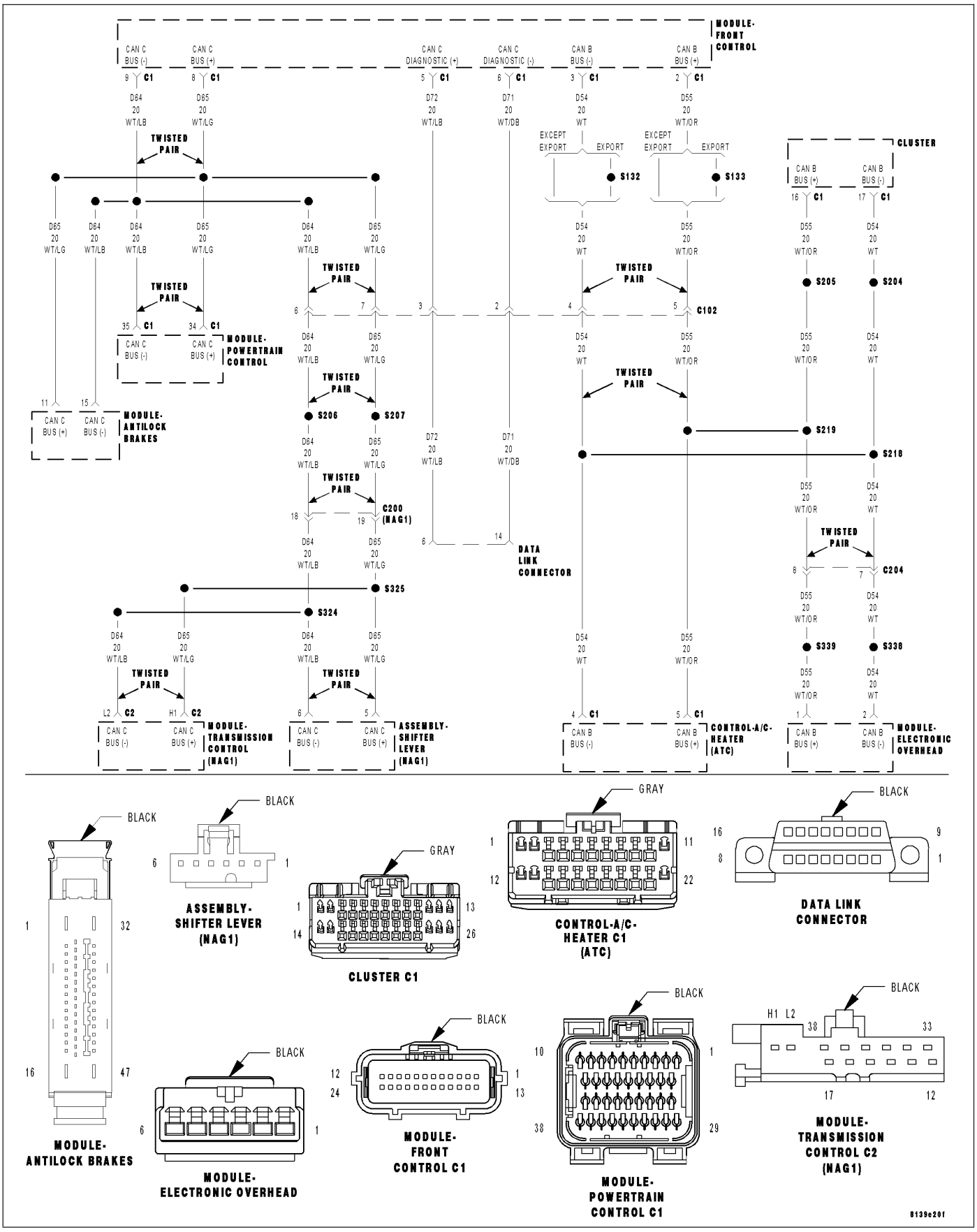

For a complete wiring diagram **Refer to Section 8W**

Theory of Operation

The messages sent on the CAN bus are distinguished by an identifier (ID). Each CAN ID is defined to contain a certain number of bytes. The Transmission Control Module (TCM) verifies that it has received the proper number of bytes for each ID.

- **When Monitored:**
  Continuously with the ignition on, one valid CAN ID received at least once, and no U0002-CAN Bus Off Performance DTC present.
- **Set Condition:**
  When the TCM detects an incorrect CAN ID from the HVAC control module.

Possible Causes
CAN BUS DTC'S PRESENT
HVAC DTC'S PRESENT
TRANSMISSION CONTROL MODULE

Always perform the NAG1 Pre-Diagnostic Troubleshooting procedure before proceeding. (Refer to 21 - TRANSMISSION/TRANSAXLE/AUTOMATIC - NAG1 - STANDARD PROCEDURE)

Diagnostic Test

1. CHECK FOR FCM CAN BUS DTCS

With the scan tool, read FCM DTCs.

Are there any FCM CAN BUS DTC's present?

Yes >> Refer to 8-ELECTRICAL - ELECTRONIC CONTROL MODULES - ELECTRICAL DIAGNOSTICS category and perform the appropriate symptom.
Perform NAG1 TRANSMISSION VERIFICATION TEST - VER 1. (Refer to 21 - TRANSMISSION/TRANSAXLE/AUTOMATIC - NAG1 - STANDARD PROCEDURE)

No >> Go To 2

2. CHECK IF HVAC DTC'S ARE PRESENT

With the scan tool, read HVAC DTCs.

Are there any HVAC DTC's present?

Yes >> Refer to Section 24 - HVAC - ELECTRICAL DIAGNOSTICS category and perform the appropriate symptom.
Perform NAG1 TRANSMISSION VERIFICATION TEST - VER 1. (Refer to 21 - TRANSMISSION/TRANSAXLE/AUTOMATIC - NAG1 - STANDARD PROCEDURE)

No >> Using the schematics as a guide, check the Transmission Control Module (TCM) terminals for corrosion, damage, or terminal push out. Pay particular attention to all power and ground circuits. If no problems are found, replace the TCM per the Service Information. (Refer to 8 - ELECTRICAL/ELECTRONIC CONTROL MODULES/TRANSMISSION CONTROL MODULE - DESCRIPTION)
Perform NAG1 TRANSMISSION VERIFICATION TEST - VER 1. (Refer to 21 - TRANSMISSION/TRANSAXLE/AUTOMATIC - NAG1 - STANDARD PROCEDURE)

U0431-IMPLAUSIBLE DATA FROM FCM

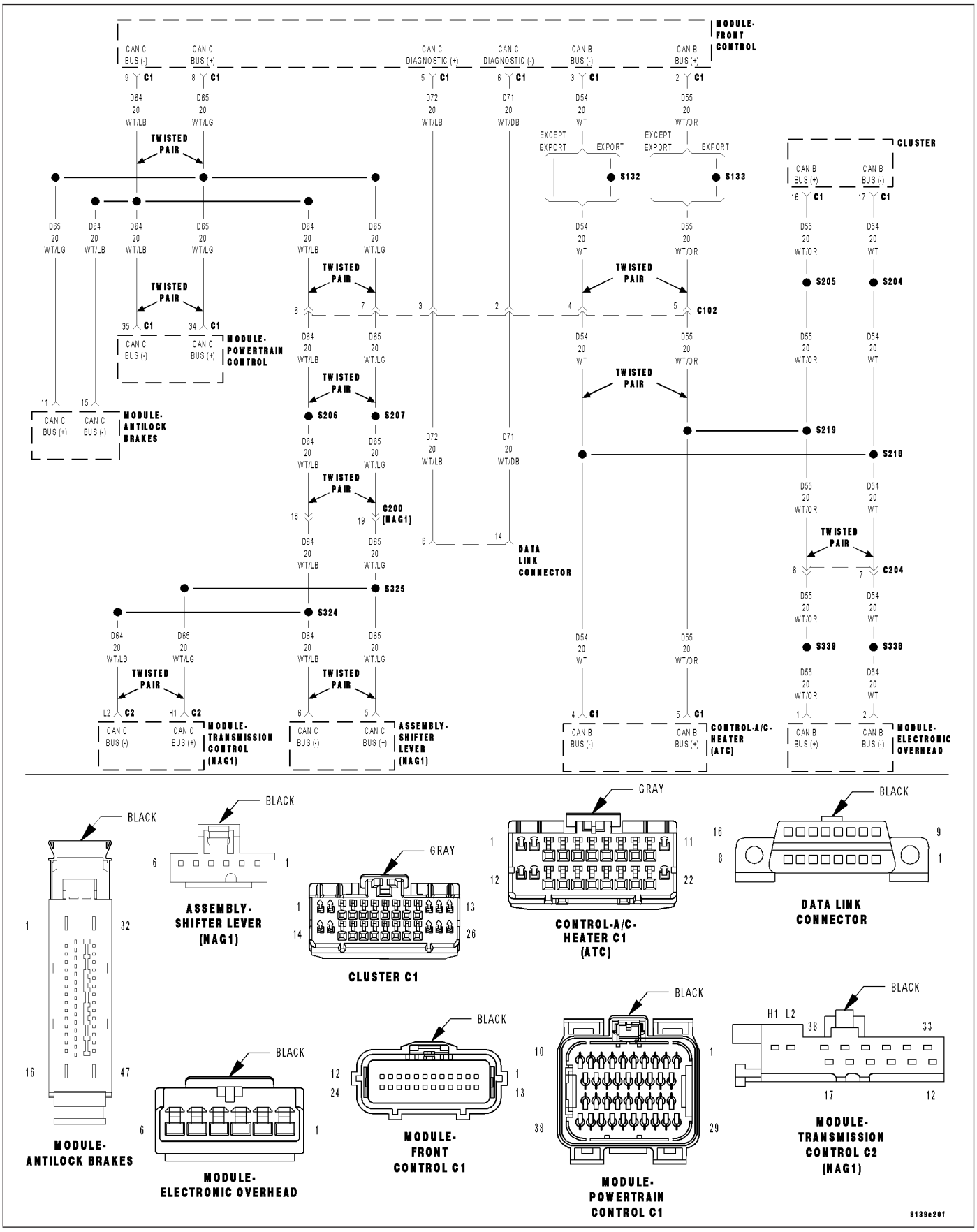

For a complete wiring diagram **Refer to Section 8W**

Theory of Operation

The messages sent on the CAN bus are distinguished by an identifier (ID). Each CAN ID is defined to contain a certain number of bytes. The Transmission Control Module (TCM) verifies that it has received the proper number of bytes for each ID.

- **When Monitored:**
  Continuously with the ignition on, one valid CAN ID received at least once, and no U0002-CAN Bus Off Performance DTC present.
- **Set Condition:**
  When the TCM detects an incorrect CAN ID from the FCM.

Possible Causes
FCM CAN BUS DTC'S PRESENT
TRANSMISSION CONTROL MODULE

Always perform the NAG1 Pre-Diagnostic Troubleshooting procedure before proceeding. (Refer to 21 - TRANSMISSION/TRANSAXLE/AUTOMATIC - NAG1 - STANDARD PROCEDURE)

Diagnostic Test

1. CHECK FOR FCM CAN BUS DTCS

With the scan tool, read FCM DTCs.

Are there any FCM CAN BUS DTC's present?

Yes >> Perform NAG1 TRANSMISSION VERIFICATION TEST - VER 1. (Refer to 21 - TRANSMISSION/TRANSAXLE/AUTOMATIC - NAG1 - STANDARD PROCEDURE)

No >> Using the schematics as a guide, check the Transmission Control Module (TCM) terminals for corrosion, damage, or terminal push out. Pay particular attention to all power and ground circuits. If no problems are found, replace the TCM per the Service Information. (Refer to 8 - ELECTRICAL/ELECTRONIC CONTROL MODULES/TRANSMISSION CONTROL MODULE - DESCRIPTION)

Perform NAG1 TRANSMISSION VERIFICATION TEST - VER 1. (Refer to 21 - TRANSMISSION/TRANSAXLE/AUTOMATIC - NAG1 - STANDARD PROCEDURE)

U110B-LOST ENGINE COOLANT MESSAGE

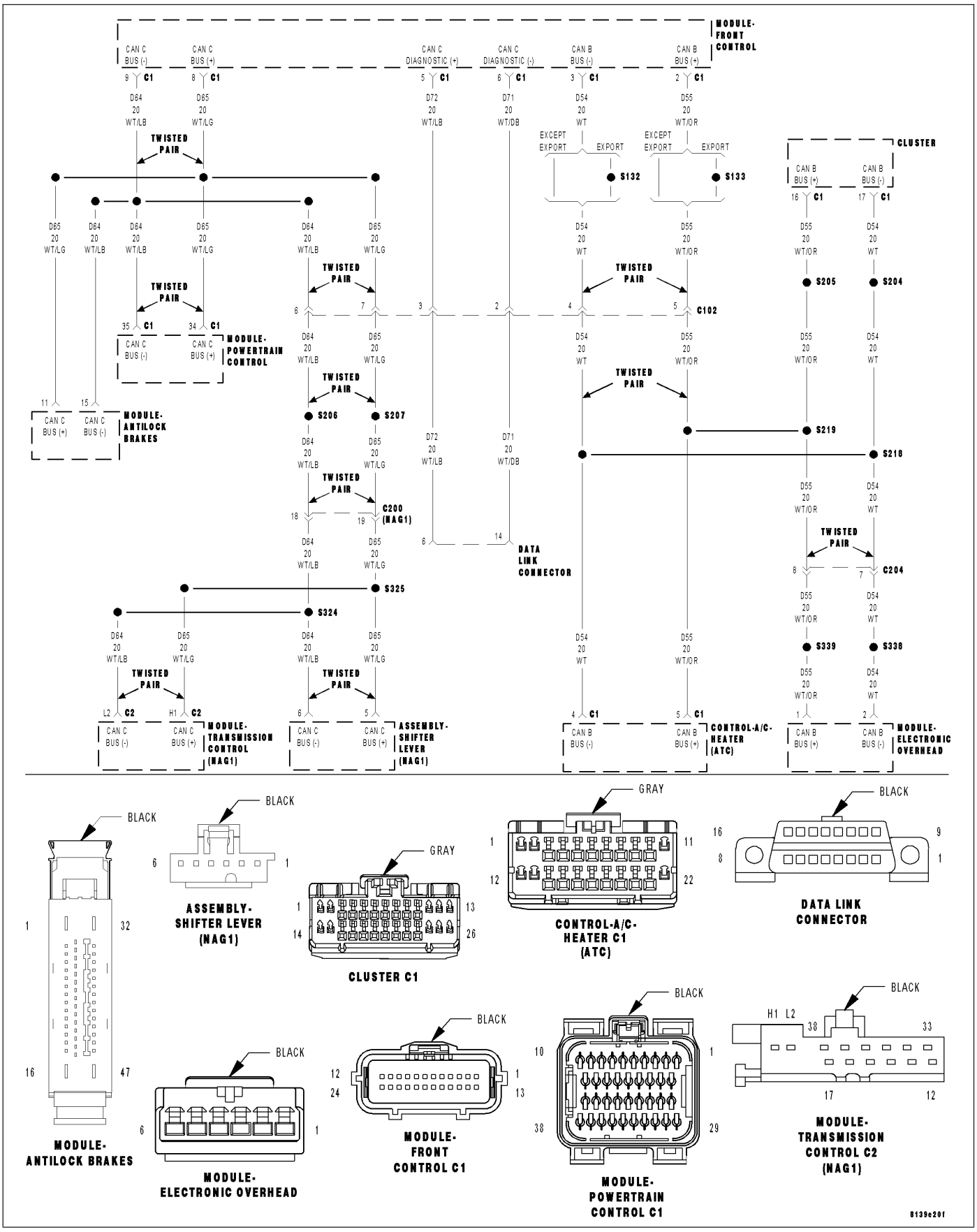

For a complete wiring diagram **Refer to Section 8W**

Theory of Operation

The Transmission Control Module (TCM) receives information from the Engine, Anti-lock Brake System, and the Electronic Gear Shift control modules over the CAN C bus. The CAN C bus is a high speed communication bus that allows real time control capability between various controllers. Most messages are sent every 20 mSec, this means critical information can be shared between multiple controllers almost instantaneously. The CAN C bus is a two wire bus with a CAN (+) and a CAN (-) circuit. To reduce the potential of radio and other electrical noise interference, the CAN Bus circuit wiring is manufactured using a twisted pair configuration within the electrical wiring harness.

- **When Monitored:**
  Continuously with the ignition on.
- **Set Condition:**
  The DTC will set if a valid CAN ID was not received in the required time from the ECM/PCM.

Possible Causes
TRANSMISSION CONTROL MODULE

Always perform the NAG1 Pre-Diagnostic Troubleshooting procedure before proceeding. (Refer to 21 - TRANSMISSION/TRANSAXLE/AUTOMATIC - NAG1 - STANDARD PROCEDURE)

Diagnostic Test

1. CHECK THE FCM FOR CAN C BUS COMMUNICATION DTCS

With the scan tool, check for FCM DTCs.

Does the FCM report the DTC U0001-CAN C BUS DTC or U0100-LOST COMMUNICATION WITH ECM/PCM?

Yes >> Refer to 8-ELECTRICAL - ELECTRONIC CONTROL MODULES - ELECTRICAL DIAGNOSTICS category and perform the appropriate symptom. Perform the diagnostic procedure for U0001-CAN C BUS first if it is present.

Perform NAG1 TRANSMISSION VERIFICATION TEST - VER 1. (Refer to 21 - TRANSMISSION/TRANSAXLE/AUTOMATIC - NAG1 - STANDARD PROCEDURE)

No >> Go To 2

2. CHECK IF THE DTC IS CURRENT

NOTE: When the Transmission Control Module (TCM) detects and stores a DTC, the TCM also stores the vehicles operating conditions under which the DTC originally set. This information is located in the scan tool under Environmental Data. Before erasing any stored DTCs, record any available data to assist in duplicating the conditions in which the DTC originally set.

Ignition on, engine not running.

With the scan tool, erase Transmission DTC's.

Using the Environmental Data recorded earlier, try to duplicate the conditions in which the DTC originally set. It may be necessary to test drive the vehicle.

With the scan tool, read Transmission DTC's.

Did the DTC U110B-LOST ENGINE COOLANT MESSAGE reset?

Yes >> Using the schematics as a guide, check the Transmission Control Module (TCM) terminals for corrosion, damage, or terminal push out. Pay particular attention to all power and ground circuits. If no problems are found, replace the TCM per the Service Information. (Refer to 8 - ELECTRICAL/ELECTRONIC CONTROL MODULES/TRANSMISSION CONTROL MODULE - DESCRIPTION)

Perform NAG1 TRANSMISSION VERIFICATION TEST - VER 1. (Refer to 21 - TRANSMISSION/TRANSAXLE/AUTOMATIC - NAG1 - STANDARD PROCEDURE)

No >> Go To 3

3. INTERMITTENT WIRING AND CONNECTORS

The conditions necessary to set this DTC are not present at this time.
Using the schematics as a guide, inspect the wiring and connectors specific to this circuit.
Wiggle the wiring and connectors while checking for any possible open or shorted circuits.
Check for any Service Information Tune-ups or Technical Service Bulletins that may apply.

Were there any problems found?

Yes >> Repair as necessary.
Perform NAG1 TRANSMISSION VERIFICATION TEST - VER 1. (Refer to 21 - TRANSMISSION/ TRANSAXLE/AUTOMATIC - NAG1 - STANDARD PROCEDURE)

No >> Test Complete.

U1118-LOST ENGINE MESSAGE

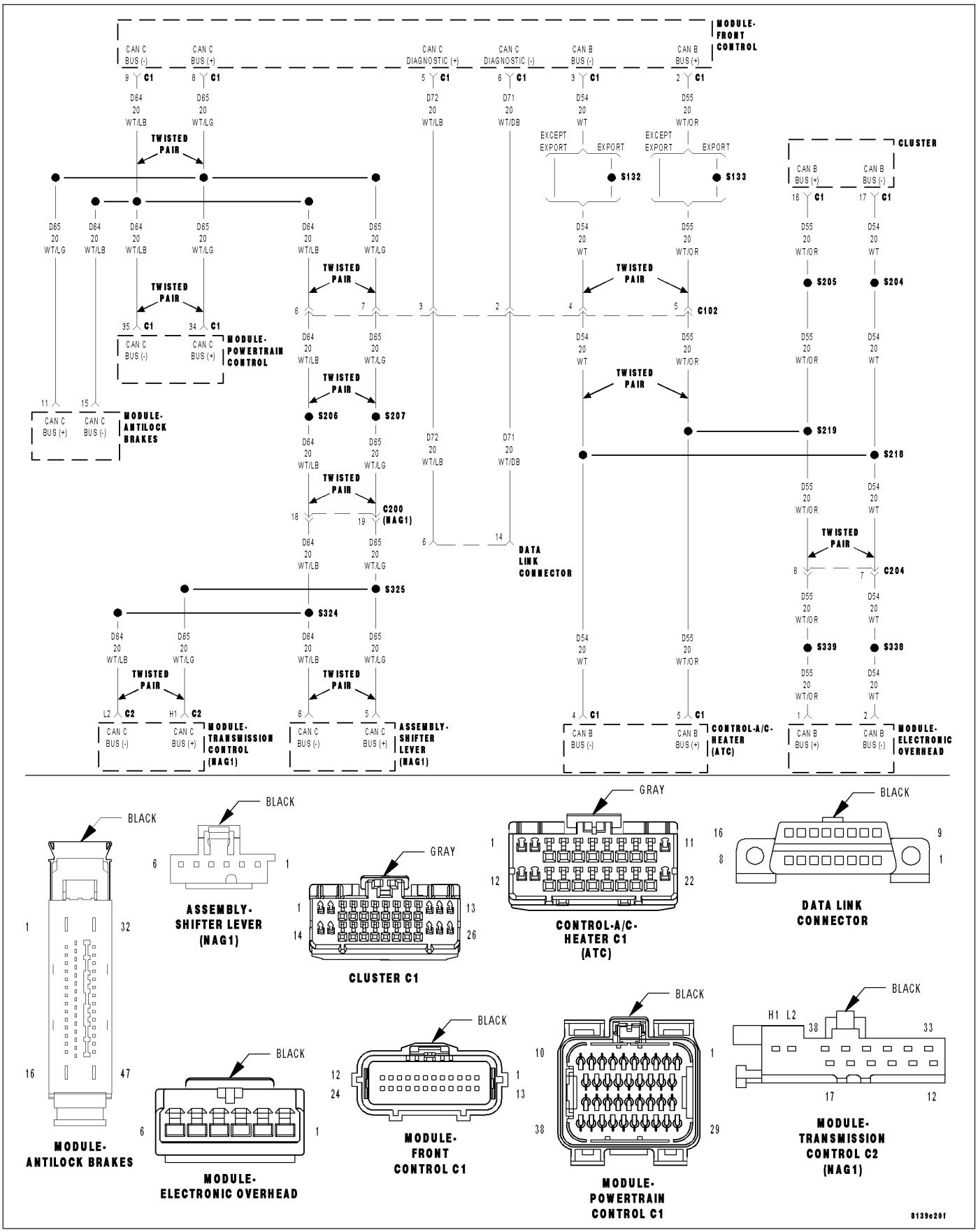

For a complete wiring diagram **Refer to Section 8W**

Theory of Operation

The Transmission Control Module (TCM) receives information from the Engine, Anti-lock Brake System, and the Electronic Gear Shift control modules over the CAN C bus. The CAN C bus is a high speed communication bus that allows real time control capability between various controllers. Most messages are sent every 20 mSec, this means critical information can be shared between multiple controllers almost instantaneously. The CAN C bus is a two wire bus with a CAN (+) and a CAN (-) circuit. To reduce the potential of radio and other electrical noise interference, the CAN Bus circuit wiring is manufactured using a twisted pair configuration within the electrical wiring harness.

- **When Monitored:**
  Continuously with the ignition on.
- **Set Condition:**
  The DTC will set if a valid CAN ID was not received in the required time from the ECM/PCM.

Possible Causes
TRANSMISSION CONTROL MODULE

Always perform the NAG1 Pre-Diagnostic Troubleshooting procedure before proceeding. (Refer to 21 - TRANSMISSION/TRANSAXLE/AUTOMATIC - NAG1 - STANDARD PROCEDURE)

Diagnostic Test

1. CHECK THE FCM FOR CAN C BUS COMMUNICATION DTCS

With the scan tool, check for FCM DTCs.

Does the FCM report the DTC U0001-CAN C BUS or U0100-LOST COMMUNICATION WITH ECM/PCM?

Yes >> Refer to 8-ELECTRICAL - ELECTRONIC CONTROL MODULES - ELECTRICAL DIAGNOSTICS category and perform the appropriate symptom. Perform the diagnostic procedure for U0001-CAN C BUS first if it is present.

Perform NAG1 TRANSMISSION VERIFICATION TEST - VER 1. (Refer to 21 - TRANSMISSION/TRANSAXLE/AUTOMATIC - NAG1 - STANDARD PROCEDURE)

No >> Go To 2

2. CHECK IF THE DTC IS CURRENT

NOTE: When the Transmission Control Module (TCM) detects and stores a DTC, the TCM also stores the vehicles operating conditions under which the DTC originally set. This information is located in the scan tool under Environmental Data. Before erasing any stored DTCs, record any available data to assist in duplicating the conditions in which the DTC originally set.

Ignition on, engine not running.

With the scan tool, erase Transmission DTC's.

Using the Environmental Data recorded earlier, try to duplicate the conditions in which the DTC originally set. It may be necessary to test drive the vehicle.

With the scan tool, read Transmission DTC's.

Did the DTC U1118-LOST ENGINE MESSAGE reset?

Yes >> Using the schematics as a guide, check the Transmission Control Module (TCM) terminals for corrosion, damage, or terminal push out. Pay particular attention to all power and ground circuits. If no problems are found, replace the TCM per the Service Information. (Refer to 8 - ELECTRICAL/ELECTRONIC CONTROL MODULES/TRANSMISSION CONTROL MODULE - DESCRIPTION)

Perform NAG1 TRANSMISSION VERIFICATION TEST - VER 1. (Refer to 21 - TRANSMISSION/TRANSAXLE/AUTOMATIC - NAG1 - STANDARD PROCEDURE)

No >> Go To 3

3. INTERMITTENT WIRING AND CONNECTORS

The conditions necessary to set this DTC are not present at this time.
Using the schematics as a guide, inspect the wiring and connectors specific to this circuit.
Wiggle the wiring and connectors while checking for any possible open or shorted circuits.
Check for any Service Information Tune-ups or Technical Service Bulletins that may apply.

Were there any problems found?

Yes >> Repair as necessary.
Perform NAG1 TRANSMISSION VERIFICATION TEST - VER 1. (Refer to 21 - TRANSMISSION/ TRANSAXLE/AUTOMATIC - NAG1 - STANDARD PROCEDURE)

No >> Test Complete.

U1119-LOST FCM MESSAGE

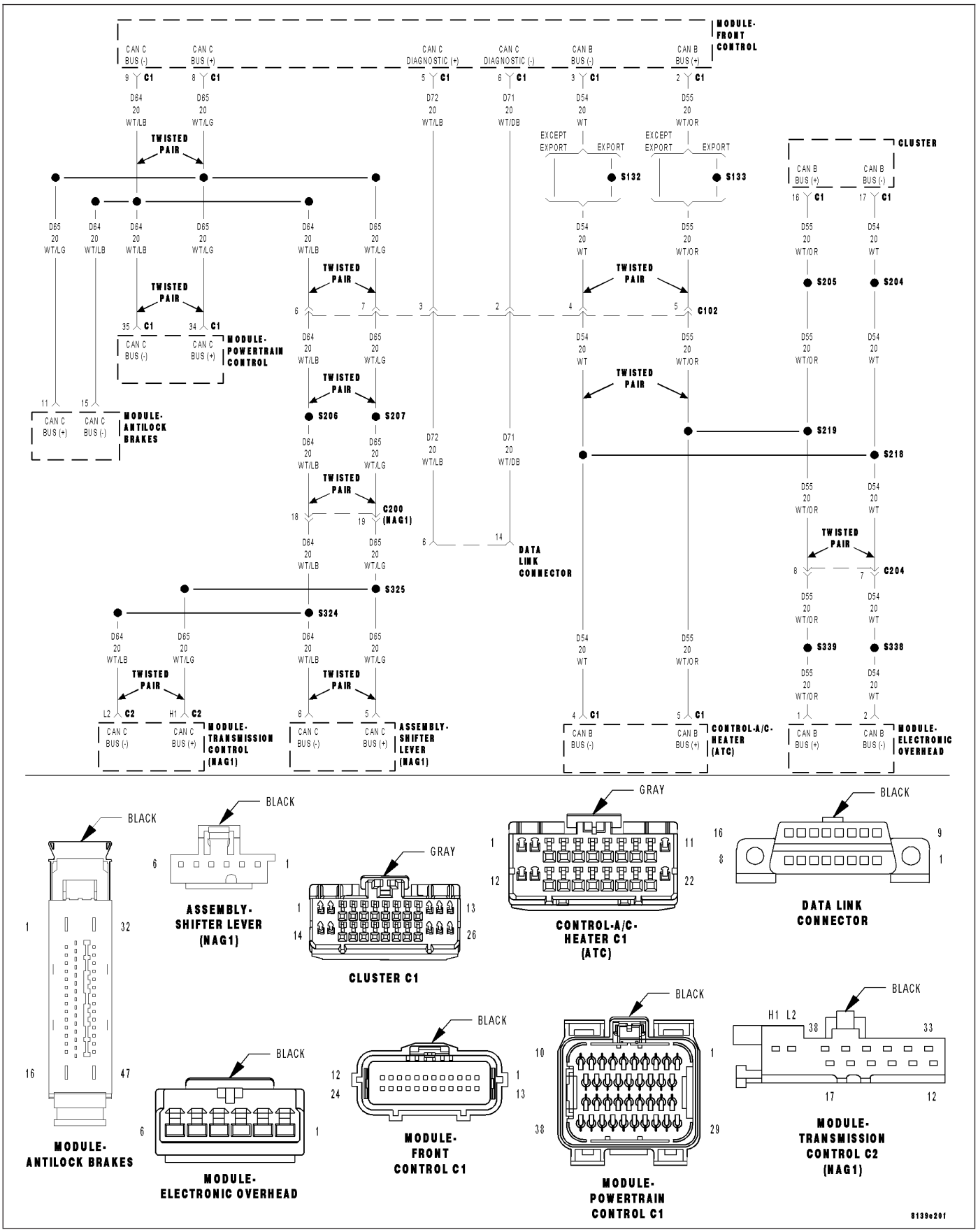

For a complete wiring diagram **Refer to Section 8W**

Theory of Operation

The Transmission Control Module (TCM) receives information from the Engine, Anti-lock Brake System, and the Electronic Gear Shift control modules over the CAN C bus. The CAN C bus is a high speed communication bus that allows real time control capability between various controllers. Most messages are sent every 20 mSec, this means critical information can be shared between multiple controllers almost instantaneously. The CAN C bus is a two wire bus with a CAN (+) and a CAN (-) circuit. To reduce the potential of radio and other electrical noise interference, the CAN Bus circuit wiring is manufactured using a twisted pair configuration within the electrical wiring harness.

- **When Monitored:**
  Continuously with the ignition on.
- **Set Condition:**
  The DTC will set if a valid CAN ID was not received in the required time from the FCM.

Possible Causes
TRANSMISSION CONTROL MODULE

Always perform the NAG1 Pre-Diagnostic Troubleshooting procedure before proceeding. (Refer to 21 - TRANSMISSION/TRANSAXLE/AUTOMATIC - NAG1 - STANDARD PROCEDURE)

Diagnostic Test

1. CHECK THE FCM FOR CAN C BUS COMMUNICATION DTCS

With the scan tool, check for FCM DTCs.

Does the FCM report the DTC U0001-CAN C BUS or U0101-LOST COMMUNICATION WITH TCM?

Yes >> Refer to 8-ELECTRICAL - ELECTRONIC CONTROL MODULES - ELECTRICAL DIAGNOSTICS category and perform the appropriate symptom. Perform the diagnostic procedure for U0001-CAN C BUS first if it is present.

Perform NAG1 TRANSMISSION VERIFICATION TEST - VER 1. (Refer to 21 - TRANSMISSION/TRANSAXLE/AUTOMATIC - NAG1 - STANDARD PROCEDURE)

No >> Go To 2

2. CHECK IF THE DTC IS CURRENT

NOTE: When the Transmission Control Module (TCM) detects and stores a DTC, the TCM also stores the vehicles operating conditions under which the DTC originally set. This information is located in the scan tool under Environmental Data. Before erasing any stored DTCs, record any available data to assist in duplicating the conditions in which the DTC originally set.

Ignition on, engine not running.

With the scan tool, erase Transmission DTC's.

Using the Environmental Data recorded earlier, try to duplicate the conditions in which the DTC originally set. It may be necessary to test drive the vehicle.

With the scan tool, read Transmission DTC's.

Did the DTC U1119-LOST FCM MESSAGE reset?

Yes >> Using the schematics as a guide, check the Transmission Control Module (TCM) terminals for corrosion, damage, or terminal push out. Pay particular attention to all power and ground circuits. If no problems are found, replace the TCM per the Service Information. (Refer to 8 - ELECTRICAL/ELECTRONIC CONTROL MODULES/TRANSMISSION CONTROL MODULE - DESCRIPTION)

Perform NAG1 TRANSMISSION VERIFICATION TEST - VER 1. (Refer to 21 - TRANSMISSION/TRANSAXLE/AUTOMATIC - NAG1 - STANDARD PROCEDURE)

No >> Go To 3

3. INTERMITTENT WIRING AND CONNECTORS

The conditions necessary to set this DTC are not present at this time.
Using the schematics as a guide, inspect the wiring and connectors specific to this circuit.
Wiggle the wiring and connectors while checking for any possible open or shorted circuits.
Check for any Service Information Tune-ups or Technical Service Bulletins that may apply.

Were there any problems found?

Yes >> Repair as necessary.
Perform NAG1 TRANSMISSION VERIFICATION TEST - VER 1. (Refer to 21 - TRANSMISSION/ TRANSAXLE/AUTOMATIC - NAG1 - STANDARD PROCEDURE)

No >> Test Complete.

U1400-IMPLAUSIBLE TPS SIGNAL RECEIVED

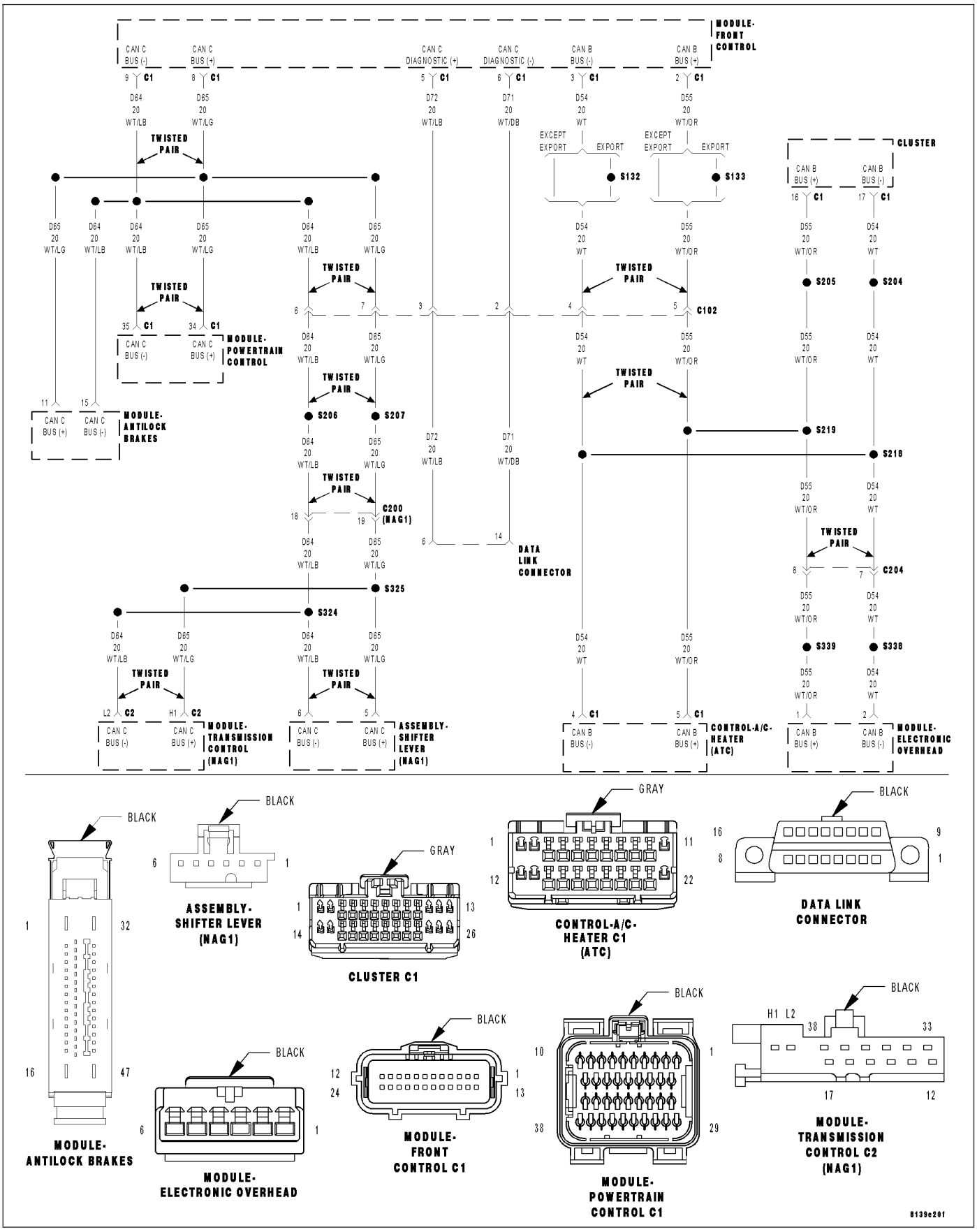

For a complete wiring diagram **Refer to Section 8W**

Theory of Operation

The messages sent on the CAN bus are distinguished by an identifier (ID). Each CAN ID is defined to contain a certain number of bytes. The Transmission Control Module (TCM) verifies that it has received the proper number of bytes for each ID.

- **When Monitored:**
  Continuously with the ignition on, one valid CAN ID received at least once, and no U0002-CAN Bus Off Performance DTC present.
- **Set Condition:**
  When the TCM detects an incorrect CAN ID from the ECM/PCM.

Possible Causes
FCM CAN BUS DTC'S PRESENT
ECM/PCM DTC'S PRESENT
TRANSMISSION CONTROL MODULE

Always perform the NAG1 Pre-Diagnostic Troubleshooting procedure before proceeding. (Refer to 21 - TRANSMISSION/TRANSAXLE/AUTOMATIC - NAG1 - STANDARD PROCEDURE)

Diagnostic Test

1. CHECK FOR FCM CAN BUS DTCS

With the scan tool, read FCM DTCs.

Are there any FCM CAN BUS DTC's present?

Yes >> Refer to 8-ELECTRICAL - ELECTRONIC CONTROL MODULES - ELECTRICAL DIAGNOSTICS category and perform the appropriate symptom.
Perform NAG1 TRANSMISSION VERIFICATION TEST - VER 1. (Refer to 21 - TRANSMISSION/TRANSAXLE/AUTOMATIC - NAG1 - STANDARD PROCEDURE)

No >> Go To 2

2. CHECK IF ECM/PCM DTC'S ARE PRESENT

With the scan tool, read engine DTCs.

Are there any engine DTC's present?

Yes >> Refer to the 9 - ENGINE ELECTRICAL DIAGNOSTICS and diagnose the appropriate symptom.
Perform NAG1 TRANSMISSION VERIFICATION TEST - VER 1.

No >> Using the schematics as a guide, check the Transmission Control Module (TCM) terminals for corrosion, damage, or terminal push out. Pay particular attention to all power and ground circuits. If no problems are found, replace the TCM per the Service Information. (Refer to 8 - ELECTRICAL/ELECTRONIC CONTROL MODULES/TRANSMISSION CONTROL MODULE - DESCRIPTION)
Perform NAG1 TRANSMISSION VERIFICATION TEST - VER 1. (Refer to 21 - TRANSMISSION/TRANSAXLE/AUTOMATIC - NAG1 - STANDARD PROCEDURE)

U1401-IMPLAUSIBLE ENGINE SPEED SIGNAL RECEIVED

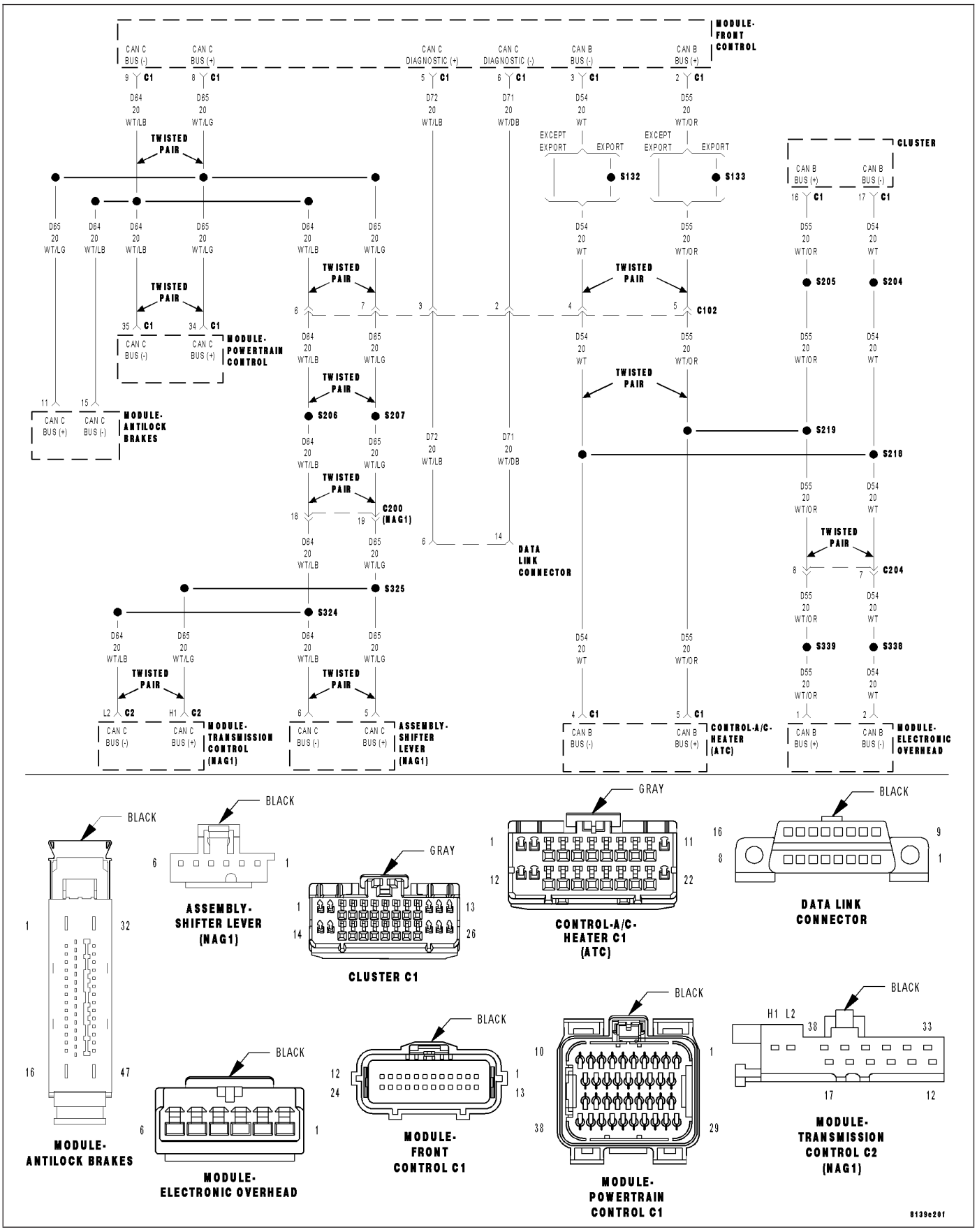

For a complete wiring diagram **Refer to Section 8W**

Theory of Operation

The messages sent on the CAN bus are distinguished by an identifier (ID). Each CAN ID is defined to contain a certain number of bytes. The Transmission Control Module (TCM) verifies that it has received the proper number of bytes for each ID.

- **When Monitored:**
  Continuously with the ignition on, one valid CAN ID received at least once, and no U0002-CAN Bus Off Performance DTC present.
- **Set Condition:**
  When the TCM detects an incorrect CAN ID from the ECM/PCM.

Possible Causes
FCM CAN BUS DTC'S PRESENT
ENGINE MODULE DTC'S PRESENT
TRANSMISSION CONTROL MODULE

Always perform the NAG1 Pre-Diagnostic Troubleshooting procedure before proceeding. (Refer to 21 - TRANSMISSION/TRANSAXLE/AUTOMATIC - NAG1 - STANDARD PROCEDURE)

Diagnostic Test

1. CHECK FOR FCM CAN BUS DTCS

With the scan tool, read FCM DTCs.

Are there any FCM CAN BUS DTC's present?

Yes >> Refer to 8-ELECTRICAL - ELECTRONIC CONTROL MODULES - ELECTRICAL DIAGNOSTICS category and perform the appropriate symptom.
Perform NAG1 TRANSMISSION VERIFICATION TEST - VER 1. (Refer to 21 - TRANSMISSION/TRANSAXLE/AUTOMATIC - NAG1 - STANDARD PROCEDURE)

No >> Go To 2

2. CHECK IF ENGINE DTC'S ARE PRESENT

With the scan tool, read engine DTCs.

Are there any engine DTC's present?

Yes >> Refer to the 9 - ENGINE ELECTRICAL DIAGNOSTICS and diagnose the appropriate symptom.
Perform NAG1 TRANSMISSION VERIFICATION TEST - VER 1.

No >> Using the schematics as a guide, check the Transmission Control Module (TCM) terminals for corrosion, damage, or terminal push out. Pay particular attention to all power and ground circuits. If no problems are found, replace the TCM per the Service Information. (Refer to 8 - ELECTRICAL/ELECTRONIC CONTROL MODULES/TRANSMISSION CONTROL MODULE - DESCRIPTION)
Perform NAG1 TRANSMISSION VERIFICATION TEST - VER 1. (Refer to 21 - TRANSMISSION/TRANSAXLE/AUTOMATIC - NAG1 - STANDARD PROCEDURE)

U1402-IMPLAUSIBLE ENGINE TEMPERATURE SIGNAL RECEIVED

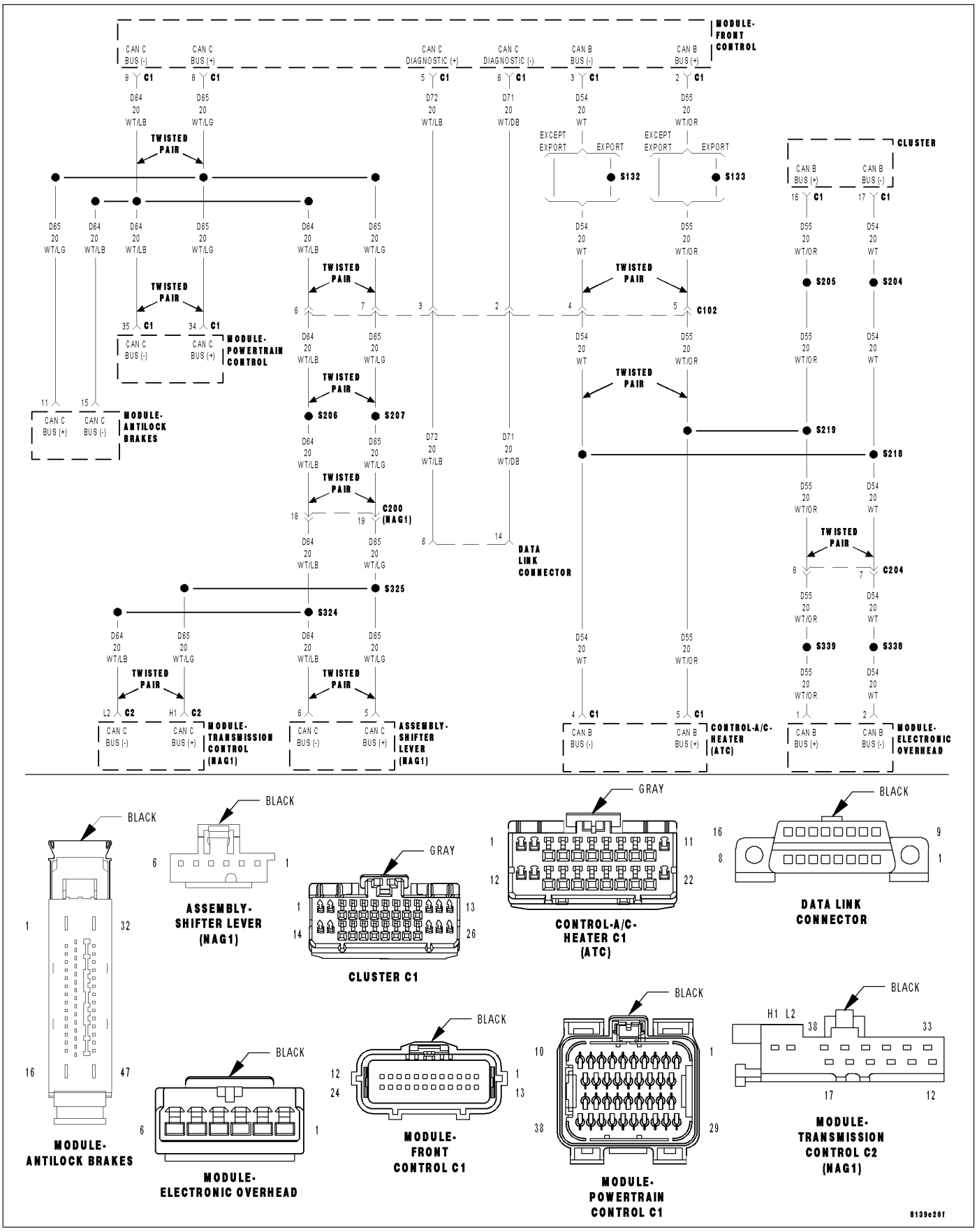

For a complete wiring diagram **Refer to Section 8W**

Theory of Operation

The messages sent on the CAN bus are distinguished by an identifier (ID). Each CAN ID is defined to contain a certain number of bytes. The Transmission Control Module (TCM) verifies that it has received the proper number of bytes for each ID.

- **When Monitored:**
  Continuously with the ignition on, one valid CAN ID received at least once, and no U0002-CAN Bus Off Performance DTC present.
- **Set Condition:**
  When the TCM detects an incorrect CAN ID from the ECM/PCM.

Possible Causes
FCM CAN BUS DTC'S PRESENT
ECM/PCM DTC'S PRESENT
TRANSMISSION CONTROL MODULE

Always perform the NAG1 Pre-Diagnostic Troubleshooting procedure before proceeding. (Refer to 21 - TRANSMISSION/TRANSAXLE/AUTOMATIC - NAG1 - STANDARD PROCEDURE)

Diagnostic Test

1. CHECK FOR FCM CAN BUS DTCS

With the scan tool, read FCM DTCs.

Are there any FCM CAN BUS DTC's present?

Yes >> Refer to 8-ELECTRICAL - ELECTRONIC CONTROL MODULES - ELECTRICAL DIAGNOSTICS category and perform the appropriate symptom.
Perform NAG1 TRANSMISSION VERIFICATION TEST - VER 1. (Refer to 21 - TRANSMISSION/TRANSAXLE/AUTOMATIC - NAG1 - STANDARD PROCEDURE)

No >> Go To 2

2. CHECK IF ENGINE DTC'S ARE PRESENT

With the scan tool, read engine DTCs.

Are there any engine DTC's present?

Yes >> Refer to the 9 - ENGINE ELECTRICAL DIAGNOSTICS and diagnose the appropriate symptom.
Perform NAG1 TRANSMISSION VERIFICATION TEST - VER 1. (Refer to 21 - TRANSMISSION/TRANSAXLE/AUTOMATIC - NAG1 - STANDARD PROCEDURE)

No >> Using the schematics as a guide, check the Transmission Control Module (TCM) terminals for corrosion, damage, or terminal push out. Pay particular attention to all power and ground circuits. If no problems are found, replace the TCM per the Service Information. (Refer to 8 - ELECTRICAL/ELECTRONIC CONTROL MODULES/TRANSMISSION CONTROL MODULE - DESCRIPTION)
Perform NAG1 TRANSMISSION VERIFICATION TEST - VER 1. (Refer to 21 - TRANSMISSION/TRANSAXLE/AUTOMATIC - NAG1 - STANDARD PROCEDURE)

U1404-IMPLAUSIBLE STATIC ENGINE TORQUE SIGNAL RECEIVED

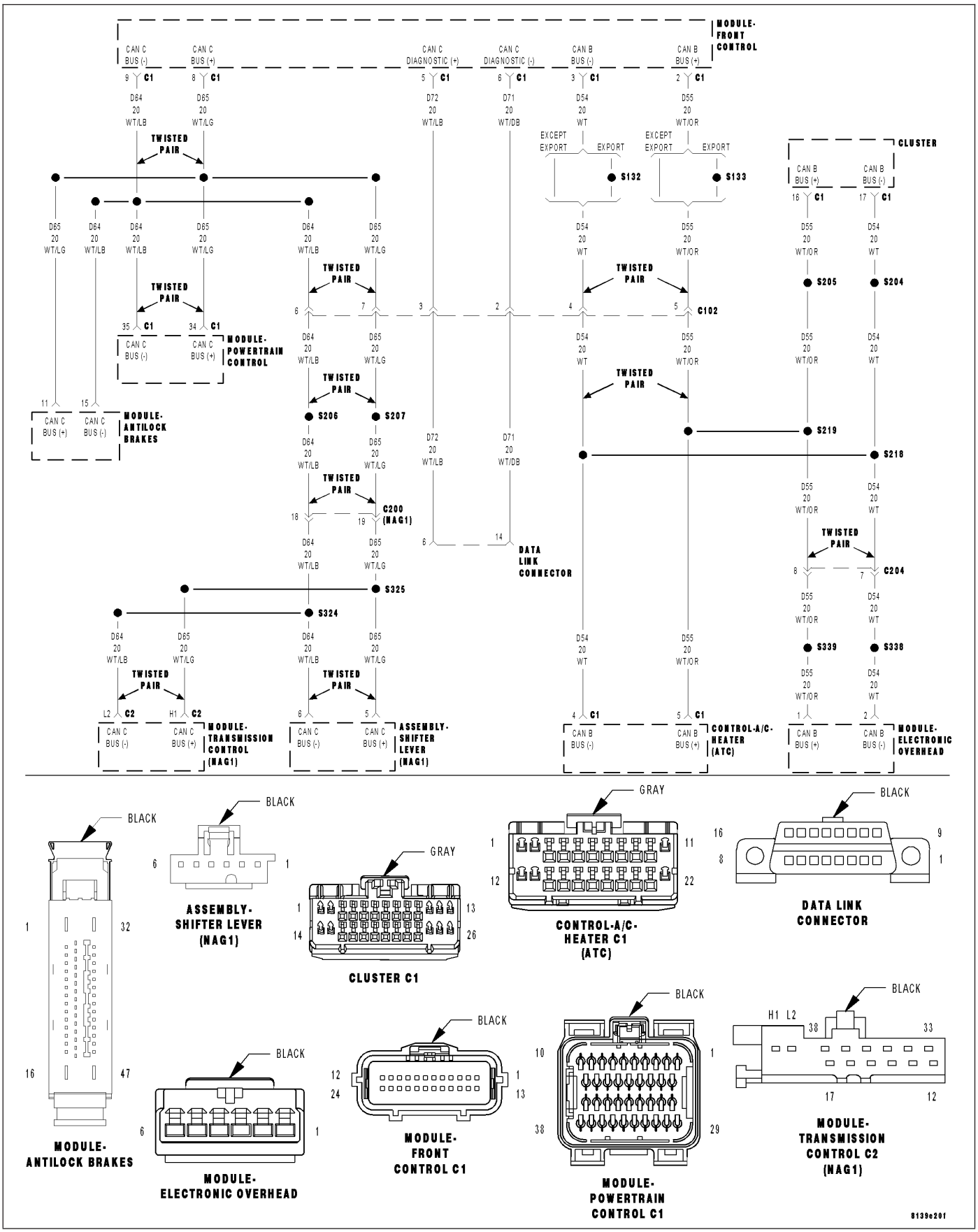

For a complete wiring diagram **Refer to Section 8W**

Theory of Operation

The messages sent on the CAN bus are distinguished by an identifier (ID). Each CAN ID is defined to contain a certain number of bytes. The Transmission Control Module (TCM) verifies that it has received the proper number of bytes for each ID.

- **When Monitored:**
  Continuously with the ignition on, one valid CAN ID received at least once, and no U0002-CAN Bus Off Performance DTC present.
- **Set Condition:**
  When the TCM detects an incorrect CAN ID from the ECM/PCM.

Possible Causes
FCM CAN BUS DTC'S PRESENT
ECM/PCM DTC'S PRESENT
TRANSMISSION CONTROL MODULE

Always perform the NAG1 Pre-Diagnostic Troubleshooting procedure before proceeding. (Refer to 21 - TRANSMISSION/TRANSAXLE/AUTOMATIC - NAG1 - STANDARD PROCEDURE)

Diagnostic Test

1. CHECK FOR FCM CAN BUS DTCS

With the scan tool, read FCM DTCs.

Are there any FCM CAN BUS DTC's present?

Yes >> Refer to 8-ELECTRICAL - ELECTRONIC CONTROL MODULES - ELECTRICAL DIAGNOSTICS category and perform the appropriate symptom.
Perform NAG1 TRANSMISSION VERIFICATION TEST - VER 1. (Refer to 21 - TRANSMISSION/TRANSAXLE/AUTOMATIC - NAG1 - STANDARD PROCEDURE)

No >> Go To 2

2. CHECK IF ENGINE DTC'S ARE PRESENT

With the scan tool, read engine DTCs.

Are there any engine DTC's present?

Yes >> Refer to the 9 - ENGINE ELECTRICAL DIAGNOSTICS and diagnose the appropriate symptom.
Perform NAG1 TRANSMISSION VERIFICATION TEST - VER 1. (Refer to 21 - TRANSMISSION/TRANSAXLE/AUTOMATIC - NAG1 - STANDARD PROCEDURE)

No >> Using the schematics as a guide, check the Transmission Control Module (TCM) terminals for corrosion, damage, or terminal push out. Pay particular attention to all power and ground circuits. If no problems are found, replace the TCM per the Service Information. (Refer to 8 - ELECTRICAL/ELECTRONIC CONTROL MODULES/TRANSMISSION CONTROL MODULE - DESCRIPTION)
Perform NAG1 TRANSMISSION VERIFICATION TEST - VER 1. (Refer to 21 - TRANSMISSION/TRANSAXLE/AUTOMATIC - NAG1 - STANDARD PROCEDURE)

U1405-IMPLAUSIBLE MINIMUM ENGINE TORQUE SIGNAL RECEIVED

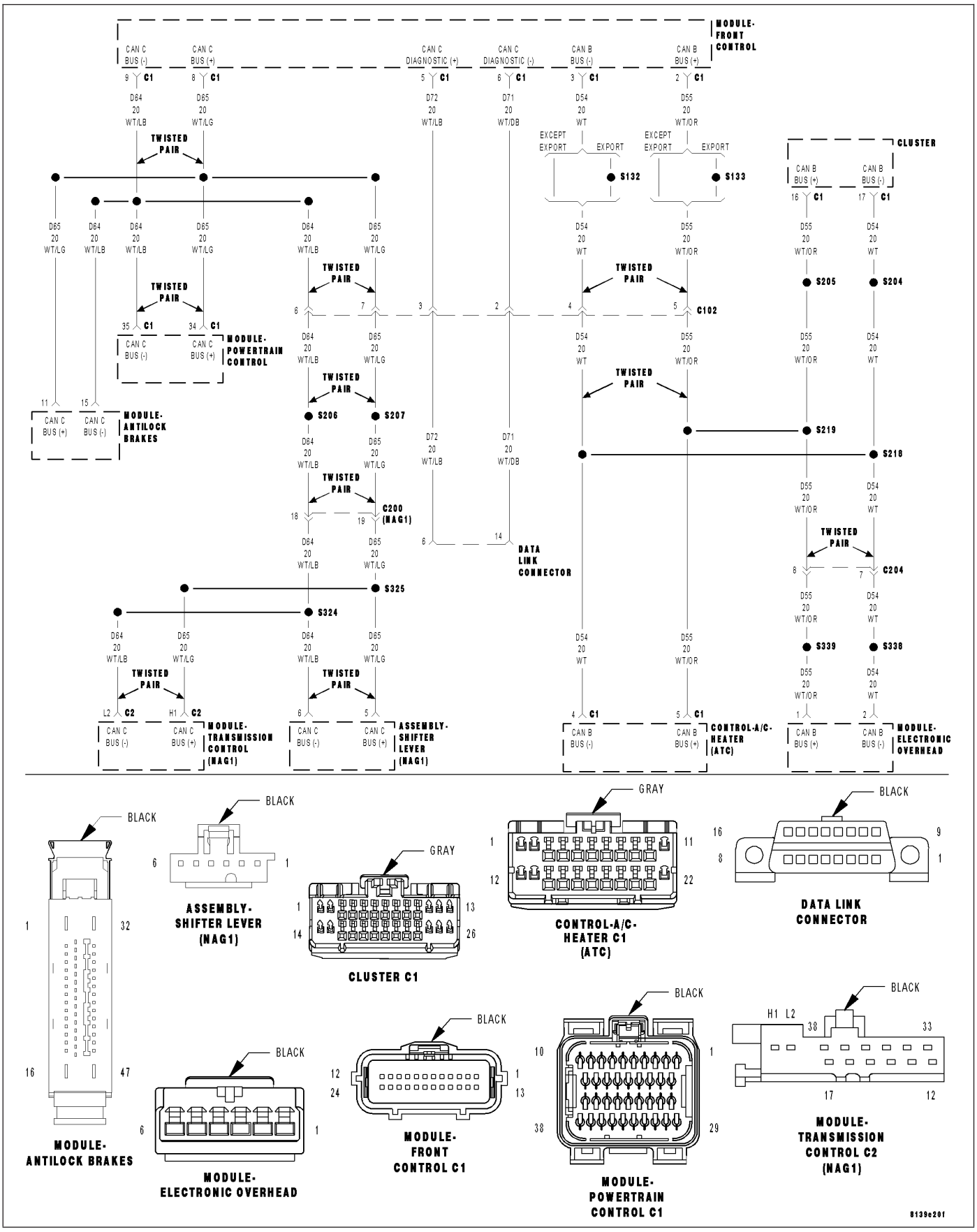

For a complete wiring diagram **Refer to Section 8W**

Theory of Operation

The messages sent on the CAN bus are distinguished by an identifier (ID). Each CAN ID is defined to contain a certain number of bytes. The Transmission Control Module (TCM) verifies that it has received the proper number of bytes for each ID.

- **When Monitored:**
  Continuously with the ignition on, one valid CAN ID received at least once, and no U0002-CAN Bus Off Performance DTC present.
- **Set Condition:**
  When the TCM detects an incorrect CAN ID from the ECM/PCM.

Possible Causes
FCM CAN BUS DTC'S PRESENT
ECM/PCM DTC'S PRESENT
TRANSMISSION CONTROL MODULE

Always perform the NAG1 Pre-Diagnostic Troubleshooting procedure before proceeding. (Refer to 21 - TRANSMISSION/TRANSAXLE/AUTOMATIC - NAG1 - STANDARD PROCEDURE)

Diagnostic Test

1. CHECK FOR FCM CAN BUS DTCS

With the scan tool, read FCM DTCs.

Are there any FCM CAN BUS DTC's present?

Yes >> Refer to 8-ELECTRICAL - ELECTRONIC CONTROL MODULES - ELECTRICAL DIAGNOSTICS category and perform the appropriate symptom.
Perform NAG1 TRANSMISSION VERIFICATION TEST - VER 1. (Refer to 21 - TRANSMISSION/TRANSAXLE/AUTOMATIC - NAG1 - STANDARD PROCEDURE)

No >> Go To 2

2. CHECK IF ENGINE DTC'S ARE PRESENT

With the scan tool, read engine DTCs.

Are there any engine DTC's present?

Yes >> Refer to the 9 - ENGINE ELECTRICAL DIAGNOSTICS and diagnose the appropriate symptom.</
Perform NAG1 TRANSMISSION VERIFICATION TEST - VER 1. (Refer to 21 - TRANSMISSION/TRANSAXLE/AUTOMATIC - NAG1 - STANDARD PROCEDURE)

No >> Using the schematics as a guide, check the Transmission Control Module (TCM) terminals for corrosion, damage, or terminal push out. Pay particular attention to all power and ground circuits. If no problems are found, replace the TCM per the Service Information. (Refer to 8 - ELECTRICAL/ELECTRONIC CONTROL MODULES/TRANSMISSION CONTROL MODULE - DESCRIPTION)
Perform NAG1 TRANSMISSION VERIFICATION TEST - VER 1. (Refer to 21 - TRANSMISSION/TRANSAXLE/AUTOMATIC - NAG1 - STANDARD PROCEDURE)

U1406-IMPLAUSIBLE MAXIMUM ENGINE TORQUE SIGNAL RECEIVED

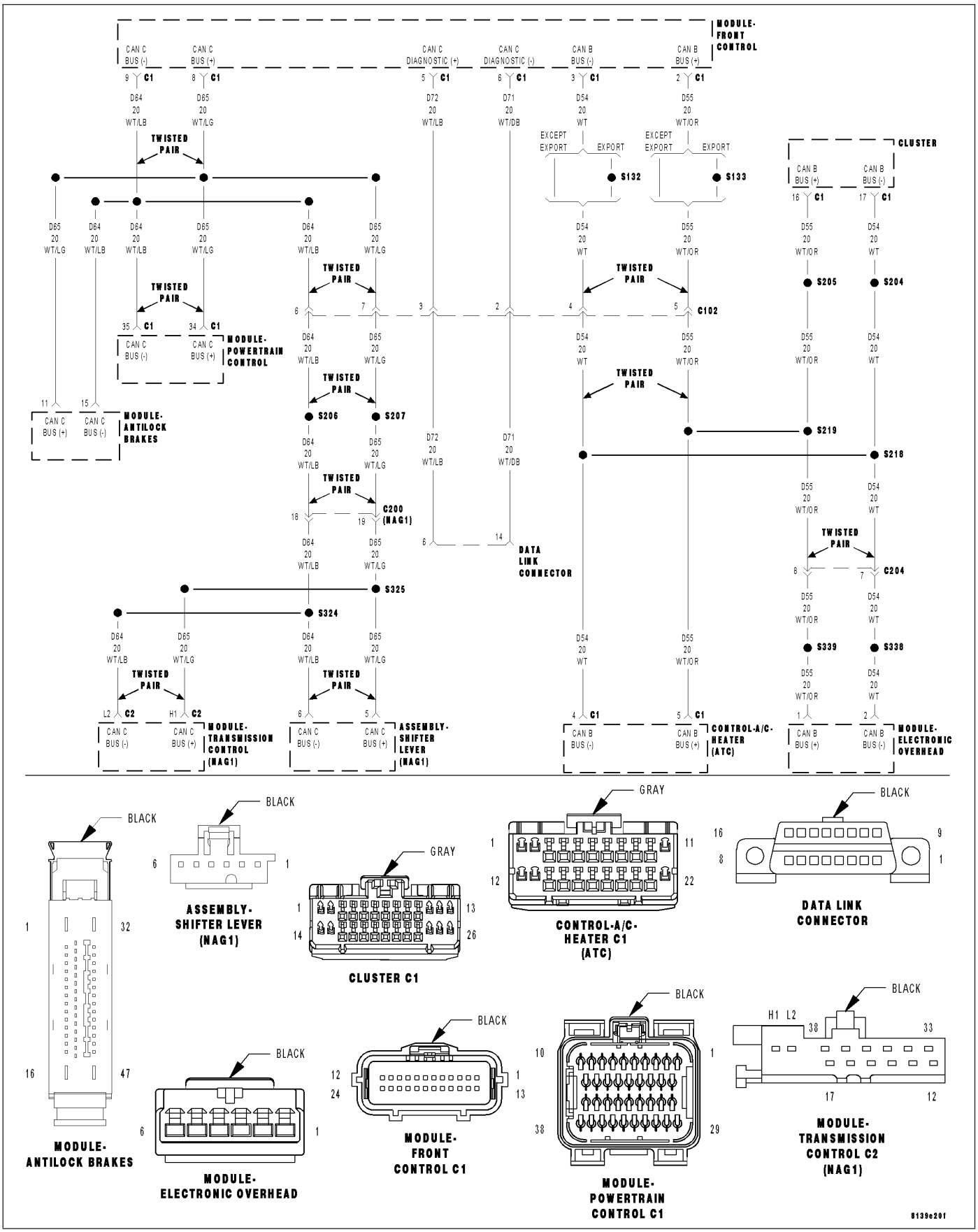

For a complete wiring diagram **Refer to Section 8W**

Theory of Operation

The messages sent on the CAN bus are distinguished by an identifier (ID). Each CAN ID is defined to contain a certain number of bytes. The Transmission Control Module (TCM) verifies that it has received the proper number of bytes for each ID.

- **When Monitored:**
  Continuously with the ignition on, one valid CAN ID received at least once, and no U0002-CAN Bus Off Performance DTC present.
- **Set Condition:**
  When the TCM detects an incorrect CAN ID from the ECM/PCM.

Possible Causes
FCM CAN BUS DTC'S PRESENT
ECM/PCM DTC'S PRESENT
TRANSMISSION CONTROL MODULE

Always perform the NAG1 Pre-Diagnostic Troubleshooting procedure before proceeding. (Refer to 21 - TRANSMISSION/TRANSAXLE/AUTOMATIC - NAG1 - STANDARD PROCEDURE)

Diagnostic Test

1. CHECK FOR FCM CAN BUS DTCS

With the scan tool, read FCM DTCs.

Are there any FCM CAN BUS DTC's present?

Yes >> Refer to 8-ELECTRICAL - ELECTRONIC CONTROL MODULES - ELECTRICAL DIAGNOSTICS category and perform the appropriate symptom.
Perform NAG1 TRANSMISSION VERIFICATION TEST - VER 1. (Refer to 21 - TRANSMISSION/TRANSAXLE/AUTOMATIC - NAG1 - STANDARD PROCEDURE)

No >> Go To 2

2. CHECK IF ENGINE DTC'S ARE PRESENT

With the scan tool, read engine DTCs.

Are there any engine DTC's present?

Yes >> Refer to the 9 - ENGINE ELECTRICAL DIAGNOSTICS and diagnose the appropriate symptom.
Perform NAG1 TRANSMISSION VERIFICATION TEST - VER 1. (Refer to 21 - TRANSMISSION/TRANSAXLE/AUTOMATIC - NAG1 - STANDARD PROCEDURE)

No >> Using the schematics as a guide, check the Transmission Control Module (TCM) terminals for corrosion, damage, or terminal push out. Pay particular attention to all power and ground circuits. If no problems are found, replace the TCM per the Service Information. (Refer to 8 - ELECTRICAL/ELECTRONIC CONTROL MODULES/TRANSMISSION CONTROL MODULE - DESCRIPTION)
Perform NAG1 TRANSMISSION VERIFICATION TEST - VER 1. (Refer to 21 - TRANSMISSION/TRANSAXLE/AUTOMATIC - NAG1 - STANDARD PROCEDURE)

U1407-IMPLAUSIBLE ENGINE TORQUE REQUEST SIGNAL RECEIVED

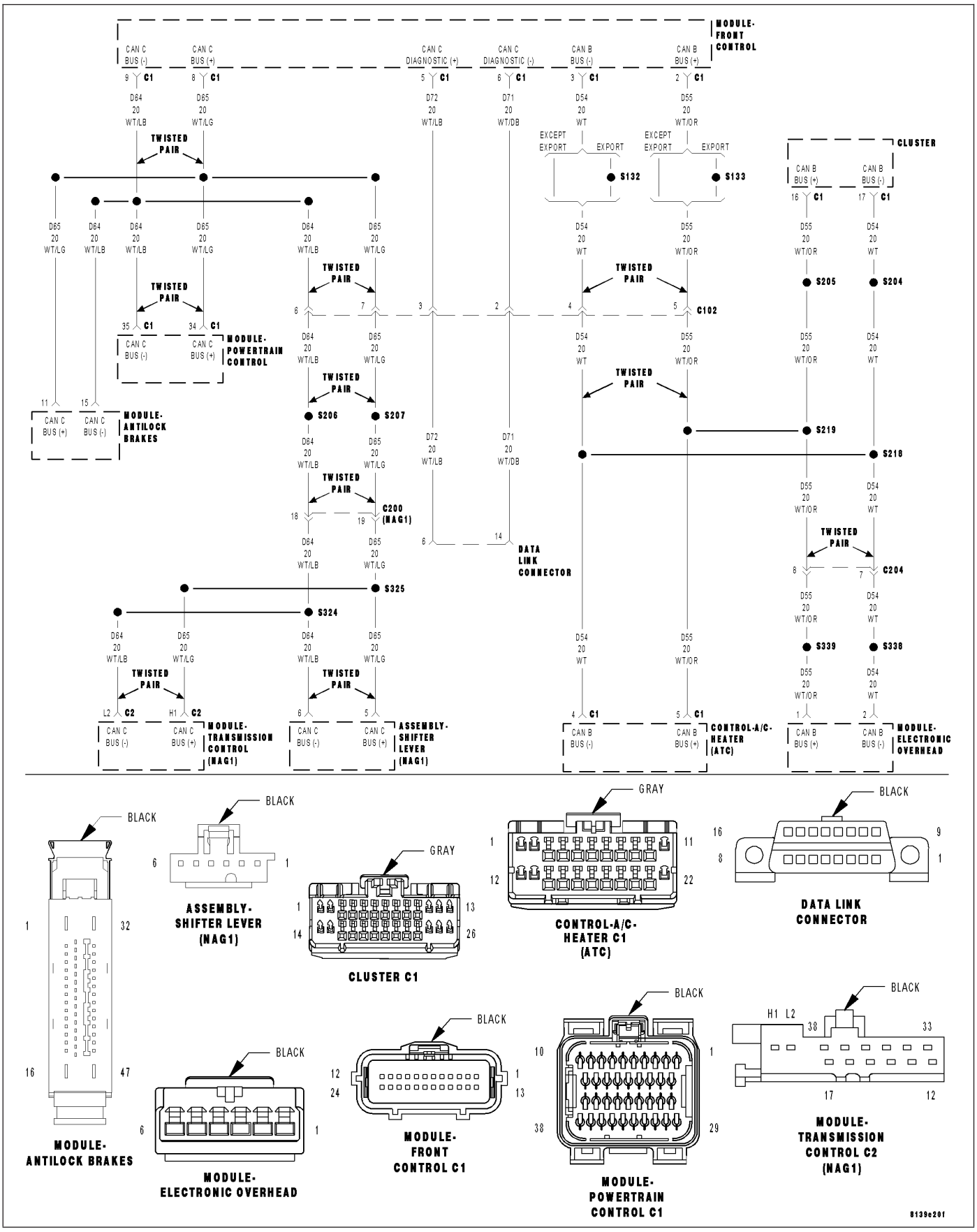

For a complete wiring diagram **Refer to Section 8W**

Theory of Operation

The messages sent on the CAN bus are distinguished by an identifier (ID). Each CAN ID is defined to contain a certain number of bytes. The Transmission Control Module (TCM) verifies that it has received the proper number of bytes for each ID.

- **When Monitored:**
  Continuously with the ignition on, one valid CAN ID received at least once, and no U0002-CAN Bus Off Performance DTC present.
- **Set Condition:**
  When the TCM detects an incorrect CAN ID from the ECM/PCM.

Possible Causes
FCM CAN BUS DTC'S PRESENT
ECM/PCM DTC'S PRESENT
TRANSMISSION CONTROL MODULE

Always perform the NAG1 Pre-Diagnostic Troubleshooting procedure before proceeding. (Refer to 21 - TRANSMISSION/TRANSAXLE/AUTOMATIC - NAG1 - STANDARD PROCEDURE)

Diagnostic Test

1. CHECK FOR FCM CAN BUS DTCS

With the scan tool, read FCM DTCs.

Are there any FCM CAN BUS DTC's present?

Yes >> Refer to 8-ELECTRICAL - ELECTRONIC CONTROL MODULES - ELECTRICAL DIAGNOSTICS category and perform the appropriate symptom.
Perform NAG1 TRANSMISSION VERIFICATION TEST - VER 1. (Refer to 21 - TRANSMISSION/TRANSAXLE/AUTOMATIC - NAG1 - STANDARD PROCEDURE)

No >> Go To 2

2. CHECK IF ENGINE DTC'S ARE PRESENT

With the scan tool, read engine DTCs.

Are there any engine DTC's present?

Yes >> Refer to the 9 - ENGINE ELECTRICAL DIAGNOSTICS and diagnose the appropriate symptom.
Perform NAG1 TRANSMISSION VERIFICATION TEST - VER 1. (Refer to 21 - TRANSMISSION/TRANSAXLE/AUTOMATIC - NAG1 - STANDARD PROCEDURE)

No >> Using the schematics as a guide, check the Transmission Control Module (TCM) terminals for corrosion, damage, or terminal push out. Pay particular attention to all power and ground circuits. If no problems are found, replace the TCM per the Service Information. (Refer to 8 - ELECTRICAL/ELECTRONIC CONTROL MODULES/TRANSMISSION CONTROL MODULE - DESCRIPTION)
Perform NAG1 TRANSMISSION VERIFICATION TEST - VER 1. (Refer to 21 - TRANSMISSION/TRANSAXLE/AUTOMATIC - NAG1 - STANDARD PROCEDURE)

U1408-IMPLAUSIBLE BRAKE SIGNAL RECEIVED

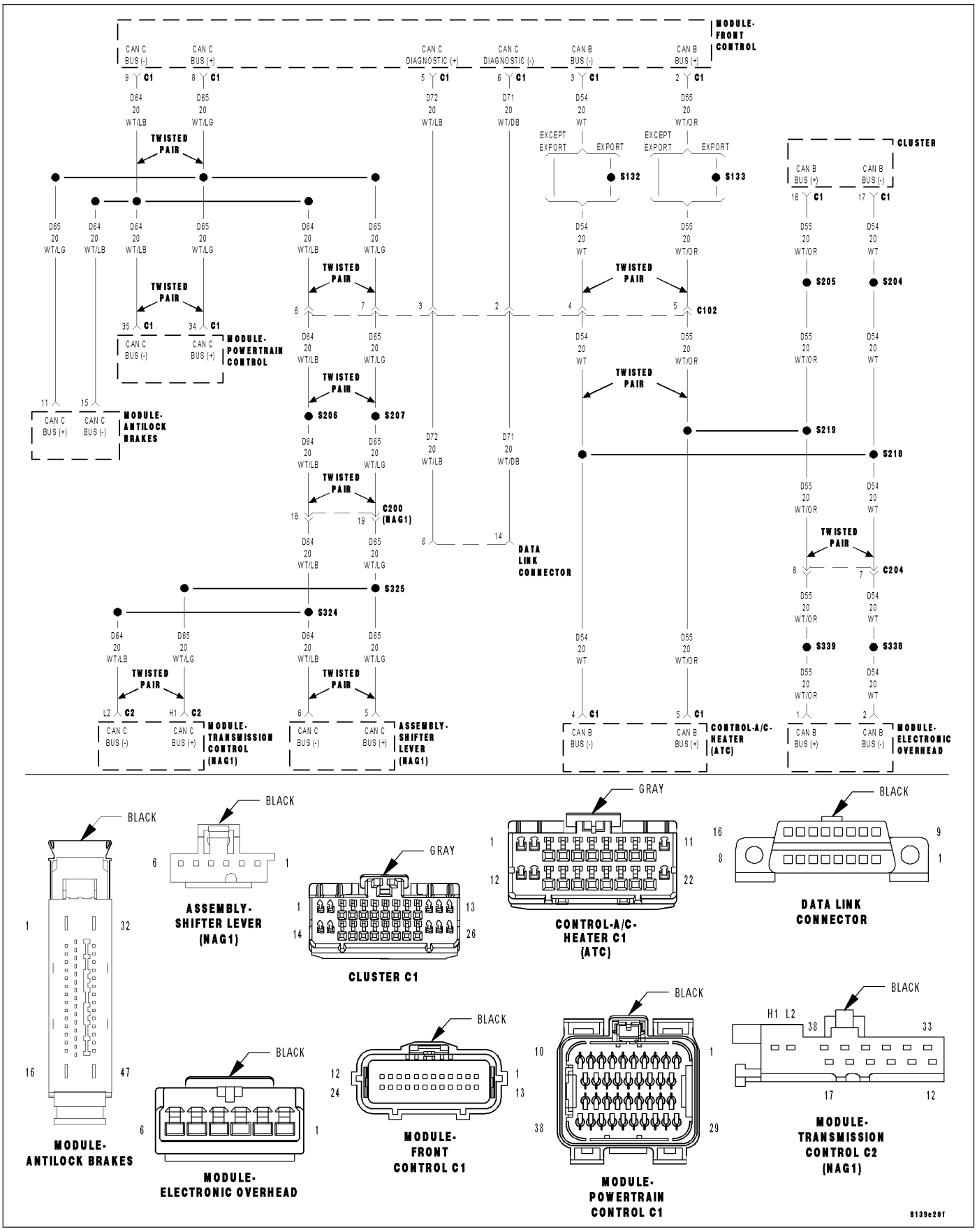

For a complete wiring diagram **Refer to Section 8W**

Theory of Operation

The messages sent on the CAN bus are distinguished by an identifier (ID). Each CAN ID is defined to contain a certain number of bytes. The Transmission Control Module (TCM) verifies that it has received the proper number of bytes for each ID.

- **When Monitored:**
  Continuously with the ignition on, one valid CAN ID received at least once, and no U0002-CAN Bus Off Performance DTC present.
- **Set Condition:**
  When the TCM detects an incorrect CAN ID from the ABS control module.

Possible Causes
FCM CAN BUS DTC'S PRESENT
ABS DTC'S PRESENT
TRANSMISSION CONTROL MODULE

Always perform the NAG1 Pre-Diagnostic Troubleshooting procedure before proceeding. (Refer to 21 - TRANSMISSION/TRANSAXLE/AUTOMATIC - NAG1 - STANDARD PROCEDURE)

Diagnostic Test

1. CHECK FOR FCM CAN BUS DTCS

With the scan tool, read FCM DTCs.

Are there any FCM CAN BUS DTC's present?

Yes >> Refer to 8-ELECTRICAL - ELECTRONIC CONTROL MODULES - ELECTRICAL DIAGNOSTICS category and perform the appropriate symptom.
Perform NAG1 TRANSMISSION VERIFICATION TEST - VER 1. (Refer to 21 - TRANSMISSION/TRANSAXLE/AUTOMATIC - NAG1 - STANDARD PROCEDURE)

No >> Go To 2

2. CHECK IF ABS DTC'S ARE PRESENT

With the scan tool, read ABS DTCs.

Are there any ABS DTC's present?

Yes >> Refer to 5 - BRAKES - ABS ELECTRICAL DIAGNOSTICS category and perform the appropriate symptom.
Perform NAG1 TRANSMISSION VERIFICATION TEST - VER 1. (Refer to 21 - TRANSMISSION/TRANSAXLE/AUTOMATIC - NAG1 - STANDARD PROCEDURE)

No >> Using the schematics as a guide, check the Transmission Control Module (TCM) terminals for corrosion, damage, or terminal push out. Pay particular attention to all power and ground circuits. If no problems are found, replace the TCM per the Service Information. (Refer to 8 - ELECTRICAL/ELECTRONIC CONTROL MODULES/TRANSMISSION CONTROL MODULE - DESCRIPTION)
Perform NAG1 TRANSMISSION VERIFICATION TEST - VER 1. (Refer to 21 - TRANSMISSION/TRANSAXLE/AUTOMATIC - NAG1 - STANDARD PROCEDURE)

U1409-IMPLAUSIBLE LEFT FRONT WHEEL SPEED SIGNAL RECEIVED

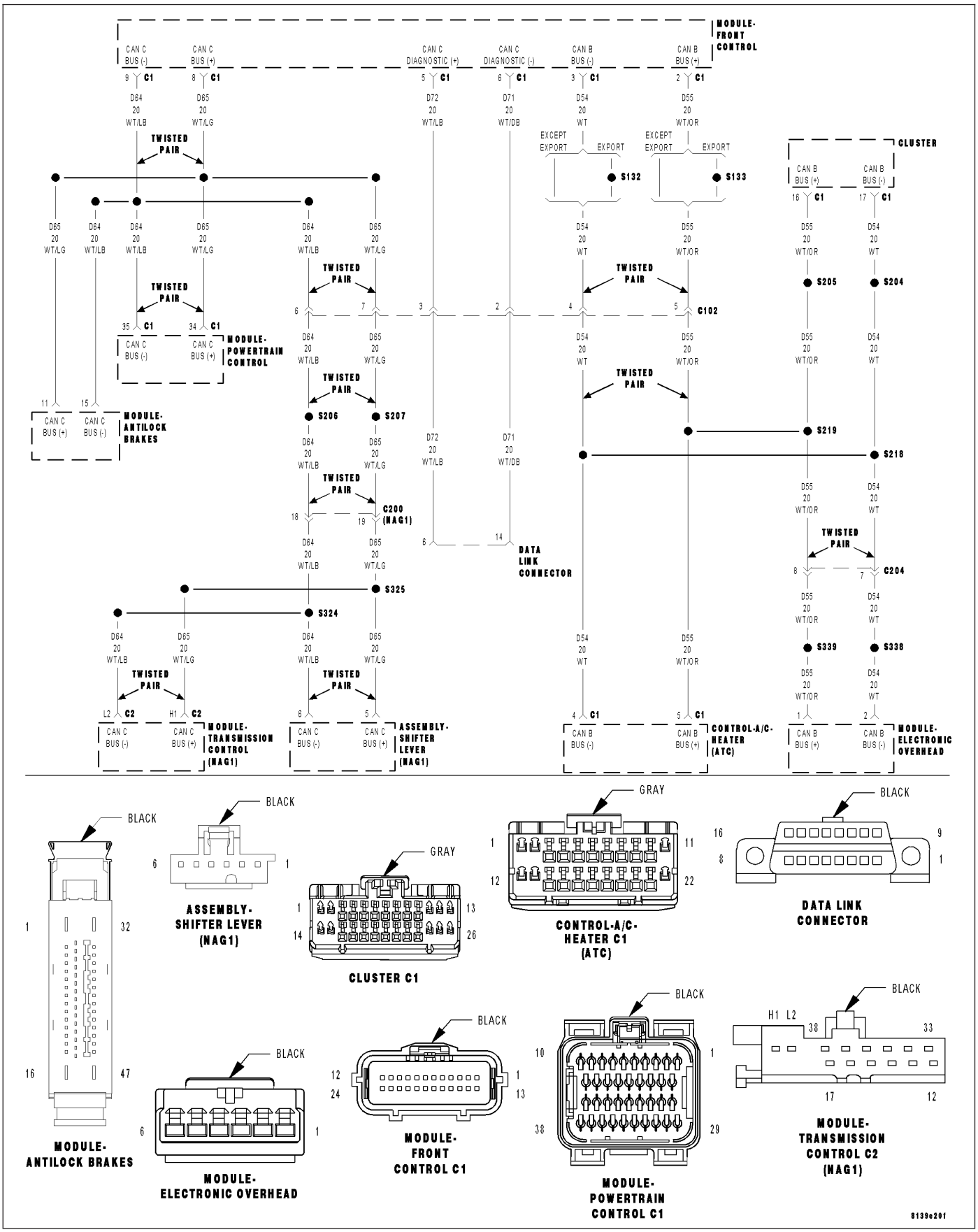

For a complete wiring diagram **Refer to Section 8W**

Theory of Operation

The messages sent on the CAN bus are distinguished by an identifier (ID). Each CAN ID is defined to contain a certain number of bytes. The Transmission Control Module (TCM) verifies that it has received the proper number of bytes for each ID.

- **When Monitored:**
  Continuously with the ignition on, one valid CAN ID received at least once, and no U0002-CAN Bus Off Performance DTC present.
- **Set Condition:**
  When the TCM detects an incorrect CAN ID from the ABS control module.

Possible Causes
FCM CAN BUS DTC'S PRESENT
ABS CONTROL MODULE DTC'S PRESENT
TRANSMISSION CONTROL MODULE

Always perform the NAG1 Pre-Diagnostic Troubleshooting procedure before proceeding. (Refer to 21 - TRANSMISSION/TRANSAXLE/AUTOMATIC - NAG1 - STANDARD PROCEDURE)

Diagnostic Test

1. CHECK FOR FCM CAN BUS DTCS

With the scan tool, read FCM DTCs.

Are there any FCM CAN BUS DTC's present?

Yes >> Refer to 8-ELECTRICAL - ELECTRONIC CONTROL MODULES - ELECTRICAL DIAGNOSTICS category and perform the appropriate symptom.
Perform NAG1 TRANSMISSION VERIFICATION TEST - VER 1. (Refer to 21 - TRANSMISSION/TRANSAXLE/AUTOMATIC - NAG1 - STANDARD PROCEDURE)

No >> Go To 2

2. CHECK IF ABS DTC'S ARE PRESENT

With the scan tool, read ABS DTCs.

Are there any ABS DTC's present?

Yes >> Refer to 5 - BRAKES - ABS ELECTRICAL DIAGNOSTICS category and perform the appropriate symptom.
Perform NAG1 TRANSMISSION VERIFICATION TEST - VER 1. (Refer to 21 - TRANSMISSION/TRANSAXLE/AUTOMATIC - NAG1 - STANDARD PROCEDURE)

No >> Using the schematics as a guide, check the Transmission Control Module (TCM) terminals for corrosion, damage, or terminal push out. Pay particular attention to all power and ground circuits. If no problems are found, replace the TCM per the Service Information. (Refer to 8 - ELECTRICAL/ELECTRONIC CONTROL MODULES/TRANSMISSION CONTROL MODULE - DESCRIPTION)
Perform NAG1 TRANSMISSION VERIFICATION TEST - VER 1. (Refer to 21 - TRANSMISSION/TRANSAXLE/AUTOMATIC - NAG1 - STANDARD PROCEDURE)

U140A-IMPLAUSIBLE RIGHT FRONT WHEEL SPEED SIGNAL RECEIVED

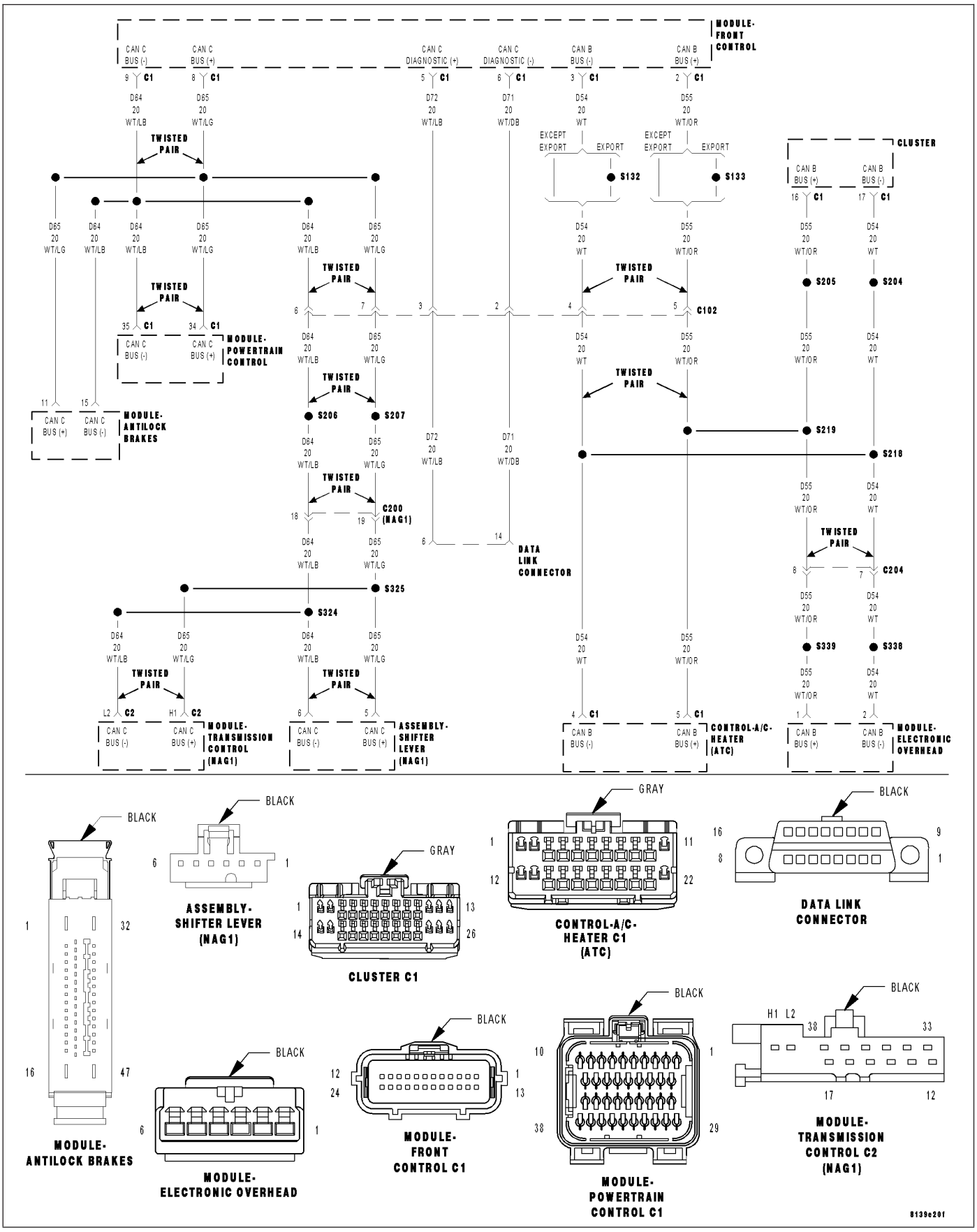

For a complete wiring diagram **Refer to Section 8W**

Theory of Operation

The messages sent on the CAN bus are distinguished by an identifier (ID). Each CAN ID is defined to contain a certain number of bytes. The Transmission Control Module (TCM) verifies that it has received the proper number of bytes for each ID.

- **When Monitored:**
  Continuously with the ignition on, one valid CAN ID received at least once, and no U0002-CAN Bus Off Performance DTC present.
- **Set Condition:**
  When the TCM detects an incorrect CAN ID from the ABS control module.

Possible Causes
FCM CAN BUS DTC'S PRESENT
ABS CONTROL MODULE DTC'S PRESENT
TRANSMISSION CONTROL MODULE

Always perform the NAG1 Pre-Diagnostic Troubleshooting procedure before proceeding. (Refer to 21 - TRANSMISSION/TRANSAXLE/AUTOMATIC - NAG1 - STANDARD PROCEDURE)

Diagnostic Test

1. CHECK FOR FCM CAN BUS DTCS

With the scan tool, read FCM DTCs.

Are there any FCM CAN BUS DTC's present?

Yes >> Refer to 8-ELECTRICAL - ELECTRONIC CONTROL MODULES - ELECTRICAL DIAGNOSTICS category and perform the appropriate symptom.
Perform NAG1 TRANSMISSION VERIFICATION TEST - VER 1. (Refer to 21 - TRANSMISSION/TRANSAXLE/AUTOMATIC - NAG1 - STANDARD PROCEDURE)

No >> Go To 2

2. CHECK IF ABS DTC'S ARE PRESENT

With the scan tool, read ABS DTCs.

Are there any ABS DTC's present?

Yes >> Refer to 5 - BRAKES - ABS ELECTRICAL DIAGNOSTICS category and perform the appropriate symptom.
Perform NAG1 TRANSMISSION VERIFICATION TEST - VER 1. (Refer to 21 - TRANSMISSION/TRANSAXLE/AUTOMATIC - NAG1 - STANDARD PROCEDURE)

No >> Using the schematics as a guide, check the Transmission Control Module (TCM) terminals for corrosion, damage, or terminal push out. Pay particular attention to all power and ground circuits. If no problems are found, replace the TCM per the Service Information. (Refer to 8 - ELECTRICAL/ELECTRONIC CONTROL MODULES/TRANSMISSION CONTROL MODULE - DESCRIPTION)
Perform NAG1 TRANSMISSION VERIFICATION TEST - VER 1. (Refer to 21 - TRANSMISSION/TRANSAXLE/AUTOMATIC - NAG1 - STANDARD PROCEDURE)

U140B-IMPLAUSIBLE LEFT REAR WHEEL SPEED SIGNAL RECEIVED

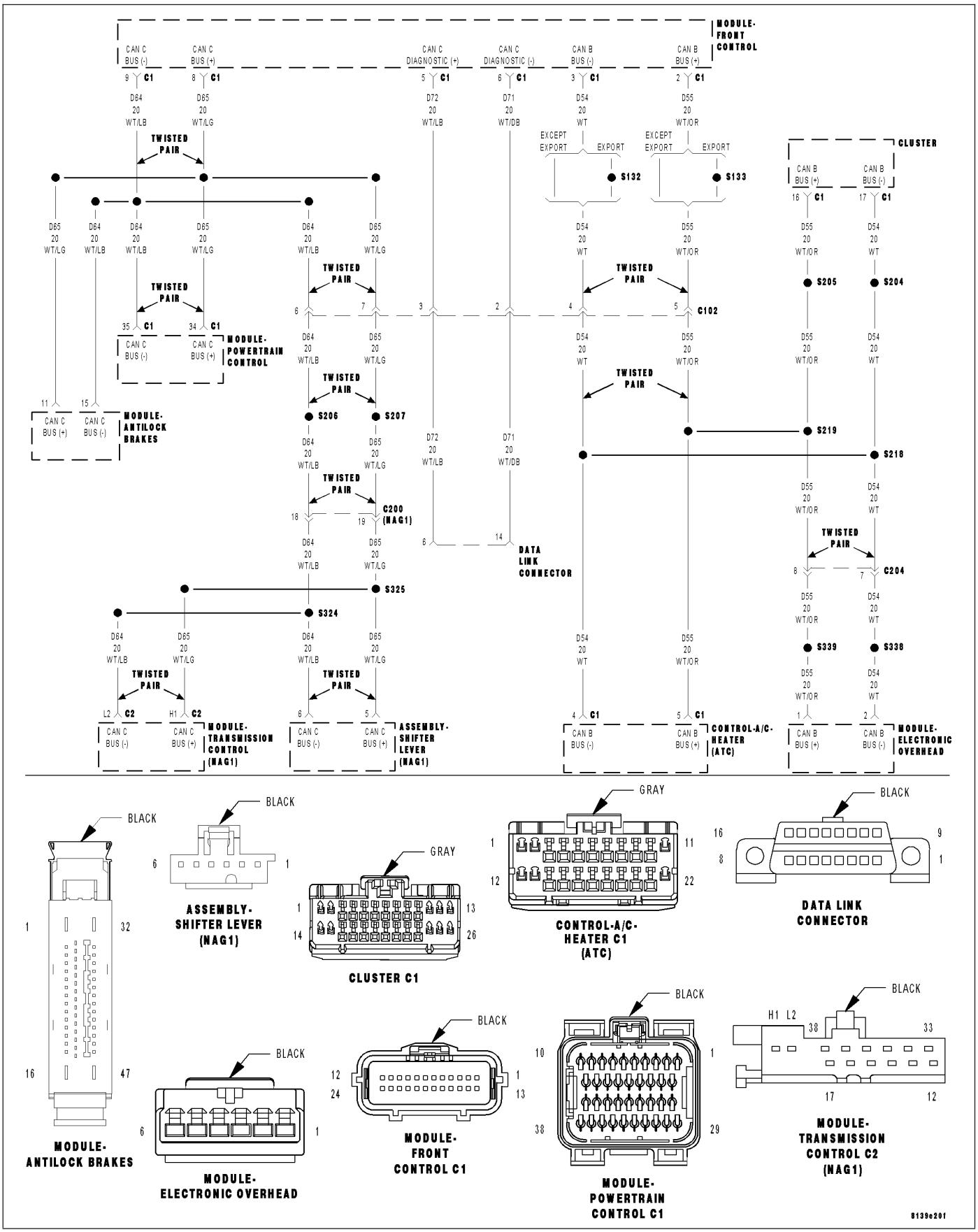

For a complete wiring diagram **Refer to Section 8W**

Theory of Operation

The messages sent on the CAN bus are distinguished by an identifier (ID). Each CAN ID is defined to contain a certain number of bytes. The Transmission Control Module (TCM) verifies that it has received the proper number of bytes for each ID.

- **When Monitored:**
  Continuously with the ignition on, one valid CAN ID received at least once, and no U0002-CAN Bus Off Performance DTC present.
- **Set Condition:**
  When the TCM detects an incorrect CAN ID from the ABS control module.

Possible Causes
FCM CAN BUS DTC'S PRESENT
ABS CONTROL MODULE DTC'S PRESENT
TRANSMISSION CONTROL MODULE

Always perform the NAG1 Pre-Diagnostic Troubleshooting procedure before proceeding. (Refer to 21 - TRANSMISSION/TRANSAXLE/AUTOMATIC - NAG1 - STANDARD PROCEDURE)

Diagnostic Test

1. CHECK FOR FCM CAN BUS DTCS

With the scan tool, read FCM DTCs.

Are there any FCM CAN BUS DTC's present?

Yes >> Refer to 8-ELECTRICAL - ELECTRONIC CONTROL MODULES - ELECTRICAL DIAGNOSTICS category and perform the appropriate symptom.
Perform NAG1 TRANSMISSION VERIFICATION TEST - VER 1. (Refer to 21 - TRANSMISSION/TRANSAXLE/AUTOMATIC - NAG1 - STANDARD PROCEDURE)

No >> Go To 2

2. CHECK IF ABS DTC'S ARE PRESENT

With the scan tool, read ABS DTCs.

Are there any ABS DTC's present?

Yes >> Refer to 5 - BRAKES - ABS ELECTRICAL DIAGNOSTICS category and perform the appropriate symptom.
Perform NAG1 TRANSMISSION VERIFICATION TEST - VER 1. (Refer to 21 - TRANSMISSION/TRANSAXLE/AUTOMATIC - NAG1 - STANDARD PROCEDURE)

No >> Using the schematics as a guide, check the Transmission Control Module (TCM) terminals for corrosion, damage, or terminal push out. Pay particular attention to all power and ground circuits. If no problems are found, replace the TCM per the Service Information. (Refer to 8 - ELECTRICAL/ELECTRONIC CONTROL MODULES/TRANSMISSION CONTROL MODULE - DESCRIPTION)
Perform NAG1 TRANSMISSION VERIFICATION TEST - VER 1. (Refer to 21 - TRANSMISSION/TRANSAXLE/AUTOMATIC - NAG1 - STANDARD PROCEDURE)

U140C-IMPLAUSIBLE RIGHT REAR WHEEL SPEED SIGNAL RECEIVED

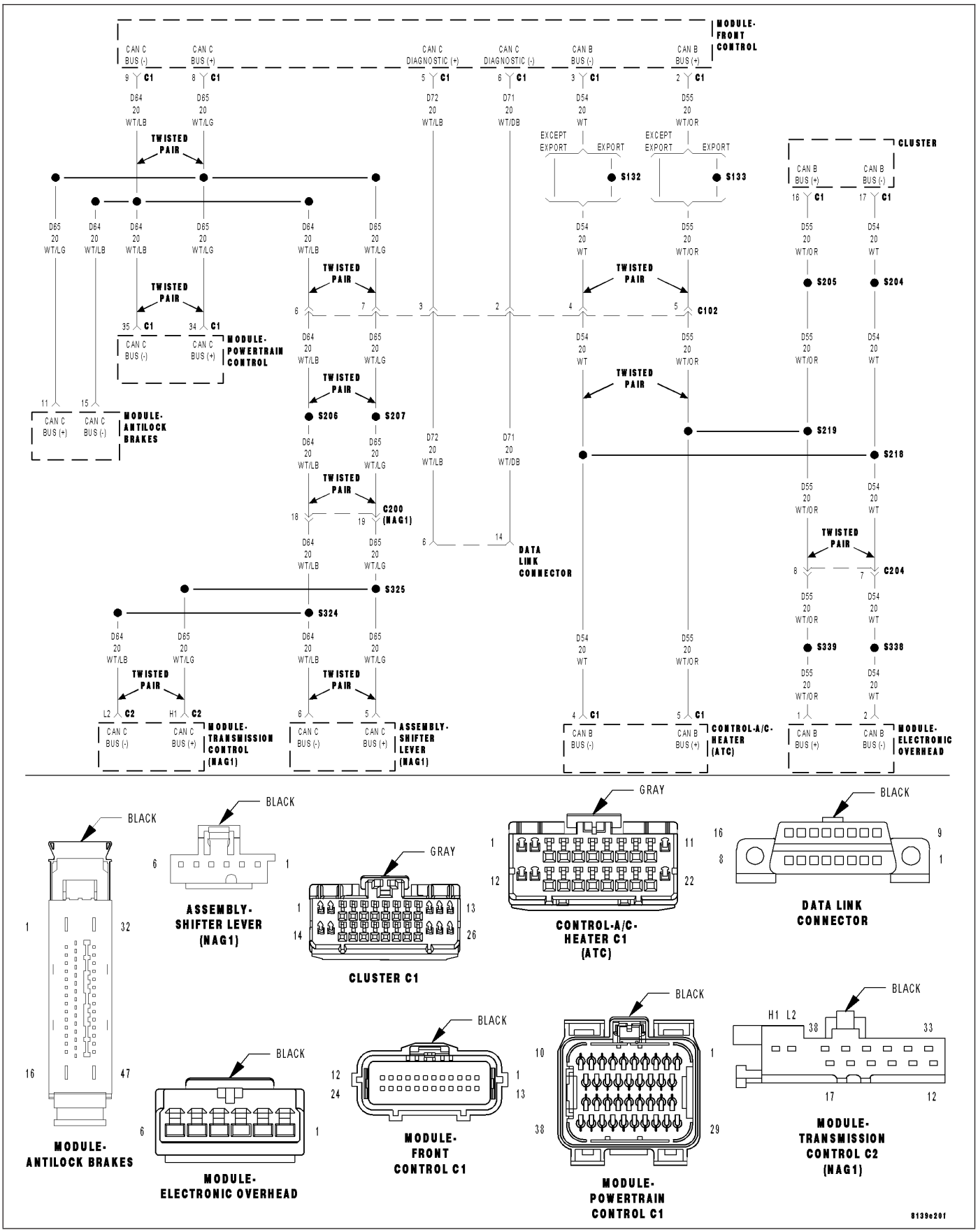

For a complete wiring diagram **Refer to Section 8W**

Theory of Operation

The messages sent on the CAN bus are distinguished by an identifier (ID). Each CAN ID is defined to contain a certain number of bytes. The Transmission Control Module (TCM) verifies that it has received the proper number of bytes for each ID.

- **When Monitored:**
  Continuously with the ignition on, one valid CAN ID received at least once, and no U0002-CAN Bus Off Performance DTC present.
- **Set Condition:**
  When the TCM detects an incorrect CAN ID from the ABS control module.

Possible Causes
FCM CAN BUS DTC'S PRESENT
ABS CONTROL MODULE DTC'S PRESENT
TRANSMISSION CONTROL MODULE

Always perform the NAG1 Pre-Diagnostic Troubleshooting procedure before proceeding. (Refer to 21 - TRANSMISSION/TRANSAXLE/AUTOMATIC - NAG1 - STANDARD PROCEDURE)

Diagnostic Test

1. CHECK FOR FCM CAN BUS DTCS

With the scan tool, read FCM DTCs.

Are there any FCM CAN BUS DTC's present?

Yes >> Refer to 8-ELECTRICAL - ELECTRONIC CONTROL MODULES - ELECTRICAL DIAGNOSTICS category and perform the appropriate symptom.
Perform NAG1 TRANSMISSION VERIFICATION TEST - VER 1. (Refer to 21 - TRANSMISSION/TRANSAXLE/AUTOMATIC - NAG1 - STANDARD PROCEDURE)

No >> Go To 2

2. CHECK IF ABS DTC'S ARE PRESENT

With the scan tool, read ABS DTCs.

Are there any ABS DTC's present?

Yes >> Refer to 5 - BRAKES - ABS ELECTRICAL DIAGNOSTICS category and perform the appropriate symptom.
Perform NAG1 TRANSMISSION VERIFICATION TEST - VER 1. (Refer to 21 - TRANSMISSION/TRANSAXLE/AUTOMATIC - NAG1 - STANDARD PROCEDURE)

No >> Using the schematics as a guide, check the Transmission Control Module (TCM) terminals for corrosion, damage, or terminal push out. Pay particular attention to all power and ground circuits. If no problems are found, replace the TCM per the Service Information. (Refer to 8 - ELECTRICAL/ELECTRONIC CONTROL MODULES/TRANSMISSION CONTROL MODULE - DESCRIPTION)
Perform NAG1 TRANSMISSION VERIFICATION TEST - VER 1. (Refer to 21 - TRANSMISSION/TRANSAXLE/AUTOMATIC - NAG1 - STANDARD PROCEDURE)

U140D-IMPLAUSIBLE WHEEL SPEED SIGNALS RECEIVED

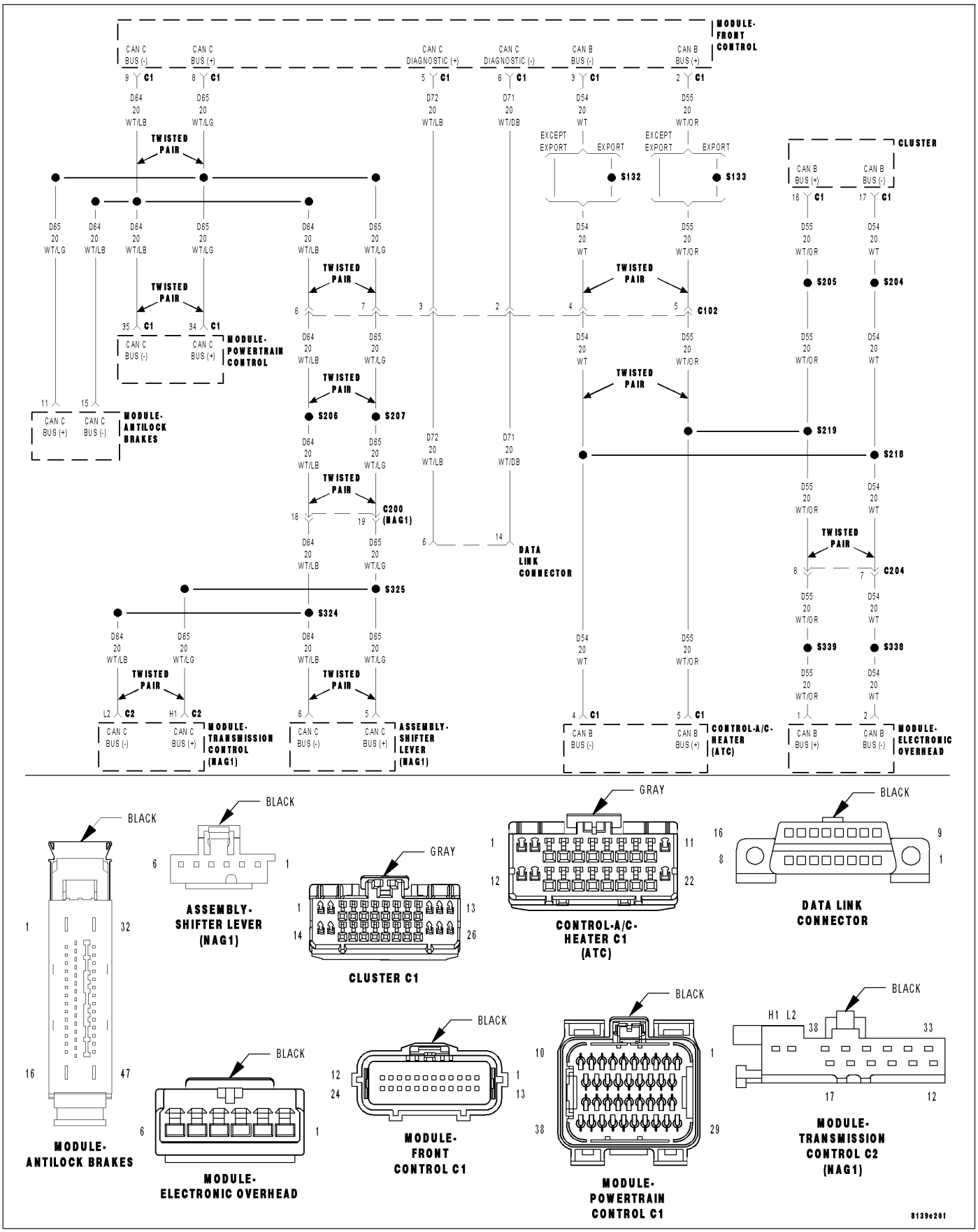

For a complete wiring diagram **Refer to Section 8W**

Theory of Operation

The messages sent on the CAN bus are distinguished by an identifier (ID). Each CAN ID is defined to contain a certain number of bytes. The Transmission Control Module (TCM) verifies that it has received the proper number of bytes for each ID.

- **When Monitored:**
  Continuously with the ignition on, one valid CAN ID received at least once, and no U0002-CAN Bus Off Performance DTC present.
- **Set Condition:**
  When the TCM detects an incorrect CAN ID from the ABS control module.

Possible Causes
FCM CAN BUS DTC'S PRESENT
ABS CONTROL MODULE DTC'S PRESENT
TRANSMISSION CONTROL MODULE

Always perform the NAG1 Pre-Diagnostic Troubleshooting procedure before proceeding. (Refer to 21 - TRANSMISSION/TRANSAXLE/AUTOMATIC - NAG1 - STANDARD PROCEDURE)

Diagnostic Test

1. CHECK FOR FCM CAN BUS DTCS

With the scan tool, read FCM DTCs.

Are there any FCM CAN BUS DTC's present?

Yes >> Refer to 8-ELECTRICAL - ELECTRONIC CONTROL MODULES - ELECTRICAL DIAGNOSTICS category and perform the appropriate symptom.
Perform NAG1 TRANSMISSION VERIFICATION TEST - VER 1. (Refer to 21 - TRANSMISSION/TRANSAXLE/AUTOMATIC - NAG1 - STANDARD PROCEDURE)

No >> Go To 2

2. CHECK IF ABS DTC'S ARE PRESENT

With the scan tool, read ABS DTCs.

Are there any ABS DTC's present?

Yes >> Refer to 5 - BRAKES - ABS ELECTRICAL DIAGNOSTICS category and perform the appropriate symptom.
Perform NAG1 TRANSMISSION VERIFICATION TEST - VER 1. (Refer to 21 - TRANSMISSION/TRANSAXLE/AUTOMATIC - NAG1 - STANDARD PROCEDURE)

No >> Using the schematics as a guide, check the Transmission Control Module (TCM) terminals for corrosion, damage, or terminal push out. Pay particular attention to all power and ground circuits. If no problems are found, replace the TCM per the Service Information. (Refer to 8 - ELECTRICAL/ELECTRONIC CONTROL MODULES/TRANSMISSION CONTROL MODULE - DESCRIPTION)
Perform NAG1 TRANSMISSION VERIFICATION TEST - VER 1. (Refer to 21 - TRANSMISSION/TRANSAXLE/AUTOMATIC - NAG1 - STANDARD PROCEDURE)

U140F-IMPLAUSIBLE ENGINE VARIANT DATA

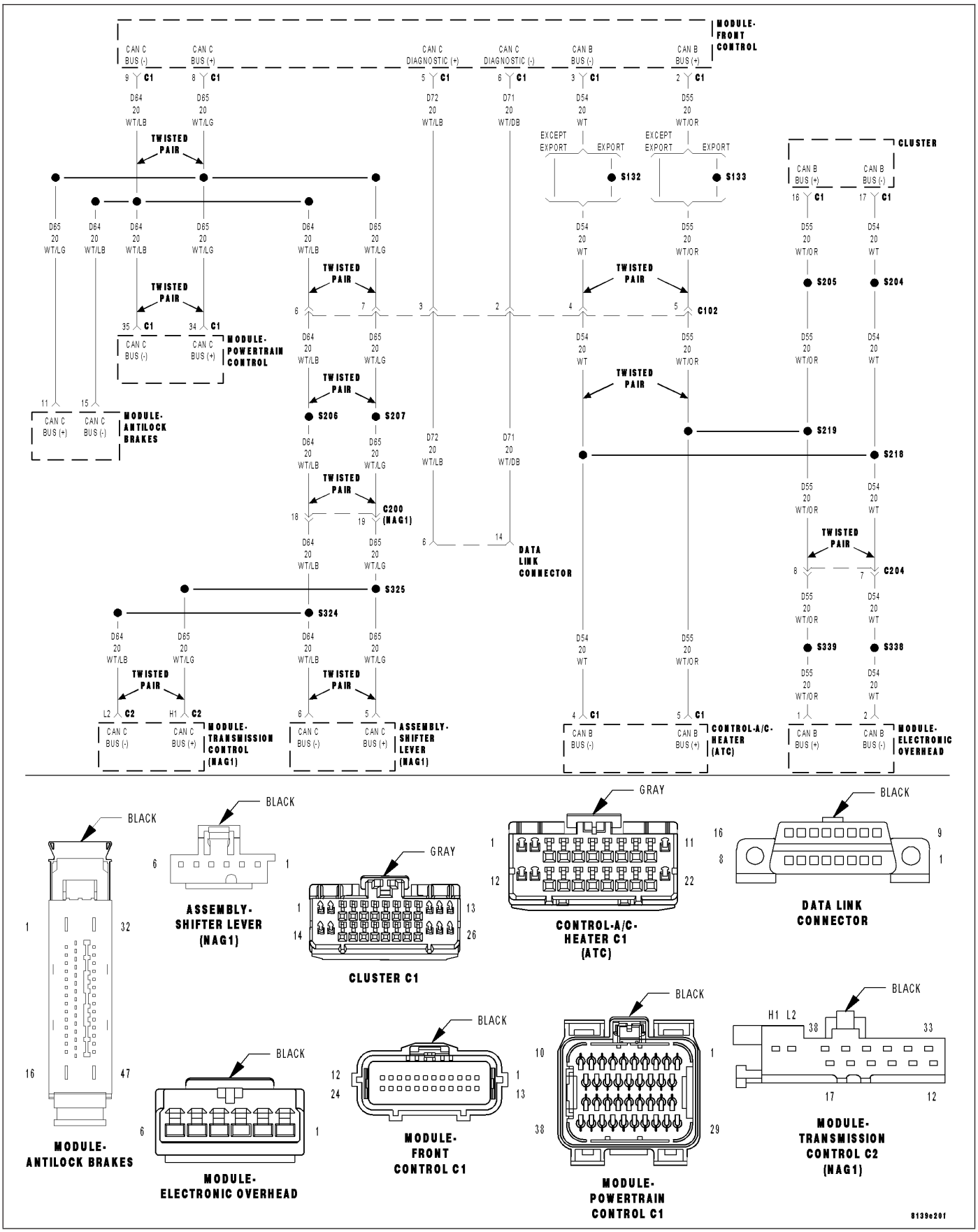

For a complete wiring diagram **Refer to Section 8W**

Theory of Operation

The messages sent on the CAN bus are distinguished by an identifier (ID). Each CAN ID is defined to contain a certain number of bytes. The Transmission Control Module (TCM) verifies that it has received the proper number of bytes for each ID.

- **When Monitored:**
  Continuously with the ignition on, one valid CAN ID received at least once, and no U0002-CAN Bus Off Performance DTC present.
- **Set Condition:**
  When the TCM detects an incorrect CAN ID from the ECM/PCM.

Possible Causes
FCM CAN BUS DTC'S PRESENT
ECM/PCM DTC'S PRESENT
TRANSMISSION CONTROL MODULE

Always perform the NAG1 Pre-Diagnostic Troubleshooting procedure before proceeding. (Refer to 21 - TRANSMISSION/TRANSAXLE/AUTOMATIC - NAG1 - STANDARD PROCEDURE)

Diagnostic Test

1. CHECK FOR FCM CAN BUS DTCS

With the scan tool, read FCM DTCs.

Are there any FCM CAN BUS DTC's present?

Yes >> Refer to 8-ELECTRICAL - ELECTRONIC CONTROL MODULES - ELECTRICAL DIAGNOSTICS category and perform the appropriate symptom.
Perform NAG1 TRANSMISSION VERIFICATION TEST - VER 1. (Refer to 21 - TRANSMISSION/TRANSAXLE/AUTOMATIC - NAG1 - STANDARD PROCEDURE)

No >> Go To 2

2. CHECK IF ECM/PCM DTC'S ARE PRESENT

With the scan tool, read ECM/PCM DTCs.

Are there any ECM/PCM DTC's present?

Yes >> Refer to 9 - ENGINE ELECTRICAL DIAGNOSTICS category and perform the appropriate symptom.
Perform NAG1 TRANSMISSION VERIFICATION TEST - VER 1. (Refer to 21 - TRANSMISSION/TRANSAXLE/AUTOMATIC - NAG1 - STANDARD PROCEDURE)

No >> Using the schematics as a guide, check the Transmission Control Module (TCM) terminals for corrosion, damage, or terminal push out. Pay particular attention to all power and ground circuits. If no problems are found, replace the TCM per the Service Information. (Refer to 8 - ELECTRICAL/ELECTRONIC CONTROL MODULES/TRANSMISSION CONTROL MODULE - DESCRIPTION)
Perform NAG1 TRANSMISSION VERIFICATION TEST - VER 1. (Refer to 21 - TRANSMISSION/TRANSAXLE/AUTOMATIC - NAG1 - STANDARD PROCEDURE)

U1410-IMPLAUSIBLE/MISSING FCM VARIANT DATA

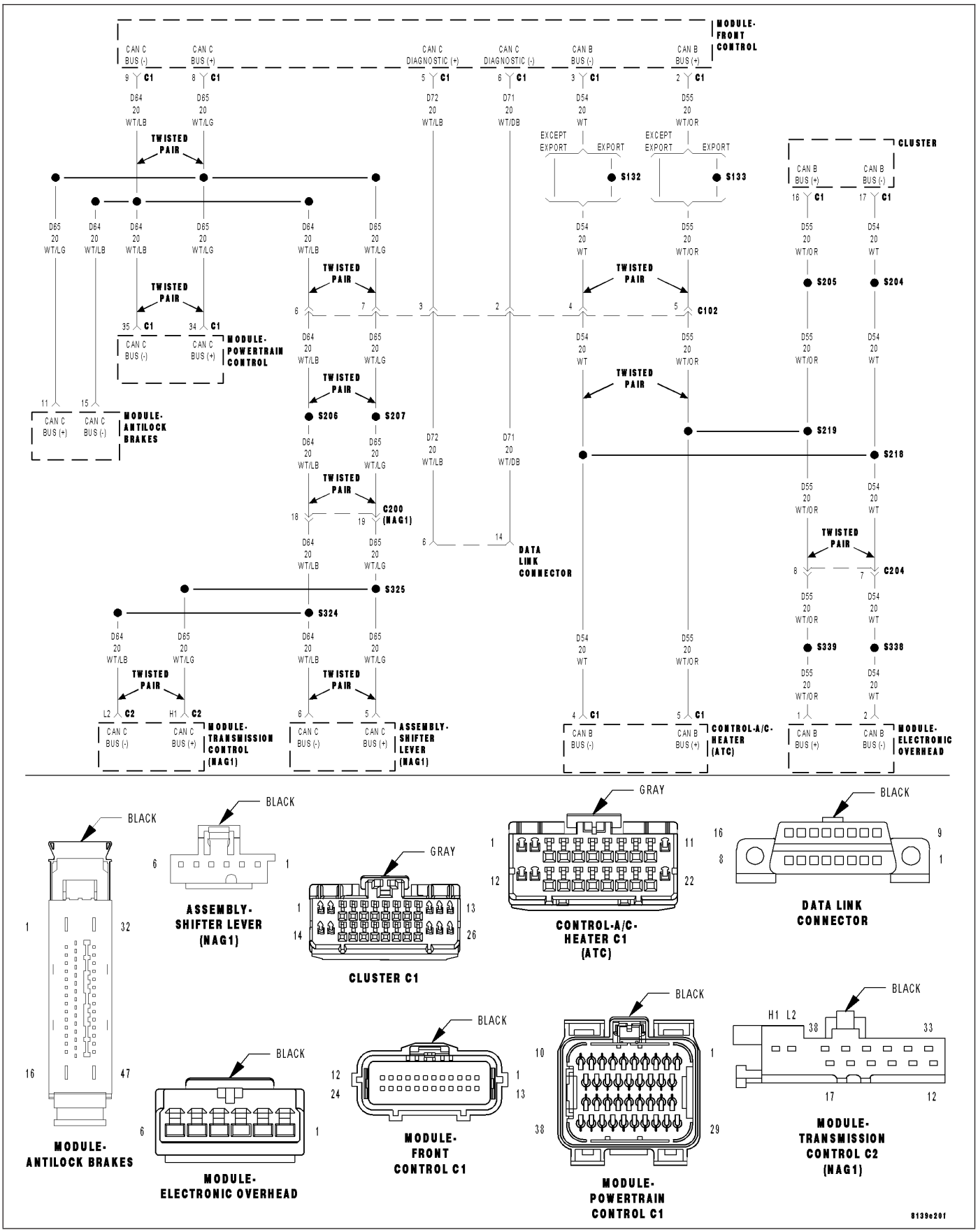

For a complete wiring diagram **Refer to Section 8W**

Theory of Operation

The messages sent on the CAN bus are distinguished by an identifier (ID). Each CAN ID is defined to contain a certain number of bytes. The Transmission Control Module (TCM) verifies that it has received the proper number of bytes for each ID.

- **When Monitored:**
  Continuously with the ignition on, one valid CAN ID received at least once, and no U0002-CAN Bus Off Performance DTC present.
- **Set Condition:**
  When the TCM detects an incorrect CAN ID from the FCM.

Possible Causes
FCM CAN BUS DTC'S PRESENT
TRANSMISSION CONTROL MODULE

Always perform the NAG1 Pre-Diagnostic Troubleshooting procedure before proceeding. (Refer to 21 - TRANSMISSION/TRANSAXLE/AUTOMATIC - NAG1 - STANDARD PROCEDURE)

Diagnostic Test

1. CHECK FOR FCM CAN BUS DTCS

With the scan tool, read FCM DTCs.

Are there any FCM CAN BUS DTC's present?

Yes >> Refer to 8-ELECTRICAL - ELECTRONIC CONTROL MODULES - ELECTRICAL DIAGNOSTICS category and perform the appropriate symptom.
Perform NAG1 TRANSMISSION VERIFICATION TEST - VER 1. (Refer to 21 - TRANSMISSION/TRANSAXLE/AUTOMATIC - NAG1 - STANDARD PROCEDURE)

No >> Using the schematics as a guide, check the Transmission Control Module (TCM) terminals for corrosion, damage, or terminal push out. Pay particular attention to all power and ground circuits. If no problems are found, replace the TCM per the Service Information. (Refer to 8 - ELECTRICAL/ELECTRONIC CONTROL MODULES/TRANSMISSION CONTROL MODULE - DESCRIPTION)
Perform NAG1 TRANSMISSION VERIFICATION TEST - VER 1. (Refer to 21 - TRANSMISSION/TRANSAXLE/AUTOMATIC - NAG1 - STANDARD PROCEDURE)

U1507-IMPLAUSIBLE ENGINE TEMPERATURE MESSAGE DATA LENGTH RECEIVED

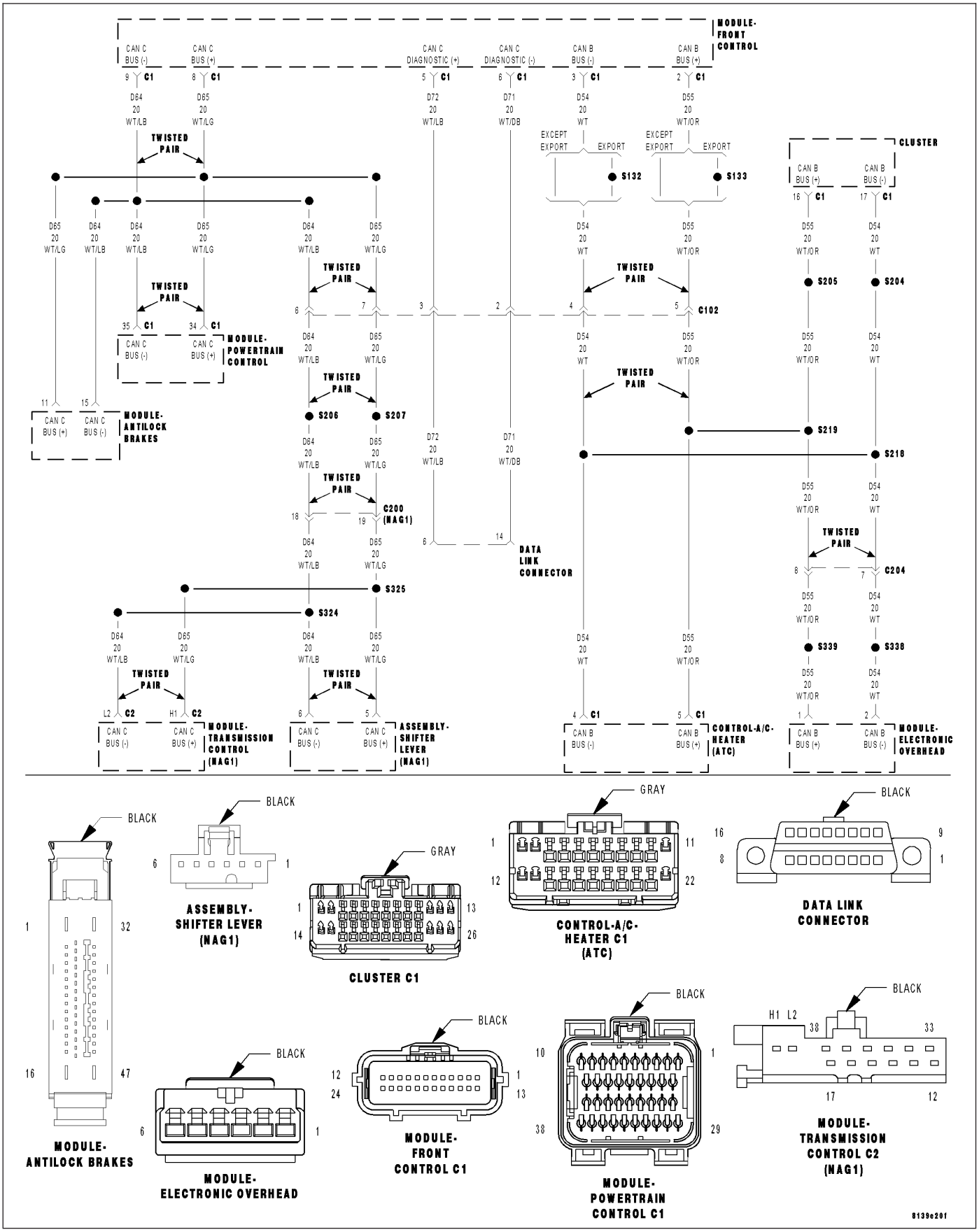

For a complete wiring diagram **Refer to Section 8W**

Theory of Operation

The messages sent on the CAN bus are distinguished by an identifier (ID). Each CAN ID is defined to contain a certain number of bytes. The Transmission Control Module (TCM) verifies that it has received the proper number of bytes for each ID.

- **When Monitored:**
  Continuously with the ignition on, one valid CAN ID received at least once, and no U0002-CAN Bus Off Performance DTC present.
- **Set Condition:**
  When the TCM detects an incorrect CAN ID from the ECM/PCM.

Possible Causes
FCM CAN BUS DTC'S PRESENT
ECM/PCM DTC'S PRESENT
TRANSMISSION CONTROL MODULE

Always perform the NAG1 Pre-Diagnostic Troubleshooting procedure before proceeding. (Refer to 21 - TRANSMISSION/TRANSAXLE/AUTOMATIC - NAG1 - STANDARD PROCEDURE)

Diagnostic Test

1. CHECK FOR FCM CAN BUS DTCS

With the scan tool, read FCM DTCs.

Are there any FCM CAN BUS DTC's present?

Yes >> Refer to 8-ELECTRICAL - ELECTRONIC CONTROL MODULES - ELECTRICAL DIAGNOSTICS category and perform the appropriate symptom.
Perform NAG1 TRANSMISSION VERIFICATION TEST - VER 1. (Refer to 21 - TRANSMISSION/TRANSAXLE/AUTOMATIC - NAG1 - STANDARD PROCEDURE)

No >> Go To 2

2. CHECK IF ECM/PCM DTC'S ARE PRESENT

With the scan tool, read ECM/PCM DTCs.

Are there any ECM/PCM DTC's present?

Yes >> Refer to 9 - ENGINE ELECTRICAL DIAGNOSTICS category and perform the appropriate symptom.
Perform NAG1 TRANSMISSION VERIFICATION TEST - VER 1. (Refer to 21 - TRANSMISSION/TRANSAXLE/AUTOMATIC - NAG1 - STANDARD PROCEDURE)

No >> Using the schematics as a guide, check the Transmission Control Module (TCM) terminals for corrosion, damage, or terminal push out. Pay particular attention to all power and ground circuits. If no problems are found, replace the TCM per the Service Information. (Refer to 8 - ELECTRICAL/ELECTRONIC CONTROL MODULES/TRANSMISSION CONTROL MODULE - DESCRIPTION)
Perform NAG1 TRANSMISSION VERIFICATION TEST - VER 1. (Refer to 21 - TRANSMISSION/TRANSAXLE/AUTOMATIC - NAG1 - STANDARD PROCEDURE)

U1509-IMPLAUSIBLE ENGINE VARIANT MESSAGE DATA LENGTH RECEIVED

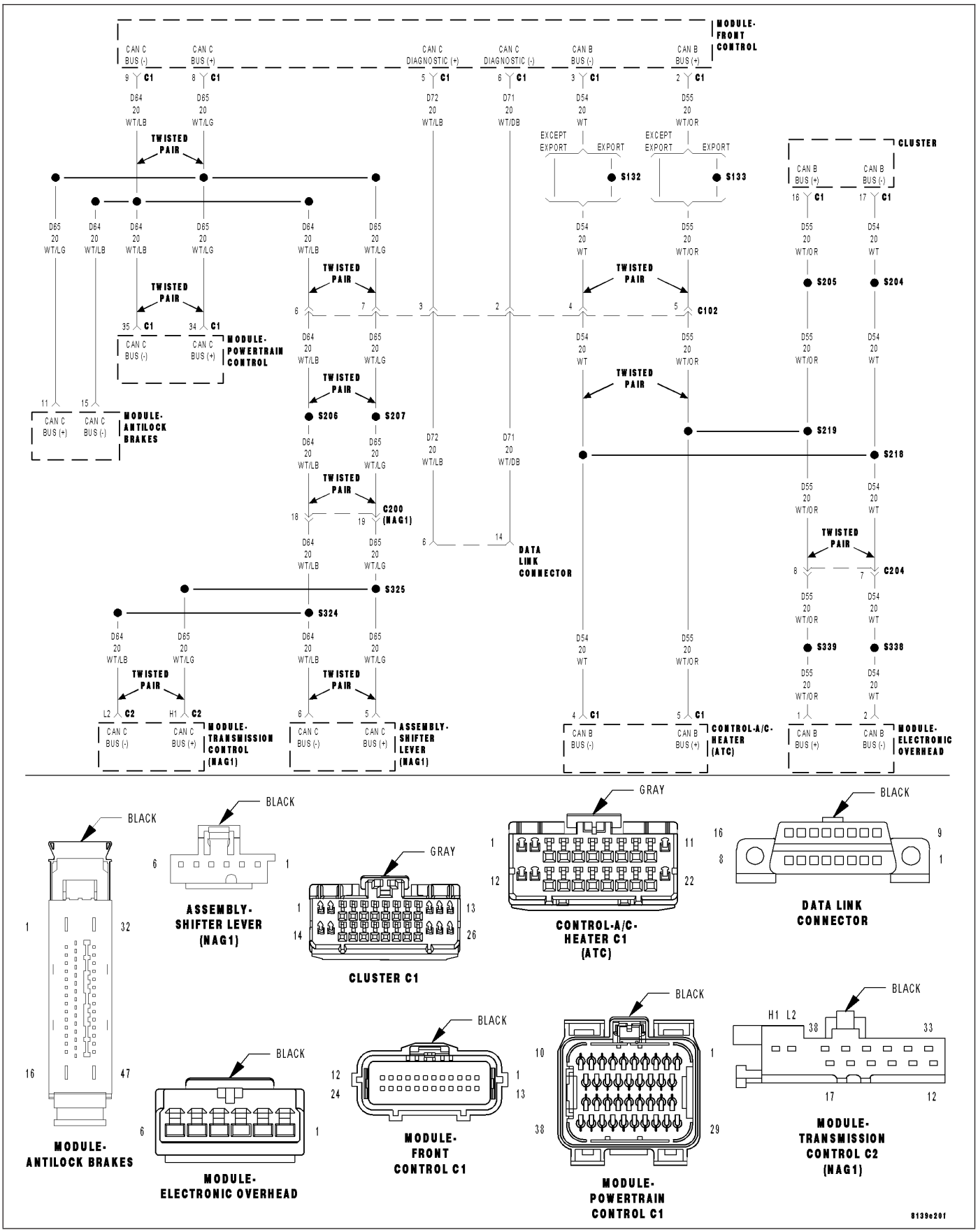

For a complete wiring diagram **Refer to Section 8W**

Theory of Operation

The messages sent on the CAN bus are distinguished by an identifier (ID). Each CAN ID is defined to contain a certain number of bytes. The Transmission Control Module (TCM) verifies that it has received the proper number of bytes for each ID.

- **When Monitored:**
  Continuously with the ignition on, one valid CAN ID received at least once, and no U0002-CAN Bus Off Performance DTC present.
- **Set Condition:**
  When the TCM detects an incorrect CAN ID from the ECM/PCM.

Possible Causes
FCM CAN BUS DTC'S PRESENT
ECM/PCM DTC'S PRESENT
TRANSMISSION CONTROL MODULE

Always perform the NAG1 Pre-Diagnostic Troubleshooting procedure before proceeding. (Refer to 21 - TRANSMISSION/TRANSAXLE/AUTOMATIC - NAG1 - STANDARD PROCEDURE)

Diagnostic Test

1. CHECK FOR FCM CAN BUS DTCS

With the scan tool, read FCM DTCs.

Are there any FCM CAN BUS DTC's present?

Yes >> Refer to 8-ELECTRICAL - ELECTRONIC CONTROL MODULES - ELECTRICAL DIAGNOSTICS category and perform the appropriate symptom.
Perform NAG1 TRANSMISSION VERIFICATION TEST - VER 1. (Refer to 21 - TRANSMISSION/TRANSAXLE/AUTOMATIC - NAG1 - STANDARD PROCEDURE)

No >> Go To 2

2. CHECK IF ECM/PCM DTC'S ARE PRESENT

With the scan tool, read ECM/PCM DTCs.

Are there any ECM/PCM DTC's present?

Yes >> Refer to 9 - ENGINE ELECTRICAL DIAGNOSTICS category and perform the appropriate symptom.
Perform NAG1 TRANSMISSION VERIFICATION TEST - VER 1. (Refer to 21 - TRANSMISSION/TRANSAXLE/AUTOMATIC - NAG1 - STANDARD PROCEDURE)

No >> Using the schematics as a guide, check the Transmission Control Module (TCM) terminals for corrosion, damage, or terminal push out. Pay particular attention to all power and ground circuits. If no problems are found, replace the TCM per the Service Information. (Refer to 8 - ELECTRICAL/ELECTRONIC CONTROL MODULES/TRANSMISSION CONTROL MODULE - DESCRIPTION)
Perform NAG1 TRANSMISSION VERIFICATION TEST - VER 1. (Refer to 21 - TRANSMISSION/TRANSAXLE/AUTOMATIC - NAG1 - STANDARD PROCEDURE)

U150A-IMPLAUSIBLE FCM VARIANT MESSAGE DATA LENGTH RECEIVED

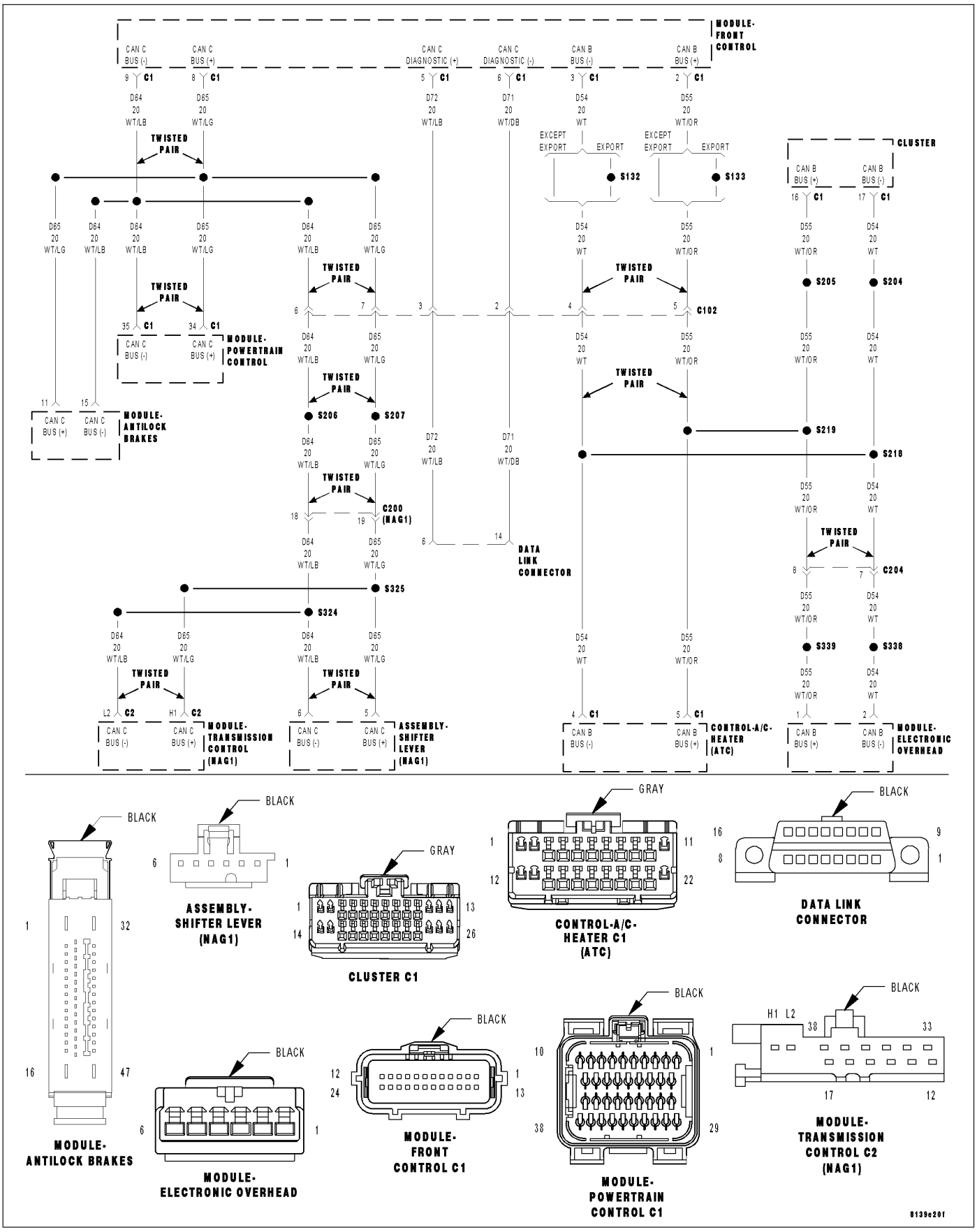

For a complete wiring diagram **Refer to Section 8W**

Theory of Operation

The messages sent on the CAN bus are distinguished by an identifier (ID). Each CAN ID is defined to contain a certain number of bytes. The Transmission Control Module (TCM) verifies that it has received the proper number of bytes for each ID.

- **When Monitored:**
  Continuously with the ignition on, one valid CAN ID received at least once, and no U0002-CAN Bus Off Performance DTC present.
- **Set Condition:**
  When the TCM detects an incorrect CAN ID from the FCM.

Possible Causes
FCM CAN BUS DTC'S PRESENT
TRANSMISSION CONTROL MODULE

Always perform the NAG1 Pre-Diagnostic Troubleshooting procedure before proceeding. (Refer to 21 - TRANSMISSION/TRANSAXLE/AUTOMATIC - NAG1 - STANDARD PROCEDURE)

Diagnostic Test

1. CHECK FOR FCM CAN BUS DTCS

With the scan tool, read FCM DTCs.

Are there any FCM CAN BUS DTC's present?

Yes >> Refer to 8-ELECTRICAL - ELECTRONIC CONTROL MODULES - ELECTRICAL DIAGNOSTICS category and perform the appropriate symptom.
Perform NAG1 TRANSMISSION VERIFICATION TEST - VER 1. (Refer to 21 - TRANSMISSION/TRANSAXLE/AUTOMATIC - NAG1 - STANDARD PROCEDURE)

No >> Using the schematics as a guide, check the Transmission Control Module (TCM) terminals for corrosion, damage, or terminal push out. Pay particular attention to all power and ground circuits. If no problems are found, replace the TCM per the Service Information. (Refer to 8 - ELECTRICAL/ELECTRONIC CONTROL MODULES/TRANSMISSION CONTROL MODULE - DESCRIPTION)
Perform NAG1 TRANSMISSION VERIFICATION TEST - VER 1. (Refer to 21 - TRANSMISSION/TRANSAXLE/AUTOMATIC - NAG1 - STANDARD PROCEDURE)

STANDARD PROCEDURE

NAG1 PRE-DIAGNOSTIC TROUBLESHOOTING PROCEDURE

For a complete wiring diagram **Refer to Section 8W**

Perform the following pre-diagnostic troubleshooting procedures prior to performing any diagnostic test.

Low fluid level can be the cause of many transmission problems. If the fluid level is low, locate and repair the leak then check and adjust the fluid level in accordance with the Service Information.

Always perform diagnostics with a fully charged battery to avoid false symptoms.

1. With the scan tool, read the engine DTCs. Check and repair all engine DTCs prior to performing transmission symptom diagnostic procedures.
2. With the scan tool, read and record all Transmission DTCs.

NOTE: If the TCM detects and stores a DTC, the TCM also stores the vehicles operating conditions under which the DTC originally set and is located in scan tool under Environmental Data. Before erasing any stored DTCs, it is recommended to record any available data to assist in duplicating the conditions in which the DTC originally set.

3. Using the wiring diagram/schematic as a guide, inspect the wiring and connectors. Clean and repair as necessary.
4. Most DTCs set on start up but some must be set by driving the vehicle such that all diagnostic monitors have run.
5. Verify flash level of transmission controller. Some problems are corrected by software upgrades to the transmission controller. Verify that no variant DTCs are present. If variant DTCs are present, perform their respective test first.
6. If the TCM (EGS) is flashed, perform a EGS initialization with the scan tool to relearn variant coding.
7. **Check for any Service Information Tune-ups or Service Bulletins that may apply.**

1.

Did any of the above procedures repair the vehicle?

Yes >> Testing is complete.
Perform NAG1 TRANSMISSION VERIFICATION TEST. (Refer to 21 - TRANSMISSION/TRANSAXLE/AUTOMATIC - NAG1 - STANDARD PROCEDURE)

No >> Refer to the identified category and perform the appropriate symptom(s).
(Refer to 21 - TRANSMISSION/TRANSAXLE/AUTOMATIC - 42RLE - DIAGNOSIS AND TESTING)

NAG1 TRANSMISSION VERIFICATION TEST

To validate that the repair(s) fixed the vehicle, perform the following steps.

1. Reconnect any disconnected components.
2. Connect the scan tool to the Data Link Connector.
3. With the scan tool, erase ABS DTCs.
4. With the scan tool, erase PCM DTCs.
5. With the scan tool, erase TCM DTCs.

CAUTION: Apply the parking brake.

NOTE: The Transmission Temperature can only be read while in Reverse or Drive.

6. With the scan tool, display the Transmission temperature. Start and run the engine until the Transmission temperature is above 43° C (110° F).
7. Check the Transmission fluid and adjust if necessary. Refer to the Service Information for the proper Fluid Fill procedure. (Refer to 21 - TRANSMISSION/TRANSAXLE/AUTOMATIC - NAG1/FILTER - STANDARD PROCEDURE)
8. If the TCM (EGS) is flashed or replaced, with the scan tool, perform a EGS initialization to relearn variant coding.
9. If internal transmission repairs are performed or replacement of the Transmission Control Module, perform a TCM ADAPTATION procedure. (Refer to 8 - ELECTRICAL/ELECTRONIC CONTROL MODULES/TRANSMISSION CONTROL MODULE - STANDARD PROCEDURE)
10. After performing the above procedures, perform the **Road Test Procedure.**

ROAD TEST PROCEDURE

1. Road test the vehicle. Make fifteen to twenty 1-2, 2-3, 3-4, and 4-5 upshifts.
2. Perform these shifts from a standing start to 72 Kmh (45 mph) with a constant throttle opening of 20 to 25 degrees.
3. With speeds below 40 Kmh (25 mph), make five to eight wide open throttle kickdowns to 1st gear. Allow at least 5 seconds each in 2nd and 3rd gear between each kickdown.
4. With the scan tool, read DTCs.

1.

Did any DTCs set?

Yes >> Refer to the identified category and perform the appropriate symptom(s).

No >> Testing is complete.

AUTOMATIC TRANSMISSION NAG1 - SHIFTER DIAGNOSTICS

TABLE OF CONTENTS

page

AUTOMATIC TRANSMISSION NAG1 - SHIFTER DIAGNOSTICS
DIAGNOSIS AND TESTING
P0562-BATTERY VOLTAGE LOW - ESM 222
P0563-BATTERY VOLTAGE HIGH - ESM 224
P0607-ECU INTERNAL PERFORMANCE - ESM 225
P0930-BTSI CONTROL CIRCUIT LOW - ESM . 226
P0931-BTSI CONTROL CIRCUIT HIGH - ESM 229
P2775-AUTOSTICK UPSHIFT SWITCH CIRCUIT PERFORMANCE - ESM. 232
P2779-AUTOSTICK DOWNSHIFT SWITCH CIRCUIT PERFORMANCE - ESM. 233
U0002-CAN C BUS OFF PERFORMANCE - ESM 234
U0100-LOST COMMUNICATION WITH ECM/PCM - ESM 236
U0121-LOST COMMUNICATION WITH ANTI-LOCK BRAKE MODULE - ESM. 238
U0141-LOST COMMUNICATION WITH FRONT CONTROL MODULE - ESM 240
P0562-BATTERY VOLTAGE LOW - ESM (COLUMN) 242
P0563-BATTERY VOLTAGE HIGH - ESM (COLUMN SHIFT) 245

page

P0607-ECU INTERNAL PERFORMANCE - ESM (COLUMN SHIFT) 247
P0930-BTSI CONTROL CIRCUIT LOW - ESM (COLUMN SHIFT) 249
P0931-BTSI CONTROL CIRCUIT HIGH - ESM (COLUMN SHIFT) 252
P2775-AUTOSTICK UPSHIFT SWITCH CIRCUIT PERFORMANCE - ESM (COLUMN SHIFT) 255
P2779-AUTOSTICK DOWNSHIFT SWITCH CIRCUIT PERFORMANCE - ESM (COLUMN SHIFT) 257
U0002-CAN C BUS OFF PERFORMANCE - ESM (COLUMN SHIFT) 259
U0100-LOST COMMUNICATION WITH ECM/PCM - ESM (COLUMN SHIFT) 259
U0121-LOST COMMUNICATION WITH ANTI-LOCK BRAKE MODULE - ESM (COLUMN SHIFT) 259
U0141-LOST COMMUNICATION WITH FRONT CONTROL MODULE - ESM (COLUMN SHIFT) 259
STANDARD PROCEDURE
NAG1 PRE-DIAGNOSTIC TROUBLESHOOTING PROCEDURE. 260
NAG1 TRANSMISSION VERIFICATION TEST . 261

AUTOMATIC TRANSMISSION NAG1 - SHIFTER DIAGNOSTICS

DIAGNOSIS AND TESTING

P0562-BATTERY VOLTAGE LOW - ESM

For a complete wiring diagram **Refer to Section 8W**

Theory of Operation

The Shift Lever Assembly (SLA) controller (Electronic Shift Module - ESM) monitors ignition voltage. The DTC will set if the monitored battery voltage drops below 6.0 volts and a temporary limp in will be activated. If the voltage rises above 9.0 volts, normal operations is resumed.

- **When Monitored:**
  Continuously with the ignition on.
- **Set Condition:**
  When monitored battery voltage drops below 6.0 volts.

Possible Causes
VEHICLE CHARGING SYSTEM
(F902) IGNITION UNLOCK RUN START CIRCUIT
(Z911) GROUND CIRCUIT
SHIFT LEVER ASSEMBLY

Always perform the NAG1 Pre-Diagnostic Troubleshooting procedure before proceeding. (Refer to 21 - TRANSMISSION/TRANSAXLE/AUTOMATIC - NAG1 - STANDARD PROCEDURE)

Diagnostic Test

1. CHECK FOR ENGINE CHARGING SYSTEM DTCS

With the scan tool, read Engine DTCs.

Are there any Engine Charging System DTCs present?

Yes >> Refer to 9 - ENGINE ELECTRICAL DIAGNOSTICS and perform the appropriate symptom.
Perform NAG1 TRANSMISSION VERIFICATION TEST. (Refer to 21 - TRANSMISSION/TRANSAXLE/AUTOMATIC - NAG1 - STANDARD PROCEDURE)

No >> Go To 3

2. CHECK (F902) IGNITION UNLOCK RUN START CIRCUIT

Turn the ignition off to the lock position.

Disconnect the Shift Lever Assembly harness connector.

Turn the ignition on.

Using a 12-volt test light connected to ground, check the (F902) Ignition Unlock Run Start circuit in the Shift Lever Assembly harness connector.

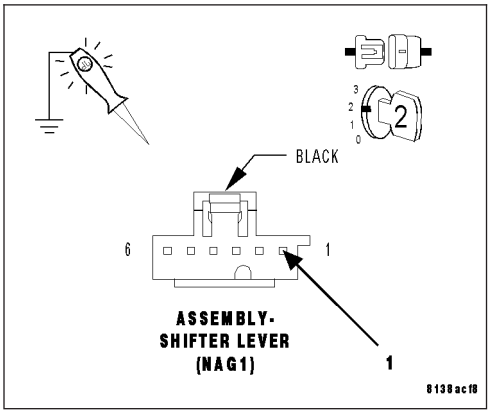

NOTE: The test light must illuminate brightly. Compare the brightness to that of a direct connection to the battery.

Does the test light illuminate brightly?

Yes >> Go To 6

No >> Repair the (F902) Ignition Unlock Run Start circuit for high resistance.
Perform NAG1 TRANSMISSION VERIFICATION TEST. (Refer to 21 - TRANSMISSION/TRANSAXLE/AUTOMATIC - NAG1 - STANDARD PROCEDURE)

3. CHECK (Z911) GROUND CIRCUIT

Turn the ignition off to the lock position.

Using a 12-volt test light connected to 12-volts, check the (Z911) Ground circuit in the Shift Lever Assembly harness connector.

NOTE: The test light must illuminate brightly. Compare the brightness to that of a direct connection to the battery.

Does the test light illuminate brightly?

Yes >> Go To 7
Perform NAG1 TRANSMISSION VERIFICATION TEST. (Refer to 21 - TRANSMISSION/TRANSAXLE/AUTOMATIC - NAG1 - STANDARD PROCEDURE)

No >> Repair the (Z911) Ground circuit for high resistance.

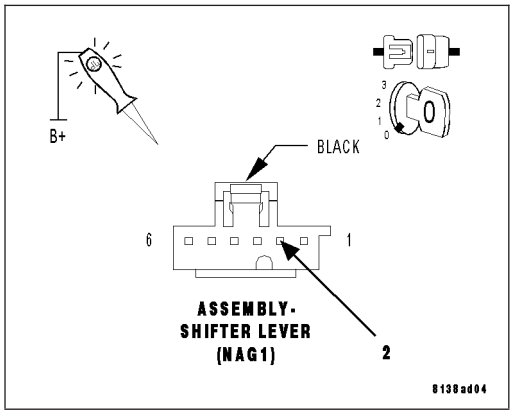

4. SHIFT LEVER ASSEMBLY

Reconnect all disconnected harness connectors.

With the scan tool, erase Shift Lever DTC's.

Start the engine and raise the engine speed to 2000 RPM.

With the scan tool, read Shift Lever DTC's.

Did the DTC P0562-BATTERY VOLTAGE LOW DTC reset?

Yes >> Replace the Shift Lever Assembly per the Service Information
Perform NAG1 TRANSMISSION VERIFICATION TEST. (Refer to 21 - TRANSMISSION/TRANSAXLE/AUTOMATIC - NAG1 - STANDARD PROCEDURE)

No >> Test Complete.

P0563-BATTERY VOLTAGE HIGH - ESM

For a complete wiring diagram **Refer to Section 8W**

- **When Monitored:**
  Continuously with the ignition on.
- **Set Condition:**
  When the monitored battery voltage rises above 16.0 volts.

Possible Causes
CHARGING SYSTEM DTCS
VEHICLE WAS JUMP STARTED INCORRECTLY
SHIFT LEVER ASSEMBLY

Always perform the NAG1 Pre-Diagnostic Troubleshooting procedure before proceeding. (Refer to 21 - TRANSMISSION/TRANSAXLE/AUTOMATIC - NAG1 - STANDARD PROCEDURE)

Theory of Operation

The Shift Lever Assembly monitors ignition voltage. The DTC will set, if the monitored battery voltage rises above 16.0 volts.

Diagnostic Test

1. CHECK FOR CHARGING SYSTEM DTCS

With the scan tool, read Engine DTCs.

NOTE: This includes any one trip faults.

Are there any Engine Charging System DTCs present?

Yes >> Refer to the 9 - ENGINE ELECTRICAL DIAGNOSTICS and perform the appropriate symptom.
Perform NAG1 TRANSMISSION VERIFICATION TEST. (Refer to 21 - TRANSMISSION/TRANSAXLE/AUTOMATIC - NAG1 - STANDARD PROCEDURE)

No >> Go To 3

2. VEHICLE WAS JUMP STARTED INCORRECTLY

Verify if the vehicle was jump started by another vehicle using a 24-volt charging system or incorrectly jump started with the 12 volt battery in series.

Was the vehicle jump started by another vehicle?

Yes >> This is the cause of the DTC. Erase the DTC and return the vehicle to the customer.
Perform NAG1 TRANSMISSION VERIFICATION TEST. (Refer to 21 - TRANSMISSION/TRANSAXLE/AUTOMATIC - NAG1 - STANDARD PROCEDURE)

No >> Go To 3

3. SHIFT LEVER ASSEMBLY

Reconnect all disconnected harness connectors.

With the scan tool, erase Shift Lever DTC's.

Start the engine and raise the engine speed to 2000 RPM.

With the scan tool, read Shift Lever DTC's.

Did the P0563-BATTERY VOLTAGE HIGH DTC reset?

Yes >> Replace the Shift Lever Assembly per the Service Information
Perform NAG1 TRANSMISSION VERIFICATION TEST. (Refer to 21 - TRANSMISSION/TRANSAXLE/AUTOMATIC - NAG1 - STANDARD PROCEDURE)

No >> Test Complete.

P0607-ECU INTERNAL PERFORMANCE - ESM

For a complete wiring diagram **Refer to Section 8W**

- **When Monitored:**
  Continuously with the ignition on.
- **Set Condition:**
  If the Shift Lever Assembly controller detects an error with the optical sensors or internal checksum value is not correct.

Possible Causes
SHIFTER LEVER ASSEMBLY

Always perform the NAG1 Pre-Diagnostic Troubleshooting procedure before proceeding. (Refer to 21 - TRANSMISSION/TRANSAXLE/AUTOMATIC - NAG1 - STANDARD PROCEDURE)

Theory of Operation

The Shifter Lever Assembly (SLA) Electronic Shift Module (ESM) performs various internal tests to verify proper controller operation. This DTC indicates that there is an issue with the Shifter's internal processor.

Diagnostic Test

1. SHIFTER LEVER ASSEMBLY

View repair

Repair

Using the schematics as a guide, check the Shifter Lever Assembly Control Module terminals for corrosion, damage, or terminal push out. Pay particular attention to all power and ground circuits. If no problems are found, replace the Shifter Lever Assembly per the Service Information. (Refer to 21 - TRANSMISSION/TRANSAXLE/AUTOMATIC - NAG1/SHIFT MECHANISM - REMOVAL)

Perform NAG1 TRANSMISSION VERIFICATION TEST. (Refer to 21 - TRANSMISSION/TRANSAXLE/AUTOMATIC - NAG1 - STANDARD PROCEDURE)

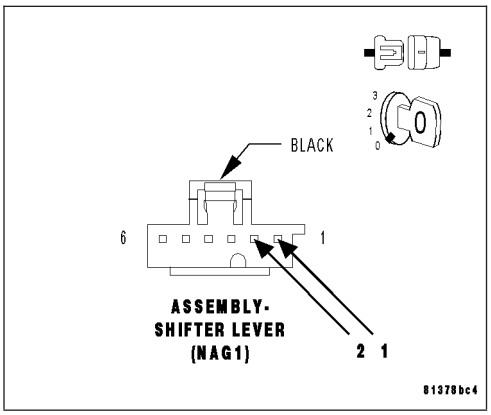

P0930-BTSI CONTROL CIRCUIT LOW - ESM

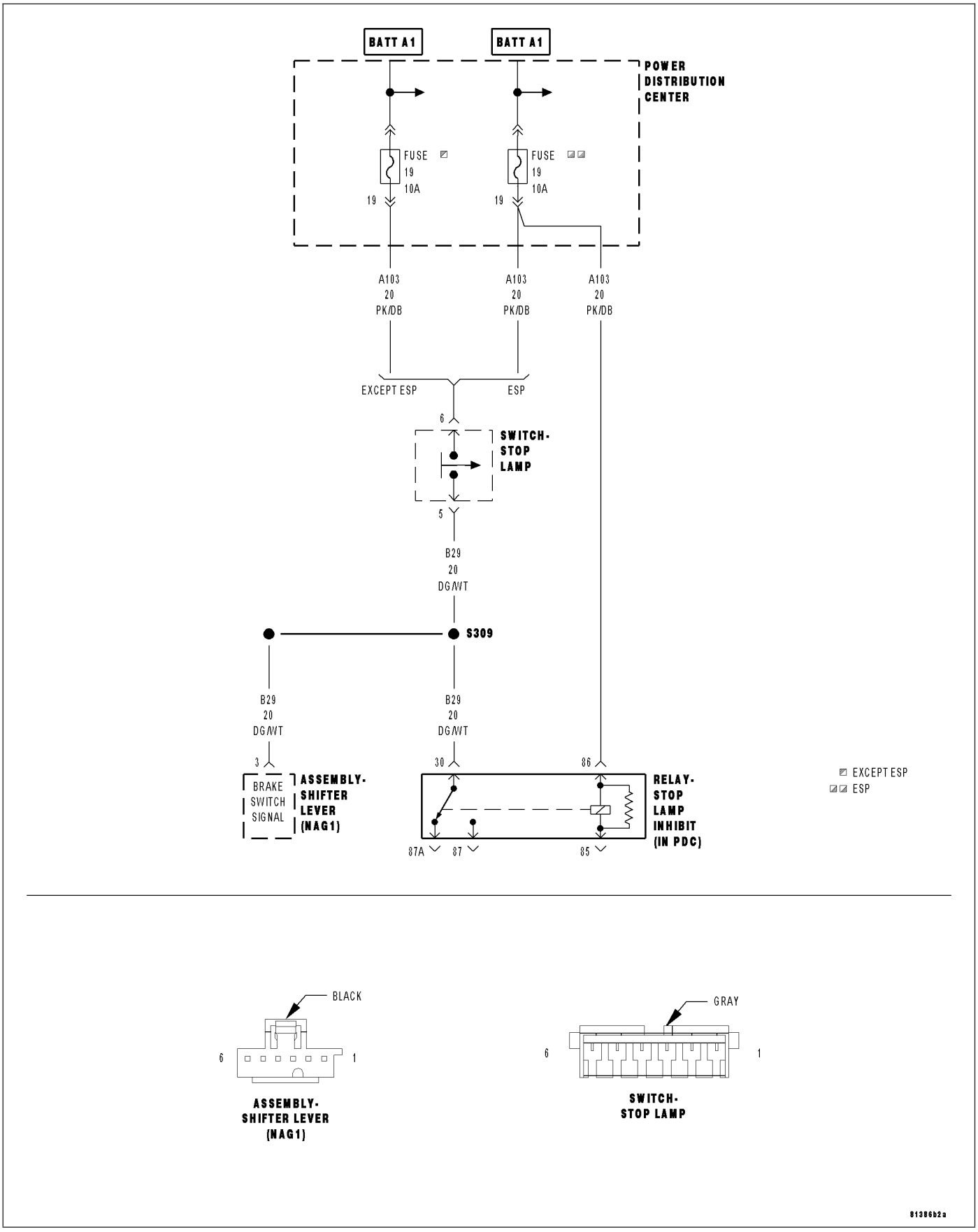

For a complete wiring diagram **Refer to Section 8W**

- **When Monitored:**
  Continuously with the ignition on.
- **Set Condition:**
  The DTC will set if the high side driver detects a short to ground for 10 seconds.

Possible Causes
ENGINE BRAKE DTCS PRESENT
ABS DTCS PRESENT
(B29) BRAKE SWITCH SIGNAL SHORT TO GROUND
SHIFTER LEVER ASSEMBLY

Always perform the NAG1 Pre-Diagnostic Troubleshooting procedure before proceeding. (Refer to 21 - TRANSMISSION/TRANSAXLE/AUTOMATIC - NAG1 - STANDARD PROCEDURE)

Theory of Operation

The brake switch signal must be active before the shift lever can be moved out of the park position. The Shifter Lever Assembly (SLA) Electronic Shift Module (ESM) receives two brake switch signals. The first signal is a CAN C Bus message sent to the shifter lever assembly. The second signal is a hard wired brake switch signal to the shifter lever assembly. The CAN C Bus message is the primary brake switch signal and the hard wired signal serves as the backup brake switch signal.

Diagnostic Test

1. ENGINE DTCS PRESENT

With the scan tool, read Engine DTCs.

Are there any Engine brake DTCs present?

Yes >> Refer to 9 - ENGINE ELECTRICAL DIAGNOSTICS and perform the appropriate diagnostic procedure.
Perform NAG1 TRANSMISSION VERIFICATION TEST. (Refer to 21 - TRANSMISSION/TRANSAXLE/AUTOMATIC - NAG1 - STANDARD PROCEDURE)

No >> Go To 2

2. ABS MODULE DTCS PRESENT

With the scan tool, read ABS Module DTCs.

Are there any ABS DTCs present?

Yes >> Refer to Section 5 - BRAKES - ABS ELECTRICAL DIAGNOSTICS and perform the appropriate diagnostic procedure.
Perform NAG1 TRANSMISSION VERIFICATION TEST. (Refer to 21 - TRANSMISSION/TRANSAXLE/AUTOMATIC - NAG1 - STANDARD PROCEDURE)

No >> Go To 3

3. (B29) BRAKE SWITCH SIGNAL SHORT TO GROUND

Turn the ignition off to the lock position.

Disconnect the Shifter Lever Assembly harness connector.

NOTE: Check connectors - Clean/repair as necessary.

Measure the resistance between ground and the (B29) Brake Switch Signal circuit.

Is the resistance below 5.0 ohms?

Yes >> Repair the (B29) Brake Switch Signal for a short to ground. Perform NAG1 TRANSMISSION VERIFICATION TEST. (Refer to 21 - TRANSMISSION/TRANSAXLE/AUTOMATIC - NAG1 - STANDARD PROCEDURE)

No >> Go To 4

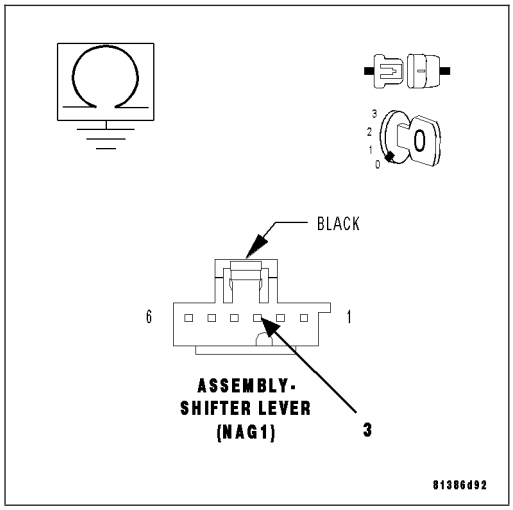

4. SHIFTER LEVER ASSEMBLY

Using the schematics as a guide, inspect the wiring and connectors. Repair as necessary. Pay particular attention to all power and ground circuits.

If there are no possible causes remaining, view repair.

Repair

Replace the Shifter Lever Assembly per the Service Information. (Refer to 21 - TRANSMISSION/TRANSAXLE/AUTOMATIC - NAG1/SHIFT MECHANISM - REMOVAL)

Perform NAG1 TRANSMISSION VERIFICATION TEST. (Refer to 21 - TRANSMISSION/TRANSAXLE/AUTOMATIC - NAG1 - STANDARD PROCEDURE)

P0931-BTSI CONTROL CIRCUIT HIGH - ESM

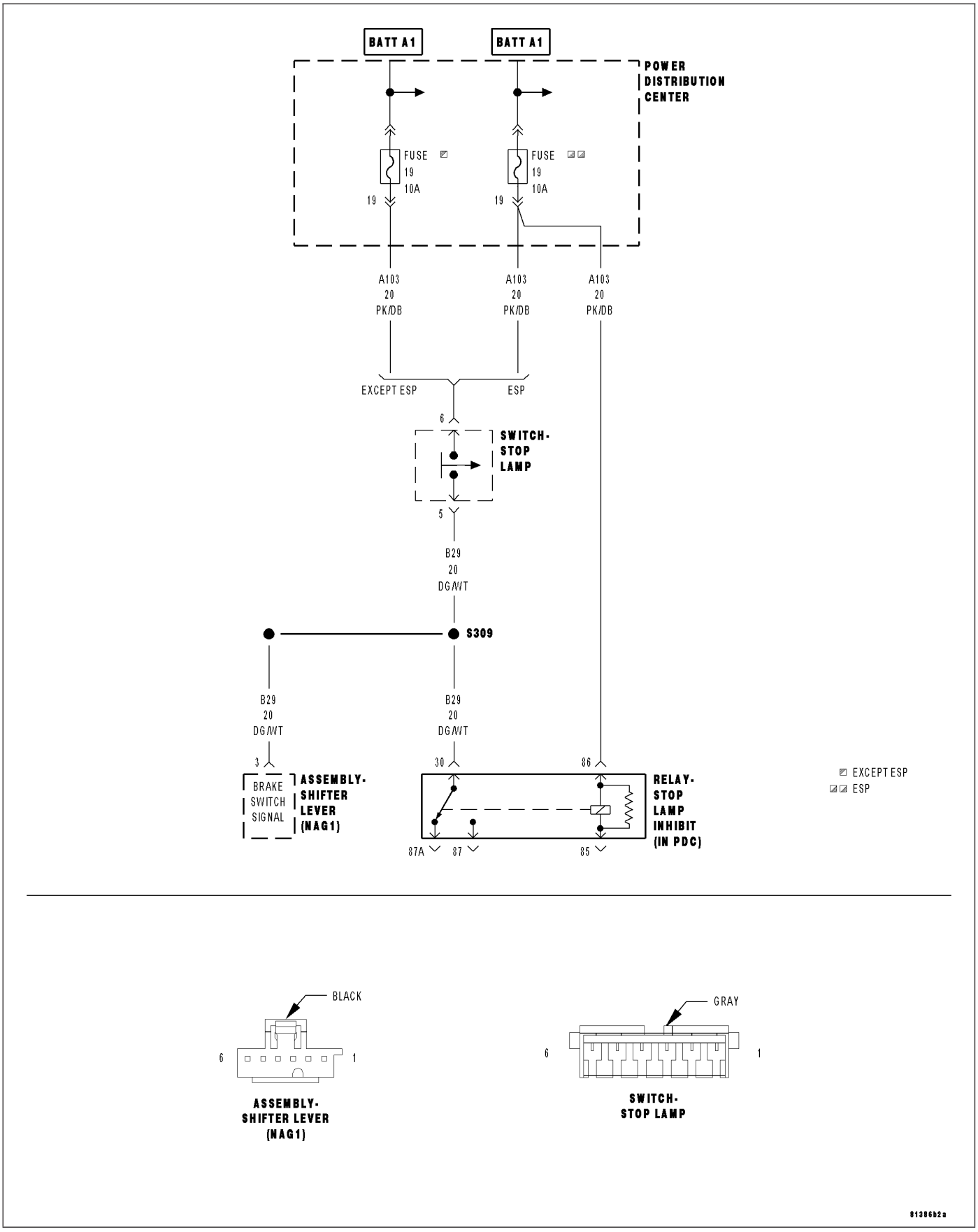

For a complete wiring diagram **Refer to Section 8W**

- **When Monitored:**
  Continuously with the ignition key on.
- **Set Condition:**
  The DTC will set if the high side driver detects an open load for 10 seconds.

Possible Causes
ENGINE BRAKE DTC'S PRESENT
ABS DTC'S PRESENT
(B29) BRAKE SWITCH SIGNAL OPEN
(B29) BRAKE SWITCH SIGNAL SHORT TO VOLTAGE
SHIFTER LEVER ASSEMBLY

Always perform the NAG1 Pre-Diagnostic Troubleshooting procedure before proceeding. (Refer to 21 - TRANSMISSION/TRANSAXLE/AUTOMATIC - NAG1 - STANDARD PROCEDURE)

Theory of Operation

The brake switch signal must be active before the shift lever can be moved out of the park position. The Shifter Lever Assembly (SLA) Electronic Shift Module (ESM) receives two brake switch signals. The first signal is a CAN C Bus message sent to the shifter lever assembly. The second signal is a hard wired brake switch signal to the shifter lever assembly. The CAN C Bus message is the primary brake switch signal and the hard wired signal serves as the backup brake switch signal. These two brake switch signals are compared against each other to verify proper brake switch operation.

Diagnostic Test

1. ENGINE DTCs PRESENT

With the scan tool, read Engine DTCs.

Are there any Engine brake DTCs present?

Yes >> Refer to 9 — ENGINE ELECTRICAL DIAGNOSTICS and perform the appropriate diagnostic procedure.
Perform NAG1 TRANSMISSION VERIFICATION TEST. (Refer to 21 - TRANSMISSION/TRANSAXLE/AUTOMATIC - NAG1 - STANDARD PROCEDURE)

No >> Go To 2

2. ABS MODULE DTCs PRESENT

With the scan tool, read ABS Module DTCs.

Are there any ABS DTCs present?

Yes >> Refer to Section 5 - BRAKES - ABS ELECTRICAL DIAGNOSTICS and perform the appropriate diagnostic procedure.
Perform NAG1 TRANSMISSION VERIFICATION TEST. (Refer to 21 - TRANSMISSION/TRANSAXLE/AUTOMATIC - NAG1 - STANDARD PROCEDURE)

No >> Go To 3

3. (B29) BRAKE SWITCH SIGNAL OPEN

Turn the ignition off to the lock position.

Disconnect the Shifter Lever Assembly harness connector.

Disconnect the Stop Lamp Switch harness connector.

NOTE: Check connectors - Clean/repair as necessary.

Measure the resistance of the (B29) Brake Switch Signal circuit between the Shifter Lever Assembly harness connector and the Stop Lamp Switch.

Is the resistance above 5.0 ohms?

Yes >> Repair the (B29) Brake Switch Signal for an open.
Perform NAG1 TRANSMISSION VERIFICATION TEST. (Refer to 21 - TRANSMISSION/TRANSAXLE/AUTOMATIC - NAG1 - STANDARD PROCEDURE)

No >> Go To 4

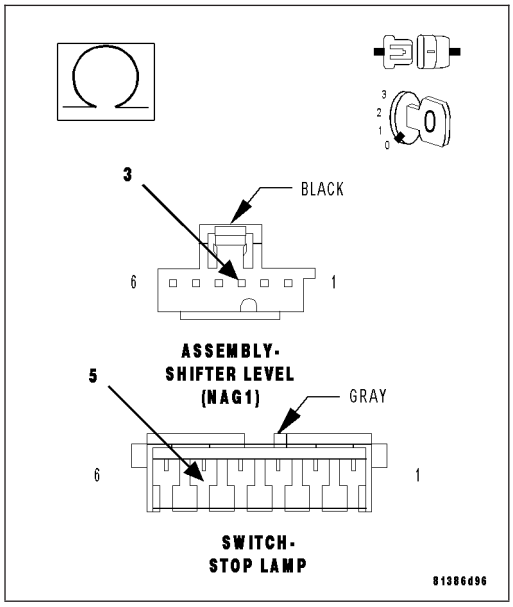

4. (B29) BRAKE SWITCH SIGNAL SHORT TO VOLTAGE

Turn the ignition off to the lock position.

Disconnect the Shifter Lever Assembly harness connector.

NOTE: Check connectors - Clean/repair as necessary.

Turn the ignition on.

Measure the voltage of the (B29) Brake Switch Signal circuit.

Is the voltage above 0.5 volts?

Yes >> Repair the (B29) Brake Switch Signal for a short to voltage.
Perform NAG1 TRANSMISSION VERIFICATION TEST. (Refer to 21 - TRANSMISSION/TRANSAXLE/AUTOMATIC - NAG1 - STANDARD PROCEDURE)

No >> Replace the Shifter Lever Assembly per the Service Information. (Refer to 21 - TRANSMISSION/TRANSAXLE/AUTOMATIC - NAG1/SHIFT MECHANISM - REMOVAL)
Perform NAG1 TRANSMISSION VERIFICATION TEST. (Refer to 21 - TRANSMISSION/TRANSAXLE/AUTOMATIC - NAG1 - STANDARD PROCEDURE)

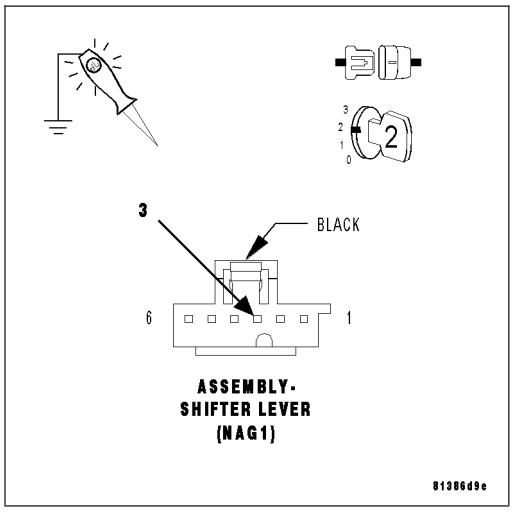

P2775-AUTOSTICK UPSHIFT SWITCH CIRCUIT PERFORMANCE - ESM

For a complete wiring diagram **Refer to Section 8W**

- **When Monitored:**
  When in AutoStick mode.
- **Set Condition:**
  When the expected switch state is not correctly sensed by the Shifter Lever Assembly. If the upshift switch signal is detected as active in gear position other than drive or both upshift and downshift signals are active at the same time.

Possible Causes
SHIFTER LEVER ASSEMBLY

Always perform the NAG1 Pre-Diagnostic Troubleshooting procedure before proceeding. (Refer to 21 - TRANSMISSION/TRANSAXLE/AUTOMATIC - NAG1 - STANDARD PROCEDURE)

Theory of Operation

The AutoStick Switch is integrated into the Shifter Lever Assembly. The gear requested by the AutoStick selection in then sent over the CAN C bus to the TCM to engage the requested gear.

1. SHIFTER LEVER ASSEMBLY

View repair

Repair

Using the schematics as a guide, check the Shifter Lever Assembly (SLA) Electronic Shift Module (ESM) terminals for corrosion, damage, or terminal push out. Pay particular attention to all power and ground circuits. If no problems are found, replace the Shifter Lever Assembly per the Service Information. Refer to Shift Mechanism for the appropriate service procedures. (Refer to 21 - TRANSMISSION/TRANSAXLE/AUTOMATIC - NAG1/SHIFT MECHANISM - REMOVAL)

Perform NAG1 TRANSMISSION VERIFICATION TEST. (Refer to 21 - TRANSMISSION/TRANSAXLE/AUTOMATIC - NAG1 - STANDARD PROCEDURE)

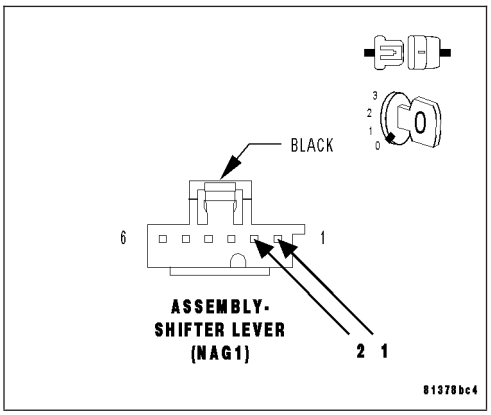

P2779-AUTOSTICK DOWNSHIFT SWITCH CIRCUIT PERFORMANCE - ESM

For a complete wiring diagram **Refer to Section 8W**

- **When Monitored:**
  When in AutoStick mode.
- **Set Condition:**
  When the expected switch state is not correctly sensed by the Shifter Lever Assembly (SLA) Electronic Shift Module (ESM). If the upshift switch signal is detected as active in gear position other than drive or both upshift and downshift signals are active at the same time.

Possible Causes
SHIFTER LEVER ASSEMBLY

Always perform the NAG1 Pre-Diagnostic Troubleshooting procedure before proceeding. (Refer to 21 - TRANSMISSION/TRANSAXLE/AUTOMATIC - NAG1 - STANDARD PROCEDURE)

Theory of Operation

The AutoStick Switch is integrated into the Shift Lever Assembly. The gear requested by the AutoStick selection is then sent over the CAN C bus from the Electronic Shift Module (ESM) to the TCM to engage the requested gear.

Diagnostic Test

1. SHIFT LEVER ASSEMBLY

View repair

Repair

Using the schematics as a guide, check the Shifter Lever Assembly (SLA) Electronic Shift Module (ESM) terminals for corrosion, damage, or terminal push out. Pay particular attention to all power and ground circuits. If no problems are found, replace the Shifter Lever Assembly per the Service Information. (Refer to 21 - TRANSMISSION/TRANSAXLE/AUTOMATIC - NAG1/SHIFT MECHANISM - REMOVAL)

Perform NAG1 TRANSMISSION VERIFICATION TEST. (Refer to 21 - TRANSMISSION/TRANSAXLE/AUTOMATIC - NAG1 - STANDARD PROCEDURE)

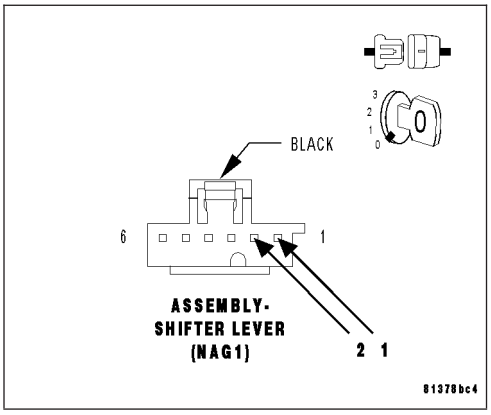

U0002-CAN C BUS OFF PERFORMANCE - ESM

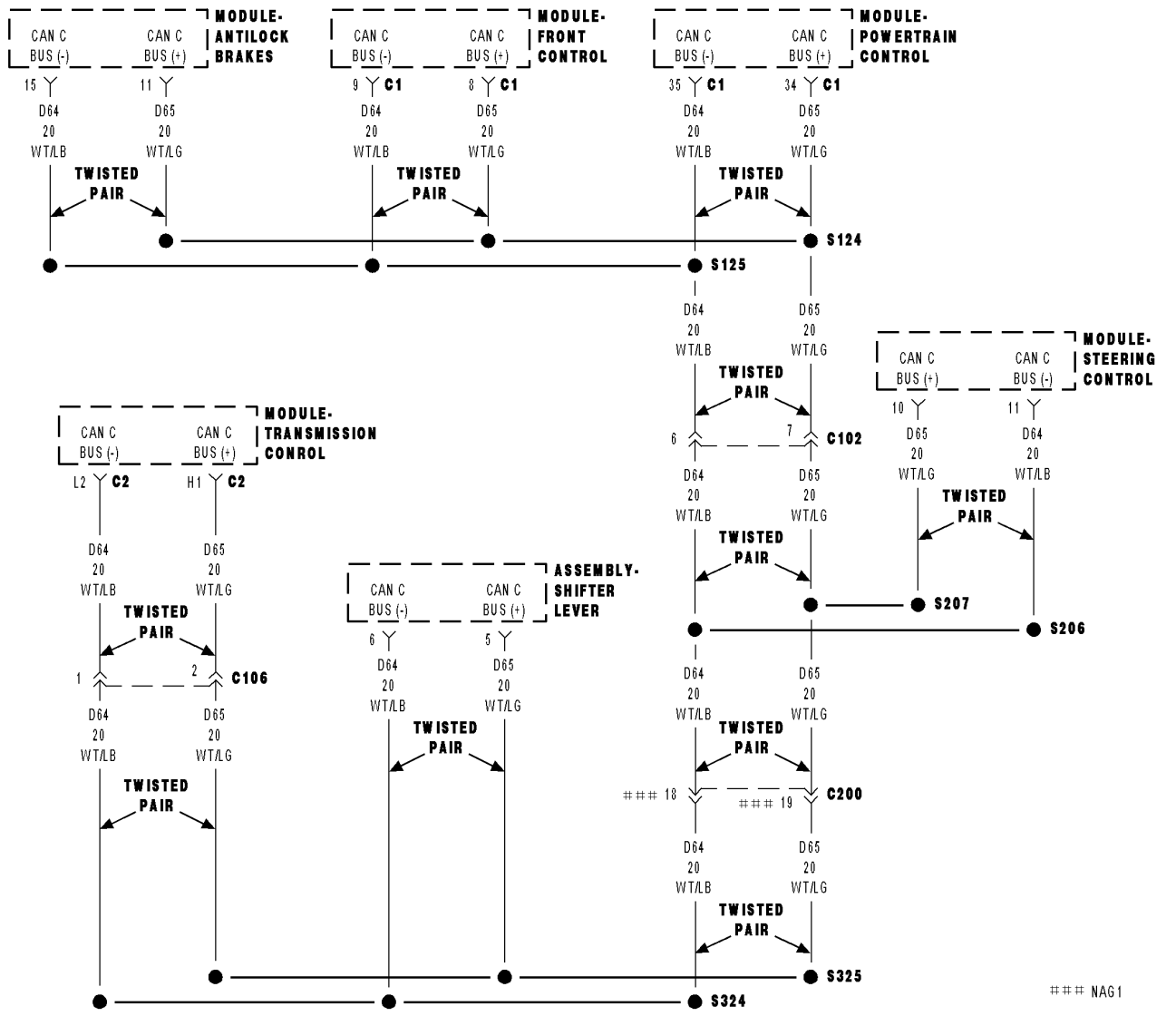

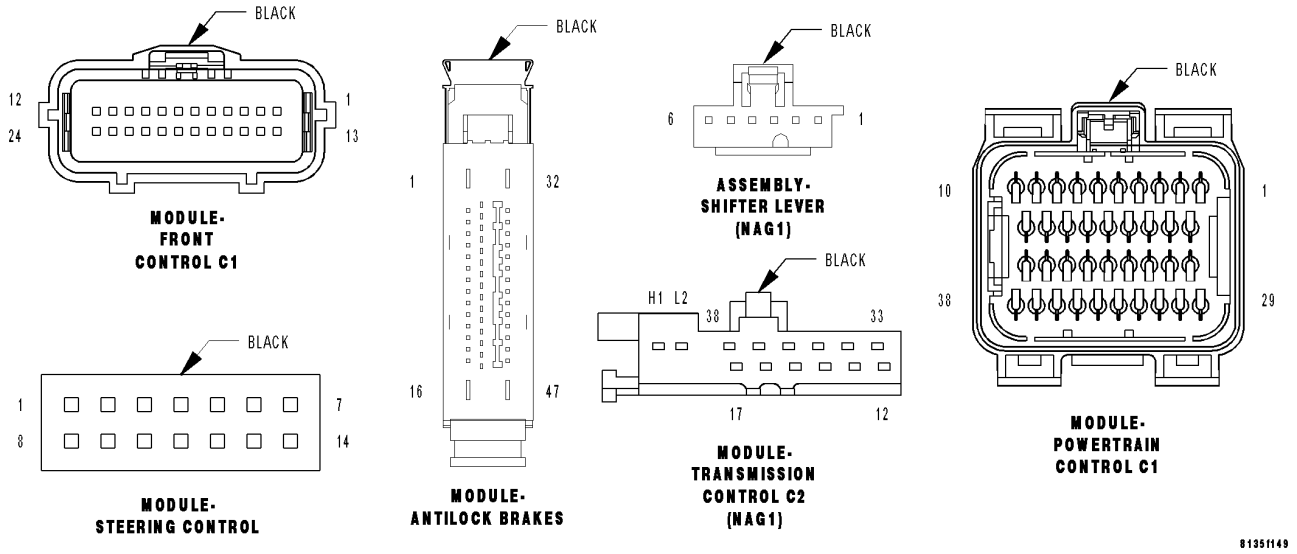

For a complete wiring diagram **Refer to Section 8W**

Theory of Operation

Some controllers communicate with other controllers over the CAN C BUS. The Electronic Shift Module (ESM) continuously monitors BUS activity and reads the messages it needs. The CAN C BUS is also used to communicate the MIL status to the Engine Controller.

For CAN BUS diagnostic procedures (Refer to 8 - ELECTRICAL/ELECTRONIC CONTROL MODULES - DIAGNOSIS AND TESTING).

U0100-LOST COMMUNICATION WITH ECM/PCM - ESM

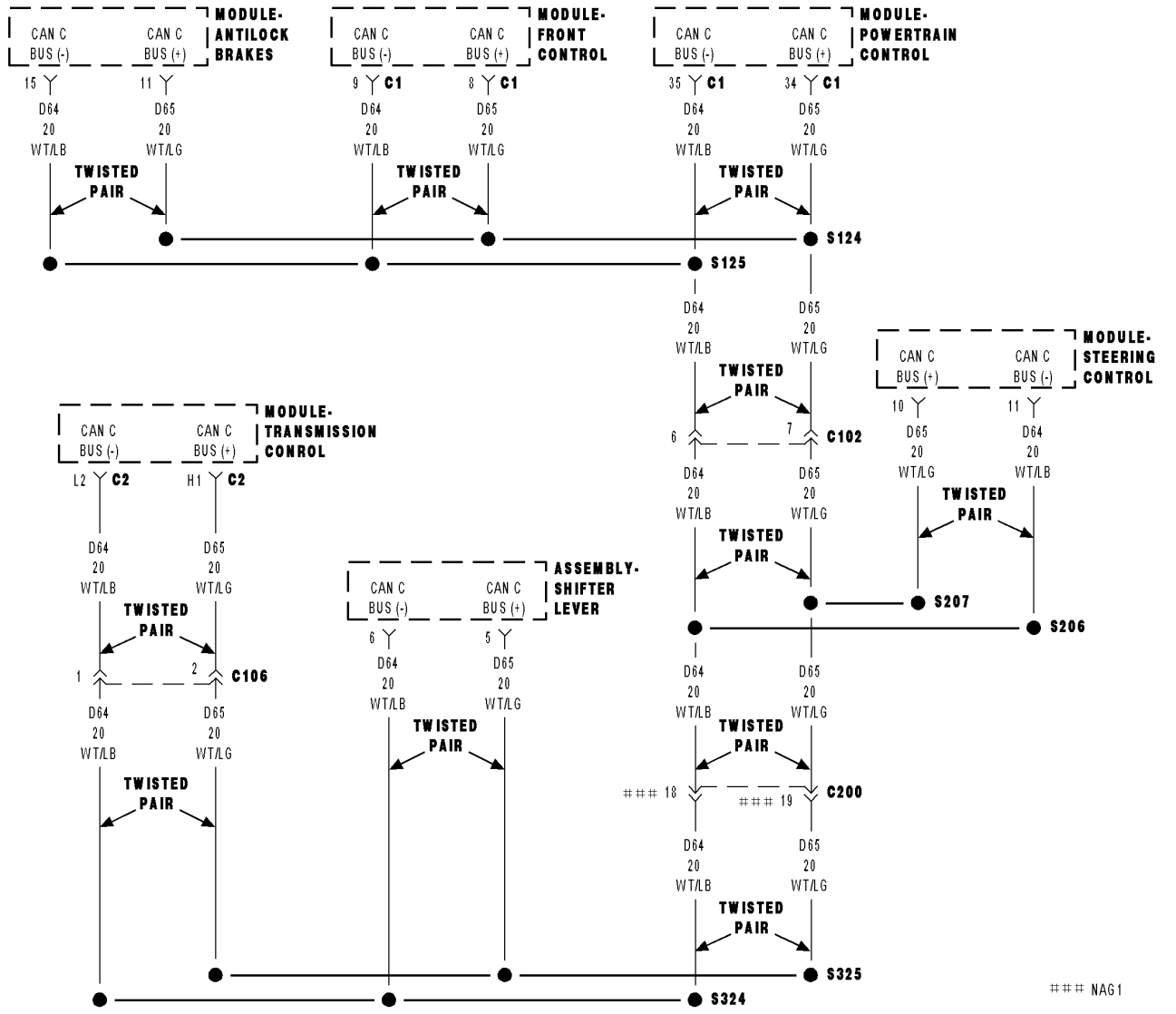

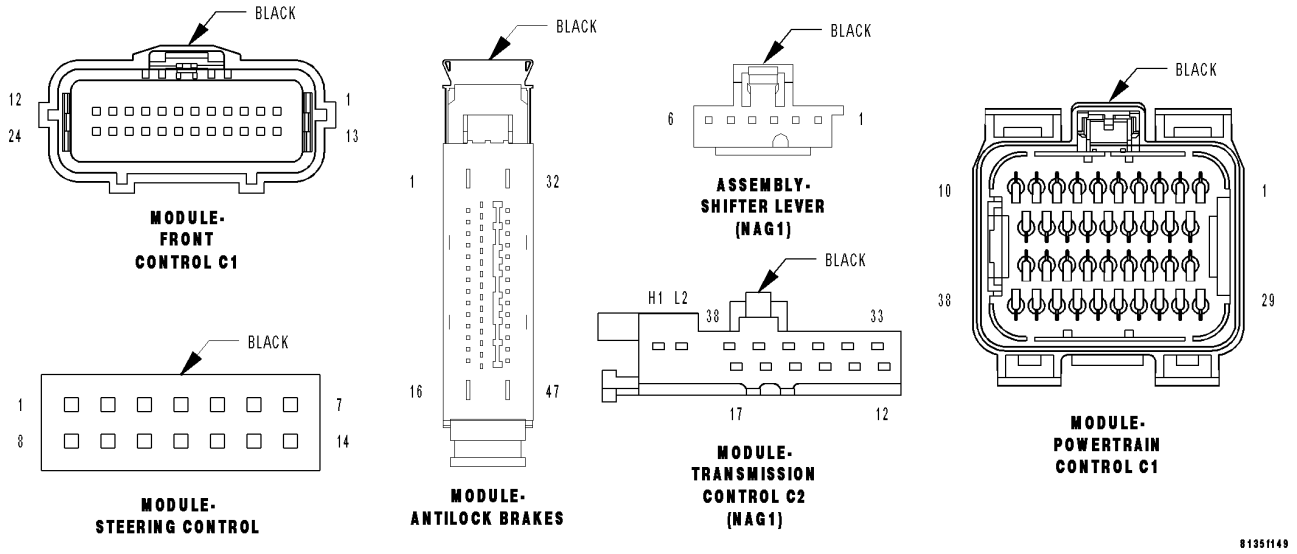

For a complete wiring diagram **Refer to Section 8W**

Theory of Operation

Some controllers communicate with other controllers over the CAN C BUS. The Electronic Shift Module (ESM) continuously monitors BUS activity and reads the messages it needs. The CAN C BUS is also used to communicate the MIL status to the Engine Controller.

For CAN BUS diagnostic procedures (Refer to 8 - ELECTRICAL/ELECTRONIC CONTROL MODULES - DIAGNOSIS AND TESTING).

U0121-LOST COMMUNICATION WITH ANTI-LOCK BRAKE MODULE - ESM

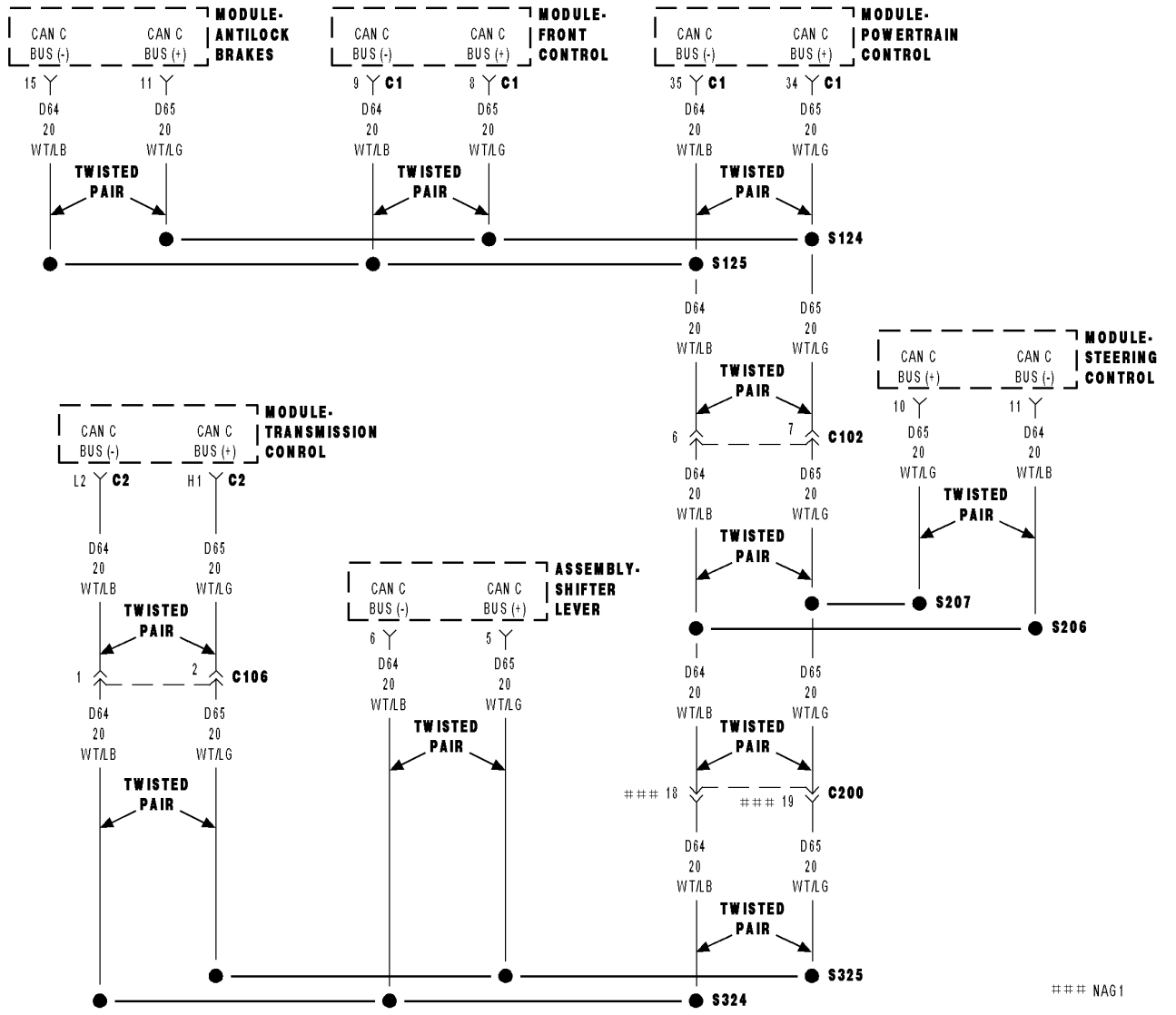

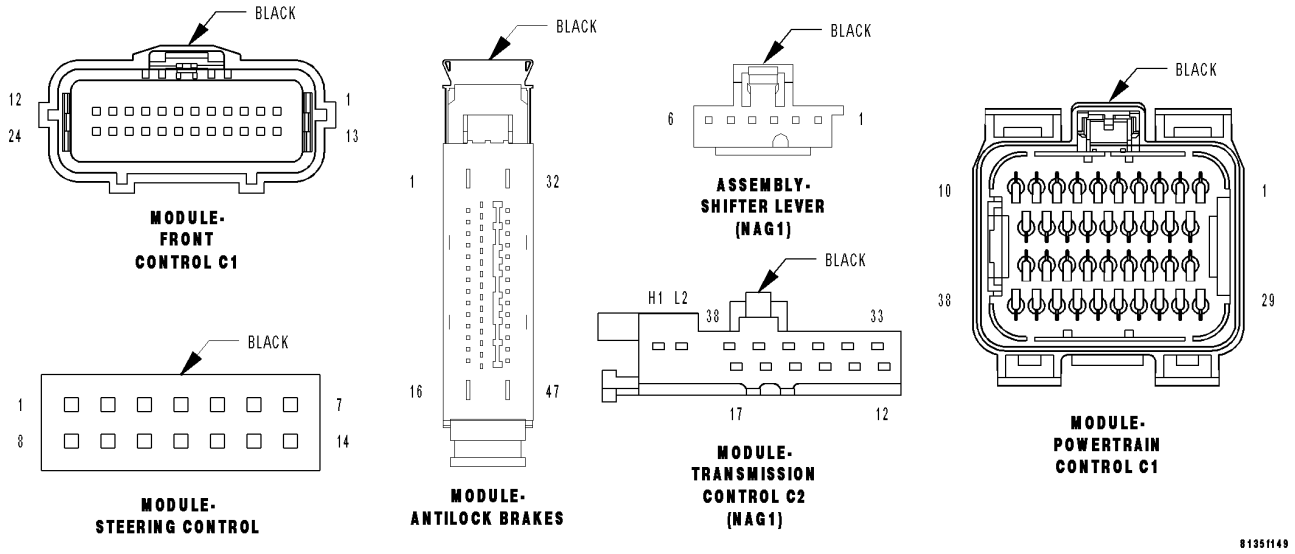

For a complete wiring diagram **Refer to Section 8W**

Theory of Operation

Some controllers communicate with other controllers over the CAN C BUS. The Electronic Shift Module (ESM) continuously monitors BUS activity and reads the messages it needs. The CAN C BUS is also used to communicate the MIL status to the Engine Controller.

For CAN BUS diagnostic procedures (Refer to 8 - ELECTRICAL/ELECTRONIC CONTROL MODULES - DIAGNOSIS AND TESTING).

U0141-LOST COMMUNICATION WITH FRONT CONTROL MODULE - ESM

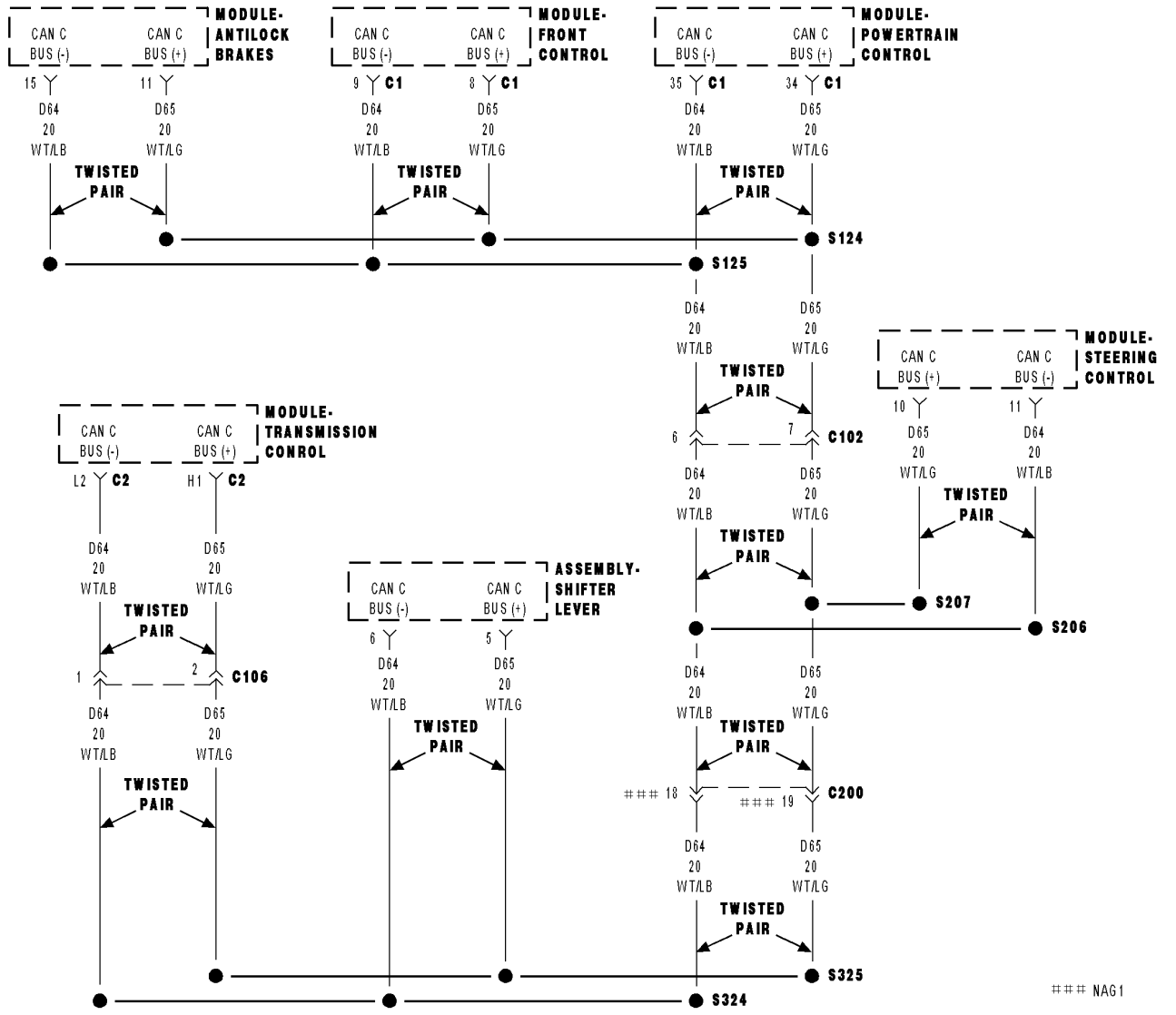

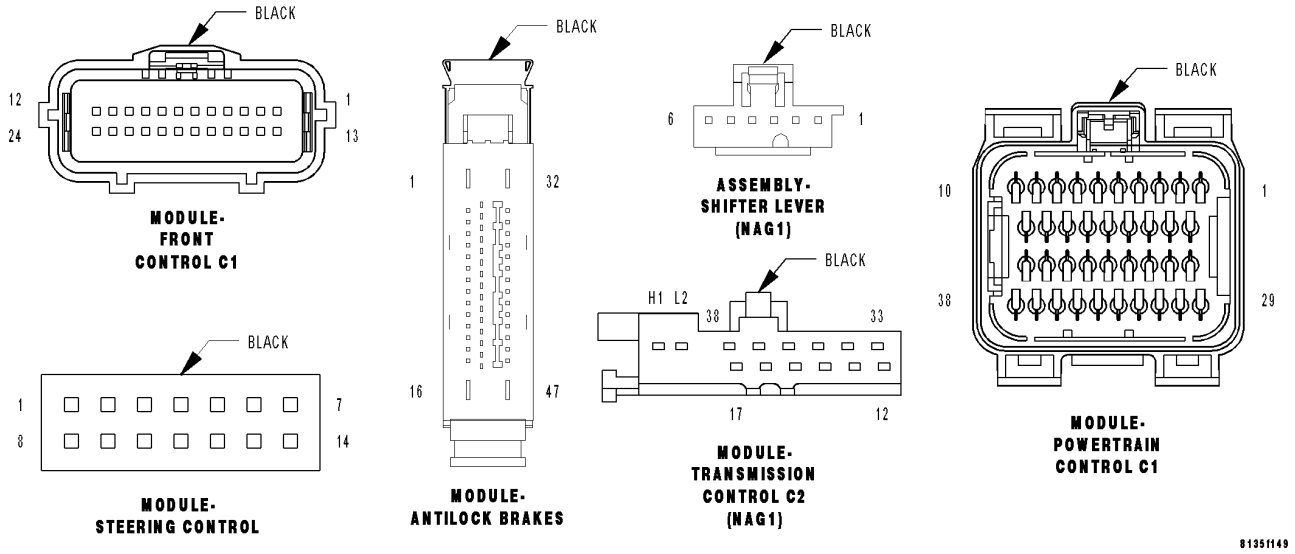

For a complete wiring diagram**Refer to Section 8W**

Theory of Operation

Some controllers communicate with other controllers over the CAN C BUS. The Electronic Shift Module (ESM) continuously monitors BUS activity and reads the messages it needs. The CAN C BUS is also used to communicate the MIL status to the Engine Controller.

For CAN BUS diagnostic procedures (Refer to 8 - ELECTRICAL/ELECTRONIC CONTROL MODULES - DIAGNOSIS AND TESTING).

P0562-BATTERY VOLTAGE LOW - ESM (COLUMN)

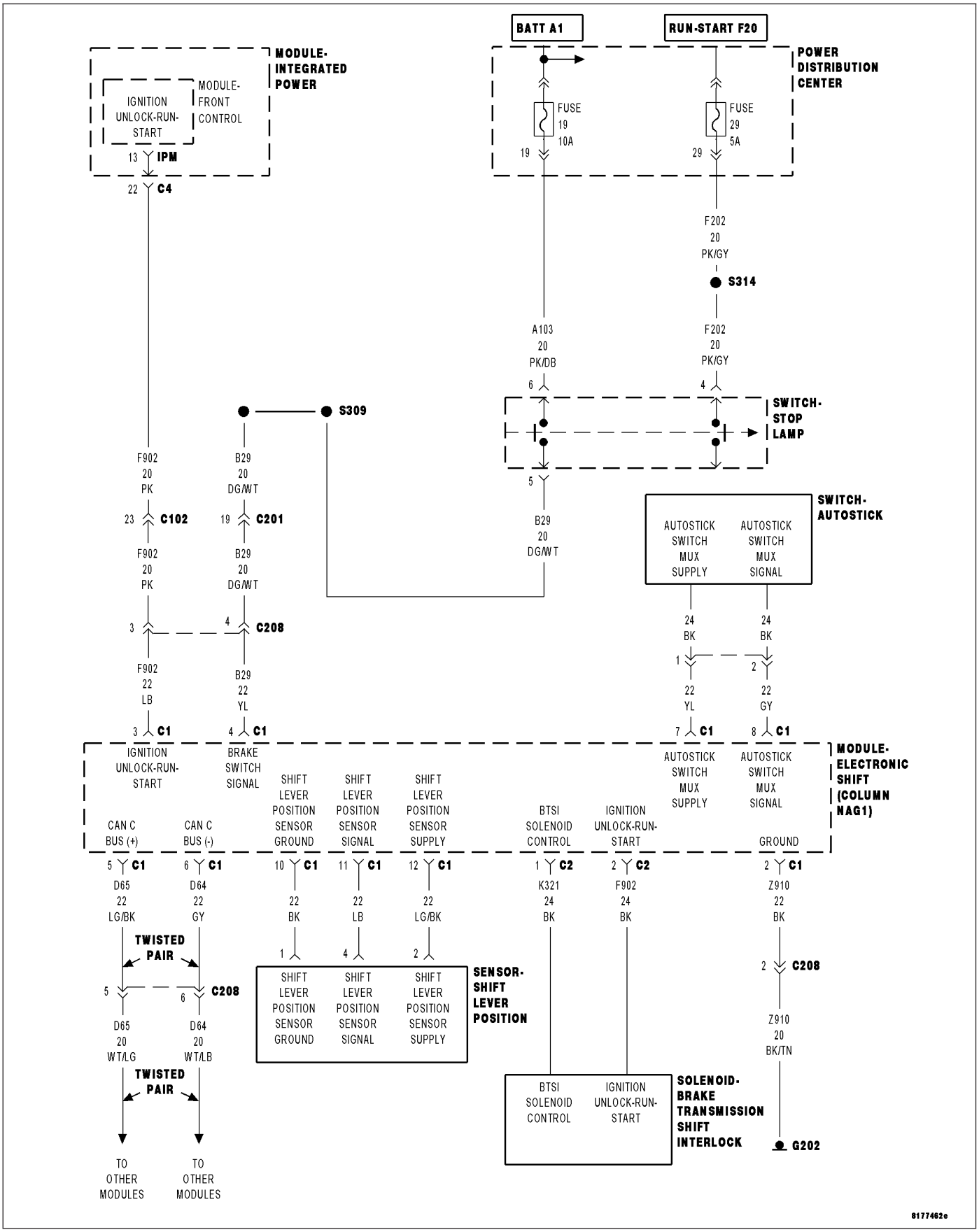

For a complete wiring diagram **Refer to Section 8W**

- **When Monitored:**
  Continuously with the ignition on.
- **Set Condition:**
  When monitored battery voltage drops below 6.0 volts.

Possible Causes
VEHICLE CHARGING SYSTEM
(F902) IGNITION UNLOCK RUN START CIRCUIT
(Z910) GROUND CIRCUIT
ELECTRONIC SHIFT MODULE (ESM)

Always perform the NAG1 Pre-Diagnostic Troubleshooting procedure before proceeding. (Refer to 21 - TRANSMISSION/TRANSAXLE/AUTOMATIC - NAG1 - STANDARD PROCEDURE)

Theory of Operation

The Electronic Shift Module (ESM) monitors ignition voltage. The DTC will set if the monitored battery voltage drops below 6.0 volts and a temporary limp in will be activated. If the voltage rises above 9.0 volts, normal operations is resumed.

Diagnostic Test

1. CHECK FOR ENGINE CHARGING SYSTEM DTCS

With the scan tool, read Engine DTCs.

Are there any Engine Charging System DTCs present?

Yes >> Refer to Engine category and perform the appropriate symptom(s). (Refer to 9 - ENGINE - DIAGNOSIS AND TESTING)
Perform NAG1 TRANSMISSION VERIFICATION TEST. (Refer to 21 - TRANSMISSION/TRANSAXLE/AUTOMATIC - NAG1 - STANDARD PROCEDURE)

No >> Go To 2

2. CHECK THE (F902) IGNITION UNLOCK RUN START CIRCUIT

Turn the ignition off to the lock position.

Disconnect the ESM harness connector.

Ignition on, engine not running.

Using a 12-volt test light connected to ground, check the (F902) Ignition Unlock Run Start circuit.

NOTE: The test light must illuminate brightly. Compare the brightness to that of a direct connection to the battery.

Does the test light illuminate brightly?

Yes >> Go To 3

No >> Repair the (F902) Ignition Unlock Run Start circuit for high resistance.
Perform NAG1 TRANSMISSION VERIFICATION TEST. (Refer to 21 - TRANSMISSION/TRANSAXLE/AUTOMATIC - NAG1 - STANDARD PROCEDURE)

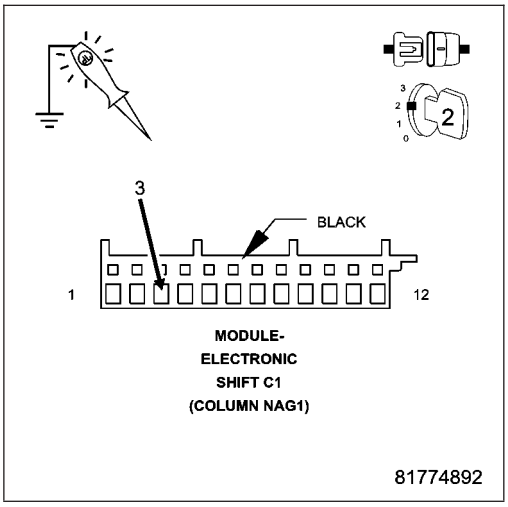

3. CHECK THE (Z910) GROUND CIRCUIT

Turn the ignition off to the lock position.

Using a 12-volt test light connected to 12-volts, check the (Z910) Ground circuit in the Shift Lever Assembly harness connector.

NOTE: The test light must illuminate brightly. Compare the brightness to that of a direct connection to the battery.

Does the test light illuminate brightly?

Yes >> Go To 4

No >> Repair the (Z910) Ground circuit for high resistance.
Perform NAG1 TRANSMISSION VERIFICATION TEST. (Refer to 21 - TRANSMISSION/TRANSAXLE/AUTOMATIC - NAG1 - STANDARD PROCEDURE)

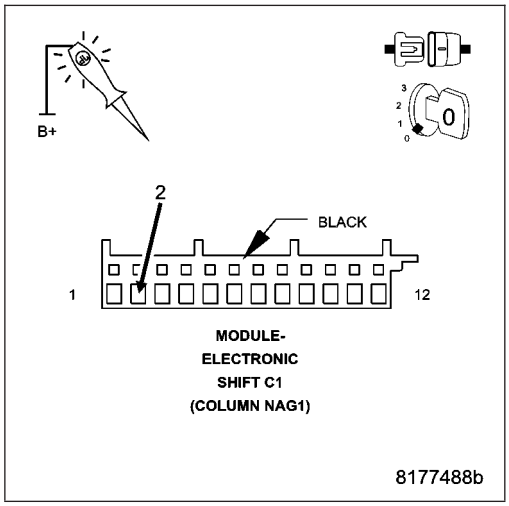

4. ELECTRONIC SHIFT MODULE

Reconnect all disconnected harness connectors.

With the scan tool, erase ESM DTCs.

Start the engine and raise the engine speed to 2000 RPM.

With the scan tool, read ESM DTCs.

Did the DTC P0562-BATTERY VOLTAGE LOW DTC reset?

Yes >> Using the schematics as a guide, check the Electronic Shift Module (ESM) terminals for corrosion, damage, or terminal push out. Pay particular attention to all power and ground circuits. If no problems are found, replace the ESM (Steering Column) per the Service Information.
Perform NAG1 TRANSMISSION VERIFICATION TEST. (Refer to 21 - TRANSMISSION/TRANSAXLE/AUTOMATIC - NAG1 - STANDARD PROCEDURE)

No >> Test Complete.

P0563-BATTERY VOLTAGE HIGH - ESM (COLUMN SHIFT)

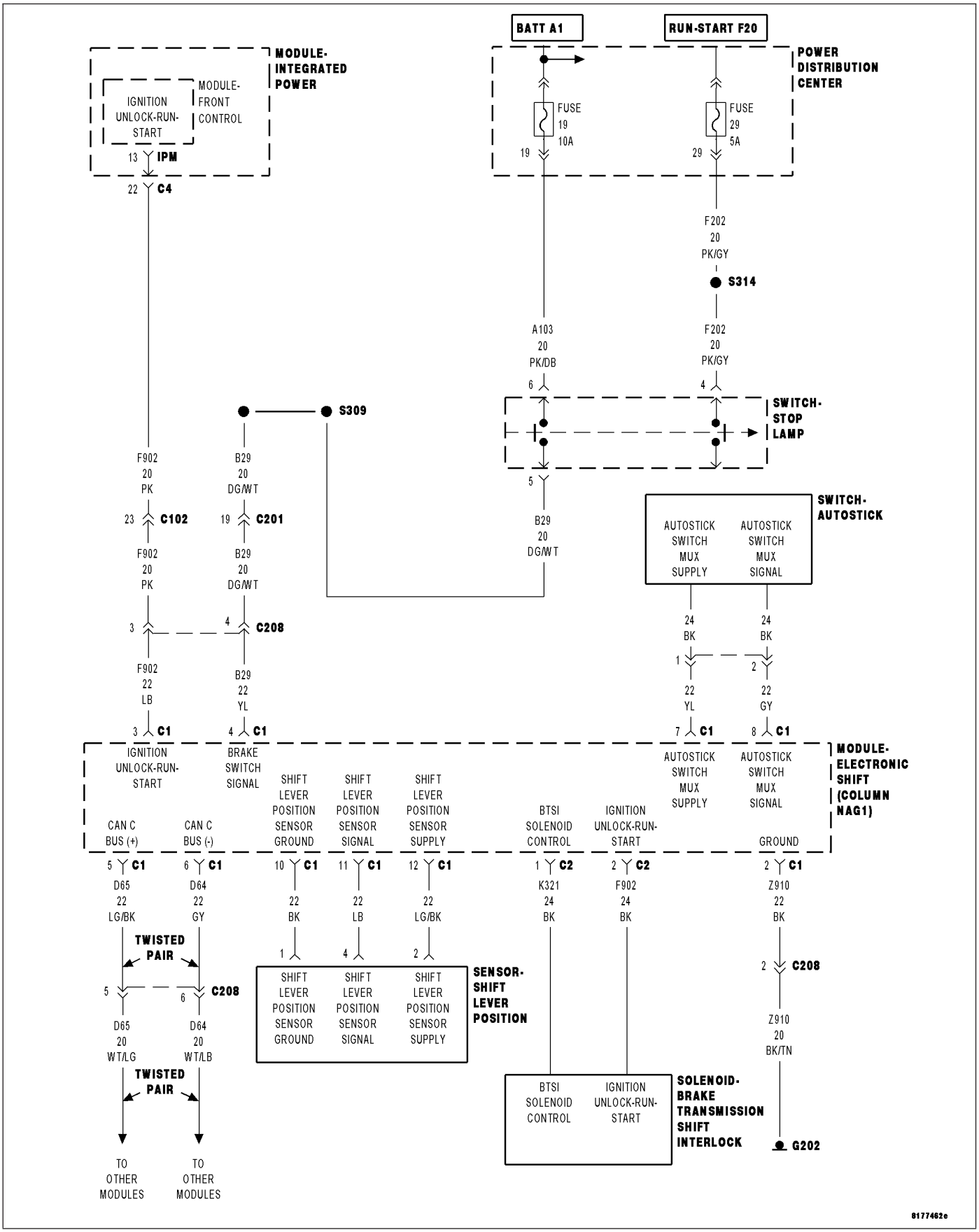

For a complete wiring diagram**Refer to Section 8W**

Theory of Operation

The Electronic Shift Module (ESM) monitors ignition voltage. The DTC will set, if the monitored battery voltage rises above 16.0 volts.

- **When Monitored:**
  Continuously with the ignition on.
- **Set Condition:**
  When the monitored battery voltage rises above 16.0 volts.

Possible Causes
CHARGING SYSTEM DTCS
VEHICLE WAS JUMP STARTED INCORRECTLY
ELECTRONIC SHIFT MODULE (ESM)

Always perform the NAG1 Pre-Diagnostic Troubleshooting procedure before proceeding. (Refer to 21 - TRANSMISSION/TRANSAXLE/AUTOMATIC - NAG1 - STANDARD PROCEDURE)

Diagnostic Test

1. CHECK FOR CHARGING SYSTEM DTCS

With the scan tool, read Engine DTCs.

NOTE: This includes any one trip faults.

Are there any Engine Charging System DTCs present?

Yes >> Refer to the Engine category and perform the appropriate symptom. (Refer to 9 - ENGINE - DIAGNOSIS AND TESTING)
Perform NAG1 TRANSMISSION VERIFICATION TEST. (Refer to 21 - TRANSMISSION/TRANSAXLE/AUTOMATIC - NAG1 - STANDARD PROCEDURE)

No >> Go To 2

2. VEHICLE WAS JUMP STARTED INCORRECTLY

Verify if the vehicle was jump started by another vehicle using a 24-volt charging system or incorrectly jump started with the 12-volt battery in series.

Was the vehicle jump started by another vehicle?

Yes >> This is the cause of the DTC. Erase the DTC and return the vehicle to the customer.
Perform NAG1 TRANSMISSION VERIFICATION TEST. (Refer to 21 - TRANSMISSION/TRANSAXLE/AUTOMATIC - NAG1 - STANDARD PROCEDURE)

No >> Go To 3

3. ELECTRONIC SHIFT MODULE

Reconnect all disconnected harness connectors.

With the scan tool, erase ESM DTCs.

Start the engine and raise the engine speed to 2000 RPM.

With the scan tool, read ESM DTCs.

Did the P0563-BATTERY VOLTAGE HIGH DTC reset?

Yes >> Using the schematics as a guide, check the Electronic Shift Module (ESM) terminals for corrosion, damage, or terminal push out. Pay particular attention to all power and ground circuits. If no problems are found, replace the ESM (Steering Column) per the Service Information.
Perform NAG1 TRANSMISSION VERIFICATION TEST. (Refer to 21 - TRANSMISSION/TRANSAXLE/AUTOMATIC - NAG1 - STANDARD PROCEDURE)

No >> Test Complete.

P0607-ECU INTERNAL PERFORMANCE - ESM (COLUMN SHIFT)

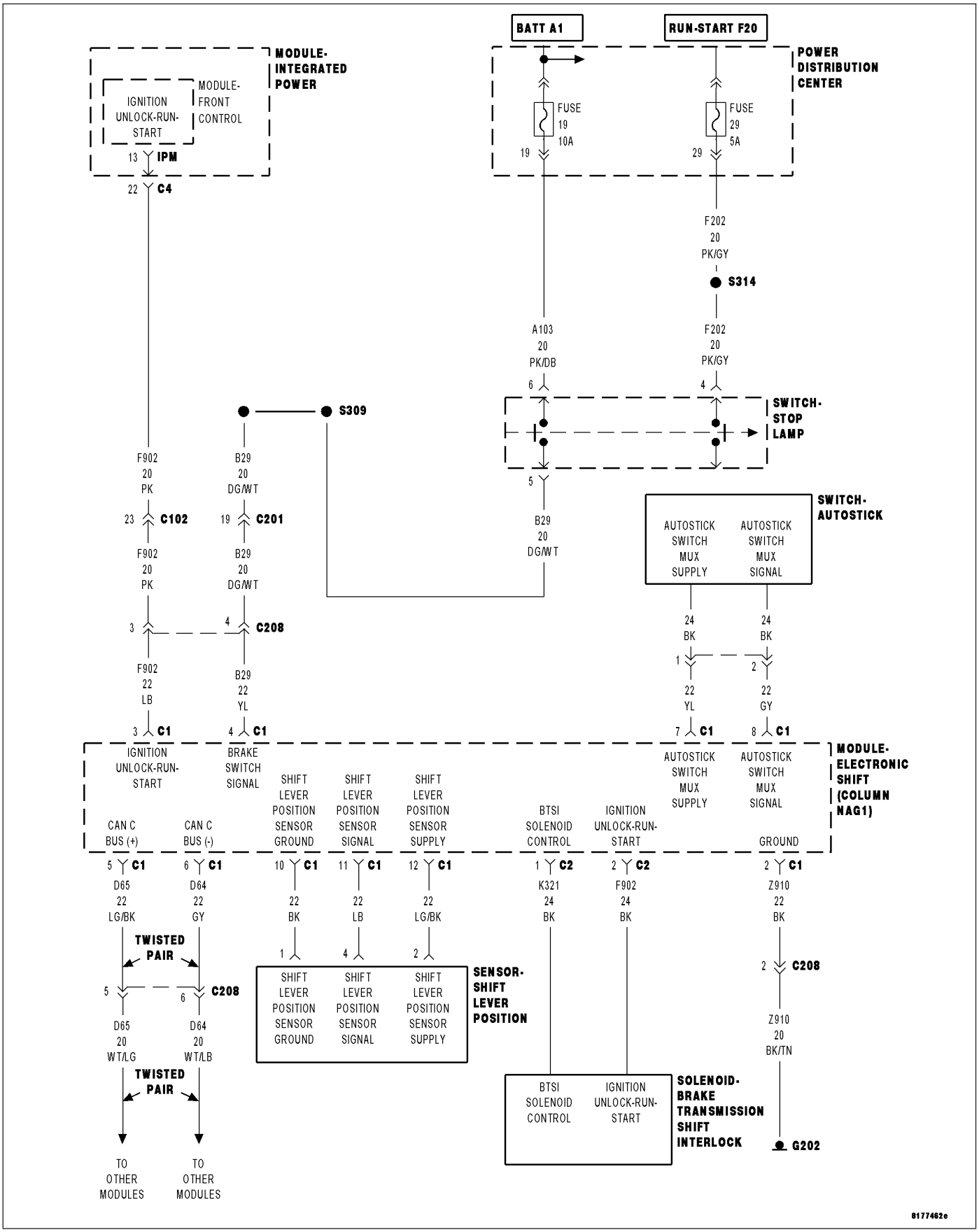

For a complete wiring diagram**Refer to Section 8W**

Theory of Operation

The Electronic Shift Module (ESM) performs various internal tests to verify proper controller operation. This DTC indicates that there is an issue with the Shifter's internal processor.

- **When Monitored:**
  Continuously with the ignition on.
- **Set Condition:**
  If the Electronic Shift Module (ESM) detects an error with the optical sensors or internal checksum value is not correct.

Possible Causes
ELECTRONIC SHIFT MODULE (ESM)

Always perform the NAG1 Pre-Diagnostic Troubleshooting procedure before proceeding. (Refer to 21 - TRANSMISSION/TRANSAXLE/AUTOMATIC - NAG1 - STANDARD PROCEDURE)

Diagnostic Test

1. ELECTRONIC SHIFT MODULE

View repair

Repair

Using the schematics as a guide, check the Electronic Shift Module (ESM) terminals for corrosion, damage, or terminal push out. Pay particular attention to all power and ground circuits. If no problems are found, replace the ESM (Steering Column) per the Service Information.

Perform NAG1 TRANSMISSION VERIFICATION TEST. (Refer to 21 - TRANSMISSION/TRANSAXLE/AUTOMATIC - NAG1 - STANDARD PROCEDURE)

P0930-BTSI CONTROL CIRCUIT LOW - ESM (COLUMN SHIFT)

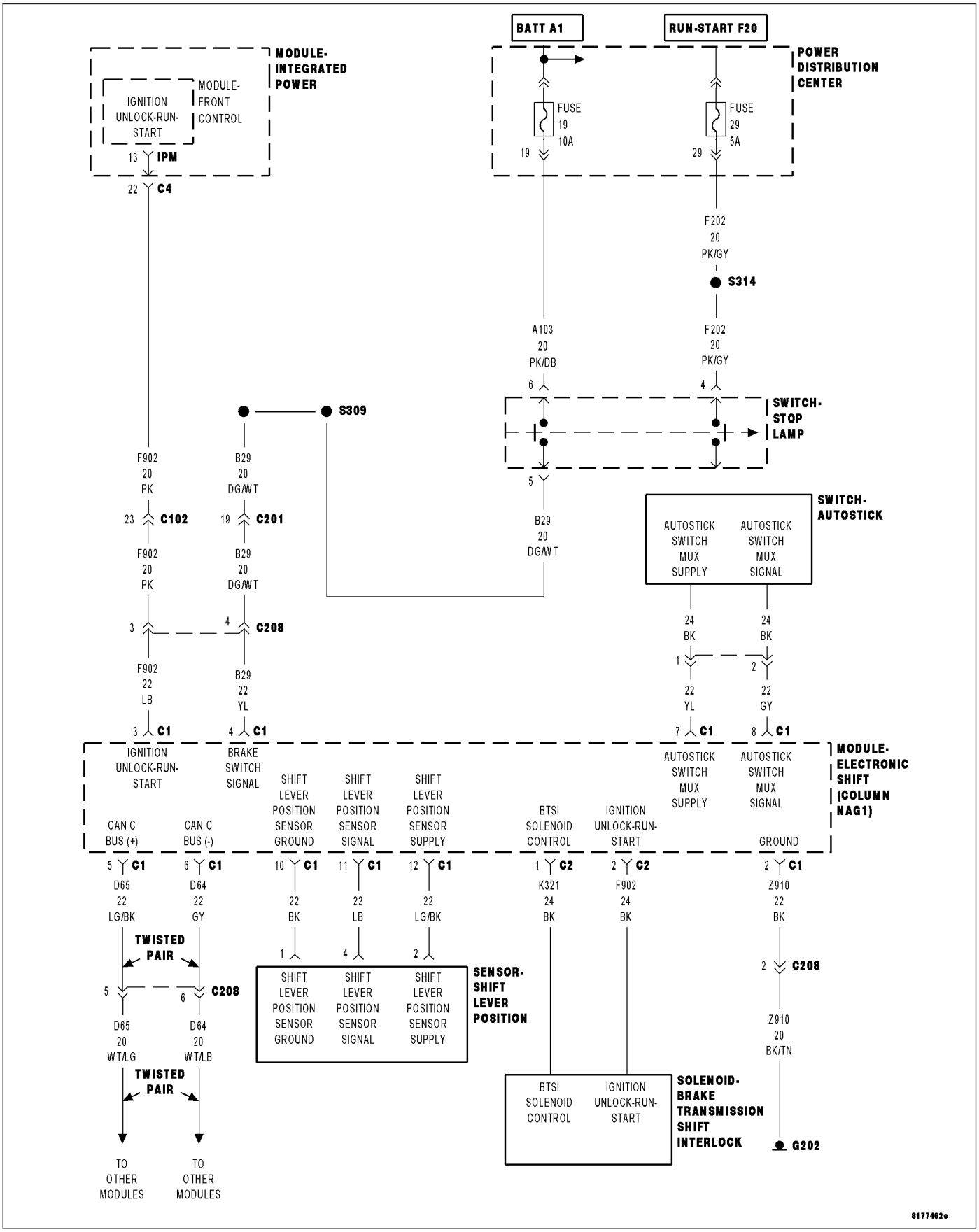

For a complete wiring diagram**Refer to Section 8W**

Theory of Operation

The brake switch signal must be active before the shift lever can be moved out of the park position. The Electronic Shift Module (ESM) receives two brake switch signals. The first signal is a CAN C BUS message is from the ABS and the second signal is a hard wired brake switch signal to the ESM. The CAN C Bus message is the primary brake switch signal and the hard wired signal serves as the backup brake switch signal.

- **When Monitored:**
  Continuously with the ignition on.
- **Set Condition:**
  The DTC will set if the high side driver detects a short to ground for 10 seconds.

Possible Causes
ENGINE BRAKE DTCS PRESENT
ABS DTCS PRESENT
(B29) BRAKE SWITCH SIGNAL SHORT TO GROUND
ELECTRONIC SHIFT MODULE (ESM)

Always perform the NAG1 Pre-Diagnostic Troubleshooting procedure before proceeding. (Refer to 21 - TRANSMISSION/TRANSAXLE/AUTOMATIC - NAG1 - STANDARD PROCEDURE)

Diagnostic Test

1. ENGINE DTCS PRESENT

With the scan tool, read Engine DTCs.

Are there any Engine brake DTCs present?

Yes >> Refer to Engine category and perform the appropriate symptom(s). (Refer to 9 - ENGINE - DIAGNOSIS AND TESTING)
Perform NAG1 TRANSMISSION VERIFICATION TEST. (Refer to 21 - TRANSMISSION/TRANSAXLE/AUTOMATIC - NAG1 - STANDARD PROCEDURE)

No >> Go To 2

2. ABS MODULE DTCS PRESENT

With the scan tool, read ABS Module DTCs.

Are there any ABS DTCs present?

Yes >> Refer to the Brake category and perform the appropriate symptom(s). (Refer to 5 - BRAKES - DIAGNOSIS AND TESTING)
Perform NAG1 TRANSMISSION VERIFICATION TEST. (Refer to 21 - TRANSMISSION/TRANSAXLE/AUTOMATIC - NAG1 - STANDARD PROCEDURE)

No >> Go To 3

3. (B29) BRAKE SWITCH SIGNAL SHORT TO GROUND

Turn the ignition off to the lock position.

Disconnect the ESM harness connector.

Measure the resistance between ground and the (B29) Brake Switch Signal circuit.

Is the resistance below 5.0 ohms?

Yes >> Repair the (B29) Brake Switch Signal for a short to ground. Perform NAG1 TRANSMISSION VERIFICATION TEST. (Refer to 21 - TRANSMISSION/TRANSAXLE/AUTOMATIC - NAG1 - STANDARD PROCEDURE)

No >> Using the schematics as a guide, check the Electronic Shift Module (ESM) terminals for corrosion, damage, or terminal push out. Pay particular attention to all power and ground circuits. If no problems are found, replace the ESM (Steering Column) per the Service Information.
Perform NAG1 TRANSMISSION VERIFICATION TEST. (Refer to 21 - TRANSMISSION/TRANSAXLE/AUTOMATIC - NAG1 - STANDARD PROCEDURE)

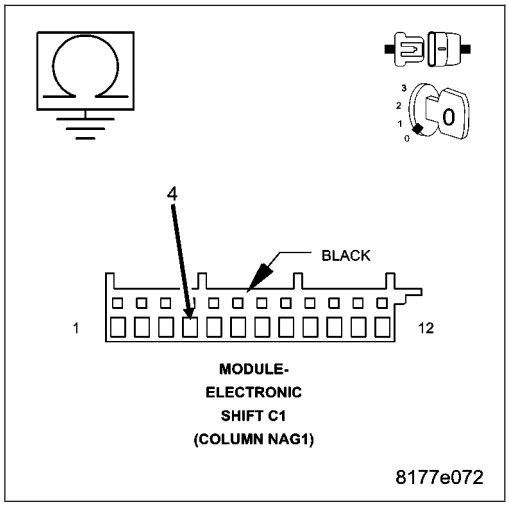

P0931-BTSI CONTROL CIRCUIT HIGH - ESM (COLUMN SHIFT)

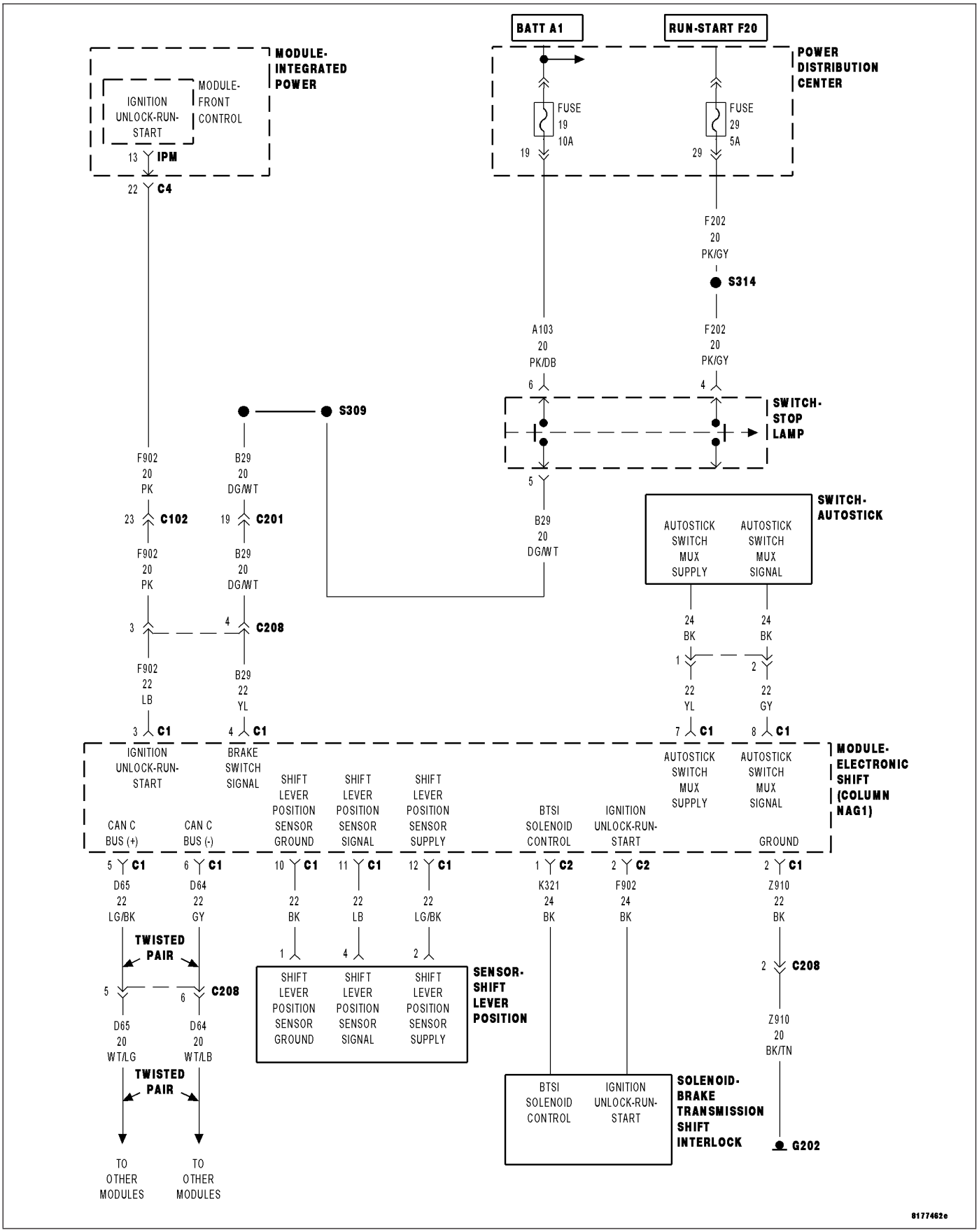

For a complete wiring diagram**Refer to Section 8W**

Theory of Operation

The brake switch signal must be active before the shift lever can be moved out of the park position. The Electronic Shift Module (ESM) receives two brake switch signals. The first signal is a CAN C BUS message and the second signal is a hard wired brake switch signal to the shifter lever assembly. The CAN C Bus message is the primary brake switch signal and the hard wired signal serves as the backup brake switch signal. These two brake switch signals are compared against each other to verify proper brake switch operation.

- **When Monitored:**
  Continuously with the ignition key on.
- **Set Condition:**
  The DTC will set if the high side driver detects an open load for 10 seconds.

Possible Causes
ENGINE BRAKE DTC'S PRESENT
ABS DTC'S PRESENT
(B29) BRAKE SWITCH SIGNAL OPEN
(B29) BRAKE SWITCH SIGNAL SHORT TO VOLTAGE
ELECTRONIC SHIFT MODULE (ESM)

Always perform the NAG1 Pre-Diagnostic Troubleshooting procedure before proceeding. (Refer to 21 - TRANSMISSION/TRANSAXLE/AUTOMATIC - NAG1 - STANDARD PROCEDURE)

Diagnostic Test

1. ENGINE DTCs PRESENT

With the scan tool, read Engine DTCs.

Are there any Engine brake DTCs present?

Yes >> Refer to Engine category and perform the appropriate symptom(s). (Refer to 9 - ENGINE - DIAGNOSIS AND TESTING)
Perform NAG1 TRANSMISSION VERIFICATION TEST. (Refer to 21 - TRANSMISSION/TRANSAXLE/AUTOMATIC - NAG1 - STANDARD PROCEDURE)

No >> Go To 2

2. ABS MODULE DTCs PRESENT

With the scan tool, read ABS Module DTCs.

Are there any ABS DTCs present?

Yes >> Refer to the Brake category and perform the appropriate symptom(s). (Refer to 5 - BRAKES - DIAGNOSIS AND TESTING)
Perform NAG1 TRANSMISSION VERIFICATION TEST. (Refer to 21 - TRANSMISSION/TRANSAXLE/AUTOMATIC - NAG1 - STANDARD PROCEDURE)

No >> Go To 3

3. (B29) BRAKE SWITCH SIGNAL OPEN

Turn the ignition off to the lock position.

Disconnect the ESM harness connector.

Disconnect the Stop Lamp Switch harness connector.

Measure the resistance of the (B29) Brake Switch Signal circuit between the ESM harness connector and the Stop Lamp Switch harness connector.

Is the resistance above 5.0 ohms?

Yes >> Repair the (B29) Brake Switch Signal for an open.
Perform NAG1 TRANSMISSION VERIFICATION TEST. (Refer to 21 - TRANSMISSION/TRANSAXLE/AUTOMATIC - NAG1 - STANDARD PROCEDURE)

No >> Go To 4

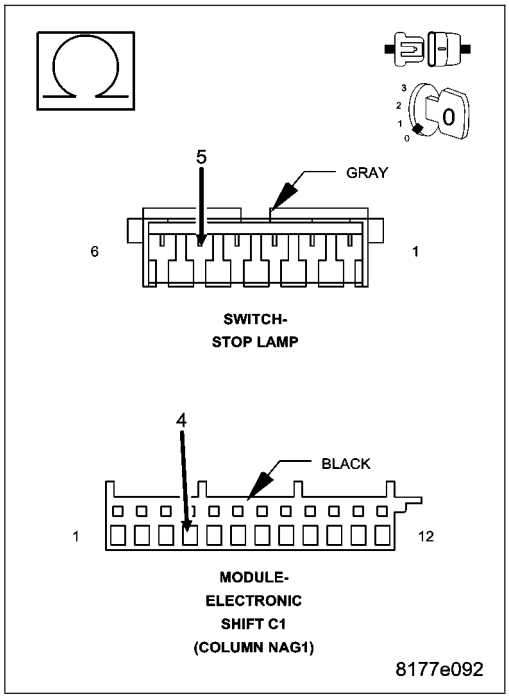

4. (B29) BRAKE SWITCH SIGNAL SHORT TO VOLTAGE

Turn the ignition on.

Measure the voltage of the (B29) Brake Switch Signal circuit.

Is the voltage above 0.5 volts?

Yes >> Repair the (B29) Brake Switch Signal for a short to voltage.
Perform NAG1 TRANSMISSION VERIFICATION TEST. (Refer to 21 - TRANSMISSION/TRANSAXLE/AUTOMATIC - NAG1 - STANDARD PROCEDURE)

No >> Using the schematics as a guide, check the Electronic Shift Module (ESM) terminals for corrosion, damage, or terminal push out. Pay particular attention to all power and ground circuits. If no problems are found, replace the ESM (Steering Column) per the Service Information.
Perform NAG1 TRANSMISSION VERIFICATION TEST. (Refer to 21 - TRANSMISSION/TRANSAXLE/AUTOMATIC - NAG1 - STANDARD PROCEDURE)

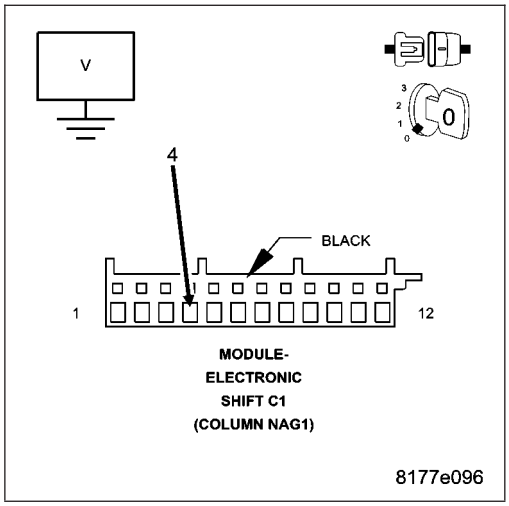

P2775-AUTOSTICK UPSHIFT SWITCH CIRCUIT PERFORMANCE - ESM (COLUMN SHIFT)

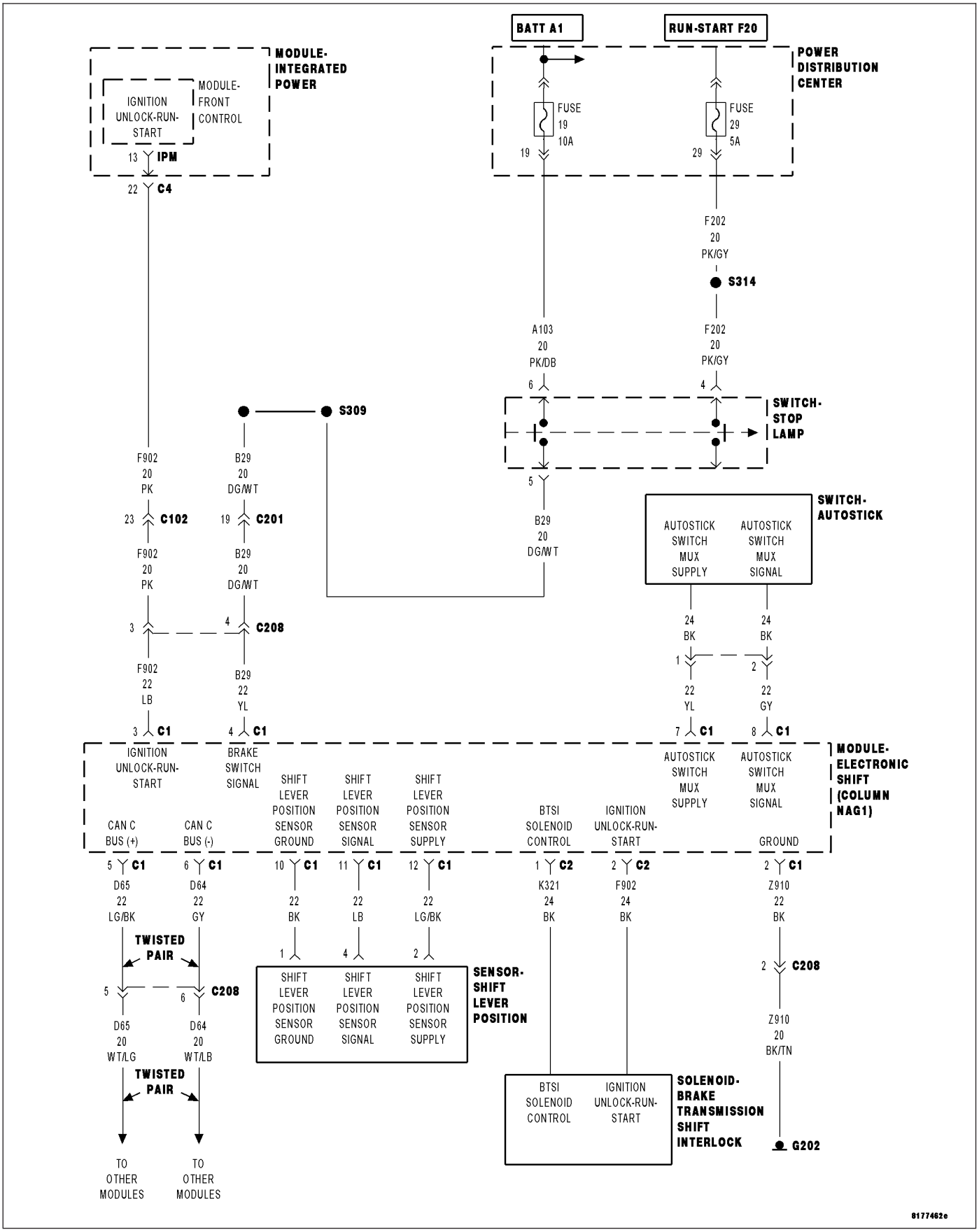

For a complete wiring diagram**Refer to Section 8W**

- **When Monitored:**
  When in AutoStick® mode.
- **Set Condition:**
  When the expected AutoStick® switch state is not correctly sensed by the Electronic Shift Module (ESM). If the upshift switch signal is detected as active in a gear position other than drive or when both the upshift and downshift signals are active at the same time.

Possible Causes
AUTOSTICK SWITCH
ELECTRONIC SHIFT MODULE

Always perform the NAG1 Pre-Diagnostic Troubleshooting procedure before proceeding. (Refer to 21 - TRANSMISSION/TRANSAXLE/AUTOMATIC - NAG1 - STANDARD PROCEDURE)

Theory of Operation

The AutoStick® Switch is located at the end of the Shift Lever. The gear change is requested by pressing the Auto-Stick Enable button, then either selecting the Upshift or Downshift on the rocker switch. The ESM then transmits the previous information over the CAN C bus to the TCM to engage the requested gear.

Diagnostic Test

1. CHECK THE AUTOSTICK SWITCH

AUTOSTICK SWITCH RESISTANCE VALUES (COLUMN SHIFT)

NON SWITCHED STATE	ENABLE	DOWNSHIFT	UPSHIFT
21.5k ohms ±1%	2.64k ohms ±1%	4.05k ohms ±1%	8.10k ohms ±1%

Turn the ignition off to the lock position.

Disconnect the AutoStick® harness connector.

Measure the resistance between the AutoStick Switch MUX circuit and the AutoStick Switch MUX Return circuit while checking each switch position.

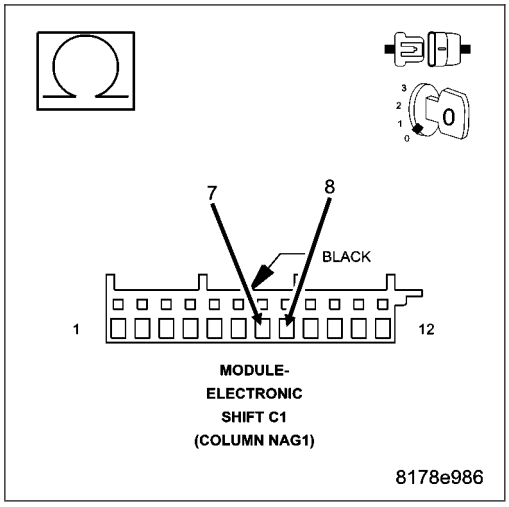

NOTE: Use the above chart to and compare your resistive readings.

Does the AutoStick Switch resistance readings match the above chart?

Yes >> Using the schematics as a guide, check the Electronic Shift Module (ESM) terminals for corrosion, damage, or terminal push out. Pay particular attention to all power and ground circuits. If no problems are found, replace the ESM (Steering Column) per the Service Information.
Perform NAG1 TRANSMISSION VERIFICATION TEST. (Refer to 21 - TRANSMISSION/TRANSAXLE/AUTOMATIC - NAG1 - STANDARD PROCEDURE)

No >> Replace the AutoStick Switch per the Service Information.
Perform NAG1 TRANSMISSION VERIFICATION TEST. (Refer to 21 - TRANSMISSION/TRANSAXLE/AUTOMATIC - NAG1 - STANDARD PROCEDURE)

P2779-AUTOSTICK DOWNSHIFT SWITCH CIRCUIT PERFORMANCE - ESM (COLUMN SHIFT)

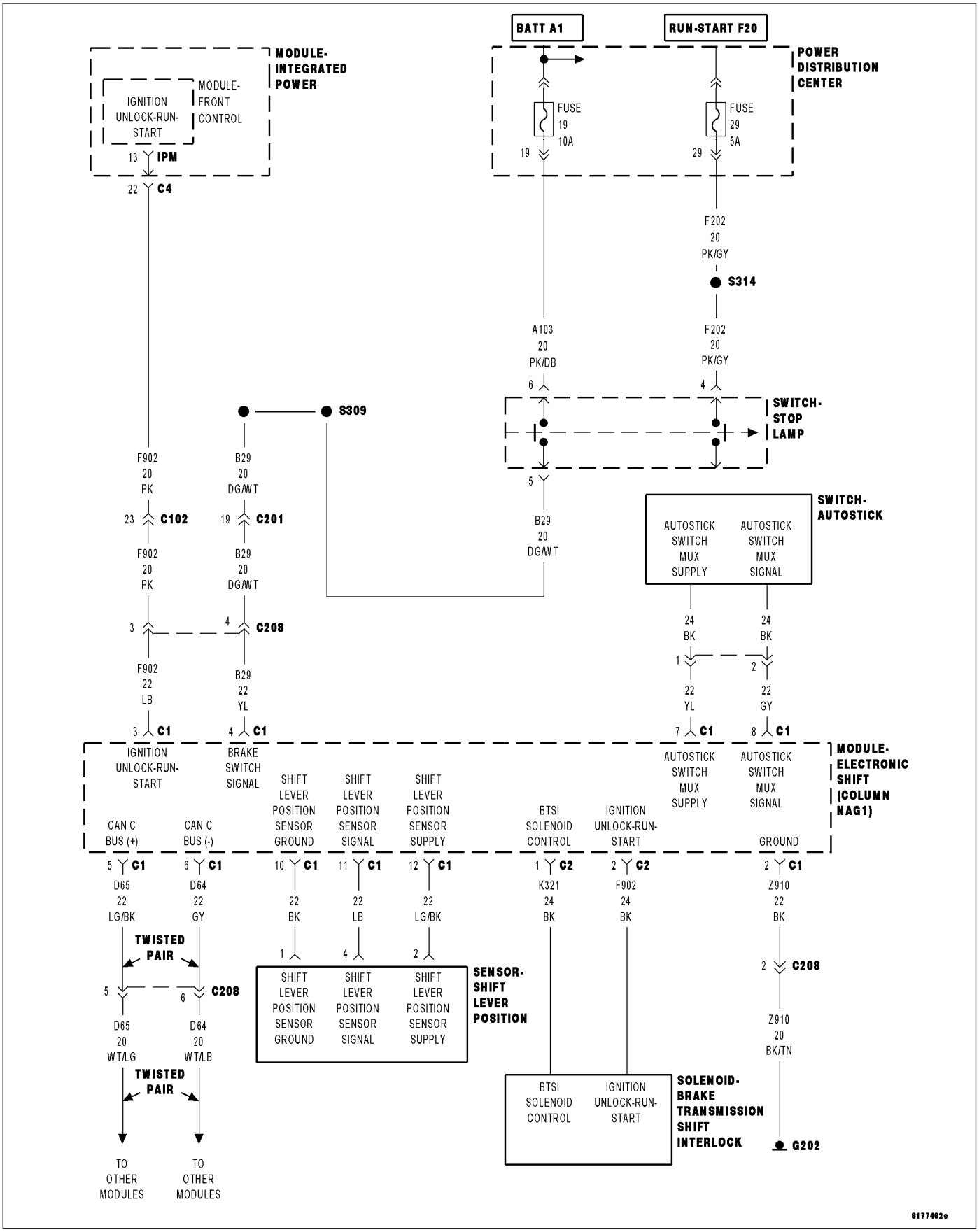

For a complete wiring diagram**Refer to Section 8W**

- **When Monitored:**
  When in AutoStick® mode.
- **Set Condition:**
  When the expected AutoStick® switch state is not correctly sensed by the Electronic Shift Module (ESM). If the upshift switch signal is detected as active in a gear position other than drive or when both the upshift and downshift signals are active at the same time.

Possible Causes
AUTOSTICK SWITCH
ELECTRONIC SHIFT MODULE

Always perform the NAG1 Pre-Diagnostic Troubleshooting procedure before proceeding. (Refer to 21 - TRANSMISSION/TRANSAXLE/AUTOMATIC - NAG1 - STANDARD PROCEDURE)

Theory of Operation

The AutoStick® Switch is located at the end of the Shift Lever. The gear change is requested by pressing the Auto-Stick Enable button, then either selecting the Upshift or Downshift on the rocker switch. The ESM then transmits the previous information over the CAN C bus to the TCM to engage the requested gear.

Diagnostic Test

1. CHECK THE AUTOSTICK SWITCH

AUTOSTICK SWITCH RESISTANCE VALUES (COLUMN SHIFT)

NON SWITCHED STATE	ENABLE	DOWNSHIFT	UPSHIFT
21.5k ohms ±1%	2.64k ohms ±1%	4.05k ohms ±1%	8.10k ohms ±1%

Turn the ignition off to the lock position.

Disconnect the AutoStick® harness connector.

Measure the resistance between the AutoStick Switch MUX circuit and the AutoStick Switch MUX Return circuit while checking each switch position.

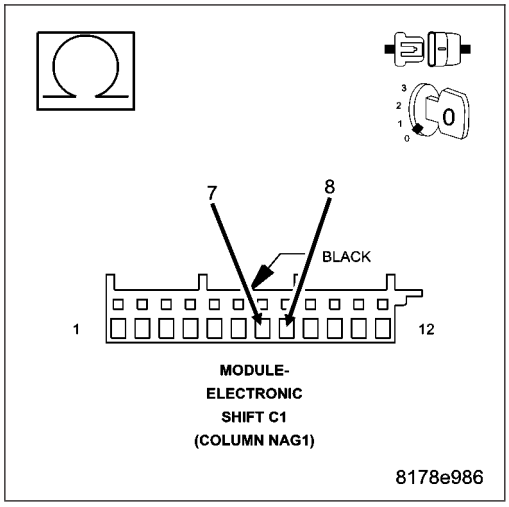

NOTE: Use the above chart to and compare your resistive readings.

Does the AutoStick Switch resistance readings match the above chart?

Yes >> Using the schematics as a guide, check the Electronic Shift Module (ESM) terminals for corrosion, damage, or terminal push out. Pay particular attention to all power and ground circuits. If no problems are found, replace the ESM (Steering Column) per the Service Information.
Perform NAG1 TRANSMISSION VERIFICATION TEST. (Refer to 21 - TRANSMISSION/TRANSAXLE/AUTOMATIC - NAG1 - STANDARD PROCEDURE)

No >> Replace the AutoStick Switch (Shift Lever) per the Service Information.
Perform NAG1 TRANSMISSION VERIFICATION TEST. (Refer to 21 - TRANSMISSION/TRANSAXLE/AUTOMATIC - NAG1 - STANDARD PROCEDURE)

U0002-CAN C BUS OFF PERFORMANCE - ESM (COLUMN SHIFT)

For a complete wiring diagram**Refer to Section 8W**

Theory of Operation

Some controllers communicate with other controllers over the CAN C BUS. The Electronic Shift Module (ESM) continuously monitors BUS activity and reads the messages it needs. The CAN C BUS is also used to communicate the MIL status to the Engine Controller.

For CAN BUS diagnostic procedures (Refer to 8 - ELECTRICAL/ELECTRONIC CONTROL MODULES - DIAGNOSIS AND TESTING).

U0100-LOST COMMUNICATION WITH ECM/PCM - ESM (COLUMN SHIFT)

For a complete wiring diagram**Refer to Section 8W**

Theory of Operation

Some controllers communicate with other controllers over the CAN C BUS. The Electronic Shift Module (ESM) continuously monitors BUS activity and reads the messages it needs. The CAN C BUS is also used to communicate the MIL status to the Engine Controller.

For CAN BUS diagnostic procedures (Refer to 8 - ELECTRICAL/ELECTRONIC CONTROL MODULES - DIAGNOSIS AND TESTING).

U0121-LOST COMMUNICATION WITH ANTI-LOCK BRAKE MODULE - ESM (COLUMN SHIFT)

For a complete wiring diagram**Refer to Section 8W**

Theory of Operation

Some controllers communicate with other controllers over the CAN C BUS. The Electronic Shift Module (ESM) continuously monitors BUS activity and reads the messages it needs. The CAN C BUS is also used to communicate the MIL status to the Engine Controller.

For CAN BUS diagnostic procedures (Refer to 8 - ELECTRICAL/ELECTRONIC CONTROL MODULES - DIAGNOSIS AND TESTING).

U0141-LOST COMMUNICATION WITH FRONT CONTROL MODULE - ESM (COLUMN SHIFT)

For a complete wiring diagram**Refer to Section 8W**

Theory of Operation

Some controllers communicate with other controllers over the CAN C BUS. The Electronic Shift Module (ESM) continuously monitors BUS activity and reads the messages it needs. The CAN C BUS is also used to communicate the MIL status to the Engine Controller.

For CAN BUS diagnostic procedures (Refer to 8 - ELECTRICAL/ELECTRONIC CONTROL MODULES - DIAGNOSIS AND TESTING).

STANDARD PROCEDURE

NAG1 PRE-DIAGNOSTIC TROUBLESHOOTING PROCEDURE

For a complete wiring diagram **Refer to Section 8W**

Perform the following pre-diagnostic troubleshooting procedures prior to performing any diagnostic test.

Low fluid level can be the cause of many transmission problems. If the fluid level is low, locate and repair the leak then check and adjust the fluid level in accordance with the Service Information.

Always perform diagnostics with a fully charged battery to avoid false symptoms.

1. With the scan tool, read the engine DTCs. Check and repair all engine DTCs prior to performing transmission symptom diagnostic procedures.
2. With the scan tool, read and record all Transmission DTCs.

NOTE: If the TCM detects and stores a DTC, the TCM also stores the vehicles operating conditions under which the DTC originally set and is located in scan tool under Environmental Data. Before erasing any stored DTCs, it is recommended to record any available data to assist in duplicating the conditions in which the DTC originally set.

3. Using the wiring diagram/schematic as a guide, inspect the wiring and connectors. Clean and repair as necessary.
4. Most DTCs set on start up but some must be set by driving the vehicle such that all diagnostic monitors have run.
5. Verify flash level of transmission controller. Some problems are corrected by software upgrades to the transmission controller. Verify that no variant DTCs are present. If variant DTCs are present, perform their respective test first.
6. If the TCM (EGS) is flashed, perform a EGS initialization with the scan tool to relearn variant coding.
7. **Check for any Service Information Tune-ups or Service Bulletins that may apply.**

1.

Did any of the above procedures repair the vehicle?

Yes >> Testing is complete.
Perform NAG1 TRANSMISSION VERIFICATION TEST. (Refer to 21 - TRANSMISSION/TRANSAXLE/AUTOMATIC - NAG1 - STANDARD PROCEDURE)

No >> Refer to the identified category and perform the appropriate symptom(s).
(Refer to 21 - TRANSMISSION/TRANSAXLE/AUTOMATIC - 42RLE - DIAGNOSIS AND TESTING)

NAG1 TRANSMISSION VERIFICATION TEST

To validate that the repair(s) fixed the vehicle, perform the following steps.

1. Reconnect any disconnected components.
2. Connect the scan tool to the Data Link Connector.
3. With the scan tool, erase ABS DTCs.
4. With the scan tool, erase PCM DTCs.
5. With the scan tool, erase TCM DTCs.

CAUTION: Apply the parking brake.

NOTE: The Transmission Temperature can only be read while in Reverse or Drive.

6. With the scan tool, display the Transmission temperature. Start and run the engine until the Transmission temperature is above 43° C (110° F).
7. Check the Transmission fluid and adjust if necessary. Refer to the Service Information for the proper Fluid Fill procedure. (Refer to 21 - TRANSMISSION/TRANSAXLE/AUTOMATIC - NAG1/FILTER - STANDARD PROCEDURE)
8. If the TCM (EGS) is flashed or replaced, with the scan tool, perform a EGS initialization to relearn variant coding.
9. If internal transmission repairs are performed or replacement of the Transmission Control Module, perform a TCM ADAPTATION procedure. (Refer to 8 - ELECTRICAL/ELECTRONIC CONTROL MODULES/TRANSMISSION CONTROL MODULE - STANDARD PROCEDURE)
10. After performing the above procedures, perform the **Road Test Procedure.**

ROAD TEST PROCEDURE

1. Road test the vehicle. Make fifteen to twenty 1-2, 2-3, 3-4, and 4-5 upshifts.
2. Perform these shifts from a standing start to 72 Kmh (45 mph) with a constant throttle opening of 20 to 25 degrees.
3. With speeds below 40 Kmh (25 mph), make five to eight wide open throttle kickdowns to 1st gear. Allow at least 5 seconds each in 2nd and 3rd gear between each kickdown.
4. With the scan tool, read DTCs.

1.

Did any DTCs set?

Yes >> Refer to the identified category and perform the appropriate symptom(s).

No >> Testing is complete.

AUTOMATIC TRANSMISSION NAG1 - SERVICE INFORMATION

TABLE OF CONTENTS

page

AUTOMATIC TRANSMISSION NAG1 - SERVICE INFORMATION
DESCRIPTION . . . 264
OPERATION . . . 266
DIAGNOSIS AND TESTING
AUTOMATIC TRANSMISSION . . . 293
PRELIMINARY . . . 293
ROAD TESTING . . . 293
AUTOMATIC TRANSMISSION . . . 294
AIR CHECKING TRANSMISSION CLUTCH OPERATION. . . . 302
STANDARD PROCEDURE - ALUMINUM THREAD REPAIR . . . 302
REMOVAL . . . 302
DISASSEMBLY . . . 306
ASSEMBLY . . . 312
INSTALLATION . . . 320
SCHEMATICS AND DIAGRAMS . . . 326
SPECIFICATIONS . . . 347
SPECIAL TOOLS - AUTOMATIC TRANSMISSION - NAG1 . . . 349
MECHANISM-BRAKE TRANSMISSION SHIFT INTERLOCK
DESCRIPTION . . . 351
OPERATION . . . 351
DIAGNOSIS AND TESTING - BRAKE TRANSMISSION SHIFT INTERLOCK . . . 352
ADJUSTMENTS - BRAKE TRANSMISSION SHIFT INTERLOCK . . . 353
UNIT-ELECTROHYDRAULIC CONTROL
DESCRIPTION . . . 355
OPERATION . . . 363
REMOVAL . . . 369
DISASSEMBLY . . . 370
ASSEMBLY . . . 373
INSTALLATION . . . 377
FLUID AND FILTER
DESCRIPTION . . . 379
OPERATION . . . 379
DIAGNOSIS AND TESTING
EFFECTS OF INCORRECT FLUID LEVEL . . . 380
CAUSES OF BURNT FLUID . . . 380
FLUID CONTAMINATION . . . 380
STANDARD PROCEDURE
CHECK OIL LEVEL . . . 380
TRANSMISSION FILL . . . 381
FLUID/FILTER SERVICE . . . 382
CLUTCH-FREEWHEELING
DESCRIPTION . . . 383
OPERATION . . . 383

page

DISASSEMBLY . . . 384
ASSEMBLY . . . 386
CABLE-GEARSHIFT
DIAGNOSIS AND TESTING GEARSHIFT CABLE . . . 387
REMOVAL . . . 387
INSTALLATION . . . 388
ADJUSTMENTS - GEARSHIFT CABLE . . . 390
CLUTCHES-HOLDING
DESCRIPTION . . . 392
OPERATION . . . 393
B1-HOLDING CLUTCH
DISASSEMBLY . . . 394
ASSEMBLY . . . 395
B2-HOLDING CLUTCH
DISASSEMBLY . . . 399
ASSEMBLY . . . 401
CLUTCHES-INPUT
DESCRIPTION . . . 405
OPERATION . . . 406
K1-INPUT CLUTCH
DISASSEMBLY . . . 407
ASSEMBLY . . . 409
K2-INPUT CLUTCH
DISASSEMBLY . . . 412
ASSEMBLY . . . 414
K3-INPUT CLUTCH
DISASSEMBLY . . . 418
ASSEMBLY . . . 419
SENSORS-INPUT SPEED
DESCRIPTION . . . 422
OPERATION . . . 422
PUMP-OIL
DESCRIPTION . . . 423
OPERATION . . . 423
DISASSEMBLY . . . 423
INSPECTION . . . 424
ASSEMBLY . . . 425
BEARING-OUTPUT SHAFT
REMOVAL . . . 426
INSTALLATION . . . 428
SEAL-OUTPUT SHAFT
REMOVAL . . . 430
INSTALLATION . . . 430
CABLE-PARK LOCK
REMOVAL . . . 432
INSTALLATION . . . 433
GEARTRAIN-PLANETARY
DESCRIPTION . . . 435
OPERATION . . . 435

DISASSEMBLY 436
ASSEMBLY 437
MECHANISM-SHIFT
DESCRIPTION 439
OPERATION 439
REMOVAL 441
INSTALLATION 443
SOLENOID
DESCRIPTION 445
OPERATION 447
CONTACT-TEMPERATURE SENSOR/PARK-NEUTRAL
DESCRIPTION
PARK/NEUTRAL CONTACT 450
TRANSMISSION TEMPERATURE SENSOR . . 450
OPERATION
PARK/NEUTRAL CONTACT 451
TRANSMISSION TEMPERATURE SENSOR . . 451
CONVERTER-TORQUE
DESCRIPTION 453
OPERATION 458
REMOVAL 460
INSTALLATION 460
SEAL-TORQUE CONVERTER HUB
REMOVAL 461
INSTALLATION 461

AUTOMATIC TRANSMISSION NAG1 - SERVICE INFORMATION

DESCRIPTION

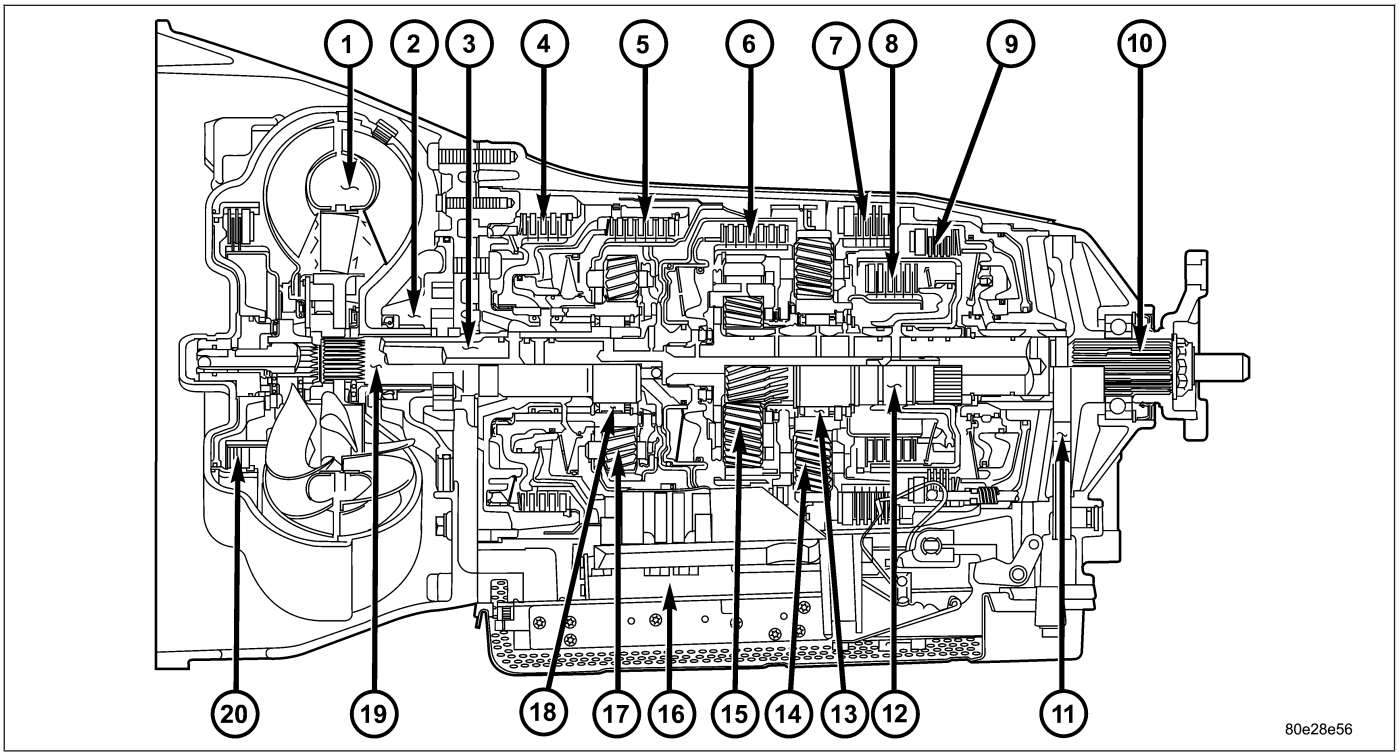

NAG1 Automatic Transmission

1 - TORQUE CONVERTER	11 - PARKING LOCK GEAR
2 - OIL PUMP	12 - INTERMEDIATE SHAFT
3 - DRIVESHAFT	13 - FREEWHEEL F2
4 - MULTI-DISC HOLDING CLUTCH B1	14 - REAR PLANETARY GEAR SET
5 - DRIVING CLUTCH K1	15 - CENTER PLANETARY GEAR SET
6 - DRIVING CLUTCH K2	16 - ELECTROHYDRAULIC CONTROL UNIT
7 - MULTI-DISC HOLDING CLUTCH B3	17 - FRONT PLANETARY GEAR SET
8 - DRIVING CLUTCH K3	18 - FREEWHEEL F1
9 - MULTI-DISC HOLDING CLUTCH B2	19 - STATOR SHAFT
10 - OUTPUT SHAFT	20 - TORQUE CONVERTER LOCK-UP CLUTCH

The NAG1 automatic transmission is an electronically controlled 5-speed transmission with a lock-up clutch in the torque converter. The ratios for the gear stages are obtained by 3 planetary gear sets. Fifth gear is designed as an overdrive with a high-speed ratio.

NAG1 identifies a family of transmissions and means “N”ew “A”utomatic “G”earbox, generation 1. Various marketing names are associated with the NAG1 family of transmissions, depending on the transmisson variation being used in a specific vehicle. Some examples of the marketing names are: W5A300, W5A380, and W5A580. The marketing name can be interpreted as follows:

- W = A transmission using a hydraulic torque converter.
- 5 = 5 forward gears.
- A = Automatic Transmission.
- 580 = Maximum input torque capacity in Newton meters.

The gears are actuated electronically/hydraulically. The gears are shifted by means of an appropriate combination of three multi-disc holding clutches, three multi-disc driving clutches, and two freewheeling clutches.

Electronic transmission control enables precise adaptation of pressures to the respective operating conditions and to the engine output during the shift phase which results in a significant improvement in shift quality.

Furthermore, it offers the advantage of a flexible adaptation to various vehicle and engines.

Basically, the automatic transmission with electronic control offers the following advantages:

- Reduces fuel consumption.
- Improved shift comfort.
- More favourable step-up through the five gears.
- Increased service life and reliability.
- Lower maintenance costs.

TRANSMISSION IDENTIFICATION

The transmission can be generically identified visually by the presence of a round 13-way connector located near the front corner of the transmission oil pan, on the right side. Specific transmission information can be found stamped into a pad on the left side of the transmission, above the oil pan rail.

TRANSMISSION GEAR RATIOS

The gear ratios for the NAG1 automatic transmission are as follows:

1st Gear	3.59:1
2nd Gear	2.19:1
3rd Gear	1.41:1
4th Gear	1.00:1
5th Gear	0.83:1
Reverse	3.16:1

TRANSMISSION HOUSING

The converter housing and transmission are made from a light alloy. These are bolted together and centered via the outer multi-disc carrier of multi-disc holding clutch, B1. A coated intermediate plate provides the sealing. The oil pump and the outer multi-disc carrier of the multi-disc holding clutch, B1, are bolted to the converter housing. The stator shaft is pressed into it and prevented from rotating by splines. The electrohydraulic unit is bolted to the transmission housing from underneath. A sheet metal steel oil pan forms the closure.

MECHANICAL SECTION

The mechanical section consists of a input shaft, output shaft, a sun gear shaft, and three planetary gear sets which are coupled to each other. The planetary gear sets each have four planetary pinion gears. The oil pressure for the torque converter lock-up clutch and clutch K2 is supplied through bores in the input shaft. The oil pressure to clutch K3 is transmitted through the output shaft. The lubricating oil is distributed through additional bores in both shafts. All the bearing points of the gear sets, as well as the freewheeling clutches and actuators, are supplied with lubricating oil. The parking lock gear is connected to the output shaft via splines.

Freewheeling clutches F1 and F2 are used to optimize the shifts. The front freewheel, F1, is supported on the extension of the stator shaft on the transmission side and, in the locking direction, connects the sun gear of the front planetary gear set to the transmission housing. In the locking direction, the rear freewheeling clutch, F2, connects the sun gear of the center planetary gear set to the sun gear of the rear planetary gear set.

ELECTROHYDRAULIC CONTROL UNIT

The electrohydraulic control unit comprises the shift plate made from light alloy for the hydraulic control and an electrical control unit. The electrical control unit comprises of a supporting body made of plastic, into which the electrical components are assembled. The supporting body is mounted on the shift plate and screwed to it.

Strip conductors inserted into the supporting body make the connection between the electrical components and a plug connector. The connection to the wiring harness on the vehicle and the transmission control module (TCM) is produced via this 13-pin plug connector with a bayonet lock.

SHIFT GROUPS

The hydraulic control components (including actuators) which are responsible for the pressure distribution before, during, and after a gear change are described as a shift group. Each shift group contains a command valve, a holding pressure shift valve, a shift pressure shift valve, overlap regulating valve, and a solenoid.

The hydraulic system contains three shift groups: 1-2/4-5, 2-3, and 3-4. Each shift group can also be described as being in one of two possible states. The active shift group is described as being in the shift phase when it is actively

engaging/disengaging a clutch combination. The 1-2/4-5 shift group control the B1 and K1 clutches. The 2-3 shift group controls the K2 and K3 clutches. The 3-4 shift group controls the K3 and B2 clutches.

OPERATION

The transmission control is divided into the electronic and hydraulic transmission control functions. While the electronic transmission control is responsible for gear selection and for matching the pressures to the torque to be transmitted, the transmission's power supply control occurs via hydraulic elements in the electrohydraulic control module. The oil supply to the hydraulic elements, such as the hydrodynamic torque converter, the shift elements and the hydraulic transmission control, is provided by way of an oil pump connected with the torque converter.

The Transmission Control Module (TCM) allows for the precise adaptation of pressures to the corresponding operating conditions and to the engine output during the gearshift phase, resulting in a noticeable improvement in shift quality. The engine speed limit can be reached in the individual gears at full throttle and kickdown. The shift range can be changed in the forward gears while driving, but the TCM employs a downshift safeguard to prevent overrevving the engine. The system offers the additional advantage of flexible adaptation to different vehicle and engine variants.

EMERGENCY RUNNING FUNCTION

In order to ensure a safe driving state and to prevent damage to the automatic transmission, the TCM control module switches to limp-home mode in the event of critical faults. A diagnostic trouble code (DTC) assigned to the fault is stored in memory. All solenoid and regulating valves are thus de-energized.

The net effect is:

- The last engaged gear remains engaged.
- The modulating pressure and shift pressures rise to the maximum levels.
- The torque converter lockup clutch is deactivated.

In order to preserve the operability of the vehicle to some extent, the hydraulic control can be used to engage 2nd gear or reverse using the following procedure:

- Stop the vehicle.
- Move selector lever to ″P″.
- Switch off engine.
- Wait at least 10 seconds.
- Start engine.
- Move selector lever to D: 2nd gear.
- Move selector lever to R: Reverse gear.

The limp-home function remains active until the DTC is rectified or the stored DTC is erased with the appropriate scan tool. Sporadic faults can be reset via ignition OFF/ON.

CLUTCH APPLICATION

Refer to CLUTCH APPLICATION for which shift elements are applied in each gear position.

CLUTCH APPLICATION

GEAR	RATIO	B1	B2	B3	K1	K2	K3	F1	F2
1	3.59	X*	X				X*	X	X
2	2.19		X		X		X*		X
3	1.41		X		X	X			
4	1.00				X	X	X		
5	0.83	X				X	X	X*	
N	N/A	X					X		
R	3.16	X*		X			X	X	
R - Limp In	1.93			X	X		X		
* = The shift components required during coast.									

FIRST GEAR POWERFLOW

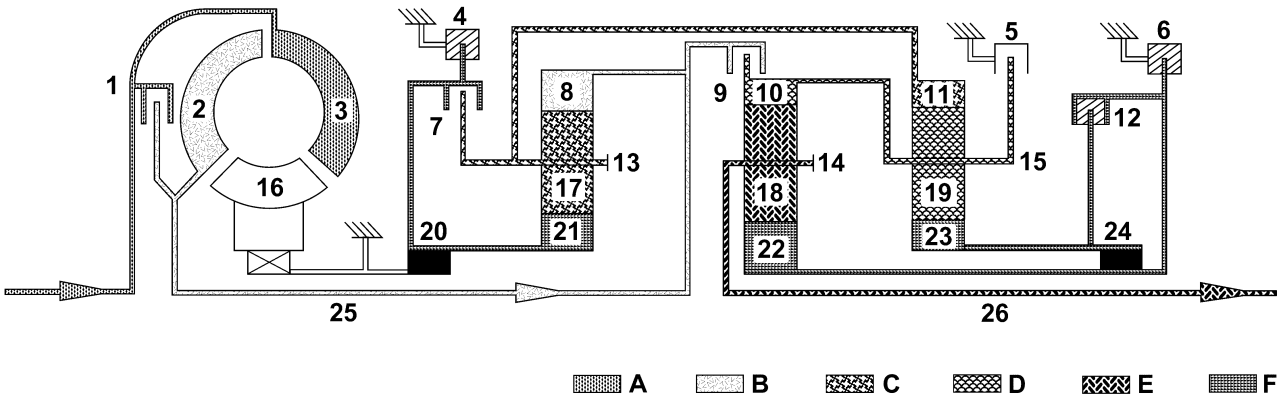

First Gear Powerflow

1 - TORQUE CONVERTER LOCK-UP CLUTCH
2 - TORQUE CONVERTER TURBINE
3 - TORQUE CONVERTER IMPELLER
4 - HOLDING CLUTCH B1
5 - HOLDING CLUTCH B3
6 - HOLDING CLUTCH B2
7 - DRIVING CLUTCH K1
8 - FRONT PLANETARY ANNULUS GEAR
9 - DRIVING CLUTCH K2
10 - CENTER PLANETARY ANNULUS GEAR
11 - REAR PLANETARY ANNULUS GEAR
12 - DRIVING CLUTCH K3
13 - FRONT PLANETARY CARRIER
A - ENGINE SPEED
B - TRANSMISSION INPUT SPEED
C - FIRST GEAR RATIO
14 - CENTER PLANETARY CARRIER
15 - REAR PLANETARY CARRIER
16 - TORQUE CONVERTER STATOR
17 - FRONT PLANETARY PINION GEARS
18 - CENTER PLANETARY PINION GEARS
19 - REAR PLANETARY PINION GEARS
20 - FREEWHEELING CLUTCH F1
21 - FRONT PLANETARY SUN GEAR
22 - CENTER PLANETARY SUN GEAR
23 - REAR PLANETARY SUN GEAR
24 - FREEWHEELING CLUTCH F2
25 - INPUT SHAFT
26 - OUTPUT SHAFT
D - SECOND GEAR RATIO
E - THIRD GEAR RATIO
F - FIXED PARTS

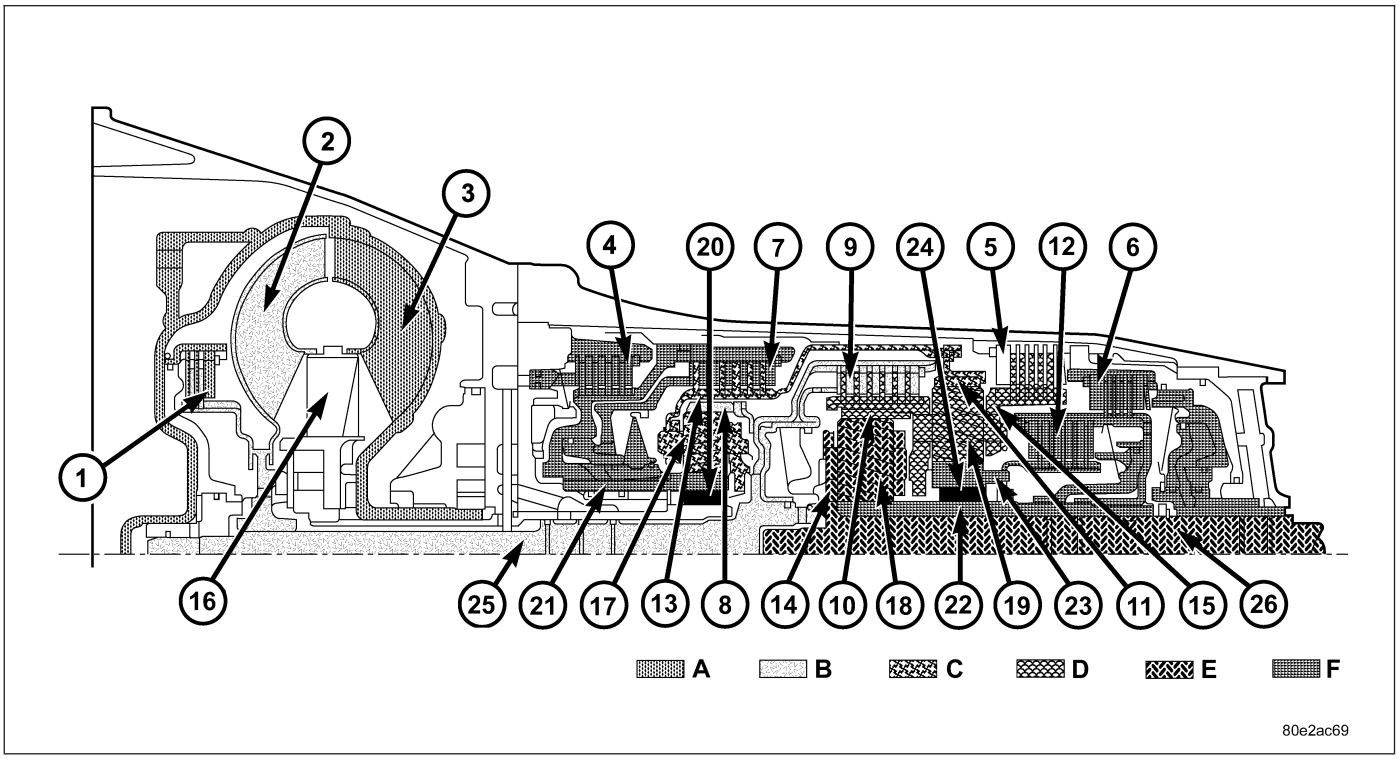

First Gear Powerflow

1 - TORQUE CONVERTER LOCK-UP CLUTCH
2 - TORQUE CONVERTER TURBINE
3 - TORQUE CONVERTER IMPELLER
4 - HOLDING CLUTCH B1
5 - HOLDING CLUTCH B3
6 - HOLDING CLUTCH B2
7 - DRIVING CLUTCH K1
8 - FRONT PLANETARY ANNULUS GEAR
9 - DRIVING CLUTCH K2
10 - CENTER PLANETARY ANNULUS GEAR
11 - REAR PLANETARY ANNULUS GEAR
12 - DRIVING CLUTCH K3
13 - FRONT PLANETARY CARRIER
A - ENGINE SPEED
B - TRANSMISSION INPUT SPEED
C - FIRST GEAR RATIO
14 - CENTER PLANETARY CARRIER
15 - REAR PLANETARY CARRIER
16 - TORQUE CONVERTER STATOR
17 - FRONT PLANETARY PINION GEARS
18 - CENTER PLANETARY PINION GEARS
19 - REAR PLANETARY PINION GEARS
20 - FREEWHEELING CLUTCH F1
21 - FRONT PLANETARY SUN GEAR
22 - CENTER PLANETARY SUN GEAR
23 - REAR PLANETARY SUN GEAR
24 - FREEWHEELING CLUTCH F2
25 - INPUT SHAFT
26 - OUTPUT SHAFT
D - SECOND GEAR RATIO
E - THIRD GEAR RATIO
F - FIXED PARTS

Torque from the torque converter is increased via the input shaft (25) and all three planetary gearsets and transferred to the output shaft (26).

Front Planetary Gear Set

The annulus gear (8) is driven by the input shaft (25). The sun gear (21) is held against the housing by the locked freewheel F1 (20) during acceleration and via the engaged multiple-disc holding clutch B1 (4) during deceleration. The planetary pinion gears (17) turn on the fixed sun gear (21) and increase the torque from the annulus gear (8) to the planetary carrier (13). The planetary carrier (13) moves at a reduced speed in the running direction of the engine.

Rear Planetary Gear Set

The annulus gear (11) turns at a reduced speed due to the mechanical connection to the front planetary carrier (15). The sun gear (23) is held against the housing by the engaged multiple-disc holding clutch B2 (6), by the locked freewheel F2 (24) during acceleration and by the engaged multiple-disc clutch K3 (12) during deceleration. The planetary gears (19) turn on the fixed sun gear (23) and increase the torque from the annulus gear (11) to the planetary carrier (15). The planetary carrier (15) moves at a reduced speed in the running direction of the engine.

Center Planetary Gear Set

The annulus gear (10) is driven at the same speed as the rear planetary carrier (15) as a result of a mechanical connection. The sun gear (22) is held against the housing by the multiple-disc holding clutch B2 (6). The planetary pinion gears (18) turn on the fixed sun gear (22) and increase the torque from the annulus gear (10) to the planetary carrier (14). The output shaft (26) connected to the planetary carrier (14) turns at a reduced speed in the running direction of the engine.

SECOND GEAR POWERFLOW

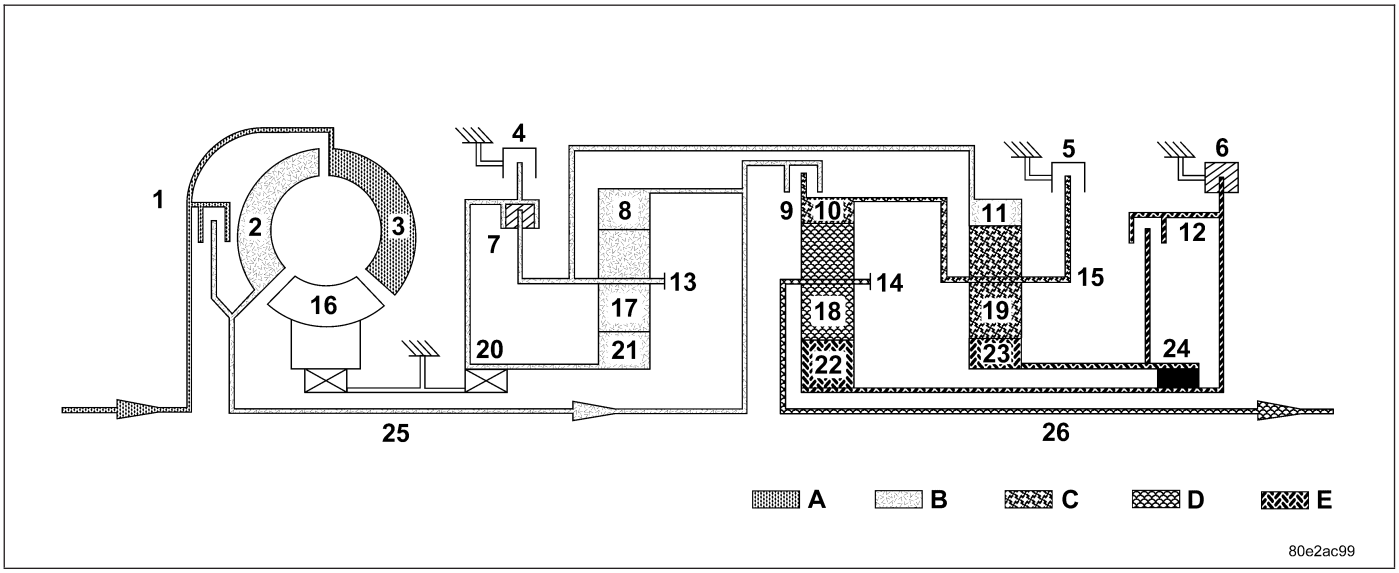

Second Gear Powerflow

1 - TORQUE CONVERTER LOCK-UP CLUTCH
2 - TORQUE CONVERTER TURBINE
3 - TORQUE CONVERTER IMPELLER
4 - HOLDING CLUTCH B1
5 - HOLDING CLUTCH B3
6 - HOLDING CLUTCH B2
7 - DRIVING CLUTCH K1
8 - FRONT PLANETARY ANNULUS GEAR
9 - DRIVING CLUTCH K2
10 - CENTER PLANETARY ANNULUS GEAR
11 - REAR PLANETARY ANNULUS GEAR
12 - DRIVING CLUTCH K3
13 - FRONT PLANETARY CARRIER
A - ENGINE SPEED
B - TRANSMISSION INPUT SPEED
C - FIRST GEAR RATIO
14 - CENTER PLANETARY CARRIER
15 - REAR PLANETARY CARRIER
16 - TORQUE CONVERTER STATOR
17 - FRONT PLANETARY PINION GEARS
18 - CENTER PLANETARY PINION GEARS
19 - REAR PLANETARY PINION GEARS
20 - FREEWHEELING CLUTCH F1
21 - FRONT PLANETARY SUN GEAR
22 - CENTER PLANETARY SUN GEAR
23 - REAR PLANETARY SUN GEAR
24 - FREEWHEELING CLUTCH F2
25 - INPUT SHAFT
26 - OUTPUT SHAFT
D - SECOND GEAR RATIO
E - FIXED PARTS

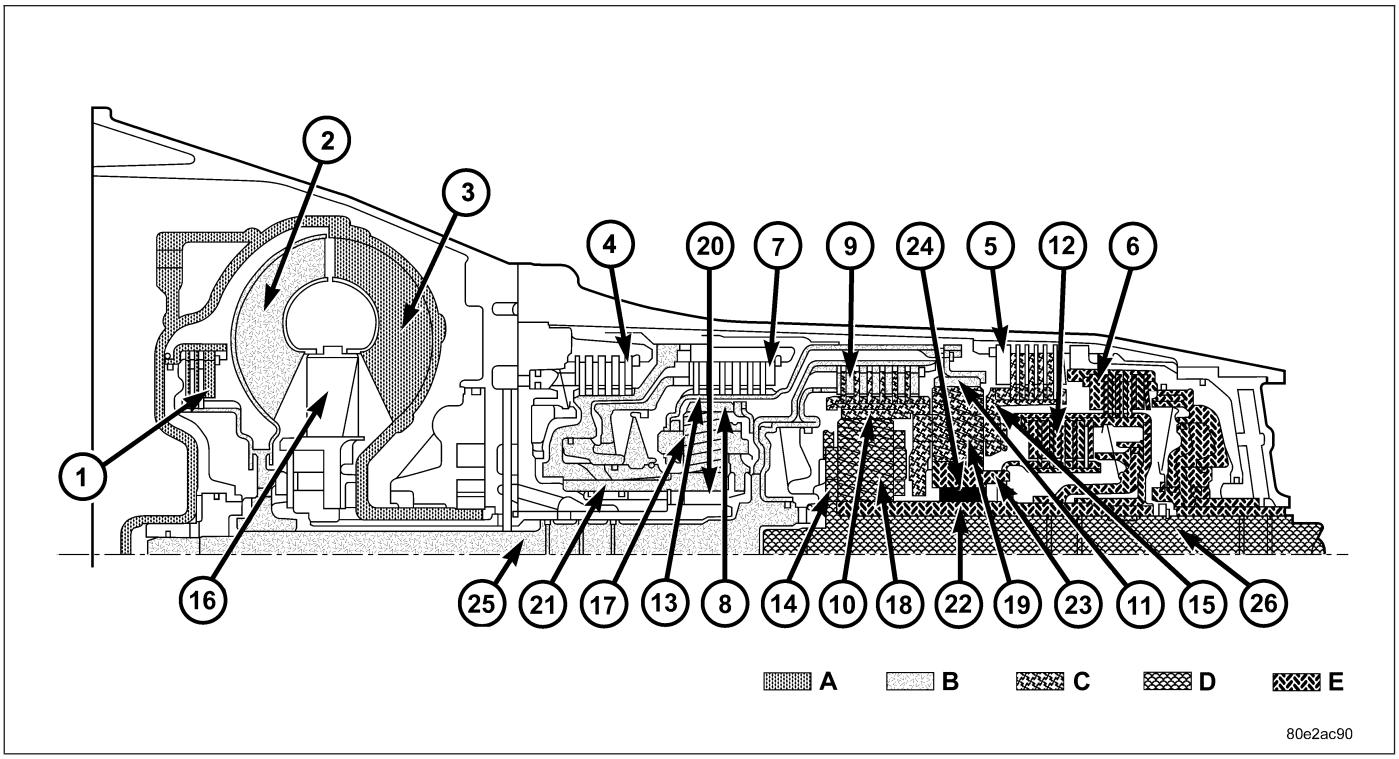

Second Gear Powerflow

1 - TORQUE CONVERTER LOCK-UP CLUTCH
2 - TORQUE CONVERTER TURBINE
3 - TORQUE CONVERTER IMPELLER
4 - HOLDING CLUTCH B1
5 - HOLDING CLUTCH B3
6 - HOLDING CLUTCH B2
7 - DRIVING CLUTCH K1
8 - FRONT PLANETARY ANNULUS GEAR
9 - DRIVING CLUTCH K2
10 - CENTER PLANETARY ANNULUS GEAR
11 - REAR PLANETARY ANNULUS GEAR
12 - DRIVING CLUTCH K3
13 - FRONT PLANETARY CARRIER
A - ENGINE SPEED
B - TRANSMISSION INPUT SPEED
C - FIRST GEAR RATIO
14 - CENTER PLANETARY CARRIER
15 - REAR PLANETARY CARRIER
16 - TORQUE CONVERTER STATOR
17 - FRONT PLANETARY PINION GEARS
18 - CENTER PLANETARY PINION GEARS
19 - REAR PLANETARY PINION GEARS
20 - FREEWHEELING CLUTCH F1
21 - FRONT PLANETARY SUN GEAR
22 - CENTER PLANETARY SUN GEAR
23 - REAR PLANETARY SUN GEAR
24 - FREEWHEELING CLUTCH F2
25 - INPUT SHAFT
26 - OUTPUT SHAFT
D - SECOND GEAR RATIO
E - FIXED PARTS

Torque from the torque converter is increased via the input shaft (25) and the center and rear planetary gearset and transferred to the output shaft (26).

Front Planetary Gear Set

The planetary carrier (13) and sun gear (21) are connected via the engaged multiple-disc clutch K1 (7). The planetary gearset is therefore blocked and turns as a closed unit at the input speed due to the mechanical connection of the annulus gear (8) and input shaft.

Rear Planetary Gear Set

The annulus gear (11) turns at the input speed as a result of the mechanical connection to the front planetary carrier (13). The sun gear (23) is held against the housing by the engaged multiple-disc holding clutch B2 (6), by the locked freewheel F2 (24) during acceleration and by the engaged multiple-disc clutch K3 (12) during deceleration. The planetary pinion gears (19) turn on the fixed sun gear (23) and increase the torque from the annulus gear (11) to the planetary carrier (15). The planetary carrier (15) moves at a reduced speed in the running direction of the engine.

Center Planetary Gear Set

The annulus gear (10) is driven at the same speed as the rear planetary carrier (15) as a result of a mechanical connection. The sun gear (22) is held against the housing by the multiple-disc holding clutch B2 (6). The planetary pinion gears (18) turn on the fixed sun gear (22) and increase the torque from the annulus gear (10) to the planetary carrier (14). The output shaft (5) connected to the planetary carrier (14) turns at a reduced speed in the running direction of the engine.

THIRD GEAR POWERFLOW

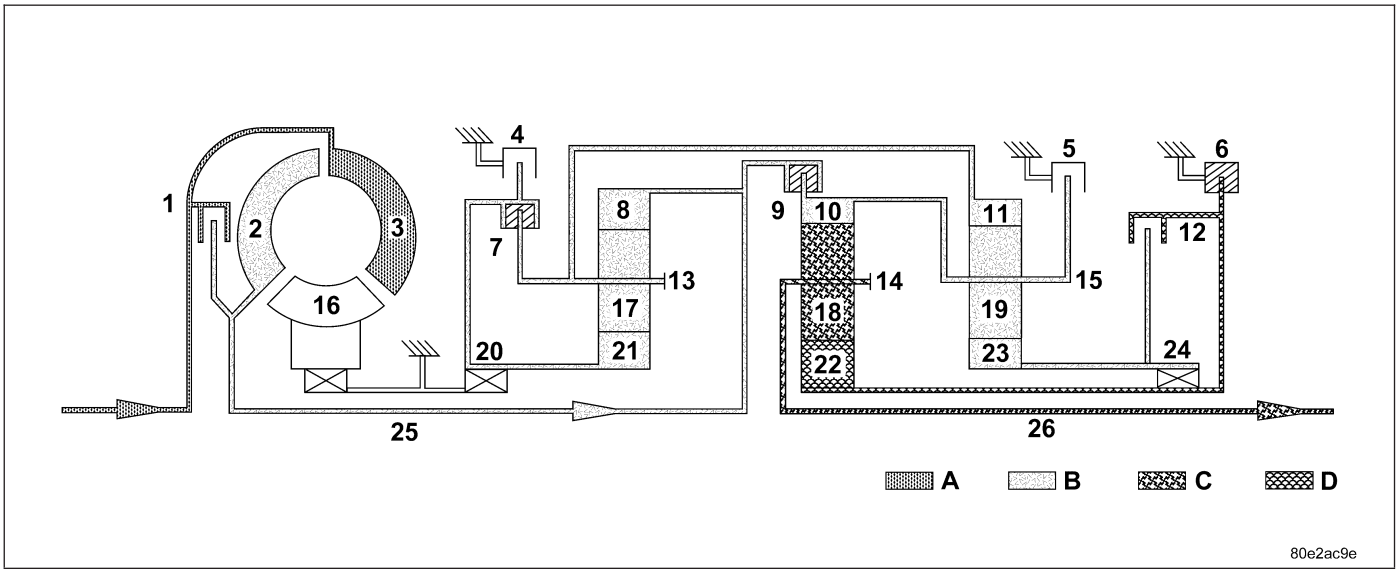

Third Gear Powerflow

1 - TORQUE CONVERTER LOCK-UP CLUTCH
2 - TORQUE CONVERTER TURBINE
3 - TORQUE CONVERTER IMPELLER
4 - HOLDING CLUTCH B1
5 - HOLDING CLUTCH B3
6 - HOLDING CLUTCH B2
7 - DRIVING CLUTCH K1
8 - FRONT PLANETARY ANNULUS GEAR
9 - DRIVING CLUTCH K2
10 - CENTER PLANETARY ANNULUS GEAR
11 - REAR PLANETARY ANNULUS GEAR
12 - DRIVING CLUTCH K3
13 - FRONT PLANETARY CARRIER
A - ENGINE SPEED
B - TRANSMISSION INPUT SPEED
14 - CENTER PLANETARY CARRIER
15 - REAR PLANETARY CARRIER
16 - TORQUE CONVERTER STATOR
17 - FRONT PLANETARY PINION GEARS
18 - CENTER PLANETARY PINION GEARS
19 - REAR PLANETARY PINION GEARS
20 - FREEWHEELING CLUTCH F1
21 - FRONT PLANETARY SUN GEAR
22 - CENTER PLANETARY SUN GEAR
23 - REAR PLANETARY SUN GEAR
24 - FREEWHEELING CLUTCH F2
25 - INPUT SHAFT
26 - OUTPUT SHAFT
C - FIRST GEAR RATIO
D - FIXED PARTS

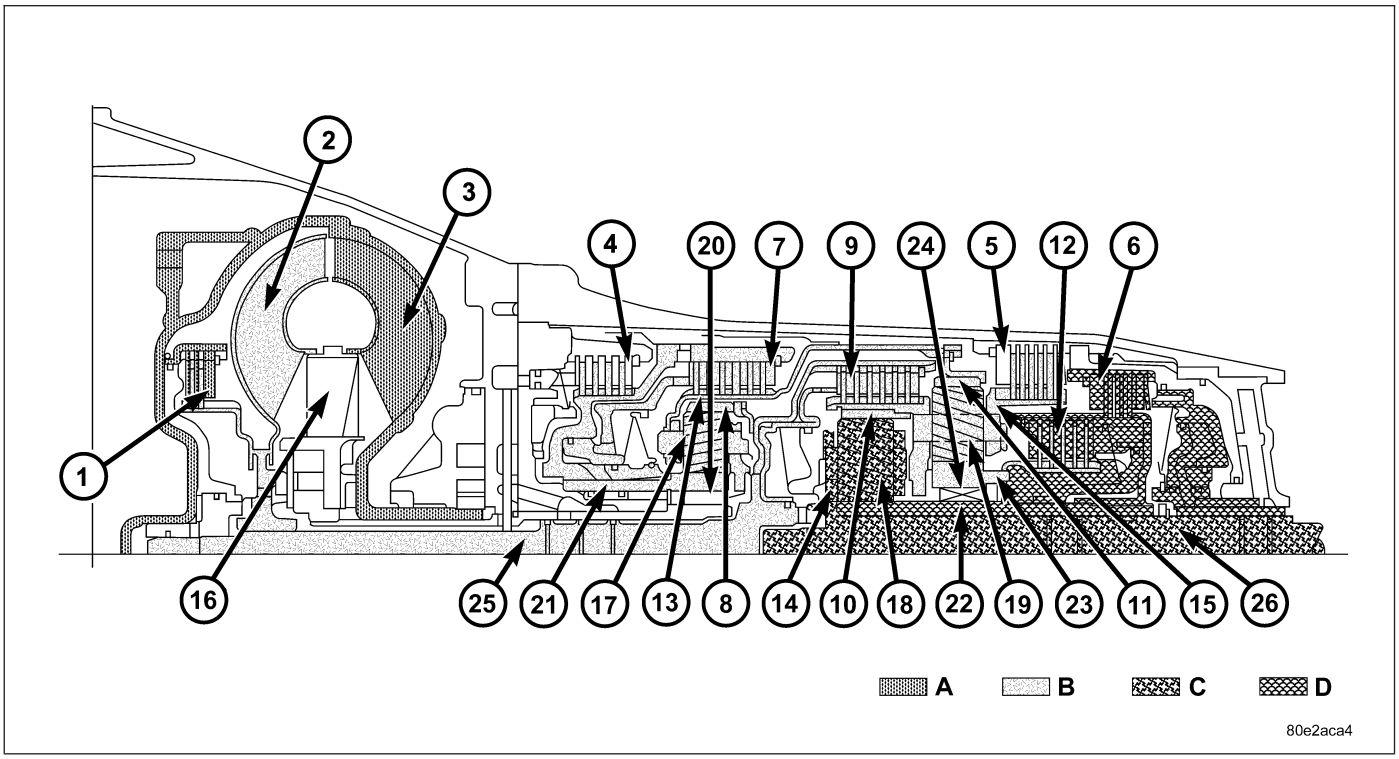

Third Gear Powerflow

1 - TORQUE CONVERTER LOCK-UP CLUTCH
2 - TORQUE CONVERTER TURBINE
3 - TORQUE CONVERTER IMPELLER
4 - HOLDING CLUTCH B1
5 - HOLDING CLUTCH B3
6 - HOLDING CLUTCH B2
7 - DRIVING CLUTCH K1
8 - FRONT PLANETARY ANNULUS GEAR
9 - DRIVING CLUTCH K2
10 - CENTER PLANETARY ANNULUS GEAR
11 - REAR PLANETARY ANNULUS GEAR
12 - DRIVING CLUTCH K3
13 - FRONT PLANETARY CARRIER
A - ENGINE SPEED
B - TRANSMISSION INPUT SPEED
14 - CENTER PLANETARY CARRIER
15 - REAR PLANETARY CARRIER
16 - TORQUE CONVERTER STATOR
17 - FRONT PLANETARY PINION GEARS
18 - CENTER PLANETARY PINION GEARS
19 - REAR PLANETARY PINION GEARS
20 - FREEWHEELING CLUTCH F1
21 - FRONT PLANETARY SUN GEAR
22 - CENTER PLANETARY SUN GEAR
23 - REAR PLANETARY SUN GEAR
24 - FREEWHEELING CLUTCH F2
25 - INPUT SHAFT
26 - OUTPUT SHAFT
C - FIRST GEAR RATIO
D - FIXED PARTS

Torque from the torque converter is increased via the input shaft (25) and the center planetary gearset and transferred to the output shaft (26).

Front Planetary Gear Set

The planetary carrier (13) and sun gear (21) are connected via the engaged multiple-disc clutch K1 (7). The planetary gearset is therefore locked and turns as a closed unit at the input speed due to the mechanical connection of the annulus gear (8) and input shaft (25).

Rear Planetary Gear Set

The multiple-disc clutch K2 (9) is engaged and transfers the input speed of the input shaft (25) to the planetary carrier (15) via the annulus gear (10). The annulus gear (11) turns in the same way as the planetary carrier (15) due to the mechanical connection with the locked front planetary gearset. This planetary gearset is therefore locked and turns as a closed unit.

Center Planetary Gear Set

The annulus gear (10) turns at the input speed as a result of the engaged multiple-disc clutch K2 (9). The sun gear (22) is held against the housing by the multiple-disc holding clutch B2 (6). The planetary pinion gears (18) turn on the fixed sun gear (22) and increase the torque from the annulus gear (10) to the planetary carrier (14). The output shaft (26) connected to the planetary carrier (14) turns at a reduced speed in the running direction of the engine.

FOURTH GEAR POWERFLOW

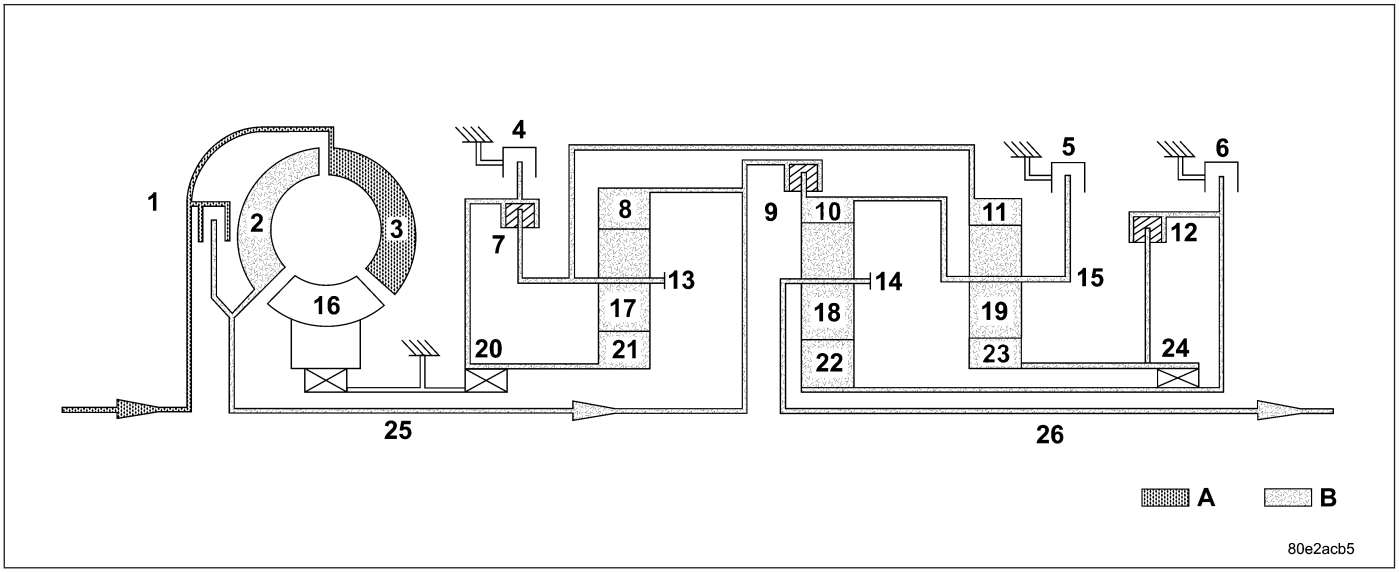

Fourth Gear Powerflow

1 - TORQUE CONVERTER LOCK-UP CLUTCH
2 - TORQUE CONVERTER TURBINE
3 - TORQUE CONVERTER IMPELLER
4 - HOLDING CLUTCH B1
5 - HOLDING CLUTCH B3
6 - HOLDING CLUTCH B2
7 - DRIVING CLUTCH K1
8 - FRONT PLANETARY ANNULUS GEAR
9 - DRIVING CLUTCH K2
10 - CENTER PLANETARY ANNULUS GEAR
11 - REAR PLANETARY ANNULUS GEAR
12 - DRIVING CLUTCH K3
13 - FRONT PLANETARY CARRIER
A - ENGINE SPEED
14 - CENTER PLANETARY CARRIER
15 - REAR PLANETARY CARRIER
16 - TORQUE CONVERTER STATOR
17 - FRONT PLANETARY PINION GEARS
18 - CENTER PLANETARY PINION GEARS
19 - REAR PLANETARY PINION GEARS
20 - FREEWHEELING CLUTCH F1
21 - FRONT PLANETARY SUN GEAR
22 - CENTER PLANETARY SUN GEAR
23 - REAR PLANETARY SUN GEAR
24 - FREEWHEELING CLUTCH F2
25 - INPUT SHAFT
26 - OUTPUT SHAFT
B - TRANSMISSION INPUT SPEED

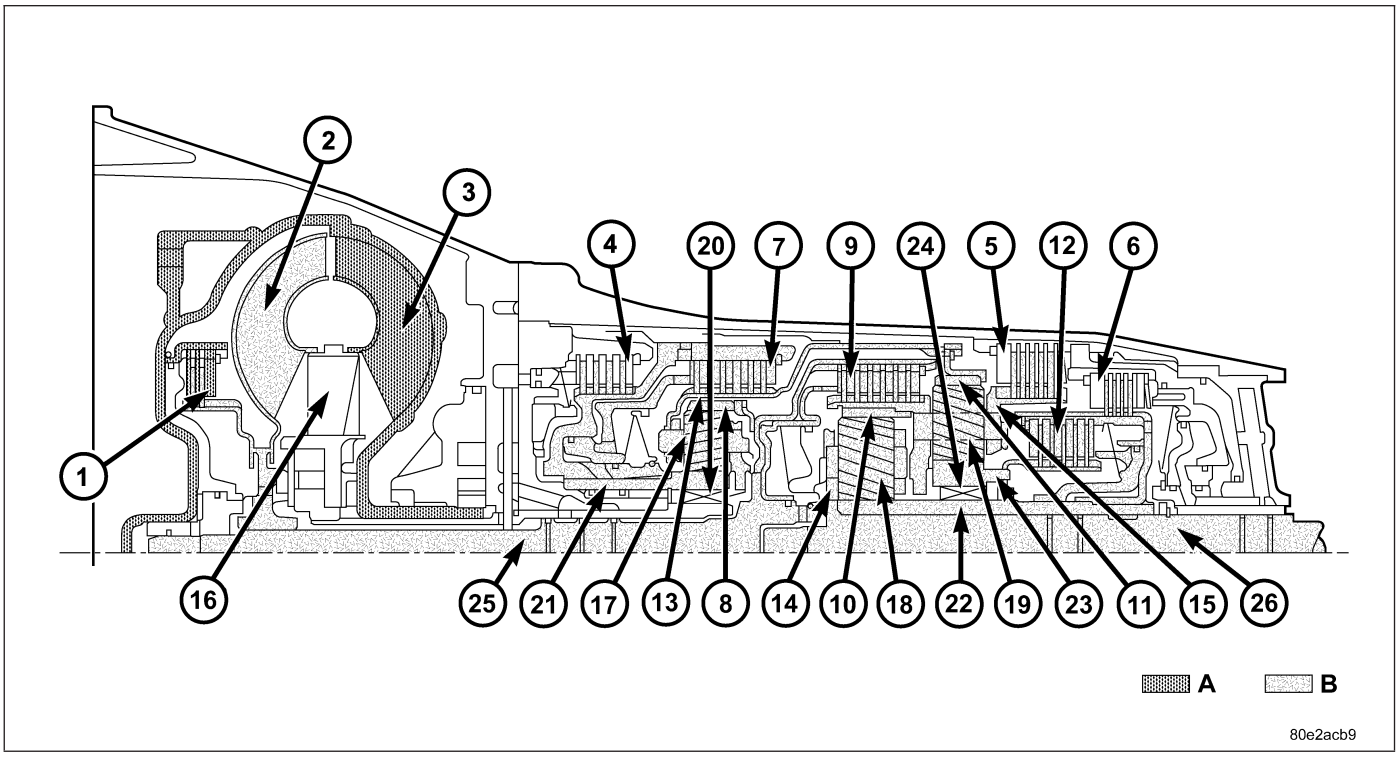

Fourth Gear Powerflow

1 - TORQUE CONVERTER LOCK-UP CLUTCH
2 - TORQUE CONVERTER TURBINE
3 - TORQUE CONVERTER IMPELLER
4 - HOLDING CLUTCH B1
5 - HOLDING CLUTCH B3
6 - HOLDING CLUTCH B2
7 - DRIVING CLUTCH K1
8 - FRONT PLANETARY ANNULUS GEAR
9 - DRIVING CLUTCH K2
10 - CENTER PLANETARY ANNULUS GEAR
11 - REAR PLANETARY ANNULUS GEAR
12 - DRIVING CLUTCH K3
13 - FRONT PLANETARY CARRIER
A - ENGINE SPEED
14 - CENTER PLANETARY CARRIER
15 - REAR PLANETARY CARRIER
16 - TORQUE CONVERTER STATOR
17 - FRONT PLANETARY PINION GEARS
18 - CENTER PLANETARY PINION GEARS
19 - REAR PLANETARY PINION GEARS
20 - FREEWHEELING CLUTCH F1
21 - FRONT PLANETARY SUN GEAR
22 - CENTER PLANETARY SUN GEAR
23 - REAR PLANETARY SUN GEAR
24 - FREEWHEELING CLUTCH F2
25 - INPUT SHAFT
26 - OUTPUT SHAFT
B - TRANSMISSION INPUT SPEED

Speed and torque are not converted by the direct gear ratio of the 4th gear. Power is transferred from the input shaft (25) to the output shaft (26) via three locked planetary gearsets.

Front Planetary Gear Set

The planetary carrier (13) and sun gear (21) are connected via the engaged multiple-disc clutch K1 (7). The planetary gearset is therefore locked and turns as a closed unit at the input speed due to the mechanical connection of the annulus gear (8) and the input shaft (25).

Rear Planetary Gear Set

The multiple-disc clutch K2 (9) is engaged and transfers the input speed of the input shaft (25) to the planetary carrier (15) via the annulus gear (10). The annulus gear (11) turns in the same way as the planetary carrier (15) due to the mechanical connection with the locked front planetary gearset. The planetary gearset is therefore locked and turns as a closed unit.

Center Planetary Gear Set

The annulus gear (10) turns at the input speed as a result of the engaged multiple-disc clutch K2 (9). The multiple-disc clutch K3 (12) connects the sun gears (22) and (23) of the rear and center planetary gearset. The planetary gearset is locked by the same speeds of the annulus gear (10) and the sun gear (22) and it turns as a closed unit.

FIFTH GEAR POWERFLOW

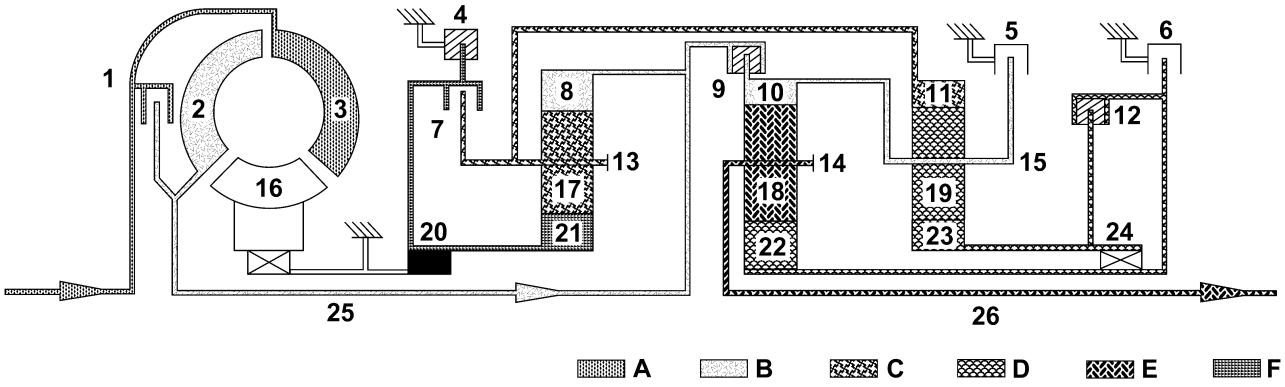

Fifth Gear Powerflow

1 - TORQUE CONVERTER LOCK-UP CLUTCH
2 - TORQUE CONVERTER TURBINE
3 - TORQUE CONVERTER IMPELLER
4 - HOLDING CLUTCH B1
5 - HOLDING CLUTCH B3
6 - HOLDING CLUTCH B2
7 - DRIVING CLUTCH K1
8 - FRONT PLANETARY ANNULUS GEAR
9 - DRIVING CLUTCH K2
10 - CENTER PLANETARY ANNULUS GEAR
11 - REAR PLANETARY ANNULUS GEAR
12 - DRIVING CLUTCH K3
13 - FRONT PLANETARY CARRIER
A - ENGINE SPEED
B - TRANSMISSION INPUT SPEED
C - FIRST GEAR RATIO
14 - CENTER PLANETARY CARRIER
15 - REAR PLANETARY CARRIER
16 - TORQUE CONVERTER STATOR
17 - FRONT PLANETARY PINION GEARS
18 - CENTER PLANETARY PINION GEARS
19 - REAR PLANETARY PINION GEARS
20 - FREEWHEELING CLUTCH F1
21 - FRONT PLANETARY SUN GEAR
22 - CENTER PLANETARY SUN GEAR
23 - REAR PLANETARY SUN GEAR
24 - FREEWHEELING CLUTCH F2
25 - INPUT SHAFT
26 - OUTPUT SHAFT
D - SECOND GEAR RATIO
E - THIRD GEAR RATIO
F - FIXED PARTS

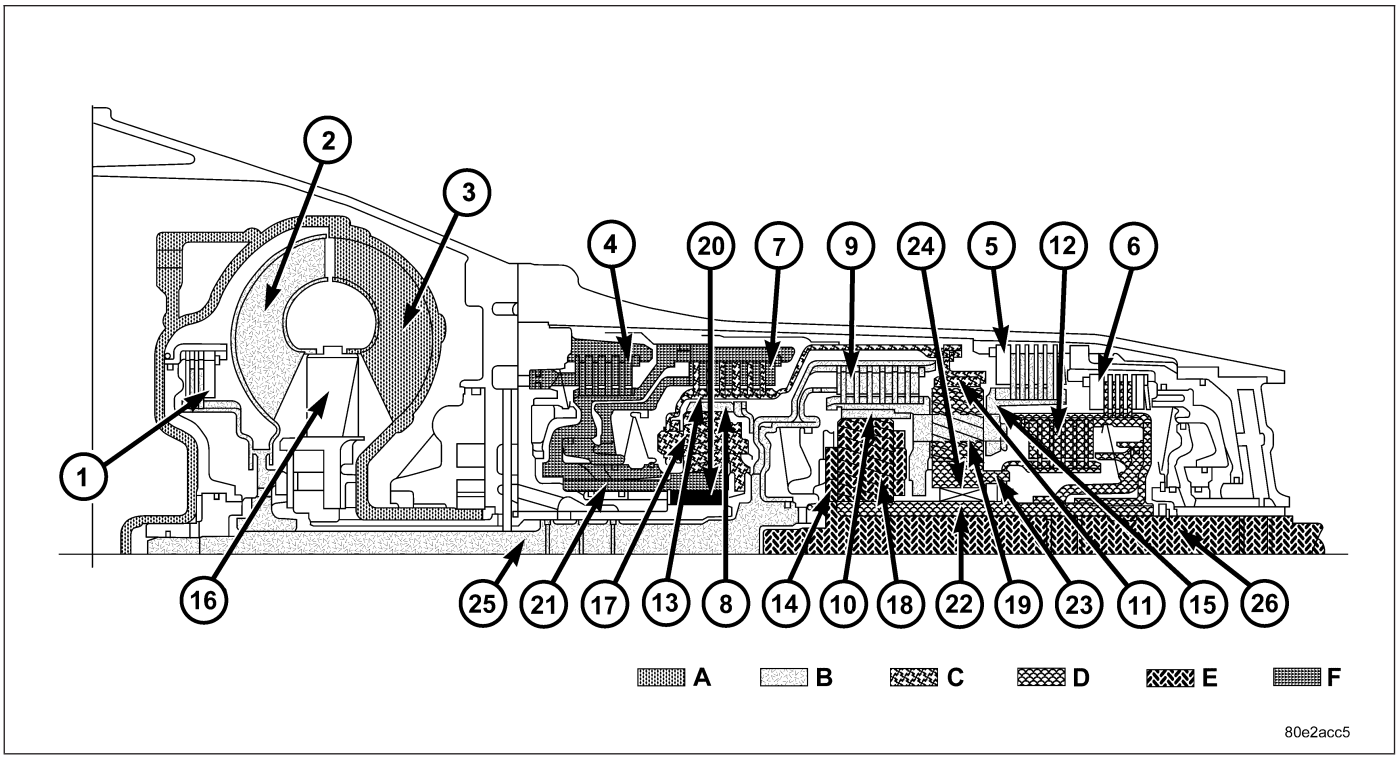

Fifth Gear Powerflow

1 - TORQUE CONVERTER LOCK-UP CLUTCH
2 - TORQUE CONVERTER TURBINE
3 - TORQUE CONVERTER IMPELLER
4 - HOLDING CLUTCH B1
5 - HOLDING CLUTCH B3
6 - HOLDING CLUTCH B2
7 - DRIVING CLUTCH K1
8 - FRONT PLANETARY ANNULUS GEAR
9 - DRIVING CLUTCH K2
10 - CENTER PLANETARY ANNULUS GEAR
11 - REAR PLANETARY ANNULUS GEAR
12 - DRIVING CLUTCH K3
13 - FRONT PLANETARY CARRIER
A - ENGINE SPEED
B - TRANSMISSION INPUT SPEED
C - FIRST GEAR RATIO
14 - CENTER PLANETARY CARRIER
15 - REAR PLANETARY CARRIER
16 - TORQUE CONVERTER STATOR
17 - FRONT PLANETARY PINION GEARS
18 - CENTER PLANETARY PINION GEARS
19 - REAR PLANETARY PINION GEARS
20 - FREEWHEELING CLUTCH F1
21 - FRONT PLANETARY SUN GEAR
22 - CENTER PLANETARY SUN GEAR
23 - REAR PLANETARY SUN GEAR
24 - FREEWHEELING CLUTCH F2
25 - INPUT SHAFT
26 - OUTPUT SHAFT
D - SECOND GEAR RATIO
E - THIRD GEAR RATIO
F - FIXED PARTS

Torque from the torque converter is increased via the input shaft (25) and all three planetary gearsets and transferred to the output shaft (26).

Front Planetary Gear Set

The annulus gear (8) is driven by the input shaft (25). The sun gear (21) is held against the housing by the locked freewheel F1 (20) during acceleration and via the engaged multiple-disc holding clutch B1 (4) during deceleration. The planetary pinion gears (17) turn on the fixed sun gear (21) and increase the torque from the annulus gear (8) to the planetary carrier (13). The planetary carrier (13) moves at a reduced speed in the running direction of the engine.

Rear Planetary Gear Set

The multiple-disc clutch K2 (9) is engaged and transfers the input speed of the input shaft (25) to the planetary carrier (15) via the annulus gear (10). The annulus gear (11) turns at a reduced speed due to the mechanical connection with the front planetary carrier (13). The planetary pinion gears (19) turn between the annulus gear (11) and the sun gear (23). The sun gear (23) moves at an increased speed in the running direction of the engine.

Center Planetary Gear Set

The annulus gear (10) turns at the input speed as a result of the engaged multiple-disc clutch K2 (9). The multiple-disc clutch K3 (12) transfers an increased speed to the sun gear (22) due to the connection with the sun gear (23). The planetary pinion gears (18) turn between the annulus gear (10) and the sun gear (22). The speed of the planetary carrier (14) and the output shaft connected to the planetary carrier (5) lies between that of the annulus gear (10) and the sun gear (22). This provides a step-up ratio.

REVERSE GEAR POWERFLOW

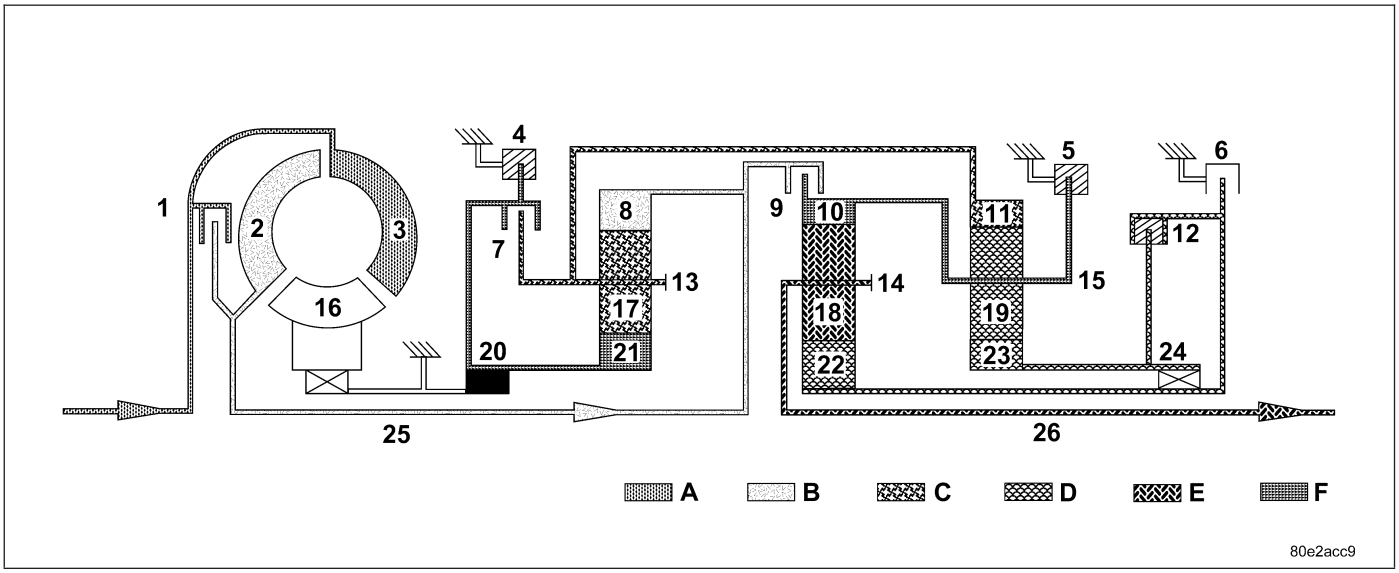

Reverse Gear Powerflow

1 - TORQUE CONVERTER LOCK-UP CLUTCH
2 - TORQUE CONVERTER TURBINE
3 - TORQUE CONVERTER IMPELLER
4 - HOLDING CLUTCH B1
5 - HOLDING CLUTCH B3
6 - HOLDING CLUTCH B2
7 - DRIVING CLUTCH K1
8 - FRONT PLANETARY ANNULUS GEAR
9 - DRIVING CLUTCH K2
10 - CENTER PLANETARY ANNULUS GEAR
11 - REAR PLANETARY ANNULUS GEAR
12 - DRIVING CLUTCH K3
13 - FRONT PLANETARY CARRIER
A - ENGINE SPEED
B - TRANSMISSION INPUT SPEED
C - FIRST GEAR RATIO
14 - CENTER PLANETARY CARRIER
15 - REAR PLANETARY CARRIER
16 - TORQUE CONVERTER STATOR
17 - FRONT PLANETARY PINION GEARS
18 - CENTER PLANETARY PINION GEARS
19 - REAR PLANETARY PINION GEARS
20 - FREEWHEELING CLUTCH F1
21 - FRONT PLANETARY SUN GEAR
22 - CENTER PLANETARY SUN GEAR
23 - REAR PLANETARY SUN GEAR
24 - FREEWHEELING CLUTCH F2
25 - INPUT SHAFT
26 - OUTPUT SHAFT
D - SECOND GEAR RATIO
E - THIRD GEAR RATIO
F - FIXED PARTS

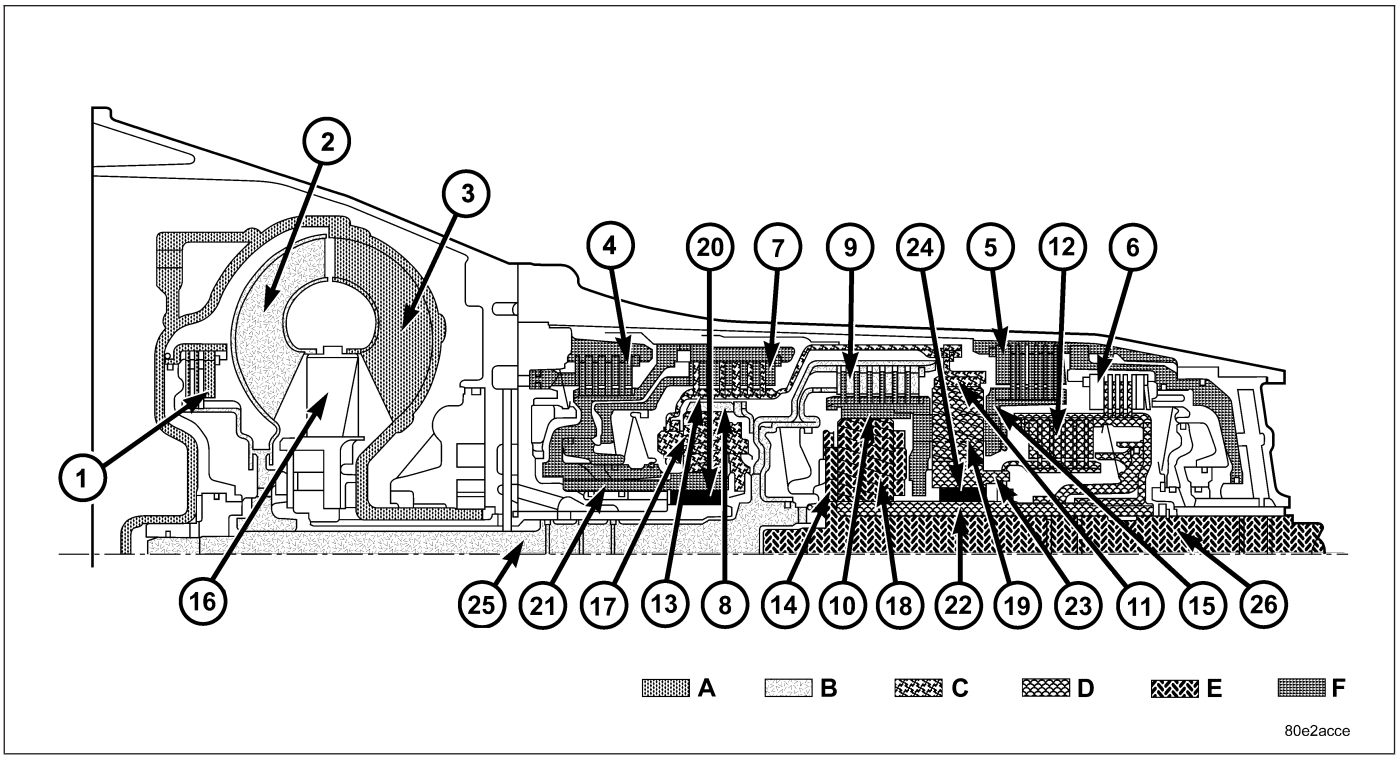

Reverse Gear Powerflow

1 - TORQUE CONVERTER LOCK-UP CLUTCH
2 - TORQUE CONVERTER TURBINE
3 - TORQUE CONVERTER IMPELLER
4 - HOLDING CLUTCH B1
5 - HOLDING CLUTCH B3
6 - HOLDING CLUTCH B2
7 - DRIVING CLUTCH K1
8 - FRONT PLANETARY ANNULUS GEAR
9 - DRIVING CLUTCH K2
10 - CENTER PLANETARY ANNULUS GEAR
11 - REAR PLANETARY ANNULUS GEAR
12 - DRIVING CLUTCH K3
13 - FRONT PLANETARY CARRIER
A - ENGINE SPEED
B - TRANSMISSION INPUT SPEED
C - FIRST GEAR RATIO
14 - CENTER PLANETARY CARRIER
15 - REAR PLANETARY CARRIER
16 - TORQUE CONVERTER STATOR
17 - FRONT PLANETARY PINION GEARS
18 - CENTER PLANETARY PINION GEARS
19 - REAR PLANETARY PINION GEARS
20 - FREEWHEELING CLUTCH F1
21 - FRONT PLANETARY SUN GEAR
22 - CENTER PLANETARY SUN GEAR
23 - REAR PLANETARY SUN GEAR
24 - FREEWHEELING CLUTCH F2
25 - INPUT SHAFT
26 - OUTPUT SHAFT
D - SECOND GEAR RATIO
E - THIRD GEAR RATIO
F - FIXED PARTS

Torque from the torque converter is increased via the input shaft (25) and all three planetary gearsets and transferred with reversed direction of rotation to the output shaft (26).

Front Planetary Gear Set

The annulus gear (8) is driven by the input shaft (25). The sun gear (21) is held against the housing by the locked freewheel F1 (20) during acceleration and via the engaged multiple-disc holding clutch B1 (4) during deceleration. The planetary pinion gears (17) turn on the fixed sun gear (21) and increase the torque from the annulus gear (8) to the planetary carrier (13). The planetary carrier (13) moves at a reduced speed in the running direction of the engine.

Rear Planetary Gear Set

The planetary carrier (15) is held against the housing by the engaged multiple-disc holding clutch B3 (5). The annulus gear (11) turns at a reduced speed due to the mechanical connection to the front planetary carrier (13). The planetary gears (19) turn between the annulus gear (11) and the sun gear (23). The direction is reversed by the held planetary carrier (15) so that the sun gear (23) turns in the opposite direction to the running direction of the engine.

Center Planetary Gear Set

The annulus gear (10) is held against the housing by the multiple-disc holding clutch B3 (5) via the mechanical connection to the planetary carrier (15). The sun gear (22) turns backwards due to the engaged multiple-disc clutch K3 (12). The planetary gears (18) turn on the fixed annulus gear (10) and increase the torque from the sun gear (22) to the planetary carrier (14). The output shaft (26) connected to the planetary carrier (14) turns at a reduced speed in the opposite direction to the running direction of the engine.

REVERSE GEAR POWERFLOW - LIMP IN

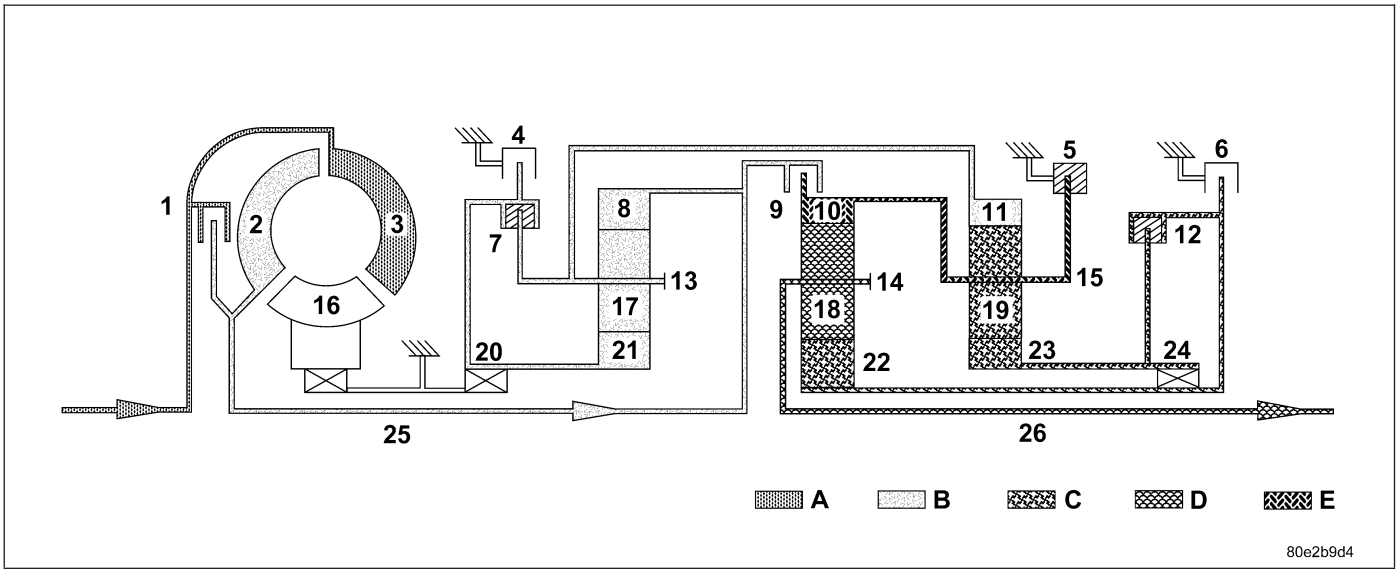

Reverse Gear Powerflow - Limp In or 4WD Low Range

1 - TORQUE CONVERTER LOCK-UP CLUTCH
2 - TORQUE CONVERTER TURBINE
3 - TORQUE CONVERTER IMPELLER
4 - HOLDING CLUTCH B1
5 - HOLDING CLUTCH B3
6 - HOLDING CLUTCH B2
7 - DRIVING CLUTCH K1
8 - FRONT PLANETARY ANNULUS GEAR
9 - DRIVING CLUTCH K2
10 - CENTER PLANETARY ANNULUS GEAR
11 - REAR PLANETARY ANNULUS GEAR
12 - DRIVING CLUTCH K3
13 - FRONT PLANETARY CARRIER
A - ENGINE SPEED
B - TRANSMISSION INPUT SPEED
C - FIRST GEAR RATIO
14 - CENTER PLANETARY CARRIER
15 - REAR PLANETARY CARRIER
16 - TORQUE CONVERTER STATOR
17 - FRONT PLANETARY PINION GEARS
18 - CENTER PLANETARY PINION GEARS
19 - REAR PLANETARY PINION GEARS
20 - FREEWHEELING CLUTCH F1
21 - FRONT PLANETARY SUN GEAR
22 - CENTER PLANETARY SUN GEAR
23 - REAR PLANETARY SUN GEAR
24 - FREEWHEELING CLUTCH F2
25 - INPUT SHAFT
26 - OUTPUT SHAFT
D - SECOND GEAR RATIO
E - FIXED PARTS

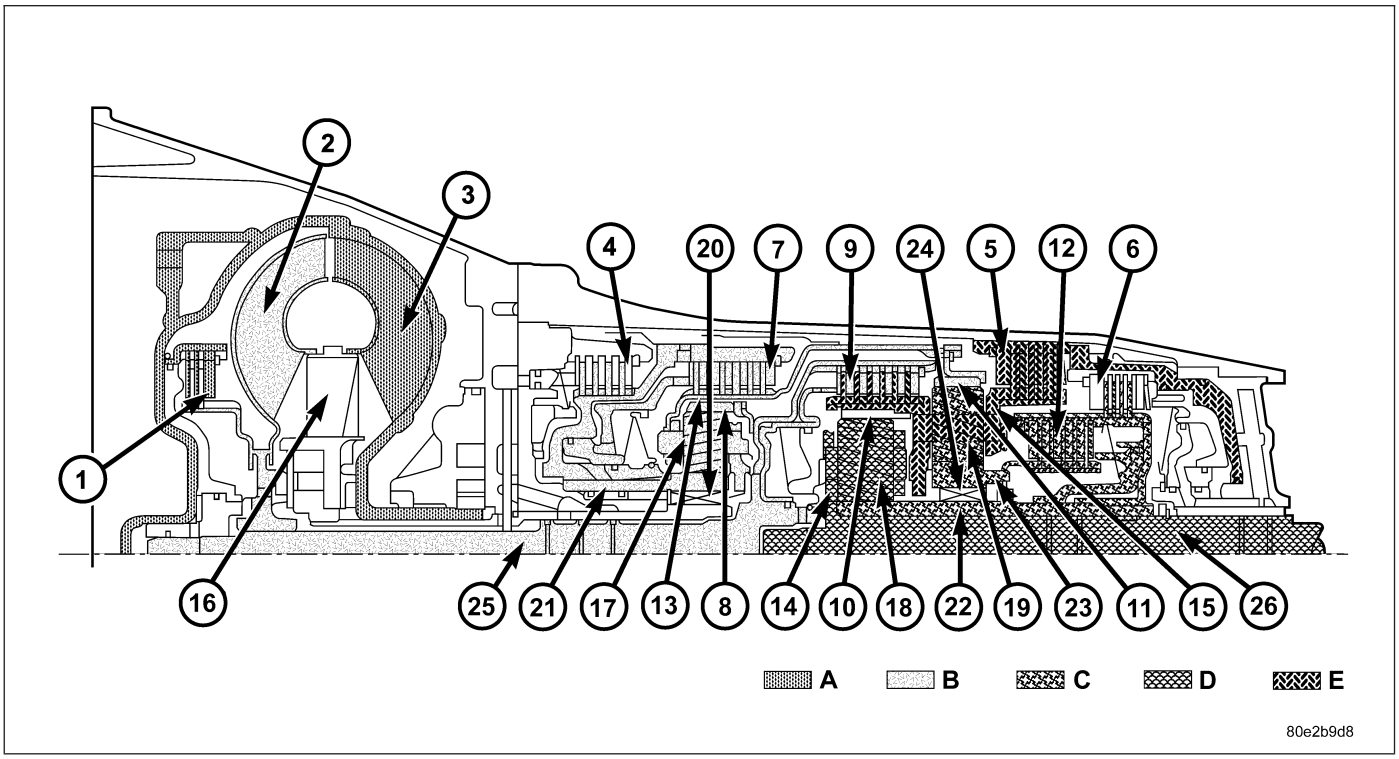

Reverse Gear Powerflow - Limp In

1 - TORQUE CONVERTER LOCK-UP CLUTCH
2 - TORQUE CONVERTER TURBINE
3 - TORQUE CONVERTER IMPELLER
4 - HOLDING CLUTCH B1
5 - HOLDING CLUTCH B3
6 - HOLDING CLUTCH B2
7 - DRIVING CLUTCH K1
8 - FRONT PLANETARY ANNULUS GEAR
9 - DRIVING CLUTCH K2
10 - CENTER PLANETARY ANNULUS GEAR
11 - REAR PLANETARY ANNULUS GEAR
12 - DRIVING CLUTCH K3
13 - FRONT PLANETARY CARRIER
A - ENGINE SPEED
B - TRANSMISSION INPUT SPEED
C - FIRST GEAR RATIO
14 - CENTER PLANETARY CARRIER
15 - REAR PLANETARY CARRIER
16 - TORQUE CONVERTER STATOR
17 - FRONT PLANETARY PINION GEARS
18 - CENTER PLANETARY PINION GEARS
19 - REAR PLANETARY PINION GEARS
20 - FREEWHEELING CLUTCH F1
21 - FRONT PLANETARY SUN GEAR
22 - CENTER PLANETARY SUN GEAR
23 - REAR PLANETARY SUN GEAR
24 - FREEWHEELING CLUTCH F2
25 - INPUT SHAFT
26 - OUTPUT SHAFT
D - SECOND GEAR RATIO
E - FIXED PARTS

Torque from the torque converter is increased via the input shaft (25) and all three planetary gearsets and transferred with reversed direction of rotation to the output shaft (26) and.

Front Planetary Gear Set

The clutch K1 (7) is shifted. The planetary carrier (13) and sun gear (21) are connected to each other as a result. The annulus gear (8) is driven via the input shaft (25). The planetary gear set is locked and turns as a unit.

Rear Planetary Gear Set

The planetary carrier (15) is held against the housing by the engaged multiple-disc holding clutch B3 (5). The annulus gear (11) turns at a reduced speed due to the mechanical connection to the front planetary carrier (13). The planetary pinion gears (19) turn between the annulus gear (11) and the sun gear (23). The direction is reversed by the held planetary carrier (15) so that the sun gear (23) turns in the opposite direction to the running direction of the engine.

Center Planetary Gear Set

The annulus gear (10) is held against the housing by the multiple-disc holding clutch B3 (5) via the mechanical connection to the planetary carrier (15). The sun gear (22) turns backwards due to the engaged multiple-disc clutch K3 (12). The planetary gears (18) turn on the fixed annulus gear (10) and increase the torque from the sun gear (22) to the planetary carrier (14). The output shaft (26) connected to the planetary carrier (14) turns at a reduced speed in the opposite direction to the running direction of the engine.

SHIFT GROUPS/ SHIFT SEQUENCE

1-2 Shift - First Gear Engaged

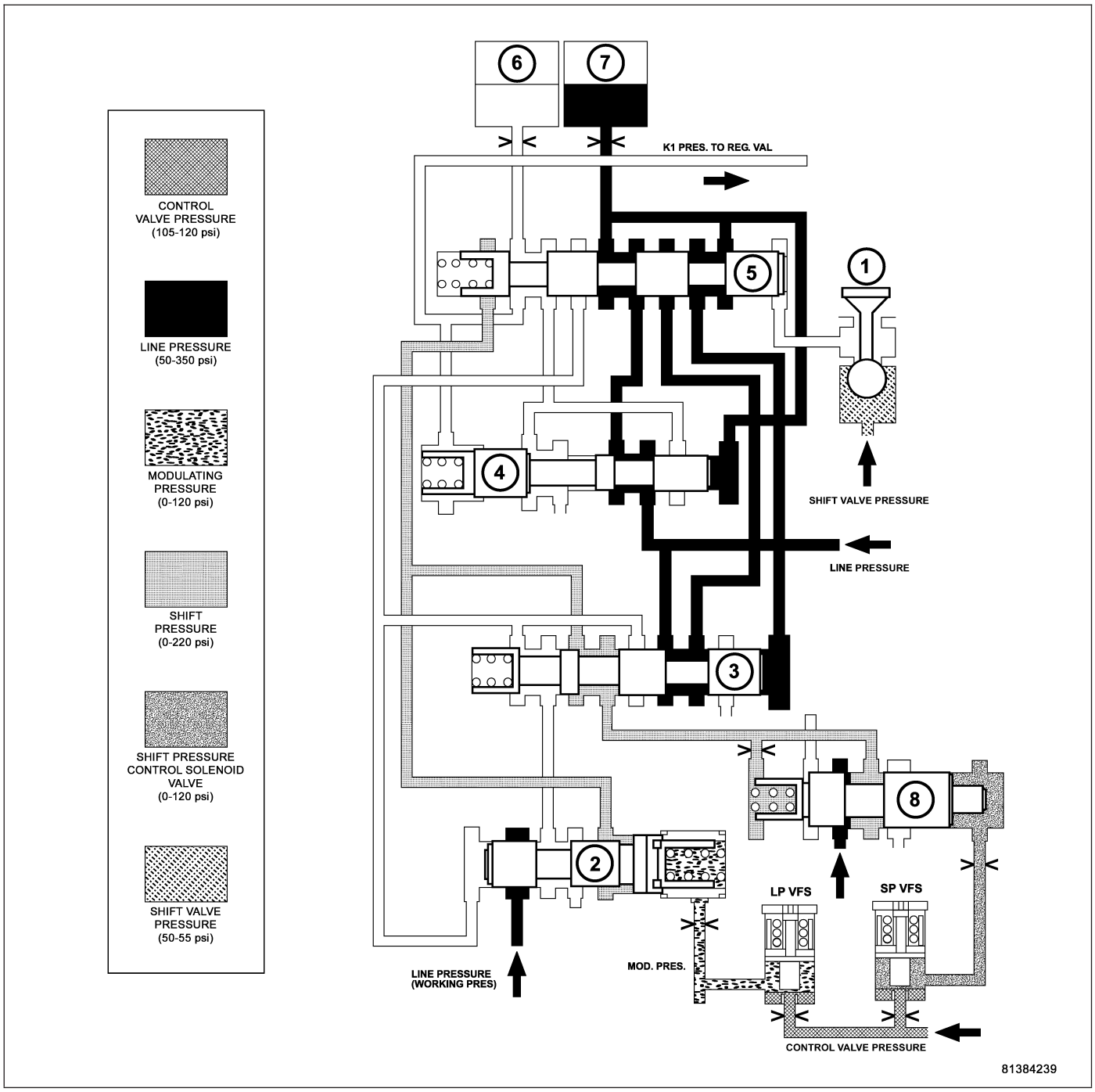

First Gear Engaged

1 - 1-2/4-5 SHIFT SOLENOID	5 - 1-2/4-5 COMMAND VALVE
2 - 1-2/4-5 OVERLAP VALVE	6 - DRIVING CLUTCH K1
3 - 1-2/4-5 SHIFT PRESSURE SHIFT VALVE	7 - HOLDING CLUTCH B1
4 - 1-2/4-5 HOLDING PRESSURE SHIFT VALVE	8 - SHIFT PRESSURE REGULATING VALVE

The end face of the command valve (5) is kept unpressurized via the solenoid valve for 1-2 and 4-5 shift (1). Because of the holding pressure shift valve (4), the working pressure (p-A) is present at the multiple-disc holding clutch B1 (7). Clutch K1 (6) is unpressurized.

Shift Phase - 1-2 Shift Phase 1

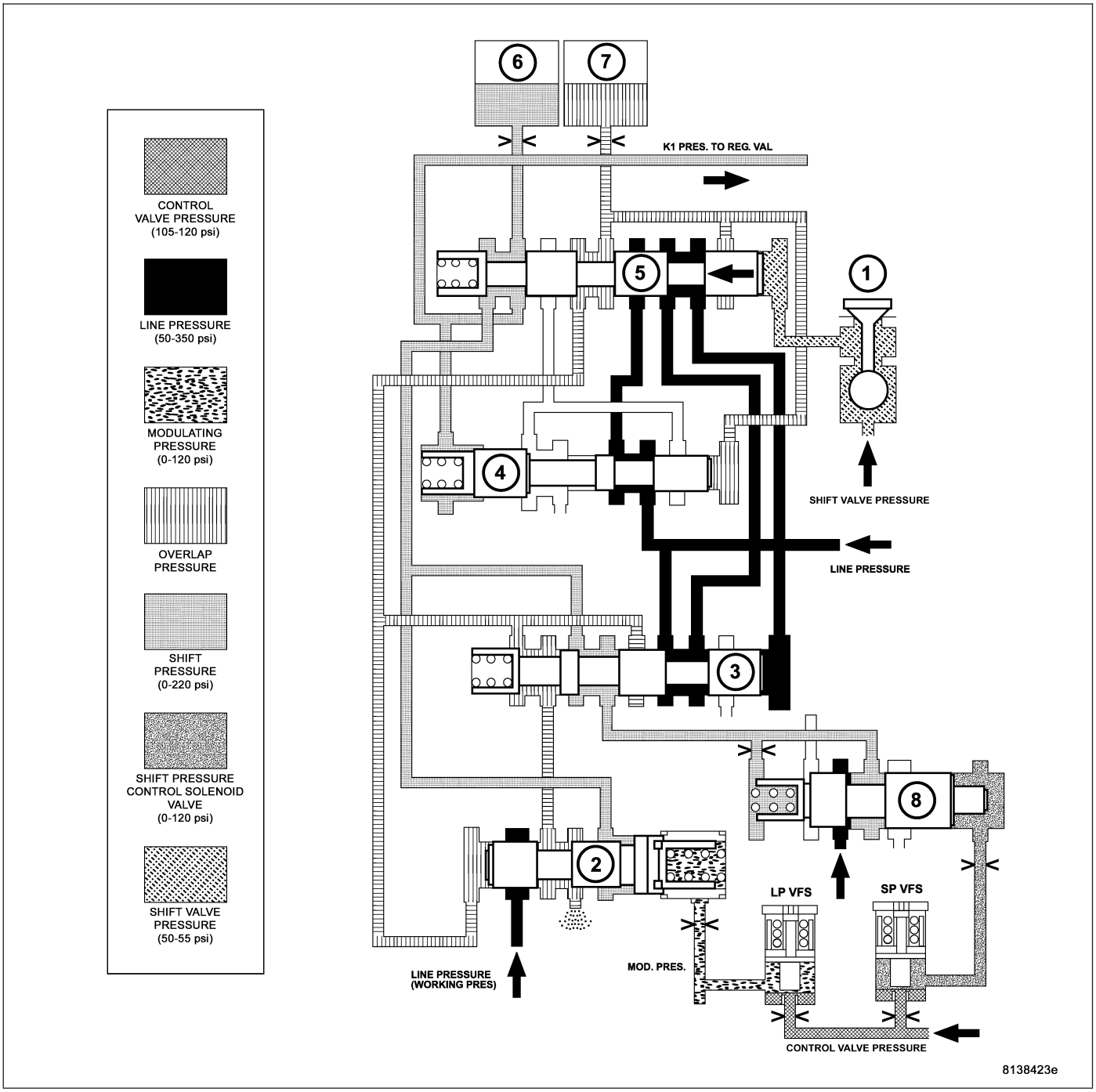

Shift Phase - 1-2 Shift Phase 1

1 - 1-2/4-5 SHIFT SOLENOID	5 - 1-2/4-5 COMMAND VALVE
2 - 1-2/4-5 OVERLAP VALVE	6 - DRIVING CLUTCH K1
3 - 1-2/4-5 SHIFT PRESSURE SHIFT VALVE	7 - HOLDING CLUTCH B1
4 - 1-2/4-5 HOLDING PRESSURE SHIFT VALVE	8 - SHIFT PRESSURE REGULATING VALVE

When the 1-2 and 4-5 shift solenoid valve (1) is turned on, the shift valve pressure (p-SV) is directed onto the end face of the command valve (5). The command valve is moved and the shift pressure (p-S) coming from the shift pressure shift valve (3) is directed via the command valve (5) onto clutch K1 (6).

Simultaneously the clutch B1 (7) is subjected to overlap pressure by the overlap regulating valve (2). The pressure in the clutch B1 (7) as it disengages is controlled during the shift phase depending on engine load by the modu-

lating pressure and the applying clutch pressure (the shift pressure in clutch K1). The controlled pressure in clutch B1 (7) is inversely proportional to the capacity of the clutch being engaged. The rising shift pressure (p-S) at clutch K1 (6) acts on the annular face of the overlap regulating valve (2) and reduces the overlap pressure regulated by the overlap regulating valve (2). When a corresponding pressure level is reached at the holding pressure shift valve (4), this valve switches over.

Shift Phase - 1-2 Shift Phase 2

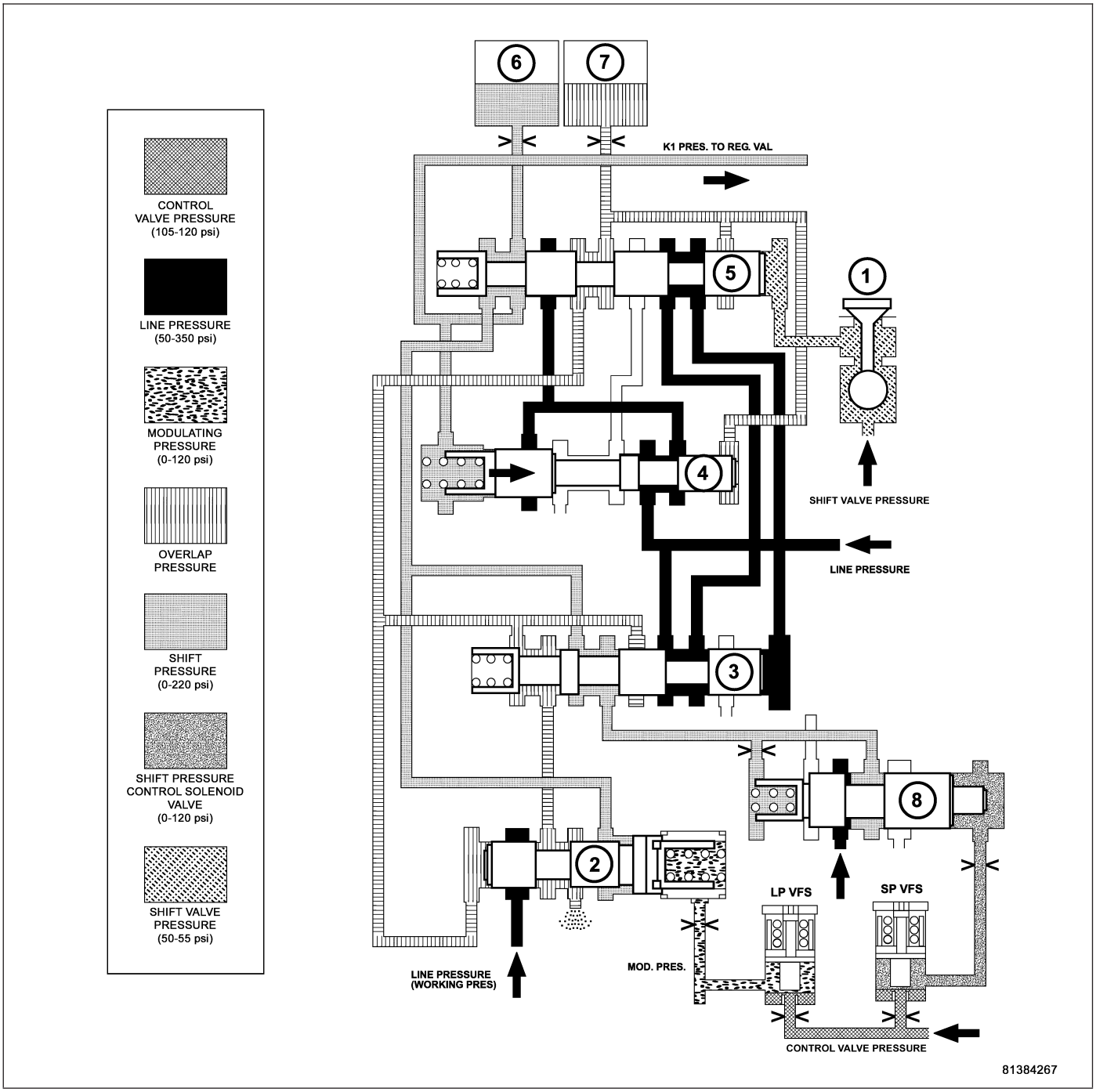

Shift Phase - 1-2 Shift Phase 2

1 - 1-2/4-5 SHIFT SOLENOID	5 - 1-2/4-5 COMMAND VALVE
2 - 1-2/4-5 OVERLAP VALVE	6 - DRIVING CLUTCH K1
3 - 1-2/4-5 SHIFT PRESSURE SHIFT VALVE	7 - HOLDING CLUTCH B1
4 - 1-2/4-5 HOLDING PRESSURE SHIFT VALVE	8 - SHIFT PRESSURE REGULATING VALVE

The B1 (7) pressure acting on the end face of the shift pressure shift valve (3) is replaced by the working pressure (p-A). The shift pressure is also routed to the spring end of the holding valve (4) and the holding valve downshifts. The line pressure is then routed to the command valve (5).

Second Gear Engaged

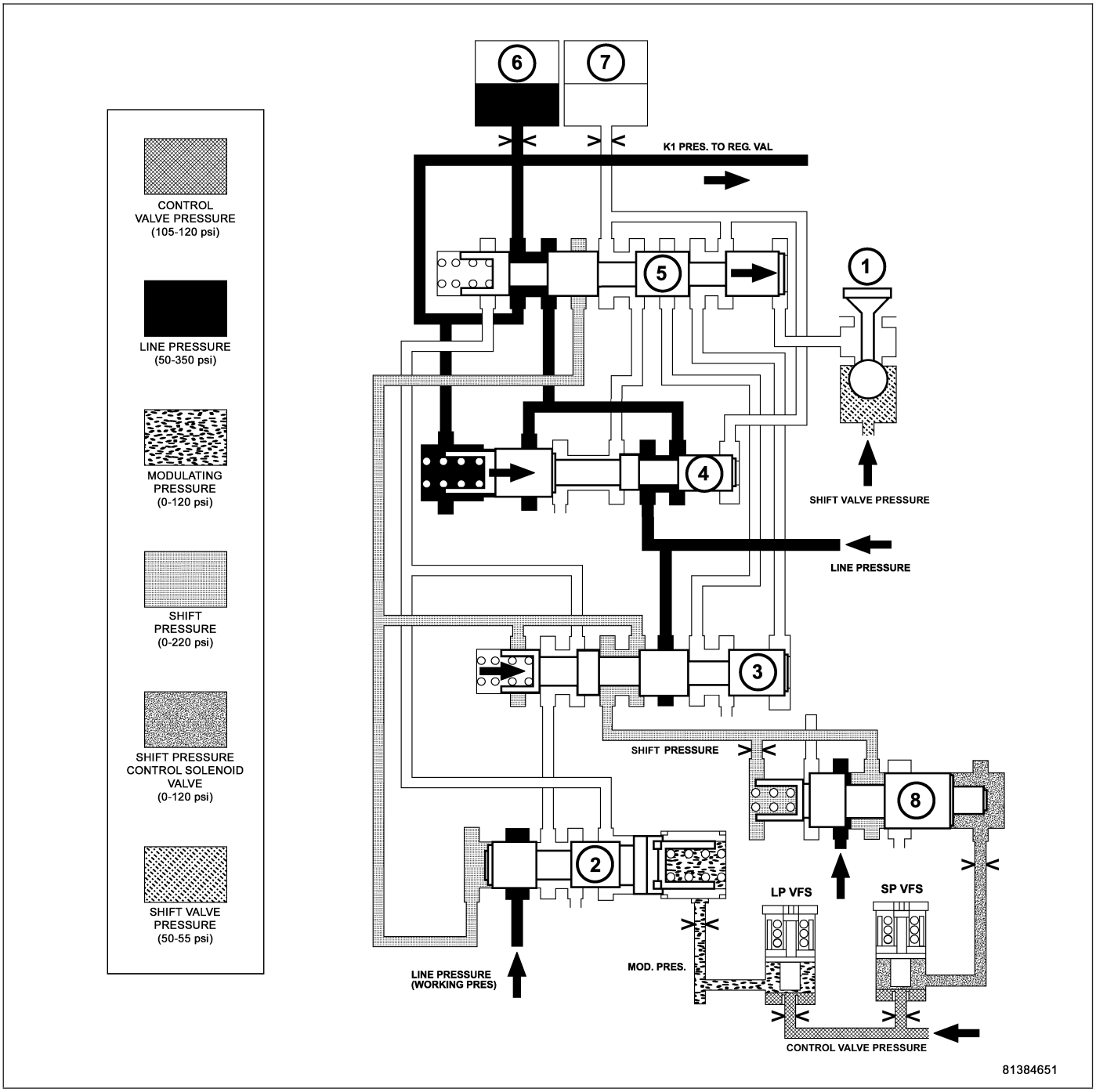

Second Gear Engaged

1 - 1-2/4-5 SHIFT SOLENOID	5 - 1-2/4-5 COMMAND VALVE
2 - 1-2/4-5 OVERLAP VALVE	6 - DRIVING CLUTCH K1
3 - 1-2/4-5 SHIFT PRESSURE SHIFT VALVE	7 - HOLDING CLUTCH B1
4 - 1-2/4-5 HOLDING PRESSURE SHIFT VALVE	8 - SHIFT PRESSURE REGULATING VALVE

After the gearchange is complete, the pressure on the end face of the command valve (5) is reduced via the 1-2 and 4-5 shift solenoid valve (1), and the command valve (5) is pushed back to its basic position. Via the holding pressure shift valve (4) the working pressure (p-A) now passes via the command valve (5) to clutch K1 (6). The multiple-disc holding clutch B1 (7) is deactivated (unpressurized). The spring of the shift pressure shift valve (3) pushes the valve back to its basic position.

Shift Phase - 2-1 Shift Phase 1

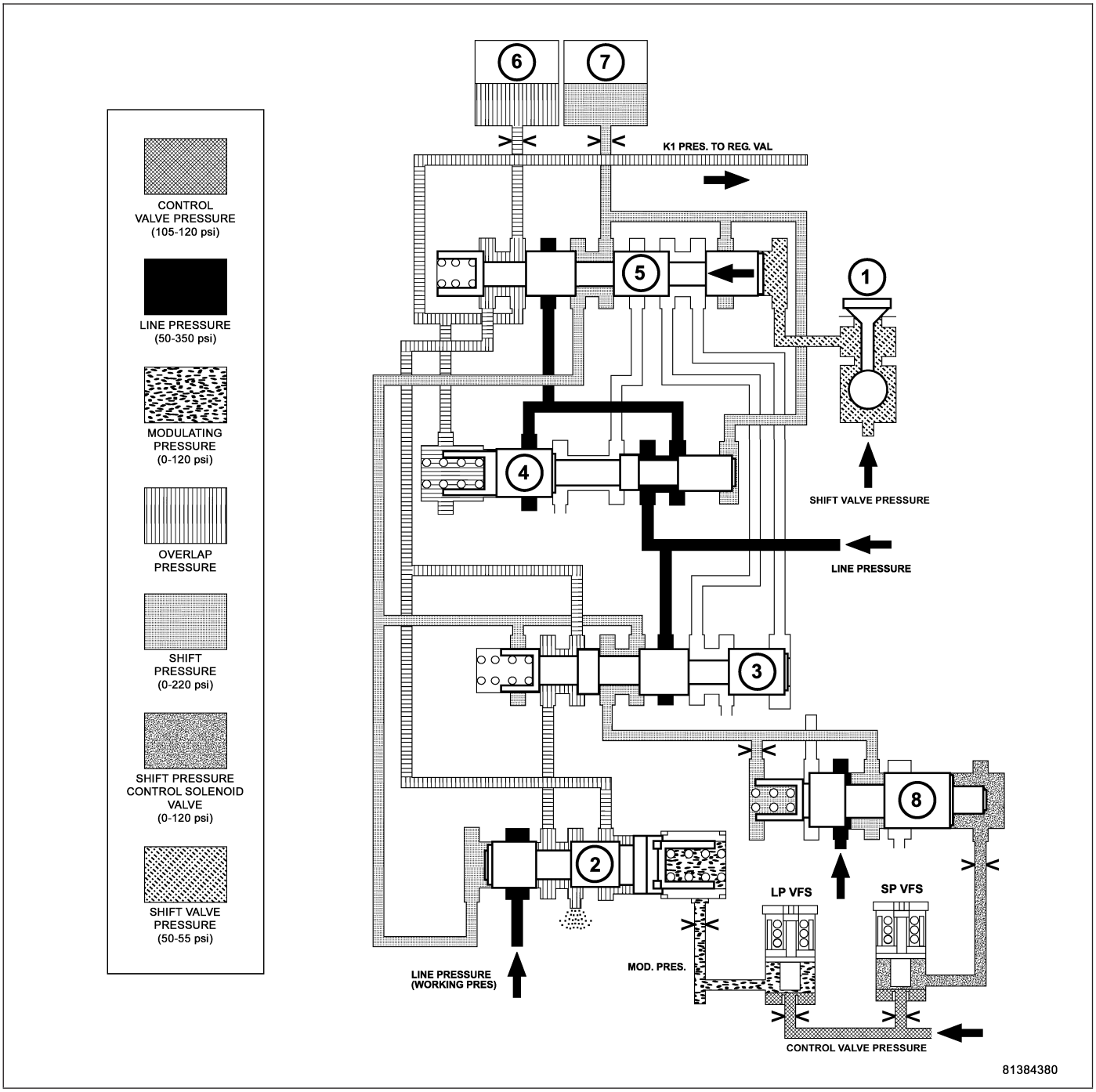

Shift Phase - 2-1 Shift Phase 1

1 - 1-2/4-5 SHIFT SOLENOID	5 - 1-2/4-5 COMMAND VALVE
2 - 1-2/4-5 OVERLAP VALVE	6 - DRIVING CLUTCH K1
3 - 1-2/4-5 SHIFT PRESSURE SHIFT VALVE	7 - HOLDING CLUTCH B1
4 - 1-2/4-5 HOLDING PRESSURE SHIFT VALVE	8 - SHIFT PRESSURE REGULATING VALVE

The 1-2/4-5 shift solenoid (1) is turned ON to apply shift pressure (p-S) to the end face of the 1-2/4-5 command valve (5). This allows the command valve to up-shift and the shift pressure coming from the 1-2/4-5 shift valve (3) is routed to the holding clutch B1 (7) via the command valve.

Simultaneously, the pressure in the releasing clutch, K1 (6), is regulated at the 1-2/4-5 overlap valve (2). The pressure in the K1 clutch as it disengages is controlled during the shift phase depending on engine load, via the mod-

ulating pressure (p-MOD), and the shift pressure in clutch B1 (7). The increasing shift pressure in clutch B1, which also acts on the end face of the overlap valve, reduces the overlap pressure.

Shift Phase - 2-1 Shift Phase 2

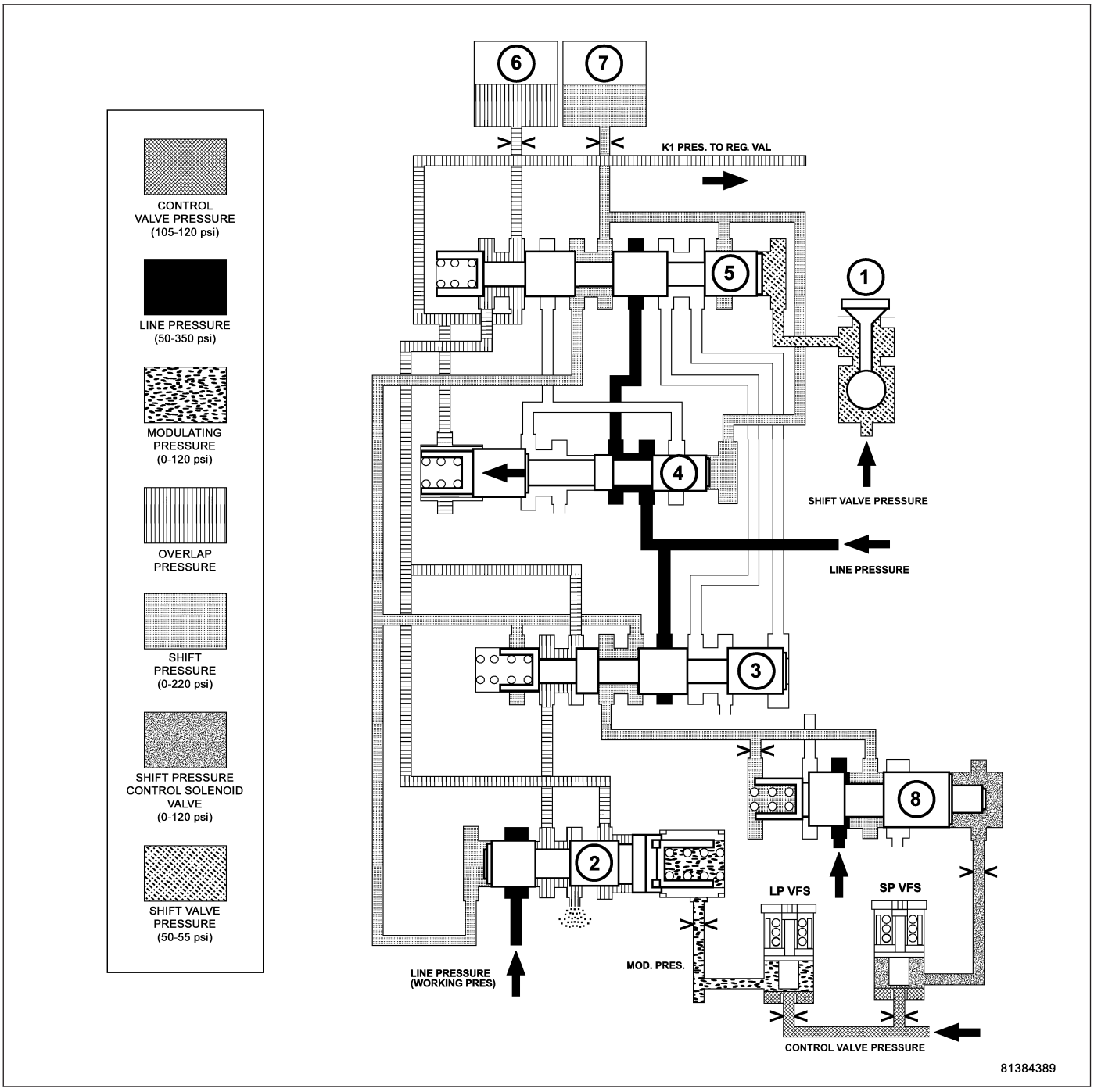

Shift Phase - 2-1 Shift Phase 2

1 - 1-2/4-5 SHIFT SOLENOID	5 - 1-2/4-5 COMMAND VALVE
2 - 1-2/4-5 OVERLAP VALVE	6 - DRIVING CLUTCH K1
3 - 1-2/4-5 SHIFT PRESSURE SHIFT VALVE	7 - HOLDING CLUTCH B1
4 - 1-2/4-5 HOLDING PRESSURE SHIFT VALVE	8 - SHIFT PRESSURE REGULATING VALVE

The pressure in clutch B1 (7) acting on the end face of the 1-2/4-5 holding valve (4) forces the valve to up-shift against the spring pressure and allows line pressure (p-A) to pass through the command valve (5).

2-1 Shift - First Gear Engaged

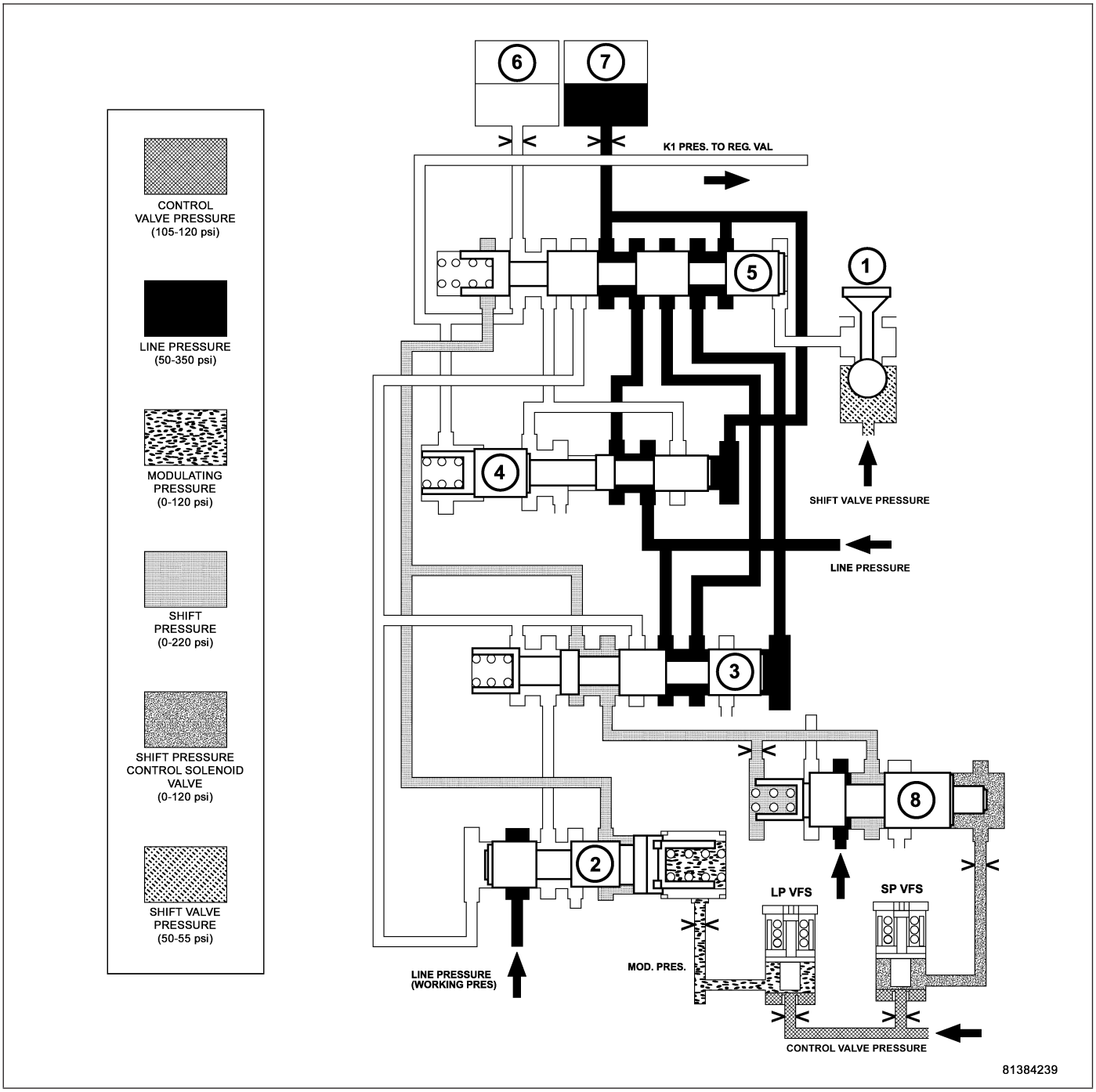

First Gear Engaged

1 - 1-2/4-5 SHIFT SOLENOID	5 - 1-2/4-5 COMMAND VALVE
2 - 1-2/4-5 OVERLAP VALVE	6 - DRIVING CLUTCH K1
3 - 1-2/4-5 SHIFT PRESSURE SHIFT VALVE	7 - HOLDING CLUTCH B1
4 - 1-2/4-5 HOLDING PRESSURE SHIFT VALVE	8 - SHIFT PRESSURE REGULATING VALVE

After the gear change is complete, the 1-2/4-5 shift solenoid (1) is turned off. This reduces the pressure on the end face of the 1-2/4-5 command valve (5) to 0 psi and the spring pressure downshifts the valve to its initial position. The line pressure (p-A) is switched to the holding clutch B1 (7) and the end face of the holding valve by the down-shifted command valve. The upshifted holding valve also allows the remaining pressure in clutch K1 (6) to be vented.

Gear Shift N to D (1st gear) - Engine Started

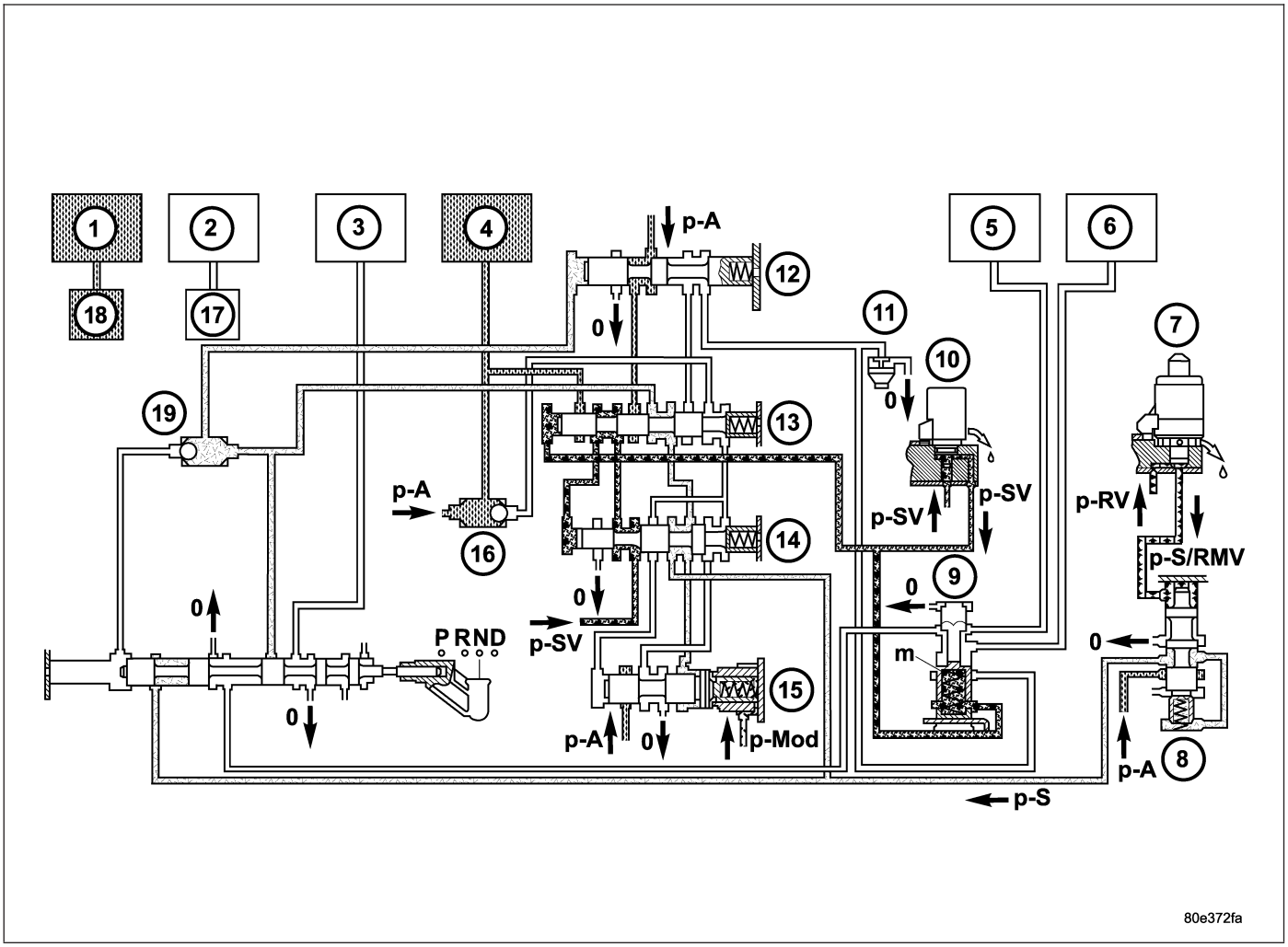

Engine Started

1 - HOLDING CLUTCH B1
2 - DRIVING CLUTCH K1
3 - HOLDING CLUTCH B3
4 - DRIVING CLUTCH K3
5 - HOLDING CLUTCH B2 PISTON
6 - HOLDING CLUTCH B2 PISTON OPPOSING FACE
7 - SHIFT PRESSURE REGULATING SOLENOID
8 - SHIFT PRESSURE REGULATING VALVE
9 - SHIFT VALVE B2
10 - 3-4 SHIFT SOLENOID
11 - PRESSURE HOLDING VALVE
12 - 3-4 HOLDING PRESSURE SHIFT VALVE
13 - 3-4 COMMAND VALVE
14 - 3-4 SHIFT PRESSURE SHIFT VALVE
15 - 3-4 OVERLAP REGULATING VALVE
16 - BALL VALVE
17 - 1-2/4-5 COMMAND VALVE
18 - 1-2/4-5 COMMAND VALVE
19 - BALL VALVE

With the engine started and the gearshift lever in the NEUTRAL or PARK positions, holding clutch B1 (1) and driving clutch K3 (4) are applied and the various valves in the 1-2/4-5 shift group are positioned to apply pressure to the holding clutch B2.

Activation Sequence

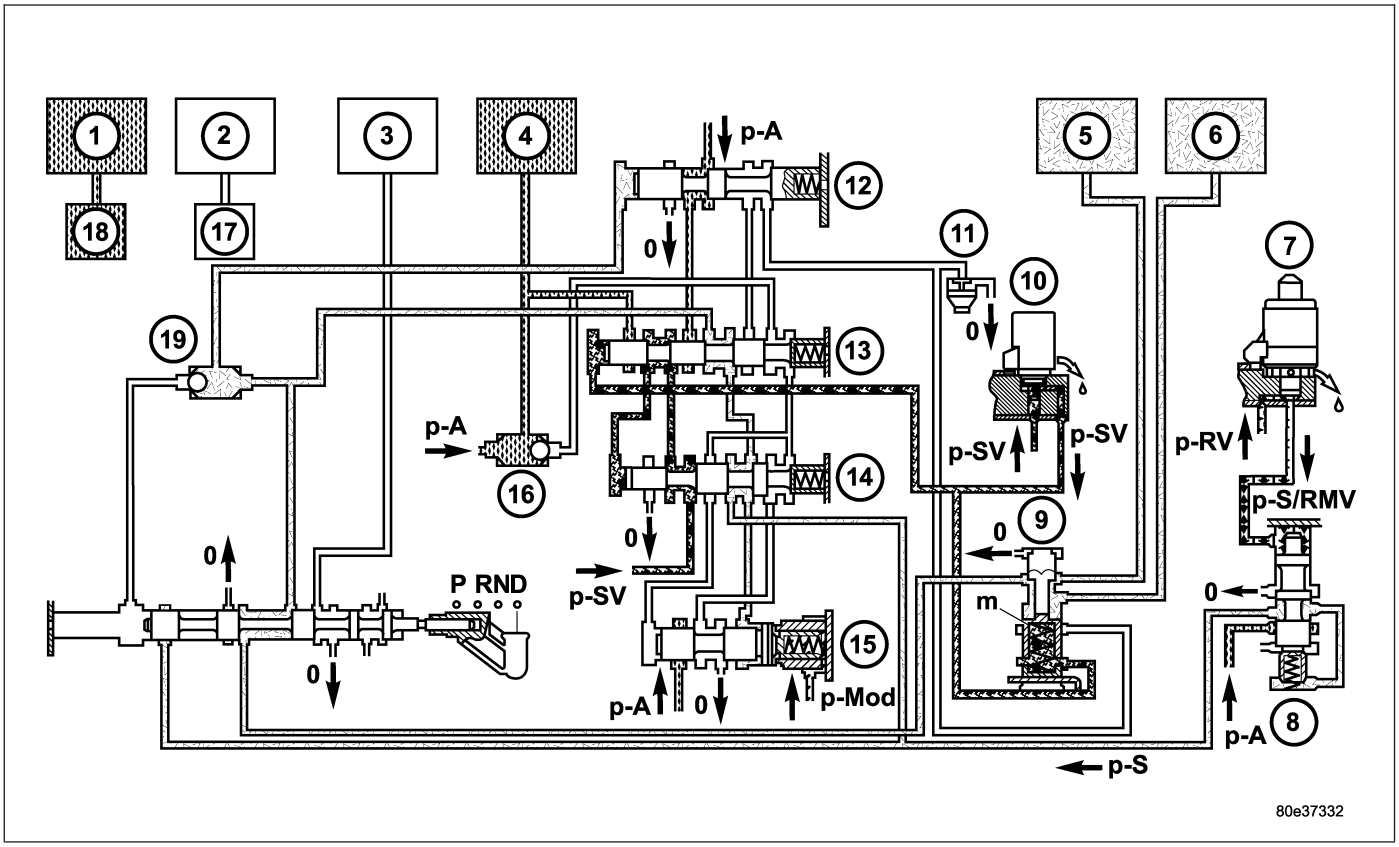

Activation Sequence

1 - HOLDING CLUTCH B1
2 - DRIVING CLUTCH K1
3 - HOLDING CLUTCH B3
4 - DRIVING CLUTCH K3
5 - HOLDING CLUTCH B2 PISTON
6 - HOLDING CLUTCH B2 PISTON OPPOSING FACE
7 - SHIFT PRESSURE REGULATING SOLENOID
8 - SHIFT PRESSURE REGULATING VALVE
9 - SHIFT VALVE B2
10 - 3-4 SHIFT SOLENOID
11 - PRESSURE HOLDING VALVE
12 - 3-4 HOLDING PRESSURE SHIFT VALVE
13 - 3-4 COMMAND VALVE
14 - 3-4 SHIFT PRESSURE SHIFT VALVE
15 - 3-4 OVERLAP REGULATING VALVE
16 - BALL VALVE
17 - 1-2/4-5 COMMAND VALVE
18 - 1-2/4-5 COMMAND VALVE
19 - BALL VALVE

The selector valve opens the shift pressure (p-S) feed connection from the ball valve (19) with the shift valve B2 (9). With the shift valve B2 (9) in the upper position, shift pressure (p-S) travels behind the piston B2 (5) and simultaneously to the opposing face of the piston B2 (6). The multiple-disc holding clutch B2 begins to close.

The pressure on the opposing face of the piston B2 (6) ensures a soft activation of the multiple-disc holding clutch B2.

First Gear Engaged

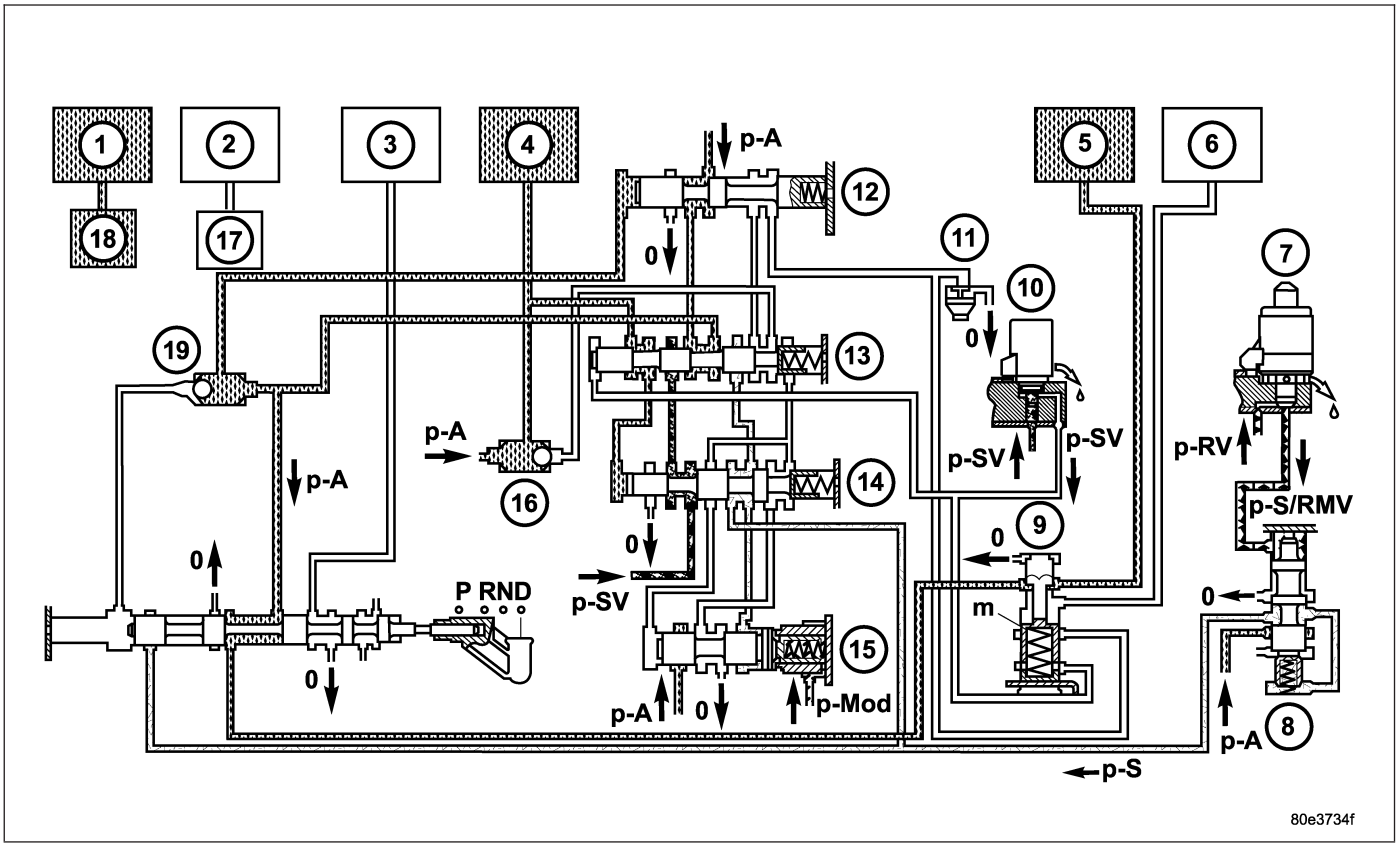

First Gear Engaged

1 - HOLDING CLUTCH B1
2 - DRIVING CLUTCH K1
3 - HOLDING CLUTCH B3
4 - DRIVING CLUTCH K3
5 - HOLDING CLUTCH B2 PISTON
6 - HOLDING CLUTCH B2 PISTON OPPOSING FACE
7 - SHIFT PRESSURE REGULATING SOLENOID
8 - SHIFT PRESSURE REGULATING VALVE
9 - SHIFT VALVE B2
10 - 3-4 SHIFT SOLENOID
11 - PRESSURE HOLDING VALVE
12 - 3-4 HOLDING PRESSURE SHIFT VALVE
13 - 3-4 COMMAND VALVE
14 - 3-4 SHIFT PRESSURE SHIFT VALVE
15 - 3-4 OVERLAP REGULATING VALVE
16 - BALL VALVE
17 - 1-2/4-5 COMMAND VALVE
18 - 1-2/4-5 COMMAND VALVE
19 - BALL VALVE

The TCM monitors the activation sequence via the speed of the input shaft, which slows down as the frictional connection in the multiple-disc holding clutch increases. When the speed drops to the specified level, the TCM shuts off the power to the 3-4 shift solenoid valve (10). The spring chamber of the shift valve B2 (9) is depressurized and switches downwards. This connects the line to the opposing face of the piston B2 (6) with the pressure holding valve (11). The pressure on the opposing face of the piston B2 (6) drops to a residual pressure.

The working pressure (p-A) is formed and travels via the 2-3 holding pressure shift valve, the 2-3 command valve and the ball valve (16) to multi-plate clutch K3 (4) and via the 3-4 command valve (13) to the end face of the 3-4 shift pressure shift valve (14). The 3-4 shift pressure shift valve (14) is moved against the force of the spring towards the right. At the same time the 3-4 solenoid valve (10) is energized. This allows shift valve pressure (p-SV) to enter the spring chamber of the shift valve B2 (9) and to reach the end face of the 3-4 command valve (13). The shift valve B2 (9) is held in the upper position and the 3-4 command valve (13) switches towards the right. At the end face of the 3-4 shift pressure shift valve (14) the working pressure (p-A) is replaced by shift valve pressure (p-SV).

The 3-4 command valve (13) moves to the left. Working pressure (p-A) travels via the holding pressure shift valve (12) and the 3-4 command valve (13) to the piston of multiple-disc holding clutch B2 (5).

DIAGNOSIS AND TESTING

AUTOMATIC TRANSMISSION

CAUTION: Before attempting any repair on a NAG1 automatic transmission, check for Diagnostic Trouble Codes with the appropriate scan tool.

Transmission malfunctions may be caused by these general conditions:

- Poor engine performance.
- Improper adjustments.
- Hydraulic malfunctions.
- Mechanical malfunctions.
- Electronic malfunctions.
- Transfer case performance (if equipped).

Diagnosis of these problems should always begin by checking the easily accessible variables: fluid level and condition, gearshift cable adjustment. Then perform a road test to determine if the problem has been corrected or if more diagnosis is necessary.

PRELIMINARY

Two basic procedures are required. One procedure for vehicles that are drivable and an alternate procedure for disabled vehicles (will not back up or move forward).

VEHICLE IS DRIVABLE

1. Check for transmission fault codes using the appropriate scan tool.
2. Check fluid level and condition.
3. Adjust gearshift cable if complaint was based on delayed, erratic, or harsh shifts.
4. Road test and note how transmission upshifts, downshifts, and engages.

VEHICLE IS DISABLED

1. Check fluid level and condition.
2. Check for broken or disconnected gearshift cable.
3. Check for cracked, leaking cooler lines, or loose or missing pressure-port plugs.
4. Raise and support vehicle on safety stands, start engine, shift transmission into gear, and note following:
    a. If propeller shaft turns but wheels do not, problem is with differential or axle shafts.
    b. If propeller shaft does not turn and transmission is noisy, stop engine. Remove oil pan, and check for debris. If pan is clear, remove transmission and check for damaged driveplate, converter, oil pump, or input shaft.
    c. If propeller shaft does not turn and transmission is not noisy, perform hydraulic-pressure test to determine if problem is hydraulic or mechanical.

ROAD TESTING

Before road testing, be sure the fluid level and control cable adjustments have been checked and adjusted if necessary. Verify that all diagnostic trouble codes have been resolved.

Observe engine performance during the road test. A poorly tuned engine will not allow accurate analysis of transmission operation.

Operate the transmission in all gear ranges. Check for shift variations and engine flare which indicates slippage. Note if shifts are harsh, spongy, delayed, early, or if part throttle downshifts are sensitive.

Slippage indicated by engine flare, usually means clutch, overrunning clutch, or line pressure problems.

A slipping clutch can often be determined by comparing which internal units are applied in the various gear ranges. The Clutch Application chart CLUTCH APPLICATION provides a basis for analyzing road test results.

CLUTCH APPLICATION

GEAR	RATIO	B1	B2	B3	K1	K2	K3	F1	F2
1	3.59	X*	X				X*	X	X
2	2.19		X		X		X*		X
3	1.41		X		X	X			
4	1.00				X	X	X		
5	0.83	X				X	X	X*	
N	N/A	X					X		
R	3.16	X*		X			X	X	
R - Limp In	1.93			X	X		X		
* = The shift components required during coast.									

AUTOMATIC TRANSMISSION

CONDITION	POSSIBLE CAUSES	CORRECTION
Harsh N-D Engagement Harsh N-R Engagement	1. Transmission adaptation/ calibration.	1. Check for latest level TCM software. Perform the TCM adaptation procedure. (Refer to 8 - ELECTRICAL/ELECTRONIC CONTROL MODULES/ TRANSMISSION CONTROL MODULE - STANDARD PROCEDURE)
	2. Transmission in limp-home mode.	2. Check TCM for DTCs. Repair as needed.
	3. Driveline lash/movement.	3. Check engine mounts, transmission mount, driveshaft couplings, rear crossmember mounts, axle mounts and axle lash.
	4. Converter clutch or lock up control valve malfunction.	4. Perform converter clutch diagnostics test. Inspect valve body for stuck or sticky lock up control valve. If valve motion is free, replace lock up solenoid and retest.
	5. Valve Body Malfunction.	5. Inspect valve body for stuck or sticky regulator valve.
	6. Clutch or planetary component damage.	6. Remove, disassemble and repair transmission as necessary.

CONDITION	POSSIBLE CAUSES	CORRECTION
Delayed N-D or N-R Engagement	1. Transmission adaptation/ calibration.	1. Check for latest level TCM software. Perform the TCM adaptation procedure. (Refer to 8 - ELECTRICAL/ELECTRONIC CONTROL MODULES/ TRANSMISSION CONTROL MODULE - STANDARD PROCEDURE)
	2. Torque converter fluid drain back, delayed soft engagement.	2. If vehicle moves normally after 3 seconds of shifting into gear, no repair is necessary. If longer, inspect pump for worn bushing.
	3. Fluid Level Low.	3. Check and adjust fluid level. (Refer to 21 - TRANSMISSION/ AUTOMATIC - NAG1/FILTER - STANDARD PROCEDURE)
	4. Filter plugged.	4. Check TC out pressure, if < 10psi, check for plugged filter. Replace if needed.
	5. Filter damaged or missing, missing o-ring.	5. Check for damaged/missing filter or cut/missing o-ring.
	6. Valve Body Malfunction.	6. Inspect valve body for stuck/ sticky regulator valve or shift group valves.
	7. Oil pump gears worn/damaged.	7. Inspect pump for damage or excessive clearances. Replace if needed.
No Drive or Reverse Engagement (vehicle will not move)	1. Fluid level low.	1. Check and adjust fluid level. (Refer to 21 - TRANSMISSION/ AUTOMATIC - NAG1/FILTER - STANDARD PROCEDURE)
	2. Misadjusted/damaged shift cable.	2. Inspect shift system. Adjust and/or replace worn/damaged parts.
	3. Filter plugged.	3. Check TC out pressure, if < 10psi, check for plugged filter. Replace if needed.
	4. Filter damaged or missing, missing filter o-ring.	4. Check for damaged/missing filter or cut/missing o-ring.
	5 Hydraulic system-Low/no line pressure.	5. Remove valve body. Inspect or sticky/stuck regulator valve. If valve motion is free, replace line pressure solenoid and retest. If condition still exists check for worn/damaged pump. Replace pump assembly if needed.

CONDITION	POSSIBLE CAUSES	CORRECTION
Shudder garage shift R-D or D-R	1. Transmission adaptation/ calibration.	1. Check for latest level TCM software. Perform the TCM adaptation procedure. (Refer to 8 - ELECTRICAL/ELECTRONIC CONTROL MODULES/ TRANSMISSION CONTROL MODULE - STANDARD PROCEDURE)
	2. Customer applying throttle while shift is in progress.	2. Instruct customer to wait until shift is complete prior to applying throttle.
Harsh rolling garage shift R-D or D-R	1. Transmission adaptation/ calibration.	1. Check for latest level TCM software. Perform the TCM adaptation procedure. (Refer to 8 - ELECTRICAL/ELECTRONIC CONTROL MODULES/ TRANSMISSION CONTROL MODULE - STANDARD PROCEDURE)
	2. Customer shifting into desired range with vehicle motion.	2. Instruct customer to only shift into the desired range with the vehicle stopped and the service brake applied.
	3. Transmission in limp-home mode.	3. Check TCM for DTCs. Repair as needed.
Engine stalls when transmission is shifted into R or D.	1. Converter clutch or lock up control valve malfunction.	1. Perform converter clutch diagnostics test. Inspect valve body for stuck or sticky lock up control valve. If valve motion is free, replace lock up solenoid and retest.
	2. Defective torque converter.	2. Replace torque converter.
Clunk/click noise during garage shift from R-D or D-R	1. Stick-slip condition between output flange and output shaft nut upon torque reversal from R to D or D to R. Click on first launch.	1. Replace output flange and nut.
Harsh Upshift or downshift	1. Transmission adaptation/ calibration.	1. Check for latest level TCM software. Perform the TCM adaptation procedure. (Refer to 8 - ELECTRICAL/ELECTRONIC CONTROL MODULES/ TRANSMISSION CONTROL MODULE - STANDARD PROCEDURE)
	2. Valve body malfunction.	2. Inspect valve body for sticky/stuck valves. Repair as needed. If valve motion is free, replace shift pressure solenoid and line pressure solenoid and retest.
	3. Damaged or misbuilt clutch.	3. Remove, disassemble and repair transmission as needed.

CONDITION	POSSIBLE CAUSES	CORRECTION
EMCC Shudder	1. Transmission adaptation/ calibration.	1. Check for latest level TCM software. Perform the TCM adaptation procedure. (Refer to 8 - ELECTRICAL/ELECTRONIC CONTROL MODULES/ TRANSMISSION CONTROL MODULE - STANDARD PROCEDURE)
	2. Fluid condition, contamination or wrong type.	2. Change fluid per service manual procedures. (Refer to 21 - TRANSMISSION/ AUTOMATIC - NAG1/FILTER - STANDARD PROCEDURE)
	3. Valve body malfunction.	3. Remove valve body. Inspect for sticky/stuck lock up control valve. If valve motion is free, replace the lock up solenoid and retest.
	4. Defective torque converter.	4. Replace torque converter.
Grating or Scraping Noise proportional to engine speed	1. Torque converter bolts contacting dust shield.	1. Dust shield bent. Replace if needed. Torque converter bolt backed out. Replace with new bolt and torque to proper level.
	2. Damaged/broken drive plate.	2. Inspect driveplate. Replace if needed.
Grating or Scraping Noise proportional to transmission output speed	1. Driveshaft or rear axle noise.	1. Check driveshaft, center bearing and axle for noise or contact with other components.
	2. Transmission output bearing noise.	2. Replace output bearing and retest.
	3. Internal transmission damage.	3. Remove, disassemble and repair transmission as needed.
High pitched whine/noise related to engine speed	1. Fluid level low.	1. Check and adjust fluid level. (Refer to 21 - TRANSMISSION/ AUTOMATIC - NAG1/FILTER - STANDARD PROCEDURE)
	2. Transmission in limp-home mode.	2. Check TCM for DTCs. Repair as needed.
	3. Filter plugged.	3. Check TC out pressure, if < 10psi, check for plugged filter. Replace if needed.
	4. Filter damaged or missing.	4. Check for damaged/missing filter or cut/missing o-ring.
	5. Oil pump bushing worn/ damaged.	5. Visually inspect for worn or damaged pump bushing. Replace pump assembly if needed.
	6. Oil pump gears worn/ damaged.	6. Inspect for worn or damaged pump gears. Replace pump assembly if needed.

CONDITION	POSSIBLE CAUSES	CORRECTION
Slips on 1-2 upshift	1. Transmission adaptation/ calibration.	1. Check for latest level TCM software. Perform the TCM adaptation procedure. (Refer to 8 - ELECTRICAL/ELECTRONIC CONTROL MODULES/ TRANSMISSION CONTROL MODULE - STANDARD PROCEDURE)
	2. Fluid level low.	2. Check and adjust fluid level. (Refer to 21 - TRANSMISSION/ AUTOMATIC - NAG1/FILTER - STANDARD PROCEDURE)
	3. Filter damaged or missing.	3. Check for damaged/missing filter or cut/missing o-ring.
	4. Valve body malfunction.	4. Check for sticky/stuck 2-3 shift pressure valve or regulator valve.
	5. F1 or K1 clutch damaged.	5. Disassemble transmission inspect for damaged F1 or K1 clutch. Repair as needed.
Slips on 2-3 upshift	1. Transmission adaptation/ calibration.	1. Check for latest level TCM software. Perform the TCM adaptation procedure. (Refer to 8 - ELECTRICAL/ELECTRONIC CONTROL MODULES/ TRANSMISSION CONTROL MODULE - STANDARD PROCEDURE)
	2. Fluid level low.	2. Check and adjust fluid level. (Refer to 21 - TRANSMISSION/ AUTOMATIC - NAG1/FILTER - STANDARD PROCEDURE)
	3. Filter damaged or missing.	3. Check for damaged/missing filter or cut/missing o-ring.
	4. Valve body malfunction.	4. Check for sticky/stuck 2-3 shift pressure valve or regulator valve.
	5. F2 or B2 clutch damaged.	5. Disassemble transmission, inspect for damaged F2 or B2 clutch. Repair as needed.

CONDITION	POSSIBLE CAUSES	CORRECTION
Slips on 3-4 upshift	1. Transmission adaptation/ calibration.	1. Check for latest level TCM software. Perform the TCM adaptation procedure. (Refer to 8 - ELECTRICAL/ELECTRONIC CONTROL MODULES/ TRANSMISSION CONTROL MODULE - STANDARD PROCEDURE)
	2. Fluid level low.	2. Check and adjust fluid level. (Refer to 21 - TRANSMISSION/ AUTOMATIC - NAG1/FILTER - STANDARD PROCEDURE)
	3. Filter damaged or missing.	3. Check for damaged/missing filter or cut/missing o-ring.
	4. Valve body malfunction.	4. Check for sticky/stuck 2-3 shift pressure valve or regulator valve.
	5. K3 or B2 clutch damaged.	5. Disassemble transmission, inspect for damaged K3 or B2 clutch. Repair as needed.
Slips on 4-5 upshift	1. Transmission adaptation/ calibration.	1. Check for latest level TCM software. Perform the TCM adaptation procedure. (Refer to 8 - ELECTRICAL/ELECTRONIC CONTROL MODULES/ TRANSMISSION CONTROL MODULE - STANDARD PROCEDURE)
	2. Fluid level low.	2. Check and adjust fluid level. (Refer to 21 - TRANSMISSION/ AUTOMATIC - NAG1/FILTER - STANDARD PROCEDURE)
	3. Filter damaged or missing.	3. Check for damaged/missing filter or cut/missing o-ring.
	4. Valve body malfunction.	4. Check for sticky/stuck 2-3 shift pressure valve or regulator valve.
	5. B1 or K1 clutch damaged.	5. Disassemble transmission, inspect for damaged B1 or K1 clutch. Repair as needed.
In-gear shudder on heavy acceleration	1. Fluid level low.	1. Check and adjust fluid level. (Refer to 21 - TRANSMISSION/ AUTOMATIC - NAG1/FILTER - STANDARD PROCEDURE)
	2. Filter damaged or missing.	2. Check for damaged/missing filter or cut/missing o-ring.
No Drive engagement following a shift to N	1. Customer shifting into N at vehicle speeds greater than 25mph and tipping in on the throttle.	1. Instruct the customer that they should not shift into N at vehicle speeds greater 25mph.
	2. Shift system malfunction.	2. Inspect shift system for proper adjustment or damage. Check shifter for DTCs. Repair as needed.

CONDITION	POSSIBLE CAUSES	CORRECTION
Reverse gear position blocked engagement when moving shift lever from D position	1. Customer shifting into R at vehicle speeds greater than 7mph.	1. Instruct customer that R shifter position is blocked at vehicle speeds greater than 7mph.
	2. Shift system malfunction.	2. Inspect shift system for proper adjustment or damage. Check shifter for DTCs. Repair as needed.
No Engine Cranking in P or N	1. Gearshift cable adjustment.	1. Adjust shift cable and retest.
	2. Shift system malfunction.	2. Check shifter DTCs. Inspect shift cable and lever assembly. Adjust and/or replace worn/ damaged parts.
	3. Valve body malfunction.	3. Starter lockout contact malfunction. Remove valve body, replace lead frame assembly.

CONDITION	POSSIBLE CAUSES	CORRECTION
Fluid Leak	1. Leak in area of bell housing.	1. Check bolt torque on internal bell housing bolts. If loose, replace fastener and torque to proper level. If bolts are to proper torque level, check pump outer seal and impeller seal. Replace if needed.
	2. Leak in area of control unit(valve body) electrical connector.	2. Check connector for damaged(cut) or missing o-rings. Replace as needed.
	3. Leak in area of pan gasket.	3. Check for proper torque on oil pan clamps. Check for mis-positioned or rolled gasket. Repair as needed.
	4. Free Wheeling Clutch F2 Defective.	4. Replace Free Wheeling Clutch F2, Hollow Shaft, and Rear Sun Gear/Inner Disc Carrier K3.
	5. Leak in area of park guide plug.	5. Remove park guide plug. Check for damaged(cut) or missing o-ring. If o-ring is in good condition, install new plug.
	6. Leak in area of shift lever.	6. Check for damaged shift lever seal or damaged lever. Repair as needed.
	7. Leak in area of output flange.	7. Check for worn/damaged slinger seal and output seal. Visually inspect output flange seal surface for damage. Repair as needed.
	8. Leak in area of transmission vent.	8. Check fluid level for overfill condition. Adjust as needed. If fluid level is within specification, ride check vehicle. Monitor transmission temperature. If high operating temperatures are observed, fluid may be contaminated or cooling system malfunctioning. Change fluid per service manual procedures. Refer to cooling system diagnostics if needed.
	9. Leak in area of transmission fill tube.	9. Inspect fill tube cap for proper installation. Inspect fill tube grommet between case and fill tube for leakage. Repair as needed.

AIR CHECKING TRANSMISSION CLUTCH OPERATION

Air-pressure testing can be used to check transmission clutch operation. The test can be conducted with the transmission either in the vehicle or on the work bench, as a final check.

Air-pressure testing requires that the oil pan and valve body be removed from the transmission. The clutch apply passages are shown in the NAG1 Clutch Application Ports graphic.

NOTE: The air supply which is used must be free of moisture and dirt. Use a pressure of 30 psi to test clutch operation.

Apply air pressure at each port. If the clutch is functioning, a soft thump will be heard as the clutch is applied. The clutch application can also be felt by touching the appropriate element while applying air pressure. As the air pressure is released, the clutch should also release.

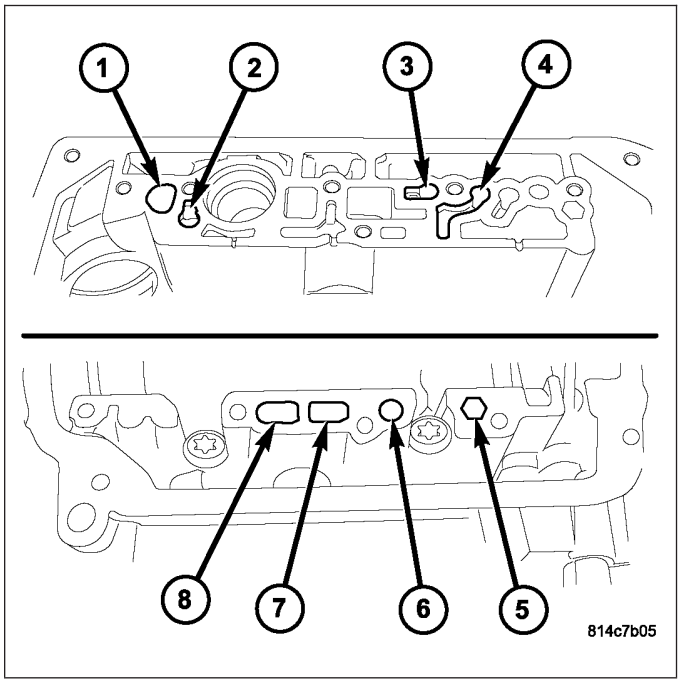

NAG1 Clutch Application Ports

1 - K1 CLUTCH APPLY PORT
2 - B1 CLUTCH APPLY PORT
3 - K2 CLUTCH APPLY PORT
4 - TORQUE CONVERTER CLUTCH APPLY PORT
5 - B3 CLUTCH APPLY PORT
6 - B2 CLUTCH COUNTER-PRESSURE PORT
7 - K3 CLUTCH APPLY PORT
8 - B2 CLUTCH APPLY PORT

STANDARD PROCEDURE - ALUMINUM THREAD REPAIR

Damaged or worn threads in the aluminum transmission case and valve body can be repaired by the use of Heli-Coils™, or equivalent. This repair consists of drilling out the worn-out damaged threads. Then tap the hole with a special Heli-Coil™ tap, or equivalent, and installing a Heli-Coil™ insert, or equivalent, into the hole. This brings the hole back to its original thread size.

Heli-Coil™, or equivalent, tools and inserts are readily available from most automotive parts suppliers.

REMOVAL

NOTE: If the transmission is being reconditioned (clutch/seal replacement) or replaced, it is necessary to perform the TCM Adaptation Procedure using the scan tool (Refer to 8 - ELECTRICAL/ELECTRONIC CONTROL MODULES/TRANSMISSION CONTROL MODULE - STANDARD PROCEDURE).

1. Disconnect the negative battery cable.
2. Raise and support the vehicle.
3. For AWD vehicles, remove the transfer case, (Refer to 21 - TRANSMISSION/TRANSFER CASE - REMOVAL), and front axle, (Refer to 3 - DIFFERENTIAL & DRIVELINE/FRONT AXLE - REMOVAL).
4. For RWD vehicles:
   a. Mark propeller shaft (1) and the transmission flange (4) for assembly alignment.
   b. Remove the bolts (2) holding the rear propeller shaft coupler (3) to the transmission flange (4).
   c. Slide the propeller shaft (1) rearward until the coupler clears the propeller shaft pilot (5) on the transmission output shaft.

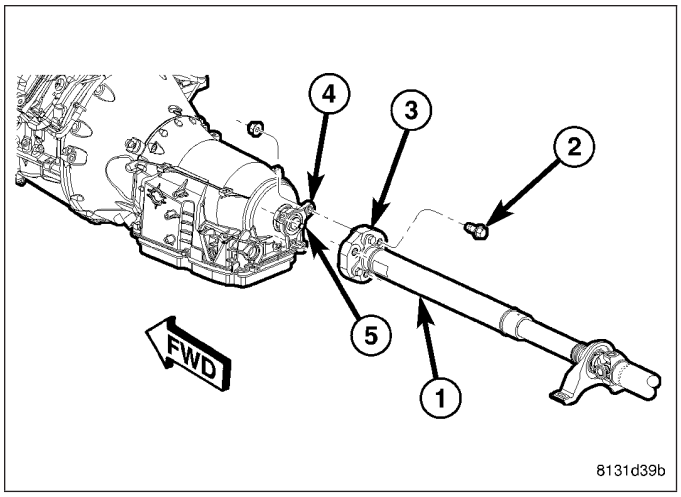

NOTE: The starters are located on the right side of the transmission for RWD vehicles and they are on the left side for AWD vehicles.

5. Remove the bolts (2) holding the starter motor (1) to the transmission. (Refer to 8 - ELECTRICAL/ STARTING/STARTER MOTOR - REMOVAL)
6. Remove the starter (1) from the transmission starter pocket and safely relocate.

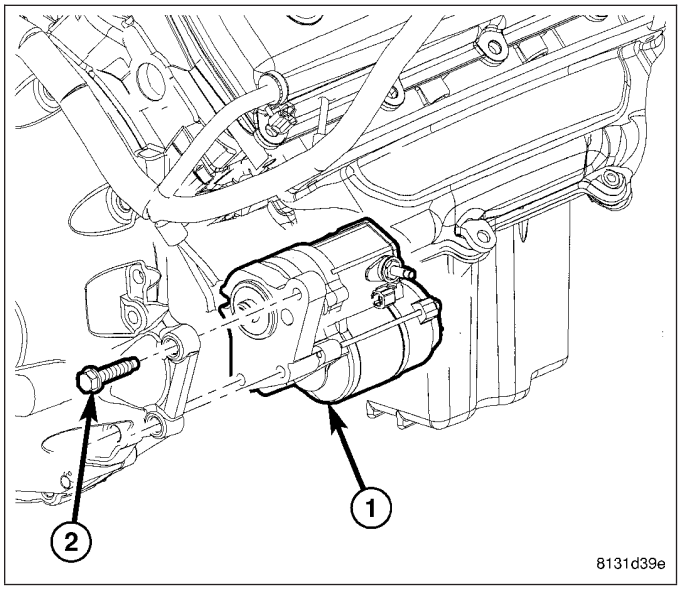

7. Remove the bolt (2) holding the torque converter access cover (1) to the transmission.
8. Remove the torque converter access cover (1) from the transmission.

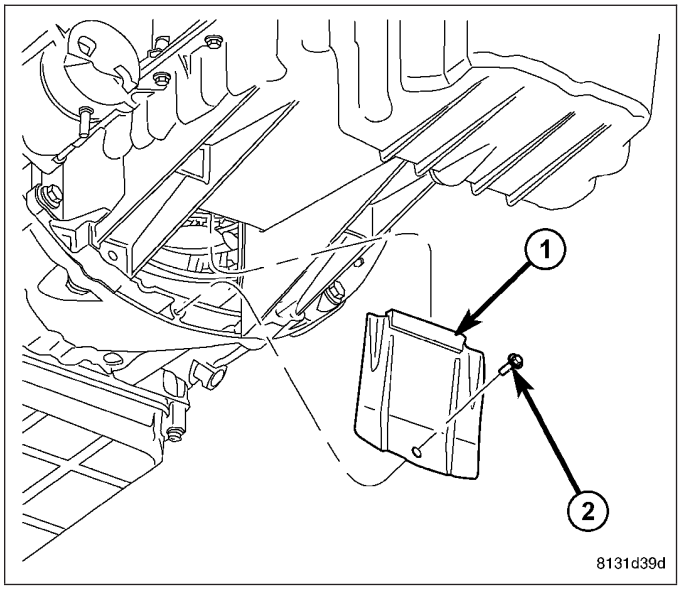

9. For gas engines, rotate crankshaft in clockwise direction until converter bolts (1) are accessible. Then remove bolts (1) one at a time. Rotate crankshaft with socket wrench on dampener bolt.

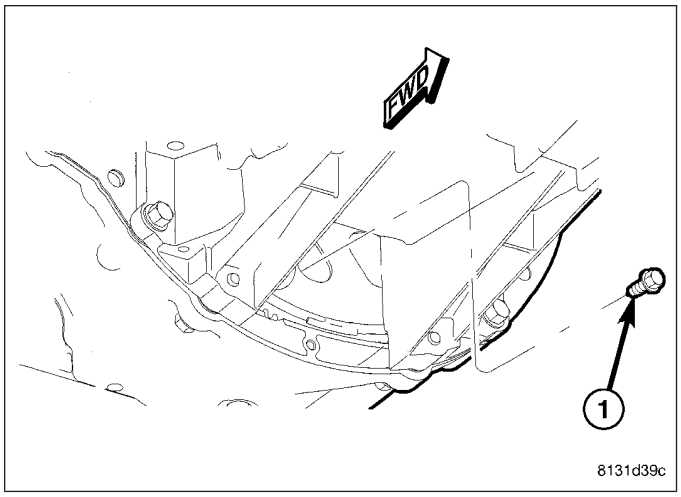

10. For diesel engines, rotate crankshaft in clockwise direction until converter bolts (1) are accessible. Then remove bolts (1) one at a time. Rotate crankshaft with socket wrench on dampener bolt.

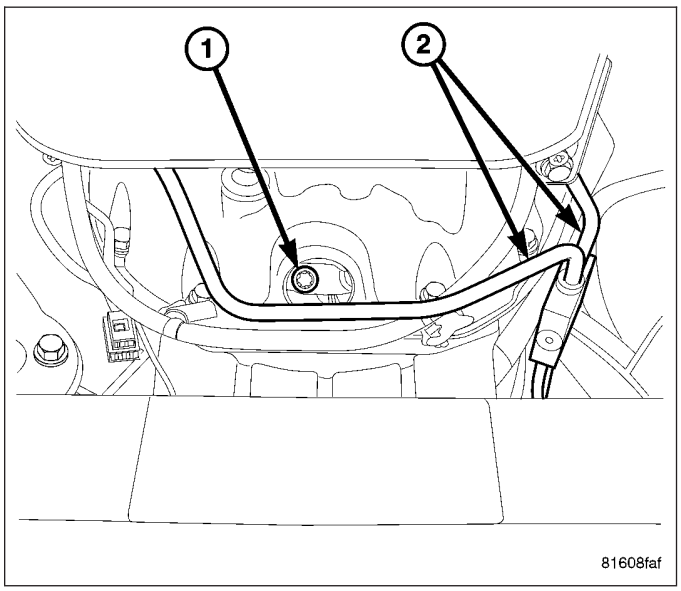

11. Disconnect the gearshift cable (1) from the transmission manual valve lever (3).
12. Loosen the bolts holding the shift cable retaining strap (2) to the transmission.
13. Remove the shift cable (1) from the transmission.

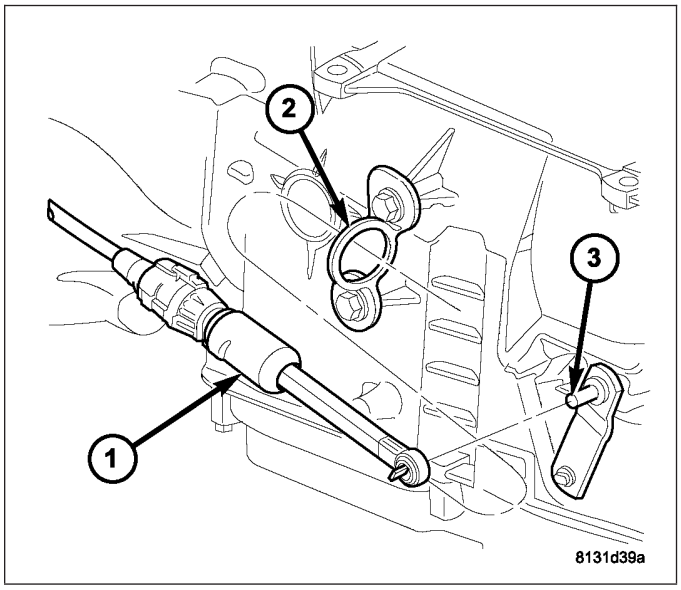

14. Disconnect 13-pin plug connector (1). Turn bayonet lock of the adapter plug (2) anti-clockwise.
15. Remove the 13-pin connector (1) from the transmission.

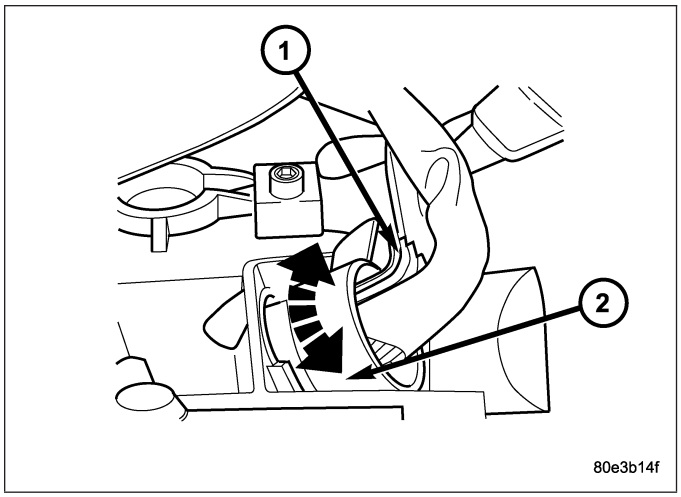

16. Disconnect transmission fluid cooler lines (1) at transmission fittings (2) and clips (3).
17. Disconnect the transmission vent hose from the transmission.

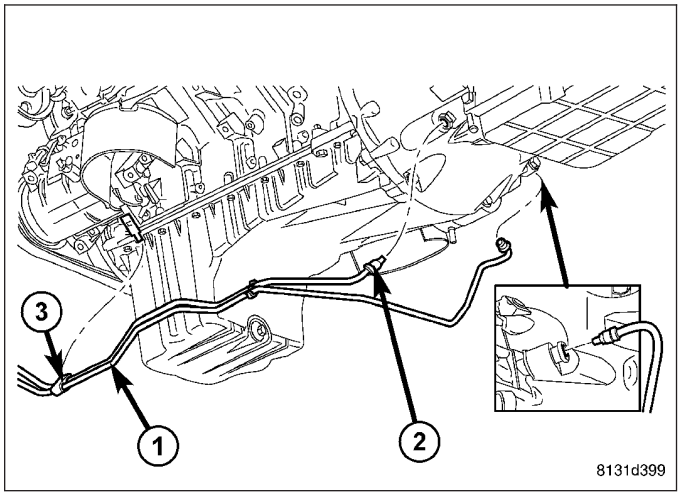

18. Support rear of engine with safety stand or jack.
19. Raise transmission slightly with service jack to relieve load on crossmember and supports.
20. Remove bolts (2) securing rear support and cushion (3) to transmission crossmember (1).
21. Remove bolts attaching crossmember (1) to frame and remove crossmember.

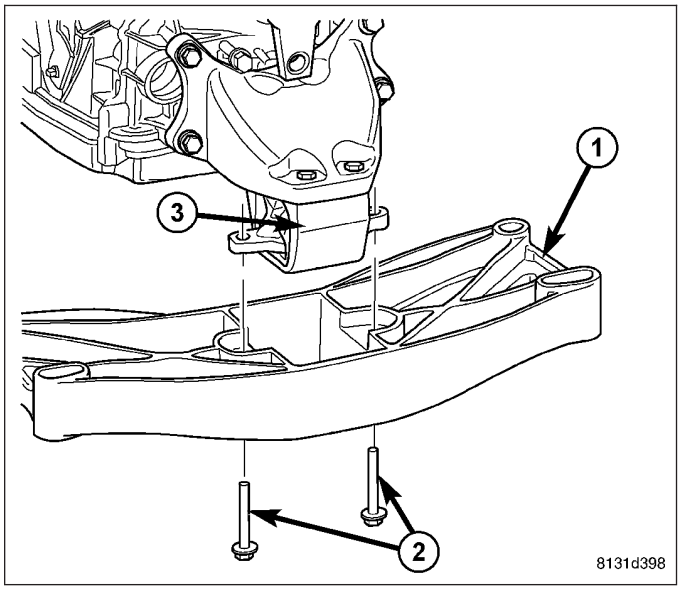

22. Remove the bolts (1) holding the engine oil pan (2) to the transmission (3), gas engines.

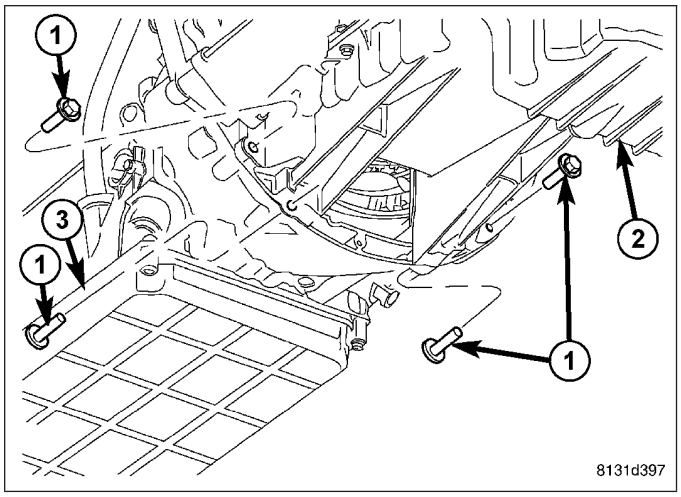

23. Remove all remaining bolts (2) holding the engine (1) to the transmission (3).
24. Carefully work transmission and torque converter assembly rearward off engine block dowels.
25. Hold torque converter in place during transmission removal.
26. Lower transmission and remove assembly from under the vehicle.
27. To remove torque converter, carefully slide torque converter out of the transmission.

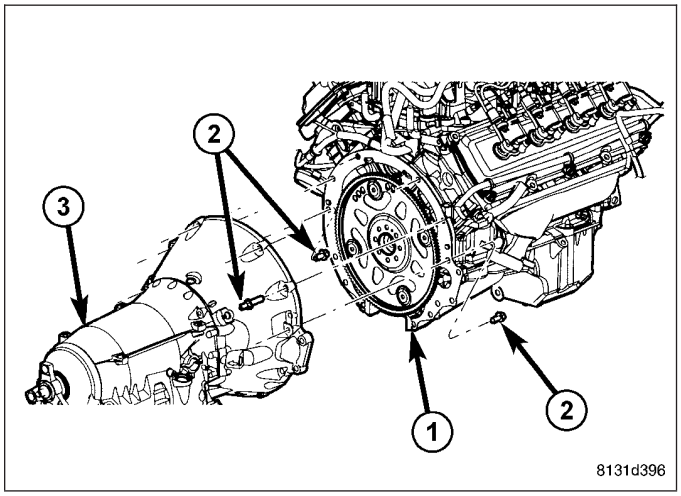

DISASSEMBLY

NOTE: If the transmission is being reconditioned (clutch/seal replacement) or replaced, it is necessary to perform the TCM Adaptation Procedure using the scan tool (Refer to 8 - ELECTRICAL/ELECTRONIC CONTROL MODULES/TRANSMISSION CONTROL MODULE - STANDARD PROCEDURE).

NOTE: Tag all clutch pack assemblies, as they are removed, for reassembly identification.

1. Remove the torque converter (1).

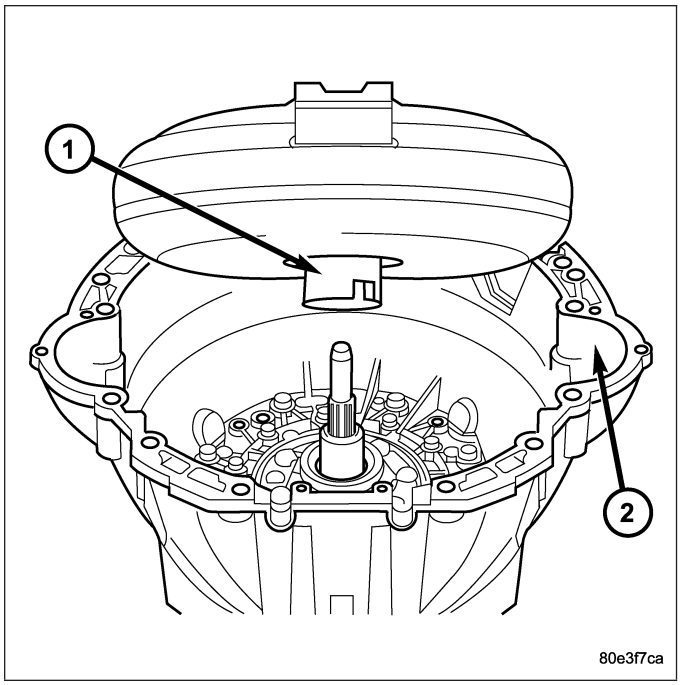

2. Place transmission in a vertical position.
3. Measure input shaft end play as follows:
   a. Attach Adapter 8266-18 (2) to Handle 8266-8 (1).
   b. Attach dial indicator C-3339 (3) to Handle 8266-8 (1).
   c. Install the assembled tool onto the input shaft of the transmission and tighten the retaining screw on Adapter 8266-18 (2) to secure it to the input shaft.
   d. Position the dial indicator plunger against a flat spot on the oil pump and zero the dial indicator.
   e. Move the input shaft in and out. Record the maximum travel for assembly reference.

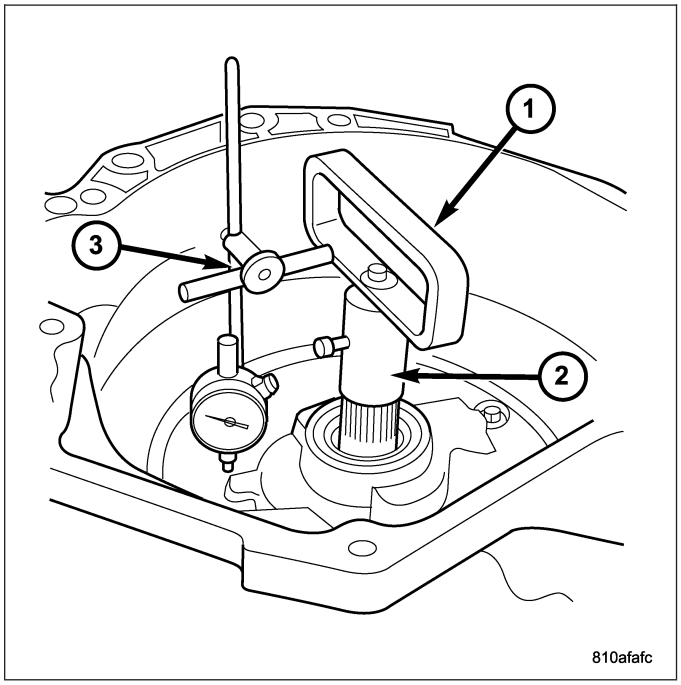

4. Loosen adapter plug bolt (9) and remove from the adapter plug (10) from the transmission housing.
5. Detach oil pan (5).
6. Remove oil filter (4).
7. Unscrew Torx socket bolts (3) and remove electro-hydraulic unit (2).

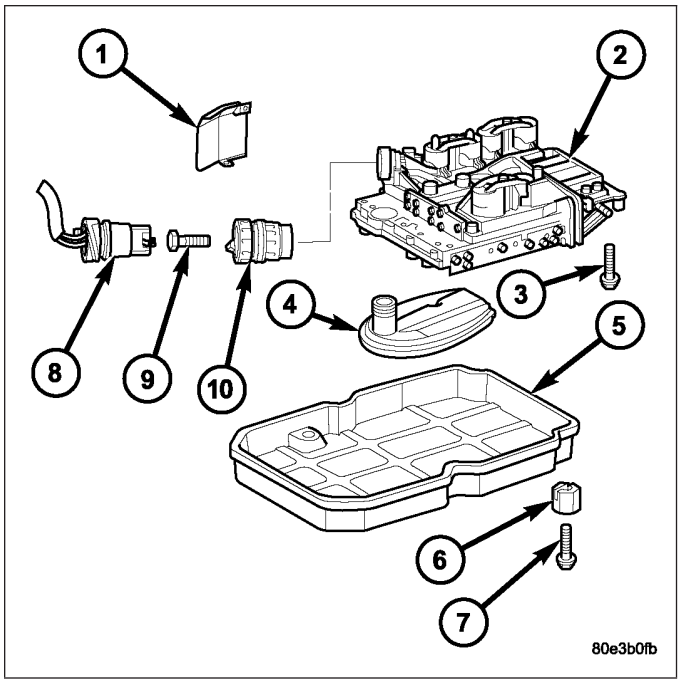

1 - HEAT SHIELD
2 - ELECTROHYDRAULIC UNIT
3 - BOLT
4 - OIL FILTER
5 - OIL PAN
6 - CLAMPING ELEMENT
7 - BOLT
8 - 13-PIN PLUG CONNECTOR
9 - BOLT
10 - ADAPTER PLUG

8. Place the transmission in PARK to prepare for the removal of the output shaft nut.
9. Remove the nut, with a 30 mm 12 point socket, holding the propeller shaft flange to the output shaft and remove the flange.
10. Remove the transmission rear oil seal with a suitable slide hammer and screw.
11. Remove the transmission output shaft washer. Be sure to tag the washer since it is very similar to the geartrain end-play shim and they must not be interchanged.
12. Remove the transmission rear output shaft bearing retaining ring (1).

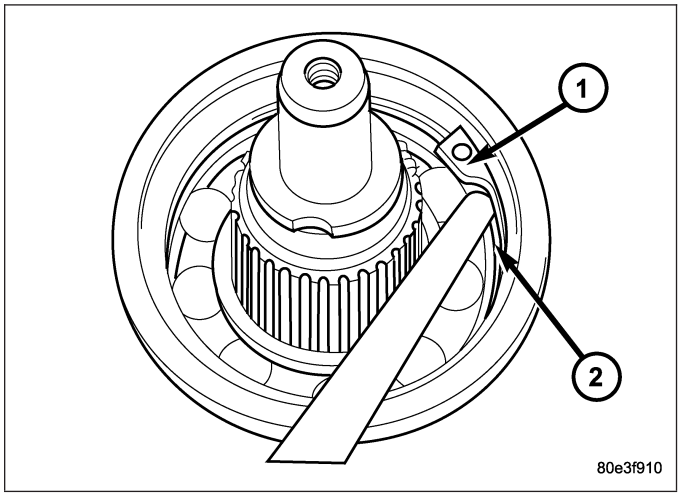

13. Position Bearing Remover 9082 (1) over the inner race of the output shaft bearing (3).

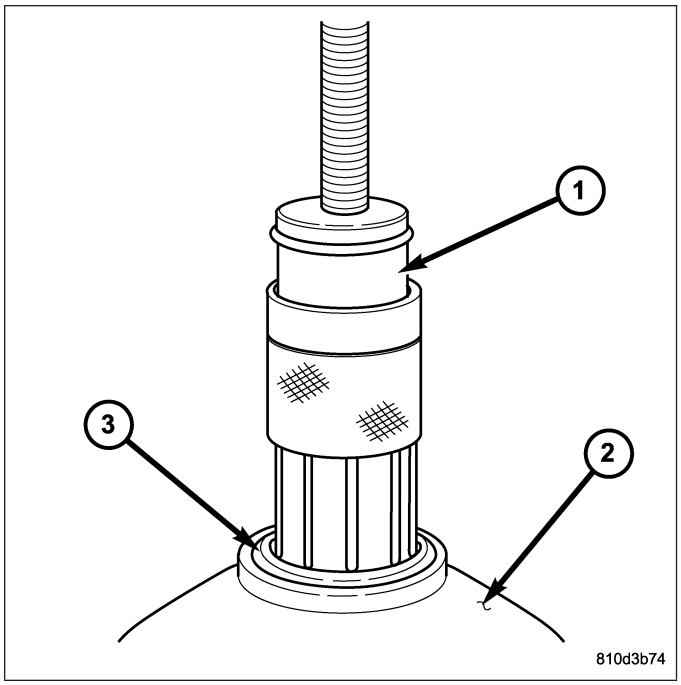

NOTE: Due to production variations in the bearing, it may not be possible to slide the collar fully downward. It is only necessary to slide the collar down far enough that the fingers securely grasp the inner bearing race.

14. Slide the collar (3) on the Bearing Remover 9082 (1) downward over the fingers (4) of the tool.

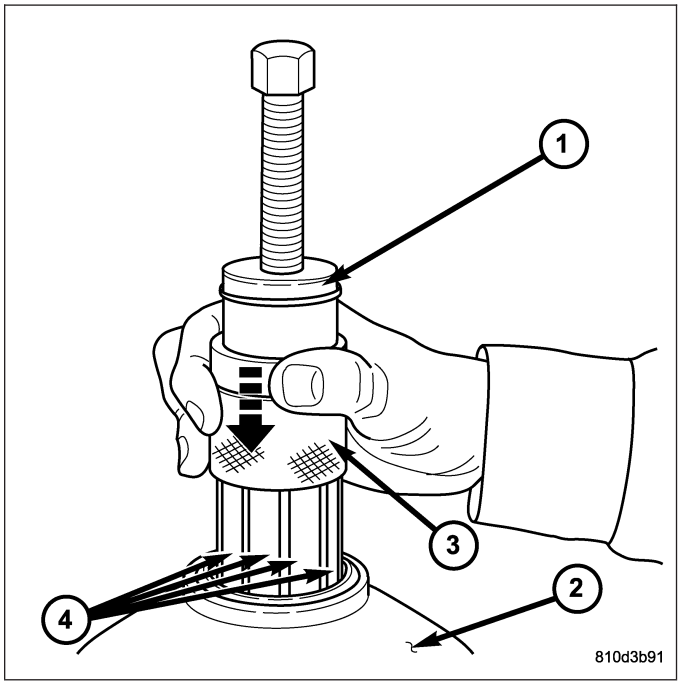

15. Remove the output shaft bearing (3).
16. Remove the geartrain end-play shim from the output shaft. Be sure to tag the shim since it is very similar to the output shaft washer and they must not be interchanged.

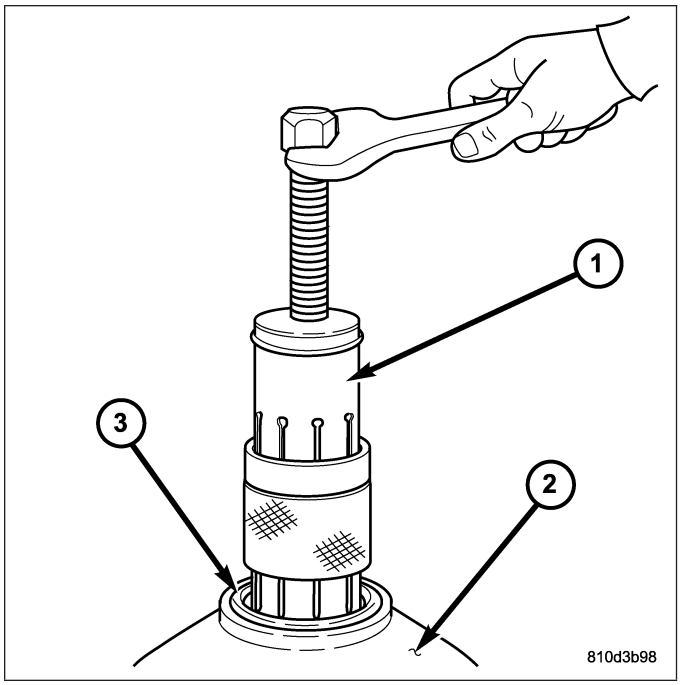

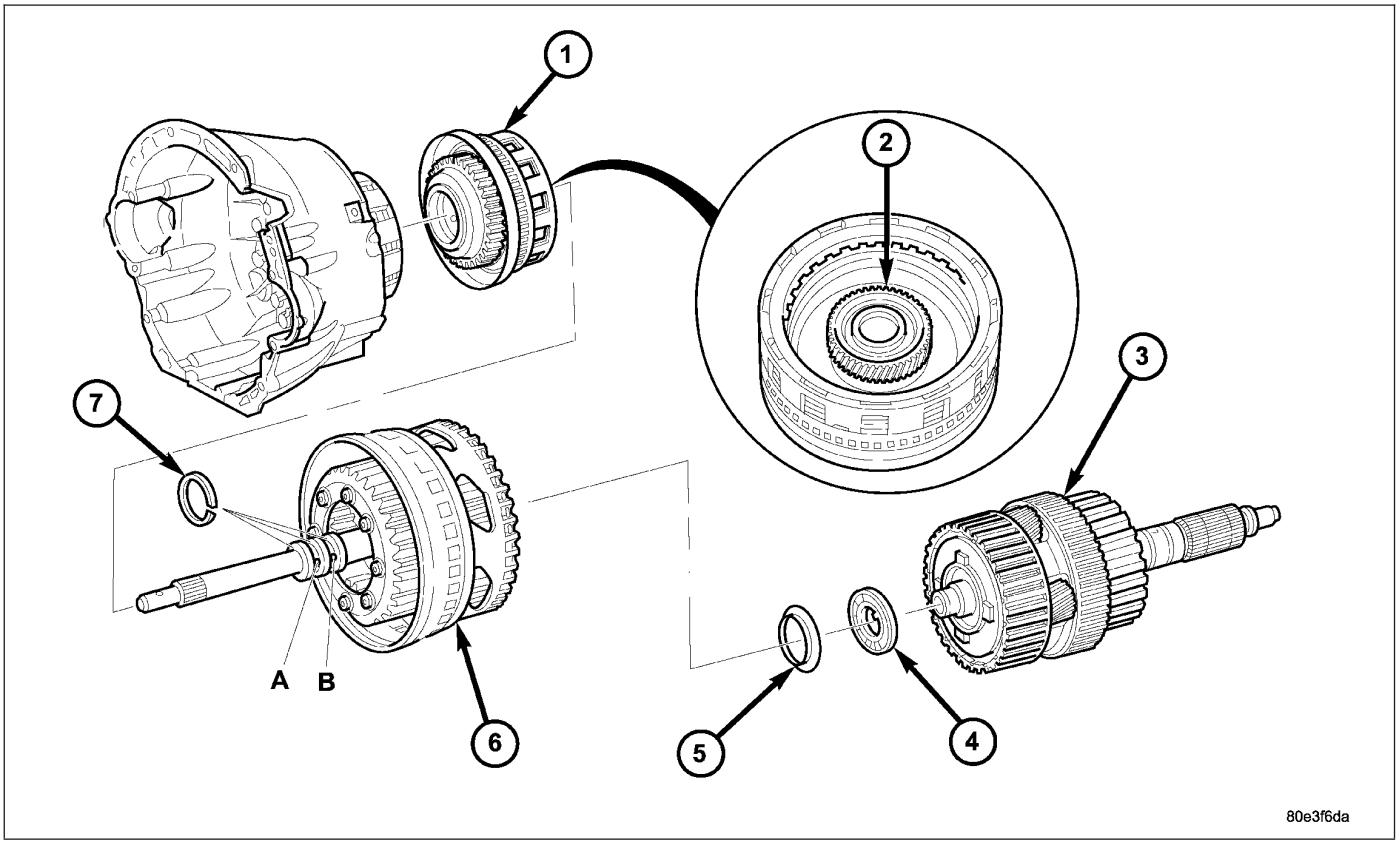

Remove K1, K2, and K3 Clutches

1 - DRIVING CLUTCH K1
2 - SUN GEAR OF FRONT PLANETARY GEAR SET
3 - DRIVING CLUTCH K3, OUTPUT SHAFT , AND CENTER AND REAR PLANETARY GEAR SETS
4 - THRUST NEEDLE BEARING
5 - THRUST WASHER
6 - FRONT PLANETARY GEAR SET, DRIVING CLUTCH K2, AND INPUT SHAFT
7 - SEALING RINGS

17. Remove the bolts holding the transmission housing to the converter housing from inside the converter housing.

18. Stand the transmission upright on the converter housing. Be sure to use suitable spacers between the bench surface and the converter housing since the input shaft protrudes past the front surface of the housing.
19. Remove the remaining bolts holding the transmission housing to the converter housing.
20. Remove the transmission housing from the converter housing.
21. Remove output shaft with center and rear gear set and clutch K3 (3).
22. Remove thrust needle bearing (4) and thrust washer (5).
23. Remove input shaft with clutch K2 and front gear set (6).
24. Remove clutch K1 (1).

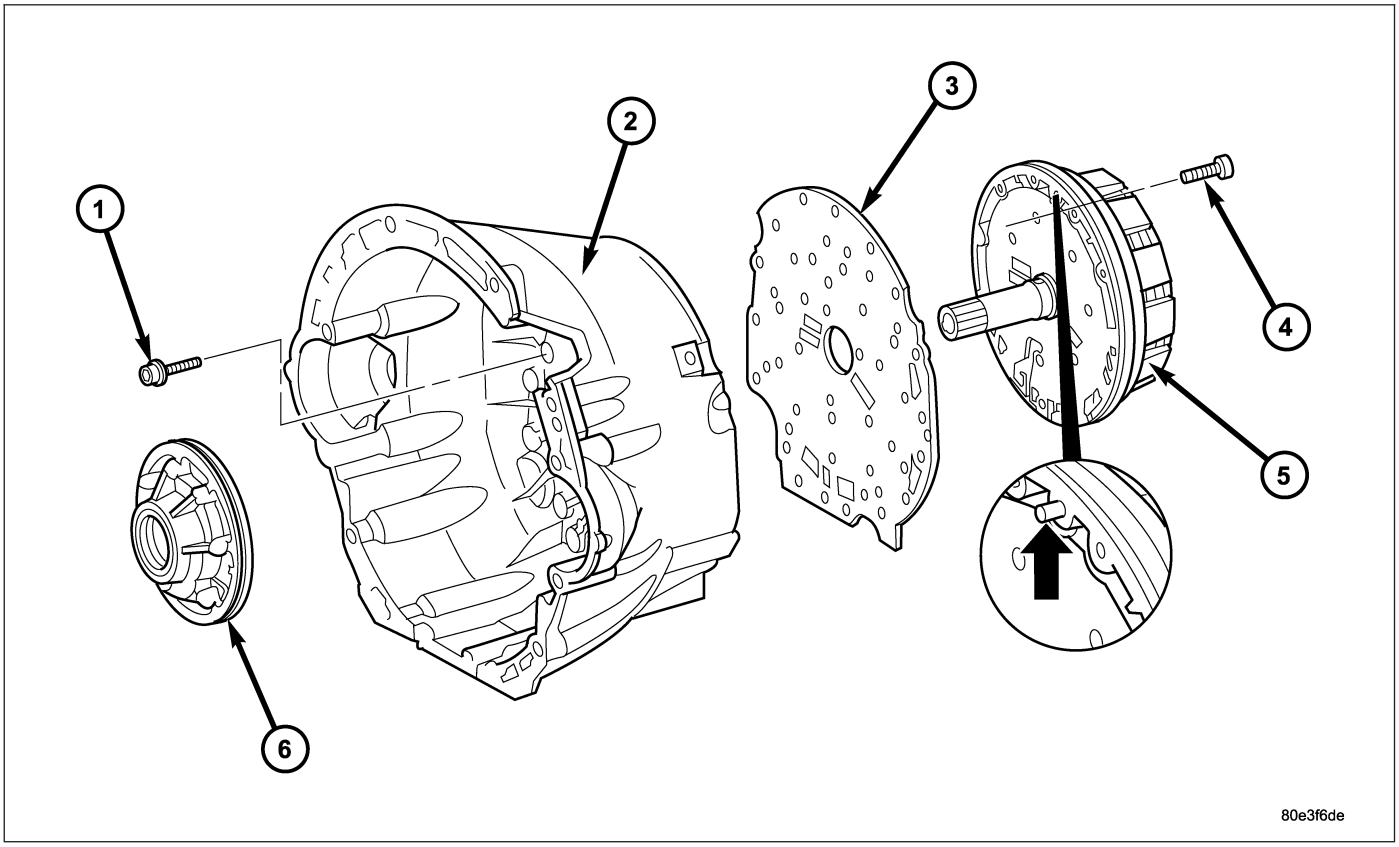

Remove Holding Clutch B1 and Oil Pump

1 - BOLTS - M6X32
2 - CONVERTER HOUSING
3 - INTERMEDIATE PLATE
4 - BOLTS - M8X35
5 - HOLDING CLUTCH B1
6 - OIL PUMP

25. Unscrew Torx socket bolts (4) and remove oil pump (6). Screw two opposed bolts into the oil pump housing and press the oil pump out of the converter housing by applying light blows with a plastic hammer.
26. Remove and discard the torque converter hub seal and the oil pump outer o-ring seal from the oil pump.
27. Unscrew Torx socket bolts (1) and remove multiple-disc holding clutch B1 (5) from converter housing. Screw two opposed bolts into the multiple-disc holding clutch B1 (5) and separate from the converter housing by applying light blows with a plastic hammer.
28. Detach intermediate plate (3) from converter housing (2).

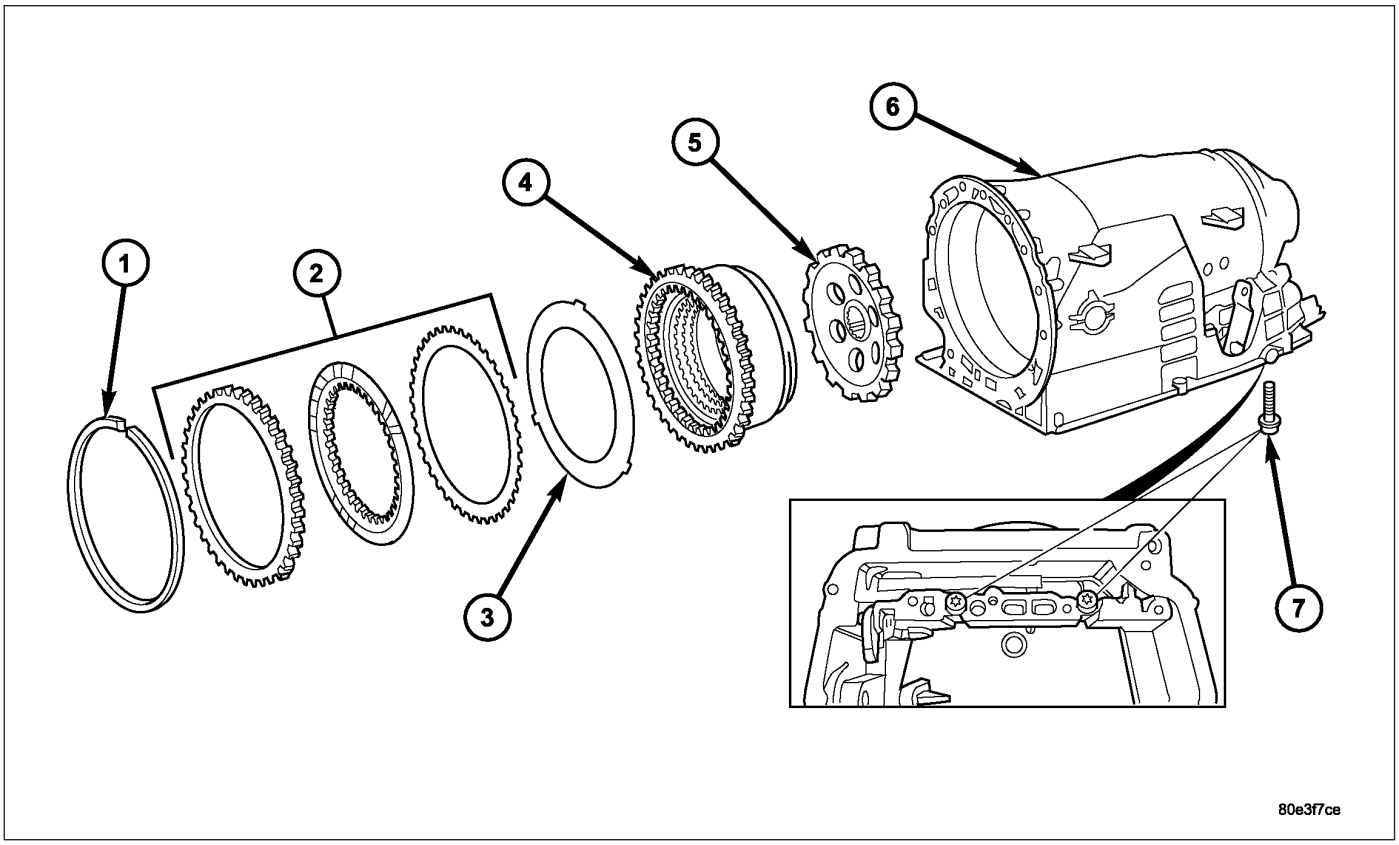

Remove B2, B3, and Parking Gear

1 - SNAP-RING
2 - HOLDING CLUTCH B3 DISCS
3 - SPRING WASHER
4 - HOLDING CLUTCH B2
5 - PARK GEAR
6 - TRANSMISSION HOUSING
7 - BOLTS - M8X60

29. Remove multiple-disc pack B3 (2) and spring washer (3) by removing snap-ring (1) in transmission housing. To facilitate removal of the snap-ring (1), compress the multiple-disc pack B3 (2). Note which clutch disc is removed just prior to the spring washer (3) for re-assembly. If the clutch discs are re-used, this disc must be returned to its original position on top of the spring washer.
30. Unscrew Torx socket bolts (7).
31. Remove multiple-disc holding clutch B2 (4) from transmission housing. The externally toothed disc carrier for multiple-disc holding clutch B2 is also the piston for multiple-disc holding clutch B3.
32. Remove parking lock gear (5).

ASSEMBLY

NOTE: If the transmission is being reconditioned (clutch/seal replacement) or replaced, it is necessary to perform the TCM Adaptation Procedure using the scan tool (Refer to 8 - ELECTRICAL/ELECTRONIC CONTROL MODULES/TRANSMISSION CONTROL MODULE - STANDARD PROCEDURE).

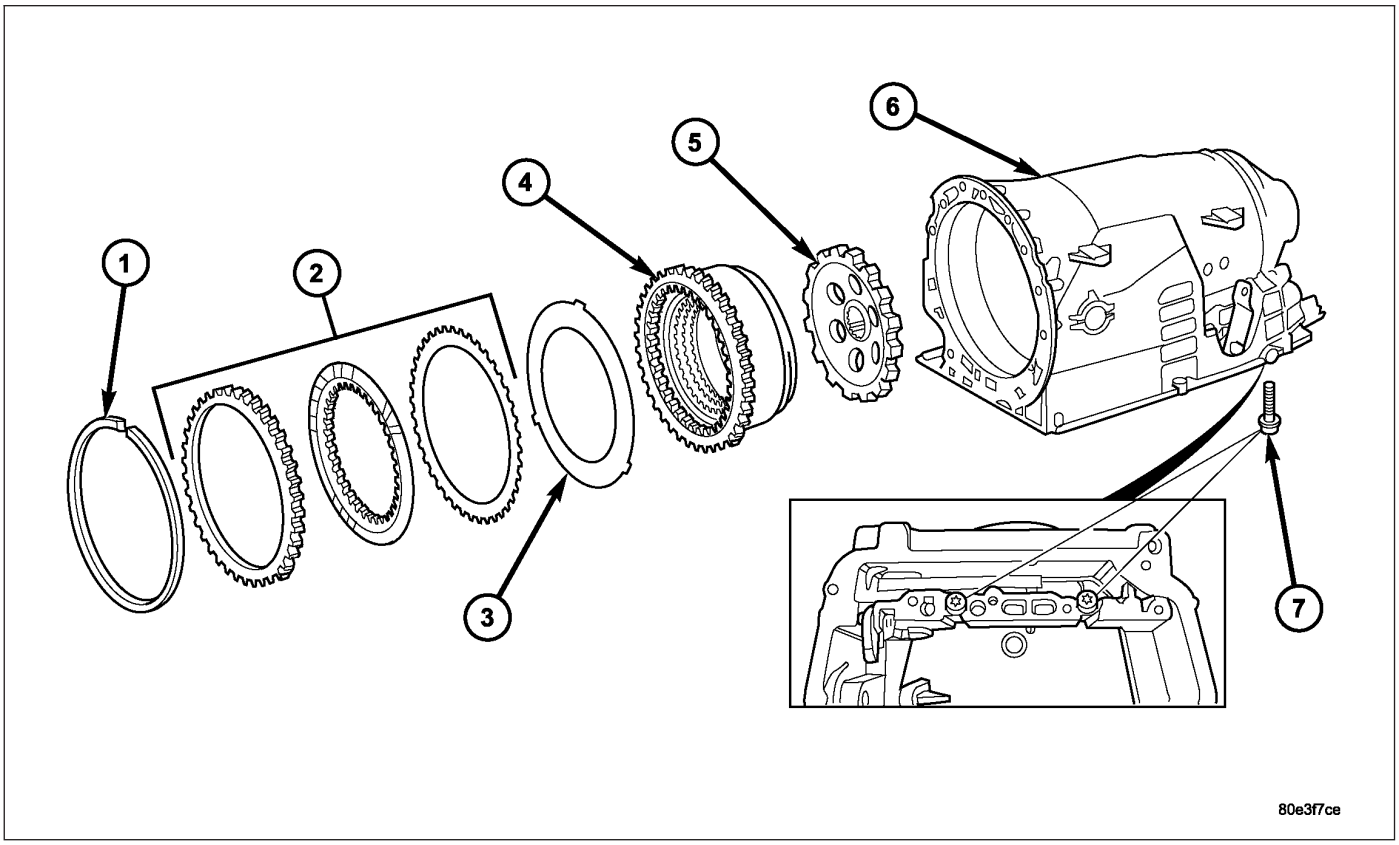

Install B2, B3, and Parking Gear

1 - SNAP-RING
2 - HOLDING CLUTCH B3 DISCS
3 - SPRING WASHER
4 - HOLDING CLUTCH B2
5 - PARK GEAR
6 - TRANSMISSION HOUSING
7 - BOLTS - M8X60

1. Insert parking lock gear (5).
2. Install multiple-disc holding clutch B2 (4) in transmission housing (6).
3. Screw in both Torx socket bolts (7). Tighten the bolts to 16 N·m (141 in.lbs.).

NOTE: During the measurement the snap ring (7) must contact the upper bearing surface of the groove in the outer multiple-disc carrier (8).

NOTE: Pay attention to sequence of discs. If the original clutch discs are reused, be sure to return the disc identified on disassembly as belonging on top of the spring washer (4) to its original location. Place new friction multiple-discs in ATF fluid for one hour before installing.

CAUTION: Apply only light pressure (less than 10 N (3 lbs.) of force) to the clutch pack when measuring the clutch clearance with the feeler gauge. Applying excessive force to the clutch will give an incorrect reading and lead to a transmission failure.

4. Insert and measure spring washer (4) and multiple-disc pack B3 (2, 6).

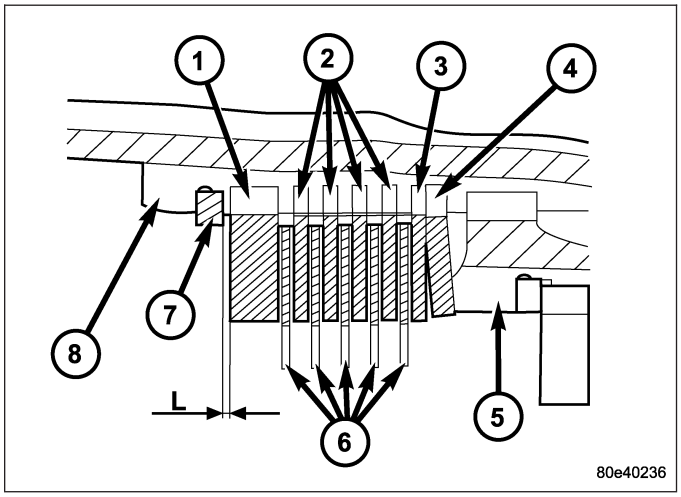

1 - OUTER DISC - 6.5 MM (0.256 IN.)
2 - OUTER DISCS - 1.8 MM (0.071 IN.)
3 - OUTER DISCS - 1.8 MM (0.071 IN.)
4 - SPRING WASHER
5 - PISTON
6 - FRICTION DISCS
7 - SNAP-RING
8 - B3 DISC CARRIER

a. Put multiple-discs for multiple-disc holding clutch B3 together in the sequence shown in the illustration and insert individually.

b. Using a feeler gauge, determine the play ″L″ at three points between the snap ring (7) and outer multiple-disc (1). B3 clutch clearance should be 1.0-1.4 mm (0.039-0.055 in.). Adjust the clearance as necessary.

c. Adjust with snap-ring (7), if necessary. Snap-rings are available in thicknesses of 3.2 mm (0.126 in.), 3.5 mm (0.138 in.), 3.8 mm (0.150 in.), 4.1 mm (0.162 in.), 4.4 mm (0.173 in.), and 4.7 mm (0.185 in.).

5. Check that the K1 clutch feed hole (1) in the inner hub of clutch B1 is free before installing clutch B1.

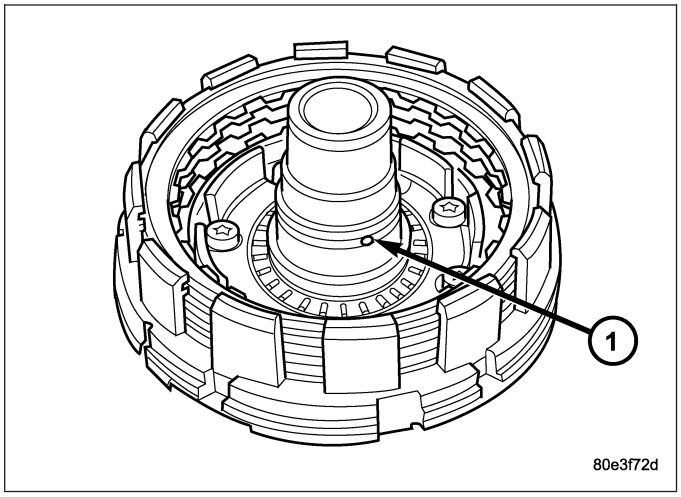

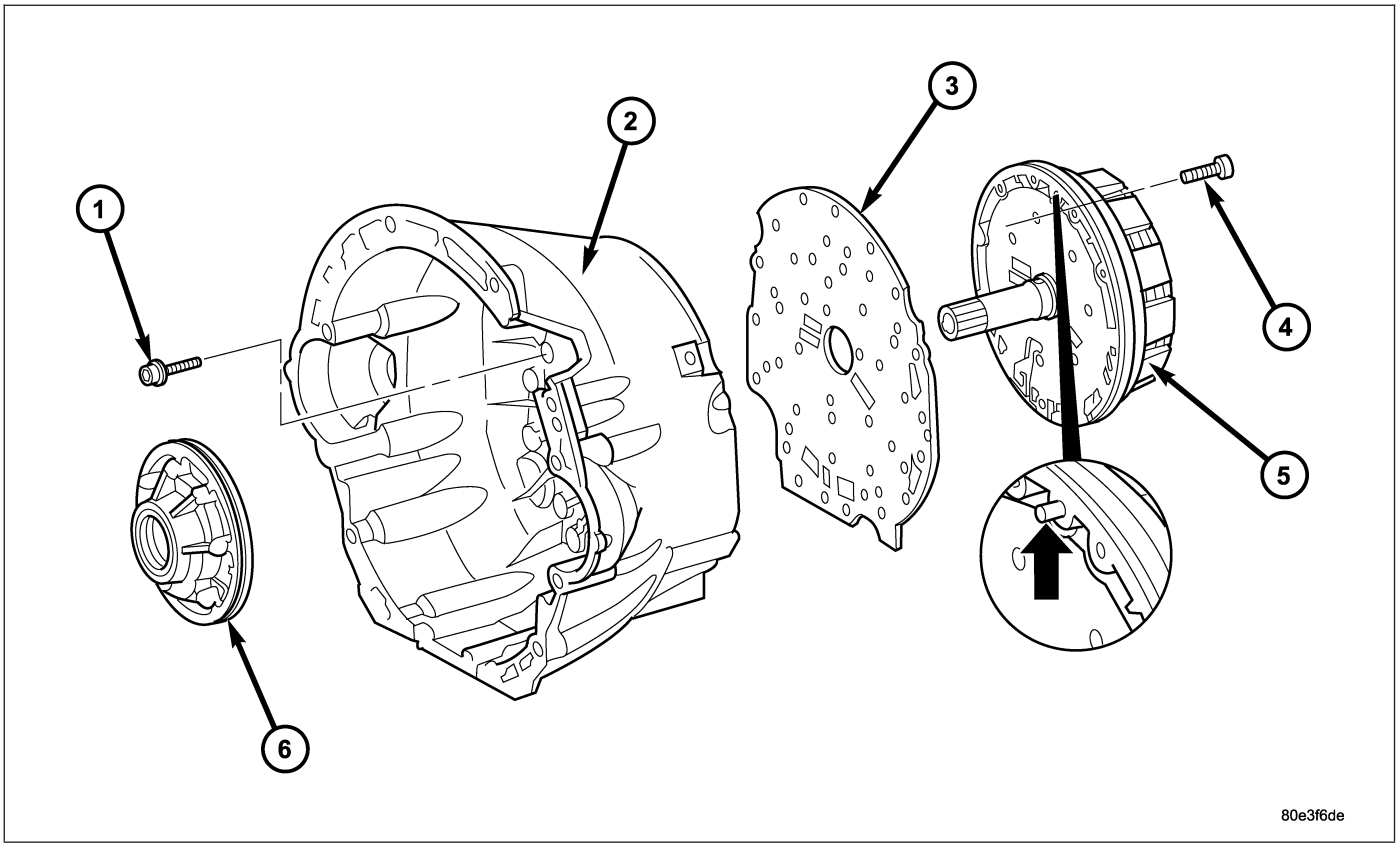

Install Holding Clutch B1 and Oil Pump

1 - BOLTS - M6X32
2 - CONVERTER HOUSING
3 - INTERMEDIATE PLATE
4 - BOLTS - M8X35
5 - HOLDING CLUTCH B1
6 - OIL PUMP

6. Place intermediate plate (3) on converter housing (2) and align.

NOTE: The intermediate plate can generally be used several times. The plate must not be coated with additional sealant

7. Install the holding clutch B1 (5) onto the converter housing and intermediate plate. Installed position of clutch B1 in relation to converter housing is specified by a plain dowel pin in clutch B1 (arrow).
8. Install the bolts to hold clutch B1 (5) to the converter housing.
9. Securely tighten multiple-disc holding clutch B1 (5) on converter housing (2) to 10 N·m (89 in.lbs.).
10. Install new torque converter hub seal (1) into the oil pump using Seal Installer 8902A.
11. Install new oil pump outer o-ring seal onto oil pump.
12. Install oil pump (6) and securely tighten. Tighten the oil pump bolts to 20 N·m (177 in.lbs.).

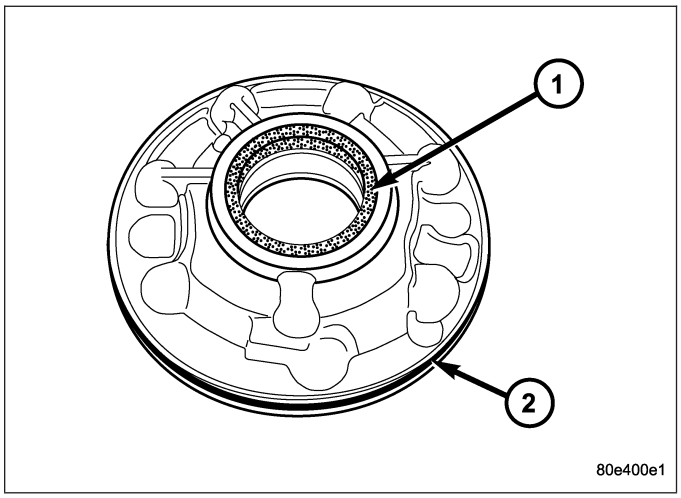

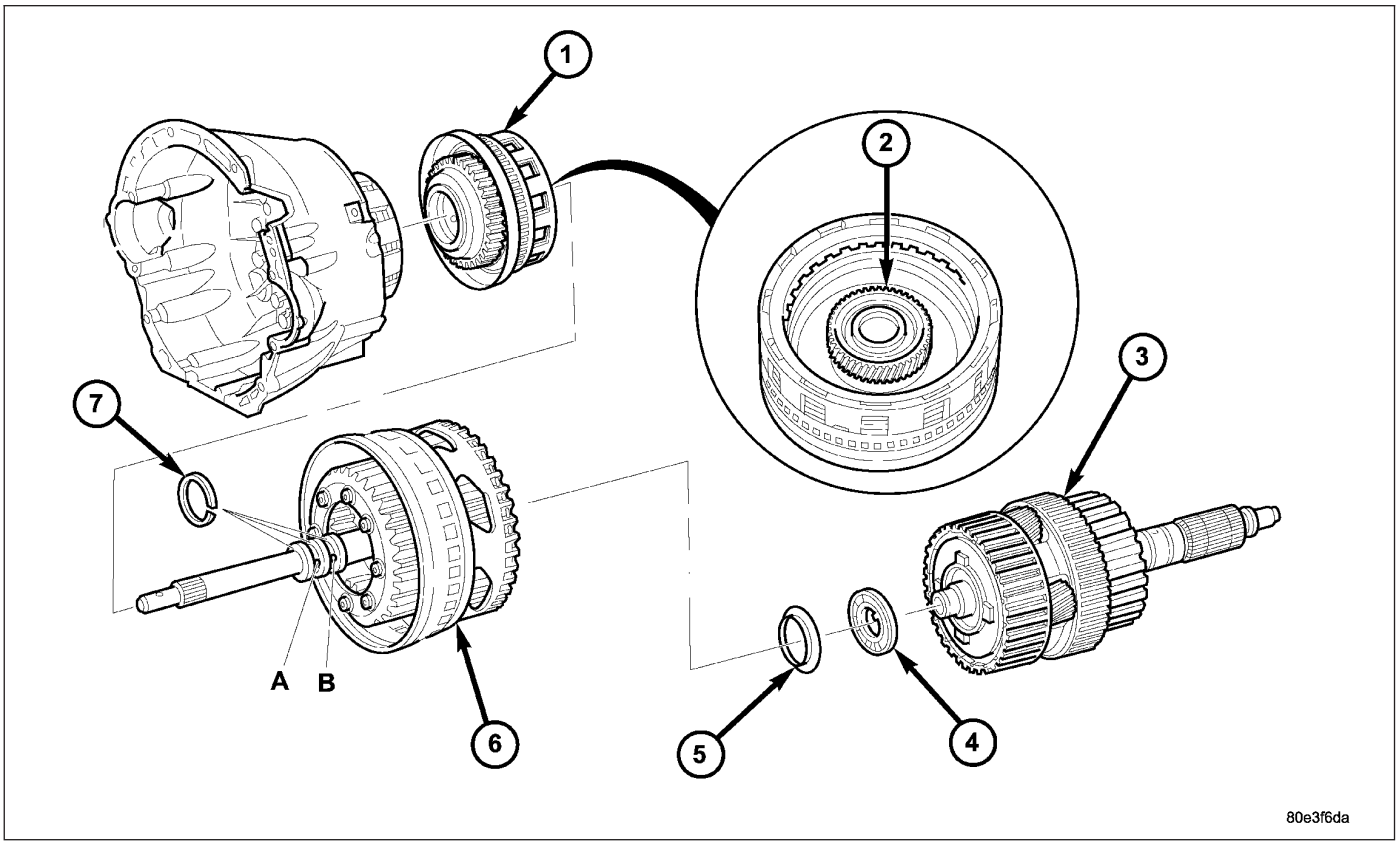

Install K1, K2, and K3 Clutches

1 - DRIVING CLUTCH K1
2 - SUN GEAR OF FRONT PLANETARY GEAR SET
3 - DRIVING CLUTCH K3, OUTPUT SHAFT , AND CENTER AND REAR PLANETARY GEAR SETS
4 - THRUST NEEDLE BEARING
5 - THRUST WASHER
6 - FRONT PLANETARY GEAR SET, DRIVING CLUTCH K2, AND INPUT SHAFT
7 - SEALING RINGS

13. Using grease, insert sealing rings (7) in the groove so that the joint remains together.
14. Install the K1 (1) clutch onto the B1 clutch.
15. Install input shaft with clutch K2 (6) and front gear set (1).
16. Install front washer (5) and thrust needle bearing (4).
17. Install output shaft with center and rear gear set and clutch K3 (3).
18. Using grease, install both Teflon rings in the groove at the rear of the output shaft so that the joint stays together.
19. Mount transmission housing on converter housing.
20. Screw in Torx socket bolts through the transmission housing into the converter housing. Tighten the bolts to 20 N·m (177 in.lbs.).

NOTE: Verify that there are no nicks or other irregularities in the surface of the transmission case that will cause an inaccurate measurement.

21. Measure end-play between park pawl gear and grooved ball bearing in order to select the proper geartrain end-play shim.
22. Place Gauge Bar 6311 (1) on transmission housing. Using a depth gauge, measure from the gauge bar (1) to the parking lock gear (2).

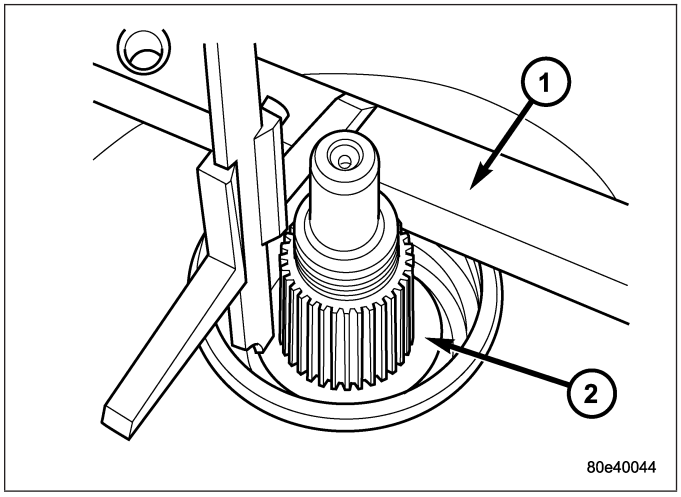

23. Using a depth gauge, measure from the Gauge Bar 6311 (1) to the contact surface of the output shaft bearing (2) in the transmission housing.
24. Subtract the first figure from the second figure to determine the current end-play of the transmission. Select a shim such that the end-play will be 0.3-0.5 mm (0.012-0.020 in.). Shims are available in thicknesses of 0.2 mm (0.008 in.), 0.3 mm (0.012 in.), 0.4 mm (0.016 in.), and 0.5 mm (0.020 in.).
25. Install the selected end-play shim.

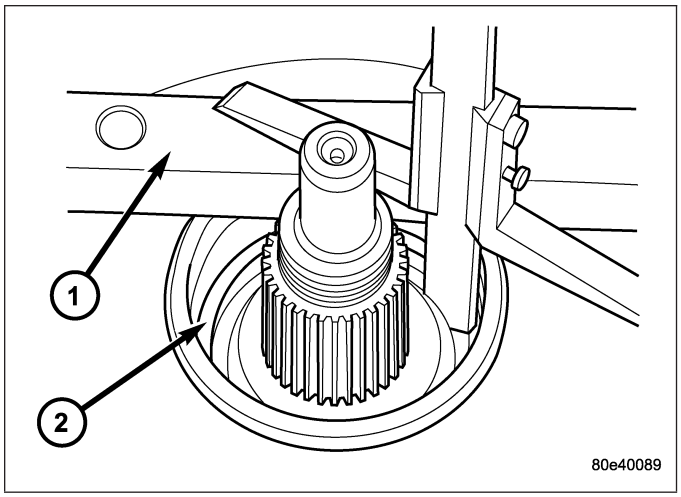

26. Screw in Torx socket bolts through the converter housing into the transmission housing. Tighten the bolts to 20 N·m (177 in.lbs.).
27. Install output shaft bearing (2) in rear transmission housing. Using Bearing Installer 9287 (1), install the output shaft bearing (2) into the transmission housing. **The closed side of the plastic cage must point towards the parking lock gear.**

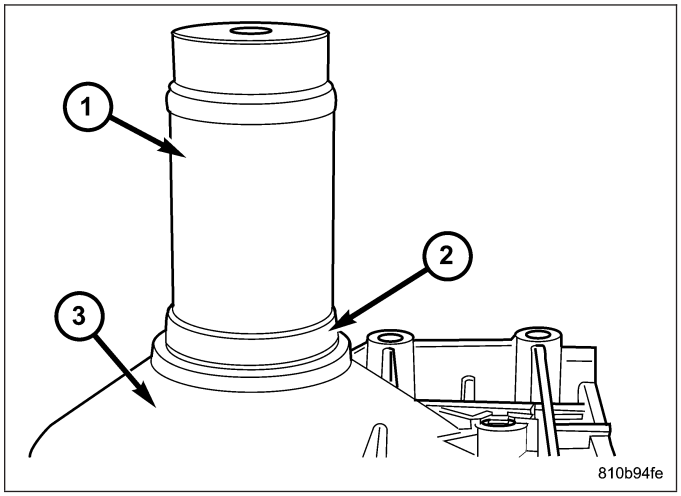

28. Install the retaining ring (1). Ensure that the retaining ring is seated correctly in the groove.
29. Check that there is no play between the bearing and the retaining ring using feeler gauge.
30. There must be no play between the retaining ring and the bearing. If the ring cannot be installed, a thinner ring must be used. If there is play between the ring and the bearing, a thicker ring must be installed. Retaining rings are available in thicknesses of 2.0 mm (0.079 in.), 2.1 mm (0.083 in.), and 2.2 mm (0.087 in.).

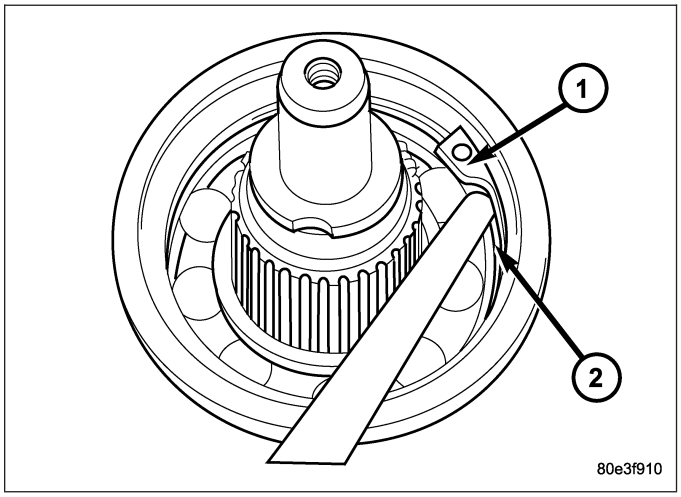

31. Rotate the transmission so that the bellhousing is pointed upward and ensuring that the output shaft is allowed to move freely.
32. Measure input shaft end-play.

NOTE: If end-play is incorrect, transmission is incorrectly assembled, or the geartrain end-play shim is incorrect. The geartrain end-play shim is selective.

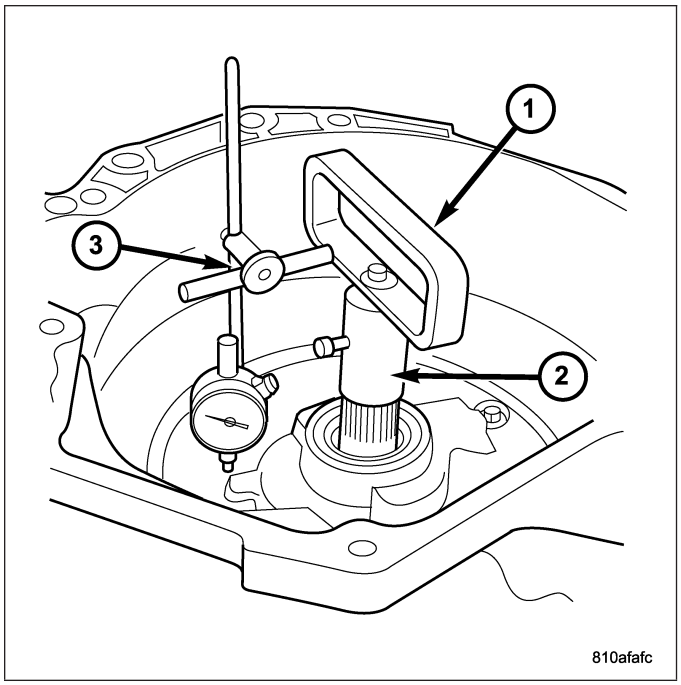

a. Attach Adapter 8266-18 (2) to Handle 8266-8 (1).
b. Attach dial indicator C-3339 (3) to Handle 8266-8 (1).
c. Install the assembled tool onto the input shaft of the transmission and tighten the retaining screw on Adapter 8266-18 to secure it to the input shaft.
d. Position the dial indicator plunger against a flat spot on the oil pump and zero the dial indicator.
e. Move input shaft in and out and record reading. End play should be 0.3-0.5 mm (0.012-0.020 in.). Adjust as necessary.

33. Install the output shaft washer onto the output shaft.
34. Install a new transmission rear seal into the transmission case with Seal Installer 8902A (1).

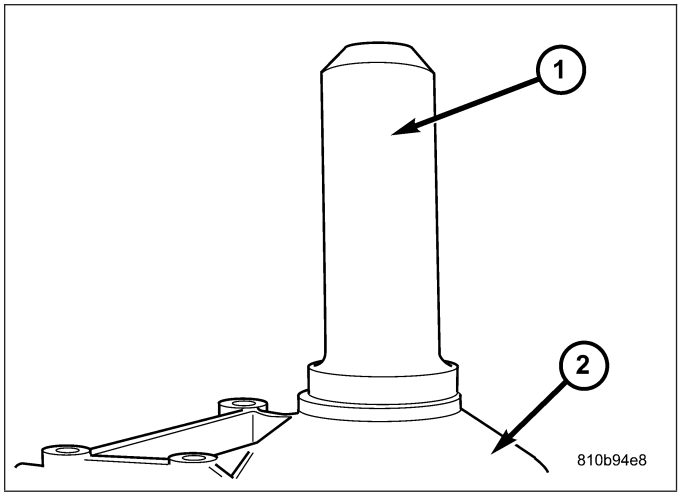

35. Place the transmission in PARK to prepare for the installation of the output shaft nut.
36. Inspect the seal protector on the rear of the output shaft flange. Replace the seal protector if damaged. the seal protector can be removed using a suitable pry tool and installed with a suitable tube style tool.
37. Install the propeller shaft flange onto the output shaft and install an new flange nut. Tighten the flange nut, with a 30 mm 12 point socket, to 200 N·m (148 ft.lbs.).
38. Place the Staking Tool 9078 (2) and Driver Handle C-4171 onto the output shaft.
39. Rotate the Staking Tool 9078 (2) until the alignment pin (3) engages the output shaft notch (4).

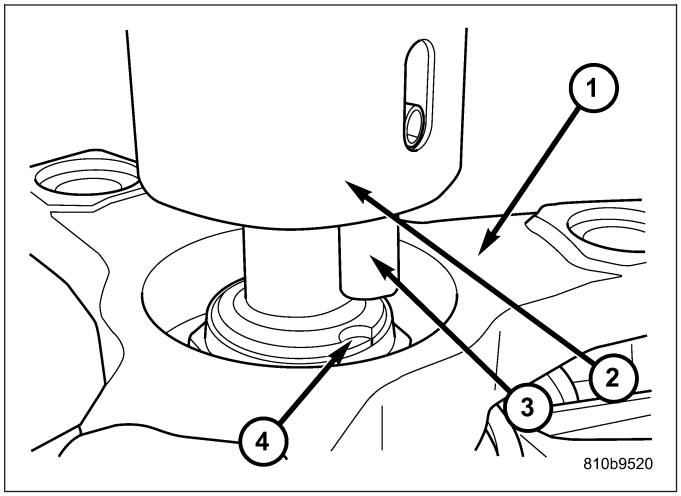

40. Press downward on the staking tool (1) until the staking pin (3) contacts the output shaft nut flange (2).
41. Strike the Driver handle C-4171 with a suitable hammer until the output shaft nut is securely staked to the output shaft.

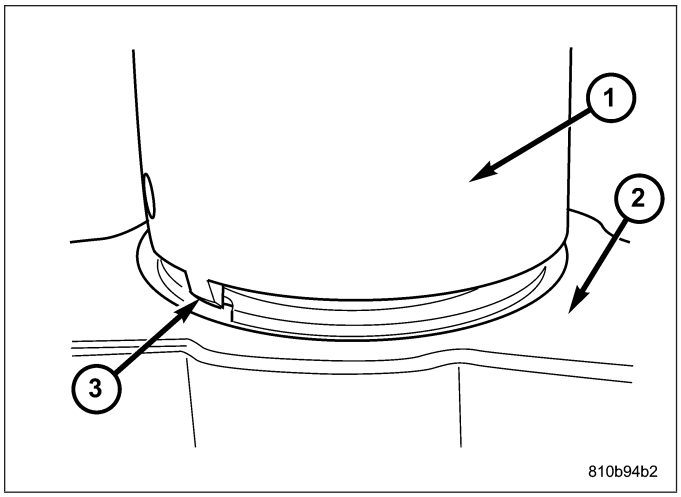

42. Install electrohydraulic unit (2). Tighten the bolts to 8 N·m (71 in.lbs.).
43. Install oil filter (4).
44. Install oil pan (5). Tighten the bolts to 8 N·m (71 in.lbs.).
45. Install the adapter plug (10). Tighten the bolt (9) to 2.5 N·m (22 in. lbs.).

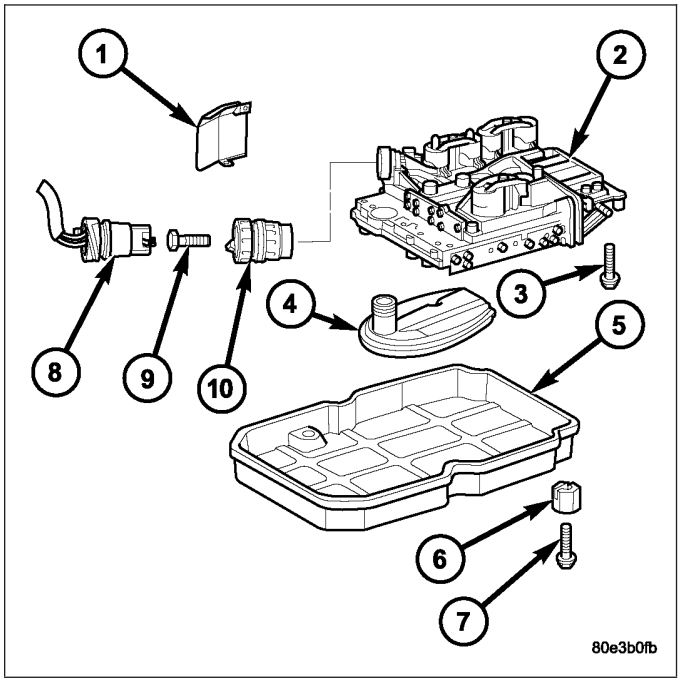

1 - HEAT SHIELD
2 - ELECTROHYDRAULIC UNIT
3 - BOLT
4 - OIL FILTER
5 - OIL PAN
6 - CLAMPING ELEMENT
7 - BOLT
8 - 13-PIN PLUG CONNECTOR
9 - BOLT
10 - ADAPTER PLUG

46. Install the torque converter.

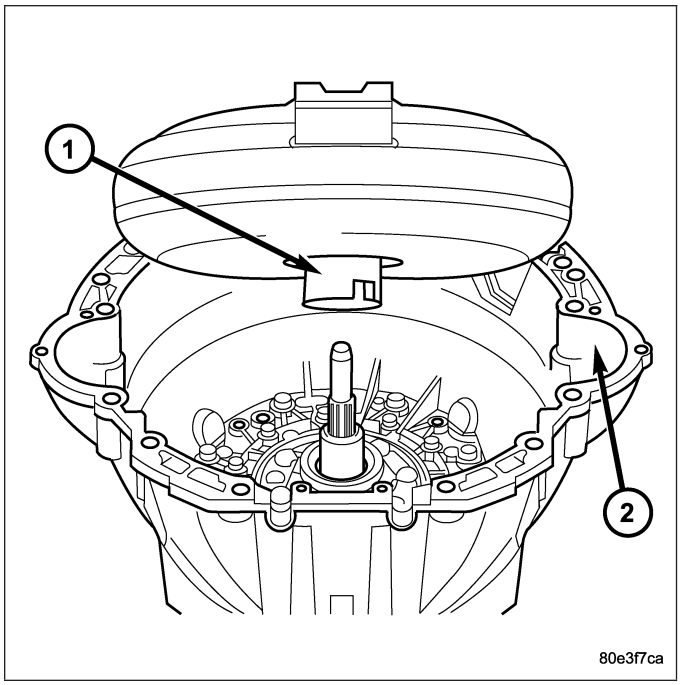

INSTALLATION

1. Check torque converter hub and hub drive flats for sharp edges burrs, scratches, or nicks. Polish the hub and flats with 320/400 grit paper and crocus cloth if necessary. The hub must be smooth to avoid damaging pump seal at installation.
2. If a replacement transmission is being installed, transfer any components necessary, such as the manual shift lever and shift cable bracket, from the original transmission onto the replacement transmission.
3. Lubricate oil pump seal lip with transmission fluid.
4. Place torque converter (1) in position in transmission (2).

CAUTION: Do not damage oil pump seal or converter hub while inserting torque converter into the front of the transmission.

5. Align torque converter to oil pump seal opening.
6. Insert torque converter hub into oil pump.
7. While pushing torque converter inward, rotate converter until converter is fully seated in the oil pump gears.
8. Check converter seating with a scale and straightedge (A). Surface of converter lugs should be at least 19 mm (3/4 in.) to rear of straightedge when converter is fully seated.

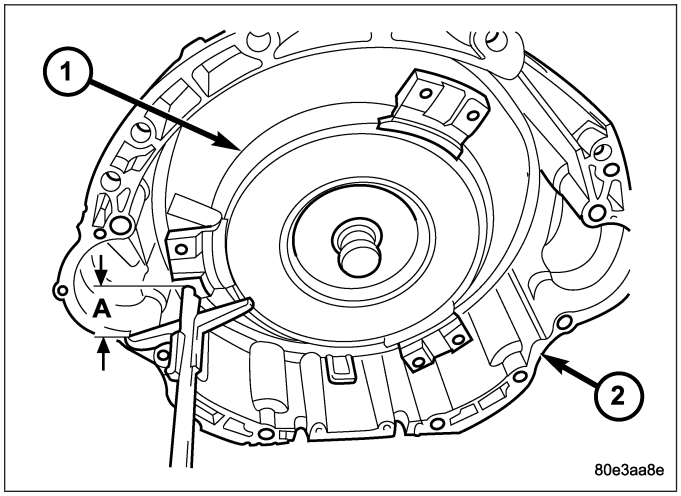

9. If necessary, temporarily secure converter with C-clamp attached to the converter housing.

10. Check condition of converter driveplate. Replace the plate if cracked, distorted or damaged. **Also be sure transmission dowel pins are seated in engine block and protrude far enough to hold transmission in alignment.**
11. Apply a light coating of Mopar® High Temp Grease to the torque converter hub pocket in the rear pocket of the engine's crankshaft.
12. Raise transmission (3) and align the torque converter with the drive plate and the transmission converter housing with the engine block (1).
13. Move transmission forward. Then raise, lower, or tilt transmission to align the converter housing with the engine block dowels.

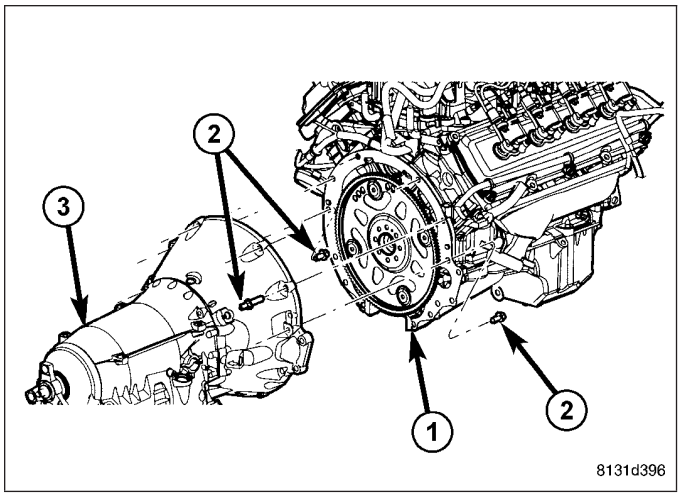

14. Carefully work transmission forward and over engine block dowels until converter hub is seated in crankshaft. Verify that no wires, or the transmission vent hose, have become trapped between the engine block and the transmission.
15. Install two bolts (2) to attach the transmission to the engine.
16. Install remaining torque converter housing to engine bolts (2). Tighten to 39 N·m (29 ft.lbs.).
17. Install rear transmission crossmember (1). Tighten crossmember to frame bolts to 68 N·m (50 ft.lbs.).
18. Install rear support (3) to transmission. Tighten bolts to 47 N·m (35 ft.lbs.).
19. Lower transmission onto crossmember and install bolts attaching transmission mount to crossmember. Tighten clevis bracket to crossmember bolts(2) to 47 N·m (39 ft.lbs.).
20. Remove engine support fixture.

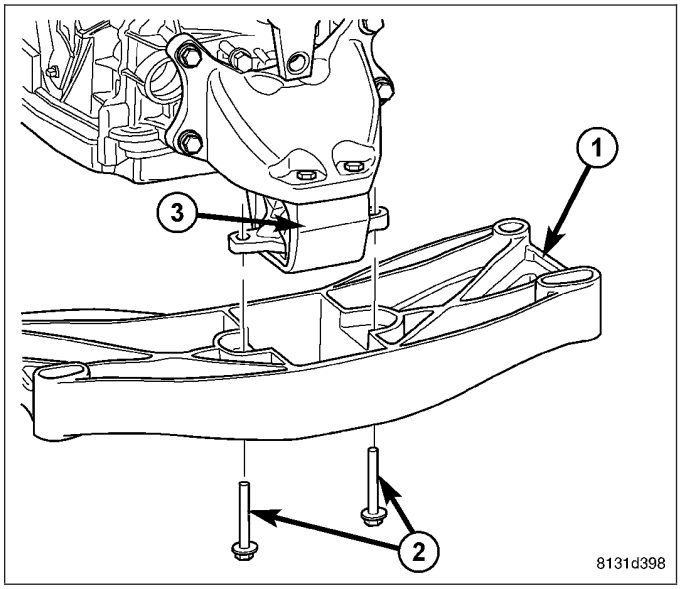

21. Install the transmission (3) to engine oil pan (2) bolts (1). Tighten to 39 N·m (29 ft.lbs.).

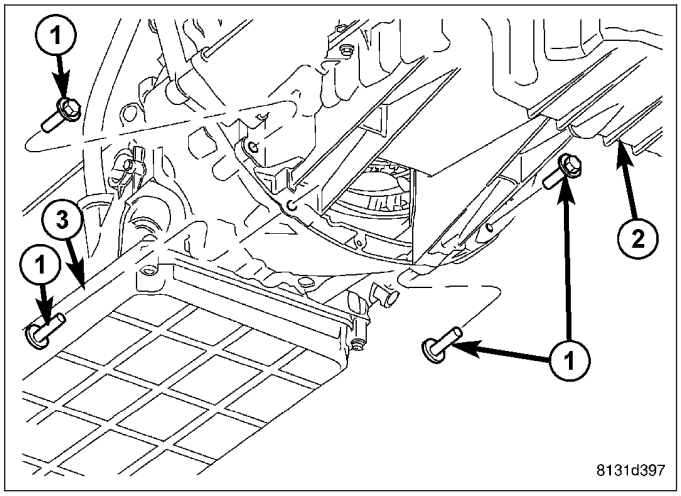

22. Connect the gearshift cable (1) to the transmission manual shift lever (3).

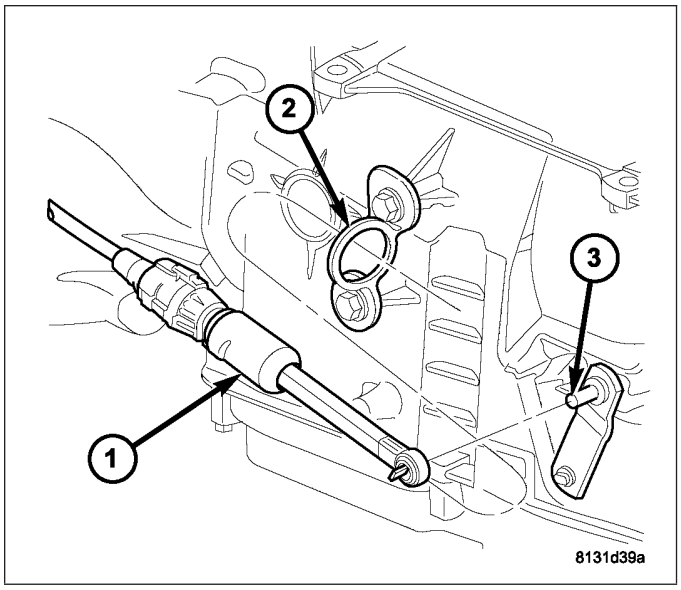

23. Check O-rings on plug connector (1) , and replace if necessary.
24. Install the plug connector (1) into the adapter plug (2). Turn bayonet lock of the adapter plug (2) clockwise to connect plug connector (1).

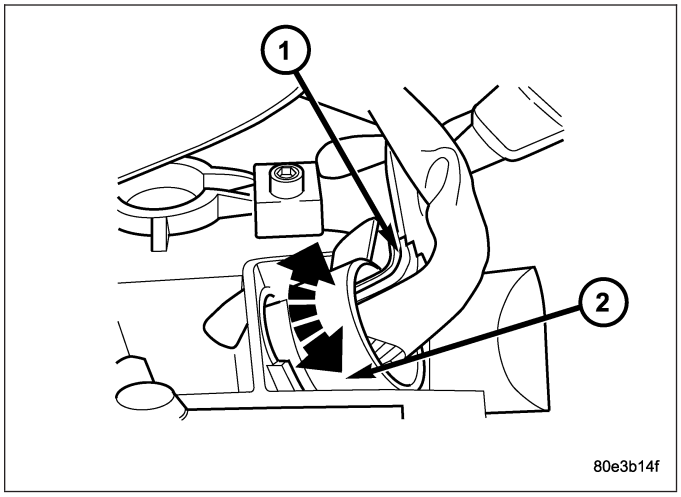

25. Position the heat shield (2) , if equipped, onto the transmission housing and install the screw (1) and bolt (3) to hold the shield in place.

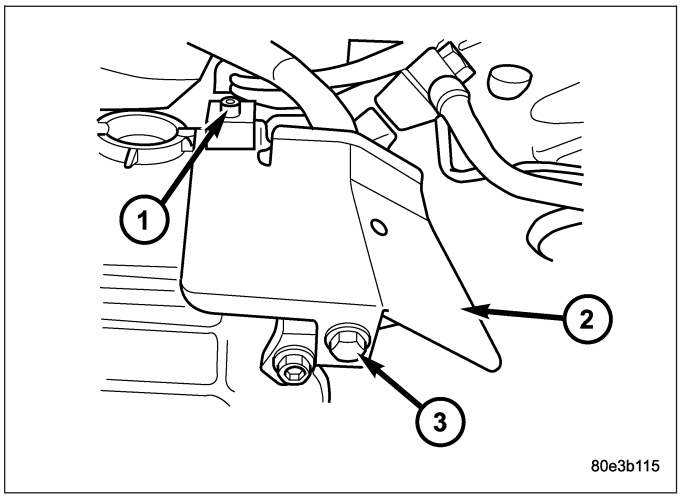

CAUTION: It is essential that correct length bolts be used to attach the converter to the driveplate. Bolts that are too long will damage the clutch surface inside the converter.

26. For gas engines, install all torque converter-to-driveplate bolts (1) by hand.
27. Verify that the torque converter is pulled flush to the driveplate. Tighten bolts to 42 N·m (31 ft. lbs.).

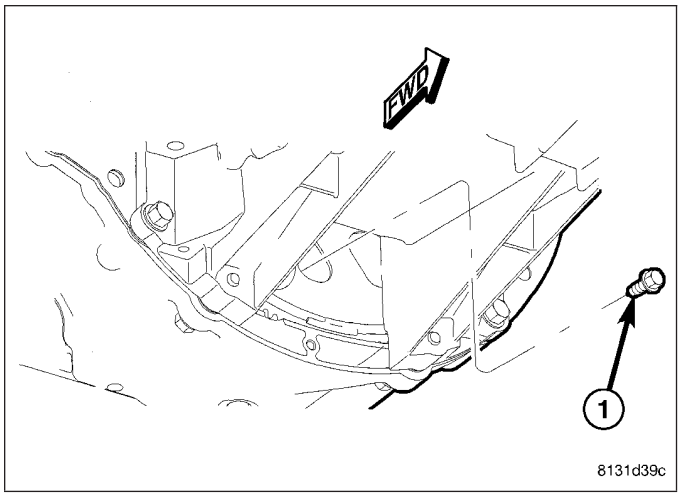

CAUTION: It is essential that correct length bolts be used to attach the converter to the driveplate. Bolts that are too long will damage the clutch surface inside the converter.

28. For diesel engines, install all torque converter-to-driveplate bolts (1) by hand.
29. Verify that the torque converter is pulled flush to the driveplate. Tighten bolts to 42 N·m (31 ft. lbs.).

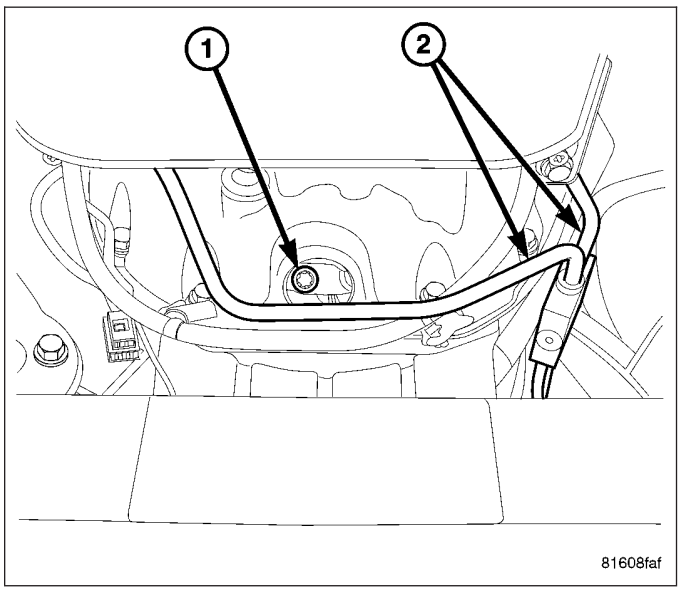

30. Install the torque converter bolt access cover (1) onto the transmission. Install the access cover bolt (2) and tighten to 11 N·m (8 ft.lbs.).

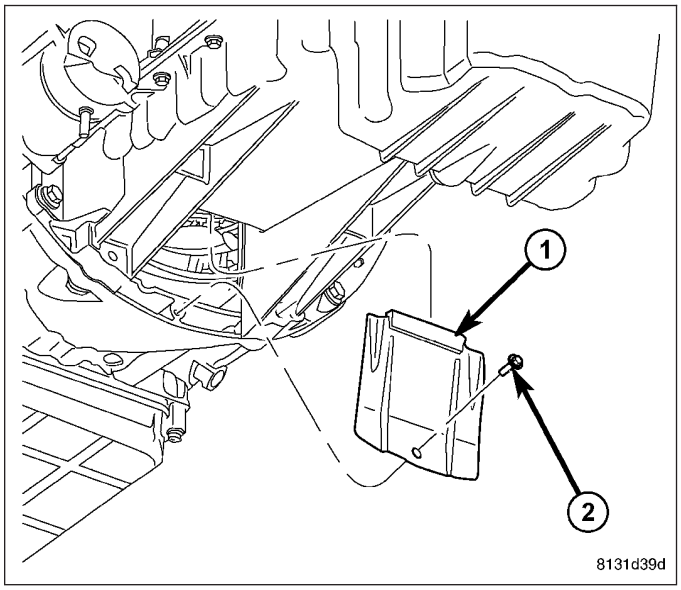

NOTE: The starters are located on the right side of the transmission for RWD vehicles and they are on the left side for AWD vehicles.

31. Install starter motor (1). (Refer to 8 - ELECTRICAL/STARTING/STARTER MOTOR - INSTALLATION)

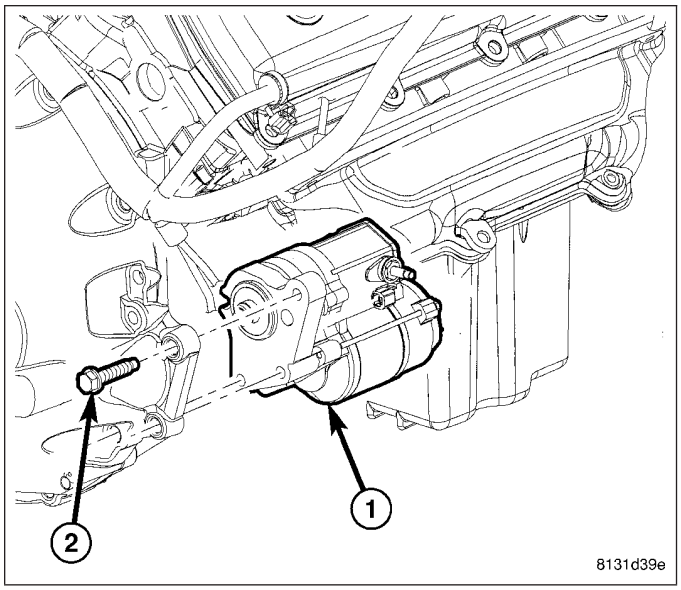

32. Connect the cooler line fittings (2) and cooler lines (1) to the transmission.

NOTE: Inspect the fill tube grommet to determine if the grommet is new or used. If a new fill tube grommet is in the transmission case, pierce the center of the grommet with a ballpoint pen, or similar instrument, to prepare the grommet for the fill tube installation.

33. Install transmission fill tube.
34. Install exhaust components.

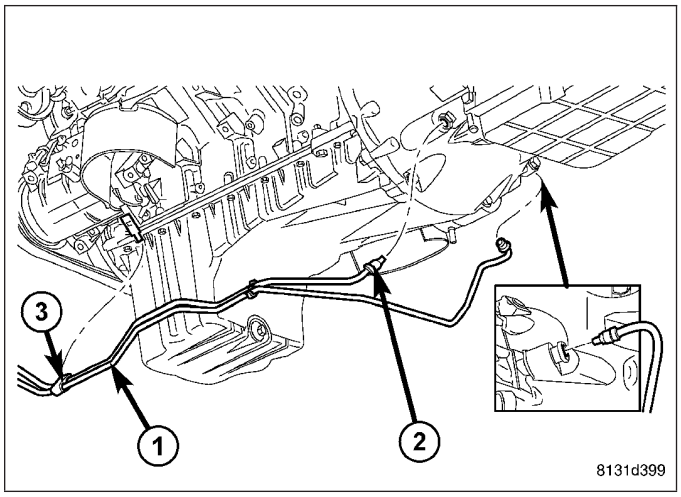

35. For AWD vehicles, install the transfer case, (Refer to 21 - TRANSMISSION/TRANSFER CASE - INSTALLATION), and the front axle, (Refer to 3 - DIFFERENTIAL & DRIVELINE/FRONT AXLE - INSTALLATION).
36. For RWD vehicles:
    a. Align and connect the propeller shaft (1). (Refer to 3 - DIFFERENTIAL & DRIVELINE/ PROPELLER SHAFT - INSTALLATION)
37. Adjust gearshift cable if necessary.
38. Lower vehicle.
39. Connect negative battery cable.
40. Fill the transmission with the appropriate transmission fluid (Refer to LUBRICATION & MAINTENANCE/FLUID TYPES - DESCRIPTION) according to the standard procedure (Refer to 21 - TRANSMISSION/AUTOMATIC - NAG1/FLUID AND FILTER - STANDARD PROCEDURE).

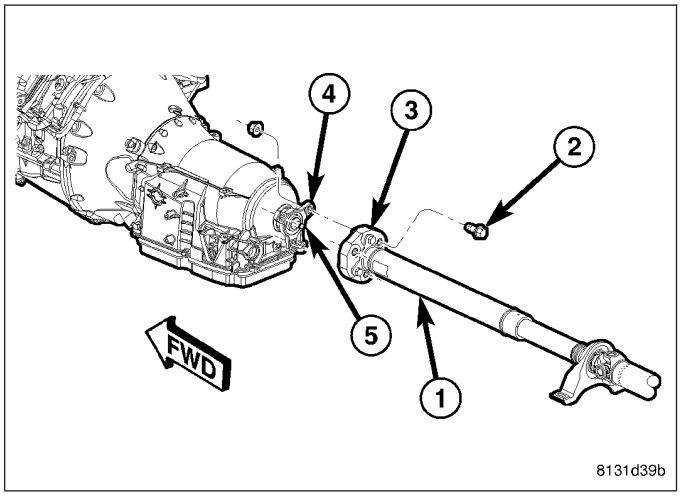

NOTE: If the transmission is being reconditioned (clutch/seal replacement) or replaced, it is necessary to perform the TCM Adaptation Procedure using the scan tool (Refer to 8 - ELECTRICAL/ELECTRONIC CONTROL MODULES/TRANSMISSION CONTROL MODULE - STANDARD PROCEDURE).

41. Verify proper operation.

SCHEMATICS AND DIAGRAMS

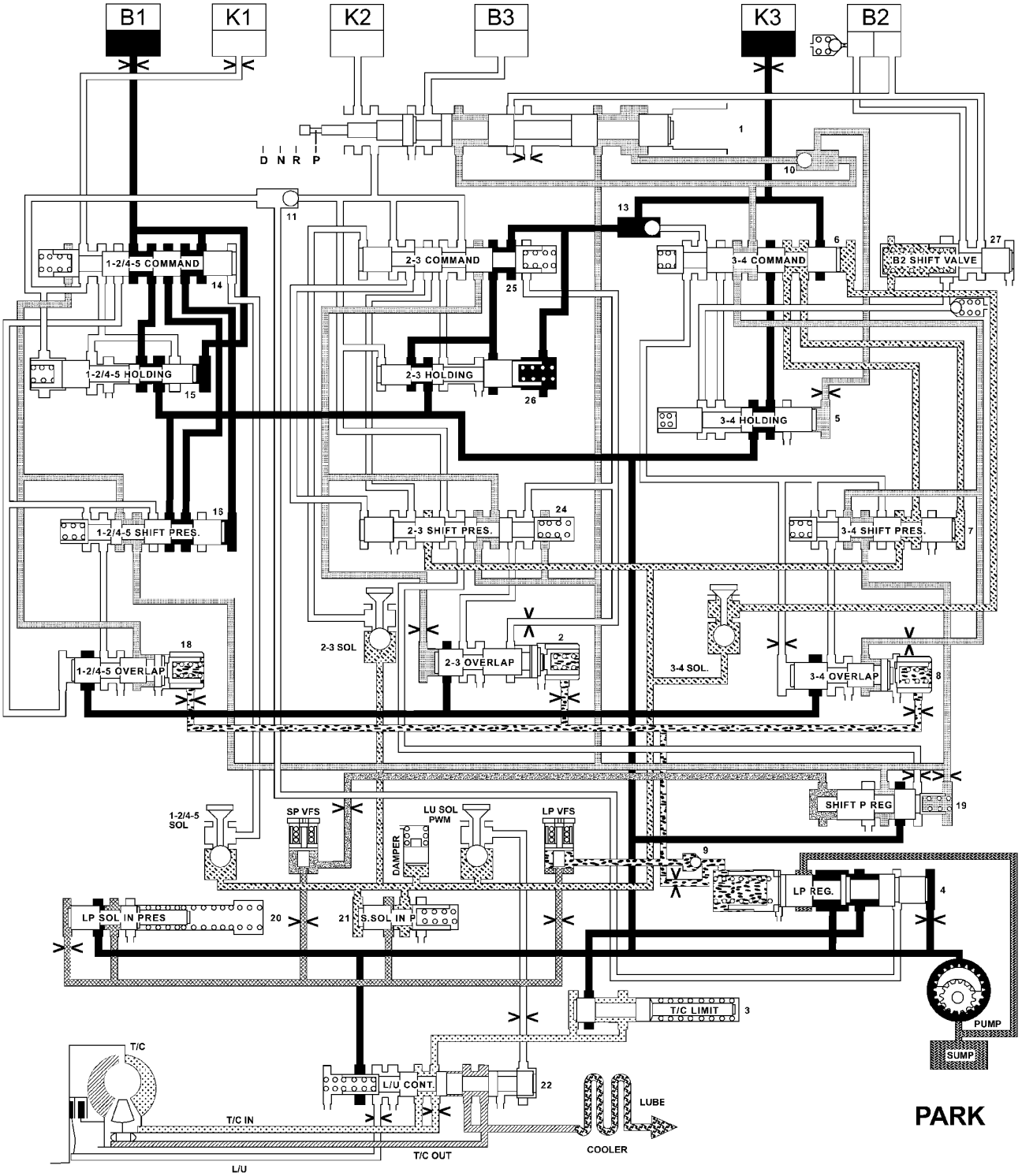

810baf1a

HYDRAULIC FLOW IN PARK

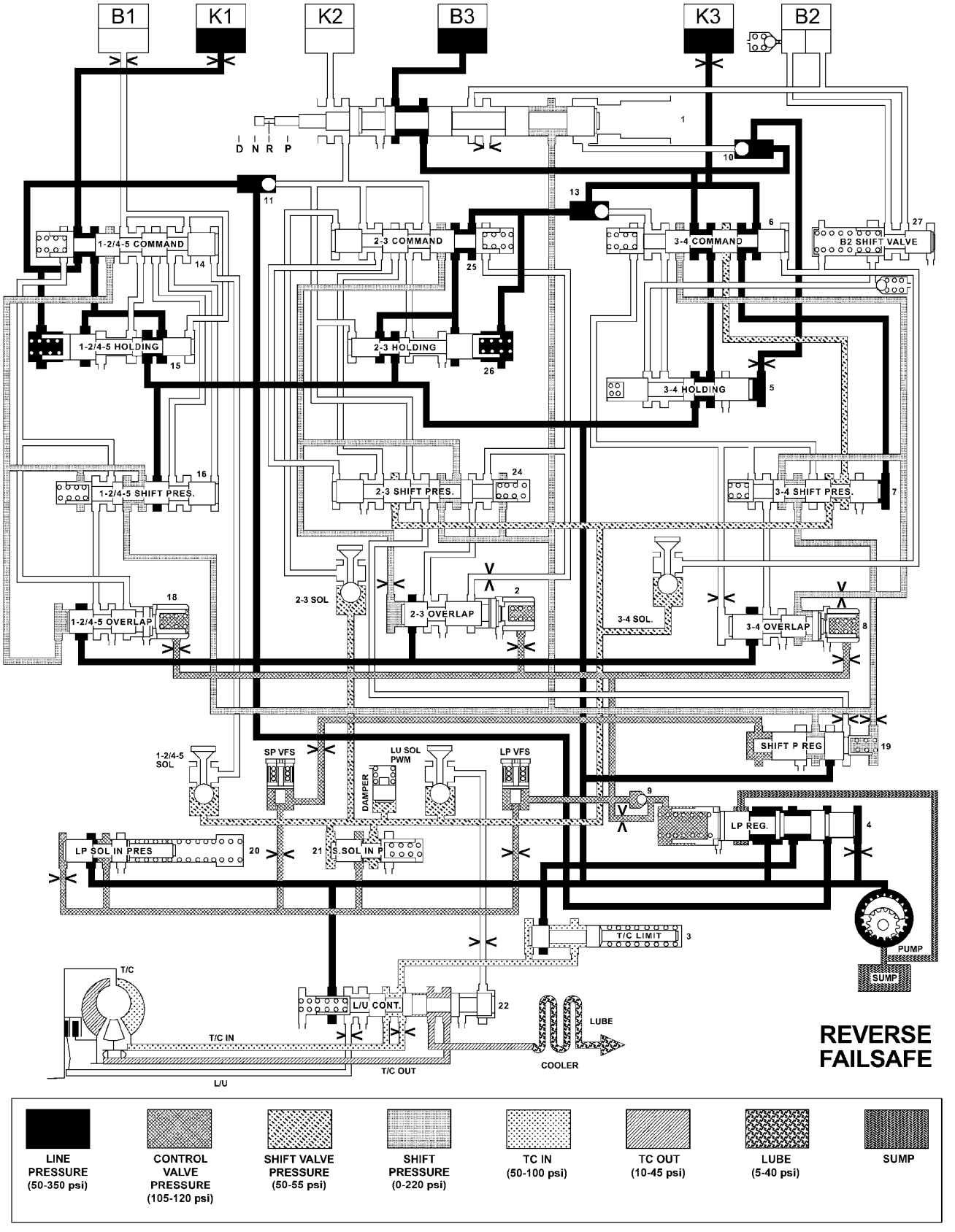

810bae77

HYDRAULIC FLOW IN REVERSE - FAILSAFE

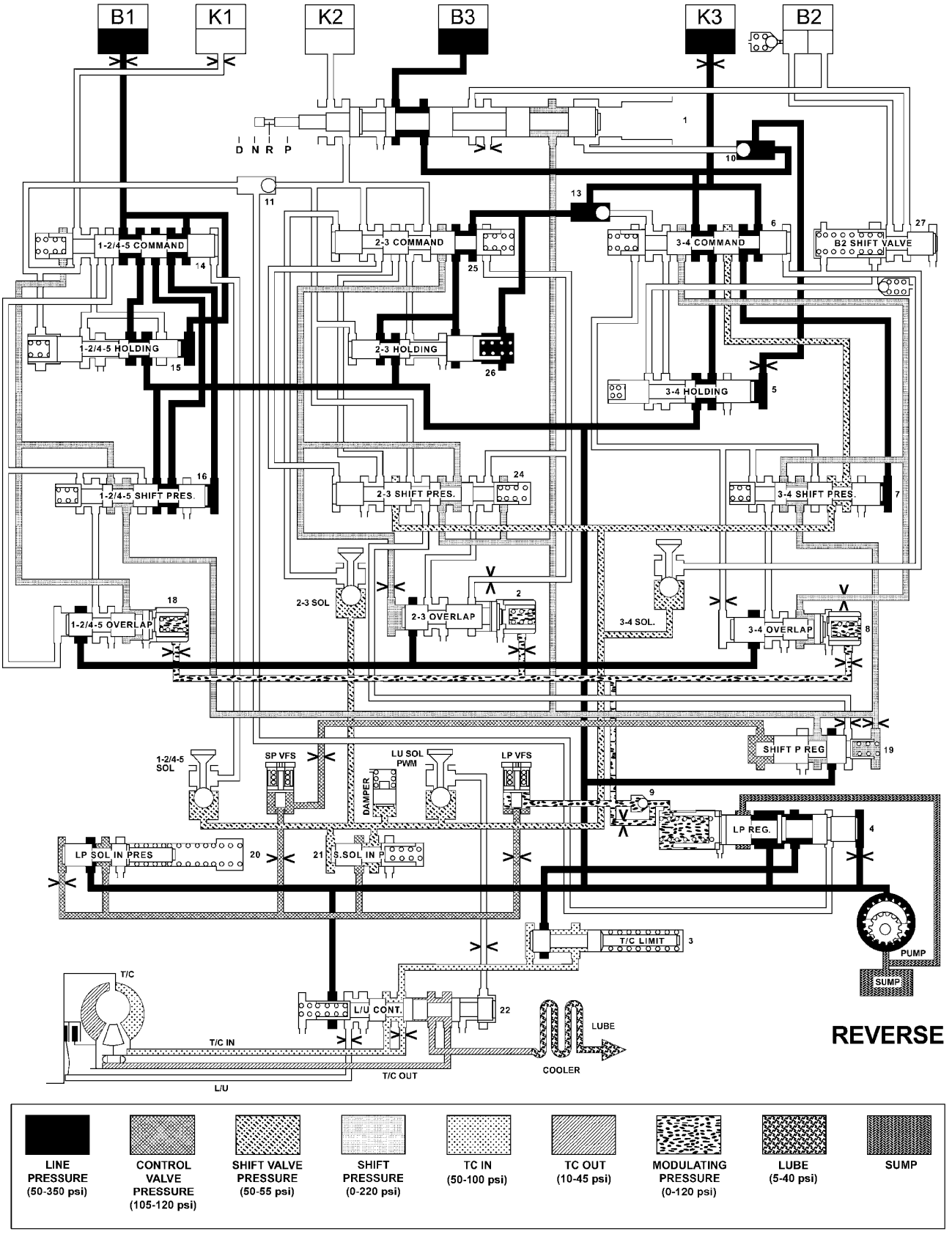

810baf23

HYDRAULIC FLOW IN REVERSE

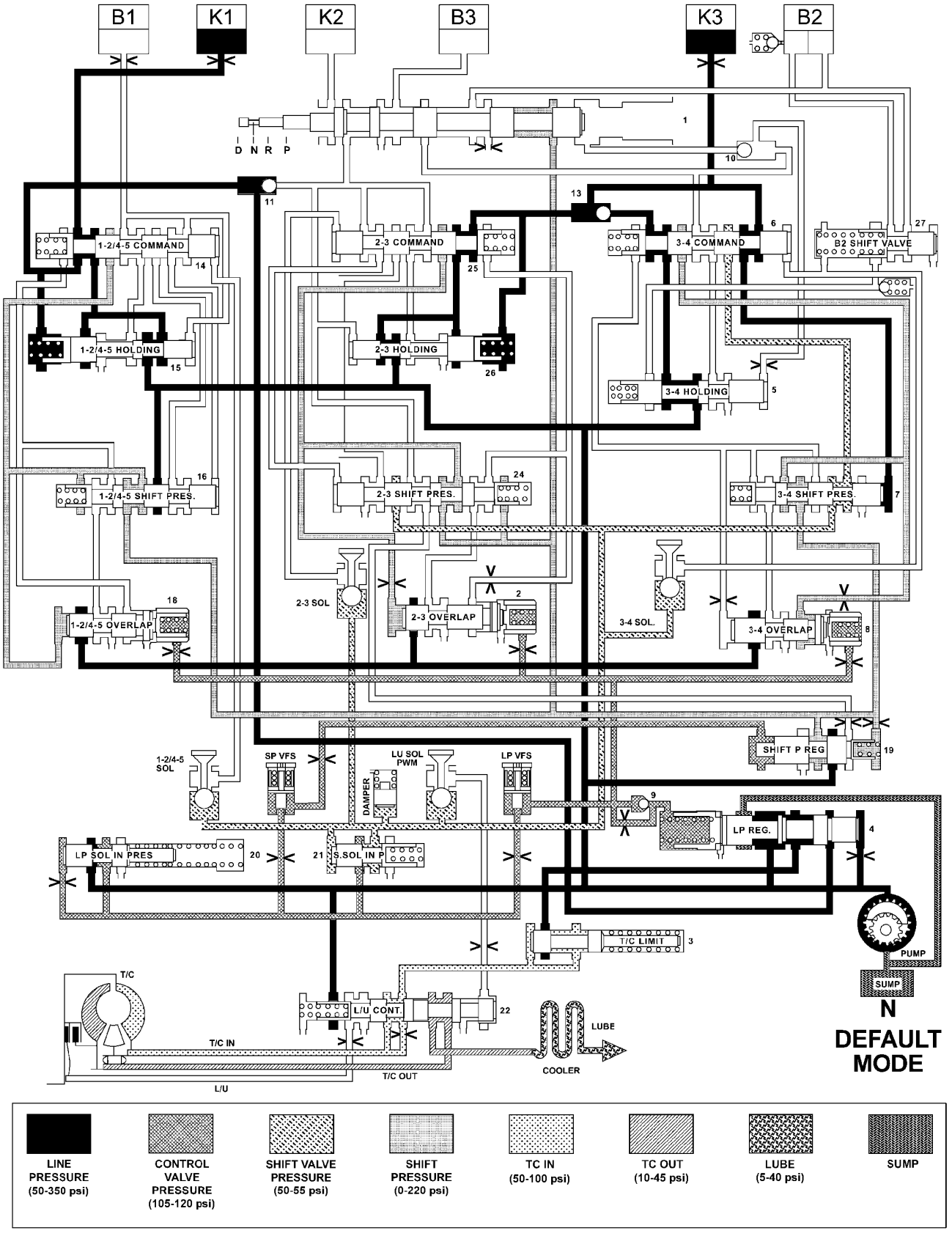

810baf1e

HYDRAULIC FLOW IN NEUTRAL - DEFAULT

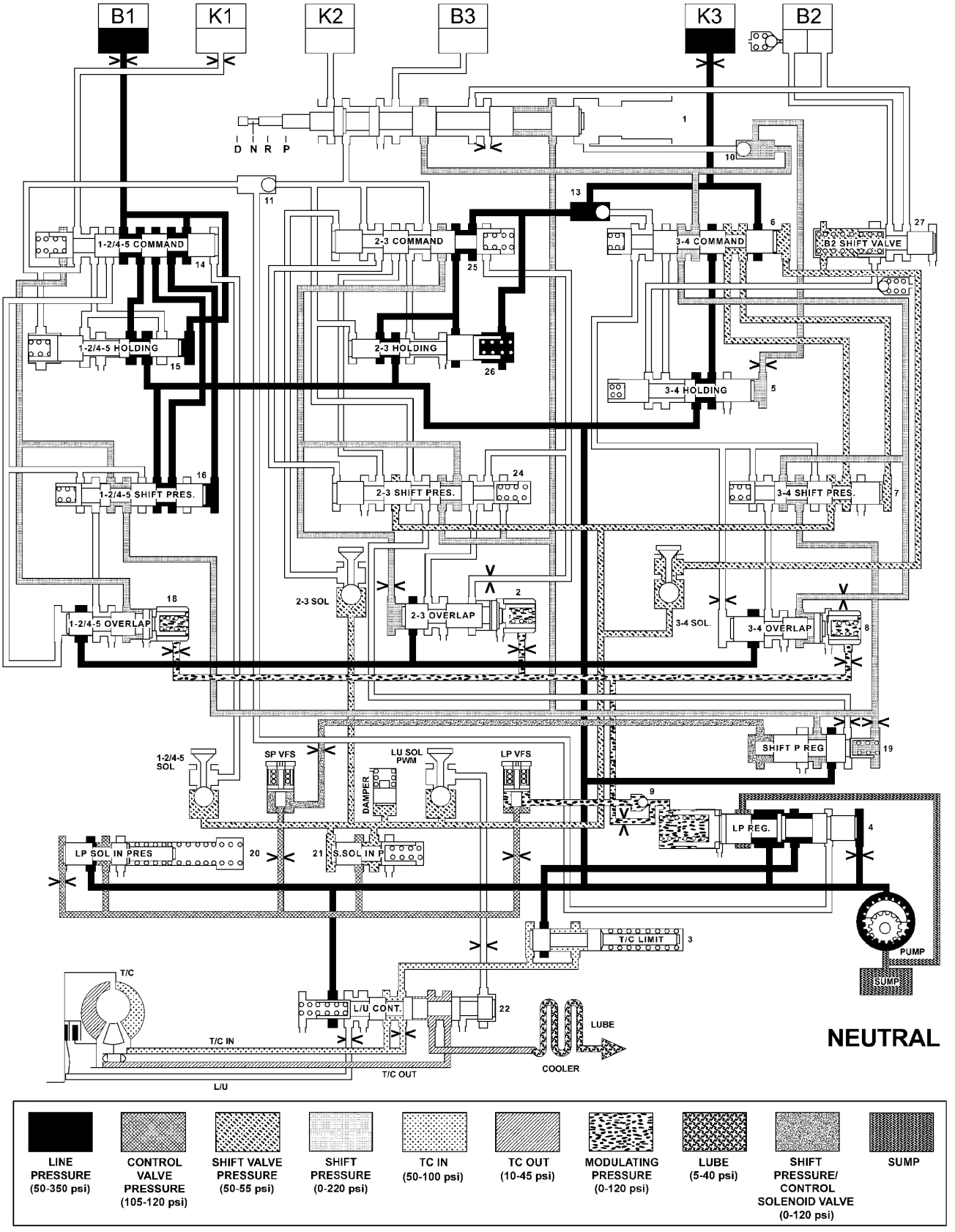

810baf59

HYDRAULIC FLOW IN NEUTRAL

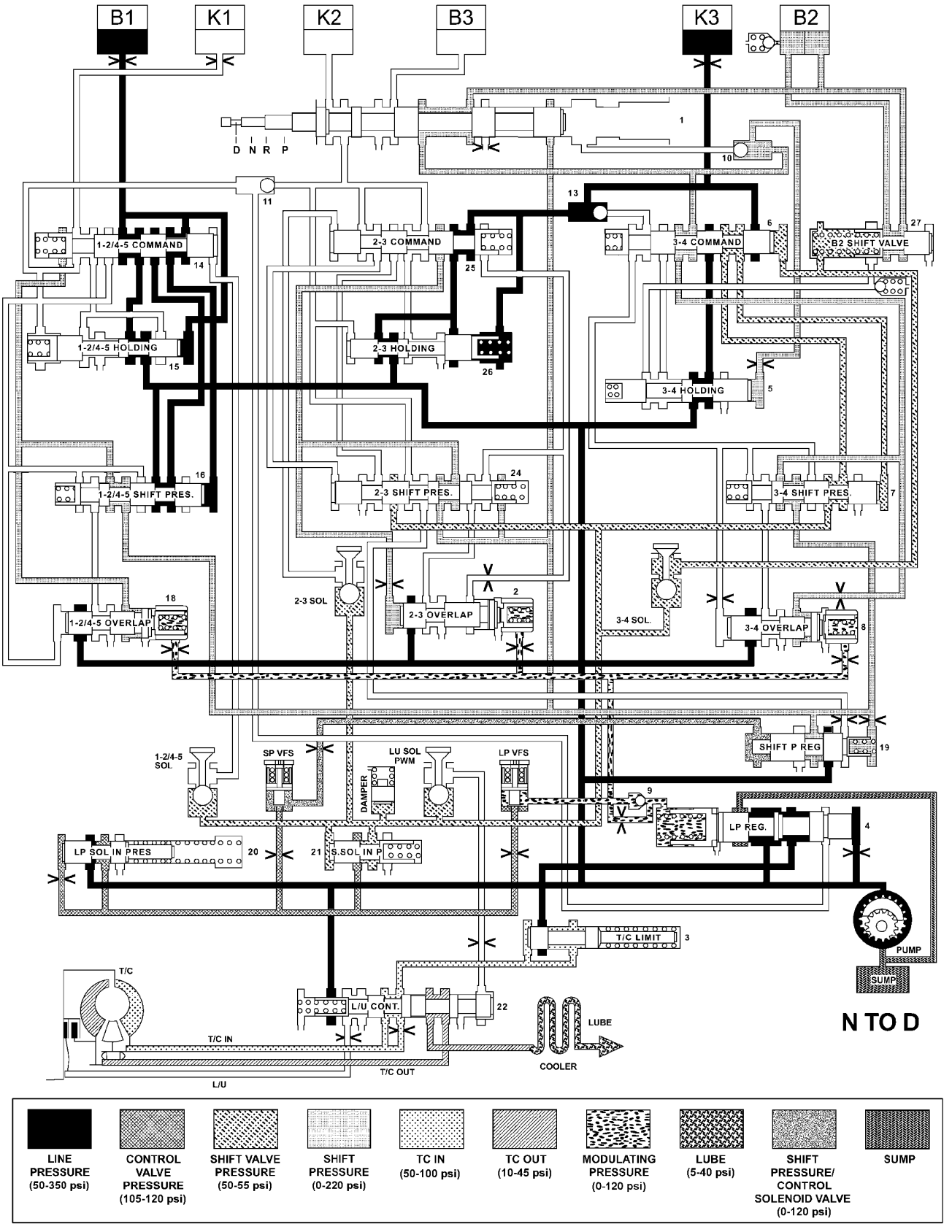

810baf80

HYDRAULIC FLOW IN NEUTRAL TO DRIVE TRANSITION

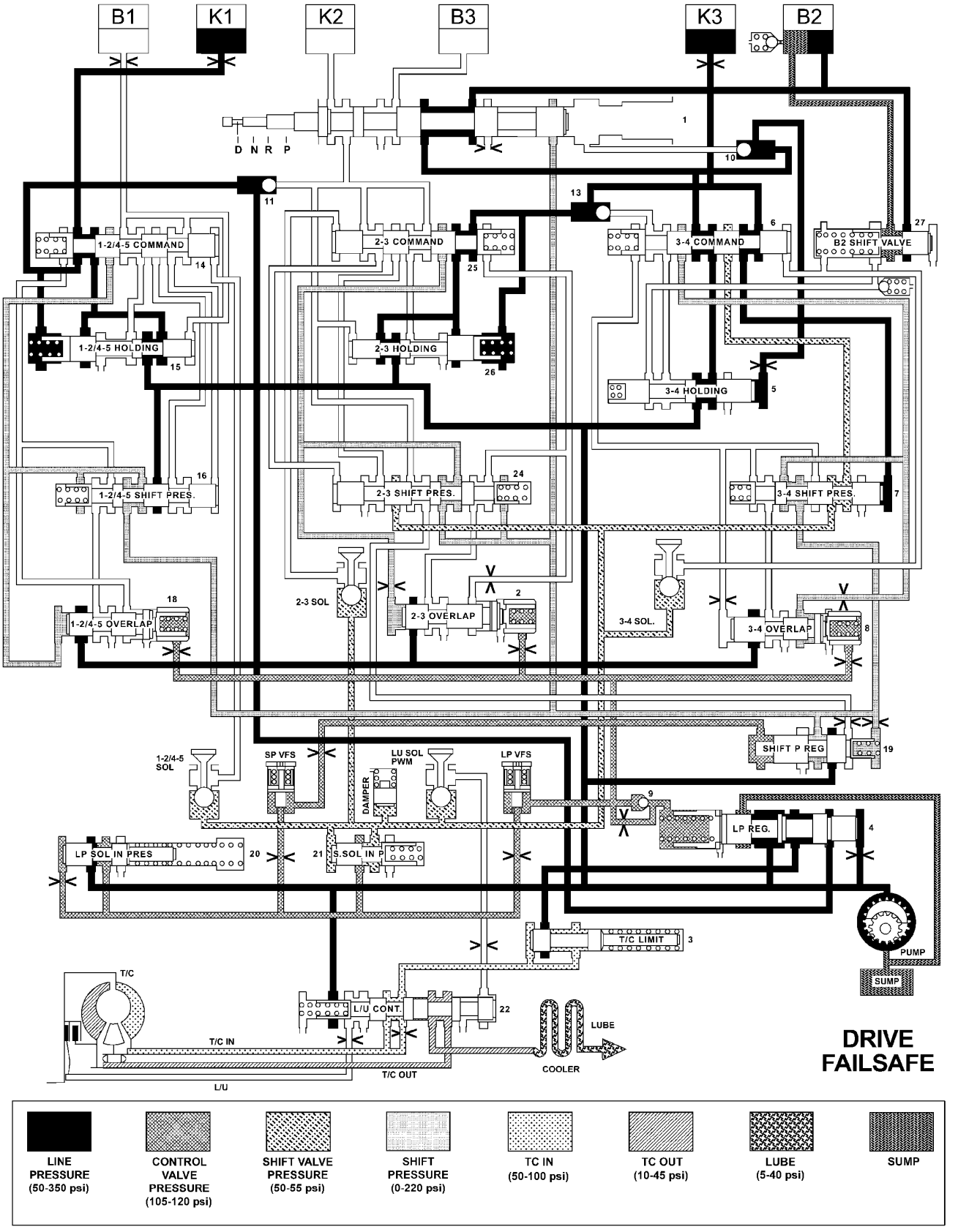

810bae73

HYDRAULIC FLOW IN DRIVE - FAILSAFE

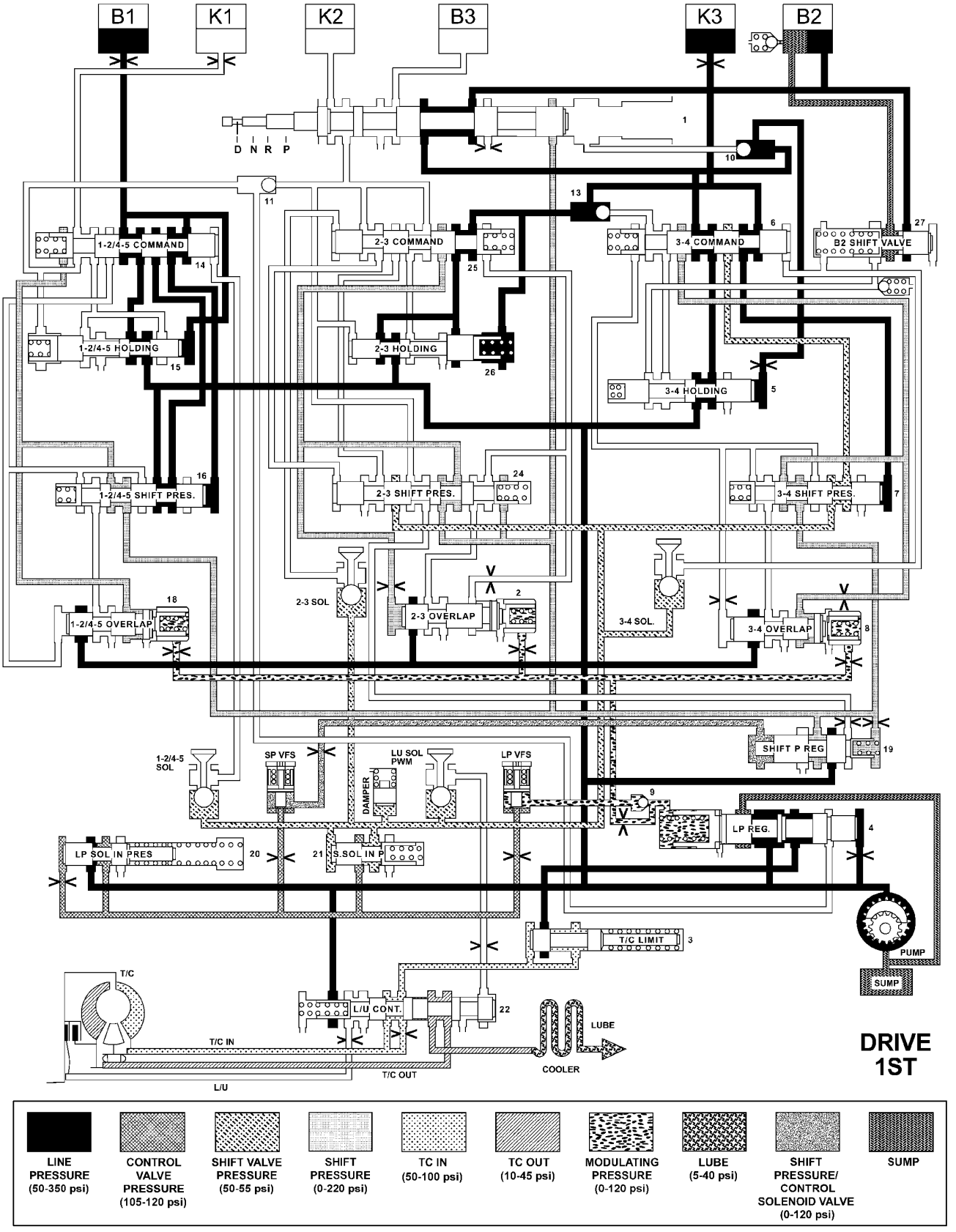

810baf9b

HYDRAULIC FLOW IN DRIVE - FIRST GEAR

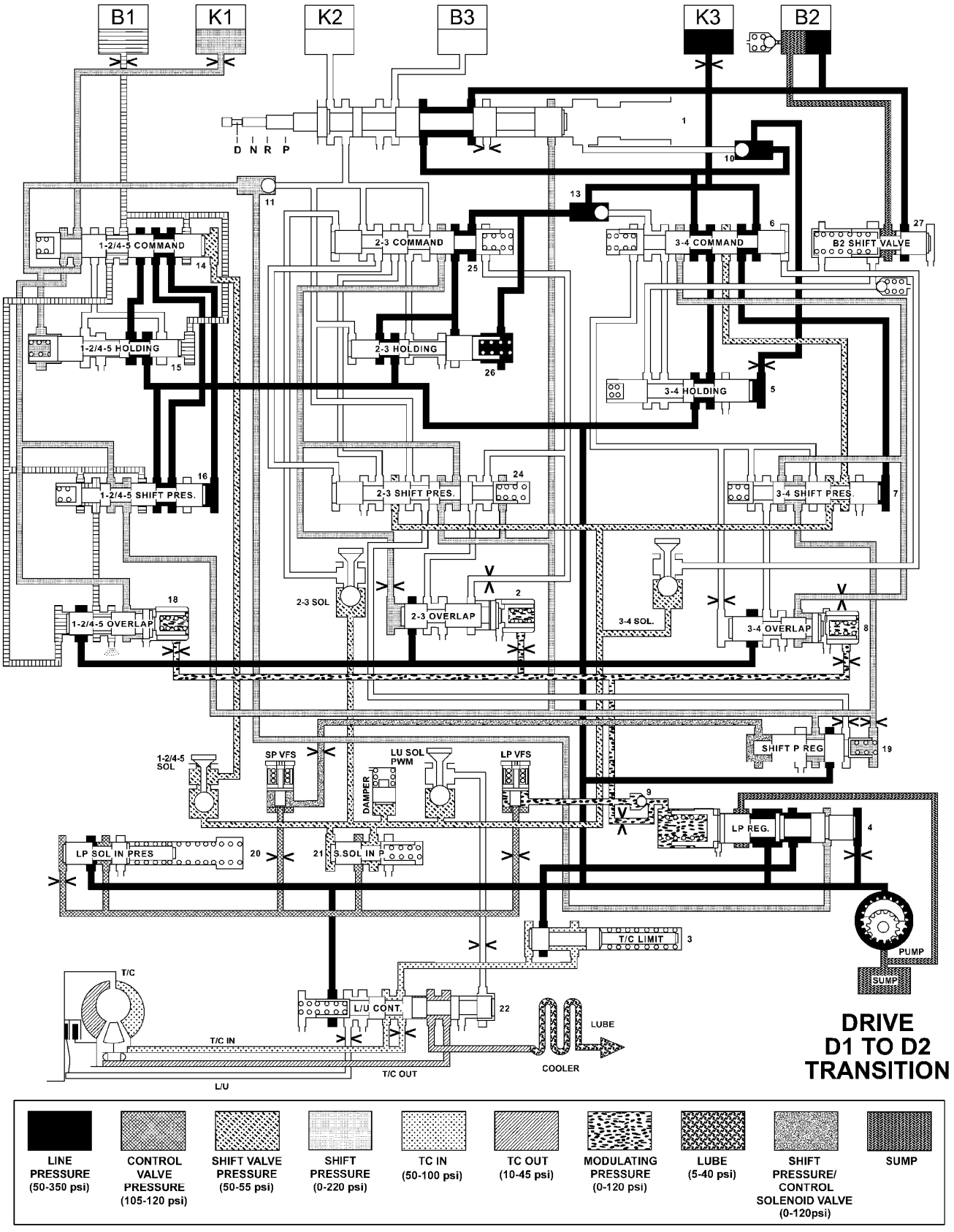

810bafa9

HYDRAULIC FLOW IN DRIVE - FIRST TO SECOND GEAR TRANSITION

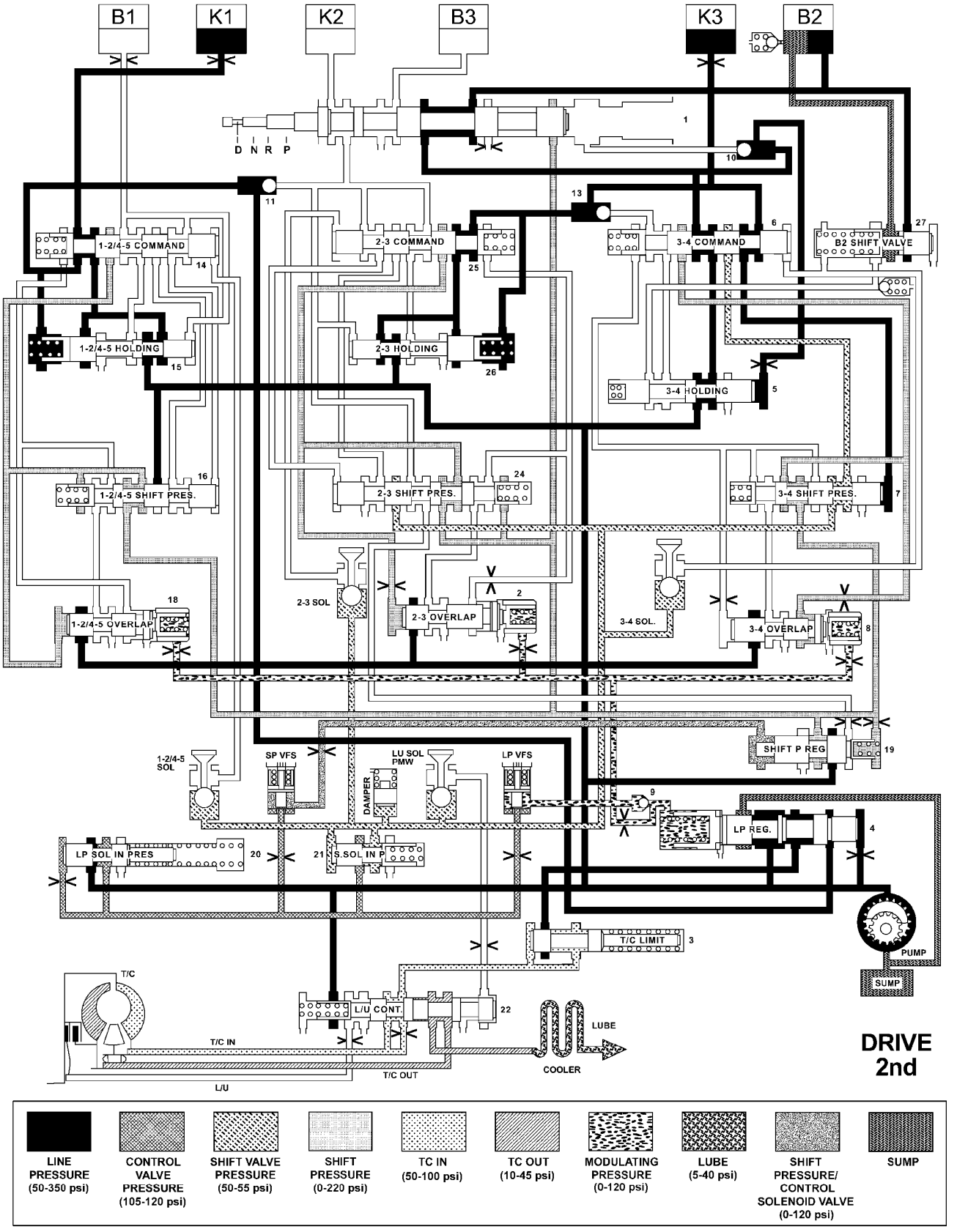

810bafb9

HYDRAULIC FLOW IN DRIVE - SECOND GEAR

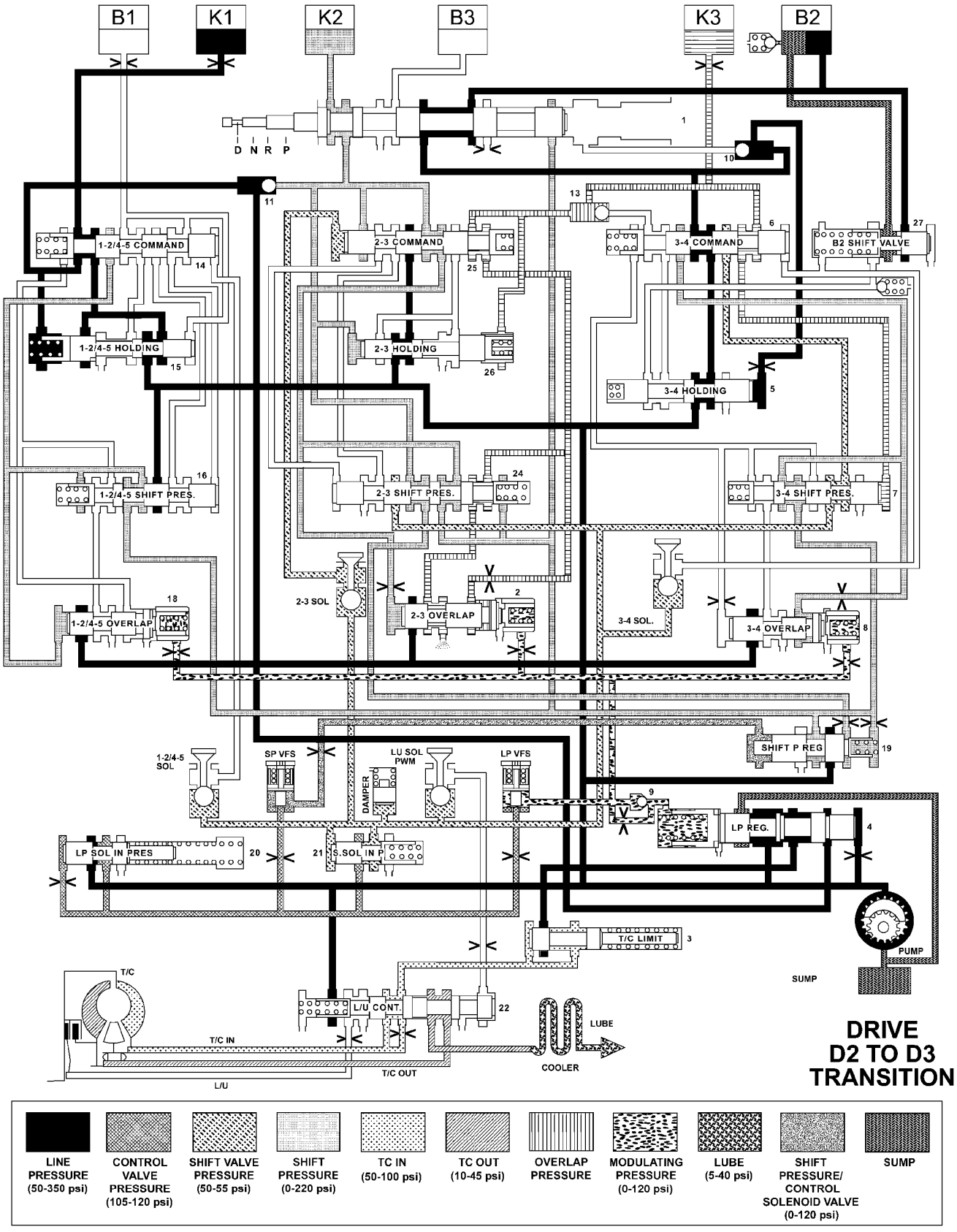

810baff2

HYDRAULIC FLOW IN DRIVE - SECOND TO THIRD GEAR TRANSITION

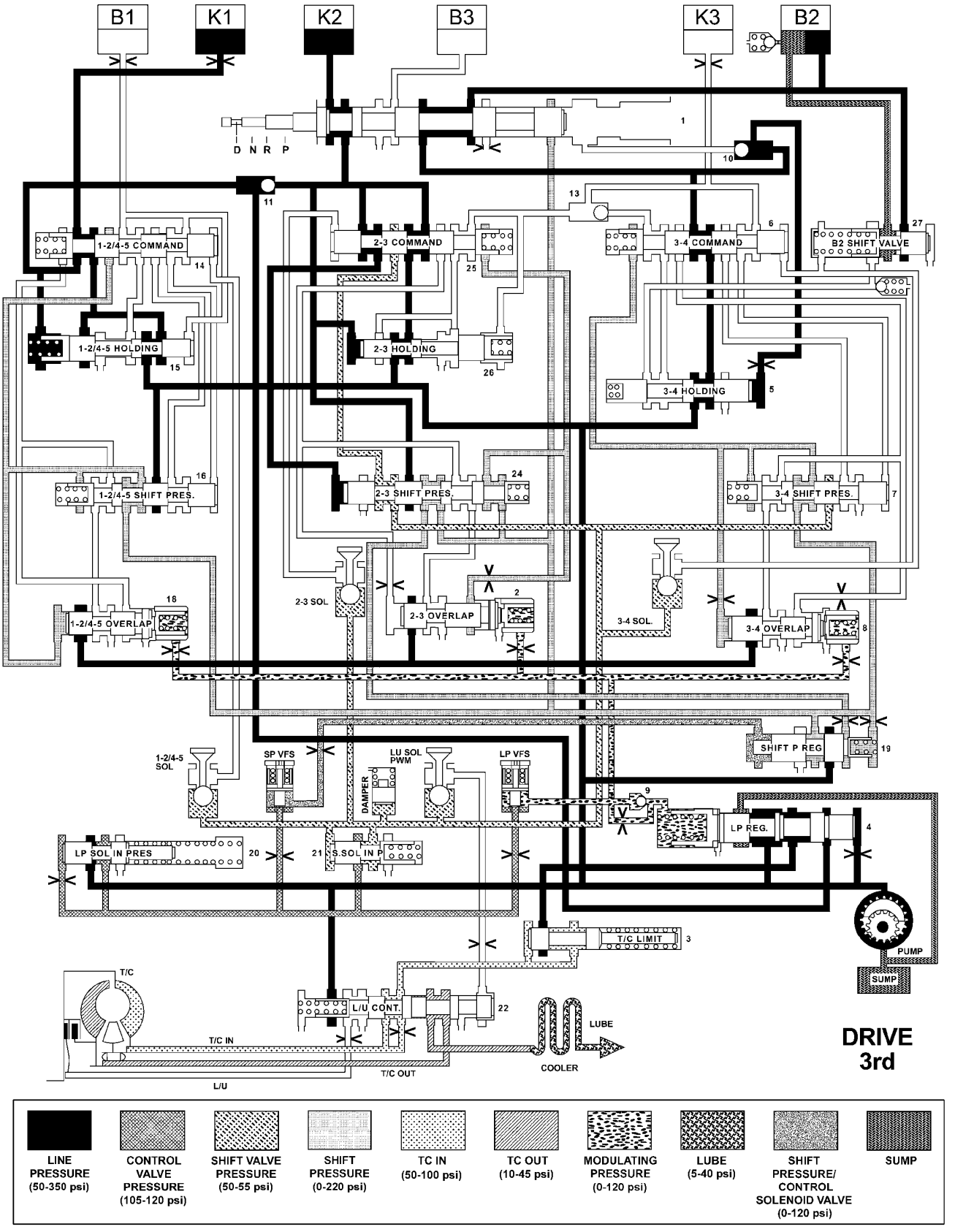

810bb0bb

HYDRAULIC FLOW IN DRIVE - THIRD GEAR

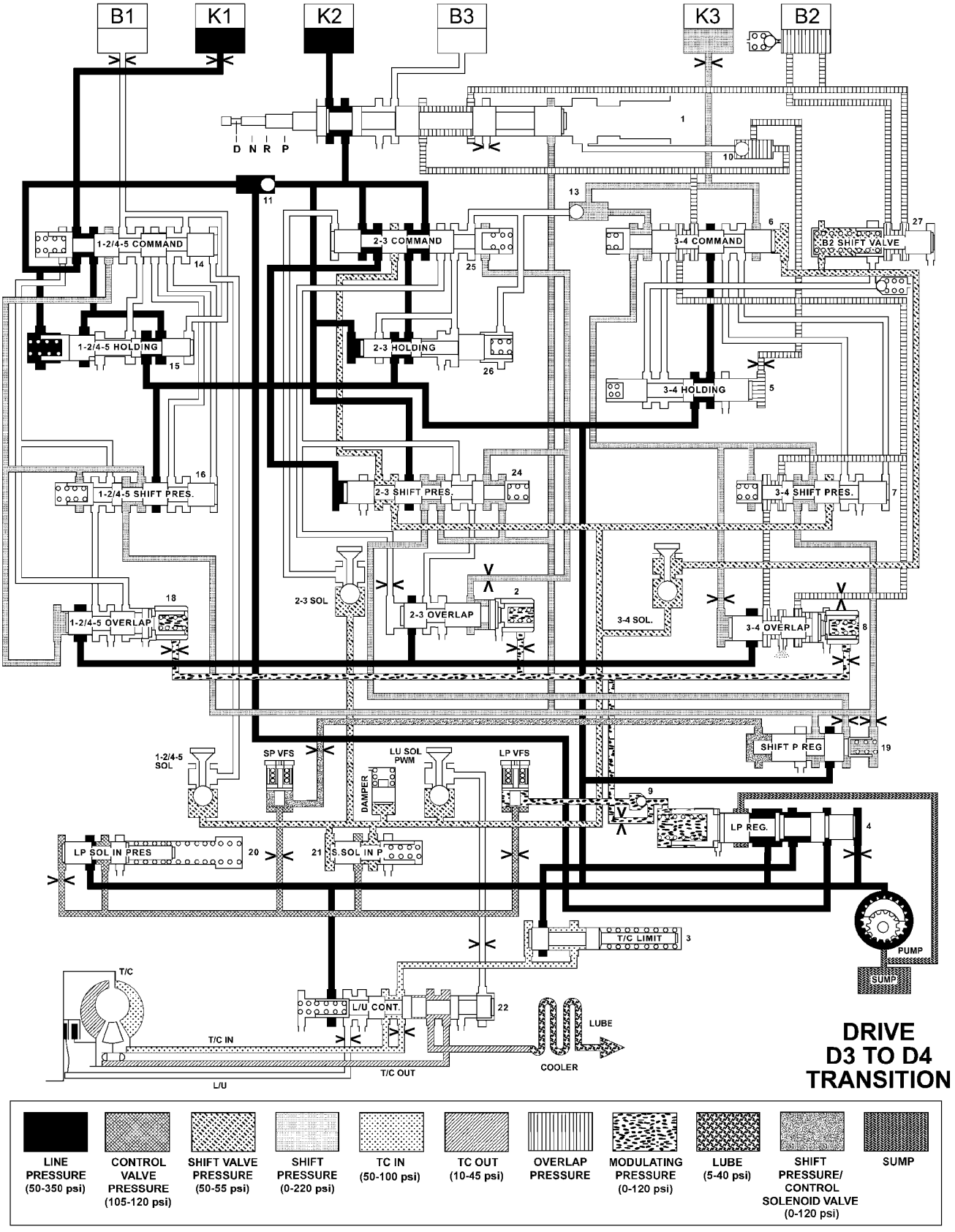

810bb0e0

HYDRAULIC FLOW IN DRIVE - THIRD TO FOURTH GEAR TRANSITION

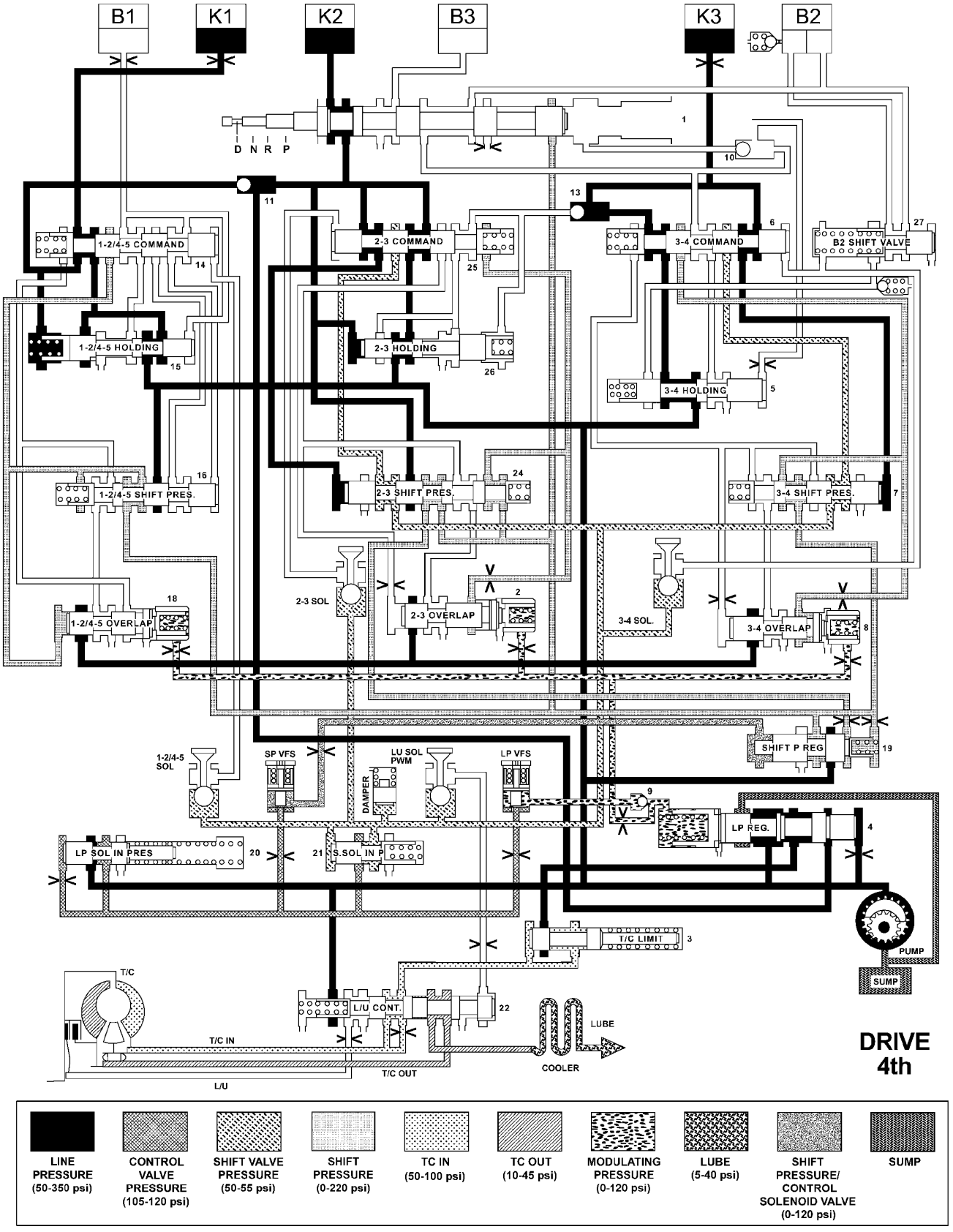

810bb1f5

HYDRAULIC FLOW IN DRIVE - FOURTH GEAR

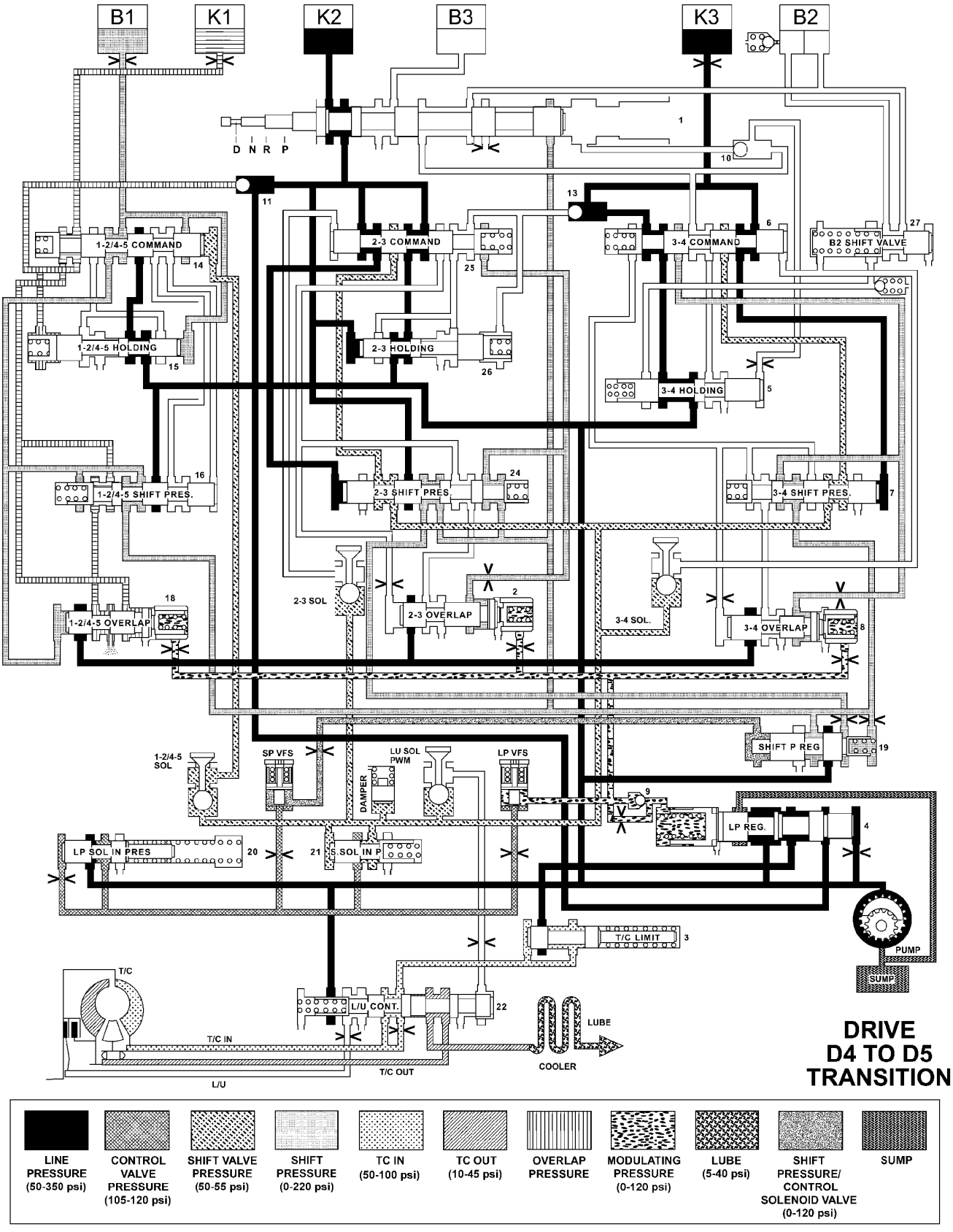

810bb20a

HYDRAULIC FLOW IN DRIVE - FOURTH TO FIFTH GEAR TRANSITION

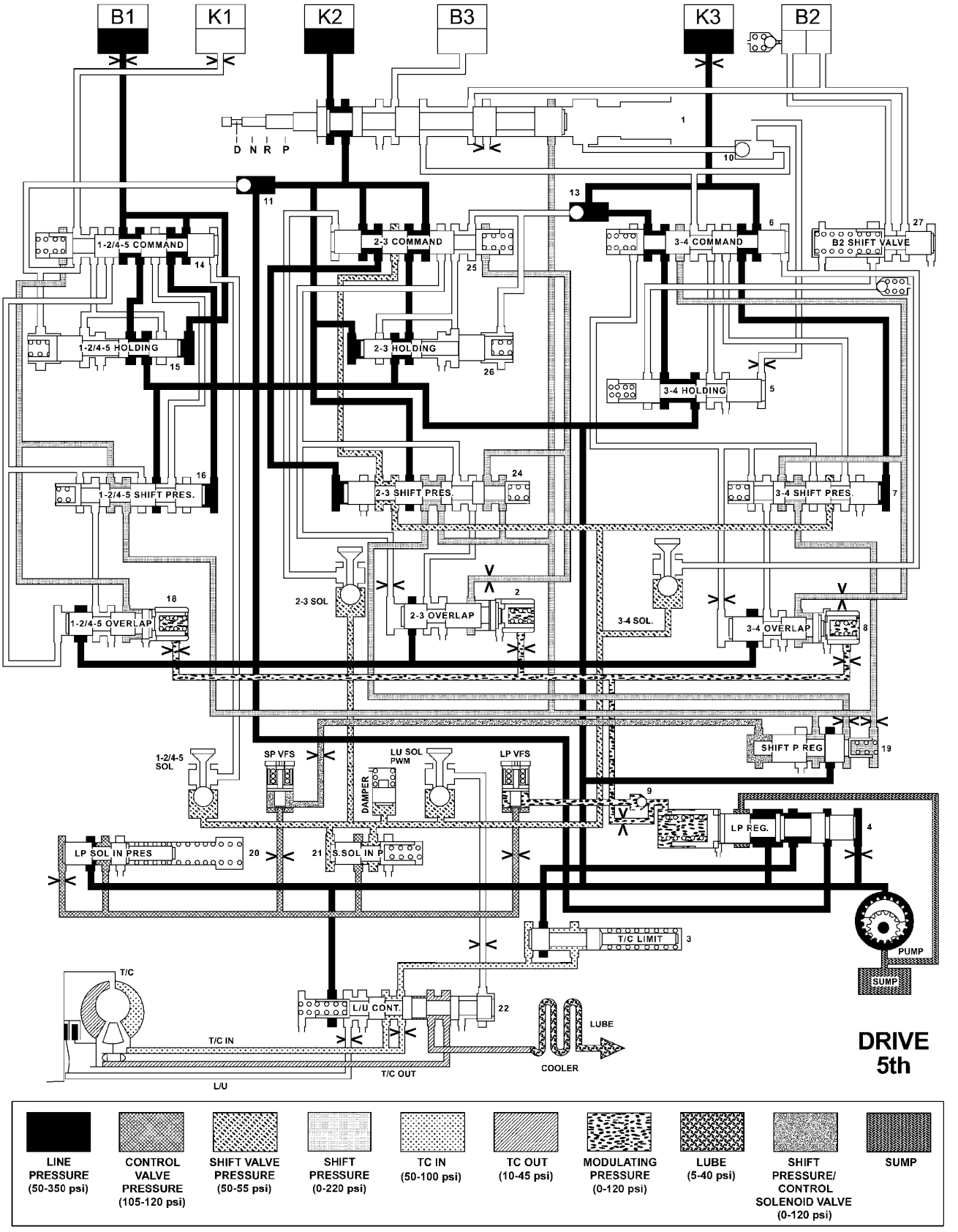

810bb210

HYDRAULIC FLOW IN DRIVE - FIFTH GEAR

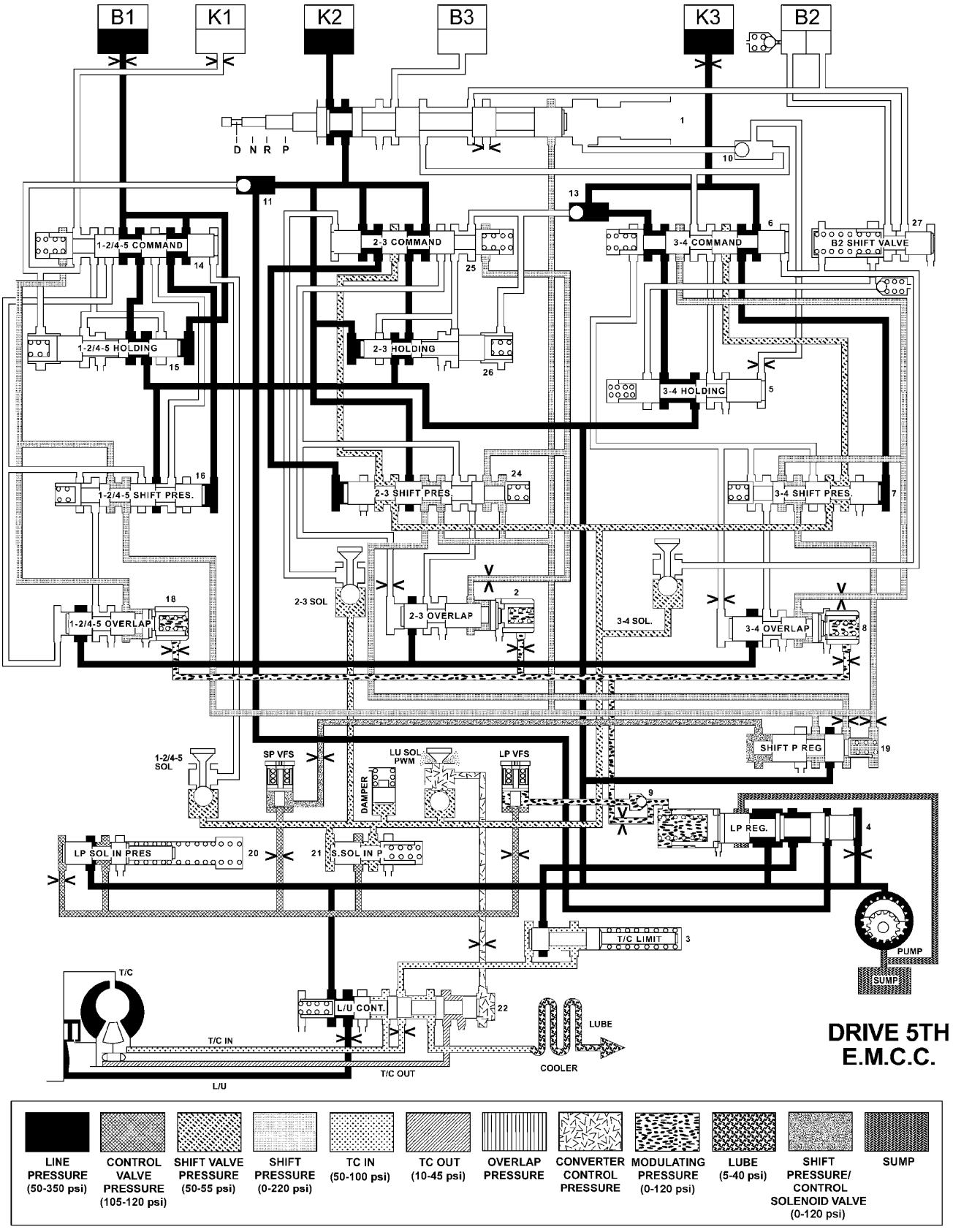

810bb235

HYDRAULIC FLOW IN DRIVE - FIFTH GEAR - EMCC

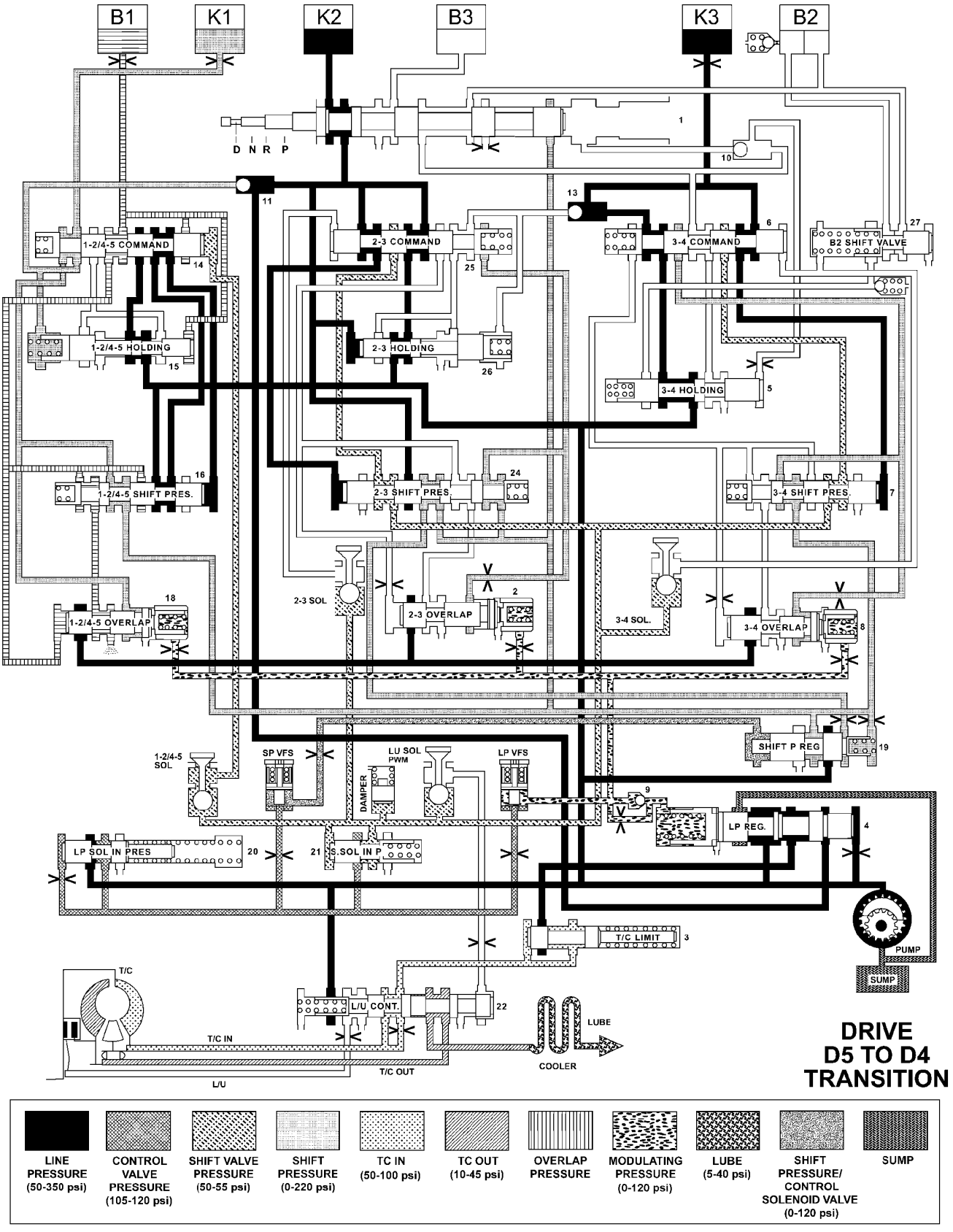

810bb261

HYDRAULIC FLOW IN DRIVE - FIFTH TO FOURTH GEAR TRANSITION

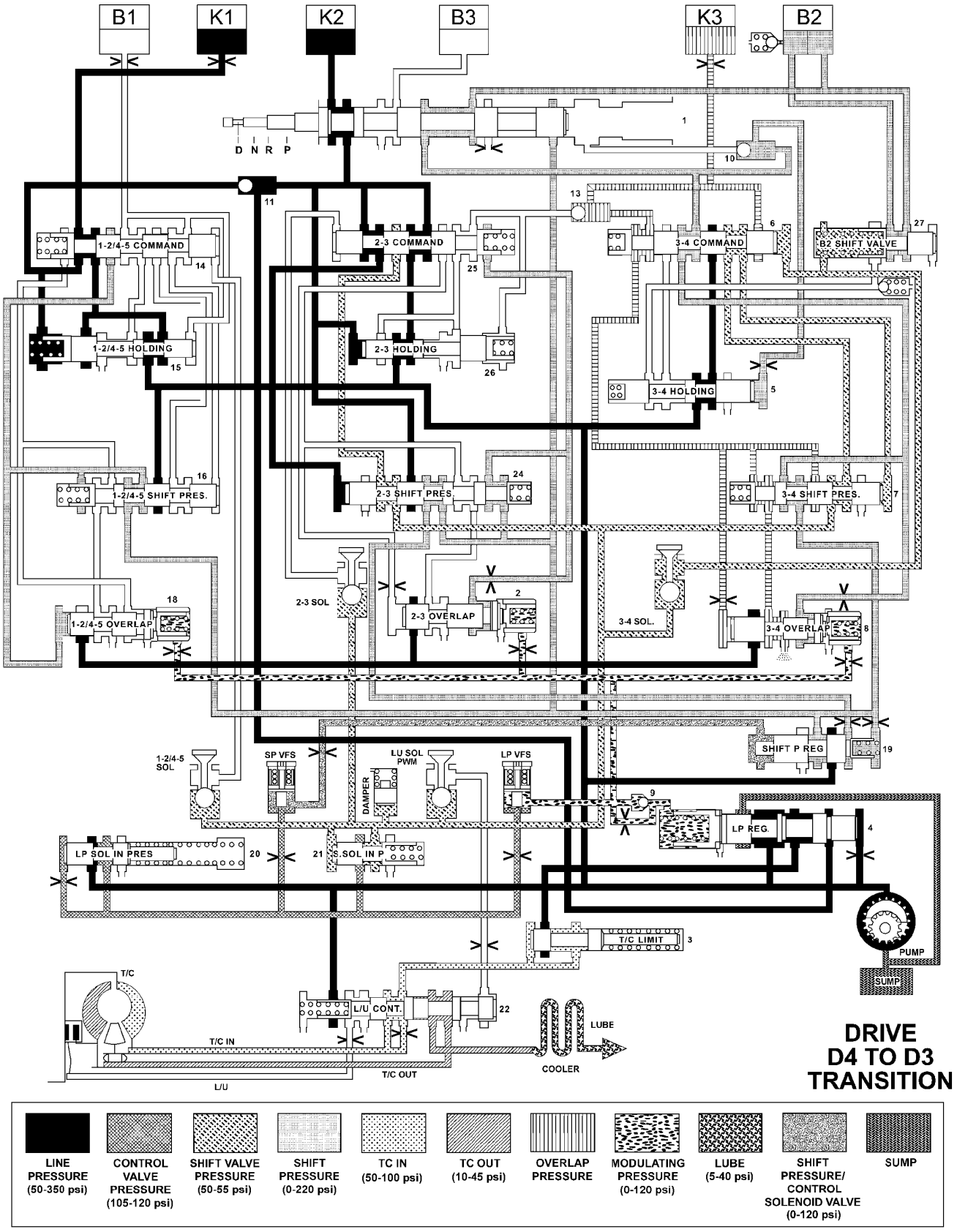

810bb2e7

HYDRAULIC FLOW IN DRIVE - FOURTH TO THIRD GEAR TRANSITION

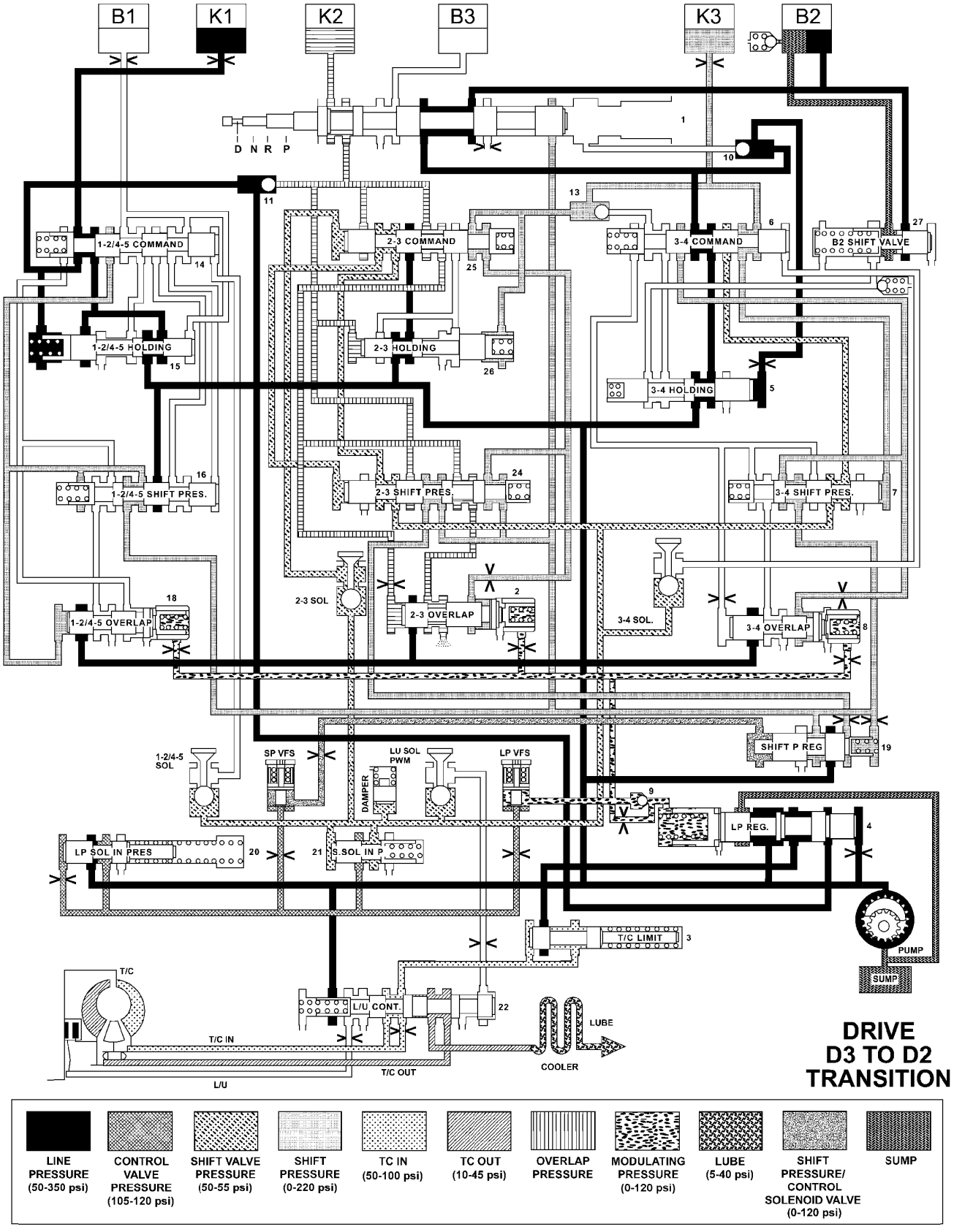

810bb2ec

HYDRAULIC FLOW IN DRIVE - THIRD TO SECOND GEAR TRANSITION

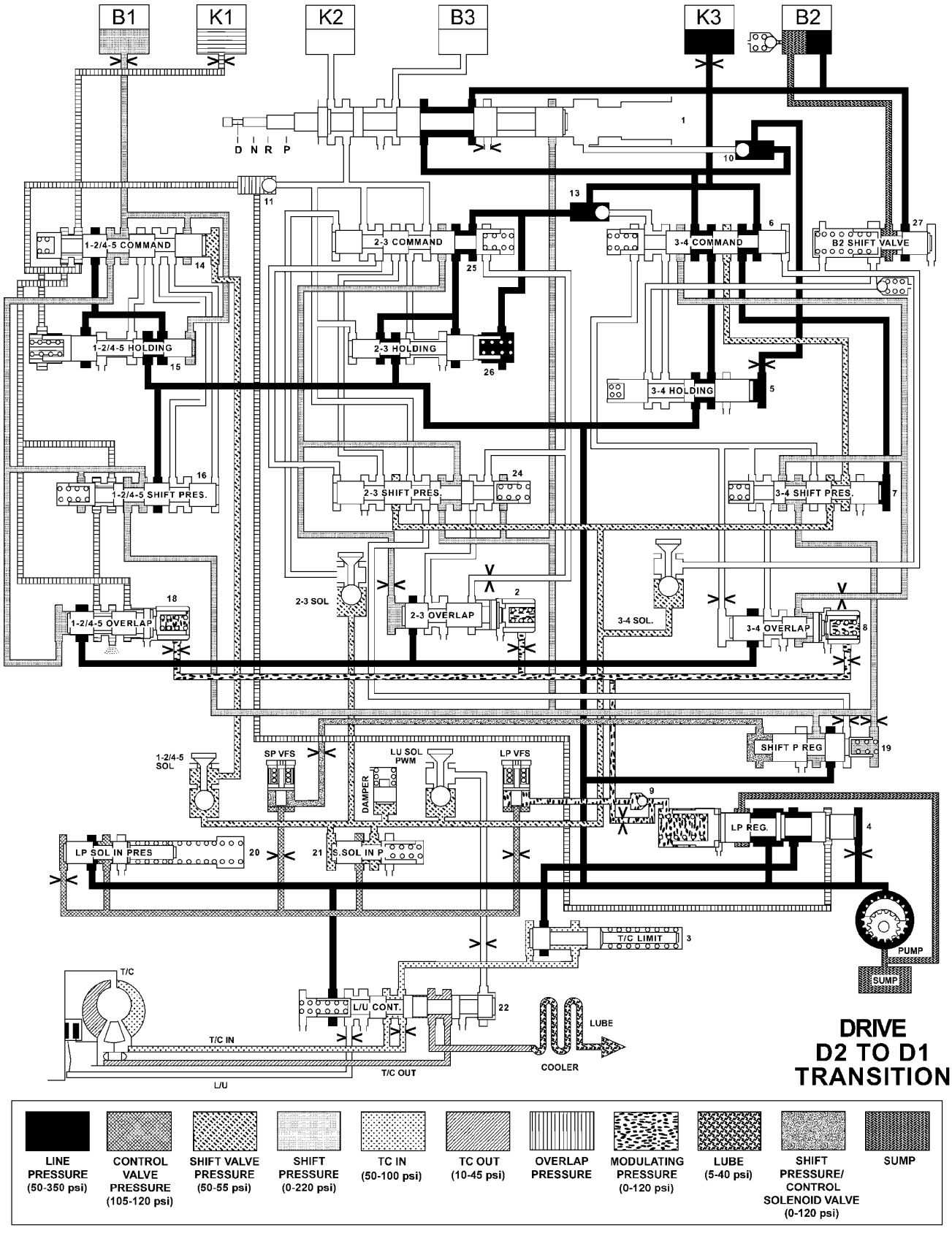

810bb2f7

HYDRAULIC FLOW IN DRIVE - SECOND TO FIRST GEAR TRANSITION

SPECIFICATIONS

GEAR RATIOS

1ST	3.59:1
2ND	2.19:1
3RD	1.41:1
4TH	1.00:1
5TH	0.83:1
REVERSE	3.16:1

SPECIFICATIONS

COMPONENT		METRIC (mm)	INCH (in.)
Geartrain End-play		0.3-0.5	0.012-0.020
Geartrain End-play Shim		0.2, 0.3, 0.4, and 0.5	0.008, 0.012, 0.016, 0.020
Rear Planetary Gear Set End-play		0.15-0.6	0.006-0.024
Rear Planetary Gear Set Snap-rings		3.0, 3.4, and 3.7	0.118, 0.134, 0.146
B1 Clutch Clearance - Double Sided Friction Discs	2 Disc	2.3-2.7	0.091-0.106
	3 Disc	2.7-3.1	0.106-0.122
	4 Disc	3.0-3.4	0.118-0.134
B1 Clutch Clearance - Single Sided Friction Discs	4 Disc	2.2-2.6	0.087-0.102
	6 Disc	2.4-2.8	0.095-0.110
	8 Disc	2.6-3.0	0.102-0.118
B1 Clutch Snap-rings		2.6, 2.9, 3.2, 3.5, 3.8, and 4.1	0.102, 0.114, 0.126, 0.138, 0.150, 0.162
B2 Clutch Clearance	4 Disc	1.9-2.3	0.075-0.091
	5 Disc	2.0-2.4	0.079-0.095
B2 Clutch Snap-rings		2.9, 3.2, 3.5, 3.8, and 4.1	0.114, 0.126, 0.138, 0.150, 0.162
B3 Clutch Clearance		1.0-1.4	0.039-0.055
B3 Clutch Snap-rings		3.2, 3.5, 3.8, 4.1, 4.4, and 4.7	0.126, 0.138, 0.150, 0.162, 0.173, 0.185
K1 Clutch Clearance - Double Sided Friction Discs	3 Disc	2.7-3.1	0.106-0.122
	4 Disc	3.0-3.4	0.118-0.134
	5 Disc	3.3-3.7	0.13-0.146
	6 Disc	3.6-4.0	0.142-0.158
K1 Clutch Clearance - Single Sided Friction Discs	6 Disc	2.4-2.8	0.095-0.110
	8 Disc	2.6-3.0	0.102-0.118
	10 Disc	2.8-3.2	0.110-0.126
	12 Disc	2.9-3.3	0.114-0.130
K1 Clutch Snap-rings		2.6, 2.9, 3.2, 3.5, 3.8, and 4.1	0.102, 0.114, 0.126, 0.138, 0.150, 0.162
K2 Clutch Clearance	3 Disc	2.3-2.7	0.091-0.106
	4 Disc	2.4-2.8	0.095-0.110
	5 Disc	2.5-2.9	0.099-0.114
	6 Disc	2.7-3.1	0.106-0.122

COMPONENT		METRIC (mm)	INCH (in.)
K2 Clutch Snap-rings		2.3, 2.6, 2.9, 3.2, 3.5, and 3.8	0.091, 0.102, 0.114, 0.126, 0.138, 0.150
K3 Clutch Clearance - Double Sided Friction Discs	3 Disc	2.3-2.7	0.091-0.106
	4 Disc	2.4-2.8	0.095-0.110
	5 Disc	2.5-2.9	0.099-0.114
K3 Clutch Clearance - Single Sided Friction Discs	6 Disc	2.3-2.7	0.091-0.106
	8 Disc	2.4-2.8	0.095-0.110
	10 Disc	2.5-2.9	0.099-0.114
K3 Clutch Snap-rings		2.0, 2.3, 2.6, 2.9, 3.2, and 3.5	0.079, 0.091, 0.102, 0.114, 0.126, 0.138

TORQUE SPECIFICATIONS

DESCRIPTION	N·m	Ft. Lbs.	In. Lbs.
Bolt, B2 Clutch Carrier	16	-	141
Bolt, B1 Carrier to Converter Housing	10	-	88.5
Bolt, Oil Pump	20	-	177
Nut, Propeller Flange	200	147.5	-
Nut, 4X4 Adapter Shaft	200	147.5	-
Bolt, Electrohydraulic Unit	8	-	71
Bolt, Adapter Plug	2.5	-	22
Bolt, Transmission Housing to Converter Housing	20	-	177
Bolts, 4X4 Adapter Housing	20	-	177
Bolts, Oil Pan	8	-	71
Screws, Valve Body/ Housing Side Cover	4	-	35
Bolt, Shift Plate	8	-	71
Bolt, Solenoid Leaf Spring	8	-	71
Nut, Shifter Mechanism to Floor Pan	7	-	65
Bolt, Torque Converter	42	31	-

SPECIAL TOOLS - AUTOMATIC TRANSMISSION - NAG1

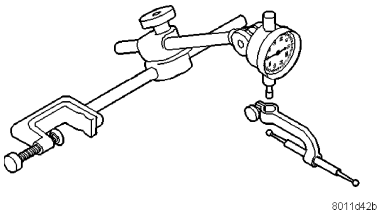

Dial Indicator - C-3339

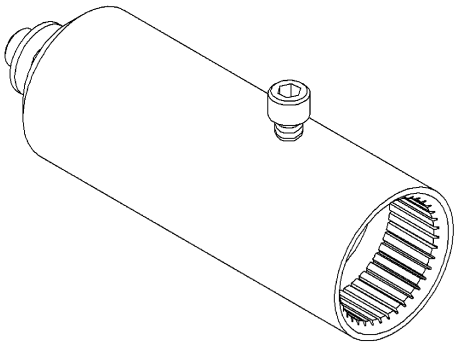

Adapter, Geartrain End-play - 8266-18

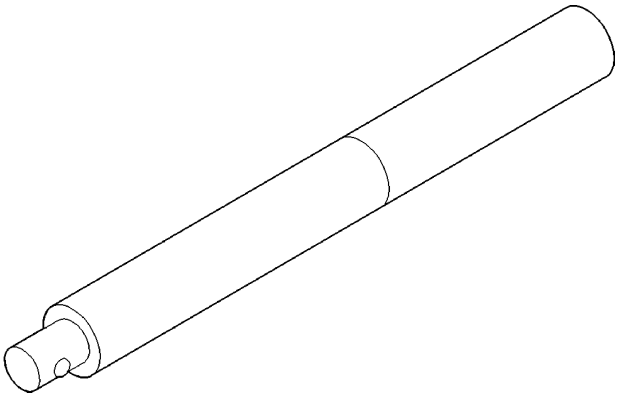

Driver Handle C-4171

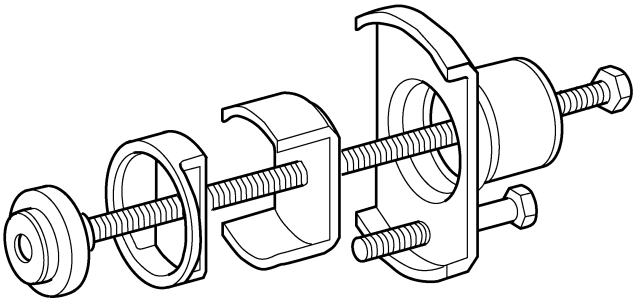

80e490db

Compressor, Multi-use Spring - 8900

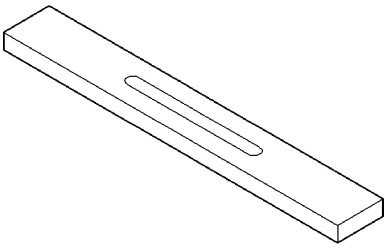

Bar, Gauge - 6311

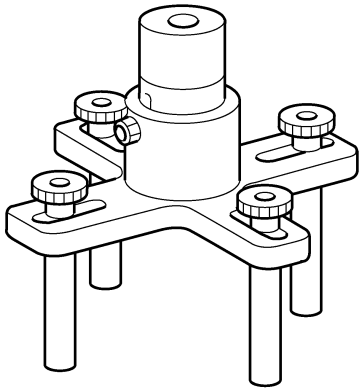

80e490e0

Tool, Pressing - 8901

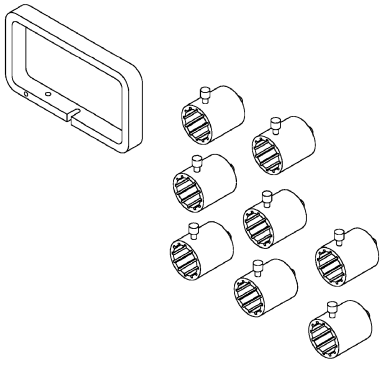

End Play Set - 8266

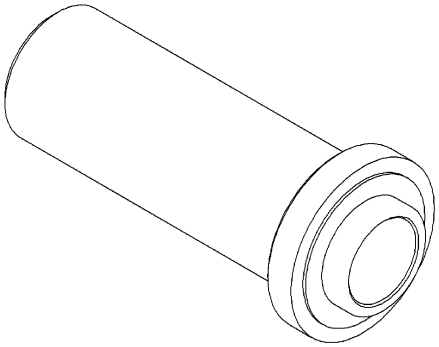

Installer, Seal - 8902A

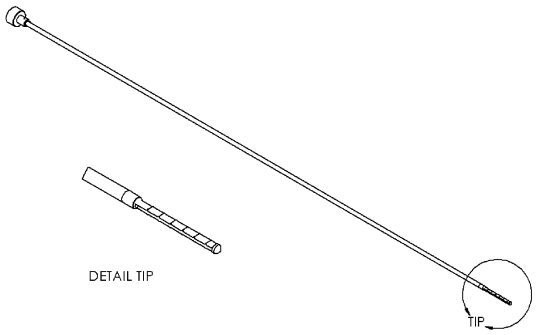

Dipstick - 9336

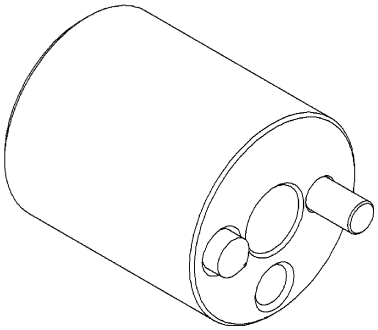

Tool, Staking - 9078

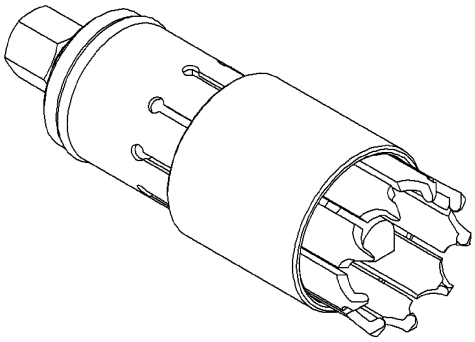

Remover, Bearing - 9082

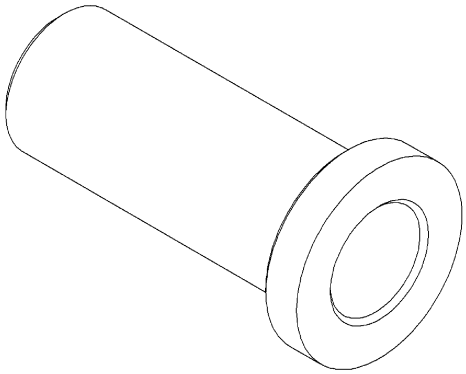

Installer, Bearing - 9287

MECHANISM-BRAKE TRANSMISSION SHIFT INTERLOCK

DESCRIPTION

The Brake Transmission Shifter/Ignition Interlock (BTSI) is a cable operated system that prevents the transmission gear shifter from being moved out of PARK without the proper driver inputs. The system also contains a solenoid that is integral to the shifter assembly. The solenoid works in conjunction with the park lock cable to permit shifter movement out of PARK when the brake is depressed and prevents shifter movement into REVERSE unless a shift into REVERSE is permitted.

A BTSI override (2) is provided on the side of the shifter mechanism (1) to allow the vehicle to be shifted out of PARK in the event of an electrical failure.

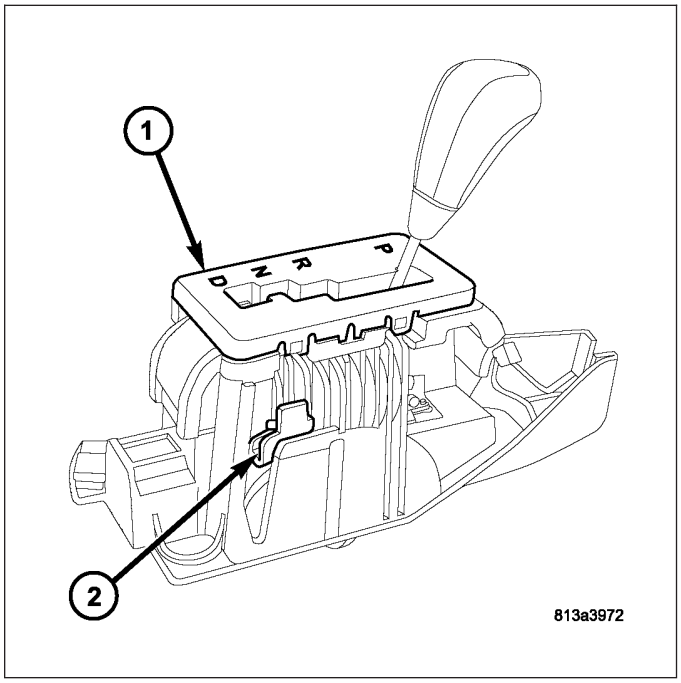

OPERATION

The Brake Transmission Shifter/Ignition Interlock (BTSI) is engaged whenever the ignition switch is in the LOCK (1) position. An additional electrically activated feature will prevent shifting out of the PARK position unless the brake pedal is depressed at least one-half inch. A solenoid in the shifter assembly is energized when the ignition is in the ON position and the brake pedal is depressed. When the key is in the ON position and the brake pedal is depressed, the shifter is unlocked and will move into any position. The interlock system also prevents the ignition switch from being turned to the LOCK position, unless the shifter is in the gated PARK position.

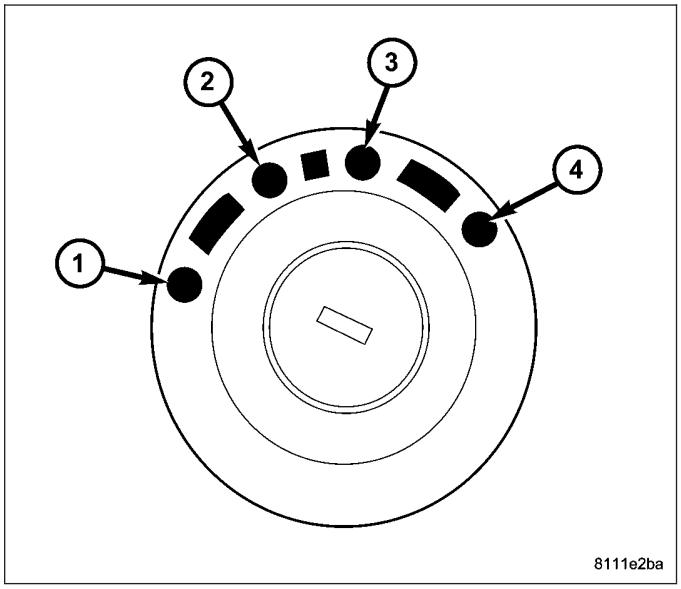

The following chart describes the normal operation of the Brake Transmission Shift Interlock (BTSI) system. If the “expected response” differs from the vehicle’s response, then system repair and/or adjustment is necessary.

ACTION	EXPECTED RESPONSE
1. Turn key to the ″ACC″ position and depress brake pedal.	1. Shifter CAN be shifted out of park.
2. Turn key to the ″ON″ position, with foot off of brake pedal.	2. Shifter CANNOT be shifted out of park.
3. Turn key to the ″ON″ position and depress the brake pedal.	3. Shifter CAN be shifted out of park.
4. Leave shifter in any gear, except ″PARK″, and try to return key to the ″LOCK″ position.	4. Key cannot be returned to the ″LOCK″ position.
5. Return shifter to ″PARK″ and try to remove the key.	5. Key can be removed (after returning to ″LOCK″ position).
6. With the key removed, and the brake depressed, try to shift out of ″PARK″.	6. Shifter cannot be shifted out of ″PARK″.
NOTE: Any failure to meet these expected responses requires system adjustment or repair.	

BTSI Override

In the event of an electrical failure, the vehicle can be shifted out of PARK by using the following procedure.

1. Turn the key to the ACC or ON position.
2. Remove the liner to the cubby bin to the right side of the shifter.
3. Depress the BTSI override (2) on the side of the shifter assembly (1).
4. While the override is depressed, move the shifter out of the PARK position.
5. Return the cubby bin liner to its original location.

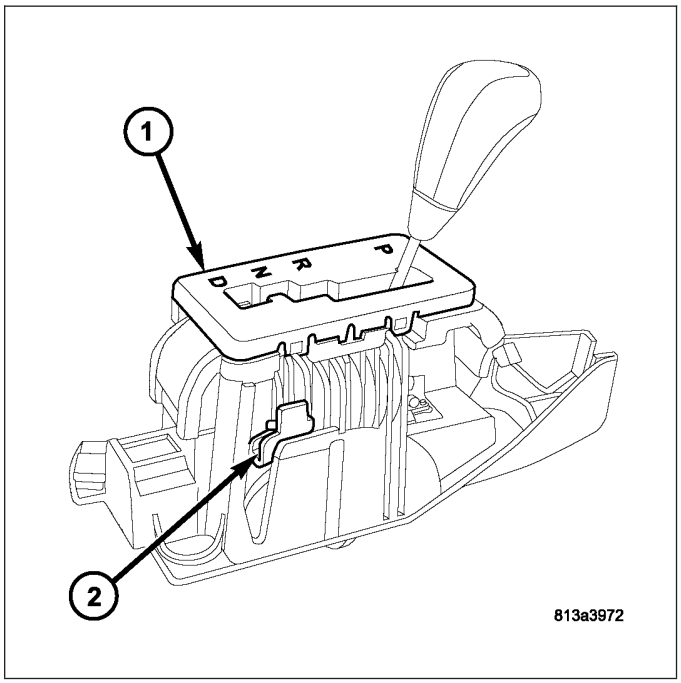

DIAGNOSIS AND TESTING - BRAKE TRANSMISSION SHIFT INTERLOCK

SYSTEM VERIFICATION

1. Verify that the key can only be removed in the PARK position
2. When the shift lever is in PARK, the ignition key cylinder should rotate freely from ACC to LOCK. When the shifter is in any other gear or neutral position, the ignition key cylinder should not rotate to the LOCK position.
3. Shifting out of PARK should not be possible when the ignition key cylinder is in the ACC position and the brake pedal is not depressed.
4. Shifting out of PARK should not be possible while applying normal force on the shift lever and ignition key cylinder is in the ACC, ON, or START positions unless the foot brake pedal is depressed approximately 1/2 inch (12mm).
5. Shifting out of PARK should not be possible when the ignition key cylinder is in the LOCK position, regardless of the brake pedal position.

6. Shifting between any gears, NEUTRAL or into PARK may be done without depressing foot brake pedal with ignition switch in ACC, ON, or START positions.

DIAGNOSTIC CHART

CONDITION	POSSIBLE CAUSE	CORRECTION
KEY WILL NOT ROTATE TO THE LOCK POSITION.	1. Misadjusted Park Lock cable.	1. Adjust Park Lock cable. (Refer to 21 - TRANSMISSION AND TRANSFER CASE/AUTOMATIC TRANSMISSION/BRAKE TRANSMISSION SHIFT INTERLOCK SYSTEM - ADJUSTMENTS)
	2. Misadjusted gearshift cable.	2. Adjust gearshift cable. (Refer to 21 - TRANSMISSION AND TRANSFER CASE/AUTOMATIC TRANSMISSION/GEAR SHIFT CABLE - ADJUSTMENTS)
	3. Burrs on ignition key.	3. Remove burrs and cycle key several times to verify operation.
	4. Binding or broken components.	4. Inspect system components and repair/replace components as necessary.
VEHICLE WILL NOT START UNLESS SHIFTER IS HELD FORWARD, OR REARWARD, OF THE PARK POSITION.	1. Misadjusted gearshift cable.	1. Adjsut gearshift cable. (Refer to 21 - TRANSMISSION AND TRANSFER CASE/AUTOMATIC TRANSMISSION/GEAR SHIFT CABLE - ADJUSTMENTS)

ADJUSTMENTS - BRAKE TRANSMISSION SHIFT INTERLOCK

The park interlock cable is part of the brake/shift lever interlock system. Correct cable adjustment is important to proper interlock operation. The gear shift and park lock cables must both be correctly adjusted in order to shift out of PARK.

ADJUSTMENT PROCEDURE

1. Remove floor console as necessary for access to the park lock cable. (Refer to 23 - BODY/INTERIOR/FLOOR CONSOLE - REMOVAL)
2. Shift the transmission into the PARK position.
3. Turn ignition switch to LOCK position. **Be sure ignition key cylinder is in the LOCK position. Cable will not adjust correctly in any other position.**

NOTE: If the key will not turn to the LOCK position, pull up on the cable lock button and manually move the cable in and out until the key can be turned to the LOCK position.

4. Pull cable lock button up to release cable, if necessary.
5. Remove and discard the cable adjuster lock pin, if a new cable is being installed.
6. Ensure that the cable is free to self-adjust by pushing cable rearward and releasing.
7. Push lock button down until it snaps in place. The lock should be 1-2mm below the surface of the cylinderical portion of the cable adjustment housing.

BTSI FUNCTION CHECK

1. Verify removal of ignition key allowed in PARK position only.
2. When the shift lever is in PARK, the ignition key cylinder should rotate freely LOCK position. When the shifter is in any other position, the ignition key should not rotate to the LOCK position.

3. Shifting out of PARK should not be possible when the ignition key cylinder is in the ACC position and the brake pedal is not depressed.
4. Shifting out of PARK should not be possible while applying normal force on the shift lever and ignition key cylinder is in the ACC, ON, or START positions unless the foot brake pedal is depressed approximately 1/2 inch (12mm).
5. Shifting out of PARK should not be possible when the ignition key cylinder is in the LOCK position, regardless of the brake pedal position.
6. Shifting between any gears, NEUTRAL or into PARK may be done without depressing foot brake pedal with ignition switch in ACC, ON, or START positions.
7. The floor shifter lever and gate positions should be in alignment with all transmission detent positions.
8. Engine starts must be possible with shifter lever in PARK or NEUTRAL gate positions only. Engine starts must not be possible in any other gate positions other than PARK or NEUTRAL.
9. With the shifter lever handle in the:
   - PARK position- apply forward force on center of handle and remove pressure. Engine start must be possible.
   - PARK position- apply rearward force on center of handle and remove pressure. Engine start must be possible.
   - NEUTRAL position- engine start must be possible.
   - NEUTRAL position, engine running and brakes applied- Apply forward force on center of shift handle. Transmission should not be able to shift into REVERSE detent.

UNIT-ELECTROHYDRAULIC CONTROL

DESCRIPTION

The electrohydraulic control unit comprises the shift plate (13) made from light alloy for the hydraulic control and an electrical control unit (12). The electrical control unit (12) comprises of a supporting body made of plastic, into which the electrical components (1 - 11) are assembled. The supporting body is mounted on the shift plate (13) and screwed to it.

Strip conductors inserted into the supporting body make the connection between the electrical components and a plug connector. The connection to the wiring harness on the vehicle and the transmission control module (TCM) is produced via this 13-pin plug connector with a bayonet lock.

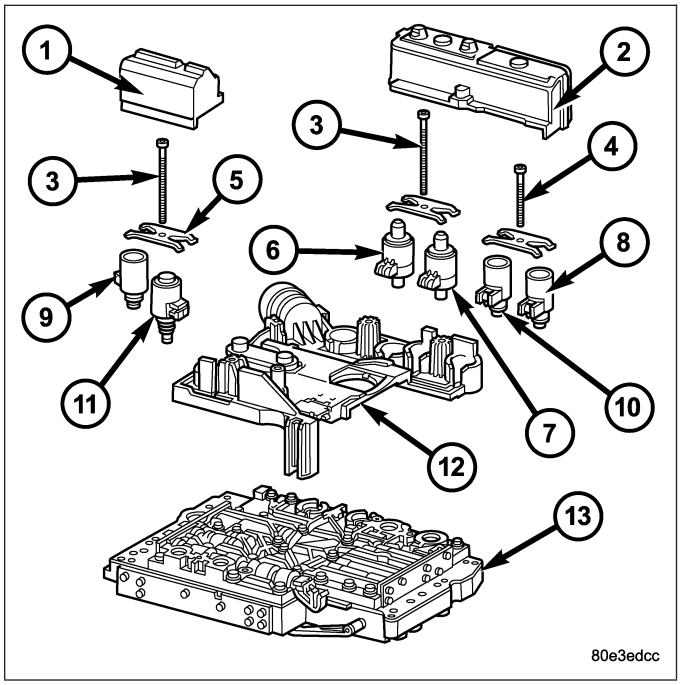

Electrical Unit Components

1 - SOLENOID CAP
2 - SOLENOID CAP
3 - BOLT - M6X32
4 - BOLT - M6X30
5 - LEAF SPRING
6 - MODULATING PRESSURE REGULATING SOLENOID VALVE
7 - SHIFT PRESSURE REGULATING SOLENOID
8 - 3-4 SHIFT SOLENOID
9 - TORQUE CONVERTER LOCK-UP SOLENOID
10 - 1-2/4-5 SHIFT SOLENOID
11 - 2-3 SHIFT SOLENOID
12 - ELECTRICHYDRAULIC CONTROL MODULE
13 - SHIFT PLATE

ELECTRICAL CONTROL UNIT

The electric valve control unit (7) consists of a plastic shell which houses the RPM sensors (1,12), regulating solenoid valves (3, 4), solenoid valves (5, 6, 10), the TCC solenoid valve (11), the park/neutral contact (9), and the transmission oil temperature sensor (8). Conductor tracks integrated into the shell connect the electric components to a plug connection (2). This 13-pin plug connection (2) establishes the connection to the vehicle-side cable harness and to the transmission control module (TCM). With the exception of the solenoid valves, all other electric components are fixed to the conductor tracks.

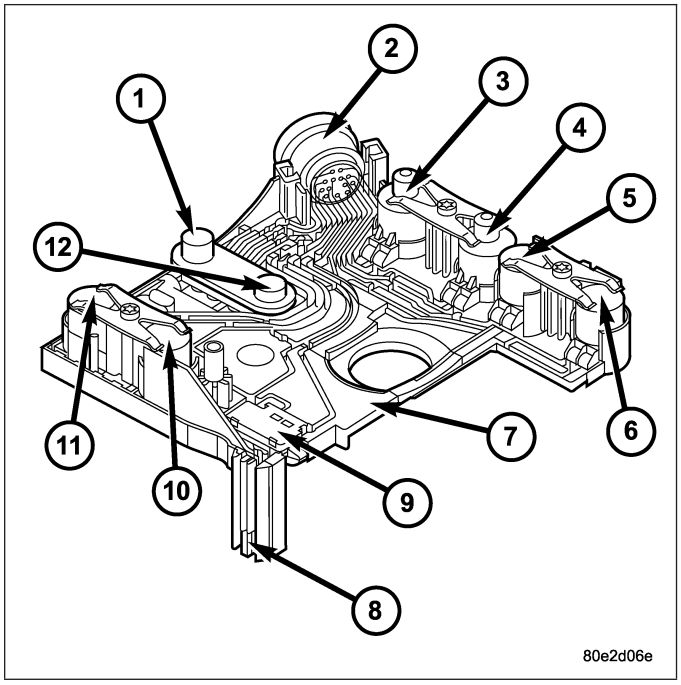

HYDRAULIC CONTROL UNIT

Working Pressure (Line Pressure or Operating Pressure) (p-A)

The working pressure provides the pressure supply to the hydraulic control and the transmission shift elements. It is the highest hydraulic pressure in the entire hydraulic system. The working pressure is regulated at the working pressure regulating valve in relation to the load and gear. All other pressures required for the transmission control are derived from the working pressure.

Lubrication Pressure (p-Sm)

At the working pressure regulating valve surplus oil is diverted to the lubrication pressure regulating valve, from where it is used in regulated amounts to lubricate and cool the mechanical transmission components and the torque converter. Furthermore, the lubrication pressure (p-Sm) is also used to limit the pressure in the torque converter.

Shift Pressure (p-S)

The shift pressure is determined by the shift pressure regulating solenoid valve and the shift pressure regulating valve. The shift pressure:

- Regulates the pressure in the activating shift element during the shift phase.
- Determines together with the modulating pressure the pressure reduction at the deactivating shift element as regulated by the overlap regulating valve.
- Initializes 2nd gear in limp-home mode.

Modulating Pressure (p-Mod)

The modulating pressure influences the size of the working pressure and determines together with the shift pressure the pressure regulated at the overlap regulating valve. The modulating pressure is regulated at the modulating pressure regulating solenoid valve, which is under regulating valve pressure. The modulating pressure is variable and relative to the engine load.

Regulating Valve/Control Valve Pressure (p-RV)

The regulating valve pressure is regulated at the regulating valve pressure regulating valve in relation to the working pressure (p-A) up to a maximum pressure of 8 bar (116 psi). It supplies the modulating pressure regulating solenoid valve, the shift pressure regulating solenoid valve and the shift valve pressure regulating valve.

Shift Valve Pressure (p-SV)

The shift valve pressure (p-SV) is derived from the regulating valve pressure (p-RV), is regulated at the shift valve pressure regulating valve and is then present at the:

- 1-2 and 4-5 shift solenoid valve.
- 3-4 shift solenoid valve.
- 2-3 shift solenoid valve.
- Torque converter lockup solenoid valve.
- 3-4 and 2-3 shift pressure shift valve.

The shift valve pressure (p-SV) controls the command valves via the upshift/downshift solenoid valves.

Overlap Pressure (p-Ü)

The overlap pressure controls the shift component pressure reduction during a shift phase. The pressure in a shift element as it disengages is controlled during the shift phase depending on engine load (modulating pressure) and the pressure in the shift element as it engages. The adjusted pressure is inversely proportional to the transmission capability of the shift element being engaged (controlled overlap).

Working Pressure Regulating Valve (Operating Pressure)

The working pressure regulating valve (4) is located in the valve housing of the shift plate. It regulates the primary pressure of the hydraulic system.

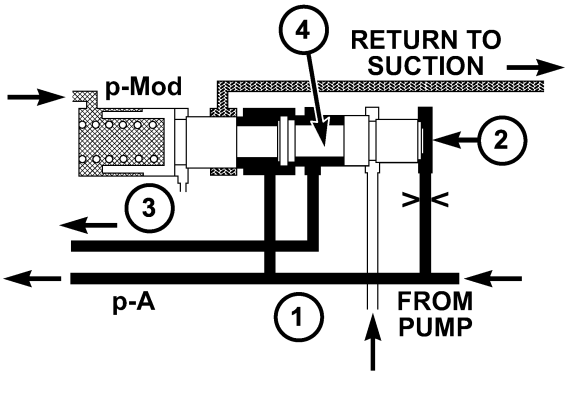

1 - PRESSURE FROM K1/K2
2 - END FACE
3 - TO TORQUE CONVERTER REGULATING VALVE
4 - WORKING PRESSURE REGULATING VALVE

Torque Converter Lockup Clutch Regulating Valve

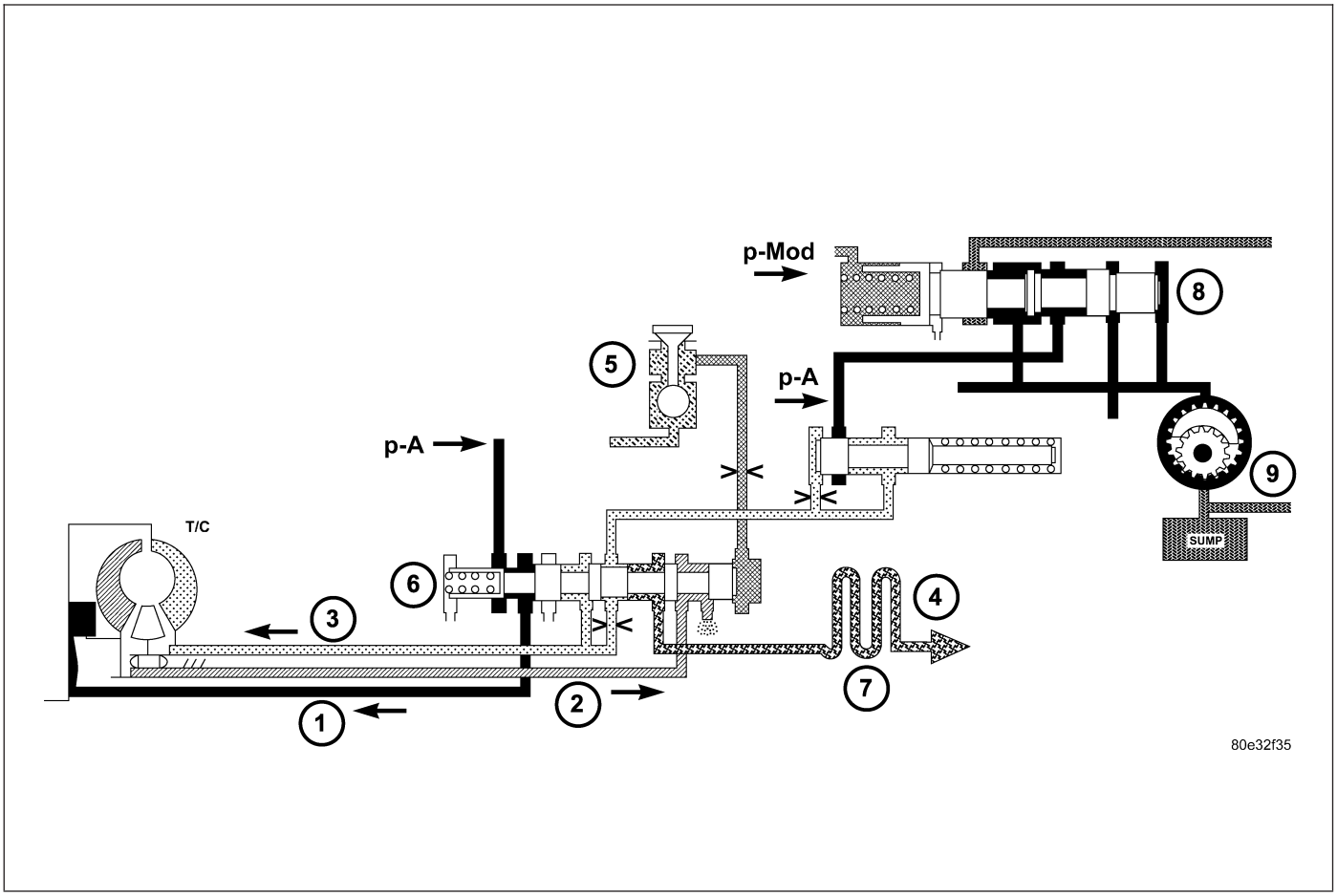

1 - TORQUE CONVERTER LOCK-UP CLUTCH
2 - TORQUE CONVERTER OUTPUT
3 - TORQUE CONVERTER INPUT
4 - LUBRICATION
5 - TORQUE CONVERTER LOCK-UP SOLENOID
6 - TORQUE CONVERTER LOCK-UP CLUTCH REGULATING VALVE
7 - OIL COOLER
8 - LINE PRESSURE REGULATING VALVE
9 - OIL PUMP

The torque converter lock-up clutch regulating valve (6) is located in the valve housing of the electrohydraulic control module. The valve is responsible for the hydraulic control of the torque converter lockup clutch and distribution of the lubricating oil.

Overlap Regulating Valve

Each shift group is assigned one overlap regulating valve (1). The 1-2 / 4-5 overlap regulating valve is installed in the shift valve housing; the 2-3 and 3-4 overlap regulating valves are installed in the valve housing. The overlap regulating valve regulates the pressure reduction during a shift phase.

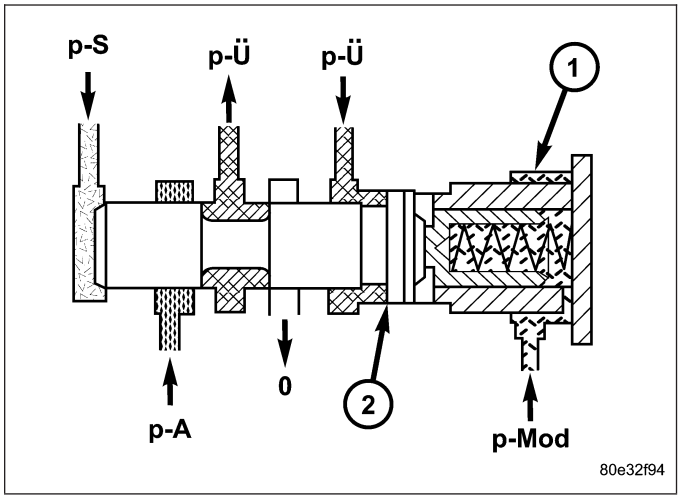

1 - OVERLAP REGULATING VALVE
2 - ANNULAR SURFACE ON OVERLAP REGULATING VALVE

Command Valve

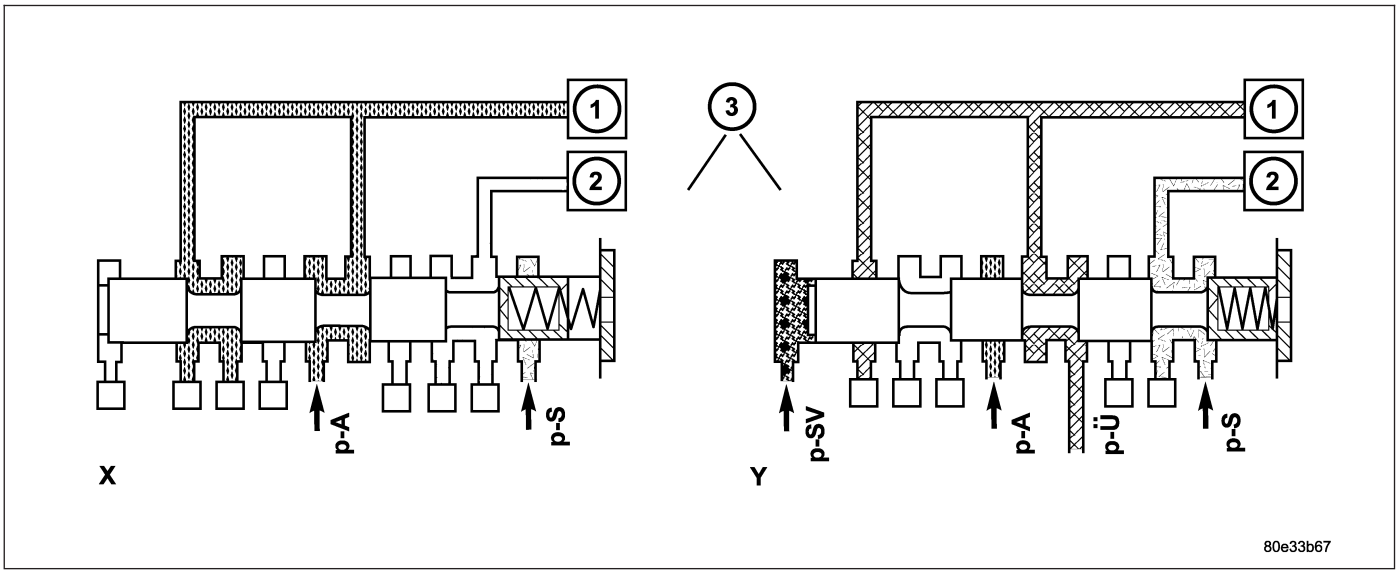

Command Valve

1 - HOLDING CLUTCH B1
2 - DRIVING CLUTCH K1
3 - 1-2/4-5 COMMAND VALVE

Each shift group possesses one command valve (3). The 1-2 / 4-5 and 2-3 command valves are installed in the shift valve housing, the 3-4 command valve is installed in the valve housing. The command valve switches the shift group from the stationary phase to the shift phase and back again.

Holding Pressure Shift Valve

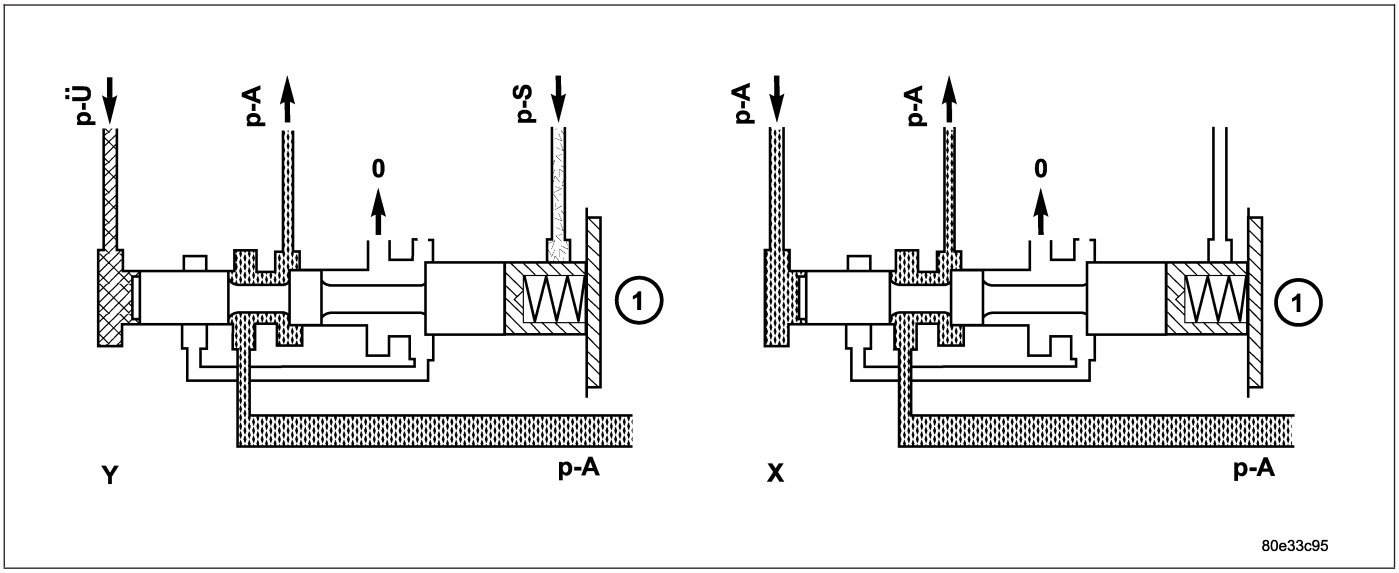

Holding Pressure Shift Valve

1 - HOLDING PRESSURE SHIFT VALVE

Each shift group possesses one holding pressure shift valve (1). The 1-2 / 4-5 and 2-3 holding pressure shift valves are installed in the shift valve housing; the 3-4 holding pressure shift valve is installed in the valve housing. The holding pressure shift valve allocates the working pressure to one actuator of a shift group.

Shift Pressure Shift Valve

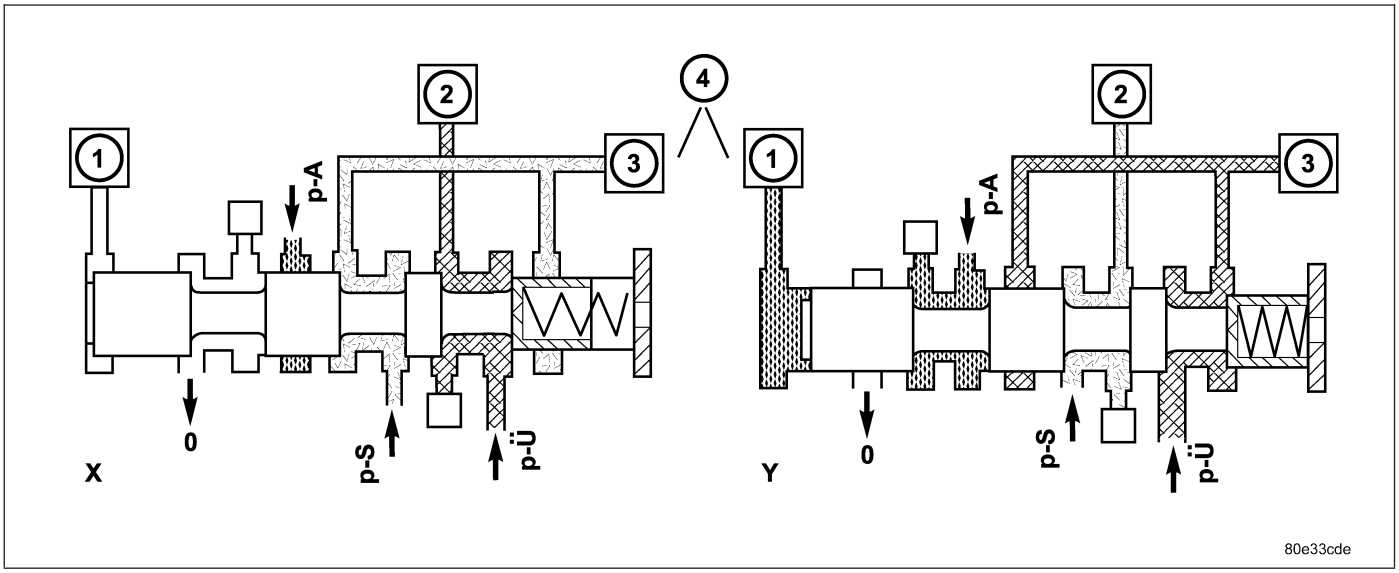

Shift Pressure Shift Valve

1 - 1-2/4-5 COMMAND VALVE
2 - DRIVING CLUTCH K1
3 - HOLDING CLUTCH B1
4 - 1-2/4-5 SHIFT PRESSURE SHIFT VALVE

Each shift group possesses one shift pressure shift valve (4). The 1-2 / 4-5 and 2-3 shift pressure shift valves are installed in the shift valve housing; the 3-4 shift pressure shift valve is installed in the valve housing. It assigns the shift pressure (p-S) to the activating actuator and the overlap pressure (p-Ü) regulated by the overlap regulating valve to the deactivating actuator.

Lubrication Pressure Regulating Valve

The lubrication pressure regulating valve (1) is located in the valve housing of the electrohydraulic control module. The valve controls the fluid to lubricate and cool the mechanical part of the transmission, and limits the pressure in the torque converter.

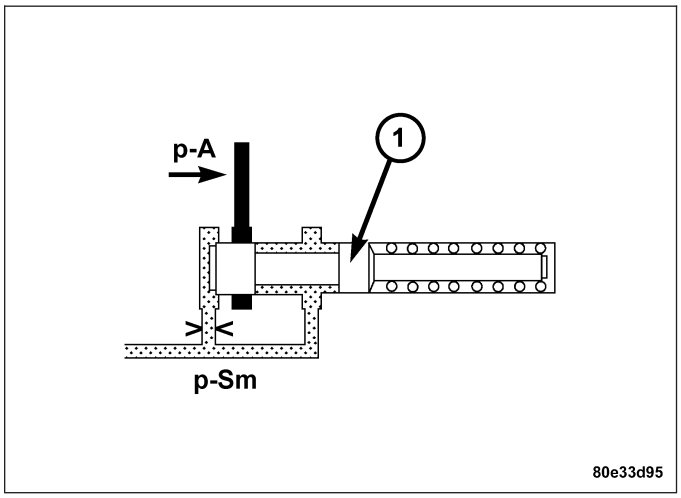

Shift Pressure Regulating Valve

The shift pressure regulating valve (1) is located in the valve housing of the shift plate. It regulates the shift pressure (p-S).

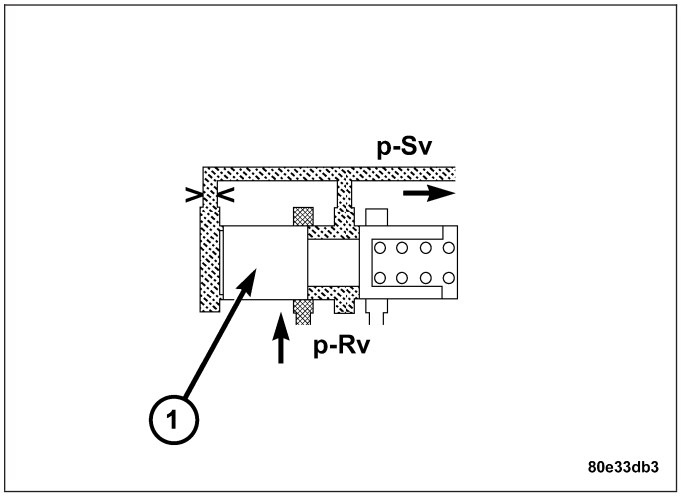

Regulating Valve Pressure Regulating Valve

The regulating valve pressure regulating valve (1) is located in the valve housing of the electrohydraulic control module. It regulates the regulating valve/control valve pressure (p-RV).

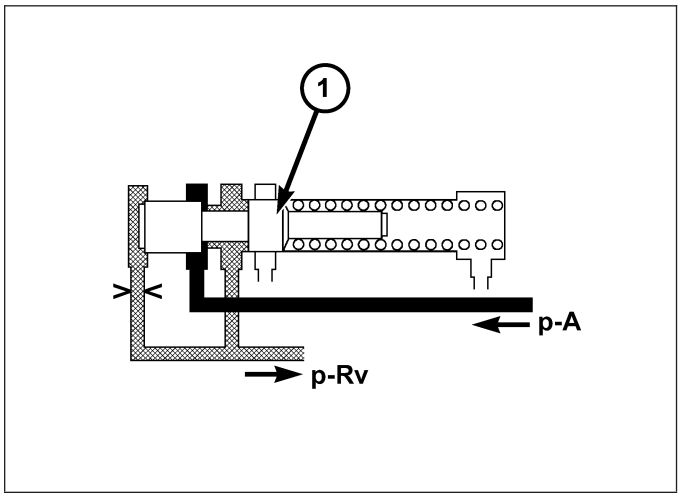

Shift Valve Pressure Regulating Valve

The shift valve pressure regulating valve (1) is located in the valve housing of the electrohydraulic control module. It regulates the shift valve pressure (p-SV).

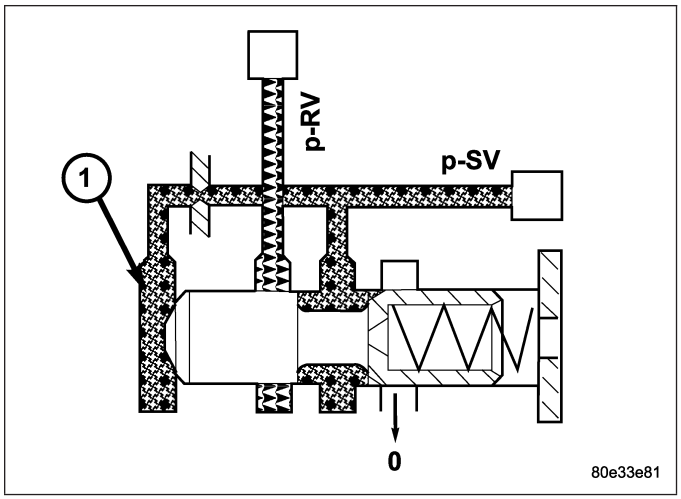

OPERATION

ELECTRICAL CONTROL UNIT

Signals from the transmission control module (TCM) are converted into hydraulic functions in the electric valve control unit (7). The RPM sensors (1, 12), starter interlock contact (9), and transmission oil temperature sensor (8) of the electric valve control unit (7) supply the TCM with input signals. The solenoid valves are controlled by the TCM and trigger the hydraulic functions.

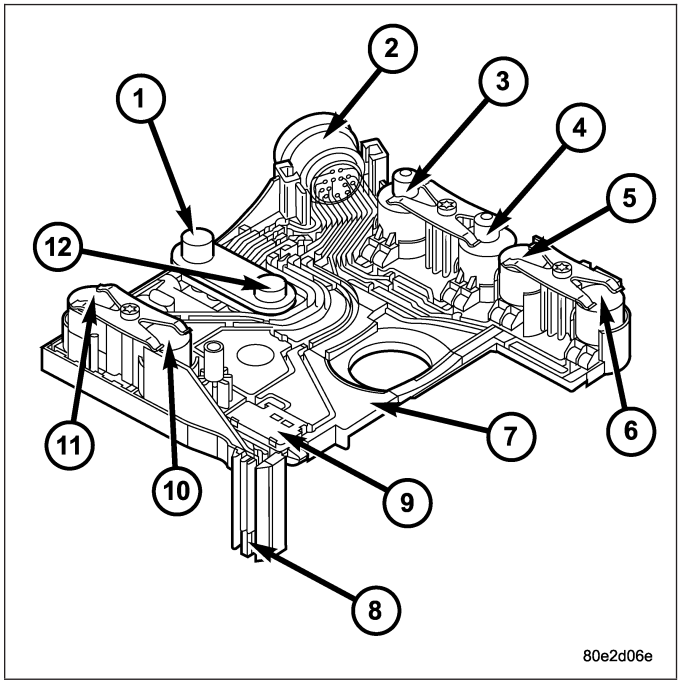

HYDRAULIC CONTROL UNIT

Working Pressure Regulating Valve (Line Pressure or Operating Pressure)

The working pressure (p-A) is regulated at the working pressure regulating valve (4) in relation to load (modulating pressure, p-Mod) and gear (K1 or K2 pressure) (1). The spring in the working pressure regulating valve sets a minimum pressure level (basic pressure).

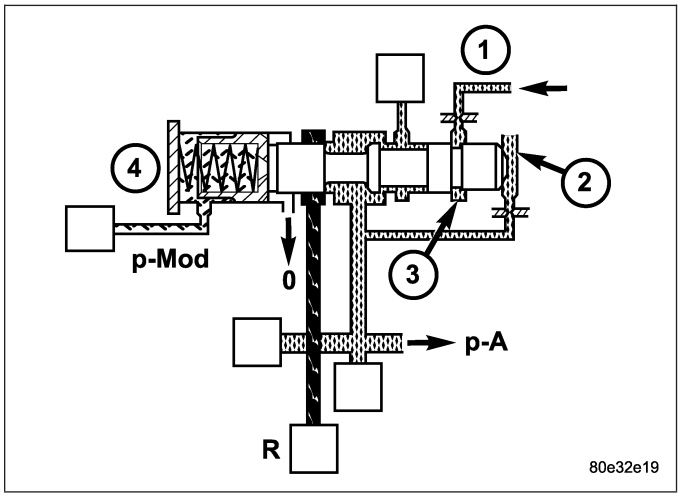

Torque Converter Lockup Clutch Regulating Valve

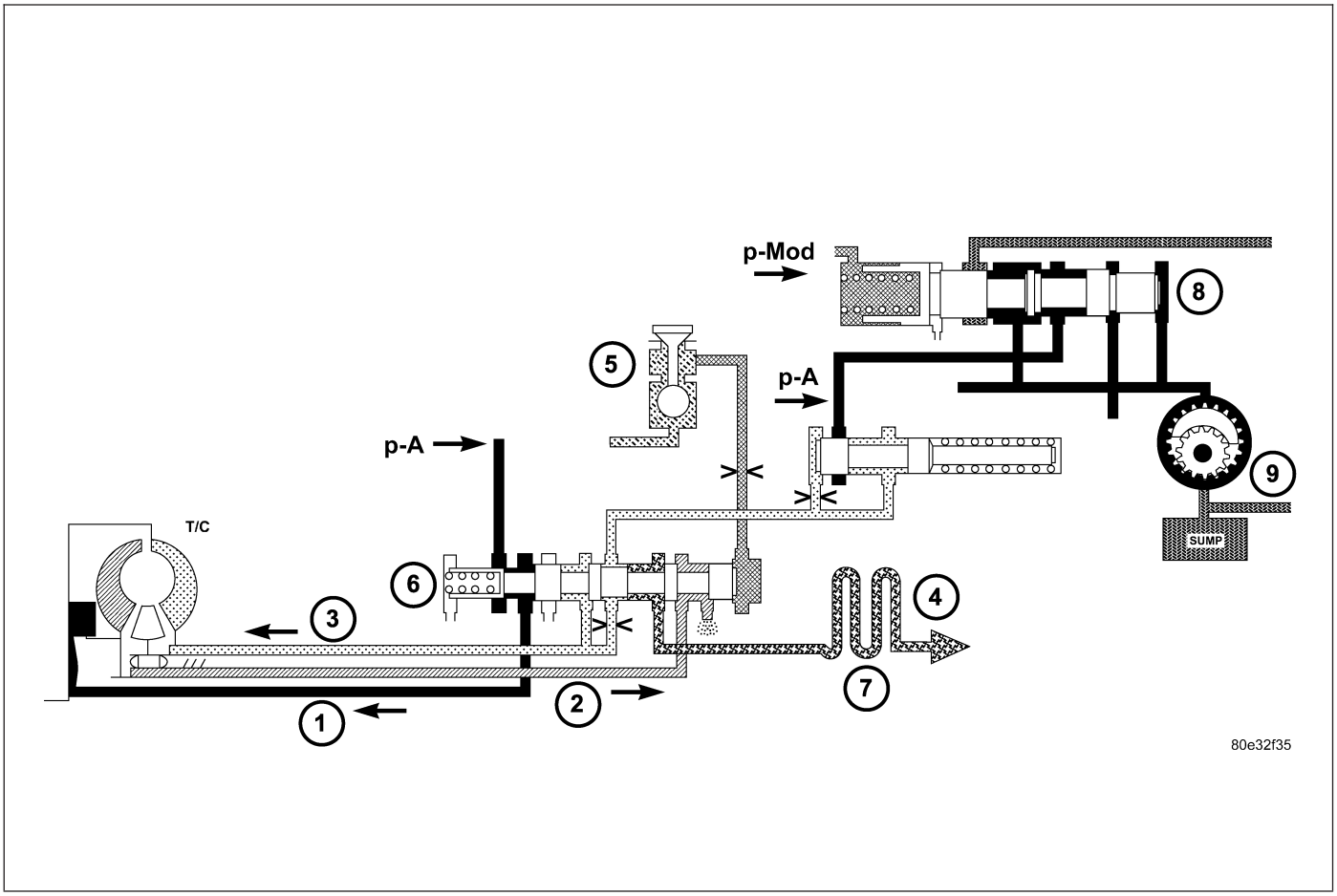

1 - TORQUE CONVERTER LOCK-UP CLUTCH
2 - TORQUE CONVERTER OUTPUT
3 - TORQUE CONVERTER INPUT
4 - LUBRICATION
5 - TORQUE CONVERTER LOCK-UP SOLENOID
6 - TORQUE CONVERTER LOCK-UP CLUTCH REGULATING VALVE
7 - OIL COOLER
8 - LINE PRESSURE REGULATING VALVE
9 - OIL PUMP

The torque converter lockup clutch regulating valve (6) regulates the torque converter lock-up clutch working pressure (p-TCC) in relation to the torque converter clutch control pressure (p-S/TCC). According to the size of the working pressure (p-A), the torque converter lockup clutch is either Engaged, Disengaged, or Slipping. When the regulating valve (6) is in the lower position, lubricating oil flows through the torque converter and oil cooler (7) into the transmission (torque converter lockup clutch unpressurized). In its regulating position (slipping, torque converter lockup clutch pressurized), a reduced volume of lubricating oil flows through the annular passage bypassing the torque converter and passing direct through the oil cooler into the transmission. The rest of the lubricating oil is directed via the throttle ″a″ into the torque converter in order to cool the torque converter lockup clutch.

Overlap Regulating Valve

During the shift phase the pressure in the deactivating shift actuator is regulated in relation to the engine load (modulating pressure, p-Mod) and the pressure in the activating actuator. The regulated pressure is inversely proportional to the transfer capacity of the activating shift actuator (regulated overlap).

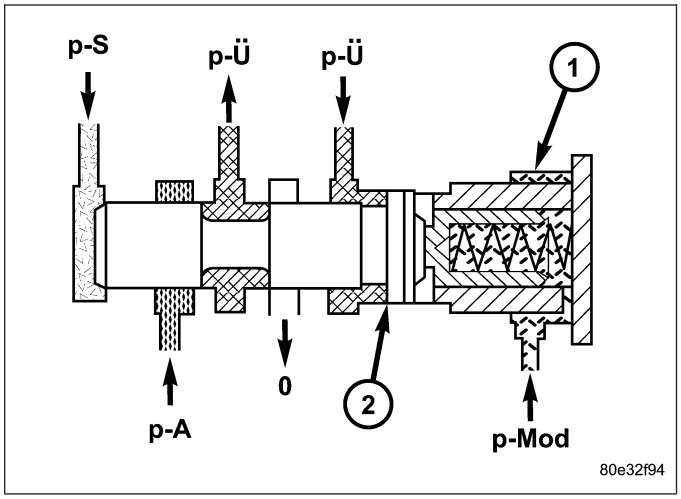

1 - OVERLAP REGULATING VALVE
2 - ANNULAR SURFACE ON OVERLAP REGULATING VALVE

Command Valve

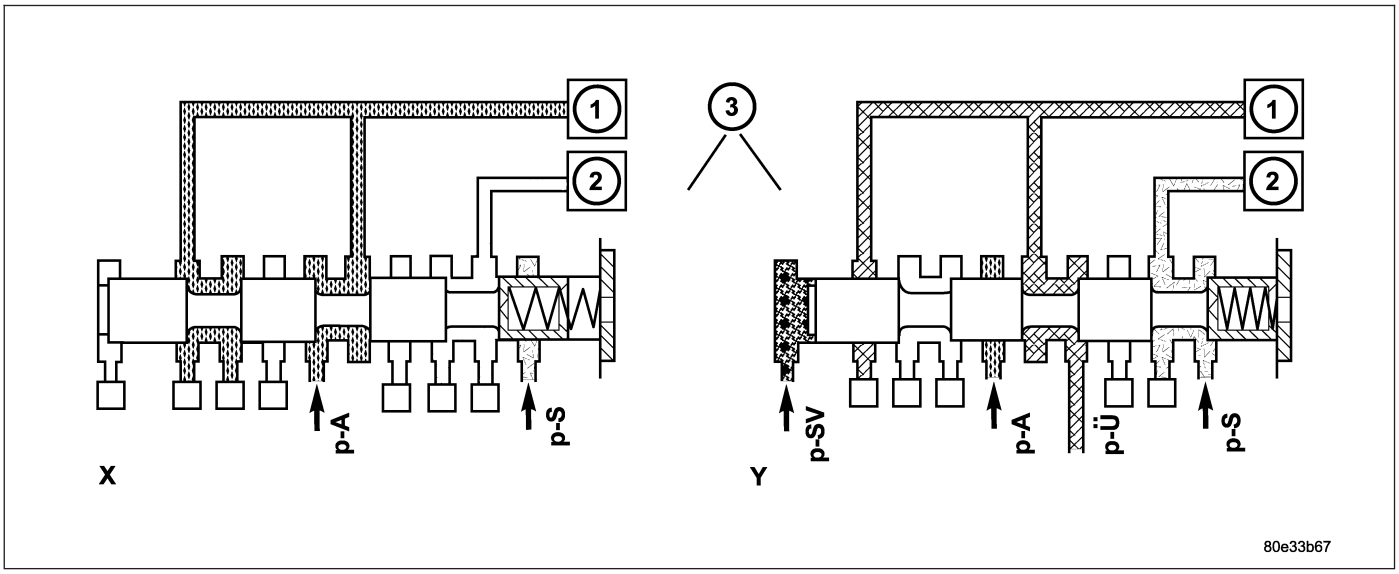

Command Valve

1 - HOLDING CLUTCH B1
2 - DRIVING CLUTCH K1
3 - 1-2/4-5 COMMAND VALVE

When the end face is unpressurized (stationary phase), the working pressure (p-A) is directed to the actuated shift element. If the end face of the command valve is subjected to the shift valve pressure (p-SV) (shift phase), then the shift pressure (p-S) is switched to the activating element and the overlap pressure (p-Ü) is switched to the deactivating element.

Shift Valve Holding Pressure

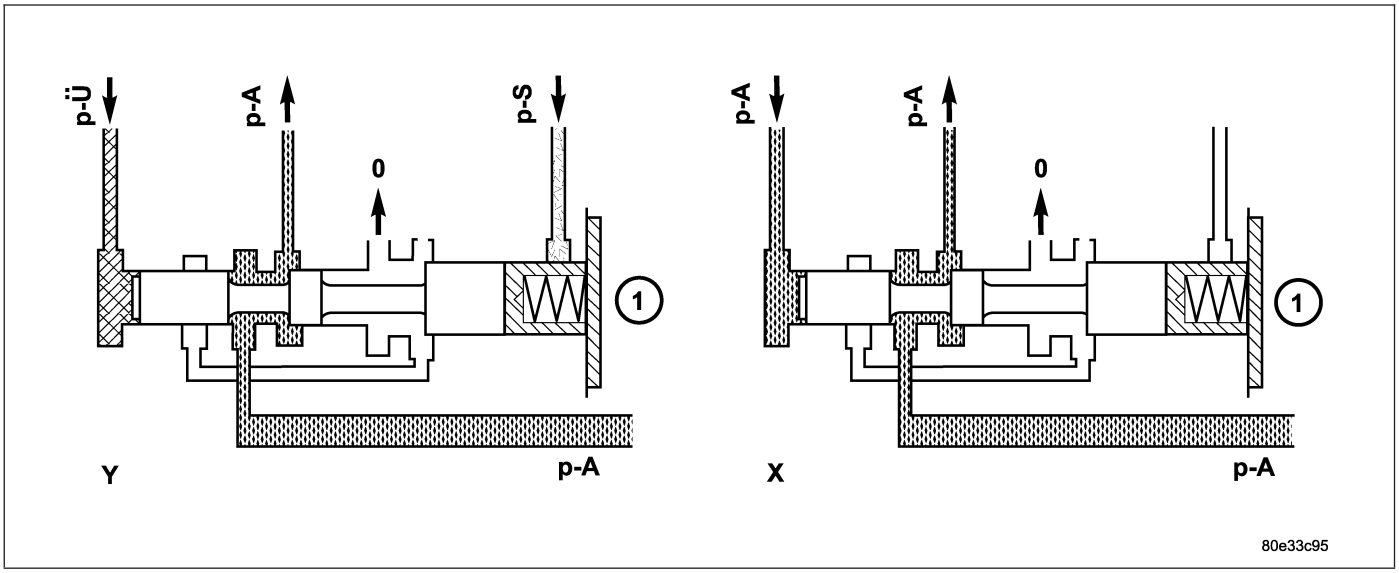

Shift Valve Holding Pressure

1 - HOLDING PRESSURE SHIFT VALVE

The holding pressure shift valve (1) is actuated by the pressures present at the end face in the actuators and a spring. It assigns the working pressure (p-A) to the actuator with the higher pressure (taking into account the spring force and the effective surface area). The other element of the shift group is then unpressurized. The valve switches over only during the shift phase and only at a certain pressure ratio between the overlap pressure (p-Ü) and the shift pressure (p-S).

Shift Pressure Shift Valve

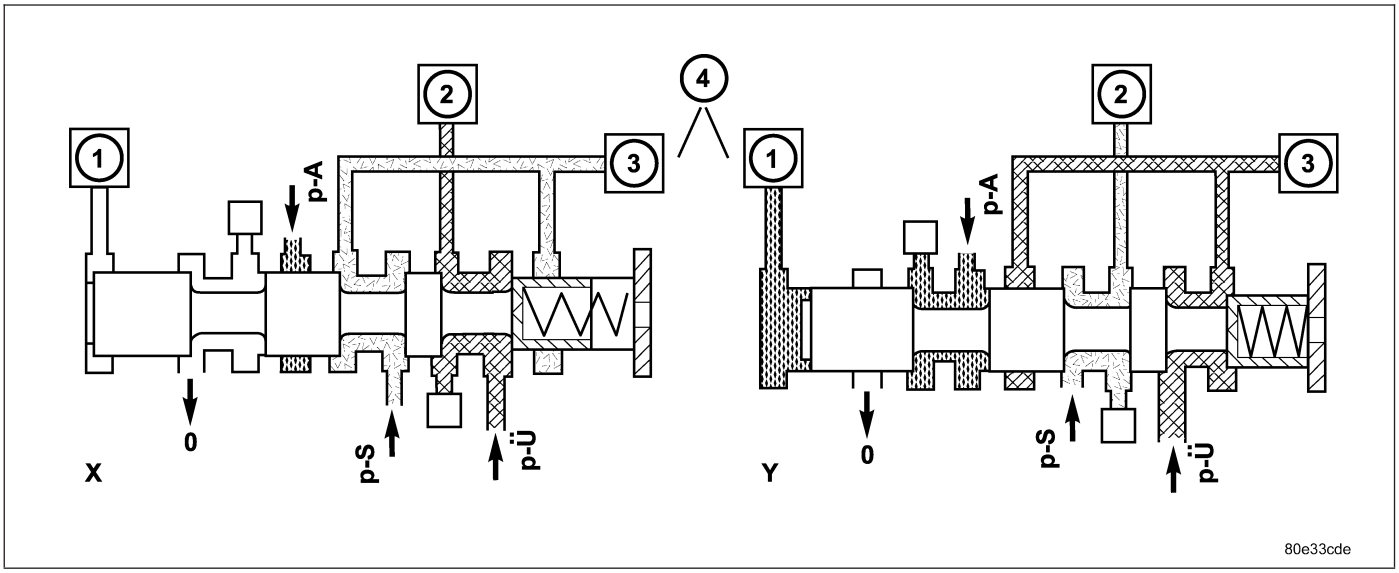

Shift Pressure Shift Valve

1 - 1-2/4-5 COMMAND VALVE
2 - DRIVING CLUTCH K1
3 - HOLDING CLUTCH B1
4 - 1-2/4-5 SHIFT PRESSURE SHIFT VALVE

When the multiple-disc brake B1 (3) is activated, the working pressure (p-A) is applied to the end face of the 1-2 / 4-5 shift pressure shift valve (4) via the command valve (1). Its shift state is maintained during the shift phase by substituting the shift element pressure acting on its end face (and which is variable during the shift phase) with a corresponding constant pressure. When the multi-plate clutch K1 (2) is activated, the end face of the shift valve is unpressurized during the stationary and shift phases, so the shift state is maintained during the shift phase in this case too.

Lubrication Pressure Regulating Valve

At the working pressure regulating valve surplus oil is diverted to the lubrication pressure regulating valve (1), from where the lubrication pressure (p-Sm) is used in regulated amounts to supply the transmission lubrication system including the torque converter.

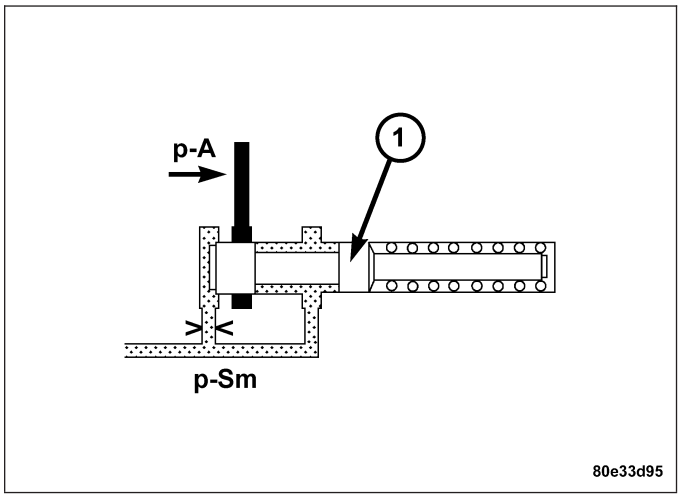

Shift Pressure Regulating Valve

The shift pressure is determined by the shift pressure regulating solenoid valve and the shift pressure regulating valve (1). In addition, pressure from the clutch K2 is also present at the annular surface of the shift pressure regulating valve. This reduces the shift pressure in 2nd gear.

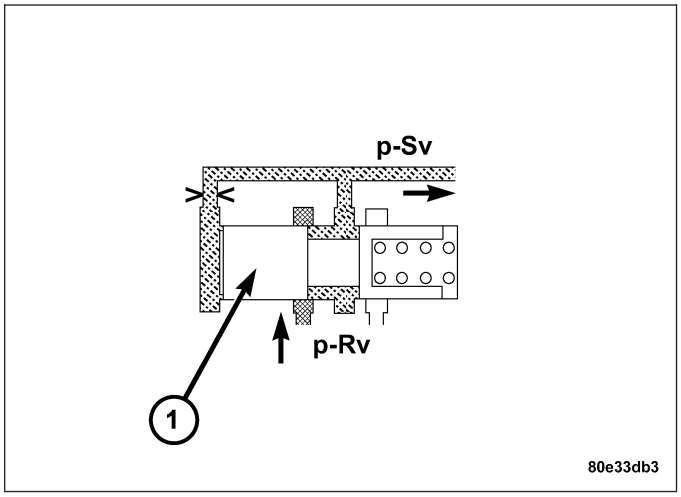

Regulating Valve Pressure Regulating Valve

The regulating valve pressure (p-RV) is set at the regulating valve pressure regulating valve (1) in relation to the working pressure (p-A) as far as the maximum pressure.

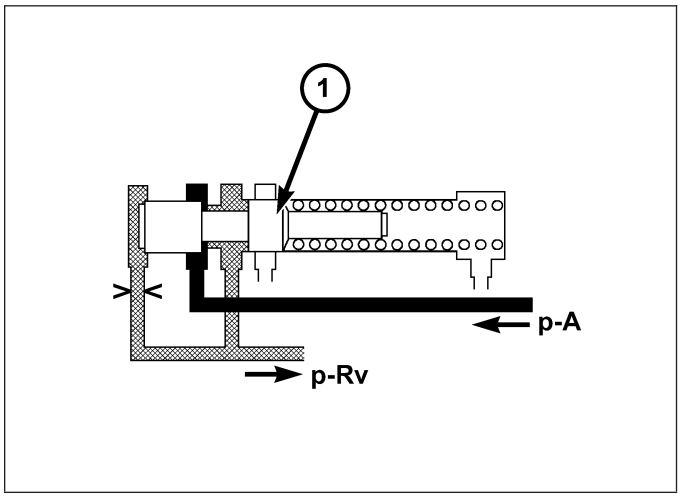

Shift Valve Pressure Regulating Valve

The non-constant regulating valve pressure (p-RV) is regulated to a constant shift valve pressure (p-SV) at the shift valve pressure regulating valve (1) and is used to supply the 1-2 and 4-5 / 3-4 / 2-3 solenoid valves and the torque converter lockup clutch PWM solenoid valve.

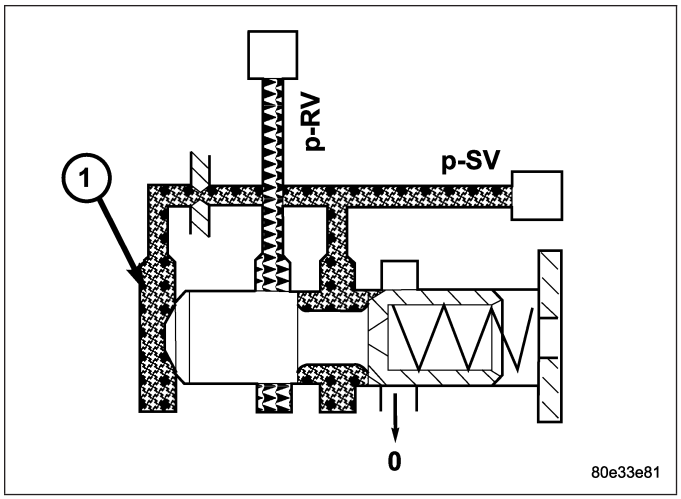

REMOVAL

1. Move selector lever to position ″P″.
2. Raise vehicle.
3. Disconnect 13-pin plug connector (1). Turn bayonet lock of the adapter plug (2) anti-clockwise.

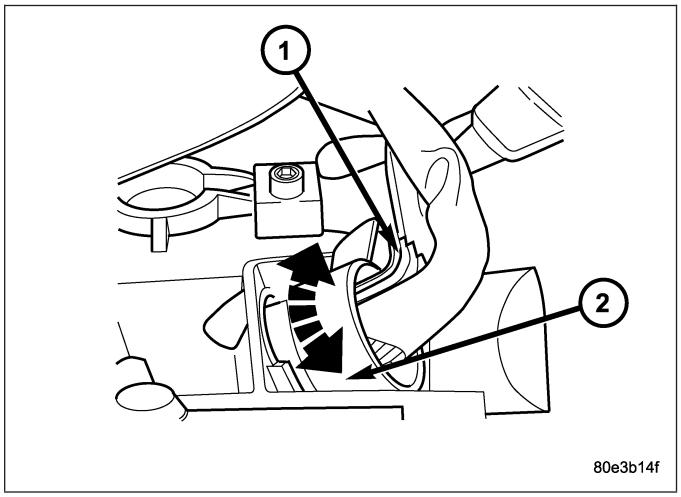

4. Loosen the adapter plug bolt (9) and remove from the adapter plug (10) from the transmission housing.
5. Detach oil pan (5).
6. Remove oil filter (4).
7. Unscrew Torx socket bolts (3) and remove electrohydraulic control module (2).

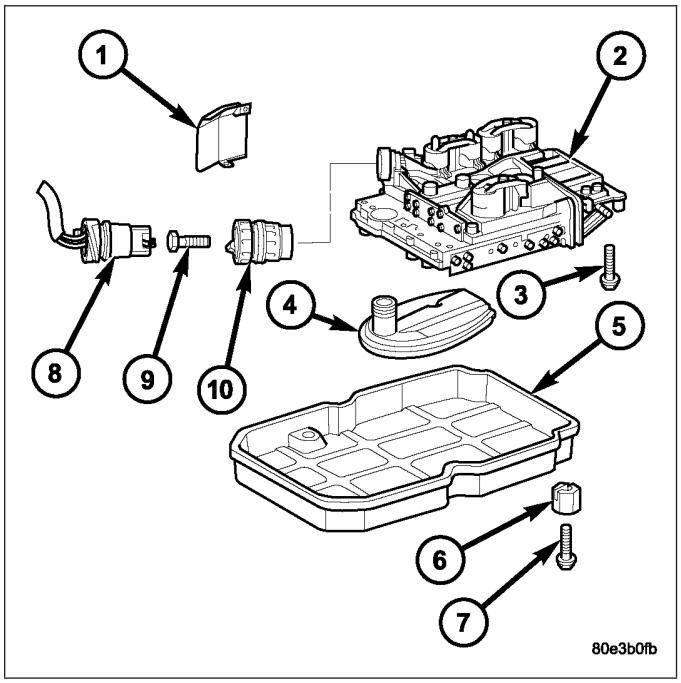

1 - HEAT SHIELD
2 - ELECTROHYDRAULIC UNIT
3 - BOLT
4 - OIL FILTER
5 - OIL PAN
6 - CLAMPING ELEMENT
7 - BOLT
8 - 13-PIN PLUG CONNECTOR
9 - BOLT
10 - ADAPTER PLUG

DISASSEMBLY

1. Remove electrohydraulic unit from the vehicle. (Refer to 21 - TRANSMISSION/AUTOMATIC TRANSMISSION - NAG1/ELECTROHYDRAULIC UNIT - REMOVAL)
2. Remove solenoid caps (1, 2).
3. Unscrew Torx® socket bolts (3, 4).

NOTE: Pay attention to the different lengths of the Torx® socket bolts.

4. Remove leaf springs (5).
5. Withdraw solenoid valves (6 - 11) from shift plate (13).

NOTE: Check O-rings on solenoid valves for damage and replace if necessary.

6. Bend away retaining lug on stiffening rib on transmission oil temperature sensor.
7. Remove electrohydraulic control module (12) from the shift plate (13).

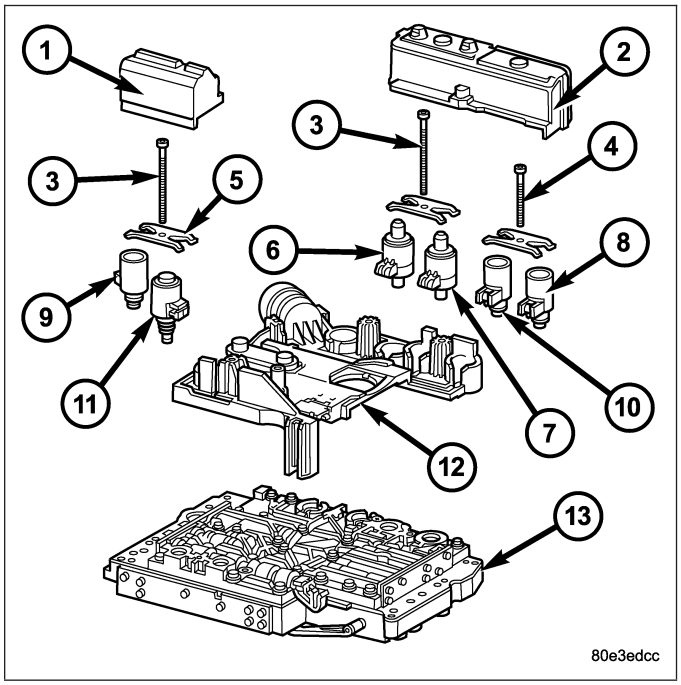

Electrical Unit Components

1 - SOLENOID CAP
2 - SOLENOID CAP
3 - BOLT - M6X32
4 - BOLT - M6X30
5 - LEAF SPRING
6 - MODULATING PRESSURE REGULATING SOLENOID VALVE
7 - SHIFT PRESSURE REGULATING SOLENOID
8 - 3-4 SHIFT SOLENOID
9 - TORQUE CONVERTER LOCK-UP SOLENOID
10 - 1-2/4-5 SHIFT SOLENOID
11 - 2-3 SHIFT SOLENOID
12 - ELECTRICHYDRAULIC CONTROL MODULE
13 - SHIFT PLATE

8. Note the locations of the major shift valve group components for assembly reference.

   A - Operating and Lubricating Pressure Regulating valves and 2-3 Overlap valve

   B - 1-2/4-5 Shift Group and Shift, Shift Valve, and Regulating Valve Pressure Regulating Valves

   C - 3-4 Shift Group

   D - 2-3 Shift Group, TCC Lock-up, and B2 Regulating Valves

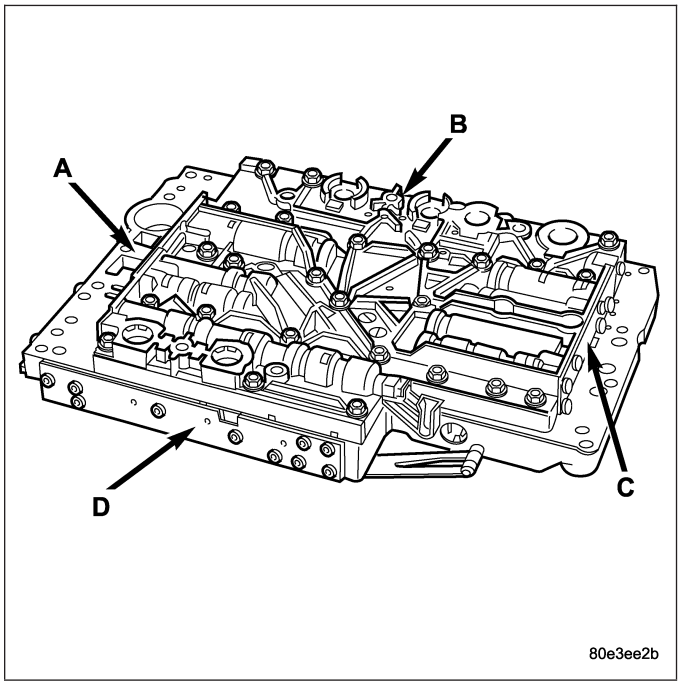

NOTE: Pay great attention to cleanliness for all work on the shift plate. Fluffy cloths must not be used. Leather cloths are particularly good. After dismantling, all parts must be washed and blown out with compressed-air, noting that parts may be blown away.

9. Unbolt leaf spring (5).
10. Unscrew Torx® bolts (1).
11. Remove valve housing (2) from valve body (4).
12. Remove sealing plate (3).

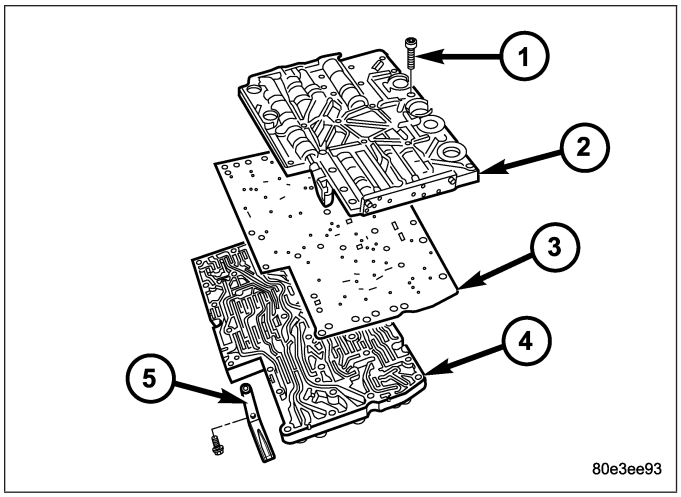

13. Remove the strainers (1) for the modulating pressure and shift pressure control solenoid valves from the valve housing.

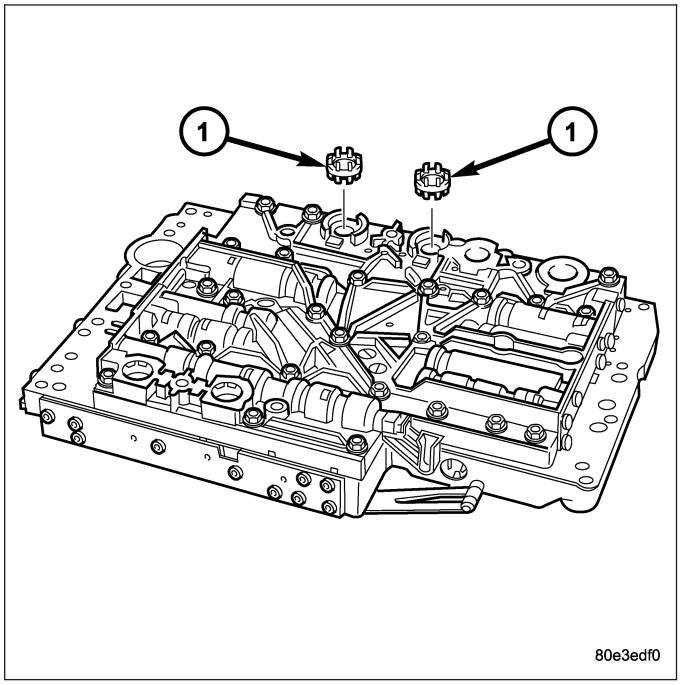

14. Remove the strainer (1) in the inlet to torque converter lock-up control solenoid valve.

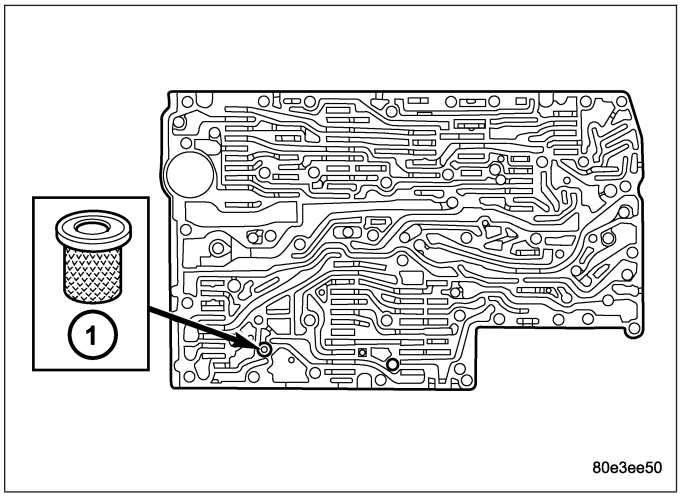

NOTE: A total of 12 valve balls are located in the valve body, four made from plastic (4) and eight from steel (1, 3).

15. Note the location of all check balls (1, 3, 4) and the central strainer (2) for re-installation. Remove all check balls (1, 3, 4) and the central strainer (2).

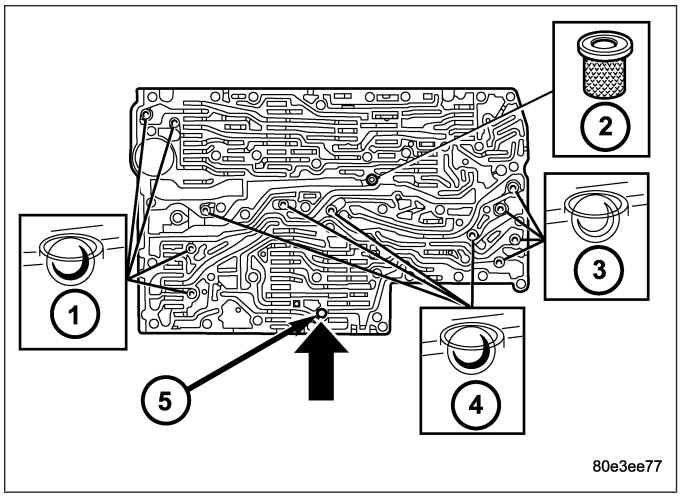

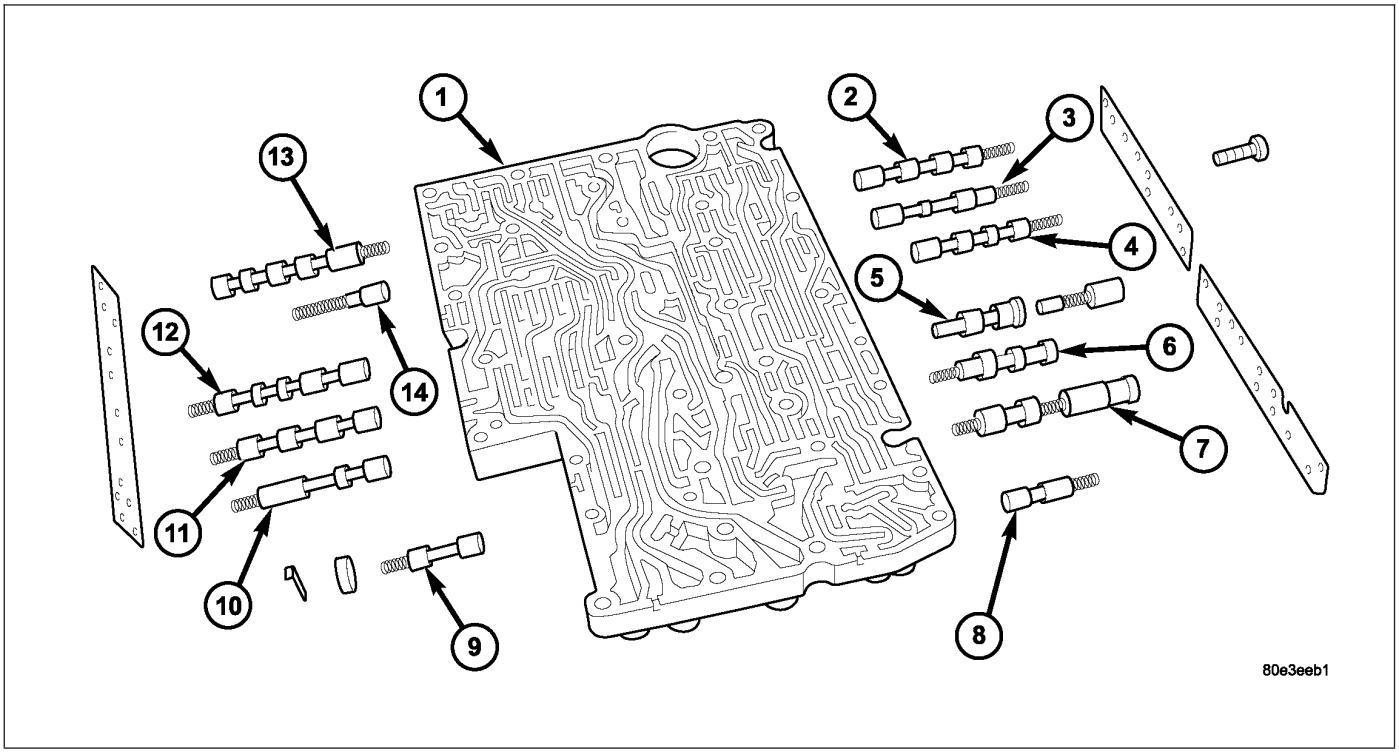

Valve Body Components

1 - VALVE BODY
2 - 1-2/4-5 COMMAND VALVE
3 - 1-2/4-5 HOLDING PRESSURE SHIFT VALVE
4 - 1-2/4-5 SHIFT PRESSURE SHIFT VALVE
5 - 1-2/4-5 OVERLAP REGULATING VALVE, SLEEVE, AND PISTON
6 - SHIFT PRESSURE REGULATING VALVE
7 - REGULATING VALVE PRESSURE REGULATING VALVE
8 - SHIFT VALVE PRESSURE REGULATING VALVE
9 - B2 SHIFT VALVE
10 - 2-3 HOLDING PRESSURE SHIFT VALVE
11 - 2-3 COMMAND VALVE
12 - 2-3 SHIFT PRESSURE SHIFT VALVE
13 - TCC LOCK-UP REGULATING VALVE
14 - TCC DAMPER VALVE - if equipped

16. Remove the screws holding the side covers to the valve body and valve housing.
17. Remove all valves and springs from the valve body (1). Check all valves for ease of movement and shavings.

NOTE: The sleeves and pistons of the overlap regulating valves must not be mixed up.

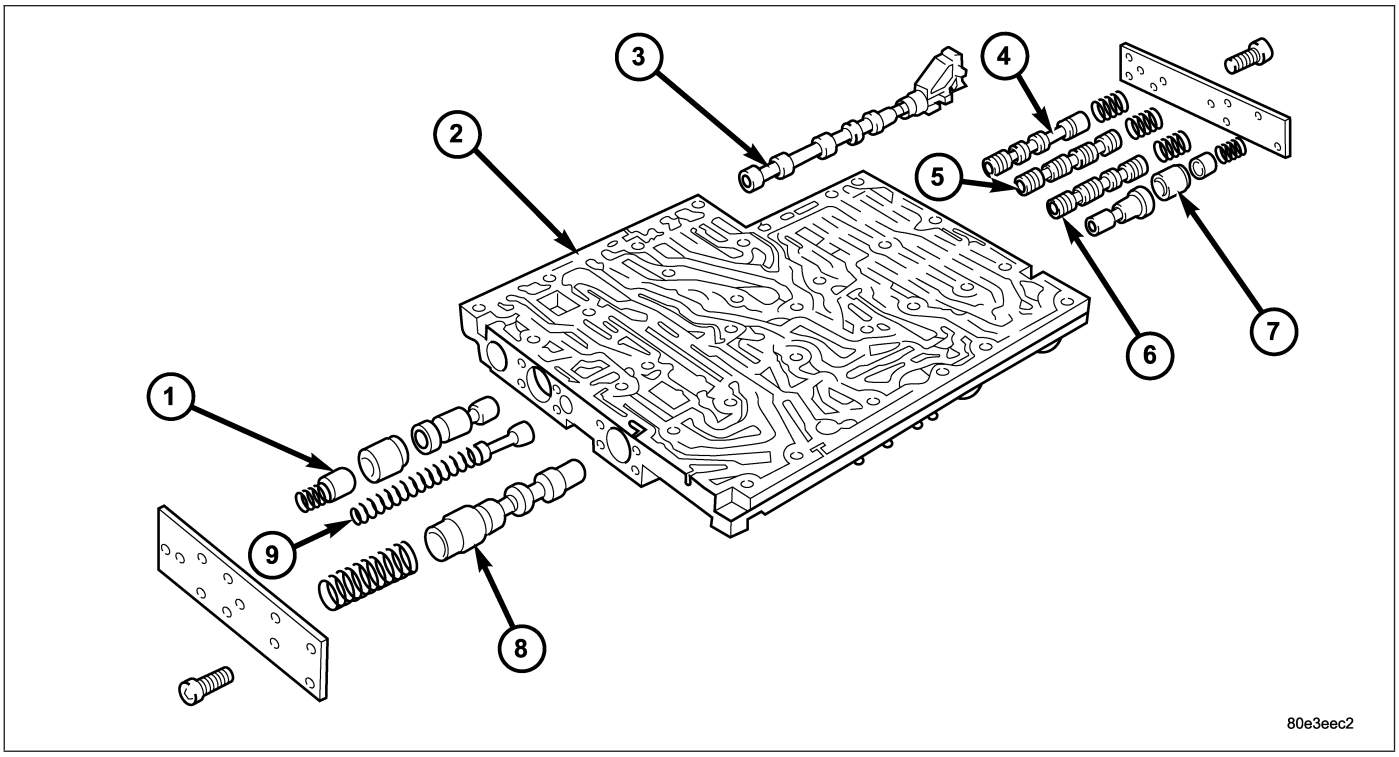

Valve Housing Components

1 - 2-3 OVERLAP REGULATING VALVE, SLEEVE, AND PISTON
2 - VALVE HOUSING
3 - SELECTOR VALVE
4 - 3-4 HOLDING PRESSURE SHIFT VALVE
5 - 3-4 COMMAND VALVE
6 - 3-4 SHIFT PRESSURE SHIFT VALVE
7 - 3-4 OVERLAP REGULATING VALVE, SLEEVE, AND PISTON
8 - OPERATING PRESSURE REGULATING VALVE
9 - LUBRICATING PRESSURE REGULATING VALVE

18. Remove all valves and springs from the valve housing (2). Check all valves for ease of movement and shavings.
19. Remove the pressure supply valve (1) from the valve body.

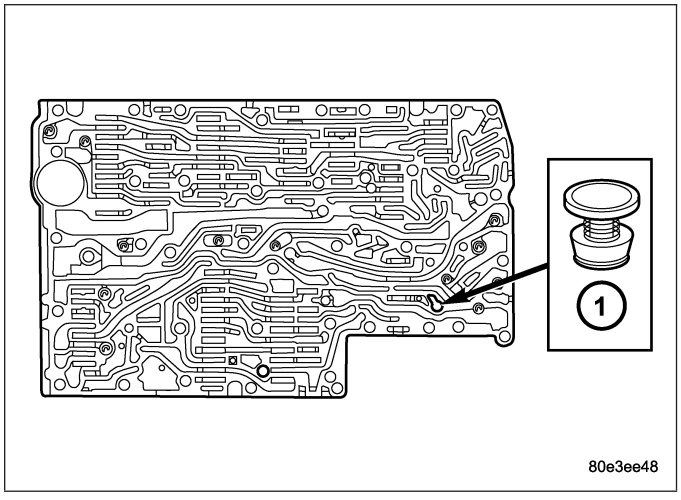

ASSEMBLY

NOTE: Pay great attention to cleanliness for all work on the shift plate. Fluffy cloths must not be used. Leather cloths are particularly good. After dismantling, all parts must be washed and blown out with compressed-air, noting that parts may be blown away.

1. Install the pressure supply valve (1) into the valve body.

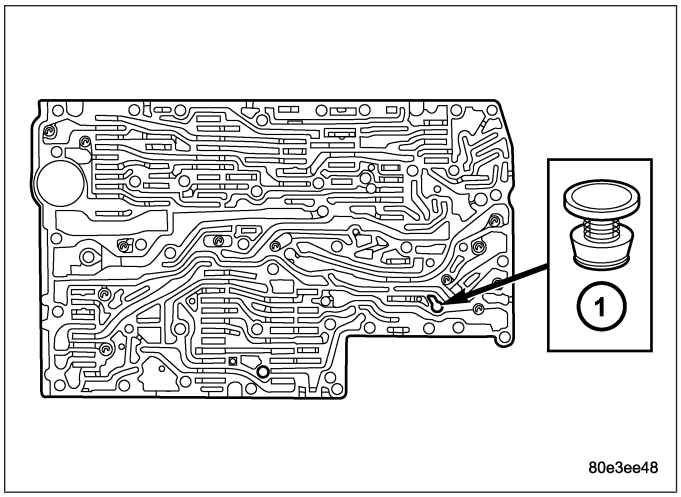

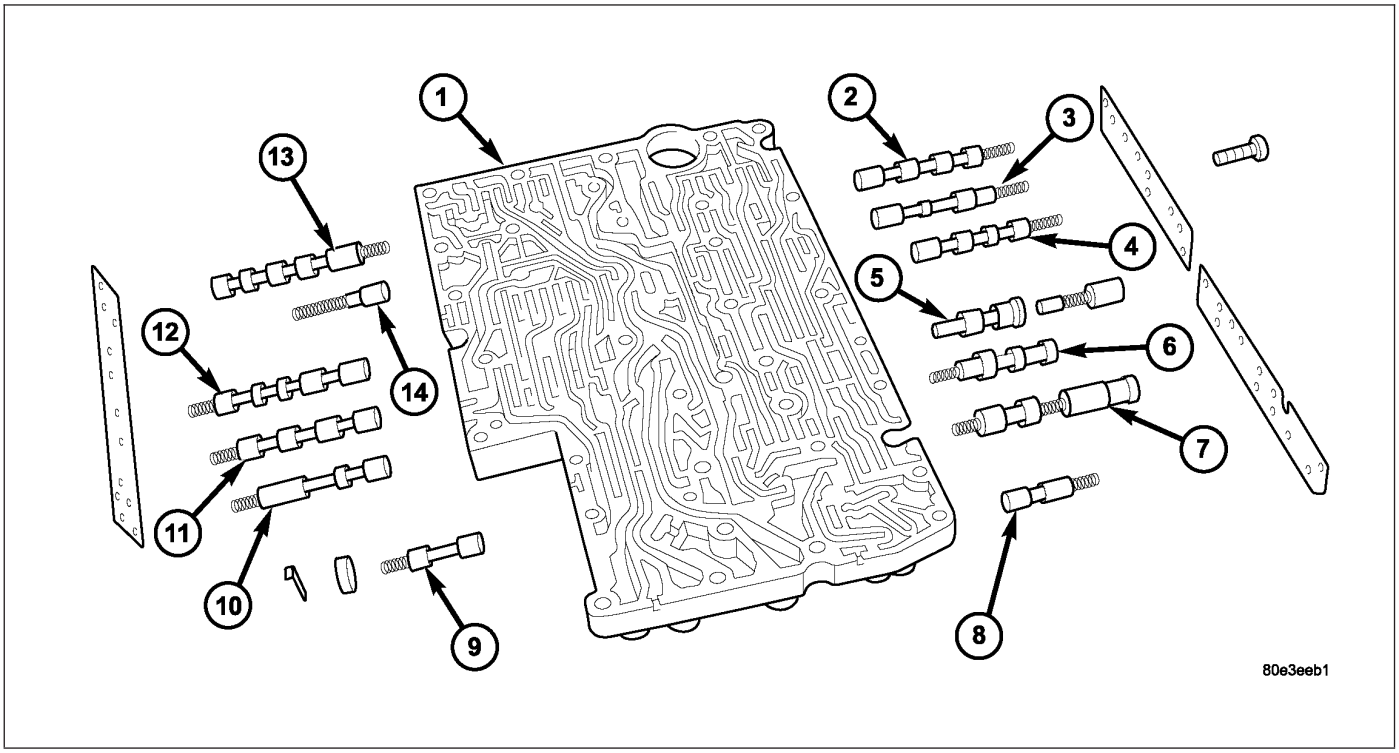

Valve Body Components

1 - VALVE BODY
2 - 1-2/4-5 COMMAND VALVE
3 - 1-2/4-5 HOLDING PRESSURE SHIFT VALVE
4 - 1-2/4-5 SHIFT PRESSURE SHIFT VALVE
5 - 1-2/4-5 OVERLAP REGULATING VALVE, SLEEVE, AND PISTON
6 - SHIFT PRESSURE REGULATING VALVE
7 - REGULATING VALVE PRESSURE REGULATING VALVE
8 - SHIFT VALVE PRESSURE REGULATING VALVE
9 - B2 SHIFT VALVE
10 - 2-3 HOLDING PRESSURE SHIFT VALVE
11 - 2-3 COMMAND VALVE
12 - 2-3 SHIFT PRESSURE SHIFT VALVE
13 - TCC LOCK-UP REGULATING VALVE
14 - TCC DAMPER VALVE - if equipped

NOTE: The sleeves and pistons of the overlap regulating valves must not be mixed up.

2. Install all valves and springs from the valve body (1). Check all valves for ease of movement and shavings.
3. Install the screws to hold the side covers to the valve body. Tighten the screws to 4 N·m (35 in.lbs.).

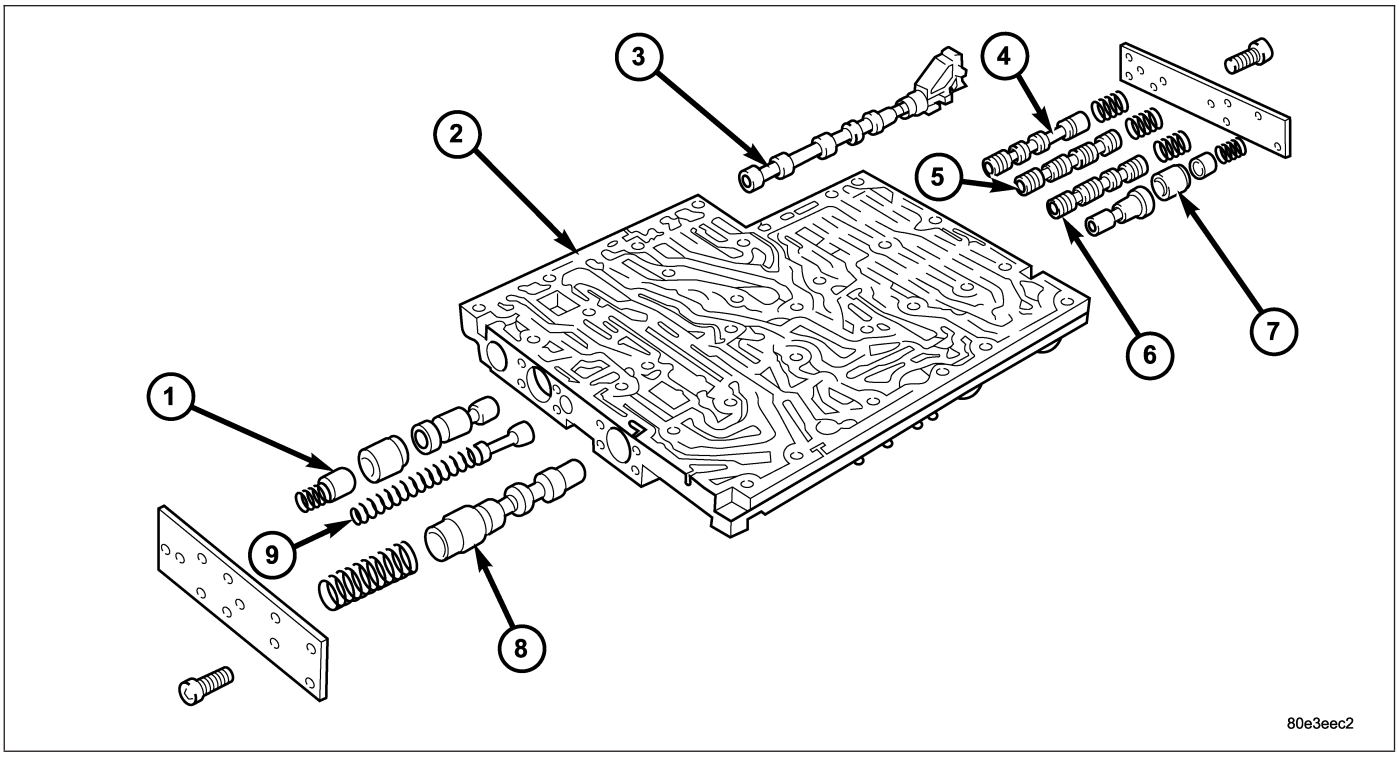

Valve Housing Components

1 - 2-3 OVERLAP REGULATING VALVE, SLEEVE, AND PISTON
2 - VALVE HOUSING
3 - SELECTOR VALVE
4 - 3-4 HOLDING PRESSURE SHIFT VALVE
5 - 3-4 COMMAND VALVE
6 - 3-4 SHIFT PRESSURE SHIFT VALVE
7 - 3-4 OVERLAP REGULATING VALVE, SLEEVE, AND PISTON
8 - OPERATING PRESSURE REGULATING VALVE
9 - LUBRICATING PRESSURE REGULATING VALVE

4. Install all valves and springs into the valve housing (2). Check all valves for ease of movement and shavings.
5. Install the screws to hold the side covers to the valve housing. Tighten the screws to 4 N·m (35 in.lbs.).

NOTE: A total of 12 valve balls are located in the valve body, four made from plastic (4) and eight from steel (1, 3).

6. Install all check balls (1, 3, 4) and the central strainer (2).

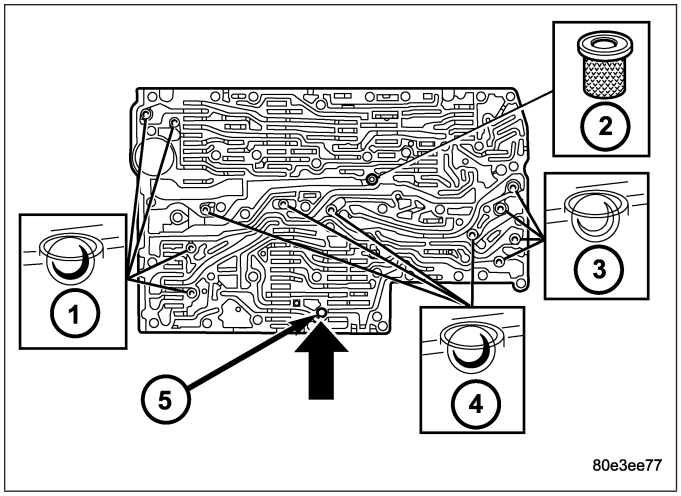

7. Install the strainer (1) in the inlet to torque converter lock-up control solenoid valve.

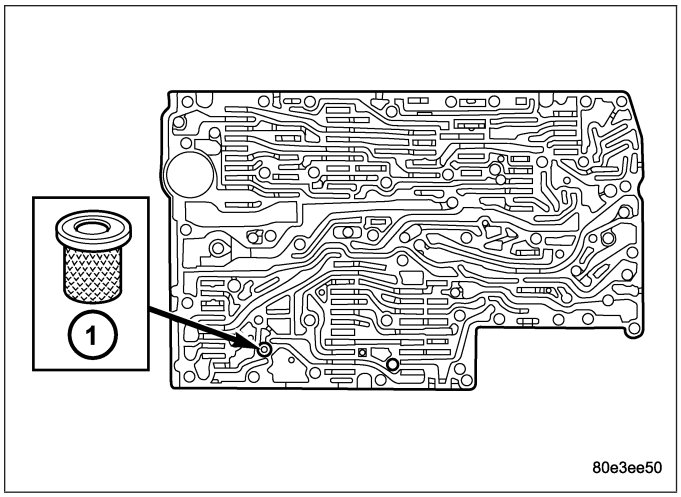

8. Position the sealing plate (3) onto the valve body (4).
9. Install the valve housing (2) onto the valve body (4) and sealing plate (3).
10. Install the shift plate Torx® bolts (1). Tighten the bolts to 8 N·m (71 in.lbs.).
11. Install leaf spring (5).

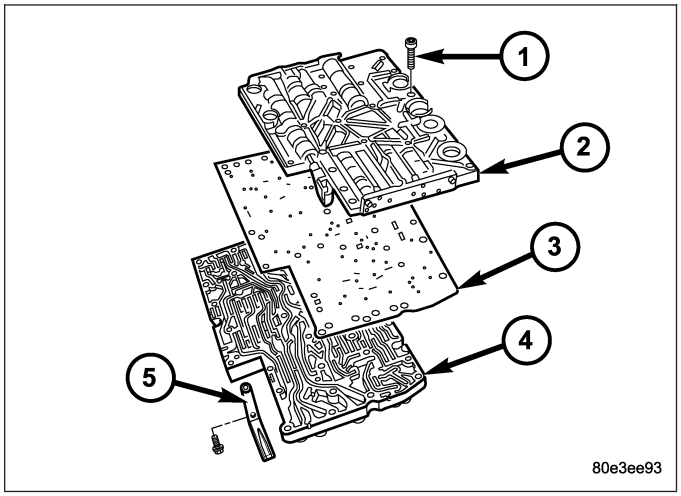

12. Install the strainers (1) for the modulating pressure and shift pressure control solenoid valves into the valve housing.

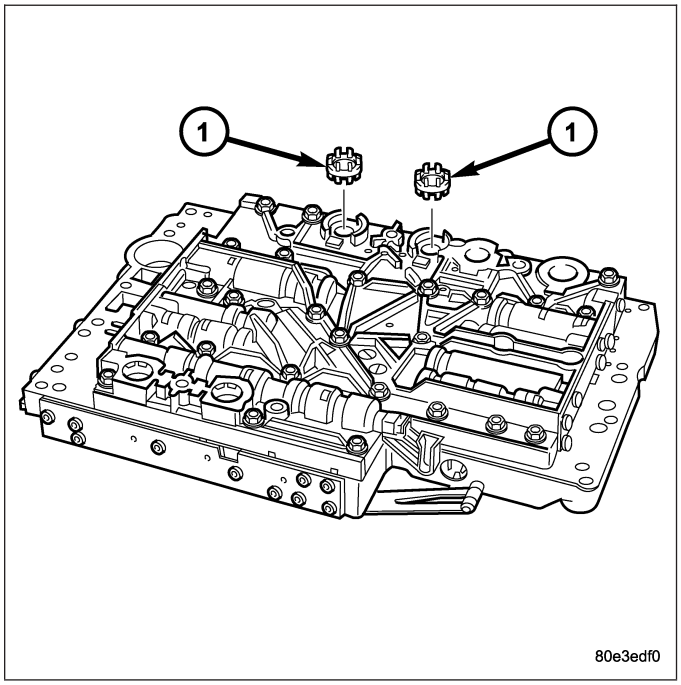

13. Install the electrohydraulic control module (12) onto the shift plate (13).
14. Bend the retaining lug on stiffening rib on transmission oil temperature sensor to retain the electrohydraulic control module.
15. Install the solenoid valves (6 - 11) into shift plate (13).

NOTE: Check O-rings on solenoid valves for damage and replace if necessary.

16. Install the leaf springs (5).
17. Install the Torx® socket bolts (3, 4). Tighten the bolts to 8 N·m (71 in.lbs.).

NOTE: Pay attention to the different lengths of the Torx® socket bolts.

18. Install the solenoid caps (1, 2).
19. Install the electrohydraulic unit into the vehicle.

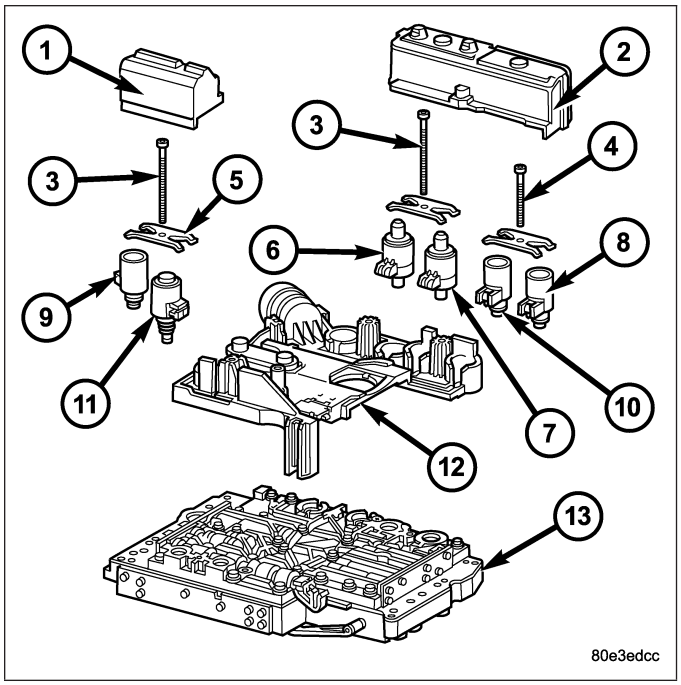

Electrical Unit Components

1 - SOLENOID CAP
2 - SOLENOID CAP
3 - BOLT - M6X32
4 - BOLT - M6X30
5 - LEAF SPRING
6 - MODULATING PRESSURE REGULATING SOLENOID VALVE
7 - SHIFT PRESSURE REGULATING SOLENOID
8 - 3-4 SHIFT SOLENOID
9 - TORQUE CONVERTER LOCK-UP SOLENOID
10 - 1-2/4-5 SHIFT SOLENOID
11 - 2-3 SHIFT SOLENOID
12 - ELECTRICHYDRAULIC CONTROL MODULE
13 - SHIFT PLATE

INSTALLATION

1. Position the electrohydraulic unit in the transmission housing.
2. Insert selector valve (1) in driver of detent plate (2). When installing the electrohydraulic control module in the transmission housing, the plastic part of the selector valve (1) must engage in the driver of the detent plate (2).

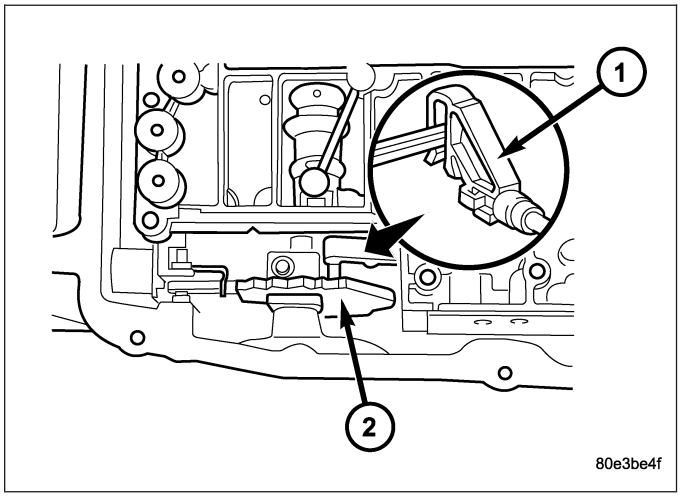

3. Install the Torx® socket bolts (3) and torque to 8 N·m (71 in.lbs.).
4. Install a new oil filter (4).
5. Install oil pan (5) and torque the oil pan bolts to 8 N·m (71 in.lbs.).
6. Install the adapter plug (10) into the transmission housing and tighten the bolt (9) to 2.5 N·m (22 in.lbs.).

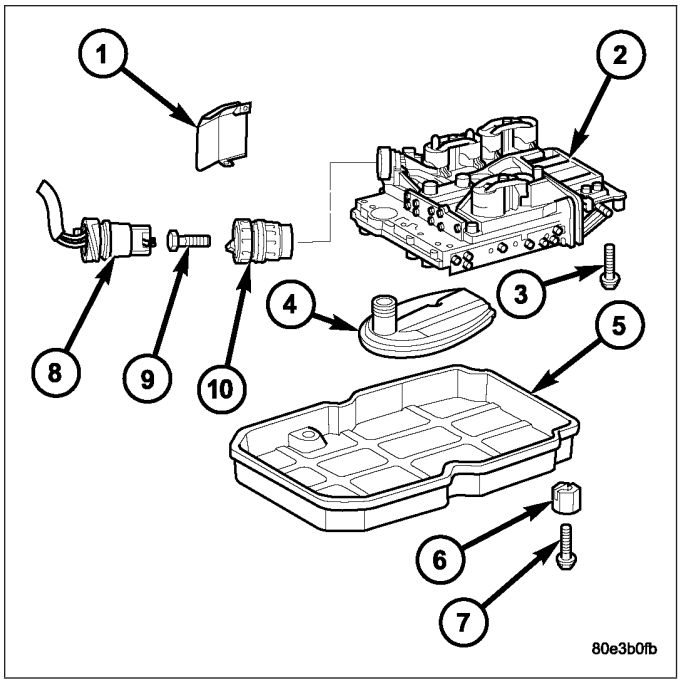

1 - HEAT SHIELD
2 - ELECTROHYDRAULIC UNIT
3 - BOLT
4 - OIL FILTER
5 - OIL PAN
6 - CLAMPING ELEMENT
7 - BOLT
8 - 13-PIN PLUG CONNECTOR
9 - BOLT
10 - ADAPTER PLUG

7. Check O-ring on plug connector (1), and replace if necessary.
8. Install the plug connector (1) into the adapter plug (2). Turn bayonet lock of adapter plug (2) clockwise to connect plug connector (1).
9. Fill the transmission with the correct oil (Refer to LUBRICATION & MAINTENANCE/FLUID TYPES - DESCRIPTION) using the standard procedure (Refer to 21 - TRANSMISSION/AUTOMATIC - NAG1/FLUID AND FILTER - STANDARD PROCEDURE - TRANSMISSION FILL).

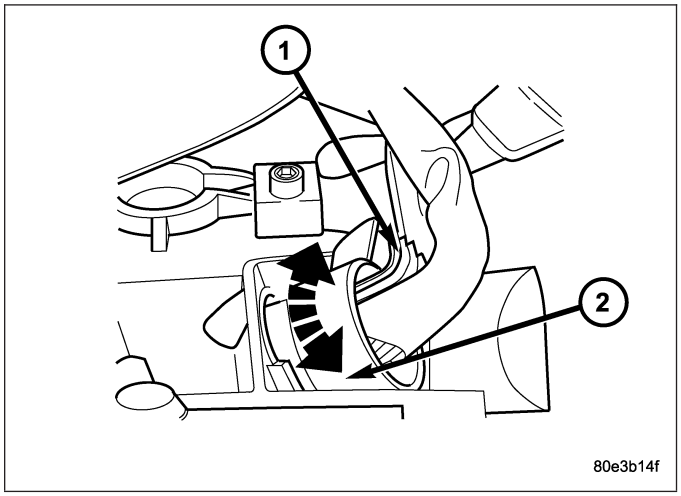

FLUID AND FILTER

DESCRIPTION

The oil level control is located on the electrohydraulic unit (4) and consists of the float (5) which is integrated into the electrohydraulic unit. The float is positioned to plug the opening (6) between the oil gallery (2) and gearset chamber (1) so that the rotating gearsets do not splash about in oil as the oil level rises. The oil level control reduces power loss and prevents oil from being thrown out of the transmission housing at high oil temperatures.

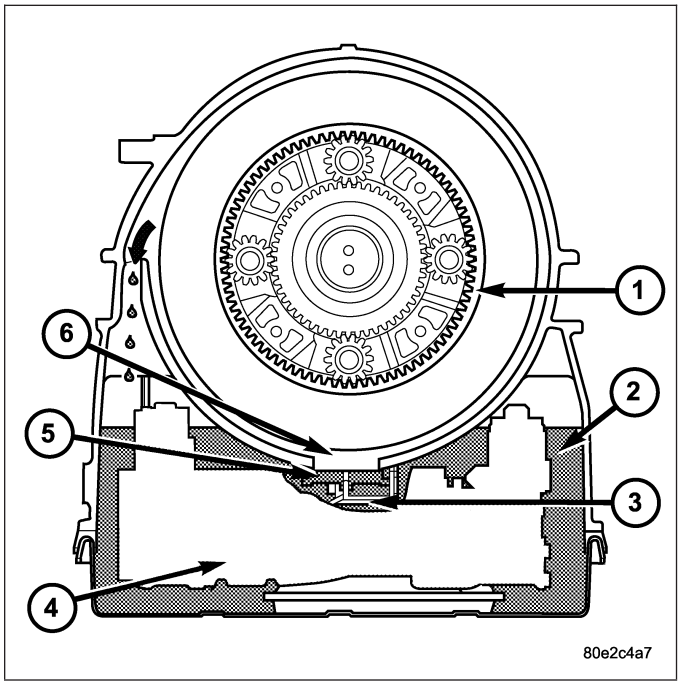

OPERATION

With low oil levels, the lubricating oil which flows constantly out of the gearset, flows back to oil gallery (2) though the opening (6). If the oil level rises, the oil presses the float (5) against the housing opening (6). The float (5) therefore separates the oil gallery (2) from the gearset chamber (1). The lubricating oil which continues to flow out of the gearsets is thrown against the housing wall, incorporated by the rotating parts and flows back into the oil gallery (2) through the upper opening (arrow).

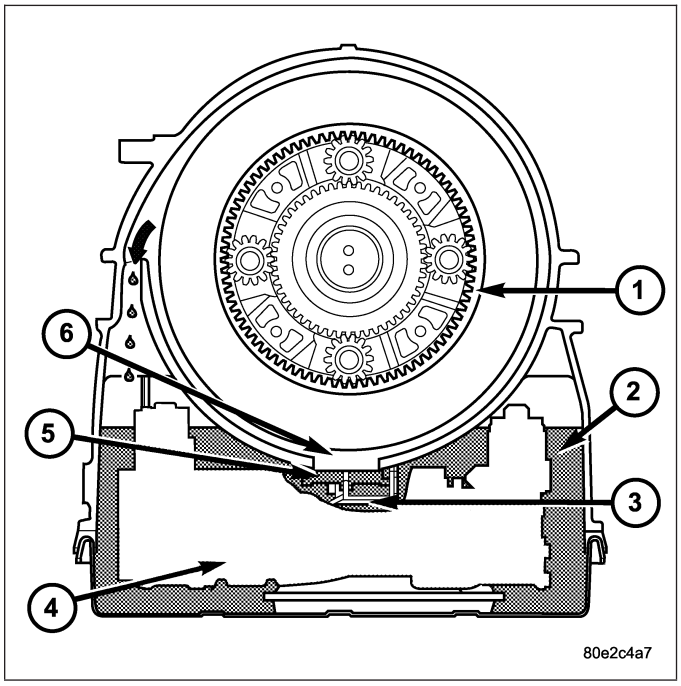

DIAGNOSIS AND TESTING

EFFECTS OF INCORRECT FLUID LEVEL

A low fluid level allows the pump to take in air along with the fluid. Air in the fluid will cause fluid pressures to be low and develop slower than normal. If the transmission is overfilled, the gears churn the fluid into foam. This aerates the fluid and causing the same conditions occurring with a low level. In either case, air bubbles cause fluid overheating, oxidation, and varnish buildup which interferes with valve and clutch operation. Foaming also causes fluid expansion which can result in fluid overflow from the transmission vent or fill tube. Fluid overflow can easily be mistaken for a leak if inspection is not careful.

CAUSES OF BURNT FLUID

Burnt, discolored fluid is a result of overheating which has three primary causes.

1. Internal clutch slippage, usually caused by low line pressure, inadequate clutch apply pressure, or clutch seal failure.
2. A result of restricted fluid flow through the main and/or auxiliary cooler. This condition is usually the result of a faulty or improperly installed drainback valve, a damaged oil cooler, or severe restrictions in the coolers and lines caused by debris or kinked lines.
3. Heavy duty operation with a vehicle not properly equipped for this type of operation. Trailer towing or similar high load operation will overheat the transmission fluid if the vehicle is improperly equipped. Such vehicles should have an auxiliary transmission fluid cooler, a heavy duty cooling system, and the engine/axle ratio combination needed to handle heavy loads.

FLUID CONTAMINATION

Transmission fluid contamination is generally a result of:

- adding incorrect fluid
- failure to clean dipstick and fill tube when checking level
- engine coolant entering the fluid
- internal failure that generates debris
- overheat that generates sludge (fluid breakdown)
- failure to replace contaminated converter after repair

The use of non-recommended fluids can result in transmission failure. The usual results are erratic shifts, slippage, abnormal wear and eventual failure due to fluid breakdown and sludge formation. Avoid this condition by using recommended fluids only.

The dipstick cap and fill tube should be wiped clean before checking fluid level. Dirt, grease and other foreign material on the cap and tube could fall into the tube if not removed beforehand. Take the time to wipe the cap and tube clean before withdrawing the dipstick.

Engine coolant in the transmission fluid is generally caused by a cooler malfunction. The only remedy is to replace the radiator as the cooler in the radiator is not a serviceable part. If coolant has circulated through the transmission, an overhaul is necessary.

The torque converter should be replaced whenever a failure generates sludge and debris. This is necessary because normal converter flushing procedures will not remove all contaminants.

STANDARD PROCEDURE

CHECK OIL LEVEL

1. Verify that the vehicle is parked on a level surface.
2. Remove the dipstick tube cap.

WARNING: Risk of accident from vehicle starting off by itself when engine running. Risk of injury from contusions and burns if you insert your hands into the engine when it is started or when it is running. Secure vehicle to prevent it from moving off by itself. Wear properly fastened and close-fitting work clothes. Do not touch hot or rotating parts.

3. Actuate the service brake. Start engine and let it run at idle speed in selector lever position ″P″.

4. Shift through the transmission modes several times with the vehicle stationary and the engine idling
5. Warm up the transmission, wait at least 2 minutes and check the oil level with the engine running. Push the Oil Dipstick 9336 into transmission fill tube until the dipstick tip contacts the oil pan and pull out again, read off oil level, repeat if necessary.

NOTE: The dipstick will protrude from the fill tube when installed.

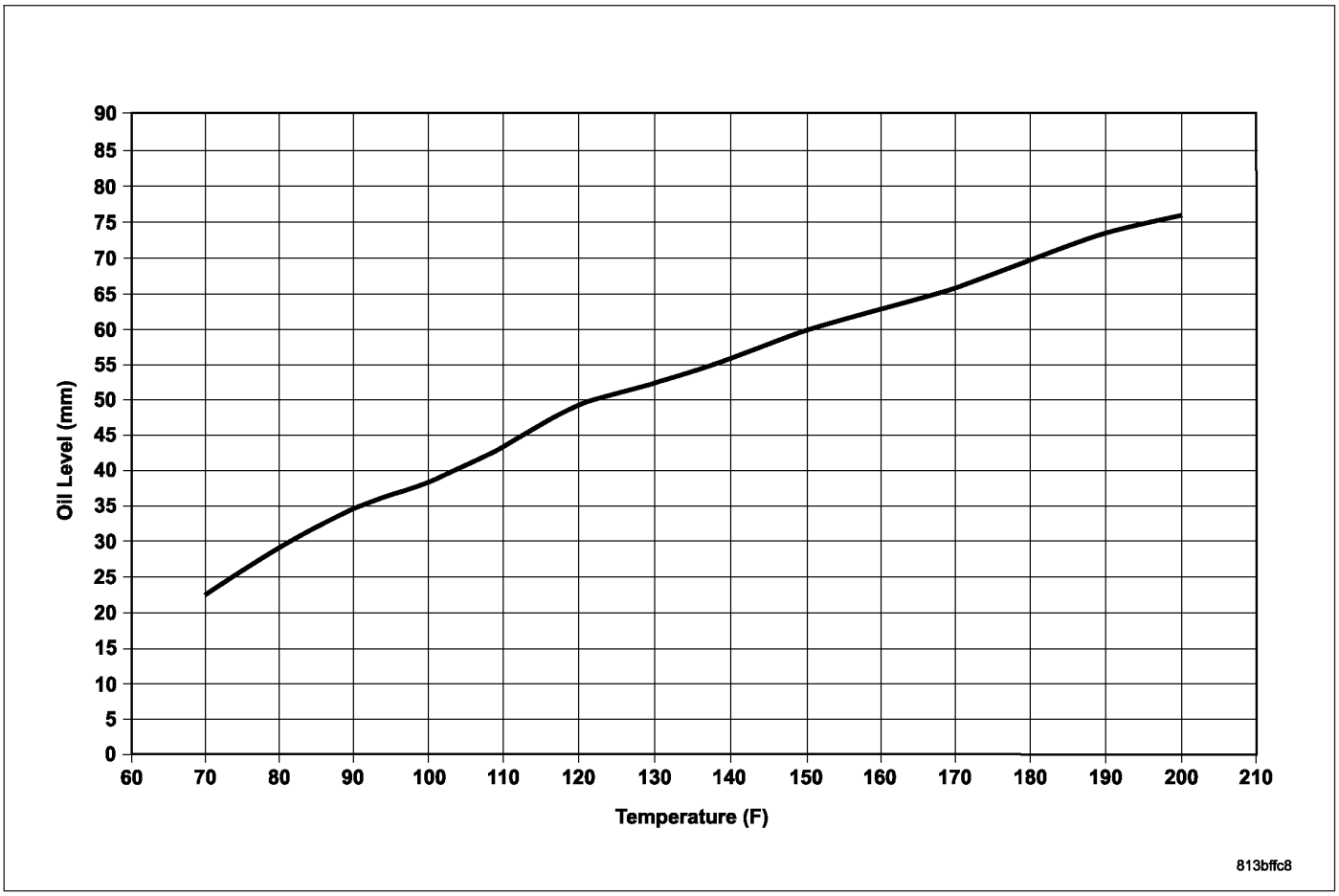

NAG1 Transmission Fill Graph

6. Check transmission oil temperature using the appropriate scan tool.

NOTE: The true transmission oil temperature can only be read by a scan tool in REVERSE or any forward gear position. (Refer to 21 - AUTOMATIC TRANSMISSION- NAG1/TRANSMISSION TEMPERATURE SENSOR/ PARK-NEUTRAL SWITCH - OPERATION)

7. The transmission Oil Dipstick 9336 has indicator marks every 10mm. Determine the height of the oil level on the dipstick and using the height, the transmission temperature, and the Transmission Fluid Graph, determine if the transmission oil level is correct.
8. Add or remove oil as necessary and recheck the oil level.
9. Once the oil level is correct, install the dipstick tube cap.

TRANSMISSION FILL

To avoid overfilling transmission after a fluid change or overhaul, perform the following procedure:

1. Verify that the vehicle is parked on a level surface.
2. Remove the dipstick tube cap.
3. Add following initial quantity of Mopar® ATF +4, Automatic Transmission Fluid, to the transmission:
   a. If only fluid and filter were changed, add **7.0 L (7.4 qts.)** of transmission fluid to transmission.

b. If the transmission was completely overhauled or the torque converter was replaced or drained, add **8.1 L (17.1 pts.)** of transmission fluid to transmission.

4. Check the transmission fluid (Refer to 21 - TRANSMISSION/AUTOMATIC - NAG1/FLUID AND FILTER - STANDARD PROCEDURE - CHECK OIL LEVEL) and adjust as required.

FLUID/FILTER SERVICE

1. Run the engine until the transmission oil reaches operating temperature.
2. Raise and support vehicle.
3. Remove the bolts (5) and retainers (4) holding the oil pan to the transmission.
4. Remove the transmission oil pan (3) and gasket (2) from the transmission.
5. Remove the transmission oil filter (1) and o-ring from the electrohydraulic control unit.
6. Clean the inside of the oil pan (3) of any debris. Inspect the oil pan gasket (2) and replace if necessary.
7. Install a new oil filter (1) and o-ring into the electrohydraulic control unit.
8. Install the oil pan (3) and gasket (2) onto the transmission.
9. Install the oil pan bolts (5) and retainers (4). Torque the bolts to 8 N·m (70 in.lbs.).
10. Lower the vehicle and add 7.0 L (7.4 qts.) of transmission fluid to the transmission.
11. Check the oil level (Refer to 21 - TRANSMISSION/AUTOMATIC - NAG1/FLUID AND FILTER - STANDARD PROCEDURE - CHECK OIL LEVEL).

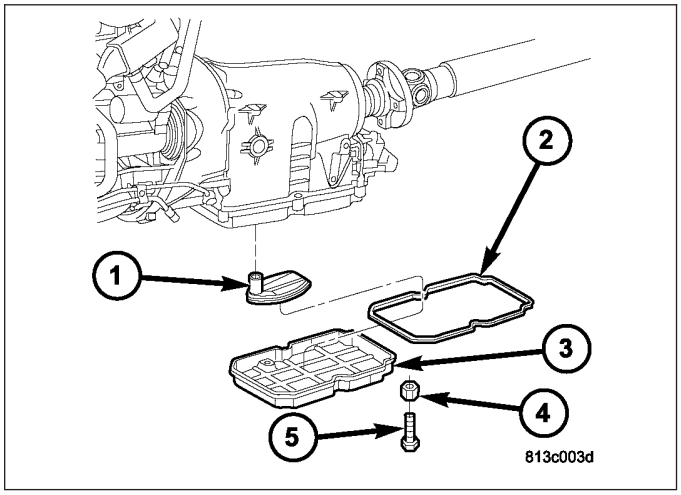

Fluid/Filter Service Points

1 - OIL FILTER
2 - OIL PAN GASKET
3 - OIL PAN
4 - RETAINER
5 - BOLT

CLUTCH-FREEWHEELING

DESCRIPTION

Freewheeling clutches are installed in the front planetary gear set between the sun gear and the stator shaft, and in the rear planetary gear set between the sun gear and the intermediate shaft.

The freewheel consists of an outer race (4), an inner race (7), a number of locking elements (3) and a cage (6) for these locking elements.

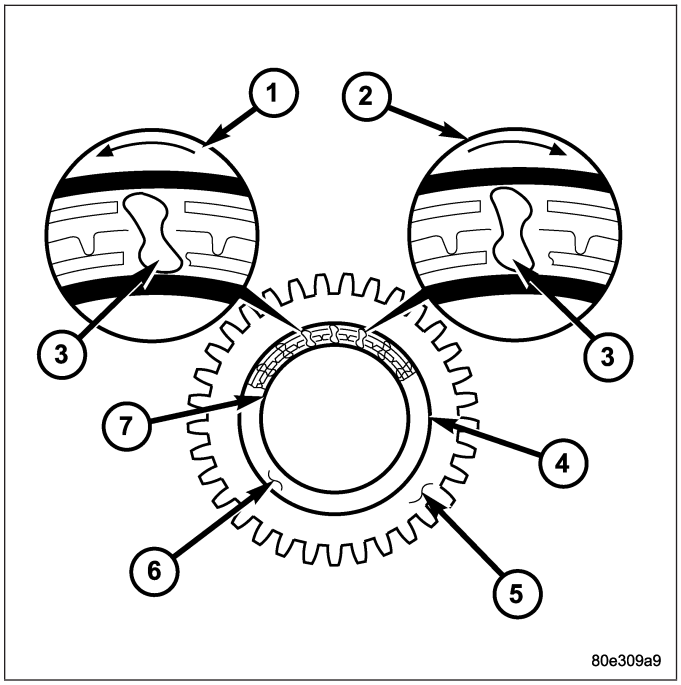

OPERATION

The freewheeling clutch optimizes individual gearshifts. They lock individual elements of a planetary gear set together or against the transmission housing in one direction of rotation to allow the torque to be transmitted.

If the inner race (7) of the freewheeling clutch is locked and the outer race (4) turns counter-clockwise (1), the locking elements (3) adopt a diagonal position on account of their special contours, allowing the freewheel function. The inner race (4) slides under the locking elements (3) with minimal friction. If the rotation of the outer race (4) changes to clockwise (2), the locking elements (3) stand up and lock the outer and inner races (4, 7) together.

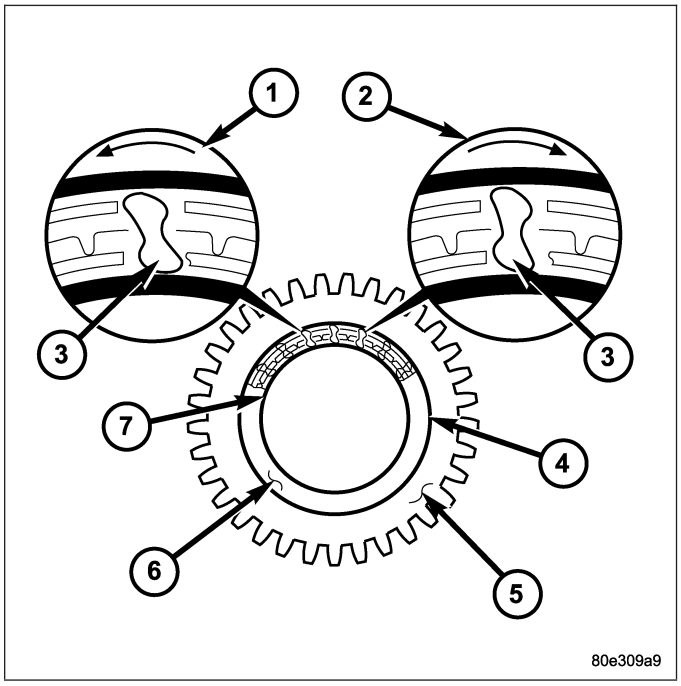

DISASSEMBLY

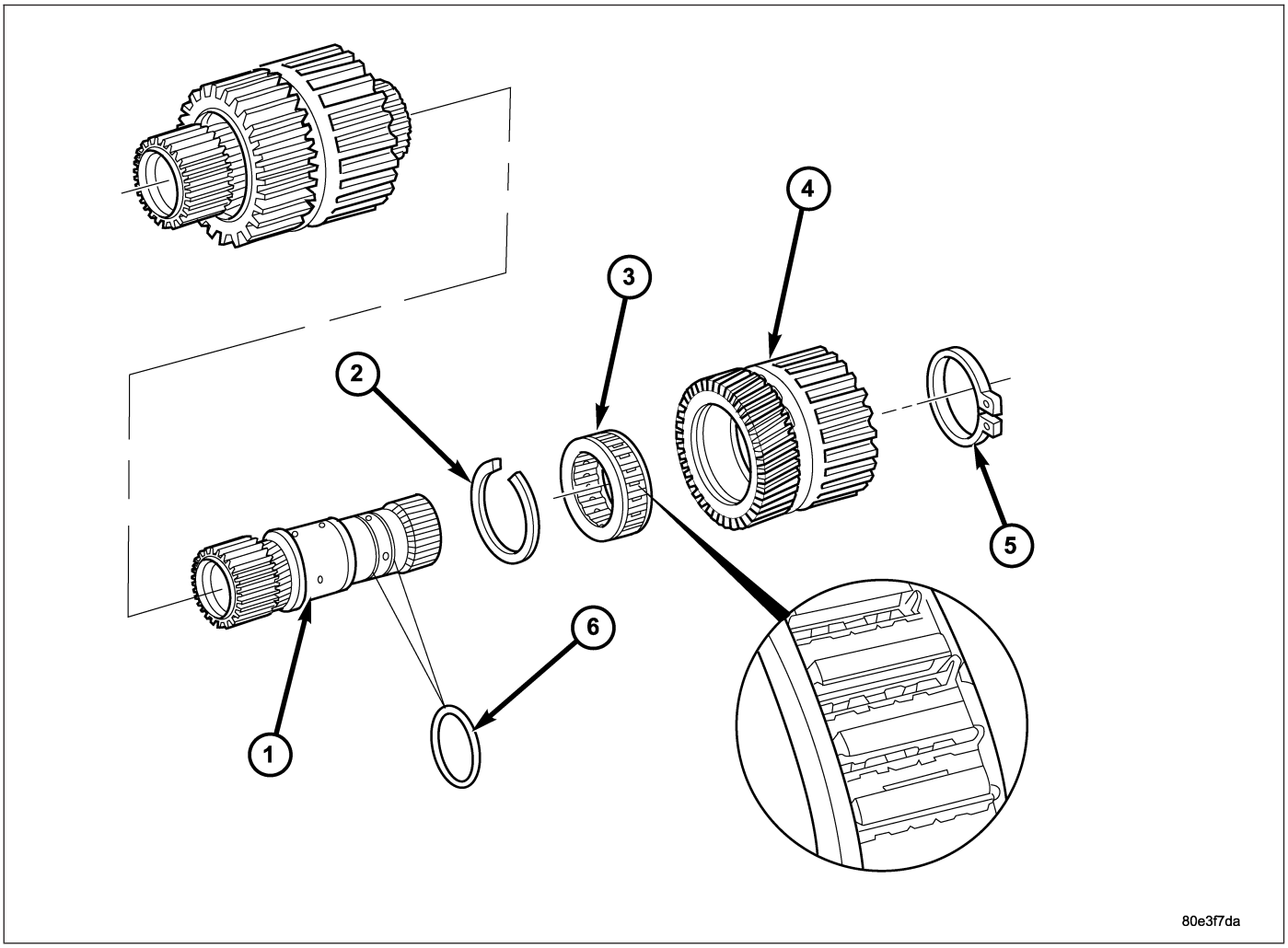

Freewheeling Clutch F2

1 - HOLLOW SHAFT
2 - F2 CLUTCH SNAP-RING
3 - FREEWHEELING CLUTCH F2
4 - K3 INNER DISC CARRIER AND REAR PLANETARY SUN GEAR
5 - RETAINING RING
6 - O-RINGS

1. Remove retaining ring (5) from hollow shaft (1).
2. Remove rear sun gear (4) with the K3 internally toothed disk carrier and rear freewheeling clutch F2 (3).
3. Remove snap-ring (2) for freewheel.
4. Press freewheeling clutch (3) out of sun gear.
5. Check O-rings (6), replace if necessary.

6. Check the anti-friction bearing (2) in the rear planetary sun gear for damage. Replace as necessary.

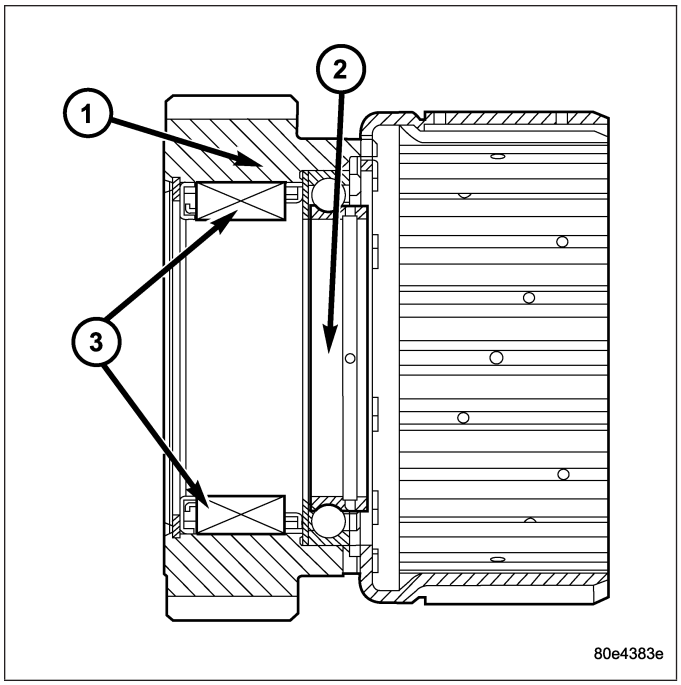

ASSEMBLY

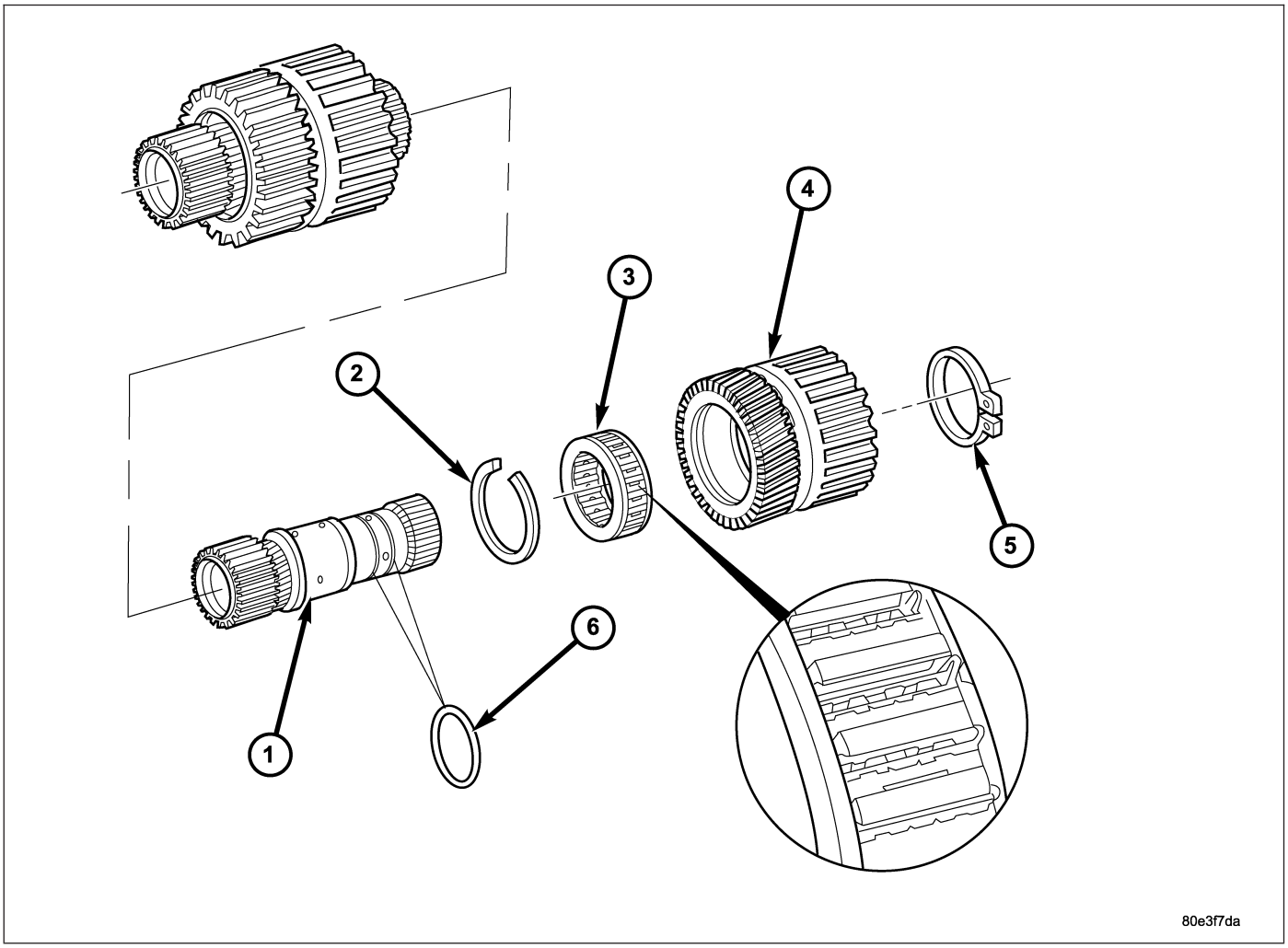

Freewheeling Clutch F2

1 - HOLLOW SHAFT
2 - F2 CLUTCH SNAP-RING
3 - FREEWHEELING CLUTCH F2
4 - K3 INNER DISC CARRIER AND REAR PLANETARY SUN GEAR
5 - RETAINING RING
6 - O-RINGS

NOTE: The side of the freewheeling clutch F2 (3) with the markings (directional arrow, part number, etc.) must be up when the clutch is installed in the sun gear (4).

1. Press freewheeling clutch F2 (3) into sun gear (4).
2. Install snap-ring (2) for freewheeling clutch.
3. Check O-rings (6) on hollow shaft, replace if necessary.
4. Install rear sun gear (4) with K3 internally toothed disc carrier and rear freewheeling clutch (3) onto the hollow shaft.
5. Verify proper operation of the freewheeling clutch F2. When the assembly is held with the F2 clutch snap-ring upward, it should be possible to rotate the hollow shaft counter-clockwise.
6. Install retaining ring (5) onto hollow shaft (1).

CABLE-GEARSHIFT

DIAGNOSIS AND TESTING

GEARSHIFT CABLE

1. The floor shifter lever and gate positions should be in alignment with all transmission PARK, NEUTRAL, and gear detent positions.
2. Engine starts must be possible with floor shift lever in PARK or NEUTRAL gate positions only. Engine starts must not be possible in any other gear position.
3. With floor shift lever handle push-button not depressed and lever in:
   a. PARK position - Apply forward force on center of handle and remove pressure. Engine starts must be possible.
   b. PARK position - Apply rearward force on center of handle and remove pressure. Engine starts must be possible.
   c. NEUTRAL position - Normal position. Engine starts must be possible.
   d. NEUTRAL position - Engine running and brakes applied, apply forward force on center of shift handle. Transmission shall not be able to shift from NEUTRAL to REVERSE.

REMOVAL

1. Shift transmission into PARK.
2. Raise vehicle.
3. Disengage the gearshift cable (1) eyelet at transmission manual shift lever (3) and pull cable out of the mounting bracket (2).

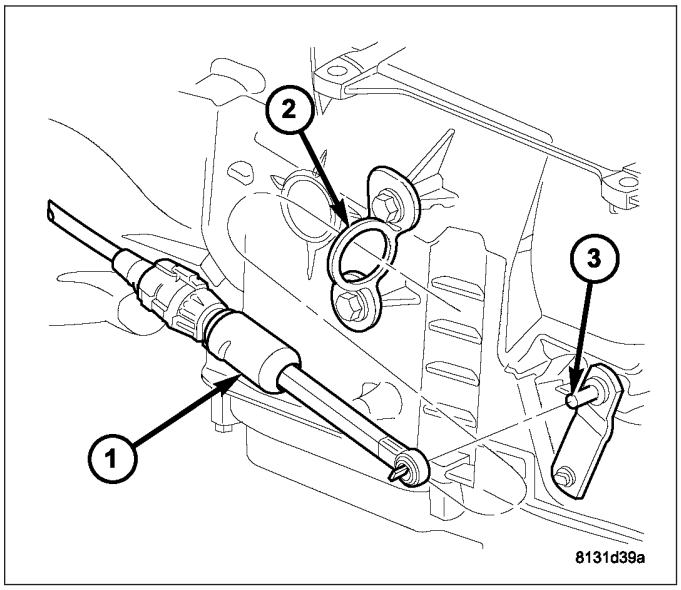

4. Lower the vehicle.
5. Remove the floor console (Refer to 23 - BODY/INTERIOR/FLOOR CONSOLE - REMOVAL) as necessary to access the shift mechanism and cables.
6. If necessary, remove the bolts holding the shield, covering the gearshift and park lock cables, to the floorpan and remove the shield.
7. Remove the gearshift cable (1) from the shift lever pin (3).
8. Remove the gearshift cable retainer (2) from the notch (2) in the shifter assembly.

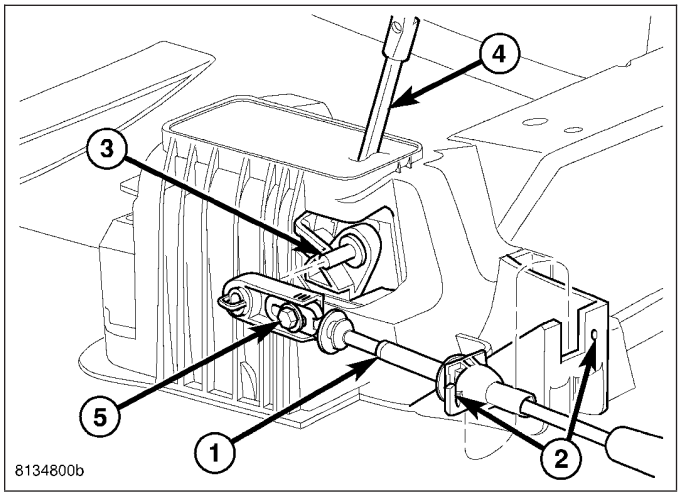

9. From under the hood, remove the shift cable grommet (2) from the dash panel.
10. Remove gearshift cable (1) from vehicle.

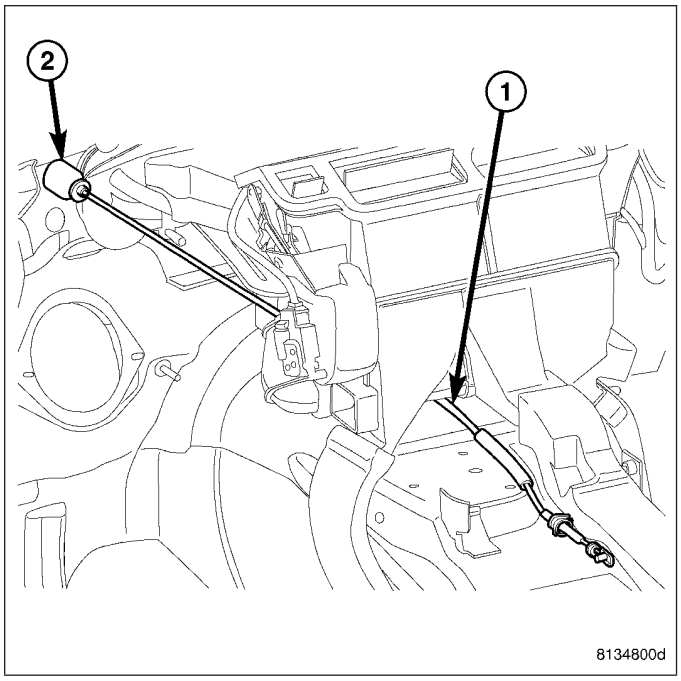

INSTALLATION

1. From under the hood, route the gearshift cable (1) through the dash panel and toward the shifter assembly.
2. From under the hood, install the grommet (2) to the dash panel.

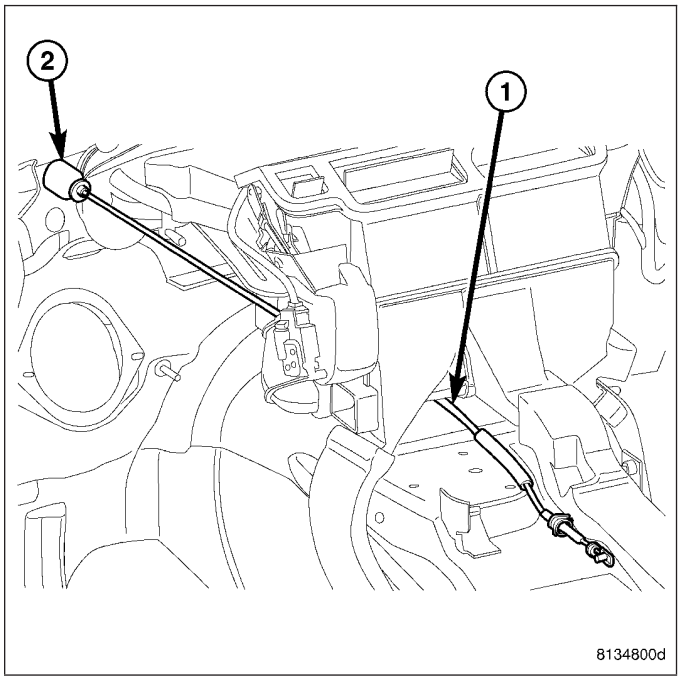

3. Engage the gearshift cable retainer (2) into the notch (2) in the shifter assembly.
4. Install the gearshift cable (1) onto the shift lever pin (3).
5. Loosen the cable adjustment screw (5), if necessary.

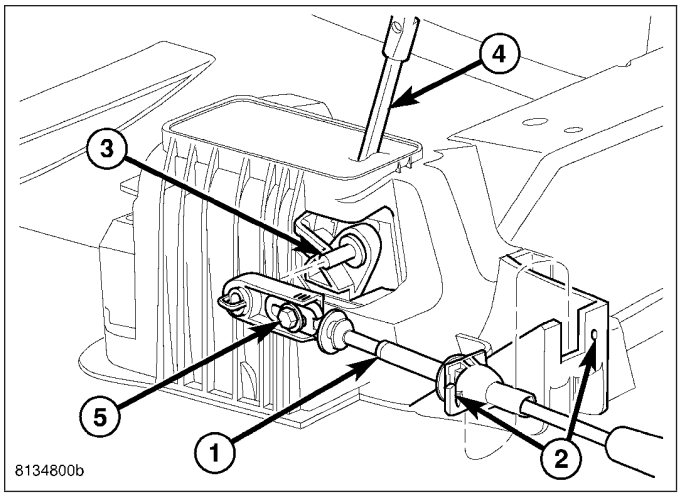

6. From under the hood, route the gearshift cable (1) forward of the air conditioning lines and the heater hoses (2) and toward the transmission (3) manual lever.

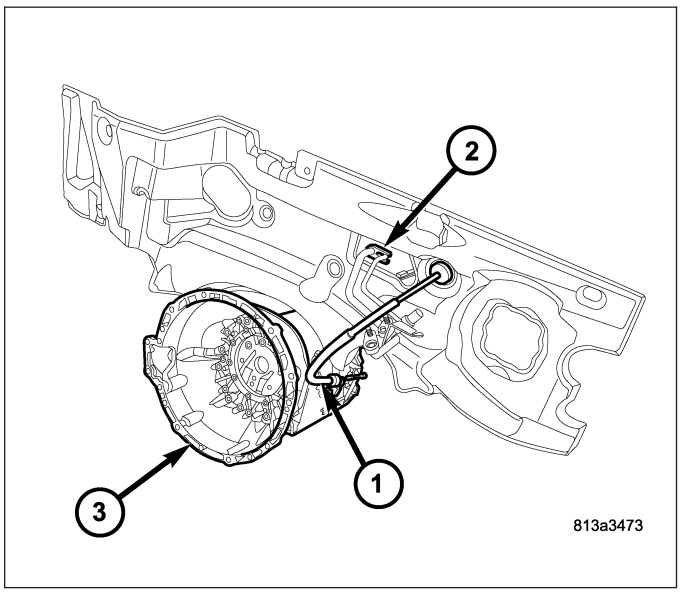

7. Raise vehicle.
8. Verify that the transmission is in the PARK position by trying to rotate the propeller shaft. If the propeller shaft rotates, move the transmission manual shift lever to the full rearward position and turn the propeller shaft until the PARK system is engaged.
9. Route the gearshift cable (1) through the mounting bracket (2).
10. Engage the gearshift cable (1) eyelet onto the transmission manual shift lever (3).

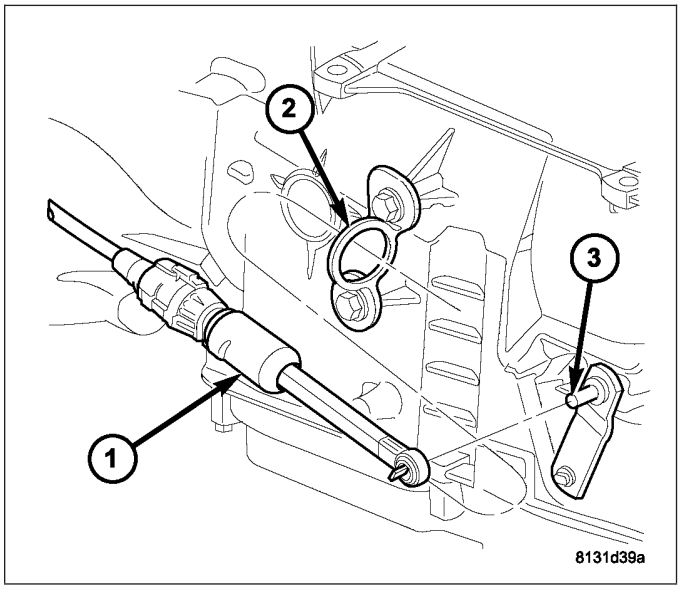

11. Lower vehicle.
12. Verify that the shifter is in the PARK position.
13. Tighten the adjustment screw (5) to 7 N·m (65 in.lbs.).
14. Verify correct shifter operation.
15. If necessary, install the shield, covering the gearshift and park lock cables, to the floorpan and install the bolts to hold the shield to the floorpan.
16. Install the floor console (Refer to 23 - BODY/INTERIOR/FLOOR CONSOLE - INSTALLATION), lower instrument panel components (Refer to 23 - BODY/INSTRUMENT PANEL/INSTRUMENT PANEL CENTER BEZEL - INSTALLATION) and dash panel insulation pad as necessary.

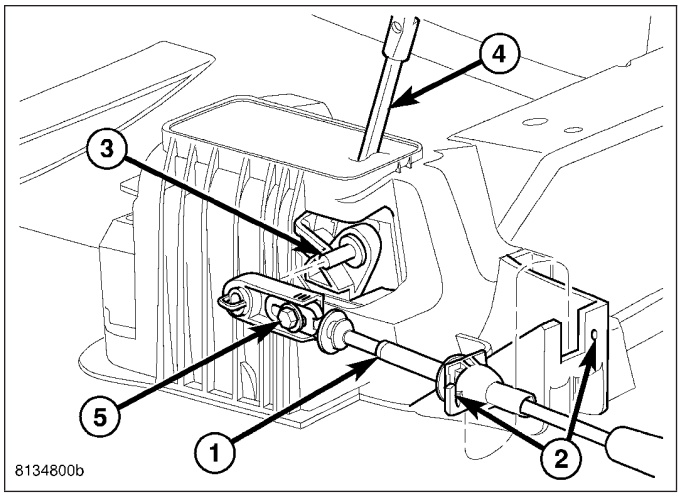

ADJUSTMENTS - GEARSHIFT CABLE

Check adjustment by starting the engine in PARK and NEUTRAL. Adjustment is CORRECT if the engine starts only in these positions. Adjustment is INCORRECT if the engine starts in one but not both positions. If the engine starts in any position other than PARK or NEUTRAL, or if the engine will not start at all, the park/neutral position contact may be faulty.

1. Shift transmission into PARK.
2. Remove floor console as necessary for access to the shift cable adjustment. (Refer to 23 - BODY/INTERIOR/FLOOR CONSOLE - REMOVAL)
3. Loosen the shift cable adjustment screw (5).

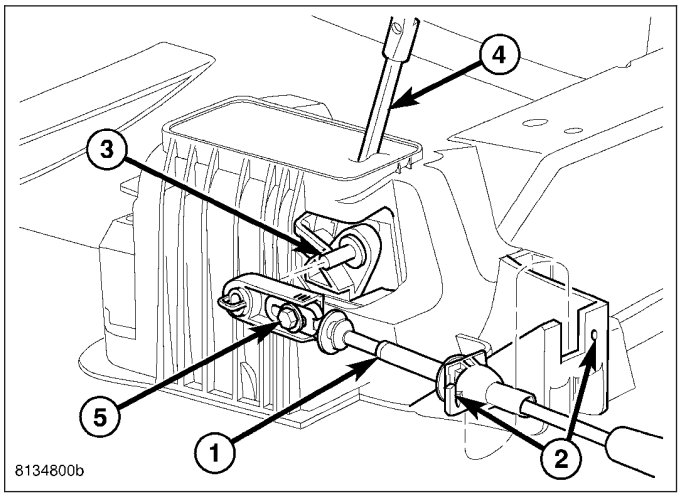

4. Raise vehicle.
5. Unsnap cable eyelet from transmission shift lever.
6. Verify transmission shift lever is in PARK detent by moving lever fully rearward. Last rearward detent is PARK position.
7. Verify positive engagement of transmission park lock by attempting to rotate propeller shaft. Shaft will not rotate when park lock is engaged.
8. Snap cable eyelet onto transmission shift lever.

9. Lower vehicle
10. Tighten the shift cable adjustment screw (5) to 7 N·m (65 in.lbs.).
11. Verify correct operation.
12. Install any floor console components removed for access. (Refer to 23 - BODY/INTERIOR/FLOOR CONSOLE - INSTALLATION)

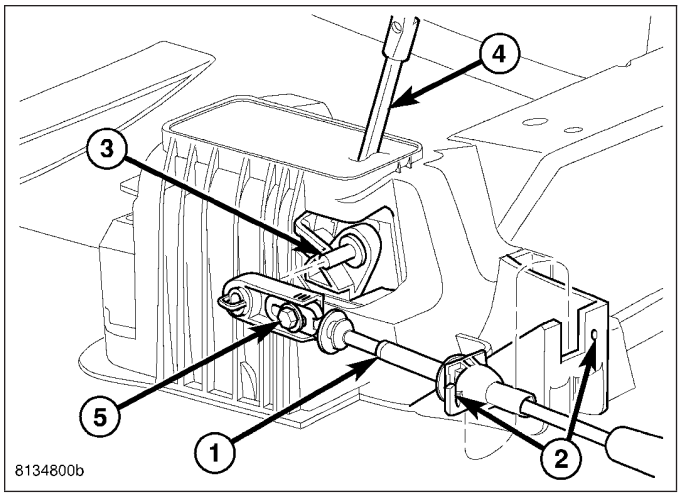

CLUTCHES-HOLDING

DESCRIPTION

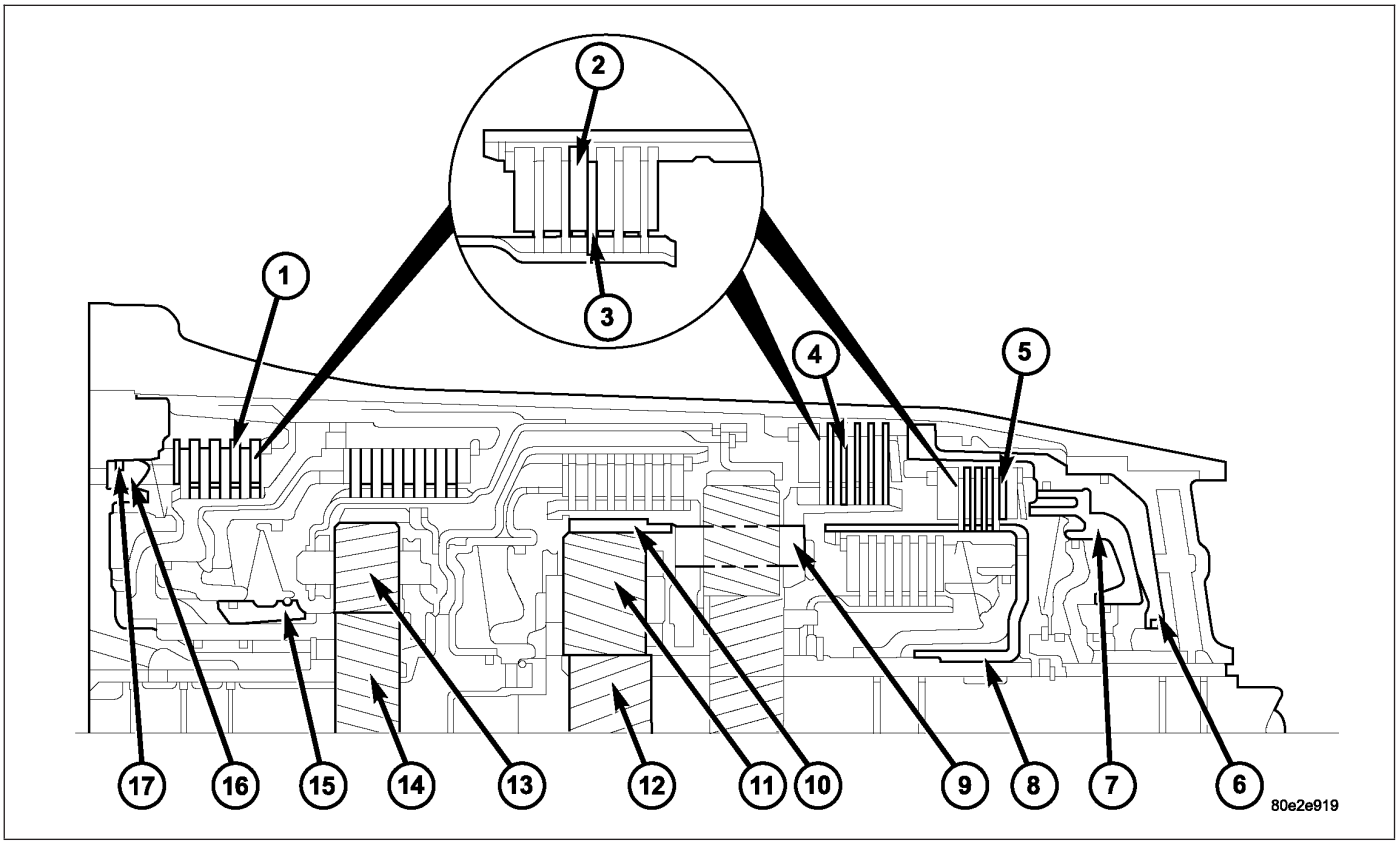

Holding Clutches

1 - B1 CLUTCH
2 - EXTERNALLY TOOTHED DISC
3 - INTERNALLY TOOTHED DISC
4 - B3 CLUTCH
5 - B2 CLUTCH
6 - B3 CLUTCH PISTON
7 - B2 CLUTCH PISTON
8 - B2 CLUTCH INTERNALLY TOOTHED DISC CARRIER
9 - REAR PLANETARY GEARSET PLANETARY CARRIER
10 - CENTER PLANETARY GEARSET ANNULUS GEAR
11 - CENTER PLANETARY GEARSET PINION GEARS
12 - CENTER PLANETARY GEARSET SUN GEAR
13 - FRONT PLANETARY GEARSET PINION GEARS
14 - FRONT PLANETARY GEARSET SUN GEAR
15 - B1 CLUTCH INTERNALLY TOOTHED DISC CARRIER
16 - B1 CLUTCH PISTON
17 - B1 CLUTCH EXTERNALLY TOOTHED DISC CARRIER

Three multiple-disc holding clutches, the front, B1 (1), middle, B3 (4), and rear multiple disc clutches, B2 (5), are located in the planetary gear sets in the transmission housing.

A multiple-disc holding clutch consists of a number of internally toothed discs (3) on an internally toothed disc carrier and externally toothed discs (2) on an externally toothed disc carrier, which is rigidly connected to the transmission housing.

OPERATION

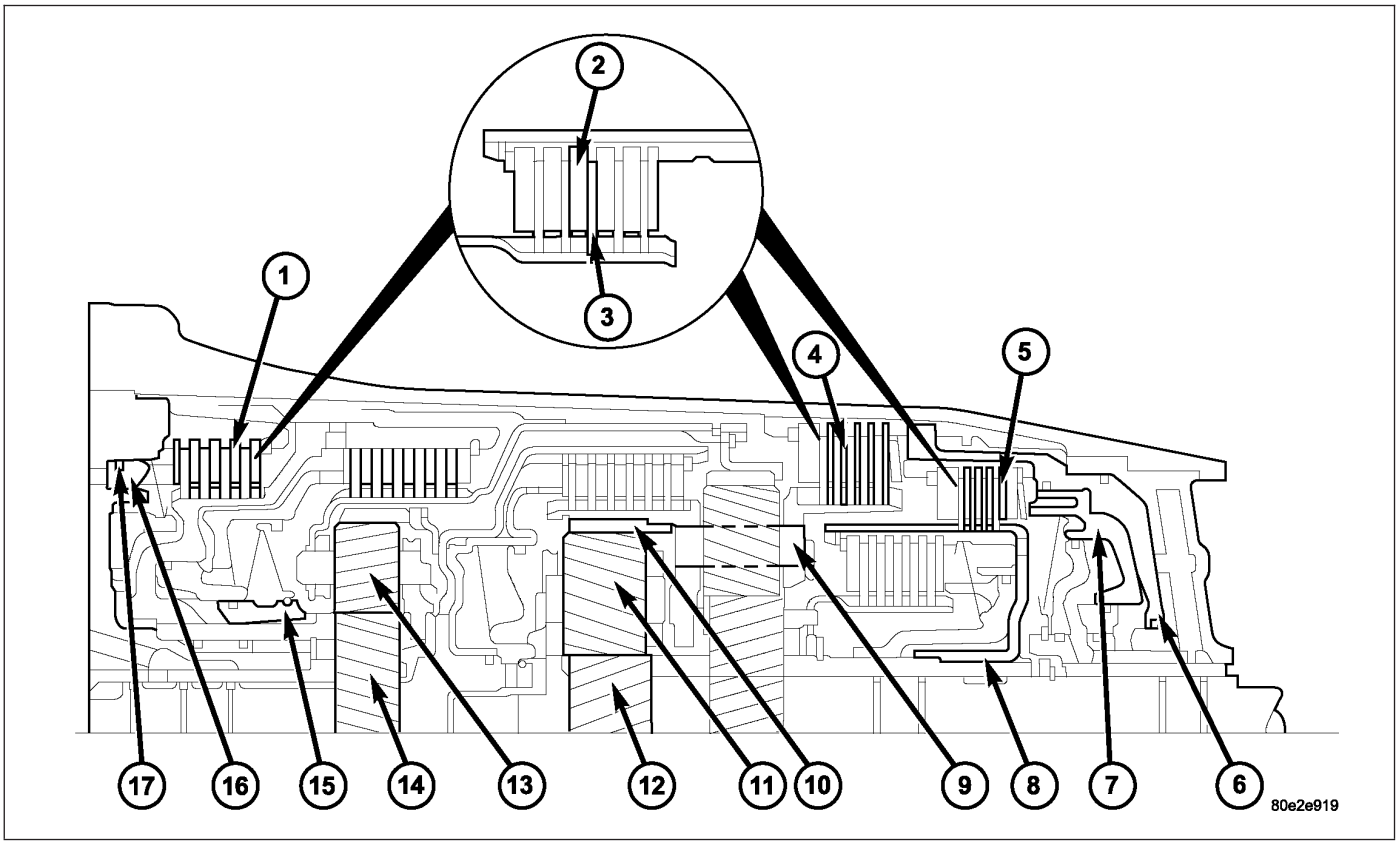

Holding Clutches

1 - B1 CLUTCH
2 - EXTERNALLY TOOTHED DISC
3 - INTERNALLY TOOTHED DISC
4 - B3 CLUTCH
5 - B2 CLUTCH
6 - B3 CLUTCH PISTON
7 - B2 CLUTCH PISTON
8 - B2 CLUTCH INTERNALLY TOOTHED DISC CARRIER
9 - REAR PLANETARY GEARSET PLANETARY CARRIER
10 - CENTER PLANETARY GEARSET ANNULUS GEAR
11 - CENTER PLANETARY GEARSET PINION GEARS
12 - CENTER PLANETARY GEARSET SUN GEAR
13 - FRONT PLANETARY GEARSET PINION GEARS
14 - FRONT PLANETARY GEARSET SUN GEAR
15 - B1 CLUTCH INTERNALLY TOOTHED DISC CARRIER
16 - B1 CLUTCH PISTON
17 - B1 CLUTCH EXTERNALLY TOOTHED DISC CARRIER

The holding clutches connect the annulus gear, sun gear, or planetary carrier of a planetary gear set against the transmission housing in order to transmit the drive torque.

If the piston (16) on multiple-disc holding clutch B1 (1) is subjected to oil pressure, it presses the internal (3) and external discs (2) of the disc set together. The internally toothed disc carrier (15) locks the sun gear (14) against the housing. The planetary pinion gears (13) turn on the sun gear (14).

If the multiple-disc holding clutch B2 (5) is actuated via the piston (7), the piston compresses the disc set. The internally toothed disc carrier (8) locks the sun gear (12) against the housing. The planetary pinion gears (11) turn on the sun gear (12).

If the multiple-disc holding clutch B3 (4) is actuated via the piston (6), the planetary carrier (9) and the annulus gear (10) are locked. When the multiple-disc brake B3 (4) is actuated, the direction of rotation is reversed.

B1-HOLDING CLUTCH

DISASSEMBLY

1. Remove the teflon rings (1) from the B1 plate carrier hub (2).

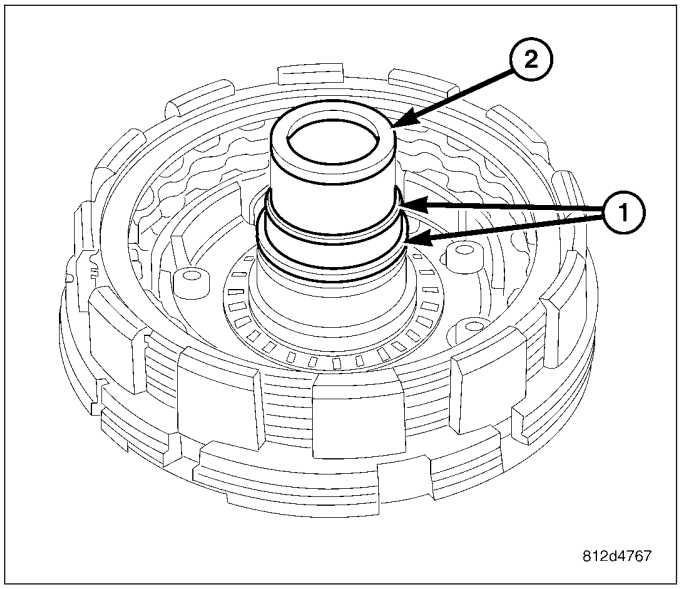

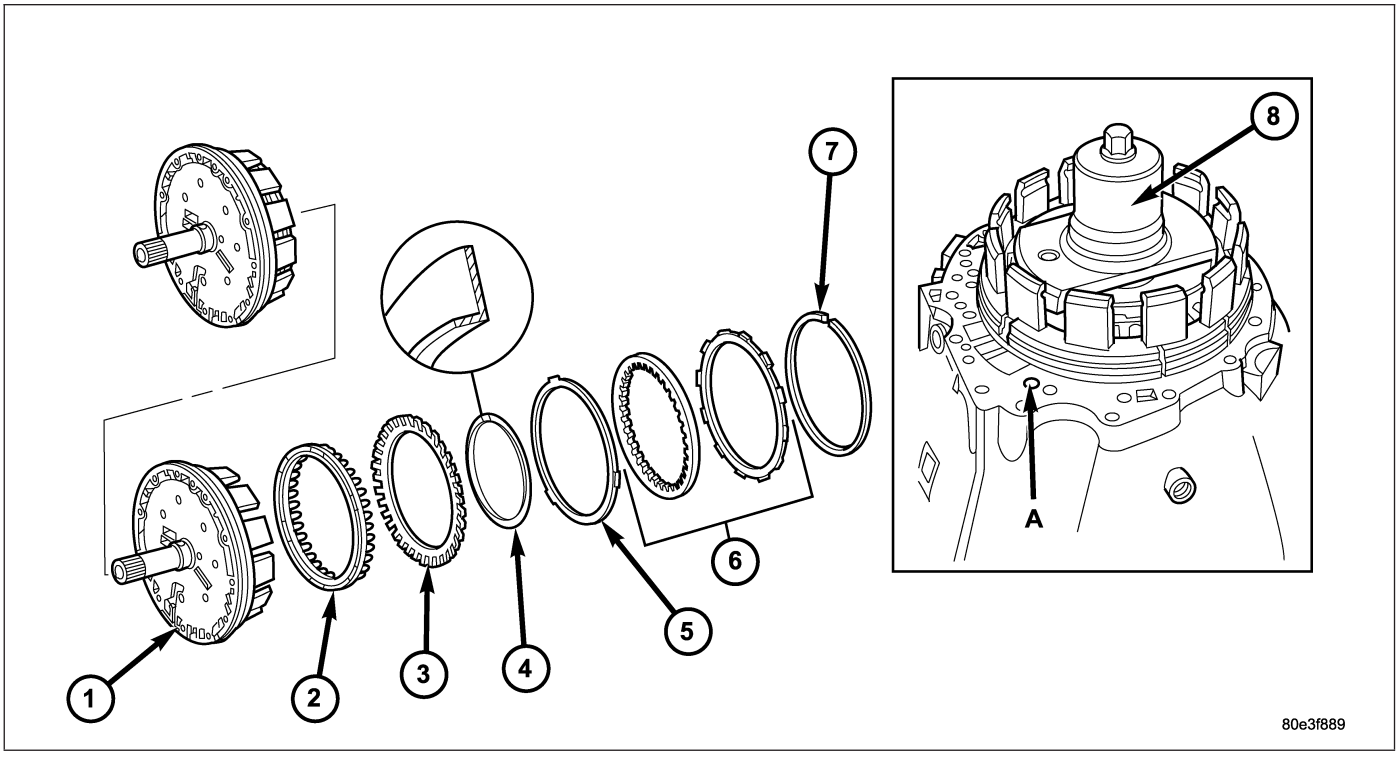

Holding Clutch B1

1 - HOLDING CLUTCH B1 OUTER CARRIER
2 - PISTON
3 - DISC SPRING
4 - SNAP-RING
5 - DISC SPRING
6 - MULTIPLE DISC PACK
7 - SNAP-RING
8 - MULTI-USE SPRING COMPRESSOR 8900

2. Remove snap-ring (7).
3. Remove multiple-disc pack (6) and disc spring (5) from outer multiple-disc carrier. Note which clutch disc is removed just prior to the disc spring (5) for re-assembly. If the clutch discs are re-used, this disc must be returned to its original position on top of the disc spring.

4. Place the Multi-use Spring Compressor 8900 (8) on disc spring (3) and compress the spring until the snap-ring (4) is exposed.
5. Remove snap-ring (4).
6. Remove piston (2) from the outer multiple-disc carrier by carefully blowing compressed air into the bore (A).

ASSEMBLY

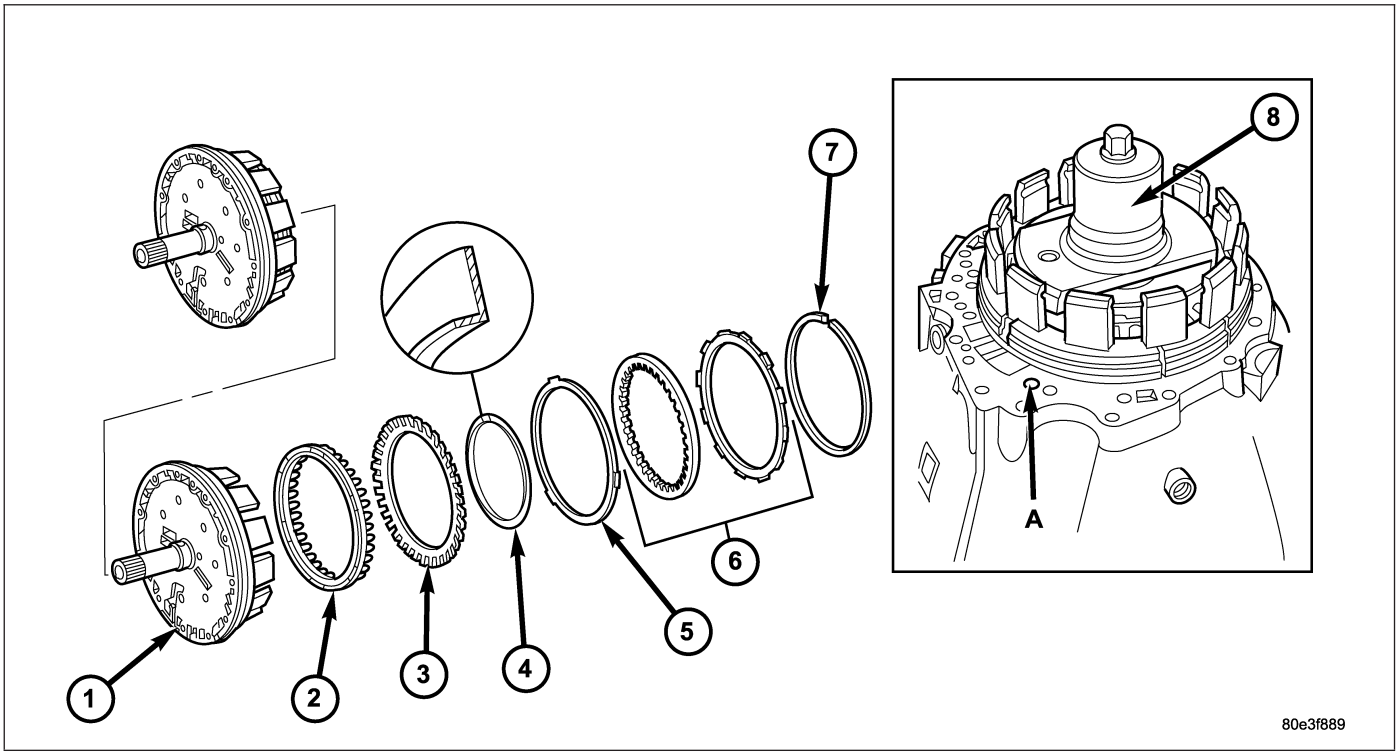

Holding Clutch B1

1 - HOLDING CLUTCH B1 OUTER CARRIER
2 - PISTON
3 - DISC SPRING
4 - SNAP-RING
5 - DISC SPRING
6 - MULTIPLE DISC PACK
7 - SNAP-RING
8 - MULTI-USE SPRING COMPRESSOR 8900

NOTE: Check vulcanized gasket, replace if necessary.

1. Install piston (2) in outer multiple-disc carrier (1).
2. Place compressor (8) on disc spring (3) and compress until the groove of the snap-ring is exposed.

NOTE: The collar of the snap-ring must point towards the multiple-disc pack. After installing, check snap-ring for correct seat.

3. Insert snap-ring (4).

4. Insert disc spring (2) in the outer multiple-disc carrier. Observe the disc spring (2) installation position. The lugs of the disc spring (2) washer must align with the 3 raised pads (arrow) of the B1 multiple-disc carrier (1). The cone of the spring washer must point downwards.

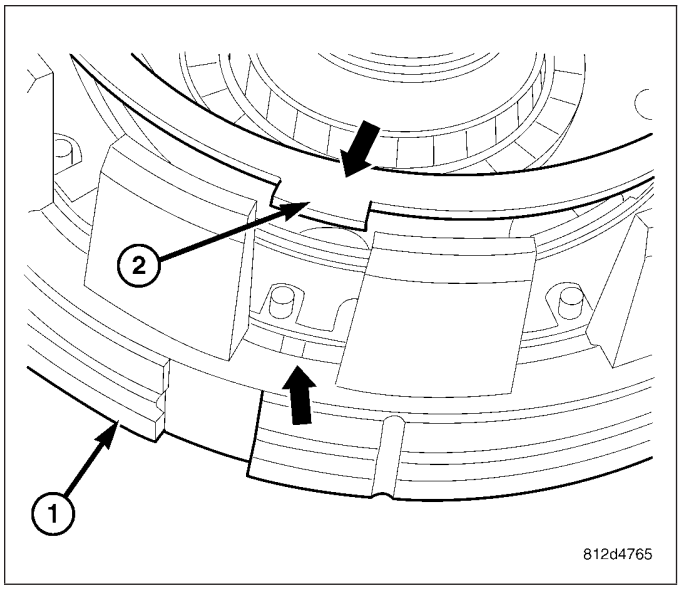

5. Insert the multiple-disc pack (6) in the outer multiple-disc carrier and measure the clutch clearance.

NOTE: Pay attention to the sequence of discs. If the original clutch discs are reused, be sure to return the disc identified on disassembly as belonging on top of the disc spring (5) to its original location.

CAUTION: When working with double sided friction discs, an externally lugged steel plate is installed first, followed by a friction disc, and continuing on until all the required discs are installed. When working with single sided friction discs, an externally lugged disc is installed first, followed by an internally lugged disc, and continuing on until all the required discs are installed. All single sided discs are installed with the friction side up.

NOTE: Place new friction multiple-discs in ATF fluid for one hour before installing.

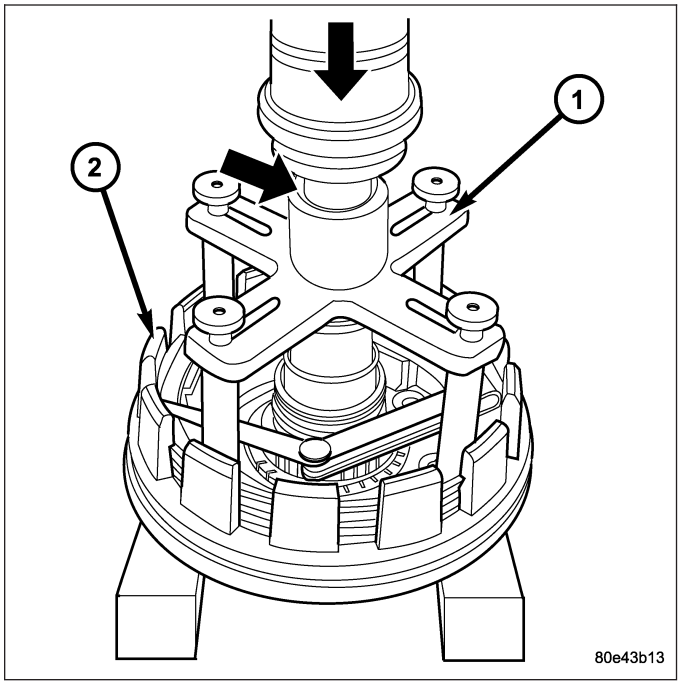

6. Measure B1 clutch clearance by mounting Pressing Tool 8901 (1) on outer multiple disc.
7. Using a lever press, compress pressing tool as far as the marking ring (the marking ring is still visible, see small arrow).

8. For transmissions using double sided friction discs, use a feeler gauge to determine the play ″L″ at three points between the snap-ring (6) and outer multiple-disc (4). During the measurement, the snap-ring (6) must contact the upper bearing surface of the groove in the outer multiple-disc carrier (5). The correct clearance for transmissions using double sided friction discs is 2.3-2.7 mm (0.091-0.106 in.) for two friction disc versions, 2.7-3.1 mm (0.106-0.122 in.) for three disc versions, and 3.0-3.4 mm (0.118-0.134 in.) for four disc versions.
9. Adjust with snap-ring (6), if necessary. Snap-rings are available in thicknesses of 2.6 mm (0.102 in.), 2.9 mm (0.114 in.), 3.2 mm (0.126 in.), 3.5 mm (0.138 in.), 3.8 mm (0.150 in.), and 4.1 mm (0.162 in.).

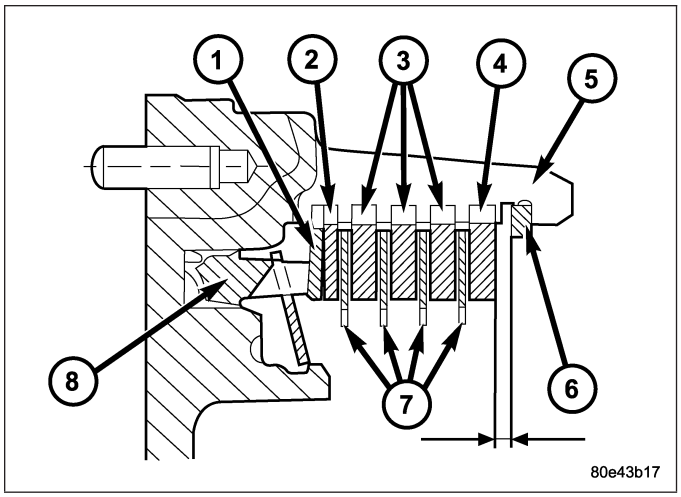

1 - DISC SPRING
2 - OUTER MULTIPLE DISC - 1.8 mm (0.071 IN.)
3 - OUTER MULTIPLE DISC - 2.8 mm (0.110 IN.)
4 - OUTER MULTIPLE DISC - 4.0 mm (0.158 IN.)
5 - B1 OUTER CARRIER
6 - SNAP-RING
7 - INNER MULTIPLE DISCS
8 - PISTON

10. For transmissions using single sided friction discs, use a feeler gauge to determine the play ″L″ at three points between the snap-ring (5) and outer multiple-disc (3). During the measurement, the snap-ring (5) must contact the upper bearing surface of the groove in the outer multiple-disc carrier (4). The correct clearance is 2.2-2.6 mm (0.087-0.102 in.) for four friction disc versions, 2.4-2.8 mm (0.095-0.110 in.) for six disc versions, and 2.6-3.0 mm (0.102-0.118 in.) for eight disc versions.
11. Adjust with snap-ring (5), if necessary. Snap-rings are available in thicknesses of 2.6 mm (0.102 in.), 2.9 mm (0.114 in.), 3.2 mm (0.126 in.), 3.5 mm (0.138 in.), 3.8 mm (0.150 in.), and 4.1 mm (0.162 in.).

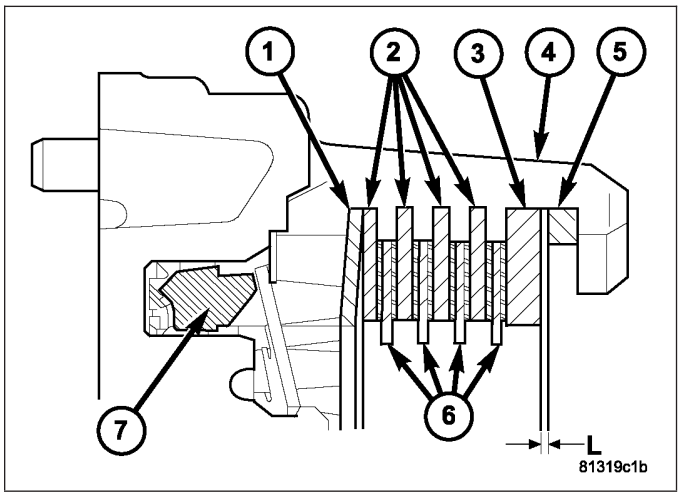

1 - DISC SPRING
2 - OUTER MULTIPLE DISC
3 - OUTER MULTIPLE DISC - 4.0 mm (0.158 IN.)
4 - B1 OUTER CARRIER
5 - SNAP-RING
6 - INNER MULTIPLE DISCS
7 - PISTON

12. Install the teflon rings (1) onto the B1 plate carrier hub (2).
13. Coat Teflon rings (1) lightly with grease and insert in the groove so that the joint remains together.

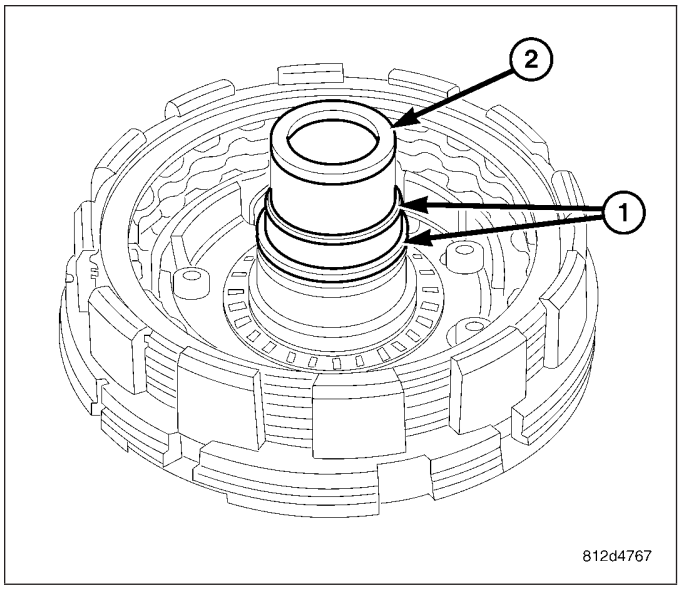

B2-HOLDING CLUTCH

DISASSEMBLY

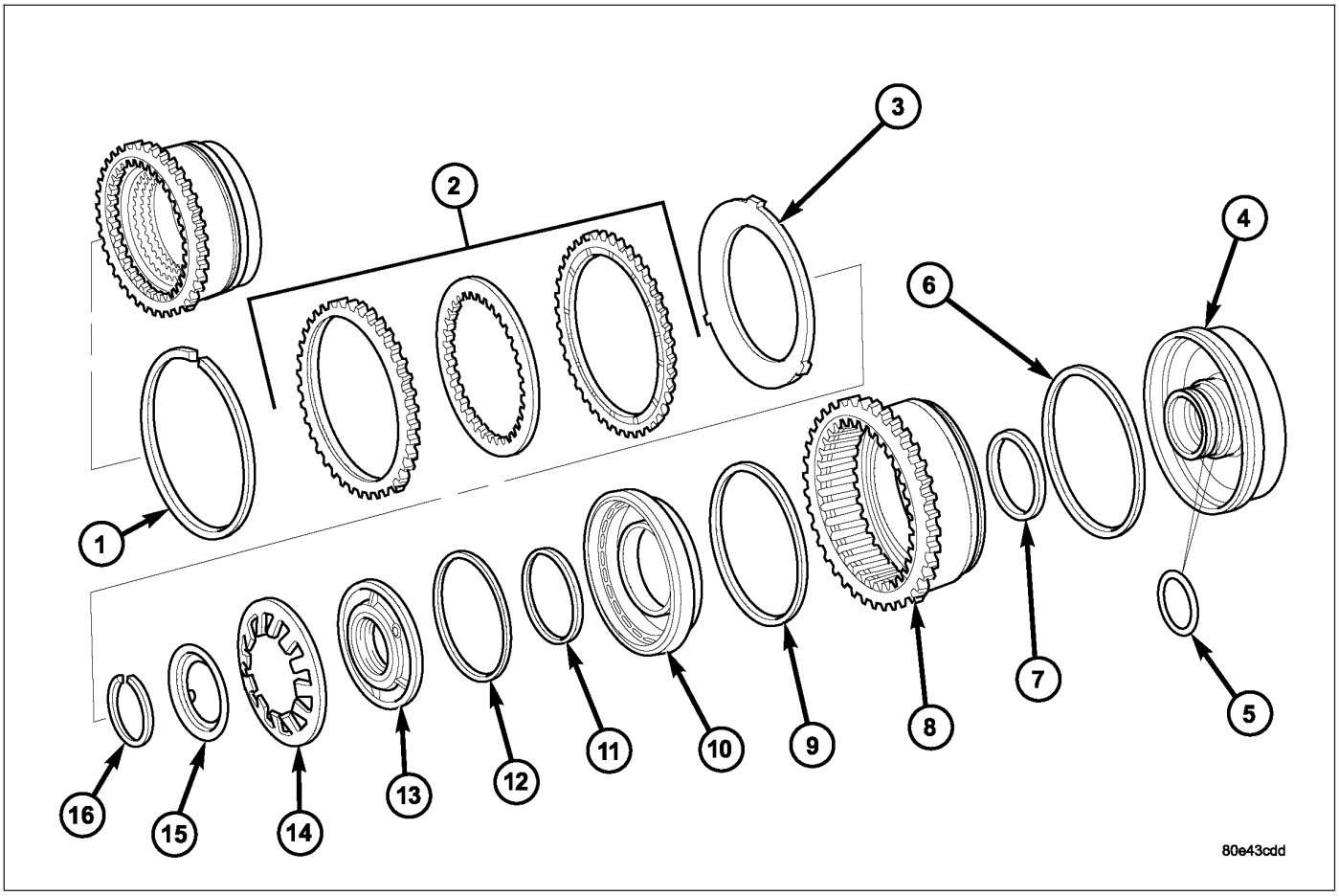

Holding Clutch B2

1 - SNAP-RING
2 - MULTIPLE DISC PACK
3 - DISC SPRING
4 - B2 AND B3 PISTON GUIDE
5 - O-RING
6 - B3 PISTON SEALING RING
7 - B3 PISTON SEALING RING
8 - B3 PISTON/B2 OUTER DISC CARRIER
9 - B2 PISTON SEALING RING
10 - B2 PISTON
11 - PISTON GUIDE SEALING RING
12 - PISTON GUIDE SEALING RING
13 - PISTON GUIDE RING
14 - PISTON BACK PRESSURE DISC SPRING
15 - SPRING PLATE
16 - SNAP-RING

1. Remove snap ring (1).
2. Take multiple-disc pack B2 (2) and disc spring (3) out of the outer multiple-disc carrier B2 (8). The outer multiple-disc carrier for the multi-disc holding clutch B2 is the piston for the multiple-disc holding clutch B3 at the same time. Note which clutch disc is removed just prior to the disc spring (3) for re-assembly. If the clutch discs are re-used, this disc must be returned to its original position on top of the disc spring.
3. Place the Multi-use Spring Compressor 8900 on the spring disc (14) and compress the spring until the groove for the snap-ring is exposed.
4. Remove snap-ring (16).
5. Remove spring plate (15) and disc spring (14).

6. Separate piston guide ring (13) and the B2 piston (10) from the B3 piston (8) by blowing compressed air into the bore (**D**).
7. Press piston guide ring (13) out of the B2 piston (10).
8. Separate piston guide (4) from the B3 piston (8) by blowing compressed air into the bore (**A**).

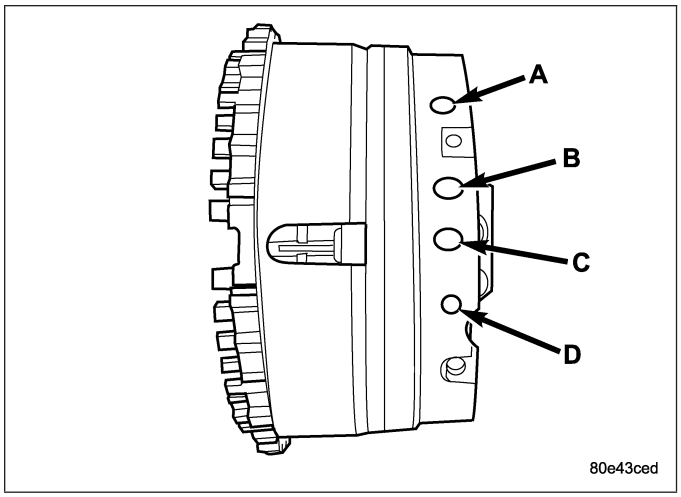

ASSEMBLY

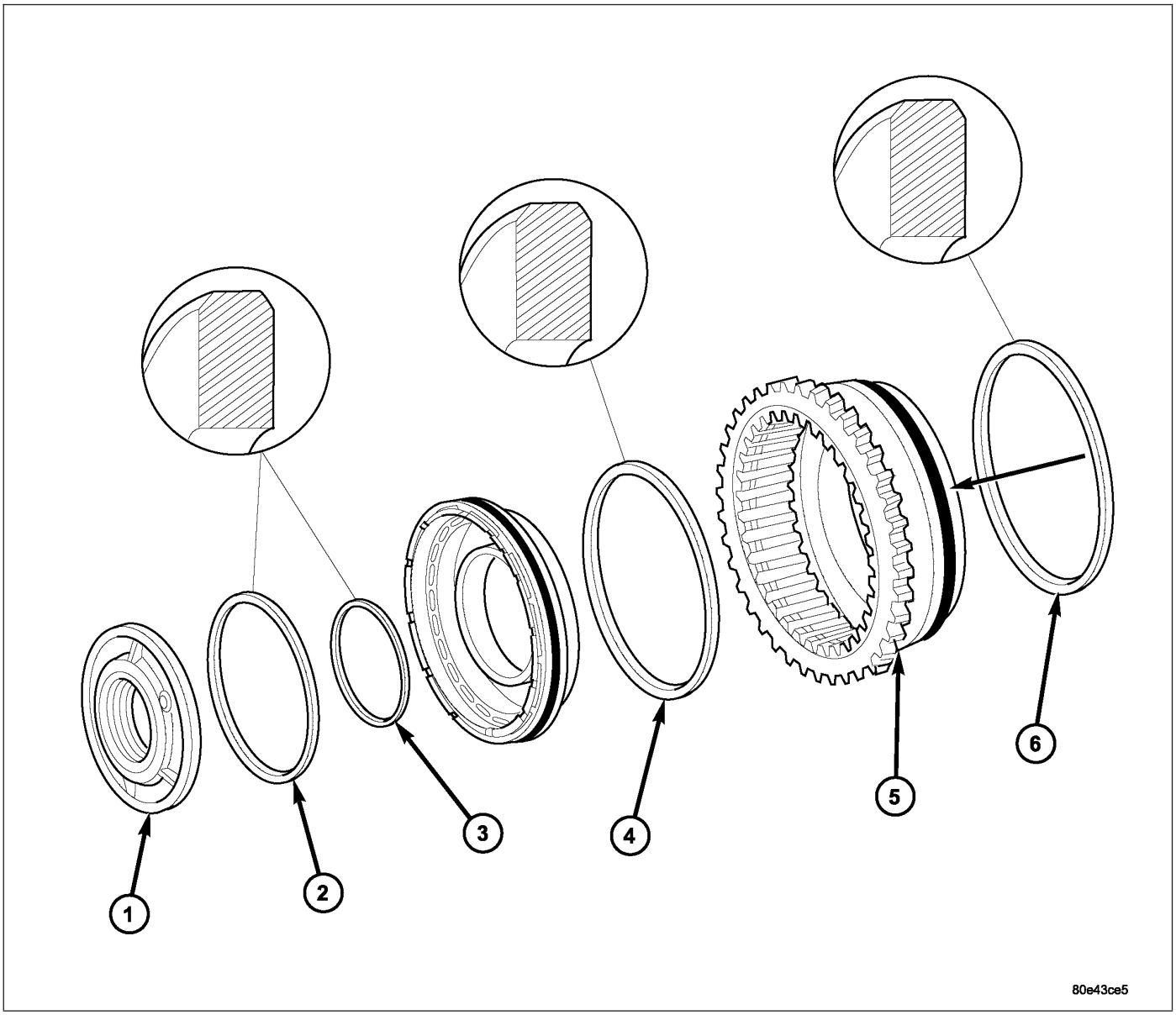

Holding Clutch B2/B3 Seals

1 - PISTON GUIDE RING
2 - PISTON GUIDE RING SEALING RING
3 - PISTON GUIDE RING SEALING RING
4 - B2 PISTON SEALING RING
5 - B3 PISTON/B2 OUTER DISC CARRIER
6 - B3 PISTON SEALING RING

1. Check all sealing rings (2-4, 6), replace if necessary. The rounded off edges on the sealing rings (2, 4, 6) must point outwards.

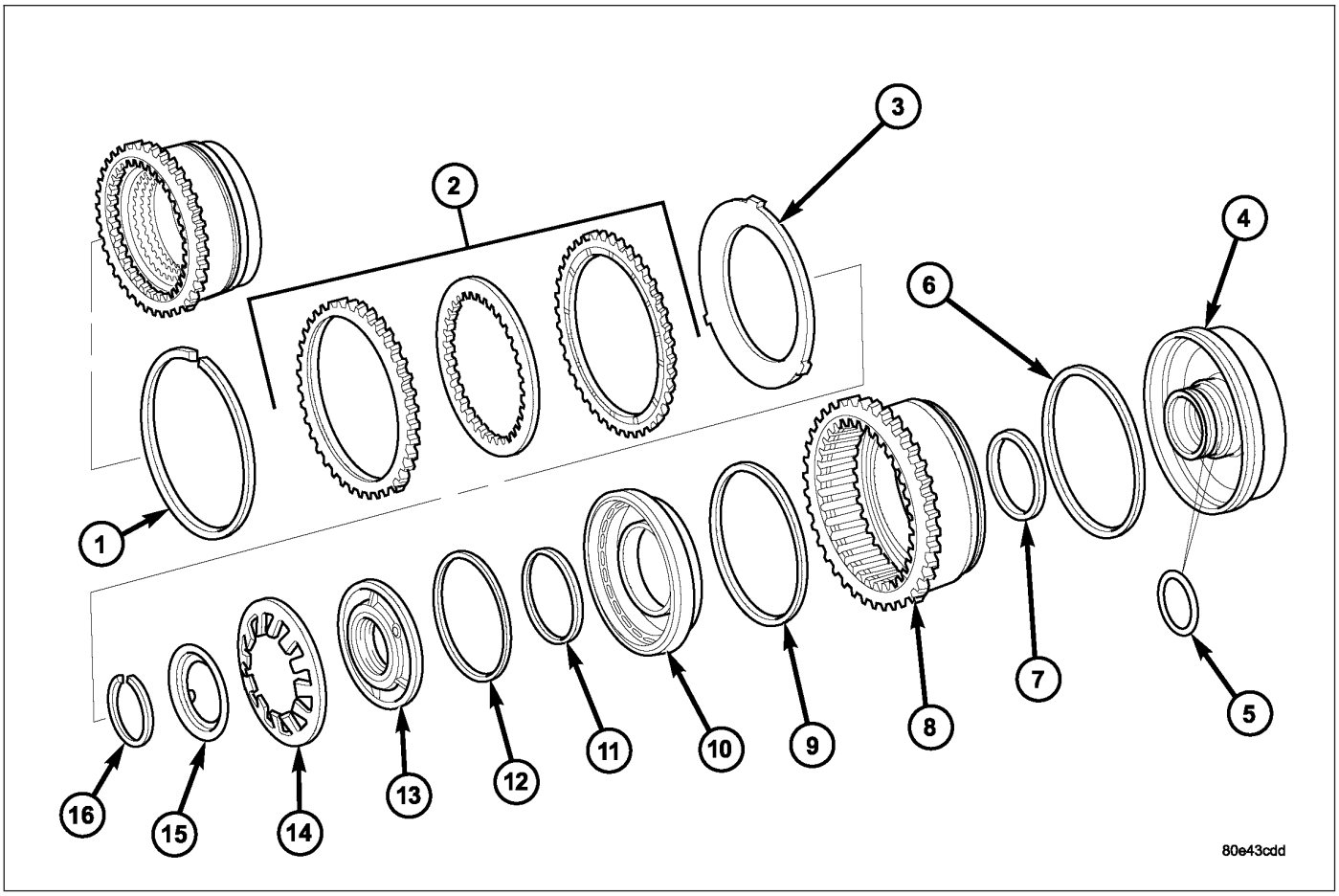

Holding Clutch B2

1 - SNAP-RING
2 - MULTIPLE DISC PACK
3 - DISC SPRING
4 - B2 AND B3 PISTON GUIDE
5 - O-RING
6 - B3 PISTON SEALING RING
7 - B3 PISTON SEALING RING
8 - B3 PISTON/B2 OUTER DISC CARRIER
9 - B2 PISTON SEALING RING
10 - B2 PISTON
11 - PISTON GUIDE SEALING RING
12 - PISTON GUIDE SEALING RING
13 - PISTON GUIDE RING
14 - PISTON BACK PRESSURE DISC SPRING
15 - SPRING PLATE
16 - SNAP-RING

2. Assemble piston guide (4) and B3 piston (8) in the correct position. Verify that the missing tooth in the B3 piston/B2 outer disc carrier (8) is aligned with the centerline of the two threaded holes in the B2 and B3 piston guide (4).
3. Insert B2 piston (10) in B3 piston (8).

4. Insert piston guide ring (2). The valve (1) in the piston guide ring must be on top.

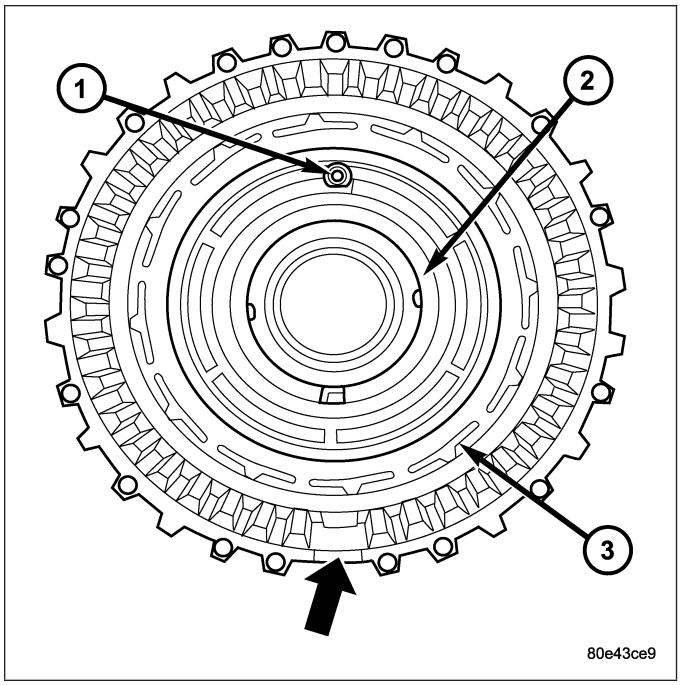

5. Insert disc spring (14) and spring plate (15). Insert disc spring with the curvature towards the spring plate
6. Place Multi-use Spring Compressor 8900 on the disc spring (14) and compress the spring until the groove for the snap-ring is exposed.
7. Insert snap-ring (16).

NOTE: Pay attention to sequence of discs. If the original clutch discs are reused, be sure to return the disc identified on disassembly as belonging on top of the disc spring (3) to its original location. Place new friction multiple-discs in ATF fluid for one hour before installing.

8. Insert disc spring (3) and multiple-disc pack (2) in the B2 outer multiple-disc carrier.
9. Insert snap-ring (1).

NOTE: During the measurement the snap-ring must contact the upper bearing surface of the groove in the outer multiple-disc carrier.

10. Measure the B2 clutch pack clearance by mounting the Pressing Tool 8901 (1) on outer multiple disc.
11. Using a lever press, compress pressing tool as far as the marking ring (the marking ring is still visible, see small arrow).

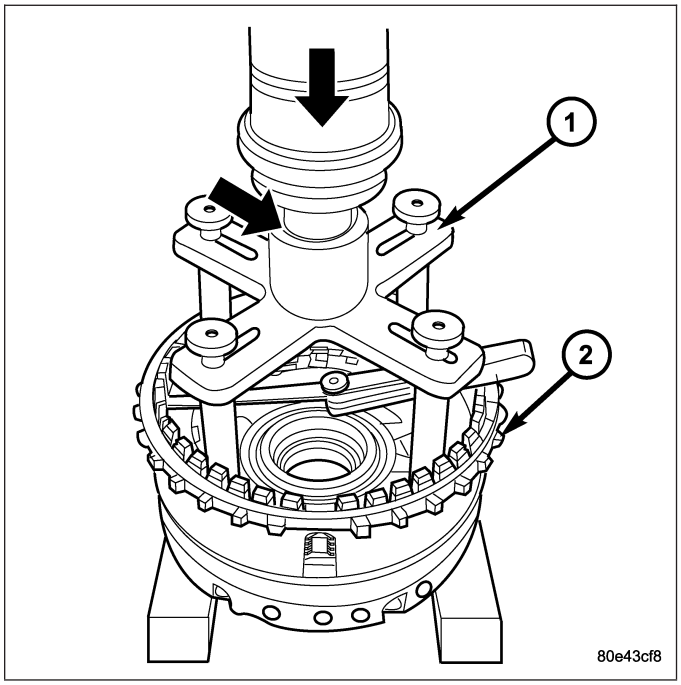

12. Using a feeler gauge, determine the play ″L″ at three points between the snap-ring (8) and outer multiple-disc (7).
13. The correct clutch clearance is 1.9-2.3 mm (0.075-0.091 in.) for the four friction disc versions and 2.0-2.4 mm (0.079-0.095 in.) for the five disc versions.
14. Adjust with snap-ring (8), if necessary. Snap-rings are available in thicknesses of 2.9 mm (0.114 in.), 3.2 mm (0.126 in.), 3.5 mm (0.138 in.), 3.8 mm (0.150 in.), and 4.1 mm (0.162 in.).

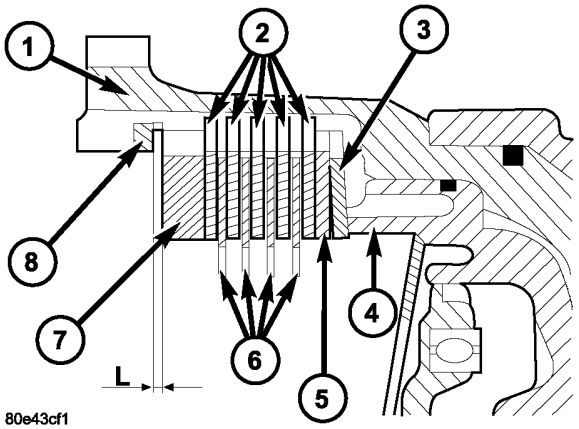

1 - B2 OUTER DISC CARRIER
2 - FRICTION DISCS
3 - DISC SPRING
4 - B2 PISTON
5 - OUTER MULTIPLE DISC - 1.8 MM (0.071 IN.)
6 - OUTER MULTIPLE DISC - 1.8 MM (0.071 IN.)
7 - OUTER MULTIPLE DISC - 6.5 MM (0.256 IN.)
8 - SNAP-RING

CLUTCHES-INPUT

DESCRIPTION

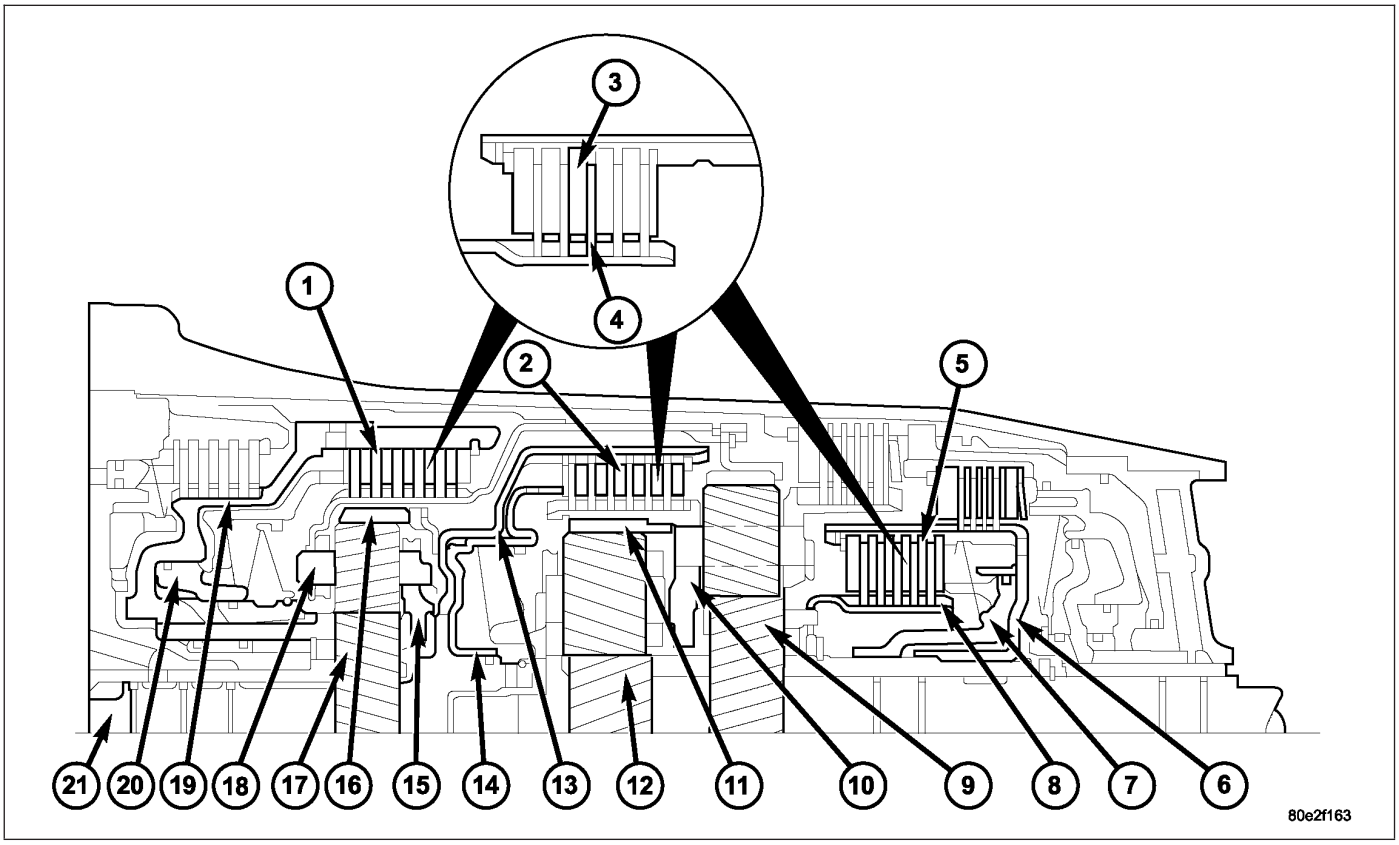

Input Clutches

1 - K1 CLUTCH
2 - K2 CLUTCH
3 - EXTERNALLY TOOTHED DISC
4 - INTERNALLY TOOTHED DISC
5 - K3 CLUTCH
6 - K3 CLUTCH EXTERNALLY TOOTHED DISC CARRIER
7 - K3 CLUTCH PISTON
8 - K3 CLUTCH INTERNALLY TOOTHED DISC CARRIER
9 - REAR PLANETARY GEARSET SUN GEAR
10 - CENTER PLANETARY GEARSET PLANETARY CARRIER
11 - CENTER PLANETARY GEARSET ANNULUS GEAR
12 - CENTER PLANETARY GEARSET SUN GEAR
13 - K2 CLUTCH EXTERNALLY TOOTHED DISC CARRIER
14 - K2 CLUTCH PISTON
15 - FRONT PLANETARY GEARSET PLANETARY CARRIER
16 - FRONT PLANETARY GEARSET ANNULUS GEAR
17 - FRONT PLANETARY GEARSET SUN GEAR
18 - K1 CLUTCH INTERNALLY TOOTHED DISC CARRIER
19 - K1 CLUTCH EXTERNALLY TOOTHED DISC CARRIER
20 - K1 CLUTCH PISTON
21 - INPUT SHAFT

Three multi-plate input clutches (1, 2, 5), the front, middle and rear multi-plate clutches K1 (1), K2 (2), and K3 (5), are located in the planetary gear sets in the transmission housing.

A multi-plate input clutch consists of a number of internally toothed discs (4) on an internally toothed disc carrier and externally toothed discs (3) on an externally toothed disc carrier.

OPERATION

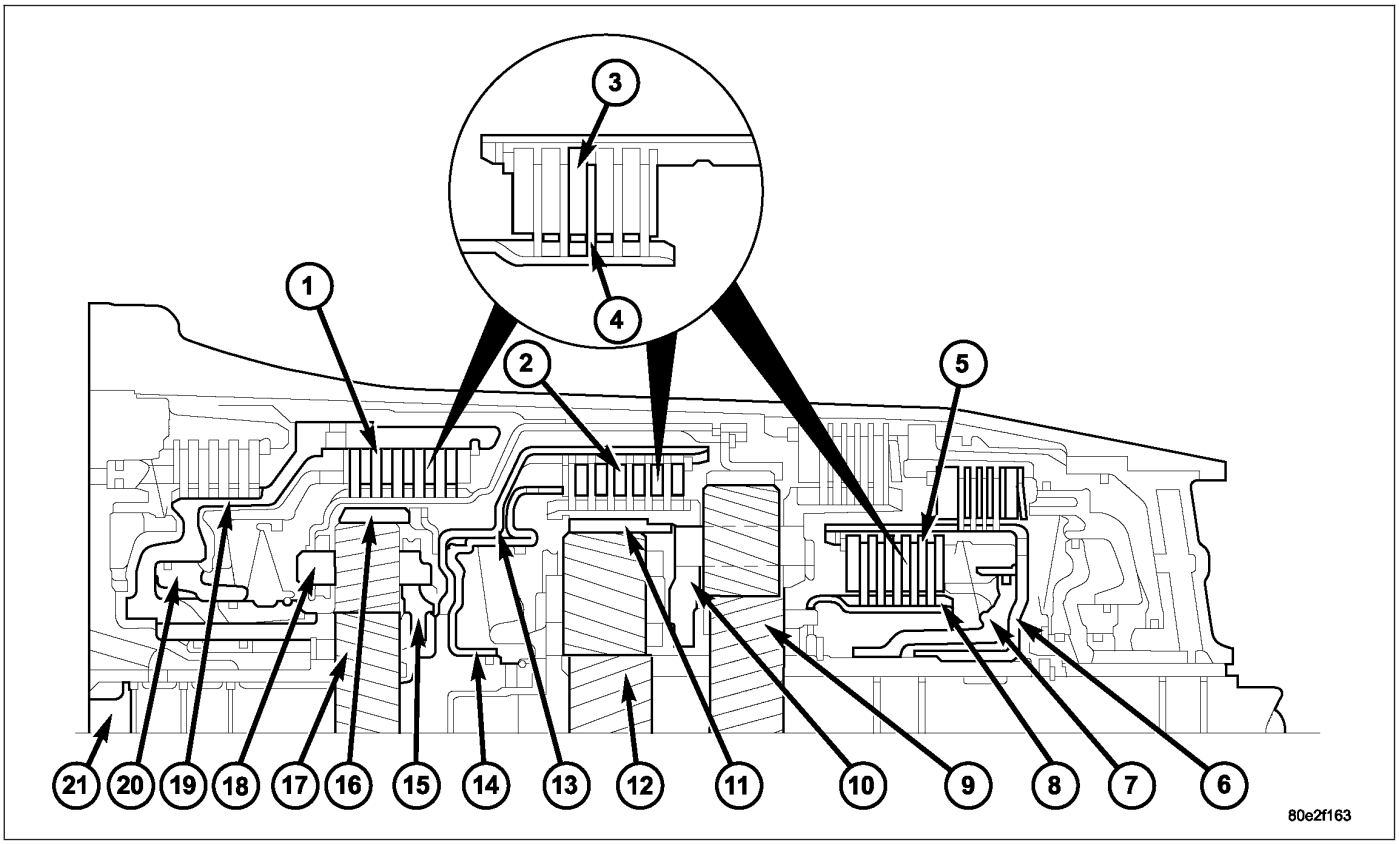

Input Clutches

1 - K1 CLUTCH
2 - K2 CLUTCH
3 - EXTERNALLY TOOTHED DISC
4 - INTERNALLY TOOTHED DISC
5 - K3 CLUTCH
6 - K3 CLUTCH EXTERNALLY TOOTHED DISC CARRIER
7 - K3 CLUTCH PISTON
8 - K3 CLUTCH INTERNALLY TOOTHED DISC CARRIER
9 - REAR PLANETARY GEARSET SUN GEAR
10 - CENTER PLANETARY GEARSET PLANETARY CARRIER
11 - CENTER PLANETARY GEARSET ANNULUS GEAR
12 - CENTER PLANETARY GEARSET SUN GEAR
13 - K2 CLUTCH EXTERNALLY TOOTHED DISC CARRIER
14 - K2 CLUTCH PISTON
15 - FRONT PLANETARY GEARSET PLANETARY CARRIER
16 - FRONT PLANETARY GEARSET ANNULUS GEAR
17 - FRONT PLANETARY GEARSET SUN GEAR
18 - K1 CLUTCH INTERNALLY TOOTHED DISC CARRIER
19 - K1 CLUTCH EXTERNALLY TOOTHED DISC CARRIER
20 - K1 CLUTCH PISTON
21 - INPUT SHAFT

The input clutches produce a non-positive locking connection between two elements of a planetary gear set or between one element from each of two planetary gear sets in order to transmit the drive torque.

If the piston (20) on multi-plate clutch K1 (1) is subjected to oil pressure, it presses the internal and external discs of the disc set together. The sun gear (17) is locked with the planetary carrier (15) via the externally toothed disc carrier (19) and the internally toothed disc carrier (18). The front planetary gear set is thus locked and turns as a closed unit.

If the multi-plate clutch K2 (2) is actuated via the piston (14), the piston compresses the disc set. The annulus gear (16) of the front planetary gear set is locked with the annulus gear (11) of the center planetary gear set via the externally toothed disc carrier (13) and the center planetary carrier (10) on which the internally toothed discs are seated. Annulus gear (16) and annulus gear (11) turn at the same speed as the input shaft (21)

If the multi-plate clutch K3 (5) is actuated via the piston (7), the piston compresses the disc set. The sun gear (12) of the center planetary gear set is locked with the sun gear (9) of the rear planetary gear set via the externally toothed disc carrier (6) and the internally toothed disc carrier (8). Sun gear (12) and sun gear (9) turn at the same speed.

K1-INPUT CLUTCH

DISASSEMBLY

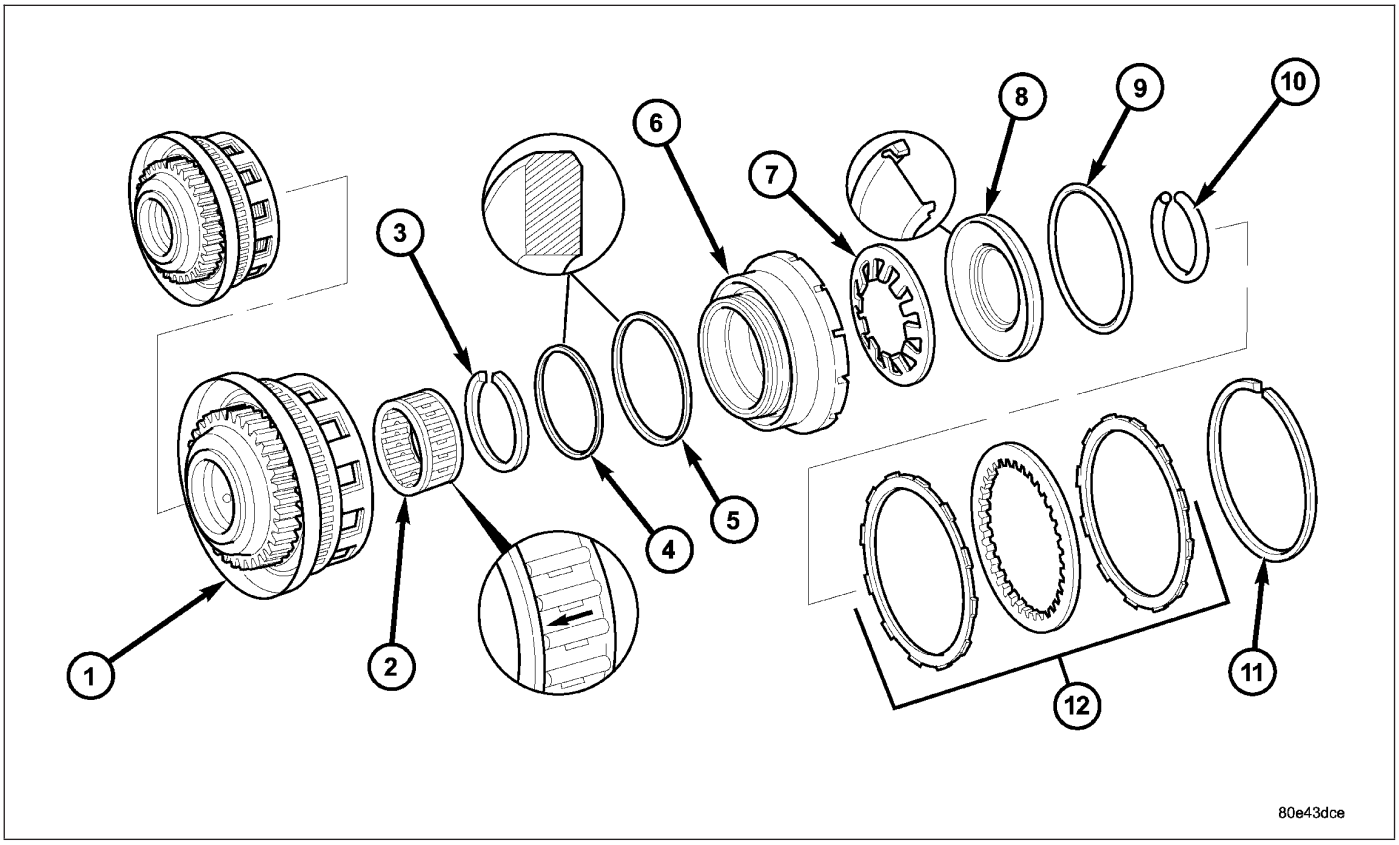

Input Clutch K1 Components

1 - K1 OUTER DISC CARRIER
2 - FREEWHEELING CLUTCH F1
3 - SNAP-RING
4 - OUTER DISC CARRIER SEALING RING
5 - PISTON SEALING RING
6 - PISTON
7 - DISC SPRING
8 - SPRING PLATE
9 - SPRING PLATE SEALING RING
10 - SNAP-RING
11 - SNAP-RING
12 - MULTIPLE DISC PACK - REFER TO TEXT FOR CORRECT ASSEMBLY ORDER

1. Remove snap-ring (11) from outer multiple-disc carrier (1).
2. Take multiple-disc pack (12) out of outer multiple-disc carrier (1). Note which clutch disc is removed just prior to the spring plate (8) for re-assembly. If the clutch discs are re-used, this disc must be returned to its original position on top of the spring plate.

3. Place Multi-use Spring Compressor 8900 (2) on the spring plate and compress the spring until the snap-ring (1) is exposed.
4. Remove snap-ring (1).
5. Take out disc spring (7) and remove piston (6) by carefully blowing compressed air into the drilled oil feed passage.
6. Remove snap-ring (3) and take out front freewheeling clutch F1 (2). Take care when removing the F1 clutch to prevent the clutch sprags from falling out. If this occurs, the clutch must be replaced.

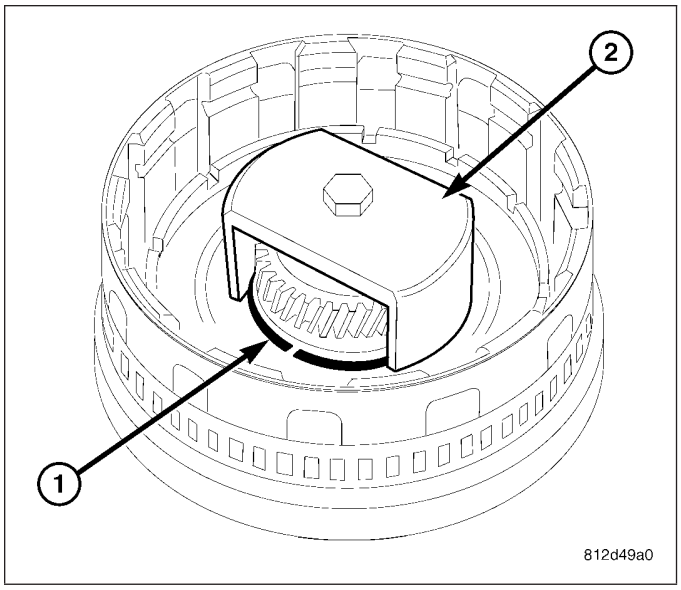

ASSEMBLY

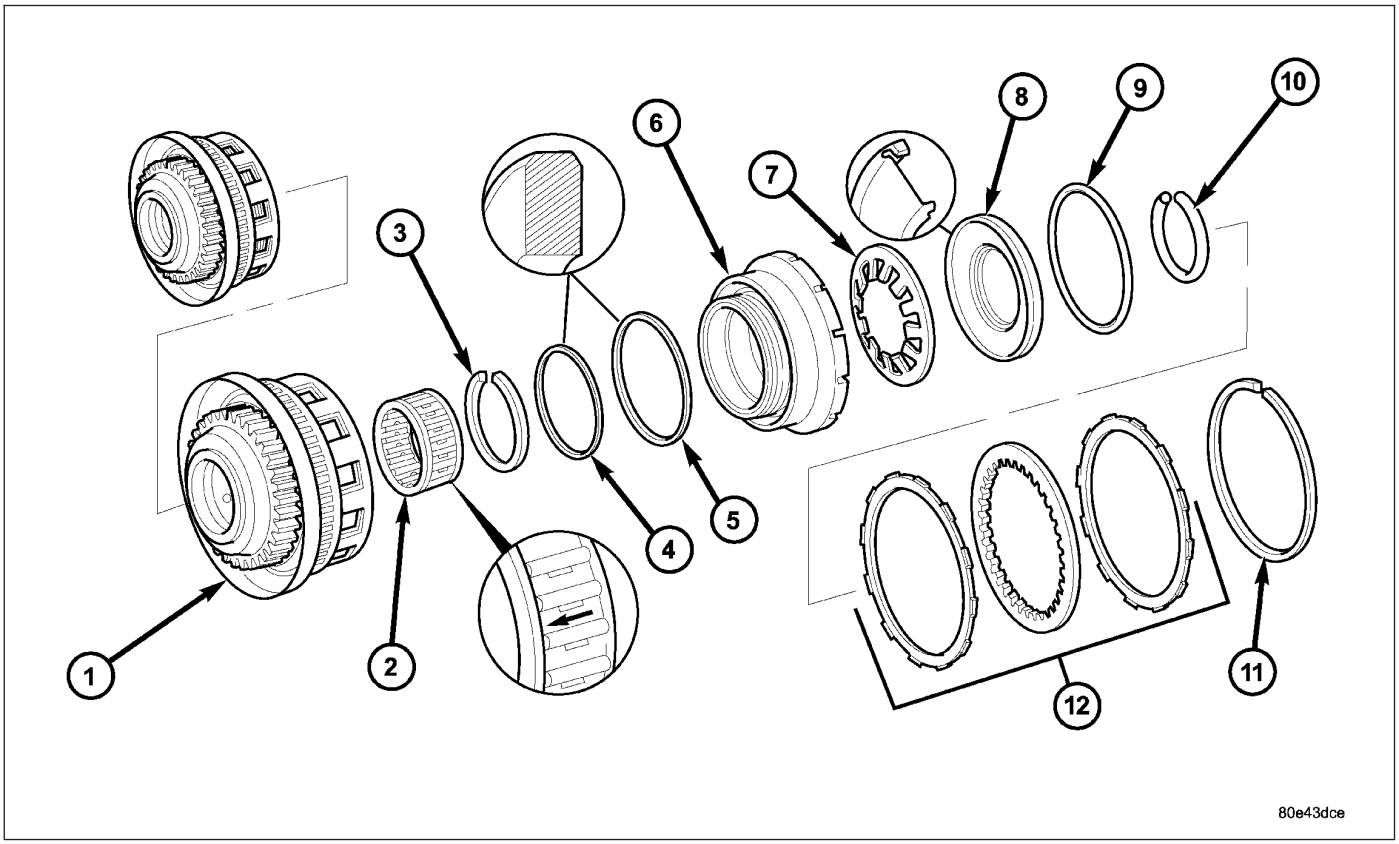

Input Clutch K1 Components

1 - K1 OUTER DISC CARRIER
2 - FREEWHEELING CLUTCH F1
3 - SNAP-RING
4 - OUTER DISC CARRIER SEALING RING
5 - PISTON SEALING RING
6 - PISTON
7 - DISC SPRING
8 - SPRING PLATE
9 - SPRING PLATE SEALING RING
10 - SNAP-RING
11 - SNAP-RING
12 - MULTIPLE DISC PACK - REFER TO TEXT FOR CORRECT ASSEMBLY ORDER

1. Install piston (6) in the outer multiple-disc carrier (1). Check sealing rings (4 and 5), replace if necessary. The rounded off edges of the sealing rings must point outwards.
2. Insert disc spring (7). Insert disc spring with the curvature towards the piston.
3. Insert spring plate (8). Insert spring plate with the curvature towards the sun gear. Check sealing ring (9), replace if necessary.

4. Place Multi-use Spring Compressor 8900 (2) on spring plate and compress the spring until the groove of the snap-ring (1) is exposed.
5. Insert snap-ring (1). After installing, check snap-ring for correct seat.

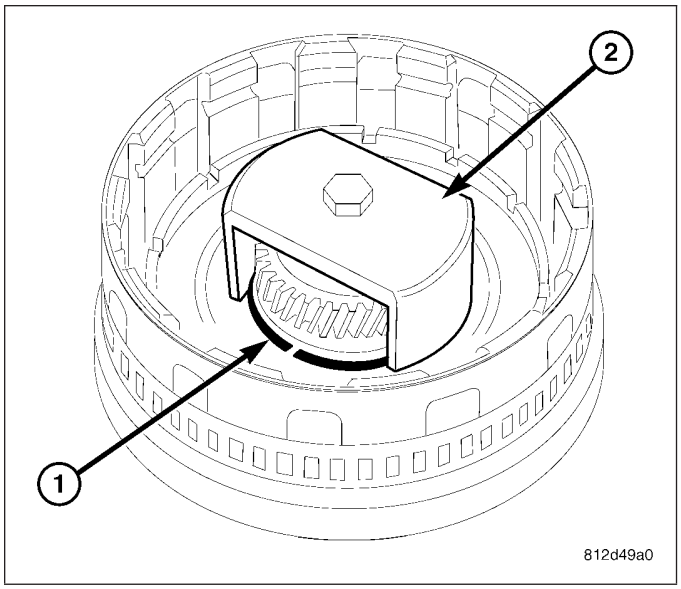

CAUTION: When working with double sided friction discs, an externally lugged steel plate is installed first, followed by a friction disc, and continuing on until all the required discs are installed. When working with single sided friction discs, an externally lugged disc is installed first, followed by an internally lugged disc, and continuing on until all the required discs are installed. All single sided discs are installed with the friction side up.

NOTE: Pay attention to the sequence of discs. If the original clutch discs are reused, be sure to return the disc identified on disassembly as belonging on top of the spring plate (8) to its original location.

NOTE: Place new friction multiple-discs in ATF fluid for one hour before installing.

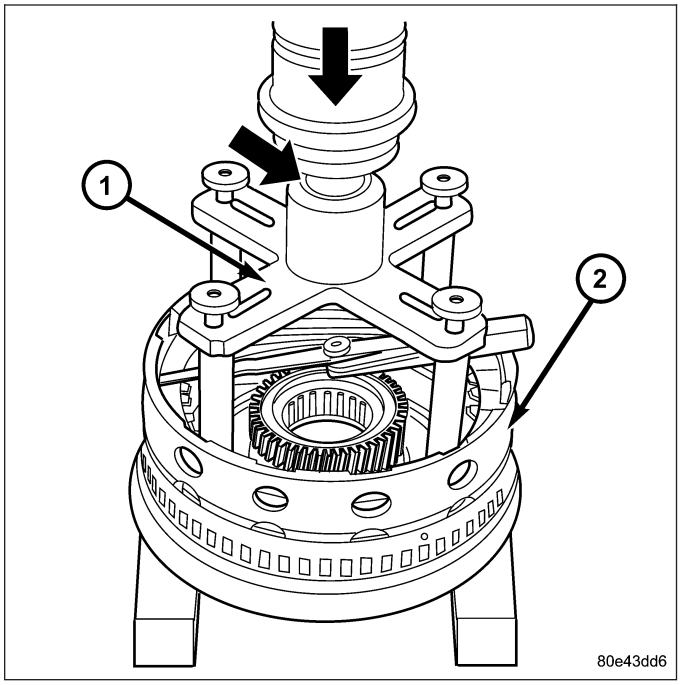

6. Insert multiple-disc pack (12) in the outer multiple-disc carrier.
7. Insert snap-ring (11).
8. Measure the K1 clutch pack clearance by mounting Pressing Tool 8901 (1) on outer multiple disc.
9. Using a lever press, compress pressing tool as far as the marking ring (the marking ring is still visible, see small arrow).

10. For transmissions using double sided friction discs, use a feeler gauge to determine the play ″L″ at three points between the snap-ring (5) and outer multiple-disc (3).
11. During the measurement the snap-ring (5) must contact the upper bearing surface of the groove in the outer multiple-disc carrier (4).
12. The correct clutch clearance for transmissions with double sided friction discs is 2.7-3.1 mm (0.106-0.122 in.) for three friction disc versions, 3.0-3.4 mm (0.118-0.134 in.) for four disc versions, 3.3-3.7 mm (0.130-0.146 in.) for five disc versions, and 3.6-4.0 mm (0.142-0.158 in.) for six disc versions.
13. Adjust with snap-ring (5), if necessary. Snap-rings are available in thicknesses of 2.6 mm (0.102 in.), 2.9 mm (0.114 in.), 3.2 mm (0.126 in.), 3.5 mm (0.138 in.), 3.8 mm (0.150 in.), and 4.1 mm (0.162 in.).
14. Insert front freewheeling clutch F1 (2) and fit snap-ring (3). The freewheeling clutch F1 (2) must be installed in the direction of the arrow.

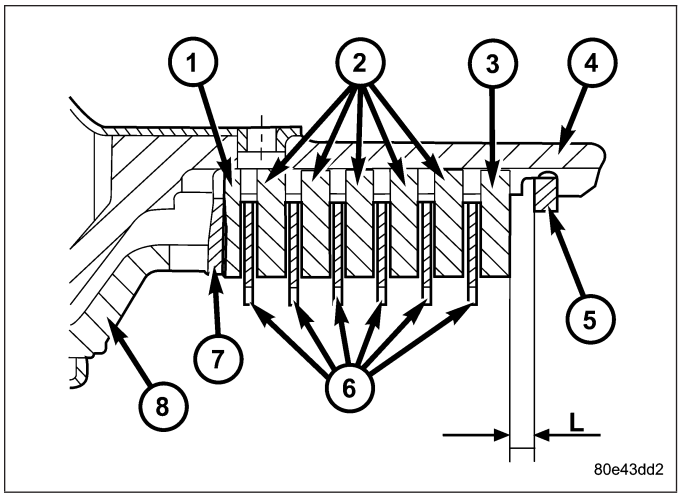

1 - OUTER MULTIPLE DISC - 1.8MM (0.071 IN.)
2 - OUTER MULTIPLE DISC - 2.8MM (0.110 IN.)
3 - OUTER MULTIPLE DISC - 4.0MM (0.158 IN.)
4 - K1 OUTER DISC CARRIER
5 - SNAP-RING
6 - FRICTION DISCS
7 - DISC SPRING
8 - PISTON

15. For transmissions using single sided friction discs, use a feeler gauge to determine the play ″L″ at three points between the snap-ring (4) and outer multiple-disc (2).
16. During the measurement the snap-ring (4) must contact the upper bearing surface of the groove in the outer multiple-disc carrier (3).
17. The correct clutch clearance for transmissions with single sided friction discs is 2.4-2.8 mm (0.095-0.110 in.) for six friction disc versions, 2.6-3.0 mm (0.102-0.118 in.) for eight disc versions, 2.8-3.2 mm (0.110-0.126 in.) for ten disc versions, and 2.9-3.3 mm (0.114-0.130 in.) for twelve disc versions.
18. Adjust with snap-ring (4), if necessary. Snap-rings are available in thicknesses of 2.6 mm (0.102 in.), 2.9 mm (0.114 in.), 3.2 mm (0.126 in.), 3.5 mm (0.138 in.), 3.8 mm (0.150 in.), and 4.1 mm (0.162 in.).
19. Insert front freewheeling clutch F1 (2) and fit snap-ring (3). The freewheeling clutch F1 (2) must be installed in the direction of the arrow.

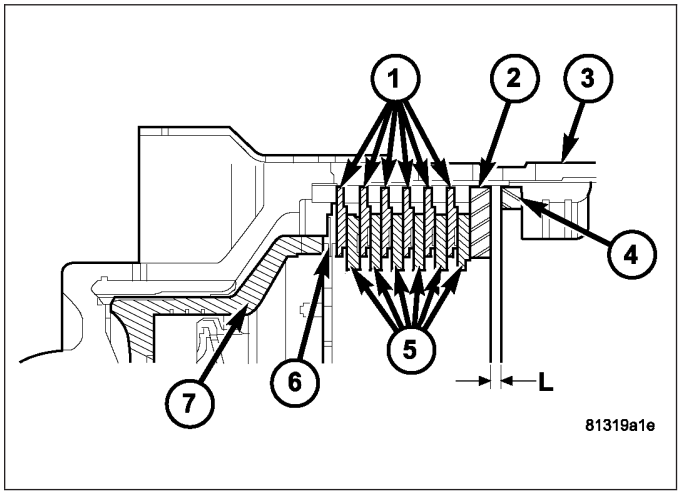

1 - OUTER MULTIPLE DISCS
2 - OUTER MULTIPLE DISC - 4.0MM (0.158 IN.)
3 - K1 OUTER DISC CARRIER
4 - SNAP-RING
5 - INNER MULTIPLE DISCS
6 - DISC SPRING
7 - PISTON

K2-INPUT CLUTCH

DISASSEMBLY

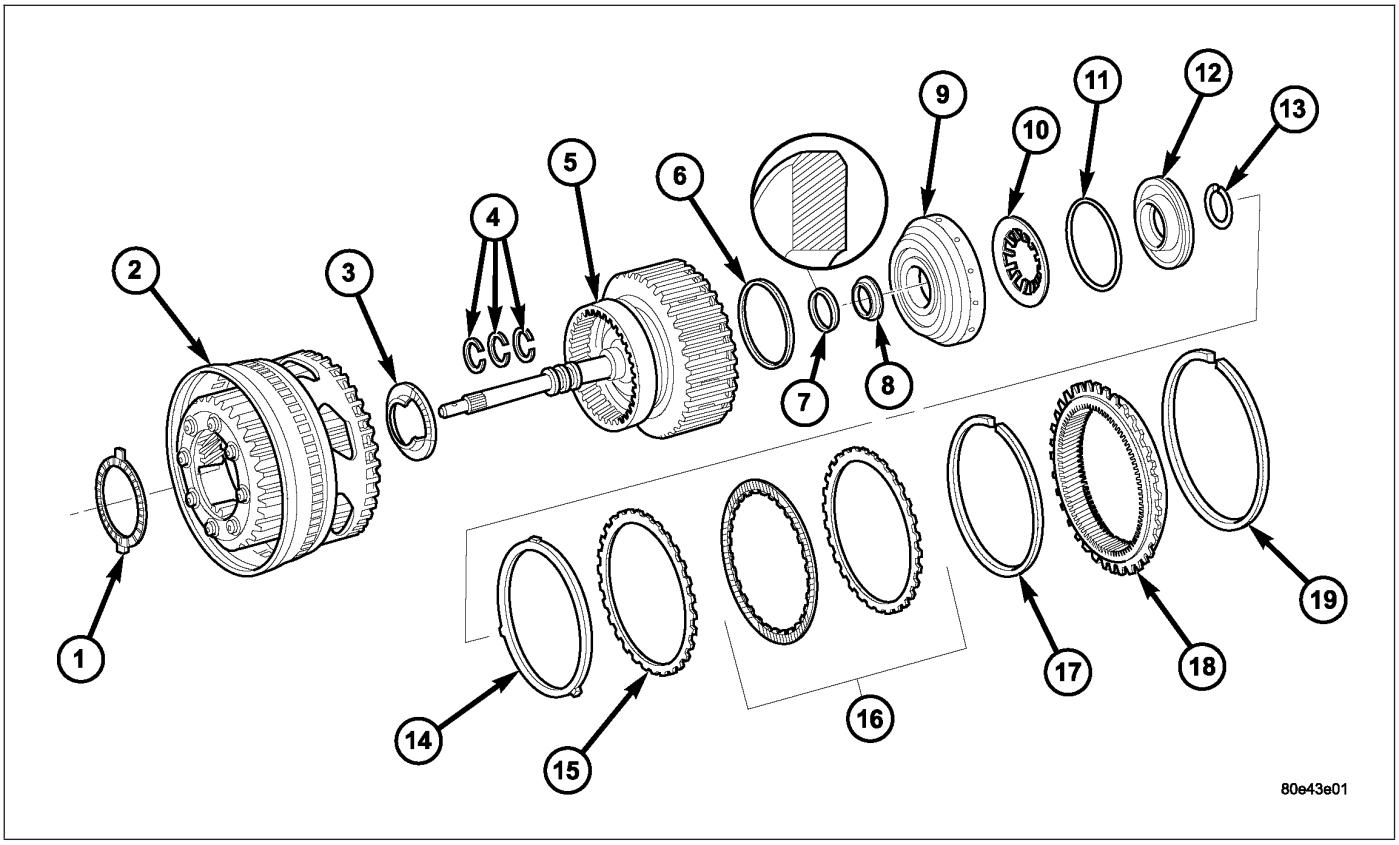

Input Clutch K2 Components

1 - NEEDLE ROLLER BEARING
2 - K1 INNER DISC CARRIER WITH INTEGRATED FRONT GEAR SET
3 - THRUST BEARING
4 - TORLON SEAL RINGS
5 - INPUT SHAFT AND K2 CLUTCH
6 - PISTON OUTER SEAL RING - O-RING
7 - PISTON INNER SEAL RING
8 - THRUST WASHER
9 - PISTON
10 - DISC SPRING
11 - SPRING RETAINER SEALING - O-RING
12 - SPRING RETAINER
13 - SNAP-RING
14 - DISC SPRING
15 - EXTERNALLY TOOTHED PLATE - 1.8 MM (0.071 IN.)
16 - MULTIPLE DISC PACK
17 - SNAP-RING
18 - HOLLOW GEAR
19 - SNAP-RING

1. Remove snap-ring (19) from the K1 inner multiple-disc carrier with integrated front gear set (2) and take off hollow gear (18).
2. Remove input shaft with clutch K2 (5).
3. Remove needle thrust bearing (3).
4. Remove snap-ring (17) from K2 outer multiple-disc carrier.
5. Take out multiple-disc pack (16). Note which clutch disc is removed just prior to the disc spring (14) for re-assembly. If the clutch discs are re-used, this disc must be returned to its original position on top of the disc spring.
6. Take out disc spring (14).

7. Fit Multi-use Spring Compressor 8900 (1) onto spring retainer (12) and press until snap-ring (2) is released.
8. Remove snap-ring (2).
9. Take out disc spring (10) and pull piston (9) out of outer multiple-disc carrier.

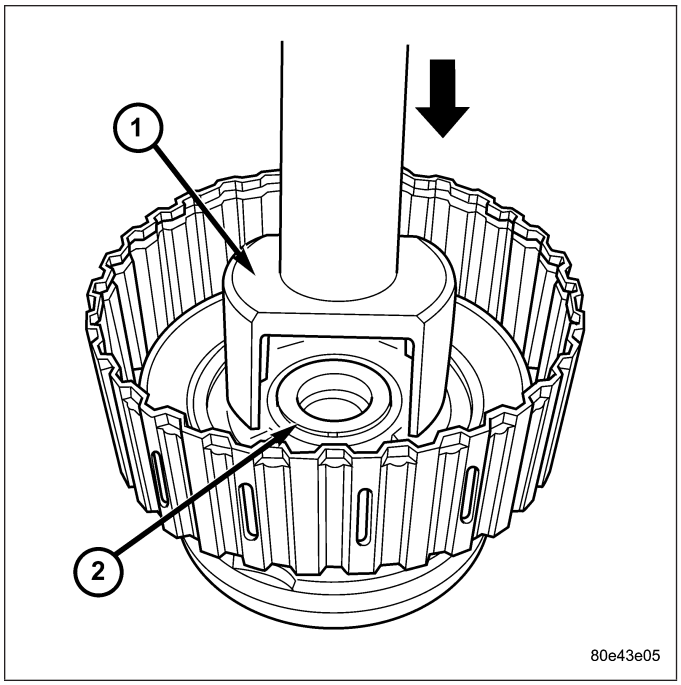

ASSEMBLY

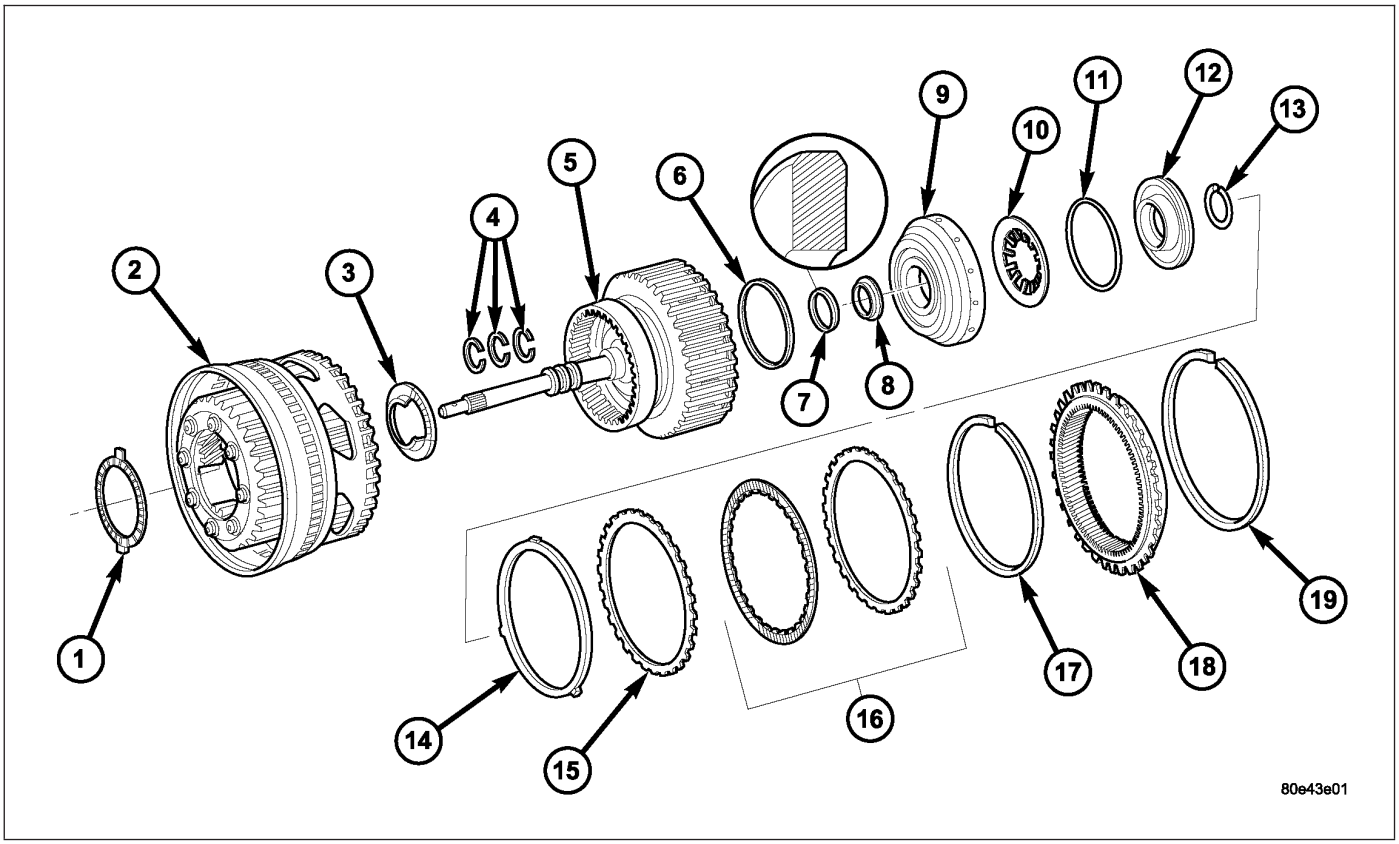

Input Clutch K2 Components

1 - NEEDLE ROLLER BEARING
2 - K1 INNER DISC CARRIER WITH INTEGRATED FRONT GEAR SET
3 - THRUST BEARING
4 - TORLON SEAL RINGS
5 - INPUT SHAFT AND K2 CLUTCH
6 - PISTON OUTER SEAL RING - O-RING
7 - PISTON INNER SEAL RING
8 - THRUST WASHER
9 - PISTON
10 - DISC SPRING
11 - SPRING RETAINER SEALING - O-RING
12 - SPRING RETAINER
13 - SNAP-RING
14 - DISC SPRING
15 - EXTERNALLY TOOTHED PLATE - 1.8 MM (0.071 IN.)
16 - MULTIPLE DISC PACK
17 - SNAP-RING
18 - HOLLOW GEAR
19 - SNAP-RING

1. Install piston (9) in outer multiple-disc carrier. Inspect seals (6 and 7), replace if necessary. The rounded edges of the inner piston seal (7) must point to the outside.
2. Insert disk spring (10) and spring retainer (12). Insert disk spring (10) with curved side pointing toward spring retainer (12). Inspect seal (11), replace if necessary.

3. Place Multi-use Spring Compressor 8900 (1) on spring plate and press until the groove (2) of the snap-ring is exposed.
4. Insert snap-ring.

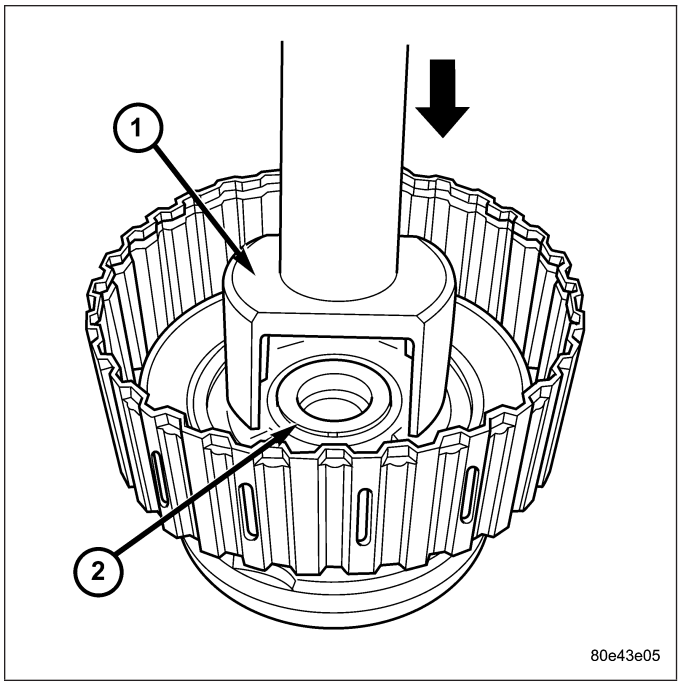

5. Insert disk spring (14).

NOTE: Pay attention to the sequence of discs. If the original clutch discs are reused, be sure to return the disc identified on disassembly as belonging on top of the disc spring (14) to its original location.

6. Insert multiple-disk set (16) into outer multiple-disk carrier.
7. Fit snap-ring (17).
8. Measure K2 clutch clearance by mounting Pressing Tool 8901 (1) on outer multiple disc.
9. Using a lever press, compress pressing tool as far as the marking ring (the marking ring is still visible, see small arrow).

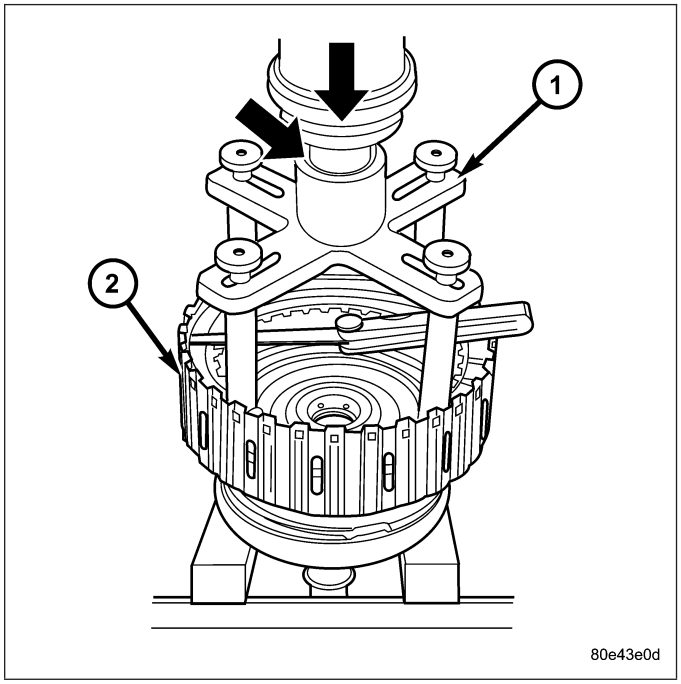

10. Using a feeler gauge, determine the play ″L″ at three points between the snap-ring (6) and outer multiple-disc (4).
11. During the measurement the snap-ring (6) must contact the upper bearing surface of the groove in the outer multiple-disc carrier.
12. The correct clutch clearance is 2.3-2.7 mm (0.091-0.106 in.) for three friction disc versions, 2.4-2.8 mm (0.095-0.110 in.) for four disc versions, 2.5-2.9 mm (0.099-0.114 in.) for five disc versions, and 2.7-3.1 mm (0.106-0.122 in.) for six disc versions.
13. Adjust with snap-ring (6), if necessary. Snap-rings are available in thicknesses of 2.3 mm (0.091 in.), 2.6 mm (0.102 in.), 2.9 mm (0.114 in.), 3.2 mm (0.126 in.), 3.5 mm (0.138 in.), and 3.8 mm (0.150 in.).

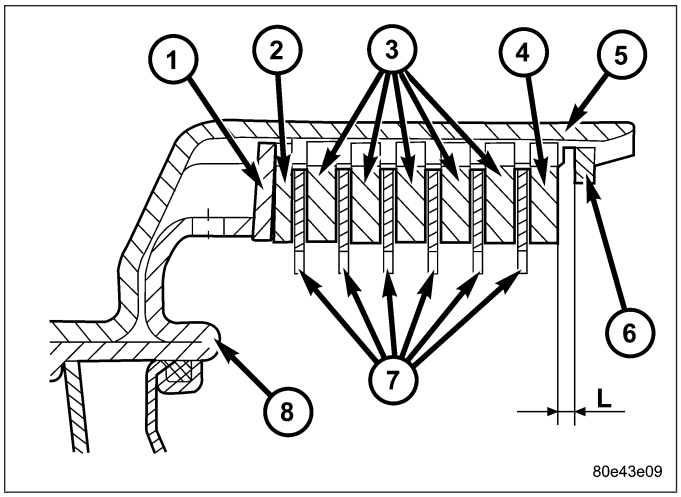

1 - DISC SPRING
2 - OUTER MULTIPLE DISC - 1.8 MM (0.071 IN.)
3 - OUTER MULTIPLE DISC - 3.5 MM (0.138 IN.)
4 - OUTER MULTIPLE DISC - 4.0 MM (0.158 IN.)
5 - K2 OUTER DISC CARRIER
6 - SNAP-RING
7 - FRICTION DISCS
8 - PISTON

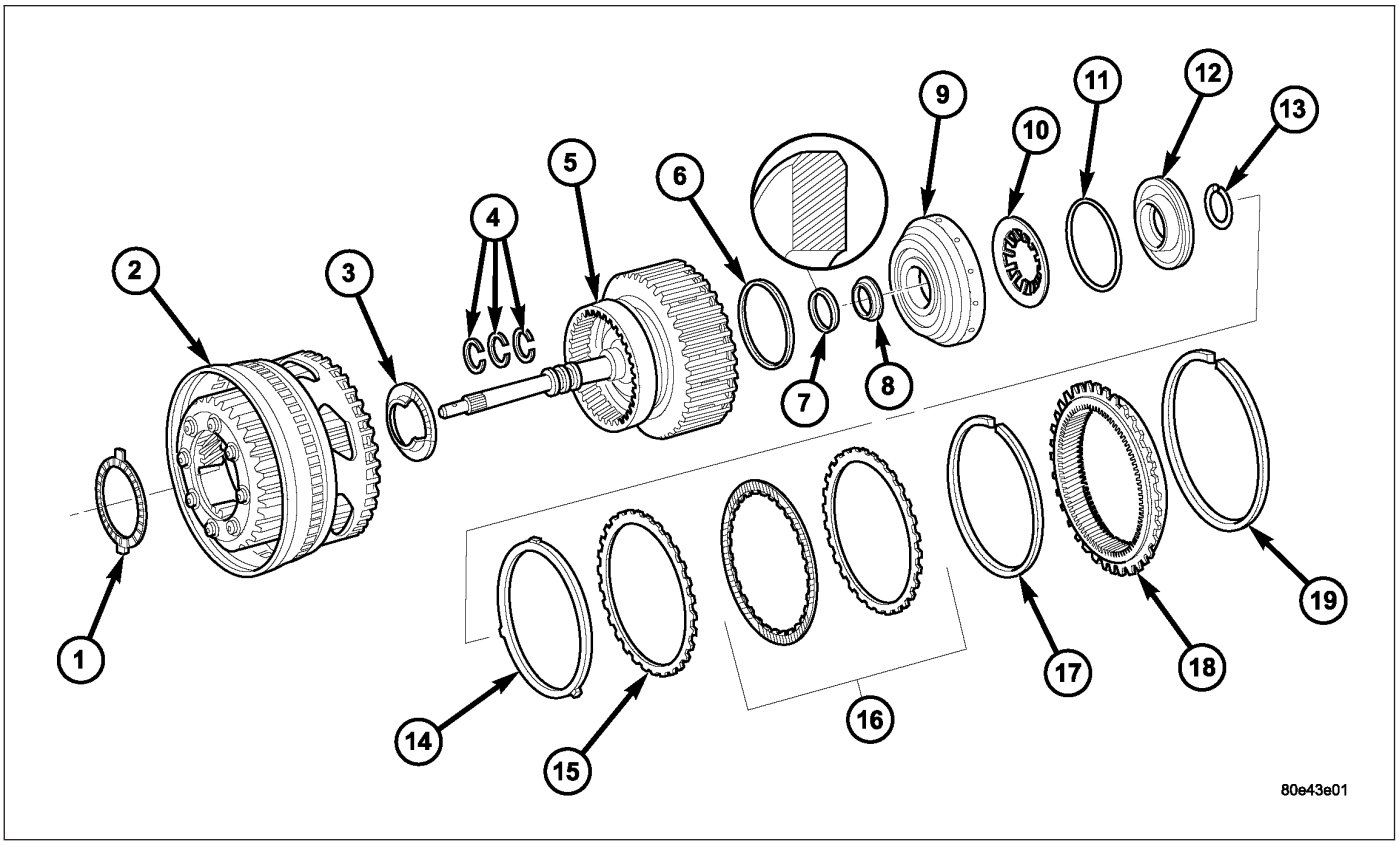

Input Clutch K2 Components

1 - NEEDLE ROLLER BEARING
2 - K1 INNER DISC CARRIER WITH INTEGRATED FRONT GEAR SET
3 - THRUST BEARING
4 - TORLON SEAL RINGS
5 - INPUT SHAFT AND K2 CLUTCH
6 - PISTON OUTER SEAL RING - O-RING
7 - PISTON INNER SEAL RING
8 - THRUST WASHER
9 - PISTON
10 - DISC SPRING
11 - SPRING RETAINER SEALING - O-RING
12 - SPRING RETAINER
13 - SNAP-RING
14 - DISC SPRING
15 - EXTERNALLY TOOTHED PLATE - 1.8 MM (0.071 IN.)
16 - MULTIPLE DISC PACK
17 - SNAP-RING
18 - HOLLOW GEAR
19 - SNAP-RING

14. Insert axial needle bearing (3) into K1 inner multiple-disk carrier. Insert axial needle bearing (3) with a little grease to prevent it slipping.
15. Install input shaft in K1 inner multiple-disc carrier with integrated front gear set (2).
16. Fit internally-geared wheel (18) and install snap-ring (19). Pay attention to installation position.

K3-INPUT CLUTCH

DISASSEMBLY

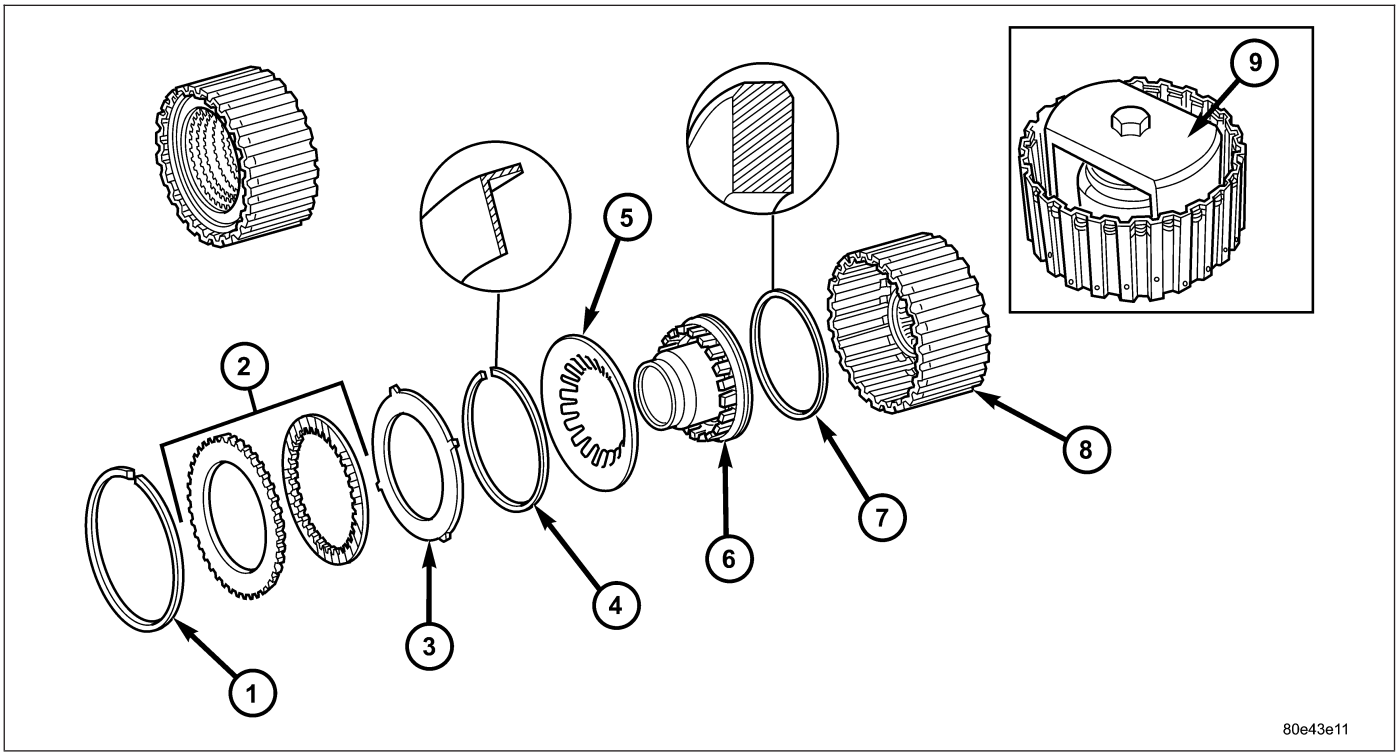

Input Clutch K3 Components

1 - SNAP-RING
2 - MULTIPLE DISC PACK
3 - DISK SPRING
4 - SNAP-RING
5 - SPRING PLATE
6 - PISTON
7 - SEALING RING
8 - OUTER DISC CARRIER
9 - MULTI-USE SPRING COMPRESSOR 8900

1. Remove snap-ring (1) from outer multiple-disc carrier.
2. Remove multiple-disc pack (2) and disk spring (3) from outer multiple-disc carrier. Note which clutch disc is removed just prior to the disc spring (3) for re-assembly. If the clutch discs are re-used, this disc must be returned to its original position on top of the spring plate.
3. Place Multi-use Spring Compressor 8900 (9) on the spring plate (5) and compress the spring until the snap-ring (4) is exposed.
4. Remove snap-ring (4).
5. Remove spring plate (5) and piston (6) from outer multiple-disc carrier.

ASSEMBLY

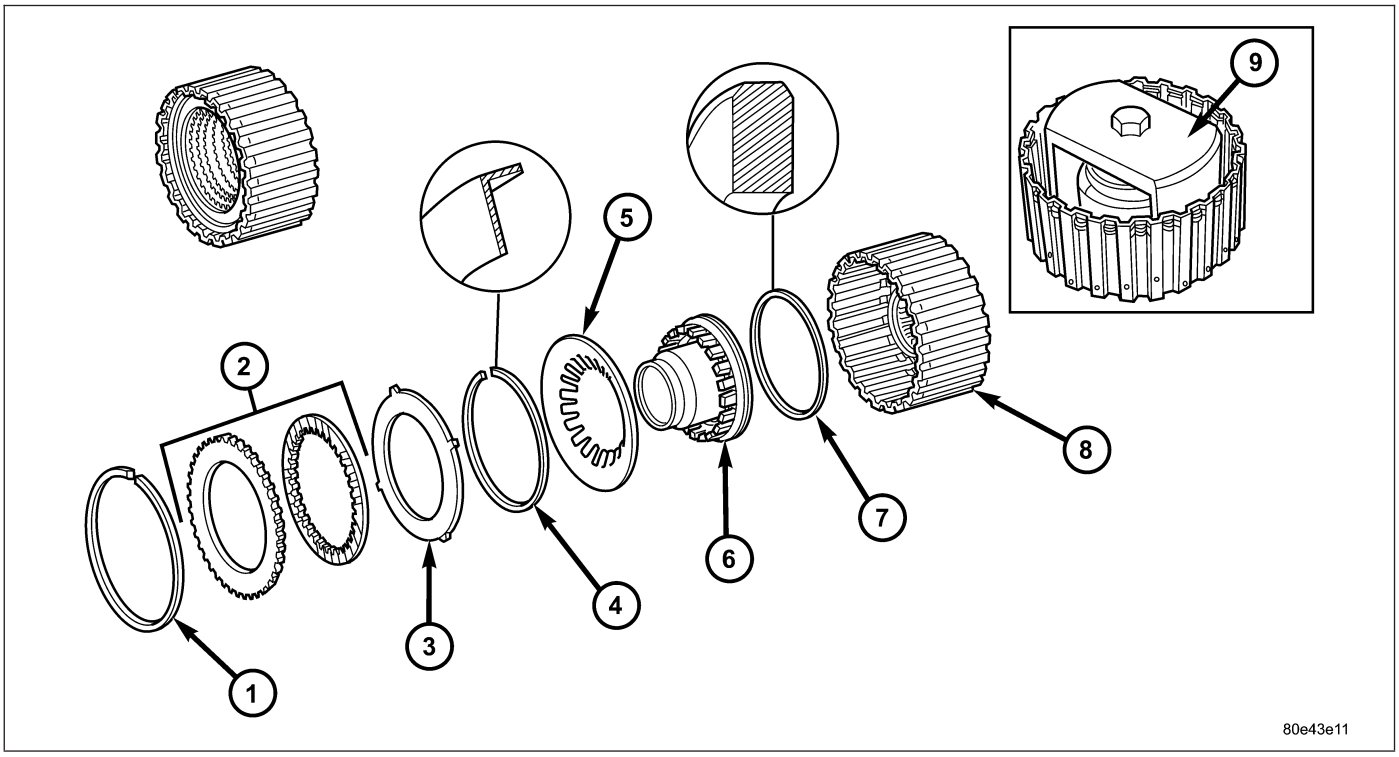

Input Clutch K3 Components

1 - SNAP-RING
2 - MULTIPLE DISC PACK
3 - DISK SPRING
4 - SNAP-RING
5 - SPRING PLATE
6 - PISTON
7 - SEALING RING
8 - OUTER DISC CARRIER
9 - MULTI-USE SPRING COMPRESSOR 8900

1. Install piston (6) in the outer multiple-disc carrier (8). Check sealing ring (7), replace if necessary. The rounded off edges of the sealing ring must point outwards.
2. Insert the spring plate (5). Insert the spring plate with the curvature towards the piston.
3. Mount the Multi-use Spring Compressor 8900 (9) on the spring plate and clamp until the snap-ring groove is exposed.
4. Insert snap-ring (4). The collar of the snap-ring must point towards the multiple-disc pack.

CAUTION: When working with double sided friction discs, an externally lugged steel plate is installed first, followed by a friction disc, and continuing on until all the required discs are installed. When working with single sided friction discs, an externally lugged disc is installed first, followed by an internally lugged disc, and continuing on until all the required discs are installed. All single sided discs are installed with the friction side up.

NOTE: Pay attention to the sequence of discs. If the original clutch discs are reused, be sure to return the disc identified on disassembly as belonging on top of the disk spring (3) to its original location.

NOTE: Place new friction multiple-discs in ATF fluid for one hour before installing.

5. Install disk spring (3) and multiple-disc pack (2) in outer multiple-disc carrier (8).
6. Insert snap-ring (1).

7. Measure the K3 clutch clearance by mounting Pressing Tool 8901 (1) on outer multiple disc.
8. Using a lever press, compress pressing tool as far as the marking ring (the marking ring is still visible, see small arrow).

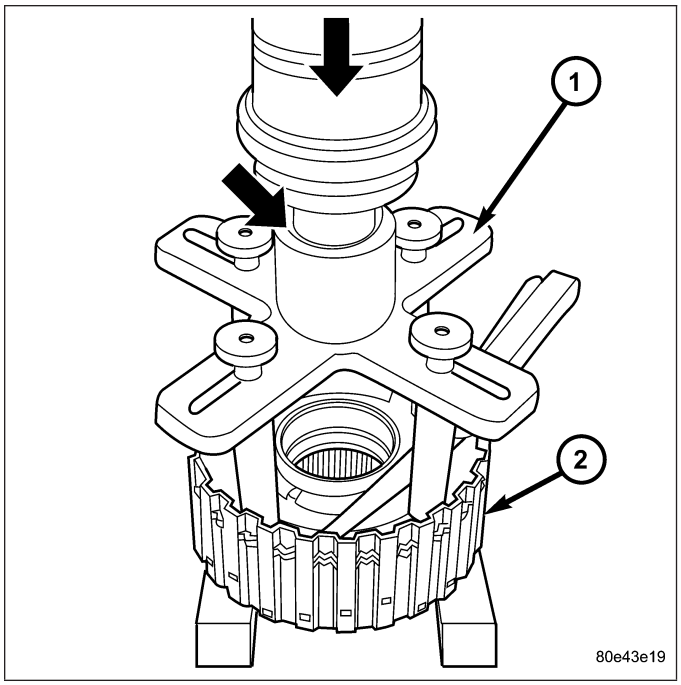

9. For transmissions using double sided friction discs, use a feeler gauge to determine the play ″L″ at three points between the snap-ring (8) and outer multiple-disc (2).
10. During the measurement the snap-ring (8) must contact the upper bearing surface of the groove in the outer multiple-disc carrier.
11. The correct clutch clearance for transmissions with double sided friction discs is 2.3-2.7 mm (0.091-0.106 in.) for three friction disc versions, 2.4-2.8 mm (0.095-0.110 in.) for four disc versions, and 2.5-2.9 mm (0.099-0.114 in.) for five disc versions.
12. Adjust with snap-ring (8), if necessary. Snap-rings are available in thicknesses of 2.0 mm (0.079 in.), 2.3 mm (0.091 in.), 2.6 mm (0.102 in.), 2.9 mm (0.114 in.), 3.2 mm (0.126 in.), and 3.5 mm (0.138 in.).

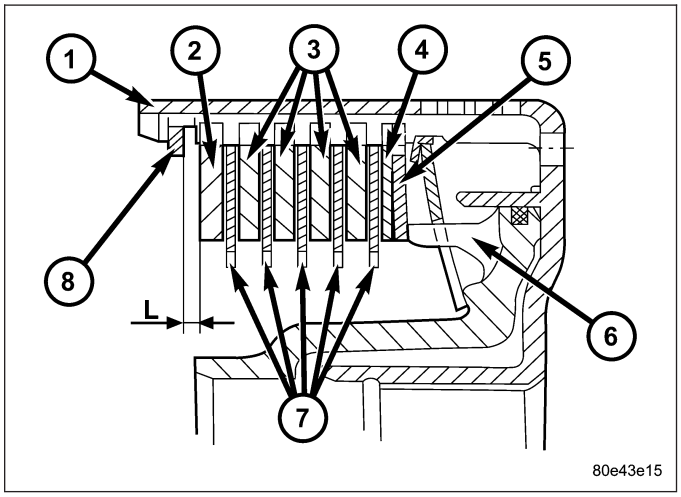

1 - OUTER DISC CARRIER
2 - OUTER MULTIPLE DISC - 4.0 MM (0.158 IN.)
3 - OUTER MULTIPLE DISC - 2.8 MM (0.110 IN.)
4 - OUTER MULTIPLE DISC - 1.8 MM (0.079 IN.)
5 - DISC SPRING
6 - PISTON
7 - FRICTION DISCS - 2.1 MM (0.083 IN.)
8 - SNAP-RING

13. For transmissions using single sided friction discs, use a feeler gauge to determine the play ″L″ at three points between the snap-ring (7) and outer multiple-disc (2).
14. During the measurement the snap-ring (7) must contact the upper bearing surface of the groove in the outer multiple-disc carrier.
15. The correct clutch clearance for transmissions with single sided friction discs is 2.3-2.7 mm (0.091-0.106 in.) for six friction disc versions, 2.4-2.8 mm (0.095-0.110 in.) for eight disc versions, and 2.5-2.9 mm (0.099-0.114 in.) for ten disc versions.
16. Adjust with snap-ring (7), if necessary. Snap-rings are available in thicknesses of 2.0 mm (0.079 in.), 2.3 mm (0.091 in.), 2.6 mm (0.102 in.), 2.9 mm (0.114 in.), 3.2 mm (0.126 in.), and 3.5 mm (0.138 in.).

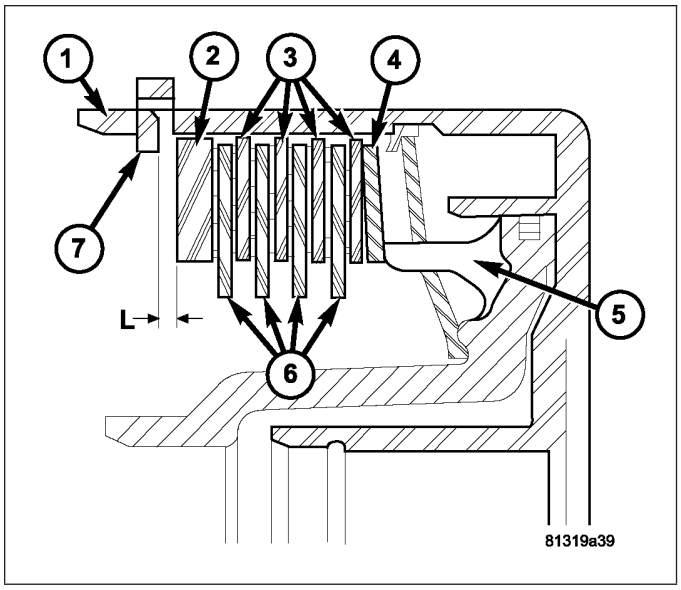

SENSORS-INPUT SPEED

DESCRIPTION

The input speed sensors (6, 8) are fixed to the shell of the control unit via contact blades. The speed sensors are pressed against the transmission housing (2) by a spring (7) which is held against the valve housing of the shift plate (5). This ensures a defined distance between the speed sensors and the exciter ring (4).

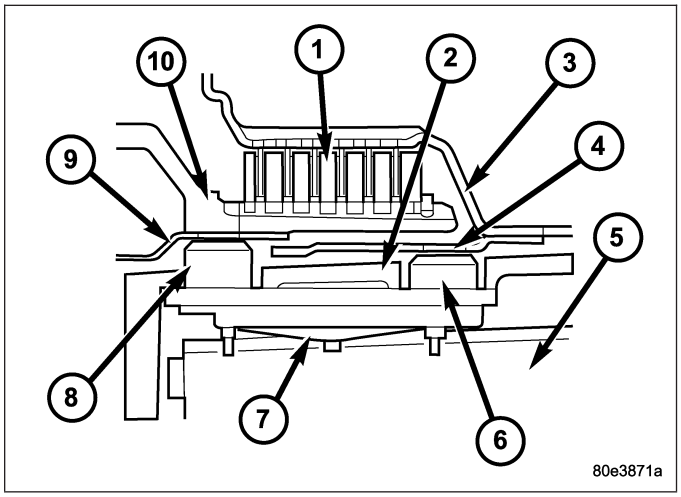

OPERATION

Signals from the input speed sensors (6, 8) are recorded in the transmission control module (TCM) together with the wheel and engine speeds and other information and are processed into an input signal for electronic control.

Input speed sensor N2 (6) records the speed of the front sun gear via the externally toothed disc carrier of the multiple-disc clutch K1 (10) and input speed sensor N3 (8) records the speed of the front planet carrier via the internally toothed disc carrier of multiple-disc clutch K1 (3).

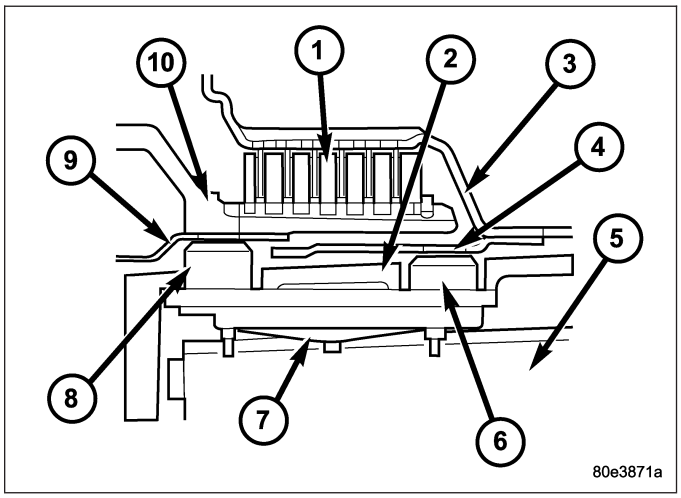

PUMP-OIL

DESCRIPTION

The oil pump (2) (crescent-type pump) is installed in the bellhousing behind the torque converter and is driven by the drive flange of the torque converter. The pump creates the oil pressure required for the hydraulic procedures.

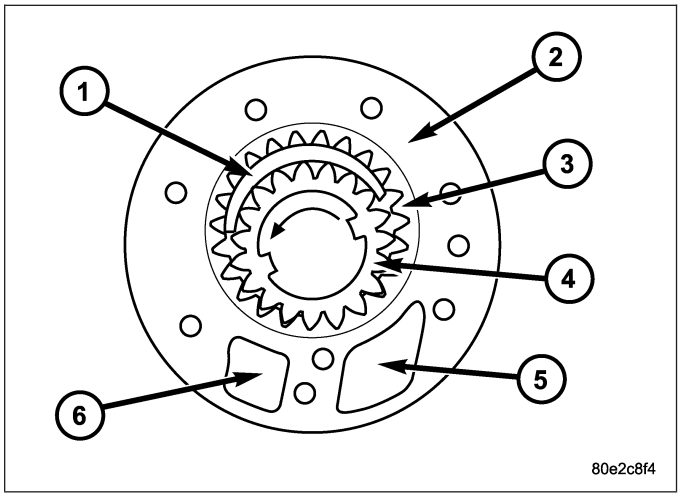

OPERATION

When the engine is running, the oil is pumped through the inlet chamber (5) along the upper and lower side of the crescent (1) to the pressure chamber (6) of the housing. The meshing of the teeth prevents oil flowing from the delivery side to the intake side. An external gear (3) is eccentrically mounted in the pump housing. The external gear is driven by the internal gear (4) which is connected to the torque converter hub.

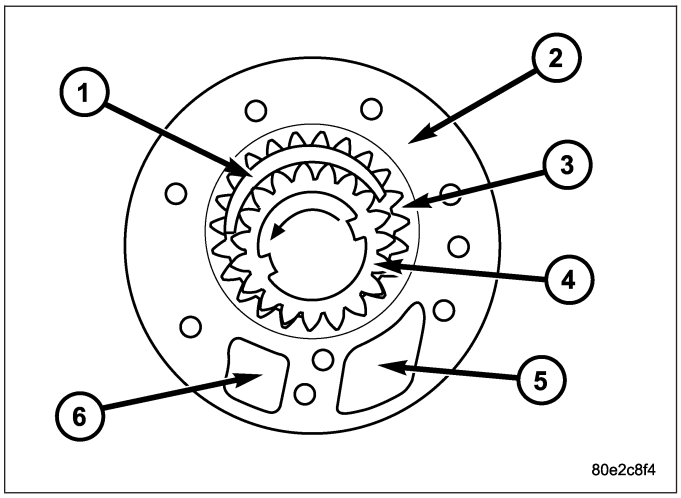

DISASSEMBLY

1. Remove pump gears (1 and 2) from pump housing.

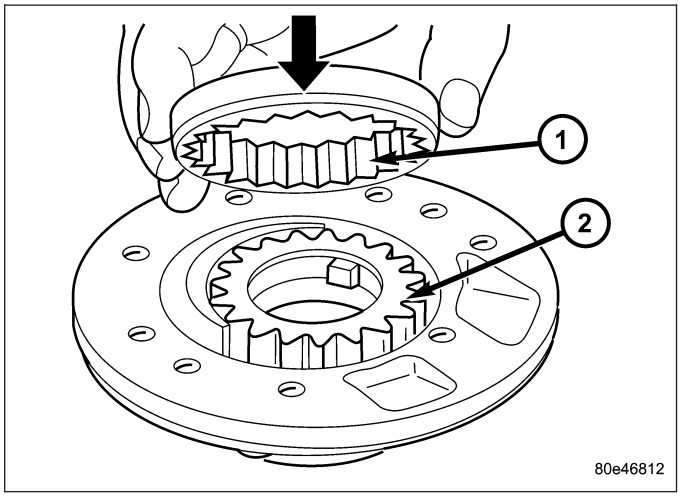

2. Remove the inner oil pump seal (1).
3. Replace the outer oil pump O-ring (2).

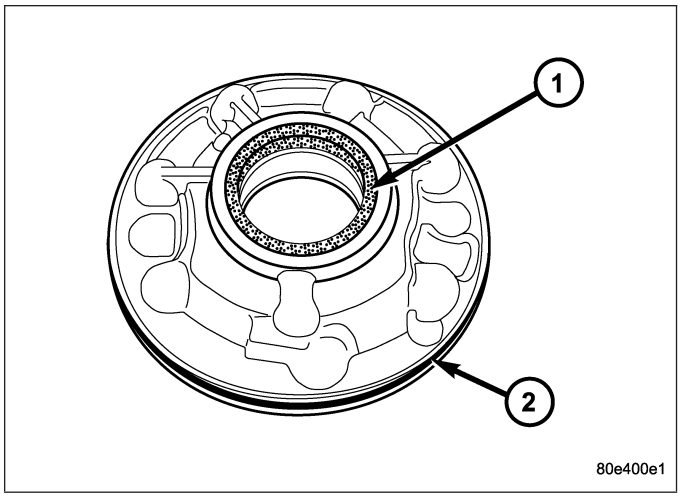

INSPECTION

Before measuring any oil pump components, perform a thorough visual inspection of all the components. If any sign of scoring, scratches, or other damage is seen, replace the oil pump as an assembly.

SIDE CLEARANCE

Side clearance is the difference between the thickness of the pump gears and the depth of the pocket in the pump housing. Side clearance can be measured by laying a flat plate across the mounting face of the pump housing, and measuring the distance between the plate and the gears.

Acceptable side clearance:

- Inner gear: 0.064 mm (0.0025 in) max
- Outer gear: 0.069 mm (0.0027 in) max

TIP CLEARANCE

Tip clearance is the difference between the tip diameters of the gear teeth and the corresponding diameters of the pocket in the pump housing.

Tip clearance for the inner gear can be checked by moving the inner gear into tight mesh (2) with the outer gear as shown. Clearance between the ID of the crescent feature of the housing and the OD of the teeth of the inner gear (3) should then me measured at a point 37 mm from the corner of the crescent (1) feature, as shown below.

Acceptable tip clearance for inner gear:

- 0.85 mm (0.033 in) max

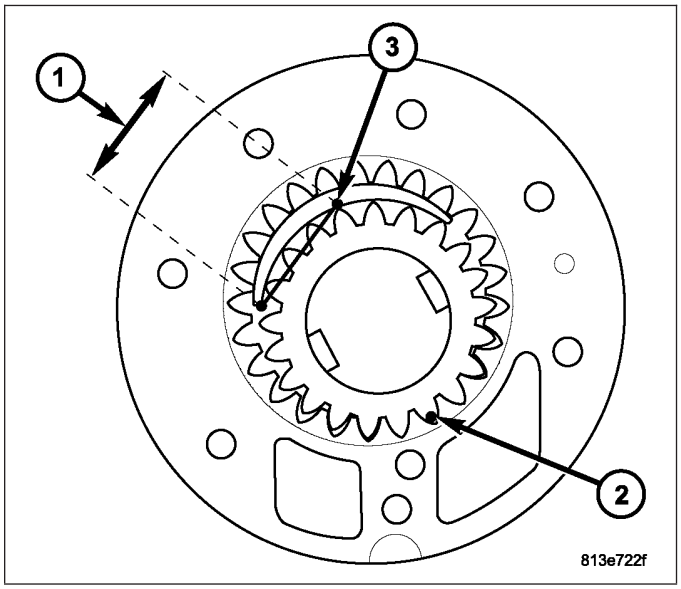

ASSEMBLY

1. Install new inner oil pump seal (1) with Seal Installer 8902-A.
2. Replace O-ring (2).

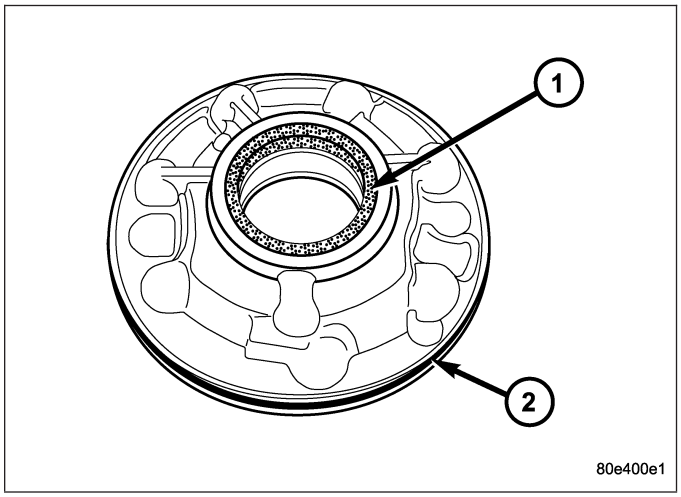

3. Lubricate pump gears and place in the pump housing. Insert pump gear (1) so that the chamfer (arrow) points towards the pump housing.

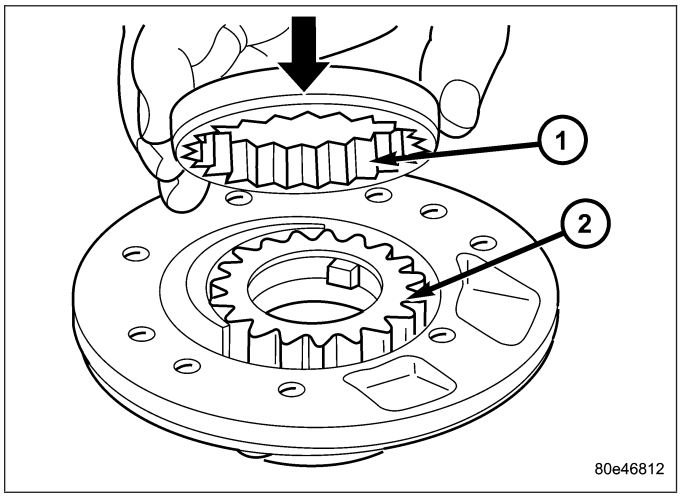

BEARING-OUTPUT SHAFT

REMOVAL

1. Raise and support vehicle.
2. Remove the propeller shaft (Refer to 3 - DIFFERENTIAL & DRIVELINE/PROPELLER SHAFT/PROPELLER SHAFT - REMOVAL).
3. Verify that the transmission is in PARK in order to prepare for the removal of the output shaft nut.
4. Remove the nut, with a 30 mm 12 point socket, holding the propeller shaft flange to the output shaft and remove the flange.
5. Remove the transmission rear oil seal with a suitable slide hammer and screw.
6. Remove the transmission output shaft washer. Be sure to tag the washer since it is very similar to the geartrain end-play shim and they must not be interchanged.

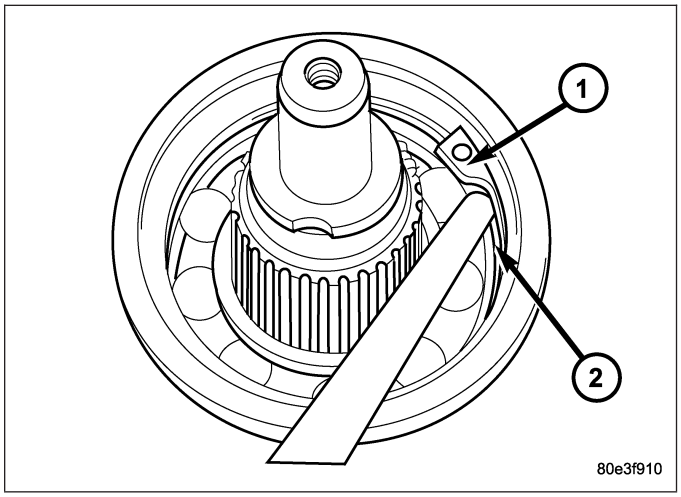

7. Remove the transmission rear output shaft bearing retaining ring (1).
8. Position Bearing Remover 9082 (1) over the inner race of the output shaft bearing.

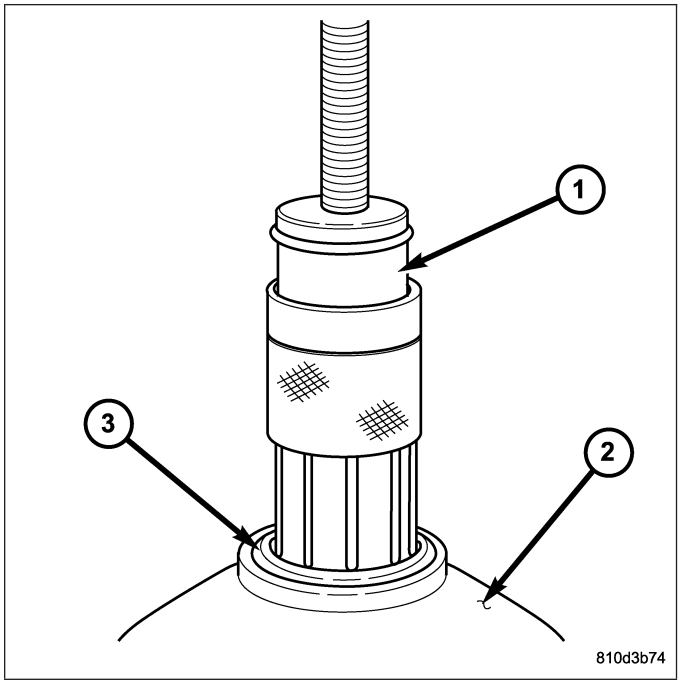

NOTE: Due to production variations in the bearing, it may not be possible to slide the collar fully downward. It is only necessary to slide the collar down far enough that the fingers securely grasp the inner bearing race.

9. Slide the collar (3) on the Bearing Remover 9082 (1) downward over the fingers (3) of the tool.

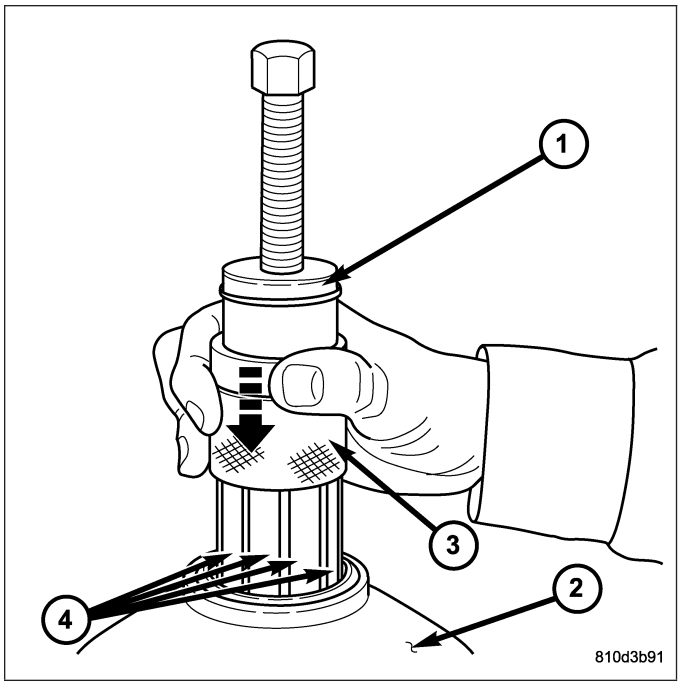

CAUTION: Verify that the geartrain end-play shim has remained on the output shaft and against the park gear. The shim may be adhered to the bearing inner race. Retrieve the shim from the bearing and install over the output shaft and against the park gear.

10. Remove the output shaft bearing (3).

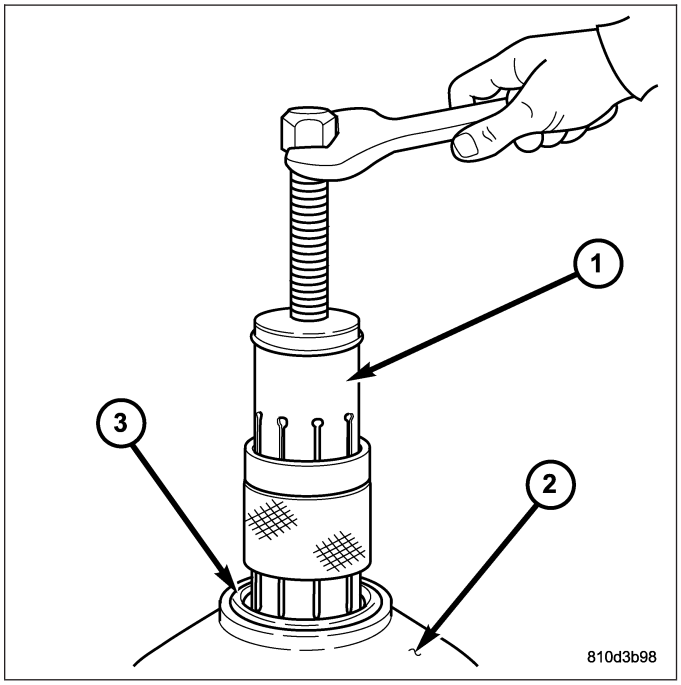

INSTALLATION

CAUTION: Verify that the geartrain end-play shim is properly installed over the output shaft and against the park gear.

1. Install output shaft bearing in the rear transmission housing. Using Bearing Installer 9287 (1), install the output shaft bearing (2) into the transmission housing. **The closed side of the plastic cage must point towards the parking lock gear.**

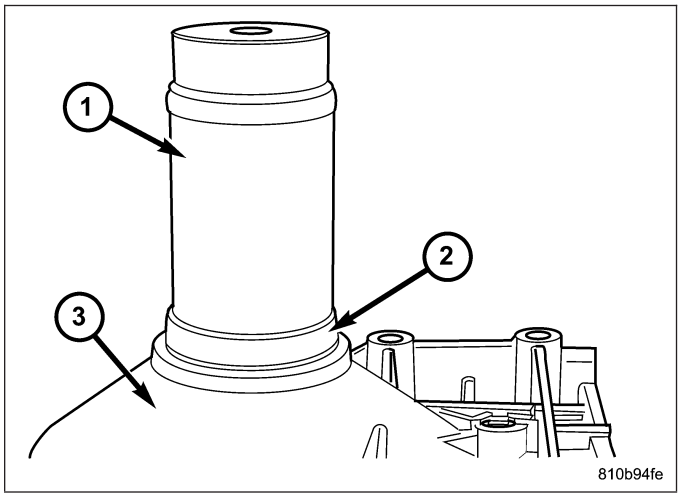

2. Install the retaining ring (1). Ensure that the retaining ring is seated correctly in the groove.
3. Check that there is no play between the bearing and the retaining ring using feeler gauge.
4. There must be no play between the retaining ring and the bearing. If the ring cannot be installed, a thinner ring must be used. If there is play between the ring and the bearing, a thicker ring must be installed. Retaining rings are available in thicknesses of 2.0 mm (0.079 in.), 2.1 mm (0.083 in.), and 2.2 mm (0.087 in.).
5. Install the output shaft washer onto the output shaft.

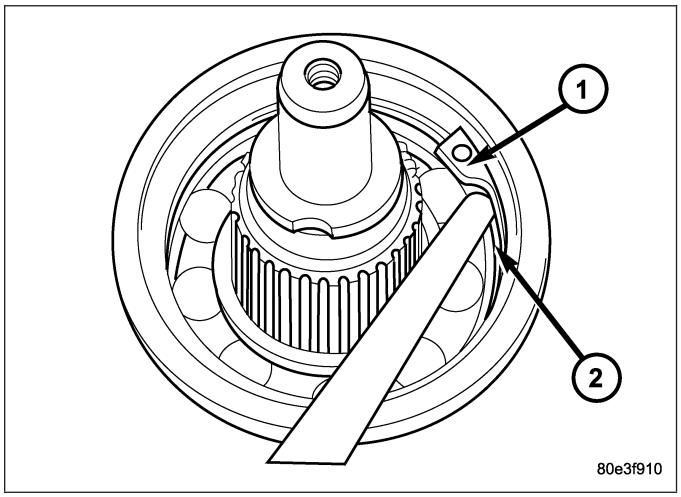

6. Install a new transmission rear seal into the transmission case with Seal Installer 8902A (1).
7. Verify that the transmission is in PARK in order to prepare for the installation of the output shaft nut.
8. Install the propeller shaft flange onto the output shaft and install an new flange nut. Tighten the flange nut, with a 30 mm 12 point socket, to 200 N·m (147.5 ft.lbs.).

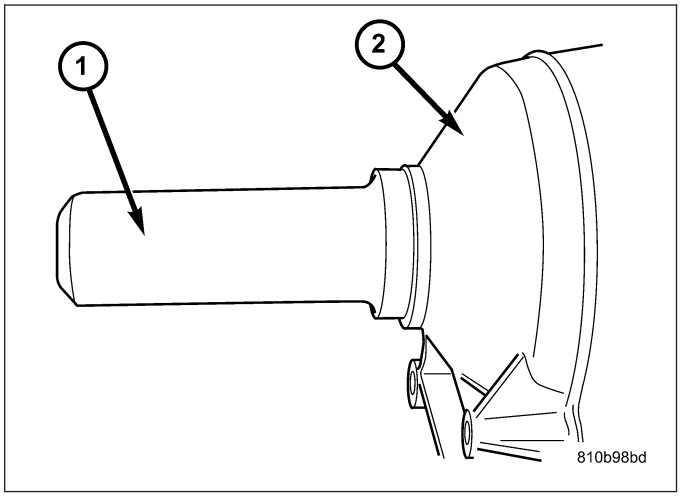

9. Stake the output shaft nut to the output shaft as follows.Place the Staking Tool 9078 (2) and Driver Handle C-4171 onto the output shaft.
10. Rotate the Staking Tool 9078 (2) until the alignment pin (3) engages the output shaft notch (4).

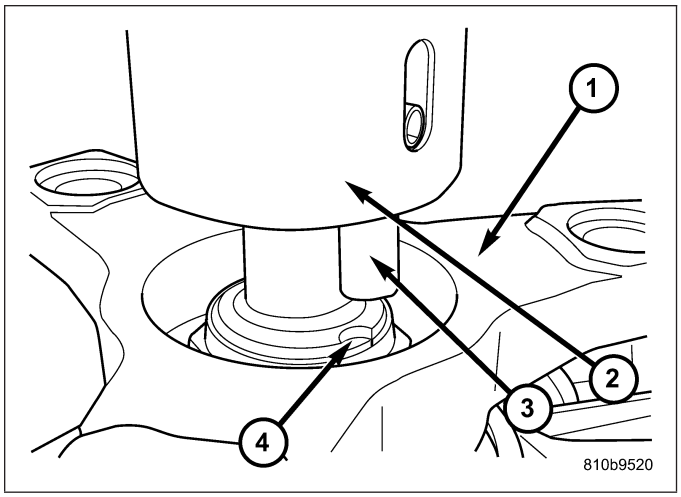

11. Press downward on the staking tool (1) until the staking pin (3) contacts the output shaft nut flange (2).
12. Strike the Driver handle C-4171 with a suitable hammer until the output shaft nut is securely staked to the output shaft.
13. Install the propeller shaft (Refer to 3 - DIFFERENTIAL & DRIVELINE/PROPELLER SHAFT/PROPELLER SHAFT - INSTALLATION).

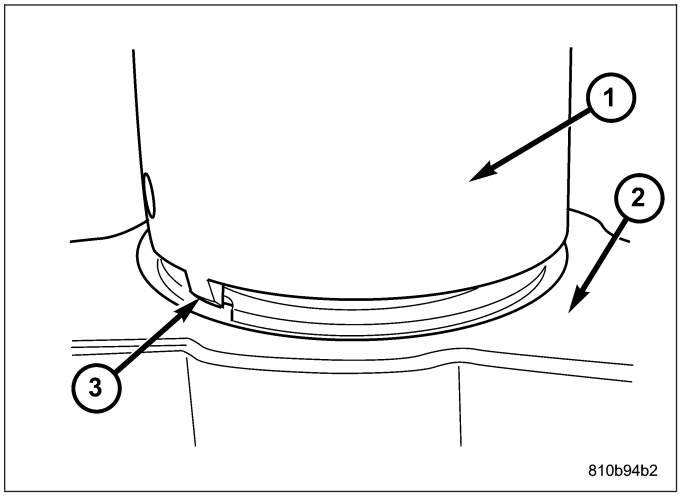

SEAL-OUTPUT SHAFT

REMOVAL

1. Remove the propeller shaft (Refer to 3 - DIFFERENTIAL & DRIVELINE/PROPELLER SHAFT/PROPELLER SHAFT - REMOVAL). Move propeller shaft to the right and tie up.
2. Verify that the transmission is in PARK in order to prepare for the removal of the output shaft nut.
3. Remove the nut, with a 30 mm 12 point socket, holding the propeller shaft flange to the output shaft and remove the flange.
4. Remove the output shaft seal with suitable screw and slide hammer.

INSTALLATION

1. Position the new output shaft seal over the output shaft and against the transmission case.
2. Use Seal Installer 8902A (1) to install the seal.
3. Verify that the transmission is in PARK in order to prepare for the installation of the output shaft nut.
4. Install the propeller shaft flange onto the output shaft and install an new flange nut. Tighten the flange nut, with a 30 mm 12 point socket, to 200 N·m (147.5 ft.lbs.).

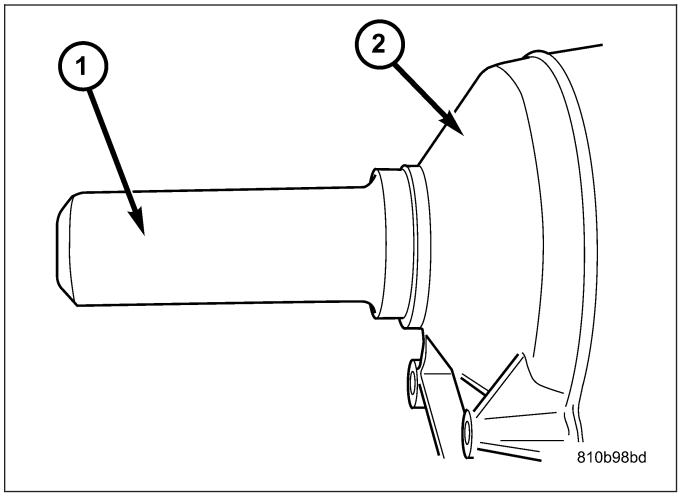

5. Stake the output shaft nut to the output shaft as follows.Place the Staking Tool 9078 (2) and Driver Handle C-4171 onto the output shaft.
6. Rotate the Staking Tool 9078 (2) until the alignment pin (3) engages the output shaft notch (4).

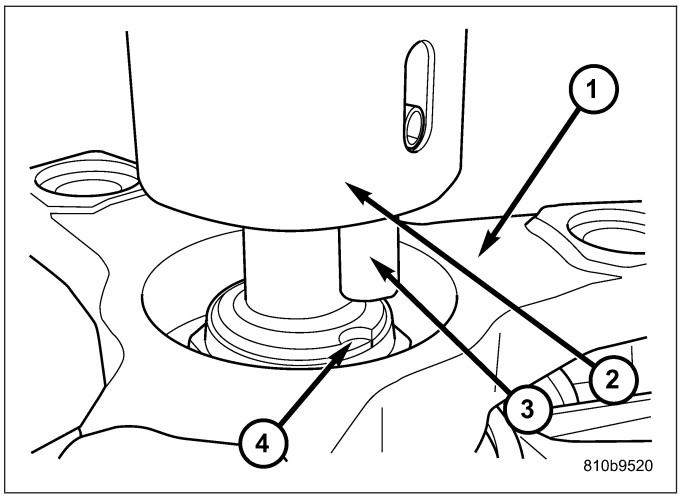

7. Press downward on the staking tool until the staking pin (3) contacts the output shaft nut flange (2).
8. Strike the Driver handle C-4171 with a suitable hammer until the output shaft nut is securely staked to the output shaft.
9. Install the propeller shaft (Refer to 3 - DIFFERENTIAL & DRIVELINE/PROPELLER SHAFT/PROPELLER SHAFT - INSTALLATION).

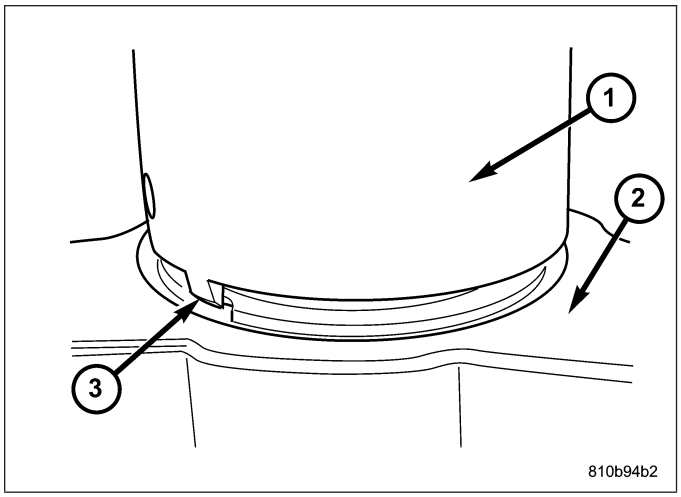

CABLE-PARK LOCK

REMOVAL

1. Place ignition key in the ACC (2) position.

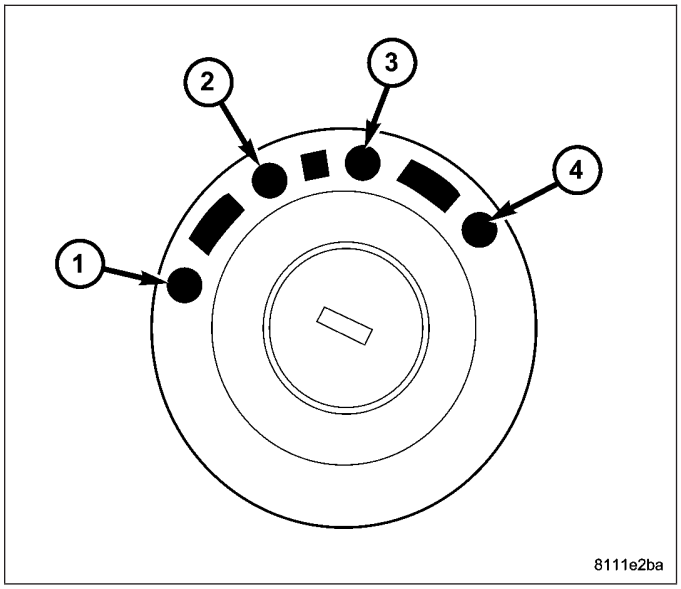

2. Remove the lower instrument panel trim as necessary to access the park lock cable.
3. Disconnect park lock cable (4) from ignition cylinder (3).

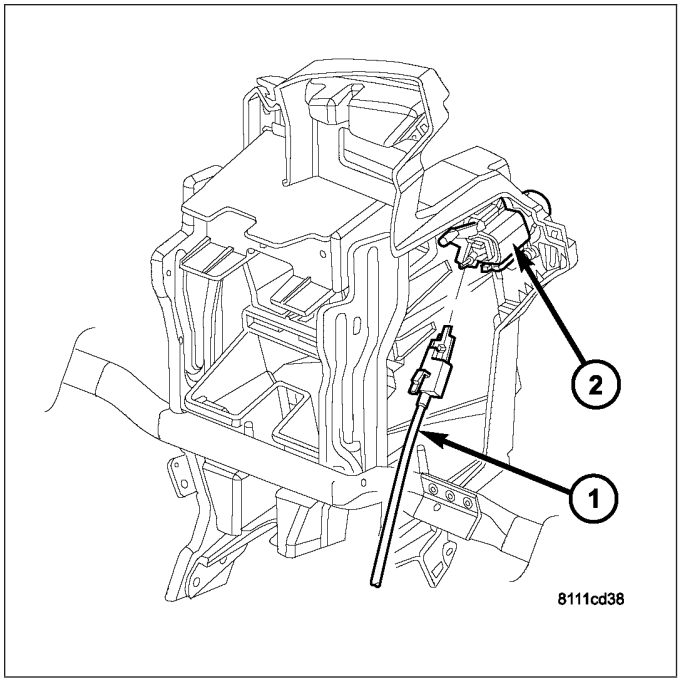

4. Remove the floor console as necessary for access to the park lock cable. (Refer to 23 - BODY/INTERIOR/FLOOR CONSOLE - REMOVAL)
5. If necessary, remove the bolts holding the shield, covering the gearshift and park lock cables, to the floorpan and remove the shield.
6. Disconnect the park lock cable from the shift mechanism. Release retention tab using suitable screwdriver.

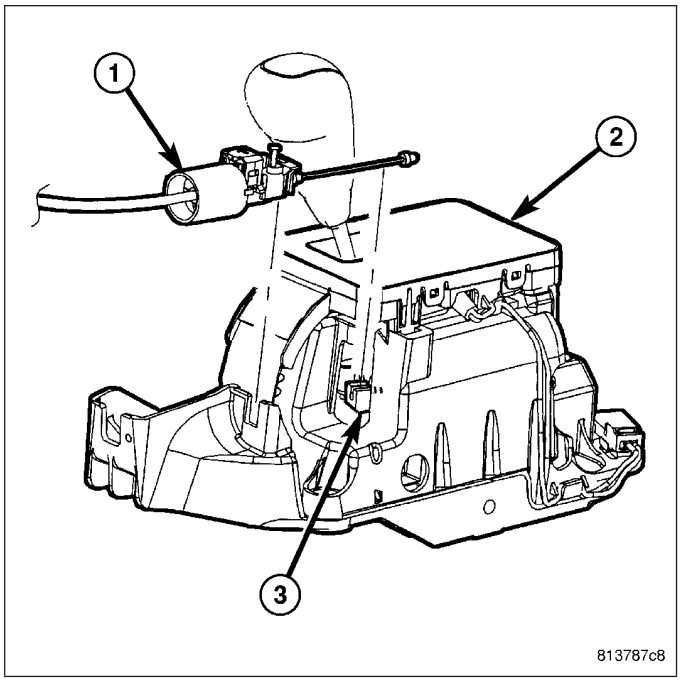

INSTALLATION

1. Verify that ignition key is in ACC (2) position.

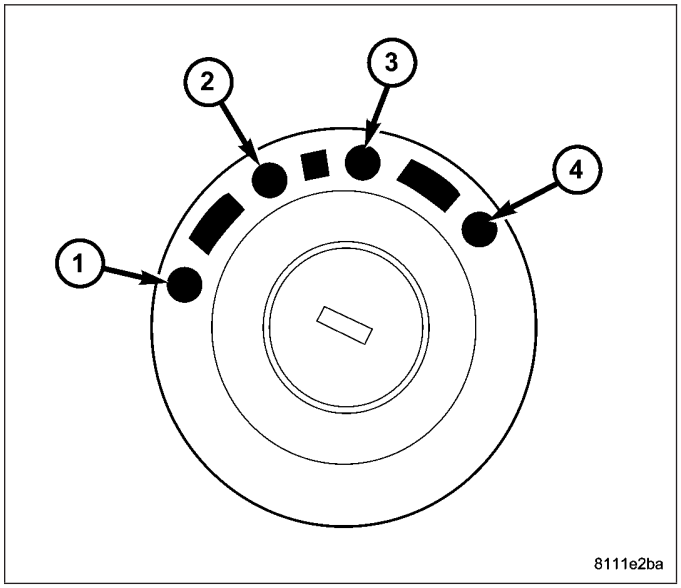

2. Install the park lock cable (4) to the ignition cylinder (3). Secure the cable to instrument panel at retainer.
3. Install any instrument panel trim that was removed to access the park lock cable.

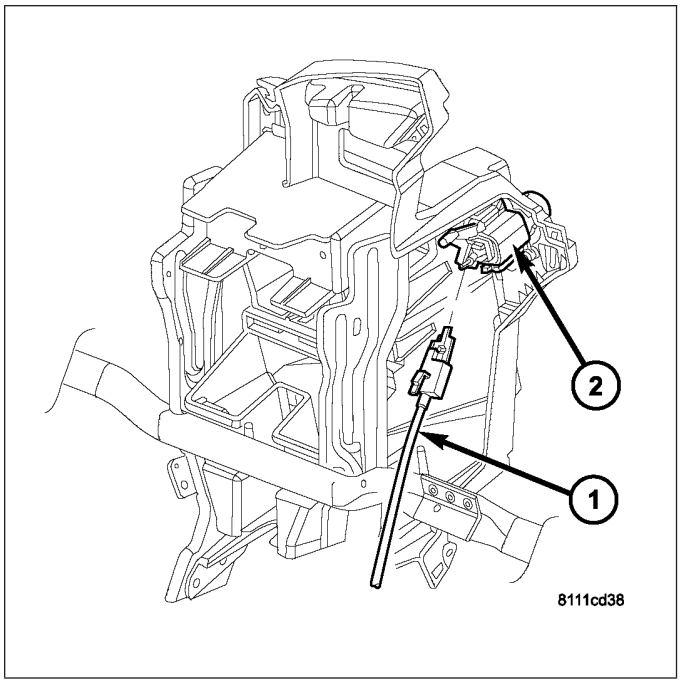

4. Route park lock cable towards shift mechanism.
5. Connect the park lock cable core to shift mechanism cam (3), and then secure cable housing to shift mechanism.

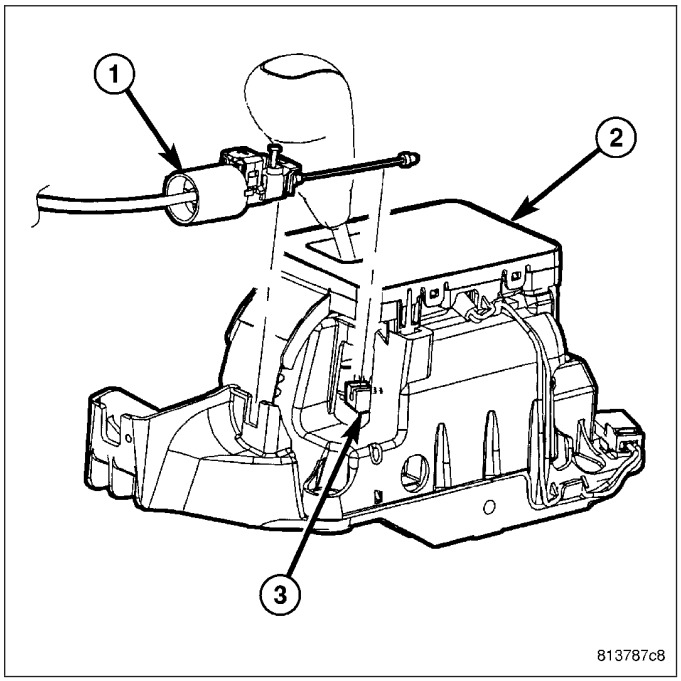

6. Adjust the park lock cable. (Refer to 21 - TRANSMISSION/AUTOMATIC TRANSMISSION/SHIFT INTERLOCK MECHANISM - ADJUSTMENTS)
7. If necessary, install the shield, covering the gearshift and park lock cables, to the floorpan and install the bolts to hold the shield to the floorpan.
8. Install the floor console assembly. (Refer to 23 - BODY/INTERIOR/FLOOR CONSOLE - INSTALLATION)

GEARTRAIN-PLANETARY

DESCRIPTION

Three planetary gear sets are used to produce the different gear ratios. These are located in the mechanical part of the transmission as the front, middle and rear planetary gear sets.

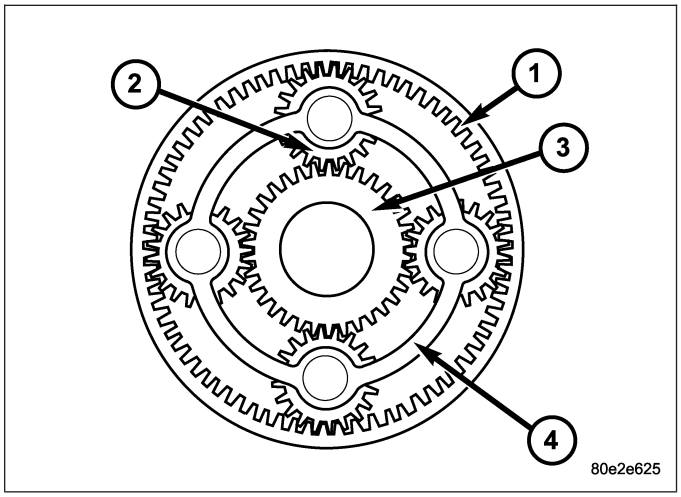

OPERATION

The annulus gear (1) and sun gear (3) elements of a planetary gear system are alternately driven and braked by the actuating elements of the multi-plate clutch and multiple-disc brake. The planetary pinion gears (2) can turn on the internal gearing of the annulus gear (1) and on the external gearing of the sun gear (3). This allows for a variety of gear ratios and the reversal of the rotation direction without the need for moving gear wheels or shift collars. When two components of the planetary gear set are locked together, the planetary gear set is locked and turns as a closed unit.

The torque and engine speed are converted according to the lever ratios and the ratio of the number of teeth on the driven gears to that on the drive gears, and is referred to as the gear ratio. The overall ratio of a number of planetary gear sets connected in series is obtained by multiplying the partial ratios.

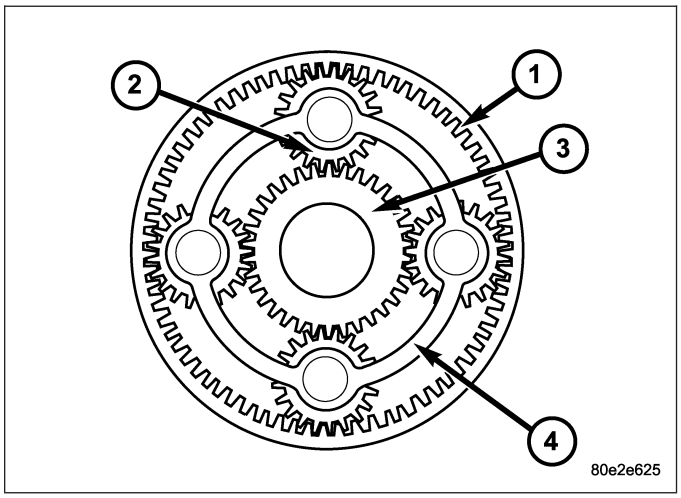

DISASSEMBLY

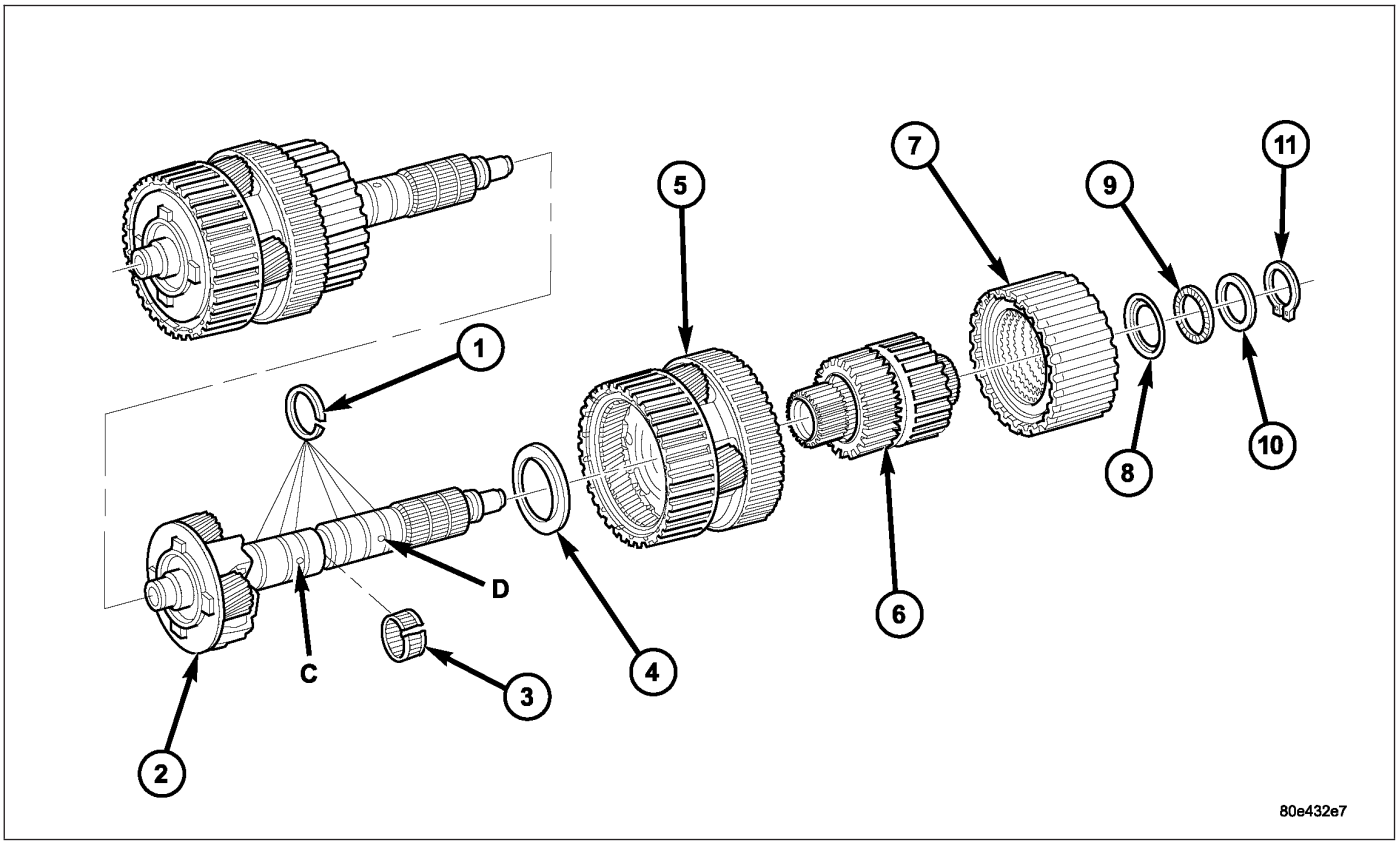

Output Shaft with Center and Rear Planetary Geartrain

1 - TEFLON RINGS
2 - OUTPUT SHAFT WITH CENTER PLANETARY CARRIER
3 - NEEDLE BEARING
4 - THRUST WASHER
5 - REAR PLANETARY GEAR SET
6 - REAR HOLLOW SHAFT/FREEWHEELING CLUTCH F2
7 - DRIVING CLUTCH K3
8 - THRUST WASHER
9 - AXIAL NEEDLE BEARING
10 - SHIM
11 - RETAINING RING

1. Remove upper two visible Teflon rings (1) from output shaft.
2. Remove retaining ring (11), shim (10), thrust needle bearing (9) and thrust washer (8) from output shaft.
3. Remove clutch K3 (7).
4. Remove rear tubular shaft/freewheeling clutch F2 (6) from output shaft.
5. Remove rear gear set (5) with integrated tubular shaft of center gear set from output shaft.
6. Remove thrust washer (4).

ASSEMBLY

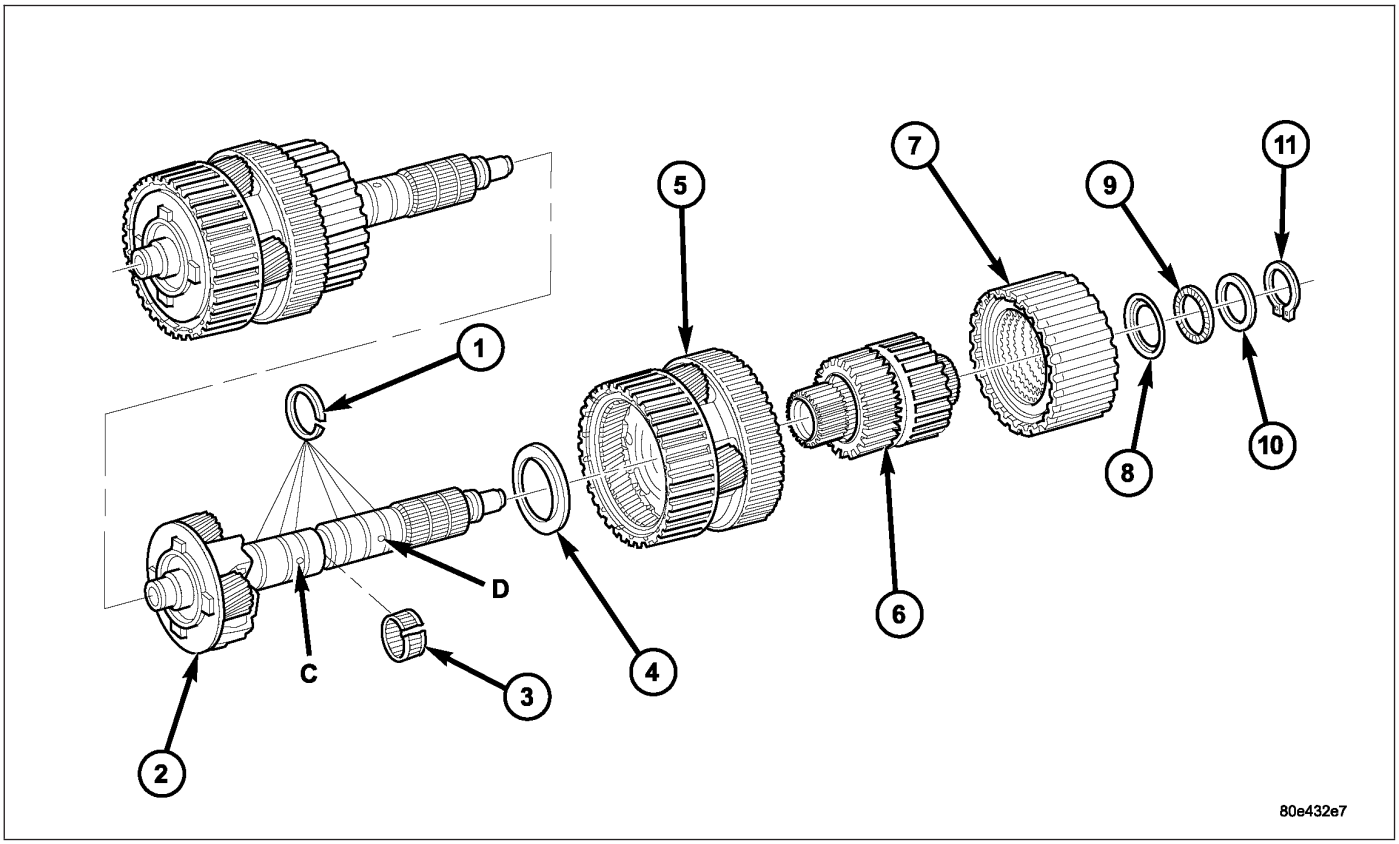

Output Shaft with Center and Rear Planetary Geartrain

1 - TEFLON RINGS
2 - OUTPUT SHAFT WITH CENTER PLANETARY CARRIER
3 - NEEDLE BEARING
4 - THRUST WASHER
5 - REAR PLANETARY GEAR SET
6 - REAR HOLLOW SHAFT/FREEWHEELING CLUTCH F2
7 - DRIVING CLUTCH K3
8 - THRUST WASHER
9 - AXIAL NEEDLE BEARING
10 - SHIM
11 - RETAINING RING

1. Mount thrust washer (4) with the collar pointing towards the planet carrier.
2. Mount the rear gear set (5) on the rear hollow shaft (6).
3. Using grease, install lower three Teflon rings (1) in the groove so that the joint stays together
4. Put rear hollow shaft/freewheeling clutch F2 (6) with rear gear set (5) onto output shaft.
5. Install clutch K3 (7).
6. Mount retaining ring, shim, thrust needle bearing and thrust washer (8 - 11).
7. Using grease, insert the upper two Teflon rings (1) in the groove so that the joint remains together.

NOTE: During the test, apply a contact force by hand to K3 in the direction of the arrow.

8. Inspect axial play between shim (10) and retaining ring (11). Check axial play ″S″ between shim (10) and retaining ring (1) using a feeler gauge. Clearance should be 0.15-0.6 mm (0.006-0.024 in.). Shims are available in thicknesses of 3.0 mm (0.118 in.), 3.4 mm (0.134 in.), and 3.7 mm (0.146 in.). Adjust as necessary

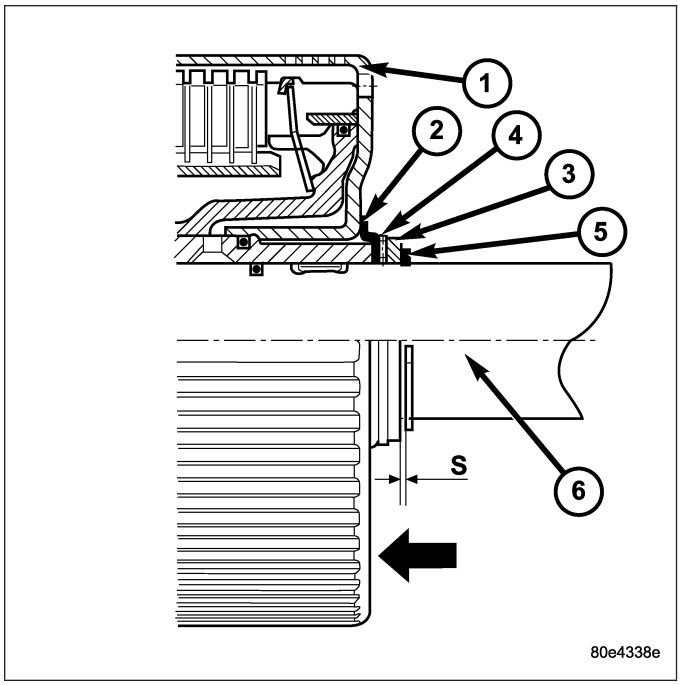

1 - DRIVING CLUTCH K3
2 - THRUST WASHER
3 - SHIM
4 - AXIAL NEEDLE BEARING
5 - RETAINING RING
6 - OUTPUT SHAFT WITH CENTER PLANETARY CARRIER

MECHANISM-SHIFT

DESCRIPTION

The automatic transmission is operated with the help of a shift lever assembly (SLA) (1) located in the floor console. There are four positions to which the selection lever can be shifted: P, R, N, D. In addition, the selector lever can be moved sideways (+/-) in position ″D″ to adjust the shift range.

All selector lever positions, as well as selected shift ranges in position ″D″, are identified by the SLA. The information is then sent to the transmission control module (TCM) via a hardwire connection. At the same time, the selector lever positions ″P″, ″R″, ″N″ and ″D″ are transmitted by a shift cable to the selector shaft in the transmission.

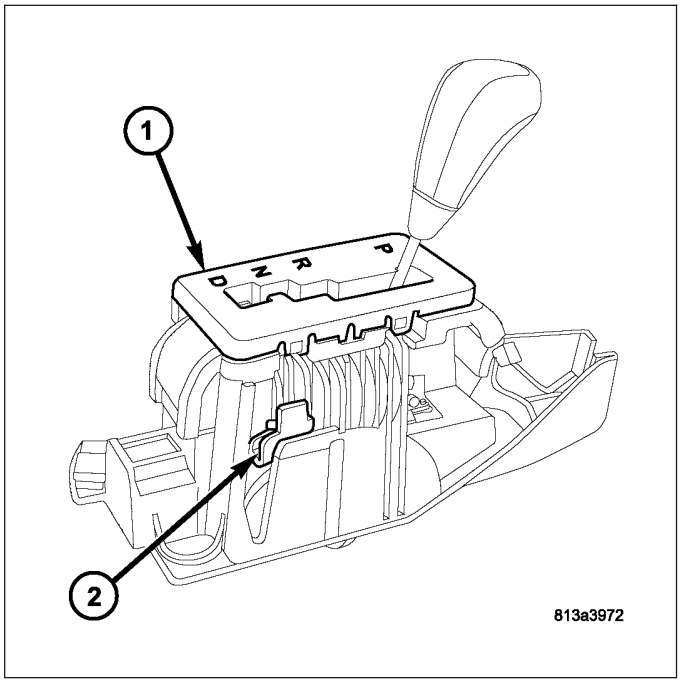

The SLA is comprised of the following functions:

- **Key lock:** Depending on the selector lever position, the ignition cylinder is locked/unlocked, i.e., the ignition key can be removed only if the selector lever is in position ″P″. A park lock cable is used to perform this function.
- **Park lock:** The selector lever is not released from postion ″P″ until the brake pedal has been applied and the ignition key is in ”ACC” or ON” positions. Shift lock is controlled by the brake light switch in conjunction with a locking solenoid in the SLA. As soon as the brake pedal is applied firmly, the locking solenoid is energized and retracted to unlock the selector lever. If the selector lever cannot be moved out of position ″P″ due to a malfunction, the shift lock function can be overriden (2). (Refer to 21 - TRANSMISSION/AUTOMATIC TRANSMISSION - NAG1/SHIFT INTERLOCK MECHANISM - OPERATION)
- **Reverse inhibitor:** As soon as the vehicle speed exceeds approximately 4-7 mph, it is no longer possible to move the selector lever from position ″N″ to position ″R″. The reverse inhibit functionality is controlled by the same solenoid as the park lock. As the vehicle accelerates past the calibrated speed threshold, the solenoid is energized to block the sideways motion of the shift lever necessary to move from NEUTRAL to REVERSE. The reverse inhibit is not released until the vehicle speed falls below approximately 4-7 mph and the shifter is moved out of the “D” shifter position.

OPERATION

With the selector lever in position ″D″, the transmission control module (TCM) automatically shifts the gears that are best-suited to the current operating situation. This means that shifting of gears is continuously adjusted to current driving and operating conditions in line with the selected shift range and the accelerator pedal position. Starting off is always performed in 1st gear.

The selector lever positions are determined by a sensor assembly internal to the shift lever assembly (SLA). The sensor assembly identifies the various positions of the SLA according to the following table.

Shift Lever Position	Bit 0	Bit 1	Bit 2	Bit 3
Default	0	0	0	0
″D″	1	0	1	0
″N″	0	1	1	0
″R″	1	1	1	0
″P″	0	0	0	1
″+″	1	0	0	1
″-″	0	1	0	1
″ND″	1	1	0	1
″RN″	0	0	1	1
″PR″	1	0	1	1
Implausible	1	1	1	1

The current selector lever position or, if the shift range has been limited, the current shift range is indicated in the instrument cluster display.

The permissible shifter positions and transmission operating ranges are:

- P = Parking lock and engine starting.
- R = Reverse.
- N = Neutral and engine starting (no power is transmitted to the axles).
- D = The shift range includes all forward gears.

The shift range can be adjusted to the current operating conditions by tipping the selector lever to the left-hand side (″-″) or the right-hand side (″+″) when in position ″D″. If the shift range is limited, the display in the instrument cluster indicates the selected shift range and not the currently engaged gear.

- 4= Shift range is limited to gears 1 to 4.
- 3= Shift range is limited to gears 1 to 3.
- 2= Shift range is limited to gears 1 to 2.
- 1= Shift range is limited to the 1st gear.

Tipping the shift lever will have the following results:

- **Tipping the selector lever toward ″-″ one time after another:** The shift range is reduced in descending sequence by one gear each time, i.e., from D - 4 - 3 - 2 - 1. If the selected limitation of the shift range would result in a downshift causing excessive engine speed, the shifting is not executed and the engaged gear as well as the shift range remain unchanged. This is to prevent the engine from overspeeding. Engine retardation is low with the selector lever in position ″D″. To make use of the full braking power of the engine, ″manual″ downshifting by tipping the lever towards the left-hand side is recommended. If this has been done, subsequent upshifting must be carried out manually as well.
- **Tipping the selector lever toward ″-″ and holding it in this position:** The currently engaged gear in range ″D″ is indicated in the instrument cluster display and the shift range is limited to this gear.
- **Tipping the selector lever toward ″+″ one time after another:** The shift range is increased by one gear each time and the increased shift range is displayed in the instrument cluster; possibly, the transmission upshifts to a faster gear.
- **Tipping the selector lever toward ″+″ several times:** The shift range is increased by one gear each time the lever is tipped until the shift range ends up in ″D″.
- **Tipping the selector lever toward ″+″ and holding it in this position:** The shift range is extended immediately to ″D″, shift ranges are indicated in ascending sequence; possibly, the transmission upshifts to a faster gear due to the extension of the shift range.

REMOVAL

1. Remove any necessary console parts for access to shift lever assembly and shifter cables. (Refer to 23 - BODY/INTERIOR/FLOOR CONSOLE - REMOVAL)
2. If necessary, remove the bolts holding the shield, covering the gearshift and park lock cables, to the floorpan and remove the shield.
3. Shift transmission into PARK.
4. Disconnect the transmission shift cable (1) at shift lever (3) and shifter assembly bracket (2).
5. Remove the shift cable retainer (2) from the notch in the shifter assembly (2).

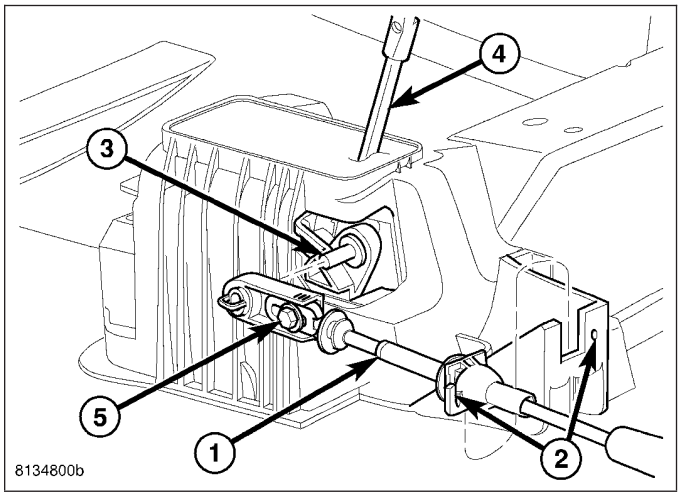

6. Verify the key is in the LOCK position and disconnect the park lock cable (1) from the shifter mechansim cam (3) and the notch in the shifter assembly (3).

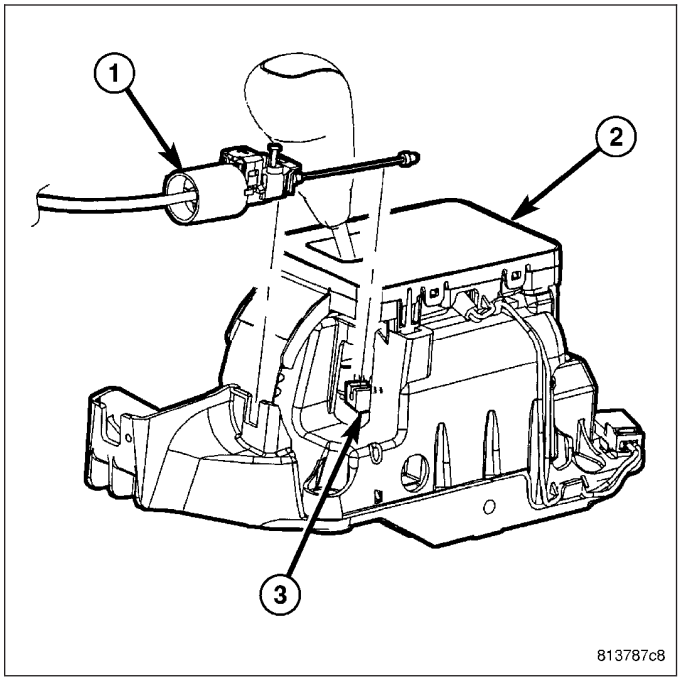

7. Disengage all wiring connectors (2) from the shifter assembly (1).

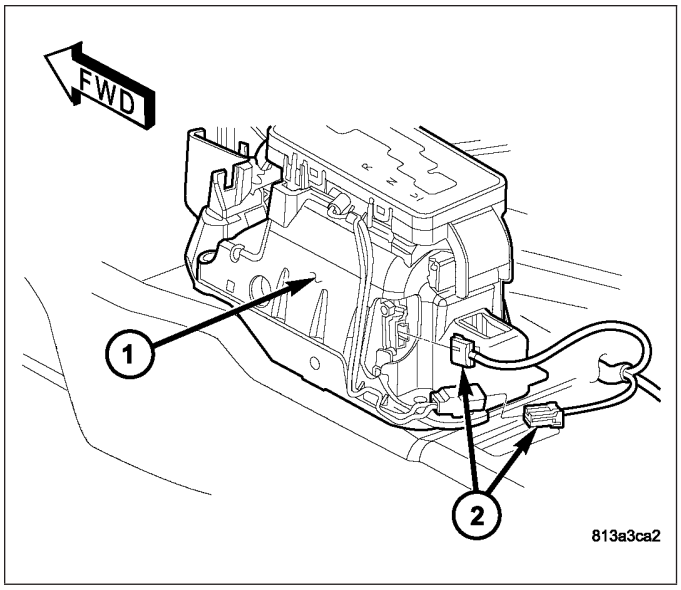

8. Remove all nuts (2) holding the shifter assembly (1) to the floor pan.
9. Remove the shifter assembly (1) from the vehicle.

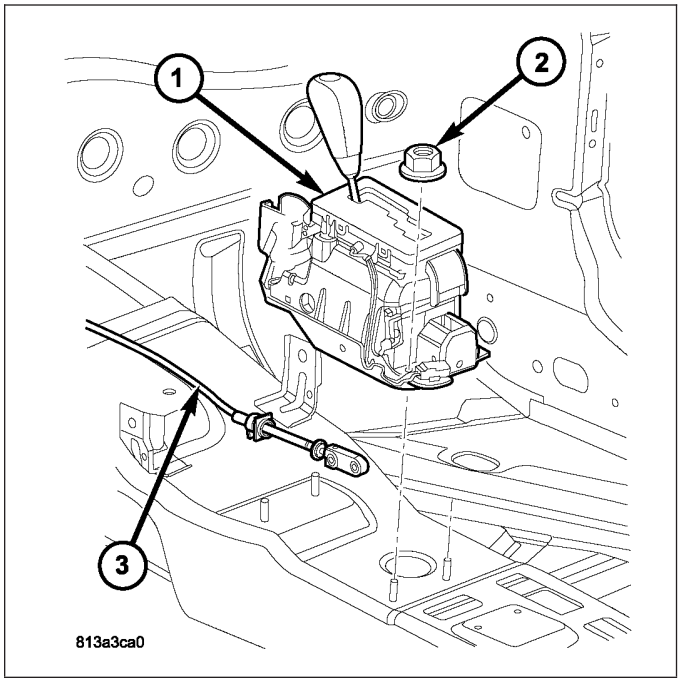

INSTALLATION

1. If a new shifter assembly is being installed, unscrew the original shift knob from the shift lever. Screw the knob onto the new shifter assembly's lever no more than 14 turns.
2. Install shifter assembly (1) onto the shifter assembly studs on the floor pan.
3. Install the nuts (2) to hold the shifter assembly (1) onto the floor pan. Tighten nuts to 7 N·m (65 in.lbs.).

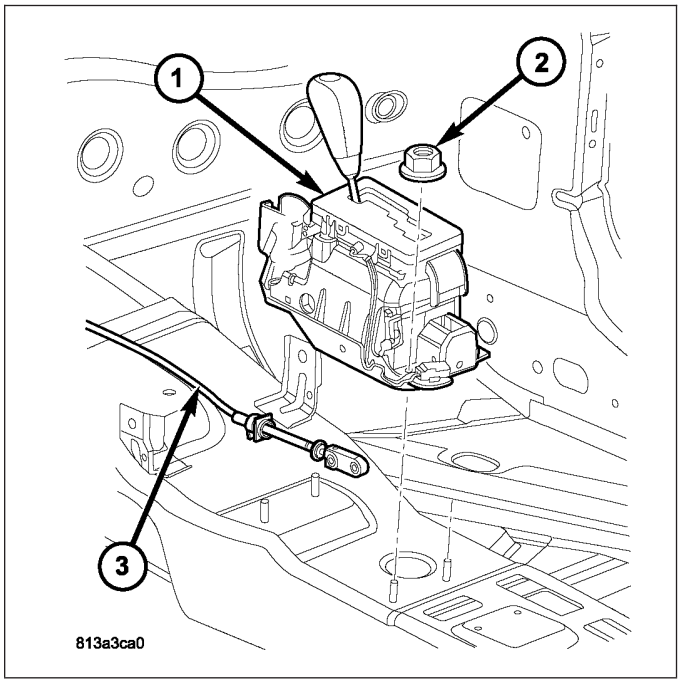

4. Place the floor shifter lever in PARK position.
5. Loosen the adjustment screw (5) on the gearshift cable (1).
6. Install the gearshift cable (1) to the shift lever pin (3).

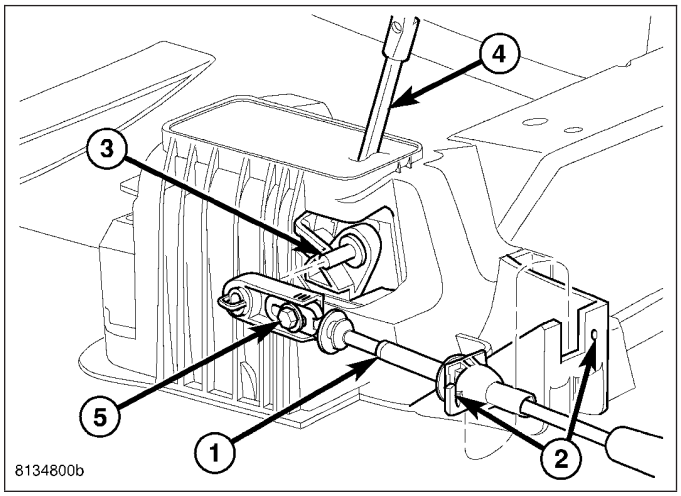

7. Install the park lock cable (1) to the shift mechanism cam (3) and the notch in the shifter assembly (2).
8. Verify that the key is in the LOCK position and remains there until the cable is fully adjusted.
9. Verify that the park lock cable adjustment tab is pulled upward to the unlocked position.

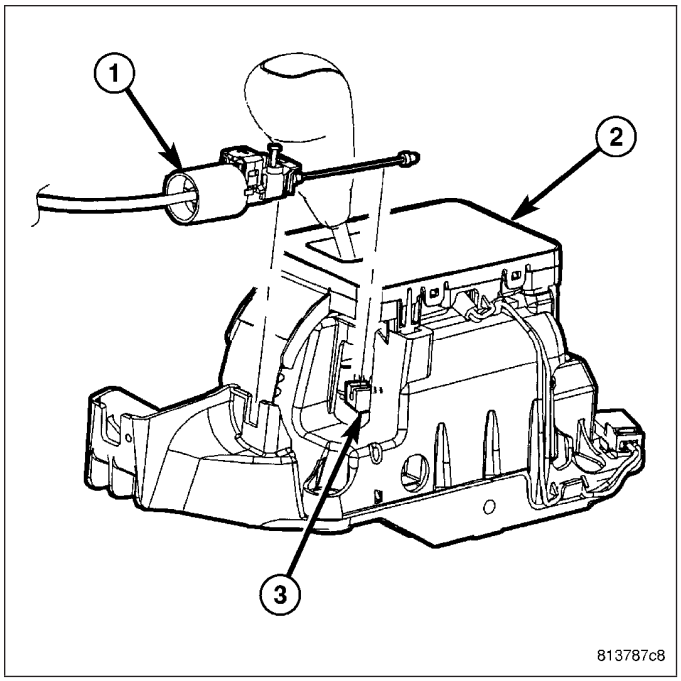

10. Install the wiring harness connectors (2) to the shifter assembly.
11. Verify that the shift lever is in the PARK position.
12. Tighten the adjustment screw to 7 N·m (65 in.lbs.).
13. Verify that the key in the LOCK position and the shifter is in PARK.
14. Push downward on the park lock cable adjustment tab to lock the adjustment.
15. Verify correct shifter, park lock, and BTSI operation.
16. If necessary, install the shield, covering the gearshift and park lock cables, to the floorpan and install the bolts to hold the shield to the floorpan.
17. Install any console parts removed for access to shift lever assembly and shift cables. (Refer to 23 - BODY/INTERIOR/FLOOR CONSOLE - INSTALLATION)

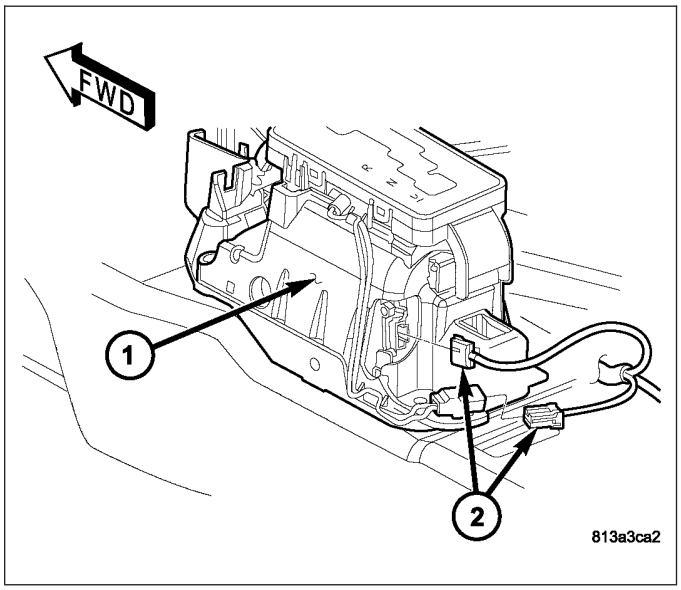

SOLENOID

DESCRIPTION

The typical electrical solenoid used in automotive applications is a linear actuator. It is a device that produces motion in a straight line. This straight line motion can be either forward or backward in direction, and short or long distance.

A solenoid is an electromechanical device that uses a magnetic force to perform work. It consists of a coil of wire, wrapped around a magnetic core made from steel or iron, and a spring loaded, movable plunger, which performs the work, or straight line motion.

The solenoids used in transmission applications are attached to valves which can be classified as **normally open** or **normally closed**. The **normally open** solenoid valve is defined as a valve which allows hydraulic flow when no current or voltage is applied to the solenoid. The **normally closed** solenoid valve is defined as a valve which does not allow hydraulic flow when no current or voltage is applied to the solenoid. These valves perform hydraulic control functions for the transmission and must therefore be durable and tolerant of dirt particles. For these reasons, the valves have hardened steel poppets and ball valves. The solenoids operate the valves directly, which means that the solenoids must have very high outputs to close the valves against the sizable flow areas and line pressures found in current transmissions. Fast response time is also necessary to ensure accurate control of the transmission.

The strength of the magnetic field is the primary force that determines the speed of operation in a particular solenoid design. A stronger magnetic field will cause the plunger to move at a greater speed than a weaker one. There are basically two ways to increase the force of the magnetic field:

1. Increase the amount of current applied to the coil or
2. Increase the number of turns of wire in the coil.

The most common practice is to increase the number of turns by using thin wire that can completely fill the available space within the solenoid housing. The strength of the spring and the length of the plunger also contribute to the response speed possible by a particular solenoid design.

A solenoid can also be described by the method by which it is controlled. Some of the possibilities include variable force, pulse-width modulated, constant ON, or duty cycle. The variable force and pulse-width modulated versions utilize similar methods to control the current flow through the solenoid to position the solenoid plunger at a desired position somewhere between full ON and full OFF. The constant ON and duty cycled versions control the voltage across the solenoid to allow either full flow or no flow through the solenoid's valve.

UPSHIFT/DOWNSHIFT SOLENOID VALVES

The solenoid valves (1) for upshifts and downshifts are located in the shell of the electric control unit and pressed against the shift plate with a spring.

The solenoid valves (1) initiate the upshift and downshift procedures in the shift plate.

The solenoid valves (1) are sealed off from the valve housing of the shift plate (5) by two O-rings (4, 6). The contact springs (8) at the solenoid valve engage in a slot in the conductor tracks (7). The force of the contact spring (8) ensures safe contacts.

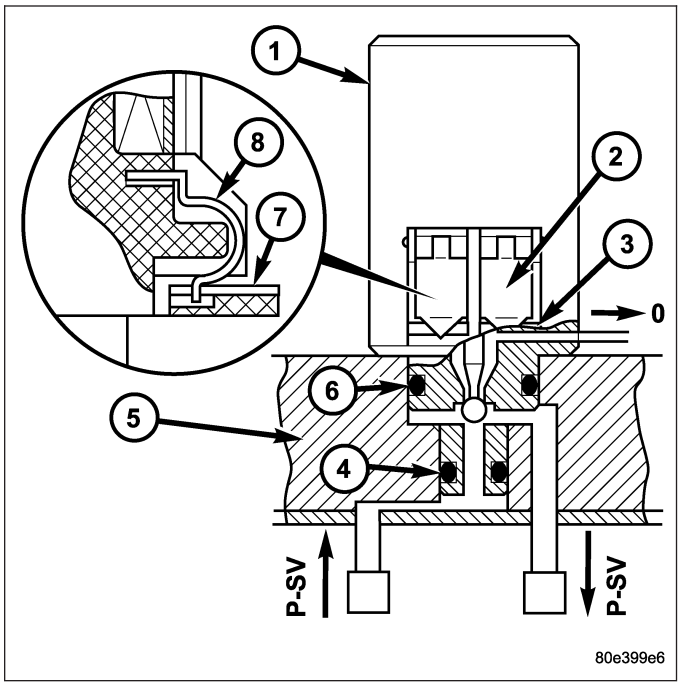

MODULATING PRESSURE CONTROL SOLENOID VALVE

The modulating pressure control solenoid valve (1) is located in the shell of the electric valve control unit and pressed against the shift plate by a spring.

Its purpose is control the modulating pressure depending on the continuously changing operating conditions, such as load and gear change.

The modulating pressure regulating solenoid valve (1) has an interference fit and is sealed off to the valve body of the shift plate (4) by a seal (arrow). The contact springs (2) at the solenoid valve engage in a slot in the conductor tracks (3). The force of the contact springs (2) ensures secure contacts.

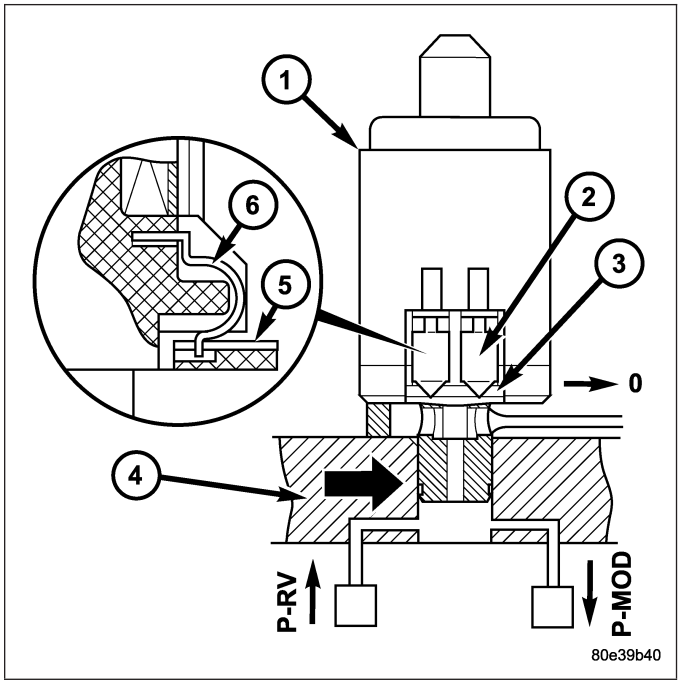

TORQUE CONVERTER LOCKUP CLUTCH PWM SOLENOID VALVE

The torque converter lockup clutch PWM solenoid valve (1) is located in the shell of the electric valve control unit and pressed against the shift plate by a spring.

The PWM solenoid valve (1) for the torque converter lockup controls the pressure for the torque converter lockup clutch.

The torque converter lockup PWM solenoid valve (1) is sealed off to the valve body of the shift plate (4) by an O-ring (5) and a seal (arrow). The contact springs (2) at the solenoid valve engage in a slot in the conductor tracks (3). The force of the contact springs (2) ensures secure contacts.

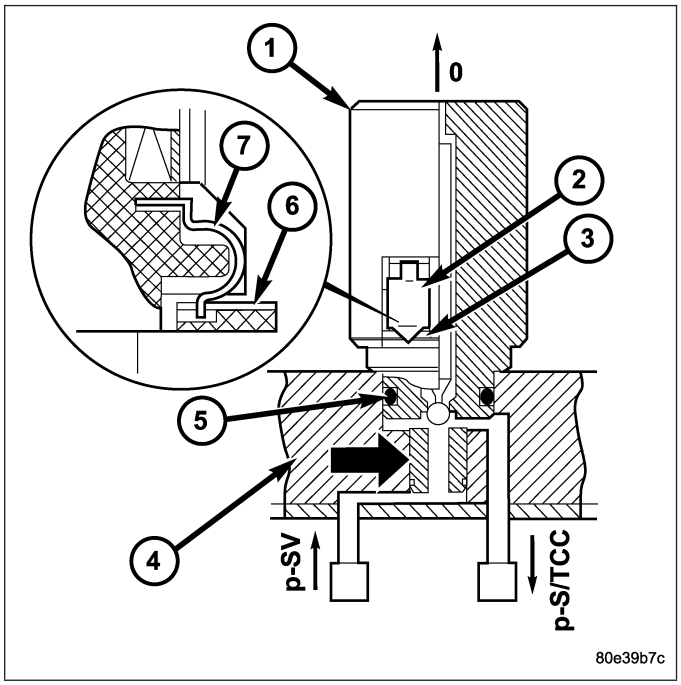

SHIFT PRESSURE CONTROL SOLENOID VALVE

The shift pressure control solenoid valve (1) is located in the shell of the electric valve control unit and pressed against the shift plate by a spring.

Its purpose is to control the shift pressure depending on the continuously changing operating conditions, such as load and gear change.

The shift pressure regulating solenoid valve (1) has an interference fit and is sealed off to the valve body of the shift plate (4) by a seal (arrow). The contact springs (2) at the solenoid valve engage in a slot in the conductor tracks (3). The force of the contact springs (2) ensures secure contacts.

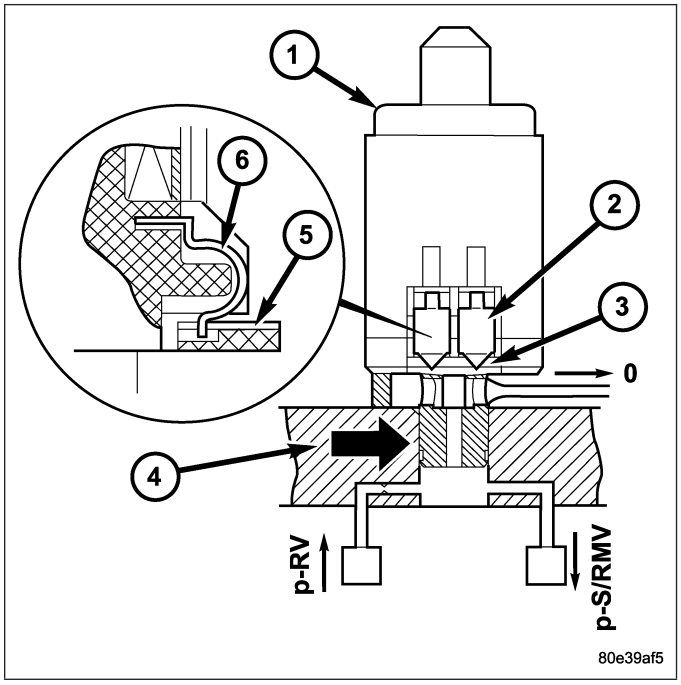

OPERATION

When an electrical current is applied to the solenoid coil, a magnetic field is created which produces an attraction to the plunger, causing the plunger to move and work against the spring pressure and the load applied by the fluid the valve is controlling. The plunger is normally directly attached to the valve which it is to operate. When the current is removed from the coil, the attraction is removed and the plunger will return to its original position due to spring pressure.

The plunger is made of a conductive material and accomplishes this movement by providing a path for the magnetic field to flow. By keeping the air gap between the plunger and the coil to the minimum necessary to allow free movement of the plunger, the magnetic field is maximized.

UPSHIFT/DOWNSHIFT SOLENOID VALVES

If a solenoid valve (1) is actuated by the TCM, it opens and guides the control pressure (p-SV) to the assigned command valve. The solenoid valve remains actuated and therefore open until the shifting process is complete. The shift pressure (p-SV) to the command valve is reduced to zero as soon as the power supply to the solenoid valve is interrupted.

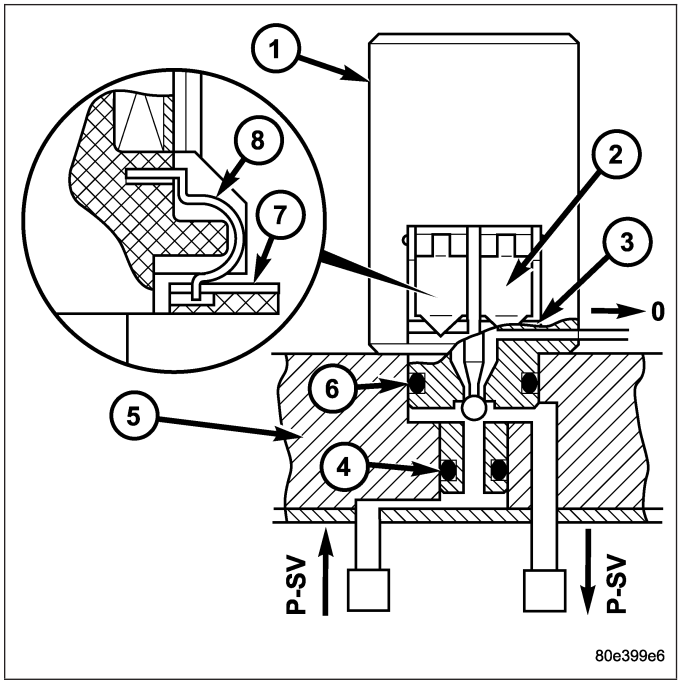

MODULATING PRESSURE CONTROL SOLENOID VALVE

The modulating pressure regulating solenoid valve (1) assigns a proportional pressure to the current which is controlled by the TCM according to the load.

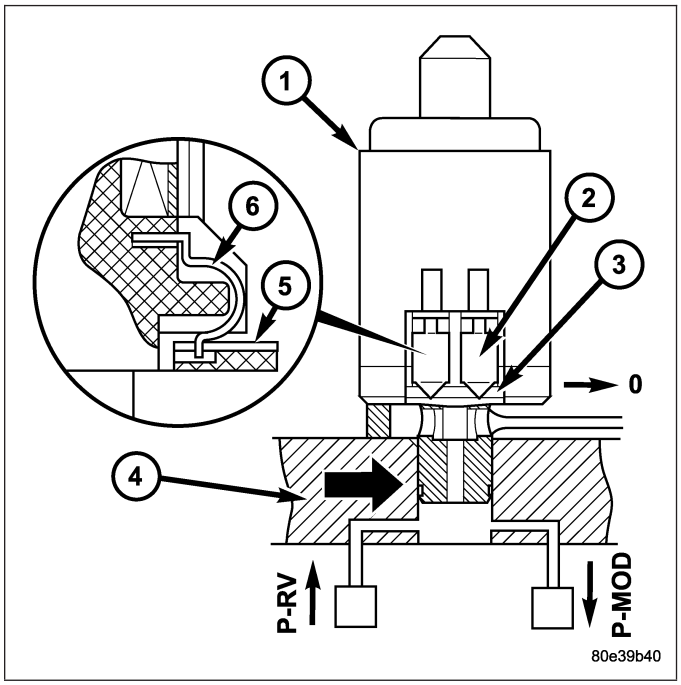

TORQUE CONVERTER LOCKUP CLUTCH PWM SOLENOID VALVE

The torque converter lockup PWM solenoid (1) valve converts pulse-wave-modulated current controlled by the TCM into the appropriate hydraulic control pressure (p-S/TCC).

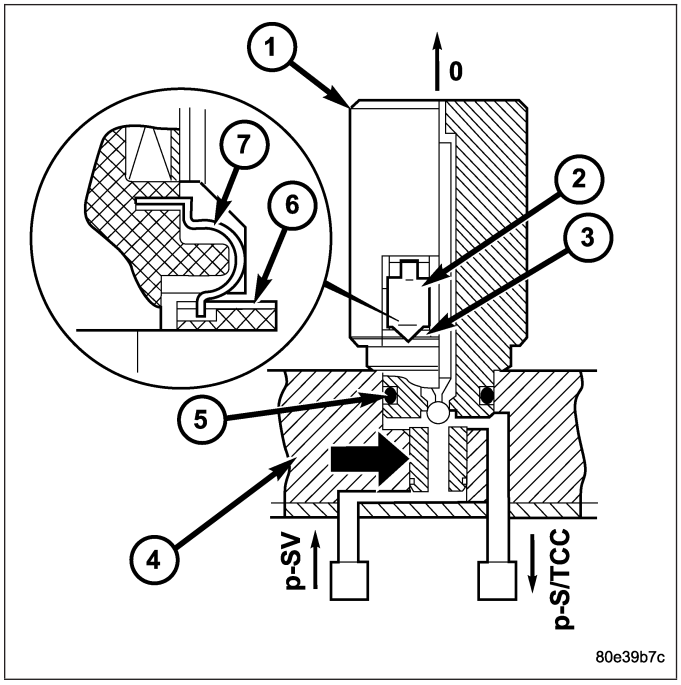

SHIFT PRESSURE CONTROL SOLENOID VALVE

The shift pressure regulating solenoid valve (1) assigns a proportional pressure to the current which is controlled by the TCM according to the load.

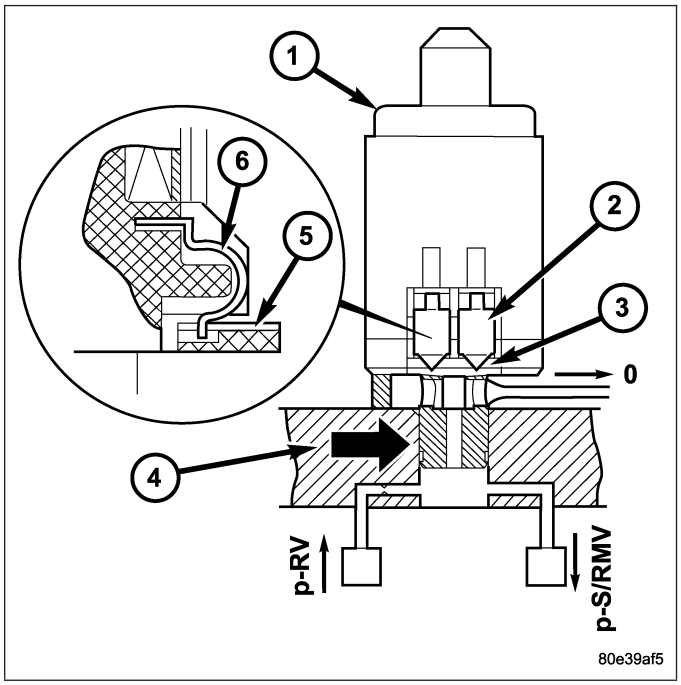

CONTACT-TEMPERATURE SENSOR/PARK-NEUTRAL

DESCRIPTION

PARK/NEUTRAL CONTACT

The park/neutral contact (4) is located in the shell of the electric control unit and is fixed to the conductor tracks.

Its purpose is to recognize selector valve and selector lever positions ″P″ and ″N″. The park/neutral contact consists of:

- the plunger (2).
- the permanent magnet (3).
- the dry-reed contact (4).

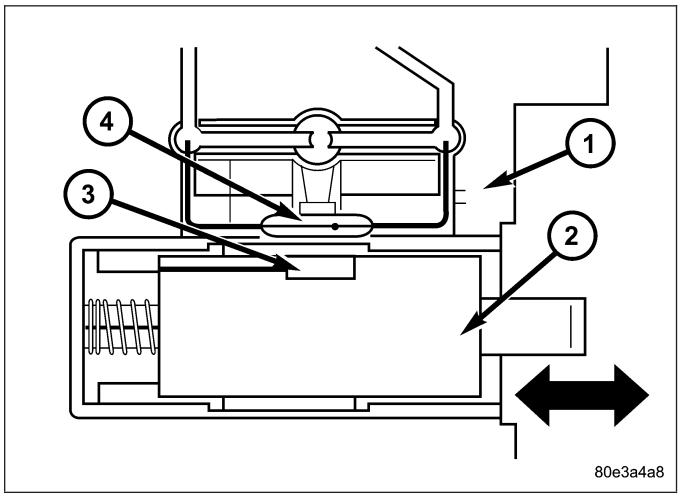

TRANSMISSION TEMPERATURE SENSOR

The transmission oil temperature sensor (1) is located in the shell of the electric valve control unit and is fixed to the conductor tracks.

Its purpose is to measure the temperature of the transmission oil and pass the temperature to the TCM as an input signal. It is a temperature-dependent resistor (PTC).

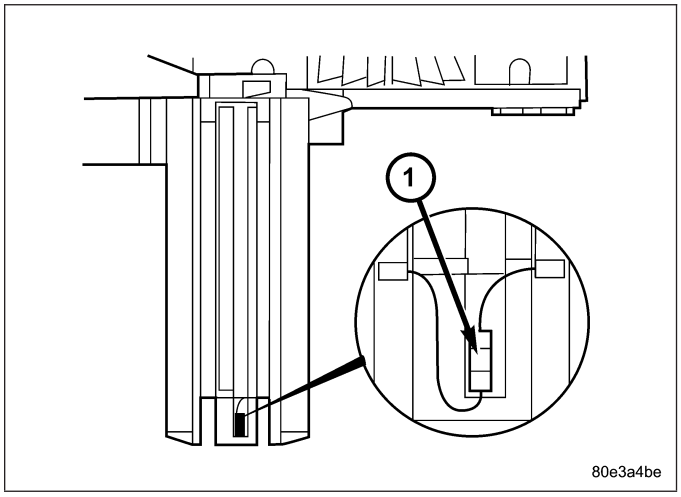

OPERATION

PARK/NEUTRAL CONTACT

In selector lever positions ″P″ and ″N″ the park/neutral contact (4) is actuated by a cam track which is located on the detent plate. The permanent magnet (3) is moved away from the dry-reed contact (4). The dry-reed contact (4) is opened. The TCM receives an electric signal. The circuit to the starter in the selector lever positions ″P″ and ″N″ is closed.

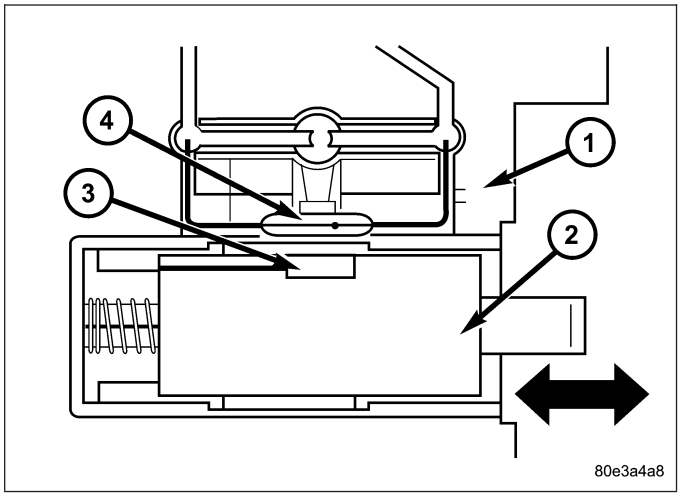

TRANSMISSION TEMPERATURE SENSOR

The temperature of the transmission oil has a considerable effect on the shifting time and therefore the shift quality. By measuring the oil temperature, shift operations can be optimized in all temperature ranges. The transmission oil temperature sensor (1) is switched in series with the park/neutral contact. The temperature signal is transferred to the TCM only when the dry-reed contact of the park/neutral contact is closed in REVERSE or a forward gear position.

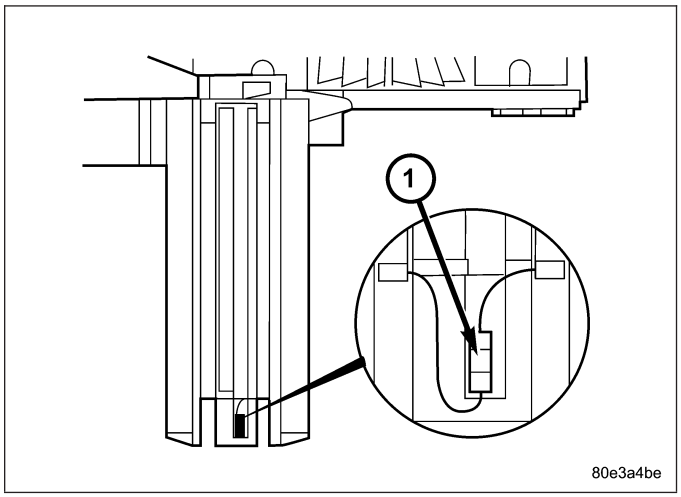

Refer to the Transmission Temperature Sensor Specifications table for the relationship between transmission temperature, sensor voltage, and sensor resistance.

TRANSMISSION TEMP SENSOR SPECIFICATIONS

TEMPERATURE/VOLTAGE/RESISTANCE CHART

TEMPERATURE (C)	TEMPERATURE (F)	VOLTAGE	RESISTANCE
-50	-58	0.73	506.0
-45	-49	0.77	534.0
-40	-40	0.80	564.0
-35	-31	0.84	593.0
-30	-22	0.88	624.0
-25	-13	0.91	654.0
-20	-4	0.95	686.0
-15	5	0.98	718.0
-10	14	1.02	750.0
-5	23	1.05	783.0
0	32	1.09	817.0
5	41	1.12	851.0
10	50	1.16	886.0
15	59	1.19	921.0
20	68	1.23	957.0
25	77	1.26	994.0
30	86	1.30	1032.0
35	95	1.33	1070.0
40	104	1.37	1109.0
45	113	1.40	1149.0
50	122	1.44	1189.0
55	131	1.48	1231.0
60	140	1.51	1273.0
65	149	1.55	1316.0
70	158	1.58	1360.0
75	167	1.62	1405.0
80	176	1.65	1450.0
85	185	1.69	1497.0
90	194	1.72	1545.0
95	203	1.76	1594.0
100	212	1.79	1644.0
105	221	1.83	1695.0
110	230	1.86	1747.0
115	239	1.90	1800.0
120	248	1.93	1855.0
125	257	1.97	1911.0
130	266	2.00	1968.0
135	275	2.04	2027.0
140	284	2.08	2087.0
145	293	2.11	2148.0
150	302	2.15	2211.0
155	311	2.18	2276.0
160	320	2.22	2342.0
165	329	2.25	2410.0
170	338	2.29	2479.0
175	347	2.32	2551.0

80e3afbe

CONVERTER-TORQUE

DESCRIPTION

CAUTION: The torque converter must be replaced if a transmission failure resulted in large amounts of metal or fiber contamination in the fluid.

The torque converter is a hydraulic device that couples the engine crankshaft to the transmission. The torque converter consists of an outer shell with an internal turbine (1), a stator (3), an overrunning clutch, an impeller (2), and an electronically applied converter clutch. The converter clutch provides reduced engine speed and greater fuel economy when engaged. Clutch engagement also provides reduced transmission fluid temperatures. The converter clutch engages in third through fifth gears. The torque converter hub drives the transmission oil (fluid) pump.

A turbine damper (6) has been added for some applications to help improve vehicle noise, vibration, and harshness (NVH) characteristics.

The torque converter is a sealed, welded unit that is not repairable and is serviced as an assembly.

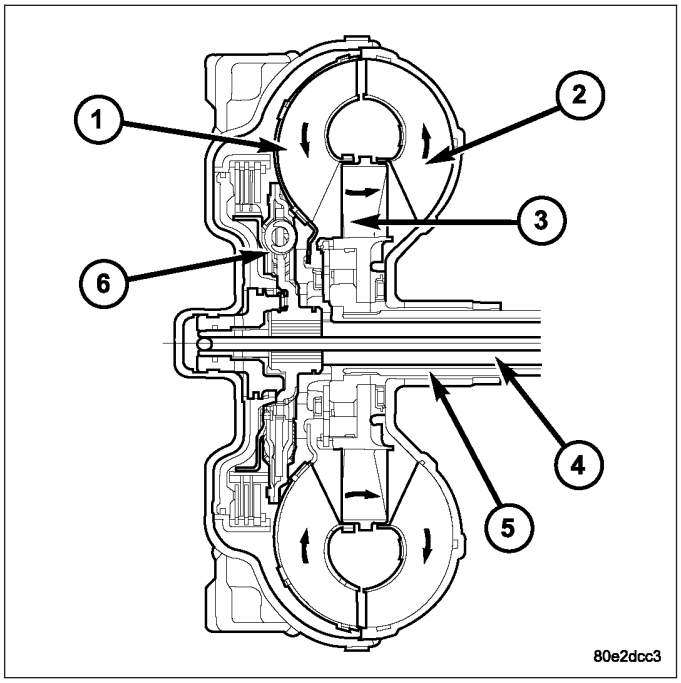

1 - TURBINE
2 - IMPELLER
3 - STATOR
4 - INPUT SHAFT
5 - STATOR SHAFT
6 - TURBINE DAMPER

IMPELLER

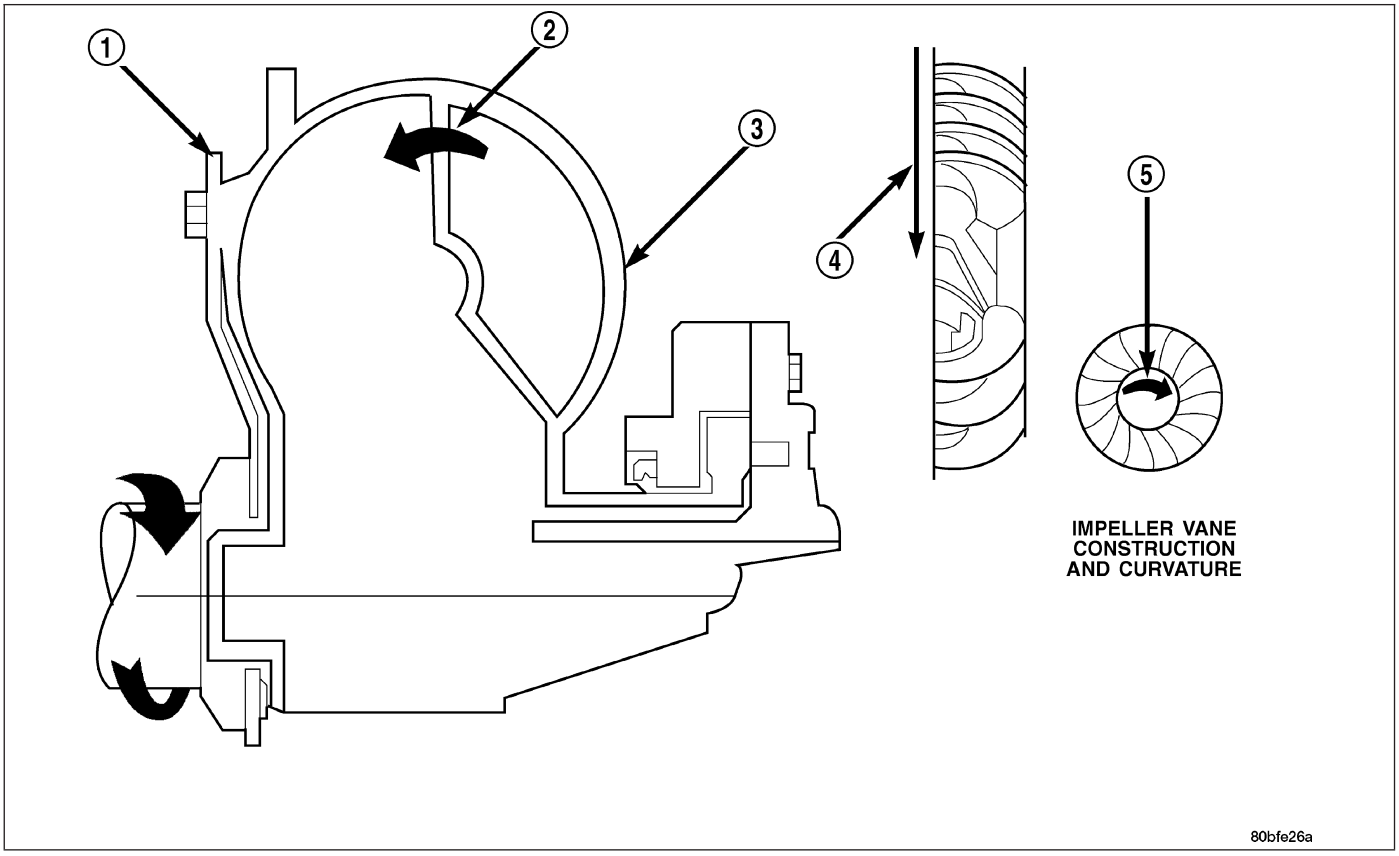

Impeller

1 - ENGINE FLEXPLATE
2 - OIL FLOW FROM IMPELLER SECTION INTO TURBINE SECTION
3 - IMPELLER VANES AND COVER ARE INTEGRAL
4 - ENGINE ROTATION
5 - ENGINE ROTATION

The impeller (3) is an integral part of the converter housing. The impeller consists of curved blades placed radially along the inside of the housing on the transmission side of the converter. As the converter housing is rotated by the engine, so is the impeller, because they are one and the same and are the driving members of the system.

TURBINE

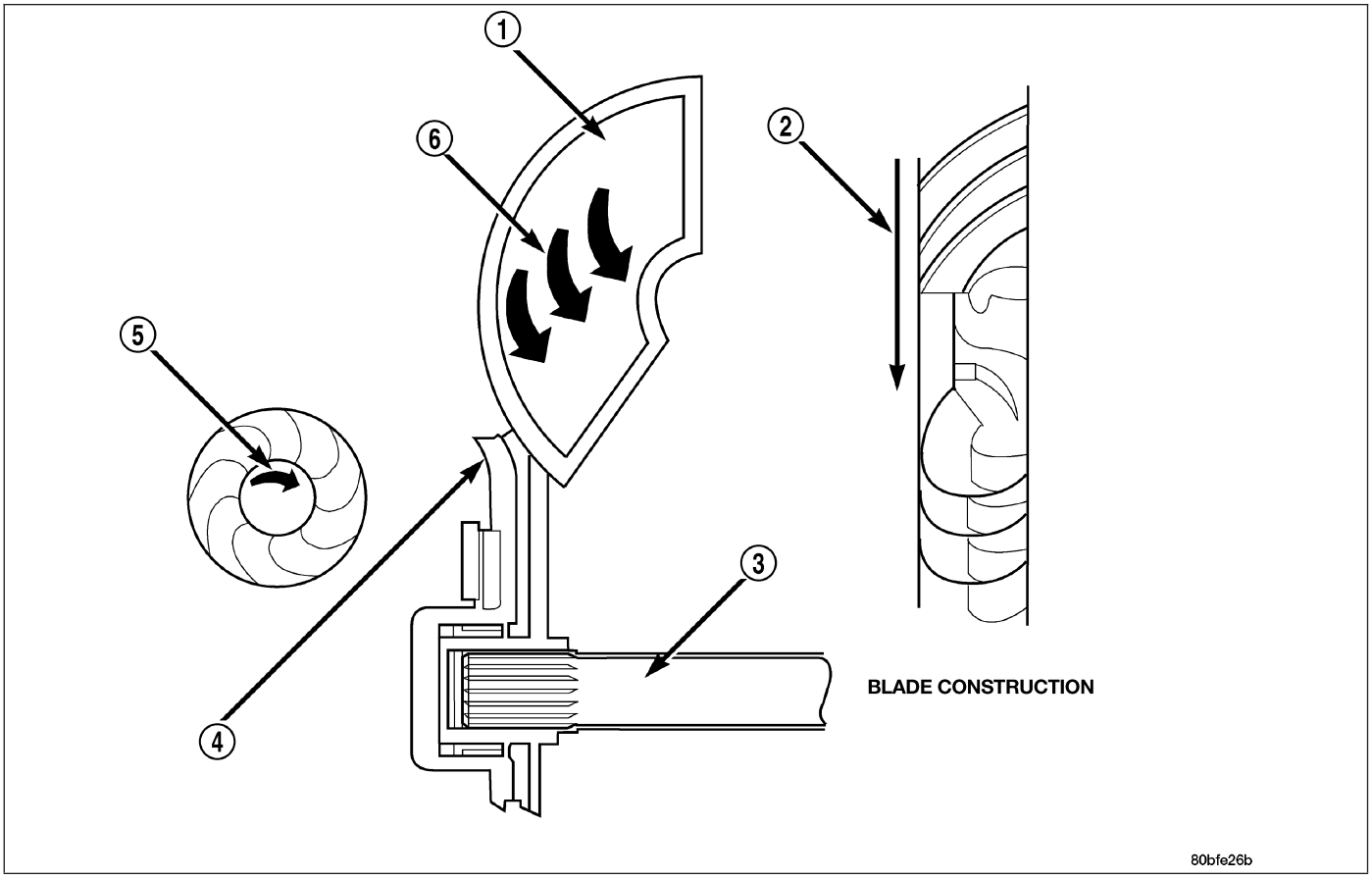

Turbine

1 - TURBINE VANE
2 - ENGINE ROTATION
3 - INPUT SHAFT
4 - PORTION OF TORQUE CONVERTER COVER
5 - ENGINE ROTATION
6 - OIL FLOW WITHIN TURBINE SECTION

The turbine (1) is the output, or driven, member of the converter. The turbine is mounted within the housing opposite the impeller, but is not attached to the housing. The input shaft is inserted through the center of the impeller and splined into the turbine. The design of the turbine is similar to the impeller, except the blades of the turbine are curved in the opposite direction.

STATOR

The stator assembly (1-4) is mounted on a stationary shaft which is an integral part of the oil pump.

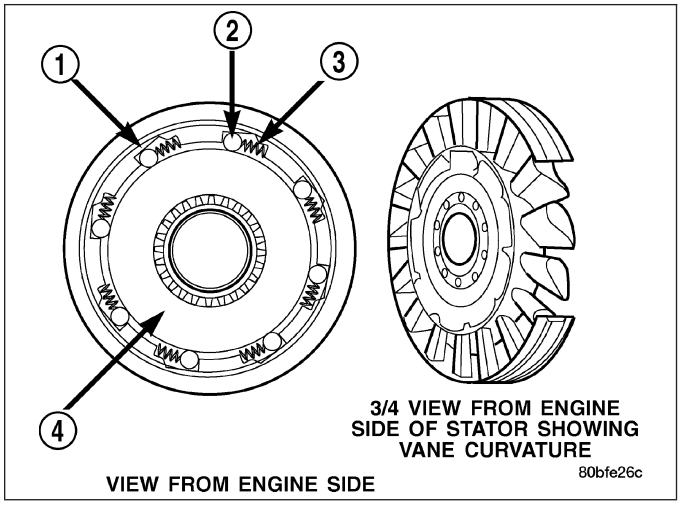

The stator (1) is located between the impeller (2) and turbine (4) within the torque converter case. The stator contains a freewheeling clutch, which allows the stator to rotate only in a clockwise direction. When the stator is locked against the freewheeling clutch, the torque multiplication feature of the torque converter is operational.

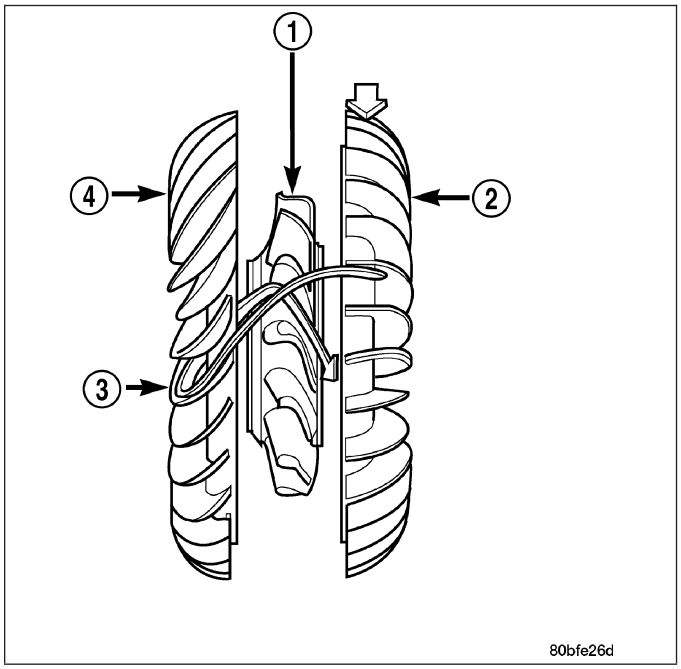

TORQUE CONVERTER CLUTCH (TCC)

The TCC (9) was installed to improve the efficiency of the torque converter that is lost to the slippage of the fluid coupling. Although the fluid coupling provides smooth, shock-free power transfer, it is natural for all fluid couplings to slip. If the impeller and turbine were mechanically locked together, a zero slippage condition could be obtained. A hydraulic piston with friction material was added to the turbine assembly to provide this mechanical lock-up.

In order to reduce heat build-up in the transmission and buffer the powertrain against torsional vibrations, the TCM can duty cycle the torque converter lock-up solenoid to achieve a smooth application of the torque converter clutch. This function, referred to as Electronically Modulated Converter Clutch (EMCC) can occur at various times depending on the following variables:

- Shift lever position
- Current gear range
- Transmission fluid temperature
- Engine coolant temperature
- Input speed
- Throttle angle
- Engine speed

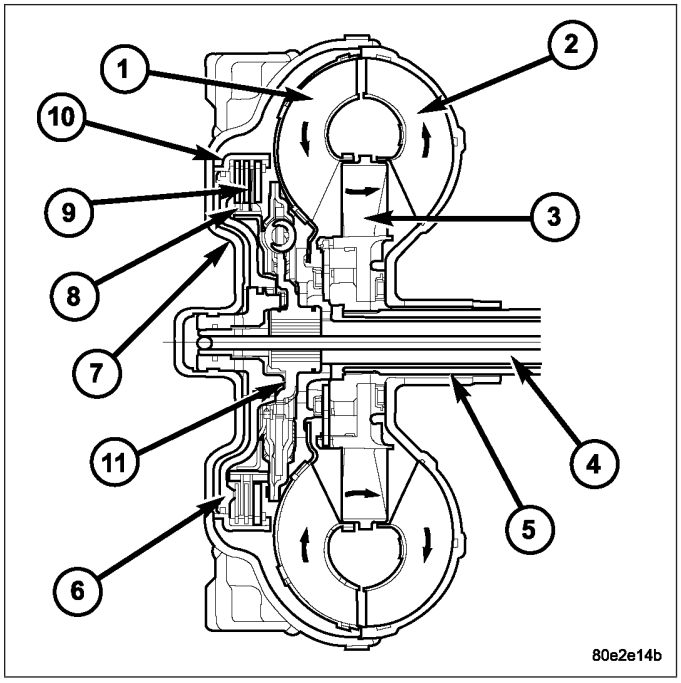

1 - TURBINE
2 - IMPELLER
3 - STATOR
4 - INPUT SHAFT
5 - STATOR SHAFT
6 - PISTON
7 - COVER SHELL
8 - INTERNALLY TOOTHED DISC CARRIER
9 - CLUTCH PLATE SET
10 - EXTERNALLY TOOTHED DISC CARRIER
11 - TURBINE DAMPER

OPERATION

The converter impeller (driving member) (2), which is integral to the converter housing and bolted to the engine drive plate, rotates at engine speed. The converter turbine (driven member) (1), which reacts from fluid pressure generated by the impeller, rotates and turns the transmission input shaft (4).

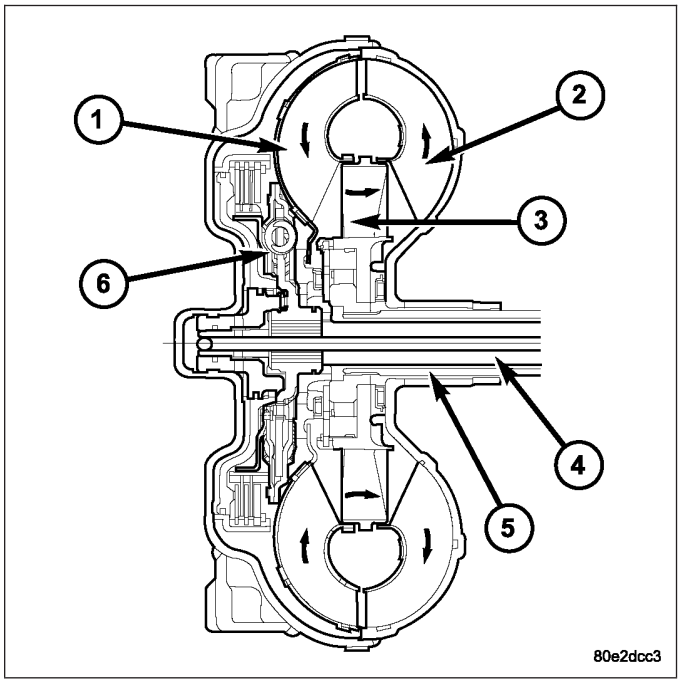

1 - TURBINE
2 - IMPELLER
3 - STATOR
4 - INPUT SHAFT
5 - STATOR SHAFT
6 - TURBINE DAMPER

TURBINE

As the fluid that was put into motion by the impeller blades strikes the blades of the turbine, some of the energy and rotational force is transferred into the turbine and the input shaft. This causes both of them (turbine and input shaft) to rotate in a clockwise direction following the impeller. As the fluid is leaving the trailing edges of the turbine's blades it continues in a "hindering" direction back toward the impeller. If the fluid is not redirected before it strikes the impeller, it will strike the impeller in such a direction that it would tend to slow it down.

STATOR

Torque multiplication is achieved by locking the stator's over-running clutch to its shaft. Under stall conditions (the turbine is stationary), the oil leaving the turbine blades strikes the face of the stator blades and tries to rotate them in a counterclockwise direction. When this happens the over-running clutch of the stator locks and holds the stator from rotating. With the stator locked, the oil strikes the stator blades and is redirected into a "helping" direction before it enters the impeller. This circulation of oil from impeller to turbine, turbine to stator, and stator to impeller, can produce a maximum torque multiplication of about 2.0:1. As the turbine begins to match the speed of the impeller, the fluid that was hitting the stator in such as way as to cause it to lock-up is no longer doing so. In this condition of operation, the stator begins to free wheel and the converter acts as a fluid coupling.

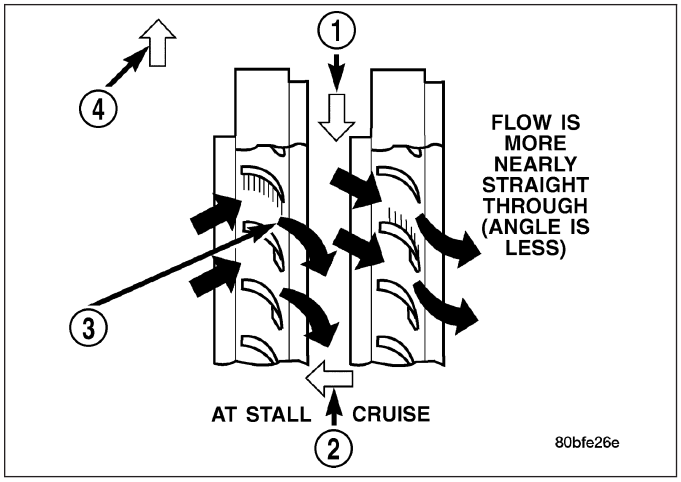

1 - DIRECTION STATOR WILL FREE WHEEL DUE TO OIL PUSHING ON BACKSIDE OF VANES
2 - FRONT OF ENGINE
3 - INCREASED ANGLE AS OIL STRIKES VANES
4 - DIRECTION STATOR IS LOCKED UP DUE TO OIL PUSHING AGAINST STATOR VANES

TORQUE CONVERTER CLUTCH (TCC)

In a standard torque converter, the impeller (2) and turbine (1) are rotating at about the same speed and the stator (3) is freewheeling, providing no torque multiplication. By applying the turbine's piston and friction material (9), a total converter engagement can be obtained. The result of this engagement is a direct 1:1 mechanical link between the engine and the transmission.

The clutch can be engaged in second, third, fourth, and fifth gear ranges.

The TCM controls the torque converter by way of internal logic software. The programming of the software provides the TCM with control over the torque converter solenoid. There are four output logic states that can be applied as follows:

- No EMCC
- Partial EMCC
- Full EMCC
- Gradual-to-no EMCC

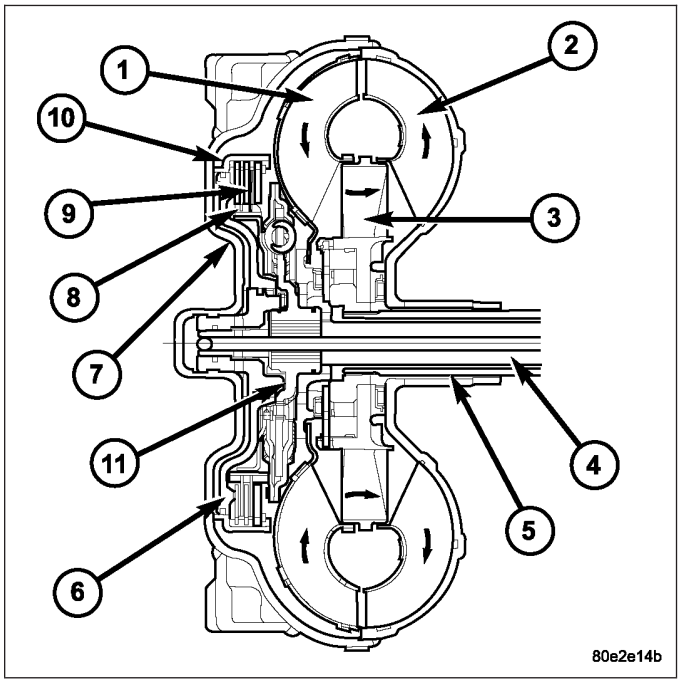

1 - TURBINE
2 - IMPELLER
3 - STATOR
4 - INPUT SHAFT
5 - STATOR SHAFT
6 - PISTON
7 - COVER SHELL
8 - INTERNALLY TOOTHED DISC CARRIER
9 - CLUTCH PLATE SET
10 - EXTERNALLY TOOTHED DISC CARRIER
11 - TURBINE DAMPER

NO EMCC

Under No EMCC conditions, the TCC Solenoid is OFF. There are several conditions that can result in NO EMCC operations. No EMCC can be initiated due to a fault in the transmission or because the TCM does not see the need for EMCC under current driving conditions.

PARTIAL EMCC

Partial EMCC operation modulates the TCC Solenoid (duty cycle) to obtain partial torque converter clutch application. Partial EMCC operation is maintained until Full EMCC is called for and actuated. During Partial EMCC some slip does occur. Partial EMCC will usually occur at low speeds, low load and light throttle situations.

FULL EMCC

During Full EMCC operation, the TCM increases the TCC Solenoid duty cycle to full ON after Partial EMCC control brings the engine speed within the desired slip range of transmission input speed relative to engine rpm.

GRADUAL-TO-NO EMCC

This operation is to soften the change from Full or Partial EMCC to No EMCC. This is done at mid-throttle by decreasing the TCC Solenoid duty cycle.

REMOVAL

1. Remove transmission and torque converter from vehicle. (Refer to 21 - TRANSMISSION/AUTOMATIC - NAG1 - REMOVAL)
2. Place a suitable drain pan under the converter housing end of the transmission.

CAUTION: Verify that transmission is secure on the lifting device or work surface, the center of gravity of the transmission will shift when the torque converter is removed creating an unstable condition. The torque converter is a heavy unit. Use caution when separating the torque converter from the transmission.

3. Pull the torque converter forward until the center hub clears the oil pump seal.
4. Separate the torque converter from the transmission.

INSTALLATION

Check converter hub and drive flats for sharp edges, burrs, scratches, or nicks. Polish the hub and flats with 320/400 grit paper or crocus cloth if necessary. The hub must be smooth to avoid damaging the pump seal at installation.

1. Lubricate oil pump seal lip with transmission fluid.
2. Place torque converter in position on transmission.

CAUTION: Do not damage oil pump seal or converter hub while inserting torque converter into the front of the transmission.

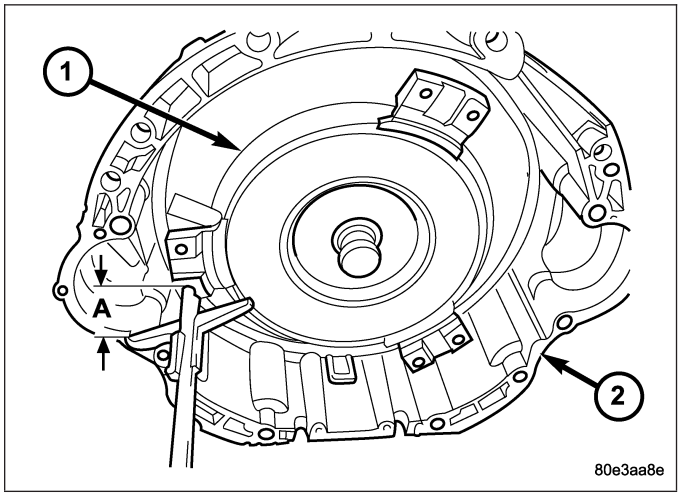

3. Align torque converter to oil pump seal opening.
4. Insert torque converter hub into oil pump.
5. While pushing torque converter inward, rotate converter until converter is fully seated in the oil pump gears.
6. Check converter seating with a scale and straightedge. Surface of converter lugs should be at least 19 mm (3/4 in.) to rear of straightedge when converter is fully seated.
7. If necessary, temporarily secure converter with C-clamp attached to the converter housing.
8. Install the transmission in the vehicle.
9. Fill the transmission with the recommended fluid.

SEAL-TORQUE CONVERTER HUB

REMOVAL

1. Remove the torque converter (Refer to 21 - TRANSMISSION/AUTOMATIC - NAG1/TORQUE CONVERTER - REMOVAL).
2. Remove the torque converter hub seal with suitable screw and slide hammer.

INSTALLATION

1. Position the torque converter hub seal (1) over the input shaft and against the transmission oil pump.

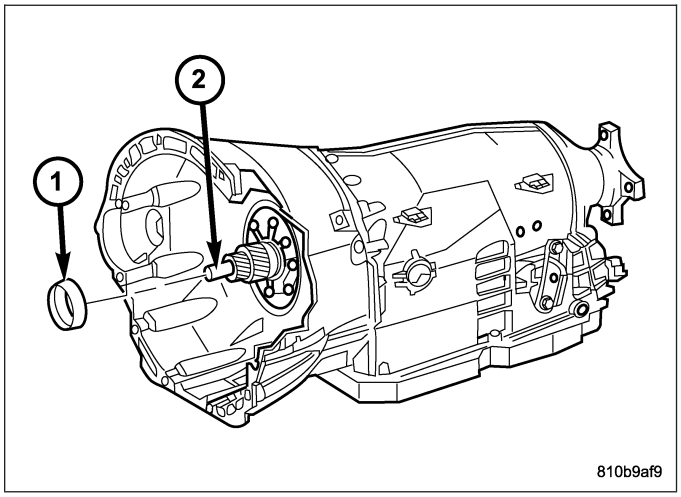

2. Using Seal Installer 8902A (2), install a new torque converter hub seal.
3. Install the torque converter (Refer to 21 - TRANSMISSION/AUTOMATIC - NAG1/TORQUE CONVERTER - INSTALLATION).

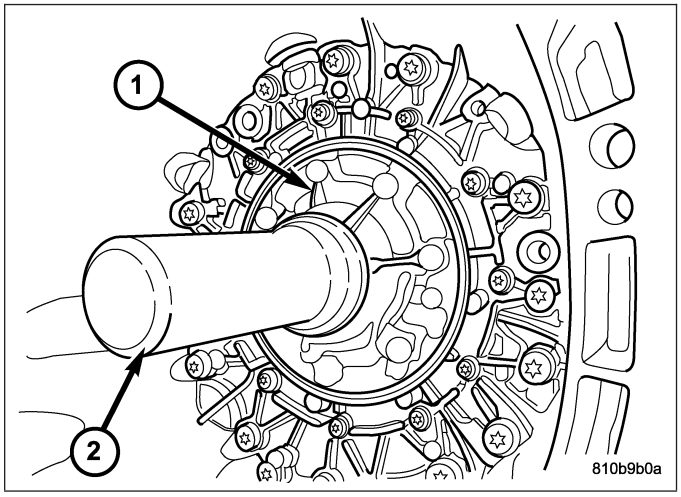

AUTOMATIC TRANSMISSION 42RLE - ELECTRICAL DIAGNOSTICS

TABLE OF CONTENTS

page

AUTOMATIC TRANSMISSION 42RLE - ELECTRICAL DIAGNOSTICS
DIAGNOSIS AND TESTING
P0122-TPS/APP CIRCUIT LOW 464
P0123-TPS/APP CIRCUIT HIGH 466
P0124-TPS/APP INTERMITTENT 468
P0218-HIGH TEMPERATURE OPERATION ACTIVATED 470
P0562-BATTERY VOLTAGE LOW 472
P0602-CONTROL MODULE PROGRAMMING ERROR/NOT PROGRAMMED 477
P0604-INTERNAL CONTROL MODULE RAM . 478
P0605-INTERNAL CONTROL MODULE ROM . 479
P0613-INTERNAL TRANSMISSION PROCESSOR 480
P0706-TRANSMISSION RANGE SENSOR RATIONALITY 481
P0711-TRANSMISSION TEMPERATURE SENSOR PERFORMANCE. 492
P0712-TRANSMISSION TEMPERATURE SENSOR LOW. 495
P0713-TRANSMISSION TEMPERATURE SENSOR HIGH 499
P0714-TRANSMISSION TEMPERATURE SENSOR INTERMITTENT 504
P0715-INPUT SPEED SENSOR 1 CIRCUIT . . . 507
P0720-OUTPUT SPEED SENSOR CIRCUIT . . 513
P0725-ENGINE SPEED SENSOR CIRCUIT . . . 519
P0731-GEAR RATIO ERROR IN 1ST 521
P0732-GEAR RATIO ERROR IN 2ND 523
P0733-GEAR RATIO ERROR IN 3RD 525
P0734-GEAR RATIO ERROR IN 4TH 527
P0736-GEAR RATIO ERROR IN REVERSE . . . 529
P0740-TCC OUT OF RANGE 531
P0750-LR SOLENOID CIRCUIT 533
P0755-2/4 SOLENOID CIRCUIT 538
P0760-OD SOLENOID CIRCUIT 543
P0765-UD SOLENOID CIRCUIT 548
P0841-LR PRESSURE SWITCH RATIONALITY 553
P0845-2/4 HYDRAULIC PRESSURE TEST . . . 558
P0846-2/4 PRESSURE SWITCH RATIONALITY 564

page

P0868-LINE PRESSURE LOW 569
P0869-LINE PRESSURE HIGH 575
P0870-OD HYDRAULIC PRESSURE TEST . . . 581
P0871-OD PRESSURE SWITCH RATIONALITY 587
P0882-TCM POWER INPUT LOW 592
P0891-TRANSMISSION RELAY ALWAYS ON . 598
P0884-POWER UP AT SPEED 602
P0890-SWITCHED BATTERY 603
P0897-TRANSMISSION FLUID DETERIORATED. 607
P0932-LINE PRESSURE SENSOR CIRCUIT . . 608
P0934-LINE PRESSURE SENSOR CIRCUIT LOW. 611
P0935-LINE PRESSURE SENSOR CIRCUIT HIGH 616
P0944-LOSS OF HYDRAULIC PUMP PRIME . 621
P0992-2/4/OD HYDRAULIC PRESSURE TEST 623
P1684-BATTERY WAS DISCONNECTED 624
P1713-RESTRICTED MANUAL VALVE IN T2 RANGE 626
P1745-TRANSMISSION LINE PRESSURE TOO HIGH FOR TOO LONG 627
P1775-SOLENOID SWITCH VALVE LATCHED IN TCC POSITION 628
P1776-SOLENOID SWITCH VALVE LATCHED IN LR POSITION 633
P1790-FAULT IMMEDIATELY AFTER SHIFT . . 638
P1794-SPEED SENSOR GROUND ERROR . . 639
P1797-MANUAL SHIFT OVERHEAT 642
U0002 CAN C BUS OFF PERFORMANCE 643
U0100 LOST COMMUNICATION WITH ECM/PCM. 645
U0121 LOST COMMUNICATION WITH ABS . . 647
U0141 LOST COMMUNICATION WITH FCM . . 649
STANDARD PROCEDURE
42RLE - PRE-DIAGNOSTIC TROUBLESHOOTING PROCEDURE. 651
42RLE TRANSMISSION VERIFICATION TEST - VER 1 652

AUTOMATIC TRANSMISSION 42RLE - ELECTRICAL DIAGNOSTICS

DIAGNOSIS AND TESTING

P0122-TPS/APP CIRCUIT LOW

For a complete wiring diagram **Refer to Section 8W**.

- **When Monitored:**
  Continuously with the ignition on and engine running.
- **Set Condition:**
  This DTC will set if the monitored TPS voltage drops below .078 volts for the period of 0.48 seconds.

Possible Causes
RELATED TPS ENGINE DTCS PRESENT
POWERTRAIN CONTROL MODULE

Always perform the 42RLE Pre-Diagnostic Troubleshooting Procedure before proceeding. (Refer to 21 - TRANSMISSION/TRANSAXLE/AUTOMATIC - 42RLE - STANDARD PROCEDURE)

Theory of Operation

The powertrain controller receives the throttle position signal from the Throttle Position Sensor (TPS) / Accelerator Pedal Position (APP). The controller provides the TPS/APP with a 5 volt pull up and a sensor ground. The signal is checked for being out of range as well as for intermittent operation (excessive signal changes). The engine controller transmits the throttle value onto the Bus. Most engine controllers will calculate the throttle value if the throttle signal is lost. If an error is detected by the transmission controller and the throttle value is available on the Bus, the Bus value will be used, normal operation will continue, and a TPS/APP code will be set. If an error is detected and the throttle value is not available on the Bus, normal operation will be discontinued, a TPS/APP DTC will be set, and the MIL will be turned on after 5 minutes of calculated operation.

Diagnostic Test

1. DETERMINING IF RELATED ENGINE TPS DTCS ARE PRESENT

With the scan tool, check Engine DTCs, including pending DTCs and one trip failures.

Are there any Engine TPS/APP DTCs present?

Yes >> Refer to the Driveability category and perform the appropriate diagnostic procedure.
Perform 42RLE TRANSMISSION VERIFICATION TEST - VER 1. (Refer to 21 - TRANSMISSION/TRANSAXLE/AUTOMATIC - 42RLE - STANDARD PROCEDURE)

No >> Go To 2

2. CHECK TO SEE IF DTC IS CURRENT

With the scan tool, record the DTC EVENT DATA to help identify the conditions in which the DTC was set.
With the scan tool, erase Transmission DTCs.

NOTE: To erase DTC EVENT DATA information, a BATTERY DISCONNECT must be performed. Performing a BATTERY DISCONNECT will reset all learned Transmission values to controller defaults which may lead to erratic shift schedules.
Drive the vehicle and try to duplicate the conditions in which the DTC was reported by the DTC EVENT DATA.
With the scan tool, read Transmission DTCs.

Does this DTC reset?

Yes >> Using the schematics as a guide, check the Powertrain Control Module (PCM) terminals for corrosion, damage, or terminal push out. Pay particular attention to all power and ground circuits. If no problems are found, replace the PCM per the Service Information. With the scan tool PERFORM QUICK LEARN, then program Pinion Factor in the Front Control Module. (Refer to 8 - ELECTRICAL/ELECTRONIC CONTROL MODULES/POWERTRAIN CONTROL MODULE - REMOVAL)
Perform 42RLE TRANSMISSION VERIFICATION TEST - VER 1. (Refer to 21 - TRANSMISSION/TRANSAXLE/AUTOMATIC - 42RLE - STANDARD PROCEDURE)

No >> Go To 3

3. INTERMITTENT WIRING AND CONNECTORS

The conditions necessary to set this DTC are not present at this time.
Using the schematics as a guide, inspect the wiring and connectors specific to this circuit.
Wiggle the wires while checking for shorted and open circuits.
Pay particular attention to the TPS/APP signal and sensor ground circuits.
With the scan tool, check the DTC EVENT DATA to help identify the conditions in which the DTC was set.

Were there any problems found?

Yes >> Repair as necessary.
Perform 42RLE TRANSMISSION VERIFICATION TEST - VER 1. (Refer to 21 - TRANSMISSION/ TRANSAXLE/AUTOMATIC - 42RLE - STANDARD PROCEDURE)

No >> Test Complete.

P0123-TPS/APP CIRCUIT HIGH

For a complete wiring diagram **Refer to Section 8W**

- **When Monitored:**
  Continuously with the ignition on and engine running.
- **Set Condition:**
  This DTC will set if the monitored TPS voltage rises above 4.94 volts for the period of 0.48 seconds.

Possible Causes
RELATED TPS ENGINE DTCS PRESENT
POWERTRAIN CONTROL MODULE

Always perform the 42RLE Pre-Diagnostic Troubleshooting Procedure before proceeding. (Refer to 21 - TRANSMISSION/TRANSAXLE/AUTOMATIC - 42RLE - STANDARD PROCEDURE)

Theory of Operation

The powertrain controller receives the throttle position signal from the Throttle Position Sensor (TPS) / Accelerator Pedal Position (APP). The controller provides the TPS with a 5 volt pull up and a sensor ground. The signal is checked for being out of range as well as for intermittent operation (excessive signal changes). The engine controller transmits the throttle value onto the Bus. Most engine controllers will calculate the throttle value if the throttle signal is lost. If an error is detected by the transmission controller and the throttle value is available on the Bus, the Bus value will be used, normal operation will continue, and a TPS/APP code will be set. If an error is detected and the throttle value is not available on the Bus, normal operation will be discontinued, a TPS/APP DTC will be set, and the MIL will be turned on after 5 minutes of calculated operation.

Diagnostic Test

1. DETERMINING IF RELATED ENGINE TPS DTCS ARE PRESENT

With the scan tool, check Engine DTCs, including pending DTCs and one trip failures.

Are there any Engine TPS/APP DTCs present?

Yes >> Refer to the Driveability category and perform the appropriate diagnostic procedure.
Perform 42RLE TRANSMISSION VERIFICATION TEST - VER 1. (Refer to 21 - TRANSMISSION/ TRANSAXLE/AUTOMATIC - 42RLE - STANDARD PROCEDURE)

No >> Go To 2

2. CHECK TO SEE IF DTC IS CURRENT

With the scan tool, record the DTC EVENT DATA to help identify the conditions in which the DTC was set.
With the scan tool, erase Transmission DTCs.

NOTE: To erase EVENT DATA information, a BATTERY DISCONNECT must be performed. Performing a BATTERY DISCONNECT will reset all learned Transmission values to controller defaults which may lead to erratic shift schedules.
Drive the vehicle and try to duplicate the conditions in which the DTC was reported by the DTC EVENT DATA.
With the scan tool, read Transmission DTCs.

Does this DTC reset?

Yes >> Perform 42RLE TRANSMISSION VERIFICATION TEST - VER 1. (Refer to 21 - TRANSMISSION/ TRANSAXLE/AUTOMATIC - 42RLE - STANDARD PROCEDURE)

No >> Go To 3

3. INTERMITTENT WIRING AND CONNECTORS

The conditions necessary to set this DTC are not present at this time.
Using the schematics as a guide, inspect the wiring and connectors specific to this circuit.
Wiggle the wires while checking for shorted and open circuits.
Pay particular attention to the TPS/APP signal and sensor ground circuits.
With the scan tool, check the DTC EVENT DATA to help identify the conditions in which the DTC was set.

Were there any problems found?

Yes >> Perform 42RLE TRANSMISSION VERIFICATION TEST - VER 1. (Refer to 21 - TRANSMISSION/ TRANSAXLE/AUTOMATIC - 42RLE - STANDARD PROCEDURE)

No >> Test Complete.

P0124-TPS/APP INTERMITTENT

For a complete wiring diagram **Refer to Section 8W**.

- **When Monitored:**
  Continuously with the ignition on and engine running.
- **Set Condition:**
  This DTC will set if the monitored TPS throttle angle between the angles of 6° and 120° and the degree change is greater than 5° within a period of less than 7.0 ms.

Possible Causes
RELATED TPS ENGINE DTCS PRESENT
THROTTLE POSITION SENSOR
POWERTRAIN CONTROL MODULE

Always perform the 42RLE Pre-Diagnostic Troubleshooting Procedure before proceeding. (Refer to 21 - TRANSMISSION/TRANSAXLE/AUTOMATIC - 42RLE - STANDARD PROCEDURE)

Theory of Operation

The powertrain controller receives the throttle position signal from the Throttle Position Sensor (TPS) / Accelerator Pedal Position (APP). The controller provides the TPS with a 5 volt pull up and a sensor ground. The signal is checked for being out of range as well as for intermittent operation (excessive signal changes). The engine controller transmits the throttle value onto the Bus. Most engine controllers will calculate the throttle value if the throttle signal is lost. If an error is detected by the transmission controller and the throttle value is available on the Bus, the Bus value will be used, normal operation will continue, and a TPS/APP code will be set. If an error is detected and the throttle value is not available on the Bus, normal operation will be discontinued, a TPS/APP DTC will be set, and the MIL will be turned on after 5 minutes of calculated operation.

Diagnostic Test

1. DETERMINING IF RELATED ENGINE TPS/APP DTCS ARE PRESENT

With the scan tool, check Engine DTCs, including pending DTCs and one trip failures.

Are there any Engine TPS/APP DTCs present?

Yes >> Refer to the Driveability category and perform the appropriate diagnostic procedure.
Perform 42RLE TRANSMISSION VERIFICATION TEST - VER 1. (Refer to 21 - TRANSMISSION/ TRANSAXLE/AUTOMATIC - 42RLE - STANDARD PROCEDURE)

No >> Go To 2

2. CHECK TO SEE IF DTC IS CURRENT

With the scan tool, record the DTC EVENT DATA to help identify the conditions in which the DTC was set.
With the scan tool, erase Transmission DTCs.

NOTE: To erase EVENT DATA information, a BATTERY DISCONNECT must be performed. Performing a BATTERY DISCONNECT will reset all learned Transmission values to controller defaults which may lead to erratic shift schedules.
Drive the vehicle and try to duplicate the conditions in which the DTC was reported by the EVENT DATA.
With the scan tool, read Transmission DTCs.

Does this DTC reset?

Yes >> Using the schematics as a guide, check the Powertrain Control Module (PCM) terminals for corrosion, damage, or terminal push out. Pay particular attention to all power and ground circuits. If no problems are found, replace the PCM per the Service Information. With the scan tool PERFORM QUICK LEARN,

then program Pinion Factor in the Front Control Module. (Refer to 8 - ELECTRICAL/ELECTRONIC CONTROL MODULES/POWERTRAIN CONTROL MODULE - REMOVAL)

Perform 42RLE TRANSMISSION VERIFICATION TEST - VER 1. (Refer to 21 - TRANSMISSION/ TRANSAXLE/AUTOMATIC - 42RLE - STANDARD PROCEDURE)

No >> Go To 3

3. INTERMITTENT WIRING AND CONNECTORS

The conditions necessary to set this DTC are not present at this time.

Using the schematics as a guide, inspect the wiring and connectors specific to this circuit.

Wiggle the wires while checking for shorted and open circuits.

Pay particular attention to the TPS/APP signal and sensor ground circuits.

With the scan tool, check the DTC EVENT DATA to help identify the conditions in which the DTC was set.

Were there any problems found?

Yes >> Repair as necessary.

Perform 42RLE TRANSMISSION VERIFICATION TEST - VER 1. (Refer to 21 - TRANSMISSION/ TRANSAXLE/AUTOMATIC - 42RLE - STANDARD PROCEDURE)

No >> Test Complete.

P0218-HIGH TEMPERATURE OPERATION ACTIVATED

For a complete wiring diagram **Refer to Section 8W**.

- **When Monitored:**
  Whenever the engine is running.
- **Set Condition:**
  Immediately when a Overheat shift schedule is activated when the Transmission Oil Temperature reaches 155° C or 240° F.

Possible Causes
ENGINE COOLING SYSTEM OPERATION
TRANSMISSION OIL COOLER PLUGGED
HIGH TEMPERATURE OPERATIONS ACTIVATED

Always perform the 42RLE Pre-Diagnostic Troubleshooting Procedure before proceeding. (Refer to 21 - TRANSMISSION/TRANSAXLE/AUTOMATIC - 42RLE - STANDARD PROCEDURE)

Theory of Operation

If the transmission oil temperature rises above 115° C (240° F), the overheat shift schedule is activated refer to Transmission Operation as a function of Transmission Oil Temperature and the code is set. The DTC is an informational code only and is being set to aid the technician in determining root cause of a customer driveability issue. The code is also intended to alert the technician to determine if a cooling system malfunction has occurred or if an additional transmission air to oil cooler should be added to the vehicle if the customer regularly drives in a manner that overheats the transmission. Extended operation above 115° C (240° F) will reduce the durability of the transmission and should be avoided. Correcting the cooling system malfunction or installing an additional transmission oil cooler will improve transmission durability especially for customers who operate in city/construction stop and go traffic, tow trailers regularly, drive aggressively in low gear or drive regularly in mountainous areas.

Diagnostic Test

1. CHECK ENGINE COOLING SYSTEM

Perform Engine Cooling System diagnostics per the Service Information.

Is the Engine Cooling System functioning properly?

Yes >> Go To 2

No >> Repair the cause of the engine overheating. Refer to the Service Information for the related diagnostic or repair procedures.
Perform 42RLE TRANSMISSION VERIFICATION TEST - VER 1. (Refer to 21 - TRANSMISSION/TRANSAXLE/AUTOMATIC - 42RLE - STANDARD PROCEDURE)

2. TRANSMISSION OIL COOLER RESTRICTED

Check the Transmission Oil Cooler Flow in accordance with the Service Information.

Is the transmission oil cooler restricted or plugged?

Yes >> Go To 3

No >> Repair or replace the Transmission Oil Cooler per the Service Information. Repair the cause of the plugged Transmission Oil Cooler as necessary.
Perform 42RLE TRANSMISSION VERIFICATION TEST - VER 1. (Refer to 21 - TRANSMISSION/TRANSAXLE/AUTOMATIC - 42RLE - STANDARD PROCEDURE)

3. HIGH TEMPERATURE OPERATION

This DTC is an informational DTC designed to aid the Technician in diagnosing shift quality complaints.

This DTC indicates that the transmission has been operating in the ″Overheat″ shift schedule which may generate a customer complaint.

The customer driving patterns may indicate the need for an additional transmission oil cooler.

With the scan tool, check the DTC EVENT DATA to help identify the conditions in which the DTC was set.

View repair options.

Repair

Repair the cause of transmission overheating per the Service Information.

Perform 42RLE TRANSMISSION VERIFICATION TEST - VER 1. (Refer to 21 - TRANSMISSION/ TRANSAXLE/AUTOMATIC - 42RLE - STANDARD PROCEDURE)

P0562-BATTERY VOLTAGE LOW

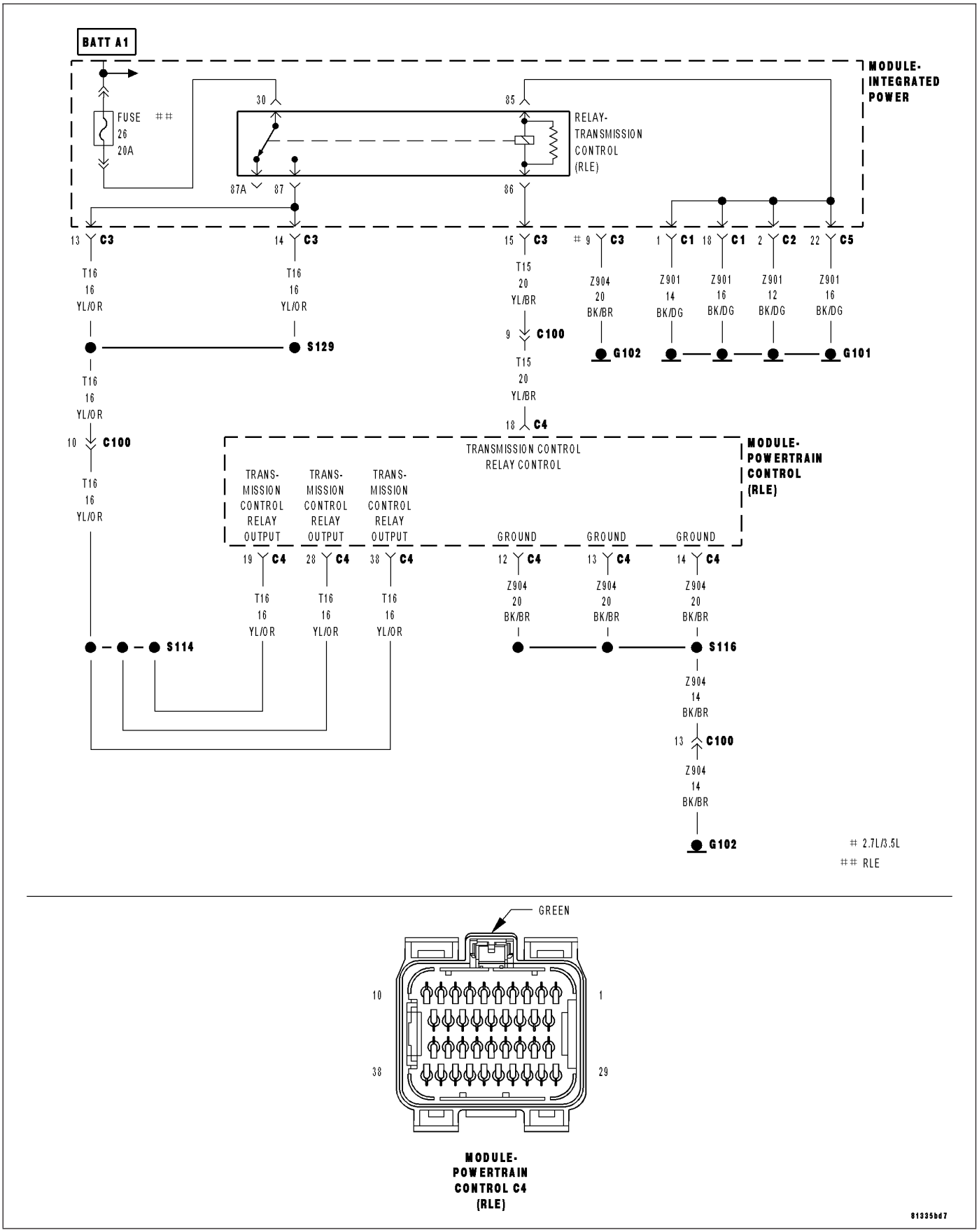

For the Transmission circuit diagram (Refer to 21 - TRANSMISSION/TRANSAXLE/AUTOMATIC - 42RLE - SCHEMATICS AND DIAGRAMS)

For a complete wiring diagram **Refer to Section 8W**.

- **When Monitored:**
  With the engine running and the PCM has closed the Transmission Control Relay.
- **Set Condition:**
  If the battery voltage of the Transmission Control Relay Output Sense circuit(s) to the PCM is less than 10.0 volts for the period of 15 seconds. Note: P0562 generally indicates a gradually falling battery voltage or a resistive connection(s) to the PCM. The DTC will also set if the battery voltage sensed at the PCM is less than 6.5v for 200ms or where Transmission Control Relay Output circuits is less than 7.2v for 200ms.

Possible Causes
RELATED CHARGING SYSTEM DTC'S
(Z904) GROUND CIRCUIT OPEN OR HIGH RESISTANCE
(INTERNAL) FUSED B+ CIRCUIT TO PCM HIGH RESISTANCE
(T16) TRANSMISSION CONTROL RELAY OUTPUT TO TCM OPEN OR HIGH RESISTANCE
TRANSMISSION CONTROL RELAY
POWERTRAIN CONTROL MODULE

Always perform the 42RLE Pre-Diagnostic Troubleshooting Procedure before proceeding. (Refer to 21 - TRANSMISSION/TRANSAXLE/AUTOMATIC - 42RLE - STANDARD PROCEDURE)

Theory of Operation

Transmission damage may occur if there is insufficient supply voltage to properly control the solenoids. To prevent this possibility, the battery voltage is monitored and the system is placed in logical limp-in if the battery voltage drops below the limit.

Diagnostic Test

1. RELATED CHARGING SYSTEM DTC'S

With the scan tool, read the Engine DTC's.

Are there any Charging System related DTCs also present?

Yes >> Refer to the Charging System category and repair any PCM Charging System DTCs, before proceeding. NOTE: After repairing the PCM Charging System DTCs, perform the Transmission Verification test to verify the transmission was not damaged.

Perform 42RLE TRANSMISSION VERIFICATION TEST - VER 1. (Refer to 21 - TRANSMISSION/TRANSAXLE/AUTOMATIC - 42RLE - STANDARD PROCEDURE)

No >> Go To 2

2. CONDITION P0562 PRESENT

NOTE: Generator, battery, and charging system must be fully functional before performing this test.
With the scan tool, read Transmission DTC's.

With the scan tool, Check the STARTS SINCE SET counter for P0562.

NOTE: This counter only applies to the last DTC set.

Is the STARTS SINCE SET counter set at 0?

Yes >> Go To 3

No >> Go To 7

3. CHECKING (Z904) GROUND CIRCUIT

Turn the ignition off to the lock position.

Disconnect the PCM C4 harness connector.

NOTE: Check connectors - Clean/repair as necessary.

CAUTION: Do not probe the PCM harness connectors. Probing the PCM harness connectors will damage the PCM terminals resulting in poor terminal to pin connection. Install Miller Tool #8815 to perform diagnosis.

Using a 12-volt test light connected to 12-volts, check the (Z904) Ground circuits in the appropriate terminals of Miller tool #8815.

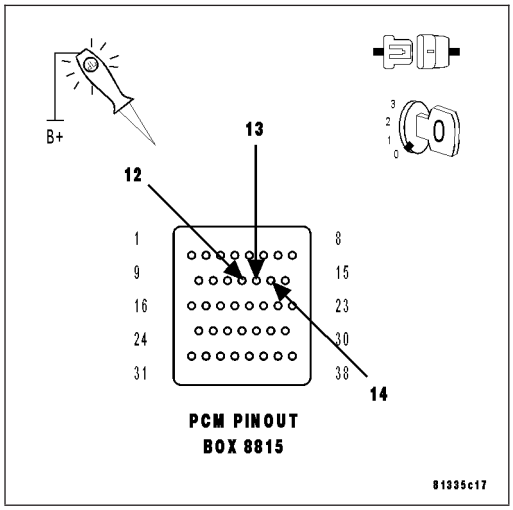

NOTE: The test light must illuminate brightly. Compare the brightness to that of a direct connection to the battery.

Does the test light illuminate brightly for all the Ground circuits?

Yes >> Go To 4

No >> Repair the Ground circuit and/or circuits for an open or high resistance.

Perform 42RLE TRANSMISSION VERIFICATION TEST - VER 1. (Refer to 21 - TRANSMISSION/TRANSAXLE/AUTOMATIC - 42RLE - STANDARD PROCEDURE)

4. CHECKING (INTERNAL) FUSED B(+) CIRCUIT

Turn the ignition off to the lock position.

Remove the Transmission Control Relay.

Ignition on, engine not running.

Using a 12-volt test light connected to ground, check the (internal) Fused B(+) circuit in the Transmission Control Relay connector.

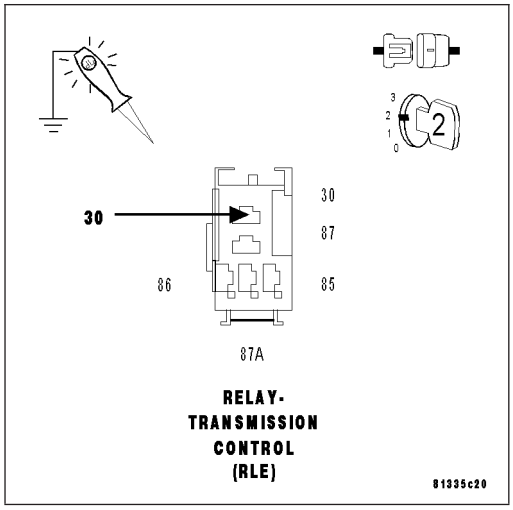

NOTE: The Test light must illuminate brightly. Compare the brightness to that of a direct connection to the battery.

Does the test light illuminate brightly?

Yes >> Go To 5

No >> Repair the Fused B(+) circuit for an open or high resistance.

Perform 42RLE TRANSMISSION VERIFICATION TEST - VER 1. (Refer to 21 - TRANSMISSION/TRANSAXLE/AUTOMATIC - 42RLE - STANDARD PROCEDURE)

5. CHECKING THE (T16) TRANSMISSION CONTROL RELAY OUTPUT CIRCUIT

Turn the ignition off to the lock position.

Disconnect the PCM C4 harness connector.

Remove the Transmission Control Relay.

NOTE: Check connectors - Clean/repair as necessary.

Connect a jumper wire between (INTERNAL) Fused B(+) circuit and the (T16) Transmission Control Relay Output circuit.

Ignition on, engine not running.

Using a 12-volt test light connected to ground, check all (T16) Transmission Control Relay Output circuits in the appropriate terminals of Miller tool #8815.

NOTE: The test light must illuminate brightly. Compare the brightness to that of a direct connection to the battery.

Does the test light illuminate brightly?

Yes >> Go To 6

No >> Repair the (T16) Transmission Control Relay Output circuit(s) for an open or high resistance.

Perform 42RLE TRANSMISSION VERIFICATION TEST - VER 1. (Refer to 21 - TRANSMISSION/TRANSAXLE/AUTOMATIC - 42RLE - STANDARD PROCEDURE)

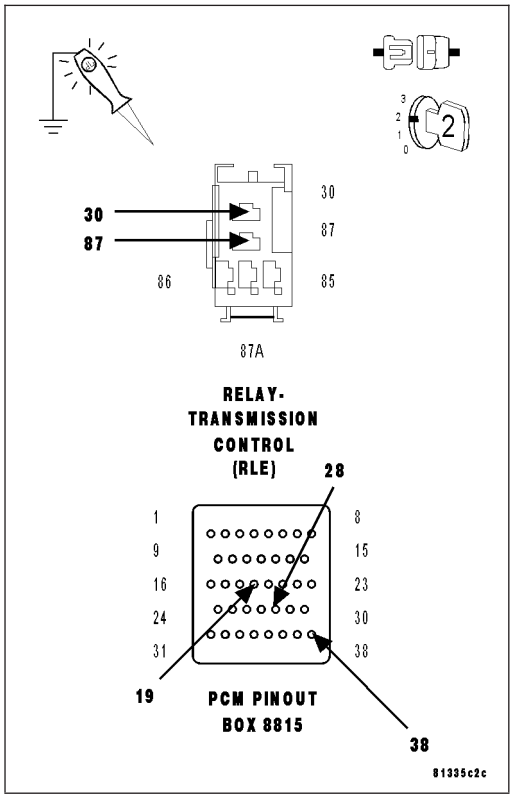

6. TRANSMISSION CONTROL RELAY

Turn the ignition off to the lock position.

Install a substitute Relay in place of the Transmission Control Relay.

Start the engine.

Using a voltmeter, measure the battery voltage.

With the scan tool, monitor the Transmission Switched Battery Voltage.

Compare the scan tool Transmission Switched Battery voltage to the actual battery voltage.

Is the scan tool voltage within 2.0 volts of the battery voltage?

Yes >> Replace the Transmission Control Relay.

Perform 42RLE TRANSMISSION VERIFICATION TEST - VER 1. (Refer to 21 - TRANSMISSION/TRANSAXLE/AUTOMATIC - 42RLE - STANDARD PROCEDURE)

No >> Using the schematics as a guide, check the Powertrain Control Module (PCM) terminals for corrosion, damage, or terminal push out. Pay particular attention to all power and ground circuits. If no problems are found, replace the PCM per the Service Information. With the scan tool PERFORM QUICK LEARN, then program Pinion Factor in the Front Control Module. (Refer to 8 - ELECTRICAL/ELECTRONIC CONTROL MODULES/POWERTRAIN CONTROL MODULE - REMOVAL)

Perform 42RLE TRANSMISSION VERIFICATION TEST - VER 1. (Refer to 21 - TRANSMISSION/TRANSAXLE/AUTOMATIC - 42RLE - STANDARD PROCEDURE)

7. INTERMITTENT WIRING AND CONNECTORS

The conditions necessary to set the DTC are not present at this time.
Using the schematics as a guide, inspect the wiring and connectors specific to this circuit.
Wiggle the wiring and connectors while checking for shorts and open circuits.
With the scan tool, check the DTC EVENT DATA to help identify the conditions in which the DTC was set.

Were there any problems found?

Yes >> Repair as necessary.
Perform 42RLE TRANSMISSION VERIFICATION TEST - VER 1. (Refer to 21 - TRANSMISSION/ TRANSAXLE/AUTOMATIC - 42RLE - STANDARD PROCEDURE)

No >> Test Complete.

P0602-CONTROL MODULE PROGRAMMING ERROR/NOT PROGRAMMED

For a complete wiring diagram **Refer to Section 8W**.

- **When Monitored:**
  Check for generic software is made at power-up.
- **Set Condition:**
  If generic software is found , the MIL will light immediately. This DTC is designed to signal the technician that the controller still has generic software installed.

Possible Causes
PCM - PROGRAMMING ERROR

Always perform the 42RLE Pre-Diagnostic Troubleshooting Procedure before proceeding. (Refer to 21 - TRANSMISSION/TRANSAXLE/AUTOMATIC - 42RLE - STANDARD PROCEDURE)

Theory of Operation

The controller is programmed during manufacturing with generic software to facilitate testing. This software does not have the proper calibrations to control a transmission in a vehicle. The check for generic software is made at power-up. If generic software is found , the MIL will light immediately and the MIL will stay on even if the fault is cleared, until the proper software is installed. Note: Transmission will be placed in limp-in mode.

Diagnostic Test

1. CONTROL MODULE PROGRAMMING ERROR

NOTE: Controller is programmed with generic software and will not allow the correct vehicle Powertrain management.

Record the controller part number.

Update the controller with the correct software in accordance with the Service Information.

Verify that the controller updated successfully.

Test Complete

Perform 42RLE TRANSMISSION VERIFICATION TEST - VER 1. (Refer to 21 - TRANSMISSION/TRANSAXLE/AUTOMATIC - 42RLE - STANDARD PROCEDURE)

P0604-INTERNAL CONTROL MODULE RAM

For a complete wiring diagram **Refer to Section 8W**.

- **When Monitored:**
  One time after the ignition key is turned to the run position.
- **Set Condition:**
  The read value does not match the written value in any RAM location.

Possible Causes
PCM - INTERNAL ERROR

Always perform the Pre-Diagnostic Troubleshooting procedure before proceeding. (Refer to 21 - TRANSMISSION/TRANSAXLE/AUTOMATIC - 42RLE - STANDARD PROCEDURE)

Theory of Operation

After the controller is reset, the microprocessor checks the integrity of each RAM location by writing to it and reading back from it. The read value should be the same as the written value. MIL on after 10 seconds of vehicle operation and transmission will be placed in limp-in.

Diagnostic Test

1. PCM - INTERNAL ERROR

View repair.

Repair

Using the schematics as a guide, check the Powertrain Control Module (PCM) terminals for corrosion, damage, or terminal push out. Pay particular attention to all power and ground circuits. If no problems are found, replace the PCM per the Service Information. With the scan tool PERFORM QUICK LEARN, then program Pinion Factor in the Front Control Module. (Refer to 8 - ELECTRICAL/ELECTRONIC CONTROL MODULES/POWERTRAIN CONTROL MODULE - REMOVAL)

Perform 42RLE TRANSMISSION VERIFICATION TEST - VER 1. (Refer to 21 - TRANSMISSION/TRANSAXLE/AUTOMATIC - 42RLE - STANDARD PROCEDURE)

P0605-INTERNAL CONTROL MODULE ROM

For a complete wiring diagram **Refer to Section 8W**.

- **When Monitored:**
  One time after the ignition key is turned to the run position.
- **Set Condition:**
  If the ROM checksum does not match a known constant.

Possible Causes
PCM - INTERNAL ERROR

Always perform the 42RLE Pre-Diagnostic Troubleshooting Procedure before proceeding. (Refer to 21 - TRANSMISSION/TRANSAXLE/AUTOMATIC - 42RLE - STANDARD PROCEDURE)

Theory of Operation

After the controller is reset, the microprocessor checks the integrity of the program memory (ROM). A checksum is calculated by adding all used bytes in the program memory. The sum should be the same as a known constant stored in memory. MIL on after 10 seconds of vehicle operation and transmission will be placed in limp-in.

Diagnostic Test

1. PCM - INTERNAL ERROR

View repair.

Repair

Using the schematics as a guide, check the Powertrain Control Module (PCM) terminals for corrosion, damage, or terminal push out. Pay particular attention to all power and ground circuits. If no problems are found, replace the PCM per the Service Information. With the scan tool PERFORM QUICK LEARN, then program Pinion Factor in the Front Control Module. (Refer to 8 - ELECTRICAL/ELECTRONIC CONTROL MODULES/POWERTRAIN CONTROL MODULE - REMOVAL)

Perform 42RLE TRANSMISSION VERIFICATION TEST - VER 1. (Refer to 21 - TRANSMISSION/TRANSAXLE/AUTOMATIC - 42RLE - STANDARD PROCEDURE)

P0613-INTERNAL TRANSMISSION PROCESSOR

For a complete wiring diagram **Refer to Section 8W**.

- **When Monitored:**
  After the ignition key is turned to the run position and 60 seconds thereafter.
- **Set Condition:**
  Either of the following conditions occur 3 times in less than 590 milliseconds: The watchdog line remains high after the watchdog test or the transmission relay coil is energized and remains on after the watchdog delay expires.

Possible Causes
PCM - INTERNAL ERROR

Always perform the 42RLE Pre-Diagnostic Troubleshooting Procedure before proceeding. (Refer to 21 - TRANSMISSION/TRANSAXLE/AUTOMATIC - 42RLE - STANDARD PROCEDURE)

Theory of Operation

The internal watchdog is a separate hardware circuit which continuously monitors the microprocessor. To make sure the transmission is operating properly, the watchdog must receive a signal from the microprocessor within a specific time window. MIL on after 10 seconds of vehicle operation and transmission will be placed in limp-in.

Diagnostic Test

1. PCM - INTERNAL ERROR

View repair.

Repair

Using the schematics as a guide, check the Powertrain Control Module (PCM) terminals for corrosion, damage, or terminal push out. Pay particular attention to all power and ground circuits. If no problems are found, replace the PCM per the Service Information. With the scan tool PERFORM QUICK LEARN, then program Pinion Factor in the Front Control Module. (Refer to 8 - ELECTRICAL/ELECTRONIC CONTROL MODULES/POWERTRAIN CONTROL MODULE - REMOVAL)

Perform 42RLE TRANSMISSION VERIFICATION TEST - VER 1. (Refer to 21 - TRANSMISSION/TRANSAXLE/AUTOMATIC - 42RLE - STANDARD PROCEDURE)

P0706-TRANSMISSION RANGE SENSOR RATIONALITY

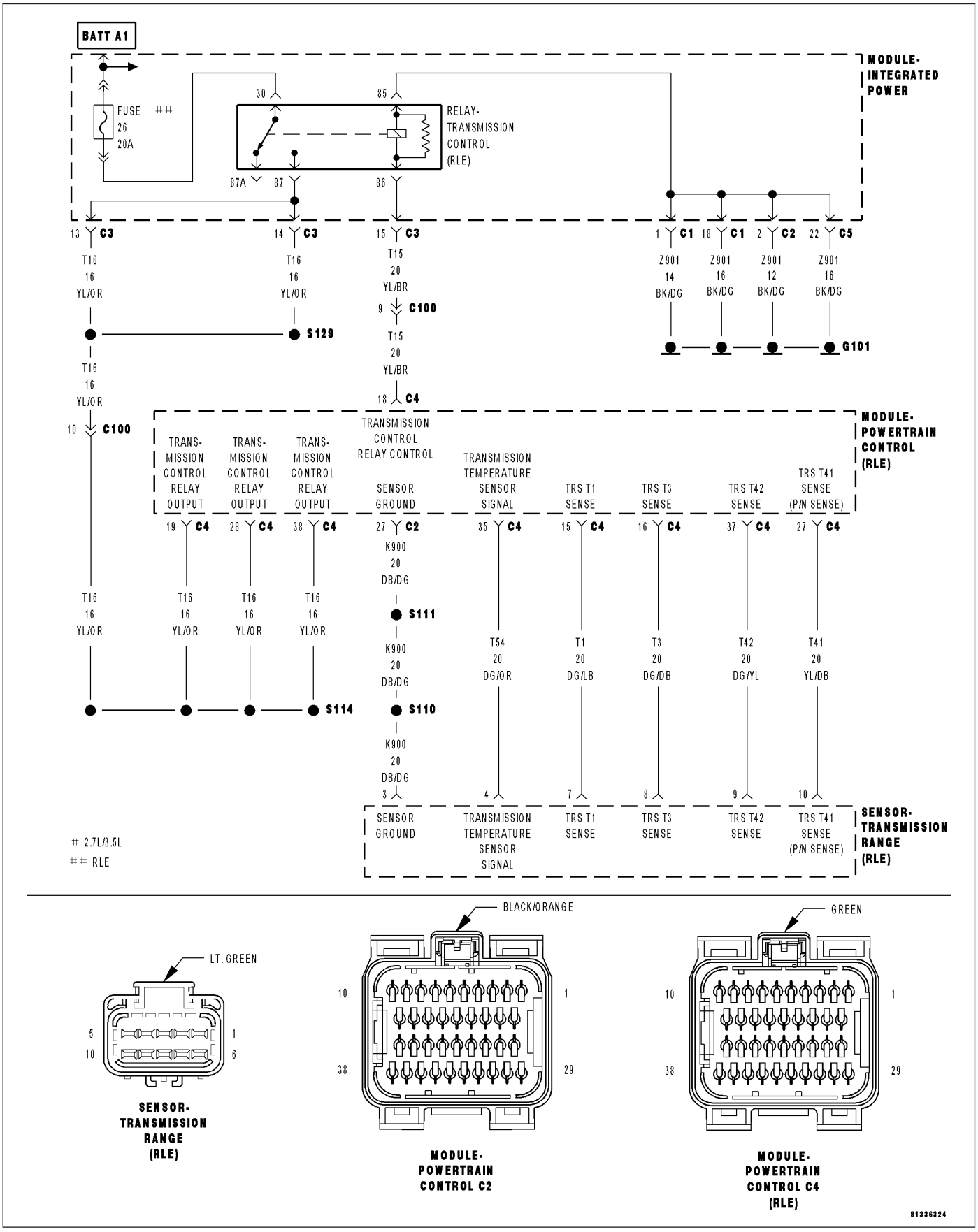

For a complete wiring diagram **Refer to Section 8W**.

- **When Monitored:**
  Continuously with the ignition in the run position.
- **Set Condition:**
  The DTC will set if an invalid PRNDL code which lasts for more than 100 milliseconds and within 1 second of power-up or the PRNDL code error does not correct itself before a change in input occurs.

Possible Causes
SHIFTER OUT OF ADJUSTMENT
TRS (T1) SENSE CIRCUIT OPEN
TRS (T3) SENSE CIRCUIT OPEN
TRS (T41) SENSE CIRCUIT OPEN
TRS (T42) SENSE CIRCUIT OPEN
TRS (T1) SENSE CIRCUIT SHORT TO GROUND
TRS (T3) SENSE CIRCUIT SHORT TO GROUND
TRS (T41) SENSE CIRCUIT SHORT TO GROUND
TRS (T42) SENSE CIRCUIT SHORT TO GROUND
TRS (T1) SENSE CIRCUIT SHORT TO VOLTAGE
TRS (T3) SENSE CIRCUIT SHORT TO VOLTAGE
TRS (T41) SENSE CIRCUIT SHORT TO VOLTAGE
TRS (T42) SENSE CIRCUIT SHORT TO VOLTAGE
TRANSMISSION RANGE SENSOR
POWERTRAIN CONTROL MODULE

Always perform the 42RLE Pre-Diagnostic Troubleshooting Procedure before proceeding. (Refer to 21 - TRANSMISSION/TRANSAXLE/AUTOMATIC - 42RLE - STANDARD PROCEDURE)

Theory of Operation

The C1 through C4 (T1, T3, T41, and T42) sense circuits communicate the shift lever position to the PCM. Each circuit is terminated at the transmission with a switch. Each switch can be either open or closed, depending on the shift lever position. The PCM can decode this information and determine the shift lever position. Each shift lever position has a certain combination of switches, which will be open and closed, this is called a PRNDL code. There are 4 switches, therefore: there are many possible combinations of open and closed switches (codes). However, there are only 9 valid codes (8 for AutoStick), one for each gear position and three recognized between gear codes. The remainder of the codes should never occur, these are called invalid codes. The following chart shows the normal switch states for each shift lever position.

TRS SWITCH STATES

SLP	T42	T41	T3	T1
P	CL	CL	CL	OP
R	CL	OP	OP	OP
N	CL	CL	OP	CL
OD	OP	OP	OP	CL
3	OP	OP	CL	OP
L	CL	OP	CL	CL

Diagnostic Test

1. CHECK IF THE DTC P0706 IS CURRENT

With the scan tool, erase Transmission DTCs.

Cycle the ignition off, then start the vehicle.

Firmly apply the brakes and shift into Overdrive.

NOTE: Vehicle must remain in Overdrive for at least three seconds.
With the brakes firmly applied, shift slowly through all gears (PRNDL) as least three times, pausing momentarily in each gear.

NOTE: If all the PRNDL lights box individually then the error was cleared.
Shift into park and turn the ignition off to the lock position.

Ignition on, engine not running.

With the scan tool, read Transmission DTCs.

Does the DTC P0706 reset, or do all the PRNDL indicators remain boxed in park or neutral?

Yes >> Go To 2

No >> Go To 18

2. CHECK SHIFTER OPERATION

With the scan tool, perform the Shift Lever Position Test.

Select the test outcome from the following:

Test passes
Go To 18

Test fails with error code
Go To 3

Test fails without error code
Go To 17

3. PCM AND WIRING

Turn the ignition off to the lock position.

Remove the Starter Relay.

CAUTION: Removal of the Starter Relay is to prevent a Transmission, NO RESPONSE, condition and disable the starter.
Install the Transmission Simulator, Miller tool #8333 and the Electronic Transmission Adapter kit 8333-1A.

Ignition on, engine not running.

With the scan tool, perform the Shift Lever Position Test.

When the scan tool instructs you to put the Gear Selector in a particular position, you must do so using the Transmission Simulator.

The LED for the gear position in question must be illuminated on the Transmission Simulator, prior to pressing the ENTER key on the scan tool.

NOTE: After completion of this procedure, make sure to disconnect the Transmission Simulator, Miller tool #8333 and Electronic Transmission adaptor cable kit, Miller tool #8333-1A and reconnect all connectors.

Did the Shift Lever Position Test pass?

Yes >> Replace the Transmission Range Sensor per the Service Information.
Perform 42RLE TRANSMISSION VERIFICATION TEST - VER 1. (Refer to 21 - TRANSMISSION/ TRANSAXLE/AUTOMATIC - 42RLE - STANDARD PROCEDURE)

No >> Go To 4

4. IDENTIFY FAULTY CIRCUIT

Reconnect all disconnected connectors. Turn the ignition on, engine not running.

With the scan tool, monitor the TRS Sense circuits on the Input/Output screen - C1 through C4.

Move the shift lever through all gear positions, pausing momentarily in each gear position and watch for one of the circuits to not change state.

Pick the one that did not change state.

TRS (T1)sense (C4)
Go To 5

TRS (T3)sense (C3)
Go To 8

TRS (T41)sense (C1)
Go To 11

TRS (T42)sense (C2)
Go To 14

5. TRS (T1) SENSE CIRCUIT OPEN

Turn the ignition off to the lock position.

Disconnect the TRS harness connector.

Disconnect the PCM C4 harness connector.

NOTE: Check connectors - Clean/repair as necessary.

CAUTION: Do not probe the PCM harness connectors. Probing the PCM harness connectors will damage the PCM terminals resulting in poor terminal to pin connection. Install Miller Tool #8815 to perform diagnosis.

Measure the resistance of the TRS (T1) Sense circuit from the appropriate terminal of special tool #8815 to the TRS harness connector.

Is the resistance above 5.0 ohms?

Yes >> Repair the TRS (T1) Sense circuit for an open.
Perform 42RLE TRANSMISSION VERIFICATION TEST - VER 1. (Refer to 21 - TRANSMISSION/TRANSAXLE/AUTOMATIC - 42RLE - STANDARD PROCEDURE)

No >> Go To 6

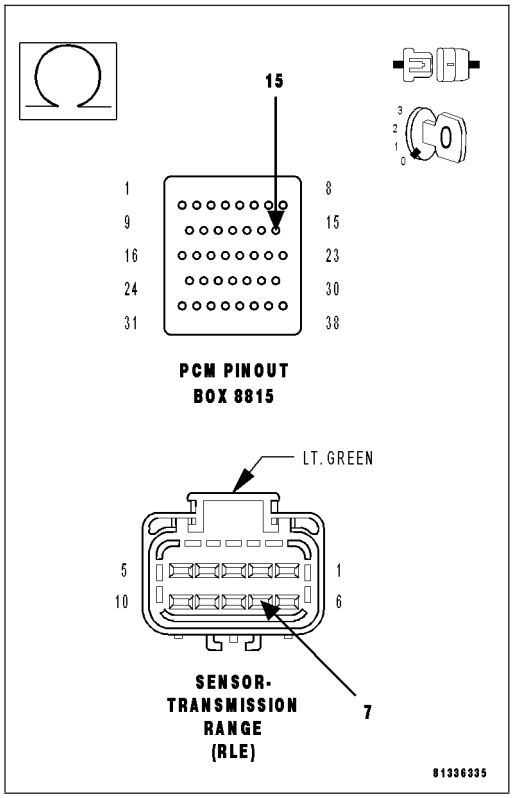

6. TRS (T1) SENSE CIRCUIT SHORT TO GROUND

Turn the ignition off to the lock position.

Disconnect the TRS harness connector.

Disconnect the PCM C4 harness connector.

NOTE: Check connectors - Clean/repair as necessary.

Measure the resistance between ground and the TRS (T1) Sense circuit.

Is the resistance below 5.0 ohms?

Yes >> Repair the TRS (T1) Sense circuit for a short to ground. Perform 42RLE TRANSMISSION VERIFICATION TEST - VER 1. (Refer to 21 - TRANSMISSION/TRANSAXLE/AUTOMATIC - 42RLE - STANDARD PROCEDURE)

No >> Go To 7

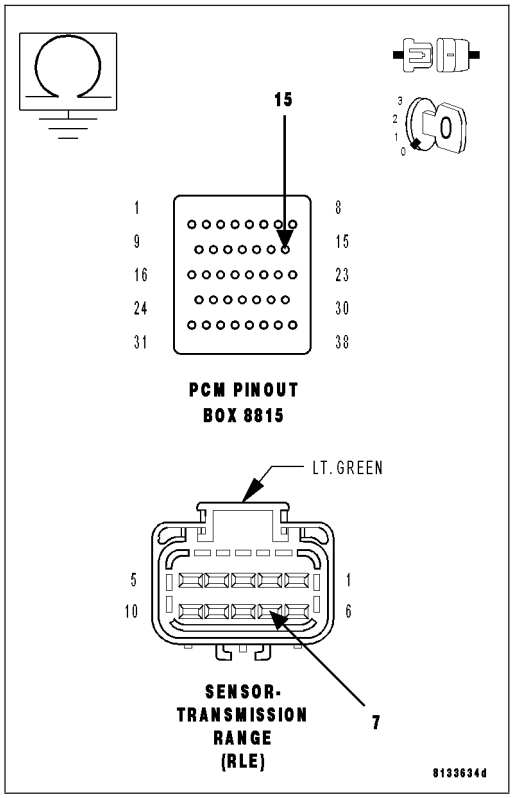

7. TRS (T1) SENSE CIRCUIT SHORT TO VOLTAGE

Turn the ignition off to the lock position.

Disconnect the TRS harness connector.

Disconnect the PCM C4 harness connector.

Remove the Transmission Control Relay from the PDC.

NOTE: Check connectors - Clean/repair as necessary.

Connect a jumper wire between the (Internal) Fused B+ circuit and the (T16) Transmission Control Relay Output circuit in the Transmission Control Relay connector.

Ignition on, engine not running.

Measure the voltage of the TRS (T1) Sense circuit at the appropriate terminal of special tool #8815.

Is the voltage above 0.5 volt?

Yes >> Repair the TRS (T1) Sense circuit for a short to voltage. Perform 42RLE TRANSMISSION VERIFICATION TEST - VER 1. (Refer to 21 - TRANSMISSION/TRANSAXLE/AUTOMATIC - 42RLE - STANDARD PROCEDURE)

No >> Using the schematics as a guide, check the Powertrain Control Module (PCM) terminals for corrosion, damage, or terminal push out. Pay particular attention to all power and ground circuits. If no problems are found, replace the PCM per the Service Information. With the scan tool PERFORM QUICK LEARN, then program Pinion Factor in the Front Control Module. (Refer to 8 - ELECTRICAL/ELECTRONIC

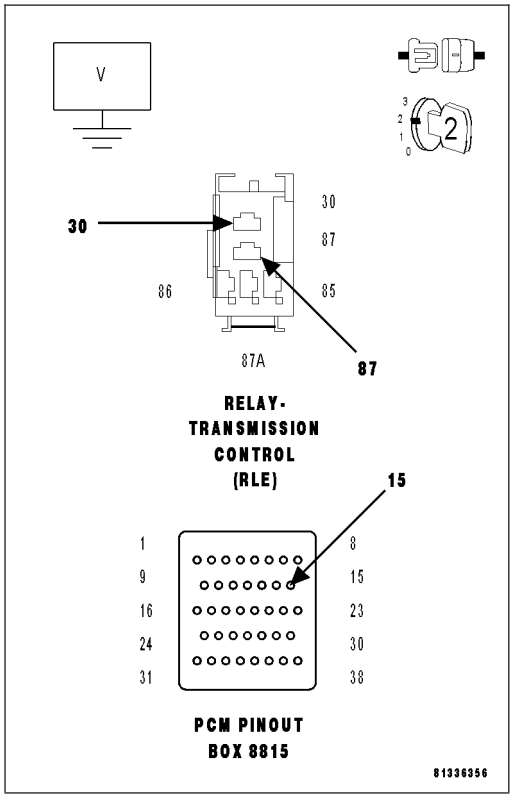

CONTROL MODULES/POWERTRAIN CONTROL MODULE - REMOVAL)

Perform 42RLE TRANSMISSION VERIFICATION TEST - VER 1. (Refer to 21 - TRANSMISSION/TRANSAXLE/AUTOMATIC - 42RLE - STANDARD PROCEDURE)

8. TRS (T3) SENSE CIRCUIT OPEN

Turn the ignition off to the lock position.

Disconnect the TRS harness connector.

Disconnect the PCM C4 harness connector.

NOTE: Check connectors - Clean/repair as necessary.

CAUTION: Do not probe the PCM harness connectors. Probing the PCM harness connectors will damage the PCM terminals resulting in poor terminal to pin connection. Install Miller Tool #8815 to perform diagnosis.

Measure the resistance of the TRS (T3) Sense circuit from the appropriate terminal of special tool #8815 to the TRS harness connector.

Is the resistance above 5.0 ohms?

Yes >> Repair the TRS (T3) Sense circuit for an open.

Perform 42RLE TRANSMISSION VERIFICATION TEST - VER 1. (Refer to 21 - TRANSMISSION/TRANSAXLE/AUTOMATIC - 42RLE - STANDARD PROCEDURE)

No >> Go To 9

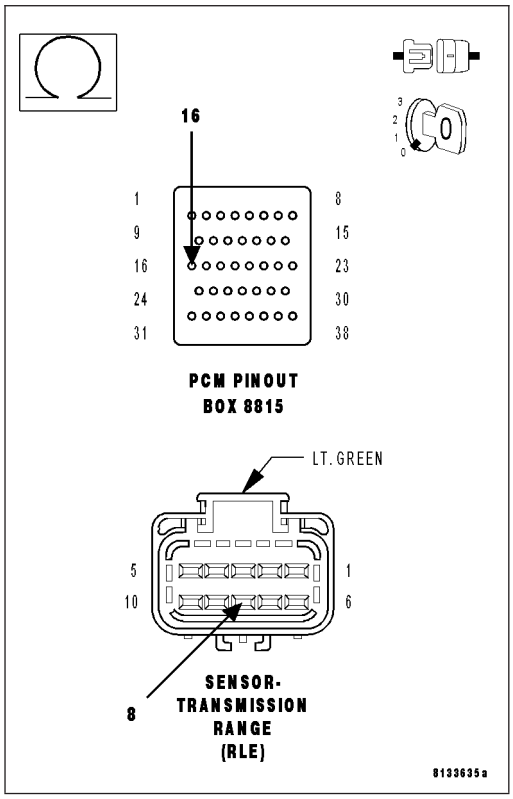

9. TRS (T3) SENSE CIRCUIT SHORT TO GROUND

Turn the ignition off to the lock position.

Disconnect the TRS harness connector.

Disconnect the PCM C4 harness connector.

NOTE: Check connectors - Clean/repair as necessary.

Measure the resistance between ground and the TRS (T3) Sense circuit.

Is the resistance below 5.0 ohms?

Yes >> Repair the TRS (T3) Sense circuit for a short to ground. Perform 42RLE TRANSMISSION VERIFICATION TEST - VER 1. (Refer to 21 - TRANSMISSION/TRANSAXLE/AUTOMATIC - 42RLE - STANDARD PROCEDURE)

No >> Go To 10

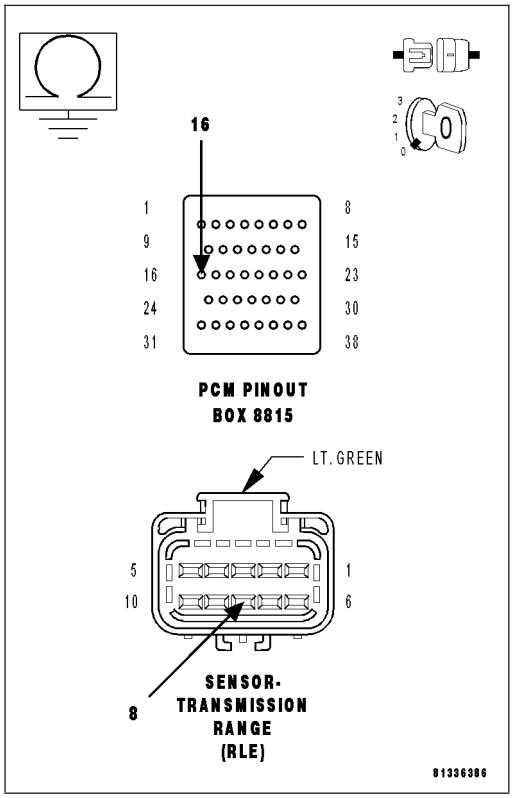

10. TRS (T3) SENSE CIRCUIT SHORT TO VOLTAGE

Turn the ignition off to the lock position.

Disconnect the TRS harness connector.

Disconnect the PCM C4 harness connector.

Remove the Transmission Control Relay.

NOTE: Check connectors - Clean/repair as necessary.

Connect a jumper wire between the (Internal) Fused B+ circuit and the (T16) Transmission Control Relay Output circuit in the Transmission Control Relay connector.

Ignition on, engine not running.

Measure the voltage of the TRS (T3) Sense circuit.

Is the voltage above 0.5 volt?

Yes >> Repair the TRS (T3) Sense circuit for a short to voltage. Perform 42RLE TRANSMISSION VERIFICATION TEST - VER 1. (Refer to 21 - TRANSMISSION/TRANSAXLE/AUTOMATIC - 42RLE - STANDARD PROCEDURE)

No >> Using the schematics as a guide, check the Powertrain Control Module (PCM) terminals for corrosion, damage, or terminal push out. Pay particular attention to all power and ground circuits. If no problems are found, replace the PCM per the Service Information. With the scan tool PERFORM QUICK LEARN, then program Pinion Factor in the Front Control Module. (Refer to 8 - ELECTRICAL/ELECTRONIC

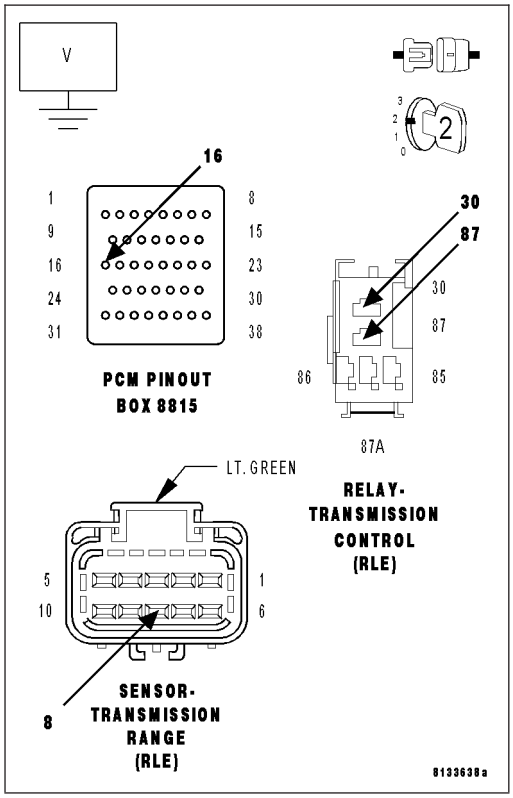

CONTROL MODULES/POWERTRAIN CONTROL MODULE - REMOVAL)

Perform 42RLE TRANSMISSION VERIFICATION TEST - VER 1. (Refer to 21 - TRANSMISSION/TRANSAXLE/AUTOMATIC - 42RLE - STANDARD PROCEDURE)

11. TRS (T41) SENSE CIRCUIT OPEN

Turn the ignition off to the lock position.

Disconnect the TRS harness connector.

Disconnect the PCM C3 harness connector.

NOTE: Check connectors - Clean/repair as necessary.

CAUTION: Do not probe the PCM harness connectors. Probing the PCM harness connectors will damage the PCM terminals resulting in poor terminal to pin connection. Install Miller Tool #8815 to perform diagnosis.

Measure the resistance of the TRS (T41) Sense circuit from the appropriate terminal of special tool #8815 to the TRS harness connector.

Is the resistance above 5.0 ohms?

Yes >> Repair the TRS (T41) Sense circuit for an open.
Perform 42RLE TRANSMISSION VERIFICATION TEST - VER 1. (Refer to 21 - TRANSMISSION/TRANSAXLE/AUTOMATIC - 42RLE - STANDARD PROCEDURE)

No >> Go To 12

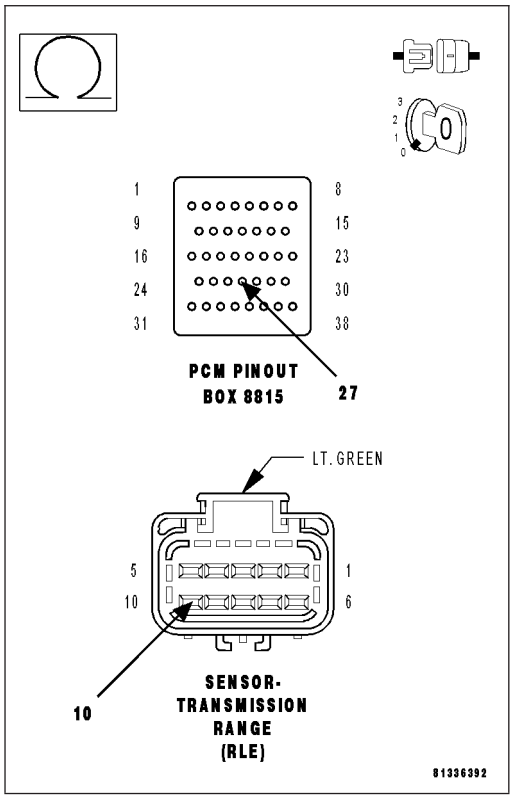

12. TRS (T41) SENSE CIRCUIT SHORT TO GROUND

Turn the ignition off to the lock position.

Disconnect the TRS harness connector.

Disconnect the PCM C3 harness connector.

NOTE: Check connectors - Clean/repair as necessary.

Measure the resistance between ground and the TRS (T41) Sense circuit

Is the resistance below 5.0 ohms?

Yes >> Repair the TRS (T41) Sense circuit for a short to ground. Perform 42RLE TRANSMISSION VERIFICATION TEST - VER 1. (Refer to 21 - TRANSMISSION/TRANSAXLE/AUTOMATIC - 42RLE - STANDARD PROCEDURE)

No >> Go To 13

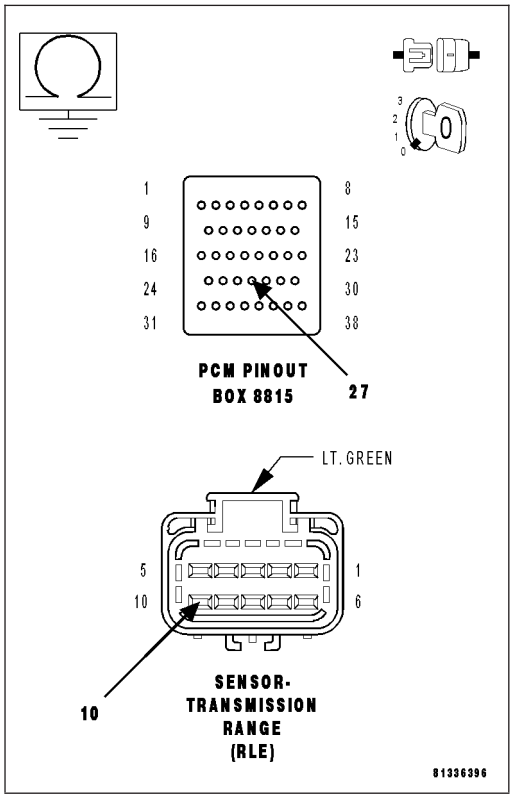

13. TRS (T41) SENSE CIRCUIT SHORT TO VOLTAGE

Turn the ignition off to the lock position.

Disconnect the TRS harness connector.

Disconnect the PCM C3 harness connector.

Remove the Transmission Control Relay.

NOTE: Check connectors - Clean/repair as necessary.

Connect a jumper wire between the (Internal) Fused B+ circuit and the (T16) Transmission Control Relay Output circuit in the Transmission Control Relay connector.Ignition on, engine not running.

Measure the voltage of the TRS (T41) Sense circuit.

Is the voltage above 0.5 volt?

Yes >> Repair the TRS (T1) Sense circuit for a short to voltage. Perform 42RLE TRANSMISSION VERIFICATION TEST - VER 1. (Refer to 21 - TRANSMISSION/TRANSAXLE/AUTOMATIC - 42RLE - STANDARD PROCEDURE)

No >> Using the schematics as a guide, check the Powertrain Control Module (PCM) terminals for corrosion, damage, or terminal push out. Pay particular attention to all power and ground circuits. If no problems are found, replace the PCM per the Service Information. With the scan tool PERFORM QUICK LEARN, then program Pinion Factor in the Front Control Module. (Refer to 8 - ELECTRICAL/ELECTRONIC CONTROL MODULES/POWERTRAIN CONTROL MODULE - REMOVAL)

Perform 42RLE TRANSMISSION VERIFICATION TEST - VER 1. (Refer to 21 - TRANSMISSION/TRANSAXLE/AU-

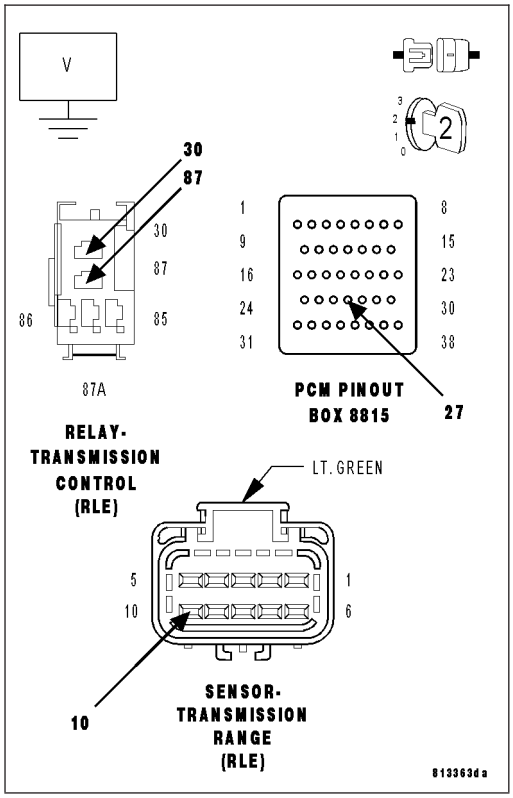

TOMATIC - 42RLE - STANDARD PROCEDURE)

14. TRS (T42) SENSE CIRCUIT OPEN

Turn the ignition off to the lock position.

Disconnect the TRS harness connector.

Disconnect the PCM C4 harness connector.

NOTE: Check connectors - Clean/repair as necessary.

CAUTION: Do not probe the PCM harness connectors. Probing the PCM harness connectors will damage the PCM terminals resulting in poor terminal to pin connection. Install Miller Tool #8815 to perform diagnosis.

Measure the resistance of the TRS (T42) Sense circuit from the appropriate terminal of special tool #8815 to the TRS harness connector.

Is the resistance above 5.0 ohms?

Yes >> Repair the TRS (T42) Sense circuit for an open.
Perform 42RLE TRANSMISSION VERIFICATION TEST - VER 1. (Refer to 21 - TRANSMISSION/TRANSAXLE/AUTOMATIC - 42RLE - STANDARD PROCEDURE)

No >> Go To 15

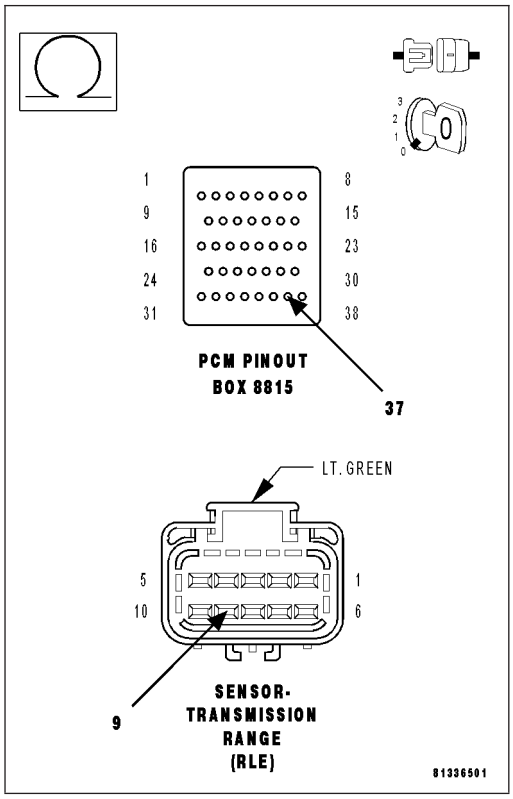

15. TRS (T42) SENSE CIRCUIT SHORT TO GROUND

Turn the ignition off to the lock position.

Disconnect the TRS harness connector.

Disconnect the PCM C4 harness connector.

NOTE: Check connectors - Clean/repair as necessary.

Measure the resistance between ground and the TRS (T42) Sense circuit.

Is the resistance below 5.0 ohms?

Yes >> Repair the TRS (T42) Sense circuit for a short to ground.
Perform 42RLE TRANSMISSION VERIFICATION TEST - VER 1. (Refer to 21 - TRANSMISSION/TRANSAXLE/AUTOMATIC - 42RLE - STANDARD PROCEDURE)

No >> Go To 16

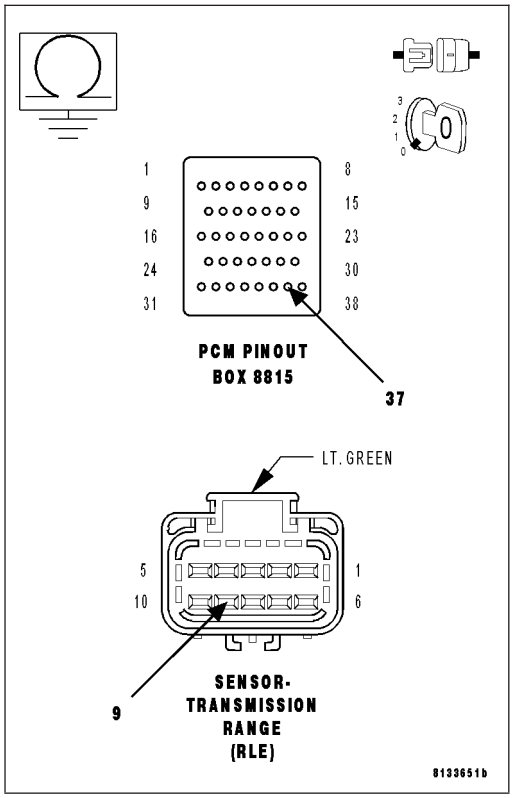

16. TRS (T42) SENSE CIRCUIT SHORT TO VOLTAGE

Turn the ignition off to the lock position.

Disconnect the TRS harness connector.

Disconnect the PCM C4 harness connector.

Remove the Transmission Control Relay.

NOTE: Check connectors - Clean/repair as necessary.

Connect a jumper wire between the (Internal) Fused B+ circuit and the (T16) Transmission Control Relay Output circuit in the Transmission Control Relay connector.

Ignition on, engine not running.

Measure the voltage of the TRS (T42) Sense circuit.

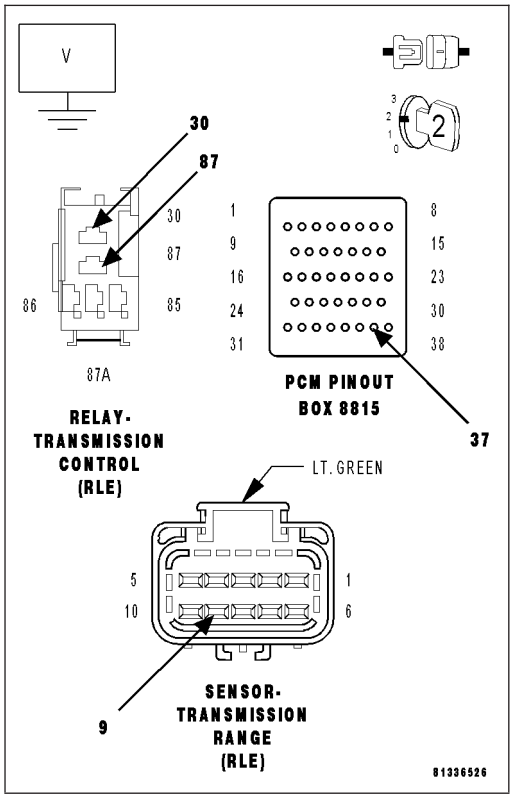

Is the voltage above 0.5 volt?

Yes >> Repair the TRS (T42) Sense circuit for a short to voltage.

Perform 42RLE TRANSMISSION VERIFICATION TEST - VER 1. (Refer to 21 - TRANSMISSION/TRANSAXLE/AUTOMATIC - 42RLE - STANDARD PROCEDURE)

No >> Using the schematics as a guide, check the Powertrain Control Module (PCM) terminals for corrosion, damage, or terminal push out. Pay particular attention to all power and ground circuits. If no problems are found, replace the PCM per the Service Information. With the scan tool PERFORM QUICK LEARN, then program Pinion Factor in the Front Control Module. (Refer to 8 - ELECTRICAL/ELECTRONIC CONTROL MODULES/POWERTRAIN CONTROL MODULE - REMOVAL)

Perform 42RLE TRANSMISSION VERIFICATION TEST - VER 1. (Refer to 21 - TRANSMISSION/TRANSAXLE/AUTOMATIC - 42RLE - STANDARD PROCEDURE)

17. CHECK AND ADJUST SHIFTER

View repair.

Repair

Adjust the Shift Linkage and/or cable per the Service Information.

Perform 42RLE TRANSMISSION VERIFICATION TEST - VER 1. (Refer to 21 - TRANSMISSION/TRANSAXLE/AUTOMATIC - 42RLE - STANDARD PROCEDURE)

18. INTERMITTENT WIRING AND CONNECTORS

The conditions necessary to set the DTC are not present at this time.

Using the schematics as a guide, inspect the wiring and connectors specific to this circuit.

Wiggle the wiring and connectors while checking for shorted and open circuits.

Check the Shift Linkage and cable for proper operation per the Service Information.

With the scan tool, check the EATX DTC EVENT DATA to help identify the conditions in which the DTC was set.

Perform *PRNDL FAULT CLEARING PROCEDURE after completion of any repairs.

Were there any problems found?

Yes >> Repair as necessary.

Perform 42RLE TRANSMISSION VERIFICATION TEST - VER 1. (Refer to 21 - TRANSMISSION/TRANSAXLE/AUTOMATIC - 42RLE - STANDARD PROCEDURE)

No >> Test Complete.

P0711-TRANSMISSION TEMPERATURE SENSOR PERFORMANCE

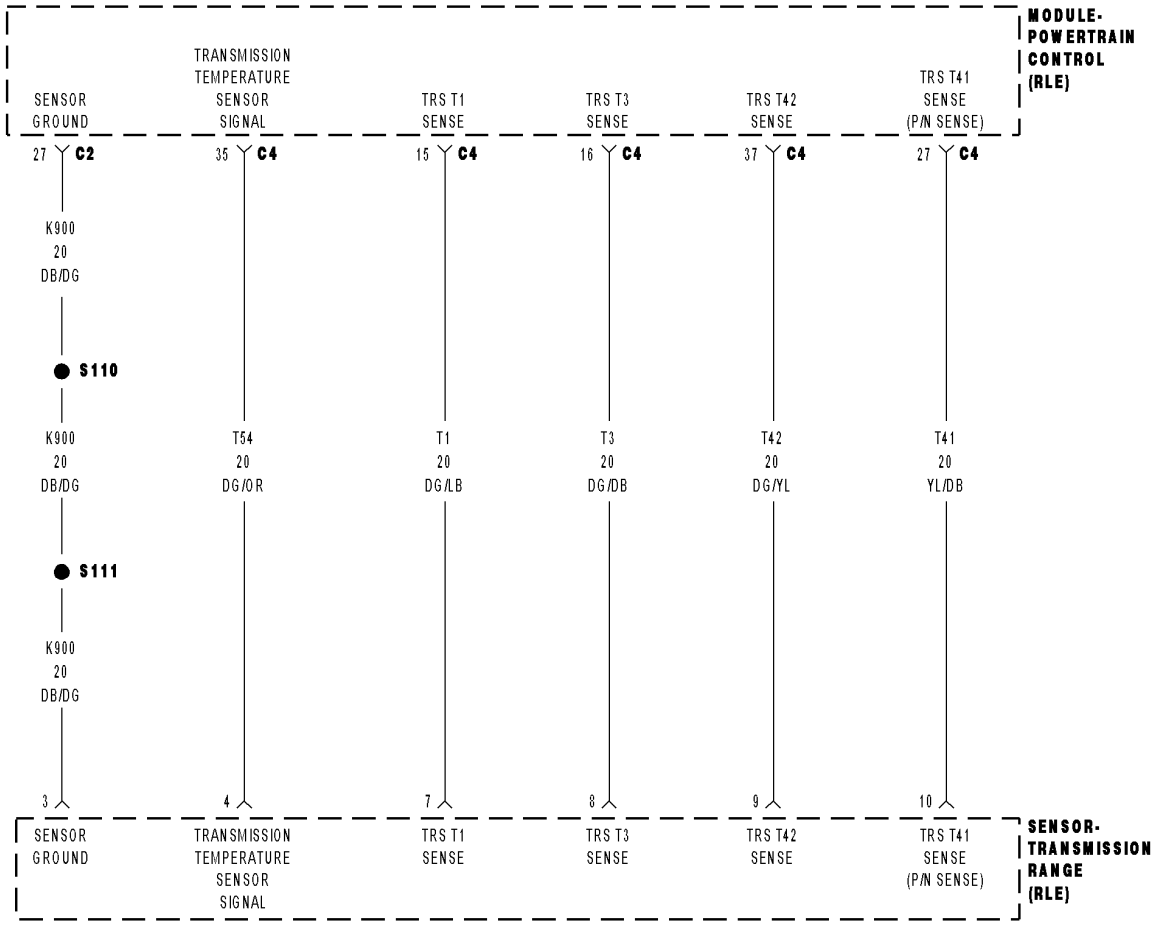

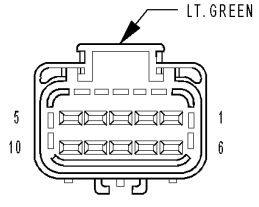

SENSOR-
TRANSMISSION
RANGE
(RLE)

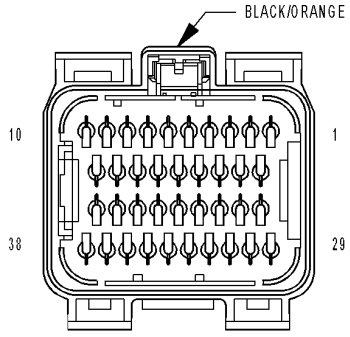

MODULE-
POWERTRAIN
CONTROL C2

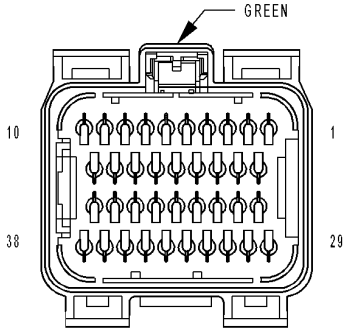

MODULE-
POWERTRAIN
CONTROL C4
(RLE)

81339356

For a complete wiring diagram **Refer to Section 8W**.

- **When Monitored:**
  Continuously with the ignition on and engine running.
- **Set Condition:**
  is DTC will set when the desired transmission temperature does not reach a normal operating temperature within a given time frame. Time is variable due to ambient temperature. Approximate DTC set time is 10 to 35 minutes. The following are starting temperature to warm up times to set this DTC: starting temp -40° C (-40° F) warm up time 35 minuets, starting temp -28° C (-20° F) 25 min, starting temp -6.6° C (20° F) 20 minuets, starting temp 15.5 ° C (60° F) 10 minuets. When the fault is set, calculated temperature is substituted for measured temperature, however the fault code is stored only after three consecutive occurrences of the fault.

Possible Causes
RELATED TRANSMISSION TEMPERATURE DTC'S PRESENT
TRANSMISSION TEMPERATURE SENSOR
POWERTRAIN CONTROL MODULE

Always perform the 42RLE Pre-Diagnostic Troubleshooting Procedure before proceeding. (Refer to 21 - TRANSMISSION/TRANSAXLE/AUTOMATIC - 42RLE - STANDARD PROCEDURE)

Theory of Operation

The temperature sensor is used to sense the temperature of the transmission fluid. Transmission fluid temperature can affect shift quality, torque converter operation and when or if some diagnostics are run. A failed temperature sensor could affect the OBD diagnostics. If a problem occurs in the transmission temperature sensor circuit, transmission temperature will be based on a calculated value.

Diagnostic Test

1. DETERMINE IF RELATED TRANSMISSION TEMPERATURE DTC'S ARE PRESENT

With the scan tool, check Transmission DTC's.

Are there any other Transmission Temperature Sensor related DTCs present?

Yes >> Refer to the Transmission category and perform the appropriate symptom. (Refer to 21 - TRANSMISSION/TRANSAXLE/AUTOMATIC - 42RLE - DIAGNOSIS AND TESTING)

No >> Go To 2

2. CHECK TO SEE IF DTC IS CURRENT

With the scan tool, Check the STARTS SINCE SET counter for P0711.

NOTE: This counter only applies to the last DTC set.

Is the STARTS SINCE SET counter 2 or less?

Yes >> Go To 3

No >> Go To 4

3. PCM AND WIRING

Turn the ignition off to the lock position.

Remove the Starter Relay.

CAUTION: Removal of the Starter Relay is to prevent a Transmission, NO RESPONSE, condition and disable the starter.

Install the Transmission Simulator, Miller tool #8333 and the Electronic Transmission Adapter kit 8333-1A.

NOTE: Check connectors - Clean/repair as necessary.

Ignition on, engine not running.

With the Transmission Simulator, turn the Input/Output switch to OFF.

With the scan tool, monitor the TRANS TEMP VOLTS while turning the Thermistor Voltage switch to all three positions on the Transmission Simulator.

Compare the scan tool readings with the numbers listed on the Transmission Simulator.

Do the readings on the Transmission Simulator match the scan tool readings ± 0.2 volts?

Yes >> Replace Transmission Solenoid/Pressure Switch Assembly per the Service Information. (Refer to 21 - TRANSMISSION/TRANSAXLE/AUTOMATIC - 42RLE/SOLENOID/PRESSURE SWITCH ASSY - REMOVAL)

Perform 42RLE TRANSMISSION VERIFICATION TEST - VER 1. (Refer to 21 - TRANSMISSION/TRANSAXLE/AUTOMATIC - 42RLE - STANDARD PROCEDURE)

No >> Using the schematics as a guide, check the Powertrain Control Module (PCM) terminals for corrosion, damage, or terminal push out. Pay particular attention to all power and ground circuits. If no problems are found, replace the PCM per the Service Information. With the scan tool PERFORM QUICK LEARN, then program Pinion Factor in the Front Control Module. (Refer to 8 - ELECTRICAL/ELECTRONIC CONTROL MODULES/POWERTRAIN CONTROL MODULE - REMOVAL)

Perform 42RLE TRANSMISSION VERIFICATION TEST - VER 1. (Refer to 21 - TRANSMISSION/TRANSAXLE/AUTOMATIC - 42RLE - STANDARD PROCEDURE)

4. INTERMITTENT WIRING AND CONNECTORS

The conditions necessary to set this DTC are not present at this time.

Using the schematics as a guide, inspect the wiring and connectors specific to this circuit.

Wiggle the wires while checking for shorted and open circuits.

With the scan tool, check the EATX DTC EVENT DATA to help identify the conditions in which the DTC was set.

Were there any problems found?

Yes >> Repair as necessary.

Perform 42RLE TRANSMISSION VERIFICATION TEST - VER 1. (Refer to 21 - TRANSMISSION/TRANSAXLE/AUTOMATIC - 42RLE - STANDARD PROCEDURE)

No >> Test Complete.

P0712-TRANSMISSION TEMPERATURE SENSOR LOW

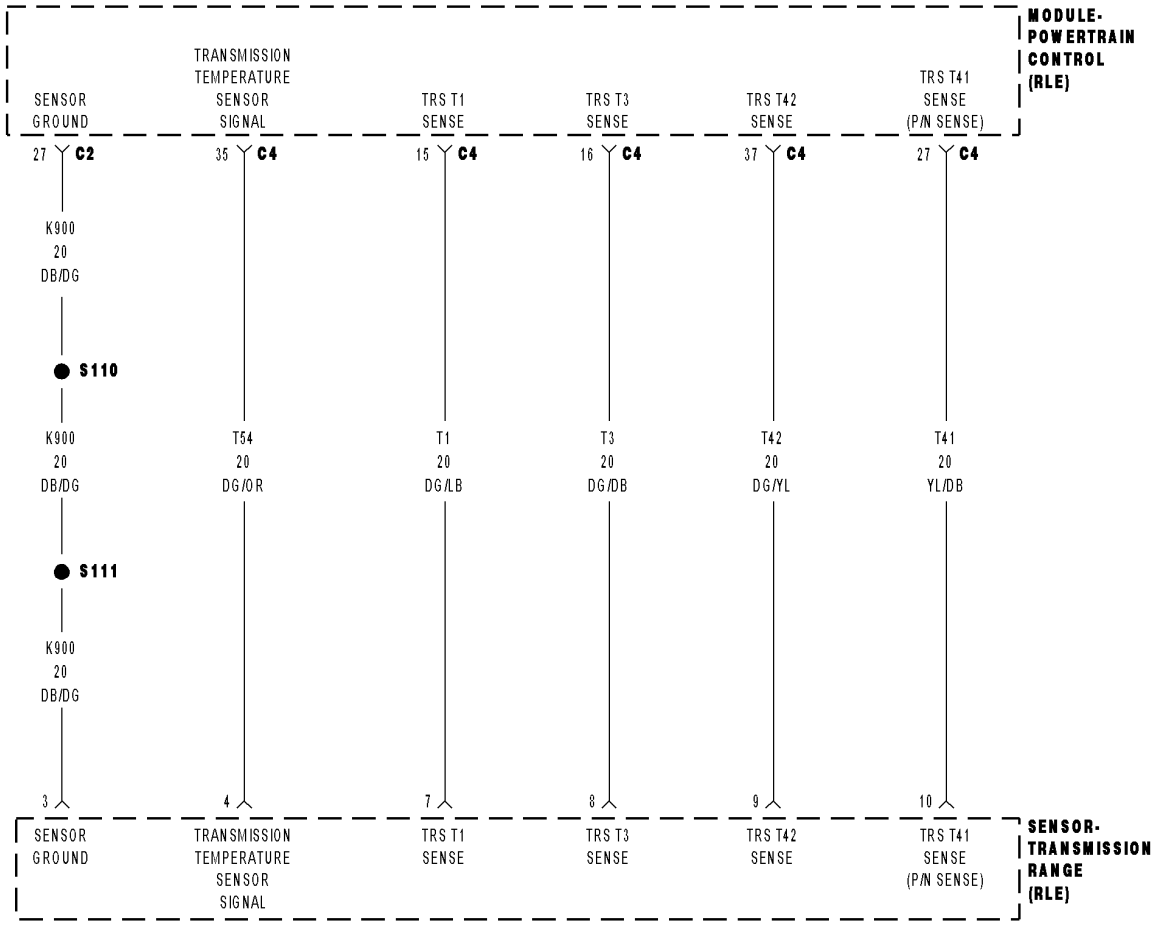

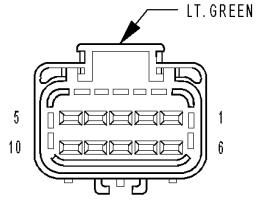

SENSOR-
TRANSMISSION
RANGE
(RLE)

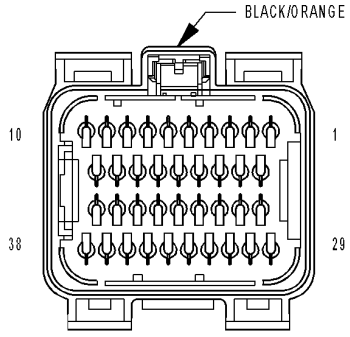

MODULE-
POWERTRAIN
CONTROL C2

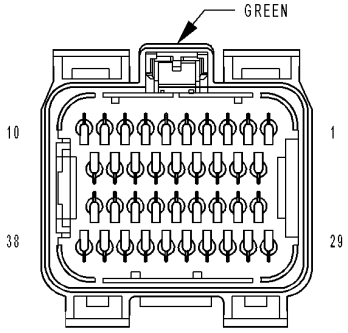

MODULE-
POWERTRAIN
CONTROL C4
(RLE)

81339356

For a complete wiring diagram **Refer to Section 8W**.

- **When Monitored:**
  Continuously with the ignition on and engine running.
- **Set Condition:**
  The DTC will set when the monitored Temperature Sensor voltage drops below 0.078 volts for the period of 1.45 seconds. When the fault is set, calculated temperature is substituted for measured temperature, however the fault code is stored only after three consecutive occurrences of the fault.

Possible Causes
RELATED DTC'S PRESENT
(T54) TRANSMISSION TEMPERATURE SENSOR SIGNAL CIRCUIT SHORT TO GROUND
TRANSMISSION TEMPERATURE SENSOR
POWERTRAIN CONTROL MODULE

Always perform the 42RLE Pre-Diagnostic Troubleshooting Procedure before proceeding. (Refer to 21 - TRANSMISSION/TRANSAXLE/AUTOMATIC - 42RLE - STANDARD PROCEDURE)

Theory of Operation

The temperature sensor is used to sense the temperature of the transmission fluid. Transmission fluid temperature can affect shift quality, torque converter operation and when or if some diagnostics are run. A failed temperature sensor could affect the OBD diagnostics. If a problem occurs in the transmission temperature sensor circuit, transmission temperature will be based on a calculated value.

Diagnostic Test

1. DETERMINE IF RELATED DTC'S ARE PRESENT

With the scan tool, check Transmission DTC's.

Are there any Speed Sensor DTCs present?

Yes >> Refer to the Transmission category and perform the appropriate symptom.
Perform 42RLE TRANSMISSION VERIFICATION TEST - VER 1. (Refer to 21 - TRANSMISSION/TRANSAXLE/AUTOMATIC - 42RLE - STANDARD PROCEDURE)

No >> Go To 2

2. CHECK TO SEE IF DTC IS CURRENT

With the scan tool, Check the STARTS SINCE SET counter for P0712.

NOTE: This counter only applies to the last DTC set.

Is the STARTS SINCE SET counter 2 or less?

Yes >> Go To 3

No >> Go To 6

3. PCM AND WIRING

Turn the ignition off to the lock position.

Remove the Starter Relay.

CAUTION: Removal of the Starter Relay is to prevent a Transmission, NO RESPONSE, condition and disable the starter.

Install the Transmission Simulator, Miller tool #8333 and the Electronic Transmission Adapter kit 8333-1A.

NOTE: Check connectors - Clean/repair as necessary.

Ignition on, engine not running.

With the Transmission Simulator, turn the Input/Output switch to OFF.

With the scan tool, monitor the TRANS TEMP VOLTS while turning the Thermistor Voltage switch to all three positions on the Transmission Simulator.

Compare the scan tool readings with the numbers listed on the Transmission Simulator.

Do the readings on the Transmission Simulator match the scan tool readings ± 0.2 volts?

Yes >> Go To 4

No >> Go To 5

4. TRANSMISSION TEMPERATURE SENSOR

View repair.

Repair

Replace Transmission Solenoid/TRS Assembly per the Service Information.

Perform 42RLE TRANSMISSION VERIFICATION TEST - VER 1. (Refer to 21 - TRANSMISSION/TRANSAXLE/AUTOMATIC - 42RLE - STANDARD PROCEDURE)

5. (T54) TRANSMISSION TEMPERATURE SENSOR SIGNAL CIRCUIT SHORT TO GROUND

Turn the ignition off to the lock position.

Disconnect the PCM C4 harness connector.

Disconnect the TRS harness connector.

NOTE: Check connectors - Clean/repair as necessary.

CAUTION: Do not probe the PCM harness connectors. Probing the PCM harness connectors will damage the PCM terminals resulting in poor terminal to pin connection. Install Miller Tool #8815 to perform diagnosis.

Measure the resistance between ground and the (T54) Transmission Temperature Sensor Signal circuit.

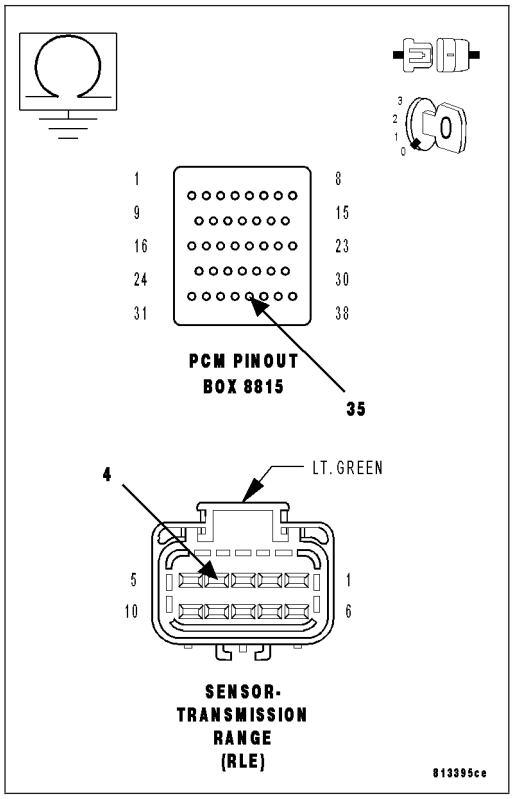

Is the resistance below 5.0 ohms?

Yes >> Repair the (T54) Transmission Temperature Sensor Signal circuit for a short to ground.

Perform 42RLE TRANSMISSION VERIFICATION TEST - VER 1. (Refer to 21 - TRANSMISSION/TRANSAXLE/AUTOMATIC - 42RLE - STANDARD PROCEDURE)

No >> Using the schematics as a guide, check the Powertrain Control Module (PCM) terminals for corrosion, damage, or terminal push out. Pay particular attention to all power and ground circuits. If no problems are found, replace the PCM per the Service Information. With the scan tool PERFORM QUICK LEARN, then program Pinion Factor in the Front Control Module. (Refer to 8 - ELECTRICAL/ELECTRONIC CONTROL MODULES/POWERTRAIN CONTROL MODULE - REMOVAL)

Perform 42RLE TRANSMISSION VERIFICATION TEST - VER 1. (Refer to 21 - TRANSMISSION/TRANSAXLE/AUTOMATIC - 42RLE - STANDARD PROCEDURE)

6. INTERMITTENT WIRING AND CONNECTORS

The conditions necessary to set this DTC are not present at this time.

Using the schematics as a guide, inspect the wiring and connectors specific to this circuit.

Wiggle the wires while checking for shorted and open circuits.

With the scan tool, check the EATX DTC EVENT DATA to help identify the conditions in which the DTC was set.

Were there any problems found?

Yes >> Repair as necessary.
Perform 42RLE TRANSMISSION VERIFICATION TEST - VER 1. (Refer to 21 - TRANSMISSION/ TRANSAXLE/AUTOMATIC - 42RLE - STANDARD PROCEDURE)

No >> Test Complete.

P0713-TRANSMISSION TEMPERATURE SENSOR HIGH

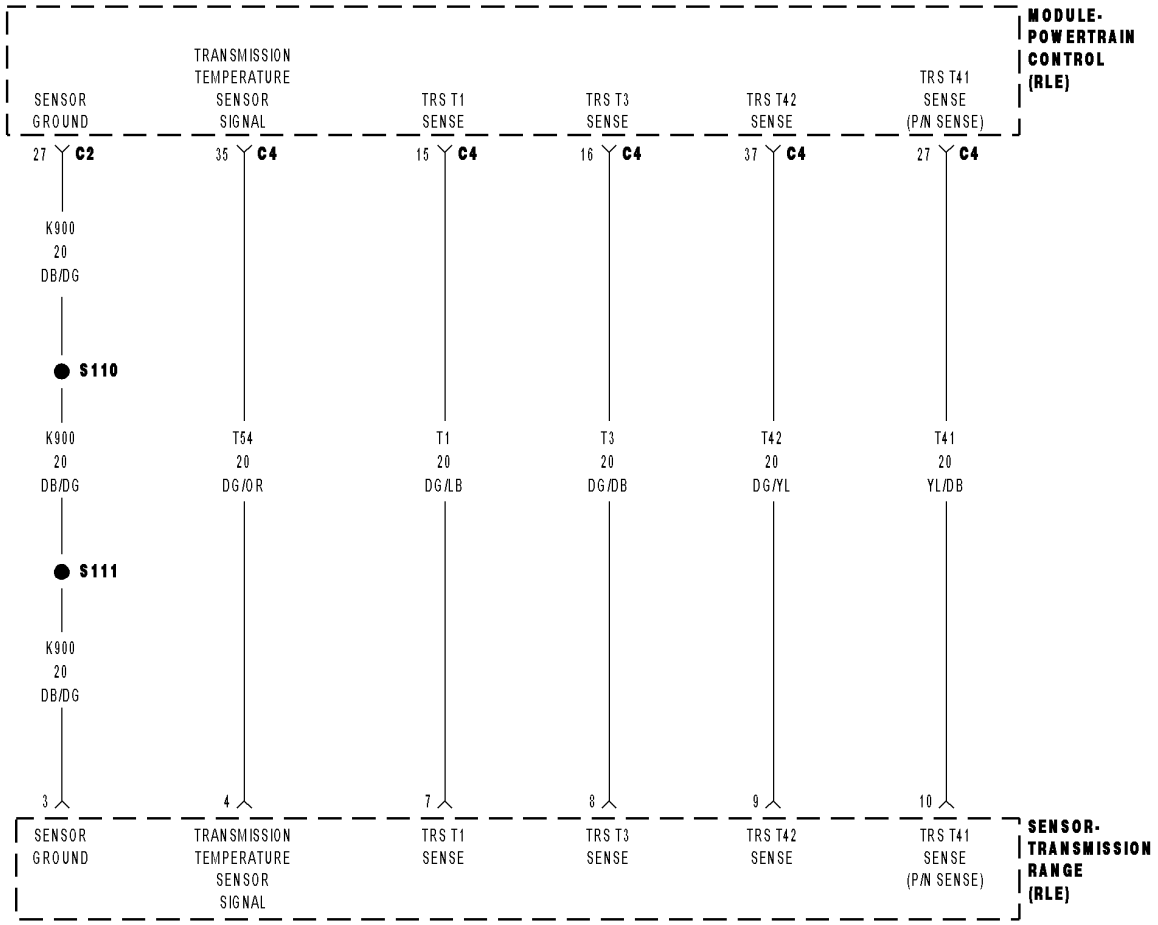

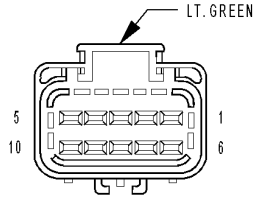

SENSOR-
TRANSMISSION
RANGE
(RLE)

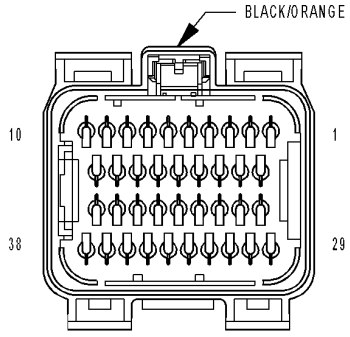

MODULE-
POWERTRAIN
CONTROL C2

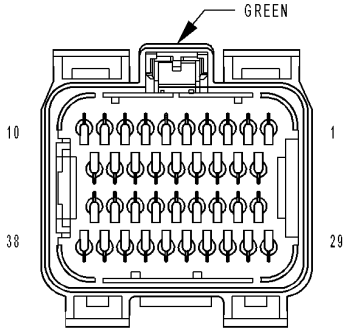

MODULE-
POWERTRAIN
CONTROL C4
(RLE)

81339356

For a complete wiring diagram **Refer to Section 8W**.

- **When Monitored:**
  Continuously with the ignition on and engine running.
- **Set Condition:**
  The DTC will set when the monitored Temperature Sensor voltage rises above 4.94 volts for the period of 1.45 seconds. When the fault is set, calculated temperature is substituted for measured temperature, however the fault code is stored only after three consecutive occurrences of the fault.

Possible Causes
(K900) SENSOR GROUND OPEN
(T54) TRANSMISSION TEMPERATURE SENSOR SIGNAL CIRCUIT OPEN
(T54) TRANSMISSION TEMPERATURE SENSOR SIGNAL CIRCUIT SHORT TO VOLTAGE
TRANSMISSION TEMPERATURE SENSOR
POWERTRAIN CONTROL MODULE

Always perform the 42RLE Pre-Diagnostic Troubleshooting Procedure before proceeding. (Refer to 21 - TRANSMISSION/TRANSAXLE/AUTOMATIC - 42RLE - STANDARD PROCEDURE)

Theory of Operation

The temperature sensor is used to sense the temperature of the transmission fluid. Transmission fluid temperature can affect shift quality, torque converter operation and when or if some diagnostics are run. A failed temperature sensor could affect the OBD diagnostics. If a problem occurs in the transmission temperature sensor circuit, transmission temperature will be based on a calculated value.

1. CHECK TO SEE IF DTC IS CURRENT

With the scan tool, Check the STARTS SINCE SET counter for P0713.

NOTE: This counter only applies to the last DTC set.

Is the STARTS SINCE SET counter 2 or less?

Yes >> Go To 2

No >> Go To 7

2. PCM AND WIRING

Turn the ignition off to the lock position.

Remove the Starter Relay.

CAUTION: Removal of the Starter Relay is to prevent a Transmission, NO RESPONSE, condition and disable the starter.

Install the Transmission Simulator, Miller tool #8333 and the Electronic Transmission Adapter kit 8333-1A.

NOTE: Check connectors - Clean/repair as necessary.

Ignition on, engine not running.

With the Transmission Simulator, turn the Input/Output switch to OFF.

With the scan tool, monitor the TRANS TEMP VOLTS while turning the Thermistor Voltage switch to all three positions on the Transmission Simulator.

Compare the scan tool readings with the numbers listed on the Transmission Simulator.

Do the readings on the Transmission Simulator match the scan tool readings ± 0.2 volts?

Yes >> Go To 3

No >> Go To 4

3. TRANSMISSION TEMPERATURE SENSOR

If there are no possible causes remaining, view repair.

Repair

Replace TRS Assembly per the Service Information.

Perform 42RLE TRANSMISSION VERIFICATION TEST - VER 1. (Refer to 21 - TRANSMISSION/TRANSAXLE/AUTOMATIC - 42RLE - STANDARD PROCEDURE)

4. (T54) TRANSMISSION TEMPERATURE SENSOR SIGNAL CIRCUIT OPEN

Turn the ignition off to the lock position.

Disconnect the PCM C4 harness connector.

Disconnect the TRS harness connector

NOTE: Check connectors - Clean/repair as necessary.

CAUTION: Do not probe the PCM harness connectors. Probing the PCM harness connectors will damage the PCM terminals resulting in poor terminal to pin connection. Install Miller Tool #8815 to perform diagnosis.

Measure the resistance of the Transmission Temperature Sensor Signal circuit from the appropriate terminal of special tool #8815 to the TRS harness connector.

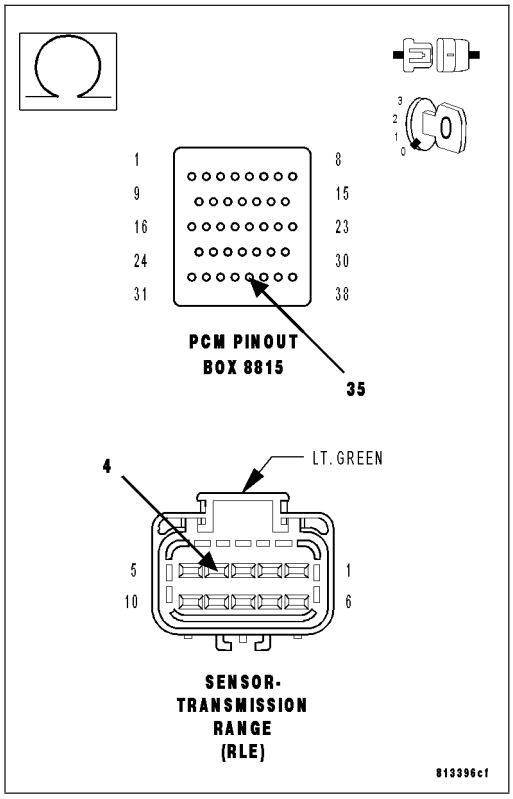

Is the resistance above 5.0 ohms?

Yes >> Repair the Transmission Temperature Sensor Signal circuit for an open.

Perform 42RLE TRANSMISSION VERIFICATION TEST - VER 1. (Refer to 21 - TRANSMISSION/TRANSAXLE/AUTOMATIC - 42RLE - STANDARD PROCEDURE)

No >> Go To 5

5. (K900) SENSOR GROUND CIRCUIT OPEN

Turn the ignition off to the lock position.

Disconnect the TRS harness connector

Disconnect the PCM C2 harness connector

NOTE: Check connectors - Clean/repair as necessary.

Measure the resistance of the (K900) Sensor Ground circuit from the appropriate terminal of special tool #8815 to the TRS harness connector.

Is the resistance above 5.0 ohms?

Yes >> Repair the (K900) Sensor Ground circuit for an open.
Perform 42RLE TRANSMISSION VERIFICATION TEST - VER 1. (Refer to 21 - TRANSMISSION/TRANSAXLE/AUTOMATIC - 42RLE - STANDARD PROCEDURE)

No >> Go To 6

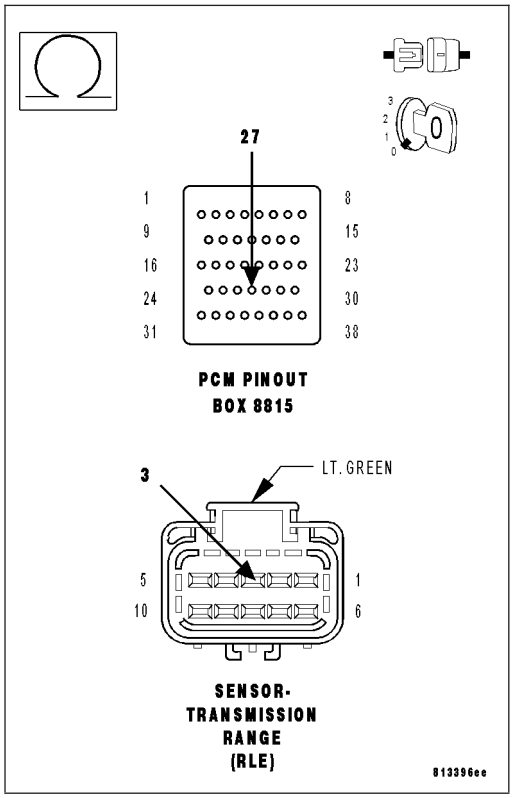

6. (T54) TRANSMISSION TEMPERATURE SENSOR SIGNAL CIRCUIT SHORT TO VOLTAGE

Turn the ignition off to the lock position.

Disconnect the PCM C4 harness connector.

Remove the Transmission Control Relay.

NOTE: Check connectors - Clean/repair as necessary.

Connect a jumper wire between the (Internal) Fused B+ circuit and the (T16) Transmission Control Relay Output circuit in the Transmission Control Relay connector.

Ignition on, engine not running.

Measure the voltage of the (T54) Transmission Temperature Sensor Signal circuit in the appropriate terminal of special tool #8815.

Is the voltage above 0.5 volts?

Yes >> Repair the Transmission Tempeture Sensor Signal circuit for a short to voltage.
Perform 42RLE TRANSMISSION VERIFICATION TEST - VER 1. (Refer to 21 - TRANSMISSION/TRANSAXLE/AUTOMATIC - 42RLE - STANDARD PROCEDURE)

No >> Using the schematics as a guide, check the Powertrain Control Module (PCM) terminals for corrosion, damage, or terminal push out. Pay particular attention to all power and ground circuits. If no problems are found, replace the PCM per the Service Information. With the scan tool PERFORM QUICK LEARN, then program Pinion Factor in the Front Control Module. (Refer to 8 - ELECTRICAL/ELECTRONIC

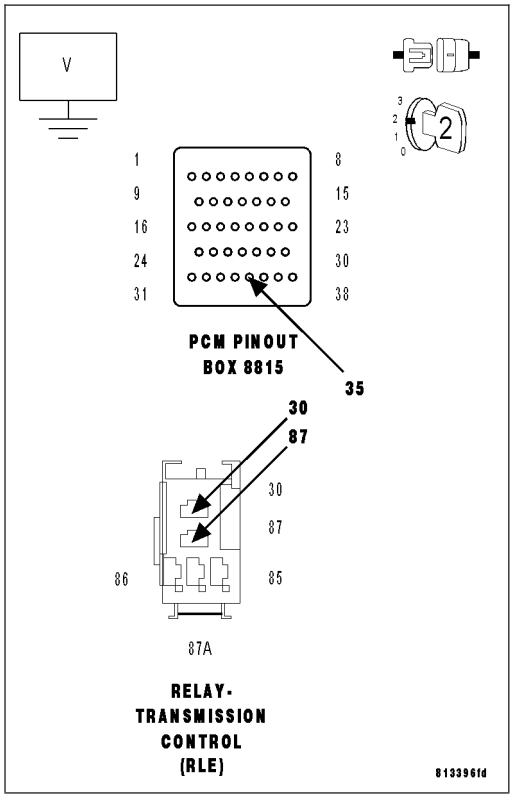

CONTROL MODULES/POWERTRAIN CONTROL MODULE - REMOVAL)

Perform 42RLE TRANSMISSION VERIFICATION TEST - VER 1. (Refer to 21 - TRANSMISSION/TRANSAXLE/AUTOMATIC - 42RLE - STANDARD PROCEDURE)

7. INTERMITTENT WIRING AND CONNECTORS

The conditions necessary to set this DTC are not present at this time.

Using the schematics as a guide, inspect the wiring and connectors specific to this circuit.

Wiggle the wires while checking for shorted and open circuits.

With the scan tool, check the EATX DTC EVENT DATA to help identify the conditions in which the DTC was set.

Were there any problems found?

Yes >> Repair as necessary.

Perform 42RLE TRANSMISSION VERIFICATION TEST - VER 1. (Refer to 21 - TRANSMISSION/TRANSAXLE/AUTOMATIC - 42RLE - STANDARD PROCEDURE)

No >> Test Complete.

P0714-TRANSMISSION TEMPERATURE SENSOR INTERMITTENT

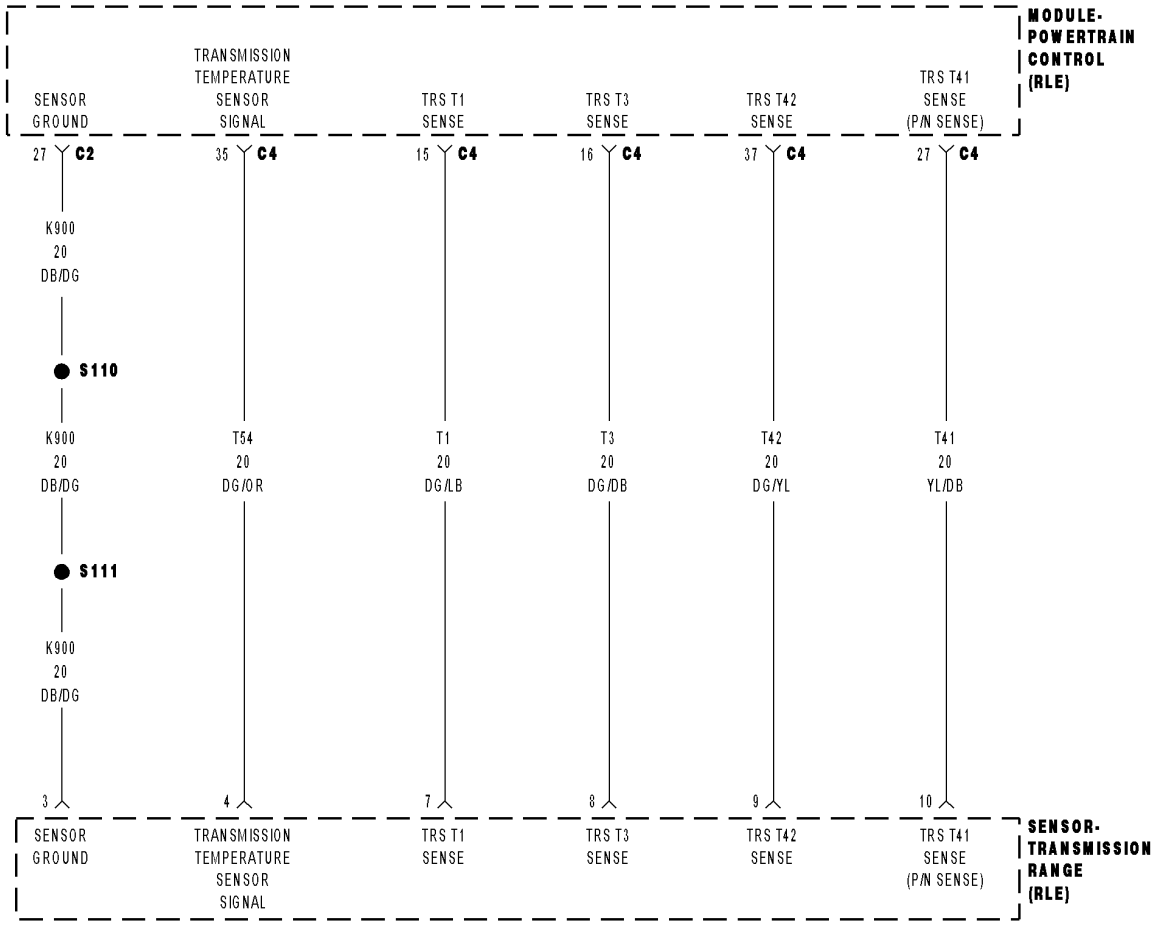

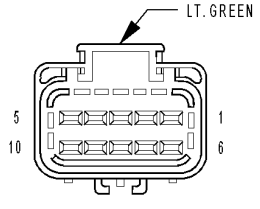

SENSOR-
TRANSMISSION
RANGE
(RLE)

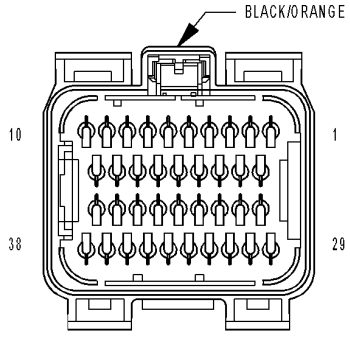

MODULE-
POWERTRAIN
CONTROL C2

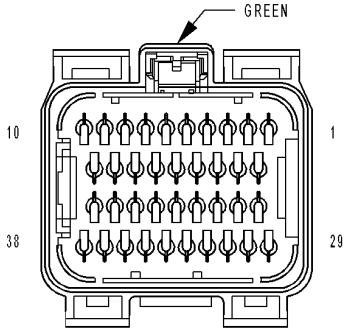

MODULE-
POWERTRAIN
CONTROL C4
(RLE)

81339356

For a complete wiring diagram **Refer to Section 8W**.

- **When Monitored:**
  Continuously with the ignition on and engine running.
- **Set Condition:**
  The DTC will set when the monitored Temperature Sensor voltage fluctuates or changes abruptly within a predetermined period of time.

Possible Causes
TRANSMISSION TEMPERATURE SENSOR
POWERTRAIN CONTROL MODULE

Always perform the 42RLE Pre-Diagnostic Troubleshooting Procedure before proceeding. (Refer to 21 - TRANSMISSION/TRANSAXLE/AUTOMATIC - 42RLE - STANDARD PROCEDURE)

Theory of Operation

The temperature sensor is used to sense the temperature of the transmission fluid. Transmission fluid temperature can affect shift quality, torque converter operation and when or if some diagnostics are run. A failed temperature sensor could affect the OBD diagnostics. If a problem occurs in the transmission temperature sensor circuit, transmission temperature will be based on a calculated value.

1. CHECK TO SEE IF DTC IS CURRENT

With the scan tool , check the STARTS SINCE SET counter for P0714.

NOTE: This counter only applies to the last DTC set.

Is the STARTS SINCE SET counter 2 or less?

Yes >> Go To 2

No >> Go To 4

2. PCM AND WIRING

Turn the ignition off to the lock position.

Remove the Starter Relay.

CAUTION: Removal of the Starter Relay is to prevent a Transmission, NO RESPONSE, condition and disable the starter.

Install the Transmission Simulator, Miller tool #8333 and the Electronic Transmission Adapter kit 8333-1A.

NOTE: Check connectors - Clean/repair as necessary.

Ignition on, engine not running.

With the Transmission Simulator, turn the Input/Output switch to OFF.

With the scan tool , monitor the TRANS TEMP VOLTS while turning the Thermistor Voltage switch to all three positions on the Transmission Simulator.

Compare the scan tool readings with the numbers listed on the Transmission Simulator.

Do the readings on the Transmission Simulator match a non-fluctuating scan tool reading ± 0.2 volts?

Yes >> Go To 3

No >> Using the schematics as a guide, check the Powertrain Control Module (PCM) terminals for corrosion, damage, or terminal push out. Pay particular attention to all power and ground circuits. If no problems are found, replace the PCM per the Service Information. With the scan tool PERFORM QUICK LEARN, then program Pinion Factor in the Front Control Module. (Refer to 8 - ELECTRICAL/ELECTRONIC CONTROL MODULES/POWERTRAIN CONTROL MODULE - REMOVAL)

Perform 42RLE TRANSMISSION VERIFICATION TEST - VER 1. (Refer to 21 - TRANSMISSION/TRANSAXLE/AUTOMATIC - 42RLE - STANDARD PROCEDURE)

3. TRANSMISSION TEMPERATURE SENSOR

View repair.

Repair

Replace TRS Assembly per the Service Information.

Perform 42RLE TRANSMISSION VERIFICATION TEST - VER 1. (Refer to 21 - TRANSMISSION/ TRANSAXLE/AUTOMATIC - 42RLE - STANDARD PROCEDURE)

4. INTERMITTENT WIRING AND CONNECTORS

The conditions necessary to set this DTC are not present at this time.

Using the schematics as a guide, inspect the wiring and connectors specific to this circuit.

Wiggle the wires while checking for shorted and open circuits.

With the scan tool , check the EATX DTC EVENT DATA to help identify the conditions in which the DTC was set.

Were there any problems found?

Yes >> Repair as necessary.

Perform 42RLE TRANSMISSION VERIFICATION TEST - VER 1. (Refer to 21 - TRANSMISSION/ TRANSAXLE/AUTOMATIC - 42RLE - STANDARD PROCEDURE)

No >> Test Complete.

P0715-INPUT SPEED SENSOR 1 CIRCUIT

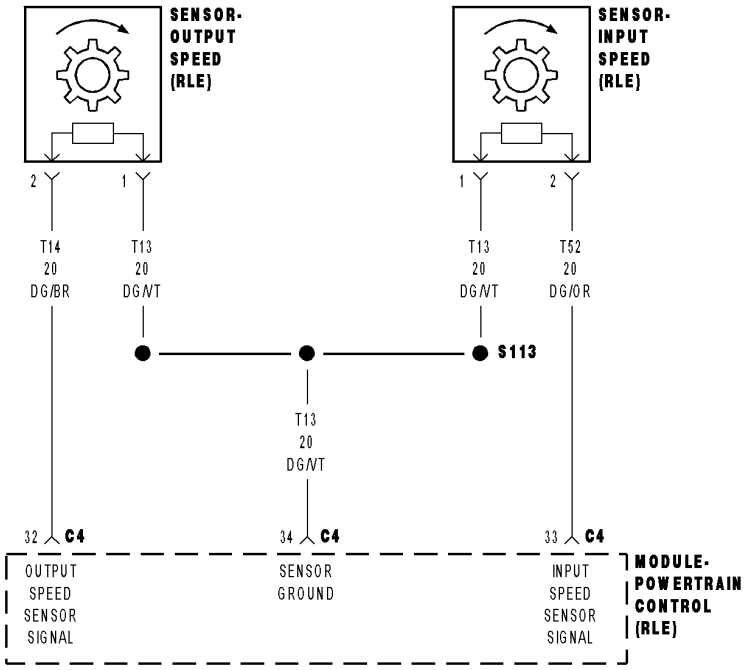

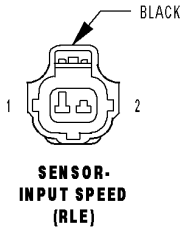

SENSOR-
INPUT SPEED
(RLE)

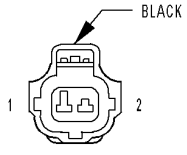

SENSOR-
OUTPUT SPEED
(RLE)

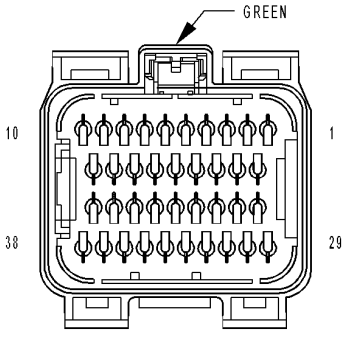

MODULE-
POWERTRAIN
CONTROL C4
(RLE)

8133d404

For a complete wiring diagram **Refer to Section 8W**.

- **When Monitored:**
  The transmission gear ratio is monitored continuously while the transmission is in gear.
- **Set Condition:**
  If there is an excessive change in the Input RPM in any gear. the vehicle must be in a valid gear R, 1st, 2nd, 3rd, or 4th.

Possible Causes
(T52) INPUT SPEED SENSOR SIGNAL CIRCUIT OPEN
(T13) SPEED SENSOR GROUND CIRCUIT OPEN
(T52) INPUT SPEED SENSOR SIGNAL CIRCUIT SHORT TO GROUND
(T52) INPUT SPEED SENSOR SIGNAL CIRCUIT SHORT TO VOLTAGE
(T13) SPEED SENSOR GROUND CIRCUIT SHORT TO VOLTAGE
INPUT SPEED SENSOR
POWERTRAIN CONTROL MODULE

Always perform the 42RLE Pre-Diagnostic Troubleshooting Procedure before proceeding. (Refer to 21 - TRANSMISSION/TRANSAXLE/AUTOMATIC - 42RLE - STANDARD PROCEDURE)

Theory of Operation

The transmission system uses two speed sensors, one to measure input RPM and one to measure output RPM. These inputs are essential for proper transmission operation. Therefore, the integrity of this data is verified through system checks.

Diagnostic Test

1. CHECK TO SEE IF DTC P0715 IS CURRENT

Start the engine.

Place the shifter in park.

With the scan tool , read the Input Speed Sensor RPM.

Is the Input Speed Sensor reading below 400 RPM?

Yes >> Go To 2

No >> Go To 9

2. PCM AND WIRING

Turn the ignition off to the lock position.

Remove the Starter Relay.

CAUTION: Removal of the Starter Relay is to prevent a Transmission, NO RESPONSE, condition and disable the starter.

Install the Transmission Simulator, Miller tool #8333 and the Electronic Transmission Adapter kit 8333-1A.

Ignition on, engine not running.

With the Transmission Simulator, set the ″Input/Output Speed″ switch to ″ON″ and the rotary switch to the ″3000/1250″ position.

With the scan tool, read the Input and Output RPM.

Does the Input speed read 3000 RPM and the Output speed read 1250 RPM ± 50 RPM?

Yes >> Go To 3

No >> Go To 4

3. INPUT SPEED SENSOR

View repair.

Repair

Replace the Input Speed Sensor per the Service Information.

Perform 42RLE TRANSMISSION VERIFICATION TEST - VER 1. (Refer to 21 - TRANSMISSION/TRANSAXLE/AUTOMATIC - 42RLE - STANDARD PROCEDURE)

4. (T52) INPUT SPEED SENSOR SIGNAL CIRCUIT OPEN

Turn the ignition off to the lock position.

Disconnect the PCM C4 harness connector.

Disconnect the Input Speed Sensor harness connector.

NOTE: Check connectors - Clean/repair as necessary.

CAUTION: Do not probe the PCM harness connectors. Probing the PCM harness connectors will damage the PCM terminals resulting in poor terminal to pin connection. Install Miller Special Tool #8815 to perform diagnosis.

Measure the resistance of the (T52) Input Speed Sensor Signal circuit from the appropriate terminal of special tool #8815 to the Input Speed Sensor connector.

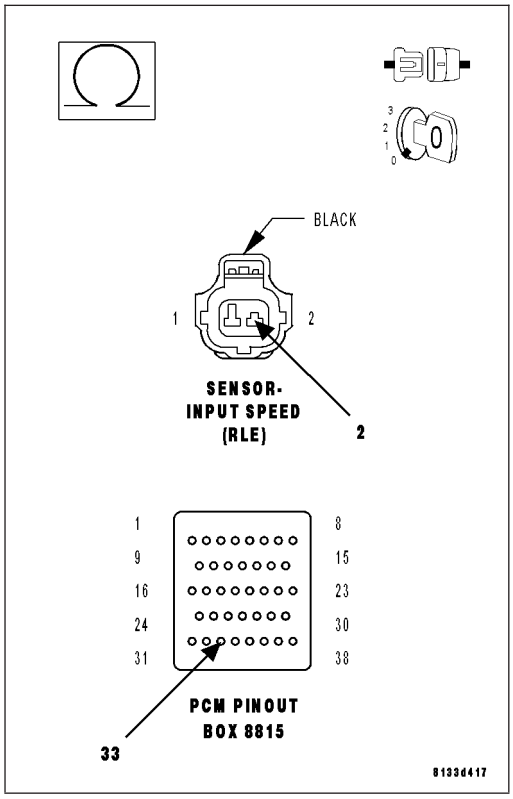

Is the resistance above 5.0 ohms?

Yes >> Repair the (T52) Input Speed Sensor Signal circuit for an open.

Perform 42RLE TRANSMISSION VERIFICATION TEST - VER 1. (Refer to 21 - TRANSMISSION/TRANSAXLE/AUTOMATIC - 42RLE - STANDARD PROCEDURE)

No >> Go To 5

5. (T13) SENSOR GROUND CIRCUIT OPEN

Turn the ignition off to the lock position.

Disconnect the PCM C4 harness connector.

Disconnect the Input Speed Sensor harness connector.

NOTE: Check connectors - Clean/repair as necessary.
Measure the resistance of the (T13) Sensor Ground circuit from the from the appropriate terminal of special tool #8815 to the Input Speed Sensor harness connector.

Is the resistance above 5.0 ohms?

Yes >> Repair the (T13) Sensor Ground circuit for an open.
Perform 42RLE TRANSMISSION VERIFICATION TEST - VER 1. (Refer to 21 - TRANSMISSION/TRANSAXLE/AUTOMATIC - 42RLE - STANDARD PROCEDURE)

No >> Go To 6

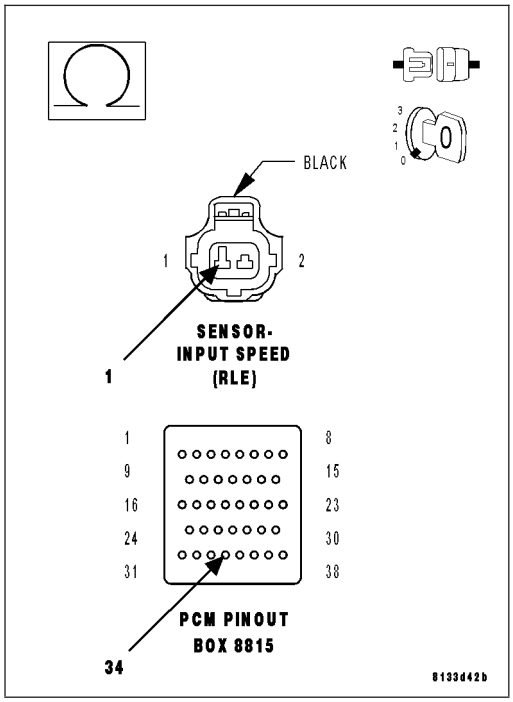

6. (T52) INPUT SPEED SENSOR SIGNAL CIRCUIT SHORT TO GROUND

Turn the ignition off to the lock position.

Disconnect the PCM C4 harness connector.

Disconnect the Input Speed Sensor harness connector.

NOTE: Check connectors - Clean/repair as necessary.
Measure the resistance between ground and the (T52) Input Speed Sensor Signal circuit.

Is the resistance Below 5.0 ohms?

Yes >> Repair the (T52) Input Speed Sensor Signal circuit for a short to ground.
Perform 42RLE TRANSMISSION VERIFICATION TEST - VER 1. (Refer to 21 - TRANSMISSION/TRANSAXLE/AUTOMATIC - 42RLE - STANDARD PROCEDURE)

No >> Go To 7

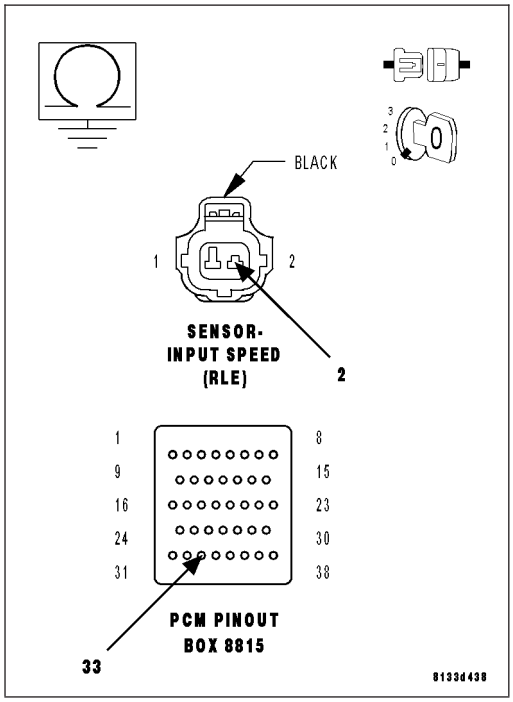

7. (T52) INPUT SPEED SENSOR SIGNAL CIRCUIT SHORT TO VOLTAGE

Turn the ignition off to the lock position.

Disconnect the PCM C4 harness connector.

Disconnect the Output Speed Sensor harness connector.

Remove the Transmission Control Relay.

NOTE: Check connectors - Clean/repair as necessary.

Connect a jumper wire between the (Internal) Fused B+ circuit and (T16) Transmission Control Relay Output circuit in the Transmission Control Relay connector.

Ignition on, engine not running.

Measure the voltage of the (T52) Input Speed Sensor Signal circuit.

Is the voltage above 0.5 volt?

Yes >> Repair the (T52) Input Speed Sensor Signal circuit for a short to voltage.

Perform 42RLE TRANSMISSION VERIFICATION TEST - VER 1. (Refer to 21 - TRANSMISSION/TRANSAXLE/AUTOMATIC - 42RLE - STANDARD PROCEDURE)

No >> Go To 8

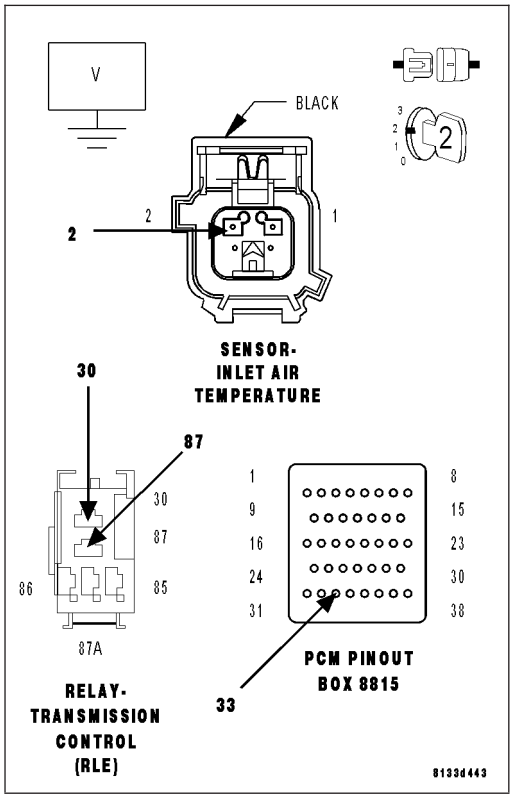

8. (T13) SENSOR GROUND CIRCUIT SHORT TO VOLTAGE

Turn the ignition off to the lock position.

Disconnect the PCM C4 harness connector.

Remove the Transmission Control Relay.

NOTE: Check connectors - Clean/repair as necessary.

Connect a jumper wire between the (Internal) Fused B+ and (T16) Transmission Control Relay Output circuits in the Transmission Control Relay connector.

Ignition on, engine not running.

Measure the voltage of the (T13) Sensor Ground circuit.

Is the voltage above 0.5 volts?

Yes >> Repair the (T13) Sensor Ground circuit for a short to voltage.

Perform 42RLE TRANSMISSION VERIFICATION TEST - VER 1. (Refer to 21 - TRANSMISSION/TRANSAXLE/AUTOMATIC - 42RLE - STANDARD PROCEDURE)

No >> Using the schematics as a guide, check the Powertrain Control Module (PCM) terminals for corrosion, damage, or terminal push out. Pay particular attention to all power and ground circuits. If no problems are found, replace the PCM per the Service Information. With the scan tool PERFORM QUICK LEARN, then program Pinion Factor in the Front Control Module. (Refer to 8 - ELECTRICAL/ELECTRONIC

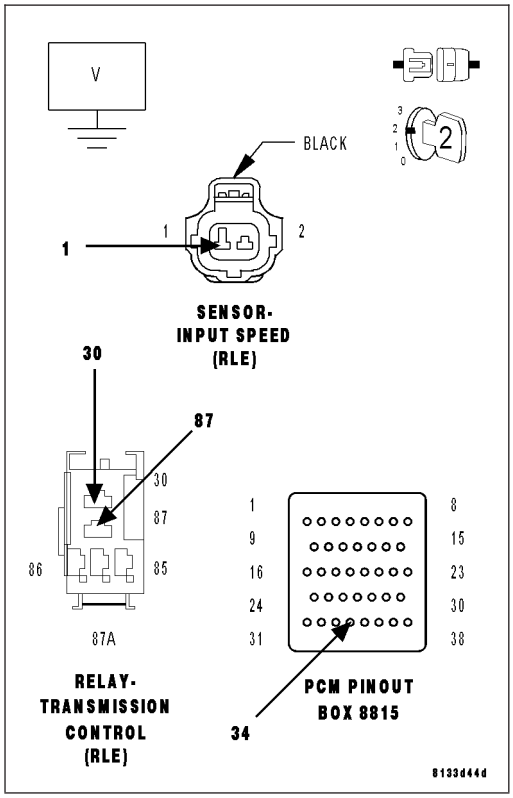

CONTROL MODULES/POWERTRAIN CONTROL MODULE - REMOVAL)

Perform 42RLE TRANSMISSION VERIFICATION TEST - VER 1. (Refer to 21 - TRANSMISSION/TRANSAXLE/AUTOMATIC - 42RLE - STANDARD PROCEDURE)

9. INTERMITTENT WIRING AND CONNECTORS

The conditions necessary to set the DTC are not present at this time.

Using the schematics as a guide, inspect the wiring and connectors specific to this circuit.

Wiggle the wiring and connectors while checking for shorted and open circuits.

With the scan tool , check the EATX DTC EVENT DATA to help identify the conditions in which the DTC was set.

Were there any problems found?

Yes >> Repair as necessary.

Perform 42RLE TRANSMISSION VERIFICATION TEST - VER 1. (Refer to 21 - TRANSMISSION/TRANSAXLE/AUTOMATIC - 42RLE - STANDARD PROCEDURE)

No >> Test Complete.

P0720-OUTPUT SPEED SENSOR CIRCUIT

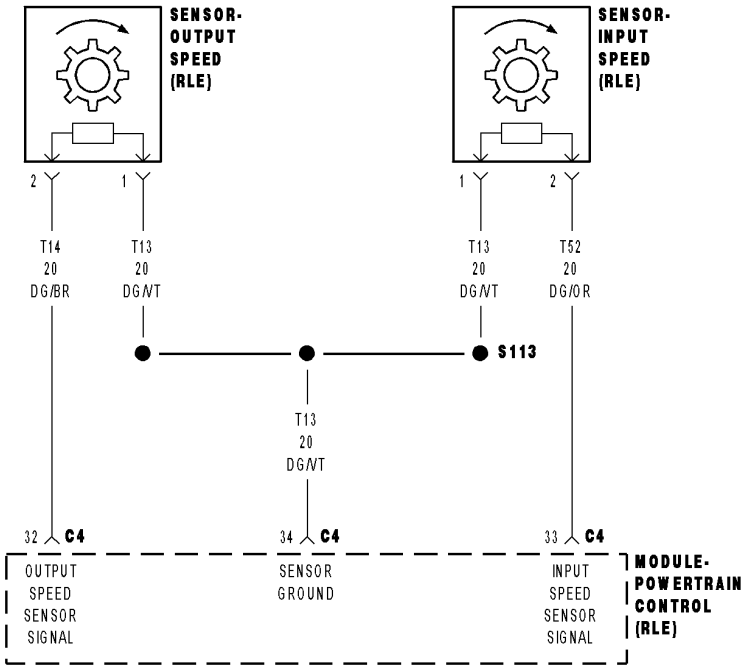

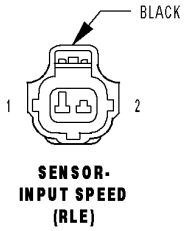

SENSOR-
INPUT SPEED
(RLE)

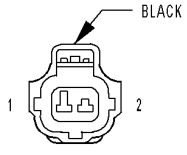

SENSOR-
OUTPUT SPEED
(RLE)

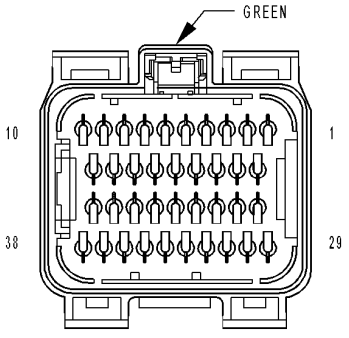

MODULE-
POWERTRAIN
CONTROL C4
(RLE)

8133d404

For a complete wiring diagram **Refer to Section 8W**.

- **When Monitored:**
  The transmission gear ratio is monitored continuously while the transmission is in gear.
- **Set Condition:**
  If there is an excessive change in the Output RPM in any gear.

Possible Causes
(T14) OUTPUT SPEED SENSOR SIGNAL CIRCUIT OPEN
(T13) SENSOR GROUND CIRCUIT OPEN
(T14) OUTPUT SPEED SENSOR SIGNAL CIRCUIT SHORT TO GROUND
(T14) OUTPUT SPEED SENSOR SIGNAL CIRCUIT SHORT TO VOLTAGE
(T13) SENSOR GROUND CIRCUIT SHORT TO VOLTAGE
OUTPUT SPEED SENSOR
POWERTRAIN CONTROL MODULE

Always perform the 42RLE Pre-Diagnostic Troubleshooting Procedure before proceeding. (Refer to 21 - TRANSMISSION/TRANSAXLE/AUTOMATIC - 42RLE - STANDARD PROCEDURE)

Theory of Operation

The transmission system uses two speed sensors, one to measure input RPM and one to measure output RPM. These inputs are essential for proper transmission operation. Therefore, the integrity of this data is verified through system checks.

Diagnostic Test

1. CHECK TO SEE IF DTC P0720 IS CURRENT

Start the engine in park.

Raise the drive wheels off of the ground.

WARNING: Properly support the vehicle.
Firmly apply the brakes and place the transmission selector in drive.

WARNING: Be sure to keep hands and feet clear of rotating wheels.
Release the brakes and allow the drive wheels to spin freely.

NOTE: The drive wheels must be turning at this point.
With the scan tool, read the Output RPM

Is the Output RPM below 100?

Yes >> Go To 2

No >> Go To 9

2. PCM AND WIRING

Turn the ignition off to the lock position.

Remove the Starter Relay.

CAUTION: Removal of the Starter Relay is to prevent a Transmission, NO RESPONSE, condition and disable the starter.
Install the Transmission Simulator, Miller tool #8333 and the Electronic Transmission Adapter kit 8333-1A.

Ignition on, engine not running.

With the Transmission Simulator, set the ″Input/Output Speed″ switch to ″ON″ and the rotary switch to the ″3000/1250″ position.

With the scan tool , read the Input and Output RPM.

Does the Input RPM read 3000 and the Output RPM read 1250 (within 50 RPM)?

Yes >> Go To 3

No >> Go To 4

3. OUTPUT SPEED SENSOR

If there are no possible causes remaining, view repair.

Repair

Replace the Output Speed Sensor per the Service Information.

Perform 42RLE TRANSMISSION VERIFICATION TEST - VER 1. (Refer to 21 - TRANSMISSION/TRANSAXLE/AUTOMATIC - 42RLE - STANDARD PROCEDURE)

4. (T14) OUTPUT SPEED SENSOR SIGNAL CIRCUIT OPEN

Turn the ignition off to the lock position.

Disconnect the PCM C4 harness connector.

Disconnect the Output Speed Sensor harness connector.

NOTE: Check connectors - Clean/repair as necessary.

CAUTION: Do not probe the PCM harness connectors. Probing the PCM harness connectors will damage the PCM terminals resulting in poor terminal to pin connection. Install Miller Special Tool #8815 to perform diagnosis.

Measure the resistance of the (T14) Output Speed Sensor Signal circuit from appropriate terminal of special tool #8815 to the Output Speed Sensor harness connector.

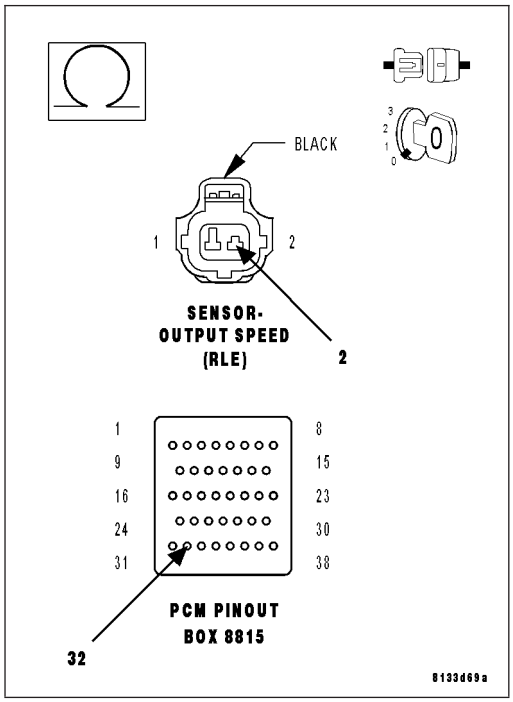

Is the resistance above 5.0 ohms?

Yes >> Repair the (T14) Output Speed Sensor Signal circuit for an open.

Perform 42RLE TRANSMISSION VERIFICATION TEST - VER 1. (Refer to 21 - TRANSMISSION/TRANSAXLE/AUTOMATIC - 42RLE - STANDARD PROCEDURE)

No >> Go To 5

5. (T13) SENSOR GROUND CIRCUIT OPEN

Turn the ignition off to the lock position.

Disconnect the PCM C4 harness connector.

Disconnect the Output Speed Sensor harness connector.

NOTE: Check connectors - Clean/repair as necessary.

Measure the resistance of the Sensor Ground circuit from the appropriate terminal of special tool #8815 to the Output Speed Sensor harness connector.

Is the resistance above 5.0 ohms?

Yes >> Repair the (T13) Sensor Ground circuit for an open.
Perform 42RLE TRANSMISSION VERIFICATION TEST - VER 1. (Refer to 21 - TRANSMISSION/TRANSAXLE/AUTOMATIC - 42RLE - STANDARD PROCEDURE)

No >> Go To 6

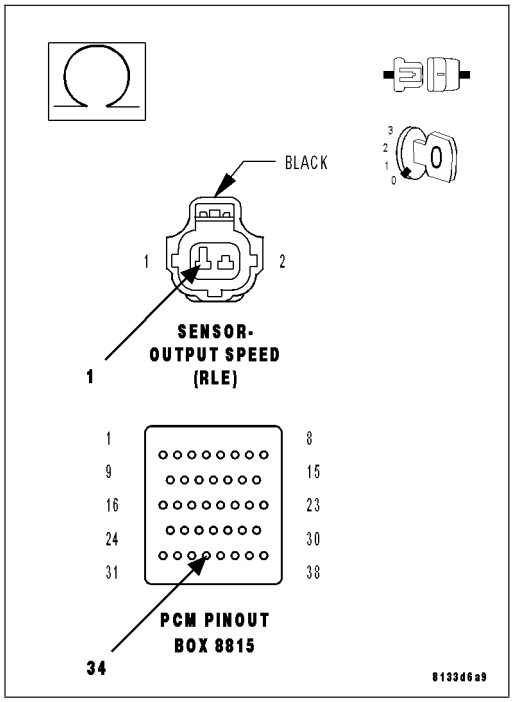

6. (T14) OUTPUT SPEED SENSOR SIGNAL CIRCUIT SHORT TO GROUND

Turn the ignition off to the lock position.

Disconnect the PCM C4 harness connector.

Disconnect the Output Speed Sensor harness connector.

NOTE: Check connectors - Clean/repair as necessary.

Measure the resistance between ground and the (T14) Output Speed Sensor Signal circuit.

Is the resistance below 5.0 ohms?

Yes >> Repair the (T14) Output Speed Sensor Signal circuit for a short to ground.
Perform 42RLE TRANSMISSION VERIFICATION TEST - VER 1. (Refer to 21 - TRANSMISSION/TRANSAXLE/AUTOMATIC - 42RLE - STANDARD PROCEDURE)

No >> Go To 7

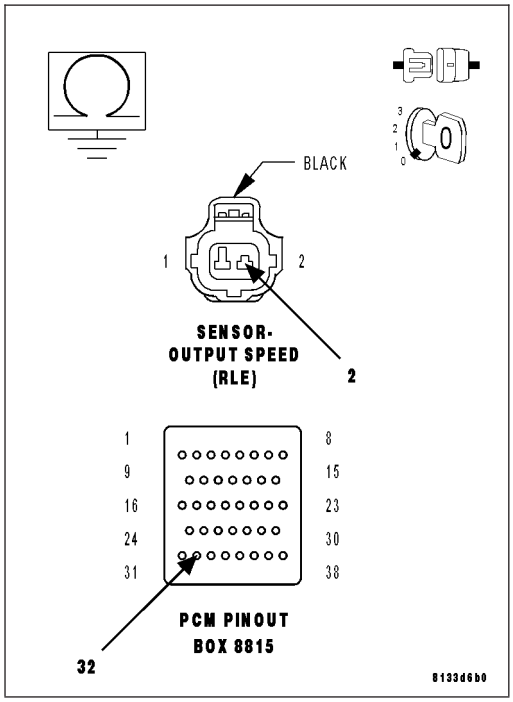

7. (T14) OUTPUT SPEED SENSOR SIGNAL CIRCUIT SHORT TO VOLTAGE

Turn the ignition off to the lock position.

Disconnect the PCM C4 harness connector.

Disconnect the Output Speed Sensor harness connector.

Remove the Transmission Control Relay.

NOTE: Check connectors - Clean/repair as necessary.

Connect a jumper wire between the (Internal) Fused B+ circuit and (T16) Transmission Control Relay Output circuit in the Transmission Control Relay connector.

Ignition on, engine not running.

Measure the voltage of the (T14) Output Speed Sensor Signal circuit.

Is the voltage above 0.5 volt?

Yes >> Repair the (T14) Output Speed Sensor Signal circuit for a short to voltage.

Perform 42RLE TRANSMISSION VERIFICATION TEST - VER 1. (Refer to 21 - TRANSMISSION/TRANSAXLE/AUTOMATIC - 42RLE - STANDARD PROCEDURE)

No >> Go To 8

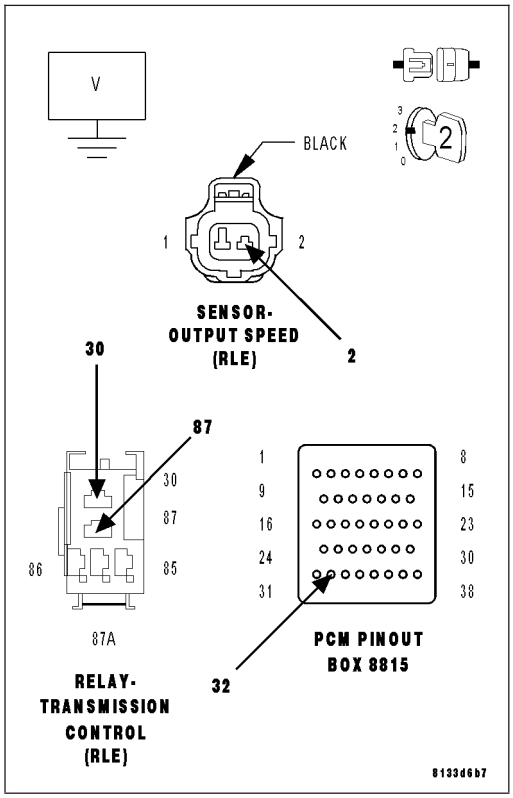

8. (T13) SENSOR GROUND CIRCUIT SHORT TO VOLTAGE

Turn the ignition off to the lock position.

Disconnect the PCM C4 harness connector.

Remove the Transmission Control Relay.

NOTE: Check connectors - Clean/repair as necessary.

Connect a jumper wire between the (Internal) Fused B+ and (T16) Transmission Control Relay Output circuits in the Transmission Control Relay connector.

Ignition on, engine not running.

Measure the voltage of the (T13) Sensor Ground circuit.

Is the voltage above 0.5 volts?

Yes >> Repair the (T13) Sensor Ground circuit for a short to voltage.

Perform 42RLE TRANSMISSION VERIFICATION TEST - VER 1. (Refer to 21 - TRANSMISSION/TRANSAXLE/AUTOMATIC - 42RLE - STANDARD PROCEDURE)

No >> Using the schematics as a guide, check the Powertrain Control Module (PCM) terminals for corrosion, damage, or terminal push out. Pay particular attention to all power and ground circuits. If no problems are found, replace the PCM per the Service Information. With the scan tool PERFORM QUICK LEARN, then program Pinion Factor in the Front Control Module. (Refer to 8 - ELECTRICAL/ELECTRONIC

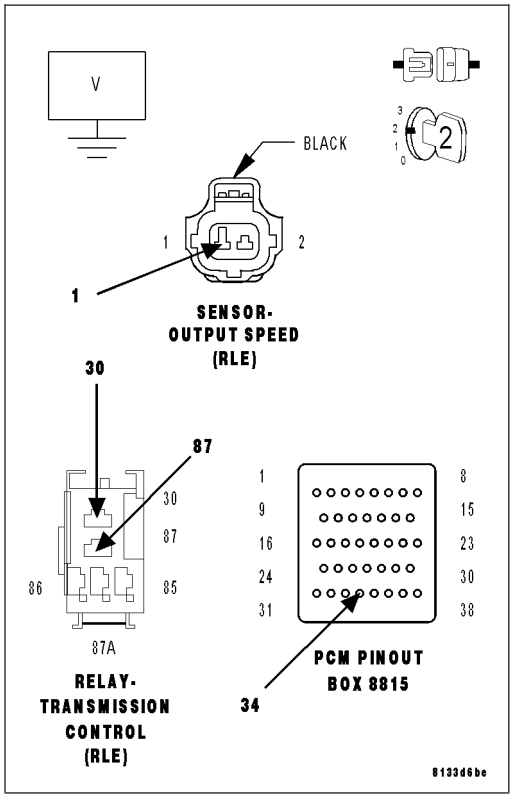

CONTROL MODULES/POWERTRAIN CONTROL MODULE - REMOVAL)

Perform 42RLE TRANSMISSION VERIFICATION TEST - VER 1. (Refer to 21 - TRANSMISSION/TRANSAXLE/AUTOMATIC - 42RLE - STANDARD PROCEDURE)

9. INTERMITTENT WIRING AND CONNECTORS

The conditions necessary to set the DTC are not present at this time.

Using the schematics as a guide, inspect the wiring and connectors specific to this circuit.

Wiggle the wiring and connectors while checking for shorted and open circuits.

With the scan tool , check the EATX DTC EVENT DATA to help identify the conditions in which the DTC was set.

Were there any problems found?

Yes >> Repair as necessary.

Perform 42RLE TRANSMISSION VERIFICATION TEST - VER 1. (Refer to 21 - TRANSMISSION/TRANSAXLE/AUTOMATIC - 42RLE - STANDARD PROCEDURE)

No >> Test Complete.

P0725-ENGINE SPEED SENSOR CIRCUIT

For a complete wiring diagram **Refer to Section 8W**.

- **When Monitored:**
  Whenever the engine is running.
- **Set Condition:**
  The Engine RPM is less than 390 or greater than 8000 for more than 2 seconds while the engine is running.

Possible Causes
ENGINE DTCS PRESENT
POWERTRAIN CONTROL MODULE

Always perform the 42RLE Pre-Diagnostic Troubleshooting Procedure before proceeding. (Refer to 21 - TRANSMISSION/TRANSAXLE/AUTOMATIC - 42RLE - STANDARD PROCEDURE)

Theory of Operation

The PCM uses a dual port RAM internal to the controller to send the engine speed signal to the Transmission Control System. The calculated engine RPM is compared to a minimum and maximum value. If the PCM interprets this signal to be out of range when the engine is running the code is set. The MIL illuminates after 10 seconds of vehicle operation and the transmission system defaults to Limp-in mode.

Diagnostic Test

1. CONDITION FOR DTC P0725 IS PRESENT

Start the engine.

NOTE: This DTC is not a Transmission Input Speed Sensor DTC.
With the scan tool, view DTCs.

Is the status Active for this DTC or is the STARTS SINCE SET counter set at 0?

Yes >> Go To 2

No >> Go To 3

2. ENGINE DTCS PRESENT

With the scan tool, read Engine DTCs.

Are there any Engine DTC's present?

Yes >> Refer to Section 9 – Engine Electrical Diagnostics and perform the appropriate diagnostic procedure.
Perform 42RLE TRANSMISSION VERIFICATION TEST - VER 1. (Refer to 21 - TRANSMISSION/ TRANSAXLE/AUTOMATIC - 42RLE - STANDARD PROCEDURE)

No >> Using the schematics as a guide, check the Powertrain Control Module (PCM) terminals for corrosion, damage, or terminal push out. Pay particular attention to all power and ground circuits. If no problems are found, replace the PCM per the Service Information. With the scan tool PERFORM QUICK LEARN, then program Pinion Factor in the Front Control Module. (Refer to 8 - ELECTRICAL/ELECTRONIC CONTROL MODULES/POWERTRAIN CONTROL MODULE - REMOVAL)
Perform 42RLE TRANSMISSION VERIFICATION TEST - VER 1. (Refer to 21 - TRANSMISSION/ TRANSAXLE/AUTOMATIC - 42RLE - STANDARD PROCEDURE)

3. INTERMITTENT WIRING AND CONNECTORS

The conditions necessary to set the DTC are not present at this time.
Using the schematics as a guide, inspect the wiring and connectors specific to this circuit.
Wiggle the wiring and connectors while checking for shorted and open circuits.
With the scan tool, check the EATX DTC EVENT DATA to help identify the conditions in which the DTC was set.

Were there any problems found?

Yes >> Repair as necessary.
Perform 42RLE TRANSMISSION VERIFICATION TEST - VER 1. (Refer to 21 - TRANSMISSION/ TRANSAXLE/AUTOMATIC - 42RLE - STANDARD PROCEDURE)

No >> Test Complete.

P0731-GEAR RATIO ERROR IN 1ST

For a complete wiring diagram **Refer to Section 8W**.

- **When Monitored:**
  The Transmission gear ratio is monitored continuously while the transmission is in gear.
- **Set Condition:**
  If the ratio of the Input RPM to the Output RPM does not match the current gear ratio when compared to the known gear ratio.

Possible Causes
RELATED TRANSMISSION DTCS PRESENT
INTERMITTENT GEAR RATIO ERRORS
INTERNAL TRANSMISSION

Always perform the 42RLE Pre-Diagnostic Troubleshooting Procedure before proceeding. (Refer to 21 - TRANSMISSION/TRANSAXLE/AUTOMATIC - 42RLE - STANDARD PROCEDURE)

Theory of Operation

The transmission system uses two speed sensors, one to measure input RPM and one to measure output RPM. These inputs are essential for proper transmission operation. Therefore, the integrity of this data is verified through data checks. When in gear, if the gear ratio does not compare to a known gear ratio, the corresponding gear ratio error trouble code is set. The transmission will go into Limp-in mode after four gear ratio error events occur in a given driving cycle.

Diagnostic Test

1. DETERMINING IF RELATED TRANSMISSION DTCS ARE PRESENT

With the scan tool, read Transmission DTCs.

If any of these DTCs are present, perform their respective tests first.

Are there any Loss of Prime, Line Pressure Sensor and/or Speed Sensor DTCs present?

Yes >> Refer to appropriate diagnostic procedure in the Transmission category. If any of these DTC's are present, they will cause a gear ratio error. Perform the test for Loss of Prime first if it is present.

No >> Go To 2

2. CHECK TO SEE IF P0731 IS CURRENT

With the scan tool, perform the 1st gear clutch test. Follow the instructions on the scan tool.

Increase the throttle angle or TPS Degree to 30° for no more than a few seconds.

CAUTION: Do not overheat the transmission.

Did the Clutch Test pass, Input Speed remain at zero?

Yes >> Go To 3

No >> Go To 4

3. CHECK FOR INTERMITTENT OPERATION

The conditions to set this DTC are not current at this time.

Check the gearshift linkage adjustment.

Gear ratio DTCs can be set by problems in the Input and Output Speed Sensor circuits. If the vehicle passes the Clutch Test and still sets Gear Ratio DTC, check the Speed Sensors for proper operation.

Remove the Starter Relay.

CAUTION: removal of the Starter Relay is to prevent a Transmission NO RESPONSE condition and to disable the starter.

Check the wiring and connectors for the Speed Sensors for a good connection, then perform a wiggle test using the Transmission Simulator, Miller tool #8333 and the Electronic Transmission Adapter kit 8333-1A.

This DTC can also be set under extreme temperature conditions. This is usually caused by an internal problem. Verify if the problem is only experienced under extreme hot or cold conditions.

With the scan tool, check the EATX DTC EVENT DATA to help identify the conditions in which the DTC was set.

Were there any problems found?

Yes >> Repair as necessary.

Perform 42RLE TRANSMISSION VERIFICATION TEST - VER 1. (Refer to 21 - TRANSMISSION/TRANSAXLE/AUTOMATIC - 42RLE - STANDARD PROCEDURE)

No >> Test Complete.

4. INTERNAL TRANSMISSION

If there are no possible causes remaining, view repair.

Repair

Repair internal Transmission per the Service Information. Check all of the components related to the UD and LR clutches. Inspect the Oil Pump and repair or replace per the Service Information.

Perform 42RLE TRANSMISSION VERIFICATION TEST - VER 1. (Refer to 21 - TRANSMISSION/TRANSAXLE/AUTOMATIC - 42RLE - STANDARD PROCEDURE)

P0732-GEAR RATIO ERROR IN 2ND

For a complete wiring diagram **Refer to Section 8W**.

- **When Monitored:**
  The Transmission gear ratio is monitored continuously while the transmission is in gear.
- **Set Condition:**
  If the ratio of the Input RPM to the Output RPM does not match the current gear ratio when compared to the known gear ratio.

Possible Causes
RELATED TRANSMISSION DTCS PRESENT
TRANSMISSION SOLENOID/PRESSURE SWITCH ASSEMBLY
INTERMITTENT GEAR RATIO ERRORS
INTERNAL TRANSMISSION

Always perform the 42RLE Pre-Diagnostic Troubleshooting Procedure before proceeding. (Refer to 21 - TRANSMISSION/TRANSAXLE/AUTOMATIC - 42RLE - STANDARD PROCEDURE)

Theory of Operation

The transmission system uses two speed sensors, one to measure input RPM and one to measure output RPM. These inputs are essential for proper transmission operation. Therefore, the integrity of this data is verified through data checks. When in gear, if the gear ratio does not compare to a known gear ratio, the corresponding gear ratio error trouble code is set. The transmission will go into Limp-in mode after four gear ratio error events occur in a given driving cycle.

Diagnostic Test

1. DETERMINING IF RELATED TRANSMISSION DTCS ARE PRESENT

With the scan tool, read Transmission DTCs.

If any of these DTCs are present, perform their respective tests first.

Are there any Loss of Prime, Line Pressure Sensor and/or Speed Sensor DTCs present?

Yes >> Refer to appropriate diagnostic procedure in the Transmission category. If any of these DTCs are present, they will cause a gear ratio error. Perform the test for Loss of Prime first if it is present.

No >> Go To 2

2. CHECK TO SEE IF P0732 IS CURRENT

With the scan tool, perform the 2nd gear clutch test. Follow the instructions on the scan tool.

Increase the throttle angle or TPS Degree to 30° for no more than a few seconds.

CAUTION: Do not overheat the transmission.

Did the Clutch Test pass, Input Speed remain at zero?

Yes >> Go To 3

No >> Go To 4

3. CHECK FOR INTERMITTENT OPERATION

The conditions to set this DTC are not current at this time.

Check the gearshift linkage adjustment.

Gear ratio DTCs can be set by problems in the Input and Output Speed Sensor circuits. If the vehicle passes the Clutch Test and still sets Gear Ratio DTC, check the Speed Sensors for proper operation.

Remove the Starter Relay.

CAUTION: removal of the Starter Relay is to prevent a Transmission NO RESPONSE condition and to disable the starter.

Check the wiring and connectors to the Speed Sensors for a good connection, then perform a wiggle test using the Transmission Simulator, Miller tool #8333 and the Electronic Transmission Adapter kit 8333-1A.

This DTC can also be set under extreme temperature conditions. This is usually caused by an internal problem. Verify if the problem is only experienced under extreme hot or cold conditions.

With the scan tool, check the EATX DTC EVENT DATA to help identify the conditions in which the DTC was set.

Were there any problems found?

Yes >> Repair as necessary.
Perform 42RLE TRANSMISSION VERIFICATION TEST - VER 1. (Refer to 21 - TRANSMISSION/ TRANSAXLE/AUTOMATIC - 42RLE - STANDARD PROCEDURE)

No >> Test Complete.

4. CHECK FOR RELATED PRESSURE SWITCH DTC'S

With the scan tool, read Transmission DTC's.

Are the DTC's P0845 and/or P0846 present also?

Yes >> Replace the Transmission Solenoid/Pressure Switch Assembly per the Service Information.
Perform 42RLE TRANSMISSION VERIFICATION TEST - VER 1. (Refer to 21 - TRANSMISSION/ TRANSAXLE/AUTOMATIC - 42RLE - STANDARD PROCEDURE)

No >> Go To 5

5. INTERNAL TRANSMISSION

If there are no possible causes remaining, view repair.

Repair

Repair internal Transmission per the Service Information. Check all of the components related to the UD and 2/4 clutches. Inspect the Oil Pump and repair or replace per the Service Information.

Perform 42RLE TRANSMISSION VERIFICATION TEST - VER 1. (Refer to 21 - TRANSMISSION/ TRANSAXLE/AUTOMATIC - 42RLE - STANDARD PROCEDURE)

P0733-GEAR RATIO ERROR IN 3RD

For a complete wiring diagram **Refer to Section 8W**.

- **When Monitored:**
  The Transmission gear ratio is monitored continuously while the transmission is in gear.
- **Set Condition:**
  If the ratio of the Input RPM to the Output RPM does not match the current gear ratio when compared to the known gear ratio.

Possible Causes
RELATED TRANSMISSION DTCS PRESENT
INTERMITTENT GEAR RATIO ERRORS
TRANSMISSION SOLENOID/PRESSURE SWITCH ASSEMBLY
INTERNAL TRANSMISSION

Always perform the 42RLE Pre-Diagnostic Troubleshooting Procedure before proceeding. (Refer to 21 - TRANSMISSION/TRANSAXLE/AUTOMATIC - 42RLE - STANDARD PROCEDURE)

Theory of Operation

The transmission system uses two speed sensors, one to measure input RPM and one to measure output RPM. These inputs are essential for proper transmission operation. Therefore, the integrity of this data is verified through data checks. When in gear, if the gear ratio does not compare to a known gear ratio, the corresponding gear ratio error trouble code is set. The transmission will go into Limp-in mode after four gear ratio error events occur in a given driving cycle.

Diagnostic Test

1. DETERMINING IF RELATED TRANSMISSION DTCS ARE PRESENT

With the scan tool, read Transmission DTCs.

If any of these DTCs are present, perform their respective tests first.

Are there any Loss of Prime, Line Pressure Sensor and/or Speed Sensor DTCs present?

Yes >> Refer to appropriate diagnostic procedure in the Transmission category. If any of these DTCs are present, they will cause a gear ratio error. Perform the test for Loss of Prime first if it is present.

No >> Go To 2

2. CHECK TO SEE IF P0733 IS CURRENT

With the scan tool, perform the 3rd gear clutch test. Follow the instructions on the scan tool.

Increase the throttle angle or TPS Degree to 30° for no more than a few seconds.

CAUTION: Do not overheat the transmission.

Did the Clutch Test pass, Input Speed remain at zero?

Yes >> Go To 3

No >> Go To 4

3. CHECK FOR INTERMITTENT OPERATION

The conditions to set this DTC are not current at this time.

Check the gearshift linkage adjustment.

Gear ratio DTCs can be set by problems in the Input and Output Speed Sensor circuits. If the vehicle passes the Clutch Test and still sets Gear Ratio DTC, check the Speed Sensors for proper operation.

Remove the Starter Relay.

CAUTION: removal of the Starter Relay is to prevent a Transmission NO RESPONSE condition and to disable the starter.

Check the wiring and connectors for the Speed Sensors for a good connection, then perform a wiggle test using the Transmission Simulator, Miller tool #8333 and the Electronic Transmission Adapter kit 8333-1A.

This DTC can also be set under extreme temperature conditions, this is usually caused by an internal problem. Verify if the problem is only experienced under extreme hot or cold conditions.

With the scan tool, check the EATX DTC EVENT DATA to help identify the conditions in which the DTC was set.

Were there any problems found?

Yes >> Repair as necessary.
Perform 42RLE TRANSMISSION VERIFICATION TEST - VER 1. (Refer to 21 - TRANSMISSION/ TRANSAXLE/AUTOMATIC - 42RLE - STANDARD PROCEDURE)

No >> Test Complete.

4. CHECK FOR RELATED PRESSURE SWITCH DTCS

With the scan tool, read Transmission DTCs.

Are the DTCs P0870 and/or P0871 present also?

Yes >> Replace the Transmission Solenoid/Pressure Switch Assembly per the Service Information.
Perform 42RLE TRANSMISSION VERIFICATION TEST - VER 1. (Refer to 21 - TRANSMISSION/ TRANSAXLE/AUTOMATIC - 42RLE - STANDARD PROCEDURE)

No >> Go To 5

5. INTERNAL TRANSMISSION

If there are no possible causes remaining, view repair.

Repair

Repair internal Transmission per the Service Information. Check all of the components related to the UD and O/D clutches. Inspect the Oil Pump and repair or replace per the Service Information.

Perform 42RLE TRANSMISSION VERIFICATION TEST - VER 1. (Refer to 21 - TRANSMISSION/ TRANSAXLE/AUTOMATIC - 42RLE - STANDARD PROCEDURE)

P0734-GEAR RATIO ERROR IN 4TH

For a complete wiring diagram **Refer to Section 8W**.

- **When Monitored:**
  The Transmission gear ratio is monitored continuously while the transmission is in gear.
- **Set Condition:**
  If the ratio of the Input RPM to the Output RPM does not match the current gear ratio when compared to the known gear ratio.

Possible Causes
RELATED TRANSMISSION DTCS PRESENT
INTERMITTENT GEAR RATIO ERRORS
TRANSMISSION SOLENOID/PRESSURE SWITCH ASSEMBLY
INTERNAL TRANSMISSION

Always perform the 42RLE Pre-Diagnostic Troubleshooting Procedure before proceeding. (Refer to 21 - TRANSMISSION/TRANSAXLE/AUTOMATIC - 42RLE - STANDARD PROCEDURE)

Theory of Operation

The transmission system uses two speed sensors, one to measure input RPM and one to measure output RPM. These inputs are essential for proper transmission operation. Therefore, the integrity of this data is verified through data checks. When in gear, if the gear ratio does not compare to a known gear ratio, the corresponding gear ratio error trouble code is set. The transmission will go into Limp-in mode after four gear ratio error events occur in a given driving cycle.

Diagnostic Test

1. DETERMINING IF RELATED TRANSMISSION DTCS ARE PRESENT

With the scan tool, read Transmission DTCs.

If any of these DTCs are present, perform their respective tests first.

Are there any Loss of Prime, Line Pressure Sensor and/or Speed Sensor DTCs present?

Yes >> Refer to appropriate diagnostic procedure in the Transmission category. If any of these DTCs are present, they will cause a gear ratio error. Perform the test for Loss of Prime first if it is present.

No >> Go To 2

2. CHECK TO SEE IF P0733 IS CURRENT

With the scan tool, perform the 4th gear clutch test. Follow the instructions on the scan tool.

Increase the throttle angle or TPS Degree to 30° for no more than a few seconds.

CAUTION: Do not overheat the transmission.

Did the Clutch Test pass, Input Speed remain at zero?

Yes >> Go To 3

No >> Go To 4

3. CHECK FOR INTERMITTENT OPERATION

The conditions to set this DTC are not current at this time.

Check the gearshift linkage adjustment.

Gear ratio DTC's can be set by problems in the Input and Output Speed Sensor circuits. If the vehicle passes the Clutch Test and still sets a Gear Ratio DTC, check the Speed Sensors for proper operation.

Remove the Starter Relay.

CAUTION: Removal of the Starter Relay is to prevent a Transmission NO RESPONSE condition and to disable the starter.

Check the wiring and connectors for the Speed Sensors for a good connection, then perform a wiggle test using the Transmission Simulator, Miller tool #8333 and the Electronic Transmission Adapter kit 8333-1A.

This DTC can also be set under extreme temperature conditions, this is usually caused by an internal problem. Verify if the problem is only experienced under extreme hot or cold conditions.

With the scan tool, check the EATX DTC EVENT DATA to help identify the conditions in which the DTC was set.

Were there any problems found?

Yes >> Repair as necessary.
Perform 42RLE TRANSMISSION VERIFICATION TEST - VER 1. (Refer to 21 - TRANSMISSION/ TRANSAXLE/AUTOMATIC - 42RLE - STANDARD PROCEDURE)

No >> Test Complete.

4. CHECK FOR RELATED PRESSURE SWITCH DTC'S

With the scan tool, read Transmission DTC's.

Are the DTC's P0870 and/or P0871 present also?

Yes >> Replace the Transmission Solenoid/Pressure Switch Assembly per the Service Information.
Perform 42RLE TRANSMISSION VERIFICATION TEST - VER 1. (Refer to 21 - TRANSMISSION/ TRANSAXLE/AUTOMATIC - 42RLE - STANDARD PROCEDURE)

No >> Go To 5

5. INTERNAL TRANSMISSION

If there are no possible causes remaining, view repair.

Repair

Repair internal Transmission per the Service Information. Check all of the components related to the O/D and 2/4 clutches. Inspect the Oil Pump and repair or replace per the Service Information.

Perform 42RLE TRANSMISSION VERIFICATION TEST - VER 1. (Refer to 21 - TRANSMISSION/ TRANSAXLE/AUTOMATIC - 42RLE - STANDARD PROCEDURE)

P0736-GEAR RATIO ERROR IN REVERSE

For a complete wiring diagram **Refer to Section 8W**.

- **When Monitored:**
  The Transmission gear ratio is monitored continuously while the transmission is in gear.
- **Set Condition:**
  If the ratio of the Input RPM to the Output RPM does not match the current gear ratio when compared to the known gear ratio.

Possible Causes
RELATED TRANSMISSION DTC'S PRESENT
INTERMITTENT GEAR RATIO ERRORS
INTERNAL TRANSMISSION

Always perform the 42RLE Pre-Diagnostic Troubleshooting Procedure before proceeding. (Refer to 21 - TRANSMISSION/TRANSAXLE/AUTOMATIC - 42RLE - STANDARD PROCEDURE)

Theory of Operation

The transmission system uses two speed sensors, one to measure input RPM and one to measure output RPM. These inputs are essential for proper transmission operation. Therefore, the integrity of this data is verified through data checks. When in gear, if the gear ratio does not compare to a known gear ratio, the corresponding gear ratio error trouble code is set. The transmission will go into Limp-in mode after four gear ratio error events occur in a given driving cycle.

Diagnostic Test

1. DETERMINING IF RELATED TRANSMISSION DTC'S ARE PRESENT

With the scan tool, read Transmission DTC's.

If any of these DTC's are present, perform their respective tests first.

Are there any Loss of Prime, Line Pressure Sensor and/or Speed Sensor DTCs present?

Yes >> Refer to appropriate diagnostic procedure in the Transmission category. If any of these DTC's are present, they will cause a gear ratio error. Perform the test for Loss of Prime first if it is present.

No >> Go To 2

2. CHECK TO SEE IF P0731 IS CURRENT

With the scan tool, perform the Reverse gear clutch test. Follow the instructions on the scan tool.

Increase the throttle angle or TPS Degree to 30° for no more than a few seconds.

CAUTION: Do not overheat the transmission.

Did the Clutch Test pass, Input Speed remain at zero?

Yes >> Go To 3

No >> Go To 4

3. CHECK FOR INTERMITTENT OPERATION

The conditions to set this DTC are not current at this time.

Check the gearshift linkage adjustment.

Gear ratio DTC's can be set by problems in the Input and Output Speed Sensor circuits. If the vehicle passes the Clutch Test and still sets Gear Ratio DTC, check the Speed Sensors for proper operation.

Remove the Starter Relay.

CAUTION: removal of the Starter Relay is to prevent a Transmission, NO RESPONSE, condition and disable the starter.

Check the wiring and connectors for the Speed Sensors for a good connection, then perform a wiggle test using the Transmission Simulator, Miller tool #8333 and the Electronic Transmission Adapter kit 8333-1A.

This DTC can also be set under extreme temperature conditions, this is usually caused by an internal problem. Verify if the problem is only experienced under extreme hot or cold conditions.

With the scan tool, check the EATX DTC EVENT DATA to help identify the conditions in which the DTC was set.

Were there any problems found?

Yes >> Repair as necessary.
Perform 42RLE TRANSMISSION VERIFICATION TEST - VER 1. (Refer to 21 - TRANSMISSION/ TRANSAXLE/AUTOMATIC - 42RLE - STANDARD PROCEDURE)

No >> Test Complete.

4. INTERNAL TRANSMISSION

If there are no possible causes remaining, view repair.

Repair

Repair internal Transmission per the Service Information. Check all of the components related to the Reverse and LR clutches. Inspect the Oil Pump and repair or replace per the Service Information.

Perform 42RLE TRANSMISSION VERIFICATION TEST - VER 1. (Refer to 21 - TRANSMISSION/ TRANSAXLE/AUTOMATIC - 42RLE - STANDARD PROCEDURE)

P0740-TCC OUT OF RANGE

For a complete wiring diagram **Refer to Section 8W**.

- **When Monitored:**
  The Torque Converter Clutch (TCC) is in FEMCC or PEMCC, Transmission temperature is hot, Engine temperature is greater than 38° C or 100° F, Transmission Input Speed greater than engine speed, TPS less than 30°, and brake not applied.
- **Set Condition:**
  The TCC is modulated by controlling the duty cycle of the L/R Solenoid until the difference between the Engine RPM and the Transmission Input Speed RPM or duty cycle is within a desired range. The DTC is set after the period of 10 seconds and 3 occurrences of either: FEMCC - with slip greater than 100 RPM or PEMCC - duty cycle greater than 85%.

Possible Causes
RELATED L/R SOLENOID OR PRESSURE SWITCH DTCS PRESENT
INTERNAL TRANSMISSION

Always perform the 42RLE Pre-Diagnostic Troubleshooting Procedure before proceeding. (Refer to 21 - TRANSMISSION/TRANSAXLE/AUTOMATIC - 42RLE - STANDARD PROCEDURE)

Theory of Operation

When in 2nd, 3rd, or 4th gear, the torque converter clutch (TCC) can be locked or partially locked when certain conditions are met. The TCC piston is electronically modulated by increasing the duty cycle of the LR/TCC solenoid until the torque converter slip difference (difference between engine and turbine speed) is within 60 RPM. Then the LR/TCC solenoid is fully energized (FEMCC / 100% duty cycle). Torque converter slip is monitored in FEMCC to ensure adequate clutch capacity. The transmission will attempt normal EMCC operation (not in Limp-in) even after the MIL is illuminated. MIL will illuminate after 5 minutes of accumulated slip in FEMCC.

Diagnostic Test

1. RELATED L/R SOLENOID OR PRESSURE SWITCH DTCS ARE PRESENT

With the scan tool, read Transmission DTCs

Are the DTCs P0750 and/or P0841 present also?

Yes >> Refer to the Transmission category and perform the appropriate diagnostic procedure.

No >> Go To 2

2. CHECK TO SEE IF DTC P0740 IS CURRENT

Ignition on, engine not running.

With the scan tool, record and erase DTCs.

Drive the vehicle until it is fully warmed up to at least 110 degrees (F).

Perform the following step 3 times.

Drive the vehicle at 50 MPH and allow 4th gear to engage for at least 10 seconds. Close the throttle, then tip back in until the throttle angle is between 25 and 29 degrees. Note that if you go over 30 degrees, you must back off of the throttle and retry.

Did the TCC engage during any of the attempts?

Yes >> Go To 4

No >> Go To 3

3. INTERNAL TRANSMISSION

If there are no possible causes remaining, view repair.

Repair

Perform the Hydraulic Pressure test per the Service Information and repair the internal transmission components and Torque convertor as necessary.

Perform 42RLE TRANSMISSION VERIFICATION TEST - VER 1. (Refer to 21 - TRANSMISSION/ TRANSAXLE/AUTOMATIC - 42RLE - STANDARD PROCEDURE)

4. INTERMITTENT WIRING AND CONNECTORS

The conditions necessary to set the DTC are not present at this time.

Using the schematics as a guide, inspect the wiring and connectors specific to this circuit.

Wiggle the wiring and connectors while checking for shorted and open circuits.

This DTC can also be set under extreme temperature conditions. This is usually caused by an internal problem. Verify if the problem is only experienced under extreme hot or cold conditions.

With the scan tool, check the EATX DTC EVENT DATA to help identify the conditions in which the DTC was set.

Were there any problems found?

Yes >> Repair as necessary.

Perform 42RLE TRANSMISSION VERIFICATION TEST - VER 1. (Refer to 21 - TRANSMISSION/ TRANSAXLE/AUTOMATIC - 42RLE - STANDARD PROCEDURE)

No >> Test Complete.

P0750-LR SOLENOID CIRCUIT

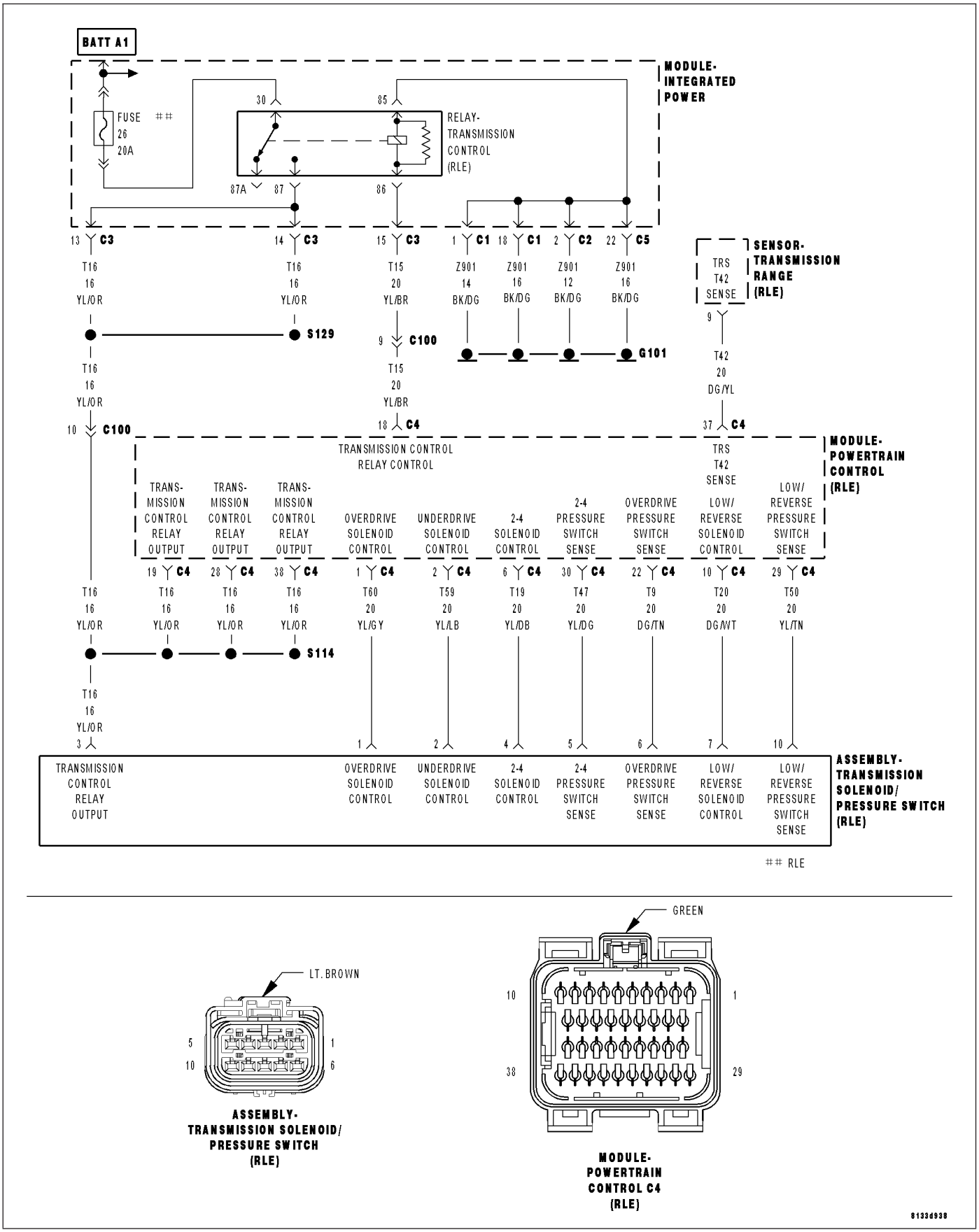

For a complete wiring diagram **Refer to Section 8W**.

- **When Monitored:**
  Initially at ignition on, then every 10 seconds thereafter. The solenoids will also be tested immediately after a gear ratio error or pressure switch error is detected.
- **Set Condition:**
  Three consecutive solenoid continuity test failures, or one failure if test is run in response to a gear ratio or pressure switch error.

Possible Causes
RELATED TCM POWER INPUT DTCS PRESENT
(T20) LR SOLENOID CONTROL CIRCUIT OPEN
(T20) LR SOLENOID CONTROL CIRCUIT SHORT TO GROUND
(T20) LR SOLENOID CONTROL CIRCUIT SHORT TO VOLTAGE
TRANSMISSION SOLENOID/PRESSURE SWITCH ASSEMBLY
POWERTRAIN CONTROL MODULE

Always perform the 42RLE Pre-Diagnostic Troubleshooting Procedure before proceeding. (Refer to 21 - TRANSMISSION/TRANSAXLE/AUTOMATIC - 42RLE - STANDARD PROCEDURE)

Theory of Operation

Four solenoids are used to control the friction elements (clutches). The continuity of the solenoids circuits are periodically tested. Each solenoid is turned on or off depending on its current state. An inductive spike should be detected by the PCM during this test. If no spike is detected, the circuit is tested again to verify the failure. In addition to the periodic testing, the solenoid circuits are tested if a gear ratio or pressure switch error occurs. In this case, one failure will result in the appropriate DTC being set. The MIL will illuminate and the transmission goes into neutral, if the DTC is set above 35 Km/h (22 MPH), Limp-in mode when vehicle speed is below 35 Km/h (22 MPH).

Diagnostic Test

1. DETERMINE IF RELATED TCM POWER INPUT DTCS ARE PRESENT

With the scan tool, read Transmission DTCs.

Are there any TCM Power Input DTCs present also?

Yes >> Refer to the Transmission category and perform the appropriate diagnostic procedure.

No >> Go To 2

2. CHECK TO SEE IF P0750 IS CURRENT

With the scan tool, Check the STARTS SINCE SET counter.

NOTE: This counter only applies to the last DTC set.

Is the STARTS SINCE SET counter for P0750 set at 0?

Yes >> Go To 3

No >> Go To 8

3. PCM AND WIRING

Turn the ignition off to the lock position.

Remove the Starter Relay.

CAUTION: Removal of the Starter Relay is to prevent a Transmission, NO RESPONSE, condition and disable the starter.

Install the Transmission Simulator, Miller tool #8333 and the Electronic Transmission Adapter kit 8333-1A.

Ignition on, engine not running.

With the scan tool, actuate the L/R Solenoid.

Monitor the L/R Solenoid LED on the Transmission Simulator.

Did the L/R Solenoid LED on the Transmission Simulator blink on and off during actuation?

Yes >> Go To 7

No >> Go To 4

4. (T20) LR SOLENOID CONTROL CIRCUIT OPEN

Turn the ignition off to the lock position.

Disconnect the PCM C4 harness connector.

Disconnect the Transmission Solenoid/Pressure Switch Assembly harness connector.

CAUTION: Do not probe the PCM harness connectors. Probing the PCM harness connectors will damage the PCM terminals resulting in poor terminal to pin connection. Install Miller Special Tool #8815 to perform diagnosis.

Measure the resistance of the (T20) LR Solenoid Control circuit from the appropriate terminal of special tool #8815 to the Solenoid/Pressure Switch Assembly harness connector.

Is the resistance above 5.0 ohms?

Yes >> Repair the (T20) LR Solenoid Control circuit for an open. Perform 42RLE TRANSMISSION VERIFICATION TEST - VER 1. (Refer to 21 - TRANSMISSION/TRANSAXLE/AUTOMATIC - 42RLE - STANDARD PROCEDURE)

No >> Go To 5

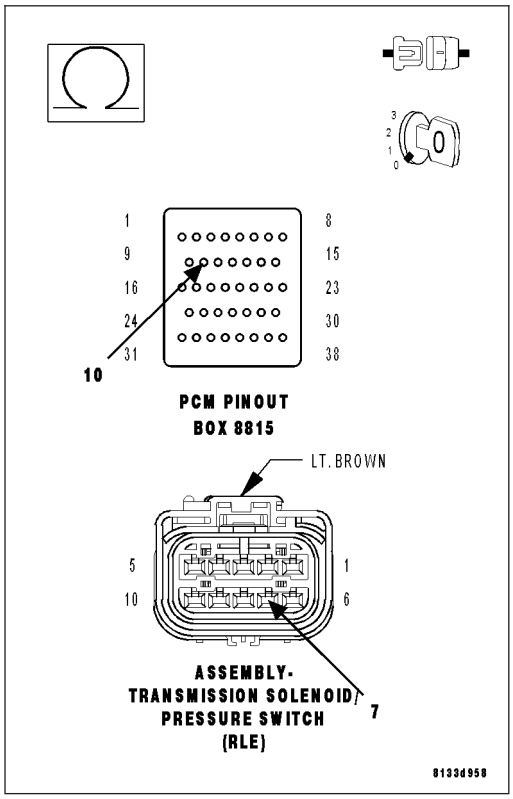

5. (T20) LR SOLENOID CONTROL CIRCUIT SHORT TO GROUND

Turn the ignition off to the lock position.

Disconnect the PCM C4 harness connector.

Disconnect the Transmission Solenoid/Pressure Switch Assembly harness connector.

Measure the resistance between ground and the (T20) LR Solenoid Control circuit.

Is the resistance below 5.0 ohms?

Yes >> Repair the (T20) LR Solenoid Control circuit for a short to ground.

Perform 42RLE TRANSMISSION VERIFICATION TEST - VER 1. (Refer to 21 - TRANSMISSION/TRANSAXLE/AUTOMATIC - 42RLE - STANDARD PROCEDURE)

No >> Go To 6

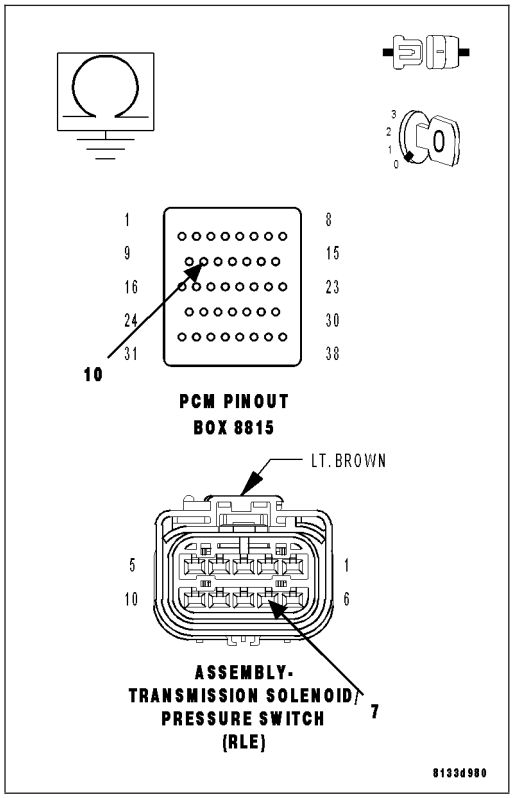

6. (T20) LR SOLENOID CONTROL CIRCUIT SHORT TO VOLTAGE

Turn the ignition off to the lock position.

Disconnect the PCM C4 harness connector.

Disconnect the Transmission Solenoid/Pressure Switch Assembly harness connector.

Remove the Transmission Control Relay.

NOTE: Check connectors - Clean/repair as necessary.

Connect a jumper wire between the (Internal) Fused B+ circuit and the (T16) Transmission Control Relay Output circuit in the Transmission Control Relay connector.

Ignition on, engine not running.

Measure the voltage of the (T20) LR Solenoid Control circuit.

Is the voltage above 0.5 volts?

Yes >> Repair the (T20) LR Solenoid Control circuit for a short to voltage.

Perform 42RLE TRANSMISSION VERIFICATION TEST - VER 1. (Refer to 21 - TRANSMISSION/TRANSAXLE/AUTOMATIC - 42RLE - STANDARD PROCEDURE)

No >> Using the schematics as a guide, check the Powertrain Control Module (PCM) terminals for corrosion, damage, or terminal push out. Pay particular attention to all power and ground circuits. If no problems are found, replace the PCM per the Service Information. With the scan tool PERFORM QUICK LEARN, then program Pinion Factor in the Front Control Module. (Refer to 8 - ELECTRICAL/ELECTRONIC

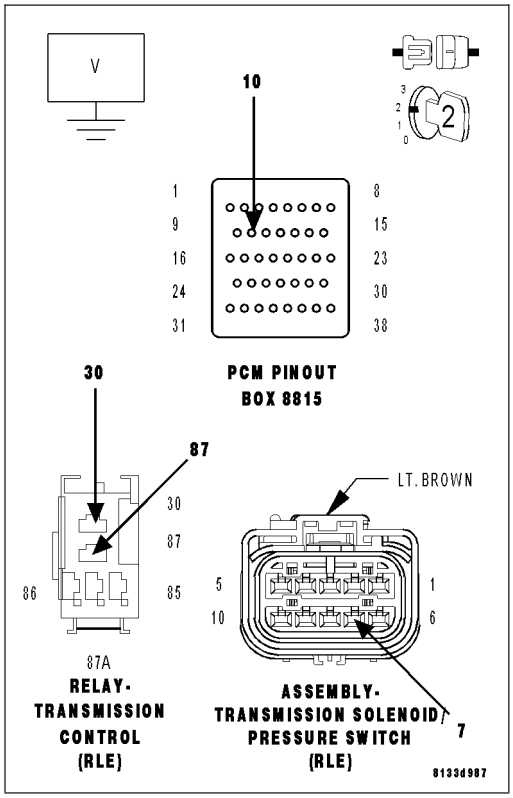

CONTROL MODULES/POWERTRAIN CONTROL MODULE - REMOVAL)

Perform 42RLE TRANSMISSION VERIFICATION TEST - VER 1. (Refer to 21 - TRANSMISSION/TRANSAXLE/AUTOMATIC - 42RLE - STANDARD PROCEDURE)

7. LR SOLENOID/PRESSURE SWITCH ASSEMBLY

View repair.

Repair

Replace the Transmission Solenoid/Pressure Switch Assembly per the Service Information.

Perform 42RLE TRANSMISSION VERIFICATION TEST - VER 1. (Refer to 21 - TRANSMISSION/TRANSAXLE/AUTOMATIC - 42RLE - STANDARD PROCEDURE)

8. INTERMITTENT WIRING AND CONNECTORS

The conditions necessary to set the DTC are not present at this time.

Using the schematics as a guide, inspect the wiring and connectors specific to this circuit.

Wiggle the wires while checking for shorted and open circuits.

With the scan tool, check the EATX DTC EVENT DATA to help identify the conditions in which the DTC was set.

Were there any problems found?

Yes >> Repair as necessary.

Perform 42RLE TRANSMISSION VERIFICATION TEST - VER 1. (Refer to 21 - TRANSMISSION/TRANSAXLE/AUTOMATIC - 42RLE - STANDARD PROCEDURE)

No >> Test Complete.

P0755-2/4 SOLENOID CIRCUIT

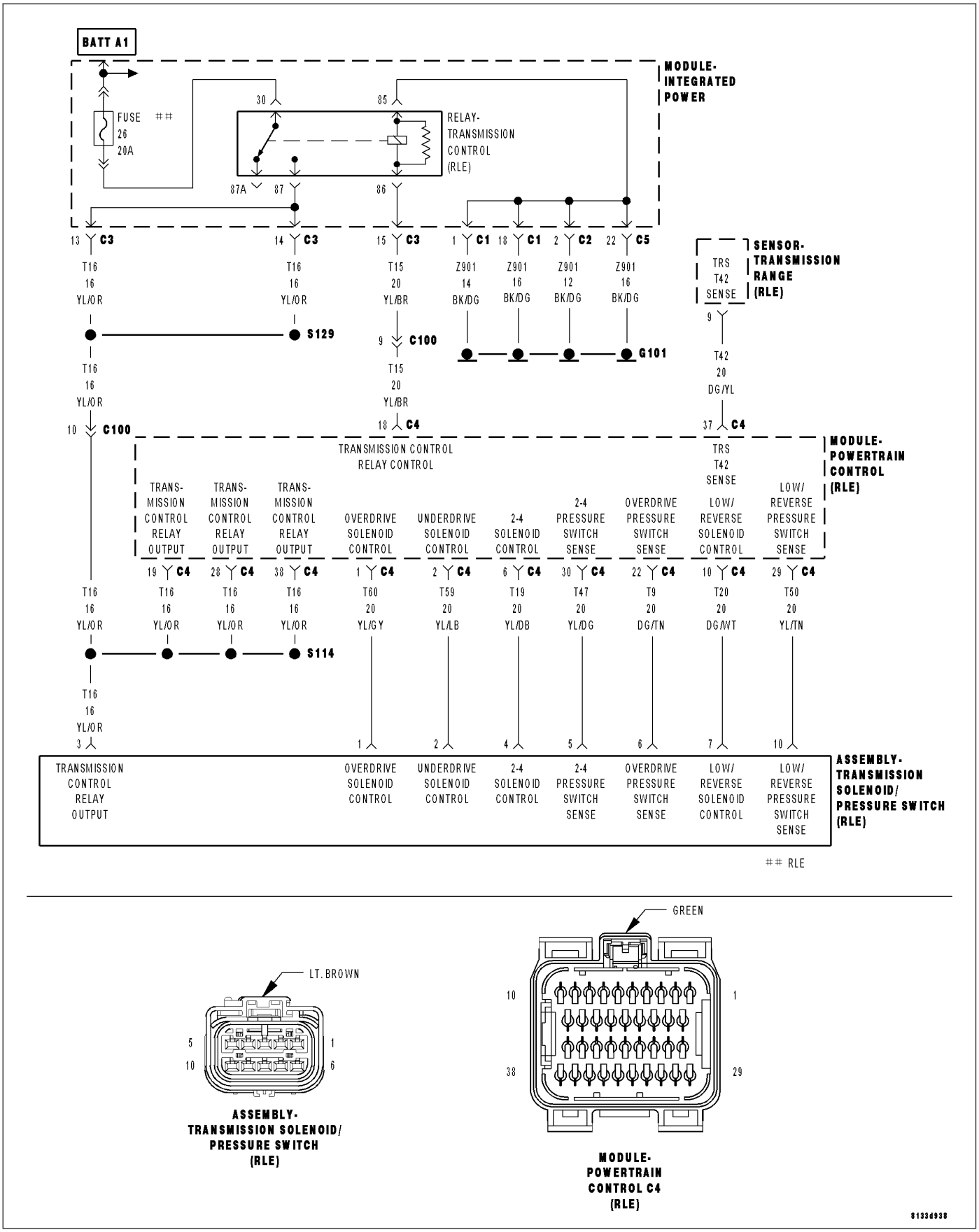

For a complete wiring diagram **Refer to Section 8W**.

- **When Monitored:**
  Initially at ignition on, then every 10 seconds thereafter. The solenoids will also be tested immediately after a gear ratio error or pressure switch error is detected.
- **Set Condition:**
  Three consecutive solenoid continuity test failures, or one failure if test is run in response to a gear ratio or pressure switch error.

Possible Causes
RELATED TCM POWER INPUT DTCS PRESENT
(T19) 2/4 SOLENOID CONTROL CIRCUIT OPEN
(T19) 2/4 SOLENOID CONTROL CIRCUIT SHORT TO GROUND
(T19) 2/4 SOLENOID CONTROL CIRCUIT SHORT TO VOLTAGE
TRANSMISSION SOLENOID/PRESSURE SWITCH ASSEMBLY
POWERTRAIN CONTROL MODULE

Always perform the 42RLE Pre-Diagnostic Troubleshooting Procedure before proceeding. (Refer to 21 - TRANSMISSION/TRANSAXLE/AUTOMATIC - 42RLE - STANDARD PROCEDURE)

Theory of Operation

Four solenoids are used to control the friction elements (clutches). The continuity of the solenoids circuits are periodically tested. Each solenoid is turned on or off depending on its current state. An inductive spike should be detected by the PCM during this test. If no spike is detected, the circuit is tested again to verify the failure. In addition to the periodic testing, the solenoid circuits are tested if a gear ratio or pressure switch error occurs. In this case, one failure will result in the appropriate DTC being set. The MIL will illuminate and the transmission goes into neutral, if the DTC is set above 35 Km/h (22 MPH), Limp-in mode when vehicle speed is below 35 Km/h (22 MPH).

Diagnostic Test

1. DETERMINE IF RELATED TCM POWER INPUT DTCS ARE PRESENT

With the scan tool, read Transmission DTCs.

Are there any TCM Power Input DTCs present also?

Yes >> Refer to the Transmission category and perform the appropriate diagnostic procedure.

No >> Go To 2

2. CHECK TO SEE IF P0755 IS CURRENT

With the scan tool, Check the STARTS SINCE SET counter.

NOTE: This counter only applies to the last DTC set.

Is the STARTS SINCE SET counter for P0755 set at 0?

Yes >> Go To 3

No >> Go To 8

3. PCM AND WIRING

Turn the ignition off to the lock position.

Remove the Starter Relay.

CAUTION: Removal of the Starter Relay is to prevent a Transmission, NO RESPONSE, condition and disable the starter.

Install the Transmission Simulator, Miller tool #8333 and the Electronic Transmission Adapter kit 8333-1A.

Ignition on, engine not running.

With the scan tool, actuate the 2/4 Solenoid.

Monitor the 2/4 Solenoid LED on the Transmission Simulator.

Did the 2/4 Solenoid LED on the Transmission Simulator blink on and off during actuation?

Yes >> Go To 7

No >> Go To 4

4. (T19) 2/4 SOLENOID CONTROL CIRCUIT OPEN

Turn the ignition off to the lock position.

Disconnect the PCM C4 harness connector.

Disconnect the Transmission Solenoid/Pressure Switch Assembly harness connector.

CAUTION: Do not probe the PCM harness connectors. Probing the PCM harness connectors will damage the PCM terminals resulting in poor terminal to pin connection. Install Miller Special Tool #8815 to perform diagnosis.

Measure the resistance of the (T19) 2/4 Solenoid Control circuit from the appropriate terminal of special tool #8815 to the Solenoid/Pressure Switch Assembly harness connector.

Is the resistance above 5.0 ohms?

Yes >> Repair the (T19) 2/4 Solenoid Control circuit for an open. Perform 42RLE TRANSMISSION VERIFICATION TEST - VER 1. (Refer to 21 - TRANSMISSION/TRANSAXLE/AUTOMATIC - 42RLE - STANDARD PROCEDURE)

No >> Go To 5

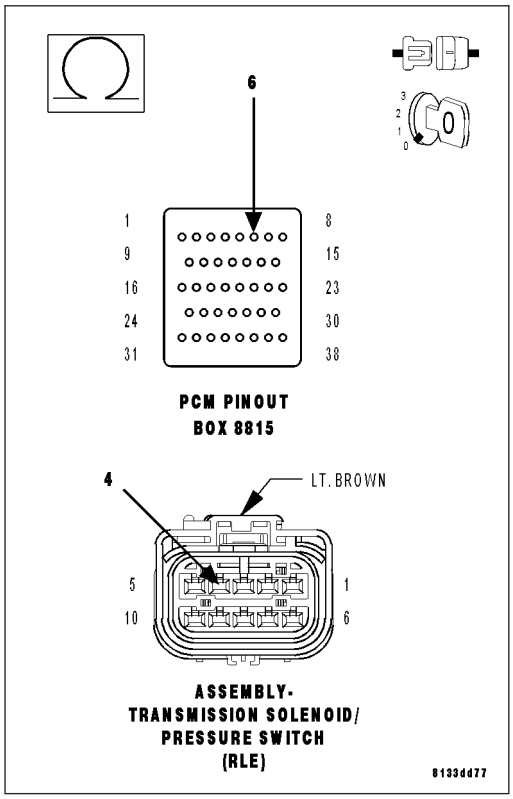

5. (T19) 2/4 SOLENOID CONTROL CIRCUIT SHORT TO GROUND

Turn the ignition off to the lock position.

Disconnect the PCM C4 harness connector.

Disconnect the Transmission Solenoid/Pressure Switch Assembly harness connector.

Measure the resistance between ground and the (T19) 2/4 Solenoid Control circuit.

Is the resistance below 5.0 ohms?

Yes >> Repair the (T19) 2/4 Solenoid Control circuit for a short to ground.

Perform 42RLE TRANSMISSION VERIFICATION TEST - VER 1. (Refer to 21 - TRANSMISSION/TRANSAXLE/AUTOMATIC - 42RLE - STANDARD PROCEDURE)

No >> Go To 6

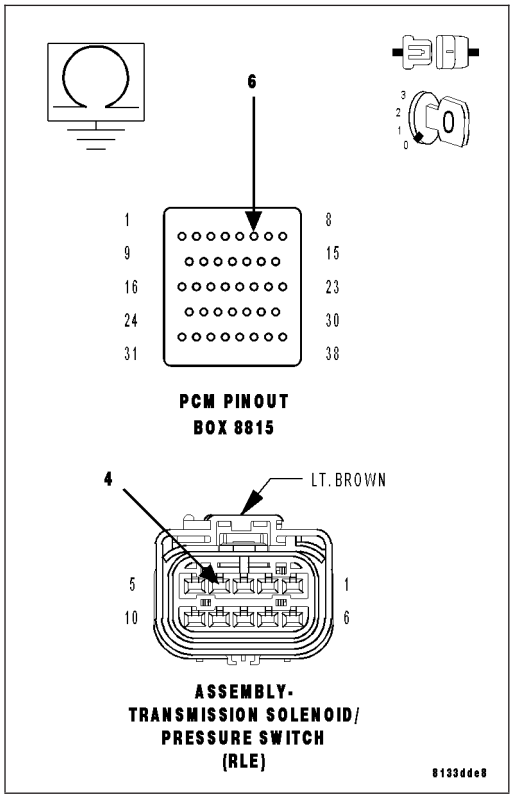

6. (T19) 2/4 SOLENOID CONTROL CIRCUIT SHORT TO VOLTAGE

Turn the ignition off to the lock position.

Disconnect the PCM C4 harness connector.

Disconnect the Transmission Solenoid/Pressure Switch Assembly harness connector.

Remove the Transmission Control Relay.

NOTE: Check connectors - Clean/repair as necessary.

Connect a jumper wire between the (Internal) Fused B+ circuit and the (T16) Transmission Control Relay Output circuit in the Transmission Control Relay connector.

Ignition on, engine not running.

Measure the voltage of the (T19) 2/4 Solenoid Control circuit.

Is the voltage above 0.5 volts?

Yes >> Repair the (T19) 2/4 Solenoid Control circuit for a short to voltage.

Perform 42RLE TRANSMISSION VERIFICATION TEST - VER 1. (Refer to 21 - TRANSMISSION/TRANSAXLE/AUTOMATIC - 42RLE - STANDARD PROCEDURE)

No >> Using the schematics as a guide, check the Powertrain Control Module (PCM) terminals for corrosion, damage, or terminal push out. Pay particular attention to all power and ground circuits. If no problems are found, replace the PCM per the Service Information. With the scan tool PERFORM QUICK LEARN, then program Pinion Factor in the Front Control Module. (Refer to 8 - ELECTRICAL/ELECTRONIC

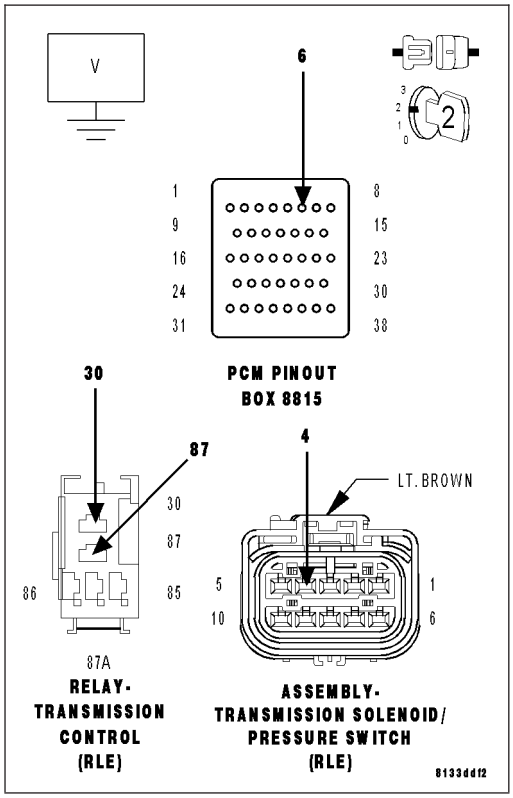

CONTROL MODULES/POWERTRAIN CONTROL MODULE - REMOVAL)

Perform 42RLE TRANSMISSION VERIFICATION TEST - VER 1. (Refer to 21 - TRANSMISSION/TRANSAXLE/AUTOMATIC - 42RLE - STANDARD PROCEDURE)

7. 2/4 SOLENOID/PRESSURE SWITCH ASSEMBLY

View repair.

Repair

Replace the Transmission Solenoid/Pressure Switch Assembly per the Service Information.

Perform 42RLE TRANSMISSION VERIFICATION TEST - VER 1. (Refer to 21 - TRANSMISSION/TRANSAXLE/AUTOMATIC - 42RLE - STANDARD PROCEDURE)

8. INTERMITTENT WIRING AND CONNECTORS

The conditions necessary to set the DTC are not present at this time.

Using the schematics as a guide, inspect the wiring and connectors specific to this circuit.

Wiggle the wires while checking for shorted and open circuits.

With the scan tool, check the EATX DTC EVENT DATA to help identify the conditions in which the DTC was set.

Were there any problems found?

Yes >> Repair as necessary.

Perform 42RLE TRANSMISSION VERIFICATION TEST - VER 1. (Refer to 21 - TRANSMISSION/TRANSAXLE/AUTOMATIC - 42RLE - STANDARD PROCEDURE)

No >> Test Complete.

P0760-OD SOLENOID CIRCUIT

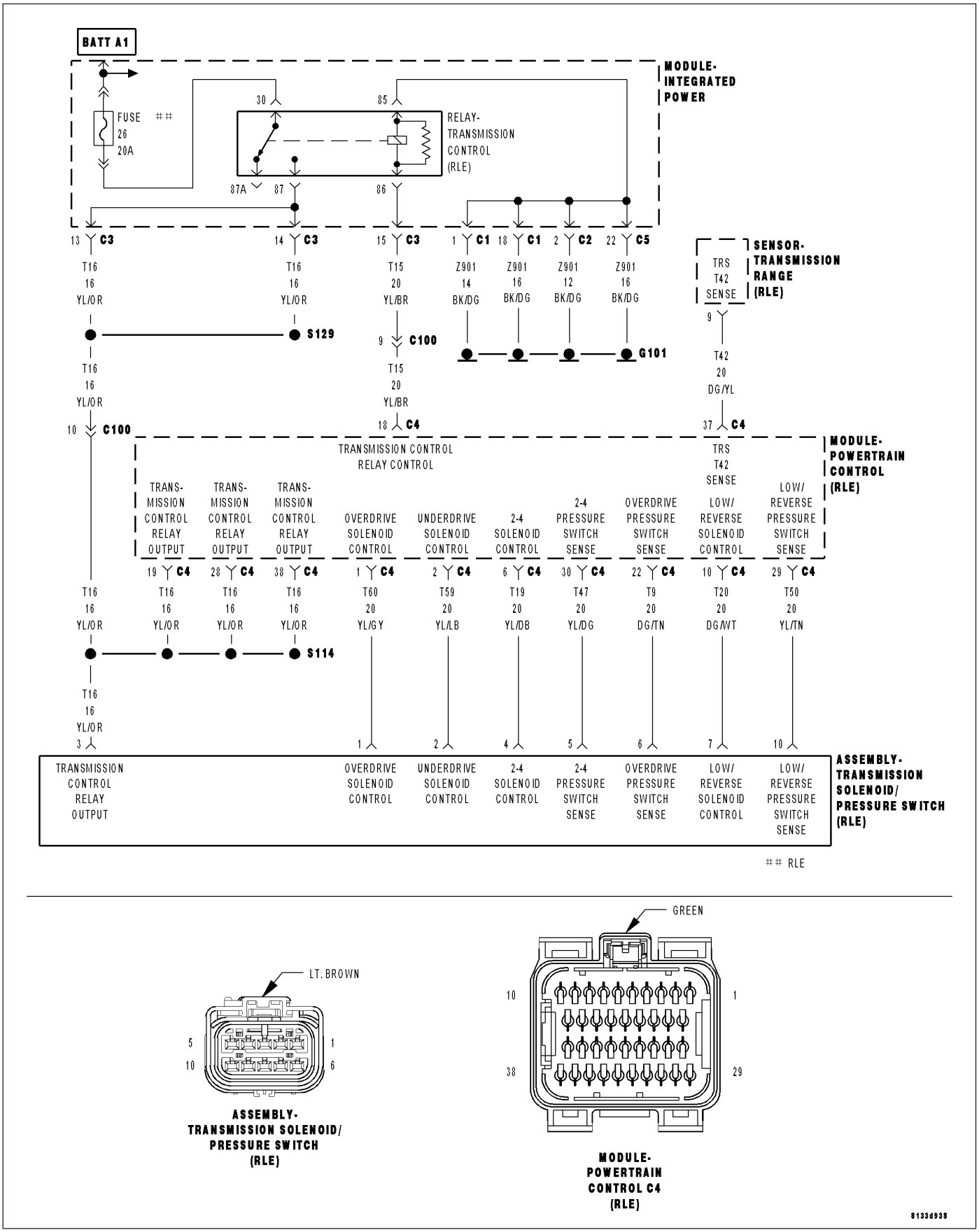

For a complete wiring diagram **Refer to Section 8W**.

- **When Monitored:**
  Initially at ignition on, then every 10 seconds thereafter. The solenoids will also be tested immediately after a gear ratio error or pressure switch error is detected.
- **Set Condition:**
  Three consecutive solenoid continuity test failures, or one failure if test is run in response to a gear ratio or pressure switch error.

Possible Causes
RELATED TCM POWER INPUT DTCS PRESENT
(T60) OD SOLENOID CONTROL CIRCUIT OPEN
(T60) OD SOLENOID CONTROL CIRCUIT SHORT TO GROUND
(T60) OD SOLENOID CONTROL CIRCUIT SHORT TO VOLTAGE
TRANSMISSION SOLENOID/PRESSURE SWITCH ASSEMBLY
POWERTRAIN CONTROL MODULE

Always perform the 42RLE Pre-Diagnostic Troubleshooting Procedure before proceeding. (Refer to 21 - TRANSMISSION/TRANSAXLE/AUTOMATIC - 42RLE - STANDARD PROCEDURE)

Theory of Operation

Four solenoids are used to control the friction elements (clutches). The continuity of the solenoids circuits are periodically tested. Each solenoid is turned on or off depending on its current state. An inductive spike should be detected by the PCM during this test. If no spike is detected, the circuit is tested again to verify the failure. In addition to the periodic testing, the solenoid circuits are tested if a gear ratio or pressure switch error occurs. In this case, one failure will result in the appropriate DTC being set. The MIL will illuminate and the transmission goes into neutral, if the DTC is set above 35 Km/h (22 MPH), Limp-in mode when vehicle speed is below 35 Km/h (22 MPH).

Diagnostic Test

1. DETERMINE IF RELATED TCM POWER INPUT DTCS ARE PRESENT

With the scan tool, read Transmission DTCs.

Are there any TCM Power Input DTCs present also?

Yes >> Refer to the Transmission category and perform the appropriate diagnostic procedure.

No >> Go To 2

2. CHECK TO SEE IF P0760 IS CURRENT

With the scan tool, Check the STARTS SINCE SET counter.

NOTE: This counter only applies to the last DTC set.

Is the STARTS SINCE SET counter for P0760 set at 0?

Yes >> Go To 3

No >> Go To 8

3. PCM AND WIRING

Turn the ignition off to the lock position.

Remove the Starter Relay.

CAUTION: Removal of the Starter Relay is to prevent a Transmission, NO RESPONSE, condition and disable the starter.

Install the Transmission Simulator, Miller tool #8333 and the Electronic Transmission Adapter kit 8333-1A.

Ignition on, engine not running.

With the scan tool, actuate the OD Solenoid.

Monitor the OD Solenoid LED on the Transmission Simulator.

Did the OD Solenoid LED on the Transmission Simulator blink on and off during actuation?

Yes >> Go To 7

No >> Go To 4

4. (T60) OD SOLENOID CONTROL CIRCUIT OPEN

Turn the ignition off to the lock position.

Disconnect the PCM C4 harness connector.

Disconnect the Transmission Solenoid/Pressure Switch Assembly harness connector.

CAUTION: Do not probe the PCM harness connectors. Probing the PCM harness connectors will damage the PCM terminals resulting in poor terminal to pin connection. Install Miller Special Tool #8815 to perform diagnosis.

Measure the resistance of the (T60) OD Solenoid Control circuit from the appropriate terminal of special tool #8815 to the Solenoid/Pressure Switch Assembly harness connector.

Is the resistance above 5.0 ohms?

Yes >> Repair the (T60) OD Solenoid Control circuit for an open. Perform 42RLE TRANSMISSION VERIFICATION TEST - VER 1. (Refer to 21 - TRANSMISSION/TRANSAXLE/AUTOMATIC - 42RLE - STANDARD PROCEDURE)

No >> Go To 5

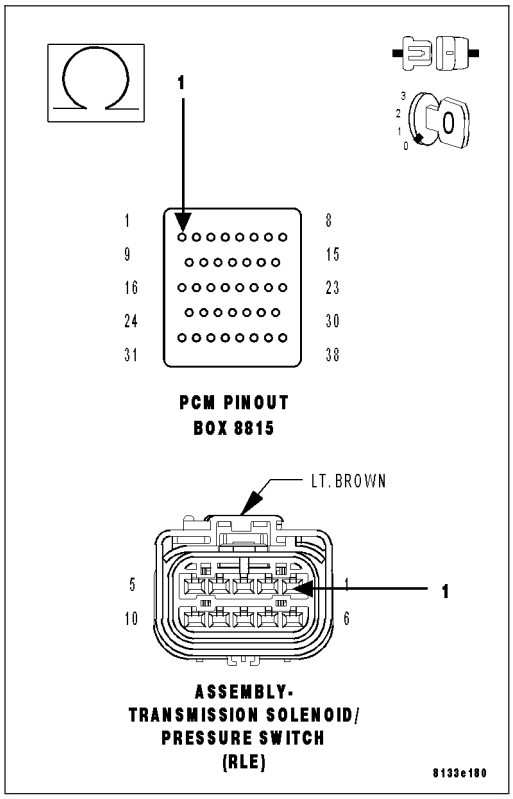

5. (T60) OD SOLENOID CONTROL CIRCUIT SHORT TO GROUND

Turn the ignition off to the lock position.

Disconnect the PCM C4 harness connector.

Disconnect the Transmission Solenoid/Pressure Switch Assembly harness connector.

Measure the resistance between ground and the (T60) OD Solenoid Control circuit.

Is the resistance below 5.0 ohms?

Yes >> Repair the (T60) OD Solenoid Control circuit for a short to ground.

Perform 42RLE TRANSMISSION VERIFICATION TEST - VER 1. (Refer to 21 - TRANSMISSION/TRANSAXLE/AUTOMATIC - 42RLE - STANDARD PROCEDURE)

No >> Go To 6

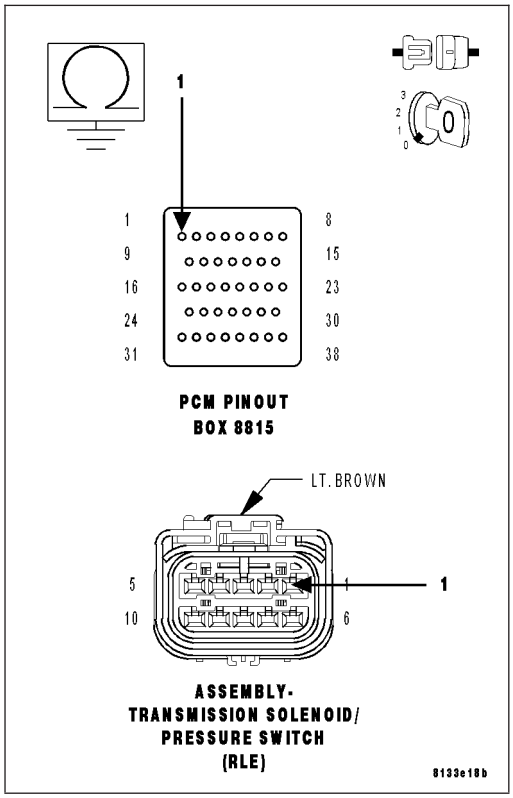

6. (T60) OD SOLENOID CONTROL CIRCUIT SHORT TO VOLTAGE

Turn the ignition off to the lock position.

Disconnect the PCM C4 harness connector.

Disconnect the Transmission Solenoid/Pressure Switch Assembly harness connector.

Remove the Transmission Control Relay.

NOTE: Check connectors - Clean/repair as necessary.

Connect a jumper wire between the (Internal) Fused B+ circuit and the (T16) Transmission Control Relay Output circuit in the Transmission Control Relay connector.

Ignition on, engine not running.

CAUTION: Do not probe the PCM harness connectors. Probing the PCM harness connectors will damage the PCM terminals resulting in poor terminal to pin connection. Install Miller Special Tool #8815 to perform diagnosis.

Measure the voltage of the (T60) OD Solenoid Control circuit.

Is the voltage above 0.5 volts?

Yes >> Repair the (T60) OD Solenoid Control circuit for a short to voltage.

Perform 42RLE TRANSMISSION VERIFICATION TEST - VER 1. (Refer to 21 - TRANSMISSION/TRANSAXLE/AUTOMATIC - 42RLE - STANDARD PROCEDURE)

No >> Using the schematics as a guide, check the Powertrain Control Module (PCM) terminals for corrosion, damage, or terminal push out. Pay particular attention to all power and ground circuits. If no problems are found, replace the PCM

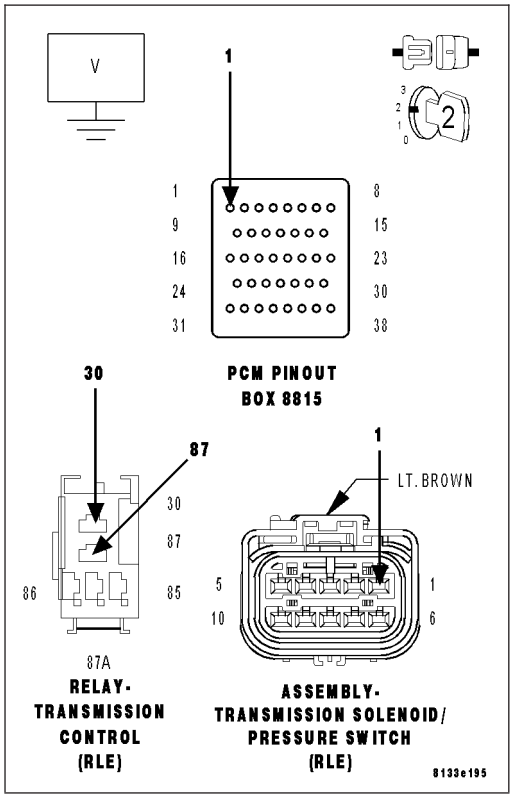

per the Service Information. With the scan tool PERFORM QUICK LEARN, then program Pinion Factor in the Front Control Module. (Refer to 8 - ELECTRICAL/ELECTRONIC CONTROL MODULES/POWERTRAIN CONTROL MODULE - REMOVAL)

Perform 42RLE TRANSMISSION VERIFICATION TEST - VER 1. (Refer to 21 - TRANSMISSION/TRANSAXLE/AUTOMATIC - 42RLE - STANDARD PROCEDURE)

7. OD SOLENOID/PRESSURE SWITCH ASSEMBLY

View repair.

Repair

Replace the Transmission Solenoid/Pressure Switch Assembly per the Service Information.

Perform 42RLE TRANSMISSION VERIFICATION TEST - VER 1. (Refer to 21 - TRANSMISSION/TRANSAXLE/AUTOMATIC - 42RLE - STANDARD PROCEDURE)

8. INTERMITTENT WIRING AND CONNECTORS

The conditions necessary to set the DTC are not present at this time.

Using the schematics as a guide, inspect the wiring and connectors specific to this circuit.

Wiggle the wires while checking for shorted and open circuits.

With the scan tool, check the EATX DTC EVENT DATA to help identify the conditions in which the DTC was set.

Were there any problems found?

Yes >> Repair as necessary.

Perform 42RLE TRANSMISSION VERIFICATION TEST - VER 1. (Refer to 21 - TRANSMISSION/TRANSAXLE/AUTOMATIC - 42RLE - STANDARD PROCEDURE)

No >> Test Complete.

P0765-UD SOLENOID CIRCUIT

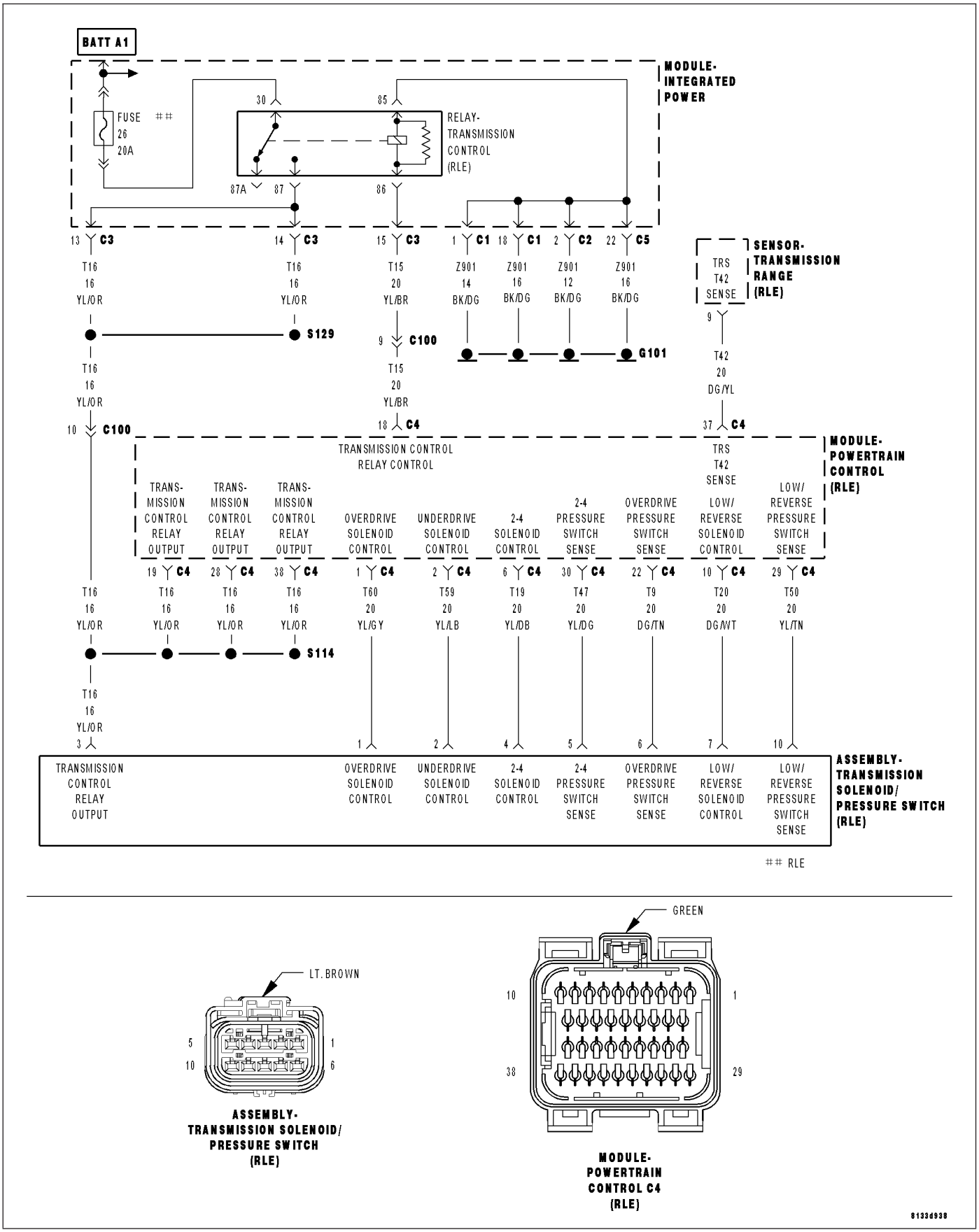

For a complete wiring diagram **Refer to Section 8W**.

- **When Monitored:**
  Initially at ignition on, then every 10 seconds thereafter. The solenoids will also be tested immediately after a gear ratio error or pressure switch error is detected.
- **Set Condition:**
  Three consecutive solenoid continuity test failures, or one failure if test is run in response to a gear ratio or pressure switch error.

Possible Causes
RELATED TCM POWER INPUT DTCS PRESENT
(T59) UD SOLENOID CONTROL CIRCUIT OPEN
(T59) UD SOLENOID CONTROL CIRCUIT SHORT TO GROUND
(T59) UD SOLENOID CONTROL CIRCUIT SHORT TO VOLTAGE
TRANSMISSION SOLENOID/PRESSURE SWITCH ASSEMBLY
POWERTRAIN CONTROL MODULE

Always perform the 42RLE Pre-Diagnostic Troubleshooting Procedure before proceeding. (Refer to 21 - TRANSMISSION/TRANSAXLE/AUTOMATIC - 42RLE - STANDARD PROCEDURE)

Theory of Operation

Four solenoids are used to control the friction elements (clutches). The continuity of the solenoids circuits are periodically tested. Each solenoid is turned on or off depending on its current state. An inductive spike should be detected by the PCM during this test. If no spike is detected, the circuit is tested again to verify the failure. In addition to the periodic testing, the solenoid circuits are tested if a gear ratio or pressure switch error occurs. In this case, one failure will result in the appropriate DTC being set. The MIL will illuminate and the transmission goes into neutral, if the DTC is set above 35 Km/h (22 MPH), Limp-in mode when vehicle speed is below 35 Km/h (22 MPH).

Diagnostic Test

1. DETERMINE IF RELATED TCM POWER INPUT DTCS ARE PRESENT

With the scan tool, read Transmission DTCs.

Are there any TCM Power Input DTCs present also?

Yes >> Refer to the Transmission category and perform the appropriate diagnostic procedure.

No >> Go To 2

2. CHECK TO SEE IF P0765 IS CURRENT

With the scan tool, Check the STARTS SINCE SET counter.

NOTE: This counter only applies to the last DTC set.

Is the STARTS SINCE SET counter for P0765 set at 0?

Yes >> Go To 3

No >> Go To 8

3. PCM AND WIRING

Turn the ignition off to the lock position.

Remove the Starter Relay.

CAUTION: Removal of the Starter Relay is to prevent a Transmission, NO RESPONSE, condition and disable the starter.

Install the Transmission Simulator, Miller tool #8333 and the Electronic Transmission Adapter kit 8333-1A.

Ignition on, engine not running.

With the scan tool, actuate the UD Solenoid.

Monitor the UD Solenoid LED on the Transmission Simulator.

Did the UD Solenoid LED on the Transmission Simulator blink on and off during actuation?

Yes >> Go To 7

No >> Go To 4

4. (T59) UD SOLENOID CONTROL CIRCUIT OPEN

Turn the ignition off to the lock position.

Disconnect the PCM C4 harness connector.

Disconnect the Transmission Solenoid/Pressure Switch Assembly harness connector.

CAUTION: Do not probe the PCM harness connectors. Probing the PCM harness connectors will damage the PCM terminals resulting in poor terminal to pin connection. Install Miller Special Tool #8815 to perform diagnosis.

Measure the resistance of the (T59) UD Solenoid Control circuit from the appropriate terminal of special tool #8815 to the Solenoid/Pressure Switch Assembly harness connector.

Is the resistance above 5.0 ohms?

Yes >> Repair the (T59) UD Solenoid Control circuit for an open. Perform 42RLE TRANSMISSION VERIFICATION TEST - VER 1. (Refer to 21 - TRANSMISSION/TRANSAXLE/AUTOMATIC - 42RLE - STANDARD PROCEDURE)

No >> Go To 5

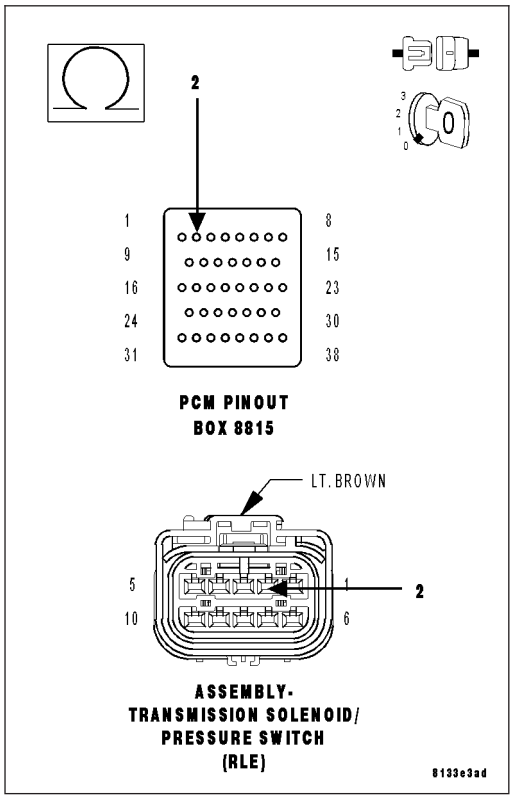

5. (T59) UD SOLENOID CONTROL CIRCUIT SHORT TO GROUND

Turn the ignition off to the lock position.

Disconnect the PCM C4 harness connector.

Disconnect the Transmission Solenoid/Pressure Switch Assembly harness connector.

Measure the resistance between ground and the (T59) UD Solenoid Control circuit.

Is the resistance below 5.0 ohms?

Yes >> Repair the (T59) UD Solenoid Control circuit for a short to ground.

Perform 42RLE TRANSMISSION VERIFICATION TEST - VER 1. (Refer to 21 - TRANSMISSION/TRANSAXLE/AUTOMATIC - 42RLE - STANDARD PROCEDURE)

No >> Go To 6

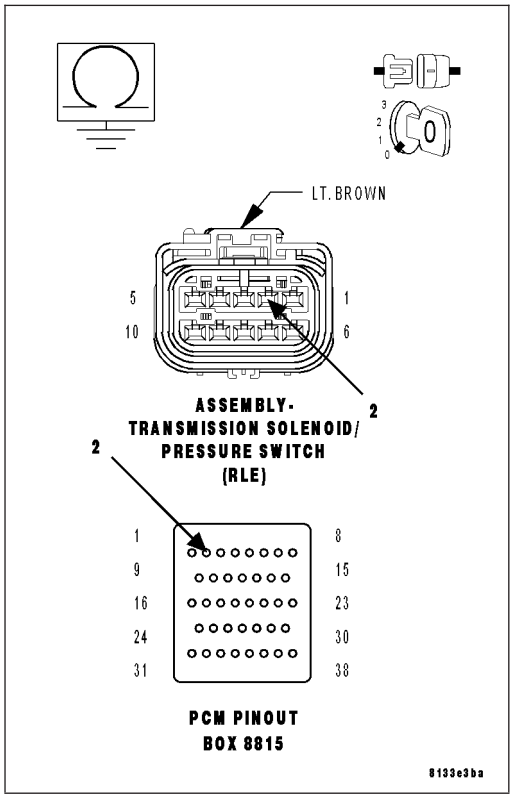

6. (T59) UD SOLENOID CONTROL CIRCUIT SHORT TO VOLTAGE

Turn the ignition off to the lock position.

Disconnect the PCM C4 harness connector.

Disconnect the Transmission Solenoid/Pressure Switch Assembly harness connector.

Remove the Transmission Control Relay.

NOTE: Check connectors - Clean/repair as necessary.

Connect a jumper wire between the (Internal) Fused B+ circuit and the (T16) Transmission Control Relay Output circuit in the Transmission Control Relay connector.

Ignition on, engine not running.

Measure the voltage of the (T59) UD Solenoid Control circuit.

Is the voltage above 0.5 volts?

Yes >> Repair the (T59) UD Solenoid Control circuit for a short to voltage.

Perform 42RLE TRANSMISSION VERIFICATION TEST - VER 1.

No >> Using the schematics as a guide, check the Powertrain Control Module (PCM) terminals for corrosion, damage, or terminal push out. Pay particular attention to all power and ground circuits. If no problems are found, replace the PCM per the Service Information. With the scan tool PERFORM QUICK LEARN, then program Pinion Factor in the Front Control Module. (Refer to 8 - ELECTRICAL/ELECTRONIC

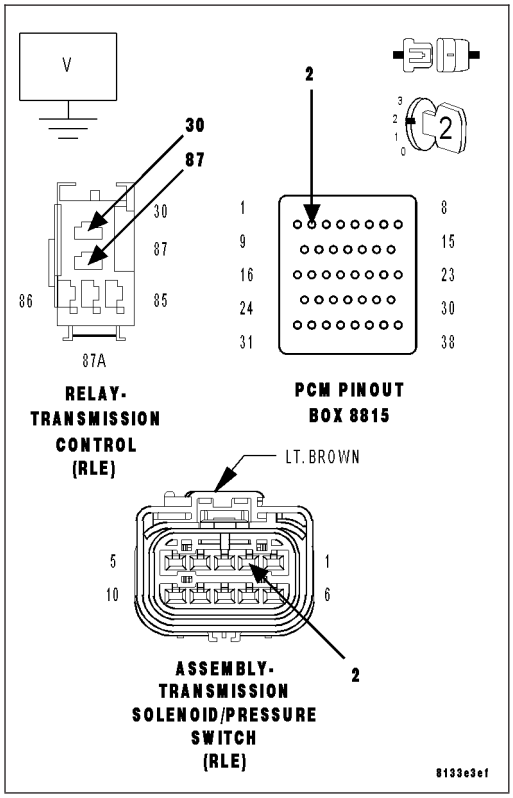

CONTROL MODULES/POWERTRAIN CONTROL MODULE - REMOVAL)

Perform 42RLE TRANSMISSION VERIFICATION TEST - VER 1. (Refer to 21 - TRANSMISSION/TRANSAXLE/AUTOMATIC - 42RLE - STANDARD PROCEDURE)

7. UD SOLENOID/PRESSURE SWITCH ASSEMBLY

View repair.

Repair

Replace the Transmission Solenoid/Pressure Switch Assembly per the Service Information.

Perform 42RLE TRANSMISSION VERIFICATION TEST - VER 1. (Refer to 21 - TRANSMISSION/TRANSAXLE/AUTOMATIC - 42RLE - STANDARD PROCEDURE)

8. INTERMITTENT WIRING AND CONNECTORS

The conditions necessary to set the DTC are not present at this time.

Using the schematics as a guide, inspect the wiring and connectors specific to this circuit.

Wiggle the wires while checking for shorted and open circuits.

With the scan tool, check the EATX DTC EVENT DATA to help identify the conditions in which the DTC was set.

Were there any problems found?

Yes >> Repair as necessary.

Perform 42RLE TRANSMISSION VERIFICATION TEST - VER 1. (Refer to 21 - TRANSMISSION/TRANSAXLE/AUTOMATIC - 42RLE - STANDARD PROCEDURE)

No >> Test Complete.

P0841-LR PRESSURE SWITCH RATIONALITY

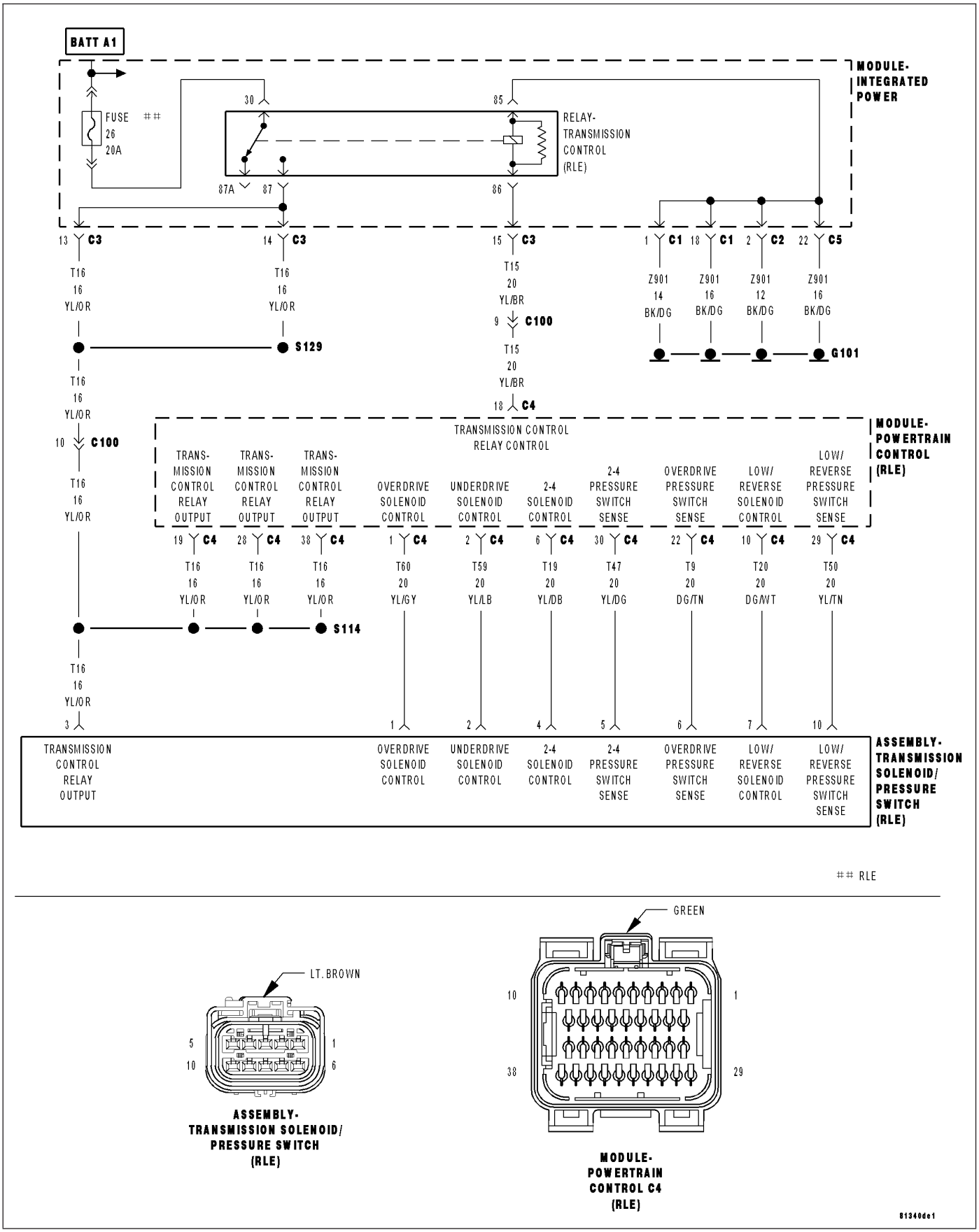

For a complete wiring diagram **Refer to Section 8W**.

- **When Monitored:**
  Whenever the engine is running.
- **Set Condition:**
  The DTC is set if one of the pressure switches are open or closed at the wrong time in a given gear. If the problem is identified for 3 successive key starts, the transmission will go into Limp-in mode a MIL will turn on after 10 seconds of vehicle operation.

Possible Causes
RELATED TCM POWER INPUT DTCS PRESENT
LOSS OF PRIME DTC PRESENT
(T50) L/R PRESSURE SWITCH SENSE CIRCUIT OPEN
(T50) L/R PRESSURE SWITCH SENSE CIRCUIT SHORT TO GROUND
(T50) L/R PRESSURE SWITCH SENSE CIRCUIT SHORT TO VOLTAGE
TRANSMISSION SOLENOID/PRESSURE SWITCH ASSEMBLY
POWERTRAIN CONTROL MODULE

Always perform the 42RLE Pre-Diagnostic Troubleshooting Procedure before proceeding. (Refer to 21 - TRANSMISSION/TRANSAXLE/AUTOMATIC - 42RLE - STANDARD PROCEDURE)

Theory of Operation

The Transmission system uses three pressure switches to monitor the fluid pressure in the LR, 2/4, and OD elements. The pressure switches are continuously monitored for the correct states in each gear. If a set condition is identified, 1st gear and torque converter lock-up (EMCC) will be inhibited. The vehicle will launch in 2nd gear and shift normally through the gears without allowing EMCC. If during the same key start, the set condition is no longer valid, the transmission will return to normal operation (1st and EMCC available). Limp-in will not occur unless DTC P0841 is accompanied by a code P0706 and the MIL will illuminate after 5 minutes of substituted operation.

PRESSURE SWITCH STATES

GEAR	L/R	2/4	OD
R	OP	OP	OP
P/N	CL	OP	OP
1st	CL	OP	OP
2nd	OP	CL	OP
D	OP	OP	CL
OD	OP	CL	CL

OP = OPEN

CL = CLOSED

Diagnostic Test

1. DETERMINE IF RELATED TCM POWER INPUT DTCS ARE PRESENT

With the scan tool, read Transmission DTCs.

Are there any TCM Power Input DTCs present also?

Yes >> Refer to the Transmission category and perform the appropriate diagnostic procedure.

No >> Go To 2

2. CHECK FOR LOSS OF PRIME DTC

With the scan tool, check for other Transmission DTCs.

Is the DTC P0944 present also?

Yes >> Refer to the Transmission category and perform the appropriate diagnostic procedure.
Perform 42RLE TRANSMISSION VERIFICATION TEST - VER 1. (Refer to 21 - TRANSMISSION/ TRANSAXLE/AUTOMATIC - 42RLE - STANDARD PROCEDURE)

No >> Go To 3

3. CHECK TO SEE IF P0841 IS CURRENT

With the scan tool, Check the STARTS SINCE SET counter for P0841.

NOTE: This counter only applies to the last DTC set.

Is the STARTS SINCE SET counter 2 or less?

Yes >> Go To 4

No >> Go To 9

4. PCM AND WIRING

Turn the ignition off to the lock position.

Remove the Starter Relay.

CAUTION: Removal of the Starter Relay is to prevent a Transmission, NO RESPONSE, condition and disable the starter.

Install the Transmission Simulator, Miller tool #8333 and the Electronic Transmission Adapter kit 8333-1A.

NOTE: Check connectors - Clean/repair as necessary.

Ignition on, engine not running.

With the Transmission Simulator, turn the Pressure Switch selector to L/R.

With the scan tool , monitor the L/R Pressure Switch state while pressing the Pressure Switch Test button on the Transmission Simulator.

Did the L/R Pressure Switch state change?

Yes >> Go To 8

No >> Go To 5

5. (T50) L/R PRESSURE SWITCH SENSE CIRCUIT OPEN

Turn the ignition off to the lock position.

Disconnect the PCM C4 harness connector.

Disconnect the Transmission Solenoid/Pressure Switch Assembly harness connector.

NOTE: Check connectors - Clean/repair as necessary.

CAUTION: Do not probe the PCM harness connectors. Probing the PCM harness connectors will damage the PCM terminals resulting in poor terminal to pin connection. Install Miller Special Tool #8815 to perform diagnosis.

Measure the resistance of the (T50) L/R Pressure Switch Sense circuit from the appropriate terminal of special tool #8815 to the Transmission Solenoid/Pressure Switch Assembly harness connector.

Is the resistance above 5.0 ohms?

Yes >> Repair the (T50) L/R Pressure Switch Sense circuit for an open.

Perform 42RLE TRANSMISSION VERIFICATION TEST - VER 1. (Refer to 21 - TRANSMISSION/TRANSAXLE/AUTOMATIC - 42RLE - STANDARD PROCEDURE)

No >> Go To 6

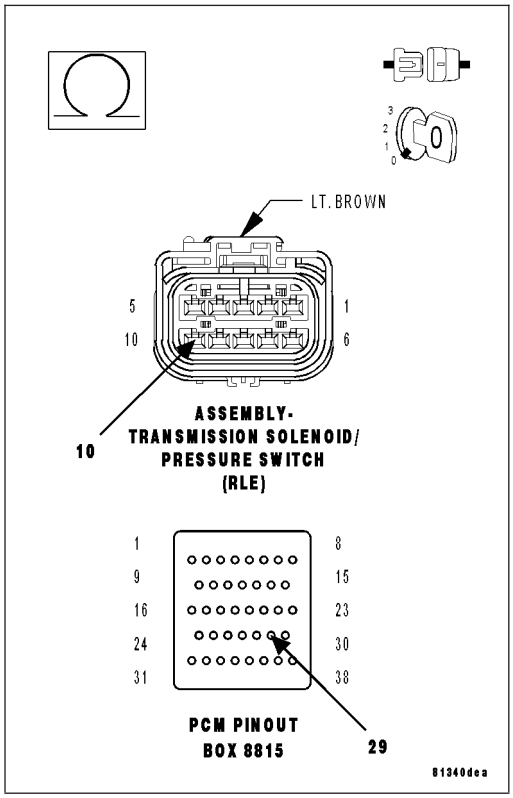

6. (T50) L/R PRESSURE SWITCH SENSE CIRCUIT SHORT TO GROUND

Turn the ignition off to the lock position.

Disconnect the PCM C4 harness connector.

Disconnect the Transmission Solenoid/Pressure Switch Assembly harness connector.

NOTE: Check connectors - Clean/repair as necessary.

Measure the resistance between ground and the (T50) L/R Pressure Switch Sense circuit.

Is the resistance below 5.0 ohms?

Yes >> Repair the (T50) L/R Pressure Switch Sense circuit for a short to ground.

Perform 42RLE TRANSMISSION VERIFICATION TEST - VER 1. (Refer to 21 - TRANSMISSION/TRANSAXLE/AUTOMATIC - 42RLE - STANDARD PROCEDURE)

No >> Go To 7

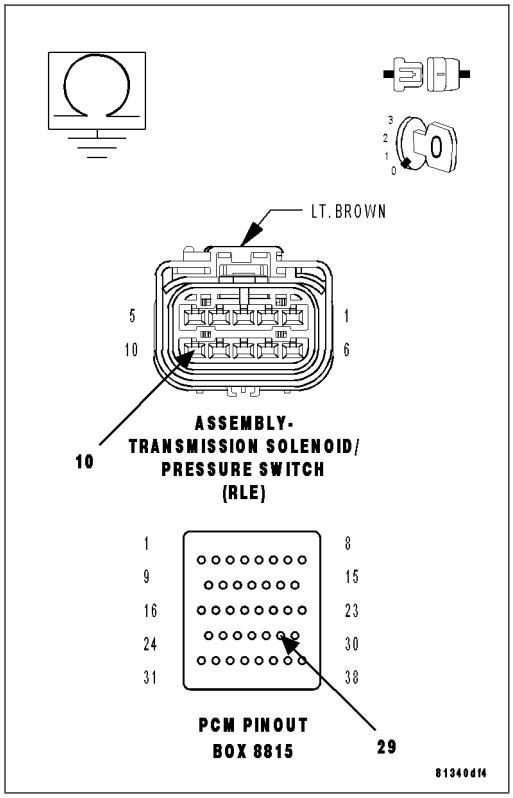

7. (T50) L/R PRESSURE SWITCH SENSE CIRCUIT SHORT TO VOLTAGE

Turn the ignition off to the lock position.

Disconnect the PCM C4 harness connector.

Disconnect the Transmission Solenoid/Pressure Switch Assembly harness connector.

Remove the Transmission Control Relay.

NOTE: Check connectors - Clean/repair as necessary.

Connect a jumper wire between the (A104)Fused B+ circuit and (T16) Transmission Control Relay Output circuit.

Ignition on, engine not running.

Measure the voltage of the (T50) L/R Pressure Switch Sense circuit.

Is the voltage above 0.5 volts?

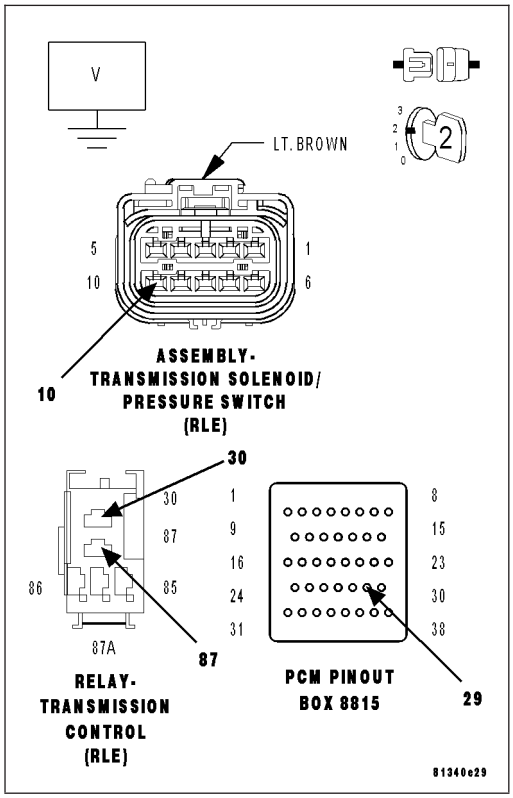

Yes >> Repair the (T50) L/R Pressure Switch Sense circuit for a short to voltage.

Perform 42RLE TRANSMISSION VERIFICATION TEST - VER 1. (Refer to 21 - TRANSMISSION/TRANSAXLE/AUTOMATIC - 42RLE - STANDARD PROCEDURE)

No >> Using the schematics as a guide, check the Powertrain Control Module (PCM) terminals for corrosion, damage, or terminal push out. Pay particular attention to all power and ground circuits. If no problems are found, replace the PCM per the Service Information. With the scan tool PERFORM QUICK LEARN, then program Pinion Factor in the Front Control Module. (Refer to 8 - ELECTRICAL/ELECTRONIC CONTROL MODULES/POWERTRAIN CONTROL MODULE - REMOVAL)

Perform 42RLE TRANSMISSION VERIFICATION TEST - VER 1. (Refer to 21 - TRANSMISSION/TRANSAXLE/AUTOMATIC - 42RLE - STANDARD PROCEDURE)

8. L/R PRESSURE SWITCH

View repair.

Repair

Replace the Transmission Solenoid/Pressure Switch Assembly per the Service Information.

Perform 42RLE TRANSMISSION VERIFICATION TEST - VER 1. (Refer to 21 - TRANSMISSION/TRANSAXLE/AUTOMATIC - 42RLE - STANDARD PROCEDURE)

9. INTERMITTENT WIRING AND CONNECTORS

The conditions necessary to set the DTC are not present at this time.

Using the schematics as a guide, inspect the wiring and connectors specific to this circuit.

Wiggle the wires while checking for shorted and open circuits.

With the scan tool, check the EATX DTC EVENT DATA to help identify the conditions in which the DTC was set.

Were there any problems found?

Yes >> Repair as necessary.

Perform 42RLE TRANSMISSION VERIFICATION TEST - VER 1. (Refer to 21 - TRANSMISSION/TRANSAXLE/AUTOMATIC - 42RLE - STANDARD PROCEDURE)

No >> Test Complete.

P0845-2/4 HYDRAULIC PRESSURE TEST

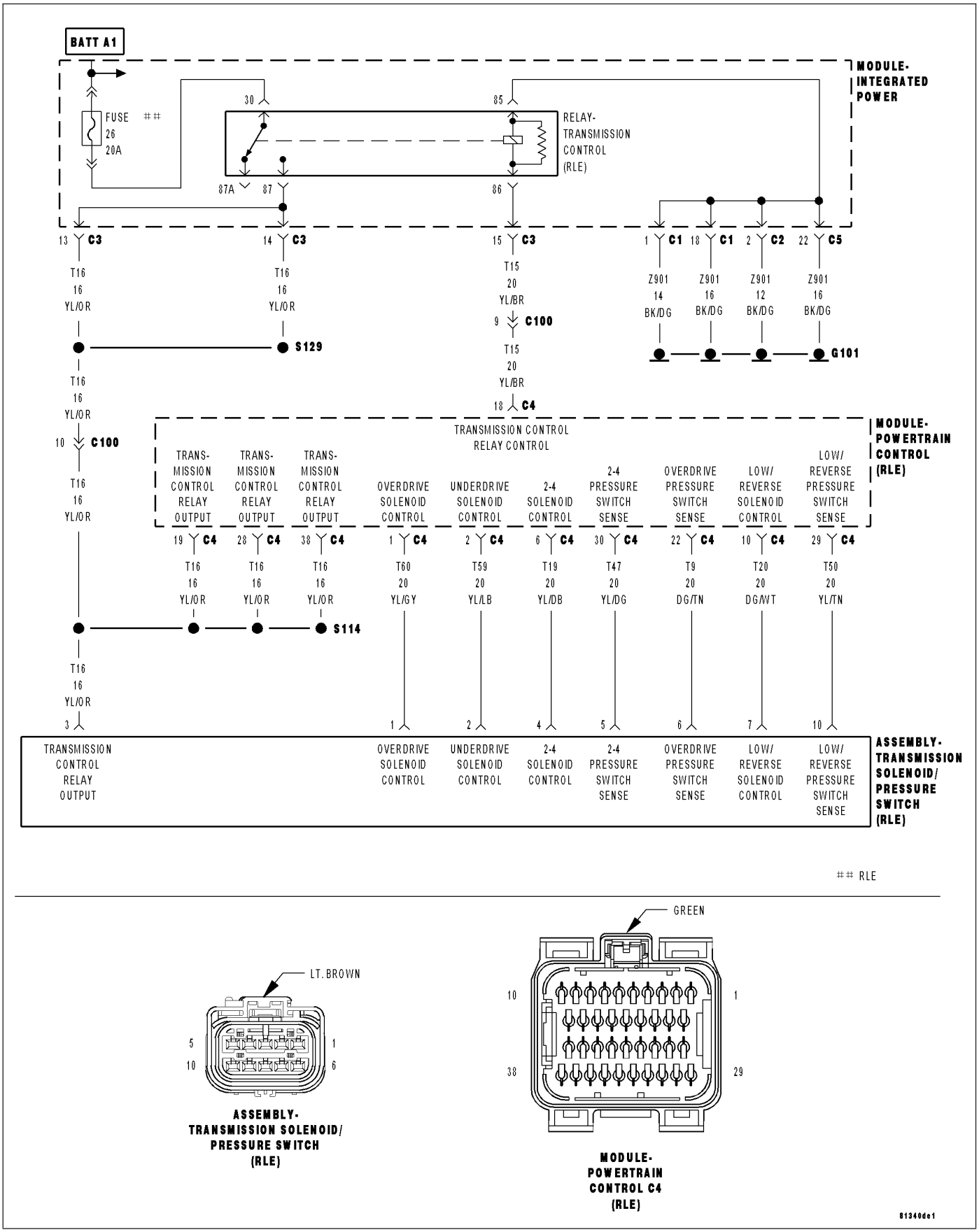

For a complete wiring diagram **Refer to Section 8W**.

- **When Monitored:**
  In any forward gear with engine speed above 1000 RPM, shortly after a shift and every minute thereafter.
- **Set Condition:**
  After a shift into a forward gear, with engine speed greater than 1000 RPM, the PCM momentarily turns on element pressure to the clutch circuits that don't have pressure to identify the correct pressure switch closes. If the pressure switch does not close 2 times the DTC sets

Possible Causes
LOSS OF PRIME P0944 PRESENT
(T16) TCM POWER INPUT CIRCUIT OPEN
(T47) 2/4 PRESSURE SWITCH SENSE CIRCUIT OPEN
(T47) 2/4 PRESSURE SWITCH CIRCUIT SHORT TO GROUND
(T47) 2/4 PRESSURE SWITCH SENSE CIRCUIT SHORT TO VOLTAGE
TRANSMISSION SOLENOID/PRESSURE SWITCH ASSEMBLY
INTERNAL TRANSMISSION
POWERTRAIN CONTROL MODULE

Always perform the 42RLE Pre-Diagnostic Troubleshooting Procedure before proceeding. (Refer to 21 - TRANSMISSION/TRANSAXLE/AUTOMATIC - 42RLE - STANDARD PROCEDURE)

Theory of Operation

Background: Pressure switches are normally off or open (no pressure applied) and read high (+12 volts). When an element is applied the corresponding pressure switch closes to ground (0 volts) or turns on. The controller tests the OD and 24 pressure switches when they are off (ie. when the corresponding friction element is not applied) by briefly applying the OD and 24 elements which will cause the corresponding pressure switch to close. The test verifies that the switches are operational and that the switch will close when the corresponding element is applied. If a switch fails to respond, it is re-tested. The MIL illuminates and the transmission system defaults to Limp-in mode.

PRESSURE SWITCH STATES

GEAR	L/R	2/4	OD
R	OP	OP	OP
P/N	CL	OP	OP
1st	CL	OP	OP
2nd	OP	CL	OP
D	OP	OP	CL
OD	OP	CL	CL

OP = OPEN

CL = CLOSED

Diagnostic Test

1. CHECKING FOR LOSS OF PRIME DTC

With the scan tool, check for other Transmission DTCs.

Is the DTC P0944 present also?

Yes >> Refer to the Transmission category and perform the appropriate diagnostic procedure.

No >> Go To 2

2. CHECK FOR RELATED TRANSMISSION DTC'S

With the scan tool, read Transmission DTC's.

Are any of the DTCs P0732, P0734 and/or P0846 present also?

Yes >> Replace the Transmission Solenoid/Pressure Switch Assembly per the Service Information.
Perform 42RLE TRANSMISSION VERIFICATION TEST - VER 1. (Refer to 21 - TRANSMISSION/ TRANSAXLE/AUTOMATIC - 42RLE - STANDARD PROCEDURE)

No >> Go To 3

3. CHECK TO SEE IF DTC P0845 IS CURRENT

With the scan tool, Check the STARTS SINCE SET counter for P0845.

NOTE: This counter only applies to the last DTC set.

Is the STARTS SINCE SET counter 2 or less?

Yes >> Go To 4

No >> Go To 10

4. PCM AND WIRING

Turn the ignition off to the lock position.

Remove the Starter Relay.

CAUTION: Removal of the Starter Relay is to prevent a Transmission, NO RESPONSE, condition and disable the starter.

Install the Transmission Simulator, Miller tool #8333 and the Electronic Transmission Adapter kit 8333-1A.

NOTE: Check connectors - Clean/repair as necessary.

Ignition on, engine not running.

With the Transmission Simulator, turn the Pressure Switch selector switch to 2/4.

With the scan tool, monitor the UD Pressure Switch state while pressing the Pressure Switch Test button on the Transmission Simulator.

Wiggle the wires leading to the PCM while pressing and holding the Pressure Switch Test button.

Did the 2/4 Pressure Switch state change to closed and remain closed while wiggling the wires?

Yes >> Go To 5

No >> Go To 6

5. INTERNAL TRANSMISSION

View repair.

Repair

Disassemble and inspect the Valve Body per the Service Information and repair or replace as necessary. If no problems are found in the Valve Body, replace the Transmission Solenoid/Pressure Switch Assembly.

Perform 42RLE TRANSMISSION VERIFICATION TEST - VER 1. (Refer to 21 - TRANSMISSION/ TRANSAXLE/AUTOMATIC - 42RLE - STANDARD PROCEDURE)

6. (T47) 2/4 PRESSURE SWITCH SENSE CIRCUIT OPEN

Turn the ignition off to the lock position.

Disconnect the PCM C4 harness connector.

Disconnect the Transmission Solenoid/Pressure Switch Assembly harness connector.

NOTE: Check connectors - Clean/repair as necessary.

CAUTION: Do not probe the PCM harness connectors. Probing the PCM harness connectors will damage the PCM terminals resulting in poor terminal to pin connection. Install Miller Special Tool #8815 to perform diagnosis.

Measure the resistance of the (T47) 2/4 Pressure Switch Sense circuit from the appropriate terminal of special tool #8815 to the Transmission Solenoid/Pressure Switch Assembly harness connector.

Is the resistance above 5.0 ohms?

Yes >> Repair the (T47) 2/4 Pressure Switch Sense circuit for an open.

Perform 42RLE TRANSMISSION VERIFICATION TEST - VER 1. (Refer to 21 - TRANSMISSION/TRANSAXLE/AUTOMATIC - 42RLE - STANDARD PROCEDURE)

No >> Go To 7

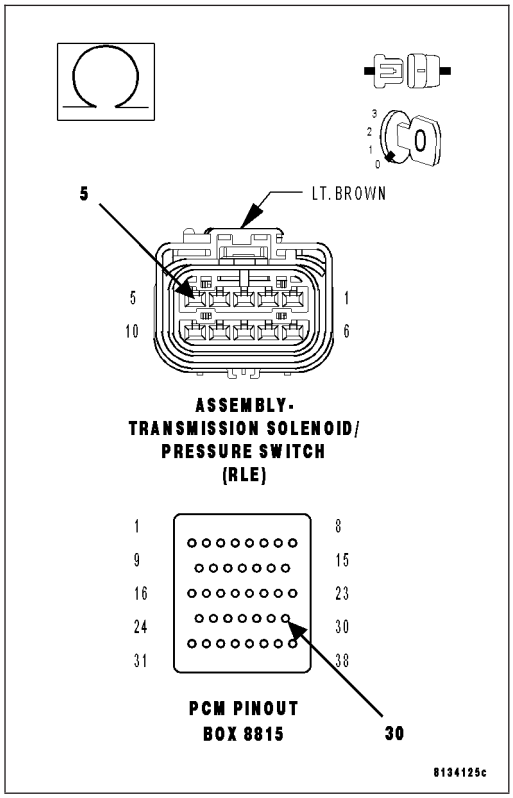

7. (T47) 2/4 PRESSURE SWITCH SENSE CIRCUIT SHORT TO GROUND

Turn the ignition off to the lock position.

Disconnect the PCM C4 harness connector.

Disconnect the Transmission Solenoid/Pressure Switch Assembly harness connector.

NOTE: Check connectors - Clean/repair as necessary.

Measure the resistance between ground and the (T47) 2/4 Pressure Switch Sense circuit.

Is the resistance below 5.0 ohms?

Yes >> Repair the (T47) 2/4 Pressure Switch Sense circuit for a short to ground.

Perform 42RLE TRANSMISSION VERIFICATION TEST - VER 1. (Refer to 21 - TRANSMISSION/TRANSAXLE/AUTOMATIC - 42RLE - STANDARD PROCEDURE)

No >> Go To 8

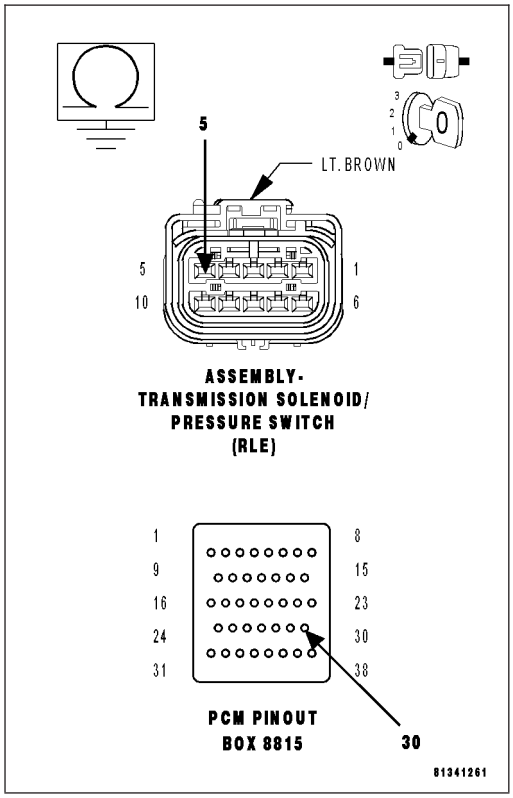

8. (T47) 2/4 PRESSURE SWITCH SENSE CIRCUIT SHORT TO VOLTAGE

Turn the ignition off to the lock position.

Disconnect the PCM C4 harness connector.

Disconnect the Transmission Solenoid/Pressure Switch Assembly harness connector.

Remove the Transmission Control Relay.

NOTE: Check connectors - Clean/repair as necessary.
Connect a jumper wire between the (A104) Fused B+ circuit and the (T16) Transmission Control Relay Output circuit.

Ignition on, engine not running.

Measure the voltage of the (T47) 2/4 Pressure Switch Sense circuit.

Is the voltage above 0.5 volts?

Yes >> Repair the (T47) 2/4 Pressure Switch Sense circuit for a short to voltage.
Perform 42RLE TRANSMISSION VERIFICATION TEST - VER 1. (Refer to 21 - TRANSMISSION/TRANSAXLE/AUTOMATIC - 42RLE - STANDARD PROCEDURE)

No >> Go To 9

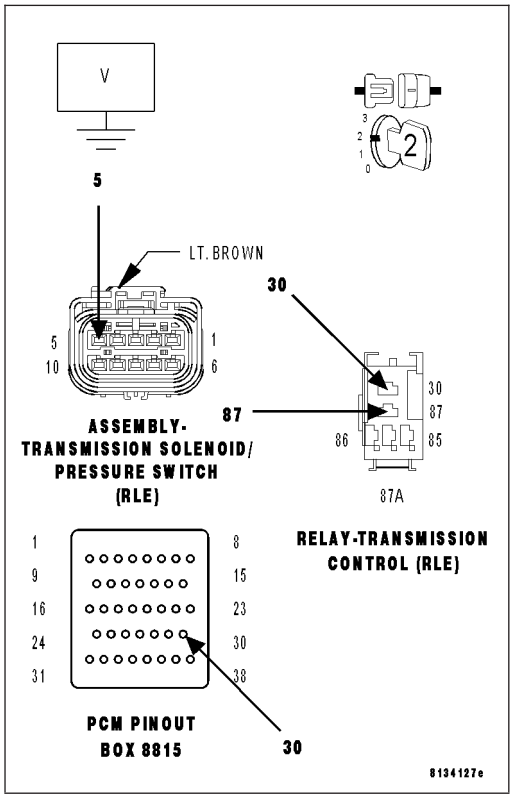

9. TRANSMISSION CONTROL RELAY OUTPUT CIRCUIT OPEN

Turn the ignition off to the lock position.

Disconnect the Transmission Solenoid/Pressure Switch Assembly harness connector.

Remove the Transmission Control Relay.

NOTE: Check connectors - Clean/repair as necessary.
Connect a jumper wire between the (Internal) Fused B+ circuit and the (T16) Transmission Control Relay Output circuit in the Transmission Control Relay connector.

Ignition on, engine not running.

Using a 12-volt test light connected to ground, check (T16) Transmission Control Relay Output circuit in the Transmission Solenoid/Pressure Switch Assembly harness connector.

NOTE: The test light must illuminate brightly. Compare the brightness to that of a direct connection to the battery.

Does the test light illuminate brightly?

Yes >> Using the schematics as a guide, check the Powertrain Control Module (PCM) terminals for corrosion, damage, or terminal push out. Pay particular attention to all power and ground circuits. If no problems are found, replace the PCM per the Service Information. With the scan tool PERFORM QUICK LEARN, then program Pinion Factor in the Front Control Module. (Refer to 8 - ELECTRICAL/ELECTRONIC

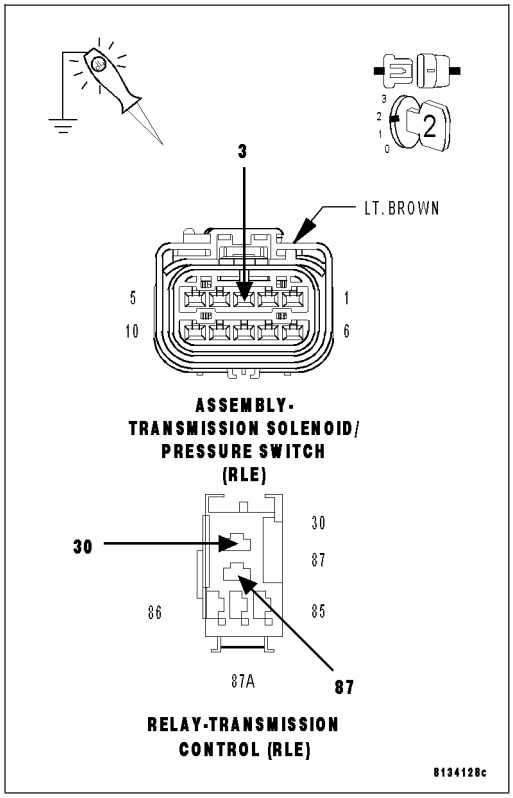

CONTROL MODULES/POWERTRAIN CONTROL MODULE - REMOVAL)

Perform 42RLE TRANSMISSION VERIFICATION TEST - VER 1. (Refer to 21 - TRANSMISSION/TRANSAXLE/AUTOMATIC - 42RLE - STANDARD PROCEDURE)

No >> Repair the Transmission Control Relay Output circuit for an open or high resistance. If the fuse is open make sure to check for a short to ground.

Perform 42RLE TRANSMISSION VERIFICATION TEST - VER 1. (Refer to 21 - TRANSMISSION/TRANSAXLE/AUTOMATIC - 42RLE - STANDARD PROCEDURE)

10. INTERMITTENT WIRING AND CONNECTORS

The conditions necessary to set the DTC are not present at this time.

Using the schematics as a guide, inspect the wiring and connectors specific to this circuit.

Wiggle the wires while checking for shorted and open circuits.

With the scan tool, check the EATX DTC EVENT DATA to help identify the conditions in which the DTC was set.

Were there any problems found?

Yes >> Repair as necessary.

Perform 42RLE TRANSMISSION VERIFICATION TEST - VER 1. (Refer to 21 - TRANSMISSION/TRANSAXLE/AUTOMATIC - 42RLE - STANDARD PROCEDURE)

No >> Test Complete.

P0846-2/4 PRESSURE SWITCH RATIONALITY

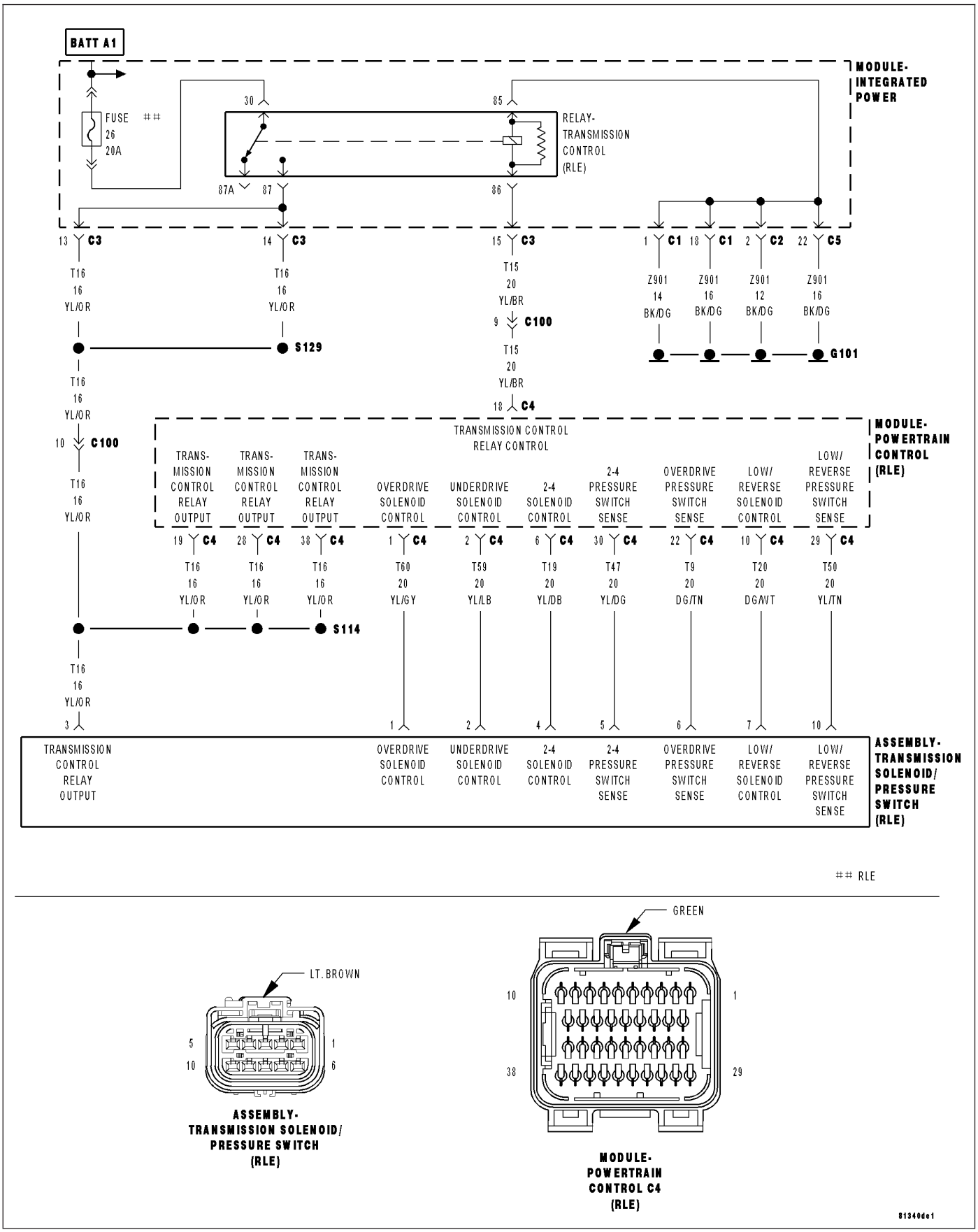

For a complete wiring diagram **Refer to Section 8W**.

- **When Monitored:**
  Whenever the engine is running.
- **Set Condition:**
  The DTC is set if one of the pressure switches are open or closed at the wrong time in a given gear. If the problem is identified for 3 successive key starts, the transmission will go into Limp-in mode a MIL will turn on after 10 seconds of vehicle operation.

Possible Causes
RELATED TCM POWER INPUT DTCS PRESENT
LOSS OF PRIME DTC PRESENT
(T47) 2/4 PRESSURE SWITCH SENSE CIRCUIT OPEN
(T47) 2/4 PRESSURE SWITCH SENSE CIRCUIT SHORT TO GROUND
(T47) 2/4 PRESSURE SWITCH SENSE CIRCUIT SHORT TO VOLTAGE
TRANSMISSION SOLENOID/PRESSURE SWITCH ASSEMBLY
POWERTRAIN CONTROL MODULE

Always perform the 42RLE Pre-Diagnostic Troubleshooting Procedure before proceeding. (Refer to 21 - TRANSMISSION/TRANSAXLE/AUTOMATIC - 42RLE - STANDARD PROCEDURE)

Theory of Operation

The Transmission system uses three pressure switches to monitor the fluid pressure in the LR, 2/4, and OD elements. The pressure switches are continuously monitored for the correct states in each gear. The 2/4 pressure switch monitors the fluid pressure to the 2/4 clutch to confirm proper operation of the 2/4 solenoid. If the 2/4 pressure switch is identified as closed in P or N, the code will immediately be set and normal operation will be allowed for that given key start. If the problem is identified for 3 successive ignition cycles, the transmission will go into Limp-in mode.

PRESSURE SWITCH STATES

GEAR	L/R	2/4	OD
R	OP	OP	OP
P/N	CL	OP	OP
1st	CL	OP	OP
2nd	OP	CL	OP
D	OP	OP	CL
OD	OP	CL	CL

OP = OPEN

CL = CLOSED

Diagnostic Test

1. DETERMINE IF RELATED TCM POWER INPUT DTCS ARE PRESENT

With the scan tool, read Transmission DTCs.

Are there any TCM Power Input DTCs present also?

Yes >> Refer to the Transmission category and perform the appropriate symptom.

No >> Go To 2

2. CHECK FOR LOSS OF PRIME DTC

With the scan tool, check for other Transmission DTC's.

Is the DTC P0944 present also?

Yes >> Refer to the Transmission category and perform the appropriate diagnostic procedure.
Perform 42RLE TRANSMISSION VERIFICATION TEST - VER 1. (Refer to 21 - TRANSMISSION/ TRANSAXLE/AUTOMATIC - 42RLE - STANDARD PROCEDURE)

No >> Go To 3

3. CHECK TO SEE IF P0846 IS CURRENT

With the scan tool, Check the STARTS SINCE SET counter for P0846.

NOTE: This counter only applies to the last DTC set.

Is the STARTS SINCE SET counter 2 or less?

Yes >> Go To 4

No >> Go To 9

4. PCM AND WIRING

Turn the ignition off to the lock position.

Remove the Starter Relay.

CAUTION: Removal of the Starter Relay is to prevent a Transmission, NO RESPONSE, condition and disable the starter.

Install the Transmission Simulator, Miller tool #8333 and the Electronic Transmission Adapter kit 8333-1A.

NOTE: Check connectors - Clean/repair as necessary.

Ignition on, engine not running.

With the Transmission Simulator, turn the Pressure Switch selector to 2/4.

With the scan tool , monitor the 2/4Pressure Switch state while pressing the Pressure Switch Test button on the Transmission Simulator.

Did the 2/4 Pressure Switch state change?

Yes >> Go To 8

No >> Go To 5

5. (T47) 2/4 PRESSURE SWITCH SENSE CIRCUIT OPEN

Turn the ignition off to the lock position.

Disconnect the PCM C4 harness connector.

Disconnect the Transmission Solenoid/Pressure Switch Assembly harness connector.

NOTE: Check connectors - Clean/repair as necessary.

CAUTION: Do not probe the PCM harness connectors. Probing the PCM harness connectors will damage the PCM terminals resulting in poor terminal to pin connection. Install Miller Special Tool #8815 to perform diagnosis.

Measure the resistance of the (T47) 2/4Pressure Switch Sense circuit from the appropriate terminal of special tool #8815 to the Transmission Solenoid/Pressure Switch Assembly harness connector.

Is the resistance above 5.0 ohms?

Yes >> Repair the (T47) 2/4Pressure Switch Sense circuit for an open.

Perform 42RLE TRANSMISSION VERIFICATION TEST - VER 1. (Refer to 21 - TRANSMISSION/TRANSAXLE/AUTOMATIC - 42RLE - STANDARD PROCEDURE)

No >> Go To 6

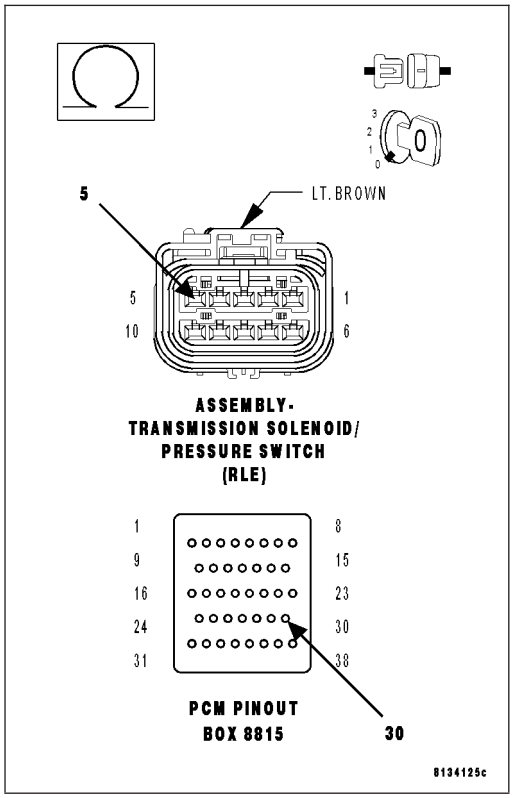

6. (T47) 2/4 PRESSURE SWITCH SENSE CIRCUIT SHORT TO GROUND

Turn the ignition off to the lock position.

Disconnect the PCM C4 harness connector.

Disconnect the Transmission Solenoid/Pressure Switch Assembly harness connector.

NOTE: Check connectors - Clean/repair as necessary.

Measure the resistance between ground and the (T47) 2/4 Pressure Switch Sense circuit.

Is the resistance below 5.0 ohms?

Yes >> Repair the (T47) 2/4 Pressure Switch Sense circuit for a short to ground.

Perform 42RLE TRANSMISSION VERIFICATION TEST - VER 1. (Refer to 21 - TRANSMISSION/TRANSAXLE/AUTOMATIC - 42RLE - STANDARD PROCEDURE)

No >> Go To 7

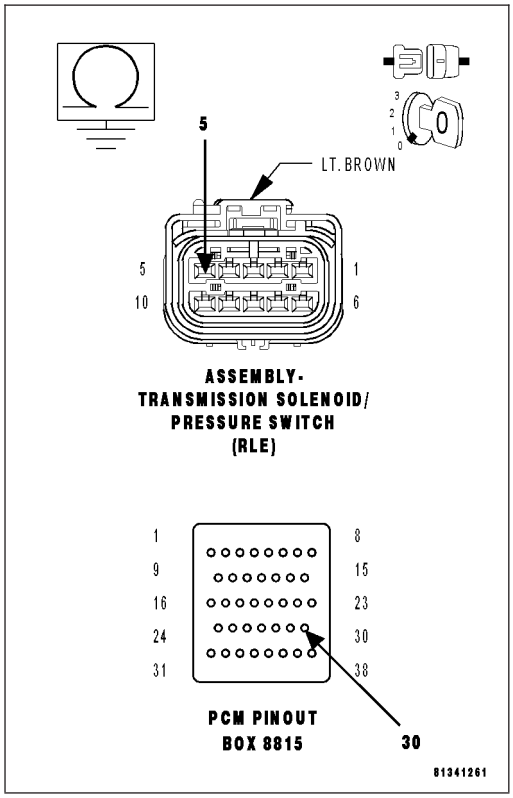

7. (T47) 2/4 PRESSURE SWITCH SENSE CIRCUIT SHORT TO VOLTAGE

Turn the ignition off to the lock position.

Disconnect the PCM C4 harness connector.

Disconnect the Transmission Solenoid/Pressure Switch Assembly harness connector.

Remove the Transmission Control Relay.

NOTE: Check connectors - Clean/repair as necessary.

Connect a jumper wire between the (Internal) Fused B+ circuit and (T16) Transmission Control Relay Output circuit.

Ignition on, engine not running.

Measure the voltage of the (T47) 2/4 Pressure Switch Sense circuit.

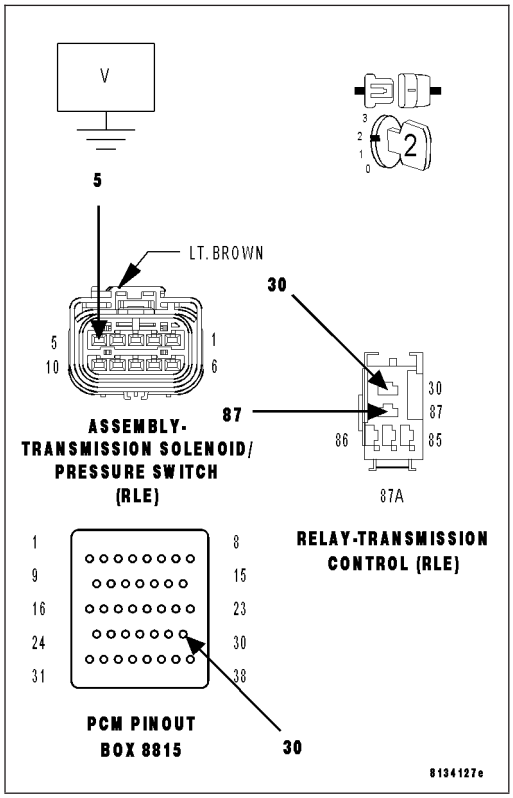

Is the voltage above 0.5 volts?

Yes >> Repair the (T47) 2/4 Pressure Switch Sense circuit for a short to voltage.

Perform 42RLE TRANSMISSION VERIFICATION TEST - VER 1. (Refer to 21 - TRANSMISSION/TRANSAXLE/AUTOMATIC - 42RLE - STANDARD PROCEDURE)

No >> Using the schematics as a guide, check the Powertrain Control Module (PCM) terminals for corrosion, damage, or terminal push out. Pay particular attention to all power and ground circuits. If no problems are found, replace the PCM per the Service Information. With the scan tool PERFORM QUICK LEARN, then program Pinion Factor in the Front Control Module. (Refer to 8 - ELECTRICAL/ELECTRONIC CONTROL MODULES/POWERTRAIN CONTROL MODULE - REMOVAL)

Perform 42RLE TRANSMISSION VERIFICATION TEST - VER 1. (Refer to 21 - TRANSMISSION/TRANSAXLE/AUTOMATIC - 42RLE - STANDARD PROCEDURE)

8. 2/4 PRESSURE SWITCH

View repair.

Repair

Replace the Transmission Solenoid/Pressure Switch Assembly per the Service Information.

Perform 42RLE TRANSMISSION VERIFICATION TEST - VER 1. (Refer to 21 - TRANSMISSION/TRANSAXLE/AUTOMATIC - 42RLE - STANDARD PROCEDURE)

9. INTERMITTENT WIRING AND CONNECTORS

The conditions necessary to set the DTC are not present at this time.

Using the schematics as a guide, inspect the wiring and connectors specific to this circuit.

Wiggle the wires while checking for shorted and open circuits.

With the scan tool, check the EATX DTC EVENT DATA to help identify the conditions in which the DTC was set.

Were there any problems found?

Yes >> Repair as necessary.

Perform 42RLE TRANSMISSION VERIFICATION TEST - VER 1. (Refer to 21 - TRANSMISSION/TRANSAXLE/AUTOMATIC - 42RLE - STANDARD PROCEDURE)

No >> Test Complete.

P0868-LINE PRESSURE LOW

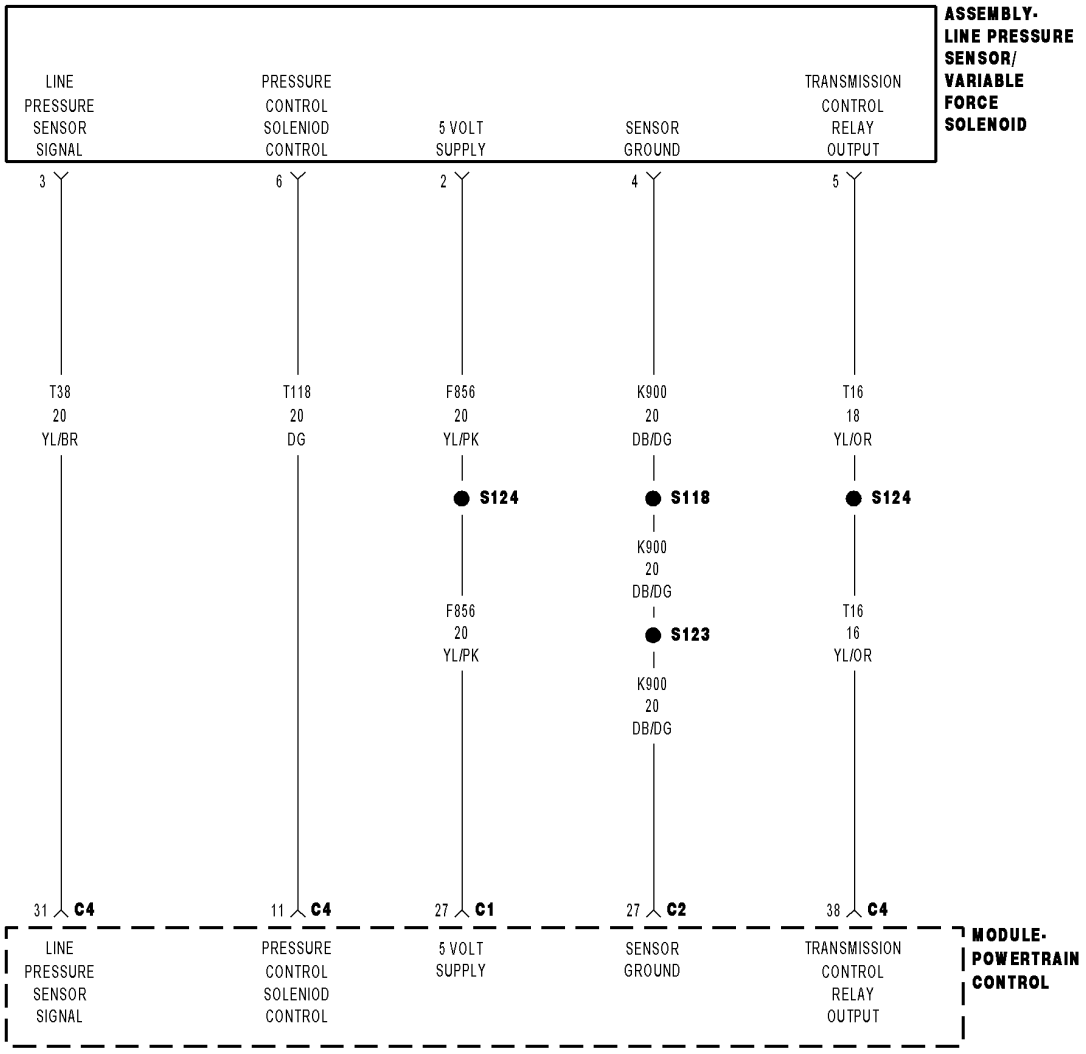

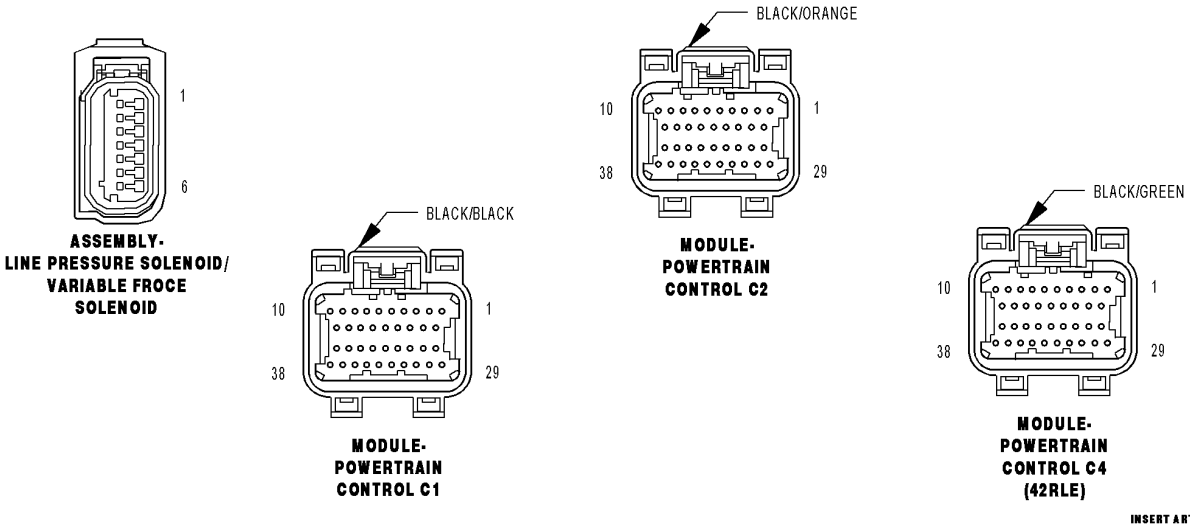

For a complete wiring diagram **Refer to Section 8W**

- **When Monitored:**
  Continuously while driving in a forward gear.
- **Set Condition:**
  The PCM continuously monitors Actual Line Pressure and compares it to Desired Line Pressure. If the Actual Line Pressure is more than 10 psi below Desired Line Pressure, this DTC will set.

Possible Causes
CHECK FOR RELATED DTCS
LOW FLUID LEVEL
(F856) 5-VOLT SUPPLY CIRCUIT OPEN
(F856) 5-VOLT SUPPLY CIRCUIT SHORT TO GROUND
(F856) 5-VOLT SUPPLY CIRCUIT SHORT TO VOLTAGE
(T118) PRESSURE CONTROL SOLENOID CONTROL CIRCUIT SHORT TO ANOTHER CIRCUIT
INTERNAL TRANSMISSION
LINE PRESSURE SENSOR
CRACKED, PLUGGED, OR MIS-INSTALLED PRIMARY OIL FILTER
STUCK OR STICKING MAIN REGULATOR VALVE
POWERTRAIN CONTROL MODULE

Always perform the 42RLE Pre-Diagnostic Troubleshooting procedure before proceeding. (Refer to 21 - TRANSMISSION/TRANSAXLE/AUTOMATIC - 42RLE - STANDARD PROCEDURE)

Theory of Operation

Line pressure is measured by the Line Pressure Sensor (LPS) and regulation is achieved by changing the duty cycle of the Pressure Control Solenoid (PCS) controlled by the Transmission Control System. (5% duty cycle = solenoid off = Max line pressure, 62% duty cycle = solenoid on = Min line pressure). The Transmission Control System calculates the desired line pressure based on inputs from both the engine and transmission.

The Transmission Control System calculates torque input to the transmission and uses it as the primary input to the desired line pressure calculation. This is called Torque Based Line Pressure. In addition, the line pressure is set to a preset level 827 or 931 kPa (120 or 135 psi) during shifts and in Park and Neutral to ensure consistent shift quality. The desired line pressure is continuously being compared to the actual line pressure. If the actual line pressure is consistently lower than the target while driving, the line pressure low DTC P0868 will set.

Diagnostic Test

1. CHECK FOR RELATED DTCS

With the scan tool, check for other transmission DTCs.

Is the DTC P0932 present also?

Yes >> Refer to the Transmission category and perform the appropriate symptom.

No >> Go To 2

2. CHECK IF THE DTC IS CURRENT

With the scan tool, check the STARTS SINCE SET counter for P0868.

NOTE: This counter only applies to the last DTC set.

Is the STARTS SINCE SET COUNTER 2 or less?

Yes >> Go To 3

No >> Go To 10

3. CHECK THE PCM AND WIRING

Turn the ignition off to the lock position.

Remove the Starter Relay from the PDC.

CAUTION: Removal of the Starter Relay will prevent the vehicle from being started in gear.

WARNING: The Starter Relay must be removed from the PDC. Failure to do so can result in personal injury or death.

NOTE: Removal of the Starter Relay is to prevent a Transmission, NO RESPONSE, condition and disable the starter.

Install the Transmission Simulator, Miller tool #8333 and the Electronic Transmission Adapter kit.

On the Transmission Simulator select the ″OFF″ position of the ″Input/Output Speed″ switch.

Ignition on, engine not running.

With the scan tool, monitor the Line Pressure during the following steps.

Using the Transmission Simulator, set the rotary knob to each of the 3 line pressure positions.

NOTE: All three scan tool Line Pressure readings should be steady and ± 14 kPa or 2.0 psi of the reading specified on the Transmission Simulator.

Did the Line Pressure read within ± 14 kPa or 2.0 psi in all three positions?

Yes >> Go To 4

No >> Go To 6

4. CHECK THE LINE PRESSURE SENSOR

Turn the ignition off to the lock position.

Disconnect the Transmission Simulator, Miller tool #8333 and reconnect all previously disconnected connectors.

Install a Pressure Gauge, 0 to 2000 kPa or 0 to 300 psi to the L/R test port.

Start the engine in park.

Monitor the line pressure readings of both the scan tool and the pressure gauge and compare the two readings.

Is the line pressure gauge reading within 34 kPa or 5 psi of the scan tool reading?

Yes >> Go To 5

No >> Replace the Line Pressure Sensor per the Service Information.
Perform 42RLE TRANSMISSION VERIFICATION TEST - VER 1. (Refer to 21 - TRANSMISSION/ TRANSAXLE/AUTOMATIC - 42RLE - STANDARD PROCEDURE)

5. CHECK FOR A PLUGGED TRANSMISSION OIL FILTER

Turn the ignition off to the lock position.

Remove and inspect the Transmission Oil Pan for excessive debris per the Service Information.

Remove and inspect the Transmission Oil Filter per the Service Information.

Does the Oil Pan contain excessive debris and/or is the Transmission Oil Filter plugged?

Yes >> Repair as necessary. If the Transmission Oil Filter is plugged or there is excessive debris, refer to the Service Information for the proper Hydraulic repair procedure.

Perform 42RLE TRANSMISSION VERIFICATION TEST - VER 1. (Refer to 21 - TRANSMISSION/TRANSAXLE/AUTOMATIC - 42RLE - STANDARD PROCEDURE)

No >> Repair internal transmission and inspect the Transmission Oil Pump per the Service Information and replace if necessary.

Perform 42RLE TRANSMISSION VERIFICATION TEST - VER 1. (Refer to 21 - TRANSMISSION/TRANSAXLE/AUTOMATIC - 42RLE - STANDARD PROCEDURE)

6. CHECK THE (F856) 5-VOLT SUPPLY CIRCUIT FOR A SHORT TO VOLTAGE

Disconnect the Transmission Simulator, Miller tool #8333 and the Electronic Transmission Adapter kit.

Reconnect all previously disconnected connectors except the Line Pressure Sensor/Variable Force Solenoid Assembly harness connector.

Ignition on, engine not running.

Measure the voltage of the (F856) 5-volt Supply circuit.

Is the voltage above 5.5 volts?

Yes >> Repair the (F856) 5-volt Supply circuit for a short to voltage.

Perform 42RLE TRANSMISSION VERIFICATION TEST - VER 1. (Refer to 21 - TRANSMISSION/TRANSAXLE/AUTOMATIC - 42RLE - STANDARD PROCEDURE)

No >> Go To 7

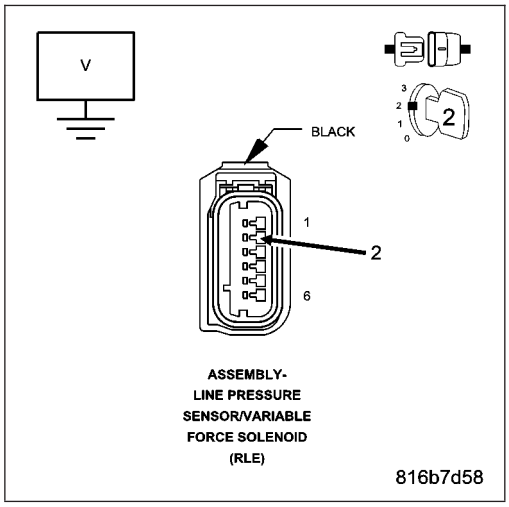

7. CHECK THE (F856) 5-VOLT SUPPLY CIRCUIT FOR AN OPEN

Turn the ignition off to the lock position.

Disconnect the PCM C1 harness connector and connect Miller tool #8815.

CAUTION: Do not probe the PCM harness connectors. Probing the PCM harness connectors will damage the PCM terminals resulting in poor terminal to pin connection. Install Miller tool #8815 to perform diagnosis.

Measure the resistance of the (F856) 5-volt Supply circuit between the Line Pressure Sensor/Variable Force Solenoid Assembly harness connector and the appropriate terminal of Miller tool #8815.

Is the resistance above 5.0 ohms?

Yes >> Repair the (F856) 5-volt Supply circuit for an open.
Perform 42RLE TRANSMISSION VERIFICATION TEST - VER 1. (Refer to 21 - TRANSMISSION/TRANSAXLE/AUTOMATIC - 42RLE - STANDARD PROCEDURE)

No >> Go To 8

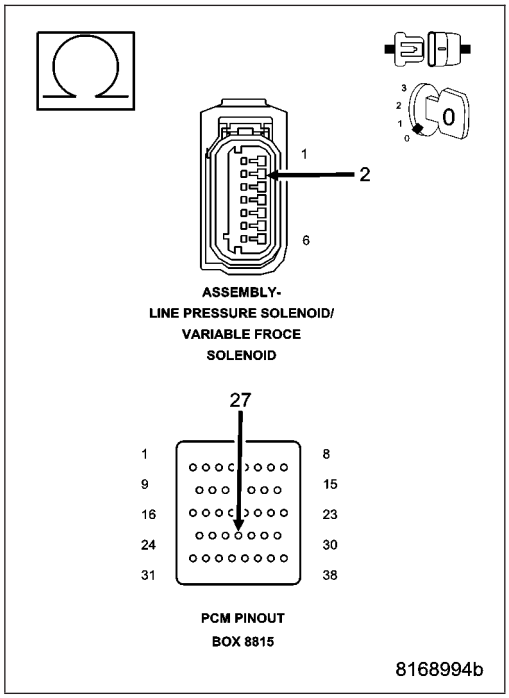

8. CHECK THE (F856) 5-VOLT SUPPLY CIRCUIT FOR A SHORT TO GROUND

Measure the resistance between ground and the (F856) 5-volt Supply circuit.

Is the resistance below 5.0 ohms?

Yes >> Repair the (F856) 5-volt Supply circuit for a short to ground.
Perform 42RLE TRANSMISSION VERIFICATION TEST - VER 1. (Refer to 21 - TRANSMISSION/TRANSAXLE/AUTOMATIC - 42RLE - STANDARD PROCEDURE)

No >> Go To 9

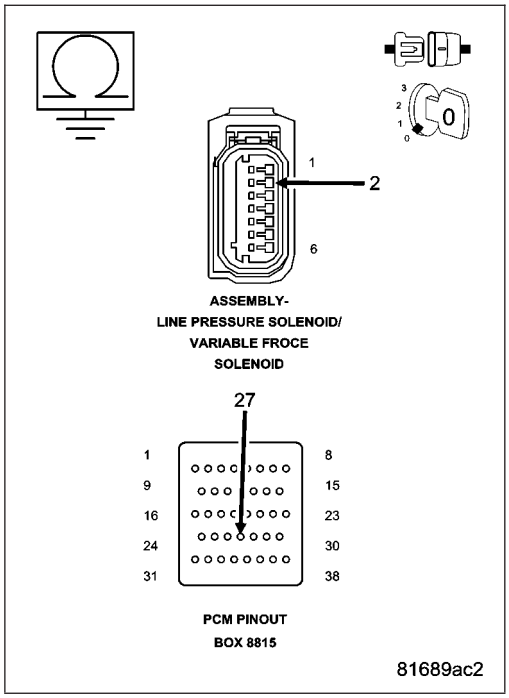

9. CHECK THE (T118) PRESSURE CONTROL SOLENOID CONTROL CIRCUIT FOR A SHORT TO ANOTHER CIRCUIT

Turn the ignition off to the lock position.

Disconnect the Line Pressure Sensor/Variable Force Solenoid Assembly harness connector.

Disconnect all PCM harness connectors.

Measure the resistance between the (T118) Pressure Control Solenoid Control circuit and all other circuits in the Line Pressure Sensor/Variable Force Solenoid Assembly harness connector.

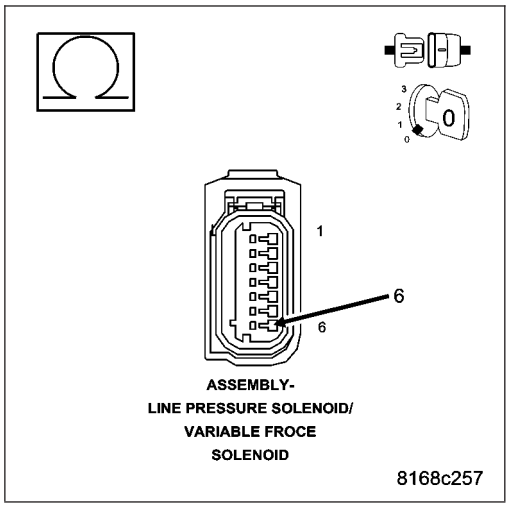

Is the resistance below 5.0 ohms between the (T118) Pressure Control Solenoid Control circuit and any other circuit(s) in the Line Pressure Sensor/Variable Force Solenoid Assembly harness connector?

Yes >> Repair the (T118) Pressure Control Solenoid Control circuit for a short to another circuit(s).

Perform 42RLE TRANSMISSION VERIFICATION TEST - VER 1. (Refer to 21 - TRANSMISSION/TRANSAXLE/AUTOMATIC - 42RLE - STANDARD PROCEDURE)

No >> Using the schematics as a guide, check the Powertrain Control Module (PCM) terminals for corrosion, damage, or terminal push out. Pay particular attention to all power and ground circuits. If no problems are found, replace the PCM per the Service Information. With the scan tool, perform QUICK LEARN.

Perform 42RLE TRANSMISSION VERIFICATION TEST - VER 1. (Refer to 21 - TRANSMISSION/TRANSAXLE/AUTOMATIC - 42RLE - STANDARD PROCEDURE)

10. INTERMITTENT WIRING AND CONNECTORS

The conditions necessary to set this DTC are not present at this time.

Using the schematics as a guide, inspect the wiring and connectors specific to this circuit.

Wiggle the wires while checking for shorted and open circuits.

With the scan tool, check the DTC EVENT DATA to help identify the conditions in which the DTC was set.

Where there any problems found?

Yes >> Repair as necessary.

Perform 42RLE TRANSMISSION VERIFICATION TEST - VER 1. (Refer to 21 - TRANSMISSION/TRANSAXLE/AUTOMATIC - 42RLE - STANDARD PROCEDURE)

No >> Test Complete.

P0869-LINE PRESSURE HIGH

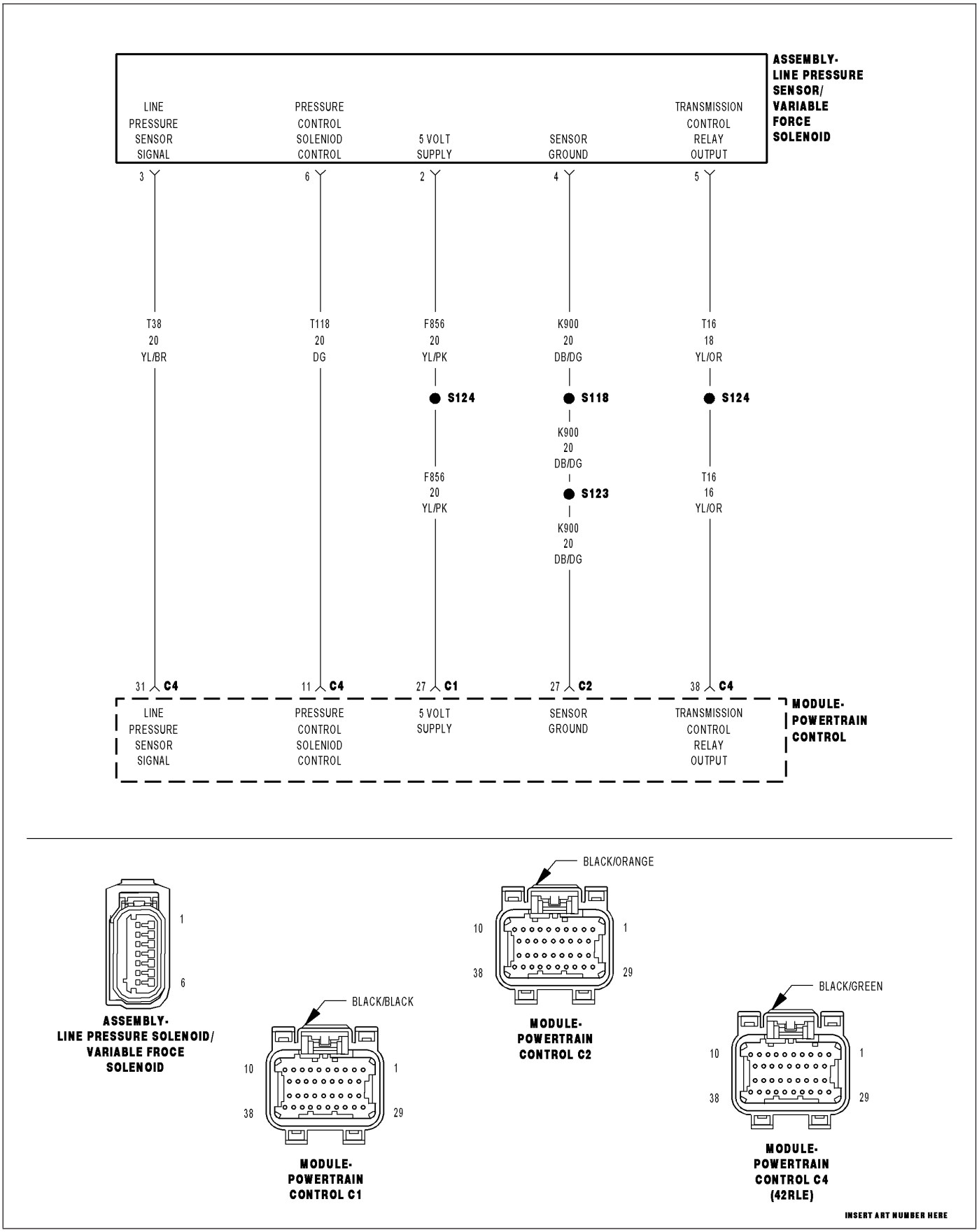

For a complete wiring diagram **Refer to Section 8W**

- **When Monitored:**
  Continuously while driving in a forward gear.
- **Set Condition:**
  The PCM continuously monitors Actual Line Pressure. If the Actual Line Pressure reading is greater than the highest Desired Line Pressure ever used in the current gear, while the Pressure Control Solenoid duty cycle is at or near its maximum value (which should result in minimum line pressure), the DTC will set.

Possible Causes
(F856) 5-VOLT SUPPLY CIRCUIT OPEN
LINE PRESSURE SENSOR CONNECTION
(T118) PRESSURE CONTROL SOLENOID CONTROL CIRCUIT OPEN
(F856) 5-VOLT SUPPLY CIRCUIT SHORT TO GROUND
(T118) PRESSURE CONTROL SOLENOID CONTROL CIRCUIT SHORT TO GROUND
TRANSMISSION CONTROL RELAY OUTPUT CIRCUIT
LINE PRESSURE SENSOR
STUCK OR STICKING MAIN REGULATOR VALVE
POWERTRAIN CONTROL MODULE

Always perform the 42RLE Pre-Diagnostic Troubleshooting procedure before proceeding. (Refer to 21 - TRANSMISSION/TRANSAXLE/AUTOMATIC - 42RLE - STANDARD PROCEDURE)

Theory of Operation

Line pressure is measured by the Line Pressure Sensor (LPS) and regulation is achieved by changing the duty cycle of the Pressure Control Solenoid (PCS) controlled by the Transmission Control System. (5% duty cycle = solenoid off = Max line pressure, 62% duty cycle = solenoid on = Min line pressure). The Transmission Control System calculates the desired line pressure based on inputs from both the engine and transmission.

The Transmission Control System calculates torque input to the transmission and uses it as the primary input to the desired line pressure calculation. This is called Torque Based Line Pressure. In addition, the line pressure is set to a preset level 827 or 931 kPa (120 or 135 psi) during shifts and in Park and Neutral to ensure consistent shift quality. The desired line pressure is continuously being compared to the actual line pressure. If the actual line pressure is consistently higher than the highest desired line pressure ever used in the current gear, the line pressure high DTC P0869 will set.

Diagnostic Test

1. CHECK FOR RELATED DTCS

With the scan tool, check for other Transmission DTCs.

Are there any line pressure sensor or transmission relay output DTCs present also?

Yes >> Refer to the Transmission category and perform the appropriate symptom.

No >> Go To 2

2. CHECK IF THE DTC IS CURRENT

With the scan tool, check the STARTS SINCE SET counter for P0869.

Is the STARTS SINCE SET COUNTER 2 or less?

Yes >> Go To 3

No >> Go To 9

3. CHECK THE PCM AND WIRING

Turn the ignition off to the lock position.

Remove the Starter Relay.

CAUTION: Removal of the Starter Relay will prevent the vehicle from being started in gear.

WARNING: The Starter Relay must be removed from the PDC. Failure to do so can result in personal injury or death.

NOTE: Removal of the Starter Relay is to prevent a Transmission, NO RESPONSE, condition and disable the starter.

Install the Transmission Simulator, Miller tool #8333 and the Electronic Transmission Adapter kit.

With the Transmission Simulator select the ″OFF″ position on the ″Input/Output Speed″ switch.

Ignition on, engine not running.

With the scan tool, monitor the Line Pressure during the following step.

Using the Transmission Simulator, set the rotary switch to each of the 3 line pressure positions.

NOTE: All three scan tool Line Pressure readings should be steady and ± 14 kPa or 2.0 psi of the reading specified on the Transmission Simulator.

Did the Line Pressure read within ± 14 kPa or 2.0 psi in all three positions?

Yes >> Go To 4

No >> Go To 5

4. CHECK THE LINE PRESSURE SENSOR CALIBRATION

Turn the ignition off to the lock position.

Disconnect the Transmission Simulator, Miller tool #8333 and the Electronic Transmission Adapter kit and reconnect all previously disconnected connectors.

Install the Line Pressure Gauge, Miller tool #C-3293, 0 to 2000 kPa or 0 to 300 psi in the L/R pressure port.

Start the engine in park.

Monitor the Line Pressure readings on the scan tool and the pressure gauge.

Compare the Line Pressure readings between the scan tool and the pressure gauge.

Is the pressure gauge reading within 34 kPa or 5 psi of the scan tool reading?

Yes >> Repair the internal transmission and inspect the Transmission Oil Pump per the Service Information and replace if necessary. If no problem is found, replace the Pressure Control Solenoid.

Perform 42RLE TRANSMISSION VERIFICATION TEST - VER 1. (Refer to 21 - TRANSMISSION/ TRANSAXLE/AUTOMATIC - 42RLE - STANDARD PROCEDURE)

No >> Replace the Line Pressure Sensor per the Service information.

Perform 42RLE TRANSMISSION VERIFICATION TEST - VER 1. (Refer to 21 - TRANSMISSION/ TRANSAXLE/AUTOMATIC - 42RLE - STANDARD PROCEDURE)

5. CHECK THE (T118) PRESSURE CONTROL SOLENOID CONTROL CIRCUIT FOR AN OPEN

Turn the ignition off to the lock position.

Disconnect the Transmission Simulator, Miller tool #8333.

Disconnect the Powertrain Control Module C4 harness connector.

CAUTION: Do not probe the PCM harness connectors. Probing the PCM harness connectors will damage the PCM terminals resulting in poor terminal to pin connection. Install Miller tool #8815 to perform diagnosis.

Measure the resistance of the (T118) Pressure Control Solenoid Control circuit between the Line Pressure Sensor/Variable Force Solenoid Assembly harness connector and the appropriate terminal of Miller tool #8815.

Is the resistance above 5.0 ohms?

Yes >> Repair the (T118) Pressure Control Solenoid Control circuit for an open.

Perform 42RLE TRANSMISSION VERIFICATION TEST - VER 1. (Refer to 21 - TRANSMISSION/TRANSAXLE/AUTOMATIC - 42RLE - STANDARD PROCEDURE)

No >> Go To 6

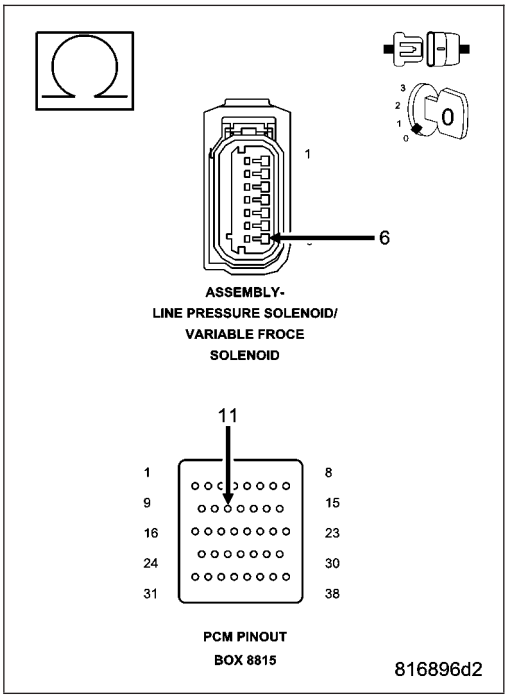

6. CHECK THE (T118) PRESSURE CONTROL SOLENOID CONTROL CIRCUIT FOR A SHORT TO GROUND

Measure the resistance between ground and the (T118) Pressure Control Solenoid Control circuit.

Is the resistance below 5.0 ohms?

Yes >> Repair the (T118) Pressure Control Solenoid Control circuit for a short to ground.

Perform 42RLE TRANSMISSION VERIFICATION TEST - VER 1. (Refer to 21 - TRANSMISSION/TRANSAXLE/AUTOMATIC - 42RLE - STANDARD PROCEDURE)

No >> Go To 7

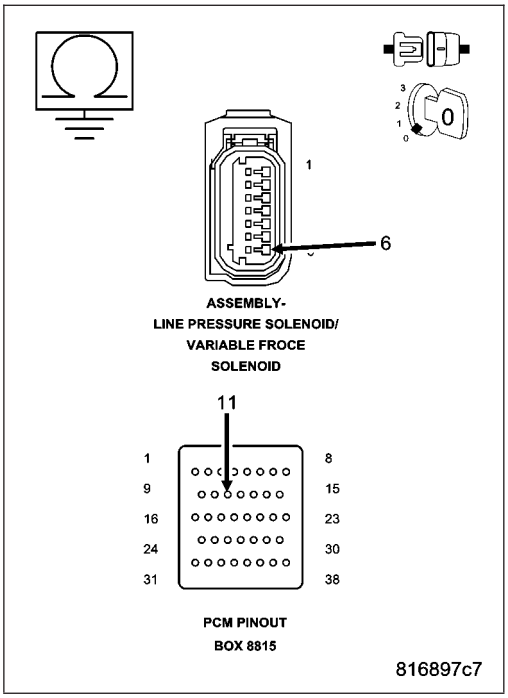

7. CHECK THE (F856) 5-VOLT SUPPLY CIRCUIT FOR AN OPEN

Measure the resistance of the (F856) 5-volt Supply circuit between the Line Pressure Sensor/Variable Force Solenoid Assembly harness connector to the appropriate terminal of Miller tool #8815.

Is the resistance above 5.0 ohms?

Yes >> Repair the (F856) 5-volt Supply circuit for an open.
Perform 42RLE TRANSMISSION VERIFICATION TEST - VER 1. (Refer to 21 - TRANSMISSION/TRANSAXLE/AUTOMATIC - 42RLE - STANDARD PROCEDURE)

No >> Go To 8

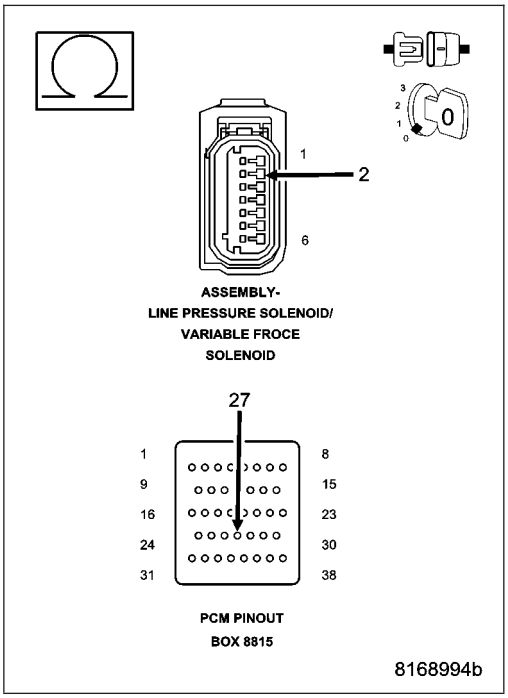

8. CHECK THE (F856) 5-VOLT SUPPLY CIRCUIT FOR A SHORT TO GROUND

Disconnect the PCM C1 harness connector.

Disconnect the Line Pressure Sensor/Variable Force Solenoid Assembly harness connector.

CAUTION: Do not probe the PCM harness connectors. Probing the PCM harness connectors will damage the PCM terminals resulting in poor terminal to pin connection. Install Miller tool #8815 to perform diagnosis.

Measure the resistance between ground and the (F856) 5-volt Supply circuit.

Is the resistance below 5.0 ohms?

Yes >> Repair the (F856) 5-volt Supply circuit for a short to ground.
Perform 42RLE TRANSMISSION VERIFICATION TEST - VER 1. (Refer to 21 - TRANSMISSION/TRANSAXLE/AUTOMATIC - 42RLE - STANDARD PROCEDURE)

No >> Using the schematics as a guide, check the Powertrain Control Module (PCM) terminals for corrosion, damage, or terminal push out. Pay particular attention to all power and ground circuits. If no problems are found, replace the PCM per the Service Information. With the scan tool, perform QUICK LEARN.
Perform 42RLE TRANSMISSION VERIFICATION TEST - VER 1. (Refer to 21 - TRANSMISSION/TRANSAXLE/AUTOMATIC - 42RLE - STANDARD PROCEDURE)

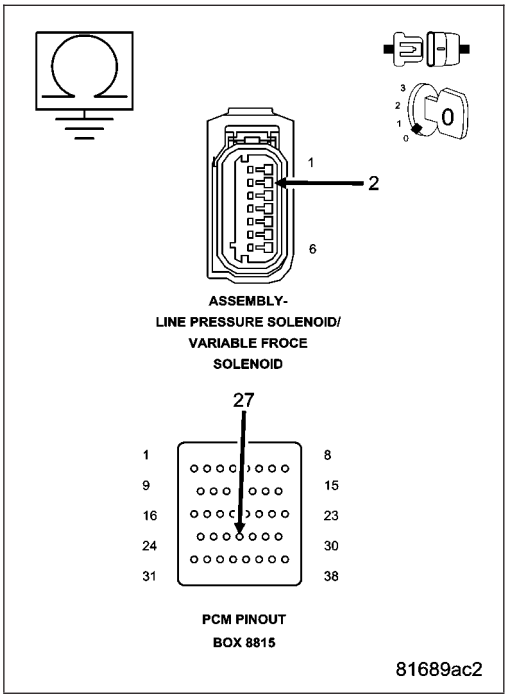

9. INTERMITTENT WIRING AND CONNECTORS

The conditions necessary to set this DTC are not present at this time.

Using the schematics as a guide, inspect the wiring and connectors specific to this circuit.

Wiggle the wires while checking for shorted and open circuits.

With the scan tool, check the DTC EVENT DATA to help identify the conditions in which the DTC was set.

Where there any problems found?

Yes >> Repair as necessary.
Perform 42RLE TRANSMISSION VERIFICATION TEST - VER 1. (Refer to 21 - TRANSMISSION/ TRANSAXLE/AUTOMATIC - 42RLE - STANDARD PROCEDURE)

No >> Test Complete.

P0870-OD HYDRAULIC PRESSURE TEST

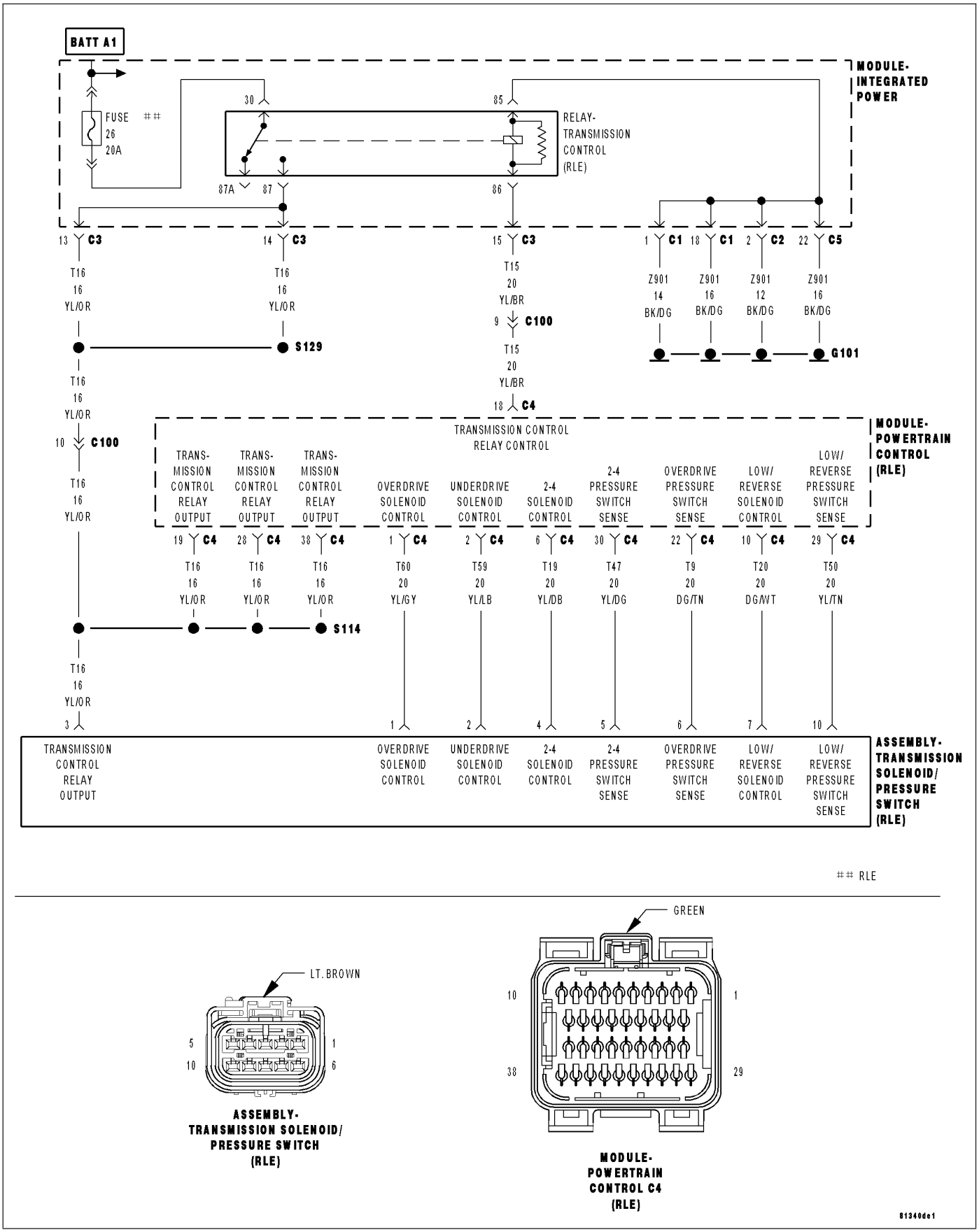

For a complete wiring diagram **Refer to Section 8W**.

- **When Monitored:**
  In any forward gear with engine speed above 1000 RPM, shortly after a shift and every minute thereafter.
- **Set Condition:**
  After a shift into a forward gear, with engine speed greater than 1000 RPM, the PCM momentarily turns on element pressure to the clutch circuits that don't have pressure to identify the correct pressure switch closes. If the pressure switch does not close 2 times the DTC sets.

Possible Causes
LOSS OF PRIME P0944 PRESENT
(T16) TCM POWER INPUT CIRCUIT OPEN
(T9) OD PRESSURE SWITCH SENSE CIRCUIT OPEN
(T9) OD PRESSURE SWITCH CIRCUIT SHORT TO GROUND
(T9) OD PRESSURE SWITCH SENSE CIRCUIT SHORT TO VOLTAGE
TRANSMISSION SOLENOID/PRESSURE SWITCH ASSEMBLY
INTERNAL TRANSMISSION
POWERTRAIN CONTROL MODULE

Always perform the 42RLE Pre-Diagnostic Troubleshooting Procedure before proceeding. (Refer to 21 - TRANSMISSION/TRANSAXLE/AUTOMATIC - 42RLE - STANDARD PROCEDURE)

PRESSURE SWITCH STATES

GEAR	L/R	2/4	OD
R	OP	OP	OP
P/N	CL	OP	OP
1st	CL	OP	OP
2nd	OP	CL	OP
D	OP	OP	CL
OD	OP	CL	CL

OP = OPEN

CL = CLOSED

Theory of Operation

Background: Pressure switches are normally off or open (no pressure applied) and read high (+12 volts). When an element is applied the corresponding pressure switch closes to ground (0 volts) or turns on. The controller tests the OD and 24 pressure switches when they are off (ie. when the corresponding friction element is not applied) by briefly applying the OD and 24 elements which will cause the corresponding pressure switch to close. The test verifies that the switches are operational and that the switch will close when the corresponding element is applied. If a switch fails to respond, it is re-tested. The MIL illuminates and the transmission system defaults to Limp-in mode.

Diagnostic Test

1. CHECKING FOR LOSS OF PRIME DTC

With the scan tool, check for other Transmission DTC's.

Is the DTC P0944 present also?

Yes >> Refer to the Transmission category and perform the appropriate diagnostic procedure.

No >> Go To 2

2. CHECK FOR RELATED TRANSMISSION DTC'S

With the scan tool, read Transmission DTC's.

Are any of the DTCs P0732, P0734 and/or P0846 present also?

Yes >> Replace the Transmission Solenoid/Pressure Switch Assembly per the Service Information.
Perform 42RLE TRANSMISSION VERIFICATION TEST - VER 1. (Refer to 21 - TRANSMISSION/ TRANSAXLE/AUTOMATIC - 42RLE - STANDARD PROCEDURE)

No >> Go To 3

3. CHECK TO SEE IF DTC P0870 IS CURRENT

With the scan tool, Check the STARTS SINCE SET counter for P0870.

NOTE: This counter only applies to the last DTC set.

Is the STARTS SINCE SET counter 2 or less?

Yes >> Go To 4

No >> Go To 10

4. PCM AND WIRING

Turn the ignition off to the lock position.

Remove the Starter Relay.

CAUTION: Removal of the Starter Relay is to prevent a Transmission, NO RESPONSE, condition and disable the starter.

Install the Transmission Simulator, Miller tool #8333 and the Electronic Transmission Adapter kit 8333-1A.

NOTE: Check connectors - Clean/repair as necessary.

Ignition on, engine not running.

With the Transmission Simulator, turn the Pressure Switch selector switch to OD.

With the scan tool, monitor the UD Pressure Switch state while pressing the Pressure Switch Test button on the Transmission Simulator.

Wiggle the wires leading to the PCM while pressing and holding the Pressure Switch Test button.

Did the OD Pressure Switch state change to closed and remain closed while wiggling the wires?

Yes >> Go To 5

No >> Go To 6

5. INTERNAL TRANSMISSION

View repair.

Repair

Disassemble and inspect the Valve Body per the Service Information and repair or replace as necessary. If no problems are found in the Valve Body, replace the Transmission Solenoid/Pressure Switch Assembly.

Perform 42RLE TRANSMISSION VERIFICATION TEST - VER 1. (Refer to 21 - TRANSMISSION/ TRANSAXLE/AUTOMATIC - 42RLE - STANDARD PROCEDURE)

6. (T9) OD PRESSURE SWITCH SENSE CIRCUIT OPEN

Turn the ignition off to the lock position.

Disconnect the PCM C4 harness connector.

Disconnect the Transmission Solenoid/Pressure Switch Assembly harness connector.

NOTE: Check connectors - Clean/repair as necessary.

CAUTION: Do not probe the PCM harness connectors. Probing the PCM harness connectors will damage the PCM terminals resulting in poor terminal to pin connection. Install Miller Special Tool #8815 to perform diagnosis.

Measure the resistance of the (T9)OD Pressure Switch Sense circuit from the appropriate terminal of special tool #8815 to the Transmission Solenoid/Pressure Switch Assembly harness connector.

Is the resistance above 5.0 ohms?

Yes >> Repair the (T9) OD Pressure Switch Sense circuit for an open.

Perform 42RLE TRANSMISSION VERIFICATION TEST - VER 1. (Refer to 21 - TRANSMISSION/TRANSAXLE/AUTOMATIC - 42RLE - STANDARD PROCEDURE)

No >> Go To 7

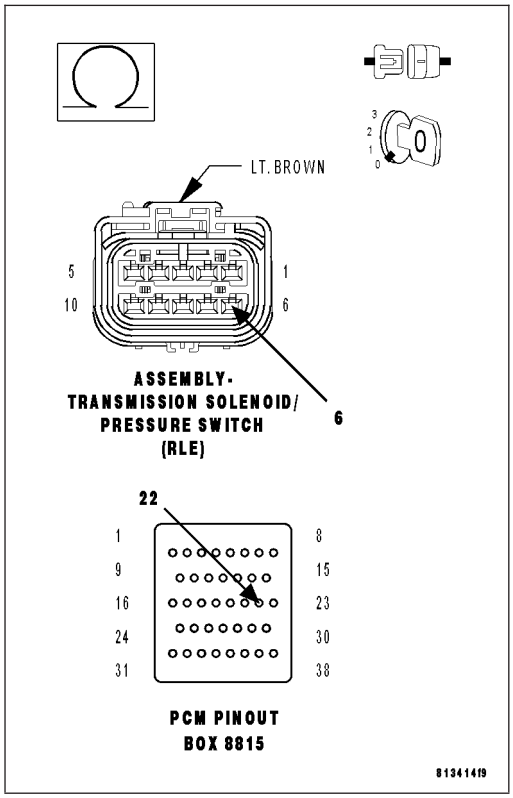

7. (T9) OD PRESSURE SWITCH SENSE CIRCUIT SHORT TO GROUND

Turn the ignition off to the lock position.

Disconnect the PCM C4 harness connector.

Disconnect the Transmission Solenoid/Pressure Switch Assembly harness connector.

NOTE: Check connectors - Clean/repair as necessary.

Measure the resistance between ground and the (T9) OD Pressure Switch Sense circuit.

Is the resistance below 5.0 ohms?

Yes >> Repair the (T9) OD Pressure Switch Sense circuit for a short to ground.

Perform 42RLE TRANSMISSION VERIFICATION TEST - VER 1. (Refer to 21 - TRANSMISSION/TRANSAXLE/AUTOMATIC - 42RLE - STANDARD PROCEDURE)

No >> Go To 8

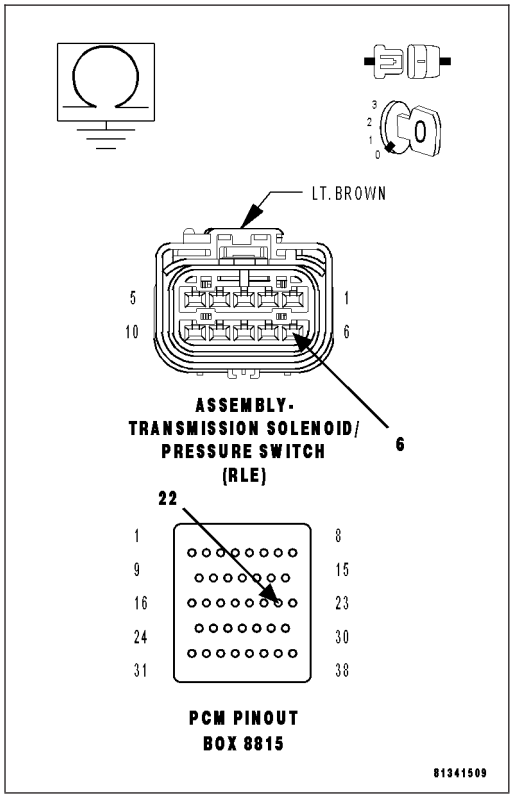

8. (T9) OD PRESSURE SWITCH SENSE CIRCUIT SHORT TO VOLTAGE

Turn the ignition off to the lock position.

Disconnect the PCM C4 harness connector.

Disconnect the Transmission Solenoid/Pressure Switch Assembly harness connector.

Remove the Transmission Control Relay.

NOTE: Check connectors - Clean/repair as necessary.

Connect a jumper wire between the (Internal) Fused B+ circuit and the (T16) Transmission Control Relay Output circuit.

Ignition on, engine not running.

Measure the voltage of the (T9) OD Pressure Switch Sense circuit.

Is the voltage above 0.5 volts?

Yes >> Repair the (T9) OD Pressure Switch Sense circuit for a short to voltage.

Perform 42RLE TRANSMISSION VERIFICATION TEST - VER 1. (Refer to 21 - TRANSMISSION/TRANSAXLE/AUTOMATIC - 42RLE - STANDARD PROCEDURE)

No >> Go To 9

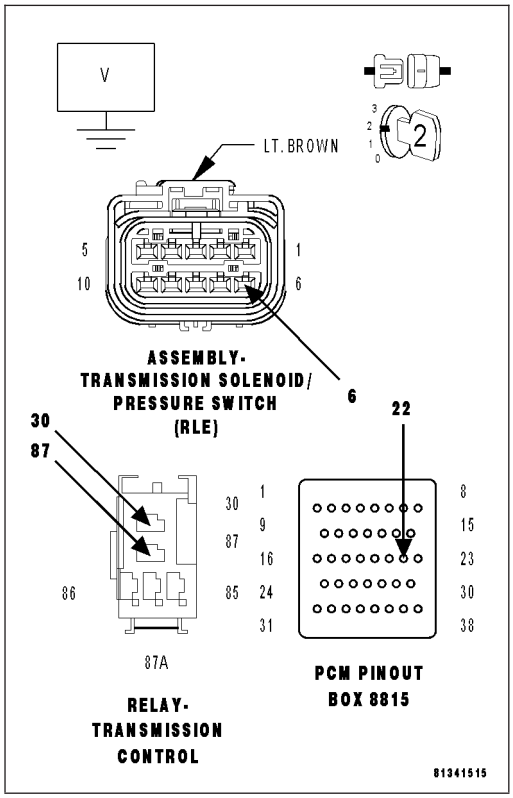

9. (T16) TRANSMISSION CONTROL RELAY OUTPUT CIRCUIT OPEN

Turn the ignition off to the lock position.

Disconnect the Transmission Solenoid/Pressure Switch Assembly harness connector.

Remove the Transmission Control Relay.

NOTE: Check connectors - Clean/repair as necessary.

Connect a jumper wire between the (Internal) Fused B+ circuit and the (T16) Transmission Control Relay Output circuit in the Transmission Control Relay connector.

Ignition on, engine not running.

Using a 12-volt test light connected to ground, check (T16) Transmission Control Relay Output circuit in the Transmission Solenoid/Pressure Switch Assembly harness connector.

NOTE: The test light must illuminate brightly. Compare the brightness to that of a direct connection to the battery.

Does the test light illuminate brightly?

Yes >> Using the schematics as a guide, check the Powertrain Control Module (PCM) terminals for corrosion, damage, or terminal push out. Pay particular attention to all power and ground circuits. If no problems are found, replace the PCM per the Service Information. With the scan tool PERFORM QUICK LEARN, then program Pinion Factor in the Front Control Module. (Refer to 8 - ELECTRICAL/ELECTRONIC

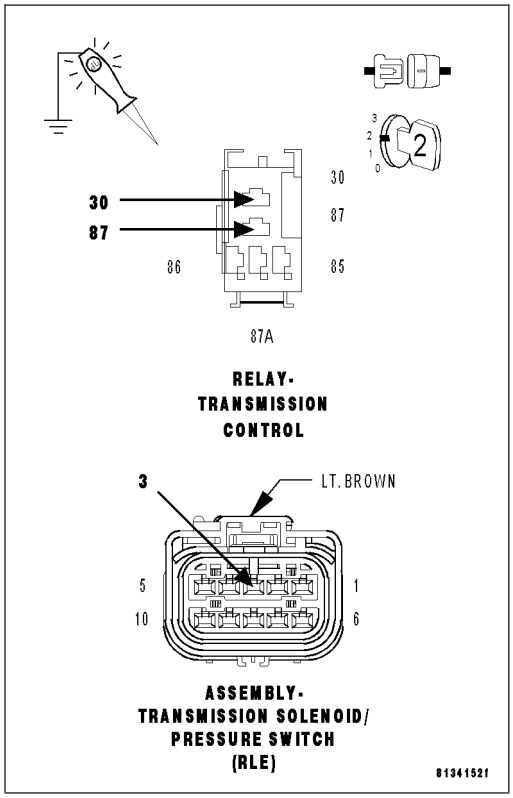

CONTROL MODULES/POWERTRAIN CONTROL MODULE - REMOVAL)

Perform 42RLE TRANSMISSION VERIFICATION TEST - VER 1. (Refer to 21 - TRANSMISSION/TRANSAXLE/AUTOMATIC - 42RLE - STANDARD PROCEDURE)

No >> Repair the (T16) Transmission Control Relay Output circuit for an open. If the fuse is open make sure to check for a short to ground.

Perform 42RLE TRANSMISSION VERIFICATION TEST - VER 1. (Refer to 21 - TRANSMISSION/TRANSAXLE/AUTOMATIC - 42RLE - STANDARD PROCEDURE)

10. INTERMITTENT WIRING AND CONNECTORS

The conditions necessary to set the DTC are not present at this time.

Using the schematics as a guide, inspect the wiring and connectors specific to this circuit.

Wiggle the wires while checking for shorted and open circuits.

With the scan tool, check the EATX DTC EVENT DATA to help identify the conditions in which the DTC was set.

Were there any problems found?

Yes >> Repair as necessary.

Perform 42RLE TRANSMISSION VERIFICATION TEST - VER 1. (Refer to 21 - TRANSMISSION/TRANSAXLE/AUTOMATIC - 42RLE - STANDARD PROCEDURE)

No >> Test Complete.

P0871-OD PRESSURE SWITCH RATIONALITY

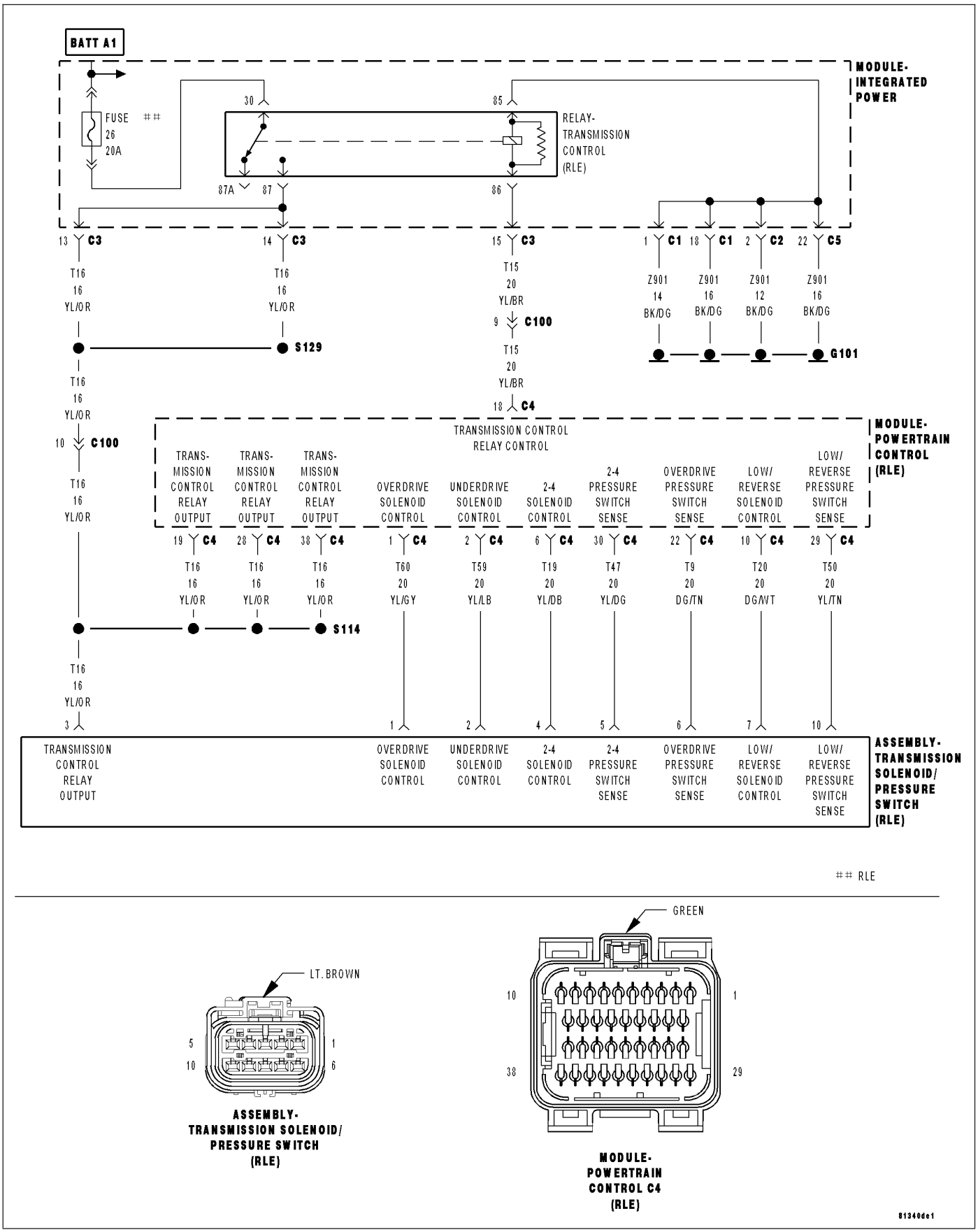

For a complete wiring diagram **Refer to Section 8W**.

- **When Monitored:**
  Whenever the engine is running.
- **Set Condition:**
  The DTC is set if one of the pressure switches are open or closed at the wrong time in a given gear. If the problem is identified for 3 successive key starts, the transmission will go into Limp-in mode a MIL will turn on after 10 seconds of vehicle operation.

Possible Causes
RELATED TCM DTCS PRESENT
LOSS OF PRIME DTC PRESENT
(T9) OD PRESSURE SWITCH SENSE CIRCUIT OPEN
(T9) OD PRESSURE SWITCH SENSE CIRCUIT SHORT TO GROUND
(T9) OD PRESSURE SWITCH SENSE CIRCUIT SHORT TO VOLTAGE
TRANSMISSION SOLENOID/PRESSURE SWITCH ASSEMBLY
POWERTRAIN CONTROL MODULE

Always perform the Pre-Diagnostic Troubleshooting procedure before proceeding. (Refer to 21 - TRANSMISSION/TRANSAXLE/AUTOMATIC - 42RLE - DIAGNOSIS AND TESTING).

Theory of Operation

The Transmission system uses three pressure switches to monitor the fluid pressure in the LR, 2/4, and OD elements. The pressure switches are continuously monitored for the correct states in each gear. Normal operation will be experienced if no other codes are present. Transmission Control System will ignore the code. Limp-in condition will only occur if DTC P0871 is present with a DTC P0706.

PRESSURE SWITCH STATES

GEAR	L/R	2/4	OD
R	OP	OP	OP
P/N	CL	OP	OP
1st	CL	OP	OP
2nd	OP	CL	OP
D	OP	OP	CL
OD	OP	CL	CL

OP = OPEN

CL = CLOSED

Diagnostic Test

1. DETERMINE IF RELATED TCM POWER INPUT DTCS ARE PRESENT

With the scan tool, read Transmission DTCs.

Are there any TCM Power Input DTCs present also?

Yes >> Refer to the Transmission category and perform the appropriate diagnostic procedure.

No >> Go To 2

2. CHECK FOR LOSS OF PRIME DTC

With the scan tool, check for other Transmission DTCs.

Is the DTC P0944 present also?

Yes >> Refer to the Transmission category and perform the appropriate diagnostic procedure.
Perform 42RLE TRANSMISSION VERIFICATION TEST - VER 1. (Refer to 21 - TRANSMISSION/ TRANSAXLE/AUTOMATIC - 42RLE - STANDARD PROCEDURE)

No >> Go To 3

3. CHECK TO SEE IF P0841 IS CURRENT

With the scan tool, Check the STARTS SINCE SET counter for P0841.

NOTE: This counter only applies to the last DTC set.

Is the STARTS SINCE SET counter 2 or less?

Yes >> Go To 4

No >> Go To 9

4. PCM AND WIRING

Turn the ignition off to the lock position.

Remove the Starter Relay.

CAUTION: Removal of the Starter Relay is to prevent a Transmission, NO RESPONSE, condition and disable the starter.

Install the Transmission Simulator, Miller tool #8333 and the Electronic Transmission Adapter kit 8333-1A.

NOTE: Check connectors - Clean/repair as necessary.

Ignition on, engine not running.

With the Transmission Simulator, turn the Pressure Switch selector to OD.

With the scan tool , monitor the OD Pressure Switch state while pressing the Pressure Switch Test button on the Transmission Simulator.

Did the OD Pressure Switch state change?

Yes >> Go To 8

No >> Go To 5

5. (T9) OD PRESSURE SWITCH SENSE CIRCUIT OPEN

Turn the ignition off to the lock position.

Disconnect the PCM C4 harness connector.

Disconnect the Transmission Solenoid/Pressure Switch Assembly harness connector.

NOTE: Check connectors - Clean/repair as necessary.

CAUTION: Do not probe the PCM harness connectors. Probing the PCM harness connectors will damage the PCM terminals resulting in poor terminal to pin connection. Install Miller Special Tool #8815 to perform diagnosis.

Measure the resistance of the (T9) OD Pressure Switch Sense circuit from the appropriate terminal of special tool #8815 to the Transmission Solenoid/Pressure Switch Assembly harness connector.

Is the resistance above 5.0 ohms?

Yes >> Repair the (T9) OD Pressure Switch Sense circuit for an open.

Perform 42RLE TRANSMISSION VERIFICATION TEST - VER 1. (Refer to 21 - TRANSMISSION/TRANSAXLE/AUTOMATIC - 42RLE - STANDARD PROCEDURE)

No >> Go To 6

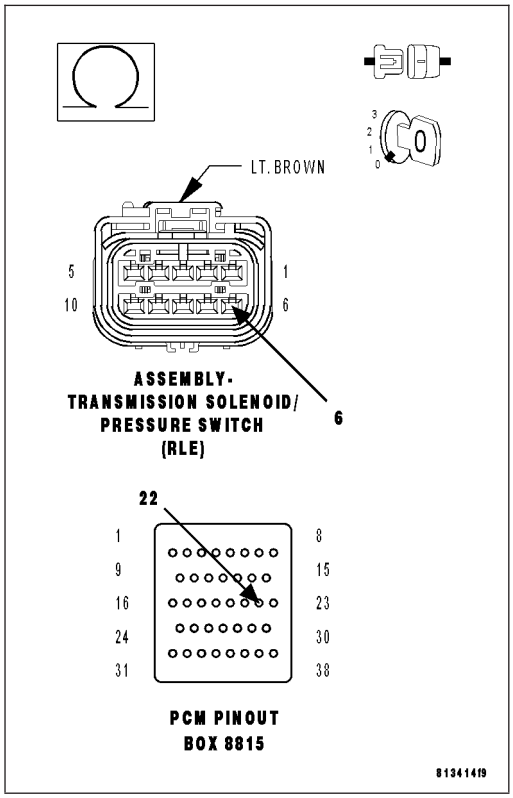

6. (T9) OD PRESSURE SWITCH SENSE CIRCUIT SHORT TO GROUND

Turn the ignition off to the lock position.

Disconnect the PCM C4 harness connector.

Disconnect the Transmission Solenoid/Pressure Switch Assembly harness connector.

NOTE: Check connectors - Clean/repair as necessary.

Measure the resistance between ground and the (T9) OD Pressure Switch Sense circuit.

Is the resistance below 5.0 ohms?

Yes >> Repair the (T9) OD Pressure Switch Sense circuit for a short to ground.

Perform 42RLE TRANSMISSION VERIFICATION TEST - VER 1. (Refer to 21 - TRANSMISSION/TRANSAXLE/AUTOMATIC - 42RLE - STANDARD PROCEDURE)

No >> Go To 7

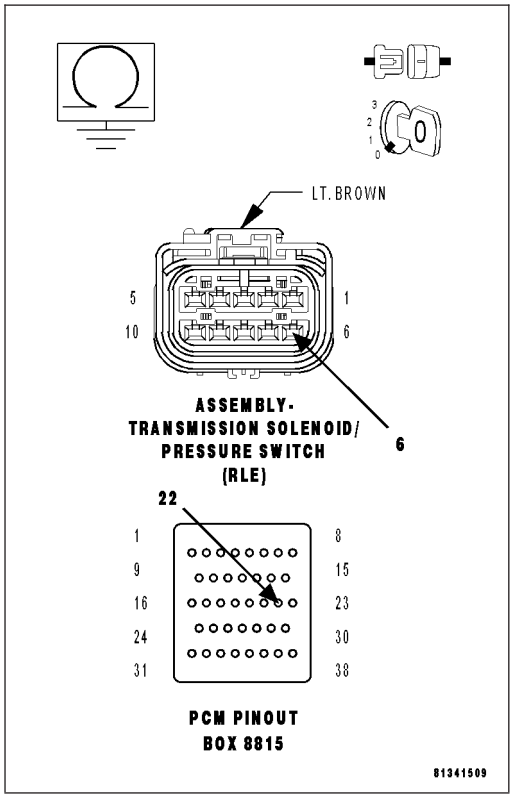

7. (T9) OD PRESSURE SWITCH SENSE CIRCUIT SHORT TO VOLTAGE

Turn the ignition off to the lock position.

Disconnect the PCM C4 harness connector.

Disconnect the Transmission Solenoid/Pressure Switch Assembly harness connector.

Remove the Transmission Control Relay.

NOTE: Check connectors - Clean/repair as necessary.

Connect a jumper wire between the (Internal) Fused B+ circuit and (T16) Transmission Control Relay Output circuit.

Ignition on, engine not running.

Measure the voltage of the (T9) OD Pressure Switch Sense circuit.

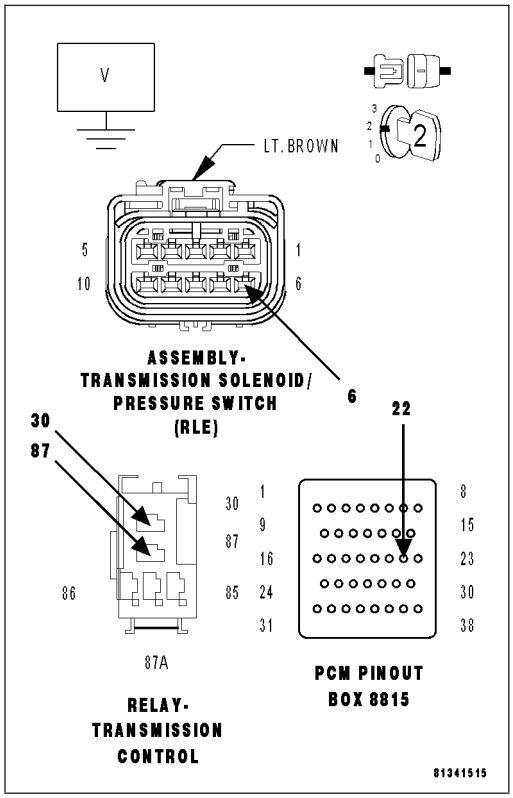

Is the voltage above 0.5 volts?

Yes >> Repair the (T9) OD Pressure Switch Sense circuit for a short to voltage.

Perform 42RLE TRANSMISSION VERIFICATION TEST - VER 1.

No >> Using the schematics as a guide, check the Powertrain Control Module (PCM) terminals for corrosion, damage, or terminal push out. Pay particular attention to all power and ground circuits. If no problems are found, replace the PCM per the Service Information. With the scan tool PERFORM QUICK LEARN, then program Pinion Factor in the Front Control Module. (Refer to 8 - ELECTRICAL/ELECTRONIC CONTROL MODULES/POWERTRAIN CONTROL MODULE - REMOVAL)

Perform 42RLE TRANSMISSION VERIFICATION TEST - VER 1. (Refer to 21 - TRANSMISSION/TRANSAXLE/AUTOMATIC - 42RLE - STANDARD PROCEDURE)

8. OD PRESSURE SWITCH

View repair.

Repair

Replace the Transmission Solenoid/Pressure Switch Assembly per the Service Information.

Perform 42RLE TRANSMISSION VERIFICATION TEST - VER 1. (Refer to 21 - TRANSMISSION/TRANSAXLE/AUTOMATIC - 42RLE - STANDARD PROCEDURE)

9. INTERMITTENT WIRING AND CONNECTORS

The conditions necessary to set the DTC are not present at this time.

Using the schematics as a guide, inspect the wiring and connectors specific to this circuit.

Wiggle the wires while checking for shorted and open circuits.

With the scan tool, check the EATX DTC EVENT DATA to help identify the conditions in which the DTC was set.

Were there any problems found?

Yes >> Repair as necessary.

Perform 42RLE TRANSMISSION VERIFICATION TEST - VER 1. (Refer to 21 - TRANSMISSION/TRANSAXLE/AUTOMATIC - 42RLE - STANDARD PROCEDURE)

No >> Test Complete.

P0882-TCM POWER INPUT LOW

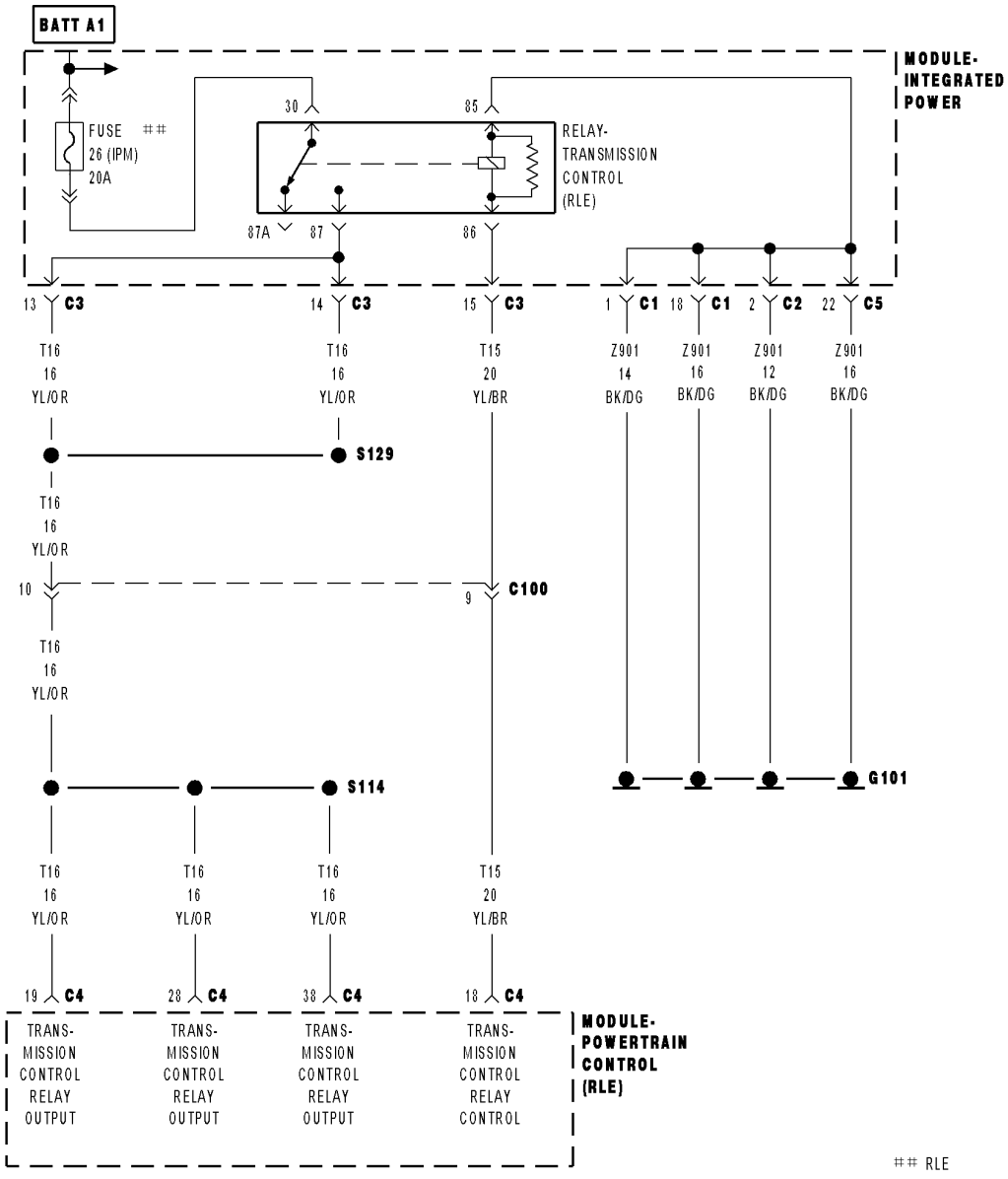

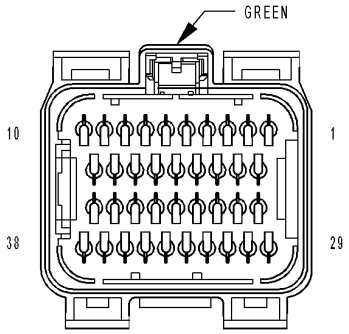

MODULE-
POWERTRAIN
CONTROL C4
(RLE)

81342934

For a complete wiring diagram **Refer to Section 8W**.

- **When Monitored:**
  Continuously
- **Set Condition:**
  This DTC is set when less than 3 volts are present at the Transmission Control Relay output circuits at the Powertrain Control Module when the PCM is energizing the relay. Note: Due to the integration of the Powertrain and Transmission Control Modules, the transmission part of the PCM has its own specific power and ground circuits.

Possible Causes
(Internal) FUSED B+ CIRCUIT OPEN
(T16) TRANSMISSION CONTROL RELAY OUTPUT CIRCUIT OPEN
(T15) TRANSMISSION CONTROL RELAY CONTROL CIRCUIT OPEN
(Z901) TRANSMISSION CONTROL RELAY GROUND CIRCUIT OPEN
(T15) TRANSMISSION CONTROL RELAY CONTROL CIRCUIT SHORT TO GROUND
(T16) TRANSMISSION CONTROL RELAY OUTPUT CIRCUIT SHORT TO GROUND
TRANSMISSION CONTROL RELAY
TRANSMISSION SOLENOID/PRESSURE SWITCH ASSEMBLY
POWERTRAIN CONTROL MODULE

Always perform the 42RLE Pre-Diagnostic Troubleshooting Procedure before proceeding. (Refer to 21 - TRANSMISSION/TRANSAXLE/AUTOMATIC - 42RLE - STANDARD PROCEDURE)

Theory of Operation

The transmission control relay is used to supply power to the solenoid pack when the transmission is in normal operating mode. When the relay is off, no power is supplied to the solenoid pack and the transmission is in Limp-in mode. The relay output is fed back to the PCM. It is referred to as the Trans Relay Output circuit or switched battery. After a controller reset (ignition key turned to the run position or after cranking engine), the controller energizes the relay. Prior to this, the PCM verifies that the contacts are open by checking for no voltage at the transmission control relay outputs (switched battery) terminals. After the relay is energized, the PCM monitors the terminals to verify that the voltage is greater than 3 volts. The MIL illuminates and the transmission will be placed in Limp-in.

Diagnostic Test

1. CHECK TO SEE IF DTC P0882 IS CURRENT

With the scan tool, Check the STARTS SINCE SET counter for P0882.

NOTE: This counter only applies to the last DTC set.

Is the STARTS SINCE SET counter equal to 0?

Yes >> Go To 2

No >> Go To 11

2. CHECK THE (INTERNAL) FUSED B+ CIRCUIT

Turn the ignition off to the lock position.

Remove the Transmission Control Relay.

NOTE: Check connectors - Clean/repair as necessary.

Using a 12-volt test light connected to ground, check the (Internal) Fused B+ circuit in the Transmission Control Relay connector.

NOTE: The test light must illuminate brightly. Compare the brightness to that of a direct connection to the battery.

Does the test light illuminate brightly?

Yes >> Go To 3

No >> Go To 8

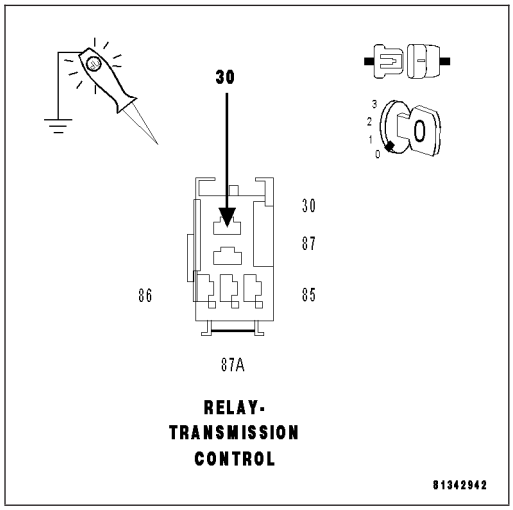

3. (T16) TRANSMISSION CONTROL RELAY OUTPUT CIRCUIT OPEN

Turn the ignition off to the lock position.

Remove the Transmission Control Relay.

NOTE: Check connectors - Clean/repair as necessary.

Connect a jumper wire between the (Internal) Fused B+ circuit and the (T16) Transmission Control Relay Output circuits.

Ignition on, engine not running.

With the scan tool in Transmission Sensors, read the Switched Battery voltage.

Does the Switched Battery voltage read battery voltage?

Yes >> Go To 4

No >> Repair the (T16) Transmission Control Relay Output circuits for an open or high resistance. Note: There are multiple Transmission Control Relay Output circuits.

Perform 42RLE TRANSMISSION VERIFICATION TEST - VER 1. (Refer to 21 - TRANSMISSION/TRANSAXLE/AUTOMATIC - 42RLE - STANDARD PROCEDURE)

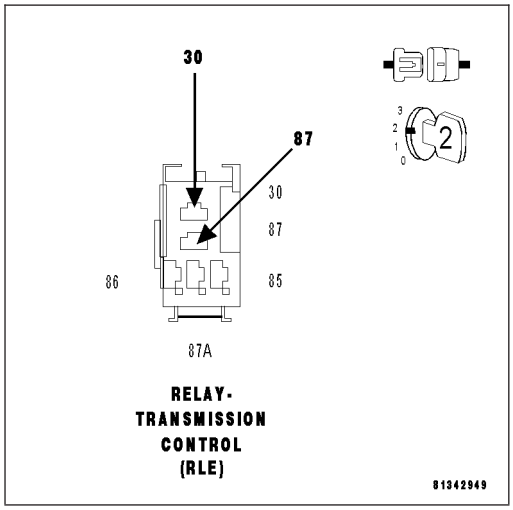

4. TRANSMISSION CONTROL RELAY

Turn the ignition off to the lock position.

Install a substitute Relay in place of the Transmission Control Relay.

Ignition on, engine not running.

With the scan tool in Transmission Sensors, read the Switched Battery voltage.

Does the Switched Battery voltage read battery voltage?

Yes >> Replace the Transmission Control Relay.

Perform 42RLE TRANSMISSION VERIFICATION TEST - VER 1. (Refer to 21 - TRANSMISSION/TRANSAXLE/AUTOMATIC - 42RLE - STANDARD PROCEDURE)

No >> Go To 5

5. (Z901) TRANSMISSION CONTROL RELAY GROUND CIRCUIT OPEN

Turn the ignition off to the lock position.

Remove the Transmission Control Relay.

NOTE: Check connectors - Clean/repair as necessary.

Using a 12-volt test light connected to 12-volts, check the (Z901) Transmission Control Relay Ground circuit.

NOTE: The test light must illuminate brightly. Compare the brightness to that of a direct connection to the battery.

Does the test light illuminate brightly?

Yes >> Go To 6

No >> Repair the (Z901) Transmission Control Relay Ground circuit for an open.

Perform 42RLE TRANSMISSION VERIFICATION TEST - VER 1. (Refer to 21 - TRANSMISSION/TRANSAXLE/AUTOMATIC - 42RLE - STANDARD PROCEDURE)

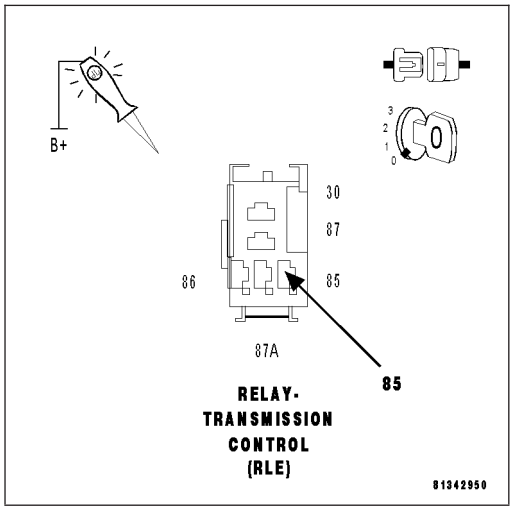

6. (T15) TRANSMISSION CONTROL RELAY CONTROL CIRCUIT OPEN

Turn the ignition off to the lock position.

Remove the Transmission Control Relay.

Disconnect the PCM C4 harness connector.

NOTE: Check connectors - Clean/repair as necessary.

CAUTION: Do not probe the PCM harness connectors. Probing the PCM harness connectors will damage the PCM terminals resulting in poor terminal to pin connection. Install Miller Special Tool #8815 to perform diagnosis.

Measure the resistance of the (T15) Transmission Control Relay Control circuit between the Transmission Control Relay connector and the appropriate terminal of special tool #8815.

Is the resistance above 5.0 ohms?

Yes >> Repair the (T15) Transmission Control Relay Control circuit for an open.

Perform 42RLE TRANSMISSION VERIFICATION TEST - VER 1. (Refer to 21 - TRANSMISSION/TRANSAXLE/AUTOMATIC - 42RLE - STANDARD PROCEDURE)

No >> Go To 7

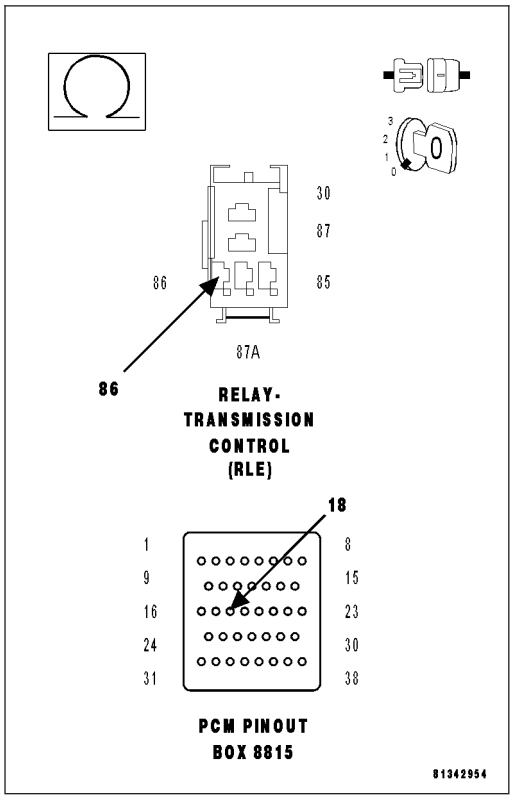

7. (T15) TRANSMISSION CONTROL RELAY CONTROL CIRCUIT SHORT TO GROUND

Turn the ignition off to the lock position.

Disconnect the PCM C4 harness connector.

Remove the Transmission Control Relay.

NOTE: Check connectors - Clean/repair as necessary.

Measure the resistance between ground and the (T15) Transmission Control Relay Control circuit.

Is the resistance below 5.0 ohms?

Yes >> Repair the (T15) Transmission Control Relay Control circuit for a short to ground.

Perform 42RLE TRANSMISSION VERIFICATION TEST - VER 1. (Refer to 21 - TRANSMISSION/TRANSAXLE/AUTOMATIC - 42RLE - STANDARD PROCEDURE)

No >> Using the schematics as a guide, check the Powertrain Control Module (PCM) terminals for corrosion, damage, or terminal push out. Pay particular attention to all power and ground circuits. If no problems are found, replace the PCM per the Service Information. With the scan tool PERFORM QUICK LEARN, then program Pinion Factor in the Front Control Module. (Refer to 8 - ELECTRICAL/ELECTRONIC CONTROL MODULES/POWERTRAIN CONTROL MODULE - REMOVAL)

Perform 42RLE TRANSMISSION VERIFICATION TEST - VER 1. (Refer to 21 - TRANSMISSION/TRANSAXLE/AUTOMATIC - 42RLE - STANDARD PROCEDURE)

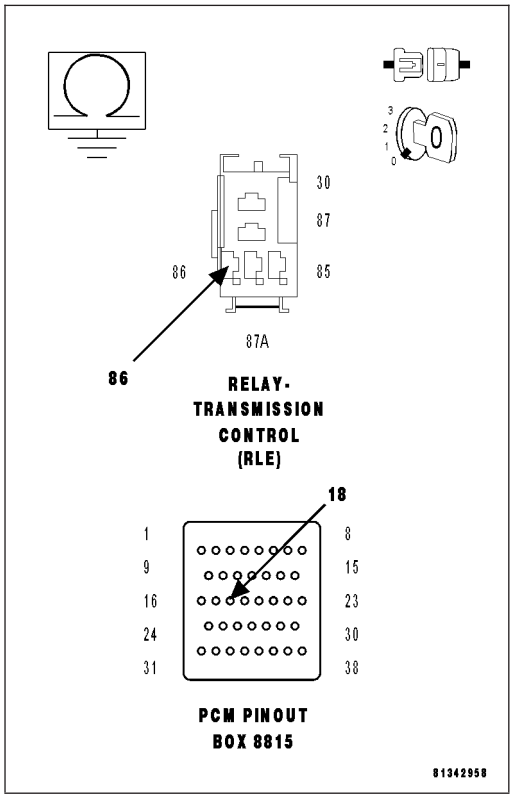

8. CHECK THE FUSED B+ CIRCUIT FOR SHORT TO GROUND

Turn the ignition off to the lock position.

Remove the Transmission Control Relay.

Disconnect the PCM C4 harness connectors.

NOTE: Check connectors - Clean/repair as necessary.

CAUTION: Do not probe the PCM harness connectors. Probing the PCM harness connectors will damage the PCM terminals resulting in poor terminal to pin connection. Install Miller Special Tool #8815 to perform diagnosis.

Measure the resistance between ground and the (T16) Transmission Control Relay Output circuit.

Is the resistance below 5.0 ohms?

Yes >> Go To 9

No >> Repair the Fused B+ circuit for an open.

Perform 42RLE TRANSMISSION VERIFICATION TEST - VER 1. (Refer to 21 - TRANSMISSION/TRANSAXLE/AUTOMATIC - 42RLE - STANDARD PROCEDURE)

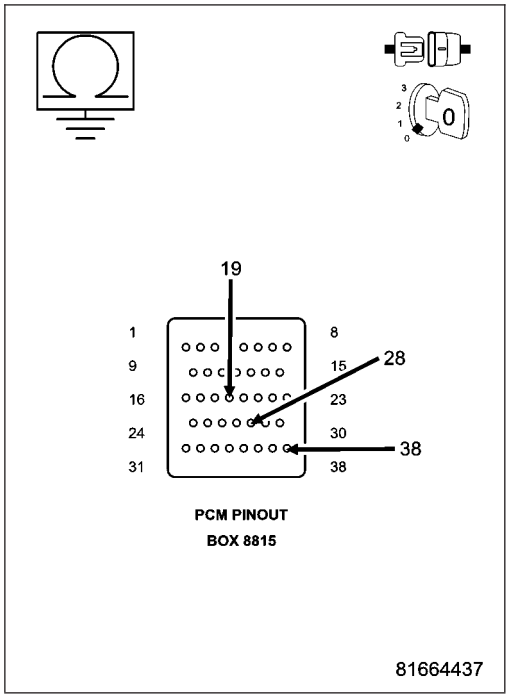

9. (T16) TRANSMISSION CONTROL RELAY OUTPUT CIRCUIT SHORT TO GROUND

Turn the ignition off to the lock position.

Disconnect the PCM C4 harness connector.

Disconnect the Transmission Solenoid/Pressure Switch harness connector.

Remove the Transmission Control Relay.

NOTE: Check connectors - Clean/repair as necessary.
Measure the resistance between ground and the (T16) Transmission Control Relay Output circuit.

Is the resistance below 5.0 ohms?

Yes >> Repair the (T16) Transmission Control Relay Output circuit for a short to ground.
Perform 42RLE TRANSMISSION VERIFICATION TEST - VER 1. (Refer to 21 - TRANSMISSION/TRANSAXLE/AUTOMATIC - 42RLE - STANDARD PROCEDURE)

No >> Go To 10

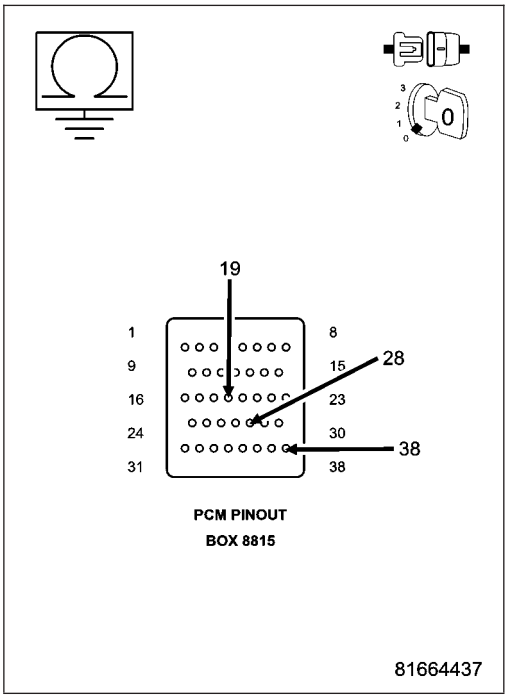

10. TRANSMISSION SOLENOID/PRESSURE SWITCH ASSEMBLY

Using the schematics as a guide, inspect the wiring and connectors. Repair as necessary. Pay particular attention to all power and ground circuits.

View repair.

Repair

Replace the Transmission Solenoid/Pressure Switch Assembly per the Service Information.

Perform 42RLE TRANSMISSION VERIFICATION TEST - VER 1. (Refer to 21 - TRANSMISSION/TRANSAXLE/AUTOMATIC - 42RLE - STANDARD PROCEDURE)

11. INTERMITTENT WIRING AND CONNECTORS

The conditions necessary to set the DTC are not present at this time.

Using the schematics as a guide, inspect the wiring and connectors specific to this circuit.

Wiggle the wiring and connectors while checking for shorted and open circuits.

With the scan tool, check the EATX EVENT DATA to help identify the conditions in which the DTC was set.

Were there any problems found?

Yes >> Repair as necessary.
Perform 42RLE TRANSMISSION VERIFICATION TEST - VER 1. (Refer to 21 - TRANSMISSION/TRANSAXLE/AUTOMATIC - 42RLE - STANDARD PROCEDURE)

No >> Test Complete.

P0891-TRANSMISSION RELAY ALWAYS ON

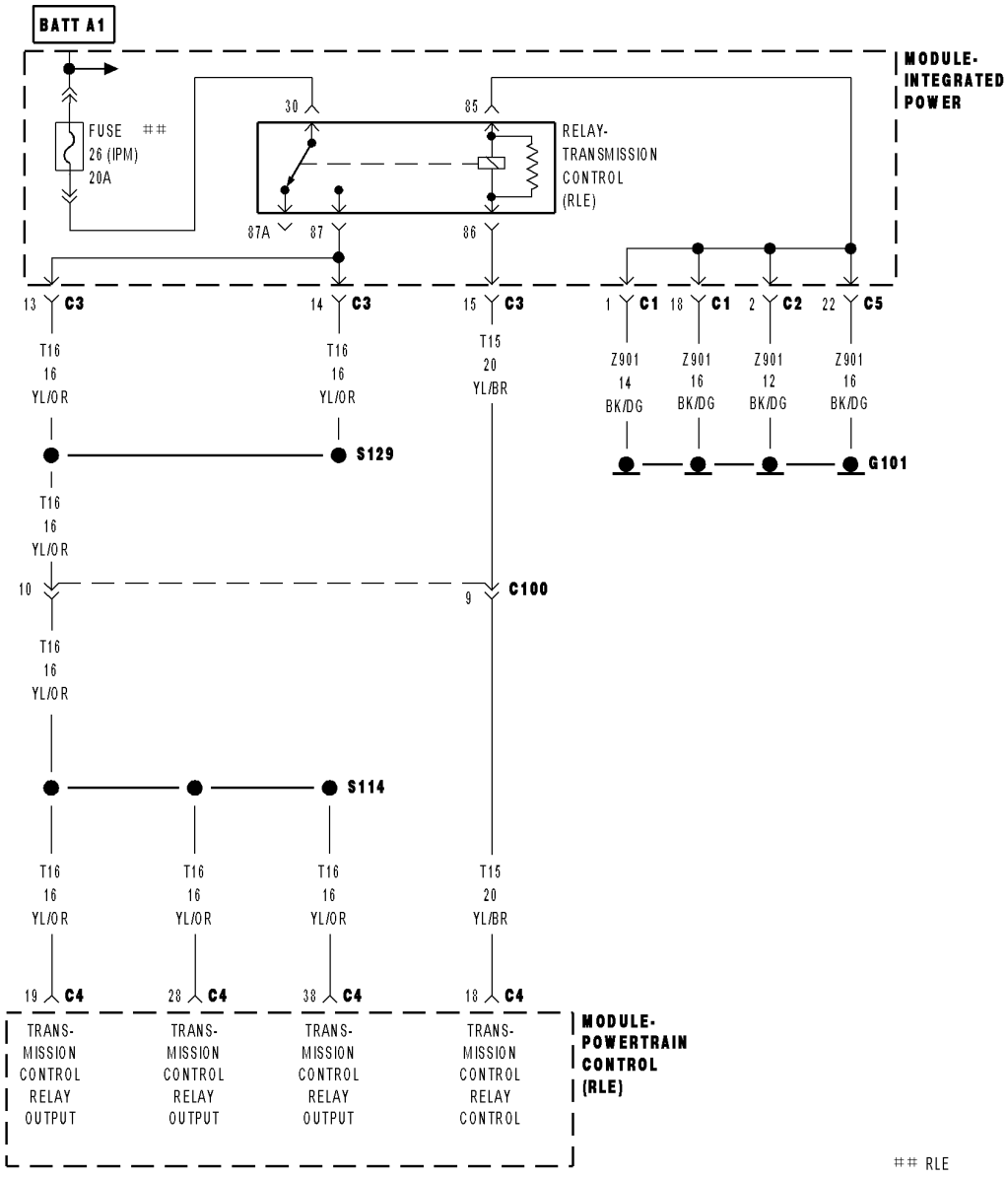

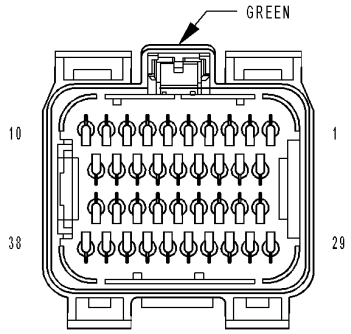

MODULE-
POWERTRAIN
CONTROL C4
(RLE)

81344313

For a complete wiring diagram **Refer to Section 8W**.

- **When Monitored:**
  After a reset (ignition key turned to the RUN position) and after a power down.
- **Set Condition:**
  Relay output (Switched Battery) is higher than 3 volts when relay is not energized by controller. Fault Set Time: Less than 100 msec

Possible Causes
TRANSMISSION CONTROL RELAY STUCK CLOSED
(T15) TRANSMISSION CONTROL RELAY CONTROL CIRCUIT SHORT TO VOLTAGE
(T16) TRANSMISSION CONTROL RELAY OUTPUT CIRCUITS SHORT TO VOLTAGE
POWERTRAIN CONTROL MODULE

Always perform the 42RLE Pre-Diagnostic Troubleshooting Procedure before proceeding. (Refer to 21 - TRANSMISSION/TRANSAXLE/AUTOMATIC - 42RLE - STANDARD PROCEDURE)

Theory of Operation

The transmission relay is used to supply power to the solenoid pack when in normal operating mode, and to turn off power to produce transmission ″limp-in″ mode. The relay output (which supplies power to the solenoid pack) is fed back to the controller This is referred to as SWITCHED BATTERY. After a controller reset (ignition key turned to the RUN position or after cranking engine), the controller verifies that the relay contacts are open by checking for no voltage on Switched battery line (ie. relay output) before the relay is energized. Transmission locked in Limp-In. MIL on after 10 sec. of vehicle operation.

Diagnostic Test

1. CHECK TO SEE IF DTC P0883 IS CURRENT

With the scan tool, Check the STARTS SINCE SET counter for P0883.

NOTE: This counter only applies to the last DTC set.

Is the STARTS SINCE SET counter equal to 0?

Yes >> Go To 2

No >> Go To 5

2. TRANSMISSION CONTROL RELAY CONTACTS STUCK CLOSED

Turn the ignition off to the lock position.

Remove the Transmission Control Relay.

NOTE: Check connectors - Clean/repair as necessary.

Measure the resistance between the Fused B+ circuit and the Transmission Control Relay Output Circuit of the Transmission Control Relay.

Is the resistance above 5.0 ohms?

Yes >> Go To 3

No >> Replace the Transmission Control Relay.
Perform 42RLE TRANSMISSION VERIFICATION TEST - VER 1. (Refer to 21 - TRANSMISSION/TRANSAXLE/AUTOMATIC - 42RLE - STANDARD PROCEDURE)

3. (T16) TRANSMISSION RELAY OUTPUT CIRCUIT SHORT TO VOLTAGE

Turn the ignition off to the lock position.

Remove the Transmission Control Relay.

NOTE: Check connectors - Clean/repair as necessary.

Ignition on, engine not running.

Measure the voltage at the (T16) Transmission Control Relay Output circuit in the Transmission Control Relay connector.

Is the voltage above 0.5 volts?

Yes >> Repair the (T16) Transmission Control Relay Output circuit for a short to voltage.

Perform 42RLE TRANSMISSION VERIFICATION TEST - VER 1. (Refer to 21 - TRANSMISSION/TRANSAXLE/AUTOMATIC - 42RLE - STANDARD PROCEDURE)

No >> Go To 4

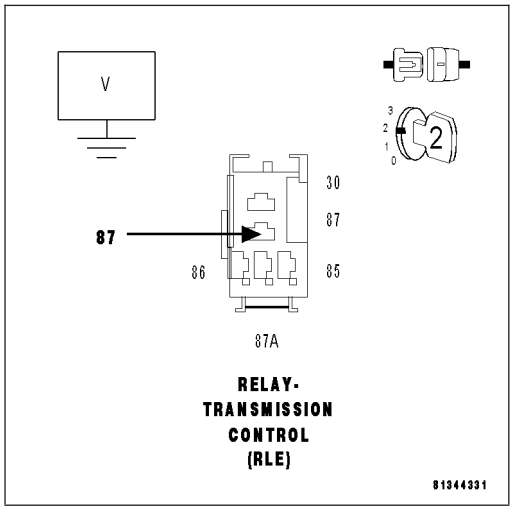

4. (T15) TRANSMISSION CONTROL RELAY CONTROL CIRCUIT SHORT TO VOLTAGE

Turn the ignition off to the lock position.

Remove the Transmission Control Relay.

NOTE: Check connectors - Clean/repair as necessary.

Ignition on, engine not running.

NOTE: The Transmission Controller will power up the Transmission Control Relay Control circuit for approximately 3.0 seconds after initial ignition on. Wait at least 3.0 seconds before performing the following voltage check.

NOTE: A One-trip fault may set for P0888 Relay Always Off, disregard the DTC.

Measure the voltage at the (T15) Transmission Control Relay Control circuit after a 3.0 second wait period.

Is the voltage above 0.5 volts?

Yes >> Repair the (T15) Transmission Control Relay Control circuit for a short to voltage.

Perform 42RLE TRANSMISSION VERIFICATION TEST - VER 1. (Refer to 21 - TRANSMISSION/TRANSAXLE/AUTOMATIC - 42RLE - STANDARD PROCEDURE)

No >> Using the schematics as a guide, check the Powertrain Control Module (PCM) terminals for corrosion, damage, or terminal push out. Pay particular attention to all power and ground circuits. If no problems are found, replace the PCM per the Service Information. With the scan tool PERFORM QUICK LEARN, then program Pinion Factor in the Front Control Module. (Refer to 8 - ELECTRICAL/ELECTRONIC CONTROL MODULES/POWERTRAIN CONTROL MODULE - REMOVAL)

Perform 42RLE TRANSMISSION VERIFICATION TEST - VER 1. (Refer to 21 - TRANSMISSION/TRANSAXLE/AUTOMATIC - 42RLE - STANDARD PROCEDURE)

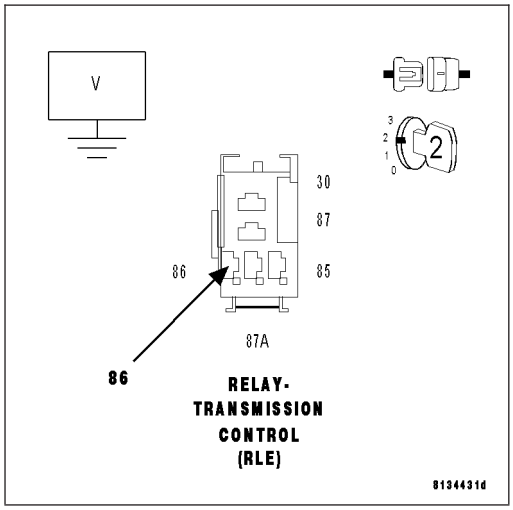

5. INTERMITTENT WIRING AND CONNECTORS

The conditions necessary to set the DTC are not present at this time.
Using the schematics as a guide, inspect the wiring and connectors specific to this circuit.
Wiggle the wiring and connectors while checking for shorted and open circuits.
With the scan tool, check the EATX DTC EVENT DATA to help identify the conditions in which the DTC was set.

Were there any problems found?

Yes >> Repair as necessary.
Perform 42RLE TRANSMISSION VERIFICATION TEST - VER 1. (Refer to 21 - TRANSMISSION/ TRANSAXLE/AUTOMATIC - 42RLE - STANDARD PROCEDURE)

No >> Test Complete.

P0884-POWER UP AT SPEED

For a complete wiring diagram **Refer to Section 8W**.

- **When Monitored:**
  One time after each controller reset. Note: the Transmission Control Module is integrated with Powertrain Control Module. The Transmission Control Module has separate powers and grounds specifically to its portion of the PCM.
- **Set Condition:**
  This DTC will set if the PCM powers up and senses the vehicle in a valid forward gear (no PRNDL DTCs) with a output speed above 800 RPM, approximately 32 Km/h (20 mph).

Possible Causes
INTERMITTENT POWER AND GROUND CIRCUITS

Always perform the 42RLE Pre-Diagnostic Troubleshooting Procedure before proceeding. (Refer to 21 - TRANSMISSION/TRANSAXLE/AUTOMATIC - 42RLE - STANDARD PROCEDURE)

Theory of Operation

If a vehicle loses power to the PCM, the vehicle will go to the 2nd gear mode since there is no power available to control the transmission solenoids. However if power is restored, the PCM will power-up and normal operation will be restored. This DTC identifies that power to the PCM was restored when the gear selector was in a ″Drive″ position while the vehicle was moving at speeds above 32 Km/h (20 mph). If a customer shifts to Neutral and cycles the ignition key and quickly shifts to ″Drive″ while moving before the PCM comes out of its START ROUTINE, the DTC can be set. Therefore it is critical that this DTC diagnosis repair procedure should only be used if the vehicle is experiencing intermittent 2nd gear operation and subsequently a return to normal operation during normal driving. The transmission will not be placed in Limp-in. This is an informational DTC to be used when attempting to diagnose an intermittent 2nd gear operation and subsequent return to normal transmission operation.

Diagnostic Test

1. CHECK THE POWER AND GROUND CIRCUITS

This DTC is set when the PCM is initialized while the vehicle is moving in a valid forward gear. This is usually caused by a momentary loss of power to the Transmission portion of the PCM.

CAUTION: Do not probe the PCM harness connectors. Probing the PCM harness connectors will damage the PCM terminals resulting in poor terminal to pin connection. Install Miller Special Tool #8815 to perform diagnosis.

NOTE: Due to the integration of the Powertrain and Transmission Control Modules, the transmission part of the PCM has its own specific power and ground circuits.

Check all of the Fused B+, Fused Ignition Switch Output, and Ground circuits related to the PCM for an intermittent open or short to ground.

Perform a wiggle test on all wiring and connectors pertaining to the PCM while looking for shorted or open circuits.

With the scan tool, check the EATX DTC EVENT DATA to help identify the conditions in which the DTC was set.

View repair.

Repair

Repair as necessary.

Perform 42RLE TRANSMISSION VERIFICATION TEST - VER 1. (Refer to 21 - TRANSMISSION/TRANSAXLE/AUTOMATIC - 42RLE - STANDARD PROCEDURE)

P0890-SWITCHED BATTERY

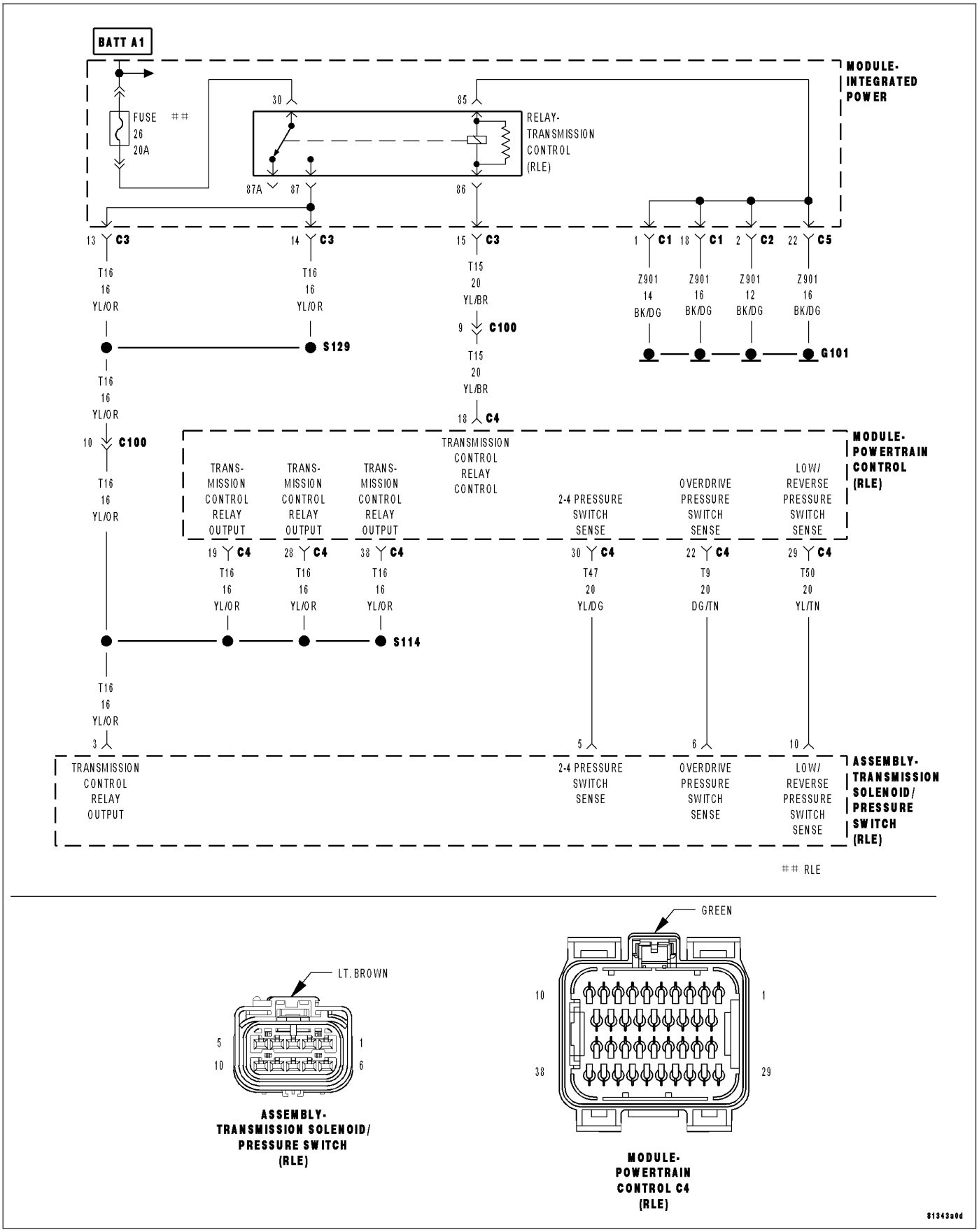

For a complete wiring diagram **Refer to Section 8W**.

- **When Monitored:**
  One time after a reset (ignition key turned to the RUN position or after cranking engine).
- **Set Condition:**
  Fault Set If: A voltage is greater than 4.5 volts is detected on any of the pressure switches, before the relay is energized. Fault Set Time: Less than 7 msec, transmission placed in Limp-In. MIL on after 10 sec. of vehicle operation).

Possible Causes
(T47) 2/4 PRESSURE SWITCH SENSE CIRCUIT SHORT TO VOLTAGE
(T50) L/R PRESSURE SWITCH SENSE CIRCUIT SHORT TO VOLTAGE
(T9) OD PRESSURE SWITCH SENSE CIRCUIT SHORT TO VOLTAGE
POWERTRAIN CONTROL MODULE

Always perform the 42RLE Pre-Diagnostic Troubleshooting Procedure before proceeding. (Refer to 21 - TRANSMISSION/TRANSAXLE/AUTOMATIC - 42RLE - STANDARD PROCEDURE)

Theory of Operation

The transmission relay is used to supply power to the solenoid pack when in normal operating mode, and to turn off power to produce transmission ″limp-in″ mode. The relay output (which supplies power to the solenoid pack) is fed back to the controller. It is referred to as SWITCHED BATTERY. After a controller reset (ignition key turned to the RUN position or after cranking engine), the controller verifies that the relay contacts are open by checking for no voltage on Switched battery line (ie. transmission control relay output) before the relay is energized. After switched battery is verified for no voltage, the voltage of each of the solenoid pack pressure switches is also checked. Since the solenoid pack is not powered up, there should be no voltage on any of the pressure switches.

Diagnostic Test

1. CHECK TO SEE IF DTC P0890 IS PRESENT

With the scan tool, Check the STARTS SINCE SET counter for P0890.

NOTE: This counter only applies to the last DTC set.

Is the ″STARTS SINCE SET″ counter set at 0?

Yes >> Go To 2

No >> Go To 5

2. (T9) OD PRESSURE SWITCH SENSE CIRCUIT SHORT TO VOLTAGE

Turn the ignition off to the lock position.

Disconnect the PCM C4 harness connector.

Disconnect the Solenoid/Pressure Switch Assembly harness connector.

Remove the Transmission Control Relay.

NOTE: Check connectors - Clean/repair as necessary.

Connect a jumper wire between the (Internal) Fused B+ circuit and (T16) Transmission Control Relay Output circuit in the Transmission Control Relay connector.

Ignition on, engine not running.

CAUTION: Do not probe the PCM harness connectors. Probing the PCM harness connectors will damage the PCM terminals resulting in poor terminal to pin connection. Install Miller Special Tool #8815 to perform diagnosis.

Measure the voltage of the (T9) OD Pressure Switch Sense circuit.

Is the voltage above 0.5 volt?

Yes >> Repair the (T9) OD Pressure Switch Sense circuit for a short to voltage.

Perform 42RLE TRANSMISSION VERIFICATION TEST - VER 1. (Refer to 21 - TRANSMISSION/TRANSAXLE/AUTOMATIC - 42RLE - STANDARD PROCEDURE)

No >> Go To 3

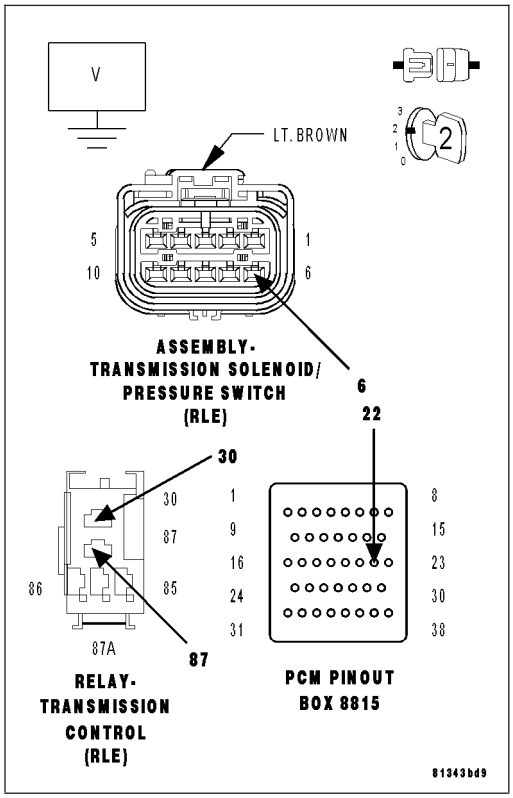

3. (T47) 2/4 PRESSURE SWITCH SENSE CIRCUIT SHORT TO VOLTAGE

Turn the ignition off to the lock position.

Disconnect the PCM C4 harness connector.

Disconnect the Transmission Solenoid/Pressure Switch Assembly harness connector.

Remove the Transmission Control Relay.

NOTE: Check connectors - Clean/repair as necessary.

Connect a jumper wire between the (Internal) Fused B+ circuit and (T16) Transmission Control Relay Output circuit in the Transmission Control Relay connector.

Ignition on, engine not running.

CAUTION: Do not probe the PCM harness connectors. Probing the PCM harness connectors will damage the PCM terminals resulting in poor terminal to pin connection. Install Miller Special Tool #8815 to perform diagnosis.

Measure the voltage of the (T47) 2/4 Pressure Switch Sense circuit.

Is the voltage above 0.5 volt?

Yes >> Repair the (T47) 2/4 Pressure Switch Sense circuit for a short to voltage.

Perform 42RLE TRANSMISSION VERIFICATION TEST - VER 1. (Refer to 21 - TRANSMISSION/TRANSAXLE/AUTOMATIC - 42RLE - STANDARD PROCEDURE)

No >> Go To 4

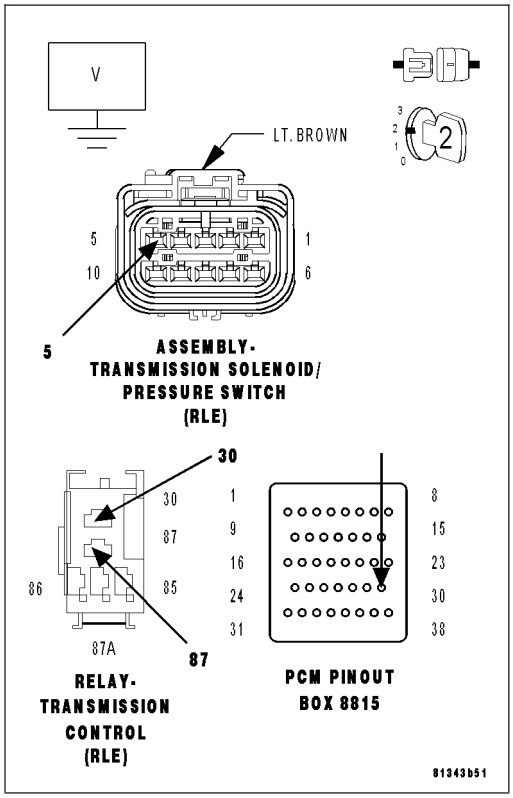

4. (T50) L/R PRESSURE SWITCH SENSE CIRCUIT SHORT TO VOLTAGE

Turn the ignition off to the lock position.

Disconnect the PCM C4 harness connector.

Disconnect the Transmission Solenoid/Pressure Switch Assembly harness connector.

Remove the Transmission Control Relay.

NOTE: Check connectors - Clean/repair as necessary.

Connect a jumper wire between the (Internal) Fused B+ circuit and (T16) Transmission Control Relay Output circuit in the Transmission Control Relay connector.

Ignition on, engine not running.

CAUTION: Do not probe the PCM harness connectors. Probing the PCM harness connectors will damage the PCM terminals resulting in poor terminal to pin connection. Install Miller Special Tool #8815 to perform diagnosis.

Measure the voltage of the (T50) L/R Pressure Switch Sense circuit.

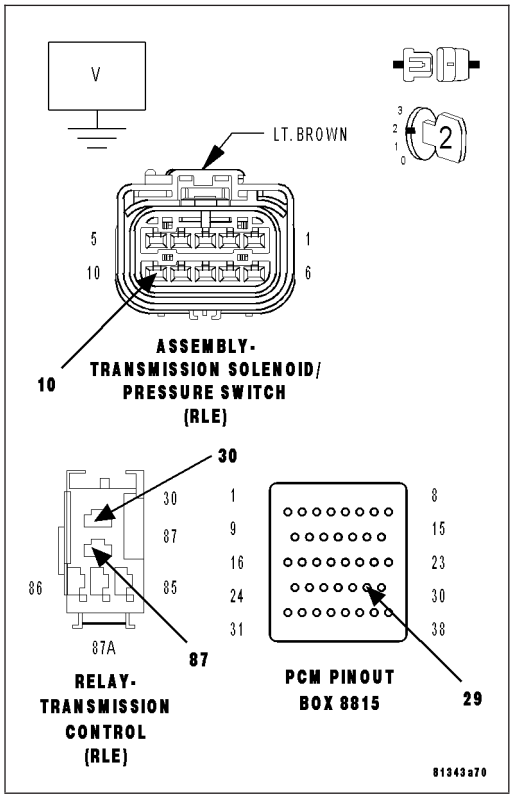

Is the voltage above 0.5 volts?

Yes >> Repair the (T50) L/R Pressure Switch Sense circuit for a short to voltage.

Perform 42RLE TRANSMISSION VERIFICATION TEST - VER 1. (Refer to 21 - TRANSMISSION/TRANSAXLE/AUTOMATIC - 42RLE - STANDARD PROCEDURE)

No >> Using the schematics as a guide, check the Powertrain Control Module (PCM) terminals for corrosion, damage, or terminal push out. Pay particular attention to all power and ground circuits. If no problems are found, replace the PCM per the Service Information. With the scan tool PERFORM QUICK LEARN, then program Pinion Factor in the Front Control Module. (Refer to 8 - ELECTRICAL/ELECTRONIC CONTROL MODULES/POWERTRAIN CONTROL MODULE - REMOVAL)

Perform 42RLE TRANSMISSION VERIFICATION TEST - VER 1. (Refer to 21 - TRANSMISSION/TRANSAXLE/AUTOMATIC - 42RLE - STANDARD PROCEDURE)

5. INTERMITTENT WIRING AND CONNECTORS

The conditions necessary to set the DTC are not present at this time.

Using the schematics as a guide, inspect the wiring and connectors specific to this circuit.

Wiggle the wiring and connectors while checking for shorted and open circuits.

With the scan tool, check the EATX DTC EVENT DATA to help identify the conditions in which the DTC was set.

Were there any problems found?

Yes >> Repair as necessary.

Perform 42RLE TRANSMISSION VERIFICATION TEST - VER 1. (Refer to 21 - TRANSMISSION/TRANSAXLE/AUTOMATIC - 42RLE - STANDARD PROCEDURE)

No >> Test Complete.

P0897-TRANSMISSION FLUID DETERIORATED

For a complete wiring diagram **Refer to Section 8W**.

- **When Monitored:**
  Each transition from full EMCC to partial EMCC for A/C bump prevention.
- **Set Condition:**
  DTC set if 20 occurrences of a turbine acceleration sum. Fault Set Time: 20 transitions from full EMCC to partial EMCC. Transmission will not use partial EMCC. Established for A/C bump prevention.

Possible Causes
WORN OUT/ BURNT TRANSAXLE FLUID

Always perform the 42RLE Pre-Diagnostic Troubleshooting Procedure before proceeding. (Refer to 21 - TRANSMISSION/TRANSAXLE/AUTOMATIC - 42RLE - STANDARD PROCEDURE)

Theory of Operation

To prevent a bump due to A/C clutch engagement, a temporary torque converter partial EMCC condition is established prior to A/C clutch engagement. A message is received over the bus indicating that A/C clutch engagement is imminent. Partial EMCC is then established and a reply message, ″OK to engage A/C clutch″ is sent via the bus. Partial EMCC will be held for 450 ms before returning to full EMCC. During the transition from full to partial EMCC, a turbine acceleration sum is calculated, if this value exceeds a threshold value for several transitions, degraded transmission fluid is indicated.

Diagnostic Test

1. WORN OUT/ BURNT TRANSMISSION FLUID

Turn the ignition off to the lock position.

Flush the Transmission Oil Cooler and lines, replace the Transmission Oil Filter, refill with new Transmission Fluid, start the engine, and adjust the fluid per the Service Information.

NOTE: The Transmission Cooler must be flushed before proceeding.
Allow the engine to idle for 10 minutes, in Park.

Turn the ignition off to the lock position.

Again, flush the Transmission Oil Cooler and lines, replace the Transmission Oil Filter, refill with new Transmission Fluid, start the engine, and adjust the fluid per the Service Information.

With the scan tool, perform a Battery Disconnect.

NOTE: The Battery Disconnect must be done to re-enable EMCC during an A/C Clutch engagement.

NOTE: The vehicle may exhibit intermittent shudder during the first few hundred miles. The new Transmission Fluid will gradually penetrate the Torque Convertor Clutch friction material and the shudder should disappear.
Erase the DTC and return the vehicle to the customer.

Did the DTC reset and/or does the vehicle still shudder after a few thousand miles?

Yes >> Replace the Torque Converter per the Service Information.
Perform 42RLE TRANSMISSION VERIFICATION TEST - VER 1. (Refer to 21 - TRANSMISSION/ TRANSAXLE/AUTOMATIC - 42RLE - STANDARD PROCEDURE)

No >> Test Complete.

P0932-LINE PRESSURE SENSOR CIRCUIT

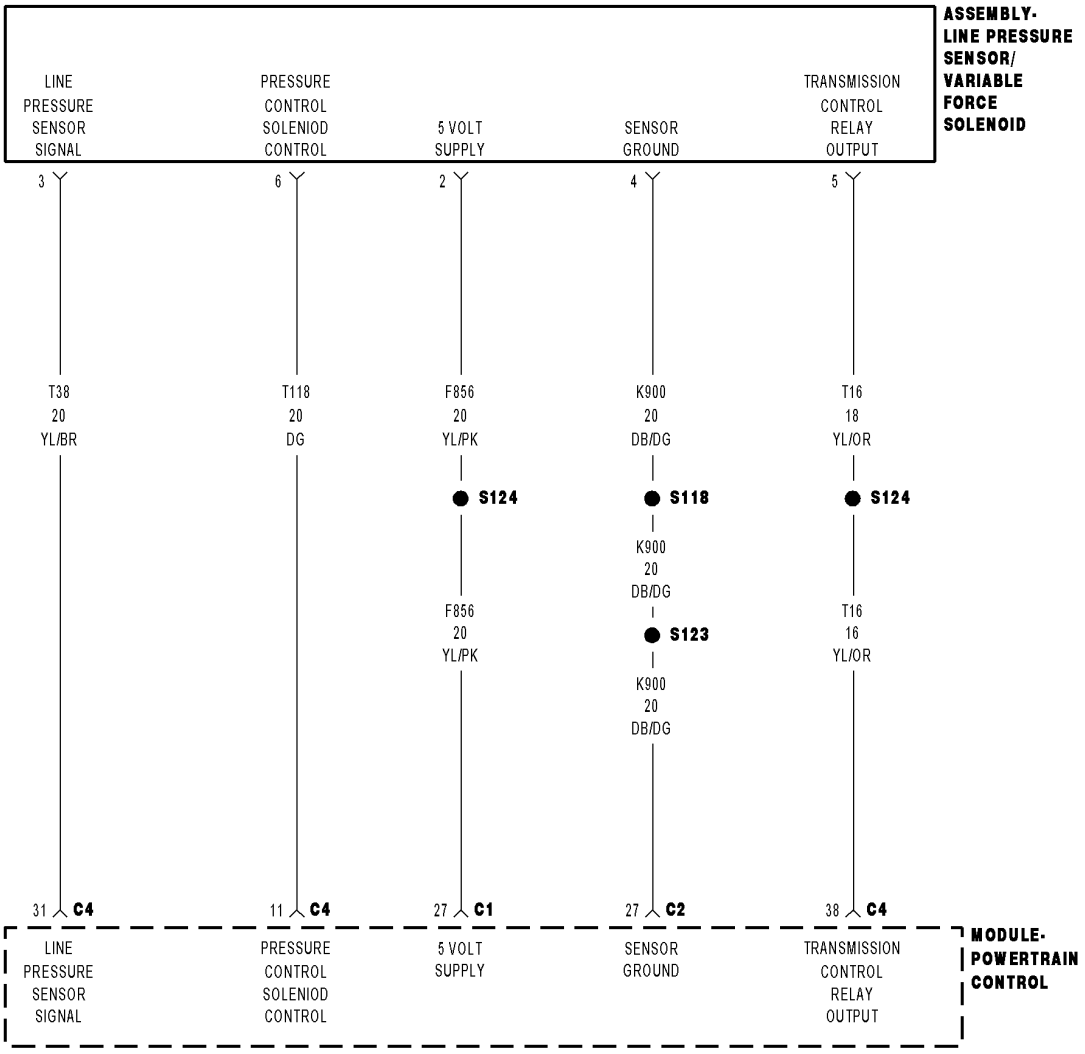

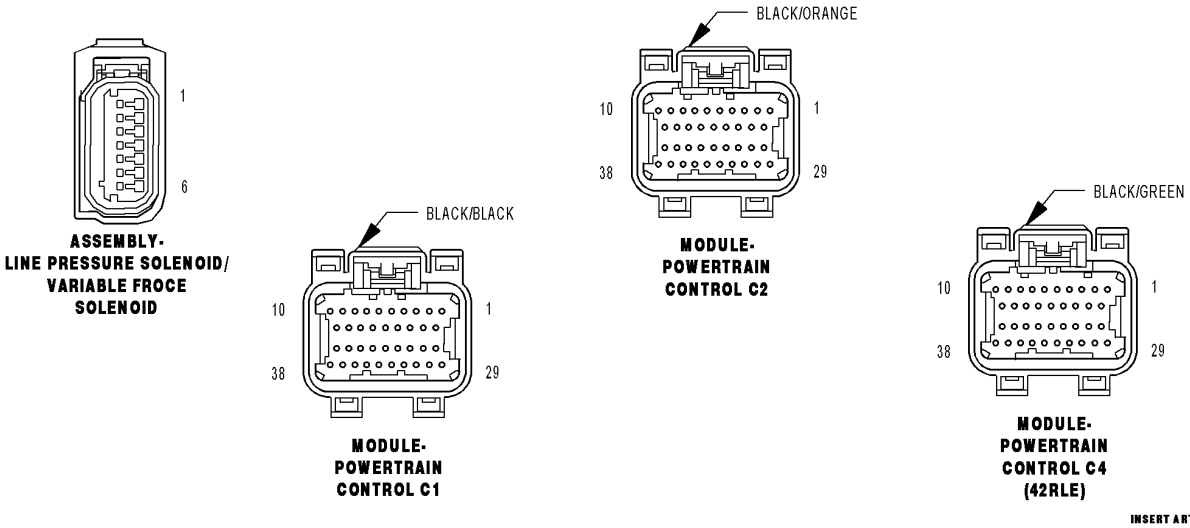

For a complete wiring diagram **Refer to Section 8W**

- **When Monitored:**
  Continuously with the ignition on, engine running, with the transmission in gear.
- **Set Condition:**
  The PCM continuously monitors Actual Line Pressure and compares it to Desired Line Pressure. If the Actual Line Pressure reading is more than 172.4 kPa (25 psi) higher than the Desired Line Pressure, but is less than the highest Line Pressure ever used in the current gear, the DTC sets.

Possible Causes
RELATED DTCS PRESENT
LINE PRESSURE CONNECTOR AND WIRING
INTERNAL TRANSMISSION
POWERTRAIN CONTROL MODULE

Always perform the 42RLE Pre-Diagnostic Troubleshooting procedure before proceeding. (Refer to 21 - TRANSMISSION/TRANSAXLE/AUTOMATIC - 42RLE - STANDARD PROCEDURE)

Theory of Operation

Line pressure is electronically controlled by the Transmission Control System and is measured by the Line Pressure Sensor (LPS). The desired line pressure is continuously being compared to the actual line pressure and is regulated by electronically changing the duty cycle of the Pressure Control Solenoid (PCS). (5% duty cycle = solenoid off = max line pressure, 62% duty cycle = solenoid on = min line pressure).

The Transmission Control System calculates the desired line pressure based on inputs from the transmission and engine. A calculated torque input to the transmission is used as the primary input of the desired line pressure calculation and is called Torque Based Line Pressure. In addition, the line pressure is set to a preset level 827 to 931 kPa (120 to 135 psi) during shifts and in Park and Neutral to ensure consistent shift quality.

Diagnostic Test

1. DETERMINING IF RELATED DTCS ARE PRESENT

With the scan tool, check for other transmission DTCs.

Are there any other line pressure related DTCs present?

Yes >> Refer to the Transmission category and perform the appropriate symptom. Perform the test for P0934 and/or P0935 first if present.

No >> Go To 2

2. COMPARE ACTUAL LINE PRESSURE TO DESIRED LINE PRESSURE

CAUTION: Apply Parking Brake
Start the engine.

CAUTION: Firmly apply the brakes.
With the scan tool, monitor the Line Pressure, Desired Line Pressure and the TPS degrees.

While firmly applying the brakes, place the shifter in reverse, then slowly press the accelerator pedal to a TPS degree of 15°.

Compare the Line Pressure reading to the Desired Line Pressure reading on the scan tool.

Does the Line Pressure stay within ± 34 kPa (5 psi) of the Desired Line Pressure?

Yes >> Go To 5

No >> Go To 3

3. CHECK LINE PRESSURE CONNECTOR AND WIRING

Ignition on, engine not running.

With the scan tool, monitor the Line Pressure Sensor voltage while wiggling the wiring harness and connectors pertaining to the Line Pressure Sensor/Variable Force Solenoid Assembly.

Did the voltage remain steady while wiggling the wiring harness and connectors?

Yes >> Go To 4

No >> Disconnect and properly reconnect the Line Pressure Sensor/Variable Force Solenoid Assembly connector. Inspect terminals and repair as necessary.

Perform 42RLE TRANSMISSION VERIFICATION TEST - VER 1. (Refer to 21 - TRANSMISSION/TRANSAXLE/AUTOMATIC - 42RLE - STANDARD PROCEDURE)

4. CHECK PCM AND WIRING

Turn the ignition off to the lock position.

Remove the Starter Relay.

CAUTION: Removal of the Starter Relay will prevent the vehicle from being started in gear.

WARNING: The Starter Relay must be removed from the PDC. Failure to do so can result in personal injury or death.

NOTE: Failure to remove the Starter Relay can cause a Transmission - No Response condition.

Install the Transmission Simulator, Miller tool #8333 and the Electronic Transmission Adapter kit.

With the Transmission Simulator select the ″OFF″ position on the ″Input/Output Speed″ switch.

Ignition on, engine not running.

With the scan tool, monitor the Line Pressure during the following step.

With the Transmission Simulator, turn the selector switch to each of the 3 Line Pressure positions.

NOTE: All three scan tool Line Pressure readings should be steady and ± 14 kPa (2.0 psi) of the reading specified on the Transmission Simulator.

Did the Line Pressure read within ± 14 kPa or (2.0 psi) in all three positions?

Yes >> Using the schematics as a guide, check the Powertrain Control Module (PCM) terminals for corrosion, damage, or terminal push out. Pay particular attention to all power and ground circuits. If no problems are found, replace the PCM per the Service Information. With the scan tool, perform QUICK LEARN.

Perform 42RLE TRANSMISSION VERIFICATION TEST - VER 1. (Refer to 21 - TRANSMISSION/TRANSAXLE/AUTOMATIC - 42RLE - STANDARD PROCEDURE)

No >> Repair internal transmission and inspect the oil pump per the Service information and replace if necessary. If no problems are found, replace the Line Pressure Sensor/Variable Force Solenoid Assembly — possible cause is the Pressure Control Solenoid is stuck.

Perform 42RLE TRANSMISSION VERIFICATION TEST - VER 1. (Refer to 21 - TRANSMISSION/TRANSAXLE/AUTOMATIC - 42RLE - STANDARD PROCEDURE)

5. CHECK WIRING AND CONNECTORS

The conditions necessary to set this DTC are not present at this time.

Using the schematics as a guide, inspect the wiring and connectors specific to this circuit.

Wiggle the wires while checking for shorted and open circuits.

With the scan tool, check the DTC EVENT DATA to help identify the conditions in which the DTC was set.

Where there any problems found?

Yes >> Repair as necessary.

Perform 42RLE TRANSMISSION VERIFICATION TEST - VER 1. (Refer to 21 - TRANSMISSION/TRANSAXLE/AUTOMATIC - 42RLE - STANDARD PROCEDURE)

No >> Test Complete.

P0934-LINE PRESSURE SENSOR CIRCUIT LOW

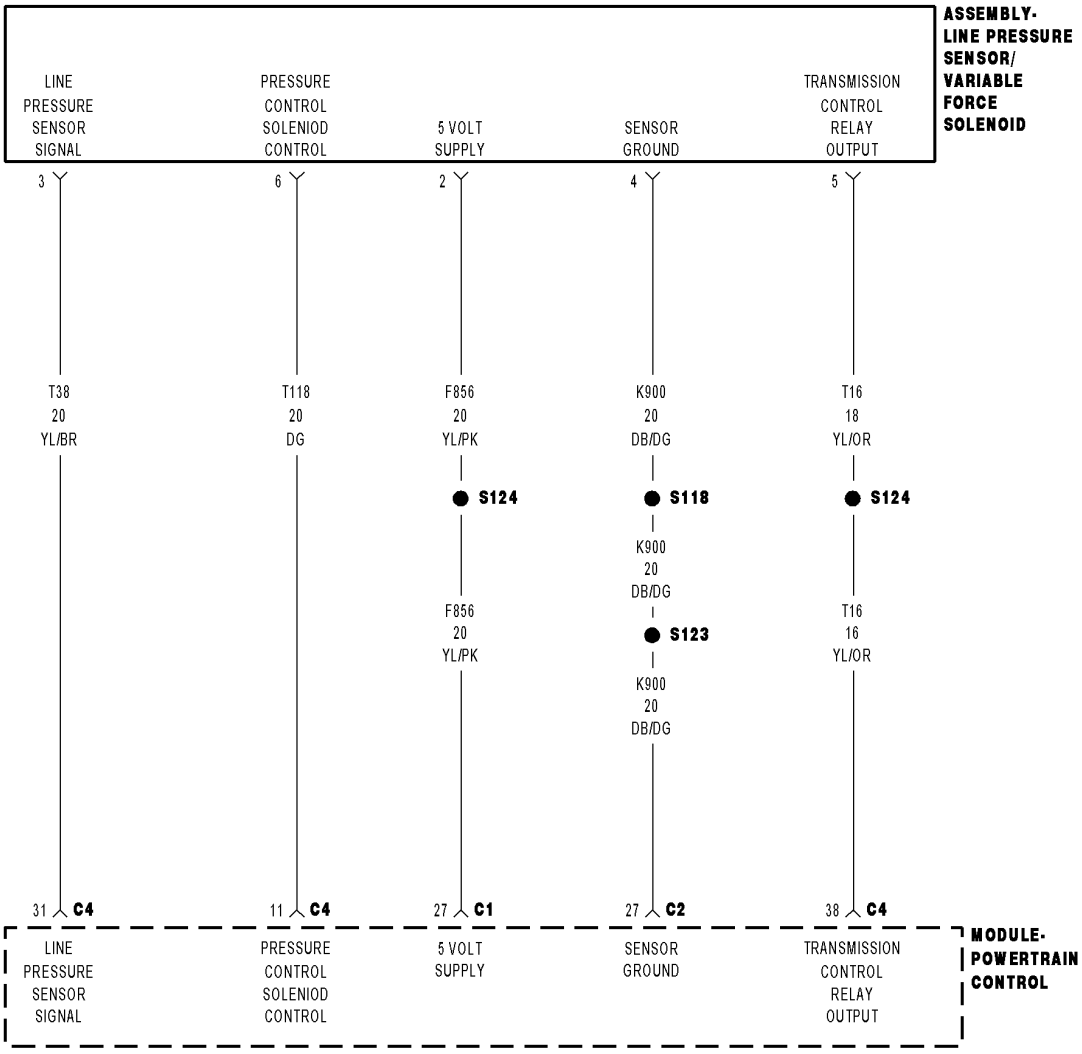

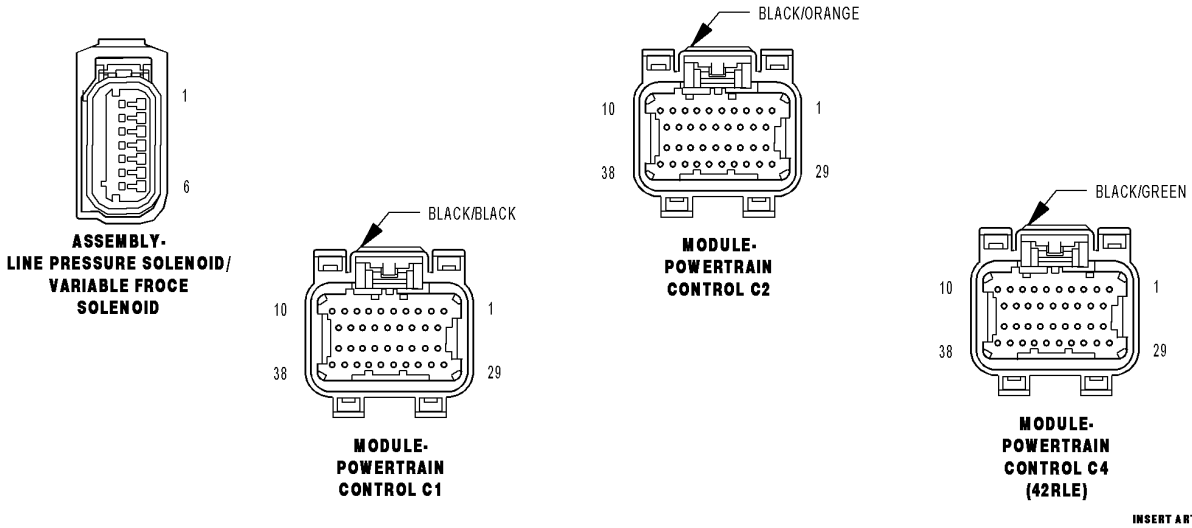

For a complete wiring diagram **Refer to Section 8W**.

- **When Monitored:**
  Continuously with the ignition on and engine running.
- **Set Condition:**
  This DTC will set when the monitored Line Pressure Sensor voltage is less than or equal to 0.35 volts for 0.18 seconds.

Possible Causes
(F856) 5-VOLT SUPPLY CIRCUIT OPEN
(F856) 5-VOLT SUPPLY CIRCUIT SHORT TO GROUND
(T38) LINE PRESSURE SENSOR SIGNAL CIRCUIT SHORT TO GROUND
LINE PRESSURE SENSOR
POWERTRAIN CONTROL MODULE

Always perform the 42RLE Pre-Diagnostic Troubleshooting procedure before proceeding. (Refer to 21 - TRANSMISSION/TRANSAXLE/AUTOMATIC - 42RLE - STANDARD PROCEDURE)

Theory of Operation

Line pressure is electronically controlled by the Transmission Control System and is measured by the Line Pressure Sensor (LPS). The desired line pressure is continuously being compared to the actual line pressure and is regulated by electronically changing the duty cycle of the Pressure Control Solenoid (PCS). (5% duty cycle = solenoid off = max line pressure, 62% duty cycle = solenoid on = min line pressure).

The Transmission Control System calculates the desired line pressure based on inputs from the transmission and engine. A calculated torque input to the transmission is used as the primary input of the desired line pressure calculation and is called Torque Based Line Pressure. In addition, the line pressure is set to a preset level 827 to 931 kPa (120 to 135 PSI) during shifts and in Park and Neutral to ensure consistent shift quality.

The monitored Line Pressure Sensor voltage should always be between 0.35 and 4.75 volts. Any monitored voltages outside these parameters indicate a Line Pressure Sensor or wiring problem and will cause either DTC P0934 or P0935 to set.

Diagnostic Test

1. CHECK IF DTC IS CURRENT

With the scan tool, check the STARTS SINCE SET counter for P0934.

NOTE: This counter only applies to the last DTC set.

Is the STARTS SINCE SET counter 2 or less?

Yes >> Go To 2

No >> Go To 6

2. CHECK THE PCM AND WIRING

Turn the ignition off to the lock position.

Remove the Starter Relay.

CAUTION: Removal of the Starter Relay will prevent the vehicle from being started in gear.

WARNING: The Starter Relay must be removed from the PDC. Failure to do so can result in personal injury or death.

NOTE: Removal of the Starter Relay is to prevent a Transmission, NO RESPONSE, condition and disable the starter.

Install the Transmission Simulator, Miller tool #8333 and the Electronic Transmission Adapter kit.

Ignition on, engine not running.

With the scan tool, under Transmission Sensors, monitor the Line Pressure.

Using the Transmission Simulator, set the rotary switch to each of the 3 line pressure positions.

NOTE: All three scan tool Line Pressure readings should be steady and ± 14 kPa or 2.0 psi of the reading specified on the Transmission Simulator.

Did the Line Pressure read within ± 14 kPa or 2.0 psi in all three positions?

Yes >> Replace the Line Pressure Sensor per the Service Information.
Perform 42RLE TRANSMISSION VERIFICATION TEST - VER 1. (Refer to 21 - TRANSMISSION/TRANSAXLE/AUTOMATIC - 42RLE - STANDARD PROCEDURE)

No >> Go To 3

3. CHECK THE (T38) LINE PRESSURE SENSOR SIGNAL CIRCUIT FOR A SHORT TO GROUND

Turn the ignition off to the lock position.

Disconnect the PCM C4 harness connector and connect Miller tool #8815.

Disconnect the Transmission Simulator, Miller tool #8333 and the Electronic Transmission Adapter kit.

CAUTION: Do not probe the PCM harness connectors. Probing the PCM harness connectors will damage the PCM terminals resulting in poor terminal to pin connection. Install Miller tool #8815 to perform diagnosis.

Measure the resistance between ground and the (T38) Line Pressure Sensor Signal circuit.

Is the resistance below 5.0 ohms?

Yes >> Repair the (T38) Line Pressure Sensor Signal circuit for a short to ground.
Perform 42RLE TRANSMISSION VERIFICATION TEST - VER 1. (Refer to 21 - TRANSMISSION/TRANSAXLE/AUTOMATIC - 42RLE - STANDARD PROCEDURE)

No >> Go To 4

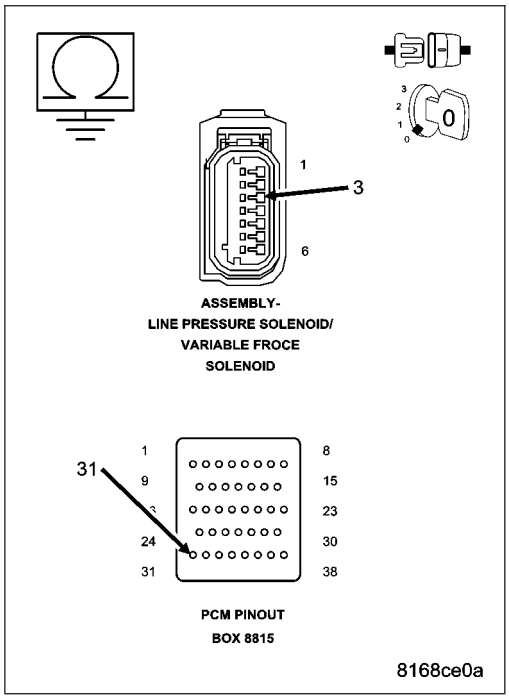

4. CHECK THE (F856) 5-VOLT SUPPLY CIRCUIT FOR AN OPEN

Disconnect the PCM C1 harness connector and connect Miller tool #8815.

Measure the resistance of the (F856) 5-volt Supply circuit between Line Pressure Sensor/Variable Force Solenoid Assembly harness connector and the appropriate terminal of Miller tool #8815.

Is the resistance below 5.0 ohms?

Yes >> Go To 5

No >> Repair the (F856) 5-volt Supply circuit for an open.

Perform 42RLE TRANSMISSION VERIFICATION TEST - VER 1. (Refer to 21 - TRANSMISSION/TRANSAXLE/AUTOMATIC - 42RLE - STANDARD PROCEDURE)

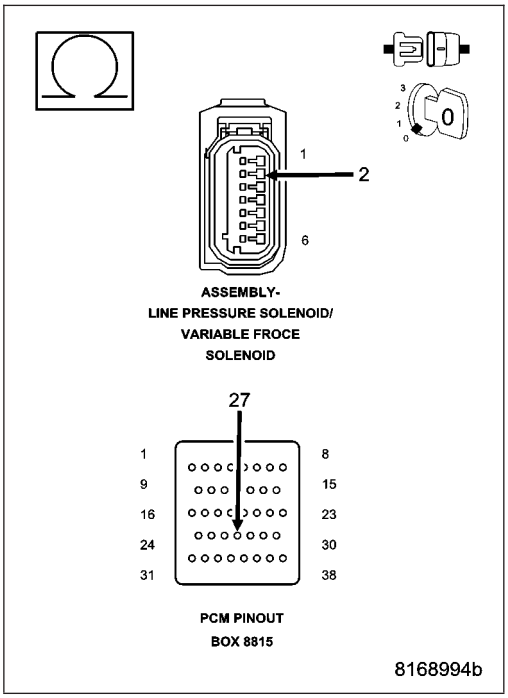

5. CHECK THE (F856) 5-VOLT SUPPLY CIRCUIT FOR A SHORT TO GROUND

Disconnect the PCM C1 harness connector and connect Miller tool #8815.

Measure the resistance between ground and the (F856) 5-volt Supply circuit.

Is the resistance below 5.0 ohms?

Yes >> Repair the (F856) 5-volt Supply circuit for a short to ground.

Perform 42RLE TRANSMISSION VERIFICATION TEST - VER 1. (Refer to 21 - TRANSMISSION/TRANSAXLE/AUTOMATIC - 42RLE - STANDARD PROCEDURE)

No >> Using the schematics as a guide, check the Powertrain Control Module (PCM) terminals for corrosion, damage, or terminal push out. Pay particular attention to all power and ground circuits. If no problems are found, replace the PCM per the Service Information. With the scan tool, perform QUICK LEARN.

Perform 42RLE TRANSMISSION VERIFICATION TEST - VER 1. (Refer to 21 - TRANSMISSION/TRANSAXLE/AUTOMATIC - 42RLE - STANDARD PROCEDURE)

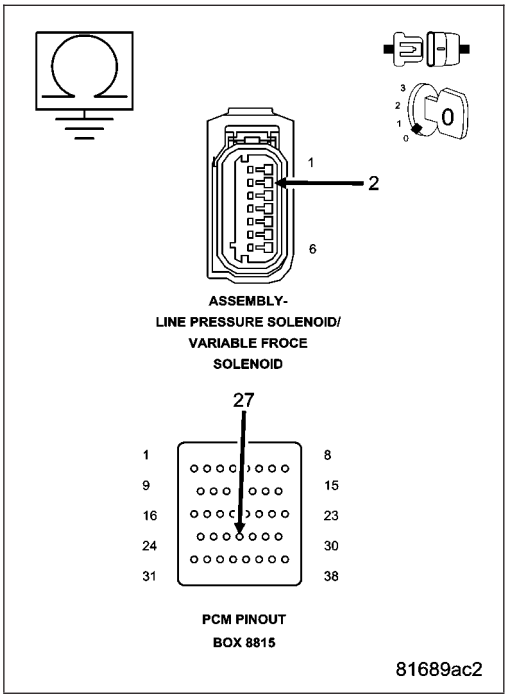

6. INTERMITTENT WIRING AND CONNECTORS

The conditions necessary to set this DTC are not present at this time.

Using the schematics as a guide, inspect the wiring and connectors specific to this circuit.

Wiggle the wires while checking for shorted and open circuits.

With the scan tool, check the DTC EVENT DATA to help identify the conditions in which the DTC was set.

Where there any problems found?

Yes >> Repair as necessary.
Perform 42RLE TRANSMISSION VERIFICATION TEST - VER 1. (Refer to 21 - TRANSMISSION/ TRANSAXLE/AUTOMATIC - 42RLE - STANDARD PROCEDURE)

No >> Test Complete.

P0935-LINE PRESSURE SENSOR CIRCUIT HIGH

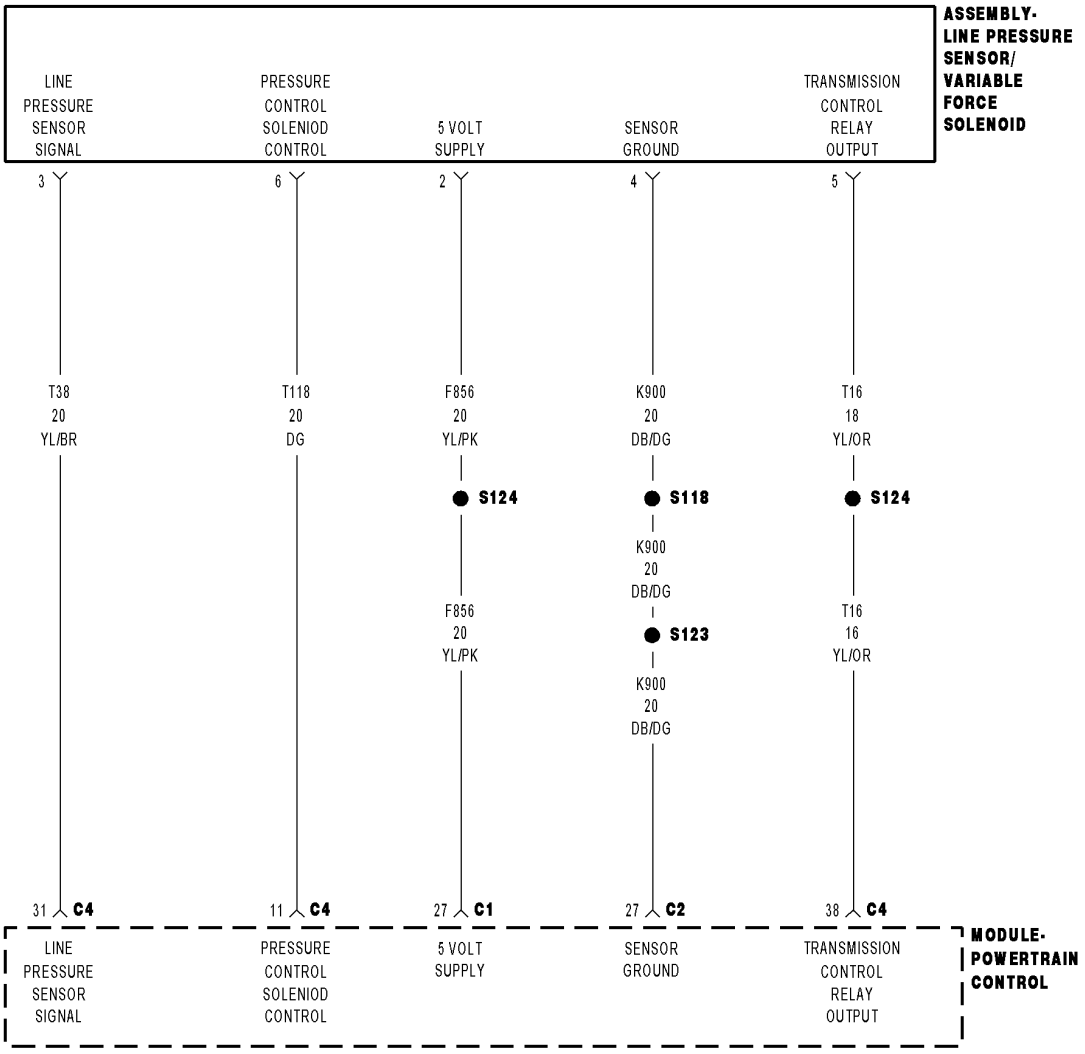

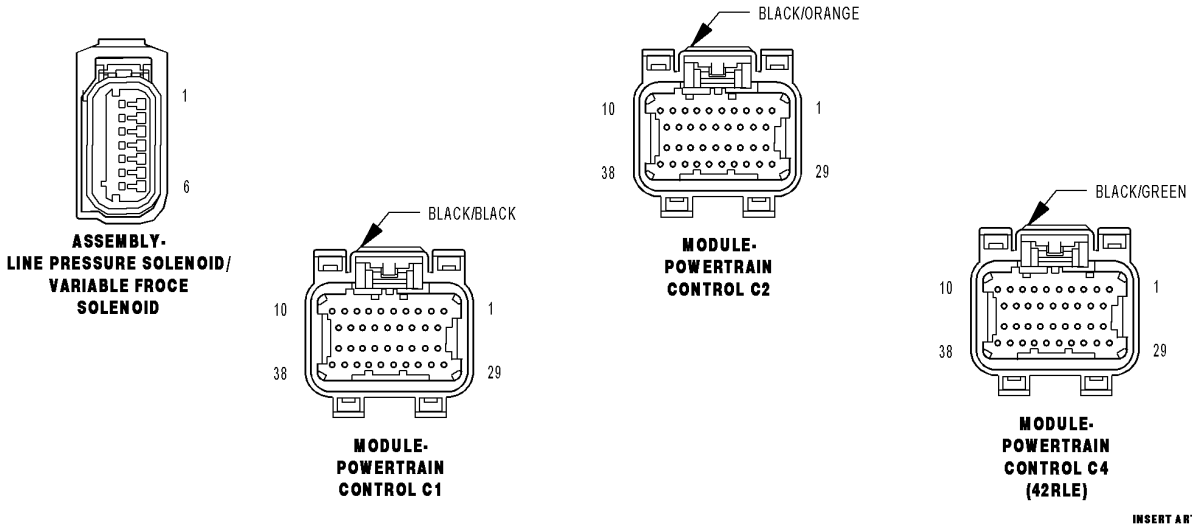

For a complete wiring diagram **Refer to Section 8W**

- **When Monitored:**
  Continuously with ignition on and engine running.
- **Set Condition:**
  This DTC will set if the monitored Line Pressure Sensor voltage is greater than or equal to 4.75 volts for the period of 0.18 seconds

Possible Causes
(T38) LINE PRESSURE SENSOR SIGNAL CIRCUIT OPEN
(K900) SENSOR GROUND CIRCUIT OPEN
(T38) LINE PRESSURE SENSOR SIGNAL CIRCUIT SHORT TO VOLTAGE
LINE PRESSURE SENSOR
POWERTRAIN CONTROL MODULE

Always perform the 42RLE Pre-Diagnostic Troubleshooting procedure before proceeding. (Refer to 21 - TRANSMISSION/TRANSAXLE/AUTOMATIC - 42RLE - STANDARD PROCEDURE)

Theory of Operation

Line pressure is electronically controlled by the Transmission Control System and is measured by the Line Pressure Sensor (LPS). The desired line pressure is continuously being compared to the actual line pressure and is regulated by electronically changing the duty cycle of the Pressure Control Solenoid (PCS). (5% duty cycle = solenoid off = max line pressure, 62% duty cycle = solenoid on = min line pressure).

The Transmission Control System calculates the desired line pressure based on inputs from the transmission and engine. A calculated torque input to the transmission is used as the primary input of the desired line pressure calculation and is called Torque Based Line Pressure. In addition, the line pressure is set to a preset level 827 to 931 kPa (120 to 135 PSI) during shifts and in Park and Neutral to ensure consistent shift quality.

The monitored Line Pressure Sensor voltage should always be between 0.35 and 4.75 volts. Any monitored voltages outside these parameters indicate an Line Pressure Sensor or wiring problem and will cause either DTC P0934 or P0935 to set.

Diagnostic Test

1. CHECK TO SEE IF DTC IS CURRENT

With the scan tool, Check the STARTS SINCE SET counter for P0935.

NOTE: This counter only applies to the last DTC set.

Is the STARTS SINCE SET counter 2 or less?

Yes >> Go To 2

No >> Go To 6

2. CHECK THE PCM AND WIRING

Turn the ignition off to the lock position.

Remove the Starter Relay.

CAUTION: Removal of the Starter Relay will prevent the vehicle from being started in gear.

WARNING: The Starter Relay must be removed from the PDC. Failure to do so can result in personal injury or death.

NOTE: Removal of the Starter Relay is to prevent a Transmission, NO RESPONSE, condition and disable the starter.

Install the Transmission Simulator, Miller tool #8333 and the Electronic Transmission Adapter kit.

Ignition on, engine not running.

With the scan tool, monitor the Line Pressure.

Using the Transmission Simulator, set the rotary switch to each of the 3 line pressure positions.

NOTE: All three scan tool Line Pressure readings should be steady and ± 14 kPa or 2.0 psi of the reading specified on the Transmission Simulator.

Did the Line Pressure read within ± 14 kPa or 2.0 psi in all three positions?

Yes >> Replace the Line Pressure Sensor per the Service Information.
Perform 42RLE TRANSMISSION VERIFICATION TEST - VER 1. (Refer to 21 - TRANSMISSION/TRANSAXLE/AUTOMATIC - 42RLE - STANDARD PROCEDURE)

No >> Go To 3

3. CHECK THE (K900) SENSOR GROUND CIRCUIT FOR AN OPEN

Turn the ignition off to the lock position.

Disconnect the Transmission Simulator, Miller tool #8333 and the Electronic Transmission Adapter kit.

Disconnect the PCM C2 harness connector and connect Miller tool #8815.

CAUTION: Do not probe the PCM harness connectors. Probing the PCM harness connectors will damage the PCM terminals resulting in poor terminal to pin connection. Install Miller tool #8815 to perform diagnosis.

Measure the resistance of the (K900) Sensor Ground circuit from the Line Pressure Sensor/Variable Force Solenoid Assembly harness connector to the appropriate terminal of Miller tool #8815.

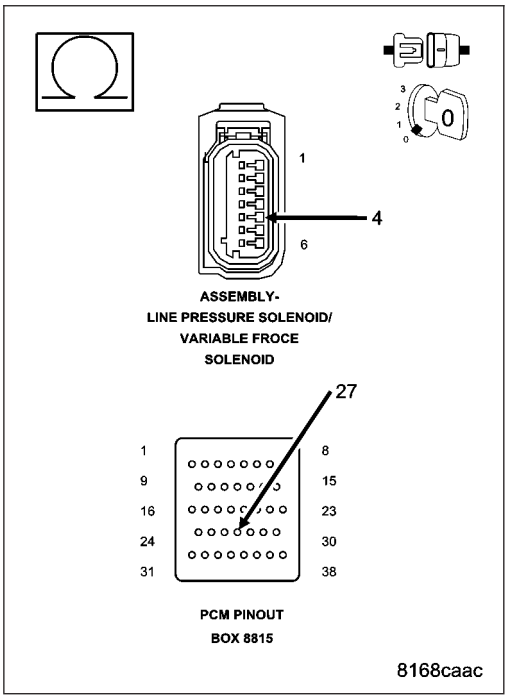

Is the resistance above 5.0 ohms?

Yes >> Repair the (K900) Sensor Ground circuit for an open.
Perform 42RLE TRANSMISSION VERIFICATION TEST - VER 1. (Refer to 21 - TRANSMISSION/TRANSAXLE/AUTOMATIC - 42RLE - STANDARD PROCEDURE)

No >> Go To 4

4. CHECK THE (T38) LINE PRESSURE SENSOR SIGNAL CIRCUIT FOR AN OPEN

Disconnect the PCM C4 harness connector and connect Miller tool #8815.

Measure the resistance of the (T38) Line Pressure Sensor Signal circuit from the Line Pressure Sensor/Variable Force Solenoid Assembly harness connector to the appropriate terminal of Miller tool #8815.

Is the resistance above 5.0 ohms?

Yes >> Repair the (T38) Line Pressure Sensor Signal circuit for an open.

Perform 42RLE TRANSMISSION VERIFICATION TEST - VER 1. (Refer to 21 - TRANSMISSION/TRANSAXLE/AUTOMATIC - 42RLE - STANDARD PROCEDURE)

No >> Go To 5

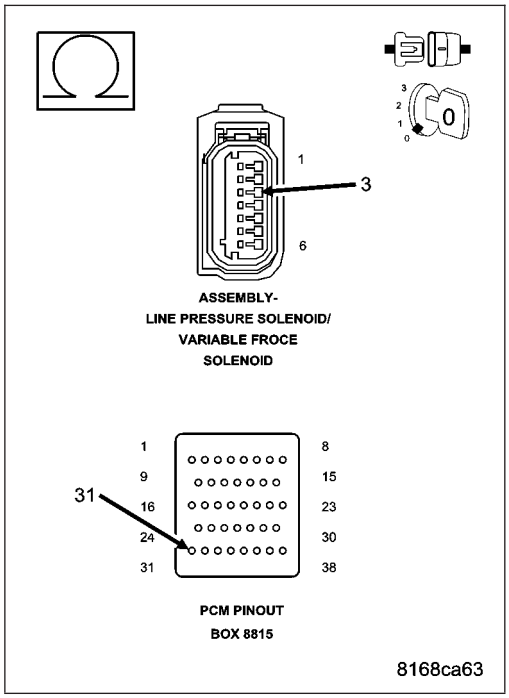

5. CHECK THE (T38) LINE PRESSURE SENSOR SIGNAL CIRCUIT FOR A SHORT TO VOLTAGE

Remove the Transmission Control Relay.

Connect a jumper wire between the (A104) Fused B(+) circuit and the (T16) Transmission Control Relay Output circuit in the Transmission Control Relay connector.

Ignition on, engine not running.

Measure the voltage of the (T38) Line Pressure Sensor Signal circuit.

Is the voltage above 5.5 volts?

Yes >> Repair the (T38) Line Pressure Sensor Signal circuit for a short to voltage.

Perform 42RLE TRANSMISSION VERIFICATION TEST - VER 1. (Refer to 21 - TRANSMISSION/TRANSAXLE/AUTOMATIC - 42RLE - STANDARD PROCEDURE)

No >> Using the schematics as a guide, check the Powertrain Control Module (PCM) terminals for corrosion, damage, or terminal push out. Pay particular attention to all power and ground circuits. If no problems are found, replace the PCM per the Service Information. With the scan tool, perform QUICK LEARN.

Perform 42RLE TRANSMISSION VERIFICATION TEST - VER 1. (Refer to 21 - TRANSMISSION/TRANSAXLE/AUTOMATIC - 42RLE - STANDARD PROCEDURE)

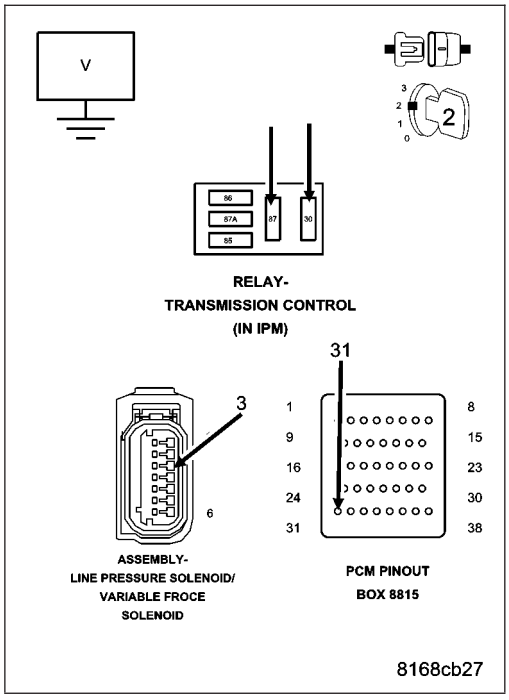

6. CHECK WIRING AND CONNECTORS

The conditions necessary to set this DTC are not present at this time.

Using the schematics as a guide, inspect the wiring and connectors specific to this circuit.

Wiggle the wires while checking for shorted and open circuits.

With the scan tool, check the DTC EVENT DATA to help identify the conditions in which the DTC was set.

Where there any problems found?

Yes >> Repair as necessary.
Perform 42RLE TRANSMISSION VERIFICATION TEST - VER 1. (Refer to 21 - TRANSMISSION/ TRANSAXLE/AUTOMATIC - 42RLE - STANDARD PROCEDURE)

No >> Test Complete.

P0944-LOSS OF HYDRAULIC PUMP PRIME

For a complete wiring diagram**Refer to Section 8W**.

- **When Monitored:**
  Every 350 msec
- **Set Condition:**
  If the transmission begins to slip in any forward gear, and the pressure switch or switches that should be closed for a given gear are open, a loss of prime test begins. All available elements (in 1st gear LR, 2/4 and OD, in 2nd, 3rd, and 4th gear 2/4 and OD) are turned on by the PCM to see if pump prime exists. The code is set if none of the pressure switches respond. The PCM will continue to run the loss of prime test until pump pressure returns. The vehicle will not move or the transmission will slip. Normal operation will continue if pump prime returns.

Possible Causes
LOW TRANSMISSION FLUID LEVEL
SHIFT LEVER POSITION
PLUGGED TRANSMISSION FILTER
TRANSMISSION OIL PUMP

Always perform the 42RLE Pre-Diagnostic Troubleshooting Procedure before proceeding. (Refer to 21 - TRANSMISSION/TRANSAXLE/AUTOMATIC - 42RLE - STANDARD PROCEDURE)

Theory of Operation

The Loss of Prime Test is used to prevent transmission defaults and erroneous fault codes during temporary loss of pump prime that may occur with low transmission fluid under severe braking conditions, start-up, etc. and to point towards more subtle problems such as a plugged or ruptured oil filter. The Loss of Prime fault is set by a loss of hydraulic pressure in the transmission system. This condition, if sustained, will result in the vehicle being unable to move.

Diagnostic Test

1. CHECK TO SEE IF DTC P0944 IS CURRENT

Place the gear selector in park.

Start the engine.

NOTE: The Transmission Temperature must be at least 43° C (110° F) before performing the following steps. The Transmission must be at operating temperature prior to checking pressure. Cold transmission fluid will result in higher pressure readings.

Place the Transmission in Reverse.

With the scan tool, observe the Transmission Pressure Switch states.

Are any of the Pressure Switches closed?

Yes >> Go To 2

No >> Go To 4

2. INTERMITTENT OPERATION

The conditions necessary to set this DTC are not present at this time.
Test drive the vehicle. Allow the Transmission to shift through all gears and ranges.

Was a delayed engagement and/or a no drive condition present during the test drive?

Yes >> Go To 4

No >> Go To 3

3. INTERMITTENT WIRING AND CONNECTORS

The conditions necessary to set this DTC are not present at this time.
Using the schematics as a guide, inspect the wiring and connectors specific to this circuit.
Wiggle the wiring while checking for shorted and open circuits.
With the scan tool, check the EATX EVENT DATA to help identify the conditions in which the DTC was set.

Were there any problems found?

Yes >> Repair as necessary.
Perform 42RLE TRANSMISSION VERIFICATION TEST - VER 1. (Refer to 21 - TRANSMISSION/ TRANSAXLE/AUTOMATIC - 42RLE - STANDARD PROCEDURE)

No >> Test Complete.

4. SHIFT LEVER POSITION TEST

With the scan tool, perform a Shift Lever Position test. Follow the instructions on the screen.

Did the Shift Lever Position Test pass?

Yes >> Go To 5

No >> Perform the diagnostic procedure for P0706–CHECK SHIFTER SIGNAL.
Perform 42RLE TRANSMISSION VERIFICATION TEST - VER 1. (Refer to 21 - TRANSMISSION/ TRANSAXLE/AUTOMATIC - 42RLE - STANDARD PROCEDURE)

5. CHECK FOR PLUGGED TRANSMISSION FILTER

Remove the Transmission Pan and inspect the Transmission Fluid and Transmission Filter per the Service Information.

Does the Transmission Oil Pan contain excessive debris and/or is the Oil Filter plugged?

Yes >> Repair the cause of the plugged Transmission Filter. Refer to the Service Information for the proper repair procedure.
Perform 42RLE TRANSMISSION VERIFICATION TEST - VER 1. (Refer to 21 - TRANSMISSION/ TRANSAXLE/AUTOMATIC - 42RLE - STANDARD PROCEDURE)

No >> Go To 6

6. TRANSMISSION OIL PUMP

View repair.

Repair

Replace the Transmission Oil Pump per the Service Information.
Perform 42RLE TRANSMISSION VERIFICATION TEST - VER 1. (Refer to 21 - TRANSMISSION/ TRANSAXLE/AUTOMATIC - 42RLE - STANDARD PROCEDURE)

P0992-2/4/OD HYDRAULIC PRESSURE TEST

For a complete wiring diagram **Refer to Section 8W**.

- **When Monitored:**
  In any forward gear with engine speed above 1000 RPM, shortly after a shift and every minute thereafter.
- **Set Condition:**
  After a shift into a forward gear, with engine speed greater than 1000 RPM, the PCM momentarily turns on element pressure to the clutch circuits that do not have pressure to identify that the correct pressure switch closes. If the pressure switch does not close 2 times the DTC sets.

Possible Causes
CONDITION P0992 PRESENT

Always perform the 42RLE Pre-Diagnostic Troubleshooting Procedure before proceeding. (Refer to 21 - TRANSMISSION/TRANSAXLE/AUTOMATIC - 42RLE - STANDARD PROCEDURE)

Theory of Operation

Pressure switches are normally off or open (no pressure applied) and read high (+12 volts). When an element is applied, the corresponding pressure switch closes to ground (0 volts) or turns on. The controller tests the OD and 2/4 pressure switches when they are off (when the corresponding friction element is not applied) by briefly applying the OD and 2/4 elements which will cause the corresponding pressure switch to close. The test verifies that the switches are operational and that the switch will close when the corresponding element is applied. If a switch fails to respond, it is re-tested. The MIL illuminates and the transmission system defaults to Limp-in mode.

1. CHECK TO SEE IF DTC P0992 IS CURRENT

NOTE: The vehicle must be driven to set this DTC. The transmission must at operating temperature with the Engine RPM above 1000 RPM.

This DTC is an indication of both the 2/4 and the O/D Hydraulic Pressure Switch DTCs present.

Perform the diagnostic procedures for both P0845 and P0870.

With the scan tool, check the EATX DTC EVENT DATA to help identify the conditions in which the DTC was set.

View repair.

Repair

Refer to the Transmission category and perform the diagnostic procedures for P0845 and P0870.

P1684-BATTERY WAS DISCONNECTED

For a complete wiring diagram **Refer to Section 8W**.

- **When Monitored:**
  After a reset (ignition key turned to the RUN position).
- **Set Condition:**
  The checksum of the battery backed RAM does not match the stored checksum. Set Time: Less than 7 msec.

Possible Causes
BATTERY WAS DISCONNECTED
PCM WAS REPLACED OR DISCONNECTED
QUICK LEARN WAS PERFORMED
(A209) FUSED B+ CIRCUIT TO PCM OPEN
(Z904) GROUND CIRCUITS OPEN

Always perform the 42RLE Pre-Diagnostic Troubleshooting Procedure before proceeding. (Refer to 21 - TRANSMISSION/TRANSAXLE/AUTOMATIC - 42RLE - STANDARD PROCEDURE)

Theory of Operation

Note: This is not a fault code. It exists to provide reference information only. A battery backed RAM is used to maintain some learned values. When the battery is disconnected, this memory is lost. When the battery is reconnected, the loss of learned values will be detected by the controller. The code will be set and the learned values will be initialized to known constants and the learning process will continue. Setting the code has no effect except for re-initialization of learned values.

Diagnostic Test

1. BATTERY WAS DISCONNECTED

Has the battery been disconnected, lost its charge, or been replaced recently?

Yes >> Disconnecting or replacing the battery will set this DTC. Erase the DTC.
Perform 42RLE TRANSMISSION VERIFICATION TEST - VER 1. (Refer to 21 - TRANSMISSION/TRANSAXLE/AUTOMATIC - 42RLE - STANDARD PROCEDURE)

No >> Go To 2

2. WAS QUICK LEARN PERFORMED

Has a Quick Learn procedure been performed?

Yes >> Performing Quick Learn will set this DTC. Erase the DTC.
Perform 42RLE TRANSMISSION VERIFICATION TEST - VER 1. (Refer to 21 - TRANSMISSION/TRANSAXLE/AUTOMATIC - 42RLE - STANDARD PROCEDURE)

No >> Go To 3

3. PCM REPLACED OR DISCONNECTED

Has the PCM been replaced or disconnected?

Yes >> Replacing or disconnecting the PCM will set this DTC. Erase the DTC.
Perform 42RLE TRANSMISSION VERIFICATION TEST - VER 1. (Refer to 21 - TRANSMISSION/TRANSAXLE/AUTOMATIC - 42RLE - STANDARD PROCEDURE)

No >> Go To 4

4. (A209) FUSED B+ CIRCUIT

Turn the ignition off to the lock position.

Disconnect the PCM C1 harness connector.

NOTE: Check connectors - Clean/repair as necessary.

CAUTION: Do not probe the PCM harness connectors. Probing the PCM harness connectors will damage the PCM terminals resulting in poor terminal to pin connection. Install Miller Special Tool #8815 to perform diagnosis.

Using a 12-volt test light connected to ground, check the (A209) Fused B+ circuit.

NOTE: The test light must illuminate brightly. Compare the brightness to that of a direct connection to the battery.

Does the test light illuminate brightly?

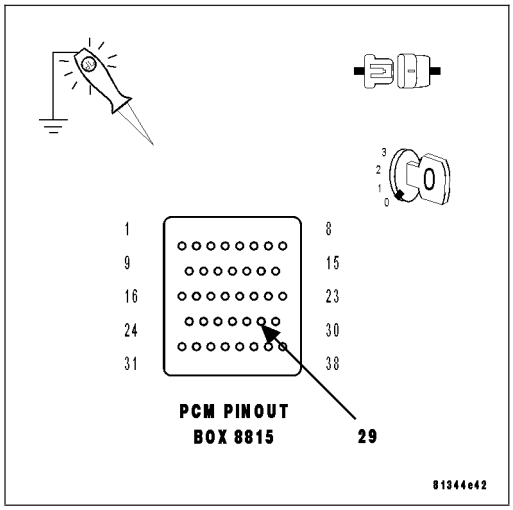

Yes >> Go To 5

No >> Repair the Fused B+ circuit for an open. If the fuse is open make sure to check for a short to ground.

Perform 42RLE TRANSMISSION VERIFICATION TEST - VER 1. (Refer to 21 - TRANSMISSION/TRANSAXLE/AUTOMATIC - 42RLE - STANDARD PROCEDURE)

5. (Z904) GROUND CIRCUITS

Turn the ignition off to the lock position.

Disconnect the PCM C4 harness connector.

NOTE: Check connectors - Clean/repair as necessary.

Using a 12-volt test light connected to 12-volts, check the (Z904) Ground circuits in the appropriate terminal of special tool #8815.

NOTE: The test light must illuminate brightly. Compare the brightness to that of a direct connection to the battery.

Does the test light illuminate brightly for all the ground circuits?

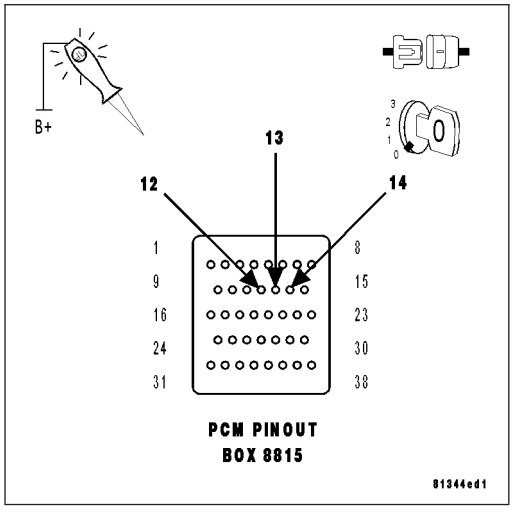

Yes >> Go To 6

No >> Repair the Ground circuits for an open.

Perform 42RLE TRANSMISSION VERIFICATION TEST - VER 1. (Refer to 21 - TRANSMISSION/TRANSAXLE/AUTOMATIC - 42RLE - STANDARD PROCEDURE)

6. INTERMITTENT WIRING AND CONNECTORS

The conditions necessary to set the DTC are not present at this time.

Using the schematics as a guide, inspect the wiring and connectors specific to this circuit.

Wiggle the wires while checking for shorted and open circuits.

With the scan tool, check the EATX DTC EVENT DATA to help identify the conditions in which the DTC was set.

Were there any problems found?

Yes >> Repair as necessary.

Perform 42RLE TRANSMISSION VERIFICATION TEST - VER 1. (Refer to 21 - TRANSMISSION/TRANSAXLE/AUTOMATIC - 42RLE - STANDARD PROCEDURE)

No >> Test Complete.

P1713-RESTRICTED MANUAL VALVE IN T2 RANGE

For a complete wiring diagram**Refer to Section 8W**

- **When Monitored:**
  Ignition on, engine running with the gear shift selector in a valid forward gear.
- **Set Condition:**
  This DTC sets whenever Transmission control system detects the manual valve is in the T2 range when it should be in OD. This is mainly an informational DTC.

Possible Causes
RELATED TRANSMISSION DTCS PRESENT
CUSTOMER DRIVING HABITS
MIS-ADJUSTED SHIFTER CABLE

Always perform the Pre-Diagnostic Troubleshooting procedure before proceeding. (Refer to 21 - TRANSMISSION/TRANSAXLE/AUTOMATIC - 42RLE - STANDARD PROCEDURE)

Diagnostic Test

1. DETERMINING IF RELATED DTCS ARE PRESENT

With the scan tool, check for other transmission DTCs.

Are there any speed sensor or gear ratio DTCs present?

Yes >> Refer to the Transmission category and perform the appropriate symptom.

No >> Go To 2

2. CHECK THE GEAR SHIFT CABLE FOR PROPER ADJUSTMENT

Check the Gear shift cable adjustment per the Service Information.

Also check the cable for possible binding or improperly routed.

Is the Gear shift cable properly adjusted and not binding or improperly routed?

Yes >> Go To 3

No >> Adjust the Shifter Assembly per the Service Information.

Perform 42RLE TRANSMISSION VERIFICATION TEST - VER 1. (Refer to 21 - TRANSMISSION/TRANSAXLE/AUTOMATIC - 42RLE - STANDARD PROCEDURE)

3. CHECK CUSTOMER DRIVING HABIT

This DTC can be set if the customer does not move the shift lever completely into the OD position (in between gears) causing the manual valve to be in the T2 position.

When this occurs, the feed port to the clutch is restricted, the transmission will declare neutral, and this DTC will set.

This DTC can also be set by simply bumping the shift lever toward neutral while accelerating.

With the scan tool, check the DTC EVENT DATA to help identify the conditions in which the DTC was set.

If there are no possible causes remaining, view repair.

Repair

This DTC can be set by the shift lever in the wrong position or not completely in the OD position. Make sure the customer is properly informed.

Perform 42RLE TRANSMISSION VERIFICATION TEST - VER 1. (Refer to 21 - TRANSMISSION/TRANSAXLE/AUTOMATIC - 42RLE - STANDARD PROCEDURE)

P1745-TRANSMISSION LINE PRESSURE TOO HIGH FOR TOO LONG

For a complete wiring diagram **Refer to Section 8W**

- **When Monitored:**
  Continuously with ignition on.
- **Set Condition:**
  If the transmission has been operating in an open-loop line pressure control for 3220 kilometers (2000 miles) or 1000 2-3 upshifts.

Possible Causes
LINE PRESSURE DTCS PRESENT

Always perform the 42RLE Pre-Diagnostic Troubleshooting procedure before proceeding. (Refer to 21 - TRANSMISSION/TRANSAXLE/AUTOMATIC - 42RLE - STANDARD PROCEDURE)

Theory of Operation

This DTC is an informational DTC to inform the technician that transmission has been operating in an open-loop line pressure control for 3220 kilometers (2000 miles) or 1000 2-3 upshifts resulting from a Line Pressure DTC. The 42RLE Transmission is not designed to operate in open-loop line pressure control for an extended period time. This DTC is intended to protect the transmission. If the DTC sets, the transmission controller will place the transmission into limp-in mode.

Diagnostic Test

1. CHECK FOR RELATED DTC'S

With the scan tool, check for Transmission Line Pressure DTCs.

View repair

Repair

Refer to the Transmission category and perform the appropriate symptom. (Refer to 21 - TRANSMISSION/TRANSAXLE/AUTOMATIC - 42RLE - DIAGNOSIS AND TESTING)

P1775-SOLENOID SWITCH VALVE LATCHED IN TCC POSITION

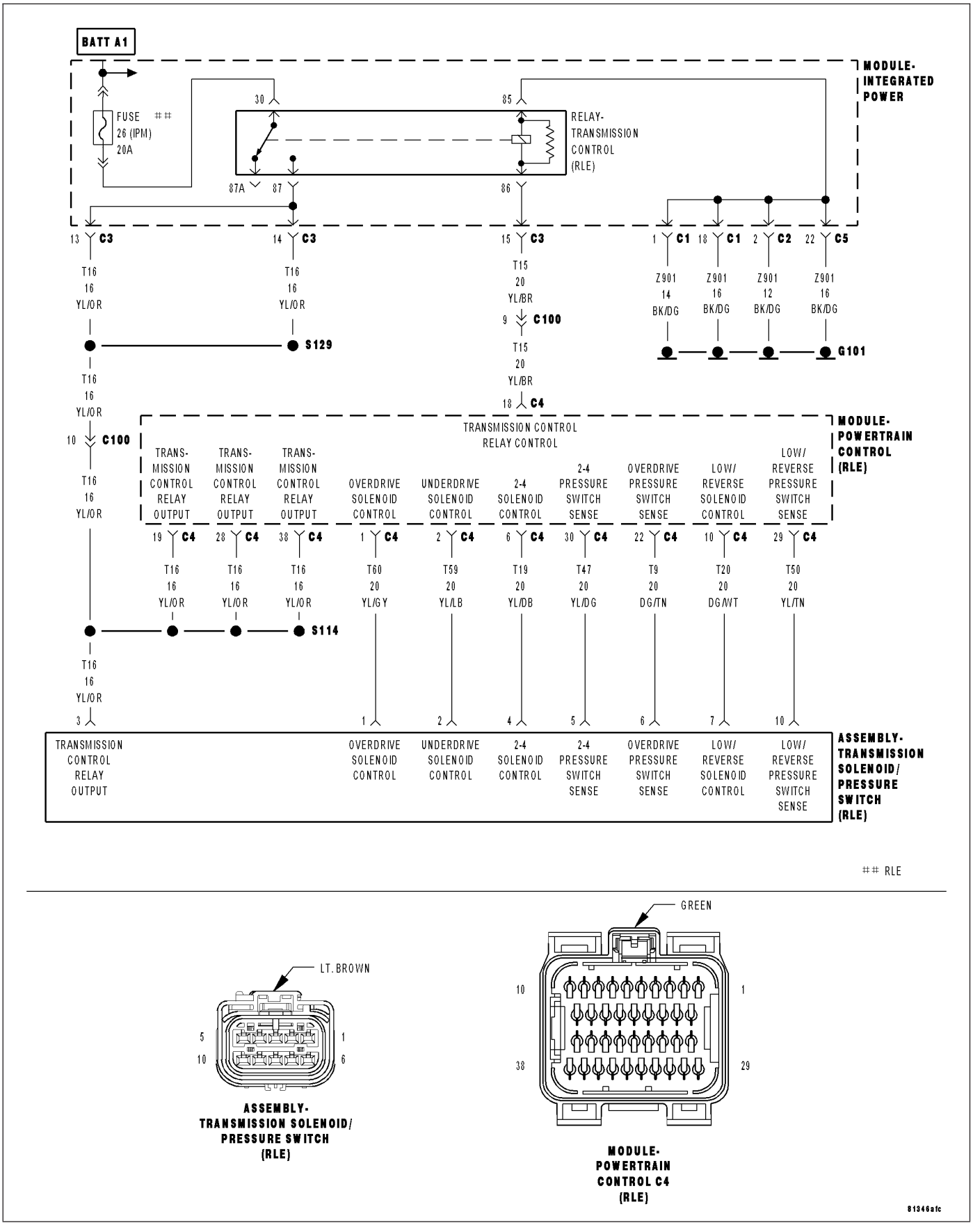

For a complete wiring diagram **Refer to Section 8W**.

- **When Monitored:**
  Prior to a shift into 1st gear.
- **Set Condition:**
  Transmission temperature must be HOT. DTC is set after six unsuccessful attempts to shift into 1st gear.

Possible Causes
RELATED DTC P0841 PRESENT
(T16) TRANSMISSION CONTROL RELAY OUTPUT CIRCUIT OPEN
(T50) L/R PRESSURE SWITCH SENSE CIRCUIT OPEN
(T50) L/R PRESSURE SWITCH SENSE CIRCUIT SHORT TO GROUND
(T50) L/R PRESSURE SWITCH SENSE CIRCUIT SHORT TO VOLTAGE
INTERNAL TRANSMISSION
POWERTRAIN CONTROL MODULE

Always perform the 42RLE Pre-Diagnostic Troubleshooting Procedure before proceeding. (Refer to 21 - TRANSMISSION/TRANSAXLE/AUTOMATIC - 42RLE - STANDARD PROCEDURE)

Theory of Operation

The Solenoid Switch Valve, an internal, hydraulically operated valve, controls the direction of the transmission fluid when the LR solenoid is energized. When the solenoid switch valve is in the downshifted position and the LR solenoid is energized, fluid is directed to the LR element for 1st gear. When the solenoid switch valve is In the upshifted position (2nd, 3rd, and 4th gear) and the LR solenoid is energized, fluid is directed into the Lockup Switch Valve which controls the Torque Converter Clutch. When shifting into 1st gear, a special sequence is followed to insure solenoid switch valve movement into the downshifted position. The LR pressure switch is monitored to confirm switch valve movement. If the solenoid switch valve movement is not confirmed (i.e. no LR pressure when the LR solenoid is energized), 2nd gear is substituted for 1st. No 1st gear (2nd gear is substituted). The transmission Torque converter FEMCC operation is inhibited. MIL on after 5 min. of substituted operation.

Diagnostic Test

1. DETERMINING IF RELATED DTCS ARE PRESENT

With the scan tool, check for other Transmission DTCs.

Is the DTC P0841 present also?

Yes >> Refer to the Transmission category and perform the appropriate diagnostic procedure.

No >> Go To 2

2. CHECK TO SEE IF DTC P1775 IS CURRENT

With the scan tool, check the STARTS SINCE SET counter for P1775.

NOTE: This counter only applies to the last DTC set.

Is the STARTS SINCE SET counter 2 or less?

Yes >> Go To 3

No >> Go To 9

3. PCM AND WIRING

Turn the ignition off to the lock position.

Remove the Starter Relay.

CAUTION: Removal of the Starter Relay is to prevent a Transmission, NO RESPONSE, condition and disable the starter.

Install the Transmission Simulator, Miller tool #8333 and the Electronic Transmission Adapter kit 8333-1A.

Ignition on, engine not running.

With the Transmission Simulator, turn the Pressure Switch selector switch to LR.

With the scan tool, monitor the LR Pressure Switch State while pressing the Pressure Switch Test button.

Did the Pressure Switch state change from open to closed when the test button was pressed?

Yes >> Go To 4

No >> Go To 5

4. INTERNAL TRANSMISSION

If there are no possible causes remaining, view repair.

Repair

Repair internal transmission as necessary per the Service Information. Inspect the Solenoid Switch Valve per the Service Information and repair or replace as necessary. If no problems are found, replace the Transmission Solenoid/Pressure Switch Assembly.

Perform 42RLE TRANSMISSION VERIFICATION TEST - VER 1. (Refer to 21 - TRANSMISSION/ TRANSAXLE/AUTOMATIC - 42RLE - STANDARD PROCEDURE)

5. (T16) TRANSMISSION CONTROL RELAY OUTPUT CIRCUIT OPEN

Turn the ignition off to the lock position.

Disconnect the Transmission Solenoid/Pressure Switch Assembly harness connector.

Remove the Transmission Control Relay.

Connect a jumper wire between the (A104) Fused B+ circuit and the (T16) Transmission Control Relay Output circuit.

NOTE: Check connectors - Clean/repair as necessary.

CAUTION: Do not probe the PCM harness connectors. Probing the PCM harness connectors will damage the PCM terminals resulting in poor terminal to pin connection. Install Miller Special Tool #8815 to perform diagnosis.

Disconnect the PCM C4 harness connector.

Remove the Starter Relay.

Using a 12-volt test light connected to ground, check all (T16) Transmission Control Relay Output circuits in the appropriate terminals of special tool #8815.

NOTE: The test light must illuminate brightly. Compare the brightness to that of a direct connection to the battery.

Does the test light illuminate brightly on all Transmission Control Relay Output circuits?

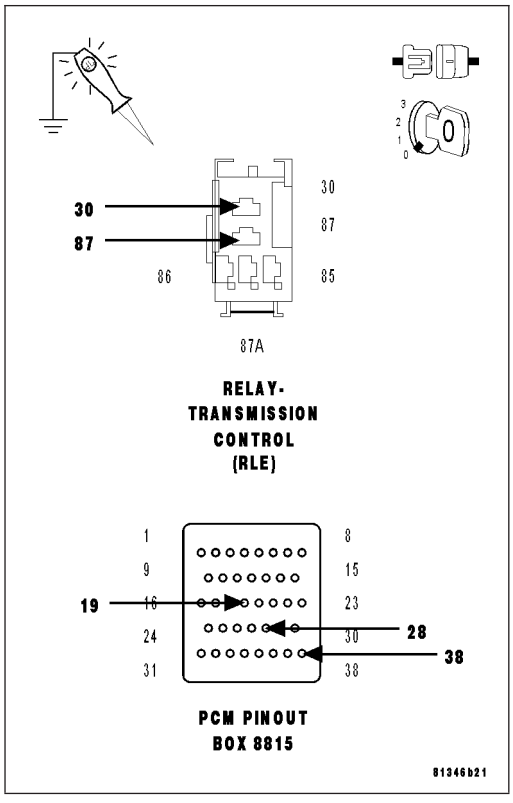

Yes >> Go To 6

No >> Repair the (T16) Transmission Control Relay Output circuit for an open.

Perform 42RLE TRANSMISSION VERIFICATION TEST - VER 1. (Refer to 21 - TRANSMISSION/ TRANSAXLE/AUTOMATIC - 42RLE - STANDARD PROCEDURE)

6. (T50) LR PRESSURE SWITCH SENSE CIRCUIT OPEN

Turn the ignition off to the lock position.

Disconnect the PCM C4 harness connector.

Disconnect the Transmission Solenoid/Pressure Switch Assembly harness connector.

NOTE: Check connectors - Clean/repair as necessary.

CAUTION: Do not probe the PCM harness connectors. Probing the PCM harness connectors will damage the PCM terminals resulting in poor terminal to pin connection. Install Miller Special Tool #8815 to perform diagnosis.

Measure the resistance of the (T50) LR Pressure Switch Sense circuit from the appropriate terminal of special tool #8815 to the Transmission Solenoid/Pressure Switch Assembly harness connector.

Is the resistance above 5.0 ohms?

Yes >> Repair the (T50) LR Pressure Switch Sense circuit for an open.

Perform 42RLE TRANSMISSION VERIFICATION TEST - VER 1. (Refer to 21 - TRANSMISSION/TRANSAXLE/AUTOMATIC - 42RLE - STANDARD PROCEDURE)

No >> Go To 7

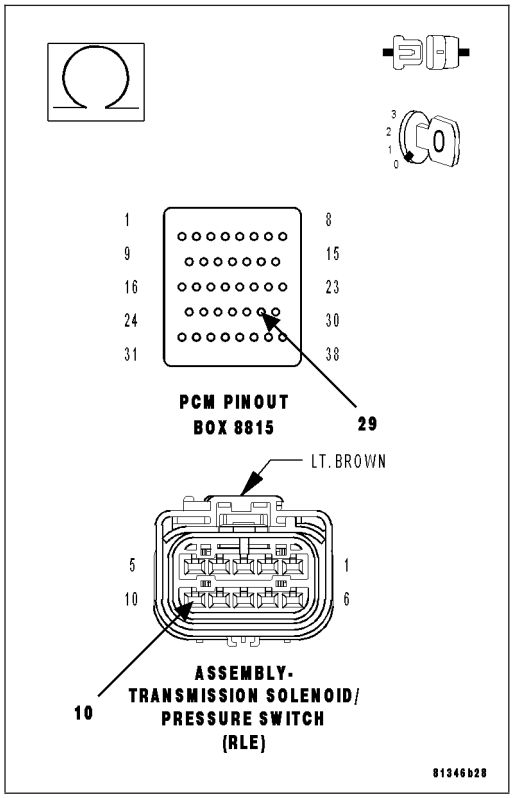

7. (T50) LR PRESSURE SWITCH SENSE CIRCUIT SHORT TO GROUND

Turn the ignition off to the lock position.

Disconnect the PCM C4 harness connector.

Disconnect the Transmission Solenoid/Pressure Switch Assembly harness connector.

NOTE: Check connectors - Clean/repair as necessary.

Measure the resistance between ground and the (T50) LR Pressure Switch Sense circuit.

Is the resistance below 5.0 ohms?

Yes >> Repair the (T50) LR Pressure Switch Sense circuit for a short to ground.

Perform 42RLE TRANSMISSION VERIFICATION TEST - VER 1. (Refer to 21 - TRANSMISSION/TRANSAXLE/AUTOMATIC - 42RLE - STANDARD PROCEDURE)

No >> Go To 8

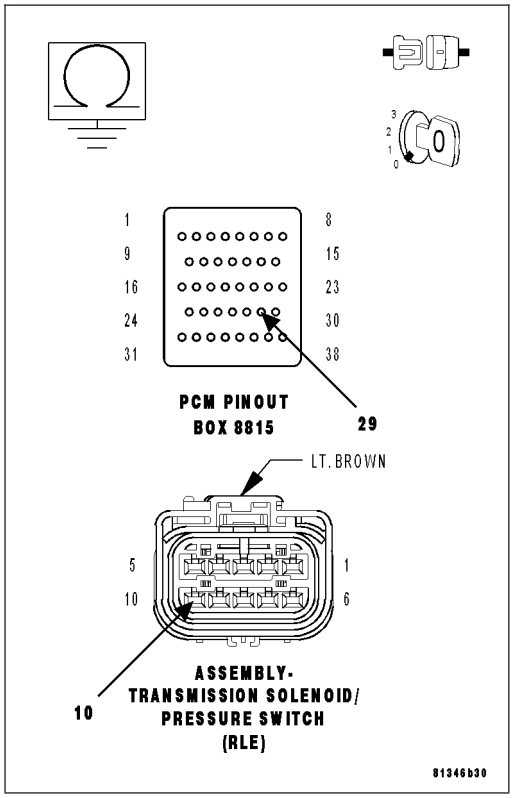

8. (T50) LR PRESSURE SWITCH SENSE CIRCUIT SHORT TO VOLTAGE

Turn the ignition off to the lock position.

Disconnect the PCM C4 harness connector.

Disconnect the Transmission Solenoid/Pressure Switch Assembly harness connector.

Remove the Transmission Control Relay.

NOTE: Check connectors - Clean/repair as necessary.

Connect a jumper wire between the (Internal) Fused B+ circuit and (T16) Transmission Control Relay Output circuit in the Transmission Control Relay connector.

Ignition on, engine not running.

Measure the voltage of the (T50) LR Pressure Switch Sense circuit.

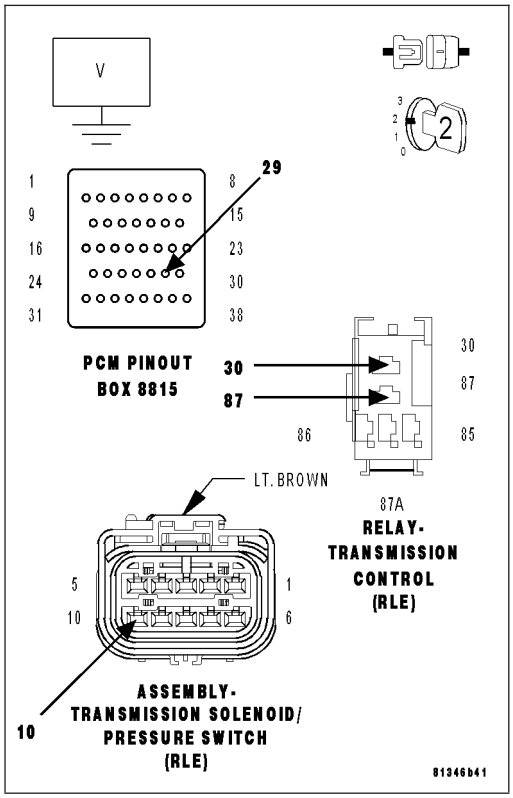

Is the voltage above 0.5 volts?

Yes >> Repair the (T50) LR Pressure Switch Sense circuit for a short to voltage.

Perform 42RLE TRANSMISSION VERIFICATION TEST - VER 1. (Refer to 21 - TRANSMISSION/TRANSAXLE/AUTOMATIC - 42RLE - STANDARD PROCEDURE)

No >> Using the schematics as a guide, check the Powertrain Control Module (PCM) terminals for corrosion, damage, or terminal push out. Pay particular attention to all power and ground circuits. If no problems are found, replace the PCM per the Service Information. With the scan tool PERFORM QUICK LEARN, then program Pinion Factor in the Front Control Module. (Refer to 8 - ELECTRICAL/ELECTRONIC CONTROL MODULES/POWERTRAIN CONTROL MODULE - REMOVAL)

Perform 42RLE TRANSMISSION VERIFICATION TEST - VER 1. (Refer to 21 - TRANSMISSION/TRANSAXLE/AUTOMATIC - 42RLE - STANDARD PROCEDURE)

9. INTERMITTENT WIRING AND CONNECTORS

The conditions necessary to set this DTC are not present at this time.

Test drive and verify if the transmission is launching in 2nd gear and/or no TCC engagement.

With the scan tool, check the EATX DTC EVENT DATA to help identify the conditions in which the DTC was set.

Are there 2nd gear launches and/or no TCC engagement?

Yes >> Disassemble and inspect the Valve Body per the Service Information and repair or replace as necessary. If no problems are found in the Valve Body, replace the Transmission Solenoid Pressure Switch Assembly.

Perform 42RLE TRANSMISSION VERIFICATION TEST - VER 1. (Refer to 21 - TRANSMISSION/TRANSAXLE/AUTOMATIC - 42RLE - STANDARD PROCEDURE)

No >> Test Complete.

P1776-SOLENOID SWITCH VALVE LATCHED IN LR POSITION

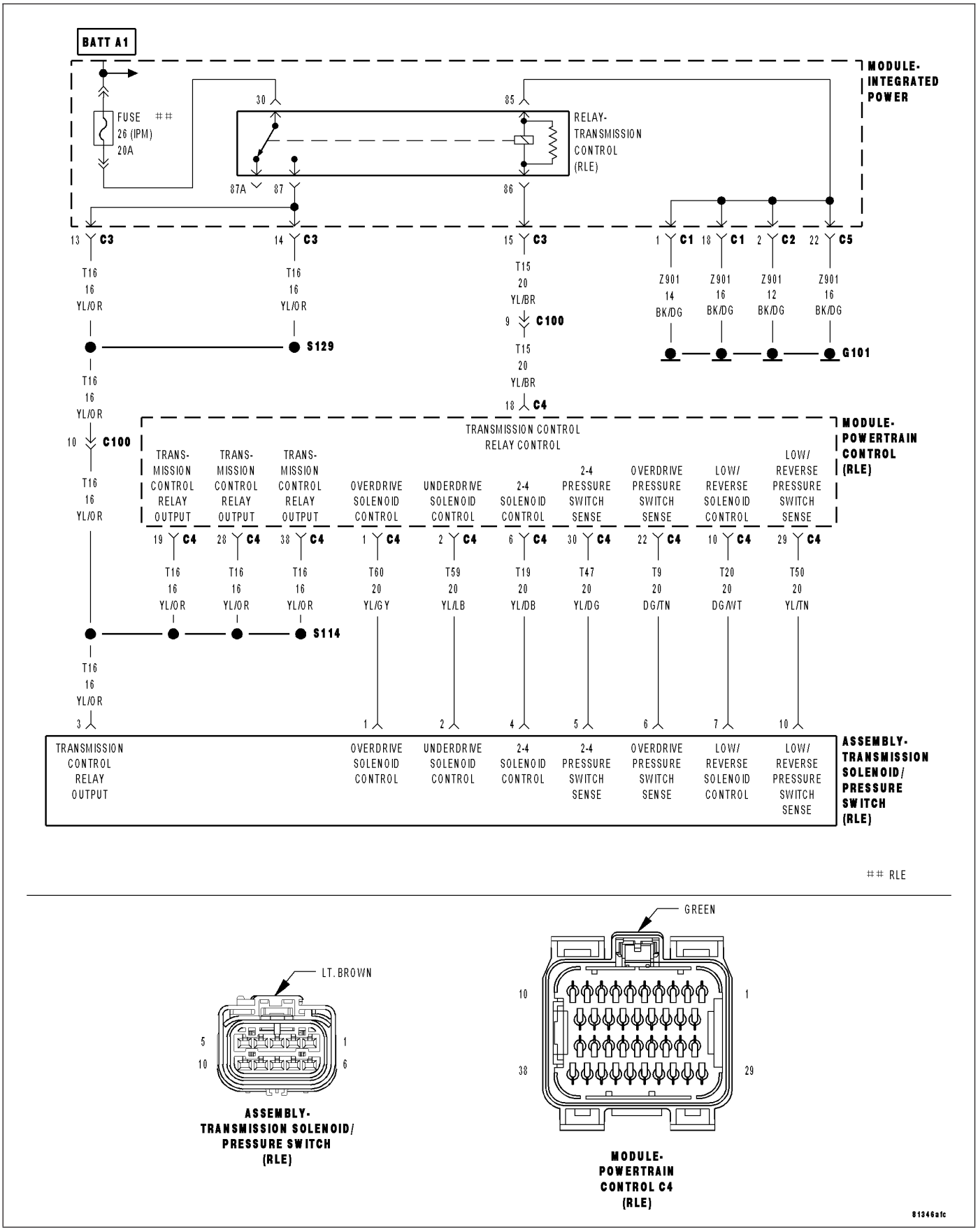

For a complete wiring diagram **Refer to Section 8W**.

- **When Monitored:**
  Every 7 ms when doing PEMCC or FEMCC.
- **Set Condition:**
  Must be in partial or full EMCC. The DTC is set if LR pressure is detected high for the fourth time.

Possible Causes
RELATED DTC P0841 PRESENT
DTC EVENT DATA SHOWS TRS CODE TR2 - SHIFT LEVER OR MANUAL CONTROL VALVE IN A INVALID POSITION
SHIFTER CABLE OUT OF ADJUSTMENT
SOLENOID SWITCH VALVE STICKING IN ITS BORE
(T50) L/R PRESSURE SWITCH SENSE CIRCUIT OPEN
(T50) L/R PRESSURE SWITCH SENSE CIRCUIT SHORT TO GROUND
(T50) L/R PRESSURE SWITCH SENSE CIRCUIT SHORT TO VOLTAGE
VALVE BODY
POWERTRAIN CONTROL MODULE

Always perform the 42RLE Pre-Diagnostic Troubleshooting Procedure before proceeding. (Refer to 21 - TRANSMISSION/TRANSAXLE/AUTOMATIC - 42RLE - STANDARD PROCEDURE)

Theory of Operation

The Solenoid Switch Valve, an internal, hydraulically operated valve, controls the direction of the transmission fluid when the LR solenoid is energized. When the solenoid switch valve is in the downshifted position and the LR solenoid is energized, fluid is directed to the LR element for 1st gear. When the solenoid switch valve is In the upshifted position (2nd, 3rd, and 4th gear) and the LR solenoid is energized, fluid is directed into the Lockup Switch Valve which controls the Torque Converter Clutch. When doing PEMCC or FEMCC, the LR pressure switch should indicate no pressure if the solenoid switch valve is in the LR position. If the LR pressure switch indicates pressure for some time while in partial or full EMCC, the EMCC operation is aborted and momentarily inhibited to avoid accidental application of the LR clutch. EMCC is attempted again when there is no LR pressure. The fourth detection of LR pressure while in PEMCC or FEMCC will result in setting the DTC.Torque converter EMCC operation inhibited. MIL on after 5 min. of substituted operation.

Diagnostic Test

1. DETERMINING IF RELATED DTCS ARE PRESENT

With the scan tool, check for other Transmission DTCs.

Is the DTC P0841 present also?

Yes >> Refer to the Transmission category and perform the appropriate diagnostic procedure.

No >> Go To 2

2. CHECK THE DTC EVENT DATA FOR TRS CODE TR2

With the scan tool, check the DTC EVENT DATA for P1776.

Does the DTC EVENT DATA show a TRS Code of TR2?

Yes >> This indicates the shift lever and the manual control valve were in an invalid position between Neutral and OD. Check the shifter cable for: proper adjustment, binding, friction, improper routing, or the shifter was moved in transit. Repair as necessary.

Perform 42RLE TRANSMISSION VERIFICATION TEST - VER 1. (Refer to 21 - TRANSMISSION/TRANSAXLE/AUTOMATIC - 42RLE - STANDARD PROCEDURE)

No >> Go To 3

3. CHECK TO SEE IF DTC P1776 IS CURRENT

With the scan tool, check the STARTS SINCE SET counter for P1776.

NOTE: This counter only applies to the last DTC set.

Is the status Active or is the STARTS SINCE SET counter 2 or less for this DTC?

Yes >> Go To 4

No >> Go To 9

4. CHECK THE PCM AND WIRING USING THE TRANSMISSION SIMULATOR

Turn the ignition off to the lock position.

Remove the Starter Relay.

CAUTION: Removal of the Starter Relay is to prevent a Transmission, NO RESPONSE, condition and disable the starter.

Install the Transmission Simulator, Miller tool #8333 and the Electronic Transmission Adapter kit 8333-1A.

Ignition on, engine not running.

With the Transmission Simulator, turn the Pressure Switch selector switch to LR.

With the scan tool, monitor the LR Pressure Switch State while pressing the Pressure Switch Test button.

Did the Pressure Switch state change from open to closed when the test button was pressed?

Yes >> Go To 5

No >> Go To 6

5. CHECK THE SOLENOID SWITCH VALVE FOR STICKING

Remove the transmission oil pan and Valve body and inspect the Solenoid Switch Valve for sticking in its bore, repair or replace as necessary.

NOTE: This DTC may be caused by debris lodged in the Transmission Solenoid Switch Valve bore. If debris is found, clean the valve body and reassemble the transmission per the Service Information.

With the scan tool, record the DTC EVENT DATA for P1776 and erase DTCs.

Reassemble the transmission and test drive the vehicle. Try to duplicate the original set conditions using the DTC EVENT DATA recorded earlier.

With the scan tool, check Transmission DTCs.

Did the DTC P1776 reset?

Yes >> Replace the Transmission Solenoid Assembly per the Service Information.
Perform 42RLE TRANSMISSION VERIFICATION TEST - VER 1. (Refer to 21 - TRANSMISSION/ TRANSAXLE/AUTOMATIC - 42RLE - STANDARD PROCEDURE)

No >> Test Complete
Perform 42RLE TRANSMISSION VERIFICATION TEST - VER 1. (Refer to 21 - TRANSMISSION/ TRANSAXLE/AUTOMATIC - 42RLE - STANDARD PROCEDURE)

6. CHECK THE (T50) LR PRESSURE SWITCH SENSE CIRCUIT FOR AN OPEN

Turn the ignition off to the lock position.

Disconnect the PCM C4 harness connector.

Disconnect the Transmission Solenoid/Pressure Switch Assembly harness connector.

NOTE: Check connectors - Clean/repair as necessary.

CAUTION: Do not probe the PCM harness connectors. Probing the PCM harness connectors will damage the PCM terminals resulting in poor terminal to pin connection. Install Miller tool #8815 to perform diagnosis.

Measure the resistance of the (T50) LR Pressure Switch Sense circuit betweem the appropriate terminal of Miller tool #8815 and the Transmission Solenoid/Pressure Switch Assembly harness connector.

Is the resistance above 5.0 ohms?

Yes >> Repair the (T50) LR Pressure Switch Sense circuit for an open.

Perform 42RLE TRANSMISSION VERIFICATION TEST - VER 1. (Refer to 21 - TRANSMISSION/TRANSAXLE/AUTOMATIC - 42RLE - STANDARD PROCEDURE)

No >> Go To 7

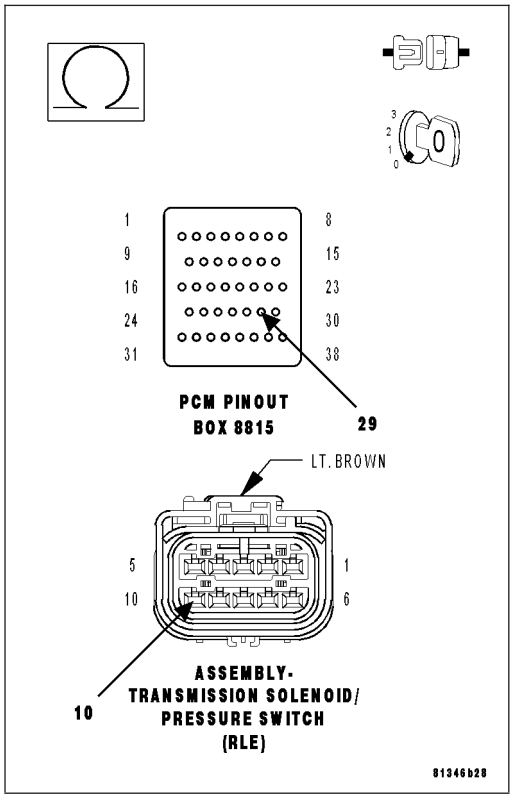

7. CHECK THE (T50) LR PRESSURE SWITCH SENSE CIRCUIT FOR A SHORT TO GROUND

Measure the resistance between ground and the (T50) LR Pressure Switch Sense circuit.

Is the resistance below 5.0 ohms?

Yes >> Repair the (T50) LR Pressure Switch Sense circuit for a short to ground.

Perform 42RLE TRANSMISSION VERIFICATION TEST - VER 1. (Refer to 21 - TRANSMISSION/TRANSAXLE/AUTOMATIC - 42RLE - STANDARD PROCEDURE)

No >> Go To 8

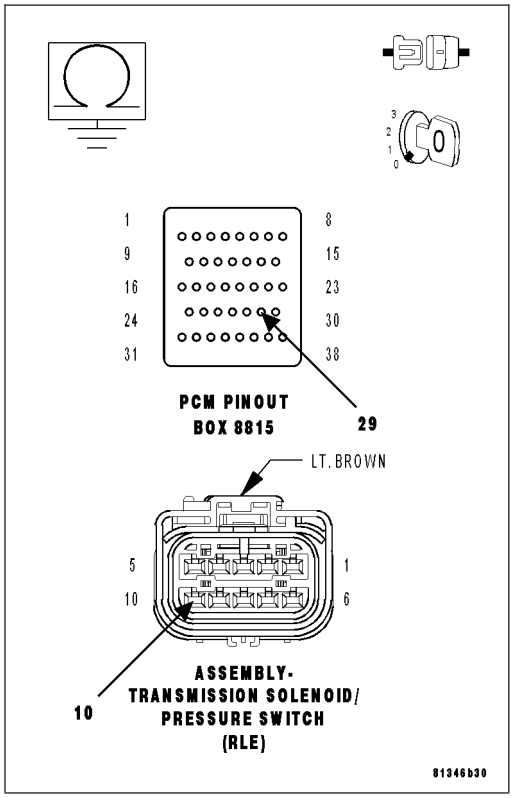

8. CHECK THE (T50) LR PRESSURE SWITCH SENSE CIRCUIT FOR A SHORT TO VOLTAGE

Remove the Transmission Control Relay.

Connect a jumper wire between the (Internal) Fused B+ circuit and (T16) Transmission Control Relay Output circuit in the Transmission Control Relay connector.

Ignition on, engine not running.

Measure the voltage of the (T50) LR Pressure Switch Sense circuit.

Is the voltage above 0.5 volts?

Yes >> Repair the (T50) LR Pressure Switch Sense circuit for a short to voltage.

Perform 42RLE TRANSMISSION VERIFICATION TEST - VER 1. (Refer to 21 - TRANSMISSION/TRANSAXLE/AUTOMATIC - 42RLE - STANDARD PROCEDURE)

No >> Using the schematics as a guide, check the Powertrain Control Module (PCM) terminals for corrosion, damage, or terminal push out. Pay particular attention to all power and ground circuits. Check for Service Information Tune-ups or Service Bulletins for any possible causes that may apply. If no problems are found, replace the PCM per the Service Information. With the scan tool, perform QUICK LEARN.

Perform 42RLE TRANSMISSION VERIFICATION TEST - VER 1. (Refer to 21 - TRANSMISSION/TRANSAXLE/AUTOMATIC - 42RLE - STANDARD PROCEDURE)

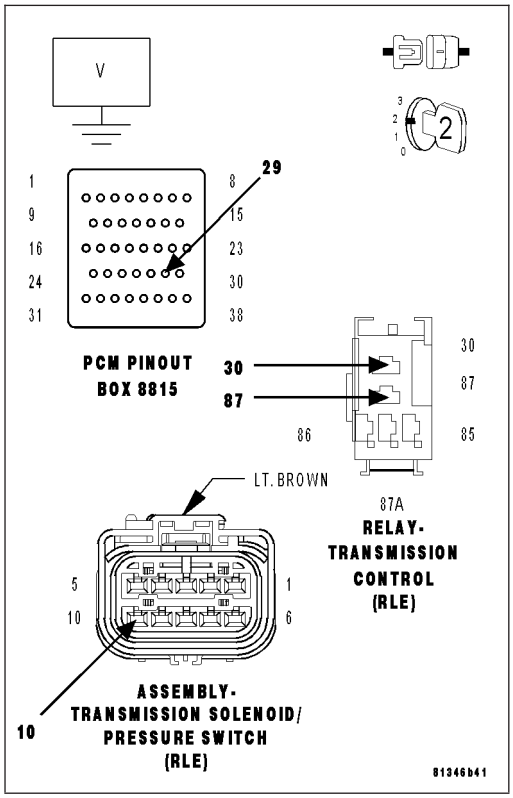

9. INTERMITTENT WIRING AND CONNECTORS

The conditions necessary to set this DTC are not present at this time.

Test Drive the vehicle and verify if the transmission is launching in 2nd gear and/or there is no TCC engagement.

With the scan tool, check the EATX EVENT DATA to help identify the conditions in which the DTC was set.

Check for any Service Information Tune-ups or Service Bulletins for possible causes that may apply.

Are there 2nd gear launches and/or no TCC engagement?

Yes >> Disassemble and inspect the Valve Body per the Service Information Inspect the Solenoid Switch Valve for sticking in its bore and repair or replace as necessary.

Perform 42RLE TRANSMISSION VERIFICATION TEST - VER 1. (Refer to 21 - TRANSMISSION/TRANSAXLE/AUTOMATIC - 42RLE - STANDARD PROCEDURE)

No >> Test Complete.

P1790-FAULT IMMEDIATELY AFTER SHIFT

For a complete wiring diagram **Refer to Section 8W**.

- **When Monitored:**
  After a Gear Ratio Error code is stored.
- **Set Condition:**
  After a Gear Ratio Error DTC has already been set. The DTC is set if the fault happened within 1.3 seconds of a shift. The DTC set time will vary from 1.214 seconds to 15 seconds.

Possible Causes
FAULT AFTER SHIFT

Always perform the 42RLE Pre-Diagnostic Troubleshooting Procedure before proceeding. (Refer to 21 - TRANSMISSION/TRANSAXLE/AUTOMATIC - 42RLE - STANDARD PROCEDURE)

Theory of Operation

This DTC is not stored alone. It is stored if a Gear Ratio DTC is detected immediately after shift. The existence of DTC P1790 indicates a mechanical or hydraulic (not electrical) related problems. It should be noted, however, that all mechanical problems don't necessarily result in DTC P1790. When this DTC exists, diagnosing the system should be based on the associated DTC and only mechanical causes should be considered.

Diagnostic Test

1. FAULT AFTER SHIFT

This DTC is set along with a Gear Ratio DTC. Perform the appropriate test for the Gear Ratio DTC stored.

NOTE: Check Pending DTCs or 1 trip failures if there are no Active or Stored Gear Ratio DTCs.

View repair.

Repair

Refer to the Transmission category and perform the appropriate diagnostic procedure.

Perform 42RLE TRANSMISSION VERIFICATION TEST - VER 1. (Refer to 21 - TRANSMISSION/TRANSAXLE/AUTOMATIC - 42RLE - STANDARD PROCEDURE)

P1794-SPEED SENSOR GROUND ERROR

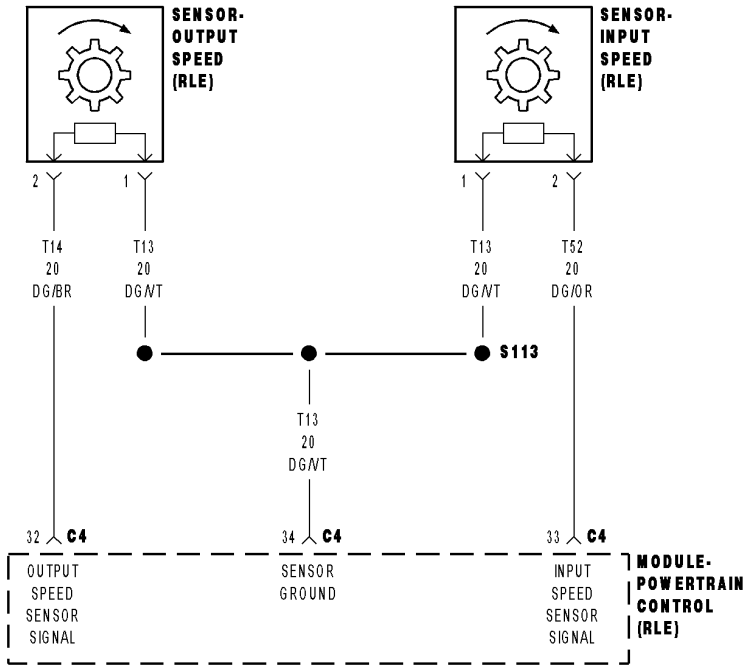

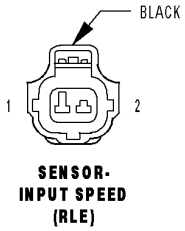

SENSOR-
INPUT SPEED
(RLE)

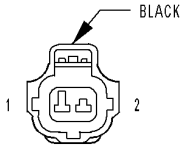

SENSOR-
OUTPUT SPEED
(RLE)

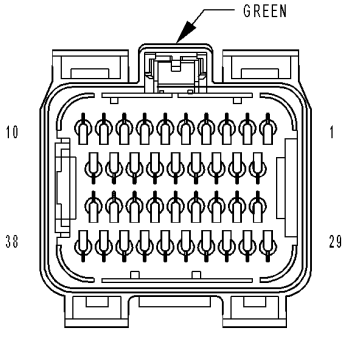

MODULE-
POWERTRAIN
CONTROL C4
(RLE)

8133d404

For a complete wiring diagram **Refer to Section 8W**.

- **When Monitored:**
  Every 7ms after a controler reset with transmission range in neutral.
- **Set Condition:**
  After a PCM reset in neutral and Input/Output Ratio equals a ratio of 2.50 to 1.0 ± 50.0 RPM.

Possible Causes
SPEED SENSOR GROUND CIRCUIT OPEN
POWERTRAIN CONTROL MODULE

Always perform the 42RLE Pre-Diagnostic Troubleshooting Procedure before proceeding. (Refer to 21 - TRANSMISSION/TRANSAXLE/AUTOMATIC - 42RLE - STANDARD PROCEDURE)

Theory of Operation

The two speed sensors in the transmission system and use a common ground circuit. The loss of this common ground results in the input signal being sensed by both sensors. After a reset and in neutral, and observing a certain Output/Input ratio will increment the Speed Check Fault Counter. Because the speed sensors and the thermistor share the same ground wire, this DTC may indicate a loss of the common speed sensor ground. In some cases this fault will cause a Gear Ratio Error DTC to be set.

Diagnostic Test

1. PCM AND WIRING

Turn the ignition off to the lock position.

Remove the Starter Relay.

CAUTION: Removal of the Starter Relay is to prevent a Transmission, NO RESPONSE, condition and disable the starter.

Install the Transmission Simulator, Miller tool #8333 and the Electronic Transmission Adapter kit 8333-1A.

Ignition on, engine not running.

With the Transmission Simulator, set the ″Input/Output Speed″ switch to ″ON″ and the rotary switch to the ″3000/1250″ position.

With the scan tool, monitor the Input and Output Speed Sensor readings.

Does the Input Speed read 3000 RPM and the Output Speed read 1250 RPM, ± 50 RPM?

Yes >> Go To 2

No >> Go To 3

2. (T13) SPEED SENSOR GROUND CIRCUIT OPEN

Turn the ignition off to the lock position.

Disconnect the PCM C4 harness connector.

Disconnect the Input and Output Speed Sensor harness connectors.

NOTE: Check connectors - Clean/repair as necessary.

CAUTION: Do not probe the PCM harness connectors. Probing the PCM harness connectors will damage the PCM terminals resulting in poor terminal to pin connection. Install Miller Special Tool #8815 to perform diagnosis.

Measure the resistance of the (T13) Speed Sensor Ground circuit from the appropriate terminal of special tool #8815 to the Input and Output Speed Sensor harness connectors.

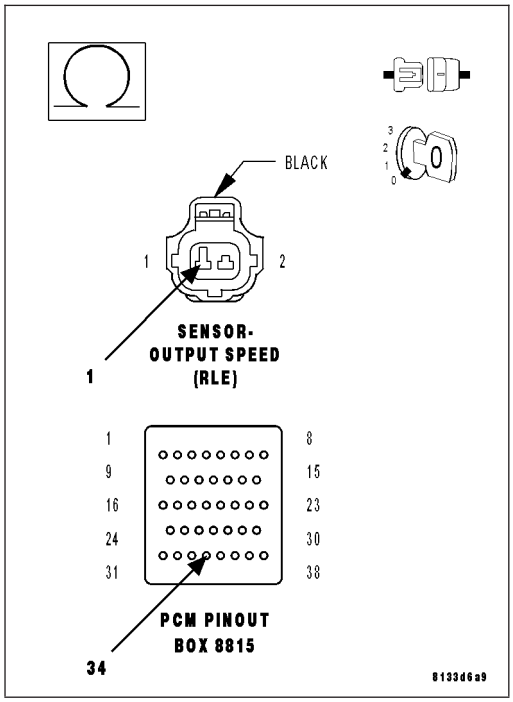

Is the resistance above 5.0 ohms on either circuit?

Yes >> Repair the (T13) Speed Sensor Ground circuit for an open.
Perform 42RLE TRANSMISSION VERIFICATION TEST - VER 1. (Refer to 21 - TRANSMISSION/TRANSAXLE/AUTOMATIC - 42RLE - STANDARD PROCEDURE)

No >> Using the schematics as a guide, check the Powertrain Control Module (PCM) terminals for corrosion, damage, or terminal push out. Pay particular attention to all power and ground circuits. If no problems are found, replace the PCM per the Service Information. With the scan tool PERFORM QUICK LEARN, then program Pinion Factor in the Front Control Module. (Refer to 8 - ELECTRICAL/ELECTRONIC CONTROL MODULES/POWERTRAIN CONTROL MODULE - REMOVAL)
Perform 42RLE TRANSMISSION VERIFICATION TEST - VER 1. (Refer to 21 - TRANSMISSION/TRANSAXLE/AUTOMATIC - 42RLE - STANDARD PROCEDURE)

3. INTERMITTENT WIRING AND CONNECTORS

The conditions necessary to set the DTC are not present at this time.

Using the schematics as a guide, inspect the wiring and connectors specific to this circuit.

Wiggle the wires while checking for shorted and open circuits.

With the scan tool, check the EATX DTC EVENT DATA to help identify the conditions in which the DTC was set.

Were there any problems found?

Yes >> Repair as necessary.
Perform 42RLE TRANSMISSION VERIFICATION TEST - VER 1. (Refer to 21 - TRANSMISSION/TRANSAXLE/AUTOMATIC - 42RLE - STANDARD PROCEDURE)

No >> Test Complete.

P1797-MANUAL SHIFT OVERHEAT

For a complete wiring diagram **Refer to Section 8W**.

- **When Monitored:**
  Continuously with engine running.
- **Set Condition:**
  If the Engine Temperature exceeds 123° C (255° F) or the Transmission Temperature exceeds 135° C (275° F) while in AutoStick® mode. Note: Aggressive driving or driving in low for extended periods of time will set this DTC.

Possible Causes
MANUAL SHIFT OVERHEAT

Always perform the 42RLE Pre-Diagnostic Troubleshooting Procedure before proceeding. (Refer to 21 - TRANSMISSION/TRANSAXLE/AUTOMATIC - 42RLE - STANDARD PROCEDURE)

Theory of Operation

The major cause of heat build up in the transmission is torque converter slip. With the transmission in the Auto-Stick® mode, the torque converter can slip during aggressive driving or heavy loading conditions such as trailer towing or driving up steep grades. In the non autostick mode, internal controller logic prevents the transmission from overheating by managing the shift and EMCC schedule. In the autostick mode, when the transmission or engine temperature approaches an overheat condition, the manual shift overheat DTC sets and the autostick mode is temporarily suspended until the temperature returns to normal.

Diagnostic Test

1. MANUAL SHIFT OVERHEAT

This is an informational DTC only.

With the scan tool, check the EATX DTC EVENT DATA to help identify the conditions in which the DTC was set.

Check the engine and transmission cooling system for proper operation.

Check the Radiator Cooling Fan operation.

Check the Transmission Cooling operation.

Check the Transmission Fluid Level per the Service Information to verify that it is not overfilled.

NOTE: Aggressive driving or driving in low for extended periods of time will set this DTC.

If there are no possible causes remaining, view repair.

Repair

If the Transmission Fluid is low, repair any Transmission Fluid leak as necessary and adjust the Transmission Fluid Level per the Service Information. Refer to Service Information for the related symptoms and repair as necessary.

Perform 42RLE TRANSMISSION VERIFICATION TEST - VER 1. (Refer to 21 - TRANSMISSION/TRANSAXLE/AUTOMATIC - 42RLE - STANDARD PROCEDURE)

U0002 CAN C BUS OFF PERFORMANCE

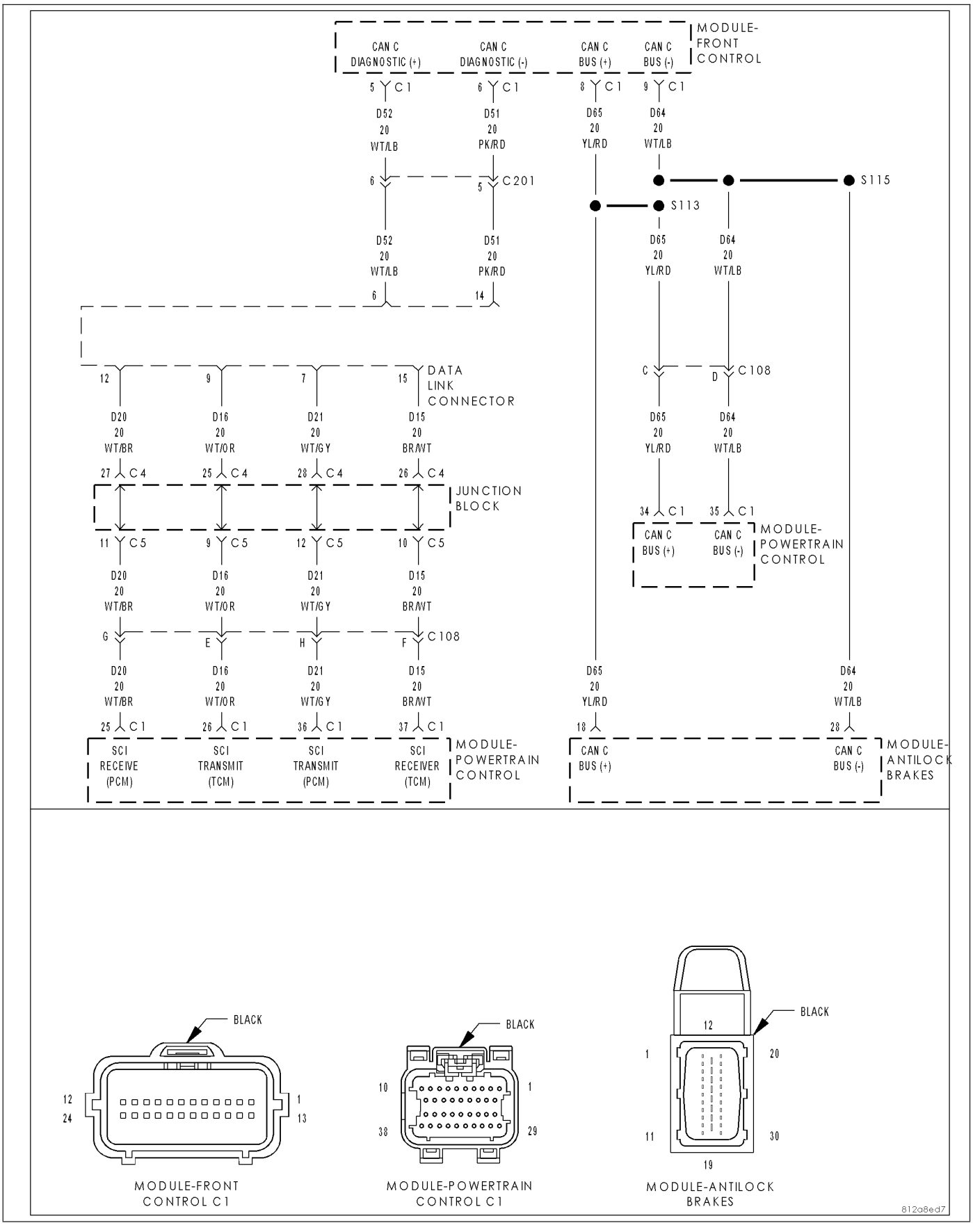

For a complete wiring diagram **Refer to Section 8W**.

- **When Monitored:**
  Every 7 msec with:
  1) Engine speed greater than 500 RPM.
  2) Battery voltage between 10 and 16 volts.
- **Set Condition:**
  CAN C bus messages are not received for 10 seconds.

Theory of Operation

The NGC controller communicates over the CAN C bus. The transmission controller continuously monitors bus activity. The CAN C bus is also used to communicate transmission MIL status to the Engine Controller. If the Engine Controller is unable to communicate with the Transmission Controller, a DTC will set and the Engine Controller will illuminate the MIL.

Diagnose the U0002 CAN C BUS OFF PERFORMANCE as the U0001 CAN C BUS CIRCUIT test in 8-ELECTRICAL/ELECTRONIC CONTROL MODULES - DIAGNOSIS AND TESTING for diagnostic procedures and for further possible causes.

U0100 LOST COMMUNICATION WITH ECM/PCM

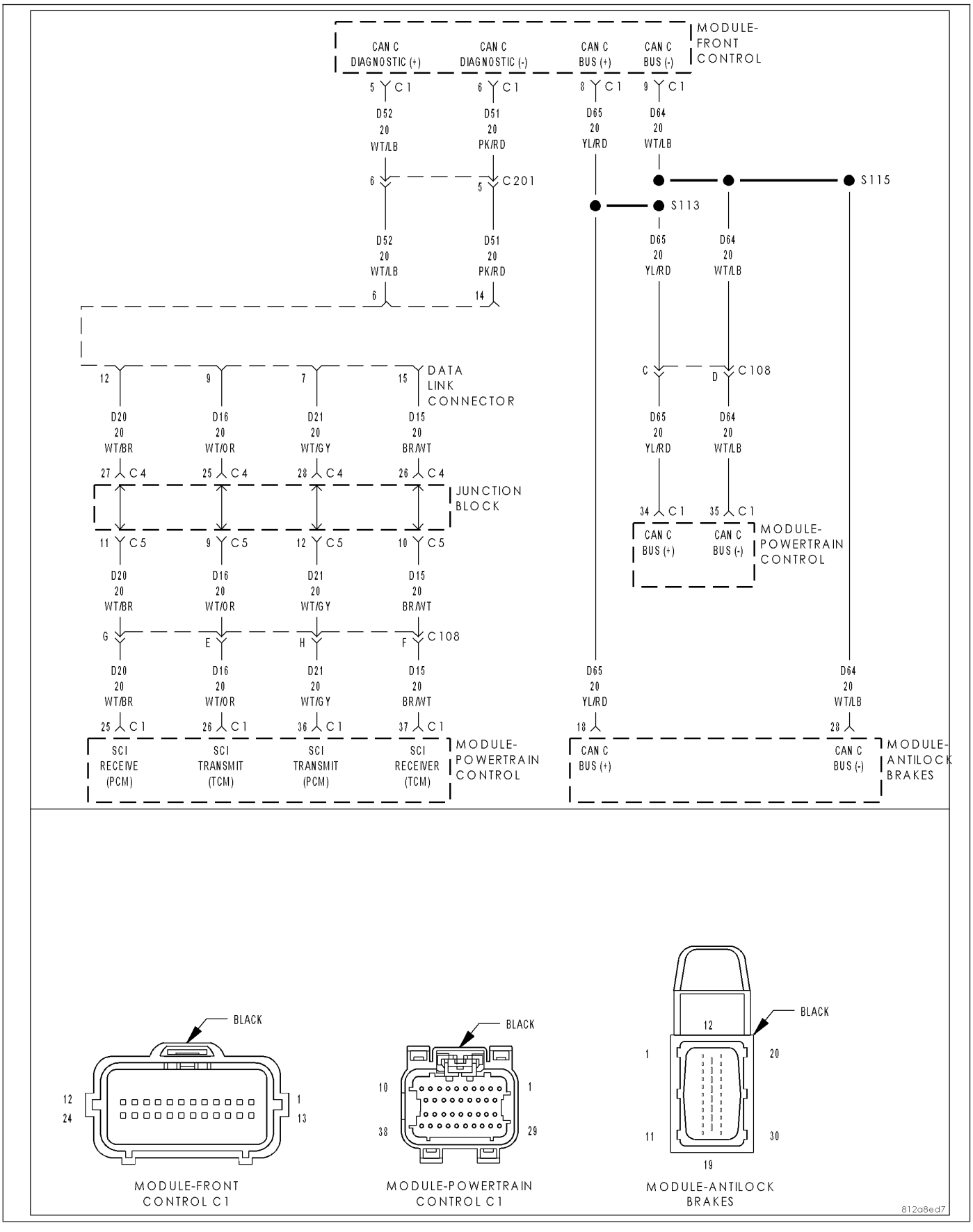

For a complete wiring diagram **Refer to Section 8W**.

- **When Monitored:**
  Every 7 msec with:
  1) Engine speed greater than 500 RPM.
  2) Battery voltage between 10 and 16 volts.
- **Set Condition:**
  CAN C bus messages are not received for 10 seconds.

Theory of Operation

The NGC controller communicates over the CAN C bus. The transmission controller continuously monitors bus activity. The CAN C bus is also used to communicate transmission MIL status to the Engine Controller. If the Engine Controller is unable to communicate with the Transmission Controller, a DTC will set and the Engine Controller will illuminate the MIL.

Refer to 8 - ELECTRICAL/ELECTRONIC CONTROL MODULES - DIAGNOSIS AND TESTING for diagnostic procedures and for further possible causes.

U0121 LOST COMMUNICATION WITH ABS

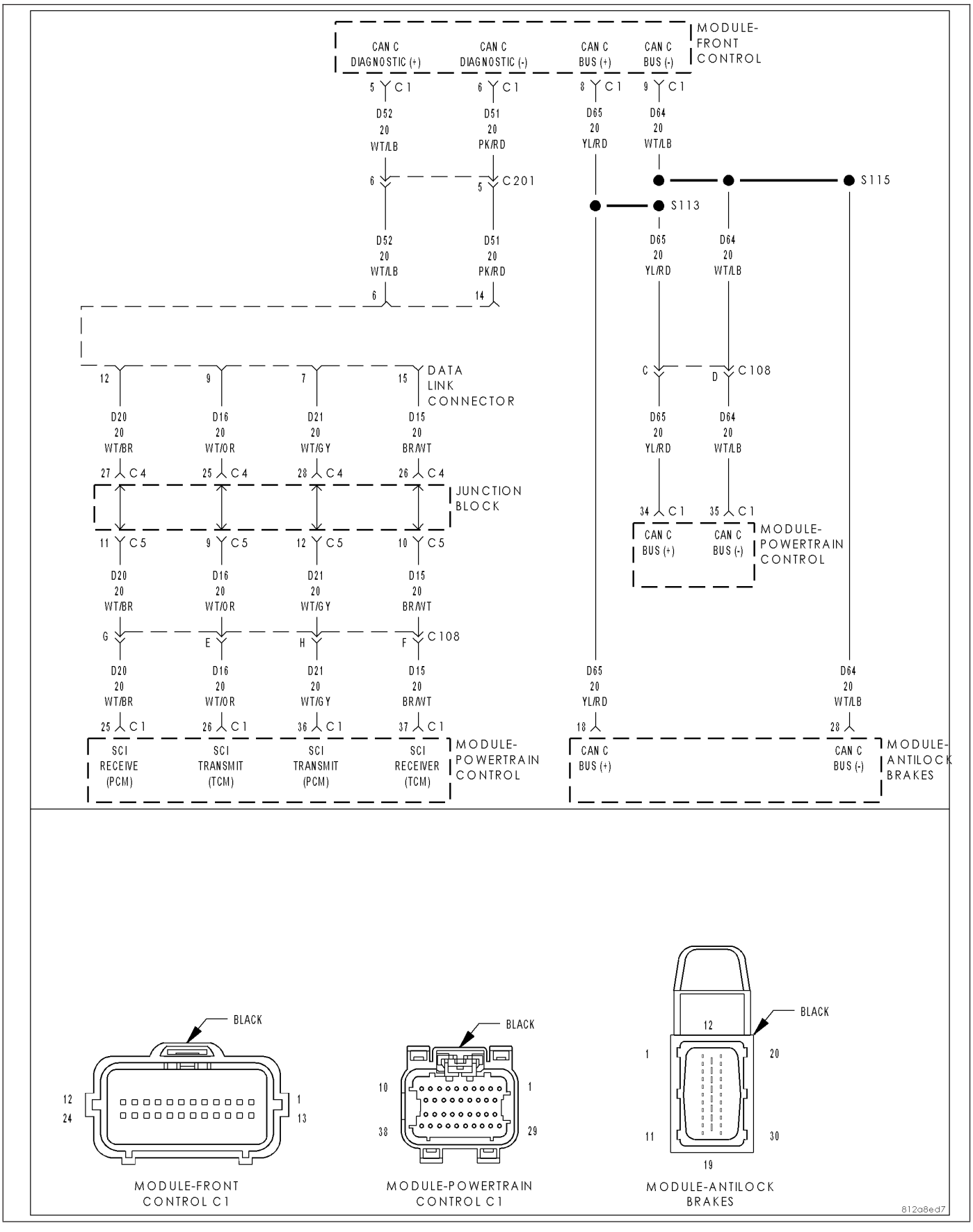

For a complete wiring diagram **Refer to Section 8W**.

- **When Monitored:**
  Every 7 msec with:
  1) Engine speed greater than 500 RPM.
  2) Battery voltage between 10 and 16 volts.
- **Set Condition:**
  CAN C bus messages are not received for 10 seconds.

Theory of Operation

The NGC controller communicates over the CAN C bus. The transmission controller continuously monitors bus activity. The CAN C bus is also used to communicate transmission MIL status to the Engine Controller. If the Engine Controller is unable to communicate with the Transmission Controller, a DTC will set and the Engine Controller will illuminate the MIL.

Refer to 8-ELECTRICAL/ELECTRONIC CONTROL MODULES - DIAGNOSIS AND TESTING for diagnostic procedures and for further possible causes.

U0141 LOST COMMUNICATION WITH FCM

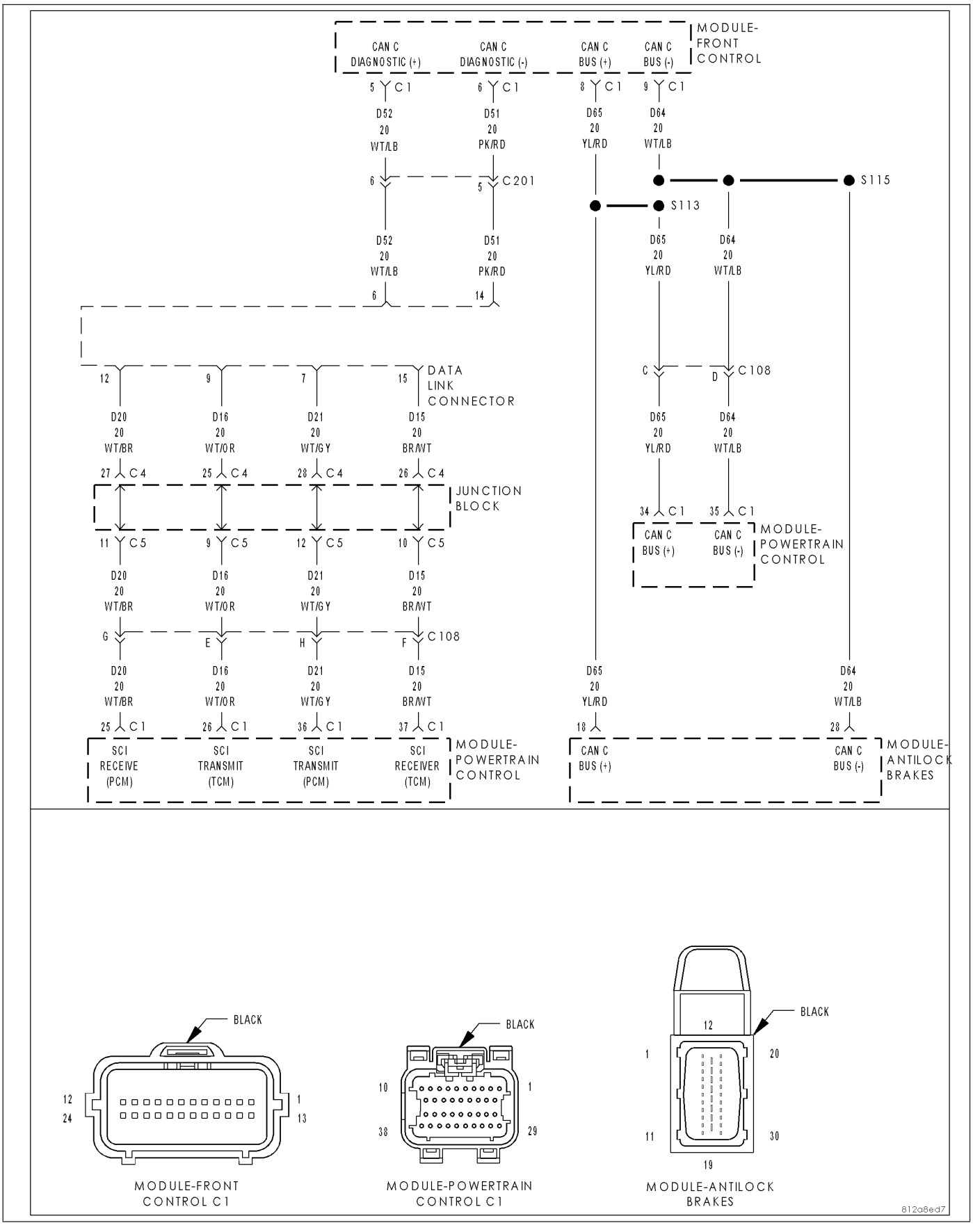

For a complete wiring diagram **Refer to Section 8W**.

- **When Monitored:**
  Every 7 msec with:
  1) Engine speed greater than 500 RPM.
  2) Battery voltage between 10 and 16 volts.
- **Set Condition:**
  CAN C bus messages are not received for 10 seconds.

Theory of Operation

The NGC controller communicates over the CAN C bus. The transmission controller continuously monitors bus activity. The CAN C bus is also used to communicate transmission MIL status to the Engine Controller. If the Engine Controller is unable to communicate with the Transmission Controller, a DTC will set and the Engine Controller will illuminate the MIL.

Refer to 8-ELECTRICAL/ELECTRONIC CONTROL MODULES - DIAGNOSIS AND TESTING for diagnostic procedures and for further possible causes.

STANDARD PROCEDURE

42RLE - PRE-DIAGNOSTIC TROUBLESHOOTING PROCEDURE

For a complete wiring diagram **Refer to Section 8W**.

Perform the following steps prior to any diagnostic procedure(s).

1. Many transmission symptoms can be caused by a low fluid level. If the fluid level is low, locate and repair any leaks and fill the transmission to the proper fluid level. Refer to the Service Information for the proper repair and fluid fill procedures.
2. Testing should only be performed with the battery fully charged to avoid false diagnosis.
3. With the scan tool, read Engine (PCM) DTCs. If Engine DTCs are present, refer to the Driveability Category and perform to the appropriate diagnostic procedure(s) before proceeding.
4. With the scan tool, read Transmission (TCM) DTCs. Record all Stored, Active, and Pending DTC information. Diagnose any Pending DTC as a matured DTC.
5. With the scan tool, read DTC EVENT DATA. Use this data to identify the conditions in which the DTC was set.

Note: Performing a Battery Disconnect will clear all DTC EVENT DATA and reset all learned Transmission values to the controllers default values which may temporarily result in erratic shift schedules.

6. With the scan tool, perform the Shift Lever Position Test. If the test does not pass, refer to the diagnostic procedure for P0706-TRANSMISSION RANGE SENSOR RATIONALITY.
7. For Gear Ratio Error DTCs, use the scan tool to read and record the Clutch Volume Index (CVI) information.
8. Use the wiring diagram as a guide, inspect the wiring and connectors related to this circuit and repair as necessary.
9. Refer to the When Monitored and Set Conditions for this DTC. DTCs can set at ignition on, at start up, driving under specific conditions, and after controller diagnostic monitors have run.
10. Refer to applicable Technical Service Bulletins (TSBs) for controller software update information. Some conditions can be corrected by upgrading the Engine (PCM) or Transmission (TCM) controller software.
11. Check for any Service Information Tune-ups or Service Bulletins for any possible causes that may apply.

1.

Did any of the above procedures repair the vehicle?

Yes >> Testing is complete.
Perform 42RLE VERIFICATION TEST. (Refer to 21 - TRANSMISSION/TRANSAXLE/AUTOMATIC - 42RLE - STANDARD PROCEDURE)

No >> Refer to the transmission category and perform the appropriate diagnostic procedure(s).
(Refer to 21 - TRANSMISSION/TRANSAXLE/AUTOMATIC - 42RLE - DIAGNOSIS AND TESTING)

42RLE TRANSMISSION VERIFICATION TEST - VER 1

Perform the following after completion of a diagnostic repair:

NOTE: After completion of the Transmission Verification Test, the Powertrain Verification Test must be performed. Refer to the Engine Category.

1. Reconnect any disconnected components.
2. With the scan tool, erase all Transmission and Engine DTCs.
3. Erase DTC P0700 under engine to turn off the MIL off after completion of transmission repairs.
4. Perform *PRNDL FAULT CLEARING PROCEDURE after completion of repairs for P0706-TRANSMISSION RANGE SENSOR RATIONALITY.
5. If the Powertrain Control Module or the Transmission has been repaired or replaced, it is necessary to perform the scan tool Quick Learn Procedure.
6. If the Torque converter has been replaced, with the scan tool perform TCC BREAK-IN.
7. If the Powertrain Control Module or Front Control Module has been replaced you must reset the Pinion Factor in the Front Control Module.
8. With the scan tool, display Transmission Temperature. Start and run the engine until the Transmission Temperature is HOT, above 43° C or 110° F.
9. Check the transmission fluid and adjust if necessary. Refer to the Service Information for the Fluid Fill procedure.
10. Road test the vehicle. With the scan tool, monitor the engine RPM. Make 15 to 20 1-2, 2-3, 3-4 upshifts. Perform these shifts from a standing start to 45 mph with a constant throttle opening of 20 to 25 degrees.
11. With speeds below 25 MPH, make 5 to 8 wide open throttle kickdowns to 1st gear. Allow at least 5 seconds each in 2nd and 3rd gear between each kickdown.
12. For a specific DTC, drive the vehicle to the Symptom's When Monitored/When Set conditions to verify the DTC is repaired.
13. If equipped with AutoStick®, upshift and downshift several times using the AutoStick® feature during the road test.

NOTE: Use the OBDII task manager to run a Good Trip in each gear, this will confirm the repair and to ensure that the DTC has not re-matured.

14. Check for any Diagnostic Trouble Codes (DTCs) during and after the road test.

1.

Did any Diagnostic Trouble Codes set during the road test?

Yes >> Repair is not complete. Refer to the Transmission category and perform the appropriate symptom(s). (Refer to 21 - TRANSMISSION/TRANSAXLE/AUTOMATIC - 42RLE - DIAGNOSIS AND TESTING)

No >> Repair is complete.

AUTOMATIC TRANSMISSION 42RLE - SERVICE INFORMATION

TABLE OF CONTENTS

page

AUTOMATIC TRANSMISSION 42RLE - SERVICE INFORMATION
DESCRIPTION . . . 655
OPERATION . . . 658
DIAGNOSIS AND TESTING
AUTOMATIC TRANSMISSION . . . 662
ROAD TEST . . . 663
HYDRAULIC PRESSURE TESTS . . . 664
CLUTCH AIR PRESSURE TESTS . . . 666
FLUID LEAKAGE . . . 667
STANDARD PROCEDURE - ALUMINUM THREAD REPAIR . . . 668
REMOVAL . . . 668
DISASSEMBLY . . . 673
ASSEMBLY . . . 694
INSTALLATION . . . 716
SCHEMATICS AND DIAGRAMS
42RLE - WITHOUT VARIABLE LINE PRESSURE . . . 722
42RLE - WITH VARIABLE LINE PRESSURE . . 736
SPECIFICATIONS
42RLE AUTOMATIC TRANSMISSION . . . 745
SPECIAL TOOLS
AUTOMATIC TRANSMISSION – 42RLE . . . 747
ACCUMULATOR
DESCRIPTION . . . 751
OPERATION . . . 752
BEARINGS
ADJUSTMENTS
BEARING ADJUSTMENT PROCEDURES . . . 753
MECHANISM-BRAKE TRANSMISSION SHIFT INTERLOCK
DESCRIPTION . . . 754
OPERATION . . . 754
DIAGNOSIS AND TESTING - BRAKE TRANSMISSION SHIFT INTERLOCK . . . 755
ADJUSTMENTS - BRAKE TRANSMISSION SHIFT INTERLOCK . . . 756
CLUTCHES-DRIVING
DESCRIPTION . . . 758
OPERATION . . . 758
FLUID AND FILTER
DIAGNOSIS AND TESTING
CAUSES OF BURNT FLUID . . . 759
EFFECTS OF INCORRECT FLUID LEVEL . . . 759
FLUID CONTAMINATION . . . 759
STANDARD PROCEDURE
CHECK OIL LEVEL . . . 759
FLUID/FILTER SERVICE . . . 760
TRANSMISSION FILL . . . 761

page

CABLE-GEARSHIFT
DIAGNOSIS AND TESTING - GEARSHIFT CABLE . . . 762
REMOVAL . . . 762
INSTALLATION . . . 763
ADJUSTMENTS - GEARSHIFT CABLE . . . 765
CLUTCHES-HOLDING
DESCRIPTION . . . 767
OPERATION . . . 767
ASSEMBLY-INPUT CLUTCH
DISASSEMBLY . . . 768
ASSEMBLY . . . 777
SENSOR-INPUT SPEED
DESCRIPTION . . . 791
OPERATION . . . 791
REMOVAL . . . 791
INSTALLATION . . . 792
SENSOR-VARIABLE LINE PRESSURE
DESCRIPTION . . . 793
OPERATION . . . 793
REMOVAL . . . 793
INSTALLATION . . . 794
PUMP-OIL
DESCRIPTION . . . 795
OPERATION . . . 795
DISASSEMBLY . . . 795
ASSEMBLY . . . 797
BEARING-OUTPUT SHAFT
REMOVAL . . . 798
INSTALLATION . . . 800
SEAL-OUTPUT SHAFT
REMOVAL . . . 802
INSTALLATION . . . 802
SENSOR-OUTPUT SPEED
DESCRIPTION . . . 804
OPERATION . . . 804
REMOVAL . . . 804
INSTALLATION . . . 805
CABLE-PARK LOCK
REMOVAL . . . 806
INSTALLATION . . . 807
GEARTRAIN-PLANETARY
DESCRIPTION . . . 809
OPERATION . . . 809
SEAL-OIL PUMP
REMOVAL . . . 810
INSTALLATION . . . 810
SOLENOID-PRESSURE CONTROL
DESCRIPTION . . . 811
OPERATION . . . 811

REMOVAL 811
INSTALLATION 812
MECHANISM-SHIFT
DESCRIPTION 813
OPERATION 813
REMOVAL 814
INSTALLATION 816
SOLENOID
DESCRIPTION 818
OPERATION 819
ASSEMBLY-TRANSMISSION SOLENOID/ PRESSURE SWITCH
DESCRIPTION 820
OPERATION 820
REMOVAL 821
INSTALLATION 822
CONVERTER-TORQUE
DESCRIPTION 823
OPERATION 828
REMOVAL 830
INSTALLATION 830
RELAY-TRANSMISSION CONTROL
DESCRIPTION 831
OPERATION 831
SENSOR-TRANSMISSION RANGE
DESCRIPTION 832
OPERATION 832
REMOVAL 833
INSTALLATION 834
SENSOR-TRANSMISSION TEMPERATURE
DESCRIPTION 835
OPERATION 835
BODY-VALVE
DESCRIPTION 836
OPERATION 837
REMOVAL 841
DISASSEMBLY 843
ASSEMBLY 850
INSTALLATION 857

AUTOMATIC TRANSMISSION 42RLE - SERVICE INFORMATION

DESCRIPTION

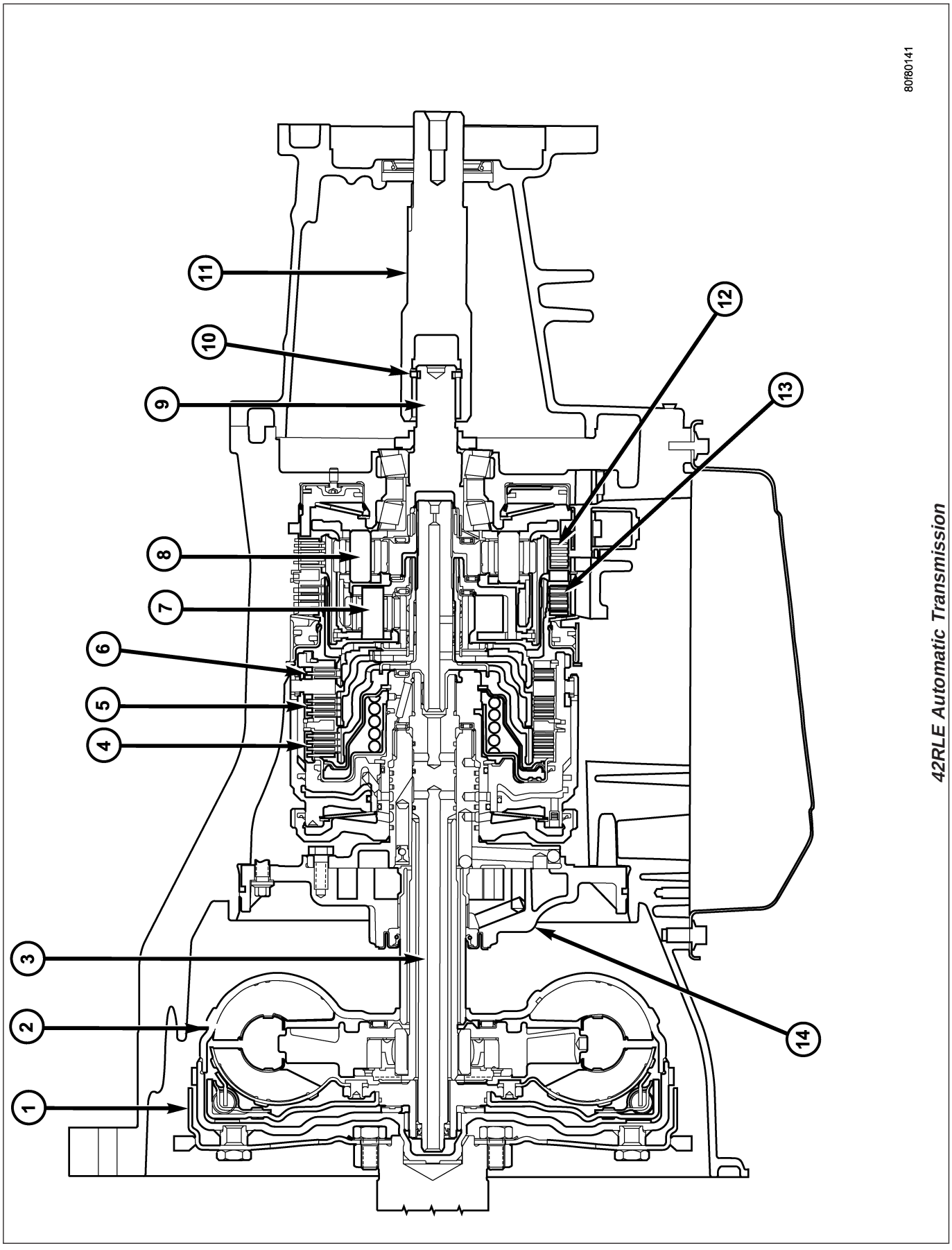

42RLE Automatic Transmission

1 - DRIVEPLATE
2 - TORQUE CONVERTER
3 - INPUT SHAFT
4 - UNDERDRIVE CLUTCH
5 - OVERDRIVE CLUTCH
6 - REVERSE CLUTCH
7 - FRONT PLANET CARRIER
8 - REAR PLANET CARRIER
9 - OUTPUT SHAFT
10 - SNAP RING
11 - STUB SHAFT
12 - LOW/REVERSE CLUTCH
13 - 2/4 CLUTCH
14 - OIL PUMP

The 42RLE is a four-speed transmission that is a conventional hydraulic/mechanical assembly controlled with adaptive electronic controls and monitors. The hydraulic system of the transmission consists of the transmission fluid, fluid passages, hydraulic valves, and various line pressure control components. An input clutch assembly which houses the underdrive, overdrive, and reverse clutches is used. It also utilizes separate holding clutches: 2nd/4th gear and Low/Reverse. The primary mechanical components of the transmission consist of the following:

- Three multiple disc input clutches
- Two multiple disc holding clutches
- Four hydraulic accumulators
- Two planetary gear sets
- Hydraulic oil pump
- Valve body
- Solenoid/Pressure switch assembly

Control of the transmission is accomplished by fully adaptive electronics. Optimum shift scheduling is accomplished through continuous real-time sensor feedback information provided to the Transmission Control Module (TCM) portion of the Powertrain Control Module (PCM).

The TCM is the heart of the electronic control system and relies on information from various direct and indirect inputs (sensors, switches, etc.) to determine driver demand and vehicle operating conditions. With this information, the TCM can calculate and perform timely and quality shifts through various output or control devices (solenoid pack, transmission control relay, etc.).

The TCM also performs certain self-diagnostic functions and provides comprehensive information (sensor data, DTC's, etc.) which is helpful in proper diagnosis and repair. This information can be viewed with the scan tool.

TRANSMISSION IDENTIFICATION

The 42RLE transmission can be identified by a bar-code label that is affixed to the upper left area of the bellhousing.

The label contains a series of digits that can be translated into useful information such as transmission part number (10), date of manufacture (4, 5), manufacturing origin (2), assembly line identifier (6), build sequence number (7), etc..

If the tag is not legible or is missing, the "PK" number, which is stamped into the left rear flange of the transmission case, can be referred to for identification. The entire part number, build code, and sequence number are stamped into the flange.

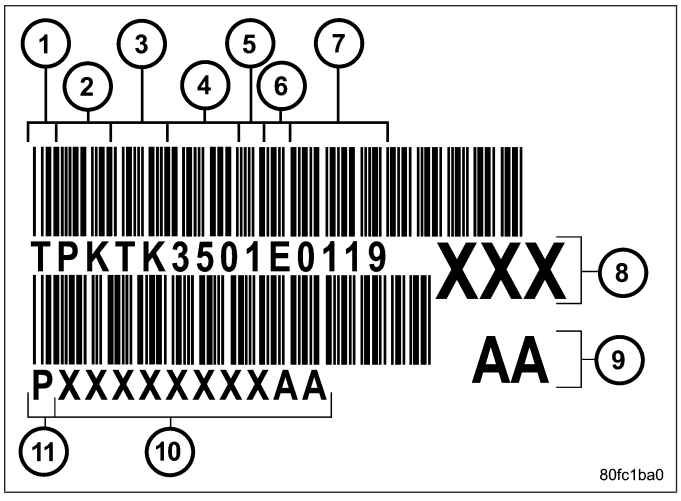

1 - T=TRACEABILITY
2 - SUPPLIER CODE (PK=KOKOMO)
3 - COMPONENT CODE (TK=KOKOMO TRANSMISSION)
4 - BUILD DAY (350=DEC. 15)
5 - BUILD YEAR (1=2001)
6 - ASSEMBLY LINE CODE
7 - BUILD SEQUENCE NUMBER
8 - LAST THREE OF P/N
9 - CHANGE LEVEL
10 - TRANSMISSION PART NUMBER
11 - P=PART NUMBER

OPERATION

The 42RLE transmission ratios are:

First	2.84 : 1
Second	1.57 : 1
Third	1.00 : 1
Overdrive	0.69 : 1
Reverse	2.21 : 1

FIRST GEAR POWERFLOW

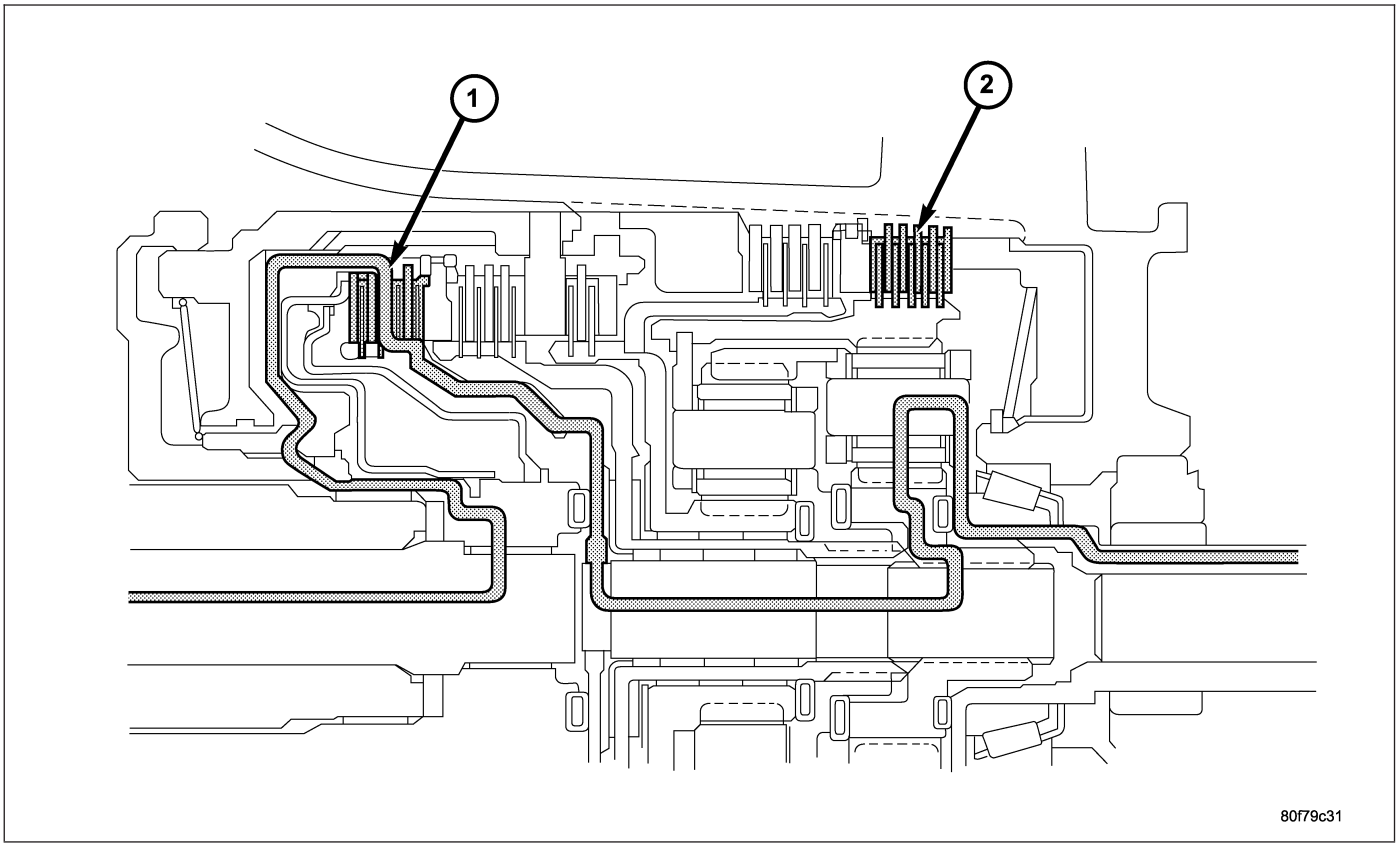

First Gear Powerflow

1 - UNDERDRIVE CLUTCH APPLIED (Turns Rear Sun)
2 - LOW-REVERSE CLUTCH APPLIED (Holds Rear Annulus/Front Carrier)

In first gear range, torque input is through the underdrive clutch (1) to the underdrive hub assembly. The underdrive hub is splined to the rear sun gear. When the underdrive clutch is applied, it rotates the underdrive hub and rear sun gear. The L/R clutch (2) is applied to hold the front carrier/rear annulus assembly. The rear sun gear drives the rear planetary pinion gears. The rear planetary pinion gears are forced to walk around the inside of the stationary rear annulus gear. The pinions are pinned to the rear carrier and cause the rear carrier assembly to rotate as they walk around the annulus gear. This provides the torque output for first gear. The other planetary gearset components are freewheeling. The first gear ratio is 2.84:1.

SECOND GEAR POWERFLOW

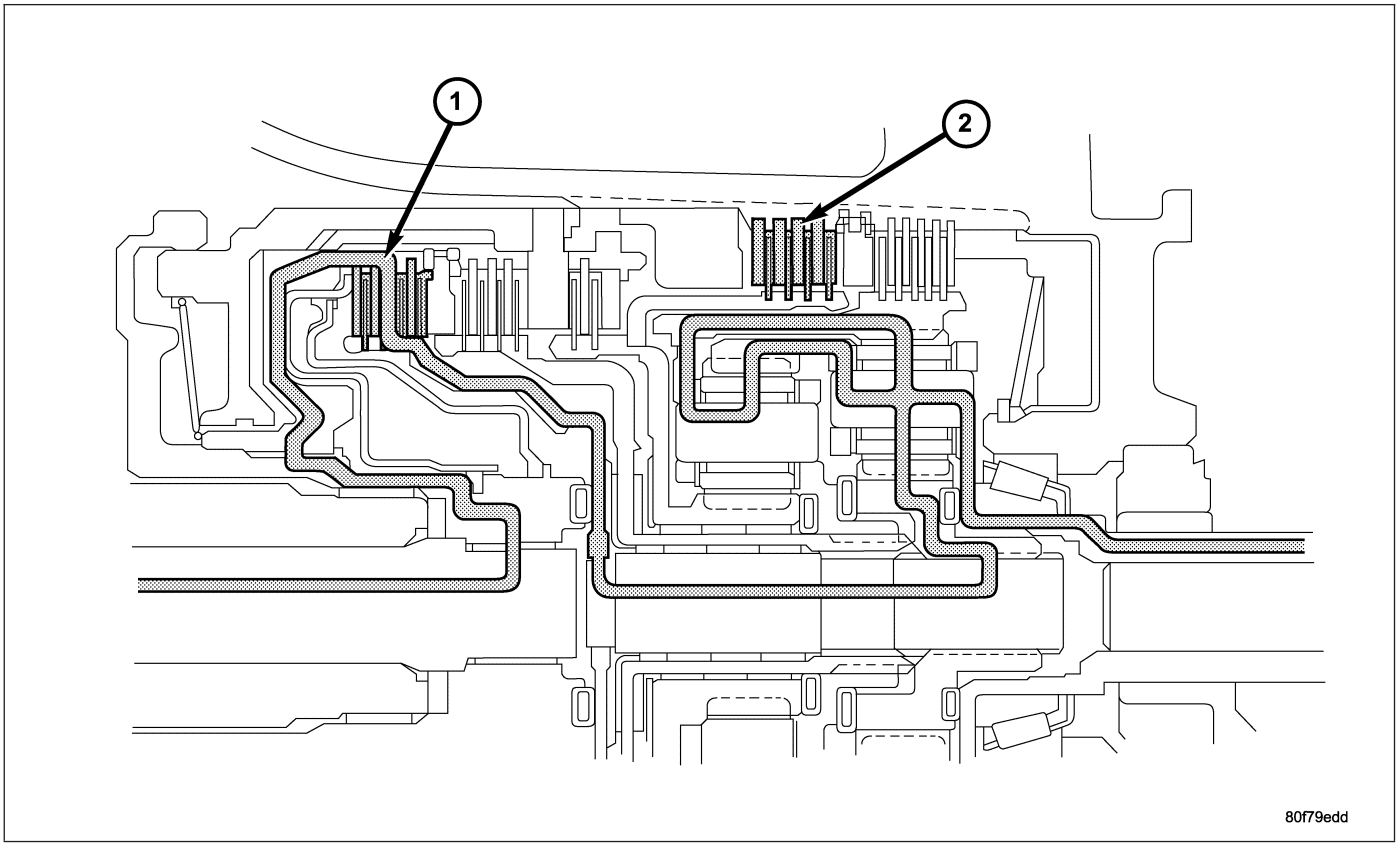

Second Gear Powerflow

1 - UNDERDRIVE CLUTCH APPLIED (Turns Rear Sun)
2 - 2-4 CLUTCH APPLIED (Holds Front Sun)

Second gear is achieved by having both planetary gear sets contribute to torque multiplication. As in first gear, torque input is through the underdrive clutch (1) to the rear sun gear. The 2/4 clutch (2) is applied to hold the front sun gear stationary. The rotating rear sun gear turns the rear planetary pinions. The rear pinions rotate the rear annulus/front carrier assembly. The pinions of the front carrier walk around the stationary front sun gear. This transmits torque to the front annulus/rear carrier assembly, which provides output torque and a gear ratio of 1.57:1.

THIRD GEAR POWERFLOW

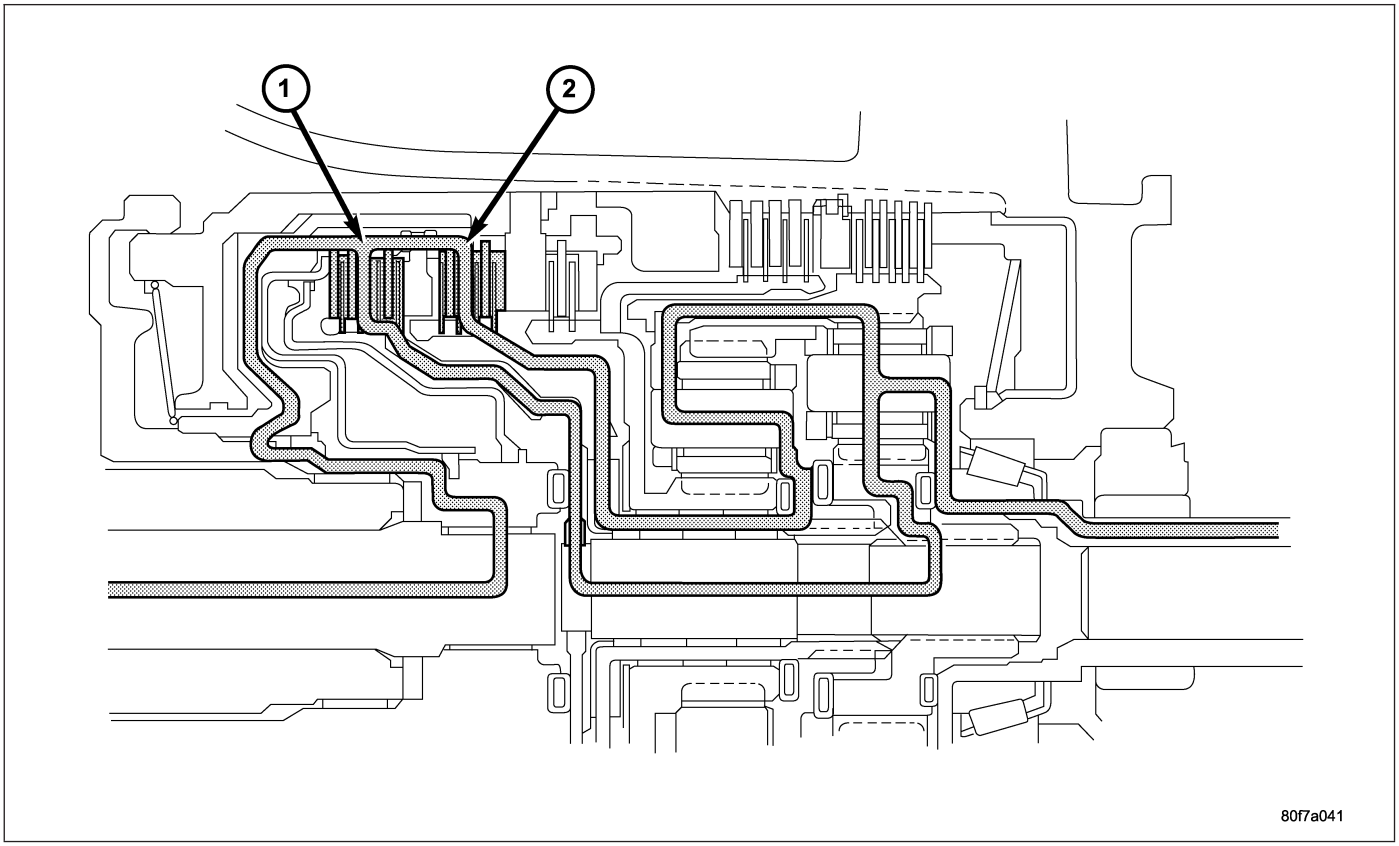

Third Gear Powerflow

1 - UNDERDRIVE CLUTCH APPLIED (Turns Rear Sun)
2 - OVERDRIVE CLUTCH APPLIED (Turns Front Carrier/Rear Annulus)

In third gear, two input clutches are applied to provide torque input: the underdrive clutch (1) and overdrive clutch (2). The underdrive clutch rotates the rear sun gear, while the overdrive clutch rotates the front carrier/rear annulus assembly. The result is two components (rear sun gear and rear annulus gear) rotating at the same speed and in the same direction. This effectively locks the entire planetary gearset together and is rotated as one unit. The gear ratio in third is 1:1.

FOURTH GEAR POWERFLOW

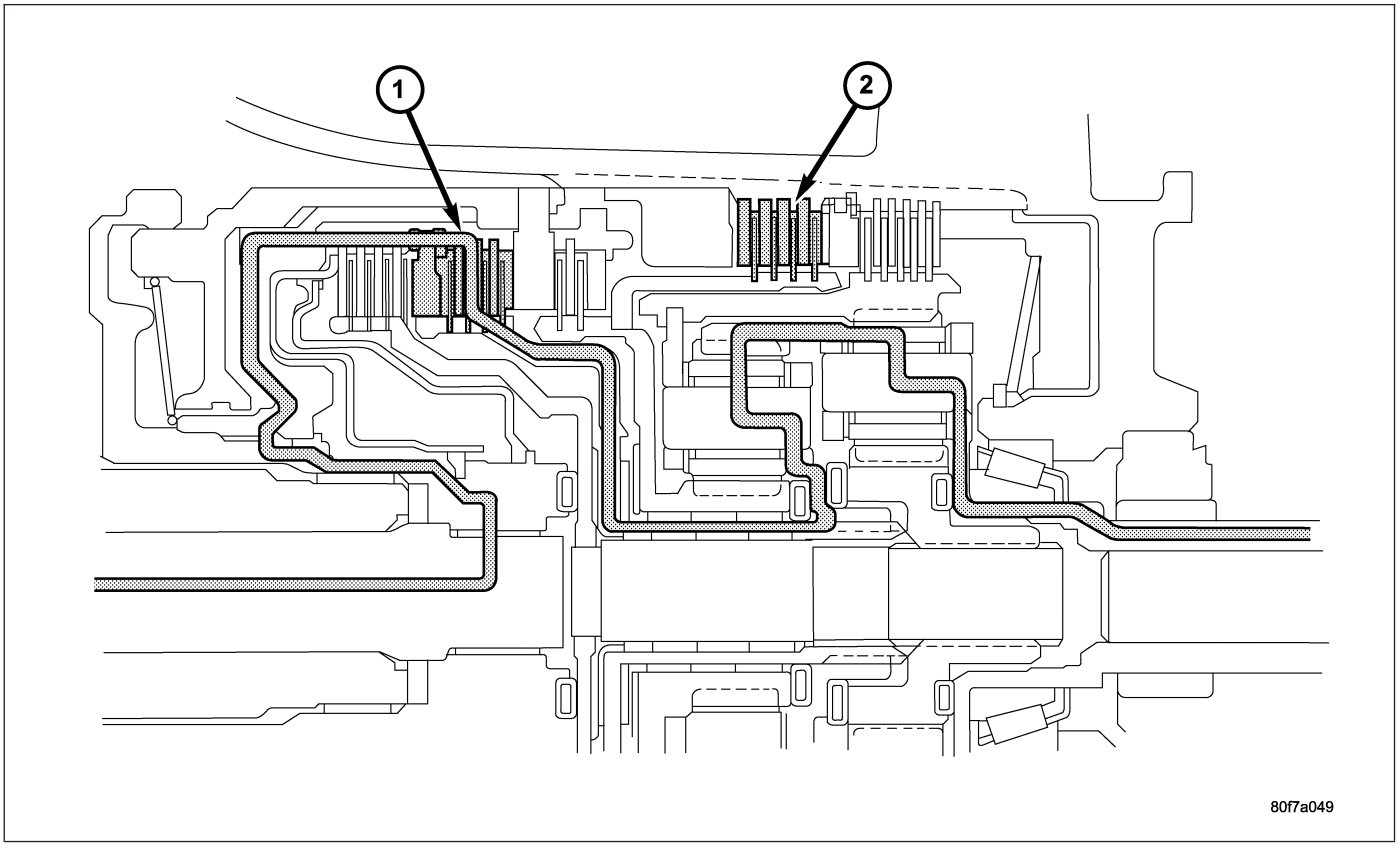

Fourth Gear Powerflow

1 - OVERDRIVE CLUTCH APPLIED (Turns Rear Sun)
2 - 2-4 CLUTCH APPLIED (Holds Front Sun)

In fourth gear input torque is through the overdrive clutch (1) which drives the front carrier. The 2/4 clutch (2) is applied to hold the front sun gear. As the overdrive clutch rotates the front carrier, it causes the pinions of the front carrier to walk around the stationary front sun gear. This causes the front carrier pinions to turn the front annulus/ rear carrier assembly which provides output torque. In fourth gear, transmission output speed is more than engine input speed. This situation is called overdrive and the gear ratio is 0.69:1.

REVERSE GEAR POWERFLOW

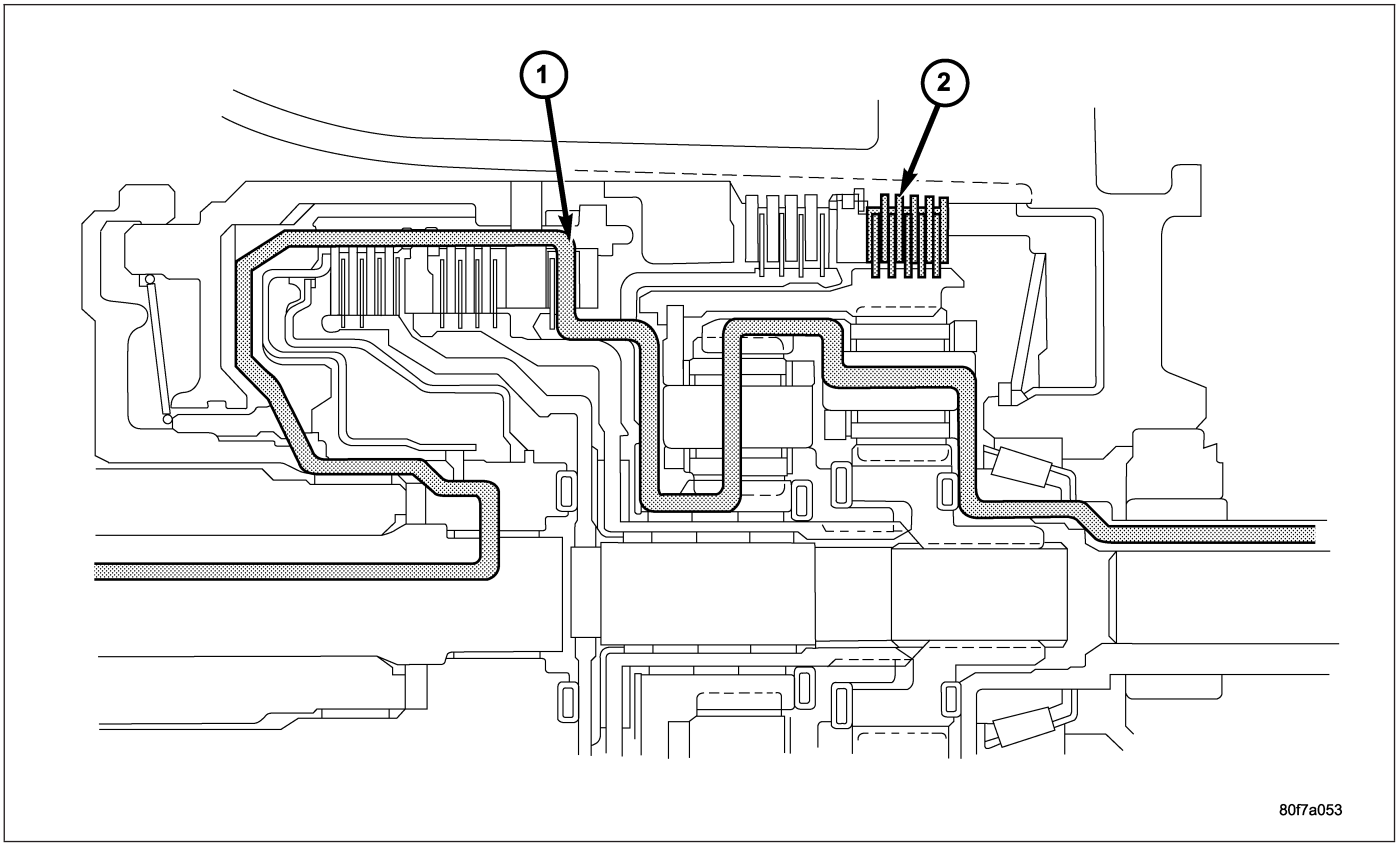

Reverse Gear Powerflow

1 - LOW-REVERSE CLUTCH APPLIED (Holds Rear Annulus Front Carrier)
2 - REVERSE CLUTCH APPLIED (Turns Front Sun)

In reverse, input power is through the reverse clutch (1). When applied, the reverse clutch drives the front sun gear through the overdrive hub and shaft. The L/R clutch (2) is applied to hold the front carrier/rear annulus assembly stationary. The front carrier is being held by the L/R clutch so the pinions are forced to rotate the front annulus/rear carrier assembly in the reverse direction. Output torque is provided, in reverse, with a gear ratio of 2.21:1.

DIAGNOSIS AND TESTING

AUTOMATIC TRANSMISSION

CAUTION: Before attempting any repair on the 42RLE Four Speed Automatic Transmission, always check for proper shift cable adjustment. Also check for diagnostic trouble codes with the scan tool and the 42RLE Transmission Diagnostic information.

42RLE automatic transmission malfunctions may be caused by these general conditions:

- Poor engine performance
- Improper adjustments
- Hydraulic malfunctions
- Mechanical malfunctions
- Electronic malfunctions

When diagnosing a problem always begin with recording the complaint. The complaint should be defined as specific as possible. Include the following checks:

- Temperature at occurrence (cold, hot, both)

- Dynamic conditions (acceleration, deceleration, upshift, cornering)
- Elements in use when condition occurs (what gear is transmission in during condition)
- Road and weather conditions
- Any other useful diagnostic information.

After noting all conditions, check the easily accessible variables:

- Fluid level and condition
- Shift cable adjustment
- Diagnostic trouble code inspection

Then perform a road test to determine if the problem has been corrected or that more diagnosis is necessary. If the problem exists after the preliminary tests and corrections are completed, hydraulic pressure checks should be performed.

ROAD TEST

Prior to performing a road test, verify that the fluid level, fluid condition, and linkage adjustment have been approved.

During the road test, the transmission should be operated in each position to check for slipping and any variation in shifting.

If the vehicle operates properly at highway speeds, but has poor acceleration, the converter stator overrunning clutch may be slipping. If acceleration is normal, but high throttle opening is needed to maintain highway speeds, the converter stator clutch may have seized. Both of these stator defects require replacement of the torque converter and thorough transmission cleaning.

Slipping clutches can be isolated by comparing the “Elements in Use” chart with clutch operation encountered on a road test. This chart identifies which clutches are applied at each position of the selector lever.

A slipping clutch may also set a DTC and can be determined by operating the transmission in all selector positions.

ELEMENTS IN USE AT EACH POSITION OF SELECTOR LEVER

Shift Lever Position	INPUT CLUTCHES			HOLDING CLUTCHES	
	Underdrive	Overdrive	Reverse	2/4	Low/Reverse
P - PARK					X
R - REVERSE			X		X
N - NEUTRAL					X
OD - OVERDRIVE					
First	X				X
Second	X			X	
Direct	X	X			
Overdrive		X		X	
D - DRIVE*					
First	X				X
Second	X			X	
Direct	X	X			
L - LOW*					
First	X				X
Second	X			X	
Direct	X	X			
* Vehicle upshift and downshift speeds are increased when in these selector positions.					

The process of elimination can be used to detect any unit which slips and to confirm proper operation of good units. Road test analysis can diagnose slipping units, but the cause of the malfunction cannot be determined. Practically any condition can be caused by leaking hydraulic circuits or sticking valves.

HYDRAULIC PRESSURE TESTS

Pressure testing is a very important step in the diagnostic procedure. These tests usually reveal the cause of most transmission problems.

Before performing pressure tests, be certain that fluid level and condition, and shift cable adjustments have been checked and approved. Fluid must be at operating temperature (150 to 200 degrees F.).

Install an engine tachometer, raise vehicle on hoist which allows the wheels to turn, and position tachometer so it can be read.

Using special adapters L-4559, attach 300 psi gauge(s) C-3293SP to the port(s) required for test being conducted.

Test port locations are shown in the Pressure Taps graphic.

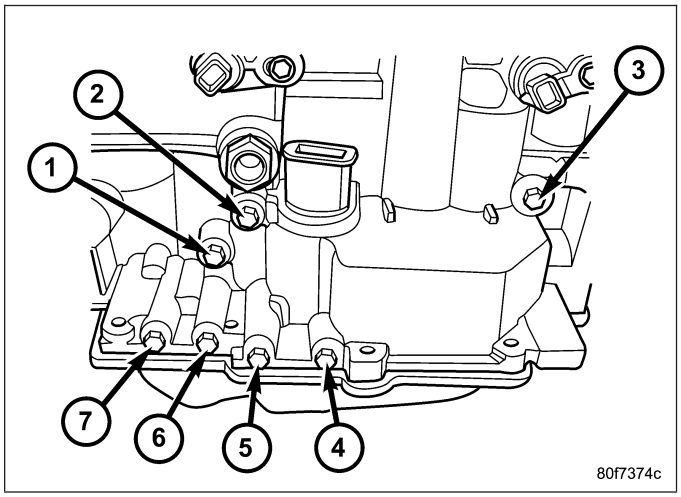

Pressure Taps

1 - TORQUE CONVERTER CLUTCH OFF
2 - REVERSE
3 - LOW/REVERSE
4 - 2/4
5 - UNDERDRIVE
6 - TORQUE CONVERTER CLUTCH ON
7 - OVERDRIVE

TEST ONE - SELECTOR IN MANUAL 1 (1st Gear)

NOTE: This test checks pump output, pressure regulation and condition of the low/reverse clutch hydraulic circuit and shift schedule.

1. Attach pressure gauge to the low/reverse clutch tap.
2. Move selector lever to the MANUAL 1 position.
3. Allow vehicle wheels to turn and increase throttle opening to achieve an indicated vehicle speed to 20 mph.
4. Low/reverse clutch pressure should read 115 to 145 psi.

TEST TWO - SELECTOR IN MANUAL 2 (Second Gear)

NOTE: This test checks the underdrive clutch hydraulic circuit as well as the shift schedule.

1. Attach gauge to the underdrive clutch tap.
2. Move selector lever to the MANUAL 2 position.
3. Allow vehicle wheels to turn and increase throttle opening to achieve an indicated vehicle speed of 30 mph.
4. In second gear the underdrive clutch pressure should read 110 to 145 psi.

TEST TWO A - SELECTOR IN DRIVE (OD ON - Fourth Gear)

NOTE: This test checks the underdrive clutch hydraulic circuit as well as the shift schedule.

1. Attach gauge to the underdrive clutch tap.
2. Move selector lever to the DRIVE position. Verfy that the OD switch is ON.
3. Allow wheels to rotate freely and increase throttle opening to achieve an indicated speed of 40 mph.
4. Underdrive clutch pressure should read below 5 psi. If not, than either the solenoid assembly or controller is at fault.

TEST THREE - SELECTOR IN DRIVE (OD OFF - Third and Second Gear)

NOTE: This test checks the overdrive clutch hydraulic circuit as well as the shift schedule.

1. Attach gauge to the overdrive clutch tap.
2. Move selector lever to the DRIVE position.
3. Allow vehicle wheels to turn and increase throttle opening to achieve an indicated vehicle speed of 20 mph.
4. Overdrive clutch pressure should read 74 to 95 psi.
5. Move selector lever to the DRIVE position and increase indicated vehicle speed to 30 mph.
6. The vehicle should be in second gear and overdrive clutch pressure should be less than 5 psi.

TEST FOUR - SELECTOR IN DRIVE (OD ON - Fourth Gear)

NOTE: This test checks the 2/4 clutch hydraulic circuit.

1. Attach gauge to the 2/4 clutch tap.
2. Move selector lever to the DRIVE position.
3. Allow vehicle front wheels to turn and increase throttle opening to achieve an indicated vehicle speed of 30 mph. Vehicle should be in fourth gear.
4. The 2/4 clutch pressure should read 75 to 95 psi.

TEST FIVE-SELECTOR IN DRIVE (OD ON - Fourth Gear, CC on)

NOTE: These tests check the torque converter clutch hydraulic circuit.

1. Attach gauge to the torque converter clutch off pressure tap.
2. Move selector lever to the DRIVE position.
3. Allow vehicle wheels to turn and increase throttle opening to achieve an indicated vehicle speed of 50 mph. Vehicle should be in 4th gear, CC on.

CAUTION: Both wheels must turn at the same speed.

4. Torque converter clutch off pressure should be less than 5 psi.
5. Now attach the gauge to the torque converter clutch on pressure tap.
6. Move selector to the OD position.
7. Allow vehicle wheels to turn and increase throttle opening to achieve an indicated vehicle speed of 50 mph.
8. Verify the torque converter clutch is applied mode using the RPM display of the scan tool.
9. Torque converter clutch on pressure should be 60-90 psi.

TEST SIX-SELECTOR IN REVERSE

NOTE: This test checks the reverse clutch hydraulic circuit.

1. Attach gauge to the reverse and low/reverse clutch tap.
2. Move selector lever to the REVERSE position.
3. Read reverse clutch pressure with output stationary (foot on brake) and throttle opened to achieve 1500 rpm.
4. Reverse and low/reverse clutch pressure should read 165 to 235 psi.

TEST RESULT INDICATIONS

1. If proper line pressure is found in any one test, the pump and pressure regulator are working properly.
2. Low pressure in all positions indicates a defective pump, a clogged filter, or a stuck pressure regulator valve.
3. Clutch circuit leaks are indicated if pressures do not fall within the specified pressure range.
4. If the overdrive clutch pressure is greater than 5 psi in Step 6 of Test Three, a worn reaction shaft seal ring or a defective solenoid assembly is indicated.

5. If the underdrive clutch pressure is greater than 5 psi in Step 4 of Test Two-A, a defective solenoid/pressure switch assembly or controller is the cause.

ALL PRESSURE SPECIFICATIONS ARE PSI (on hoist, with wheels free to turn)

Gear Selector Position	Actual Gear	PRESSURE TAPS						
		Under-drive Clutch	Over-drive Clutch	Reverse Clutch	Torque Converter Clutch Off	Torque Converter Clutch On	2/4 Clutch	Low/ Reverse Clutch
PARK - 0 mph *	PARK	0-2	0-5	0-2	60-110	45-100	0-2	115-145
REVERSE - 0 mph *	REVERSE	0-2	0-7	165-235	50-100	35-85	0-2	165-235
NEUTRAL - 0 mph *	NEUTRAL	0-2	0-5	0-2	60-110	45-100	0-2	115-145
Low - 20 mph #	FIRST	110-145	0-5	0-2	60-110	45-100	0-2	115-145
Third - 30 mph #	SECOND	110-145	0-5	0-2	60-110	45-100	115-145	0-2
Third - 45 mph #	DIRECT	75-95	75-95	0-2	60-90	45-80	0-2	0-2
OD - 30 mph #	OVERDRIVE	0-2	75-95	0-2	60-90	45-80	75-95	0-2
OD - 50 mph #	OVERDRIVE WITH TCC	0-2	75-95	0-2	0-5	60-95	75-95	0-2
*** Engine Speed at 1500 rpm**								
# CAUTION: Both wheels must be turning at same speed.								

CLUTCH AIR PRESSURE TESTS

Inoperative clutches can be located by substituting air pressure for fluid pressure. The clutches may be tested by applying air pressure to their respective passages after the valve body has been removed. Use Plate Set 6599-1 (1) and 6599-2 (1) to perform test.

To make air pressure tests, proceed as follows:

NOTE: The compressed air supply must be free of all dirt and moisture. Use a pressure of 30 psi.

1. Remove oil pan and valve body. (Refer to 21 - TRANSMISSION/AUTOMATIC - 42RLE/VALVE BODY - REMOVAL)
2. Apply air pressure to the holes in the plates (1), one at a time.
3. Listen for the clutch to apply. It will give a slight thud sound. If a large amount of air is heard escaping, the transmission must be removed from vehicle, disassembled and all seals inspected.

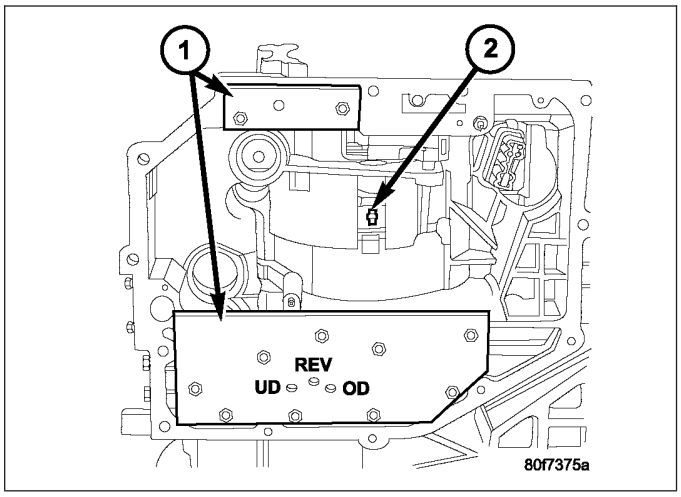

Air Pressure Test Plate

1 - AIR PRESSURE TEST PLATES
2 - 2/4 CLUTCH RETAINER HOLE

2/4 CLUTCH

Apply air pressure to the feed hole located on the 2/4 clutch retainer (2). Look in the area where the 2/4 piston contacts the first separator plate and watch carefully for the 2/4 piston to move rearward. The piston should return to its original position after the air pressure is removed.

OVERDRIVE CLUTCH

Apply air pressure to the overdrive clutch apply passage and watch for the push/pull piston to move forward. The piston should return to its starting position when the air pressure is removed.

REVERSE CLUTCH

Apply air pressure to the reverse clutch apply passage and watch for the push/pull piston to move rearward. The piston should return to its starting position when the air pressure is removed.

LOW/REVERSE CLUTCH

Apply air pressure to the low/reverse clutch feed hole passage. Look in the area where the low/reverse piston contacts the first separator plate. Watch carefully for the piston to move forward. The piston should return to its original position after the air pressure is removed.

UNDERDRIVE CLUTCH

Because this clutch piston cannot be seen, its operation is checked by function. Use an air nozzle (2) to apply air pressure is to the low/reverse or the 2/4 clutch opening in Test Plate 6599-1 (2). This locks the output shaft. Use a piece of rubber hose wrapped around the input shaft and a pair of clamp-on pliers to turn the input shaft. Next apply air pressure to the underdrive clutch. The input shaft should not rotate with hand torque. Release the air pressure and confirm that the input shaft will rotate.

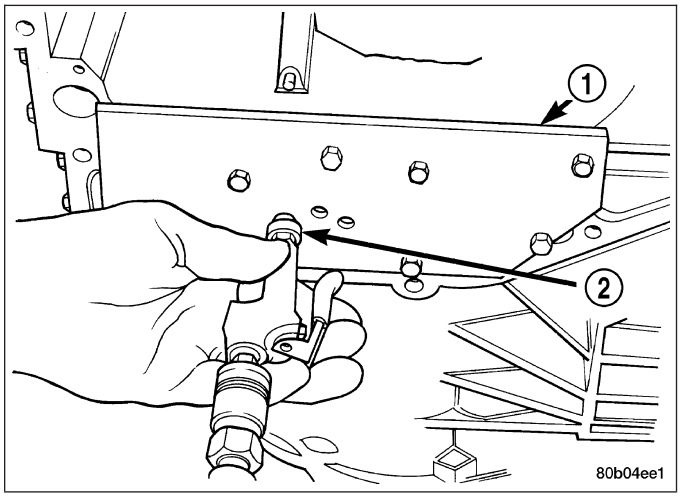

FLUID LEAKAGE

FLUID LEAKAGE - TORQUE CONVERTER HOUSING AREA

When diagnosing converter housing (5) fluid leaks, three actions must be taken before repair:

1. Verify proper transmission fluid level.
2. Verify that the leak originates from the converter housing area and is transmission fluid.
3. Determine the true source of the leak.

Fluid leakage at or around the torque converter area may originate from an engine oil leak (7). The area should be examined closely. Factory fill fluid is red and, therefore, can be distinguished from engine oil.

Some suspected converter housing fluid leaks may not be leaks at all. They may only be the result of residual fluid in the converter housing, or excess fluid spilled during factory fill, or fill after repair. Converter housing leaks have several potential sources. Through careful observation, a leak source can be identified before removing the transmission for repair.

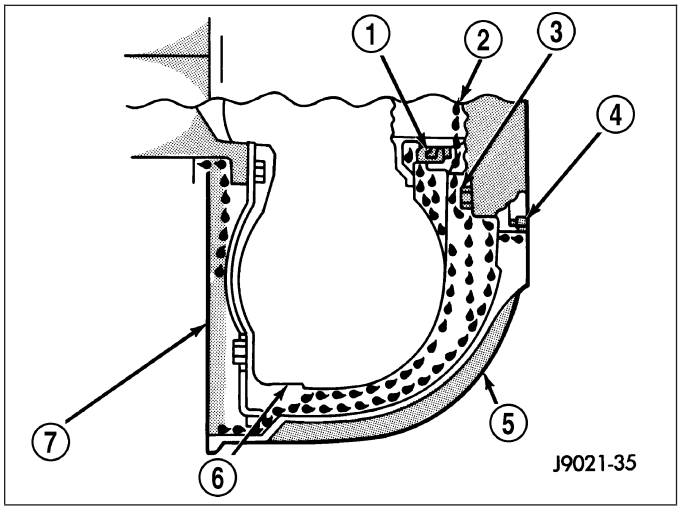

Pump seal (1) leaks tend to move along the drive hub and onto the rear of the converter. Pump o-ring or pump body leaks follow the same path as a seal leak. Pump attaching bolt (3) leaks are generally deposited on the inside of the converter housing (5) and not on the converter itself. Pump seal (1) or gasket (4) leaks usually travel down the inside of the converter housing.

TORQUE CONVERTER LEAKAGE

Possible sources of torque converter leakage are:

- Torque converter weld leaks at the outside diameter weld (1).
- Torque converter hub weld (2).

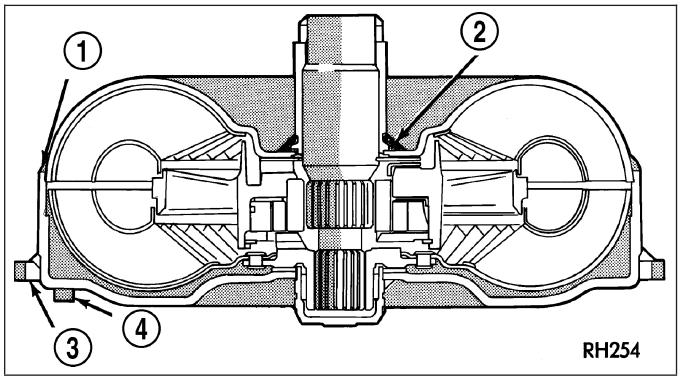

STANDARD PROCEDURE - ALUMINUM THREAD REPAIR

Damaged or worn threads in the aluminum transmission case and valve body can be repaired by the use of Heli-Coils®, or equivalent. This repair consists of drilling out the worn-out damaged threads. Then tap the hole with a special Heli-Coil® tap, or equivalent, and installing a Heli-Coil® insert, or equivalent, into the hole. This brings the hole back to its original thread size.

Heli-Coil®, or equivalent, tools, and inserts are readily available from most automotive parts suppliers.

REMOVAL

1. Disconnect the negative battery cable.
2. Raise and support the vehicle.
3. Mark propeller shaft (1) and the transmission flange (4) for assembly alignment.
4. Remove the bolts (2) holding the rear propeller shaft coupler (3) to the transmission flange (4).
5. Slide the propeller shaft (1) rearward until the coupler clears the propeller shaft pilot (5) on the transmission output shaft.

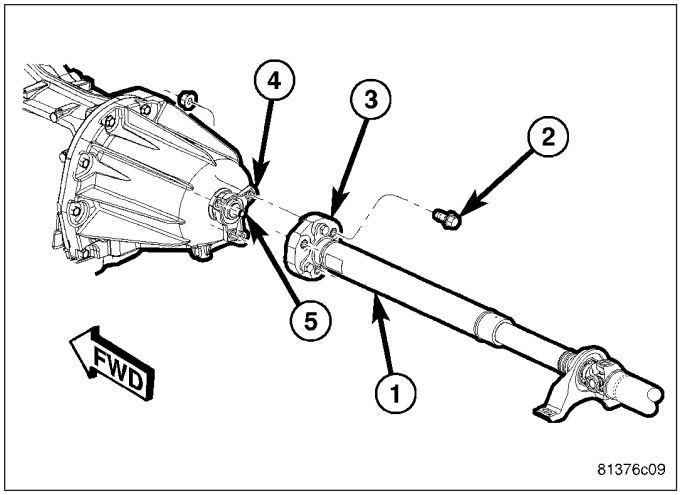

6. Remove the bolts (2) holding the starter motor (1) to the transmission. (Refer to 8 - ELECTRICAL/ STARTING/STARTER MOTOR - REMOVAL)
7. Remove the starter (1) from the transmission starter pocket and safely relocate.

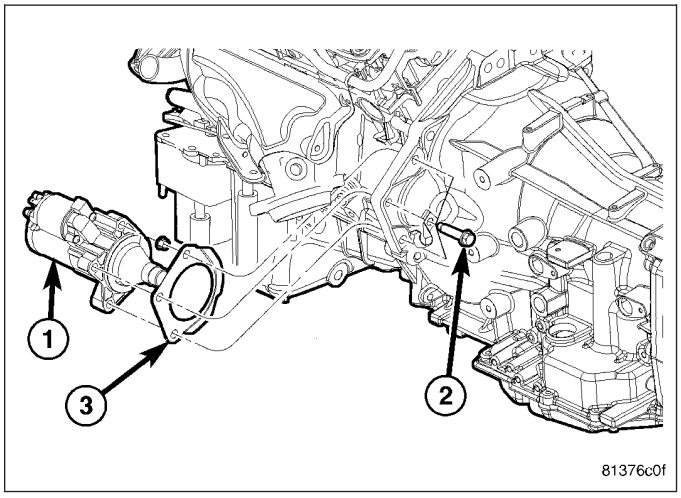

8. Remove the bolt (2) holding the torque converter access cover (1) to the transmission, 3.5L engines.
9. Remove the torque converter access cover (1) from the transmission.

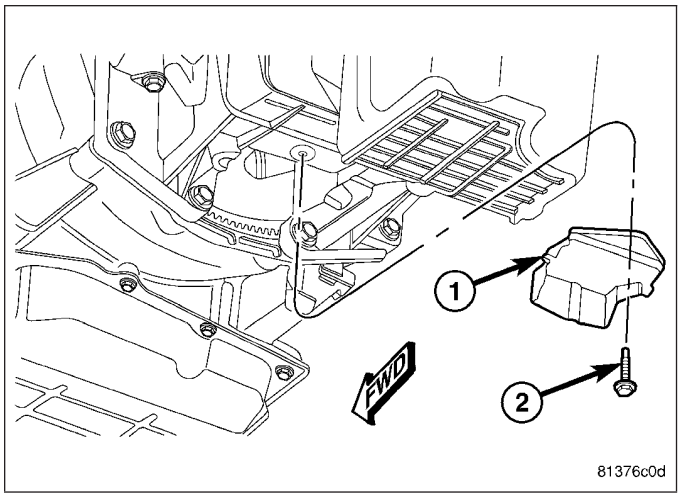

10. Remove the structural collar bolts (3, 4) and stuctural collar (2) on vehicles equipped with 2.7L engines. (Refer to 9 - ENGINE - 2.7L/ENGINE BLOCK/STRUCTURAL COVER - REMOVAL)

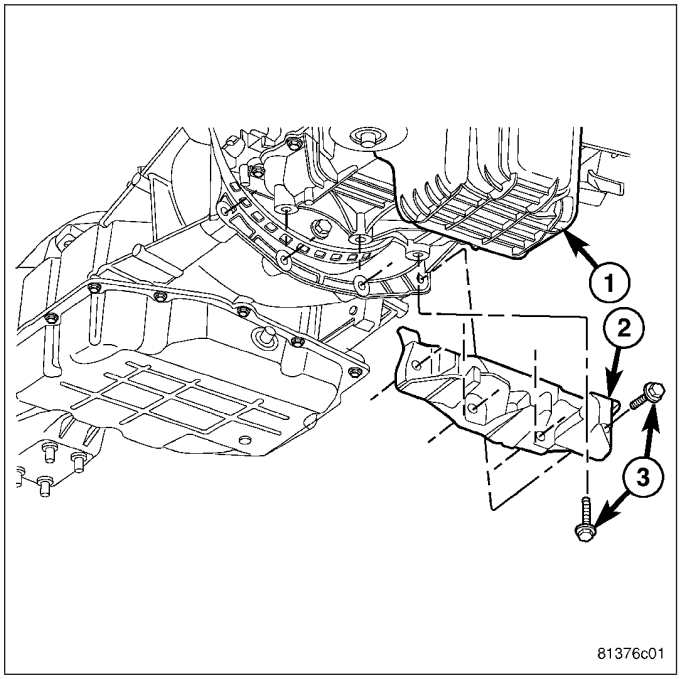

11. Rotate crankshaft in clockwise direction until converter bolts (1) are accessible. Then remove bolts (1) one at a time. Rotate crankshaft with socket wrench on dampener bolt.

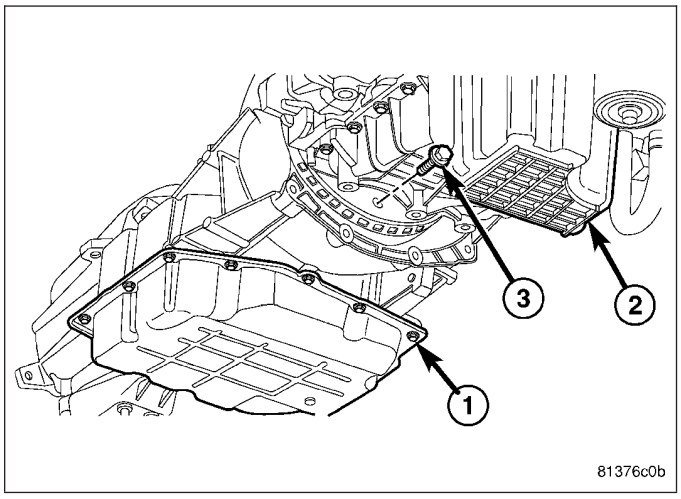

12. Disconnect the gearshift cable (1) from the transmission manual valve lever (3).
13. Loosen the bolts holding the shift cable retaining strap (2) to the transmission.
14. Remove the shift cable (1) from the transmission.

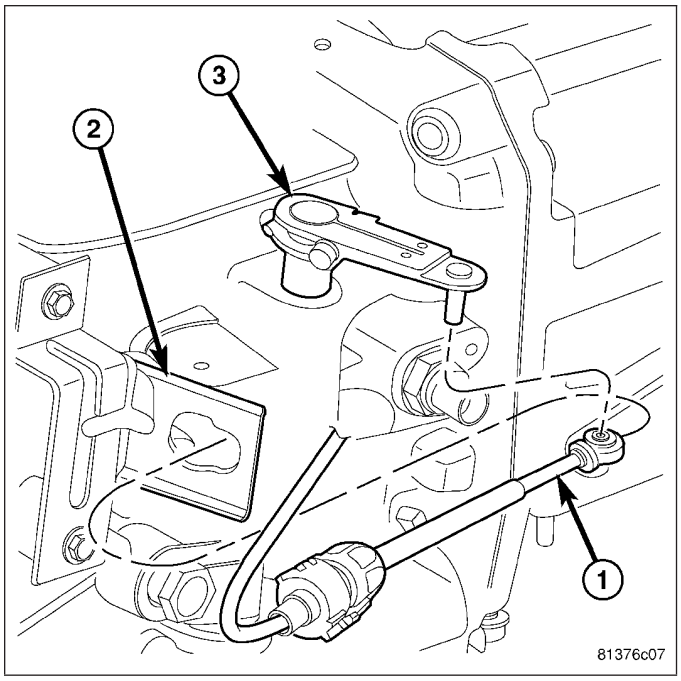

15. Disconnect wires from the input (1) and output (2) speed sensors.
16. Disconnect wires from the transmission range sensor (3).

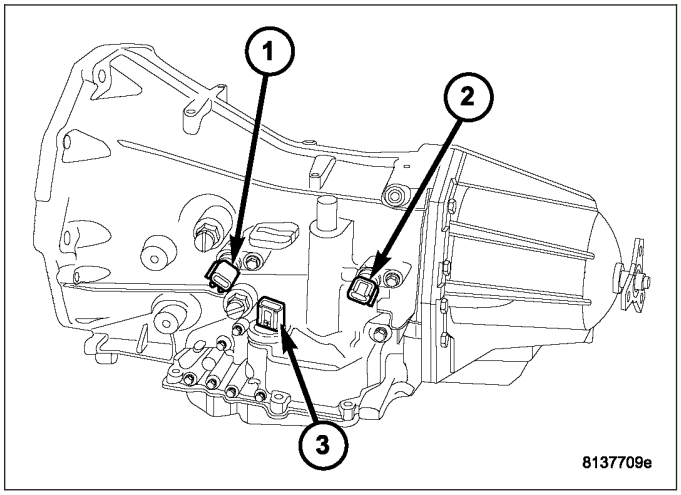

17. Disconnect wires from the solenoid/pressure switch assembly (1).

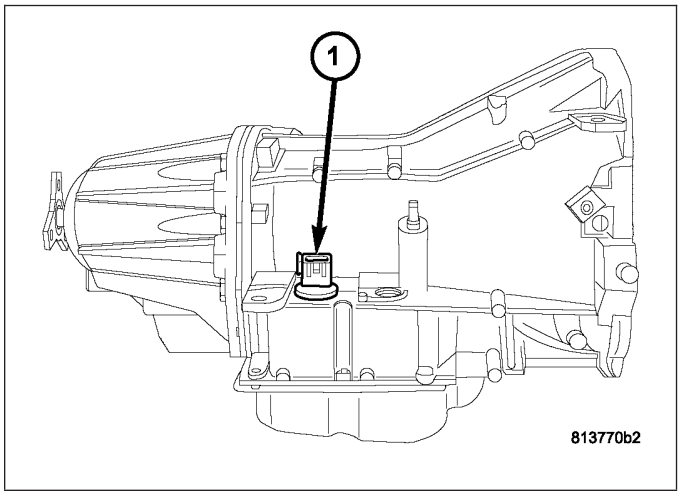

18. Remove the crankshaft position sensor. (Refer to 14 - FUEL SYSTEM/FUEL INJECTION/CRANKSHAFT POSITION SENSOR - REMOVAL)

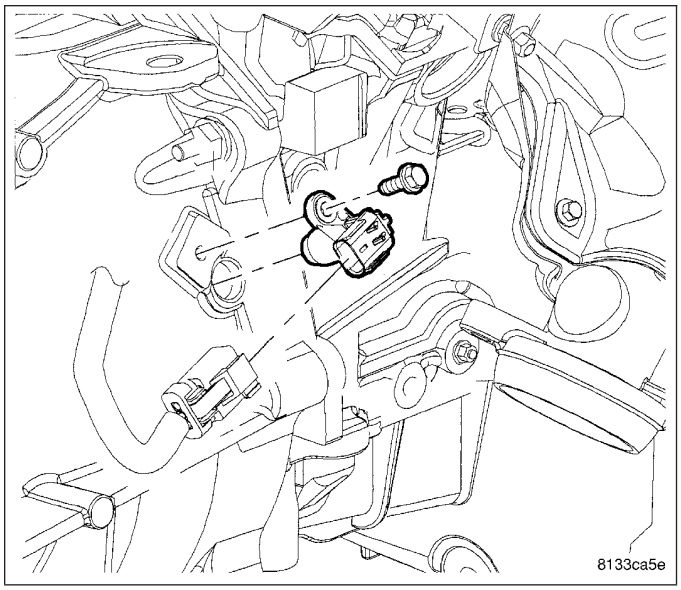

19. Remove the bolt (3) holding the transmission fill tube (2) to the transmission (1).
20. Remove the transmission fill tube (2).

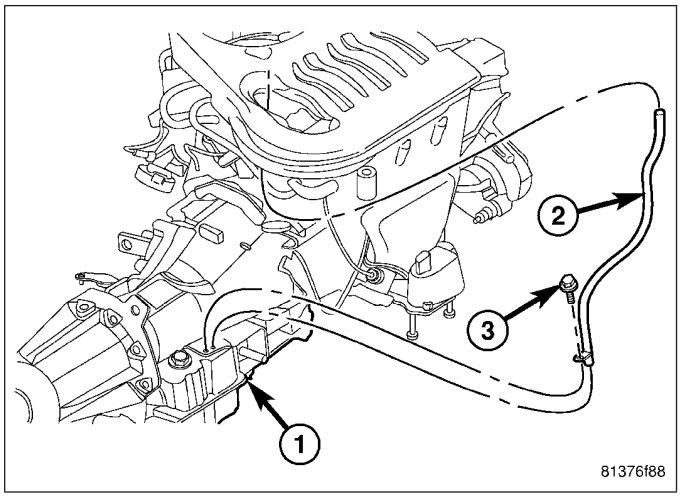

21. Disconnect transmission fluid cooler lines (1) at transmission fittings (2) and clips (3).
22. Disconnect the transmission vent hose from the transmission.

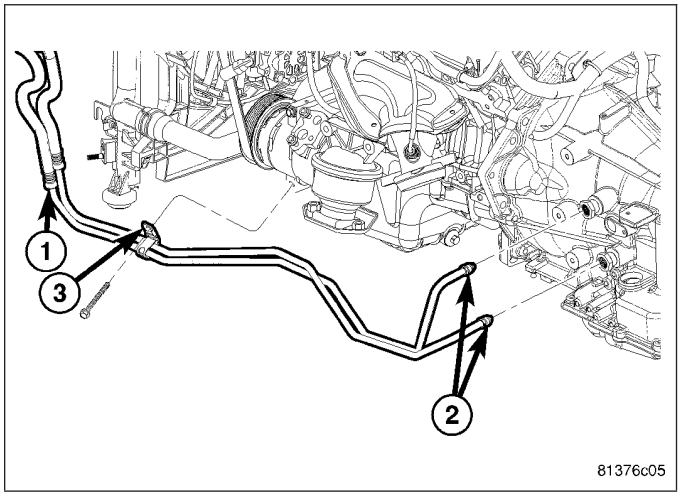

23. Support rear of engine with safety stand or jack.
24. Raise transmission slightly with service jack to relieve load on crossmember and supports.
25. Remove bolts (2) securing rear support and cushion (3) to transmission crossmember (1).
26. Remove bolts attaching crossmember (1) to frame and remove crossmember.

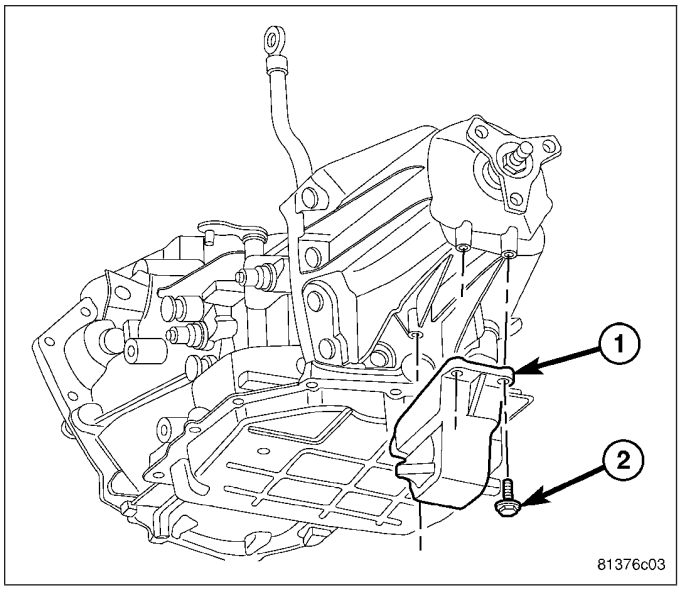

27. Remove the bolts (1) holding the engine oil pan (2) to the transmission (3).

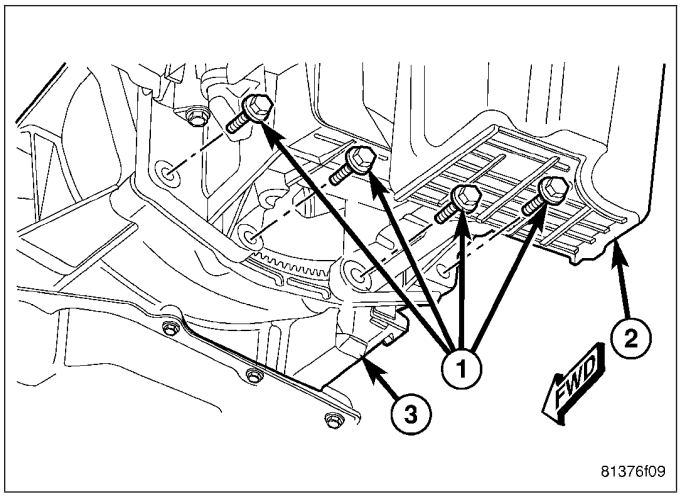

28. Remove all remaining bolts (2) holding the engine (1) to the transmission (3).
29. Carefully work transmission and torque converter assembly rearward off engine block dowels.
30. Hold torque converter in place during transmission removal.
31. Lower transmission and remove assembly from under the vehicle.
32. To remove torque converter, carefully slide torque converter out of the transmission.

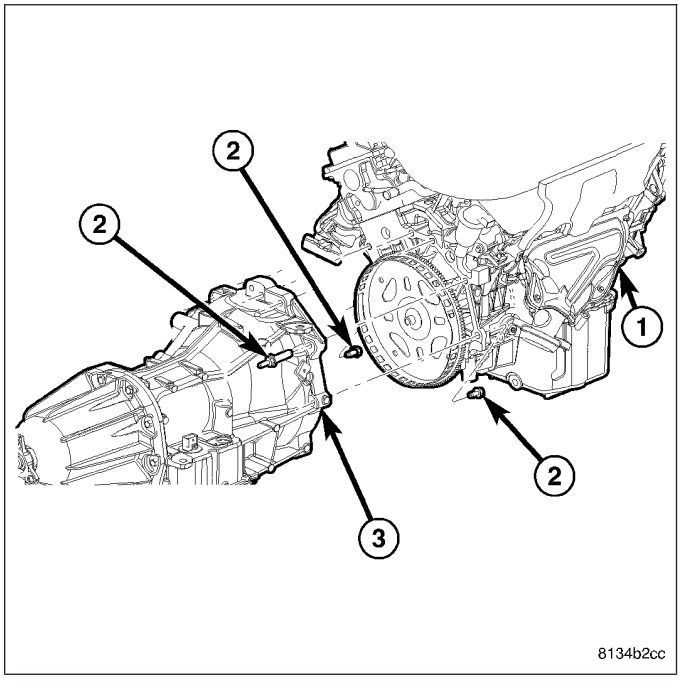

DISASSEMBLY

NOTE: If the transmission is being reconditioned (clutch/seal replacement) or replaced, it is necessary to perform the Quick Learn Procedure using the scan tool (Refer to 8 - ELECTRICAL/ELECTRONIC CONTROL MODULES/TRANSMISSION CONTROL MODULE - STANDARD PROCEDURE).

NOTE: Tag all clutch pack assemblies, as they are removed, for reassembly identification.

CAUTION: Do not intermix clutch discs or plates as the unit might then fail.

Before disassembling transmission, move the shift lever clockwise as far as it will go and then remove the shift lever.

1. Remove the torque converter (1) from the transmission input shaft (3).

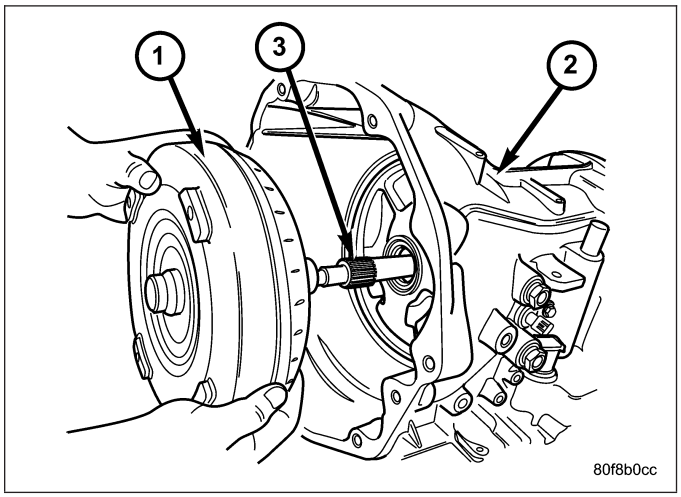

2. Measure input shaft end play using Tool 8266 (1, 2). Set up Tool 8266 and a dial indicator as shown.
3. Move input shaft in and out to obtain end play reading. End play specifications are 0.13 to 0.64 mm (0.005 to 0.025 inch). Record indicator reading for reference when reassembling the transmission. If endplay exceeds the specified range, the #4 thrust plate needs to be inspected and changed if necessary.

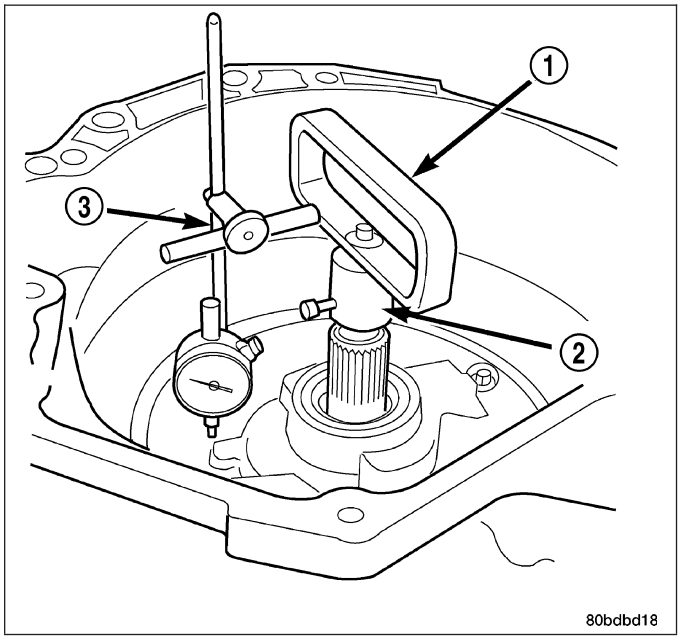

NOTE: It is not necessary to remove the output shaft flange to dissassemble the transmission. Perform the following steps only if it necessary to replace a component in the extension housing assembly.

4. Place the transmission in PARK to prepare for the removal of the output shaft nut.
5. Remove the nut holding the propeller shaft flange to the output shaft and remove the flange.
6. Remove the transmission rear oil seal with a suitable slide hammer and screw.
7. Remove the transmission output shaft washer.
8. Remove the transmission rear output shaft bearing retaining ring (1).
9. Position Bearing Remover 9082 (1) over the inner race of the output shaft bearing (3).

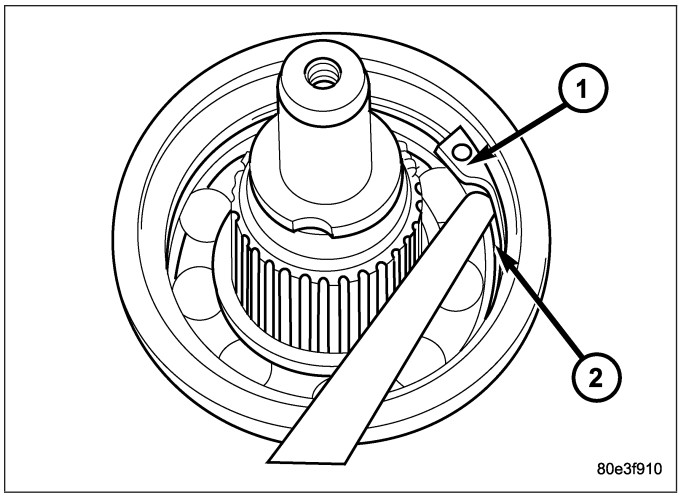

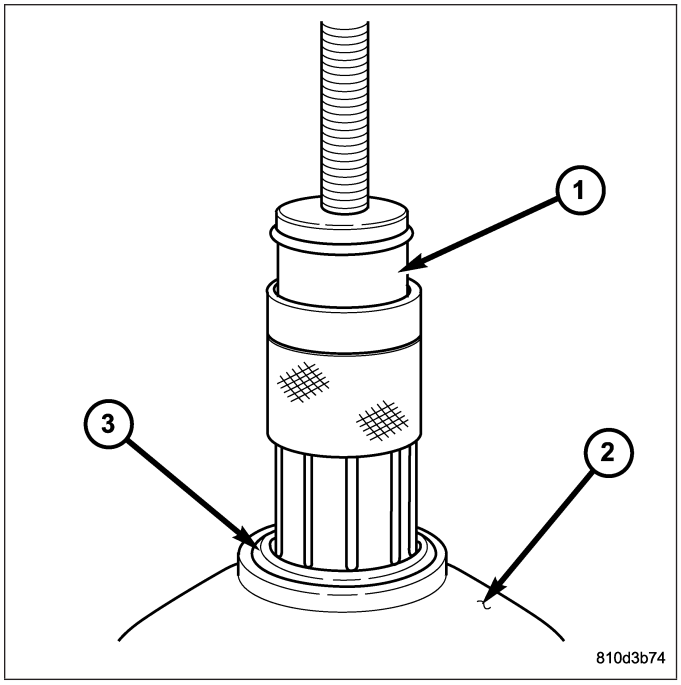

NOTE: Due to production variations in the bearing, it may not be possible to slide the collar fully downward. It is only necessary to slide the collar down far enough that the fingers securely grasp the inner bearing race.

10. Slide the collar (3) on the Bearing Remover 9082 (1) downward over the fingers (4) of the tool.

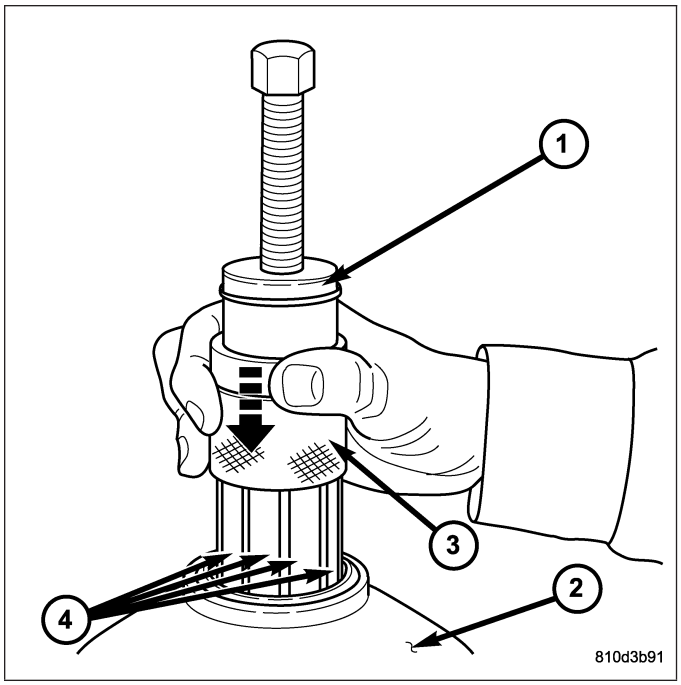

11. Remove the output shaft bearing (3).
12. Remove the geartrain end-play shim from the output shaft. Be sure to tag the shim since it is very similar to the output shaft washer and they must not be interchanged.

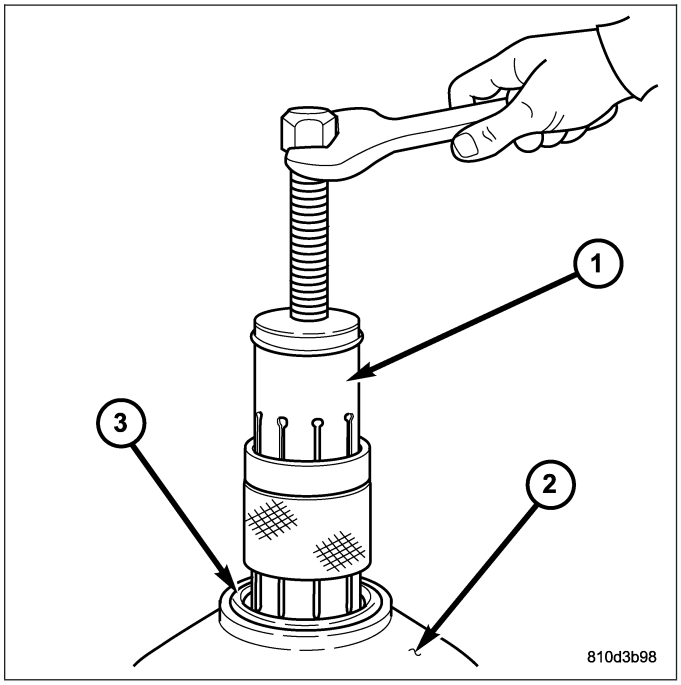

NOTE: The four bolts (3) along the bottom of the extension housing (2) have a sealing patch applied from the factory. Note the locations of these bolts and separate these bolts for reuse.

13. Remove the bolts that hold the extension housing (2) onto the transmission case.

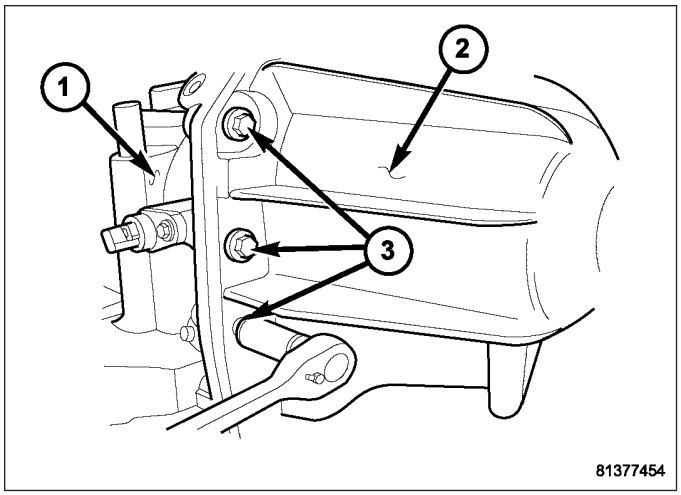

14. Remove the extension (2) housing from the transmission case. There are two pry slots located near the bottom corners of the housing for separating the housing from the transmission case.

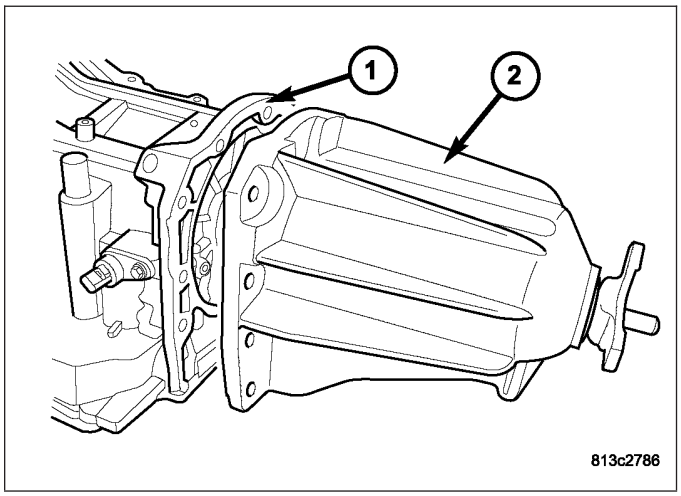

15. Inspect the lube tube grommet (3) for damage. If the grommet lip is damaged, it will need to be replaced.

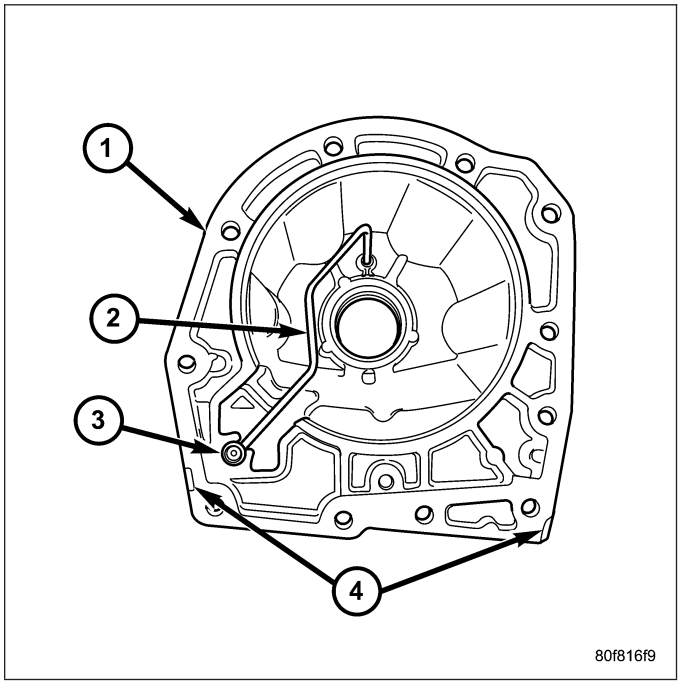

NOTE: The speed sensor bolts have a sealing patch applied from the factory. Separate these bolts for reuse.

16. Remove the input speed sensor bolt.

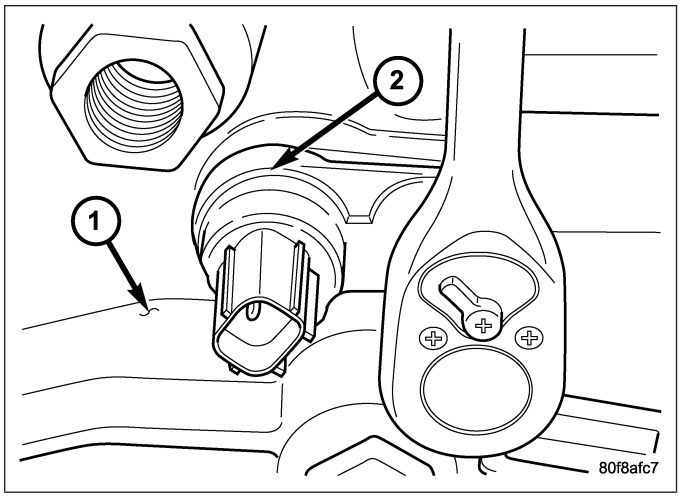

NOTE: The speed sensor bolts have a sealing patch applied from the factory. Separate these bolts for reuse.

17. Remove the output speed sensor bolt.

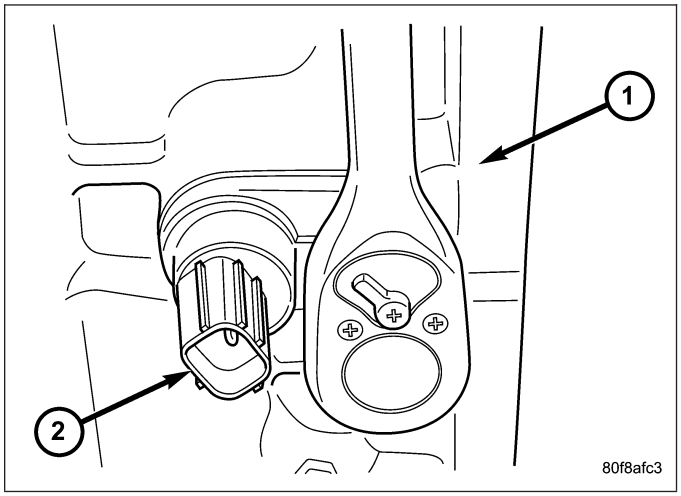

18. Remove the input and output (2) speed sensors. Identify the speed sensors for re-installation since they are not interchangeable.

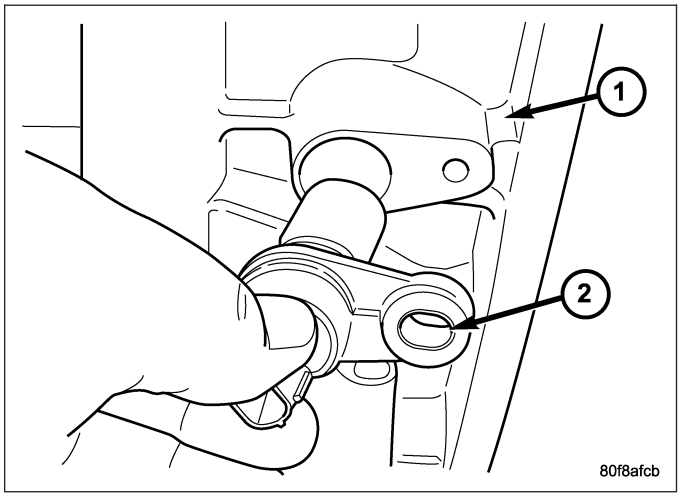

NOTE: One of the oil pan bolts has a sealing patch applied from the factory. Separate this bolt for reuse.

19. Remove the transmission oil pan bolts (2).

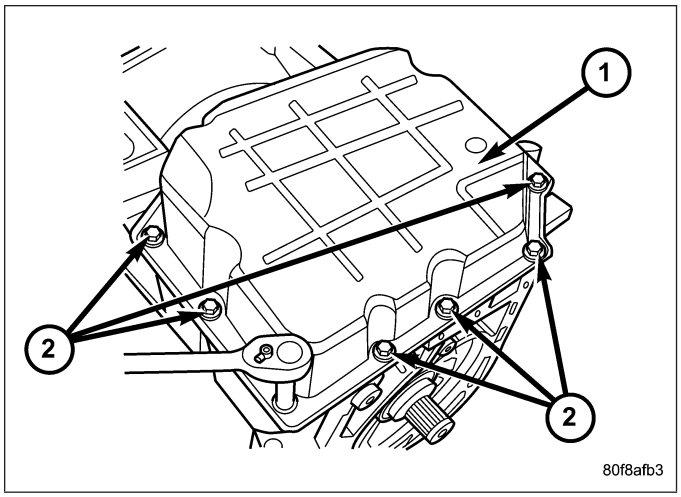

20. Remove the transmission oil pan (1).

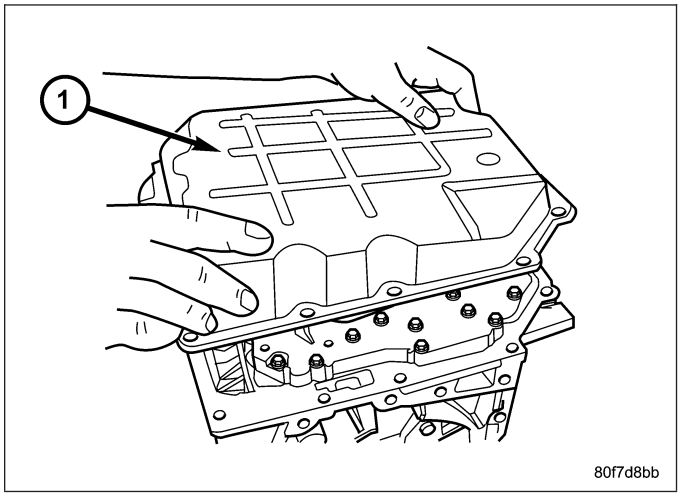

21. Remove the transmission oil filter screws (2).

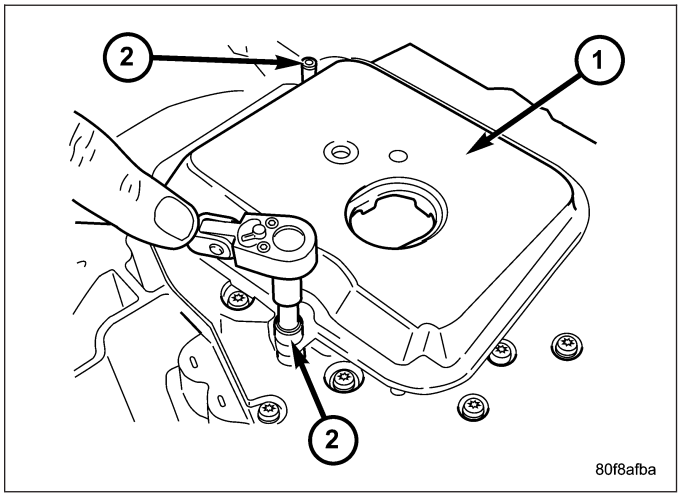

22. Remove transmission oil filter (1).

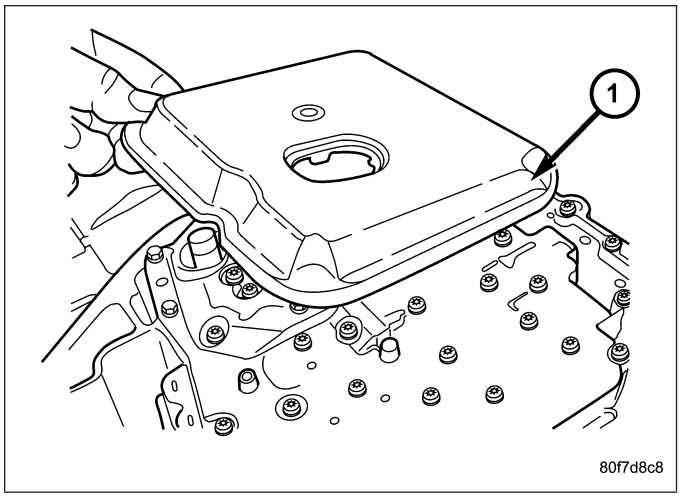

23. Remove the oil filter o-ring (2) from the valve body.
24. If necessary, use a suitable tool to push the transmission fill tube grommet and extension from the transmission case from the bottom.

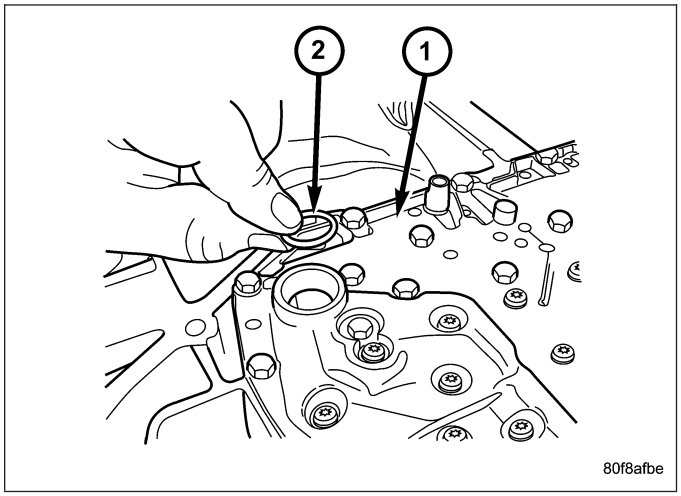

25. Remove valve body-to-case bolts (1).

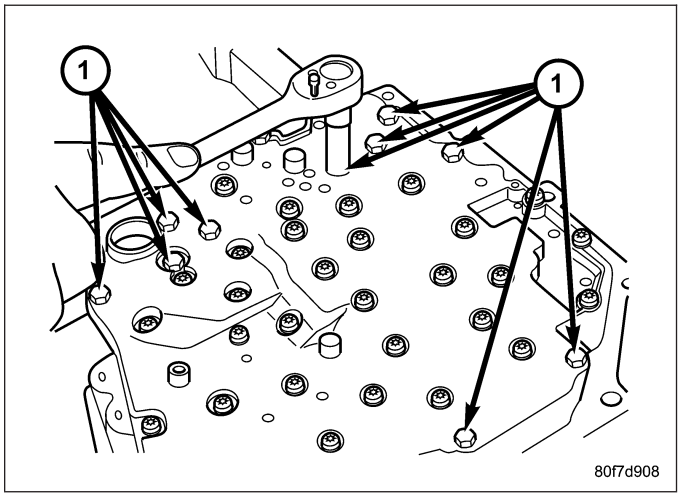

CAUTION: Do not handle the valve body by the manual shaft. Damage could result.

26. Remove valve body (1) from transmission.

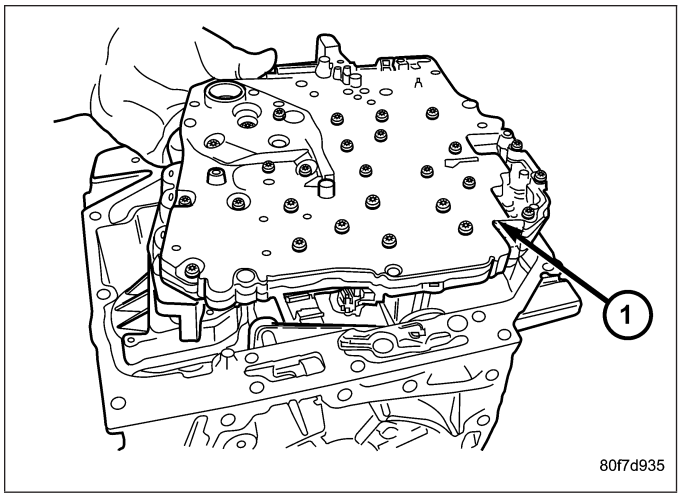

27. Remove underdrive and overdrive accumulators (1, 2).

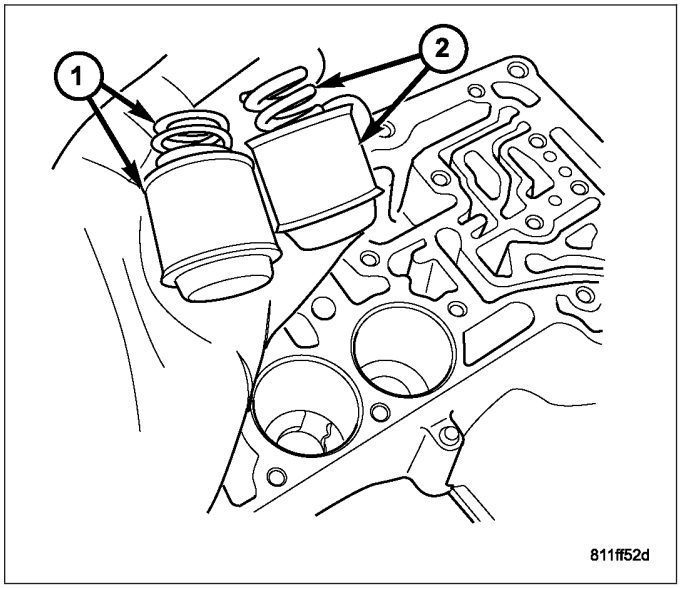

28. Remove the low/reverse accumulator snap ring (1).

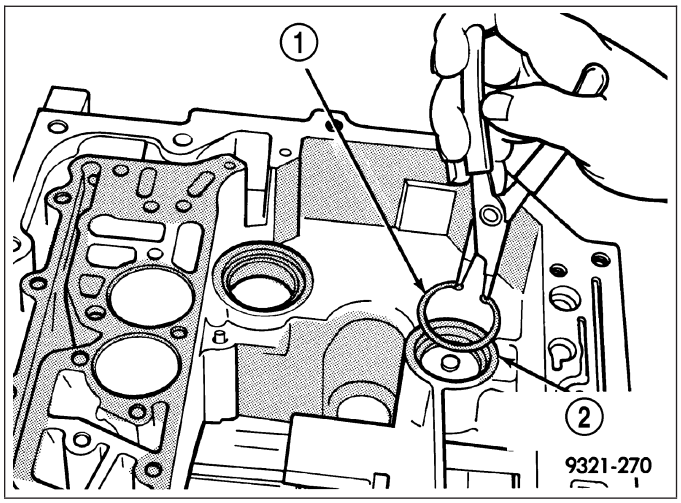

29. Remove the low/reverse accumulator plug (2).

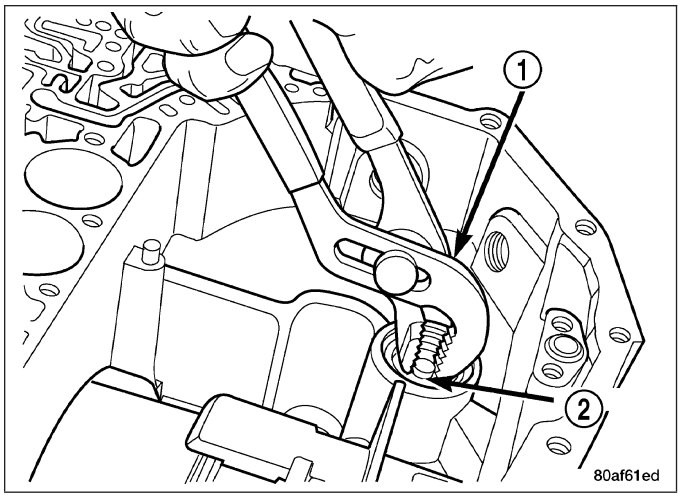

30. Remove low/reverse accumulator piston (1) using suitable pliers.

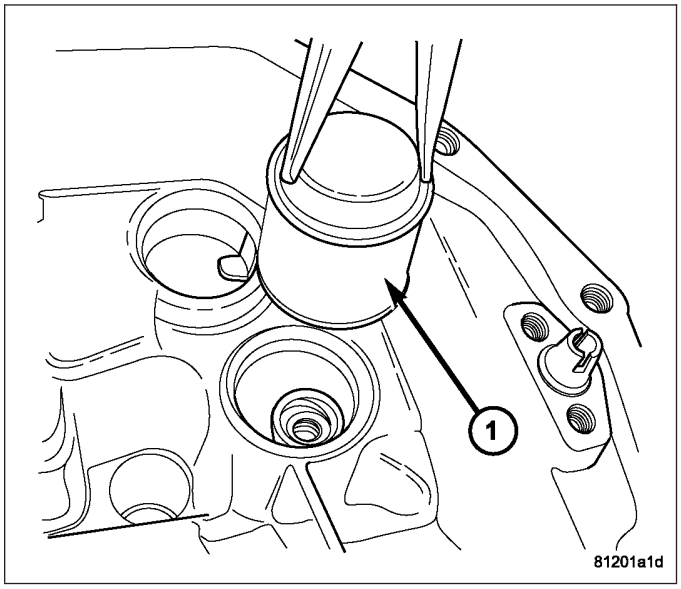

31. Remove piston (1) and springs (2).

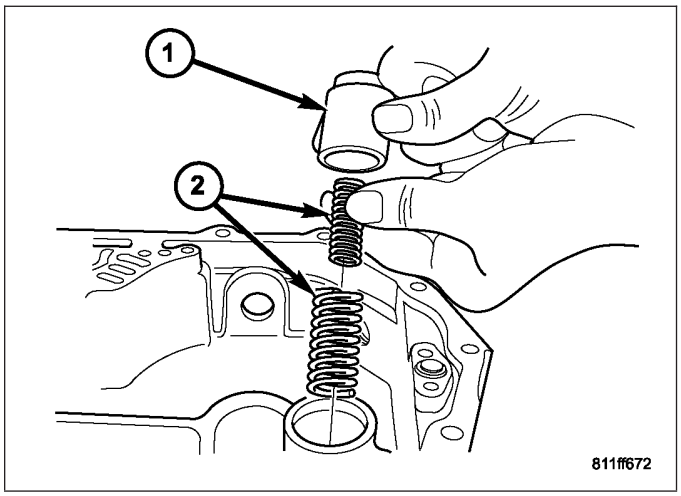

32. Remove and discard the oil pump-to-case bolts (1). The oil pump bolts are not to be reused.

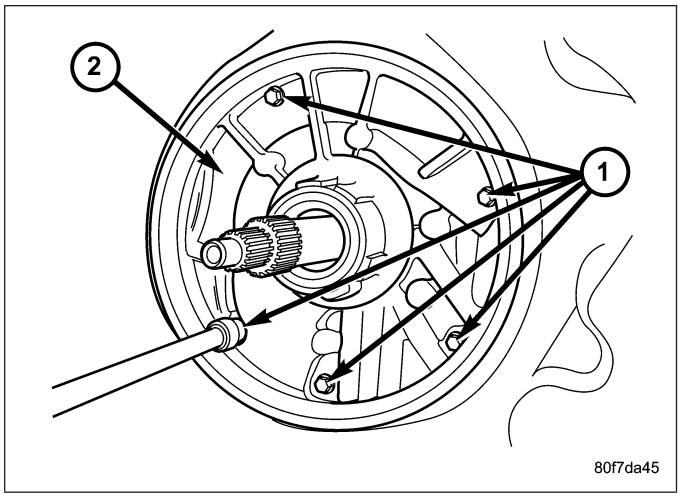

33. Remove oil pump using C-3752 Pullers (2).

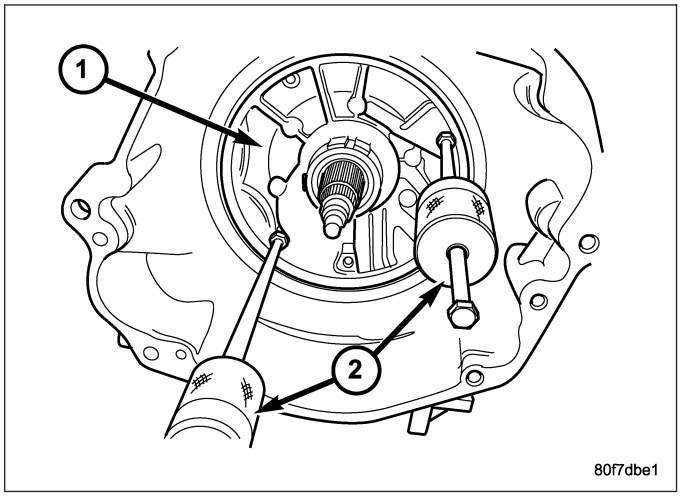

34. Remove oil pump while pushing in on input shaft (1).

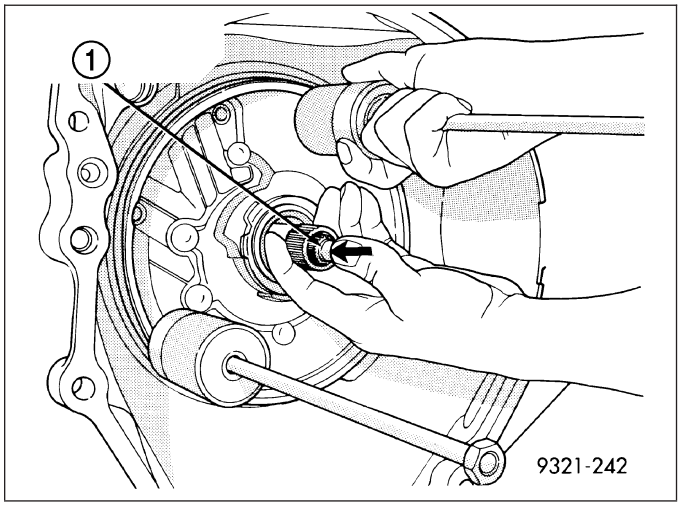

35. Remove oil pump gasket (2).

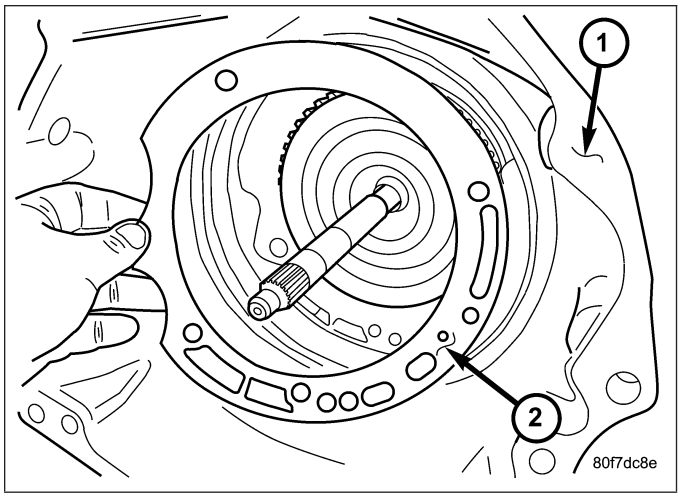

CAUTION: By-pass valve must be replaced if transmission failure occurs.

36. Remove the cooler by-pass valve (1).

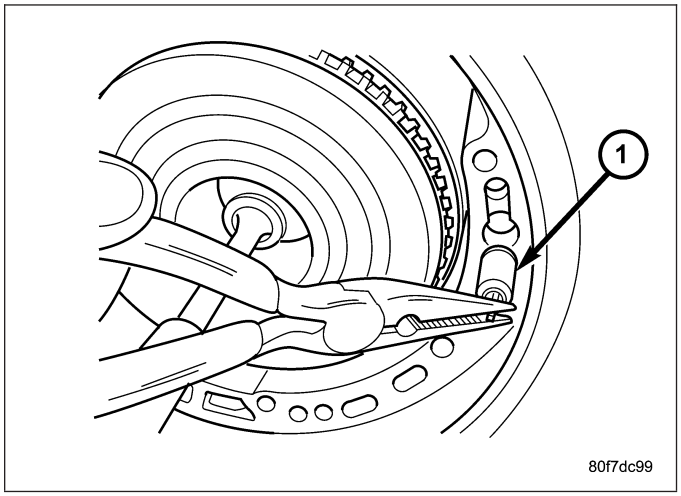

37. Remove the #1 caged needle bearing (1).

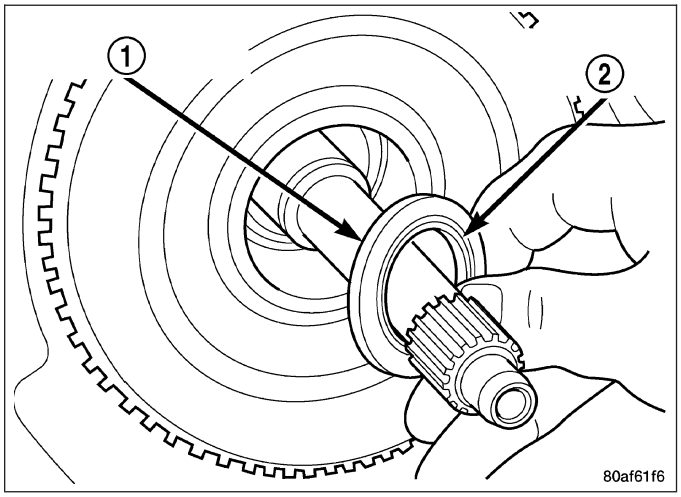

38. Remove the input clutch assembly (1).

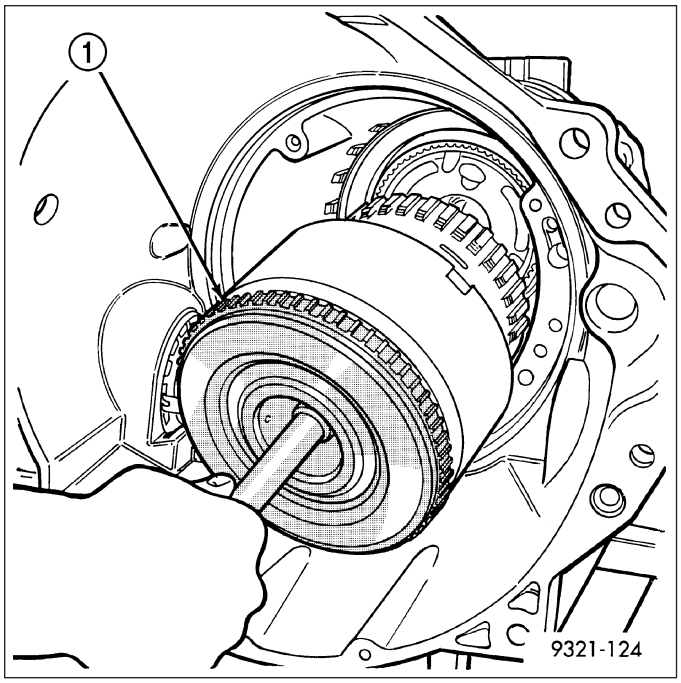

39. Remove the #4 thrust plate (2).

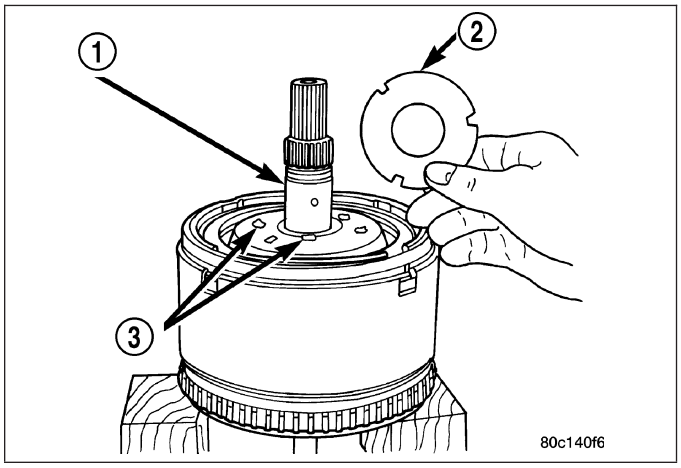

40. Remove the front sun gear assembly (1) and #4 thrust washer (if still in place).

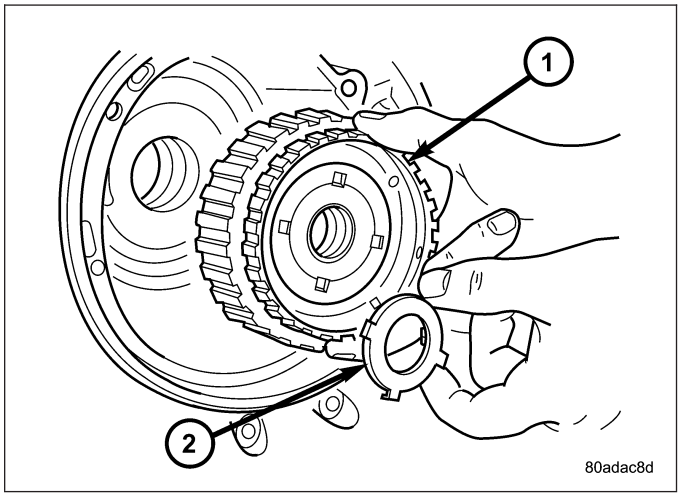

41. Remove the front carrier/rear annulus (2) and #6 needle bearing (1).

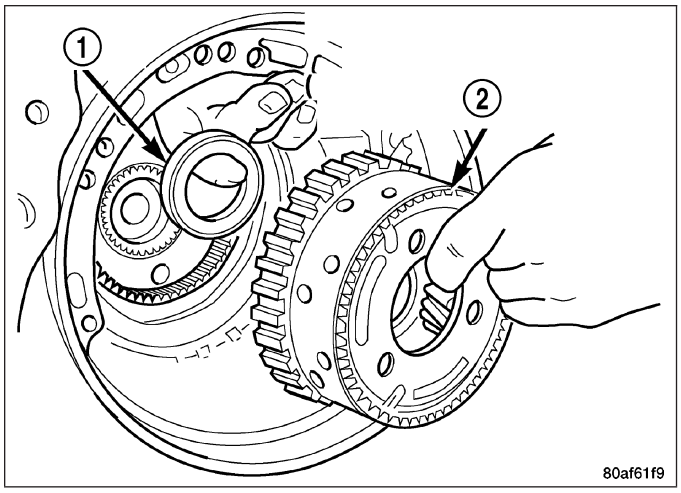

42. Remove the rear sun gear (2) and #7 needle bearing (1).

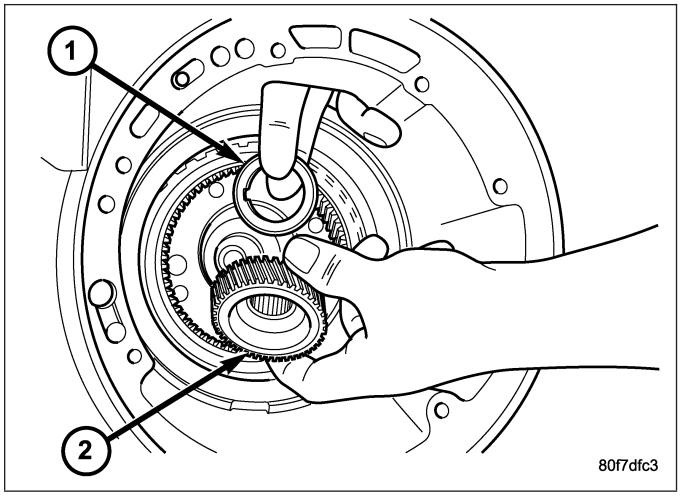

NOTE: The number seven needle bearing (1) has three antireversal tabs and is common with the number five and number two position. The orientation should allow the bearing to seat flat against the rear sun gear. A small amount of petrolatum can be used to hold the bearing to the rear sun gear.

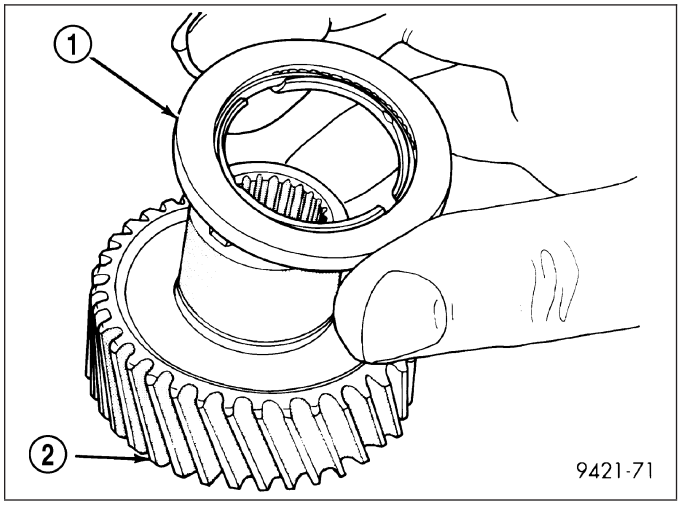

NOTE: Verify that Tool 5058A (1) is centered properly over the 2/4 clutch retainer (4) before compressing. If necessary, fasten the 5058A bar to the bellhousing flange with any combination of locking pliers and bolts to center the tool properly.

43. Install and load Tool 5058A to remove the 2/4 clutch retainer snap ring (3).

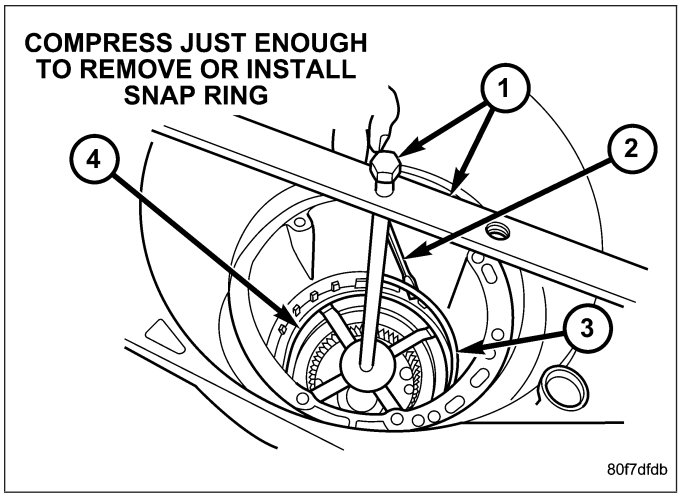

NOTE: The 2/4 Clutch Piston has bonded seals which are not individually serviceable. Seal replacement requires replacement of the piston assembly.

44. Remove the 2/4 clutch retainer (1).

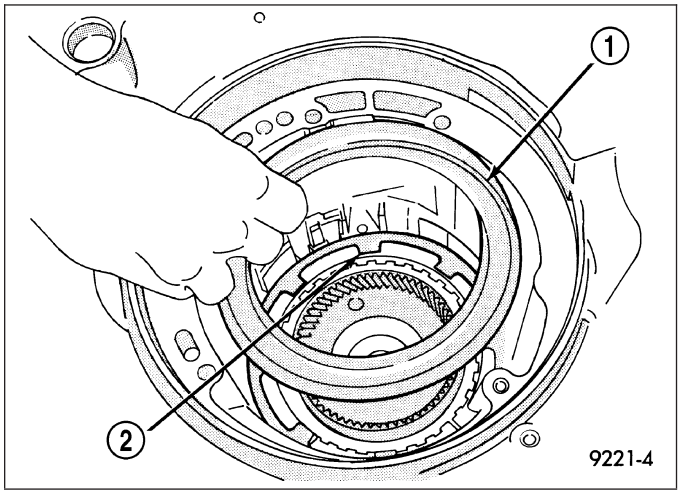

45. Remove the 2/4 clutch return spring (1).

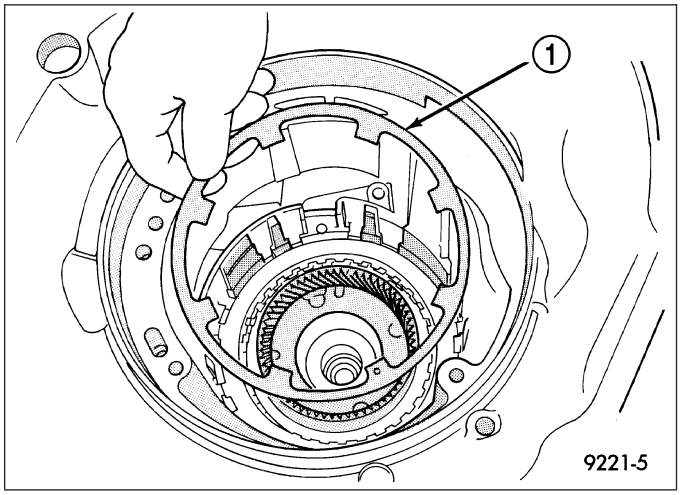

46. Remove the 2/4 clutch pack (1, 2).

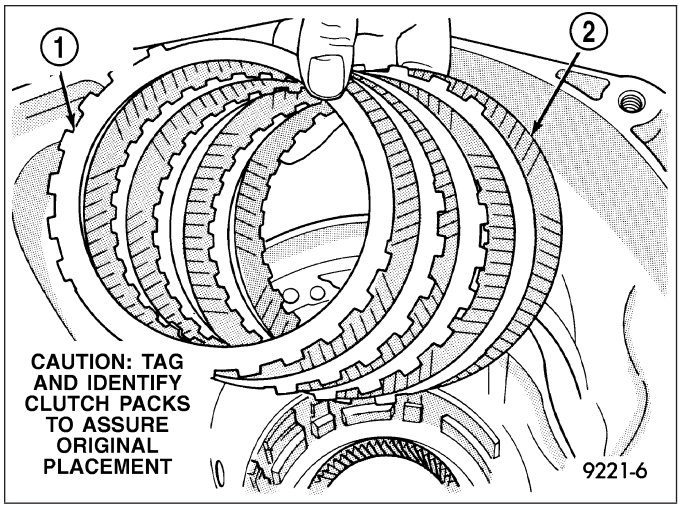

47. Remove the tapered snap ring (4).

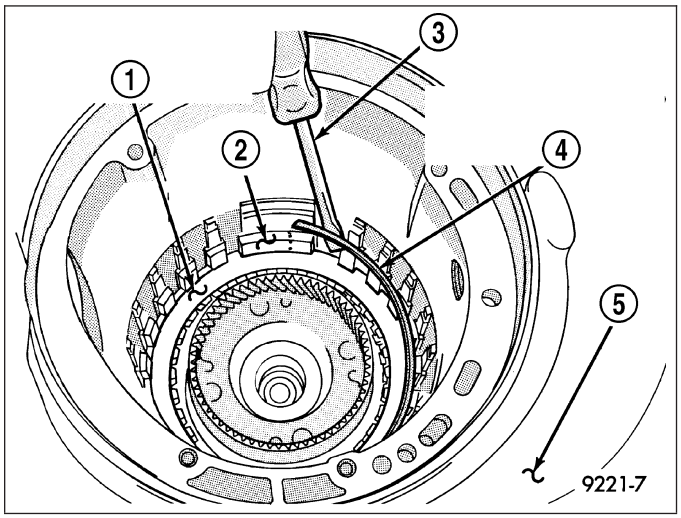

48. Remove the low/reverse reaction plate (1).

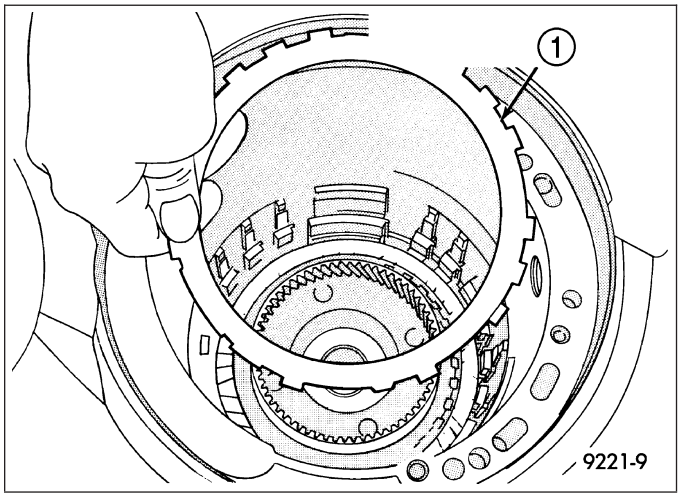

49. Remove one (1) low/reverse clutch disc to facilitate snap ring removal.

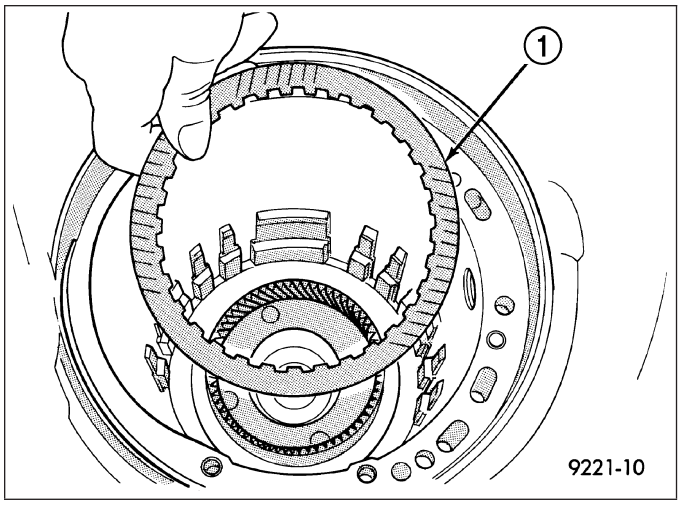

50. Remove the low/reverse reaction plate snap ring (2).

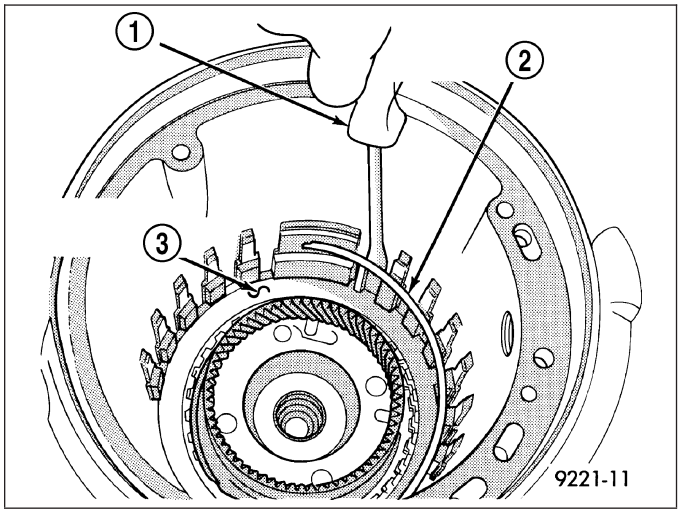

51. Remove the low/reverse clutch pack (1, 2).

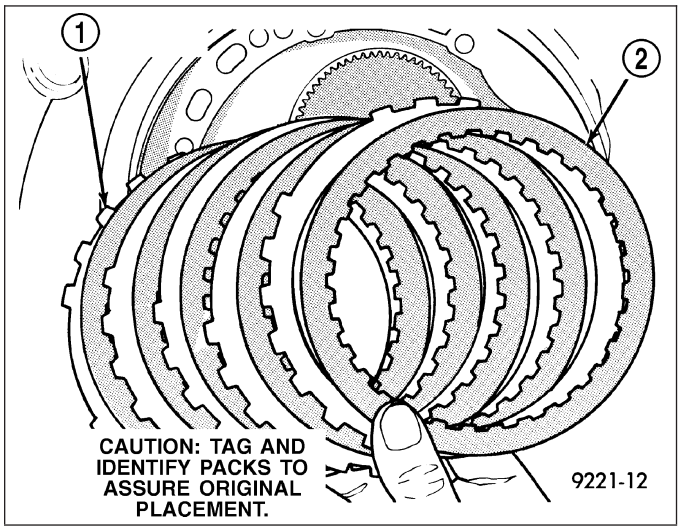

CAUTION: Failure to grind and open stakes (4) of the output shaft nut will result in thread damage to the shaft during nut removal.

WARNING: WEAR SAFETY GOGGLES WHILE GRINDING STAKE NUTS.

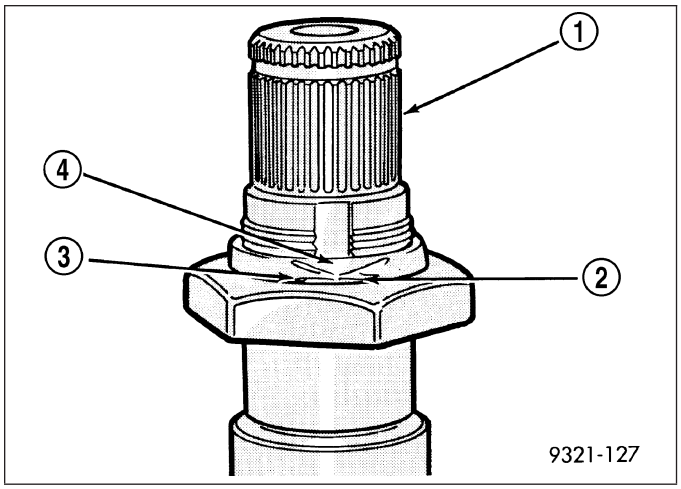

52. Using a die grinder or equivalent, grind the stakes in the shoulder of the shaft nut (2) as shown. Do not grind all the way through the nut and into the shaft. There are two stakes on each nut.

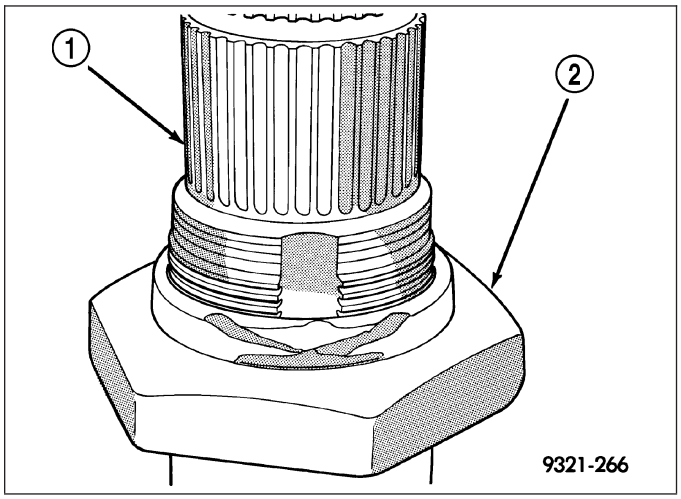

53. Using a small chisel (1), carefully open the stakes on nut (2).

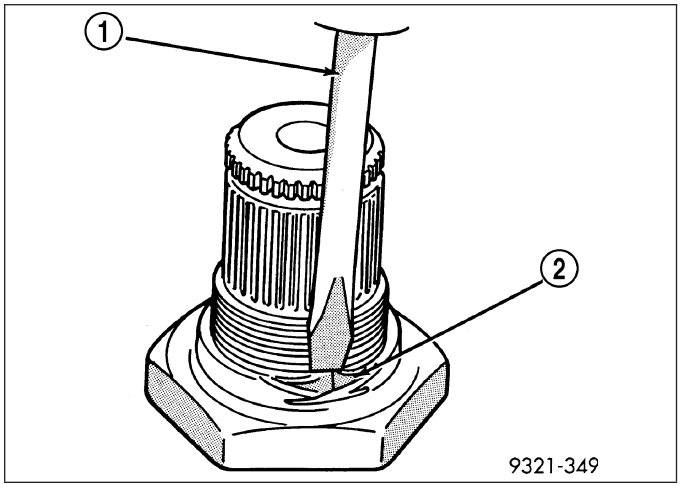

54. Use special tool 6497 (1) and 6498A (2) to remove the output shaft nut.

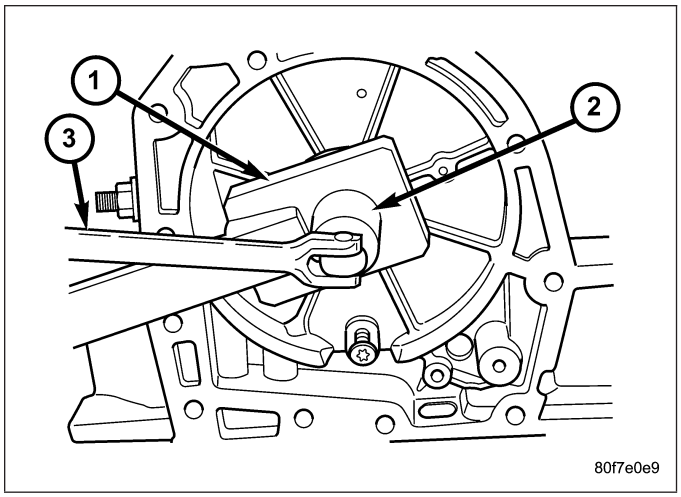

55. Remove the output shaft (1) from case (3) using a shop press (2).

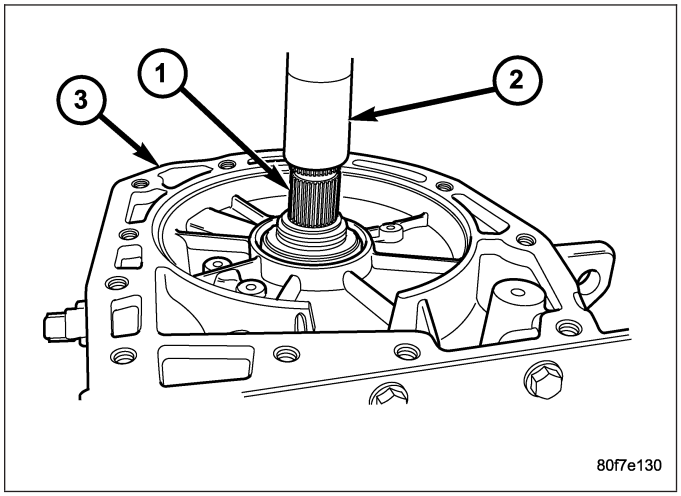

56. Use special tool 6596 (2) with a shop press (1) to remove the front output shaft bearing cup.

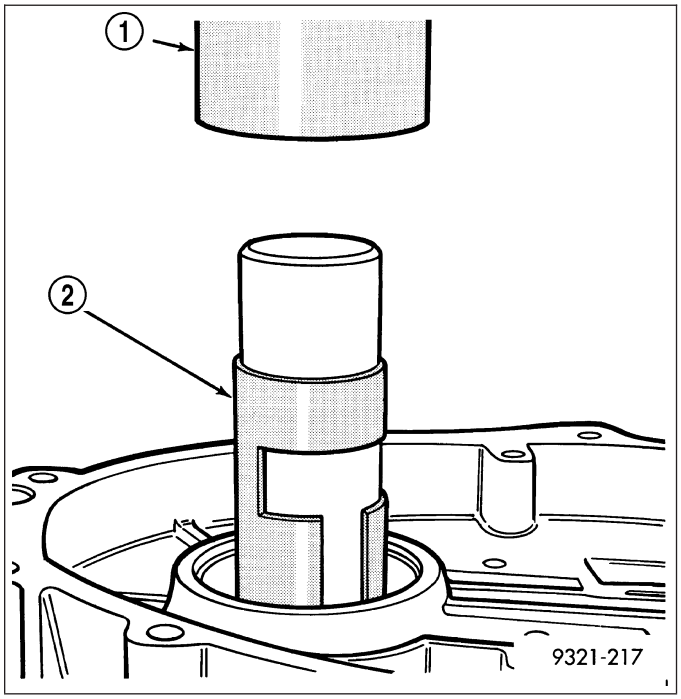

57. Use special tool 6597 (2) and handle C-4171 (1) and C-4171-2 to press the rear output shaft bearing cup rearward.

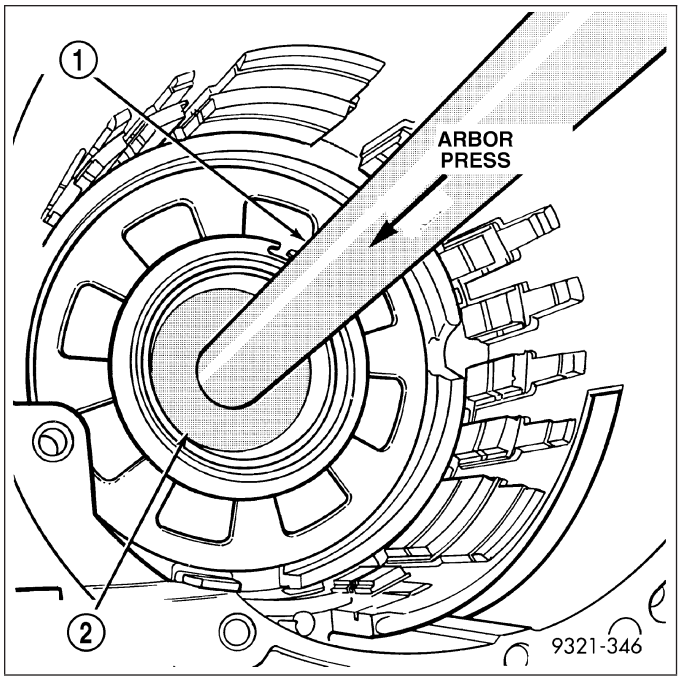

58. Remove the rear carrier front bearing cone (3).

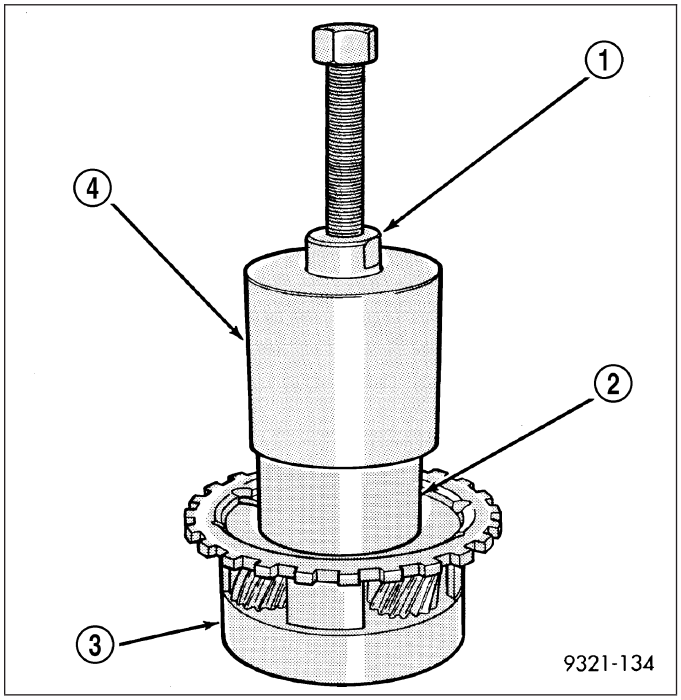

59. Install and load compressor 5059A (4) as shown.

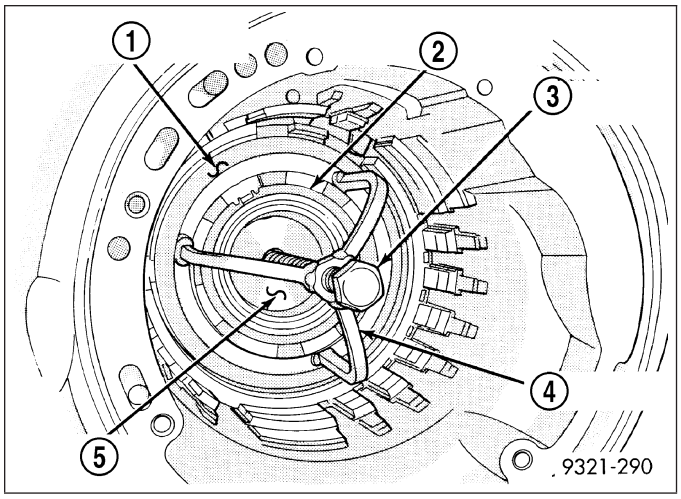

60. Remove the low/reverse belleville spring snap ring (1).

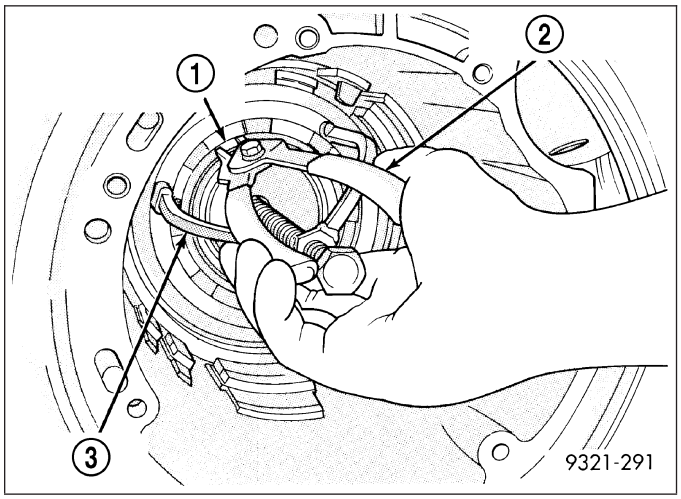

61. Remove the low/reverse piston belleville spring (1).

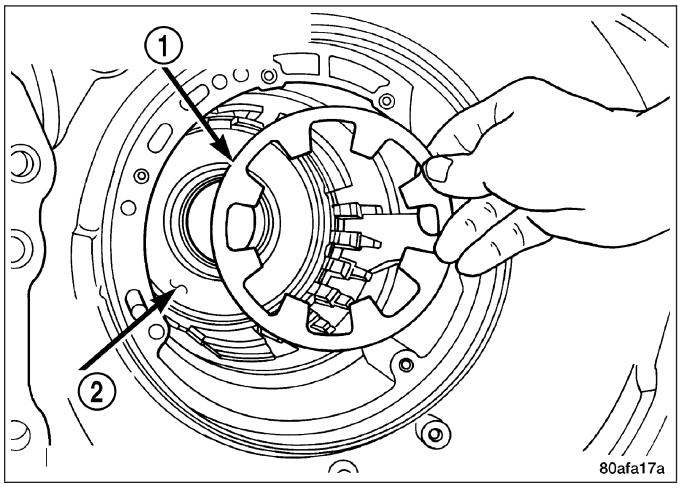

62. Remove the park sprag pivot retaining screw.
63. Drive out the anchor shaft using suitable punch (1).

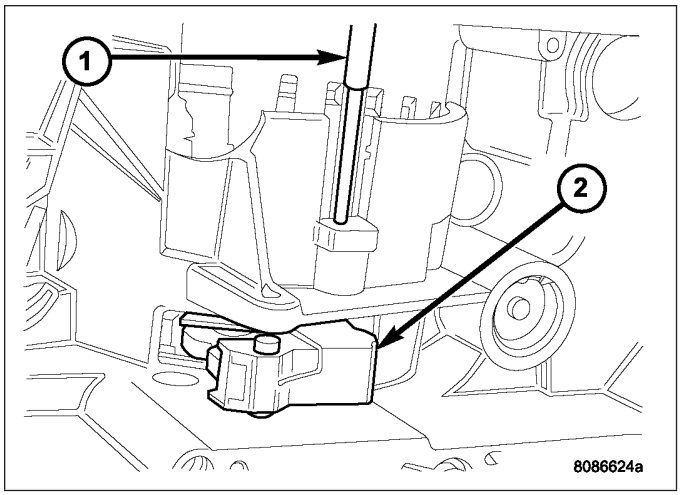

64. Remove the guide bracket pivot pin (1). Inspect all components for wear and replace if necessary.

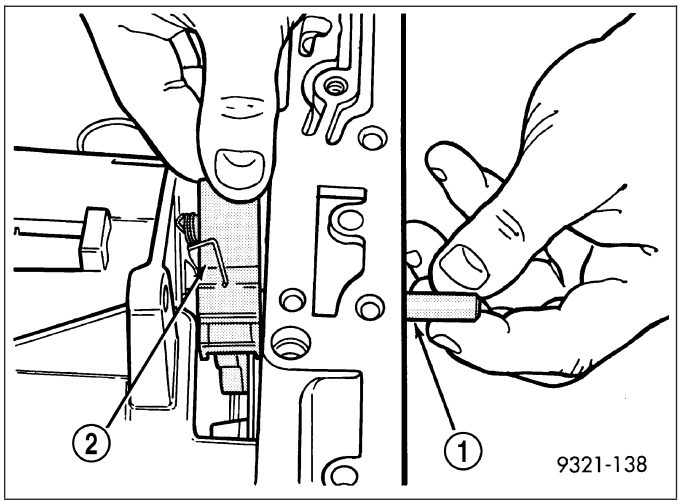

NOTE: The Low/Reverse Clutch Piston has bonded seals which are not individually serviceable. Seal replacement requires replacement of the piston assembly.

65. Remove the low/reverse clutch piston (1).
66. Remove the low/reverse piston retainer screws.

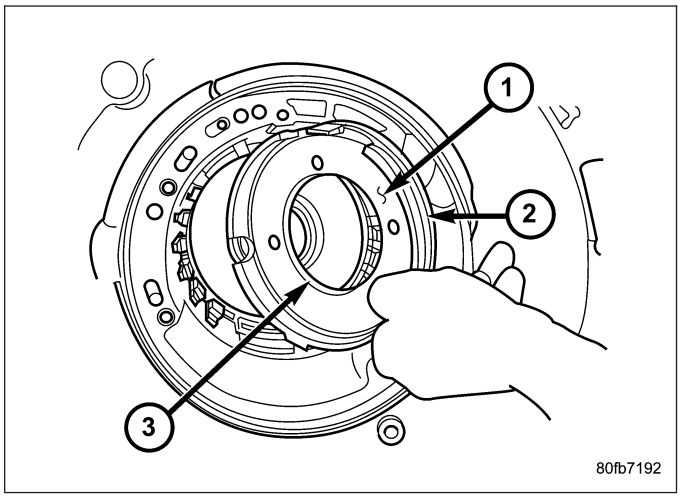

67. Remove low/reverse piston retainer (1).

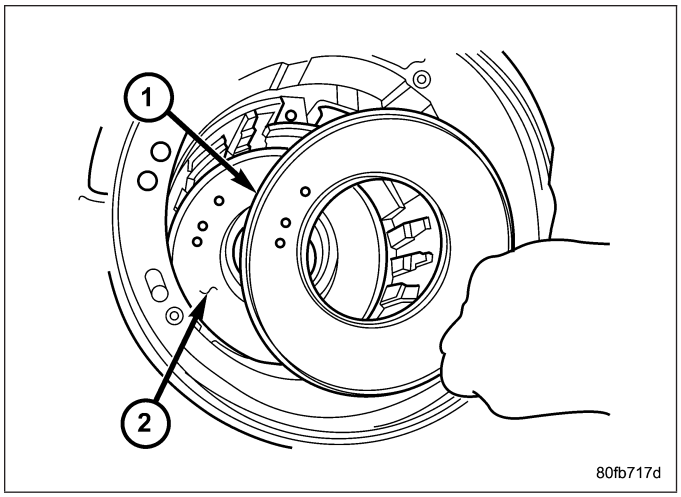

68. Remove the low/reverse piston retainer gasket (2).

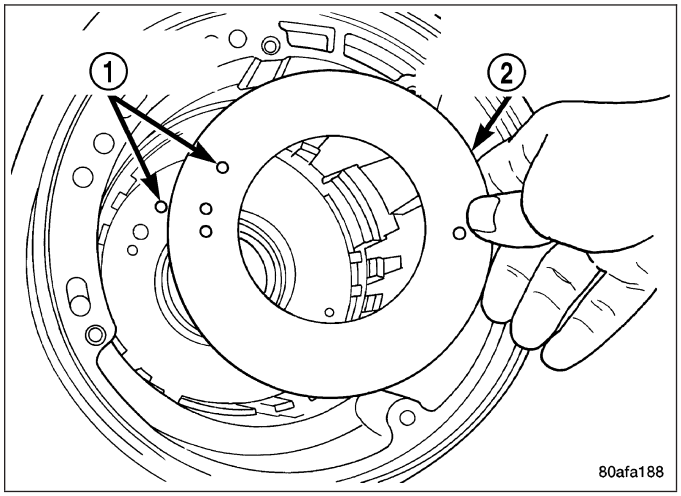

ASSEMBLY

NOTE: If the transmission assembly is being reconditioned (clutch/seal replacement) or replaced, it is necessary to perform the Quick Learn Procedure using the scan tool (Refer to 8 - ELECTRICAL/ELECTRONIC CONTROL MODULES/TRANSMISSION CONTROL MODULE - STANDARD PROCEDURE).

1. Install the output bearing cups using Special Tool - 5050A.

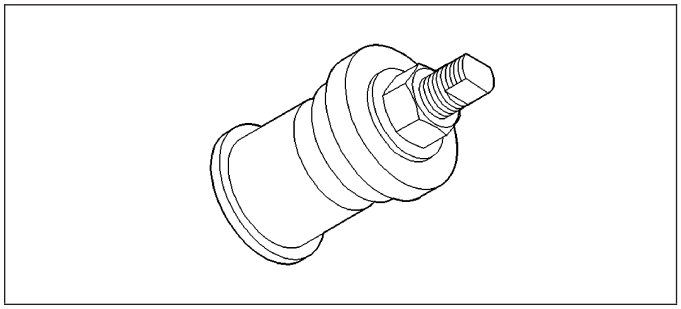

2. Install low/reverse piston retainer gasket (2).

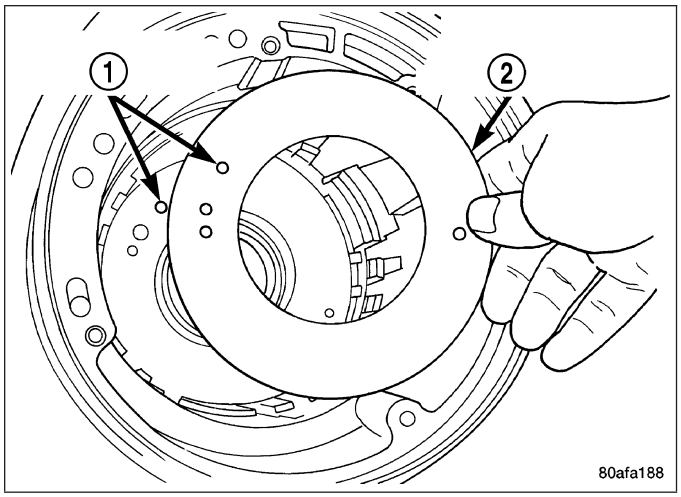

3. Install low/reverse piston retainer (1).

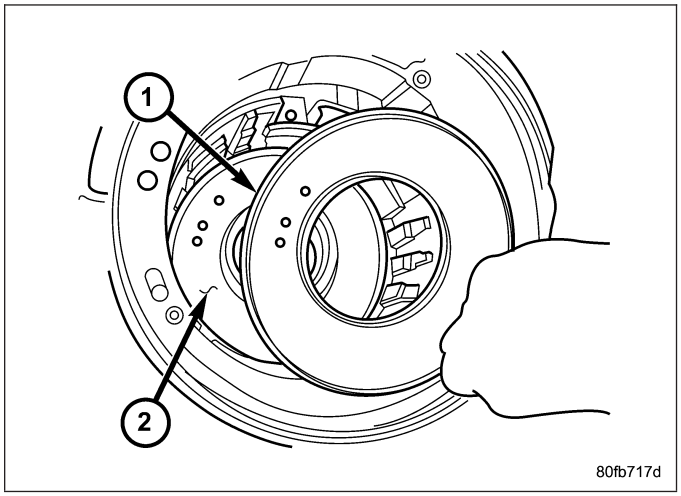

4. Install low/reverse piston retainer-to-case screws (3) and torque to 5 N·m (45 in. lbs.).

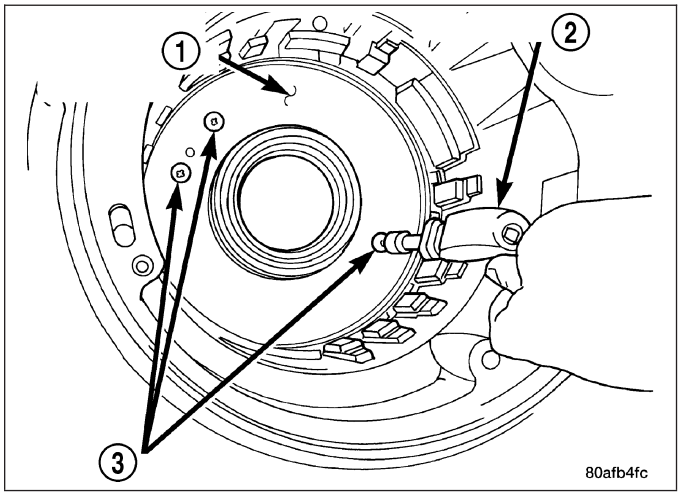

NOTE: The Low/Reverse Clutch Piston has bonded seals which are not individually serviceable. Seal replacement requires replacement of the piston assembly.

5. Install low/reverse clutch piston (1).

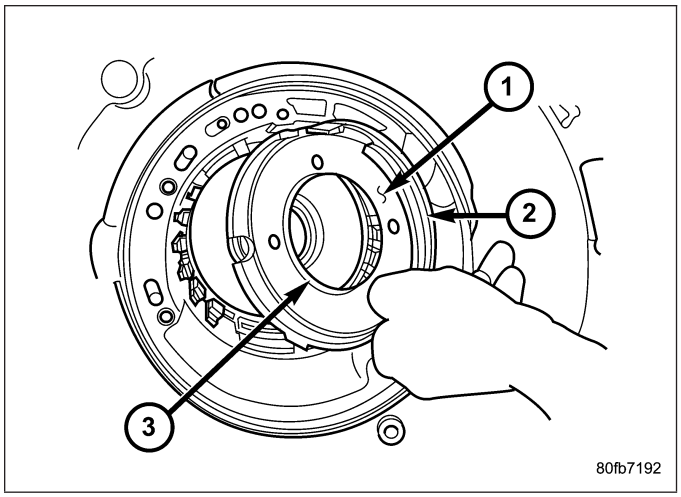

6. Assemble guide bracket (1) assembly as shown, if necessary.

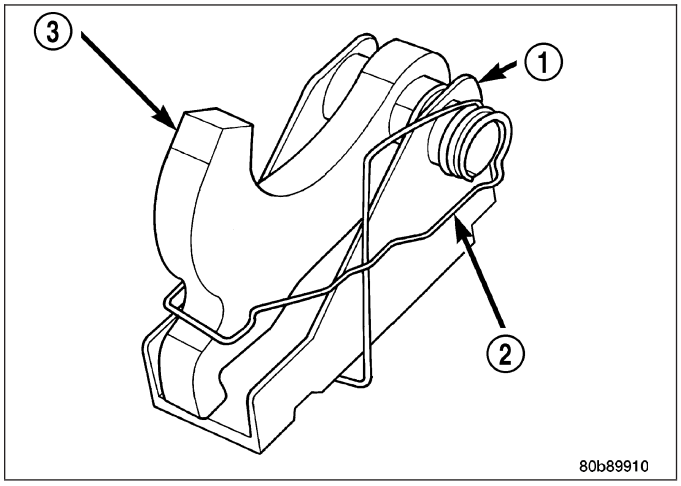

CAUTION: When installing, be sure guide bracket and split sleeve touch the rear of the transmission case.

7. Install guide bracket pivot pin (1).
8. Install park sprag pivot retaining screw and torque to 4.5 N·m (40 in. lbs.).

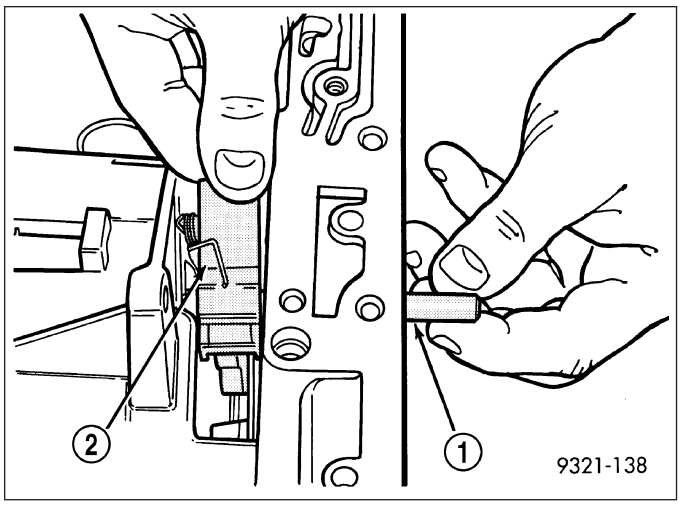

9. Install low/reverse piston belleville spring (1) into position.

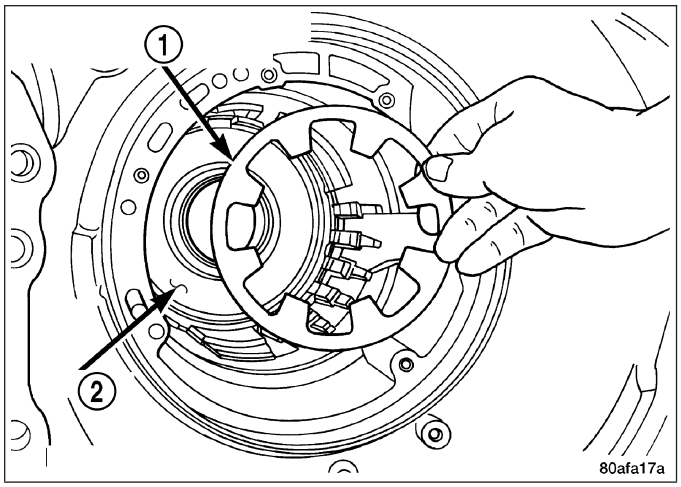

10. Install and load low/reverse spring compressor tool (3, 4, 5) as shown to facilitate snap ring (2) installation.

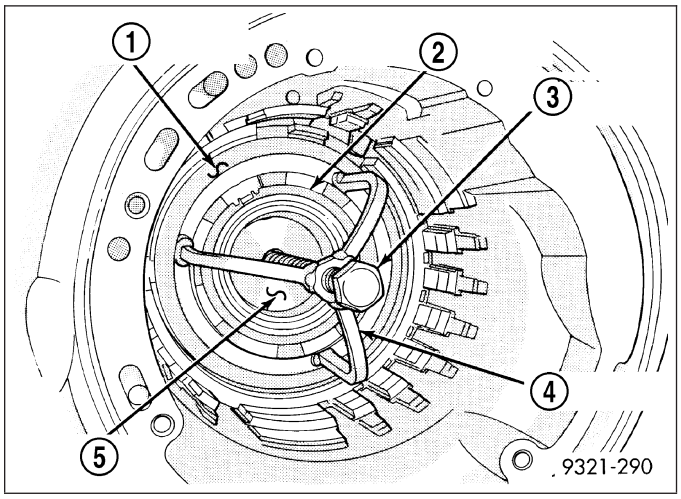

11. Install snap ring (1) and remove compressor tool.

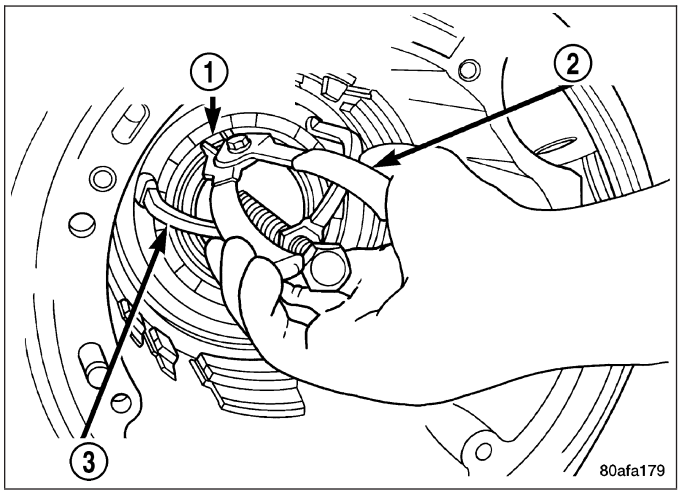

12. Install rear carrier (4) front bearing cone.

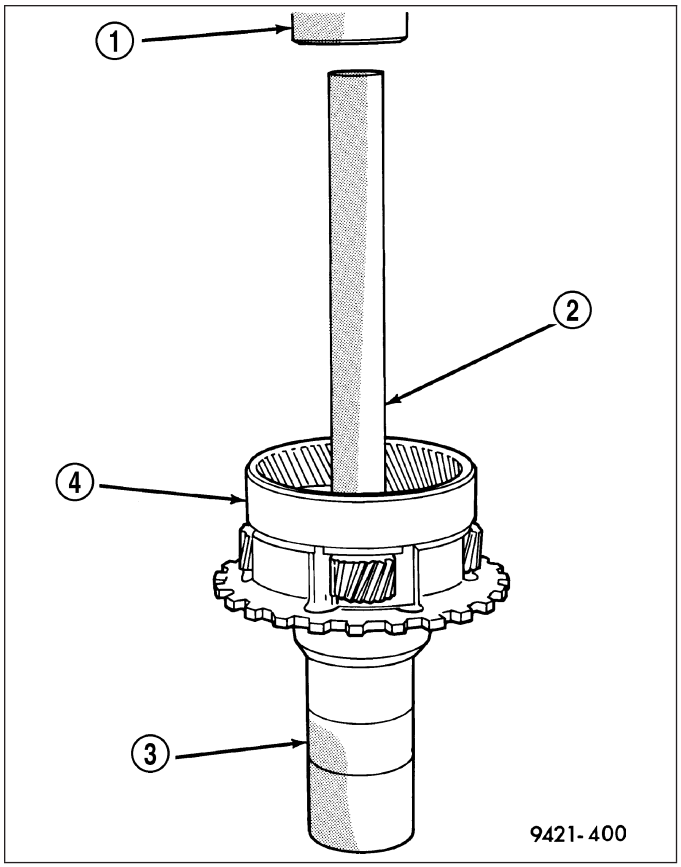

Check output bearing preload. **Output bearing preload must be checked and/or adjusted if any of the following items have been replaced:**

- Output shaft (rear carrier assembly)
- Output shaft bearings
- Transmission case

13. **PRELOAD CHECK/SHIM SELECTION:** Install rear output shaft bearing cone and special tool 6618A (1).

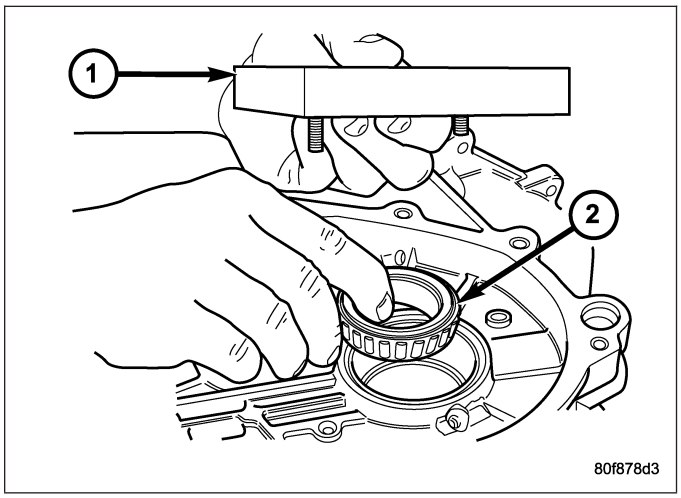

14. Install special tool 6618A (1). Lightly tighten retaining screws. Screws should be below the plate surface, but do not snug screws.
15. Turn case over on arbor press so that the plate is resting on the press base. **CAUTION: The output shaft will extend through the hole of tool 6618A. Ensure your press table has clearance for the output shaft.**

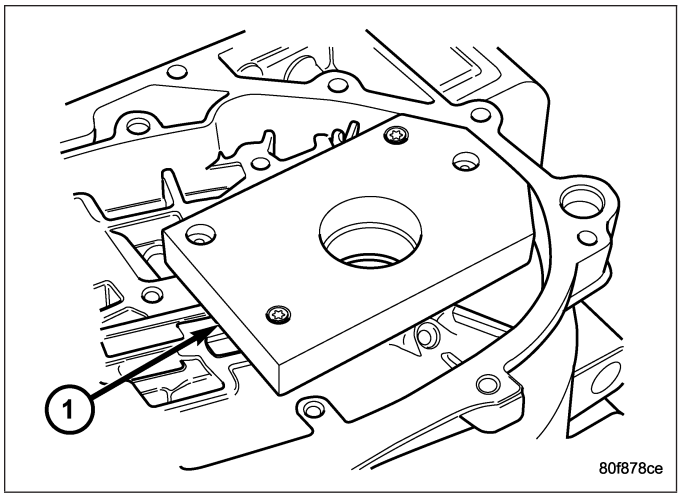

16. Install shim (1) on output shaft (2). Apply small amount of petrolatum onto the shim to hold it in place. Use the original shim as a starting point. If original shim is not available, use the thickest shim available.

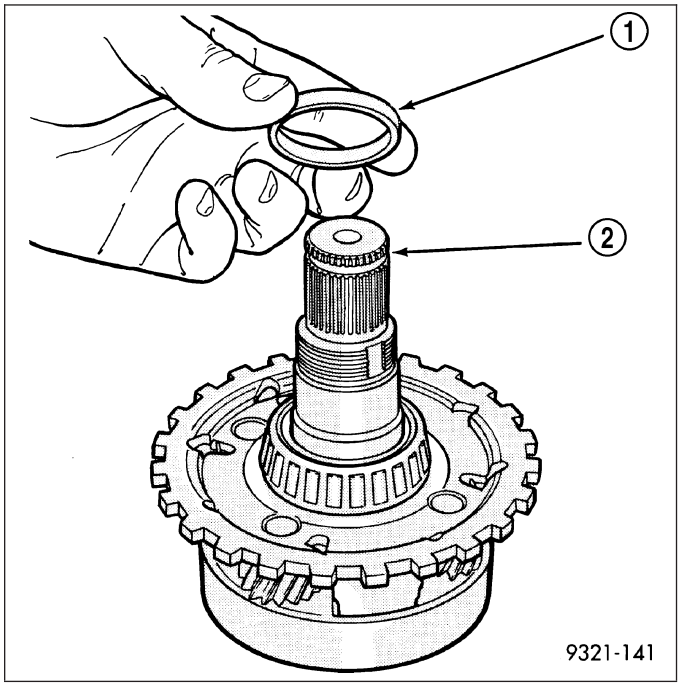

17. Install output shaft/rear carrier into rear bearing. The shaft must be pressed into position. Use special tool MD-998911 (Disc) (2) and C- 4171 and C4171-2 (Handle) (1) to press shaft into rear bearing.

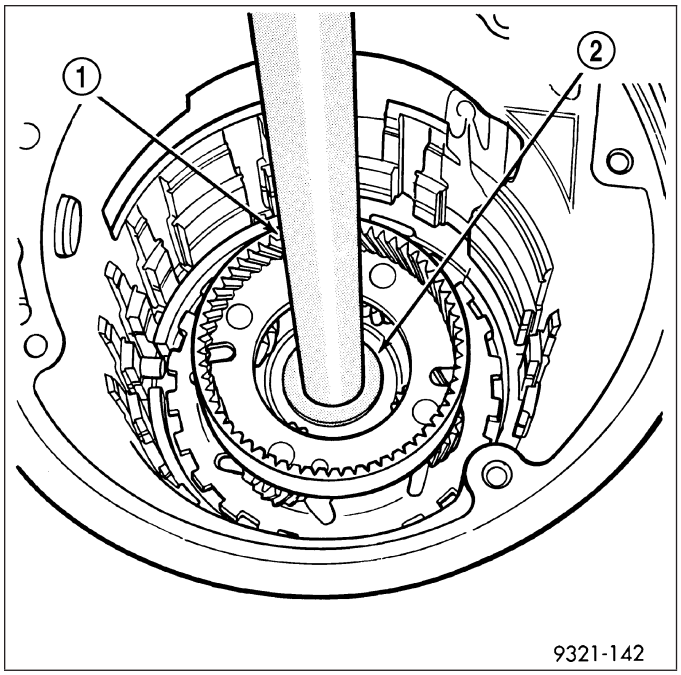

CAUTION: Do not re-use old output shaft nut because the removed stake weakens the nut flange. Using special tools 6497 and 6498-A, install new output shaft nut. Tighten new output shaft nut to 271 N·m (200 ft. lbs.).

18. Check the turning torque (1) of the output shaft. The shaft should have 1 to 8 in. lbs. of turning torque. If the turning torque is **higher than** 8 in. lbs., install a thicker shim. If turning torque is **less than** 1 in. lb., install a thinner shim. Make sure there is no end play.

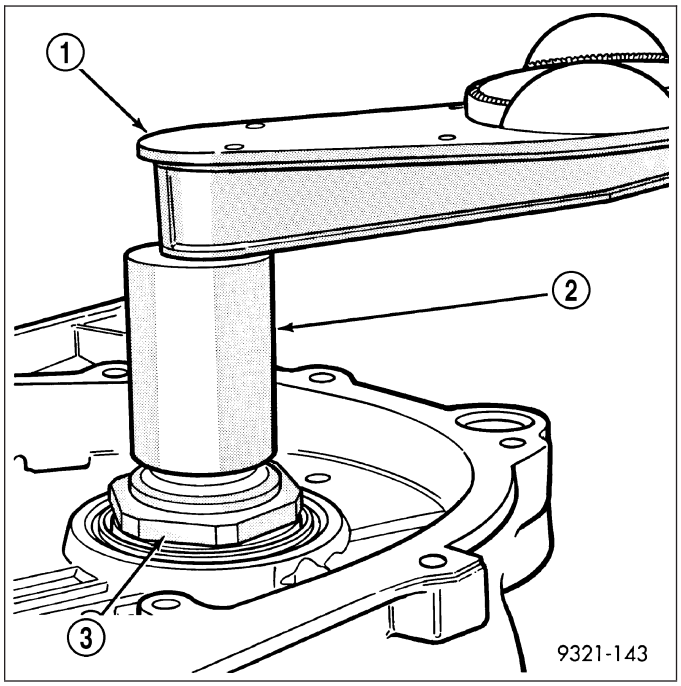

CAUTION: Failure to stake nut could allow the nut to back-off during use.

19. The new nut (3) must be staked after the correct turning torque is obtained. Use special tool 6639 (2) to stake output shaft nut.

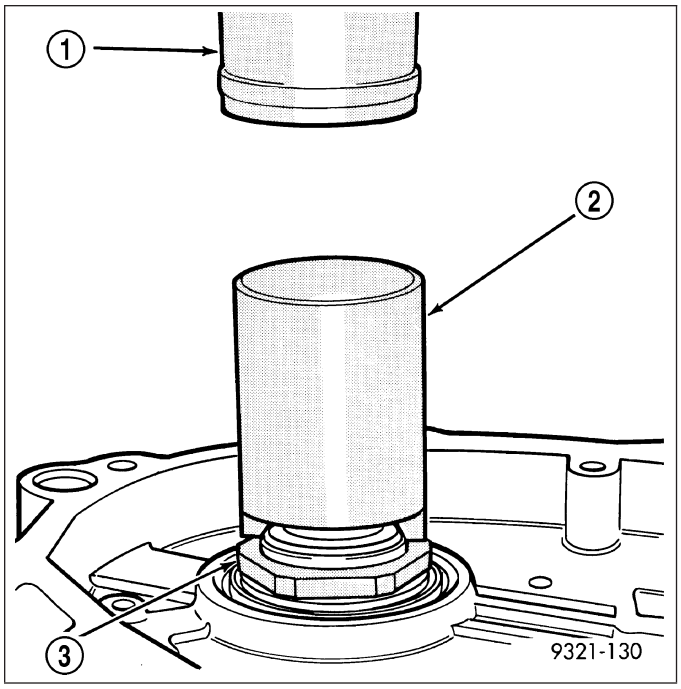

20. Verify that the nut has been properly staked (2) to the output shaft.

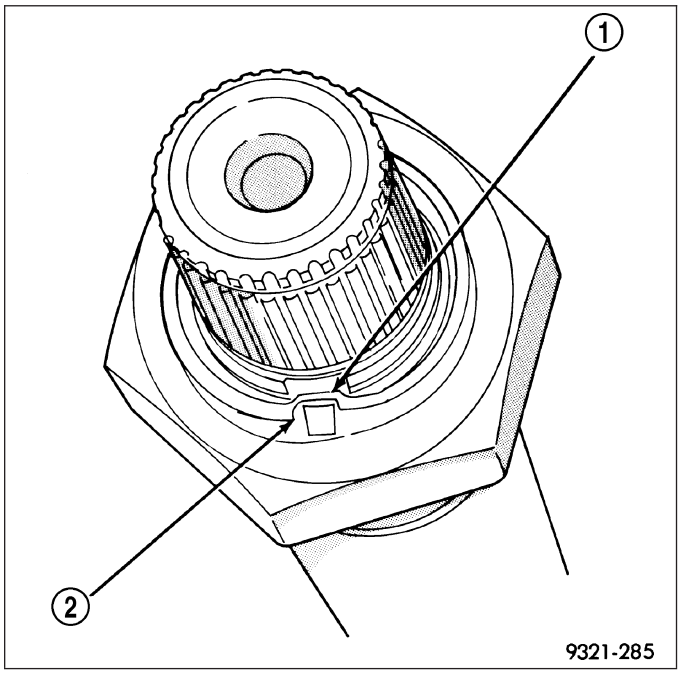

21. Install low/reverse clutch pack (1, 2). Leave uppermost disc out to facilitate snap ring installation.

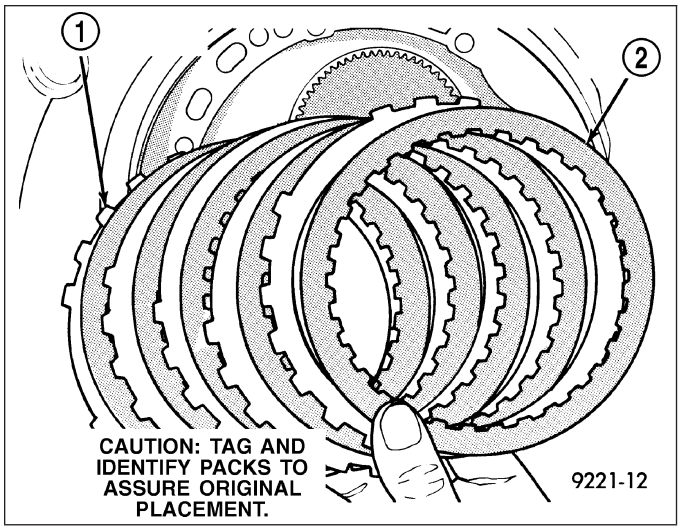

22. Install low/reverse reaction plate snap ring (2).

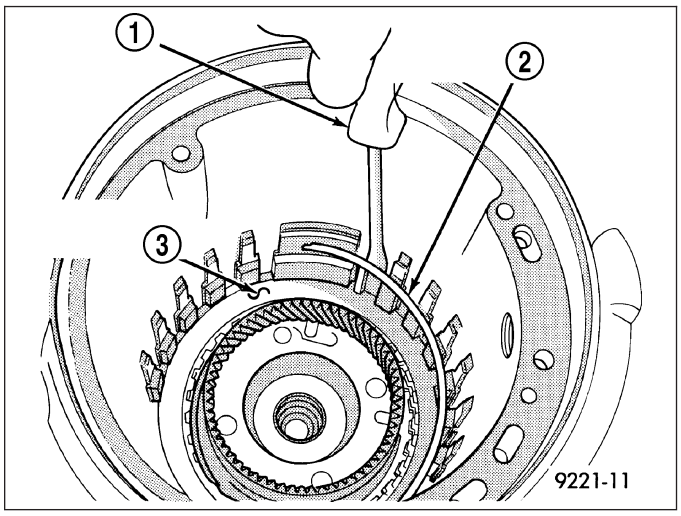

23. Install one low/reverse clutch disc (1).

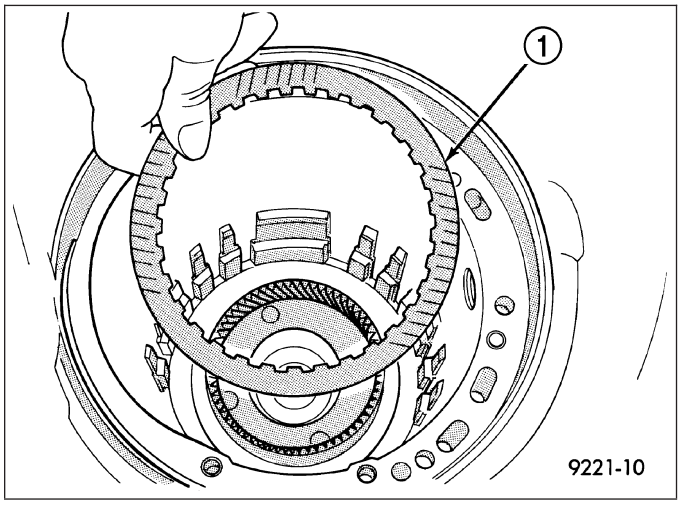

24. Install low/reverse reaction plate (1) with flat side up.

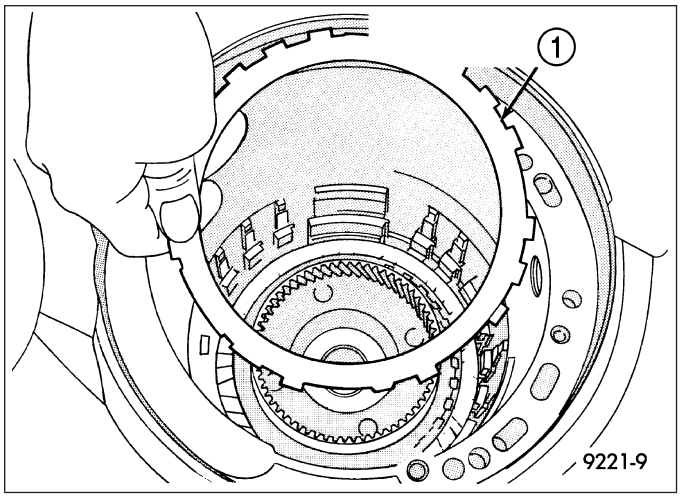

25. Install a new tapered snap ring (2) (tapered side out).

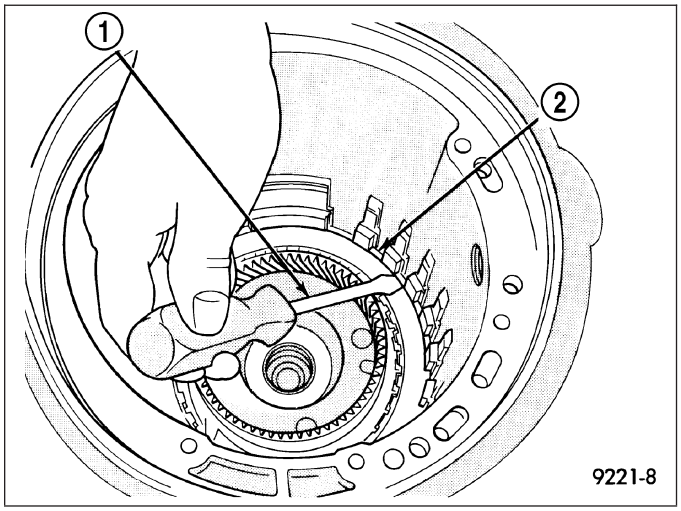

26. Make sure that the snap ring ends are oriented as shown.

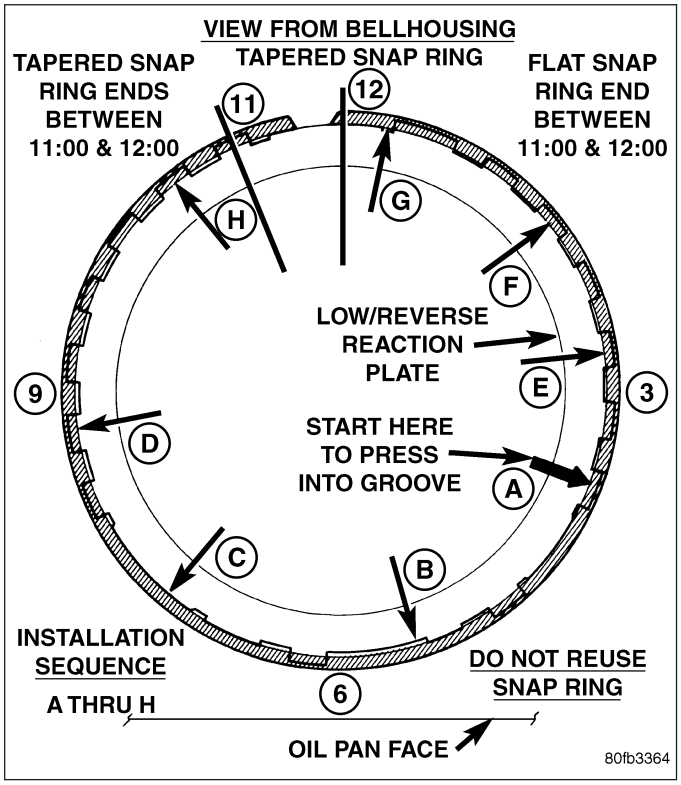

27. Measure low/reverse clutch pack. Set up dial indicator (1) as shown. Press down clutch pack with finger and zero dial indicator. Record measurement in four (4) places and take average reading. **Low/Reverse clutch pack clearance is 0.84 to 1.60 mm (0.033 to 0.063 inch).**
28. Select the proper low/reverse reaction plate to achieve specifications.

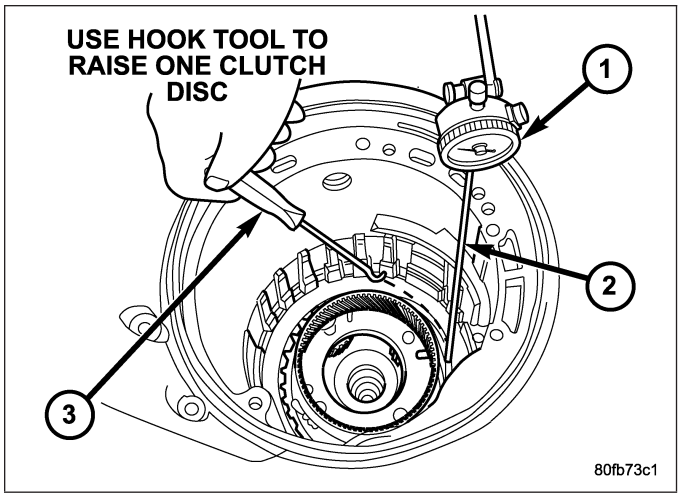

29. Install 2/4 clutch pack (1, 2).

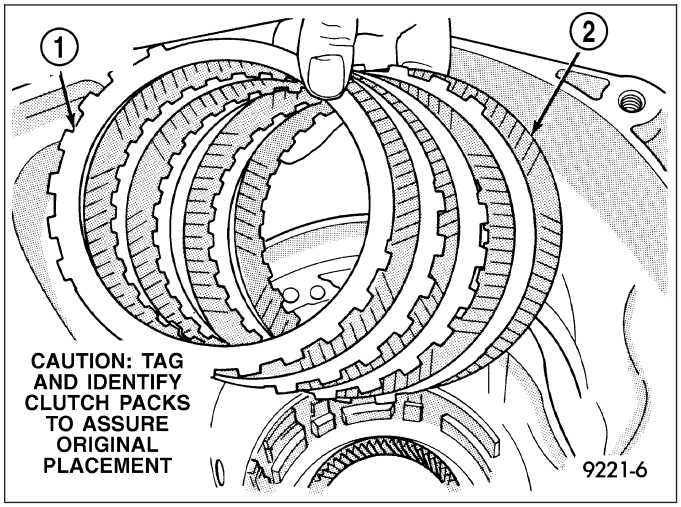

NOTE: The 2/4 Clutch Piston has bonded seals which are not individually serviceable. Seal replacement requires replacement of the piston assembly.

30. Install 2/4 clutch belleville spring (1).

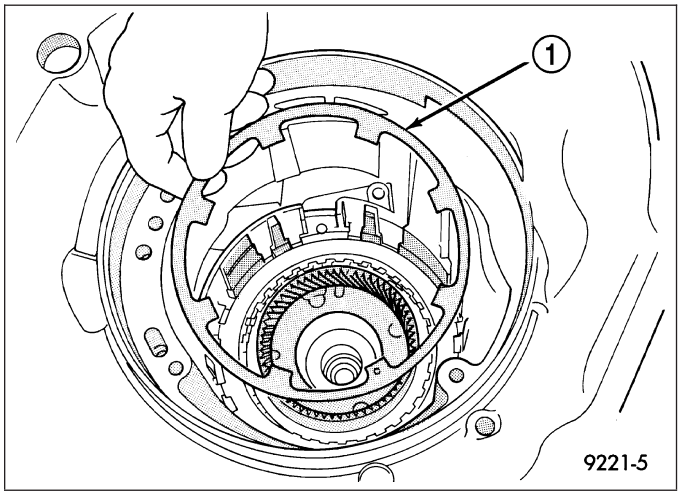

31. Verify the proper orientation of the return spring (2) to the 2/4 retainer (3).

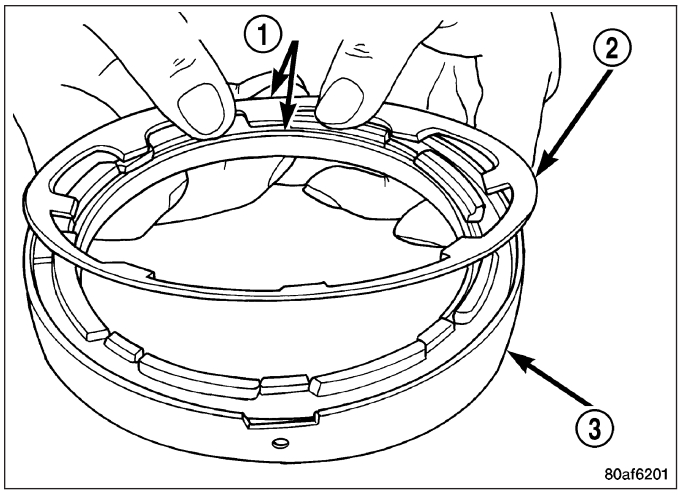

32. Install 2/4 clutch retainer (1).

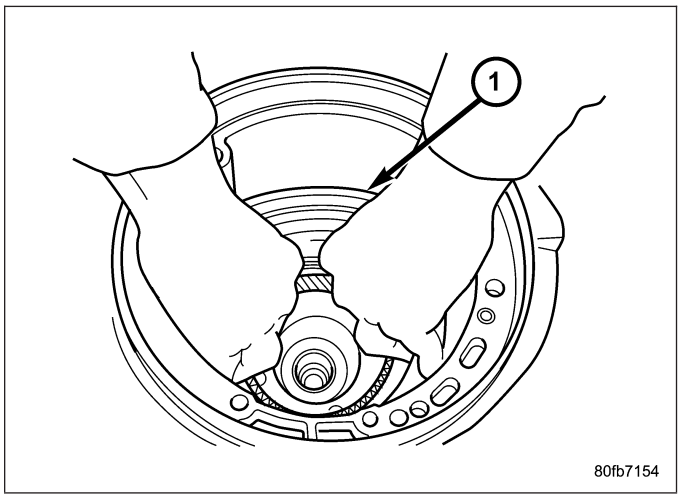

NOTE: Verify that Tool 5058A (1) is centered properly over the 2/4 clutch retainer (4) before compressing. If necessary, fasten the 5058A bar to the bellhousing flange with any combination of locking pliers and bolts to center the tool properly.

33. Set up Tool 5058 (1) as shown. Compress 2/4 clutch just enough to facilitate snap ring installation.

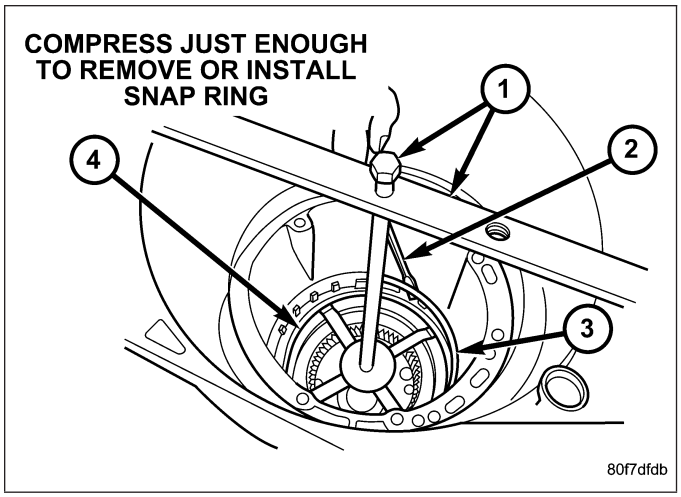

34. **Measure 2/4 clutch clearance:** Set up dial indicator (1) as shown. Press down clutch pack with finger and zero dial indicator. Record measurement in four (4) places and take average reading. **The 2/4 clutch pack clearance is 0.76 to 2.64 mm (0.030 to 0.104 inch).** If not within specifications, the clutch is not assembled properly or is excessively worn. **There is no adjustment for the 2/4 clutch clearance.**

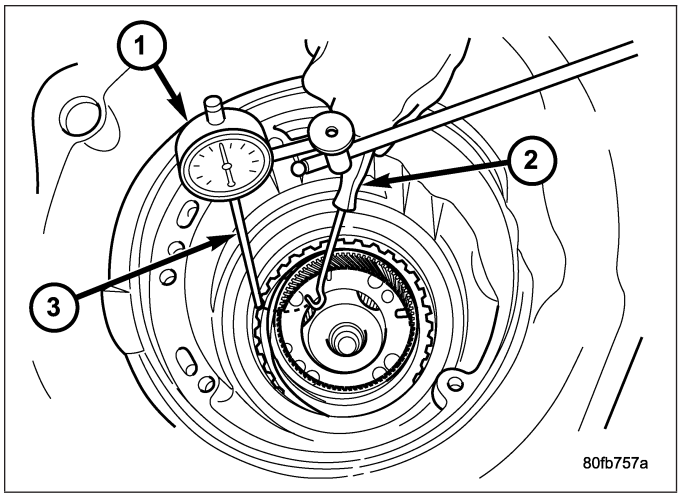

35. Install the #7 needle bearing (1) to the rear sun gear (2). **The number 7 needle bearing has three antireversal tabs and is common with the number 5 and number 2 position. The orientation should allow the bearing to seat flat against the rear sun gear. A small amount of petrolatum can be used to hold the bearing to the rear sun gear.**

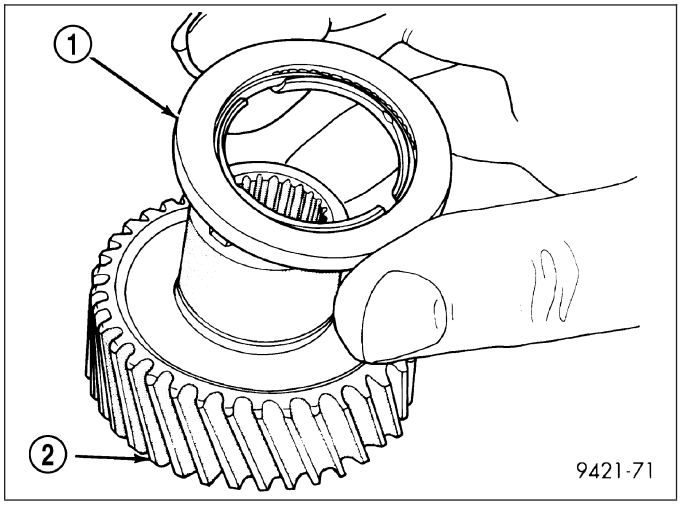

36. Install rear sun gear (2) and #7 needle bearing (1).

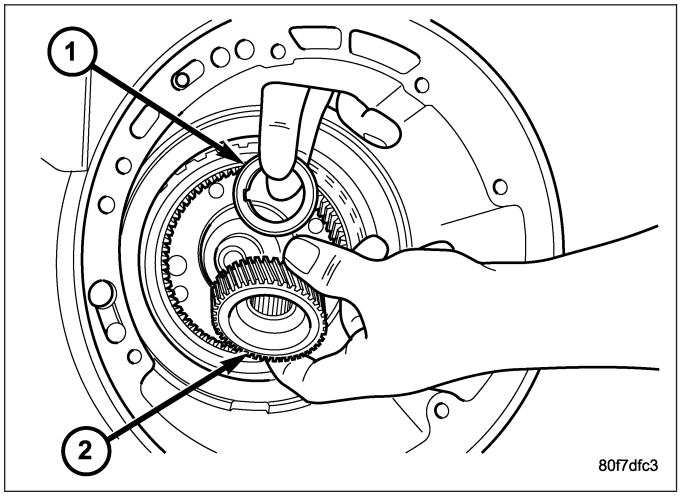

37. Install front carrier/rear annulus assembly (2) and #6 needle bearing (1).

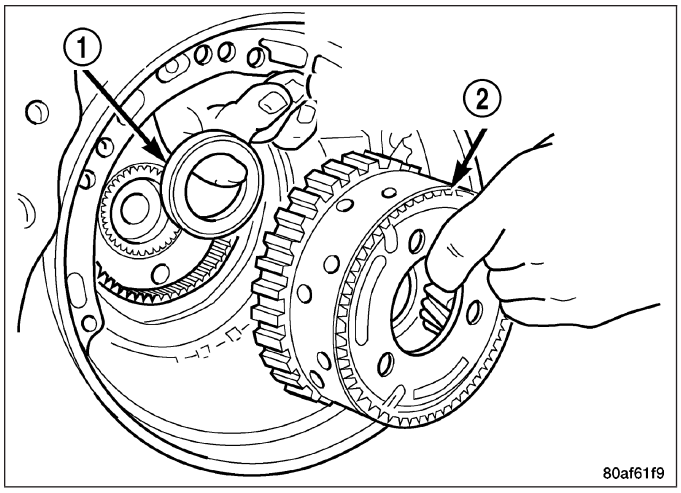

38. Install front sun gear assembly (1) and #4 thrust washer (2).

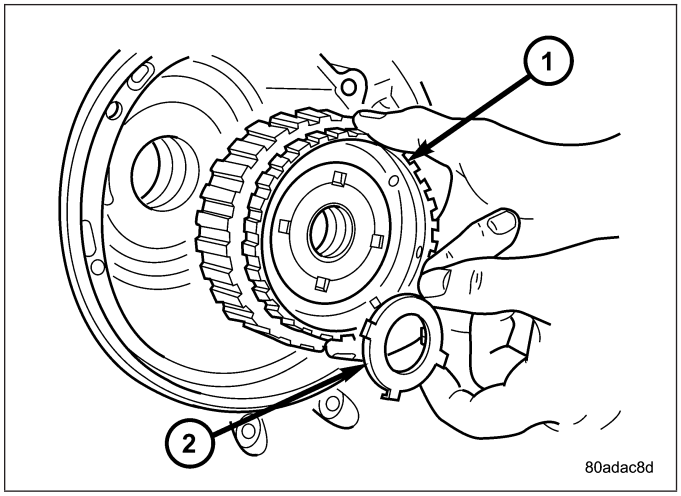

39. Determine proper #4 thrust plate thickness. Select the thinnest available #4 thrust plate.
40. Install #4 thrust plate (2) using petrolatum to hold into position.
41. Install input clutch assembly. Ensure the input clutch assembly is completely seated by viewing position through input speed sensor hole. **If the speed sensor tone wheel is not centered in the opening, the input clutches assembly is not seated properly.**

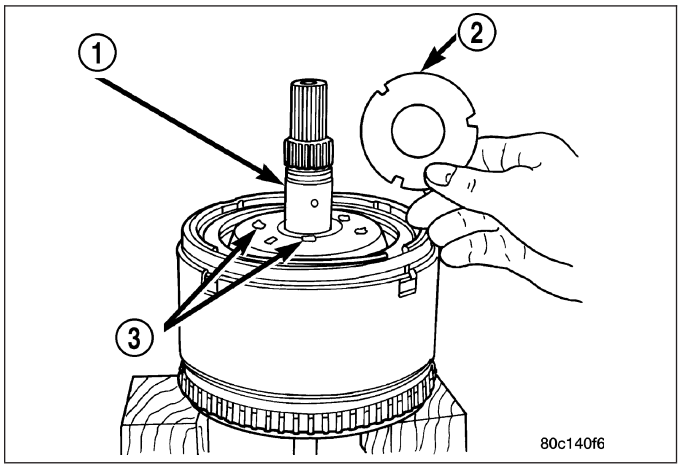

42. Remove the oil pump o-ring (2) and install oil pump and gasket to transmission. **Use screw-in dowels or phillips-head screwdrivers to align pump to case. Be sure to reinstall O-ring on oil pump after selecting the proper No. 4 thrust plate.**

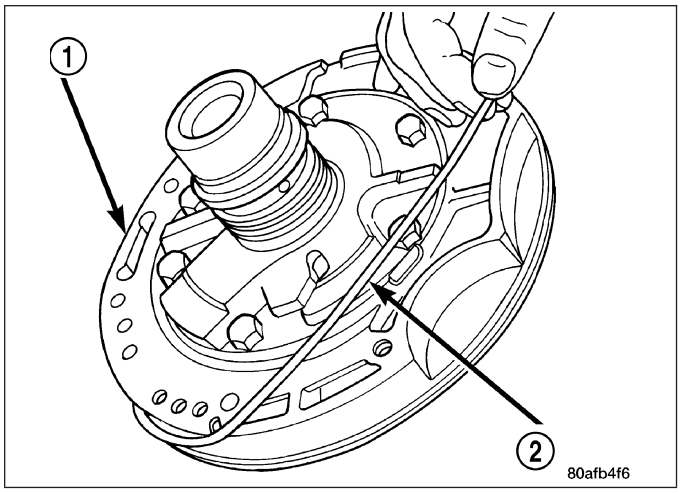

43. Measure the input shaft end play with the transmission in the vertical position. This will ensure that the measurement will be accurate.
44. Set up and measure endplay using End Play Set 8266 (1, 2) and Dial Indicator Set C3339 (3) as shown.
45. Measure input shaft end play. **Input shaft end play must be 0.127 to 0.635 mm (0.005 to 0.025 inch).** For example, if end play reading is 0.055 inch, select No. 4 Thrust Plate which is 0.071 to 0.074 thick. This should provide an input shaft end play reading of 0.020 inch, which is within specifications.

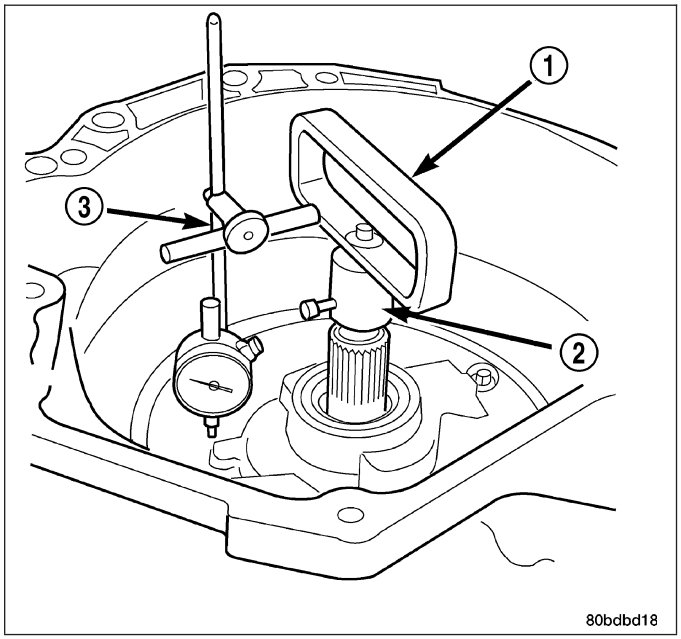

46. Remove oil pump, gasket, and input clutch assembly to gain access to and install proper #4 thrust plate.
47. Install input clutch assembly (1) with proper thrust plate.

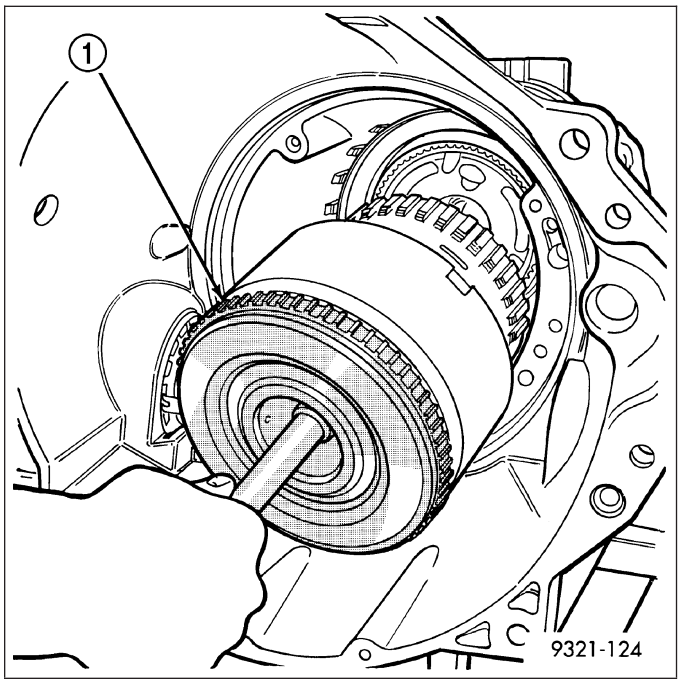

48. Install #1 caged needle bearing (1).

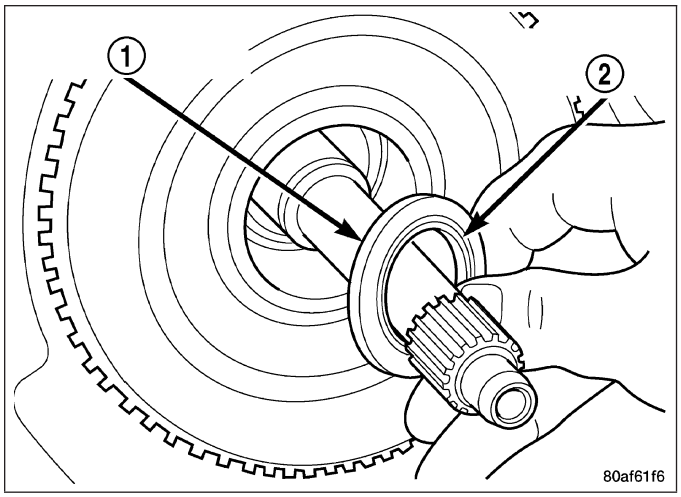

CAUTION: By-pass valve MUST be replaced if transmission failure occurs.

49. Replace cooler by-pass valve (1) if transmission failure has occurred.

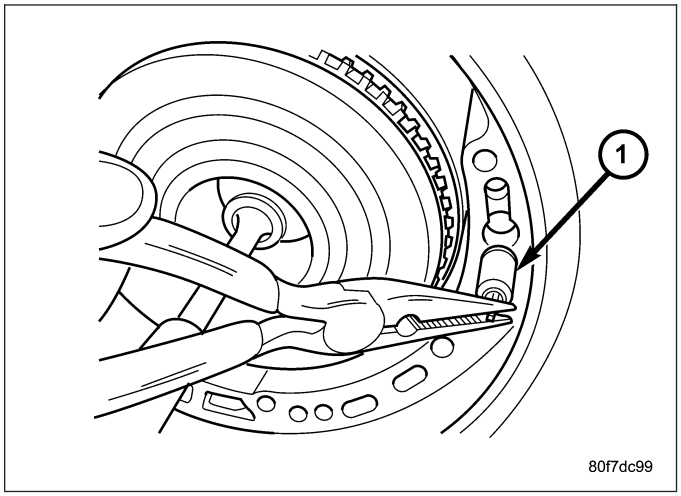

NOTE: To align oil pump, gasket, and case during installation, use threaded dowels or phillips screwdrivers.

50. Install oil pump gasket (2).

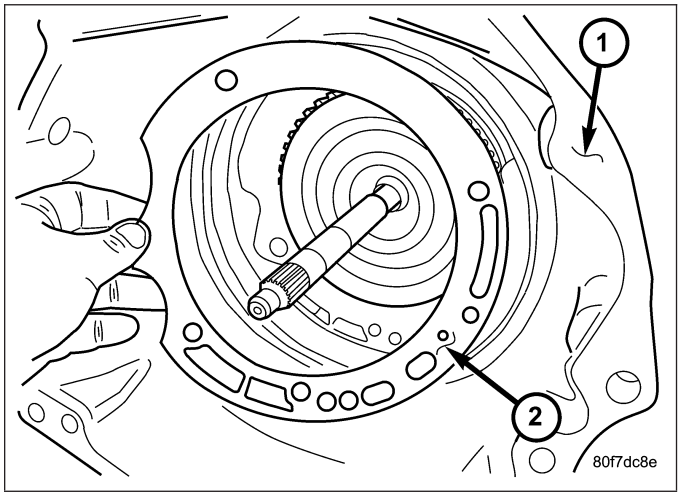

51. Install oil pump (2) and torque oil pump-to-case bolts (1) to 30 N·m (265 in. lbs.). Do not reuse original oil pump bolts.

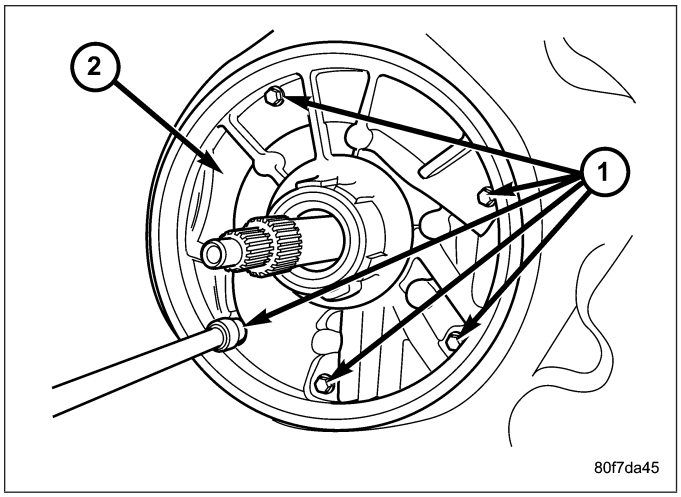

52. Install low/reverse accumulator (1) as shown.

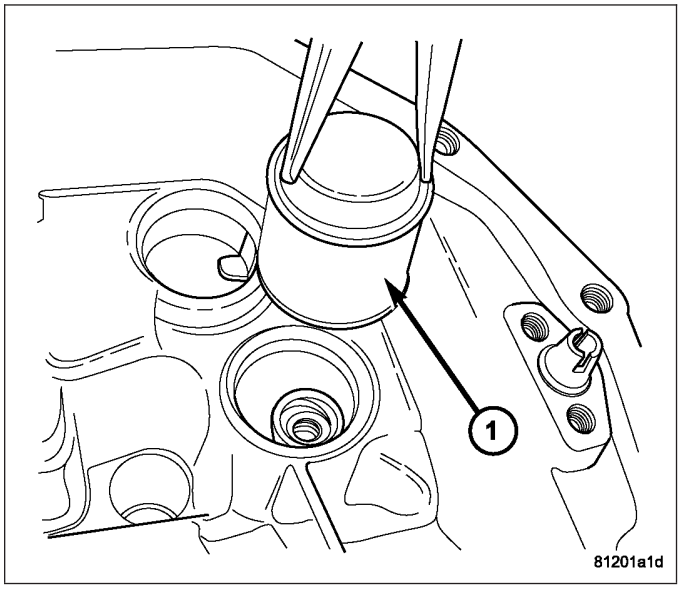

53. Install low/reverse accumulator plug (2).

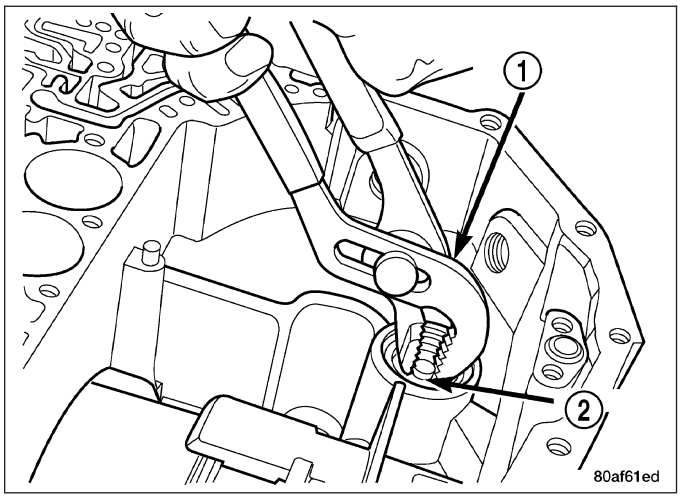

54. Install low/reverse accumulator snap ring (1).

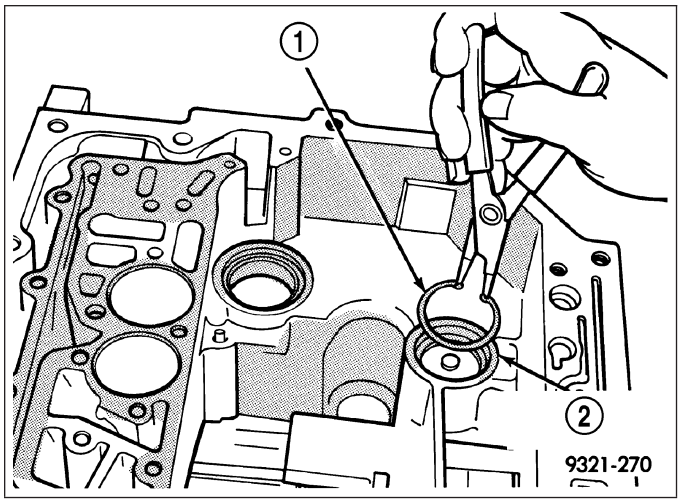

55. Install underdrive (2) and overdrive (1) accumulators and springs.

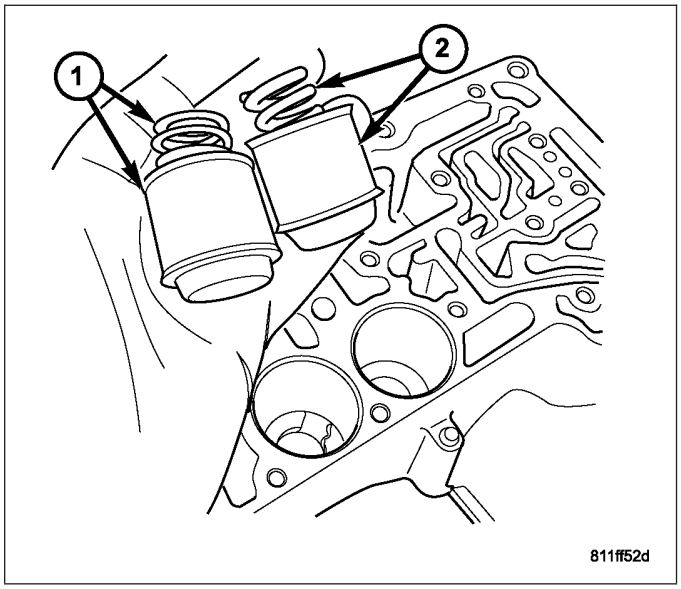

CAUTION: Do not handle the valve body by the manual shaft. Damage could result.

56. Install valve body (1) into place as shown.

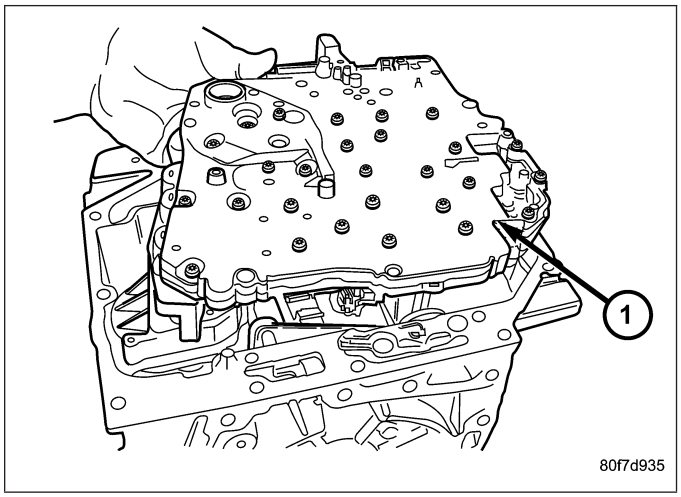

57. Install seven (7) valve body-to-case bolts (1) and torque to 12 N·m (105 in. lbs.).

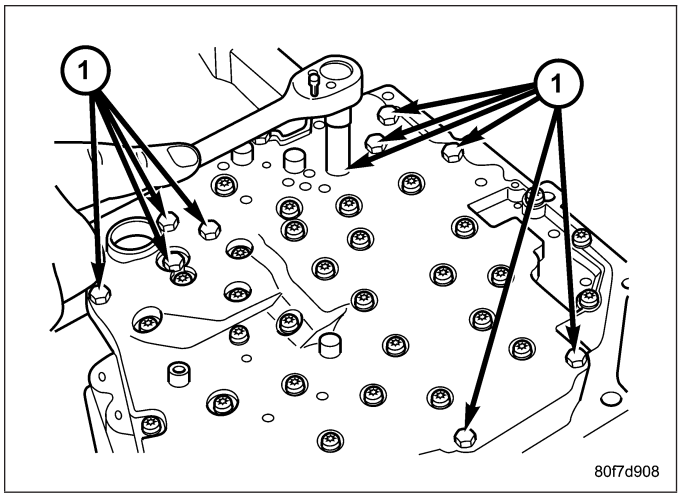

58. Install transmission oil filter (1) and o-ring. Tighten the bolts to 5 N·m (45 in. lbs.).
59. If necessary, install a new transmission fill tube grommet into the transmission case with Installer 8254.

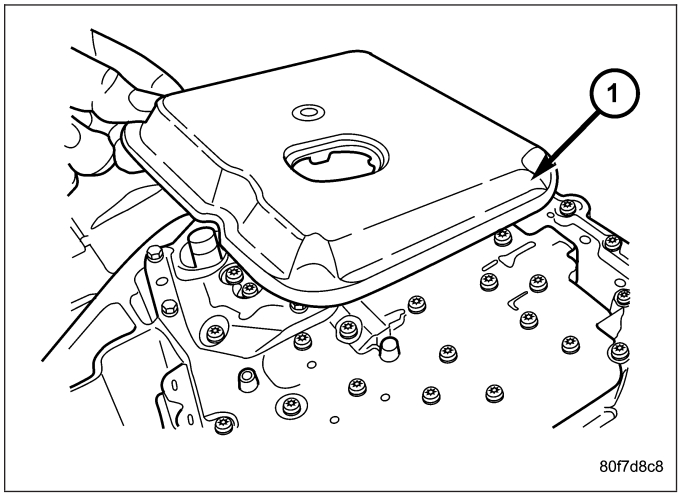

60. Install transmission oil pan (1) with a bead of Mopar® ATF RTV.

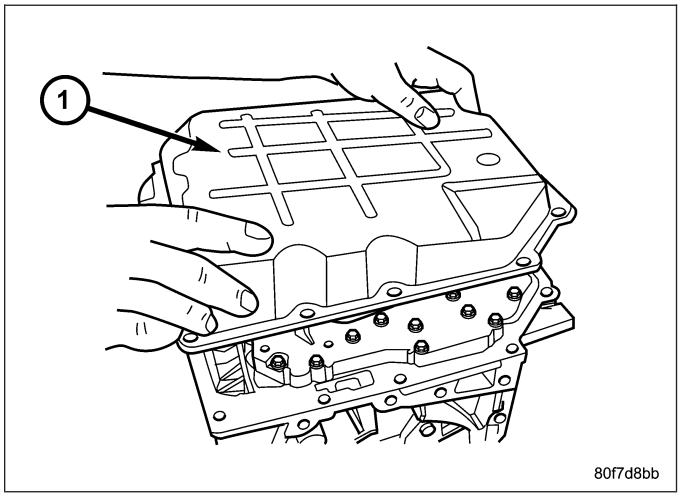

NOTE: Before installing the oil pan bolt in the bolt hole located between the torque converter clutch on and U/D clutch pressure tap circuits , it will be necessary to replentish the sealing patch on the bolt using Mopar® Lock & Seal Adhesive.

61. Install and torque the oil pan-to-case bolts to 20 N·m (14.5 ft. lbs.).

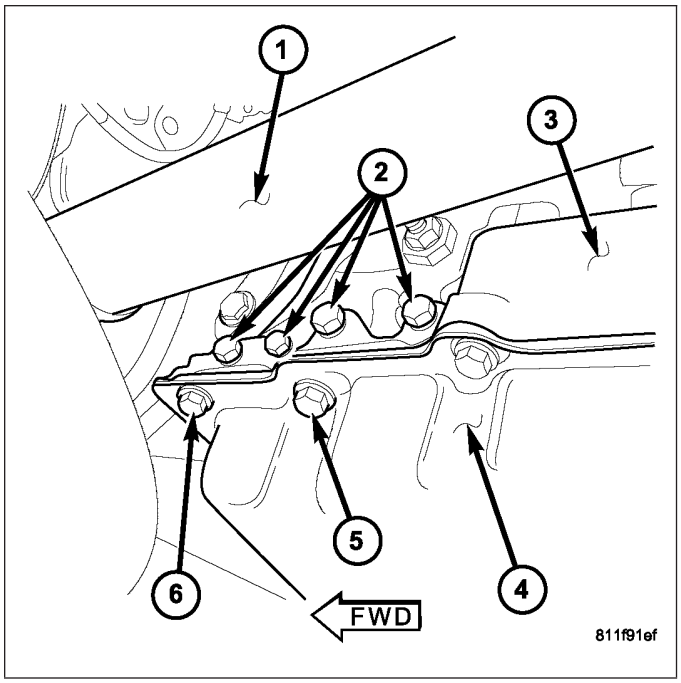

NOTE: Before installing either speed sensor bolt, it will be necessary to replentish the sealing patch on the bolt using Mopar® Lock & Seal Adhesive.

62. Install both speed sensors (1, 2) into the transmission case. Torque the speed sensor bolts to 9 N·m (80 in. lbs.).

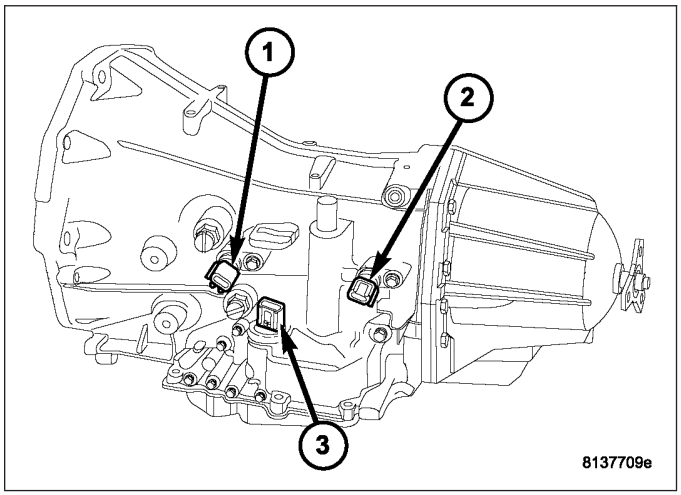

63. As a final check of the transmission, measure the input shaft end play. This will indicate when a #4 thrust plate change is required. The #4 thrust plate is located behind the overdrive clutch hub. Attach a dial indicator to transmission bell housing with its plunger seated against end of input shaft. Move input shaft in and out to obtain end play reading. **Input shaft end play must be 0.127 to 0.635 mm (0.005 to 0.025 inch).** If not within specifications, make the necessary thrust plate adjustment.

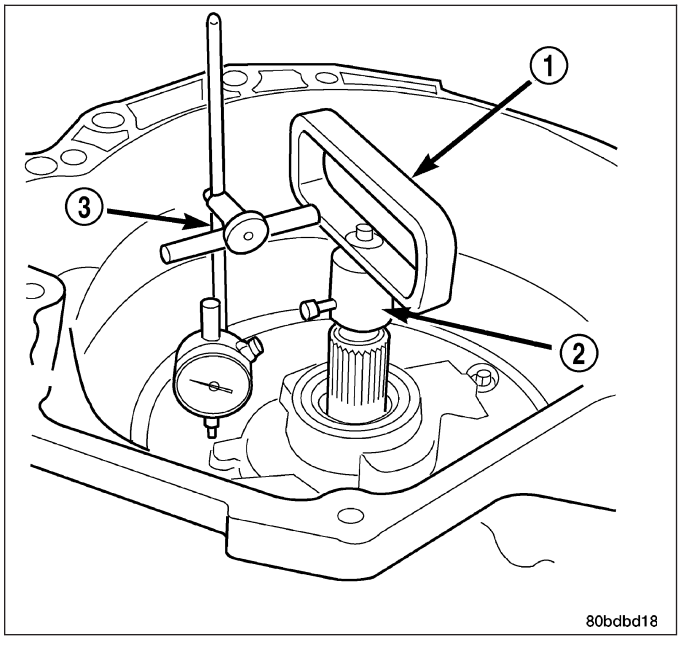

64. Inspect the lube tube grommet (2) for damage. If the grommet lip is damaged, it will need to be replaced.

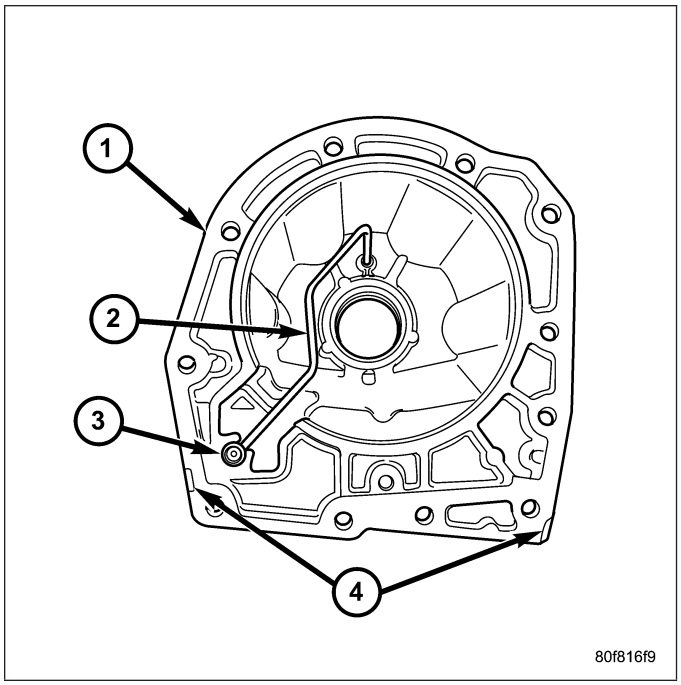

65. Install output shaft bearing in the rear transmission housing. Using Bearing Installer 9287 (1), install the output shaft bearing (2) into the transmission housing. **The closed side of the plastic cage must point towards the transmission.**

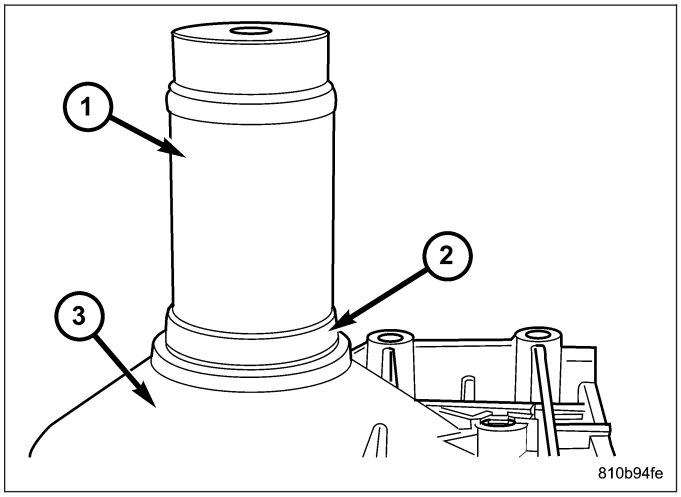

66. Install the snap-ring into the groove in the output shaft.
67. Install the output shaft into the output shaft bearing.
68. Install the retaining ring (1). Ensure that the retaining ring is seated correctly in the groove.
69. Install the output shaft washer onto the output shaft.

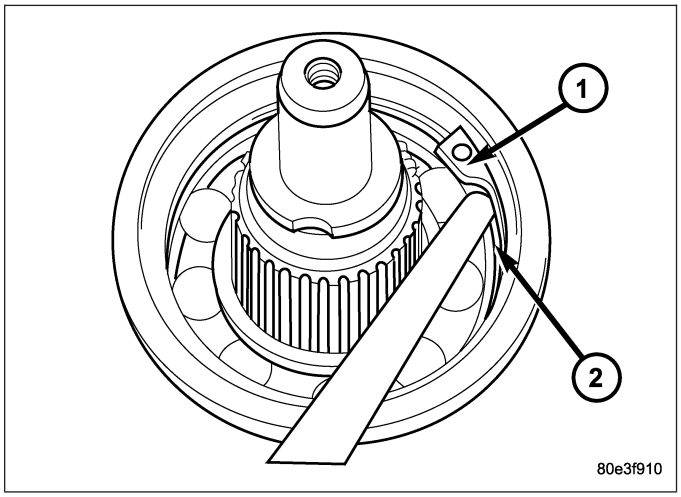

70. Install a new transmission rear seal into the transmission case with Seal Installer 8902A (1).
71. Install the propeller shaft flange onto the output shaft and install an new flange nut finger tight.

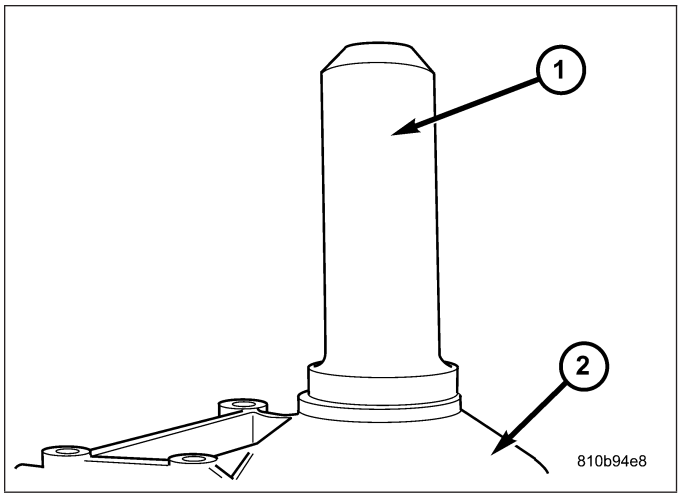

72. Install the extension housing (2) onto the transmission case.

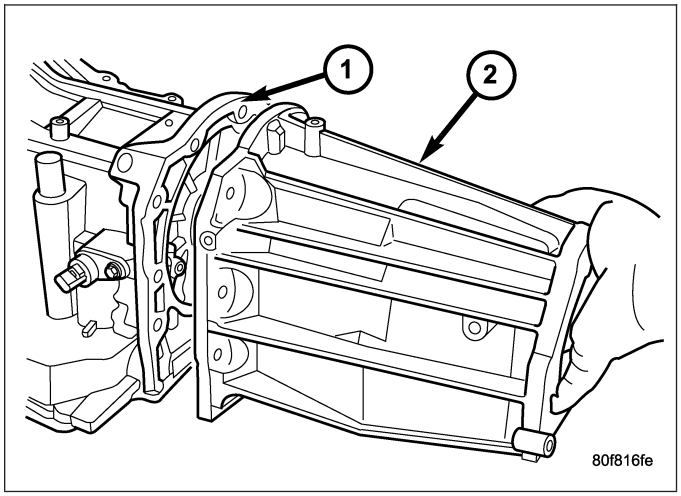

NOTE: Before installing the lowermost four extension housing bolts, it will be necessary to replentish the sealing patch on the bolts using Mopar® Lock & Seal Adhesive.

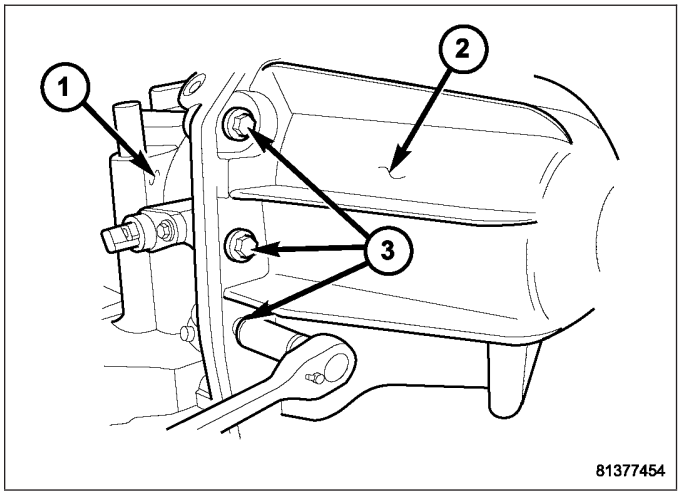

73. Install the bolts that hold the extension housing onto the transmission case. Be sure to install any stud bolts to their original locations. Tighten the bolts to 54 N·m (40 ft.lbs.).

74. Verify that the transmission is in PARK in order to prepare for the installation of the output shaft nut. Tighten the flange nut to 120 N·m (88.5 ft.lbs.).
75. Stake the output shaft nut to the output shaft as follows.Place the Staking Tool 9078 (2) and Driver Handle C-4171 onto the output shaft.
76. Rotate the Staking Tool 9078 (2) until the alignment pin (3) engages the output shaft notch (4).

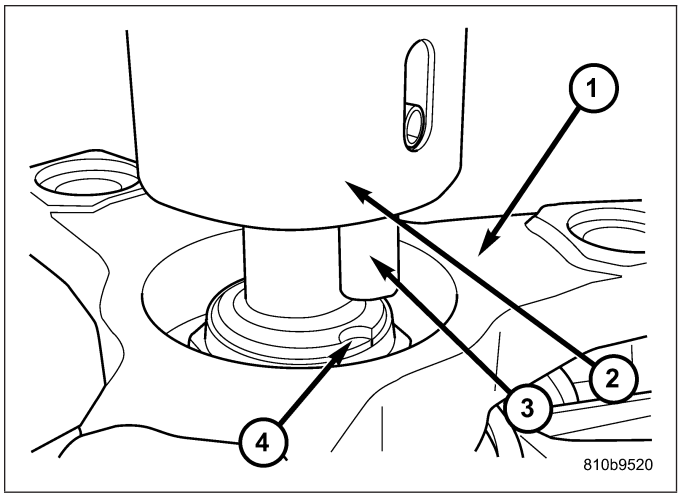

77. Press downward on the staking tool (1) until the staking pin (3) contacts the output shaft nut flange (2).
78. Strike the Driver handle C-4171 with a suitable hammer until the output shaft nut is securely staked to the output shaft.

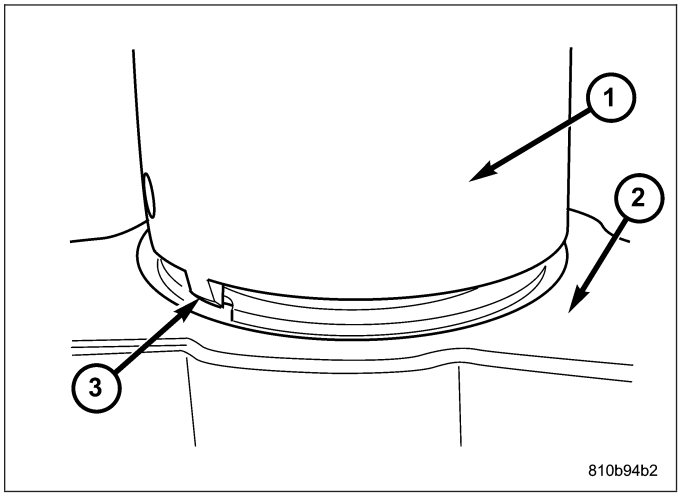

INSTALLATION

1. Check torque converter hub and hub drive flats for sharp edges burrs, scratches, or nicks. Polish the hub and flats with 320/400 grit paper and crocus cloth if necessary. The hub must be smooth to avoid damaging pump seal at installation.
2. If a replacement transmission is being installed, transfer any components necessary, such as the manual shift lever and shift cable bracket, from the original transmission onto the replacement transmission.
3. Lubricate oil pump seal lip with transmission fluid.
4. Place torque converter (1) in position in transmission (2).

CAUTION: Do not damage oil pump seal or converter hub while inserting torque converter into the front of the transmission.

5. Align torque converter to oil pump seal opening.
6. Insert torque converter hub into oil pump.
7. While pushing torque converter inward, rotate converter until converter is fully seated in the oil pump gears.
8. Check converter seating with a scale and straightedge (A). Surface of converter lugs should be at least 19 mm (3/4 in.) to rear of straightedge when converter is fully seated.

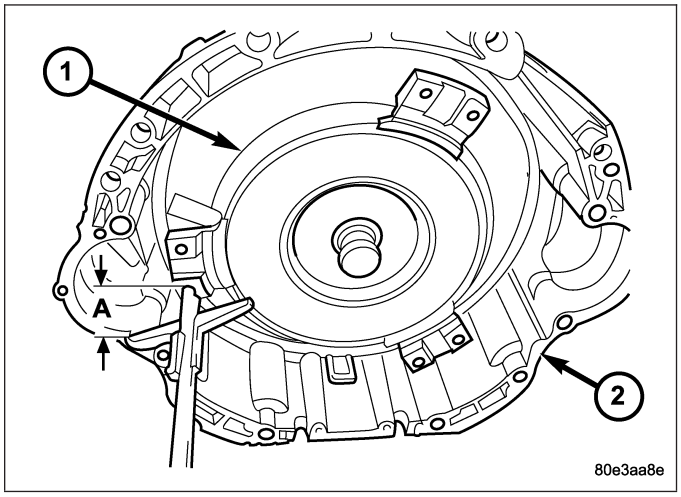

9. If necessary, temporarily secure converter with C-clamp attached to the converter housing.

10. Check condition of converter driveplate. Replace the plate if cracked, distorted or damaged. **Also be sure transmission dowel pins are seated in engine block and protrude far enough to hold transmission in alignment.**
11. Apply a light coating of Mopar® High Temp Grease to the torque converter hub pocket in the rear pocket of the engine's crankshaft.
12. Raise transmission (3) and align the torque converter with the drive plate and the transmission converter housing with the engine block (1).
13. Move transmission forward. Then raise, lower, or tilt transmission to align the converter housing with the engine block dowels.
14. Carefully work transmission forward and over engine block dowels until converter hub is seated in crankshaft. Verify that no wires, or the transmission vent hose, have become trapped between the engine block and the transmission.
15. Install two bolts (2) to attach the transmission to the engine.

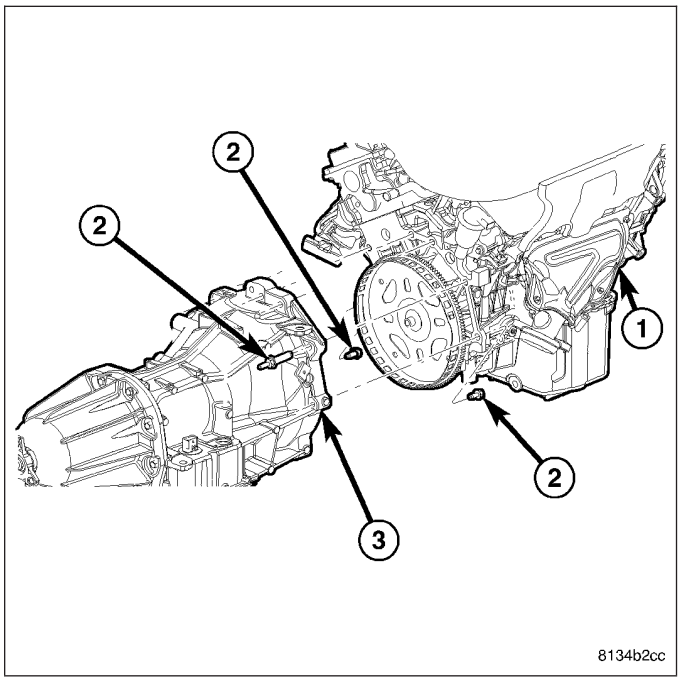

16. Install remaining torque converter housing to engine bolts (2). Tighten to 39 N·m (29 ft.lbs.).
17. Install rear transmission crossmember (1). Tighten crossmember to frame bolts to 68 N·m (50 ft.lbs.).
18. Install rear support (3) to transmission. Tighten bolts to 47 N·m (35 ft.lbs.).
19. Lower transmission onto crossmember and install bolts attaching transmission mount to crossmember. Tighten clevis bracket to crossmember bolts(2) to 47 N·m (39 ft.lbs.).
20. Remove engine support fixture.

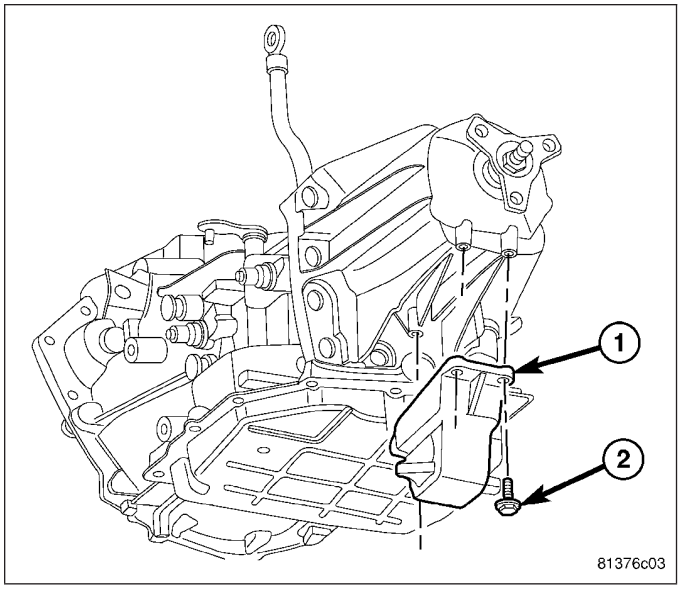

21. Install the transmission (3) to engine oil pan (2) bolts (1). Tighten to 39 N·m (29 ft.lbs.).

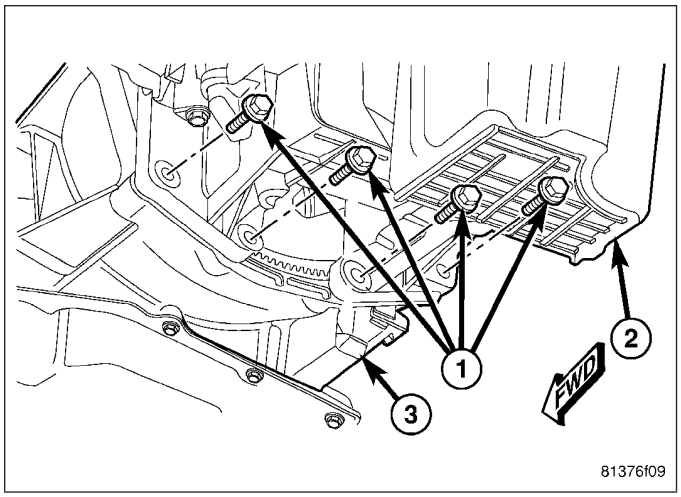

22. Connect input (1) and output (2) speed sensor wires and the transmission range sensor (3).

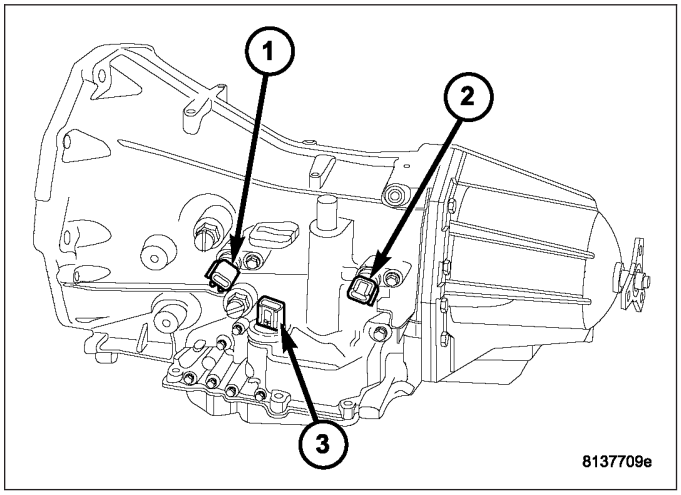

23. Connect wires to the solenoid/pressure switch assembly (1).

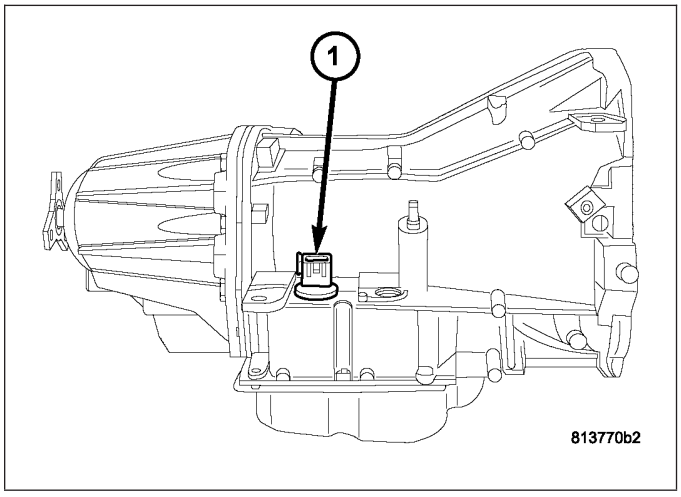

24. Install the crankshaft position sensor. (Refer to 14 - FUEL SYSTEM/FUEL INJECTION/CRANKSHAFT POSITION SENSOR - INSTALLATION)

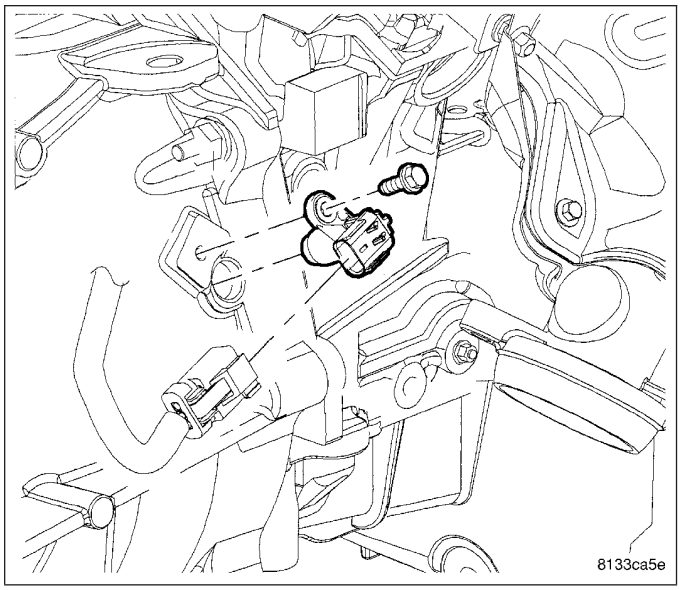

25. Connect the gearshift cable (1) to the transmission manual shift lever (3).

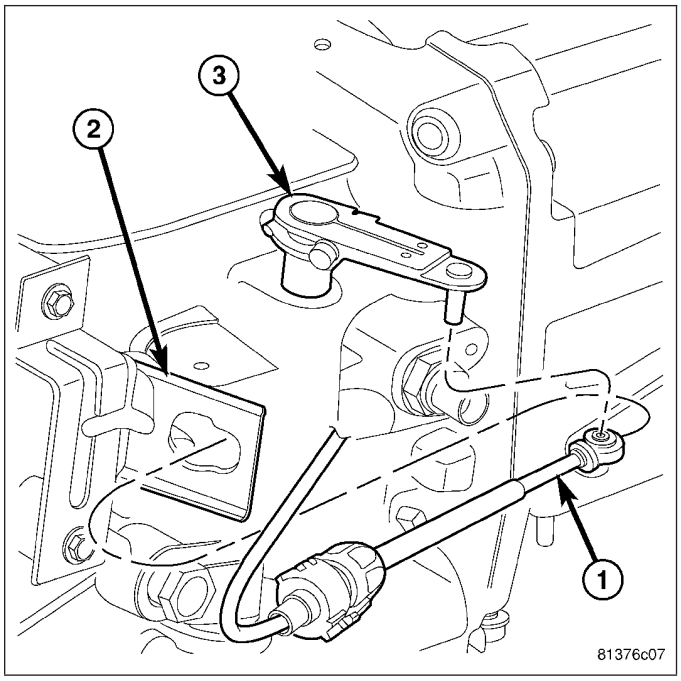

CAUTION: It is essential that correct length bolts be used to attach the converter to the driveplate. Bolts that are too long will damage the clutch surface inside the converter.

26. Install all torque converter-to-driveplate bolts (1) by hand.
27. Verify that the torque converter is pulled flush to the driveplate. Tighten bolts to 42 N·m (30.5 ft. lbs.).

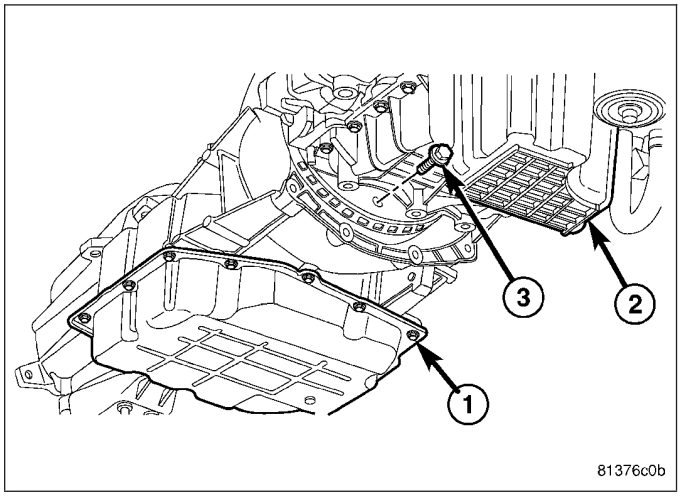

28. Install the torque converter bolt access cover (1) onto the transmission, for vehicles equipped with 3.5L engines. Install the access cover bolt (2) and tighten to 11 N·m (8 ft.lbs.).

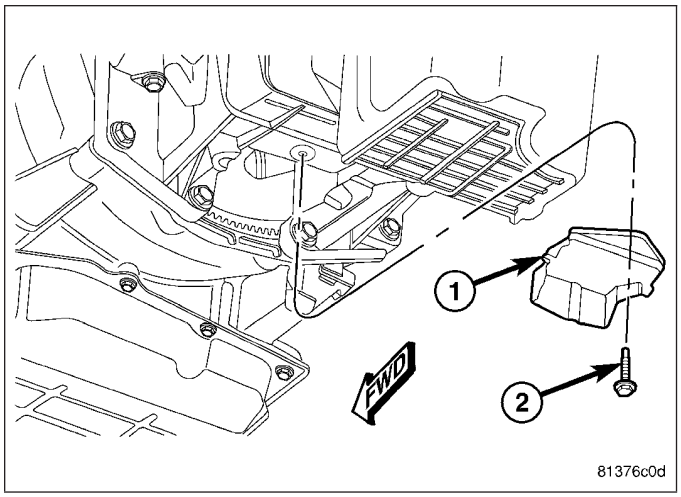

29. Install the structural collar (2) and bolts (3, 4) for vehicles equipped with a 2.7L engine. (Refer to 9 - ENGINE - 2.7L/ENGINE BLOCK/STRUCTURAL COVER - INSTALLATION)

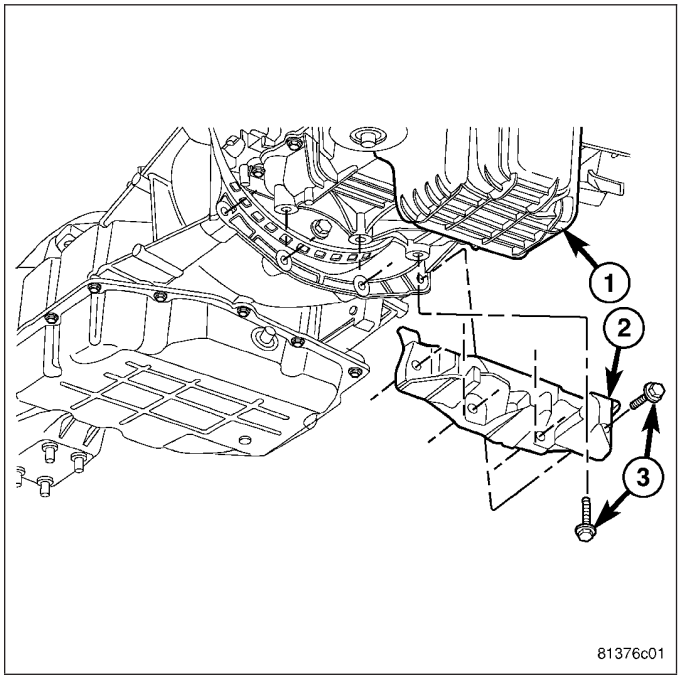

30. Install starter motor (1). (Refer to 8 - ELECTRICAL/STARTING/STARTER MOTOR - INSTALLATION)

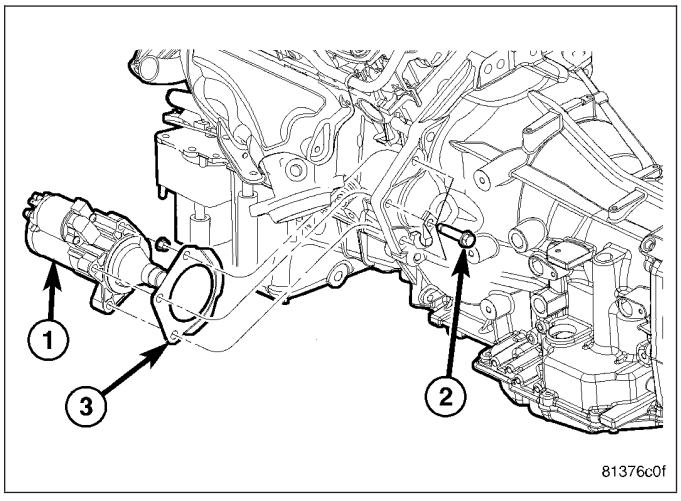

31. Connect the cooler line fittings (2) and cooler lines (1) to the transmission.

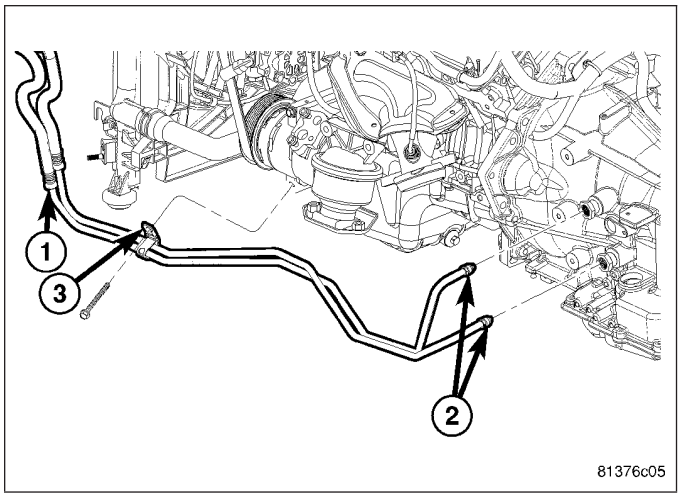

NOTE: Inspect the fill tube grommet to determine if the grommet is new or used. If a new fill tube grommet is in the transmission case, pierce the center of the grommet with a ballpoint pen, or similar instrument, to prepare the grommet for the fill tube installation.

32. Install the transmission fill tube (2).
33. Install exhaust components.

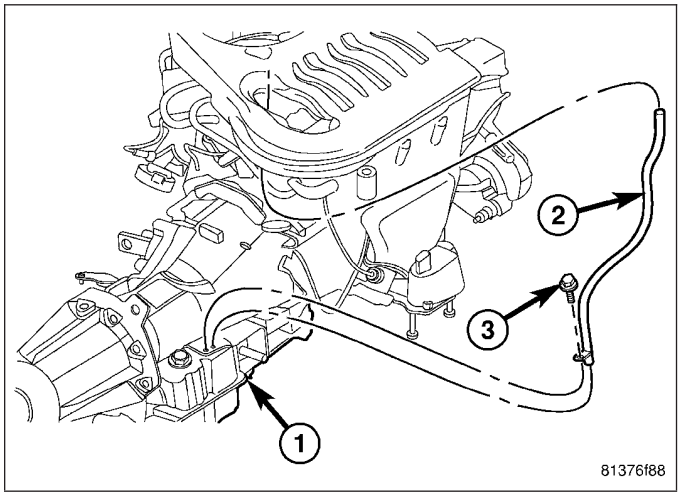

34. Align and connect the propeller shaft (1). (Refer to 3 - DIFFERENTIAL & DRIVELINE/PROPELLER SHAFT - INSTALLATION)
35. Adjust gearshift cable if necessary.
36. Lower vehicle.
37. Connect negative battery cable.
38. Fill transmission with appropriate transmission fluid (Refer to LUBRICATION & MAINTENANCE/ FLUID TYPES - DESCRIPTION) according to the standard procedure (Refer to 21 - TRANSMISSION/AUTOMATIC - NAG1/FILTER - STANDARD PROCEDURE).
39. Verify proper operation.

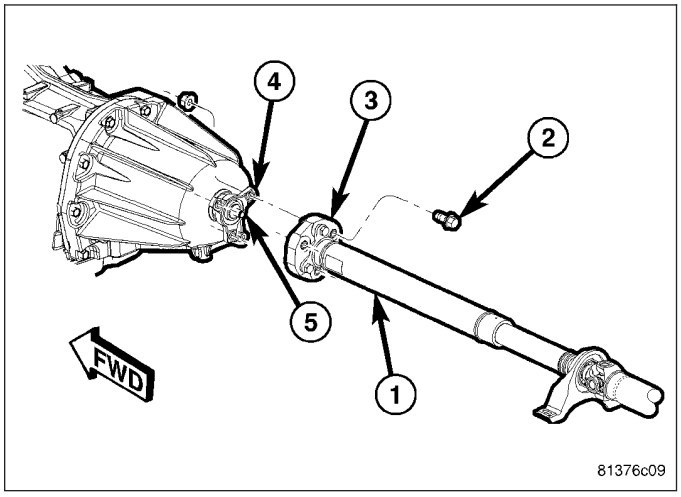

SCHEMATICS AND DIAGRAMS

42RLE - WITHOUT VARIABLE LINE PRESSURE

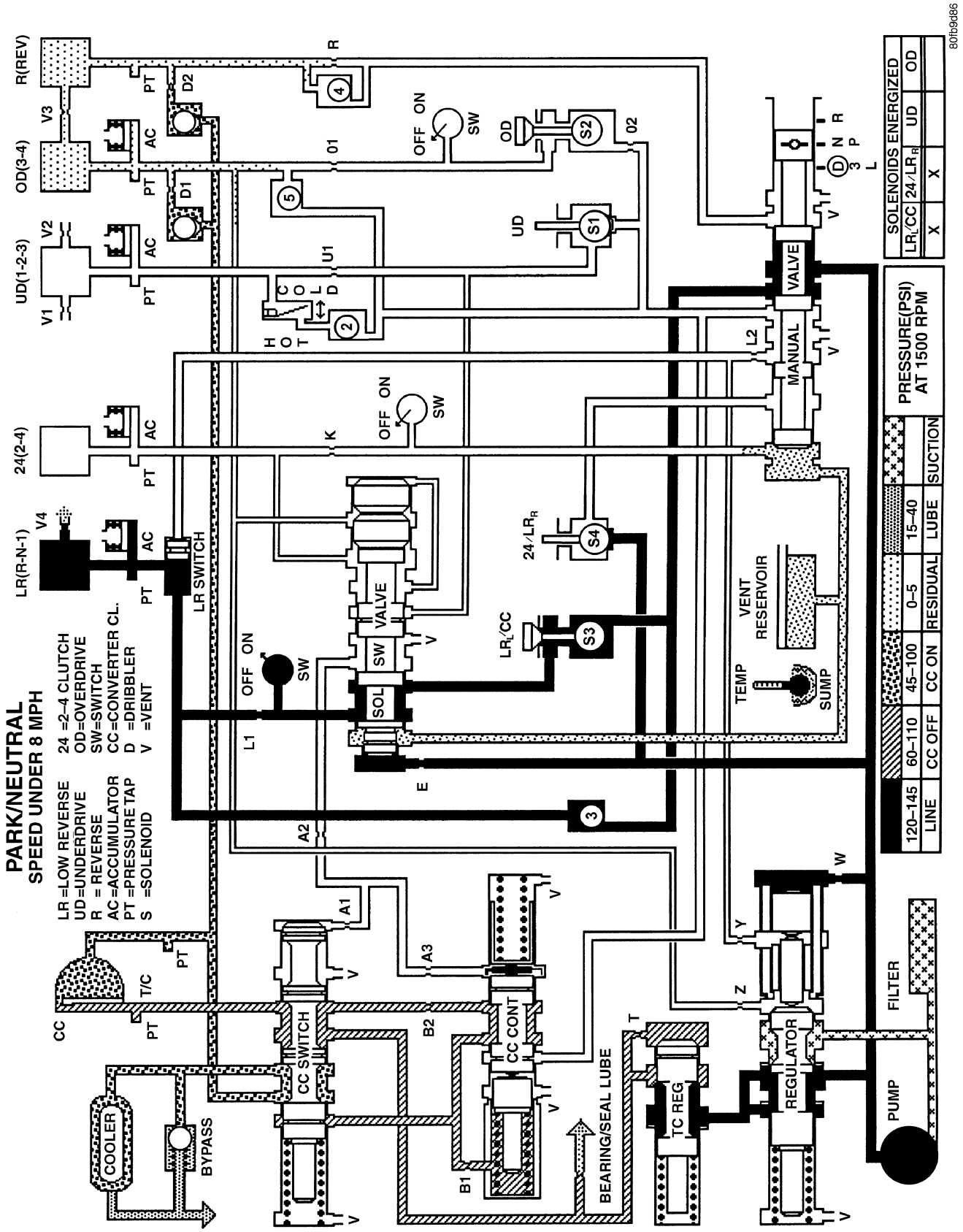

Park/Neutral (Speed Under 8 mph)

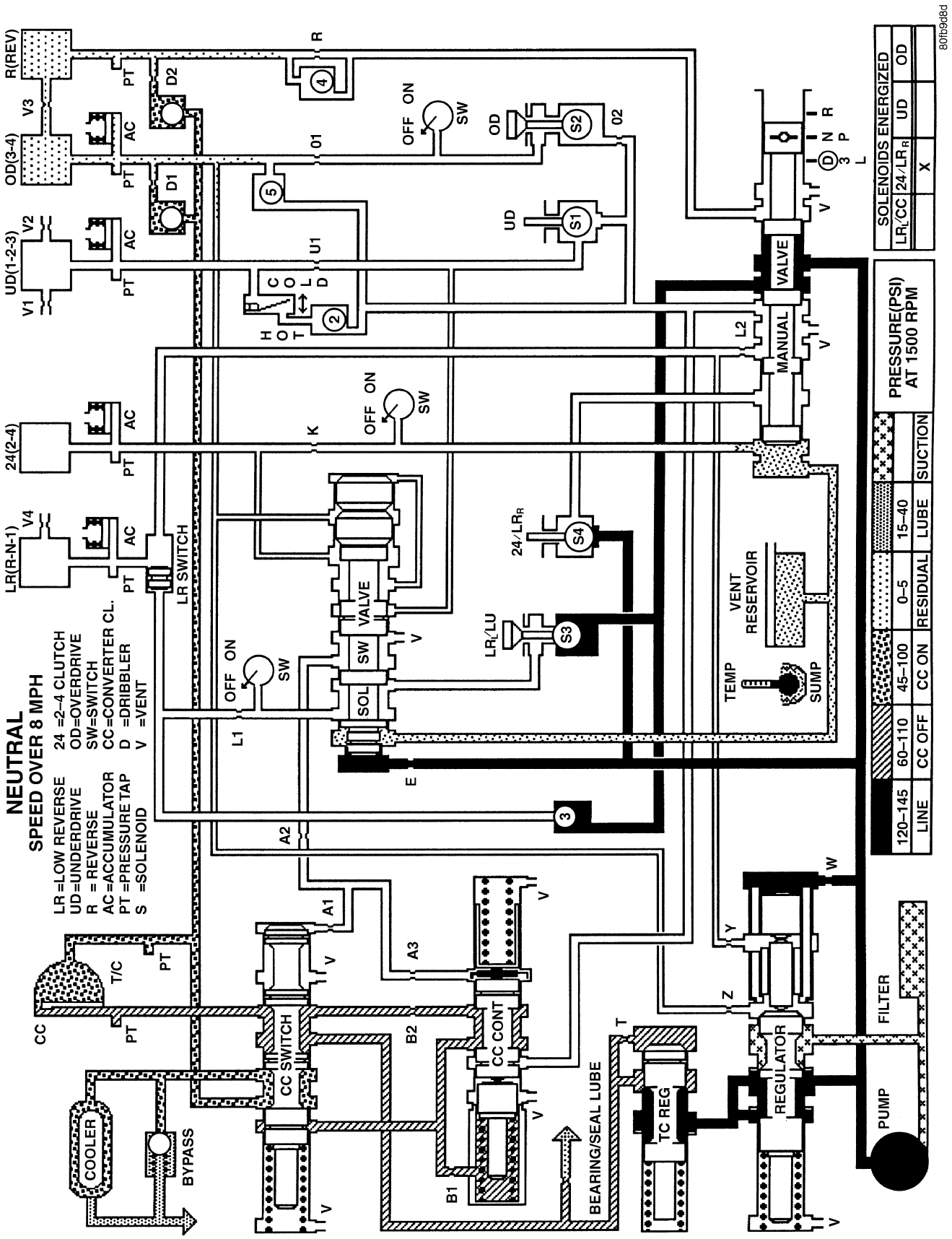

Neutral (Speed Over 8 mph)

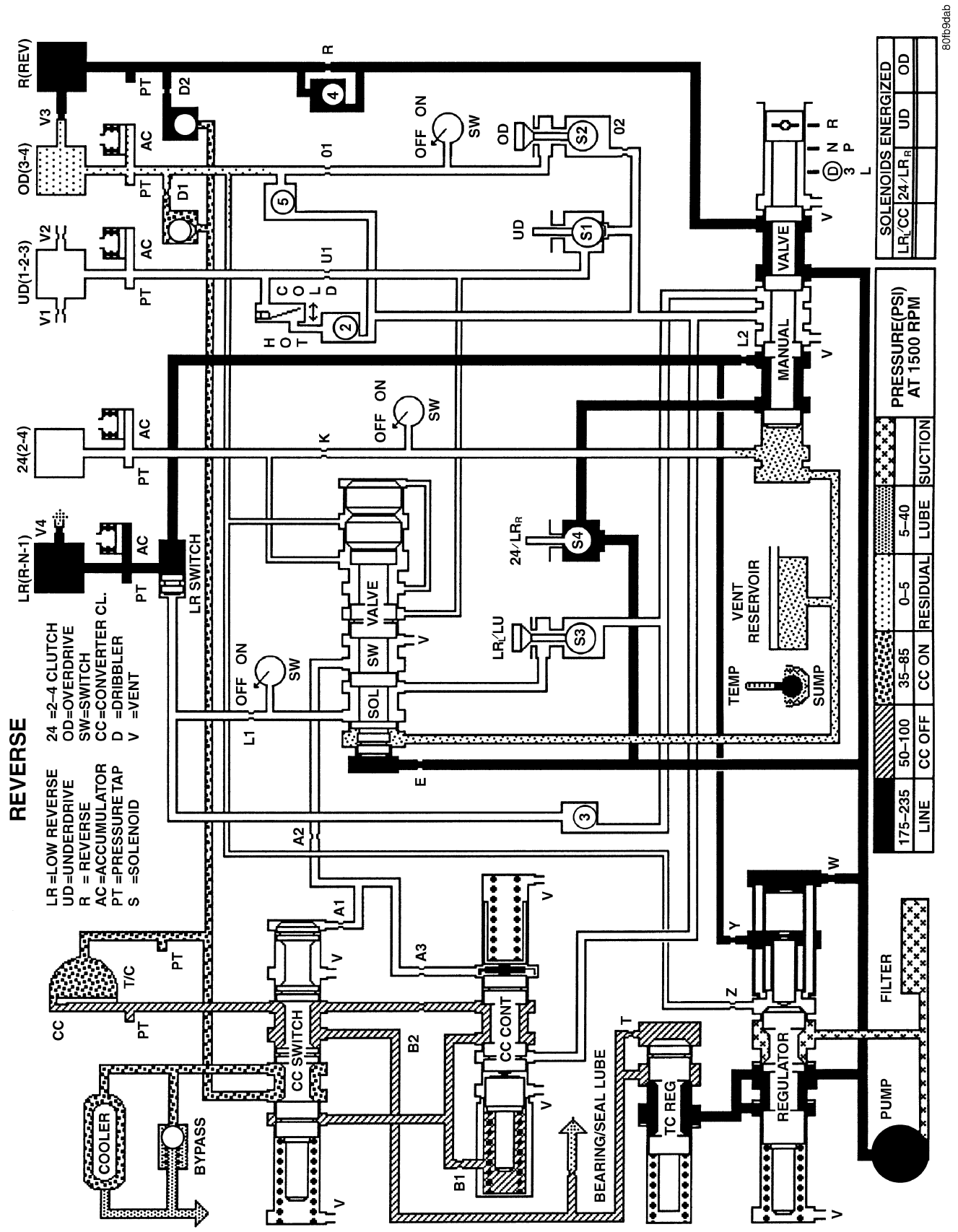
REVERSE
LR =LOW REVERSE
UD=UNDERDRIVE
R = REVERSE
AC =ACCUMULATOR
PT =PRESSURE TAP
S =SOLENOID
24 =2–4 CLUTCH
OD=OVERDRIVE
SW=SWITCH
CC=CONVERTER CL.
D =DRIBBLER
V =VENT
R(REV)
OD(3-4)
UD(1-2-3)
24(2-4)
LR(R-N-1)
LR SWITCH
VALVE
SOL
SW
OFF ON
MANUAL
VENT RESERVOIR
TEMP
SUMP
CC SWITCH
CC CONT
TC REG
REGULATOR
PUMP
FILTER
COOLER
BYPASS
BEARING/SEAL LUBE
SOLENOIDS ENERGIZED
PRESSURE(PSI) AT 1500 RPM
175–235 LINE
50–100 CC OFF
35–85 CC ON
0–5 RESIDUAL
5–40 LUBE
SUCTION
80fb9dab

Reverse

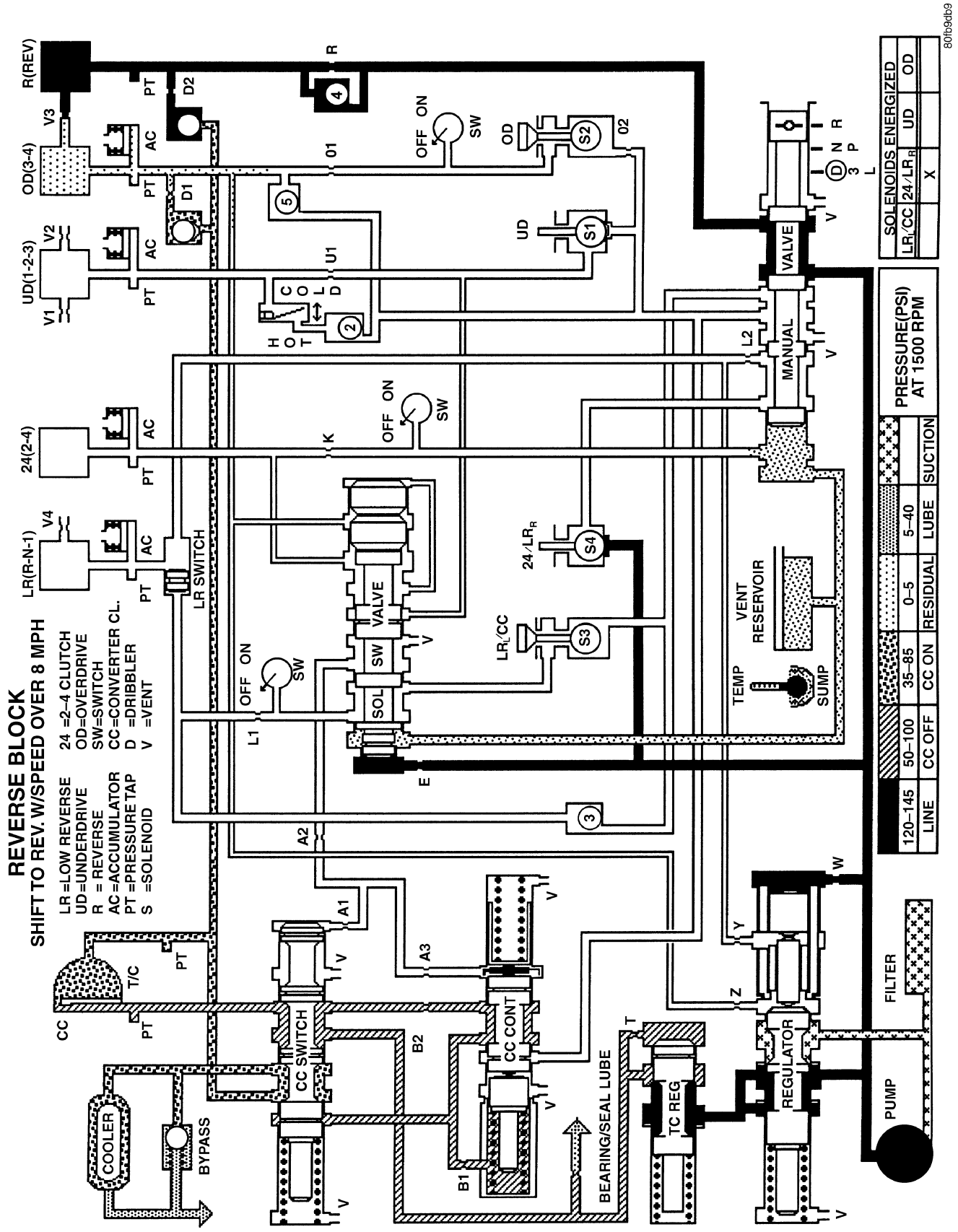

Reverse Block (Shift to Reverse w/Speed Over 8 mph)

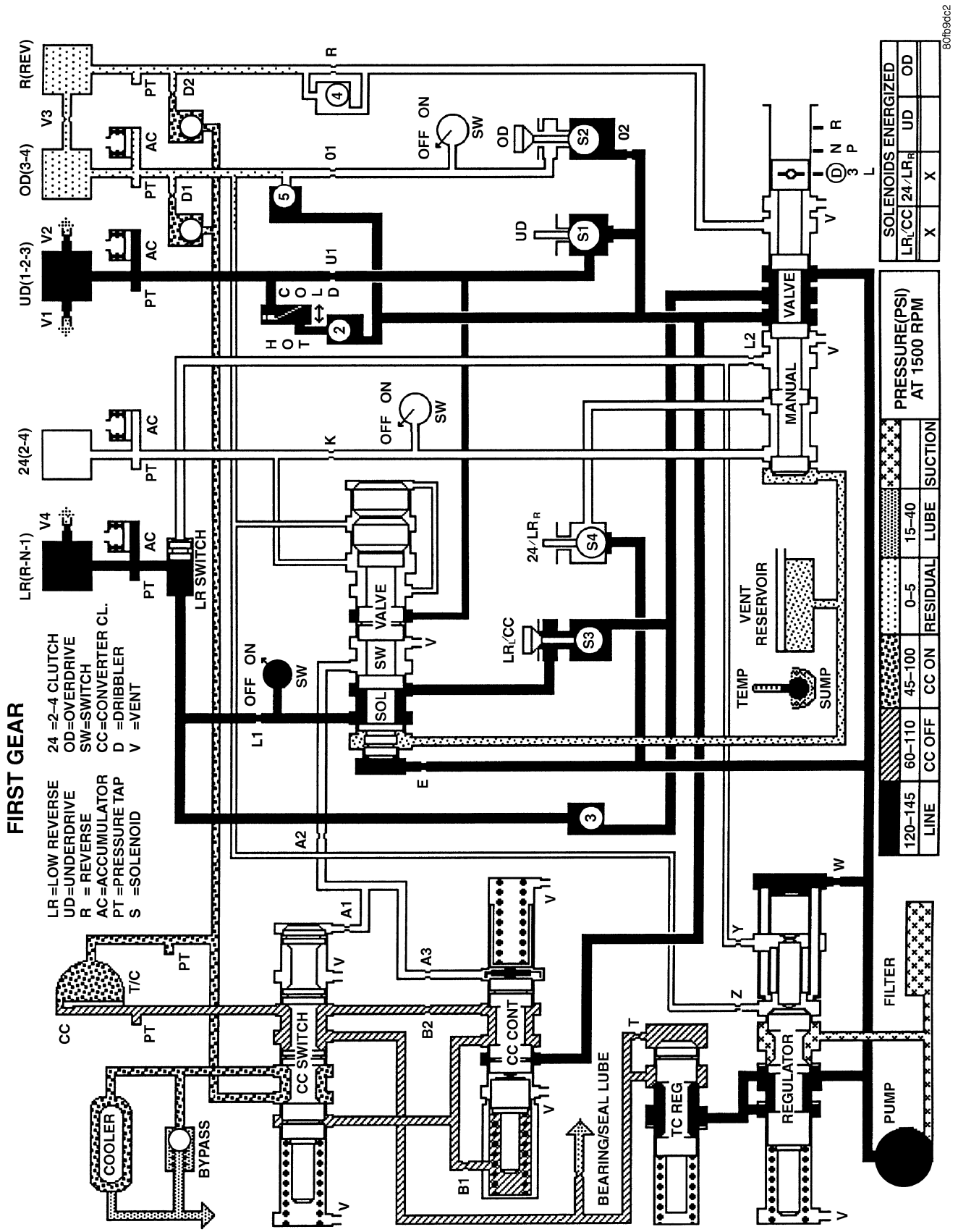
FIRST GEAR
LR =LOW REVERSE
UD=UNDERDRIVE
R = REVERSE
AC =ACCUMULATOR
PT =PRESSURE TAP
S =SOLENOID
24 =2–4 CLUTCH
OD=OVERDRIVE
SW=SWITCH
CC=CONVERTER CL.
D =DRIBBLER
V =VENT
LR(R-N-1)
24(2-4)
UD(1-2-3)
OD(3-4)
R(REV)
V1
V2
V3
V4
PT
AC
D1
D2
LR SWITCH
OFF ON
SW
OD
S1
S2
S3
S4
UD
HOT
COLD
VALVE
SOL
24/LR_R
LR_L/CC
MANUAL
VENT RESERVOIR
TEMP
SUMP
L1
L2
E
A1
A2
A3
B1
B2
CC
T/C
COOLER
BYPASS
CC SWITCH
CC CONT
BEARING/SEAL LUBE
TC REG
REGULATOR
PUMP
FILTER
SOLENOIDS ENERGIZED
LR_L/CC
24/LR_R
UD
OD
X
X
PRESSURE(PSI) AT 1500 RPM
120–145
LINE
60–110
CC OFF
45–100
CC ON
0–5
RESIDUAL
15–40
LUBE
SUCTION
80fb9dc2

First Gear

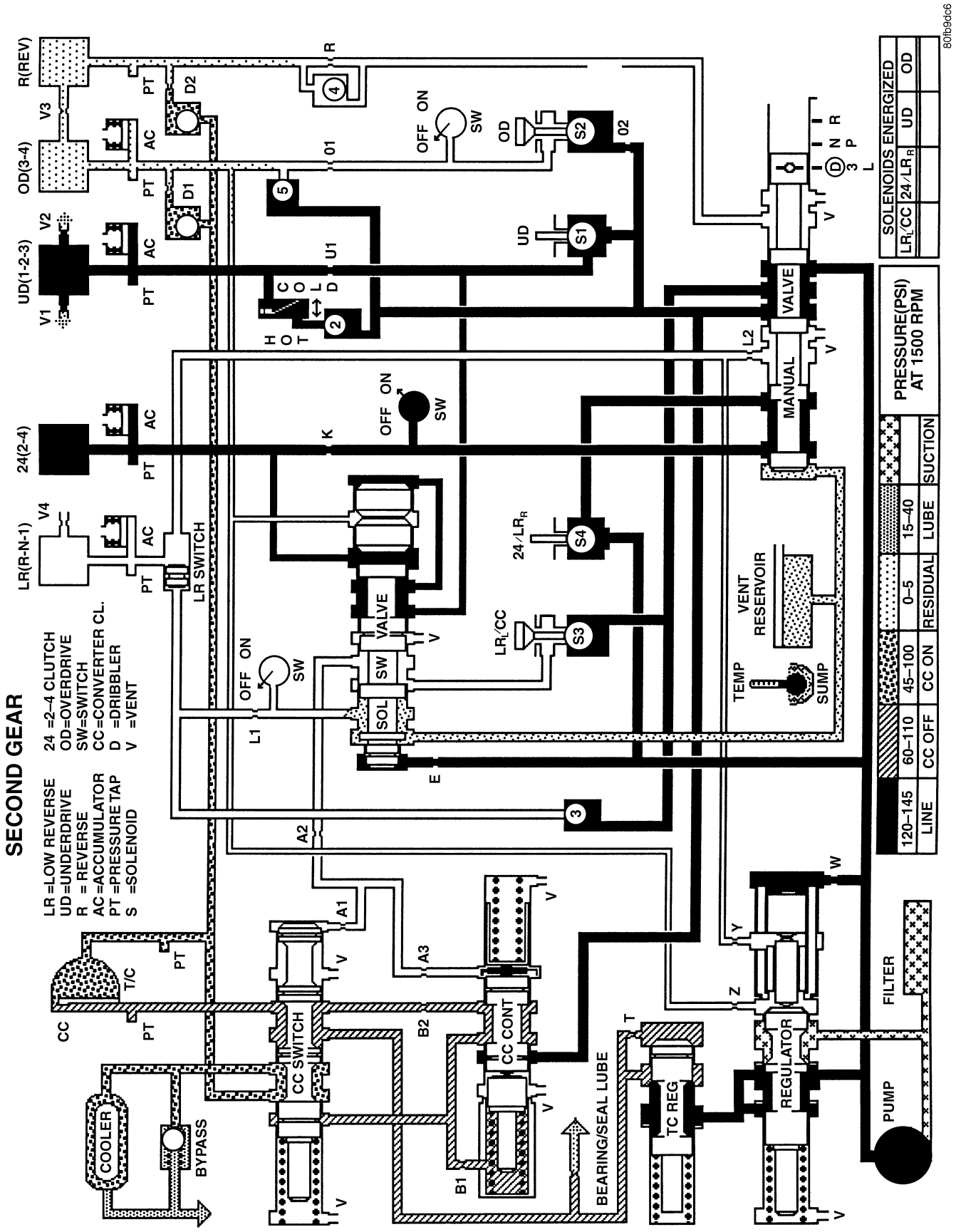
SECOND GEAR
LR =LOW REVERSE
UD =UNDERDRIVE
R = REVERSE
AC =ACCUMULATOR
PT =PRESSURE TAP
S =SOLENOID
24 =2–4 CLUTCH
OD=OVERDRIVE
SW=SWITCH
CC=CONVERTER CL.
D =DRIBBLER
V =VENT
LR(R-N-1)
24(2-4)
UD(1-2-3)
OD(3-4)
R(REV)
V1
V2
V3
V4
AC
PT
D1
D2
LR SWITCH
OFF ON
SW
SOL
VALVE
HOT
COLD
S1
S2
S3
S4
UD
OD
24/LR_R
LR_L/CC
MANUAL
VALVE
VENT RESERVOIR
TEMP
SUMP
COOLER
BYPASS
CC
T/C
CC SWITCH
CC CONT
BEARING/SEAL LUBE
TC REG
REGULATOR
FILTER
PUMP
SOLENOIDS ENERGIZED
LR_L/CC
24/LR_R
UD
OD
PRESSURE(PSI) AT 1500 RPM
120–145
LINE
60–110
CC OFF
45–100
CC ON
0–5
RESIDUAL
15–40
LUBE
SUCTION
80fb9dc6

Second Gear

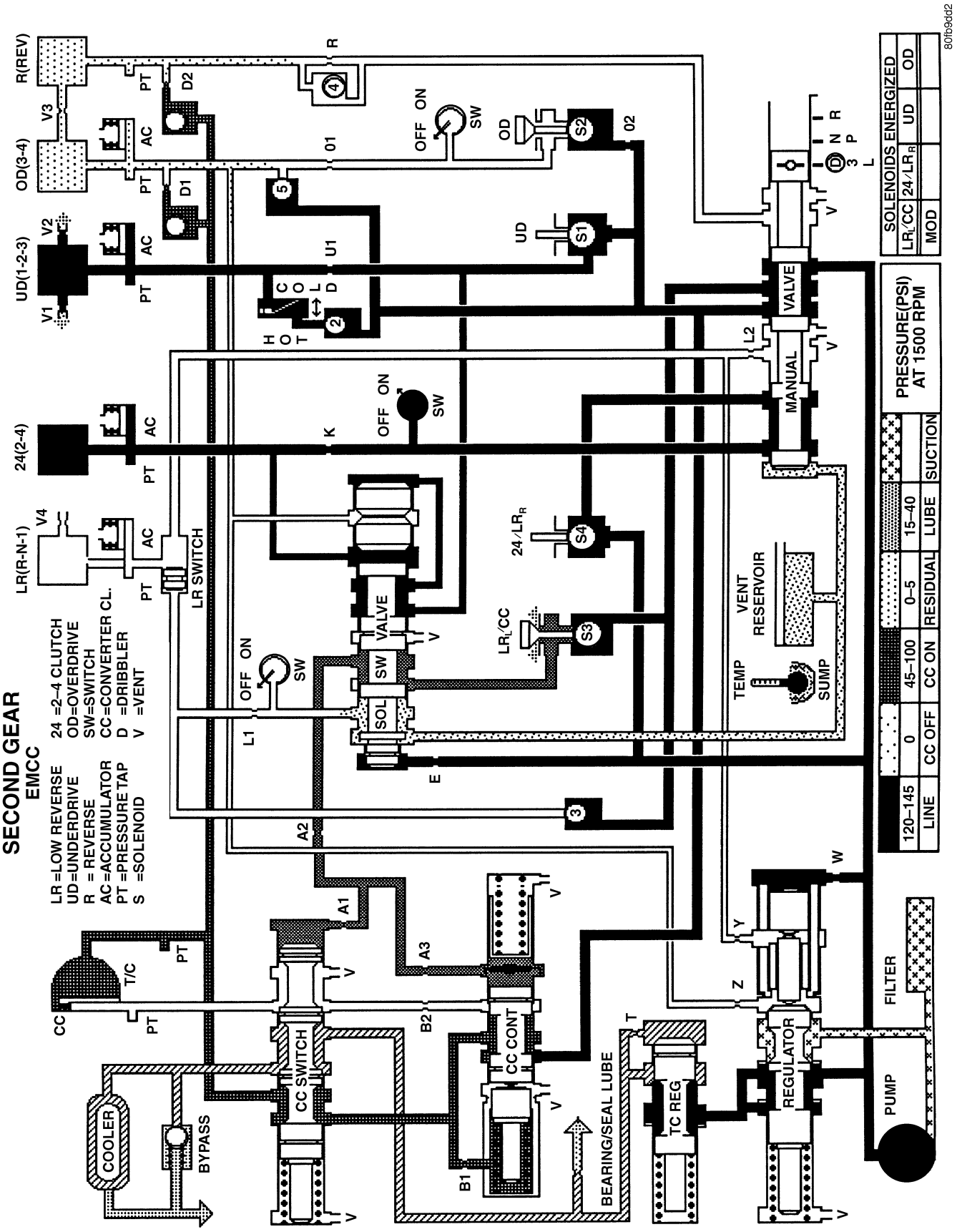

Second Gear (EMCC)

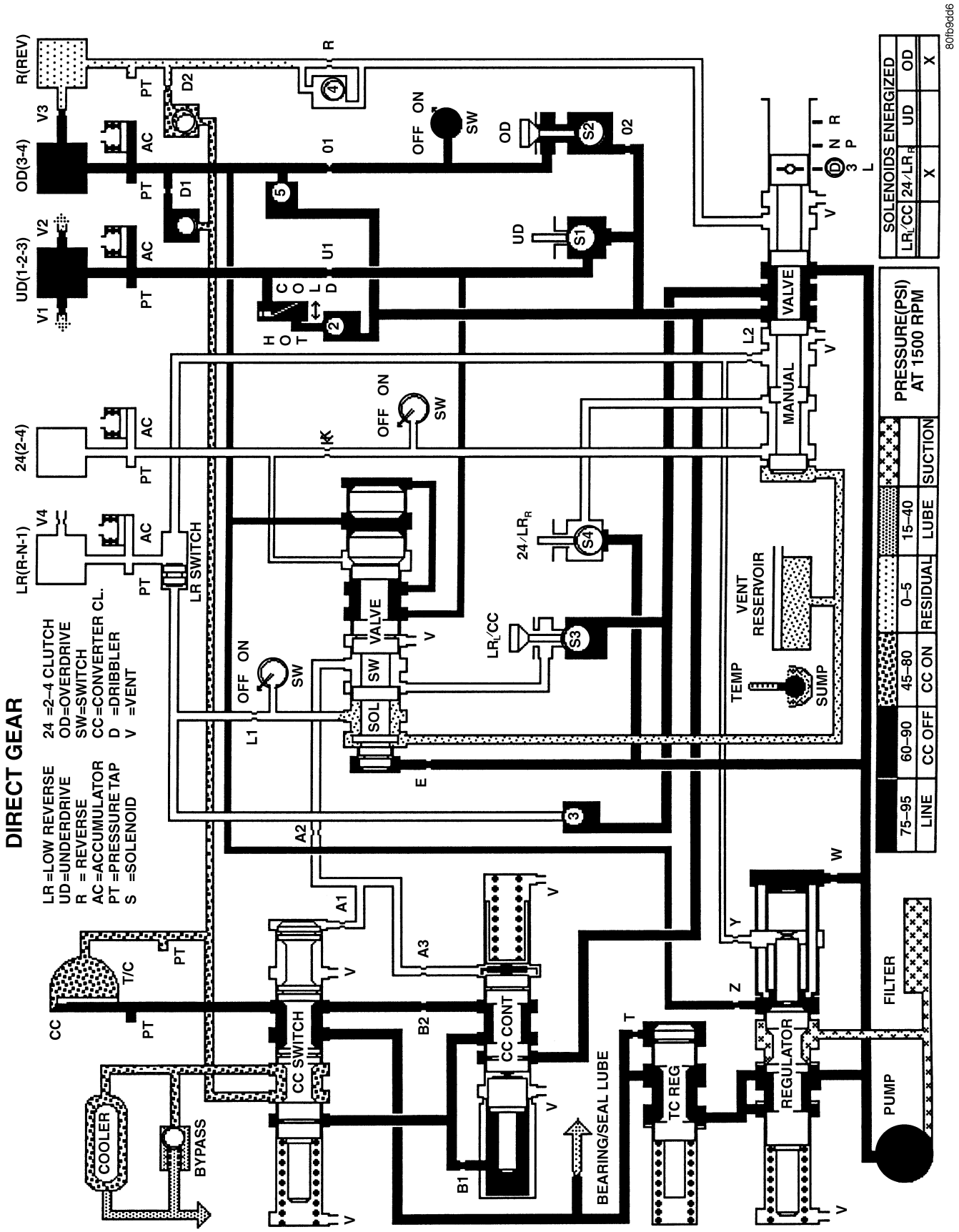
DIRECT GEAR
LR =LOW REVERSE
UD =UNDERDRIVE
R = REVERSE
AC =ACCUMULATOR
PT =PRESSURE TAP
S =SOLENOID
24 =2–4 CLUTCH
OD =OVERDRIVE
SW =SWITCH
CC =CONVERTER CL.
D =DRIBBLER
V =VENT
R(REV)
OD(3-4)
UD(1-2-3)
24(2-4)
LR(R-N-1)
LR SWITCH
COOLER
BYPASS
CC SWITCH
CC CONT
BEARING/SEAL LUBE
TC REG
REGULATOR
PUMP
FILTER
VENT RESERVOIR
TEMP
SUMP
MANUAL
VALVE
SOL
SW
OFF ON
SOLENOIDS ENERGIZED
LR/CC
24/LR
UD
OD
X
PRESSURE(PSI) AT 1500 RPM
75–95
60–90
45–80
0–5
15–40
LINE
CC OFF
CC ON
RESIDUAL
LUBE
SUCTION
80fb9dd6

Direct Gear

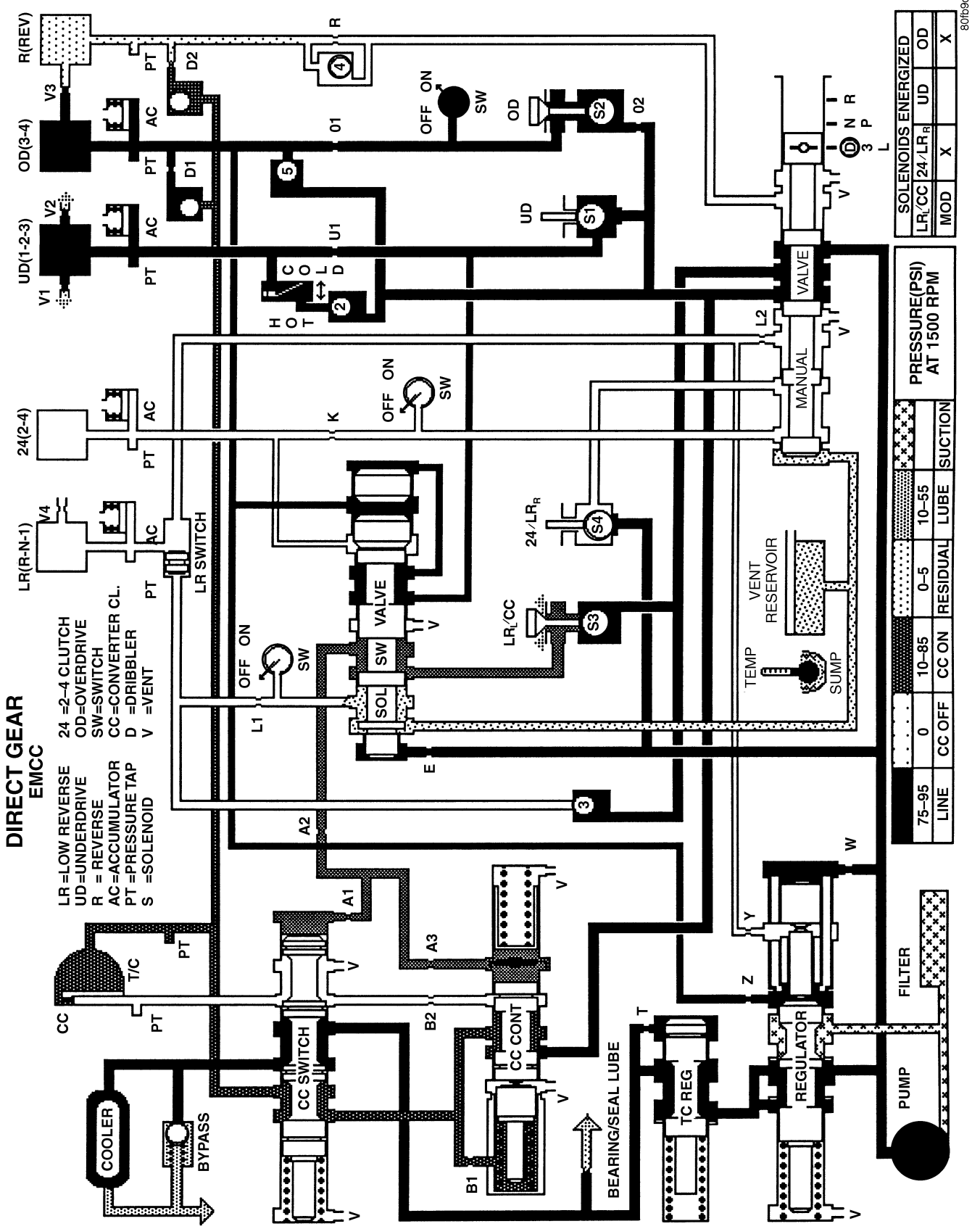

Direct Gear (EMCC)

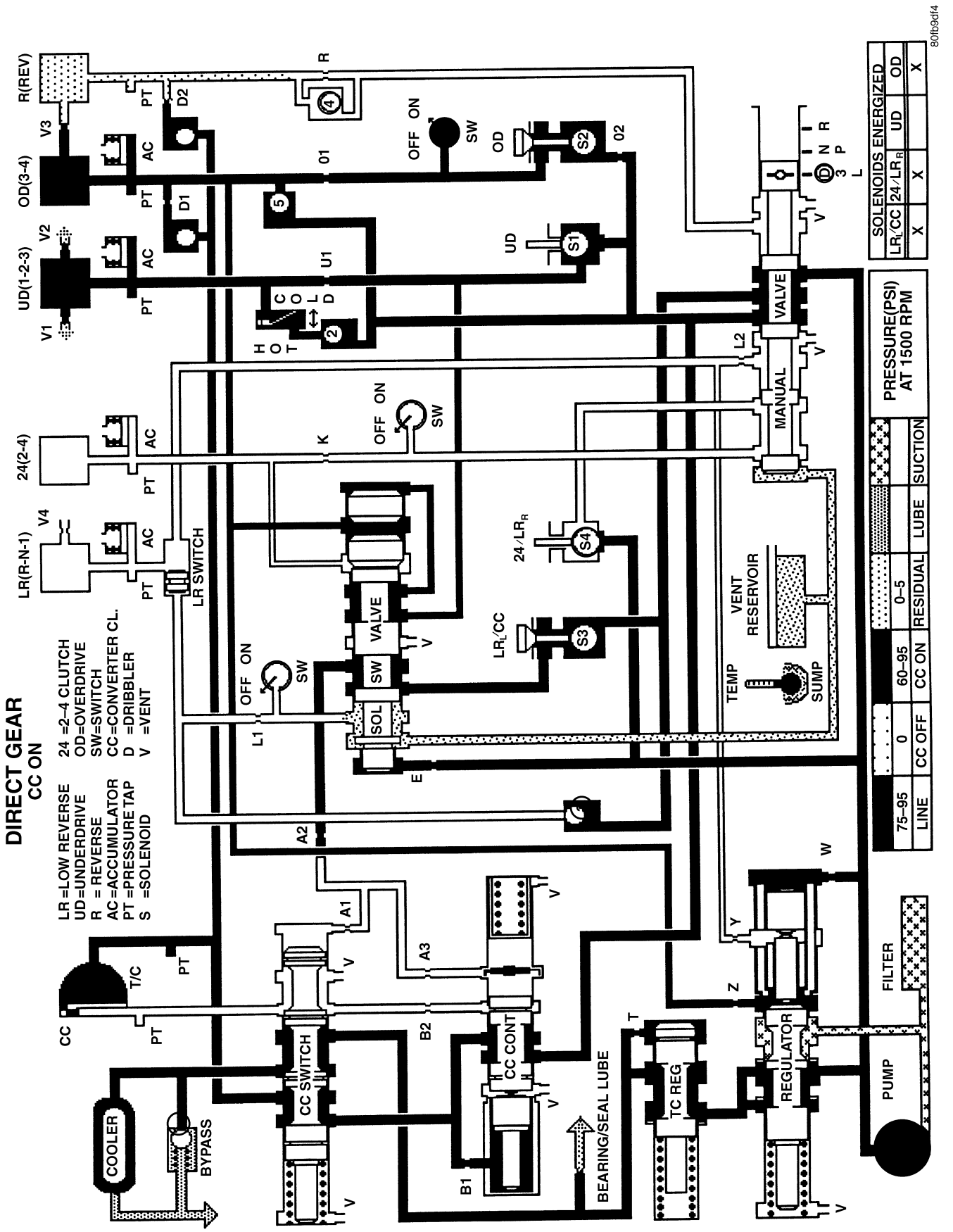

Direct Gear (CC On)

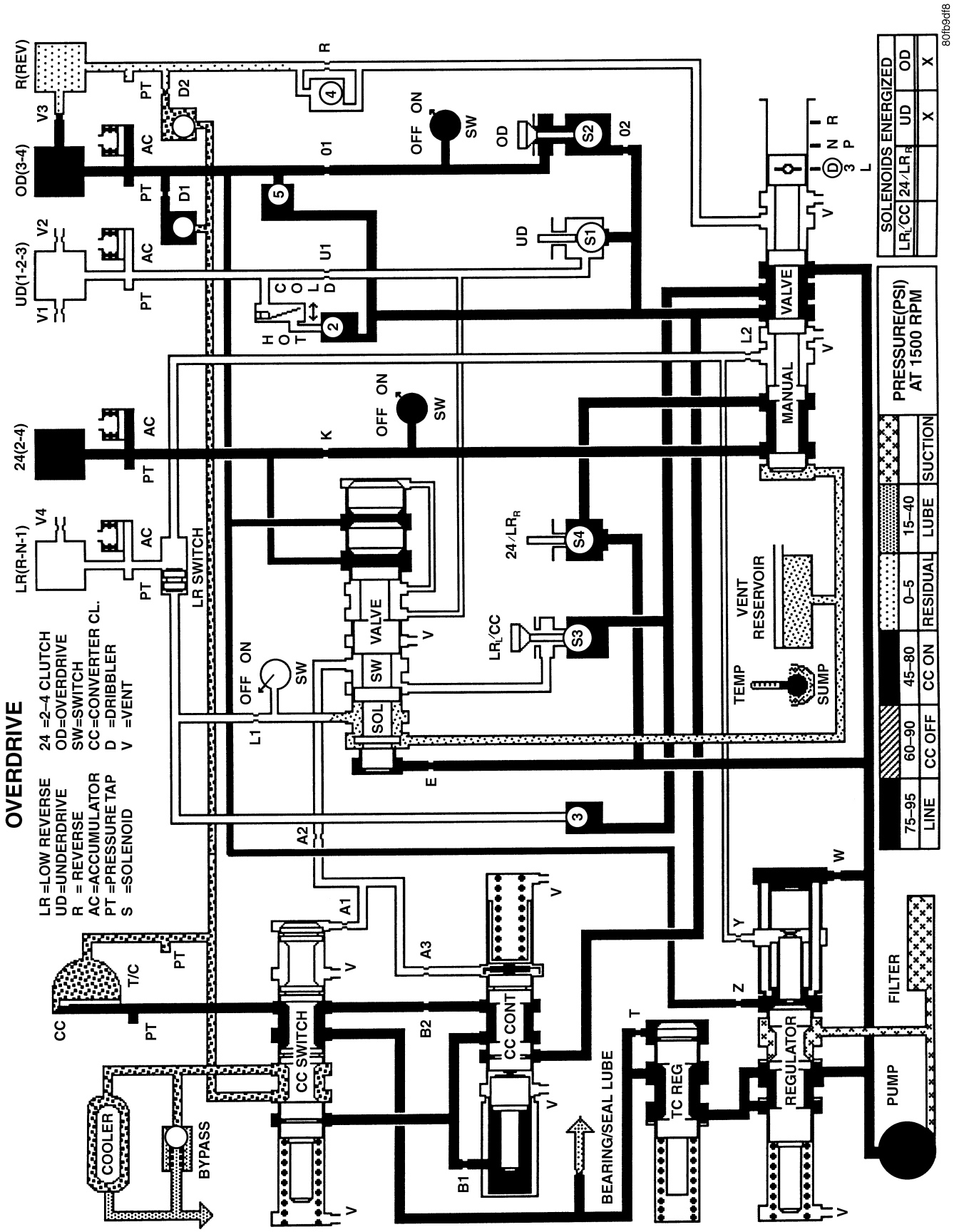
OVERDRIVE
LR =LOW REVERSE
UD =UNDERDRIVE
R = REVERSE
AC =ACCUMULATOR
PT =PRESSURE TAP
S =SOLENOID
24 =2–4 CLUTCH
OD=OVERDRIVE
SW=SWITCH
CC=CONVERTER CL.
D =DRIBBLER
V =VENT
R(REV)
OD(3-4)
UD(1-2-3)
24(2-4)
LR(R-N-1)
V1
V2
V3
V4
PT
AC
D1
D2
LR SWITCH
OFF ON
SW
VALVE
SOL
L1
L2
K
E
A1
A2
A3
B1
B2
CC
T/C
COOLER
BYPASS
CC SWITCH
CC CONT
BEARING/SEAL LUBE
TC REG
REGULATOR
PUMP
FILTER
MANUAL
VALVE
VENT RESERVOIR
TEMP
SUMP
UD
OD
S1
S2
S3
S4
01
02
U1
HOT
COLD
SOLENOIDS ENERGIZED
LR/CC
24/LR
UD
OD
X
PRESSURE(PSI) AT 1500 RPM
75–95
LINE
60–90
CC OFF
45–80
CC ON
0–5
RESIDUAL
15–40
LUBE
SUCTION
80fb9df8

Overdrive

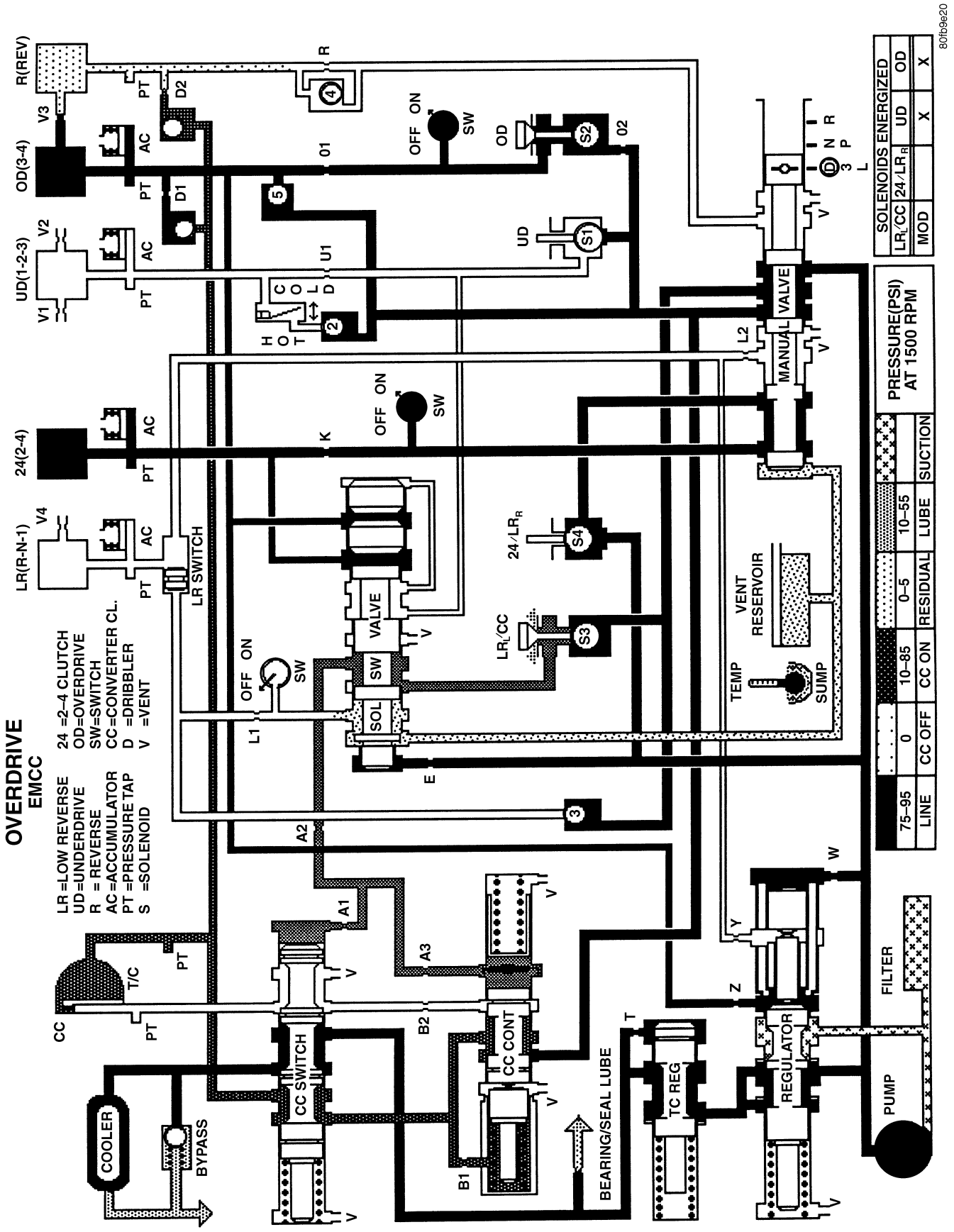

Overdrive (EMCC)

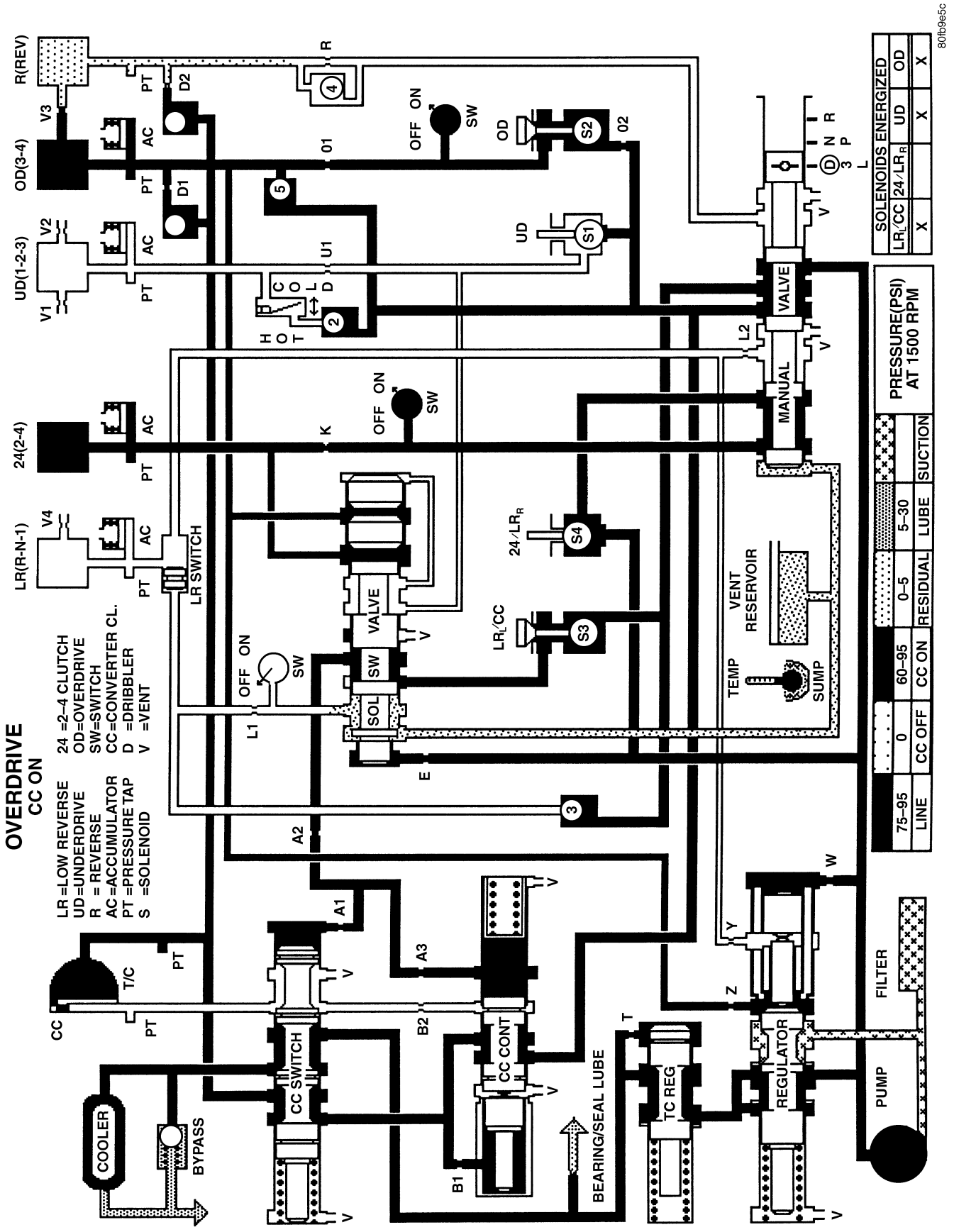

Overdrive (CC On)

42RLE - WITH VARIABLE LINE PRESSURE

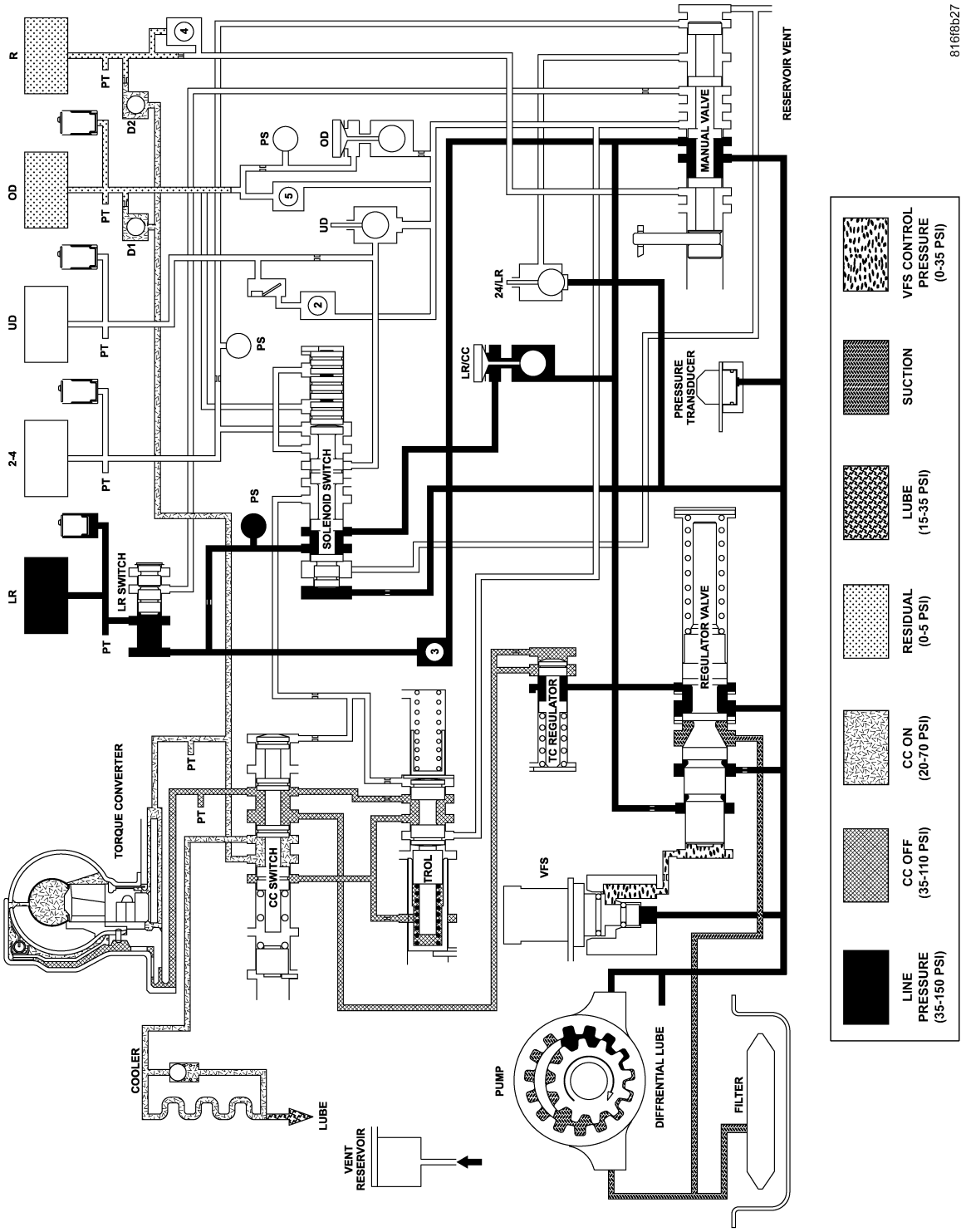

Park and Neutral

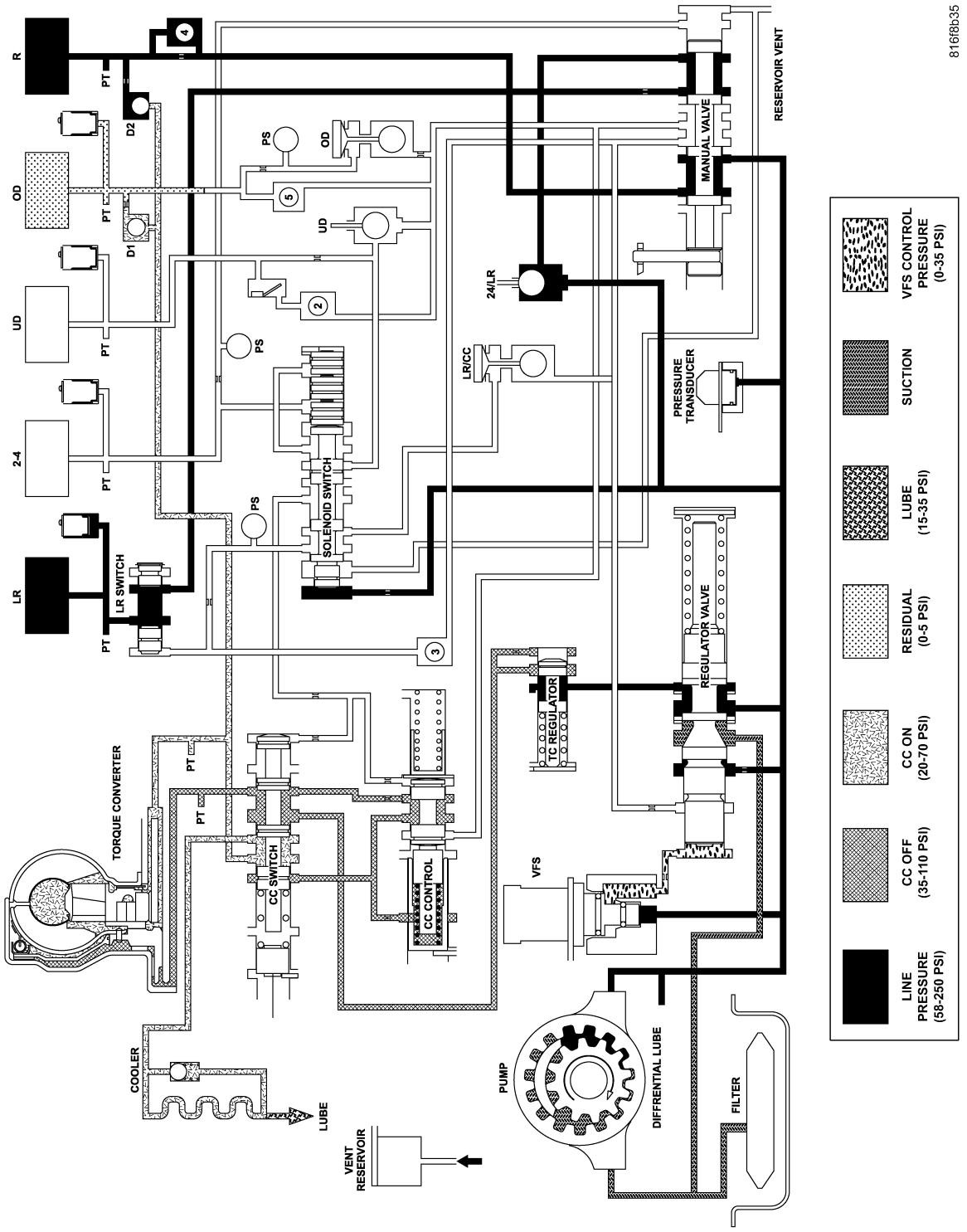
R
OD
UD
2-4
LR
PT
D2
D1
4
5
2
3
PS
OD
UD
24/LR
LR/CC
MANUAL VALVE
RESERVOIR VENT
PRESSURE TRANSDUCER
SOLENOID SWITCH
LR SWITCH
REGULATOR VALVE
TC REGULATOR
TORQUE CONVERTER
CC SWITCH
CC CONTROL
VFS
COOLER
LUBE
VENT RESERVOIR
PUMP
DIFFERENTIAL LUBE
FILTER
LINE PRESSURE (58-250 PSI)
CC OFF (35-110 PSI)
CC ON (20-70 PSI)
RESIDUAL (0-5 PSI)
LUBE (15-35 PSI)
SUCTION
VFS CONTROL PRESSURE (0-35 PSI)
816f8b35

Reverse

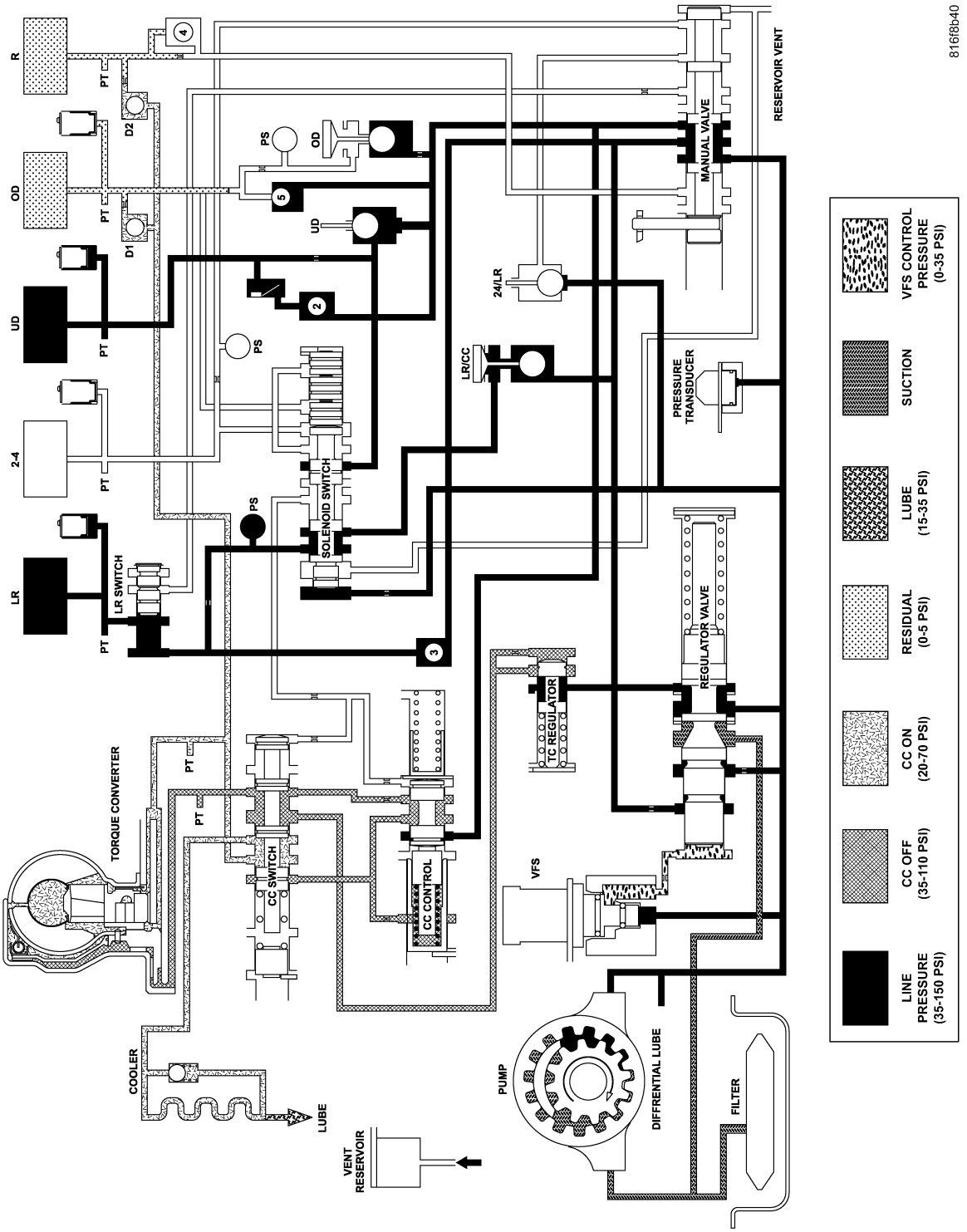

Drive - First Gear

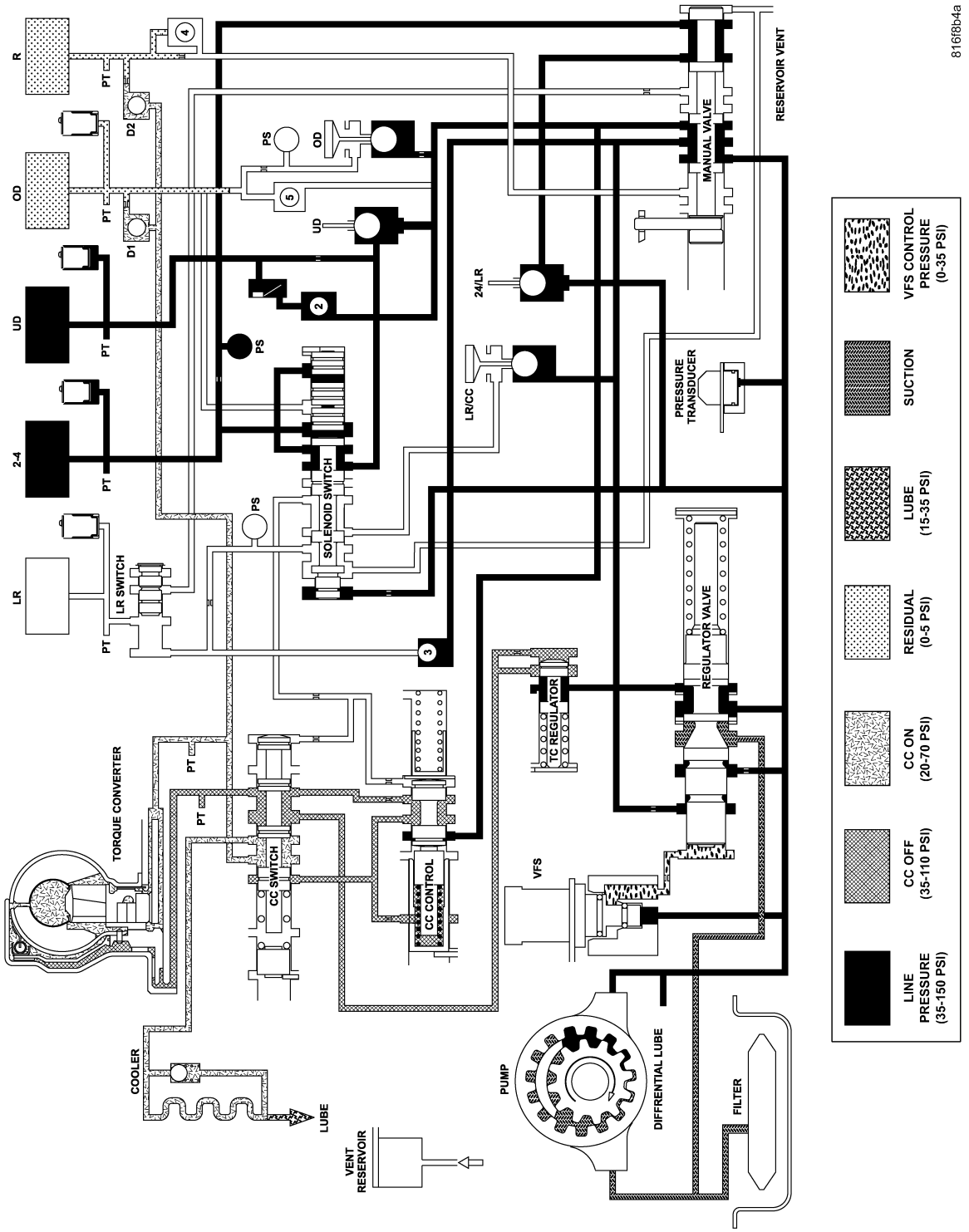

Drive - Second Gear

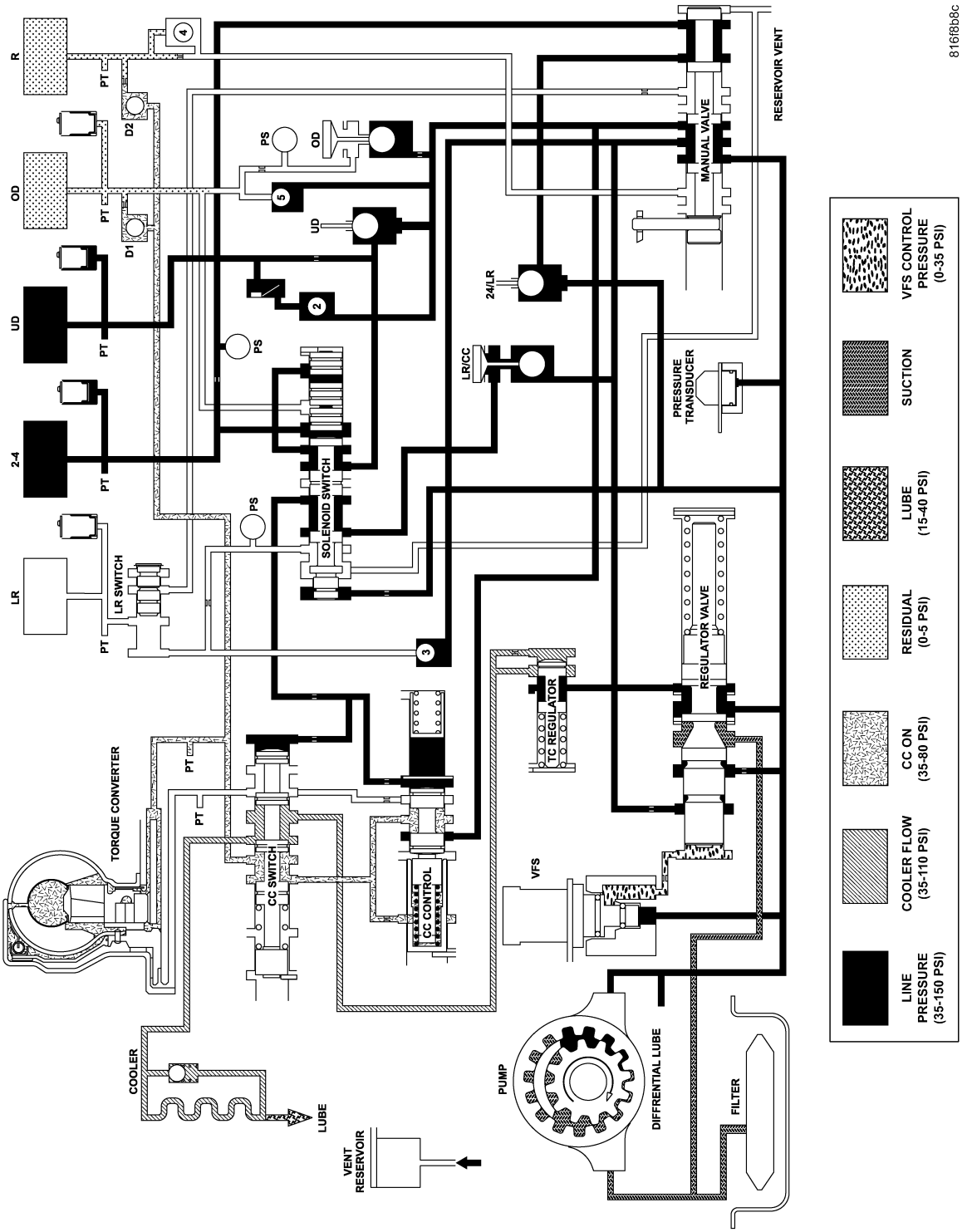

Drive - Second Gear EMCC

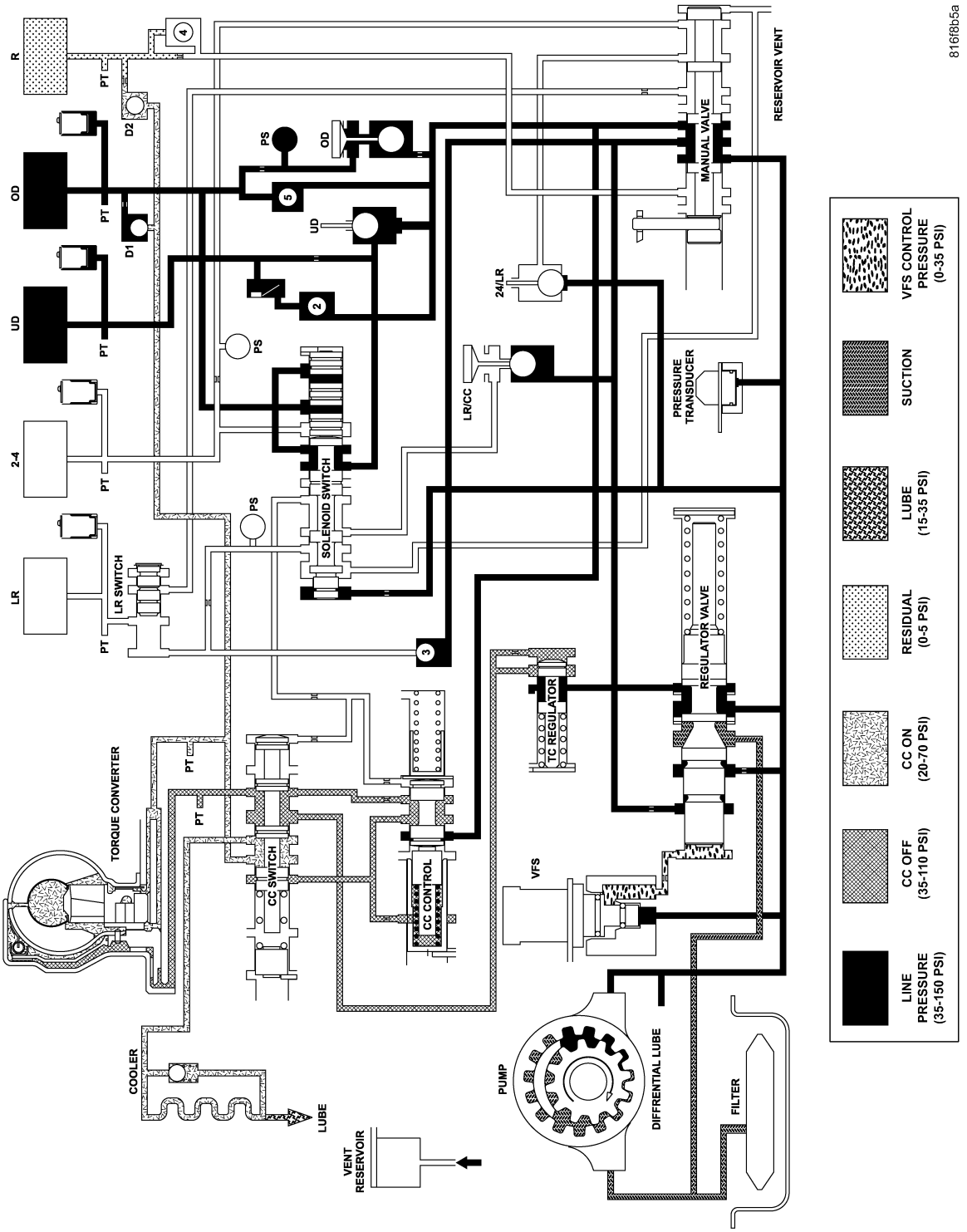

Drive - Direct Gear

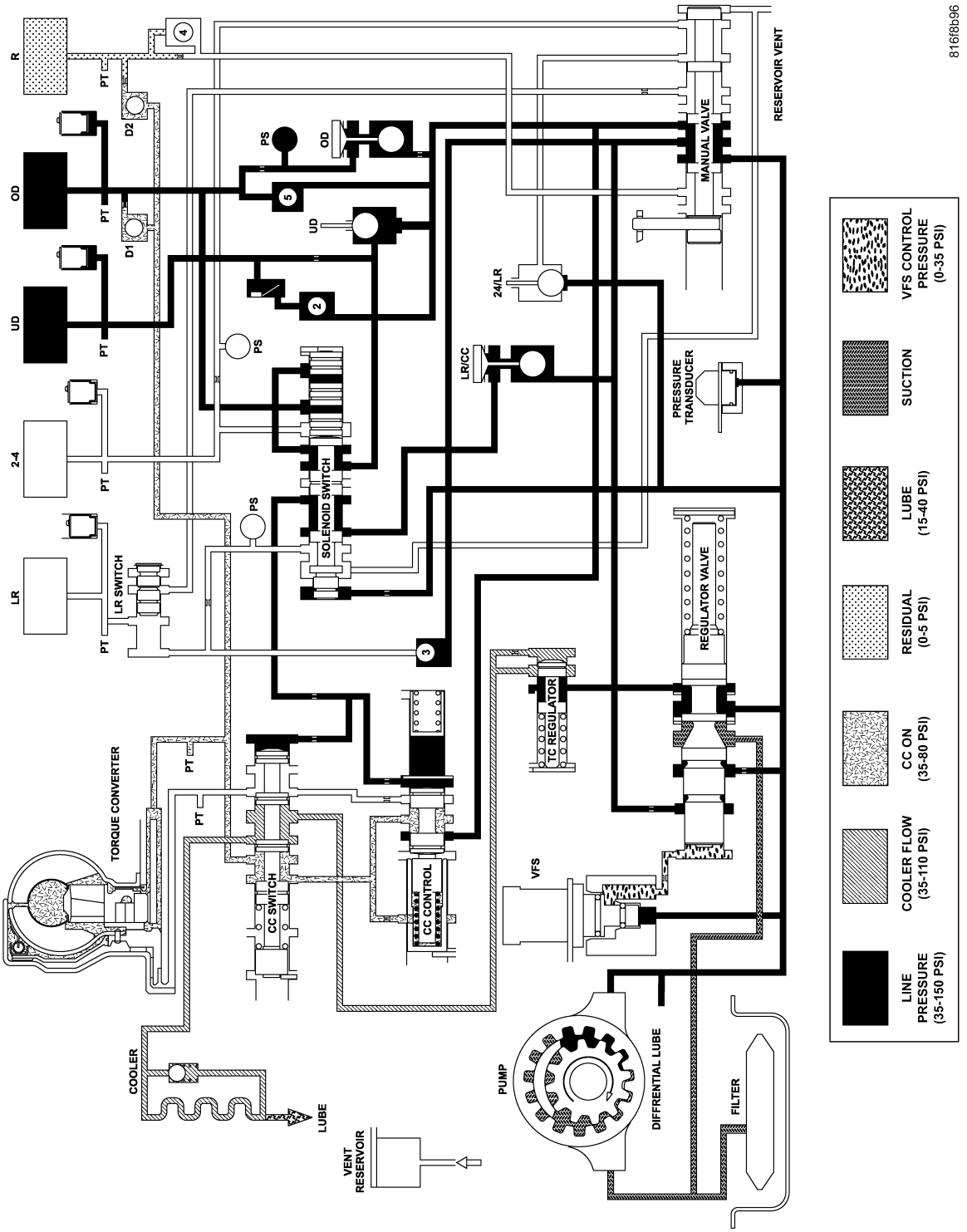

Drive - Direct Gear EMCC

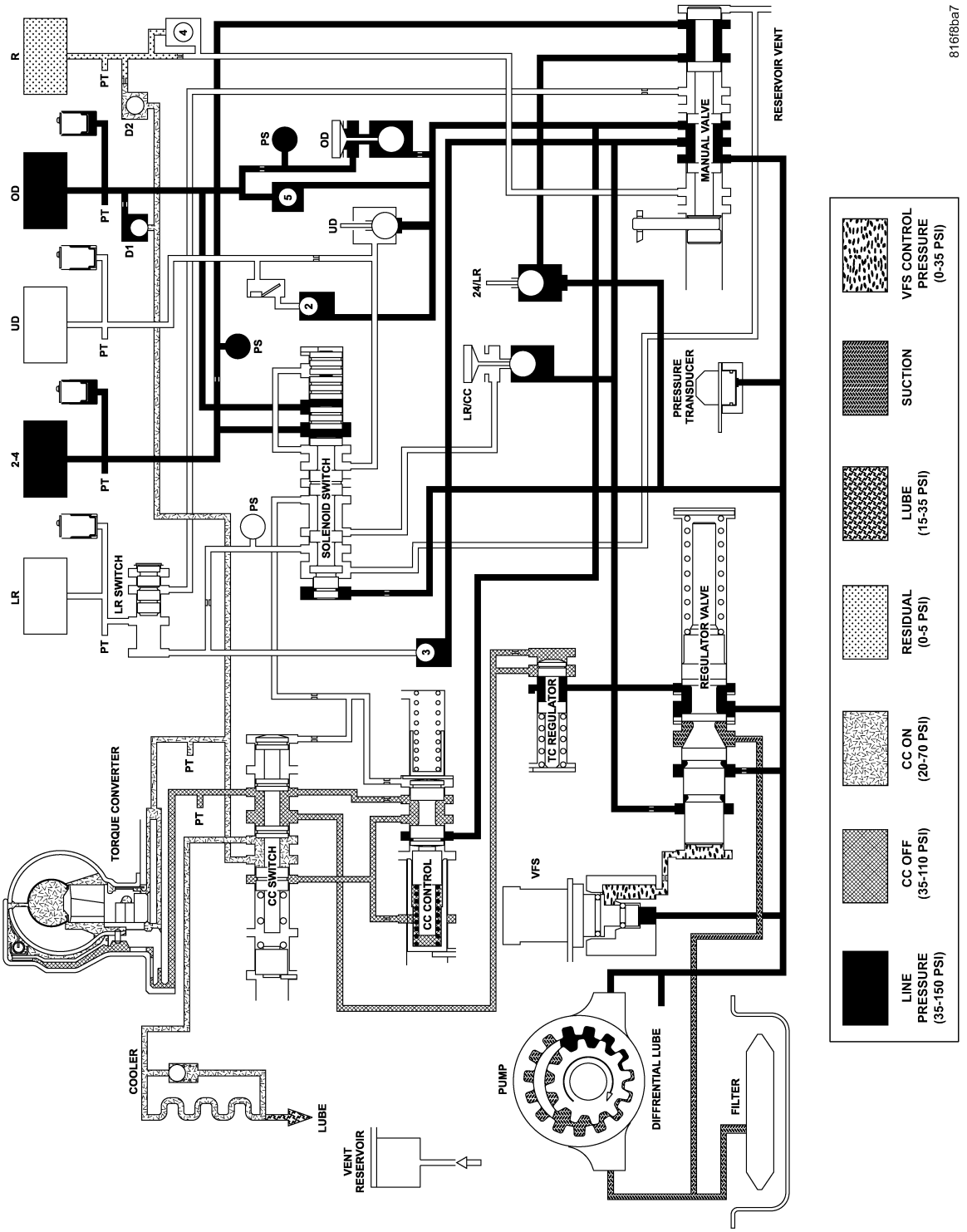

Drive - Fourth Gear (Overdrive)

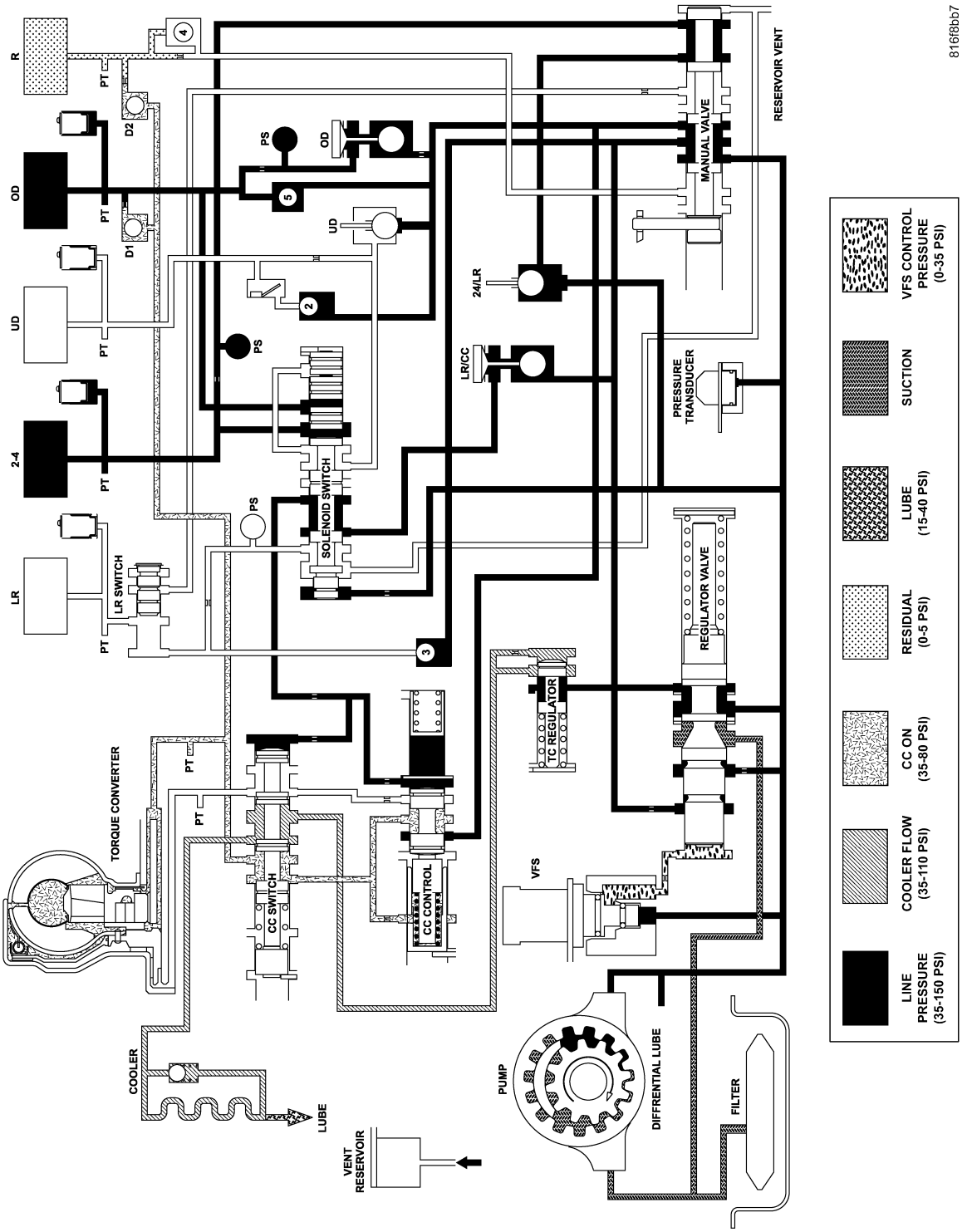

Drive - Fourth Gear (Overdrive) EMCC

SPECIFICATIONS

42RLE AUTOMATIC TRANSMISSION

GENERAL SPECIFICATIONS

Transmission Type	Four-Speed Automatic, Electronically Controlled, Fully Adaptive, Electronically Modulated Torque Converter
Lubrication Method	Pump (internal - external gear-type)
Cooling Method	Water Heat Exchanger and/or Air-to-Oil Heat Exchanger

GEAR RATIOS

1st Gear	2.84:1
2nd Gear	1.57:1
3rd Gear (Direct)	1.00:1
4th Gear (Overdrive)	0.69:1
Reverse Gear	2.21:1

BEARING PRELOAD (Drag Torque)

Description	Metric	Standard
Output Shaft	0.22-0.903 N·m	1-8 in. lbs.

CLUTCH PACK

Description	Metric	Standard
Low/Reverse Clutch (Select Reaction Plate)	0.84-1.60 mm	0.033-0.063 in.
Two/Four Clutch (No Select)	0.76-2.64 mm	0.030-0.104 in.
Reverse Clutch (Select Snap Ring)	0.89-1.37 mm	0.035-0.054 in.
Overdrive Clutch (No Select)	1.07-3.25 mm	0.042-0.128 in.
Underdrive Clutch (Select Reaction Plate)	0.94-1.50 mm	0.037-0.059 in.

INPUT SHAFT

Description	Metric	Standard
End Play	0.127-0.635 mm	0.005-0.025 in.

OIL PUMP CLEARANCES

DESCRIPTION	METRIC	STANDARD
Outer Gear-to-Crescent	0.060-0.298 mm	0.0023-0.0117 in.
Inner Gear-to-Crescent	0.093-0.385 mm	0.0036-0.0151 in.
Outer Gear-to-Pocket	0.089-0.202 mm	0.0035-0.0079 in.
Outer Gear Side Clearance	0.020-0.046 mm	0.0008-0.0018 in.
Inner Gear Side Clearance	0.020-0.046 mm	0.0008-0.0018 in.

TORQUE SPECIFICATIONS

Description	N·m	Ft. Lbs.	In. Lbs.
Bolt, Torque Converter Housing to Engine	68	50	-
Bolt, Converter-to-Driveplate	88	65	-
Bolt, Fluid Filter-to-Valve Body	5	-	45
Bolt, L/R Piston Retainer-to-Case	5	-	45
Bolt, Adapter/Extension Housing	54	40	-
Bolt, Manual Valve Lever-to-Manual Valve	5	-	45
Bolt, Oil Pan-to-Case	20	14.5	-
Bolt, Oil Pump-to-Case	30	-	265
Bolt, Park Sprag Retainer	4.5	-	40
Bolt, Reaction Shaft Support Halves	28	-	250
Bolt, Solenoid/Pressure Switch Assembly-to-Valve Body	5.5	-	50
Bolt, Valve Body-to-Case	12	-	105
Bolt, Valve Body-to-Transfer Plate	5	-	45
Fitting, Cooler Line	47.5	35	-
Nut, Output Shaft	271	200	-
Plug, Pressure Tap	5	-	45
Bolt, Input Speed-to-Case Sensor	9	-	80
Bolt, Output Speed-to-Case Sensor	9	-	80
Nut, Transfer Case	47	35	-
Bolt, Crossmember to Frame	68	50	-
Bolt, Rear Support to Transmission	47	35	-
Bolt, Clevis Bracket to Crossmember	47	35	-
Bolt, Clevis Bracket to Transmission	68	50	-
Screw, TRS/Manual Shaft Retaining	5	-	45
Screw, 2/4 Accumulator Retainer Plate	5	-	45

SPECIAL TOOLS

AUTOMATIC TRANSMISSION – 42RLE

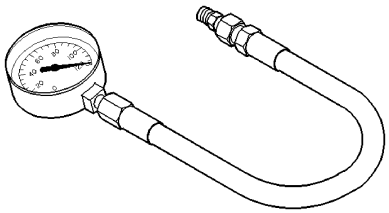

Gauge , Pressure (High) - C-3293SP

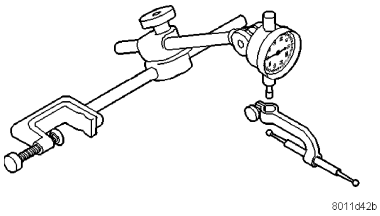

Indicator, Dial - C-3339

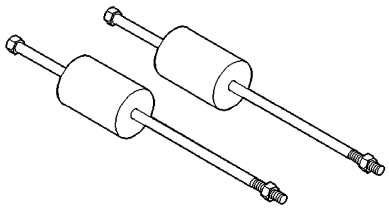

Hammer, Slide - C-3752

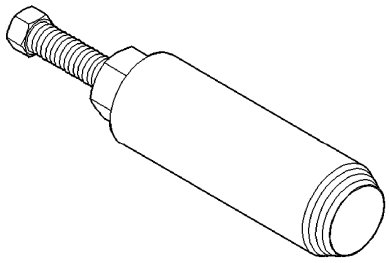

Puller, Seal - C-3981B

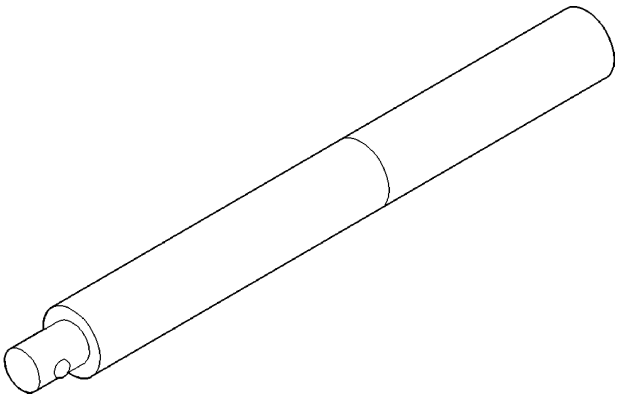

Handle, Universal - C-4171

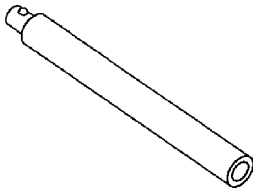

Extension, Handle - C-4171-2

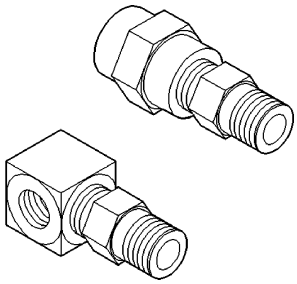

Adapter Set - L-4559

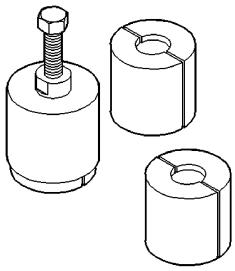

Puller Set - 5048

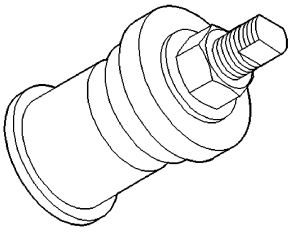

Installer - 5050A

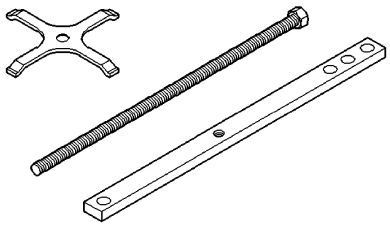

Compressor - 5058A

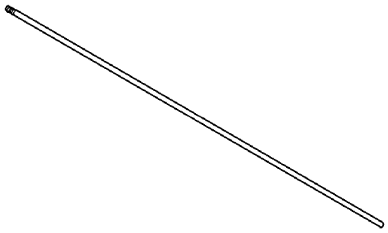

Tip - 6268

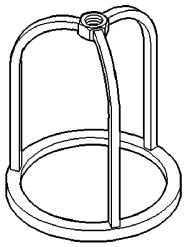

Compressor - 5059-A

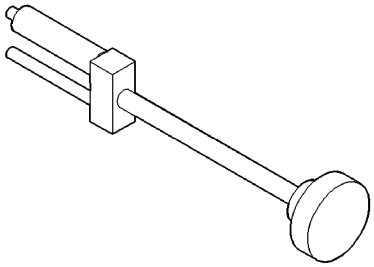

Remover/Installer - 6301

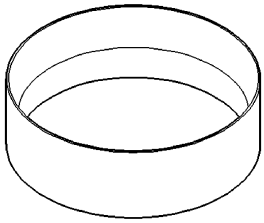

Installer - 5067

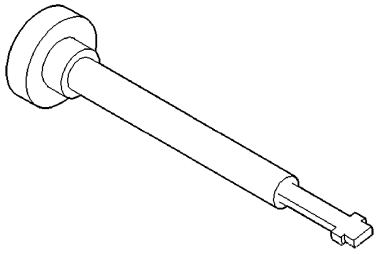

Remover/Installer - 6302

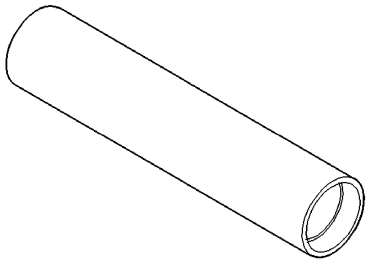

Installer - 6052

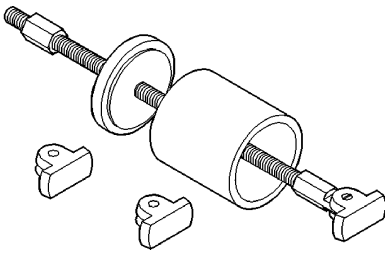

Remover - 6310

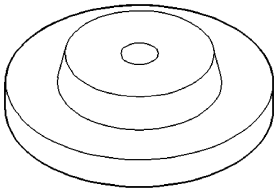

Disc - 6057

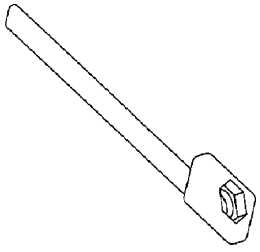

Wrench - 6497

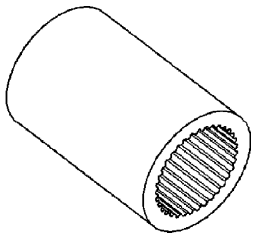

Wrench - 6498-A

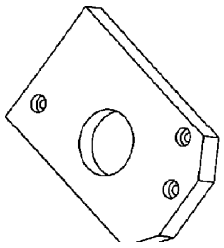

Plate, Support - 6618A

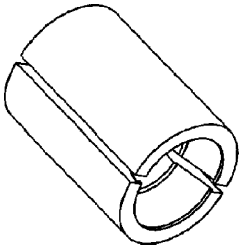

Puller Jaws - 6545

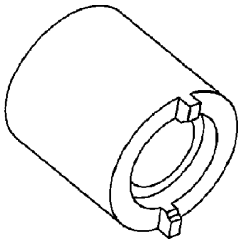

Tool, Staking - 6639

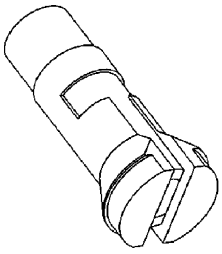

Remover - 6596

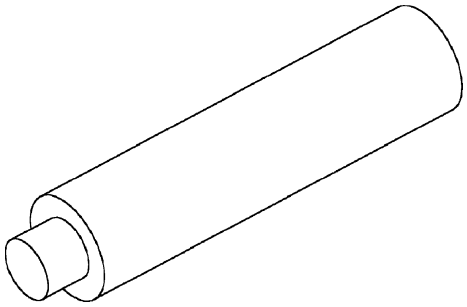

Installer, Seal - 8254

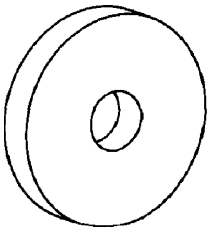

Remover - 6597

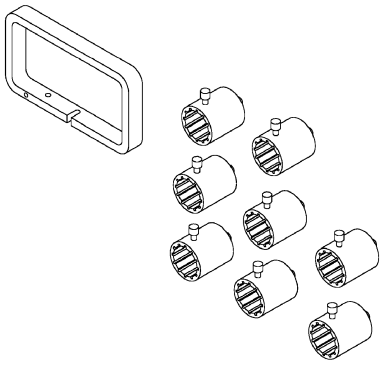

End Play Set - 8266

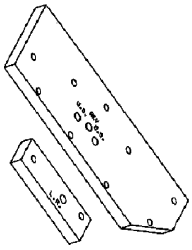

Plate Set - 6599

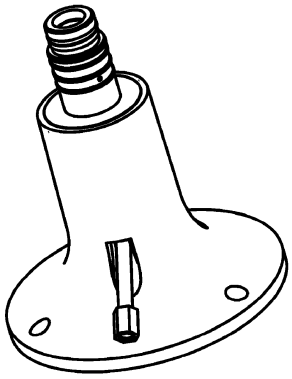

Fixture, Pressure - 8391

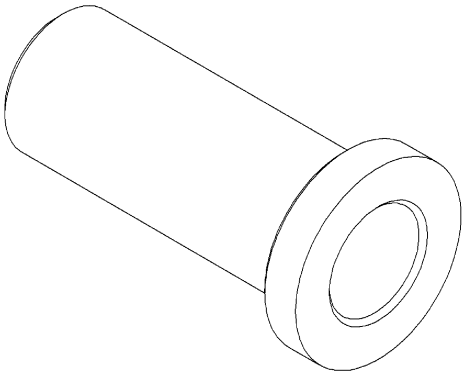

Installer, Bearing - 9287

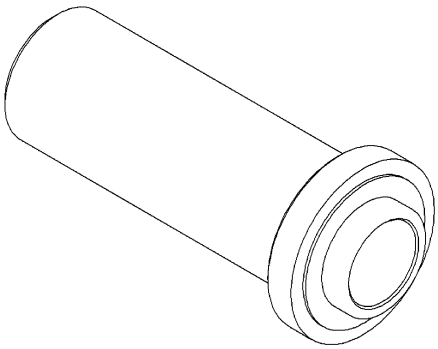

Installer, Seal - 8902A

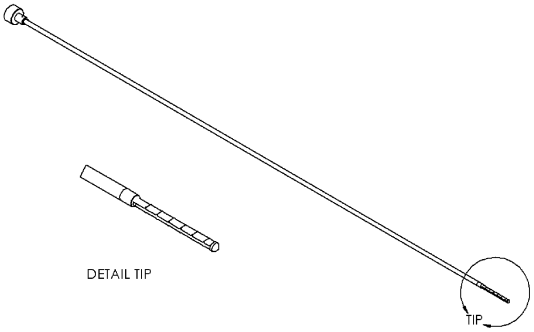

Dipstick - 9336

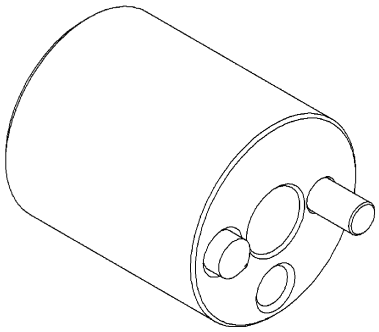

Tool, Staking - 9078

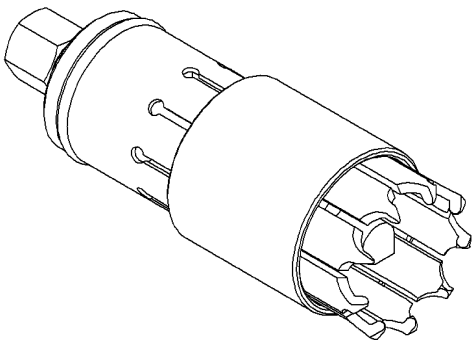

Remover, Bearing - 9082

ACCUMULATOR

DESCRIPTION

The 42RLE underdrive, overdrive, low/reverse, and 2/4 clutch hydraulic circuits each contain an accumulator. An accumulator typically consists of a piston, return spring(s), and a cover or plug. The overdrive (1) and underdrive (2) accumulators are located within the transmission case, and are retained by the valve body.

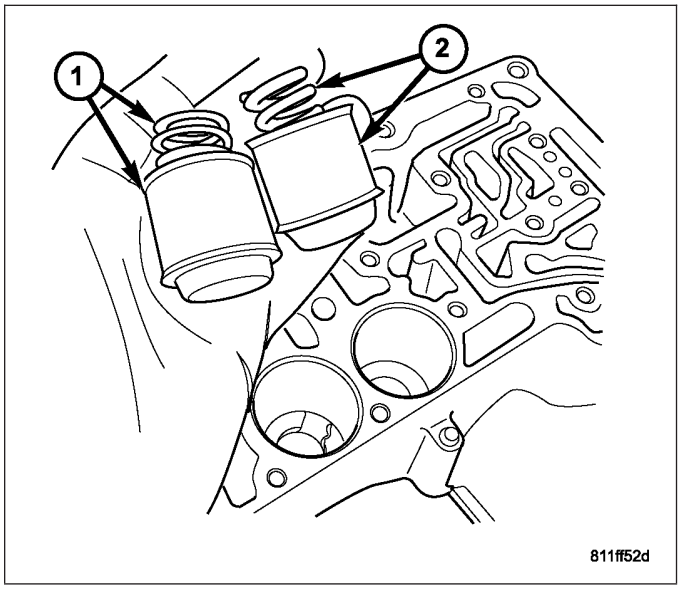

The low reverse (1) accumulator is also located within the transmission case, but the assembly is retained by a cover and a snap-ring.

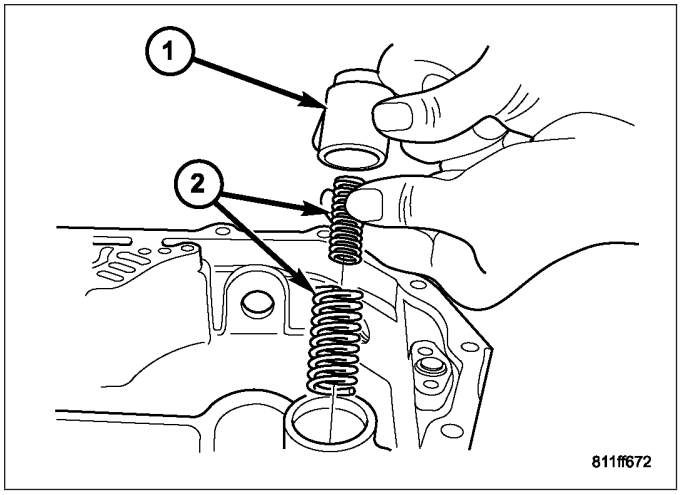

The 2/4 accumulator (5) is located in the valve body. It is retained by a cover and retaining screws.

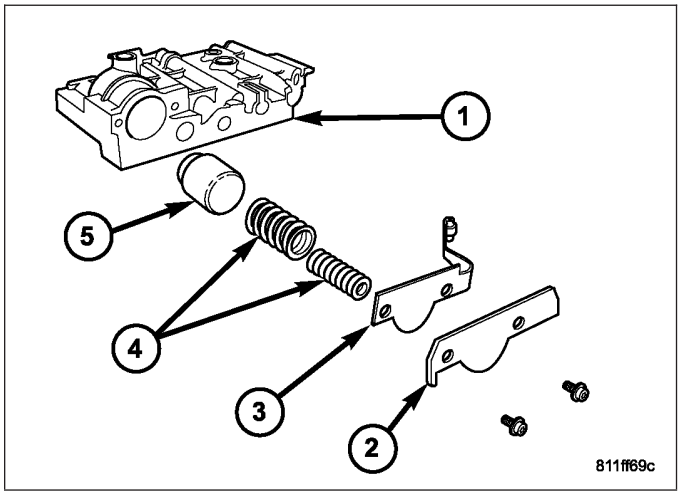

OPERATION

The function of an accumulator is to cushion the application of a frictional clutch element. When pressurized fluid is applied to a clutch circuit, the application force is dampened by fluid collecting in the respective accumulator chamber against the piston and springs. The intended result is a smooth, firm clutch application.

BEARINGS

ADJUSTMENTS

BEARING ADJUSTMENT PROCEDURES

Take extreme care when removing and installing bearing cups and cones. **Use only an arbor press for installation,** as a hammer may not properly align the bearing cup or cone. Burrs or nicks on the bearing seat will give a false end play reading, while gauging for proper shims. Improperly seated bearing cup and cones are subject to low-mileage failure.

Bearing cups and cones should be replaced if they show signs of pitting or heat distress.

If distress is seen on either the cup or bearing rollers, both cup and cone must be replaced.

NOTE: Bearing drag torque specifications must be maintained to avoid premature bearing failures.

Used (original) bearing may lose up to 50 percent of the original drag torque after break-in.

NOTE: All bearing adjustments must be made with no other component interference or gear inter-mesh.

Oil all bearings before checking turning torque.

MECHANISM-BRAKE TRANSMISSION SHIFT INTERLOCK

DESCRIPTION

The Brake Transmission Shifter/Ignition Interlock (BTSI) is a cable operated system that prevents the transmission gear shifter from being moved out of PARK without the proper driver inputs. The system also contains a solenoid that is integral to the shifter assembly. The solenoid works in conjunction with the park lock cable to permit shifter movement out of PARK when the brake is depressed.

A BTSI override (2) is provided on the side of the shifter mechanism (1) to allow the vehicle to be shifted out of PARK in the event of an electrical failure.

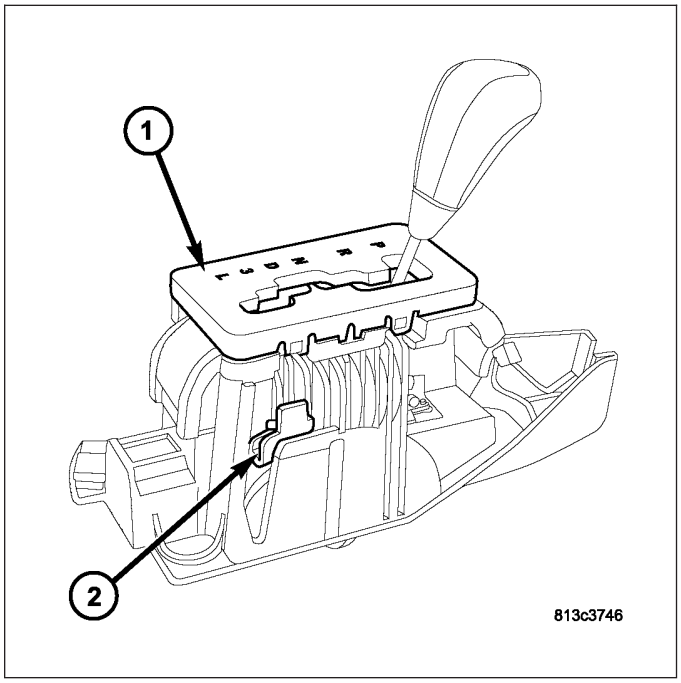

OPERATION

The Brake Transmission Shifter/Ignition Interlock (BTSI) is engaged whenever the ignition switch is in the LOCK (1) position. An additional electrically activated feature will prevent shifting out of the PARK position unless the brake pedal is depressed at least one-half inch. A solenoid in the shifter assembly is energized when the brake pedal is depressed. When the key is in the ON position and the brake pedal is depressed, the shifter is unlocked and will move into any position. The interlock system also prevents the ignition switch from being turned to the LOCK position, unless the shifter is in the gated PARK position.

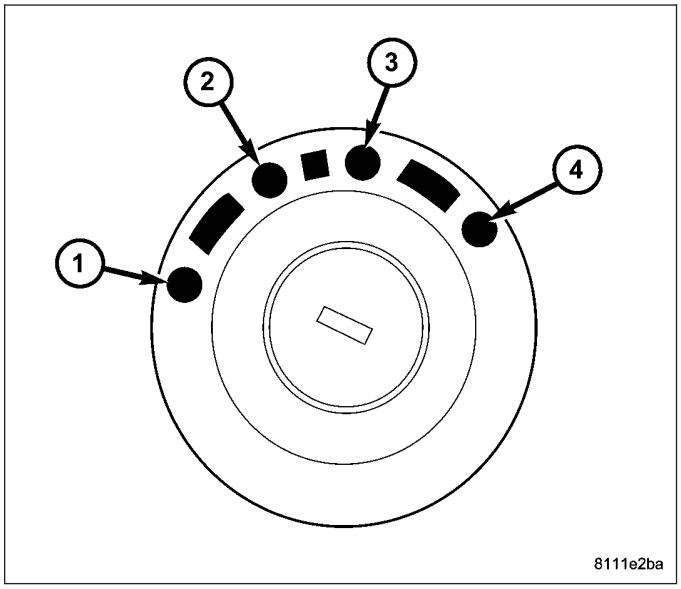

The following chart describes the normal operation of the Brake Transmission Shift Interlock (BTSI) system. If the “expected response” differs from the vehicle’s response, then system repair and/or adjustment is necessary.

ACTION	EXPECTED RESPONSE
1. Turn key to the ″ACC″ position and depress brake pedal.	1. Shifter CAN be shifted out of park.
2. Turn key to the ″ON″ position, with foot off of brake pedal.	2. Shifter CANNOT be shifted out of park.
3. Turn key to the ″ON″ position and depress the brake pedal.	3. Shifter CAN be shifted out of park.
4. Leave shifter in any gear position, except PARK, and try to return key to the ″LOCK″ position.	4. Key cannot be returned to the ″LOCK″ position.
5. Return shifter to ″PARK″ and try to remove the key.	5. Key can be removed (after returning to ″LOCK″ position).
6. With the key removed, and the brake depressed, try to shift out of ″PARK″.	6. Shifter cannot be shifted out of ″PARK″.
NOTE: Any failure to meet these expected responses requires system adjustment or repair.	

BTSI Override

In the event of an electrical failure, the vehicle can be shifted out of PARK by using the following procedure.

1. Turn the key to the ACC or ON position.
2. Remove the liner to the cubby bin to the right side of the shifter.
3. Depress the BTSI override (2) on the side of the shifter assembly (1).
4. While the override is depressed, move the shifter out of the PARK position.
5. Return the cubby bin liner to its original location.

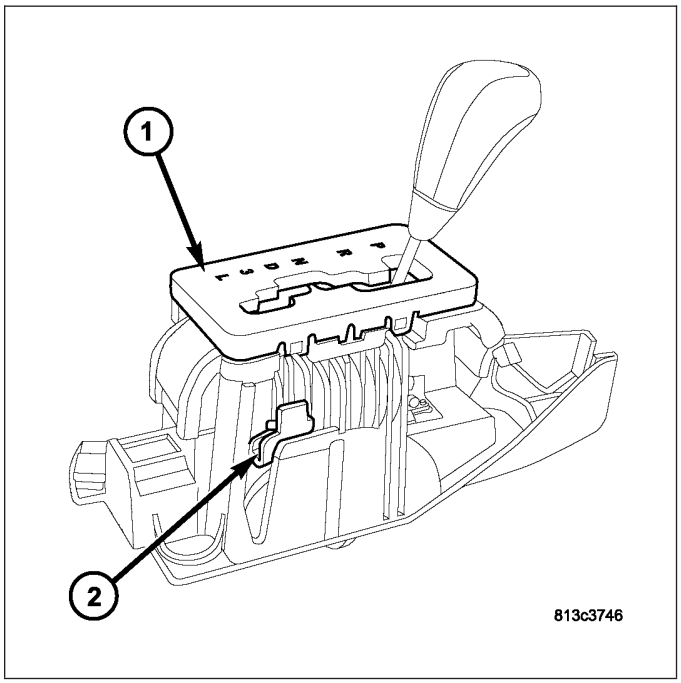

DIAGNOSIS AND TESTING - BRAKE TRANSMISSION SHIFT INTERLOCK

SYSTEM VERIFICATION

1. Verify that the key can only be removed in the PARK position
2. When the shift lever is in PARK, the ignition key cylinder should rotate freely from ACC to LOCK. When the shifter is in any other gear or neutral position, the ignition key cylinder should not rotate to the LOCK position.
3. Shifting out of PARK should not be possible when the ignition key cylinder is in the ACC position and the brake pedal is not depressed.
4. Shifting out of PARK should not be possible while applying normal force on the shift lever and ignition key cylinder is in the ACC, ON, or START positions unless the foot brake pedal is depressed approximately 1/2 inch (12mm).
5. Shifting out of PARK should not be possible when the ignition key cylinder is in the LOCK position, regardless of the brake pedal position.

6. Shifting between any gears, NEUTRAL or into PARK may be done without depressing foot brake pedal with ignition switch in ACC, ON, or START positions.

DIAGNOSTIC CHART

CONDITION	POSSIBLE CAUSE	CORRECTION
KEY WILL NOT ROTATE TO THE LOCK POSITION.	1. Misadjusted Park Lock cable.	1. Adjust Park Lock cable. (Refer to 21 - TRANSMISSION AND TRANSFER CASE/AUTOMATIC TRANSMISSION/BRAKE TRANSMISSION SHIFT INTERLOCK SYSTEM - ADJUSTMENTS)
	2. Misadjusted gearshift cable.	2. Adjust gearshift cable. (Refer to 21 - TRANSMISSION AND TRANSFER CASE/AUTOMATIC TRANSMISSION/GEAR SHIFT CABLE - ADJUSTMENTS)
	3. Burrs on ignition key.	3. Remove burrs and cycle key several times to verify operation.
	4. Binding or broken components.	4. Inspect system components and repair/replace components as necessary.
VEHICLE WILL NOT START UNLESS SHIFTER IS HELD FORWARD, OR REARWARD, OF THE PARK POSITION.	1. Misadjusted gearshift cable.	1. Adjsut gearshift cable. (Refer to 21 - TRANSMISSION AND TRANSFER CASE/AUTOMATIC TRANSMISSION/GEAR SHIFT CABLE - ADJUSTMENTS)

ADJUSTMENTS - BRAKE TRANSMISSION SHIFT INTERLOCK

The park interlock cable is part of the brake/shift lever interlock system. Correct cable adjustment is important to proper interlock operation. The gear shift and park lock cables must both be correctly adjusted in order to shift out of PARK.

ADJUSTMENT PROCEDURE

1. Remove floor console as necessary for access to the park lock cable. (Refer to 23 - BODY/INTERIOR/FLOOR CONSOLE - REMOVAL)
2. Shift the transmission into the PARK position.
3. Turn ignition switch to LOCK position. **Be sure ignition key cylinder is in the LOCK position. Cable will not adjust correctly in any other position.**

NOTE: If the key will not turn to the LOCK position, pull up on the cable lock button and manually move the cable in and out until the key can be turned to the LOCK position.

4. Pull cable lock button up to release cable, if necessary.
5. Remove and discard the cable adjuster lock pin, if a new cable is being installed.
6. Ensure that the cable is free to self-adjust by pushing cable rearward and releasing.
7. Push lock button down until it snaps in place. The lock should be 1-2mm below the surface of the cylinderical portion of the cable adjustment housing.

BTSI FUNCTION CHECK

1. Verify removal of ignition key allowed in PARK position only.
2. When the shift lever is in PARK, the ignition key cylinder should rotate freely LOCK position. When the shifter is in any other position, the ignition key should not rotate to the LOCK position.

3. Shifting out of PARK should not be possible when the ignition key cylinder is in the ACC position and the brake pedal is not depressed.
4. Shifting out of PARK should not be possible while applying normal force on the shift lever and ignition key cylinder is in the ACC, ON, or START positions unless the foot brake pedal is depressed approximately 1/2 inch (12mm).
5. Shifting out of PARK should not be possible when the ignition key cylinder is in the LOCK position, regardless of the brake pedal position.
6. Shifting between any gears, NEUTRAL or into PARK may be done without depressing foot brake pedal with ignition switch in ACC, ON, or START positions.
7. The floor shifter lever and gate positions should be in alignment with all transmission detent positions.
8. Engine starts must be possible with shifter lever in PARK or NEUTRAL gate positions only. Engine starts must not be possible in any other gate positions other than PARK or NEUTRAL.
9. With the shifter lever handle in the:
   - PARK position- apply forward force on center of handle and remove pressure. Engine start must be possible.
   - PARK position- apply rearward force on center of handle and remove pressure. Engine start must be possible.
   - NEUTRAL position- engine start must be possible.
   - NEUTRAL position, engine running and brakes applied- Apply forward force on center of shift handle. Transmission should not be able to shift into REVERSE detent.

CLUTCHES-DRIVING

DESCRIPTION

Three hydraulically applied input clutches are used to drive planetary components. The underdrive (2), overdrive (3), and reverse (4) clutches are considered input/driving clutches and are contained within the input clutch assembly. The input clutch assembly also contains:

- Input shaft.
- Input hub.
- Clutch retainer.
- Underdrive piston.
- Overdrive/reverse piston.
- Overdrive hub.
- Underdrive hub.

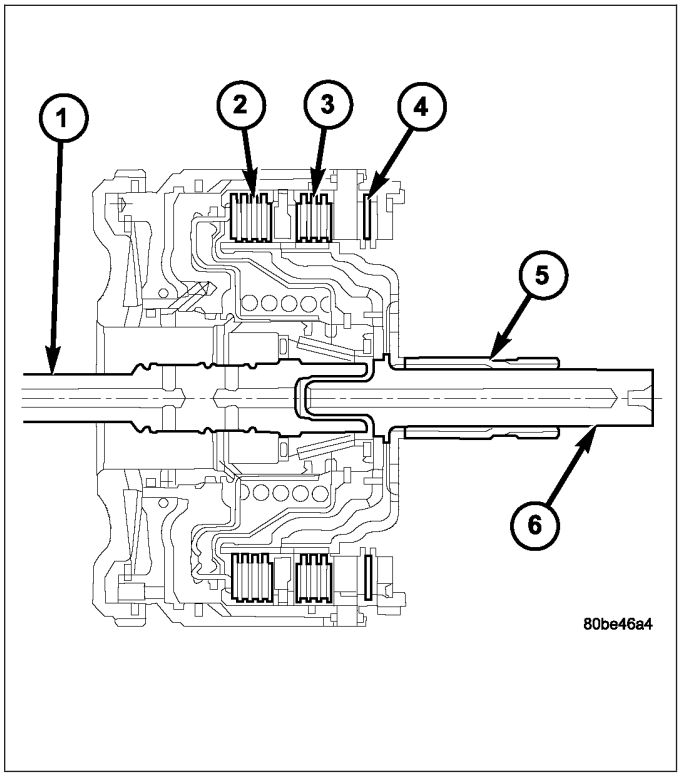

OPERATION

The three input clutches are responsible for driving different components of the planetary geartrain.

NOTE: (Refer to 21 - TRANSMISSION/AUTOMATIC - 42RLE - DIAGNOSIS AND TESTING) for a collective view of which clutch elements are applied at each position of the selector lever.

UNDERDRIVE CLUTCH

The underdrive clutch is hydraulically applied in first, second, and third (direct) gears by pressurized fluid against the underdrive piston. When the underdrive clutch is applied, the underdrive hub drives the rear sun gear.

OVERDRIVE CLUTCH

The overdrive clutch is hydraulically applied in third (direct) and overdrive gears by pressurized fluid against the overdrive/reverse piston. When the overdrive clutch is applied, the overdrive hub drives the front planet carrier.

REVERSE CLUTCH

The reverse clutch is hydraulically applied in reverse gear only by pressurized fluid against the overdrive/reverse piston. When the reverse clutch is applied, the front sun gear assembly is driven.

FLUID AND FILTER

DIAGNOSIS AND TESTING

CAUSES OF BURNT FLUID

Burnt, discolored fluid is a result of overheating which has two primary causes.

1. A result of restricted fluid flow through the main and/or auxiliary cooler. This condition is usually the result of a faulty or improperly installed drainback valve, a damaged oil cooler, or severe restrictions in the coolers and lines caused by debris or kinked lines.
2. Heavy duty operation with a vehicle not properly equipped for this type of operation. Trailer towing or similar high load operation will overheat the transmission fluid if the vehicle is improperly equipped. Such vehicles should have an auxiliary transmission fluid cooler, a heavy duty cooling system, and the engine/axle ratio combination needed to handle heavy loads.

EFFECTS OF INCORRECT FLUID LEVEL

A low fluid level allows the pump to take in air along with the fluid. Air in the fluid will cause fluid pressures to be low and develop slower than normal. If the transmission is overfilled, the gears churn the fluid into foam. This aerates the fluid and causing the same conditions occurring with a low level. In either case, air bubbles cause fluid overheating, oxidation, and varnish buildup which interferes with valve and clutch operation. Foaming also causes fluid expansion which can result in fluid overflow from the transmission vent or fill tube. Fluid overflow can easily be mistaken for a leak if inspection is not careful.

FLUID CONTAMINATION

Transmission fluid contamination is generally a result of:

- adding incorrect fluid
- failure to clean dipstick and fill tube when checking level
- engine coolant entering the fluid
- internal failure that generates debris
- overheat that generates sludge (fluid breakdown)
- failure to replace contaminated converter after repair

The use of non-recommended fluids can result in transmission failure. The usual results are erratic shifts, slippage, abnormal wear and eventual failure due to fluid breakdown and sludge formation. Avoid this condition by using recommended fluids only.

The dipstick cap and fill tube should be wiped clean before checking fluid level. Dirt, grease and other foreign material on the cap and tube could fall into the tube if not removed beforehand. Take the time to wipe the cap and tube clean before withdrawing the dipstick.

Engine coolant in the transmission fluid is generally caused by a cooler malfunction. The only remedy is to replace the radiator as the cooler in the radiator is not a serviceable part. If coolant has circulated through the transmission, an overhaul is necessary.

The torque converter should be replaced whenever a failure generates sludge and debris. This is necessary because normal converter flushing procedures will not remove all contaminants.

STANDARD PROCEDURE

CHECK OIL LEVEL

1. Verify that the vehicle is parked on a level surface.
2. Remove the dipstick tube cap.

WARNING: Risk of accident from vehicle starting off by itself when engine running. Risk of injury from contusions and burns if you insert your hands into the engine when it is started or when it is running. Secure vehicle to prevent it from moving off by itself. Wear properly fastened and close-fitting work clothes. Do not touch hot or rotating parts.

3. Actuate the service brake. Start engine and let it run at idle speed in selector lever position ″P″.
4. Shift through the transmission modes several times with the vehicle stationary and the engine idling
5. Warm up the transmission, wait at least 2 minutes and check the oil level with the engine running. Push the Oil Dipstick 9336 into transmission fill tube until the dipstick tip contacts the oil pan and pull out again, read off oil level, repeat if necessary.

NOTE: The dipstick will protrude from the fill tube when installed.

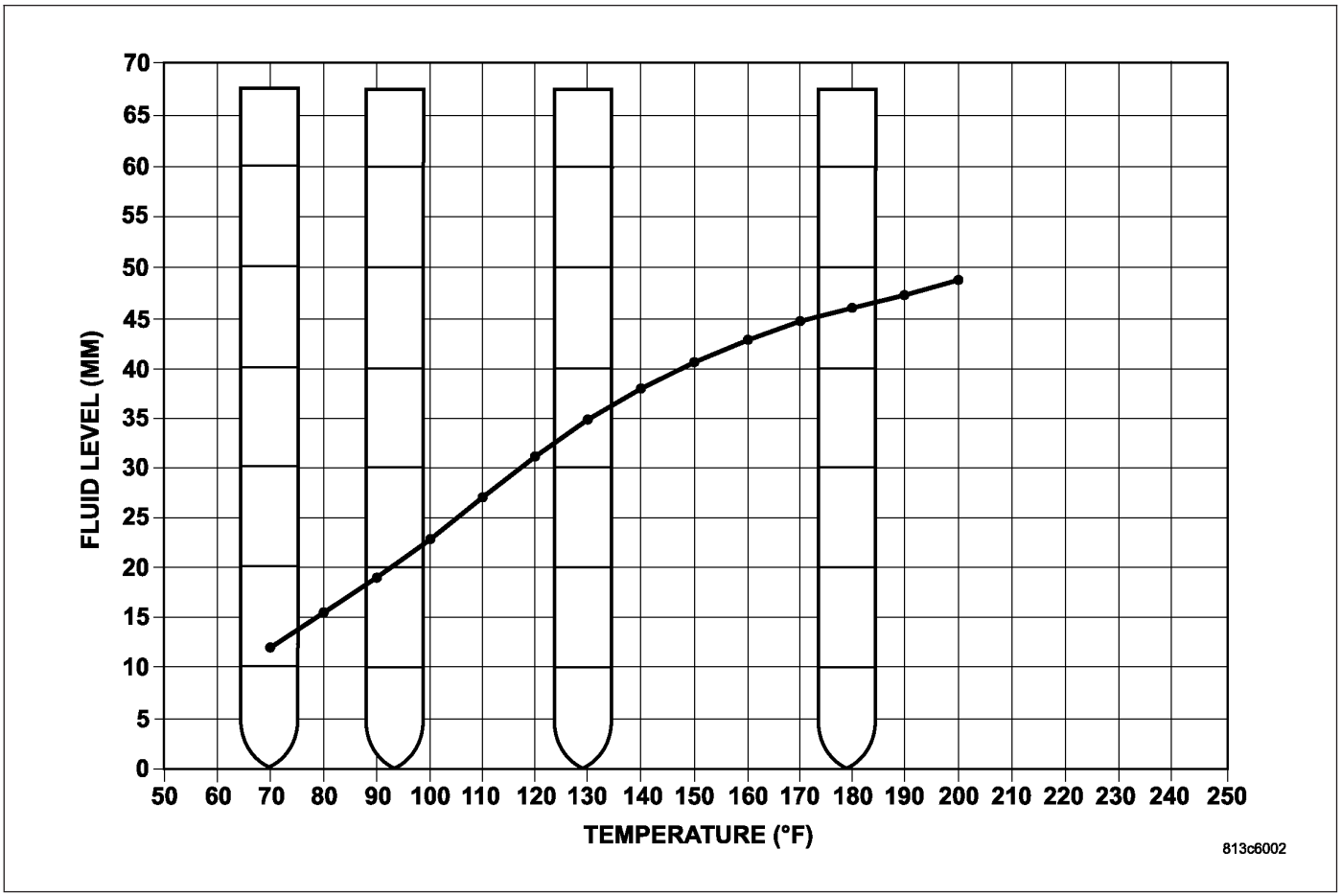

42RLE Fluid Temperature Chart

6. Check transmission oil temperature using the appropriate scan tool.
7. The transmission Oil Dipstick 9336 has indicator marks every 10mm. Determine the height of the oil level on the dipstick and using the height, the transmission temperature, and the Transmission Fluid Graph, determine if the transmission oil level is correct.
8. Add or remove oil as necessary and recheck the oil level.
9. Once the oil level is correct, install the dipstick tube cap.

FLUID/FILTER SERVICE

NOTE: Only fluids of the type labeled Mopar® ATF+4, Automatic Transmission Fluid, should be used in the transmission sump. A filter change should be made at the time of the transmission oil change. The magnet (on the inside of the oil pan) should also be cleaned with a clean, dry cloth.

NOTE: If the transmission is disassembled for any reason, the fluid and filter should be changed.

1. Raise vehicle on a hoist. Place a drain container with a large opening, under transmission oil pan.

NOTE: One of the oil pan bolts (5) has a sealing patch applied from the factory. Separate this bolt for reuse.

2. Loosen pan bolts and tap the pan at one corner to break it loose allowing fluid to drain, then remove the oil pan.
3. Install a new filter and o-ring on bottom of the valve body and tighten retaining screws to 5 N·m (45 in. lbs.).

NOTE: Before installing the oil pan bolt (5) in the bolt hole located between the torque converter clutch on and U/D clutch pressure tap circuits, it will be necessary to replentish the sealing patch on the bolt using Mopar® Lock & Seal Adhesive.

4. Clean the oil pan and magnet. Reinstall pan using new Mopar® Silicone Adhesive sealant. Tighten oil pan bolts to 20 N·m (14.5 ft. lbs.).
5. Pour four quarts of Mopar® ATF+4, Automatic Transmission Fluid, through the dipstick opening.

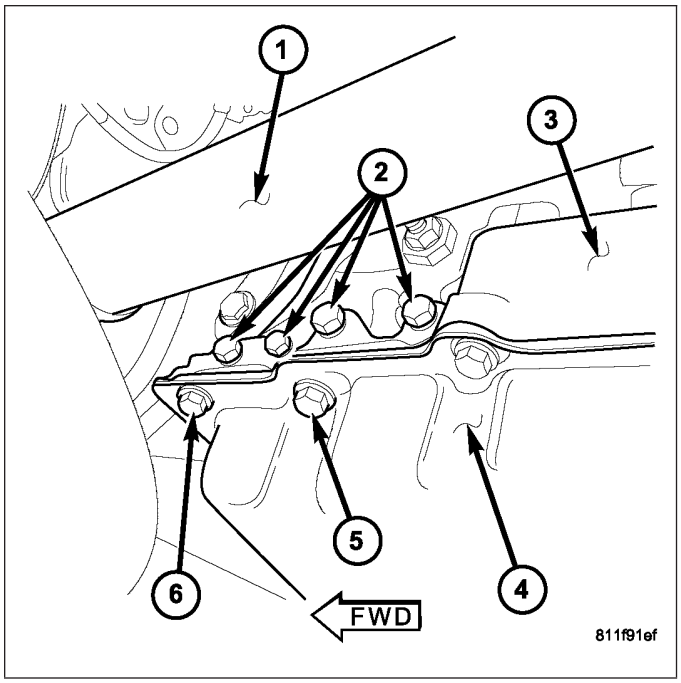

6. Start engine and allow to idle for at least one minute. Then, with parking and service brakes applied, move selector lever momentarily to each position, ending in the park or neutral position.
7. Check the transmission fluid level and add an appropriate amount to bring the transmission fluid level to 3mm (1/8 in.) below the lowest mark on the dipstick.
8. Recheck the fluid level after the transmission has reached normal operating temperature, 82° C (180°F).
9. To prevent dirt from entering transmission, make certain that dipstick is fully seated into the dipstick opening.

TRANSMISSION FILL

To avoid overfilling transmission after a fluid change or overhaul, perform the following procedure:

1. Remove dipstick and insert clean funnel in transmission fill tube.
2. Add following initial quantity of Mopar® ATF +4, Automatic Transmission Fluid, to transmission:
   a. If only fluid and filter were changed, add **3 pints (1-1/2 quarts)** of ATF +4 to transmission.
   b. If transmission was completely overhauled, or torque converter was replaced or drained, add **12 pints (6 quarts)** of ATF +4 to transmission.
3. Apply parking brakes.
4. Start and run engine at normal curb idle speed.
5. Apply service brakes, shift transmission through all gear ranges then back to NEUTRAL, set parking brake, and leave engine running at curb idle speed.
6. Remove funnel, insert dipstick and check fluid level. If level is low, **add fluid to bring level to MIN mark on dipstick.** Check to see if the oil level is equal on both sides of the dipstick. If one side is noticably higher than the other, the dipstick has picked up some oil from the dipstick tube. Allow the oil to drain down the dipstick tube and re-check.
7. Drive vehicle until transmission fluid is at normal operating temperature.
8. With the engine running at curb idle speed, the gear selector in NEUTRAL, and the parking brake applied, check the transmission fluid level.

CAUTION: Do not overfill transmission, fluid foaming and shifting problems can result.

9. Add fluid to bring level up to MAX arrow mark.

When fluid level is correct, shut engine off, release park brake, remove funnel, and install dipstick in fill tube.

CABLE-GEARSHIFT

DIAGNOSIS AND TESTING - GEARSHIFT CABLE

1. Engine starts must be possible with shift lever in PARK or NEUTRAL positions only. Engine starts must not be possible in any other gear position.
2. With the shift lever in the:
   a. PARK position - Apply upward force on the shift arm and remove pressure. Engine starts must be possible.
   b. PARK position - Apply downward force on the shift arm and remove pressure. Engine starts must be possible.
   c. NEUTRAL position - Normal position. Engine starts must be possible.
   d. NEUTRAL position - Engine running and brakes applied, apply upward force on the shift arm. Transmission shall not be able to shift from neutral to reverse.

REMOVAL

1. Shift transmission into PARK.
2. Raise vehicle.
3. Disengage the gearshift cable (1) eyelet at transmission manual shift lever (3) and pull cable out of mounting bracket (2).

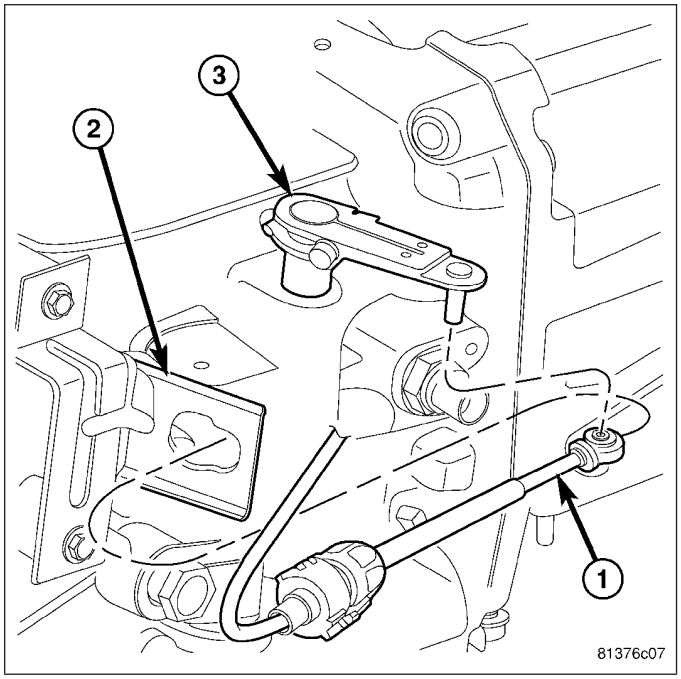

4. Lower the vehicle.
5. Remove the floor console (Refer to 23 - BODY/INTERIOR/FLOOR CONSOLE - REMOVAL) as necessary to access the shift mechanism and cables.
6. If necessary, remove the bolts holding the shield, covering the gearshift and park lock cables, to the floorpan and remove the shield.
7. Remove the gearshift cable (1) from the shift lever pin (3).
8. Remove the gearshift cable retainer (2) from the notch (2) in the shifter assembly.

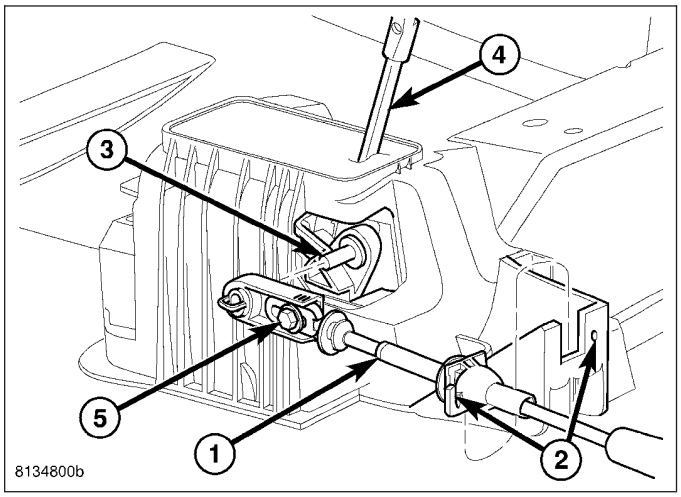

9. From under the hood, remove the shift cable grommet (2) from the dash panel.
10. Remove gearshift cable (1) from vehicle.

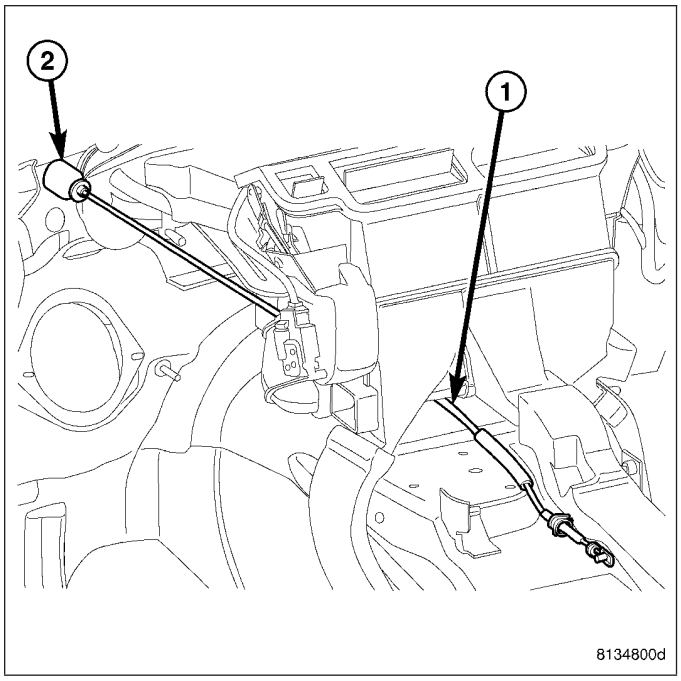

INSTALLATION

1. From under the hood, route the gearshift cable (1) through the dash panel and toward the shifter assembly.
2. Install the grommet (2) to the dash panel.

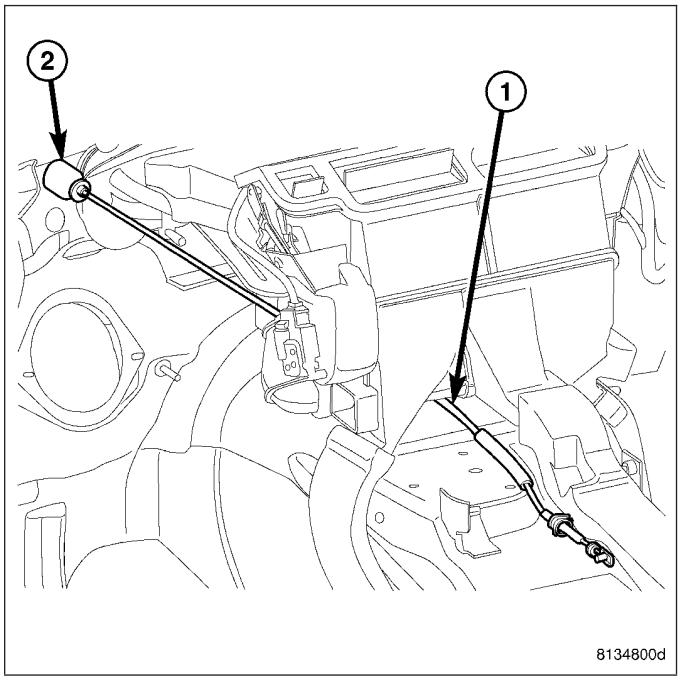

3. Engage the gearshift cable retainer (2) into the notch (2) in the shifter assembly.
4. Install the gearshift cable (1) onto the shift lever pin (3).
5. Loosen the cable adjustment screw (5), if necessary.

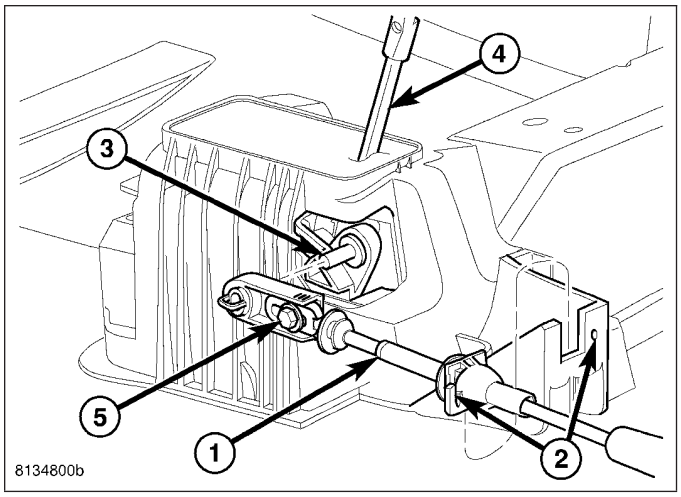

6. From under the hood, route the gearshift cable (1) forward of the air conditioning lines and the heater hoses (2) and toward the transmission (3) manual lever.

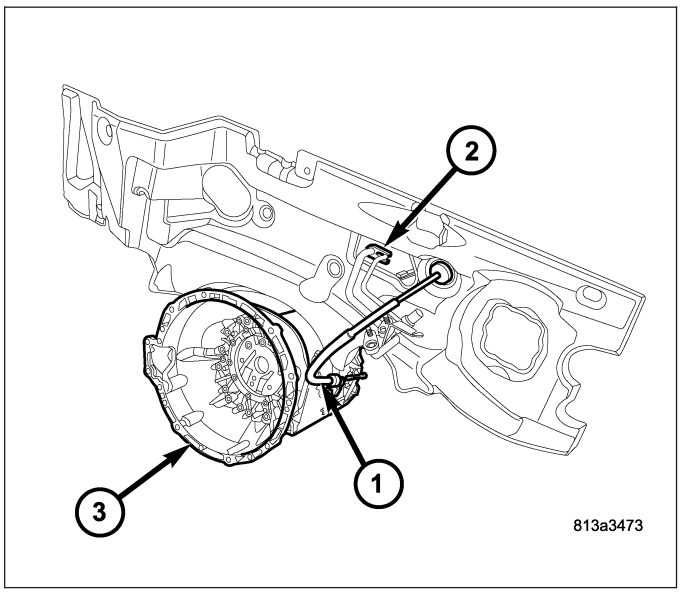

7. Raise vehicle.
8. Verify that the transmission is in the PARK position by trying to rotate the propeller shaft. If the propeller shaft rotates, move the transmission manual shift lever until the PARK system is engaged.
9. Route the gearshift cable (1) through the mounting bracket (2).
10. Engage the gearshift cable (1) eyelet onto the transmission manual shift lever (3).

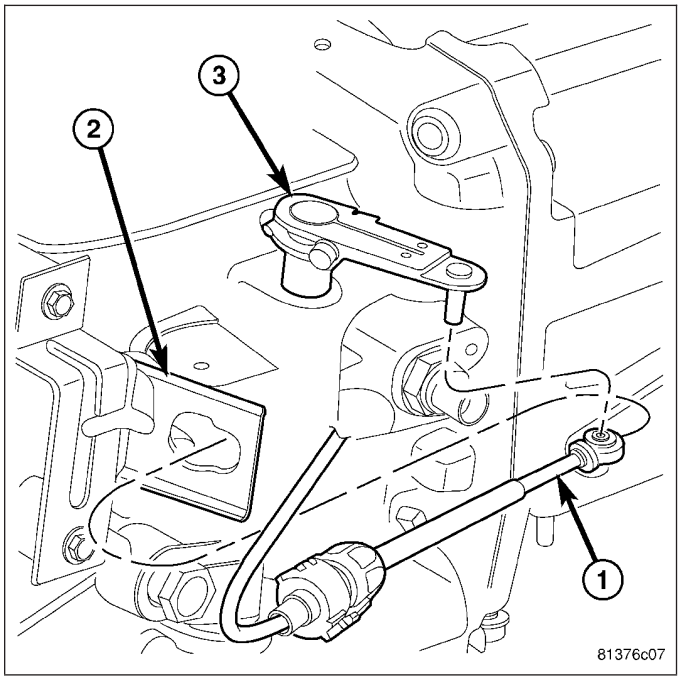

11. Lower vehicle.
12. Verify that the shifter is in the PARK position and tighten the adjustment screw (5) to 7 N·m (65 in.lbs.).
13. Verify correct shifter operation.
14. If necessary, install the shield, covering the gearshift and park lock cables, to the floorpan and install the bolts to hold the shield to the floorpan.
15. Install the floor console (Refer to 23 - BODY/INTERIOR/FLOOR CONSOLE - INSTALLATION) as necessary.

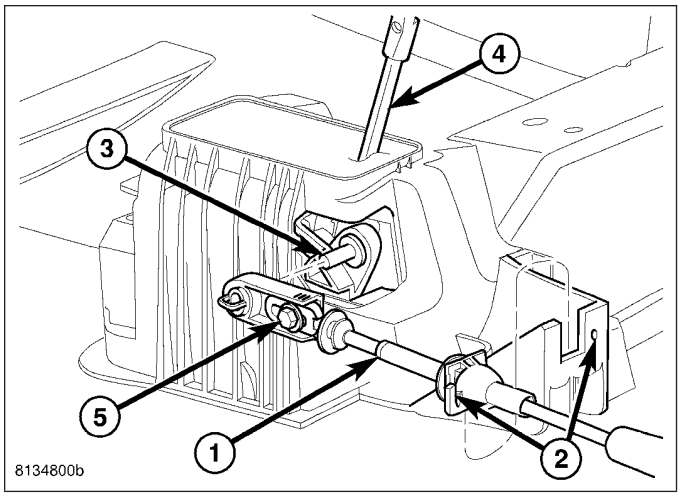

ADJUSTMENTS - GEARSHIFT CABLE

Check adjustment by starting the engine in PARK and NEUTRAL. Adjustment is CORRECT if the engine starts only in these positions. Adjustment is INCORRECT if the engine starts in one but not both positions. If the engine starts in any position other than PARK or NEUTRAL, or if the engine will not start at all, the park/neutral position contact may be faulty.

1. Shift transmission into PARK.
2. Remove floor console as necessary for access to the shift cable adjustment. (Refer to 23 - BODY/INTERIOR/FLOOR CONSOLE - REMOVAL)
3. Loosen the shift cable adjustment screw (5).

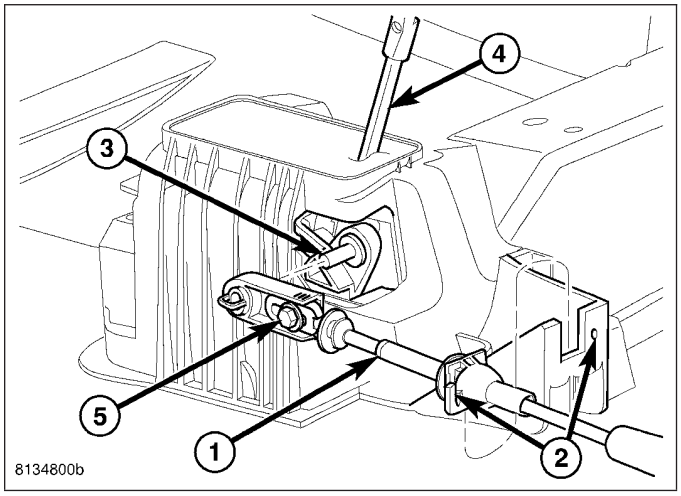

4. Raise vehicle.
5. Unsnap cable eyelet from transmission shift lever.
6. Verify transmission shift lever is in PARK detent by moving lever fully rearward. Last rearward detent is PARK position.
7. Verify positive engagement of transmission park lock by attempting to rotate propeller shaft. Shaft will not rotate when park lock is engaged.
8. Snap cable eyelet onto transmission shift lever.

9. Lower vehicle
10. Tighten the shift cable adjustment screw (5) to 7 N·m (65 in.lbs.).
11. Verify correct operation.
12. Install any floor console components removed for access. (Refer to 23 - BODY/INTERIOR/FLOOR CONSOLE - INSTALLATION)

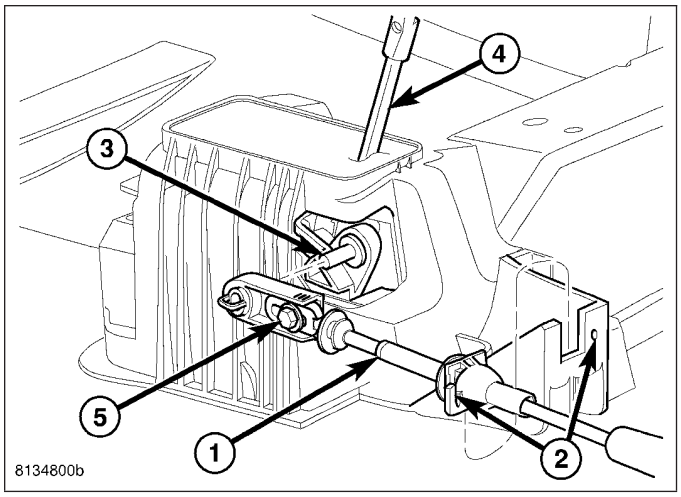

CLUTCHES-HOLDING

DESCRIPTION

Two hydraulically applied multi-disc clutches are used to hold planetary geartrain components stationary while the input clutches drive others. The 2/4 (2) and Low/Reverse (3) clutches are considered holding clutches and are contained at the rear of the transmission case.

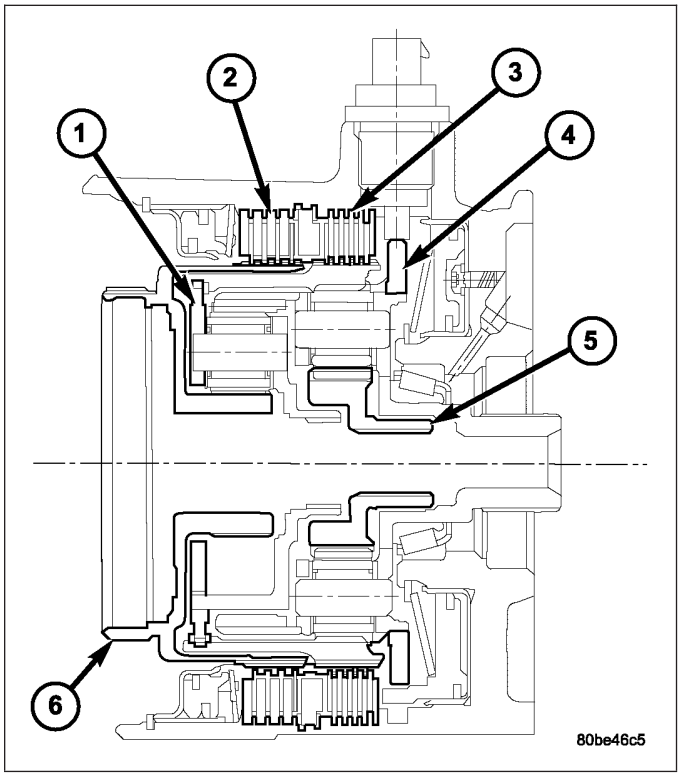

OPERATION

NOTE: (Refer to 21 - TRANSMISSION/AUTOMATIC - 42RLE - DIAGNOSIS AND TESTING) for a collective view of which clutch elements are applied at each position of the selector lever.

2/4 CLUTCH

The 2/4 clutch is hydraulically applied in second and fourth gears by pressurized fluid against the 2/4 clutch piston. When the 2/4 clutch is applied, the front sun gear assembly is held or grounded to the transmission case.

LOW/REVERSE CLUTCH

The Low/Reverse clutch is hydraulically applied in park, reverse, neutral, and first gears by pressurized fluid against the Low/Reverse clutch piston. When the Low/Reverse clutch is applied, the front planet carrier/rear annulus assembly is held or grounded to the transmission case.

ASSEMBLY-INPUT CLUTCH

DISASSEMBLY

NOTE: If the input clutch assembly is being reconditioned (clutch/seal replacement) or replaced, it is necessary to perform the Quick Learn Procedure using the scan tool (Refer to 8 - ELECTRICAL/ELECTRONIC CONTROL MODULES/TRANSMISSION CONTROL MODULE - STANDARD PROCEDURE).

1. Mount input clutch assembly to Input Clutch Pressure Fixture (Tool 8391).
2. Tap down (2) reverse clutch reaction plate (4) to release pressure from snap ring.

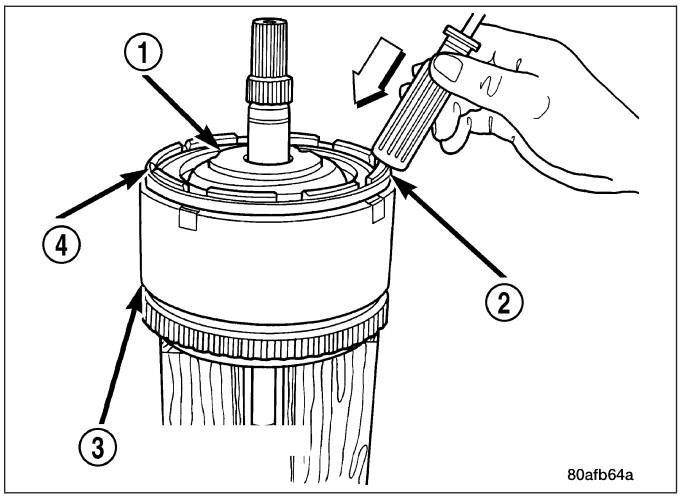

3. Remove reverse clutch snap ring (3).

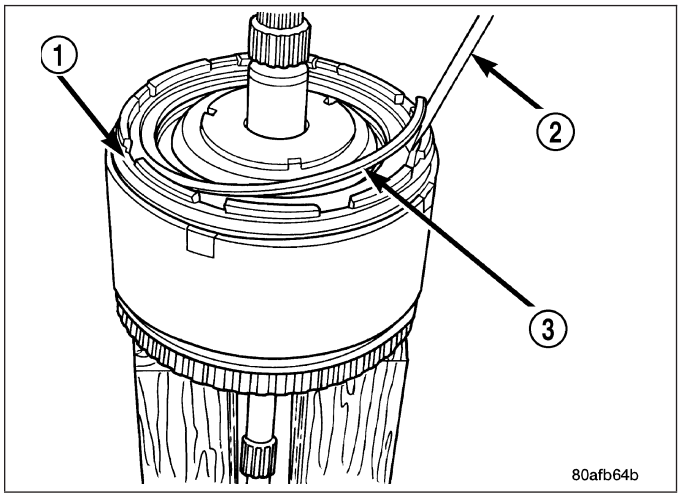

4. Pry up reverse clutch reaction plate (1).

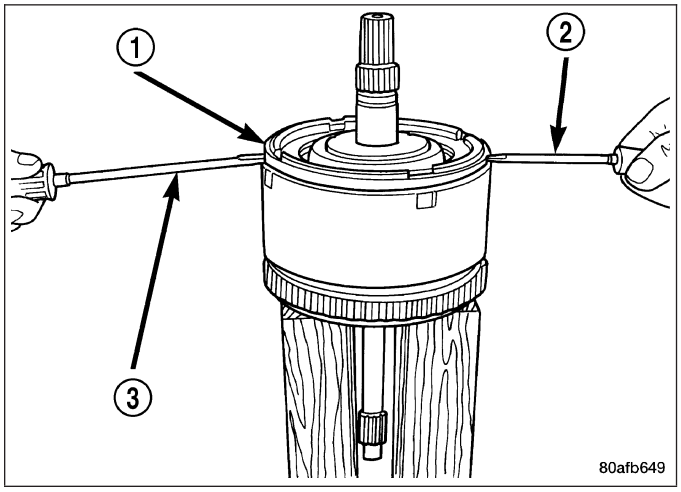

5. Remove reverse clutch reaction plate (1).

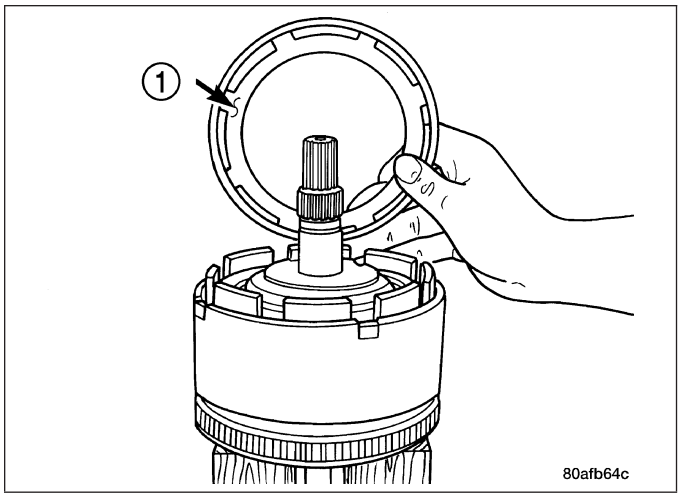

NOTE: Tag reverse clutch pack for reassembly identification.

6. Remove the reverse clutch pack (two fibers/one steel) (1, 2).

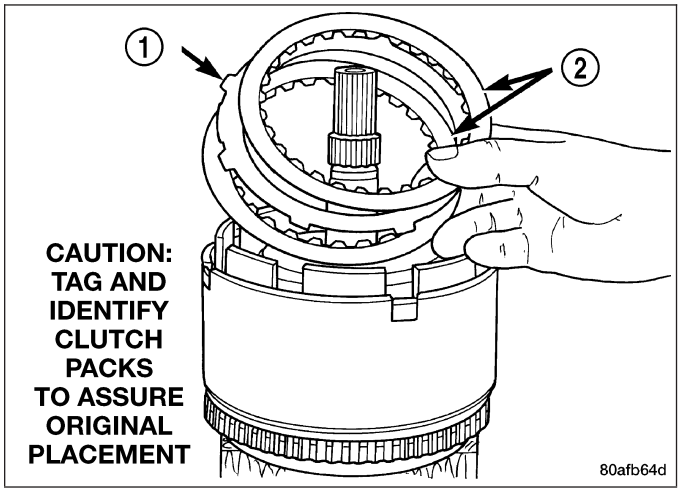

7. Remove the OD/Reverse reaction plate (1) snap ring (3).

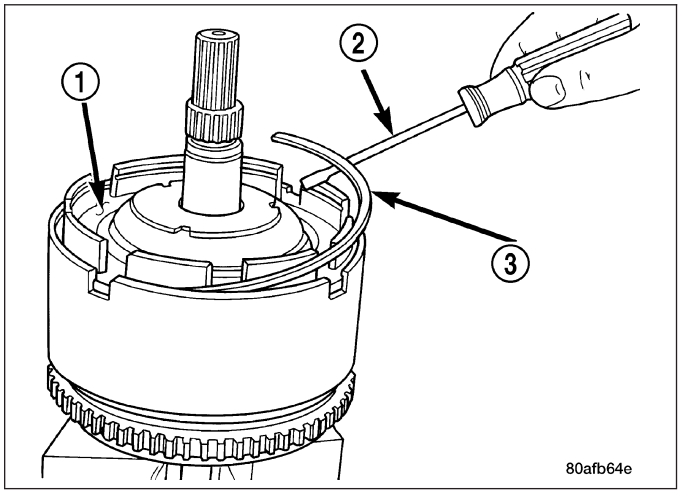

8. Remove OD/Reverse pressure plate (1).

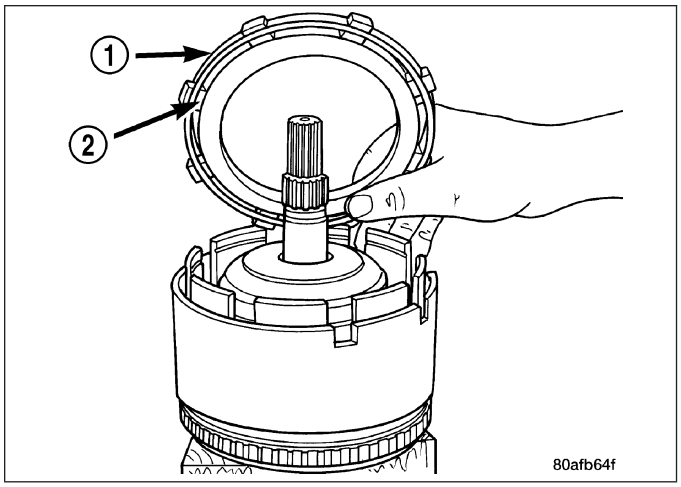

9. Remove OD/Reverse reaction plate wave snap ring (2).

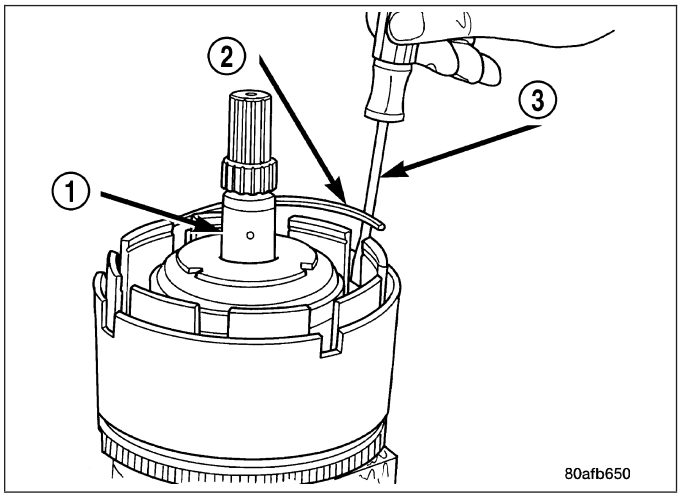

10. Remove OD shaft/hub and OD clutch pack (1).

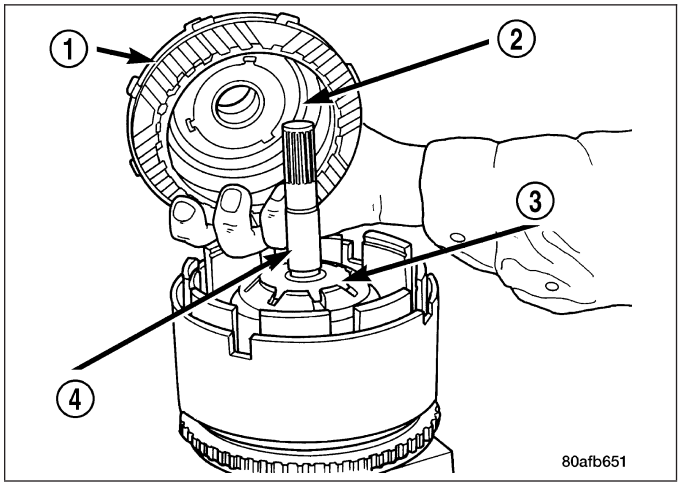

NOTE: Tag overdrive clutch pack for reassembly identification.

11. Remove the overdrive clutch (1, 3) from the overdrive hub/shaft (2).

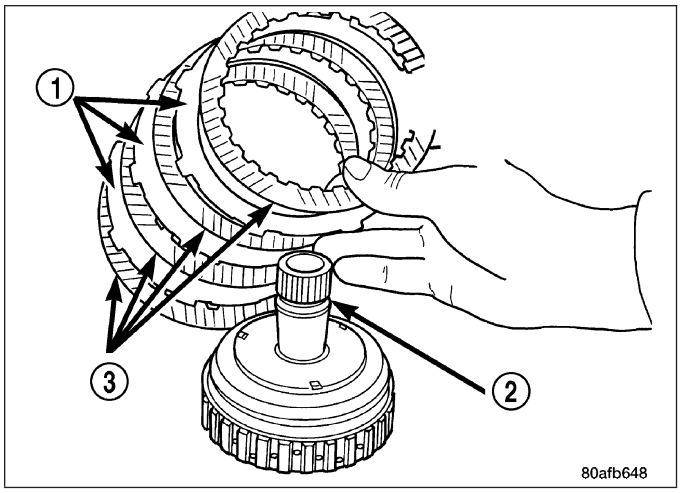

12. Remove and inspect number 3 and 4 thrust plates (1, 3).

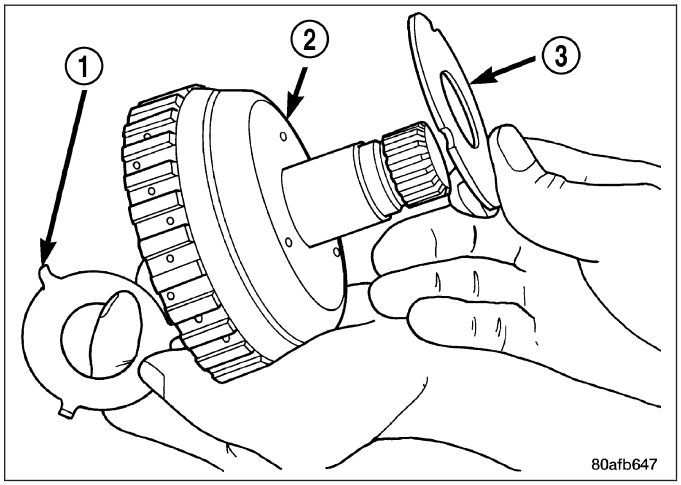

13. Remove the underdrive shaft assembly (2).

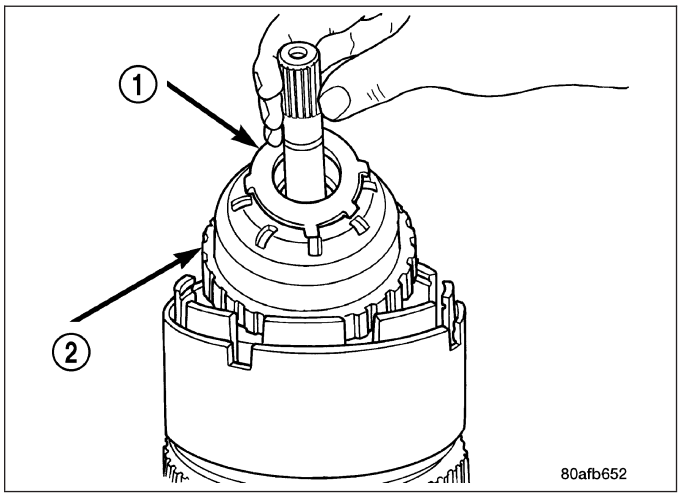

14. Remove the number 2 needle bearing (1).

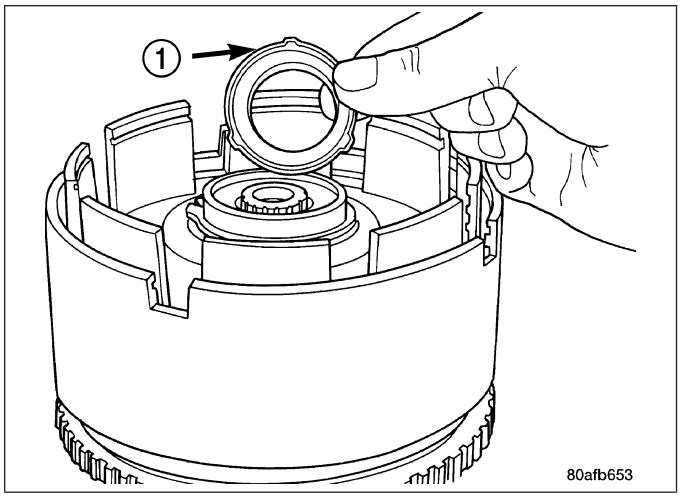

15. Remove the OD/UD reaction plate tapered snap ring (1).

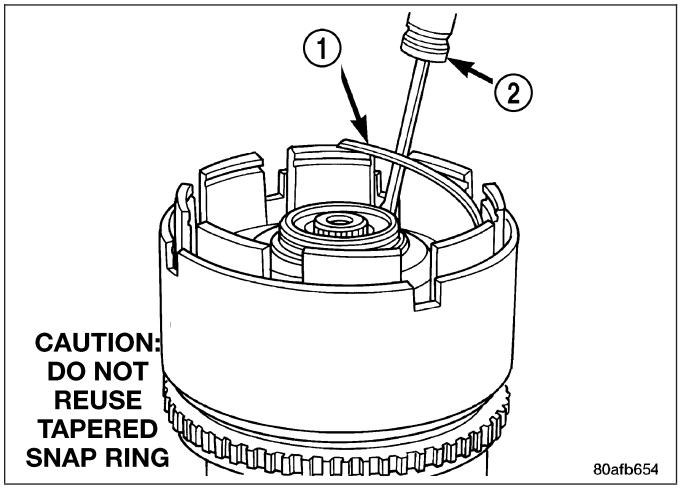

NOTE: The OD/UD clutch reaction plate has a step on both sides. The OD/UD clutches reaction plate goes tapered step side up.

16. Remove the OD/UD reaction plate (1).

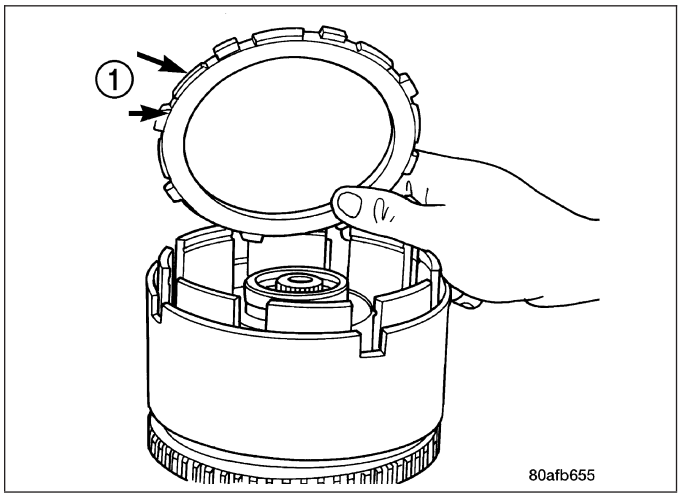

17. Remove the first UD clutch disc (1).

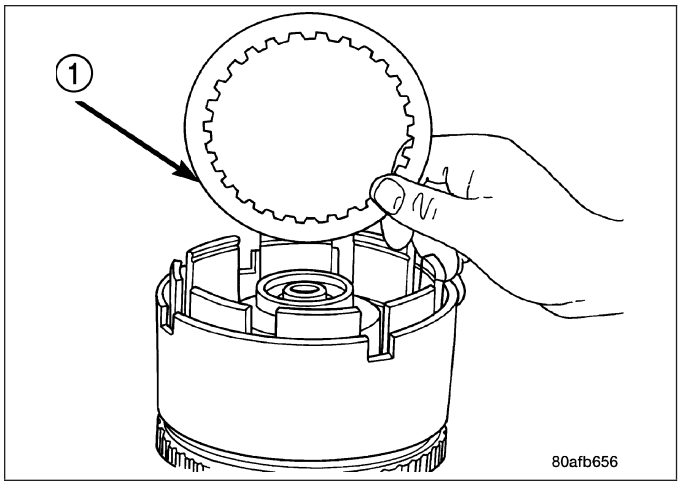

18. Remove the UD clutch flat snap ring (1).

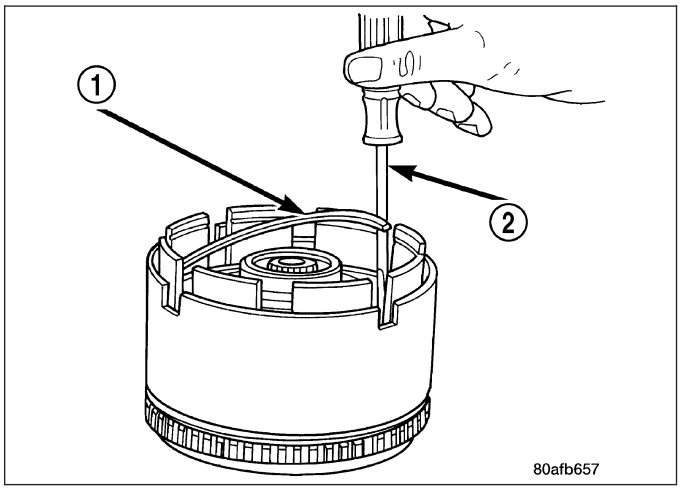

NOTE: Tag underdrive clutch pack for reassembly identification.

19. Remove the UD clutch pack (1, 3).

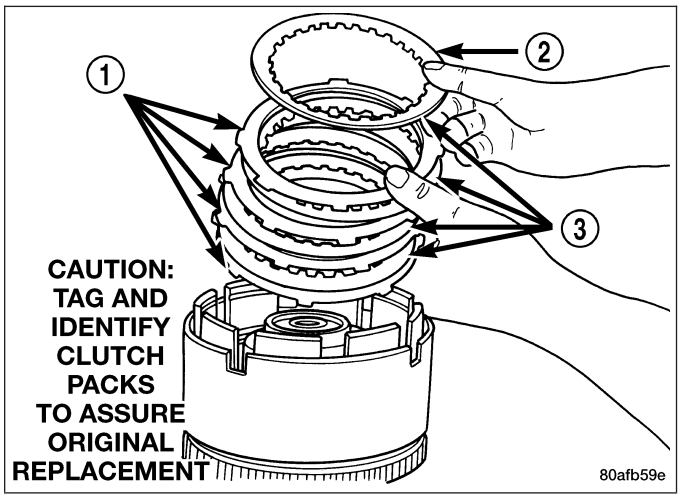

CAUTION: Compress return spring just enough to remove or install snap ring.

20. Using Compressor 5059A (4) and an arbor press (2), compress UD clutch piston enough to remove snap ring (3).

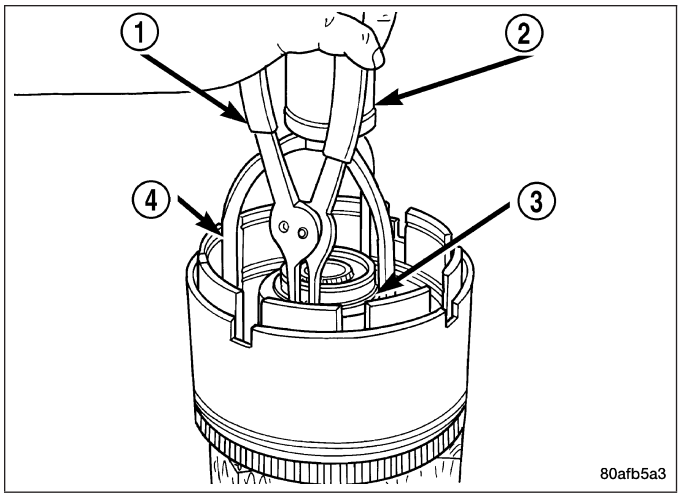

21. Remove the underdrive spring retainer snap ring (2), spring retainer (1), and spring (4).

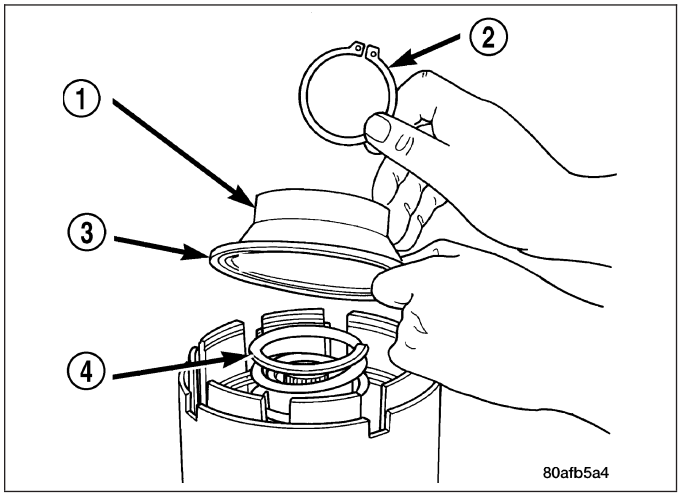

22. Remove the UD clutch piston (1).

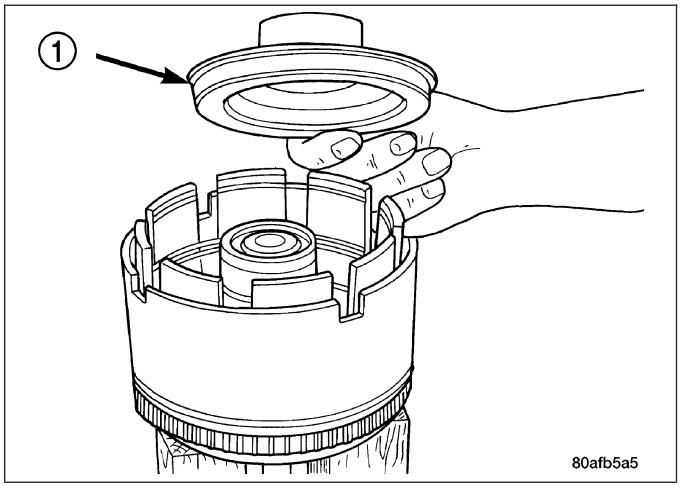

23. Remove the input hub tapered snap ring (2).

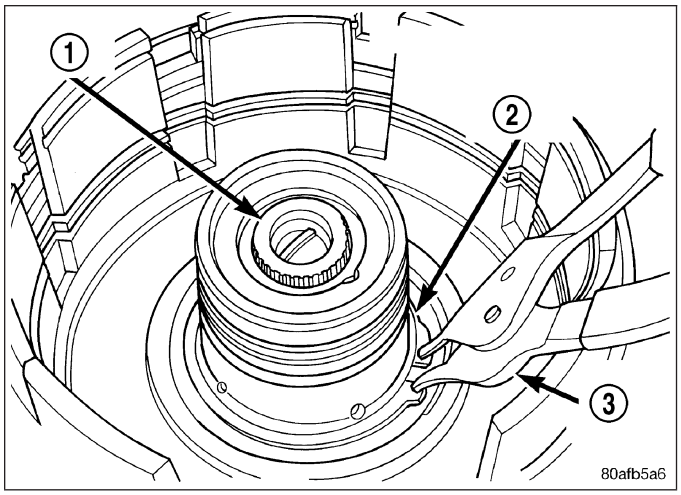

24. Tap on input hub (1) with soft faced hammer (2) and separate input hub from OD/Reverse piston and clutch retainer.

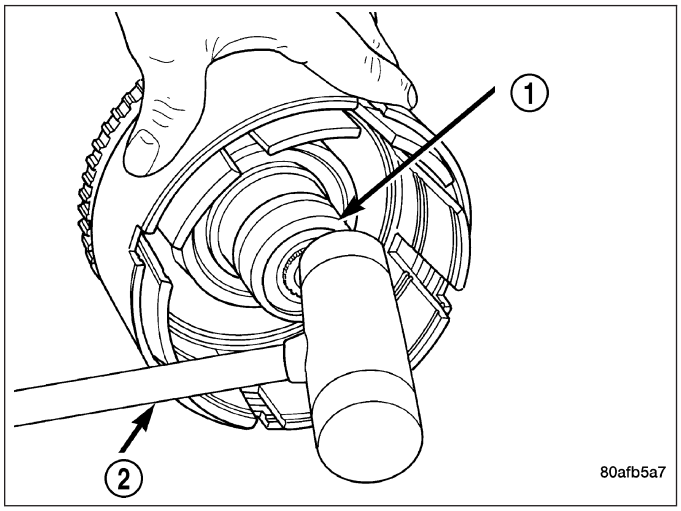

25. Separate the input hub from OD/Reverse piston (5) and clutch retainer (2).

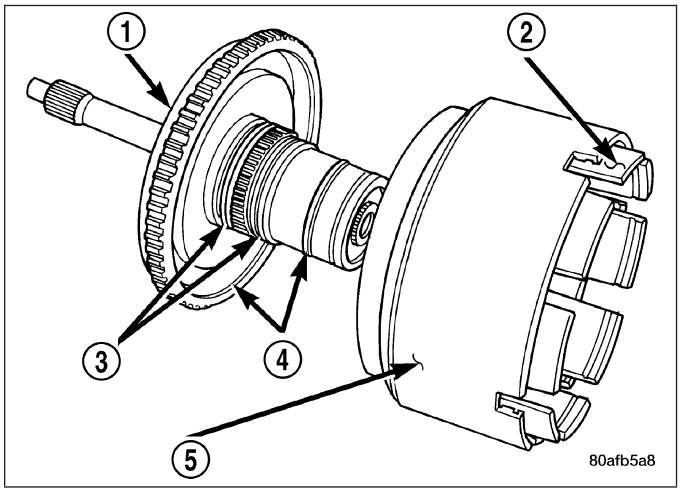

26. Separate clutch retainer (2) from OD/Reverse piston (1).

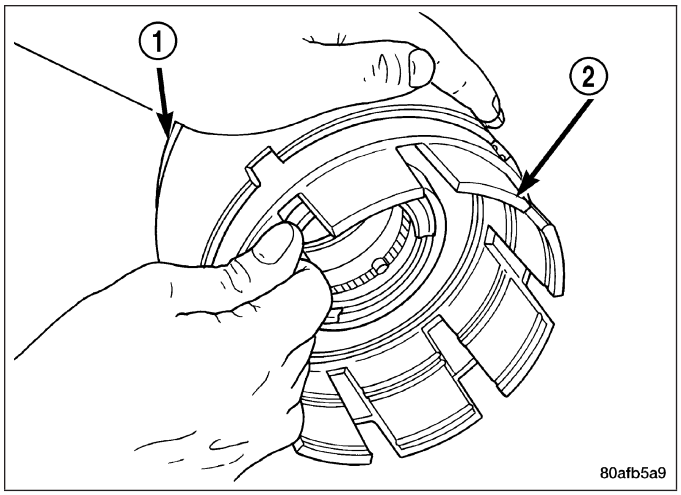

27. Using Disc 6057 (4) and an arbor press (1), compress OD/Reverse piston (5) return spring just enough to remove snap ring (3).

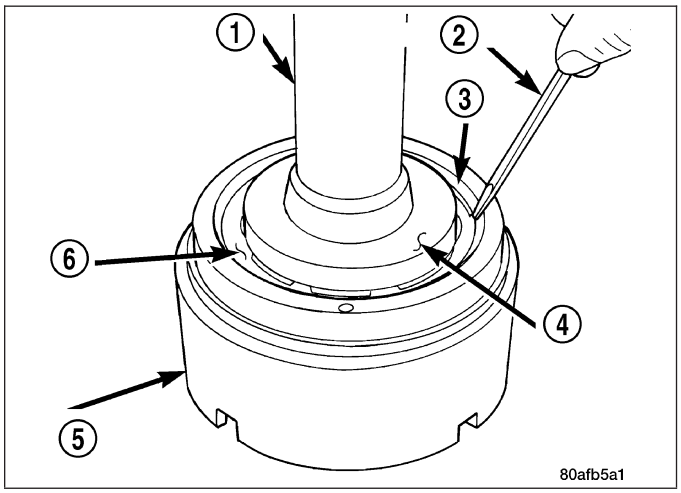

28. Remove the OD/Reverse piston return spring (2) and snap ring (3).

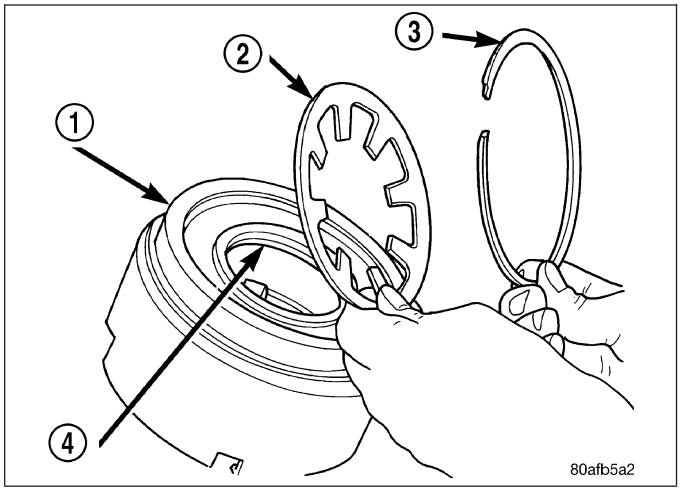

29. Remove input shaft (1) to input clutch hub snap ring (3).

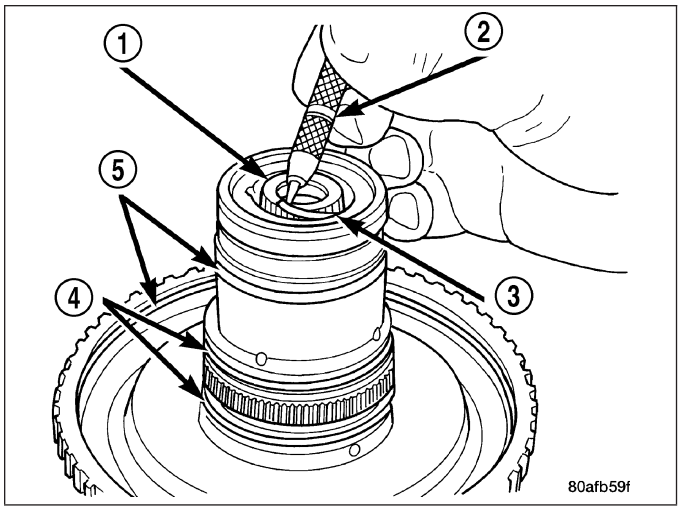

30. Using a suitably sized socket (2) and an arbor press (1), remove input shaft (5) from input shaft hub.

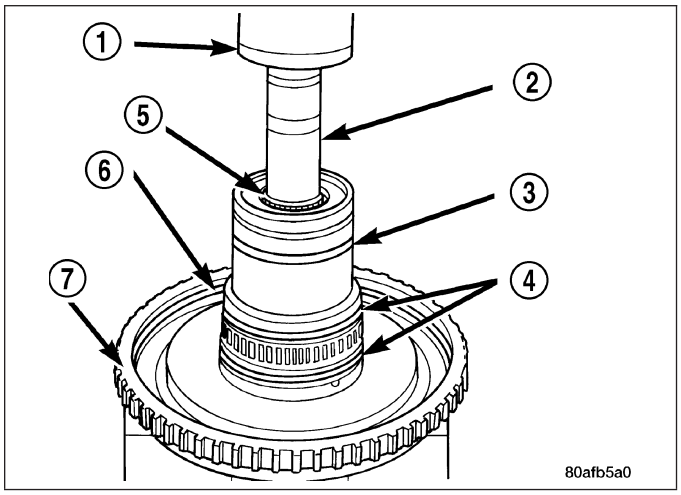

ASSEMBLY

Use petrolatum on all seals to ease assembly of components.

1. Using an arbor press (2), install input shaft (1) to input shaft hub (3).

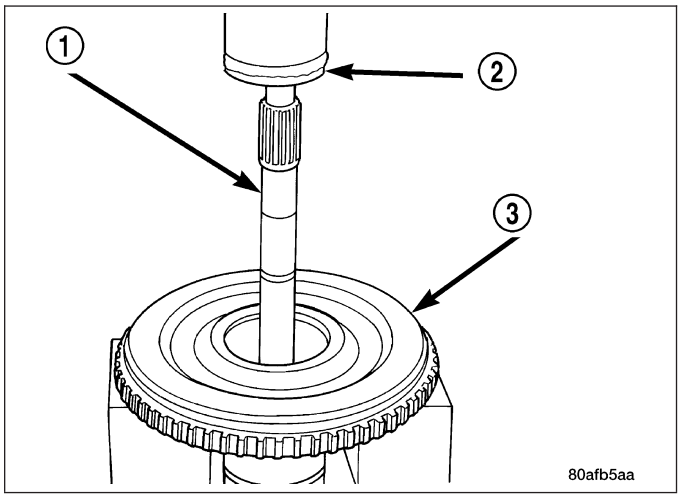

2. Install input shaft snap ring (3).

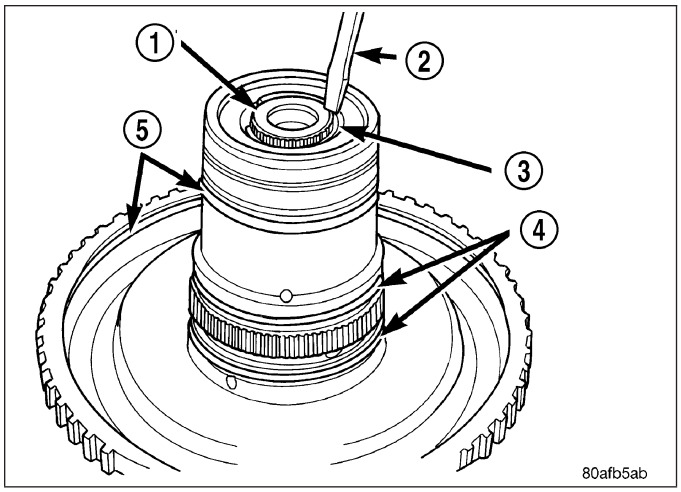

3. Position the OD/Reverse piston return spring (2) and snap ring (3) onto the OD/Reverse piston (1).

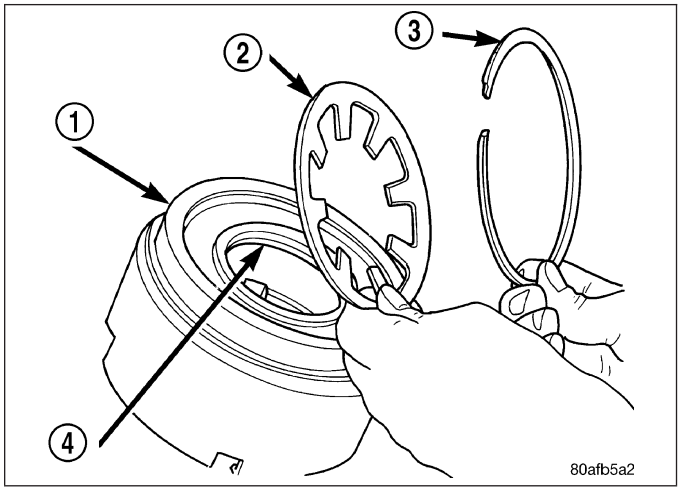

4. Using an arbor press (1) and Disc 6057 (4), install the OD/Reverse piston return spring (6) and snap ring (3).

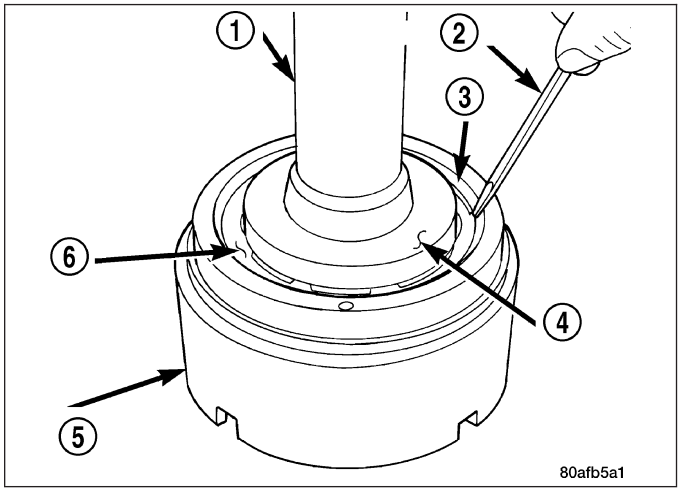

5. Install the OD/Reverse piston (1) assembly to the input clutch retainer (2).

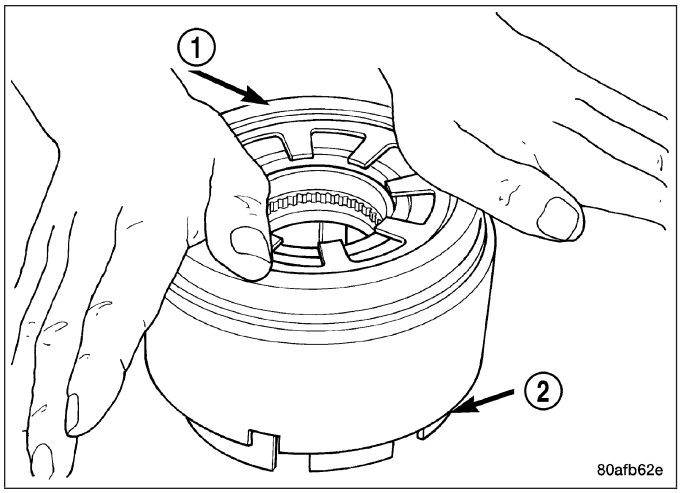

6. Install the input hub/shaft assembly (1) to the OD/Reverse piston/clutch retainer assembly (2).

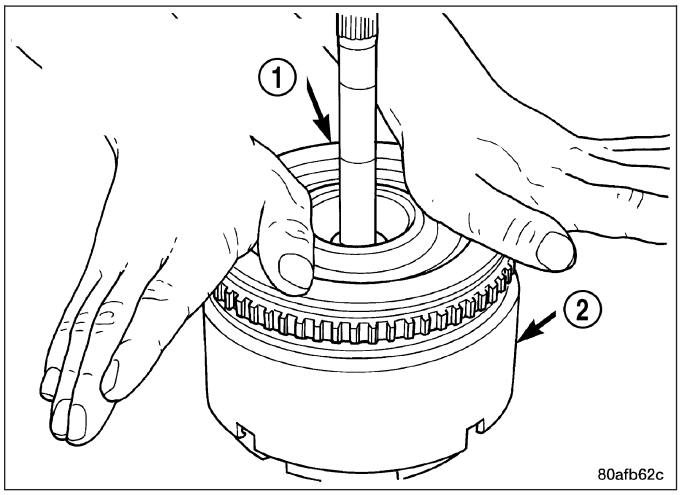

7. Install input hub tapered snap ring (2). **Make sure snap ring is fully seated.**

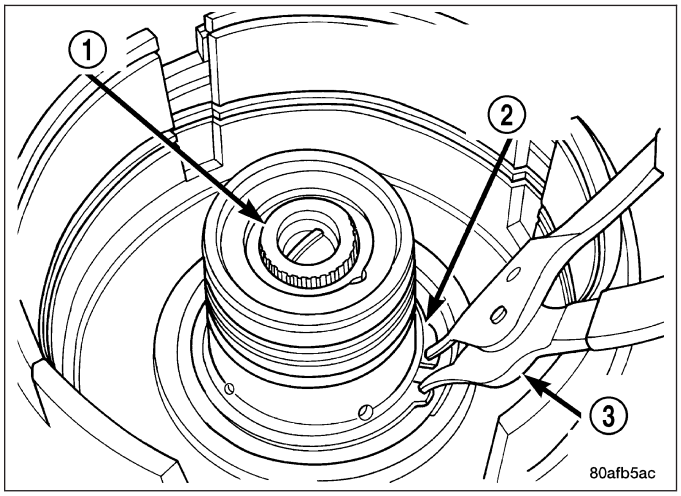

8. Install the UD clutch piston (1).

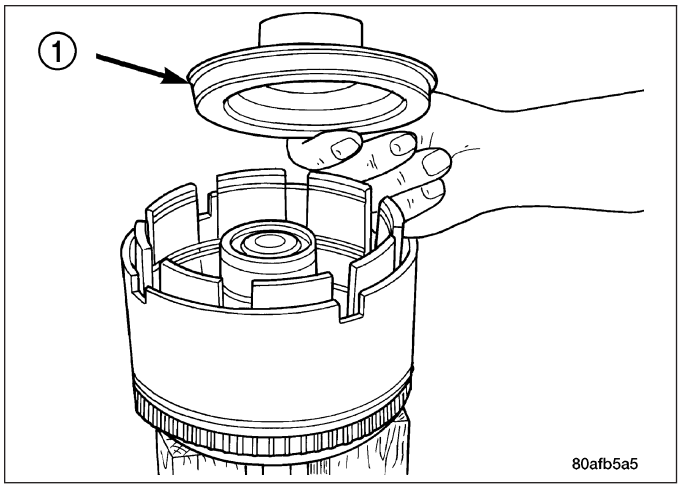

9. Install UD piston return spring (1) and Disc 5067 (2).

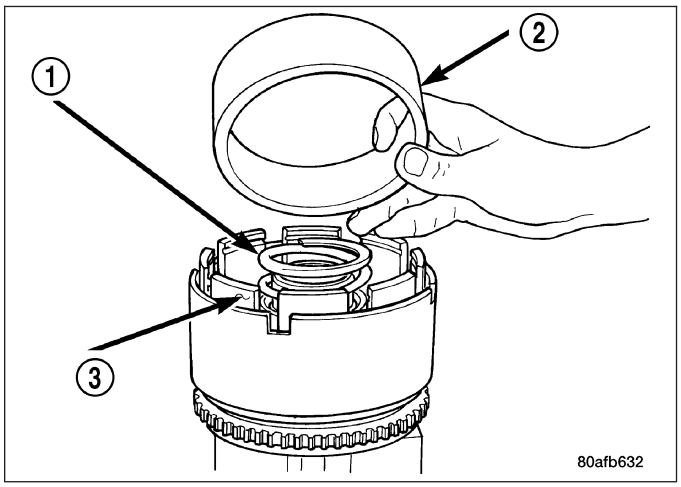

10. Position the UD spring retainer (1) and snap ring (2) on the piston return spring (4).

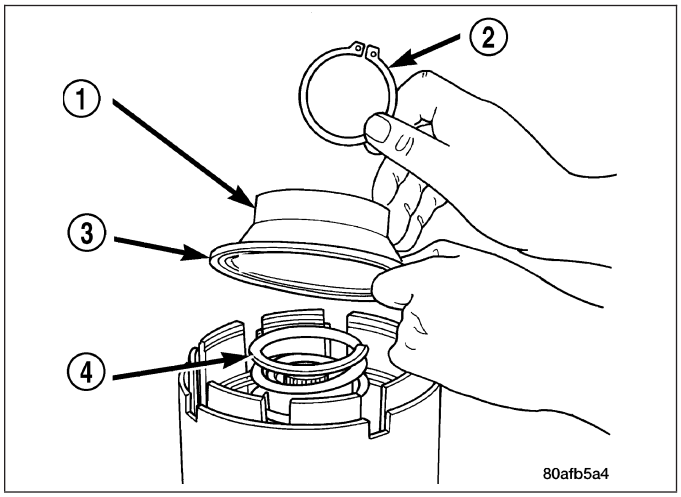

CAUTION: Compress return spring just enough to install snap ring.

11. Using Compressor 5059A (6) and an arbor press (1), install the UD spring retainer and snap ring (3).

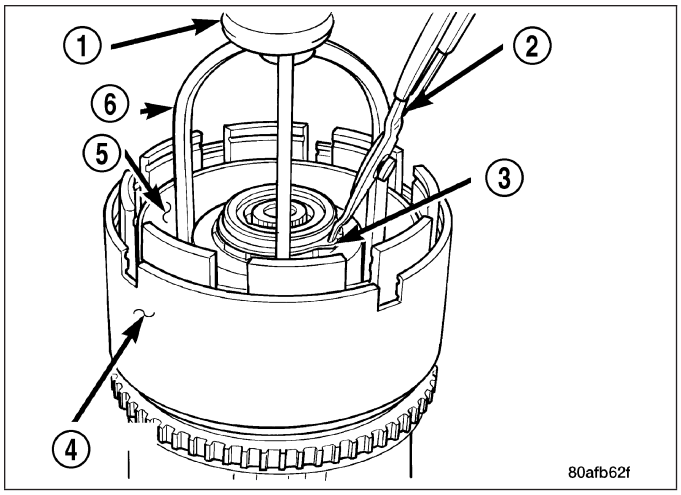

12. Install the UD clutch pack (four fibers/four steels) (1, 3). Leave the top disc (2) out until after the snap ring is installed.

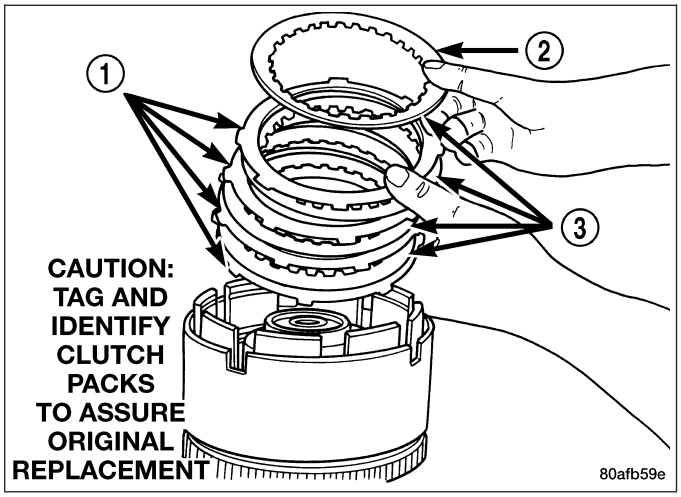

13. Install the UD clutch flat snap ring (1).

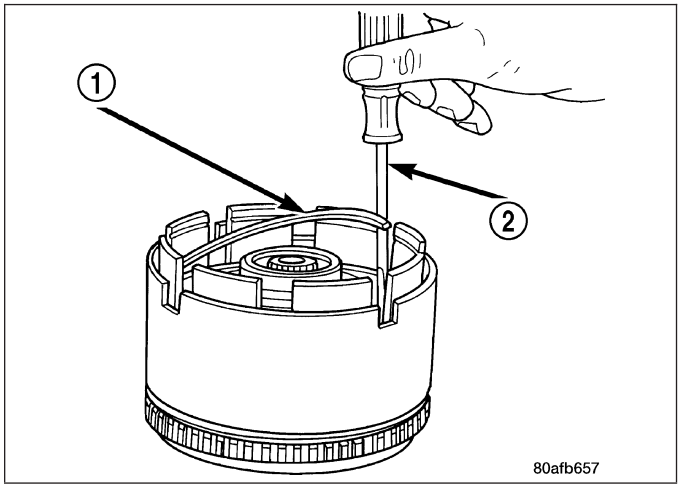

14. Install the last UD clutch disc (1).

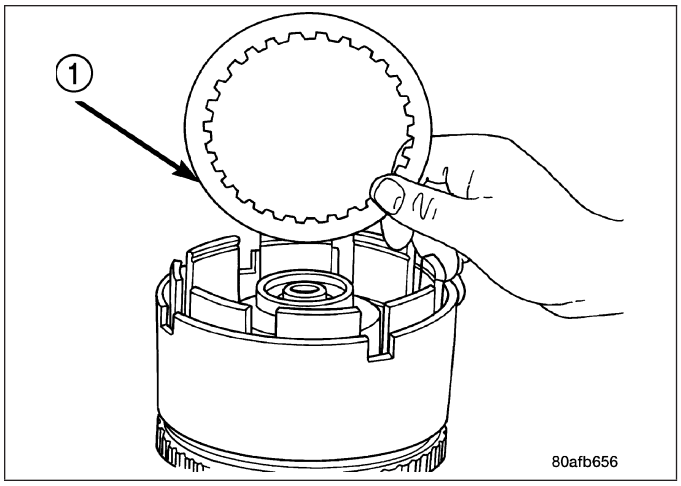

15. Install the OD/UD clutch reaction plate (1). The OD/UD clutches reaction plate has a step on both sides. Install the OD/UD clutches reaction plate tapered step side up.

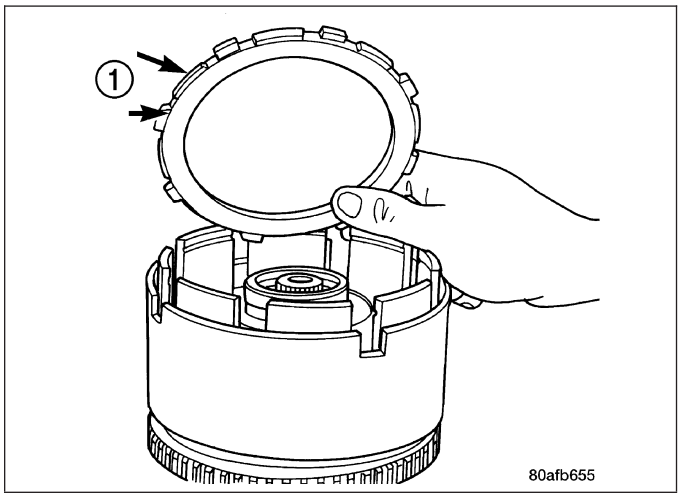

NOTE: Snap ring ends must be located within one finger of the input clutch hub. Be sure that snap ring is fully seated, by pushing with screwdriver, into snap ring groove all the way around.

16. Install the UD/OD tapered snap ring (1).

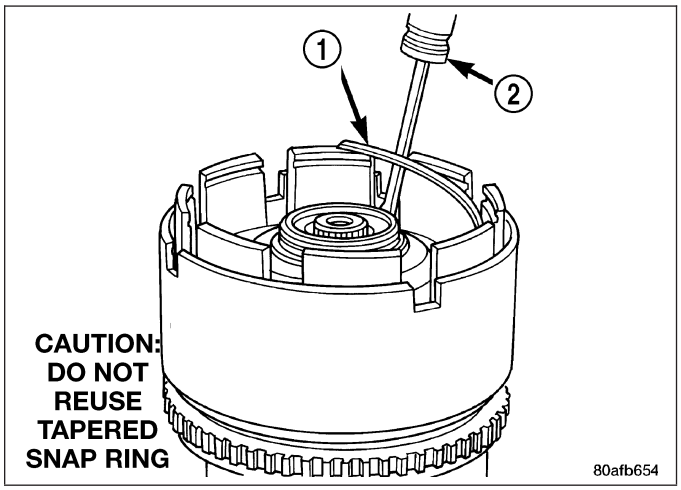

17. Seat tapered snap ring (1) to ensure proper installation.

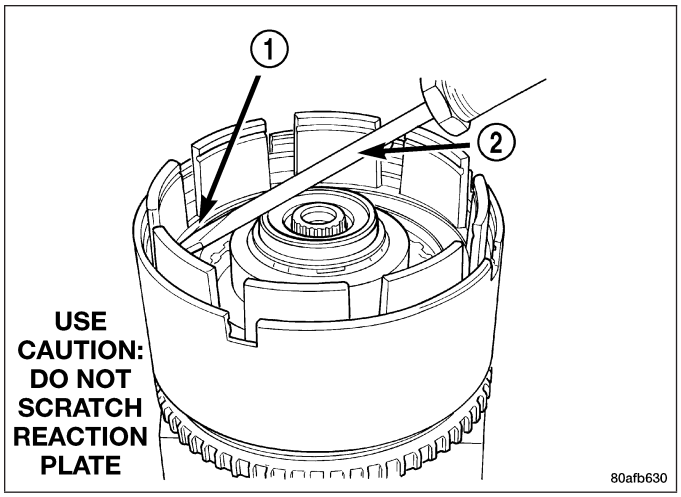

18. Install input clutch assembly (1) to the Input Clutch Pressure Fixture 8391 (2).

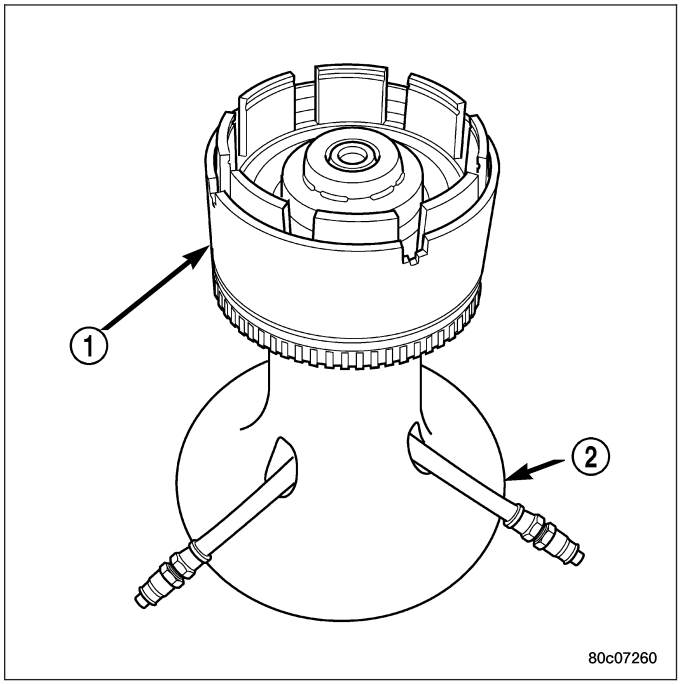

19. Set up Dial Indicator C-3339 (1) on the UD clutch pack (2).

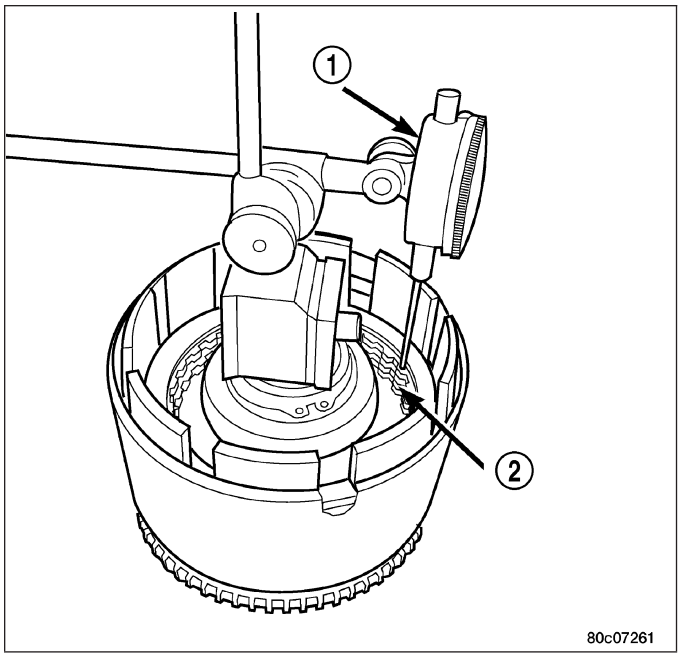

20. Using moderate pressure, press down and hold (near indicator) the UD clutch pack (2) with screwdriver or suitable tool and zero dial indicator (1). When releasing pressure on clutch pack, indicator reading should advance 0.005-0.010 inches.

CAUTION: Do not apply more than 30 psi (206 kPa) to the underdrive clutch pack.

21. Apply 30 psi (206 kPa) to the underdrive hose on Pressure Fixture 8391 and measure UD clutch clearance. Measure and record UD clutch pack measurement in four (4) places, 90° apart.
22. Take average of four measurements and compare with UD clutch pack clearance specification. **Underdrive clutch pack clearance must be 0.94-1.50 mm (0.037-0.059 in.).**
23. If necessary, select the proper reaction plate to achieve specifications.

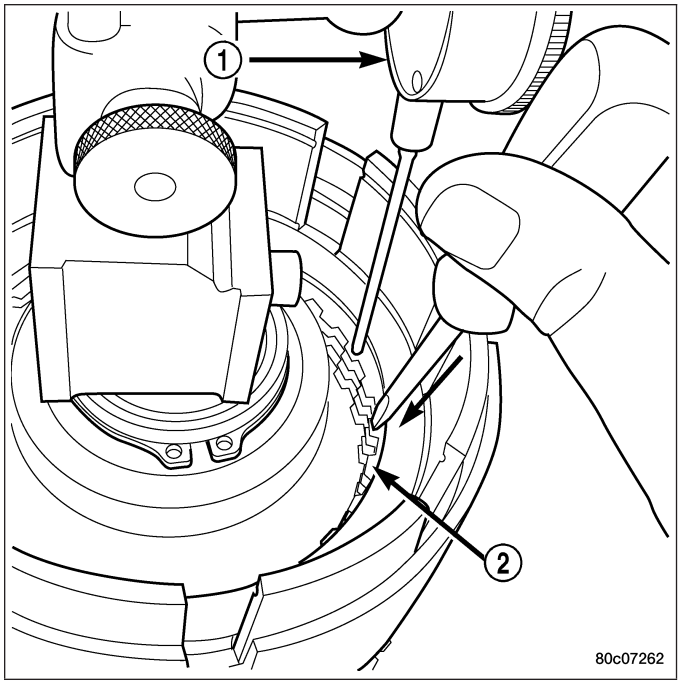

24. Install the OD clutch pack (four fibers/three steels) (1).

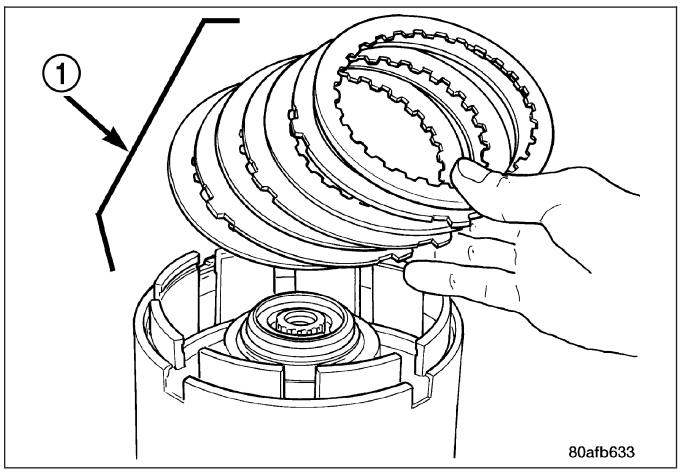

25. Install OD reaction plate waved snap ring (1).

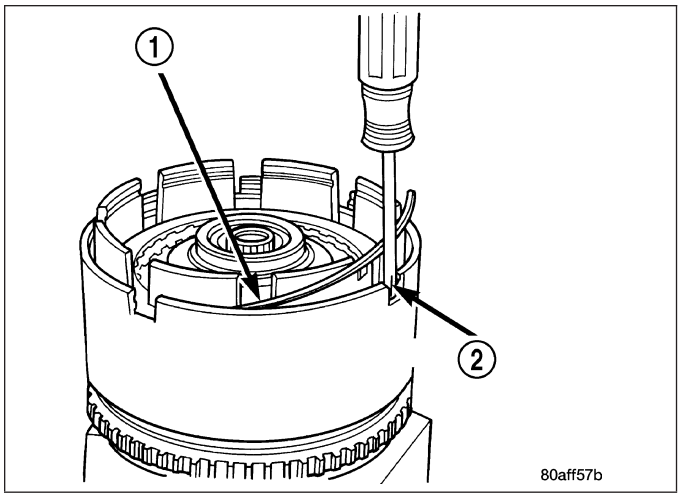

26. Install the OD/Reverse reaction plate (1) with large step down (towards OD clutch pack).

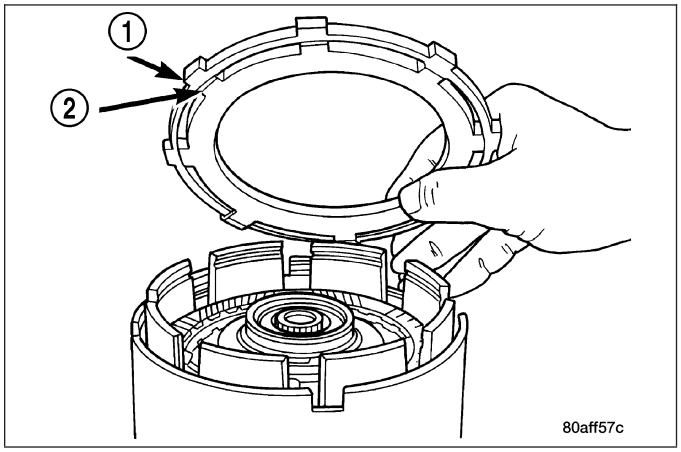

27. Install OD reaction plate flat snap ring (3).

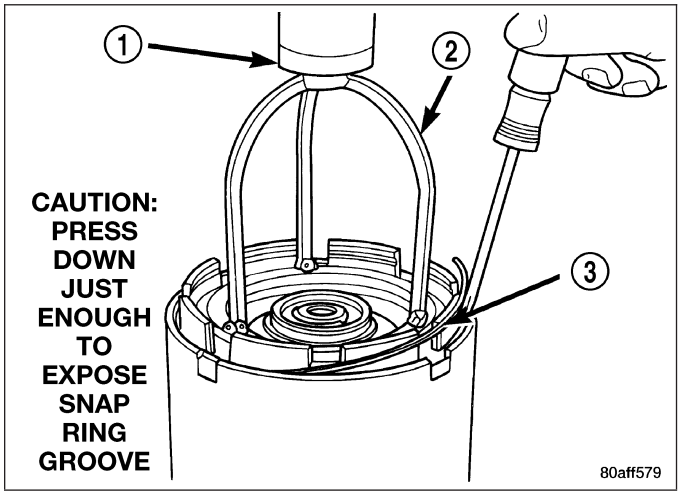

28. Measure OD clutch pack clearance. Set up Dial Indicator C-3339 (1) on top of the OD/Reverse reaction plate (2).
29. Zero dial indicator and apply 30 psi (206 kPa) air pressure to the overdrive clutch hose on Pressure Fixture 8391. Measure and record OD clutch pack measurement in four (4) places, 90° apart.
30. Take average of four measurements and compare with OD clutch pack clearance specification. **The overdrive (OD) clutch pack clearance is 1.07-3.25 mm (0.042-0.128 in.).**

If not within specifications, the clutch is not assembled properly. There is no adjustment for the OD clutch clearance.

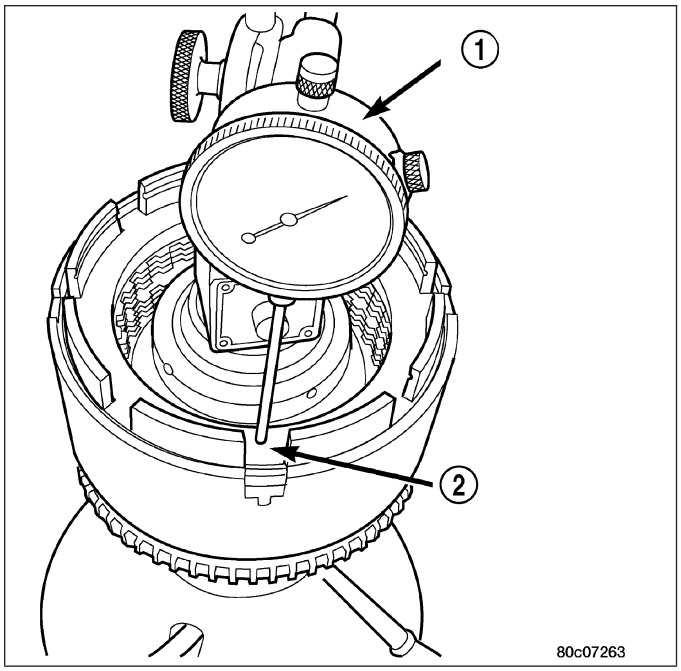

31. Install reverse clutch pack (two fibers/one steel) (1, 2).

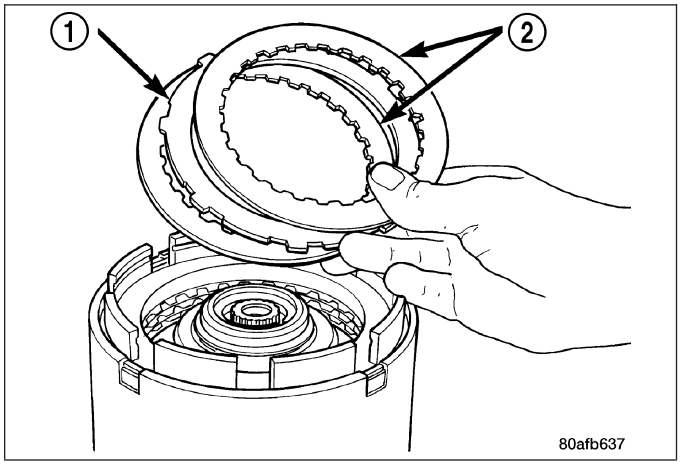

32. Install reverse clutch reaction plate (1) with the flat side down towards reverse clutch.

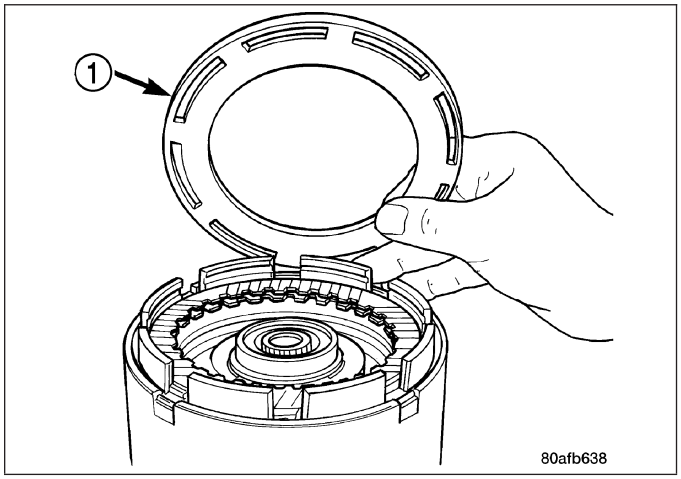

33. Tap reaction plate (3) down to allow installation of the reverse clutch snap ring (1). Install reverse clutch snap ring (1).

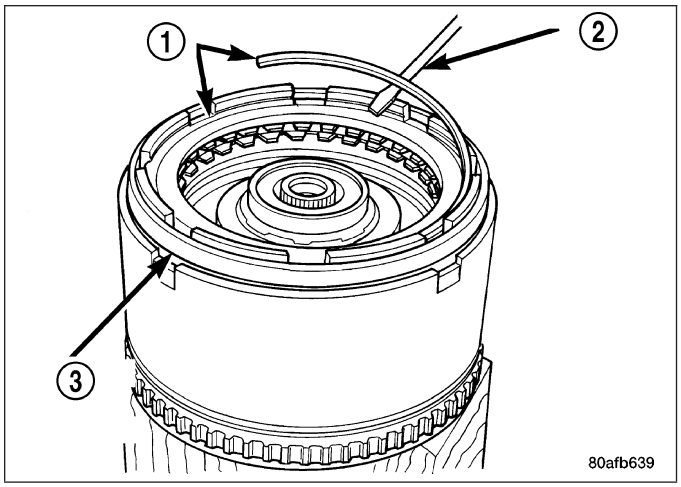

34. Pry up reverse reaction plate (4) to seat against snap ring (2).

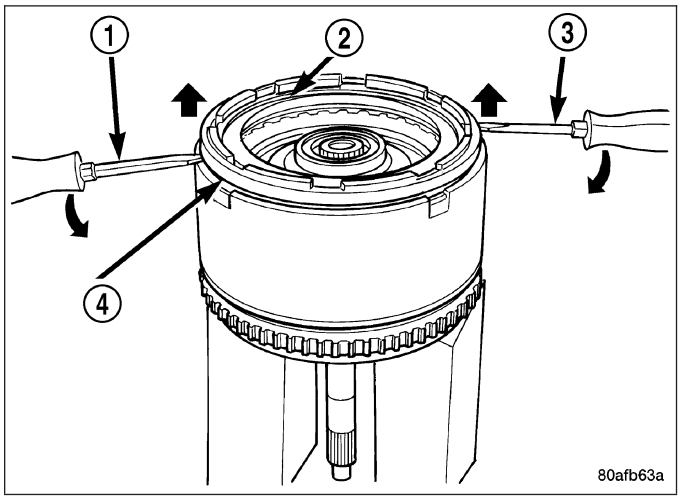

35. Set up a Dial Indicator C-3339 (1) on the reverse clutch pack (2).

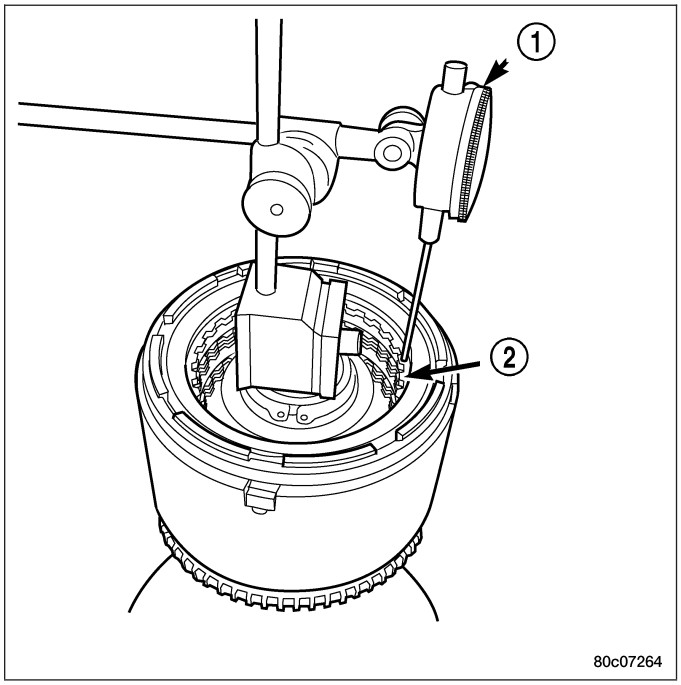

36. Using moderate pressure, press down and hold (near indicator) reverse clutch disc (2) with screwdriver or suitable tool and zero dial indicator (1). When releasing pressure, indicator should advance 0.005-0.010 inches as clutch pack relaxes.
37. Apply 30 psi (206 kPa) air pressure to the reverse clutch hose on Pressure Fixture 8391. Measure and record reverse clutch pack measurement in four (4) places, 90° apart.
38. Take average of four measurements and compare with reverse clutch pack clearance specification. **The reverse clutch pack clearance is 0.89-1.37 mm (0.035-0.054 in.).** Select the proper reverse clutch snap ring to achieve specifications.
39. To complete the assembly, reverse clutch and overdrive clutch must be removed.

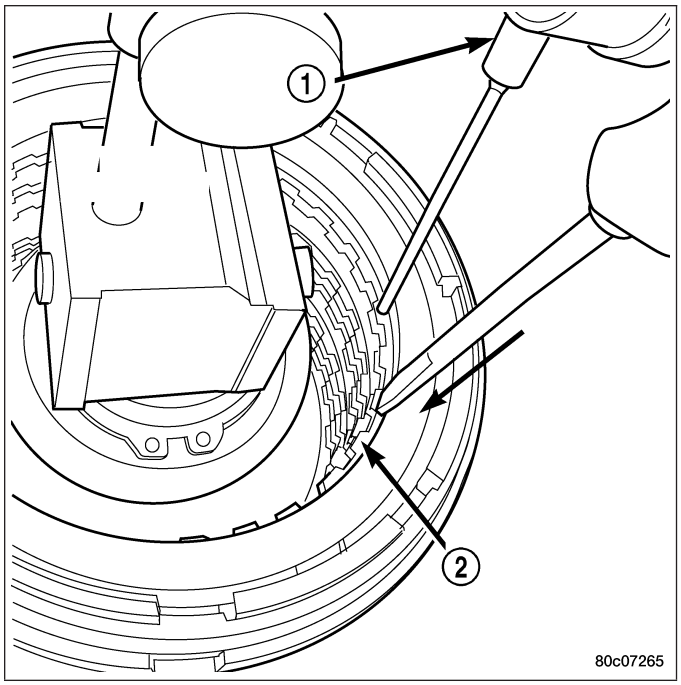

40. Install the number 2 needle bearing (1).

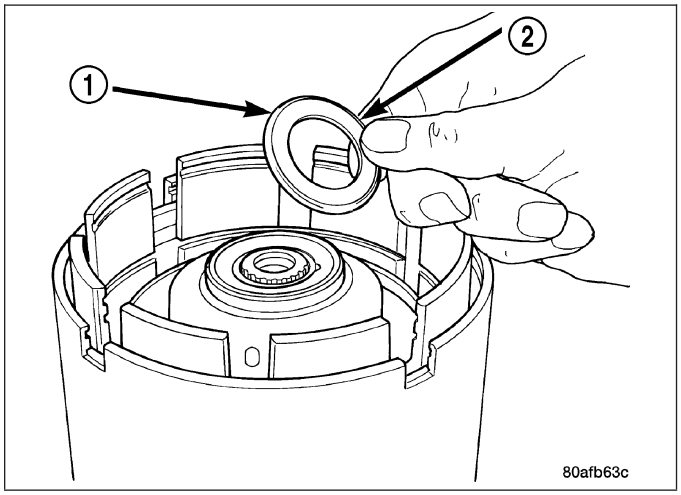

41. Install the underdrive shaft assembly (1).

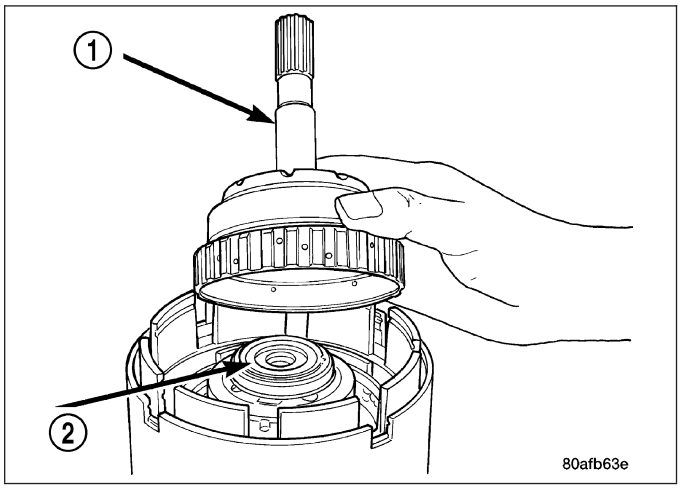

42. Install the number 3 thrust washer (1) to the underdrive shaft assembly (2). Be sure five tabs are seated properly.

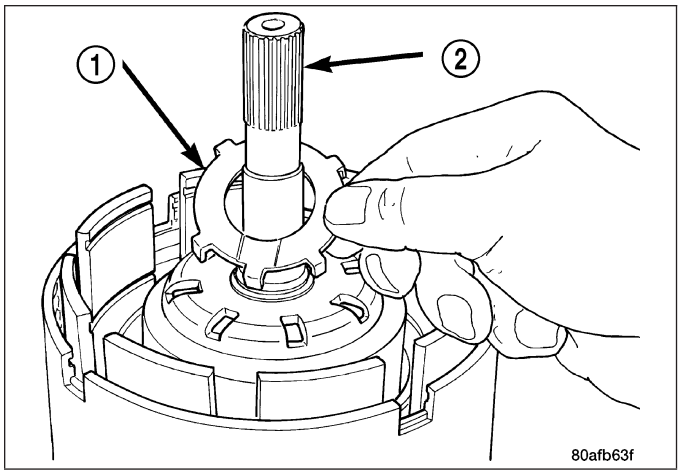

43. Install the number 3 thrust plate (3) to the bottom of the overdrive shaft assembly (1). Retain with petrolatum or transmission assembly gel (2).

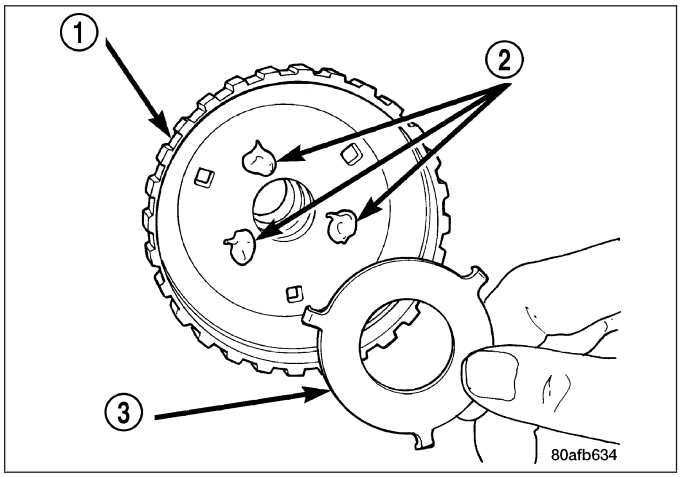

44. Install the overdrive shaft assembly (1).

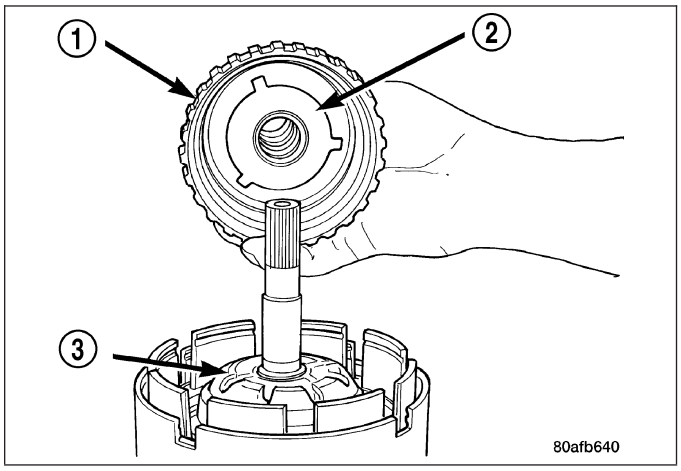

45. Reinstall overdrive and reverse clutch. **Rechecking these clutch clearances is not necessary.**

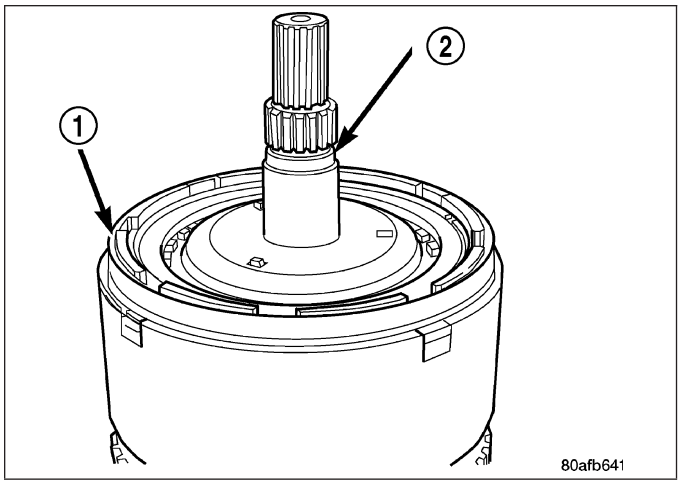

SENSOR-INPUT SPEED

DESCRIPTION

The Input (1) and Output (2) Speed Sensors are two-wire magnetic pickup devices that generate AC signals as rotation occurs. They are mounted in the left side of the transmission case and are considered primary inputs to the Transmission Control Module (TCM).

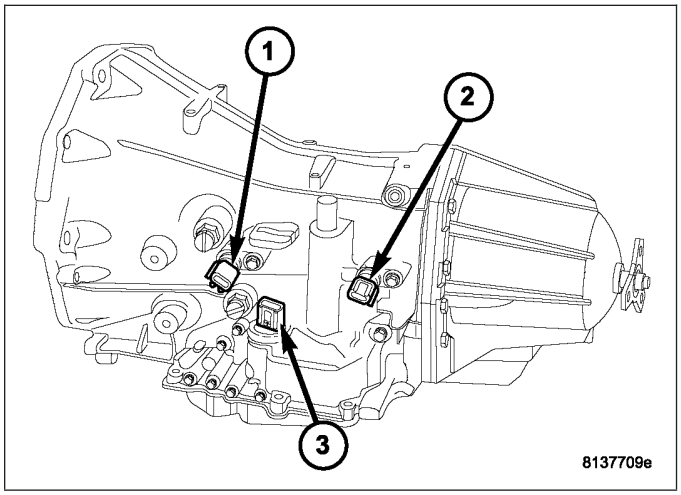

OPERATION

The Input Speed Sensor provides information on how fast the input shaft is rotating. As the teeth of the input clutch hub pass by the sensor coil, an AC voltage is generated and sent to the TCM. The TCM interprets this information as input shaft rpm.

The Output Speed Sensor generates an AC signal in a similar fashion, though its coil is excited by rotation of the rear planetary carrier lugs. The TCM interprets this information as output shaft rpm.

The TCM compares the input and output speed signals to determine the following:

- Transmission gear ratio
- Speed ratio error detection
- CVI calculation

The TCM also compares the input speed signal and the engine speed signal to determine the following:

- Torque converter clutch slippage
- Torque converter element speed ratio

REMOVAL

1. Raise vehicle.
2. Place a suitable fluid catch pan under the transmission.
3. Remove the wiring connector from the input speed sensor 91).

NOTE: The speed sensor bolt has a sealing patch applied from the factory. Be sure to reuse the same bolt.

4. Remove the bolt holding the input speed sensor (1) to the transmission case.
5. Remove the input speed sensor (1) from the transmission case.

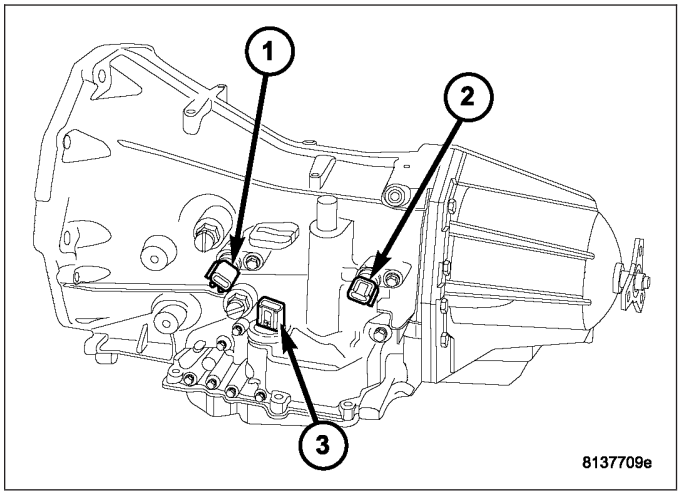

INSTALLATION

1. Install the input speed sensor (1) into the transmission case.

NOTE: Before installing the speed sensor bolt, it will be necessary to replentish the sealing patch on the bolt using Mopar® Lock & Seal Adhesive.

2. Install the bolt to hold the input speed sensor (1) into the transmission case. Tighten the bolt to 9 N·m (80 in.lbs.).
3. Install the wiring connector onto the input speed sensor
4. Verify the transmission fluid level. Add fluid as necessary. (Refer to 21 - TRANSMISSION/AUTOMATIC TRANSMISSION - 42RLE/FLUID - STANDARD PROCEDURE)
5. Lower vehicle.

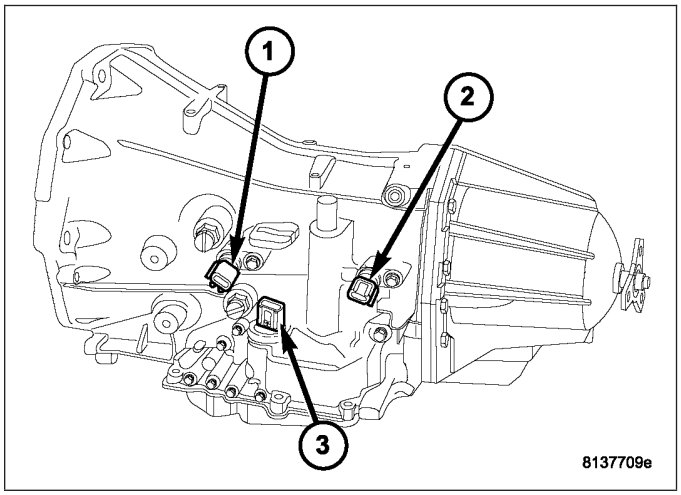

SENSOR-VARIABLE LINE PRESSURE

DESCRIPTION

The line pressure sensor (2) is mounted on the top of the valve body, next to the pressure control solenoid (1).

The TCM utilizes a closed-loop system to control transmission line pressure. The system contains a variable force style solenoid, the Pressure Control Solenoid. The solenoid is duty cycle controlled by the TCM to vent the unnecessary line pressure supplied by the oil pump back to the sump. The system also contains a variable pressure style sensor, the Line Pressure Sensor, which is a direct input to the TCM. The line pressure solenoid monitors the transmission line pressure and completes the feedback loop to the TCM. The TCM uses this information to adjust its control of the pressure control solenoid to achieve the desired line pressure.

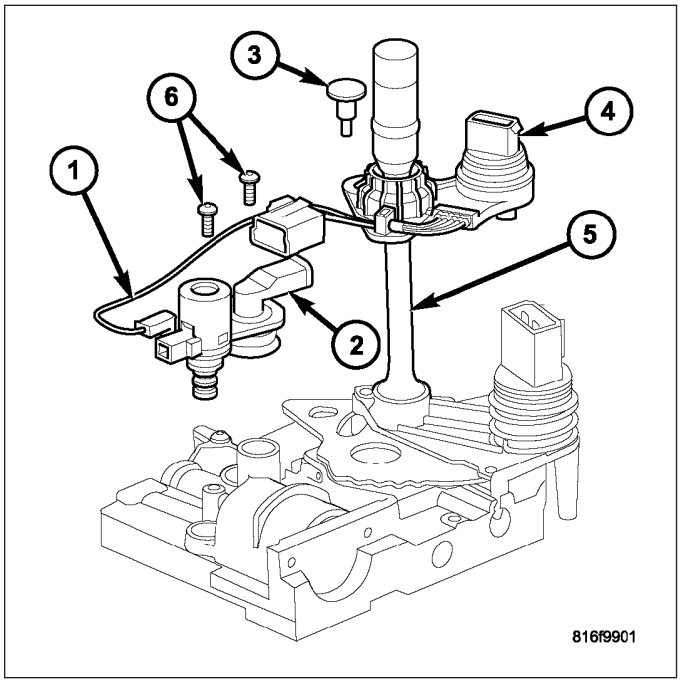

OPERATION

The TCM calculates the desired line pressure based upon inputs from the transmission and engine. The TCM calculates the torque input to the transmission and uses that information as the primary input to the calculation. The line pressure is set to a predetermined value during shifts and when the transmission is in the PARK and NEUTRAL positions. This is done to ensure consistent shift quality. During all other operation, the actual line pressure is compared to the desired line pressure and adjustments are made to the pressure control solenoid duty cycle.

REMOVAL

1. Remove the valve body from the transmission. (Refer to 21 - TRANSMISSION/TRANSAXLE/AUTOMATIC - 42RLE/VALVE BODY - REMOVAL)
2. Remove the electrical connectors from the pressure control solenoid (1) and the line pressure sensor (2).
3. Remove the screws (6) holding the pressure control solenoid (1) and line pressure sensor (2) to the valve body.
4. Remove the pressure control solenoid and line pressure sensor from the valve body.

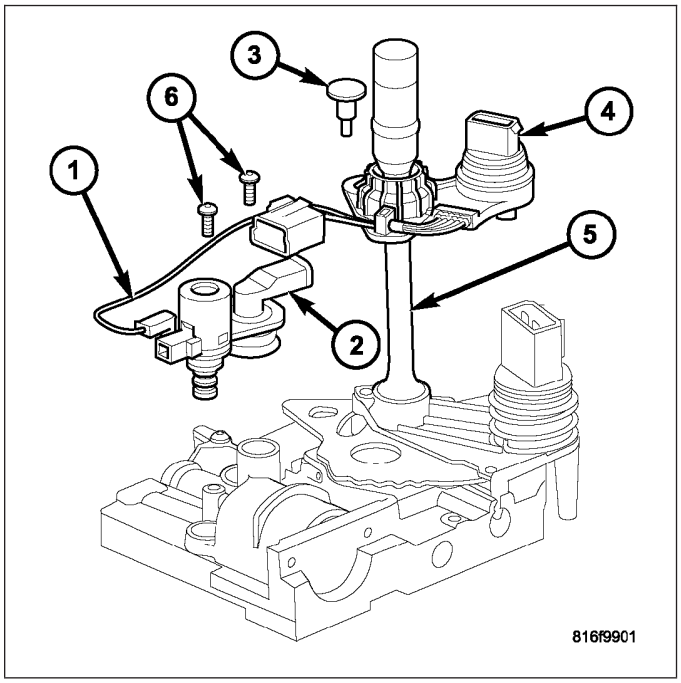

INSTALLATION

1. Install the pressure control solenoid (1) and line pressure sensor (2) into the valve body.
2. Install the screws (6) to hold the pressure control solenoid (1) and line pressure sensor (2) to the valve body.
3. Install the electrical connectors to the pressure control solenoid (1) and the line pressure sensor (2).
4. Install the valve body into the transmission. (Refer to 21 - TRANSMISSION/TRANSAXLE/AUTOMATIC - 42RLE/VALVE BODY - INSTALLATION)

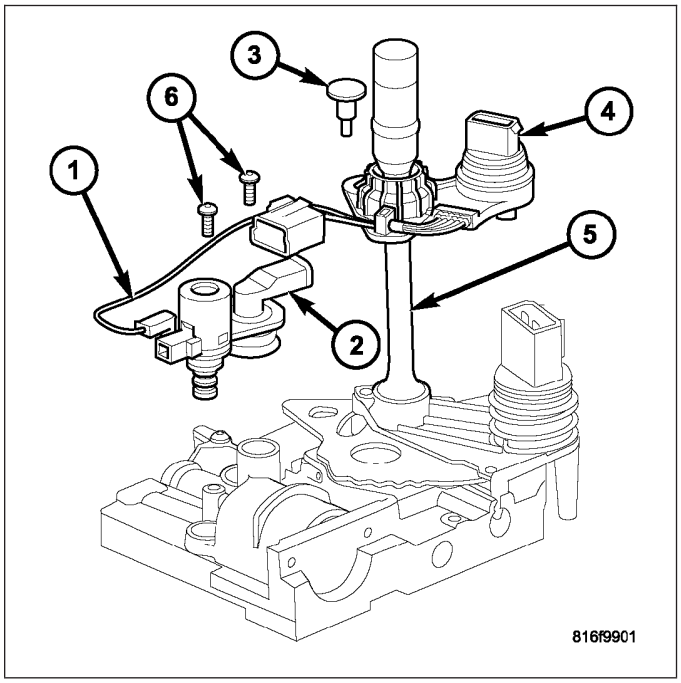

PUMP-OIL

DESCRIPTION

The oil pump is located in the pump housing inside the bell housing of the transmission case. The oil pump assembly consists of an inner (3) and outer (2) gear, a housing (1), and a cover that also serves as the reaction shaft support (6).

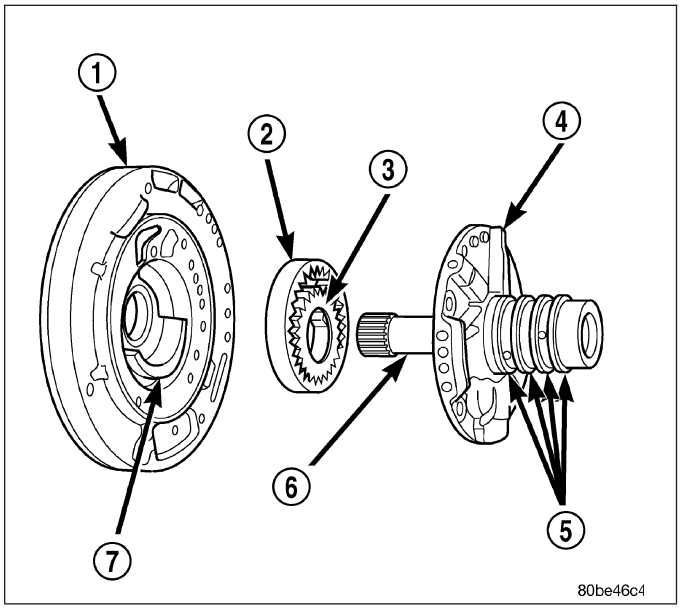

OPERATION

As the torque converter rotates, the converter hub rotates the inner and outer gears. As the gears rotate, the clearance between the gear teeth increases in the crescent area, and creates a suction at the inlet side of the pump. This suction draws fluid through the pump inlet from the oil pan. As the clearance between the gear teeth in the crescent area decreases, it forces pressurized fluid into the pump outlet and to the valve body.

DISASSEMBLY

1. Remove the reaction shaft support bolts.
2. Remove the reaction shaft support (2) from the pump housing (1).

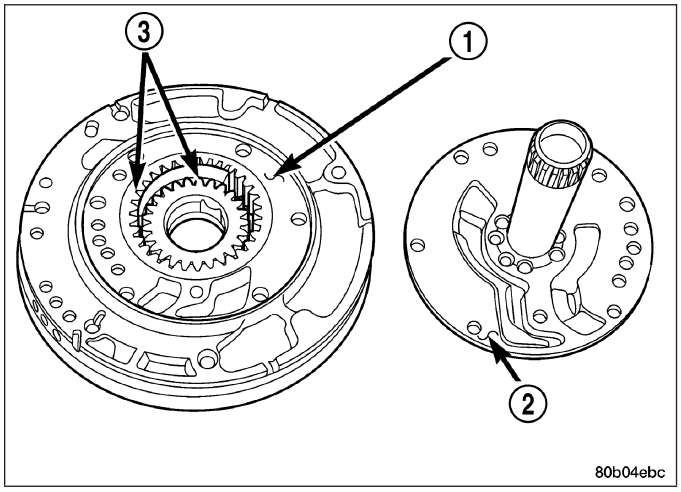

3. Remove the pump gears (2, 3) and check for wear and damage on pump housing (1) and gears (2, 3).

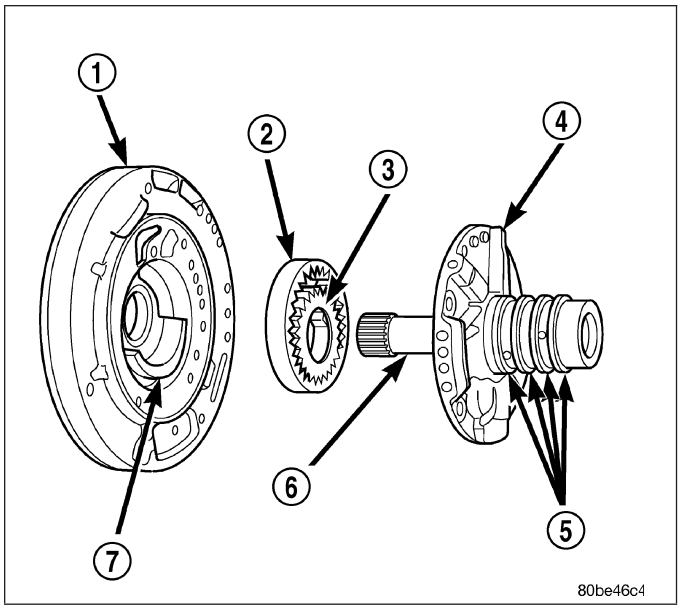

4. Re-install the gears and check clearances.
5. Measure the clearance between the outer gear (1) and the pump pocket (2). Clearance should be 0.089-0.202 mm (0.0035-0.0079 in.).
6. Measure clearance between outer gear and crescent. Clearance should be 0.060-0.298 mm (0.0023-0.0117 in.).
7. Measure clearance between inner gear and crescent. Clearance should be 0.093-0.385 mm (0.0036-0.0151 in.).
8. Position an appropriate piece of Plastigage across both pump gears.
9. Align the Plastigage to a flat area on the reaction shaft support housing.
10. Install the reaction shaft to the pump housing. Tighten the bolts to 28 N·m (250 in. lbs.).

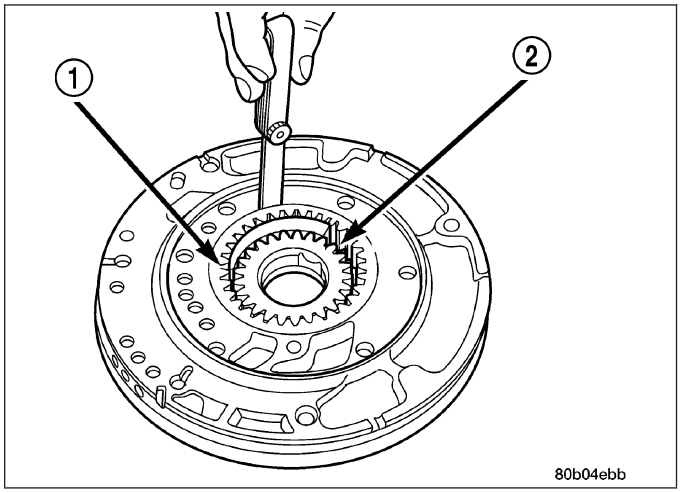

11. Remove bolts and carefully separate the housings. Measure the Plastigage following the instructions supplied.
12. Clearance between outer gear side and the reaction shaft support should be 0.020-0.046 mm (0.0008-0.0018 in.). Clearance between inner gear side and the reaction shaft support should be 0.020-0.046 mm (0.0008-0.0018 in.).

ASSEMBLY

1. Assemble oil pump as shown
2. Install and torque reaction shaft support-to-oil pump housing bolts to 28 N·m (250 in. lbs.) torque.

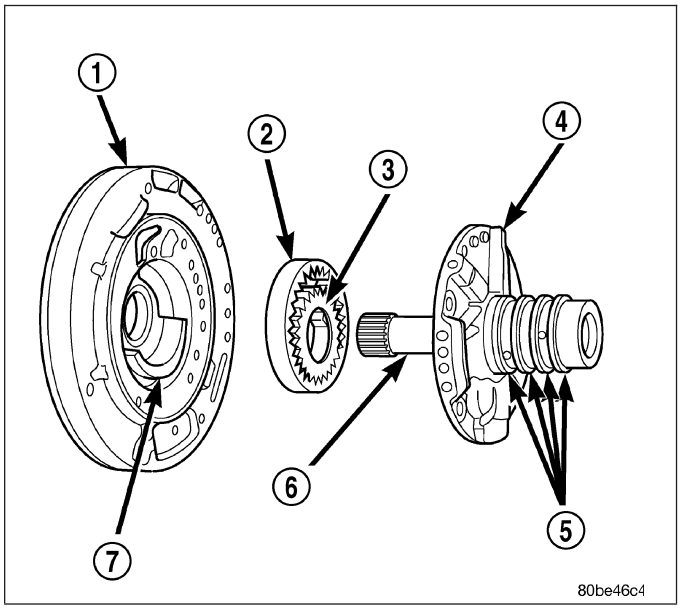

BEARING-OUTPUT SHAFT

REMOVAL

1. Raise and support vehicle.
2. Remove the propeller shaft (Refer to 3 - DIFFERENTIAL & DRIVELINE/PROPELLER SHAFT/PROPELLER SHAFT - REMOVAL).
3. Verify that the transmission is in PARK in order to prepare for the removal of the output shaft nut.
4. Remove the nut holding the propeller shaft flange to the output shaft and remove the flange.
5. Remove the transmission rear oil seal with a suitable slide hammer and screw.
6. Remove the transmission rear output shaft bearing retaining ring (1).

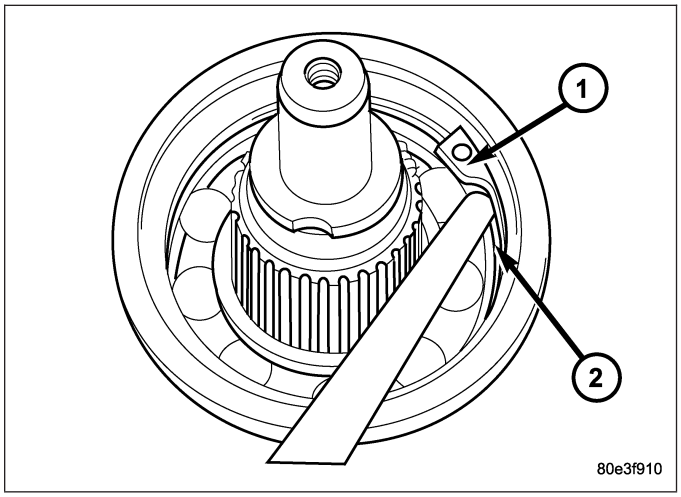

7. Position Bearing Remover 9082 (1) over the inner race of the output shaft bearing.

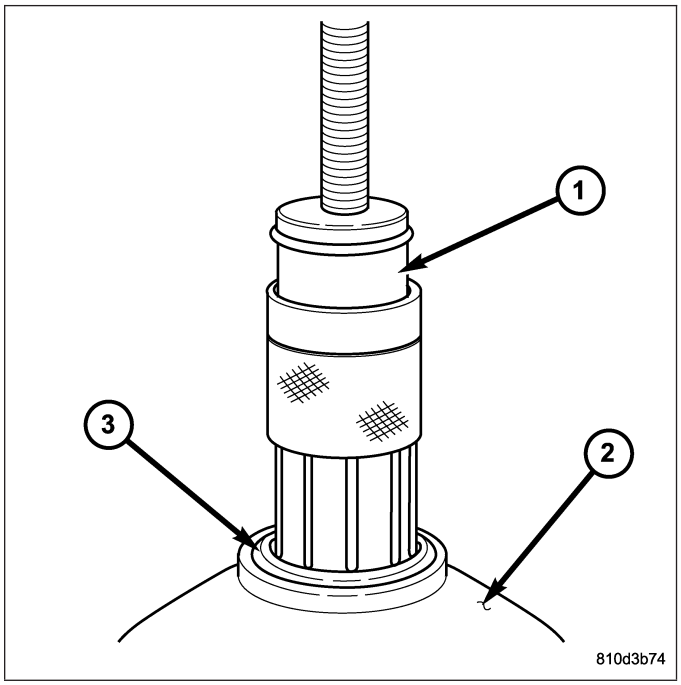

NOTE: Due to production variations in the bearing, it may not be possible to slide the collar fully downward. It is only necessary to slide the collar down far enough that the fingers securely grasp the inner bearing race.

8. Slide the collar (3) on the Bearing Remover 9082 (1) downward over the fingers (3) of the tool.

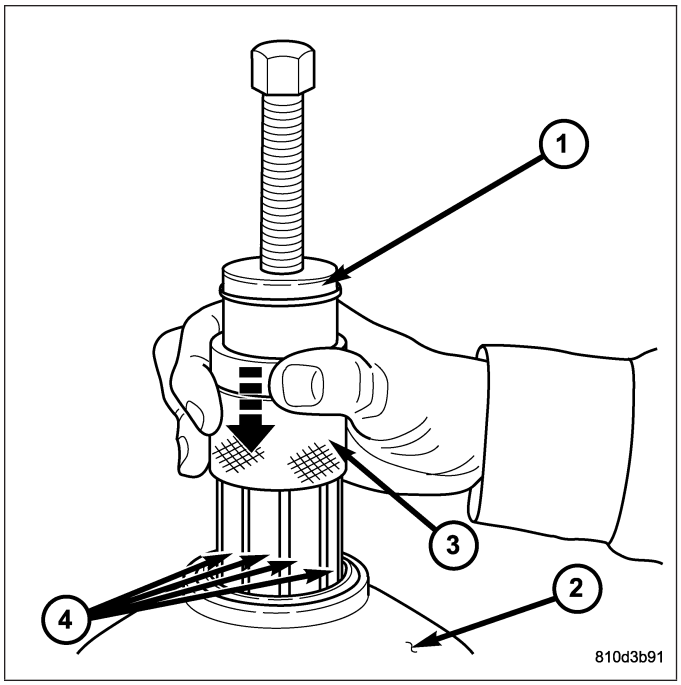

9. Remove the output shaft bearing (3).

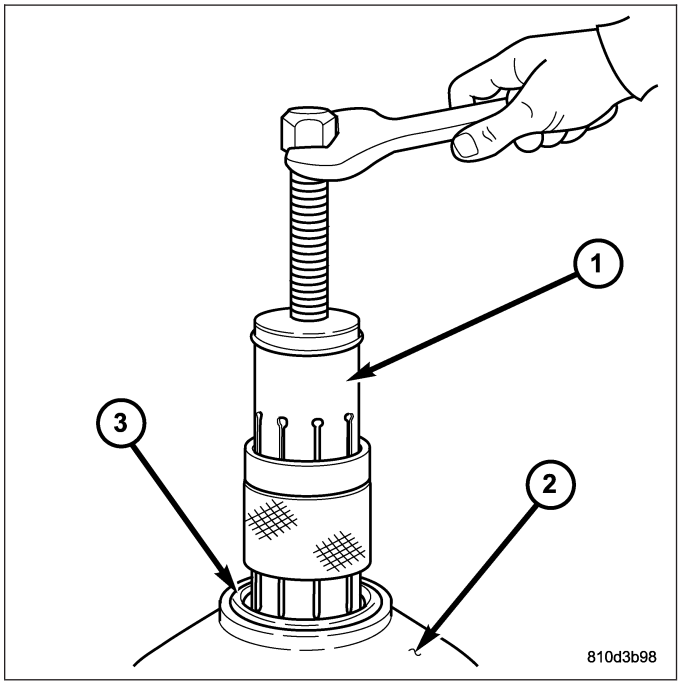

INSTALLATION

1. Install output shaft bearing in the rear transmission housing. Using Bearing Installer 9287 (1), install the output shaft bearing (2) into the transmission housing. **The closed side of the plastic cage must point towards the transmission.**

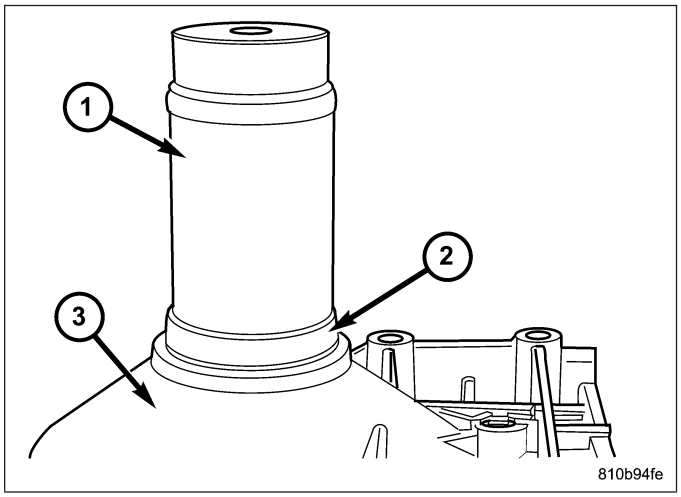

2. Install the retaining ring (1). Ensure that the retaining ring is seated correctly in the groove.
3. Install the output shaft washer onto the output shaft.

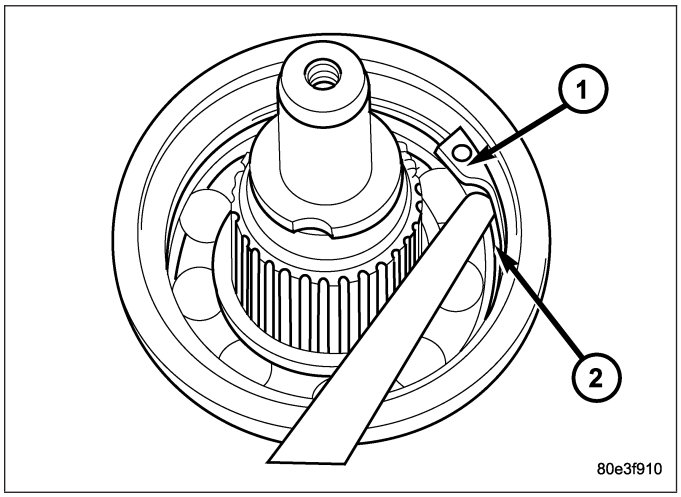

4. Install a new transmission rear seal into the transmission case with Seal Installer 8902A (1).
5. Verify that the transmission is in PARK in order to prepare for the installation of the output shaft nut.
6. Install the propeller shaft flange onto the output shaft and install an new flange nut. Tighten the flange nut to 120 N·m (88.5 ft.lbs.).

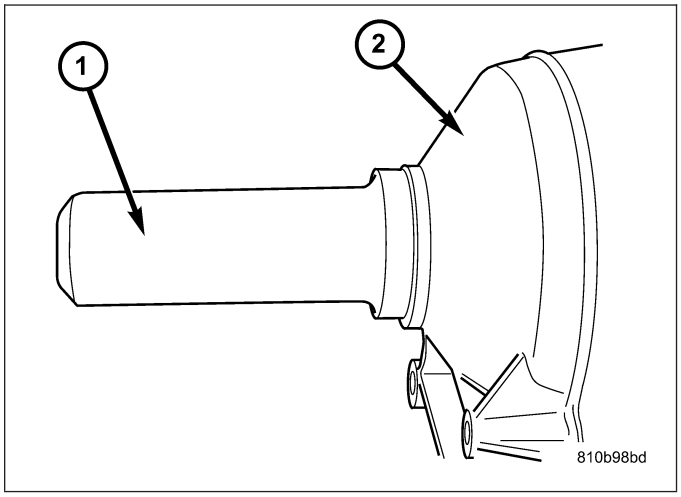

7. Stake the output shaft nut to the output shaft as follows.Place the Staking Tool 9078 (2) and Driver Handle C-4171 onto the output shaft.
8. Rotate the Staking Tool 9078 (2) until the alignment pin (3) engages the output shaft notch (4).

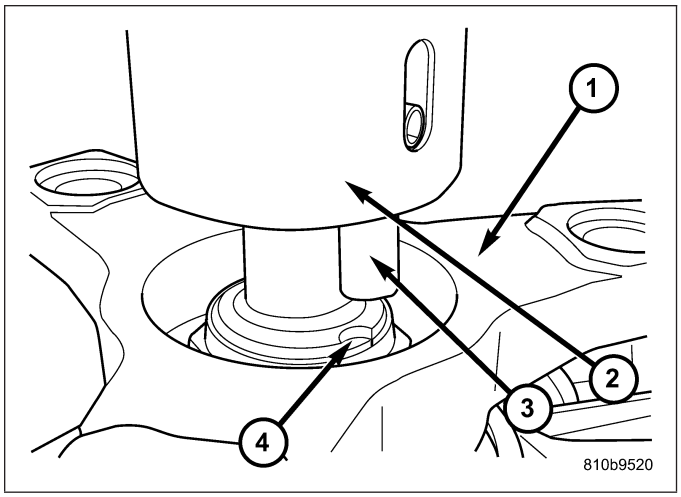

9. Press downward on the staking tool (1) until the staking pin (3) contacts the output shaft nut flange (2).
10. Strike the Driver handle C-4171 with a suitable hammer until the output shaft nut is securely staked to the output shaft.
11. Install the propeller shaft (Refer to 3 - DIFFERENTIAL & DRIVELINE/PROPELLER SHAFT/PROPELLER SHAFT - INSTALLATION).

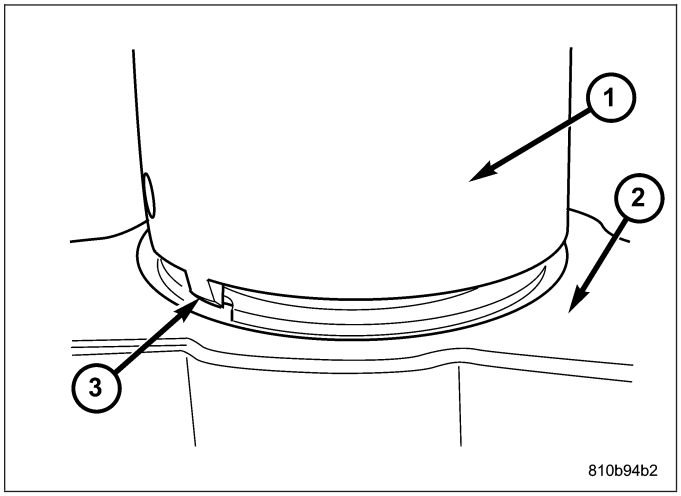

SEAL-OUTPUT SHAFT

REMOVAL

1. Remove the propeller shaft (Refer to 3 - DIFFERENTIAL & DRIVELINE/PROPELLER SHAFT/PROPELLER SHAFT - REMOVAL). Move propeller shaft to the right and tie up.
2. Verify that the transmission is in PARK in order to prepare for the removal of the output shaft nut.
3. Remove the nut holding the propeller shaft flange to the output shaft and remove the flange.
4. Remove the output shaft seal with suitable screw and slide hammer.

INSTALLATION

1. Position the new output shaft seal over the output shaft and against the transmission case.
2. Use Seal Installer 8902A (1) to install the seal.
3. Verify that the transmission is in PARK in order to prepare for the installation of the output shaft nut.
4. Install the propeller shaft flange onto the output shaft and install an new flange nut. Tighten the flange nut to 120 N·m (88.5 ft.lbs.).

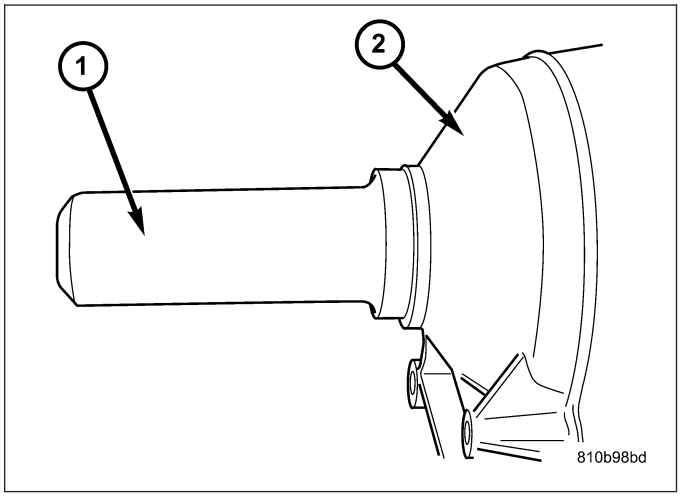

5. Stake the output shaft nut to the output shaft as follows.Place the Staking Tool 9078 (2) and Driver Handle C-4171 onto the output shaft.
6. Rotate the Staking Tool 9078 (2) until the alignment pin (3) engages the output shaft notch (4).

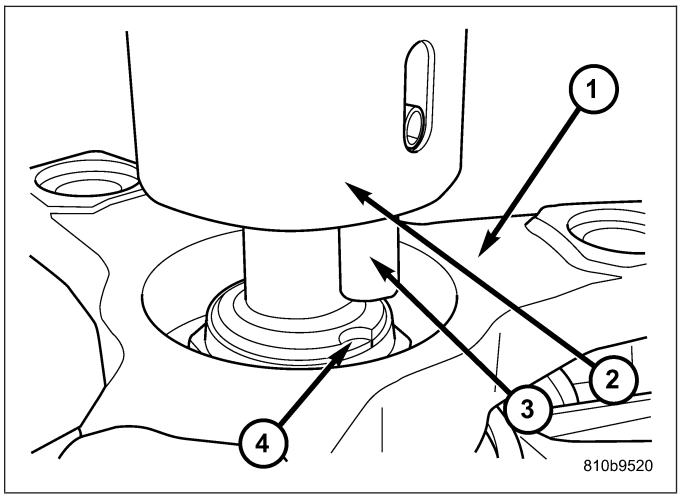

7. Press downward on the staking tool until the staking pin (3) contacts the output shaft nut flange (2).
8. Strike the Driver handle C-4171 with a suitable hammer until the output shaft nut is securely staked to the output shaft.
9. Install the propeller shaft (Refer to 3 - DIFFERENTIAL & DRIVELINE/PROPELLER SHAFT/PROPELLER SHAFT - INSTALLATION).

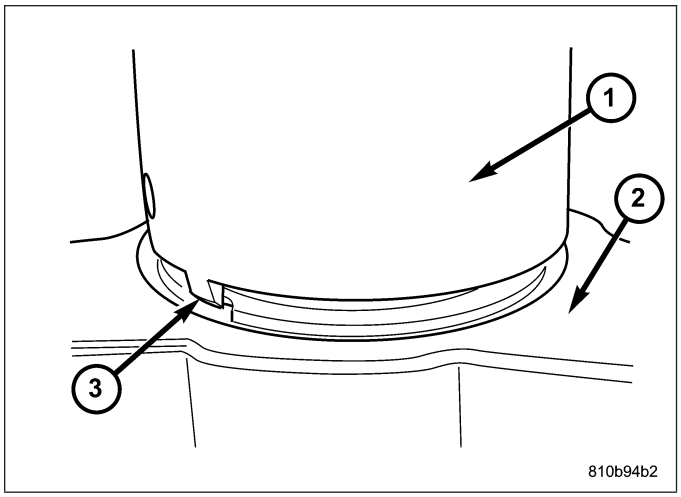

SENSOR-OUTPUT SPEED

DESCRIPTION

The Input (1) and Output (2) Speed Sensors are two-wire magnetic pickup devices that generate AC signals as rotation occurs. They are mounted in the left side of the transmission case and are considered primary inputs to the Transmission Control Module (TCM).

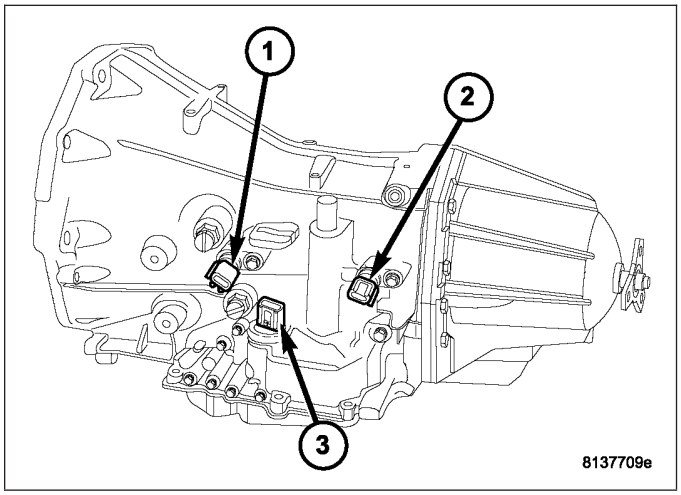

OPERATION

The Input Speed Sensor provides information on how fast the input shaft is rotating. As the teeth of the input clutch hub pass by the sensor coil, an AC voltage is generated and sent to the TCM. The TCM interprets this information as input shaft rpm.

The Output Speed Sensor generates an AC signal in a similar fashion, though its coil is excited by rotation of the rear planetary carrier lugs. The TCM interprets this information as output shaft rpm.

The TCM compares the input and output speed signals to determine the following:

- Transmission gear ratio
- Speed ratio error detection
- CVI calculation

The TCM also compares the input speed signal and the engine speed signal to determine the following:

- Torque converter clutch slippage
- Torque converter element speed ratio

REMOVAL

1. Raise vehicle.
2. Place a suitable fluid catch pan under the transmission.
3. Remove the wiring connector from the output speed sensor (2).

NOTE: The speed sensor bolt has a sealing patch applied from the factory. Be sure to reuse the same bolt.

4. Remove the bolt holding the output speed sensor (2) to the transmission case.
5. Remove the output speed sensor (2) from the transmission case.

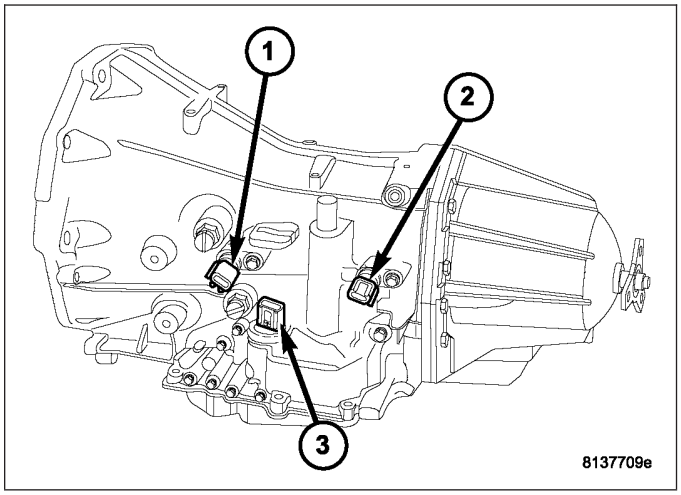

INSTALLATION

1. Install the output speed sensor (2) into the transmission case.

NOTE: Before installing the speed sensor bolt, it will be necessary to replentish the sealing patch on the bolt using Mopar® Lock & Seal Adhesive.

2. Install the bolt to hold the output speed sensor (2) into the transmission case. Tighten the bolt to 9 N·m (80 in.lbs.).
3. Install the wiring connector onto the output speed sensor (2).
4. Verify the transmission fluid level. Add fluid as necessary. (Refer to 21 - TRANSMISSION/AUTOMATIC TRANSMISSION - 42RLE/FLUID - STANDARD PROCEDURE)
5. Lower vehicle.

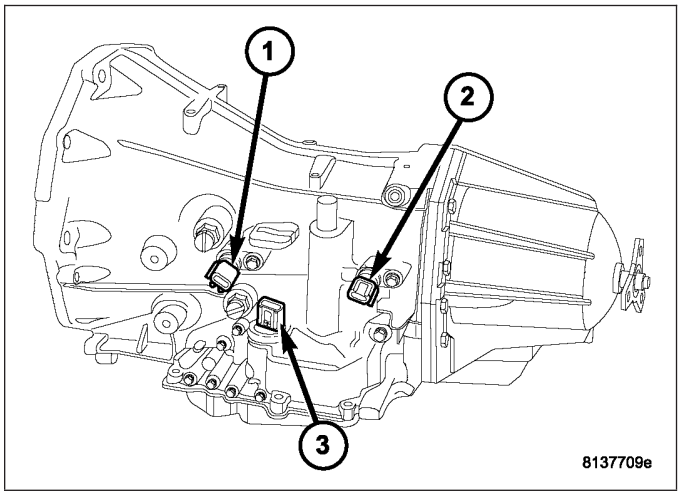

CABLE-PARK LOCK

REMOVAL

1. Place ignition key in the ACC (2) position.

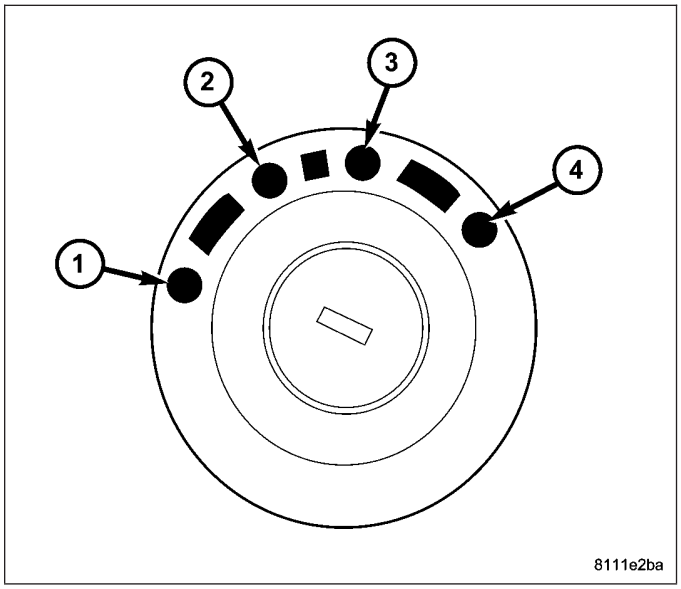

2. Remove the lower instrument panel trim as necessary to access the park lock cable.
3. Disconnect park lock cable (4) from ignition cylinder (3).

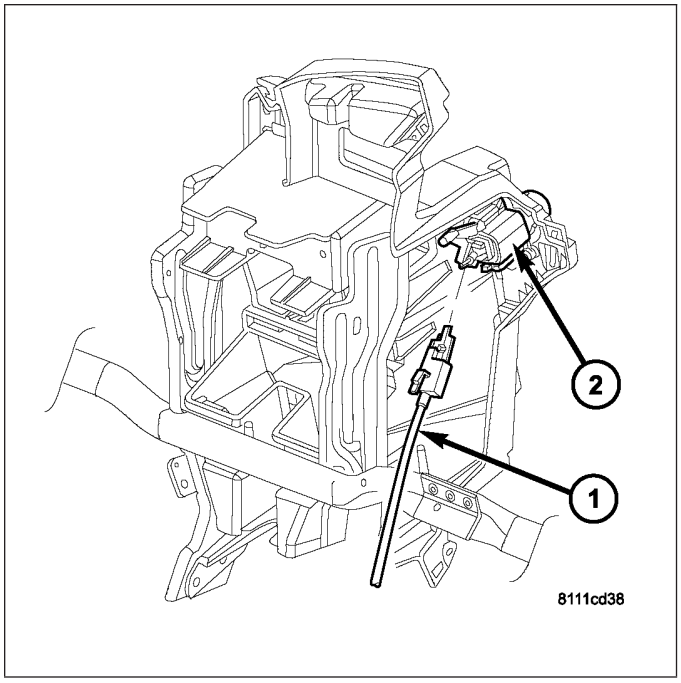

4. Remove the floor console as necessary for access to the park lock cable. (Refer to 23 - BODY/INTERIOR/FLOOR CONSOLE - REMOVAL)
5. If necessary, remove the bolts holding the shield, covering the gearshift and park lock cables, to the floorpan and remove the shield.
6. Disconnect the park lock cable from the shift mechanism. Release retention tab using suitable screwdriver.

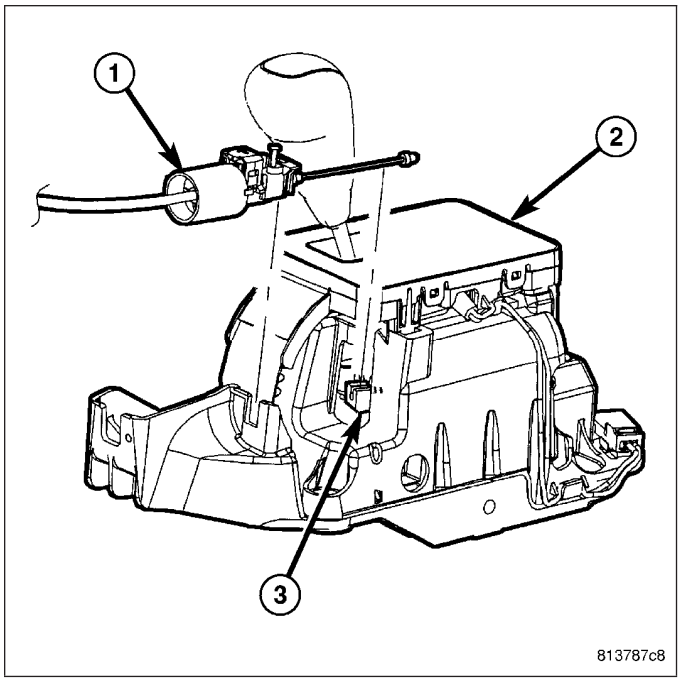

INSTALLATION

1. Verify that ignition key is in ACC (2) position.

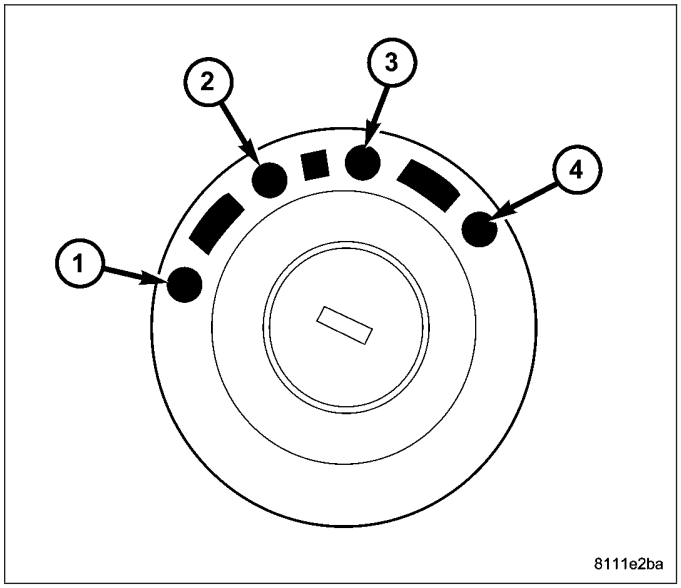

2. Install the park lock cable (4) to the ignition cylinder (3). Secure the cable to instrument panel at retainer.
3. Install any instrument panel trim that was removed to access the park lock cable.

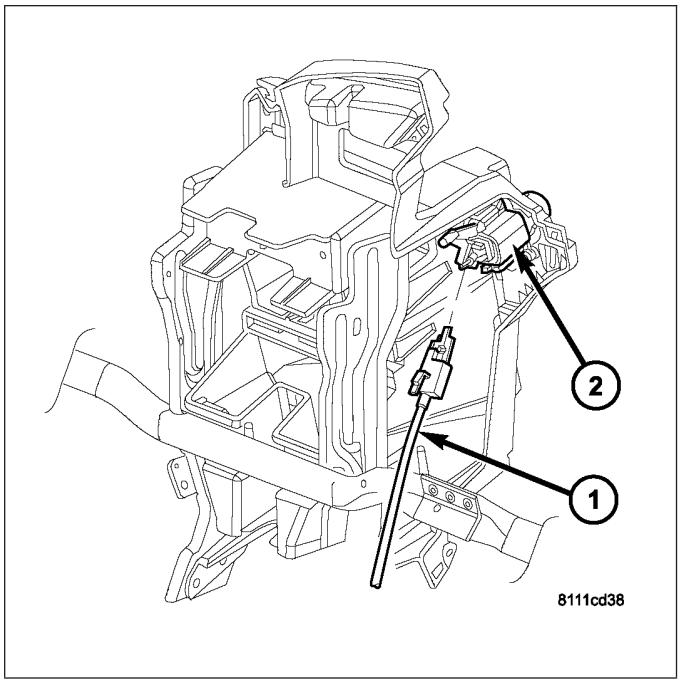

4. Route park lock cable towards shift mechanism.
5. Connect the park lock cable core to shift mechanism cam (3), and then secure cable housing to shift mechanism.

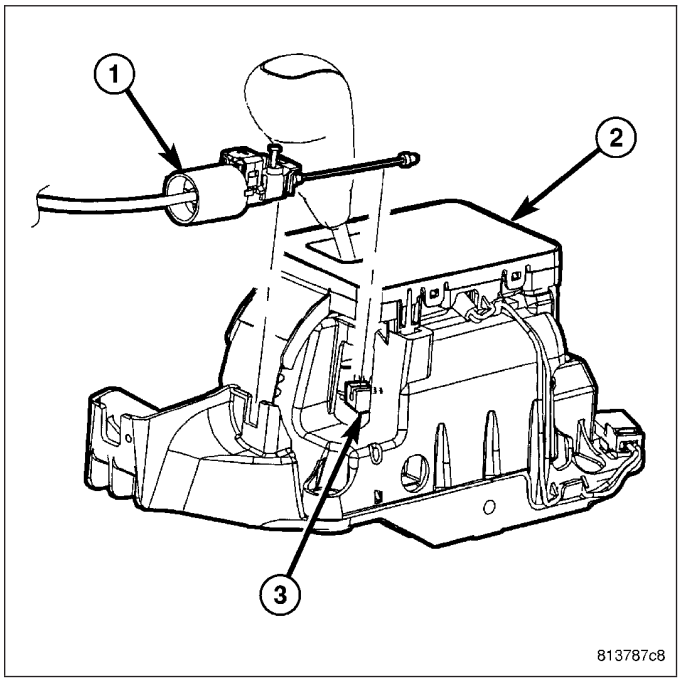

6. Adjust the park lock cable. (Refer to 21 - TRANSMISSION/AUTOMATIC TRANSMISSION/SHIFT INTERLOCK MECHANISM - ADJUSTMENTS)
7. If necessary, install the shield, covering the gearshift and park lock cables, to the floorpan and install the bolts to hold the shield to the floorpan.
8. Install the floor console assembly. (Refer to 23 - BODY/INTERIOR/FLOOR CONSOLE - INSTALLATION)

GEARTRAIN-PLANETARY

DESCRIPTION

The planetary geartrain is located between the input clutch assembly and the rear of the transmission case. The planetary geartrain consists of two sun gears, two planetary carriers, two annulus (ring) gears, and one output shaft.

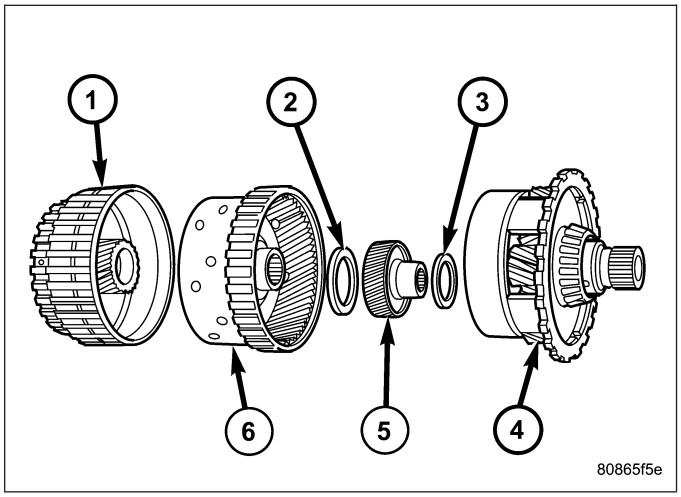

OPERATION

The planetary geartrain utilizes two planetary gear sets that connect the transmission input shaft to the output shaft. Input and holding clutches drive or lock different planetary members to change output ratio or direction.

SEAL-OIL PUMP

REMOVAL

1. Remove the transmission from the vehicle (Refer to 21 - TRANSMISSION/AUTOMATIC - 42RLE - REMOVAL).
2. Remove the torque converter from the transmission bellhousing.
3. Use a screw mounted in a slide hammer to remove oil pump seal.

INSTALLATION

1. Clean and inspect oil pump seal seat. Then install seal using Seal Installer C-4193-A.
2. Clean and inspect torque converter hub. If nicks, scratches or hub wear are found, torque converter replacement will be required.

CAUTION: If the torque converter is being replaced, apply a light coating of grease to the crankshaft pilot hole. Also inspect the engine drive plate for cracks. If any cracks are found replace the drive plate. Do not attempt to repair a cracked drive plate. Always use new torque converter to drive plate bolts.

3. Apply a light film of transmission oil to the torque converter hub and oil seal lips. Then install torque converter into transmission. Be sure that the hub lugs mesh with the front pump lugs when installing.
4. Reinstall the transmission into the vehicle. (Refer to 21 - TRANSMISSION/TRANSAXLE/AUTOMATIC - 42RLE - INSTALLATION)

SOLENOID-PRESSURE CONTROL

DESCRIPTION

The pressure control solenoid (1) is mounted on the top of the valve body, next to the line pressure sensor (2).

The TCM utilizes a closed-loop system to control transmission line pressure. The system contains a variable force style solenoid, the Pressure Control Solenoid. The solenoid is duty cycle controlled by the TCM to vent the unnecessary line pressure supplied by the oil pump back to the sump. The system also contains a variable pressure style sensor, the Line Pressure Sensor, which is a direct input to the TCM. The line pressure solenoid monitors the transmission line pressure and completes the feedback loop to the TCM. The TCM uses this information to adjust its control of the pressure control solenoid to achieve the desired line pressure.

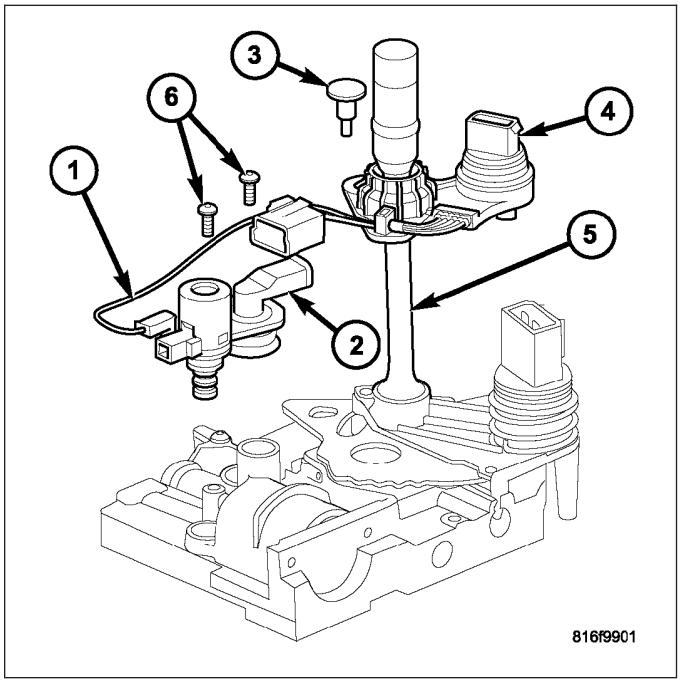

OPERATION

The pressure control solenoid (PCS) is a variable force (VFS) style solenoid. A VFS solenoid is an electro-hydraulic actuator, combining a solenoid and a regulating valve.

The transmission control module varies the current for the PCS, which varies the pressure in the line pressure hydraulic circuit. When the current (duty cycle) of the PCS is low, the pressure in the circuit is higher. At 0 current (0% duty cycle), the pressure is at the maximum value. Conversely, when the current is maximized (100% duty cycle), the pressure in the circuit is at the lowest possible value.

REMOVAL

1. Remove the valve body from the transmission. (Refer to 21 - TRANSMISSION/TRANSAXLE/AUTOMATIC - 42RLE/VALVE BODY - REMOVAL)
2. Remove the electrical connectors from the pressure control solenoid (1) and the line pressure sensor (2).
3. Remove the screws (6) holding the pressure control solenoid (1) and line pressure sensor (2) to the valve body.
4. Remove the pressure control solenoid and line pressure sensor from the valve body.

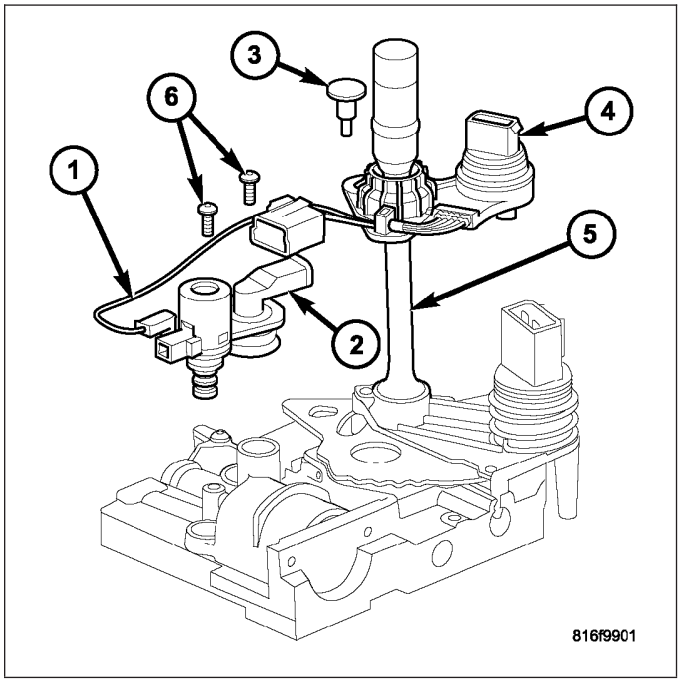

INSTALLATION

1. Install the pressure control solenoid (1) and line pressure sensor (2) into the valve body.
2. Install the screws (6) to hold the pressure control solenoid (1) and line pressure sensor (2) to the valve body.
3. Install the electrical connectors to the pressure control solenoid (1) and the line pressure sensor (2).
4. Install the valve body into the transmission. (Refer to 21 - TRANSMISSION/TRANSAXLE/AUTOMATIC - 42RLE/VALVE BODY - INSTALLATION)

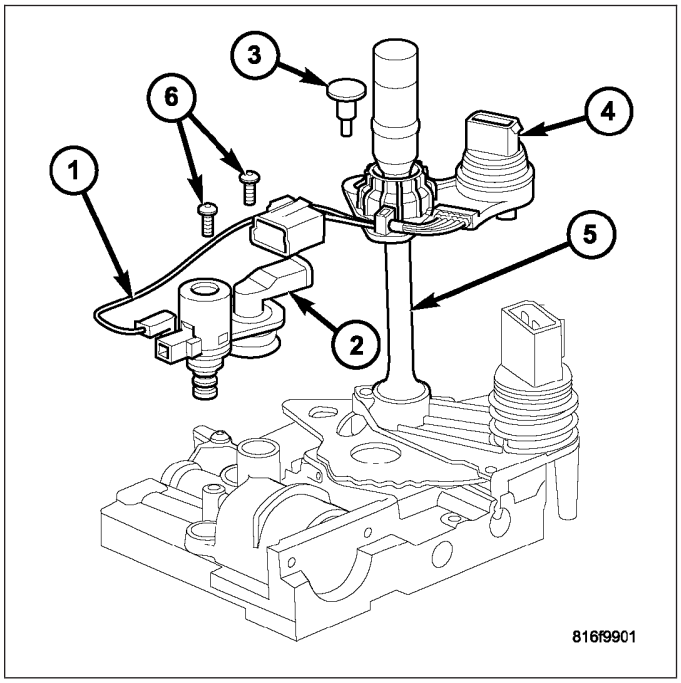

MECHANISM-SHIFT

DESCRIPTION

The automatic transmission is operated with the help of a shift lever assembly (SLA) (1) located in the floor console. There are six positions to which the selection lever can be shifted: P, R, N, D, 3, L.

All selector lever positions are identified by the SLA and transmitted by a shift cable to the selector shaft in the transmission.

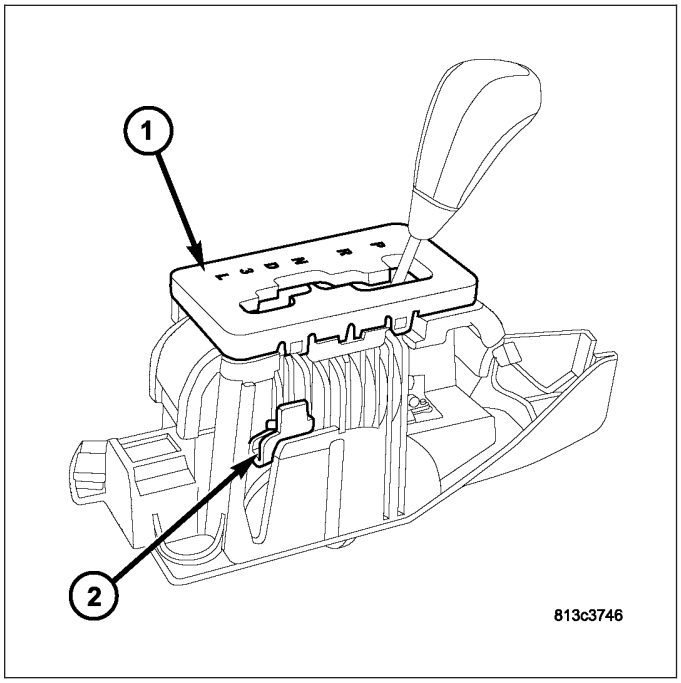

The SLA is comprised of the following functions:

- **Key lock:** Depending on the selector lever position, the ignition cylinder is locked/unlocked, i.e., the ignition key can be removed only if the selector lever is in position ″P″. A park lock cable is used to perform this function.
- **Park lock:** The selector lever is not released from postion ″P″ until the brake pedal has been applied and the ignition key is in ”ACC” or ON” positions. Shift lock is controlled by the brake light switch in conjunction with a locking solenoid in the SLA. As soon as the brake pedal is applied firmly, the locking solenoid is energized and retracted to unlock the selector lever. If the selector lever cannot be moved out of position ″P″ due to a malfunction, the shift lock function can be overriden (2). (Refer to 21 - TRANSMISSION/AUTOMATIC TRANSMISSION - NAG1/SHIFT INTERLOCK MECHANISM - OPERATION)

OPERATION

With the selector lever in position ″D″, the transmission control module (TCM) automatically shifts the gears that are best-suited to the current operating situation. This means that shifting of gears is continuously adjusted to current driving and operating conditions in line with the selected shift range and the accelerator pedal position. Starting off is always performed in 1st gear.

The current selector lever position or, if the shift range has been limited, the current shift range is indicated in the instrument cluster display.

The permissible shifter positions and transmission operating ranges are:

- P = Parking lock and engine starting.
- R = Reverse.
- N = Neutral and engine starting (no power is transmitted to the axles).
- D = The shift range includes all forward gears.
- 3= Shift range is limited to gears 1 to 3.
- 1= Shift range is limited to the 1st gear.

REMOVAL

1. Remove any necessary console parts for access to shift lever assembly and shifter cables. (Refer to 23 - BODY/INTERIOR/FLOOR CONSOLE - REMOVAL)
2. If necessary, remove the bolts holding the shield, covering the gearshift and park lock cables, to the floorpan and remove the shield.
3. Shift transmission into PARK.
4. Disconnect the transmission shift cable (1) at shift lever (3) and shifter assembly bracket (2).
5. Remove the shift cable retainer (2) from the notch in the shifter assembly (2).

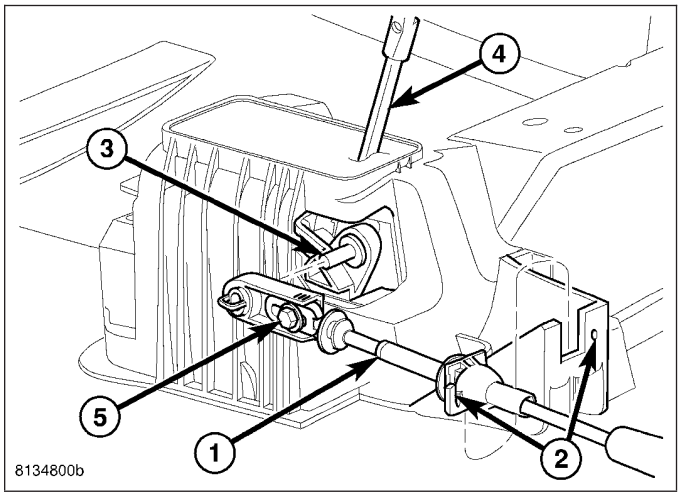

6. Verify the key is in the LOCK position and disconnect the park lock cable (1) from the shifter mechansim cam (3) and the notch in the shifter assembly (3).

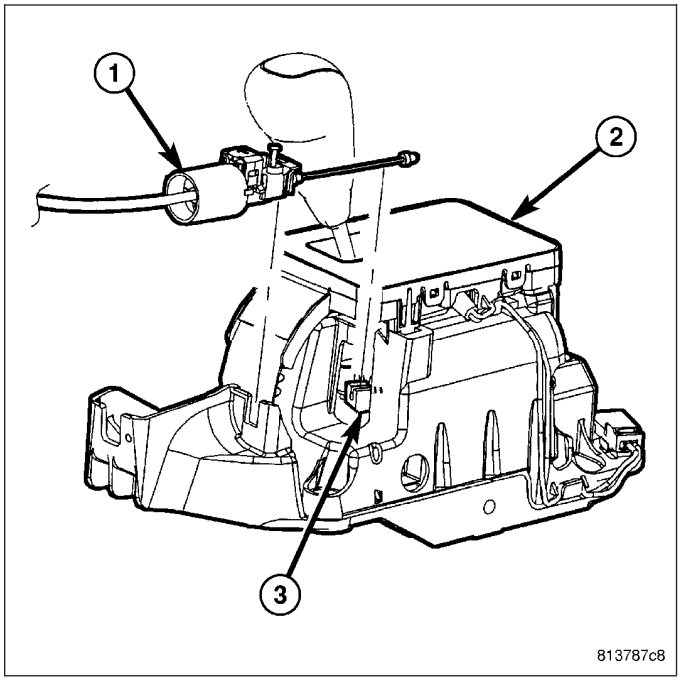

7. Disengage all wiring connectors (2) from the shifter assembly (1).

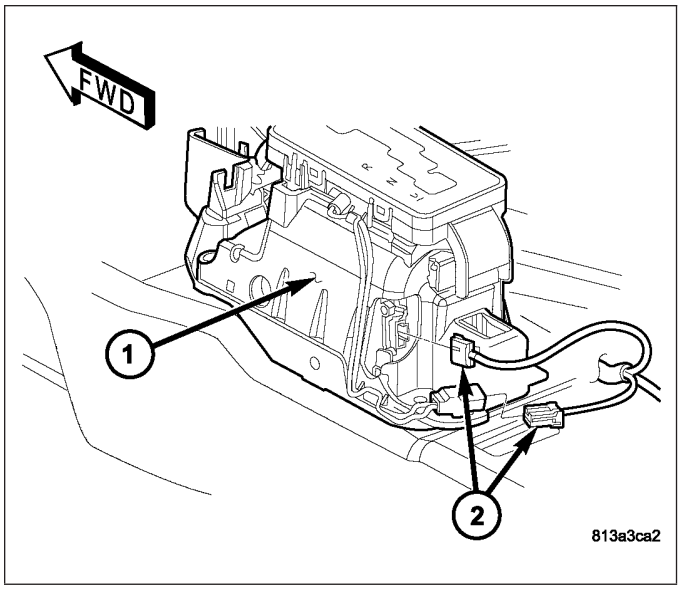

8. Remove all nuts (2) holding the shifter assembly (1) to the floor pan.
9. Remove the shifter assembly (1) from the vehicle.

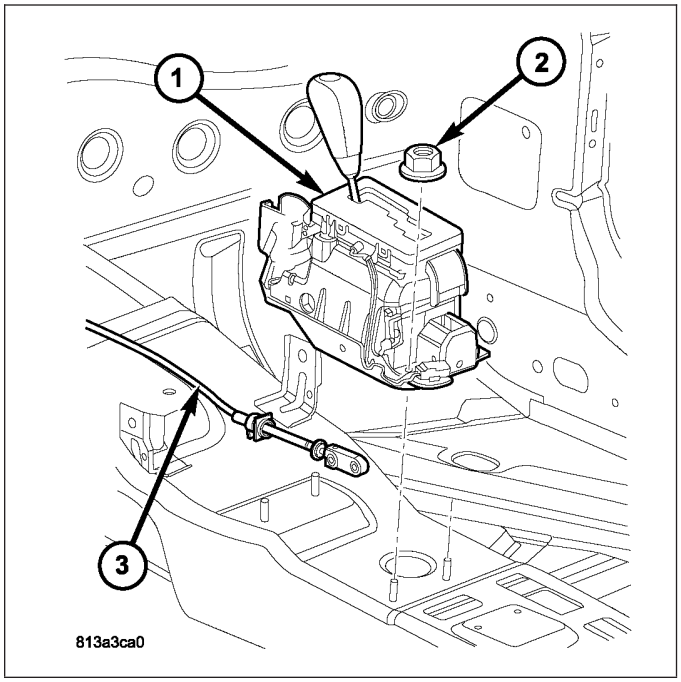

INSTALLATION

1. If a new shifter assembly is being installed, unscrew the original shift knob from the shift lever. Screw the knob onto the new shifter assembly's lever no more than 14 turns.
2. Install shifter assembly (1) onto the shifter assembly studs on the floor pan.
3. Install the nuts (2) to hold the shifter assembly (1) onto the floor pan. Tighten nuts to 7 N·m (65 in.lbs.).

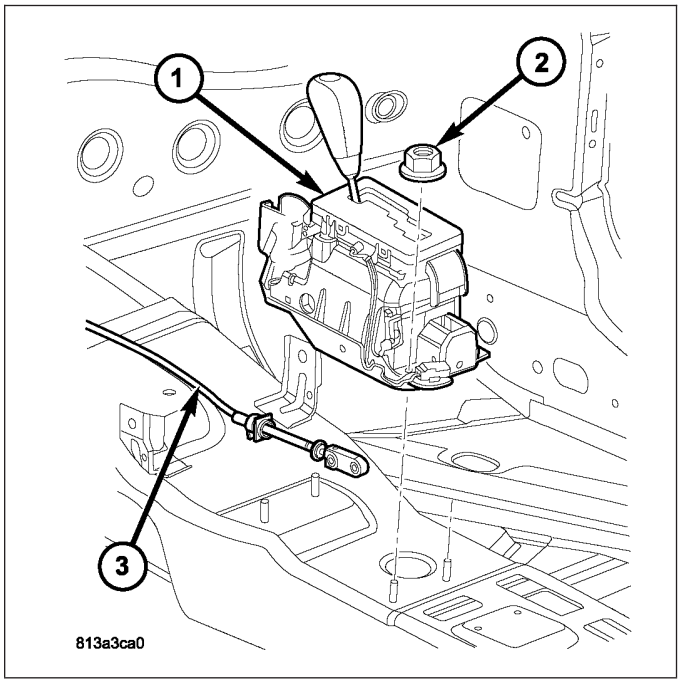

4. Place the floor shifter lever in PARK position.
5. Loosen the adjustment screw (5) on the gearshift cable (1).
6. Install the gearshift cable (1) to the shift lever pin (3).

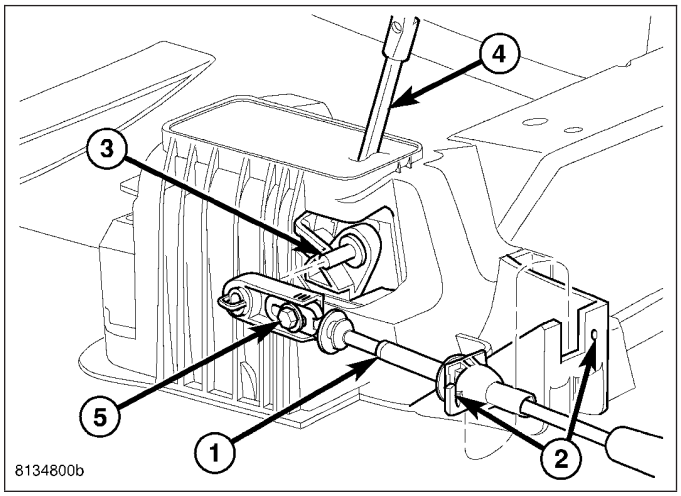

7. Install the park lock cable (1) to the shift mechanism cam (3) and the notch in the shifter assembly (2).
8. Verify that the key is in the LOCK position and remains there until the cable is fully adjusted.
9. Verify that the park lock cable adjustment tab is pulled upward to the unlocked position.

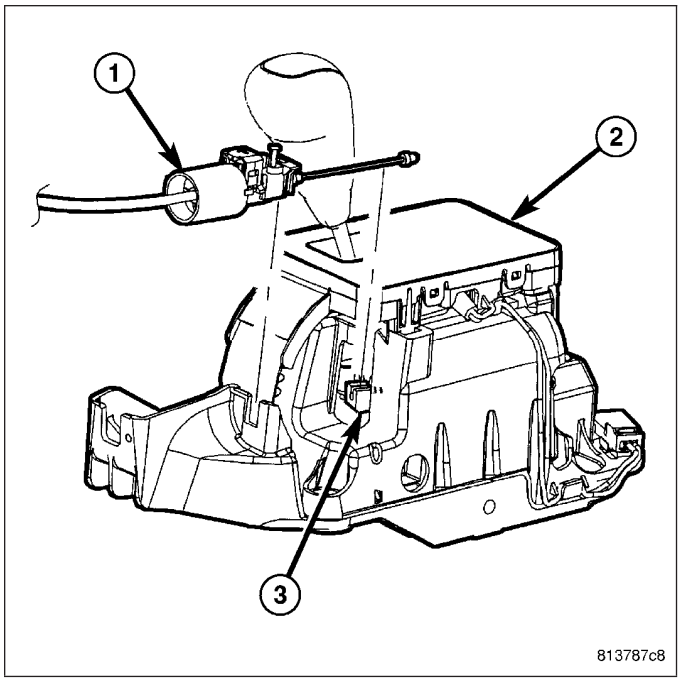

10. Install the wiring harness connectors (2) to the shifter assembly.
11. Verify that the shift lever is in the PARK position.
12. Tighten the adjustment screw to 7 N·m (65 in.lbs.).
13. Verify that the key in the LOCK position and the shifter is in PARK.
14. Push downward on the park lock cable adjustment tab to lock the adjustment.
15. Verify correct shifter, park lock, and BTSI operation.
16. If necessary, install the shield, covering the gearshift and park lock cables, to the floorpan and install the bolts to hold the shield to the floorpan.
17. Install any console parts removed for access to shift lever assembly and shift cables. (Refer to 23 - BODY/INTERIOR/FLOOR CONSOLE - INSTALLATION)

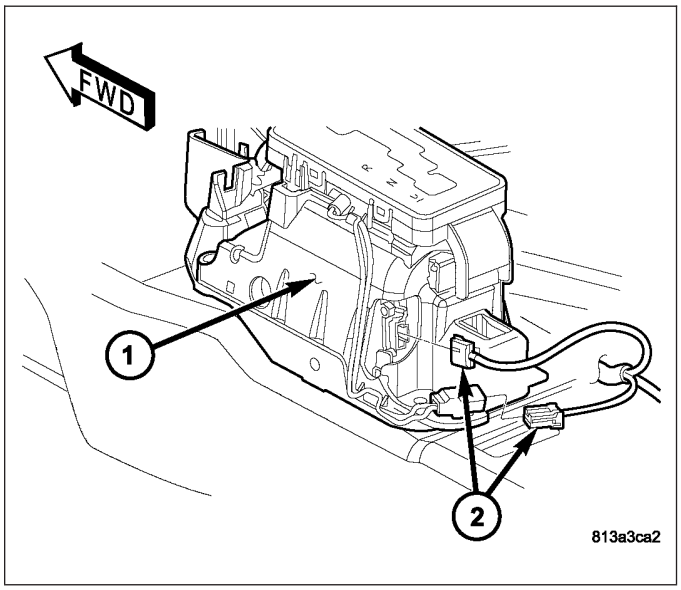

SOLENOID

DESCRIPTION

The typical electrical solenoid used in automotive applications is a linear actuator. It is a device that produces motion in a straight line. This straight line motion can be either forward or backward in direction, and short or long distance.

A solenoid is an electromechanical device that uses a magnetic force to perform work. It consists of a coil of wire, wrapped around a magnetic core made from steel or iron, and a spring loaded, movable plunger, which performs the work, or straight line motion.

The solenoids used in transmission applications are attached to valves which can be classified as **normally open** or **normally closed.** The **normally open** solenoid valve is defined as a valve which allows hydraulic flow when no current or voltage is applied to the solenoid. The **normally closed** solenoid valve is defined as a valve which does not allow hydraulic flow when no current or voltage is applied to the solenoid. These valves perform hydraulic control functions for the transmission and must therefore be durable and tolerant of dirt particles. For these reasons, the valves have hardened steel poppets and ball valves. The solenoids operate the valves directly, which means that the solenoids must have very high outputs to close the valves against the sizable flow areas and line pressures found in current transmissions. Fast response time is also necessary to ensure accurate control of the transmission.

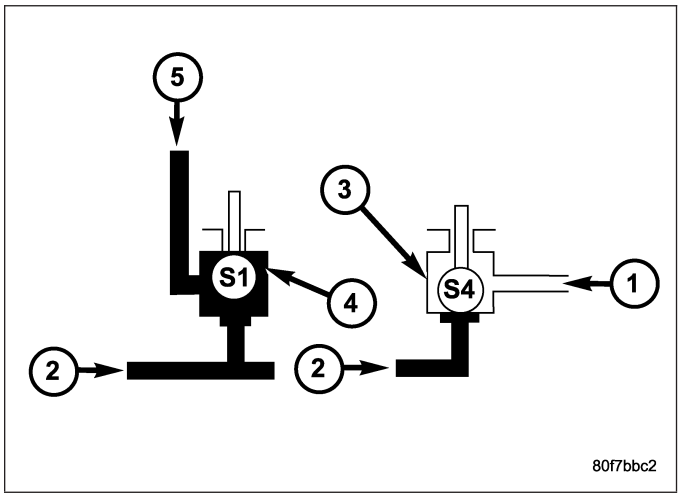

1 - MANUAL VALVE
2 - LINE PRESSURE
3 - 2/4 - LOW REVERSE SOLENOID ENERGIZED
4 - UNDERDRIVE SOLENOID DE-ENERGIZED
5 - UNDERDRIVE CLUTCH

The strength of the magnetic field is the primary force that determines the speed of operation in a particular solenoid design. A stronger magnetic field will cause the plunger to move at a greater speed than a weaker one. There are basically two ways to increase the force of the magnetic field:

1. Increase the amount of current applied to the coil or
2. Increase the number of turns of wire in the coil.

The most common practice is to increase the number of turns by using thin wire that can completely fill the available space within the solenoid housing. The strength of the spring and the length of the plunger also contribute to the response speed possible by a particular solenoid design.

A solenoid can also be described by the method by which it is controlled. Some of the possibilities include variable force, pulse-width modulated, constant ON, or duty cycle. The variable force and pulse-width modulated versions utilize similar methods to control the current flow through the solenoid to position the solenoid plunger at a desired position somewhere between full ON and full OFF. The constant ON and duty cycled versions control the voltage across the

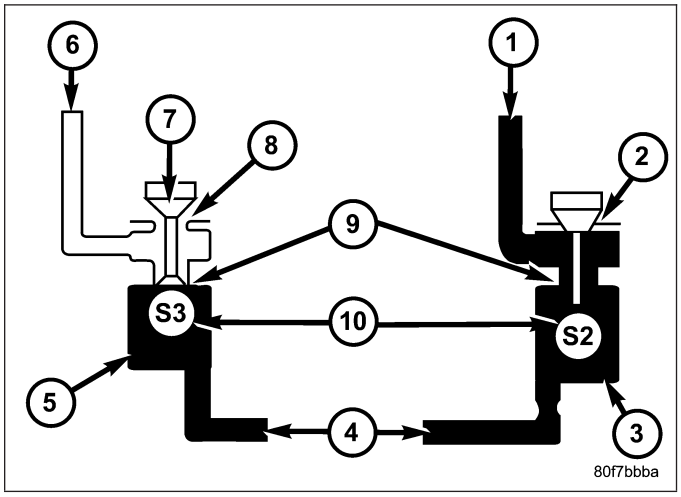

1 - OVERDRIVE CLUTCH
2 - NO VENT
3 - OVERDRIVE SOLENOID ENERGIZED
4 - MANUAL VALVE
5 - LOW REVERSE/CONVERTER CLUTCH SOLENOID DE-ENERGIZED
6 - SOLENOID SWITCH VALVE
7 - TAPER
8 - VENT TO SUMP
9 - ORIFICE
10 - CHECK BALL

solenoid to allow either full flow or no flow through the solenoid's valve.

OPERATION

When an electrical current is applied to the solenoid coil, a magnetic field is created which produces an attraction to the plunger, causing the plunger to move and work against the spring pressure and the load applied by the fluid the valve is controlling. The plunger is normally directly attached to the valve which it is to operate. When the current is removed from the coil, the attraction is removed and the plunger will return to its original position due to spring pressure.

The plunger is made of a conductive material and accomplishes this movement by providing a path for the magnetic field to flow. By keeping the air gap between the plunger and the coil to the minimum necessary to allow free movement of the plunger, the magnetic field is maximized.

ASSEMBLY-TRANSMISSION SOLENOID/PRESSURE SWITCH

DESCRIPTION

The Solenoid/Pressure Switch Assembly (1) is inside the transmission and mounted to the valve body assembly. The assembly consists of four solenoids that control hydraulic pressure to the L/R, 2/4, OD, and UD friction elements (transmission clutches), and the torque converter clutch. The reverse clutch is controlled by line pressure from the manual valve in the valve body. The solenoids are contained within the Solenoid/Pressure Switch Assembly, and can only be serviced by replacing the assembly.

The solenoid assembly also contains pressure switches that monitor and send hydraulic circuit information to the TCM. Likewise, the pressure switches can only be service by replacing the assembly.

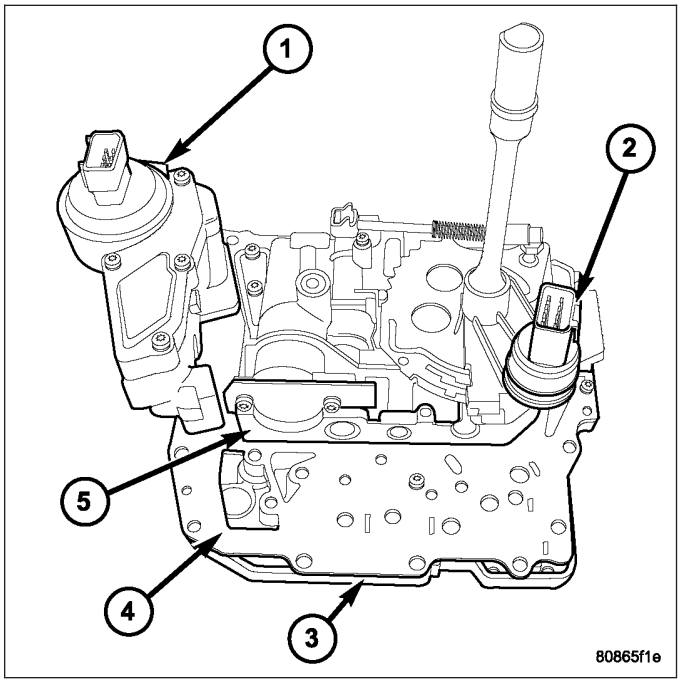

OPERATION

SOLENOIDS

The solenoids receive electrical power from the Transmission Control Relay through a single wire. The TCM energizes or operates the solenoids individually by grounding the return wire of the solenoid needed. When a solenoid is energized, the solenoid valve shifts, and a fluid passage is opened or closed (vented or applied), depending on its default operating state. The result is an apply or release of a frictional element.

The 2/4 and UD solenoids are normally applied, which allows fluid to pass through in their relaxed or “off” state. By design, this allows transmission limp-in (P,R,N,2) in the event of an electrical failure.

The continuity of the solenoids and circuits are periodically tested. Each solenoid is turned on or off depending on its current state. An inductive spike should be detected by the TCM during this test. If no spike is detected, the circuit is tested again to verify the failure. In addition to the periodic testing, the solenoid circuits are tested if a speed ratio or pressure switch error occurs.

PRESSURE SWITCHES

The TCM relies on three pressure switches to monitor fluid pressure in the L/R, 2/4, and OD hydraulic circuits. The primary purpose of these switches is to help the TCM detect when clutch circuit hydraulic failures occur. The range for the pressure switch closing and opening points is 11-23 psi. Typically the switch opening point will be approximately one psi lower than the closing point. For example, a switch may close at 18 psi and open at 17 psi. The switches are continuously monitored by the TCM for the correct states (open or closed) in each gear as shown in the following chart:

PRESSURE SWITCH STATES

GEAR	L/R	2/4	OD
R	OP	OP	OP
P/N	CL	OP	OP
1st	CL	OP	OP
2nd	OP	CL	OP
D	OP	OP	CL
OD	OP	CL	CL

OP = OPEN

CL = CLOSED

A Diagnostic Trouble Code (DTC) will set if the TCM senses any switch open or closed at the wrong time in a given gear.

The TCM also tests the 2/4 and OD pressure switches when they are normally off (OD and 2/4 are tested in 1st gear, OD in 2nd gear, and 2/4 in 3rd gear). The test simply verifies that they are operational, by looking for a closed state when the corresponding element is applied. Immediately after a shift into 1st, 2nd, or 3rd gear with the engine speed above 1000 rpm, the TCM momentarily turns on element pressure to the 2/4 and/or OD clutch circuits to identify that the appropriate switch has closed. If it doesn't close, it is tested again. If the switch fails to close the second time, the appropriate Diagnostic Trouble Code (DTC) will set.

REMOVAL

NOTE: If the Solenoid/Pressure Switch Assembly is being replaced, the Quick Learn Procedure must be performed. (Refer to 8 - ELECTRICAL/ELECTRONIC CONTROL MODULES/TRANSMISSION CONTROL MODULE - STANDARD PROCEDURE)

1. Raise vehicle on hoist.
2. Remove valve body assembly from transmission. (Refer to 21 - TRANSMISSION/AUTOMATIC - 42RLE/VALVE BODY - REMOVAL)
3. Remove Solenoid/Pressure Switch Assembly retaining screws (2) from solenoid.

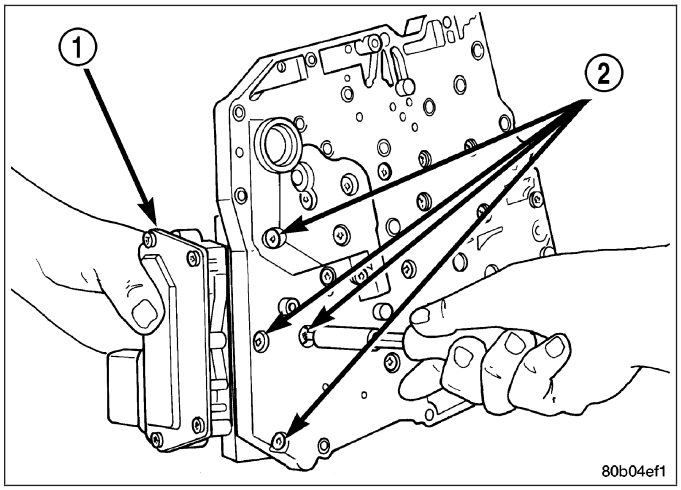

4. Remove Solenoid/Pressure Switch Assembly (1) and screen from valve body (2).

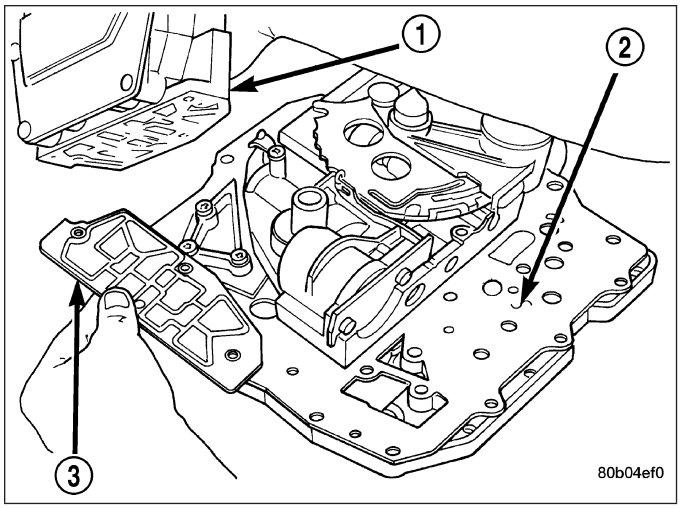

INSTALLATION

NOTE: If the Solenoid/Pressure Switch assembly is being replaced, the Quick Learn Procedure must be performed. (Refer to 8 - ELECTRICAL/ELECTRONIC CONTROL MODULES/TRANSMISSION CONTROL MODULE - STANDARD PROCEDURE)

1. Install Solenoid/Pressure Switch Assembly (1) and screen (3) to the separator and transfer plates.

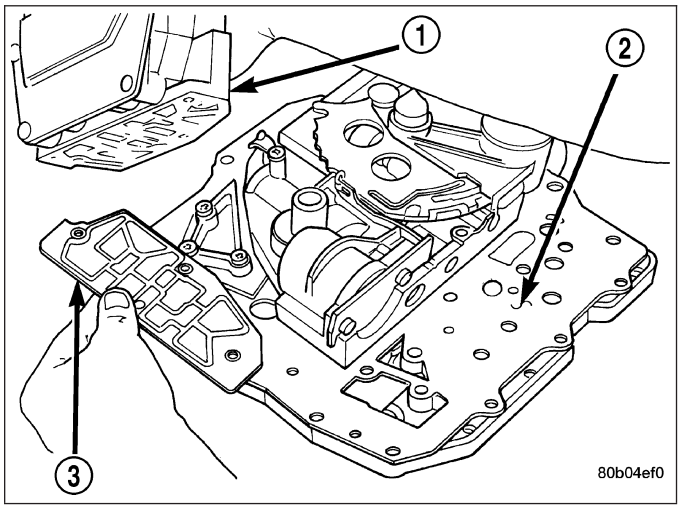

2. Install and tighten retaining screws (2) to 5.5 N·m (50 in. lbs.) torque.
3. Install valve body. (Refer to 21 - TRANSMISSION/ AUTOMATIC - 42RLE/VALVE BODY - INSTALLATION)

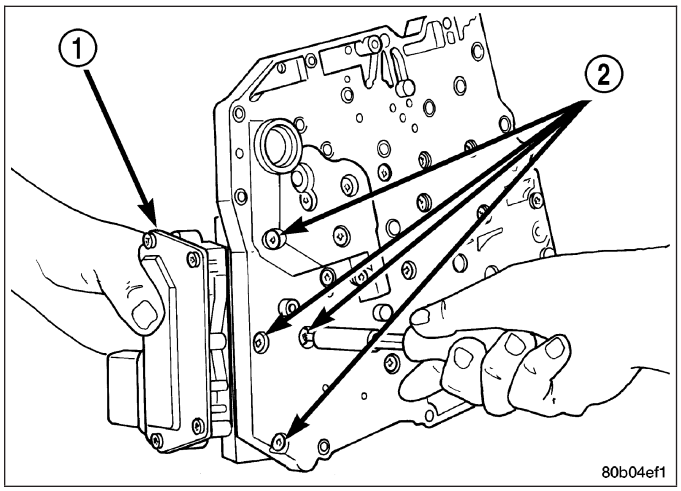

CONVERTER-TORQUE

DESCRIPTION

The torque converter is a hydraulic device that couples the engine crankshaft to the transmission. The torque converter consists of an outer shell with an internal turbine (1), a stator (4), an overrunning clutch, an impeller (2) and an electronically applied converter clutch (6). The converter clutch provides reduced engine speed and greater fuel economy when engaged. Clutch engagement also provides reduced transmission fluid temperatures. The torque converter hub drives the transmission oil (fluid) pump.

The torque converter is a sealed, welded unit that is not repairable and is serviced as an assembly.

CAUTION: The torque converter must be replaced if a transmission failure resulted in large amounts of metal or fiber contamination in the fluid.

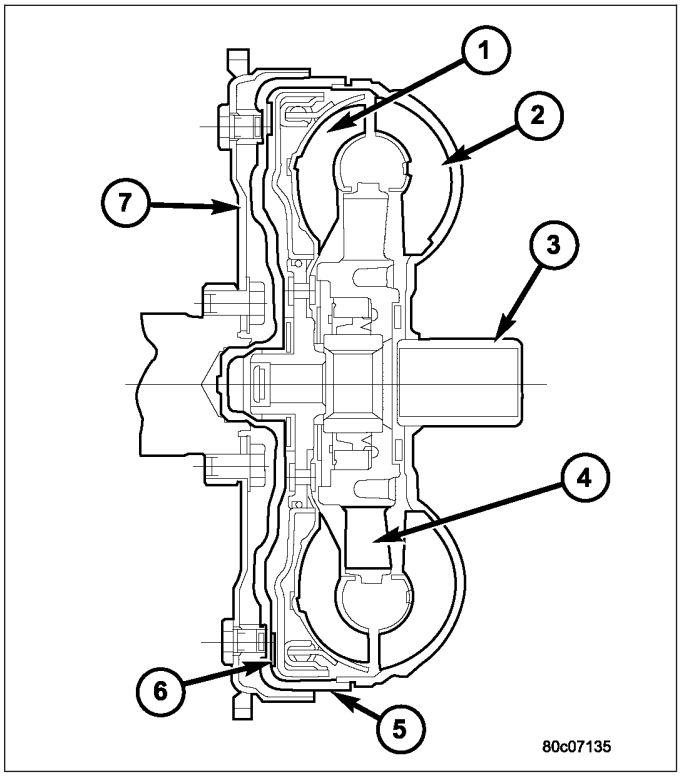

IMPELLER

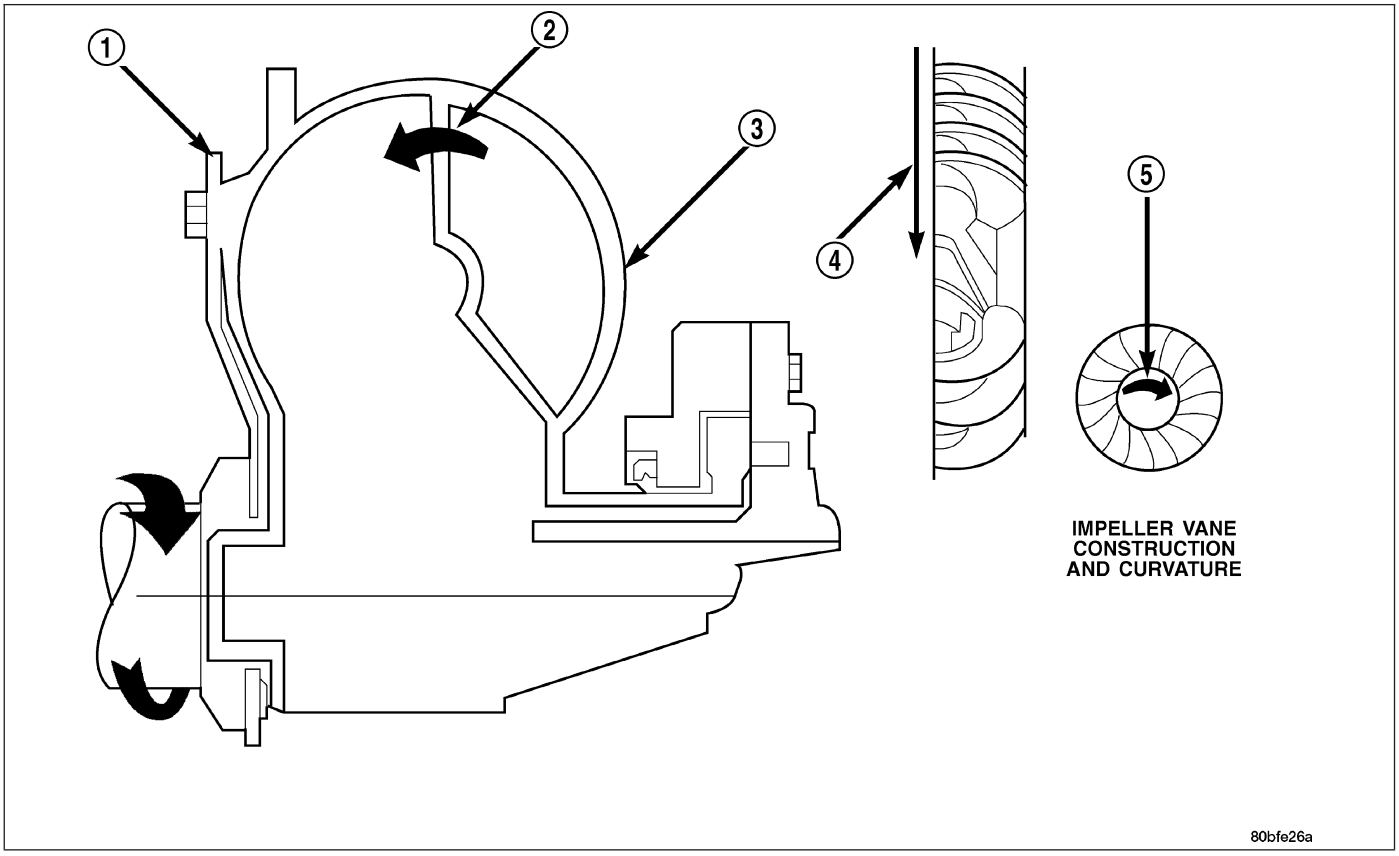

Impeller

1 - ENGINE FLEXPLATE
2 - OIL FLOW FROM IMPELLER SECTION INTO TURBINE SECTION
3 - IMPELLER VANES AND COVER ARE INTEGRAL
4 - ENGINE ROTATION
5 - ENGINE ROTATION

The impeller is an integral part of the converter housing. The impeller consists of curved blades placed radially along the inside of the housing on the transmission side of the converter. As the converter housing is rotated by the engine, so is the impeller, because they are one and the same and are the driving members of the system.

TURBINE

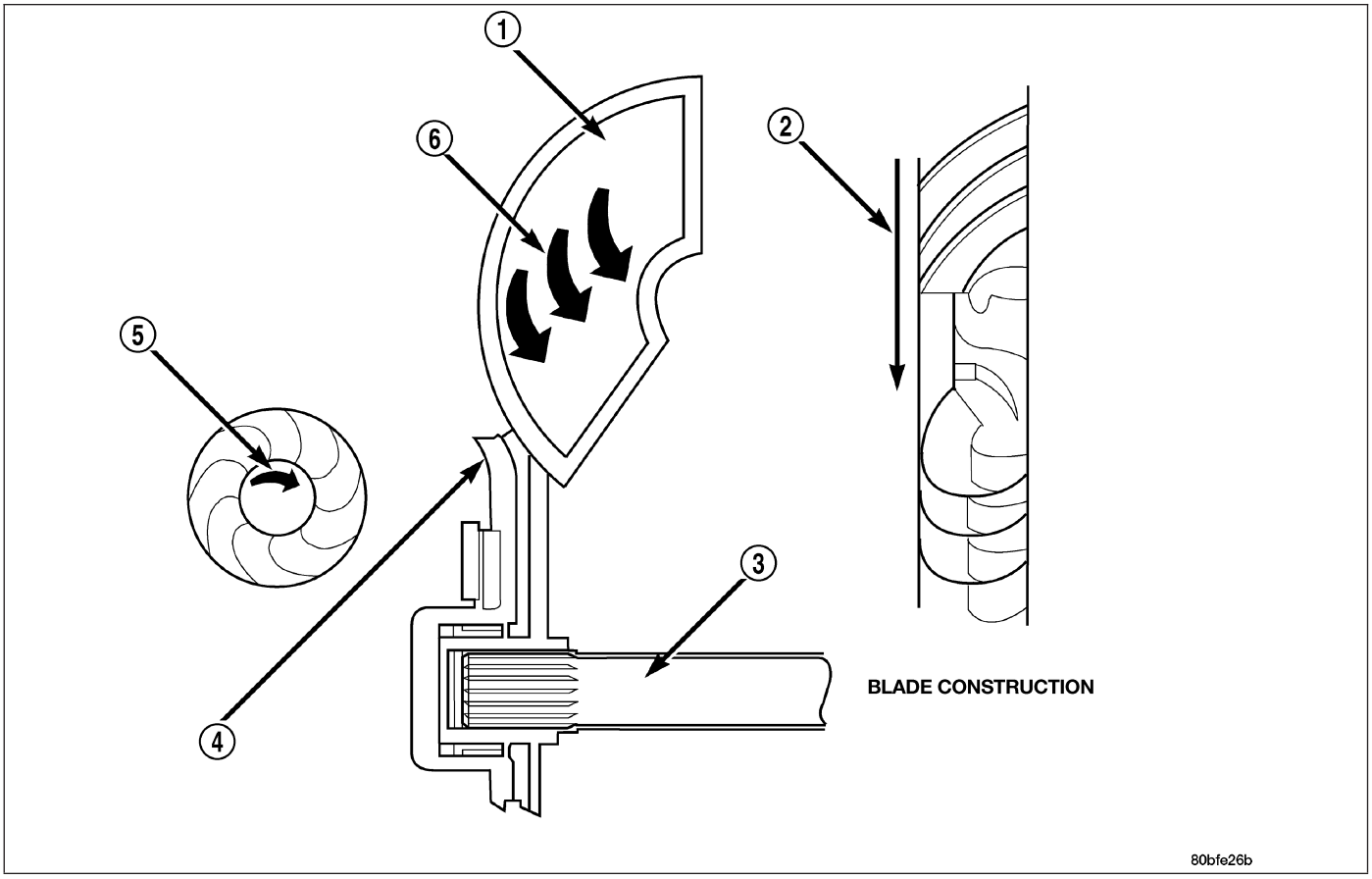

Turbine

1 - TURBINE VANE
2 - ENGINE ROTATION
3 - INPUT SHAFT
4 - PORTION OF TORQUE CONVERTER COVER
5 - ENGINE ROTATION
6 - OIL FLOW WITHIN TURBINE SECTION

The turbine is the output, or driven, member of the converter. The turbine is mounted within the housing opposite the impeller, but is not attached to the housing. The input shaft is inserted through the center of the impeller and splined into the turbine. The design of the turbine is similar to the impeller, except the blades of the turbine are curved in the opposite direction.

STATOR

The stator assembly is mounted on a stationary shaft which is an integral part of the oil pump. The stator (1) is located between the impeller (2) and the turbine (4) within the torque converter case.

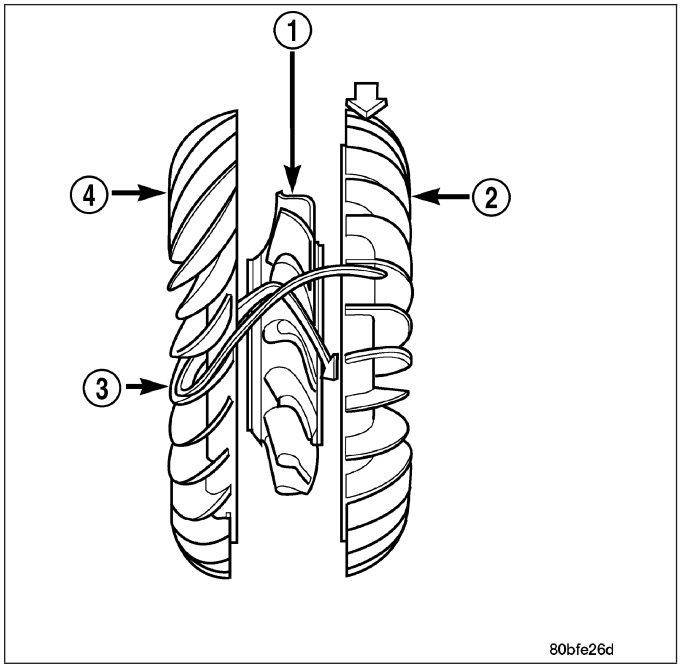

The stator contains an over-running clutch (1-4), which allows the stator to rotate only in a clockwise direction. When the stator is locked against the over-running clutch, the torque multiplication feature of the torque converter is operational.

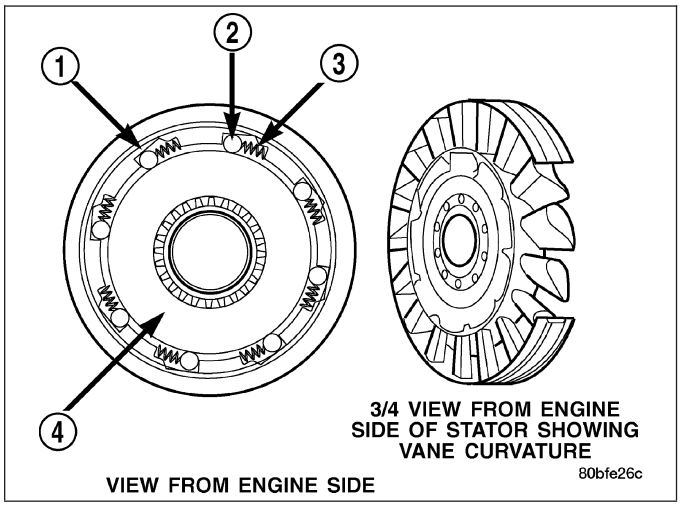

TORQUE CONVERTER CLUTCH (TCC)

The TCC was installed to improve the efficiency of the torque converter that is lost to the slippage of the fluid coupling. Although the fluid coupling provides smooth, shock-free power transfer, it is natural for all fluid couplings to slip. If the impeller (3) and turbine (5) were mechanically locked together, a zero slippage condition could be obtained. A hydraulic piston (6) with friction material (7) was added to the turbine assembly (5) to provide this mechanical lock-up.

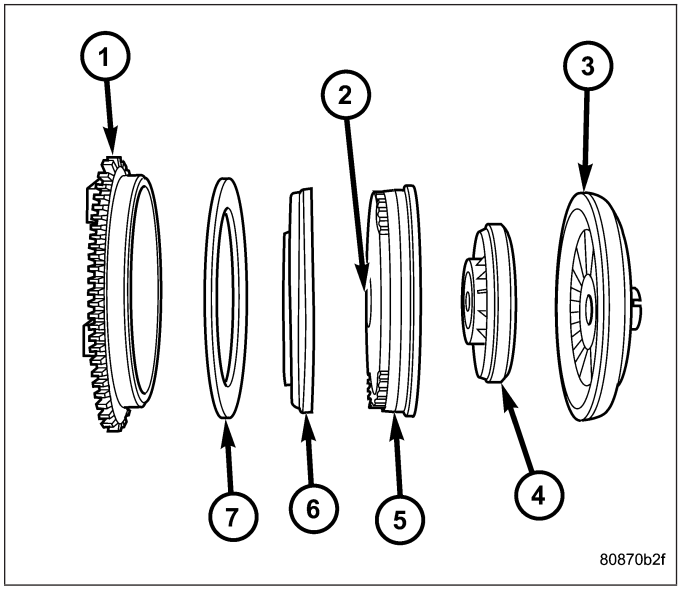

In order to reduce heat build-up in the transmission and buffer the powertrain against torsional vibrations, the TCM can duty cycle the L/R-CC Solenoid to achieve a smooth application of the torque converter clutch. This function, referred to as Electronically Modulated Converter Clutch (EMCC) can occur at various times depending on the following variables:

- Shift lever position
- Current gear range
- Transmission fluid temperature
- Engine coolant temperature
- Input speed
- Throttle angle
- Engine speed

OPERATION

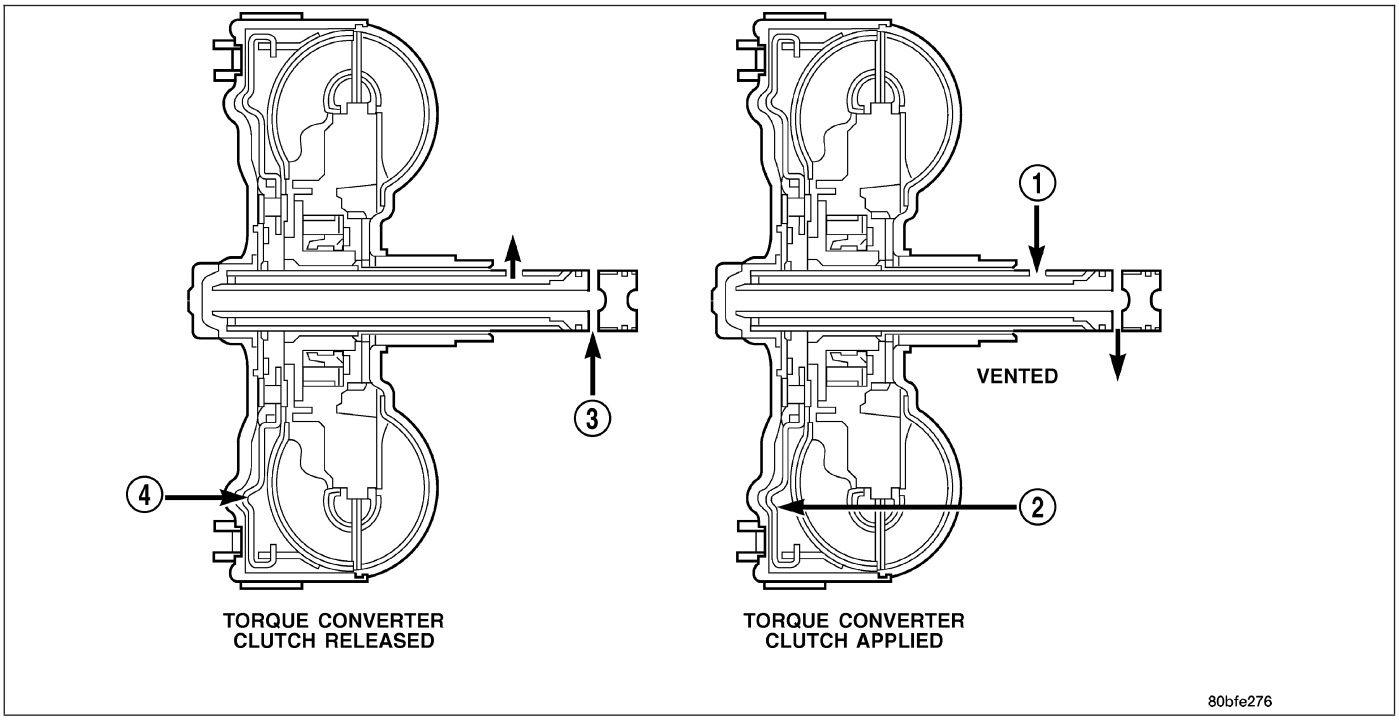

Torque Converter Fluid Operation - Typical

1 - APPLY PRESSURE
2 - THE PISTON MOVES SLIGHTLY FORWARD
3 - RELEASE PRESSURE
4 - THE PISTON MOVES SLIGHTLY REARWARD

The converter impeller (driving member), which is integral to the converter housing and bolted to the engine drive plate, rotates at engine speed. The converter turbine (driven member), which reacts from fluid pressure generated by the impeller, rotates and turns the transmission input shaft.

TURBINE

As the fluid that was put into motion by the impeller blades strikes the blades of the turbine, some of the energy and rotational force is transferred into the turbine and the input shaft. This causes both of them (turbine and input shaft) to rotate in a clockwise direction following the impeller. As the fluid is leaving the trailing edges of the turbine's blades it continues in a "hindering" direction back toward the impeller. If the fluid is not redirected before it strikes the impeller, it will strike the impeller in such a direction that it would tend to slow it down.

STATOR

Torque multiplication is achieved by locking the stator's over-running clutch to its shaft. Under stall conditions (the turbine is stationary), the oil leaving the turbine blades strikes the face of the stator blades and tries to rotate them in a counterclockwise direction. When this happens the over-running clutch of the stator locks and holds the stator from rotating. With the stator locked, the oil strikes the stator blades and is redirected into a "helping" direction before it enters the impeller. This circulation of oil from impeller to turbine, turbine to stator, and stator to impeller, can produce a maximum torque multiplication of about 2.4:1. As the turbine begins to match the speed of the impeller, the fluid that was hitting the stator in such as way as to cause it to lock-up is no longer doing so. In this condition of operation, the stator begins to free wheel and the converter acts as a fluid coupling.

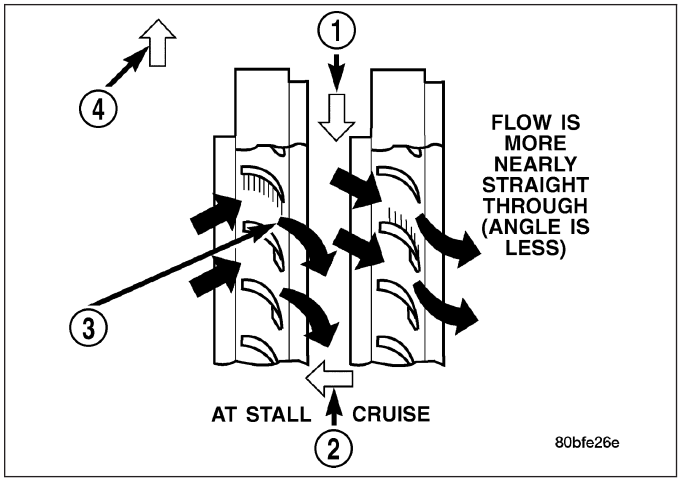

1 - DIRECTION STATOR WILL FREE WHEEL DUE TO OIL PUSHING ON BACKSIDE OF VANES
2 - FRONT OF ENGINE
3 - INCREASED ANGLE AS OIL STRIKES VANES
4 - DIRECTION STATOR IS LOCKED UP DUE TO OIL PUSHING AGAINST STATOR VANES

TORQUE CONVERTER CLUTCH (TCC)

In a standard torque converter, the impeller and turbine are rotating at about the same speed and the stator is freewheeling, providing no torque multiplication. By applying the turbine's piston and friction material to the front cover, a total converter engagement can be obtained. The result of this engagement is a direct 1:1 mechanical link between the engine and the transmission.

The clutch can be engaged in second, third, and fourth gear ranges depending on overdrive control switch position. If the overdrive control switch is in the normal ON position, the clutch will engage after the shift to fourth gear. If the control switch is in the OFF position, the clutch will engage after the shift to third gear.

The TCM controls the torque converter by way of internal logic software. The programming of the software provides the TCM with control over the L/R-CC Solenoid. There are four output logic states that can be applied as follows:

- No EMCC
- Partial EMCC
- Full EMCC
- Gradual-to-no EMCC

NO EMCC

Under No EMCC conditions, the L/R Solenoid is OFF. There are several conditions that can result in NO EMCC operations. No EMCC can be initiated due to a fault in the transmission or because the TCM does not see the need for EMCC under current driving conditions.

PARTIAL EMCC

Partial EMCC operation modulates the L/R Solenoid (duty cycle) to obtain partial torque converter clutch application. Partial EMCC operation is maintained until Full EMCC is called for and actuated. During Partial EMCC some slip does occur. Partial EMCC will usually occur at low speeds, low load and light throttle situations.

FULL EMCC

During Full EMCC operation, the TCM increases the L/R Solenoid duty cycle to full ON after Partial EMCC control brings the engine speed within the desired slip range of transmission input speed relative to engine rpm.

GRADUAL-TO-NO EMCC

This operation is to soften the change from Full or Partial EMCC to No EMCC. This is done at mid-throttle by decreasing the L/R Solenoid duty cycle.

REMOVAL

1. Remove transmission and torque converter from vehicle. (Refer to 21 - TRANSMISSION/AUTOMATIC - 545RFE/42RLE - REMOVAL)
2. Place a suitable drain pan under the converter housing end of the transmission.

CAUTION: Verify that transmission is secure on the lifting device or work surface, the center of gravity of the transmission will shift when the torque converter is removed creating an unstable condition. The torque converter is a heavy unit. Use caution when separating the torque converter from the transmission.

3. Pull the torque converter forward until the center hub clears the oil pump seal.
4. Separate the torque converter from the transmission.

INSTALLATION

NOTE: Check converter hub and drive notches for sharp edges, burrs, scratches, or nicks. Polish the hub and notches with 320/400 grit paper or crocus cloth if necessary. The hub must be smooth to avoid damaging the pump seal at installation.

1. Lubricate oil pump seal lip with transmission fluid.
2. Place torque converter in position on transmission.

CAUTION: Do not damage oil pump seal or bushing while inserting torque converter into the front of the transmission.

3. Align torque converter to oil pump seal opening.
4. Insert torque converter hub into oil pump.
5. While pushing torque converter inward, rotate converter until converter is fully seated in the oil pump gears.
6. Check converter seating with a scale (1) and straightedge (2). Surface of converter lugs should be 1/2 in. to rear of straightedge when converter is fully seated.
7. If necessary, temporarily secure converter with C-clamp attached to the converter housing.
8. Install the transmission in the vehicle.
9. Fill the transmission with the recommended fluid.

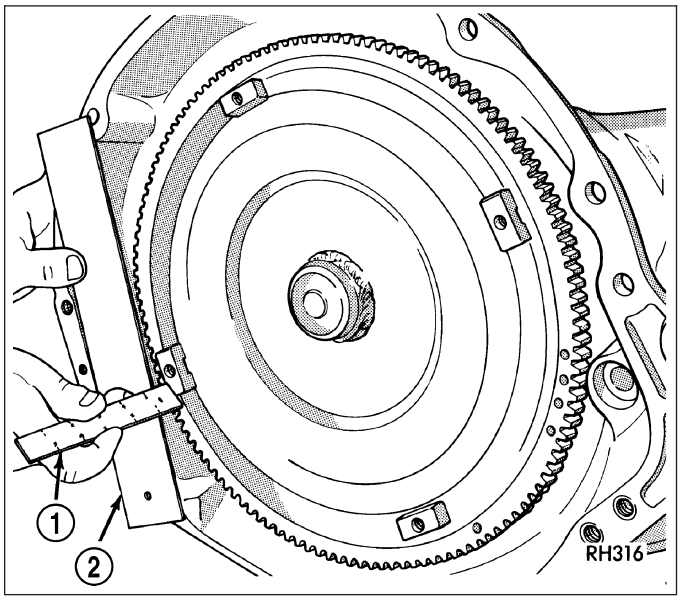

RELAY-TRANSMISSION CONTROL

DESCRIPTION

The relay is supplied fused B+ voltage, energized by the TCM, and is used to supply power to the solenoid pack when the transmission is in normal operating mode.

OPERATION

When the relay is “off”, no power is supplied to the solenoid pack and the transmission is in “limp-in” mode. After a controller reset, the TCM energizes the relay. Prior to this, the TCM verifies that the contacts are open by checking for no voltage at the switched battery terminals. After this is verified, the voltage at the solenoid pack pressure switches is checked. After the relay is energized, the TCM monitors the terminals to verify that the voltage is greater than 3 volts.

SENSOR-TRANSMISSION RANGE

DESCRIPTION

The Transmission Range Sensor (TRS) (2) is mounted to the top of the valve body inside the transmission and can only be serviced by removing the valve body assembly. The electrical connector extends through the transmission case.

The Transmission Range Sensor (TRS) has four switch contacts that monitor shift lever position and send the information to the PCM.

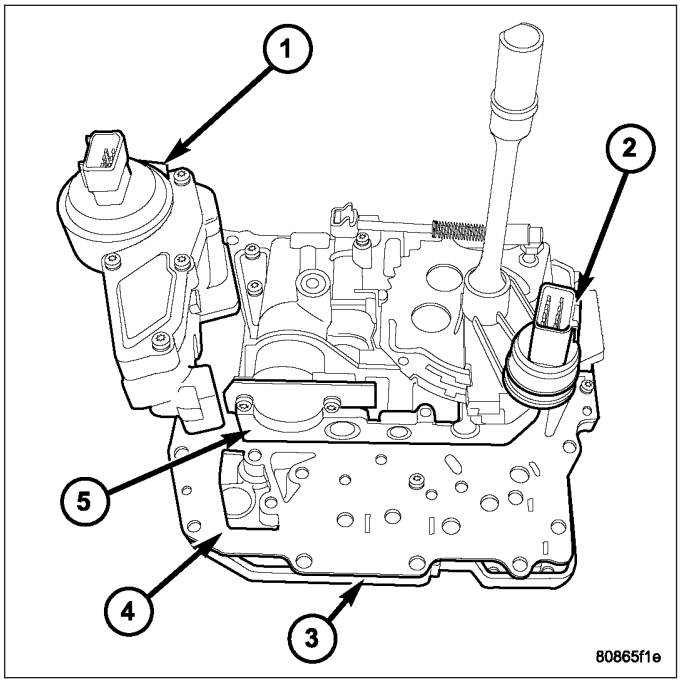

OPERATION

The Transmission Range Sensor (TRS) communicates shift lever position (SLP) to the TCM as a combination of open and closed switches. Each shift lever position has an assigned combination of switch states (open/closed) that the TCM receives from four sense circuits. The TCM interprets this information and determines the appropriate transmission gear position and shift schedule.

Since there are four switches, there are 16 possible combinations of open and closed switches (codes). Seven of these codes are related to gear position and three are recognized as “between gear” codes. This results in six codes which should never occur. These are called “invalid” codes. An invalid code will result in a DTC, and the TCM will then determine the shift lever position based on pressure switch data. This allows reasonably normal transmission operation with a TRS failure.

TRS SWITCH STATES

SLP	T42	T41	T3	T1
P	CL	CL	CL	OP
R	CL	OP	OP	OP
N	CL	CL	OP	CL
D	OP	OP	OP	CL
2	OP	OP	CL	OP
1	CL	OP	CL	CL

REMOVAL

1. Remove valve body assembly from vehicle. (Refer to 21 - TRANSMISSION/AUTOMATIC - 42RLE/ VALVE BODY - REMOVAL)
2. Remove the manual shaft seal (1).

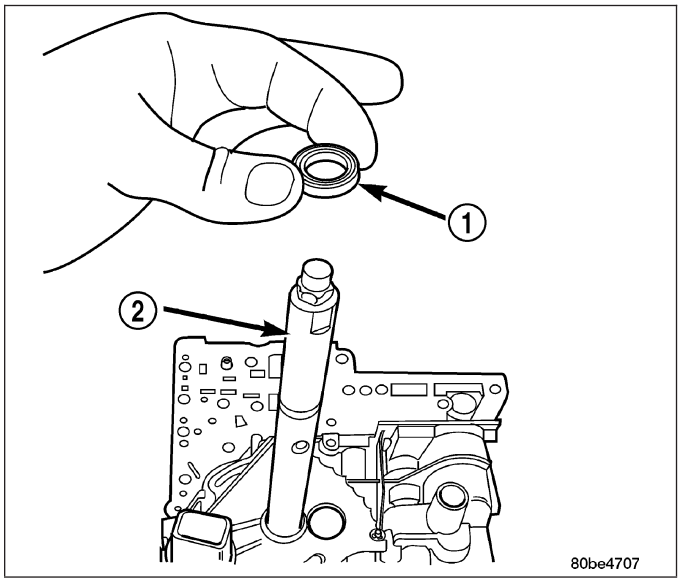

3. Remove manual shaft/TRS retaining screw (1).
4. Slide TRS off of manual valve shaft.

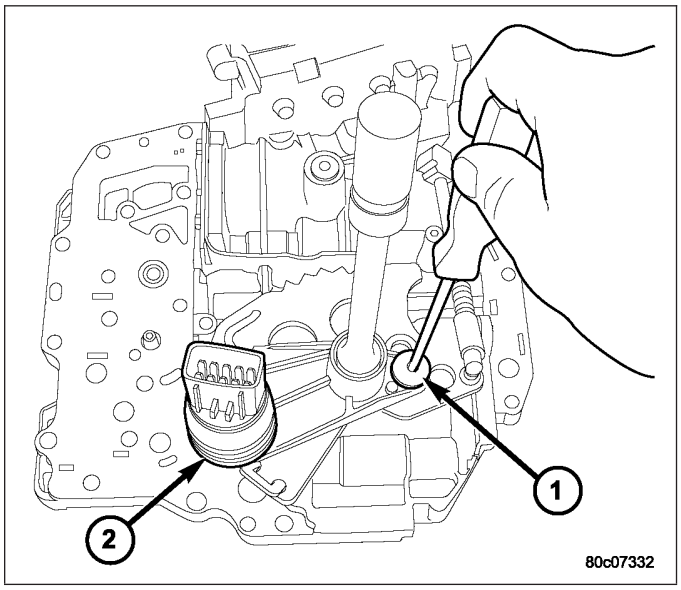

INSTALLATION

1. Install the TRS (2) to the manual shaft. Make sure TRS locating pin rests in manual valve bore slot.
2. Install the TRS/manual shaft retaining screw (1) and torque to 5 N·m (45 in. lbs.) torque.

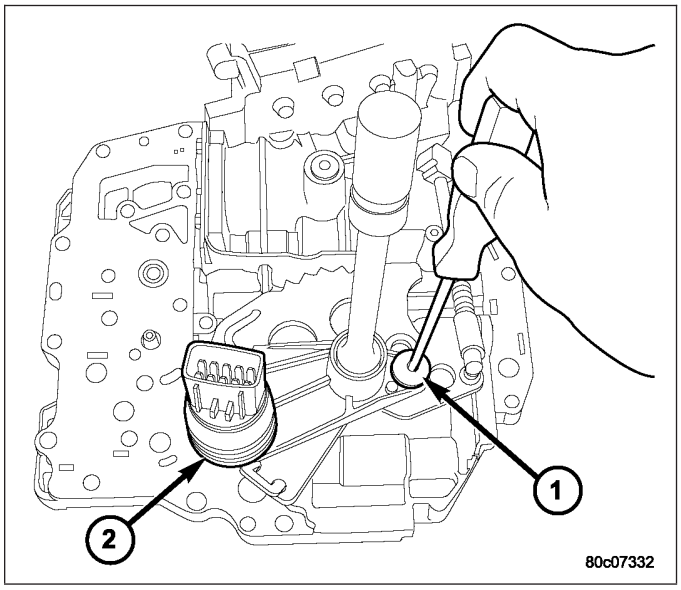

3. Install the manual shaft seal (1).
4. Install valve body to the transmission. (Refer to 21 - TRANSMISSION//AUTOMATIC - 42RLE/VALVE BODY - INSTALLATION)

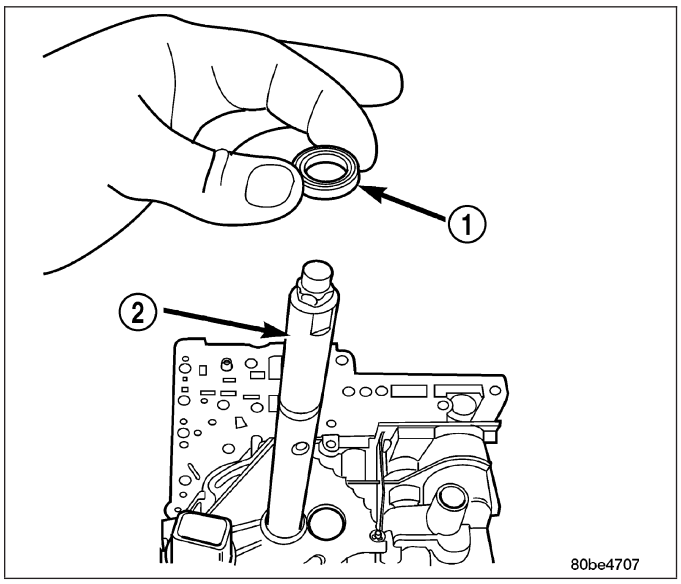

SENSOR-TRANSMISSION TEMPERATURE

DESCRIPTION

The transmission temperature sensor (2) is located in the transmission range sensor (1) and communicates transmission sump temperature to the TCM.

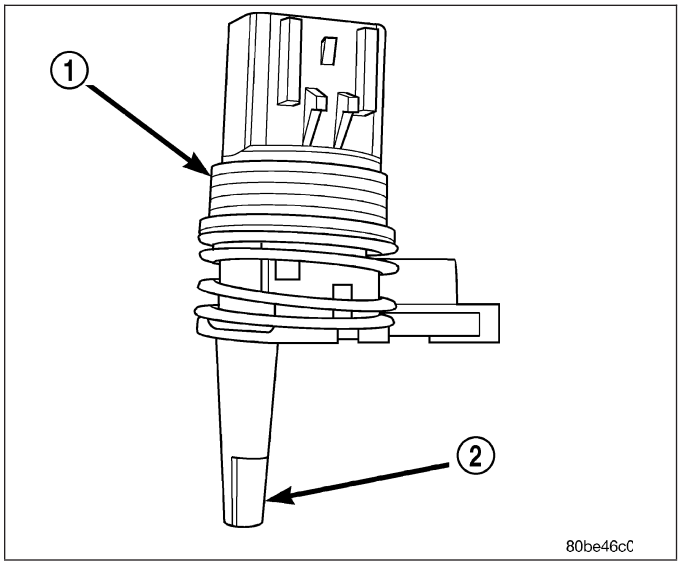

OPERATION

The transmission range sensor (TRS) has an integrated thermistor that the TCM uses to monitor the transmission's sump temperature. Since fluid temperature can affect transmission shift quality and convertor lock up, the TCM requires this information to determine which shift schedule to operate in. The TCM also monitors this temperature data so it can energize the vehicle cooling fan(s) when a transmission "overheat" condition exists. If the thermistor circuit fails, the TCM will revert to calculated oil temperature usage.

CALCULATED TEMPERATURE

A failure in the temperature sensor or circuit will result in calculated temperature being substituted for actual temperature. Calculated temperature is a predicted fluid temperature which is calculated from a combination of inputs:

- Battery (ambient) temperature
- Engine coolant temperature
- In-gear run time since start-up

BODY-VALVE

DESCRIPTION

The valve body assembly consists of a cast aluminum valve body (5), separator plate (4), and transfer plate (3). The valve body contains valves and check balls that control fluid delivery to the torque converter clutch, solenoid/pressure switch assembly, and frictional clutches.

Also mounted to the valve body assembly are the solenoid/pressure switch assembly and the transmission range sensor (2).

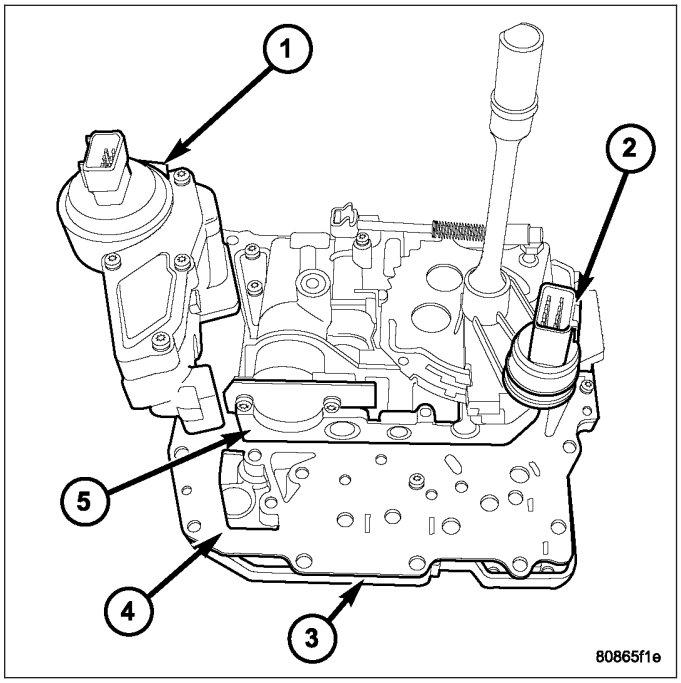

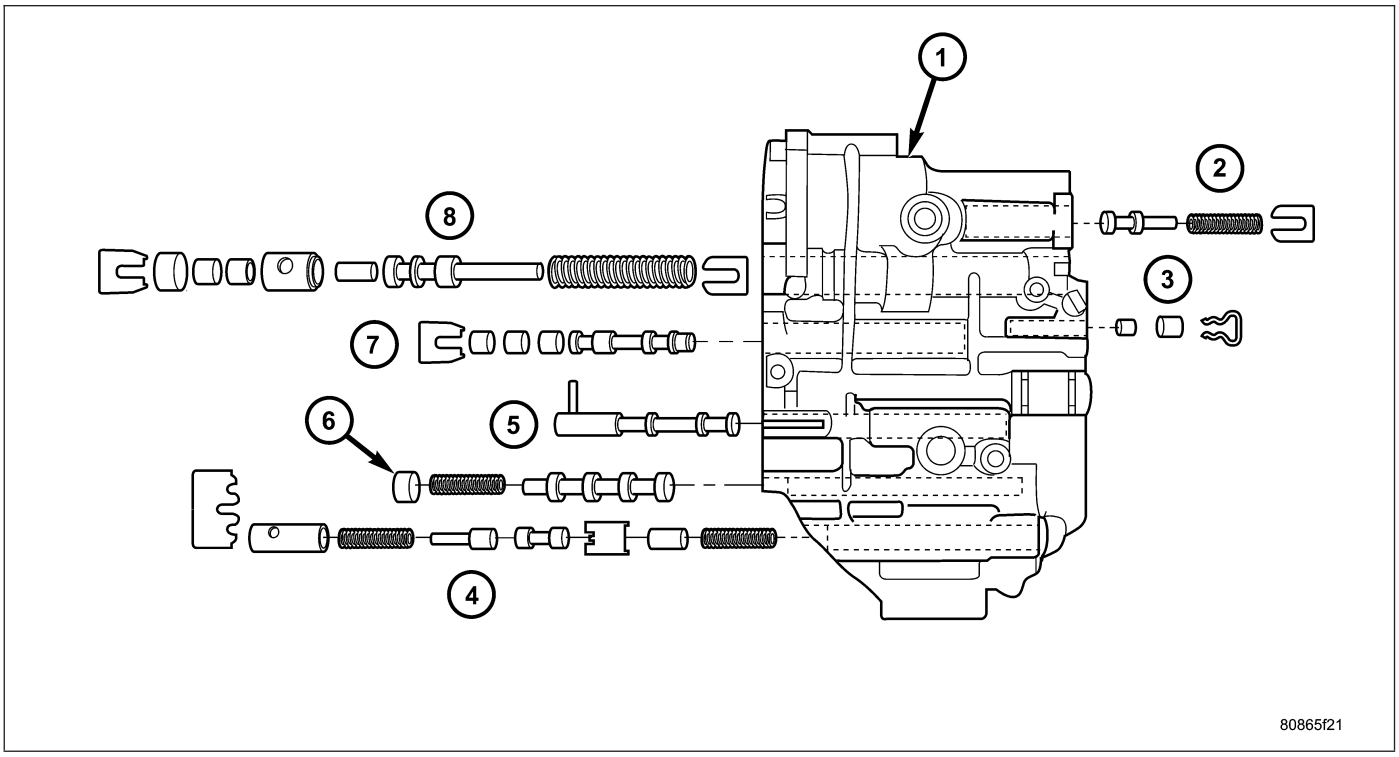

Valve Body - Exploded

1 - VALVE BODY
2 - T/C REGULATOR VALVE
3 - L/R SWITCH VALVE
4 - CONVERTER CLUTCH CONTROL VALVE
5 - MANUAL VALVE
6 - CONVERTER CLUTCH SWITCH VALVE
7 - SOLENOID SWITCH VALVE
8 - REGULATOR VALVE

The valves contained within the valve body (1) include the following :

- Regulator valve (8)
- Solenoid switch valve (7)
- Manual valve (5)
- Converter clutch switch valve (6)
- Converter clutch control valve (4)
- Torque converter regulator valve (2)
- Low/Reverse switch valve (3)

In addition, the valve body also contains the thermal valve, #2, 3, 4 & 5 check balls and the 2/4 accumulator assembly.

OPERATION

NOTE: (Refer to 21 - TRANSMISSION/AUTOMATIC - 42RLE - SCHEMATICS AND DIAGRAMS) for a visual aid in determining valve location, operation and design.

THERMAL VALVE

The thermal valve (1) is a bi-metallic shudder valve that helps control the venting rate of oil pressure in the underdrive clutch passage during release of the clutch. When the oil temperature is approximately 20 degrees Fahrenheit or less, the valve is fully open to assist in venting oil past the U1 orifice (2). At temperatures above 20 degrees, the valve starts to close and becomes fully closed at approximately 140 degrees. The thermal valve is located in the transfer plate of the valve body.

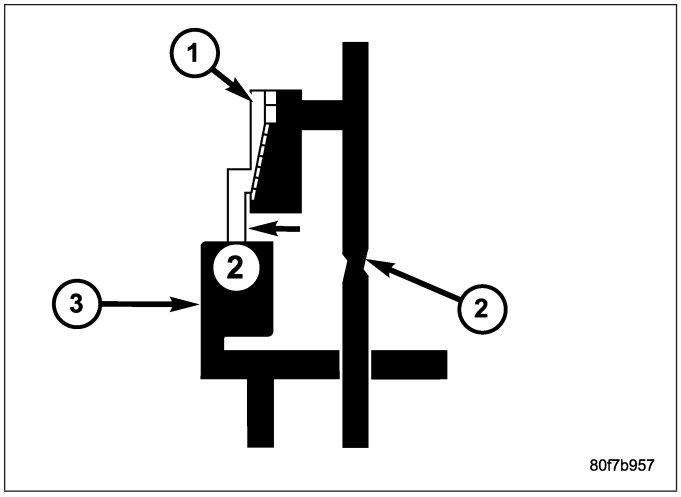

REGULATOR VALVE

The regulator valve (9) controls hydraulic pressure in the transmission. It receives unregulated pressure from the pump (6), which works against spring tension (8) to maintain oil at specific pressures. A system of sleeves and ports allows the regulator valve to work at one of three predetermined pressure levels. Regulated oil pressure is also referred to as “line pressure.”

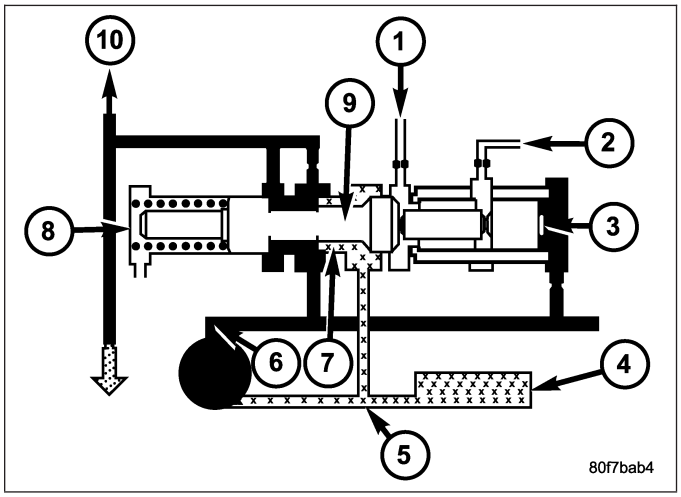

1 - FROM OVERDRIVE CLUTCH CIRCUIT
2 - FROM MANUAL VALVE
3 - HYDRAULIC PRESSURE
4 - FILTER
5 - PUMP INLET
6 - PUMP OUTLET
7 - OIL PRESSURE REGULATED AT THIS POINT
8 - SPRING TENSION
9 - REGULATOR VALVE
10 - TORQUE CONVERTER CONTROL VALVE

SOLENOID SWITCH VALVE

The solenoid switch valve controls line pressure from the LR/CC solenoid (4). In one position, it allows the low/reverse clutch to be pressurized. In the other, it directs line pressure to the converter control and converter clutch valves (7).

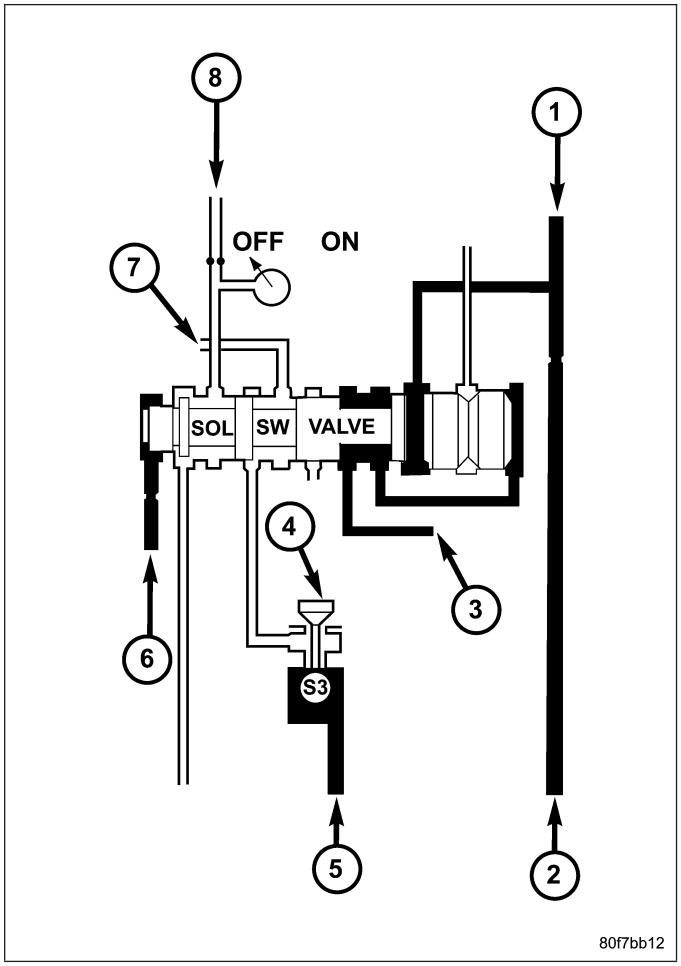

1 - 2/4 CLUTCH
2 - MANUAL VALVE
3 - UD CLUTCH
4 - LR/CC SOLENOID DE-ENERGIZED
5 - MANUAL VALVE
6 - LINE PRESSURE
7 - CONVERTER CLUTCH SWITCH AND CONTROL VALVES
8 - LR CLUTCH

MANUAL VALVE

The manual valve (4) is operated by the mechanical shift linkage. Its primary responsibility is to send line pressure to the appropriate hydraulic circuits and solenoids. The valve has three operating ranges or positions.

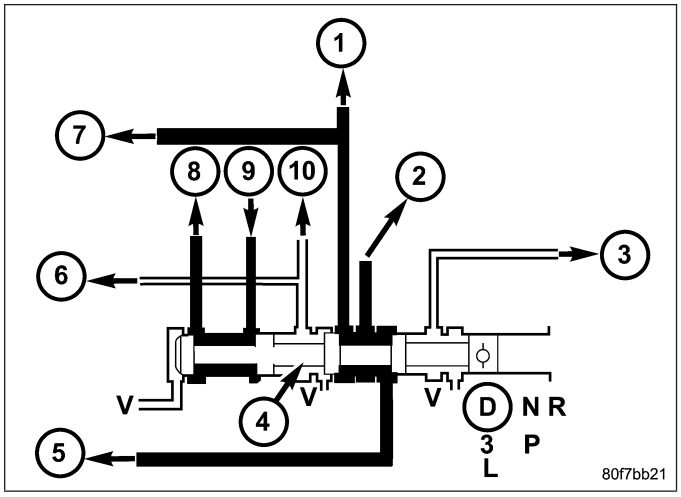

1 - UD CLUTCH
2 - LR/CC CLUTCH
3 - REVERSE CLUTCH
4 - MANUAL VALVE
5 - REGULATOR VALVE
6 - REGULATOR VALVE
7 - CONVERTER CLUTCH CONTROL VALVE
8 - 2/4 CLUTCH
9 - 2/4 - L/R SOLENOID
10 - L/R CLUTCH

CONVERTER CLUTCH SWITCH VALVE

The main responsibility of the converter clutch switch valve (10) is to control hydraulic pressure applied to the front (off) side of the converter clutch piston. Line pressure from the regulator valve (5) is fed to the torque converter regulator valve (8). The pressure is then directed to the converter clutch switch valve (10) and to the front side of the converter clutch piston. This pressure pushes the piston back and disengages the converter clutch.

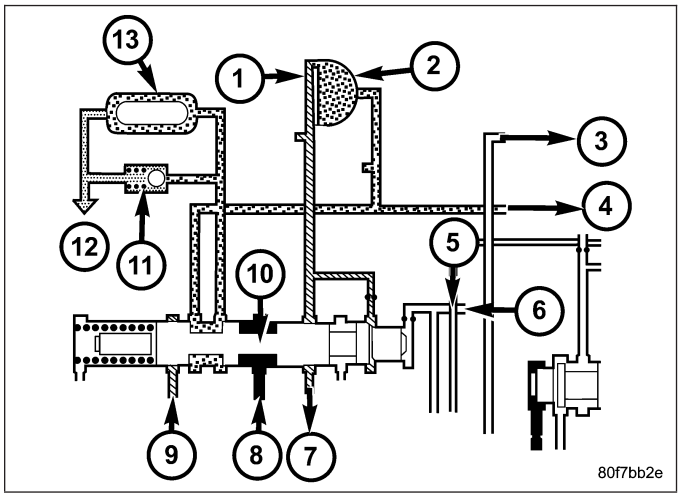

1 - CONVERTER CLUTCH
2 - TORQUE CONVERTER
3 - LR CLUTCH
4 - DRIBBLERS
5 - REGULATOR VALVE
6 - SOLENOID SWITCH VALVE
7 - CONVERTER CLUTCH CONTROL VALVE
8 - TORQUE CONVERTER REGULATOR VALVE
9 - CONVERTER CLUTCH CONTROL VALVE
10 - CONVERTER CLUTCH SWITCH VALVE
11 - BYPASS VALVE
12 - LUBE
13 - COOLER

CONVERTER CLUTCH CONTROL VALVE

The converter clutch control valve (5) controls the back (on) side of the torque converter clutch (1). When the controller energizes or modulates the LR/CC solenoid to apply the converter clutch piston, both the converter clutch control valve (5) and the converter control valve move, allowing pressure to be applied to the back side of the clutch.

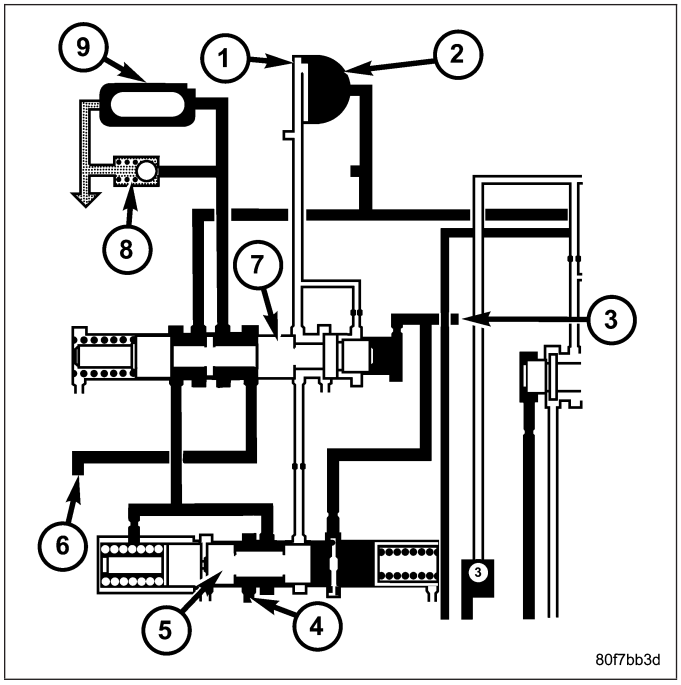

1 - CONVERTER CLUTCH
2 - TORQUE CONVERTER
3 - LR/CC SOLENOID
4 - FROM MANUAL VALVE
5 - CONVERTER CLUTCH CONTROL VALVE
6 - TORQUE CONVERTER REGULATOR VALVE
7 - CONVERTER CLUTCH SWITCH VALVE
8 - BYPASS VALVE
9 - COOLER

T/C REGULATOR VALVE

The torque converter regulator valve slightly regulates the flow of fluid to the torque converter.

LOW/REVERSE SWITCH VALVE

The low/reverse clutch is applied from different sources, depending on whether low (1st) gear or reverse is selected. The low/reverse switch valve alternates positions depending on from which direction fluid pressure is applied. By design, when the valve is shifted by fluid pressure from one channel, the opposing channel is blocked. The switch valve alienates the possibility of a sticking ball check, thus providing consistent application of the low/reverse clutch under these operating conditions.

REMOVAL

NOTE: If valve body is being reconditioned or replaced, it is necessary to perform the Quick Learn Procedure. (Refer to 8 - ELECTRICAL/ELECTRONIC CONTROL MODULES/TRANSMISSION CONTROL MODULE - STANDARD PROCEDURE)

1. Disconnect the transmission range sensor (5) and solenoid/pressure switch assembly wiring connectors.
2. Disconnect the variable line pressure connector (4), if equipped.
3. Disconnect the shift cable from the shift lever (at the transmission).
4. Move the manual shift lever clockwise as far as it will go. This should be one position past the L position. Then remove the manual shift lever.

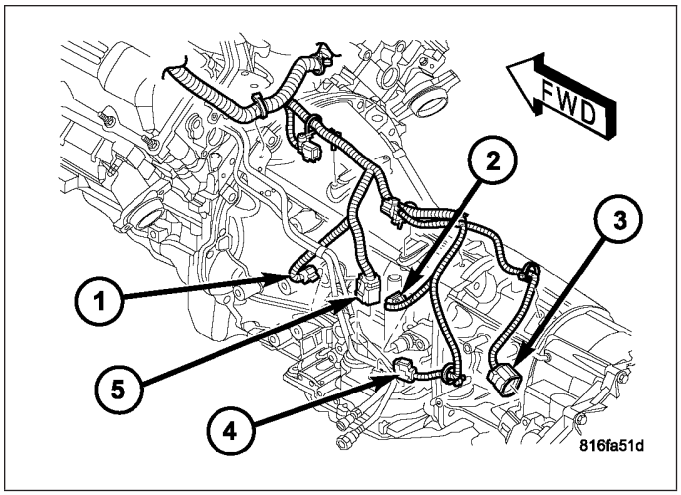

NOTE: One of the oil pan bolts has a sealing patch applied from the factory. Separate this bolts for reuse.

5. Remove transmission pan bolts (2).

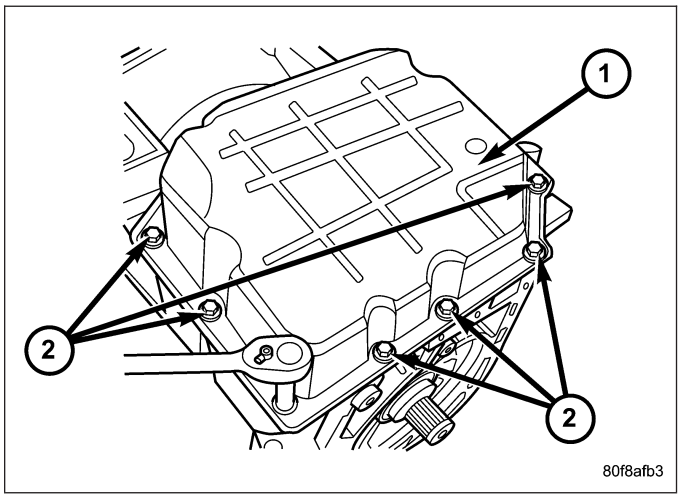

6. Remove transmission oil pan (1).

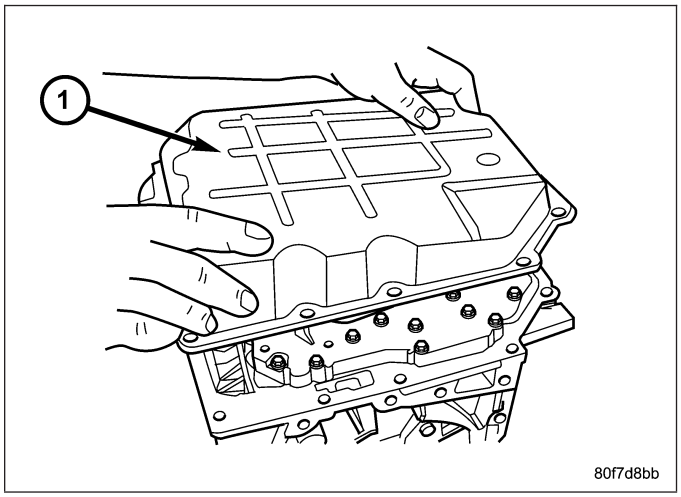

7. Remove oil filter (1) from valve body. It is held in place by two screws.

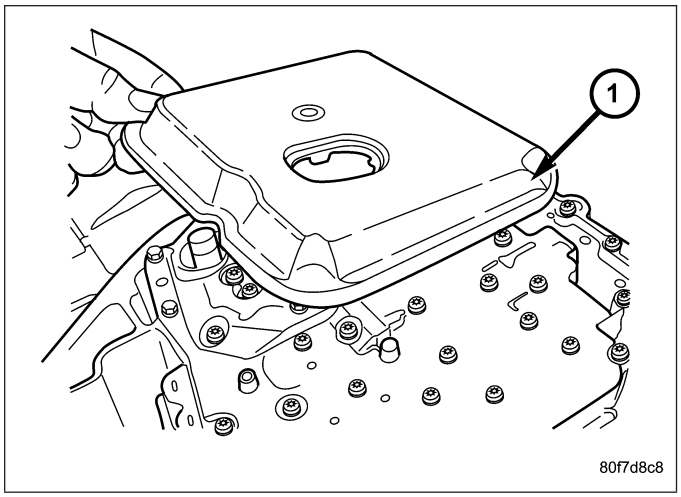

8. Remove valve body bolts-to-case (1).

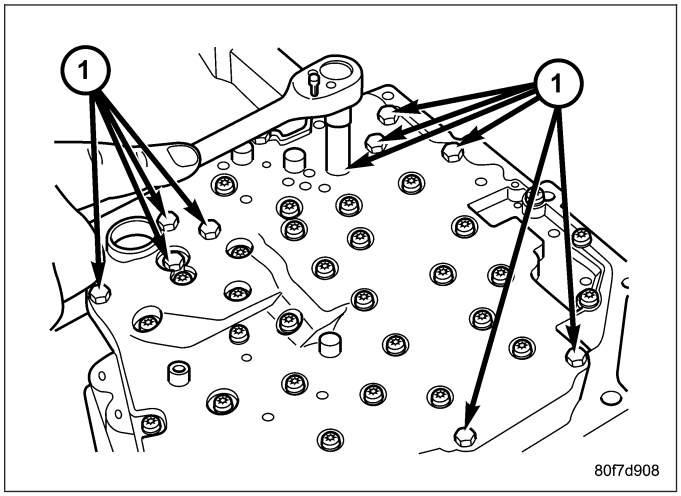

CAUTION: The overdrive and underdrive accumulators and springs may fall out when removing the valve body.

9. Carefully remove valve body assembly (1) from the transmission.

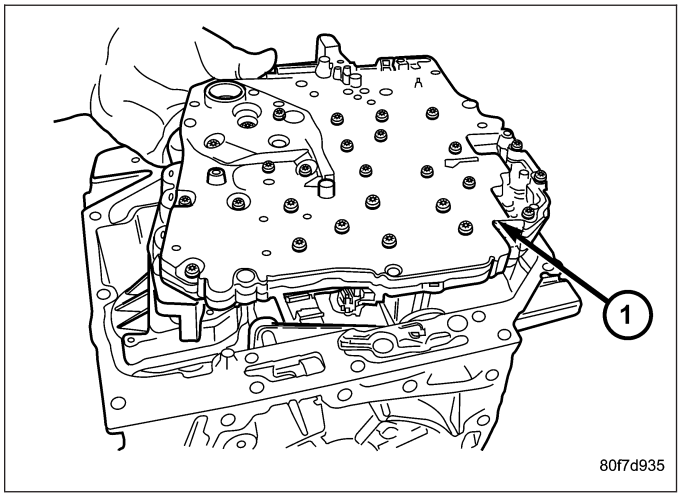

DISASSEMBLY

NOTE: If the valve body is being reconditioned or replaced, it is necessary to perform the Quick Learn Procedure using the scan tool (Refer to 8 - ELECTRICAL/ELECTRONIC CONTROL MODULES/TRANSMISSION CONTROL MODULE - STANDARD PROCEDURE)

1. Remove the electrical connectors from the pressure control solenoid (1) and the line pressure sensor (2).
2. Remove the screws (6) holding the pressure control solenoid (1) and line pressure sensor (2) to the valve body.
3. Remove the pressure control solenoid and line pressure sensor from the valve body.
4. Remove the shoulder screw (3) holding the variable line pressure header (4) to the valve body.
5. Remove the variable line pressure header from the manual shaft (5).

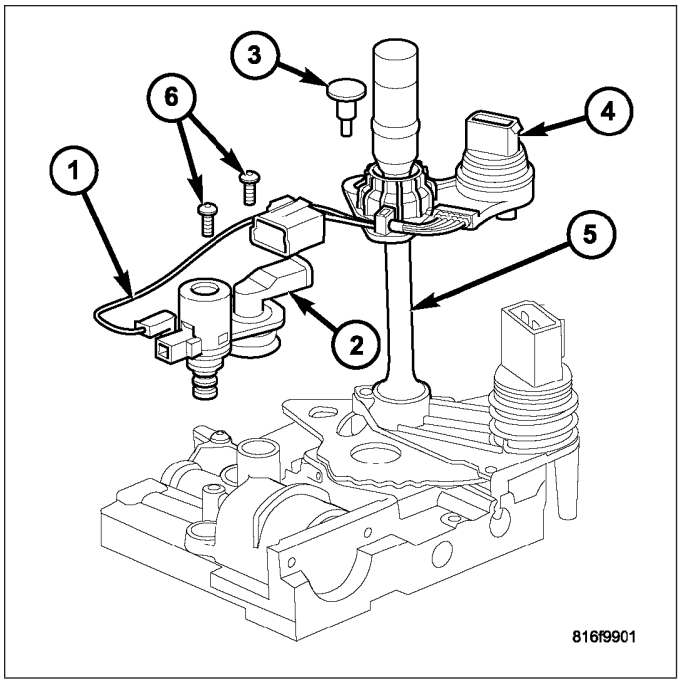

6. Remove manual shaft seal.
7. Remove manual shaft screw (1).

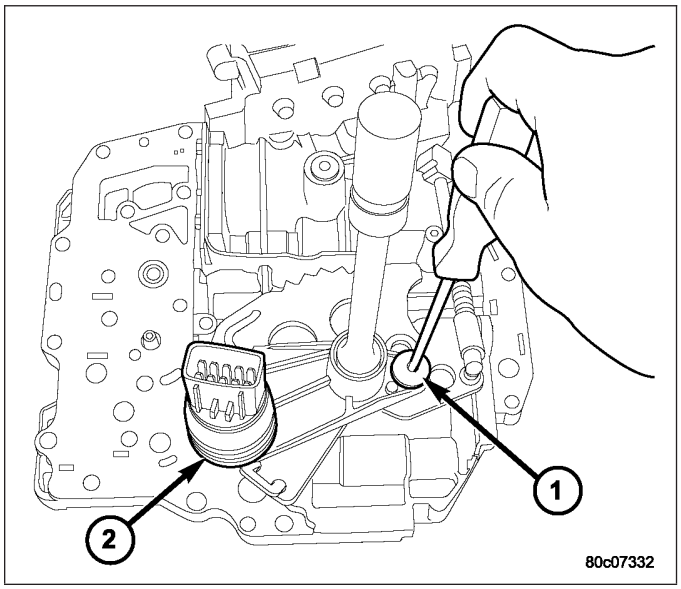

8. Remove Transmission Range Sensor (TRS) (1) and manual shaft (2).

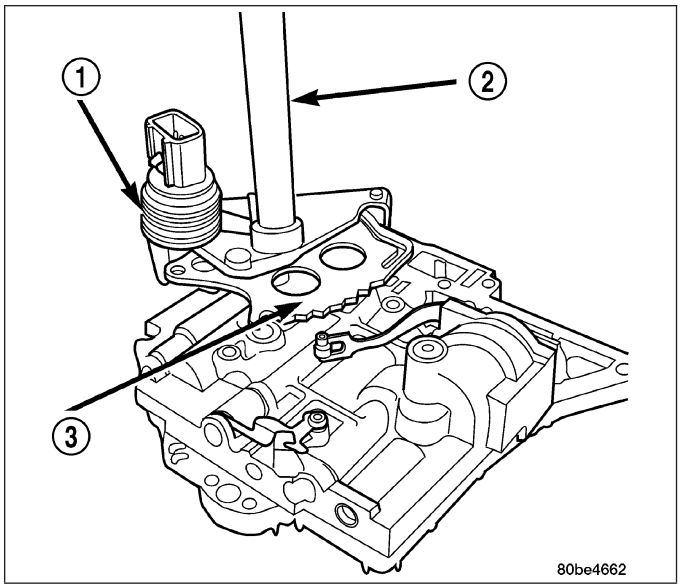

9. Remove Solenoid/Pressure Switch Assembly (1) from valve body.

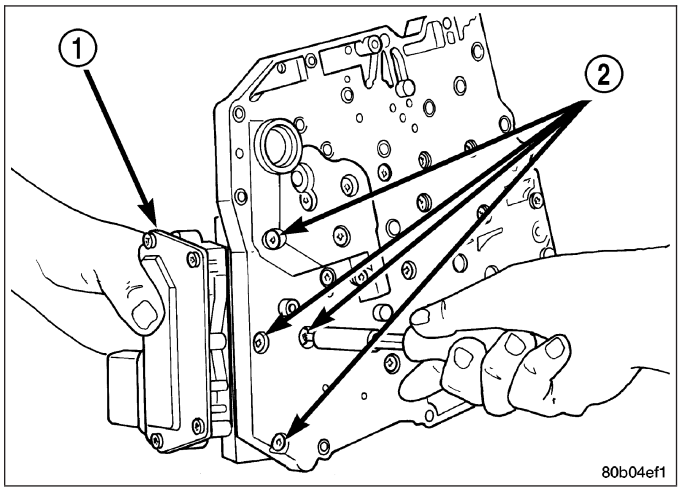

10. Remove valve body stiffener plate (1).

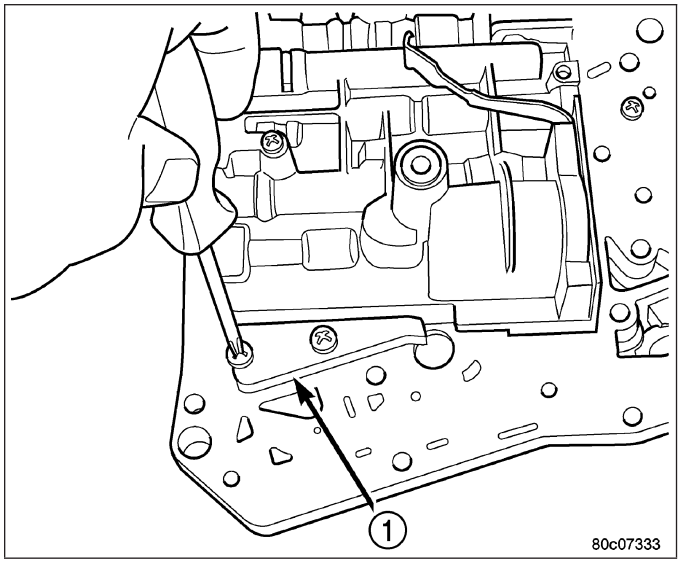

11. Invert valve body assembly and remove transfer plate-to-valve body screws (1).

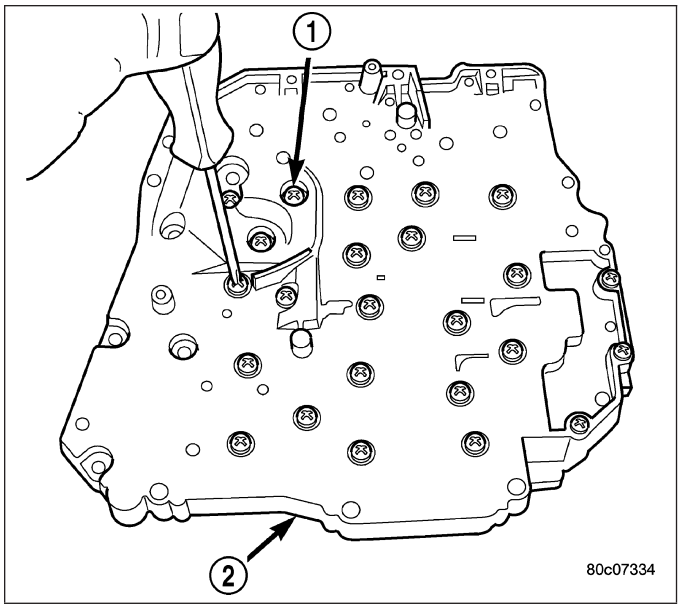

12. Remove transfer/separator plate (1) from valve body (2)

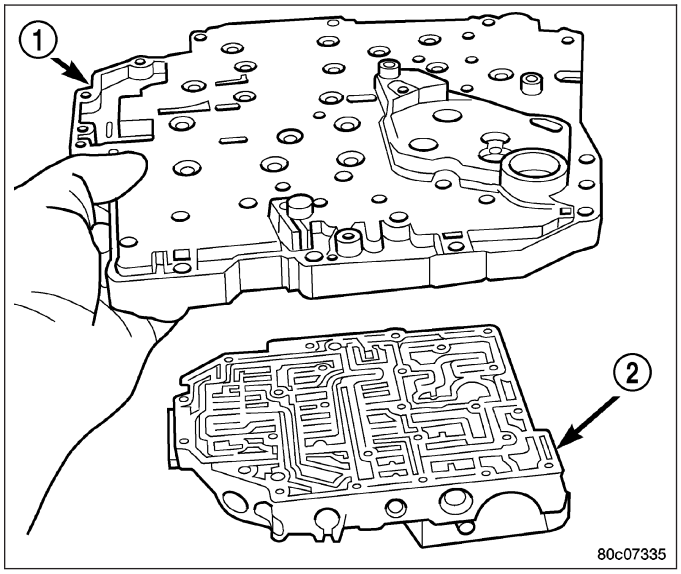

13. Remove separator plate-to-transfer plate screws (2).

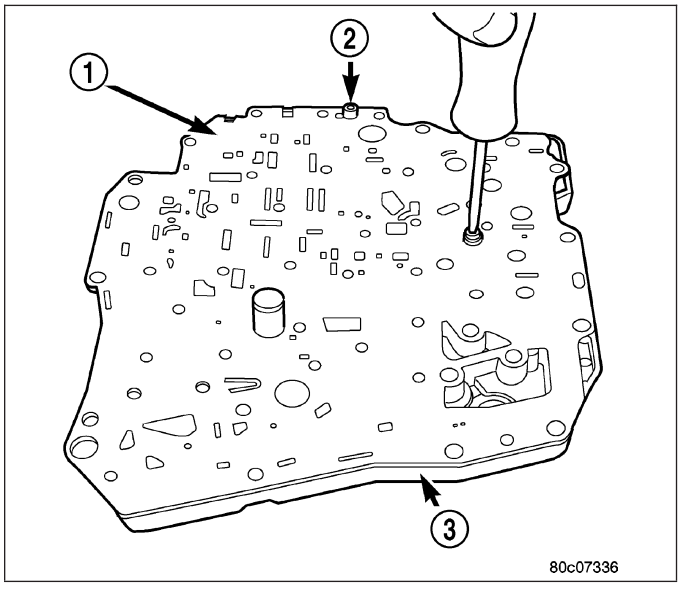

14. Remove separator plate (1) from transfer plate (2).

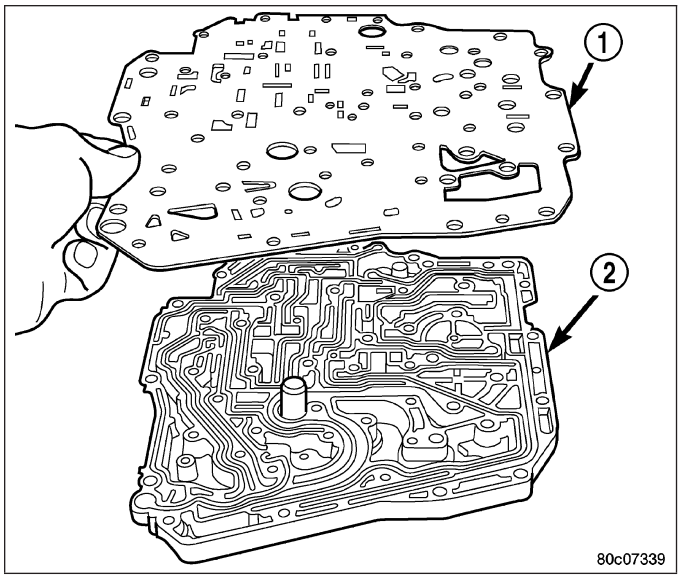

15. Remove the oil screen (1) from the transfer plate.

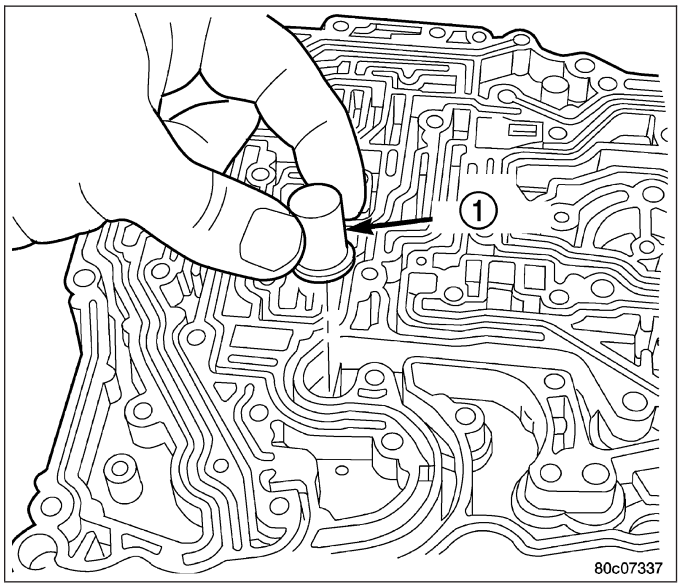

16. Remove thermal valve (1) from transfer plate.

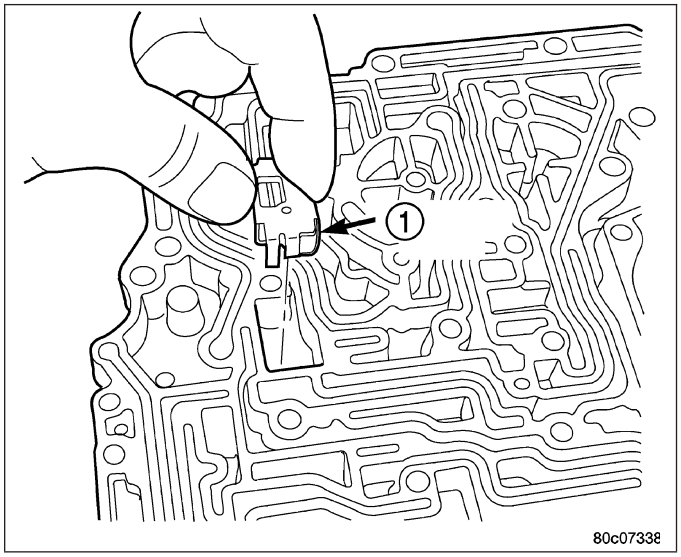

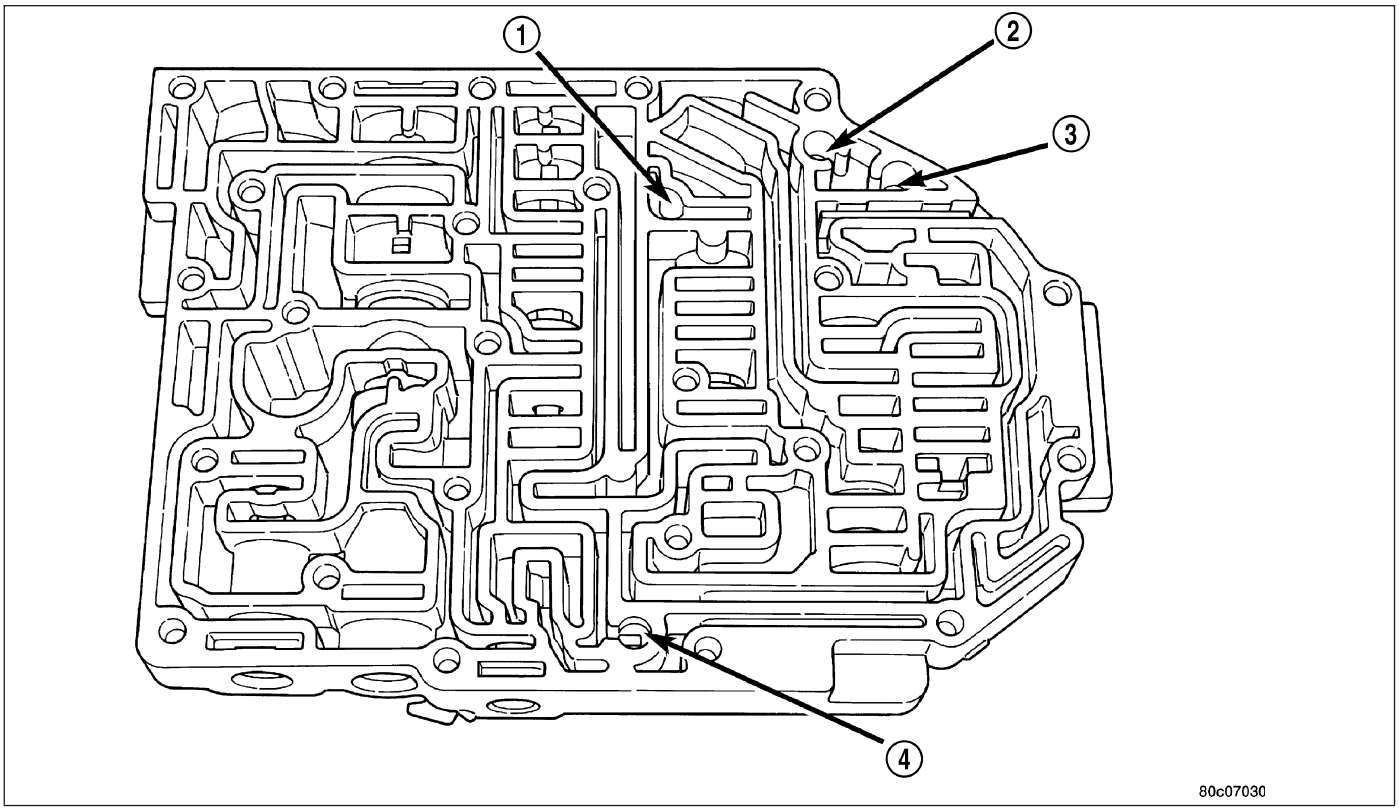

Ball Check Location

1 - (#4) BALL CHECK LOCATION
2 - (#2) BALL CHECK LOCATION
3 - (#5) BALL CHECK LOCATION
4 - (#3) BALL CHECK LOCATION

17. Remove valve body check balls (1-4). Note their location for assembly ease.
18. Remove 2/4 accumulator assembly (1-5).

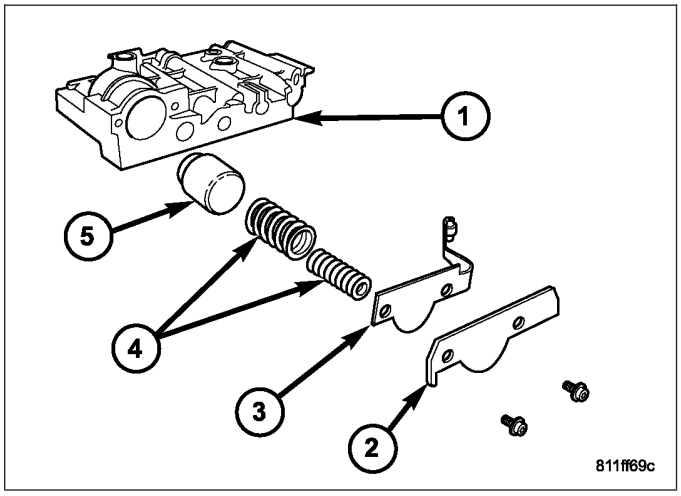

19. Remove dual retainer plate (2) from valve body. Use Remover/Installer 6301 (1) to remove plate (2).

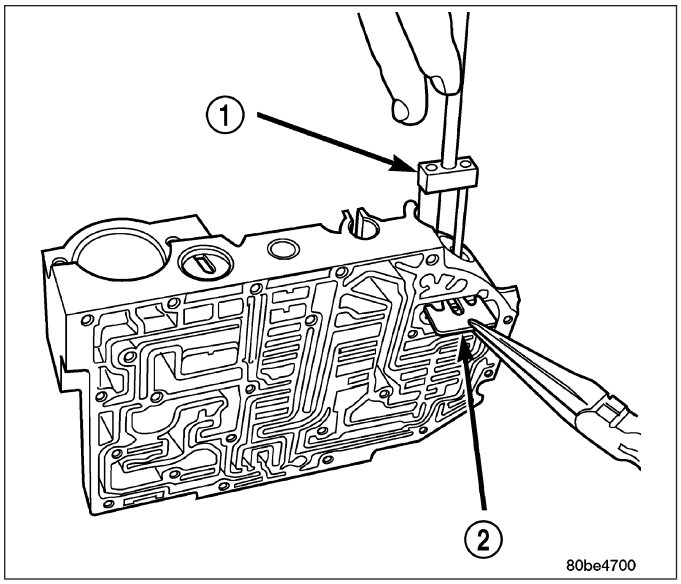

20. Remove regulator valve spring retainer (2).

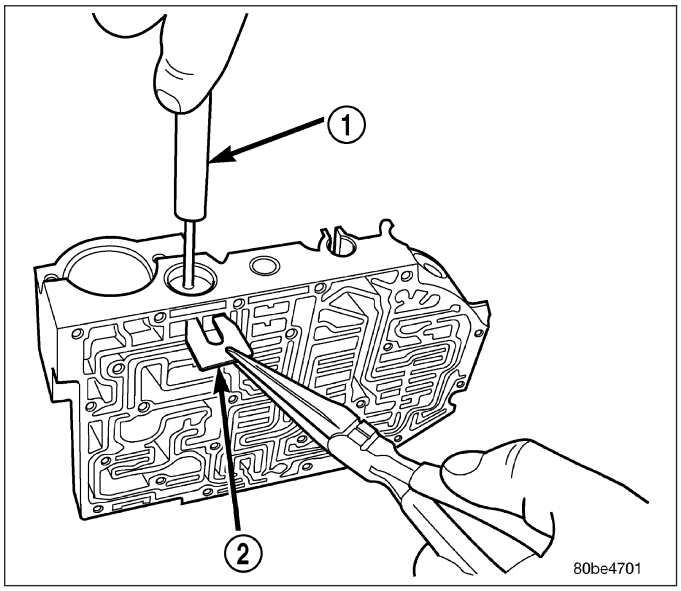

21. Remove remaining retainers (1, 2).

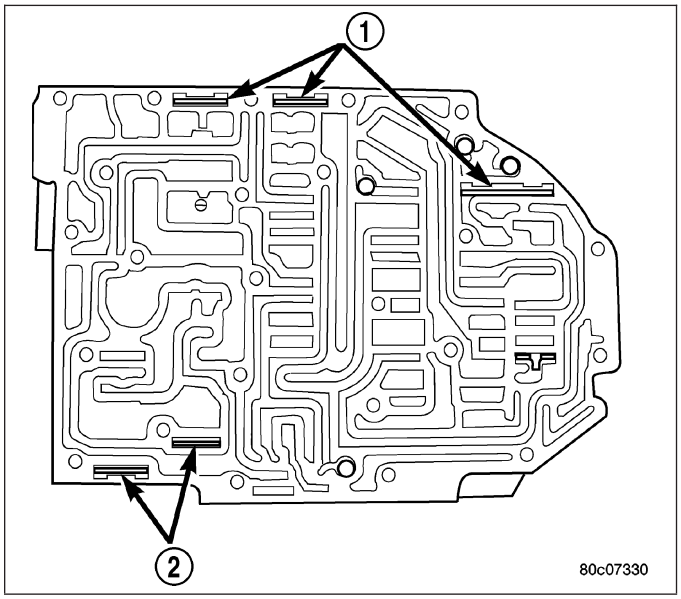

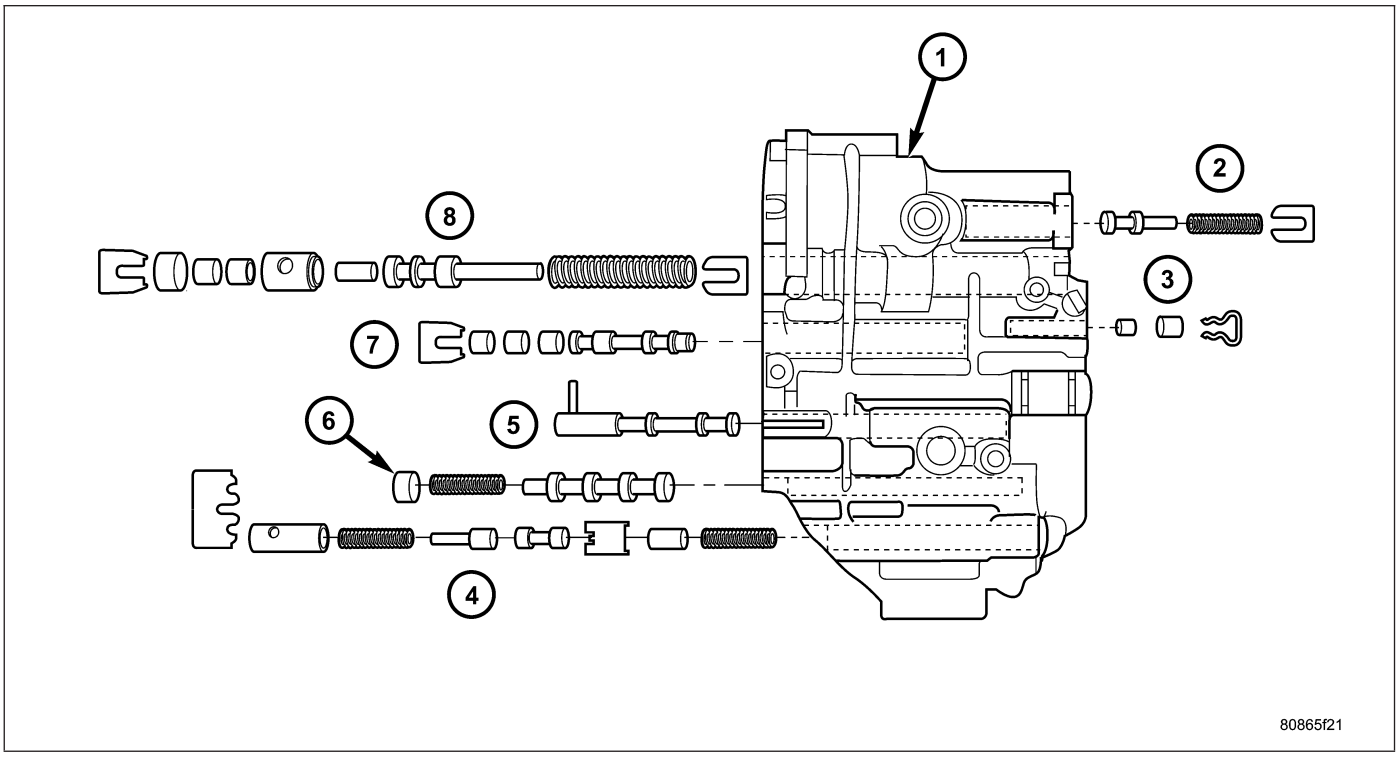

Valve Body Assembly

1 - VALVE BODY
2 - T/C REGULATOR VALVE
3 - L/R SWITCH VALVE
4 - CONVERTER CLUTCH CONTROL VALVE
5 - MANUAL VALVE
6 - CONVERTER CLUTCH SWITCH VALVE
7 - SOLENOID SWITCH VALVE
8 - REGULATOR VALVE

22. Remove all valves and springs.
23. Cleanliness through entire disassembly and assembly of the valve body cannot be overemphasized. When disassembling, each part should be washed in a suitable solvent, then dried by compressed air. **Do not wipe parts with shop towels.** All mating surfaces in the valve body are accurately machined; therefore, careful handling of all parts must be exercised to avoid nicks or burrs.

ASSEMBLY

NOTE: If the valve body assembly is being reconditioned or replaced, it is necessary to perform the Quick Learn Procedure using the scan tool. (Refer to 8 - ELECTRICAL/ELECTRONIC CONTROL MODULES/TRANSMISSION CONTROL MODULE - STANDARD PROCEDURE)

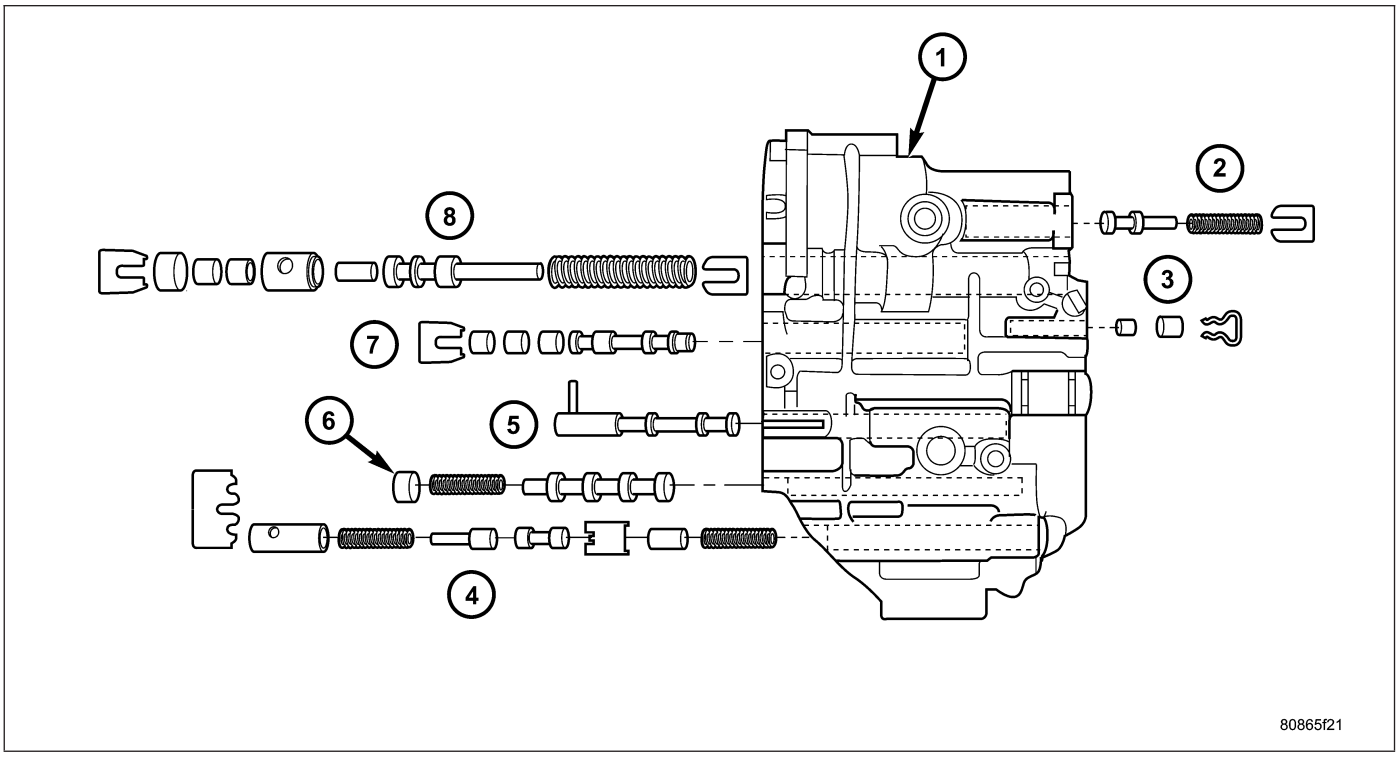

Valve Body Assembly

1 - VALVE BODY
2 - T/C REGULATOR VALVE
3 - L/R SWITCH VALVE
4 - CONVERTER CLUTCH CONTROL VALVE
5 - MANUAL VALVE
6 - CONVERTER CLUTCH SWITCH VALVE
7 - SOLENOID SWITCH VALVE
8 - REGULATOR VALVE

1. Install all valves and springs as shown.
2. Install regulator valve spring retainer (2).

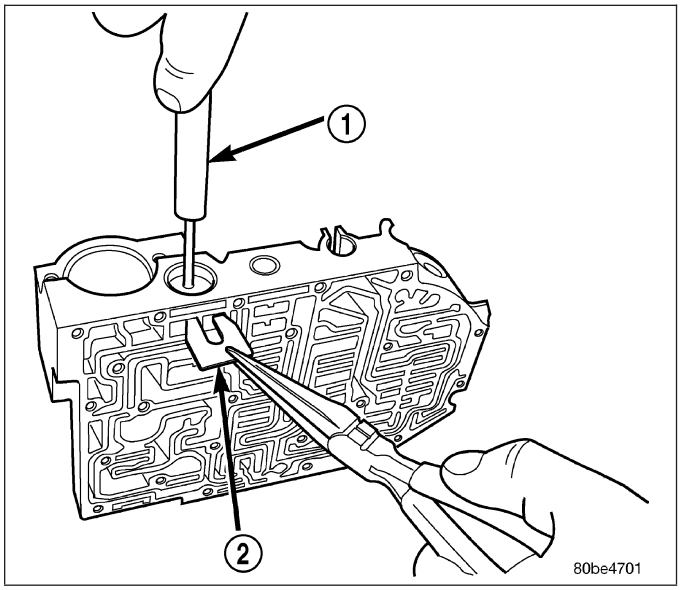

3. Install dual retainer plate (2) using Remover/Installer 6301 (1).

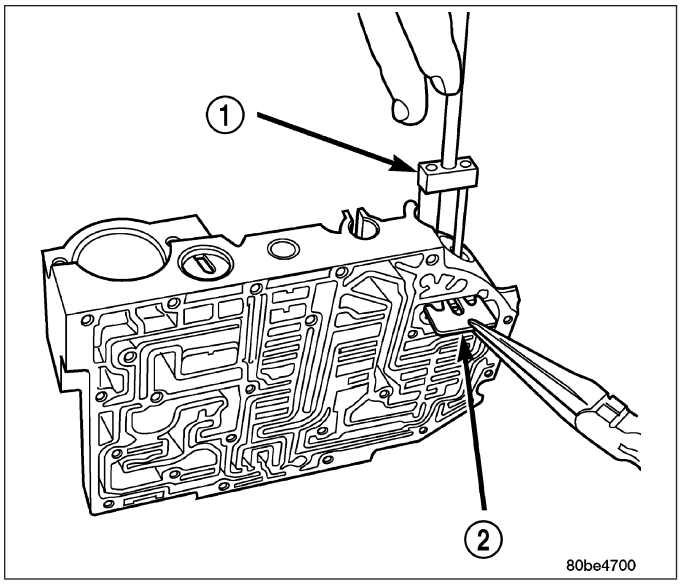

4. Verify that all retainers (1, 2) are installed as shown. Retainers should be flush or below valve body surface.

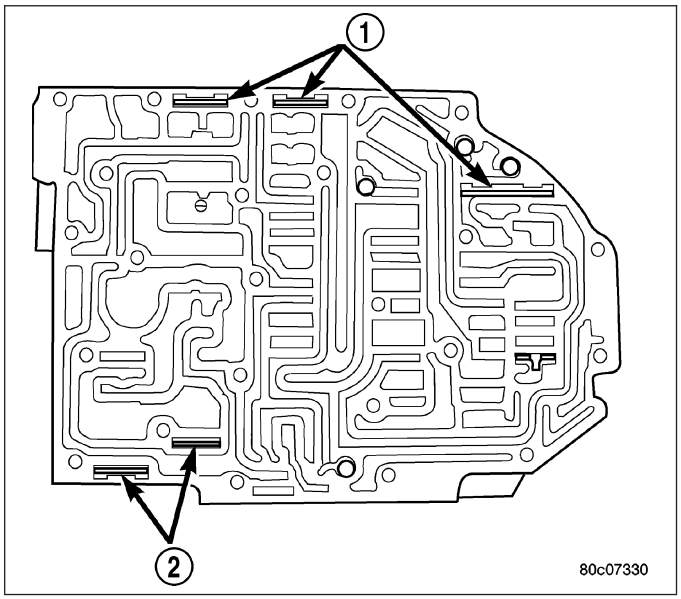

5. Install 2/4 Accumulator components (1-5) as shown. Torque 2/4 Accumulator retainer plate to 5 N·m (45 in. lbs.).

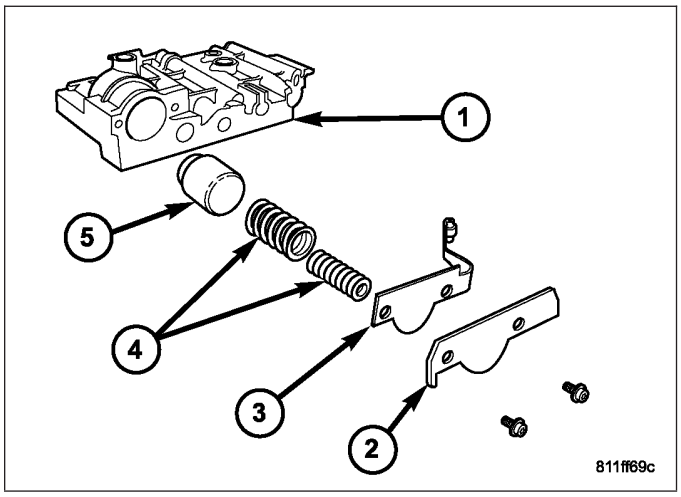

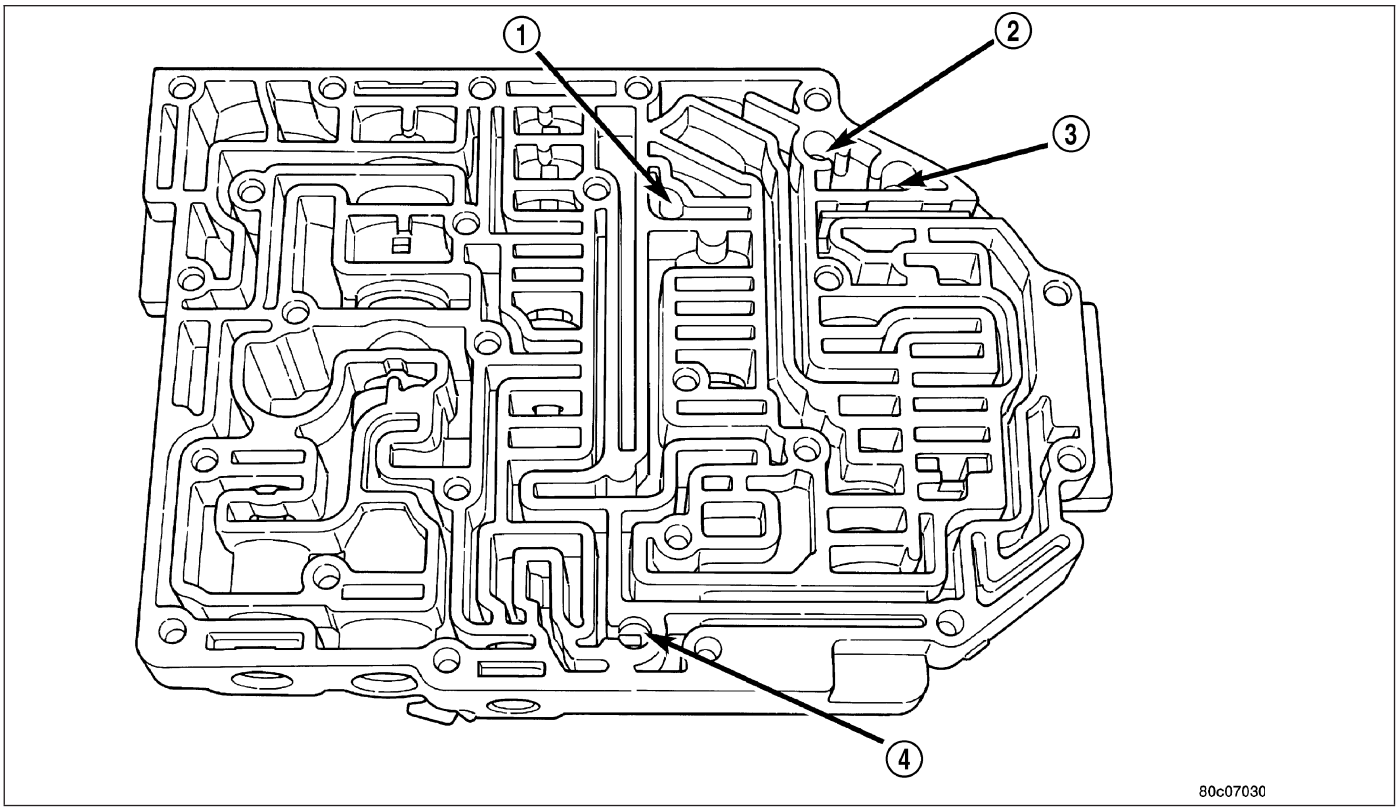

Ball Check Location

1 - (#4) BALL CHECK LOCATION
2 - (#2) BALL CHECK LOCATION
3 - (#5) BALL CHECK LOCATION
4 - (#3) BALL CHECK LOCATION

6. Install check balls into position as shown. If necessary, secure them with petrolatum or transmission assembly gel for assembly ease.
7. Install thermal valve (1) to the transfer plate.

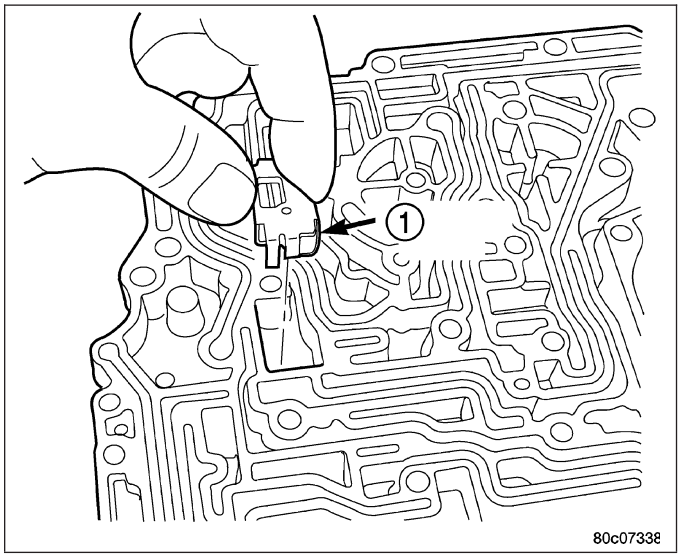

8. Install the oil screen (1) to the transfer plate.

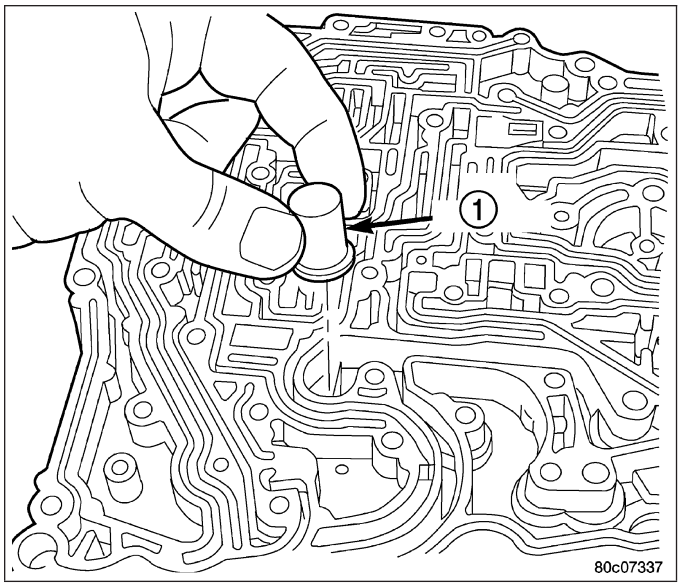

9. Install separator plate (1) to transfer plate (2).

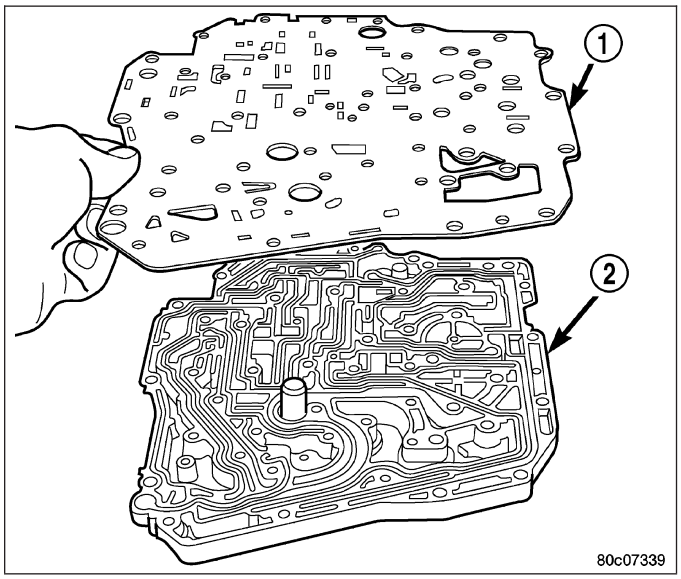

10. Install the two separator plate-to-transfer plate screws (2).

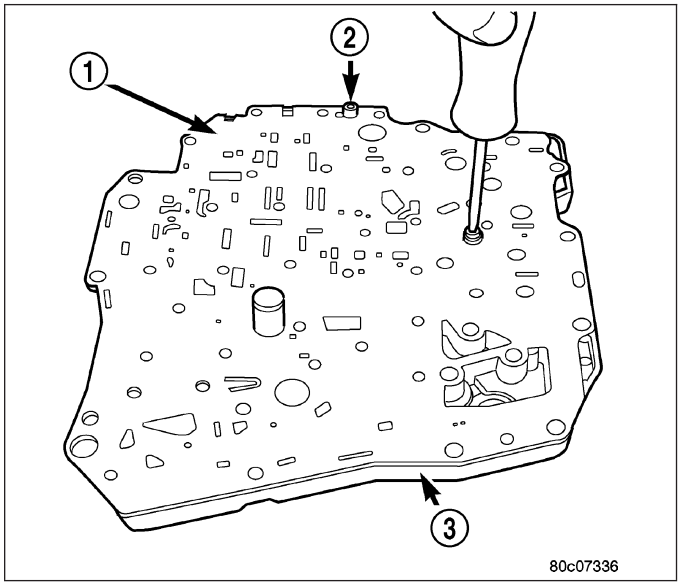

11. Install the transfer plate (1) to the valve body (2).

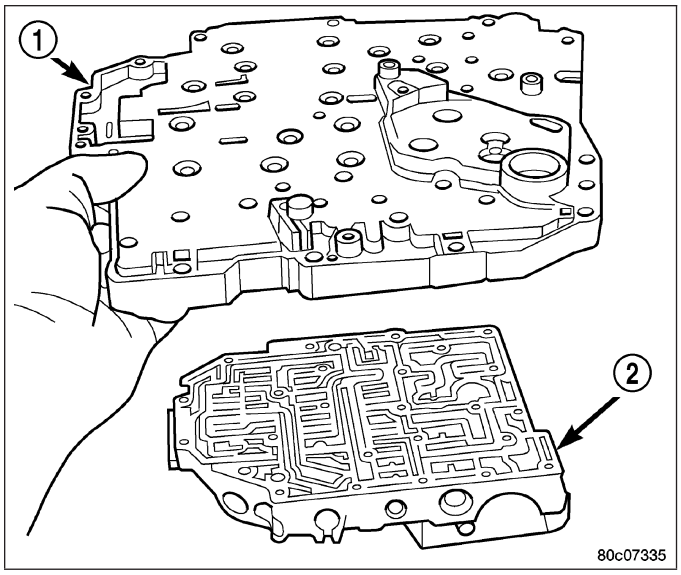

12. Install the transfer plate-to-valve body screws (1) and torque to 5 N·m (45 in. lbs.).

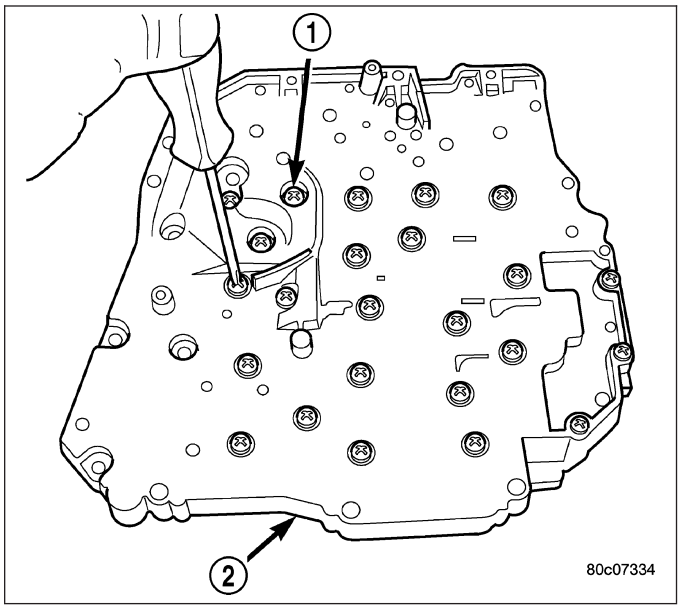

13. Install the stiffener plate (1).

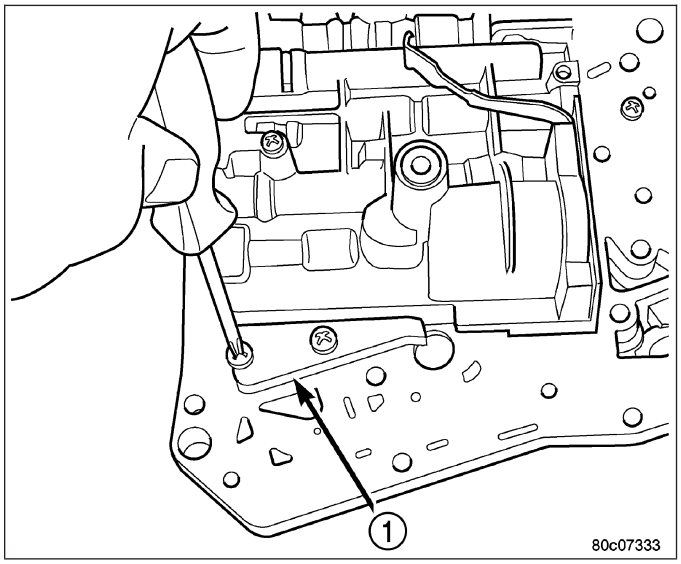

14. Install the solenoid/pressure switch assembly (1) and screws to the transfer plate and torque to 5.5 N·m (50 in. lbs.).

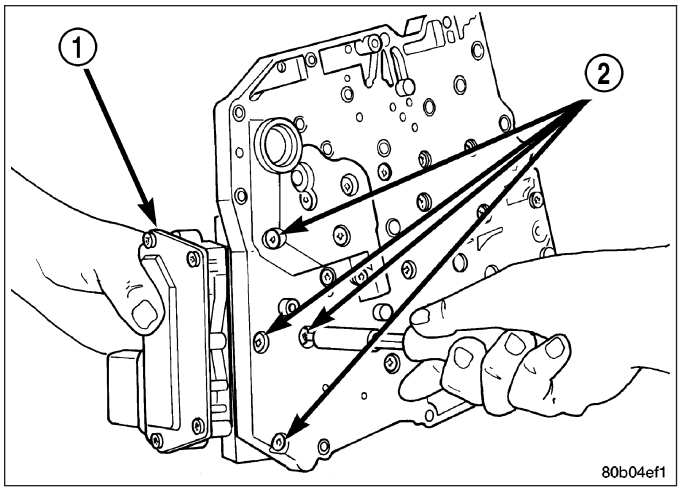

15. Install the manual shaft/rooster comb (3) and transmission range sensor (1) to the valve body.

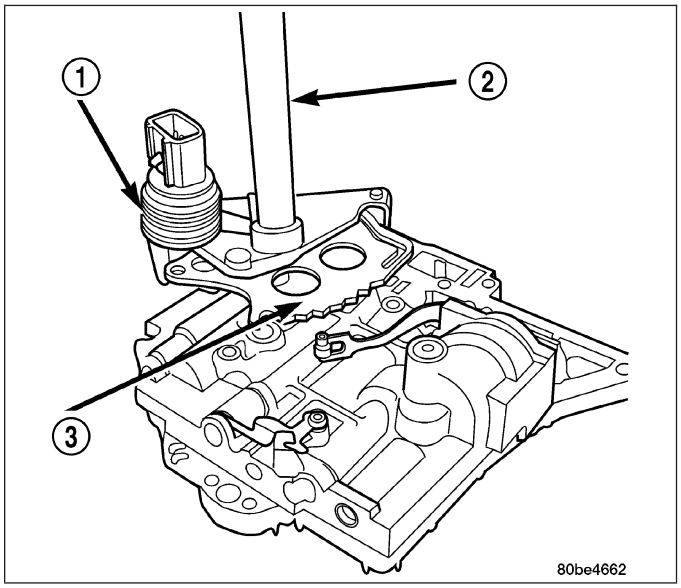

16. Install the TRS/manual shaft retaining screw (1) and torque to 5 N·m (45 in. lbs.).
17. Install manual shaft seal.

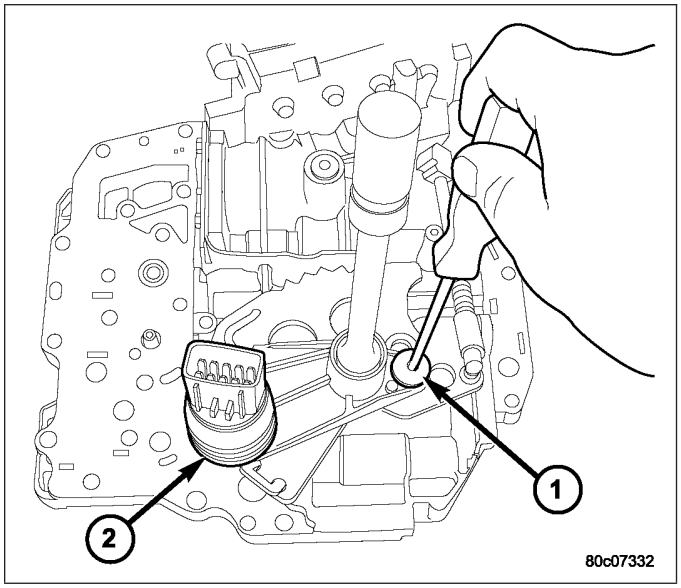

18. Install the variable line pressure header onto the manual shaft (5).
19. Install the shoulder screw (3) to hold the variable line pressure header (4) to the valve body.
20. Install the pressure control solenoid and line pressure sensor into the valve body.
21. Install the screws (6) to hold the pressure control solenoid (1) and line pressure sensor (2) to the valve body.
22. Install the electrical connectors to the pressure control solenoid (1) and the line pressure sensor (2).

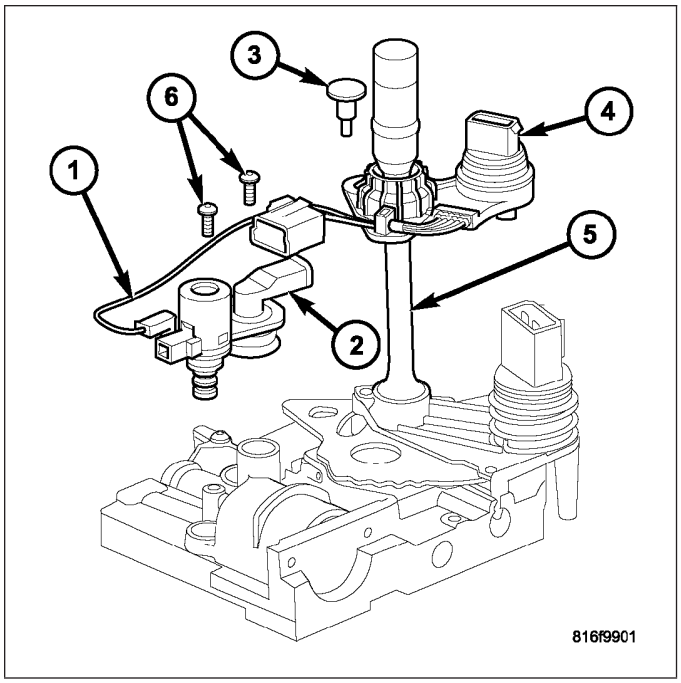

INSTALLATION

1. Install valve body into position and start bolts (1). Torque valve body to transmission case bolts (1) to 12 N·m (105 in. lbs.) torque.

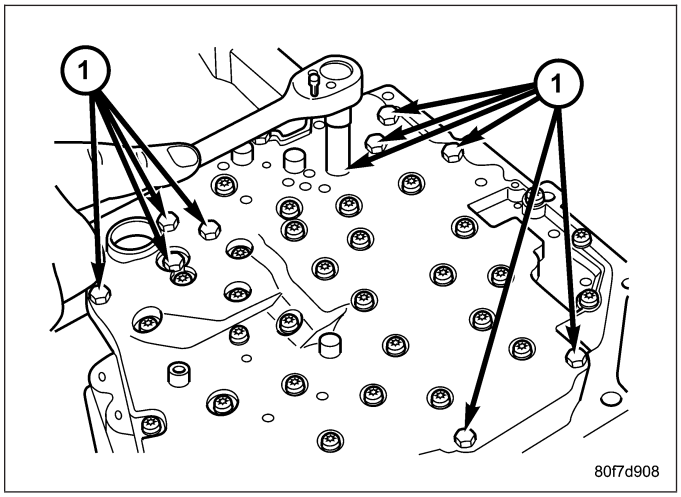

2. Install transmission oil filter (1).

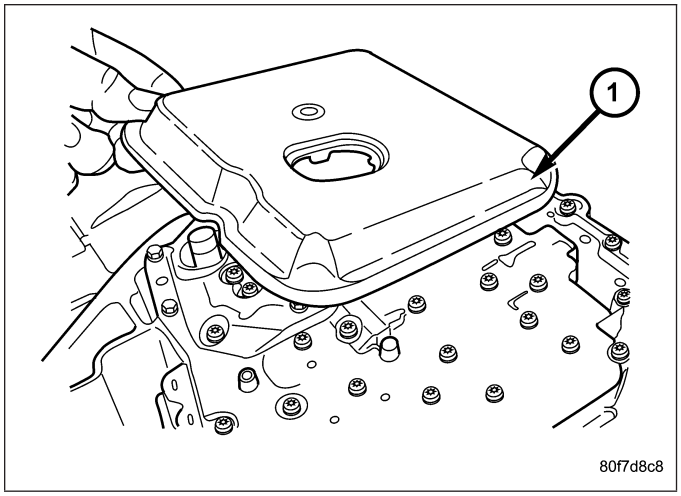

NOTE: Before installing the oil pan bolt in the bolt hole (5) located between the torque converter clutch on and U/D clutch pressure tap circuits, it will be necessary to replenish the sealing patch on the bolt using MOPAR® Lock & Seal Adhesive.

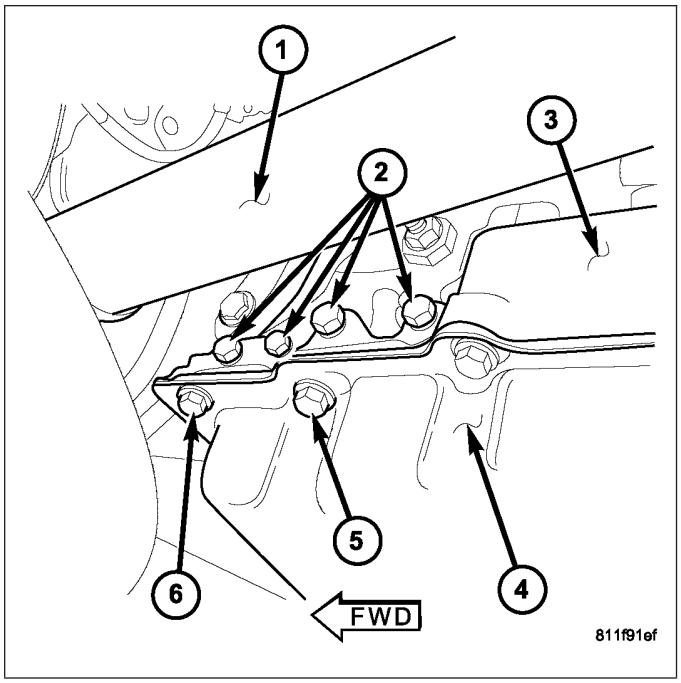

3. Make sure oil pan (1) and case rail are clean and dry. Install an 1/8” bead of RTV to the transmission oil pan and install to case. Tighten bolts (2) to 20 N·m (14.5 ft. lbs.).

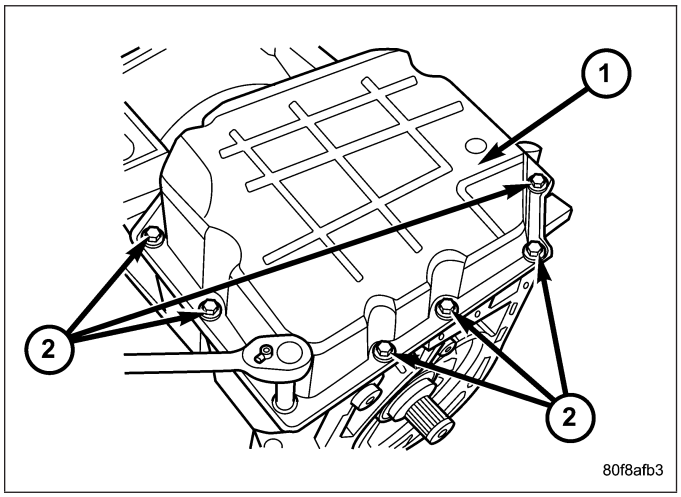

4. Lower vehicle and connect the transmission range sensor (5) connector.
5. Connect solenoid/pressure switch assembly connector.
6. Connect the variable line pressure connector (4), if equipped.
7. Lower vehicle.
8. Fill transmission with ATF+4, Automatic Transmission Fluid. Verify proper fluid level. (Refer to 21 - TRANSMISSION/AUTOMATIC - 42RLE/FLUID - STANDARD PROCEDURE)

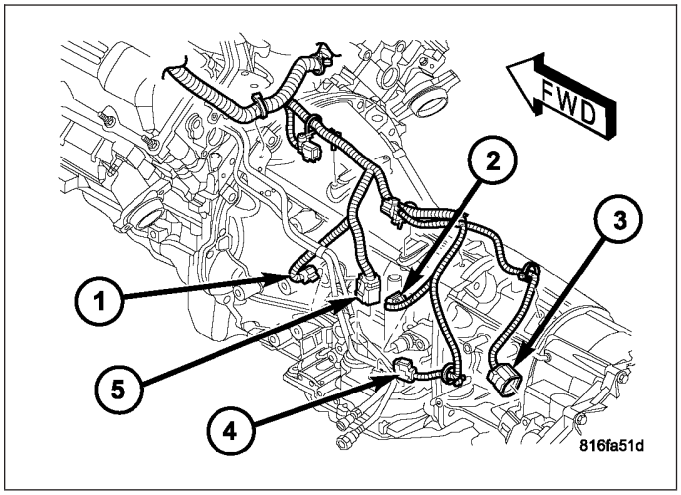

NOTE: If the valve body has been reconditioned or replaced, it is necessary to perform the Quick Learn Procedure. (Refer to 8 - ELECTRICAL/ELECTRONIC CONTROL MODULES/TRANSMISSION CONTROL MODULE - STANDARD PROCEDURE)

TRANSFER CASE - MS140 - SERVICE INFORMATION

TABLE OF CONTENTS

page

TRANSFER CASE - MS140 - SERVICE INFORMATION
DESCRIPTION 860
OPERATION 862
REMOVAL 863
DISASSEMBLY 865
ASSEMBLY 873
INSTALLATION 882
SPECIFICATIONS
TORQUE SPECIFICATIONS - MS140 884
SPECIAL TOOLS - MS140 885
FLUID
STANDARD PROCEDURE - FLUID DRAIN AND FILL 888

page

PLANETARY-TRANSFER CASE
DISASSEMBLY 889
ASSEMBLY 891
SEAL-FRONT OUTPUT SHAFT
REMOVAL 894
INSTALLATION 895
SEAL-REAR OUTPUT SHAFT
REMOVAL 896
INSTALLATION 897

TRANSFER CASE - MS140 - SERVICE INFORMATION

DESCRIPTION

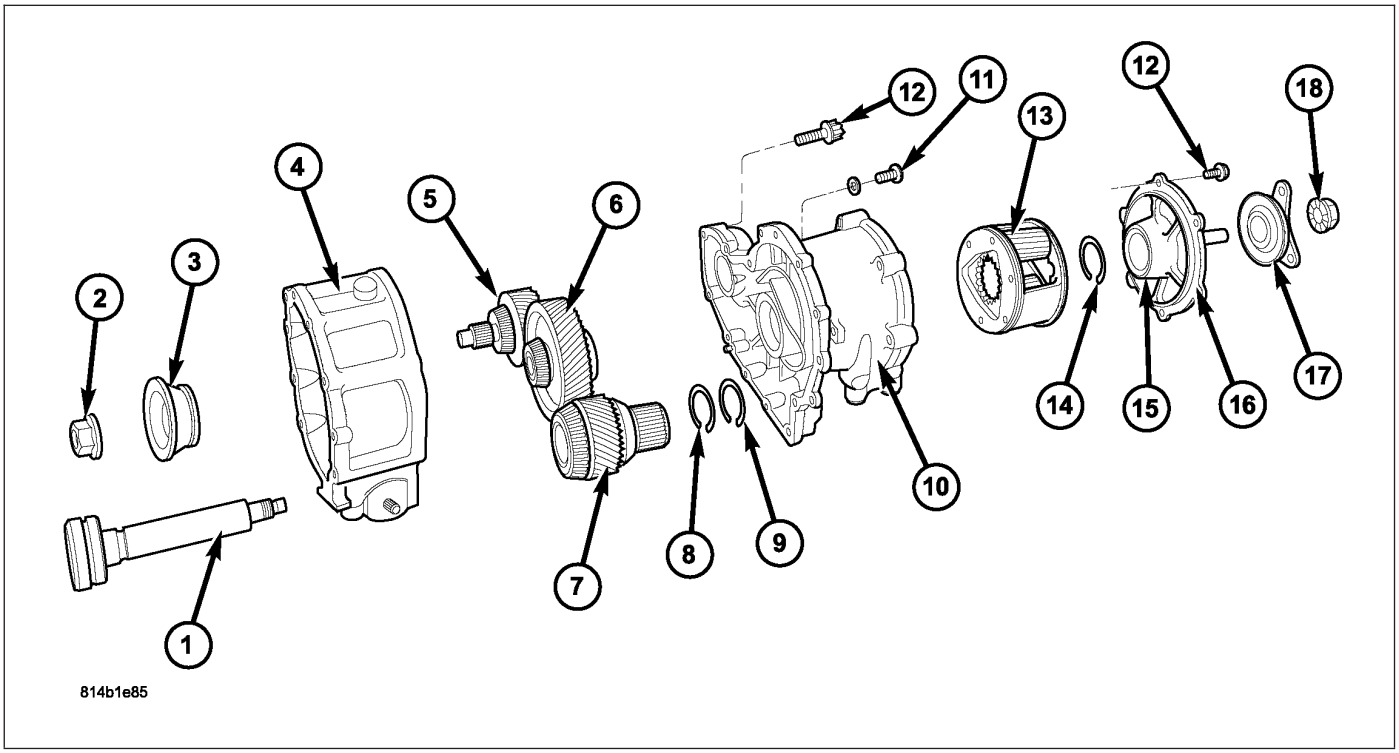

MS140 Exploded View

1 - INPUT SHAFT
2 - FRONT OUTPUT SHAFT NUT
3 - FRONT OUTPUT SHAFT FLANGE
4 - FRONT TRANSFER CASE HOUSING
5 - FRONT OUTPUT SHAFT
6 - INTERMEDIATE GEAR
7 - HOLLOW SHAFT
8 - WASHER
9 - SNAP-RING
10 - REAR TRANSFER CASE HOUSING
11 - OIL DRAIN PLUG
12 - BOLTS
13 - PLANETARY GEAR SYSTEM
14 - SNAP-RING
15 - REAR OUTPUT SHAFT
16 - TRANSFER CASE COVER
17 - REAR OUTPUT SHAFT FLANGE
18 - REAR OUTPUT SHAFT NUT

The MS140 is an all-wheel-drive transfer case system that divides power between the front and rear differentials and transmits power to both axles at all times. Its planetary center differential (13) delivers approximately 62 percent of the engine torque to the rear axle and 38 percent to the front.

IDENTIFICATION

The transfer case name can be decoded as follows:

- M = Magna
- S = Steyr
- 1 = Single speed transfer case
- 4 = relative torque capacity
- 0 = Full time with an open differential

The transfer case (1) has a barcode label (3) applied to the right side of the rear transfer case housing to provide important part number and build information.

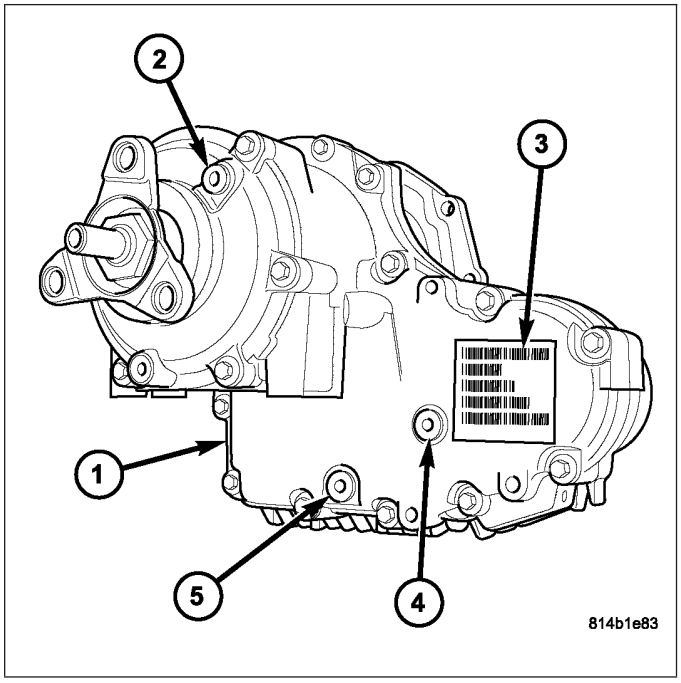

OPERATION

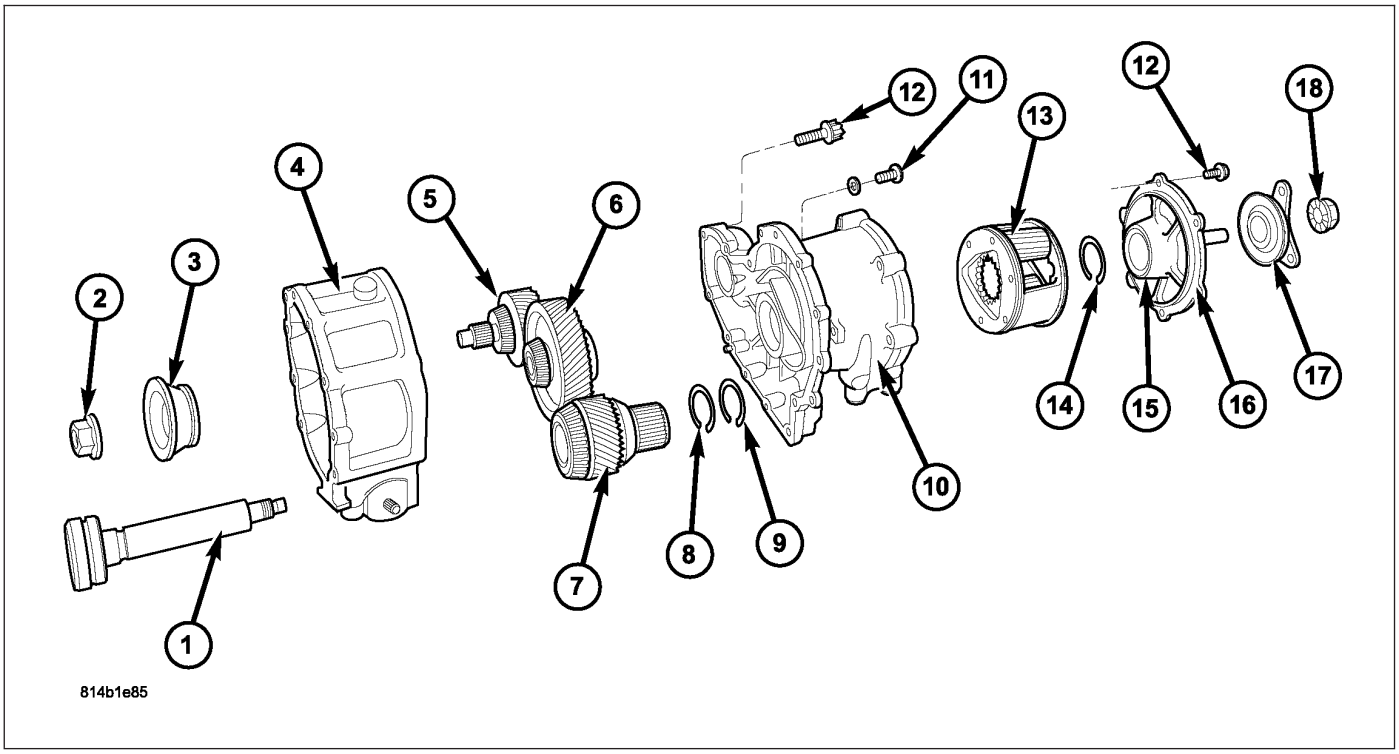

MS140 Exploded View

1 - INPUT SHAFT
2 - FRONT OUTPUT SHAFT NUT
3 - FRONT OUTPUT SHAFT FLANGE
4 - FRONT TRANSFER CASE HOUSING
5 - FRONT OUTPUT SHAFT
6 - INTERMEDIATE GEAR
7 - HOLLOW SHAFT
8 - WASHER
9 - SNAP-RING
10 - REAR TRANSFER CASE HOUSING
11 - OIL DRAIN PLUG
12 - BOLTS
13 - PLANETARY GEAR SYSTEM
14 - SNAP-RING
15 - REAR OUTPUT SHAFT
16 - TRANSFER CASE COVER
17 - REAR OUTPUT SHAFT FLANGE
18 - REAR OUTPUT SHAFT NUT

The transfer case input shaft (1) extends through the hollow shaft (7) to drive the planetary gear system (13) housing. The housing transfers the engine torque to the outer gears, which drive the rear output shaft (15). The outer gears drive the smaller inner gears, which drive the hollow shaft (7). The hollow shaft transfers the torque to the intermediate gear (6) and then to the front output shaft (5).

The planetary gear system assembly contains a friction disc that is splined to the hollow shaft and applied to the planetary gear system housing to dampen vibrations in the system.

REMOVAL

1. Raise support vehicle.
2. Disconnect the front and rear propeller shafts from the transfer case. (Refer to 3 - DIFFERENTIAL & DRIVELINE/PROPELLER SHAFT - REMOVAL)
3. Support transmission (1) with jack stand.
4. Remove the bolts holding the transmission cross-member to the frame.
5. Remove the bolts (2) holding the transmission crossmember (1) to the transmission mount (3).

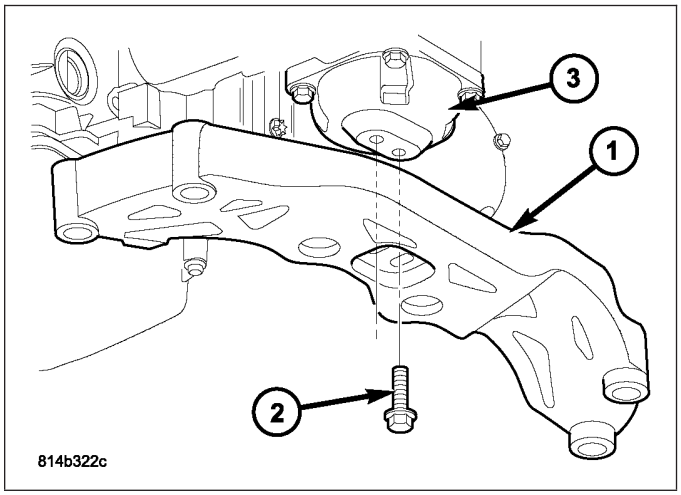

6. Remove the bolts (2) holding the transmission mount (1) to the transfer case, 5.7L engine, and remove the transmission mount.

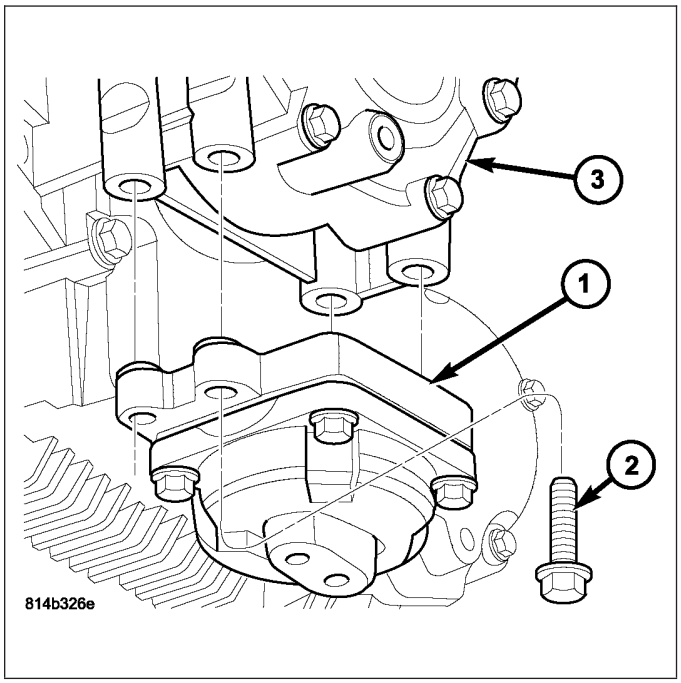

7. Remove the bolts (3) holding the transmission mount assembly (2) to the transfer case (1), 3.5L engine, and remove the transmission mount assembly.

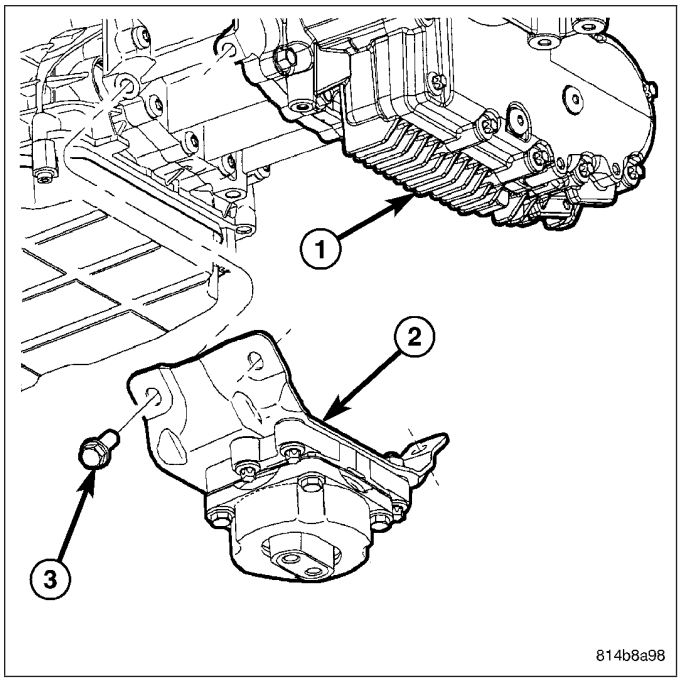

8. Remove the transfer case dampner.
9. Remove the transfer case drain plug (3) and drain transfer case lubricant.
10. Support transfer case (4) with transmission jack.
11. Secure transfer case to jack with chains.
12. Lower the transmission and transfer case slightly, to improve access to the upper transfer case to transmission fasteners.
13. Remove nuts and bolts attaching transfer case to transmission.
14. Pull transfer case and jack rearward to disengage transfer case.
15. Remove transfer case from under vehicle.

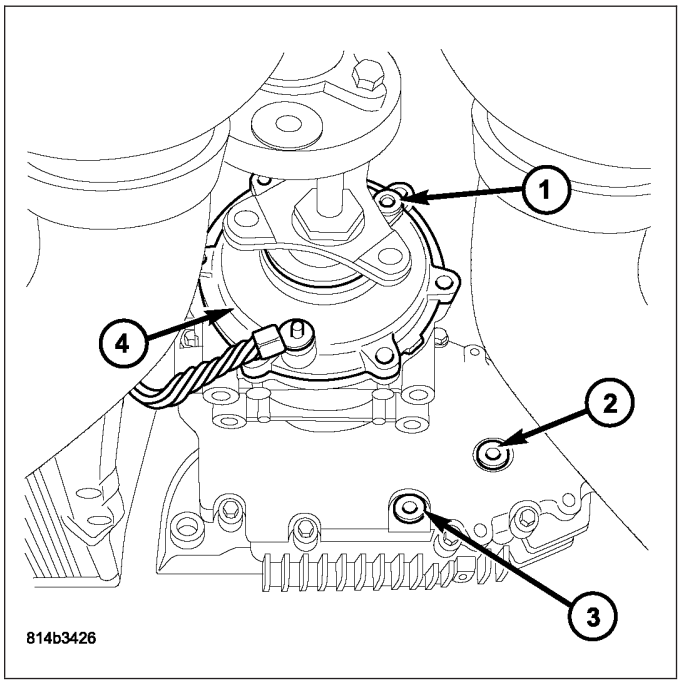

DISASSEMBLY

1. Place the transfer case so that it can be drained of any remaining fluid and remove the drain plug (5).

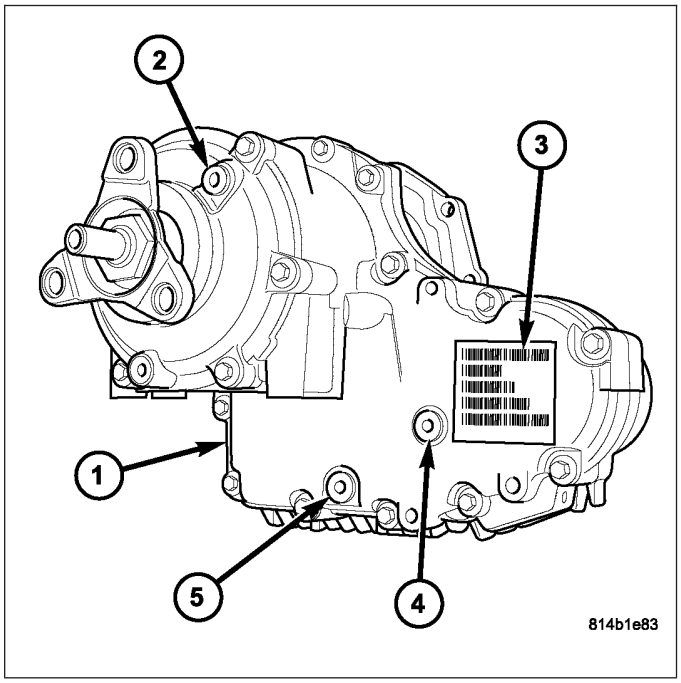

2. Install Holder 6958 (1) onto the rear output flange (2).
3. Remove the output shaft nut.

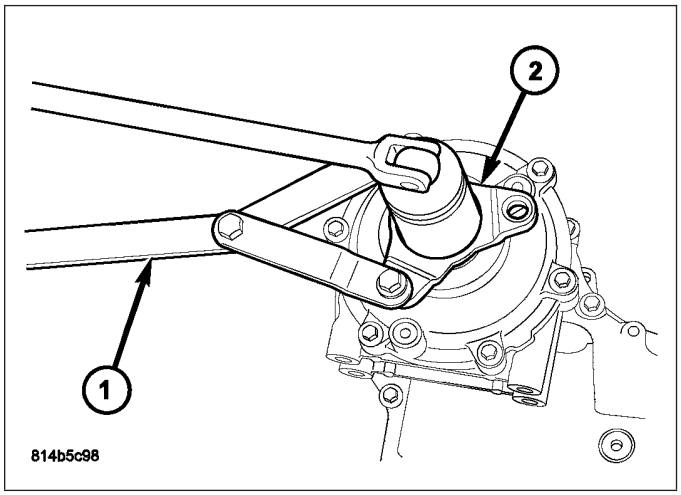

4. Remove the rear output shaft flange (2) from the output shaft. If the flange is difficult to remove, use a suitable 2 or 3 jaw puller to remove the flange.

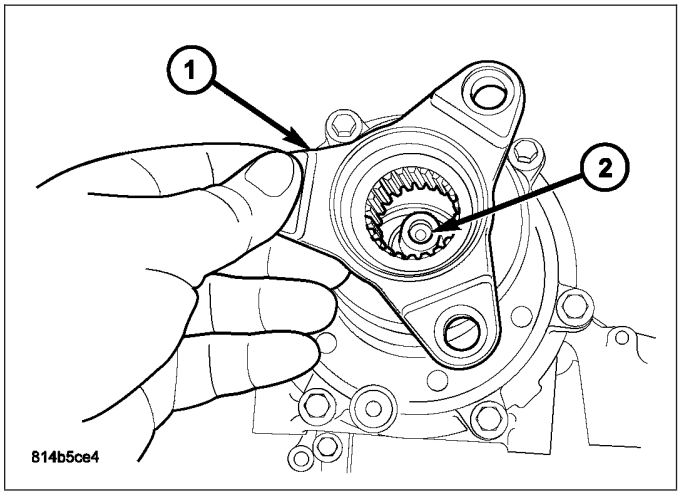

5. Install Holder 6958 (1) onto the front output flange (2).
6. Remove the output shaft nut.

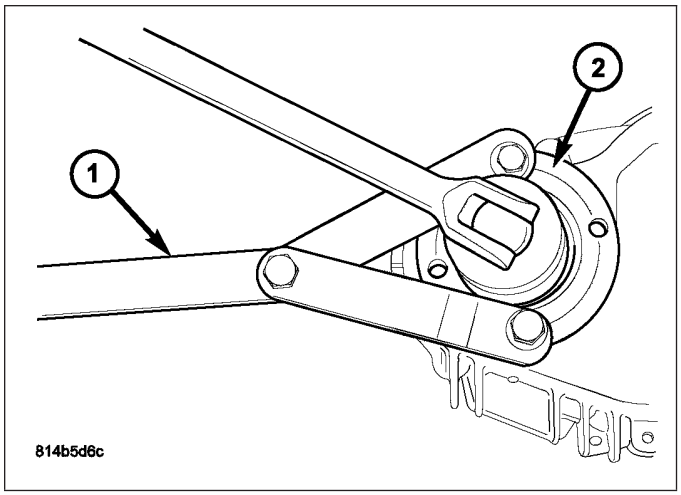

7. Remove the front output shaft flange (2) from the output shaft. If the flange (2) is difficult to remove, use a suitable 2 or 3 jaw puller (1) to remove the flange.

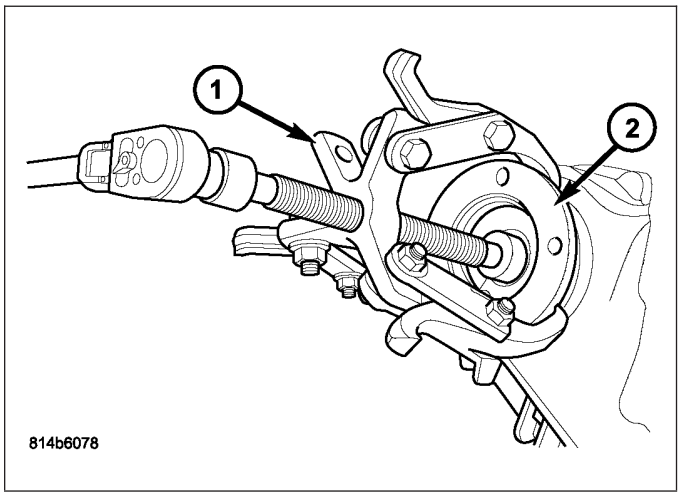

8. Remove the bolts (3) holding the transfer case rear cover (2) to the transfer case.

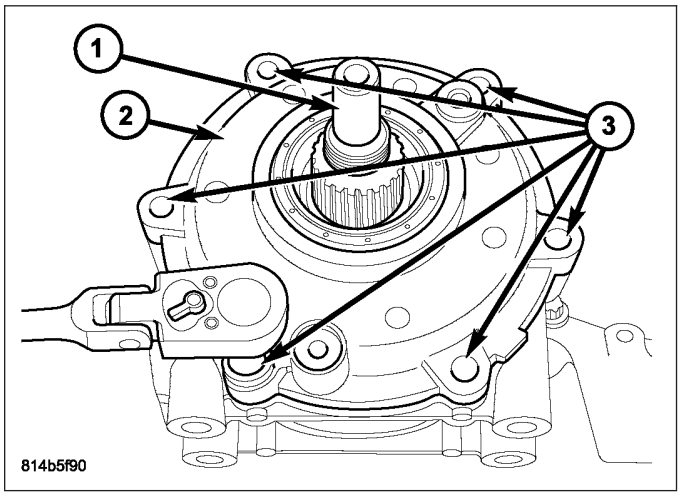

9. Remove the transfer case cover (1) from the transfer case (2).

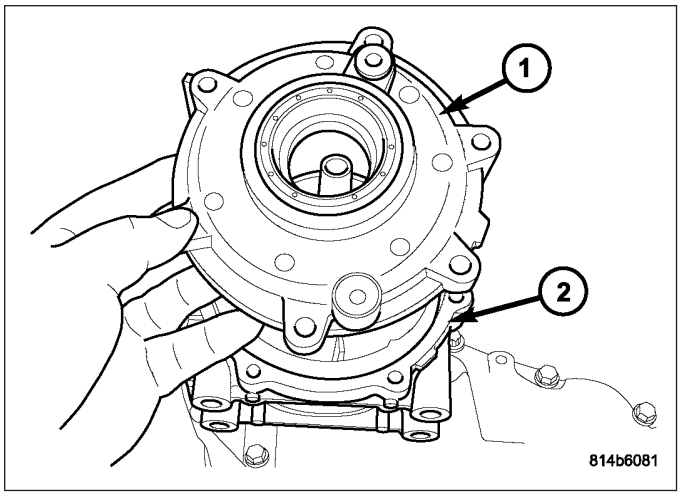

10. Remove the rear output shaft seal from the transfer case cover with a suitable pry tool.
11. Remove the rear output shaft bearing snap-ring (1) from the transfer case cover (2).
12. Remove the output shaft bearing from the cover using a suitable drift tool.

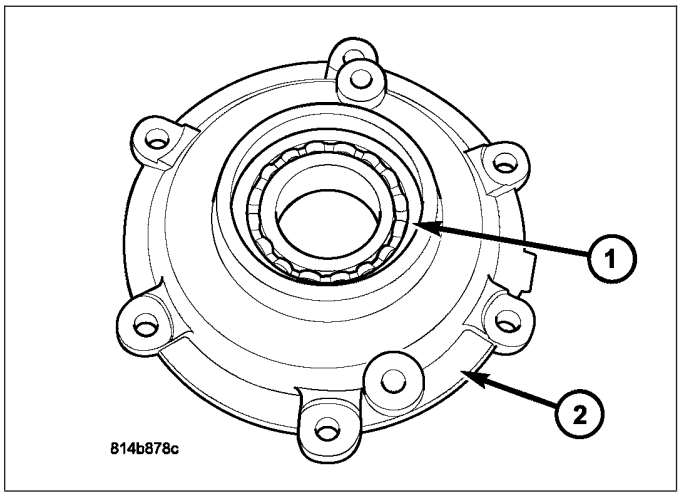

13. Remove the output shaft (1) from the planetary gear system (2).

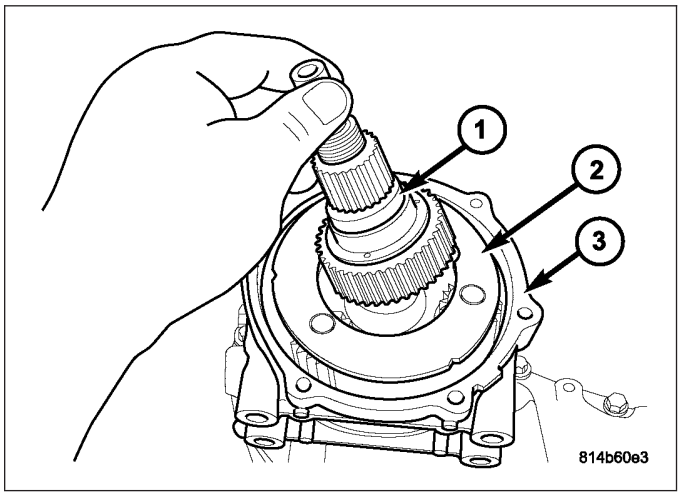

14. Remove the snap-ring (2) holding the input shaft (1) to the planetary gear system (3).

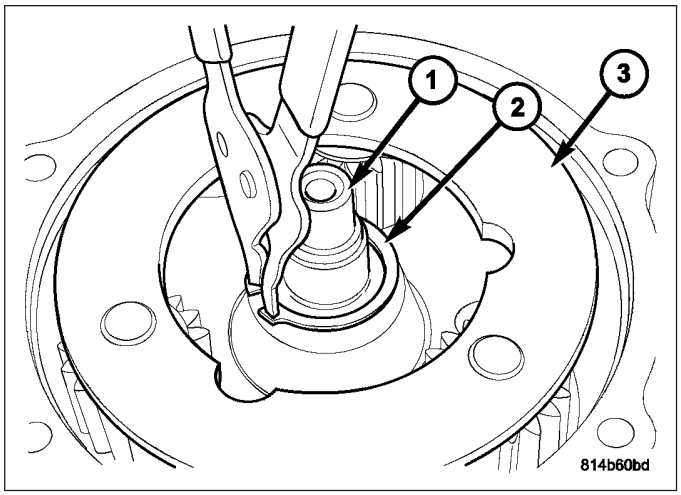

15. Remove the planetary gear system (1) from the transfer case rear housing (2).

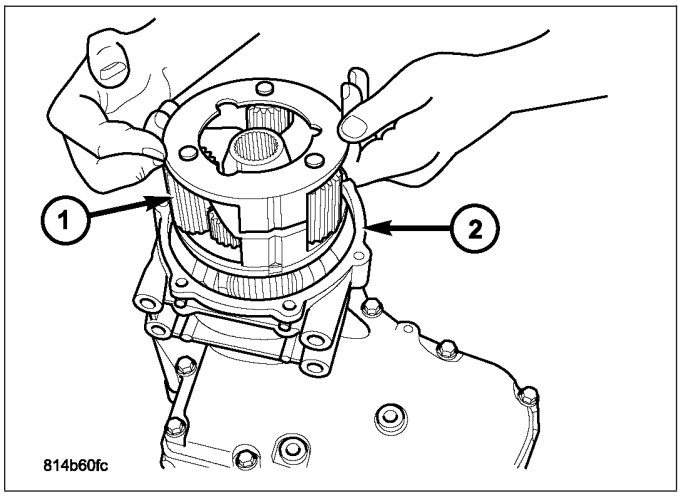

16. Remove the bolts (1) holding the rear housing (2) to the front housing.

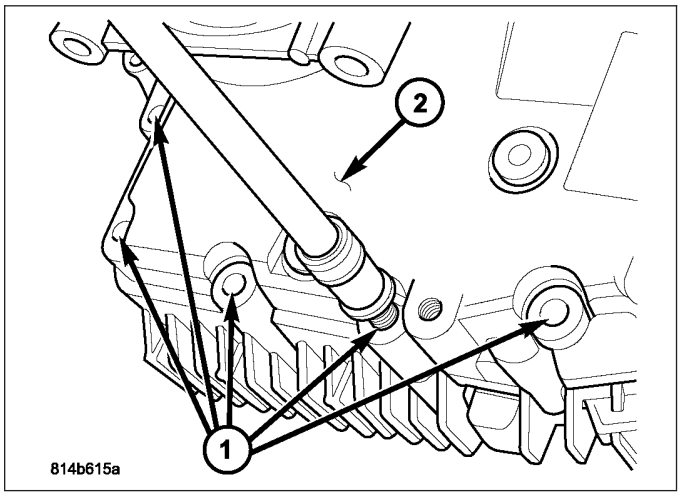

17. Loosen the rear housing (1) from the front housing (2) by prying the sections apart at the provided slots. Remove the rear housing (1) from the front housing (2).

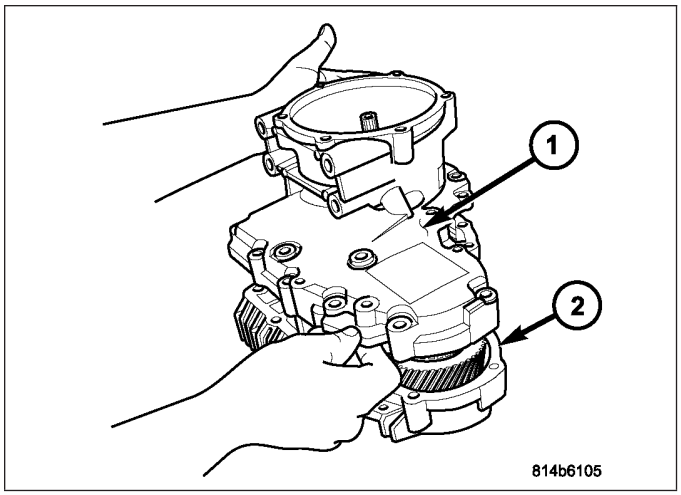

18. Remove the front output shaft (1) from the front housing (2).

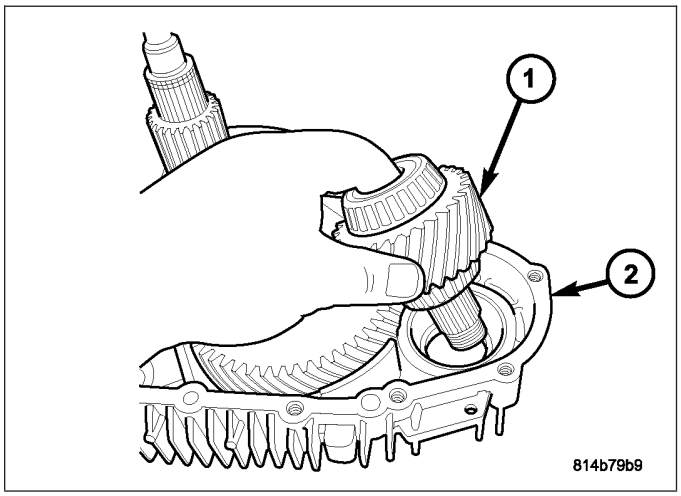

19. Remove the intermediate gear (1) from the front housing (2).

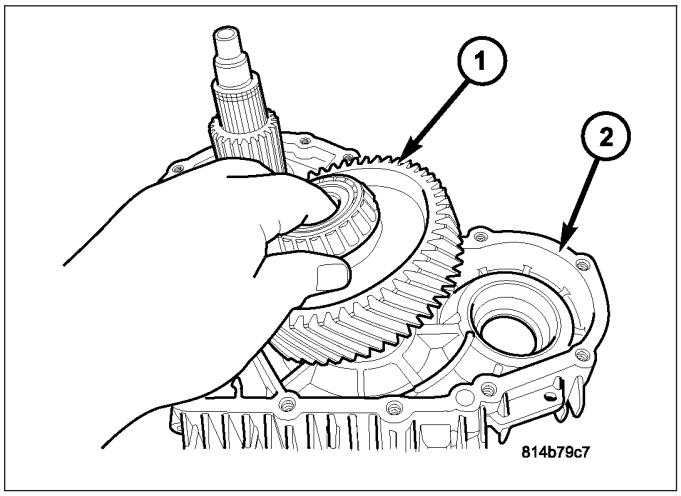

20. Remove the input gear and hollow shaft assembly (1) from the front housing (2).

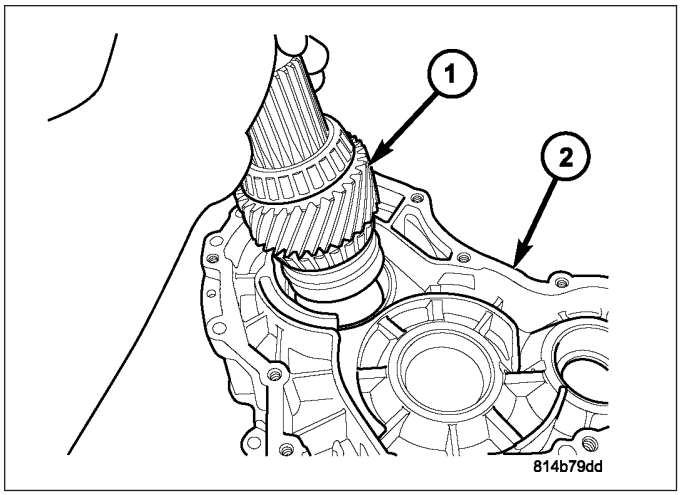

21. Remove the snap-ring (2) holding the input shaft (1) in the hollow shaft (3).

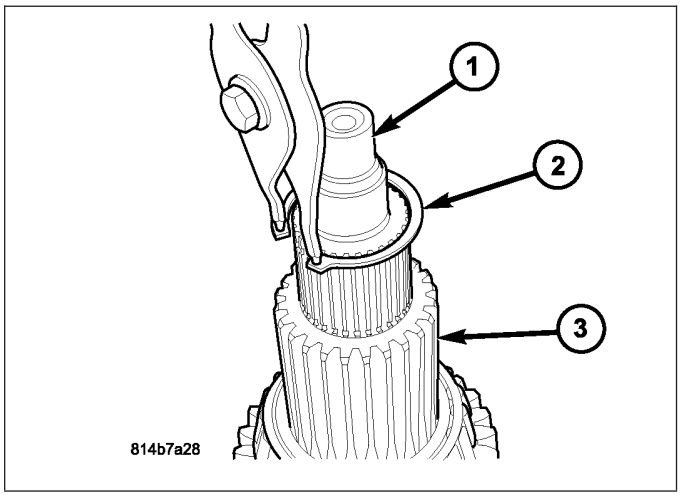

22. Remove the input gear thrust washer (2) from the input shaft (1) and hollow shaft (3).

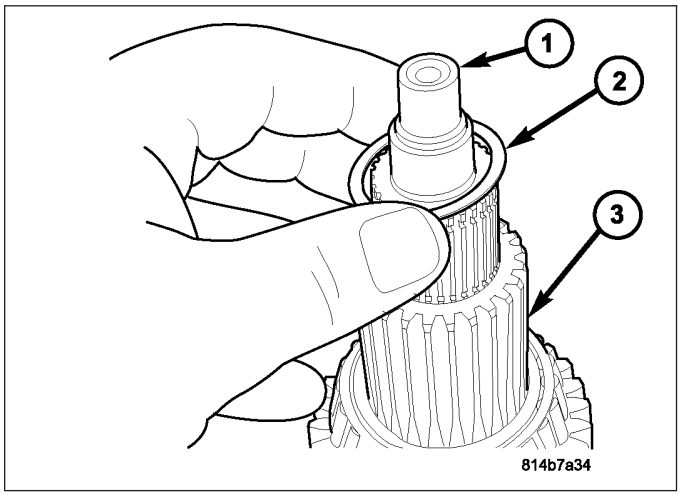

23. Remove the hollow shaft (2) from the input shaft (1).

CAUTION: Inspect the needle bearing located inside the hollow shaft. If the needle bearing is within 1 mm (0.040 in.) of the edge of the hollow shaft, the hollow shaft must be replaced. DO NOT attempt to drive the bearing back into the hollow shaft.

24. Install the jaws from Remover L-4518 (2) into the intermediate gear rear bearing race in the rear housing (1).

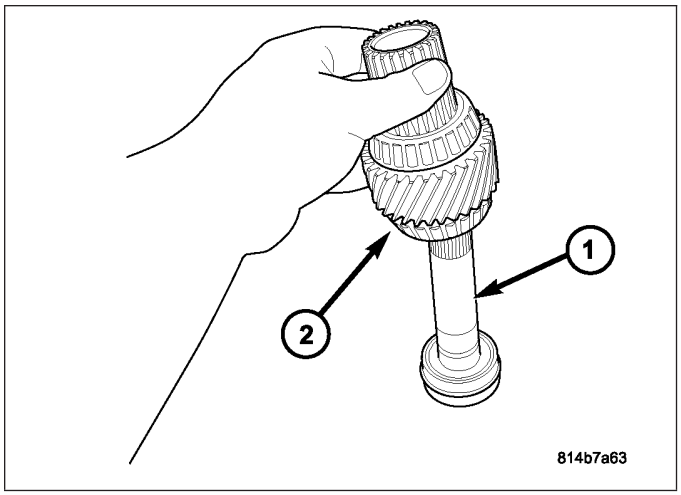

25. Install the cup from Remover L-4518 (2) onto the jaws. Install the bearing, washer, and nut onto the threaded shaft and remove the bearing race.
26. Repeat Step 24 and Step 25 for the other blind bearing races in the front and rear housings.
27. Drive out the input gear and front output shaft seals with a suitable drift.
28. Drive out the front hollow shaft and front output shaft front bearing races with a suitable brass drift.

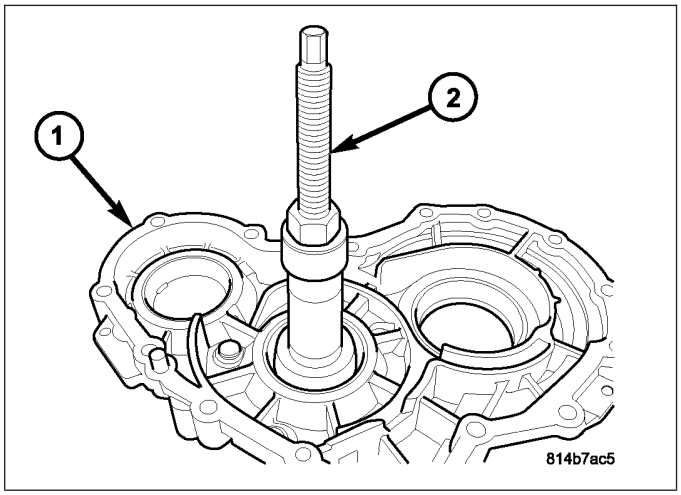

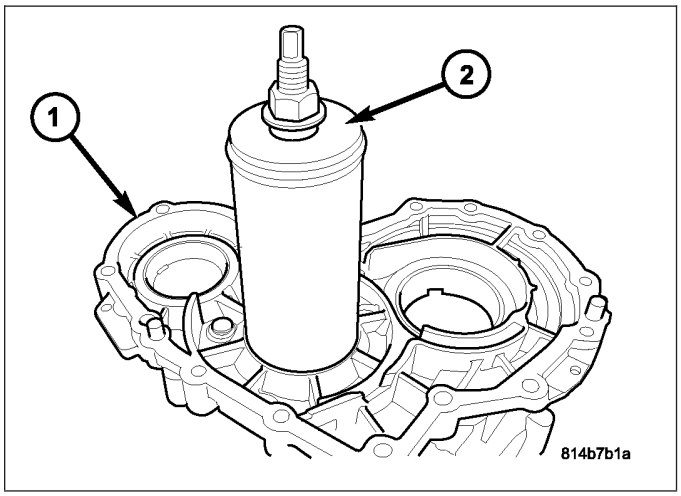

29. Remove the front output shaft (2) front bearing with Press C-293-PA (1) and Adapters C-293-52 (3).

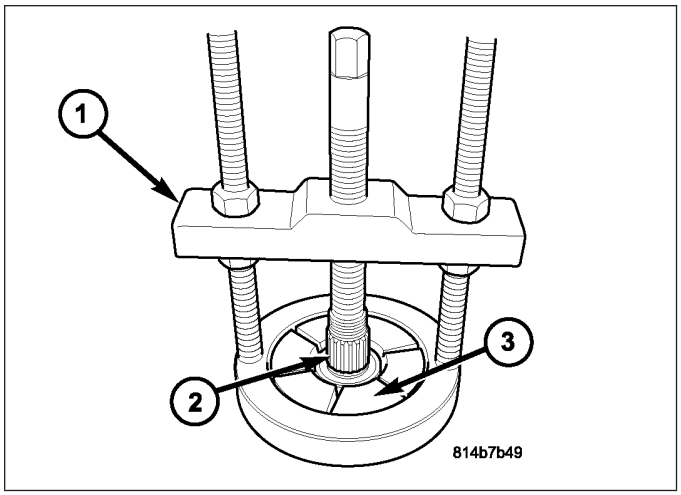

30. Remove the front output shaft (4) rear bearing with Press C-293-PA (1), Plug 8513A (2), and Adapters C-293-52 (3).

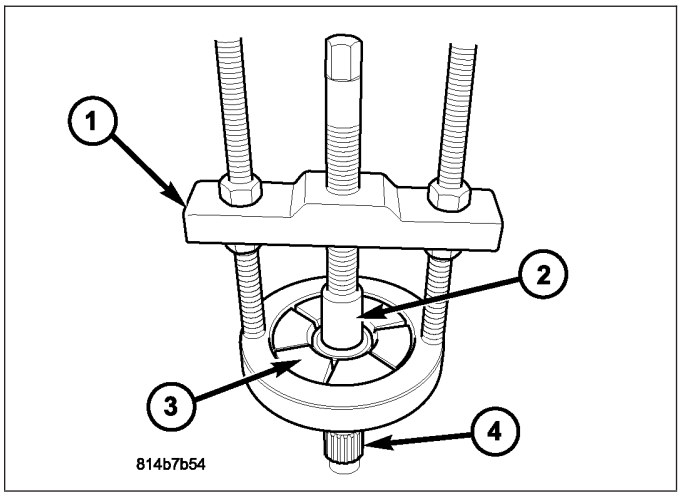

31. Remove the front hollow shaft (3) bearing with Press C-293-PA (1), Plug 9678 (2), and Adapters C-293-48 (4).

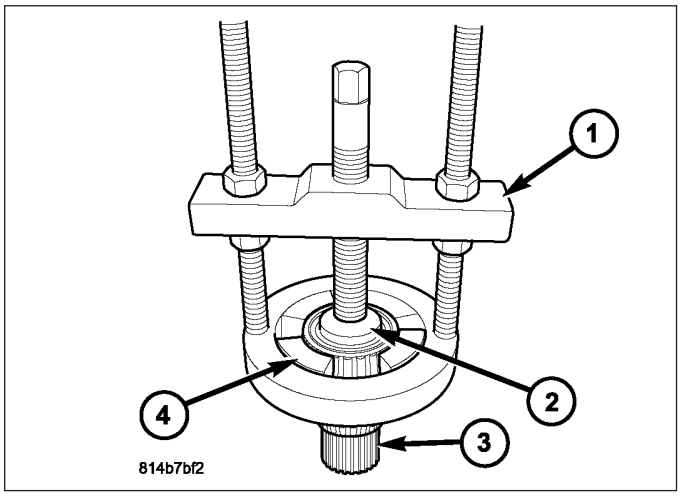

32. Remove the rear hollow shaft (4) bearing with Press C-293-PA (1), Plug SP3289 (2), and Adapters C-293-48 (3).

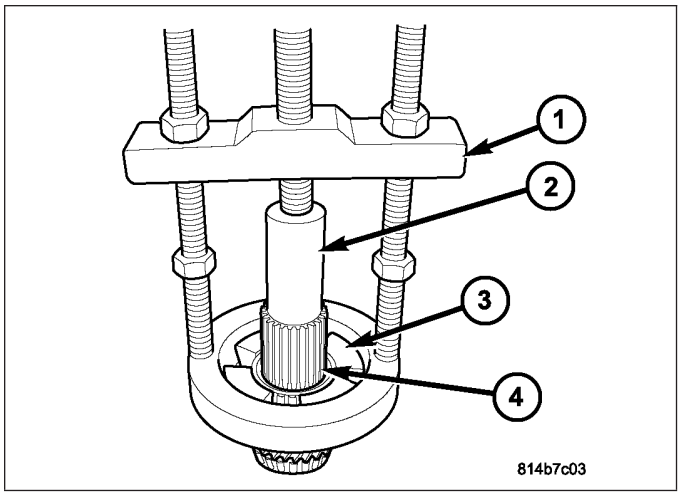

33. Remove the front and rear intermediate gear (4) bearings with Press C-293-PA (1), Plug 8513A (2), and Adapters C-293-40 (3).

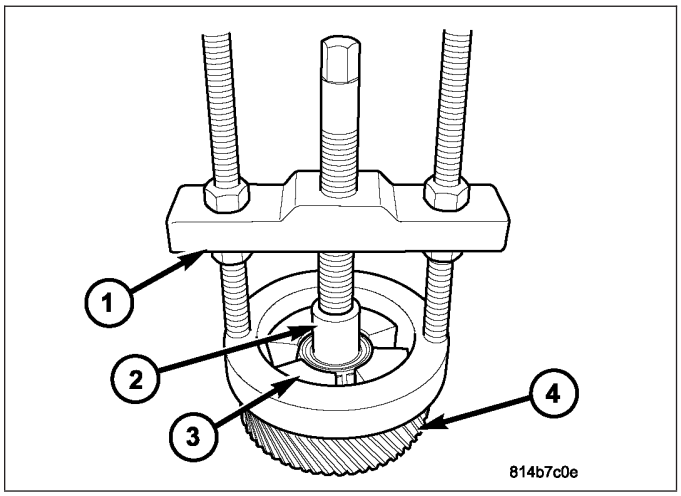

ASSEMBLY

1. Install the intermediate gear rear bearing race into the rear housing (1) with Handle C-4171 (2) and Installer D-130 (3).

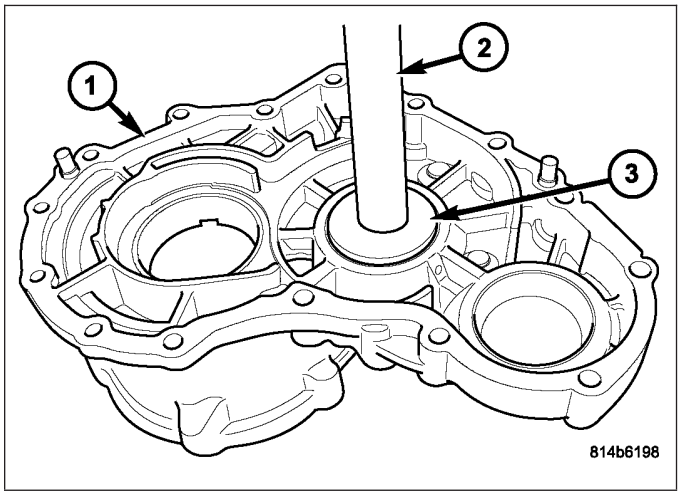

2. Install the intermediate gear front bearing race into the front housing (1) with Handle C-4171 (2) and Installer D-130 (3).

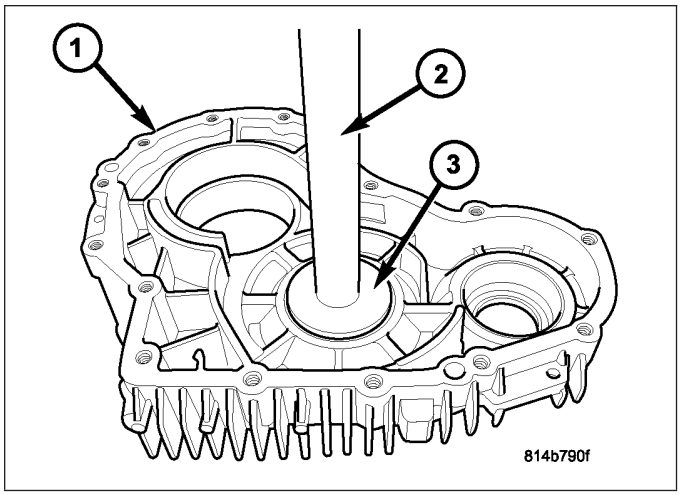

3. Install the hollow shaft front bearing race into the front housing (1) with Handle C-4171 (2) and Installer C-4308 (3).

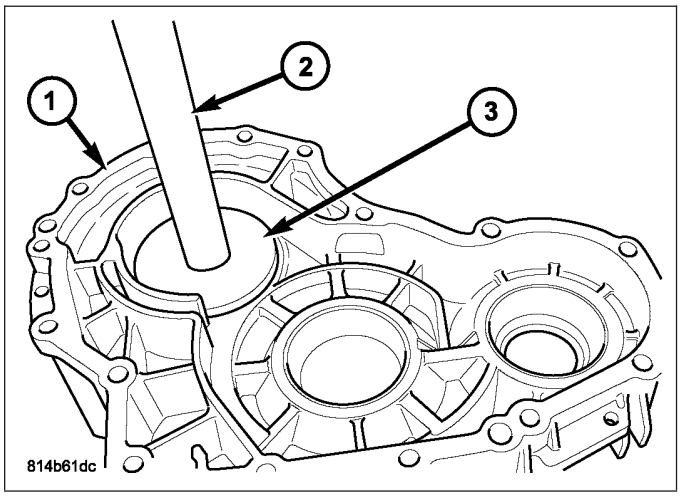

4. Install the hollow shaft rear bearing race into the rear housing (1) with Handle C-4171 (2) and Installer D-145 (3).

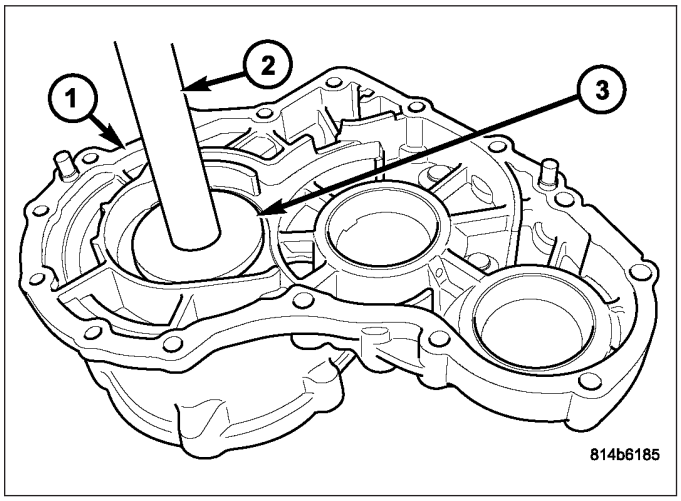

5. Install the front output shaft front bearing race into the front housing (1) with Handle C-4171 (2) and Installer D-130 (3).

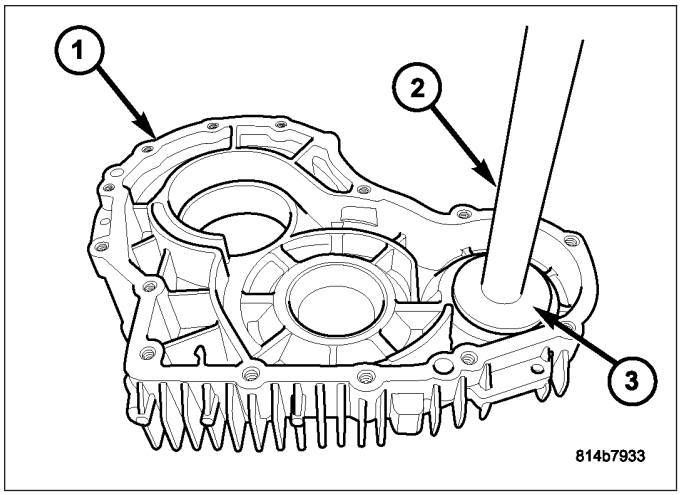

6. Install the front output shaft rear bearing race into the rear housing (1) with Handle C-4171 (2) and Installer D-130 (3).

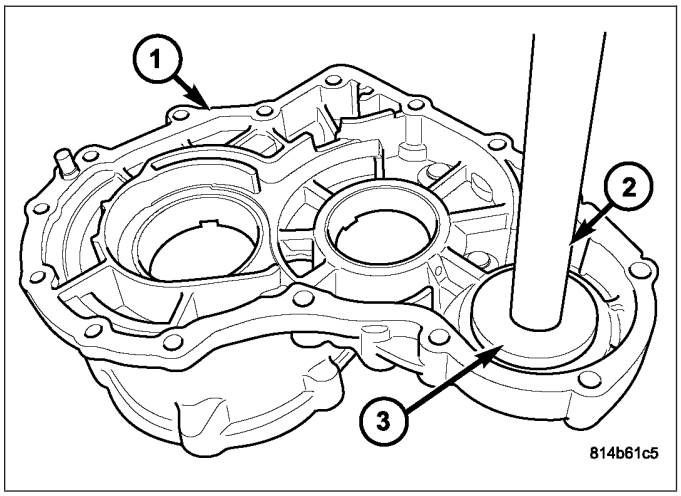

7. Install the front output shaft front bearing (2) onto the front output gear (3) with Installer C-3717 (1).

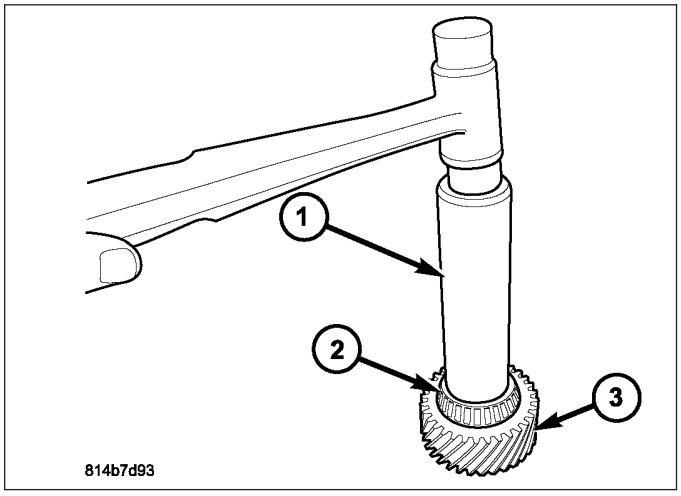

8. Install the front output shaft rear bearing onto the front output gear (3) with Handle C-4171 (1) and Installer L-4410 (2).

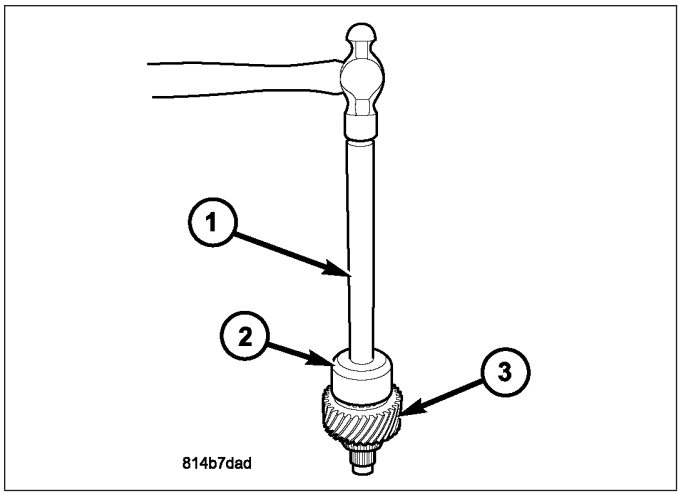

9. Install the front and rear bearings onto the intermediate gear (3) with Handle C-4171 (1) and Installer L-4410 (2).

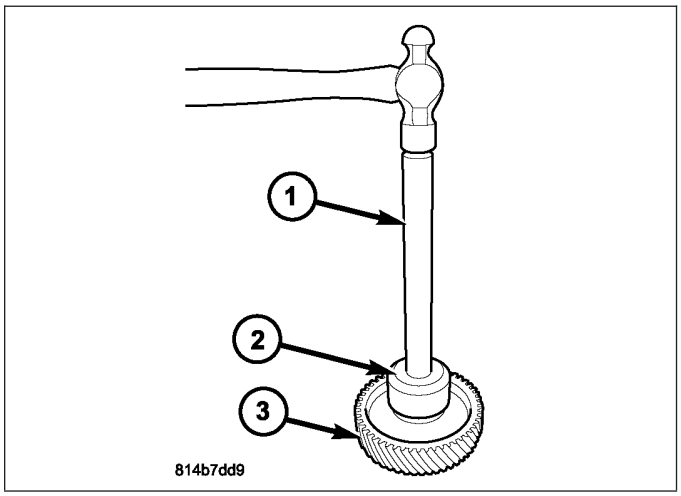

10. Install the front bearing onto the hollow shaft (3) with Handle C-4171 (1) and Installer C-4213 (2).
11. Install the rear bearing onto the hollow shaft with Installer 9679.

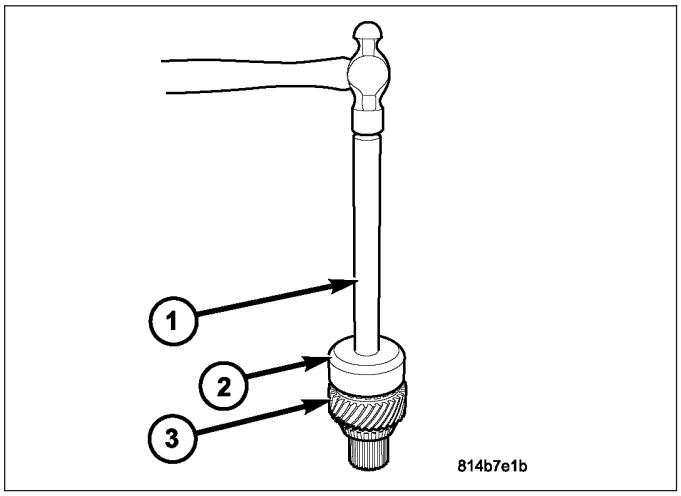

12. Install a new front output shaft seal into the front housing with Insataller MD998334.

NOTE: Apply a light coating of oil to both the inner lip and outer surface of the new oil seal.

13. Install a new input gear seal in the front housing (1) using Installer 8891 (2).

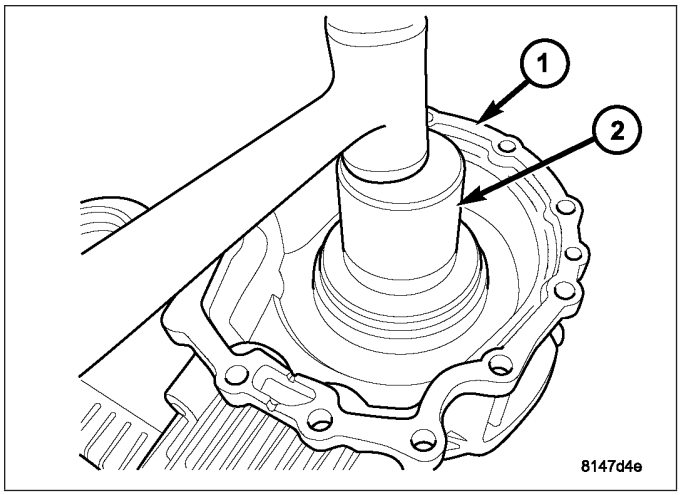

14. Set the hollow shaft in position in the front housing.
15. Install the input shaft through the front seal and the hollow shaft.
16. Install the input gear thrust washer (2) onto the input shaft (1) and hollow shaft (3).

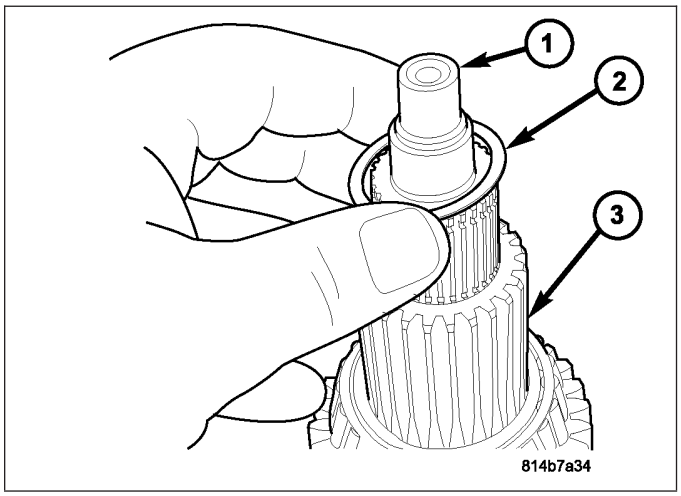

17. Install the snap-ring (2) to hold the input shaft (1) in the hollow shaft (3).

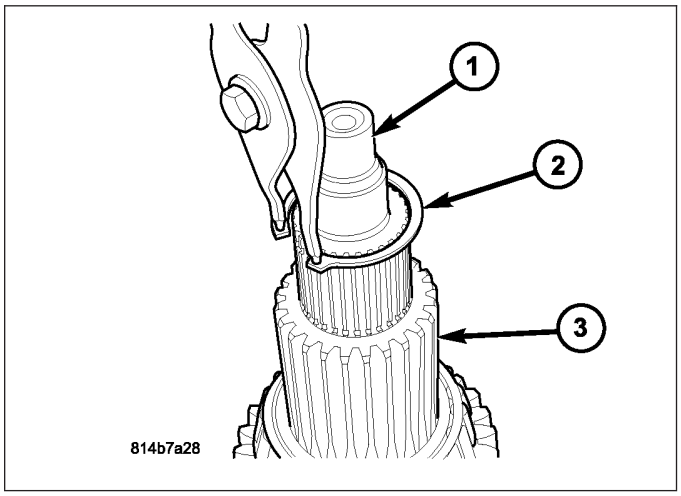

18. Install the intermediate gear (1) into the front housing (2).

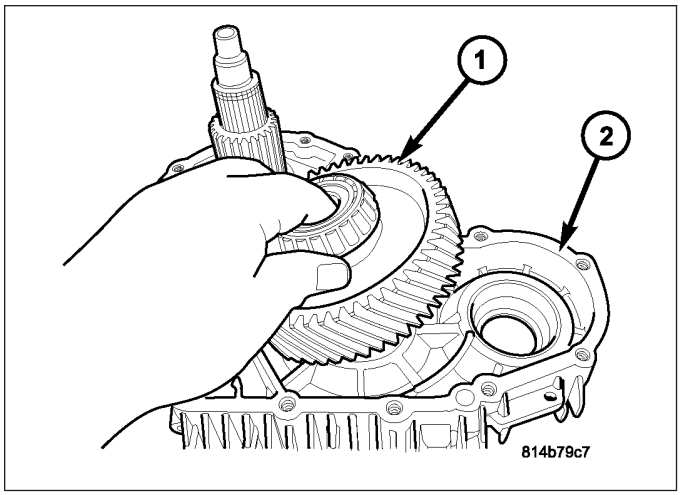

19. Install the front output shaft (1) into the front housing (2).

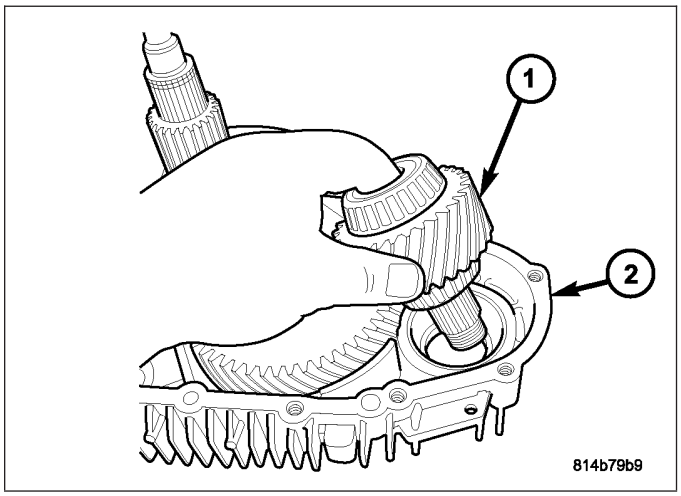

20. Clean the mating surfaces of the transfer case housings.
21. Apply a 2 mm (0.08 in.) bead of MOPAR® Gasket Maker around the perimeter of the front housing.
22. Set the rear housing (1) onto the front housing (2).

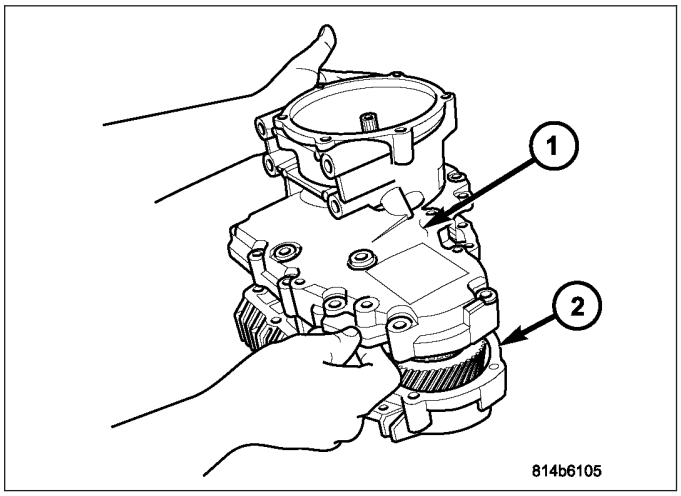

23. Install the bolts (1) to hold the rear housing (2) to the front housing. Tighten the bolts in a cross pattern to 34 N·m (25 ft.lbs.) for the 30 and 45 mm long bolts.
24. Using locally acquired nuts, install the 120 mm long bolts through the transfer case and install the nuts to the bolts. Tighten the nuts to 10 N·m (7.5 ft.lbs.). Leave the 120 mm bolts torqued this way for a minimum of 30 minutes to ensure that the sealant has cured properly. After the 30 minutes, the 120 mm bolts can be removed.

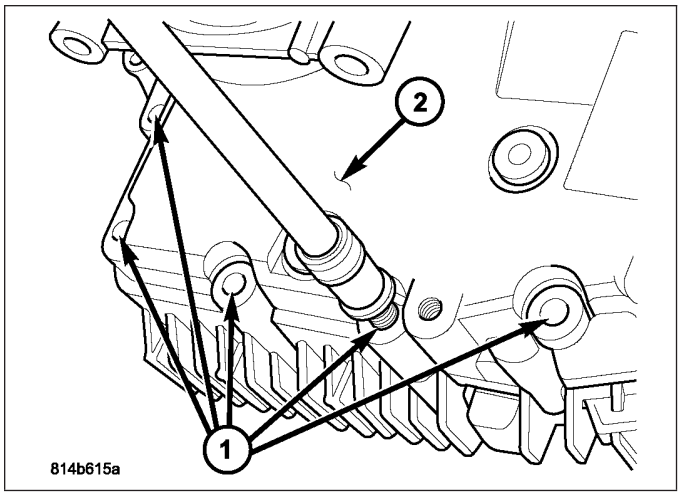

25. Install the planetary gear system (1) into the transfer case rear housing (2).

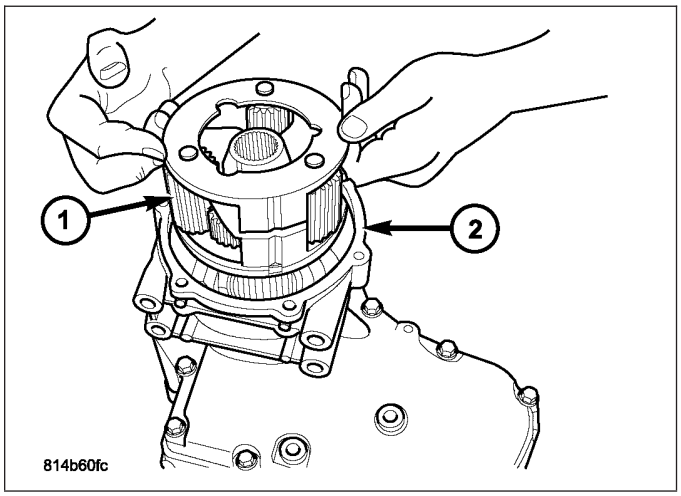

26. Install the snap-ring (2) to hold the input shaft (1) to the planetary gear system (3).

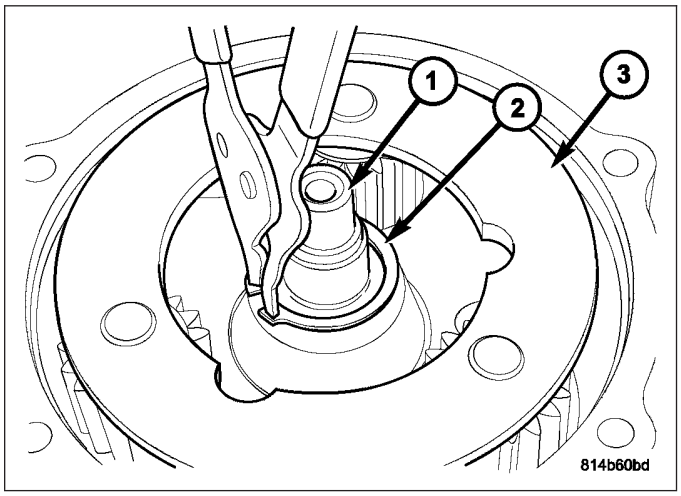

27. Install the output shaft (1) into the planetary gear system (2).

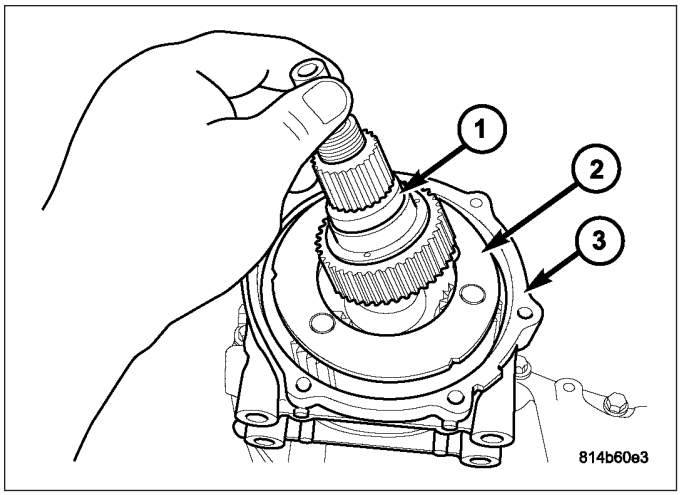

28. Install the output shaft bearing into the cover using a suitable drift tool.
29. Install the rear output shaft bearing snap-ring (1) into the transfer case cover (2).

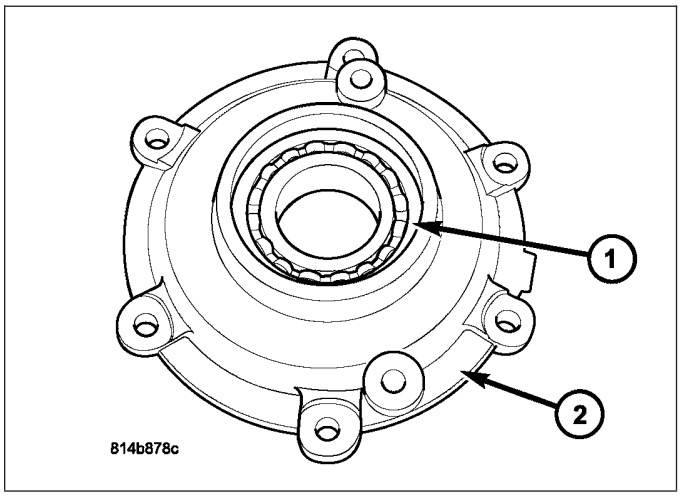

30. Clean the mating surfaces of the transfer case cover and the rear housing.
31. Apply a 2 mm (0.08 in.) bead of MOPAR® Gasket Maker around the perimeter of the rear housing.
32. Position the transfer case cover (1) onto the transfer case (2).

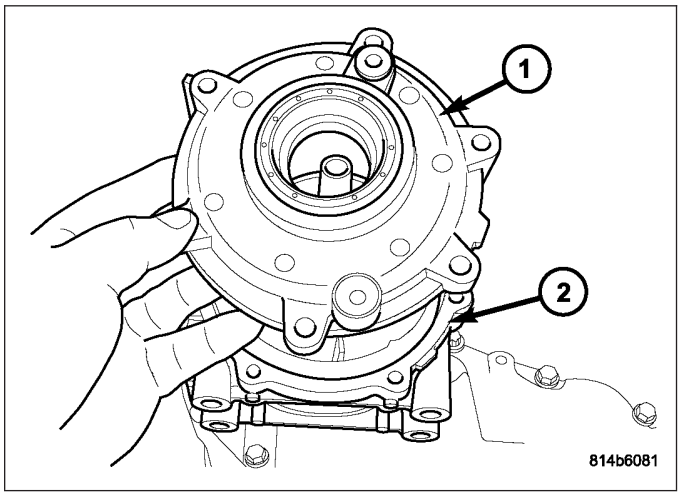

33. Install the bolts (3) to hold the transfer case rear cover (2) to the transfer case. Tighten the bolts in a cross pattern to 34 N·m (25 ft.lbs).

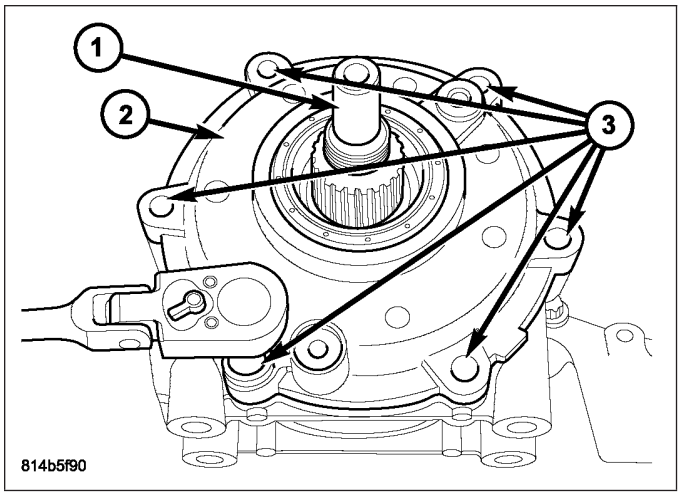

34. Install the rear output shaft seal from the transfer case cover (2) with Installer C-3860A (1).

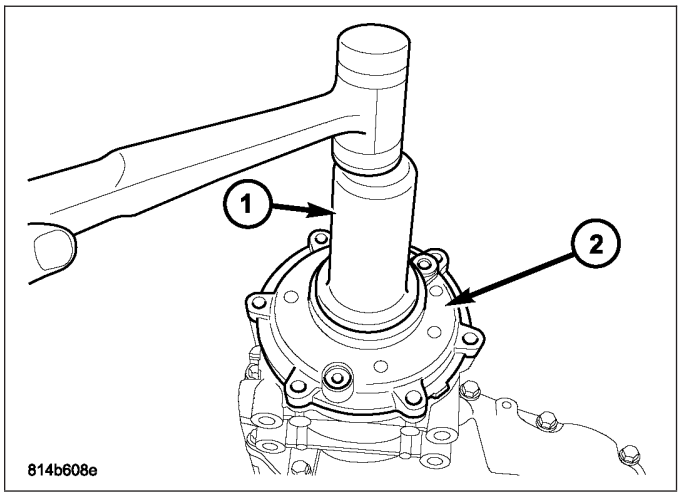

NOTE: For the most accurate torque reading, apply a light coating of oil to the nut face that contacts the flange and to the flange splines.

35. Install the rear output shaft flange (2) onto the output shaft. Install a new nut.

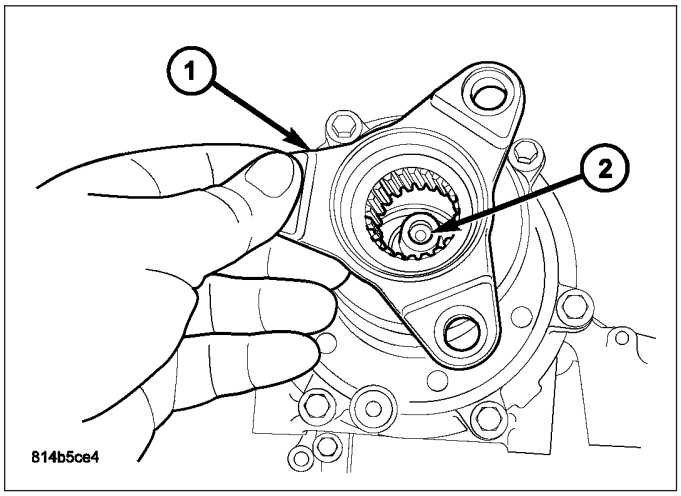

36. Install Holder 6958 (1) onto the rear output flange (2).
37. Tighten the rear output flange nut to 250 N·m (185 ft.lbs.).

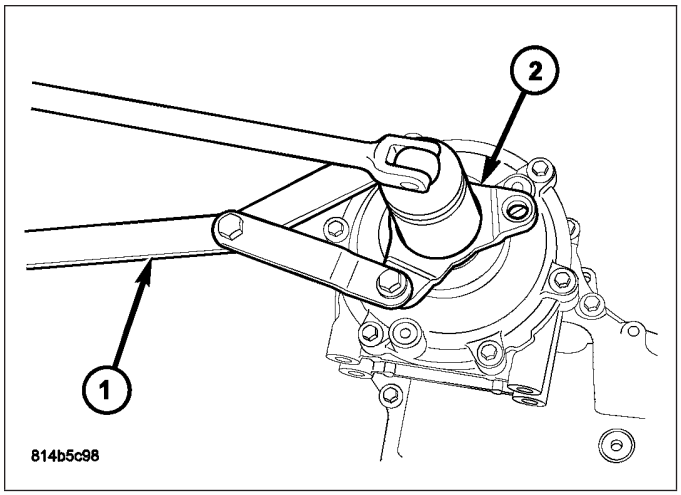

38. Install the front output shaft flange onto the front output shaft. Install a new nut.
39. Install Holder 6958 (1) onto the front output flange (2).
40. Tighten the front output flange nut to 250 N·m (185 ft.lbs.).

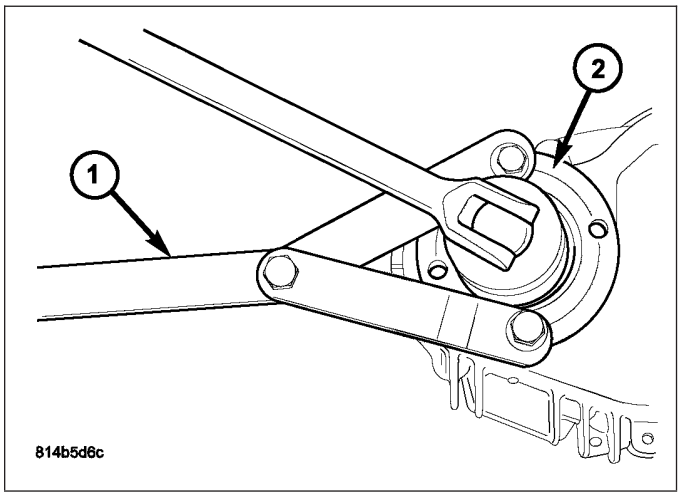

INSTALLATION

1. Support transfer case on a transmission jack.
2. Secure transfer case to jack with chains.
3. Position the transfe case under the vehicle and align the input shaft with the transmission output shaft.
4. Move the transfer case and jack forward to engage transfer case to the transmission.
5. Install the nuts and bolts to attach transfer case to transmission. Tighten the 120mm bolts to 25 N·m (18 ft.lbs.), the 30mm bolts to 27 N·m (20 ft.lbs.), and the nuts to 20 N·m (15 ft.lbs.)
6. Raise the transmission and transfer case into their normal position.
7. Fill (1, 2) the transfer case with the appropriate fluid.
8. Install the transfer case dampner.

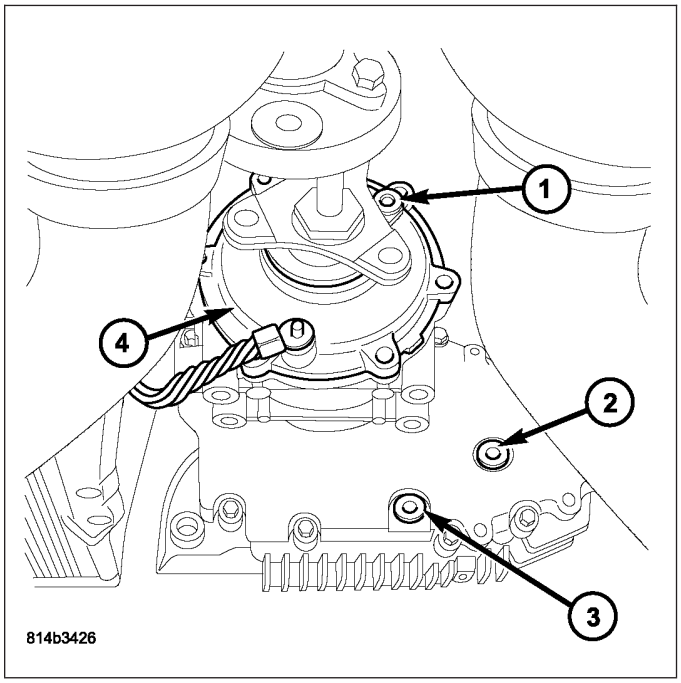

9. Install the transmission mount assembly to the transfer case and install the bolts (3) to hold the transmission mount assembly (2) to the transfer case (1), 3.5L engine. Tighten the bolts to 55 N·m (41 ft.lbs.).

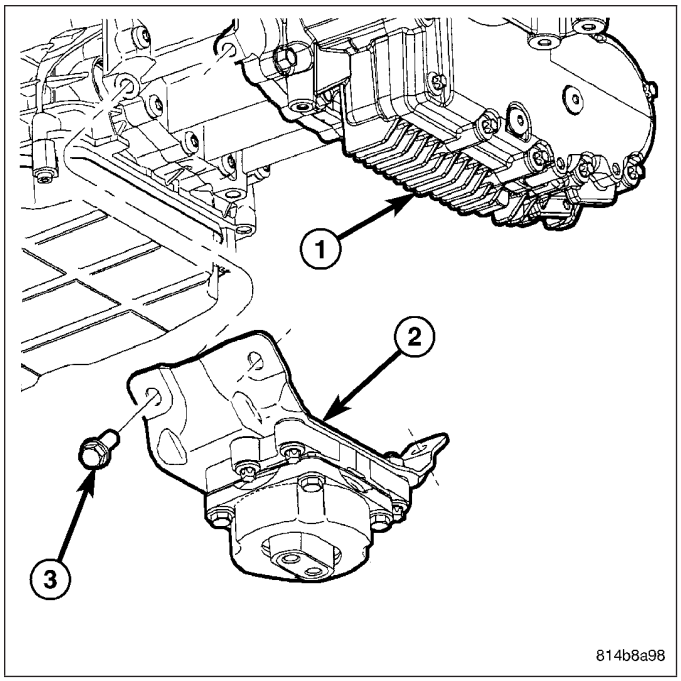

10. Install the transmission mount to the transfer case and install the bolts (2) to hold the transmission mount (1) to the transfer case, 5.7L engine. Tighten the bolts to 68 N·m (50 ft.lbs.).

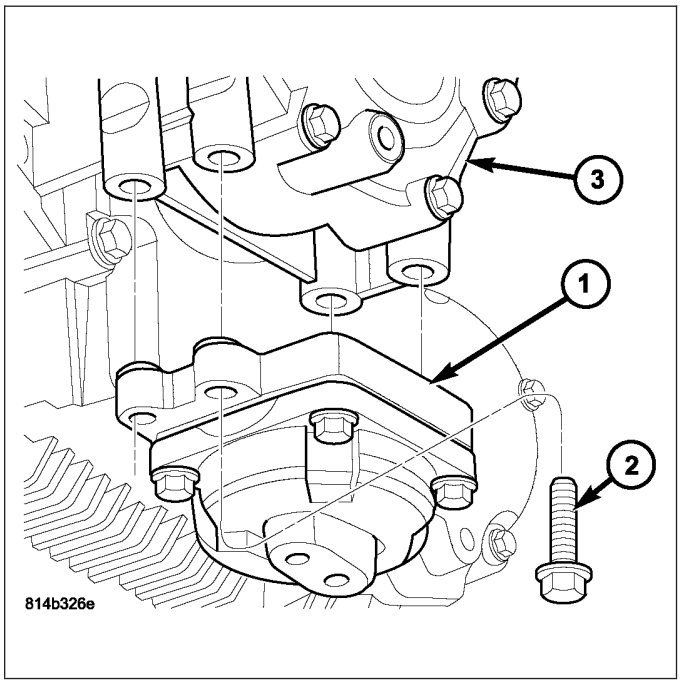

11. Install the bolts (2) to hold the transmission crossmember (1) to the transmission mount (3). Tighten the bolts to 65 N·m (48 ft.lbs.).
12. Install the bolts to hold the transmission crossmember to the frame.Tighten the bolts to 68 N·m (50 ft.lbs.).
13. Install the front and rear propeller shafts to the transfer case. (Refer to 3 - DIFFERENTIAL & DRIVELINE/PROPELLER SHAFT - INSTALLATION)

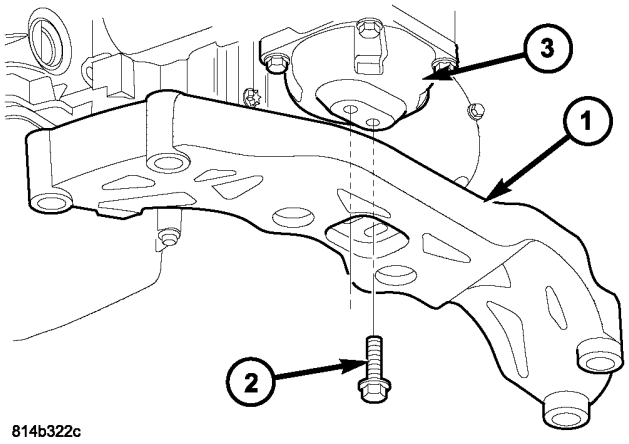

SPECIFICATIONS

TORQUE SPECIFICATIONS - MS140

DESCRIPTION	N·m	Ft. Lbs.	In. Lbs.
Bolts, Transfer Case Mounting - 120mm	25	18	-
Bolts, Transfer Case Mounting - 30mm	27	20	-
Nuts, Transfer Case Mounting	20	15	-
Bolts, Front to Rear Housing - 120mm	22	16	-
Bolts, Front to Rear Housing - 45mm	34	25	-
Bolts, Front to Rear Housing - 30mm	34	25	-
Bolts, Planetary Assembly Cover	9	6.5	79.5
Bolts, Rear Cover	34	25	-
Nut, Rear Output Shaft Flange	250	185	-
Nut, Front Output Shaft Flange	250	185	-
Bolts, Transmission Mount Assembly to Transfer Case - 3.5L	55	41	-
Bolts, Transmission Mount to Transfer Case - 5.7L	68	50	-
Bolts, Transmission Mount to Crossmember	65	48	-
Bolts, Transmission Crossmember	68	50	-
Plug, Oil Fill and Drain	25	18.5	-

SPECIAL TOOLS - MS140

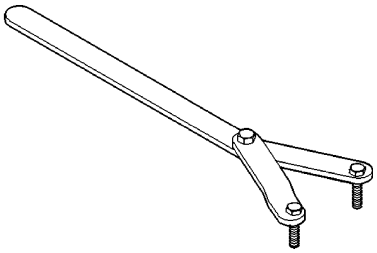

Wrench, Spanner - 6958

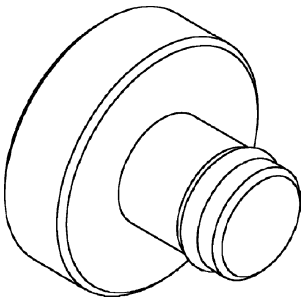

Insert, Crankshaft Damper Removal - 8513

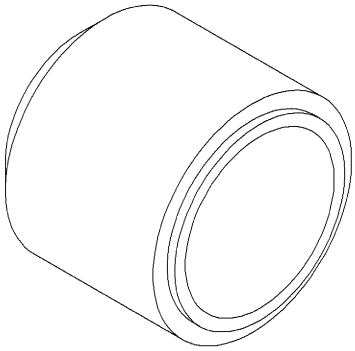

Installer, Seal - 8891

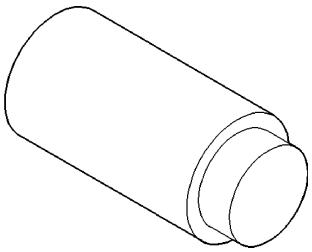

Plug - 9678

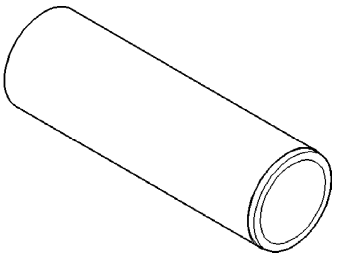

Sleeve - 9679

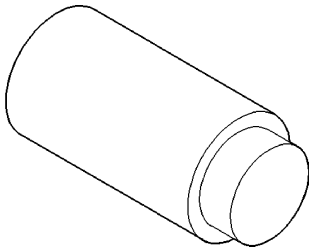

Plug - C-293-3

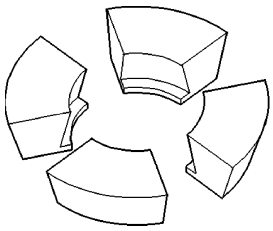

Blocks, Adapter - C-293-40

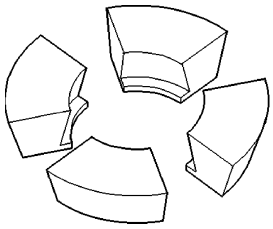

Blocks, Adapter - C-293-48

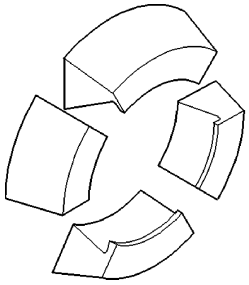

Blocks, Adapter - C-293-52

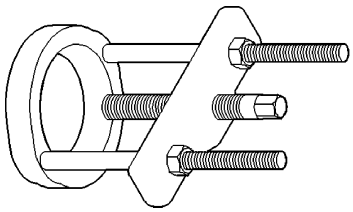

Puller - C-293-PA

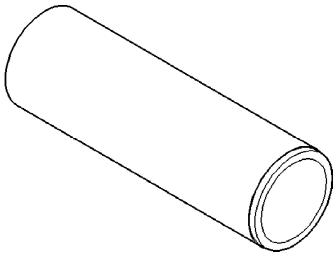

Sleeve - C-3717

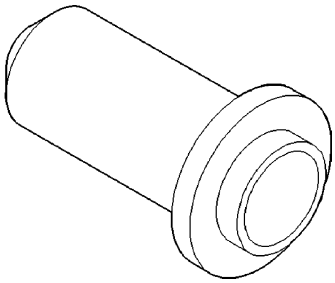

Installer - C-3860A

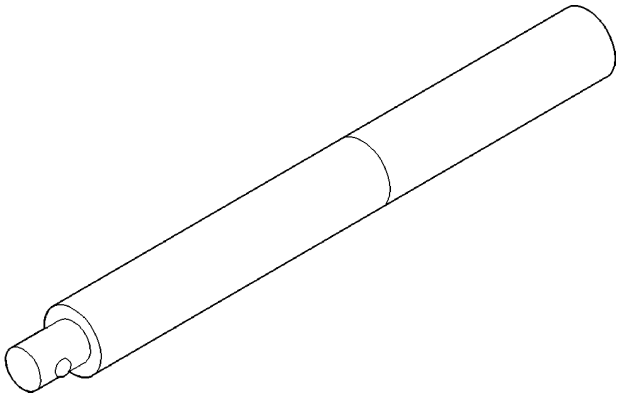

Handle, Driver - C-4171

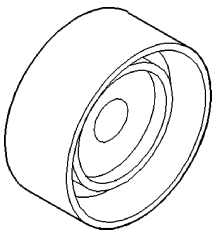

Installer - C-4213

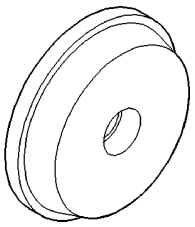

Installer, Bearing - C-4308

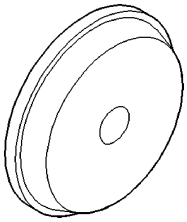

Installer - D-130

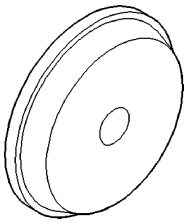

Installer - D-145

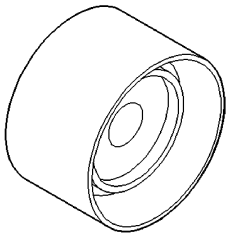

Installer, Bearing - L-4410

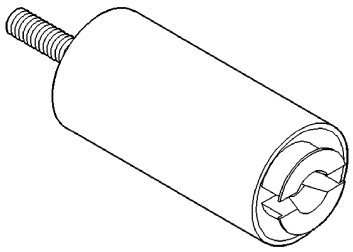

Remover - L-4518

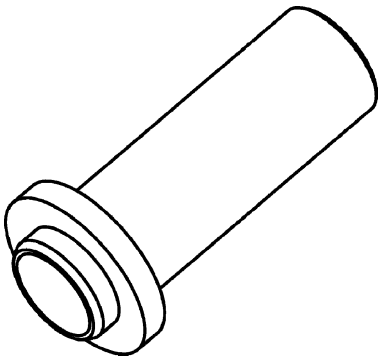

Installer, Seal - MD998334

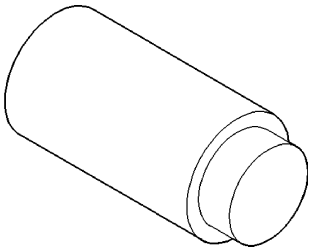

Plug - SP-3289

FLUID

STANDARD PROCEDURE - FLUID DRAIN AND FILL

1. Raise support vehicle.
2. Disconnect the front and rear propeller shafts from the transfer case. (Refer to 3 - DIFFERENTIAL & DRIVELINE/PROPELLER SHAFT - REMOVAL) It is not necessary to completely remove the propeller shafts from the vehicle.
3. Support transmission (1) with jack stand.
4. Remove the bolts holding the transmission crossmember to the frame.
5. Remove the bolts (2) holding the transmission crossmember (1) to the transmission mount (3) and remove the crossmember from the vehicle.

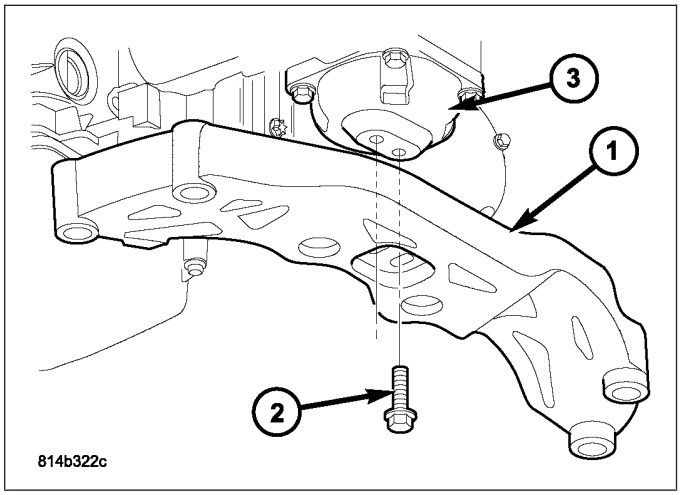

6. Remove the transfer case dampner.
7. Clean the area around the transfer case plugs.
8. Remove the transfer case fill plug (1).
9. Remove the transfer case fluid level inspection plug (2).
10. Remove the transfer case drain plug (3) and drain transfer case lubricant.

NOTE: Inspect all the transfer case plug seals and replace as necessary.

11. Once the fluid has stopped draining, install the drain plug and tighten the plug to 25 N·m (18.5 ft.lbs.).
12. Raise the transfer case to the normal installed position.

CAUTION: The fluid must be poured through the fill opening since there is an area behind the opening that must be filled with fluid. Do not attempt to fill the transfer case through the inspection hole.

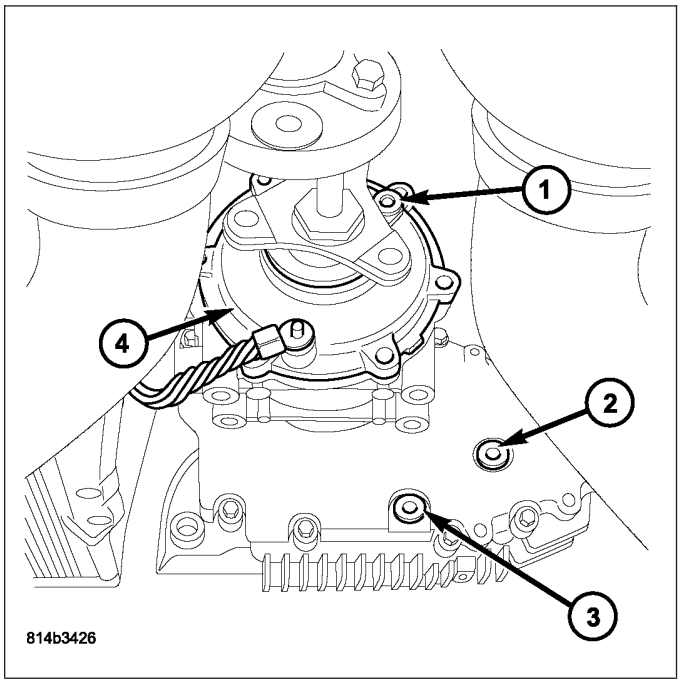

13. Begin pouring the appropriate transfer case fluid in the fill hole until the fluid begins to run out of the inspection hole.
14. After the fluid has drained from the inspection hole for one to two minutes, install the inspection plug and tighten the plug to 30 N·m (22 ft.lbs.).
15. Install the fill plug and tighten the plug to 25 N·m (18.5 ft.lbs..
16. Install the propeller shafts, transfer case dampner, and the transmission crossmember.

PLANETARY-TRANSFER CASE

DISASSEMBLY

1. Remove the bolts (1) holding the planetary cover (2) to the planetary assembly (3).

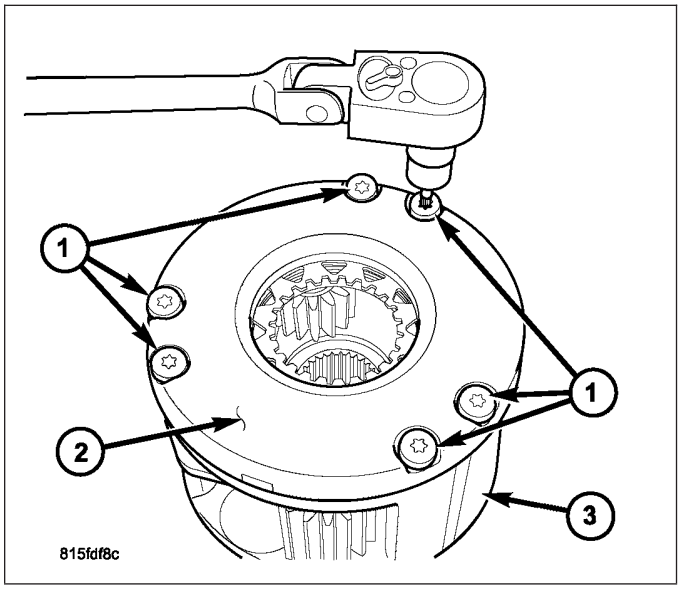

2. Remove the planetary cover (1) from the planetary assembly (2).

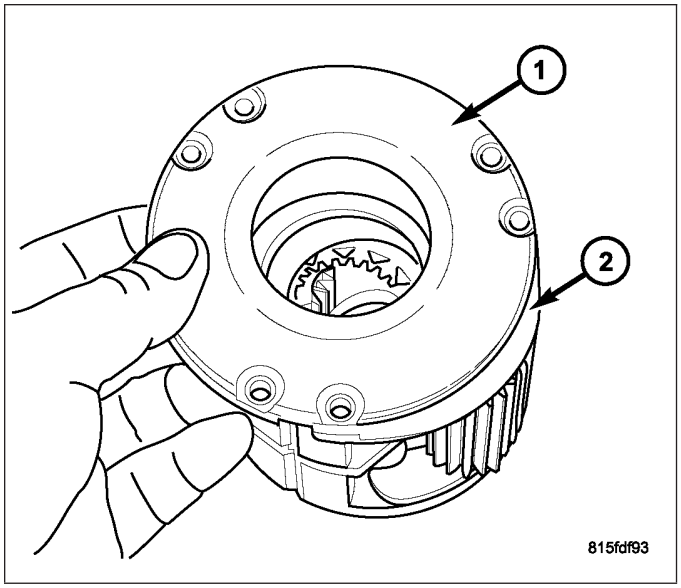

3. Remove the Belleville spring (1) from the friction disc apply plate (2).

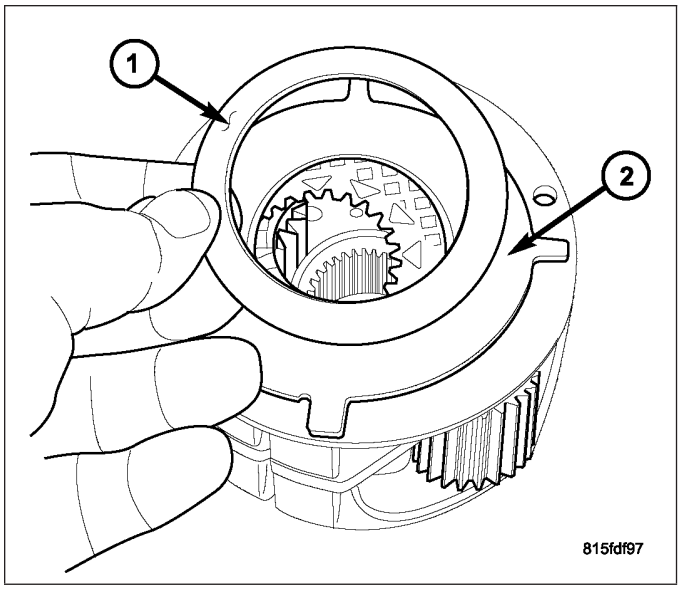

4. Remove the friction disc apply plate (1) from the friction disc (2).

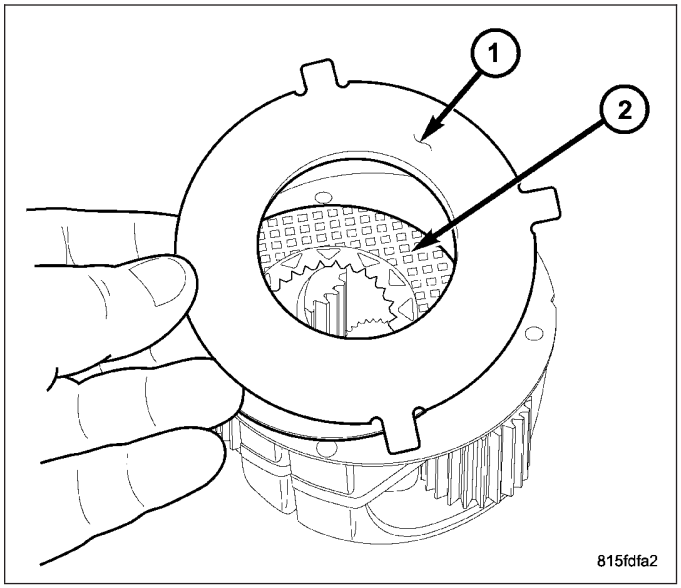

5. Remove the friction disc (1) from the friction disc washer (2).

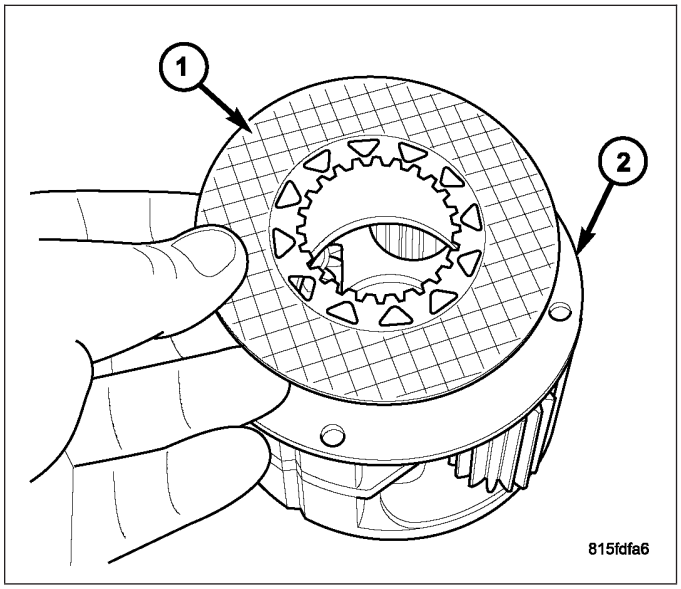

6. Remove the friction disc washer (1) from the planetary assembly (2).

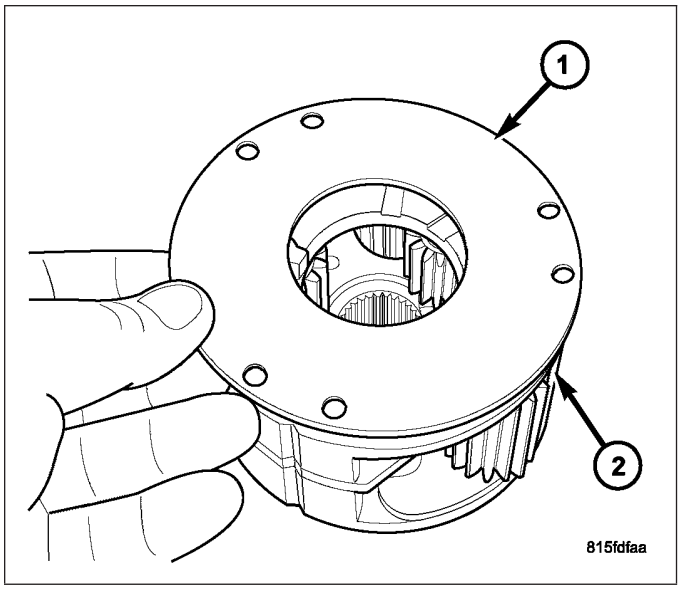

ASSEMBLY

CAUTION: Soak the new friction disc in the appropriate transfer case lubricant (Refer to LUBRICATION & MAINTENANCE/FLUID TYPES - DESCRIPTION) for a minimum of 30 minutes prior to installation.

1. Install the friction disc washer (1) onto the planetary assembly (2).

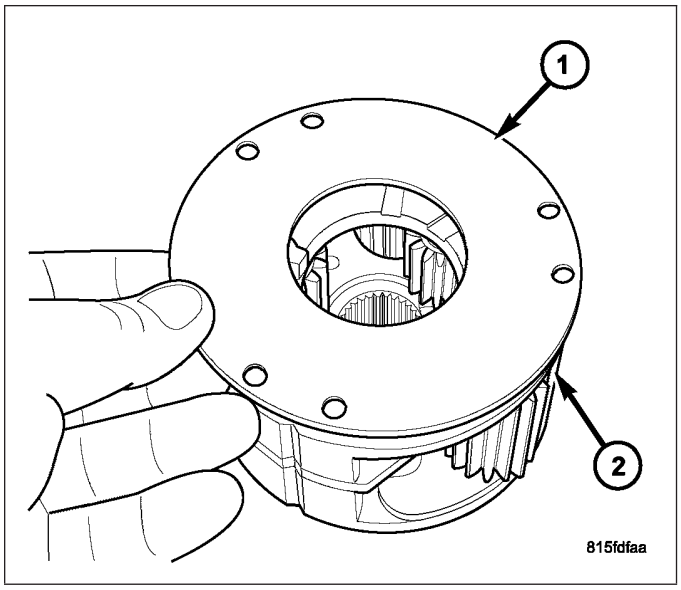

2. Install the friction disc (1) onto the friction disc washer (2).

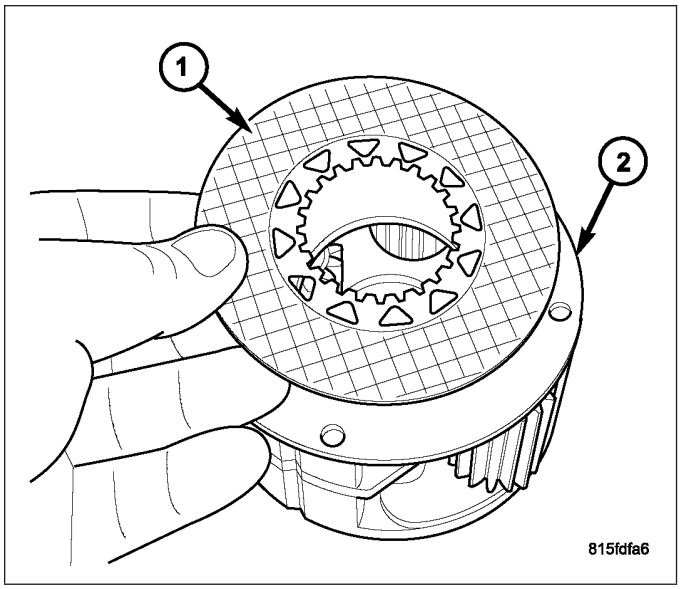

3. Install the friction disc apply plate (1) onto the friction disc (2).

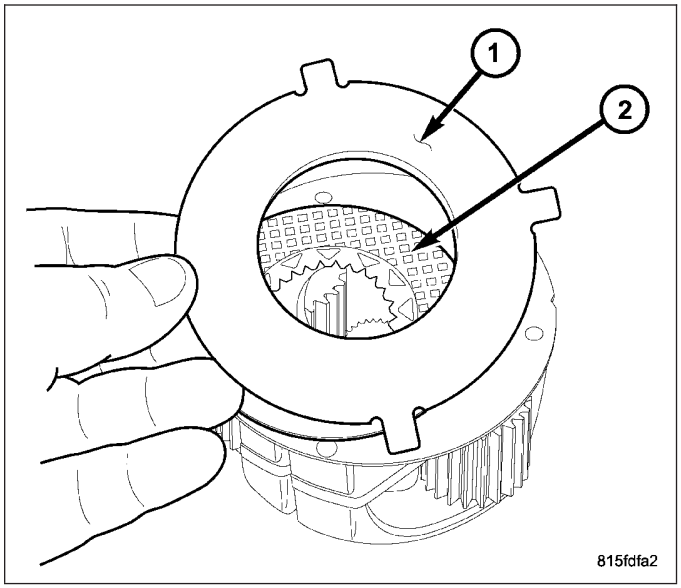

4. Install the Belleville spring (1) onto the friction disc apply plate (2).

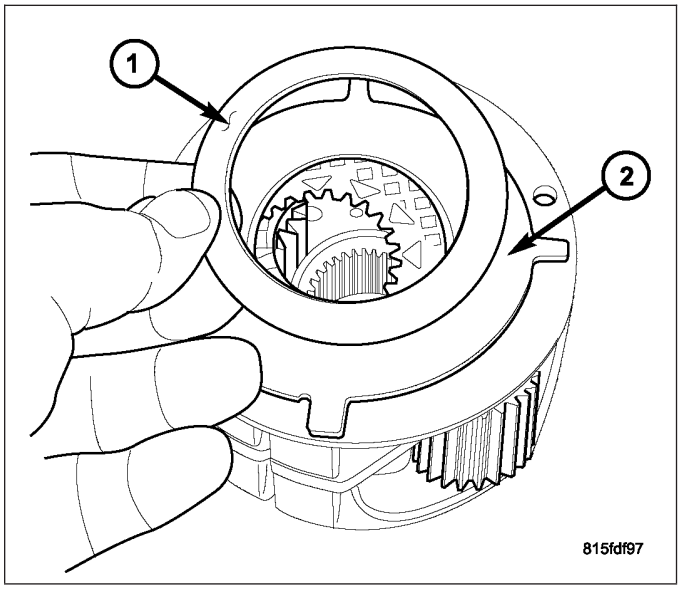

5. Install the planetary cover (1) onto the planetary assembly (2).

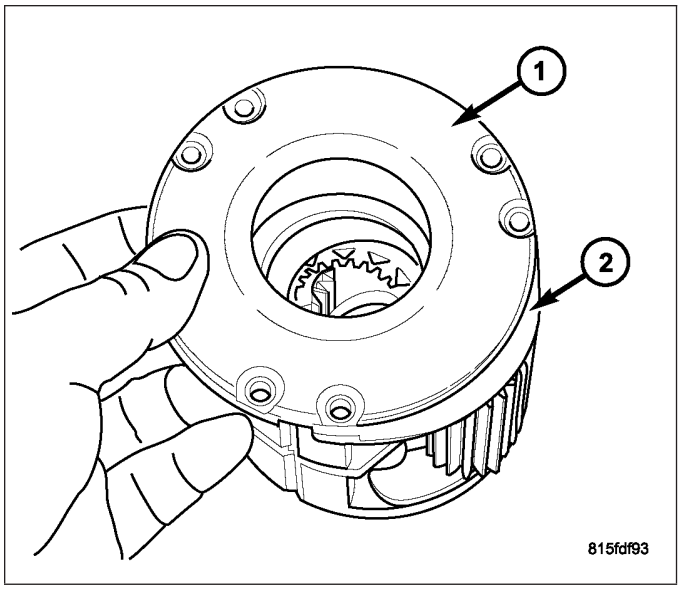

6. Install the bolts (1) holding the planetary cover (2) to the planetary assembly (3). Tighten the bolts to 9 N·m (6.5 ft.lbs.).

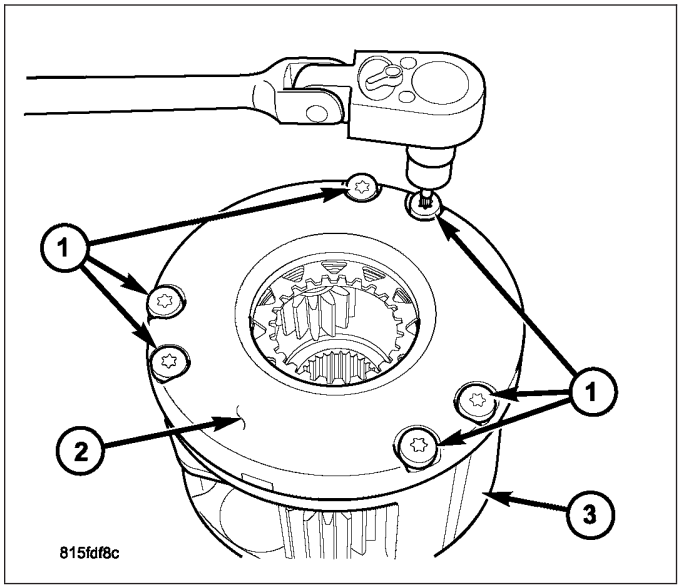

SEAL-FRONT OUTPUT SHAFT

REMOVAL

1. Remove the front propeller shaft. (Refer to 3 - DIFFERENTIAL & DRIVELINE/PROPELLER SHAFT - REMOVAL)
2. Using Holder 6958 (1), remove the front output shaft flange (2) nut.

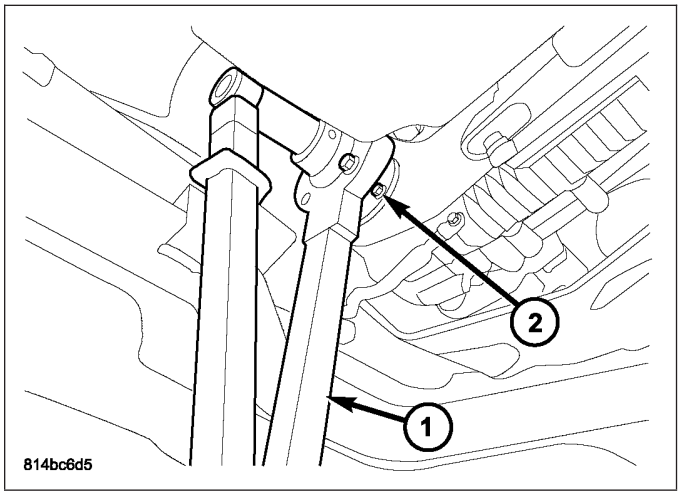

3. Using a suitable 2 or 3 jaw puller (1), remove the front output shaft flange (2).

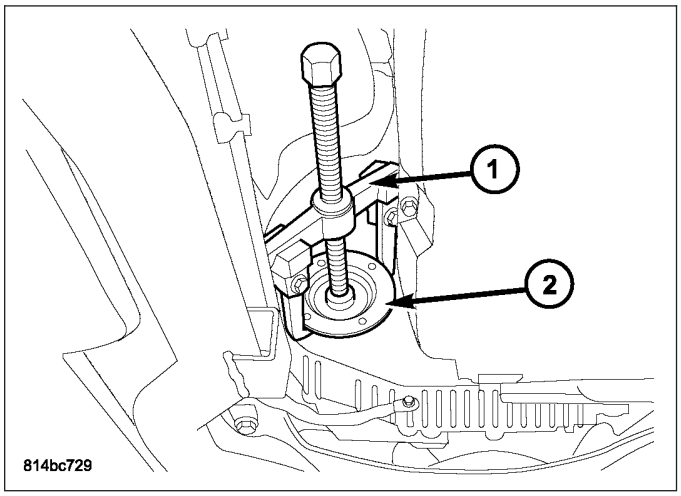

4. Using a suitable pry tool (1), remove the output shaft seal (2) from the transfer case (2).

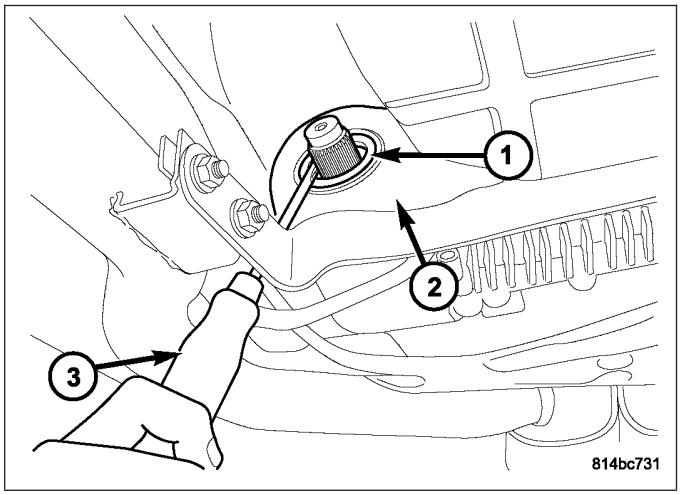

INSTALLATION

1. Install a new front output shaft seal into the transfer case (2) using Seal Installer MD 998334 (1).
2. Coat both the outer surface and the seal lip with automatic transmission fluid.

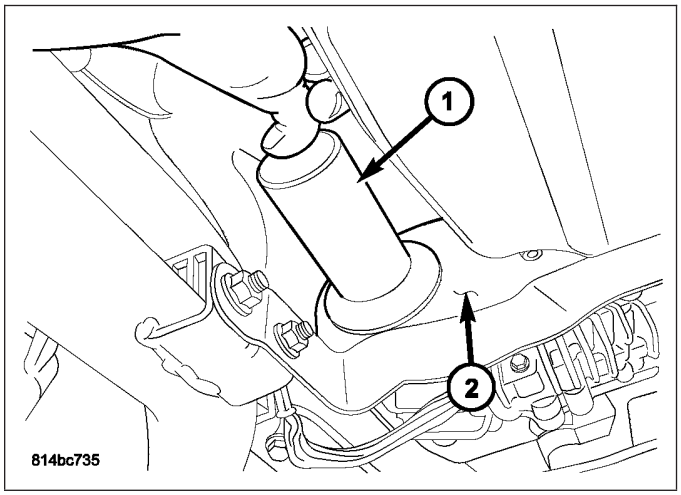

NOTE: Apply a light coating of automatic transmission fluid to the flange splines prior to installation.

CAUTION: It may be necessary to use a block of wood and a soft-faced hammer to install the flange since the flange may have a slight interference fit to the output shaft.

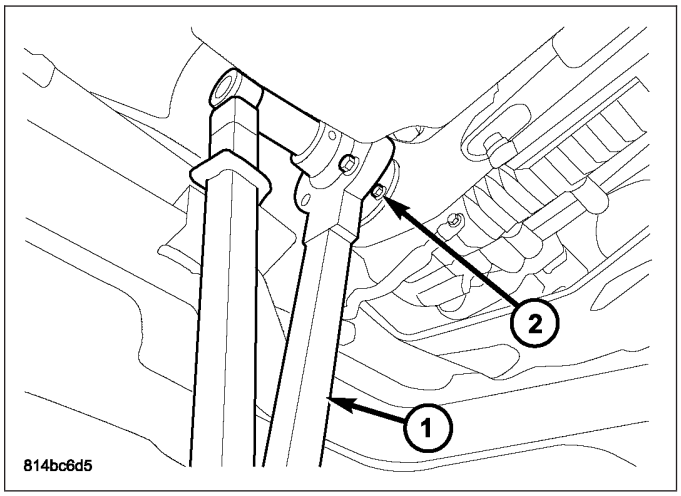

3. Install the front output shaft flange onto the front output shaft.
4. Install a new nut onto the output shaft.
5. Using Holder 6958 (1), tighten the front output shaft flange (2) nut to 250 N·m (185 ft.lbs.).
6. Install the front propeller shaft. (Refer to 3 - DIFFERENTIAL & DRIVELINE/PROPELLER SHAFT - INSTALLATION)
7. Check and correct the transfer case oil level. (Refer to 21 - TRANSMISSION AND TRANSFER CASE/TRANSFER CASE - MS140/FLUID - STANDARD PROCEDURE)

SEAL-REAR OUTPUT SHAFT

REMOVAL

1. Remove the rear propeller shaft. (Refer to 3 - DIFFERENTIAL & DRIVELINE/PROPELLER SHAFT - REMOVAL)
2. Using Holder 6958 (1), remove the rear output shaft flange (2) nut.

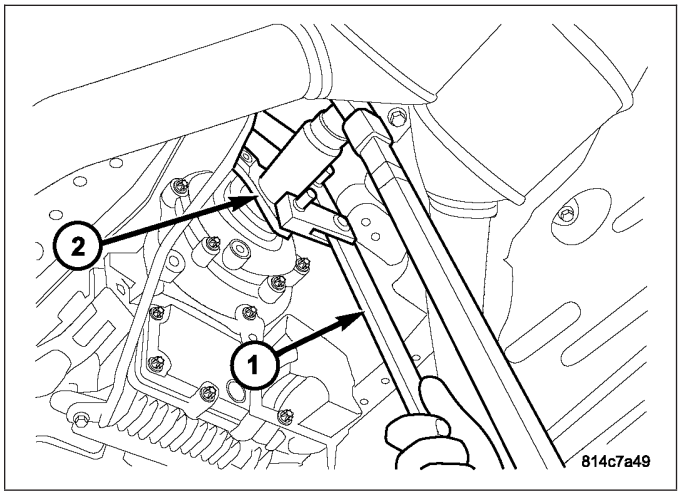

3. Using a suitable 2 or 3 jaw puller (1), remove the rear output shaft flange (2).

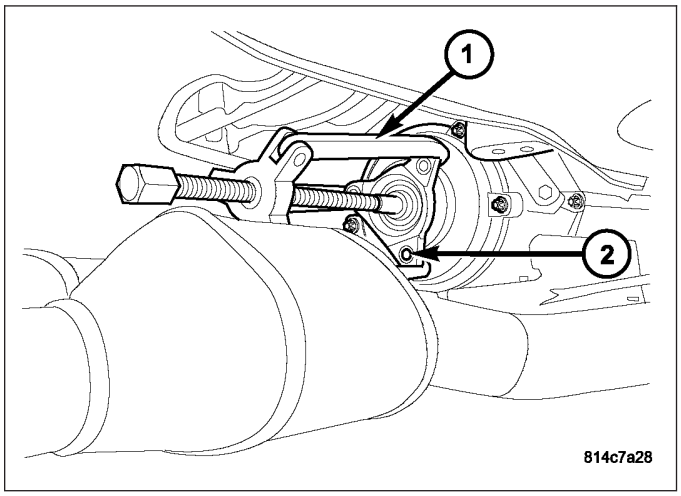

4. Using a suitable pry tool (1), remove the output shaft seal (2) from the transfer case (2).

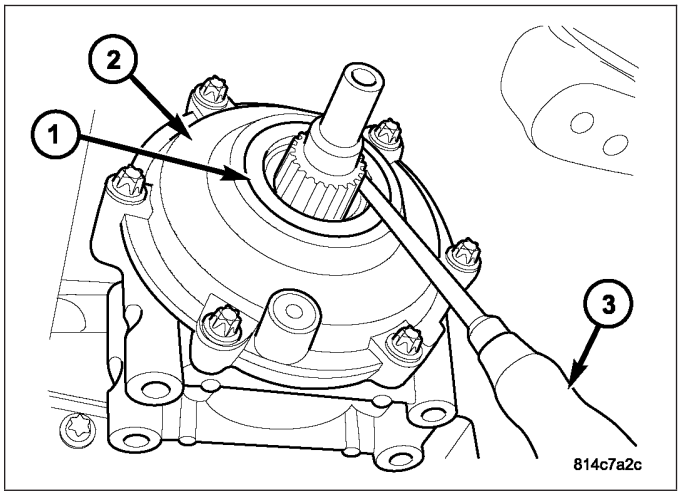

INSTALLATION

1. Install a new rear output shaft seal into the transfer case (2) using Seal Installer C-3860A (1).
2. Coat both the outer surface and the seal lip with automatic transmission fluid.

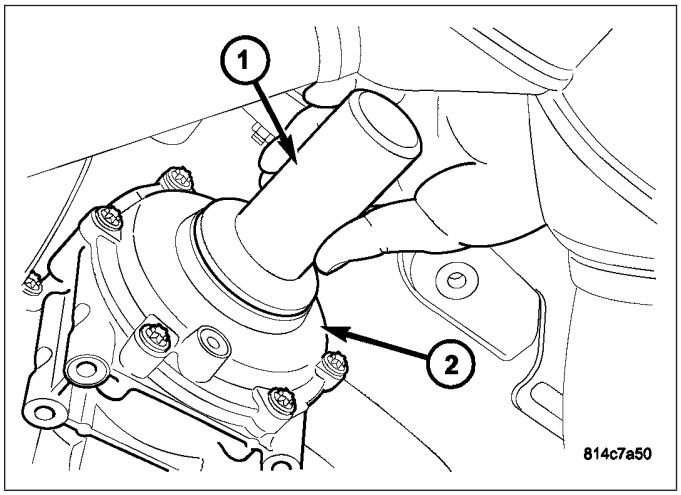

NOTE: Apply a light coating of automatic transmission fluid to the flange splines prior to installation.

CAUTION: It may be necessary to use a block of wood and a soft-faced hammer to install the flange since the flange may have a slight interference fit to the output shaft.

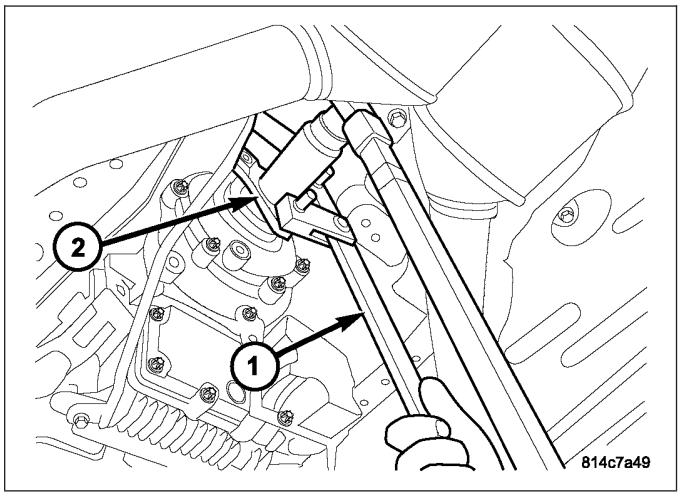

3. Install the rear output shaft flange onto the rear output shaft.
4. Install a new nut onto the output shaft.
5. Using Holder 6958 (1), tighten the rear output shaft flange (2) nut to 250 N·m (185 ft.lbs.).
6. Install the rear propeller shaft. (Refer to 3 - DIFFERENTIAL & DRIVELINE/PROPELLER SHAFT - INSTALLATION)
7. Check and correct the transfer case oil level. (Refer to 21 - TRANSMISSION AND TRANSFER CASE/TRANSFER CASE - MS140/FLUID - STANDARD PROCEDURE)

TIRES/WHEELS

TABLE OF CONTENTS

page

TIRES/WHEELS
DIAGNOSIS AND TESTING
TIRE AND WHEEL VIBRATION 3
STANDARD PROCEDURE
TIRE AND WHEEL BALANCE 8
TIRE AND WHEEL MATCH MOUNTING 9
TIRE AND WHEEL ROTATION 9
TIRE AND WHEEL ROTATION - SRT8 9
REMOVAL
TIRE AND WHEEL ASSEMBLY (ALUMINUM WHEEL). 10
TIRE AND WHEEL ASSEMBLY (STEEL WHEEL). 11
INSTALLATION
TIRE AND WHEEL ASSEMBLY (ALUMINUM WHEEL). 11
TIRE AND WHEEL ASSEMBLY (STEEL WHEEL). 13
SPECIAL TOOLS
TIRES AND WHEELS 15
TIRE PRESSURE MONITORING - ELECTRICAL DIAGNOSIS
DIAGNOSIS AND TESTING
C0077-LOW TIRE PRESSURE 17
C1501–TIRE PRESSURE SENSOR 1 INTERNAL 19
C1502–TIRE PRESSURE SENSOR 2 INTERNAL 22
C1503–TIRE PRESSURE SENSOR 3 INTERNAL 25
C1504–TIRE PRESSURE SENSOR 4 INTERNAL 28
C1505–TIRE PRESSURE SENSOR 5 INTERNAL 31
C1506–LEFT FRONT TIRE PRESSURE TRANSPONDER MODULE PERFORMANCE. 34
C1507–RIGHT FRONT TIRE PRESSURE TRANSPONDER MODULE PERFORMANCE. 39
C1509–RIGHT REAR TIRE PRESSURE TRANSPONDER MODULE PERFORMANCE. 44
C150A–LEFT FRONT TIRE PRESSURE TRANSPONDER MODULE VOLTAGE HIGH . . 49
C150B–RIGHT FRONT TIRE PRESSURE TRANSPONDER MODULE VOLTAGE HIGH . . 52
C150C–RIGHT REAR TIRE PRESSURE TRANSPONDER MODULE VOLTAGE HIGH . . 55
TPM VERIFICATION 58
TIRE PRESSURE MONITORING - SERVICE INFORMATION
DESCRIPTION 60
OPERATION 60
SENSOR - TPM
DESCRIPTION 62
OPERATION 64
CAUTION 64
DIAGNOSIS AND TESTING
TIRE PRESSURE SENSOR 65
REMOVAL 65
INSTALLATION 67
TRANSPONDER - TPM
DESCRIPTION 71
OPERATION 71
REMOVAL
FRONT 71
REAR 71
INSTALLATION
FRONT 72
REAR 73
TIRES
DESCRIPTION
TIRE 74
TIRE - SRT8 75
REPLACEMENT TIRES 75
SPARE TIRE 76
DIAGNOSIS AND TESTING
TIRE NOISE 76
TIRE/VEHICLE LEAD 76
TIRE WEAR PATTERNS 77
TREAD WEAR INDICATORS 77
STANDARD PROCEDURE
TIRE INFLATION PRESSURES 77
TIRE PRESSURE FOR HIGH SPEED OPERATION. 78
TIRE LEAK REPAIRING 79
CLEANING
TIRE CLEANING 79
SPECIFICATIONS
TIRE - SRT8 79
WHEELS
DESCRIPTION
WHEEL 80
WHEEL - SRT8 80
DIAGNOSIS AND TESTING
WHEEL INSPECTION 81

CLEANING
WHEEL AND WHEEL TRIM CARE 82
SPECIFICATIONS
WHEEL 82
WHEEL - SRT8 82
STUDS - FRONT
REMOVAL 84
INSTALLATION 84
STUDS - REAR
REMOVAL 85
INSTALLATION 86

TIRES/WHEELS

DIAGNOSIS AND TESTING

TIRE AND WHEEL VIBRATION

Tire and wheel imbalance, runout and force variation can cause vehicles to exhibit steering wheel vibration.

VISUAL INSPECTION

Visual inspection of the vehicle is recommended prior to road testing or performing any other procedure. Raise the vehicle on a suitable hoist. (Refer to LUBRICATION & MAINTENANCE/HOISTING - STANDARD PROCEDURE)

Inspect for the following:

- Verify correct (OEM) wheel and tire, as well as correct wheel weights.
- Inspect tires and wheels for damage, mud packing and unusual wear; correct as necessary.
- Check and adjust tire air pressure to the pressure listed on the label attached to the driver's door opening.

ROAD TEST

Road test vehicle on a smooth road for a least five miles to warm tires (remove any flat spots). Lightly place hands on steering wheel at the 10:00 and 2:00 positions while slowly sweeping up and down from 90 to 110 km/h (55 to 70 mph) where legal speed limits allow.

Observe the steering wheel for:

- Visual Nibble (oscillation: clockwise/counterclockwise, usually due to tire imbalance)
- Visual Buzziness (high frequency, rapid vibration up and down)

To rule out vibrations due to brakes or powertrain:

- Lightly apply brakes at speed; if vibration occurs or is enhanced, vibration is likely due to causes other than tire and wheel assemblies.
- Shift transmission into neutral while vibration is occurring; if vibration is eliminated, vibration is likely due to causes other than tire and wheel assemblies.

For brake vibrations, (Refer to 5 - BRAKES - BASE/HYDRAULIC/MECHANICAL/ROTOR - DIAGNOSIS AND TESTING).

For powertrain vibrations, (Refer to 3 - DIFFERENTIAL & DRIVELINE - DIAGNOSIS AND TESTING).

For tire and wheel assembly vibrations, continue with this diagnosis and testing procedure.

TIRE AND WHEEL BALANCE

1. Balance the tire and wheel assemblies as necessary following the wheel balancer manufacturer's instructions and using the information listed in Tire And Wheel Balance. (Refer to 22 - TIRES/WHEELS - STANDARD PROCEDURE)
2. Road test the vehicle for at least 5 miles, following the format described in Road Test.
3. If the vibration persists, continue with this diagnosis and testing procedure.

TIRE AND WHEEL RUNOUT/MATCH MOUNTING

1. **System Radial Runout.** This on-the-vehicle system check will measure the radial runout including the hub, wheel and tire.

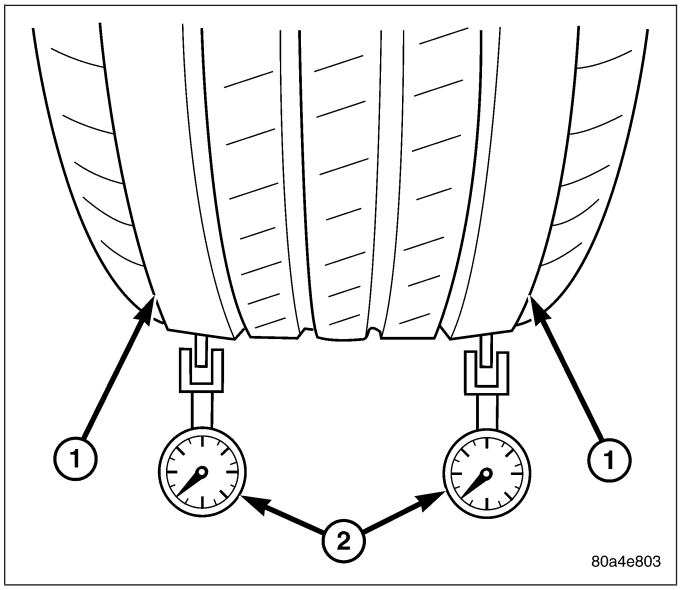

   a. Raise vehicle so tires clear floor. (Refer to LUBRICATION & MAINTENANCE/HOISTING - STANDARD PROCEDURE)

   b. Apply masking tape around the circumference of the tire in the locations to be measured (1). Do not overlap the tape.

   c. Check system runout using Dial Indicator Set, Special Tool C-3339A with 25-W wheel, or equivalent. Place the end of the indicator against each taped area (one at a time) (2) and rotate the tire and wheel. System radial runout should not exceed 0.76 mm (0.030 inch) with no tread “dips” or “steps.” Tread “dips” and “steps” can be identified by spikes of the dial indicator gauge.

- Tread ″dips″; Rapid decrease then increase in dial indicator reading over 101.6 mm (4.0 inch) of tread circumference.
- Tread ″steps″; Rapid decrease or increase in dial indicator reading over 101.6 mm (4.0 inch) of tread circumference.

   d. If system runout is excessive, re-index the tire and wheel assembly on the hub. Remove assembly from vehicle and install it back on the hub two studs over from original mounting position. If re-indexing the tire and wheel assembly corrects or reduces system runout, check hub runout and repair as necessary (Refer to 5 - BRAKES - BASE/HYDRAULIC/MECHANICAL/ROTORS - DIAGNOSIS AND TESTING).

   e. If system runout is still excessive, continue with this diagnosis and testing procedure.

2. **Tire and Wheel Assembly Radial Runout.** This radial runout check is performed with the tire and wheel assembly off the vehicle.

   a. Remove tire and wheel assembly from vehicle and install it on a suitable wheel balancer.

   b. Check system runout using Dial Indicator Set, Special Tool C-3339A with 25-W wheel, or equivalent. Place the end of the indicator against each taped area (one at a time) and rotate the tire and wheel. Radial runout should not exceed 0.76 mm (0.030 inch) with no tread “dips” or “steps.” Tread “dips” and “steps” can be identified by spikes of the dial indicator gauge.

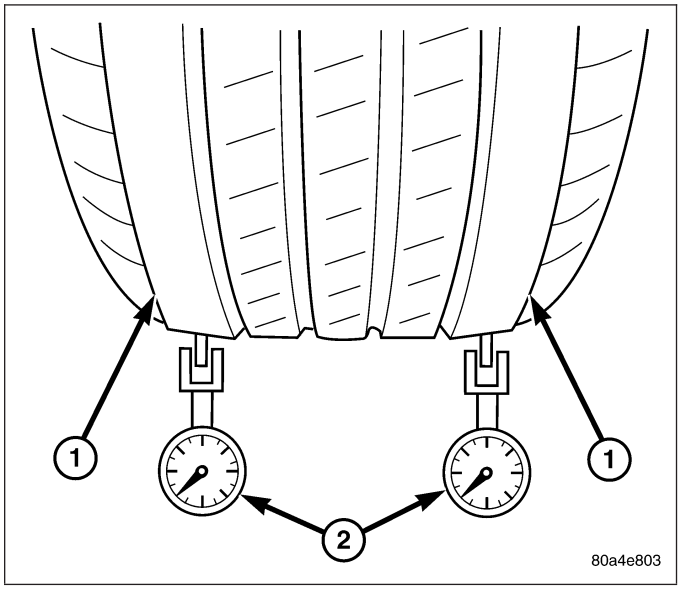

c. If runout exceeds limits, mark the original location of the tire on the wheel at the valve stem (1)(4). Also, mark the tire and wheel to indicate the original high spot (2) of the assembly and record the runout measurement.

d. If runout exceeds limits, the tire will need to be dismounted from the wheel to verify wheel vs. tire contribution. Refer to Wheel Runout below.

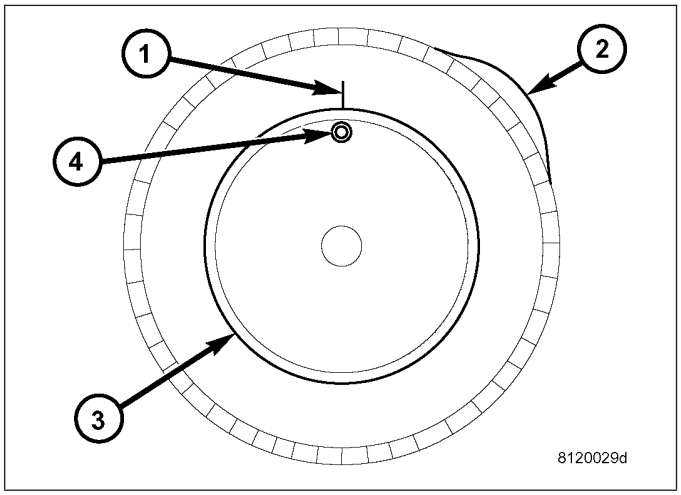

3. **Lateral Runout.** Lateral runout for the vehicle system as well as the tire and wheel assembly should be less than 0.76 mm (0.030 inch). The same procedure and theory described for radial runout can also be applied to identify and reduce lateral runout.
4. **Wheel Runout.** This runout check is performed as follows:

   a. Dismount the tire from the wheel.

   b. Mount the wheel back on the wheel balancer.

   c. Measure radial runout of the wheel at the tire bead seat (1, 6). Runout should not exceed the specification limit listed in the following table. Replace the wheel if it exceeds the limit.

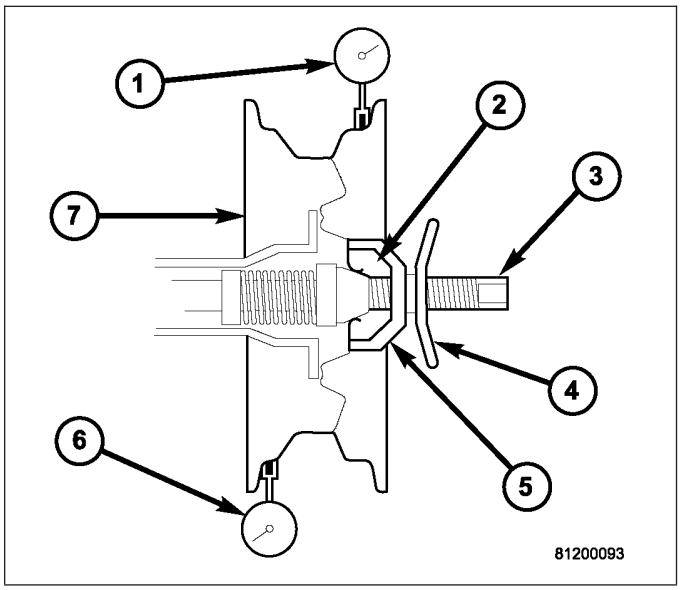

d. Measure lateral runout of the wheel at the tire bead seat (1, 6). Runout should not exceed the specification limit listed in the following table. Replace the wheel if it exceeds the limit.

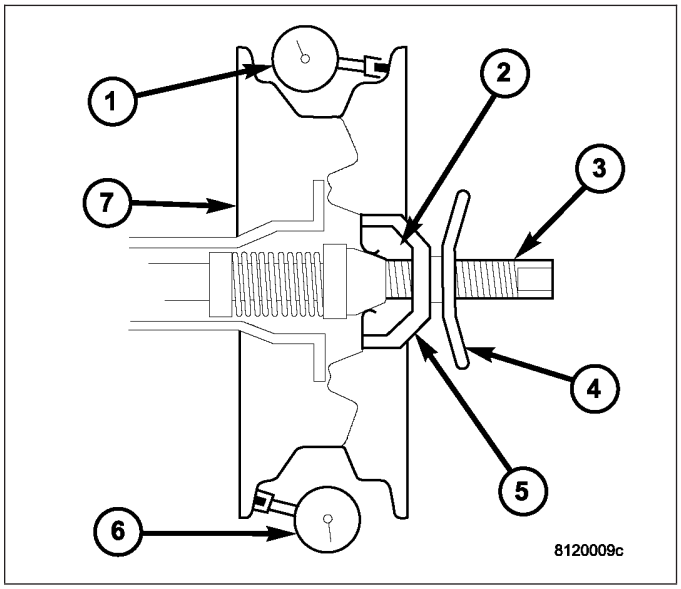

WHEEL RUNOUT LIMITS

WHEEL TYPE	RADIAL RUNOUT	LATERAL RUNOUT
Aluminum Wheel	0.25 mm (0.010 inch)	0.76 mm (0.030 inch)
Steel Wheel	0.51 mm (0.020 inch)	0.76 mm (0.030 inch)
SRT8 Wheel	0.51 mm (0.020 inch)	0.64 mm (0.025 inch)

5. **Match Mounting.** If the wheel runout is within specifications, tire and wheel assembly runout can be improved by re-indexing (match mounting) the tire to the wheel as described below.
   a. Remount the tire on the rim 180 degrees from its original location. Ensure the tire bead is properly seated.
   b. Re-measure the total runout. Mark the tire at the high spot and record the measurement.

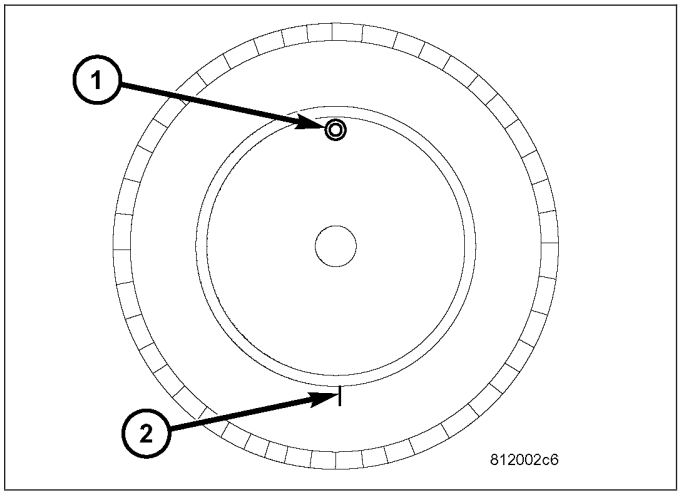

If runout is still excessive, perform the following:

- If the new high spot is within 102 mm (4.0 inch) of the first high spot on the tire, replace the tire.
- If the new high spot is within 102 mm (4.0 inch) of the first high spot on the wheel, the wheel may be out of specification. Refer to Wheel Runout above.

- If the new high spot is NOT within 102 mm (4.0 inch) of either high spot, draw an arrow on the tread from new high spot toward the original (2). Break down the tire and remount it 90 degrees on rim in that direction, then re-measure runout. This will normally reduce the runout to an acceptable amount.

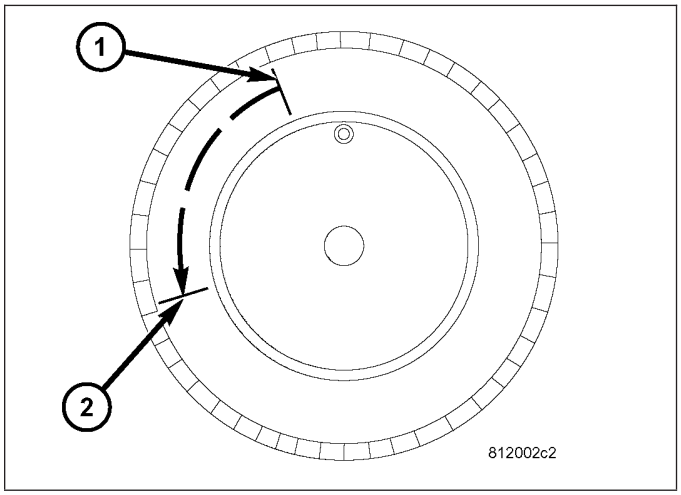

6. Once back together, road test the vehicle for at least 5 miles, following the format described in Road Test. If vibration persists, and all components tested are within specification, the tires may have an excessive radial force condition. Radial force variation can only be checked as indicated below. If this equipment is not available, consult with the tire manufacturer.

RADIAL FORCE VARIATION

Radial Force Variation can be checked using the Hunter GSP 9700 Vibration Control System (Wheel Balancer) or equivalent, if available. This type of equipment helps to correct ride disturbances by reducing the radial force variation of an assembly through re-indexing of the tire to wheel.

The equipment manufacturer or DaimlerChrysler Corporation may supply reference values as guidelines. Radial force measurements above the reference value may not always result in a ride disturbance, nor do they automatically mean the assembly components are out of specification. Do not replace components based on radial force values alone. Balancing, runout diagnosis, re-indexing, and subjective road testing must be performed as outlined in previous sections of this diagnosis and testing procedure.

Use the Radial Force equipment to identify suspect assemblies and minimize the radial forces. After all suspect assemblies are optimized, reinstall the assemblies and road test the vehicle. If a disturbance still exists and all other vibration diagnostic procedures have been completed, replace one tire or one wheel at a time, starting with the assembly having the highest force variation. Be sure to minimize each new assembly. Road test the vehicle following each replacement. Continue this process until the disturbance is resolved.

NOTE: When using Radial Force equipment, it is critically important to set proper tire inflation pressure and ensure centering of the wheel on the equipment spindle.

RADIAL FORCE VARIATION REFERENCE VALUES

MEASUREMENT	17 INCH TIRES	18 INCH TIRES	20 INCH TIRES
Total Radial Force Variation (RFV)	Less Than 25 Lbs. ± 2 Lbs.	Less Than 18 Lbs. ± 2 Lbs.	Less Than 23 Lbs. ± 2 Lbs.
Radial First Harmonic (R1H)	Less Than 12 Lbs. ± 2 Lbs.	Less Than 12 Lbs. ± 2 Lbs.	Less Than 15 Lbs. ± 2 Lbs.
Radial Second Harmonic (R2H)	Less Than 8 Lbs. ± 2 Lbs.	Less Than 8 Lbs. ± 2 Lbs.	Less Than 10 Lbs. ± 2 Lbs.

STANDARD PROCEDURE

TIRE AND WHEEL BALANCE

NOTE: Balance equipment must be calibrated and maintained per equipment manufacturer's specifications.

Wheel balancing can be accomplished with either on-vehicle or off-vehicle equipment.

NOTE: If using on-vehicle balancing equipment, on the driving axle, remove the opposite wheel and tire assembly.

It is recommended that a two-plane dynamic balancer be used when a tire and wheel assembly requires balancing. A static balancer should only be used when a two-plane balancer is not available.

Balance wheel and tire assemblies dynamically and statically to less than 0.25 (¼) ounce.

For static balancing, find the location of the heavy spot causing the imbalance (1). Counter balance the wheel directly opposite the heavy spot. Determine weight required to counterbalance the area of imbalance. Place half of this weight on the **inner** rim flange and the other half on the **outer** rim flange (3) at the predetermined spots.

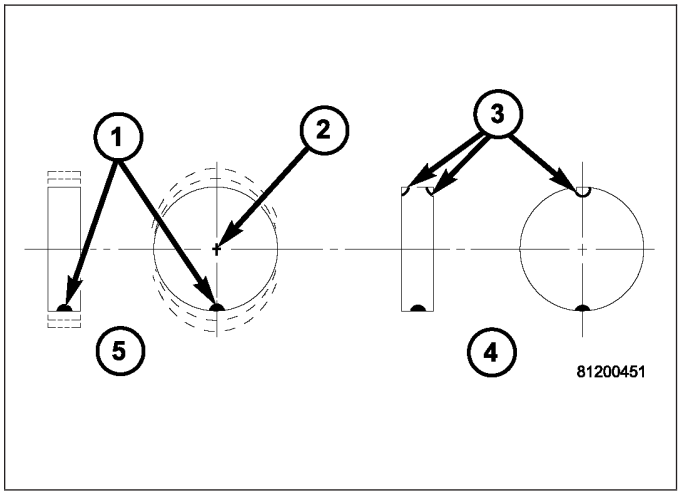

For dynamic balancing, the balance equipment is designed to indicate the location and amount of weight to be applied to both the inner and outer rim flanges (2).

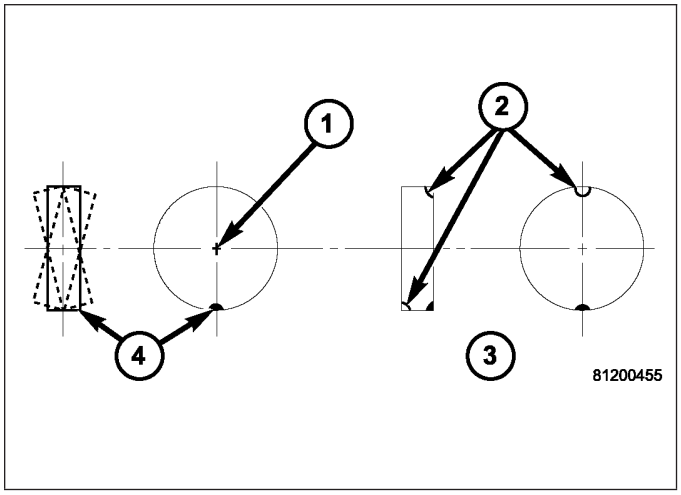

The aluminum wheels on this vehicle use a different wheel weight than do the steel wheels. Be sure to use the correct wheel weight for the wheel type.

Always verify the Balance. When using off-vehicle equipment, remount the tire and wheel assembly 180 degrees on the balancer spindle and recheck balance. Balance variation from one spot to the other should not be more than 0.125 (⅛) ounce. If variation is more than 0.125 ounce, balancing equipment could be malfunctioning.

If difficult to balance, break down the tire and wheel assembly and check for loose debris inside the tire. Prior to disassembly, mark (index) the tire at the valve stem. Use this mark in order to remount the tire in its original orientation with respect to the wheel.

TIRE AND WHEEL MATCH MOUNTING

Wheels and tires are match mounted at the factory. This means that the high spot of the tire is matched to the low spot on the wheel rim. This technique is used to reduce runout in the wheel and tire assembly. The high spot on the tire is marked with a paint mark or a bright colored adhesive label on the outboard sidewall. The low spot on the wheel is identified with a label on the outside of the rim and a dot or line in the drop well area of the rim (inside where the tire mounts). If the outside label has been removed, the tire will have to be removed to locate the dot or line on the inside of the rim. The tire can then be match mounted to the tire.

Information on match mounting the tire to the wheel can be found in Tire and Wheel Runout/Match Mounting, items (2) through (5), within Diagnosis And Testing - Tire And Wheel Vibration. (Refer to 22 - TIRES/WHEELS - DIAGNOSIS AND TESTING)

TIRE AND WHEEL ROTATION

Tires on the front and rear operate at different loads and perform different steering, driving, and braking functions. For these reasons they wear at unequal rates and tend to develop irregular wear patterns. These effects can be reduced by rotating the tires at regular intervals. The benefits of tire rotation are:

- Increase tread life
- Maintain traction levels
- A smooth, quiet ride

The suggested method of tire rotation is shown in graphic. Other rotation methods can be used, but they will not provide all the tire longevity benefits.

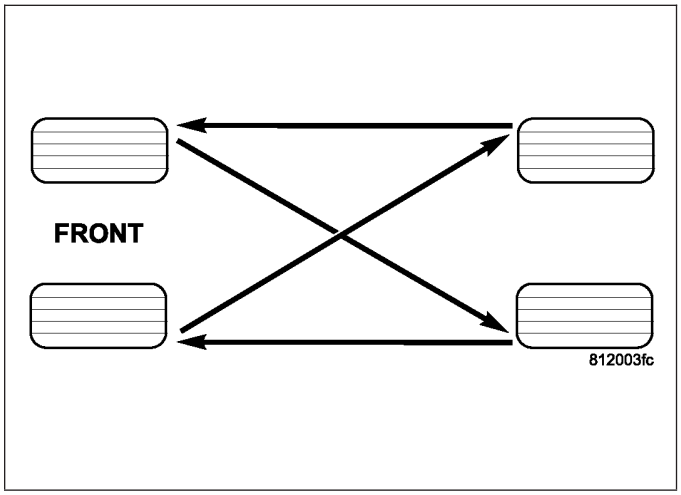

TIRE AND WHEEL ROTATION - SRT8

The following information covers recommended tire rotation practices. For Tire And Wheel Removal and Installation procedures, (Refer to 22 - TIRES/WHEELS - REMOVAL) (Refer to 22 - TIRES/WHEELS - INSTALLATION)

THREE-SEASON TIRE EQUIPPED

Vehicles equipped with Three-Season tires (Goodyear F1 Supercar) do not allow for normal tire rotation due to different size tires front-to-rear. These tires have a non-directional asymmetrical tread pattern allowing the tire and wheel assemblies to be switched side-to-side on the same axle.

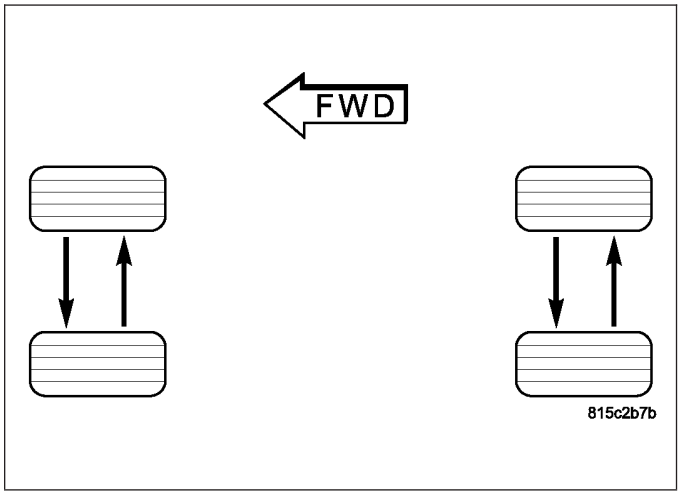

ALL-SEASON TIRE EQUIPPED

Vehicles equipped with All-Season tires (Goodyear Eagle RS-A) use the suggested method of tire rotation that is shown in the graphic. Other rotation methods can be used, but they will not provide all the tire longevity benefits.

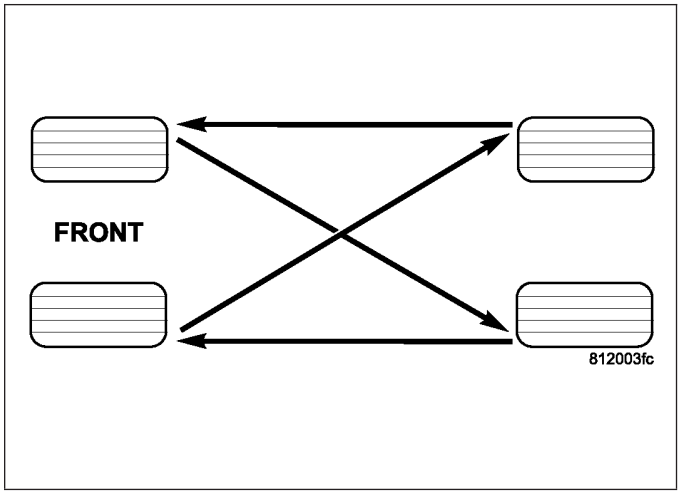

REMOVAL

TIRE AND WHEEL ASSEMBLY (ALUMINUM WHEEL)

1. Raise vehicle so tire and wheel assembly clears ground level.
2. If vehicle is equipped with wheel center caps covering wheel nuts, remove cap with appropriate removal tool utilizing notch formed into wheel (2) near valve stem (1). Use care not to damage wheel coating.

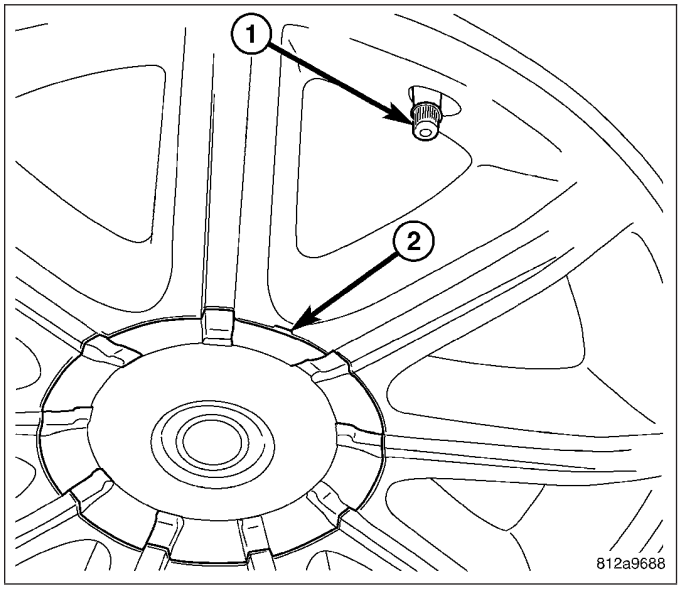

3. Remove five wheel mounting (lug) nuts (3) from studs.
4. Remove tire and wheel assembly (1) from hub.

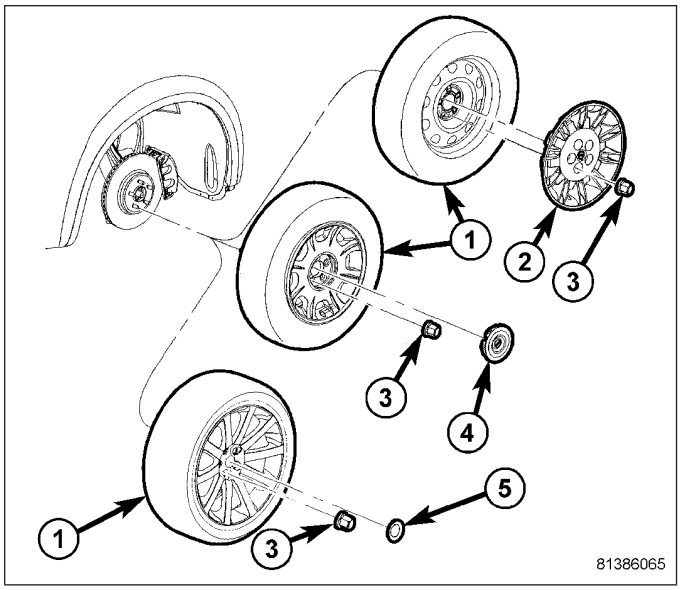

TIRE AND WHEEL ASSEMBLY (STEEL WHEEL)

1. Raise and support vehicle so tire and wheel assembly clears ground level.

CAUTION: When removing the wheel cover, do not pry the wheel cover from the wheel. This can result in damage to the wheel cover. The wheel cover is attached using the wheel mounting nuts.

2. Remove five wheel mounting (lug) nuts (3) from studs.
3. Remove wheel cover (2) using care not to let tire and wheel assembly (1) fall off vehicle.
4. Remove tire and wheel assembly (1) from hub.

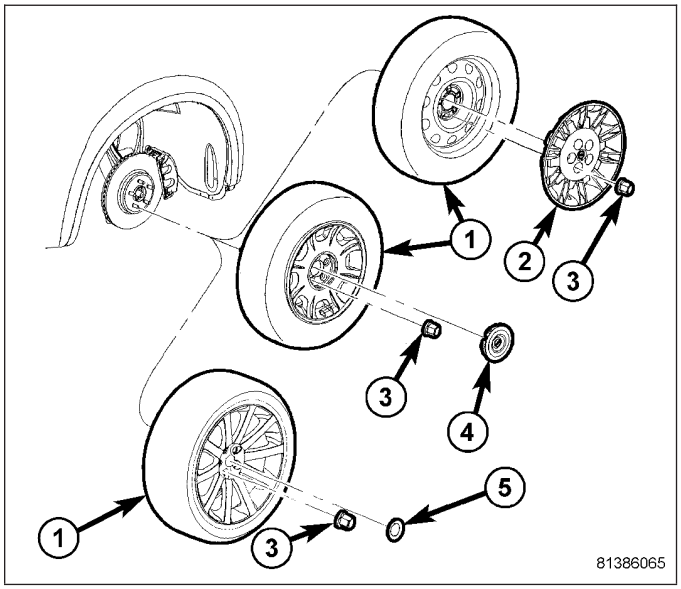

INSTALLATION

TIRE AND WHEEL ASSEMBLY (ALUMINUM WHEEL)

WARNING: Installing wheels without good metal-to-metal contact with the mounting surface could cause loosening of the wheel mounting (lug) nuts. This could adversely affect the safety and handling of the vehicle.

NOTE: Never use oil or grease on studs or wheel mounting (lug) nuts.

1. Clean wheel mounting surfaces, removing any build-up of corrosion. It is important to have good metal-to-metal contact between wheel and vehicle.
2. Position tire and wheel assembly (1) on wheel mounting studs using hub pilot as guide. Place and hold wheel flush up against mounting surface.

NOTE: Always use the original (OEM) style wheel mounting (lug) nuts. Do not use replacement parts of lesser quality or substitute design.

3. Loosely install all five wheel mounting (lug) nuts (3).

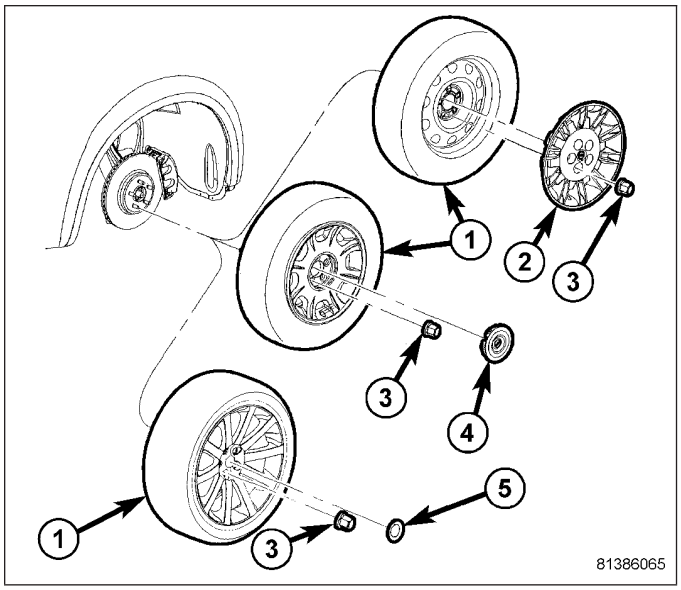

4. Lightly snug all wheel mounting nuts, then progressively tighten them in proper sequence shown. Tighten nuts to 150 N·m (110 ft. lbs.).

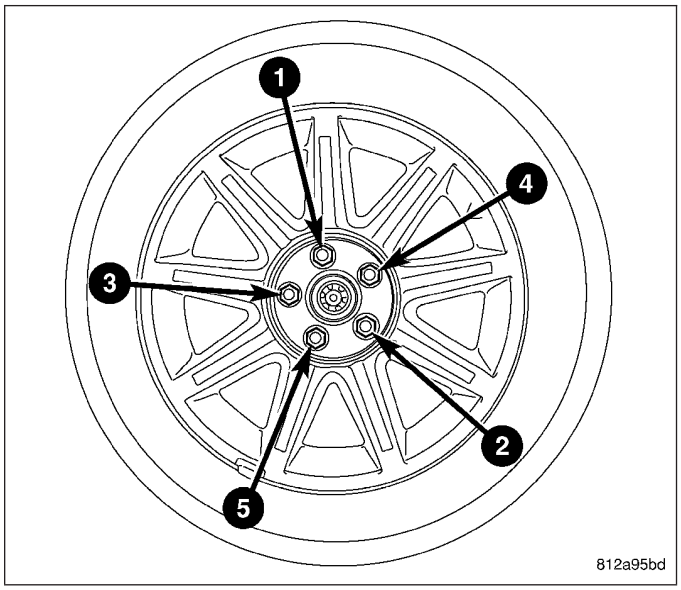

5. If applicable, install wheel center cap (4).
6. Lower vehicle.

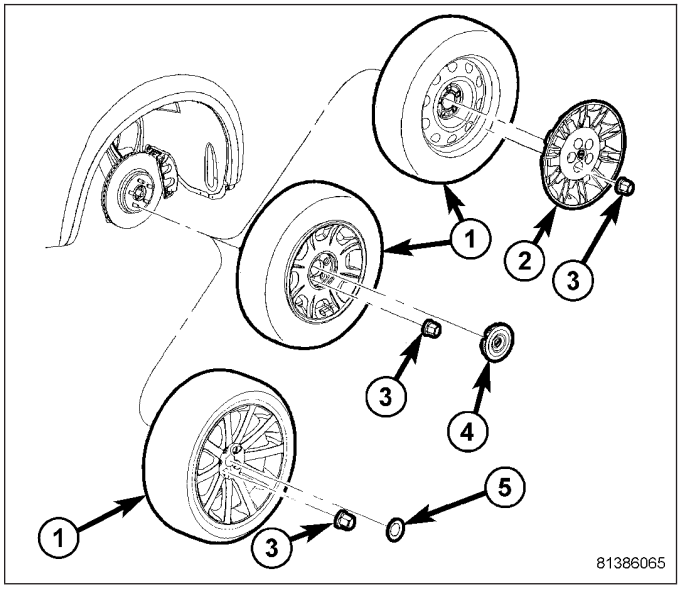

TIRE AND WHEEL ASSEMBLY (STEEL WHEEL)

WARNING: Installing wheels without good metal-to-metal contact with the mounting surface could cause loosening of the wheel mounting (lug) nuts. This could adversely affect the safety and handling of the vehicle.

NOTE: Never use oil or grease on studs or wheel mounting nuts.

1. Clean wheel mounting surfaces, removing any corrosion build-up. It is important to have good metal-to-metal contact between wheel and vehicle.
2. Position tire and wheel assembly (1) on wheel mounting studs using hub pilot as guide. Place and hold wheel flush up against mounting surface.

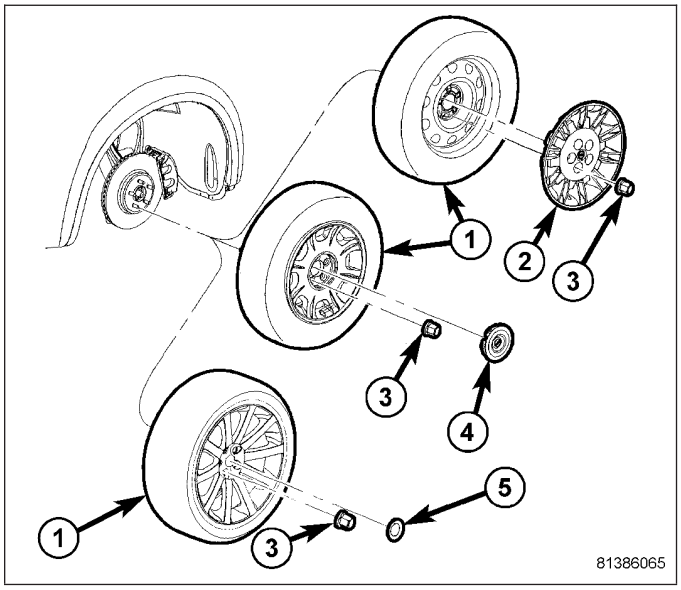

NOTE: Wheel mounting nuts must be installed on the studs as shown (2) to allow proper installation of the wheel cover.

3. Using valve stem as an index placed at 12 O'clock position (1), install and **lightly tighten** two wheel mounting nuts on studs located at 2 O'clock and 10 O'clock positions as shown (2).

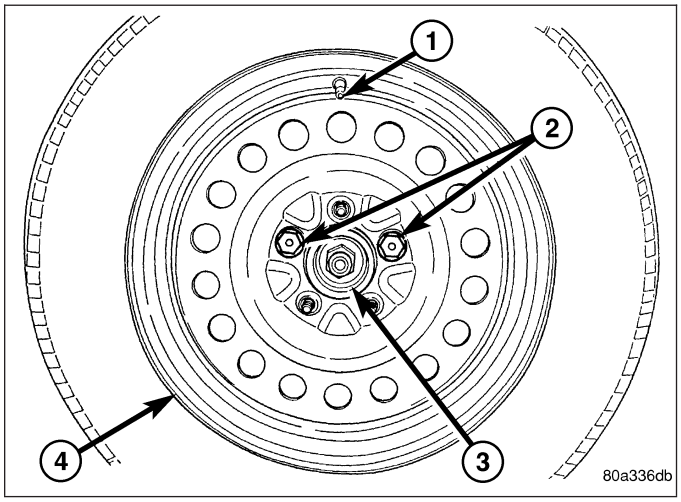

4. Place wheel cover (3) on wheel in the following fashion:
   a. Align valve notch in wheel cover with valve stem on wheel (2).
   b. At same time, align two holes in wheel cover having retaining tabs (1) with two installed wheel nuts.
   c. Press in on center of wheel cover until wheel cover retaining tabs (1) push past and engage rear of previously installed wheel mounting nuts. This will hold wheel cover in place.

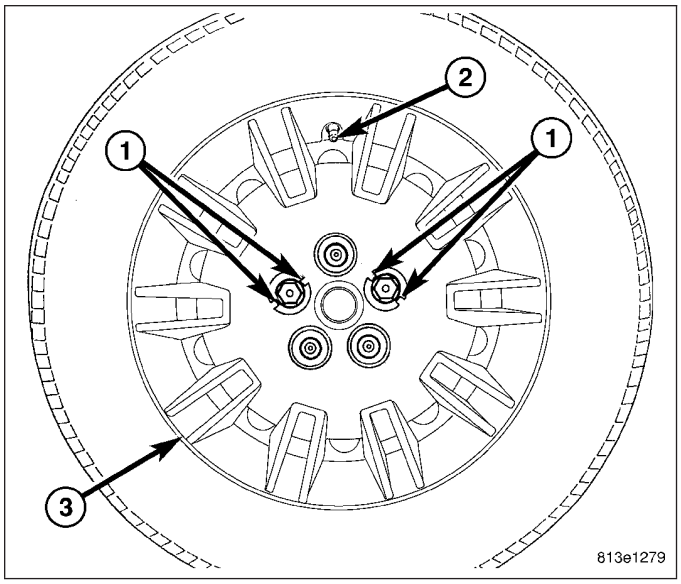

5. Install and **lightly tighten** three remaining wheel mounting nuts (3) securing wheel cover in place.

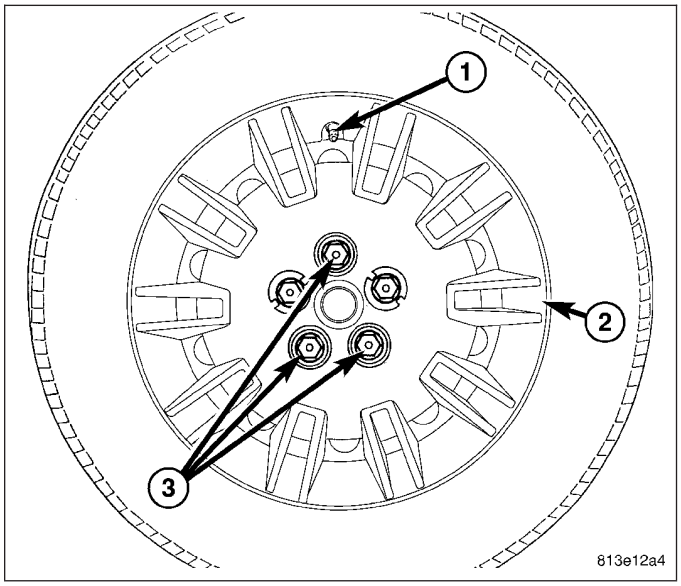

6. Progressively tighten all five wheel mounting nuts in proper sequence. Tighten wheel nuts to 150 N·m (110 ft. lbs.) torque.
7. Lower vehicle.

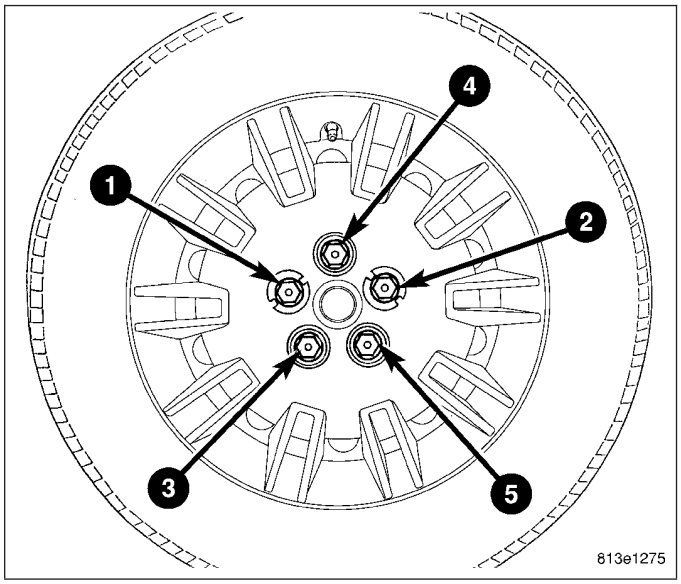

SPECIAL TOOLS

TIRES AND WHEELS

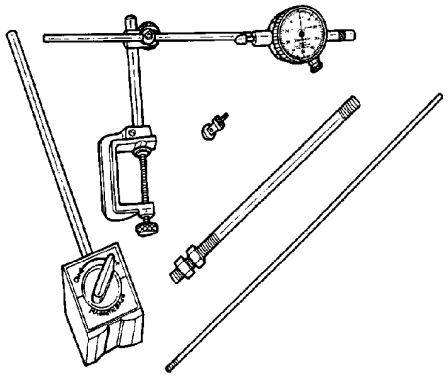

Dial Indicator C-3339A

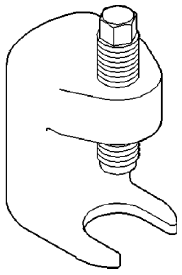

Press, Ball Joint C-4150A

TIRE PRESSURE MONITORING - ELECTRICAL DIAGNOSIS

DIAGNOSIS AND TESTING

C0077-LOW TIRE PRESSURE

For a complete wiring diagram **Refer to Section 8W**.

- **When Monitored:**
  Continuously.
- **Set Condition:**
  A low pressure condition will exist when the tire pressure falls below or is equal to the low pressure threshold value as specified for the vehicle.

Possible Causes
INTERMITTENT PERFORMANCE DTC
INCORRECT TIRE PRESSURE
TIRE PRESSURE SENSOR
WCM (SKREEM)

Diagnostic Test

1. DTC STATUS IS ACTIVE

Turn the ignition on.

With the scan tool, select View DTCs in the Wireless Control Module (SKREEM).

Is the DTC status Active at this time?

Yes >> Go to 2

No >> Go to 4

2. LOW TIRE PRESSURE

NOTE: The DTC can be caused by many different factors and might not be a sensor/transmitter or a WCM (SKREEM) fault. Interference from other elements will over power the sensor/transmitter RF frequency making erratic operation to the in the TPM system. Check the vehicle for aftermarket accessories that could compromise the RF frequency signal before diagnosing the TPM system.

Correct all tire pressure to the recommended specifications and wait 2 minutes.

With the scan tool, clear DTCs in the Wireless Control Module (SKREEM).

Test Drive the vehicle for a minimum of 10 minutes with vehicle speed greater than 15 m.p.h.

With the scan tool, select View DTCs in the Wireless Control Module (SKREEM).

Does the DTC reset or is the status Active for this DTC?

Yes >> Go to 3

No >> Test Complete.

3. TIRE PRESSURE SENSOR

Turn the ignition off.

Replace the Tire Pressure Sensor in accordance with the Service Information.

With the scan tool, clear DTCs in the Wireless Control Module (SKREEM).

Test Drive the vehicle for a minimum of 10 minutes with vehicle speed greater than 15 m.p.h.

With the scan tool, select View DTCs in the Wireless Control Module (SKREEM).

Does the DTC reset or is the status Active for this DTC?

Yes >> Replace the Wireless Control Module (SKREEM) in accordance with the Service Information.
Perform TPM VERIFICATION TEST (Refer to 22 - TIRES/WHEELS/TIRE PRESSURE MONITORING - DIAGNOSIS AND TESTING)

No >> Test Complete.

4. INTERMITTENT TIRE PRESSURE SENSOR DTC

The conditions necessary to set this DTC are not present at this time.
Refer to any Technical Service Bulletins that may apply to this condition.
With the scan tool, clear DTCs in the Wireless Control Module (SKREEM).
Test Drive the vehicle for a minimum of 10 minutes with vehicle speed greater than 15 m.p.h.
With the scan tool, select View DTCs in the Wireless Control Module (SKREEM).

Does the DTC reset or is the status Active for this DTC?

Yes >> Repair as necessary.
Perform TPM VERIFICATION TEST (Refer to 22 - TIRES/WHEELS/TIRE PRESSURE MONITORING - DIAGNOSIS AND TESTING)

No >> Test complete.

C1501–TIRE PRESSURE SENSOR 1 INTERNAL

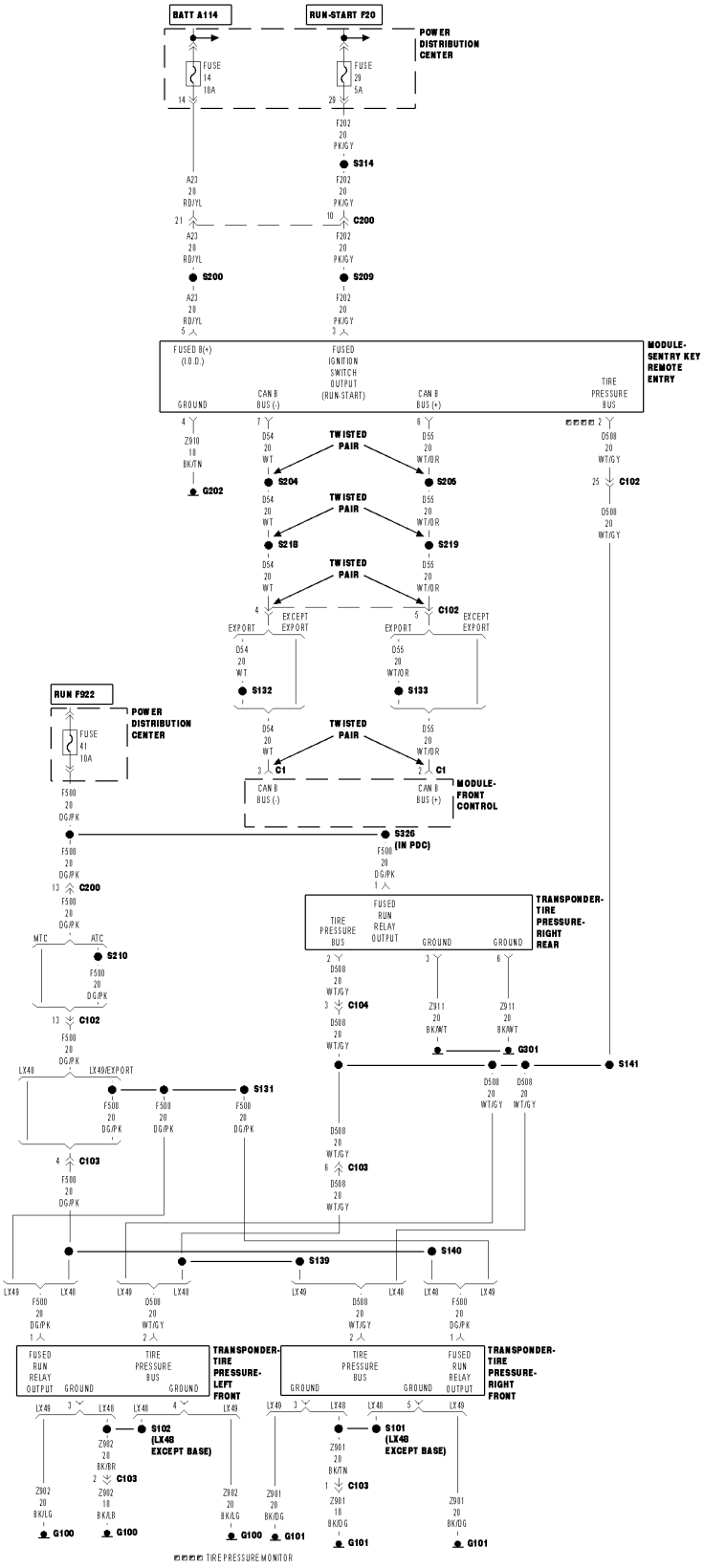

For a complete wiring diagram **Refer to Section 8W**

Theory of Operation

The tire pressure sensor actively monitors the air pressure and air temperature inside the tire, the sensor internal battery status, and the radial acceleration of the wheel. Each sensor has a unique ID code. The sensor transmits the data at regular intervals via an encoded signal to a receiver circuit located in the Wireless Control Module (SKREEM).

- **When Monitored:**
  With vehicle speed greater than 15 m.p.h. (24 km/h).
- **Set Condition:**
  The WCM (SKREEM) will monitor the signals from the four active road tire sensors. A loss of signal error is detected when eight consecutive blocks of data are not received or cannot be accurately decoded. An internal sensor hardware error condition will be set when an error in the accelerometer, pressure sensor, or temperature sensor is detected.

Possible Causes
INTERMITTENT TIRE PRESSURE SENSOR INTERNAL DTC
TIRE PRESSURE SENSOR
WIRELESS CONTROL MODULE (SKREEM)

Diagnostic Test

1. DTC STATUS IS ACTIVE

Turn the ignition on.
With the scan tool, select View DTCs in the Wireless Control Module (SKREEM).

Is the DTC status Active at this time?

Yes >> Go to 2

No >> Go to 4

2. TIRE PRESSURE SENSOR

Turn the ignition off.
Replace the Tire Pressure Sensor in accordance with the Service Information.
With the scan tool, clear DTCs in the Wireless Control Module (SKREEM).
Test Drive the vehicle for a minimum of 10 minutes with vehicle speed greater than 15 m.p.h.
With the scan tool, select View DTCs in the Wireless Control Module (SKREEM).

Does the DTC reset or is the status Active for this DTC?

Yes >> Go to 3

No >> Test Complete.

3. WIRELESS CONTROL MODULE (SKREEM)

View repair.

Repair

Replace the Wireless Control Module (SKREEM) in accordance with the Service Information.
Perform TPM VERIFICATION TEST (Refer to 22 - TIRES/WHEELS/TIRE PRESSURE MONITORING - DIAGNOSIS AND TESTING)

4. INTERMITTENT TIRE PRESSURE SENSOR DTC

The conditions necessary to set this DTC are not present at this time.
Refer to any Technical Service Bulletins that may apply to this condition.
With the scan tool, clear DTCs in the Wireless Control Module (SKREEM).
Test Drive the vehicle for a minimum of 10 minutes with vehicle speed greater than 15 m.p.h.
With the scan tool, select View DTCs in the Wireless Control Module (SKREEM).

Does the DTC reset or is the status Active for this DTC?

Yes >> Return to the beginning of this test and perform the diagnostic procedure as necessary.
Perform TPM VERIFICATION TEST (Refer to 22 - TIRES/WHEELS/TIRE PRESSURE MONITORING - DIAGNOSIS AND TESTING)

No >> Test complete.

C1502–TIRE PRESSURE SENSOR 2 INTERNAL

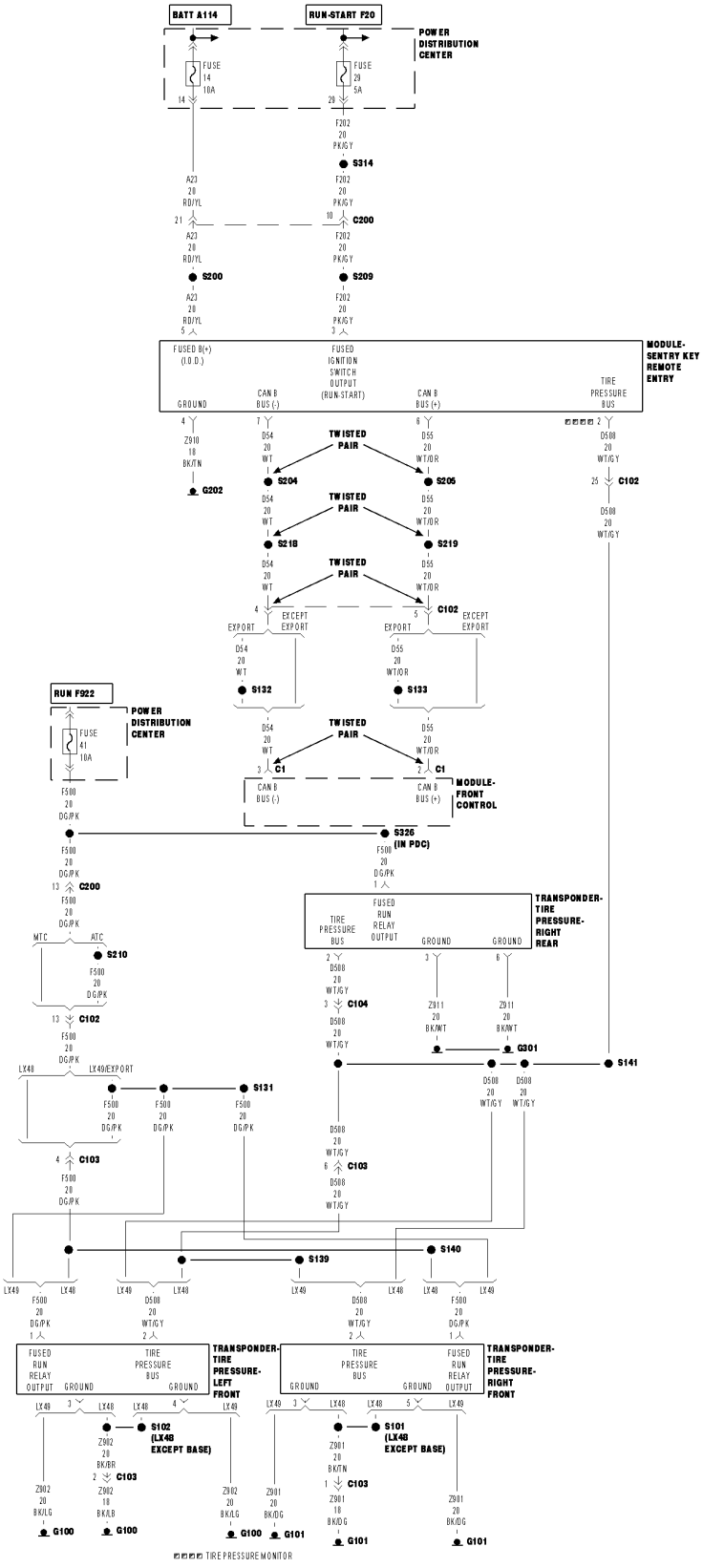

For a complete wiring diagram **Refer to Section 8W**

Theory of Operation

The tire pressure sensor actively monitors the air pressure and air temperature inside the tire, the sensor internal battery status, and the radial acceleration of the wheel. Each sensor has a unique ID code. The sensor transmits the data at regular intervals via an encoded signal to a receiver circuit located in the Wireless Control Module (SKREEM).

- **When Monitored:**
  With vehicle speed greater than 15 m.p.h. (24 km/h).
- **Set Condition:**
  The WCM (SKREEM) will monitor the signals from the four active road tire sensors. A loss of signal error is detected when eight consecutive blocks of data are not received or cannot be accurately decoded. An internal sensor hardware error condition will be set when an error in the accelerometer, pressure sensor, or temperature sensor is detected.

Possible Causes
INTERMITTENT TIRE PRESSURE SENSOR INTERNAL DTC
TIRE PRESSURE SENSOR
WIRELESS CONTROL MODULE (SKREEM)

Diagnostic Test

1. DTC STATUS IS ACTIVE

Turn the ignition on.
With the scan tool, select View DTCs in the Wireless Control Module (SKREEM).

Is the DTC status Active at this time?

Yes >> Go to 2

No >> Go to 4

2. TIRE PRESSURE SENSOR

Turn the ignition off.
Replace the Tire Pressure Sensor in accordance with the Service Information.
With the scan tool, clear DTCs in the Wireless Control Module (SKREEM).
Test Drive the vehicle for a minimum of 10 minutes with vehicle speed greater than 15 m.p.h.
With the scan tool, select View DTCs in the Wireless Control Module (SKREEM).

Does the DTC reset or is the status Active for this DTC?

Yes >> Go to 3

No >> Test Complete.

3. WIRELESS CONTROL MODULE (SKREEM)

View repair.

Repair

Replace the Wireless Control Module (SKREEM) in accordance with the Service Information.Perform TPM VERIFICATION TEST (Refer to 22 - TIRES/WHEELS/TIRE PRESSURE MONITORING - DIAGNOSIS AND TESTING)

4. INTERMITTENT TIRE PRESSURE SENSOR DTC

The conditions necessary to set this DTC are not present at this time.
Refer to any Technical Service Bulletins that may apply to this condition.
With the scan tool, clear DTCs in the Wireless Control Module (SKREEM).
Test Drive the vehicle for a minimum of 10 minutes with vehicle speed greater than 15 m.p.h.
With the scan tool, select View DTCs in the Wireless Control Module (SKREEM).

Does the DTC reset or is the status Active for this DTC?

Yes >> Return to the beginning of this test and perform the diagnostic procedure as necessary.

No >> Test complete.

C1503–TIRE PRESSURE SENSOR 3 INTERNAL

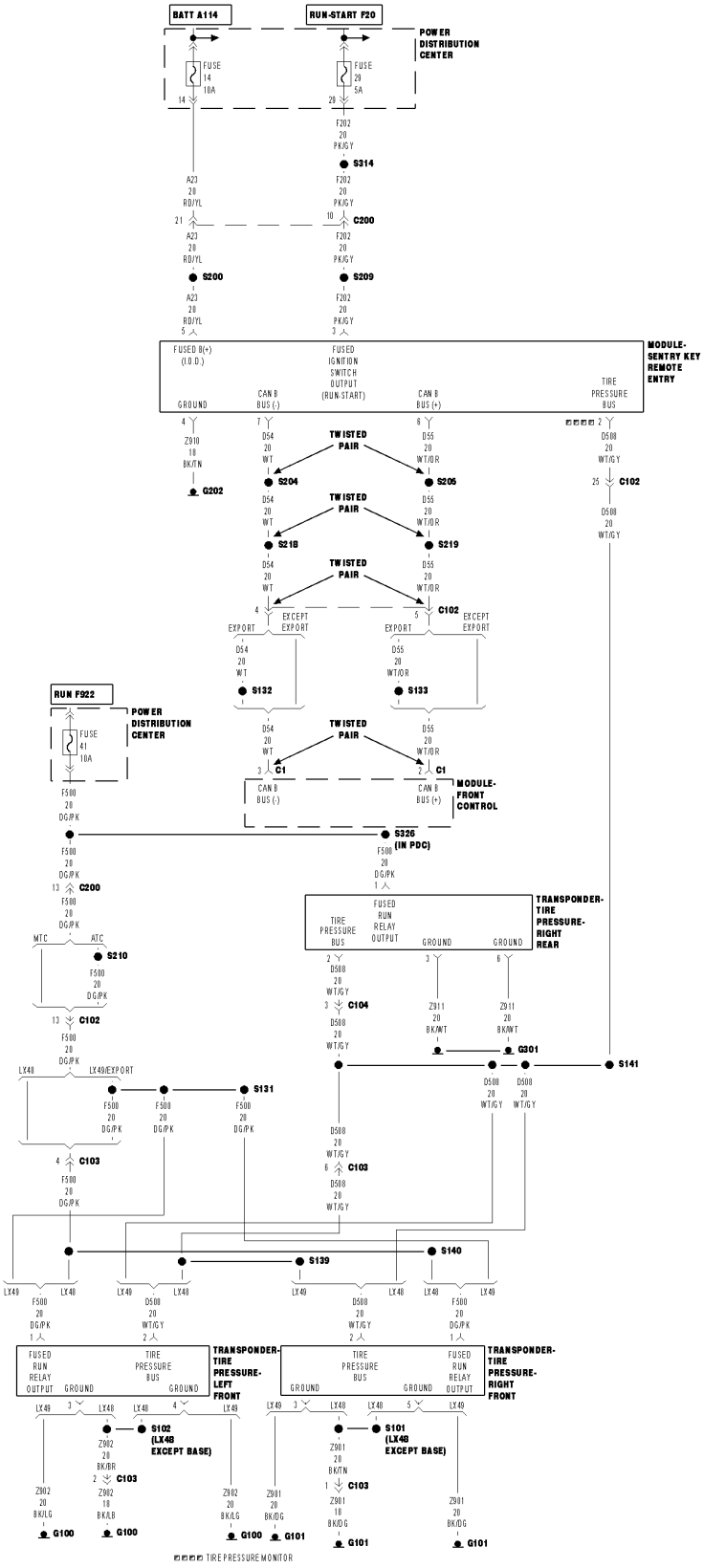

For a complete wiring diagram **Refer to Section 8W**

Theory of Operation

The tire pressure sensor actively monitors the air pressure and air temperature inside the tire, the sensor internal battery status, and the radial acceleration of the wheel. Each sensor has a unique ID code. The sensor transmits the data at regular intervals via an encoded signal to a receiver circuit located in the Wireless Control Module (SKREEM).

- **When Monitored:**
  With vehicle speed greater than 15 m.p.h. (24 km/h).
- **Set Condition:**
  The WCM (SKREEM) will monitor the signals from the four active road tire sensors. A loss of signal error is detected when eight consecutive blocks of data are not received or cannot be accurately decoded. An internal sensor hardware error condition will be set when an error in the accelerometer, pressure sensor, or temperature sensor is detected.

Possible Causes
INTERMITTENT TIRE PRESSURE SENSOR INTERNAL DTC
TIRE PRESSURE SENSOR
WIRELESS CONTROL MODULE (SKREEM)

Diagnostic Test

1. DTC STATUS IS ACTIVE

Turn the ignition on.
With the scan tool, select View DTCs in the Wireless Control Module (SKREEM).

Is the DTC status Active at this time?

Yes >> Go to 2

No >> Go to 4

2. TIRE PRESSURE SENSOR

Turn the ignition off.
Replace the Tire Pressure Sensor in accordance with the Service Information.
With the scan tool, clear DTCs in the Wireless Control Module (SKREEM).
Test Drive the vehicle for a minimum of 10 minutes with vehicle speed greater than 15 m.p.h.
With the scan tool, select View DTCs in the Wireless Control Module (SKREEM).

Does the DTC reset or is the status Active for this DTC?

Yes >> Go to 3

No >> Test Complete.

3. WIRELESS CONTROL MODULE (SKREEM)

View repair.

Repair

Replace the Wireless Control Module (SKREEM) in accordance with the Service Information.Perform TPM VERIFICATION TEST (Refer to 22 - TIRES/WHEELS/TIRE PRESSURE MONITORING - DIAGNOSIS AND TESTING)

4. INTERMITTENT TIRE PRESSURE SENSOR DTC

The conditions necessary to set this DTC are not present at this time.
Refer to any Technical Service Bulletins that may apply to this condition.
With the scan tool, clear DTCs in the Wireless Control Module (SKREEM).
Test Drive the vehicle for a minimum of 10 minutes with vehicle speed greater than 15 m.p.h.
With the scan tool, select View DTCs in the Wireless Control Module (SKREEM).

Does the DTC reset or is the status Active for this DTC?

Yes >> Return to the beginning of this test and perform the diagnostic procedure as necessary.

No >> Test complete.

C1504–TIRE PRESSURE SENSOR 4 INTERNAL

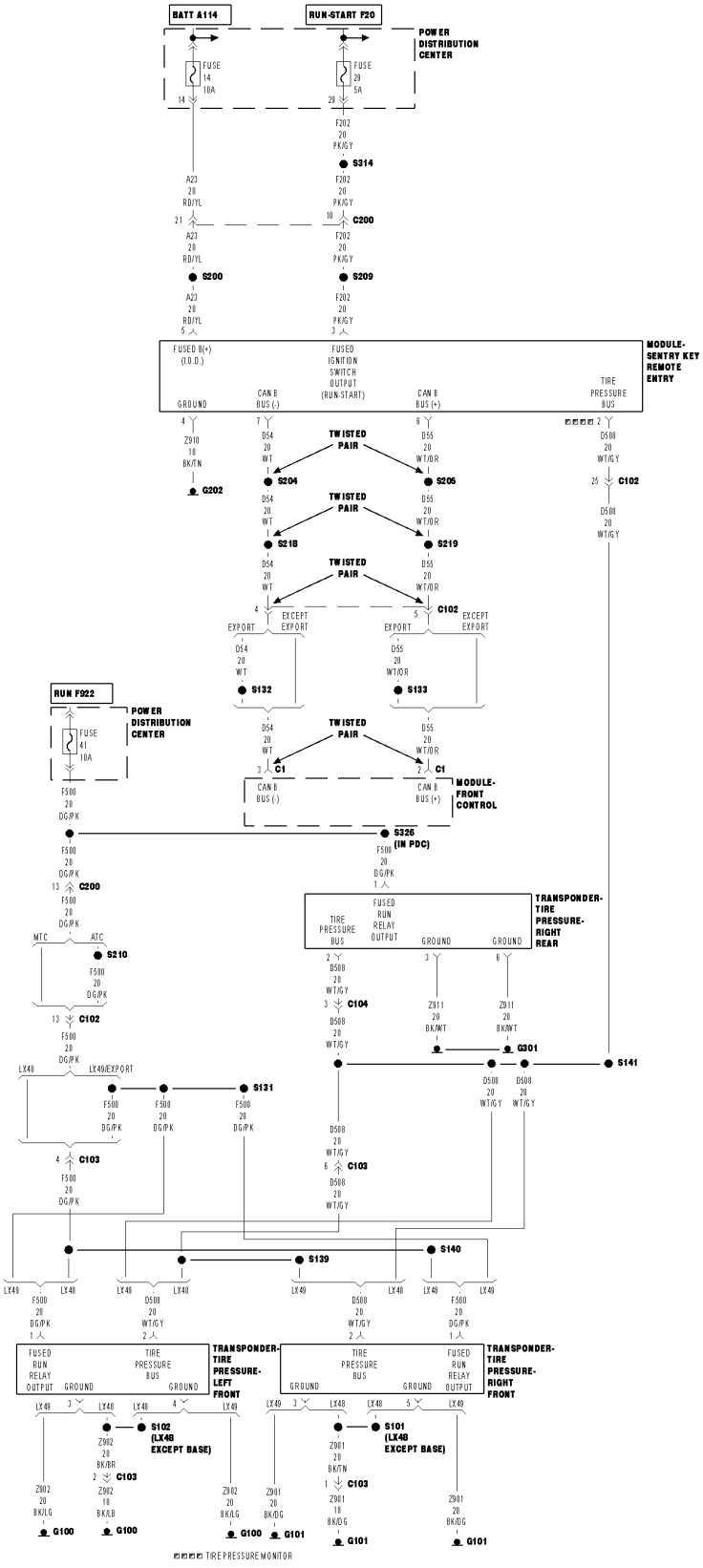

For a complete wiring diagram **Refer to Section 8W**

Theory of Operation

The tire pressure sensor actively monitors the air pressure and air temperature inside the tire, the sensor internal battery status, and the radial acceleration of the wheel. Each sensor has a unique ID code. The sensor transmits the data at regular intervals via an encoded signal to a receiver circuit located in the Wireless Control Module (SKREEM).

- **When Monitored:**
  With vehicle speed greater than 15 m.p.h. (24 km/h).
- **Set Condition:**
  The WCM (SKREEM) will monitor the signals from the four active road tire sensors. A loss of signal error is detected when eight consecutive blocks of data are not received or cannot be accurately decoded. An internal sensor hardware error condition will be set when an error in the accelerometer, pressure sensor, or temperature sensor is detected.

Possible Causes
INTERMITTENT TIRE PRESSURE SENSOR INTERNAL DTC
TIRE PRESSURE SENSOR
WIRELESS CONTROL MODULE (SKREEM)

Diagnostic Test

1. DTC STATUS IS ACTIVE

Turn the ignition on.
With the scan tool, select View DTCs in the Wireless Control Module (SKREEM).

Is the DTC status Active at this time?

Yes >> Go to 2

No >> Go to 4

2. TIRE PRESSURE SENSOR

Turn the ignition off.
Replace the Tire Pressure Sensor in accordance with the Service Information.
With the scan tool, clear DTCs in the Wireless Control Module (SKREEM).
Test Drive the vehicle for a minimum of 10 minutes with vehicle speed greater than 15 m.p.h.
With the scan tool, select View DTCs in the Wireless Control Module (SKREEM).

Does the DTC reset or is the status Active for this DTC?

Yes >> Go to 3

No >> Test Complete.

3. WIRELESS CONTROL MODULE (SKREEM)

View repair.

Repair

Replace the Wireless Control Module (SKREEM) in accordance with the Service Information.Perform TPM VERIFICATION TEST (Refer to 22 - TIRES/WHEELS/TIRE PRESSURE MONITORING - DIAGNOSIS AND TESTING)

4. INTERMITTENT TIRE PRESSURE SENSOR DTC

The conditions necessary to set this DTC are not present at this time.
Refer to any Technical Service Bulletins that may apply to this condition.
With the scan tool, clear DTCs in the Wireless Control Module (SKREEM).
Test Drive the vehicle for a minimum of 10 minutes with vehicle speed greater than 15 m.p.h.
With the scan tool, select View DTCs in the Wireless Control Module (SKREEM).

Does the DTC reset or is the status Active for this DTC?

Yes >> Return to the beginning of this test and perform the diagnostic procedure as necessary.

No >> Test complete.

C1505–TIRE PRESSURE SENSOR 5 INTERNAL

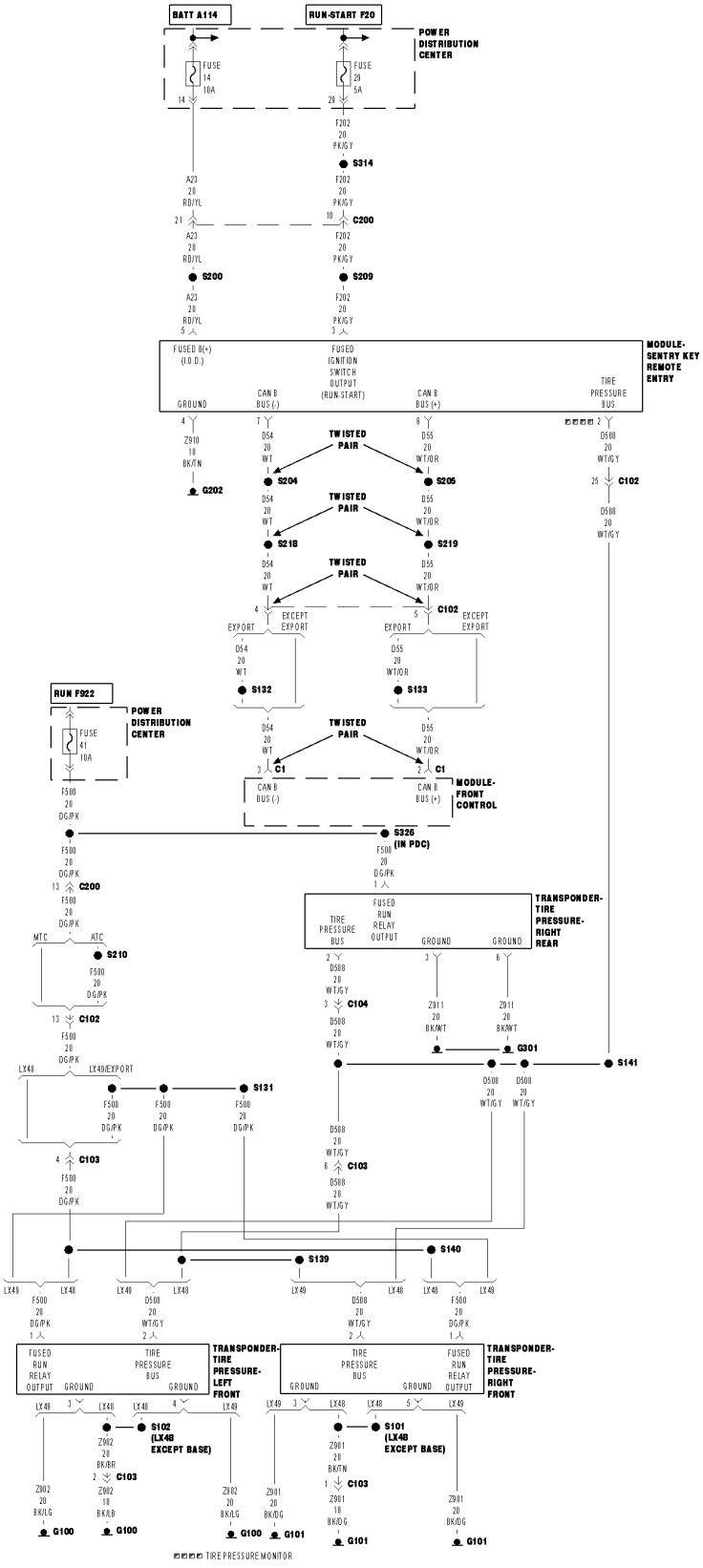

For a complete wiring diagram **Refer to Section 8W**

Theory of Operation

The tire pressure sensor actively monitors the air pressure and air temperature inside the tire, the sensor internal battery status, and the radial acceleration of the wheel. Each sensor has a unique ID code. The sensor transmits the data at regular intervals via an encoded signal to a receiver circuit located in the Wireless Control Module (SKREEM).

- **When Monitored:**
  With vehicle speed greater than 15 m.p.h. (24 km/h).
- **Set Condition:**
  The WCM (SKREEM) will monitor the signals from the four active road tire sensors. A loss of signal error is detected when eight consecutive blocks of data are not received or cannot be accurately decoded. An internal sensor hardware error condition will be set when an error in the accelerometer, pressure sensor, or temperature sensor is detected.

Possible Causes
INTERMITTENT TIRE PRESSURE SENSOR INTERNAL DTC
TIRE PRESSURE SENSOR
WIRELESS CONTROL MODULE (SKREEM)

Diagnostic Test

1. DTC STATUS IS ACTIVE

Turn the ignition on.
With the scan tool, select View DTCs in the Wireless Control Module (SKREEM).

Is the DTC status Active at this time?

Yes >> Go to 2

No >> Go to 4

2. TIRE PRESSURE SENSOR

Turn the ignition off.
Replace the Tire Pressure Sensor in accordance with the Service Information.
With the scan tool, clear DTCs in the Wireless Control Module (SKREEM).
Test Drive the vehicle for a minimum of 10 minutes with vehicle speed greater than 15 m.p.h.
With the scan tool, select View DTCs in the Wireless Control Module (SKREEM).

Does the DTC reset or is the status Active for this DTC?

Yes >> Go to 3

No >> Test Complete.

3. WIRELESS CONTROL MODULE (SKREEM)

View repair.

Repair

Replace the Wireless Control Module (SKREEM) in accordance with the Service Information.Perform TPM VERIFICATION TEST (Refer to 22 - TIRES/WHEELS/TIRE PRESSURE MONITORING - DIAGNOSIS AND TESTING)

4. INTERMITTENT TIRE PRESSURE SENSOR DTC

The conditions necessary to set this DTC are not present at this time.
Refer to any Technical Service Bulletins that may apply to this condition.
With the scan tool, clear DTCs in the Wireless Control Module (SKREEM).
Test Drive the vehicle for a minimum of 10 minutes with vehicle speed greater than 15 m.p.h.
With the scan tool, select View DTCs in the Wireless Control Module (SKREEM).

Does the DTC reset or is the status Active for this DTC?

Yes >> Return to the beginning of this test and perform the diagnostic procedure as necessary.

No >> Test complete.

C1506–LEFT FRONT TIRE PRESSURE TRANSPONDER MODULE PERFORMANCE

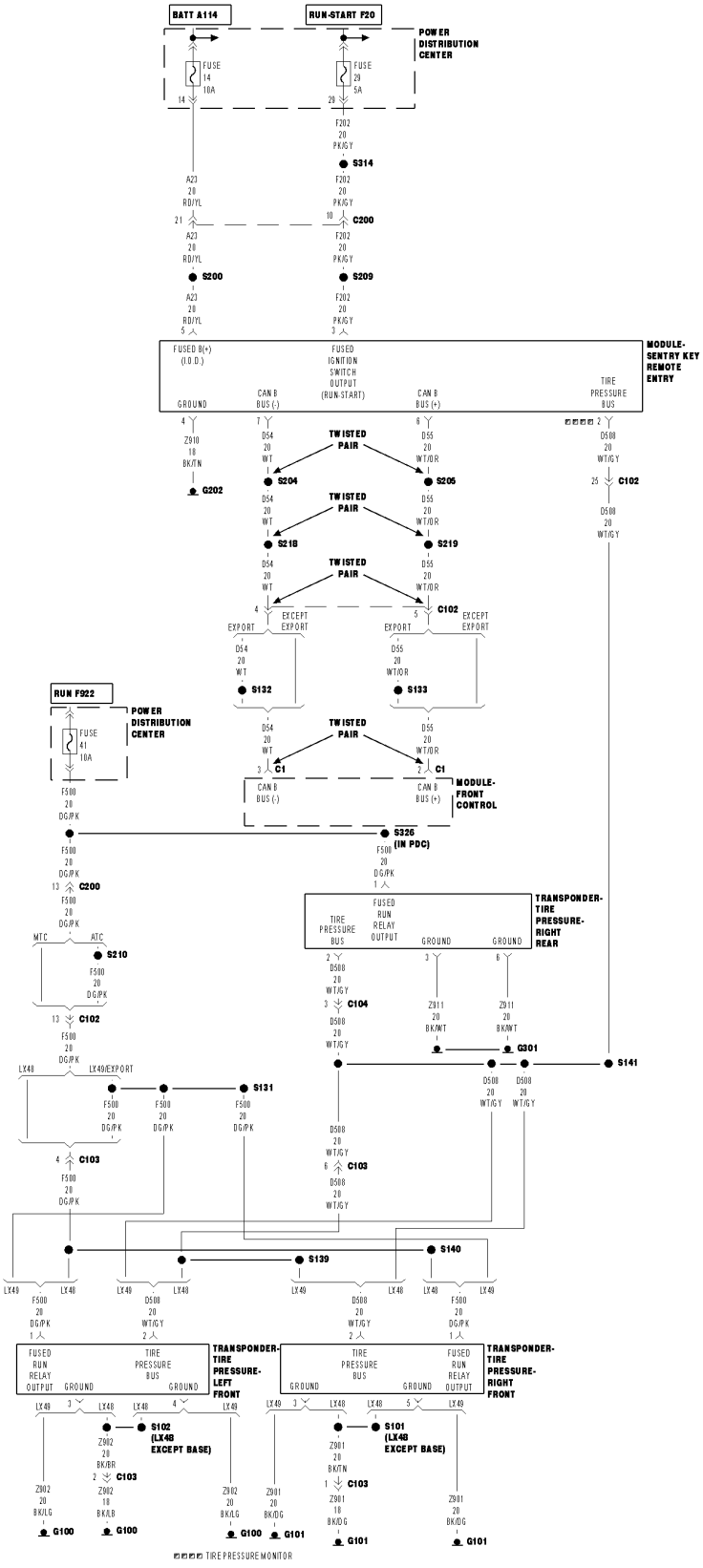

For a complete wiring diagram **Refer to Section 8W**

Theory of Operation

The Tire Pressure Transponder Module is used to automatically learn the location of each wheel sensor on the vehicle. The module is controlled and activated in sequence by the Wireless Control Module (SKREEM) over a LIN bus. When activated, the module will generate a 125 KHz signal of sufficient field strength to activate the tire pressure sensor and force a RF transmission from the sensor.

- **When Monitored:**
  Continuously.
- **Set Condition:**
  The WCM (SKREEM) will monitor the messages from each Tire Pressure Transponder Module over the LIN bus. If any of the messages are not received, or are received other than as expected, a DTC will set. When the condition is corrected, or is no longer detected, as acknowledged via a LIN bus message, the WCM will reset the appropriate transponder module fault status.

Possible Causes
INTERMITTENT TIRE PRESSURE TRANSPONDER MODULE PERFORMANCE DTC
(D508) TIRE PRESSURE BUS CIRCUIT SHORT TO VOLTAGE
(D508) TIRE PRESSURE BUS CIRCUIT SHORT TO GROUND
(D508) TIRE PRESSURE BUS CIRCUIT OPEN OR HIGH RESISTANCE
(F500) FUSED RUN RELAY OUTPUT CIRCUIT OPEN OR HIGH RESISTANCE
(Z901) GROUND CIRCUIT(S) OPEN OR HIGH RESISTANCE
TIRE PRESSURE TRANSPONDER MODULE
WIRELESS CONTROL MODULE (SKREEM)

Diagnostic Test

1. DTC STATUS IS ACTIVE

Turn the ignition on.

With the scan tool, select View DTCs in the Wireless Control Module (SKREEM).

Is the DTC status Active at this time?

Yes >> Go to 2

No >> Go to 9

2. (D508) TIRE PRESSURE BUS CIRCUIT SHORT TO VOLTAGE

Turn the ignition off.

Disconnect the Tire Pressure Transponder Module harness connector.

Disconnect the Sentry Key Remote Entry Module harness connector.

Turn the ignition on.

Measure the voltage of the (D508) Tire Pressure Bus circuit.

Is there any voltage present?

Yes >> Repair the (D508) Tire Pressure Bus circuit for a short to voltage.
Perform TPM VERIFICATION TEST (Refer to 22 - TIRES/WHEELS/TIRE PRESSURE MONITORING - DIAGNOSIS AND TESTING)

No >> Go to 3

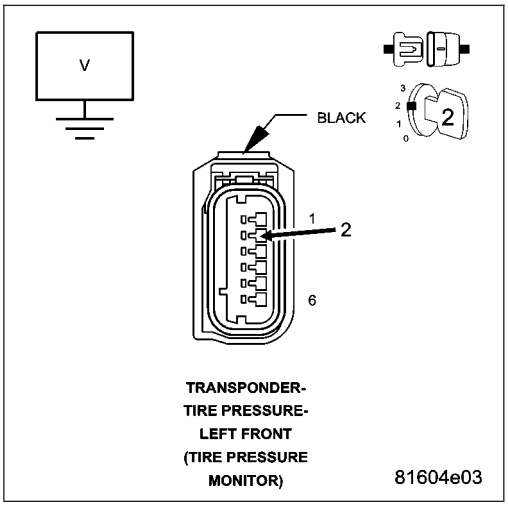

3. (D508) TIRE PRESSURE BUS CIRCUIT SHORT TO GROUND

Turn the ignition off.

Measure the resistance between ground and the (D508) Tire Pressure Bus circuit.

Is the resistance below 5.0 ohms?

Yes >> Repair the (D508) Tire Pressure Bus circuit for a short to ground.

Perform TPM VERIFICATION TEST (Refer to 22 - TIRES/WHEELS/TIRE PRESSURE MONITORING - DIAGNOSIS AND TESTING)

No >> Go to 4

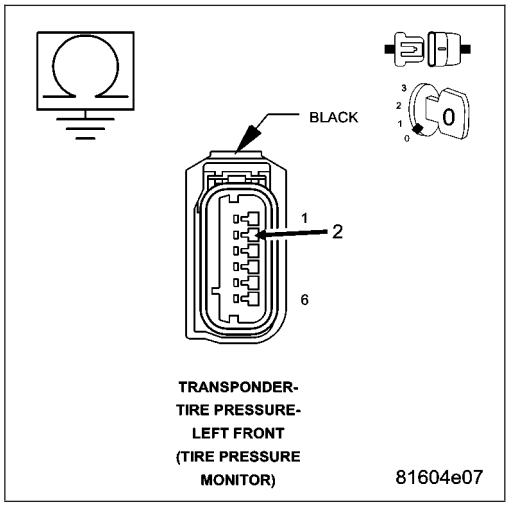

4. (D508) TIRE PRESSURE BUS CIRCUIT OPEN OR HIGH RESISTANCE

Measure the resistance of the (D508) Tire Pressure Bus circuit.

Is the resistance above 5.0 ohms?

Yes >> Repair the (D508) Tire Pressure Bus circuit for an open circuit or high resistance.Perform TPM VERIFICATION TEST (Refer to 22 - TIRES/WHEELS/TIRE PRESSURE MONITORING - DIAGNOSIS AND TESTING)

No >> Go to 5

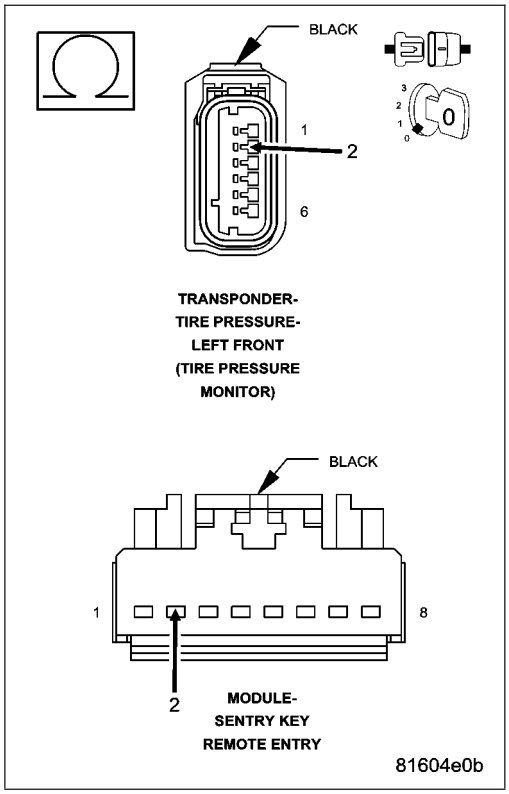

5. (F500) FUSED RUN RELAY OUTPUT CIRCUIT OPEN OR HIGH RESISTANCE

Turn the ignition on.

Using a 12–volt test light connect to ground, check the (F500) Fused Run Relay Output circuit.

NOTE: The test light should be illuminated and bright. Compare the brightness to that of a direct connection to the battery.

Is the test light illuminated and bright?

Yes >> Go to 6

No >> Repair the (F500) Fused Run Relay Output circuit for an open circuit or high resistance.Perform TPM VERIFICATION TEST (Refer to 22 - TIRES/WHEELS/TIRE PRESSURE MONITORING - DIAGNOSIS AND TESTING)

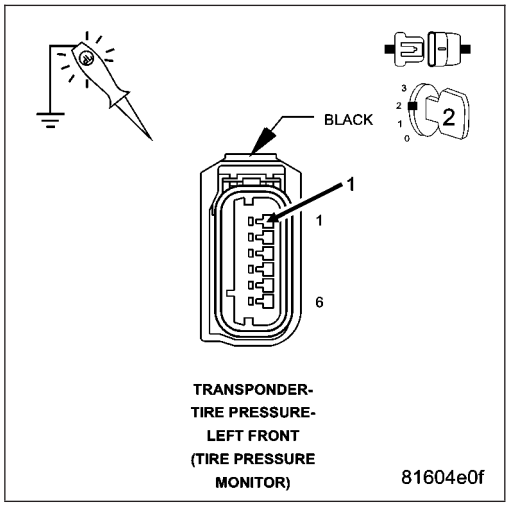

6. (Z901) GROUND CIRCUIT(S) OPEN OR HIGH RESISTANCE

Using a 12–volt test light connect to 12 volts, check each of the (Z901) Ground circuit(s).

NOTE: The test light should be illuminated and bright. Compare the brightness to that of a direct connection to the battery.

Is the test light illuminated and bright?

Yes >> Go to 7

No >> Repair the (Z901) Ground circuit(s) for an open circuit or high resistance.Perform TPM VERIFICATION TEST (Refer to 22 - TIRES/WHEELS/TIRE PRESSURE MONITORING - DIAGNOSIS AND TESTING)

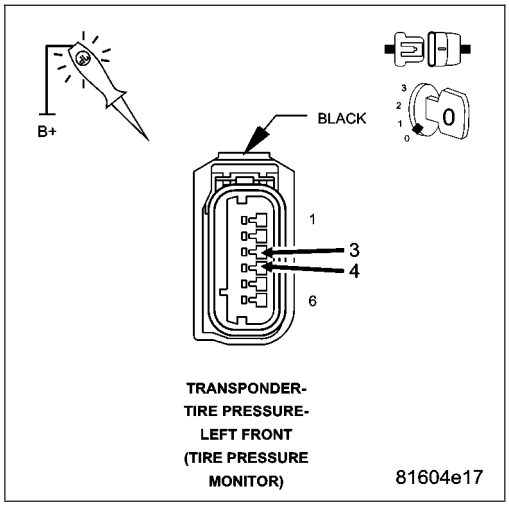

7. TIRE PRESSURE TRANSPONDER MODULE

Turn the ignition off.

Replace the appropriate Tire Pressure Transponder Module in accordance with the Service Information.

With the scan tool, clear DTCs in the Wireless Control Module (SKREEM).

Test Drive the vehicle for a minimum of 10 minutes with vehicle speed greater than 15 m.p.h.

With the scan tool, select View DTCs in the Wireless Control Module (SKREEM).

Does the DTC reset or is the status Active for this DTC?

Yes >> Go to 8

No >> Test Complete.

8. WIRELESS CONTROL MODULE (SKREEM)

View repair.

Repair

Replace the Wireless Control Module (SKREEM) in accordance with the Service Information.

9. INTERMITTENT TIRE PRESSURE TRANSPONDER MODULE DTC

The conditions necessary to set this DTC are not present at this time.
Using the wiring schematic as a guide, inspect the wiring and connectors relative to this circuit.
Refer to any Technical Service Bulletins that may apply to this condition.
With the scan tool, clear DTCs in the Wireless Control Module (SKREEM).
Test Drive the vehicle for a minimum of 10 minutes with vehicle speed greater than 15 m.p.h.
With the scan tool, select View DTCs in the Wireless Control Module (SKREEM).

Does the DTC reset or is the status Active for this DTC?

Yes >> Return to the first step of this test and perform the diagnostic procedure.
Perform TPM VERIFICATION TEST (Refer to 22 - TIRES/WHEELS/TIRE PRESSURE MONITORING - DIAGNOSIS AND TESTING)

No >> Test complete.

C1507–RIGHT FRONT TIRE PRESSURE TRANSPONDER MODULE PERFORMANCE

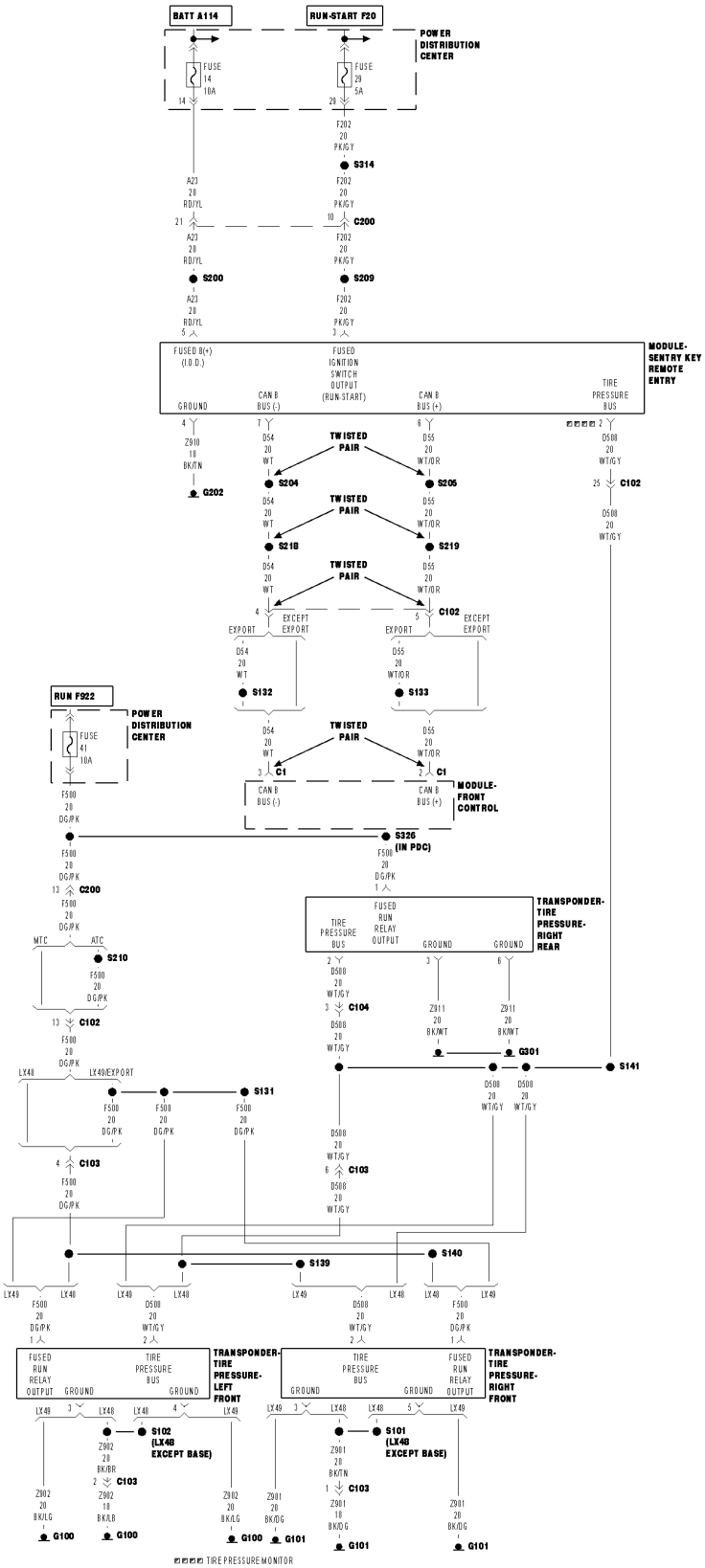

For a complete wiring diagram **Refer to Section 8W**

Theory of Operation

The Tire Pressure Transponder Module is used to automatically learn the location of each wheel sensor on the vehicle. The module is controlled and activated in sequence by the Wireless Control Module (SKREEM) over a LIN bus. When activated, the module will generate a 125 KHz signal of sufficient field strength to activate the tire pressure sensor and force a RF transmission from the sensor.

- **When Monitored:**
  Continuously.
- **Set Condition:**
  The WCM (SKREEM) will monitor the messages from each Tire Pressure Transponder Module over the LIN bus. If any of the messages are not received, or are received other than as expected, a DTC will set. When the condition is corrected, or is no longer detected, as acknowledged via a LIN bus message, the WCM will reset the appropriate transponder module fault status.

Possible Causes
INTERMITTENT TIRE PRESSURE TRANSPONDER MODULE PERFORMANCE DTC
(D508) TIRE PRESSURE BUS CIRCUIT SHORT TO VOLTAGE
(D508) TIRE PRESSURE BUS CIRCUIT SHORT TO GROUND
(D508) TIRE PRESSURE BUS CIRCUIT OPEN OR HIGH RESISTANCE
(F500) FUSED RUN RELAY OUTPUT CIRCUIT OPEN OR HIGH RESISTANCE
(Z901) GROUND CIRCUIT(S) OPEN OR HIGH RESISTANCE
TIRE PRESSURE TRANSPONDER MODULE
WIRELESS CONTROL MODULE (SKREEM)

Diagnostic Test

1. DTC STATUS IS ACTIVE

Turn the ignition on.

With the scan tool, select View DTCs in the Wireless Control Module (SKREEM).

Is the DTC status Active at this time?

Yes >> Go to 2

No >> Go to 9

2. (D508) TIRE PRESSURE BUS CIRCUIT SHORT TO VOLTAGE

Turn the ignition off.

Disconnect the Tire Pressure Transponder Module harness connector.

Disconnect the Sentry Key Remote Entry Module harness connector.

Turn the ignition on.

Measure the voltage of the (D508) Tire Pressure Bus circuit.

Is there any voltage present?

Yes >> Repair the (D508) Tire Pressure Bus circuit for a short to voltage.
Perform TPM VERIFICATION TEST (Refer to 22 - TIRES/ WHEELS/TIRE PRESSURE MONITORING - DIAGNOSIS AND TESTING)

No >> Go to 3

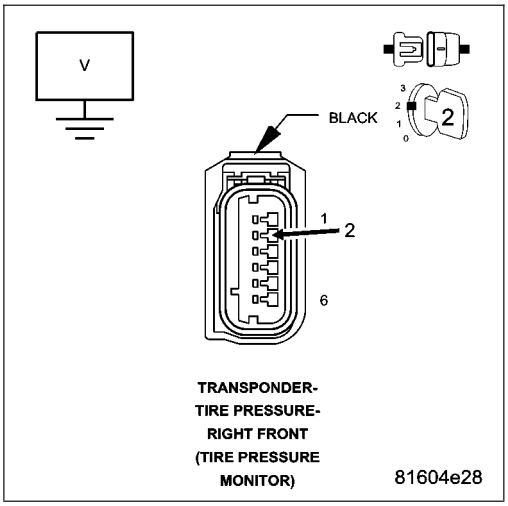

3. (D508) TIRE PRESSURE BUS CIRCUIT SHORT TO GROUND

Turn the ignition off.

Measure the resistance between ground and the (D508) Tire Pressure Bus circuit.

Is the resistance below 5.0 ohms?

Yes >> Repair the (D508) Tire Pressure Bus circuit for a short to ground.

Perform TPM VERIFICATION TEST (Refer to 22 - TIRES/ WHEELS/TIRE PRESSURE MONITORING - DIAGNOSIS AND TESTING)

No >> Go to 4

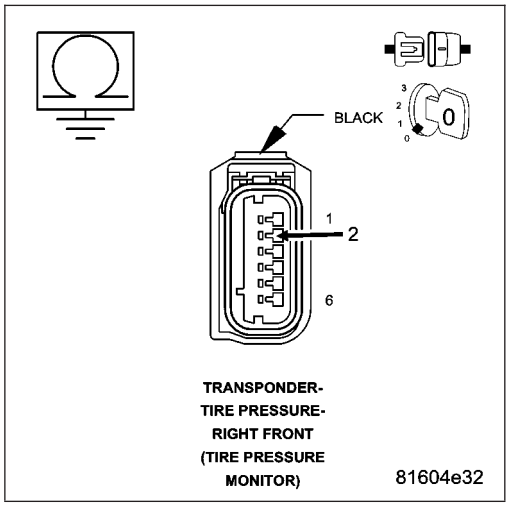

4. (D508) TIRE PRESSURE BUS CIRCUIT OPEN OR HIGH RESISTANCE

Measure the resistance of the (D508) Tire Pressure Bus circuit.

Is the resistance above 5.0 ohms?

Yes >> Repair the (D508) Tire Pressure Bus circuit for an open circuit or high resistance.Perform TPM VERIFICATION TEST (Refer to 22 - TIRES/WHEELS/TIRE PRESSURE MONITORING - DIAGNOSIS AND TESTING)

No >> Go to 5

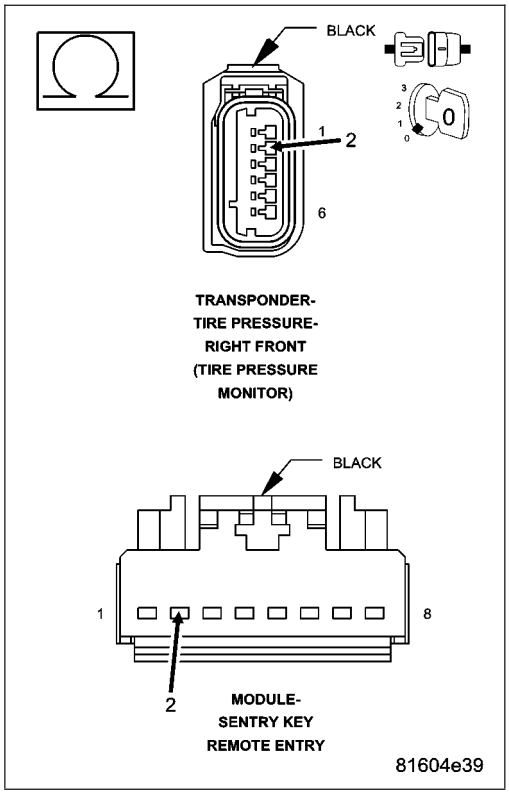

5. (F500) FUSED RUN RELAY OUTPUT CIRCUIT OPEN OR HIGH RESISTANCE

Turn the ignition on.

Using a 12–volt test light connect to ground, check the (F500) Fused Run Relay Output circuit.

NOTE: The test light should be illuminated and bright. Compare the brightness to that of a direct connection to the battery.

Is the test light illuminated and bright?

Yes >> Go to 6

No >> Repair the (F500) Fused Run Relay Output circuit for an open circuit or high resistance.Perform TPM VERIFICATION TEST (Refer to 22 - TIRES/WHEELS/TIRE PRESSURE MONITORING - DIAGNOSIS AND TESTING)

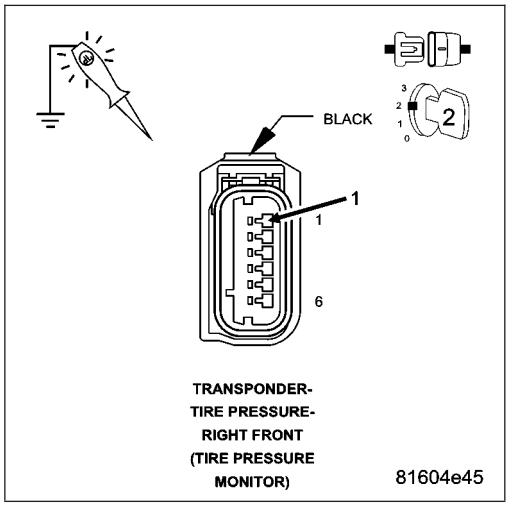

6. (Z901) GROUND CIRCUIT(S) OPEN OR HIGH RESISTANCE

Using a 12–volt test light connect to 12 volts, check each of the (Z901) Ground circuit(s).

NOTE: The test light should be illuminated and bright. Compare the brightness to that of a direct connection to the battery.

Is the test light illuminated and bright?

Yes >> Go to 7

No >> Repair the (Z901) Ground circuit(s) for an open circuit or high resistance.Perform TPM VERIFICATION TEST (Refer to 22 - TIRES/WHEELS/TIRE PRESSURE MONITORING - DIAGNOSIS AND TESTING)

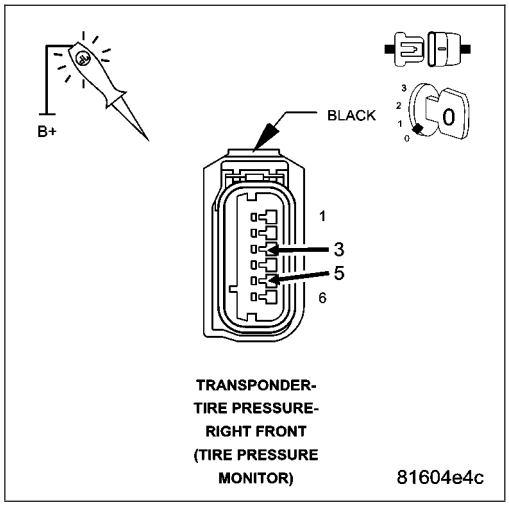

7. TIRE PRESSURE TRANSPONDER MODULE

Turn the ignition off.

Replace the appropriate Tire Pressure Transponder Module in accordance with the Service Information.

With the scan tool, clear DTCs in the Wireless Control Module (SKREEM).

Test Drive the vehicle for a minimum of 10 minutes with vehicle speed greater than 15 m.p.h.

With the scan tool, select View DTCs in the Wireless Control Module (SKREEM).

Does the DTC reset or is the status Active for this DTC?

Yes >> Go to 8

No >> Test Complete.

8. WIRELESS CONTROL MODULE (SKREEM)

View repair.

Repair

Replace the Wireless Control Module (SKREEM) in accordance with the Service Information.Perform TPM VERIFICATION TEST (Refer to 22 - TIRES/WHEELS/TIRE PRESSURE MONITORING - DIAGNOSIS AND TESTING)

9. INTERMITTENT TIRE PRESSURE TRANSPONDER MODULE DTC

The conditions necessary to set this DTC are not present at this time.

Using the wiring schematic as a guide, inspect the wiring and connectors relative to this circuit.

Refer to any Technical Service Bulletins that may apply to this condition.

With the scan tool, clear DTCs in the Wireless Control Module (SKREEM).

Test Drive the vehicle for a minimum of 10 minutes with vehicle speed greater than 15 m.p.h.

With the scan tool, select View DTCs in the Wireless Control Module (SKREEM).

Does the DTC reset or is the status Active for this DTC?

Yes >> Return to the first step of this test and perform the diagnostic procedure.Perform TPM VERIFICATION TEST (Refer to 22 - TIRES/WHEELS/TIRE PRESSURE MONITORING - DIAGNOSIS AND TESTING)

No >> Test complete.

C1509–RIGHT REAR TIRE PRESSURE TRANSPONDER MODULE PERFORMANCE

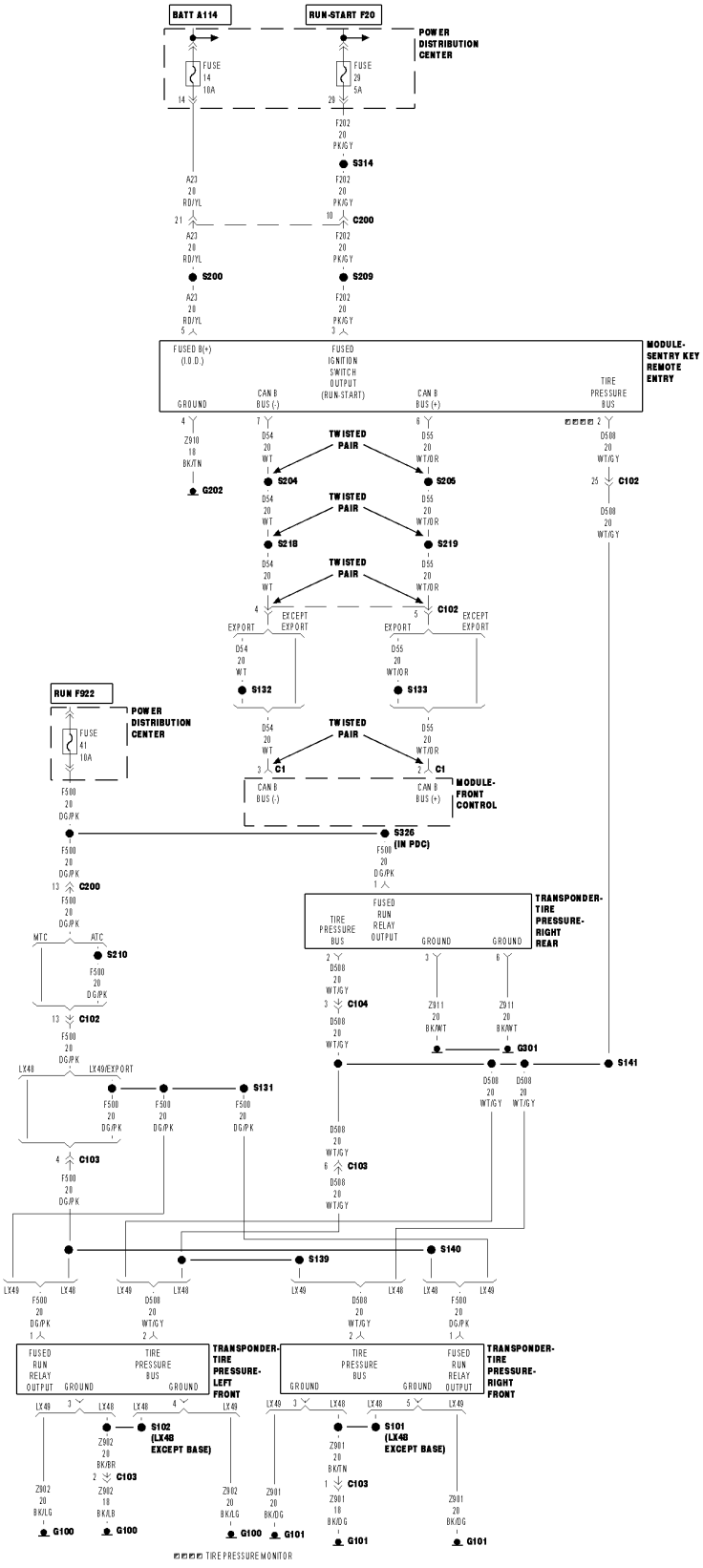

For a complete wiring diagram **Refer to Section 8W**

Theory of Operation

The Tire Pressure Transponder Module is used to automatically learn the location of each wheel sensor on the vehicle. The module is controlled and activated in sequence by the Wireless Control Module (SKREEM) over a LIN bus. When activated, the module will generate a 125 KHz signal of sufficient field strength to activate the tire pressure sensor and force a RF transmission from the sensor.

- **When Monitored:**
  Continuously.
- **Set Condition:**
  The WCM (SKREEM) will monitor the messages from each Tire Pressure Transponder Module over the LIN bus. If any of the messages are not received, or are received other than as expected, a DTC will set. When the condition is corrected, or is no longer detected, as acknowledged via a LIN bus message, the WCM will reset the appropriate transponder module fault status.

Possible Causes
INTERMITTENT TIRE PRESSURE TRANSPONDER MODULE PERFORMANCE DTC
(D508) TIRE PRESSURE BUS CIRCUIT SHORT TO VOLTAGE
(D508) TIRE PRESSURE BUS CIRCUIT SHORT TO GROUND
(D508) TIRE PRESSURE BUS CIRCUIT OPEN OR HIGH RESISTANCE
(F500) FUSED RUN RELAY OUTPUT CIRCUIT OPEN OR HIGH RESISTANCE
(Z911) GROUND CIRCUIT(S) OPEN OR HIGH RESISTANCE
TIRE PRESSURE TRANSPONDER MODULE
WIRELESS CONTROL MODULE (SKREEM)

Diagnostic Test

1. DTC STATUS IS ACTIVE

Turn the ignition on.

With the scan tool, select View DTCs in the Wireless Control Module (SKREEM).

Is the DTC status Active at this time?

Yes >> Go to 2

No >> Go to 9

2. (D508) TIRE PRESSURE BUS CIRCUIT SHORT TO VOLTAGE

Turn the ignition off.

Disconnect the Tire Pressure Transponder Module harness connector.

Disconnect the Sentry Key Remote Entry Module harness connector.

Turn the ignition on.

Measure the voltage of the (D508) Tire Pressure Bus circuit.

Is there any voltage present?

Yes >> Repair the (D508) Tire Pressure Bus circuit for a short to voltage.Perform TPM VERIFICATION TEST (Refer to 22 - TIRES/WHEELS/TIRE PRESSURE MONITORING - DIAGNOSIS AND TESTING)

No >> Go to 3

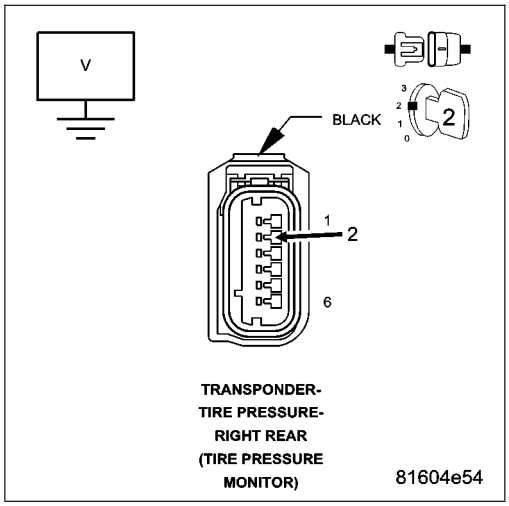

3. (D508) TIRE PRESSURE BUS CIRCUIT SHORT TO GROUND

Turn the ignition off.

Measure the resistance between ground and the (D508) Tire Pressure Bus circuit.

Is the resistance below 5.0 ohms?

Yes >> Repair the (D508) Tire Pressure Bus circuit for a short to ground.

Perform TPM VERIFICATION TEST (Refer to 22 - TIRES/WHEELS/TIRE PRESSURE MONITORING - DIAGNOSIS AND TESTING)

No >> Go to 4

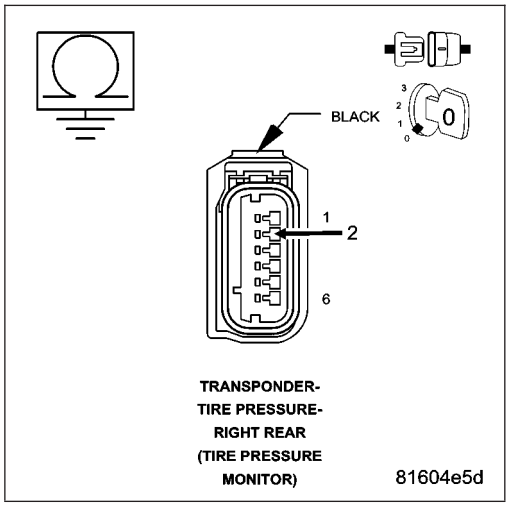

4. (D508) TIRE PRESSURE BUS CIRCUIT OPEN OR HIGH RESISTANCE

Measure the resistance of the (D508) Tire Pressure Bus circuit.

Is the resistance above 5.0 ohms?

Yes >> Repair the (D508) Tire Pressure Bus circuit for an open circuit or high resistance.Perform TPM VERIFICATION TEST (Refer to 22 - TIRES/WHEELS/TIRE PRESSURE MONITORING - DIAGNOSIS AND TESTING)

No >> Go to 5

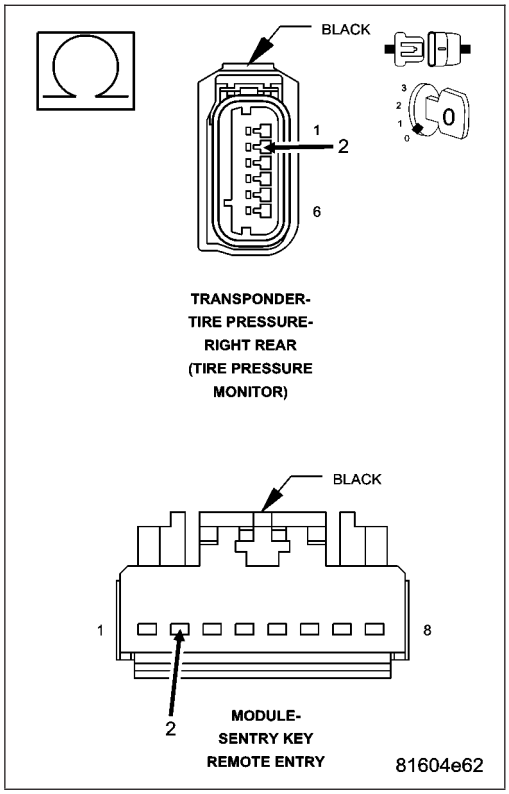

5. (F500) FUSED RUN RELAY OUTPUT CIRCUIT OPEN OR HIGH RESISTANCE

Turn the ignition on.

Using a 12–volt test light connect to ground, check the (F500) Fused Run Relay Output circuit.

NOTE: The test light should be illuminated and bright. Compare the brightness to that of a direct connection to the battery.

Is the test light illuminated and bright?

Yes >> Go to 6

No >> Repair the (F500) Fused Run Relay Output circuit for an open circuit or high resistance.Perform TPM VERIFICATION TEST (Refer to 22 - TIRES/WHEELS/TIRE PRESSURE MONITORING - DIAGNOSIS AND TESTING)

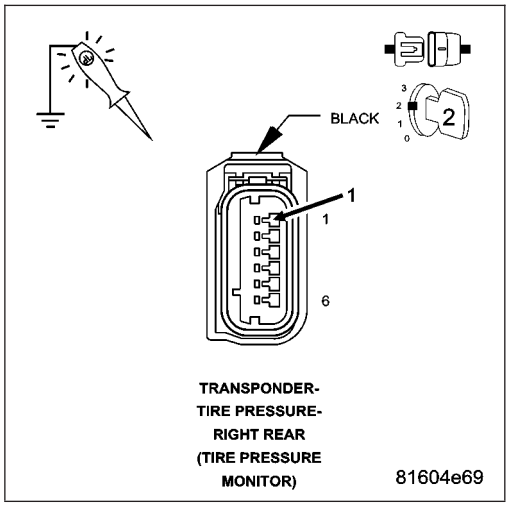

6. (Z911) GROUND CIRCUIT(S) OPEN OR HIGH RESISTANCE

Using a 12–volt test light connect to 12 volts, check each of the (Z911) Ground circuit(s).

NOTE: The test light should be illuminated and bright. Compare the brightness to that of a direct connection to the battery.

Is the test light illuminated and bright?

Yes >> Go to 7

No >> Repair the (Z911) Ground circuit(s) for an open circuit or high resistance.Perform TPM VERIFICATION TEST (Refer to 22 - TIRES/WHEELS/TIRE PRESSURE MONITORING - DIAGNOSIS AND TESTING)

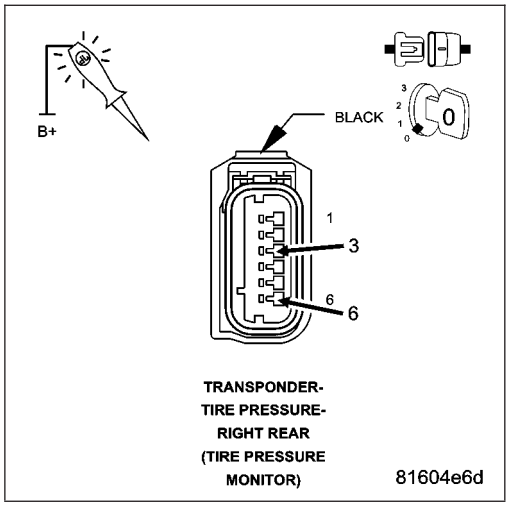

7. TIRE PRESSURE TRANSPONDER MODULE

Turn the ignition off.

Replace the appropriate Tire Pressure Transponder Module in accordance with the Service Information.

With the scan tool, clear DTCs in the Wireless Control Module (SKREEM).

Test Drive the vehicle for a minimum of 10 minutes with vehicle speed greater than 15 m.p.h.

With the scan tool, select View DTCs in the Wireless Control Module (SKREEM).

Does the DTC reset or is the status Active for this DTC?

Yes >> Go to 8

No >> Test Complete.

8. WIRELESS CONTROL MODULE (SKREEM)

View repair.

Repair

Replace the Wireless Control Module (SKREEM) in accordance with the Service Information.Perform TPM VERIFICATION TEST (Refer to 22 - TIRES/WHEELS/TIRE PRESSURE MONITORING - DIAGNOSIS AND TESTING)

9. INTERMITTENT TIRE PRESSURE TRIGGER MODULE DTC

The conditions necessary to set this DTC are not present at this time.

Using the wiring schematic as a guide, inspect the wiring and connectors relative to this circuit.

Refer to any Technical Service Bulletins that may apply to this condition.

With the scan tool, clear DTCs in the Wireless Control Module (SKREEM).

Test Drive the vehicle for a minimum of 10 minutes with vehicle speed greater than 15 m.p.h.

With the scan tool, select View DTCs in the Wireless Control Module (SKREEM).

Does the DTC reset or is the status Active for this DTC?

Yes >> Return to the first step of this test and perform the diagnostic procedure.
Perform TPM VERIFICATION TEST (Refer to 22 - TIRES/WHEELS/TIRE PRESSURE MONITORING - DIAGNOSIS AND TESTING)

No >> Test complete.

C150A–LEFT FRONT TIRE PRESSURE TRANSPONDER MODULE VOLTAGE HIGH

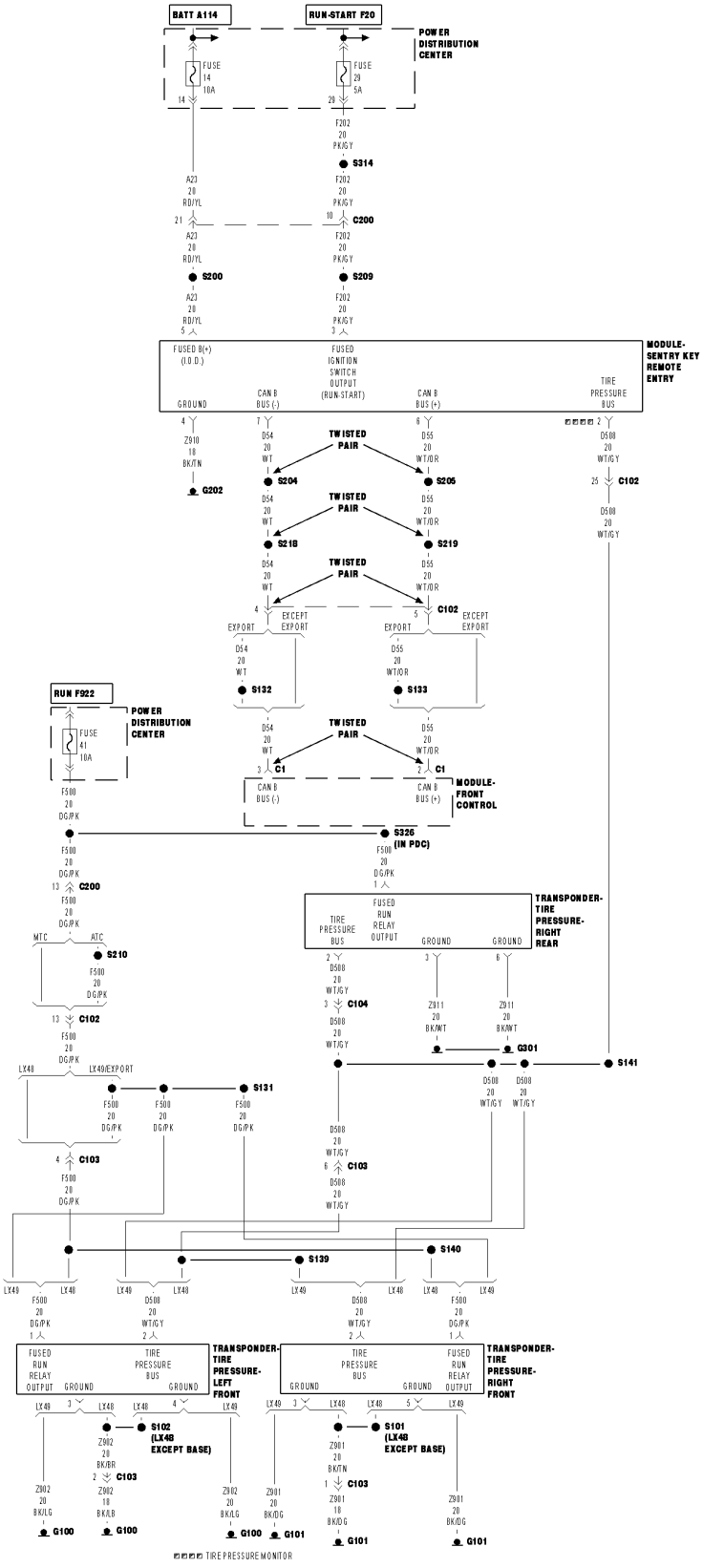

For a complete wiring diagram **Refer to Section 8W**

Theory of Operation

The Tire Pressure Transponder Module is used to automatically learn the location of each wheel sensor on the vehicle. The module is controlled and activated in sequence by the Wireless Control Module (SKREEM) over a LIN bus. When activated, the module will generate a 125 KHz signal of sufficient field strength to activate the tire pressure sensor and force a RF transmission from the sensor.

- **When Monitored:**
  Continuously.
- **Set Condition:**
  The WCM receives a message from the Tire Pressure Transponder Module indicating that an over voltage condition has been detected.

Possible Causes
INTERMITTENT TIRE PRESSURE TRANSPONDER MODULE PERFORMANCE DTC
(F500) FUSED RUN RELAY OUTPUT CIRCUIT OPEN OR HIGH RESISTANCE
(Z901) GROUND CIRCUIT(S) OPEN OR HIGH RESISTANCE
TIRE PRESSURE TRANSPONDER MODULE
WIRELESS CONTROL MODULE (SKREEM)

Diagnostic Test

1. DTC STATUS IS ACTIVE

Turn the ignition on.

NOTE: If a system or battery voltage high DTC is set in the Wireless Control Module (SKREEM) or in the PCM, repair the voltage DTC before continuing with this test.
With the scan tool, select View DTCs in the Wireless Control Module (SKREEM).

Is the DTC status Active at this time?

Yes >> Go to 2

No >> Go to 6

2. (F500) FUSED RUN RELAY OUTPUT CIRCUIT OPEN OR HIGH RESISTANCE

Turn the ignition on.

Using a 12–volt test light connect to ground, check the (F500) Fused Run Relay Output circuit.

NOTE: The test light should be illuminated and bright. Compare the brightness to that of a direct connection to the battery.

Is the test light illuminated and bright?

Yes >> Go to 3

No >> Repair the (F500) Fused Run Relay Output circuit for an open circuit or high resistance.
Perform TPM VERIFICATION TEST (Refer to 22 - TIRES/ WHEELS/TIRE PRESSURE MONITORING - DIAGNOSIS AND TESTING)

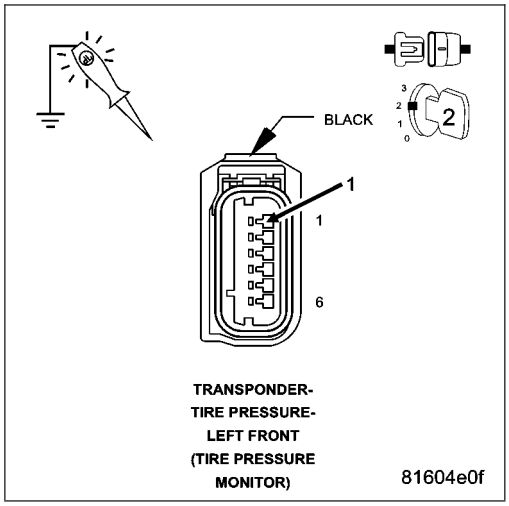

3. (Z901) GROUND CIRCUIT(S) OPEN OR HIGH RESISTANCE

Using a 12–volt test light connect to 12 volts, check each of the (Z901) Ground circuit(s).

NOTE: The test light should be illuminated and bright. Compare the brightness to that of a direct connection to the battery.

Is the test light illuminated and bright?

Yes >> Go to 4

No >> Repair the (Z901) Ground circuit(s) for an open circuit or high resistance.

Perform TPM VERIFICATION TEST (Refer to 22 - TIRES/ WHEELS/TIRE PRESSURE MONITORING - DIAGNOSIS AND TESTING)

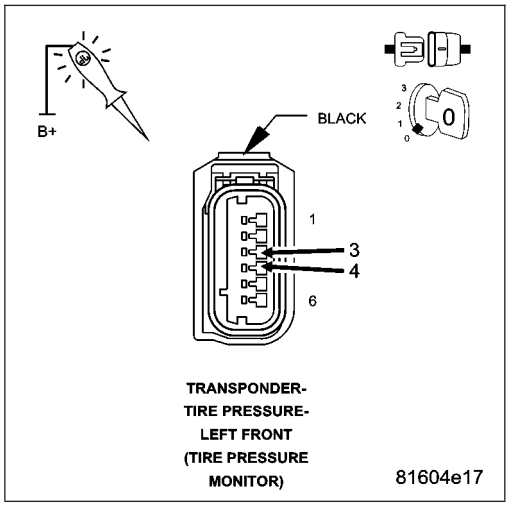

4. TIRE PRESSURE TRANSPONDER MODULE

Turn the ignition off.

Replace the appropriate Tire Pressure Transponder Module in accordance with the Service Information.

With the scan tool, clear DTCs in the Wireless Control Module (SKREEM).

Test Drive the vehicle for a minimum of 10 minutes with vehicle speed greater than 15 m.p.h.

With the scan tool, select View DTCs in the Wireless Control Module (SKREEM).

Does the DTC reset or is the status Active for this DTC?

Yes >> Go to 5

No >> Test Complete.

5. WIRELESS CONTROL MODULE (SKREEM)

View repair.

Repair

Replace the Wireless Control Module (SKREEM) in accordance with the Service Information.

Perform TPM VERIFICATION TEST (Refer to 22 - TIRES/WHEELS/TIRE PRESSURE MONITORING - DIAGNOSIS AND TESTING)

6. INTERMITTENT TIRE PRESSURE TRANSPONDER MODULE DTC

The conditions necessary to set this DTC are not present at this time.

Refer to any Technical Service Bulletins that may apply to this condition.

With the scan tool, clear DTCs in the Wireless Control Module (SKREEM).

Test Drive the vehicle for a minimum of 10 minutes with vehicle speed greater than 15 m.p.h.

With the scan tool, select View DTCs in the Wireless Control Module (SKREEM).

Does the DTC reset or is the status Active for this DTC?

Yes >> Return to the first step of this test and perform the diagnostic procedure.

No >> Test complete.

C150B–RIGHT FRONT TIRE PRESSURE TRANSPONDER MODULE VOLTAGE HIGH

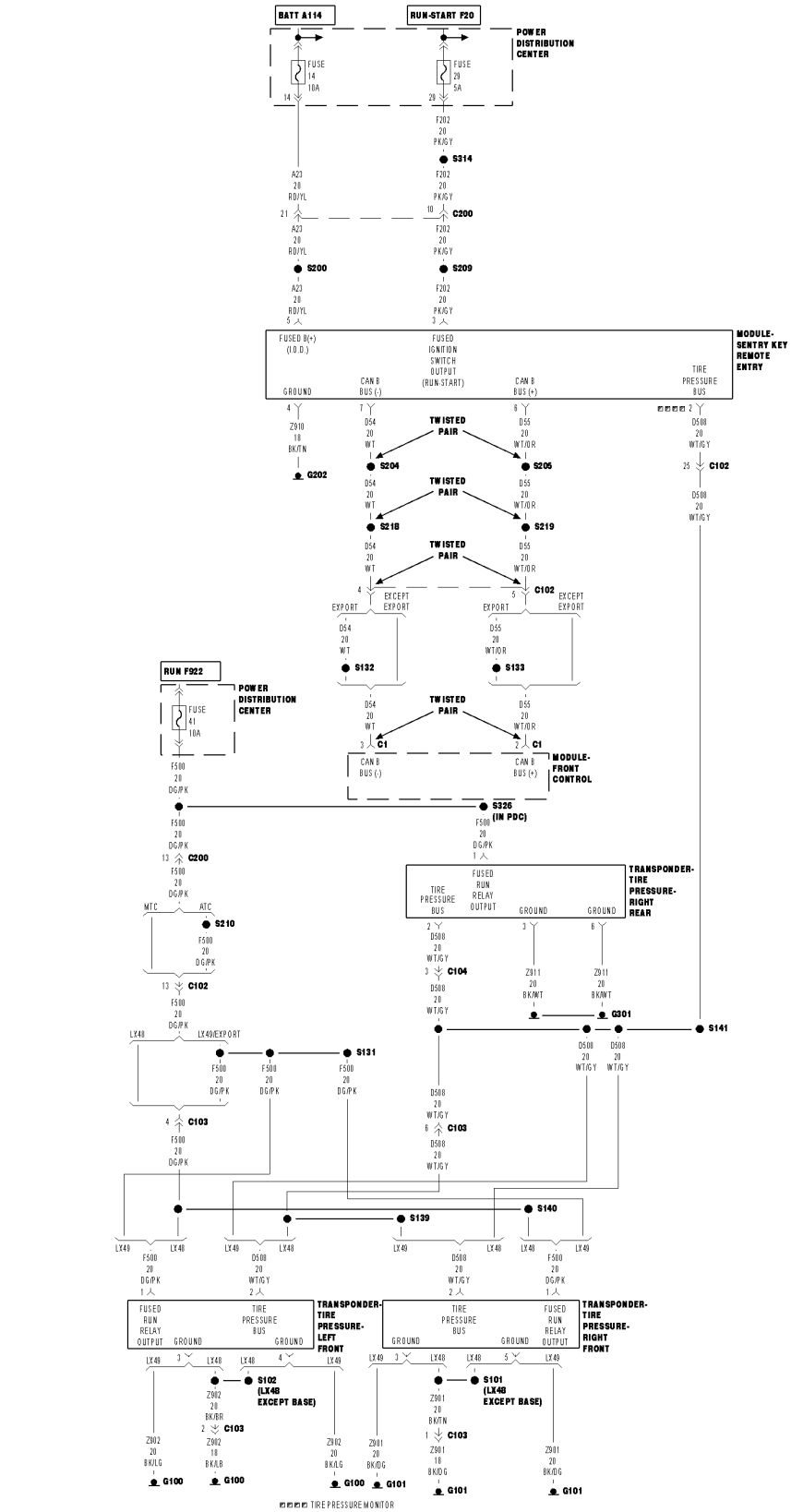

For a complete wiring diagram **Refer to Section 8W**

Theory of Operation

The Tire Pressure Transponder Module is used to automatically learn the location of each wheel sensor on the vehicle. The module is controlled and activated in sequence by the Wireless Control Module (SKREEM) over a LIN bus. When activated, the module will generate a 125 KHz signal of sufficient field strength to activate the tire pressure sensor and force a RF transmission from the sensor.

- **When Monitored:**
  Continuously.
- **Set Condition:**
  The WCM receives a message from the Tire Pressure Transponder Module indicating that an over voltage condition has been detected.

Possible Causes
INTERMITTENT TIRE PRESSURE TRANSPONDER MODULE PERFORMANCE DTC
(F500) FUSED RUN RELAY OUTPUT CIRCUIT OPEN OR HIGH RESISTANCE
(Z901) GROUND CIRCUIT(S) OPEN OR HIGH RESISTANCE
TIRE PRESSURE TRANSPONDER MODULE
WIRELESS CONTROL MODULE (SKREEM)

Diagnostic Test

1. DTC STATUS IS ACTIVE

Turn the ignition on.

NOTE: If a system or battery voltage high DTC is set in the Wireless Control Module (SKREEM) or in the PCM, repair the voltage DTC before continuing with this test.
With the scan tool, select View DTCs in the Wireless Control Module (SKREEM).

Is the DTC status Active at this time?

Yes >> Go to 2

No >> Go to 6

2. (F500) FUSED RUN RELAY OUTPUT CIRCUIT OPEN OR HIGH RESISTANCE

Turn the ignition on.

Using a 12–volt test light connect to ground, check the (F500) Fused Run Relay Output circuit.

NOTE: The test light should be illuminated and bright. Compare the brightness to that of a direct connection to the battery.

Is the test light illuminated and bright?

Yes >> Go to 3

No >> Repair the (F500) Fused Run Relay Output circuit for an open circuit or high resistance.
Perform TPM VERIFICATION TEST (Refer to 22 - TIRES/ WHEELS/TIRE PRESSURE MONITORING - DIAGNOSIS AND TESTING)

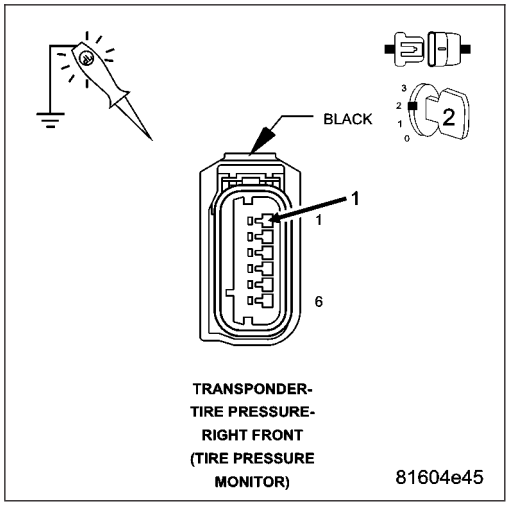

3. (Z901) GROUND CIRCUIT(S) OPEN OR HIGH RESISTANCE

Using a 12–volt test light connect to 12 volts, check each of the (Z901) Ground circuit(s).

NOTE: The test light should be illuminated and bright. Compare the brightness to that of a direct connection to the battery.

Is the test light illuminated and bright?

Yes >> Go to 4

No >> Repair the (Z901) Ground circuit(s) for an open circuit or high resistance.

Perform TPM VERIFICATION TEST (Refer to 22 - TIRES/ WHEELS/TIRE PRESSURE MONITORING - DIAGNOSIS AND TESTING)

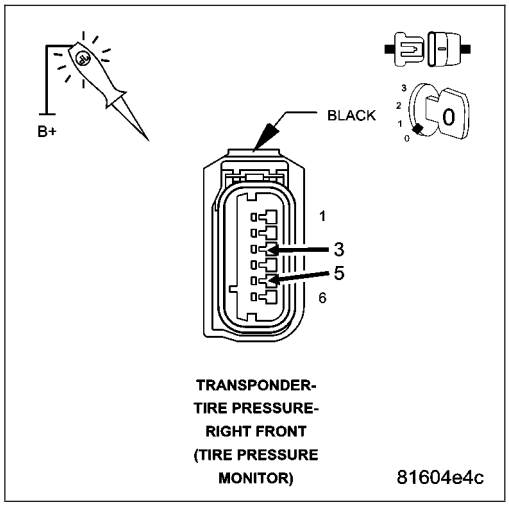

4. TIRE PRESSURE TRANSPONDER MODULE

Turn the ignition off.

Replace the appropriate Tire Pressure Transponder Module in accordance with the Service Information.

With the scan tool, clear DTCs in the Wireless Control Module (SKREEM).

Test Drive the vehicle for a minimum of 10 minutes with vehicle speed greater than 15 m.p.h.

With the scan tool, select View DTCs in the Wireless Control Module (SKREEM).

Does the DTC reset or is the status Active for this DTC?

Yes >> Go to 5

No >> Test Complete.

5. WIRELESS CONTROL MODULE (SKREEM)

View repair.

Repair

Replace the Wireless Control Module (SKREEM) in accordance with the Service Information.

Perform TPM VERIFICATION TEST (Refer to 22 - TIRES/WHEELS/TIRE PRESSURE MONITORING - DIAGNOSIS AND TESTING)

6. INTERMITTENT TIRE PRESSURE TRANSPONDER MODULE DTC

The conditions necessary to set this DTC are not present at this time.

Refer to any Technical Service Bulletins that may apply to this condition.

With the scan tool, clear DTCs in the Wireless Control Module (SKREEM).

Test Drive the vehicle for a minimum of 10 minutes with vehicle speed greater than 15 m.p.h.

With the scan tool, select View DTCs in the Wireless Control Module (SKREEM).

Does the DTC reset or is the status Active for this DTC?

Yes >> Return to the first step of this test and perform the diagnostic procedure.

No >> Test complete.

C150C–RIGHT REAR TIRE PRESSURE TRANSPONDER MODULE VOLTAGE HIGH

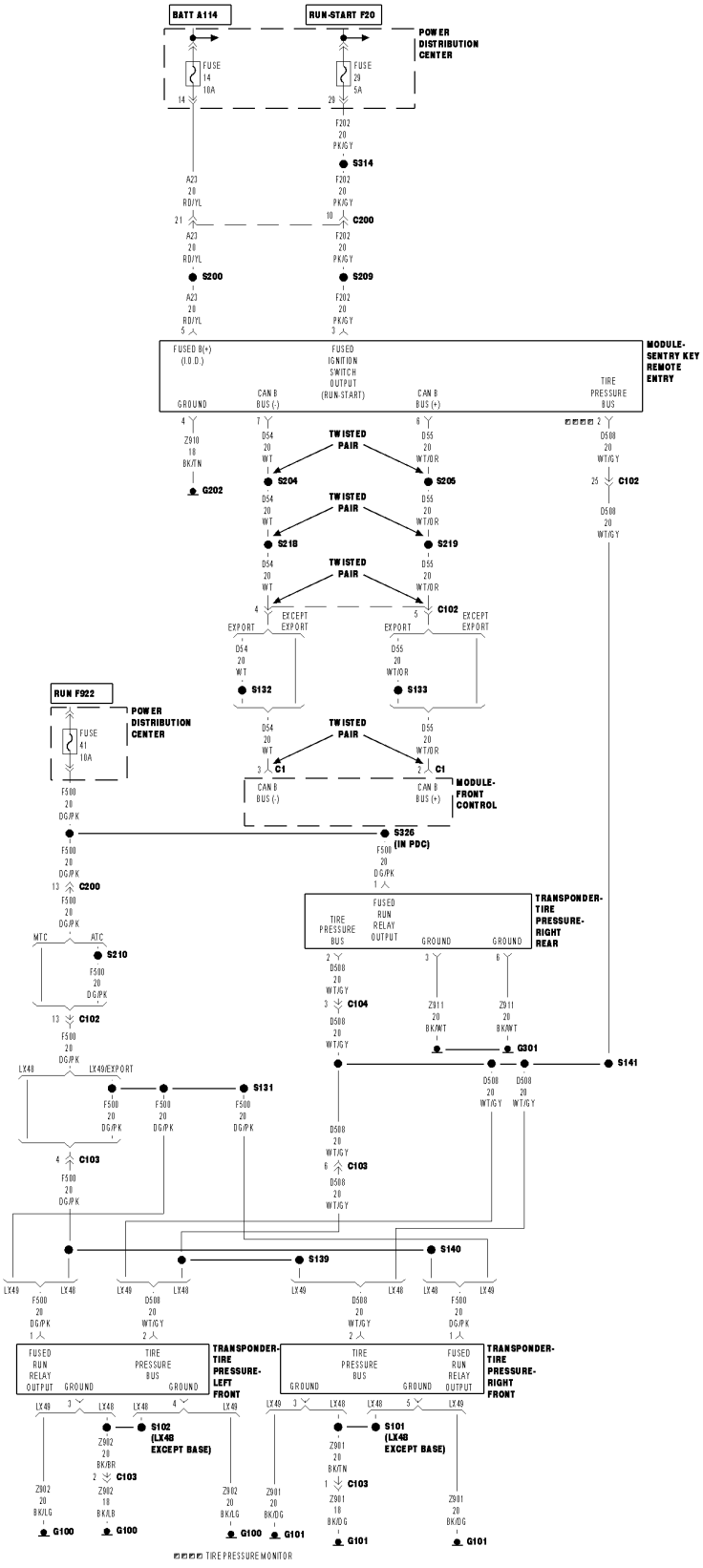

For a complete wiring diagram **Refer to Section 8W**

Theory of Operation

The Tire Pressure Transponder Module is used to automatically learn the location of each wheel sensor on the vehicle. The module is controlled and activated in sequence by the Wireless Control Module (SKREEM) over a LIN bus. When activated, the module will generate a 125 KHz signal of sufficient field strength to activate the tire pressure sensor and force a RF transmission from the sensor.

- **When Monitored:**
  Continuously.
- **Set Condition:**
  The WCM receives a message from the Tire Pressure Transponder Module indicating that an over voltage condition has been detected.

Possible Causes
INTERMITTENT TIRE PRESSURE TRANSPONDER MODULE PERFORMANCE DTC
(F500) FUSED RUN RELAY OUTPUT CIRCUIT OPEN OR HIGH RESISTANCE
(Z911) GROUND CIRCUIT(S) OPEN OR HIGH RESISTANCE
TIRE PRESSURE TRANSPONDER MODULE
WIRELESS CONTROL MODULE (SKREEM)

Diagnostic Test

1. DTC STATUS IS ACTIVE

Turn the ignition on.

NOTE: If a system or battery voltage high DTC is set in the Wireless Control Module (SKREEM) or in the PCM, repair the voltage DTC before continuing with this test.
With the scan tool, select View DTCs in the Wireless Control Module (SKREEM).

Is the DTC status Active at this time?

Yes >> Go to 2

No >> Go to 6

2. (F500) FUSED RUN RELAY OUTPUT CIRCUIT OPEN OR HIGH RESISTANCE

Turn the ignition on.

Using a 12–volt test light connect to ground, check the (F500) Fused Run Relay Output circuit.

NOTE: The test light should be illuminated and bright. Compare the brightness to that of a direct connection to the battery.

Is the test light illuminated and bright?

Yes >> Go to 3

No >> Repair the (F500) Fused Run Relay Output circuit for an open circuit or high resistance.
Perform TPM VERIFICATION TEST (Refer to 22 - TIRES/ WHEELS/TIRE PRESSURE MONITORING - DIAGNOSIS AND TESTING)

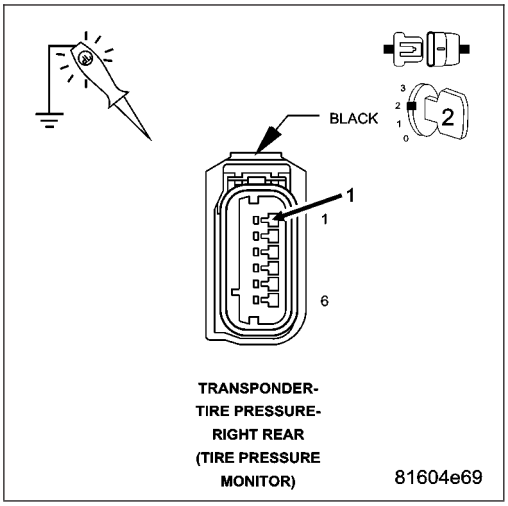

3. (Z911) GROUND CIRCUIT(S) OPEN OR HIGH RESISTANCE

Using a 12–volt test light connect to 12 volts, check each of the (Z911) Ground circuit(s).

NOTE: The test light should be illuminated and bright. Compare the brightness to that of a direct connection to the battery.

Is the test light illuminated and bright?

Yes >> Go to 4

No >> Repair the (Z911) Ground circuit(s) for an open circuit or high resistance.

Perform TPM VERIFICATION TEST (Refer to 22 - TIRES/ WHEELS/TIRE PRESSURE MONITORING - DIAGNOSIS AND TESTING)

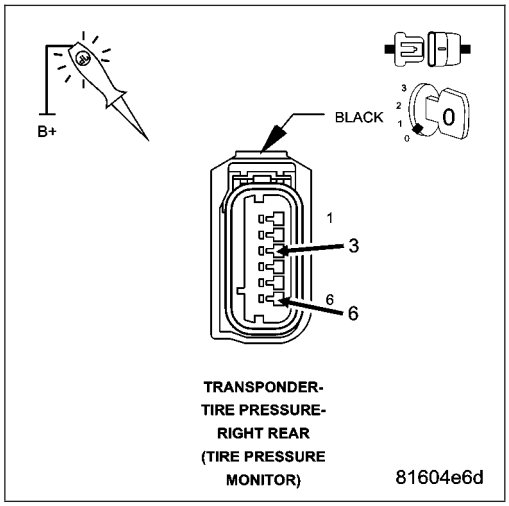

4. TIRE PRESSURE TRANSPONDER MODULE

Turn the ignition off.

Replace the appropriate Tire Pressure Transponder Module in accordance with the Service Information.

With the scan tool, clear DTCs in the Wireless Control Module (SKREEM).

Test Drive the vehicle for a minimum of 10 minutes with vehicle speed greater than 15 m.p.h.

With the scan tool, select View DTCs in the Wireless Control Module (SKREEM).

Does the DTC reset or is the status Active for this DTC?

Yes >> Go to 5

No >> Test Complete.

5. WIRELESS CONTROL MODULE (SKREEM)

View repair.

Repair

Replace the Wireless Control Module (SKREEM) in accordance with the Service Information.

Perform TPM VERIFICATION TEST (Refer to 22 - TIRES/WHEELS/TIRE PRESSURE MONITORING - DIAGNOSIS AND TESTING)

6. INTERMITTENT TIRE PRESSURE TRANSPONDER MODULE DTC

The conditions necessary to set this DTC are not present at this time.

Refer to any Technical Service Bulletins that may apply to this condition.

With the scan tool, clear DTCs in the Wireless Control Module (SKREEM).

Test Drive the vehicle for a minimum of 10 minutes with vehicle speed greater than 15 m.p.h.

With the scan tool, select View DTCs in the Wireless Control Module (SKREEM).

Does the DTC reset or is the status Active for this DTC?

Yes >> Return to the first step of this test and perform the diagnostic procedure.

No >> Test complete.

TPM VERIFICATION

For a complete wiring diagram **Refer to Section 8W**.

Diagnostic Test

1. TPM

Was the WCM/SKREEM replaced during the test procedure?

Yes >> Go to 2

No >> Go to 3

2. WCM/SKREEM

NOTE: When entering the PIN, care should be taken because the SKREEM will only allow 3 consecutive attempts to enter the correct PIN. If 3 consecutive incorrect PIN's are entered the SKREEM will Lock Out the scan tool. To exit Lock Mode, the ignition key must remain the Run position for I hour. All accessories must be off. A battery charger connected to the battery during this time period is recommended.

1. Reconnect the previously removed and/or disconnected components and connectors.
2. Obtain the vehicle's unique Personal Identification Number (PIN) assigned to it's original SKREEM. This number can be obtained from the vehicle invoice or from the DaimlerChrysler Customer Center (Phone 1-800-992-1997).
3. With the scan tool, select Miscellaneous Functions, WCM/Wireless Control Module. Then select the desired procedure and follow the display on the scan tool.
4. If the WCM/SKREEM was replaced, all the customer's keys must be programmed to the new module. Use the scan tool and the Program Key procedure
5. With the scan tool, ease all DTCs. Perform 5 ignition key cycles, leaving the key on for at least 90 seconds per cycle.
6. Drive the vehicle for a minimum of 10 minutes while maintaining a continuous speed above 15 mph (24 km/h). During this time the system will learn the new sensor ID code and will clear any DTC(s) automatically.
7. With the scan tool, read WCM/SKREEM DTC(s).

Are there any DTC(s) present?

Yes >> Repair not complete, refer to the appropriate symptom.

No >> Repair is complete.

3. TIRE PRESSURE SENSOR/TIRE PRESSURE TRANSPONDER REPLACE

1. Reconnect the previously removed and/or disconnected components and connectors.
2. Drive the vehicle for a minimum of 10 minutes while maintaining a continuous speed above 15 mph (24 km/h). During this time the system will learn the new sensor ID code and will clear any DTC(s) automatically.
3. With the scan tool, read TPM DTC(s).

Are there any DTC(s) present?

Yes >> Repair not complete, refer to the appropriate symptom.

No >> Repair is complete.

TIRE PRESSURE MONITORING - SERVICE INFORMATION

DESCRIPTION

The Tire Pressure Monitoring (TPM) system monitors air pressure in the four road tires (excludes spare). Pressure in the spare tire is not monitored. There are two systems available on this vehicle, a base and a premium. The base system does not specify how many tires are low or where they are located. The premium system does so.

TPM alerts the driver when tire pressure falls below predetermined thresholds. (Refer to 22 - TIRES/WHEELS/TIRE PRESSURE MONITORING - OPERATION)

The TPM systems are controlled by the Wireless Control Module (WCM), commonly referred to as the Sentry Key Remote Entry Module (SKREEM).

There is a sensor (transmitter) in each of the vehicle's four road wheels that operates on a 315 MHz radio frequency. Export vehicle sensors operate on a 433 MHz radio frequency.

If a vehicle is equipped with the premium TPM system, transponders located in three of the four wheel wells of the vehicle are used to provide the WCM with the location of the tire pressure sensors on the vehicle. The transponders are located in the left front, right front and right rear wheel wells.

An indicator lamp located in the instrument cluster and, if equipped with the premium TPM system, the Electronic Vehicle Information Center (EVIC) are used to communicate system information.

For further information, refer to the Owners Manual or the appropriate diagnostic information.

OPERATION

The Tire Pressure Monitoring (TPM) system uses radio and sensor technology to monitor tire air pressure levels. Sensors, mounted to each road wheel as part of the valve stem, transmit an RF signal indicating their individual pressure to a receiver located in the Wireless Control Module (WCM), commonly referred to as the Sentry Key Remote Entry Module (SKREEM). These transmissions occur approximately once every minute at speeds over 15 mph (24 km/h). The Tire Pressure Monitoring system remains active even if no tire pressure related message is displayed.

The sensors lay dormant (Park Mode), then wake and start transmitting (Drive Mode) when the vehicle first reaches speeds over 15 mph (24 km/h). Once the wheels stop rotating for a period of approximately 20 minutes, the sensors shut down until again awaken. Although not transmitting as when in Drive Mode, while in Park Mode, the sensors still transmit approximately once every 13 hours to let the receiver know air pressure status at that time. Sensors will also transmit when a pressure change of one psi (seven kPa) or more is detected during that period. For more information on sensors, (Refer to 22 - TIRES/WHEELS/TIRE PRESSURE MONITORING/SENSOR - OPERATION).

If the vehicle is equipped with the premium TPM system, transponders located in three of the four wheel wells of the vehicle are used to provide the WCM with the location of the tire pressure sensors on the vehicle. The transponders are located in the left front, right front and right rear wheel wells. A fourth transponder is not necessary in the remaining wheel well due to the process-of-elimination theory. Once the system knows the location of the first three sensors it assumes the location of the fourth tire pressure sensor is in the left rear tire. For more information, (Refer to 22 - TIRES/WHEELS/TIRE PRESSURE MONITORING/TRANSPONDER - OPERATION).

If the system detects that the tire pressure in any road tire is going low, beyond the Low Pressure (lamp) ON threshold (see following tables), the TPM system will continuously illuminate an indicator lamp. If equipped with the premium TPM system, a message will be displayed in the instrument cluster. The text message will indicate which tire is low and the display will show all current tire pressures, the low tire will be flashing with its pressure value. This message will be displayed for the rest of the ignition cycle, or until the Low Tire pressure condition has been corrected. A chime will sound upon initial detection. Once pressure in the suspect tire raises above the Low Pressure (lamp) OFF Threshold, the lamp will go out and the system returns to normal within approximately two minutes time. If a message center button is pressed, the message is replaced by the new message requested; however, if the Low Tire condition has not been corrected, the Low Tire pressure message will again be displayed.

If a system fault is detected, the indicator lamp will flash on/off for 60 seconds, once every 10 minutes.

For further information, refer to the Owners Manual or the Appropriate Diagnostic Information.

NOTE: Each of the following TPM Threshold Pressure Tables corresponds to a specific placard tire pressure. To use the correct table, refer to the Tire And Loading Information label attached to the driver's door opening (B-pillar) of the vehicle being serviced.

TPM THRESHOLD PRESSURES - PLACARD PRESSURE 30 PSI (207 KPA)

Placard Pressure (Cold)	30 PSI (207 kPa)
Low Pressure OFF Threshold	28 PSI (193 kPa)
Low Pressure ON Threshold	24 PSI (165 kPa)

TPM THRESHOLD PRESSURES - PLACARD PRESSURE 32 PSI (221 KPA)

Placard Pressure (Cold)	32 PSI (221 kPa)
Low Pressure OFF Threshold	29 PSI (200 kPa)
Low Pressure ON Threshold	25 PSI (172 kPa)

TPM THRESHOLD PRESSURES - PLACARD PRESSURE 36 PSI (248 KPA)

Placard Pressure (Cold)	36 PSI (248 kPa)
Low Pressure OFF Threshold	34 PSI (234 kPa)
Low Pressure ON Threshold	29 PSI (200 kPa)

SENSOR - TPM

DESCRIPTION

On vehicles equipped with Tire Pressure Monitoring (TPM), one tire pressure sensor (6) is mounted to each wheel (5) in place of the traditional tire valve stem. Each sensor has an internal battery that lasts up to 10 years. The battery is not serviceable. At the time of battery failure, the sensor must be replaced.

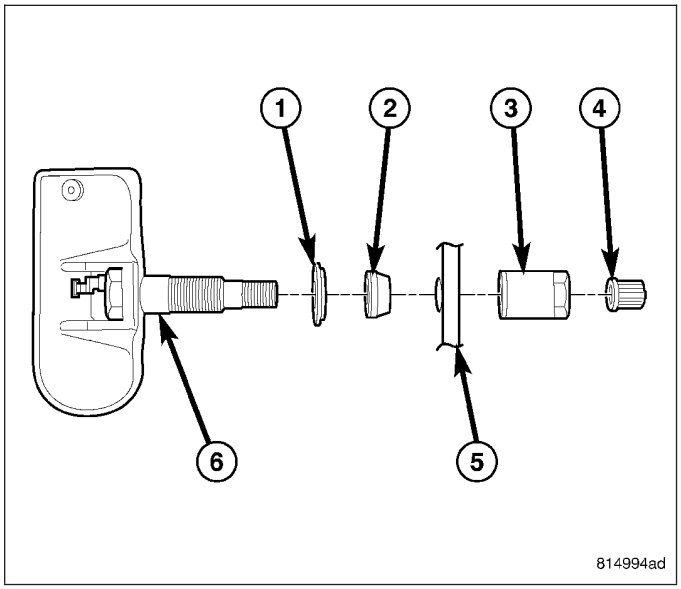

The TPM system operates on a 315 MHz radio frequency. The 315 MHz sensors can be easily identified by a white outline oval (black center) insignia (3) on the sensor body.

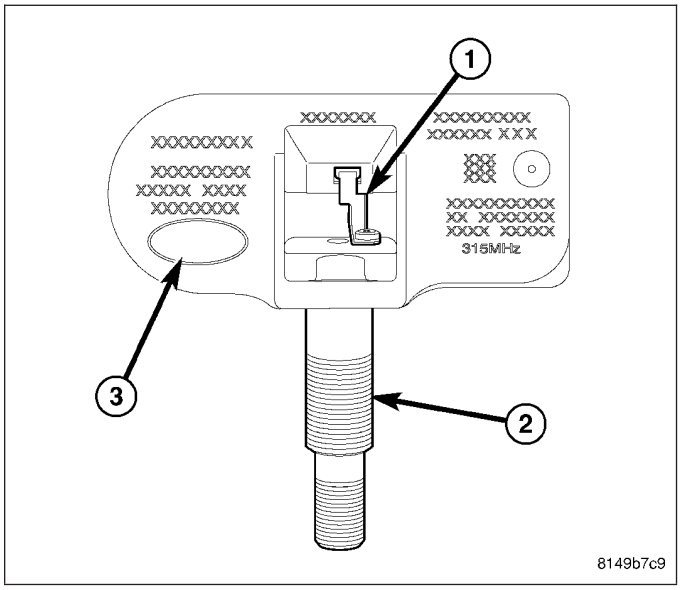

The Export TPM system operates on a 433 MHz radio frequency. The 433 MHz sensors can be easily identified by either a solid white oval insignia (3) on the body or...

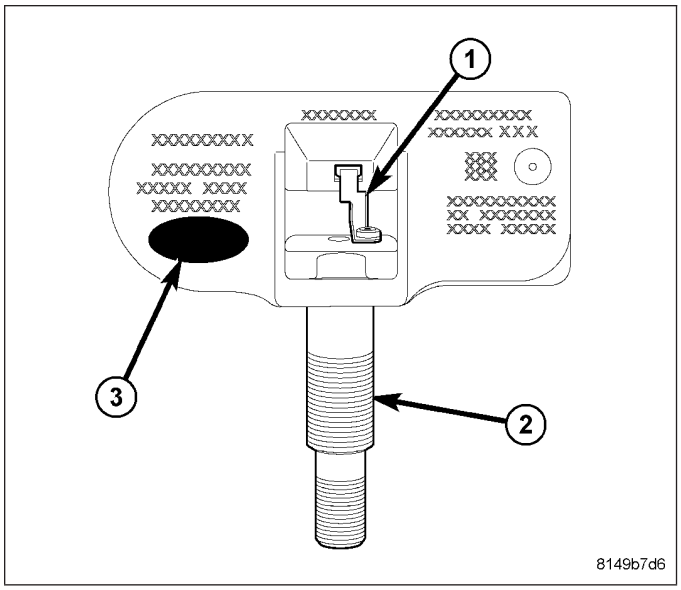

... a solid white oval insignia (3) with 433 printed in the center. The sensors are identical except for the oval insignia.

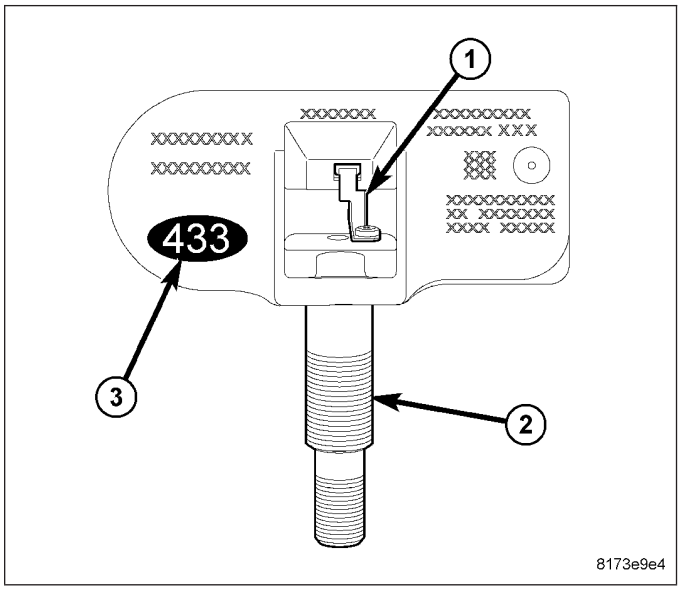

CAUTION: Although 315 MHz and 433 MHz sensors are identical in size and shape, they are not interchangeable. Always make sure the correct sensor is being used.

NOTE: Once mounted inside a tire and wheel assembly you are not able to visually tell the difference between a 315 MHz and 433 MHz sensor. The tire must be dismounted allowing visual inspection of the sensor body.

The TPM sensors are designed for original style factory wheels. **Do not attempt to install a tire pressure sensor in an aftermarket wheel. If aftermarket wheels are installed and do not contain tire pressure sensors, the system will not function properly and the driver will be continuously notified of a system malfunction.**

The serviceable components of the tire pressure sensor are :

- Sensor-To-Wheel Seal (2) and Metal Washer (1)
- Valve Stem Cap (4)
- Valve Stem Core
- Valve Stem Nut (with pressed-in washer) (3)

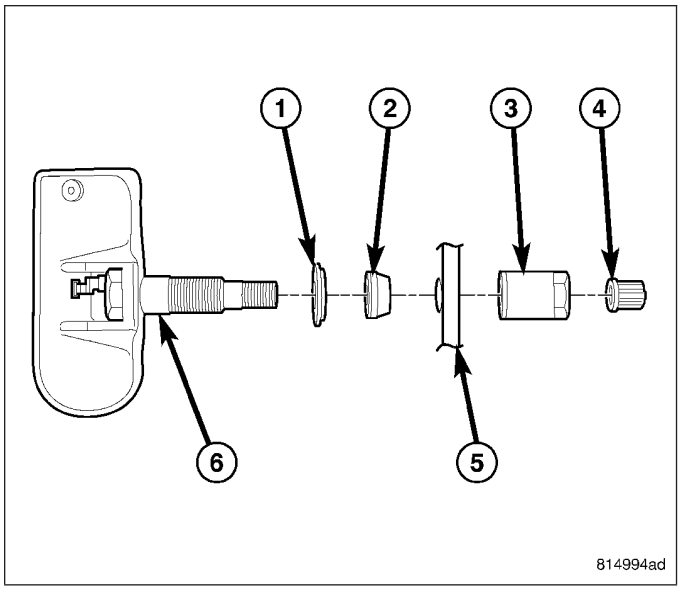

The valve stem caps and cores used are specifically designed for the tire pressure monitoring sensors. Although similar to standard valve stem caps and cores, they are different. The valve stem cap has a special seal inside to keep moisture and corrosion out. The valve stem core has a special nickel coating to protect from corrosion.

OPERATION

The battery operated tire pressure sensors lay dormant (Park Mode), then wake and start transmitting (Drive Mode) when the vehicle first reaches speeds over 15 mph (24 km/h). Once the wheels stop rotating for a period of approximately 20 minutes, the sensors shut down until again awaken. Although not transmitting as when in Drive Mode, while in Park Mode, the sensors still transmit approximately once every 13 hours to let the receiver know air pressure status at that time. Sensors will also transmit when a pressure change of one psi (seven kPa) or more is detected during that period.

Using an RF signal, each sensor transmits tire pressure data approximately once every minute. Each sensor's (transmitter) broadcast is uniquely coded so that the Wireless Control Module (WCM), commonly referred to as the Sentry Key Remote Entry Module (SKREEM), can monitor the state of each of the sensors in the four rotating road wheels. The WCM automatically learns and stores the sensor's ID while driving after a sensor has been replaced. This can take up to 10 minutes while driving at speeds above 15 mph (24 km/h). **There is no formal retraining procedure necessary.**

For additional information, refer to appropriate diagnostic information.

CAUTION

CAUTION: The use of tire sealants is strictly prohibited for vehicles equipped with the Tire Pressure Monitoring system. Tire sealants can clog tire pressure sensors.

CAUTION: Tire pressure sensor valve stem caps and cores are specially designed for the sensors. Due to risk of corrosion, do not use a standard valve stem cap or core in a tire pressure sensor in place of the original equipment style sensor cap and core.

CAUTION: Do not attempt to install a tire pressure sensor in an aftermarket wheel. Use tire pressure sensors in original style factory wheels only. If aftermarket wheels are installed, and therefore do not contain tire pressure sensors, the system will not function properly and the driver will be continuously notified of a system malfunction.

CAUTION: Any time a sensor is to be installed in a wheel, a new seal and washer must be installed on the stem to ensure air tight sealing.

NOTE: TPM thresholds have been established for the original tire size equipped on the vehicle. Use original size tires only to maintain system accuracy.

DIAGNOSIS AND TESTING

TIRE PRESSURE SENSOR

NOTE: Tire pressure may increase from 2 to 6 psi (14 to 41 kPa) during normal driving conditions. Do NOT reduce this normal pressure build up.

When diagnosing a tire pressure issue, always check air pressure in the tires first with a known accurate air gauge. Adjust air pressure as necessary to that listed on the Tire Inflation Pressure Label (Placard) provided with the vehicle (usually applied to the driver's side B-pillar). After adjusting air pressure in a tire on the vehicle, allow approximately two minutes for the message or indicator lamp to go out.

Check the tire pressure indicator lamp in the instrument cluster. If the lamp is illuminating continuously, proceed as listed below. If the indicator lamp is flashing on/off for 60 seconds, once every 10 minutes, there is a system fault detected. Refer to the appropriate diagnostic information.

If air pressure in any tire is low, inspect **all** the tires for leaks. A water "dunk tank" or other water test may be used to check for a leak around the sensor as long as any water at the valve core is removed once the procedure is completed. The water can be easily expelled from the core area by pushing in on the core for several seconds, allowing escaping air to drive out any moisture. Reinflate the tire as necessary. Always make sure the original valve stem cap is securely installed to keep moisture out of the sensor.

If the gauge-read pressure in the tires does not indicate a tire pressure issue, refer to the appropriate diagnostic information.

REMOVAL

1. Raise and support vehicle. (Refer to LUBRICATION & MAINTENANCE/HOISTING - STANDARD PROCEDURE)
2. Remove wheel mounting nuts (3), then tire and wheel assembly (1). (Refer to 22 - TIRES/WHEELS - REMOVAL)

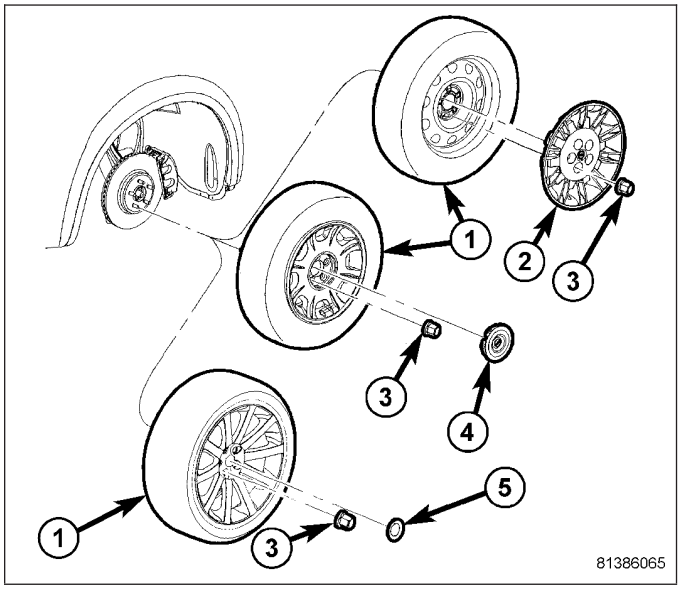

CAUTION: The cap used on this valve stem contains an O-ring seal to prevent contamination and moisture from entering the valve stem. Retain this valve stem cap for reuse. Do not substitute a regular valve stem cap in its place.

CAUTION: The valve stem used on this vehicle is made of aluminum and the core is nickel plated brass. The original valve stem core must be reinstalled and not substituted with a valve stem core made of a different material. This is required to prevent corrosion in the valve stem caused by the different metals.

3. Dismount tire from wheel following tire changer manufacturers instructions while paying special attention to the following to avoid damaging the pressure sensor:
   a. When breaking the tire bead loose from the wheel rim, avoid using the Bead Breaker in the area of the sensor. That includes both front and rear beads of the tire.
   b. When preparing to dismount the tire from the wheel, carefully insert the mounting/dismounting tool at the valve stem ± 10°, then proceed to dismount the tire from the wheel. Use this process on both the upper and lower tire beads.

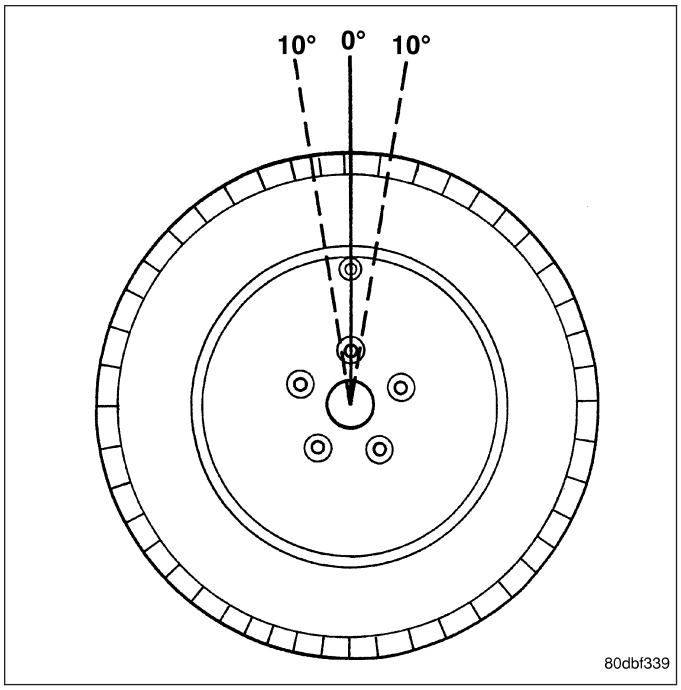

4. Remove sensor nut (3) retaining sensor to wheel. While removing nut, hold pressure against rear of metal valve stem to keep valve stem from pushing rearward, damaging antenna strap.
5. Remove sensor (1) from wheel (2).

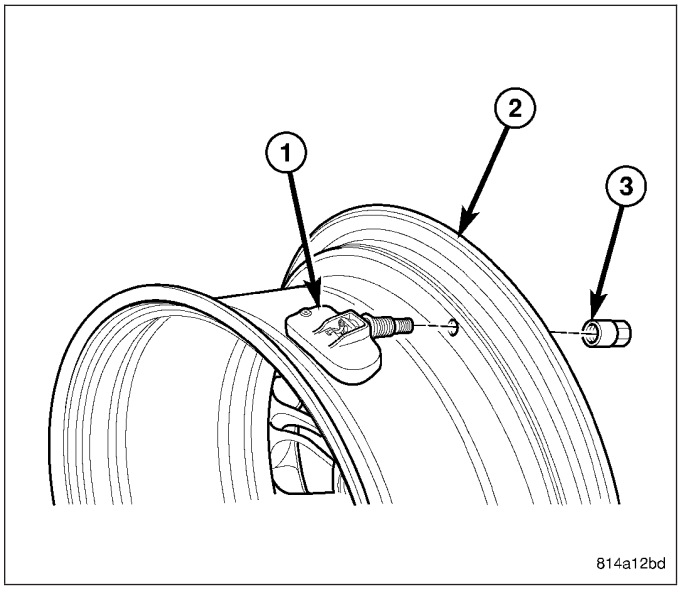

INSTALLATION

NOTE: Before reinstalling an existing tire pressure sensor, replace seal (2) and metal washer (1) at base of sensor valve stem (6) to ensure proper sealing.

1. Wipe area clean around sensor/valve stem mounting hole in wheel (5). Make sure surface of wheel is not damaged.

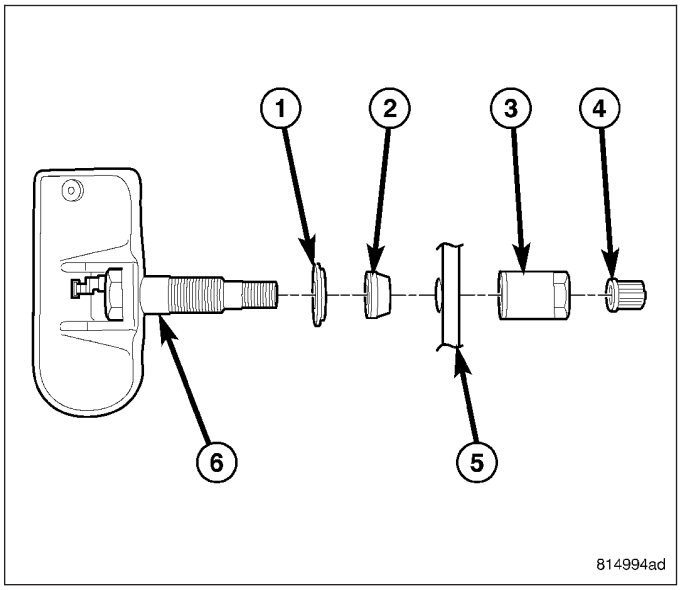

CAUTION: To avoid damaging sensor antenna strap (1), hold pressure against rear of metal valve stem (2) while sensor is inserted through wheel mounting hole and nut is installed.

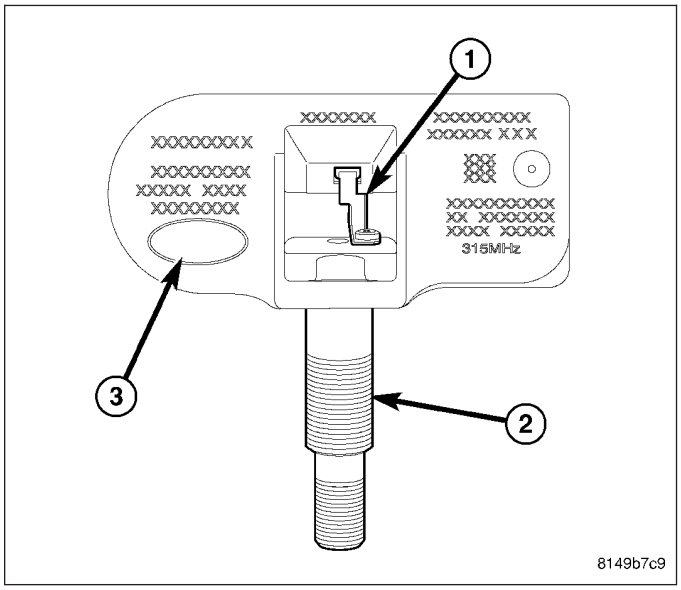

2. Insert sensor (1) through wheel (2) as shown keeping pressure against rear of metal valve stem (See Arrow). Potted side of sensor is to be positioned toward wheel. Do not attempt to mount sensor otherwise, damage may occur.
3. Install sensor nut (with pressed-in washer) (3) by hand.

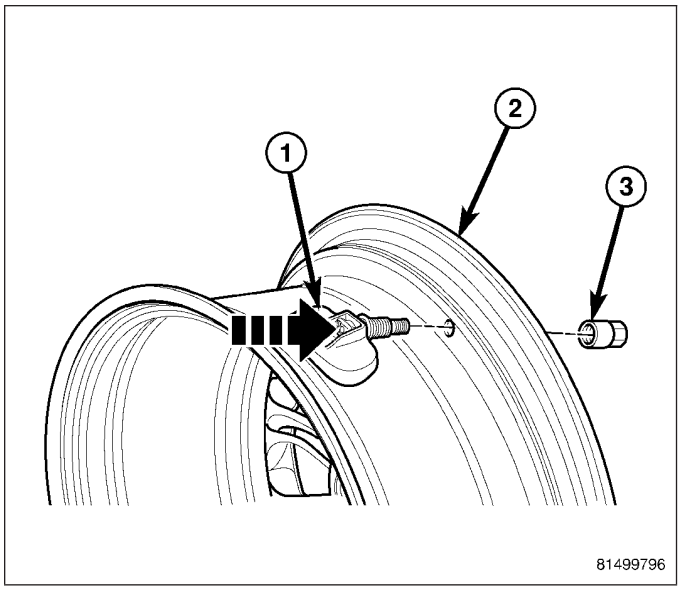

NOTE: Before tightening sensor nut, push downward on sensor housing (2) in an attempt to make it flush with interior contour of wheel (1).

4. While holding sensor in position, tighten sensor nut to 6.5 N·m (58 in. lbs.) torque.

CAUTION: Over-torquing the sensor nut by as little as 12 N·m (106 in. lbs.) may result in sensor separation from the valve stem. Under this condition, the sensor may still function. However, the condition should be corrected immediately.

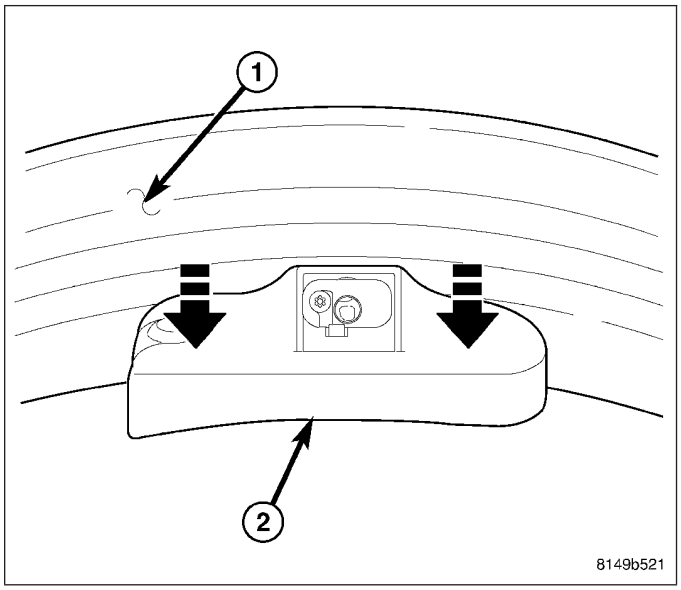

5. Mount tire on wheel following tire changer manufacturers instructions, paying special attention to the following to avoid damaging tire pressure sensor:

a.

Rotating Wheel Tire Changers - Once the wheel is mounted to the changer, position the sensor valve stem (2) approximately 210° from the head of the changer (located at 1) in a clockwise direction before rotating the wheel (also in a clockwise direction) to mount the tire. Use this procedure on both the upper and lower tire beads.

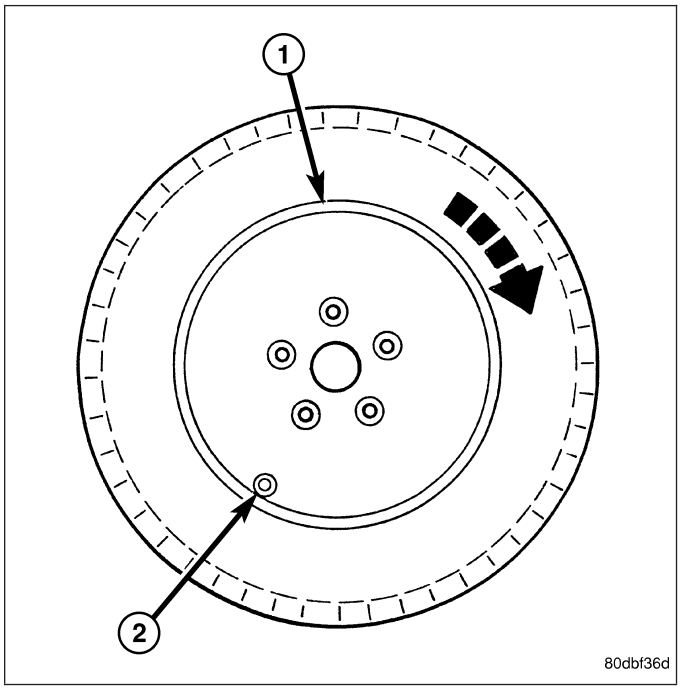

b. Rotating Tool Tire Changers - Position the wheel on the changer so that the sensor valve stem (1) is located approximately 210° clockwise from the installation end of the mounting/dismounting tool (2) once the tool is mounted for tire installation. Make sure the sensor is clear of the lower bead breaker area (3) to avoid damaging the sensor when the breaker rises. Rotate the tool (2) in a counterclockwise direction to mount the tire. Use this procedure on both the upper and lower tire beads.

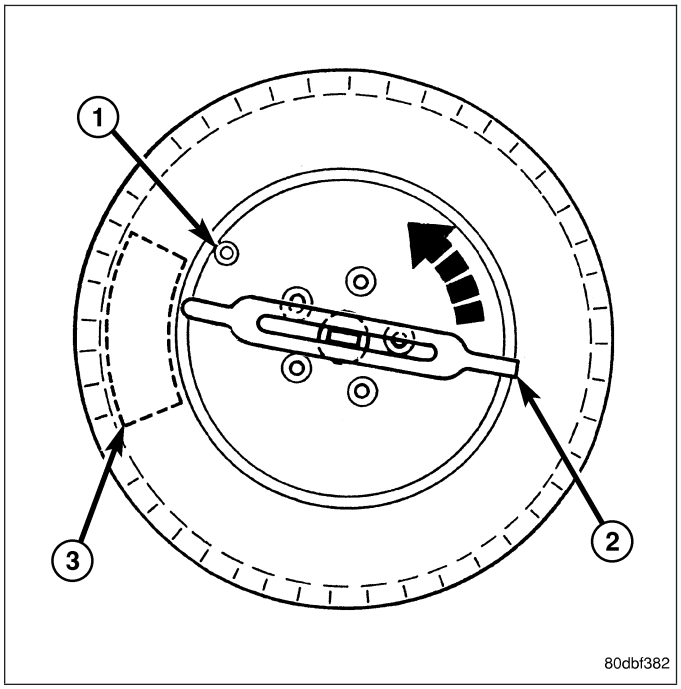

6. Adjust air pressure to that listed on Tire Inflation Pressure Label (Placard) provided with vehicle (usually applied to driver's side B-pillar). Make sure **original style** valve stem cap is securely installed to keep moisture out of sensor.
7. Install tire and wheel assembly (1) on vehicle (Refer to 22 - TIRES/WHEELS - INSTALLATION). Tighten wheel mounting nuts (3) to 150 N·m (110 ft. lbs.) torque.
8. Lower vehicle.
9. Drive vehicle for a minimum of 10 minutes while maintaining a continuous speed above 15 mph (24 km/h). During this time the system will learn the new sensor ID code and will clear any DTC's automatically.

NOTE: If a sensor cannot be trained, refer to appropriate diagnostic information.

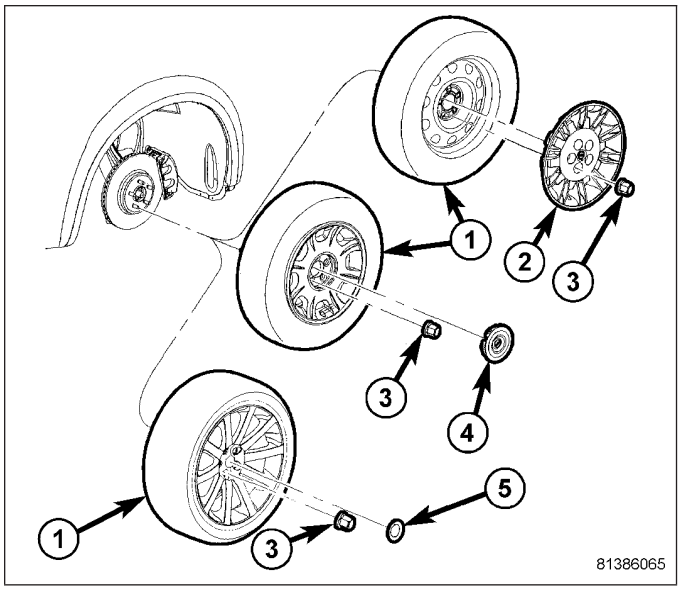

TRANSPONDER - TPM

DESCRIPTION

Vehicles equipped with the premium TPM system use transponders, sometimes referred to as trigger modules, to provide the Wireless Control Module (WCM), commonly referred to as the Sentry Key Remote Entry Module (SKREEM), with the location of the tire pressure sensors on the vehicle. A transponder is located in three of the four wheel wells on the vehicle The transponders are located in the left front, right front and right rear wheel wells behind the wheelhouse splash shields. Only three transponders are necessary to locate the four rotating sensors because the WCM can determine the location of the fourth by using the process-of-elimination theory. Once the system knows the location of the first three sensors, it assumes the location of the fourth tire pressure sensor is in the left rear tire.

OPERATION

On vehicles equipped with the premium TPM system, the Wireless Control Module (WCM), commonly referred to as the Sentry Key Remote Entry Module (SKREEM), uses transponders (trigger modules) located in three of the four wheel wells on the vehicle to provide it with the location of the tire pressure sensors on the vehicle. Like the base system, the WCM receives RF signals from all four rotating wheel speed sensors. When the WCM needs to know which sensor is located at a particular location on the vehicle, it directs the transponder at that location to send out a low frequency signal to excite the nearby sensor. The WCM then receives that excited signal and knows where that sensor is located. This auto-locating process only happens in the first 10 minutes of any WCM cycle while traveling at speeds above 20 mph (32 km/h) (Each WCM cycle ends when the vehicle has been shut off for a time period of approximately 15 minutes or longer). Once the WCM has performed this to the three locations that have transponders (left front, right front and right rear wheel wells), it uses the process-of-elimination theory to know that the fourth sensor ID signal is coming from the left rear tire sensor.

REMOVAL

FRONT

1. Remove wheelhouse splash shield at transponder requiring service. (Refer to 23 - BODY/EXTERIOR/F WHEELHOUSE SPLASH SHIELD - REMOVAL)
2. Disconnect wiring harness connector (1) at transponder (2).
3. Remove mounting screws (3), then remove transponder (2) from front fascia (4).

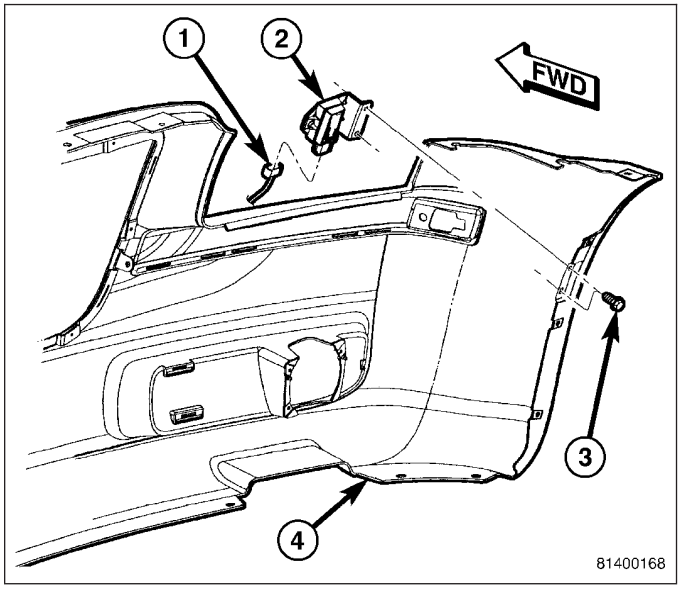

REAR

1. Remove wheelhouse splash shield at transponder requiring service. (Refer to 23 - BODY/EXTERIOR/REAR WHEELHOUSE SPLASH SHIELD - REMOVAL)

2. Disconnect wiring harness connector (3) at transponder (2).
3. Remove mounting nuts (1), then remove transponder (2) from body seam flange (4).

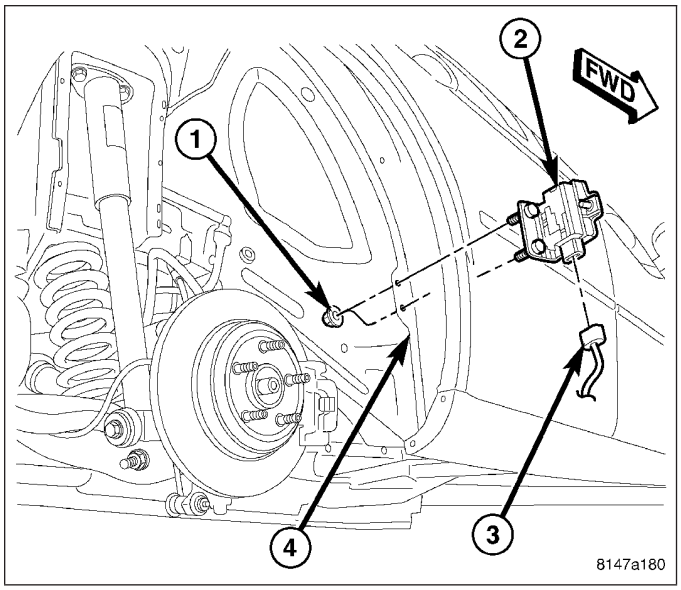

INSTALLATION

FRONT

1. Position transponder (2) against front fascia (4) and install mounting screw (3).
2. Connect wiring harness connector (1) at transponder (2).
3. Install wheelhouse splash shield and all components removed to access it. (Refer to 23 - BODY/ EXTERIOR/F WHEELHOUSE SPLASH SHIELD - INSTALLATION)
4. Perform TPM Diagnostic Verification Test. (Refer to 22 - TIRES/WHEELS/TIRE PRESSURE MONITORING - DIAGNOSIS AND TESTING)

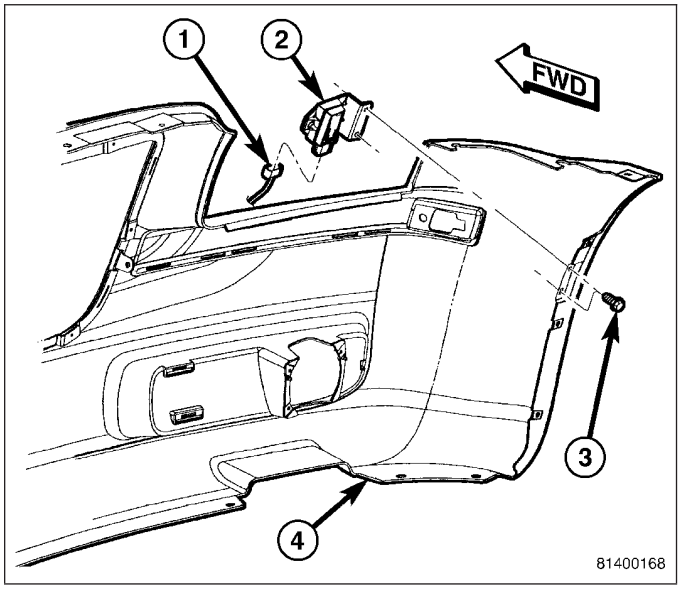

REAR

1. Position transponder (2) on body seam flange (4) and install mounting nuts (1).
2. Connect wiring harness connector (3) at transponder (2).
3. Install wheelhouse splash shield and all components removed to access it. (Refer to 23 - BODY/EXTERIOR/REAR WHEELHOUSE SPLASH SHIELD - INSTALLATION)
4. Perform TPM Diagnostic Verification Test. (Refer to 22 - TIRES/WHEELS/TIRE PRESSURE MONITORING - DIAGNOSIS AND TESTING)

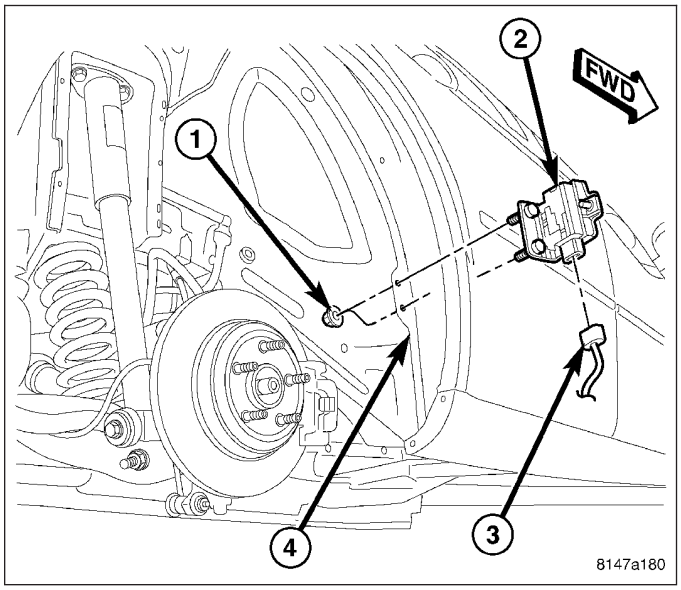

TIRES

DESCRIPTION

TIRE

Tires are designed and engineered for each specific vehicle. They provide the best overall performance for normal operation. The ride and handling characteristics match the vehicle's requirements. With proper care they will give excellent reliability, traction, skid resistance, and tread life.

Driving habits have more effect on tire life than any other factor. Careful drivers will obtain, in most cases, much greater mileage than severe use or careless drivers. A few of the driving habits which will shorten the life of any tire are:

- Rapid acceleration
- Severe application of brakes
- High-speed driving
- Taking turns at excessive speeds
- Striking curbs and other obstacles
- Operating vehicle with over or under inflated tire pressures

Radial ply tires are more prone to irregular tread wear. It is important to follow the tire rotation interval shown in the section on Tire Rotation. This will help to achieve a greater tread-life potential.

TIRE IDENTIFICATION

Tire type, size, load index and speed rating are encoded in the letters and numbers imprinted on the side wall of the tire. Refer to the Tire Identification chart to decipher the code. For example purposes, the tire size P225/60 R 16 97 T is used in the chart. An All Season type tire will also have either M + S, M & S or M - S (indicating mud and snow traction) imprinted on the side wall. An Extra or Light Load marking "XL" or "LL" may also be listed on the sidewall. The absence of an "XL" or "LL" marking infers a standard load tire.

TIRE IDENTIFICATION

P	TIRE TYPE (Not present on all tires)	P - Passenger T - Temporary C - Commercial LT - Light Truck
225	SECTIONAL WIDTH	SHOWN IN MILLIMETERS
60	ASPECT RATIO	SECTIONAL HEIGHT ÷ SECTIONAL WIDTH *
R	CONSTRUCTION TYPE	R - RADIAL B - BIAS BELTED D - DIAGONAL (BIAS)
16	WHEEL DIAMETER	SHOWN IN INCHES
97	LOAD INDEX	**
T	SPEED RATING	**

*** NOTE: Height (2) ÷ Width (1) = Aspect Ratio.**

**** NOTE: Consult the tire manufacturer regarding any questions on tire specifications or capabilities.**

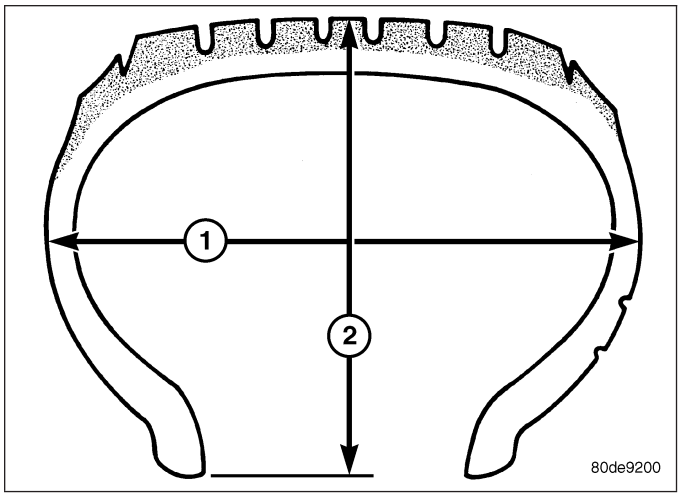

TIRE CHAINS

Refer to the owners manual supplied with the vehicle to determine whether the use of tire chains is permitted on this vehicle.

TIRE - SRT8

There are two different tire (1) types available for the this vehicle. A standard Three-Season tire and an optional All-Season tire. The three-season tire is the Goodyear Eagle F1 Supercar. The All-Season tire is the Goodyear RS-A. Both tires have a non-directional asymmetrical tread pattern.

The three-season tire size differs front-to-rear on the vehicle. Because of this size difference, normal tire rotation is not applicable. The All-Season tire and wheel combination may be rotated. (Refer to 22 - TIRES/WHEELS - STANDARD PROCEDURE).

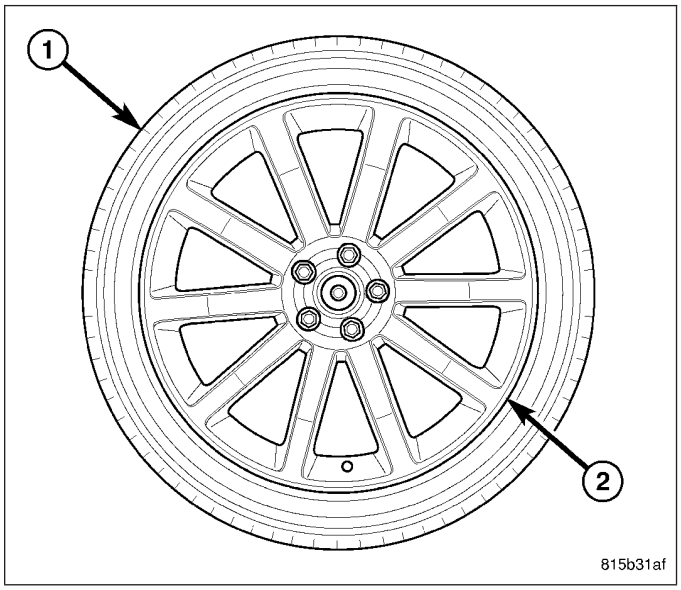

For tire specifications, (Refer to 22 - TIRES/WHEELS/TIRES - SPECIFICATIONS)

There is no spare tire available with this vehicle. It is equipped with the TIREFIT tire repair kit to be used to repair small punctures in the tire as necessary. For additional information, refer to the Owners Manual.

REPLACEMENT TIRES

WARNING: Failure to equip the vehicle with tires having adequate speed capability can result in sudden tire failure.

WARNING: In order to maintain the speed capability of the vehicle, replacement tires must have speed ratings equal to or higher than those fitted to the vehicle as original equipment. If tires with lower speed ratings are fitted, the vehicle's handling may be affected and the speed capability of the vehicle may be lowered to the maximum speed capability of the replacement tires. To avoid an accident resulting in severe or fatal injury, consult the tire manufacturer in regards to maximum speed ratings.

It is recommended that tires equivalent to the original equipment tires be used when replacement is needed.

Failure to use equivalent replacement tires may adversely affect the safety and handling of the vehicle.

The original equipment tires provide a proper combination of many characteristics such as:

- Ride
- Noise
- Handling
- Durability
- Tread life
- Traction
- Rolling resistance
- Speed capability

The use of tires smaller than the minimum tire size approved for the vehicle can result in tire overloading and failure.

Use tires that have the approved load rating for the vehicle and never overload them. Failure to equip the vehicle with tires having adequate speed capability can result in sudden tire failure and loss of vehicle control.

The use of oversize tires may cause interference with vehicle components. Under extremes of suspension and steering travel, interference with vehicle components may cause tire damage.

SPARE TIRE

A compact (temporary) spare tire and wheel assembly is standard equipment on most models of this vehicle. A full-size spare is not available on most models.

A spare tire is not available on the SRT8. The SRT8 is equipped with the TIREFIT tire repair kit to be used to repair small punctures in the tire as necessary. For additional information, refer to the Owners Manual.

A full-size spare is used on fleet vehicles equipped with the Police Package. This tire and wheel assembly is identical to the heavy duty steel wheels and tires mounted on the vehicle. It mounts to a special full-size spare mounting bracket located in the luggage compartment.

The spare tire and wheel diameters and wheel offsets match those of the road wheels on the vehicle.

The compact (temporary) spare tire is designed for emergency use only. The original tire should be repaired or replaced at the first opportunity, then reinstalled. Do not exceed speeds of 80 km/h (50 mph) when using the compact (temporary) spare tire and wheel assembly. Refer to the Owner's Manual for complete details.

DIAGNOSIS AND TESTING

TIRE NOISE

Unusual tire noise can be associated with tire and wheel vibration or irregular tire wear. For vibration issues, (Refer to 22 - TIRES/WHEELS - DIAGNOSIS AND TESTING). For irregular tire wear issues, (Refer to 22 - TIRES/WHEELS/TIRES - DIAGNOSIS AND TESTING).

TIRE/VEHICLE LEAD

(Refer to 2 - SUSPENSION/WHEEL ALIGNMENT - DIAGNOSIS AND TESTING)

TIRE WEAR PATTERNS

CONDITION	RAPID WEAR AT SHOULDERS	RAPID WEAR AT CENTER	CRACKED TREADS	WEAR ON ONE SIDE	FEATHERED EDGE	BALD SPOTS	SCALLOPED WEAR
EFFECT	1. 2. 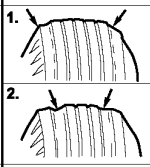	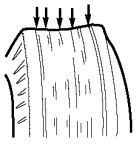		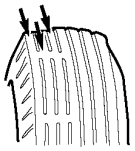	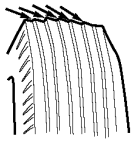	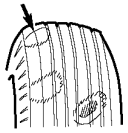	
CAUSE	UNDER-INFLATION OR LACK OF ROTATION 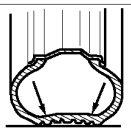	OVER-INFLATION OR LACK OF ROTATION 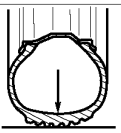	UNDER-INFLATION OR EXCESSIVE SPEED*	EXCESSIVE CAMBER 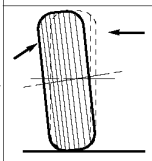	INCORRECT TOE 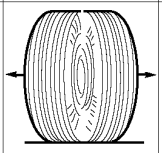	UNBALANCED WHEEL 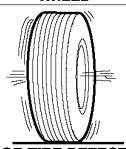 OR TIRE DEFECT*	LACK OF ROTATION OF TIRES OR WORN OR OUT-OF-ALIGNMENT SUSPENSION.
CORRECTION	ADJUST PRESSURE TO SPECIFICATIONS WHEN TIRES ARE COOL ROTATE TIRES			ADJUST CAMBER TO SPECIFICATIONS	ADJUST TOE-IN TO SPECIFICATIONS	DYNAMIC OR STATIC BALANCE WHEELS	ROTATE TIRES AND INSPECT SUSPENSION SEE GROUP 2

* HAVE TIRE INSPECTED FOR FUTURE USE.

812014d7

Under inflation will cause wear on the shoulders of tire. Over inflation will cause wear at the center of tire.

Excessive camber causes the tire to run at an angle to the road. One side of tread is then worn more than the other.

Excessive toe-in or toe-out causes wear on the tread edges and a feathered effect across the tread.

TREAD WEAR INDICATORS

Tread wear indicators are molded into the bottom of the tread grooves. When tread depth is 1.6 mm (1/16 in.), the tread wear indicators will appear as a 13 mm (1/2 in.) band (3).

Tire replacement is necessary when indicators appear in two or more grooves or if localized balding occurs.

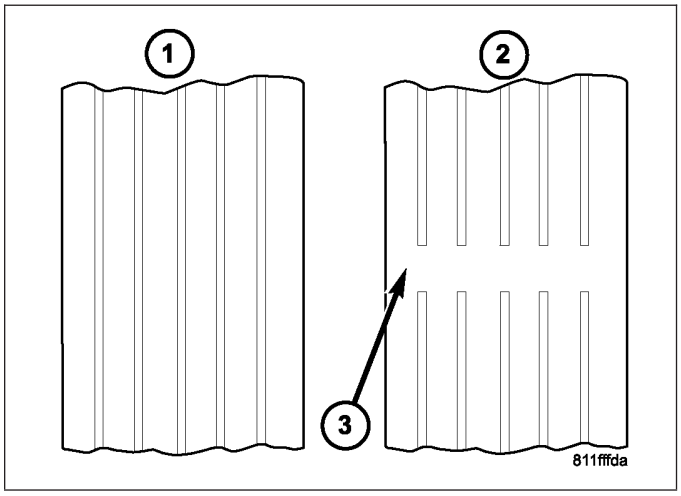

STANDARD PROCEDURE

TIRE INFLATION PRESSURES

The specified tire pressures have been chosen to provide safe operation, vehicle stability, and a smooth ride. The proper tire pressure specification can be found on the Tire And Loading Information Label provided with the vehicle (usually on the driver's door opening or B-pillar).

A quality air pressure gauge is recommended to check tire air pressure. Tire pressure should be checked cold once per month. Check tire pressure more frequently when the weather temperature varies widely. Tire pressure will decrease when the outdoor temperature drops. After checking the air pressure, replace valve cap finger tight.

Inflation pressures specified on the Tire Inflation Pressure Label are always the cold inflation pressure of the tire. Cold inflation pressure is obtained after the vehicle has not been operated for at least 3 hours, or the vehicle is

driven less than one mile after being inoperative for 3 hours. Tire inflation pressures may increase from 2 to 6 pounds per square inch (psi) during operation. Do not reduce this normal pressure buildup.

Improper inflation can cause:

- Uneven wear patterns
- Reduced tread life
- Reduced fuel economy
- Unsatisfactory ride
- The vehicle to drift.

WARNING: Over or under inflated tires can affect vehicle handling. The tire can fail suddenly, resulting in loss of vehicle control.

Under inflation causes rapid shoulder wear, tire flexing, and can result in tire failure (1).

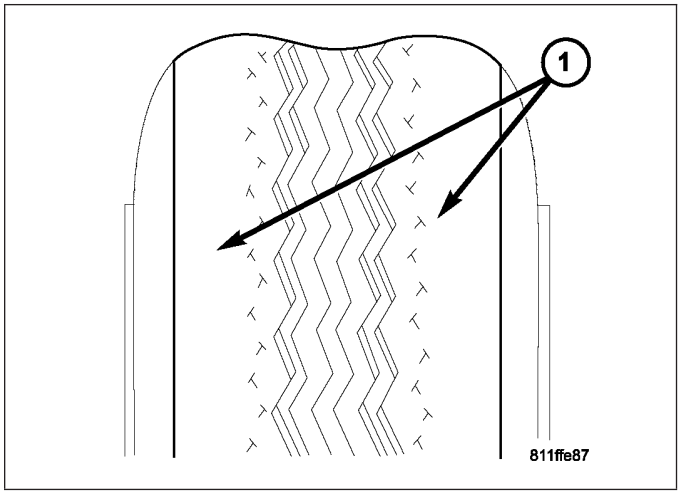

Over inflation causes rapid center wear and loss of the tire's ability to cushion shocks (1).

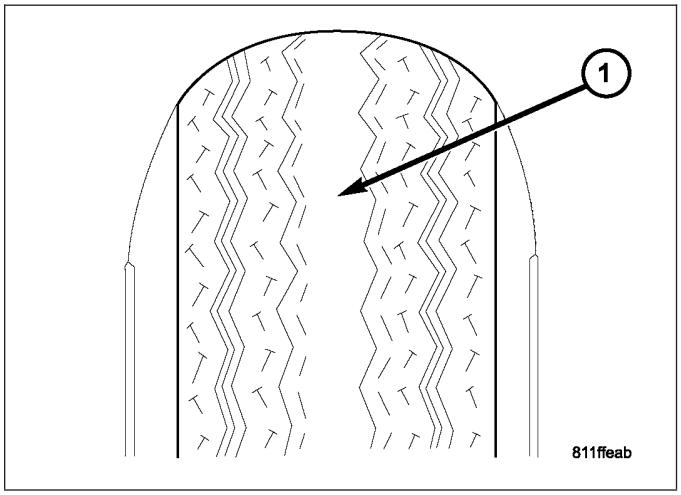

TIRE PRESSURE FOR HIGH SPEED OPERATION

Refer to the vehicle's Owners Manual Package.

TIRE LEAK REPAIRING

For proper repairing, a radial tire must be removed from the wheel. Repairs should only be made if the defect, or puncture, is in the tread area (1). The tire should be replaced if the puncture is located in the sidewall.

Deflate tire completely before attempting to dismount the tire from the wheel. **Use a lubricant such as a mild soap solution when dismounting or mounting tire.** Use tools free of burrs or sharp edges which could damage the tire or wheel rim.

Before mounting tire on wheel, make sure all rust is removed from the rim bead and repaint if necessary.

Install wheel on vehicle, and progressively tighten the 5 wheel nuts to a torque of 150 N·m (110 ft. lbs.).

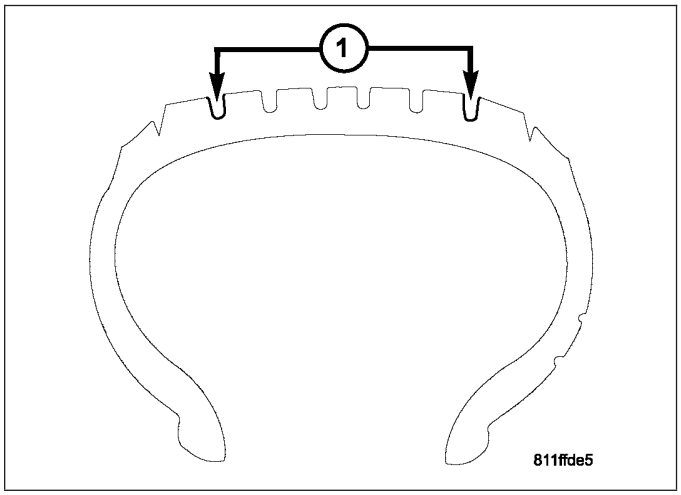

CLEANING

TIRE CLEANING

Before delivery of a vehicle, remove the protective coating on the tires with white sidewalls or raised white letters. To remove the protective coating, apply warm water and let it soak for a few minutes. Afterwards, scrub the coating away with a soft bristle brush. Steam cleaning may also be used to remove the coating.

CAUTION: DO NOT use gasoline, mineral oil, oil-based solvent or a wire brush for cleaning.

SPECIFICATIONS

TIRE - SRT8

THREE-SEASON TIRE

DESCRIPTION	SPECIFICATION
Manufacturer	Goodyear
Model	Eagle F1 Supercar
Size-Front	245/45ZR20
Size-Rear	255/45ZR20

ALL-SEASON TIRE

DESCRIPTION	SPECIFICATION
Manufacturer	Goodyear
Model	Eagle RS-A
Size	245/45ZR20

WHEELS

DESCRIPTION

WHEEL

All vehicles use either steel or cast aluminum drop center wheels. The original equipment wheels are designed for proper operation at all loads up to the specified maximum vehicle capacity.

Every wheel has raised sections between the rim flanges (1) and drop well (3) called safety humps (2). In case of air loss, these raised sections help hold the tire in position on the wheel until the vehicle can be brought to a safe stop. When being installed on the wheel, initial inflation of the tire forces the tire bead over these raised sections into place.

The wheels used on All-Wheel-Drive (AWD) vehicles have a shallower dish (larger offset) than Rear-Wheel-Drive (RWD) wheels to accommodate the AWD suspension geometry and half shaft package, while maintaining the same track as RWD vehicles.

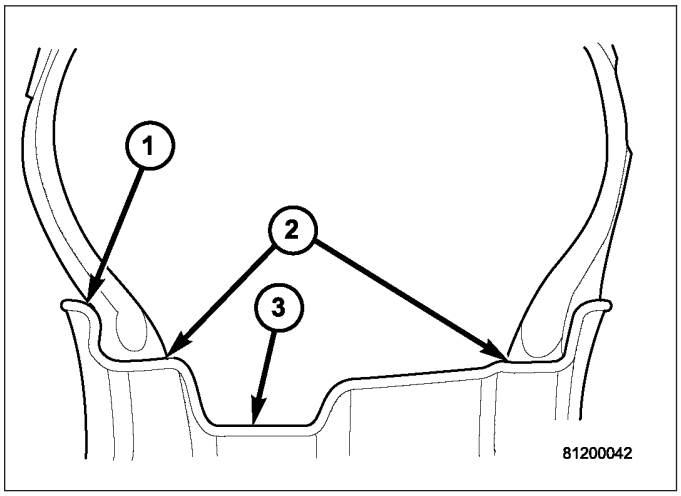

The wheel studs and nuts are designed for specific wheel applications and must be replaced with equivalent parts. Do not use replacement parts of lesser quality or of a substitute design. All aluminum and steel wheels have wheel stud nuts with an enlarged nose. This enlarged nose is necessary to ensure proper retention of the wheels.

WHEEL - SRT8

Each SRT8 model has a unique wheel.

This is the Chrysler 300 SRT8 wheel (2).

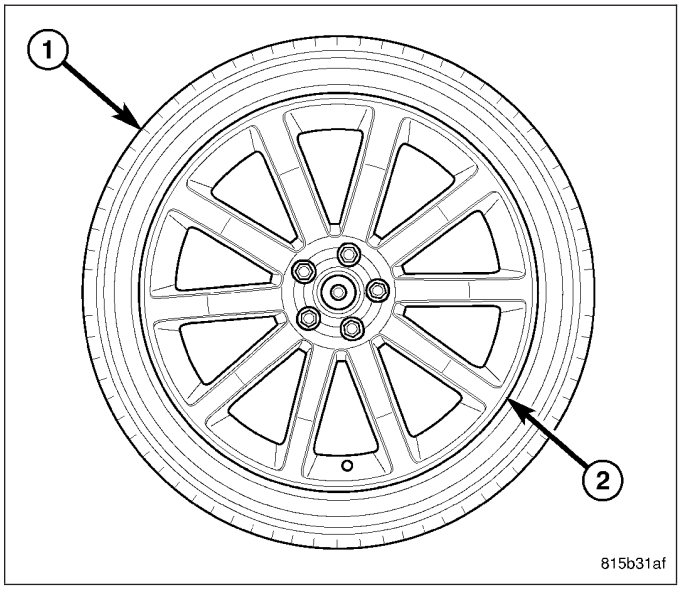

This is the Dodge Charger SRT8 wheel (2).

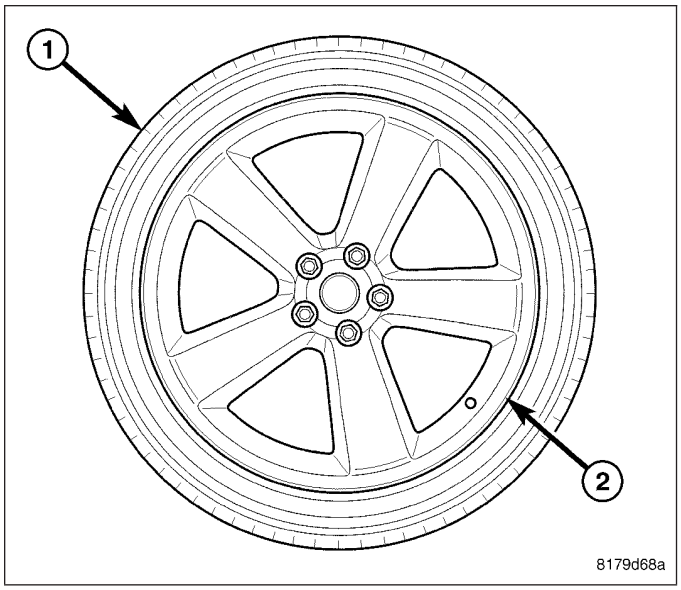

This is the Dodge Magnum SRT8 wheel (2).

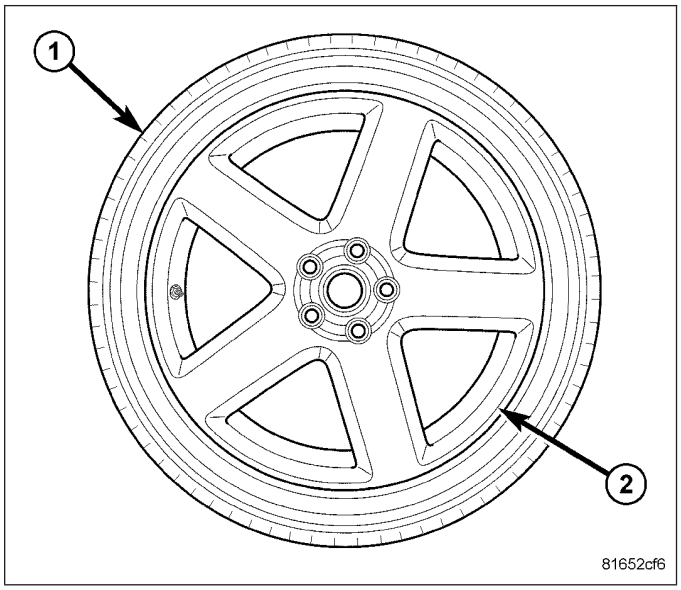

Although different in appearance, all SRT8 wheels have the same basic specifications. (Refer to 22 - TIRES/WHEELS/WHEELS - SPECIFICATIONS)

DIAGNOSIS AND TESTING

WHEEL INSPECTION

Inspect wheels for:

- Excessive runout
- Dents, cracks or irregular bends
- Damaged wheel stud (lug) holes
- Air Leaks

NOTE: Do not attempt to repair a wheel by hammering, heating or welding.

If a wheel is damaged, an original equipment replacement wheel should be used. When obtaining replacement wheels, they should be equivalent in load carrying capacity. The diameter, width, offset, pilot hole and bolt circle of the wheel should be the same as the original wheel.

WARNING: Failure to use equivalent replacement wheels may adversely affect the safety and handling of the vehicle.

WARNING: Replacement with used wheels is not recommended. The service history of the wheel may have included severe treatment or very high mileage. The rim could fail without warning.

CLEANING

WHEEL AND WHEEL TRIM CARE

All wheels and wheel trim, especially aluminum and chrome plated, should be cleaned regularly using mild soap and water to maintain their luster and to prevent corrosion. Wash them with the same soap solution recommended for the body of the vehicle.

When cleaning extremely dirty wheels, care must be taken in the selection of tire and wheel cleaning chemicals and equipment to prevent damage to the wheels. Mopar® Wheel Treatment or Mopar® Chrome Cleaner is recommended. Any of the “DO NOT USE” items listed below can damage wheels and wheel trim.

DO NOT USE:

- Any abrasive cleaner
- Any abrasive cleaning pad (such as steel wool) or abrasive brush
- Any cleaner that contains an acid which can react with and discolor the chrome surface. **Many wheel cleaners contain acids that can harm the wheel surface.**
- Oven cleaner
- A car wash that uses carbide-tipped wheel cleaning brushes or acidic solutions.

SPECIFICATIONS

WHEEL

SPECIFICATIONS

DESCRIPTION	SPECIFICATION
Wheel Mounting (Lug) Nut Hex Size	21 mm
Wheel Mounting Stud Size	M14 x 1.5 mm

TORQUE SPECIFICATIONS

DESCRIPTION	N·m	Ft. Lbs.	In. Lbs.
Wheel Mounting (Lug) Nut	150	110	—

WHEEL - SRT8

SPECIFICATIONS

DESCRIPTION	SPECIFICATION
Wheel Size	20 in. X 9 in.
Wheel Bolt Pattern (Circle) Size	115 mm (4.53 in.)
Wheel Offset	25.5 mm
Wheel Mounting Stud Size	M14 x 1.5 mm

TORQUE SPECIFICATIONS

DESCRIPTION	N·m	Ft. Lbs.	In. Lbs.
Wheel Mounting (Lug) Nut	150	110	—

STUDS - FRONT

REMOVAL

NOTE: Before proceeding, (Refer to 5 - BRAKES - WARNING) (Refer to 5 - BRAKES - CAUTION).

CAUTION: Wheel mounting studs MUST NOT be hammered out of hub flange of hub and bearing assembly. If a stud is removed by hammering it out, damage to hub and bearing assembly will occur leading to premature bearing failure.

1. Raise and support vehicle. (Refer to LUBRICATION & MAINTENANCE/HOISTING - STANDARD PROCEDURE)
2. Remove front wheel and tire assembly. (Refer to 22 - TIRES/WHEELS - REMOVAL)
3. Access and remove front brake rotor. (Refer to 5 - BRAKES/HYDRAULIC/MECHANICAL/ROTOR - REMOVAL)
4. On wheel mounting stud to be removed, install a wheel mounting (lug) nut (1) far enough so the threads on the stud are even with end of nut. Install Remover (3), Special Tool C-4150A, on hub and bearing flange and wheel stud (5).
5. Tighten screw on Remover, pushing wheel stud (5) out of hub flange. Once shoulder of wheel stud is past flange, remove special tool. Remove nut from stud and remove stud from hub flange.

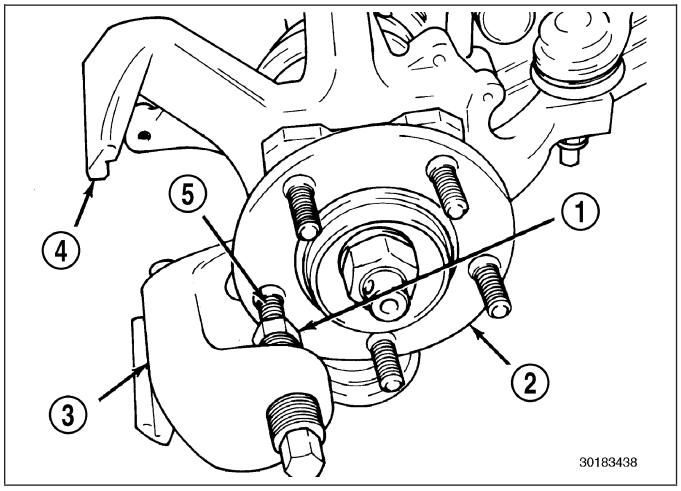

INSTALLATION

1. Install replacement wheel stud into flange of hub and bearing from rear. Install stack of washers (1) on wheel stud, then install a standard type wheel mounting (lug) nut (3) on stud with flat side of lug nut against washers.
2. Tighten nut (3), pulling wheel stud into hub flange. Once head of stud is fully seated against rear of hub flange, remove nut and washers from stud.
3. Install brake rotor and caliper. (Refer to 5 - BRAKES/HYDRAULIC/MECHANICAL/ROTOR - INSTALLATION)
4. Install wheel and tire assembly (Refer to 22 - TIRES/WHEELS - INSTALLATION). Tighten wheel mounting (lug) nuts in proper sequence to 150 N·m (110 ft. lbs.) torque.
5. Lower vehicle.
6. Road test vehicle to ensure proper operation of the brakes.

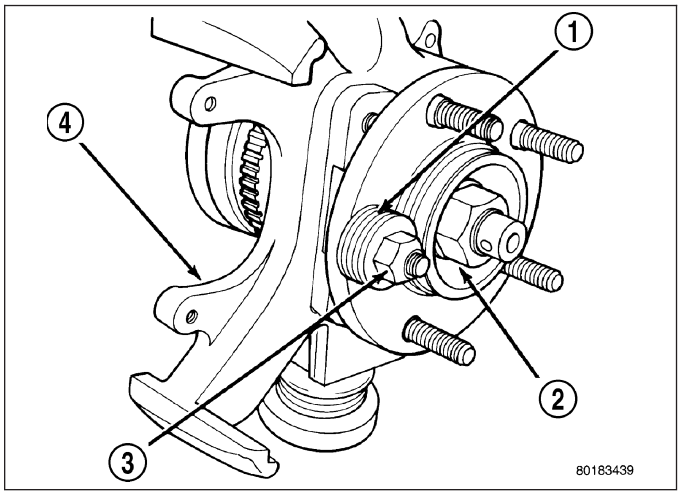

STUDS - REAR

REMOVAL

NOTE: Before proceeding, (Refer to 5 - BRAKES - WARNING) (Refer to 5 - BRAKES - CAUTION).

CAUTION: Wheel mounting studs MUST NOT be hammered out of hub flange of hub and bearing assembly. If a stud is removed by hammering it out, damage to hub and bearing assembly will occur leading to premature bearing failure.

1. Raise and support vehicle. (Refer to LUBRICATION & MAINTENANCE/HOISTING - STANDARD PROCEDURE)
2. Remove rear wheel and tire assembly. (Refer to 22 - TIRES/WHEELS - REMOVAL)
3. Access and remove rear brake rotor. (Refer to 5 - BRAKES/HYDRAULIC/MECHANICAL/ROTOR - REMOVAL)
4. Back off shoe adjustment until adjuster (1) threads bottom.
5. Using appropriate tools, remove spring (3) at adjuster.
6. Pull upward on upper shoe near adjuster to provide enough slack to remove adjuster from shoes, then remove adjuster (1).

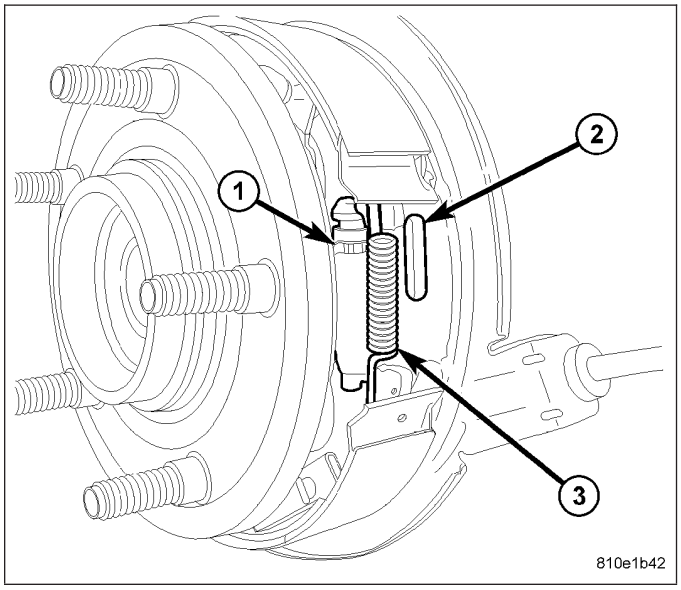

7. Install Remover (3), Special Tool C-4150A, on hub and bearing flange and wheel stud (1).
8. Tighten Remover forcing screw, pushing wheel stud (1) out of hub and bearing flange. Remove tool (3).
9. Remove stud from rear of hub flange. It may be necessary to rock hub flange back and forth to ease stud removal.

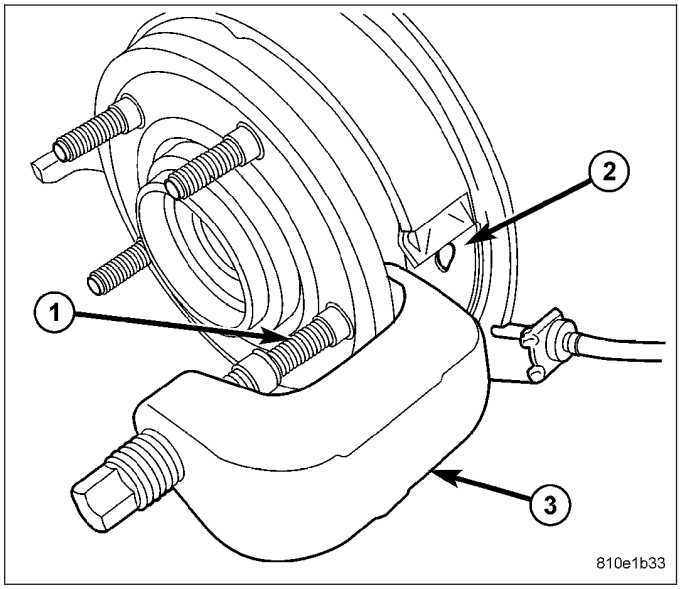

INSTALLATION

1. Install replacement wheel stud into flange of hub and bearing from rear (2). Install a stack of washers (3) (approximately 5, depending on thickness) over stud, then install a standard wheel mounting (lug) nut (1) on stud with flat side of nut against washers.
2. Tighten wheel mounting nut (1), pulling wheel stud into flange of hub and bearing. Once head of stud (2) is fully seated against rear of hub flange, remove nut and washers from wheel stud.

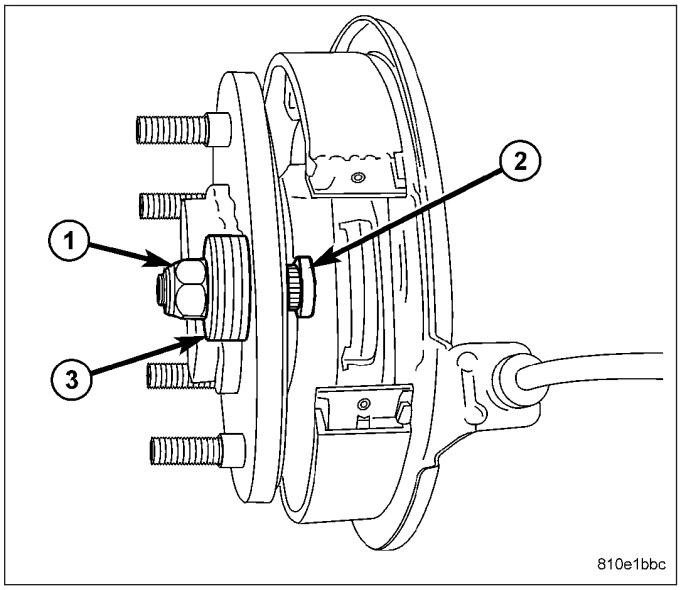

3. Install parking brake shoe adjuster (1) between upper and lower parking brake shoes. Position end of adjuster with star wheel upward. Once in place, slide upper shoe downward against adjuster mounting slot, taking up any slack between two pieces.
4. Using appropriate tools, install spring (3) at adjuster.

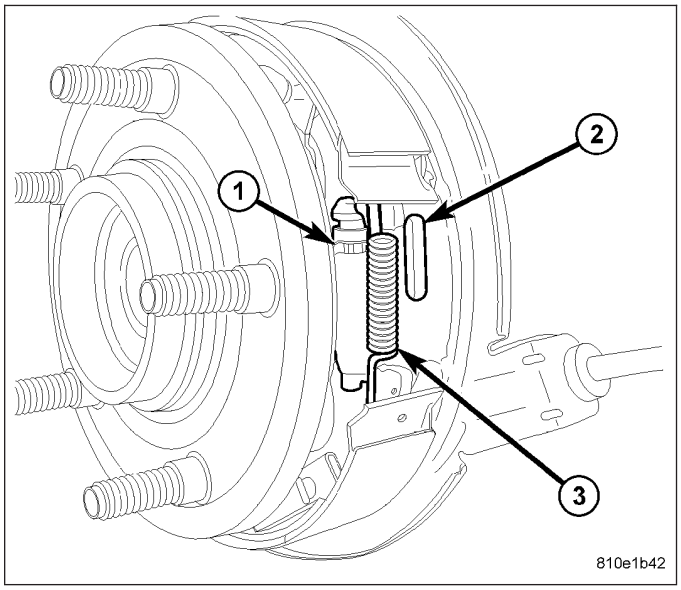

NOTE: When measuring brake drum diameter, diameter should be measured in center of shoe contact surface area.

5. Using Brake Shoe Gauge, Special Tool C-3919, or equivalent, measure inside diameter of parking brake drum portion of rotor.

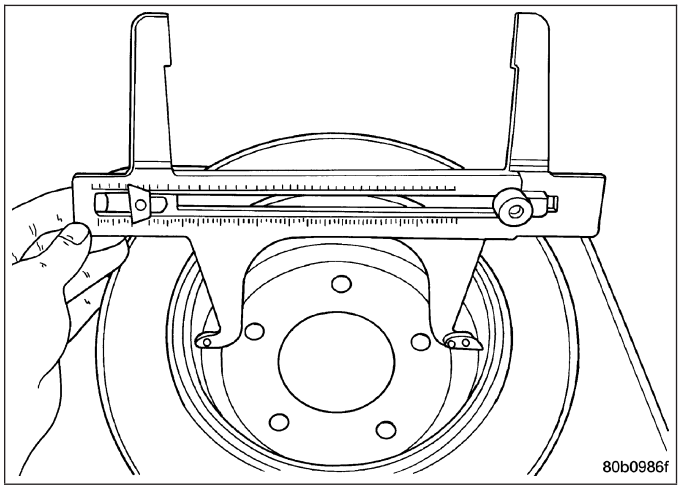

6. Place Gauge (1) over parking brake shoes at widest point.
7. Using adjuster star wheel (2), adjust parking brake shoes until linings on both park brake shoes just touch jaws on gauge. This will give a good preliminary adjustment of parking brake shoes, before a final adjustment is made at end of this procedure.
8. Install brake rotor and components removed to access it. (Refer to 5 - BRAKES/HYDRAULIC/MECHANICAL/ROTOR - INSTALLATION)
9. Install wheel and tire assembly (Refer to 22 - TIRES/WHEELS - INSTALLATION). Tighten wheel mounting (lug) nuts in proper sequence to 150 N·m (110 ft. lbs.) torque.
10. Adjust parking brake shoes. (Refer to 5 - BRAKES/PARKING BRAKE/SHOES - ADJUSTMENT)
11. Lower vehicle.
12. Road test vehicle to ensure proper operation of the brakes.

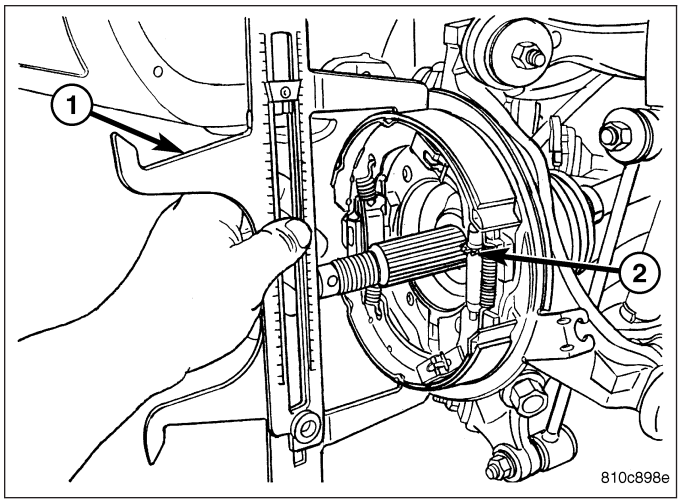

BODY

TABLE OF CONTENTS

page

BODY
- DESCRIPTION - VEHICLE IDENTIFICATION 2
- WARNING
  - SAFETY PRECAUTIONS AND WARNINGS 2
- DIAGNOSIS AND TESTING
  - DIAGNOSIS AND TESTING - WATER LEAKS . . . 2
  - DIAGNOSIS AND TESTING - WIND NOISE 3
- STANDARD PROCEDURE
  - STANDARD PROCEDURE - HEAT STAKING 4
  - PLASTIC BODY PANEL REPAIR 4
- SPECIFICATIONS
  - BODY LUBRICATION 12
  - TORQUE SPECIFICATIONS 13
- SPECIAL TOOLS
  - BODY 15

page

DECKLID 16
DOOR - FRONT 31
DOOR - REAR 62
EXTERIOR 92
HOOD 117
INSTRUMENT PANEL 131
INTERIOR 165
LIFTGATE 205
PAINT 222
SEATS 228
STATIONARY GLASS 272
SUNROOF - SERVICE INFORMATION 287
BODY STRUCTURE 317

BODY

DESCRIPTION - VEHICLE IDENTIFICATION

Throughout this group, references to the DaimlerChrysler Corporation vehicle family identification code are used when describing a procedure that is unique to that vehicle. Refer to Introduction Group of this manual for detailed information on vehicle identification. If a procedure is common to all vehicles covered in this manual, no reference will be made to a vehicle family code.

WARNING

SAFETY PRECAUTIONS AND WARNINGS

WARNING: Use a osha approved breathing filter when spraying paint or solvents in a confined area. Personal injury can result.
Avoid prolonged skin contact with petroleum or alcohol – based cleaning solvents. Personal injury can result.
Do not stand under a hoisted vehicle that is not properly supported on safety stands. Personal injury can result.

CAUTION: When holes must be drilled or punched in an inner body panel, verify depth of space to the outer body panel, electrical wiring, or other components. Damage to vehicle can result.
Do not weld exterior panels unless combustible material on the interior of vehicle is removed from the repair area. Fire or hazardous conditions, can result.
Always have a fire extinguisher ready for use when welding.
Disconnect the negative (-) cable clamp from the battery when servicing electrical components that are live when the ignition is OFF. Damage to electrical system can result.
Do not use abrasive chemicals or compounds on painted surfaces. Damage to finish can result.
Do not use harsh alkaline based cleaning solvents on painted or upholstered surfaces. Damage to finish or color can result.
Do not hammer or pound on plastic trim panel when servicing interior trim. Plastic panels can break.

DIAGNOSIS AND TESTING

DIAGNOSIS AND TESTING - WATER LEAKS

Water leaks can be caused by poor sealing, improper body component alignment, body seam porosity, missing plugs, or blocked drain holes. Centrifugal and gravitational force can cause water to drip from a location away from the actual leak point, making leak detection difficult. All body sealing points should be water tight in normal wet-driving conditions. Water flowing downward from the front of the vehicle should not enter the passenger or luggage compartment. Moving sealing surfaces will not always seal water tight under all conditions. At times, side glass or door seals will allow water to enter the passenger compartment during high pressure washing or hard driving rain (severe) conditions. Overcompensating on door or glass adjustments to stop a water leak that occurs under severe conditions can cause premature seal wear and excessive closing or latching effort. After completing a repair, water test vehicle to verify leak has stopped before returning vehicle to use.

VISUAL INSPECTION BEFORE WATER LEAK TESTS

Verify that floor and body plugs are in place, body drains are clear, and body components are properly aligned and sealed. If component alignment or sealing is necessary, refer to the appropriate section of this group for proper procedures.

WATER LEAK TESTS

WARNING: Do not use electric shop lights or tools in water test area. Personal injury can result.

When the conditions causing a water leak have been determined, simulate the conditions as closely as possible.

- If a leak occurs with the vehicle parked in a steady light rain, flood the leak area with an open-ended garden hose.
- If a leak occurs while driving at highway speeds in a steady rain, test the leak area with a reasonable velocity stream or fan spray of water. Direct the spray in a direction comparable to actual conditions.
- If a leak occurs when the vehicle is parked on an incline, hoist the end or side of the vehicle to simulate this condition. This method can be used when the leak occurs when the vehicle accelerates, stops or turns. If the leak occurs on acceleration, hoist the front of the vehicle. If the leak occurs when braking, hoist the back of the vehicle. If the leak occurs on left turns, hoist the left side of the vehicle. If the leak occurs on right turns, hoist the right side of the vehicle. For hoisting recommendations (Refer to LUBRICATION & MAINTENANCE/HOISTING - STANDARD PROCEDURE).

WATER LEAK DETECTION

To detect a water leak point-of-entry, do a water test and watch for water tracks or droplets forming on the inside of the vehicle. If necessary, remove interior trim covers or panels to gain visual access to the leak area. If the hose cannot be positioned without being held, have someone help do the water test.

Some water leaks must be tested for a considerable length of time to become apparent. When a leak appears, find the highest point of the water track or drop. The highest point usually will show the point of entry. After leak point has been found, repair the leak and water test to verify that the leak has stopped.

Locating the entry point of water that is leaking into a cavity between panels can be difficult. The trapped water may splash or run from the cavity, often at a distance from the entry point. Most water leaks of this type become apparent after accelerating, stopping, turning, or when on an incline.

MIRROR INSPECTION METHOD

When a leak point area is visually obstructed, use a suitable mirror to gain visual access. A mirror can also be used to deflect light to a limited-access area to assist in locating a leak point.

BRIGHT LIGHT LEAK TEST METHOD

Some water leaks in the luggage compartment can be detected without water testing. Position the vehicle in a brightly lit area. From inside the darkened luggage compartment inspect around seals and body seams. If necessary, have a helper direct a drop light over the suspected leak areas around the luggage compartment. If light is visible through a normally sealed location, water could enter through the opening.

PRESSURIZED LEAK TEST METHOD

When a water leak into the passenger compartment cannot be detected by water testing, pressurize the passenger compartment and soap test exterior of the vehicle. To pressurize the passenger compartment, close all doors and windows, start engine, and set heater control to high blower in HEAT position. If engine can not be started, connect a charger to the battery to ensure adequate voltage to the blower. With interior pressurized, apply dish detergent solution to suspected leak area on the exterior of the vehicle. Apply detergent solution with spray device or soft bristle brush. If soap bubbles occur at a body seam, joint, seal or gasket, the leak entry point could be at that location.

DIAGNOSIS AND TESTING - WIND NOISE

Wind noise is the result of most air leaks. Air leaks can be caused by poor sealing, improper body component alignment, body seam porosity, or missing plugs in the engine compartment or door hinge pillar areas. All body sealing points should be airtight in normal driving conditions. Moving sealing surfaces will not always seal airtight under all conditions. At times, side glass or door seals will allow wind noise to be noticed in the passenger compartment during high cross winds. Over compensating on door or glass adjustments to stop wind noise that occurs under severe conditions can cause premature seal wear and excessive closing or latching effort. After a repair procedure has been performed, test vehicle to verify noise has stopped before returning vehicle to use.

VISUAL INSPECTION BEFORE TESTS

Verify that floor and body plugs are in place and body components are aligned and sealed. If component alignment or sealing is necessary, refer to the appropriate section of this group for proper procedures.

ROAD TESTING WIND NOISE

1. Drive the vehicle to verify the general location of the wind noise.
2. Apply 50 mm (2 in.) masking tape in 150 mm (6 in.) lengths along weatherstrips, weld seams or moldings. After each length is applied, drive the vehicle. If noise goes away after a piece of tape is applied, remove tape, locate, and repair defect.

POSSIBLE CAUSE OF WIND NOISE

- Moldings standing away from body surface can catch wind and whistle.
- Gaps in sealed areas behind overhanging body flanges can cause wind-rushing sounds.
- Misaligned movable components.
- Missing or improperly installed plugs in pillars.
- Weld burn through holes.

STANDARD PROCEDURE

STANDARD PROCEDURE - HEAT STAKING

1. Remove trim panel.
2. Bend or move the trim panel components at the heat staked joints. Observe the heat staked locations and/or component seams for looseness.
3. Heat stake the components.
   a. If the heat staked or component seam location is loose, hold the two components tightly together and using a soldering gun with a flat tip, melt the material securing the components together. Do not over heat the affected area, damage to the exterior of the trim panel may occur.
   b. If the heat staked material is broken or missing, use a hot glue gun to apply new material to the area to be repaired. The panels that are being heat staked must be held together while the applying the glue. Once the new material is in place, it may be necessary to use a soldering gun to melt the newly applied material. Do not over heat the affected area, damage to the exterior of the trim panel may occur.
4. Allow the repaired area to cool and verify the repair.
5. Install trim panel.

PLASTIC BODY PANEL REPAIR

There are many different types of plastics used in today's automotive environment. We group plastics in three different categories: Rigid, Semi-Rigid, and Flexible. Any of these plastics may require the use of an adhesion promoter for repair. These types of plastic are used extensively on DaimlerChrysler Motors vehicles. Always follow repair material manufacturer's plastic identification and repair procedures.

Rigid Plastics:

Examples of rigid plastic use: Fascias, Hoods, Doors, and other Body Panels, which include SMC, ABS, and Polycarbonates.

Semi-Rigid Plastics:

Examples of semi-rigid plastic use: Interior Panels, Under Hood Panels, and other Body Trim Panels.

Flexible Plastics:

Examples of flexible plastic use: Fascias, Body Moldings, and upper and lower Fascia Covers.

Repair Procedure:

The repair procedure for all three categories of plastics is basically the same. The one difference is the material used for the repair. The materials must be specific for each substrate, rigid repair material for rigid plastic repair, semi-rigid repair material for semi-rigid plastic repair and flexible repair material for flexible plastic repair.

Adhesion Promoter/Surface Modifier:

Adhesion Promoters/Surface Modifiers are required for certain plastics. All three categories may have plastics that require the use of adhesion promoter/surface modifiers. Always follow repair material manufacturer's plastic identification and repair procedures.

SAFETY PRECAUTION AND WARNINGS

WARNING:
- **Eye protection should be used when servicing components. Personal injury can result.**
- **Use an OSHA approved breathing mask when mixing epoxy, grinding, and spraying paint or solvents in a confined area. Personal injury can result.**
- **Avoid prolonged skin contact with resin, petroleum, or alcohol based solvents. Personal injury can result.**
- **Do not venture under a hoisted vehicle that is not properly supported on safety stands. Personal injury can result.**

NOTE:
- **When holes must be drilled or cut in body panels, verify locations of internal body components and electrical wiring. Damage to vehicle can result.**
- **Do not use abrasive chemicals or compounds on undamaged painted surfaces around repair areas. Damage to finish can result.**

RIGID, SEMI-RIGID, AND FLEXIBLE PLASTIC PARTS TYPES

CODE	FAMILY NAME	COMMON TRADE NAME	TYPICAL APPLICATION
ASA	ACRYLONITRILE STYRENE ACRYLITE	LURAN S	CONSOLES, GRILLES
ABS	ACRYLONITRILE BUTADIENE STYRENE	TERLURAN	″A″ PILLARS, CONSOLES, GRILLES
ABS/PC	ABS/PC ALLOY	PULSE, PROLOY, BAYBLEND	DOORS, INSTRUMENT PANELS
ABS/PVC	ABS/PV ALLOY	PROLOY, PULSE, LUSTRAN, CYCLOVIN	DOOR PANELS, GRILLES, TRIM
BMC	BULK MOLDING COMPOUND	BMC	FENDER EXTENSIONS
EMA	EHTYLENE METHYL ACRYLATE/IONOMER	SURLYN, EMA, IONOMER	BUMPER GUARDS, PADS
METTON	METTON	METTON	GRILLES, KICK PANELS, RUNNING BOARDS
MPPO	MODIFIED POLYPHENYLENE OXIDE	MPPO	SPOILER ASSEMBLY
PA	POLYAMID	ZYTEL, VYDYNE, PA, MINLON	FENDERS, QUARTER PANELS
PET	THERMOPLASTIC POLYESTER	RYNITE	TRIM
PBT/PPO	PBT/PPO ALLOY	GERMAX	CLADDINGS
PBTP	POLYBUTYLENE THEREPTHALATE	PBT, PBTP, POCAN, VALOX	WHEEL COVERS, FENDERS, GRILLES
PBTP/EEBC	POLYBUTYLENE THEREPTHALATE/EEBC ALLOY	BEXLOY, ″M″, PBTP/EEBC	FASCIAS, ROCKER PANEL, MOLDINGS
PC	POLYCARBONATE	LEXAN, MERLON, CALIBRE, MAKROLON PC	TAIL LIGHT LENSES, IP TRIM, VALANCE PANELS

CODE	FAMILY NAME	COMMON TRADE NAME	TYPICAL APPLICATION
PC/ABS	PC/ABS ALLOY	GERMAX, BAY BLENDS, PULSE	DOORS, INSTRUMENT PANELS
PPO	POLYPHENYLENE OXIDE	AZDEL, HOSTALEN, MARLEX, PRFAX, NORYL, GTX, PPO	INTERIOR TRIM, DOOR PANELS, SPLASH SHIELDS, STEERING COLUMN SHROUD
PPO/PA	POLYPHENYLENE/ POLYAMID	PPO/PA, GTX 910	FENDERS, QUARTER PANELS
PR/FV	FIBERGLASS REINFORCED PLASTIC	FIBERGLASS, FV, PR/FV	BODY PANELS
PS	POLYSTYRENE	LUSTREX, STYRON, PS	DOOR PANELS, DASH PANELS
RTM	RESIN TRANSFER MOLDING COMPOUND	RTM	BODY PANELS
SMC	SHEET MOLDED COMPOUND	SMC	BODY PANELS
TMC	TRANSFER MOLDING COMPOUND	TMC	GRILLES
UP	UNSATURATED POLYESTER (THERMOSETTING)	SMC, BMC, TMC, ZMC, IMC, XSMC, UP	GRILLE OPENING PANEL, LIFTGATES, FLARESIDE FENDERS, FENDER EXTENSIONS
EEBC	ETHER/ESTER BLOCKED CO-POLYMER	EEBC	BUMPERS
EEBC/PBTP	EEBC/POLYBUTYLENE TEREPTHALATE	EEBC, PBTP, BEXLOY	BUMPER, ROCKER PANELS
EMPP	ETHYLENE MODIFIED POLYPROPYLENE	EMPP	BUMPER COVERS
EPDM	ETHYLENE/ PROPROPYLENE DIENE MONOMER	EPDM, NORDEL, VISTALON	BUMPERS
EPM	ETHYLENE/ PROPROPYLENE CO-POLYMER	EPM	FENDERS
MPU	FOAM POLYURETHANE	MPU	SPOILERS
PE	POLYETHYLENE	ALATHON, DYLAN, LUPOLEN, MARLEX	—
PP	POLYPROPYLENE (BLENDS)	NORYL, AZDEL, MARLOX, DYLON, PRAVEX	INNER FENDER, SPOILERS, KICK PANELS
PP/EPDM	PP/EPDM ALLOY	PP/EPDM	SPOILERS, GRILLES
PUR	POLYURETHANE	COLONELS, PUR, PU	FASCIAS, BUMPERS
PUR/PC	PUR/PC ALLOY	TEXIN	BUMPERS
PVC	POLYVINYL CHLORIDE	APEX, GEON, VINYLITE	BODY MOLDINGS, WIRE INSULATION, STEERING WHEELS
RIM	REACTION INJECTED MOLDED POLYURETHANE	RIM, BAYFLEX	FRONT FASCIAS, MODULAR WINDOWS
RRIM	REINFORCED REACTION INJECTED MOLDED	PUR, RRIM	FASCIAS, BODY PANELS, BODY TRIMS

CODE	FAMILY NAME	COMMON TRADE NAME	TYPICAL APPLICATION
TPE	THERMO POLYETHYLENE	TPE, HYTREL, BEXLOY-V	FASCIAS, BUMPERS, CLADDINGS
TPO	THERMOPOLYOLEFIN	POLYTROPE, RENFLEX, SANTOPRENE, VISAFLEX, ETA, APEX, TPO, SHIELDS, CLADDINGS	BUMPERS, END CAPS, TELCAR, RUBBER, STRIPS, SIGHT, INTERIOR B POST
TPP	THERMO-POLYPROPYLENE	TPP	BUMPERS
TPU	THERMOPOLYURETHANE, POLYESTER	TPU, HYTREL, TEXIN, ESTANE	BUMPERS, BODY SIDE, MOLDINGS, FENDERS, FASCIAS

PANEL SECTIONING

If it is required to section a large panel for a plastic repair, it will be necessary to reinforce the panel. To bond two plastic panels together, a reinforcement must overlap both panels. The panels must be “V’d” at a 20 °angle. The area to be reinforced should be washed, then sanded. Be sure to wipe off any excess soap and water when finished. Lightly sand or abrade the plastic with an abrasive pad or sandpaper. Blow off any dust with compressed air or wipe with a clean dry rag.

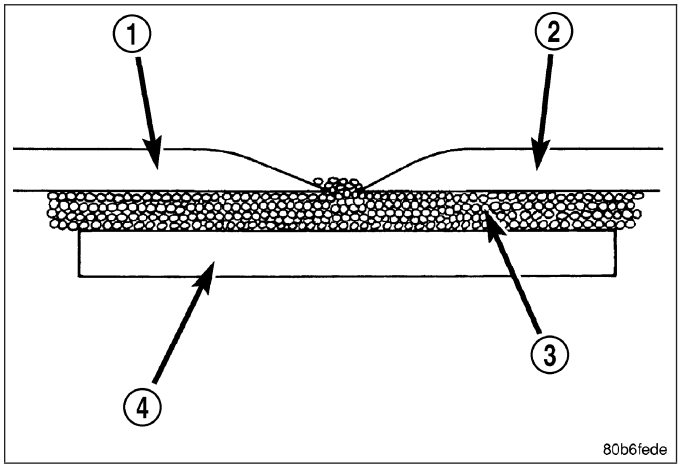

When bonding plastic panels, follow repair material manufacturers recommendations. Be sure that enough adhesive has been applied to allow squeeze out and to fill the full bond line. Once the pieces have been brought together, do not move them until the adhesive is cured. The assembly can be held together with clamps, rivets, etc. A faster cure can be obtained by heating with a heat lamp or heat gun. After the parts have been bonded and have had time to cure, rough sand the seam and apply the final adhesive filler to the area being repaired. Smooth the filler with a spreader, wooden tongue depressor, or squeegee. For fine texturing, a small amount of water can be applied to the filler surface while smoothing. The cured filler can be sanded as necessary and, as a final step, cleanup can be done with soapy water. Wipe the surface clean with a dry cloth allowing time for the panel to dry before moving on with the repair.

PANEL REINFORCEMENT

Structural repair procedures for rigid panels with large cracks and holes will require a reinforcement backing. Reinforcements can be made with several applications of glass cloth saturated with structural adhesive. Semi-rigid or flexible repair materials should be used for semi-rigid or flexible backing reinforcement and open meshed fiberglass dry wall tape can be used to form a reinforcement. The dry wall tape allows the resin to penetrate through and make a good bond between the panel and the adhesive. Structurally, the more dry wall tape used, the stronger the repair.

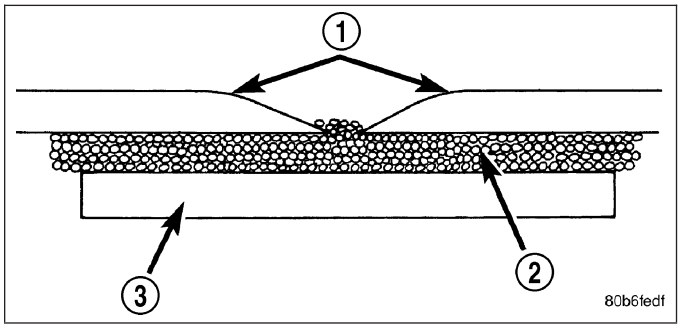

Another kind of repair that can be done to repair large cracks and holes is to use a scrap piece of similar plastic and bond with structural adhesive. The reinforcement should cover the entire break and should have a generous amount of overlap on either side of the cracked or broken area.

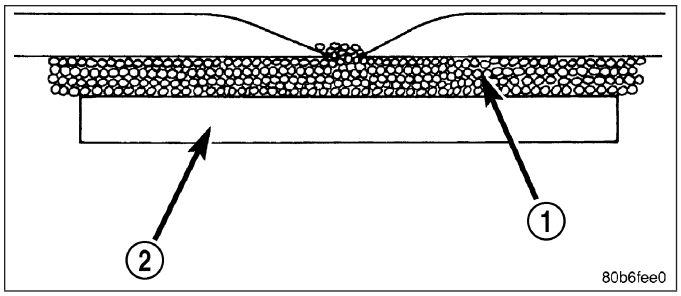

When repairing plastic, the damaged area is first “V’d” out, or beveled. Large bonding areas are desirable when repairing plastic because small repairs are less likely to hold permanently. Beveling the area around a crack at a 20 ° angle will increase the bonding surface for a repair. It is recommended that sharp edges be avoided because the joint may show through after the panel is refinished.

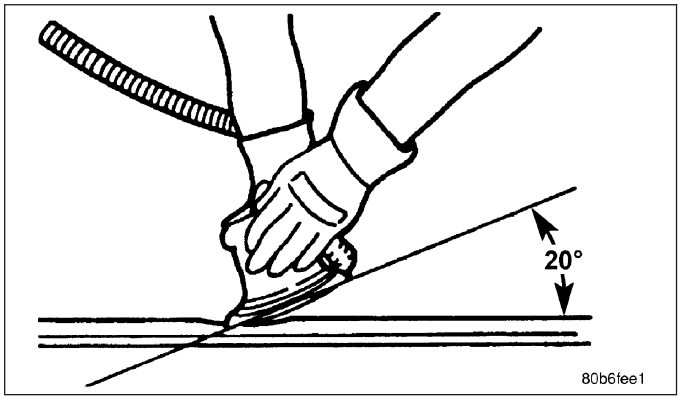

- Panel repair for both flexible and rigid panels are basically the same. The primary difference between flexible panel repair and rigid panel repair is in the adhesive materials used.
- The technician should first decide what needs to be done when working on any type of body panel. One should determine if it is possible to return the damage part to its original strength and appearance without exceeding the value of the replacement part.
- When plastic repairs are required, it is recommended that the part be left on the vehicle when ever possible. That will save time, and the panel will remain stationary during the repair. Misalignment can cause stress in the repair areas and can result in future failure.

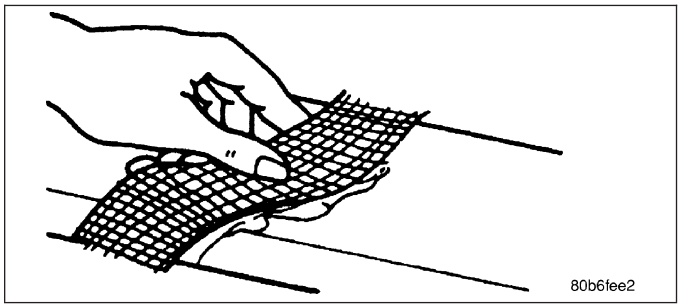

VISUAL INSPECTION

Composite materials can mask the severity of an accident. Adhesive bond lines, interior structure of the doors, and steel structures need to be inspected carefully to get a true damage assessment. Close inspection may require partial removal of interior trim or inner panels.

Identify the type of repair: Puncture or Crack - Damage that has penetrated completely through the panel. Damage is confined to one general area; a panel section is not required. However, a backer panel, open fiberglass tape, or matted material must be bonded from behind.

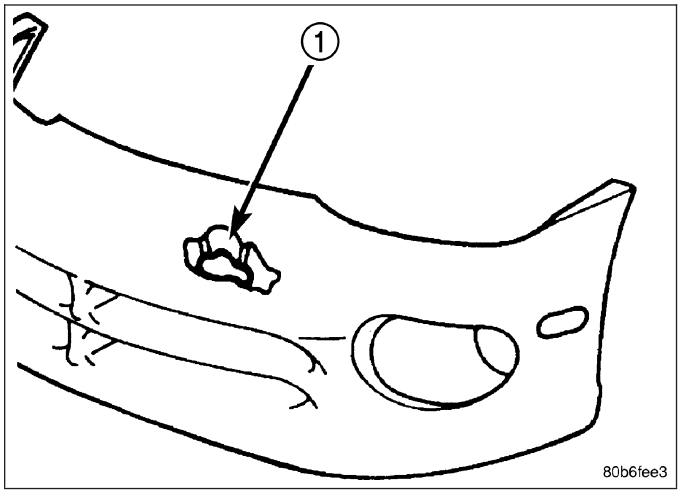

PANEL SURFACE PREPARATION

If a body panel has been punctured, cracked, or crushed, the damaged area must be removed from the panel to achieve a successful repair. All spider web cracks leading away from a damaged area must be stopped or removed. To stop a running crack in a panel, drill a 6 mm (0.250 in.) hole at the end of the crack farthest away from the damage. If spider web cracks can not be stopped, the panel would require replacement. The surfaces around the damaged area should be stripped of paint and freed from wax and oil. Scuff surfaces around repair area with 360 grit wet/dry sandpaper, or equivalent, to assure adhesion of repair materials.

PATCHING PANELS

A panel that has extensive puncture type damage can be repaired by cutting out the damaged material. Use a suitable reciprocating saw or cut off wheel to remove the section of the panel that is damaged. The piece cut out can be used as a template to shape the new patch. It is not necessary to have access to the back of the panel to install a patch. Bevel edges of cutout at 20° to expose a larger bonding area on the outer side. This will allow for an increased reinforcement areas.

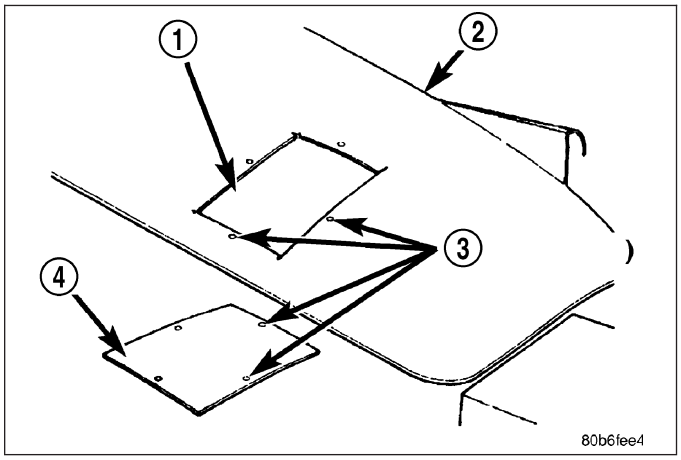

PANEL PATCH FABRICATIONS

A patch can be fabricated from any rigid fiberglass panel that has comparable contour with the repair area. Lift gates and fenders can be used to supply patch material. If existing material is not available or compatible, a patch can be constructed with adhesive and reinforcement mesh (dry wall tape). Perform the following operation if required:

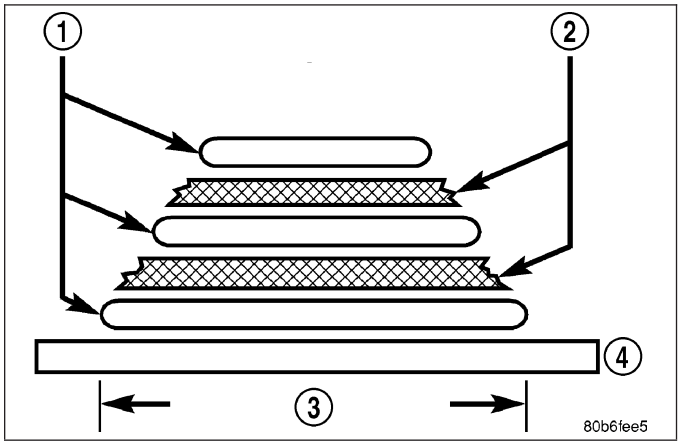

1. Cover waxed paper or plastic with adhesive backed nylon mesh (dry wall tape) larger than the patch required.
2. Tape waxed paper or plastic sheet with mesh to a surface that has a compatible contour to the repair area.
3. Apply a liberal coat of adhesive over the reinforcement mesh. If necessary apply a second or third coat of adhesive and mesh after first coat has cured. The thickness of the patch should be the same as the repair area.
4. After patch has cured, peel waxed paper or plastic from the back of the patch.
5. If desired, a thin film coat of adhesive can be applied to the back of the patch to cover mesh for added strength.

PANEL PATCH INSTALLATION

1. Make a paper or cardboard pattern the size and shape of the cutout hole in the panel.
2. Trim 3 mm (0.125 in.) from edges of pattern so patch will have a gap between connecting surfaces.
3. Using the pattern as a guide, cut the patch to size.
4. Cut scrap pieces of patch material into 50 mm (2 in.) squares to use as patch supports to sustain the patch in the cutout.
5. Drill 4 mm (0.160 in.) holes 13 mm (0.5 in.) in from edge of cutout hole.
6. Drill 4 mm (0.160 in.) holes 13 mm (0.5 in.) away from edge of patch across from holes drilled around cutout.
7. Drill 3 mm (0.125 in.) holes in the support squares 13 mm (0.5 in.) from the edge in the center of one side.

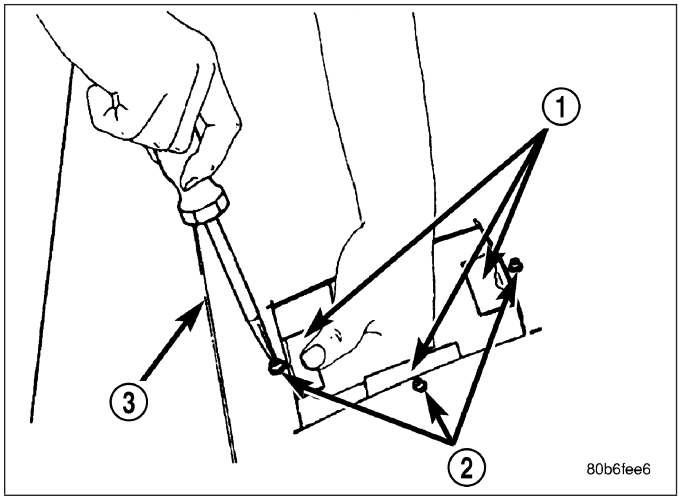

8. Scuff the backside of the body panel around the cutout hole with a scuff pad or sandpaper.
9. Mix enough adhesive to cover one side of all support squares.
10. Apply adhesive to cover one side of all support squares.
11. Using number 8 sheet metal screws, secure support squares to back side of body panel with adhesive sandwiched between the panel and squares.
12. Position patch in cutout against support squares and adjust patch until the gap is equal along all sides.
13. Drill 3 mm (0.125 in.) holes in the support squares through the pre-drilled holes in the patch.

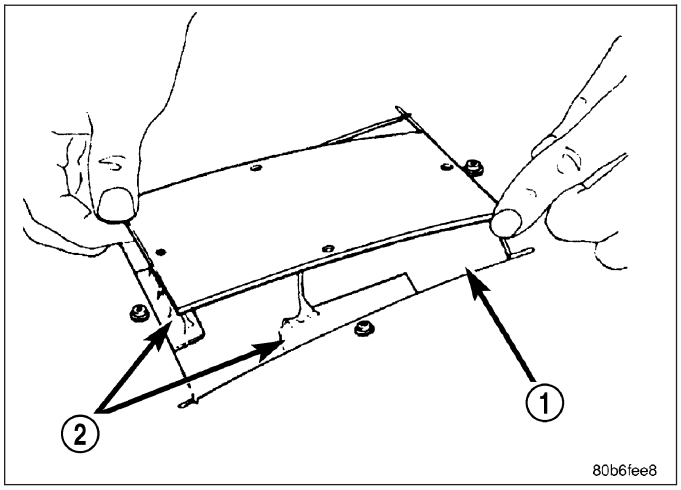

14. Apply a coat of adhesive to the exposed ends of the support squares.

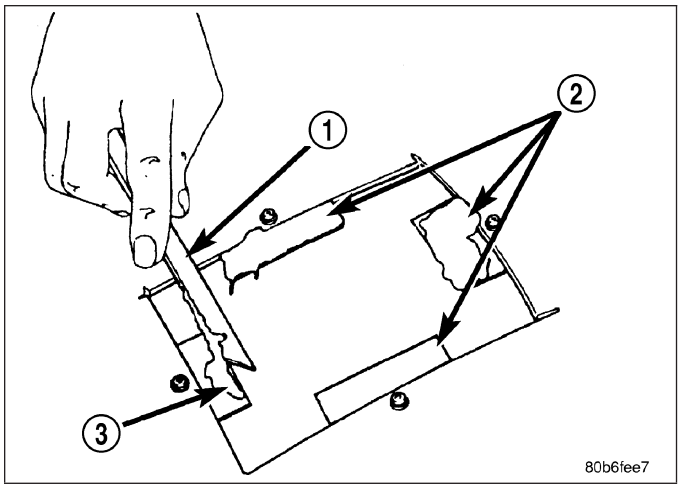

15. Install screws to hold the patch to support squares. Tighten screws until patch surface is flush with panel surface.
16. Allow adhesive to cure, and remove all screws.

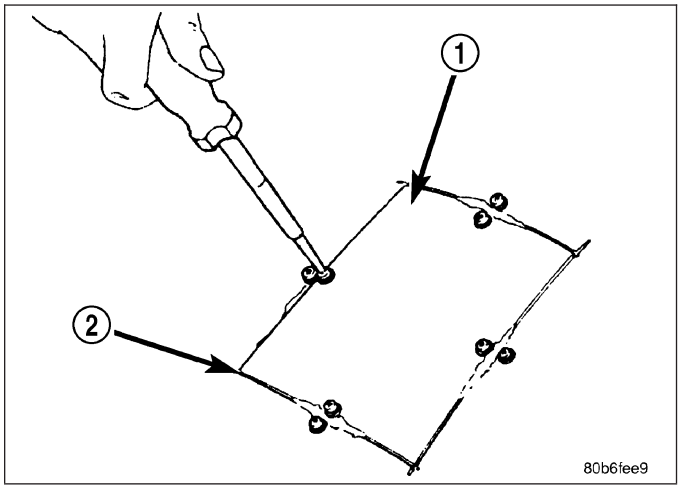

17. Using a 125 mm (5 in.) 24 grit disc grinder, grind a 50 mm (2 in.) to 75 mm (3 in.) wide and 2 mm (0.080 in.) deep path across the gaps around the patch. With compressed air, blow dust from around patch.

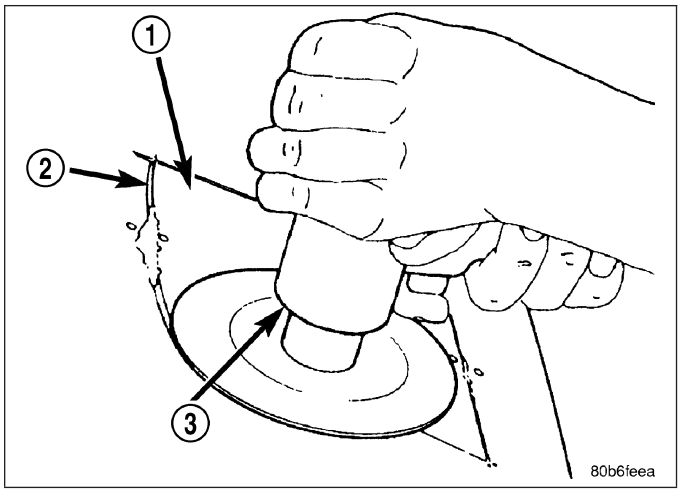

18. Apply adhesive backed nylon mesh (dry wall tape) over gaps around patch.
19. Mix enough adhesive to cover the entire patch area.

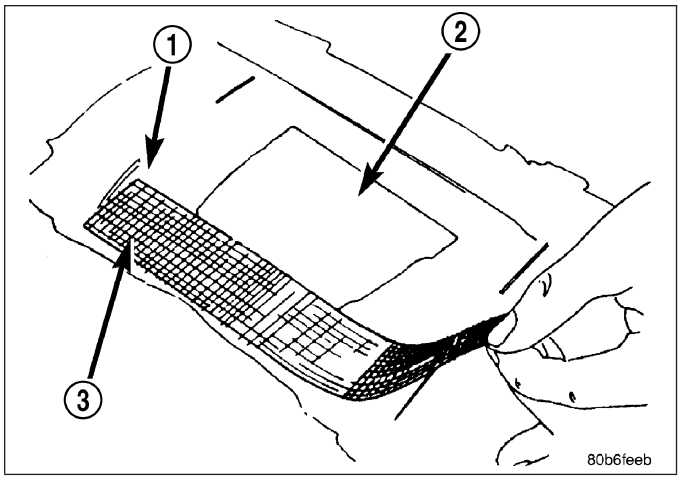

20. Apply adhesive over the mesh around patch, and smooth epoxy with a wide spreader to reduce finish grinding. Use two to three layers of mesh and adhesive to create a stronger repair.

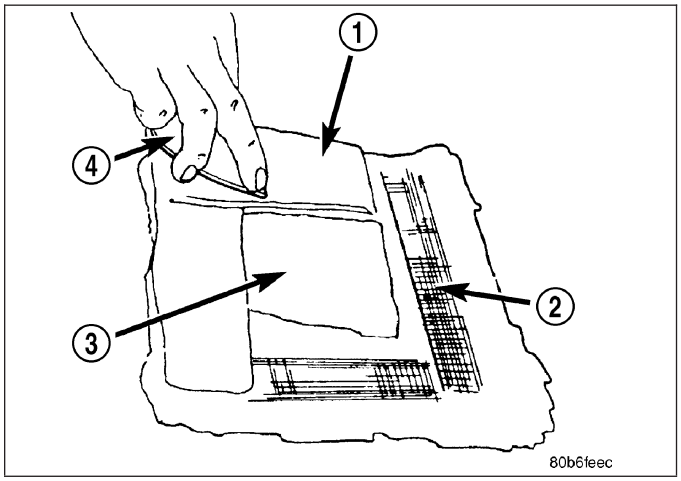

PATCHED PANEL SURFACING

After patch panel is installed, the patch area can be finished using the same methods as finishing other types of body panels. If mesh material is exposed in the patched area, grind surface down, and apply a coat of high quality rigid plastic body filler. Prime, block sand, and paint as required.

SPECIFICATIONS

BODY LUBRICATION

LUBRICATION REQUIREMENTS

Body mechanisms and linkages should be inspected, cleaned, and lubricated, as required, to maintain ease of operation and to provide protection against rust and wear. When performing other under hood services, the hood latch release mechanism and safety catch should be inspected, cleaned, and lubricated. During the winter season, external door lock cylinders should be lubricated to assure proper operation when exposed to water and ice.

Prior to the application of any lubricant, the parts concerned should be wiped clean to remove dust and grit. If necessary, a suitable solvent can be used to clean the item to be lubricated. After lubricating a component, any excess oil or grease should be removed.

LUBRICANT APPLICATION

DOOR LOCK CYLINDERS

1. Apply a small amount of lubricant directly into the lock cylinder.
2. Apply a small amount of lubricant to the key.
3. Insert key into lock cylinder and cycle the mechanism from the locked to the unlocked position.

NOTE: Do not add more lubricant.

4. Cycle the lock cylinder mechanism several times to allow the lubricant to flow throughout the cylinder.
5. Wipe all lubricant from exterior of lock cylinder and key.

ALL OTHER BODY MECHANISMS

1. Clean component as described above.
2. Apply specified lubricant to all pivoting and sliding contact areas of component.

LUBRICANT USAGE

ENGINE OIL

- Door Hinges – Hinge Pin and Pivot Contact Areas
- Hood Hinges – Pivot Points
- Liftgate Hinges

MOPAR® SPRAY WHITE LUBE OR EQUIVALENT

- Door Check Straps
- Liftgate Latches
- Liftgate Prop Pivots
- Ash Receiver
- Fuel Filler Door Remote Control Latch Mechanism
- Parking Brake Mechanism
- Sliding Seat Tracks
- Liftgate Latch

MOPAR® Multipurpose GREASE OR EQUIVALENT

- All Other Hood Mechanisms

MOPAR® LOCK CYLINDER LUBRICANT OR EQUIVALENT

- Door Lock Cylinders
- Liftgate Lock Cylinder

TORQUE SPECIFICATIONS

DESCRIPTION	N·m	Ft. Lbs.	In. Lbs.
Front Console Shifter Bezel	3	—	23
Front Console to Instrument Panel	3	—	23
Front Door Bottom Pull Bracket to Window Regulator Rear Rail	11	—	100
Front Door Latch to Outer Latch Face	12	—	108
Front Door Bottom Pull Cup Bracket to Inside Front Door	11	—	100
Front Door Glass Clamps	10	—	90
Front Door Exterior Handle to Door	5	—	44
Front seat track to floor pan bolts	61	45	—

DESCRIPTION	N·m	Ft. Lbs.	In. Lbs.
Front seat inboard pivot bolt	40	30	—
Front seat recliner to seat cushion frame	12	9	—
Front seat track to cushion frame bolt	12	9	—
Front seat back	40	30	—
Front seat back to seat cushion	30	22	—
Front seat arm rest - 60/40	12	9	—
Front arm rest - 50/50 split	25	18	—
Front seat back recliner to seat back	12	9	—
Front seat belt buckle anchor nut	40	29	—
Front seat belt retractor bolt	38	28	—
Front seat belt buckle anchor bolt	40	29	—
Front door hinge to hinge pillar bolt	28	21	—
Front Door Hinge to Bracket to Outside the Lower A-Pillar	30	—	22
Front door hinge to door nuts and bolt	28	21	—
Front door latch striker	28	20	—
Front seat rear outboard seat track to floor pan bolts	28	20	—
Front strut tower to tower brace bolts	38	28	—
Decklid latch striker	22	16	—
Decklid Spoiler SRT 8	6	4.4	—
Door hinge bolt and nut	28	21	—
Door hinge double ended stud	14	—	120
Headlamp Mounting Crossmember	28	—	21
Hood latch release cable handle to the cowl side	2.3 to 3.4	—	20 to 30
Hood latch to crossmember	22.6 to 33.9	—	200 to 300
Hood hinges	22.6 to 33.9	—	200 to 300
Horn to Crossmember	28	—	21
Instrument Panel Side Support Bolts	27	—	20
Interior Remote Handle to Inside Door	2	—	16
Instrument Panel Fence Bolts	8	—	70
Instrument Panel Bottom Bolts	6	—	55
Rear Child Tether anchor	20	15	—
Radiator Mounting Bracket to Headlamp Mounting Crossmember	28	—	21
Rear door glass to regulator bolt	11	—	105
Rear seat arm rest to seat back with ski pass	5	—	46
Rear seat back and belts to floor	44	32	—
Rear seat back 40 section to collar section	60	44	—
Rear seat back 60 section	16	12	—
Rear seat back collar assembly	60	44	—
Rear door hinge to B-pillar bolt	28	20	—
Rear door hinge to door bolt	28	20	—
Rear door latch striker	28	20	—
Sunroof module to roof panel	11	—	97

SPECIAL TOOLS

BODY

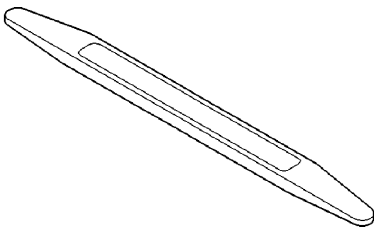

Trim Stick C-4755

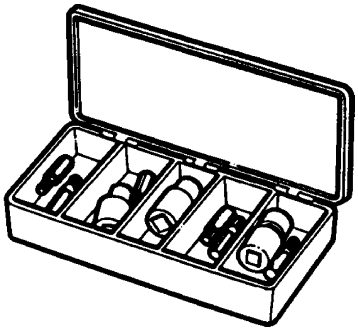

TORX BIT SET C-4794-B

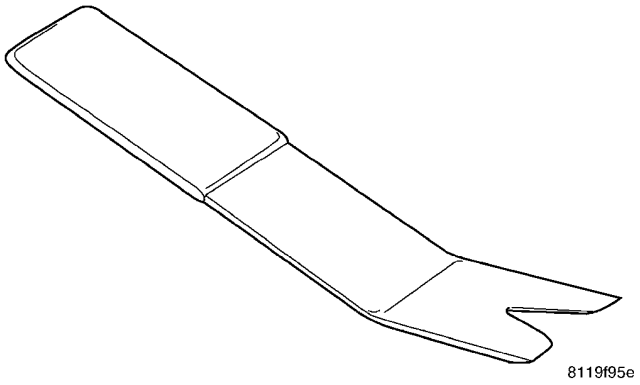

REMOVER, MOLDINGS C-4829-A

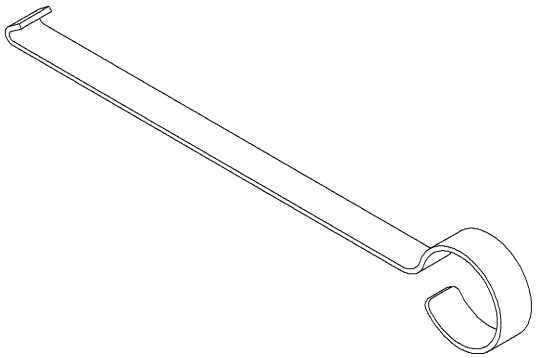

Outer Belt Molding Remover - 9093

DECKLID

TABLE OF CONTENTS

page

BUMPER
REMOVAL
LOWER 17
UPPER 17
INSTALLATION
LOWER 18
UPPER 18
COVER
REMOVAL 19
INSTALLATION 19
DECKLID
REMOVAL 20
INSTALLATION 21
HINGE
REMOVAL 23
INSTALLATION 24
LATCH
REMOVAL 25
INSTALLATION 26
LATCH STRIKER
REMOVAL 27
INSTALLATION 27
SUPPORT CYLINDER
REMOVAL 28
INSTALLATION 29
DECKLID - SPOILER
REMOVAL 30
INSTALLATION 30

BUMPER

REMOVAL

LOWER

1. Open the deck lid.
2. Remove the push-pin fastener (1) that secures the lower bumper (2) to the rear fascia flange that extends over the deck opening lower panel.
3. Remove the bumper.

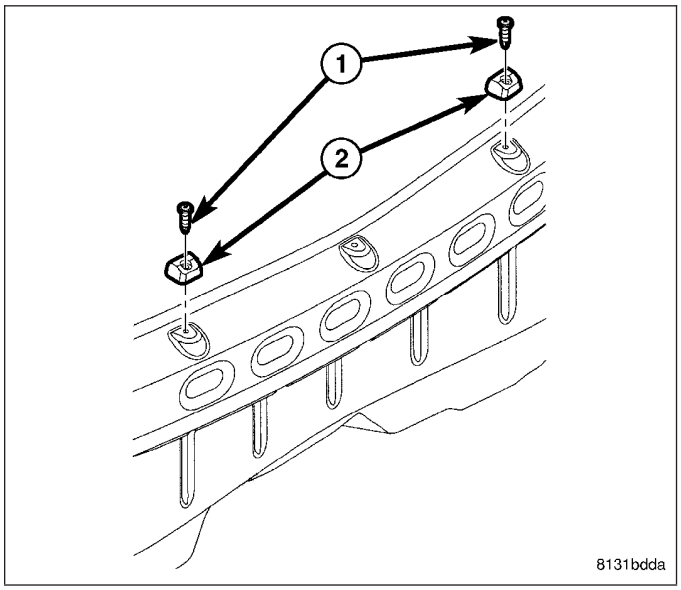

UPPER

1. Open the deck lid.
2. Unscrew the upper bumper (2) from the lower flange of the deck lid inner panel (1).

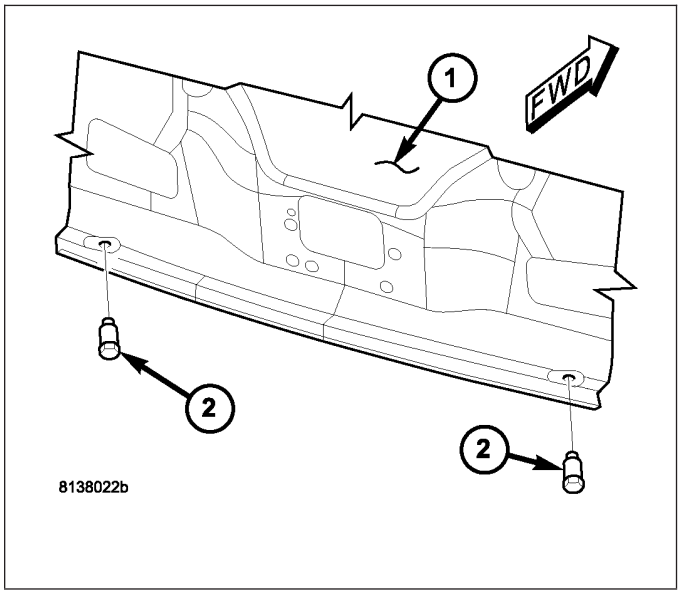

INSTALLATION

LOWER

1. Position the lower bumper (2) to the rear fascia flange that extends over the deck opening lower panel.
2. Secure the bumper with a push-pin fastener.
3. Close the deck lid.

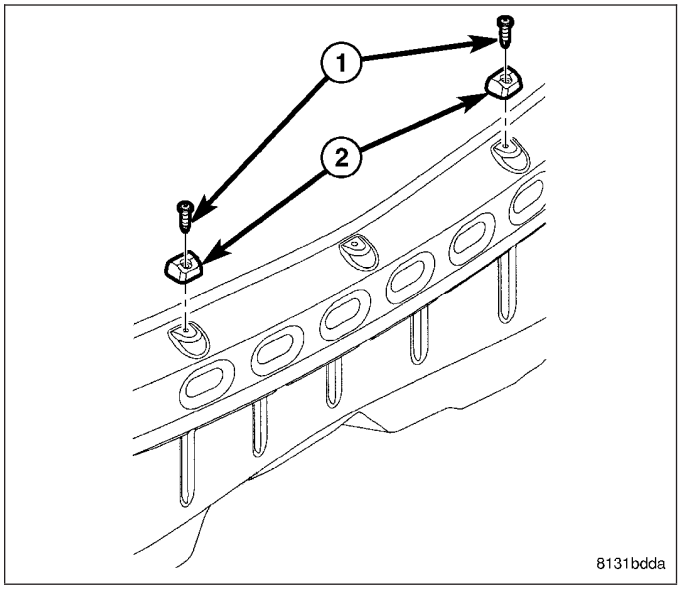

UPPER

1. Screw the upper bumper (2) into the hole in the lower flange of the deck lid inner panel (1).
2. Thread the bumper in or out of the deck lid as necessary to achieve proper deck lid closing and alignment.
3. Close the deck lid.

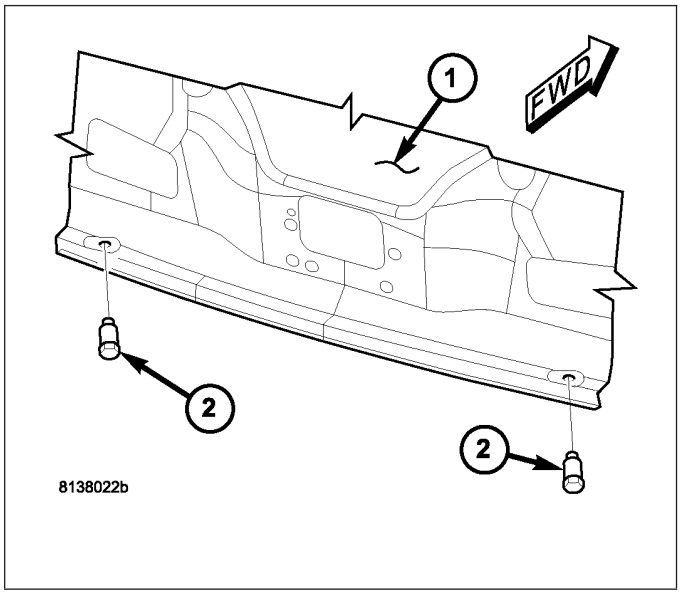

COVER

REMOVAL

1. Open the deck lid.
2. Remove the four push-pin fasteners (4) that secure the latch cover (1) to the deck lid inner panel (3).
3. Disengage the emergency latch release T-handle from the cover.
4. Remove the cover from the deck lid inner panel.

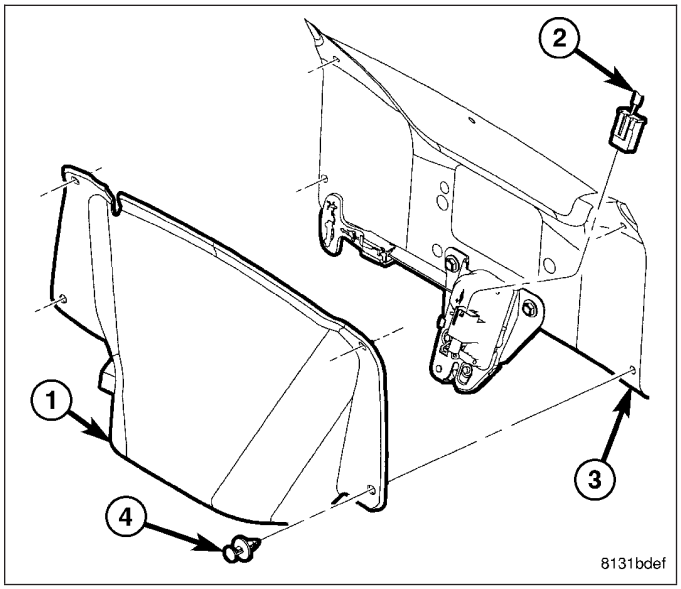

INSTALLATION

1. Position the latch cover (1) over the latch on the deck lid inner panel (3).
2. Engage the emergency latch release T-handle through the slit in the cover.
3. Align the mounting holes in the cover to the holes in the deck lid inner panel.
4. Install the four push-pin fasteners that secure the cover to the deck lid.
5. Close the deck lid.

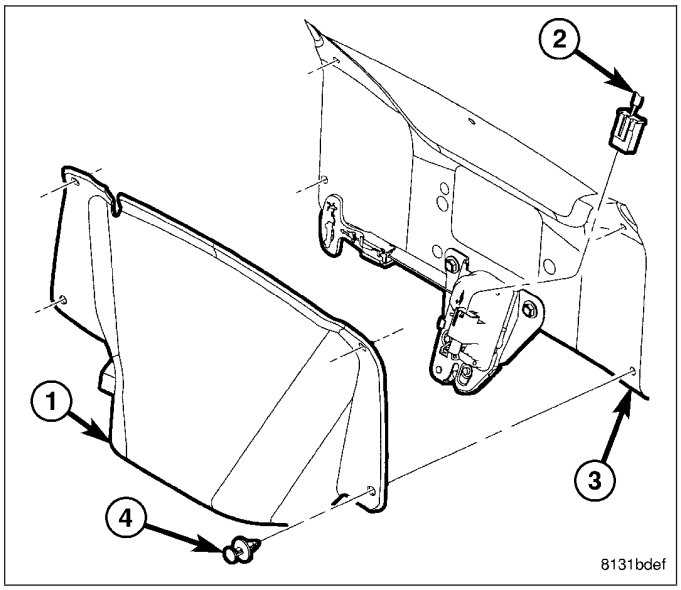

DECKLID

REMOVAL

1. Open the deck lid.
2. Disconnect and isolate the battery negative cable.
3. Remove the cover from over the latch on the inside of the deck lid. (Refer to 23 - BODY/DECKLID/ COVER - DECKLID LATCH - REMOVAL).
4. Disconnect the connector (2) of the body wire harness take out for the deck lid (1) from the latch connector receptacle (3).

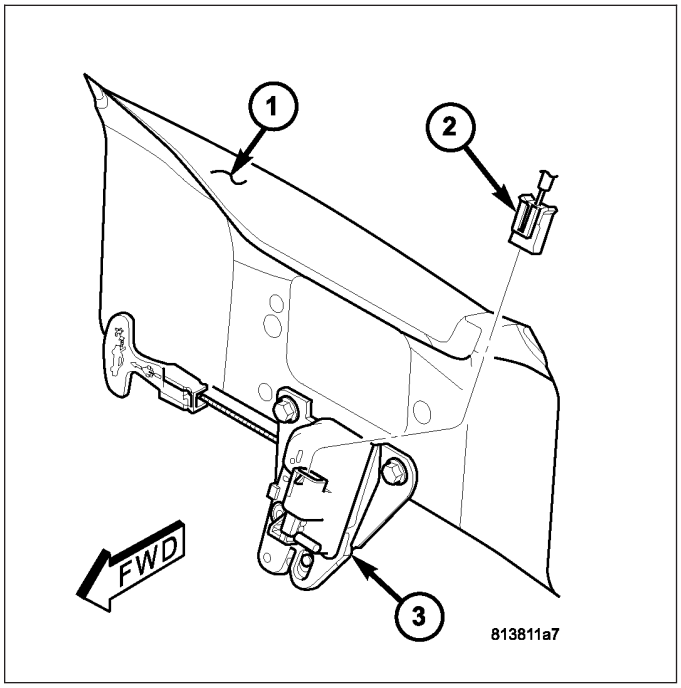

5. Disengage the two retainers (4) that secure the deck lid take out (2) of the body wire harness to the underside of the deck lid.
6. Disengage the wire grommet (1) near the right hinge from the underside of the deck lid.
7. Carefully remove the deck lid take out of the body wire harness from between the inner and outer deck lid panels.

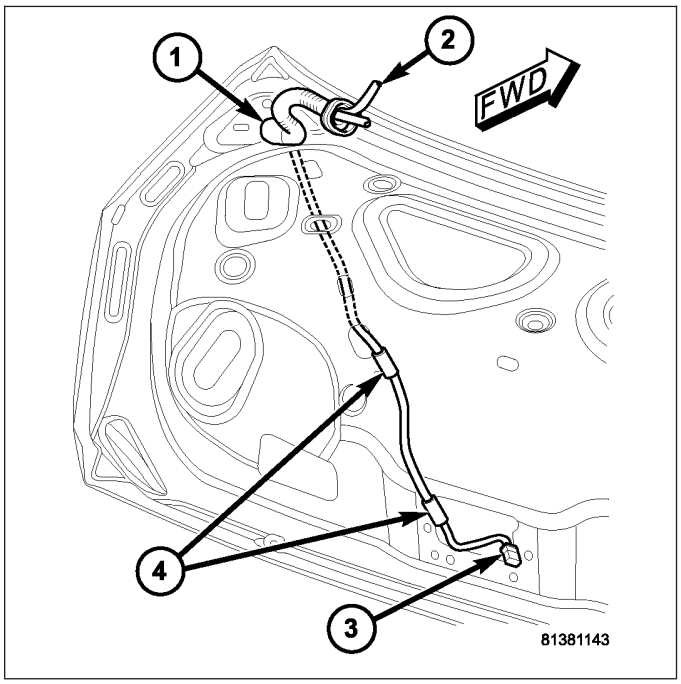

8. Mark both upper hinge bracket (3) locations on the deck lid inner panel (1) to aid reinstallation.
9. With the aid of an assistant, support the deck lid while removing the two screws (2) that secure each upper hinge bracket to the deck lid.
10. Remove the deck lid from the vehicle.

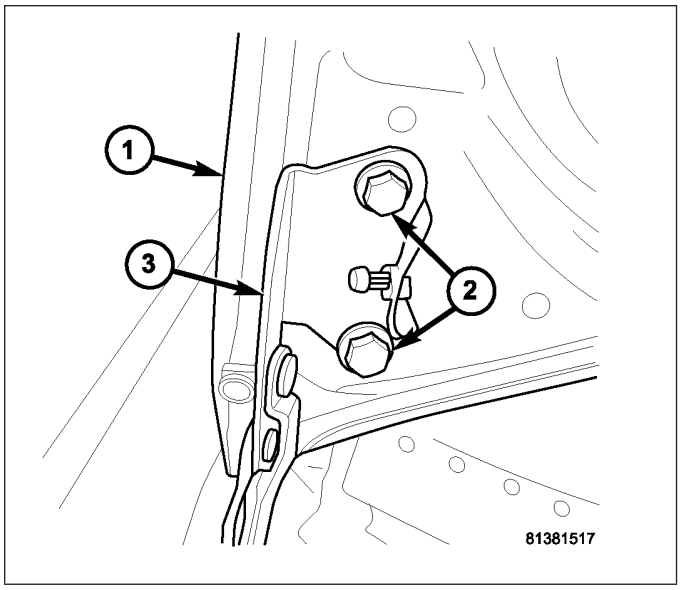

INSTALLATION

1. With the aid of an assistant, support and position the deck lid (1) to the two upper hinge brackets (3) on the vehicle.
2. Install and tighten the two screws (2) that secure each upper hinge bracket to the deck lid. Tighten the screws to 28 N·m (21 ft. lbs.).

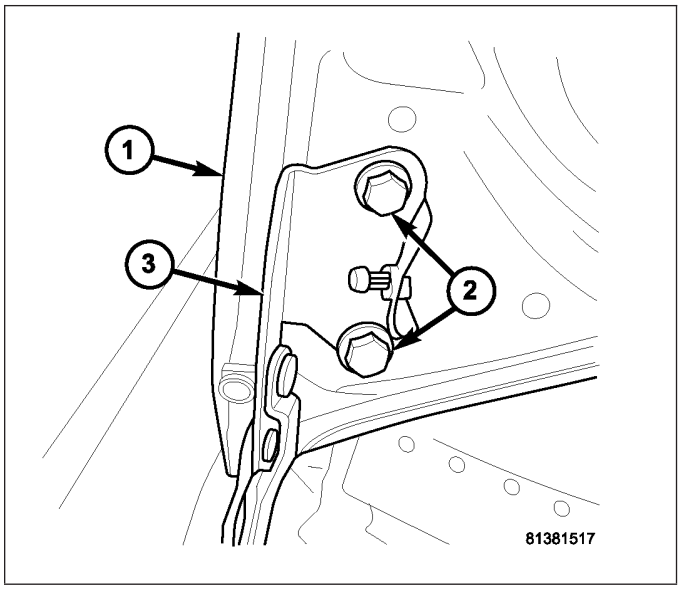

3. Carefully route the deck lid take out (2) of the body wire harness between the inner and outer deck lid panels.
4. Engage the wire grommet (1) into the hole near the right hinge on the underside of the deck lid.
5. Engage the two retainers (4) that secure the deck lid take out (2) of the body wire harness to the underside of the deck lid.

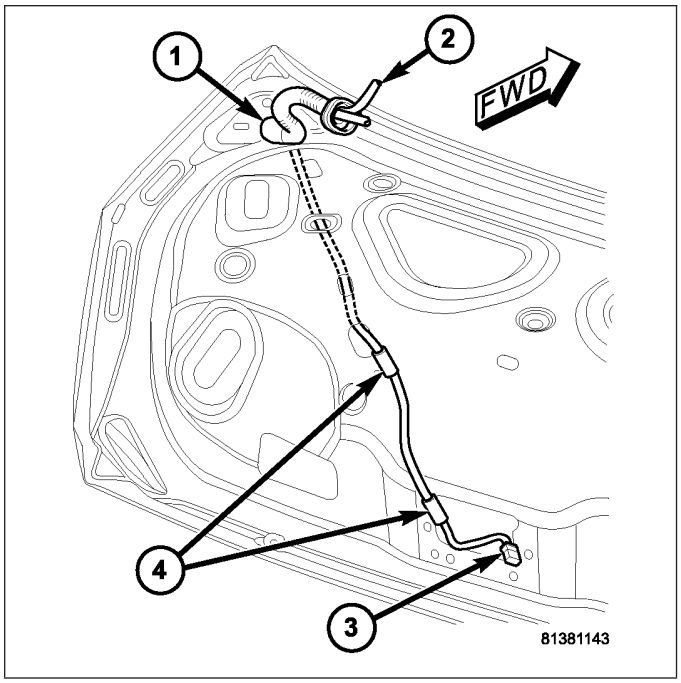

6. Reconnect the connector (2) of the body wire harness take out for the deck lid (1) to the latch connector receptacle (3).
7. Reinstall the cover over the latch on the inside of the deck lid. (Refer to 23 - BODY/DECKLID/ COVER - DECKLID LATCH - INSTALLATION).
8. Reconnect the battery negative cable.
9. Close the deck lid.
10. Adjust the deck lid hinge positions and upper overslam bumpers as necessary to achieve proper spacing and operation.

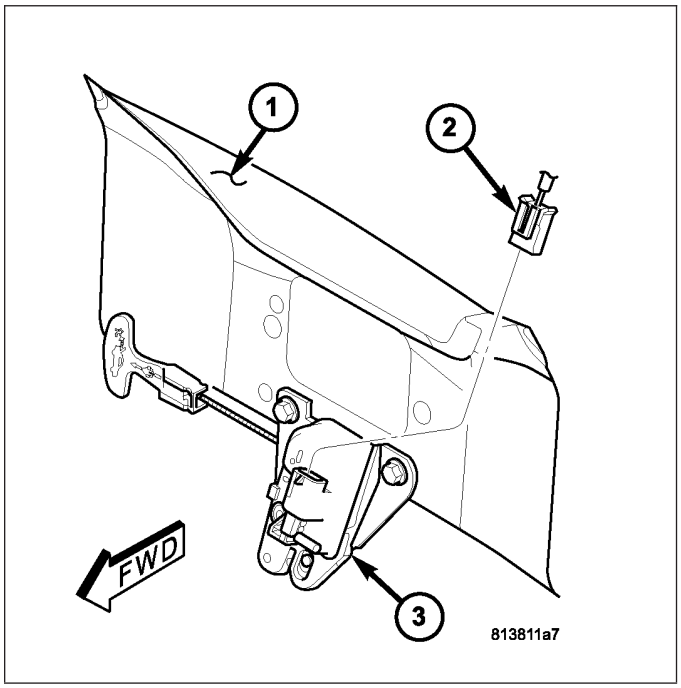

HINGE

REMOVAL

1. Open and support the deck lid (1) with a suitable prop or block.
2. Remove the support cylinder from the deck lid hinge. (Refer to 23 - BODY/DECKLID/CYLINDER - DECKLID SUPPORT - REMOVAL).
3. Mark the upper hinge bracket (3) location on the deck lid inner panel to aid reinstallation.
4. Remove the two screws (2) that secure the hinge to the deck lid.

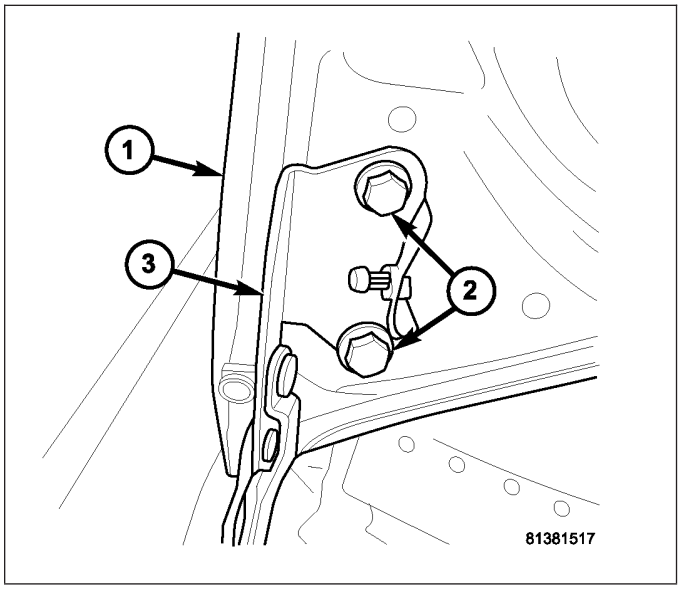

5. Mark the lower hinge bracket (1) location on the deck lid opening drain trough to aid reinstallation.
6. Remove the three screws (2) that secure the hinge to the drain trough.
7. Remove the deck lid hinge from the vehicle.

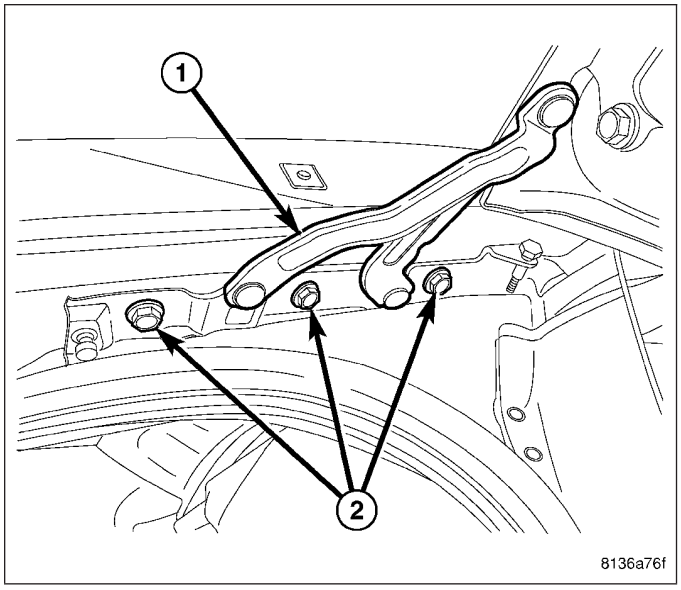

INSTALLATION

1. Position the lower bracket of the deck lid hinge (1) to the drain trough on the vehicle.
2. Install and tighten the three screws (2) that secure the hinge to the drain trough. Tighten the screws to 28 N·m (21 ft. lbs.).

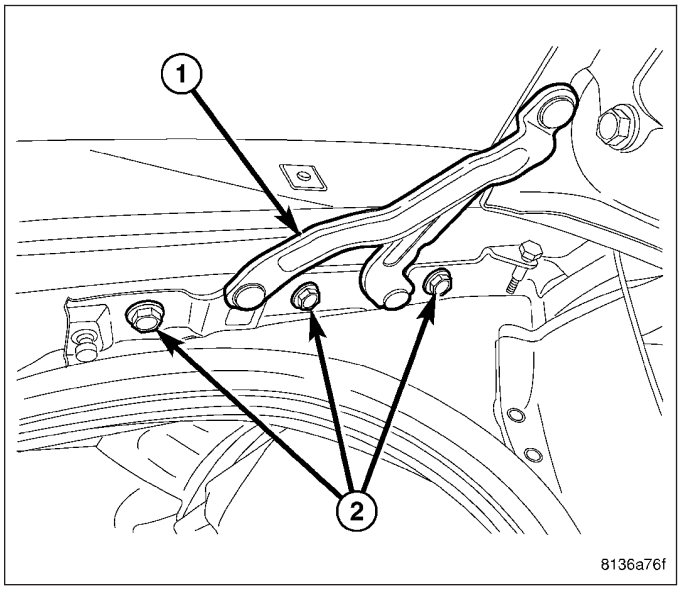

3. Position the deck lid (1) to the upper hinge bracket (3) on the vehicle.
4. Install and tighten the two screws (2) that secure the hinge to the deck lid. Tighten the screws to 28 N·m (21 ft. lbs.).
5. Reinstall the support cylinder onto the deck lid hinge. (Refer to 23 - BODY/DECKLID/CYLINDER - DECKLID SUPPORT - INSTALLATION).
6. Remove the fixture being used to support the deck lid for service and close the deck lid.
7. Adjust the deck lid hinge position as necessary to achieve proper spacing and operation.

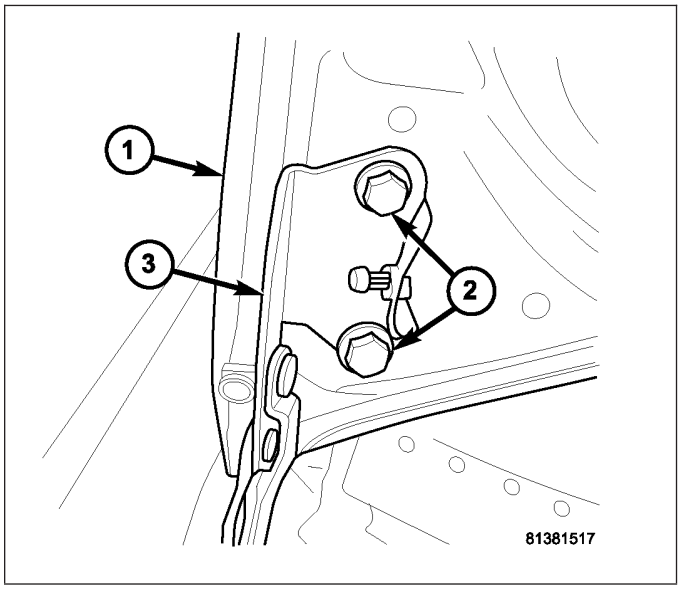

LATCH

REMOVAL

1. Open the deck lid.
2. Disconnect and isolate the battery negative cable.
3. Remove the cover from over the latch on the inside of the deck lid. (Refer to 23 - BODY/DECKLID/ COVER - DECKLID LATCH - REMOVAL).
4. Disconnect the connector (2) of the body wire harness take out for the deck lid (1) from the latch connector receptacle (3).

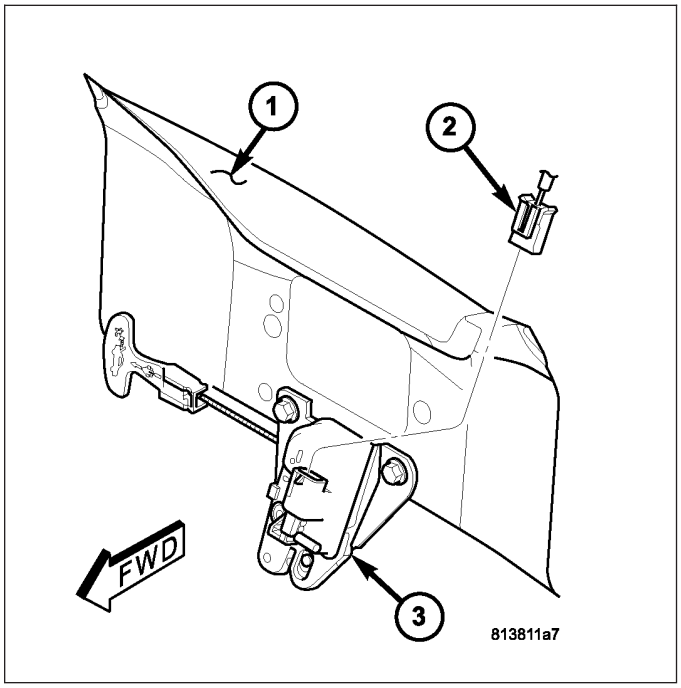

5. Remove the two screws (2) that secure the latch (3) to the inside of the deck lid (1).
6. Remove the latch from the inside of the deck lid.

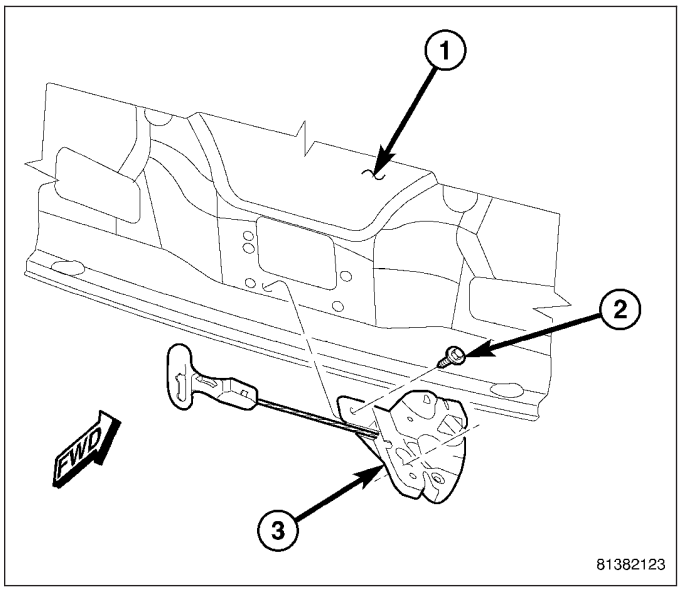

INSTALLATION

1. Position the latch (3) to the inside of the deck lid (1).
2. Install and tighten the two screws (2) that secure the latch to the inside of the deck lid. Tighten the screws to 8 N·m (71 in. lbs.).

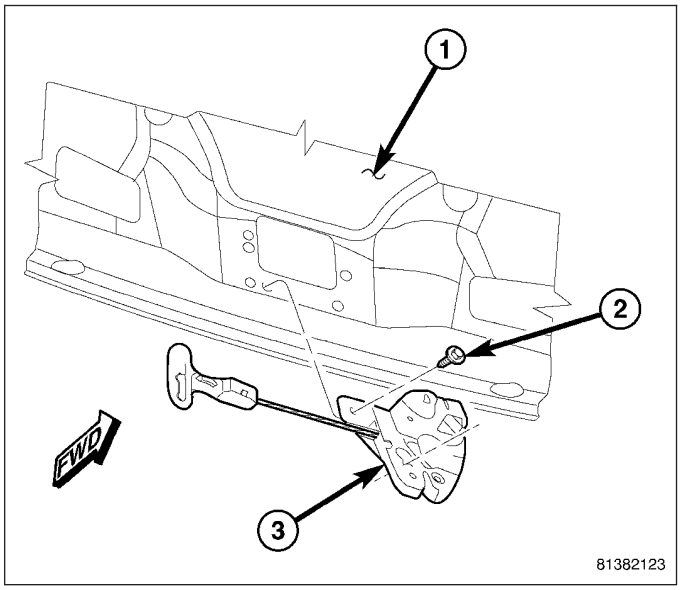

3. Reconnect the connector (2) of the body wire harness take out for the deck lid (1) to the latch connector receptacle (3).
4. Reinstall the cover over the latch on the inside of the deck lid. (Refer to 23 - BODY/DECKLID/ COVER - DECKLID LATCH - INSTALLATION).
5. Reconnect the battery negative cable.
6. Close the deck lid.

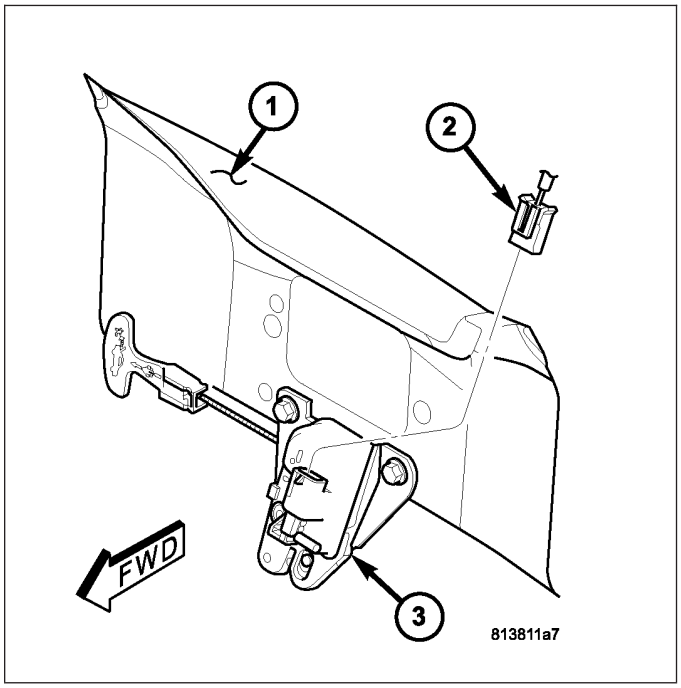

LATCH STRIKER

REMOVAL

1. Open the deck lid.
2. Remove the trunk rear trim panel from the inside of the deck opening lower panel (3). (Refer to 23 - BODY/INTERIOR/TRUNK REAR TRIM PANEL - REMOVAL).
3. Mark the deck lid latch striker (2) location on the inside of the deck opening lower panel to aid reinstallation.
4. Remove the two screws (1) that secure the latch striker to the inside of the deck opening lower panel.
5. Remove the latch striker from the vehicle.

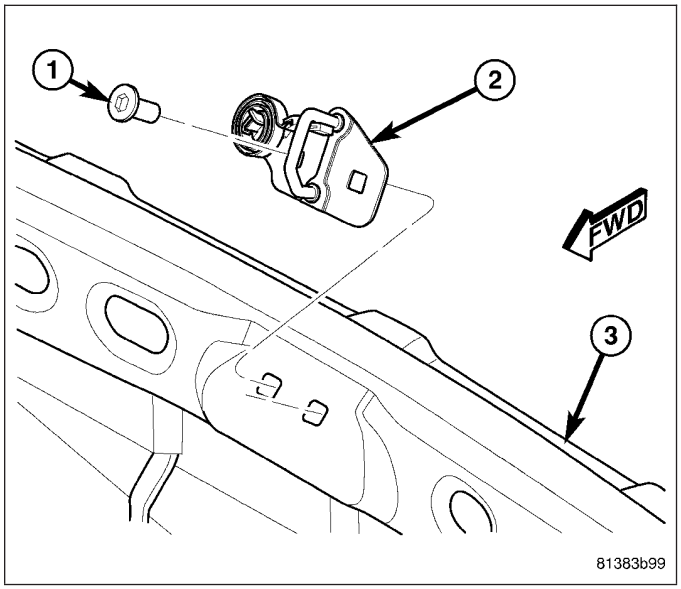

INSTALLATION

1. Position the deck lid latch striker (2) to the inside of the deck opening lower panel (3).
2. Install and tighten the two screws (1) that secure the latch striker to the deck opening lower panel. Tighten the screws to 28 N·m (21 ft. lbs.).
3. Adjust the latch striker position as necessary to achieve proper deck lid latch operation.
4. Reinstall the trunk rear trim panel to the deck opening lower panel. (Refer to 23 - BODY/INTERIOR/TRUNK REAR TRIM PANEL - INSTALLATION).
5. Close the deck lid.

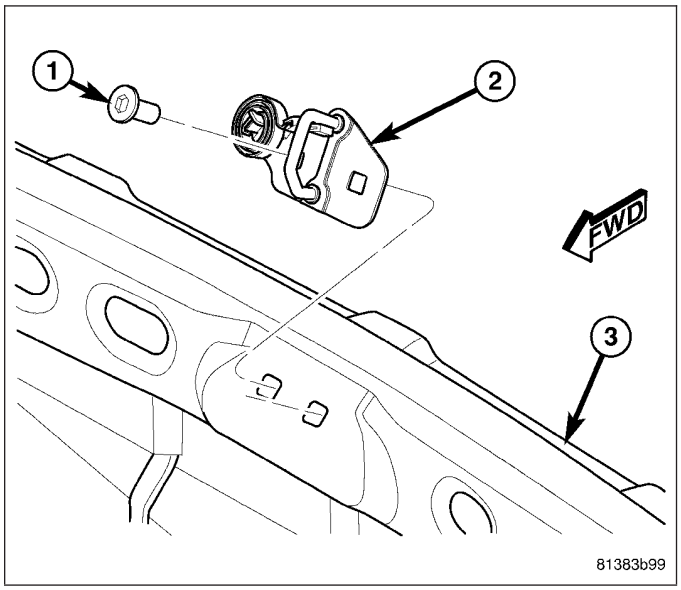

SUPPORT CYLINDER

REMOVAL

1. Open and support the deck lid with a suitable prop or block.

WARNING: To avoid personal injury or death, during service lift the ball socket end retaining clip only far enough to release the socket from the ball stud. Excessive prying or removal of the clip may result in improper clip spring tension. Improper clip tension may result in the support cylinder separating from the ball stud causing sudden, unexpected loss of deck lid support.

2. Insert a small flat-bladed tool (3) into the notch on the outer face of one ball socket end (1) of the support cylinder and carefully pry the retaining clip (2) outward while pulling the ball socket away from the ball stud (4) on the deck lid hinge.
3. Release the retaining clip to its installed position.
4. Repeat Step 2 and Step 3 for the opposite end of the support cylinder.
5. Remove the support cylinder (2) from the deck lid hinge (1).

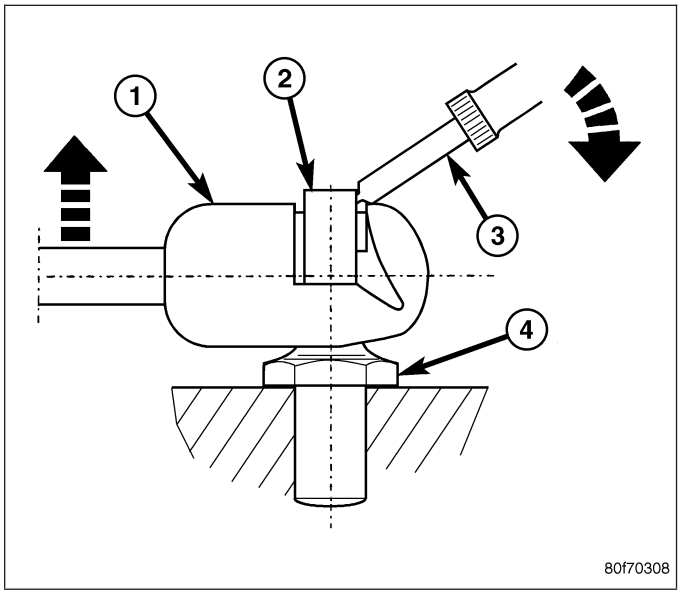

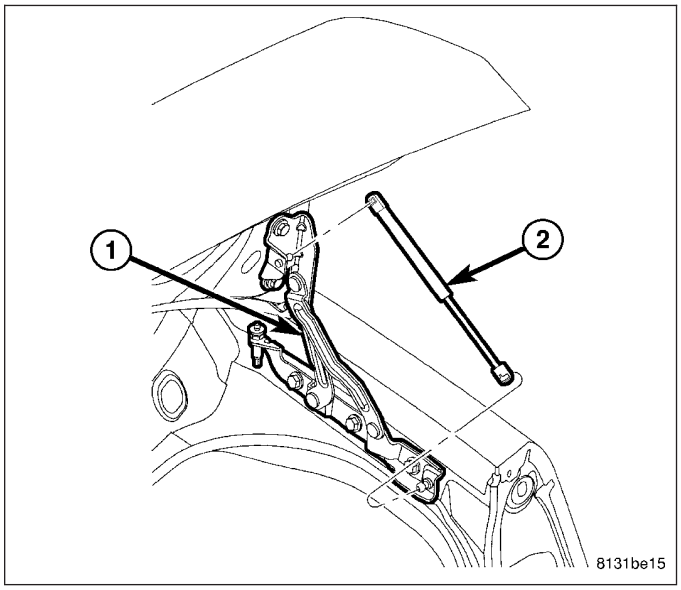

INSTALLATION

1. Position the ball socket on the cylinder end of the support cylinder (2) to the ball stud on the upper bracket of the deck lid hinge (1).
2. Using hand pressure, press the ball socket onto the ball stud until the retainer clip snaps into place.
3. Position the ball socket on the rod end of the support cylinder to the ball stud on the lower bracket of the deck lid hinge.
4. Using hand pressure, press the ball socket onto the ball stud until the retainer clip snaps into place.
5. Inspect to be certain that the retaining clip on each of the support cylinder ball socket ends is fully seated.
6. Remove the service prop or block and close the deck lid.

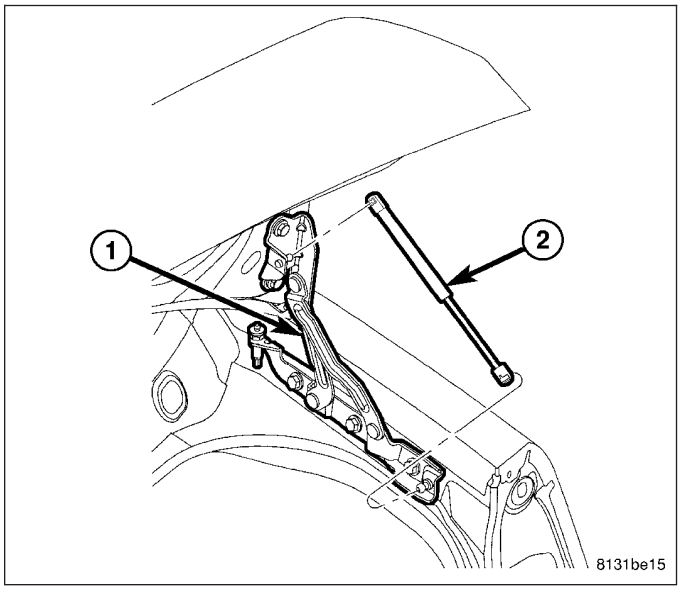

DECKLID - SPOILER

REMOVAL

NOTE: On SRT 8 vehicles only.

1. Remove spoiler nuts from spoiler studs..
2. Remove spoiler (1) from decklid (2).

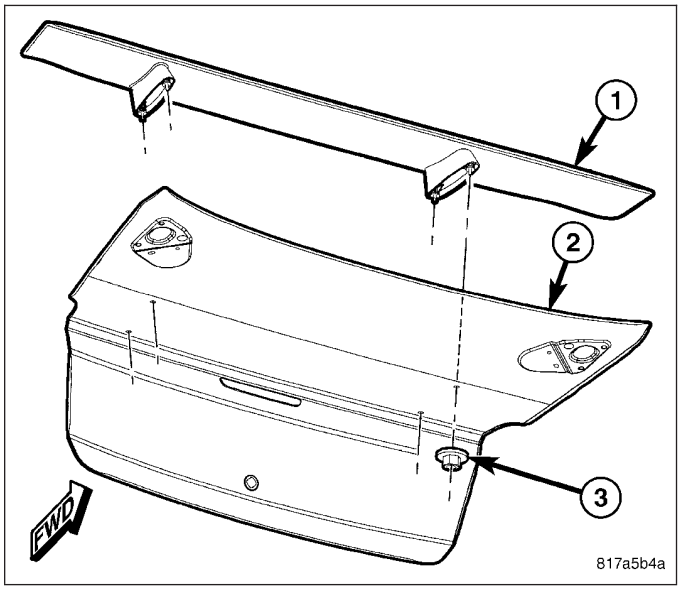

INSTALLATION

NOTE: SRT 8 vehicles only

1. Insert spoiler studs through decklid (2) holes.
2. Install nuts (3) to spoiler studs.
3. Torque nuts to 6 N·m (4.4 ft. lbs.)

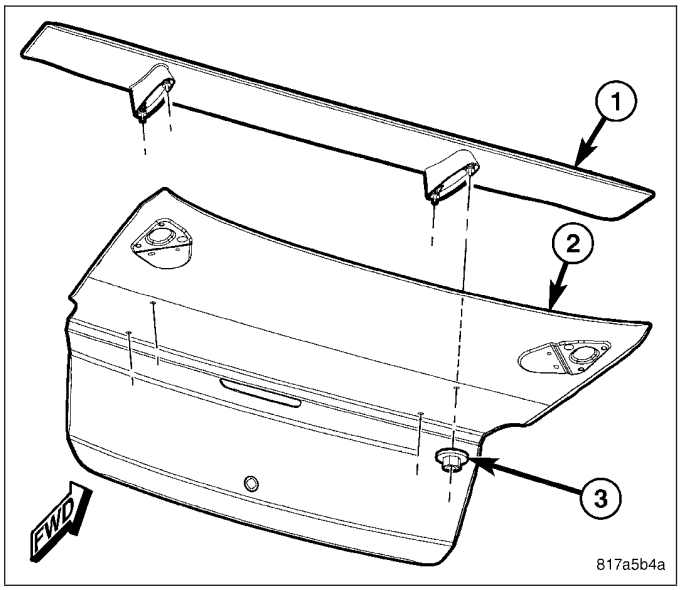

DOOR - FRONT

TABLE OF CONTENTS

page

DOOR - FRONT
DESCRIPTION - FASTENER 32
DOOR
REMOVAL 33
INSTALLATION 35
EXTERIOR HANDLE
REMOVAL 37
INSTALLATION 38
GLASS
REMOVAL 40
INSTALLATION 41
HINGE
REMOVAL 42
INSTALLATION 43
LATCH
REMOVAL 44
INSTALLATION 47
LOCK CYLINDER
REMOVAL 50
INSTALLATION 50
STRIKER
REMOVAL 51
INSTALLATION 51
TRIM PANEL
REMOVAL 52
INSTALLATION 54
WATERSHIELD
REMOVAL 57
INSTALLATION 57
WINDOW REGULATOR
REMOVAL 58
INSTALLATION 60

DOOR - FRONT

DESCRIPTION - FASTENER

1. The push pin fastener is in the open position (1) when the center pin is pull outward approximately 2 mm. Then the push pin fastener is ready to be used.
2. To install push pin place it into position, and push the center pin in flush with the head of the push pin to lock it into position (2).
3. To remove the push pin fastener, push the center pin inward approximately 2 mm to release push pin fastener (3).

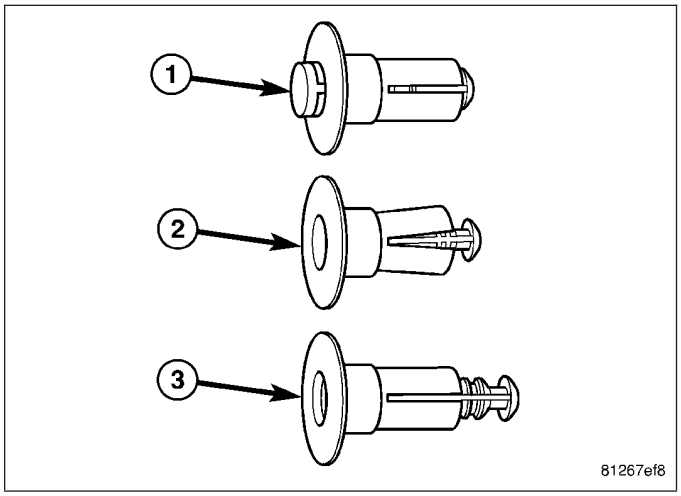

DOOR

REMOVAL

1. Disconnect and isolate the battery negative cable.
2. Open the front door.
3. Disengage the front door wire harness boot and connector (1) from the outside of the lower A-pillar (2).

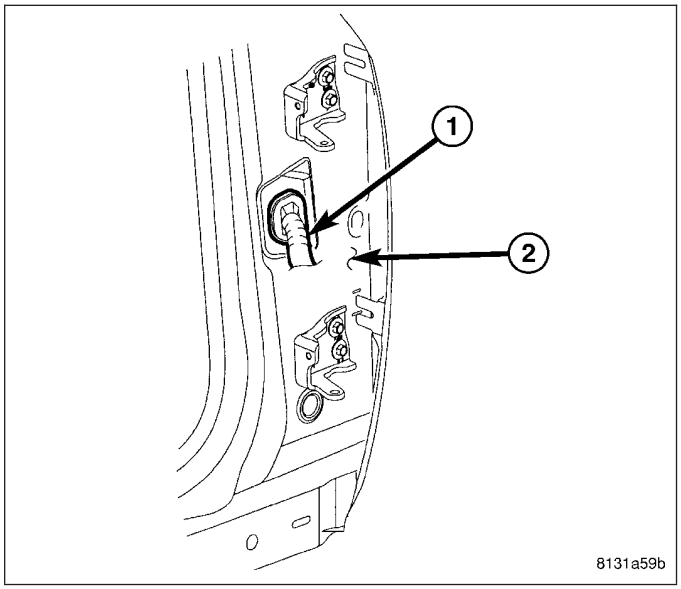

4. Carefully pull the door wire harness boot and connector (2) out from the A-pillar far enough to access and disconnect the body wire harness connector(s) (1).
5. Open the door to the full open position.
6. Support the door with a suitable lifting device.

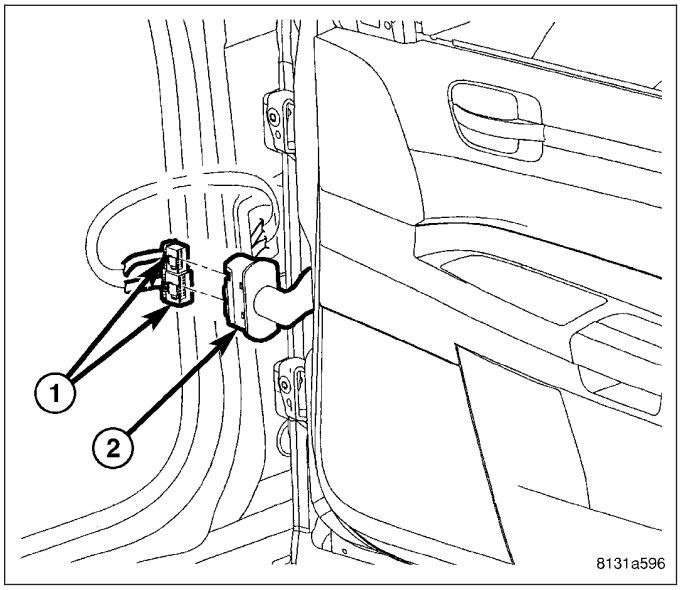

7. Remove the screw (1) from both the upper and lower front door hinges that secures the door hinge bracket (3) to the body hinge bracket (2).
8. While still supporting the door, close the door to the intermediate detent position (one detent from the full open position).

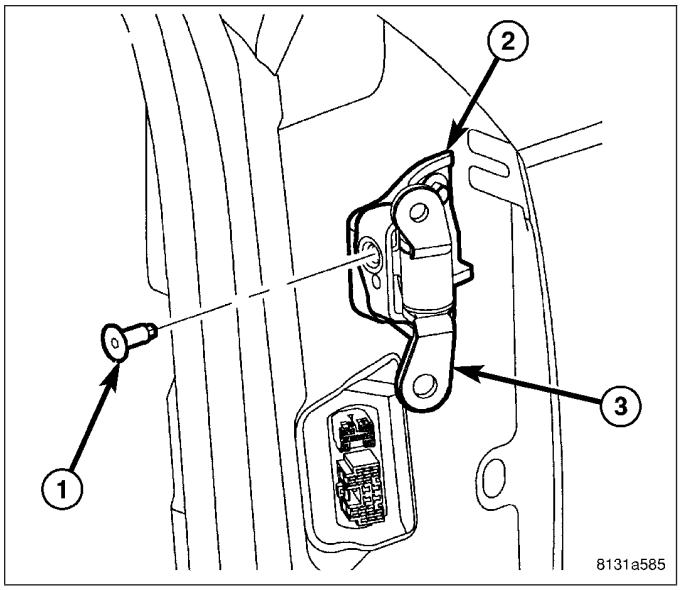

9. Raise the front door (2) upward far enough to disengage the upper and lower hinge pins (3) from the pivots (1) on the upper and lower body hinge brackets.
10. Remove the front door from the vehicle.

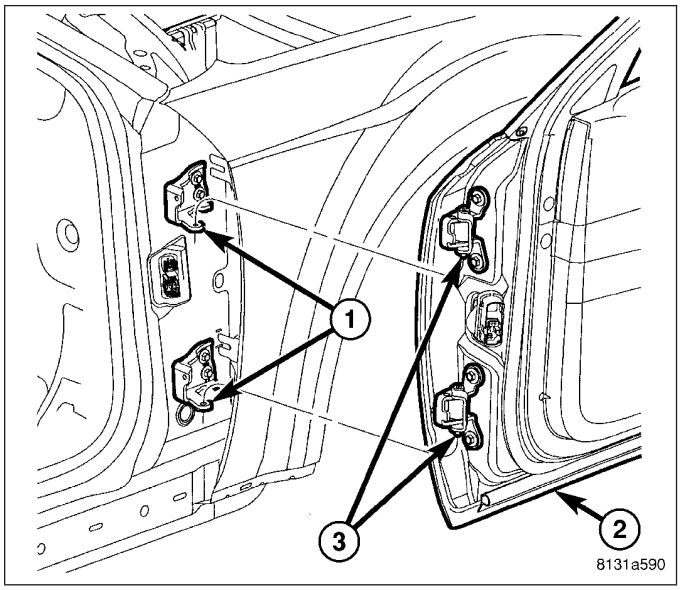

INSTALLATION

1. Support the front door (2) with a suitable lifting device.
2. Position the door with the upper and lower hinge pins (3) aligned over the pivots (1) on the upper and lower body hinge brackets.
3. Lower the door far enough to engage the hinge pins into the pivot holes.
4. While still supporting the door, open the door to the full open position.

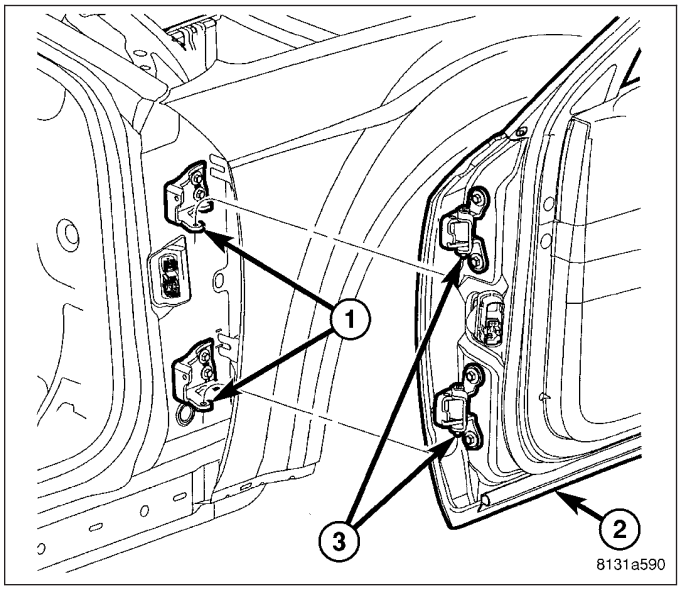

5. Align the holes in the upper and lower front door hinge brackets (3) with those in the body hinge brackets (2).
6. Install and tighten the screw (1) into both the upper and lower front door hinge to secure the door hinge brackets to the body hinge brackets. Tighten the screws to 42 N·m (31 ft. lbs.).
7. Remove the lifting device supporting the door.

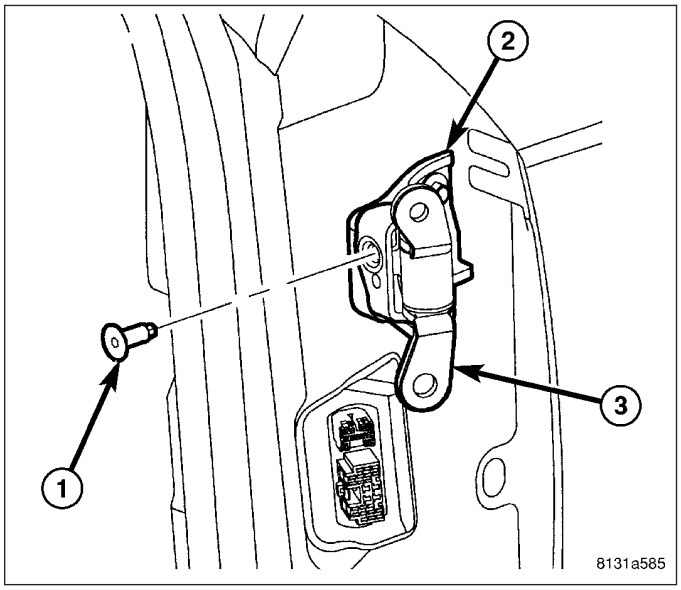

8. Carefully pull the body wire harness connector(s) (1) out from the A-pillar far enough to reconnect them to the door wire harness boot and connector (2).

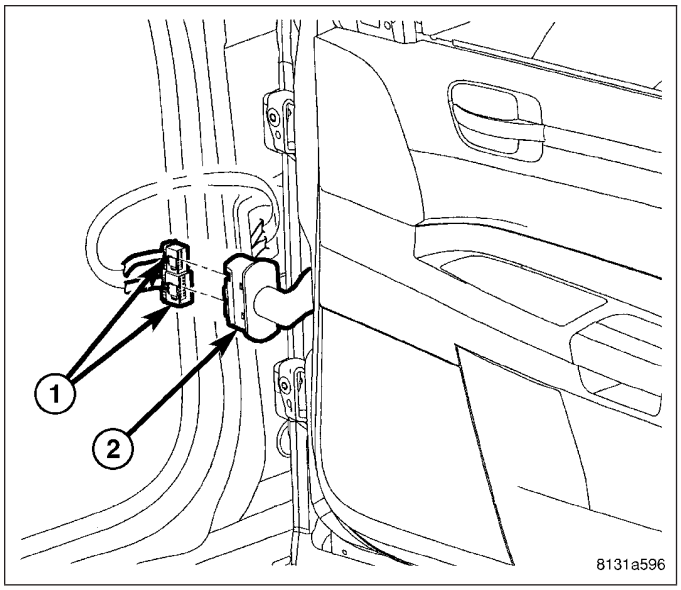

9. Engage the front door wire harness boot and connector (1) into the wiring clearance hole on the outside of the lower A-pillar (2).
10. Reconnect the battery negative cable.

NOTE: For vehicles equipped with the optional Automatic Express Up power window feature, recalibration of this feature is required whenever power to the door module is disrupted. (Refer to 8 - ELECTRICAL/BATTERY SYSTEM - STANDARD PROCEDURE - BATTERY CONNECTION).

11. Adjust the door hinge positions as necessary to achieve proper door spacing and operation.

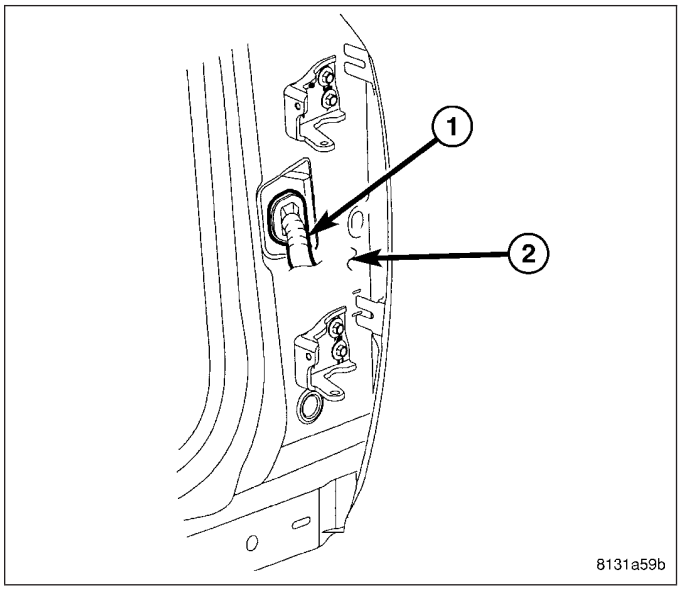

EXTERIOR HANDLE

REMOVAL

1. Remove the trim panel from the inside of the front door. (Refer to 23 - BODY/DOOR - FRONT/TRIM PANEL - REMOVAL).
2. Remove the speaker from the inside of the front door. (Refer to 8 - ELECTRICAL/AUDIO/SPEAKER - REMOVAL).
3. Remove the watershield from the inside of the front door. (Refer to 23 - BODY/DOOR - FRONT/WATERSHIELD - REMOVAL).
4. Remove the screw (3) that secures the bottom of the pull cup bracket (2) and the bottom of the window regulator rear rail to the inside of the front door.
5. Loosen the screw (1) that secures the top of the pull cup bracket to the inside of the front door.
6. Disengage the upper pull cup bracket screw from the keyed hole and remove the bracket from the inside of the front door.

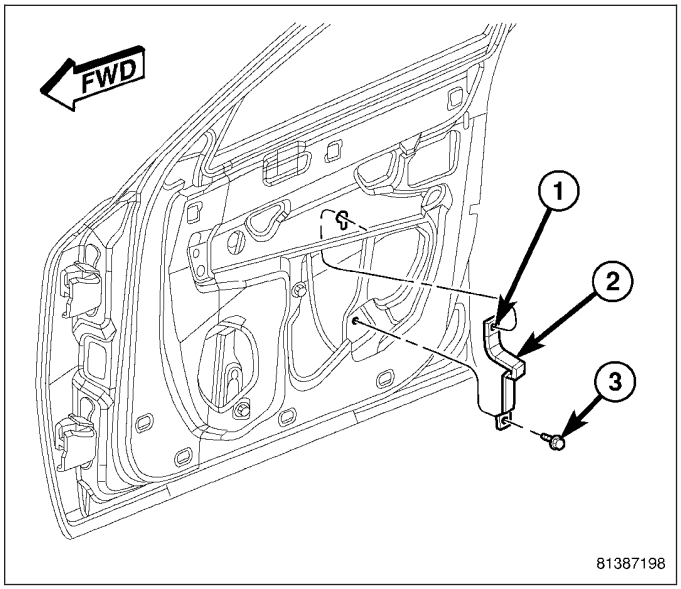

7. Reach up into the back of the door shell to unsnap the plastic clip (2) that secures the end of the latch release link to the exterior door handle (1) and disengage the latch release link from the handle.
8. For the driver side handle only, reach up into the back of the door shell to unsnap the plastic clip (3) that secures the end of the lock actuator link to the lock cylinder and disengage the link from the lock cylinder.

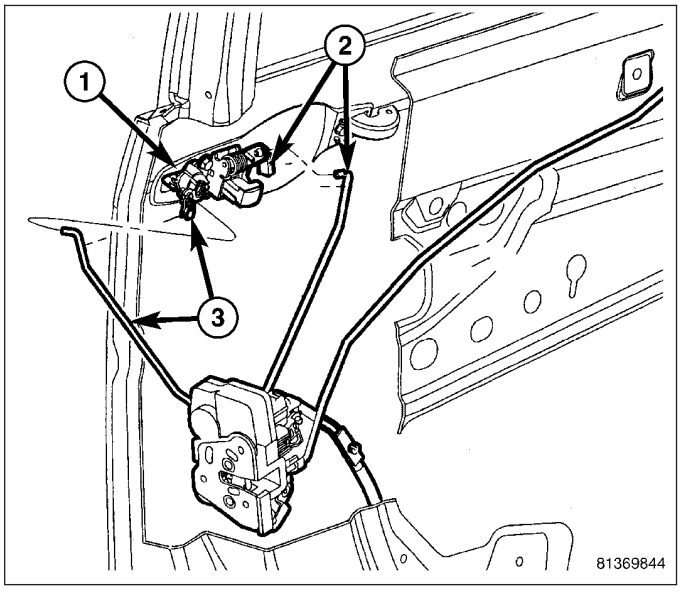

9. Remove the three screws (2) from the inside of the door that secure that exterior handle to the door.
10. Remove the handle from the outside of the door.

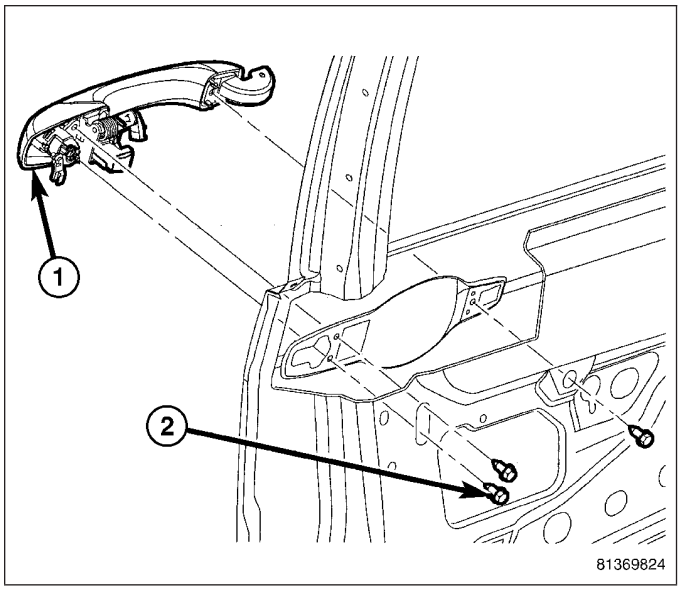

INSTALLATION

1. Position the exterior handle (1) to the mounting holes on the outside of the door.
2. From the inside of the door, install and tighten the three screws (2) that secure that exterior handle to the door. Tighten the screws to 5 N·m (44 in. lbs.).

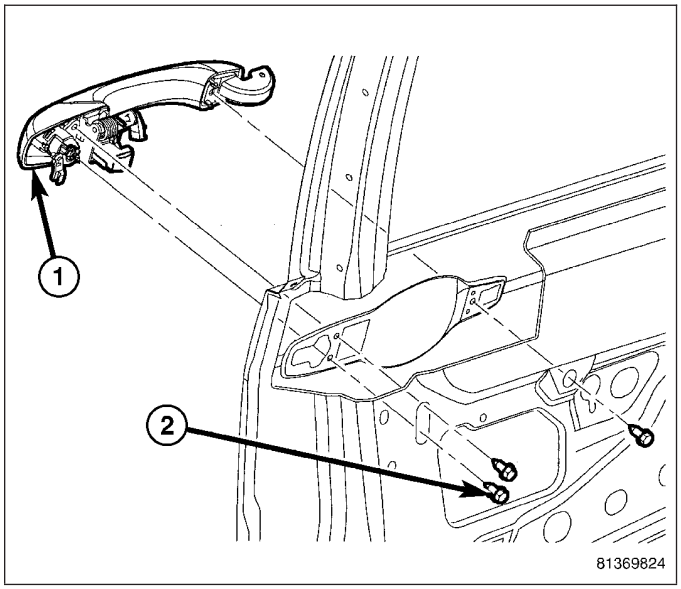

3. For the driver side handle only, reach up into the back of the door shell to engage the lock actuator link (3) to the lock cylinder and snap the plastic clip over the link to secure it to the lock cylinder.
4. Reach up into the back of the door shell to engage the latch release link (2) to the exterior door handle (1) and snap the plastic clip over the link to secure it to the handle.

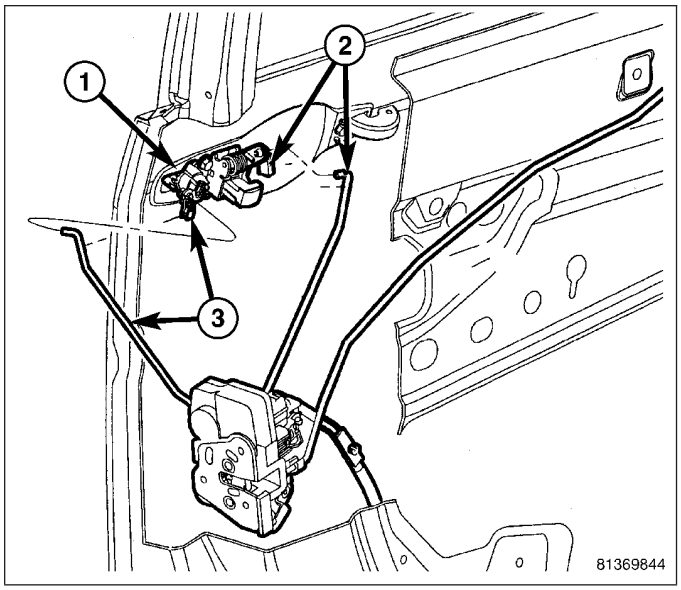

5. With the upper screw (1) hand-started into the pull cup bracket (2), position the screw into the keyed hole on the inside of the front door.
6. Install and tighten the screw (3) that secures the bottom of the pull cup bracket and the bottom of the window regulator rear rail to the inside of the front door. Tighten the screw to 11 N·m (100 in. lbs.).
7. Tighten the screw that secures the top of the pull cup bracket to the inside of the front door. Tighten the screw to 10 N·m (90 in. lbs.).
8. Reinstall the watershield onto the inside of the front door. (Refer to 23 - BODY/DOOR - FRONT/WATERSHIELD - INSTALLATION).
9. Reinstall the speaker onto the inside of the front door. (Refer to 8 - ELECTRICAL/AUDIO/SPEAKER - INSTALLATION).
10. Reinstall the trim panel onto the inside of the front door. (Refer to 23 - BODY/DOOR - FRONT/TRIM PANEL - INSTALLATION).

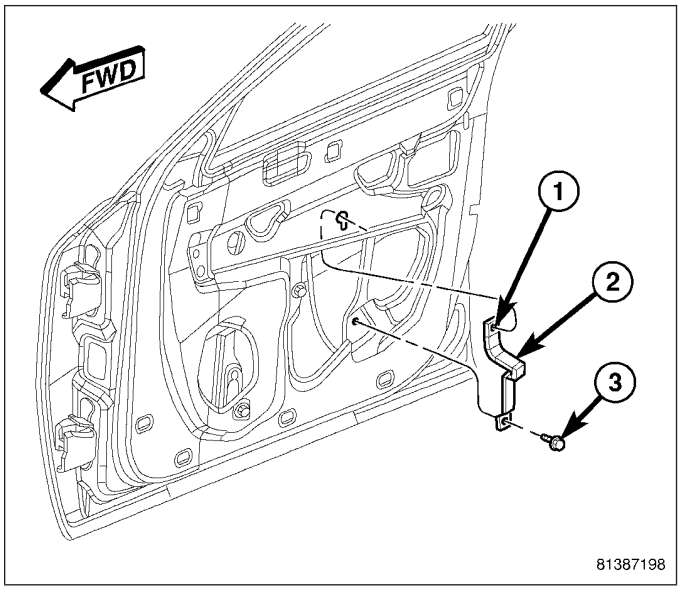

GLASS

REMOVAL

1. Remove the trim panel from the inside of the front door. (Refer to 23 - BODY/DOOR - FRONT/TRIM PANEL - REMOVAL).
2. Remove the speaker from the inside of the front door. (Refer to 8 - ELECTRICAL/AUDIO/SPEAKER - REMOVAL).
3. Remove the inner belt weatherstrip from the front door. (Refer to 23 - BODY/WEATHERSTRIP/SEALS/DOOR INNER BELT WEATHERSTRIP - REMOVAL - FRONT).
4. Remove the watershield from the inside of the front door. (Refer to 23 - BODY/DOOR - FRONT/WATERSHIELD - REMOVAL).
5. Using the regulator, adjust the front door glass (1) position up or down as required for access to the two window regulator glass clamps (3).
6. Loosen the screw (3) in each of the glass clamps far enough to release the glass.

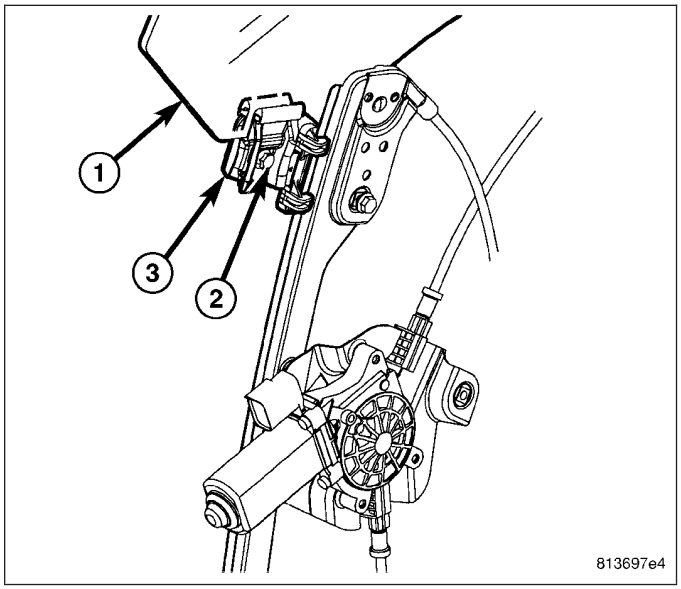

7. From the outside of the front door, lift the glass (1) upward far enough to disengage it from the two glass clamps (2).
8. Lift the rear side of the glass upward and out from the top of the door shell first to unload the glass from the door.

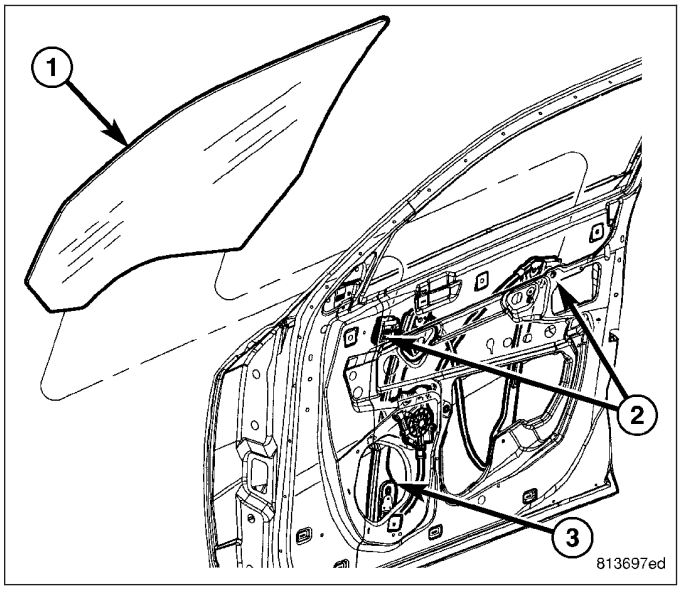

INSTALLATION

1. From the outside of the front door, insert the front side of the glass (1) into the top of the door shell first to load the glass into the door.
2. Engage the glass into the two window regulator glass clamps (2).

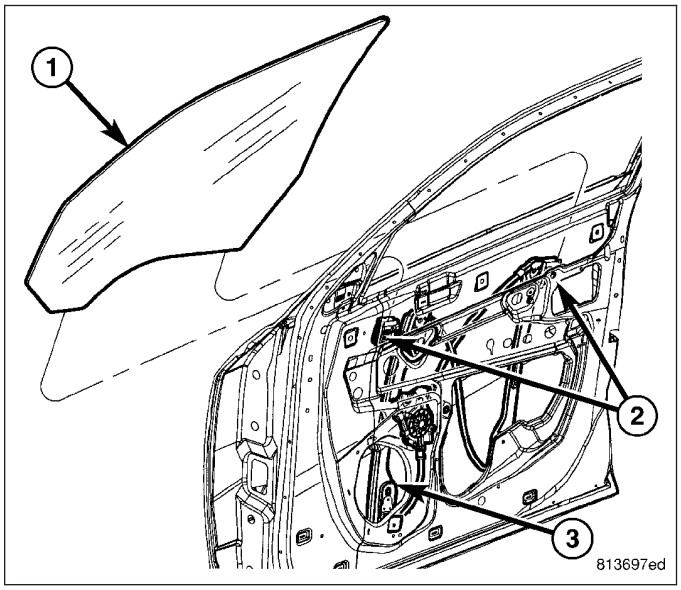

3. Using the regulator, lower the window as required for access to the two window regulator glass clamp screws (2).
4. Tighten the screw in each of the glass clamps. Tighten the screws to 10 N·m (90 in. lbs.).
5. Reinstall the watershield onto the inside of the front door. (Refer to 23 - BODY/DOOR - FRONT/WATERSHIELD - INSTALLATION).
6. Reinstall the inner belt weatherstrip onto the front door. (Refer to 23 - BODY/WEATHERSTRIP/SEALS/DOOR INNER BELT WEATHERSTRIP - INSTALLATION - FRONT).
7. Reinstall the speaker onto the inside of the front door. (Refer to 8 - ELECTRICAL/AUDIO/SPEAKER - INSTALLATION).
8. Reinstall the trim panel onto the inside of the front door. (Refer to 23 - BODY/DOOR - FRONT/TRIM PANEL - INSTALLATION).

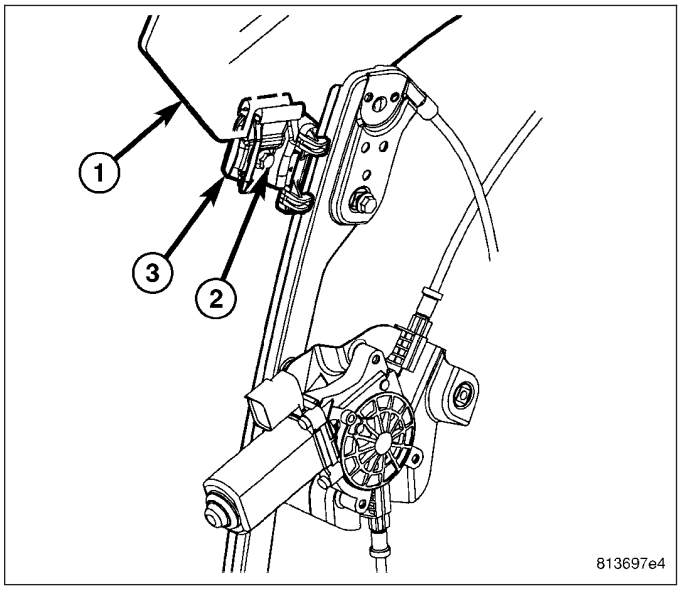

HINGE

REMOVAL

1. Remove the front door from the vehicle. (Refer to 23 - BODY/DOOR - FRONT/DOOR - REMOVAL).
2. Mark the upper or lower hinge bracket (2) location on the outside of the lower A-pillar to aid reinstallation.
3. Remove the screws (1) that secure the hinge bracket to the outside of the lower A-pillar.
4. Remove the hinge bracket from the A-pillar.

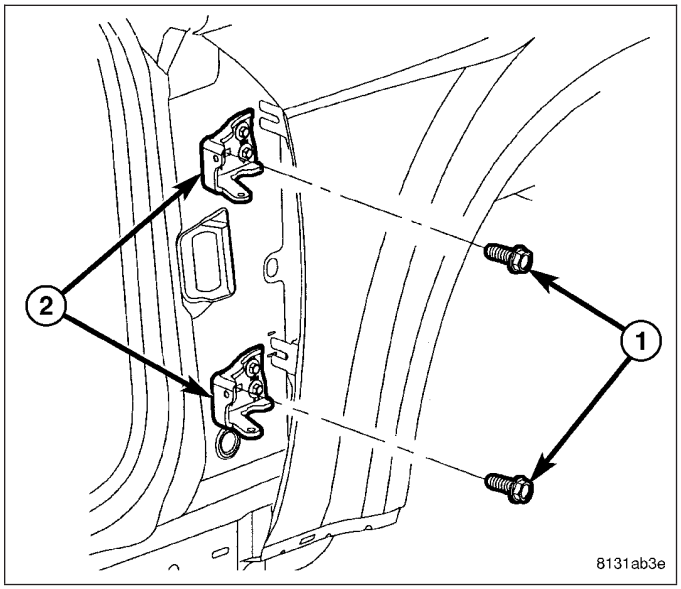

5. Mark the upper (1) or lower (4) door hinge location on the hinge face of the front door (2) to aid reinstallation.
6. Remove the screw (5) that secures the hinge to the door.
7. Remove the nut (3) that secures the hinge to the stud on the door.
8. Remove the upper or lower hinge from the hinge face of the door.

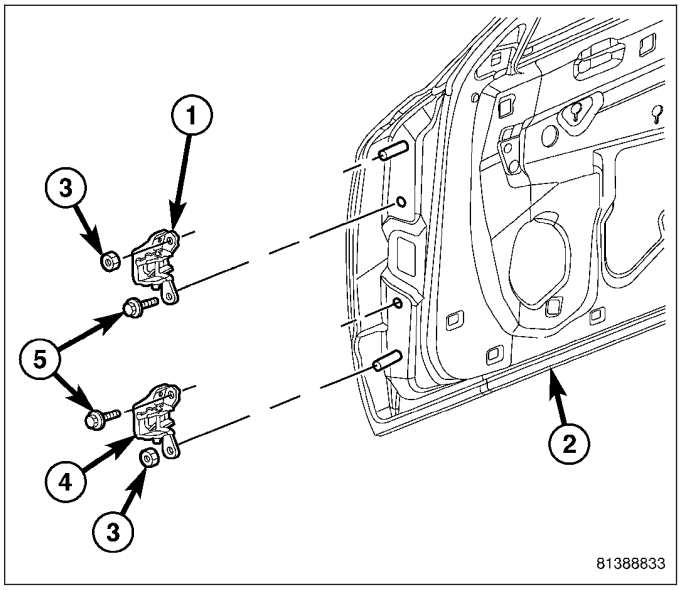

INSTALLATION

1. Position the upper (1) or lower (4) hinge to the hinge face of the front door.
2. Install and tighten the nut (3) that secures the hinge to the stud on the door. Tighten the nut to 28 N·m (21 ft. lbs.).
3. Install and tighten the screw (5) that secures the hinge to the door. Tighten the screw to 28 N·m (21 ft. lbs.).

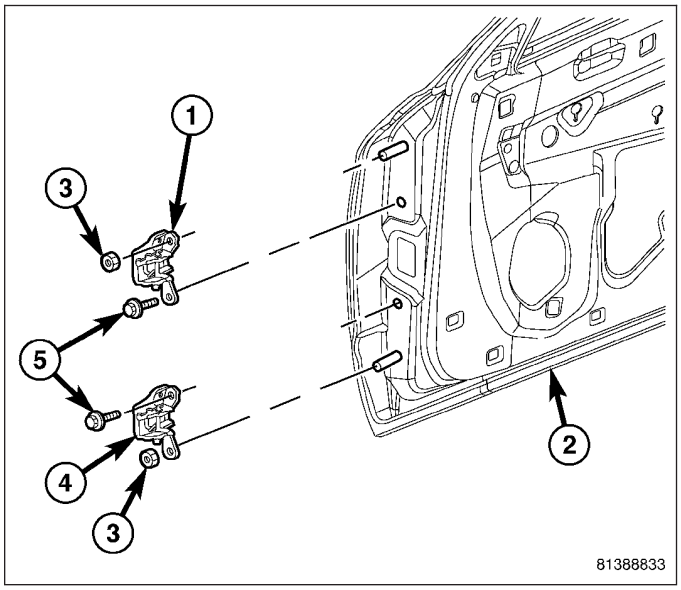

4. Position the upper or lower hinge bracket (2) onto the outside of the lower A-pillar.
5. Install and tighten the three screws (1) that secure the hinge bracket to the outside of the lower A-pillar. Tighten the screws to 30 N·m (22 ft. lbs.).
6. Reinstall the front door onto the vehicle. (Refer to 23 - BODY/DOOR - FRONT/DOOR - INSTALLATION).

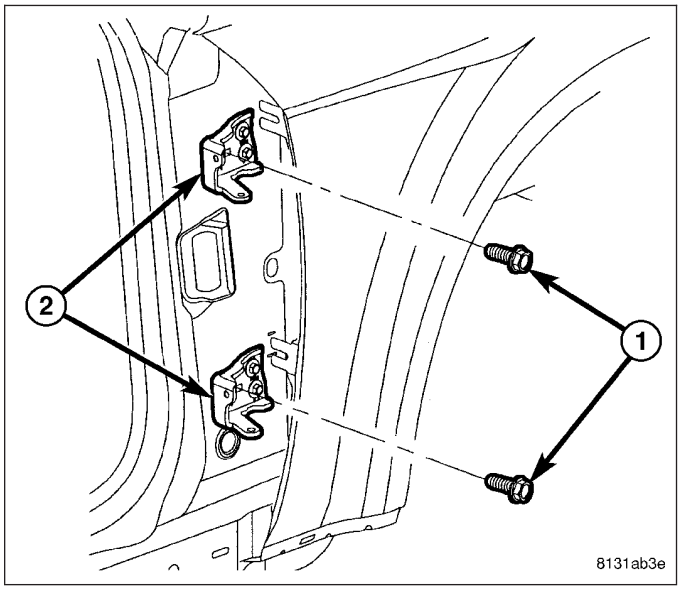

LATCH

REMOVAL

1. Remove the trim panel from the inside of the front door. (Refer to 23 - BODY/DOOR - FRONT/TRIM PANEL - REMOVAL).
2. Remove the speaker from the inside of the front door. (Refer to 8 - ELECTRICAL/AUDIO/SPEAKER - REMOVAL).
3. Remove the watershield from the inside of the front door. (Refer to 23 - BODY/DOOR - FRONT/WATERSHIELD - REMOVAL).
4. Remove the screw (3) that secures the bottom of the pull cup bracket (2) and the bottom of the window regulator rear rail to the inside of the front door.
5. Loosen the screw (1) that secures the top of the pull cup bracket to the inside of the front door.
6. Disengage the upper pull cup bracket screw from the keyed hole and remove the bracket from the inside of the front door.

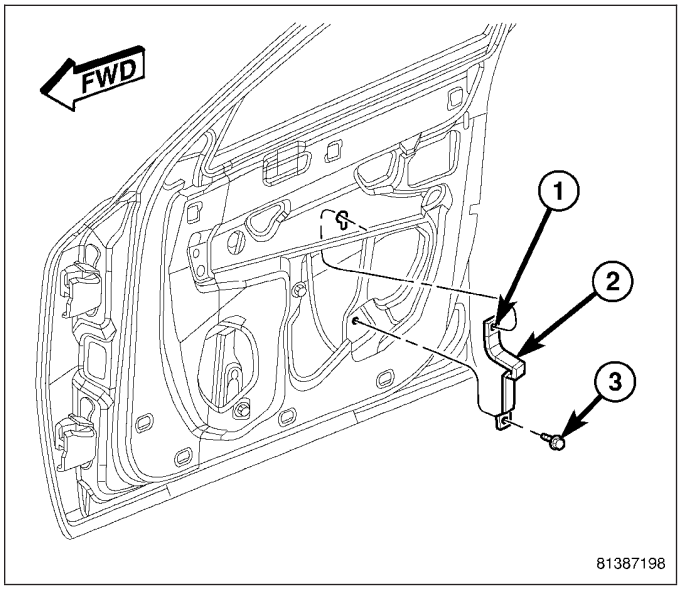

7. Reach into the back of the door shell to unsnap the plastic clip that secures the end of the interior door latch lock link (1) to the latch lever and disengage the link from the latch (2).

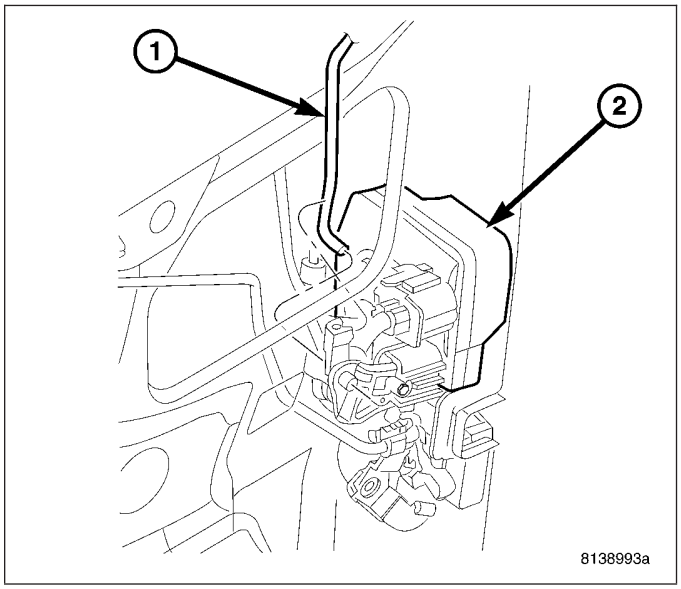

8. Remove the interior door latch lock link and knob unit (2) from the front door (1).

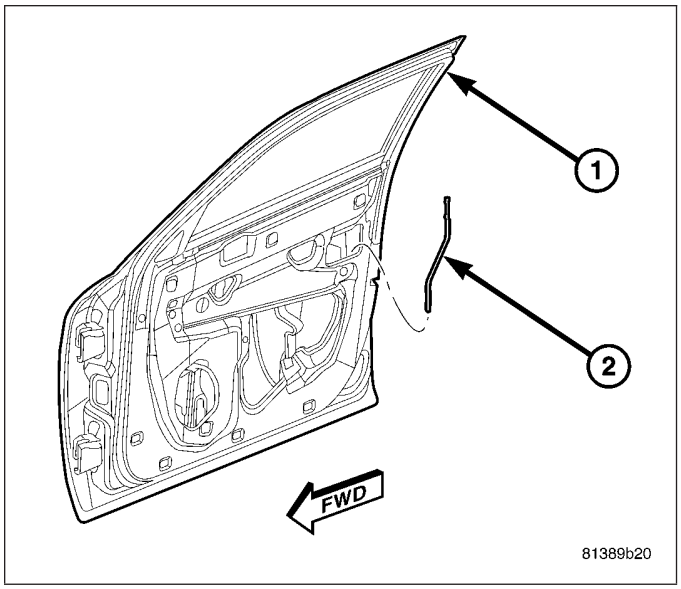

9. Reach into the back of the door shell to unsnap the plastic clip that secures the end of the interior door handle latch release link (4) to the latch lever and disengage the link from the latch (3).
10. Reach into the back of the door shell to unsnap the plastic clip that secures the end of the exterior door handle latch release link (1) to the latch lever and disengage the link from the latch.
11. For the driver side front door only, reach into the back of the door shell to unsnap the plastic clip that secures the end of the lock cylinder lock actuator link (2) to the latch lever and disengage the link from the latch.

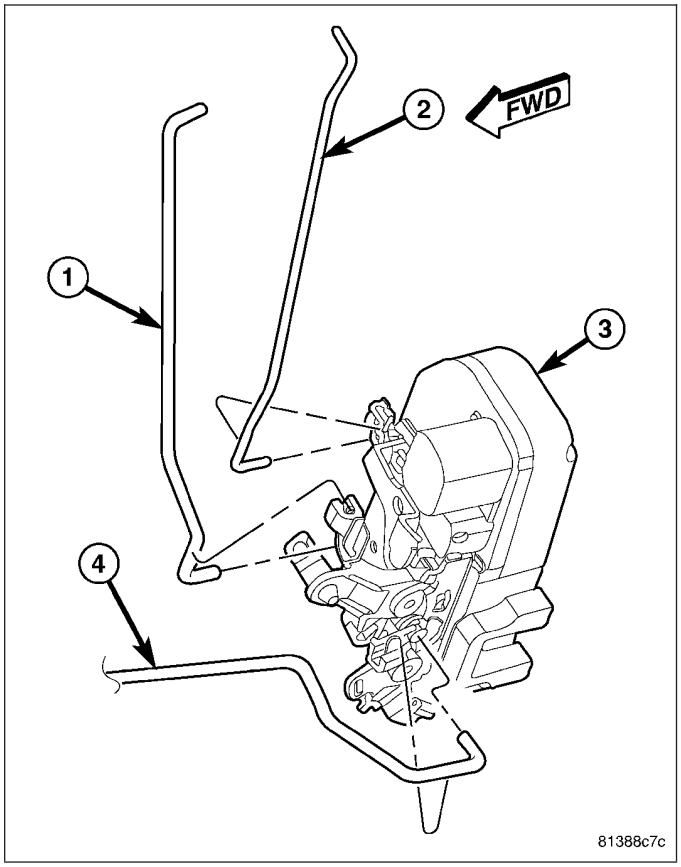

12. Remove the three screws (2) that secure the latch (1) to the outer latch face of the front door.

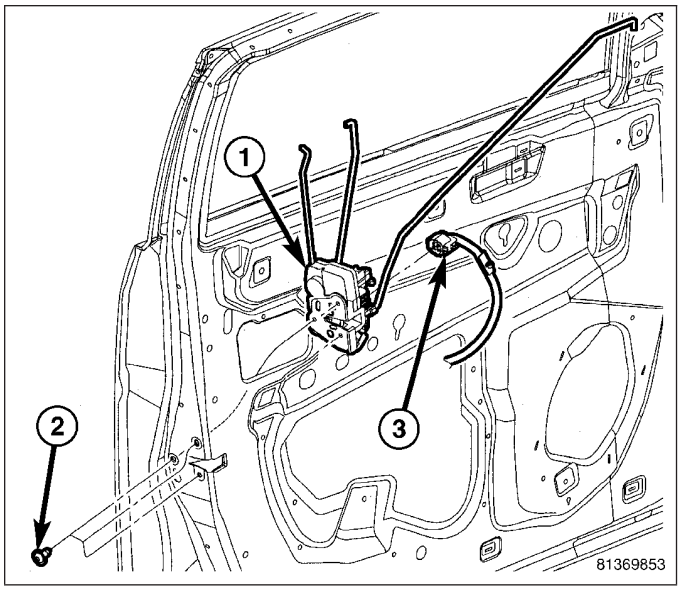

NOTE: Wiring connector can be disconnected much easier after all links are disconnected from latch and latch is unscrewed from door.

13. Reach into the back of the door shell (3) and pull the latch forward far enough to access and disconnect the door wire harness connector (1) from the front door latch (2) connector receptacle.
14. Remove the latch from the interior of the door shell.

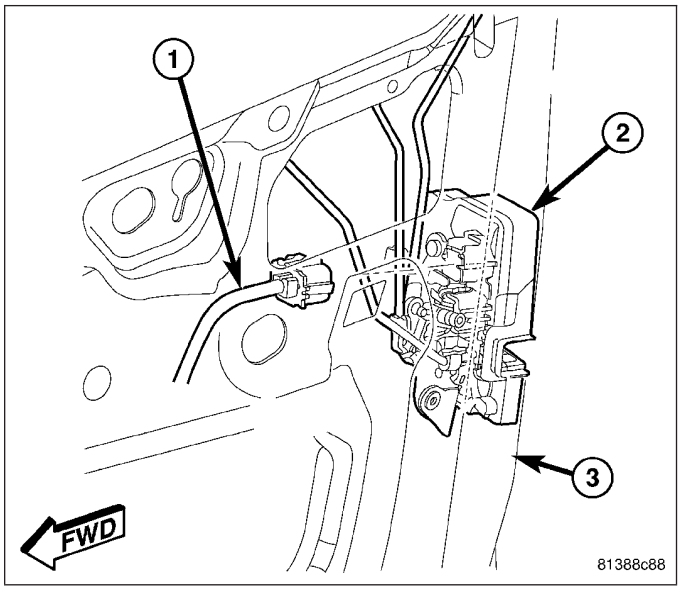

INSTALLATION

NOTE: Wiring connector can be connected much easier with all links disconnected from latch and latch is unscrewed from door.

1. Connect the door wire harness connector (1) to the door latch (2).

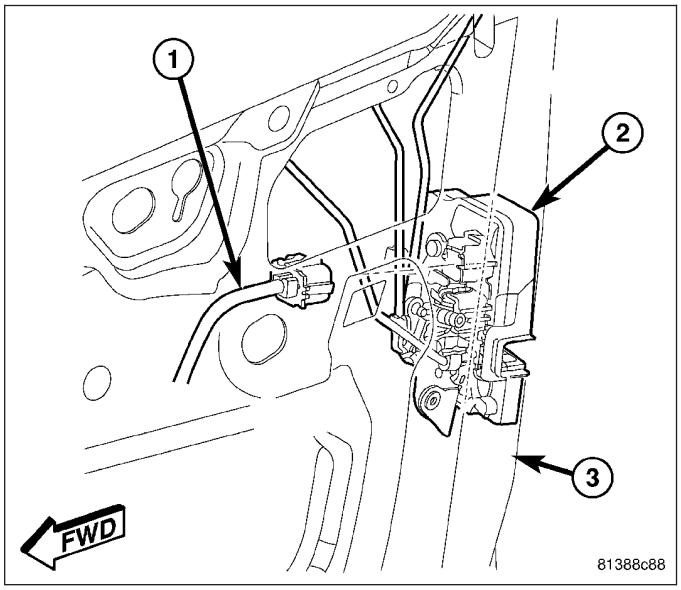

2. Position the latch (1) to the latch face on the interior of the front door shell.
3. Install and tighten the three screws (2) that secure the latch to the outer latch face of the front door. Tighten the screws to 12 N·m (108 in. lbs.).

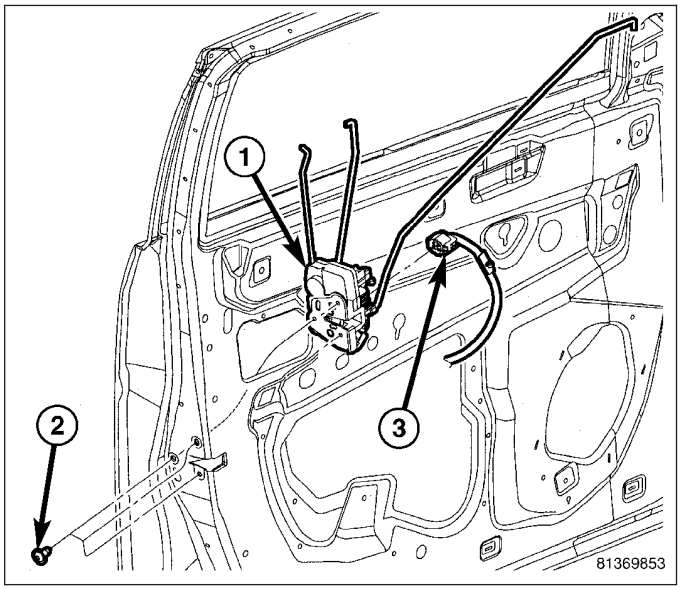

4. For the driver side front door only, reach into the back of the door shell to engage the lock cylinder actuator link (2) to the latch lever and snap the plastic clip over the link to secure it to the latch (3).
5. Reach into the back of the door shell to engage the exterior door handle latch release link (1) to the latch lever and snap the plastic clip over the link to secure it to the latch.
6. Reach into the back of the door shell to engage the end of the interior door handle latch release link (4) to the latch lever and snap the plastic clip over the link to secure it to the latch.

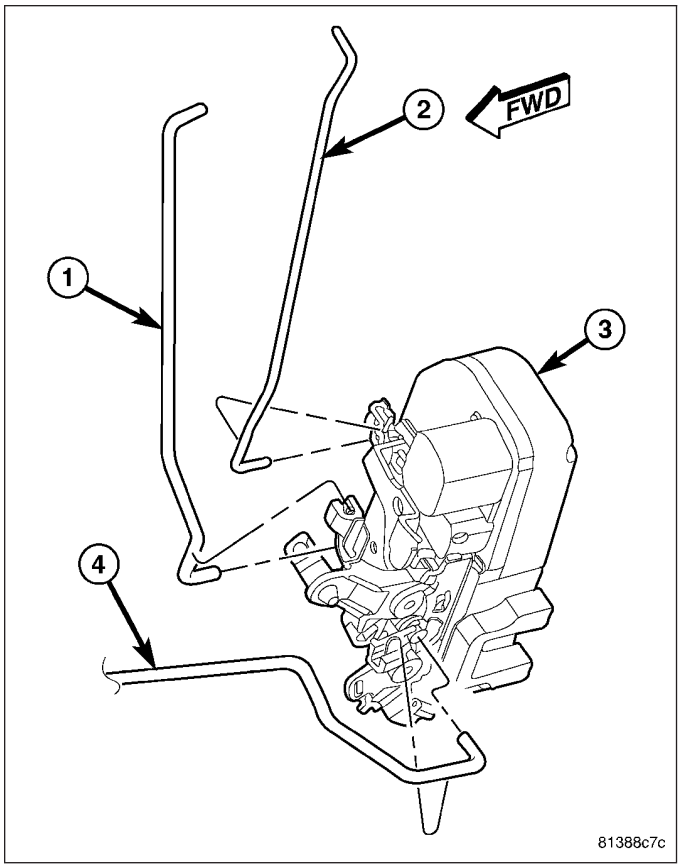

7. Position the interior door latch lock link and knob unit (2) into the front door (1).

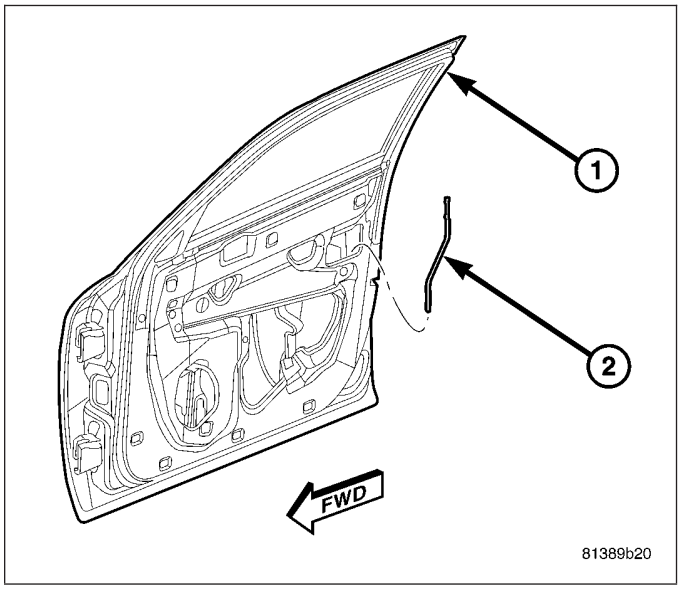

8. Reach into the back of the door shell to engage the end of the interior door latch lock link (1) to the latch lever and snap the plastic clip over the link to secure it to the latch (2).

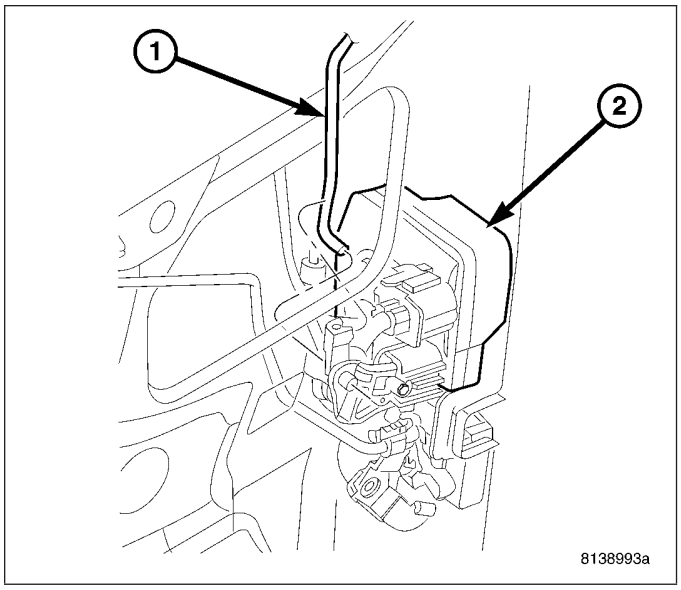

9. With the upper screw (1) hand-started into the pull cup bracket (2), position the screw into the keyed hole on the inside of the front door.
10. Install and tighten the screw (3) that secures the bottom of the pull cup bracket and the bottom of the window regulator rear rail to the inside of the front door. Tighten the screw to 11 N·m (100 in. lbs.).
11. Tighten the screw that secures the top of the pull cup bracket to the inside of the front door. Tighten the screw to 10 N·m (90 in. lbs.).
12. Reinstall the watershield onto the inside of the front door. (Refer to 23 - BODY/DOOR - FRONT/ WATERSHIELD - INSTALLATION).
13. Reinstall the speaker onto the inside of the front door. (Refer to 8 - ELECTRICAL/AUDIO/ SPEAKER - INSTALLATION).
14. Reinstall the trim panel onto the inside of the front door. (Refer to 23 - BODY/DOOR - FRONT/TRIM PANEL - INSTALLATION).
15. Use a wrench inserted through the access slot on the outer latch face of the front door shell (1) to loosen the hex socket latch release adjusting screw (3) on the latch (2).
16. Cycle the door outside latch release handle through its full travel two or three times.
17. Tighten the adjusting screw.

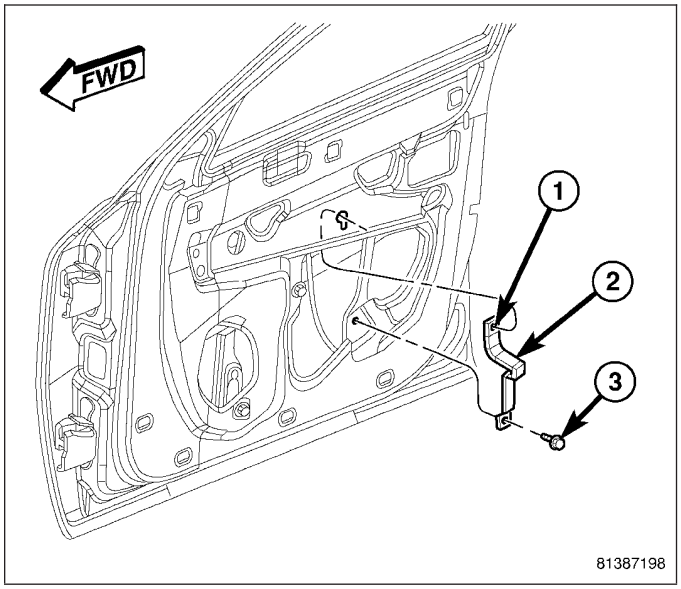

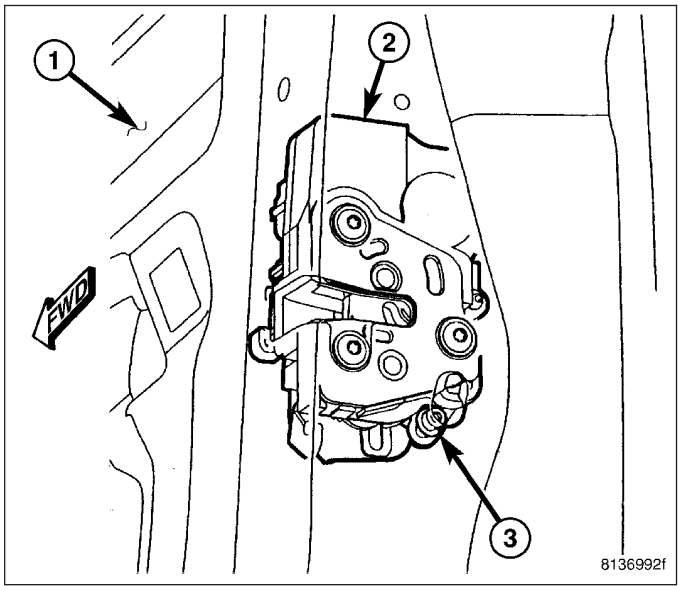

LOCK CYLINDER

REMOVAL

NOTE: A door lock cylinder is used only on the driver side front door exterior handle.

1. Remove the handle (1) from the outside of the driver side front door. (Refer to 23 - BODY/DOOR - FRONT/EXTERIOR HANDLE - REMOVAL).
2. Using hand pressure, push on the face of the lock cylinder (2) until it pops out of the cavity in the back of the door handle.

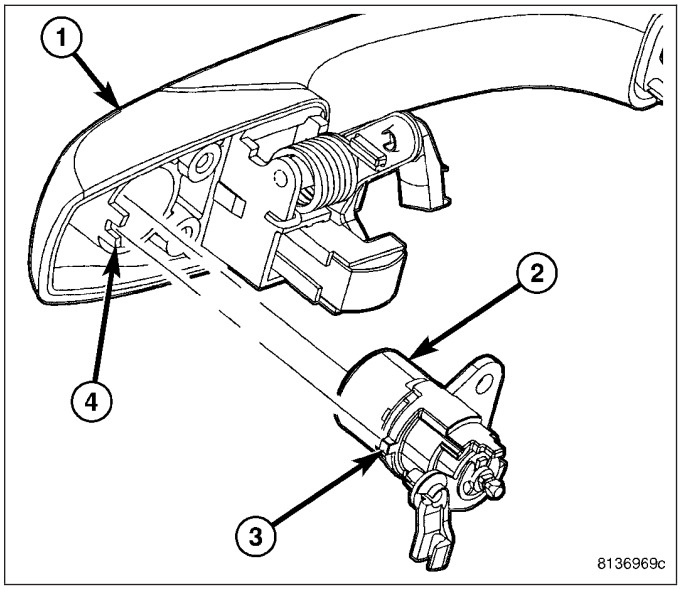

INSTALLATION

NOTE: A door lock cylinder is used only on the driver side front door exterior handle.

1. Insert the lock cylinder (2) into the cavity on the back of the door handle (1).
2. Align the lock cylinder in the handle by engaging the tab (3) on the outer circumference of the cylinder in the slot of the tab (4) on the wall of the handle cavity.
3. Reinstall the handle onto the outside of the driver side front door. (Refer to 23 - BODY/DOOR - FRONT/EXTERIOR HANDLE - INSTALLATION).

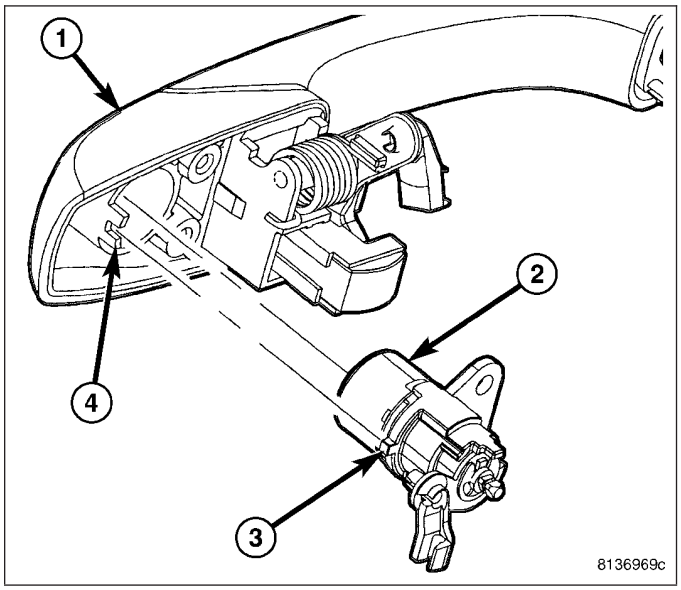

STRIKER

REMOVAL

1. Open the front door.
2. Mark the front door latch striker (3) location on the face of the outer B-pillar (1) to aid reinstallation.
3. Remove the two screws (2) that secure the striker to the B-pillar.
4. Remove the striker from the B-pillar.

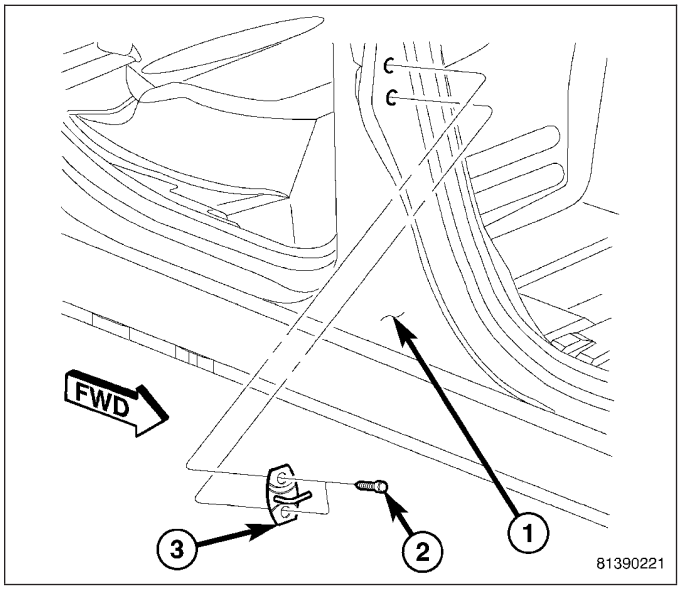

INSTALLATION

1. Position the front door latch striker (3) on the face of the outer B-pillar (1).
2. Install and tighten the two screws (2) that secure the striker to the B-pillar. Tighten the screws to 33 N·m (24 ft. lbs.).
3. Adjust the latch striker position as necessary to achieve proper door spacing and latch operation.

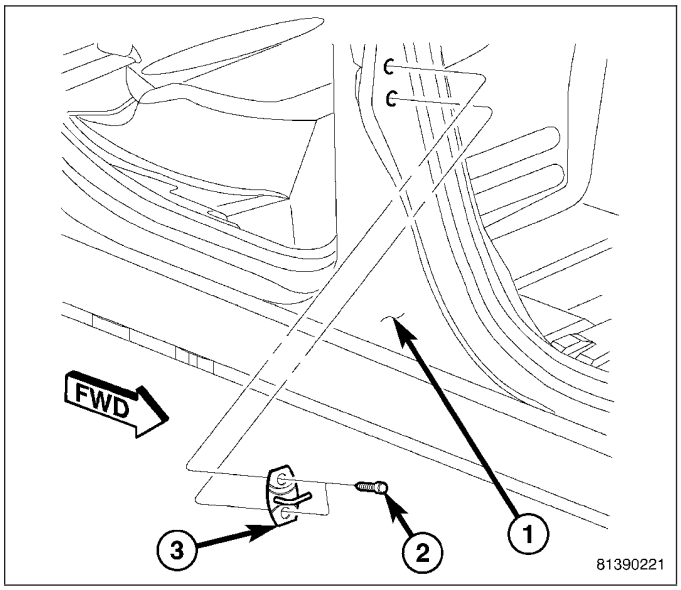

TRIM PANEL

REMOVAL

1. Disconnect and isolate the battery negative cable. (Refer to 8 - ELECTRICAL/BATTERY SYSTEM - STANDARD PROCEDURE).
2. Unsnap and fold back the screw cap below the trim panel pull handle to access and remove the screw (5) that secures the panel (2) to the pull handle bracket.
3. Unsnap and fold back the screw cap within the interior remote handle recess of the trim panel to access and remove the screw (4) that secures the panel to the inside of the door (1). The screw cap on the sedan opens from the top, and the wagon opens from the bottom.
4. Remove the four screws (6) that secure the bottom and front lower corner of the trim panel to the inside of the door.

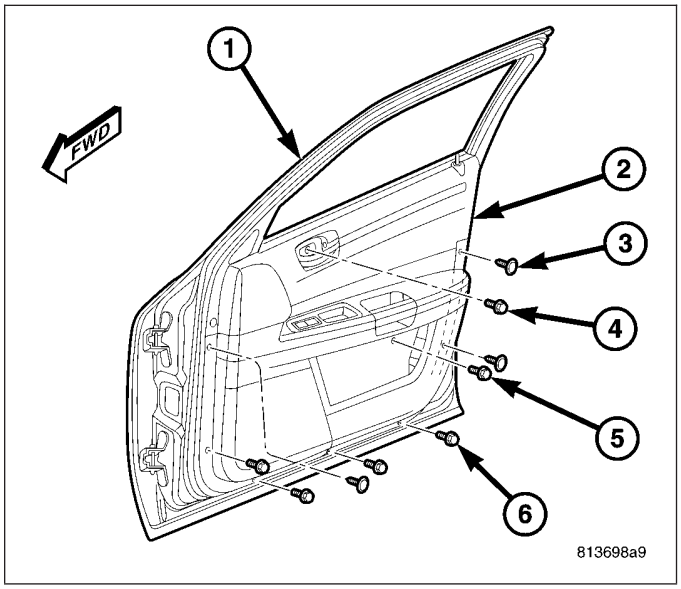

5. Remove the two push pins (1) at the rear of the trim panel and one push pin (1) at the front edge of the trim panel. (Refer to 23 - BODY/DOOR - FRONT - DESCRIPTION - FASTENERS).

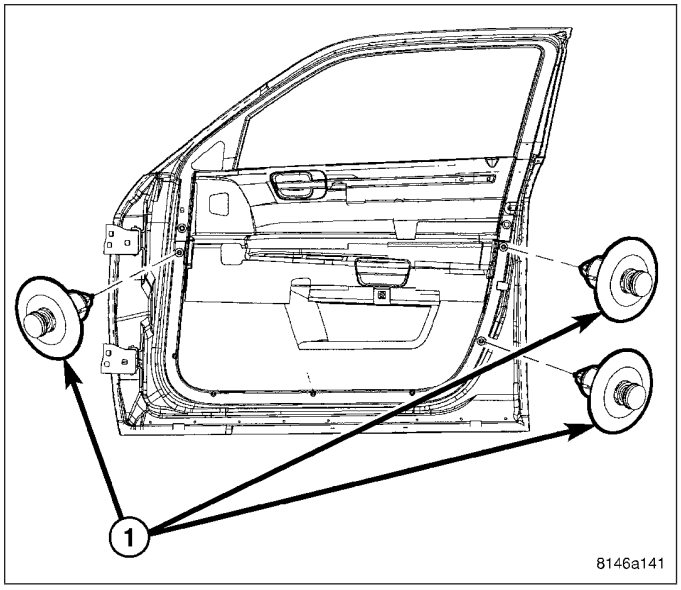

6. Pull the trim panel (2) away from the inside of the door far enough to disengage the locator pins near the top of the panel from the door, then lift the rear of the panel upward far enough to disengage the interior door latch lock link and knob (1) from the clearance hole at the upper rear corner of the panel.

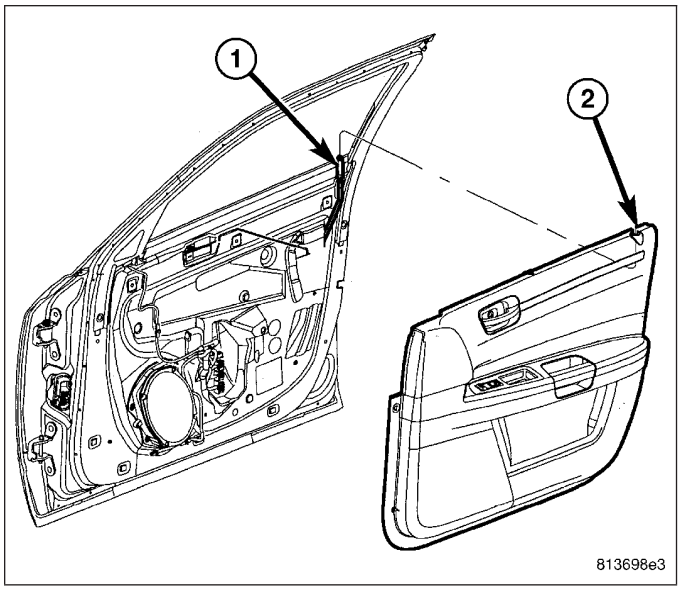

7. Reach between the top of the trim panel (3) and the inside of the door shell to unsnap the plastic clip that secures the end of the interior door handle latch release link (1) to the handle lever (2) and disengage the link from the handle.

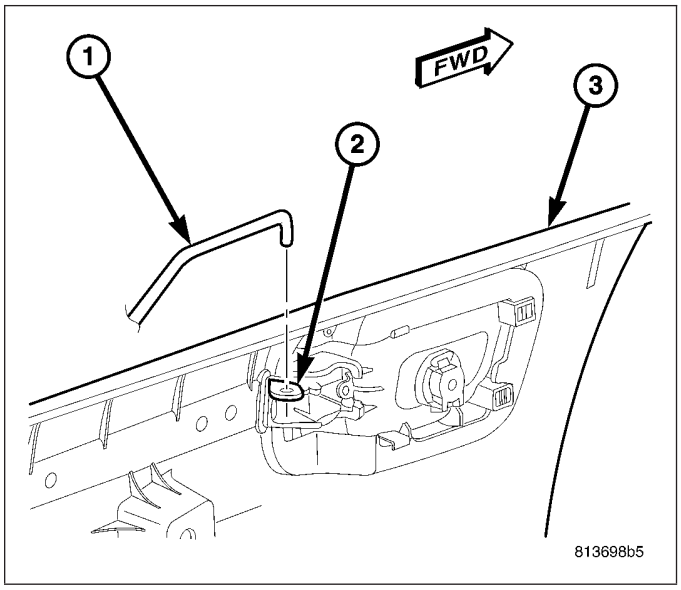

8. Pull the trim panel (1) away from the inside of the door shell far enough to access and disconnect the door wire harness (4) connectors from the power window/lock/mirror switches (2), the door module (6), and the door courtesy lamp (5) as the vehicle is equipped.
9. Disengage the retainers (3) that secure the door wire harness to the inside of the trim panel.
10. Remove the trim panel from the inside of the door.
11. Remove door module if necessary. The heat stakes have to be cut off or drilled out. (Refer to 8 - ELECTRICAL/ELECTRONIC CONTROL MODULES/DOOR MODULE - REMOVAL).

NOTE: A battery reconnect procedure must be performed anytime the battery has been disconnected. (Refer to 8 - ELECTRICAL/BATTERY SYSTEM - STANDARD PROCEDURE).

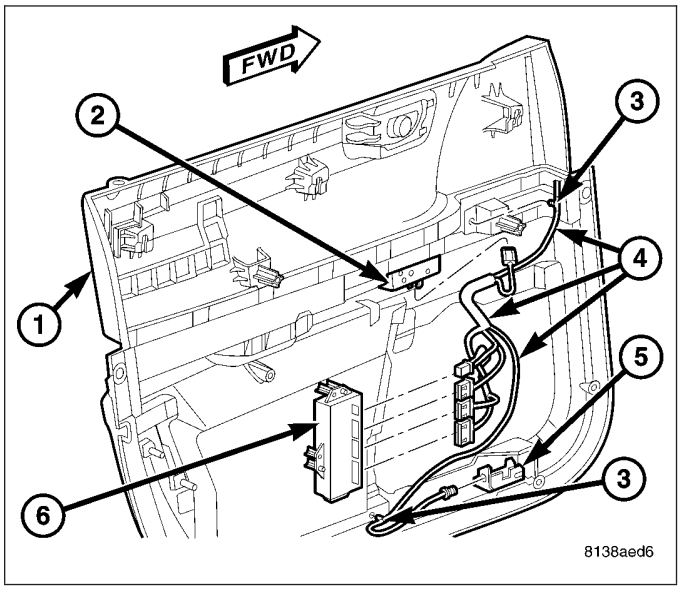

INSTALLATION

1. Check to be certain that the five spring nuts (1 and 3) are properly installed and in good condition on the inside of the door (2).

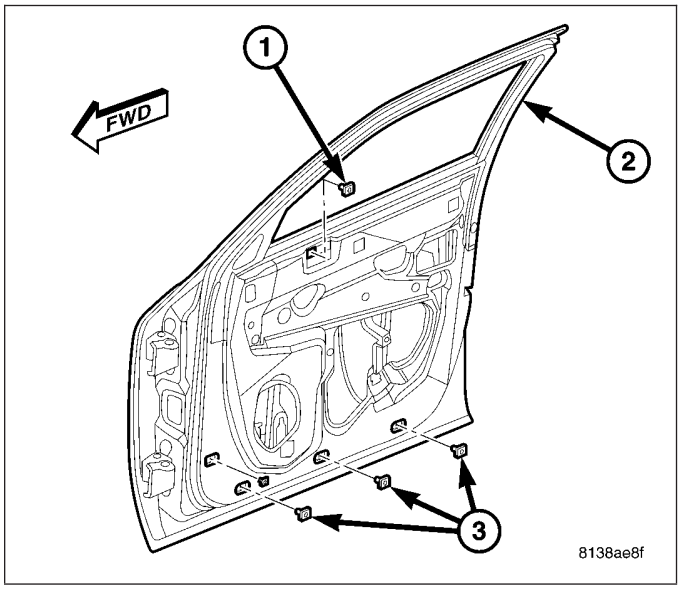

2. Check to be certain that the three plug grommets (1 and 2) are properly installed and in good condition on the inside of the door.

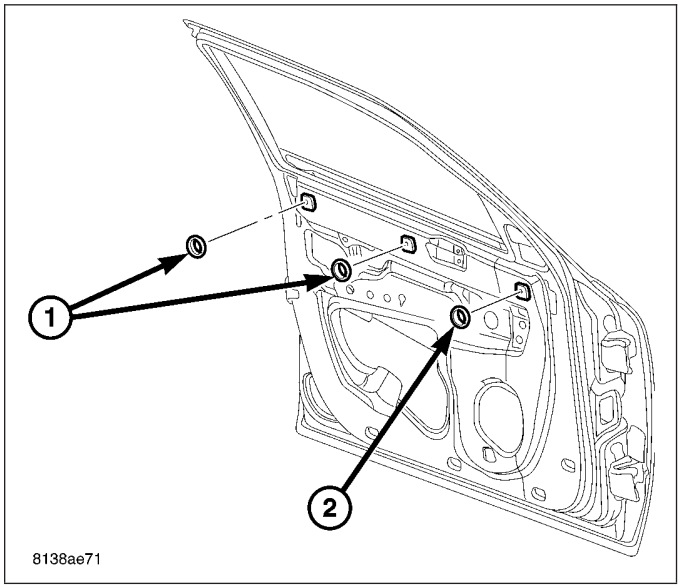

3. Installing a new door trim panel (1) with the original door module (6) or new door module (6) the module can be attached by using screws or heat stake the door module (6) to the trim panel. If the door module (6) was removed or being replaced, use screws to attach door module (6) to the second set of bosses on the door trim panel (1). (Refer to 23 - BODY - STANDARD PROCEDURE - HEAT STAKING). If the door module (6) was removed or being replaced, use screws to attach module to the second set of bosses on the door trim panel (1).
4. Position the trim panel (1) close enough to the inside of the door to engage the retainers (3) that secure the door wire harness (4) to the inside of the trim panel.
5. Reconnect the door wire harness connectors to the power window/lock/mirror switches (2), the door module (6), and the door courtesy lamp (5) as the vehicle is equipped.
6. Reach between the top of the trim panel (3) and the inside of the door shell to engage the end of the interior door handle latch release link (1) to the handle lever (2) and snap the plastic clip over the link to secure it to the handle.

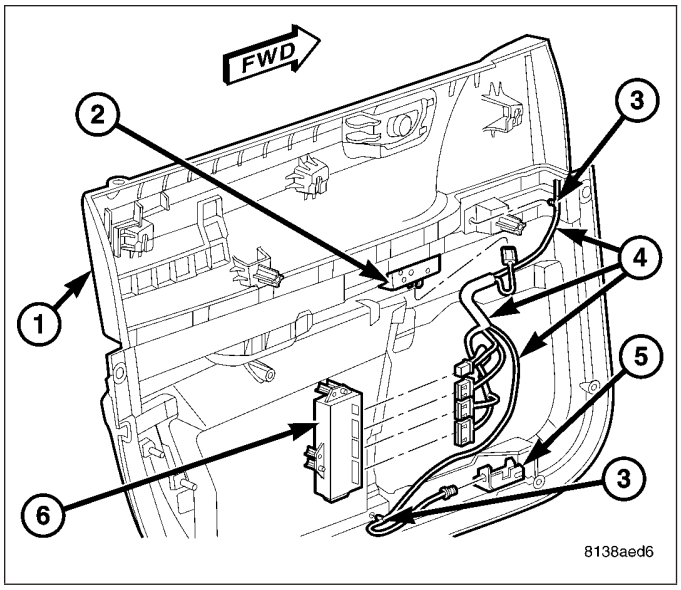

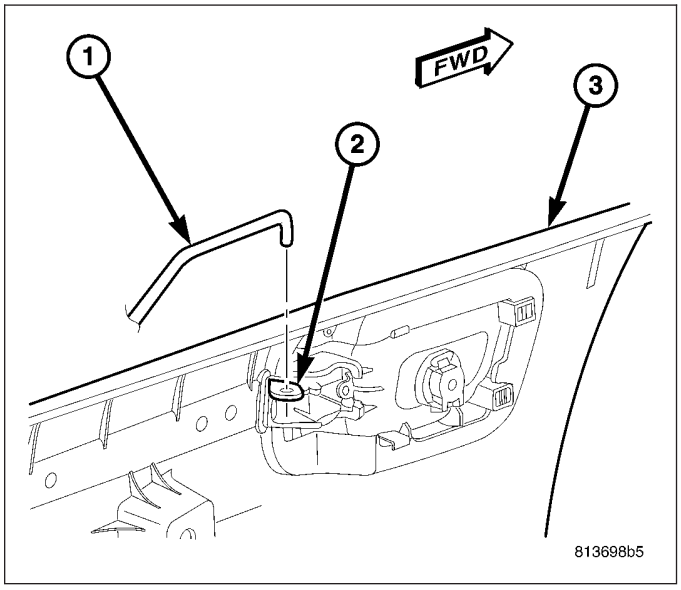

7. Lift the trim panel (2) over the inside of the door far enough to engage the interior door latch lock link and knob (1) into the clearance hole at the upper rear corner of the panel.

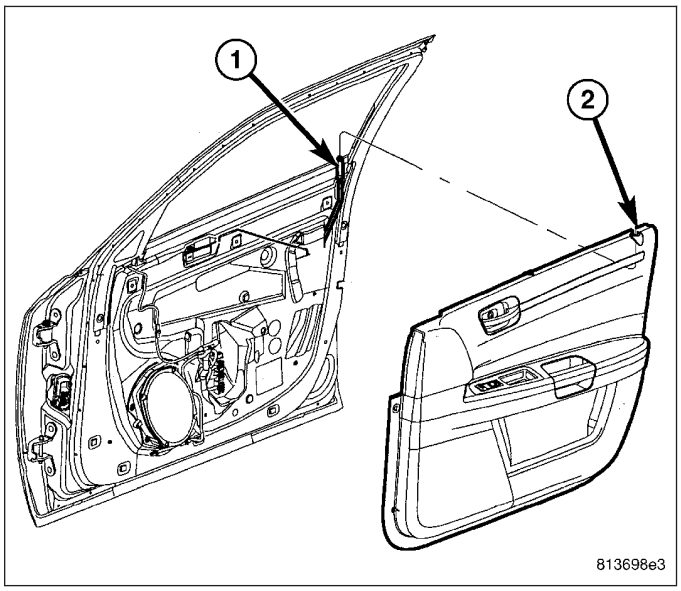

8. Position the two locator pins (4) on the back of the trim panel (2) to the locator holes (3) on the inside of the door panel and simultaneously push the three upper pins (1) into the grommet plugs near the top of the door. Make certain that the upper edges of the trim panel are engaged in the grooves of the window moldings.

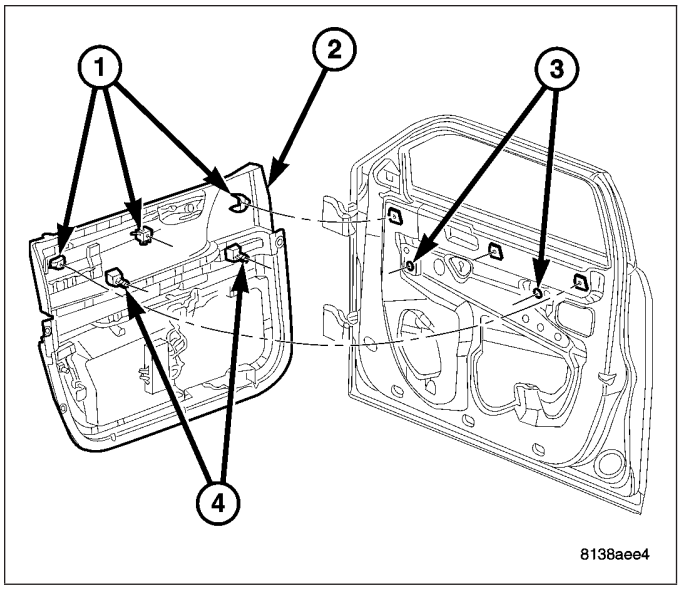

9. Install and tighten the screw (4) that secures the interior remote handle recess of the trim panel (2) to the inside of the door (1). Tighten the screw to 2 N·m (16 in. lbs.). Fold and snap the screw cap over the screw.
10. Install and tighten the screw (5) that secures the trim panel (2) to the pull cup bracket below the trim panel pull cup. Tighten the screw to 2 N·m (16 in. lbs.). Fold and snap the screw cap over the screw.

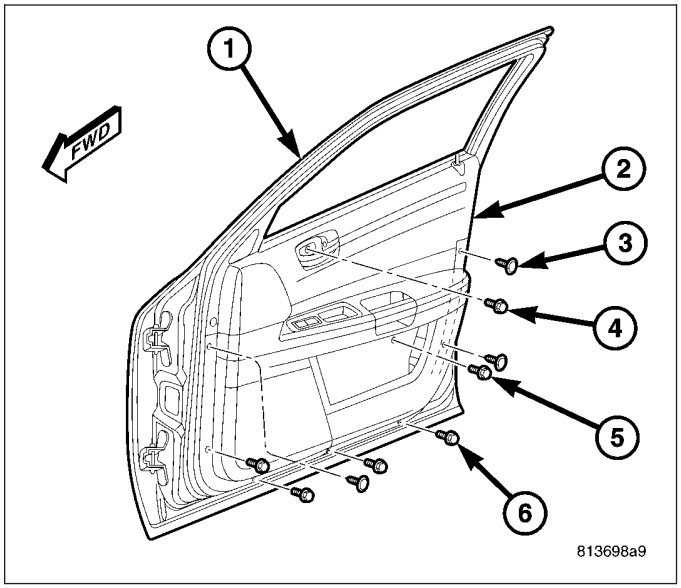

11. Install the three push-pin retainers (1) that secure the trim panel to the inside of the door. (Refer to 23 - BODY/DOOR - FRONT - DESCRIPTION - FASTENERS).
12. Install and tighten the four screws (6) that secure the bottom and front lower corner of the trim panel to the inside of the door. Tighten the screws to 2 N·m (16 in. lbs.).

NOTE: For vehicles equipped with the optional Automatic Express Up power window feature, calibration of this feature is required whenever power to the door module is disrupted. A battery reconnect procedure must be performed anytime the battery has been disconnected. (Refer to 8 - ELECTRICAL/BATTERY SYSTEM - STANDARD PROCEDURE).

13. Reconnect the battery negative cable.

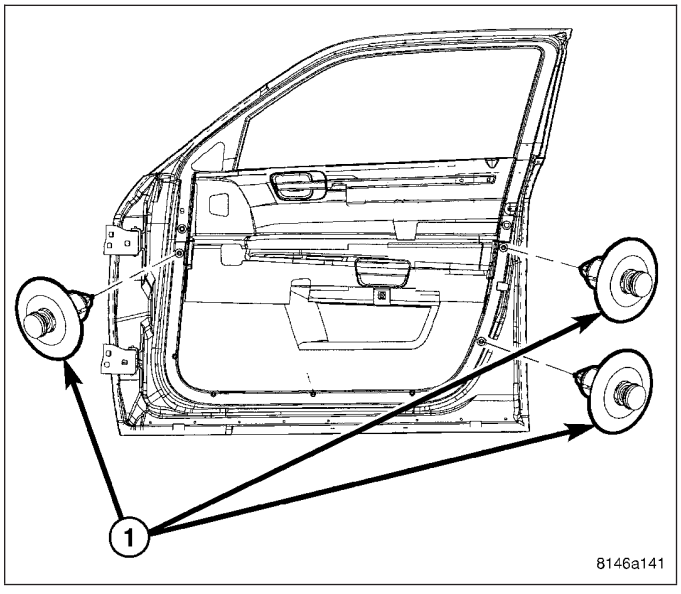

WATERSHIELD

REMOVAL

CAUTION: Do not allow the watershield or adhesive to become contaminated with dirt or other foreign substances.

Do not damage the watershield during removal and installation.

If the watershield becomes contaminated or damaged, replace the watershield.

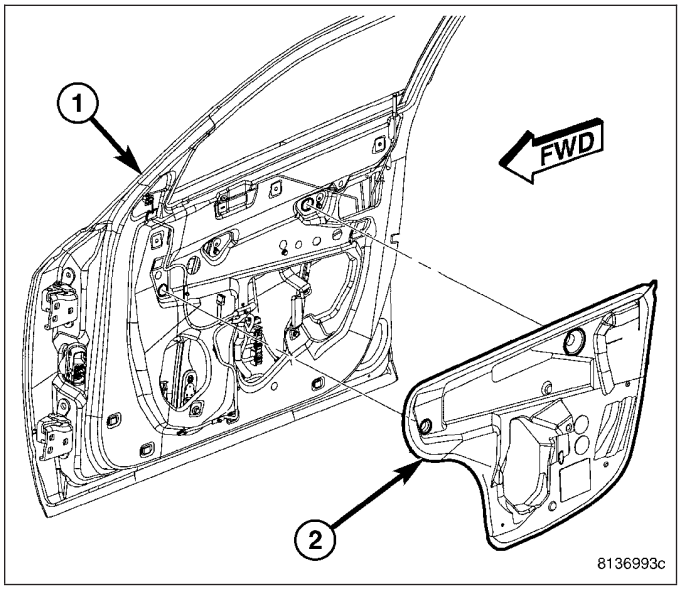

1. Remove the trim panel from the inside of the front door. (Refer to 23 - BODY/DOOR - FRONT/TRIM PANEL - REMOVAL).
2. Carefully separate the lower half of the watershield (2) from the inside of the door (1).
3. Lift the lower half of the watershield upward far enough to access and pull the trim panel take outs of the door wire harness out of the slit near the center of the watershield.
4. Carefully separate the upper half of the watershield from the inside of the door.
5. Lift the upper half of the watershield upward far enough to disengage the inside latch lock knob and link and the inside remote latch release handle link from the slit near the upper rear corner of the watershield.
6. Remove the watershield from the door.

INSTALLATION

CAUTION: Do not allow the watershield or adhesive to become contaminated with dirt or other foreign substances.

Do not damage the watershield during removal and installation.

If the watershield becomes contaminated or damaged, replace the watershield.

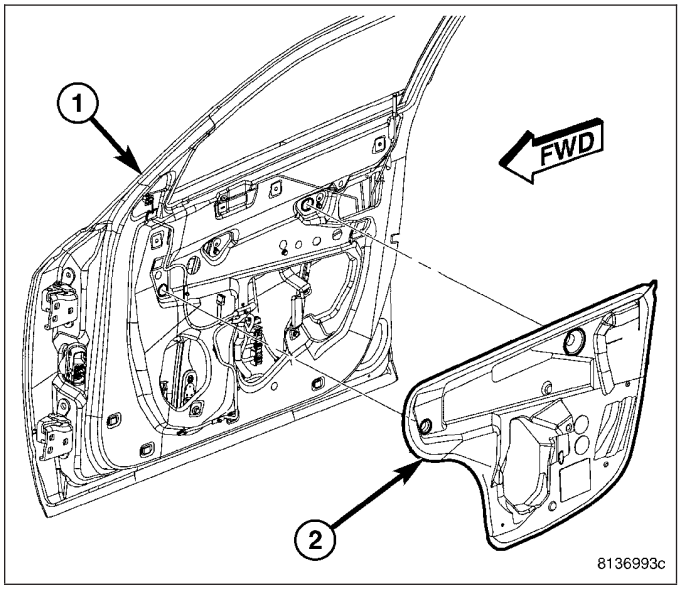

1. Thread the inside latch lock knob and link and the inside remote latch release handle link through the slit near the upper rear corner of the watershield (2).
2. Place the front and rear dimple formations located in the upper watershield into their respective locator holes in the door (1) inner panel.
3. Apply firm and even pressure to the adhesive bead along the upper edge of the watershield to seal it to the inside of the door.
4. Lift the lower half of the watershield upward far enough to access and pull the trim panel take outs of the door wire harness out of through the slit near the center of the watershield.
5. Apply firm and even pressure to the adhesive bead along the remaining edges of the watershield to seal it to the inside of the door. Be certain that the watershield is sealed to the inside of the door.
6. Reinstall the trim panel onto the inside of the front door. (Refer to 23 - BODY/DOOR - FRONT/TRIM PANEL - INSTALLATION).

WINDOW REGULATOR

REMOVAL

1. Remove the trim panel from the inside of the front door. (Refer to 23 - BODY/DOOR - FRONT/TRIM PANEL - REMOVAL).
2. Remove the speaker from the inside of the front door. (Refer to 8 - ELECTRICAL/AUDIO/SPEAKER - REMOVAL).
3. Remove the watershield from the inside of the front door. (Refer to 23 - BODY/DOOR - FRONT/WATERSHIELD - REMOVAL).
4. Remove the screw (3) that secures the bottom of the pull cup bracket (2) and the bottom of the window regulator rear rail to the inside of the front door.
5. Loosen the screw (1) that secures the top of the pull cup bracket to the inside of the front door.
6. Disengage the upper pull cup bracket screw from the keyed hole and remove the bracket from the inside of the front door.

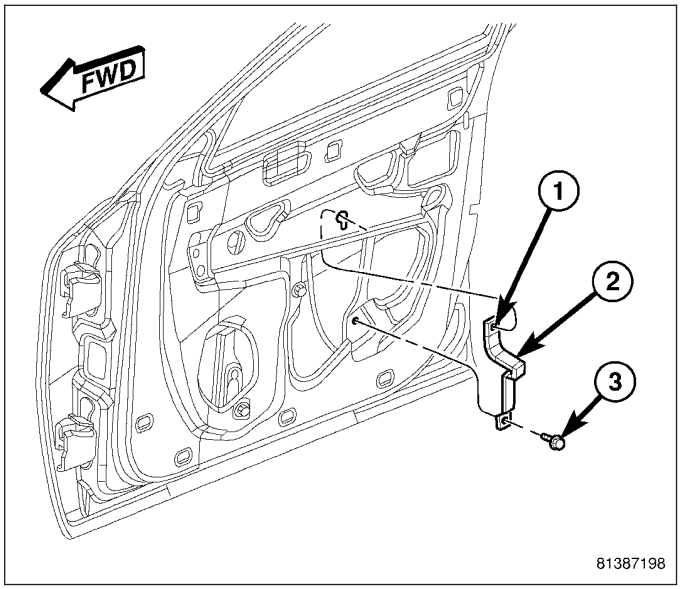

7. Using the regulator, adjust the front door glass (1) position up or down as required for access to the two window regulator glass clamps (3).
8. Loosen the screw (2) in each of the glass clamps far enough to release the glass.
9. Lift the glass out of the regulator clamps and into its full up position, then tape the glass securely into place.

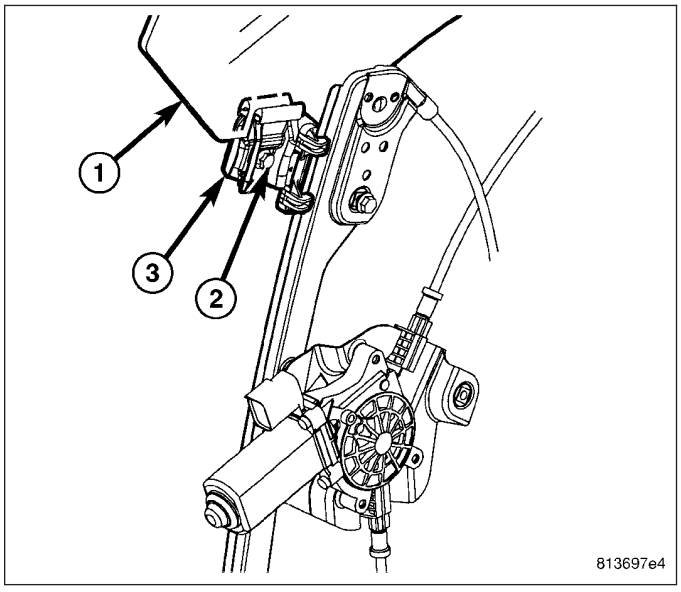

10. Remove the two screws (6) that secure the bottom of the front regulator rail (5) and the regulator motor support bracket (4) to the inside of the door.
11. Loosen the two screws (2) that secure the tops of both regulator rails to the keyed holes (1) on the inside of the door.
12. Lift the front regulator rail upward within the door far enough to disengage the screw from the keyed hole in the door.

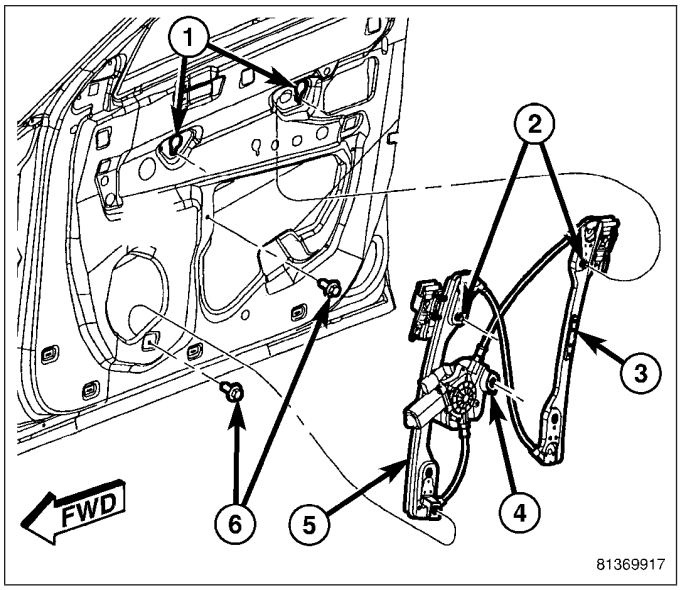

13. Lower the front regulator rail within the door (1) far enough to access and disconnect the door wire harness connector (4) from the regulator motor (2) through the speaker mounting hole (3) on the inside of the door near the front.
14. Lift the rear regulator rail upward within the door far enough to disengage the screw from the keyed hole in the door.
15. Remove the regulator through the large access hole on the inside of the door near the rear.

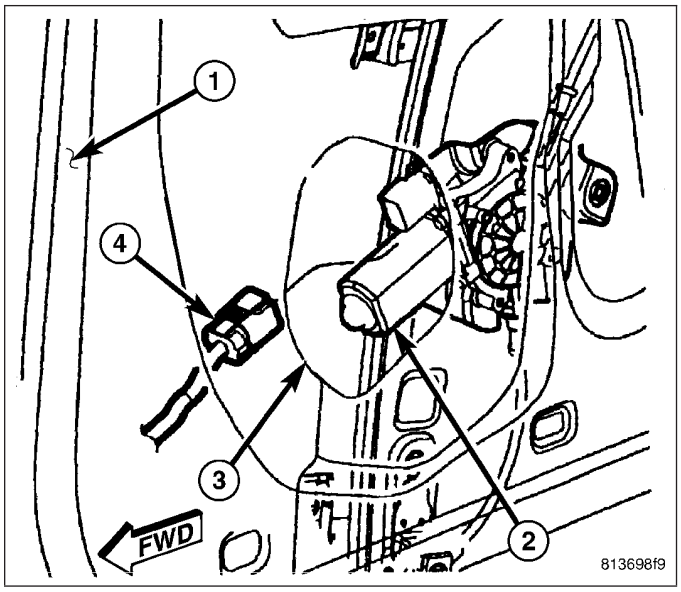

INSTALLATION

1. Load the regulator into the door through the large access hole on the inside of the door near the rear.
2. Engage the screw (2) at the top of the rear regulator rail (3) into the keyed hole (1) on the inside of the door near the rear.

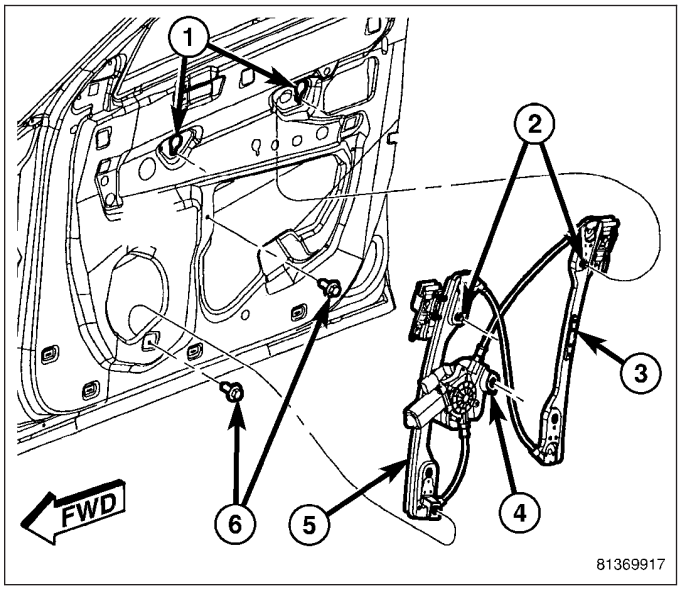

3. Position the front regulator rail within the door (1) so that the door wire harness connector (4) can be reconnected to the regulator motor (2) through the speaker mounting hole (3) on the inside of the door near the front.
4. Engage the screw at the top of the front regulator rail into the keyed hole on the inside of the door near the front.
5. Install and tighten the two screws that secure the bottom of the front regulator rail and the regulator motor support bracket to the inside of the door. Tighten the screws to 10 N·m (90 in. lbs.).
6. Tighten the two screws that secure the tops of both regulator rails to the keyed holes on the inside of the door. Tighten the screws to 10 N·m (90 in. lbs.).

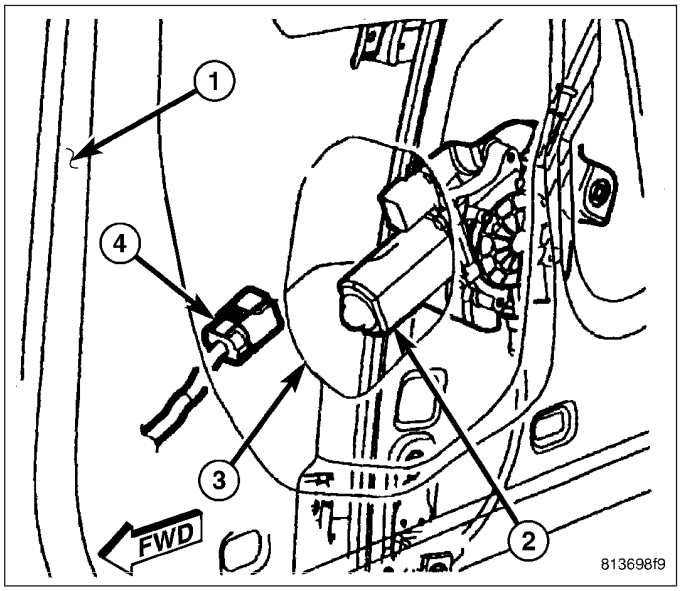

7. Remove the tape securing the door glass in its full up position, then lower the glass to engage it into the two window regulator glass clamps (3).
8. Using the regulator, lower the glass far enough to access the two window regulator glass clamp screws (2).
9. Tighten the screw in each of the glass clamps. Tighten the screws to 10 N·m (90 in. lbs.).

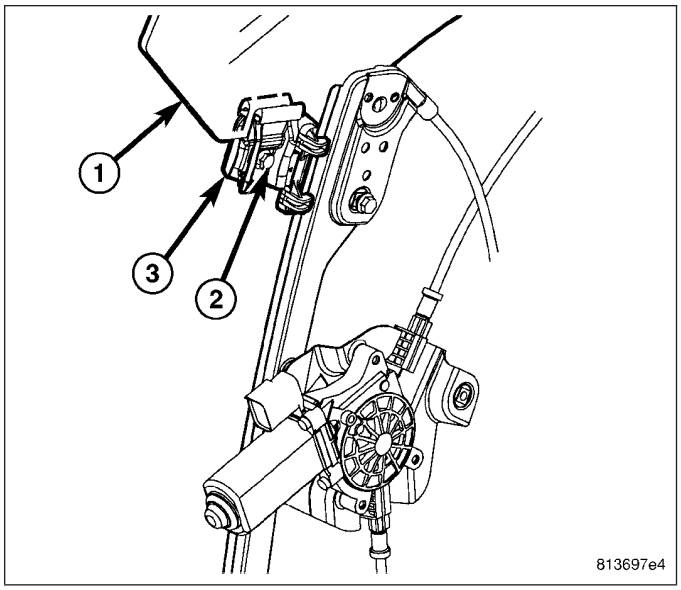

10. With the upper screw (1) hand-started into the pull cup bracket (2), position the screw into the keyed hole on the inside of the front door.
11. Install and tighten the screw (3) that secures the bottom of the pull cup bracket and the bottom of the window regulator rear rail to the inside of the front door. Tighten the screw to 11 N·m (100 in. lbs.).
12. Tighten the screw that secures the top of the pull cup bracket to the inside of the front door. Tighten the screw to 10 N·m (90 in. lbs.).
13. Install the watershield onto the inside of the front door. (Refer to 23 - BODY/DOOR - FRONT/WATERSHIELD - INSTALLATION).
14. Install the speaker onto the inside of the front door. (Refer to 8 - ELECTRICAL/AUDIO/SPEAKER - INSTALLATION).
15. Install the trim panel onto the inside of the front door. (Refer to 23 - BODY/DOOR - FRONT/TRIM PANEL - INSTALLATION).

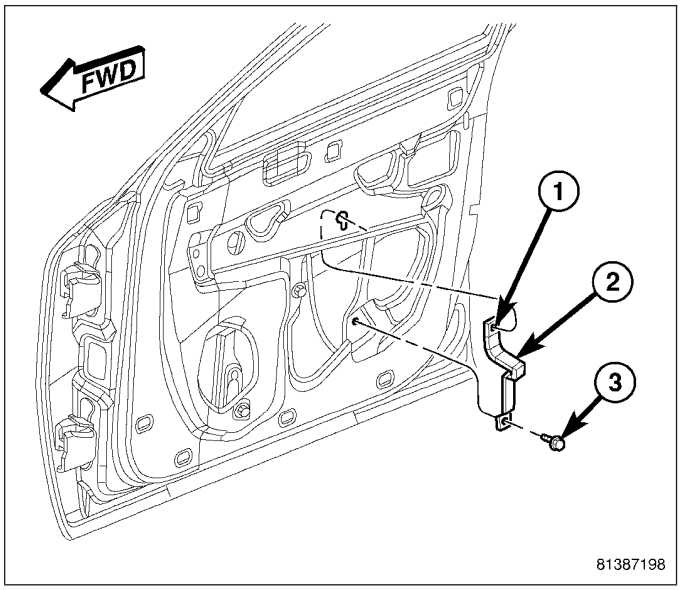

DOOR - REAR

TABLE OF CONTENTS

page

DOOR
REMOVAL 63
INSTALLATION 65
EXTERIOR HANDLE
REMOVAL 67
INSTALLATION 67
GLASS
REMOVAL 68
INSTALLATION 69
GLASS RUN CHANNEL
REMOVAL 70
INSTALLATION 70
HINGE
REMOVAL 71
INSTALLATION 72
LATCH
REMOVAL 73
INSTALLATION 74
STRIKER
REMOVAL 77
INSTALLATION 77
TRIM PANEL
REMOVAL 78
INSTALLATION 80
WATERSHIELD
REMOVAL 83
INSTALLATION 83
WINDOW REGULATOR
REMOVAL 85
INSTALLATION 87
CABLE - REMOTE LOCK ACTUATOR
REMOVAL 89
INSTALLATION 90

DOOR

REMOVAL

1. Disconnect and isolate the battery negative cable.
2. Open the rear door.
3. Disengage the rear door wire harness boot and connector (1) from the outside of the lower B-pillar (2).

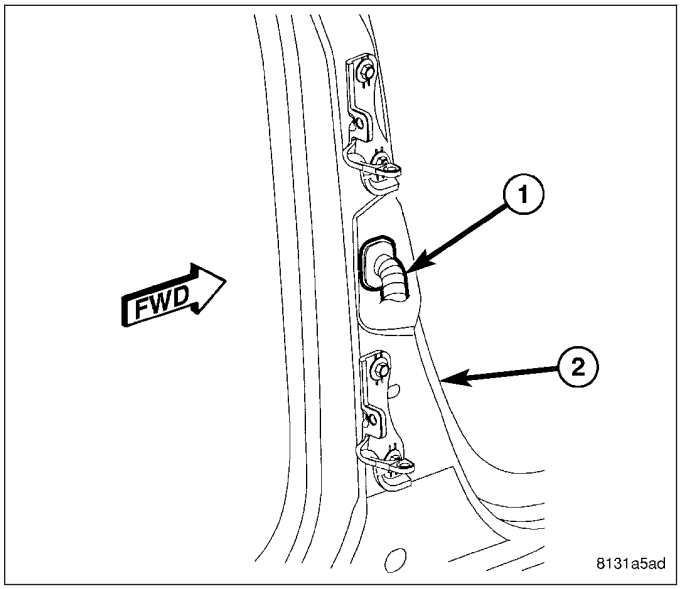

4. Carefully pull the door wire harness boot and connector (2) out from the B-pillar far enough to access and disconnect the body wire harness connector (1).
5. Open the door to the full open position.
6. Support the door with a suitable lifting device.

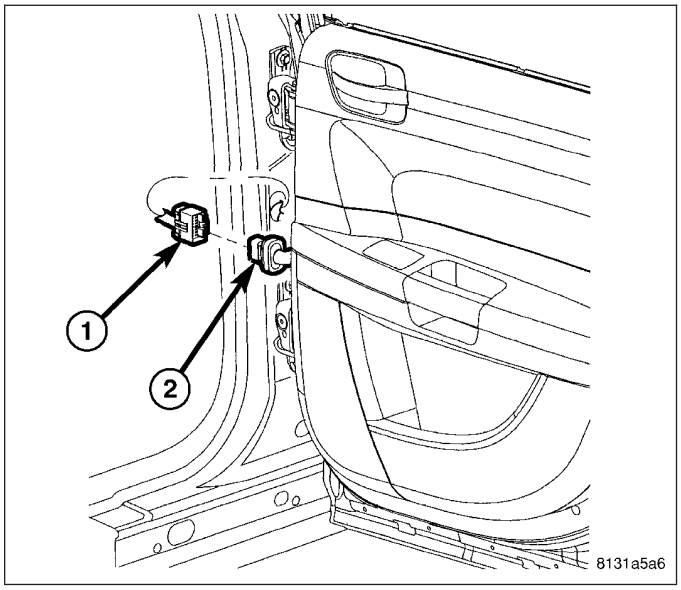

7. Remove the screw (1) from both the upper and lower rear door hinges that secures the door hinge bracket (3) to the body hinge bracket (2).
8. While still supporting the door, close the door to the intermediate detent position (one detent from the full open position).

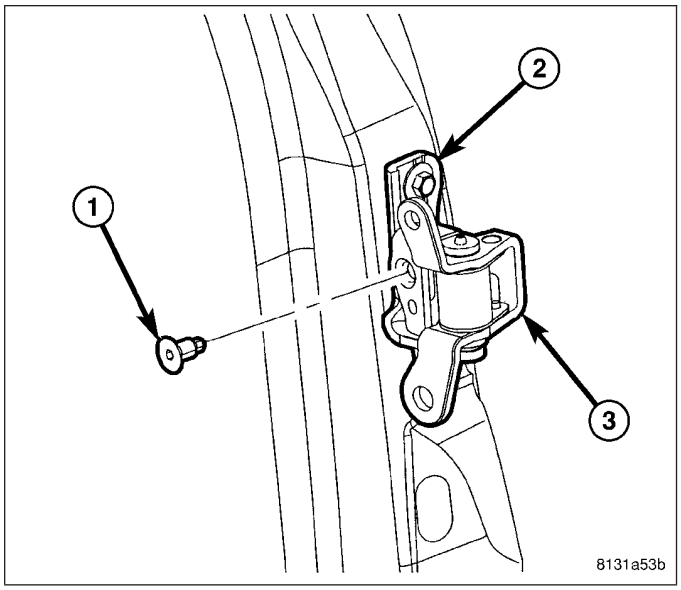

9. Raise the rear door (2) upward far enough to disengage the upper and lower hinge pins (3) from the pivots (1) on the upper and lower body hinge brackets.
10. Remove the rear door from the vehicle.

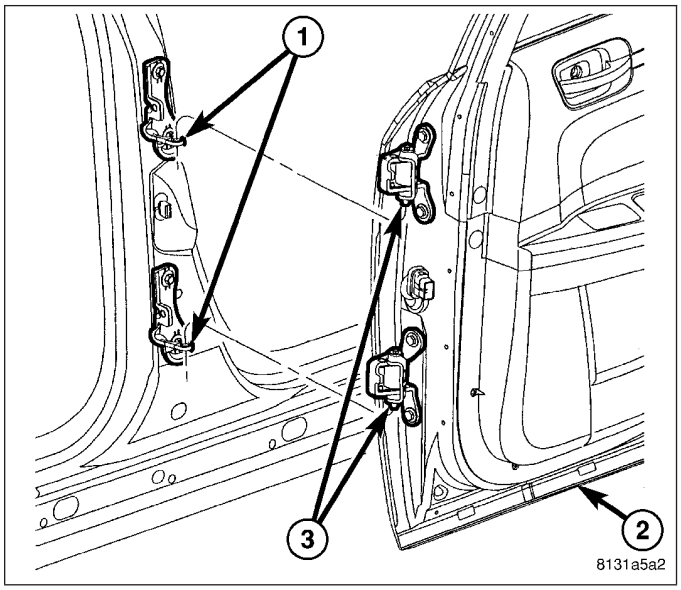

INSTALLATION

1. Support the rear door (2) with a suitable lifting device.
2. Position the door with the upper and lower hinge pins (3) aligned over the pivots (1) on the upper and lower body hinge brackets.
3. Lower the door far enough to engage the hinge pins into the pivot holes.
4. While still supporting the door, open the door to the full open position.

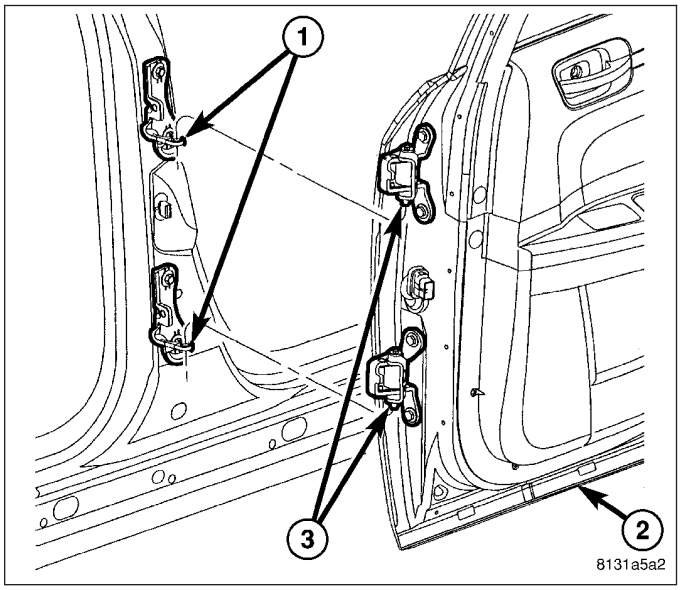

5. Align the holes in the upper and lower rear door hinge brackets (3) with those in the body hinge brackets (2).
6. Install and tighten the screw (1) into both the upper and lower rear door hinge to secure the door hinge brackets to the body hinge brackets. Tighten the screws to 42 N·m (31 ft. lbs.).
7. Remove the lifting device supporting the door.

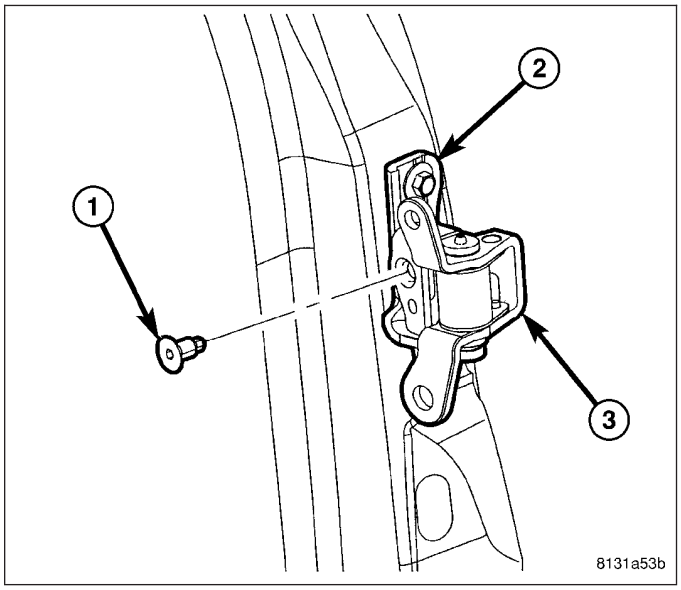

8. Carefully pull the body wire harness connector (1) out from the B-pillar far enough to reconnect it to the door wire harness boot and connector (2).

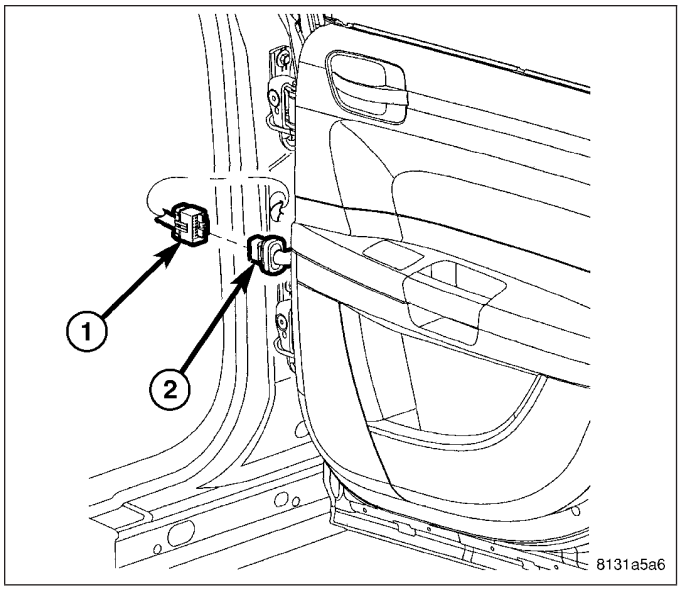

9. Engage the rear door wire harness boot and connector (1) into the wiring clearance hole on the outside of the lower B-pillar (2).
10. Reconnect the battery negative cable.
11. Adjust the door hinge positions as necessary to achieve proper door spacing and operation.

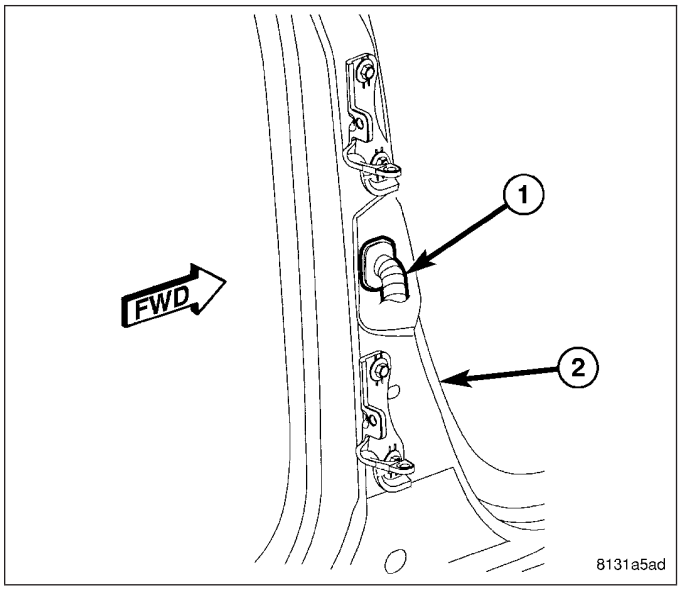

EXTERIOR HANDLE

REMOVAL

1. Remove the trim panel from the inside of the rear door. (Refer to 23 - BODY/DOOR - REAR/TRIM PANEL - REMOVAL).
2. Remove the watershield from the inside of the rear door. (Refer to 23 - BODY/DOOR - REAR/WATER-SHIELD - REMOVAL).
3. Remove the door glass channel and bracket from the inside of the rear door. (Refer to 23 - BODY/DOOR - REAR/GLASS RUN CHANNEL - REMOVAL).
4. Remove the latch from the inside of the rear door. (Refer to 23 - BODY/DOOR - REAR/LATCH - REMOVAL).
5. Remove the three screws (2) from the inside of the door that secure that exterior handle (1) to the door.
6. Remove the handle from the outside of the door.

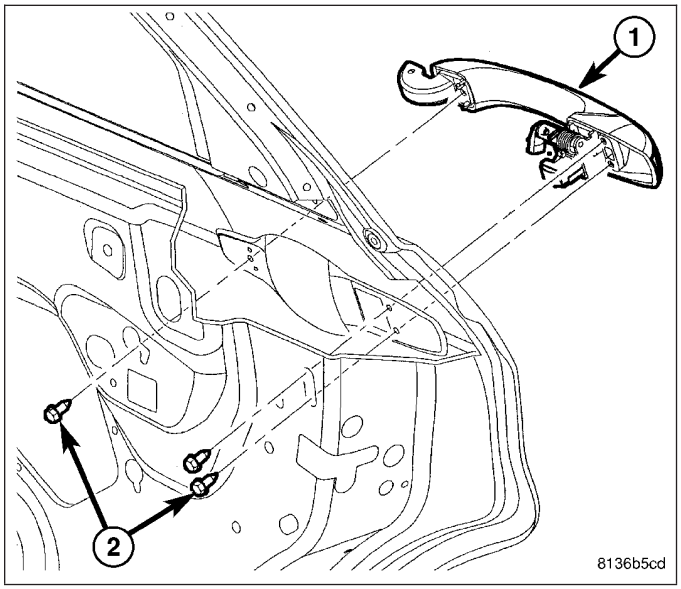

INSTALLATION

1. Position the exterior handle (1) to the mounting holes on the outside of the door.
2. From the inside of the door, install and tighten the three screws (2) that secure that exterior handle to the door. Tighten the screws to 5 N·m (44 in. lbs.).
3. Reinstall the latch to the inside of the rear door. (Refer to 23 - BODY/DOOR - REAR/LATCH - INSTALLATION).
4. Reinstall the door glass channel and bracket to the inside of the rear door. (Refer to 23 - BODY/DOOR - REAR/GLASS RUN CHANNEL - INSTALLATION).
5. Reinstall the watershield onto the inside of the rear door. (Refer to 23 - BODY/DOOR - REAR/WATER-SHIELD - INSTALLATION).
6. Reinstall the trim panel onto the inside of the rear door. (Refer to 23 - BODY/DOOR - REAR/TRIM PANEL - INSTALLATION).

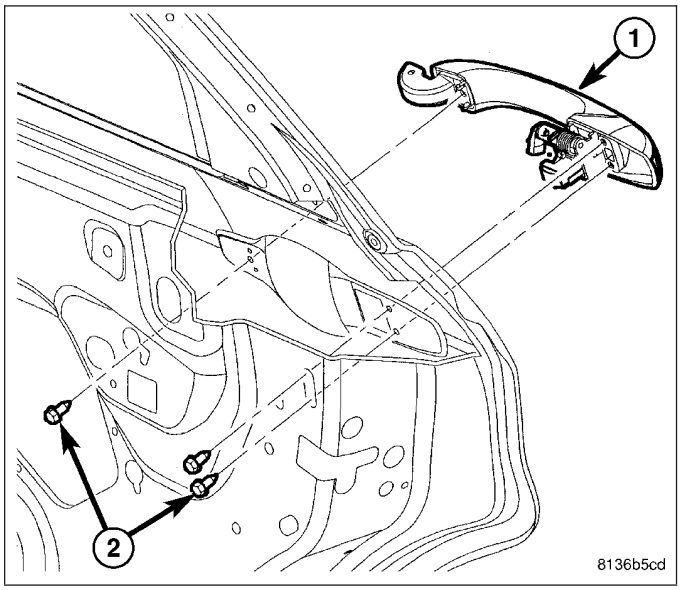

GLASS

REMOVAL

1. Remove the trim panel from the inside of the rear door. (Refer to 23 - BODY/DOOR - REAR/TRIM PANEL - REMOVAL).
2. Remove the inner belt weatherstrip from the rear door. (Refer to 23 - BODY/WEATHERSTRIP/ SEALS/DOOR INNER BELT WEATHERSTRIP - REMOVAL-REAR).
3. Remove the watershield from the inside of the rear door. (Refer to 23 - BODY/DOOR - REAR/WATER-SHIELD - REMOVAL).
4. Remove the glass channel and bracket from the inside of the rear door. (Refer to 23 - BODY/DOOR - REAR/GLASS RUN CHANNEL - REMOVAL).
5. Using the regulator, adjust the rear door glass (1) position up or down as required for access to the two window regulator glass clamps (2).
6. Loosen the screw (2) in each of the glass clamps far enough to release the glass.

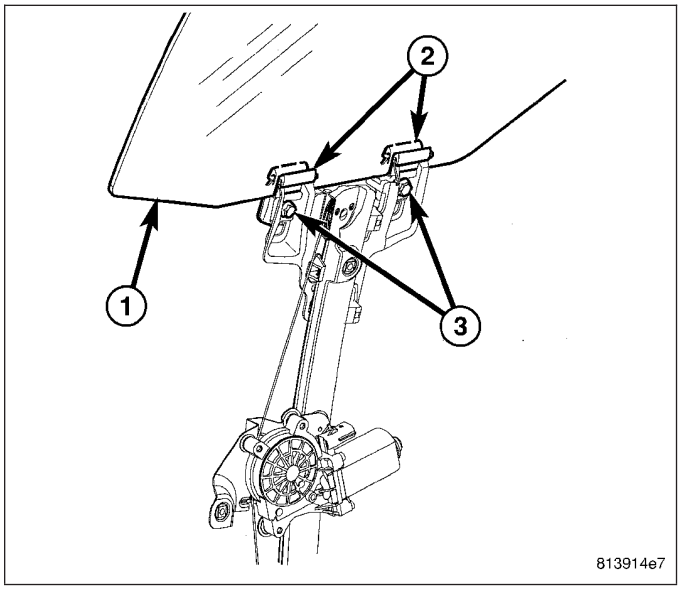

7. From the outside of the rear door, lift the glass (1) upward far enough to disengage it from the two glass clamps (2).
8. Lift the glass upward and out from the top of the door shell to unload the glass from the door.

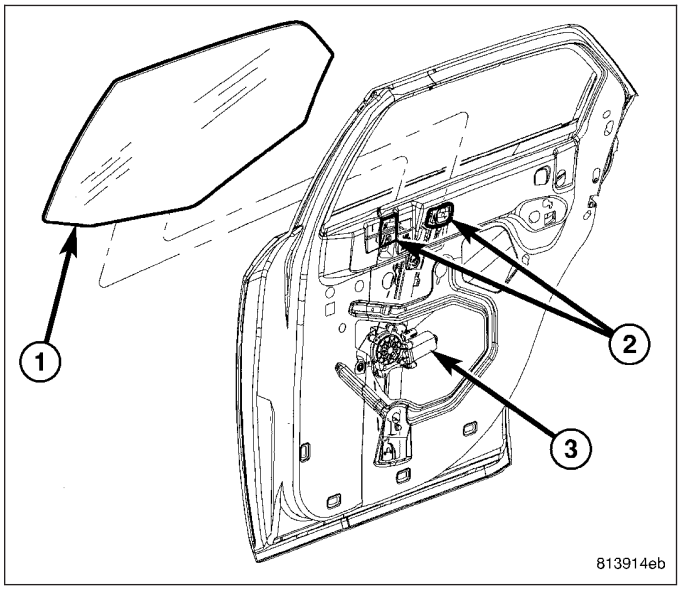

INSTALLATION

1. From the outside of the rear door, insert the rear door glass (1) into the top of the door shell to load the glass into the door.
2. Engage the glass into the two window regulator glass clamps (2).

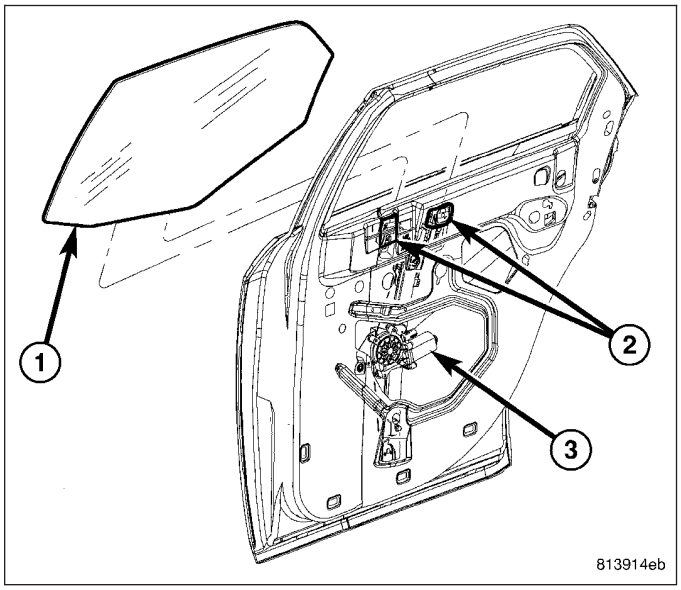

3. Using the regulator, lower the window as required for access to the two window regulator glass clamp screws (3).
4. Tighten the screw in each of the glass clamps. Tighten the screws to 10 N·m (90 in. lbs.).
5. Reinstall the glass channel and bracket onto the inside of the rear door. (Refer to 23 - BODY/DOORS - REAR/GLASS RUN CHANNEL - INSTALLATION).
6. Reinstall the watershield onto the inside of the rear door. (Refer to 23 - BODY/DOOR - REAR/WATERSHIELD - INSTALLATION).
7. Reinstall the inner belt weatherstrip onto the rear door. (Refer to 23 - BODY/WEATHERSTRIP/SEALS/DOOR INNER BELT WEATHERSTRIP - INSTALLATION-REAR).
8. Reinstall the trim panel onto the inside of the rear door. (Refer to 23 - BODY/DOOR - REAR/TRIM PANEL - INSTALLATION).

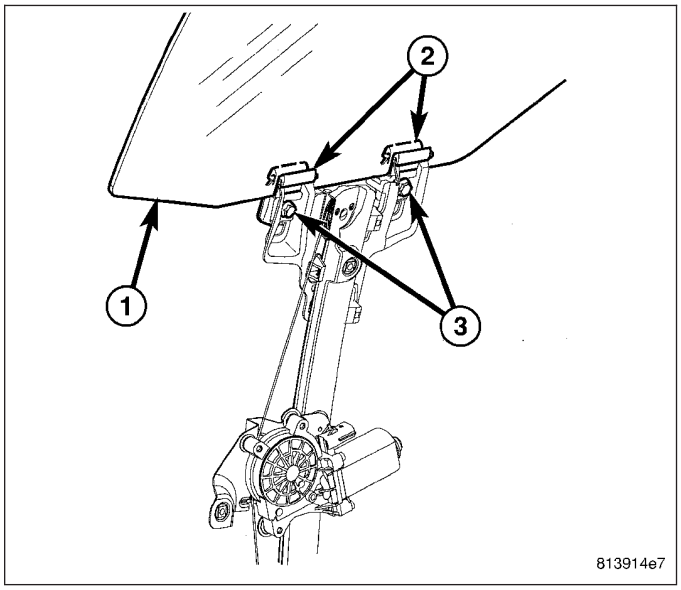

GLASS RUN CHANNEL

REMOVAL

1. Remove the trim panel from the inside of the rear door. (Refer to 23 - BODY/DOOR - REAR/TRIM PANEL - REMOVAL).
2. Remove the watershield from the inside of the rear door. (Refer to 23 - BODY/DOOR - REAR/WATERSHIELD - REMOVAL).
3. Loosen the two screws (1) that secure the rear door glass channel and bracket (2) to the inside of the rear door.
4. Disengage the two screws from the keyed holes near the back of the inner door panel and remove the channel and bracket from the interior of the rear door.

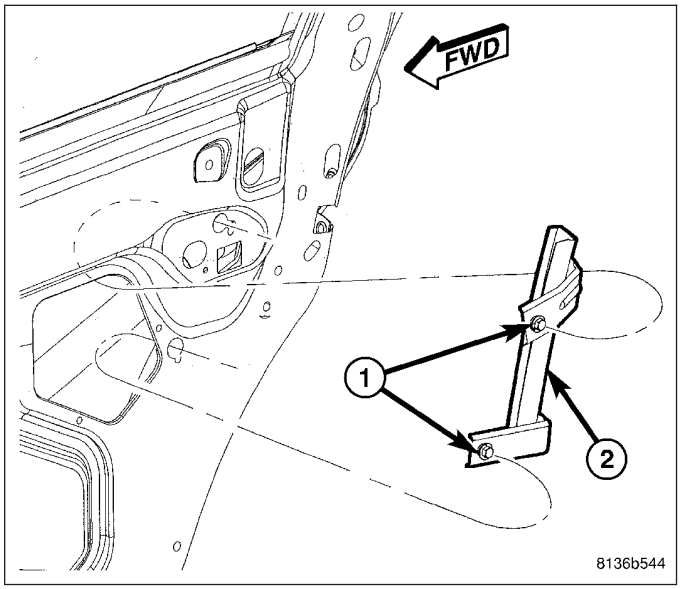

INSTALLATION

1. Position the rear door glass channel and bracket (2) into the interior of the rear door.
2. Engage the two screws (1) into the keyed holes near the back of the inner door panel.
3. Tighten the two screws that secure the channel and bracket to the inside of the rear door. Tighten the screws to 10 N·m (90 in. lbs.).
4. Reinstall the watershield onto the inside of the rear door. (Refer to 23 - BODY/DOOR - REAR/WATERSHIELD - INSTALLATION).
5. Reinstall the trim panel onto the inside of the rear door. (Refer to 23 - BODY/DOOR - REAR/TRIM PANEL - INSTALLATION).

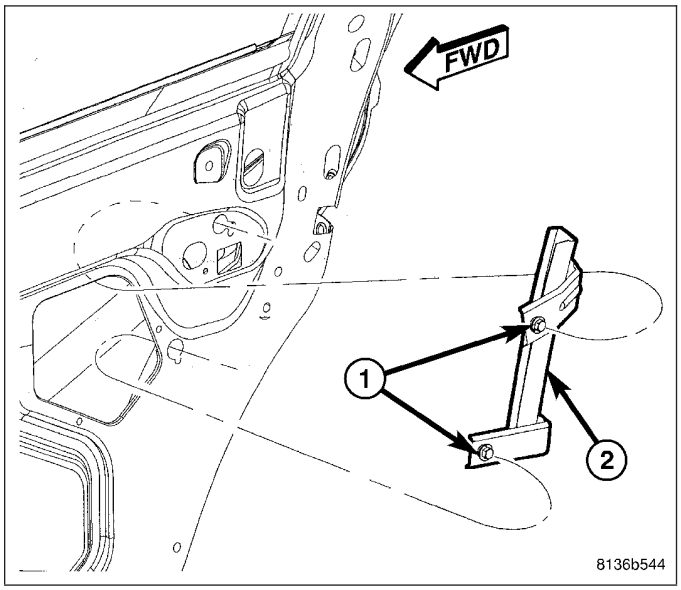

HINGE

REMOVAL

1. Remove the rear door from the vehicle. (Refer to 23 - BODY/DOOR - REAR/DOOR - REMOVAL).
2. Mark the upper (2) or lower (4) hinge bracket location on the outside of the lower B-pillar (1) to aid reinstallation.
3. Remove the two screws (3) that secure the hinge bracket to the outside of the lower B-pillar.
4. Remove the hinge bracket from the B-pillar.

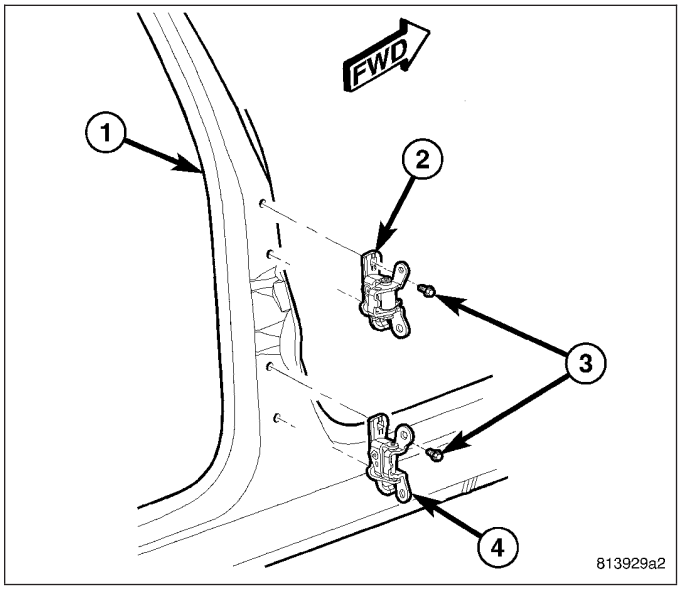

5. Mark the upper (1) or lower (4) door hinge location on the hinge face of the rear door (3) to aid reinstallation.
6. Remove the screw (6) that secures the hinge to the door.
7. Remove the nut (5) that secures the hinge to the stud (2) on the door.
8. Remove the upper or lower hinge from the hinge face of the door.

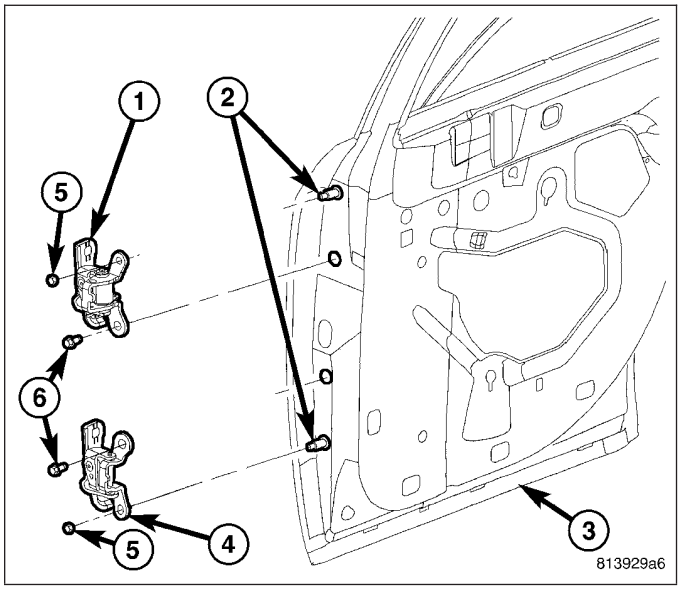

INSTALLATION

1. Position the upper (1) or lower (4) hinge to the hinge face of the rear door (3).
2. Install and tighten the nut (5) that secures the hinge to the stud (2) on the door. Tighten the nut to 28 N·m (21 ft. lbs.).
3. Install and tighten the screw (6) that secures the hinge to the door. Tighten the screw to 28 N·m (21 ft. lbs.).

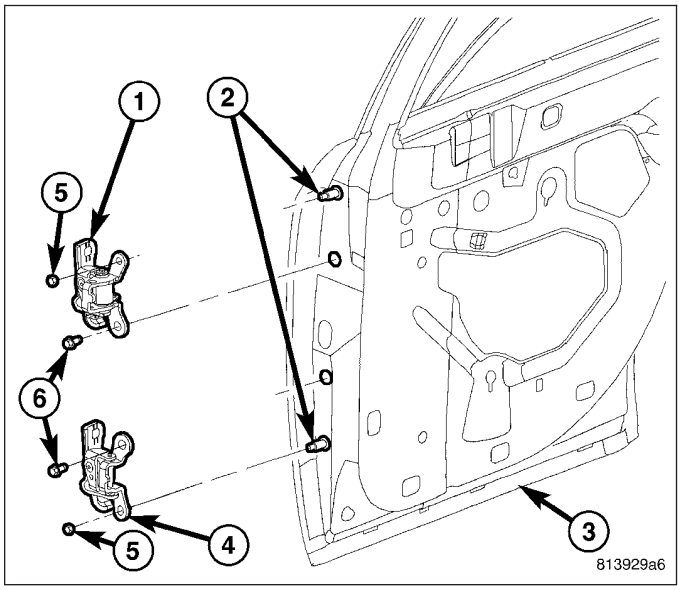

4. Position the upper (2) or lower (4) hinge bracket onto the outside of the lower B-pillar (1).
5. Install and tighten the two screws (3) that secure the hinge bracket to the outside of the lower B-pillar. Tighten the screws to 30 N·m (22 ft. lbs.).
6. Reinstall the rear door onto the vehicle. (Refer to 23 - BODY/DOOR - REAR/DOOR - INSTALLATION).

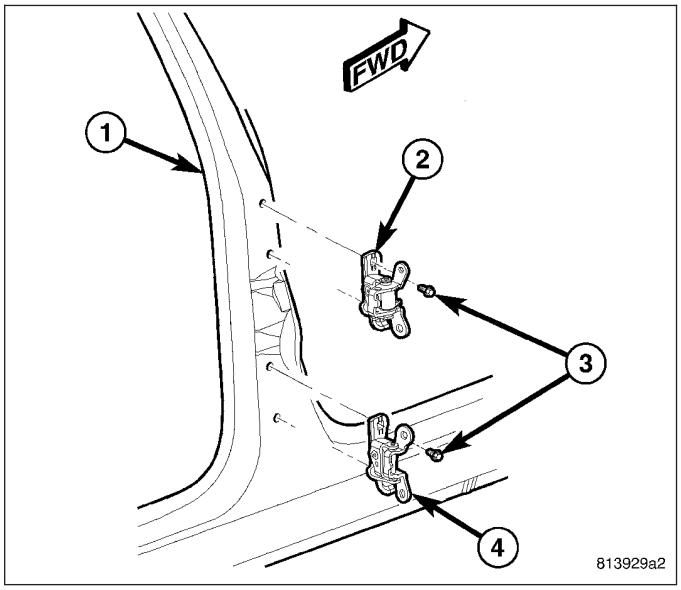

LATCH

REMOVAL

1. Remove the trim panel from the inside of the rear door. (Refer to 23 - BODY/DOOR - REAR/TRIM PANEL - REMOVAL).
2. Remove the watershield from the inside of the rear door. (Refer to 23 - BODY/DOOR - REAR/WATERSHIELD - REMOVAL).
3. Remove the door glass channel and bracket from the inside of the rear door. (Refer to 23 - BODY/DOOR - REAR/GLASS RUN CHANNEL - REMOVAL).
4. Reach into the back of the door shell to unsnap the plastic clip that secures the end of the interior door latch lock link (1) to the latch lever and disengage the link from the latch (2).
5. Remove the interior door latch lock link and knob unit from the rear door.
6. Reach into the back of the door shell to unsnap the plastic clip that secures the end of the interior door handle latch release link (3) to the latch lever and disengage the link from the latch.

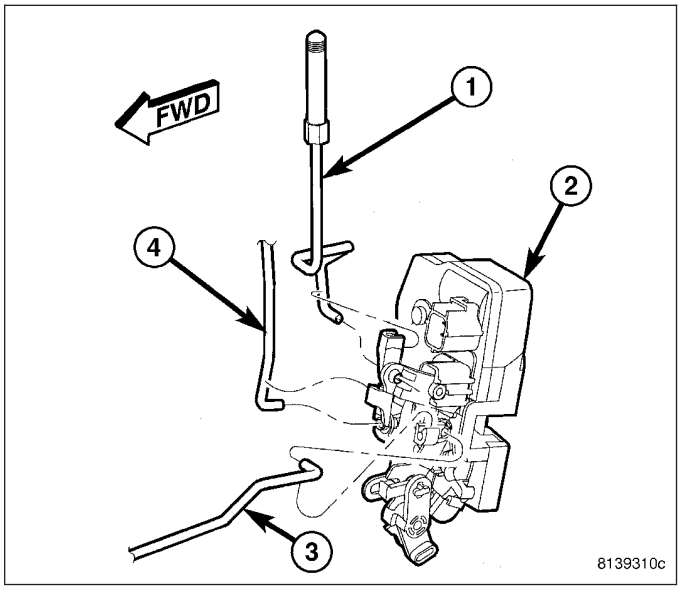

7. Reach into the back of the door shell to unsnap the plastic clip that secures the end of the exterior door handle latch release link (4) to the latch lever and disengage the link from the latch.
8. Remove the three screws (2) that secure the latch (3) to the outer latch face of the rear door (1).

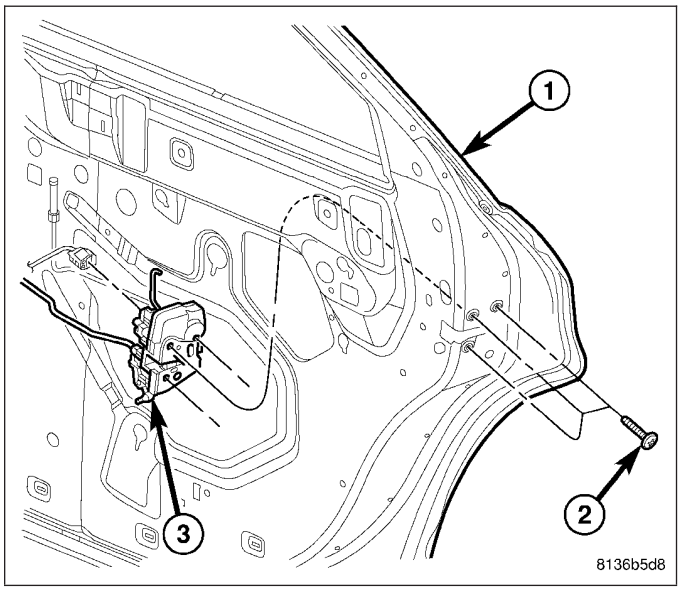

NOTE: Wiring connector can be disconnected much easier after all links are disconnected from latch and latch is unscrewed from door.

9. Reach into the back of the door shell (3) and pull the latch forward far enough to access and disconnect the door wire harness connector (1) from the front door latch (2).
10. Remove the latch from the interior of the door shell.

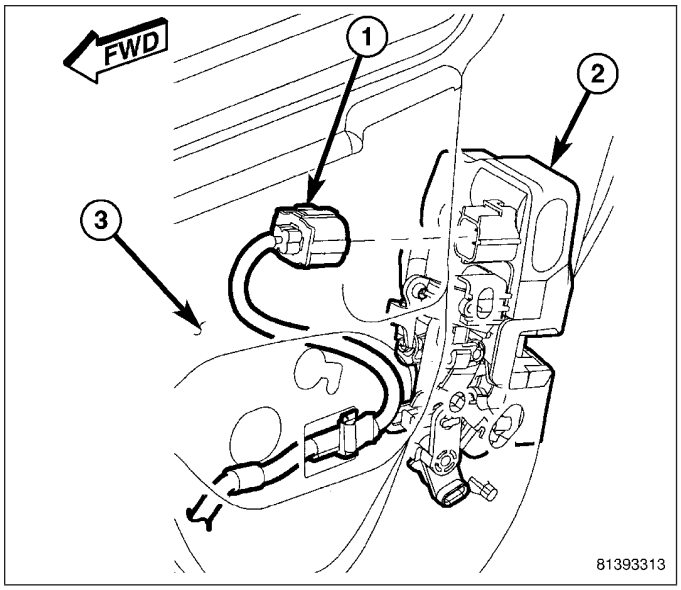

INSTALLATION

NOTE: Wiring connector can be connected much easier with all links disconnected from latch and latch is unscrewed from door.

1. Connect the door wire harness connector (1) to the door latch (2).

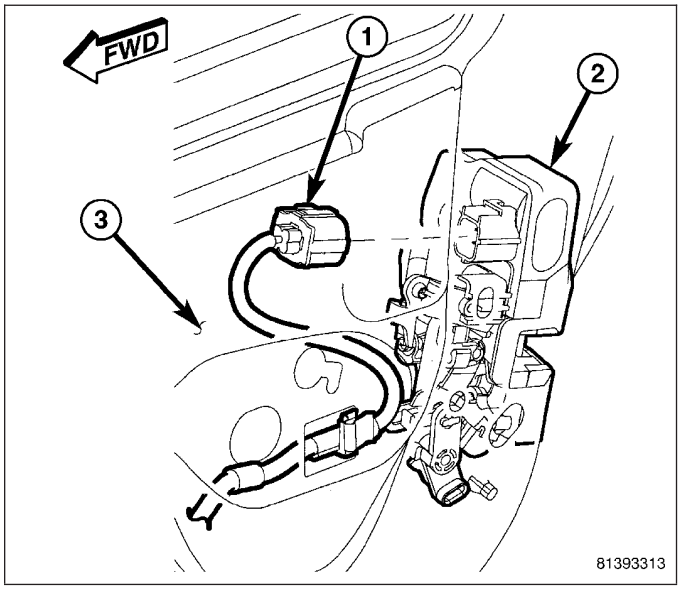

2. Position the latch (3) to the latch face on the interior of the rear door shell (1).
3. Install and tighten the three screws (2) that secure the latch to the outer latch face of the rear door. Tighten the screws to 12 N·m (108 in. lbs.).

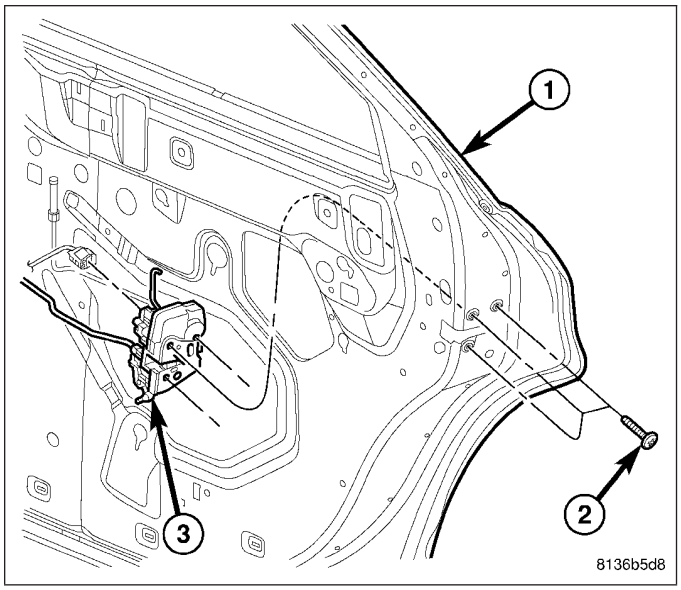

4. Reach into the back of the door shell to engage the exterior door handle latch release link (4) to the latch (2) lever and snap the plastic clip over the link to secure it to the latch.
5. Reach into the back of the door shell to engage the end of the interior door handle latch release link (3) to the latch lever and snap the plastic clip over the link to secure it to the latch.

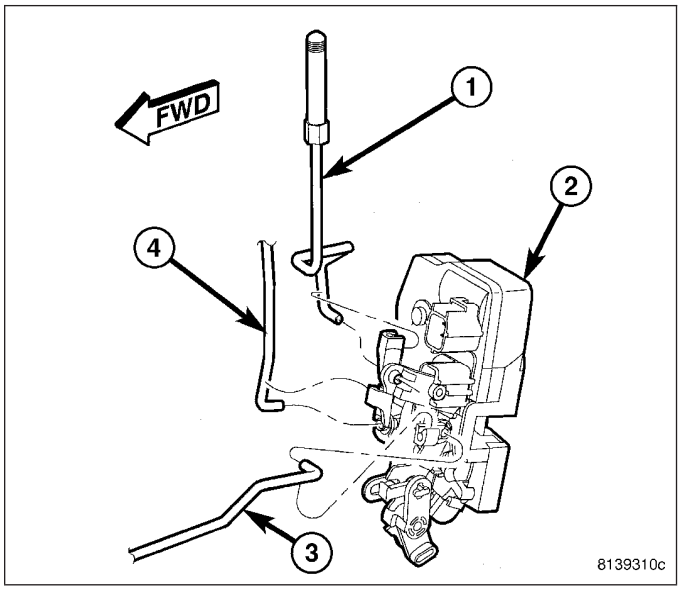

6. Position the interior door latch lock link and knob unit (2) into the rear door (1).
7. Reach into the back of the door shell to engage the end of the interior door latch lock link to the latch lever and snap the plastic clip over the link to secure it to the latch.
8. Reinstall the door glass channel and bracket to the inside of the rear door. (Refer to 23 - BODY/DOOR - REAR/GLASS RUN CHANNEL - INSTALLATION).
9. Reinstall the watershield onto the inside of the rear door. (Refer to 23 - BODY/DOOR - REAR/WATERSHIELD - INSTALLATION).
10. Reinstall the trim panel onto the inside of the rear door. (Refer to 23 - BODY/DOOR - REAR/TRIM PANEL - INSTALLATION).

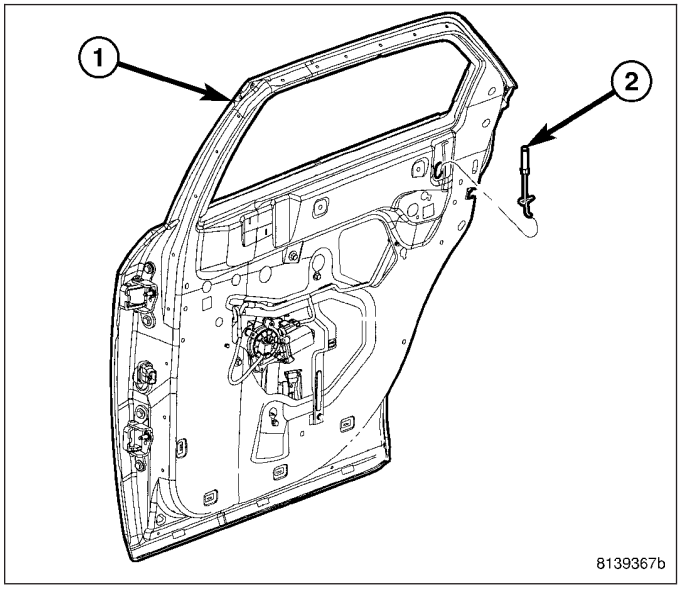

11. Use a wrench inserted through the access slot on the outer latch face of the rear door shell to loosen the hex socket latch release adjusting screw (2) on the latch (1).
12. Cycle the door outside latch release handle through its full travel two or three times.
13. Tighten the adjusting screw.

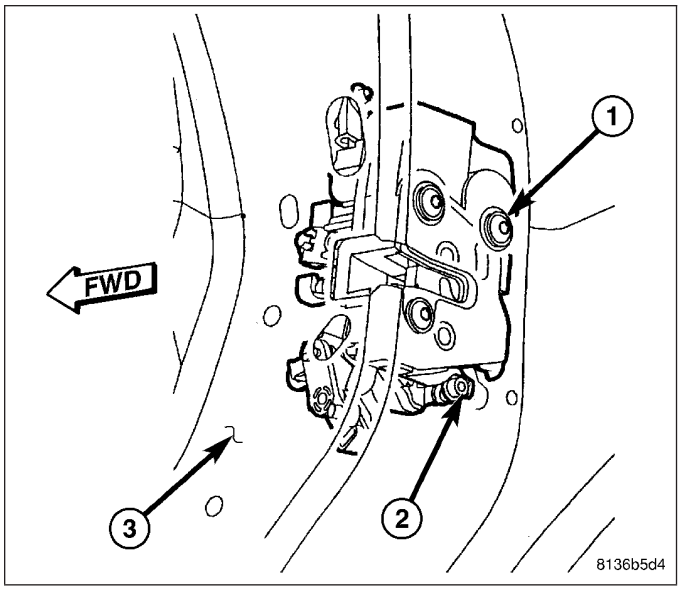

STRIKER

REMOVAL

1. Open the rear door.
2. Mark the rear door latch striker (3) location on the face of the outer C-pillar (1) to aid reinstallation.
3. Remove the two screws (2) that secure the striker to the C-pillar.
4. Remove the striker from the C-pillar.

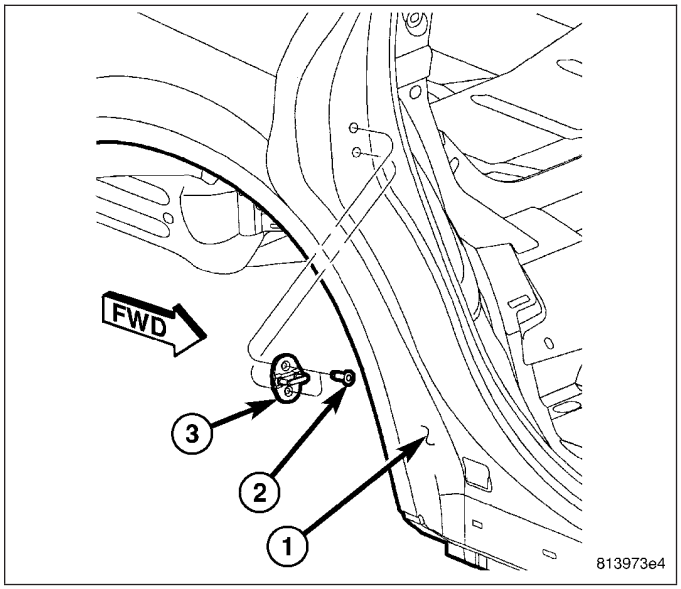

INSTALLATION

1. Position the rear door latch striker (3) on the face of the outer C-pillar (1).
2. Install and tighten the two screws (2) that secure the striker to the C-pillar. Tighten the screws to 33 N·m (24 ft. lbs.).
3. Adjust the latch striker position as necessary to achieve proper door spacing and latch operation.

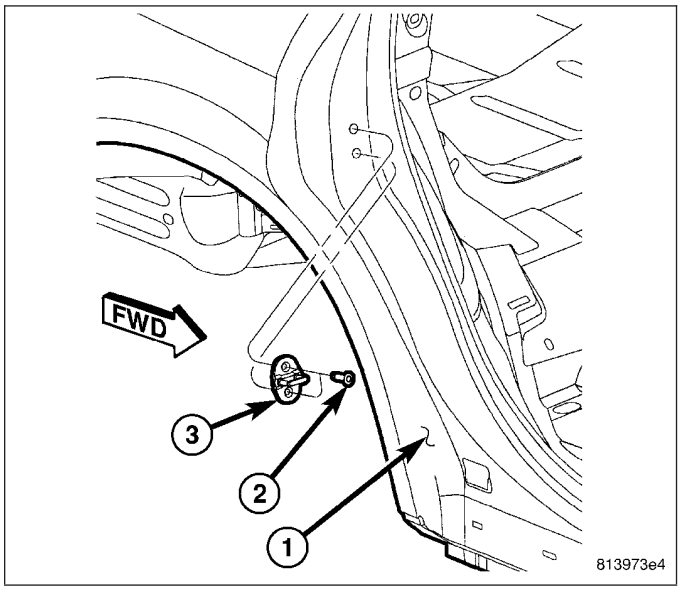

TRIM PANEL

REMOVAL

1. Disconnect and isolate the battery negative cable. (Refer to 8 - ELECTRICAL/BATTERY SYSTEM - STANDARD PROCEDURE).
2. Unsnap and fold back the screw cap below the trim panel pull cup to access and remove the screw (5) that secures the panel (2) to the pull cup bracket.
3. Unsnap and fold back the screw cap within the interior remote handle recess of the trim panel to access and remove the screw (4) that secures the panel to the inside of the door (1).
4. Remove the four screws (6) that secure the bottom and front lower corner of the trim panel to the inside of the door.

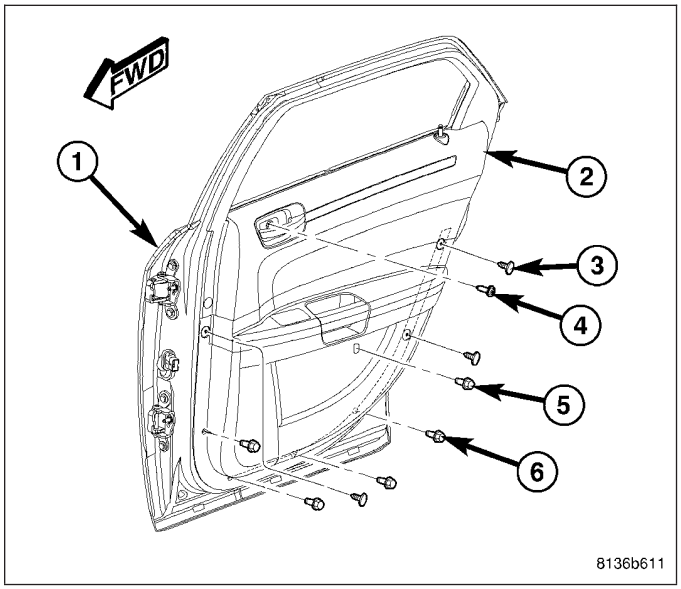

5. Remove the three push-pin retainers (1) that secure the trim panel to the inside of the door. (Refer to 23 - BODY/DOOR - FRONT - DESCRIPTION - FASTENERS).

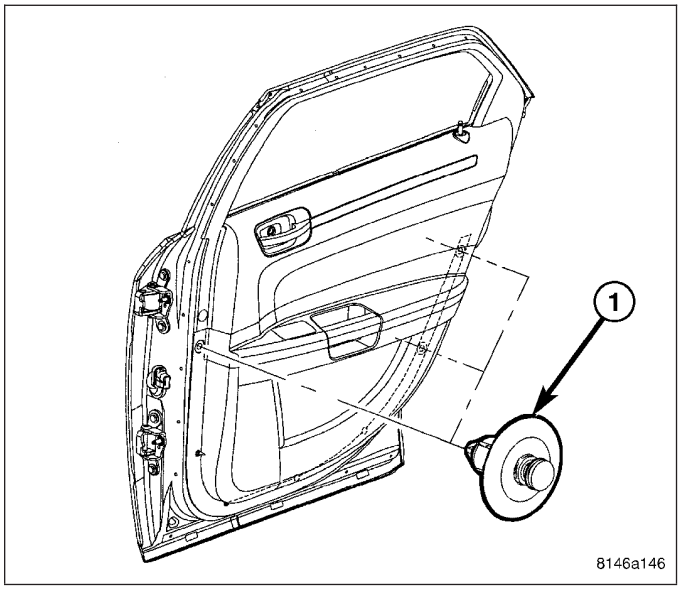

6. Pull the trim panel (2) away from the inside of the door far enough to disengage the locator pins near the top of the panel from the door and the steel clip fastener. Then lift the rear of the panel upward far enough to disengage the interior door latch lock link and knob (1) from the clearance hole at the upper rear corner of the panel.

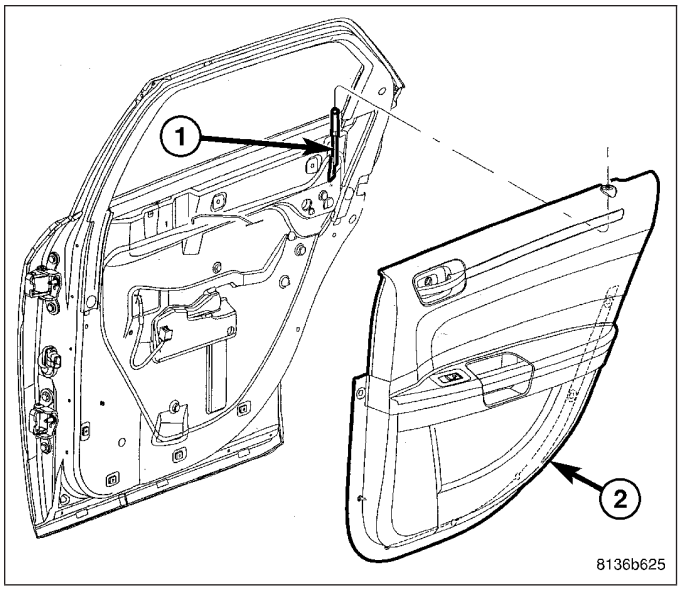

7. Reach between the top of the trim panel (3) and the inside of the door shell to unsnap the plastic clip that secures the end of the interior door handle latch release link (1) to the handle lever (2) and disengage the link from the handle.
8. Pull the trim panel away from the inside of the door shell far enough to access and disconnect the door wire harness connector (5) from the power window switch (4).
9. Remove the trim panel from the inside of the door.

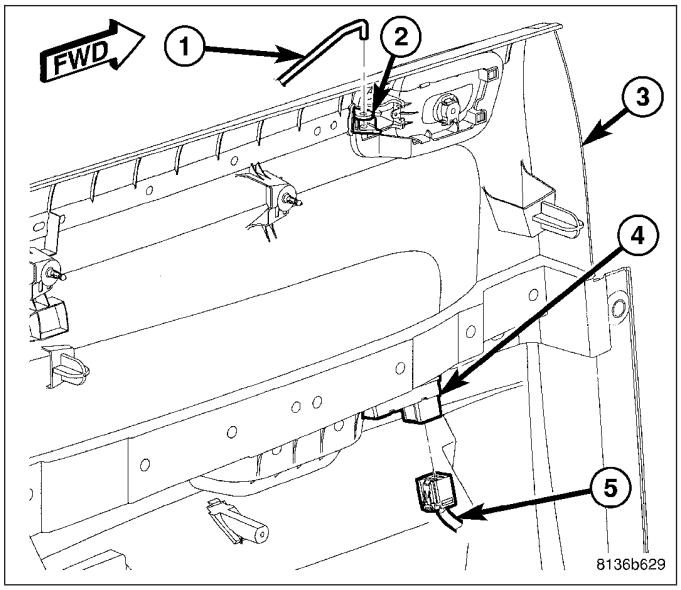

NOTE: A battery reconnect procedure must be performed anytime the battery has been disconnected. (Refer to 8 - ELECTRICAL/BATTERY SYSTEM - STANDARD PROCEDURE).

INSTALLATION

1. Check to be certain that the five spring nuts (1 and 2) are properly installed and in good condition on the inside of the door (3).

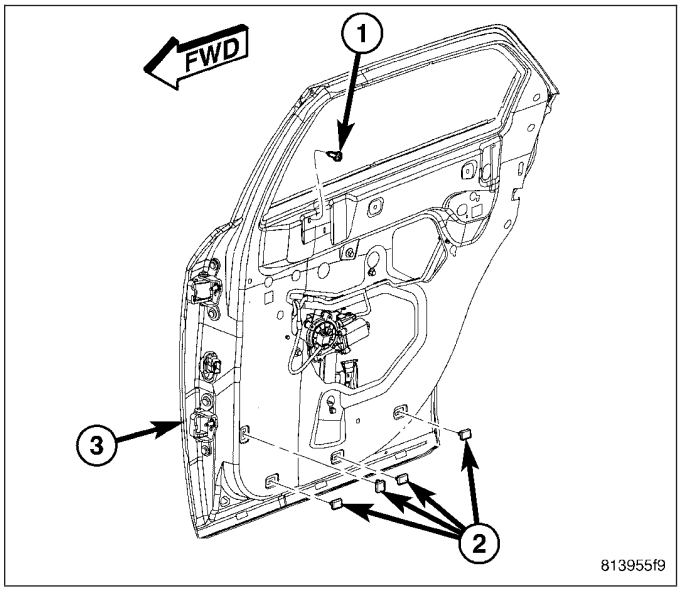

2. Check to be certain that the two plug grommets (2) are properly installed and in good condition on the inside of the door (1).

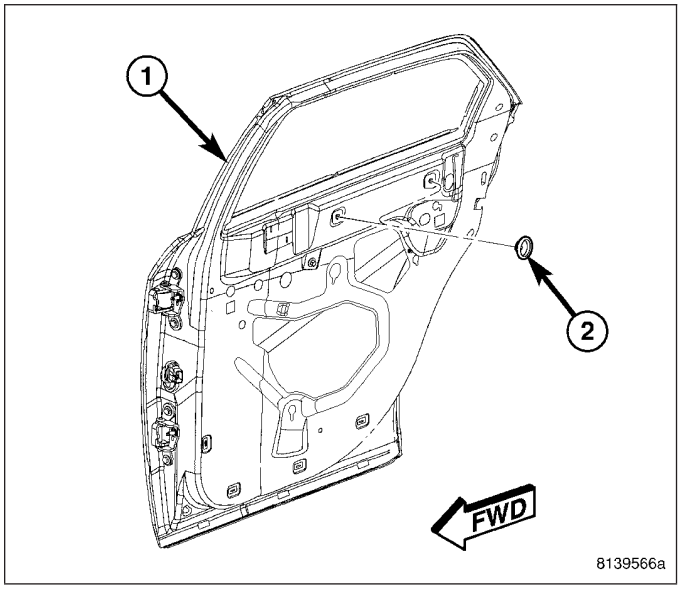

3. Position the trim panel (3) close enough to the inside of the door to reconnect the door wire harness connector (5) to the power window switch (4).
4. Reach between the top of the trim panel and the inside of the door shell to engage the end of the interior door handle latch release link (1) to the handle lever (2) and snap the plastic clip over the link to secure it to the handle.

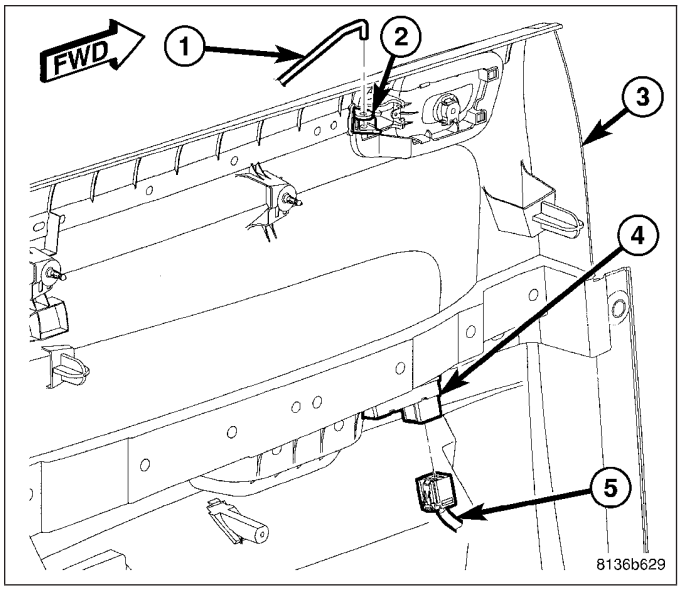

5. Lift the trim panel (2) over the inside of the door far enough to engage the interior door latch lock link and knob (1) into the clearance hole at the upper rear corner of the panel.

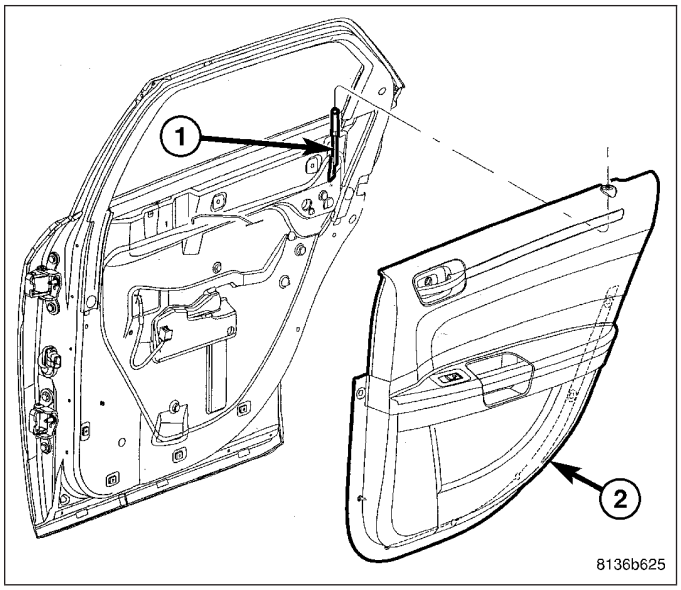

6. Position the two locator pins (4) on the back of the trim panel (2) to the locator holes (3) on the inside of the door panel and simultaneously push the two upper pins (1) into the grommet plugs near the top of the door. Make certain that the upper edges of the trim panel are engaged in the grooves of the window moldings.

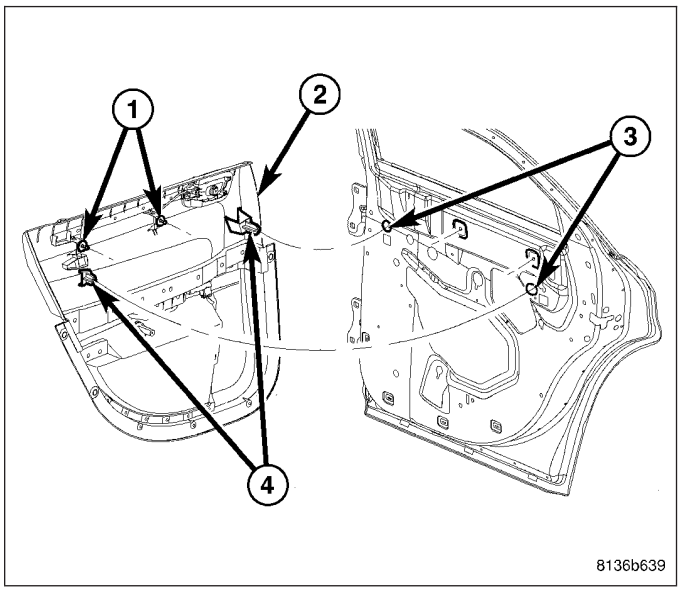

7. Install and tighten the screw (4) that secures the interior remote handle recess of the trim panel (2) to the inside of the door (1). Tighten the screw to 2 N·m (16 in. lbs.). Fold and snap the screw cap over the screw.
8. Install and tighten the screw (5) that secures the trim panel (2) to the pull cup bracket below the trim panel pull cup. Tighten the screw to 2 N·m (16 in. lbs.). Fold and snap the screw cap over the screw.
9. Install and tighten the four screws (6) that secure the bottom and front lower corner of the trim panel to the inside of the door. Tighten the screws to 2 N·m (16 in. lbs.).

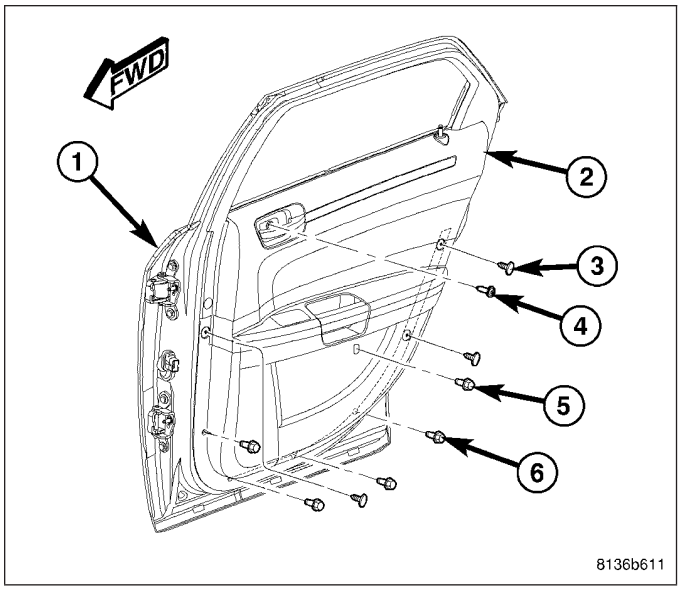

10. Install the three push-pin retainers (1) that secure the trim panel to the inside of the door. (Refer to 23 - BODY/DOOR - FRONT - DESCRIPTION).

NOTE: A battery reconnect procedure must be performed anytime the battery has been disconnected. (Refer to 8 - ELECTRICAL/BATTERY SYSTEM - STANDARD PROCEDURE).

11. Reconnect the battery negative cable.

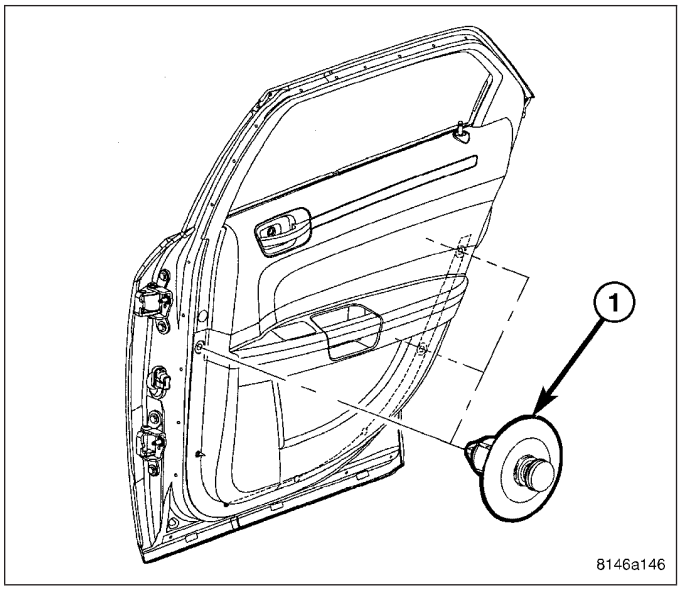

WATERSHIELD

REMOVAL

CAUTION: Do not allow the watershield or adhesive to become contaminated with dirt or other foreign substances.

Do not damage the watershield during removal and installation.

If the watershield becomes contaminated or damaged, replace the watershield.

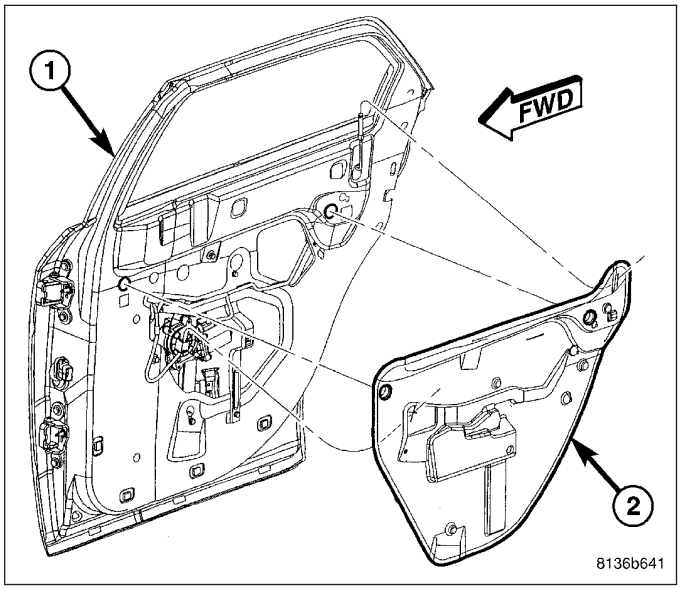

1. Remove the trim panel from the inside of the rear door. (Refer to 23 - BODY/DOOR - REAR/TRIM PANEL - REMOVAL).
2. Carefully separate the lower half of the watershield (2) from the inside of the door (1).
3. Lift the lower half of the watershield upward far enough to access and pull the trim panel take out of the door wire harness out of the slit near the front of the watershield.
4. Carefully separate the upper half of the watershield from the inside of the door.
5. Pull the upper front half of the watershield away from the inside of the door far enough to disengage the inside remote latch release handle link from the slit in the upper center area of the watershield.
6. Lift the upper half of the watershield upward far enough to disengage the inside latch lock knob and link from the slit in the upper rear corner of the watershield.
7. Remove the watershield from the door.

INSTALLATION

CAUTION: Do not allow the watershield or adhesive to become contaminated with dirt or other foreign substances.

Do not damage the watershield during removal and installation.

If the watershield becomes contaminated or damaged, replace the watershield.

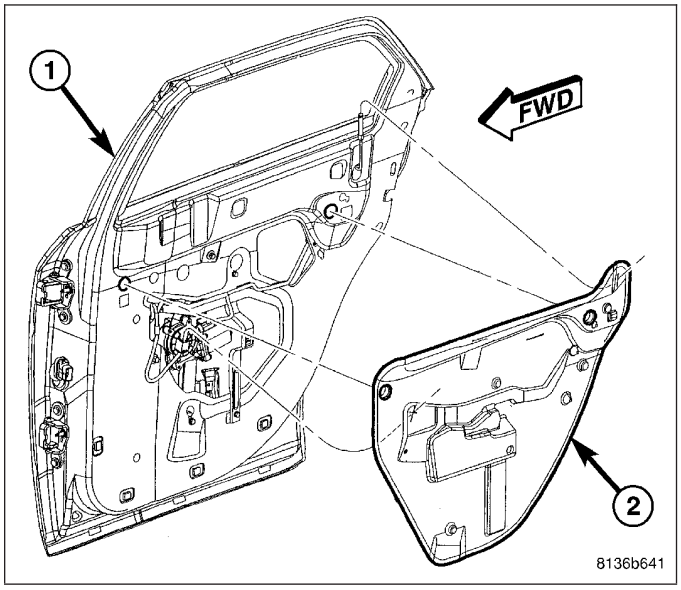

1. Thread the inside latch lock knob and link through the slit near the upper rear corner of the watershield (2).
2. Thread the inside remote latch release handle link through the slit in the upper center area of the watershield.
3. Place the front and rear dimple formations located in the upper watershield into their respective locator holes in the door (1) inner panel.
4. Apply firm and even pressure to the adhesive bead along the upper edge of the watershield to seal it to the inside of the door.
5. Lift the lower half of the watershield upward far enough to access and pull the trim panel take out of the door wire harness out of through the slit near the front of the watershield.
6. Apply firm and even pressure to the adhesive bead along the remaining edges of the watershield to seal it to the inside of the door. Be certain that the watershield is sealed to the inside of the door.

7. Reinstall the trim panel onto the inside of the rear door. (Refer to 23 - BODY/DOOR - REAR/TRIM PANEL - INSTALLATION).

WINDOW REGULATOR

REMOVAL

1. Remove the trim panel from the inside of the rear door. (Refer to 23 - BODY/DOOR - REAR/TRIM PANEL - REMOVAL).
2. Remove the watershield from the inside of the rear door. (Refer to 23 - BODY/DOOR - REAR/WATERSHIELD - REMOVAL).
3. Remove the door glass channel and bracket from the inside of the rear door. (Refer to 23 - BODY/DOOR - REAR/GLASS RUN CHANNEL - REMOVAL).
4. Remove the screw (2) that secures the bottom of the pull cup bracket (1) to the inside of the rear door.
5. Loosen the screw that secures the top of the pull cup bracket to the inside of the rear door.
6. Disengage the upper pull cup bracket screw from the keyed hole and remove the bracket from the inside of the rear door.

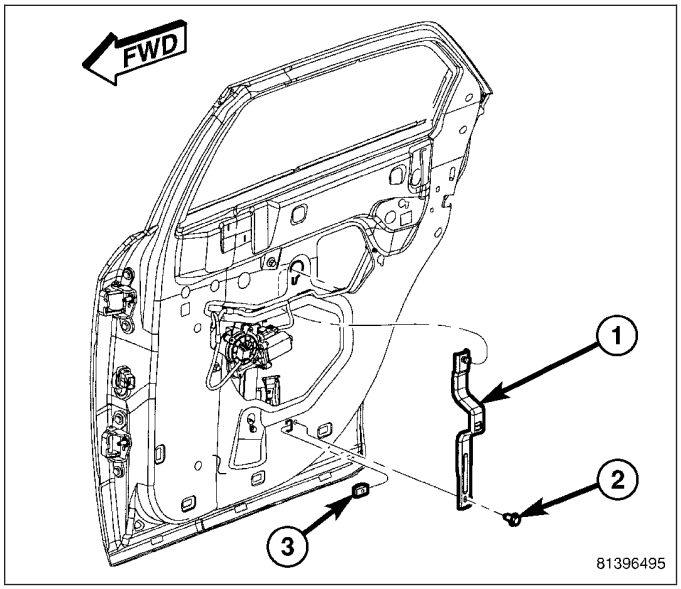

7. Using the regulator, adjust the rear door glass (1) position up or down as required for access to the two window regulator glass clamps (2).
8. Loosen the screw (3) in each of the glass clamps far enough to release the glass.
9. Lift the glass out of the regulator clamps and into its full up position, then tape the glass securely into place.

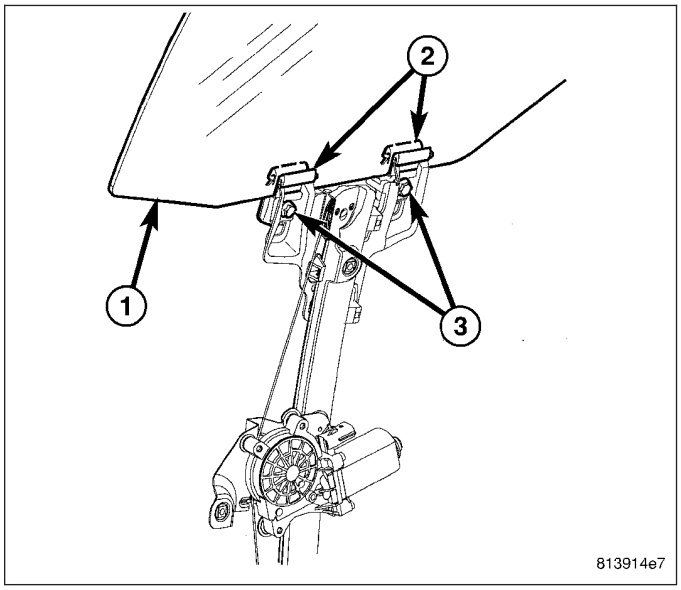

10. Remove the screw (1) that secures the top of the rear regulator rail (2) to the inside of the door.
11. Remove the screw (4) that secures the regulator motor support bracket to the inside of the door.
12. Loosen the screw that secures the bottom of the regulator rail to the keyed hole (3) on the inside of the door.
13. Lift the rear regulator rail upward within the door far enough to disengage the screw from the keyed hole in the door.

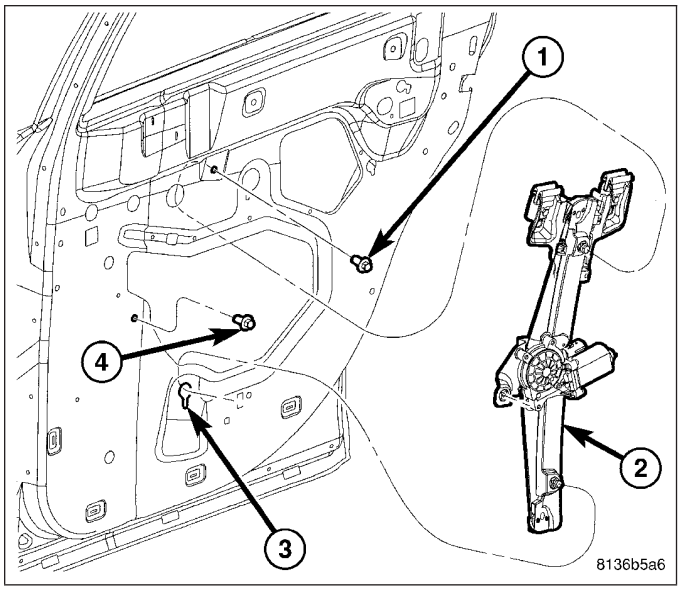

14. Lower the rear regulator within the door (3) far enough to access and disconnect the door wire harness connector (1) from the regulator motor (2) through the large access hole on the inside of the door near the front.
15. Remove the regulator through the large access hole on the inside of the door.

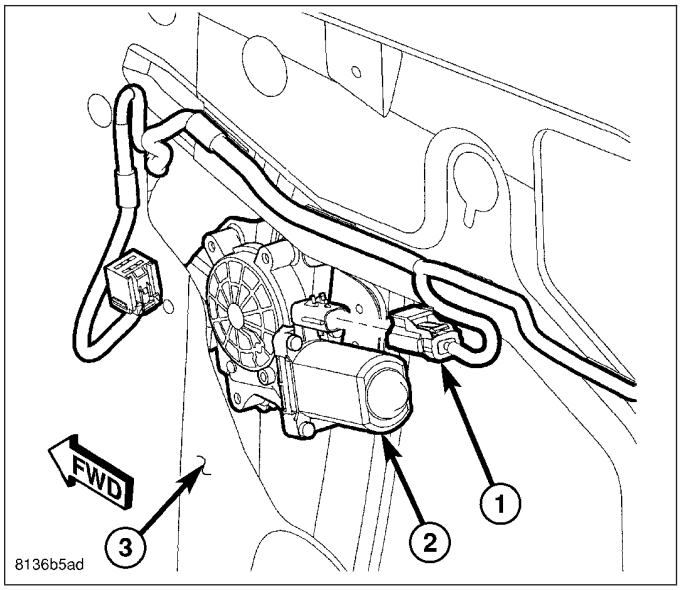

INSTALLATION

1. Load the regulator into the door (3) through the large access hole on the inside of the door near the front.
2. Position the rear regulator within the door so that the door wire harness connector (1) can be reconnected to the regulator motor (2) through the large access hole on the inside of the door.

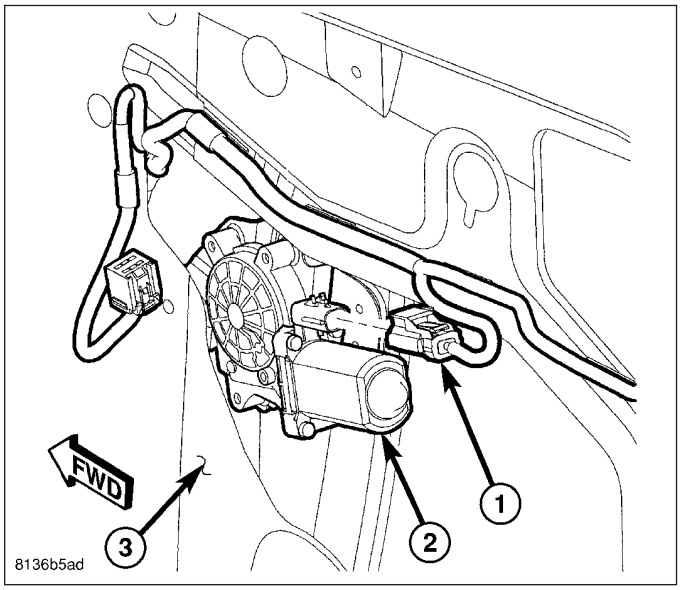

3. Engage the screw at the bottom of the rear regulator rail (2) into the keyed hole (3) on the inside of the door near the bottom.
4. Install and tighten the screw (1) that secures the top of the rear regulator rail to the inside of the door. Tighten the screw to 10 N·m (90 in. lbs.).
5. Install and tighten the screw (4) that secures the regulator motor support bracket to the inside of the door. Tighten the screw to 10 N·m (90 in. lbs.).
6. Tighten the screw that secures the bottom of the regulator rail to the keyed hole on the inside of the door. Tighten the screw to 10 N·m (90 in. lbs.).

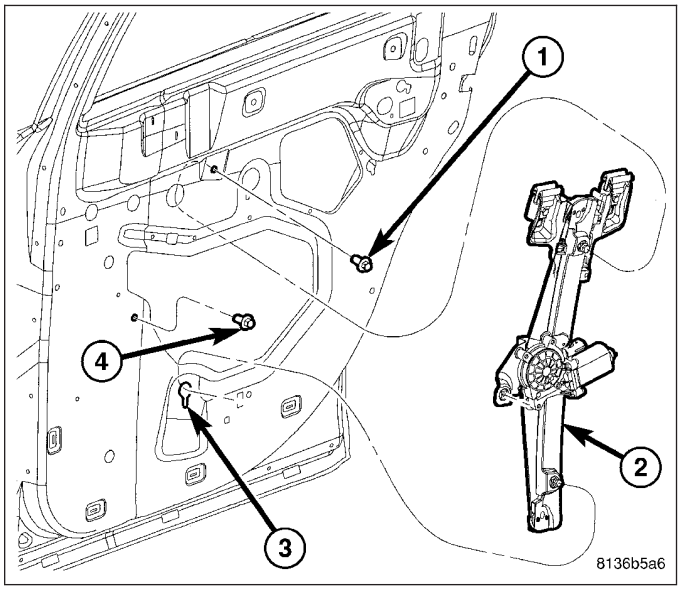

7. Remove the tape securing the door glass in its full up position, then lower the glass to engage it into the two window regulator glass clamps (2).
8. Using the regulator, lower the glass far enough to access the two window regulator glass clamp screws (3).
9. Tighten the screw in each of the glass clamps. Tighten the screws to 10 N·m (90 in. lbs.).

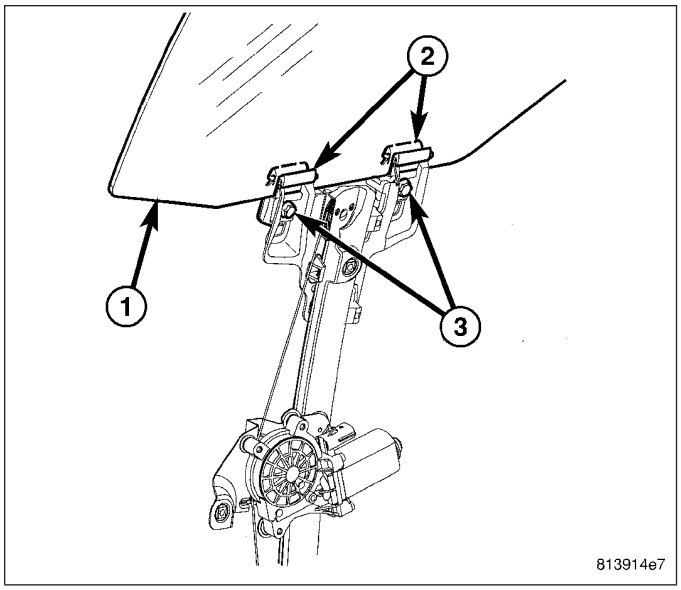

10. With the upper screw hand-started into the pull cup bracket (1), position the screw into the keyed hole on the inside of the rear door.
11. Install and tighten the screw (2) that secures the bottom of the pull cup bracket to the U-nut (3) on the inside of the rear door. Tighten the screw to 11 N·m (100 in. lbs.).
12. Tighten the screw that secures the top of the pull cup bracket to the inside of the rear door. Tighten the screw to 10 N·m (90 in. lbs.).
13. Reinstall the glass channel and bracket onto the inside of the rear door. (Refer to 23 - BODY/DOORS - REAR/GLASS RUN CHANNEL - INSTALLATION).
14. Reinstall the watershield onto the inside of the rear door. (Refer to 23 - BODY/DOOR - REAR/WATERSHIELD - INSTALLATION).
15. Reinstall the inner belt weatherstrip onto the rear door. (Refer to 23 - BODY/WEATHERSTRIP/SEALS/DOOR INNER BELT WEATHERSTRIP - INSTALLATION-REAR).

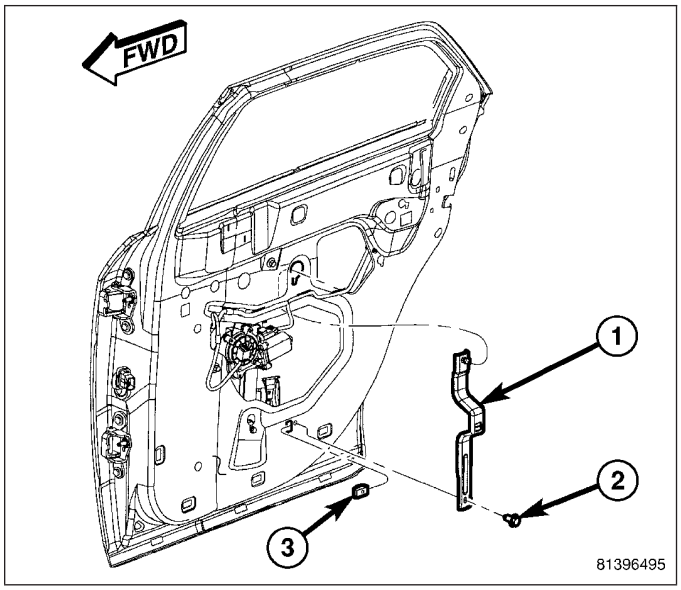

16. Reinstall the trim panel onto the inside of the rear door. (Refer to 23 - BODY/DOOR - REAR/TRIM PANEL - INSTALLATION).

CABLE - REMOTE LOCK ACTUATOR

REMOVAL

1. Disconnect battery.
2. Open the front door.
3. Remove the lock actuator knob lock nut.

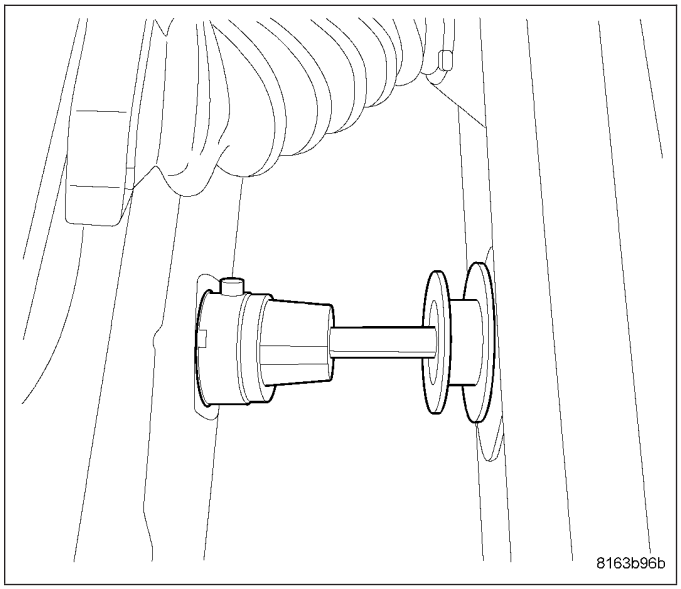

4. Open rear door.
5. Remove the trim panel and watershield. (Refer to 23 - BODY/DOORS - REAR/TRIM PANEL - REMOVAL)

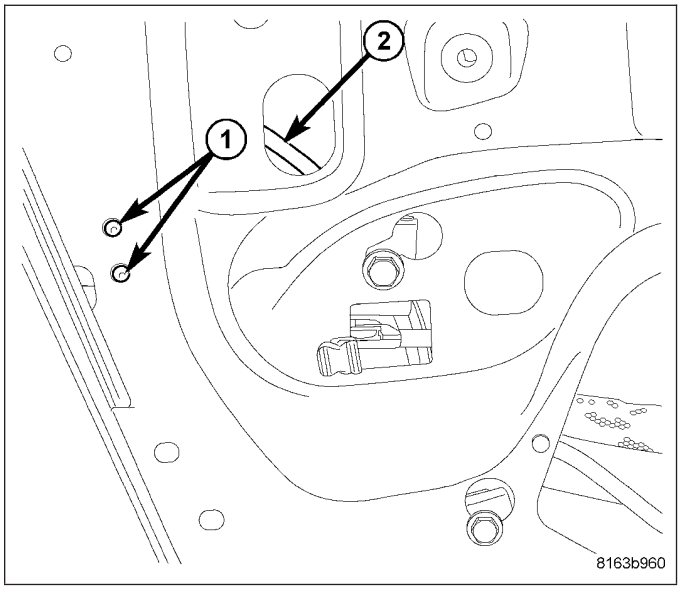

6. Cut zip ties connecting actuator cable to door reinforcement.
7. Drill out rivets (2).
8. Remove door lock actuator cable from door.

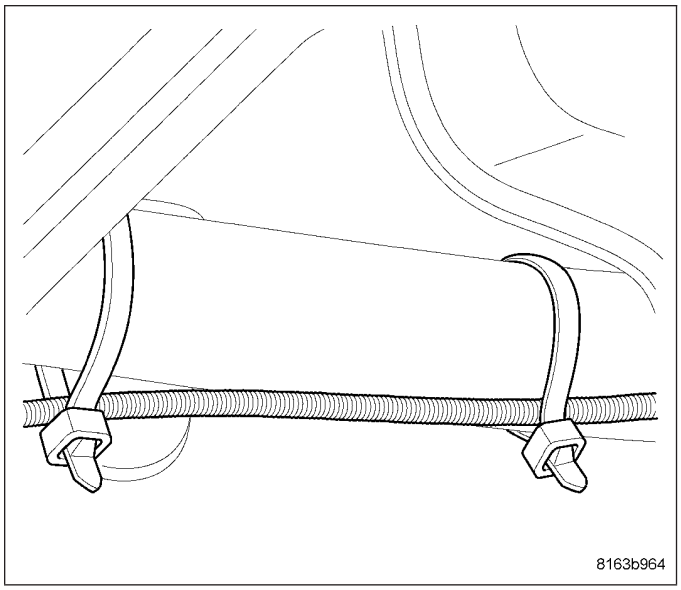

INSTALLATION

1. Install the cable into the door and through the hole in the door shut face.
2. Install and tighten the cable nut.

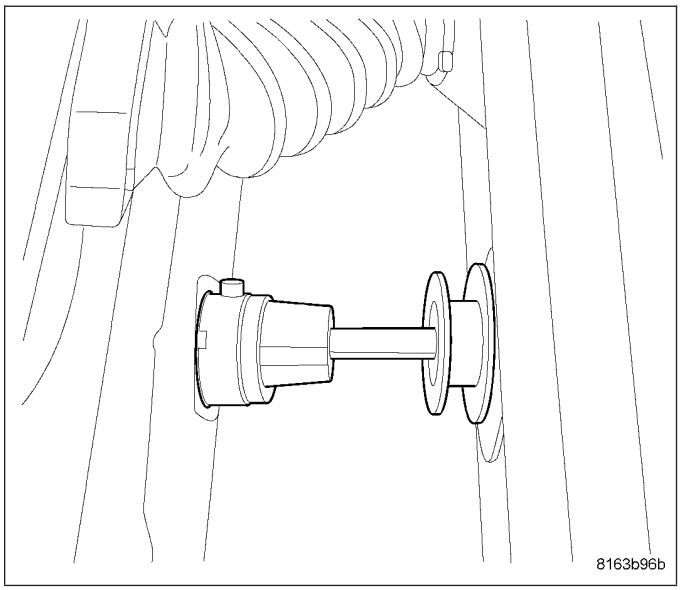

3. Replace zip ties and fasten to door replacement bar.

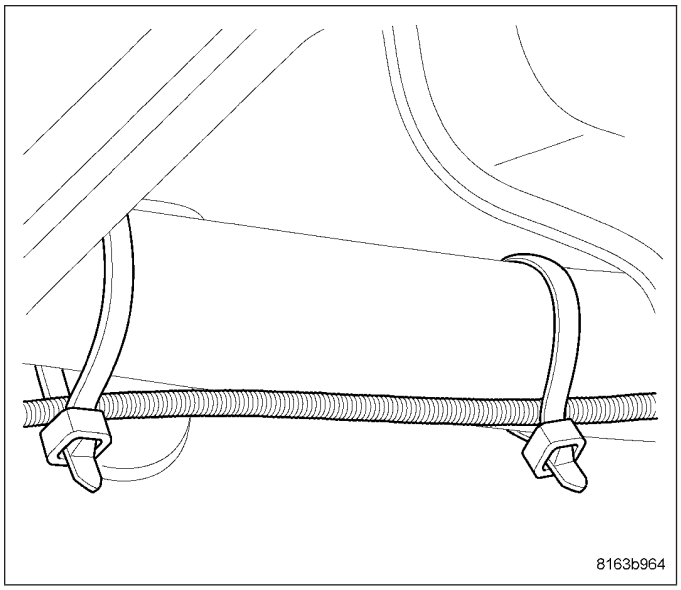

4. Rivet actuator cable bracket to door..
5. Reinstall the watershield and the trim panel. (Refer to 23 - BODY/DOORS - REAR/TRIM PANEL - INSTALLATION)

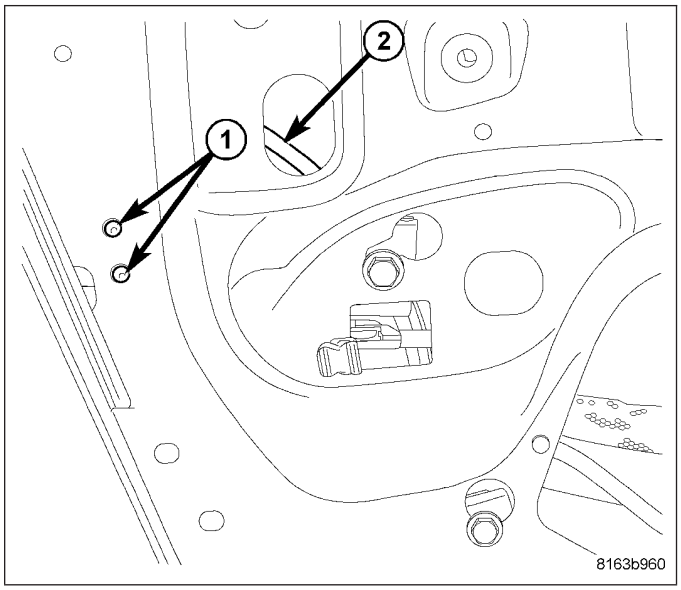

EXTERIOR

TABLE OF CONTENTS

page

BELLY PAN
REMOVAL 93
INSTALLATION 94
CLADDING-BODY SIDE
REMOVAL 95
INSTALLATION 95
PANEL-COWL TOP
REMOVAL 96
INSTALLATION 97
GRILLE
REMOVAL 98
INSTALLATION 98
RACK-LUGGAGE
REMOVAL 99
INSTALLATION 99
RACK-LUGGAGE - CROSSBAR
REMOVAL 101
INSTALLATION 101
CROSSMEMBER-HEADLAMP MOUNTING
REMOVAL 102
INSTALLATION 104
SHIELD-WHEELHOUSE - FRONT
REMOVAL 106
INSTALLATION 107
SHIELD-WHEELHOUSE - REAR
REMOVAL 108
INSTALLATION 109
SPOILER
REMOVAL 110
INSTALLATION 111
MIRROR-SIDE VIEW
REMOVAL 112
INSTALLATION 113
GLASS-SIDE VIEW MIRROR
REMOVAL 114
INSTALLATION 115
COWL EXTENSION TRIM
REMOVAL 116
INSTALLATION 116

BELLY PAN

REMOVAL

1. Raise and support the vehicle.
2. Remove the screws (1) that secure the front belly pan (2) to the underside of the vehicle.
3. Remove the front belly pan from the underside of the vehicle.

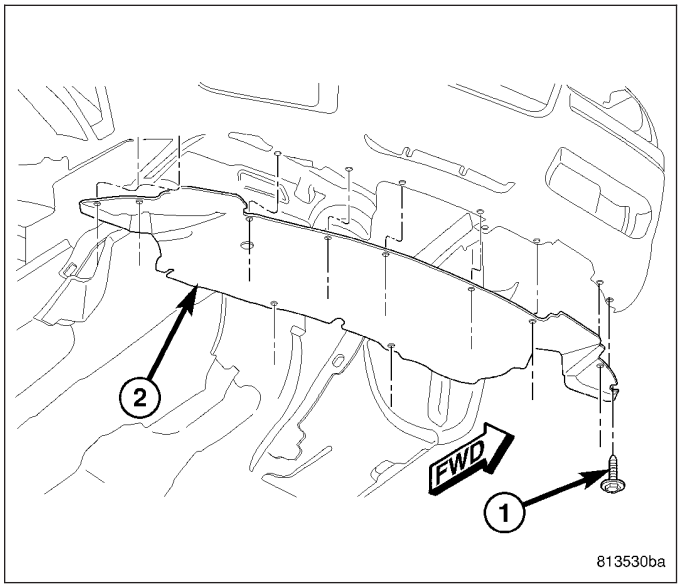

4. Remove the screws (1) that secure the rear belly pan (2) to the underside of the vehicle.
5. Remove the rear belly pan from the underside of the vehicle.

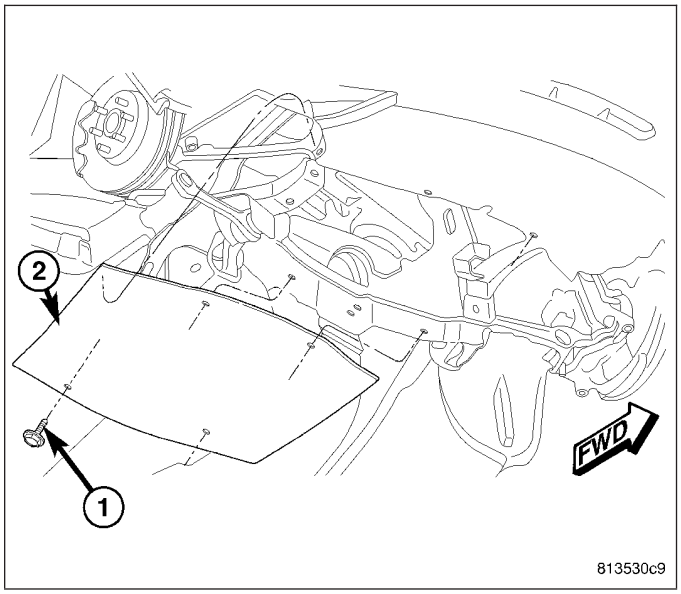

INSTALLATION

1. Position the rear belly pan (2) to the underside of the vehicle.
2. Install the screws (1) that secure the rear belly pan to the underside of the vehicle. Tighten the screws securely.

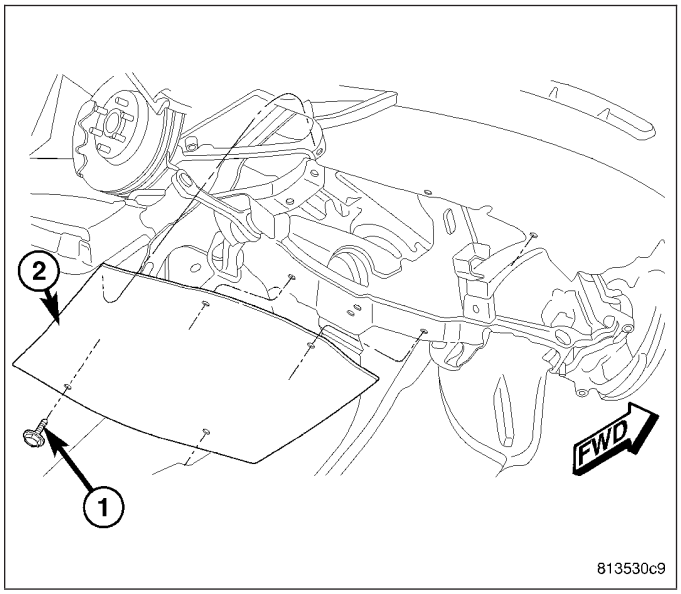

3. Position the front belly pan (2) to the underside of the vehicle.
4. Install the screws (1) that secure the front belly pan to the underside of the vehicle. Tighten the screws securely.
5. Lower the vehicle.

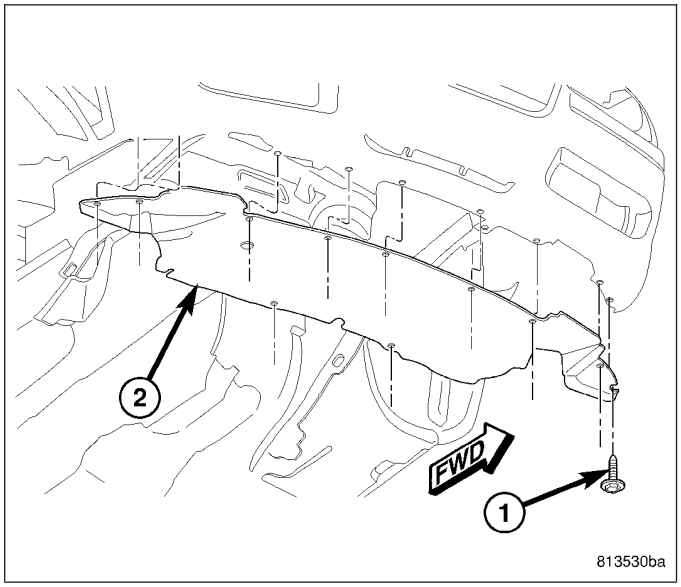

CLADDING-BODY SIDE

REMOVAL

1. Raise and support the vehicle.
2. Remove the wheels from the side of the vehicle being serviced (Refer to 22 - TIRES/WHEELS - REMOVAL).
3. Remove the pop rivets (2 and 5) from the front fender (1) and rear quarter panel (6).
4. Remove the rear body side cladding (4) by disengaging the cladding retaining clips from the rocker panel (7).
5. Remove the front body side cladding (3) by disengaging the retaining clip from the front fender.

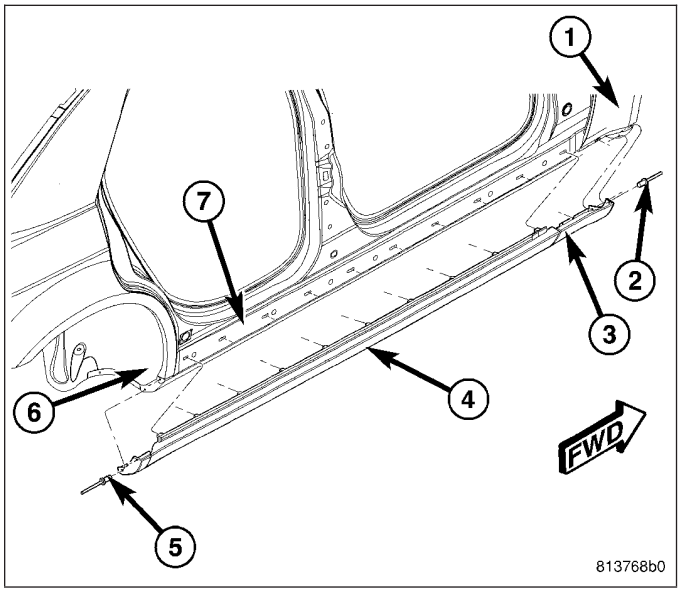

INSTALLATION

1. Position the front body side cladding (3) to the front fender (1).
2. Engaging the front cladding retaining clip to the front fender.
3. Position the rear body side cladding (4) to the rocker panel (6).
4. Engaging the rear cladding retaining clips to the rocker panel.
5. Install the pop rivets (2 and 5).
6. Install the wheels (Refer to 22 - TIRES/WHEELS - INSTALLATION).
7. Lower the vehicle.

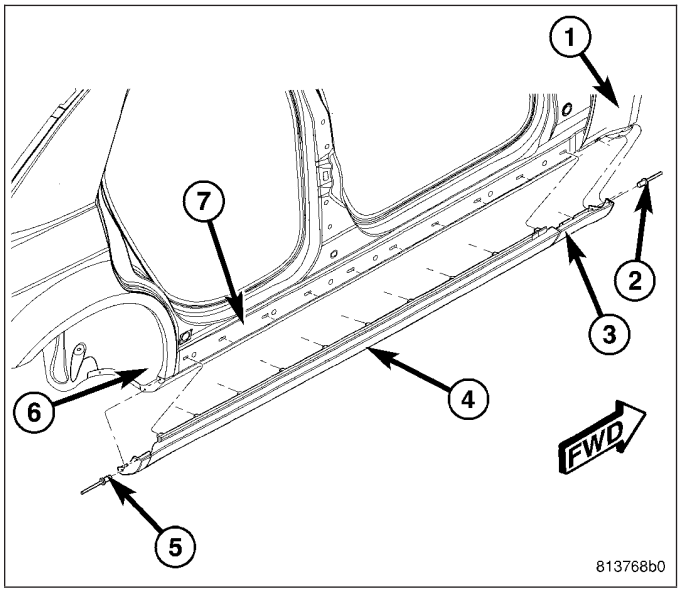

PANEL-COWL TOP

REMOVAL

1. Remove the two push pins (2) that secure the front cowl top panel (1) to the right rear corner of the engine compartment
2. Remove the front cowl top panel.

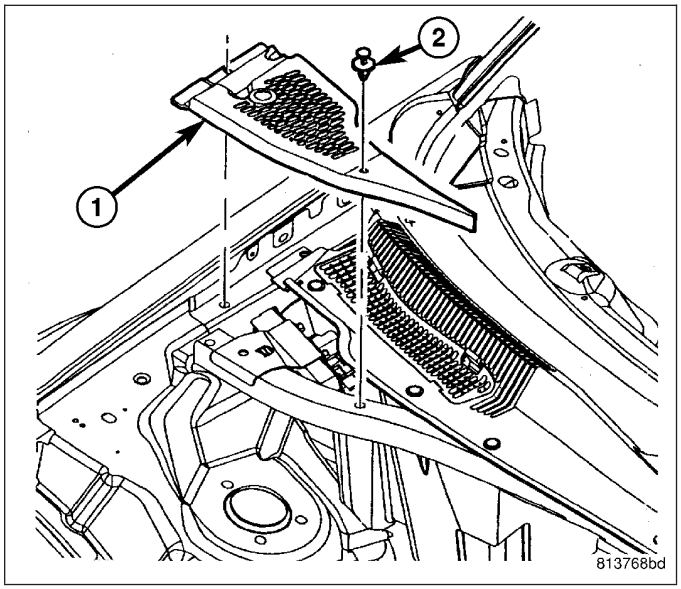

3. Remove the windshield wiper arms (Refer to 8 - ELECTRICAL/WIPERS/WASHERS/WIPER ARMS - REMOVAL).
4. Remove the push-pin (2) that secures each end of the cowl top panel (1) to each front fender (7).
5. Disengage the two 1/4-turn fasteners (3) that secure the cowl top panel to the dash panel (5).
6. Remove the six push-pins (4) that secure the cowl top panel to the strut tower support (6).
7. Disengage the integral retaining clips that secure the cowl top panel to the dash panel and remove the cowl panel from the engine compartment.

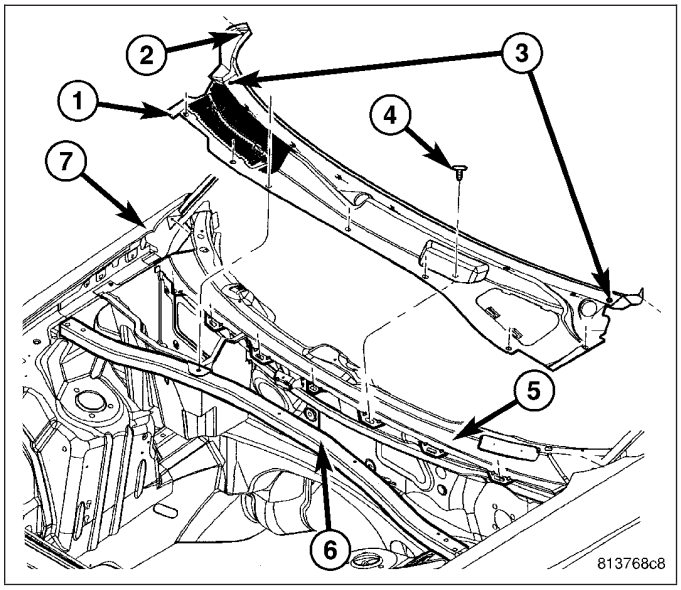

INSTALLATION

1. Position the cowl top panel (1) into the engine compartment.
2. Engage the integral retaining clips that secure the cowl top panel to the dash panel (5).
3. Install the six push-pins (4) that secure the cowl top panel to the strut tower support (6).
4. Engage the 1/4-turn fasteners (3) that secure cowl top panel to the dash panel.
5. Install the push-pin (2) that secures each end of the cowl top panel to each front fender (7).
6. Install the windshield wiper arms (Refer to 8 - ELECTRICAL/WIPERS/WASHERS/WIPER ARMS - INSTALLATION).

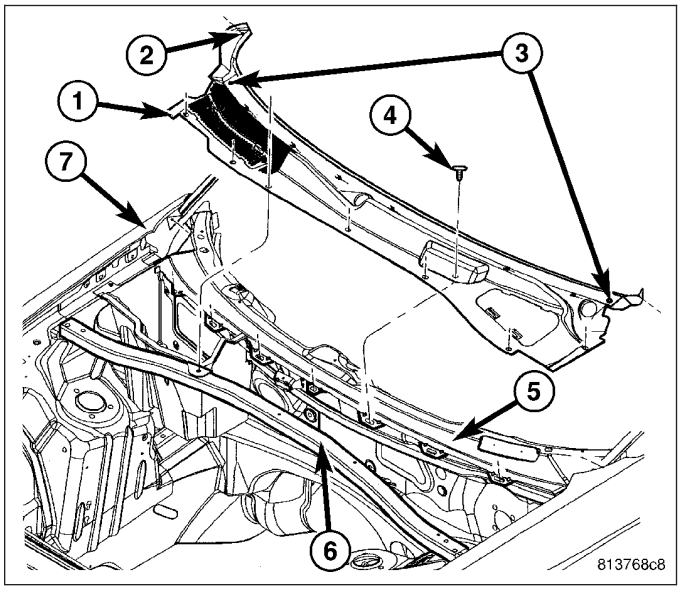

7. Position the front cowl top panel (1) to the right rear corner of the engine compartment.
8. Install the two push-pins (2) that secure the front cowl top panel.

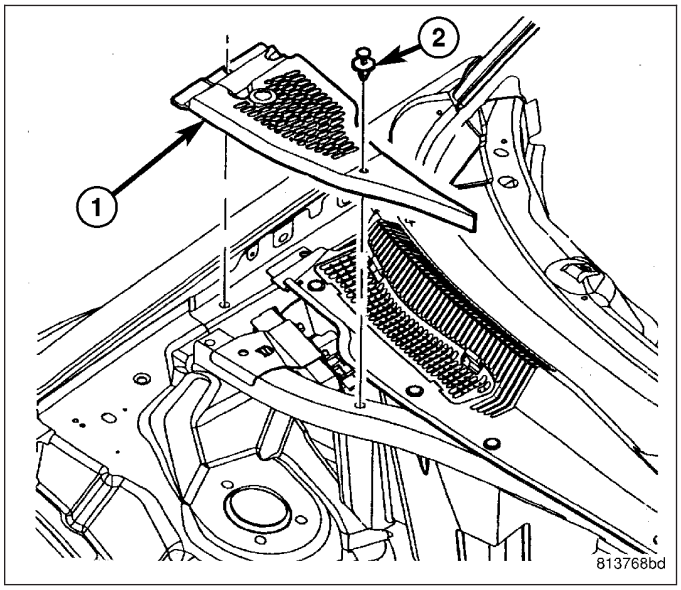

GRILLE

REMOVAL

NOTE: Take the proper precautions to protect the face of the front fascia from cosmetic damage.

1. Remove the front fascia (1) and place it on a workbench (Refer to 13 - FRAME & BUMPERS/BUMPERS/FRONT FASCIA - REMOVAL).
2. Remove the screws (2) that secure the grille (3) to the inside of the front fascia.
3. Remove the grille from the front fascia.

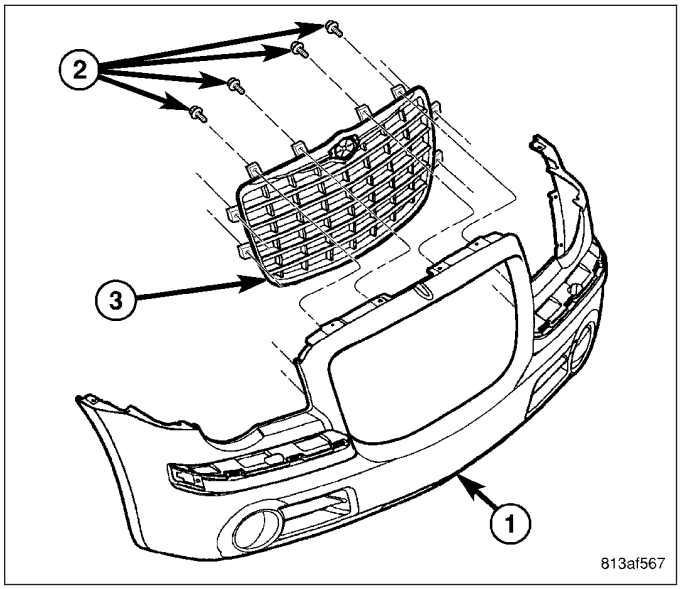

INSTALLATION

1. Position the grille into the front fascia.
2. Install the screws that secure the grille to the front fascia. Tighten the screws securely.
3. Install the front fascia (Refer to 13 - FRAME & BUMPERS/BUMPERS/FRONT FASCIA - INSTALLATION).

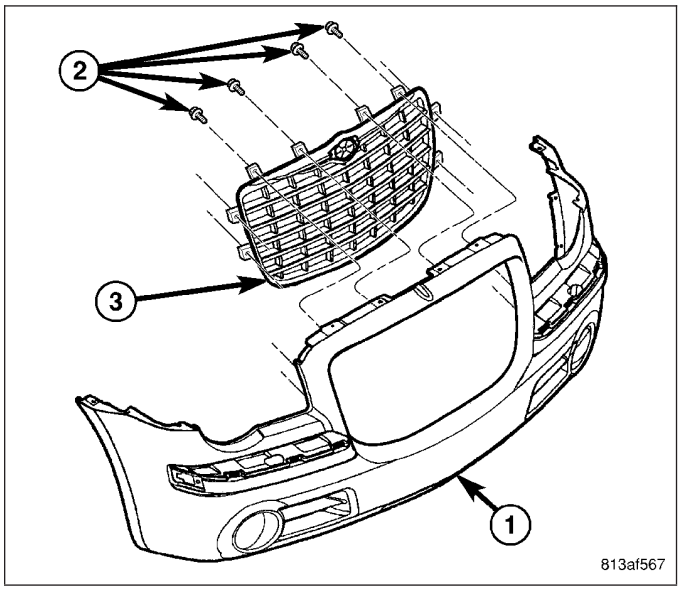

RACK-LUGGAGE

REMOVAL

1. If equipped, remove the luggage rack crossbars (Refer to 23 - BODY/EXTERIOR/LUGGAGE RACK CROSSBAR - REMOVAL).
2. Remove the end caps (1) from the luggage rack bars (2) by gently prying up on the end cap to disengage the two integral retainers (3).

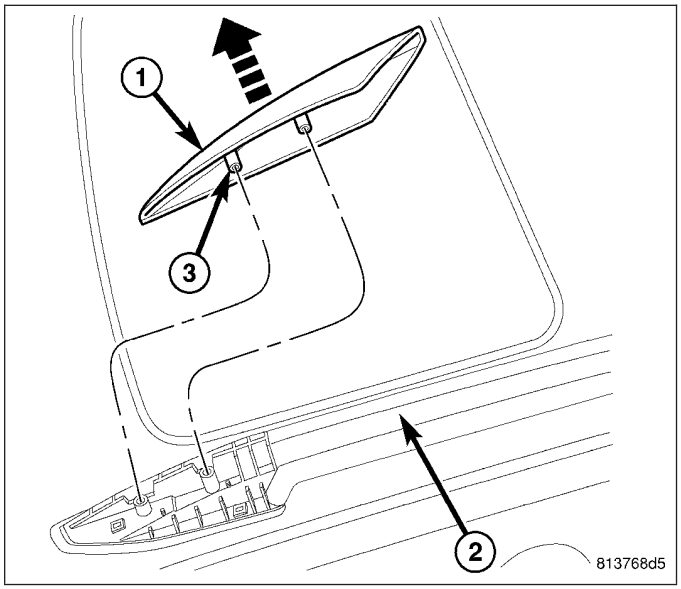

3. Remove the two nuts (1) that secure each end of the luggage rack crossbars (2) to the top of the vehicle.
4. Remove the luggage rack crossbars from the top of the vehicle.

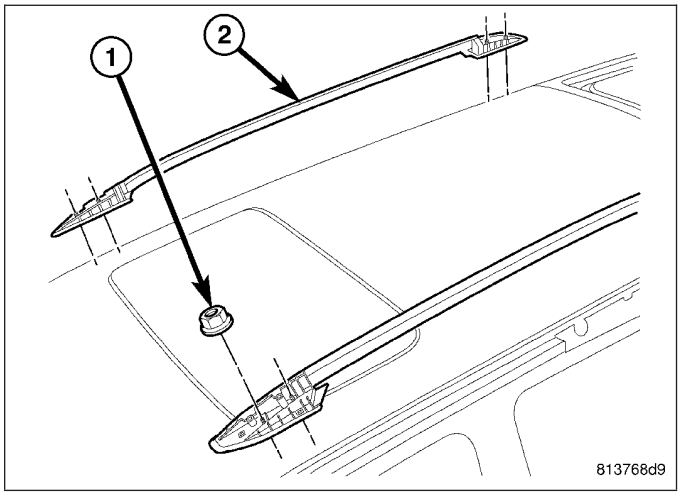

INSTALLATION

1. Position the luggage rack crossbars (2) onto the top of the vehicle.
2. Install the two nuts (1) that secure each end of the luggage rack crossbars to the top of the vehicle. Tighten the nuts to 7 N·m (60 in. lbs.).

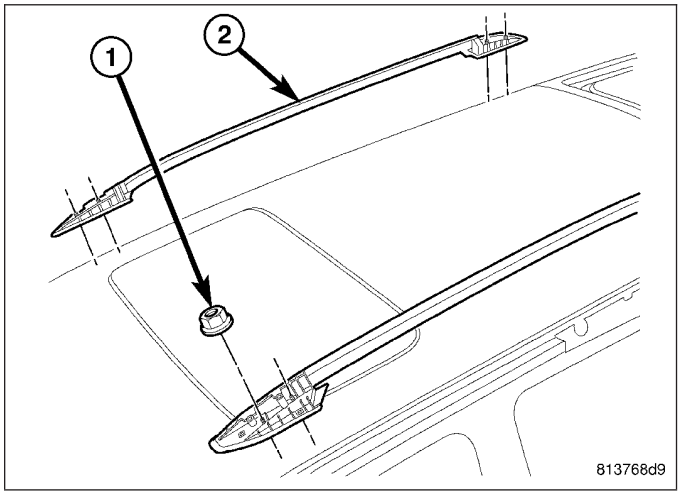

3. Position the end cap (1) onto each end of the luggage rack crossbars (2).
4. Push down firmly on the end caps until the integral retainers (3) fully engage the crossbars.
5. If removed, install the luggage rack crossbars (Refer to 23 - BODY/EXTERIOR/LUGGAGE RACK CROSSBAR - INSTALLATION).

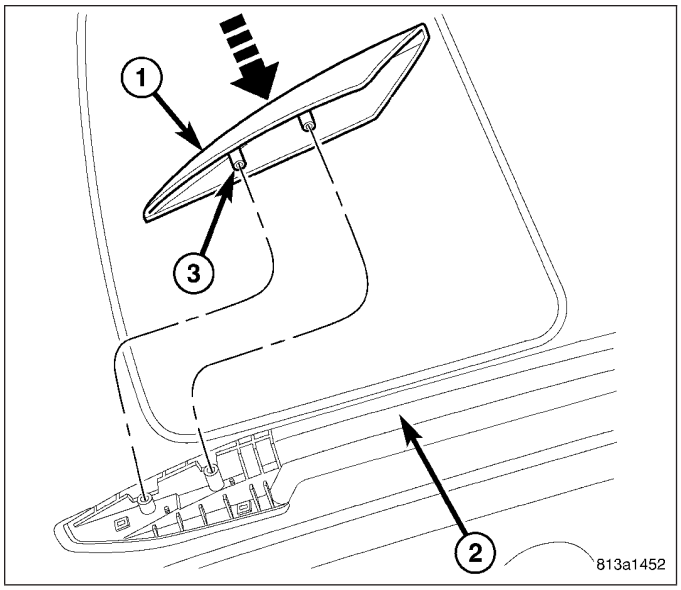

RACK-LUGGAGE - CROSSBAR

REMOVAL

1. Remove the two screws (1) that secure the front luggage rack crossbar (2) to the luggage rack bars (3).
2. Lift the handle on the four luggage rack crossbar levers (4) and then turn the levers counter - clockwise to loosen lower clamps (5).
3. Turn the lower clamps towards the center of the vehicle.
4. Remove the front luggage rack crossbar and the rear luggage rack crossbar (6) from the luggage rack bars.

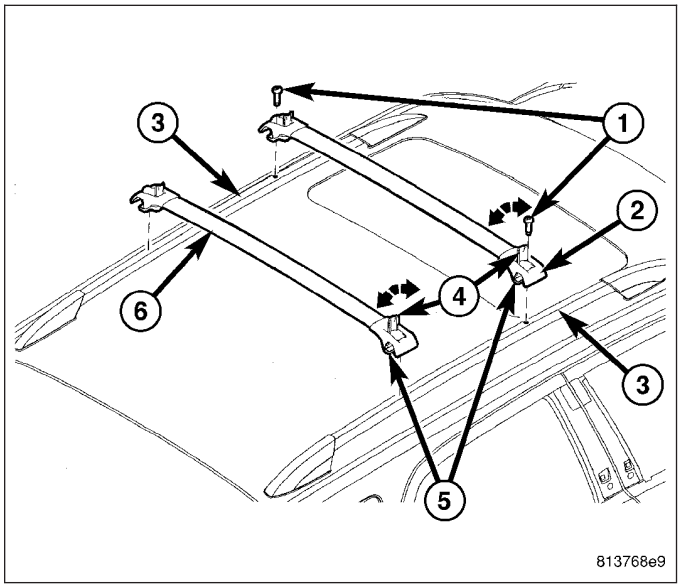

INSTALLATION

NOTE: Do not place the front luggage rack crossbar directly over the sunroof glass, if equipped.

1. Position the front luggage rack crossbar (2) onto the luggage rack bars (3).
2. Install the two screws (1) that secure the front luggage rack crossbar to the luggage rack bars. Tighten the screws securely.
3. Position the rear luggage rack crossbar (6) onto the luggage rack bars.
4. Turn the lower clamps (5) towards the outside of vehicle.
5. Turn the handle on the four luggage rack crossbar levers (4) clockwise until the lower clamps are tight on the luggage rack bars.
6. Flip the handle on the four luggage rack crossbar levers down and attempt to move the crossbars to ensure that they are properly locked into position.

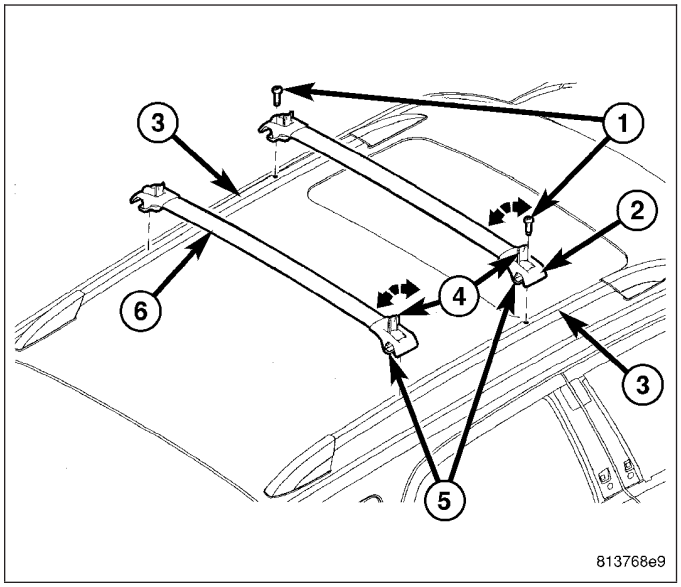

CROSSMEMBER-HEADLAMP MOUNTING

REMOVAL

1. Disconnect and isolate the negative battery cable.
2. Remove the front fascia (Refer to 13 - FRAME & BUMPERS/BUMPERS/FRONT FASCIA - REMOVAL).
3. Remove the headlamp units (1) (Refer to 8 - ELECTRICAL/LAMPS/LIGHTING - EXTERIOR/ HEADLAMP UNIT - REMOVAL).

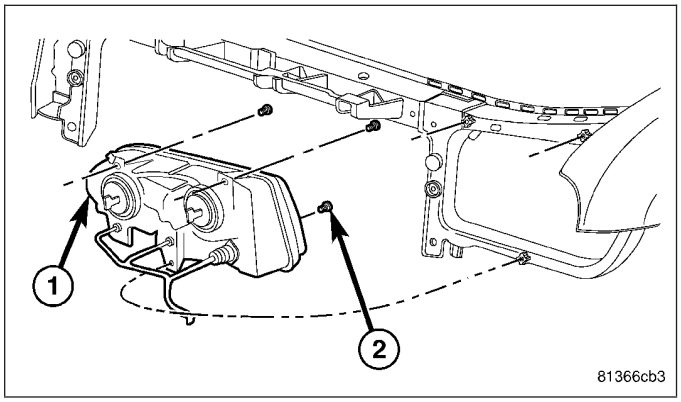

4. Disconnect the headlamp wire harness from the horns.
5. Remove the bolts that secure the horns to the headlamp mounting crossmember and remove the horns.

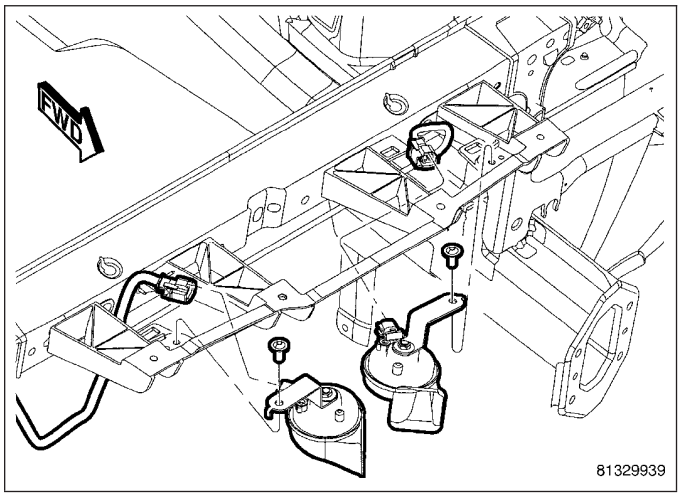

6. Mark the location of the hood latch (2) on the front of the headlamp mounting crossmember (1) to aid in reinstallation.
7. Remove the two bolts (3) that secure the hood latch to the headlamp mounting crossmember and position the hood latch and cable out of the way.

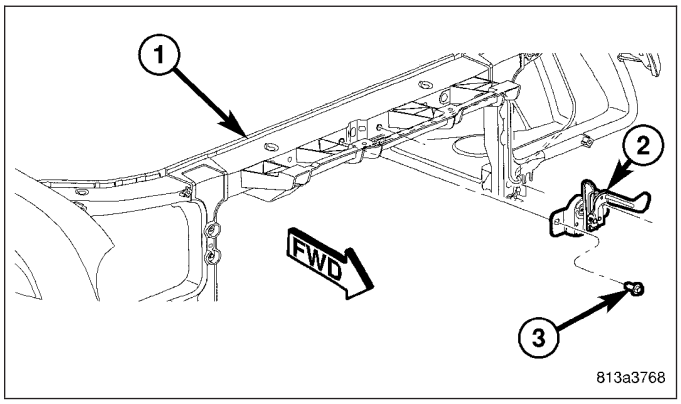

8. Remove the bolts (2) the secure the radiator mounting brackets (1) to the headlamp mounting crossmember.

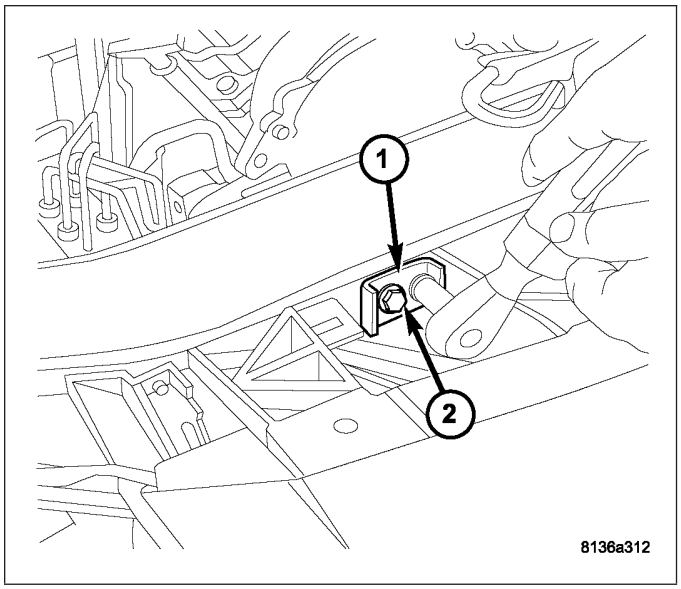

NOTE: Mark the location of the headlamp mounting crossmember to the other body components prior to removal of the crossmember to aid in reinstallation.

9. Mark the location of the headlamp mounting crossmember (1) to the front fenders.
10. Remove the bolts (2 and 3) that secure the headlamp mounting crossmember to the front fenders.
11. Remove the bolts (4) that secure the headlamp mounting crossmember to the front frame rails (5).
12. Remove the headlamp mounting crossmember from the engine compartment.

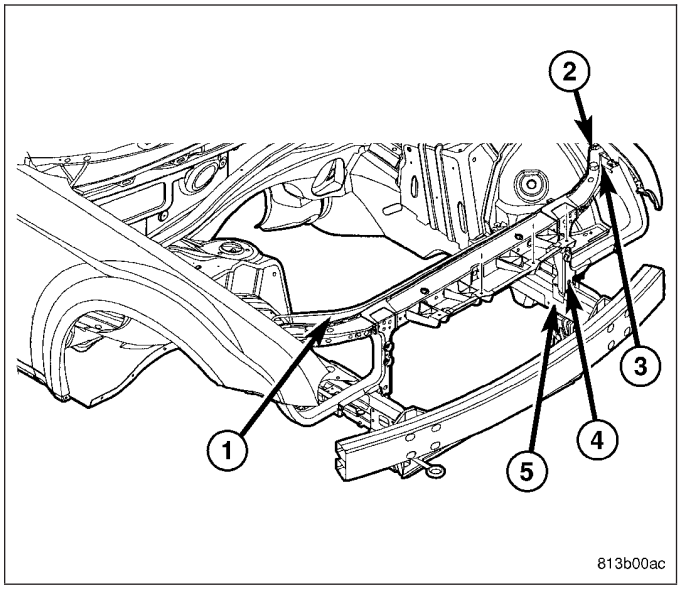

INSTALLATION

1. Position the headlamp mounting crossmember (1) into the engine compartment.
2. Loosely install the bolts (2 and 3) that secure the headlamp mounting crossmember to the front fenders.
3. Loosely install the bolts (4) that secure the headlamp mounting crossmember to the front frame rails (5).
4. Align the headlamp mounting crossmember using the alignment marks previously indicated and tighten all of the retaining bolts to 28 N·m (21 ft. lbs.).

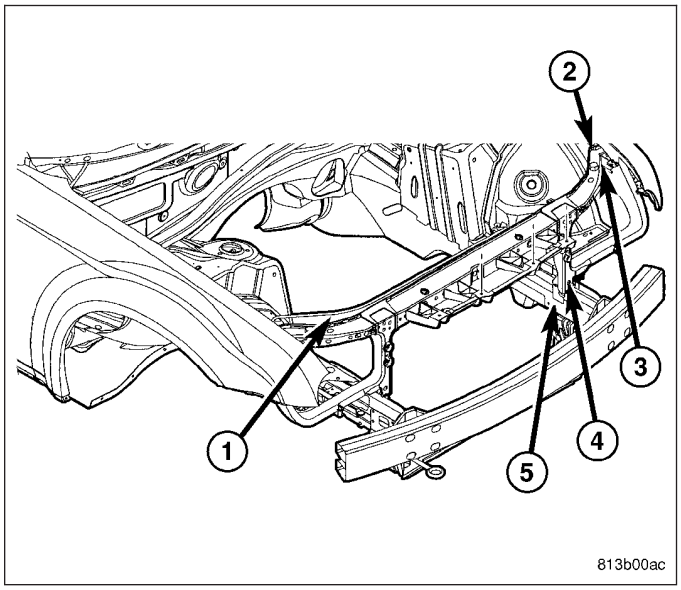

5. Install the bolts (2) that secure the radiator mounting bracket (1) to the headlamp mounting crossmember. Tighten the bolts to 5 N·m (45 in. lbs.).

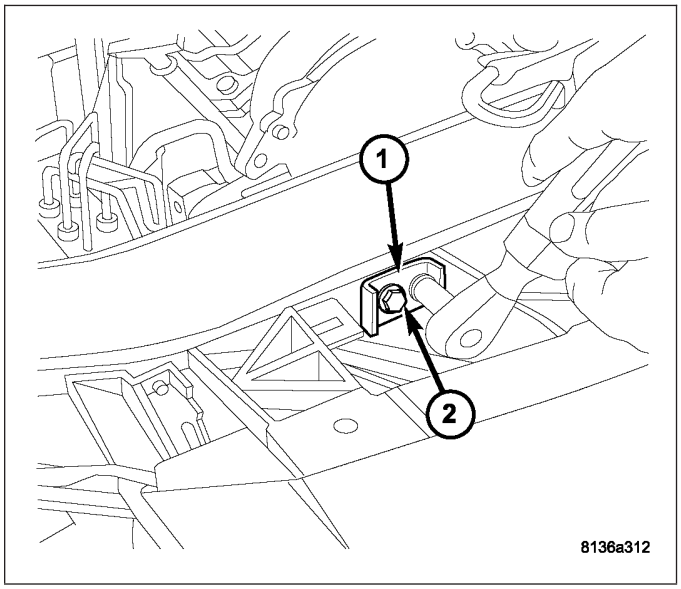

6. Position the latch (2) to the front of the crossmember (1).
7. Loosely install the two bolts (3) that secure the hood latch to the headlamp mounting crossmember.
8. Align the hood latch using the alignment marks previously indicated and tighten the hood latch bolts to 28 N·m (21 ft. lbs.).

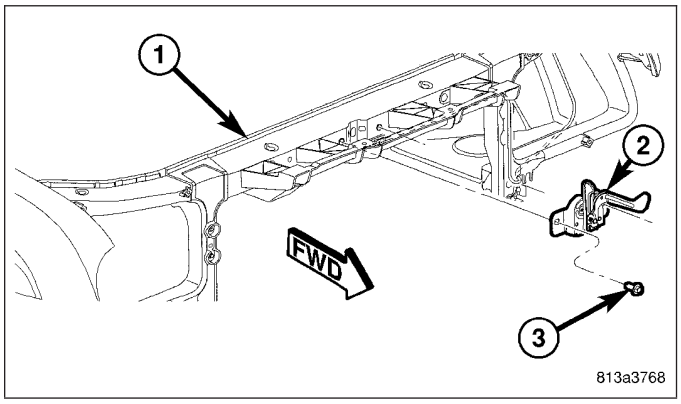

9. Install the horns onto the headlamp mounting crossmember. Tighten the bolts to 28 N·m (21 ft. lbs.).
10. Connect the headlamp wire harness to the horns.

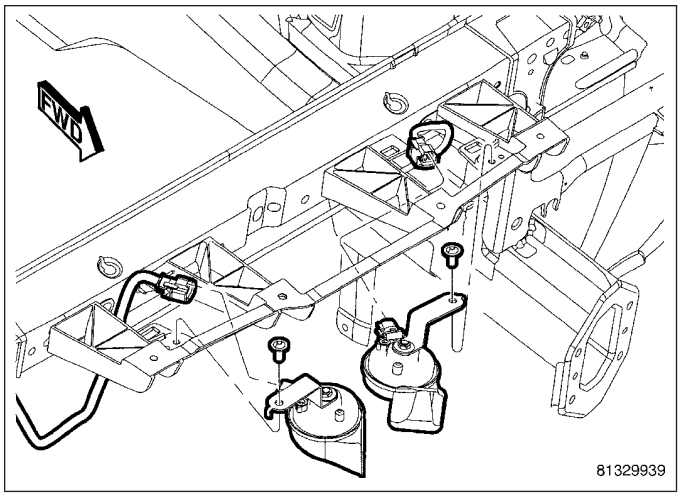

11. Install the headlamp units (1) (Refer to 8 - ELECTRICAL/LAMPS/LIGHTING - EXTERIOR/HEADLAMP UNIT - INSTALLATION).
12. Install the front fascia (Refer to 13 - FRAME & BUMPERS/BUMPERS/FRONT FASCIA - INSTALLATION).
13. Reconnect the negative battery cable.
14. Carefully close the hood and verify hood latch and panel alignment. Adjust as necessary.

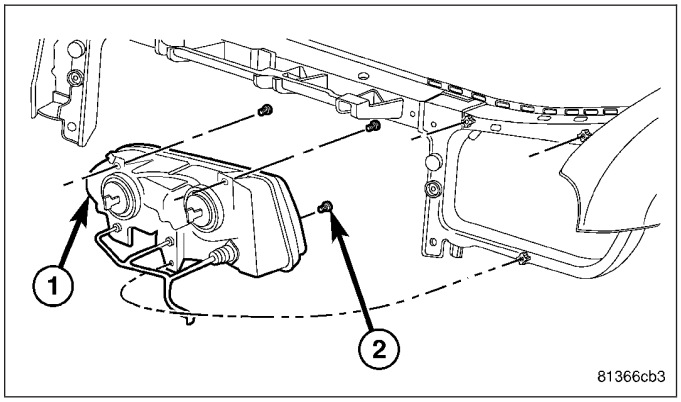

SHIELD-WHEELHOUSE - FRONT

REMOVAL

1. Raise and support the vehicle.
2. Remove the wheels from the side of the vehicle being serviced (Refer to 22 - TIRES/WHEELS - REMOVAL).
3. Remove the body side cladding from the side of the vehicle being serviced (Refer to 23 - BODY/EXTERIOR/BODY SIDE CLADDING - REMOVAL).
4. Remove the push-pins (1) that secure the lower front wheelhouse shield (3) to the front wheelhouse shield (3) and the body.
5. Remove lower front wheelhouse shield from the vehicle.

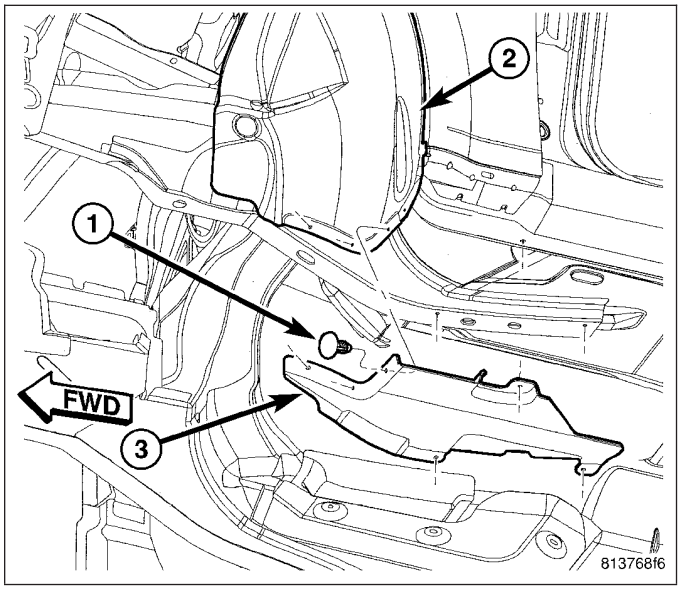

6. Remove the front belly pan (Refer to 23 - BODY/EXTERIOR/BELLY PAN - REMOVAL).
7. Remove the push-pins (2) that secure the front wheelhouse shield (1) to the body.
8. Remove the front wheelhouse shield from the vehicle.

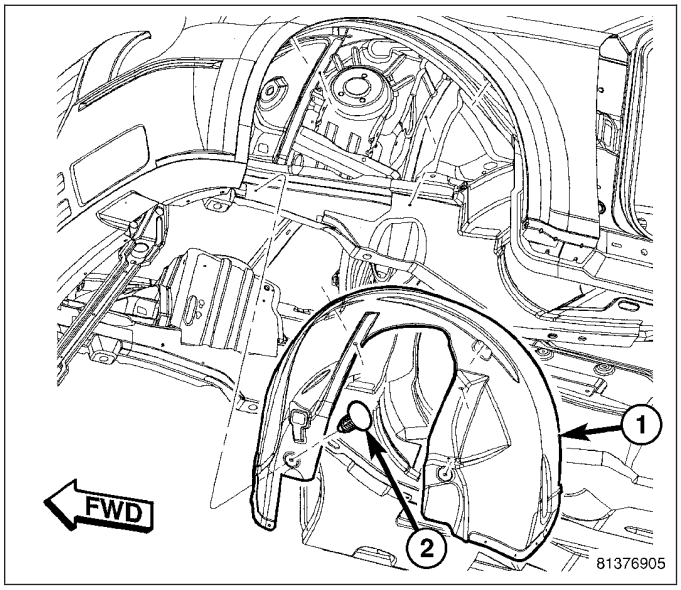

INSTALLATION

1. Position the front wheelhouse shield (1) into the front fenderwell.
2. Install the push-pin (2) that secure the front wheelhouse shield to the body.
3. Install the front belly pan (Refer to 23 - BODY/EXTERIOR/BELLY PAN - INSTALLATION).

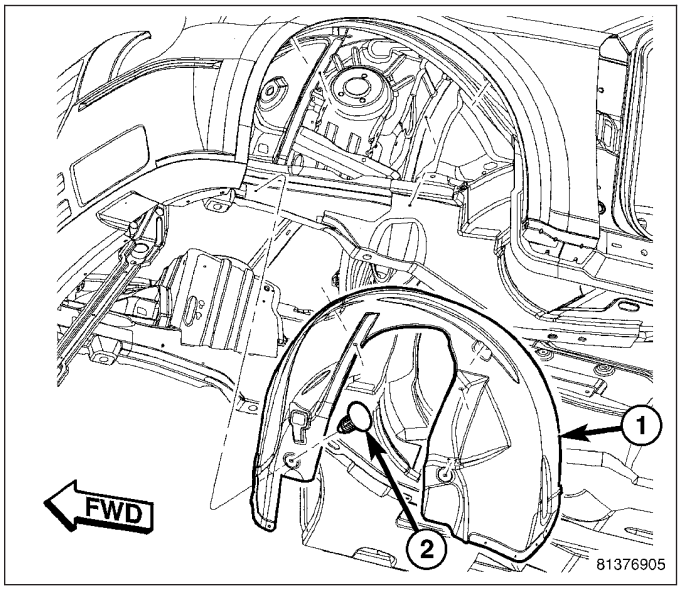

4. Position the lower front wheelhouse shield (3) onto the body.
5. Install the push-pins (1) that secure the lower front wheelhouse shield to the front wheelhouse shield (2) and the body.
6. Install the body side cladding (Refer to 23 - BODY/EXTERIOR/BODY SIDE CLADDING - INSTALLATION).
7. Install the front wheels (Refer to 22 - TIRES/WHEELS - INSTALLATION).
8. Lower the vehicle.

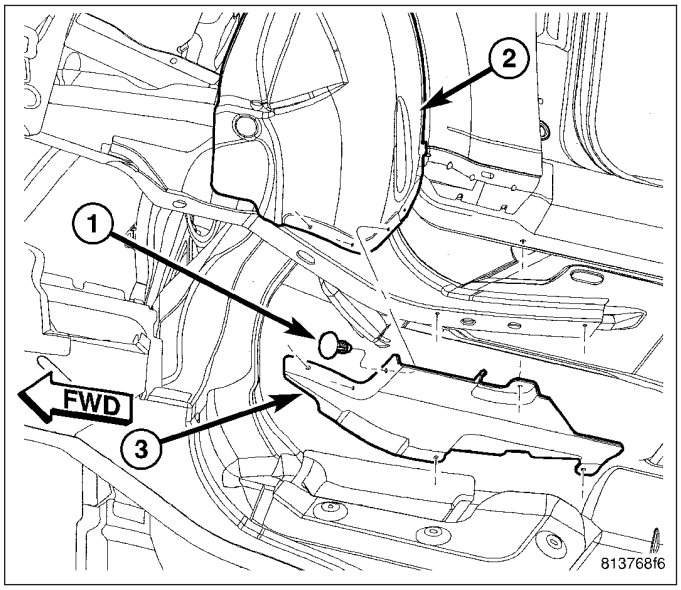

SHIELD-WHEELHOUSE - REAR

REMOVAL

1. Raise and support the vehicle.
2. Remove the wheels from the side of the vehicle being serviced (Refer to 22 - TIRES/WHEELS - REMOVAL).
3. Remove the rear portion of the body side cladding from the side of the vehicle being serviced (Refer to 23 - BODY/EXTERIOR/BODY SIDE CLADDING - REMOVAL).
4. Remove the nuts (1), bolt (2) and the push-pins (4), that secure the lower rear wheelhouse shield (3) to the body.
5. Remove lower rear wheelhouse shield from the vehicle.

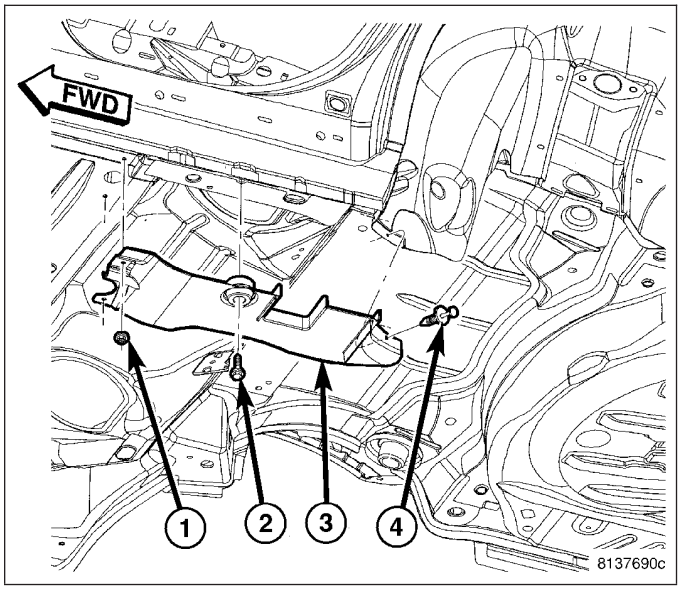

6. Remove the push-pins (1) that secure the rear wheelhouse shield (2) to the body.
7. Remove the rear wheelhouse shield from the vehicle.

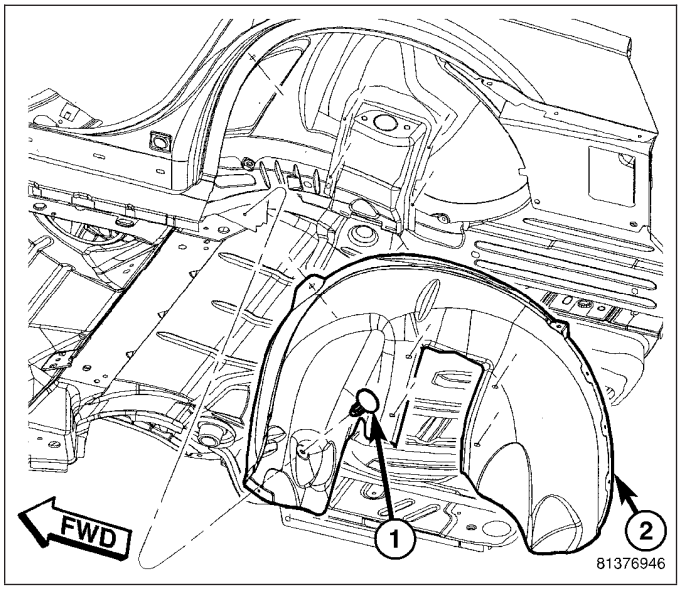

INSTALLATION

1. Position the rear wheelhouse shield (2) into the rear wheelwell.
2. Install the push-pins (1) that secure the rear wheelhouse shield to the body.

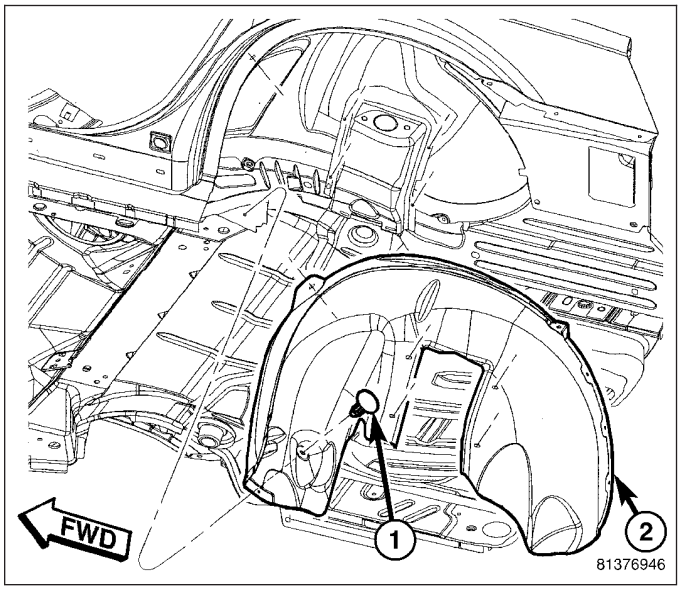

3. Position the lower rear wheelhouse shield (3) onto the body.
4. Install the nuts (1), bolt (2) and the push-pins (4) that secure the lower rear wheelhouse shield to the body. Tighten the nuts and the bolt securely.
5. Install the rear portion of the body side cladding (Refer to 23 - BODY/EXTERIOR/BODY SIDE CLADDING - INSTALLATION).
6. Install the wheels (Refer to 22 - TIRES/WHEELS - INSTALLATION).
7. Lower the vehicle.

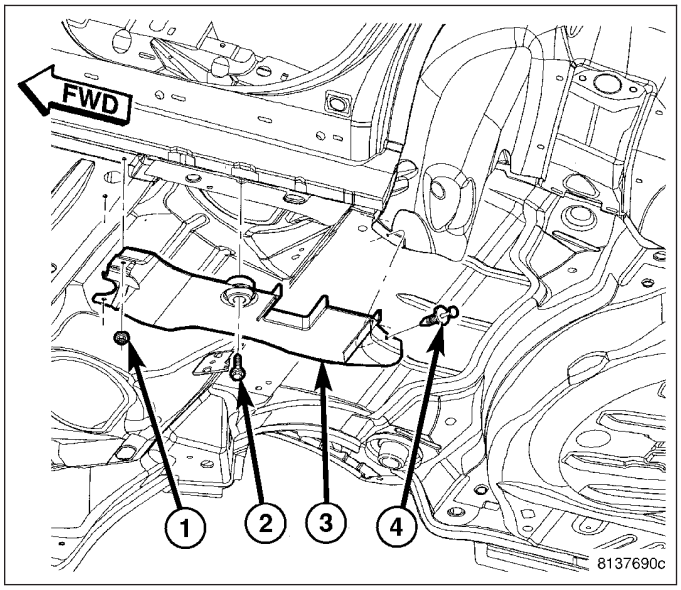

SPOILER

REMOVAL

1. Disconnect and isolate the negative battery cable.
2. Remove the lift gate upper trim panel (Refer to 23 - BODY/DECKLID/HATCH/LIFTGATE/TAILGATE/ TRIM PANEL - REMOVAL).
3. Disconnect the rear washer fluid supply hose (1).
4. Disconnect the CHMSL wire harness connector (2).
5. Remove the nuts (3) that secure the rear spoiler to the liftgate (4).

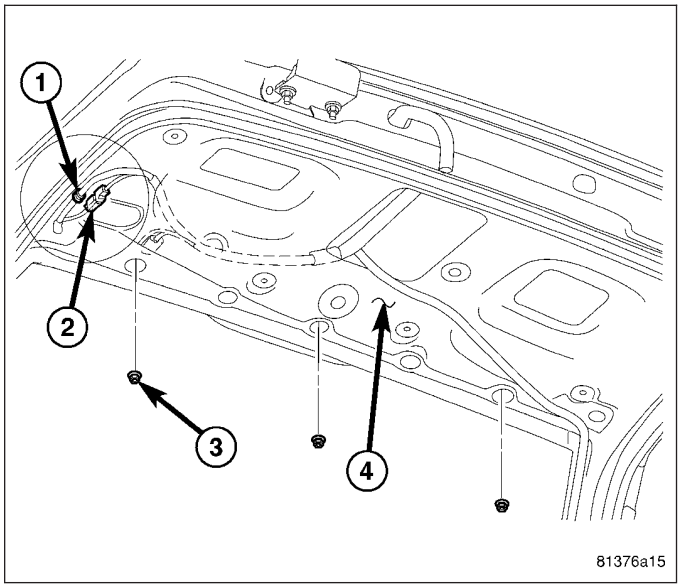

6. Partially remove the rear spoiler (1) from the liftgate to access the wire harness and washer fluid supply hose (2).
7. Remove the rubber grommet from the right top of the lift gate and route the wire harness and washer supply hose through the opening in the liftgate.
8. Remove rear spoiler from the vehicle.

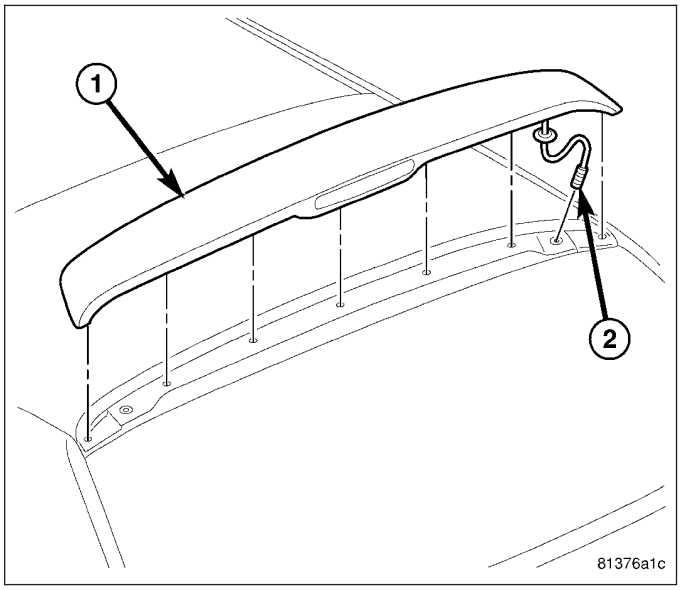

INSTALLATION

1. Position the rear spoiler (1) to the vehicle.
2. Route the wire harness and rear washer fluid supply hose (2) through the opening in the liftgate and install the grommet to the liftgate.
3. Install the rear spoiler onto the liftgate.

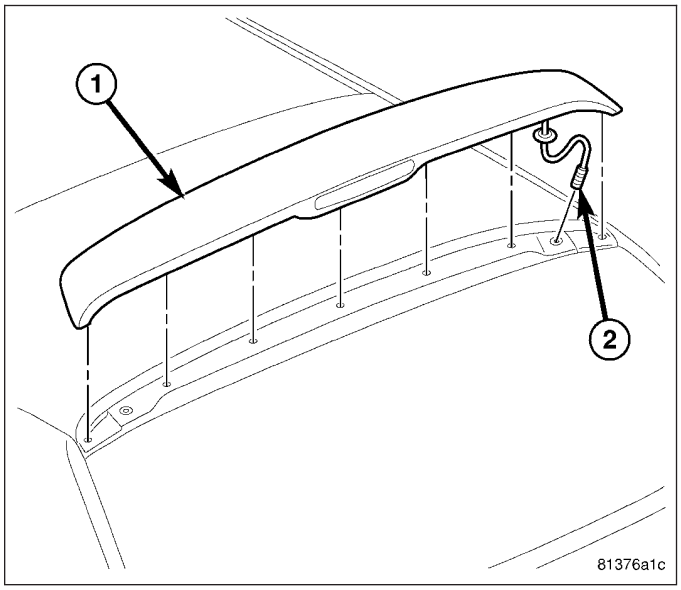

4. Install the nuts (3) that secure the rear spoiler to the liftgate (4). Tighten the nuts securely.
5. Connect the CHMSL wire harness connector (2) and the washer fluid supply hose (1).
6. Install the liftgate upper trim panel (Refer to 23 - BODY/DECKLID/HATCH/LIFTGATE/TAILGATE/ TRIM PANEL - INSTALLATION).
7. Connect the negative battery cable.

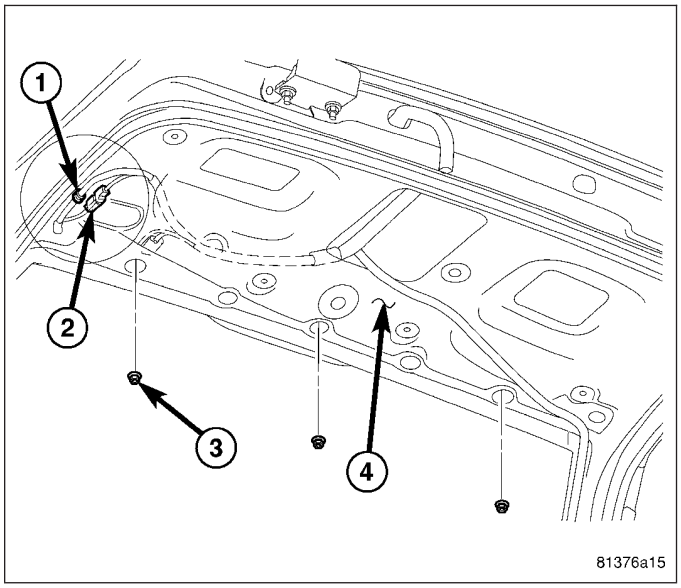

MIRROR-SIDE VIEW

REMOVAL

1. Disconnect and isolate the negative battery cable.
2. Remove the trim panel from the inside of the front door (Refer to 23 - BODY/DOOR - FRONT/PANEL-TRIM - REMOVAL).
3. Remove the two push pins (2) that secure the window trim molding (1) to the front door.
4. Remove the window trim molding to gain access to the mirror fasteners.

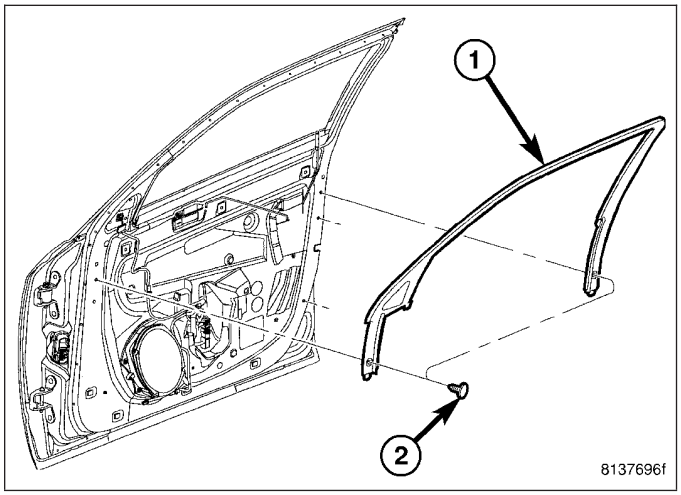

5. Disconnect the door wire harness connector (4) from the mirror electrical connector (2).
6. Remove the three nuts (1) that secure the outside rearview mirror (3) to the front door.
7. Remove the outside rearview mirror from the front door.

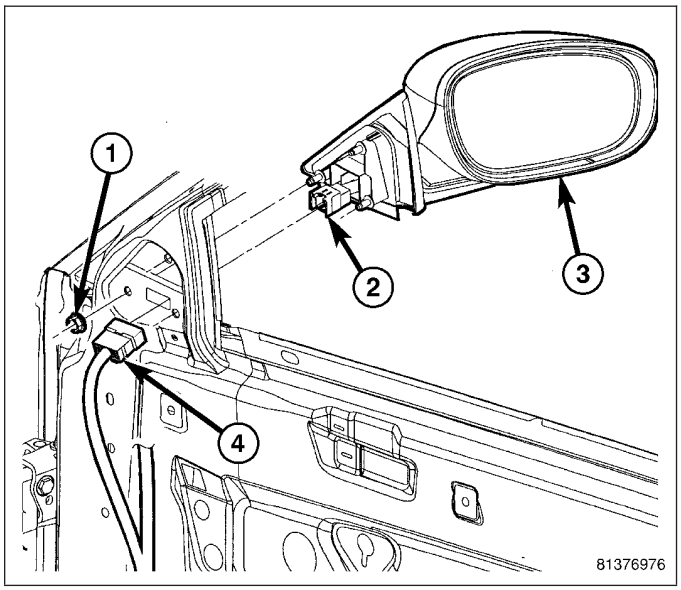

INSTALLATION

1. Position the outside rearview mirror (3) to the front door.
2. Install the three nuts (1) that secure the mirror to the front door. Tighten the nuts to 7 N·m (60 in. lbs.).
3. Connect the door wire harness connector (4) to the mirror electrical connector (2).

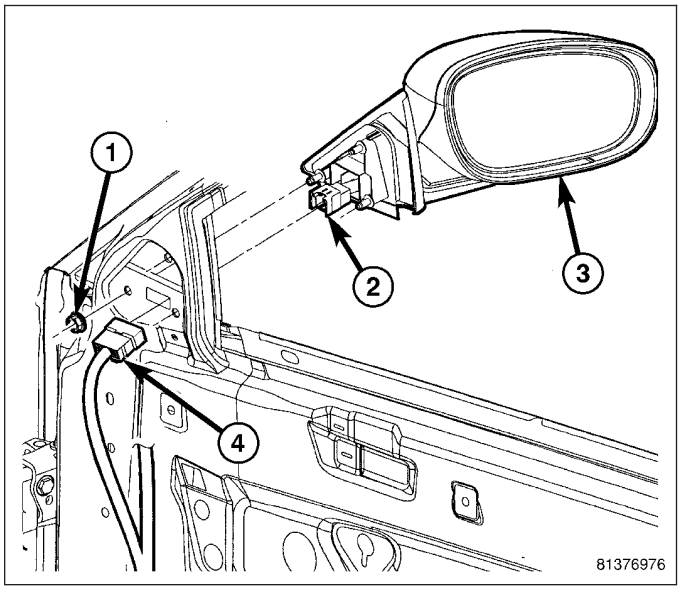

4. Install the window trim molding (1) onto the front door.
5. Install the two push pins (2) that secure the window trim molding to the front door.
6. Install the trim panel to the inside of the front door (Refer to 23 - BODY/DOOR - FRONT/PANEL-TRIM - INSTALLATION).
7. Reconnect the negative battery cable.

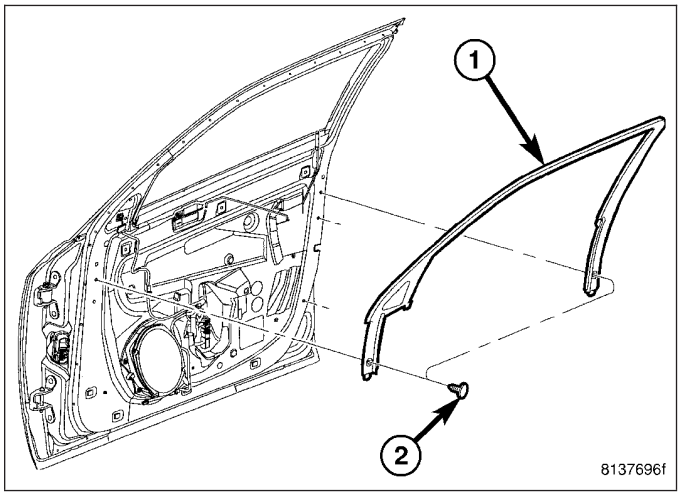

GLASS-SIDE VIEW MIRROR

REMOVAL

WARNING: Always wear eye and hand protection when servicing the mirror glass. Failure to observe these warnings may result in personal injury from broken glass.

1. Position the mirror glass (1) so that it is facing in toward the vehicle as far as possible.
2. Disconnect and isolate the negative battery cable.
3. Using a trim stick C-4755 or equivalent flat bladed tool (2), release the two outer mirror glass holder retaining clips from the mirror motor by inserting the trim stick between the mirror glass holder and the mirror motor.

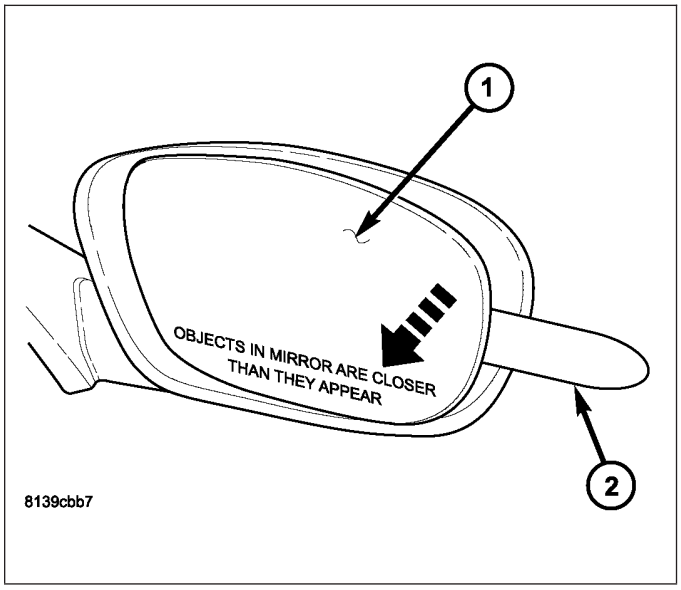

4. Carefully pull/pry the outside edges of the mirror glass holder (1) away from the mirror motor (2) to disengage the remaining six mirror glass retaining clips (3) from the mirror motor.
5. Separate the mirror glass holder from the mirror motor and disconnect the mirror wire harness from the heated glass electrical connector, if equipped.

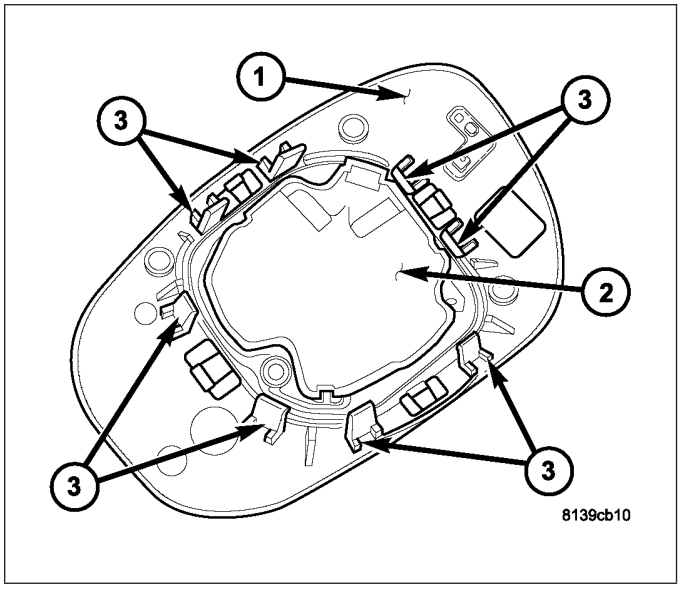

INSTALLATION

1. Connect the mirror wire harness to the heated glass electrical connector, if equipped.
2. Position the mirror glass holder (1) to the mirror assembly and align the eight mirror glass retaining clips (3) to the mirror motor (2).

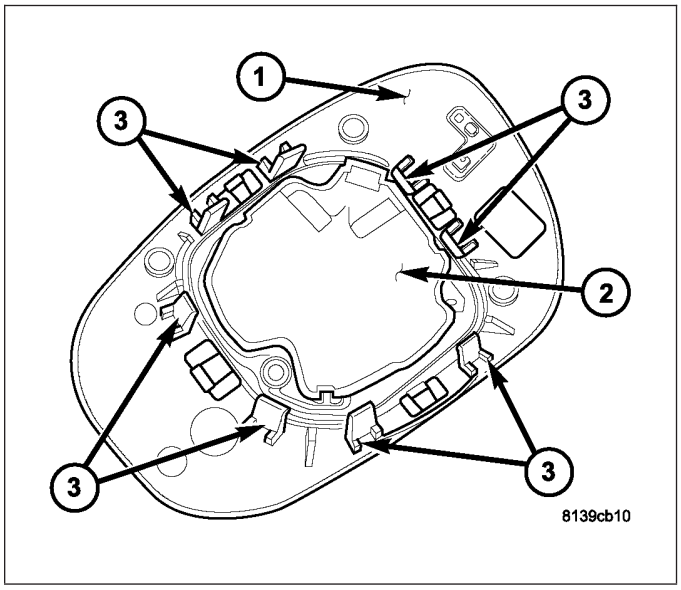

NOTE: Pressure must be applied equally over the center portion of the mirror glass to fully engage the mirror glass retaining clips to the mirror motor.

3. Using one hand, carefully push the mirror glass holder (1) onto the mirror motor, while at the same time supporting the mirror housing (2) from the backside with the other hand. Firmly push on the mirror glass holder until all eight mirror glass retaining clips are fully engaged.
4. Verify retention of the mirror glass holder by gently pulling outward on the glass.
5. Reconnect the negative battery cable.

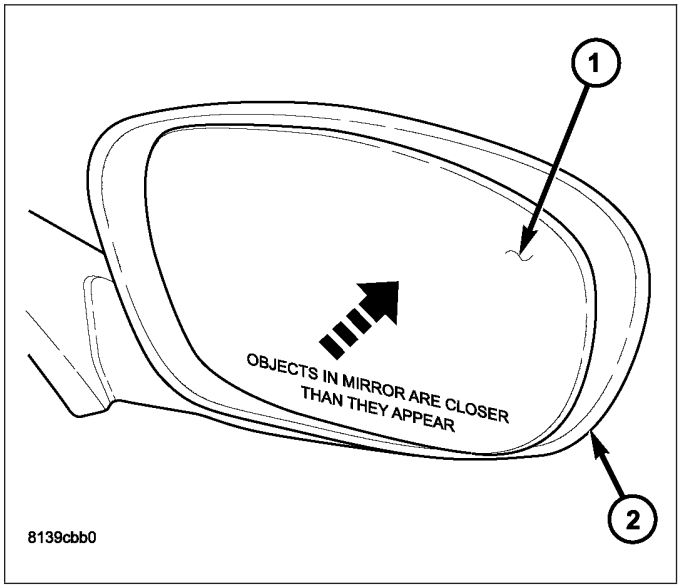

COWL EXTENSION TRIM

REMOVAL

1. Insert special tool C-4755 (from the outside in the direction of arrow 2) under the middle of the trim extension (2).
2. Slide trim stick up to the upper spring clip retainer, and pry to disengage clip.
3. Slide the trim stick down to the lower spring clip retainer, and pry to disengage clip.

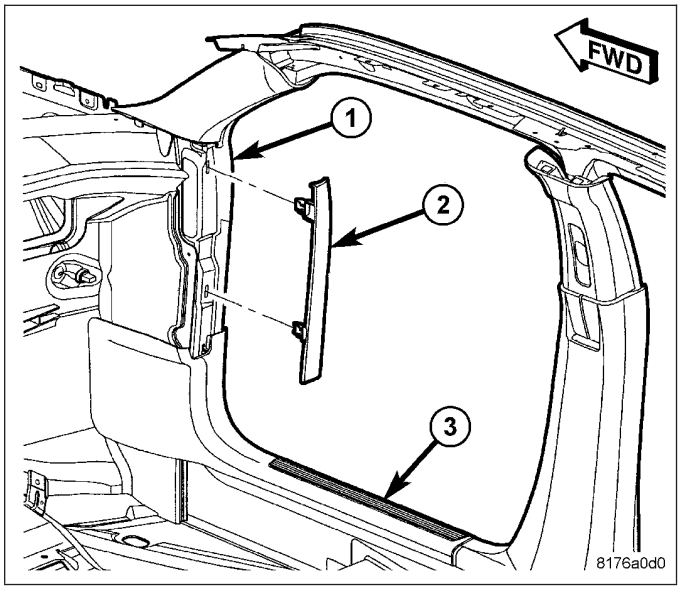

INSTALLATION

1. Place trim extension (2) against cowl (1) and align spring clips with holes on cowl.
2. Tap trim extension on to cowl (1) ensuring trim extension (2) is properly seated.

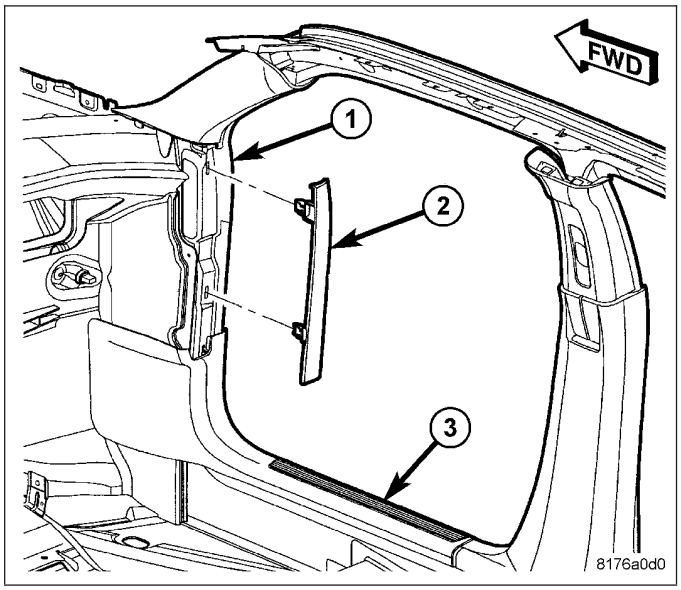

HOOD

TABLE OF CONTENTS

page

BUMPER-ADJUSTMENT
REMOVAL 118
INSTALLATION 118
HINGE
REMOVAL 119
INSTALLATION 119
HOOD
REMOVAL 120
INSTALLATION 120
LATCH
REMOVAL 121
INSTALLATION 122
LATCH RELEASE CABLE
REMOVAL 123
INSTALLATION 124

page

LATCH STRIKER
REMOVAL 125
INSTALLATION 125
ROD-PROP
REMOVAL 126
INSTALLATION 126
SUPPORT CYLINDER
REMOVAL 127
INSTALLATION 128
AIR INLET- FRESH AIR DUCT
REMOVAL 129
INSTALLATION 129
HOOD-BEZEL
REMOVAL 130
INSTALLATION 130

BUMPER-ADJUSTMENT

REMOVAL

1. Open and support the hood.
2. Unscrew the hood adjustement bumper(s) (1) from the mounting hole(s) in the top of the headlamp mounting crossmember (2).
3. Remove the adjustment bumper(s) from the vehicle.

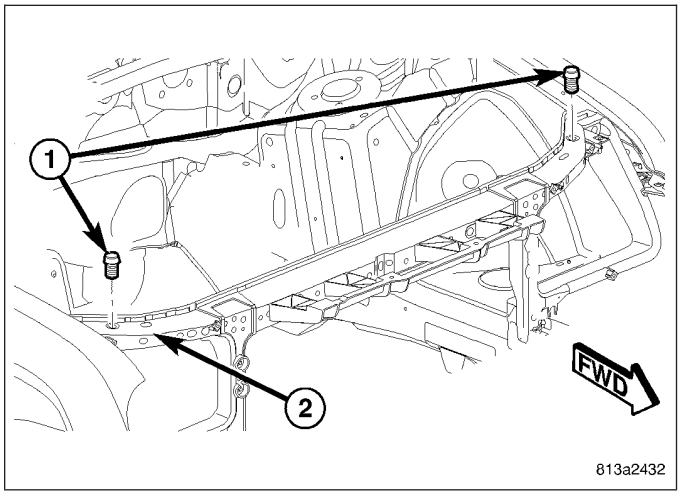

INSTALLATION

1. Install the hood adjustment bumper(s) (1) into the mounting hole(s) located in the top of the headlamp mounting crossmember (2).
2. Adjust the adjustment bumper(s) in or out of the crossmember as necessary to achieve proper hood alignment.

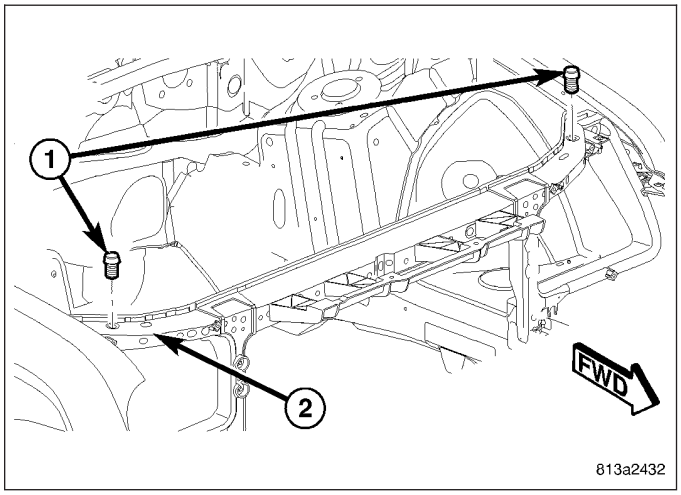

HINGE

REMOVAL

1. Open and support the hood (2) with a suitable prop or block.
2. If the vehicle is so equipped, disconnect the upper end of the gas support cylinder from the upper bracket of the hood hinge (3). (Refer to 23 - BODY/HOOD/SUPPORT CYLINDER - REMOVAL).
3. Mark the location of the hood hinge upper bracket on the hood (2) inner panel to aid reinstallation.
4. Remove the two screws (1) that secure the hinge to the hood.
5. Mark the hinge lower bracket location on the inside of the front fender ledge (5) to aid reinstallation.
6. Remove the two screws (4) that secure the hinge to the fender.
7. Remove the hood hinge from the vehicle.

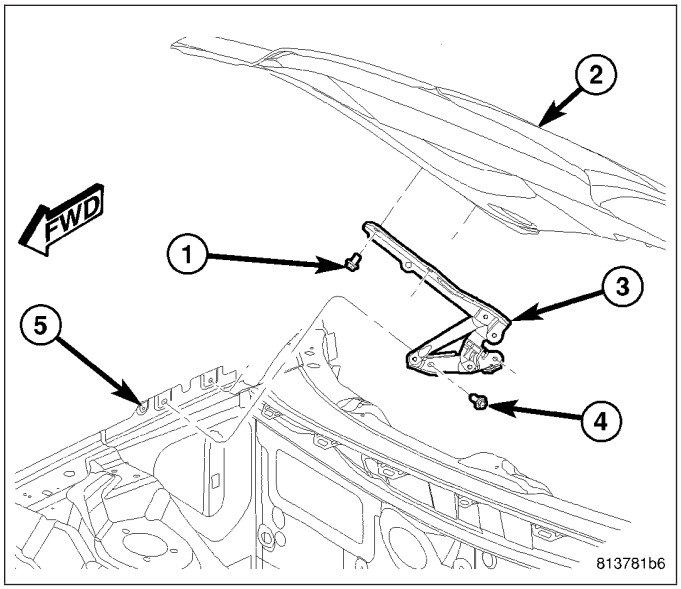

INSTALLATION

1. Position the lower bracket of the hood hinge (3) to the inside of the front fender ledge (5) on the vehicle.
2. Install and tighten the two screws (4) that secure the hinge to the fender. Tighten the screws to 28 N·m (21 ft. lbs.).
3. Position the hood panel (2) to the upper hinge bracket on the vehicle.
4. Install and tighten the two screws (2) that secure the hinge to the hood. Tighten the screws to 28 N·m (21 ft. lbs.).
5. If the vehicle is so equipped, reinstall the upper end of the gas support cylinder to the upper hinge bracket. (Refer to 23 - BODY/HOOD/SUPPORT CYLINDER - INSTALLATION).
6. Remove the fixture being used to support the hood for service and close the hood.
7. Adjust the hood hinge position as necessary to achieve proper spacing and operation.

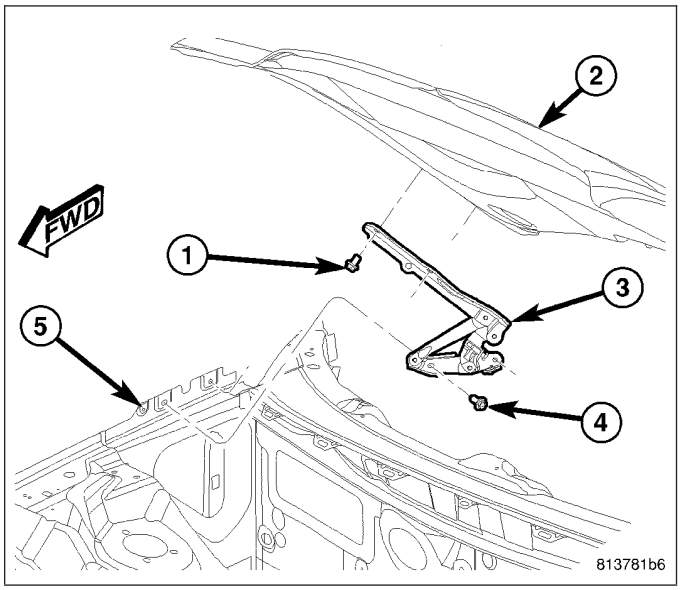

HOOD

REMOVAL

1. Open and support the hood (2).
2. Disconnect the washer supply hose between the body and the two washer nozzles on the underside of the hood.
3. Mark both upper hinge bracket (3) locations on the hood inner panel to aid reinstallation.
4. With the aid of an assistant, support the hood while removing the two screws (1) that secure each upper hinge bracket to the hood.
5. Remove the hood from the vehicle.

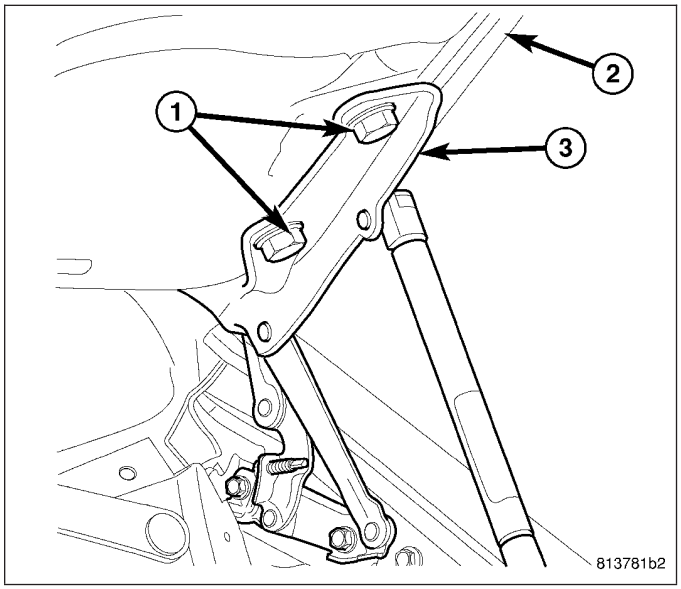

INSTALLATION

1. With the aid of an assistant, support and position the hood panel (2) to the two upper hinge brackets (3) on the vehicle.
2. Install and tighten the two screws (1) that secure each upper hinge bracket to the hood. Tighten the screws to 28 N·m (21 ft. lbs.).
3. Reconnect the washer supply hose between the body and the two washer nozzles on the underside of the hood.
4. Close the hood.
5. Adjust the hood hinge positions and the hood adjuster bumpers as necessary to achieve proper spacing and operation.

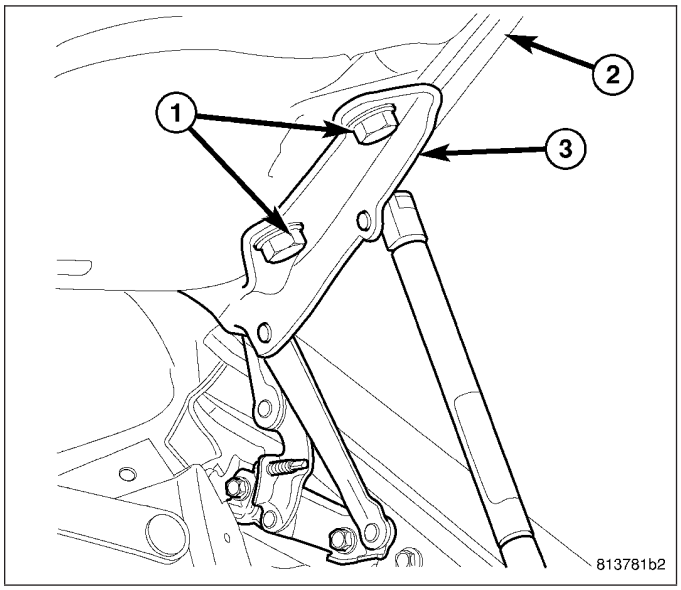

LATCH

REMOVAL

1. Disconnect and isolate the battery negative cable.
2. Unsnap the left underhood appearance cover (4) from the headlamp mounting crossmember (1).
3. Disengage the interlocking feature on the inboard end of the left underhood appearance cover from the inboard end of the right cover (2) and remove it from the vehicle.
4. Unsnap the right underhood appearance cover from the headlamp mounting crossmember and remove it from the vehicle.

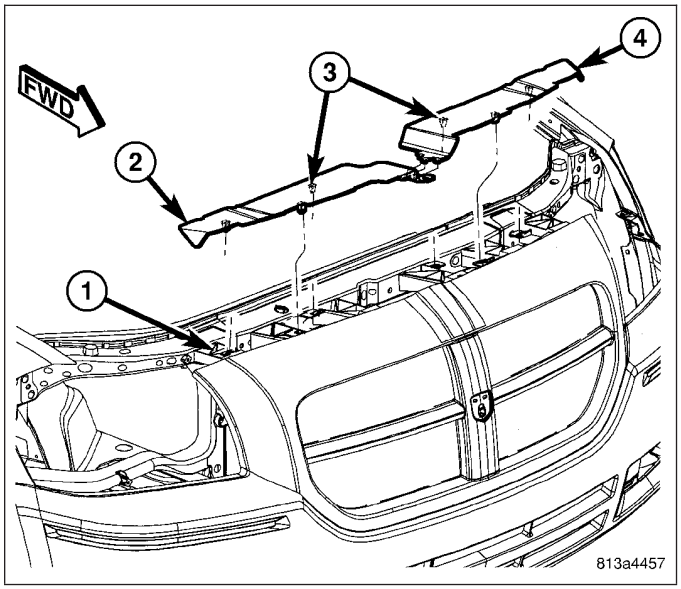

5. Mark the location of the hood latch (2) on the front of the headlamp mounting crossmember (1) to aid reinstallation.
6. Remove the two screws (3) that secure the latch to the front of the crossmember.

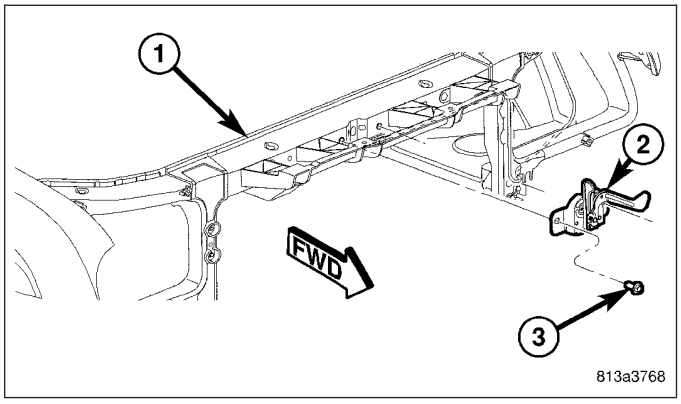

7. Pull the latch (1) away from the front of the crossmember far enough to access and disengage the hood latch release cable housing from the latch and the cable ball end (2) from the latch lever.
8. Remove the hood latch from the vehicle.

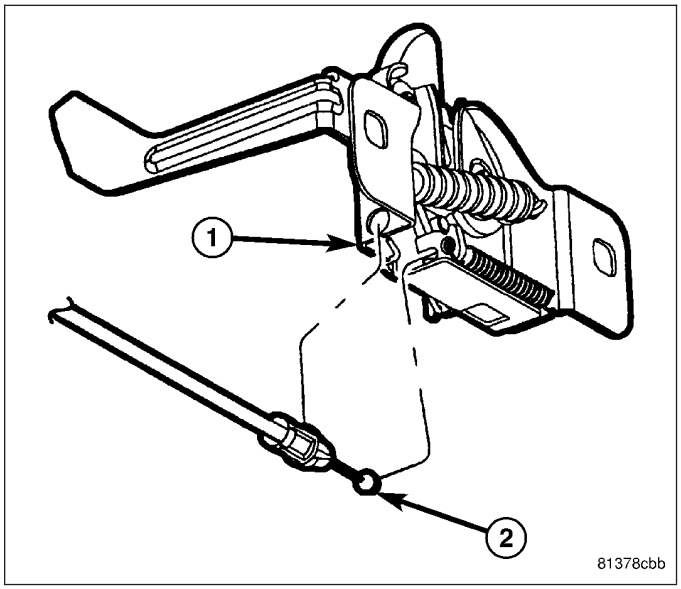

INSTALLATION

1. Position the hood latch (1) close enough to the front of the headlamp mounting crossmember to access and engage the hood latch release cable ball end (2) to the latch lever and the cable housing to the latch.

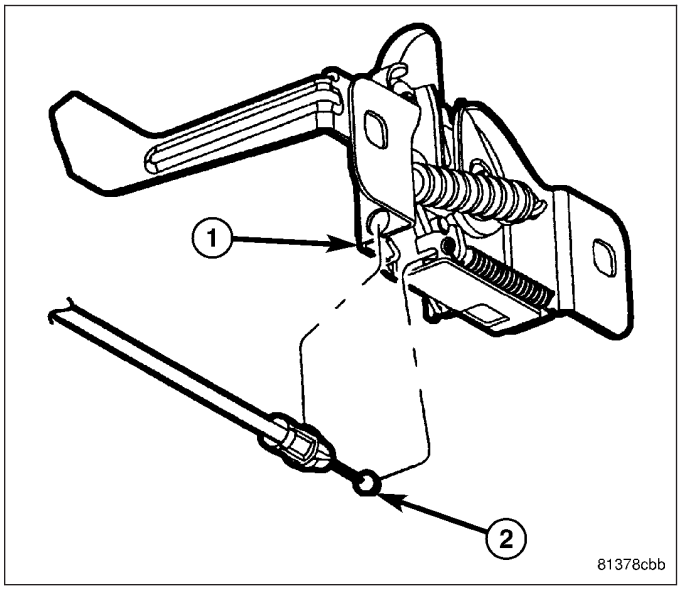

2. Position the latch (2) to the front of the crossmember (1).
3. Install and tighten the two screws (3) that secure the latch to the crossmember. Tighten the screws to 28 N·m (21 ft. lbs.).
4. Adjust the latch position as necessary to achieve proper hood latch operation.

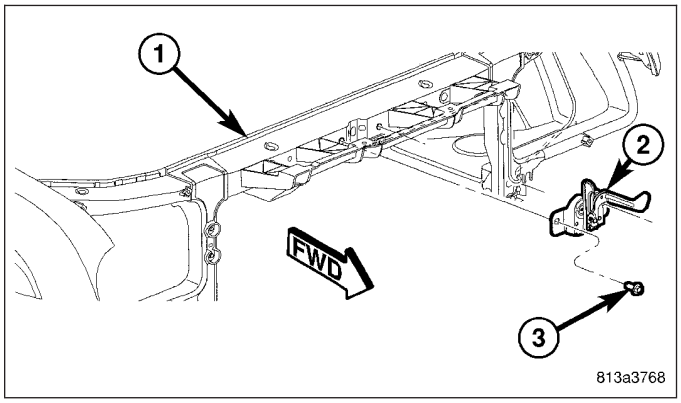

5. Position the right underhood appearance cover (2) to the headlamp mounting crossmember (1).
6. Using hand pressure, press the right appearance cover downward until each of the integral clips (3) snaps into the receptacles in the headlamp mounting crossmember.
7. Engage the interlocking feature on the inboard end of the left appearance cover (4) with the inboard end of the right cover and position it to the headlamp mounting crossmember.
8. Using hand pressure, press the left appearance cover downward until each of the integral clips snaps into the receptacles in the headlamp mounting crossmember.
9. Reconnect the battery negative cable.

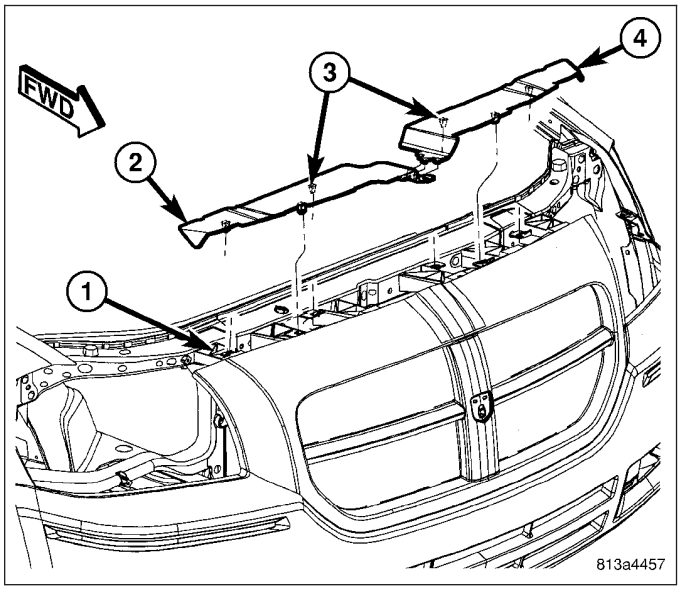

LATCH RELEASE CABLE

REMOVAL

1. Remove the hood latch (2) from the vehicle. (Refer to 23 - BODY/HOOD/LATCH - REMOVAL).
2. Remove the left headlamp unit from the vehicle. (Refer to 8 - ELECTRICAL/LAMPS/LIGHTING - EXTERIOR/HEADLAMP UNIT - REMOVAL).
3. Disengage the hood latch release cable from the integral routing clips on the headlamp mounting crossmember and the routing clips (1) along the left side of the engine compartment.

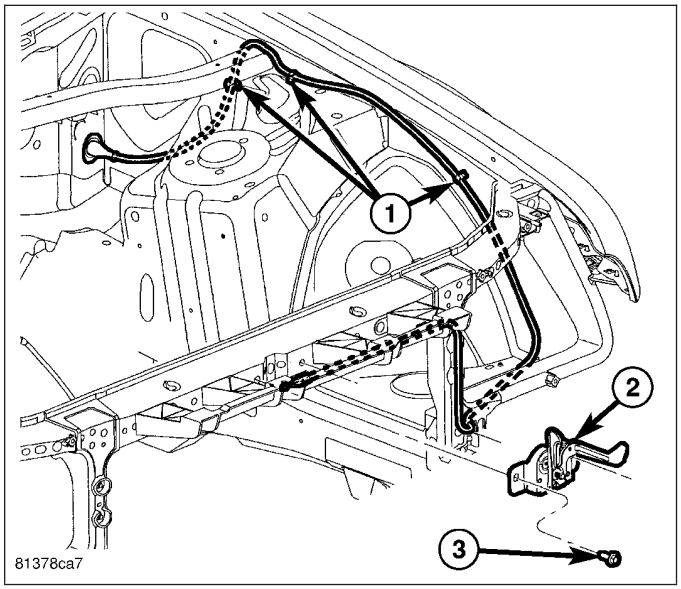

4. From the passenger compartment, remove the closeout panel from beneath the left side of the instrument panel. (Refer to 23 - BODY/INSTRUMENT PANEL/INSTRUMENT PANEL SILENCER - REMOVAL).
5. Unseat the hood latch release cable grommet (1) from the dash panel.
6. Remove the two screws (4) that secure the hood latch release handle (3) to the lower instrument panel reinforcement (2).
7. Remove the hood latch release handle and cable through the passenger compartment of the vehicle.

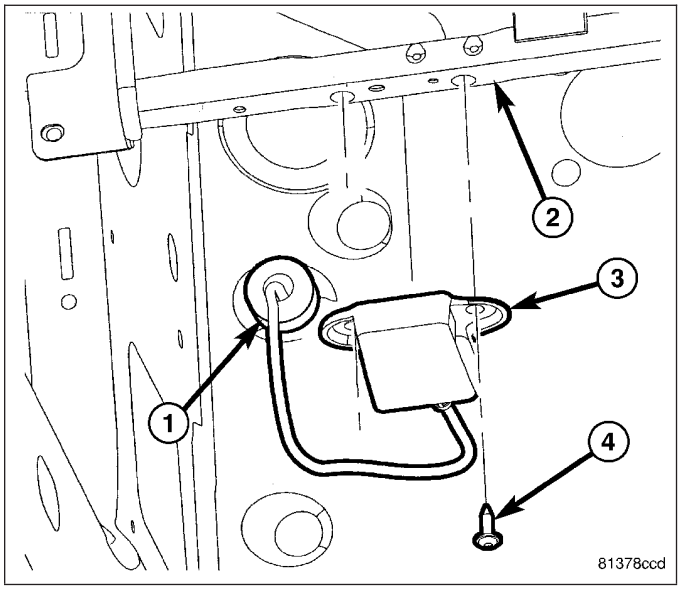

INSTALLATION

1. Position the hood latch release handle and cable (3) under the left side of the instrument panel in the passenger compartment of the vehicle.
2. Thread the cable through the appropriate hole in the dash panel far enough to seat the cable grommet (1) into the hole.
3. Position the hood latch release handle to the lower instrument panel reinforcement (2).
4. Install and tighten the two screws (4) that secure the handle to the reinforcement. Tighten the screws to 5 N·m (45 in. lbs.).
5. Reinstall the closeout panel beneath the left side of the instrument panel. (Refer to 23 - BODY/INSTRUMENT PANEL/INSTRUMENT PANEL SILENCER - INSTALLATION).

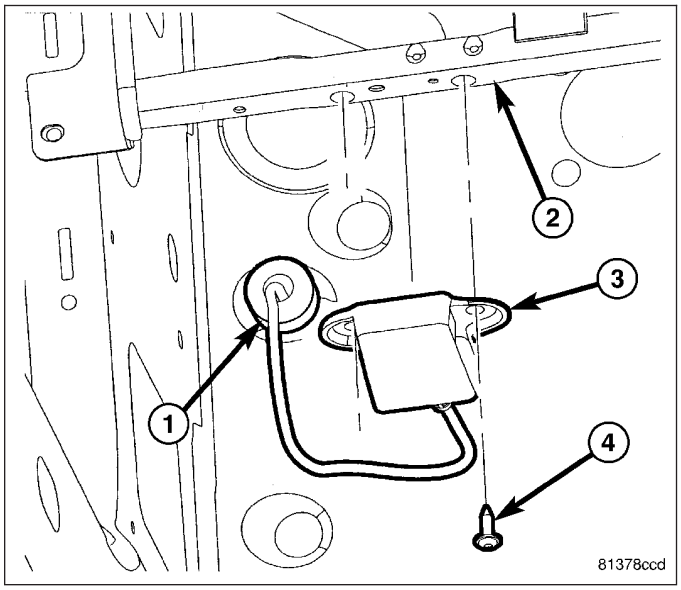

6. Route the hood latch release cable from the dash panel along the left side of the engine compartment to the center of the headlamp mounting crossmember as shown.
7. Fully engage the cable into the integral routing clips on the headlamp mounting crossmember and the routing clips (1) along the left side of the engine compartment.
8. Reinstall the left headlamp unit to the vehicle. (Refer to 8 - ELECTRICAL/LAMPS/LIGHTING - EXTERIOR/HEADLAMP UNIT - INSTALLATION).
9. Reinstall the hood latch (2) to the vehicle. (Refer to 23 - BODY/HOOD/LATCH - INSTALLATION).

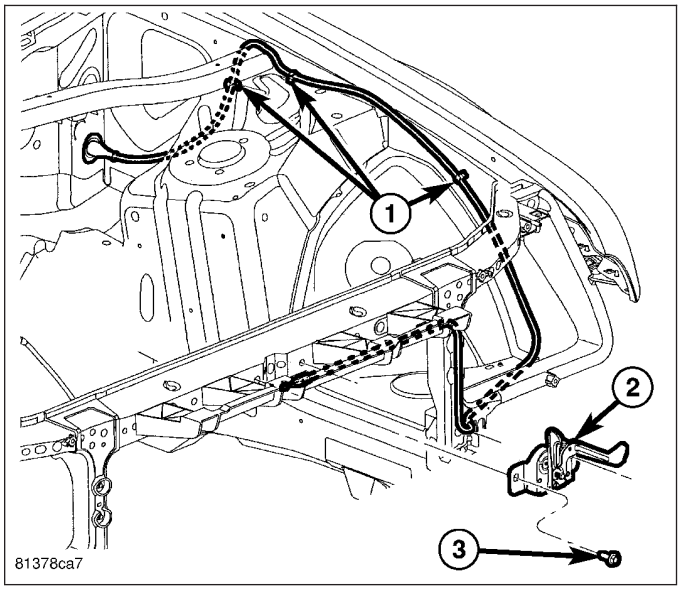

LATCH STRIKER

REMOVAL

1. Open and support the hood (3).
2. Remove the two screws (2) that secure the latch striker (1) to the hood inner reinforcement.
3. Remove the striker from the vehicle.

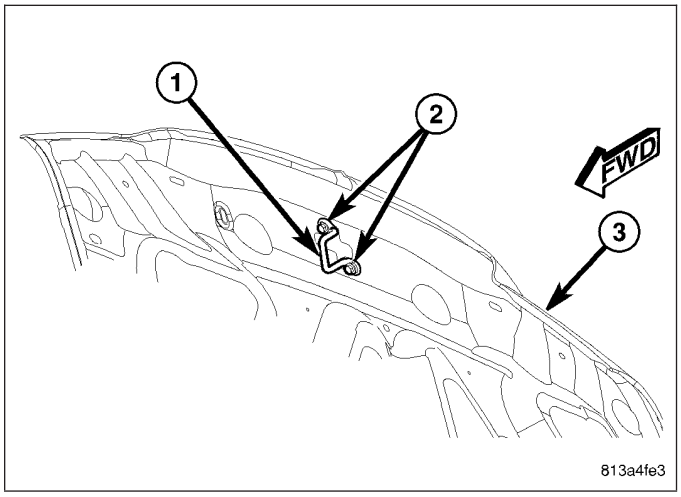

INSTALLATION

1. Position the latch striker (1) to the underside of the hood (3).
2. Install and tighten the two screws (2) that secure the striker to the hood inner reinforcement. Tighten the screws to 28 N·m (21 ft. lbs.).
3. Close the hood.

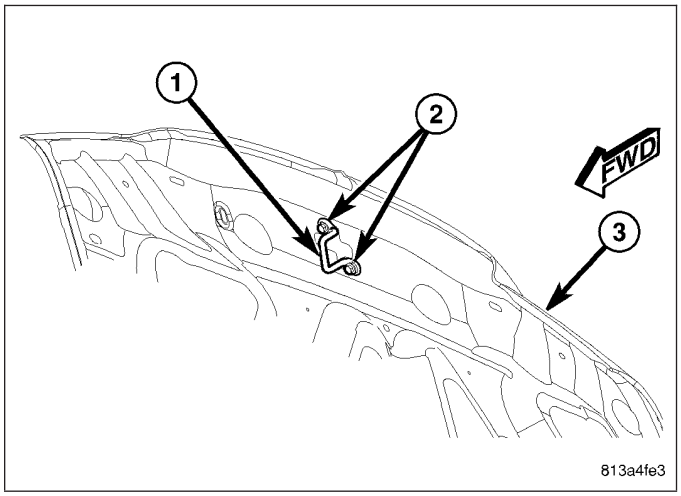

ROD-PROP

REMOVAL

1. Open and support the hood.
2. Remove the blind rivet (1) that secures the hood prop rod (2) pivot bracket to the right side of the headlamp mounting crossmember (3).
3. Disengage the prop rod from the rod clip (4) on the left side of the headlamp mounting crossmember.
4. Remove the hood prop rod from the vehicle.

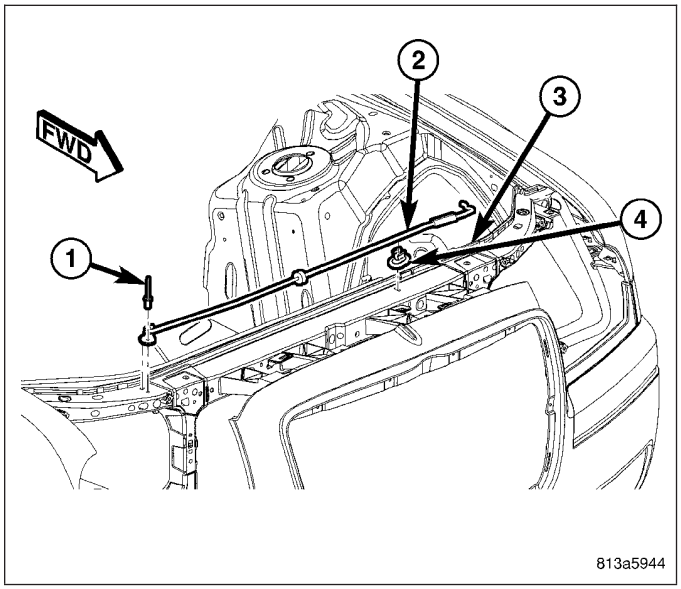

INSTALLATION

1. Position the hood prop rod (2) pivot bracket to the right side of the headlamp mounting crossmember (3).
2. Secure the pivot bracket to the headlamp mounting crossmember with a new blind rivet (1).
3. Engage the prop rod into the rod clip (4) on the left side of the headlamp mounting crossmember.
4. Close the hood.

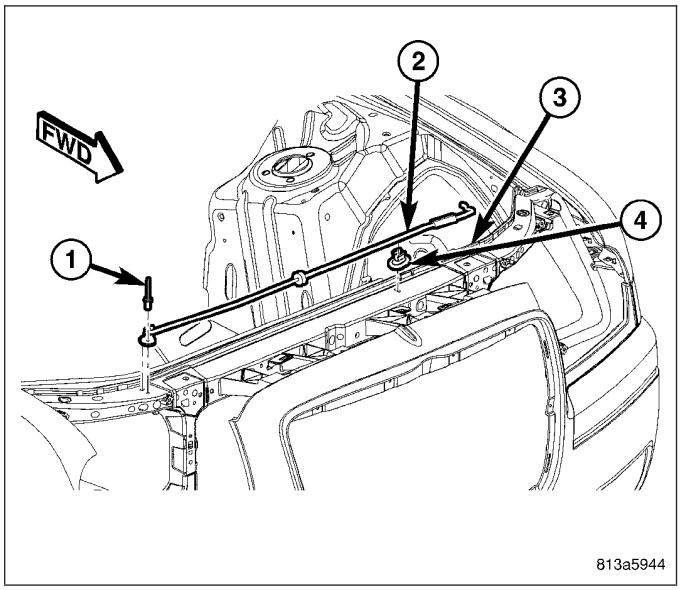

SUPPORT CYLINDER

REMOVAL

1. Open and support the hood with a suitable prop or block.
2. Insert a small flat-bladed tool into the lower notch of the retainer (1) of the lower ball socket end (2) of the support cylinder on the top of the fender load beam and carefully pry the retaining clip upward to the installation position.

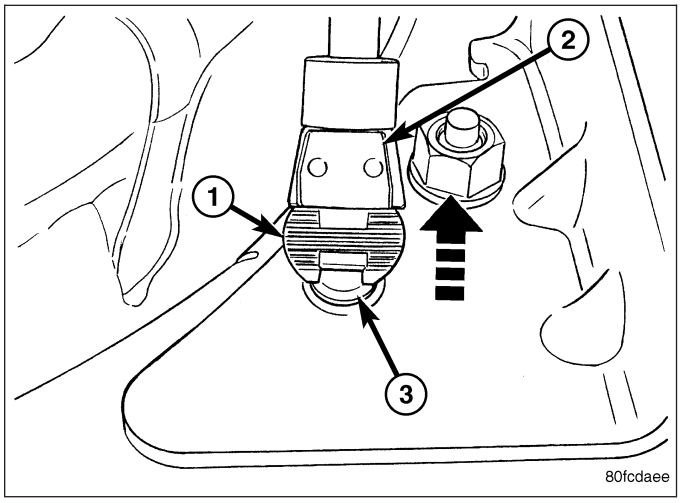

WARNING: To avoid personal injury or death, during service lift the ball socket end retaining clip only far enough to release the socket from the ball stud. Excessive prying or removal of the clip may result in improper clip spring tension. Improper clip tension may result in the support cylinder separating from the ball stud causing sudden, unexpected loss of hood support.

3. Insert a small flat-bladed tool (3) into the notch on the outer face of the upper ball socket end (1) of the support cylinder and carefully pry the retaining clip (2) outward while pulling the ball socket away from the ball stud (4) on the upper hood hinge bracket.
4. Release the retaining clip to its installed position.
5. Disengage the lower ball socket from the ball stud.
6. Remove the support cylinder from the vehicle.

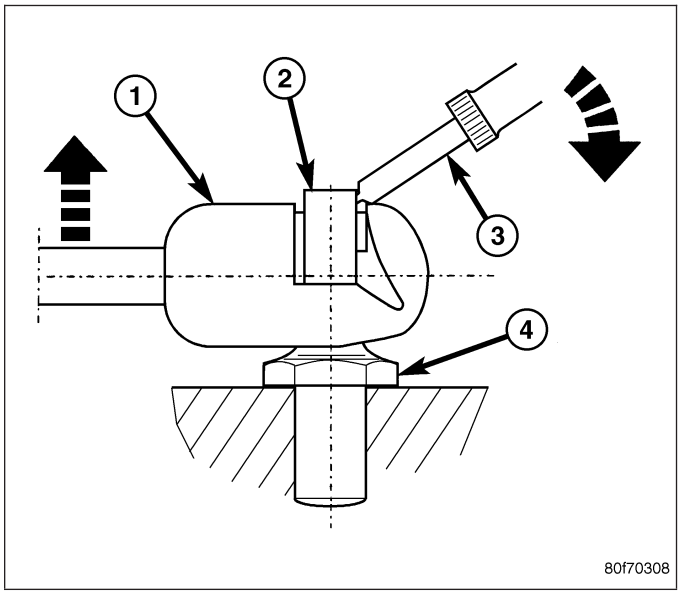

INSTALLATION

1. Check to be certain that the ball stud (3) on the top of the fender load beam is in good condition and properly installed. Tighten the ball stud to 28 N·m (21 ft. lbs.).
2. Position the ball socket on the rod end of the support cylinder (1) to the ball stud on the top of the fender load beam.

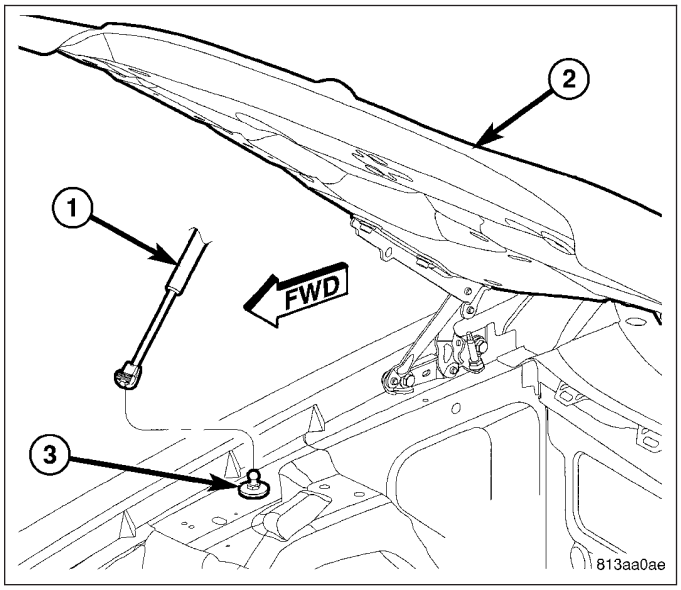

3. Check to be certain that the ball stud (1) secured by a U-nut (3) to the upper bracket (2) of the hood hinge is in good condition and properly installed. Tighten the ball stud to 28 N·m (21 ft. lbs.).
4. Position the ball socket on the cylinder end of the support cylinder (4) to the ball stud on the upper bracket of the hood hinge.
5. Using hand pressure, press the ball socket onto the ball stud until the retainer clip snaps into place.
6. Inspect to be certain that the retaining clip on each of the support cylinder ball socket ends is fully seated.
7. Remove the service prop or block and close the hood.

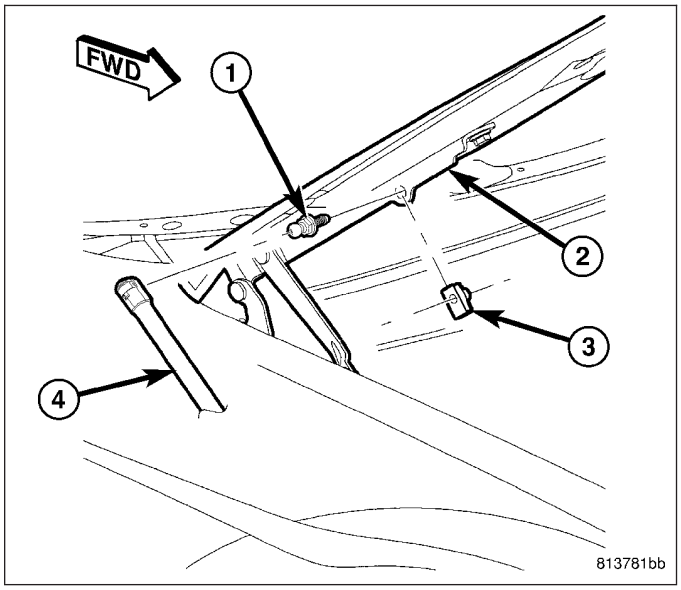

AIR INLET- FRESH AIR DUCT

REMOVAL

NOTE: On SRT 8 models only.

1. Remove hood liner.
2. Remove push pins (2) and remove air inlet (1) from hood (2).

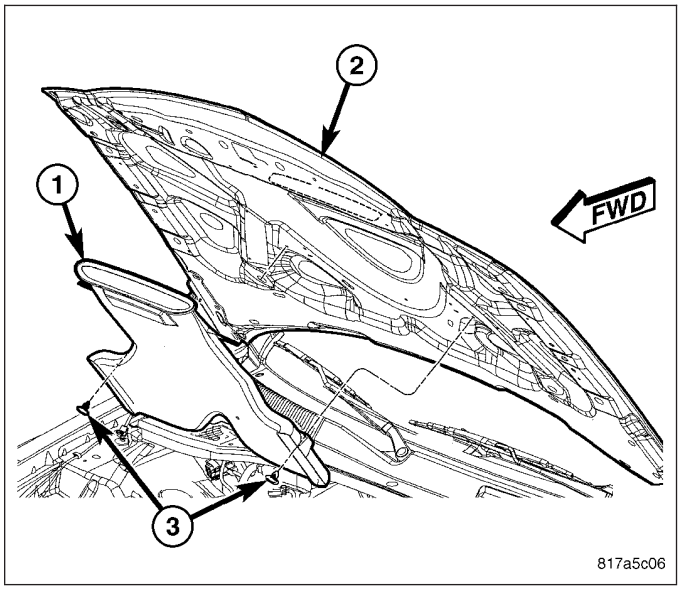

INSTALLATION

NOTE: On SRT 8 models only.

1. Place air inlet (1) to hood (2).
2. Insert push pins (3) fastening air inlet to hood.
3. Install hood liner and push pins.

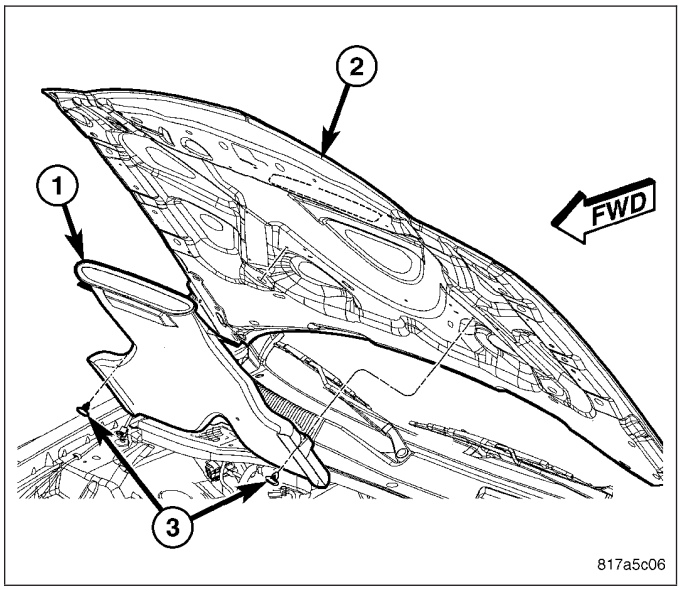

HOOD-BEZEL

REMOVAL

NOTE: On SRT 8 models only.

1. Using special tool C-4755, release tabs securing bezel (1) to hood (2).
2. Remove bezel (1).

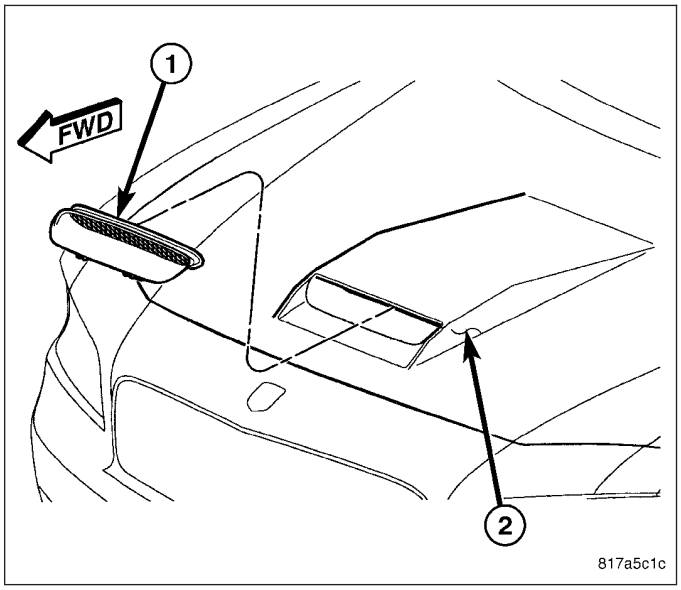

INSTALLATION

NOTE: On SRT 8 models only.

1. Insert top of hood bezel to hood (2).
2. Insert bottom of hood bezel (1) to hood (2) ensuring bezel clips fasten.

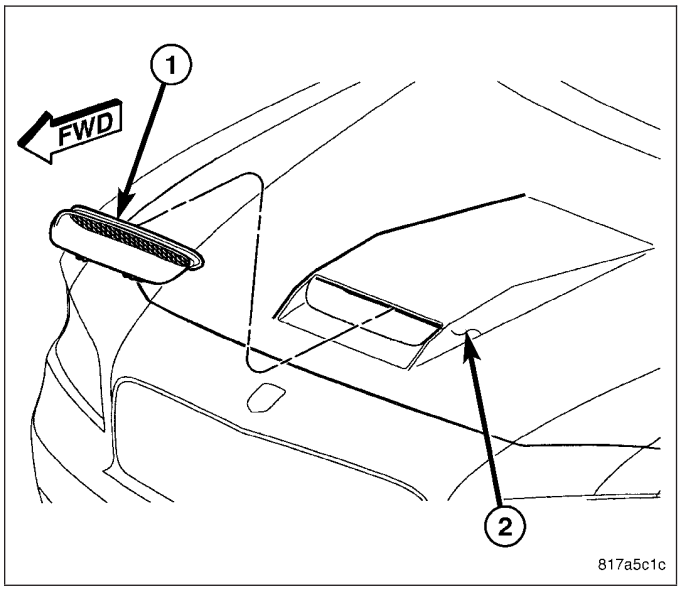

INSTRUMENT PANEL

TABLE OF CONTENTS

page

ASH RECEIVER
REMOVAL 132
INSTALLATION 133
ASSEMBLY-INSTRUMENT PANEL
REMOVAL 134
INSTALLATION 139
BEZEL-CENTER
REMOVAL
CHRYSLER 144
DODGE 145
INSTALLATION
CHRYSLER 146
DODGE 147
BEZEL-CLUSTER
REMOVAL
REMOVAL 148
DODGE 149
INSTALLATION
INSTALLATION 150
INSTALLATION 151
BIN-GLOVE BOX
REMOVAL 152
INSTALLATION 153
COVER-STEERING COLUMN OPENING
REMOVAL 154
INSTALLATION 155
GRILLE-DEFROSTER
REMOVAL 156
INSTALLATION 156
LATCH-GLOVE BOX
REMOVAL 157
INSTALLATION 157
LOCK CYLINDER-GLOVE BOX
REMOVAL 158
INSTALLATION 160
SILENCER-INSTRUMENT PANEL
REMOVAL 162
INSTALLATION 163
STRIKER-LATCH-GLOVE BOX
REMOVAL 164
INSTALLATION 164

ASH RECEIVER

REMOVAL

1. Disconnect and isolate the negative battery cable.
2. Remove the gear shift center bezel from the floor console (4) (Refer to 23 - BODY/INTERIOR/CONSOLE-FLOOR - REMOVAL).
3. Set the emergency brake and place the gear shift lever into Low gear.
4. Using a trim stick C-4755 or equivalent (1), remove the ash receiver (2) from the instrument panel (3) by releasing the snap retainers from the instrument panel.

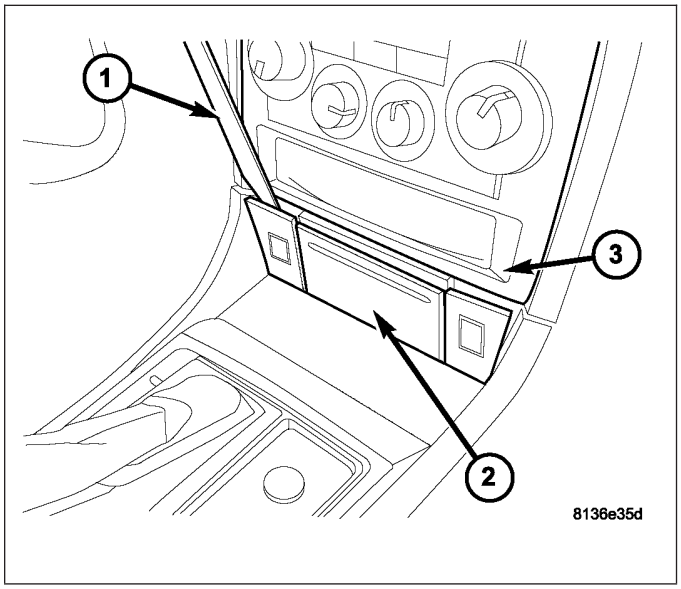

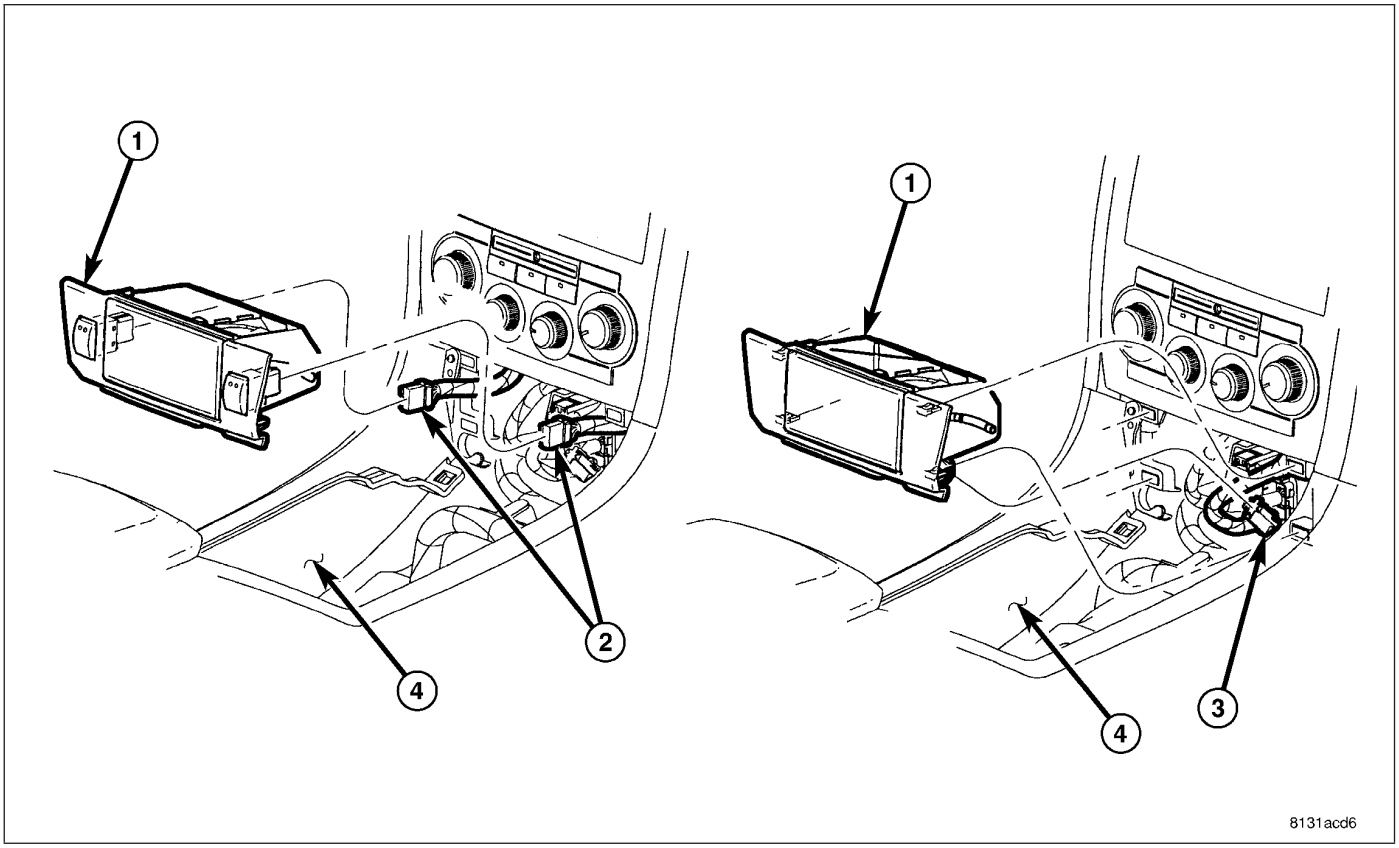

5. If equipped, disconnect the wire harness connectors (2) from the heated seat switches and remove the switches as required (Refer to 8 - ELECTRICAL/HEATED SEATS/SWITCH-HEATED SEAT - REMOVAL).
6. Disconnect the wire harness connector (3) from the lighter and remove the lighter assembly as required.
7. Remove the ash receiver from the vehicle.

INSTALLATION

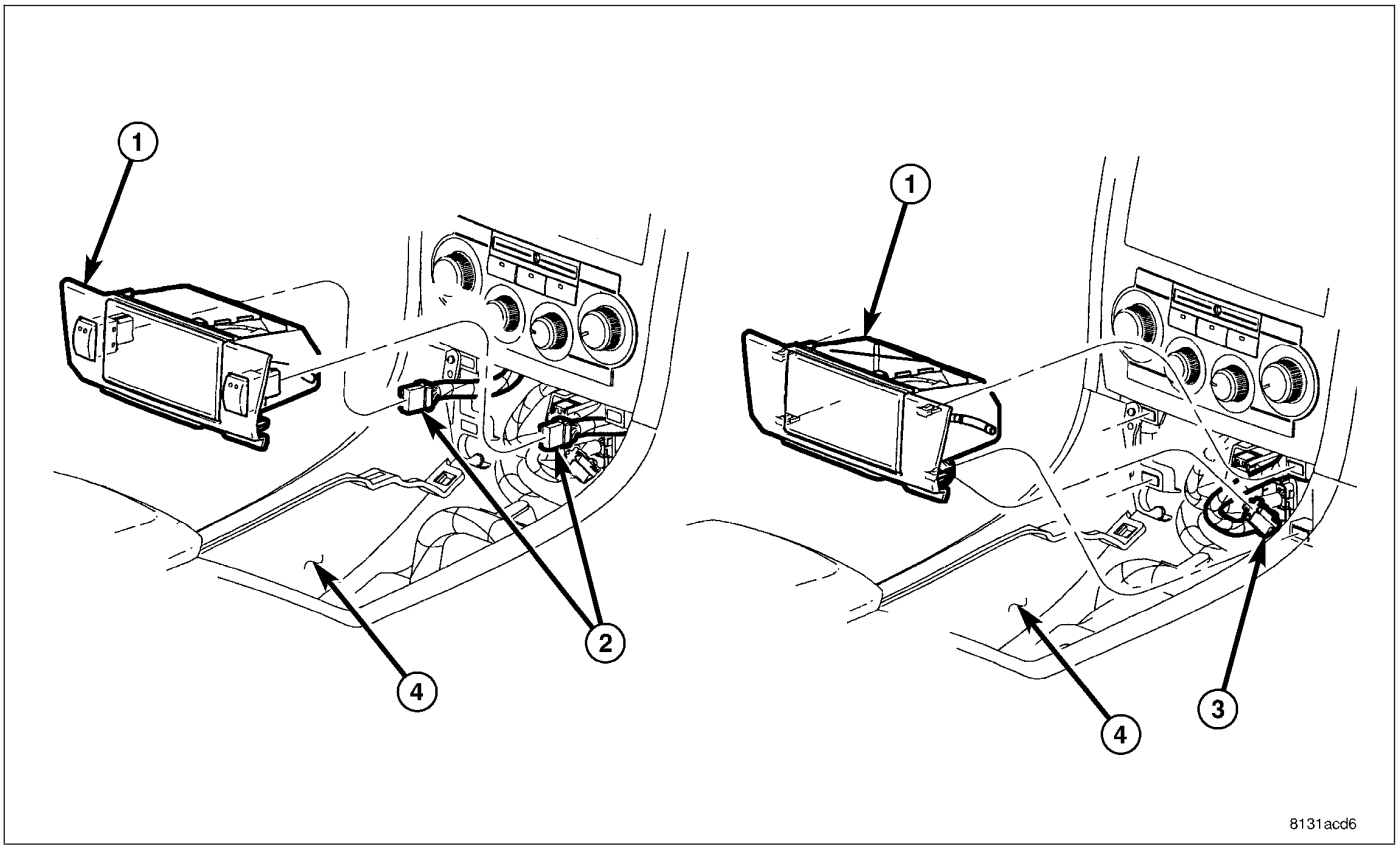

1. If equipped and removed, install the heated seat switches into the ash receiver (Refer to 8 - ELECTRICAL/ HEATED SEATS/SEAT SWITCH - INSTALLATION) and connect the wire harness connectors (2) to the switches.
2. If removed, install the lighter assembly into the ash receiver and connect the wire harness connector (3) to the lighter.
3. Install the ash receiver assembly (1) into the instrument panel by carefully pushing the receiver housing into the instrument panel until the snap retainers are fully seated.
4. Install the gear shift center bezel onto the floor console (4)
5. Place the gear shift lever into Park and release the emergency brake.
6. Reconnect the negative battery cable.

ASSEMBLY-INSTRUMENT PANEL

REMOVAL

WARNING: To avoid personal injury or death, on vehicles equipped with air bags, disable the supplemental restraint system before attempting any steering wheel, steering column, airbag, occupant classification system, seat belt tensioner, impact sensor, or instrument panel component diagnosis or service. Disconnect and isolate the battery negative (ground) cable, then wait two minutes for the system capacitor to discharge before performing further diagnosis or service. This is the only sure way to disable the supplemental restraint system. Failure to take the proper precautions could result in accidental airbag deployment.

WARNING: To avoid personal injury or death, never strike or drop the occupant restraint controller, as it can damage the impact sensor or affect its calibration. The occupant restraint controller contains the impact sensor, which enables the system to deploy the supplemental restraints. If an airbag control module is accidentally dropped during service, the module must be scrapped and replaced with a new unit. Failure to observe this warning could result in accidental, incomplete, or improper supplemental restraint deployment.

CAUTION: On vehicles equipped with the Occupant Classification System (OCS), never replace both the Occupant Restraint Controller (ORC) and the Occupant Classification Module (OCM) at the same time. If both require replacement, replace one. Then perform the supplemental restraint verification test before replacing the other. Both the ORC and the OCM store OCS calibration data, which they transfer to one another when one of them is replaced. If both are replaced at the same time, an irreversible fault will be set in both modules.

NOTE: Left hand drive shown throughout, right hand drive similar.

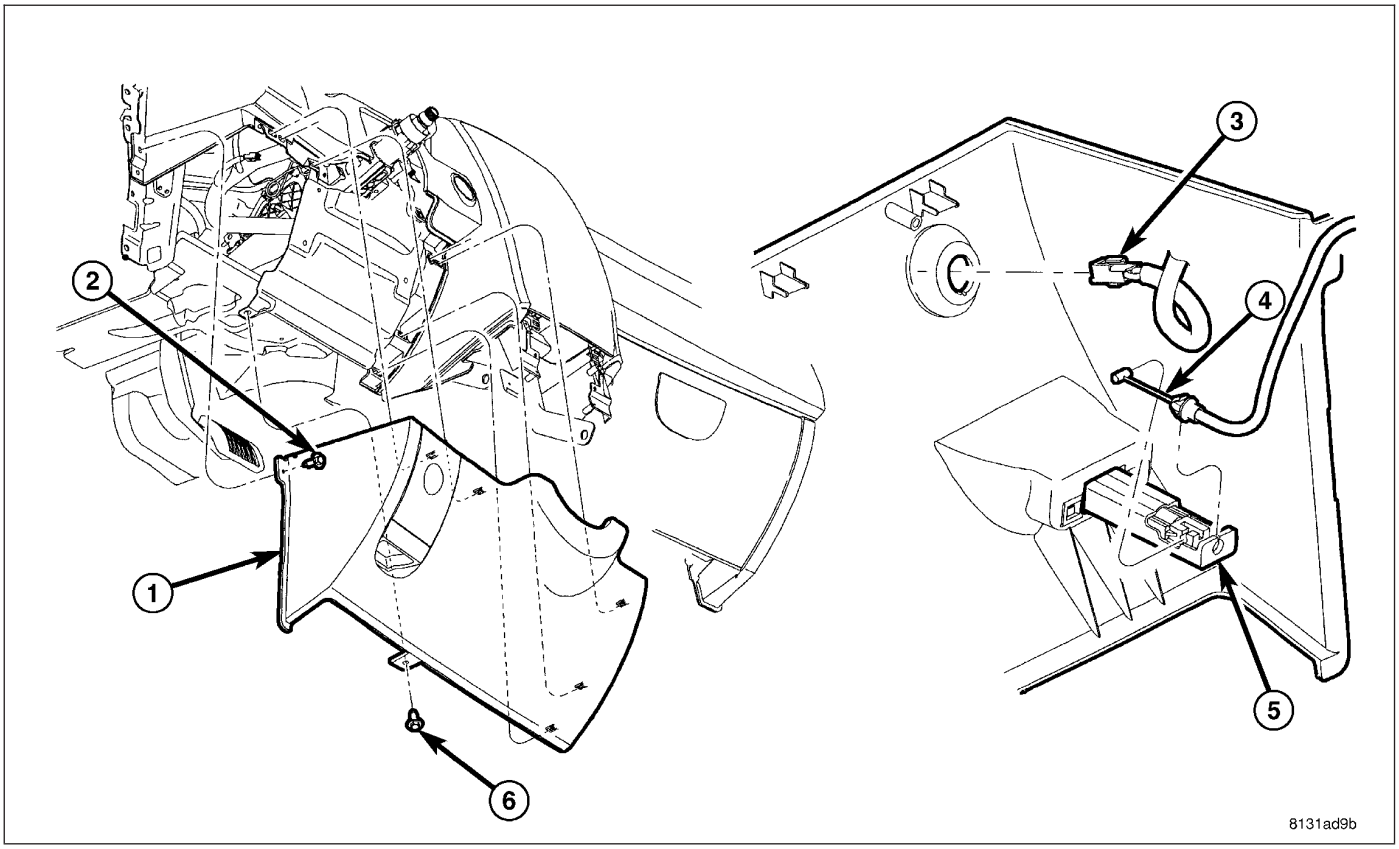

1. Before proceeding with the following repair procedure, review all warnings and cautions (Refer to 23 - BODY/ INSTRUMENT PANEL - WARNING).
2. Disconnect and isolate negative battery cable.

3. Raise and support the vehicle.
4. Disconnect the steering column from the steering coupling (Refer to 19 - STEERING/COLUMN/STEERING COUPLING - REMOVAL).
5. Lower the vehicle.
6. Remove key bezel and instrument cluster (2 screws). Disconnect cluster connectors.
7. Remove the left and right side instrument panel silencers (Refer to 23 - BODY/INSTRUMENT PANEL/INSTRUMENT PANEL SILENCER - REMOVAL).
8. Remove the screws (2 and 6) that secure the steering column cover (1) to the instrument panel.
9. Disconnect the wire harness connector (3) from the trunk release switch.
10. Disconnect the hood release cable (4) from the hood release handle (5) and remove the steering column cover from the vehicle.
11. Remove the screws (3) that secure the instrument panel steering column cover reinforcement (1) to the bracket (2) and remove the reinforcement from the vehicle.

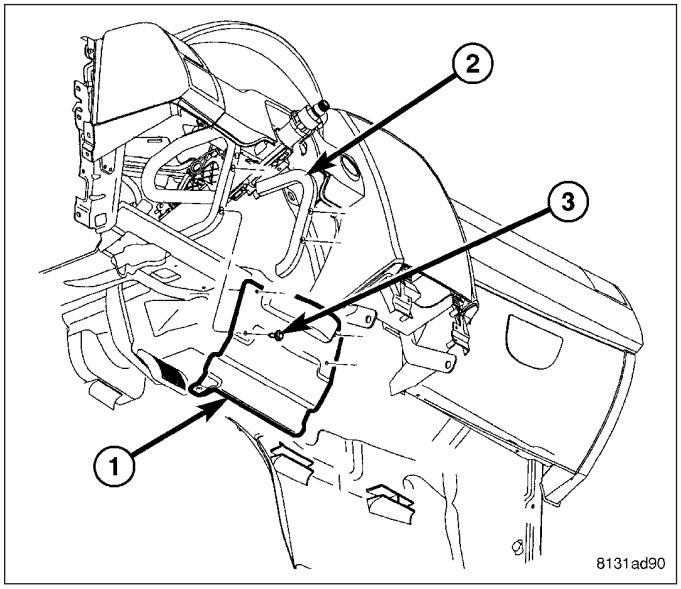

12. Disconnect the body wire harness connectors (1 and 3) from the instrument panel wire harness connectors.
13. Disconnect the body wire harness connectors (2 and 4) from the transmission control module.

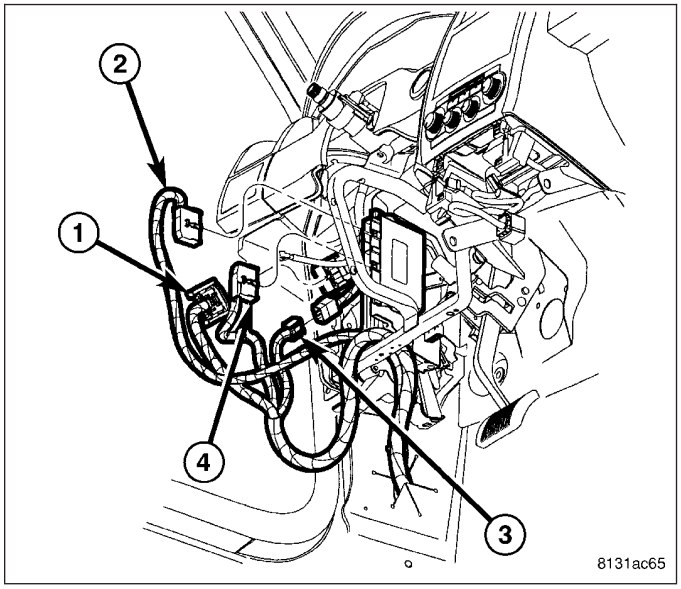

14. Remove the center floor console and floor duct (2 screws) (Refer to 23 - BODY/INTERIOR/CONSOLE-FLOOR - REMOVAL).
15. Remove the ash receiver from the instrument panel (Refer to 23 - BODY/INSTRUMENT PANEL/ASH RECEIVER - REMOVAL).
16. Disconnect the instrument panel wire harness connector (1) from the occupant restraint controller (ORC) module.

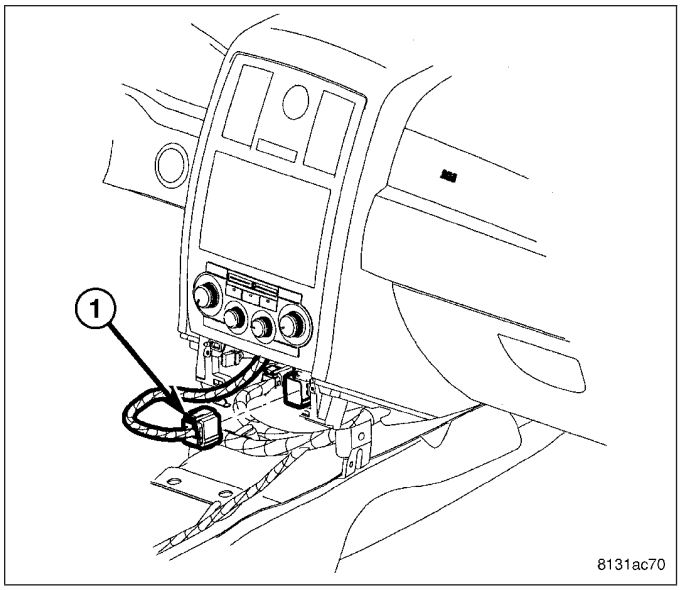

17. Disconnect the antenna coax (1) from the instrument panel coax extension.
18. Disconnect the wire harness connectors (2, 4, 5 and 6) from the instrument panel wire harness connectors (3).
19. Disconnect shifter link cable from ignition (2 bolts).

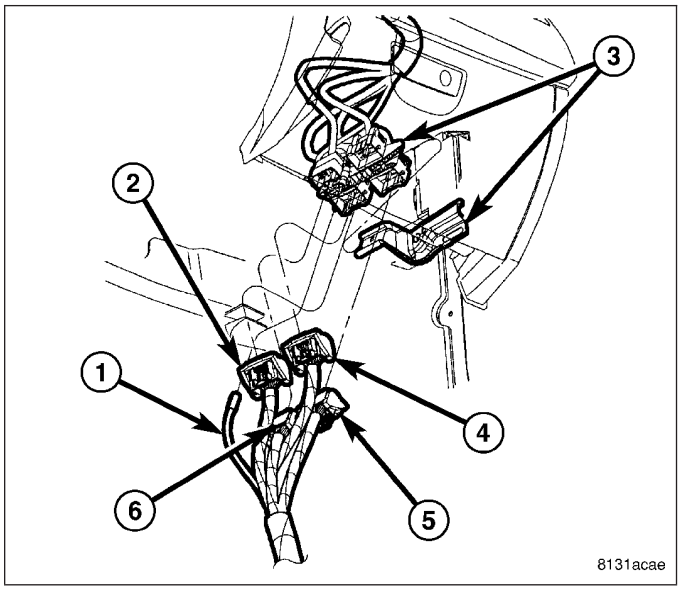

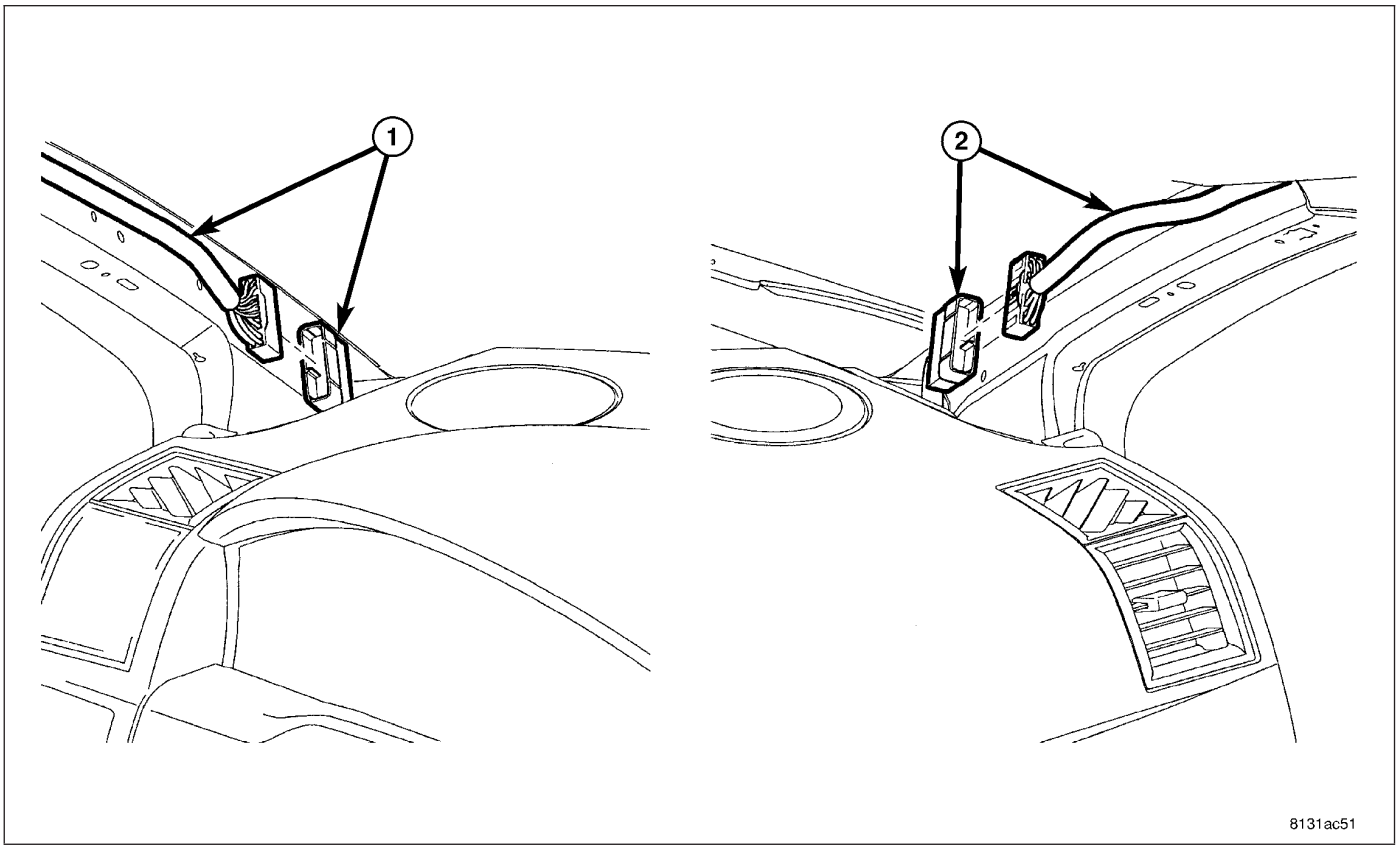

20. Remove the A-pillar trim panels (Refer to 23 - BODY/INTERIOR/PANEL-A-PILLAR TRIM - REMOVAL).
21. Disconnect the wire harness connectors (1 and 2) located on the A-pillars.

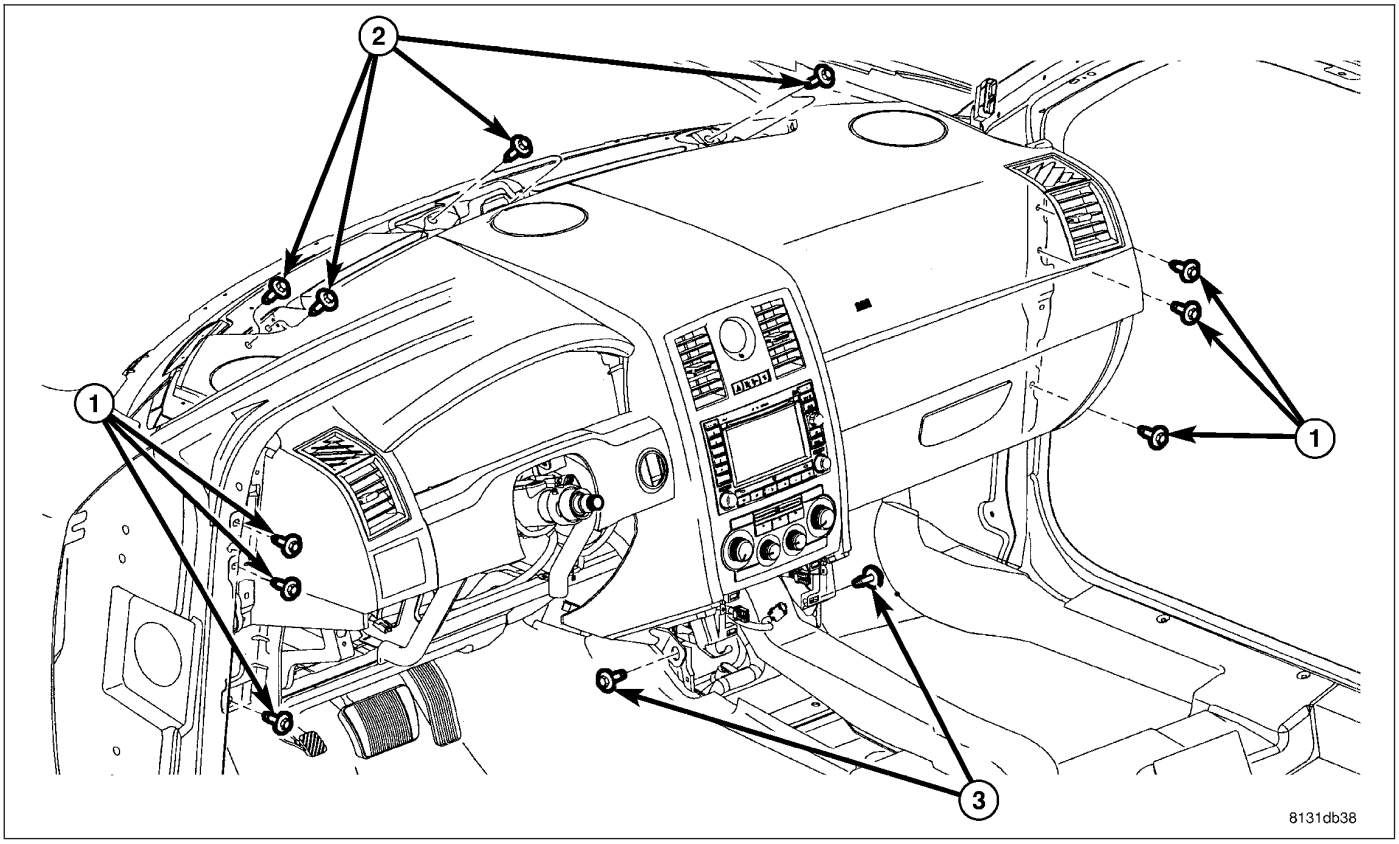

22. Remove the end caps from the left and right side of the instrument panel to access the instrument panel side support bolts (1) and remove the bolts.

23. Remove the defroster grille to access the instrument panel top retaining bolts (2) and remove the bolts (Refer to 23 - BODY/INSTRUMENT PANEL/GRILLE-DEFROSTER - REMOVAL).
24. Remove the bolts (3) that secure the bottom of the instrument panel.

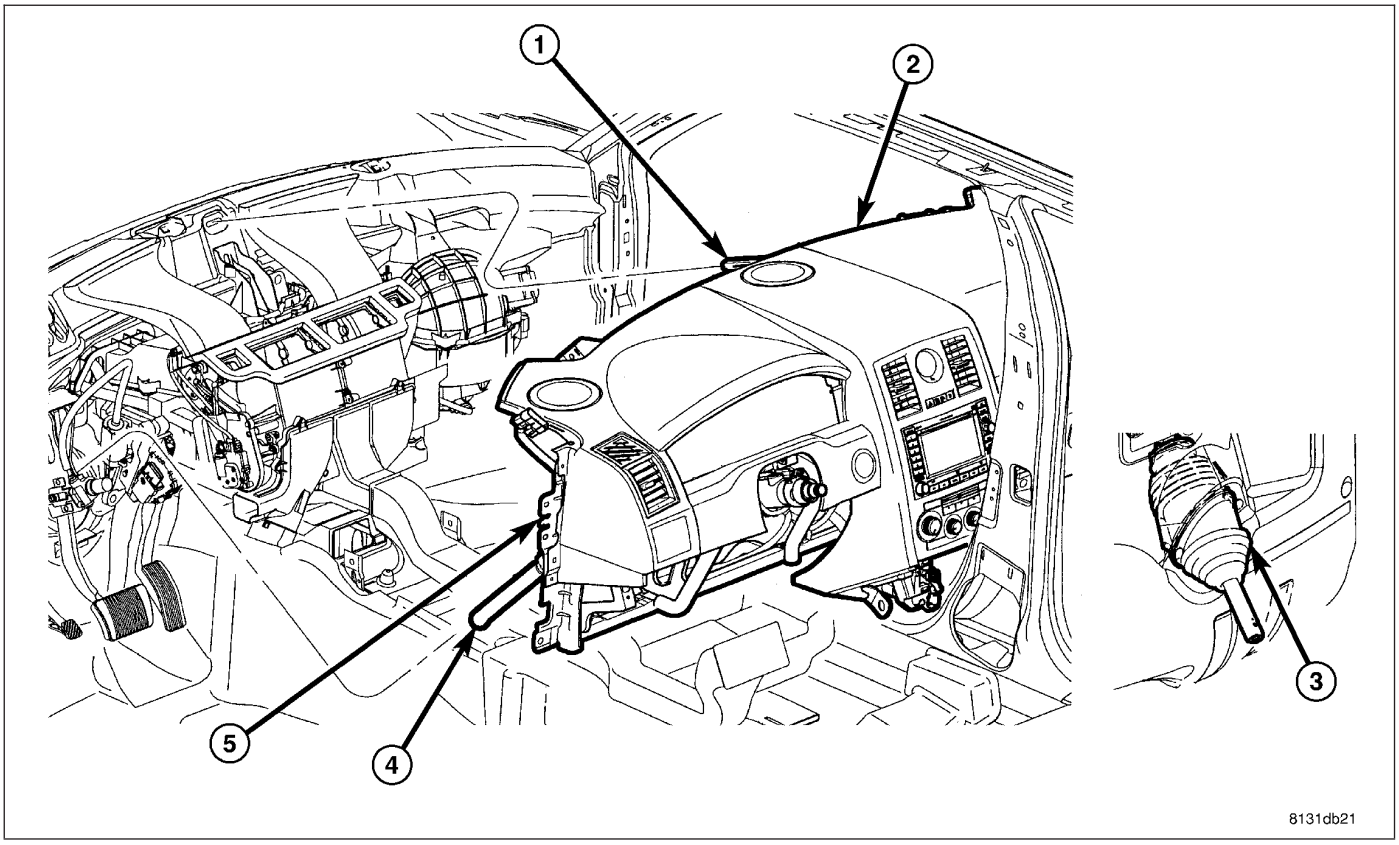

25. Lift the instrument panel assembly (2) off of the supports (1 and 5). Guide the steering column end (4) through the opening in the dash panel (3) and remove the instrument panel through the passenger door.
26. If required, remove the spring nuts (1) from the dash panel.

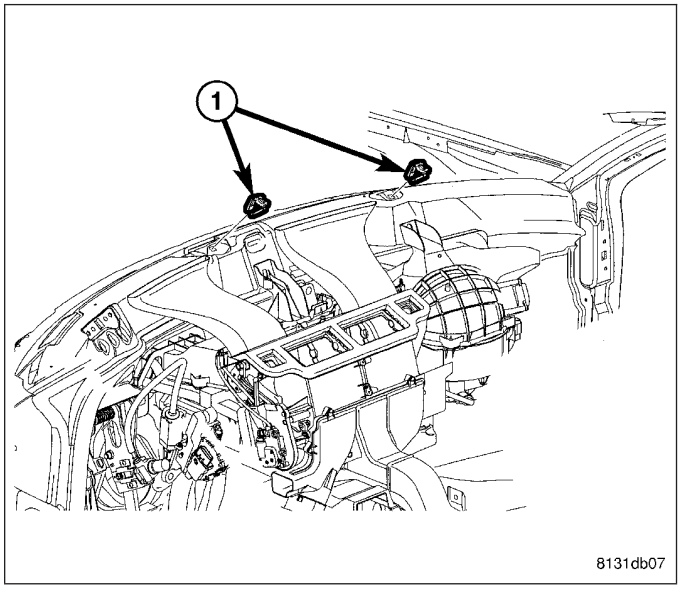

INSTALLATION

WARNING: To avoid personal injury or death, on vehicles equipped with air bags, disable the supplemental restraint system before attempting any steering wheel, steering column, airbag, occupant classification system, seat belt tensioner, impact sensor, or instrument panel component diagnosis or service. Disconnect and isolate the battery negative (ground) cable, then wait two minutes for the system capacitor to discharge before performing further diagnosis or service. This is the only sure way to disable the supplemental restraint system. Failure to take the proper precautions could result in accidental airbag deployment.

WARNING: To avoid personal injury or death, never strike or drop the occupant restraint controller, as it can damage the impact sensor or affect its calibration. The occupant restraint controller contains the impact sensor, which enables the system to deploy the supplemental restraints. If an airbag control module is accidentally dropped during service, the module must be scrapped and replaced with a new unit. Failure to observe this warning could result in accidental, incomplete, or improper supplemental restraint deployment.

CAUTION: On vehicles equipped with the Occupant Classification System (OCS), never replace both the Occupant Restraint Controller (ORC) and the Occupant Classification Module (OCM) at the same time. If both require replacement, replace one. Then perform the supplemental restraint verification test before replacing the other. Both the ORC and the OCM store OCS calibration data, which they transfer to one another when one of them is replaced. If both are replaced at the same time, an irreversible fault will be set in both modules.

NOTE: Left hand drive shown throughout, right hand drive similar.

1. Before proceeding with the following repair procedure, review all warnings and cautions (Refer to 23 - BODY/INSTRUMENT PANEL - WARNING).
2. If required, install new spring nuts (1) into the dash panel.

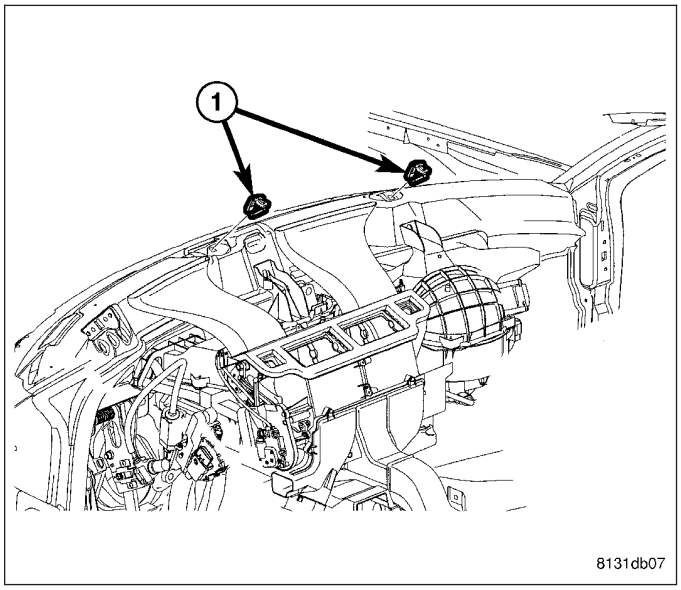

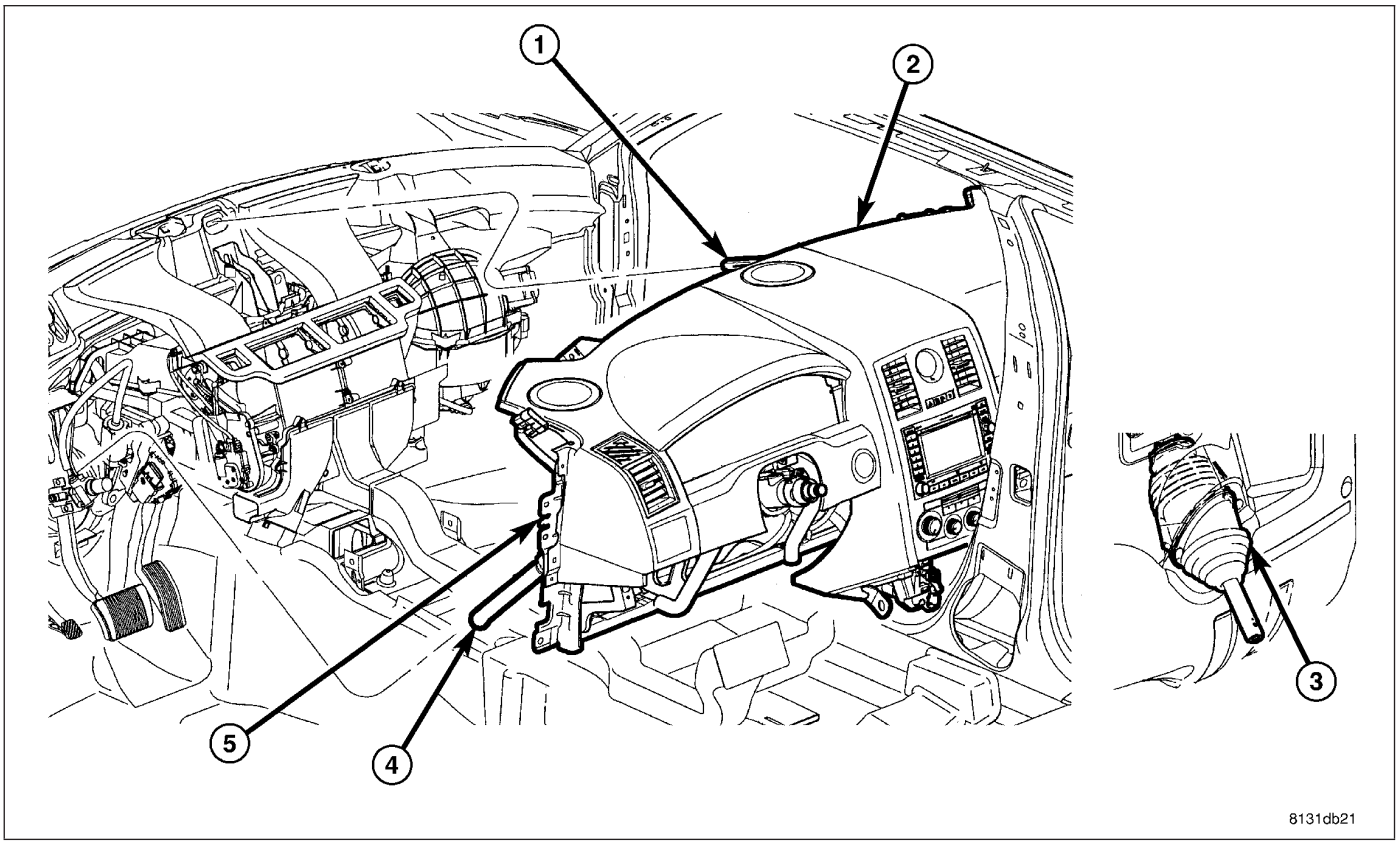

3. Position the instrument panel assembly (3) into the vehicle through the drivers side door. Guide the steering column end (4) through the opening in the dash panel (3) and install the instrument panel onto the supports (1 and 5).

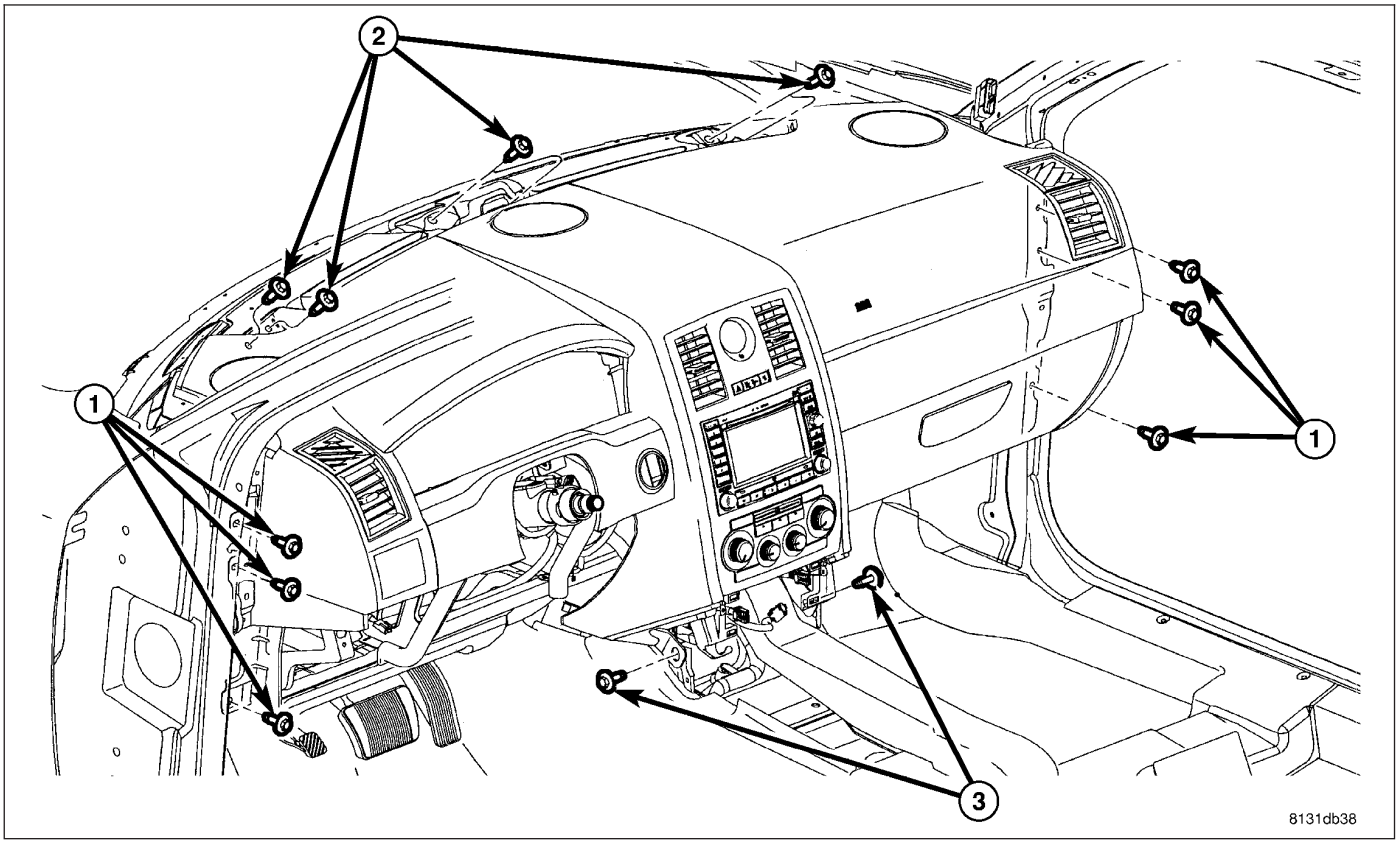

4. Loosely install all the bolts that secure the instrument panel to the body. Then tighten the bolts in the following order:

- Top of instrument panel (2) to 8 N·m (70 in. lbs.).
- Side support bolts (1) to 27 N·m (20 ft. lbs.).
- Bottom of instrument panel (3) to 6 N·m (55 in. lbs.).

5. Install the end caps to the left and right side of the instrument panel.
6. Install the defroster grille to the top of the instrument panel (Refer to 23 - BODY/INSTRUMENT PANEL/GRILLE-DEFROSTER - INSTALLATION).

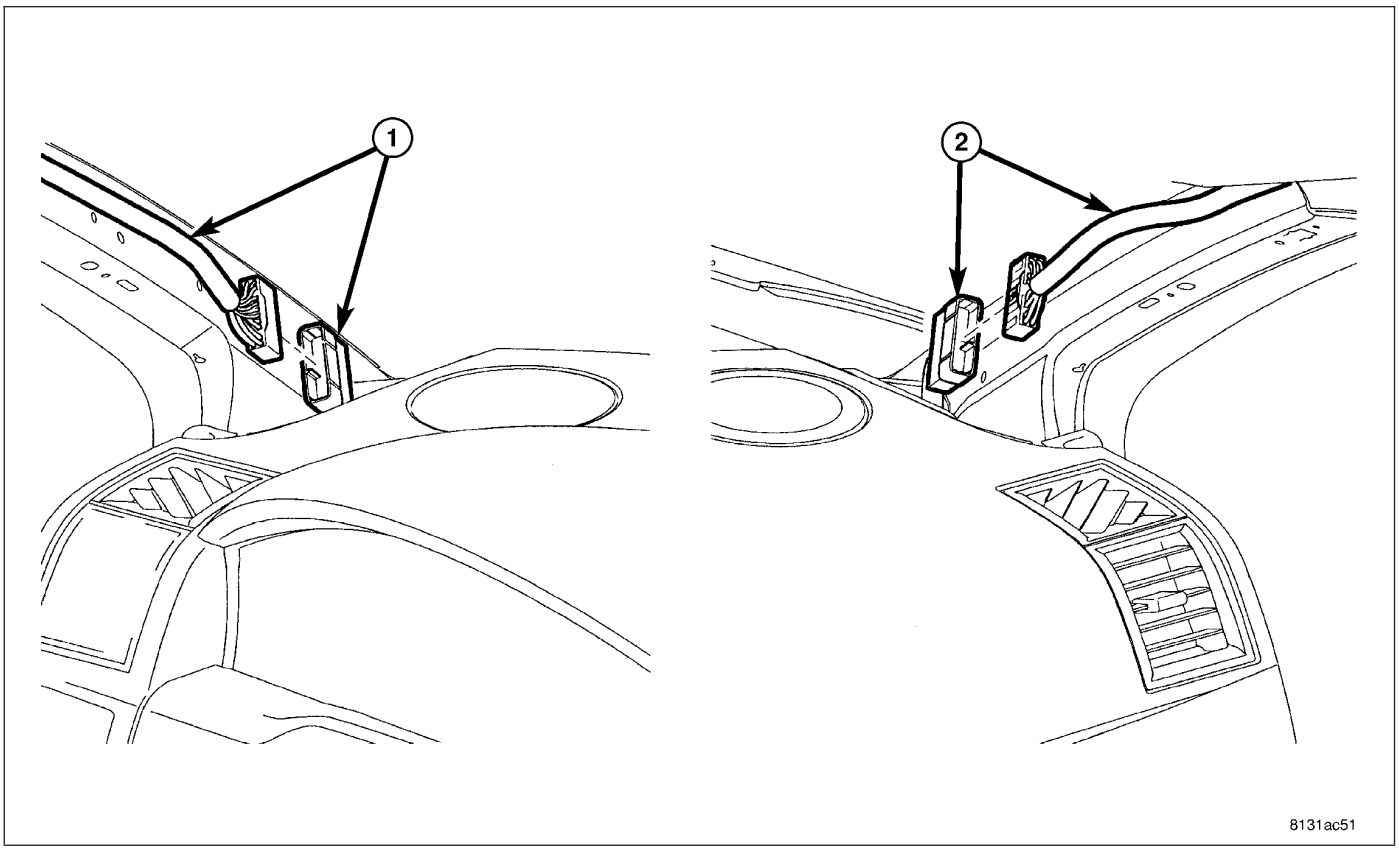

7. Connect the wire harness connectors (1 and 2) located on the A-pillars.
8. Install the A-pillar trim panels (Refer to 23 - BODY/INTERIOR/PANEL-A-PILLAR TRIM - INSTALLATION).
9. Connect the wire harness connectors (2, 4, 5 and 6) to the instrument panel wire harness connector (3).
10. Connect shifter link cable to ignition (2 screws).
11. Connect the antenna coax (1) to the instrument panel coax extension.

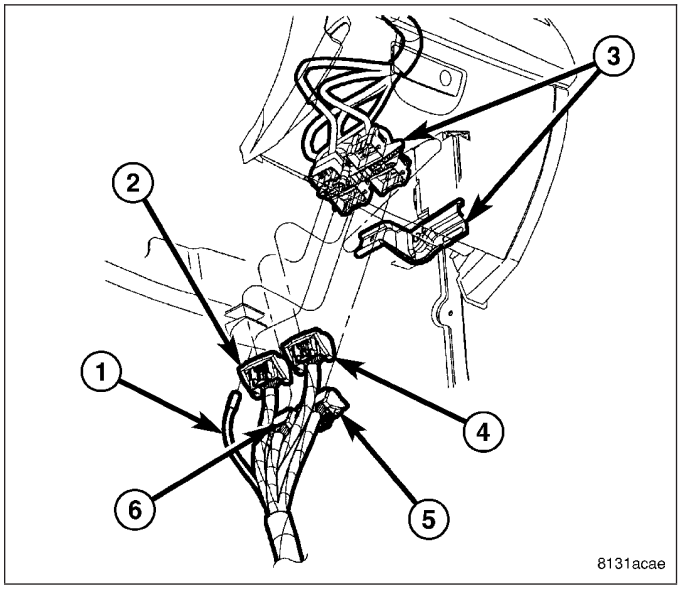

12. Connect the instrument panel wire harness connector (1) to the occupant restraint controller (ORC) module.
13. Install the ash receiver into the instrument panel (Refer to 23 - BODY/INSTRUMENT PANEL/ASH RECEIVER - INSTALLATION).
14. Install the center floor console and floor duct (2 scews) (Refer to 23 - BODY/INTERIOR/CONSOLE-FLOOR - INSTALLATION).

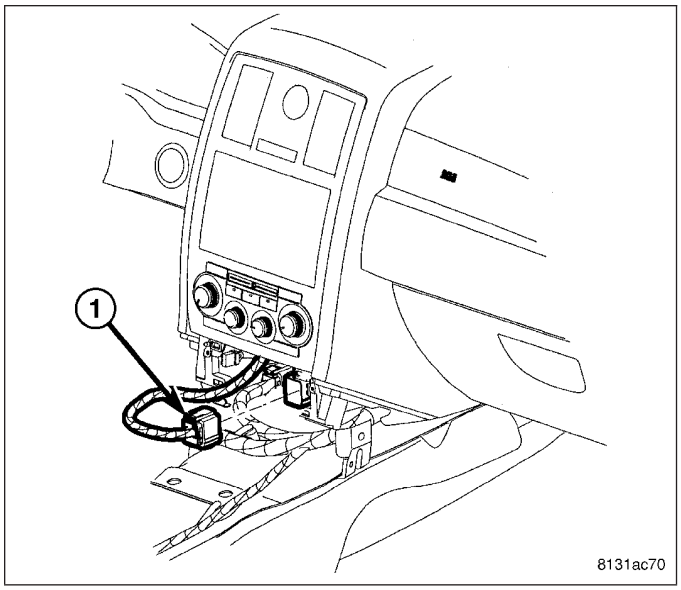

15. Connect the body wire harness connectors (2 and 4) to the transmission control module.
16. Connect the body wire harness connectors (1 and 3) to the instrument panel wire harness connectors.

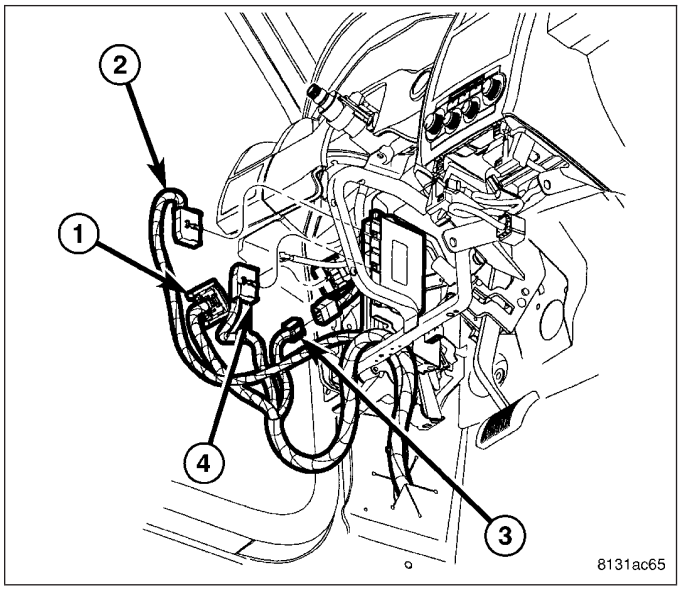

17. Position the instrument panel steering column cover reinforcement (1) onto the bracket (2).
18. Install the screws (3) that secure the instrument panel steering column cover reinforcement to the bracket. Tighten the screws securely.

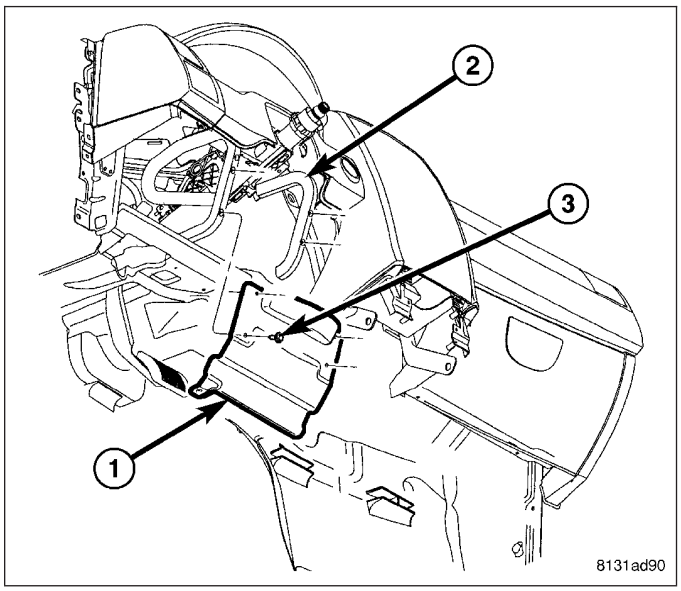

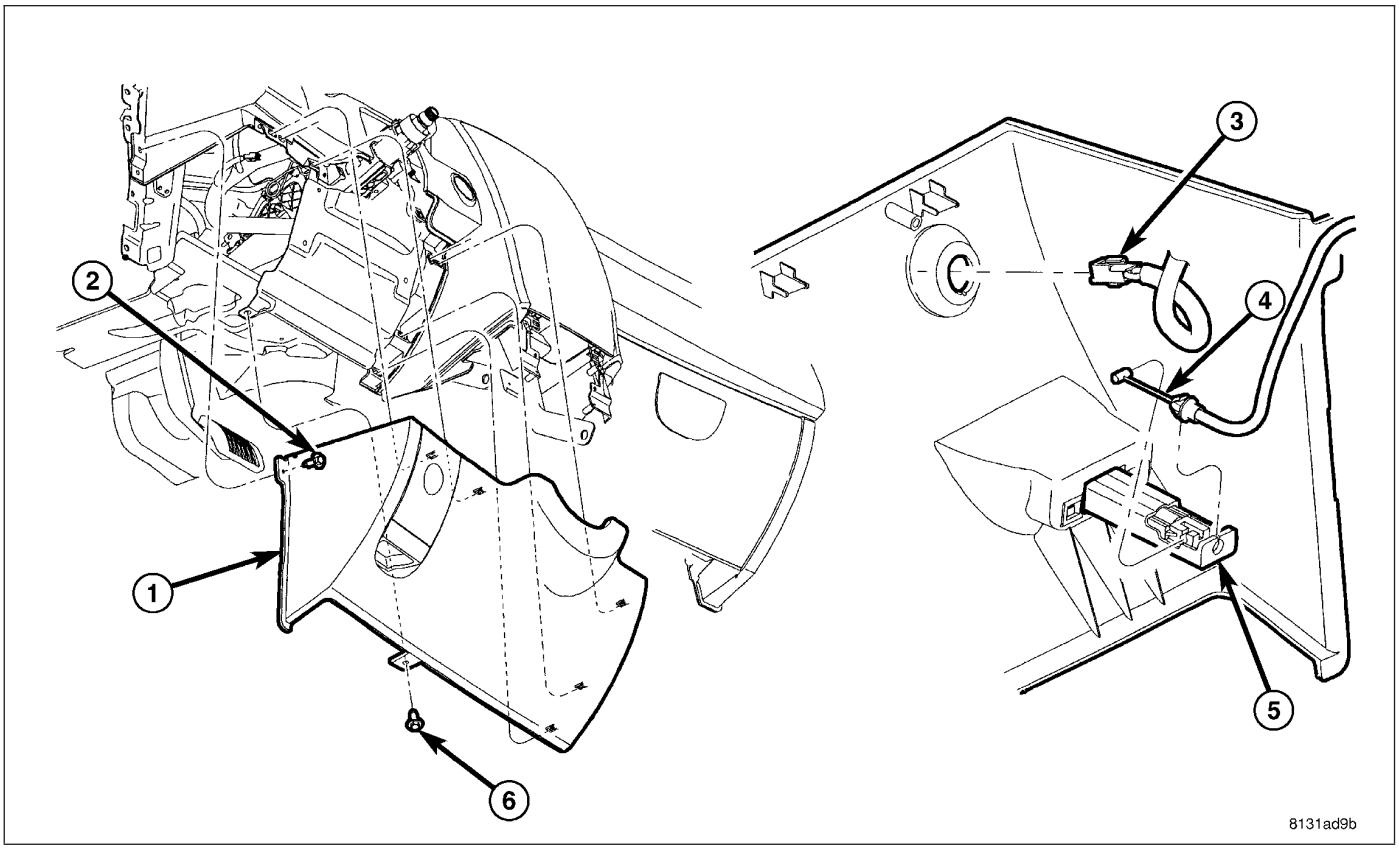

19. Position the steering column cover (1) into the vehicle.
20. Connect the hood release cable (4) to the hood release handle (5).
21. Connect the wire harness connector (3) to the trunk release switch.
22. Install the screws (2 and 6) that secure the steering column cover (1) to the instrument panel. Tighten the screws securely.
23. Install the left and right side instrument panel silencers (Refer to 23 - BODY/INSTRUMENT PANEL/INSTRUMENT PANEL SILENCER - INSTALLATION.)
24. Install key bezel and instrument cluster (2 bolts). Connect cluster connectors.
25. Raise and support the vehicle.
26. Connect the steering column to the steering coupling (Refer to 19 - STEERING/COLUMN/STEERING COUPLING - INSTALLATION).
27. Lower the vehicle.

CAUTION: Do not reconnect the negative battery cable at this time. The supplemental restraint system verification test procedure should be performed following service of any supplemental restraint system component.

28. Perform the supplemental restraint system verification test (Refer to 8 - ELECTRICAL/RESTRAINTS - STANDARD PROCEDURE - VERIFICATION TEST).

BEZEL-CENTER

REMOVAL

CHRYSLER

1. Before proceeding with the following repair procedure, review all warnings and cautions (Refer to 23 - BODY/INSTRUMENT PANEL - WARNING).
2. Using a trim stick C-4755 or equivalent (1), remove the center bezel (2) from the instrument panel (3) by releasing the snap retainers from the instrument panel.

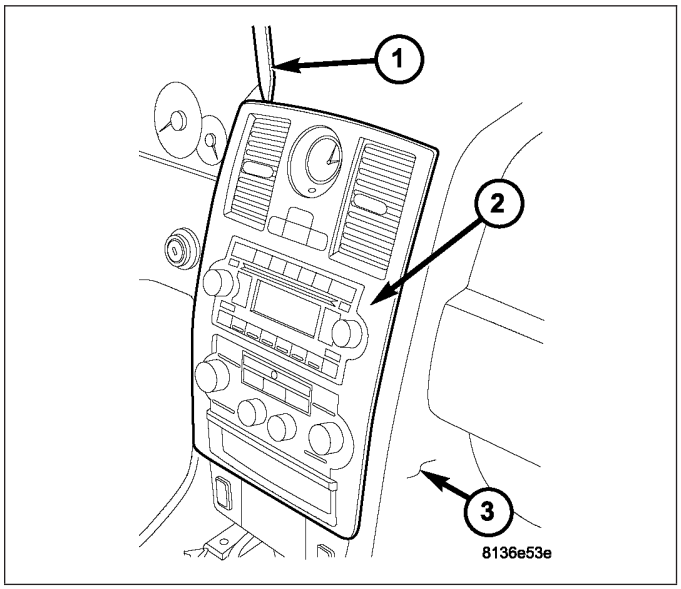

3. Disconnect the electrical connectors (3) from the A/C - heater control (4) and the clock and remove the center bezel (1) from the vehicle.

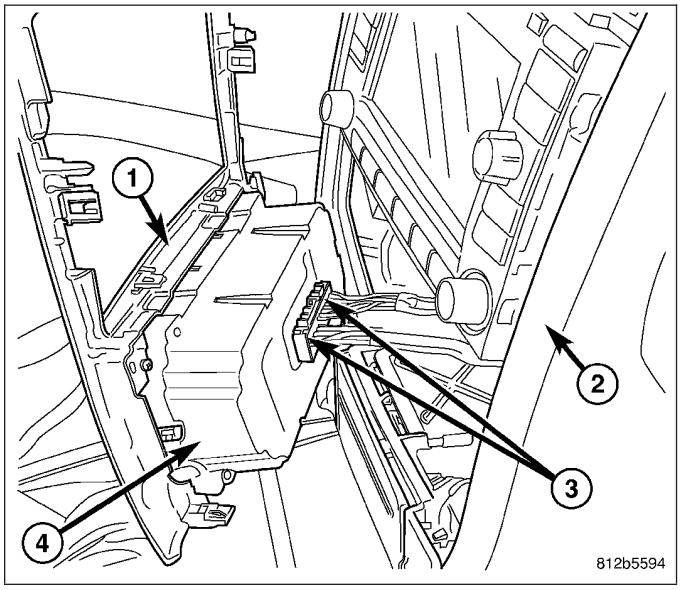

DODGE

1. Before proceeding with the following repair procedure, review all warnings and cautions (Refer to 23 - BODY/INSTRUMENT PANEL - WARNING).
2. Using a trim stick C-4755 or equivalent (1), remove the center bezel (2) from the instrument panel (3) by releasing the snap retainers from the instrument panel.

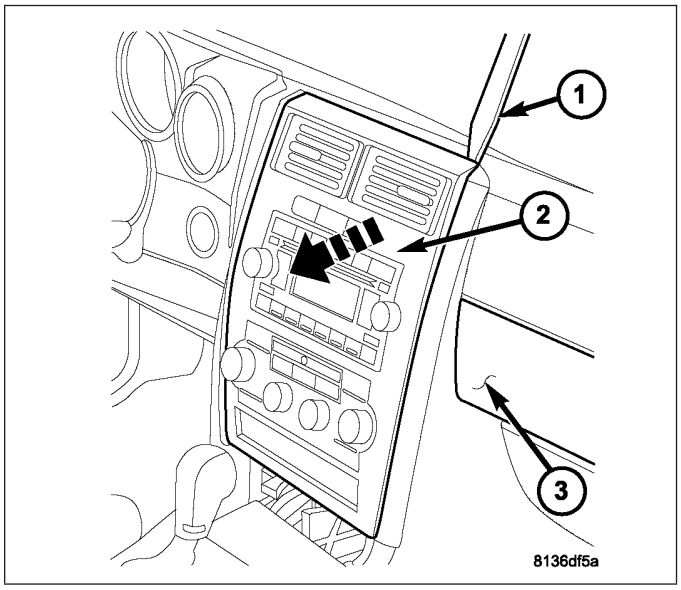

3. Disconnect the electrical connectors (3) from the A/C - heater control (4) and the switch pod and remove the center bezel (1) from the vehicle.

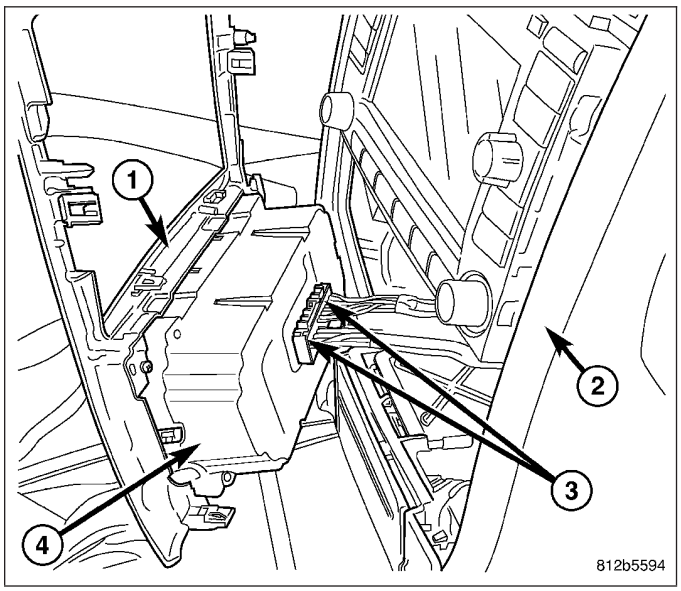

INSTALLATION

CHRYSLER

1. Before proceeding with the following repair procedure, review all warnings and cautions (Refer to 23 - BODY/INSTRUMENT PANEL - WARNING).
2. Position the center bezel (1) near the instrument panel (2).
3. Connect the electrical connectors (3) to the A/C - heater control (4) and the clock.

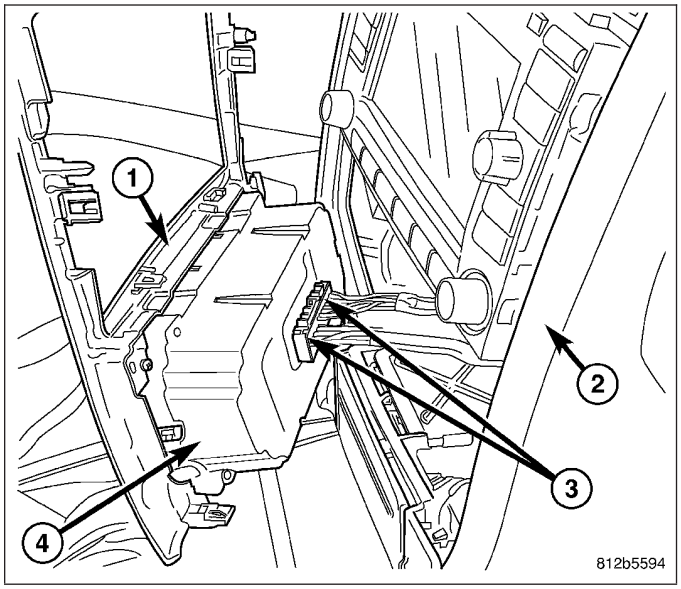

4. Install the center bezel (1) onto the instrument panel (2) and carefully push on the outside edges of the center bezel to fully seat the snap clip retainers into the instrument panel.

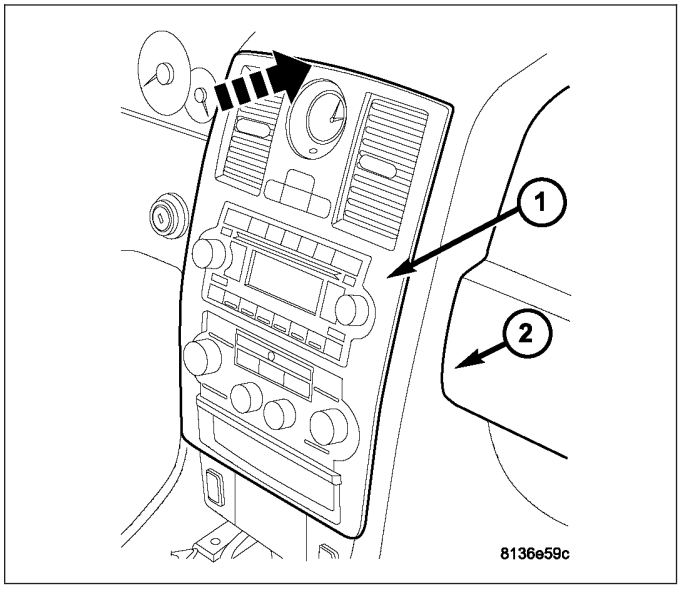

DODGE

1. Before proceeding with the following repair procedure, review all warnings and cautions (Refer to 23 - BODY/INSTRUMENT PANEL - WARNING).
2. Position the center bezel (1) near the instrument panel (2).
3. Connect the electrical connectors (3) to the A/C - heater control (4) and the switch pod.

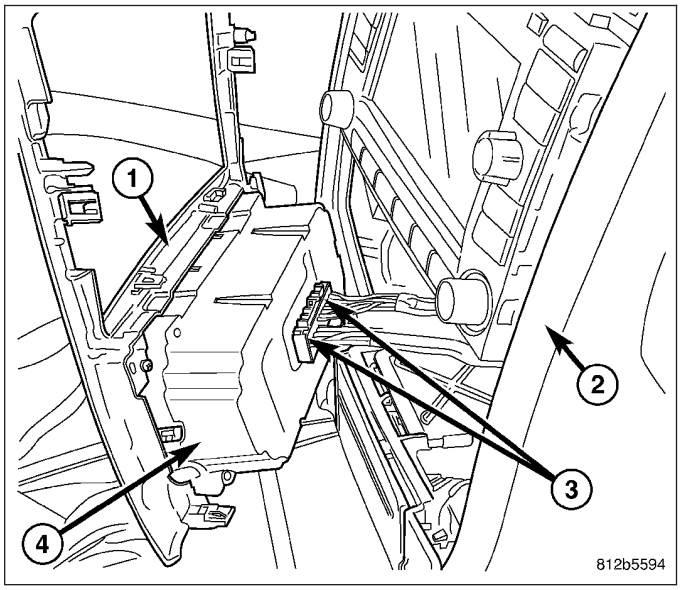

4. Install the center bezel (1) onto the instrument panel (2) and carefully push on the outside edges of the center bezel to fully seat the snap clip retainers into the instrument panel.

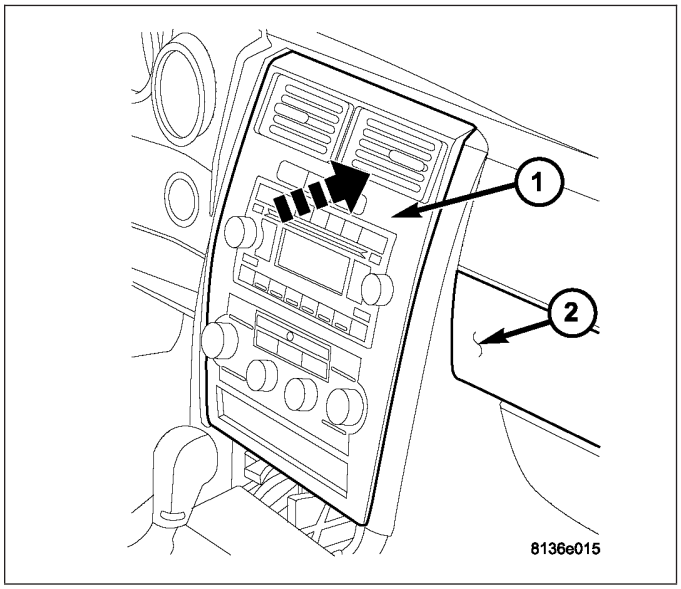

BEZEL-CLUSTER

REMOVAL

REMOVAL

1. Before proceeding with the following repair procedure, review all warnings and cautions (Refer to 23 - BODY/INSTRUMENT PANEL - WARNING).
2. Using a trim stick C-4755 or equivalent (1), gently pry between the ignition switch bezel (2) and the instrument cluster bezel (3) to release the snap retainers that secure the switch bezel.
3. Remove the ignition switch bezel from the vehicle.

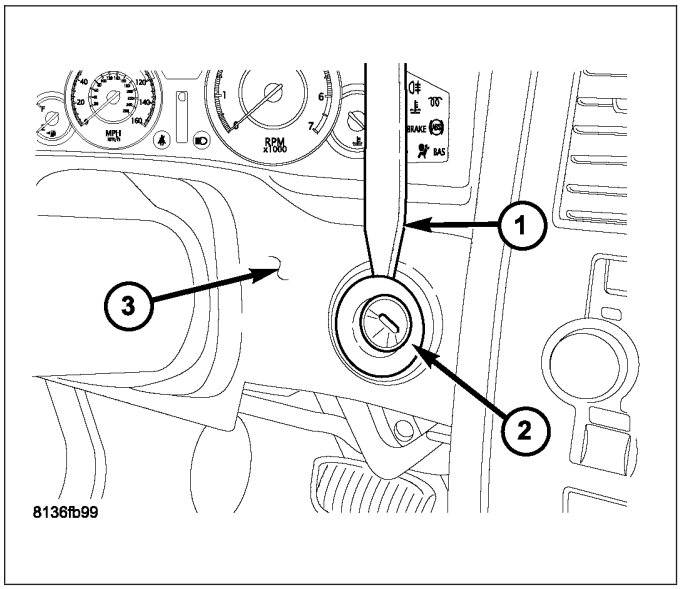

4. Using a trim stick C-4755 or equivalent (1), gently pry between the instrument panel (2) and the cluster bezel (3) to release the snap clip retainers that secure the cluster bezel.

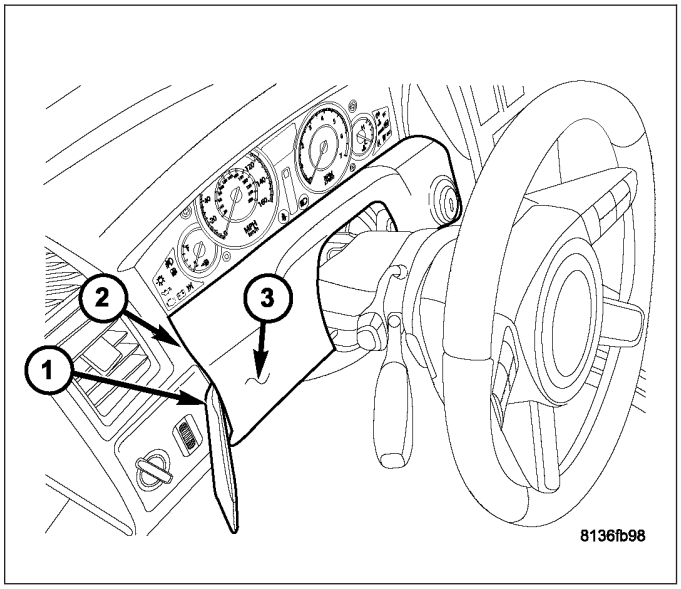

DODGE

1. Before proceeding with the following repair procedure, review all warnings and cautions (Refer to 23 - BODY/INSTRUMENT PANEL - WARNING).
2. Using a trim stick C-4755 or equivalent (1), gently pry between the ignition switch bezel (2) and the instrument cluster bezel (3) to release the snap retainers that secure the switch bezel.
3. Disconnect the wire harness connector from the headlamp switch (4) and remove the cluster bezel from the vehicle.

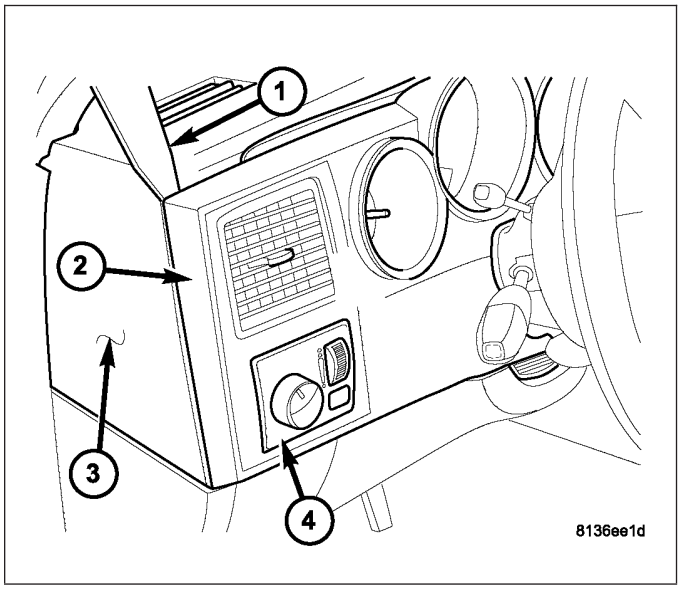

4. Using a trim stick C-4755 or equivalent (1), gently pry between the cluster bezel (2) and the instrument panel (3) to release the snap clip retainers that secure the cluster bezel.
5. If required, remove the headlamp switch from the cluster bezel (Refer to 8 - ELECTRICAL/LAMPS/LIGHTING - EXTERIOR/HEADLAMP SWITCH - REMOVAL).
6. Remove the ignition switch bezel from the vehicle.

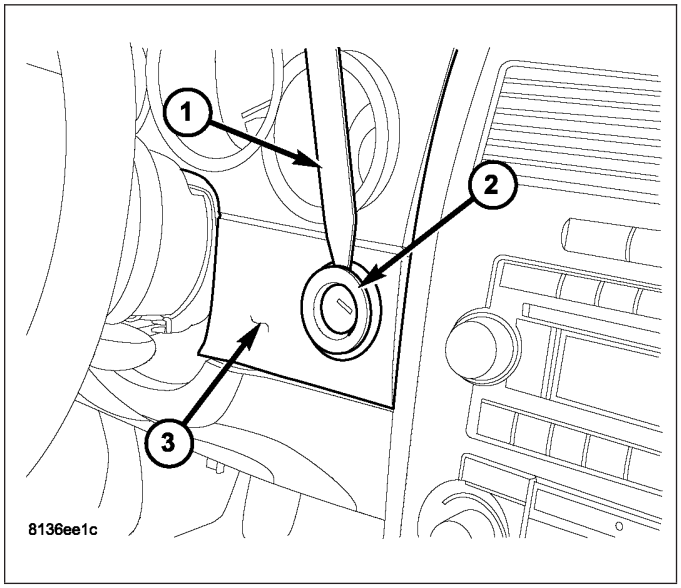

INSTALLATION

INSTALLATION

1. Position the cluster bezel (1) onto the instrument panel (2).
2. Carefully push on the cluster bezel to fully seat the snap clip retainers into the instrument panel.

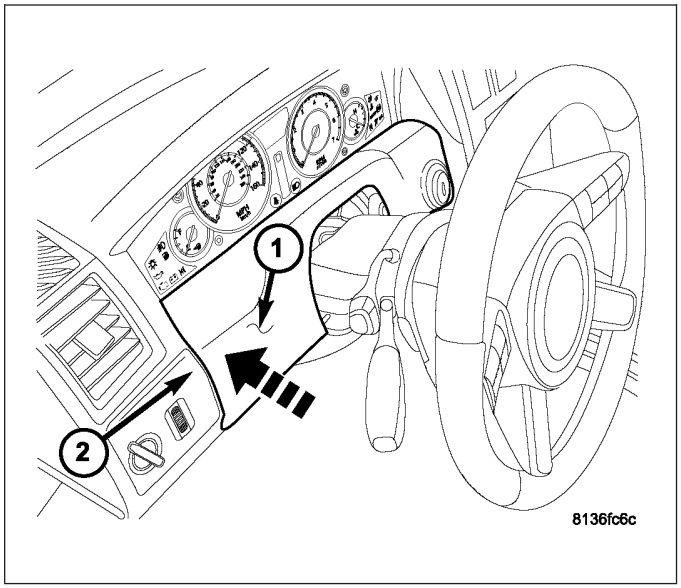

3. Position the ignition switch bezel (1) into the cluster bezel (2).
4. Carefully push on the ignition switch bezel to engage the snap retainers that secure the switch bezel.

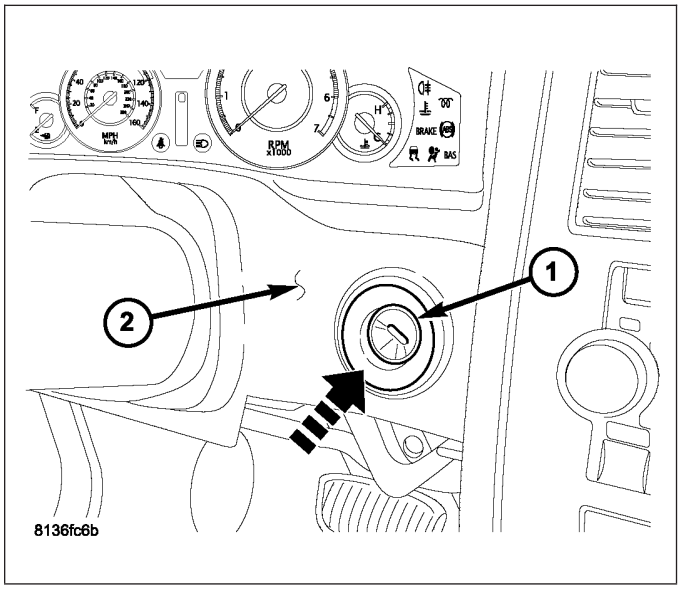

INSTALLATION

1. If removed, install the headlamp switch (1) into the cluster bezel (2) (Refer to 8 - ELECTRICAL/ LAMPS/LIGHTING - EXTERIOR/HEADLAMP SWITCH - INSTALLATION).
2. Position the cluster bezel into the vehicle and connect the wire harness connector to the headlamp switch.
3. Install the cluster bezel onto the instrument panel (3) and carefully push on the cluster bezel to fully seat the snap clip retainers into the instrument panel.

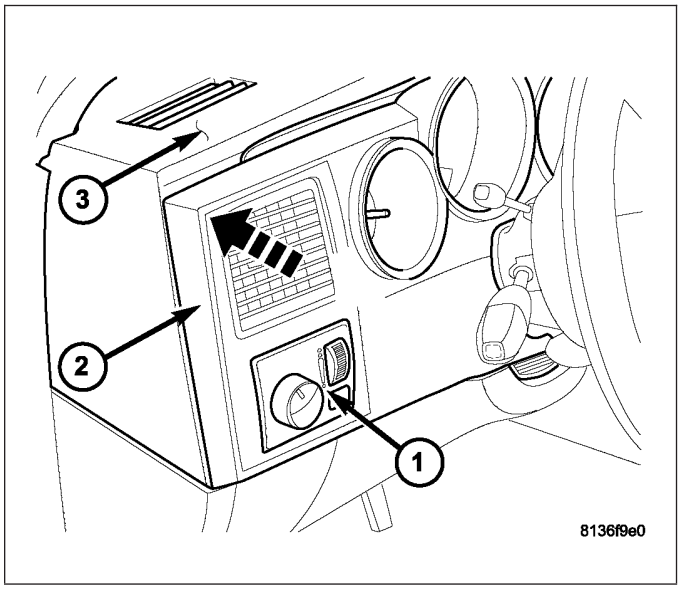

4. Position the ignition switch bezel (1) into the cluster bezel (2).
5. Carefully push on the ignition switch bezel to engage the snap retainers that secure the switch bezel.

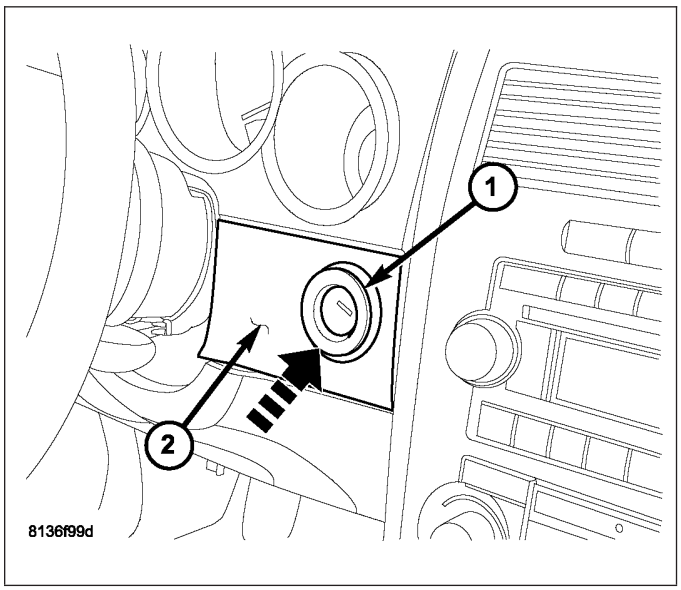

BIN-GLOVE BOX

REMOVAL

1. Open the glove box bin (1).
2. Push in on both sides of glove box bin to disengage the glove box stops (2) and lower the bin.
3. Pivot the glove box bin downward and disengage the bin hinge hooks (3) from the instrument panel hinge brackets (4) located at each end of the bin.

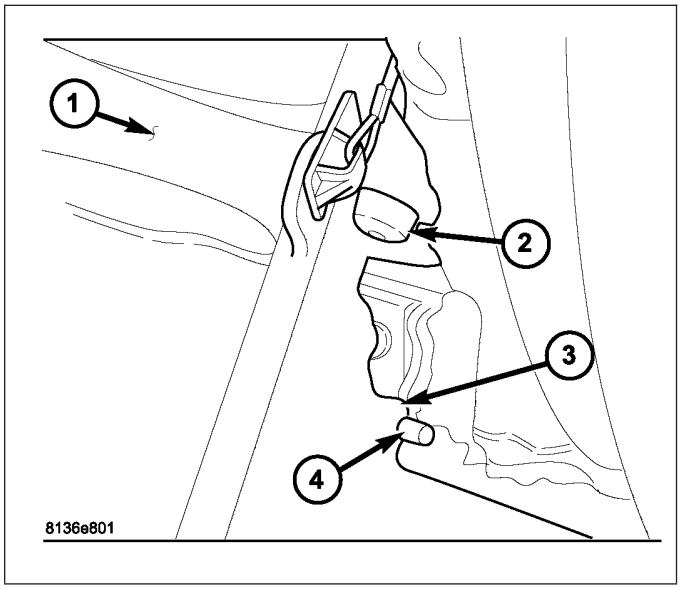

4. Turn the glove box bin (1) sideways and remove the support strap and retainer assembly (2) from the outboard end of the bin.
5. Remove the glove box bin from the vehicle.

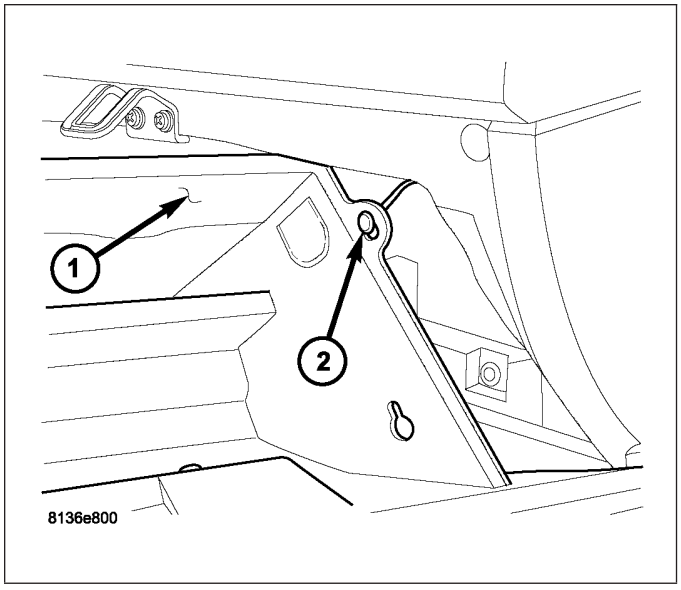

INSTALLATION

1. Position the glove box bin (1) into the vehicle.
2. Turn the glove box bin sideways and install the support strap and retainer assembly (2) onto the outboard end of the bin.

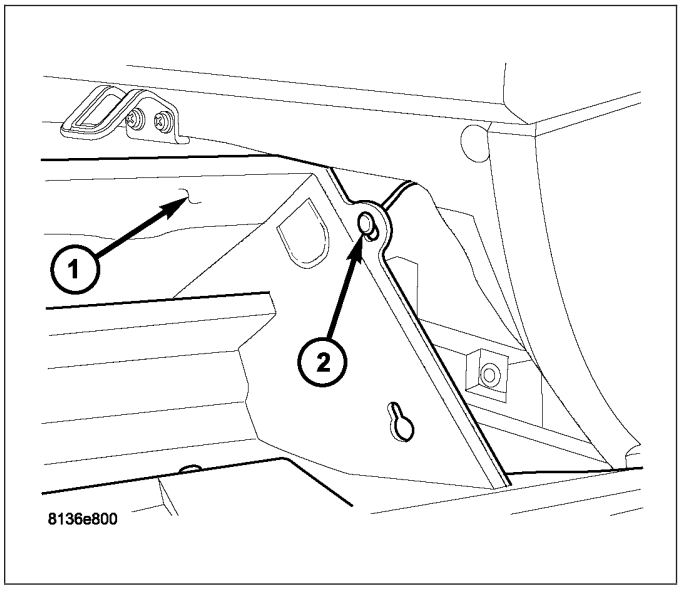

3. Engage the glove box bin hinge hooks (3) onto the instrument panel hinge brackets (4) located at each end of the glove box bin (1) and pivot the bin upward.
4. To engage the glove box stops (2), push inward on both sides of the glove box bin and pivot the bin into the instrument panel.
5. Close the glove box bin.

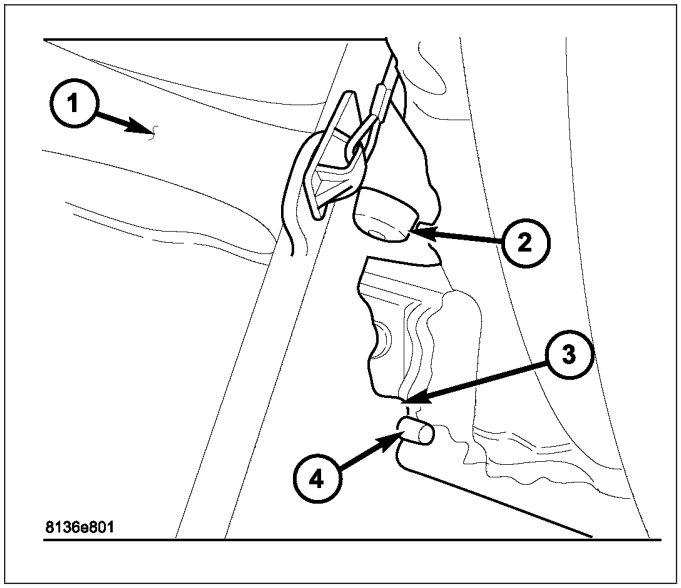

COVER-STEERING COLUMN OPENING

REMOVAL

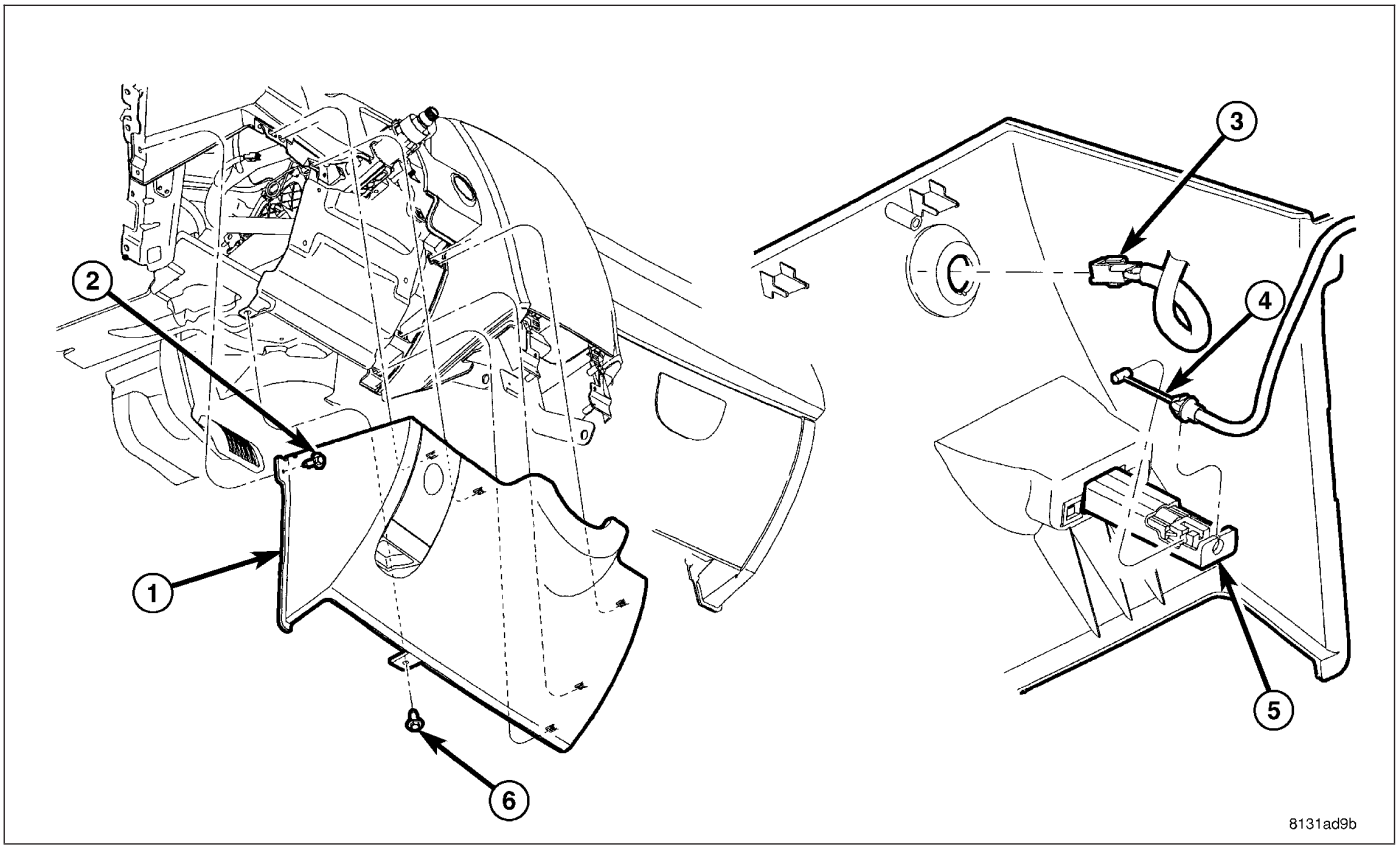

1. Disconnect and isolate negative battery cable.
2. Remove the screws (2 and 6) that secure the steering column cover (1) to the instrument panel.
3. Pull the steering column cover rearward at the top and right side of the cover to release the snap retainers from the instrument panel.
4. Disconnect the wire harness connector (3) from the trunk release switch, if equipped.
5. Disconnect the release cable (4) from the emergency bracket release handle (5) and remove the steering column cover from the vehicle.
6. If required, remove the screws (3) that secure the instrument panel steering column cover reinforcement (1) to the bracket (2) and remove the reinforcement from the vehicle.

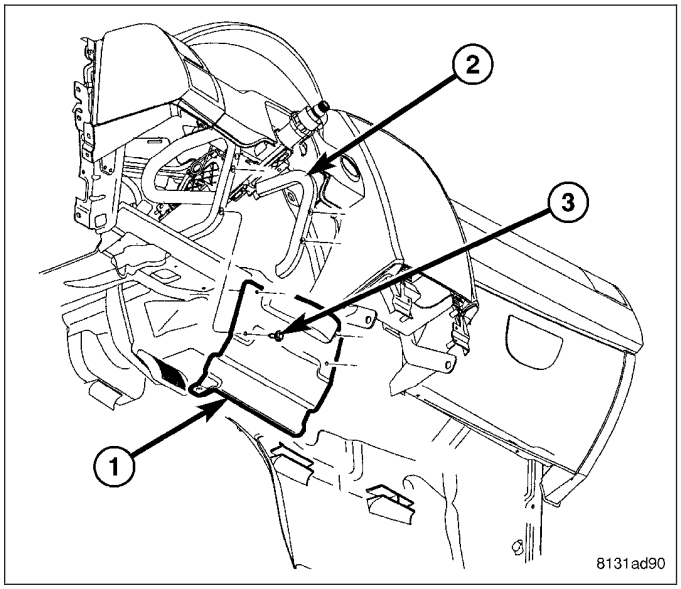

INSTALLATION

1. If removed, position the instrument panel steering column cover reinforcement (1) onto the bracket (2).
2. Install the screws (3) that secure the instrument panel steering column cover reinforcement to the bracket. Tighten the screws securely.

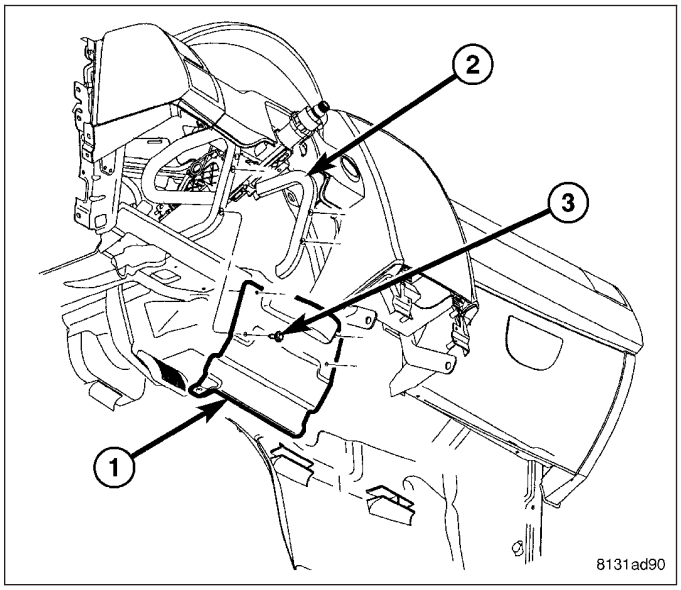

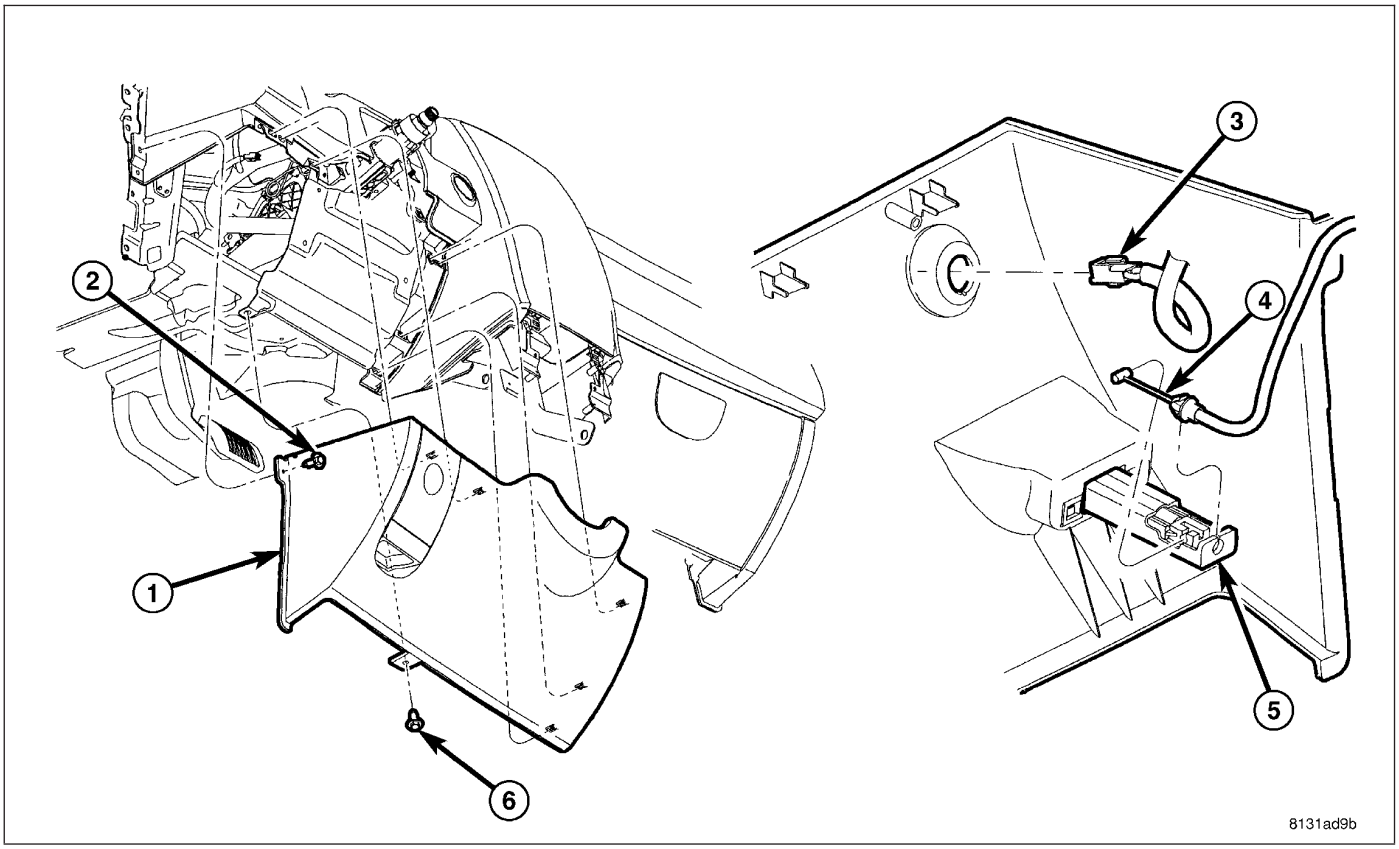

3. Position the steering column cover (1) into the vehicle.
4. Connect the release cable (4) to the emergency brake release handle (5).
5. Connect the wire harness connector (3) to the trunk release switch, if equipped.
6. Install the steering column cover onto the instrument panel and carefully push on the top and right side of the cover to fully seat the snap clip retainers into the instrument panel.
7. Install the screws (2 and 6) that secure the steering column cover (1) to the instrument panel. Tighten the screws securely.

GRILLE-DEFROSTER

REMOVAL

1. Before proceeding with the following repair procedure, review all warnings and cautions (Refer to 23 - BODY/INSTRUMENT PANEL - WARNING).
2. Using a trim stick C-4755 or equivalent, gently pry between the instrument panel top cover and the defroster grille (1) to release the snap clip retainers that secure the defroster grille.
3. Remove the defroster grille.

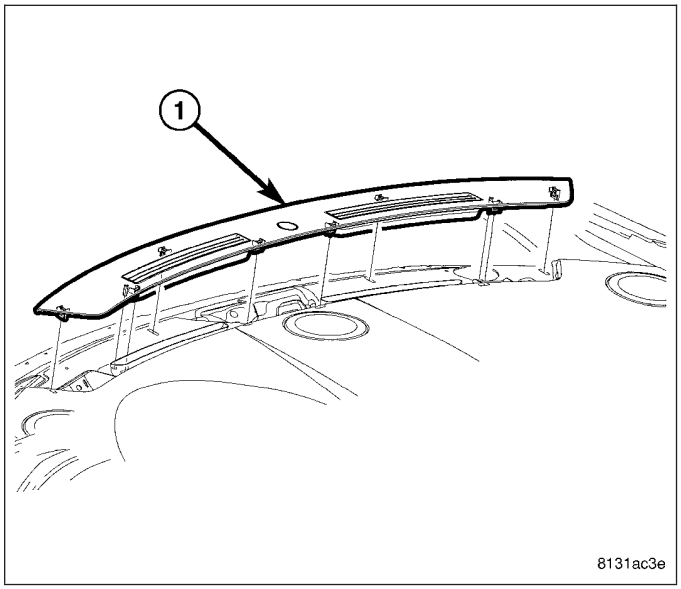

INSTALLATION

1. Before proceeding with the following repair procedure, review all warnings and cautions (Refer to 23 - BODY/INSTRUMENT PANEL - WARNING).
2. Position the defroster grille (1) onto the top of the instrument panel.
3. Carefully push down on the defroster grille to fully seat the snap clip retainers into the instrument panel top cover.

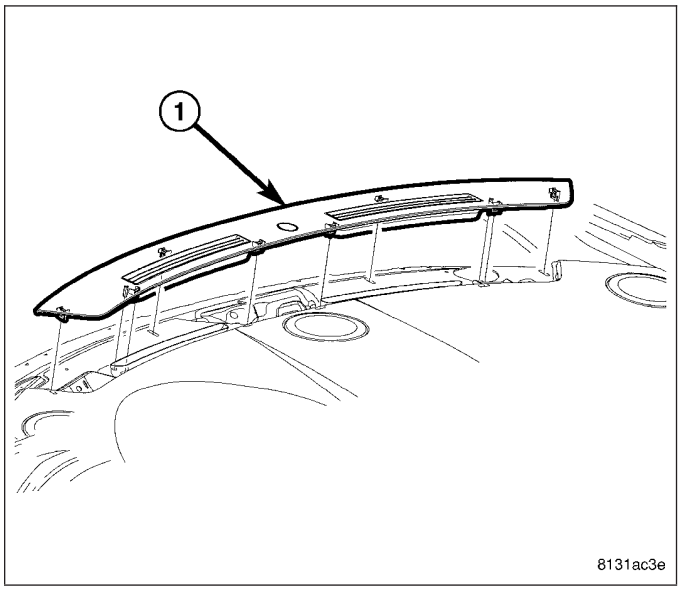

LATCH-GLOVE BOX

REMOVAL

1. Open the glove box bin.
2. Remove the two screws (2) that secure the latch assembly (3) to the glove box door (1) and remove the latch assembly.
3. If required, remove the glove box lock cylinder from the latch (Refer to 23 - BODY/INSTRUMENT PANEL/LOCK CYLINDER-GLOVE BOX - REMOVAL).

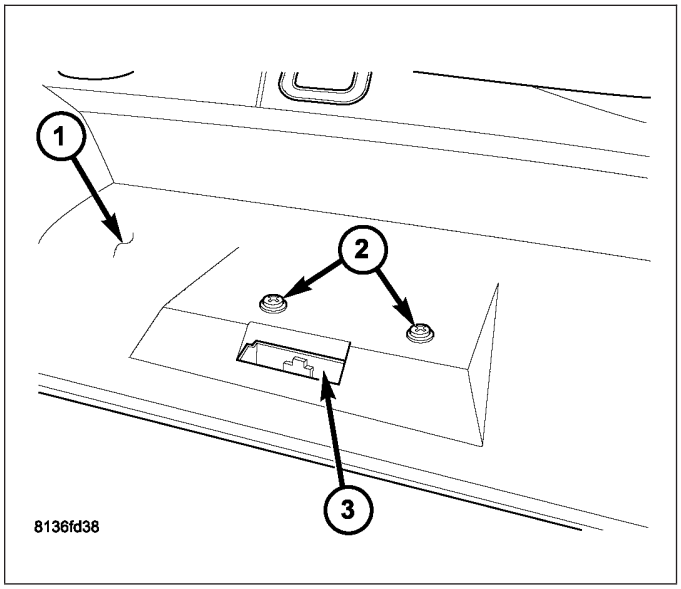

INSTALLATION

1. If removed, install the glove box lock cylinder into the latch (Refer to 23 - BODY/INSTRUMENT PANEL/LOCK CYLINDER-GLOVE BOX - INSTALLATION).
2. Install the latch assembly (3) into the glove box door (1).
3. Install the two screws (2) that secure the latch assembly to the glove box door. Tighten the screws securely.
4. Close the glove box bin.

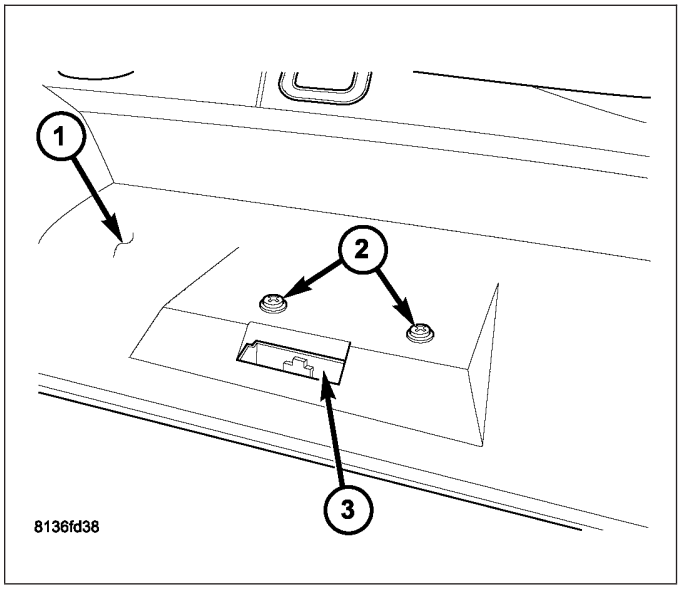

LOCK CYLINDER-GLOVE BOX

REMOVAL

1. Remove the glove box latch (1) from the glove box door and place it on a workbench (Refer to 23 - BODY/INSTRUMENT PANEL/LATCH-GLOVE BOX - REMOVAL).
2. Insert the ignition key (2) into the glove box lock cylinder (3) and rotate the ignition key 90 degrees clockwise.

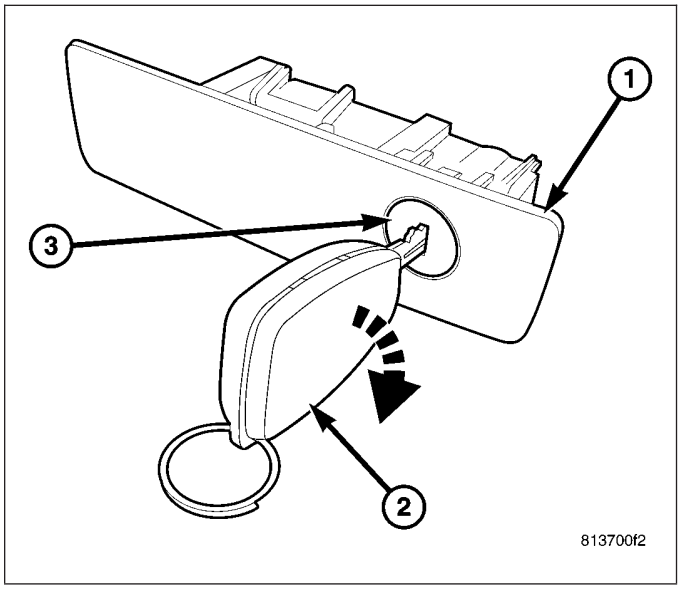

3. Using a small pointed tool, press in on the lock pin (1) showing through the opening in the glove box latch housing (2) and rotate the ignition key (3) an additional 45 degrees clockwise.

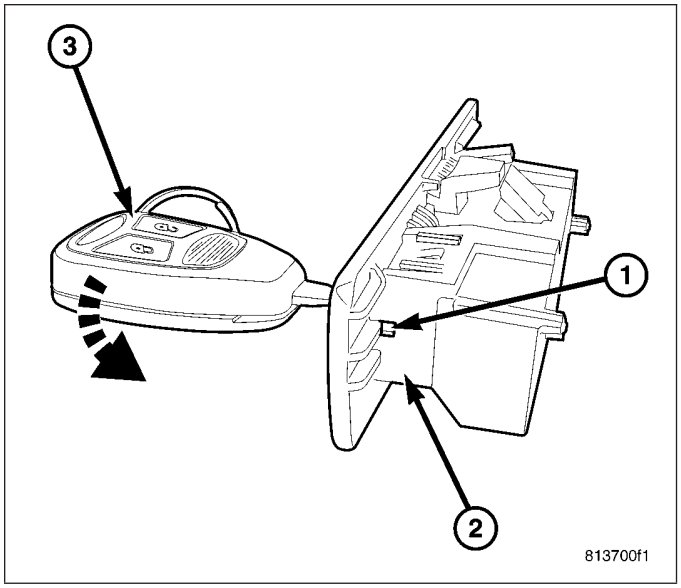

4. Pull the ignition key (1) and the glove box lock cylinder (2) out of the glove box latch (3) as an assembly.

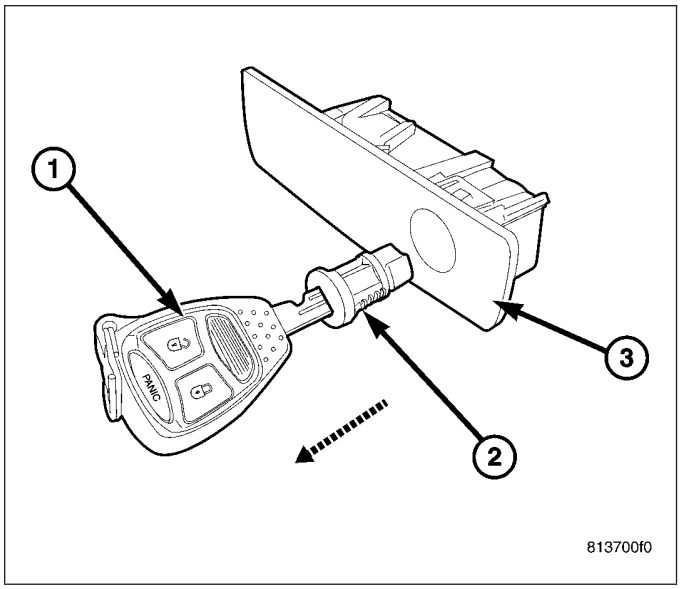

NOTE: For reinstallation purposes, when removing the tumblers from the glove box lock, be sure to make note of the location of each tumbler within the lock cylinder.

5. If required, remove the tumblers (1) and the springs (2) from the glove box lock cylinder (3). Note the location of each tumbler within the lock.

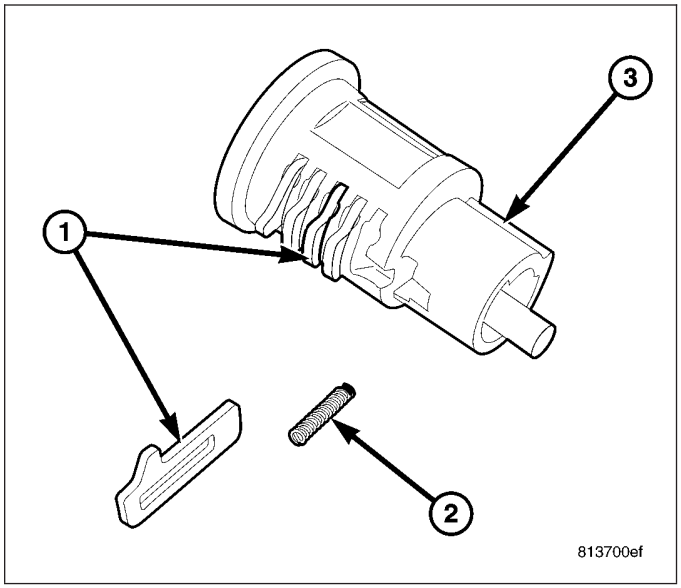

INSTALLATION

NOTE: Be sure to install each tumble into their correct location within the lock cylinder.

1. If removed, install the springs (2) and the tumblers (1) into the glove box lock cylinder (3) in the order in which they were removed.

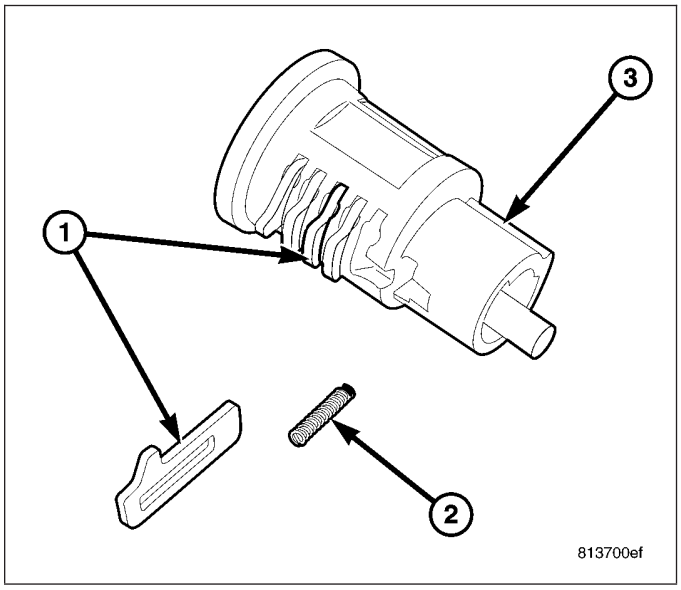

2. Install the ignition key (1) and the glove box lock cylinder (2) into the glove box latch (3) as an assembly.

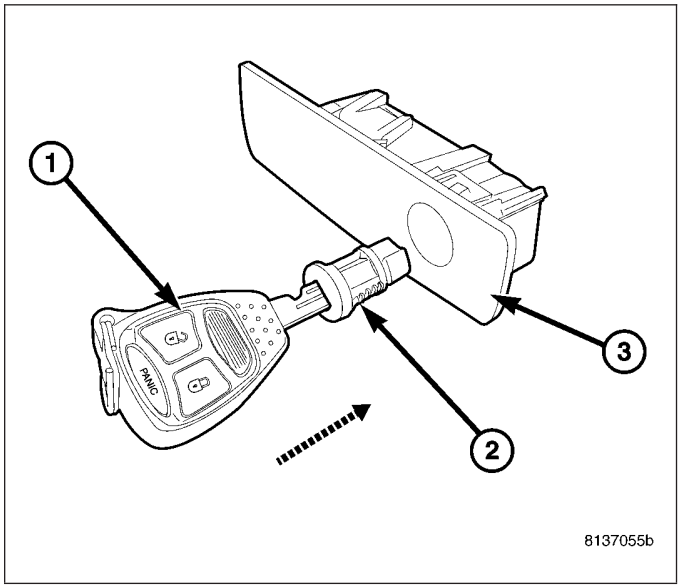

3. Rotate the ignition key (1) counterclockwise until the lock cylinder (2) is fully retained in the glove box latch (3).
4. Install the glove box latch onto the glove box door (Refer to 23 - BODY/INSTRUMENT PANEL/ LATCH-GLOVE BOX - INSTALLATION).

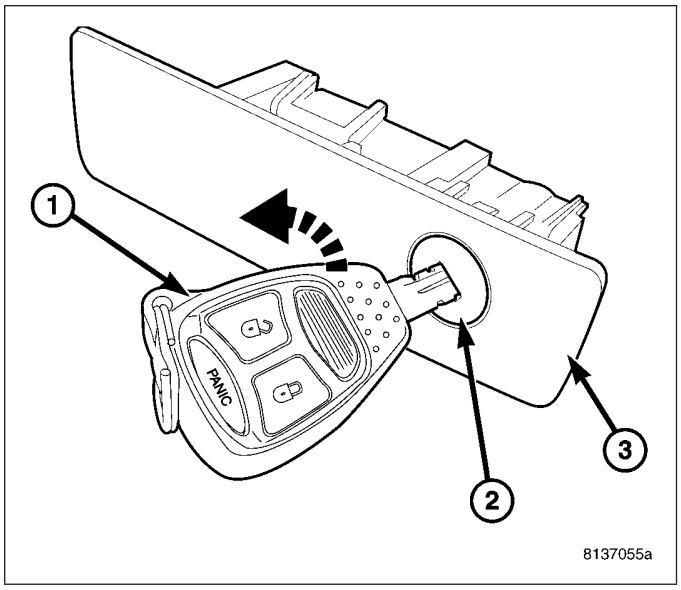

SILENCER-INSTRUMENT PANEL

REMOVAL

DRIVER SIDE

1. Remove the two push-pins (4) that secure the instrument panel silencer (1) to the instrument panel bracket (2).
2. Pull the instrument panel silencer rearward to disengage it from the brackets (3) located near the dash panel.
3. Remove the instrument panel silencer from the vehicle.

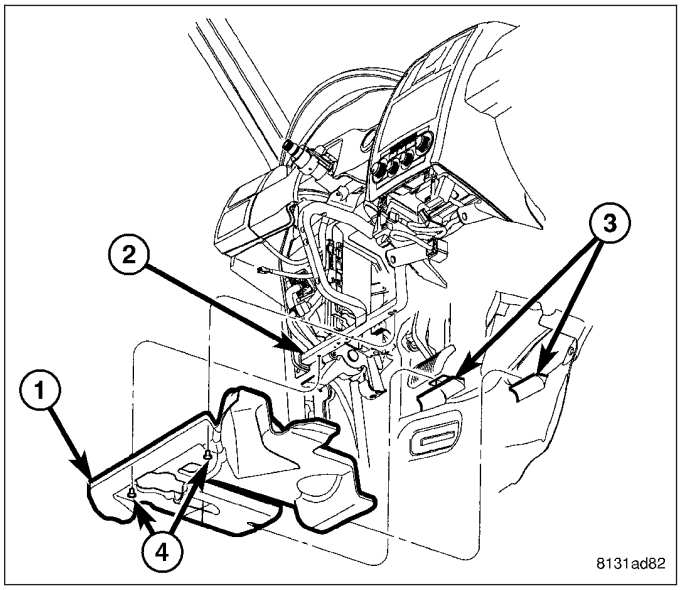

PASSENGER SIDE

1. Remove the two push-pins (3) that secure the instrument panel silencer (2) to the instrument panel.
2. Pull the instrument panel silencer rearward to disengage it from the brackets (1) located near the dash panel.
3. Remove the instrument panel silencer from the vehicle.

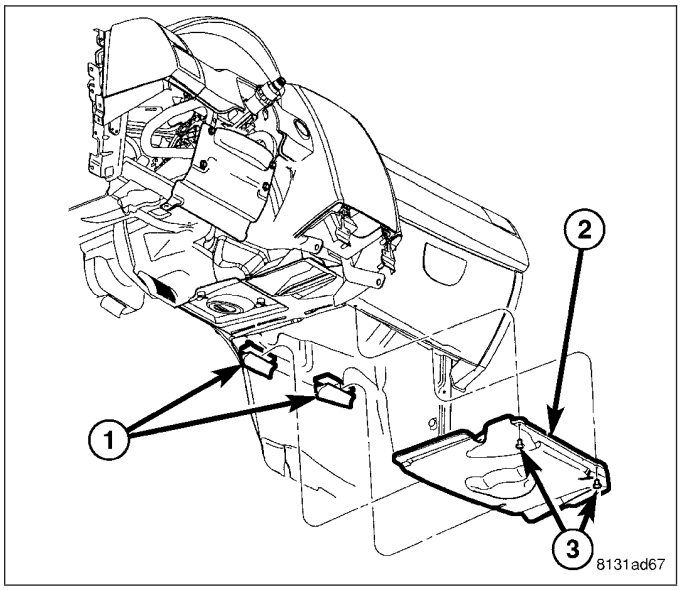

INSTALLATION

DRIVER SIDE

1. Position the instrument panel silencer (1) into the vehicle.
2. Install the instrument panel silencer above the brackets (3) located near the dash panel.
3. Install the two push-pins (4) that secure the instrument panel silencer to the instrument panel bracket (2).

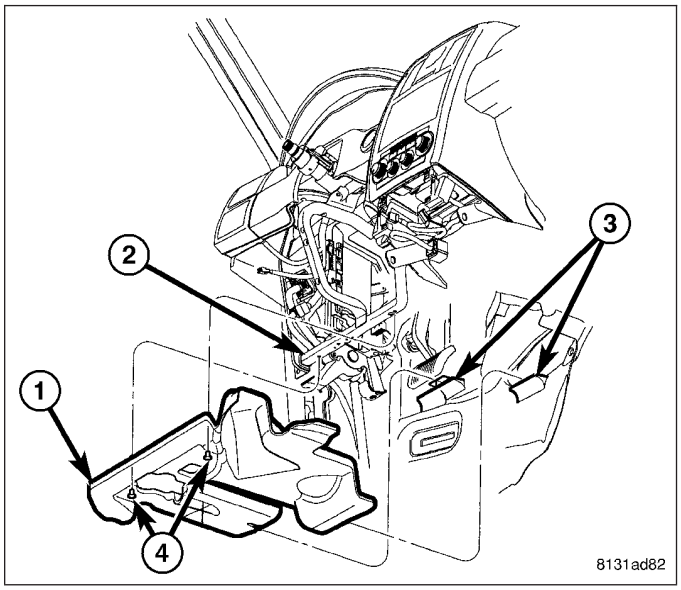

PASSENGER SIDE

1. Position the instrument panel silencer (2) into the vehicle.
2. Install the instrument panel silencer above the brackets (1) located near the dash panel.
3. Install the two push-pins (3) that secure the instrument panel silencer to the instrument panel.

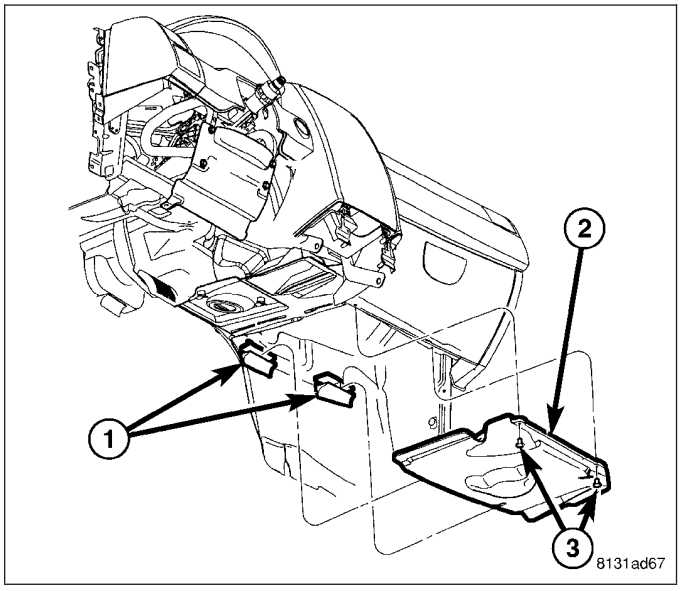

STRIKER-LATCH-GLOVE BOX

REMOVAL

1. Open the glove box door (1).
2. Remove the two screws (2) that secure the glove box latch striker (3) to the instrument panel (4).
3. Remove the glove box latch striker from the instrument panel.

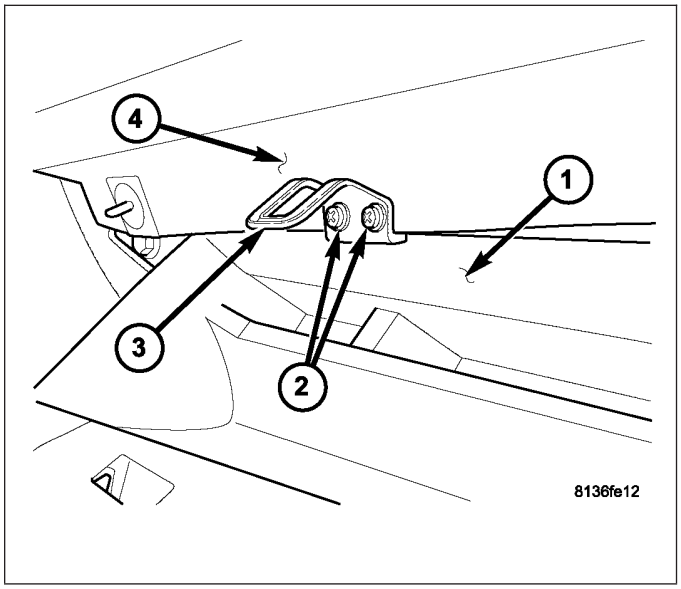

INSTALLATION

1. Position the glove box latch striker (3) onto the instrument panel (4).
2. Install the two screws (2) that secure the glove box latch striker onto the instrument panel. Tighten the screws securely.
3. Close glove box door (1).

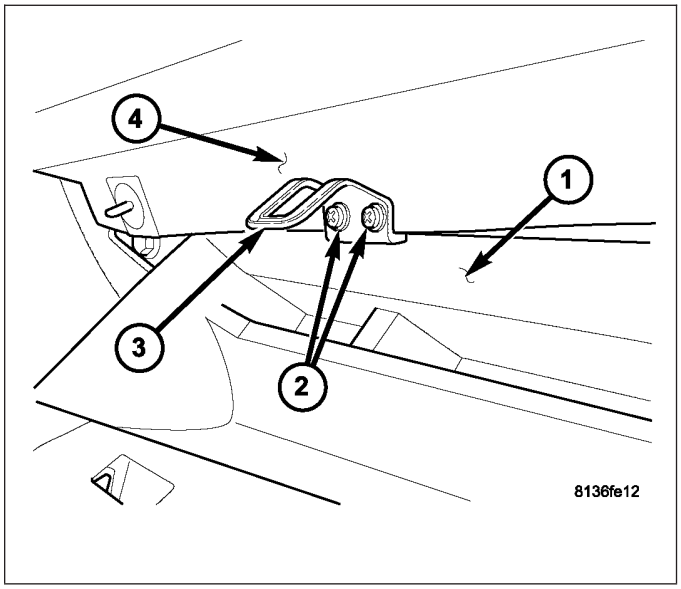

INTERIOR

TABLE OF CONTENTS

page

A-PILLAR TRIM
REMOVAL 166
INSTALLATION 166
B-PILLAR TRIM
REMOVAL
LOWER 168
UPPER 168
INSTALLATION
LOWER 169
UPPER 170
C-PILLAR TRIM
REMOVAL
UPPER - SEDAN 171
LOWER 171
UPPER - WAGON 172
INSTALLATION
UPPER - SEDAN 172
LOWER 173
UPPER - WAGON 174
CARPET
REMOVAL
FRONT 175
REAR 176
TRUNK - SEDAN 176
CARGO AREA - WAGON 177
INSTALLATION
FRONT 177
REAR 178
TRUNK - SEDAN 179
CARGO AREA - WAGON 179
CONSOLE-FLOOR
REMOVAL 180
INSTALLATION 181
COWL TRIM
REMOVAL
UPPER 183
LOWER 183
INSTALLATION
UPPER 184
LOWER 184
D-PILLAR TRIM
REMOVAL 185
INSTALLATION 185
FRONT FLOOR FOOT REST
REMOVAL 186
INSTALLATION 186
HEADLINER
REMOVAL
SEDAN 187
WAGON 188
INSTALLATION
SEDAN 189
WAGON 190
LIFTGATE OPENING UPPER TRIM
REMOVAL 192
INSTALLATION 192
LIFTGATE SCUFF PLATE
REMOVAL 193
INSTALLATION 193
QUARTER TRIM PANEL
REMOVAL 194
INSTALLATION 195
QUARTER TRIM SPEAKER BEZEL
REMOVAL 197
INSTALLATION 197
REAR DOOR SILL SCUFF PLATE
REMOVAL 198
INSTALLATION 198
REAR SHELF TRIM PANEL
REMOVAL 199
INSTALLATION 199
MIRROR-INSIDE REARVIEW
REMOVAL 200
INSTALLATION
MIRROR 201
SUPPORT BRACKET 201
TRUNK LINING
REMOVAL 203
INSTALLATION 203
TRUNK REAR TRIM PANEL
REMOVAL 204
INSTALLATION 204

A-PILLAR TRIM

REMOVAL

1. Using a trim stick or another suitable wide flat-bladed tool, carefully pry the upper end of the A-pillar trim (1) rearward from the inside of the A-pillar (3) far enough to disengage the two spring clip retainers that secure the trim to the slots in the pillar.
2. Disengage the base of the A-pillar trim from the end of the instrument panel top cover.
3. Remove the A-pillar trim from the vehicle.

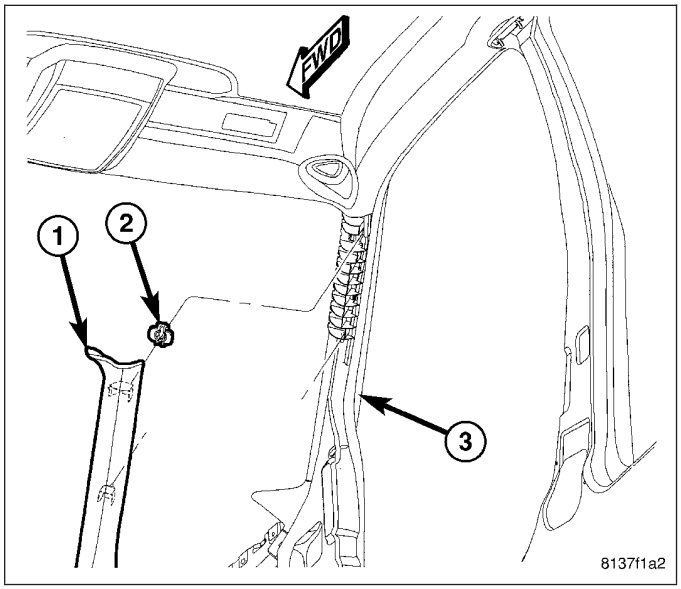

INSTALLATION

1. Check to be certain that the energy absorbing cartridge (1) is properly installed and in good condition on the inside of the A-pillar (2). Replace the cartridge if any damage is evident. Tighten the screws (3) to 3 N·m (25 in. lbs.).

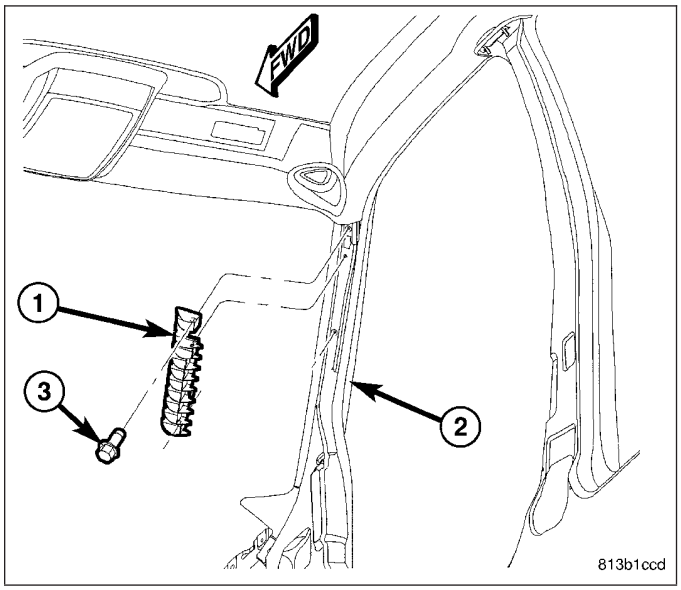

2. Check to be certain that the grommet (2) for the front tether of the side curtain airbag is properly installed and in good condition. Replace the grommet if any damage is evident. (Refer to 8 - ELECTRICAL/RESTRAINTS/CURTAIN AIRBAG - REMOVAL).
3. Engage the base of the A-pillar trim (1) to the end of the instrument panel top cover.
4. Align the two spring clip retainers on the trim with the slots in the inner A-pillar (3).
5. Using hand pressure, press firmly and evenly forward on the trim over each of the spring clip locations until the retainers snap into place.

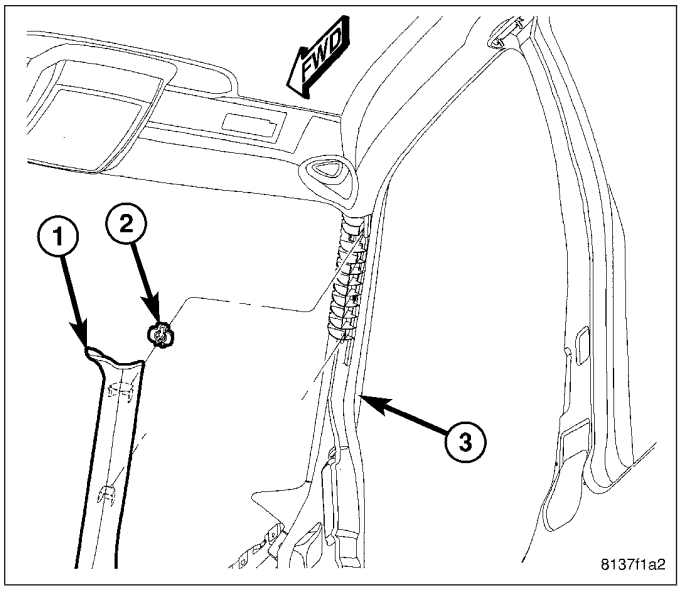

B-PILLAR TRIM

REMOVAL

LOWER

1. Loosen the front door sill portion of the lower cowl trim at the rear of the front door opening for access to the forward lower B-pillar trim screw. (Refer to 23 - BODY/INTERIOR/COWL TRIM - REMOVAL).
2. Loosen the front of the scuff plate trim from the rear door sill for access to the rearward lower B-pillar trim screw. (Refer to 23 - BODY/INTERIOR/DOOR SILL SCUFF PLATE - REMOVAL).
3. Move aside the seat belt webbing to access and remove the two screws (2) that secure the upper end of the lower B-pillar trim (3) to the inside of the B-pillar (1).
4. Remove the two screws (4) that secure the lower end of the B-pillar trim to the front and rear door sills.
5. Disengage the seat belt webbing from the slot in the upper end of the lower B-pillar trim through the slit in the trim and remove the trim from the inside of the B-pillar.

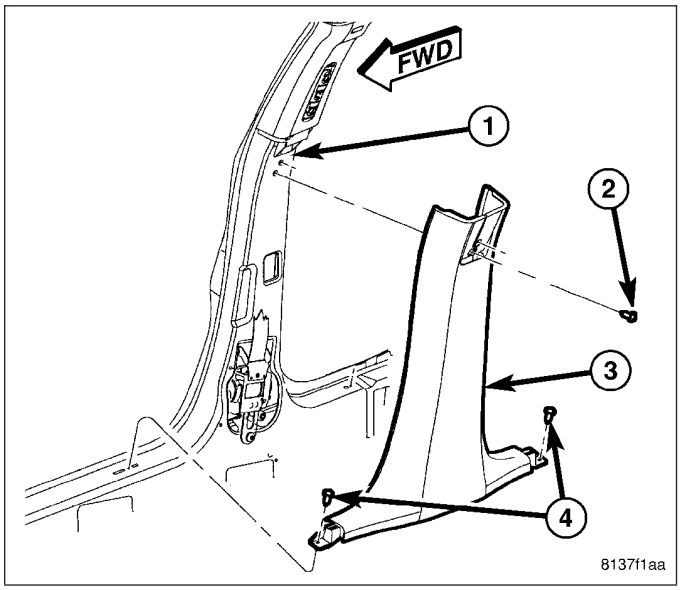

UPPER

1. Remove the lower trim from the inside of the B-pillar (2). (Refer to 23 - BODY/INTERIOR/B-PILLAR TRIM - REMOVAL).
2. Unsnap and remove the trim cover (3) from the seat belt turning loop on the inside of the upper B-pillar.
3. Remove the screw (1) that secures the turning loop to the seat belt height adjuster on the upper B-pillar.
4. Lower the seat belt (4) and turning loop from the B-pillar.

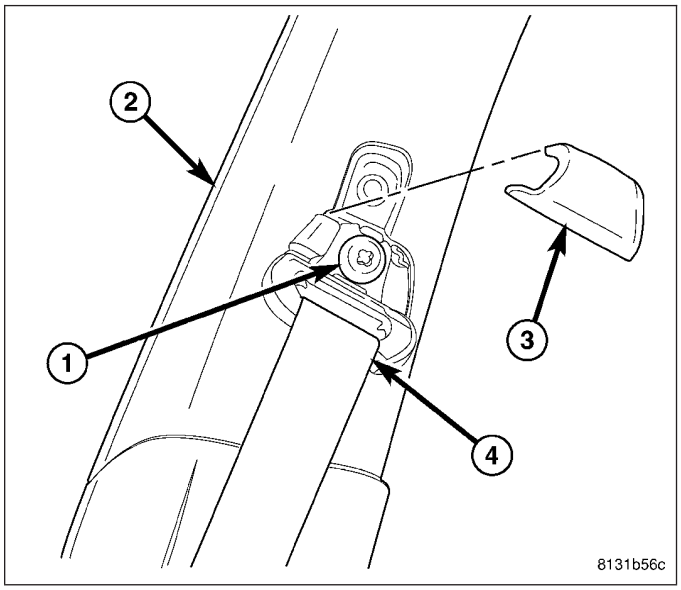

5. Remove the screw (1) that secures the lower end of the upper trim (4) to the inside of the B-pillar (3).
6. Using a trim stick or another suitable wide flat-bladed tool, carefully pry the lower end of the upper B-pillar trim away from the inside of the B-pillar far enough to disengage the two spring clip retainers that secure the trim to the slots in the pillar.
7. Lift the lower end of the upper trim upward to disengage the locator tab (2) from the locator hole and remove the trim from the inside of the B-pillar.

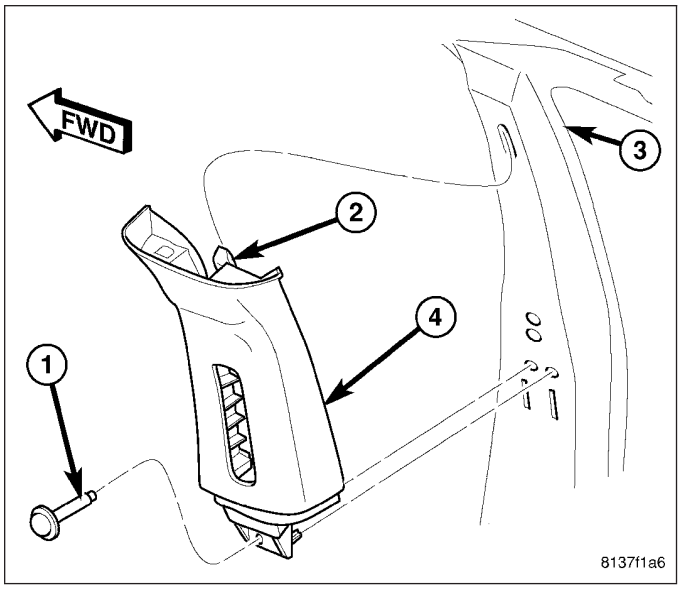

INSTALLATION

LOWER

1. Engage the seat belt webbing through the slit and into the slot in the upper end of the lower B-pillar trim (3) and position the trim to the inside of the B-pillar (1). Be certain the webbing is not twisted.
2. Press fit the lower end of the lower B-pillar trim to the front and rear door opening sills.
3. Install and tighten the two screws (4) that secure the lower end of the B-pillar trim to the front and rear door sills. Tighten the screws to 2 N·m (22 in. lbs.).
4. Move aside the seat belt webbing to install and tighten the two screws (2) that secure the upper end of the lower B-pillar trim to the inside of the B-pillar. Tighten the screws to 2 N·m (22 in. lbs.).
5. Reinstall the scuff plate trim onto the rear door sill. (Refer to 23 - BODY/INTERIOR/DOOR SILL SCUFF PLATE - INSTALLATION).
6. Reinstall the lower cowl trim onto the front door opening sill. (Refer to 23 - BODY/INTERIOR/COWL TRIM - INSTALLATION).

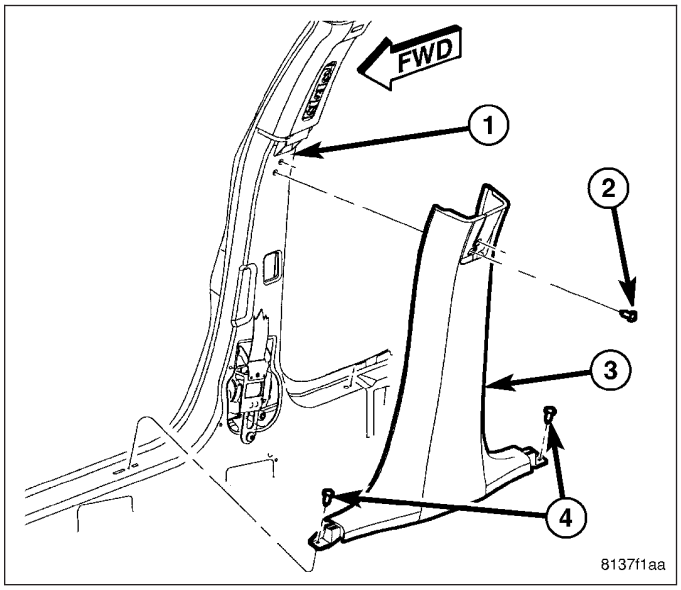

UPPER

1. Engage the locator tab (2) on the back of the upper trim (4) into the locator hole on the inside of the B-pillar (3).
2. Align the two spring clip retainers on the trim with the slots in the inner B-pillar.
3. Using hand pressure, press firmly and evenly on the trim over each of the spring clip locations until the retainers snap into place.
4. Install and tighten the screw (1) that secures the lower end of the upper trim to the inside of the B-pillar. Tighten the screw to 3 N·m (25 in. lbs.).

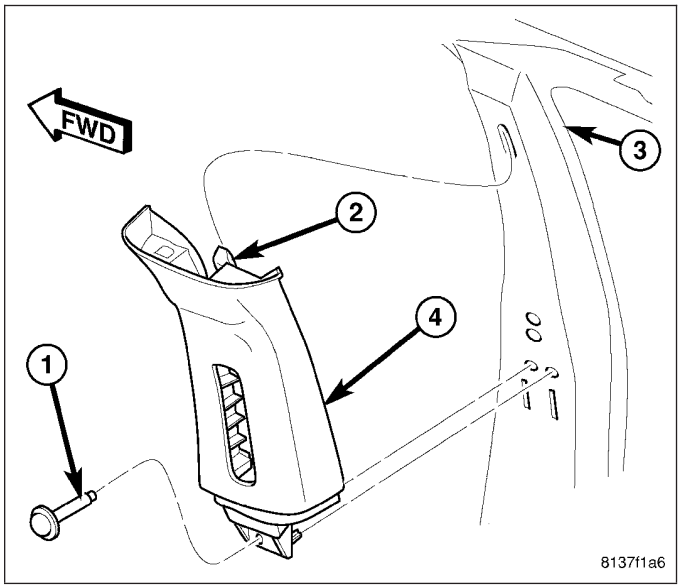

5. Position the seat belt (4) and turning loop to the height adjuster on the upper B-pillar (2). Be certain that the webbing is not twisted.
6. Install and tighten the screw (1) that secures the turning loop to the seat belt height adjuster on the upper B-pillar. Tighten the screw to 40 N·m (30 ft. lbs.).
7. Position the trim cover (3) over the seat belt turning loop on the inside of the upper B-pillar.
8. Using hand pressure, press the trim cover and turning loop together until the cover snaps into place.
9. Reinstall the lower trim onto the inside of the B-pillar. (Refer to 23 - BODY/INTERIOR/B-PILLAR TRIM - INSTALLATION).

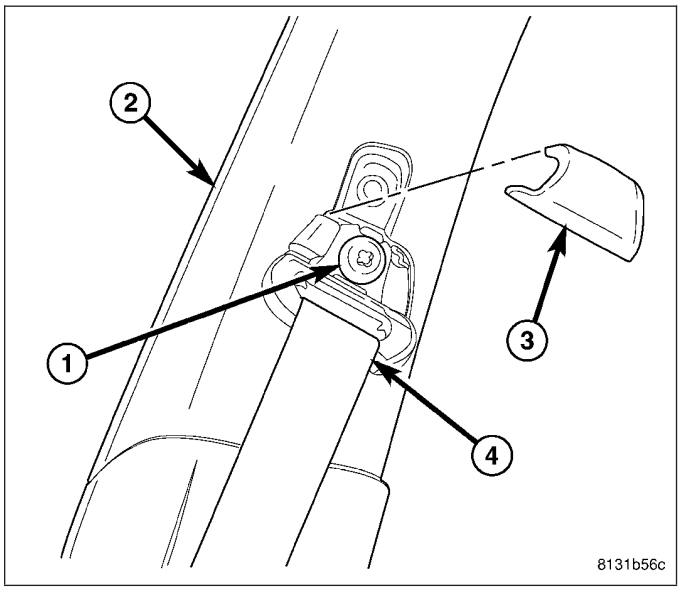

C-PILLAR TRIM

REMOVAL

UPPER - SEDAN

1. Remove the rear seat cushion from the vehicle. (Refer to 23 - BODY/SEATS/SEAT CUSHION COVER - REMOVAL).
2. Remove the lower trim from the inside of the C-pillar. (Refer to 23 - BODY/INTERIOR/C-PILLAR TRIM - REMOVAL-LOWER).
3. Remove the screw that secures the outboard rear seat belt lower anchor to the quarter inner panel.
4. Using a trim stick or another suitable wide flat-bladed tool, carefully pry the upper edge of the upper C-pillar trim (3) away from the quarter inner panel (1) far enough to disengage the upper spring clip retainers that secure the trim to the slots in the quarter inner panel and (if equipped) the curtain airbag support.
5. Rotate the upper edge of the upper C-pillar trim downward to disengage the locator pin (2) on the back of the panel from the locator hole in the quarter inner panel.

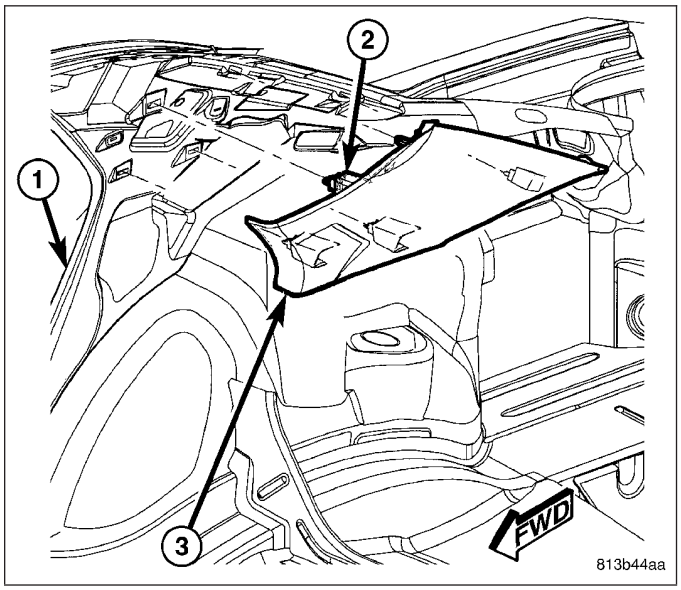

6. Pull the outboard rear seat belt webbing and lower anchor through the slot in the upper C-pillar trim.
7. Carefully pry the lower edge of the upper C-pillar trim away from the quarter inner panel far enough to disengage the lower spring clip retainers that secure the trim to the slots in the quarter inner panel and remove the trim from the vehicle.

LOWER

1. Remove the rear seat cushion from the vehicle. (Refer to 23 - BODY/SEATS/SEAT CUSHION COVER - REMOVAL).
2. Remove the rear seat back side bolster from the quarter inner panel (1). (Refer to 23 - BODY/SEATS/SEAT BACK CUSHION/COVER - REMOVAL).
3. Remove the screw (4) that secures the upper end of the lower C-pillar trim (5) to the rear shelf panel (3).
4. Remove the two screws that secure the lower C-pillar trim to the quarter inner panel.
5. Remove the lower C-pillar trim from the quarter inner panel.

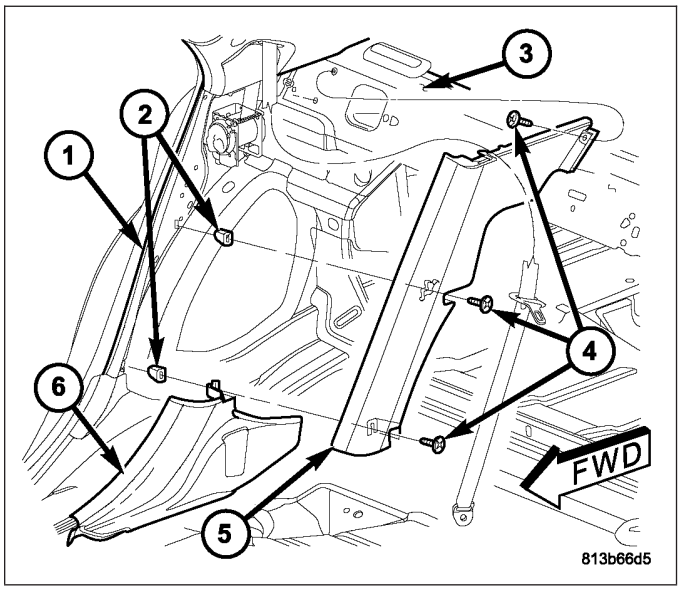

UPPER - WAGON

1. Remove the rear seat cushion from the vehicle. (Refer to 23 - BODY/SEATS/SEAT CUSHION COVER - REMOVAL).
2. Loosen the front edge of the quarter trim panel from the inside of the lower C-pillar. (Refer to 23 - BODY/INTERIOR/QUARTER TRIM PANEL - REMOVAL).
3. Remove the screw (3) that secures the lower end of the upper C-pillar trim (1) to the quarter inner panel (4).
4. Using a trim stick or another suitable wide flat-bladed tool, carefully pry the rear edge of the upper C-pillar trim away from the quarter inner panel far enough to disengage the upper spring clip retainer that secures the trim to the slot in the quarter inner panel.
5. Pull the lower edge of the upper C-pillar trim away and down to disengage the locator tab (2) on the back of the panel from the locator hole in the quarter inner panel.
6. Remove the upper C-pillar trim from the vehicle.

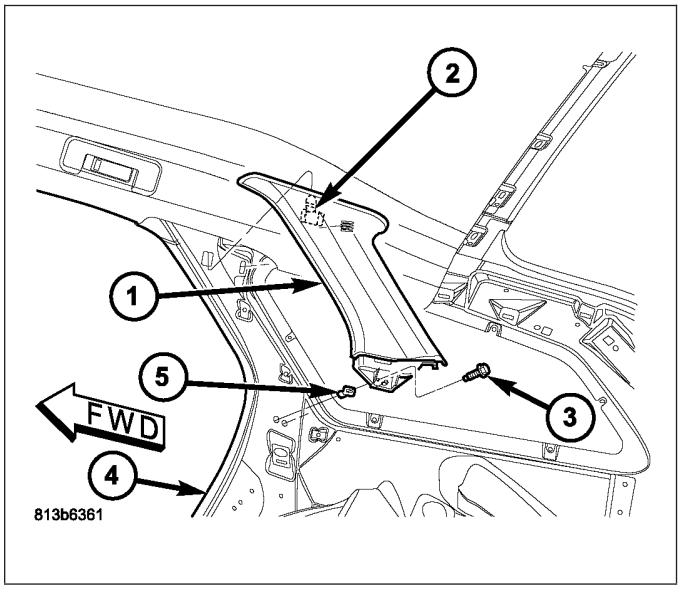

INSTALLATION

UPPER - SEDAN

1. If the vehicle is so equipped, be certain that the curtain airbag support (3) is properly installed and in good condition on the quarter inner panel (1). Replace the support if any damage is evident. Tighten the screws (4) into the spring nuts (2) to 2 N·m (15 in. lbs.).

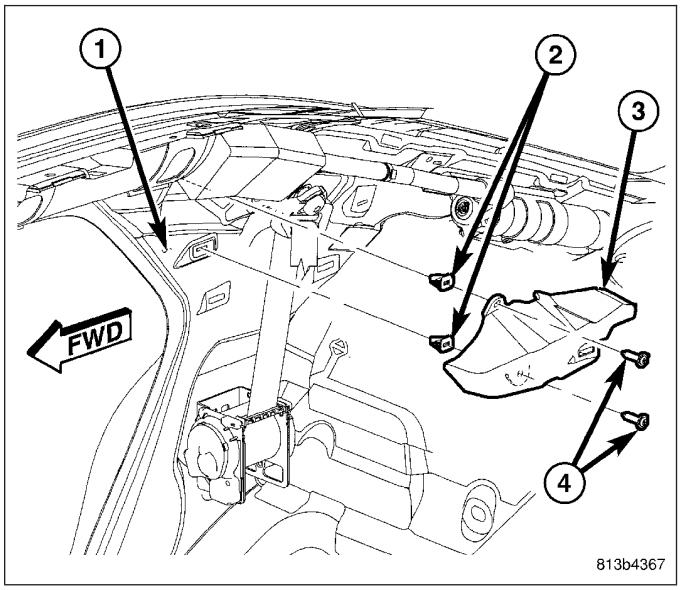

2. Align the spring clip retainers on the lower edge of the upper C-pillar trim (3) with the installation holes in the quarter inner panel (1) and pull the outboard rear seat belt webbing and lower anchor through the slot in the trim.
3. Rotate the top of the upper C-pillar trim upwards far enough to engage the locating pin (2) into the locating hole in the quarter inner panel.
4. Align the spring clip retainers on the trim with the slots in the quarter inner panel and (if equipped) the curtain airbag support.
5. Using hand pressure, press firmly and evenly on the trim over each of the spring clip locations until the retainers snap into place.
6. Reinstall the lower trim onto the inside of the C-pillar. (Refer to 23 - BODY/INTERIOR/C-PILLAR TRIM - INSTALLATION-LOWER).
7. Position the outboard rear seat belt lower anchor to the quarter inner panel.

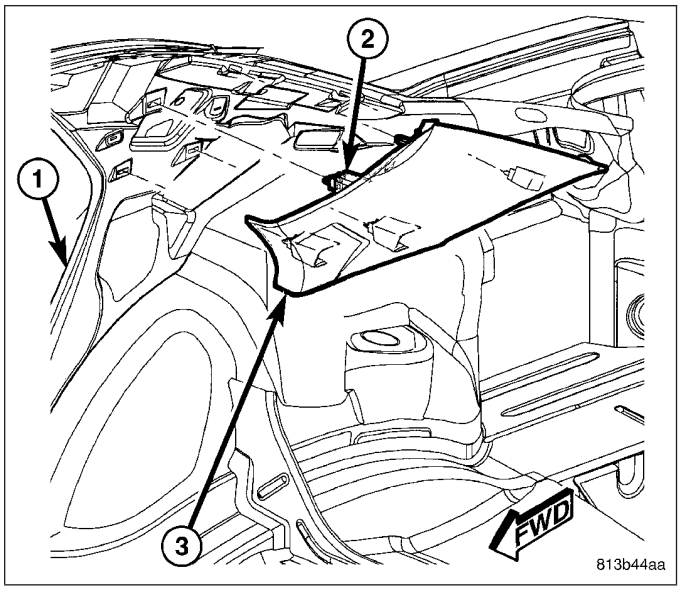

8. Install and tighten the screw that secures the outboard rear seat belt lower anchor to the quarter inner panel. Tighten the screw to 32 N·m (24 ft. lbs.).
9. Reinstall the rear seat cushion into the vehicle. (Refer to 23 - BODY/SEATS/SEAT CUSHION COVER - INSTALLATION).

LOWER

1. Check to be certain that the spring nuts (2) are properly installed and in good condition on the quarter inner panel (1). Replace the spring nut if any damage is evident.
2. Position the lower C-pillar trim (5) onto the quarter inner panel with the lower edge sequenced over the rear extension of the rear door sill scuff plate (6).
3. Install and tighten the two screws (4) that secure the lower C-pillar trim to the quarter inner panel. Tighten the screws to 1 N·m (11 in. lbs.).
4. Install and tighten the screw that secures the lower C-pillar trim to the rear shelf panel (3). Tighten the screw to 1 N·m (11 in. lbs.).
5. Reinstall the rear seat back side bolster onto the quarter inner panel. (Refer to 23 - BODY/SEATS/SEAT BACK CUSHION/COVER - INSTALLATION).
6. Reinstall the rear seat cushion into the vehicle. (Refer to 23 - BODY/SEATS/SEAT CUSHION COVER - INSTALLATION).

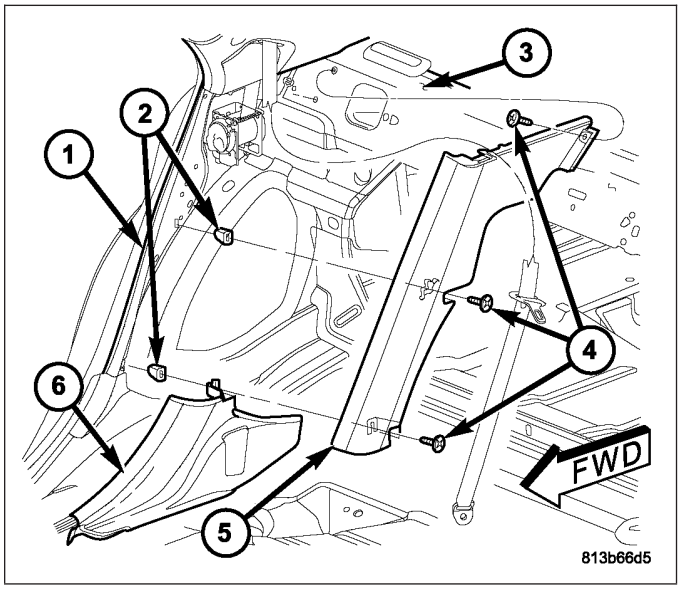

UPPER - WAGON

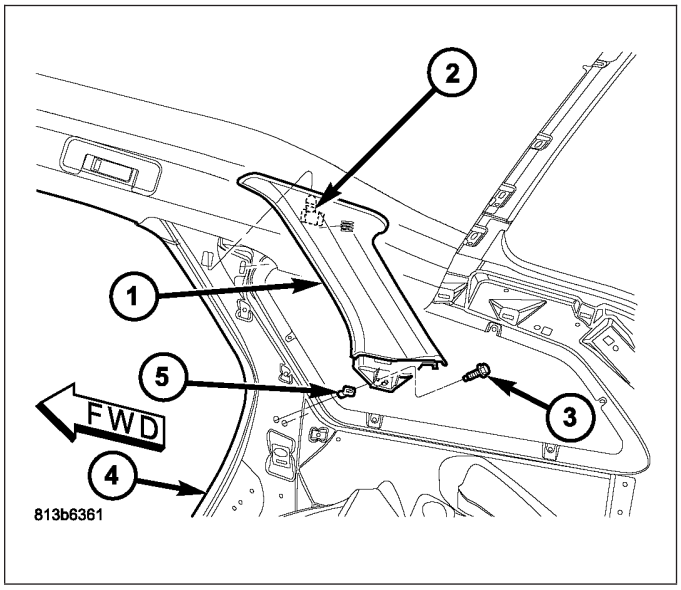

1. Check to be certain that the spring nut (5) is properly installed and in good condition on the quarter inner panel (4). Replace the spring nut if any damage is evident.
2. Position the upper C-pillar trim (1) to the quarter inner panel in the vehicle.
3. Engage the locator tab (2) on the back of the upper C-pillar trim into the locator hole in the quarter inner panel.
4. Align the spring clip retainer on the upper rear corner of the upper C-pillar trim with the installation hole in the quarter inner panel.
5. Using hand pressure, press firmly and evenly on the trim over the spring clip location until the retainer snaps into place.
6. Install and tighten the screw (3) that secures the lower end of the upper C-pillar trim to the quarter inner panel. Tighten the screw to 2 N·m (15 in. lbs.).
7. Reinstall the front edge of the quarter trim panel onto the inside of the lower C-pillar. (Refer to 23 - BODY/INTERIOR/QUARTER TRIM PANEL - INSTALLATION).
8. Reinstall the rear seat cushion into the vehicle. (Refer to 23 - BODY/SEATS/SEAT CUSHION COVER - INSTALLATION).

CARPET

REMOVAL

FRONT

NOTE: The front carpet consists of two individual carpets, one for the driver side and one for the passenger side. These carpets can be removed from and installed into the vehicle individually.

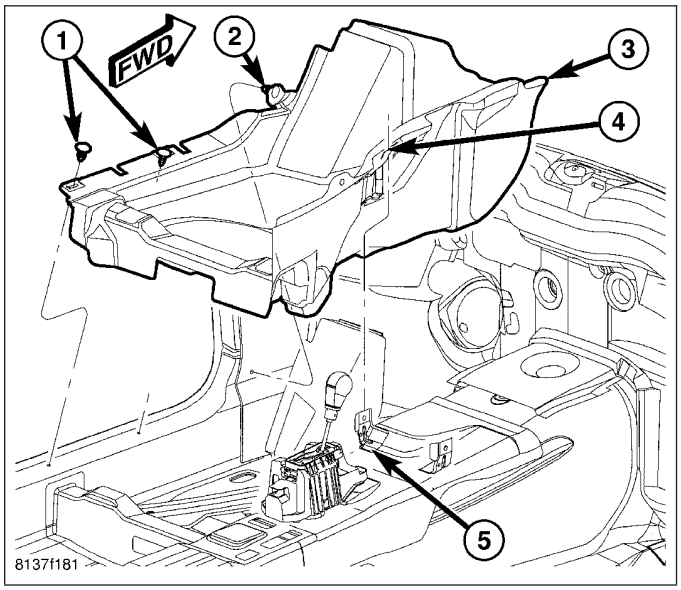

1. Remove the driver and/or passenger front seat from the vehicle as appropriate. (Refer to 23 - BODY/SEATS/SEAT-FRONT - REMOVAL).
2. Remove the center console from the front floor panel transmission tunnel. (Refer to 23 - BODY/INTERIOR/FLOOR CONSOLE - REMOVAL).
3. Remove the trim from the driver or passenger side lower cowl side inner panel as appropriate. (Refer to 23 - BODY/INTERIOR/COWL TRIM - REMOVAL-LOWER).
4. Remove the two push-pin fasteners (1) that secure the outboard edge of the front carpet (3) to the front door opening sill.
5. On the driver side only, remove the push-pin fastener (2) that secures the front carpet to the cowl side inner panel above the foot rest.
6. On the driver side only, remove the push-pin fastener (3) that secures the inboard edge of the front carpet (1) to the transmission shifter bracket (2).
7. Remove the front carpet from the floor panel.

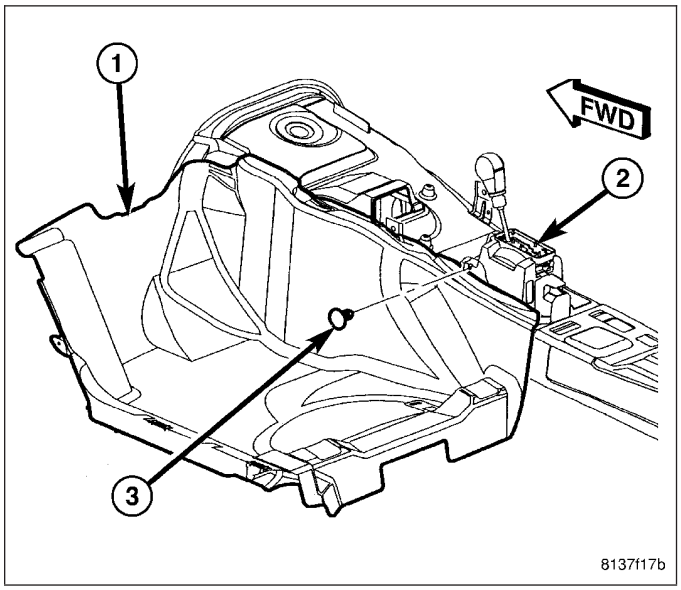

REAR

1. Remove the driver and passenger front seats from the vehicle. (Refer to 23 - BODY/SEATS/SEAT-FRONT - REMOVAL).
2. Remove the center console from the front floor panel transmission tunnel. (Refer to 23 - BODY/INTERIOR/FLOOR CONSOLE - REMOVAL).
3. Remove the trim from the inside of both lower B-pillars. (Refer to 23 - BODY/INTERIOR/B-PILLAR TRIM - REMOVAL-LOWER).
4. Remove the rear seat cushion from the vehicle. (Refer to 23 - BODY/SEATS/REAR SEAT CUSHION COVER - REMOVAL).
5. Remove the scuff plate from both rear door sills. (Refer to 23 - BODY/INTERIOR/REAR DOOR SILL SCUFF PLATE - REMOVAL).
6. Remove the push-pin fasteners (2) that secure the outboard edges of the rear carpet (3) near the front of each rear door opening (1) sill.

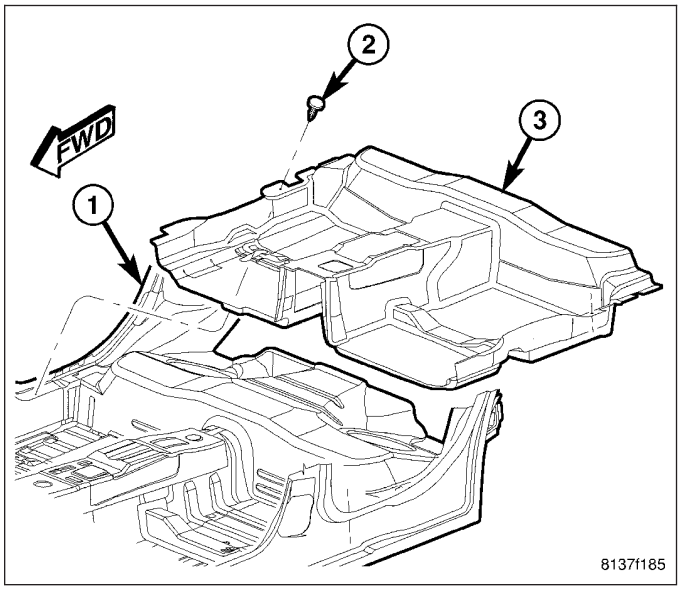

7. Lift the rear carpet from the floor panel far enough to extract the body wire harness take outs and connectors through the appropriate slits in the carpeting.
8. Remove the rear carpet from the vehicle through one of the rear door openings.

TRUNK - SEDAN

1. If equipped, remove the cargo liner and/or cargo net from the luggage compartment.
2. Fold and remove the spare tire cover/trunk floor carpet (1) from over the spare tire well (2).

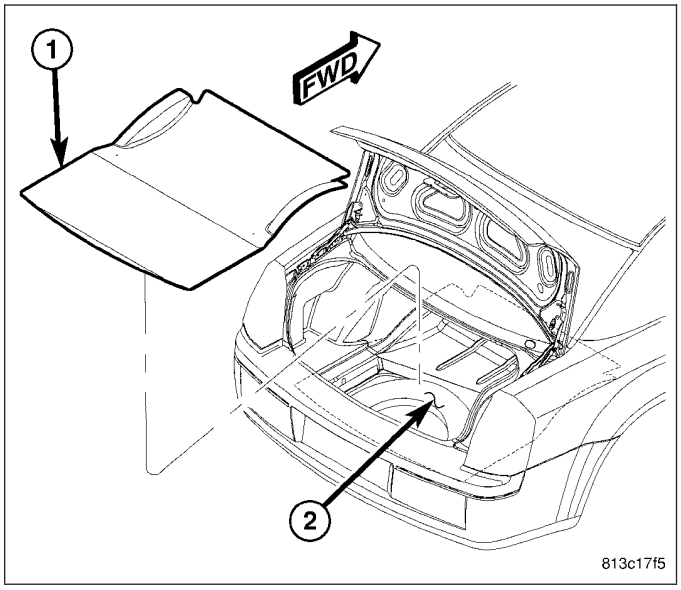

CARGO AREA - WAGON

1. If equipped, remove the cargo net from the rear cargo area.
2. Fold and remove the cargo floor carpet (1) from the rear cargo area.
3. If equipped, remove the cargo liner and/or the cargo organizer from the cargo compartment.
4. Fold and remove the spare tire cover/cargo compartment carpet (3) from over the spare tire well (2).

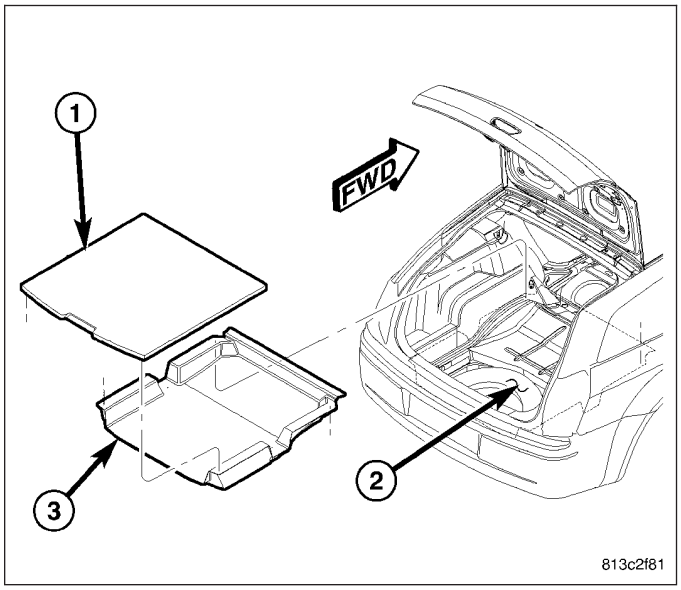

INSTALLATION

FRONT

NOTE: The front carpet consists of two individual carpets, one for the driver side and one for the passenger side. These carpets can be removed from and installed into the vehicle individually.

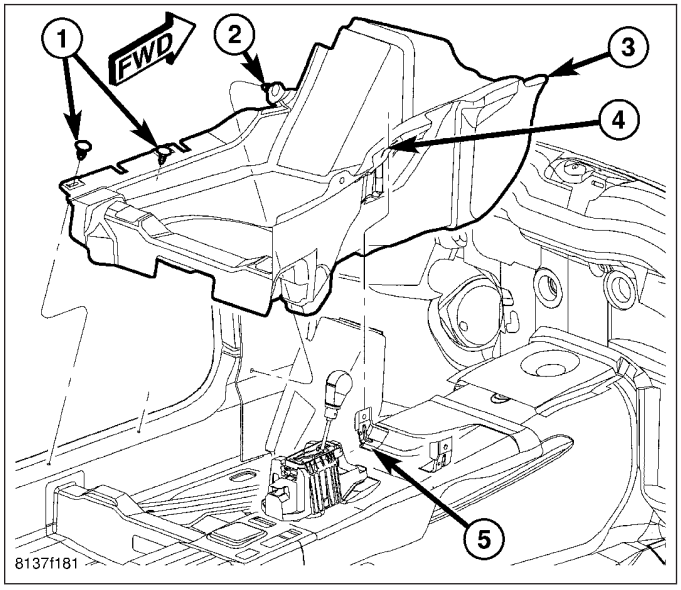

1. Position and fit the front carpet (3) onto the floor panel. Be certain that the rear of the front carpet is fitted over the floor panel front crossmember and butts up against the front of the rear carpet without interference with the rear floor air duct opening. Be certain that the front of the front carpet is fitted to the dash panel without interference with the steering column, the accelerator or the heater and air conditioner unit. On the driver side only, be certain the slit (4) on the inboard edge of the carpet is engaged around the left instrument panel support bracket (5) on the top of the floor panel transmission tunnel.
2. Install the two push-pin fasteners (1) that secure the outboard edge of the front carpet to the front door opening sill.
3. On the driver side only, install the push-pin fastener (2) that secures the front carpet to the cowl side inner panel above the foot rest.

4. On the driver side only, install the push-pin fastener (3) that secures the inboard edge of the front carpet (1) to the transmission shifter bracket (2).
5. Reinstall the trim onto the driver or passenger side lower cowl side inner panel as appropriate. (Refer to 23 - BODY/INTERIOR/COWL TRIM - INSTALLATION-LOWER).
6. Reinstall the center console onto the front floor panel transmission tunnel. (Refer to 23 - BODY/INTERIOR/FLOOR CONSOLE - INSTALLATION).
7. Reinstall the driver and/or passenger front seat into the vehicle as appropriate. (Refer to 23 - BODY/SEATS/SEAT-FRONT - INSTALLATION).

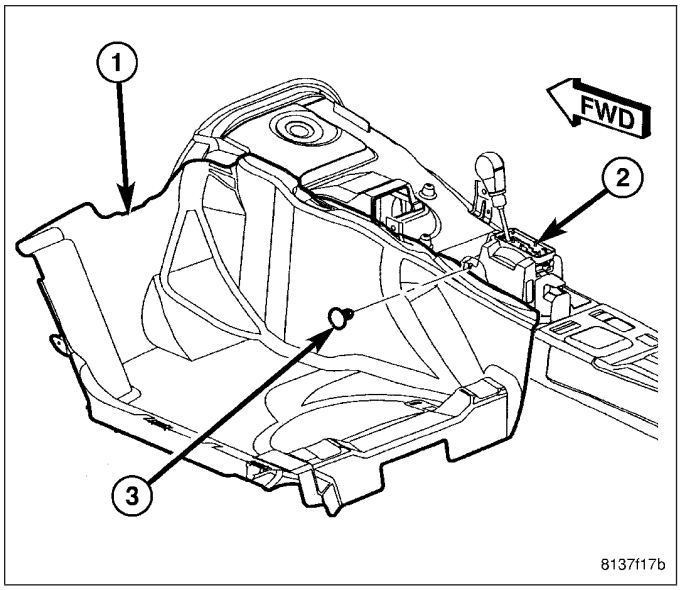

REAR

1. Position the rear carpet (3) into the vehicle through one of the rear door openings.
2. Pull the body wire harness take outs and connectors through the appropriate slits in the rear carpet.
3. Fit the rear carpet to the floor panel. Be certain to align the holes in the carpet with the corresponding holes in the floor panel. Be certain that the rear edge of the carpet is fitted over the rear seat kick-up area and over the rear seat cushion cups on the top of the kick-up area. Be certain that the front edge of the carpet is fitted over the front seat rear crossmember and butts up against the rear of the front seat front crossmember.
4. Install the push-pin fasteners (2) that secure the outboard edges of the rear carpet near the front of each rear door opening (1) sill.
5. Reinstall the scuff plate onto both rear door sills. (Refer to 23 - BODY/INTERIOR/REAR DOOR SILL SCUFF PLATE - INSTALLATION).

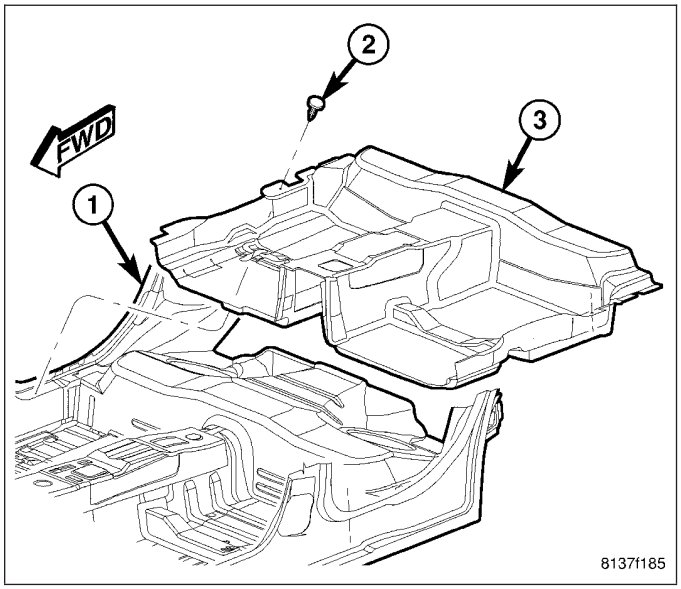

6. Reinstall the rear seat cushion into the vehicle. (Refer to 23 - BODY/SEATS/REAR SEAT CUSHION COVER - INSTALLATION).
7. Reinstall the trim onto the inside of both lower B-pillars. (Refer to 23 - BODY/INTERIOR/B-PILLAR TRIM - INSTALLATION-LOWER).
8. Reinstall the center console onto the front floor panel transmission tunnel. (Refer to 23 - BODY/INTERIOR/FLOOR CONSOLE - INSTALLATION).
9. Reinstall the driver and passenger front seats into the vehicle. (Refer to 23 - BODY/SEATS/SEAT-FRONT - INSTALLATION).

TRUNK - SEDAN

1. Fold the spare tire cover/trunk floor carpet (1) and place it within the luggage compartment.
2. Unfold, position and fit the spare tire cover/trunk floor carpet over the spare tire well (2) in the luggage compartment.
3. If equipped, reinstall the cargo liner and/or cargo net into the luggage compartment.

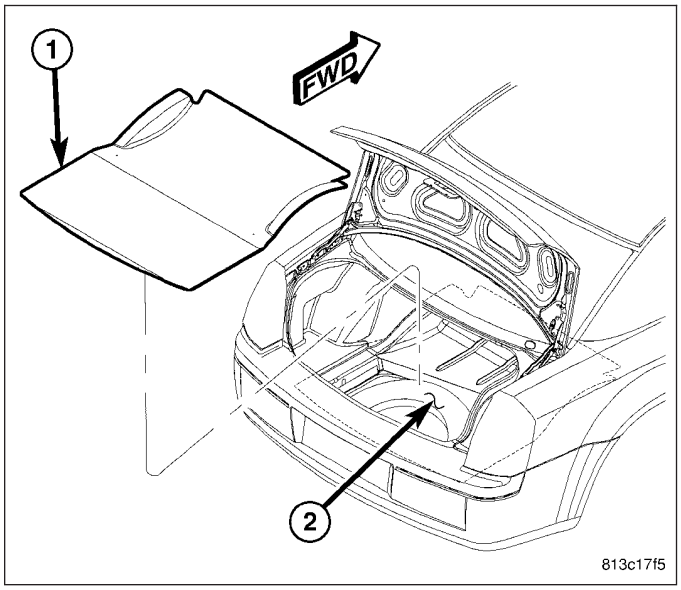

CARGO AREA - WAGON

1. Fold the spare tire cover/cargo compartment carpet (3) and place it into the rear cargo area.
2. Unfold, position and fit the spare tire cover/cargo compartment carpet over the spare tire well (2) in the rear cargo area.
3. If equipped, reinstall the cargo liner and/or the cargo organizer into the cargo compartment.
4. Fold the cargo floor carpet (1) and place it into the rear cargo area.
5. Unfold, position and fit the cargo floor carpet into the rear cargo area.
6. If equipped, reinstall the cargo net into the rear cargo area.

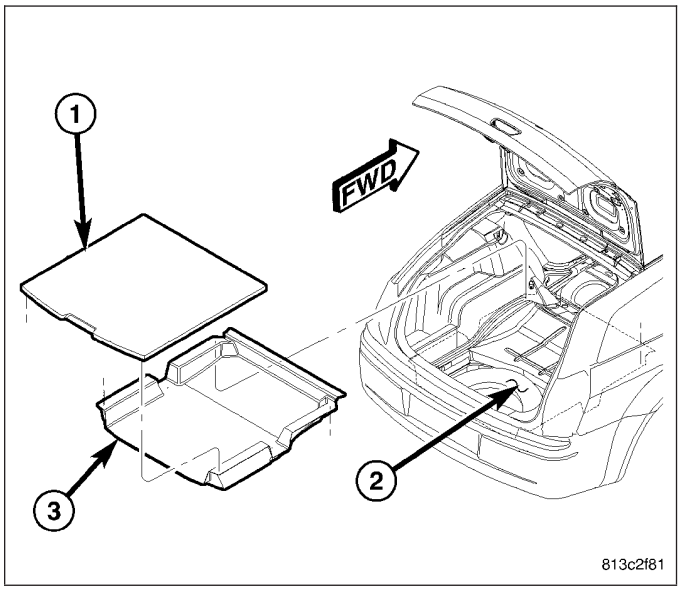

CONSOLE-FLOOR

REMOVAL

1. Apply the parking brake.
2. Turn the ignition switch to the On position, apply the service brakes and place the gear selector lever into the Neutral position.
3. Turn the ignition switch to the Off position and release the service brakes.

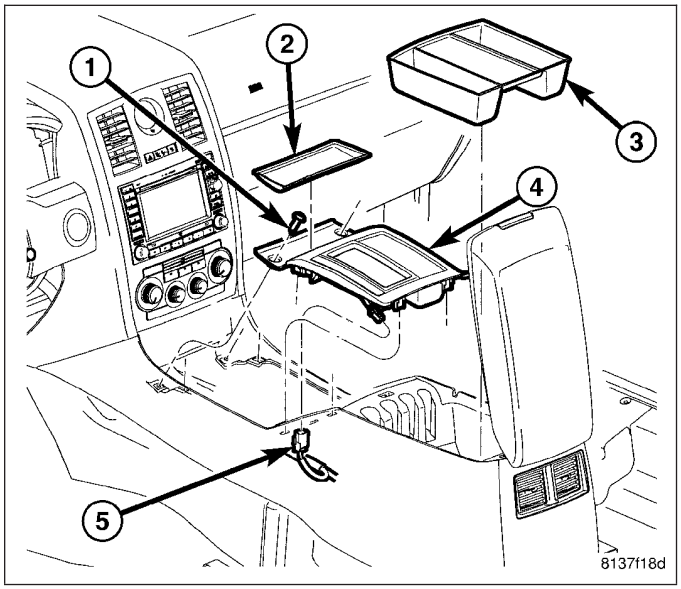

NOTE: For vehicles equipped with the optional Automatic Express Up power window feature, calibration of this feature is required whenever power to the door module is disrupted. A battery reconnect procedure must be performed anytime the battery has been disconnected. (Refer to 8 - ELECTRICAL/BATTERY SYSTEM - STANDARD PROCEDURE).

4. Disconnect and isolate the battery negative cable.
5. Remove the mat from the cubby bin at the front of the floor console.
6. Open the lid of the console rear bin and remove the mat from the rear bin.
7. Remove the two screws (1) that secure the front of the console shifter bezel to the console.
8. Using a trim stick unsnap the console bezel from the console
9. Remove the shifter bezel from around the gear selector lever.

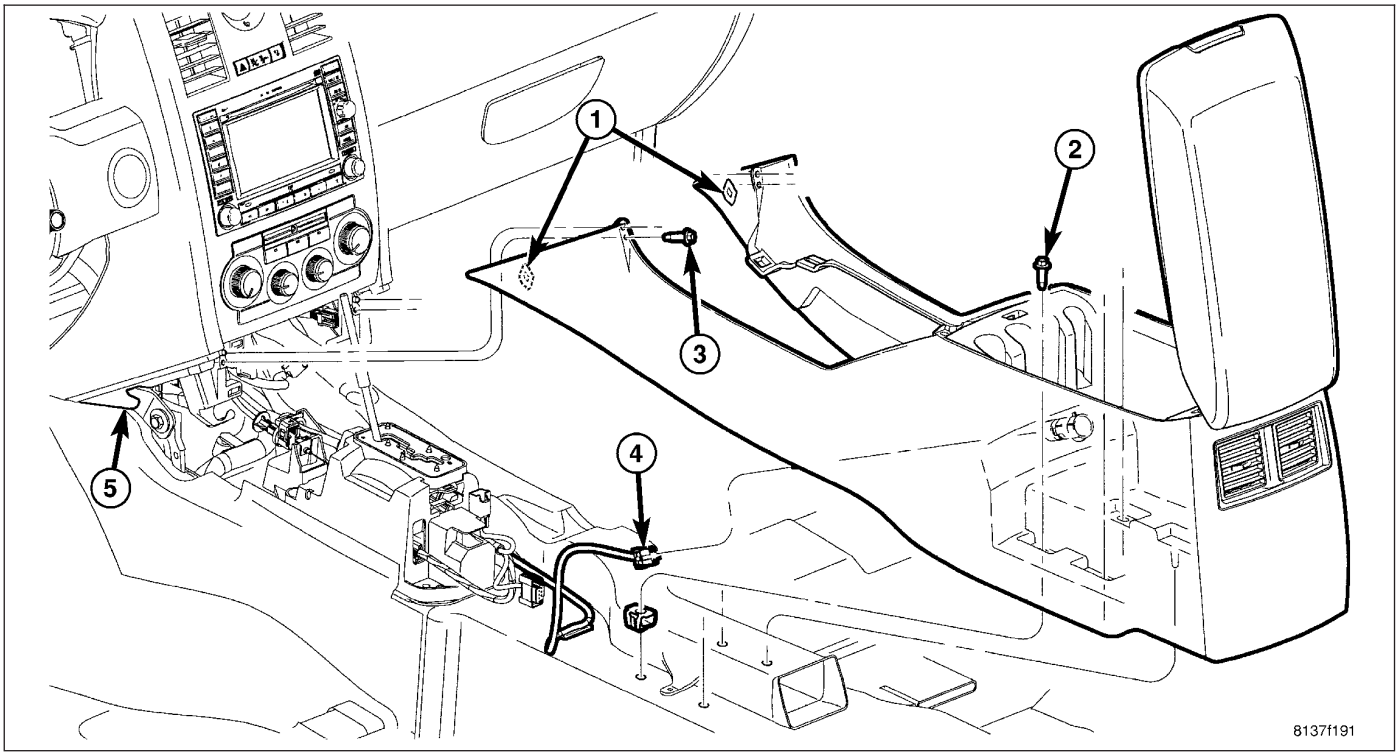

10. Remove the three 8 mm bolts (2) from the rear bin that secure the console to the floor panel transmission tunnel.
11. Remove the two screws (3) that secure the front of the console to the instrument panel.
12. Slide the console rearward far enough to access and disconnect the jumper wire connector (4) from the accessory power outlet on the underside of the console.

13. Remove the floor console from the vehicle.

Center Console Cover with DVD

1. Open console lid.
2. Remove side covers.
3. Remove six screws.
4. Remove console cover.

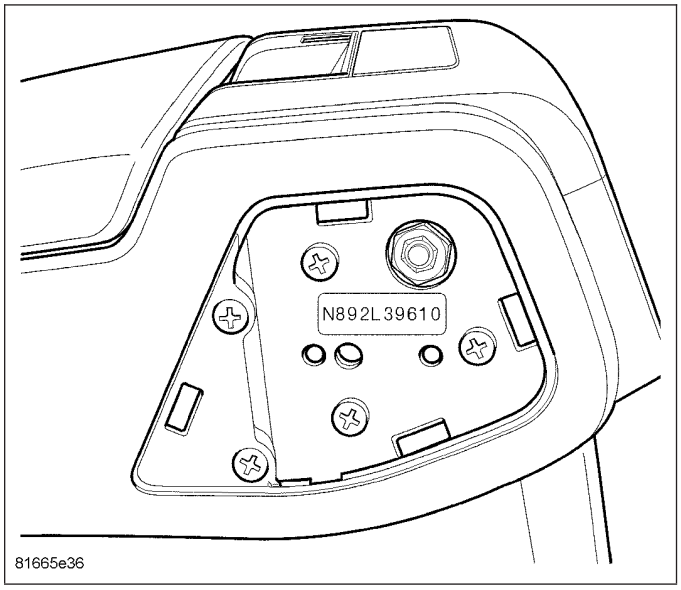

INSTALLATION

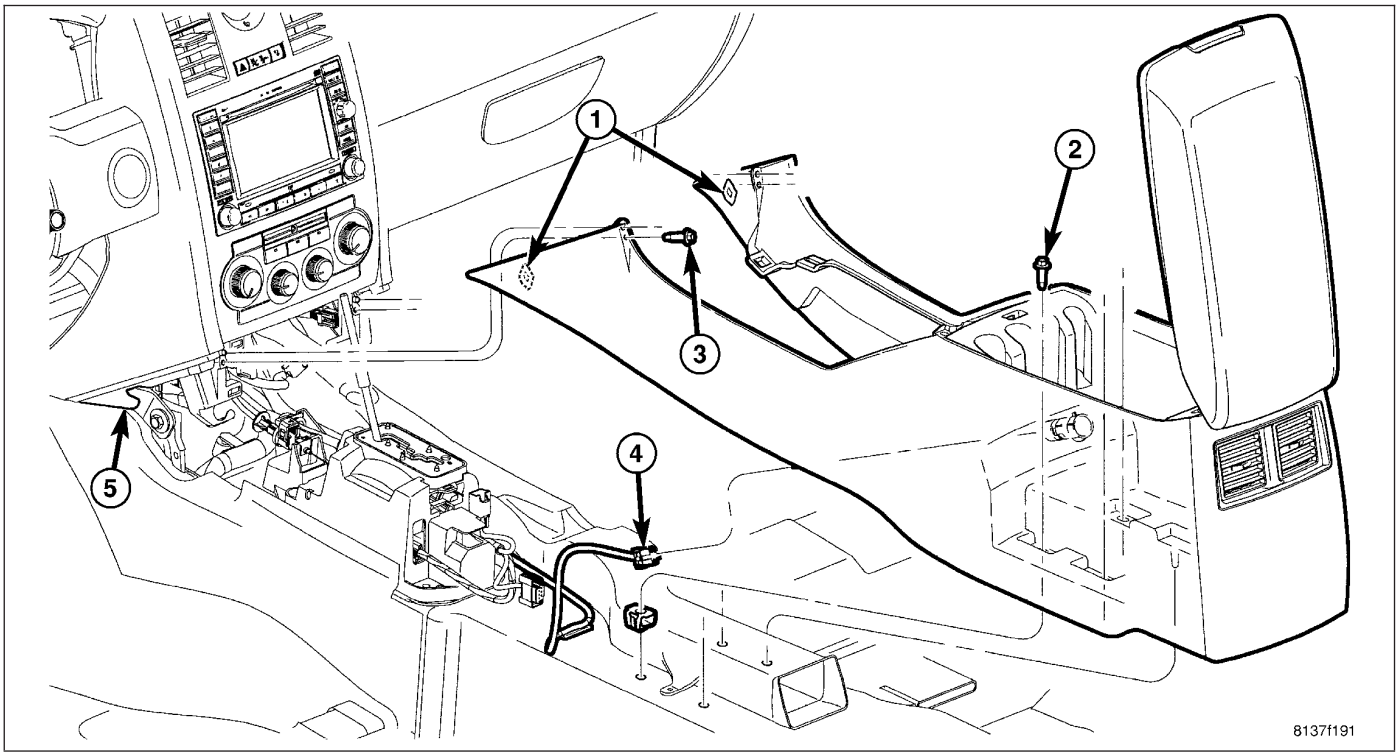

1. Position the floor console into the vehicle rearward far enough to access and reconnect the jumper wire connector (4) to the accessory power outlet on the underside of the console.
2. While holding both sides of the console at the front carefully engage the ears at the front of the console to the slots (5) at the lower instrument panel.
3. Locate the two alignment holes at the front of the console over the two alignment pins on the instrument panel.
4. Engage the locating pin on the underside of the console rear bin into the slot in the top of the floor panel transmission tunnel.

5. Install and tighten the two screws (3) that secure the front of the console to the instrument panel. Tighten the screws to 3 N·m (23 in. lbs.).
6. Install and tighten the three 8 mm bolts (2) into the rear bin that secure the console to the floor panel transmission tunnel. Tighten the bolts to 5 N·m (40 in. lbs.).
7. Position the console shifter bezel (4) over the gear selector lever.
8. Position the tabs on the underside of the console shifter bezel into the holes in the floor console.
9. Install and tighten the two screws (1) that secure the front of the console shifter bezel to the console. Tighten the screws to 3 N·m (23 in. lbs.).
10. Position the mat (5) into the console rear bin with the curved edge oriented forward in the vehicle.
11. Position the mat (2) into the cubby bin at the front of the floor console.
12. Firmly push shifter trim ring (4) down the to position it to the gear selector.
13. Place the gear selector lever into the Park position.

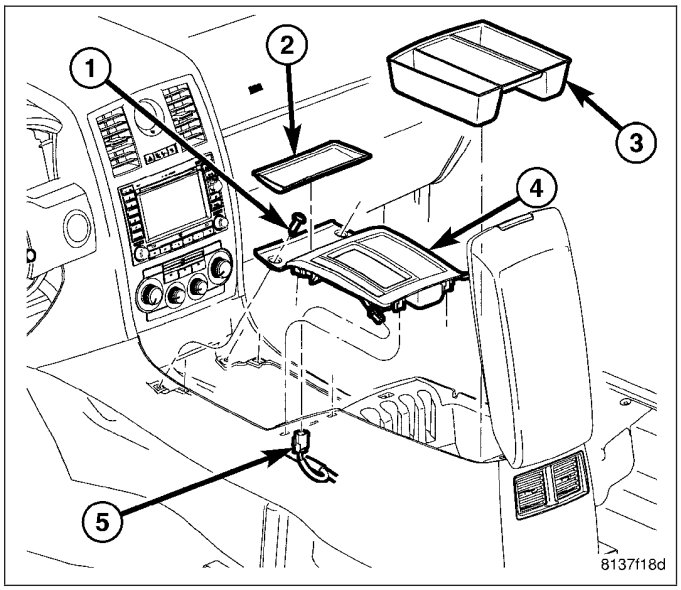

NOTE: For vehicles equipped with the optional Automatic Express Up power window feature, calibration of this feature is required whenever power to the door module is disrupted. A battery reconnect procedure must be performed anytime the battery has been disconnected. (Refer to 8 - ELECTRICAL/BATTERY SYSTEM - STANDARD PROCEDURE).

14. Reconnect the battery negative cable.

Center Console Cover with DVD

1. Install console cover.
2. Install six screws.
3. Replace side covers.

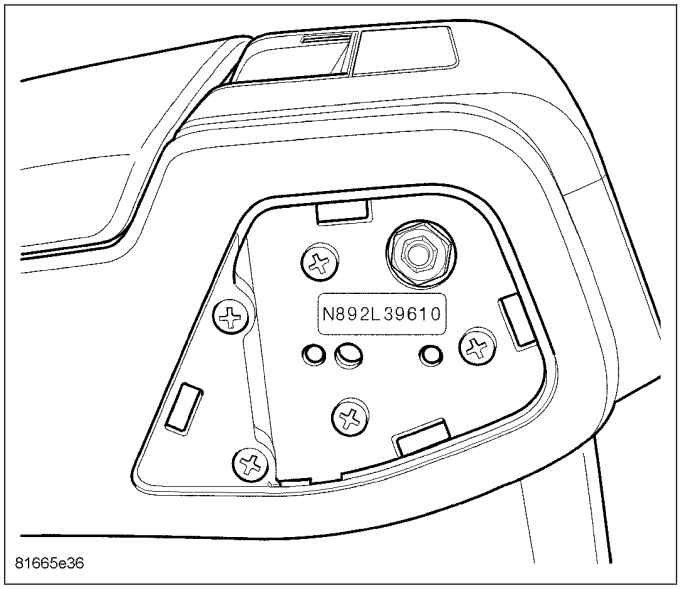

COWL TRIM

REMOVAL

UPPER

1. Insert trim stick from the outside in the direction of arrow (2) under the middle of the part.
2. Then slide trim stick up to the upper spring clip retainer, and pry to disengage clip.
3. Slide the trim stick down to the lower spring clip retainer, and pry to disengage clip.
4. Remove the upper cowl trim from the vehicle.

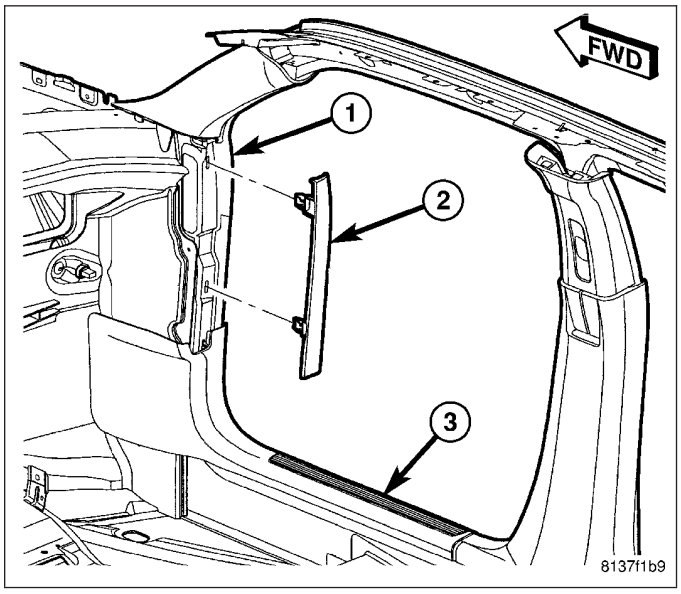

LOWER

1. Remove the upper cowl trim from the front of the front door opening. (Refer to 23 - BODY/INTERIOR/COWL TRIM - REMOVAL-UPPER).
2. Using a trim stick or another suitable wide flat-bladed tool and starting nearest the B-pillar trim (2), carefully pry the lower cowl trim (3) upward from the front door opening sill far enough to disengage the three spring clip retainers that secure the trim to the slots in the sill.
3. Using a trim stick or another suitable wide flat-bladed tool, carefully pry the lower cowl trim rearward from the front of the front door opening far enough to disengage the spring clip retainer that secures the trim to the slot in the cowl (1).
4. Remove the lower cowl trim from the vehicle.

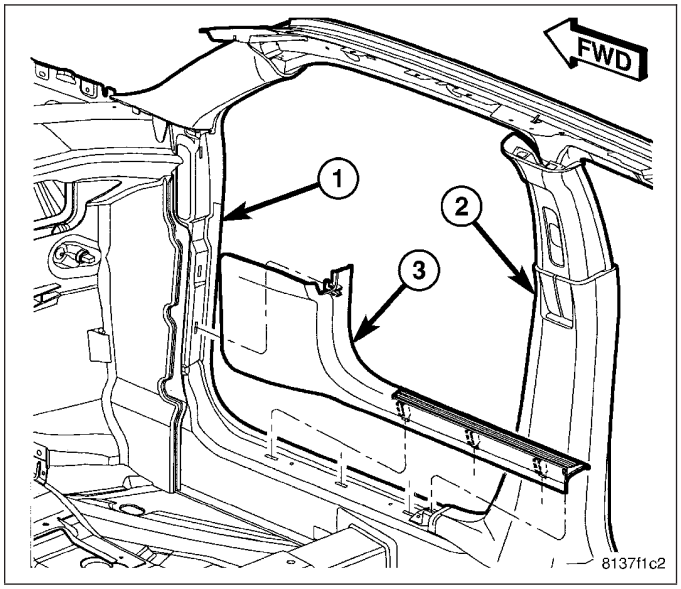

INSTALLATION

UPPER

1. Position the upper cowl trim (2) to the cowl (1) at the front of the front door opening and the lower cowl trim (3).
2. Align the two spring clip retainers on the trim with the slots in the cowl.
3. Using hand pressure, press firmly and evenly downward on the trim over each of the spring clip locations until the retainers snap into place.

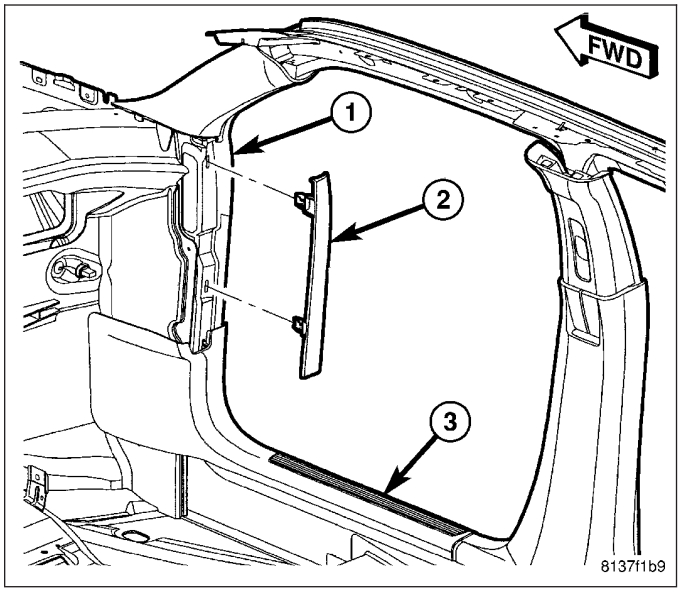

LOWER

1. Check to be certain that the three plastic nuts are properly installed and in good condition in the slots of the front door opening sill. Replace a plastic nut if any damage is evident.
2. Position the vertical portion of the lower cowl trim (3) to the cowl (1) at the front of the front door opening.
3. Align the spring clip retainer on the trim with the slot in the cowl (1).
4. Using hand pressure, press firmly and evenly forward on the trim over the spring clip location until the retainer snaps into place.
5. Position the horizontal portion of the lower cowl trim to the front door sill and the B-pillar trim (2).
6. Align the three spring clip retainers on the trim with the slots in the sill.
7. Using hand pressure, press firmly and evenly downward on the trim over each of the spring clip locations until the retainers snap into place.

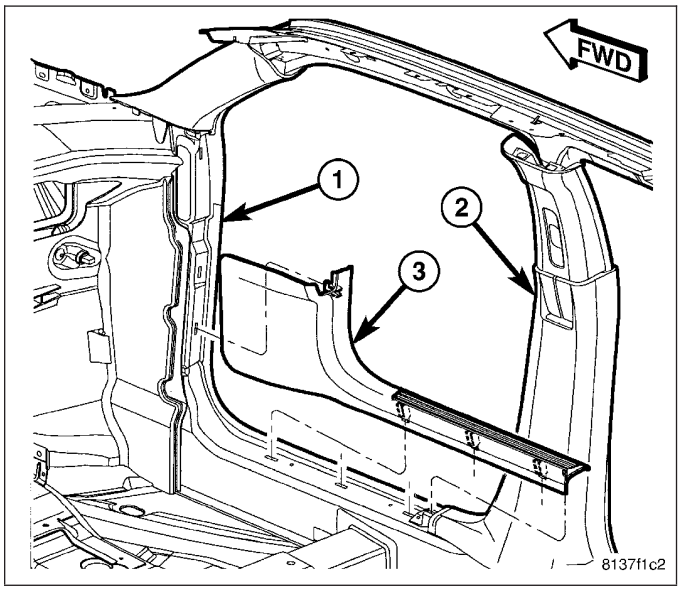

8. Reinstall the upper cowl trim to the front of the front door opening. (Refer to 23 - BODY/INTERIOR/COWL TRIM - INSTALLATION-UPPER).

D-PILLAR TRIM

REMOVAL

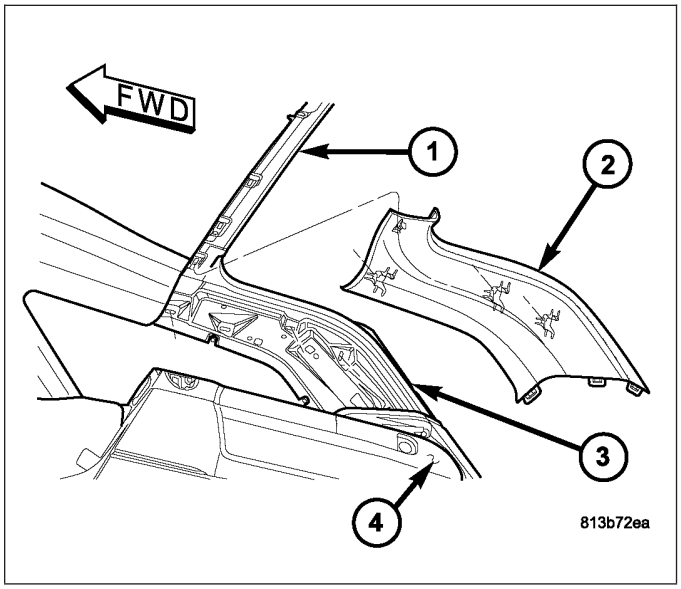

1. Remove the trim plate from the upper liftgate opening header (1). (Refer to 23 - BODY/INTERIOR/LIFTGATE OPENING UPPER TRIM - REMOVAL).
2. Loosen the rear edge of the quarter trim panel (4) from the inside of the lower D-pillar. (Refer to 23 - BODY/INTERIOR/QUARTER TRIM PANEL - REMOVAL).
3. Using a trim stick or another suitable wide flat-bladed tool, carefully pry the upper edge of the upper D-pillar trim (2) away from the headliner far enough to disengage the two upper spring clip retainers that secure the trim to the slots in the upper liftgate opening header and the inside of the D-pillar.
4. Using a trim stick or another suitable wide flat-bladed tool, carefully pry the lower half of the upper D-pillar trim away from the D-pillar far enough to disengage the two lower spring clip retainers that secure the trim to the slots in the pillar.
5. Disengage the lower edge of the upper D-pillar trim from under the quarter trim panel.
6. Remove the upper D-pillar trim from the vehicle.

INSTALLATION

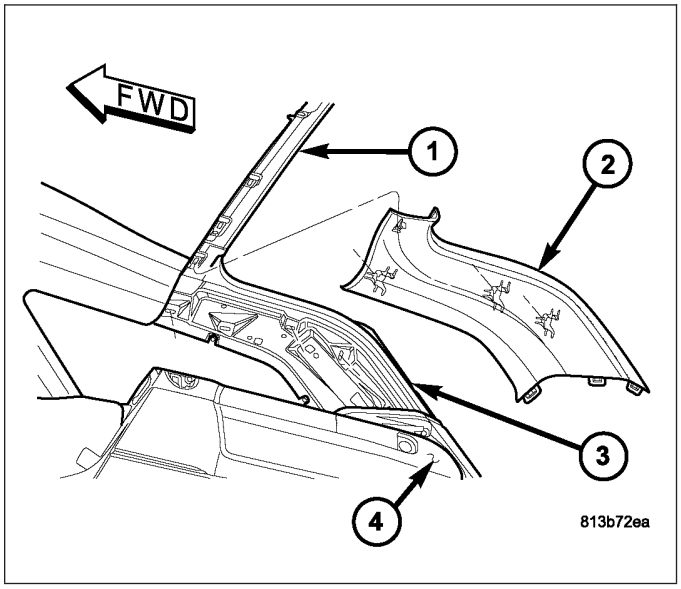

1. Engage the lower edge of the upper D-pillar trim (2) under the upper edge of the quarter trim panel (4) at the inner D-pillar (3).
2. Align the two lower spring clip retainers on the back of the trim with the slots in the inside of the D-pillar.
3. Using hand pressure, press firmly and evenly on the trim over each of the lower spring clip locations until the retainers snap into place.
4. Align the two upper spring clip retainers on the back of the trim with the slots in the inside of the D-pillar and the upper liftgate opening header (1).
5. Using hand pressure, press firmly and evenly on the trim over each of the spring clip locations until the retainers snap into place.
6. Reinstall the rear edge of the quarter trim panel to the inside of the lower D-pillar. (Refer to 23 - BODY/INTERIOR/QUARTER TRIM PANEL - INSTALLATION).
7. Reinstall the trim plate onto the upper liftgate opening header. (Refer to 23 - BODY/INTERIOR/LIFTGATE OPENING UPPER TRIM - INSTALLATION).

FRONT FLOOR FOOT REST

REMOVAL

1. Remove the trim from the driver side lower cowl side inner panel. (Refer to 23 - BODY/INTERIOR/ COWL TRIM - REMOVAL-LOWER).
2. Remove the three push-pin fasteners that secure the driver side front carpet to the cowl side inner panel and the front door opening sill.
3. Pull the front floor carpet up and away from the foot rest (1) far enough to access and remove the nut (2) that secures the foot rest to the weld stud (5) on the front floor panel.
4. Lift the base of the foot rest upward far enough to disengage the tab (3) at the top of the foot rest from the slot (4) in the dash panel.
5. Remove the foot rest from the vehicle.

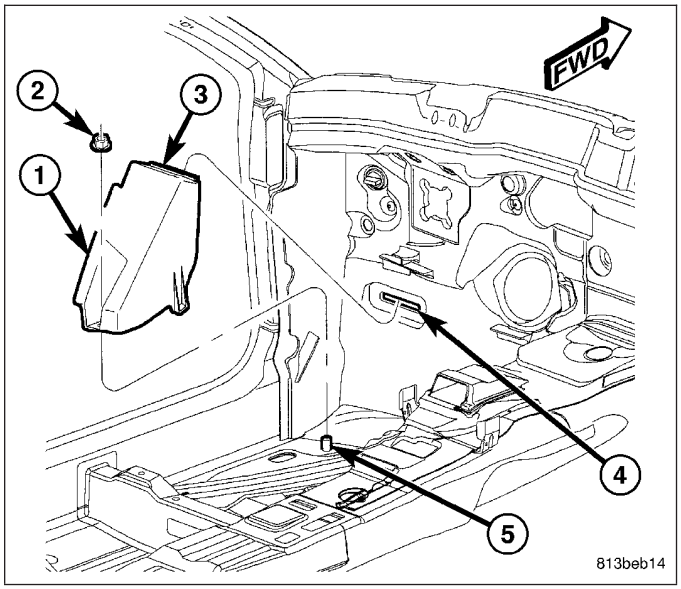

INSTALLATION

1. Pull the outboard edge of the driver side front floor carpet up and away from the floor far enough to position the foot rest (1) between the front floor panel and the carpet.
2. Engage the tab (3) at the top of the foot rest into the slot (4) in the dash panel.
3. Position the hole at the base of the foot rest over the weld stud (5) on the front floor panel.
4. Install and tighten the nut (2) that secures the foot rest to the weld stud. Tighten the nut to 16 N·m (12 ft. lbs.).
5. Reposition the driver side front carpet to the cowl side inner panel and the front door opening sill and secure with three push-pin fasteners.
6. Reinstall the trim onto the driver side lower cowl side inner panel. (Refer to 23 - BODY/INTERIOR/ COWL TRIM - INSTALLATION-LOWER).

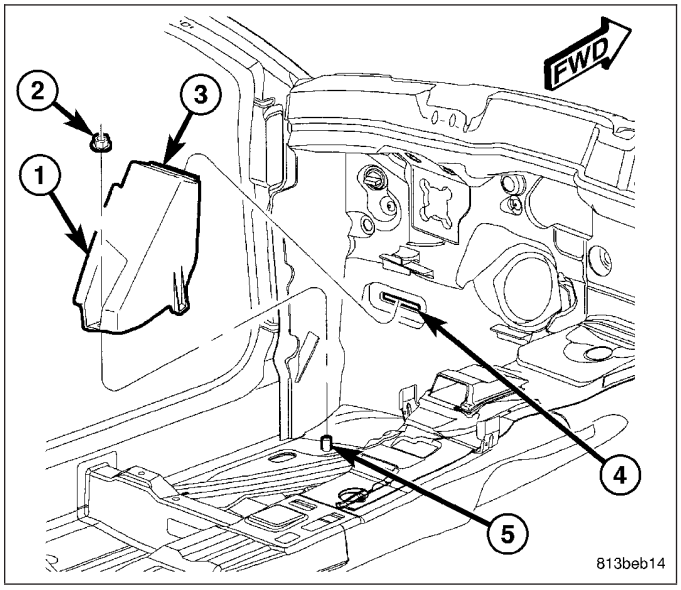

HEADLINER

REMOVAL

SEDAN

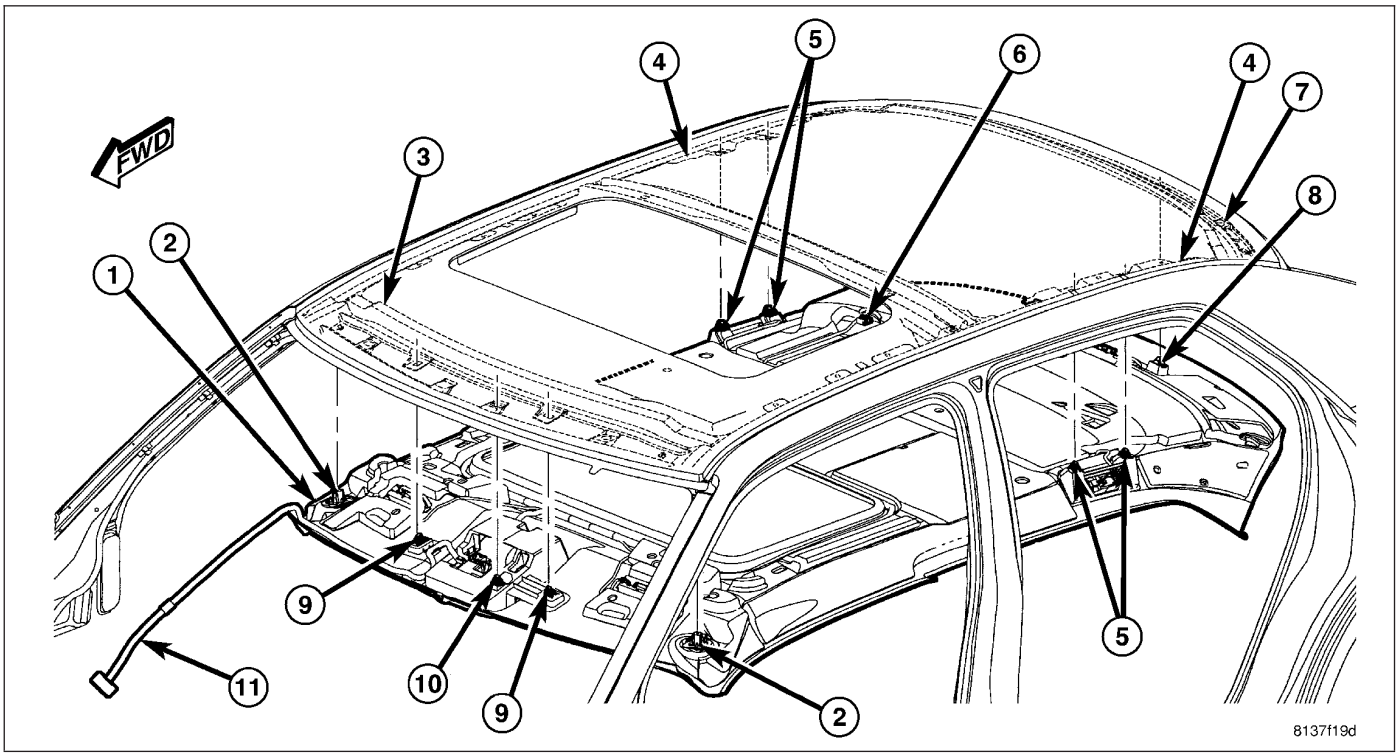

1. Disconnect and isolate the battery negative cable.
2. Remove the trim from both upper A-pillars. (Refer to 23 - BODY/INTERIOR/A-PILLAR TRIM - REMOVAL).
3. Disengage the headliner wire harnesses from the retainers on each inner A-pillar and disconnect the connectors (11) from the body wire harness connectors near the base of each A-pillar.
4. Remove the trim from both upper B-pillars. (Refer to 23 - BODY/INTERIOR/B-PILLAR TRIM - REMOVAL-UPPER).
5. Remove the trim from both upper C-pillars. (Refer to 23 - BODY/INTERIOR/C-PILLAR TRIM - REMOVAL-UPPER-SEDAN).
6. If the vehicle is so equipped, remove the overhead console from the center of the headliner (1) near the windshield header (3). (Refer to 8 - ELECTRICAL/OVERHEAD CONSOLE - REMOVAL).
7. If the vehicle is so equipped, disconnect the electrochromic (automatic dimming) and/or the telematic (hands-free phone) mirror takeout(s) and connector(s) of the headliner wire harness from the connector receptacle(s) on the back (windshield side) of the inside rear view mirror housing.
8. Remove both sun visors and both visor receptacles from the headliner near the windshield header.
9. Remove both grab handle/coat hook/rear dome/reading lamp units from the headliner at the inner rear roof side rails (4).
10. If the vehicle is so equipped, remove the trim welt from the headliner sunroof opening.
11. Fold down both rear seat backs.
12. Recline both front seat backs.
13. Carefully pull the headliner downward at the windshield header far enough to disengage the spring clip retainers at each sun visor mounting location (2), at each visor receptacle location (9), and at the overhead console location (10).
14. Carefully pull the headliner downward at the inner rear roof side rails far enough to disengage the spring clip retainers at each grab handle location (5).

15. Carefully pull the headliner downward near the center of the rear roof header (7) far enough to disengage the rear spring clip retainer (8).
16. If the vehicle is equipped with a sunroof, reach between the headliner and the roof panel from the right rear door opening to access and disconnect the sunroof jumper wire connector from the headliner wire harness sunroof take out and connector (6).
17. Carefully bow the headliner longitudinally as necessary to remove the unit through the right rear door opening.

WAGON

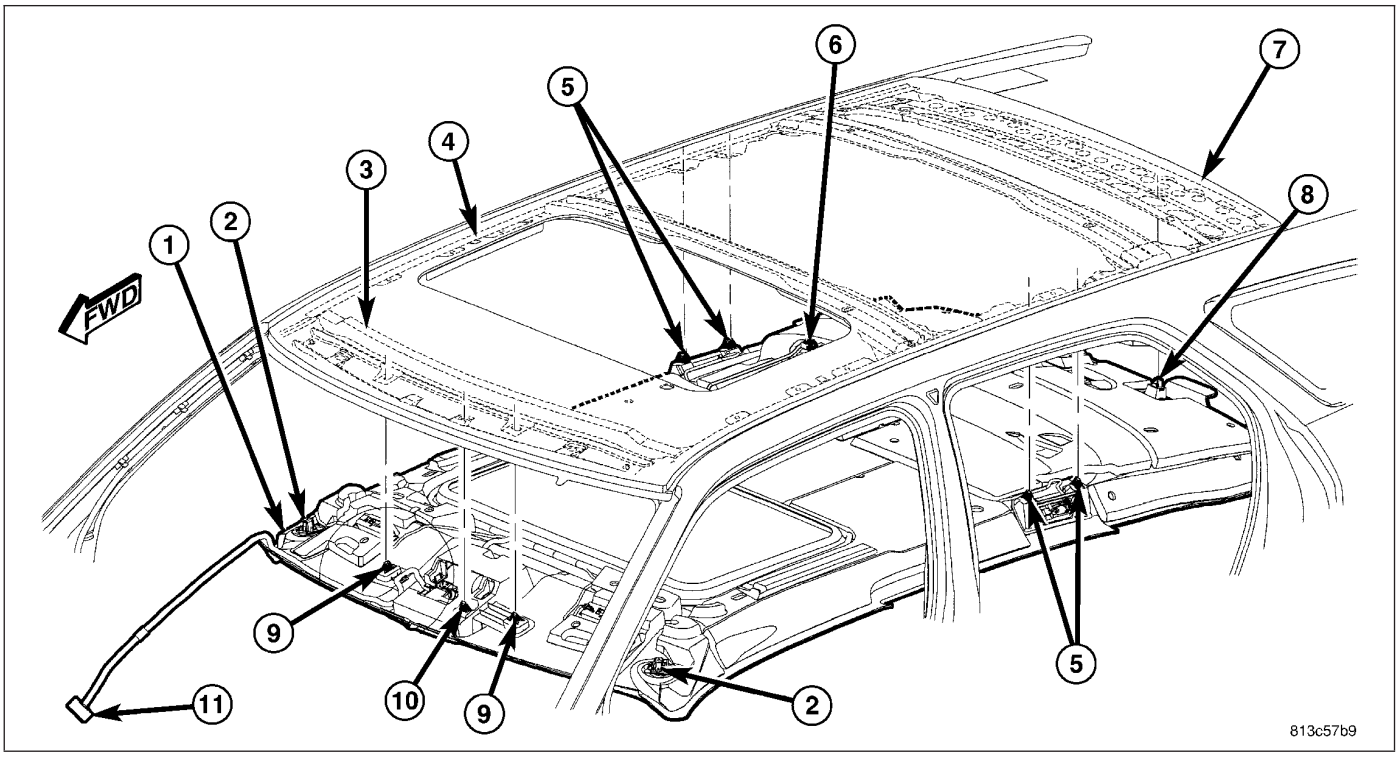

1. Disconnect and isolate the battery negative cable.
2. Remove the trim from both upper A-pillars. (Refer to 23 - BODY/INTERIOR/A-PILLAR TRIM - REMOVAL).
3. Disengage the headliner wire harnesses from the retainers on each inner A-pillar and disconnect the connectors (11) from the body wire harness connectors near the base of each A-pillar.
4. Remove the trim from both upper B-pillars. (Refer to 23 - BODY/INTERIOR/B-PILLAR TRIM - REMOVAL-UPPER).
5. Remove the trim from both upper C-pillars. (Refer to 23 - BODY/INTERIOR/C-PILLAR TRIM - REMOVAL-UPPER-WAGON).
6. Remove the trim from both upper D-pillars. (Refer to 23 - BODY/INTERIOR/D-PILLAR TRIM - REMOVAL).
7. If the vehicle is so equipped, remove the overhead console from the center of the headliner (1) near the windshield header (3). (Refer to 8 - ELECTRICAL/OVERHEAD CONSOLE - REMOVAL).
8. If the vehicle is so equipped, disconnect the electrochromic (automatic dimming) and/or the telematic (hands-free phone) mirror takeout(s) and connector(s) of the headliner wire harness from the connector receptacle(s) on the back (windshield side) of the inside rear view mirror housing.
9. Remove both sun visors and both visor receptacles from the headliner near the windshield header.
10. Remove both grab handle/coat hook/rear dome/reading lamp units from the headliner at the inner rear roof side rails (4).
11. If the vehicle is so equipped, remove the trim welt from the headliner sunroof opening.
12. Fold down both rear seat backs.
13. Recline both front seat backs.

14. Carefully pull the headliner downward at the windshield header far enough to disengage the spring clip retainers at each sun visor mounting location (2), at each visor receptacle location (9), and at the overhead console location (10).
15. Carefully pull the headliner downward at the inner rear roof side rails far enough to disengage the spring clip retainers at each grab handle location (5).
16. Carefully pull the headliner downward near the center of the liftgate opening header (7) far enough to disengage the rear spring clip retainer (8).
17. If the vehicle is equipped with a sunroof, reach between the headliner and the roof panel from the right rear door opening to access and disconnect the sunroof jumper wire connector from the headliner wire harness sunroof take out and connector (6).
18. Carefully bow the headliner longitudinally as necessary to remove the unit through the liftgate opening.

INSTALLATION

SEDAN

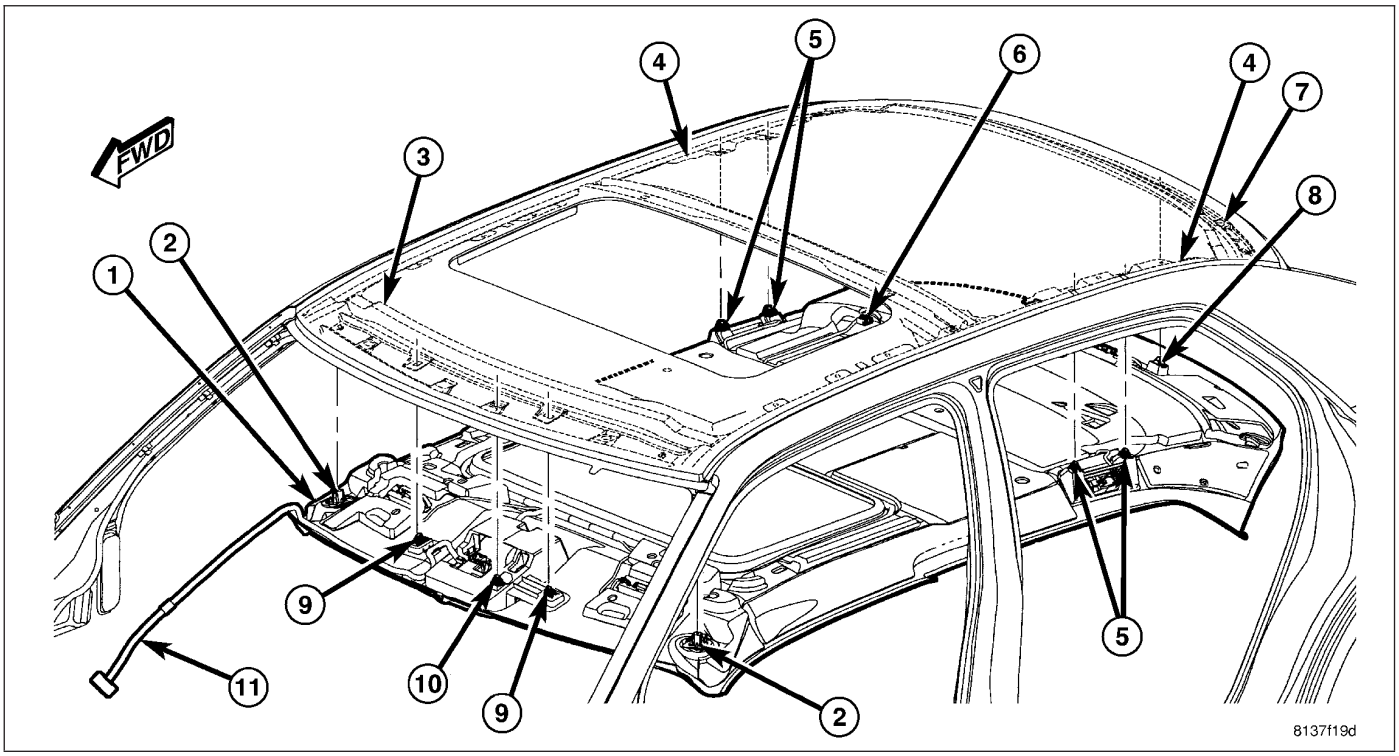

1. Carefully bow the headliner (1) longitudinally as necessary to position the unit into the vehicle through the right rear door opening.
2. If the vehicle is equipped with a sunroof, reach between the headliner and the roof panel from the right rear door opening to access and reconnect the sunroof jumper wire connector to the headliner wire harness sunroof take out and connector (6).

NOTE: In order to ease installation and ensure proper headliner positioning it is important to install the headliner spring clip retainers in the correct sequence as follows.

3. Position the spring clip at the right visor receptacle location (9) to the appropriate hole in the windshield header (3) and press firmly and evenly upward on the headliner over the retainer location until it snaps into place.
4. Position the rear spring clip retainer (8) to the appropriate hole near the center of the rear roof header (7) and press firmly and evenly upward on the headliner over the retainer location until it snaps into place.
5. Position the two spring clip retainers at each grab handle location (5) to the appropriate holes in the inner rear roof side rails (4) and press firmly and evenly upward on the headliner over each retainer location until it snaps into place.

6. Position the spring clip retainers at each sun visor mounting location (2), at the left visor receptacle location (9), and at the overhead console location (10) to the appropriate holes in the windshield header and press firmly and evenly upward on the headliner over each retainer location until it snaps into place.
7. If the vehicle is so equipped, reinstall the trim welt onto the headliner sunroof opening.
8. Reinstall both grab handle/coat hook/rear dome/reading lamp units into the headliner at the inner rear roof side rails.
9. Reinstall both sun visors and both visor receptacles onto the headliner near the windshield header.
10. If the vehicle is so equipped, reconnect the electrochromic (automatic dimming) and/or the telematic (hands-free phone) mirror takeout and connector of the headliner wire harness to the connector receptacle(s) on the back (windshield side) of the inside rear view mirror housing.
11. If the vehicle is so equipped, reinstall the overhead console to the center of the headliner near the windshield header. (Refer to 8 - ELECTRICAL/OVERHEAD CONSOLE - INSTALLATION).
12. Reinstall the trim onto both upper C-pillars. (Refer to 23 - BODY/INTERIOR/C-PILLAR TRIM - INSTALLATION-UPPER-SEDAN).
13. Reinstall the trim onto both upper B-pillars. (Refer to 23 - BODY/INTERIOR/B-PILLAR TRIM - INSTALLATION-UPPER).
14. Engage the headliner wire harnesses into the retainers on each inner A-pillar and reconnect the connectors (11) to the body wire harness connectors near the base of each A-pillar. Be certain the harnesses are not twisted and that the connectors are both fully engaged.
15. Reinstall the trim onto both upper A-pillars. (Refer to 23 - BODY/INTERIOR/A-PILLAR TRIM - INSTALLATION).
16. Reconnect the battery negative cable.

WAGON

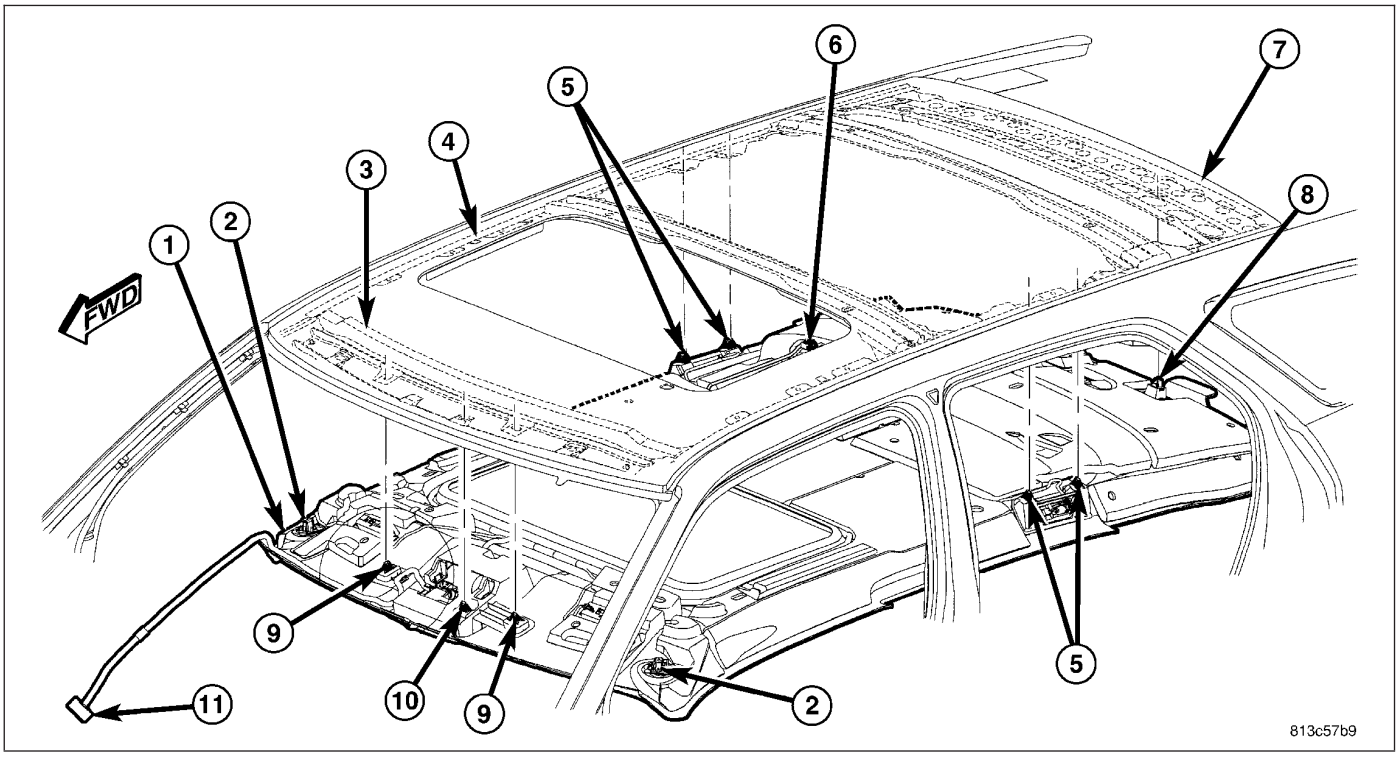

1. Carefully bow the headliner (1) longitudinally as necessary to position the unit into the vehicle through the liftgate opening.
2. If the vehicle is equipped with a sunroof, reach between the headliner and the roof panel from the right rear door opening to access and reconnect the sunroof jumper wire connector to the headliner wire harness sunroof take out and connector (6).

NOTE: In order to ease installation and ensure proper headliner positioning it is important to install the headliner spring clip retainers in the correct sequence as follows.

3. Position the spring clip at the right visor receptacle location (9) to the appropriate hole in the windshield header (3) and press firmly and evenly upward on the headliner over the retainer location until it snaps into place.
4. Position the rear spring clip retainer (8) to the appropriate hole near the center of the liftgate opening header (7) and press firmly and evenly upward on the headliner over the retainer location until it snaps into place.
5. Position the two spring clip retainers at each grab handle location (5) to the appropriate holes in the inner rear roof side rails (4) and press firmly and evenly upward on the headliner over each retainer location until it snaps into place.
6. Position the spring clip retainers at each sun visor mounting location (2), at the left visor receptacle location (9), and at the overhead console location (10) to the appropriate holes in the windshield header and press firmly and evenly upward on the headliner over each retainer location until it snaps into place.
7. If the vehicle is so equipped, reinstall the trim welt onto the headliner sunroof opening.
8. Reinstall both grab handle/coat hook/rear dome/reading lamp units into the headliner at the inner rear roof side rails.
9. Reinstall both sun visors and both visor receptacles onto the headliner near the windshield header.
10. If the vehicle is so equipped, reconnect the electrochromic (automatic dimming) and/or the telematic (hands-free phone) mirror takeout and connector of the headliner wire harness to the connector receptacle(s) on the back (windshield side) of the inside rear view mirror housing.
11. If the vehicle is so equipped, reinstall the overhead console to the center of the headliner near the windshield header. (Refer to 8 - ELECTRICAL/OVERHEAD CONSOLE - INSTALLATION).
12. Reinstall the trim onto both upper D-pillars. (Refer to 23 - BODY/INTERIOR/D-PILLAR TRIM - INSTALLATION).
13. Reinstall the trim onto both upper C-pillars. (Refer to 23 - BODY/INTERIOR/C-PILLAR TRIM - INSTALLATION-UPPER-SEDAN).
14. Reinstall the trim onto both upper B-pillars. (Refer to 23 - BODY/INTERIOR/B-PILLAR TRIM - INSTALLATION-UPPER).
15. Engage the headliner wire harnesses into the retainers on each inner A-pillar and reconnect the connectors (11) to the body wire harness connectors near the base of each A-pillar. Be certain the harnesses are not twisted and that the connectors are both fully engaged.
16. Reinstall the trim onto both upper A-pillars. (Refer to 23 - BODY/INTERIOR/A-PILLAR TRIM - INSTALLATION).
17. Reconnect the battery negative cable.

LIFTGATE OPENING UPPER TRIM

REMOVAL

1. Using a trim stick or another suitable wide flat-bladed tool, carefully pry the rear edge of the trim plate (3) down from the upper liftgate opening header (2) far enough to disengage the four spring clip retainers from the slots in the header.
2. Pull the trim plate rearward to disengage it from the rear edge of the headliner (1).
3. Remove the trim plate from the vehicle.

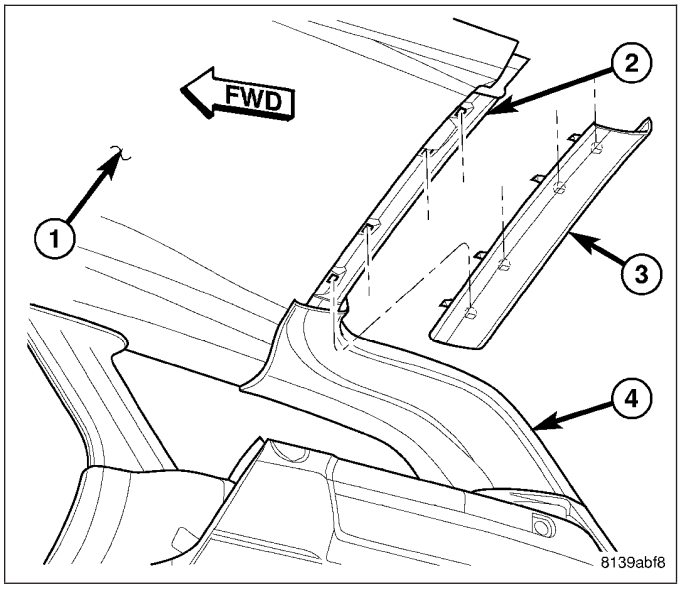

INSTALLATION

1. Fit the forward edge of the liftgate opening header trim plate (3) to the rear edge of the headliner (1).
2. Align the four spring clip retainers on the trim plate to the slots in the upper liftgate opening header (2).
3. Using hand pressure, press firmly and evenly upward on the trim plate over each of the retainer locations until they snap into place.
4. Be certain that ends of the trim plate are properly engaged over the inboard edges of the right and left upper D-pillar trim.

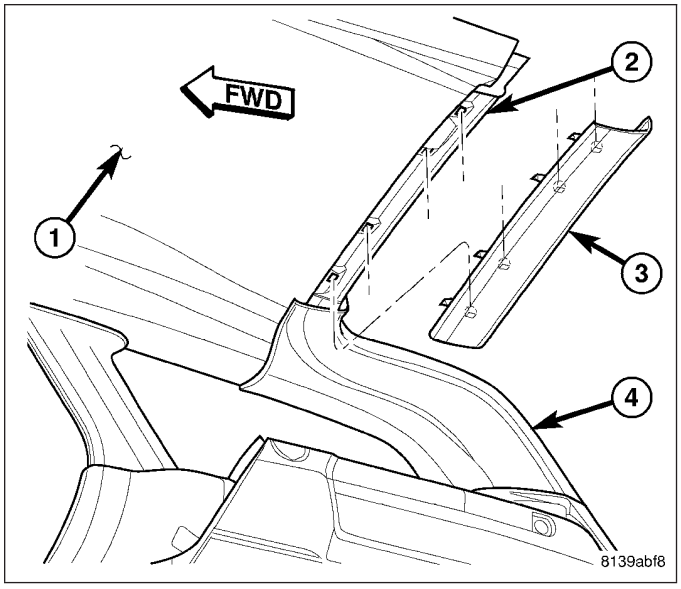

LIFTGATE SCUFF PLATE

REMOVAL

1. Remove the two screws (2) that secure the tie-down loops (1) and the scuff plate trim panel (5) to the top of the liftgate opening lower panel (4).
2. Remove the two screws (6) that secure the scuff plate trim panel to the inside of the liftgate opening lower panel.
3. Remove the scuff plate trim panel from the vehicle.

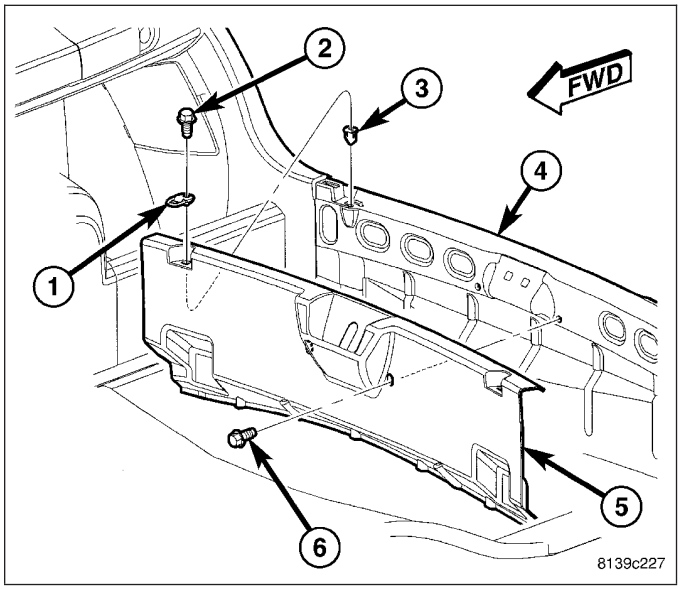

INSTALLATION

1. Check to be certain that two spring nuts (3) are properly installed and in good condition in the top of the liftgate opening lower panel (4).
2. Position the scuff plate trim panel (5) to the inside of the liftgate opening lower panel. Ensure that the trim edge is located into the seal crack.
3. Position the two tie-down loops (1) to the top of the trim panel.
4. Install and tighten the two screws that secure the tie-down loops and the scuff plate trim panel to the top of the liftgate opening lower panel. Tighten the screws to 11 N·m (8 ft. lbs.).
5. Install and tighten the two screws (6) that secure the trim panel to the inside of the liftgate opening lower panel. Tighten the screws to 11 N·m (8 ft. lbs.).

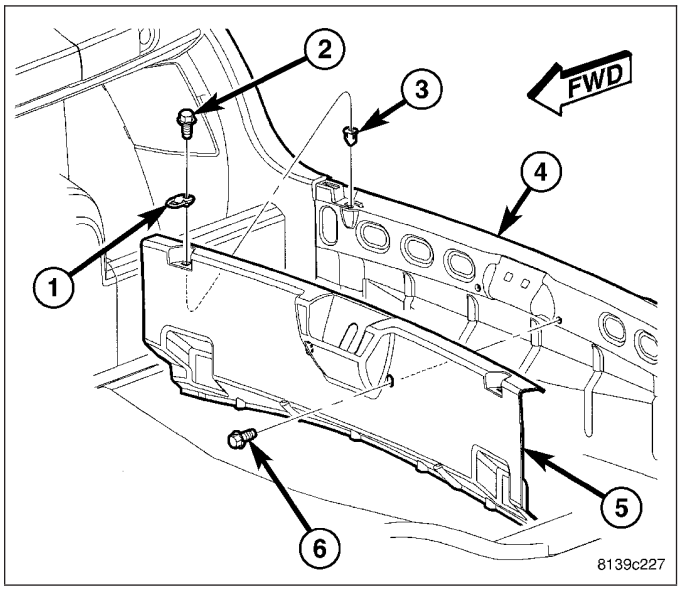

QUARTER TRIM PANEL

REMOVAL

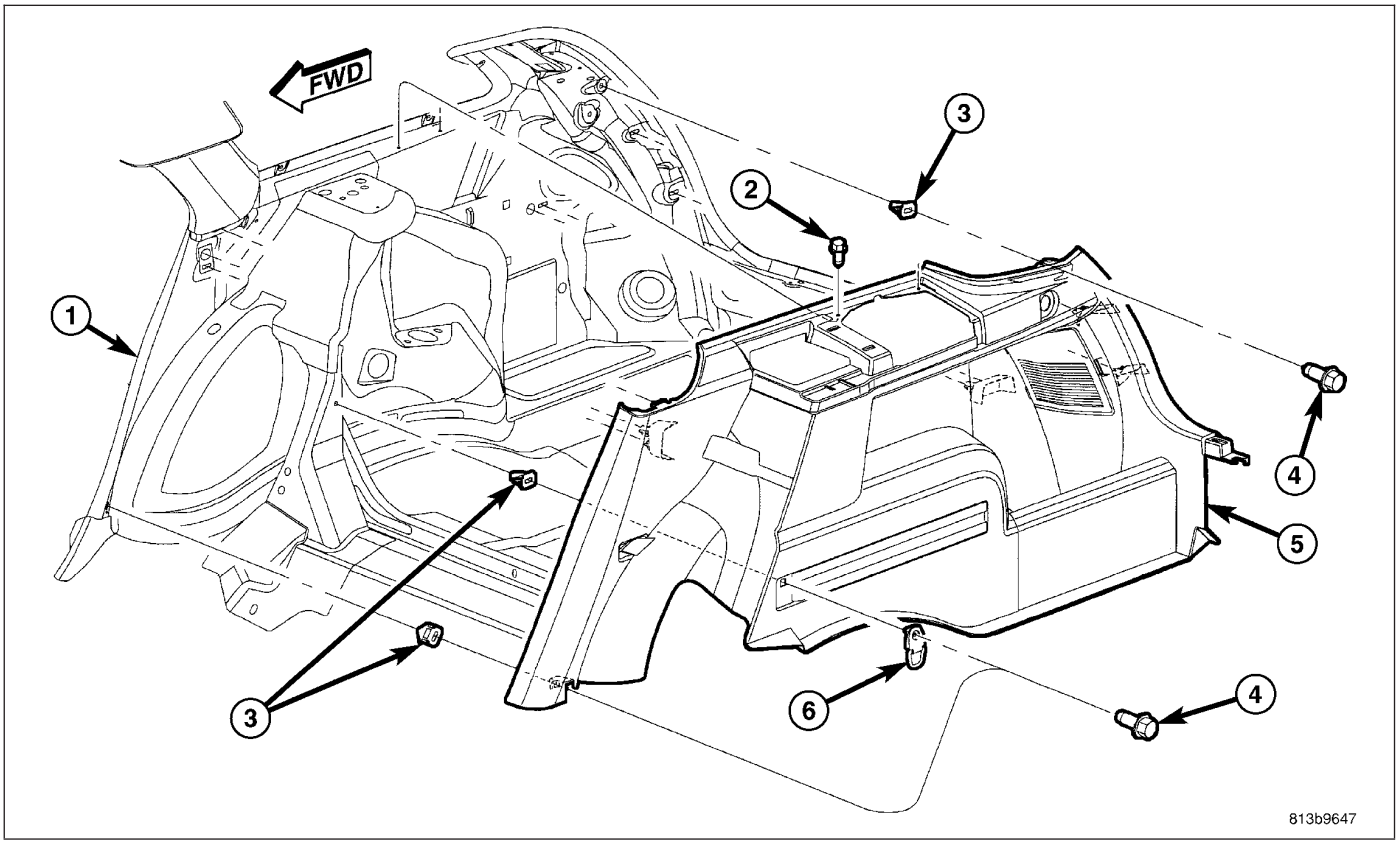

1. Disconnect and isolate the battery negative cable.
2. Remove the rear seat cushion from the vehicle. (Refer to 23 - BODY/SEATS/SEAT CUSHION COVER - REMOVAL).
3. Remove the rear seat back side bolster from the quarter inner panel (1). (Refer to 23 - BODY/SEATS/SEAT BACK CUSHION/COVER - REMOVAL).
4. Remove the screw that secures the outboard rear seat belt lower anchor to the quarter inner panel.
5. Remove the trim from the upper D-pillar. (Refer to 23 - BODY/INTERIOR/D-PILLAR TRIM - REMOVAL).
6. Remove the speaker bezel from the quarter trim panel. (Refer to 23 - BODY/INTERIOR/SPEAKER BOX TRIM COVER - REMOVAL).
7. Remove the two screws (2) that secure the quarter trim panel (5) to the speaker bracket above the rear wheel house.
8. Remove the screw that secures the tie-down loop, the liftgate scuff plate trim panel and the rear extension of the quarter trim panel to the top of the liftgate opening lower panel.
9. Remove the three screws (3) that secure the tie-down loop (6) and the quarter trim panel to the quarter inner panel.
10. Using a trim stick or another suitable wide flat-bladed tool, carefully pry the quarter trim panel away from the side of the liftgate opening far enough to disengage the three spring clip retainers that secure the trim to the slots in the quarter inner panel behind the rear wheel house.
11. Move the back of the quarter trim panel away from the base of the upper D-pillar trim far enough to access and disconnect the body wire harness connector from the back of the auxiliary power outlet, if equipped.
12. Using a trim stick or another suitable wide flat-bladed tool, carefully pry the quarter trim panel away from the base of the upper C-pillar trim far enough to disengage the spring clip retainer that secures the trim to the slot in the quarter inner panel.

13. Lift the quarter trim panel up and over the outboard rear seat belt retractor on the top of the rear wheel house while feeding the loose belt webbing and lower anchor through the retractor clearance hole in the top of the panel.
14. Remove the quarter trim panel from the vehicle through the liftgate opening.

INSTALLATION

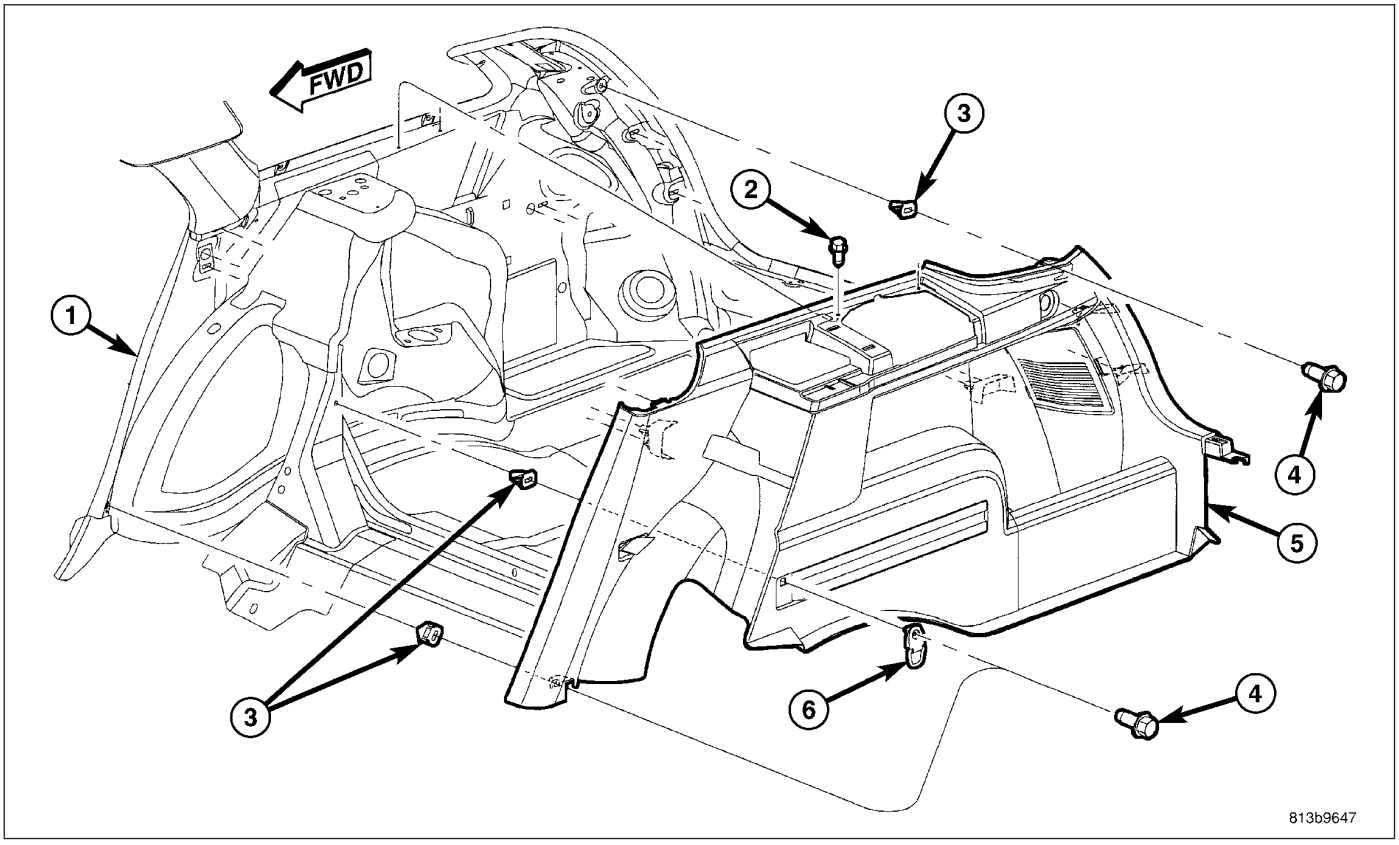

1. Check to be certain that the three spring nuts (3) are properly installed and in good condition on the quarter inner panel (1). Replace a spring nut if any damage is evident.
2. Position the quarter trim panel (5) into the vehicle through the liftgate opening.
3. Lift the quarter trim panel up and over the outboard rear seat belt retractor on the top of the rear wheel house while pulling the loose belt webbing and lower anchor through the retractor clearance hole in the top of the panel.
4. Align the spring clip retainer on the back of the quarter trim panel with the slot in the quarter inner panel at the base of the upper C-pillar trim.
5. Using hand pressure, press firmly and evenly on the trim over the spring clip location until the retainer snaps into place.
6. Move the rear of the quarter trim panel away from the base of the upper D-pillar trim far enough to access and reconnect the body wire harness connector to the back of the auxiliary power outlet, if equipped.
7. Align the three spring clip retainers on the back of the quarter trim panel with the slots in the quarter inner panel behind the rear wheel house.
8. Using hand pressure, press firmly and evenly on the trim over the spring clip locations until the retainers snap into place.
9. Position the rear extension of the quarter trim panel onto the top of the liftgate opening lower panel with the extension sequenced under the end of the liftgate scuff plate.
10. Install and tighten the three screws (4) that secure the tie-down loop (6) and the quarter trim panel to the quarter inner panel. Tighten the screws to 11 N·m (8 ft. lbs.).
11. Install and tighten the screw that secures the tie-down loop, the liftgate scuff plate and the rear extension of the quarter trim panel to the top of the liftgate opening lower panel. Tighten the screw to 11 N·m (8 ft. lbs.).

12. Install and tighten the two screws (2) that secure the quarter trim panel to the speaker bracket above the rear wheel house. Tighten the screws to 11 N·m (8 ft. lbs.).
13. Reinstall the speaker bezel onto the quarter trim panel. (Refer to 23 - BODY/INTERIOR/SPEAKER BOX TRIM COVER - INSTALLATION).
14. Reinstall the trim onto the upper D-pillar. (Refer to 23 - BODY/INTERIOR/D-PILLAR TRIM - INSTALLATION).
15. Install and tighten the screw that secures the outboard rear seat belt lower anchor to the quarter inner panel. Tighten the screw to 32 N·m (24 ft. lbs.).
16. Reinstall the rear seat back side bolster onto the quarter inner panel. (Refer to 23 - BODY/SEATS/SEAT BACK CUSHION/COVER - INSTALLATION).
17. Reinstall the rear seat cushion into the vehicle. (Refer to 23 - BODY/SEATS/SEAT CUSHION COVER - INSTALLATION).

QUARTER TRIM SPEAKER BEZEL

REMOVAL

1. Remove the screw in the cargo cover cradle formation of the quarter trim speaker bezel (2) that secures the bezel to the quarter trim panel (3) on top of the rear wheel house.
2. Using a trim stick or another suitable wide flat-bladed tool, carefully pry the front edge of the speaker bezel upward from the quarter trim panel far enough to disengage the two spring clip retainers that secure the bezel to the slots in the trim panel.
3. Disengage the rear outboard seat belt webbing (1) from the quarter trim speaker bezel through the slit below the slot at the front of the bezel.
4. Lift the front of the quarter trim speaker bezel upward and pull it forward far enough to disengage the tabs at the back of the bezel from the slots in the back of the quarter trim panel opening.
5. Remove the quarter trim speaker bezel from the vehicle.

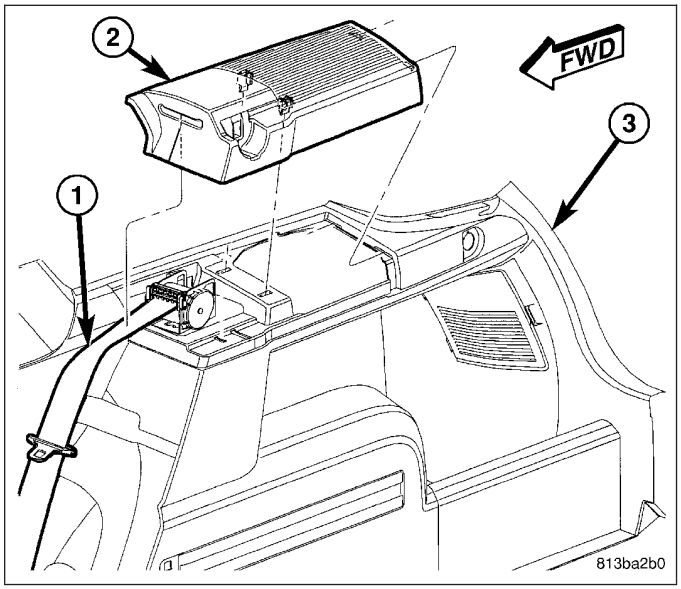

INSTALLATION

1. Position the quarter trim speaker bezel (2) to the quarter trim panel (3) above the rear wheel house.
2. Engage the rear outboard seat belt webbing (1) into the slot of the quarter trim speaker bezel through the slit below the slot at the front of the bezel. Be certain the webbing is not twisted.
3. Lift the front of the quarter trim speaker bezel upward and engage the tabs at the back of the bezel into the slots in the back of the quarter trim panel opening.
4. Align the two spring clip retainers on the bezel with the slots in the quarter trim panel.
5. Using hand pressure, press firmly and evenly on the bezel over each of the spring clip locations until the retainers snap into place.
6. Install and tighten the screw into the cargo cover cradle formation of the quarter trim speaker bezel that secures the bezel to the quarter trim panel on top of the rear wheel house. Tighten the screw to 2 N·m (15 in. lbs.).

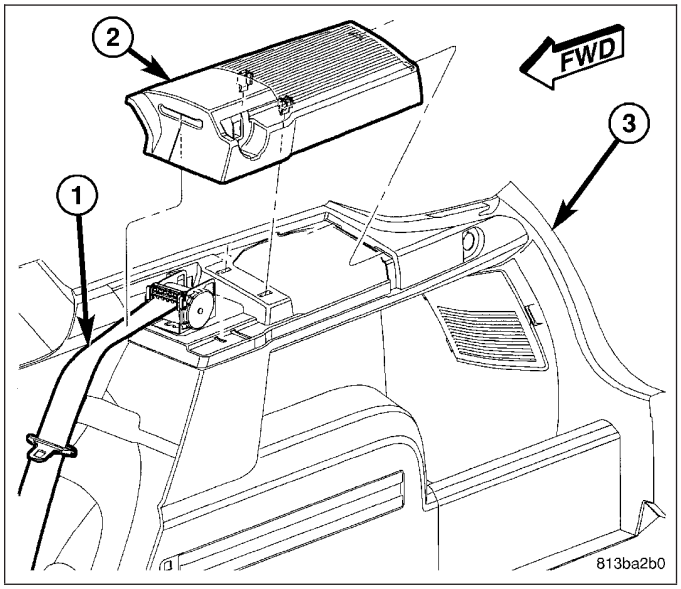

REAR DOOR SILL SCUFF PLATE

REMOVAL

1. Remove the screw (2) that secures the rear door scuff plate (4) to the quarter inner panel.
2. Remove the screw that secures the outboard rear seat belt lower anchor to the quarter inner panel.
3. Using a trim stick or another suitable wide flat-bladed tool, carefully pry the scuff plate upwards from the sill far enough to disengage the two spring clip retainers that secure the scuff plate to the slots in the sill.
4. Disengage the rear extension of the scuff plate from under the lower C-pillar trim (Sedan) or quarter trim panel (Wagon) (3).
5. Remove the rear door scuff plate from the vehicle.

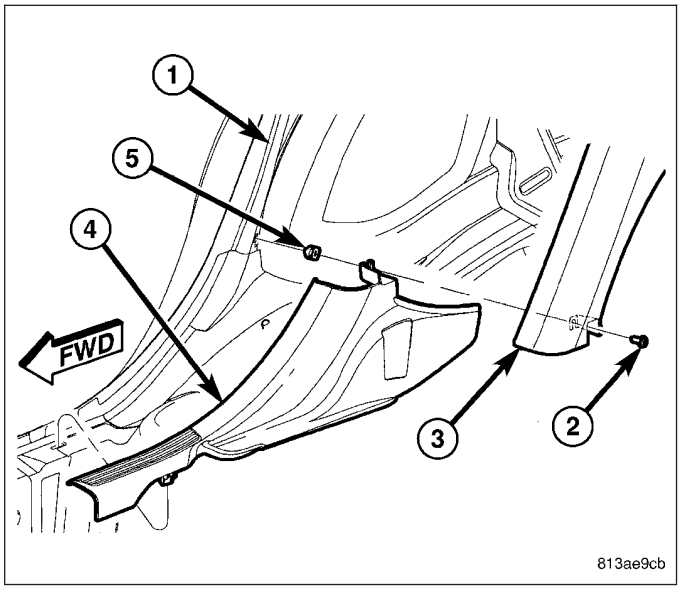

INSTALLATION

1. Check to be certain that spring nut (5) is properly installed and in good condition in the quarter inner panel (1).
2. Check to be certain that a plastic nut is properly installed and in good condition in the slot of the rear door opening sill. Replace the plastic nut if any damage is evident.
3. Engage the rear extension of the rear door scuff plate (4) under the lower C-pillar trim (Sedan) or quarter trim panel (Wagon) (3) on the quarter inner panel.
4. Align the two spring clip retainers on the scuff plate with the slots in the rear door sill.
5. Using hand pressure, press firmly and evenly downward on the scuff plate over each of the spring clip locations until the retainers snap into place.
6. Position the outboard rear seat belt lower anchor to the quarter inner panel.

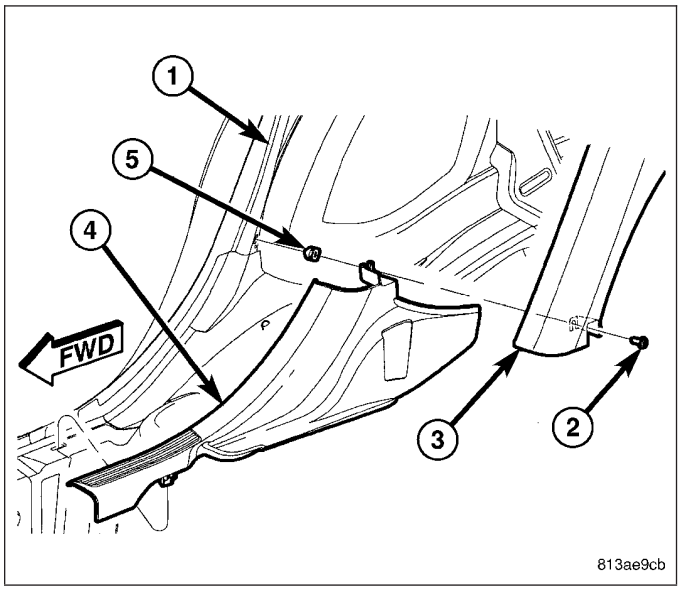

7. Install and tighten the screw that secures the outboard rear seat belt lower anchor to the quarter inner panel. Tighten the screw to 32 N·m (24 ft. lbs.).
8. Install and tighten the screw (2) that secures the scuff plate trim panel and the lower C-pillar trim (Sedan) or quarter trim panel (Wagon) to the quarter inner panel. Tighten the screw to 11 N·m (8 ft. lbs.).

REAR SHELF TRIM PANEL

REMOVAL

1. Disconnect and isolate the battery negative cable.
2. Remove the right and left lower and upper C-pillar trim from the vehicle. (Refer to 23 - BODY/INTERIOR/C-PILLAR TRIM - REMOVAL).
3. Remove the nut that secures the center rear seat belt lower anchor to the stud on the floor panel and feed the seat belt webbing back through the opening in the top of the rear shelf panel trim (2) to the retractor.
4. Remove the push-pin fastener (1) that secures the trim to the rear shelf panel (3).
5. Slide the trim forward to disengage the S-clip that secures the underside of the trim to the center of the shelf panel.
6. Remove the trim from the rear shelf panel.

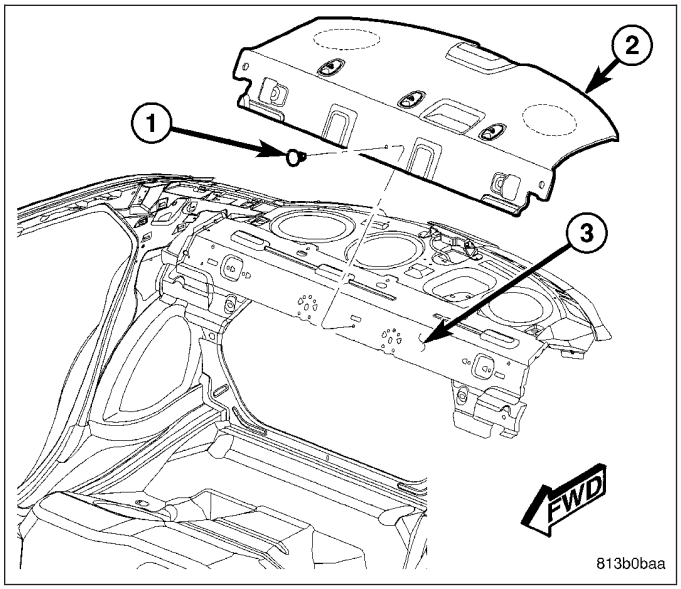

INSTALLATION

1. Position the trim (2) onto the rear shelf panel (3).
2. Slide the rear edge of the trim rearward to engage the lens bezel of the center high-mounted stop lamp and far enough to engage the S-clip that secures the underside of the trim to the center of the shelf panel.
3. Install the push-pin fastener (1) that secures the trim to the rear shelf panel.
4. Pull the center rear seat belt lower anchor and belt webbing from the retractor through the opening in the top of the rear shelf panel trim and back down to the stud on the floor panel.
5. Install and tighten the nut that secures the seat belt lower anchor to the stud on the floor panel. Tighten the nut to 34 N·m (25 ft. lbs.).
6. Reinstall the right and left upper and lower C-pillar trim to the vehicle. (Refer to 23 - BODY/INTERIOR/C-PILLAR TRIM - INSTALLATION).
7. Reconnect the battery negative cable.

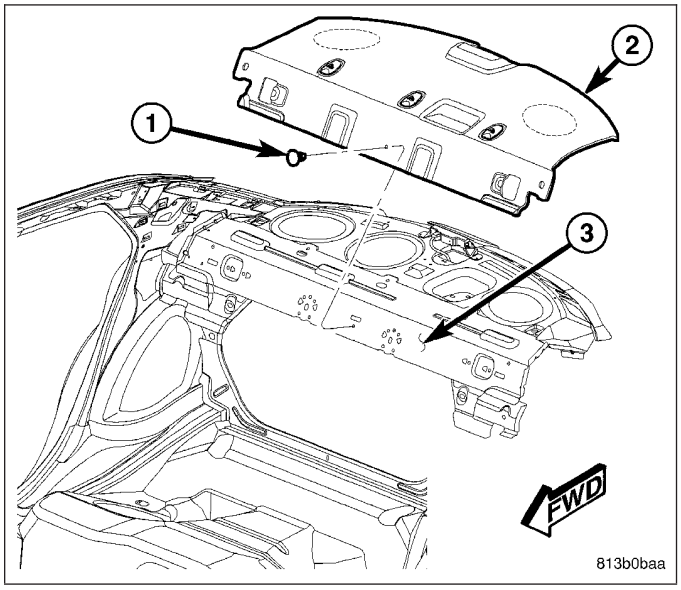

MIRROR-INSIDE REARVIEW

REMOVAL

1. If the vehicle is equipped with either the electrochromic (automatic dimming) or the telematic (hands-free phone) mirror option, disconnect and isolate the battery negative cable.
2. If the vehicle is so equipped, disconnect the electrochromic mirror takeout and connector (1) and/or the telematic mirror takeout and connector (2) of the headliner wire harness from the connector receptacle on the back (windshield side) of the mirror housing (3).

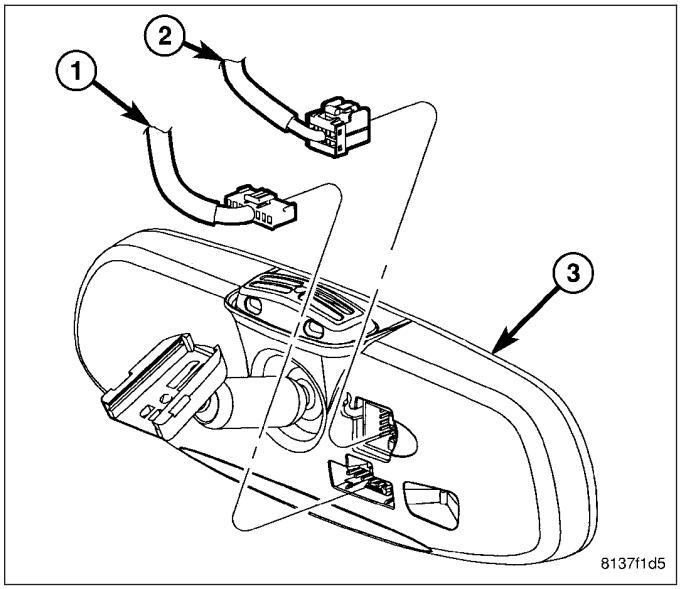

3. Remove the set screw (3) that secures the rear view mirror (2) to the support bracket/button (1) on the inside of the windshield glass.
4. Slide the rear view mirror upward far enough to disengage it from the support bracket/button.

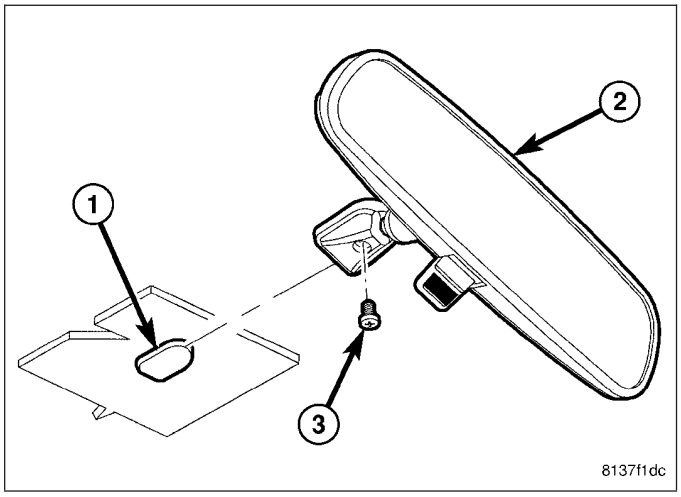

INSTALLATION

MIRROR

1. Position and slide the rear view mirror (2) downward over the support bracket/button (1) on the inside of the windshield glass.
2. Install and tighten the set screw (3) that secures the rear view mirror to the support bracket/button. Tighten the screw to 2 N·m (17 in. lbs.).

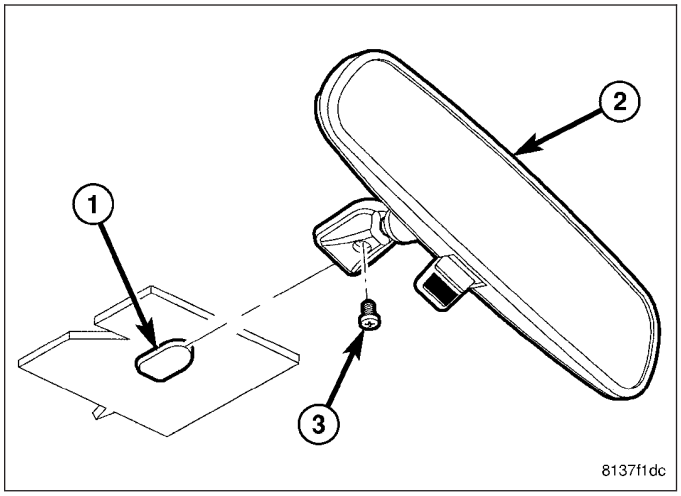

3. If the vehicle is so equipped, route the electrochromic (automatic dimming) mirror takeout and connector (1) and/or the telematic (hands-free phone) mirror takeout and connector (2) of the headliner wire harness to the left of the mirror support bracket and reconnect it to the connector receptacle on the back (windshield side) of the mirror housing (3).
4. If the vehicle is equipped with either the electrochromic or the telematic mirror option, reconnect the battery negative cable.

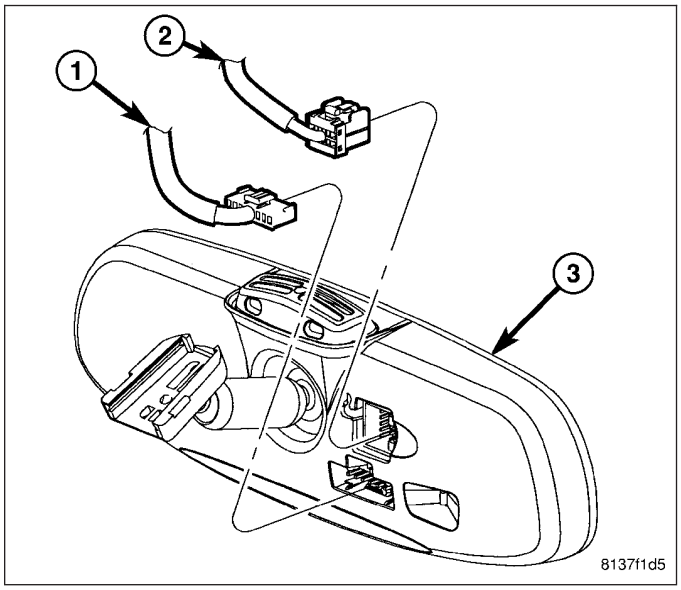

SUPPORT BRACKET

NOTE: The rear view mirror support bracket (or button) is permanently bonded to the inside of the windshield glass. If the bracket should become separated from the glass, it may be rebonded using the following procedure. This procedure requires the use of a Rear View Mirror Adhesive kit that is available through Mopar in single application packages that include a two-part adhesive and an accelerant with applicator.

1. Mark the proper position for the mirror bracket on the outside of the windshield glass with a wax pencil. The residual adhesive on the inside of the glass from the prior mirror bracket installation can be used as a guide.
2. Clean the bracket contact area on the inside of the glass. Use a mild powdered cleanser on a cloth saturated with isopropyl (rubbing) alcohol. Finally, clean the glass with a paper towel dampened with alcohol.
3. Sand the bonding surface (the smaller side) of the support bracket with fine grit-sandpaper. Wipe the bracket surface clean with a paper towel.
4. Apply accelerant to the bonding surface of the bracket according to the following instructions:
   - Crush the accelerant vial to saturate the felt applicator.
   - Remove the paper sleeve.
   - Apply accelerant to the bonding surface of the bracket.

- Allow the accelerant to dry for five minutes.
- Do not touch the bracket bonding surface after the accelerant has been applied.

5. Apply adhesive accelerant to the bracket contact area on the inside of the windshield glass. Allow the accelerant to dry for one minute. Do not touch the bracket contact area of the glass after the accelerant has been applied.
6. Install the bracket according to the following instructions:
   - Apply one drop of adhesive at the center of the bracket contact area on the inside of the windshield glass.
   - Apply an even coat of adhesive to the bonding surface of the bracket.
   - Align the bracket with the marked position on the windshield glass.
   - Press and hold the bracket in place for at least one minute.

NOTE: Verify that the mirror support bracket is correctly aligned, because the adhesive will cure rapidly.

7. Allow the adhesive to cure for 8-10 minutes. Remove any excess adhesive with an alcohol-dampened cloth.
8. Allow the adhesive to cure for an additional 8-10 minutes before reinstalling the mirror.

TRUNK LINING

REMOVAL

1. Remove the spare tire cover/trunk floor carpet from over the spare tire well. (Refer to 23 - BODY/INTERIOR/CARPETS AND FLOOR MATS - REMOVAL-TRUNK).
2. Remove the trunk rear trim panel from the luggage compartment. (Refer to 23 - BODY/INTERIOR/TRUNK REAR TRIM PANEL - REMOVAL).
3. Remove the three push-pin fasteners (2) that secure the right or the left trunk side trim (1) to the appropriate locations within the luggage compartment.
4. Remove the trunk side trim from the luggage compartment.

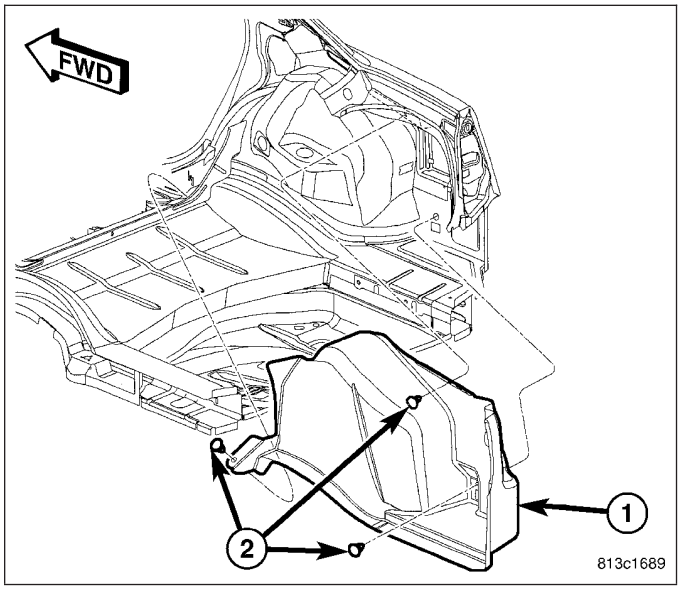

INSTALLATION

1. Position and fit the right or the left trunk side trim (1) within the luggage compartment.
2. Install the three push-pin fasteners (2) that secure side trim to the appropriate locations within the luggage compartment.
3. Reinstall the trunk rear trim panel into the luggage compartment. (Refer to 23 - BODY/INTERIOR/TRUNK REAR TRIM PANEL - INSTALLATION).
4. Reinstall the spare tire cover/trunk floor carpet over the spare tire well in the luggage compartment. (Refer to 23 - BODY/INTERIOR/CARPETS AND FLOOR MATS - INSTALLATION-TRUNK).

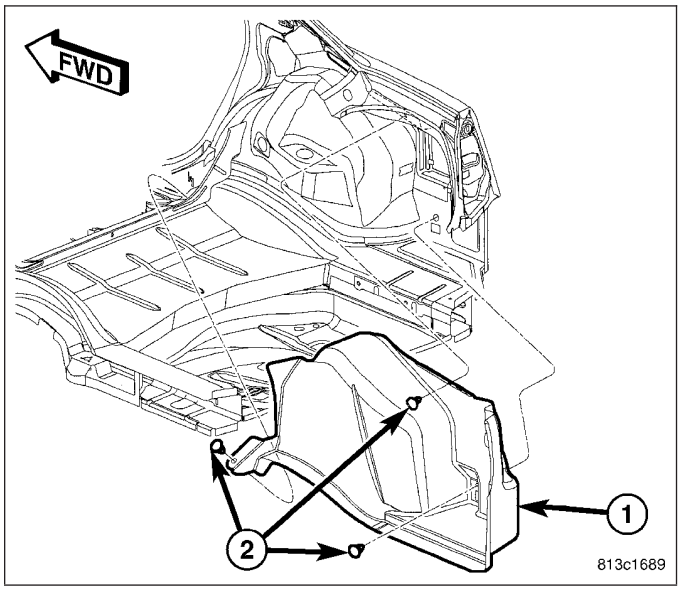

TRUNK REAR TRIM PANEL

REMOVAL

1. Remove the four push-pin fasteners (1) that secure the trunk rear trim panel (2) to the inside of the deck opening lower panel (3).
2. Remove the trim panel from the vehicle.

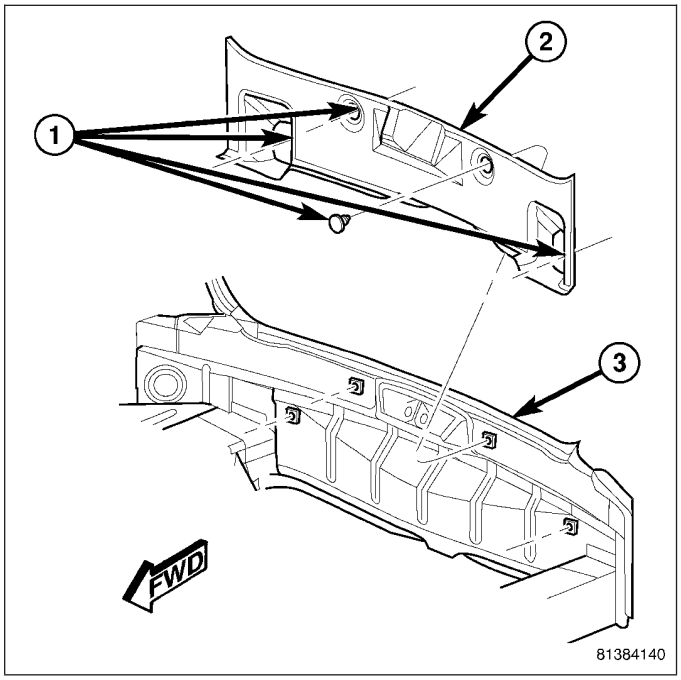

INSTALLATION

1. Position the trunk rear trim panel (2) to the inside of the deck opening lower panel (3).
2. Reinstall the four push-pin fasteners (1) that secure the trim panel to the deck opening lower panel.

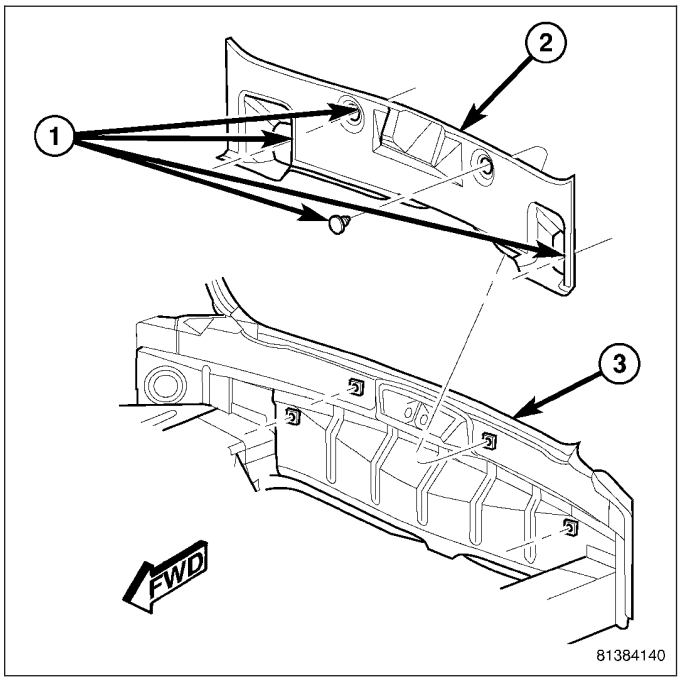

LIFTGATE

TABLE OF CONTENTS

page

LOCK CYLINDER - POLICE ONLY
REMOVAL 206
INSTALLATION 207
BUMPER
REMOVAL 209
INSTALLATION 209
GAS PROP
REMOVAL 210
INSTALLATION 210
HINGE
REMOVAL 212
INSTALLATION 212
LATCH
REMOVAL 213
INSTALLATION 213
LATCH HANDLE
REMOVAL 214
INSTALLATION 214
LATCH STRIKER
REMOVAL 215
INSTALLATION 215
LIFTGATE
REMOVAL 216
INSTALLATION 217
TRIM PANEL
REMOVAL
LOWER 218
REMOVAL 219
INSTALLATION
LOWER 220
UPPER 221

LOCK CYLINDER - POLICE ONLY

REMOVAL

NOTE: Magnum Police Only

1. Open liftgate. Lock cylinder shown (1).
2. Remove fasteners (2) attaching liftgate lower trim panel. (Refer to 23 - BODY/DECKLID/HATCH/LIFTGATE/TAILGATE/TRIM PANEL - REMOVAL)

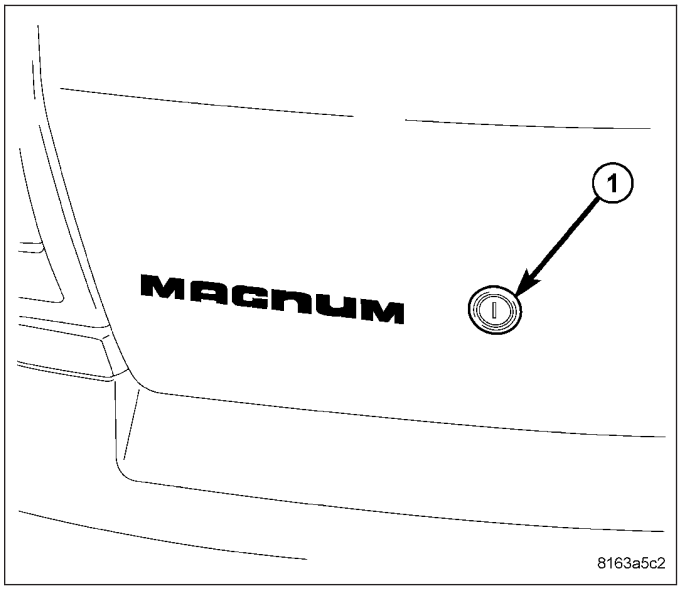

3. Disconnect remote handle link from lock cylinder.

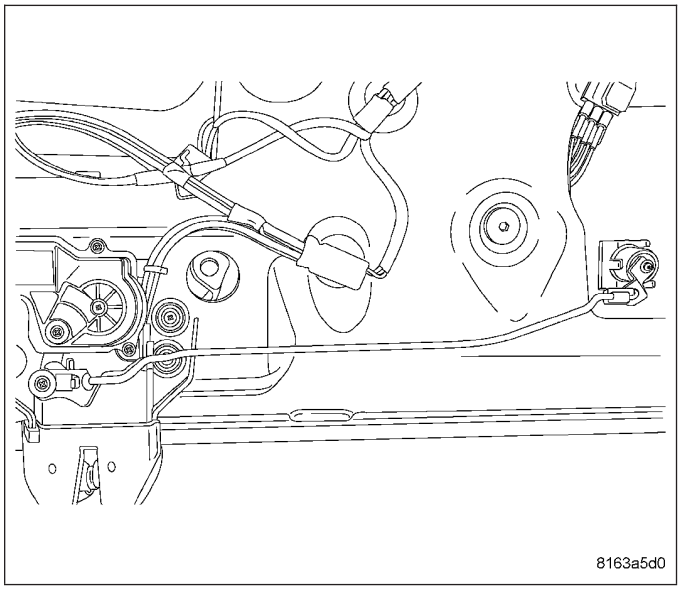

4. Remove lock cylinder clip (1) from lock cylinder (2).
5. Remove lock cylinder (2).

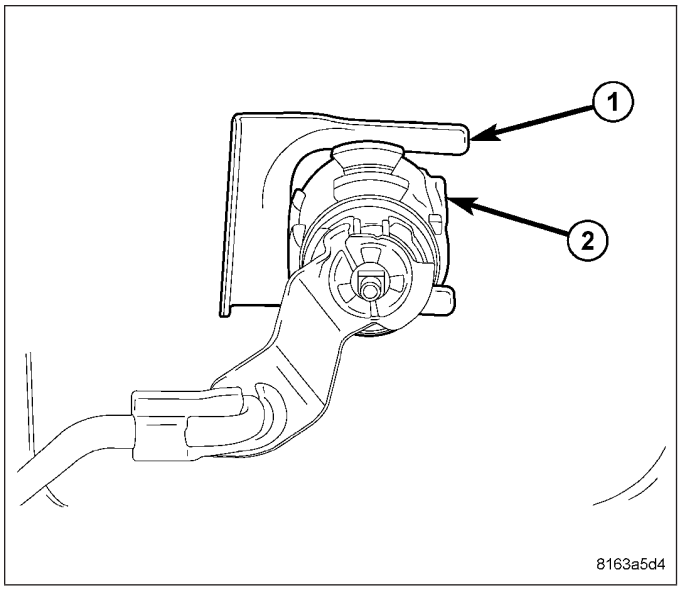

INSTALLATION

NOTE: Magnum Police Only

1. Open liftgate.
2. Reinstall lock cylinder into liftgate lock hole (1).

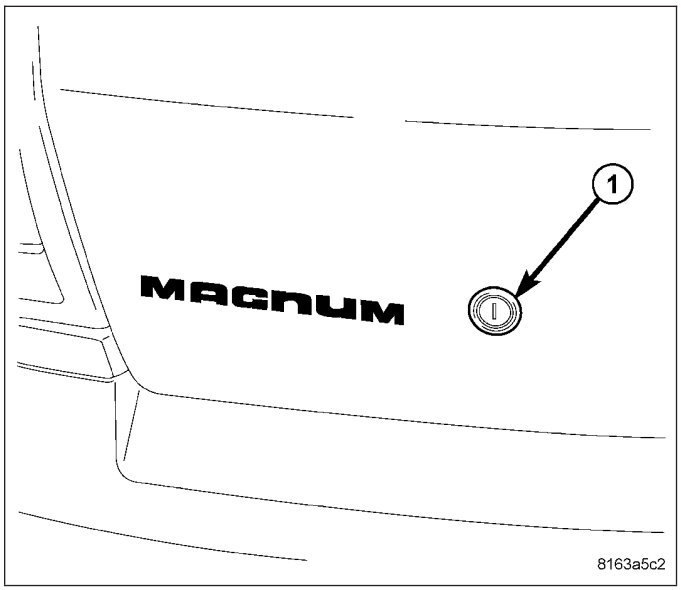

3. Fasten lock cylinder (2) to liftgate using lock cylinder clip (1).

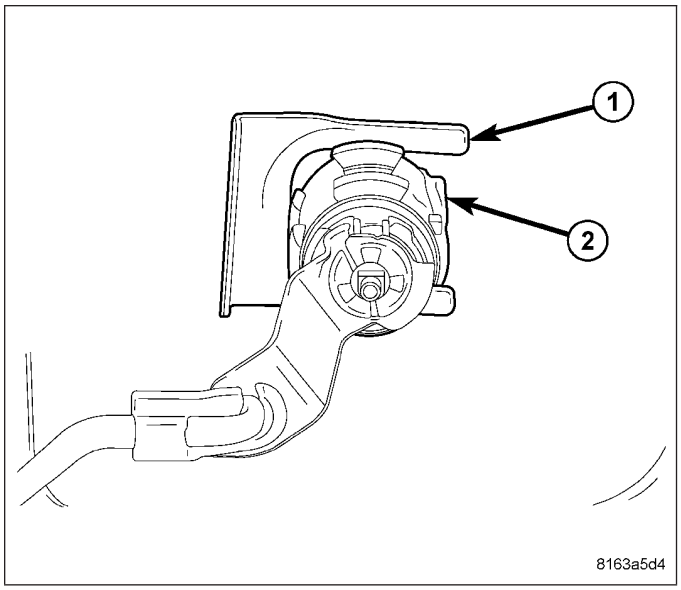

4. Connect remote handle link to lock cylinder.

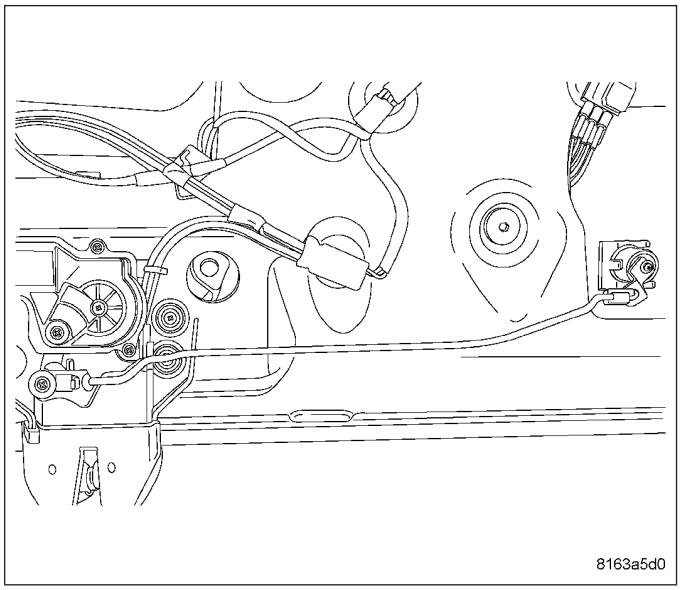

5. Reinstall lower liftgate trim panel. (Refer to 23 - BODY/DECKLID/HATCH/LIFTGATE/TAILGATE/TRIM PANEL - INSTALLATION)

BUMPER

REMOVAL

1. Open the liftgate.
2. Remove the two screws (3) that secure the stabilizer bumper (2) to the liftgate opening drain trough (1).
3. Remove the bumper from the trough.

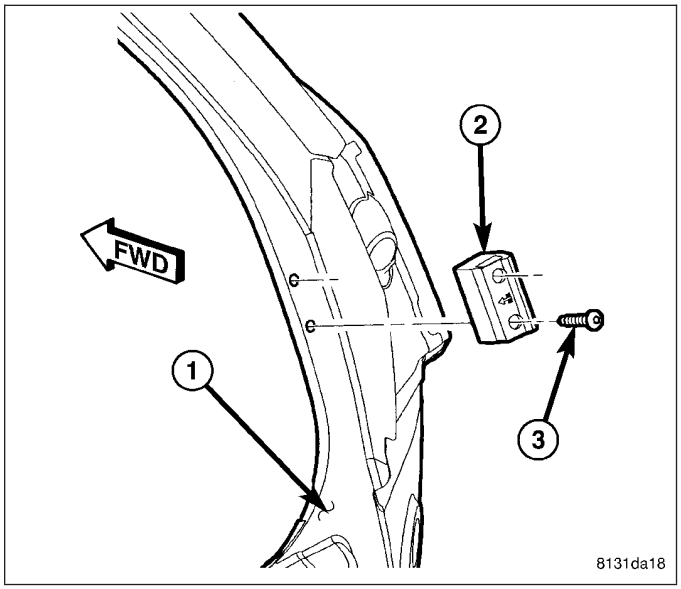

INSTALLATION

1. Position the stabilizer bumper (2) to the two mounting holes on the liftgate opening drain trough (1) with the arrow molded into the bumper pointed inboard.
2. Install and tighten the two screws (3) that secure the bumper to the trough. Tighten the screws to 12 N·m (9 ft. lbs.).
3. Close the liftgate.

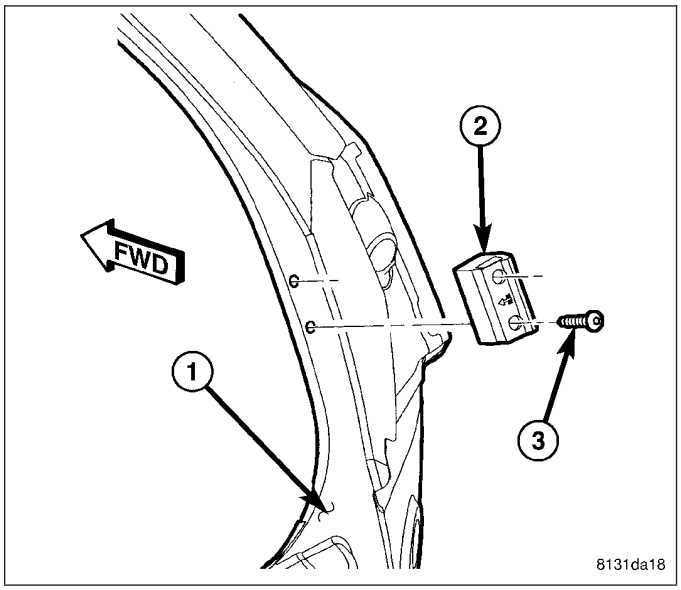

GAS PROP

REMOVAL

1. Open and support the liftgate with a suitable prop or block.

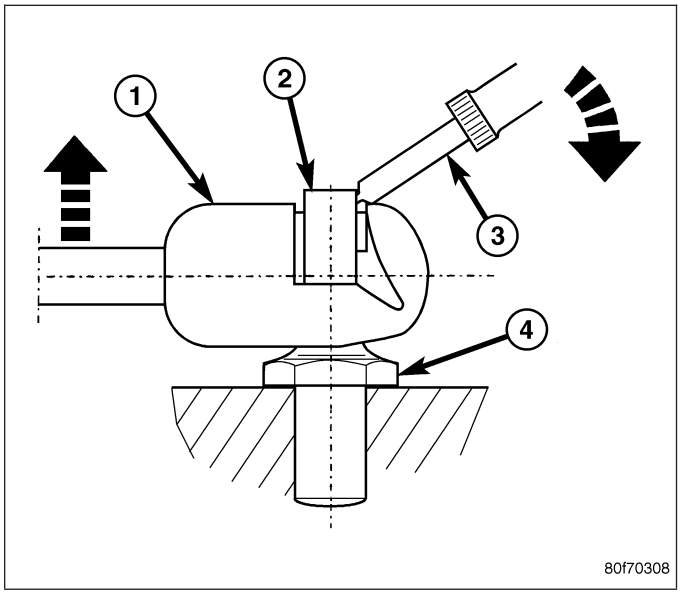

WARNING: To avoid personal injury or death, during service lift the ball socket end retaining clip only far enough to release the socket from the ball stud. Excessive prying or removal of the clip may result in improper clip spring tension. Improper clip tension may result in the support cylinder separating from the ball stud causing sudden, unexpected loss of deck lid support.

2. Insert a small flat-bladed tool (3) into the notch on the outer face of one ball socket end (1) of the support cylinder and carefully pry the retaining clip (2) outward while pulling the ball socket away from the ball stud (4) on the liftgate or the liftgate opening trough.
3. Release the retaining clip to its installed position.
4. Repeat Step 2 and Step 3 for the opposite end of the support cylinder.
5. Remove the support cylinder from the liftgate and liftgate opening.

INSTALLATION

1. Check to be certain that the ball studs (2) on the liftgate and on the liftgate opening trough (3) are in good condition and properly installed. Tighten the ball studs to 28 N·m (21 ft. lbs.).
2. Position the ball socket on the cylinder end of the support cylinder (1) to the ball stud on the liftgate opening trough.
3. Using hand pressure, press the ball socket onto the ball stud until the retainer clip snaps into place.

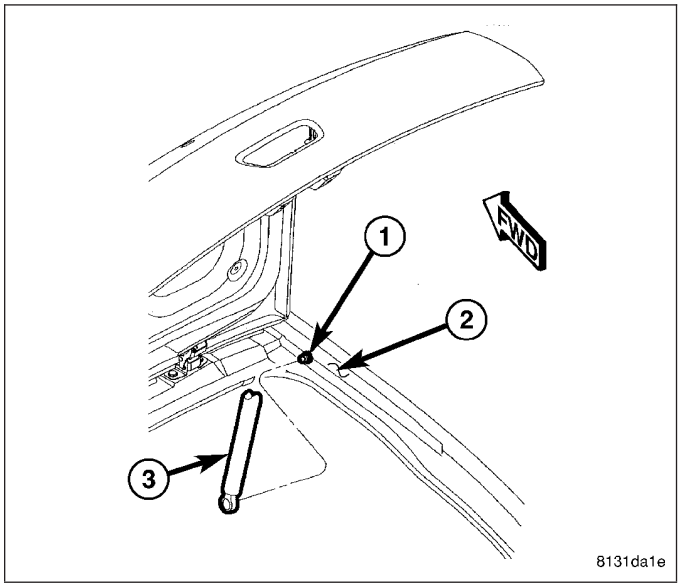

4. Position the ball socket on the rod end of the support cylinder (3) to the ball stud (2) on the liftgate (1).
5. Using hand pressure, press the ball socket onto the ball stud until the retainer clip snaps into place.
6. Inspect to be certain that the retaining clip on each of the support cylinder ball socket ends is fully seated.
7. Remove the service prop or block and close the liftgate.

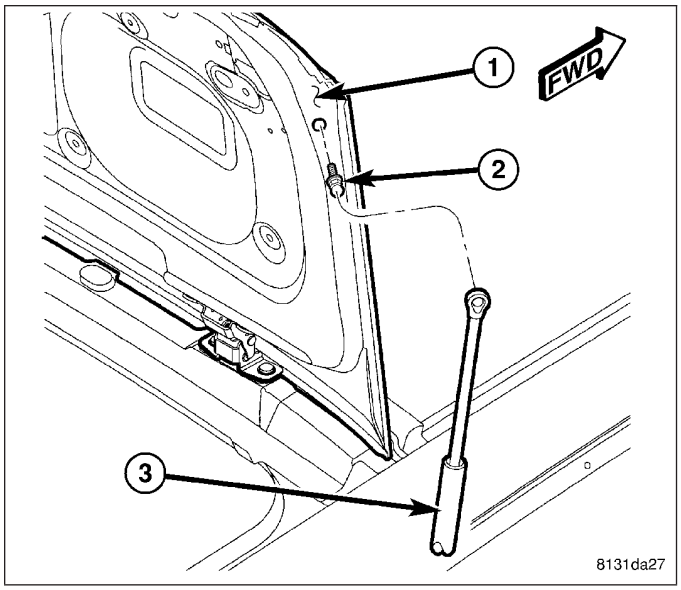

HINGE

REMOVAL

1. Open and support the liftgate (2) with a suitable prop or block.
2. Remove the trim plate from the upper liftgate opening header (4). (Refer to 23 - BODY/INTERIOR/ LIFTGATE OPENING UPPER TRIM - REMOVAL).
3. Mark the hinge (1) liftgate half location on the liftgate inner panel to aid reinstallation.
4. Remove the two screws (3) that secure the hinge to the liftgate.
5. Mark the hinge body half location on the upper liftgate opening header to aid reinstallation.
6. Carefully pull the rear edge of the headliner downward from the header far enough to access and remove the two nuts (5) that secure the hinge studs to the underside of the header.
7. Remove the hinge from the vehicle.

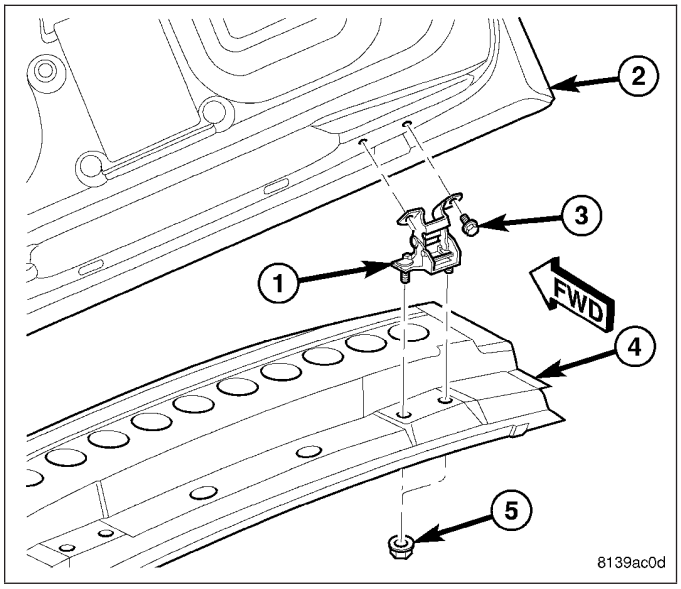

INSTALLATION

1. Position the body half of the liftgate hinge (1) to the upper liftgate opening header (4) on the vehicle.
2. Carefully pull the rear edge of the headliner downward from the header far enough to install and tighten the two nuts (5) that secure the hinge studs to the underside of the header. Tighten the nuts to 28 N·m (21 ft. lbs.).
3. Position the liftgate (2) to the liftgate half of the hinge on the vehicle.
4. Install and tighten the two screws (3) that secure the hinge to the liftgate. Tighten the screws to 28 N·m (21 ft. lbs.).
5. Remove the fixture being used to support the liftgate for service.
6. Adjust the liftgate hinge position as necessary to achieve proper spacing and operation.
7. Reinstall the trim plate onto the upper liftgate opening header. (Refer to 23 - BODY/INTERIOR/LIFTGATE OPENING UPPER TRIM - INSTALLATION).

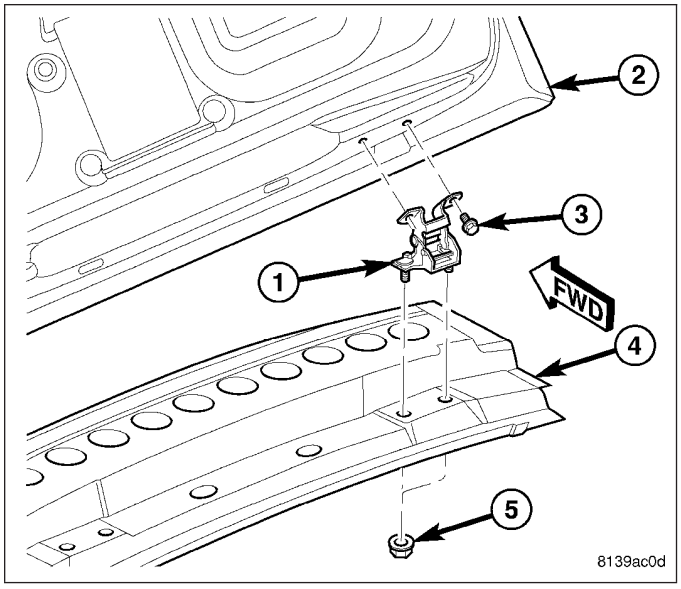

LATCH

REMOVAL

1. Open the liftgate.
2. Disconnect and isolate the battery negative cable.
3. Remove the lower trim panel from the inside of the liftgate (1). (Refer to 23 - BODY/DECKLID/HATCH/ LIFTGATE/TAILGATE/TRIM PANEL/LOWER - REMOVAL).
4. Disconnect the pigtail wire connector of the latch (5) from the take out of the liftgate wire harness (3) on the inside of the liftgate.
5. Remove the three nuts (4) that secure the latch to the studs (2) on the inside of the liftgate.
6. Remove the liftgate latch from the vehicle.

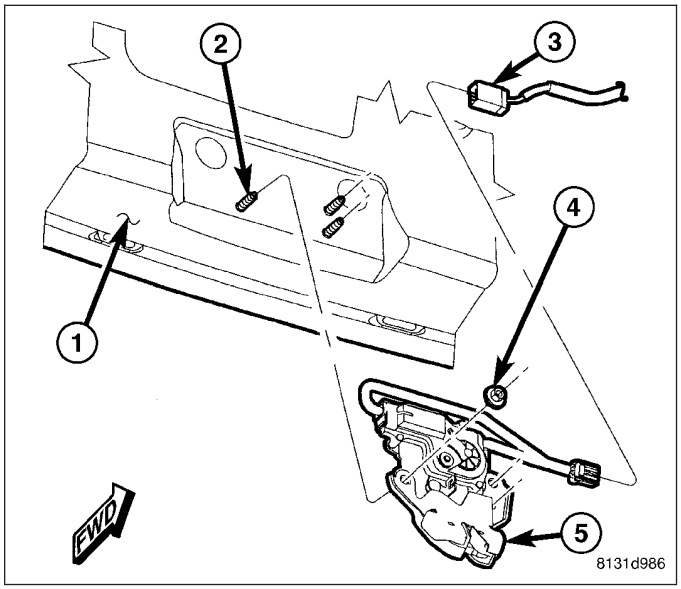

INSTALLATION

1. Position the latch (5) onto the studs (2) on the inside of the liftgate (1).
2. Install and tighten the three nuts (4) that secure the latch to the studs on the inside of the liftgate. Tighten the nuts to 12 N·m (9 ft. lbs.).
3. Reconnect the pigtail wire connector of the latch to the take out of the liftgate wire harness (3) on the inside of the liftgate.
4. Reinstall the lower trim panel onto the inside of the liftgate. (Refer to 23 - BODY/DECKLID/HATCH/ LIFTGATE/TAILGATE/TRIM PANEL/LOWER - INSTALLATION).
5. Reconnect the battery negative cable.
6. Close the liftgate.

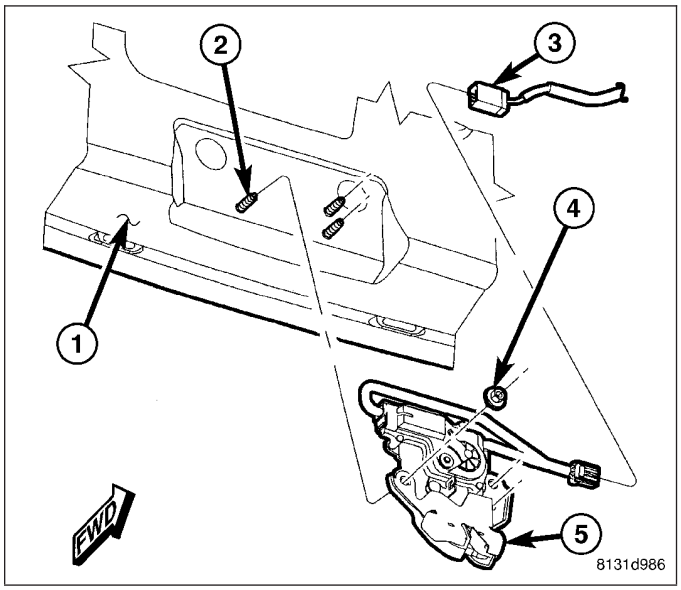

LATCH HANDLE

REMOVAL

1. Open the liftgate (4).
2. Disconnect and isolate the battery negative cable.
3. Remove the lower trim panel from the inside of the liftgate. (Refer to 23 - BODY/DECKLID/HATCH/ LIFTGATE/TAILGATE/TRIM PANEL/LOWER - REMOVAL).
4. Disconnect the pigtail wire connector of the latch handle (2) from the take out of the liftgate wire harness (3) on the inside of the liftgate.
5. Reach through the clearance hole in the inside of the liftgate panel on each side of the latch to access and remove the two screws (1) that secure the handle to the liftgate.
6. Remove the latch handle from the outside of the liftgate.

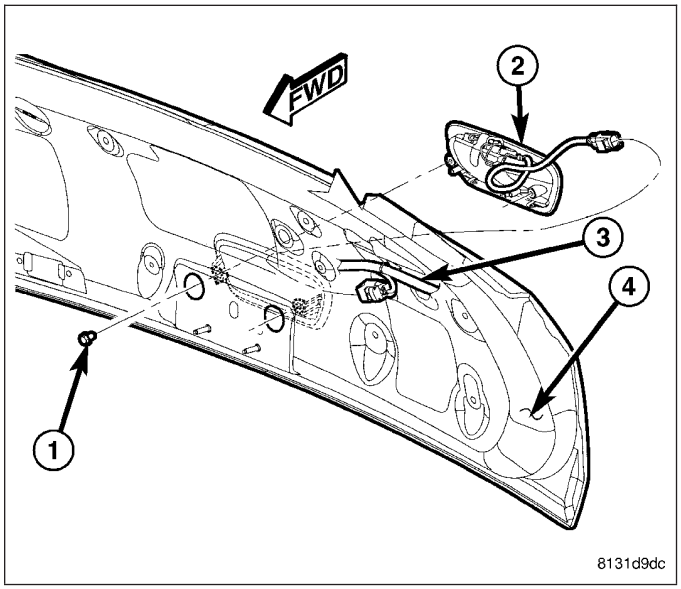

INSTALLATION

1. Position the latch handle (2) onto the outside of the liftgate (4).
2. Reach through the clearance hole in the inside of the liftgate panel on each side of the latch to install and tighten the two screws (1) that secure the handle to the liftgate. Tighten the screws to 9 N·m (7 ft. lbs.).
3. Reconnect the pigtail wire connector of the latch handle to the take out of the liftgate wire harness (3) on the inside of the liftgate.
4. Reinstall the lower trim panel onto the inside of the liftgate. (Refer to 23 - BODY/DECKLID/HATCH/ LIFTGATE/TAILGATE/TRIM PANEL/LOWER - INSTALLATION).
5. Reconnect the battery negative cable.
6. Close the liftgate.

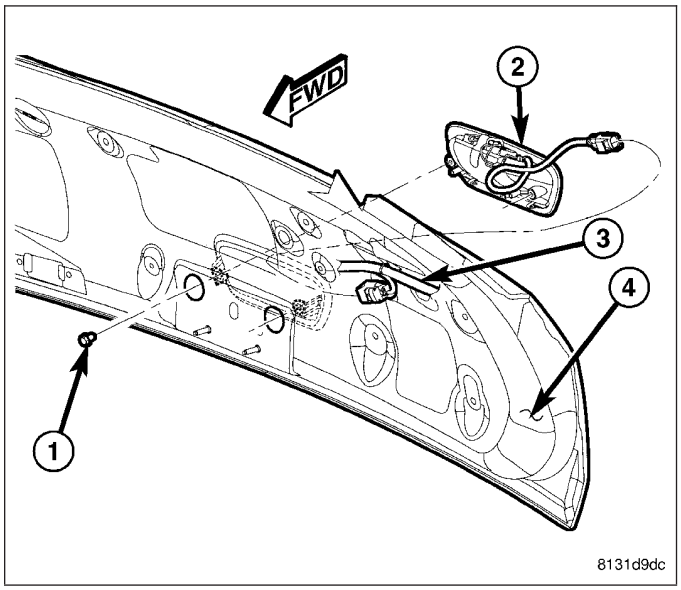

LATCH STRIKER

REMOVAL

1. Open the liftgate.
2. Remove the scuff plate trim panel from the inside of the liftgate opening lower panel (3). (Refer to 23 - BODY/INTERIOR/LIFTGATE SCUFF PLATE - REMOVAL).
3. Mark the latch striker (2) location on the inside of the liftgate opening lower panel to aid reinstallation.
4. Remove the two screws (1) that secure the latch striker to the inside of the liftgate opening lower panel.
5. Remove the latch striker from the vehicle.

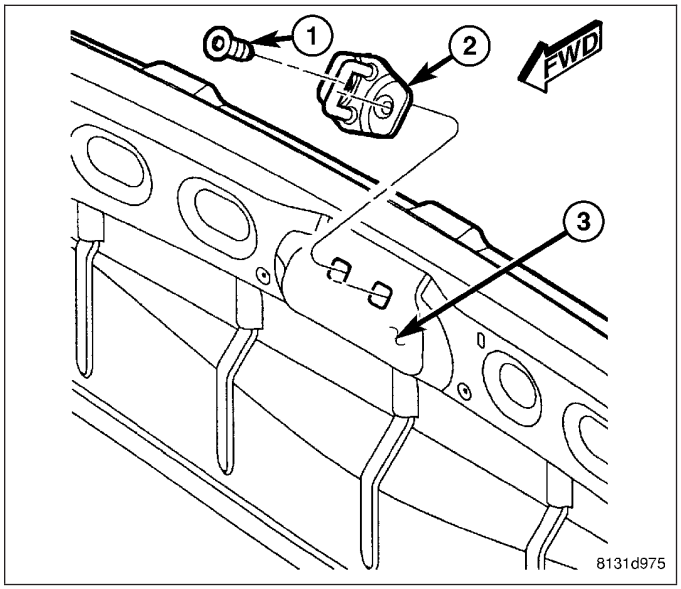

INSTALLATION

1. Position the liftgate latch striker (2) to the inside of the liftgate opening lower panel (3).
2. Install and tighten the two screws (1) that secure the latch striker to the liftgate opening lower panel. Tighten the screws to 28 N·m (21 ft. lbs.).
3. Adjust the latch striker position as necessary to achieve proper liftgate latch operation.
4. Reinstall the scuff plate trim panel to the liftgate opening lower panel. (Refer to 23 - BODY/INTERIOR/LIFTGATE SCUFF PLATE - INSTALLATION).
5. Close the liftgate.

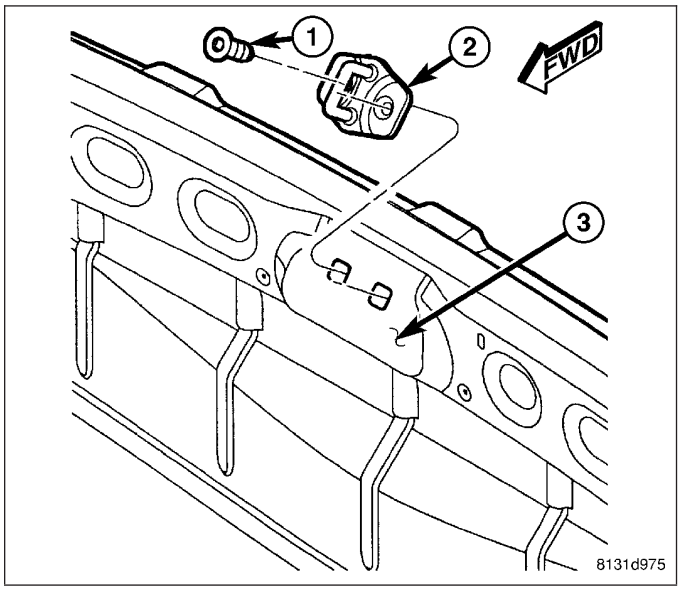

LIFTGATE

REMOVAL

1. Open the liftgate (7).
2. Disconnect and isolate the battery negative cable.
3. Remove the upper and lower trim panels from the inside of the liftgate. (Refer to 23 - BODY/DECKLID/HATCH/LIFTGATE/TAILGATE/TRIM PANEL - REMOVAL).
4. Disconnect the washer supply hose (2) in the right body wire harness (3) from the liftgate spoiler washer nozzle hose on the underside of the liftgate.
5. Disconnect the take out and connector (1) of the right body wire harness from the antenna amplifier module on the inside of the liftgate near the right upper corner of the glass opening.
6. Disconnect the two connectors (6) of the liftgate wire harness from the two take outs and connectors of the left body wire harness (5).

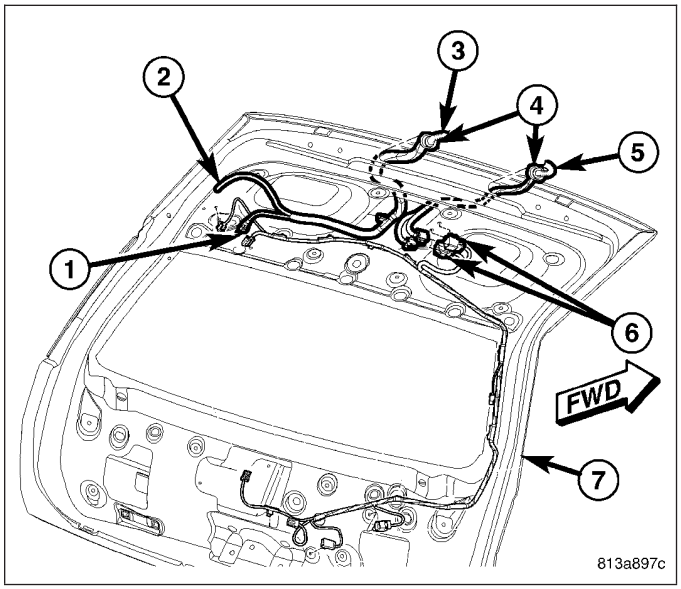

7. Disengage the retainers that secure the liftgate take outs of the right and left body wire harnesses to the underside of the liftgate.
8. Disengage the wire grommets (4) of the right and left body wire harnesses inboard of the liftgate hinges from the underside of the liftgate.
9. Carefully remove the liftgate take outs of the right and left body wire harnesses from between the inner and outer liftgate panels.
10. Disconnect the gas props from the ball studs on each side of the liftgate (2). (Refer to 23 - BODY/DECKLID/HATCH/LIFTGATE/TAILGATE/GAS PROP - REMOVAL).
11. Remove the trim plate from the underside of the upper liftgate opening header (3). (Refer to 23 - BODY/INTERIOR/LIFTGATE OPENING UPPER TRIM - REMOVAL).
12. Mark the liftgate hinge body bracket (1) locations on the upper liftgate opening header to aid reinstallation.
13. Carefully pull the rear edge of the headliner downward from the header far enough to access and remove the four nuts (4) that secure the two studs of each hinge to the underside of the header.
14. With the aid of an assistant, lift the liftgate far enough to disengage the hinge studs from the header and remove the liftgate from the vehicle.

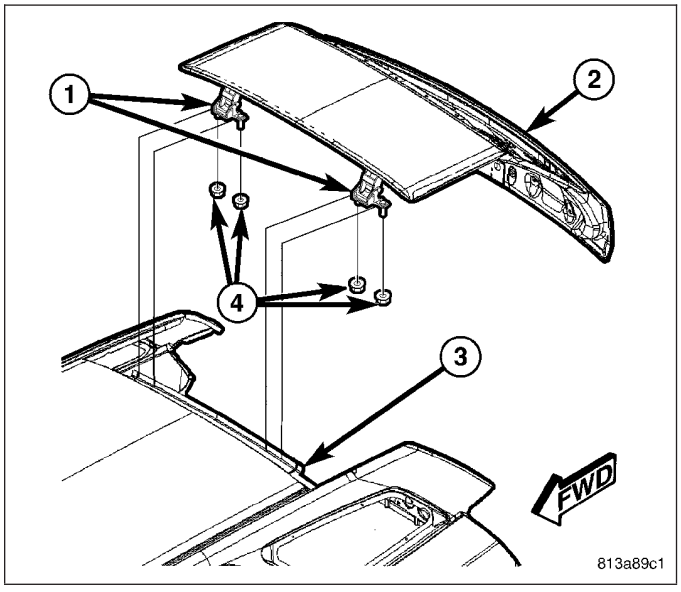

INSTALLATION

1. With the aid of an assistant, support and position the liftgate (2) with the studs of the two hinge body half brackets (1) inserted into the holes of the upper liftgate opening header (3) on the vehicle.
2. Carefully pull the rear edge of the headliner downward from the header far enough to install and tighten the four nuts (4) that secure the hinge studs to the underside of the header. Tighten the nuts to 28 N·m (21 ft. lbs.).
3. Reinstall the gas props to the ball studs on each side of the liftgate. (Refer to 23 - BODY/DECKLID/HATCH/LIFTGATE/TAILGATE/GAS PROP - INSTALLATION).
4. Remove the fixture being used to support the liftgate for service.

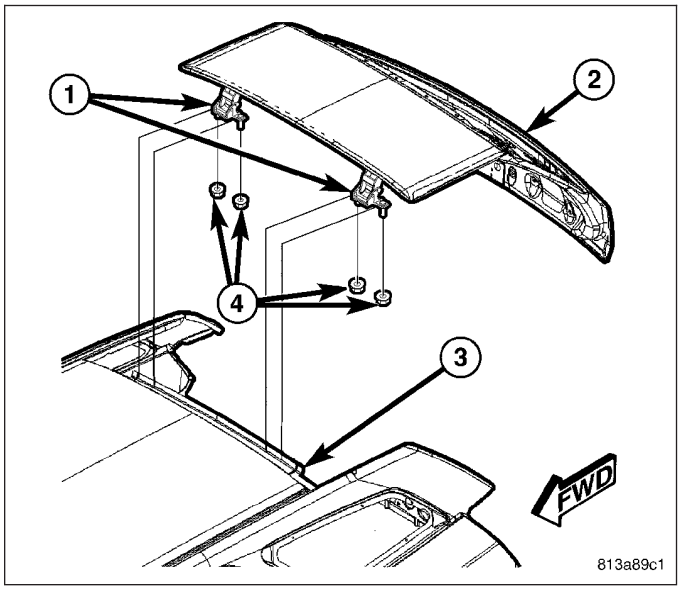

5. Carefully route the liftgate take outs of the right (3) and left (5) body wire harnesses between the inner and outer panels of the liftgate (7).
6. Engage the wire grommets (4) of the right and left body wire harnesses into the holes inboard of the liftgate hinges on the underside of the liftgate.
7. Engage the retainers that secure the liftgate take outs of the right and left body wire harnesses to the underside of the liftgate.
8. Reconnect the two connectors (6) of the liftgate wire harness to the two take outs and connectors of the left body wire harness.
9. Reconnect the take out and connector (1) of the right body wire harness to the antenna amplifier module on the inside of the liftgate near the right upper corner of the glass opening.
10. Reconnect the washer supply hose (2) in the right body wire harness to the liftgate spoiler washer nozzle hose on the underside of the liftgate.

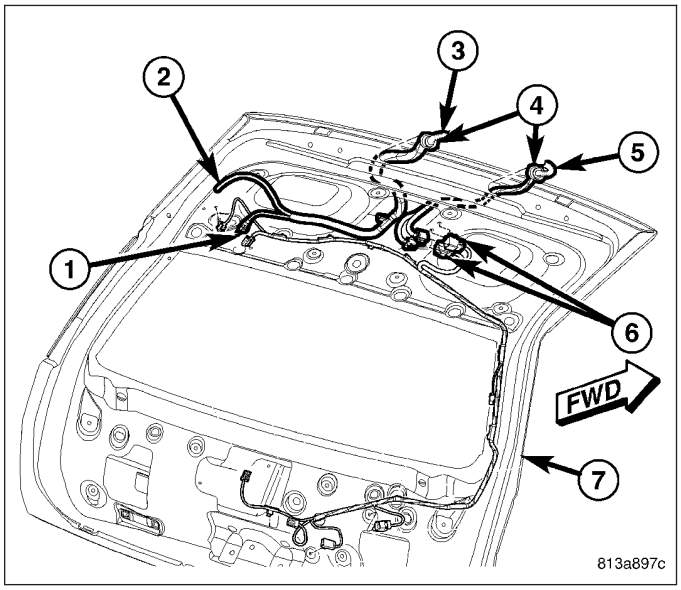

11. Adjust the liftgate hinge, bumper, latch and latch striker positions as necessary to achieve proper spacing and operation.
12. Reinstall the trim plate onto the upper liftgate opening header. (Refer to 23 - BODY/INTERIOR/LIFTGATE OPENING UPPER TRIM - INSTALLATION).
13. Reinstall the upper and lower trim panels onto the inside of the liftgate. (Refer to 23 - BODY/DECKLID/HATCH/LIFTGATE/TAILGATE/TRIM PANEL - INSTALLATION).
14. Reconnect the battery negative cable.
15. Close the liftgate.

TRIM PANEL

REMOVAL

LOWER

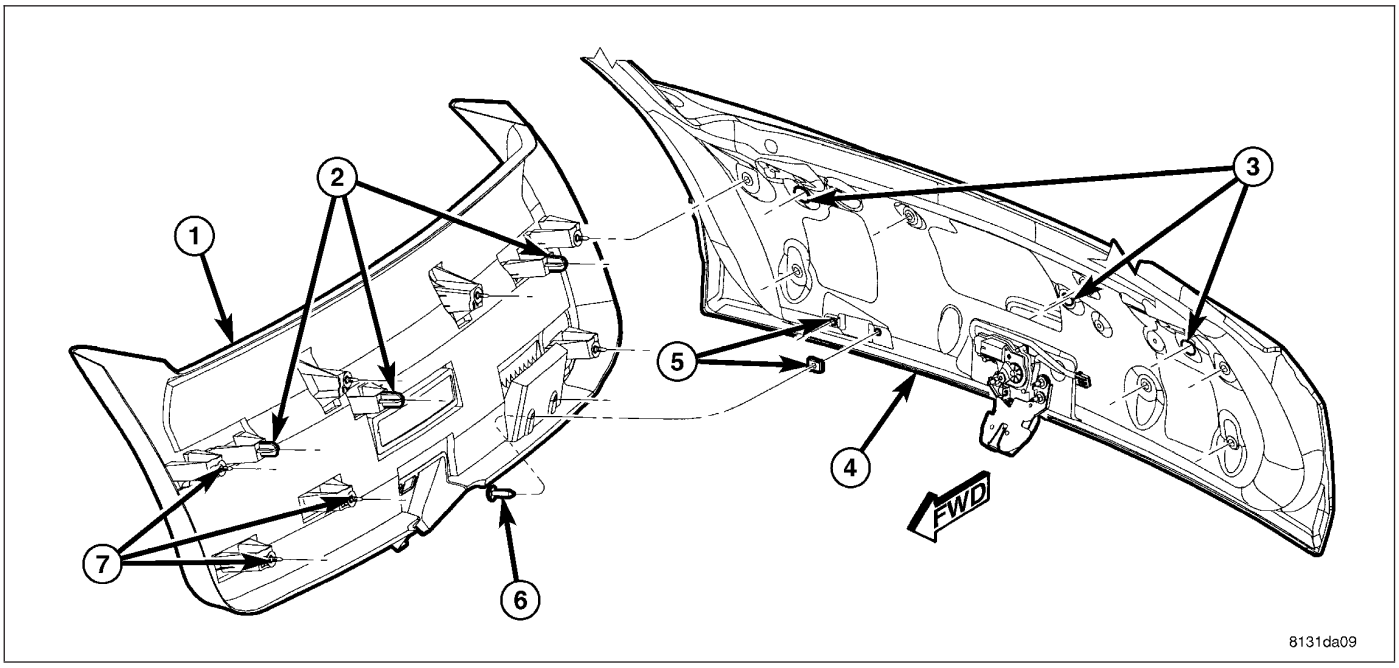

1. Disconnect and isolate the battery negative cable.
2. Remove the lamp from the lower liftgate trim panel.
3. Remove the two screws (6) within the pull cup formation to the right of the latch that secure the lower trim panel (1) to the inside of the liftgate (4).
4. Using a trim stick or another suitable wide flat-bladed tool, carefully pry the trim panel away from the inside of the liftgate to release the seven push-in plastic fasteners (7) that secure the panel to the liftgate.
5. Remove the liftgate lower trim panel from the vehicle.

REMOVAL

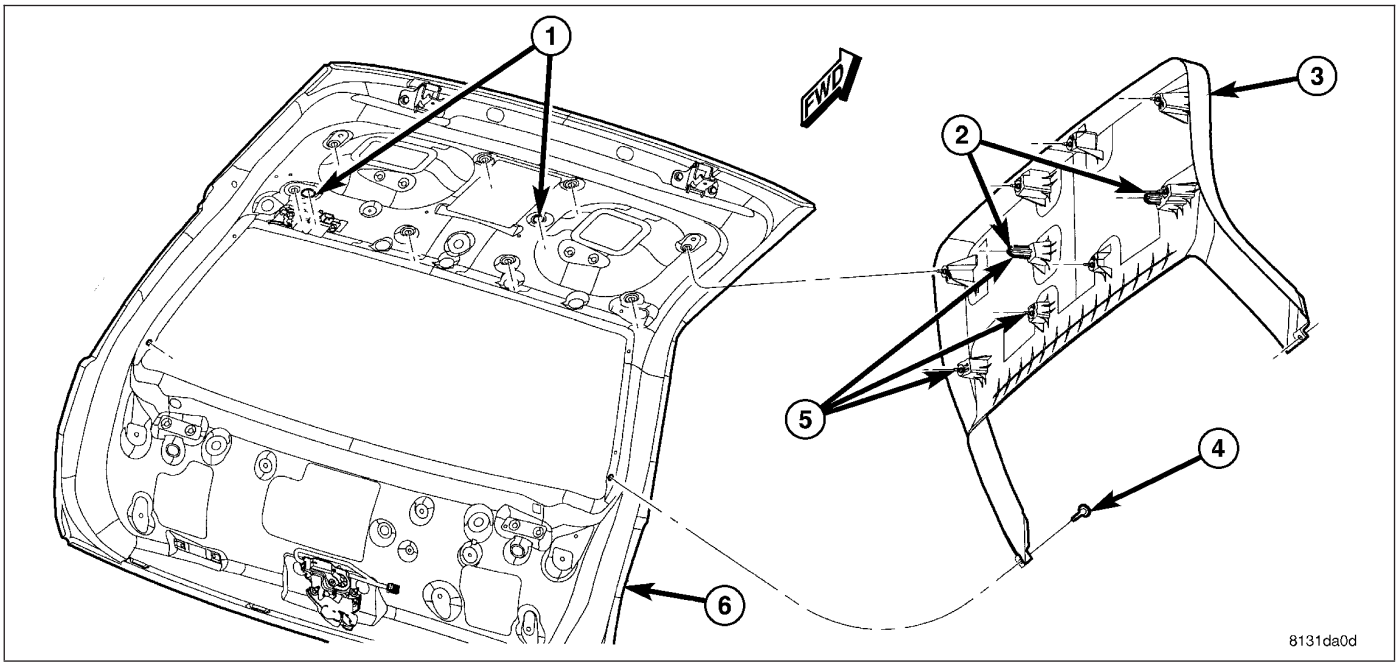

1. Open the liftgate (6).
2. Remove the lower trim panel from the inside of the liftgate. (Refer to 23 - BODY/DECKLID/HATCH/LIFTGATE/TAILGATE/TRIM PANEL/LOWER - REMOVAL).
3. Remove the two screws (4) that secure the lower corners of the upper trim panel (3) to the inside of the liftgate.
4. Using a trim stick or another suitable wide flat-bladed tool, carefully pry the trim panel away from the inside of the liftgate to release the push-in plastic fasteners that secure the panel to the liftgate.
5. Remove the liftgate upper trim panel from the vehicle.

INSTALLATION

LOWER

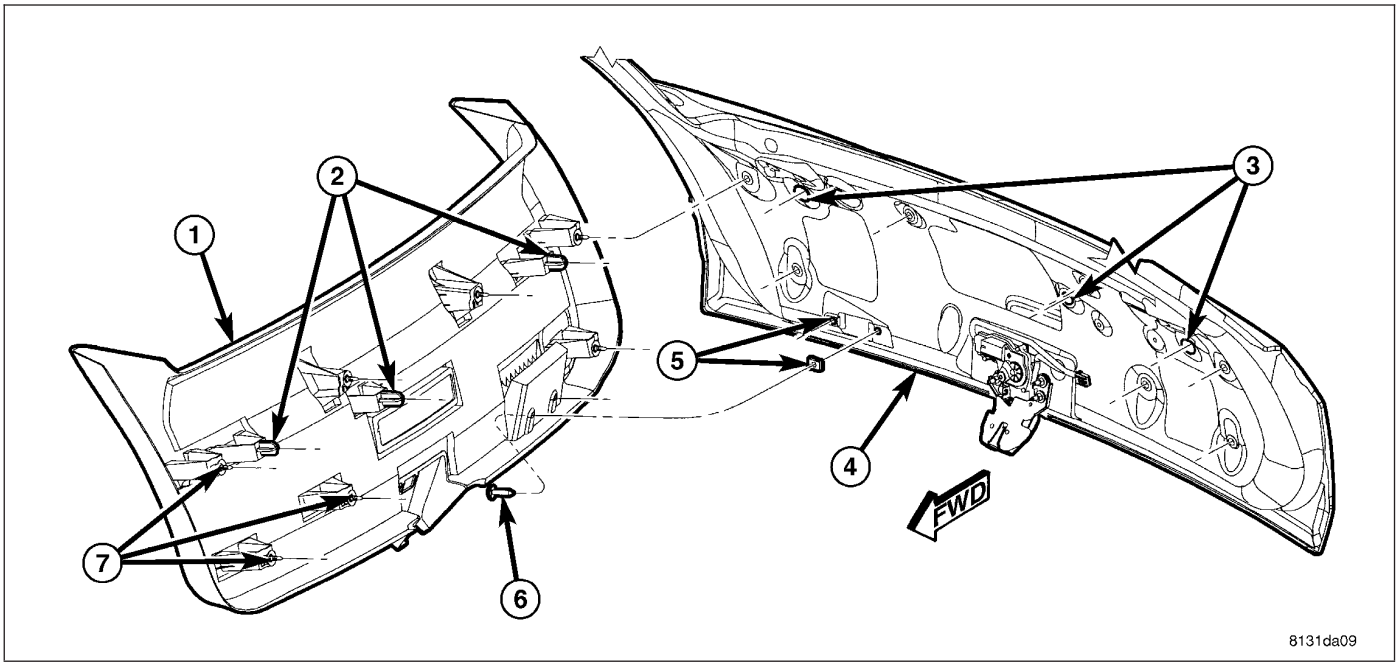

1. Check to be certain that the two U-nuts (5) are properly installed and in good condition on the inside of the liftgate (4).
2. Check to be certain that the seven push-in plastic fasteners (7) are properly installed and in good condition on the inside of the lower trim panel (1).
3. Position the upper corners of the lower trim panel over the lower corners of the upper trim panel on the inside of the liftgate.
4. Align the three locator pins (2) on the back of the trim panel to the locator holes (3) on the inside of the liftgate.
5. Using hand pressure, press firmly and evenly on the trim panel over each of the seven push-in plastic fastener locations until the fasteners are fully engaged in the holes on the inside of the liftgate.
6. Install and tighten the two screws (6) within the pull cup formation to the right of the latch that secure the lower trim panel to the U-nuts on the inside of the liftgate. Tighten the screws to 3 N·m (27 in. lbs.).
7. Reinstall the lamp into the lower liftgate trim panel.
8. Reconnect the battery negative cable.

UPPER

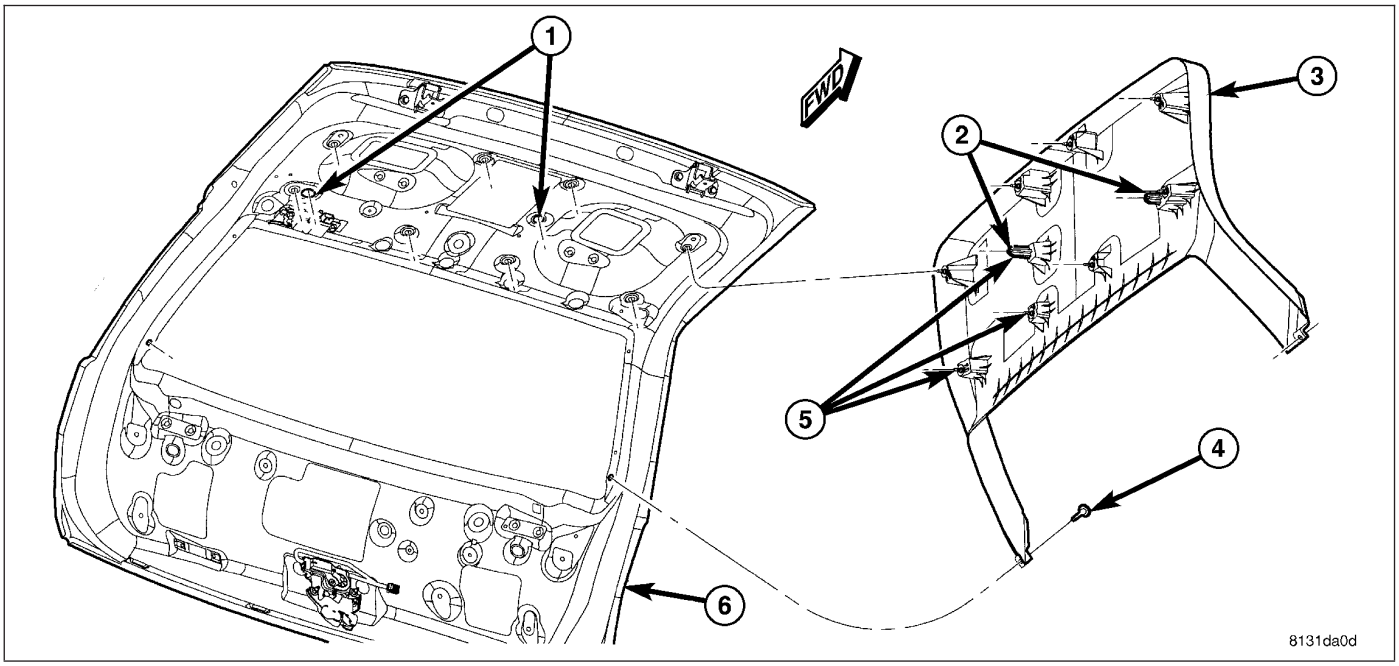

1. Check to be certain that the eight push-in plastic fasteners (5) are properly installed and in good condition on the inside of the liftgate upper trim panel (3).
2. Position the upper trim panel over the inside of the liftgate (6).
3. Align the two locator pins (2) on the back of the trim panel to the locator holes (1) on the inside of the liftgate.
4. Using hand pressure, press firmly and evenly on the trim panel over each of the eight push-in plastic fastener locations until the fasteners are fully engaged in the holes on the inside of the liftgate.
5. Install and tighten the two screws (6) that secure the lower corners of the upper trim panel to the inside of the liftgate. Tighten the screws to 2 N·m (16 in. lbs.).
6. Reinstall the lower trim panel onto the inside of the liftgate. (Refer to 23 - BODY/DECKLID/HATCH/LIFTGATE/TAILGATE/TRIM PANEL/LOWER - INSTALLATION).
7. Close the liftgate.

PAINT

TABLE OF CONTENTS

page

PAINT
SPECIFICATIONS - PAINT CODES 223
BASE COAT/CLEAR COAT FINISH
DESCRIPTION 224
FINESSE SANDING/BUFFING & POLISHING
DESCRIPTION 225

page

PAINT CODE
DESCRIPTION 226
PAINT TOUCH-UP
DESCRIPTION 227
STANDARD PROCEDURE 227

PAINT

SPECIFICATIONS - PAINT CODES

EXTERIOR COLORS

EXTERIOR COLOR	DAIMLERCHRYSLER CODE
Brilliant Black Pearlcoat	AXR
Bright Silver Metallic Clearcoat	WS2
Stone White Clearcoat	SW1
Timberline Green Pearlcoat	AGW
Inferno Red Crystal Pearlcoat	ARH
Linen Gold Metallic Pearlcoat	CYG
Magnesium Pearlcoat	BPK
Midnight Blue Pearlcoat	BB8
Mineral Gray Metallic Clearcoat	CDM
Satin Jade Pearlcoat	AP4
Michigan State Blue Clearcoat	PY8999
Cool Vanilla	XWG
Silver Steel Metallic	DA4
Go Mango Clearcoat	AVE
Top Banana Clearcoat	VYH
Plum Crazy Clearcoat	FHG
Navy Blue Clear Coat	PY9326
Cream Clearcoat	PY6672
High Performance Red	ZR3

INTERIOR COLORS

INTERIOR COLOR	DAIMLERCHRYSLER CODE
D = Dark Slate Gray /Medium Slate Grey	DD
P= Deep Jade/ LIght Greystone	P1
T = Deep Slate Gray/ Light Greystone	D1

BASE COAT/CLEAR COAT FINISH

DESCRIPTION

The original equipment paint finish is a multi step process that involves cleaning, applying electro de-position (E-coat), anti-chip primer, basecoat, and clearcoat steps.

CAUTION: Do not use abrasive chemicals, abrasive compounds or harsh alkaline based cleaning solvents on the painted surfaces of a vehicle. Failure to follow this caution can result in damage to vehicle finish.

On most vehicles a two-part paint application (basecoat/clearcoat) is used. Color paint that is applied to primer is called basecoat. A clear coat paint is then applied to protect the basecoat from ultraviolet light and to provide a durable high-gloss finish.

FINESSE SANDING/BUFFING & POLISHING

DESCRIPTION

CAUTION: Do not remove more than 0.5 mils of clearcoat finish when sanding, hand buffing or polishing. Basecoat paint must retain clearcoat for durability.

CAUTION: If the finish has been finesse sanded in the past, it cannot be repeated. Failure to follow this caution can result in damage to vehicle finish.

NOTE: Finesse sanding should only be performed by a trained automotive paint technician.

Minor acid etching, orange peel, or smudging in a clearcoat or single-stage finish can be reduced with light finesse sanding, hand buffing and polishing. Use a Paint Thickness Gauge #PR-ETG-2X or equivalent to determine clearcoat or single-stage paint thickness before and after the repair.

PAINT CODE

DESCRIPTION

Exterior vehicle body colors are identified on the Vehicle Certification Label (Refer to VEHICLE DATA/VEHICLE INFORMATION/VEHICLE CERTIFICATION LABEL - DESCRIPTION). The first digit of the paint code listed on the vehicle indicates the sequence of application, i.e.: P = primary coat, Q = secondary coat. The color names provided in the Paint and Trim Code Description chart are the color names used on most repair product containers. (Refer to 23 - BODY/PAINT - SPECIFICATIONS)

PAINT TOUCH-UP

DESCRIPTION

When a painted metal surface has been scratched or chipped, it should be touched-up as soon as possible to avoid corrosion. For best results, use MOPAR® Scratch Filler/Primer, Touch-Up Paints and Clear Top Coat.

WARNING: Use an osha approved respirator and safety glasses when spraying paint or solvents in a confined area. Personal injury can result.

STANDARD PROCEDURE

1. Scrape loose paint and corrosion from inside scratch or chip.
2. Clean affected area with MOPAR® Tar/Road Oil Remover or equivalent, and allow to dry.
3. Fill the inside of the scratch or chip with a coat of filler/primer. Do not overlap primer onto good surface finish. The applicator brush should be wet enough to puddle-fill the scratch or chip without running. Do not stroke brush applicator on body surface. Allow the filler/primer to dry hard.
4. Cover the filler/primer with color touch-up paint. Do not overlap touch-up color onto the original color coat around the scratch or chip. Butt the new color to the original color, if possible. Do not stroke applicator brush on body surface. Allow touch-up paint to dry hard.
5. On vehicles without clearcoat, the touch-up color can be lightly finesse sanded (1500 grit) and polished with rubbing compound.
6. On vehicles with clearcoat, apply clear top coat to touch-up paint with the same technique as described in Step 4. Allow clear top coat to dry hard. If desired, Step 5 can be performed on clear top coat.

WARNING: Avoid prolonged skin contact with petroleum or alcohol – based cleaning solvents. Personal injury can result. Avoid prolonged skin contact with petroleum or alcohol – based cleaning solvents. Personal injury can result.

SEATS

TABLE OF CONTENTS

page

SEATS
WARNING
RESTRAINT SYSTEM 229
ADJUSTERS-FRONT
REMOVAL 231
INSTALLATION 233
ARMREST-REAR
REMOVAL 236
INSTALLATION 236
CUSHION/COVER-CUSHION - FRONT
REMOVAL 237
INSTALLATION 237
CUSHION/COVER-CUSHION - SECOND ROW
REMOVAL 239
INSTALLATION 242
CUSHION/COVER-SEAT BACK - FRONT
REMOVAL 246
INSTALLATION 247
CUSHION/COVER-SEAT BACK - SECOND ROW
REMOVAL 249
INSTALLATION
REMOVAL 252
RISER-FRONT
REMOVAL 256
INSTALLATION 257
SEAT-FRONT
REMOVAL 259
INSTALLATION 261
STRIKER-SEAT BACK LATCH - SECOND ROW
REMOVAL 264
INSTALLATION 266
SUPPORT-LUMBAR
REMOVAL 268
INSTALLATION 270

SEATS

WARNING

RESTRAINT SYSTEM

WARNING: During and following any seat belt or child restraint anchor service, carefully inspect all seat belts, buckles, mounting hardware, retractors, tether straps, and anchors for proper installation, operation, or damage. Replace any belt that is cut, frayed, or torn. Straighten any belt that is twisted. Tighten any loose fasteners. Replace any belt that has a damaged or inoperative buckle or retractor. Replace any belt that has a bent or damaged latch plate or anchor plate. Replace any child restraint anchor or the unit to which the anchor is integral that has been bent or damaged. Never attempt to repair a seat belt or child restraint component. Always replace damaged or faulty seat belt and child restraint components with the correct, new and unused replacement parts listed in the DaimlerChrysler Mopar® parts catalog. Failure to follow these instructions may result in personal injury or death.

WARNING: On vehicles equipped with airbags, disable the supplemental restraint system before attempting any steering wheel, steering column, airbag, occupant classification system, seat belt tensioner, impact sensor, or instrument panel component diagnosis or service. Disconnect and isolate the battery negative (ground) cable, then wait two minutes for the system capacitor to discharge before performing further diagnosis or service. This is the only sure way to disable the supplemental restraint system. Failure to take the proper precautions could result in accidental airbag deployment. Failure to follow these instructions may result in personal injury or death.

WARNING: On vehicles equipped with airbags, before performing any welding operations disconnect and isolate the battery negative (ground) cable and disconnect all wire harness connectors from the Airbag Control Module (ACM). Failure to take the proper precautions could result in accidental airbag deployment and other possible damage to the supplemental restraint system circuits and components. Failure to follow these instructions may result in personal injury or death.

WARNING: Replace all restraint system components only with parts specified in the DaimlerChrysler Mopar® parts catalog. Substitute parts may appear interchangeable, but internal differences may result in inferior occupant protection. Failure to follow these instructions may result in personal injury or death.

WARNING: The fasteners, screws, and bolts originally used for the restraint system components must never be replaced with any substitutes. These fasteners have special coatings and are specifically designed for the restraint system. Any time a new fastener is needed, replace it with the correct fasteners provided in the service package or specified in the DaimlerChrysler Mopar® parts catalog. Failure to follow these instructions may result in personal injury or death.

WARNING: On vehicles equipped with the Occupant Classification System (OCS) do not hang any after market devices from the front passengers seat back. Do not install a front drivers seat back cover with map pocket onto the passenger seat. Failure to follow these instructions may result in personal injury or death.

WARNING: The Seat Weight Sensor is a sensitive, calibrated unit and must be handled carefully. Do not drop or handle roughly. If dropped or damaged, replace with another sensor. Failure to follow these instructions may result in personal injury or death.

WARNING: The front passenger seat must be handled carefully as well. When removing the seat, be careful when setting on floor not to drop. If dropped, the sensor may be inoperative. Failure to follow these instructions may result in personal injury or death.

WARNING: When the seat is on the floor, no one should sit in the front passenger seat. This uneven force may damage the sensing ability of the seat weight sensors. If sat on and damaged, the sensor may be inoperative. Failure to follow these instructions may result in personal injury or death.

ADJUSTERS-FRONT

REMOVAL

1. Before proceeding with the following repair procedure, review all warnings and cautions. (Refer to 23 - BODY/ SEATS - WARNING)
2. Remove the seat cushion as necessary. (Refer to 23 - BODY/SEATS/SEAT CUSHION / COVER - FRONT - REMOVAL)

Power

1. Remove the seat risers. (Refer to 23 - BODY/ SEATS/SEAT RISER - FRONT - REMOVAL)
2. Remove the bolts and nuts (2 & 4) and separate the height adjuster assembly from the length adjuster assembly (3).

NOTE: Bolt (4) is a different size from the other three bolts (2). Note the location for proper installation.

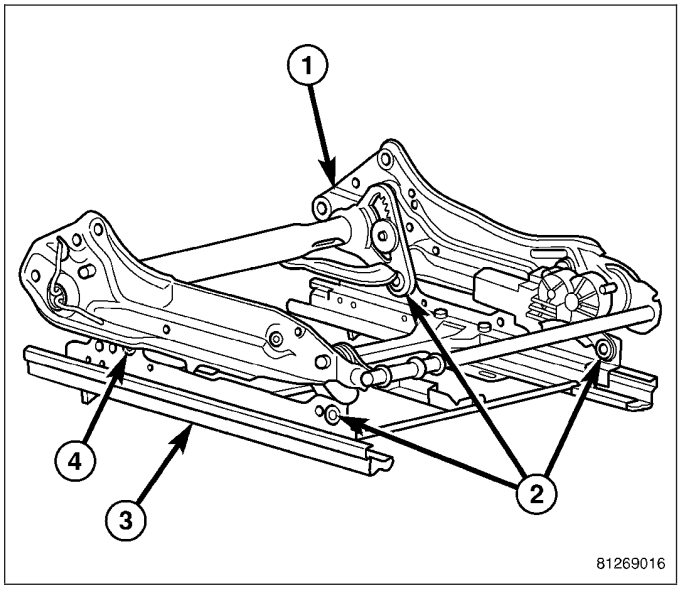

WARNING: A seat structure that has seen significant load may have the locking mechanism activated and may exhibit the following symptoms:

- **Locking pawl (2) loose**
- **Locking pawl (2) engaged into the seat frame side member (1)**
- **Height adjuster only works on outboard side**
- **Broken or missing shear pin (3)**

If any one or more of these symptoms exist replace the height adjuster assembly. Do not attempt any repairs. Failure to follow these instructions may result in personal injury or death.

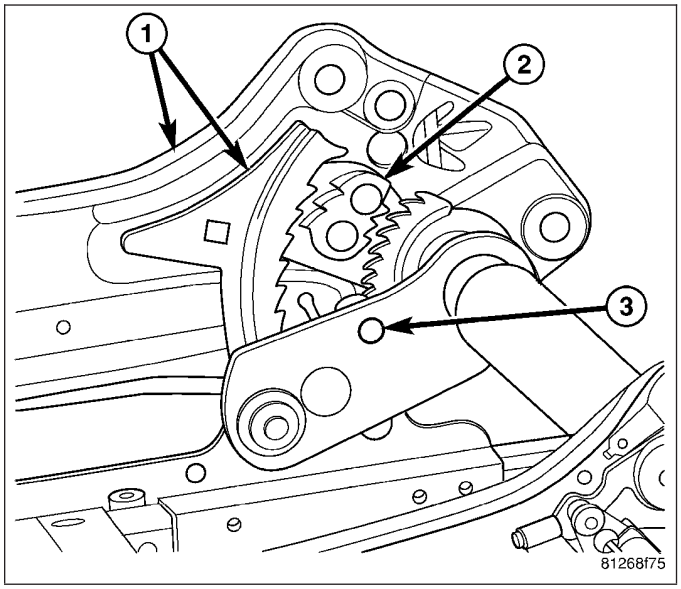

Manual

1. Remove the spring clip.

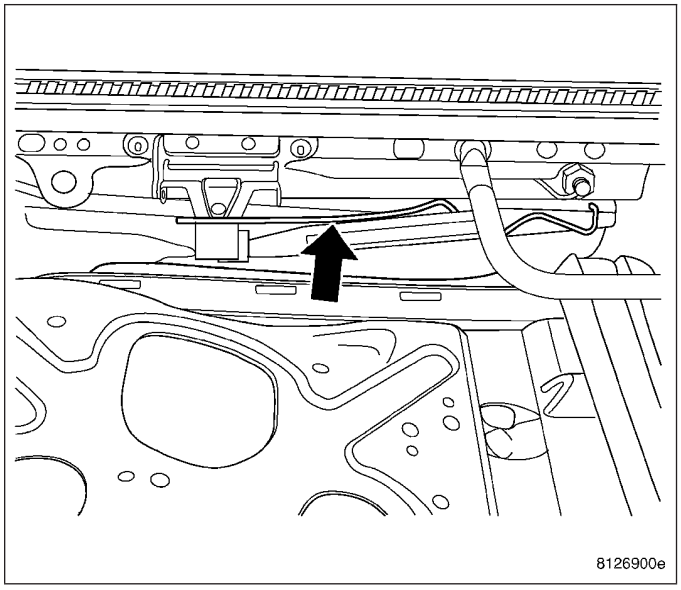

2. Squeeze the towel bar together and pull the towel bar out of the left and right seat tracks.

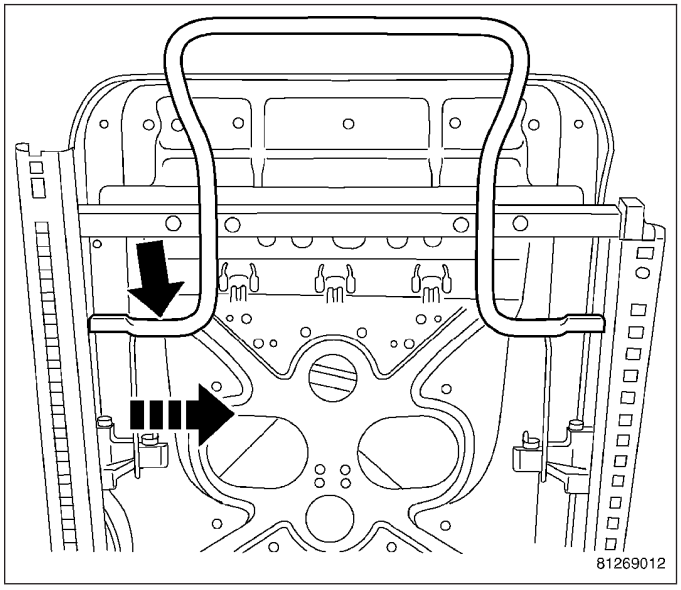

3. Remove the bolts (1 & 4), nuts (6) and spacers (2) and separate the side member assembly (3) from the length adjuster assembly (5).

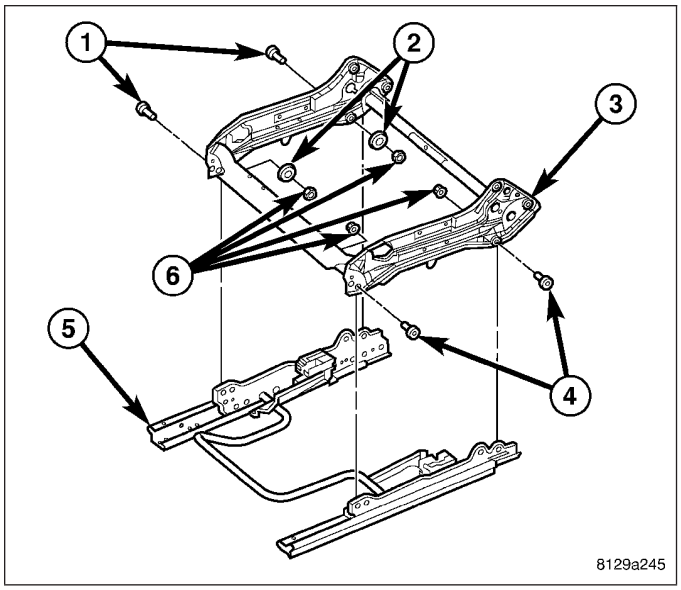

INSTALLATION

Power

1. Before proceeding with the following repair procedure, review all warnings and cautions. (Refer to 23 - BODY/SEATS - WARNING)

WARNING: A seat structure that has seen significant load may have the locking mechanism activated and may exhibit the following symptoms:
- **Locking pawl (2) loose**
- **Locking pawl (2) engaged into the seat frame side member (1)**
- **Height adjuster only works on outboard side**
- **Broken or missing shear pin (3)**

If any one or more of these symptoms exist replace the height adjuster assembly. Do not attempt any repairs. Failure to follow these instructions may result in personal injury or death.

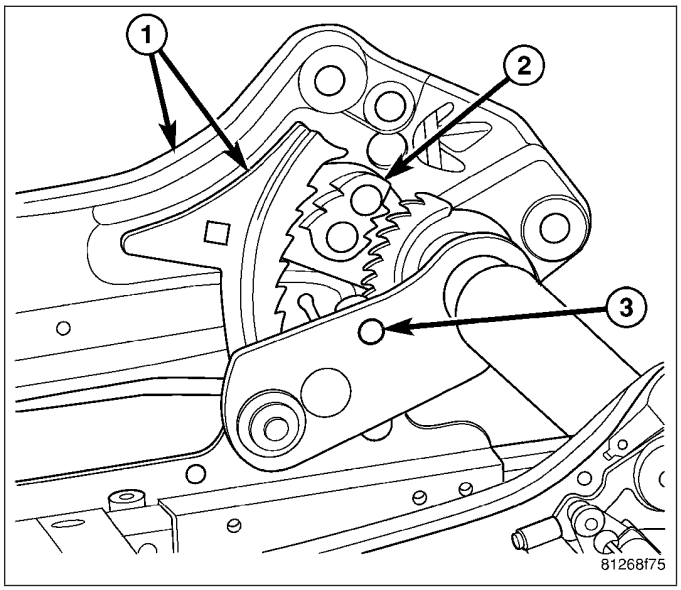

2. Install the seat risers. (Refer to 23 - BODY/SEATS/SEAT RISER - INSTALLATION)
3. Position the height adjuster assembly (1) onto the length adjuster assembly (3) and install the nuts, bolts and spacers on the inboard side.

NOTE: Bolts (2) and (4) are different and need to be installed into the correct positions.

4. Tighten the bolts to 21 N·m (15 ft. lbs.).
5. Install the seat cushion and install the seat. (Refer to 23 - BODY/SEATS/SEAT CUSHION COVER - INSTALLATION)

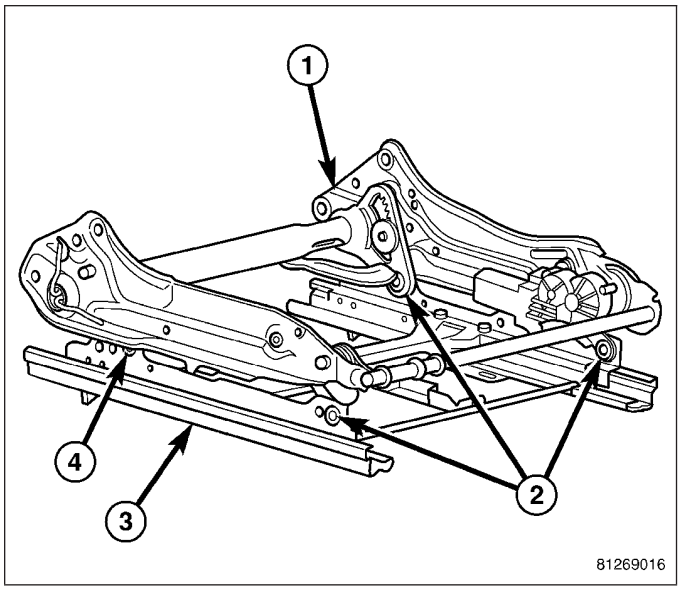

Manual

1. Install the seat risers. (Refer to 23 - BODY/SEATS/SEAT RISER - INSTALLATION)
2. Position the side member assembly (3) onto the length adjuster assembly (5) and install the nuts (6), bolts (1 & 4) and spacers (2) on the inboard side.
3. Tighten the bolts to 42 N·m (31 ft. lbs.).

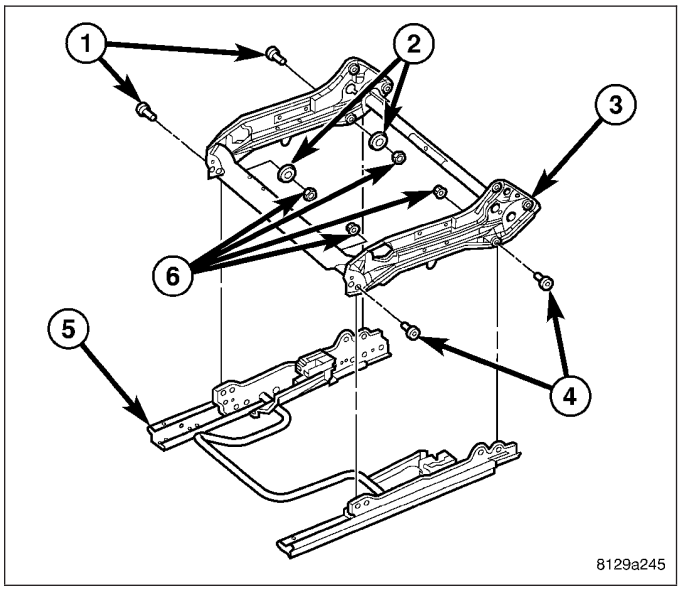

4. Squeeze the towel bar together and insert the ends into the bushings on both tracks.

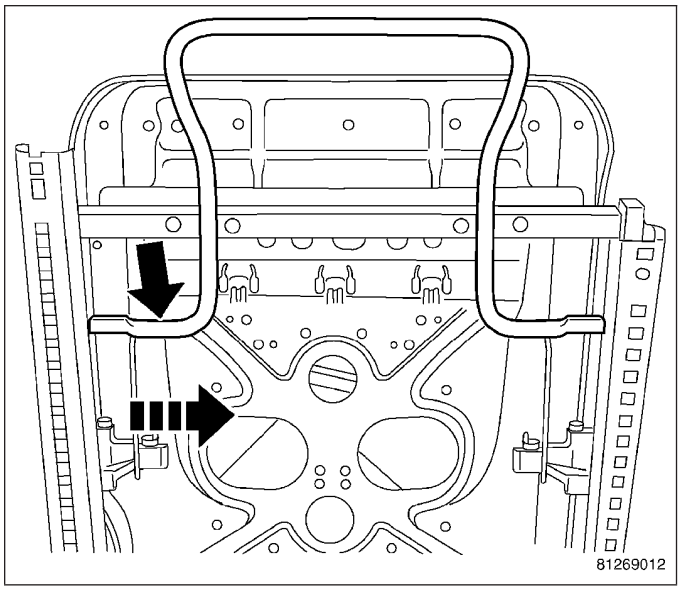

5. Install the spring clip.
6. Install the seat cushion and install the seat. (Refer to 23 - BODY/SEATS/SEAT CUSHION COVER - INSTALLATION)

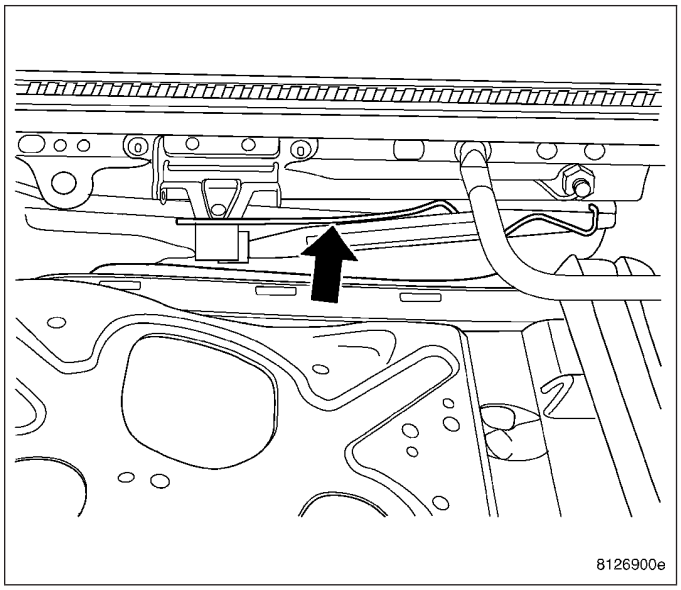

ARMREST-REAR

REMOVAL

1. Fold down 40 side rear seat back.
2. Remove arm rest bolt (1).
3. Remove retaining C-clip (2).
4. Remove arm rest.

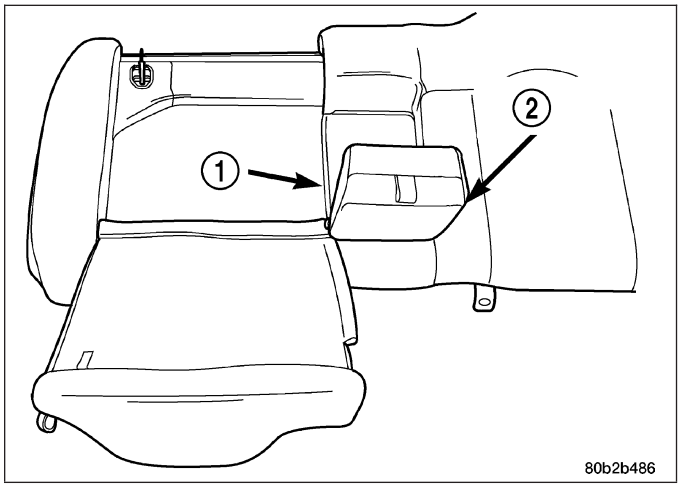

INSTALLATION

1. Place arm rest in bracket.
2. Install arm rest bolt (1). Tighten to 12 N·m (9 ft. lbs.).
3. Install retaining C-clip (2).
4. Reposition the seats.

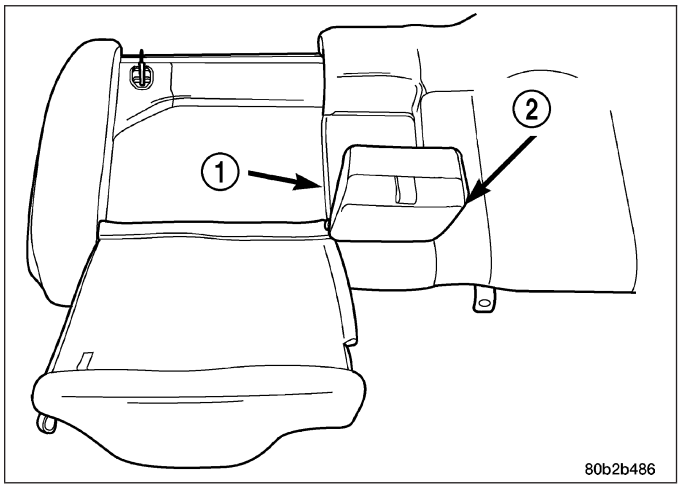

CUSHION/COVER-CUSHION - FRONT

REMOVAL

1. Before proceeding with the following repair procedure, review all warnings and cautions. (Refer to 23 - BODY/SEATS - WARNING)
2. Move the seat to the forward position and disconnect and isolate the batter negative cable.
3. Remove the bolts (2) and the clamps (1) and remove the seat cushion.
4. Disconnect the electrical connector, if equipped.

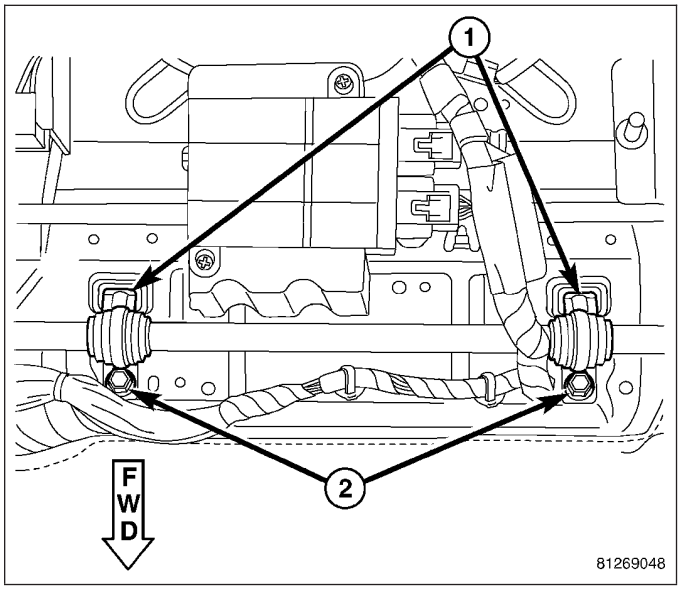

5. Separate the j-straps (1 & 2) and seat cushion cover and foam.

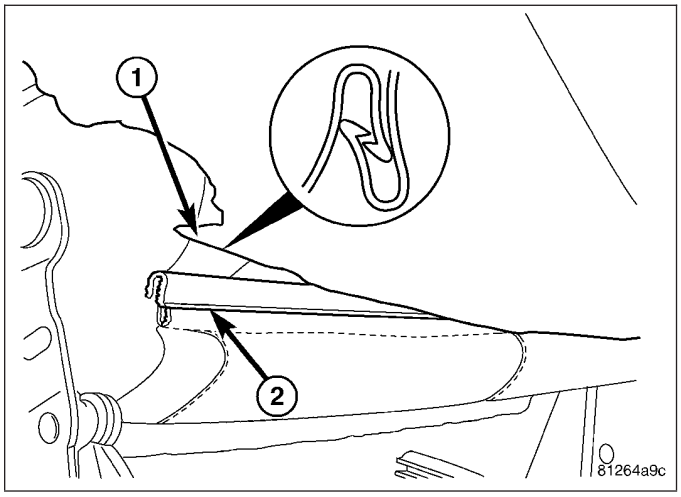

INSTALLATION

1. Before proceeding with the following repair procedure, review all warnings and cautions. (Refer to 23 - BODY/SEATS - WARNING)
2. Position the cushion cover and foam over the seat pan and connect the j-straps (1 & 2).

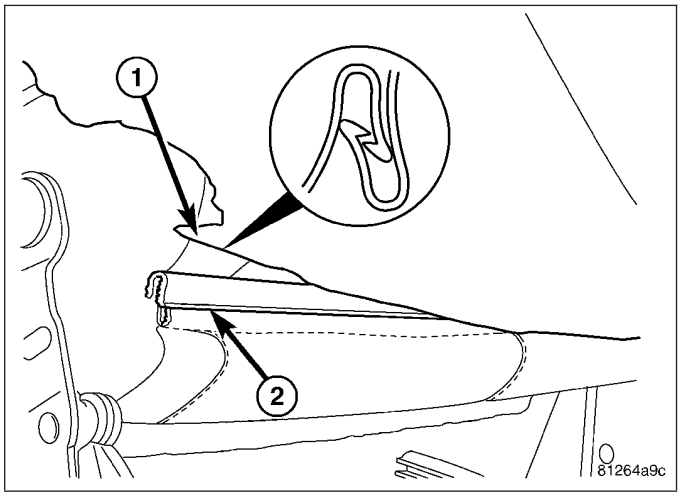

3. Position the seat cushion assembly onto the seat frame and install the clamps (1).
4. Connect the wire harness to the seat cushion pan, if equipped.
5. Install the bolts (2) and tighten to 10 N·m (90 in. lbs.).
6. Connect battery negative cable.

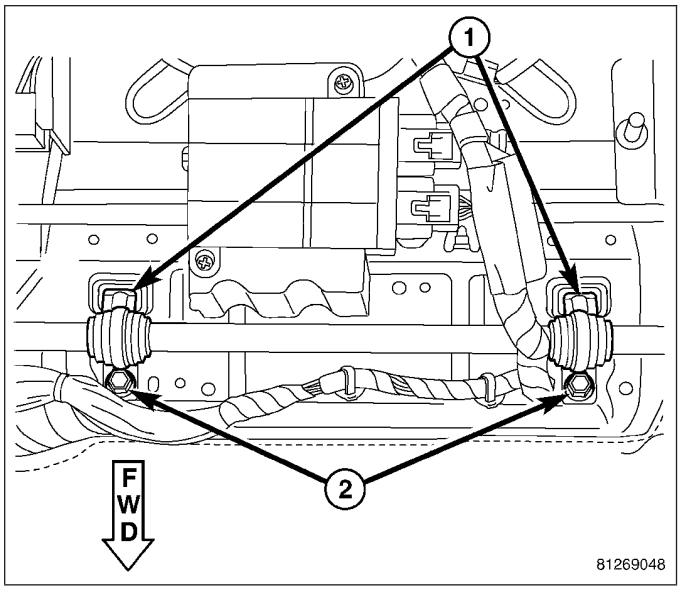

CUSHION/COVER-CUSHION - SECOND ROW

REMOVAL

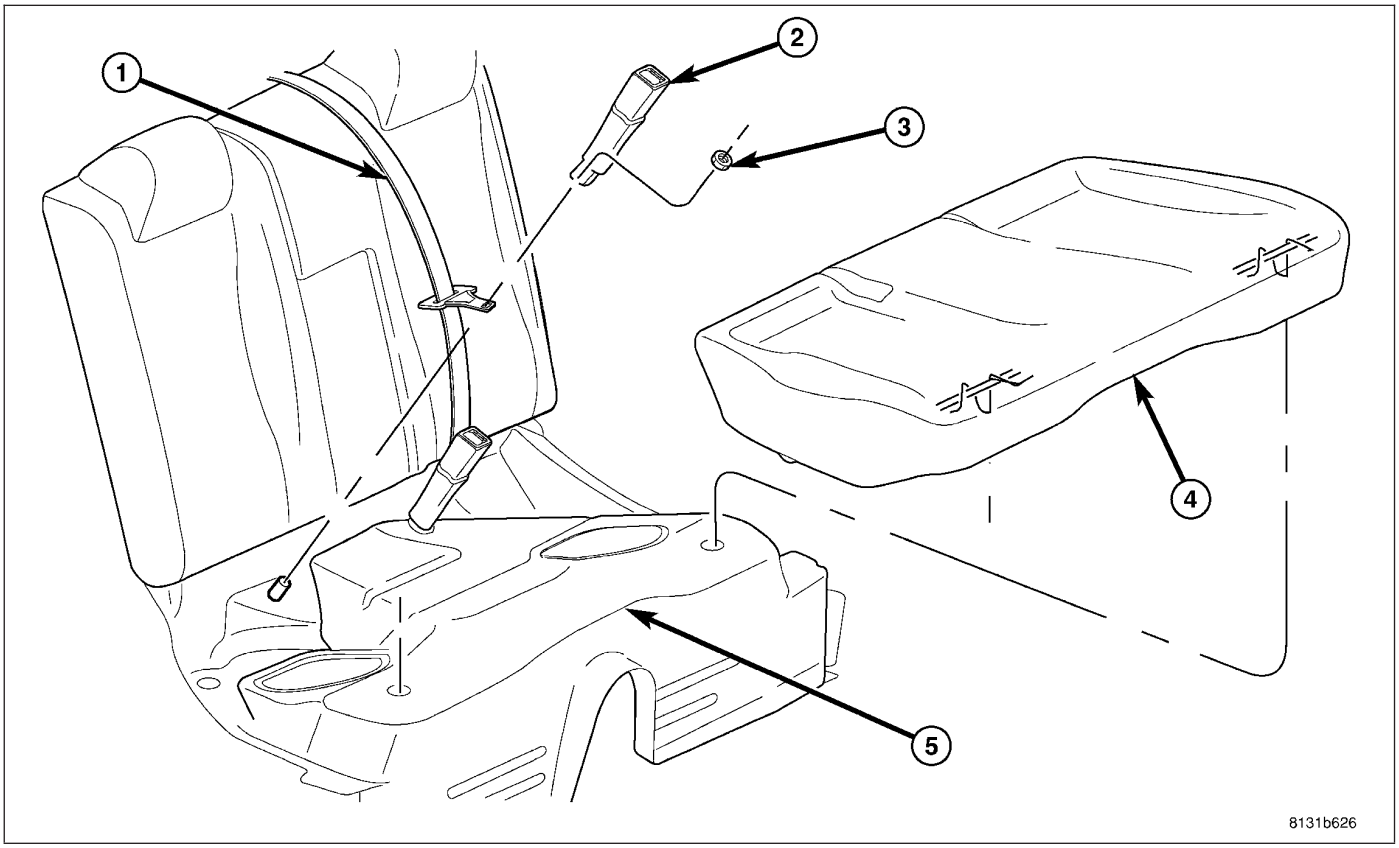

1. Pull upward at forward edge of cushion each retainer loop of the rear seat cushion to disengage retainer loops from cups in floor.
2. Remove rear seat cushion (4) from vehicle.

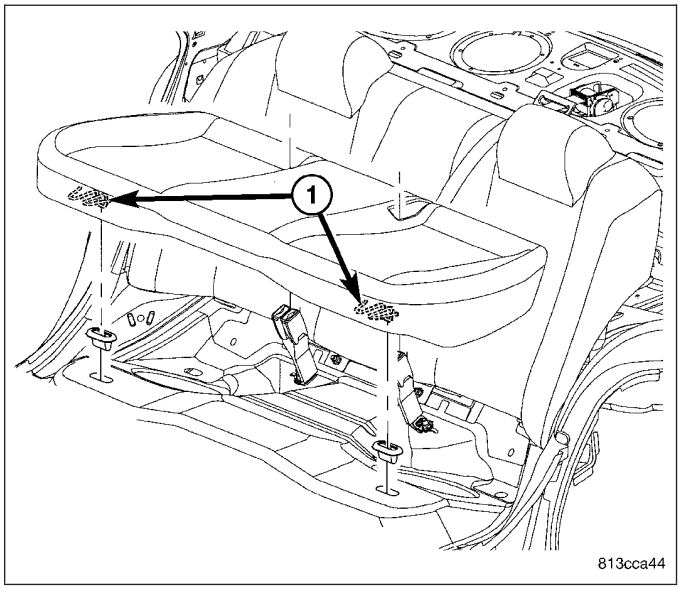

3. Disengage the J-straps attaching seat cover to the cushion.

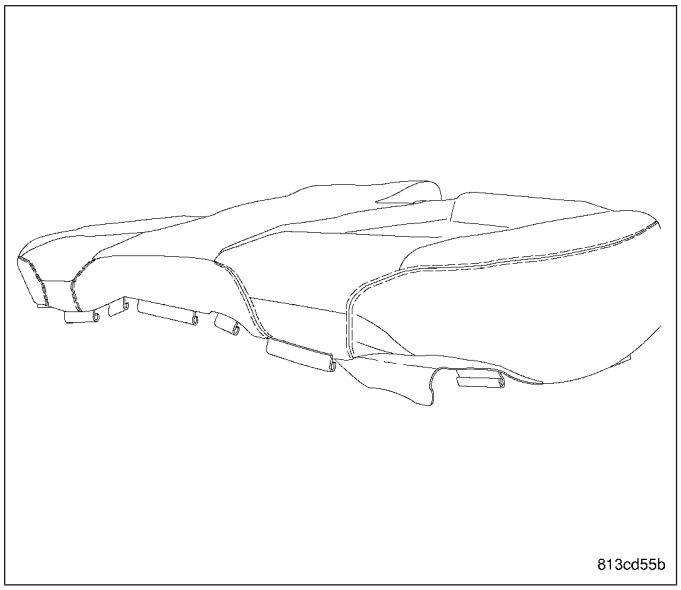

4. Fold rear of the seat cover forward to uncover hog rings.

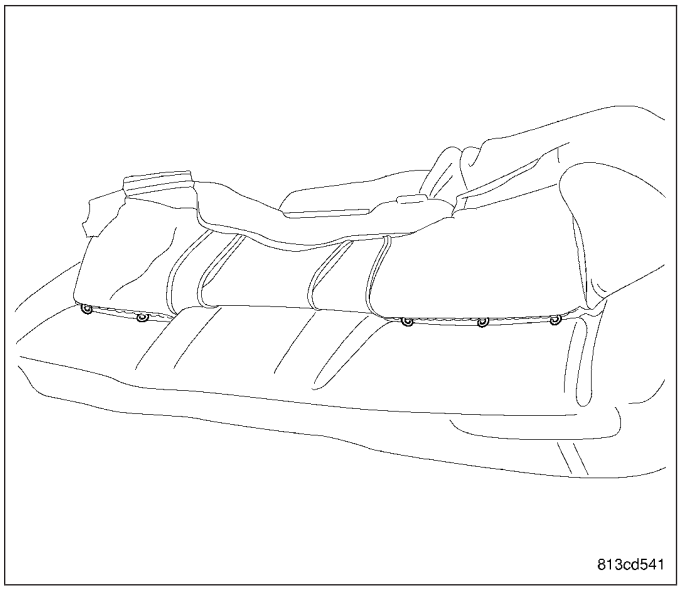

5. Start on the rear side of the cushion and cut hog rings.

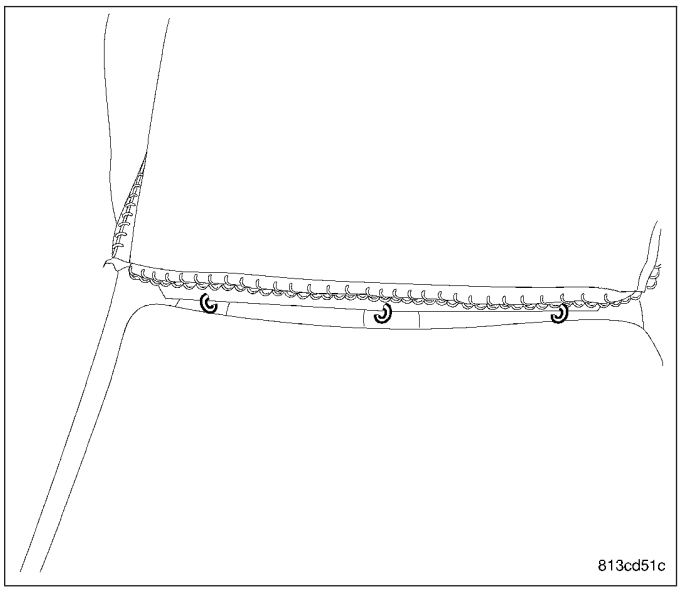

6. Cut the hog rings on the outer side of the cushion.

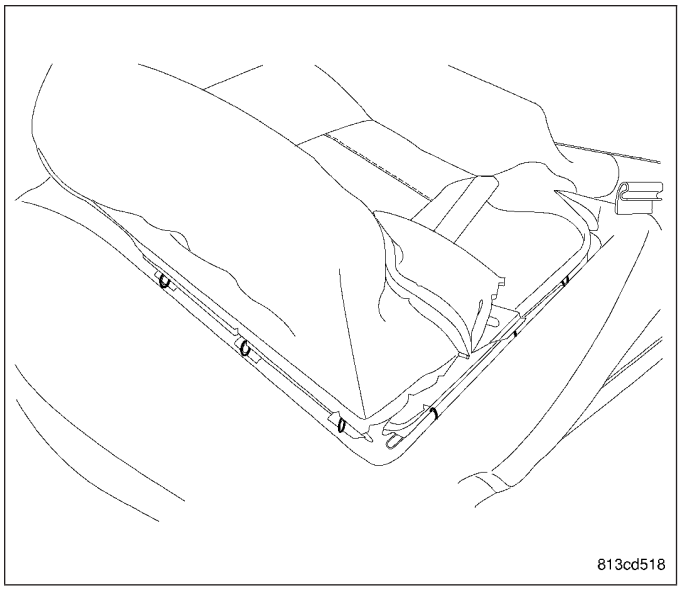

7. Work around the outer edges and cut the hog rings.

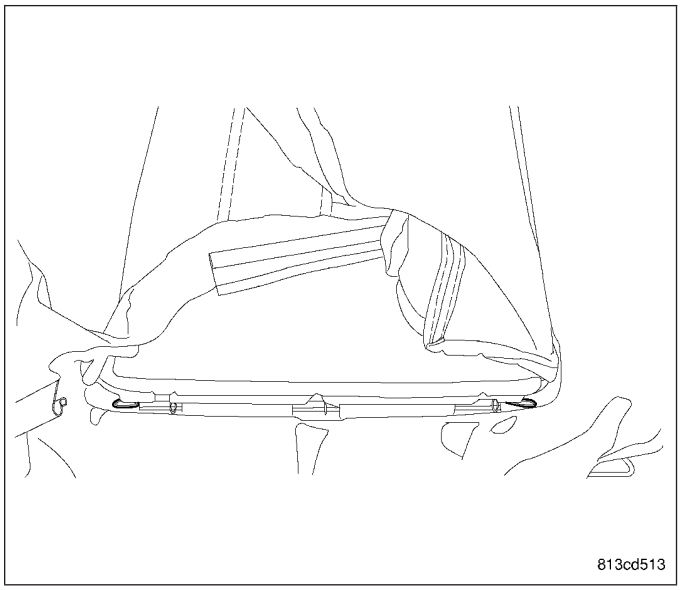

8. Fold cover up to access the inner hog rings and cut them.
9. Repeat operation on the other side of cushion.
10. Remove seat cushion cover from seat cushion.

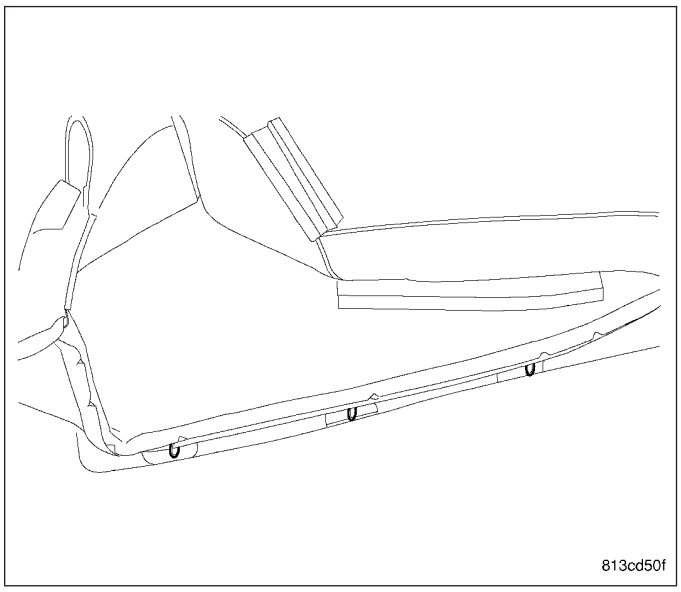

11. If replacing cushion, remove the cushion support by cutting the hog rings attaching it to the foam and remove.

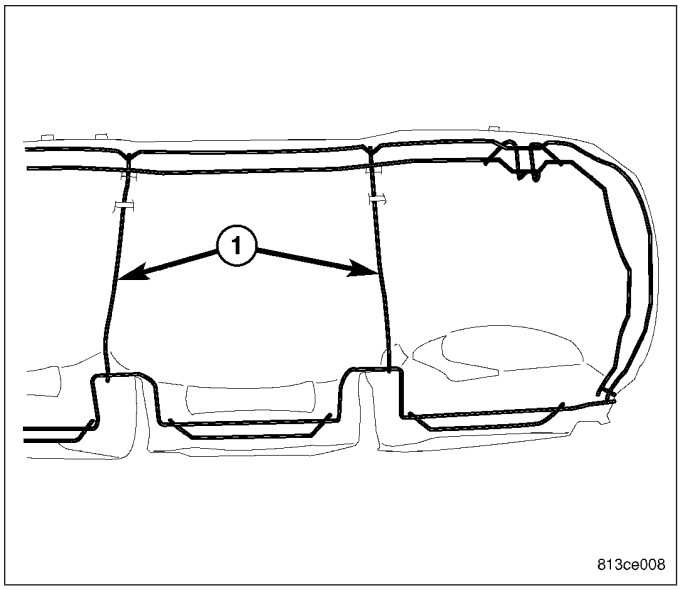

INSTALLATION

1. Install hog rings attaching cushion support, if remove.

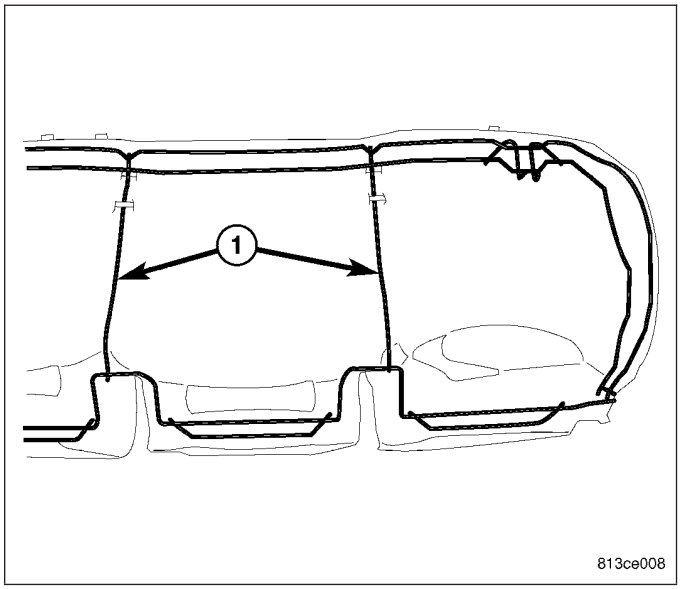

2. Place seat cover into position on the foam.
3. Install the attaching hog rings on the inner side of the seat cover and cushion.

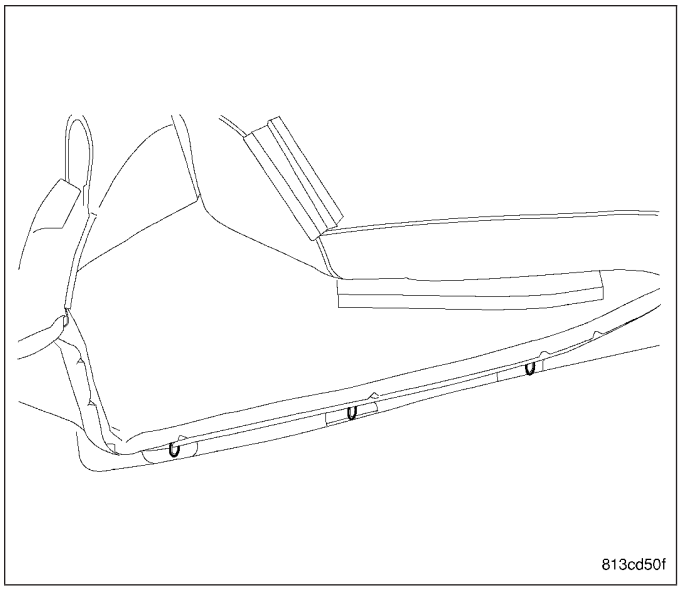

4. Install hog rings on the on the front side the seat cover.

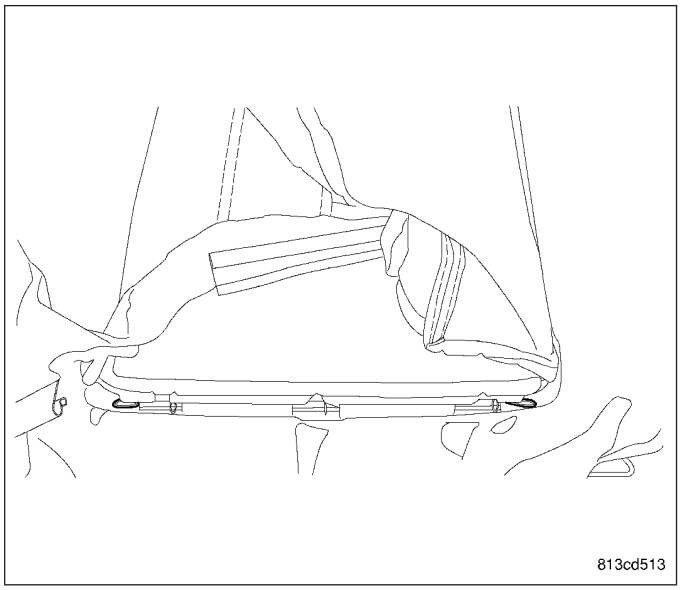

5. Install hog rings on the outer side of the seat cover. Check for seat cover wrinkles.

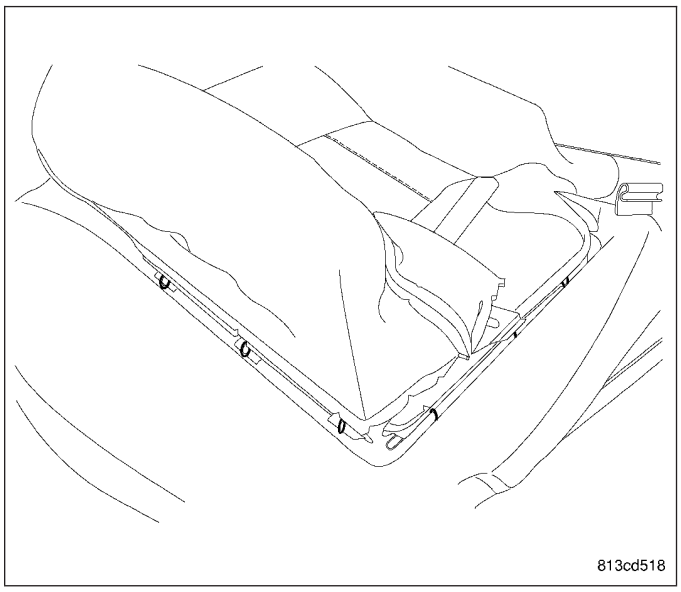

6. Install the hog rings on the rear side of seat cover.
7. Repeat the operation for the other side of cushion.

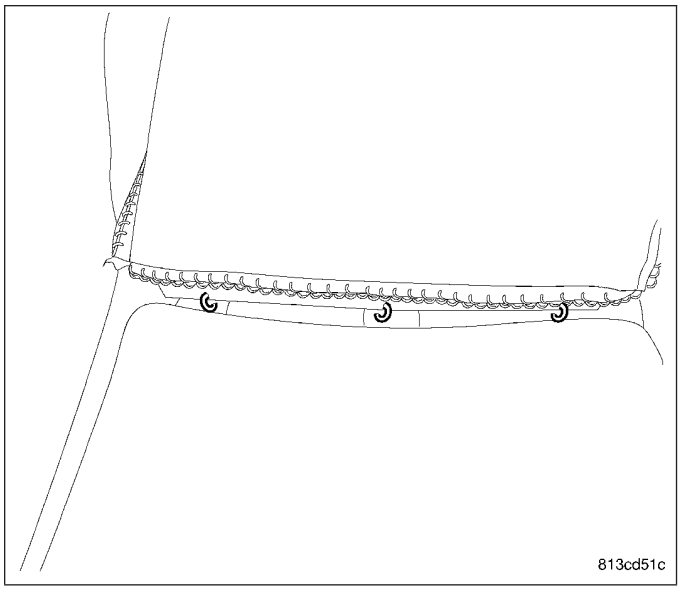

8. Position seat cover in to position on the foam and check for seat cover wrinkles.

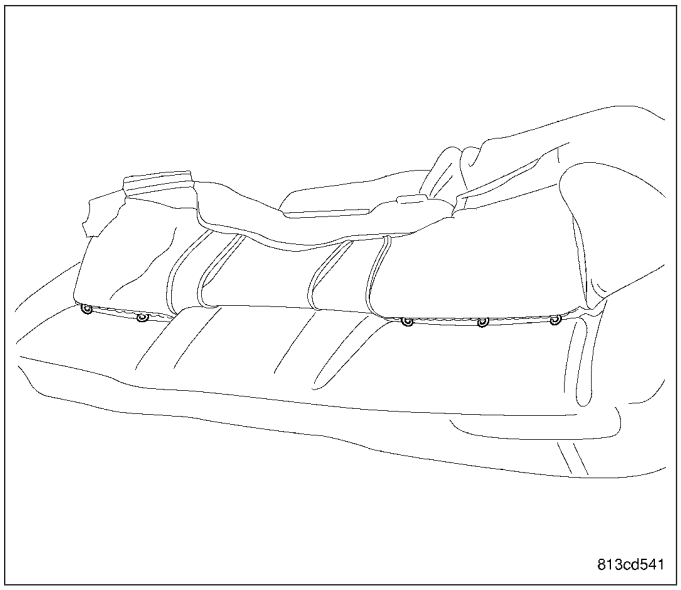

9. Connect the J-straps, and smooth out seat cover.
10. Steam wrinkles from seat cushion, if necessary.

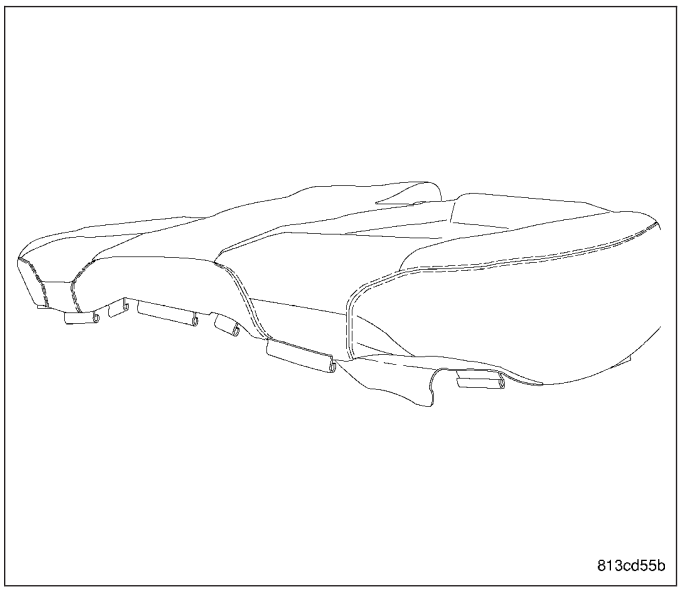

11. Place seat cushion (4) into position.
12. Engage retainer loops into cup on floor kick up.
13. Push downward at forward edge at each retainer loop of the rear seat cushion to engage retainers.

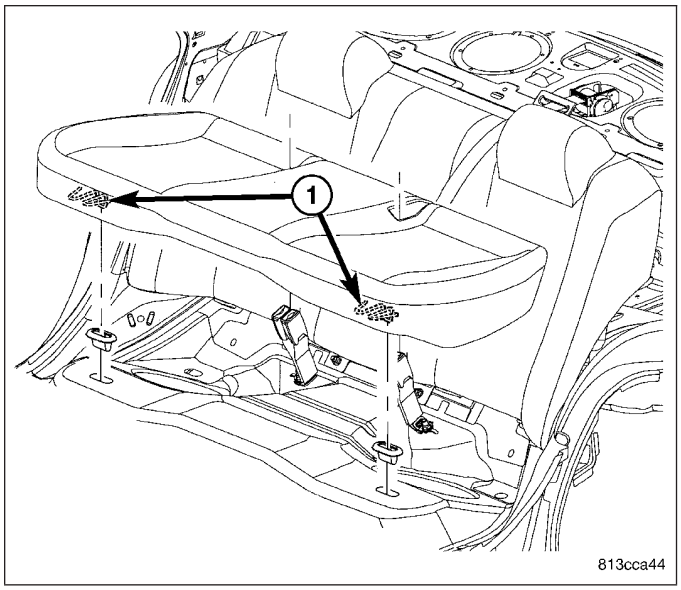

CUSHION/COVER-SEAT BACK - FRONT

REMOVAL

1. Before proceeding with the following repair procedure, review all warnings and cautions. (Refer to 23 - BODY/SEATS - WARNING)
2. Remove the front seat. (Refer to 23 - BODY/SEATS/SEAT - FRONT - REMOVAL)
3. Remove the lumbar and recliner handles (1).
4. Remove the screws and remove the side shields (2).

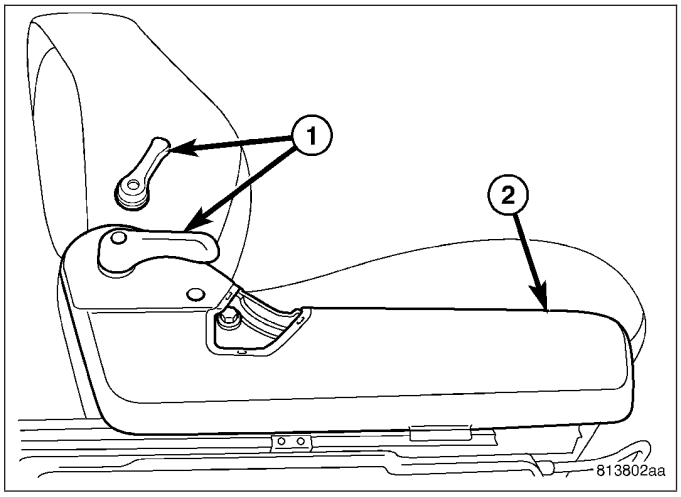

5. Remove the belt buckle.

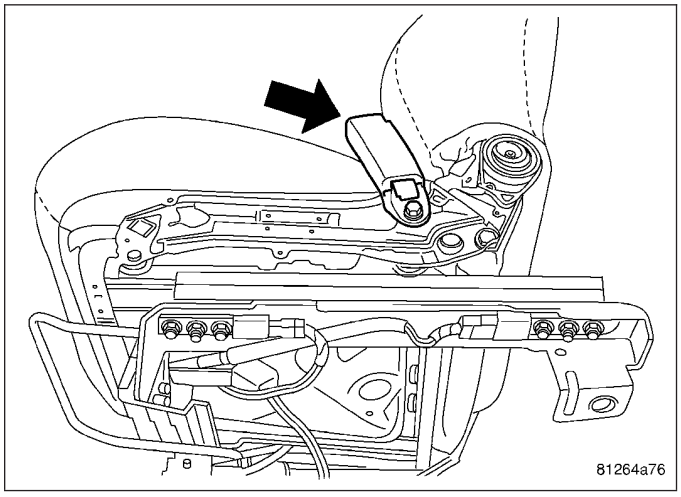

6. Remove the seat back bolts from both sides.

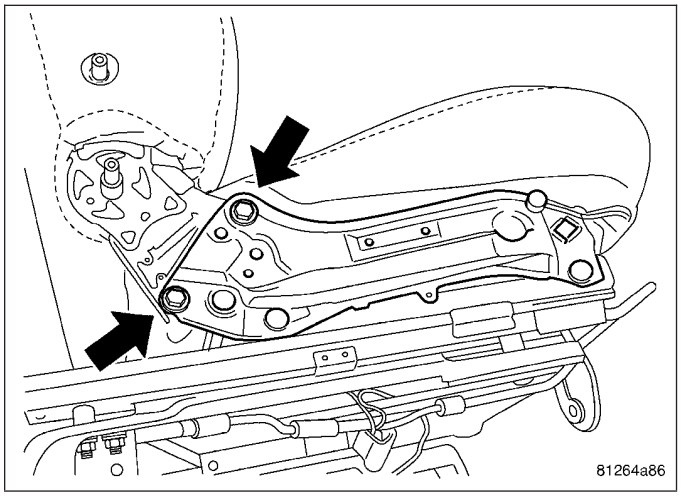

7. Push in the buttons on both headrest sleeves, pull the headrest up and remove.

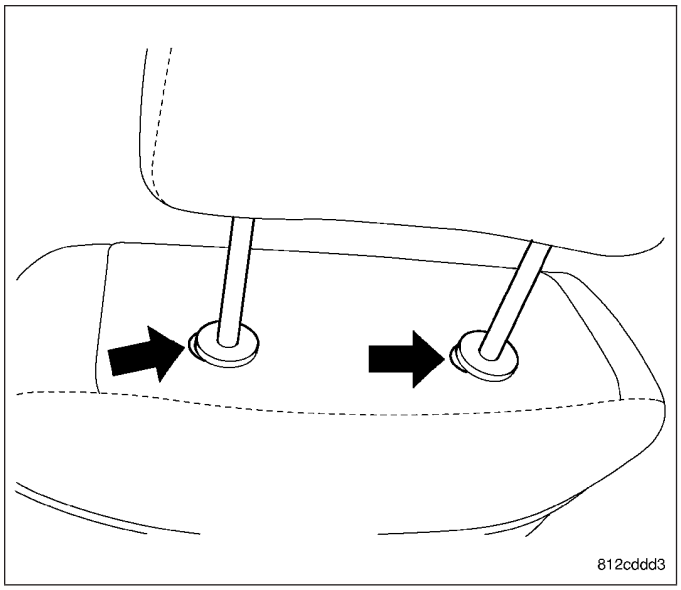

8. Separate the j-straps (1 & 2) and pull cover up over frame and remove cushion.
9. Pinch both headrest sleeve ribs from inside the seat back frame with pliers or equivalent.
10. Strike the bottom of the sleeve with a rubber mallet or equivalent, and remove the headrest sleeves.

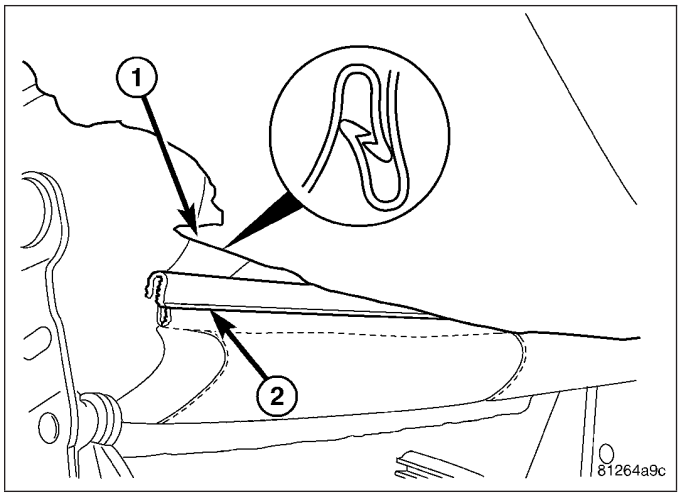

INSTALLATION

1. Before proceeding with the following repair procedure, review all warnings and cautions. (Refer to 23 - BODY/SEATS - WARNING)
2. Position the seat back cover over the seat back frame and install the headrest sleeves.
3. Position the seat back cushion on the frame and position the cover over the cushion.
4. Connect the j-straps (1 & 2).

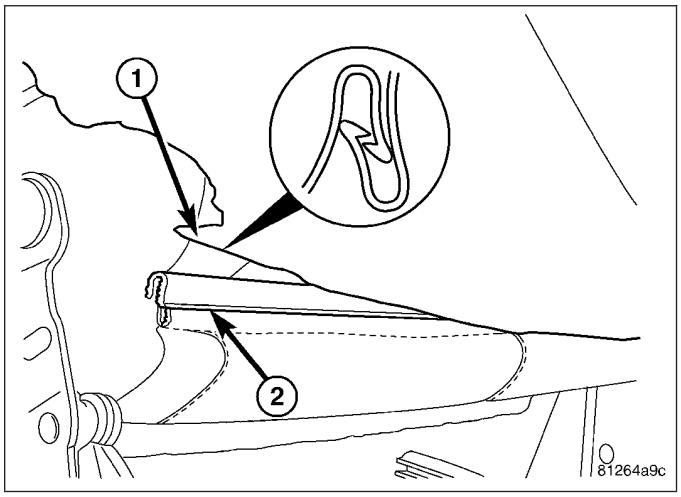

5. Install the seat back bolts and tighten to 40 N·m (30 ft. lbs.).

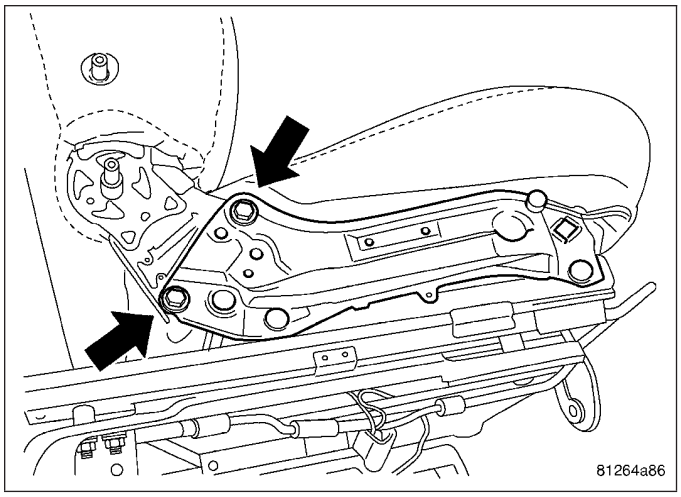

6. Position the front seat belt buckle lower anchor onto the stud near the rear of the inboard seat cushion frame. Be certain the anti-rotation tab on the anchor is engaged in the clearance hole of the frame.
7. Tighten the nut to 43 N·m (32 ft. lbs.)

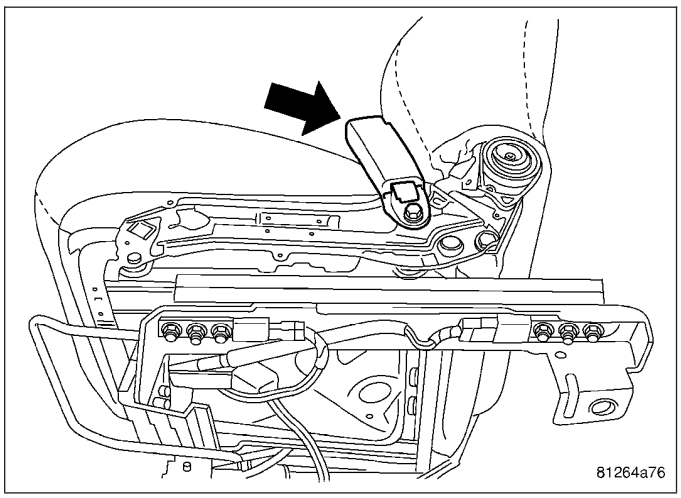

8. Install the side shields (2) and install the screws.
9. Install the lumbar and recliner handles.

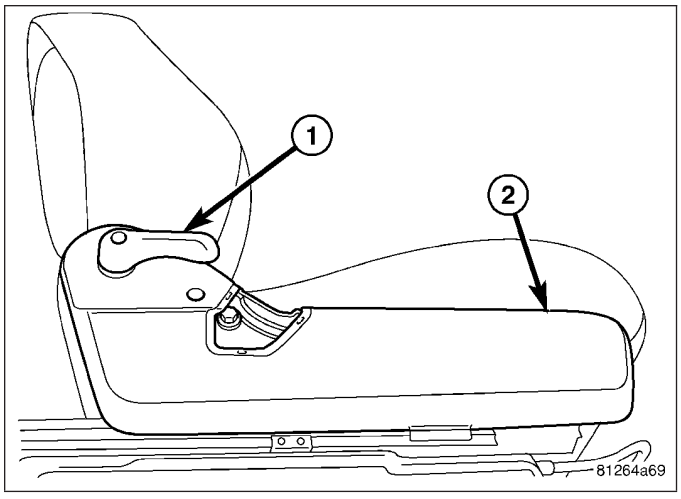

CUSHION/COVER-SEAT BACK - SECOND ROW

REMOVAL

1. Remove the seat cushion. (Refer to 23 - BODY/ SEATS/SEAT CUSHION COVER - REMOVAL)
2. Remove the nut and disconnect the seat belt anchor.

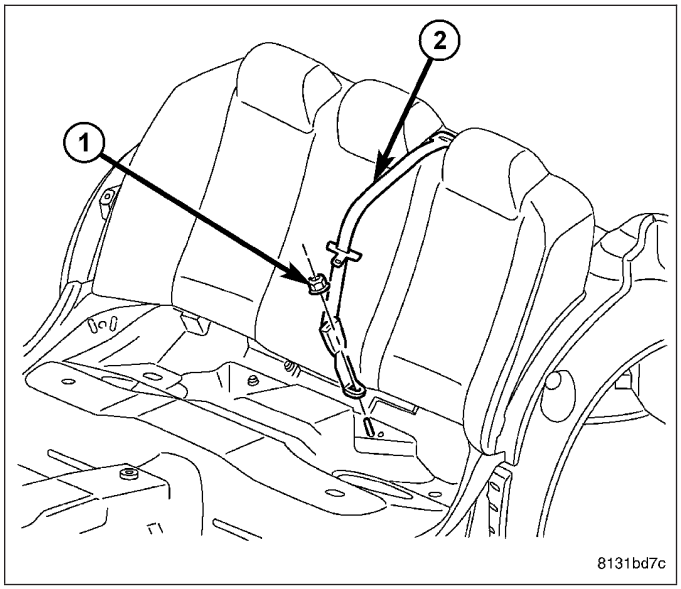

60/40 Seat Back - Wagon

40% SEAT BACK SIDE

1. Fold the 40% section of the seat (2) down.
2. Remove the nuts (5).
3. Pivot the seat back off the pivot pin (3) located on the 60% seat back.
4. Remove the seat back from vehicle.

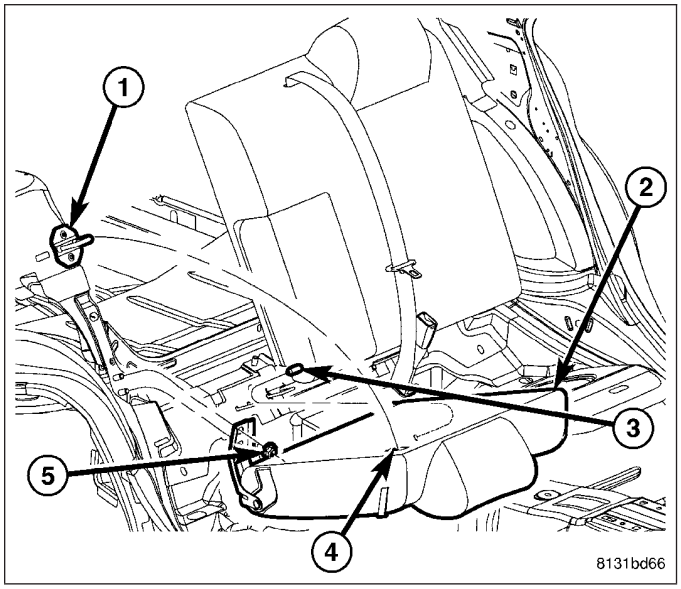

60/40 Seat Back - Wagon

60% SEAT BACK SIDE

1. With the 40% seat back removed.
2. Fold the 60% section of the seat down.
3. Remove the four nuts attaching seat back (5).
4. Remove the seat back for vehicle.

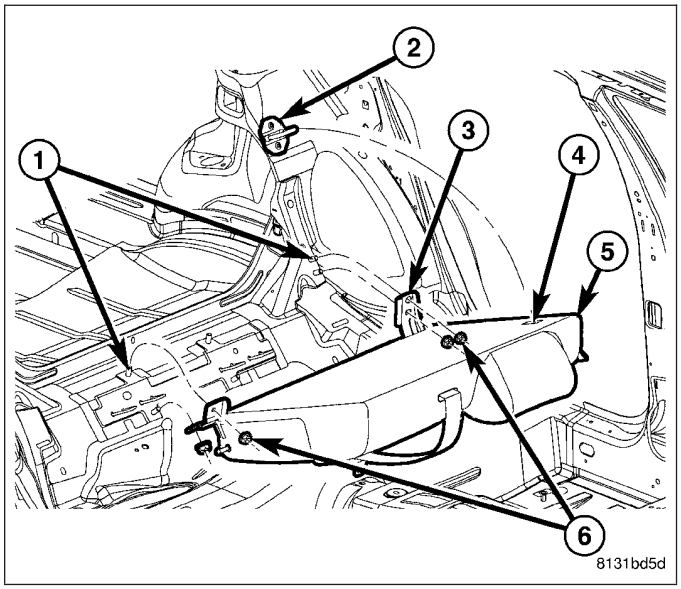

60/40 Seat Back - Domestic Sedan

40% SEAT BACK SIDE

1. Fold the 40% section of the seat (3) down.
2. Remove the two nuts (4) attaching seat back.
3. Pivot the seat back off the pivot pin (1) located on the 60% seat back (2).
4. Remove the seat back from vehicle.

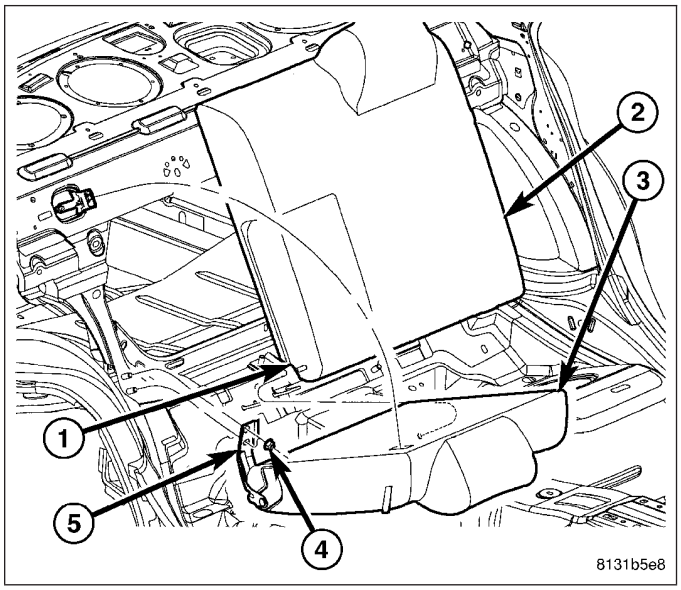

60/40 Seat Back - Domestic Sedan

60% SEAT BACK SIDE

1. With the 40% seat back removed.
2. Fold the 60% section of the seat down.
3. Remove the four nuts attaching seat back (4).
4. Remove the seat back for vehicle.

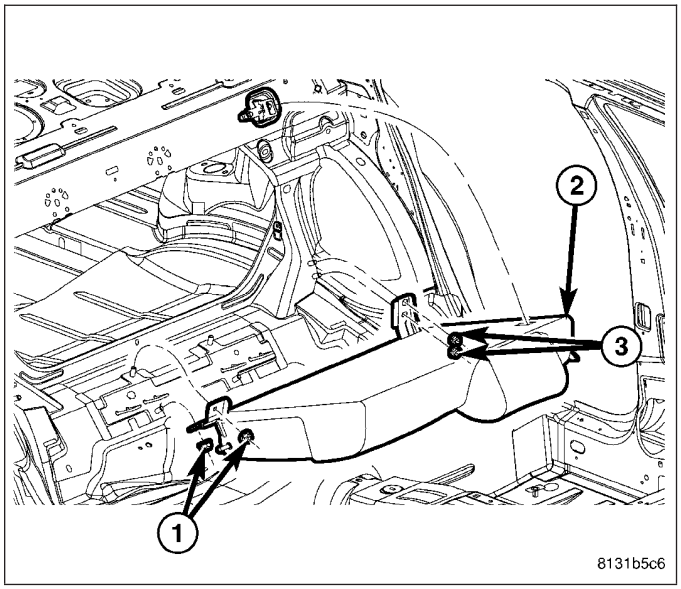

60/40 Seat Back - Export Sedan

40% SEAT BACK SIDE

1. Fold the 40% section of the seat (3) down.
2. Remove the three nuts (4) attaching seat back.
3. Remove the seat back from vehicle.

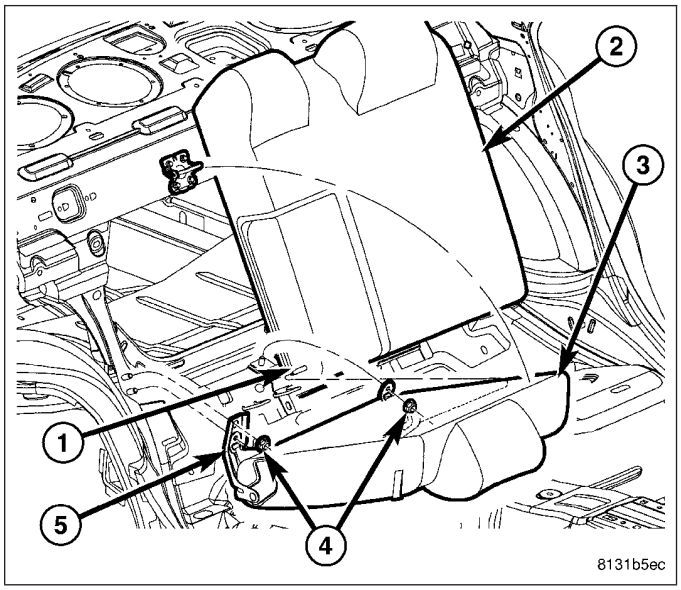

60/40 Seat Back - Export Sedan

60% SEAT BACK SIDE

1. With the 40% seat back removed.
2. Remove the four nuts (1) and (3) attaching seat back.
3. Remove the seat back from vehicle.

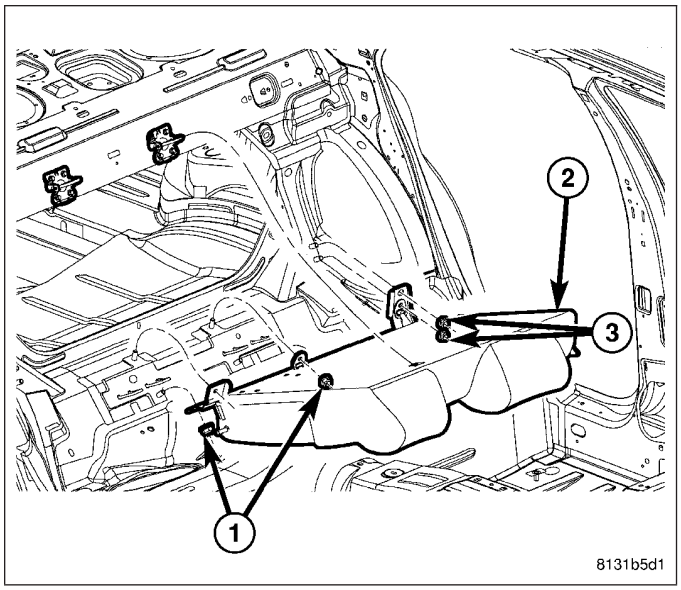

INSTALLATION

REMOVAL

1. Place seat belt into position and install the seat belt anchor nut. Tighten nut to 32 N·m (24 ft. lbs.).
2. Place the seat cushion into position and push downward on the forward edge of the seat cushion to lock into position. (Refer to 23 - BODY/SEATS/ SEAT CUSHION COVER - REMOVAL)

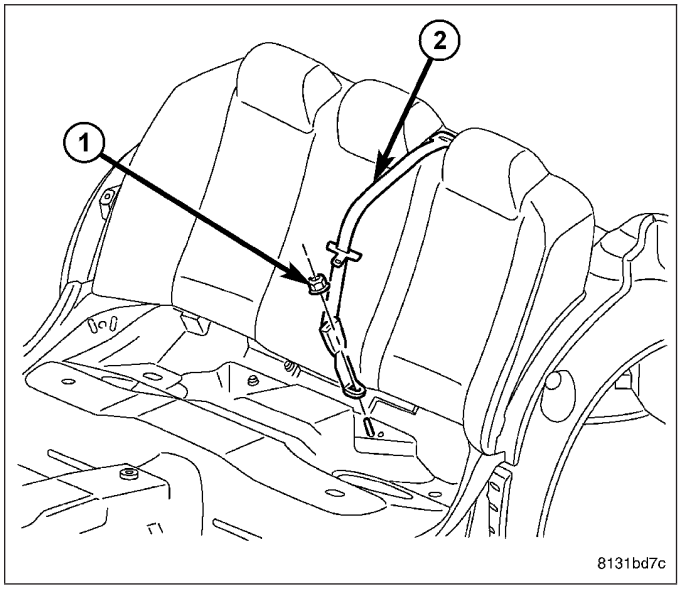

60/40 Seat Back - Wagon

60% SEAT BACK SIDE

1. With the 40% seat back removed.
2. Place 60% seat back (5) into position on the studs.
3. Fold the 60% section of the seat down.
4. Install the four nuts (6) attaching seat back (5). Tighten nuts to 57 N·m (42 ft. lbs.).

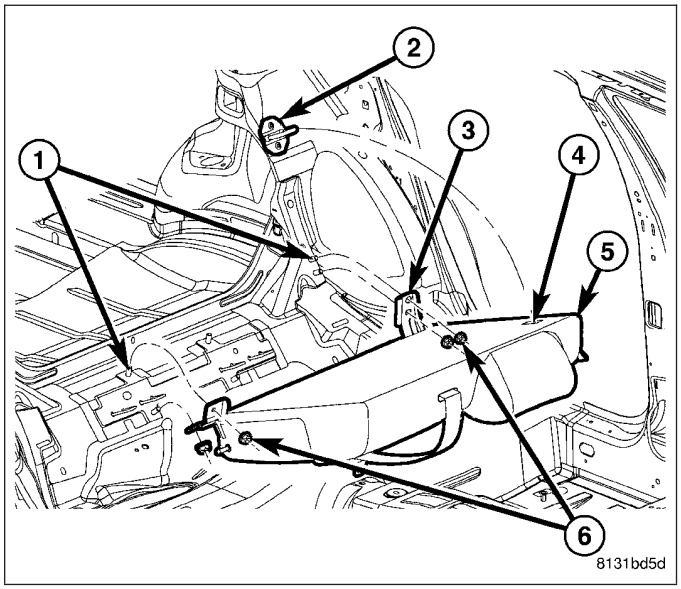

60/40 Seat Back - Wagon

40% SEAT BACK SIDE

1. Place the 40% section (2) into position.
2. Slide 40% seat back onto the pivot pin (3) located on the 60% seat back.
3. Install the two nuts (5) attaching seat back. Tighten nuts to 57 N·m (42 ft. lbs.).

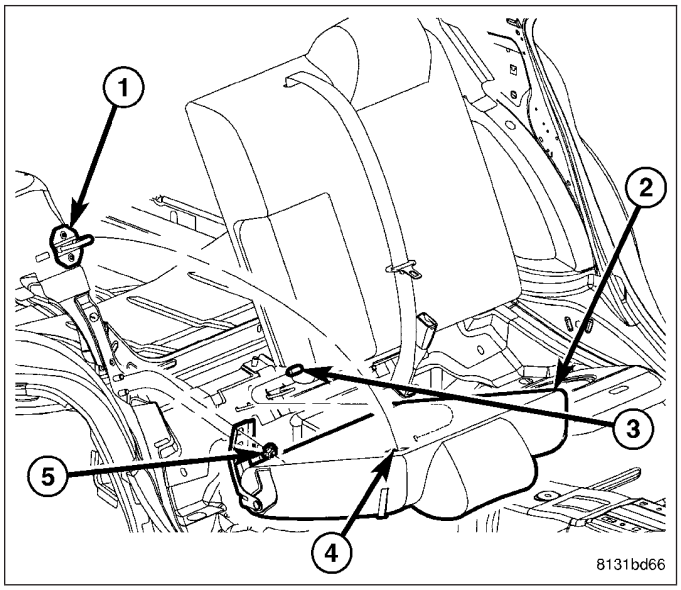

60/40 Seat Back Domestic Sedan

60% SEAT BACK SIDE

1. With the 40% seat back removed.
2. Place 60% seat back (2) into position on the studs.
3. Fold the 60% section of the seat down.
4. Install the four nuts (1) and (3) attaching seat back (2). Tighten nuts to 57 N·m (42 ft. lbs.).

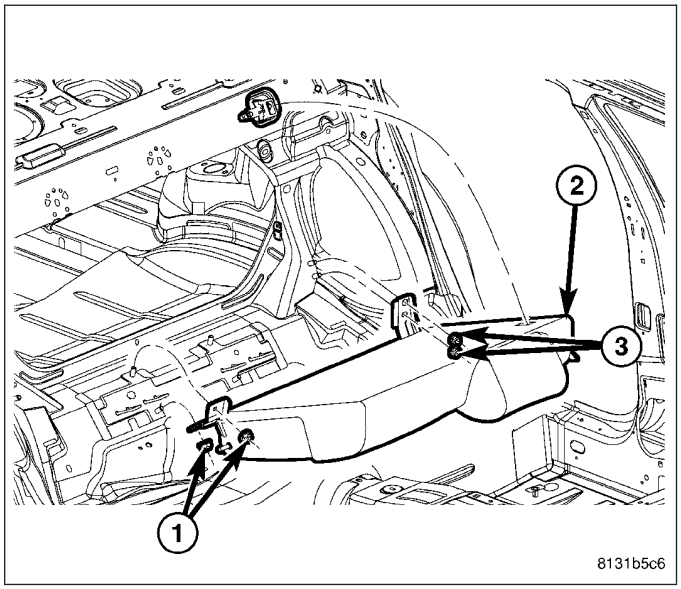

60/40 Seat Back Domestic Sedan

40% SEAT BACK SIDE

1. Place the 40% section (3) into position.
2. Slide 40% seat back onto the pivot pin (1) located on the 60% seat back (2).
3. Install the two nuts (5) attaching seat back. Tighten nuts to 57 N·m (42 ft. lbs.).

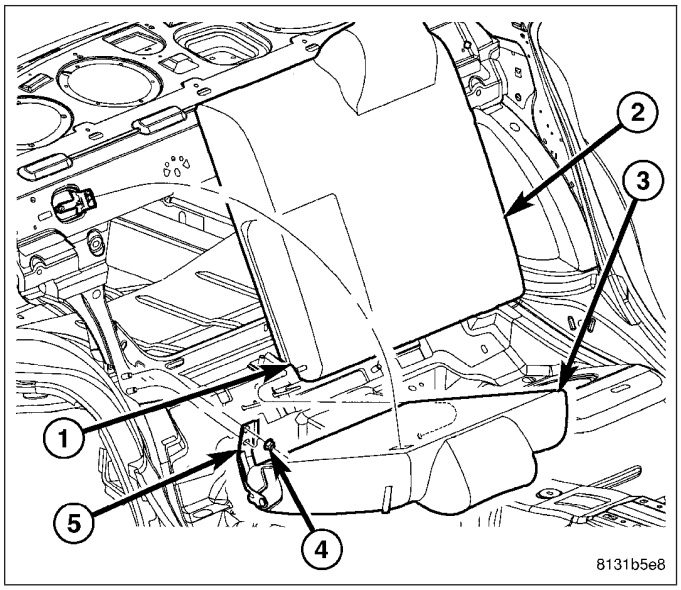

60/40 Seat Back Export Sedan

60% SEAT BACK SIDE

1. With the 40% seat back removed.
2. Place 60% seat back (2) into position on the studs.
3. Fold the 60% section of the seat down.
4. Install the four nuts (1) and (3) attaching seat back (2). Tighten nuts to 57 N·m (42 ft. lbs.).

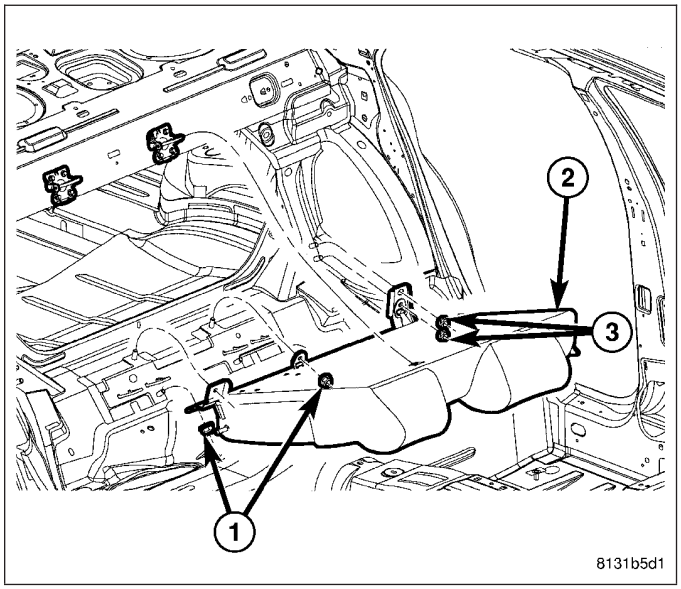

60/40 Seat Back Export Sedan

40% SEAT BACK SIDE

1. Place the 40% section (3) into position onto the studs.
2. Fold the 40% section of the seat down.
3. Install the four nuts (4) attaching seat back (3). Tighten nuts to 57 N·m (42 ft. lbs.).

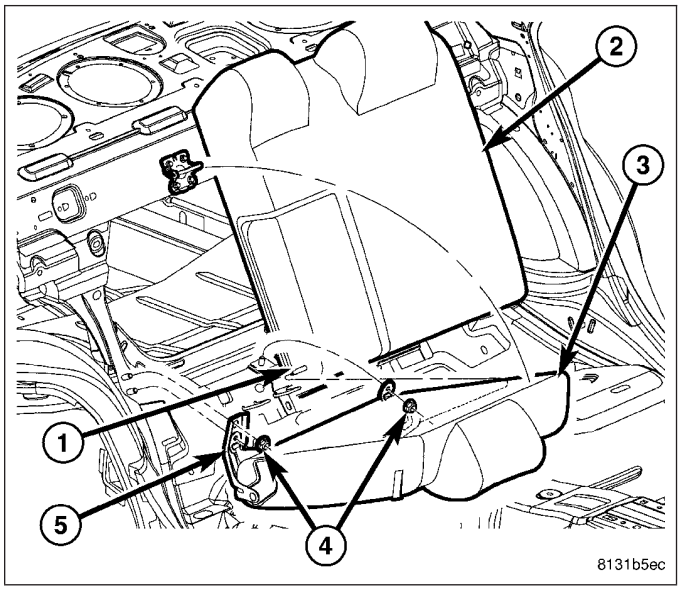

RISER-FRONT

REMOVAL

Manual Length Adjuster

1. Before proceeding with the following repair procedure, review all warnings and cautions. (Refer to 23 - BODY/SEATS - WARNING)
2. Remove the seat. (Refer to 23 - BODY/SEATS/SEAT - REMOVAL)
3. Move the seat to the forward position on the tracks and remove the seat adjuster bolts/nuts (3).
4. Move the seat to the reward position on the tracks and remove the front seat adjuster bolts/nuts (3).

NOTE: Passenger seat with strain gauges shown, drivers side seat similar.

5. Disconnect strain gauge electrical connectors (1), if equipped.
6. If equipped, remove the strain gauge bolts (2) and remove the strain gauges as necessary.

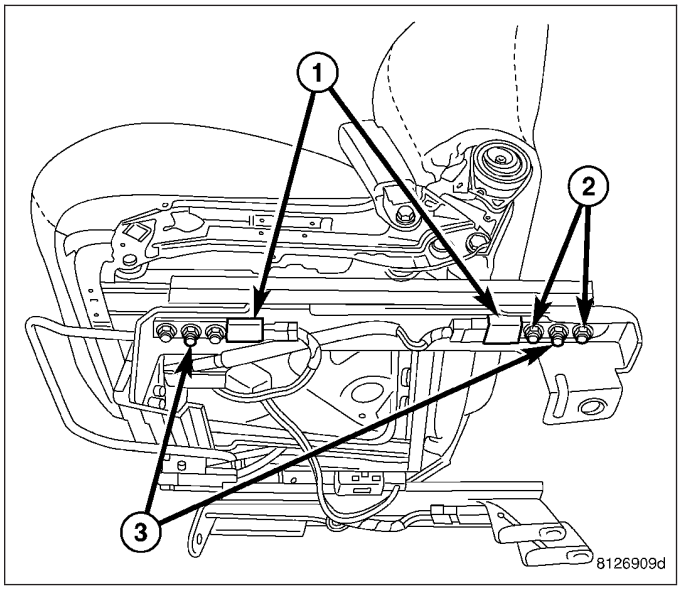

Power Length Adjuster

1. Before proceeding with the following repair procedure, review all warnings and cautions. (Refer to 23 - BODY/SEATS - WARNING)
2. Unbolt the seat from the floor as necessary to gain access to the riser bolts. (Refer to 23 - BODY/SEATS/SEAT - REMOVAL)
3. Move the seat to the forward position on the tracks, tip the seat backwards in vehicle and remove the seat adjuster bolts/nuts (1).
4. Move the seat to the reward position on the tracks and remove the front seat adjuster bolts/nuts (1).

NOTE: Manual seat length adjuster shown, power similar.

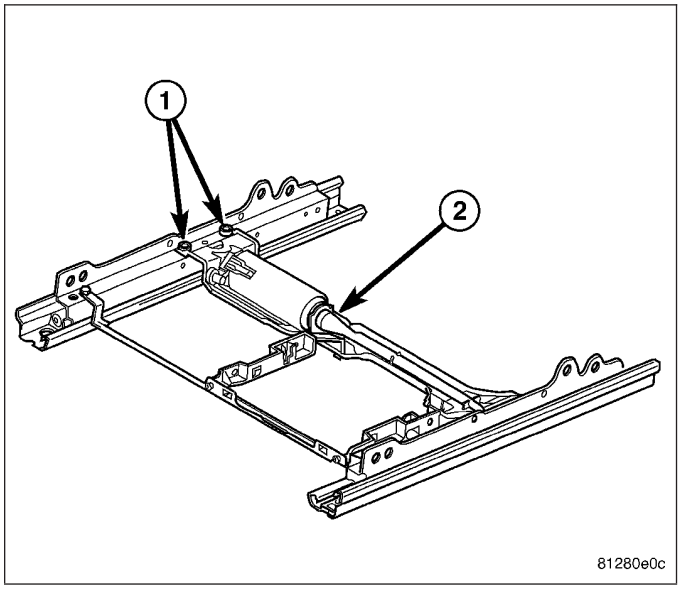

5. If the seat cannot be moved forward or backward, remove the seat cushion. (Refer to 23 - BODY/SEATS/SEAT CUSHION COVER - REMOVAL)
6. Remove the four bolts (1) and remove the motor and cable assembly (2) from the length adjuster assembly.

CAUTION: When the motor and cable assembly are removed from the tracks discard the length adjuster assembly and replace with a new one.

7. Disconnect and isolate battery negative cable.
8. Remove the seat off of the risers and disconnect the electrical connectors.
9. Disconnect strain gauge electrical connectors (1), if equipped.
10. If equipped, remove the strain gauge bolts (2) and remove the strain gauges as necessary.

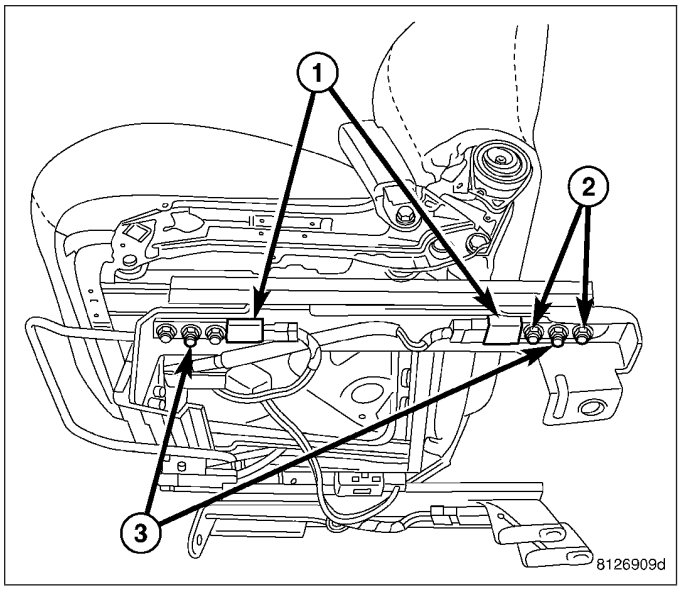

INSTALLATION

Manual Length Adjuster

1. Before proceeding with the following repair procedure, review all warnings and cautions. (Refer to 23 - BODY/SEATS - WARNING)

NOTE: Passenger seat with strain gauges shown, drivers side seat similar.

2. If equipped, install the strain gauges and install the bolts (2).
3. Tighten the bolts to 40 N·m (30 ft. lbs.).
4. If necessary, connect the electrical connections (1).
5. Move the seat to the forward position on the tracks and install the rear seat adjuster bolts/nuts (3).
6. Tighten the bolts to 45 N·m (33 ft. lbs.).
7. Move the seat to the reward position on the tracks and install the front seat adjuster bolts/nuts (3).
8. Tighten the bolts to 45 N·m (33 ft. lbs.).
9. Install the seat. (Refer to 23 - BODY/SEATS/SEAT - INSTALLATION)

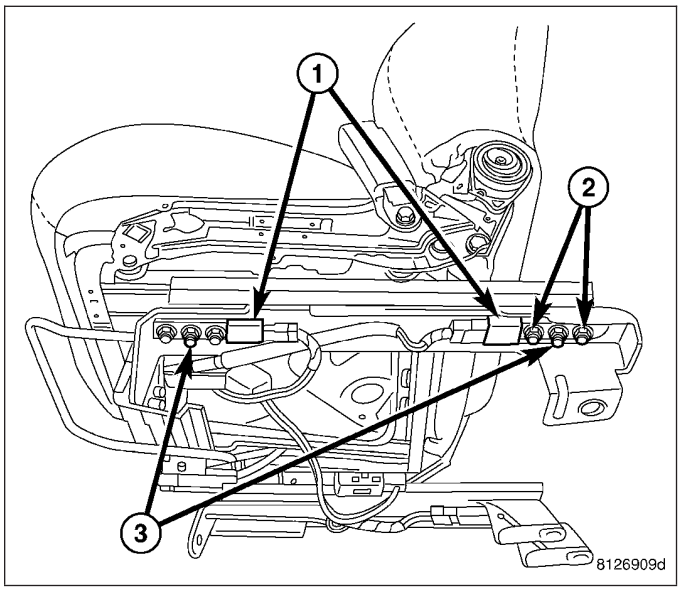

Power Length Adjuster

1. Before proceeding with the following repair procedure, review all warnings and cautions. (Refer to 23 - BODY/SEATS - WARNING)
2. If equipped, install the strain gauges and install the bolts (2).
3. Tighten the bolts to 40 N·m (30 ft. lbs.).
4. Position the seat into the vehicle onto the risers and connect the electrical connectors.
5. Move the seat to the forward position on the tracks and install the seat adjuster bolts/nuts (3).
6. Tighten the bolts attaching the adjuster to the risers/strain gauges to 45 N·m (33 ft. lbs.).
7. Move the seat to the reward position on the tracks and install the front seat adjuster bolts/nuts (3).
8. Tighten the bolts attaching the adjuster to the risers/strain gauges to 45 N·m (33 ft. lbs.).
9. If necessary, connect the strain gauge electrical connections (1).

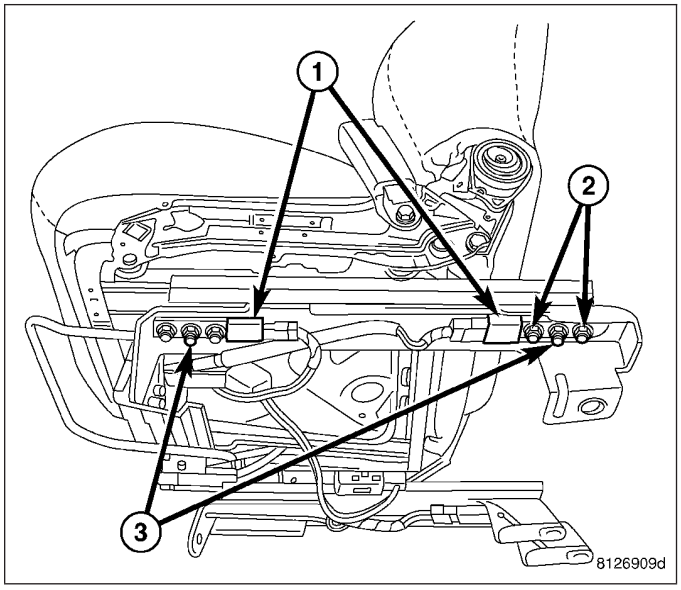

CAUTION: When the motor and cable assembly are removed from the tracks discard the length adjuster assembly and replace with a new one.

10. Bolt the seat to the floor. (Refer to 23 - BODY/SEATS/SEAT - INSTALLATION)

SEAT-FRONT

REMOVAL

1. Before proceeding with the following repair procedure, review all warnings and cautions. (Refer to 23 - BODY/SEATS - WARNING).
2. Remove the cover (1) and lower seat belt anchor bolt (2).

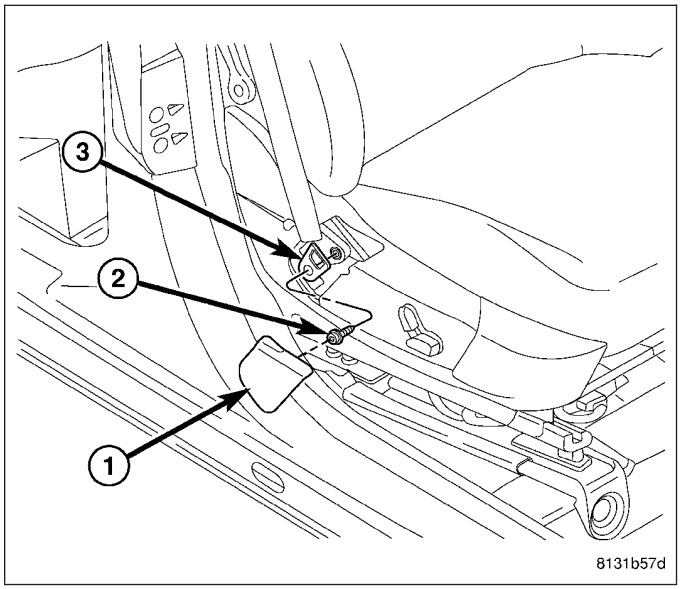

FRONT SEAT - LEFT SIDE

1. Remove the left side front seat two front attaching bolts (1).

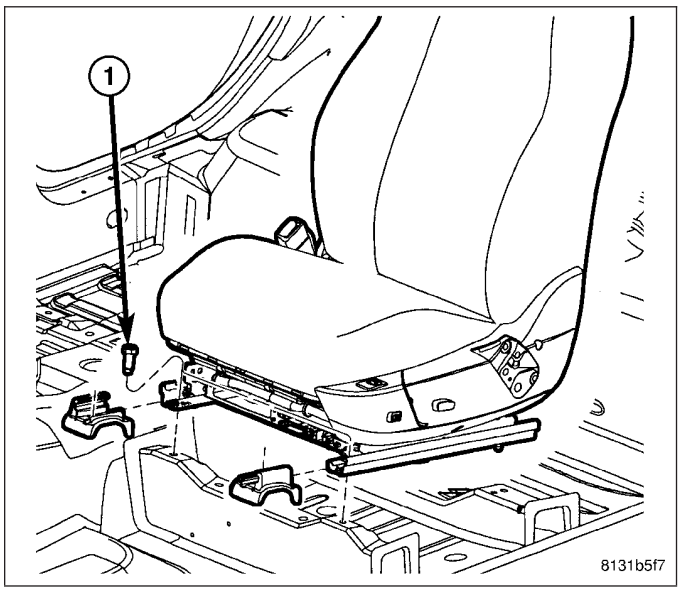

2. Move the seat forward to gain access to the rear bolts.
3. Remove the left side front seat two rear attaching bolts (1) and (2).
4. Disconnect and isolate battery negative cable.
5. Disconnect the electrical connectors.
6. Remove the seat.

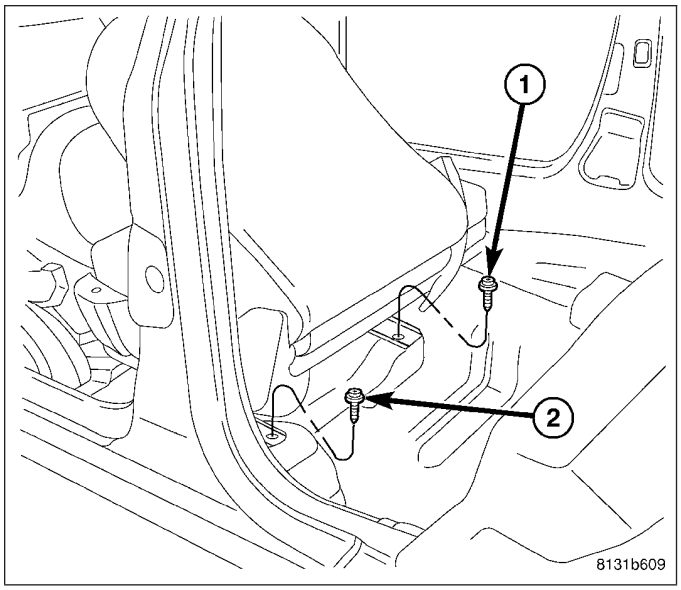

FRONT SEAT - RIGHT SIDE

1. Before proceeding with the following repair procedure, review all warnings and cautions. (Refer to 23 - BODY/ SEATS - WARNING).

WARNING: The front passenger seat must be handled carefully as well. When removing the seat, be careful when setting on floor not to drop. If dropped, the sensor may be inoperative. Failure to follow these instructions may result in personal injury or death.

WARNING: When the seat is on the floor, no one should sit in the front passenger seat. This uneven force may damage the sensing ability of the seat weight sensors. If sat on and damaged, the sensor may be inoperative. Failure to follow these instructions may result in personal injury or death.

2. Remove the right side front seat with OCS sensor two front attaching bolts (1).

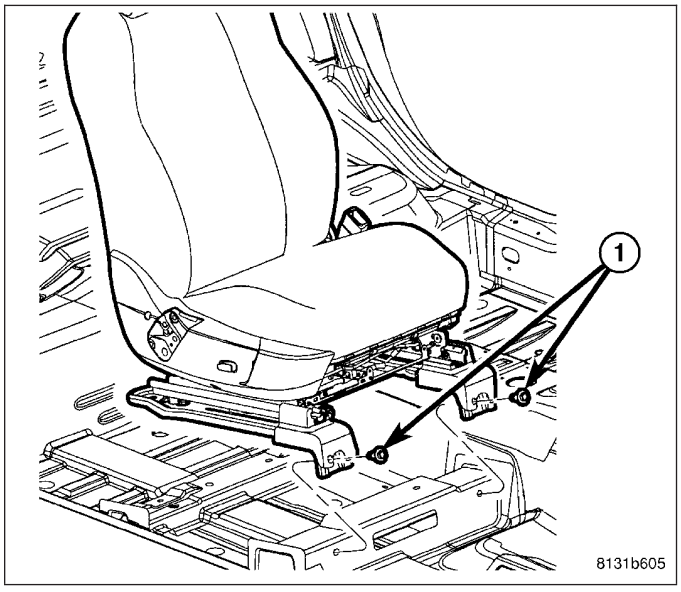

3. Move the seat forward to gain access to the rear bolts.
4. Remove the right side front seat with OCS sensor two rear attaching bolts (2) and (3).
5. Ensure that the ignition key is in the off position.
6. Disconnect and isolate battery negative cable.
7. Disconnect the electrical connectors.
8. Remove the seat.

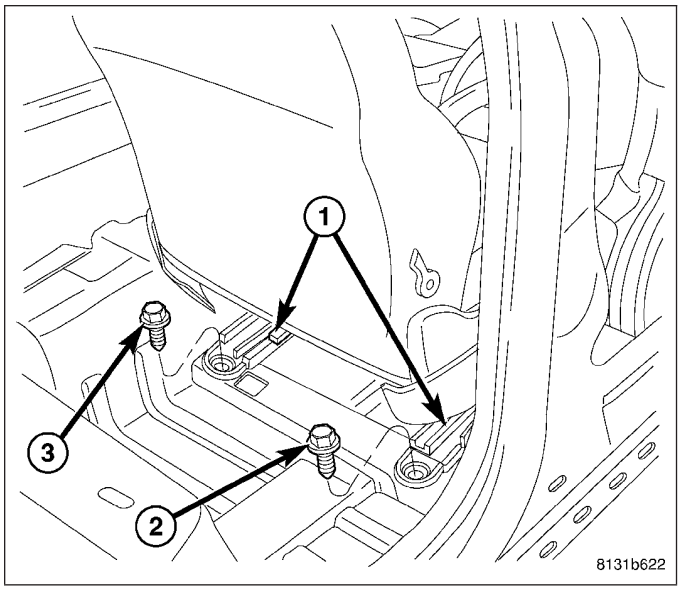

INSTALLATION

FRONT SEAT - RIGHT SIDE

1. Before proceeding with the following repair procedure, review all warnings and cautions. (Refer to 23 - BODY/ SEATS - WARNING)

WARNING: The front passenger seat must be handled carefully as well. When removing the seat, be careful when setting on floor not to drop. If dropped, the sensor may be inoperative. Failure to follow these instructions may result in personal injury or death.

WARNING: When the seat is on the floor, no one should sit in the front passenger seat. This uneven force may damage the sensing ability of the seat weight sensors. If sat on and damaged, the sensor may be inoperative. Failure to follow these instructions may result in personal injury or death.

2. With battery negative cable disconnected.
3. Place seat into position in vehicle.

WARNING: The front passenger seat must be handled carefully as well. When removing the seat, be careful when setting on floor not to drop. If dropped, the sensor may be inoperative. Failure to follow these instructions may result in personal injury or death.

4. Connect the electrical connectors.
5. Place the ignition key in the run position.
6. Connect battery negative cable.
7. Place ignition key in the off position.
8. Move the seat forward to gain access to the rear bolts, as necessary.
9. Install the front seat attaching rear bolts (1) and (2).

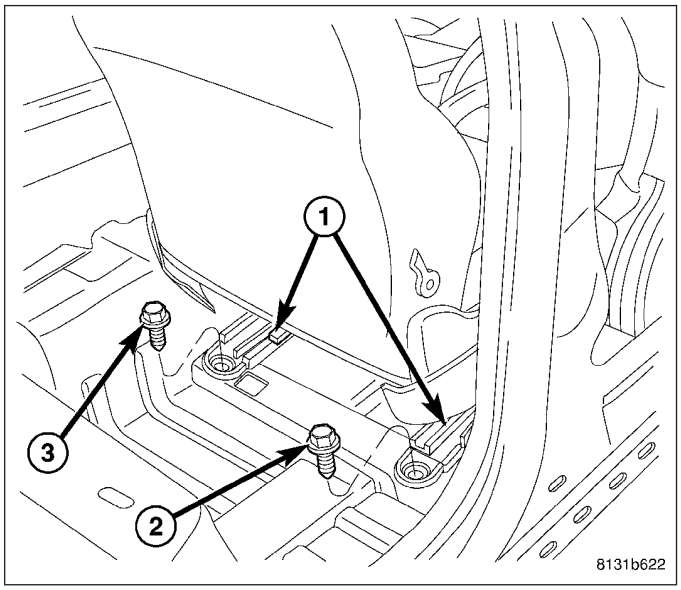

10. Install the front seat front attaching bolts (1).
11. The supplemental restraint system verification test procedure should be performed following service of any supplemental restraint system component. (Refer to 8 - ELECTRICAL/RESTRAINTS - STANDARD PROCEDURE - VERIFICATION TEST).
12. Following successful completion of the supplemental restraint system verification test procedure, perform the Occupant Classification System Verification Test using a scan tool. (Refer to 8 - ELECTRICAL/RESTRAINTS - *OCS VERIFICATION TEST - VER 1)

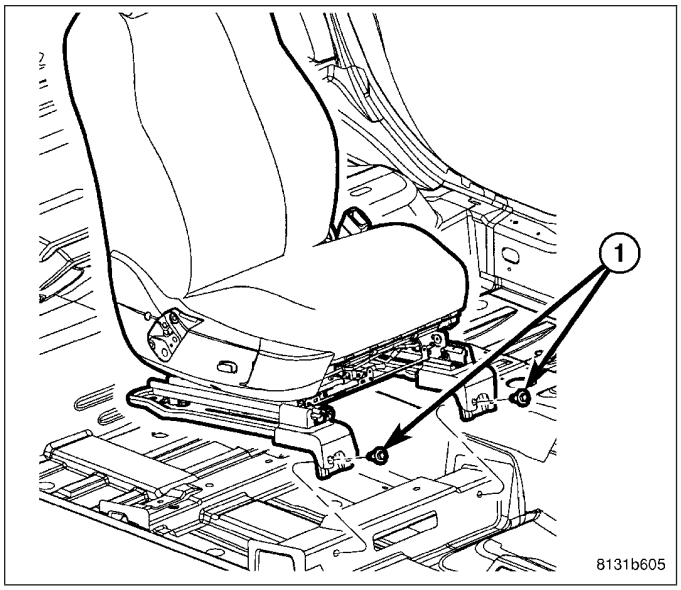

FRONT SEAT - LEFT SIDE

1. Place seat into position in vehicle.
2. Connect the electrical connectors.
3. Connect battery negative cable.
4. Move the seat forward to gain access to the rear bolts.
5. Install the front seat attaching rear bolts (1) and (2).

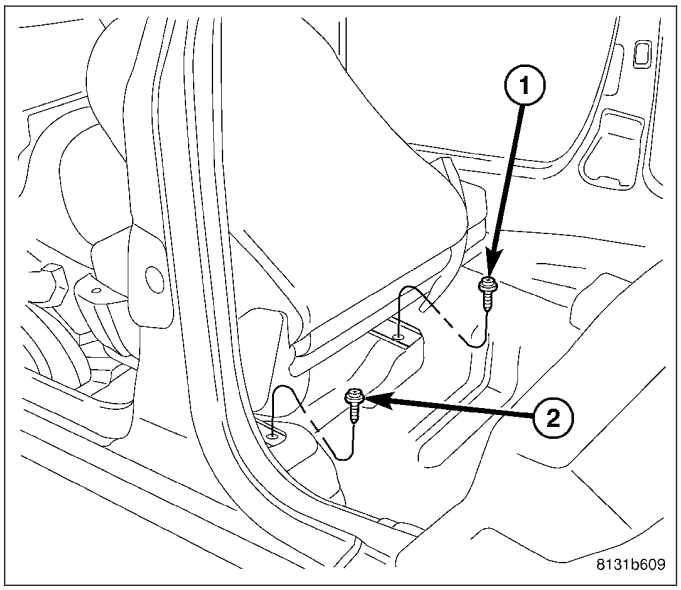

6. Install the front seat front attaching bolts (1).

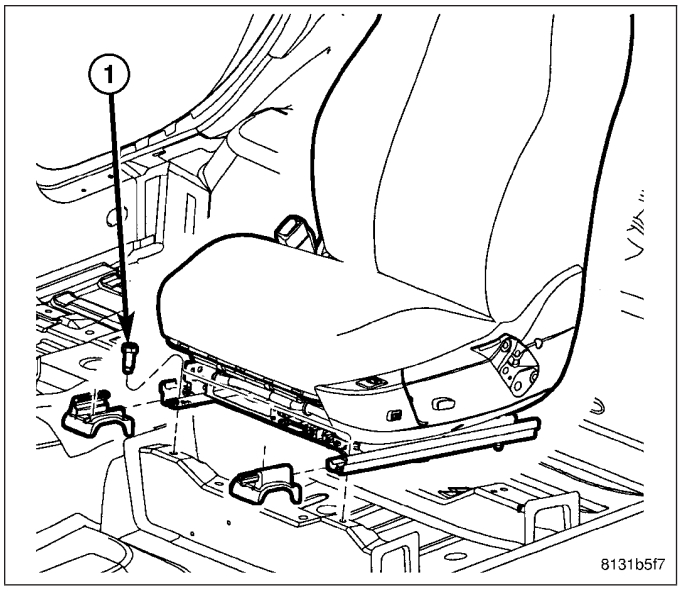

7. Install the cover (1) and lower seat belt anchor bolt (2).

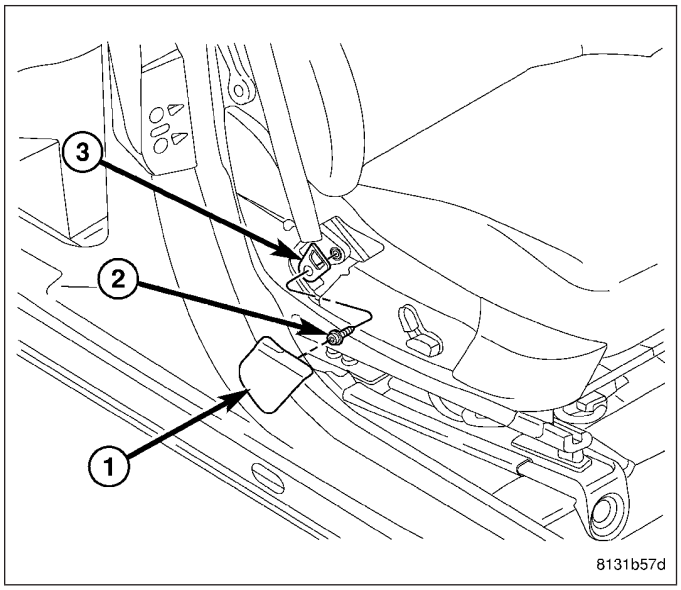

STRIKER-SEAT BACK LATCH - SECOND ROW

REMOVAL

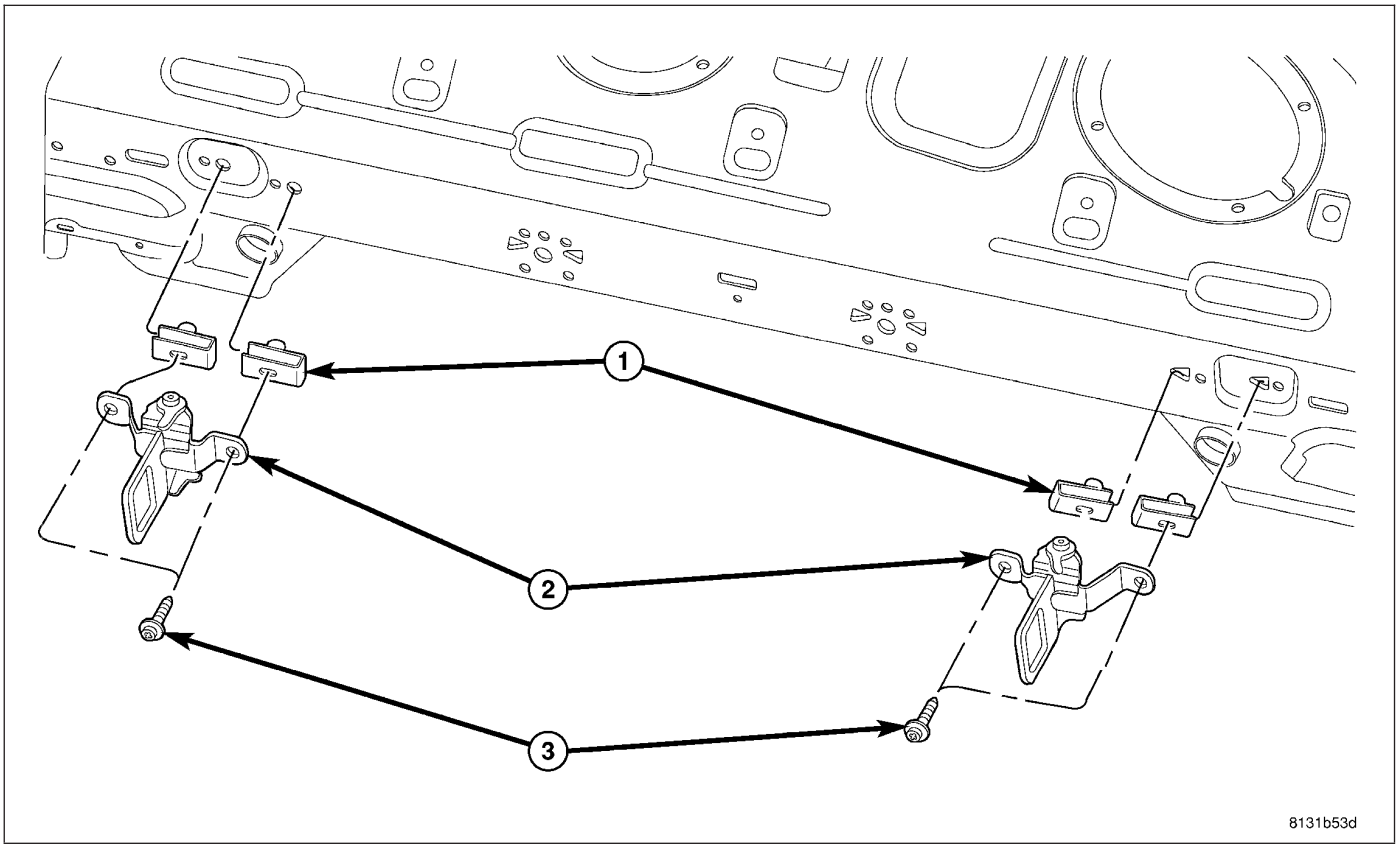

1. Remove the sedan seat back striker (2), remove the attaching screws (3) and remove seat back striker from the vehicle.
2. Remove the wagon seat back striker (2), remove the attaching screws (1) and remove seat back striker from the vehicle.

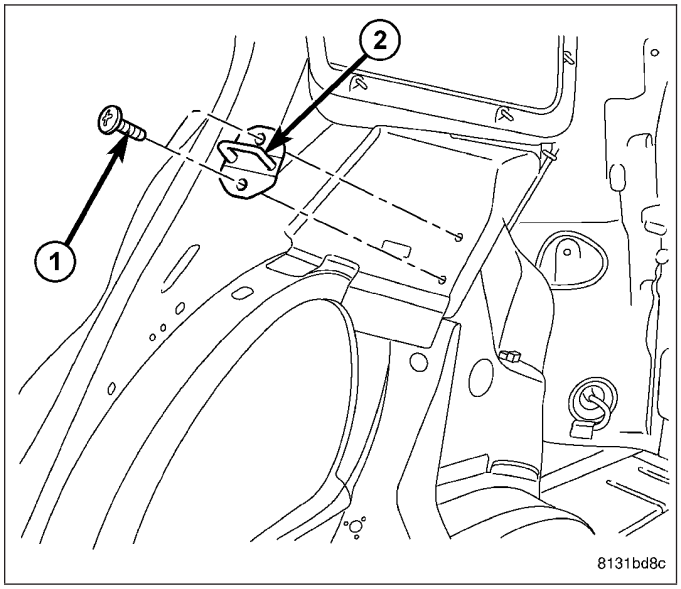

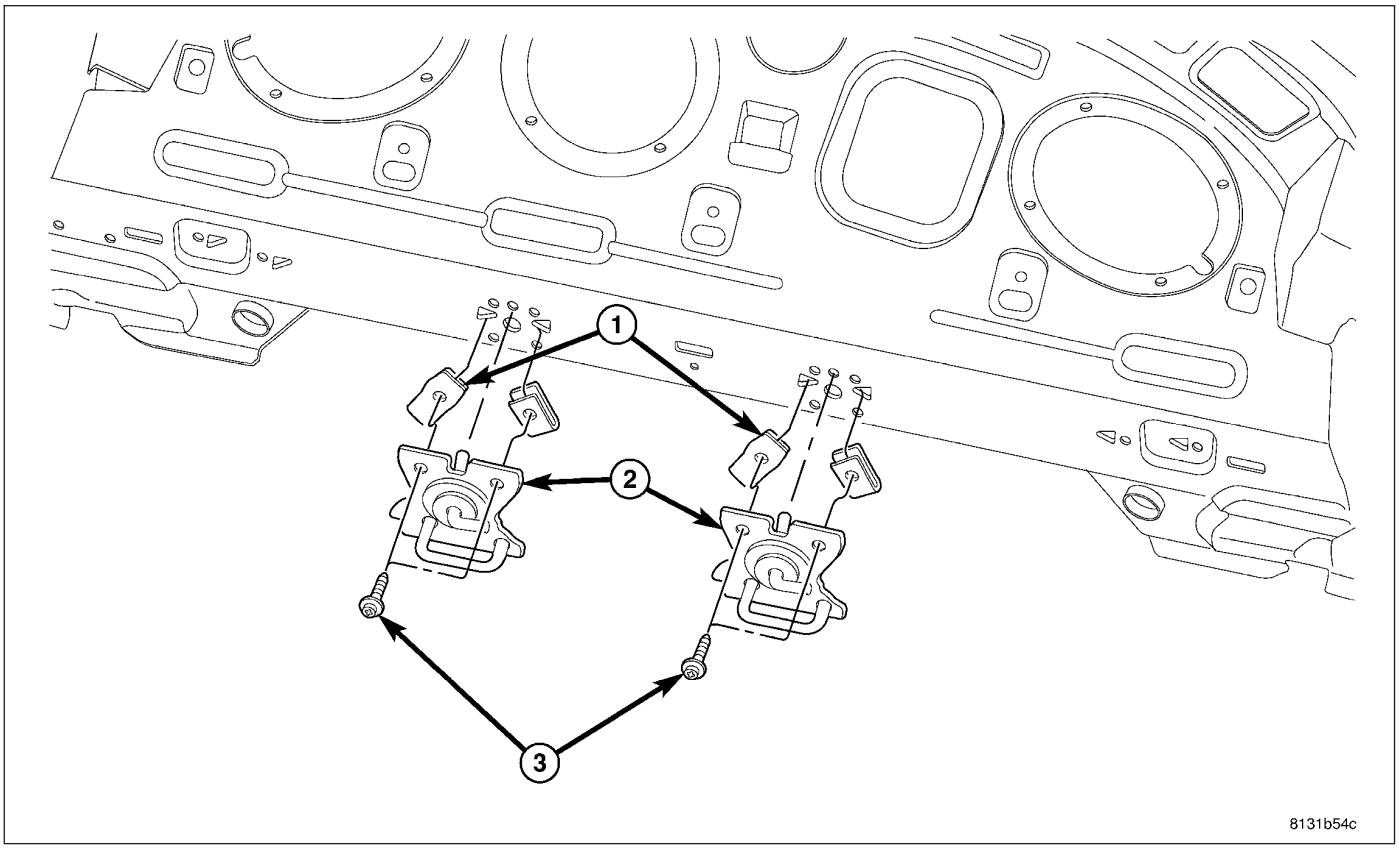

3. Remove the export sedan seat back striker (2), remove the attaching screws (3) and remove seat back striker from the vehicle.

INSTALLATION

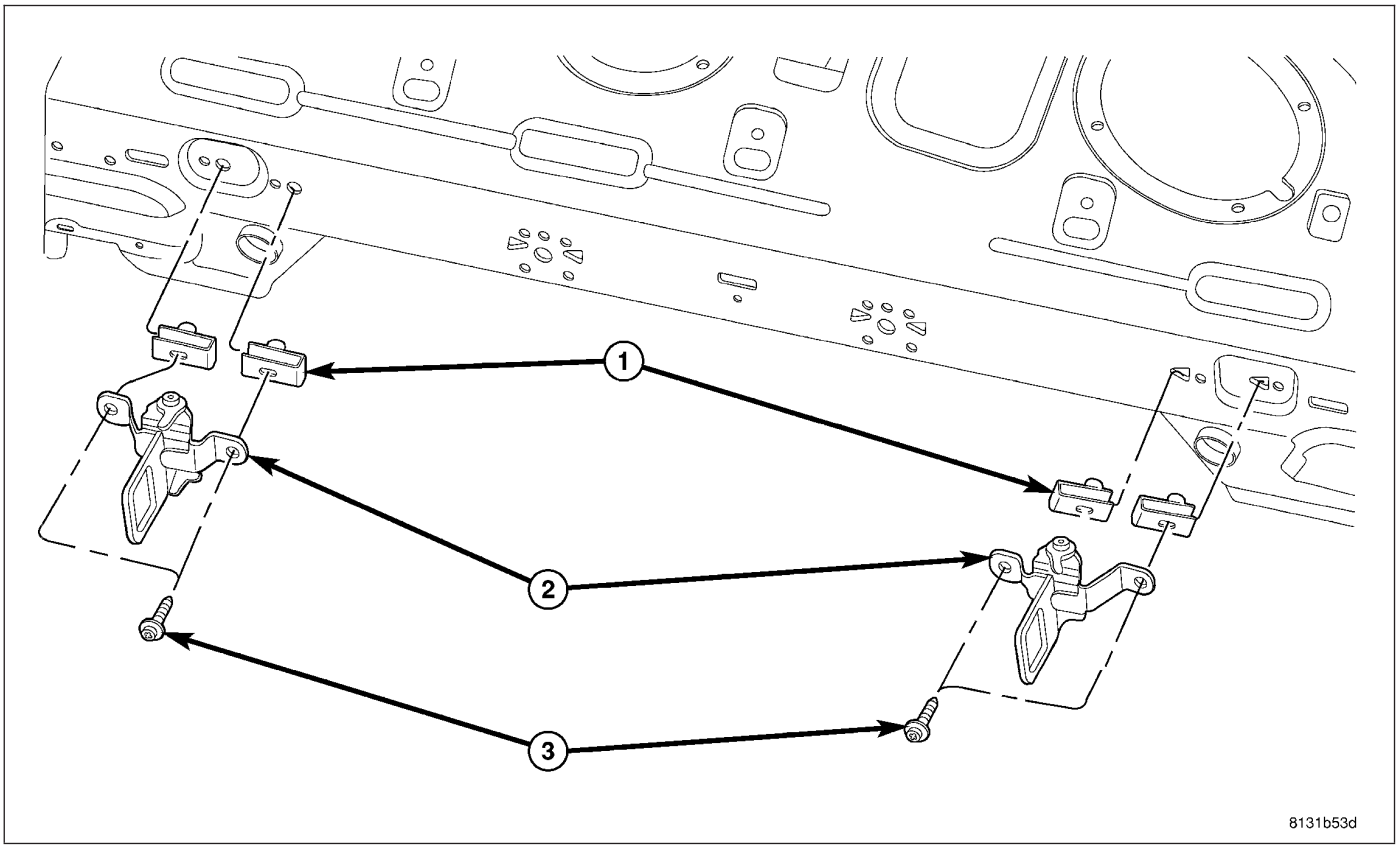

1. Spring nut(s) (1) replace, if necessary.
2. Place the sedan back seat striker (2) into position and Install attaching screws (3).
3. Place the wagon back seat striker (2) into position and Install attaching screws (1).

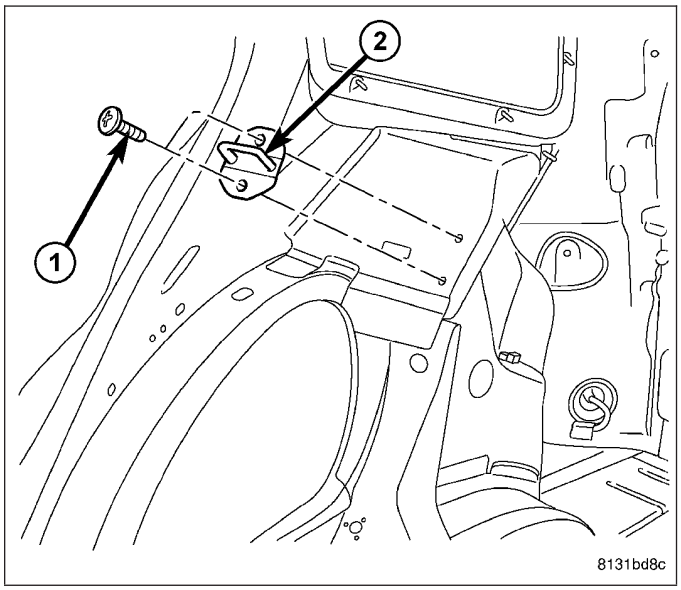

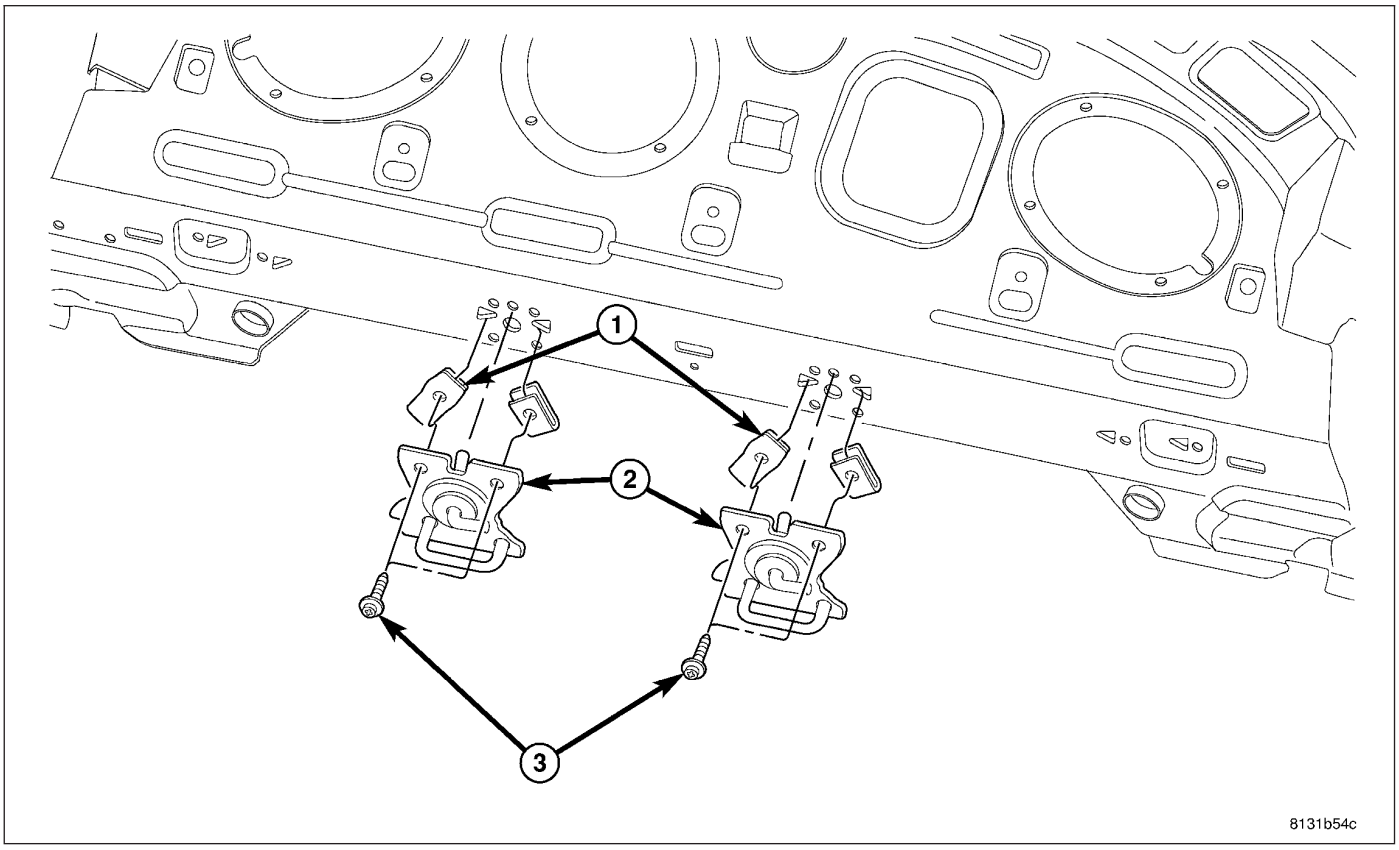

4. Spring nut(s) (1) replace, if necessary.
5. Place the (Export) sedan back seat striker (2) into position and Install attaching screws (3).

SUPPORT-LUMBAR

REMOVAL

1. Before proceeding with the following repair procedure, review all warnings and cautions. (Refer to 23 - BODY/SEATS - WARNING)
2. Remove the seat back cushion/cover. (Refer to 23 - BODY/SEATS/SEAT BACK CUSHION / COVER - FRONT - REMOVAL)
3. Release the lumbar mat side wires (1) by pulling out on the wire supports and then pulling them in.

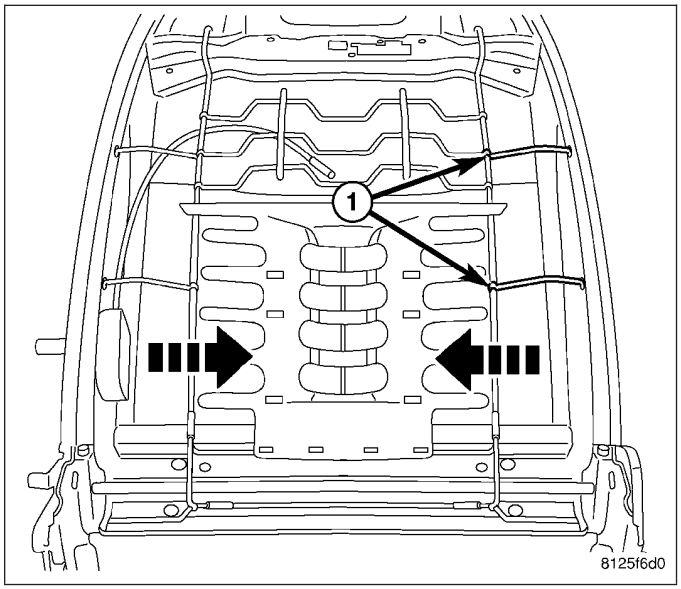

4. Squeeze the lower support wires (1) in and release the lower wires.

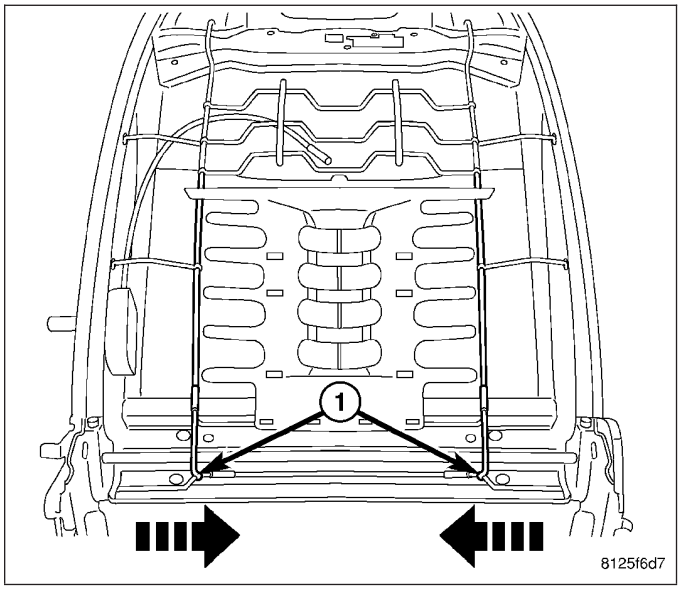

5. Pull the upper support wires (1) down and release the lumbar mat from the seat back frame.

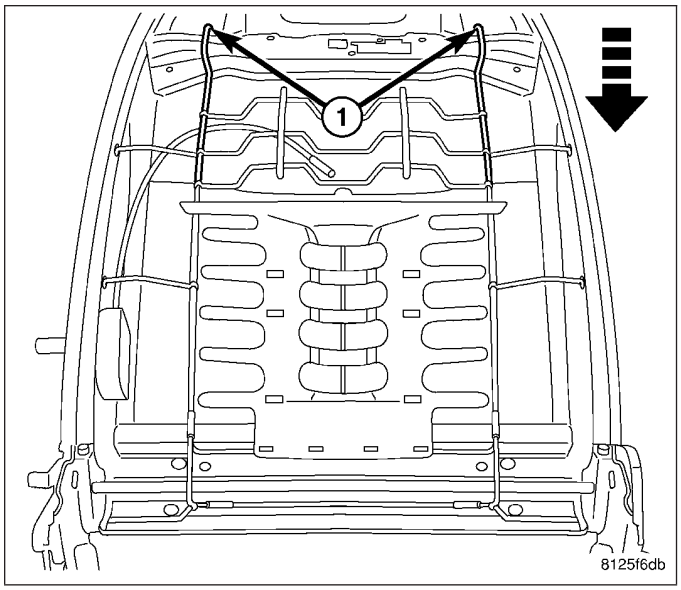

6. Remove the rivet (1) and remove the lumbar mechanism (2).

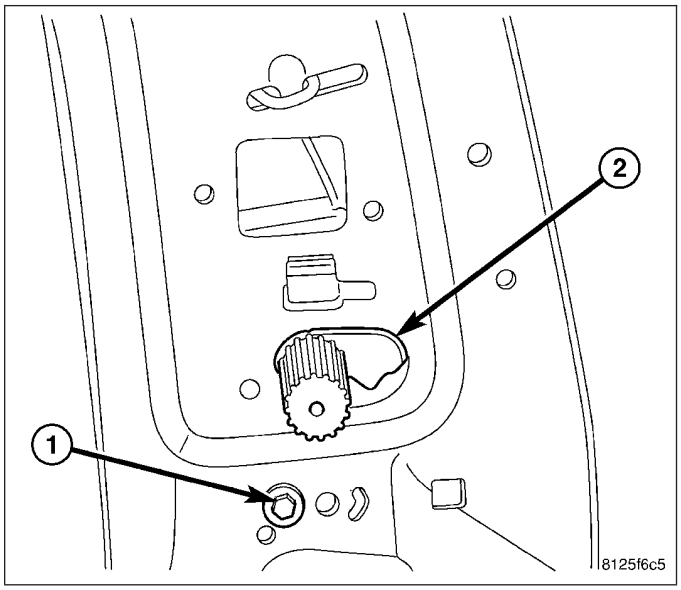

INSTALLATION

1. Before proceeding with the following repair procedure, review all warnings and cautions. (Refer to 23 - BODY/SEATS - WARNING)
2. Install the lumbar mechanism (2) and install a new rivet (1).

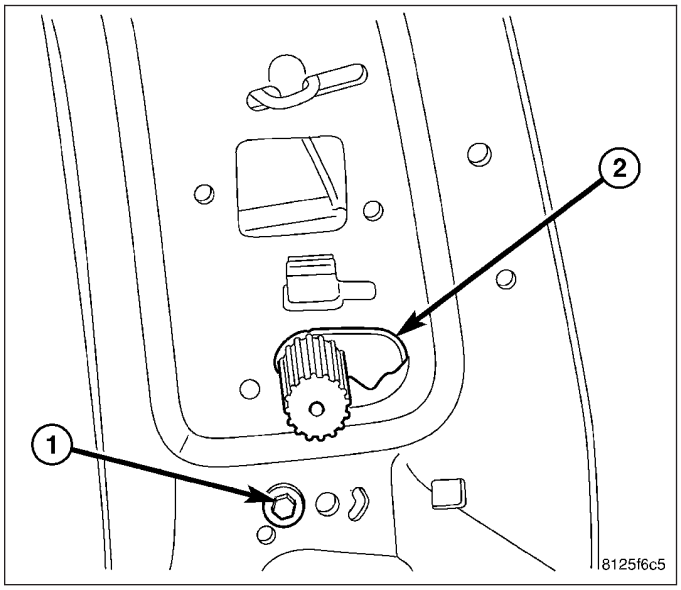

3. Place lumbar mat onto seat back frame and insert the upper support wires (1) into the frame.

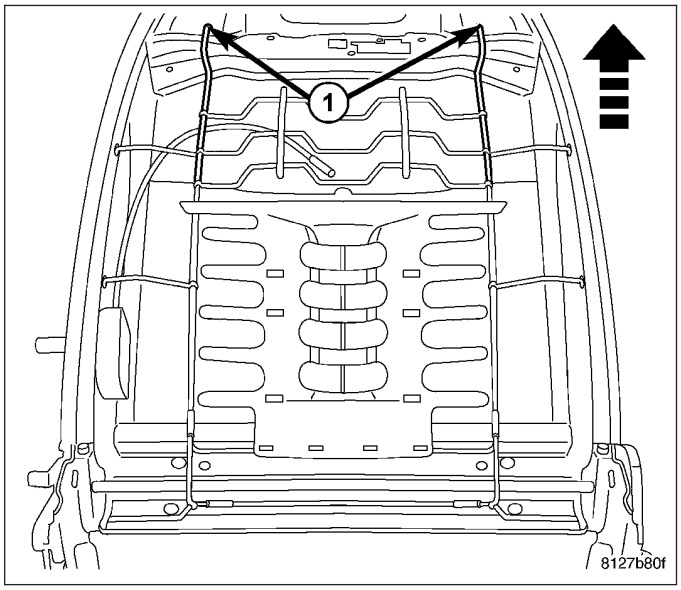

4. Squeeze the lower support wires (1) together and insert into the lower frame.

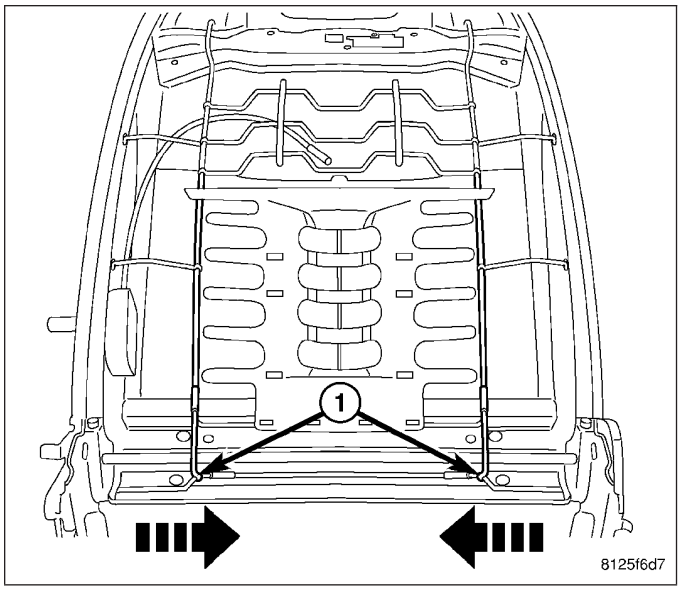

5. Squeeze the side support wires together and insert them into the sides of the seat back frame.
6. Install the seat back cushion/cover. (Refer to 23 - BODY/SEATS/SEAT BACK CUSHION / COVER - FRONT - INSTALLATION)

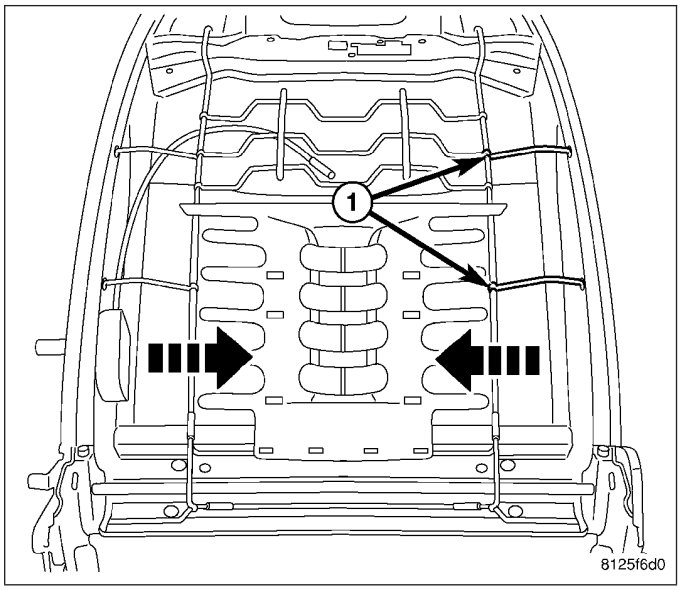

STATIONARY GLASS

TABLE OF CONTENTS

page

STATIONARY GLASS
WARNING
WINDSHIELD SAFETY PRECAUTIONS 273
BACKLITE
REMOVAL 274
INSTALLATION 274
GLASS-LIFTGATE
REMOVAL 278
INSTALLATION 278
GLASS-QUARTER
REMOVAL 282
INSTALLATION 282
WINDSHIELD
DESCRIPTION 283
REMOVAL 283
INSTALLATION 283

STATIONARY GLASS

WARNING

WINDSHIELD SAFETY PRECAUTIONS

WARNING: Do not operate the vehicle within 24 hours of windshield installation. It takes at least 24 hours for urethane adhesive to cure. If it is not cured, the windshield may not perform properly in an accident.

- **urethane adhesives are applied as a system. Use glass cleaner, glass prep solvent, glass primer, pvc (vinyl) primer and pinch weld (fence) primer provided by the adhesive manufacturer. If not, structural integrity could be compromised.**
- **DaimlerChrysler does not recommend glass adhesive by brand. Technicians should review product labels and technical data sheets, and use only adhesives that their manufactures warrant will restore a vehicle to the requirements of fmvss 212. Technicians should also insure that primers and cleaners are compatible with the particular adhesive used.**
- **be sure to refer to the urethane manufacturer's directions for curing time specifications, and do not use adhesive after its expiration date.**
- **vapors that are emitted from the urethane adhesive or primer could cause personal injury. Use them in a well-ventilated area.**
- **skin contact with urethane adhesive should be avoided. Personal injury may result.**
- **always wear eye and hand protection when working with glass.**

CAUTION: Protect all painted and trimmed surfaces from coming in contact with urethane or primers. Be careful not to damage painted surfaces when removing moldings or cutting urethane around windshield.

BACKLITE

REMOVAL

NOTE: Windshield removal shown, backlite similar.

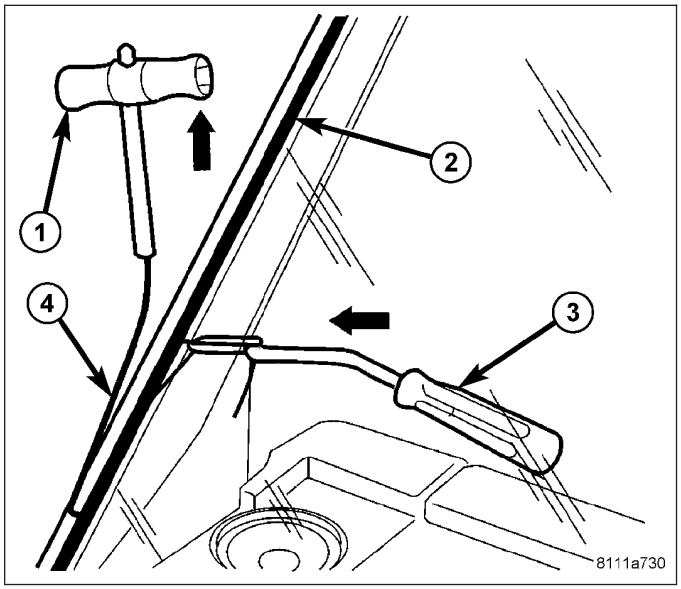

1. Before proceeding with the following repair procedure, review all warnings and cautions (Refer to 23 - BODY/STATIONARY GLASS - WARNING).
2. Remove quarter trim panels (Refer to 23 - BODY/INTERIOR/QUARTER TRIM PANEL - REMOVAL).
3. Remove the trim panel from the rear shelf (Refer to 23 - BODY/INTERIOR/REAR SHELF TRIM PANEL - REMOVAL).
4. Disconnect the wire connectors from rear window defogger terminals and, rear window mounted radio antenna, if equipped.

CAUTION: Be careful not to damage painted surfaces when cutting urethane around the backlight.

5. Using an assistant and a wire-type windshield cut-out tool (1, 3 and 4), cut and separate the urethane adhesive (2) securing the backlite to the backlite fence.
6. Carefully remove the backlite from the vehicle.

INSTALLATION

CAUTION: To help prevent water leaks, partially roll down the left and right door glass before installing the backlite. This avoids pressurizing the passenger compartment if a door is slammed before the urethane is cured.

CAUTION: Protect all painted and trimmed surfaces from coming in contact with urethane or primers.

1. If the backlite (1) is being reused, remove the as much original urethane (3) as possible from the glass surface using a razor knife (2).

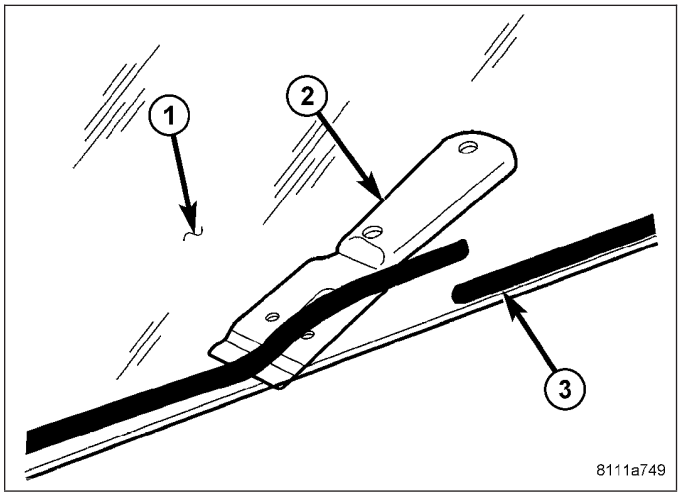

NOTE: To prevent corrosion, do not damage paint on the backlite fence when removing original urethane.

NOTE: The backlite fence should be cleaned of most of its old urethane adhesive. A small amount of old urethane, approximately 1 mm in height should remain on the fence. Do not completely remove all old urethane from the fence, the paint finish and bonding strength will be adversely affected. Replace any missing or damaged spacers around the perimeter of the backlite fence.

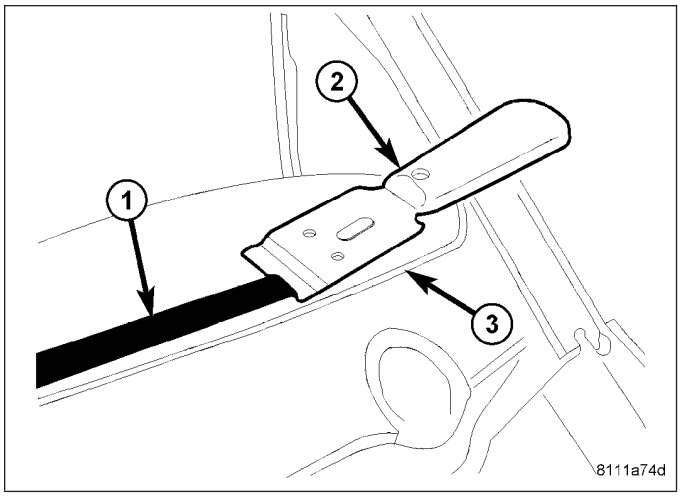

2. Using a razor knife (2), level the original bead of urethane (1) on the backlite fence (3) to a thickness of approximately 1 mm (0.04 in.) and remove the loose adhesive.
3. Install a new rubber seal (1) around the top and side edges of backlite (2).
4. Using an assistant, position the backlite into the backlite opening and against the backlite fence (3).
5. Verify the backlite lays evenly against the fence at the top, bottom and sides of the opening. If not, the fence must be formed to the shape of the backlite.
6. Mark the backlite and fence with a grease pencil or pieces of masking tape to use as a reference for installation.
7. Using an assistant, remove the backlite from the backlite opening and place it on a suitable padded work surface.

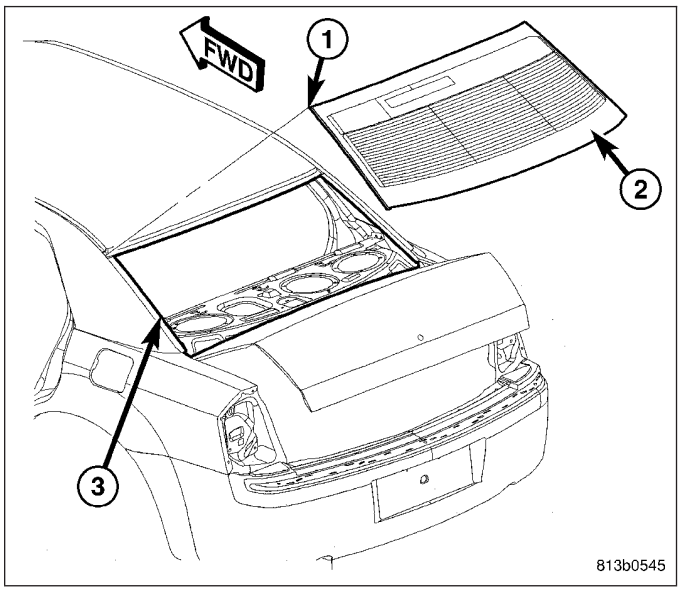

WARNING: Do not use solvent based glass cleaners to clean the backlite before applying glass prep and primer or poor glass adhesion may result.

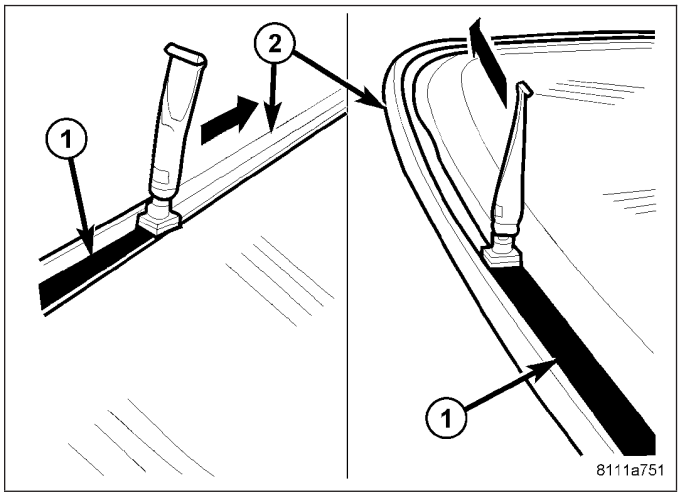

8. Clean the inside of the backlite with an ammonia based glass cleaner and a lint-free cloth.
9. Apply glass prep adhesion promoter 25 mm (1 in.) wide (1) around the perimeter of the backlight (2) and 5 mm (0.2 in.) from the edge of the glass and wipe dry with a clean lint-free cloth until no streaks are visible.
10. Apply glass primer 25 mm (1 in.) wide around the perimeter of the backlight and 5 mm (0.2 in.) from the edge of the glass. Allow at least three minutes drying time.
11. Using a flashlight, verify that the primer is completely and evenly installed along the perimeter of the backlite.
12. Re-prime any area that is not fully and evenly primed.

13. Clean the backlite fence with an ammonia based glass cleaner and a lint-free cloth.
14. Apply pinch weld primer 15 mm (0.75 in.) wide (1) around the backlite fence (2). Allow at least three minutes drying time.
15. Using a flashlight, verify that the primer is completely and evenly installed along the backlite fence.
16. Re-prime any area that is not fully and evenly primed.

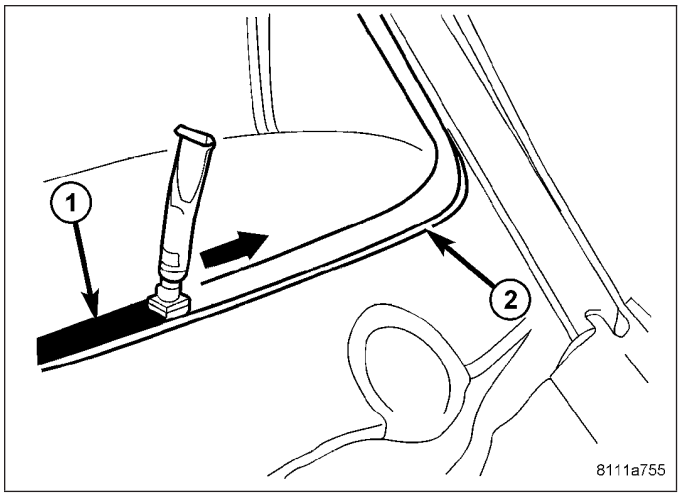

CAUTION: Always apply the bead of adhesive to the backlite. Always install the backlite within 5 minutes after applying the adhesive.

NOTE: If the original urethane adhesive has been exposed for more than 12 hours, the entire adhesive area will need to be re-primed prior to installing new adhesive.

17. Apply approximately a 10 mm (0.4 in.) wide bead of adhesive (1) with a triangular nozzle approximately 6 mm (0.230 in.) from the edge of the glass (2) starting at the bottom center of the backlite.

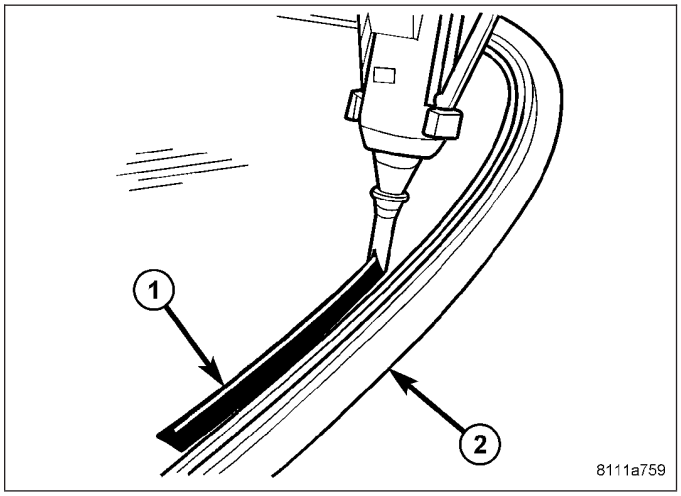

18. Run the end of the adhesive bead (1) on the backlite (2) parallel to the start of the bead and smooth the ends flush.

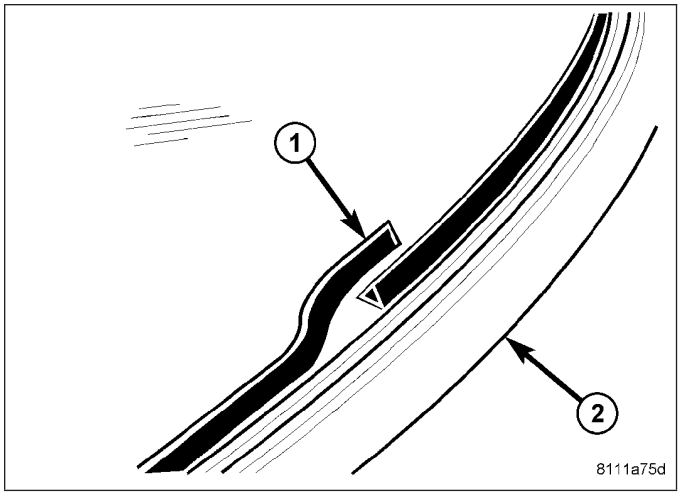

19. Using an assistant, position the backlite (2) over the backlite opening.
20. Using the grease pencil marks or tape as reference points, align the backlite to the opening.
21. Carefully lower the backlite onto the backlite fence (3). Guide the backlite and the rubber seal (1) around the backlite into its proper location.

CAUTION: It is not possible to move the backlite after installation. The backlite should never be pressed into place by more than one person, because the backlite can break if pressed simultaneously on both sides.

22. Push the backlite inward until the backlite comes into contact with the spacers located on each side of the backlite fence.
23. Connect the wire connectors to the rear window defogger terminals and, rear window mounted radio antenna, if equipped.

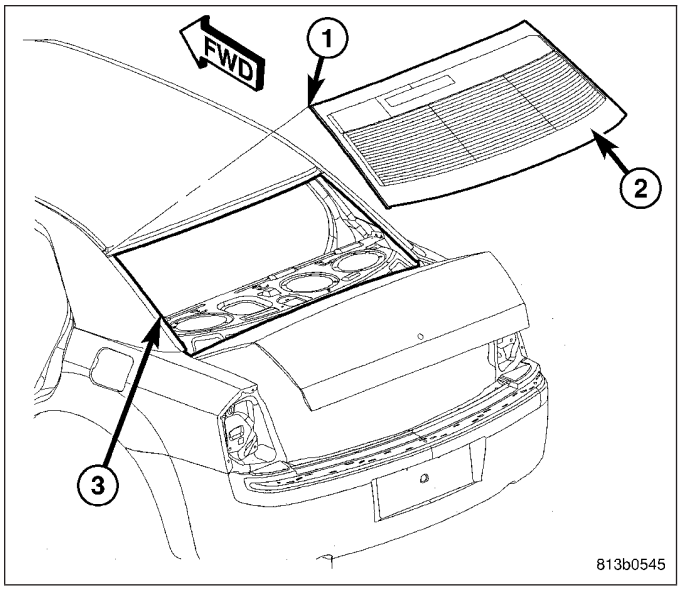

24. Install the trim panel to the rear shelf (Refer to 23 - BODY/INTERIOR/REAR SHELF TRIM PANEL - INSTALLATION).
25. Install the quarter trim panels (Refer to 23 - BODY/INTERIOR/QUARTER TRIM PANEL - INSTALLATION).

GLASS-LIFTGATE

REMOVAL

NOTE: Windshield removal shown, liftgate glass similar.

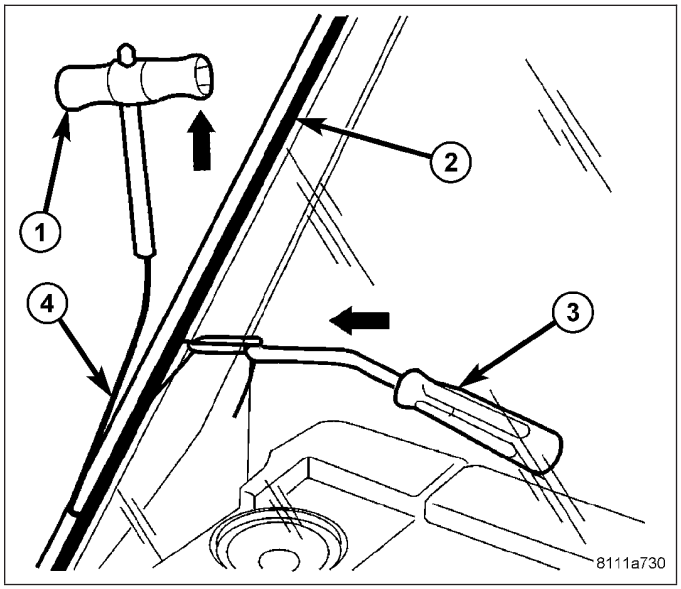

1. Before proceeding with the following repair procedure, review all warnings and cautions. (Refer to 23 - BODY/STATIONARY GLASS - WARNING)
2. Remove the liftgate trim panels (Refer to 23 - BODY/LIFTGATE/TRIM PANEL - REMOVAL).
3. Remove rear window wiper arm, if equipped (Refer to 8 - ELECTRICAL/WIPERS/WASHERS/WIPER ARMS - REMOVAL).
4. Disconnect the wire connectors from rear window defogger terminals and, rear window mounted radio antenna, if equipped.
5. Using an assistant and a wire-type windshield cut-out tool (1, 3 and 4), cut and separate the urethane adhesive (2) securing the backlite to the liftgate.
6. Carefully remove the backlite from the vehicle.

INSTALLATION

CAUTION: To help prevent water leaks, partially roll down the left and right door glass before installing the liftgate glass. This avoids pressurizing the passenger compartment if a door is slammed before the urethane is cured.

CAUTION: Protect all painted and trimmed surfaces from coming in contact with urethane or primers.

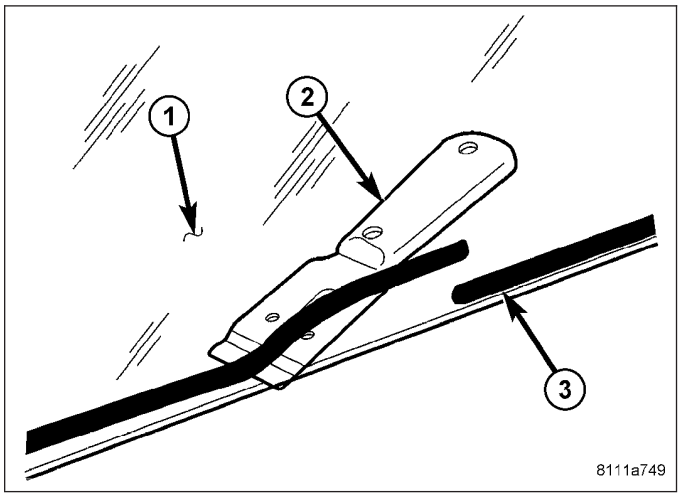

1. If the liftgate glass (1) is being reused, remove the as much original urethane (3) as possible from the glass surface using a razor knife (2).

NOTE: To prevent corrosion, do not damage paint on the liftgate glass fence when removing original urethane.

NOTE: The liftgate glass fence should be cleaned of most of its old urethane adhesive. A small amount of old urethane, approximately 1 mm in height should remain on the fence. Do not completely remove all old urethane from the fence, the paint finish and bonding strength will be adversely affected. Replace any missing or damaged spacers around the perimeter of the liftgate glass fence.

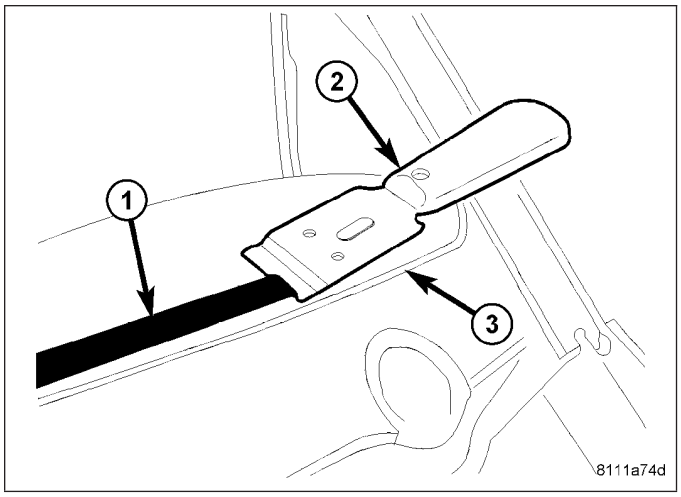

2. Using a razor knife (2), level the original bead of urethane (1) on the liftgate glass fence (3) to a thickness of approximately 1 mm (0.04 in.) and remove the loose adhesive.
3. Replace any damaged or missing spacers (1 and 3).
4. Using an assistant, position the liftgate glass (2) into the liftgate glass opening and against the support spacers.
5. Verify the liftgate glass lays evenly against the liftgate fence at the top, bottom and sides of the opening. If not, the fence must be formed to the shape of the liftgate glass.
6. Mark the liftgate glass and fence with a grease pencil or pieces of masking tape to use as a reference for installation.
7. Using an assistant, remove the liftgate glass from the liftgate glass opening and place it on a suitable padded work surface.

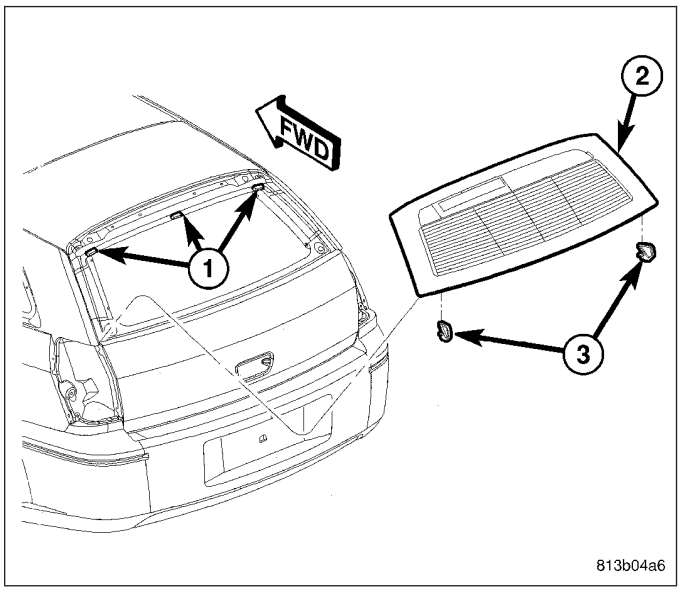

WARNING: Do not use solvent based glass cleaners to clean the liftgate glass before applying glass prep and primer or poor glass adhesion may result.

8. Clean the inside of the liftgate glass with an ammonia based glass cleaner and a lint-free cloth.
9. Apply glass prep adhesion promoter 25 mm (1 in.) wide (1) around the perimeter of the liftgate glass (2) and 5 mm (0.2 in.) from the edge of the glass and wipe dry with a clean lint-free cloth until no streaks are visible.
10. Apply glass primer 25 mm (1 in.) wide around the perimeter of the liftgate glass and 5 mm (0.2 in.) from the edge of the glass. Allow at least three minutes drying time.

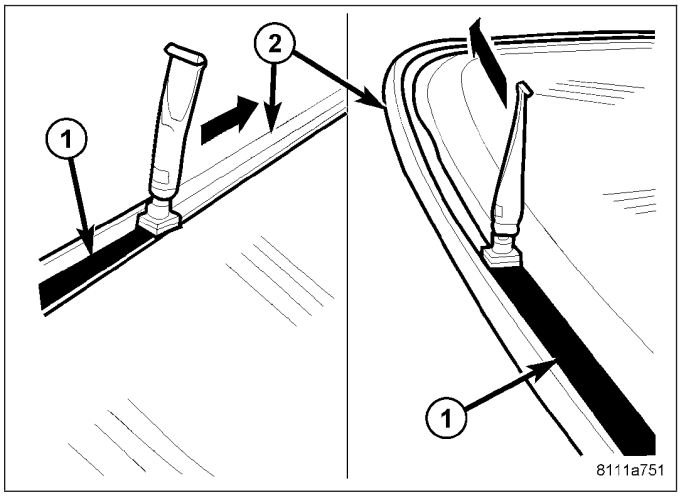

11. Using a flashlight, verify that the primer is completely and evenly installed along the perimeter of the liftgate glass.
12. Re-prime any area that is not fully and evenly primed.

13. Clean the liftgate glass fence with an ammonia based glass cleaner and a lint-free cloth.
14. Apply pinch weld primer 15 mm (0.75 in.) wide (1) around the liftgate glass fence (2). Allow at least three minutes drying time.
15. Using a flashlight, verify that the primer is completely and evenly installed along the liftgate glass fence.
16. Re-prime any area that is not fully and evenly primed.

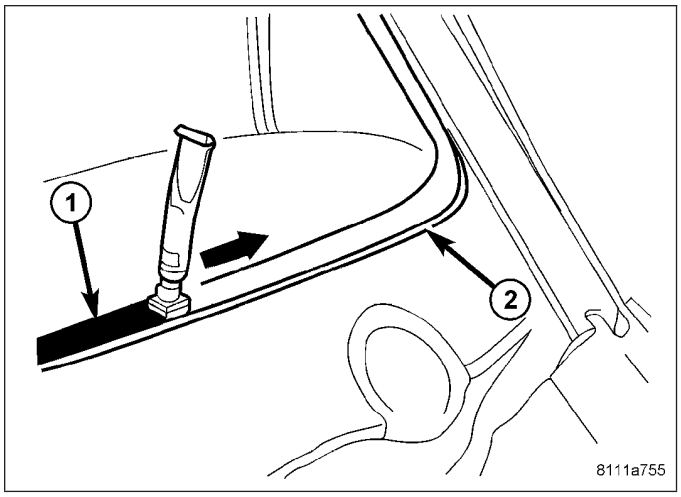

CAUTION: Always apply the bead of adhesive to the backlite. Always install the backlite within 5 minutes after applying the adhesive.

NOTE: If the original urethane adhesive has been exposed for more than 12 hours, the entire adhesive area will need to be re-primed prior to installing new adhesive.

17. Apply approximately a 10 mm (0.4 in.) wide bead of adhesive (1) with a triangular nozzle triangular nozzle approximately 6 mm (0.230 in.) from the edge of the glass (2) starting at the bottom center of the glass.

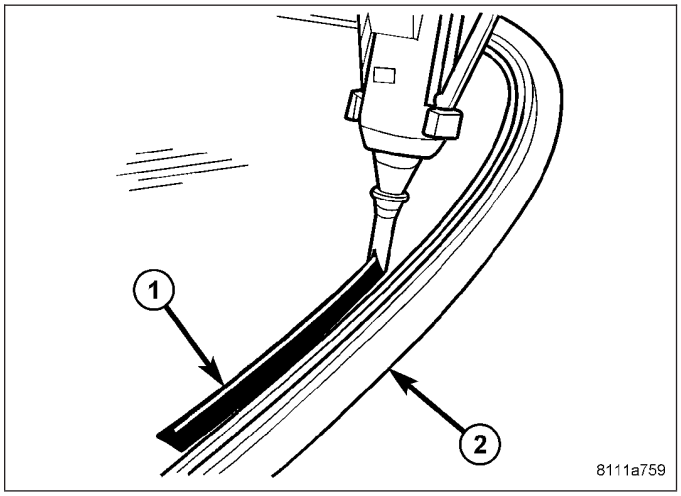

18. Run the end of the adhesive bead (1) on the liftgate glass (2) parallel to the start of the bead and smooth the ends flush.

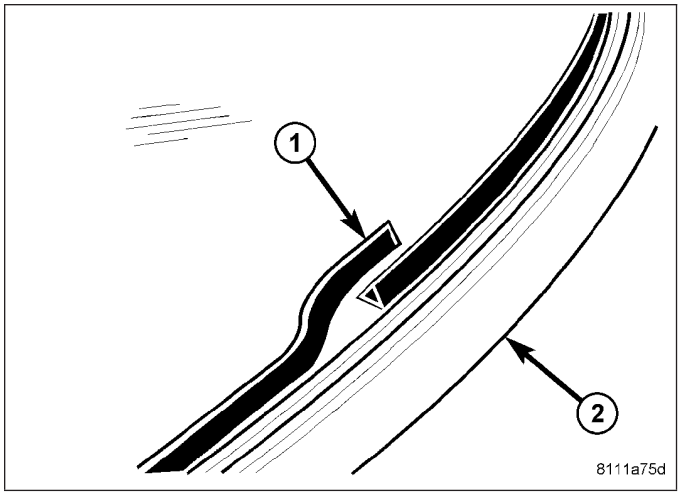

19. Using an assistant, position the liftgate glass (2) over the liftgate glass opening and against the support spacers (1 and 3).
20. Using the grease pencil marks or tape as reference points, align the liftgate glass to the opening.
21. Carefully lower the liftgate glass onto the liftgate glass fence.

CAUTION: It is not possible to move the liftgate glass after installation. The liftgate glass should never be pressed into place by more than one person, because the glass can break if pressed simultaneously on both sides.

22. Push the liftgate glass inward until the glass comes into contact with the spacers located on each side of the liftgate glass fence.
23. Connect the wire connectors to the rear window defogger terminals and, rear window mounted radio antenna, if equipped.

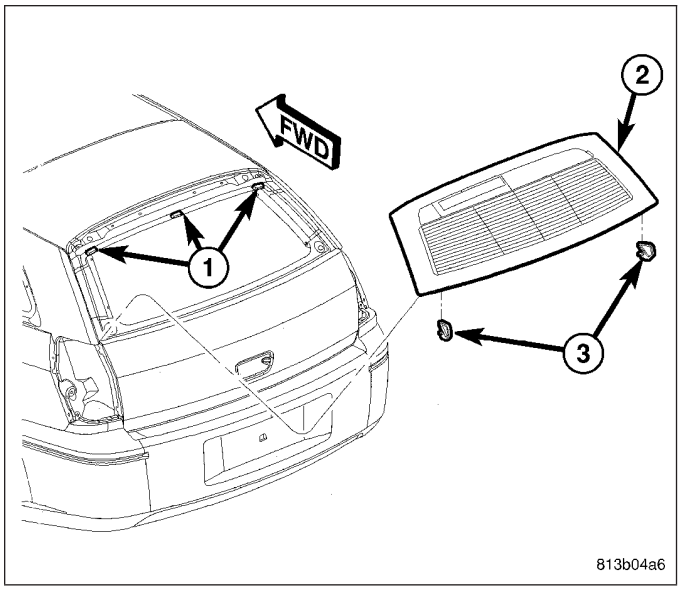

24. Install the liftgate trim panels (Refer to 23 - BODY/DECKLID/HATCH/LIFTGATE/TAILGATE/TRIM PANEL - INSTALLATION).
25. Install the rear window wiper arm, if equipped (Refer to 8 - ELECTRICAL/WIPERS/WASHERS/WIPER ARMS - INSTALLATION).

GLASS-QUARTER

REMOVAL

1. Before proceeding with the following repair procedure, review all warnings and cautions (Refer to 23 - BODY/STATIONARY GLASS - WARNING).
2. Remove the quarter panel trim from the side of the vehicle being serviced (Refer to 23 - BODY/INTERIOR/QUARTER PANEL TRIM - REMOVAL).
3. Carefully pull down the headliner to access the upper mounting studs (1) that secure the quarter glass (2) to the window fence (3) and, remove the nuts from the studs.
4. Remove the nuts that secure the lower mounting studs (4) to the window fence and, remove the nuts from the studs.
5. Using razor knife, cut butyl sealer between the mounting studs that secure the quarter glass to window fence.
6. Carefully push the quarter window glass from the opening.

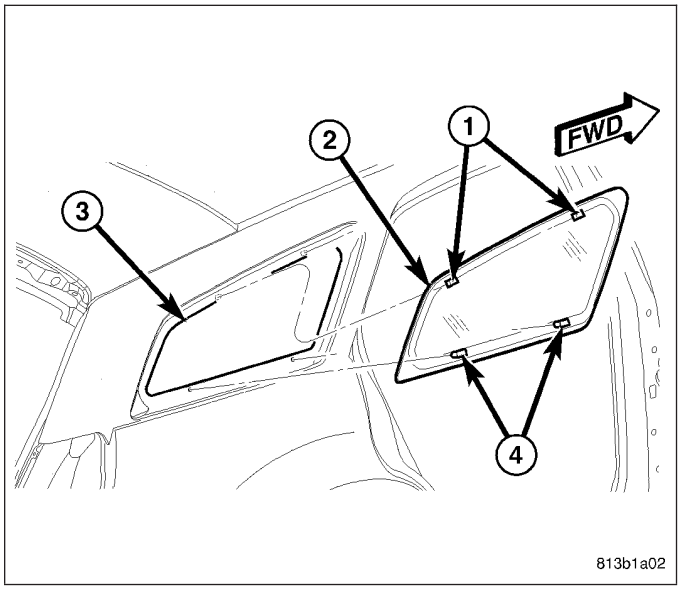

INSTALLATION

CAUTION: Roll down the left and right front door glass and open the liftgate glass before installing quarter glass to avoid pressurizing the passenger compartment if a door is slammed before urethane is cured. Water leaks can result.

NOTE: The quarter glass fence should be cleaned of all old butyl sealer. Do not grind sealer off the fence, the paint finish will be adversely affected.

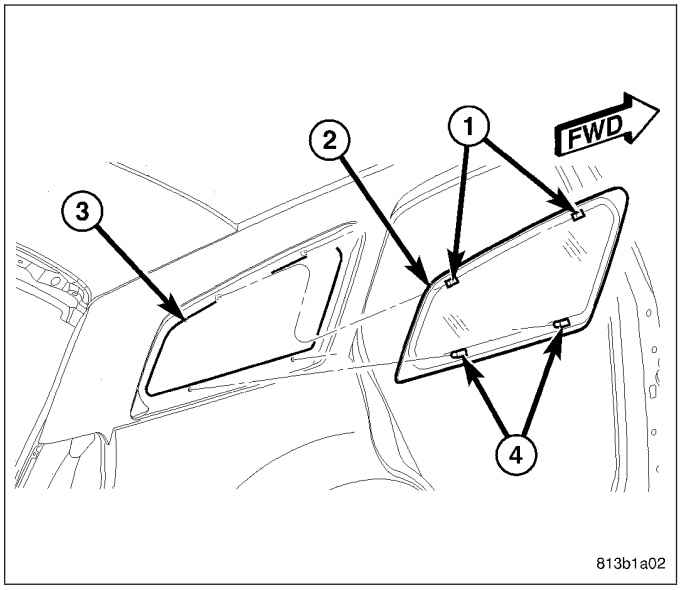

1. Apply 6 mm (0.25 in.) wide butyl tape around perimeter of the (2) quarter glass approximately 5 mm (0.2 in.) from the edge of the glass. Ensure the butyl tape is wrapped around the mounting studs.
2. Place the quarter glass into the window opening (3) and insert mounting studs (1 and 4) through the holes in the window fence.
3. Install the nuts that secure the quarter glass to the window fence. Tighten the nuts to 4.5 N·m (40 in. lbs.).
4. Install the headliner.
5. Install quarter panel trim (Refer to 23 - BODY/INTERIOR/QUARTER PANEL TRIM - INSTALLATION).

WINDSHIELD

DESCRIPTION

The windshield is attached to the window frame (fence) with urethane adhesive. The urethane adhesive is applied cold and seals the surface area between the window opening and the glass. The primer adheres the urethane adhesive to the windshield.

It is difficult to salvage a windshield during the removal operation. The windshield is part of the structural support for the roof. The urethane bonding used to secure the windshield to the fence is difficult to cut or clean from any surface. If the rubber seals are set in urethane, it would also be unlikely they could be salvaged. Before removing the windshield, check the availability of the windshield and seals from the parts supplier.

REMOVAL

1. Before proceeding with the following repair procedure, review all warnings and cautions (Refer to 23 - BODY/STATIONARY GLASS - WARNING).
2. Remove the rear view mirror (Refer to 23 - BODY/INTERIOR/REAR VIEW MIRROR - REMOVAL).
3. Remove the cowl grille (Refer to 23 - BODY/EXTERIOR/COWL GRILLE - REMOVAL.)

CAUTION: Be careful not to damage painted surfaces when removing moldings or cutting urethane around the windshield.

4. Remove the windshield side moldings (Refer to 23 - BODY/WEATHERSTRIP/SEALS/WINDSHIELD A-PILLAR WEATHERSTRIP - INSTALLATION).
5. Using an assistant and a wire-type windshield cutout tool (1, 3 and 4), cut and separate the urethane adhesive (2) securing the windshield to the windshield fence.
6. Carefully remove the windshield from the vehicle.

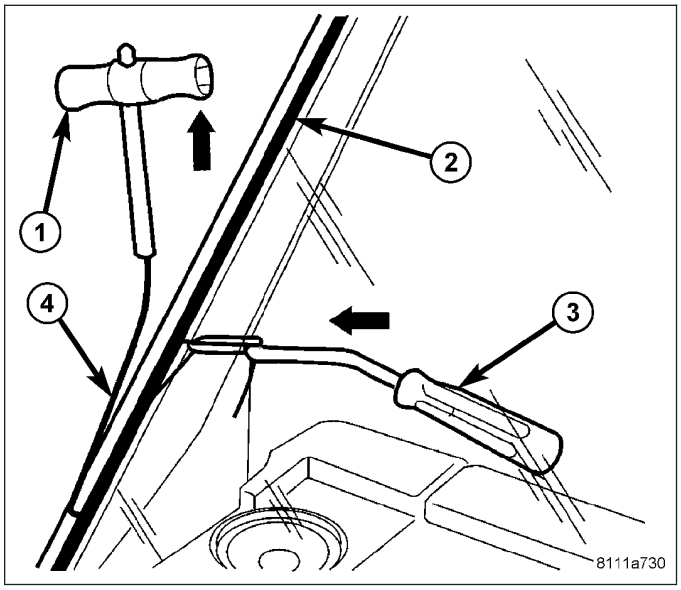

INSTALLATION

WARNING: Do not operate the vehicle within 24 hours of windshield installation. It takes at least 24 hours for urethane adhesive to cure. If it is not cured, the windshield may not perform properly if the vehicle is in an accident.

CAUTION: To help prevent water leaks, partially roll down the left and right door glass before installing the windshield. This avoids pressurizing the passenger compartment if a door is slammed before the urethane is cured.

CAUTION: Protect all painted and trimmed surfaces from coming in contact with urethane or primers.

1. If the windshield (1) is being reused, remove the as much original urethane (3) as possible from the glass surface using a razor knife (2).

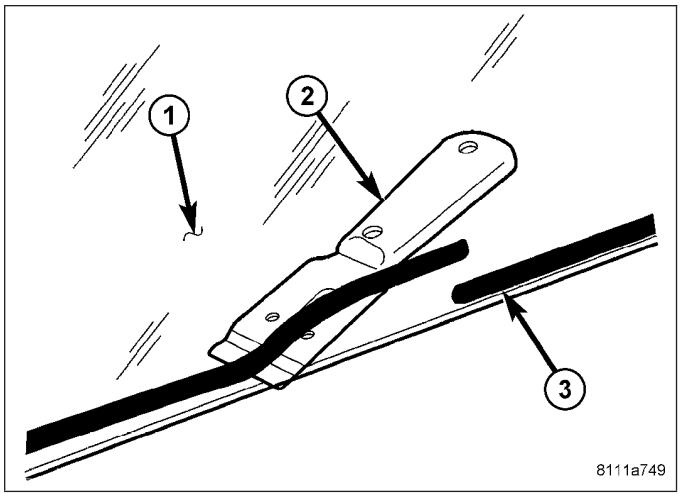

NOTE: To prevent corrosion, do not damage paint on windshield fence when removing original urethane.

NOTE: The windshield fence should be cleaned of most of its old urethane adhesive. A small amount of old urethane, approximately 1 mm in height should remain on the fence. Do not completely remove all old urethane from the fence, the paint finish and bonding strength will be adversely affected. Support spacers located near the cowl at the bottom of the windshield fence should be replaced with new spacers. Replace any missing or damaged spacers around the perimeter of the windshield fence.

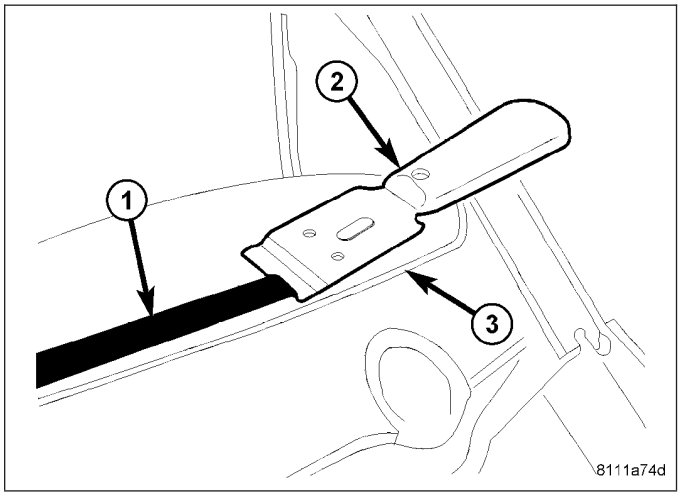

2. Using a razor knife (2), level the original bead of urethane (1) on the windshield fence (3) to a thickness of approximately 1 mm (0.04 in.) and remove the loose adhesive.
3. Install a new rubber seal (1) along the top of the windshield (2).
4. Using an assistant, position the windshield into the windshield opening and against the windshield fence (3).
5. Verify the windshield lays evenly against the fence at the top, bottom and sides of the opening. If not, the fence must be formed to the shape of the windshield.
6. Mark the windshield and the windshield fence with a grease pencil or pieces of masking tape to use as a reference for installation.
7. Using an assistant, remove the windshield from the windshield opening and place it on a suitable padded work surface.

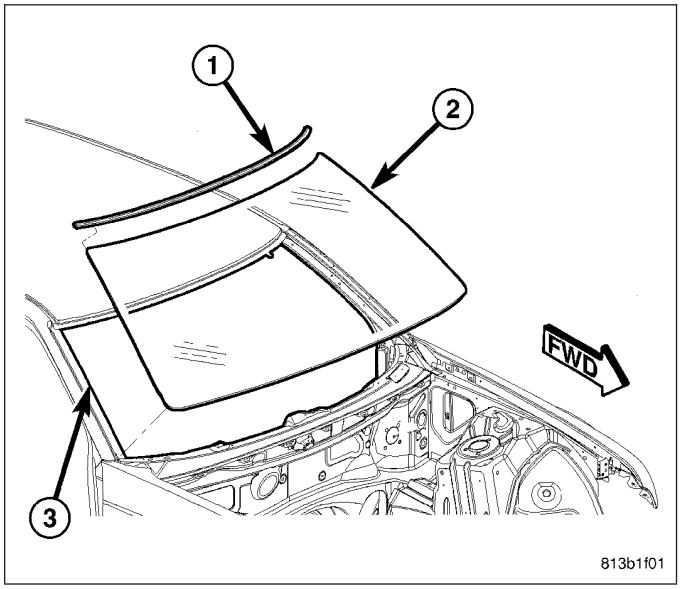

WARNING: Do not use solvent based glass cleaners to clean the windshield before applying glass prep and primer or poor glass adhesion may result.

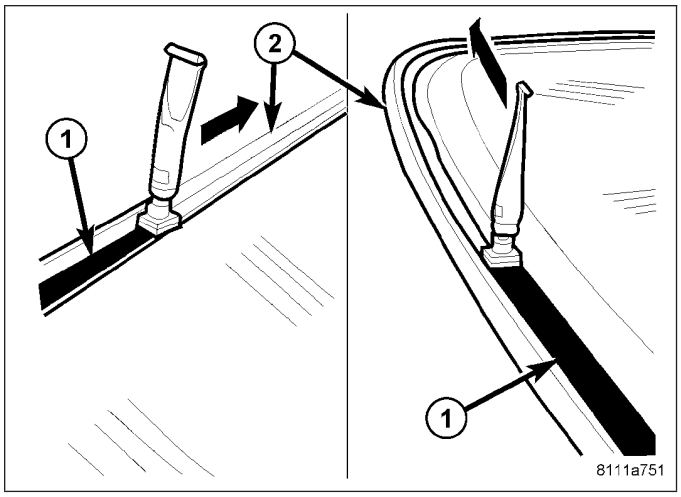

8. Clean the inside of the windshield with an ammonia based glass cleaner and a lint-free cloth.
9. Apply glass prep adhesion promoter 25 mm (1 in.) wide (1) around the perimeter of the windshield (2) and 5 mm (0.2 in.) from the edge of the glass and wipe dry with a clean lint-free cloth until no streaks are visible.
10. Apply glass primer 25 mm (1 in.) wide (1) around the perimeter of the windshield (2) and 5 mm (0.2 in.) from the edge of the glass. Allow at least three minutes drying time.
11. Using a flashlight, verify that the primer is completely and evenly installed along the perimeter of the windshield.
12. Re-prime any area that is not fully and evenly primed.
13. Clean the windshield fence with an ammonia based glass cleaner and a lint-free cloth.
14. Apply pinch weld primer 15 mm (0.75 in.) wide (1) around the windshield fence (2). Allow at least three minutes drying time.
15. Using a flashlight, verify that the primer is completely and evenly installed along the windshield fence.
16. Re-prime any area that is not fully and evenly primed.

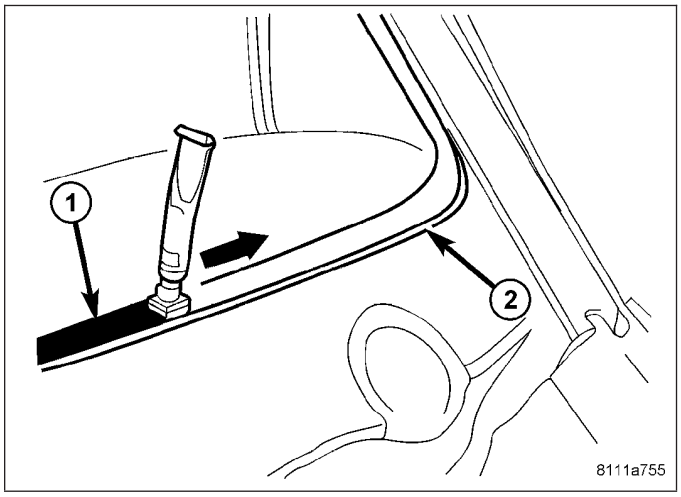

CAUTION: Always apply the bead of adhesive to the windshield. Always install the windshield within 5 minutes after applying the adhesive.

NOTE: If the original urethane adhesive has been exposed for more than 12 hours, the entire adhesive area will need to be re-primed prior to installing new adhesive.

17. Apply approximately a 10 mm (0.4 in.) wide bead of adhesive (1) with a triangular nozzle approximately 6 mm (0.230 in.) from the edge of the glass (2) starting at the bottom center of the windshield.

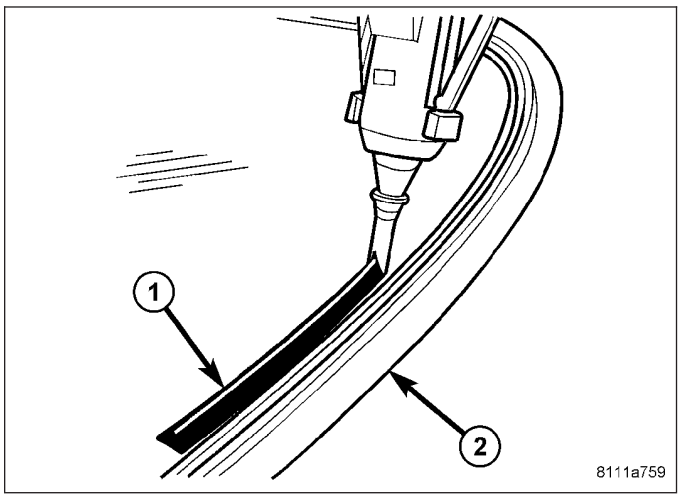

18. Run the end of the adhesive bead (1) on the windshield (2) parallel to the start of the bead and smooth the ends flush.

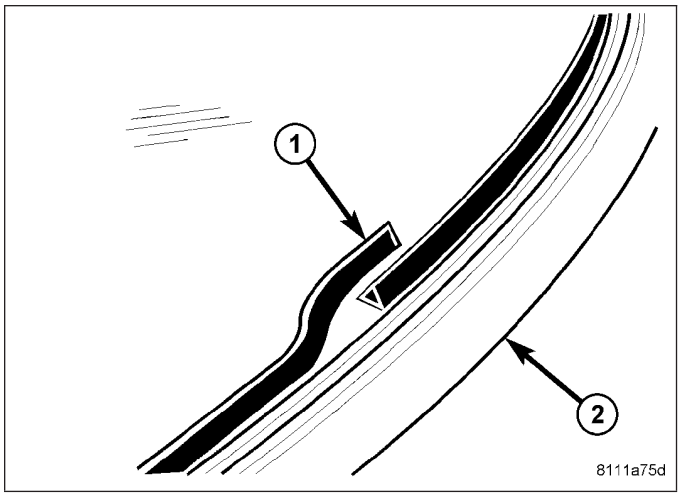

19. Using an assistant, position the windshield (2) over the windshield opening.
20. Using the grease pencil marks or tape as reference points, align the windshield to the opening.
21. Carefully lower the windshield onto the windshield fence. Guide the windshield and the rubber seal at the top the windshield into its proper location.

CAUTION: It is not possible to move the windshield after installation. The windshield should never be pressed into place by more than one person, because the windshield can break if pressed simultaneously on both sides.

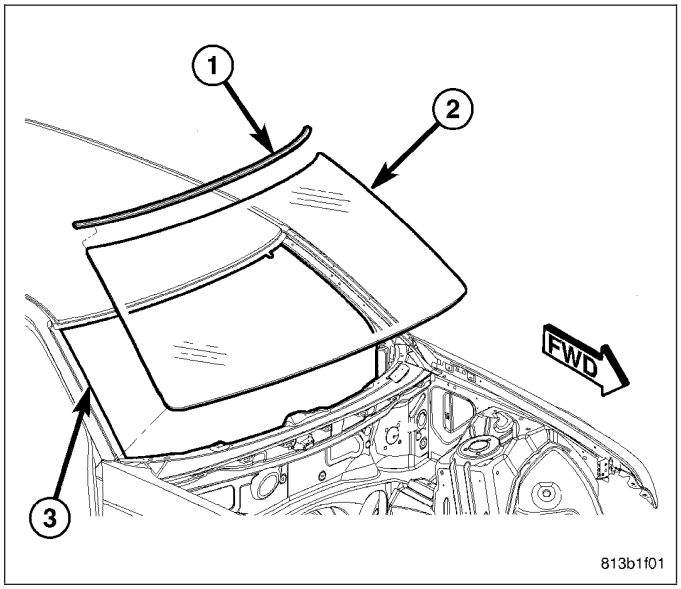

22. Push the windshield inward until the windshield comes into contact with the spacers located on each side of the windshield fence (2).
23. Install the windshield side moldings (Refer to 23 - BODY/WEATHERSTRIP/SEALS/WINDSHIELD A-PILLAR WEATHERSTRIP - INSTALLATION).
24. Install the cowl grille (Refer to 23 - BODY/EXTERIOR/COWL GRILLE - REMOVAL).
25. Install the rear view mirror (Refer to 23 - BODY/INTERIOR/REAR VIEW MIRROR - INSTALLATION).

SUNROOF - SERVICE INFORMATION

TABLE OF CONTENTS

page

SUNROOF - SERVICE INFORMATION
DESCRIPTION 288
OPERATION 289
DIAGNOSIS AND TESTING
POWER TOP - SUNROOF 290
SUNROOF 290
ASSEMBLY-MODULE
REMOVAL 292
INSTALLATION 294
CHANNEL-DRAIN
REMOVAL 296
INSTALLATION 297
COVER-GUIDE MECHANISM
REMOVAL 298
INSTALLATION 299
DEFLECTOR-WIND
REMOVAL 300
INSTALLATION 301
GLASS
REMOVAL 302
INSTALLATION 303
ADJUSTMENTS
ADJUSTMENT 304
GUIDE-SUNROOF GLASS
REMOVAL 306
INSTALLATION 308
HOSE-DRAIN
REMOVAL 310
INSTALLATION 311
MOTOR
DESCRIPTION 312
SUNSHADE
REMOVAL 313
INSTALLATION 314
SWITCH-SUNROOF
DESCRIPTION 315
TRIM LACE
REMOVAL 316
INSTALLATION 316

SUNROOF - SERVICE INFORMATION

DESCRIPTION

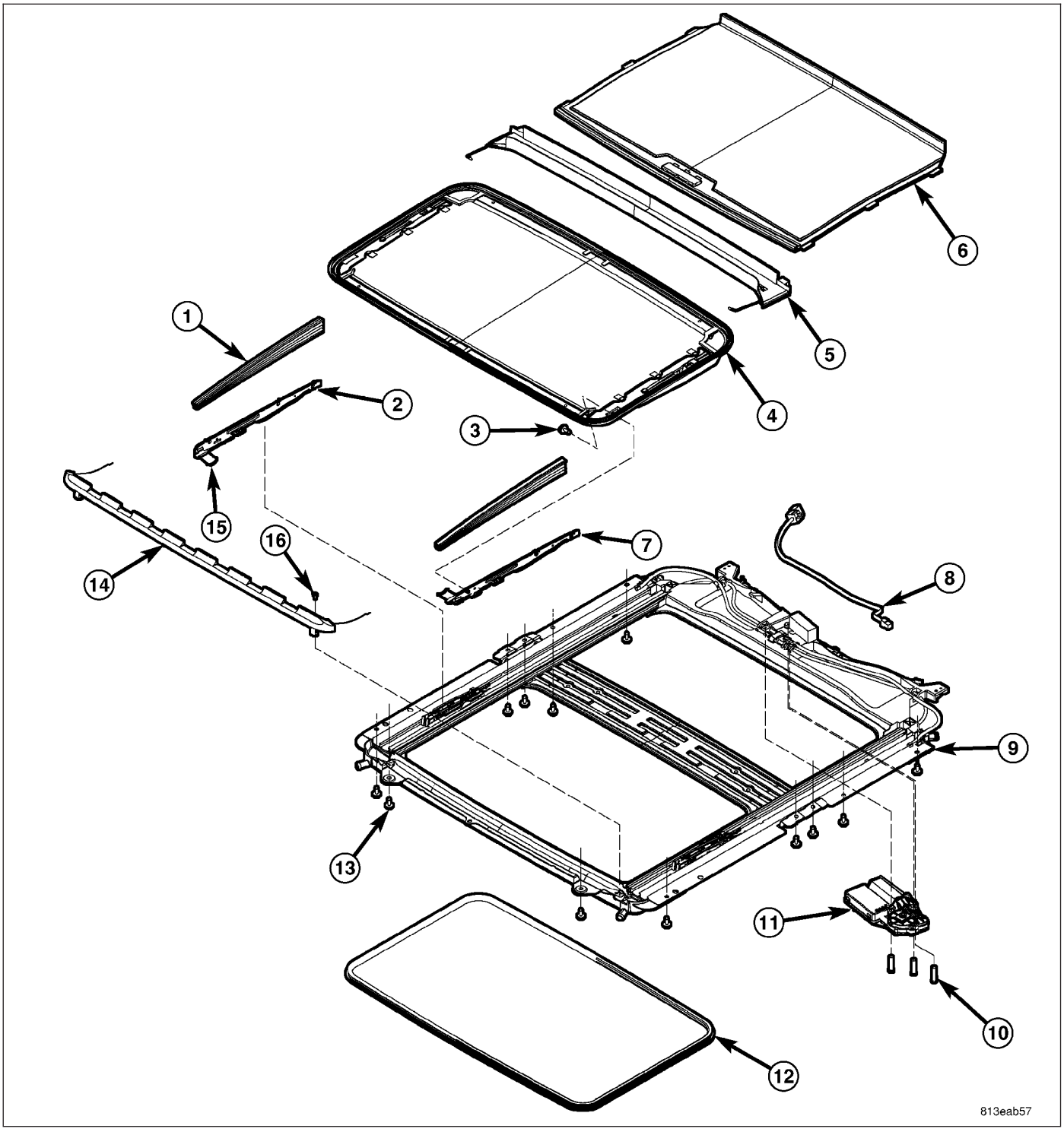

EXPLODED VIEW

The power sunroof system allows the sunroof to be opened, closed or placed in the vent position electrically by actuating a switch in the overhead console. The sunroof system receives battery feed through a fuse in the Power Distribution Center (PDC). The sunroof will operate normally with the key in any position while the Accessory Delay system is active.

1 - MECHANISM COVERS (2)	9 - SUNROOF ASSEMBLY
2 - RIGHT HAND GLASS GUIDE	10 - MOTOR FASTENERS (3)
3 - GLASS FASTENERS (4)	11 - SUNROOF MOTOR/MODULE ASSEMBLY
4 - GLASS ASSEMBLY	12 - TRIM LACE
5 - DRAIN CHANNEL	13 - ASSEMBLY FASTENERS (12)
6 - SUNSHADE	14 - WIND DEFLECTOR
7 - LEFT SUNROOF GLASS GUIDE	15 - RIGHT SUNROOF GLASS GUIDE
8 - WIRE HARNESS	16 - WIND DEFLECTOR STRAP SCREWS (2)

The sunroof glass panel tilts upward at the rear for ventilation and slides rearward under the roof when open. The panel seals flush with the roof in the closed position to eliminate wind noise. The sunroof includes a manual-sliding sunshade to cover the deep-tinted glass panel.

In addition to the standard power sunroof operation, this vehicle offers several additional features. There is an express (one-touch) opening and closing feature as well as Excessive Force Limitation (EFL). The EFL function detects obstacles trapped between the glass and the vehicle roof during a closing motion. Upon sensing an obstacle the EFL function will reverse direction of the glass to allow removal of the obstacle.

The main components of the power sunroof system are:

- The motor/module assembly
- The power sunroof glass and frame assembly
- The power sunroof switch
- The manual-sliding sunshade

OPERATION

This vehicle has a vent, tilt and slide power sunroof system with express (one-touch) open and closing feature. The sunroof system receives constant battery feed through a fuse in the Power Distribution Center (PDC). The sunroof will operate normally with the key in any position while the Accessory Delay system is active. If the sunroof is moving when the key is turned to the START position (crank engine), all motions stop until the key is released, then the previously requested sunroof motion will resume. The sunroof will also complete a requested motion if the Accessory Delay system goes inactive while the motion is in progress.

A combination push-button and rocker switch module mounted in the overhead console controls sunroof operation. The sunroof switch is a rocker design with a push button in the center of the two halves of the rocker. Pressing the rocker towards the front of the car commands the sunroof closed. Pressing the rocker towards the rear of the car commands the sunroof open. Pressing the center push button commands the sunroof up into the vent position (Rear of sunroof glass raises above the vehicle roof with glass still covering the sunroof opening). All switch commands operate with the glass starting in any position. (Refer to 8 - ELECTRICAL/POWER TOP/SWITCH - OPERATION) for additional information.

An electronic control system, integral to the motor/module assembly, provides the express open and close functions. Pressing the ″open″ or ″close″ end of the rocker switch moves the sunroof glass panel to the full open or full closed position, respectively. During express closing, anytime an obstacle is detected in the way of the glass, the motor will stop and reverse travel to avoid pinching an occupant’s finger, ice in the track, etc. This function is called Excessive Force Limitation (EFL). There are two methods of overriding the EFL function.

1. When three EFL events occur without the glass being allowed to fully close, the next close attempt will only move while the close switch is continuously actuated. This allows the sunroof to be forced closed if multiple close attempts fail.
2. If the sunroof close switch is continuously actuated during an EFL event, through the reversal, and during a two second wait time, then continuing to hold the close switch will cause the roof to move towards close with the EFL protection disabled. This allows the sunroof to be forced closed if it is known that a reversal will occur.

While in EFL override, the closing motion will cease if the sunroof switch is released at any time.

The motor/module is programmed to learn the speed required to drive the panel based on position and recalibrates itself as needed. If the sunroof becomes uncalibrated, it will only respond to the vent switch. If the vent switch is pressed, the glass will move toward vent; if the switch is released, all motion stops. In the event that the sunroof system becomes uncalibrated perform the sunroof position calibration procedure, (Refer to 8 - ELECTRICAL/POWER TOP/MOTOR - STANDARD PROCEDURE -SUNROOF POSITION CALIBRATION).

DIAGNOSIS AND TESTING

POWER TOP - SUNROOF

Any diagnosis of the power sunroof system should begin with the use of a scan tool and the proper Diagnostic Procedures Information. The scan tool can provide confirmation that the Controller Area Network (CAN) Data Bus is functional, that all of the electronic modules are sending and receiving the proper messages on the CAN Data Bus, and that the power sunroof motor is being sent the proper hard wired output by the sunroof switch.

For complete circuit diagrams, refer to the appropriate wiring information. The wiring information includes wiring diagrams, proper wire and connector repair procedures, details of wire harness routing and retention, connector pin-out information and location views for the various wire harness connectors, splices and grounds.

Refer to the appropriate diagnostic information.

SUNROOF

Refer to SUNROOF DIAGNOSIS CHART for possible causes. Before beginning sunroof diagnostics verify that all other power accessories are in proper operating condition. If not, a common electrical problem may exist. Refer to Wiring Diagrams, in this publication for circuit, splice and component descriptions. Check the condition of the circuit protection (20 amp circuit breaker in the Junction Block). Inspect all wiring connector pins for proper engagement and continuity. Check for battery voltage at the power sunroof controller, refer to Wiring Diagrams, for circuit information. If battery voltage of more than 10 volts is detected at the controller, proceed with the following tests (the controller will not operate at less than 10 volts).

Before beginning diagnosis for wind noise or water leaks, verify that the problem was not caused by releasing the control switch before the sunroof was fully closed. The sunroof module has a water-management system. If however, the sunroof glass is in a partial closed position, high pressure water may be forced beyond the water management system boundaries and onto the headlining.

Every time the sunroof module loses power it must be initialized. This is done by connecting power to the sunroof and moving the sunroof toward the closed position. When initialization occurs a slight “kick” in the sunroof module will be seen and heard. This is the indication that the sunroof module is initialized

SUNROOF DIAGNOSIS CHART

SYMPTOM	POSSIBLE CAUSE
Sunroof motor inoperative.	Faulty control switch. Faulty circuit ground between sunroof module, control switch, and body harness. Faulty power circuit between sunroof module, control switch, and body harness. Faulty sunroof drive motor. Faulty sunroof module.
Audible whine when switch is depressed, sunroof does not operate.	Faulty sunroof drive motor. Binding cable.
Audible clicking or ratcheting when switch is pressed, sunroof does not operate.	Broken or worn drive cable. Worn drive motor gear. Mechanisms not synchronized.
Sunroof vents and opens, but does not close.	Broken or disengaged trough guide Binding cable. Faulty circuit. Faulty control switch. Faulty sunroof module. Faulty drive motor.

SYMPTOM	POSSIBLE CAUSE
Sunroof vents, but does not open.	Binding cable or mechanism. Faulty circuit. Faulty switch. Faulty sunroof module.
Sunroof does not vent	Binding cable or mechanism. Faulty circuit. Faulty control switch. Faulty sunroof module.
Sunroof water leak.	Drain tubes clogged or kinked or disconnected from the sunroof. Glass panel improperly adjusted. Faulty glass panel seal.
Gurgling sound from sunroof	Low spot in drain hose routing, allowing water to stand.
Wind noise from sunroof.	Glass panel compression to the roof opening not consistent. Wind deflector not deploying properly. Glass not installed or adjusted properly. Faulty glass panel seal.
Buzz, Squeak, Rattles from sunroof	Loose or broken attaching hardware. No lubrication in track. Worn or broken mechanism. Cables bunched or kinked.
Sunshade will not function or does not operate smoothly	Sunshade feet are broken. Sunshade feet are in the wrong track. Track obstructions or interference. Trim lace incorrectly installed in track.
Glass movement not consistent or glass does not operate smoothly	Glass and Track timing. Glass and Track alignment. Cables and Guide alignment.
Broken or jammed guide mechanism	Mechanism cover was not installed correctly.

WATER DRAINAGE AND WIND NOISE DIAGNOSIS

The sliding glass panel is designed to seal water entry with a snug fit between the roof and the seal. The fit can be checked by inserting a business card or equivalent, between the roof and the seal. The piece of paper should have some resistance when pulled out when the glass panel is in the closed position. The sunroof housing will drain off a minimum amount of water. Excessive wind noise could result if the gap clearances are exceeded. The sunroof glass panel may need to be adjusted. (Refer to 23 - BODY/SUNROOF/GLASS PANEL - ADJUSTMENTS)

Adequate drainage is provided by a drain trough in the sunroof housing which encircles the sliding glass panel and leads to drain hoses. If a wet headliner or other water leak complaints are encountered, before performing any adjustments, first ensure that the drainage system is not plugged or disconnected. Use a pint container to pour water into the sunroof housing drain trough. If water flow is restricted, use compressed air to blow out any material plugging the drain system. Retest system again.

To further check for a disconnected drain hose:

NOTE: Care must be taken not to fold or kink the headliner upon removal.

1. Lower headliner as necessary to gain access to sunroof housing drain tubes. (Refer to 23 - BODY/INTERIOR/HEADLINER - REMOVAL)
2. Repair as necessary.

ASSEMBLY-MODULE

REMOVAL

WARNING: The excessive force limitation (efl) feature must be calibrated any time a sunroof motor/module is replaced with a new component. Failure to perform this procedure could result in vehicle damage and/or personal injury. (refer to 8 - electrical/power top/motor - standard procedure - excessive force limitation (efl) calibration) for the appropriate procedure.

1. Move glass panel to the fully closed position.
2. Disconnect and isolate the battery negative cable.
3. Remove headliner (Refer to 23 - BODY/INTERIOR/HEADLINER - REMOVAL).
4. Disconnect the sunroof wire harness electrical connector.

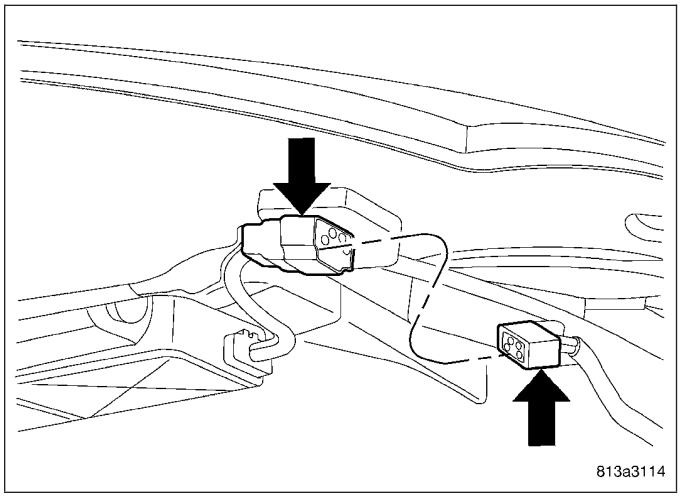

5. Disconnect the four drain tubes (1) from sunroof housing.

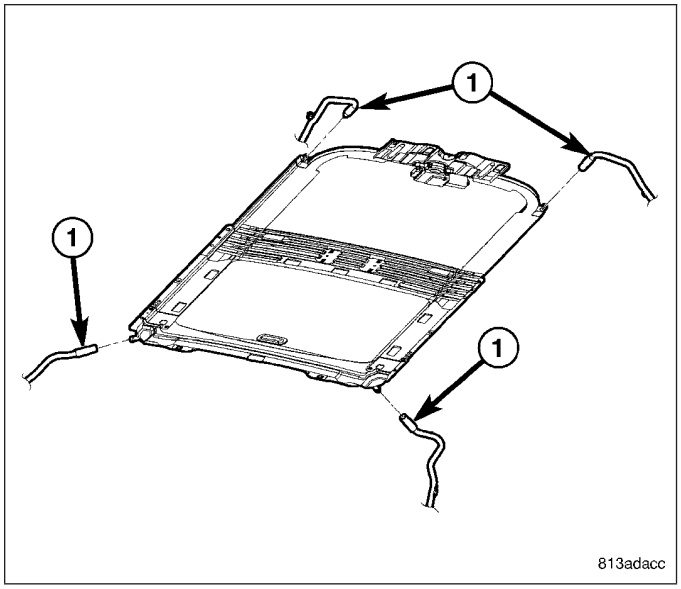

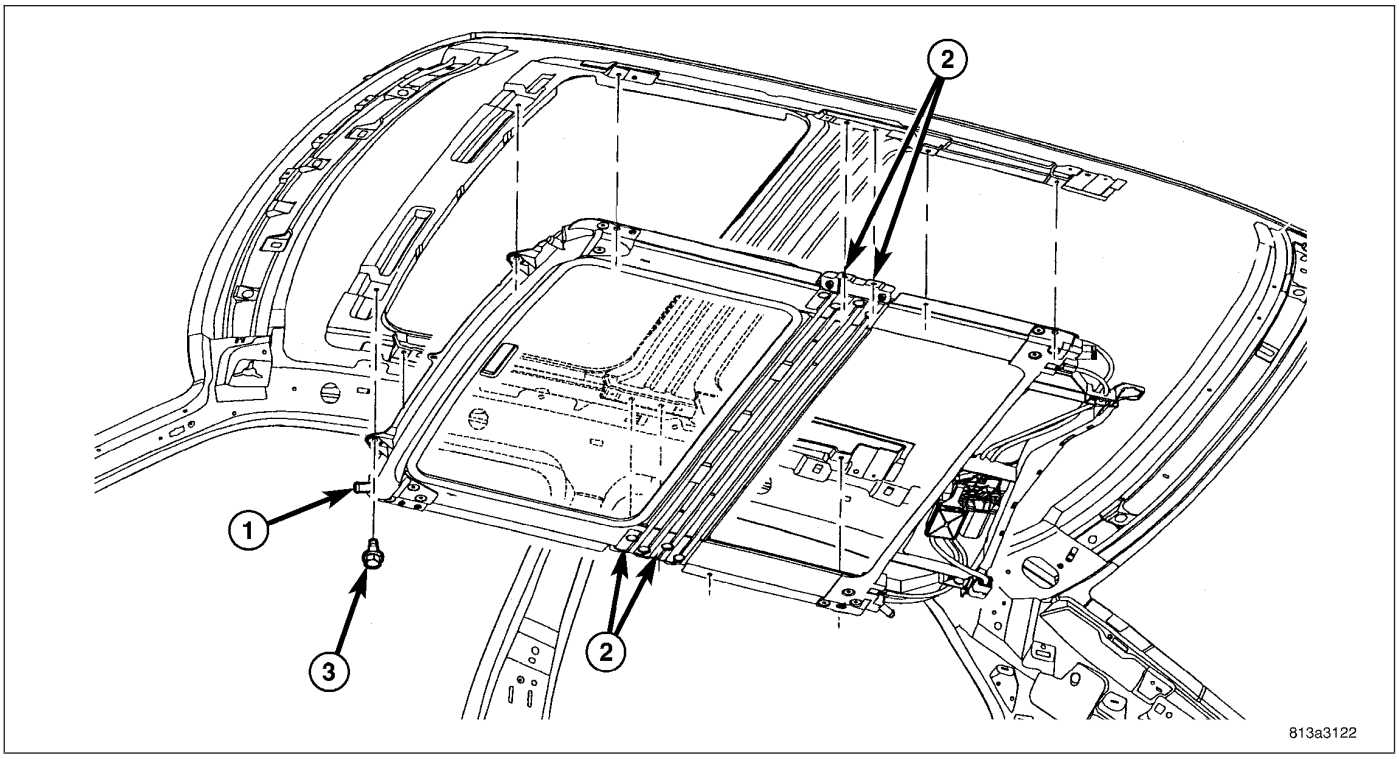

6. Remove the eight fasteners (3) attaching sunroof assembly.
7. With the aid of a helper, support the sunroof and remove the fasteners (2) attaching sunroof assembly (1) to roof panel.
8. Remove the sunroof (1) from vehicle.

INSTALLATION

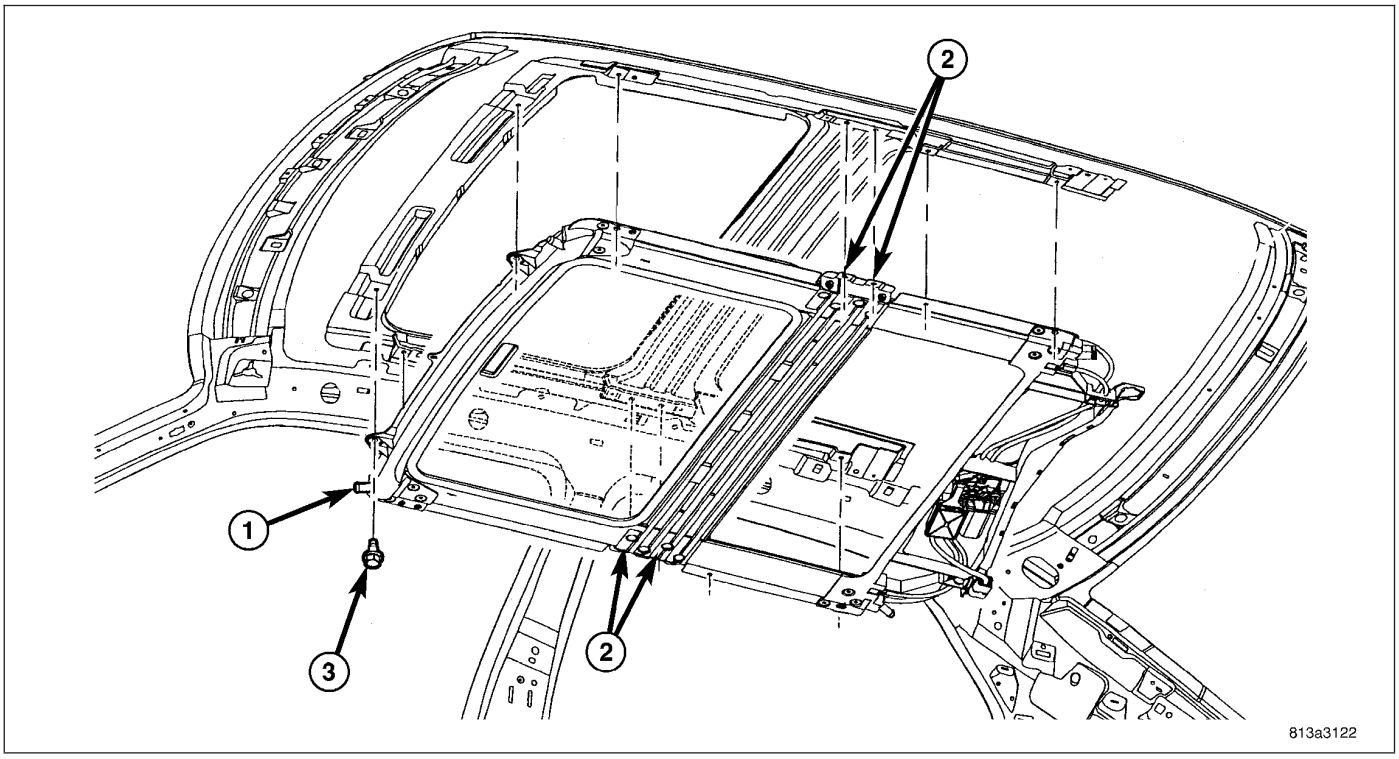

WARNING: The excessive force limitation (efl) feature must be calibrated any time a sunroof motor/module is replaced with a new component. Failure to perform this procedure could result in vehicle damage and/or personal injury. (refer to 8 - electrical/power top/motor - standard procedure - excessive force limitation (efl) calibration) for the appropriate procedure.

1. Verify that glass panel is loose and slightly retracted.
2. Raise sunroof module assembly (1) and guide it carefully into position.

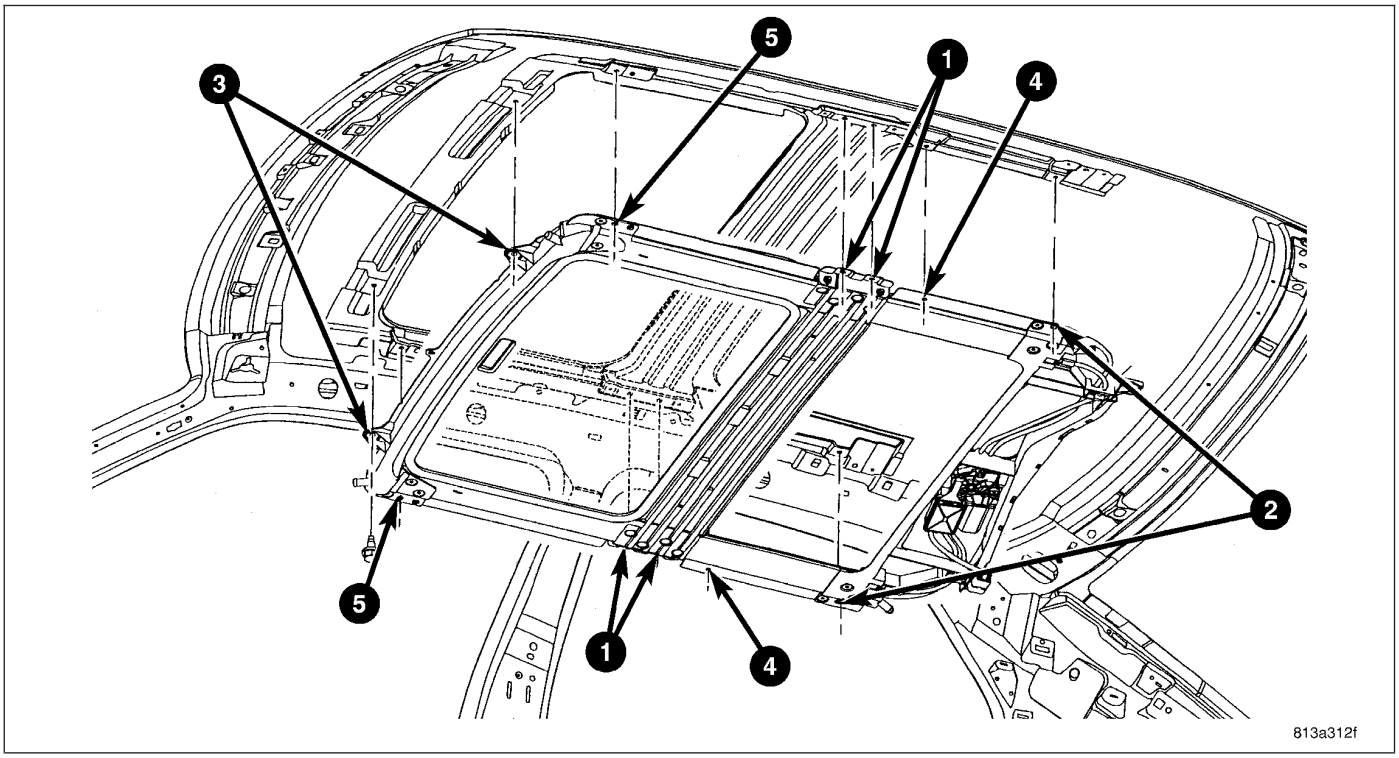

3. While supporting the sunroof assembly start the 12 attaching screws and tighten the attaching screws to 6 N·m (53 in. lbs.) using the sequence shown.
4. Connect the electrical connector.

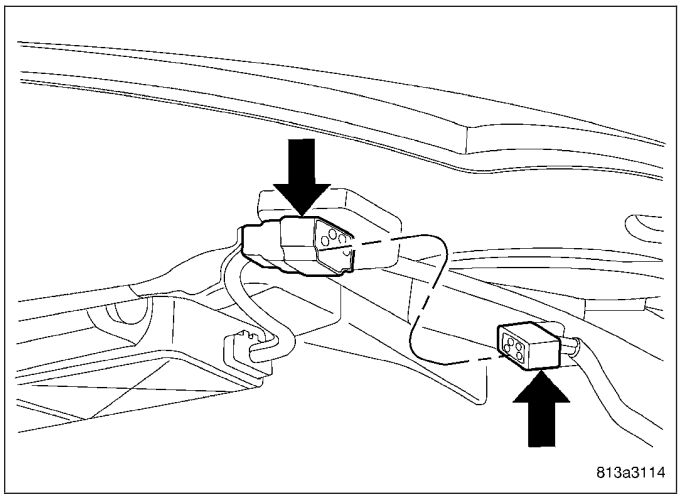

5. Connect the drain tubes to the sunroof (1).
6. Adjust the sunroof glass. (Refer to 23 - BODY/ SUNROOF/GLASS PANEL - ADJUSTMENTS)
7. Connect battery negative cable.
8. Install the vehicle headliner, (Refer to 23 - BODY/ INTERIOR/HEADLINER - INSTALLATION).
9. Perform the sunroof position calibration, (Refer to 8 - ELECTRICAL/POWER TOP/MOTOR - STANDARD PROCEDURE - SUNROOF POSITION CALIBRATION).
10. Perform the Excessive Force Limitation (EFL) calibration, (Refer to 8 - ELECTRICAL/POWER TOP/ MOTOR - STANDARD PROCEDURE - EXCESSIVE FORCE LIMITATION (EFL) CALIBRATION).
11. Verify proper operation of the power sunroof system.

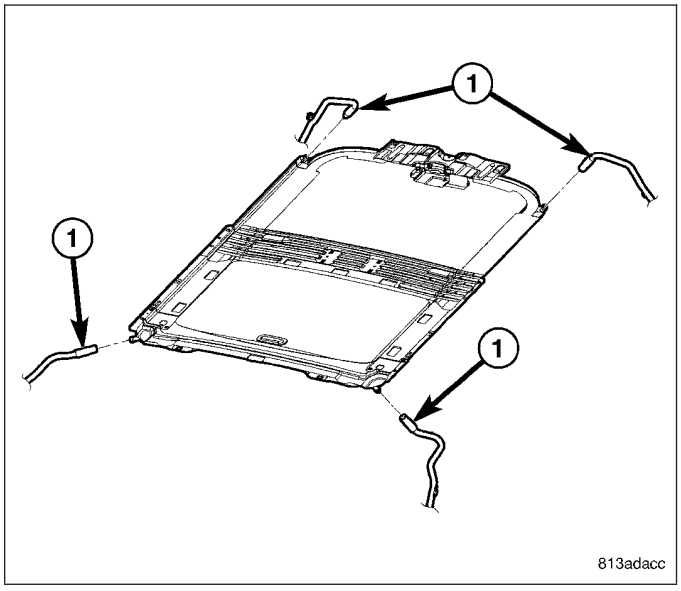

CHANNEL-DRAIN

REMOVAL

1. Remove glass panel (2). (Refer to 23 - BODY/ SUNROOF/GLASS PANEL - REMOVAL)
2. Separate the drain channel arms (2) from the guide mechanisms (1) one at a time.

CAUTION: Do not pry the channel arms apart at the same time or you could break the drain channel.

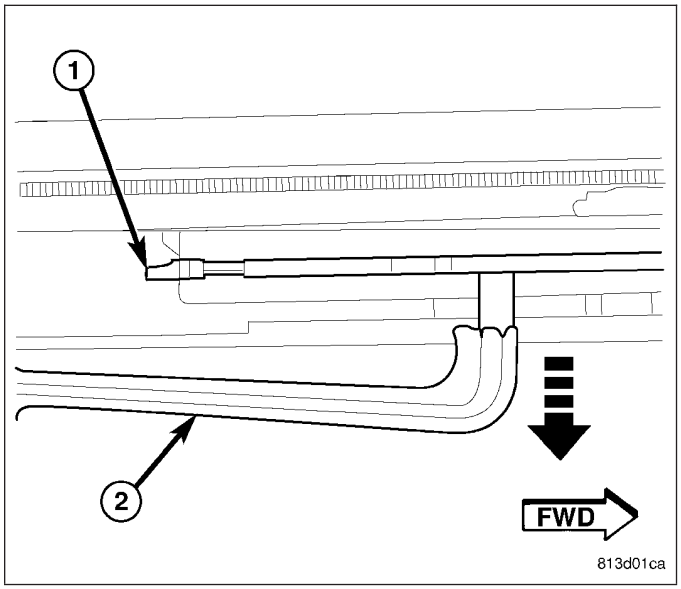

3. Carefully slide the drain channel (1) forward to the notches (2) in the frame and remove from the vehicle.

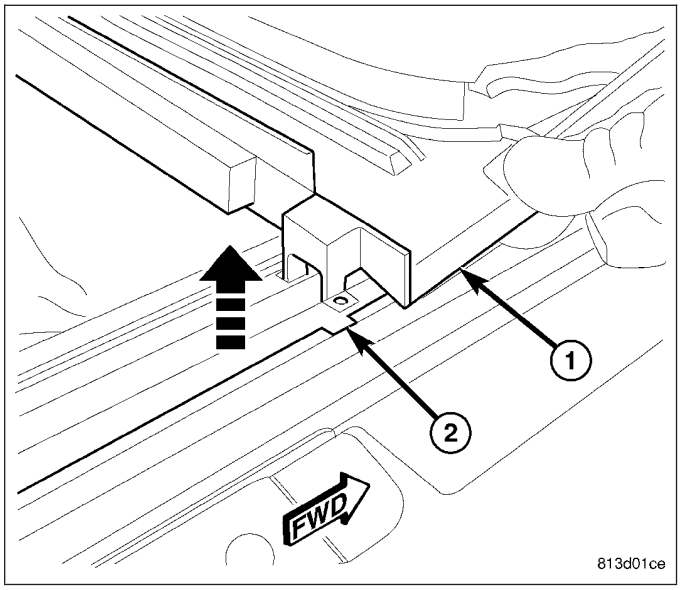

INSTALLATION

1. Carefully position the drain channel (1) into the notches (2) in the frame and slide rearward.

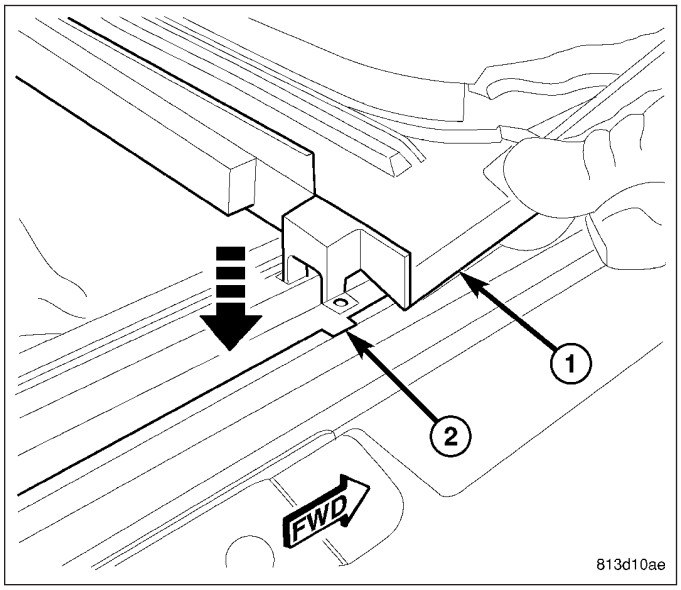

2. Install the drain channel arms (2) into the mechanism (1) holes one at a time with the reinforcements on the inside of mechanism arms.

CAUTION: Do not pry the channel arms apart at the same time or you could break the drain channel.

3. Install the sunroof glass. (Refer to 23 - BODY/ SUNROOF/GLASS PANEL - INSTALLATION)

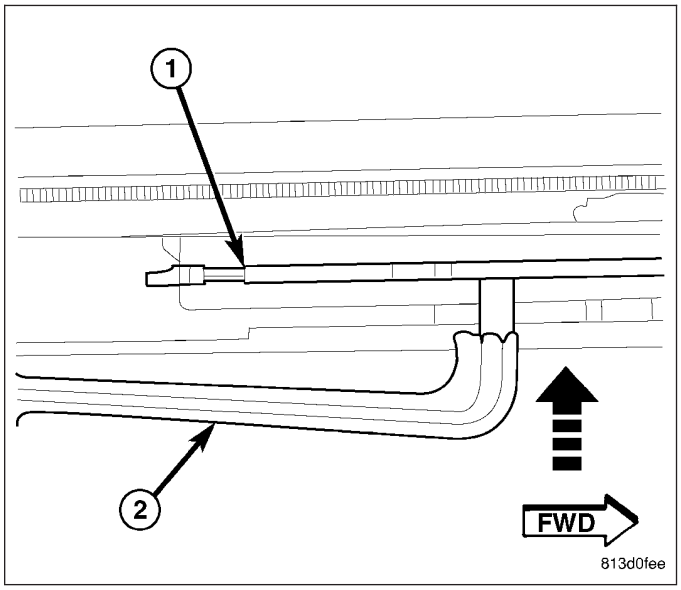

COVER-GUIDE MECHANISM

REMOVAL

1. Move the glass panel to the full closed position.
2. Slide sunshade rearward to the open position.
3. Separate the mechanism covers (2) from the tabs (1) on the glass panel.

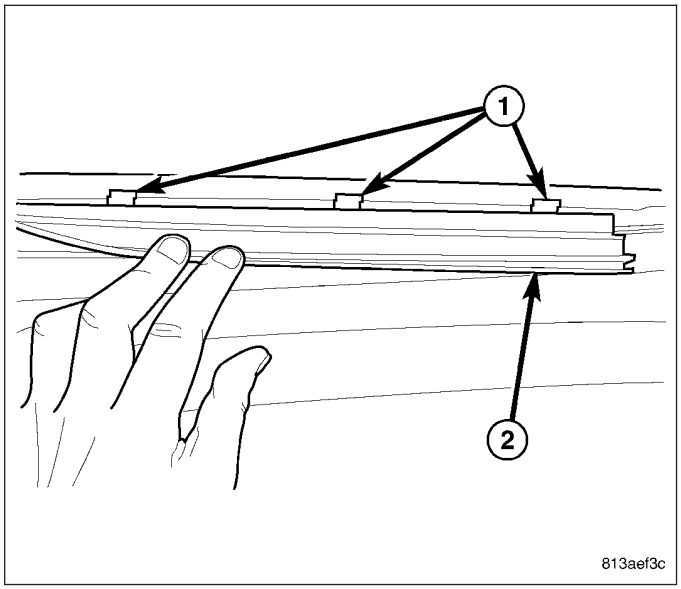

4. Hold both mechanism covers down and open the sunroof fully.
5. Slide the mechanism covers (1) out the front of the guide in the frame (2).

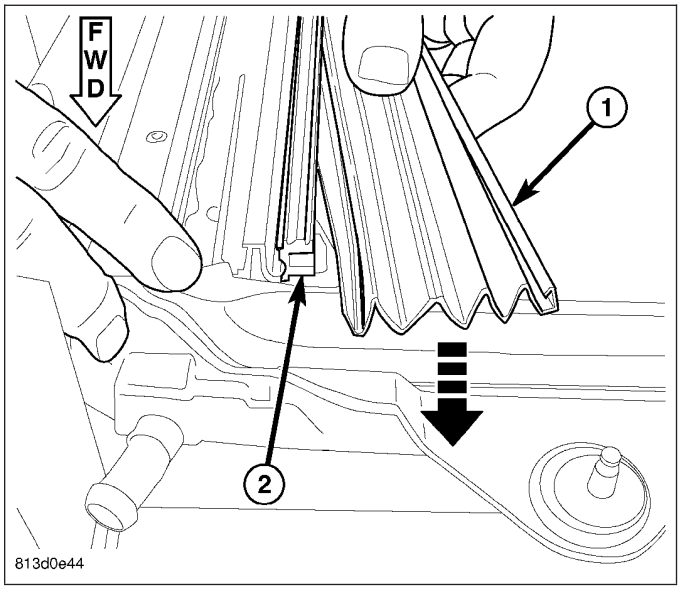

INSTALLATION

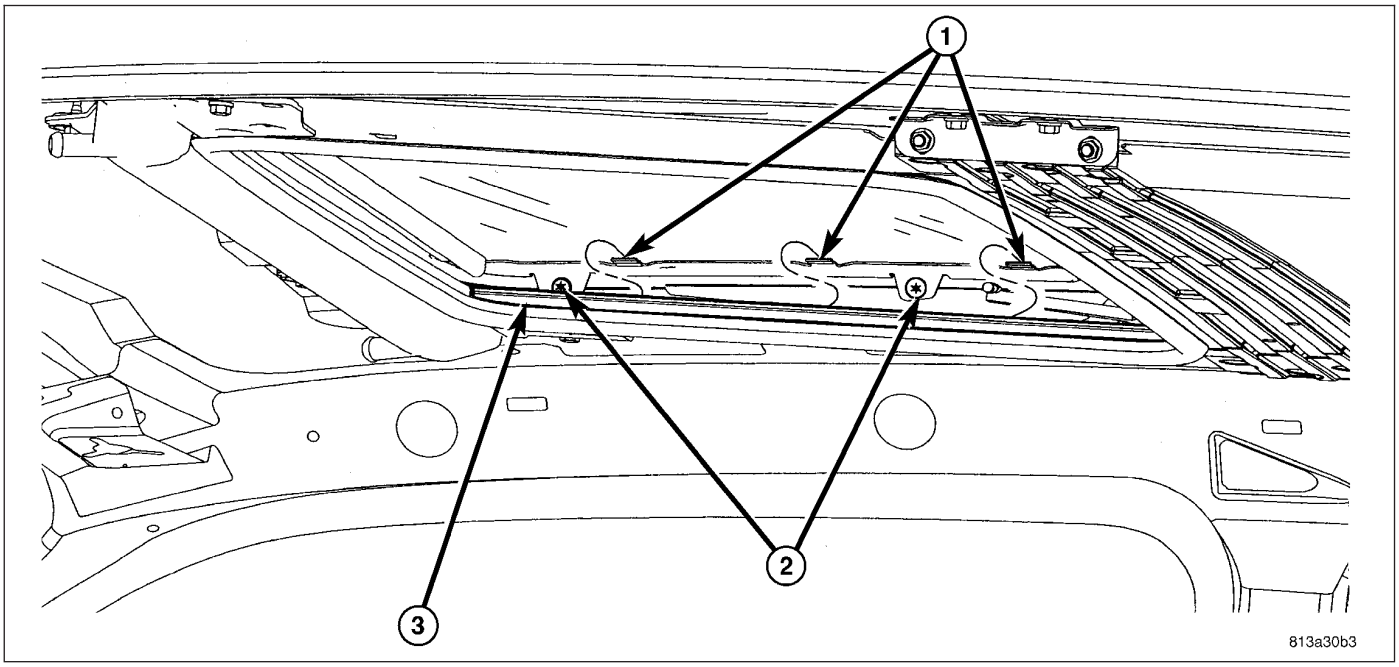

1. With the sunroof in the open position, snap the mechanism cover into the lower guide channel.
2. Hold down each cover and close the sunroof.
3. Snap the upper portion of the cover into the retaining clips (1) on the glass panel between the locating features.

DEFLECTOR-WIND

REMOVAL

1. Open the sunroof fully.
2. Remove the strap screws (2) from the beam area release the strap (3).

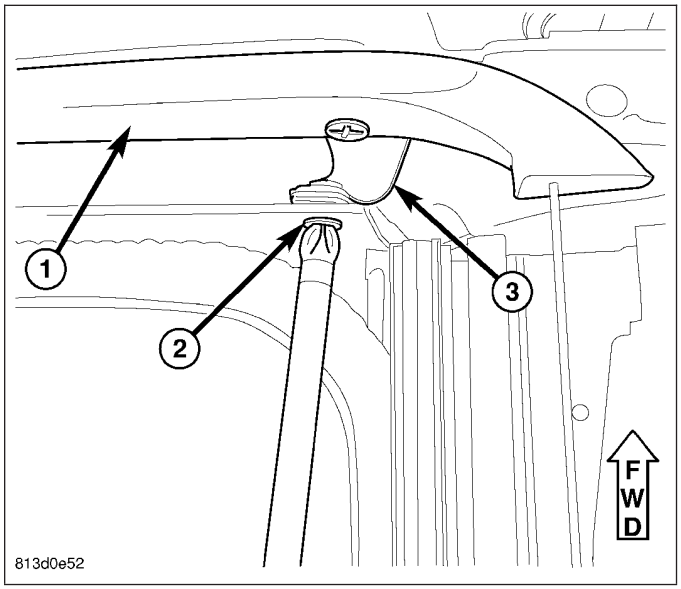

3. Rotate the deflector up and remove springs (2) from the holes in the frame (1).

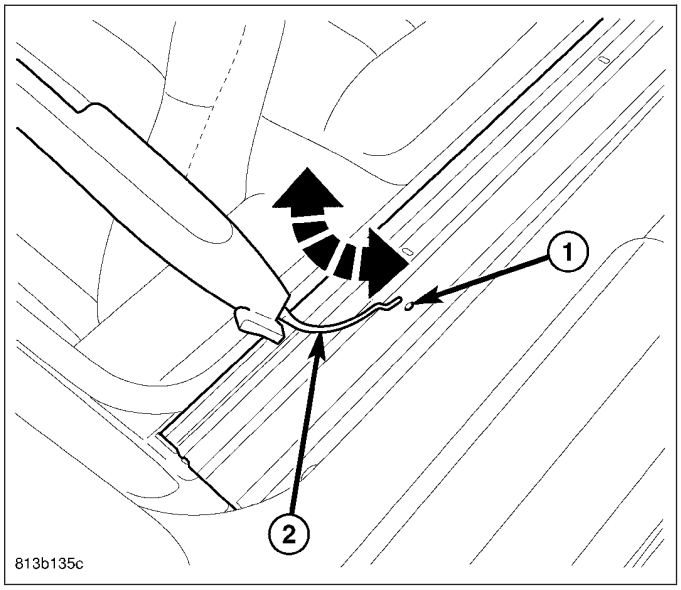

INSTALLATION

1. Position the deflector spring arms (2) into the holes of the frame (1).

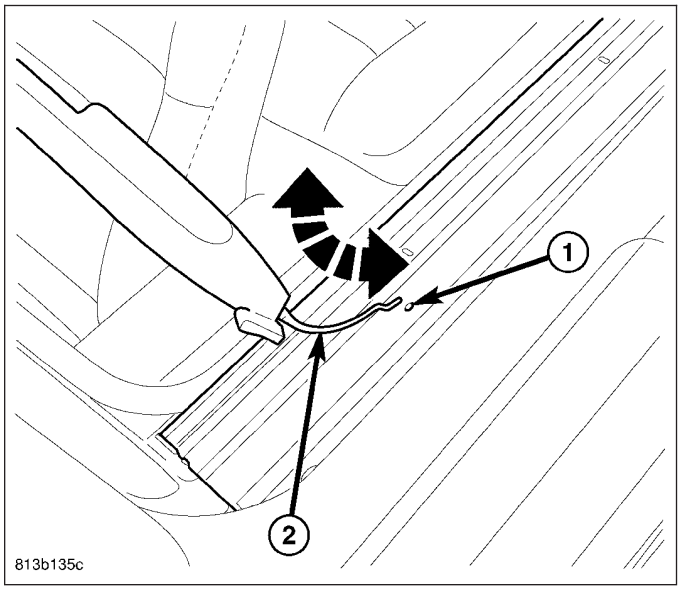

2. Rotate the deflector down, attach the straps (3) and install the strap screws (2) into the front beam.
3. Verify sunroof operation and alignment.

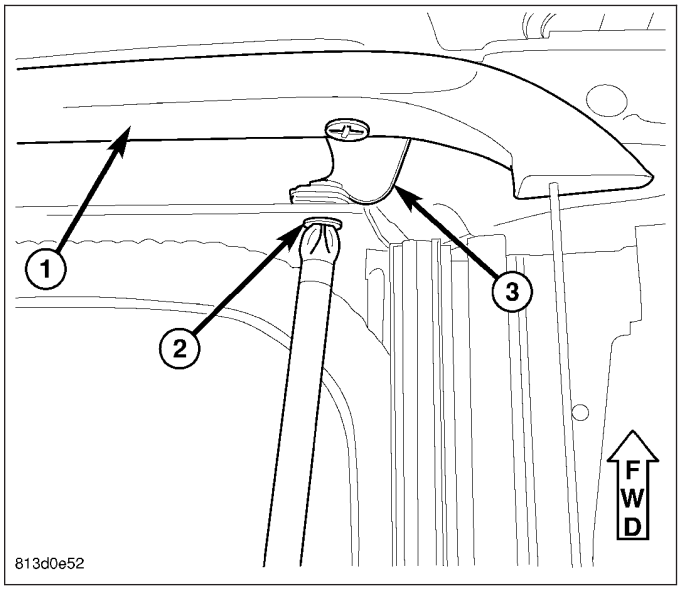

GLASS

REMOVAL

1. Move the glass panel (2) to the full closed position.
2. Slide sunshade rearward to the open position.
3. Separate the mechanism covers (2) from the tabs (1) on the glass panel.

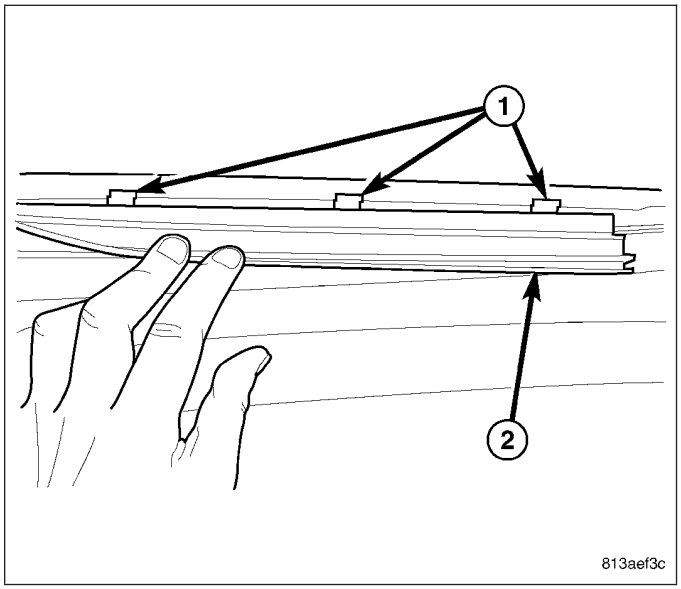

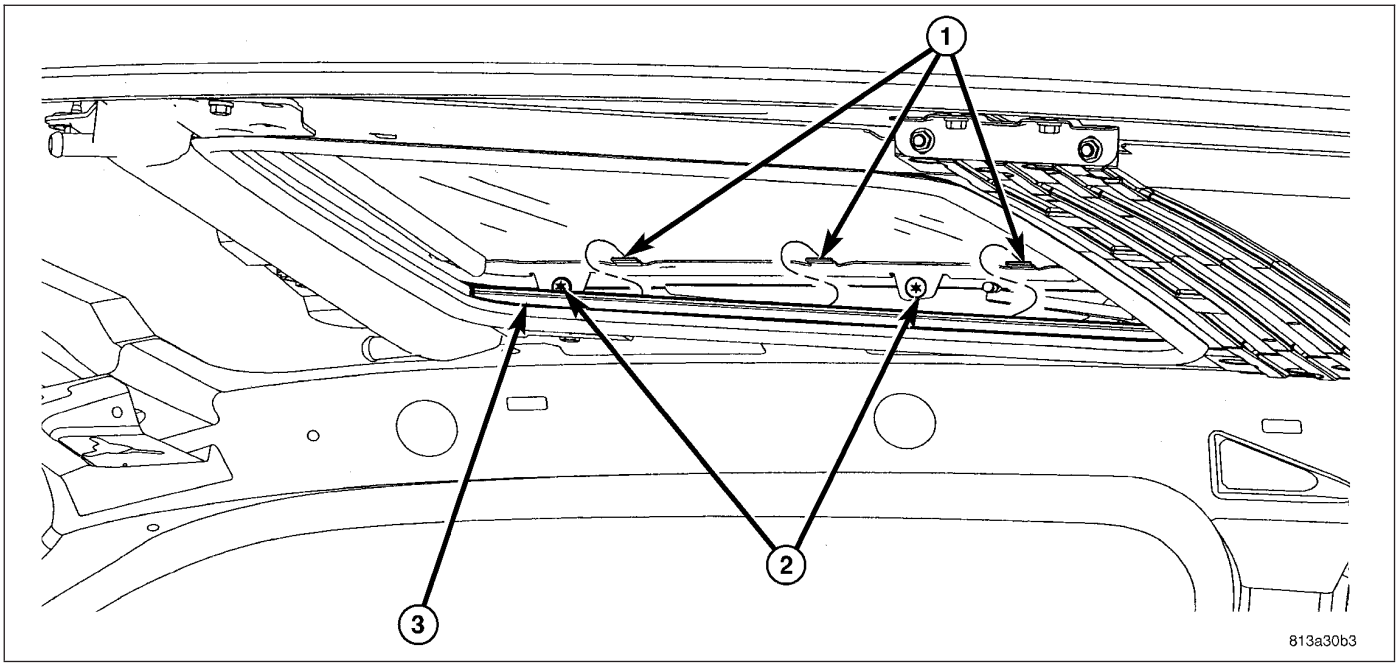

4. Remove the glass panel screws (2).
5. Lift off glass panel and remove from vehicle.

INSTALLATION

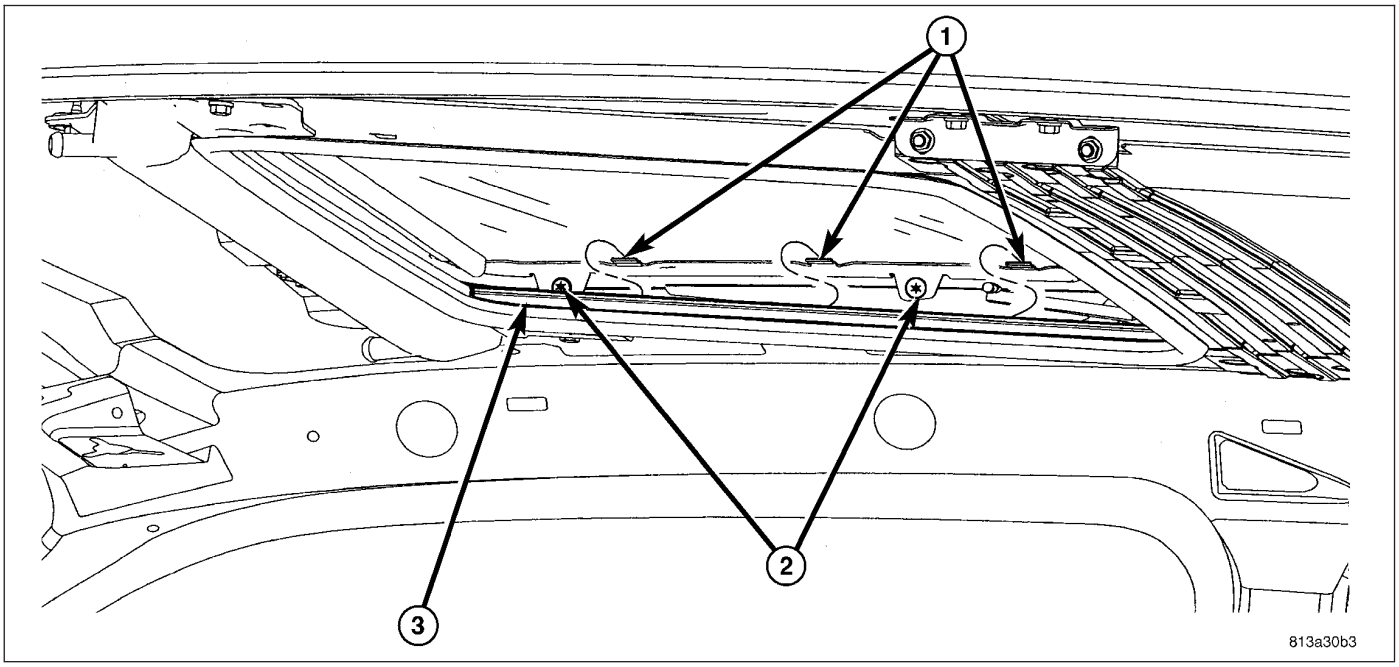

CAUTION: Charger sunglass seal is serviceable. 300 / Magnum seal is not serviceable.

Position glass panel on to mechanism lift arms.

CAUTION: Verify that the retaining tabs are located on the INSIDE of the guide mechanism arms.

1. Start the attaching screws (2).
2. Connect a 12v power supply and verify that the sunroof is in the closed position.
3. Adjust sunroof glass to fit flush with roof line (Refer to 23 - BODY/SUNROOF/GLASS PANEL - ADJUSTMENTS).
4. Tighten the screws to 5.5 N·m (49 in. lbs.).
5. Position the mechanism covers (2) over the glass tabs (1) between the locating features and seat fully.
6. Verify sunroof operation and alignment.

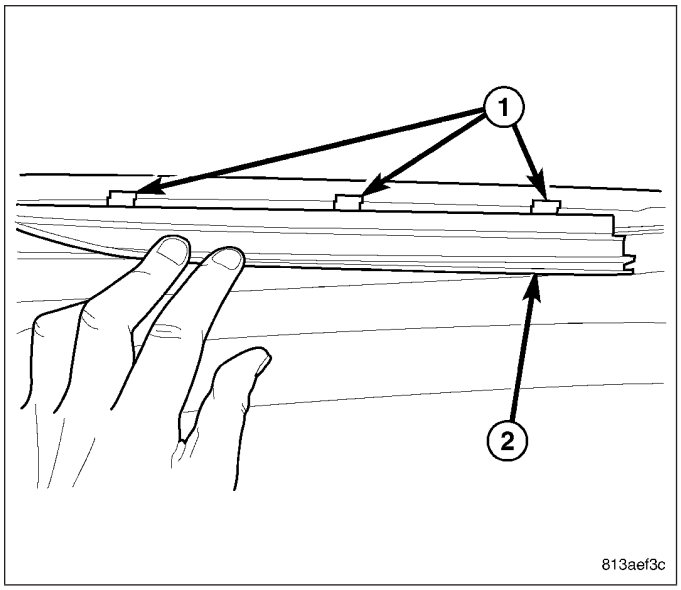

ADJUSTMENTS

ADJUSTMENT

1. Move the sunshade rearward to the open position.
2. Separate the mechanism covers (2) from the tabs (1) on the glass panel.

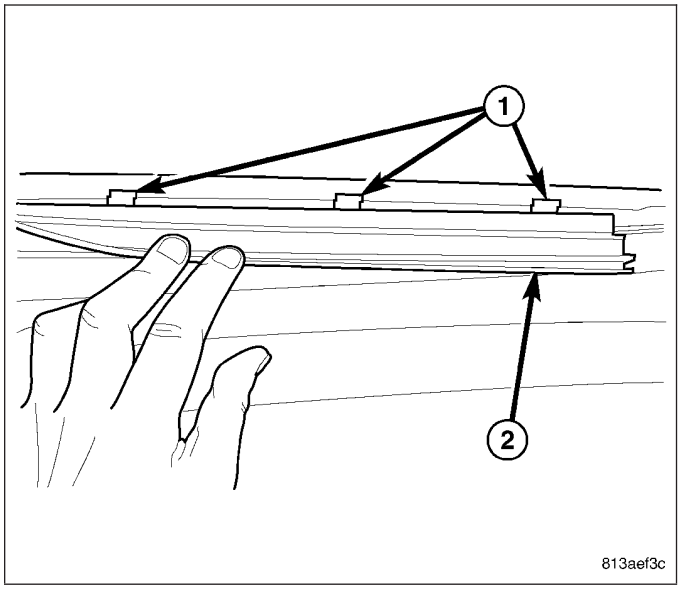

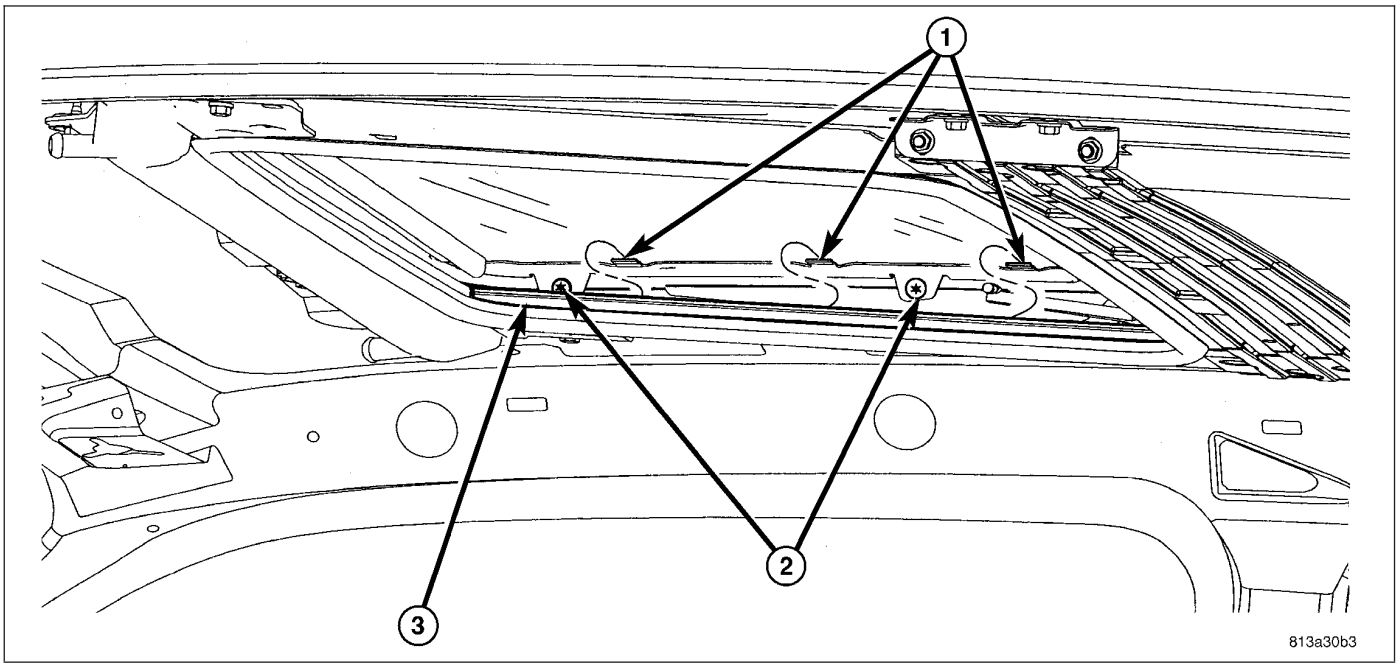

3. Verify the sunroof glass panel is in the fully closed position.
4. Loosen the forward attaching screws (2) on each side enough to permit the front of the glass to adjust up or down.
5. Adjust the front surface of the sunroof glass panel 0.00 mm to 2 mm (0.00 in. to 0.08 in.) **below** the top surface of the roof.
6. Tighten the front glass panel attaching screws to 5.5 N·m (49 in. lbs.).
7. Loosen the rear screws (2) on each side enough to make the rear adjustment.
8. Adjust the rear surface of the sunroof glass panel 0.00 mm to 2 mm (0.00 in. to 0.08 in.) **above** the top surface of the roof.
9. Tighten the rear glass panel attaching screws to 5.5 N·m (49 in. lbs.).
10. Check for proper fit. If not OK, repeat glass panel adjustment.

11. Position the mechanism covers (2) over the glass tabs (1) between the locating features and seat fully.
12. Verify sunroof operation and alignment.

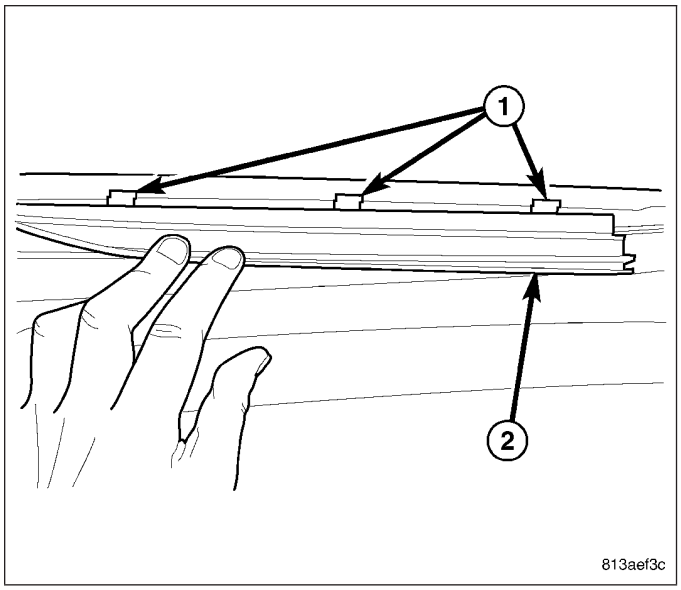

GUIDE-SUNROOF GLASS

REMOVAL

1. Place the sunroof in the vent position.
2. Remove the sunroof assembly. (Refer to 23 - BODY/SUNROOF/ASSEMBLY-MODULE - REMOVAL)
3. Remove the motor. (Refer to 8 - ELECTRICAL/ POWER TOP - SUNROOF SERVICE INFO/MOTOR/MODULE-SUNROOF - REMOVAL)
4. Remove the glass. (Refer to 23 - BODY/SUNROOF/GLASS - REMOVAL)
5. Remove the wind deflector. (Refer to 23 - BODY/ SUNROOF/DEFLECTOR-WIND - REMOVAL)
6. Separate the drain channel arms (2) from the guide mechanisms (1) one at a time.

CAUTION: Do not pry the channel arms apart at the same time or you could break the drain channel.

7. Slide the drain channel rearward out of the way.
8. Remove the hard stop screw from the frame.

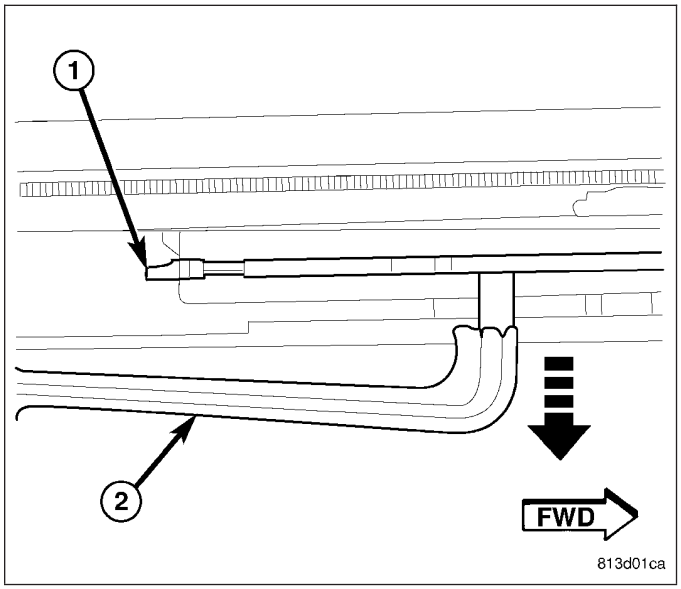

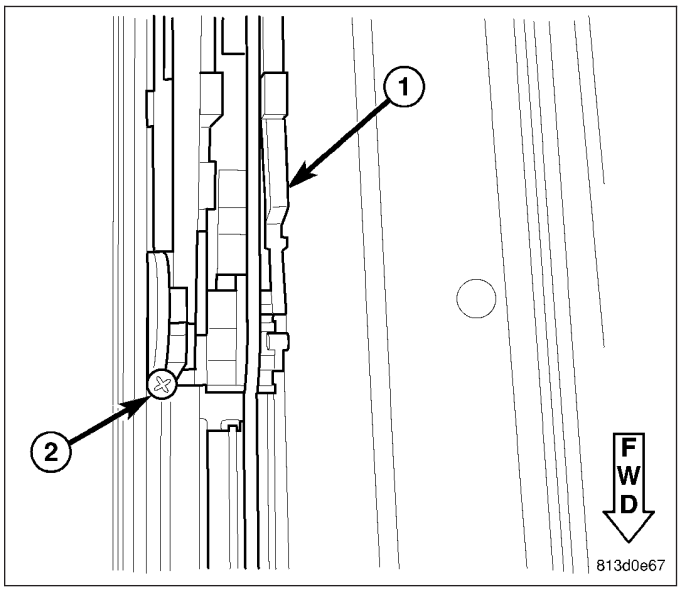

9. Push the drive cable and guide plate forward past the hard stop screw location until the glass guide comes loose.

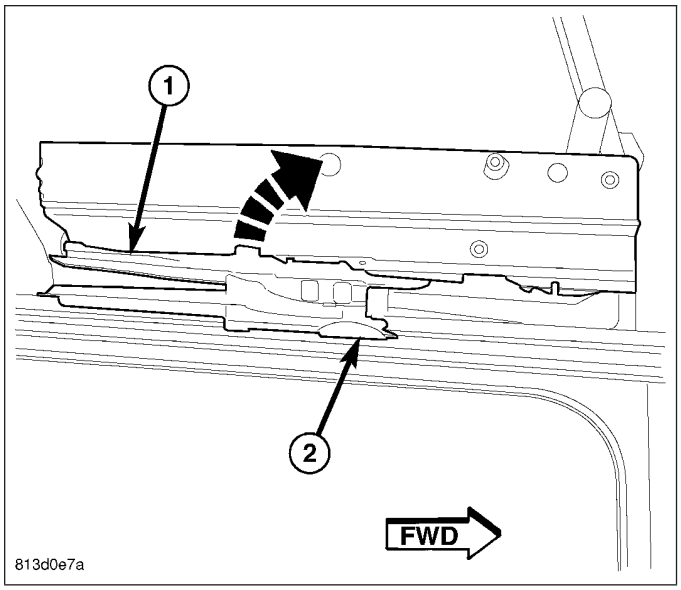

10. Rotate the guide (1) up and out of the front beam (3) and release the front foot (2) from the channel guide.

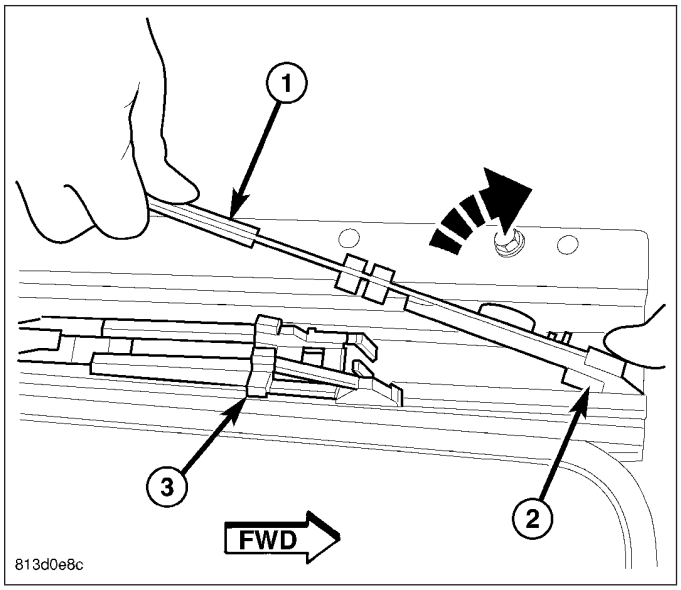

INSTALLATION

1. With the drive cable plate aligned insert the front foot (2) into the guide channel and engage the feet with the front beam (3).

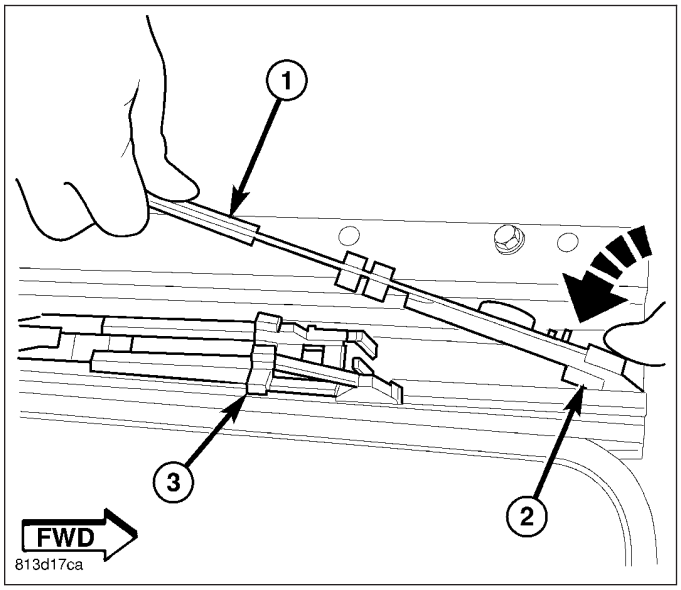

2. Rotate the guide plate (1) inboard until the feet of the guide are engaged into the front beam (2).

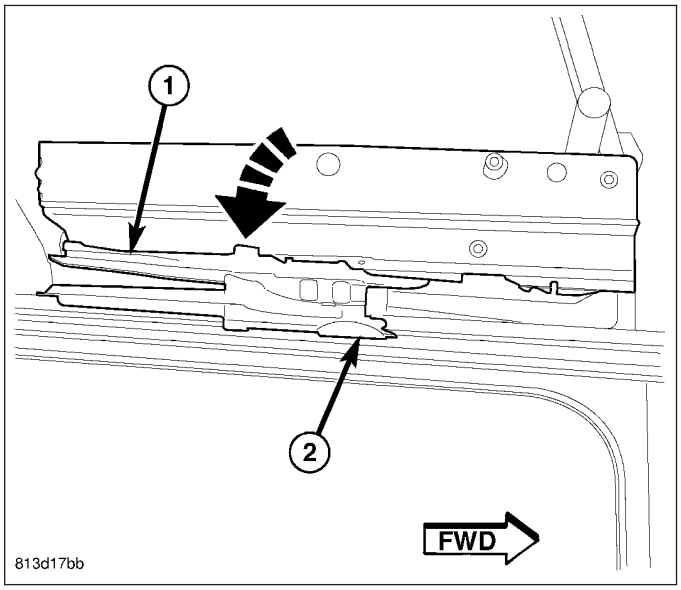

3. Push the guide assembly (1) and drive cable rearward past the hard stop location.
4. Install the hard stop screw (2) and push the drive cable and guide assembly (1) up against the hard stop screw (2).
5. Verify that the opposite guide assembly is also positioned up against the hard stop screw.
6. Install the wind deflector as necessary. (Refer to 23 - BODY/SUNROOF/DEFLECTOR-WIND - INSTALLATION)
7. Install the motor as necessary. (Refer to 8 - ELECTRICAL/POWER TOP - SUNROOF SERVICE INFO/MOTOR/MODULE-SUNROOF - INSTALLATION)

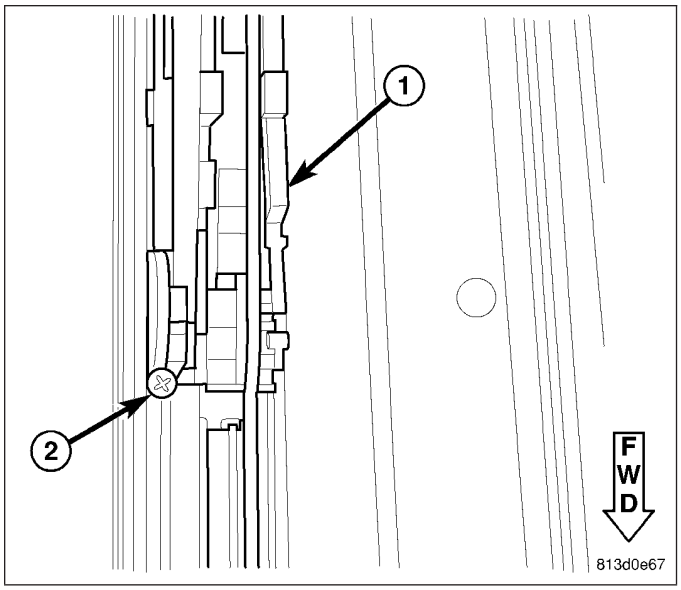

8. Install the drain channel arms (2) into the mechanism (1) holes one at a time with the reinforcements on the inside of mechanism arms.

CAUTION: Do not pry the channel arms apart at the same time or you could break the drain channel.

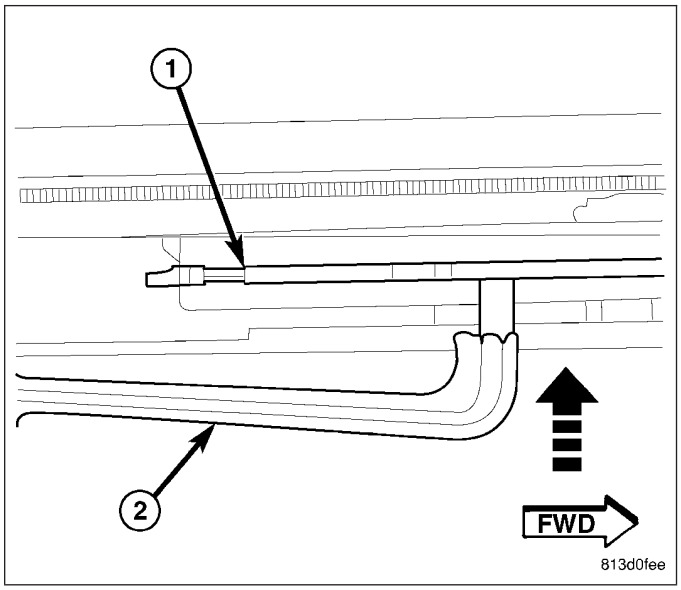

9. Install the sunroof assembly into the vehicle. (Refer to 23 - BODY/SUNROOF/ASSEMBLY-MODULE - INSTALLATION)
10. Perform the sunroof position calibration, (Refer to 8 - ELECTRICAL/POWER TOP/MOTOR - STANDARD PROCEDURE - SUNROOF POSITION CALIBRATION).
11. Perform the Excessive Force Limitation (EFL) calibration, (Refer to 8 - ELECTRICAL/POWER TOP/MOTOR - STANDARD PROCEDURE - EXCESSIVE FORCE LIMITATION (EFL) CALIBRATION).
12. Install the glass as necessary. (Refer to 23 - BODY/SUNROOF/GLASS - INSTALLATION)
13. Adjust sunroof glass to fit flush with roof line (Refer to 23 - BODY/SUNROOF/GLASS PANEL - ADJUSTMENTS).
14. Verify proper operation of the power sunroof system.

HOSE-DRAIN

REMOVAL

FRONT HOSES

1. Remove headliner (Refer to 23 - BODY/INTERIOR/ HEADLINER - REMOVAL).
2. Disconnect the drain hose from the sunroof housing (3).
3. Separate the lower tube from the grommet in the body (4).
4. Drain any liquid from hose connection, if necessary.
5. Release the clips (2) and remove the tube (1).

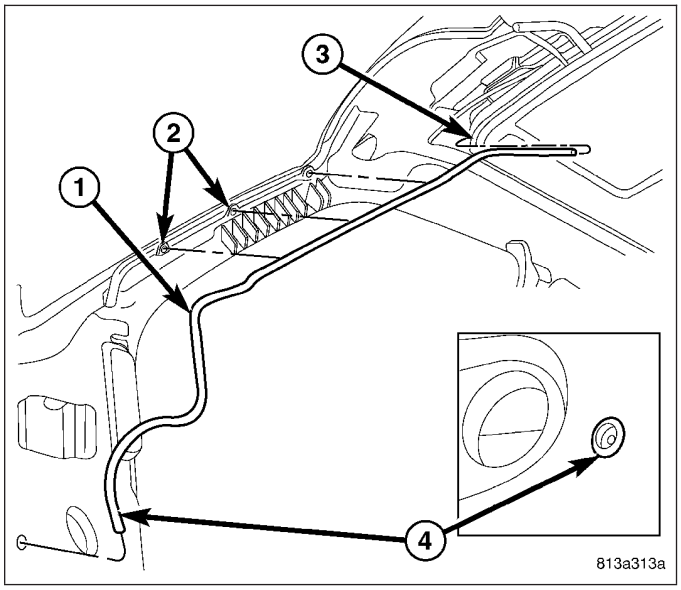

REAR HOUSING HOSE

1. Remove headliner (Refer to 23 - BODY/INTERIOR/ HEADLINER - REMOVAL).
2. Disconnect the drain hose from the sunroof housing (1).
3. Drain any liquid from hose connection, if necessary.
4. Release the push pin fasteners (2) and separate the lower tube from the grommet in the body (4).

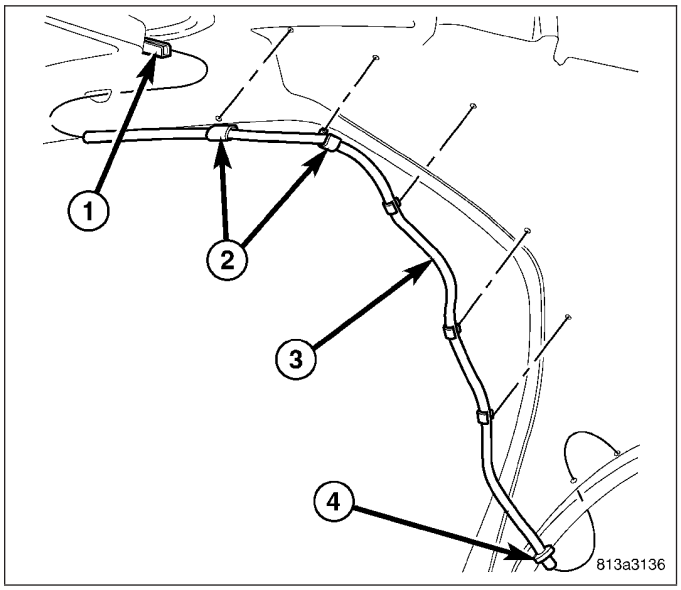

INSTALLATION

FRONT HOSES

1. Position the lower portion through the grommet in the body (4).
2. Connect the new drain hose (1) to the sunroof housing (3) and test drainage.
3. Position the hose (1) into the support clips (2).
4. Install headliner (Refer to 23 - BODY/INTERIOR/ HEADLINER - INSTALLATION).

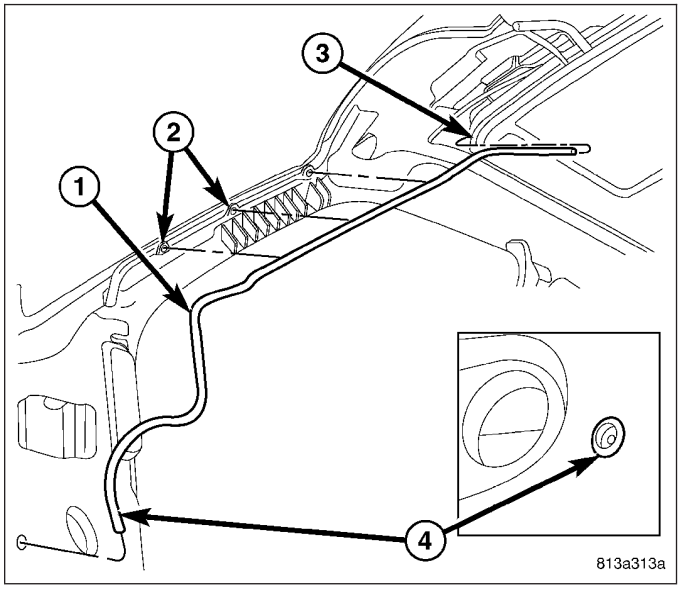

REAR HOUSING HOSE

1. Install the rear hose (3) and seat the push pin fasteners (2) fully.
2. Position the lower portion through the grommet in the body (4).
3. Connect the new drain hose (3) to the sunroof housing (1) and test drainage.
4. Install headliner (Refer to 23 - BODY/INTERIOR/ HEADLINER - INSTALLATION).

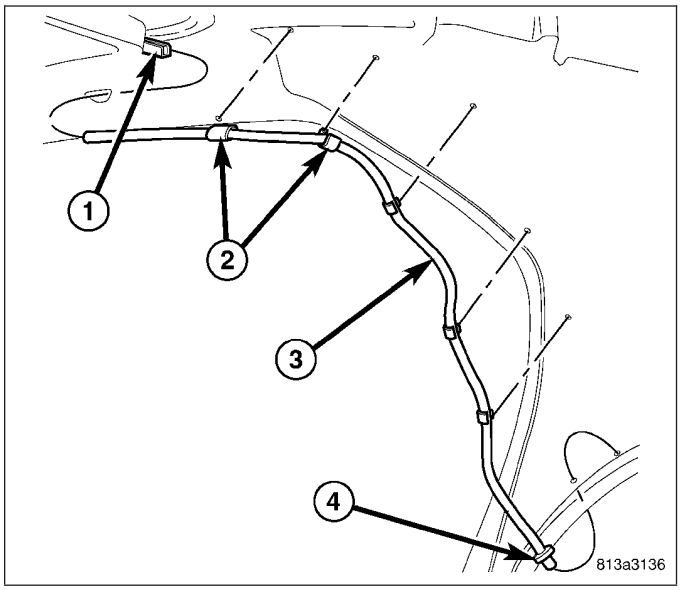

MOTOR

DESCRIPTION

For service information refer to (Refer to 8 - ELECTRICAL/POWER TOP/MOTOR - DIAGNOSIS AND TESTING).

SUNSHADE

REMOVAL

1. Remove the drain channel. (Refer to 23 - BODY/ SUNROOF/CHANNEL-DRAIN - REMOVAL)
2. Push up the front center of the sunshade (1) to pop out the front two feet.

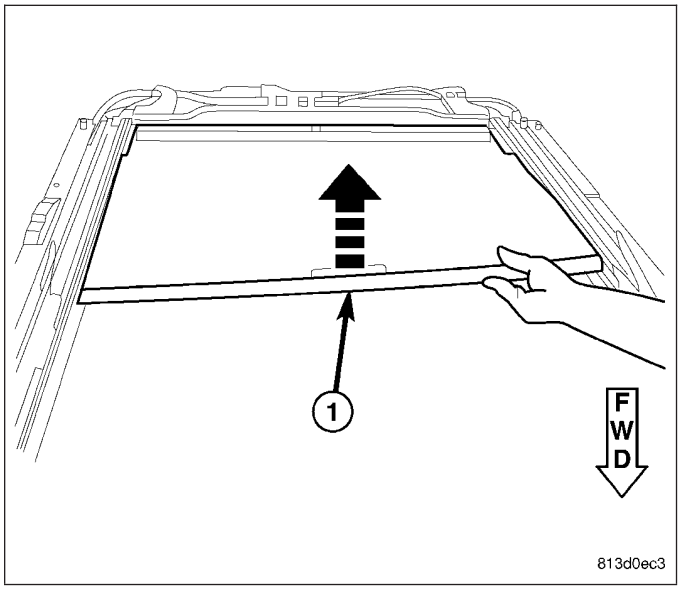

3. Rotate the sunshade (2) so that the other feet (1) are removed from the guide track.

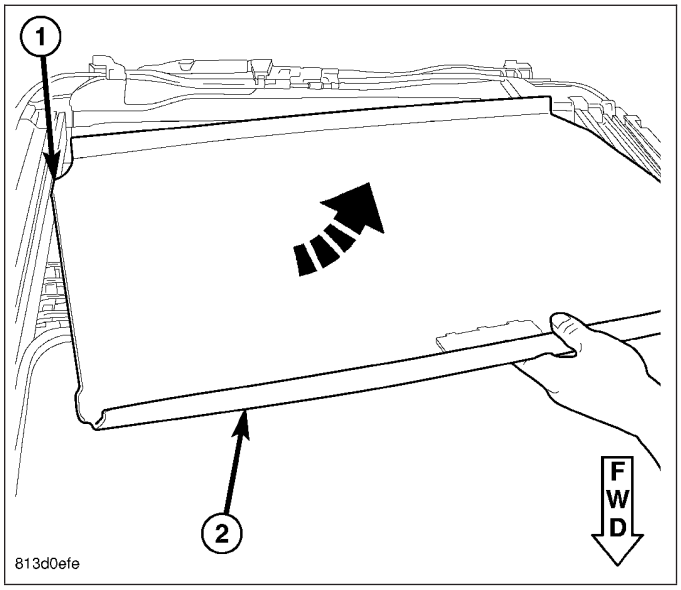

INSTALLATION

1. Verify the sunshade track is free of obstructions like the trim lace.
2. Start with sunshade (2) at an angle with one foot (1) in the track.
3. Rotate the sunshade so the other rear foot is in the track as well as the 2 other feet (3) on the same side as the first foot.

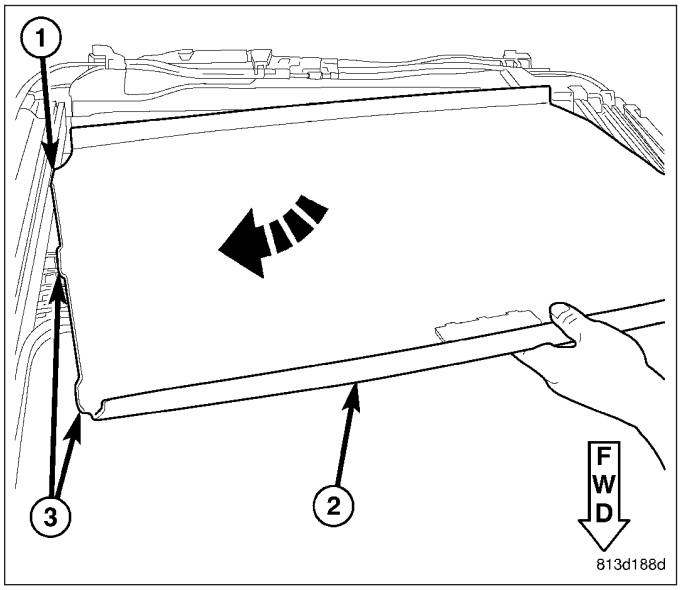

4. To insert the remaining two feet (2) apply force to the middle front of sunshade (3) and guide them into the track.
5. Check that all the feet are in the right track and verify sunshade operation.
6. Install the drain channel. (Refer to 23 - BODY/ SUNROOF/CHANNEL-DRAIN - INSTALLATION)

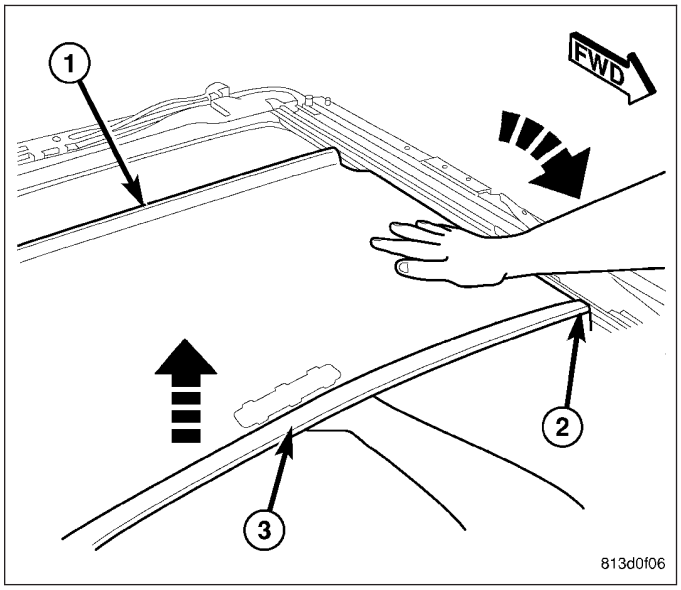

SWITCH-SUNROOF

DESCRIPTION

For service information refer to (Refer to 8 - ELECTRICAL/POWER TOP/SWITCH - DIAGNOSIS AND TESTING).

TRIM LACE

REMOVAL

1. Remove trim lace (2) by holding one end of the trim lace at the butt joint and pulling horizontally into the opening until lace is completely loose from the headliner/sunroof joint.

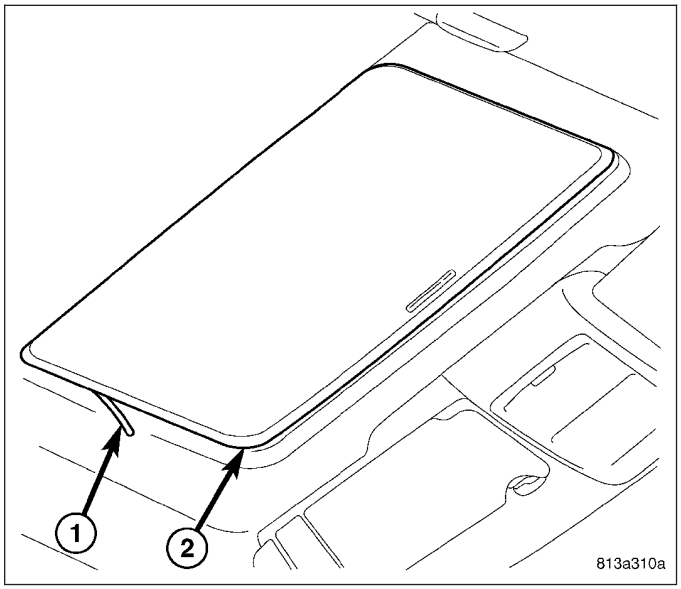

INSTALLATION

1. Place butt joint of trim lace into position starting at the drivers side middle of the opening at the butt joint notch in the u-frame.
2. Push lace into position.
3. Ensure that the corner radii is fully engage.
4. Once the trim lace is attached to sunroof module using a trim stick C-4755 or equivalent, begin tucking the headliner under the lip on the trim lace working all the way around the opening. When installing a new trim lace, begin tucking the headliner under the lip as the tear cord (1) is removed working all the way around the opening.

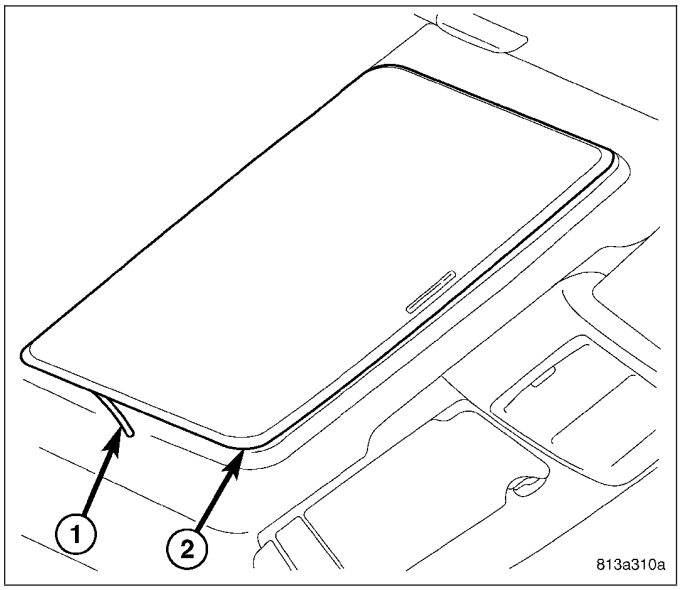

BODY STRUCTURE

TABLE OF CONTENTS

page

GAP AND FLUSH
SPECIFICATIONS
GAP AND FLUSH 318
OPENING DIMENSIONS
SPECIFICATIONS
OPENING DIMENSIONS 326
SEALER LOCATIONS
SPECIFICATIONS
BODY SEALING LOCATIONS 332

page

STRUCTURAL ADHESIVE LOCATIONS
SPECIFICATIONS
STRUCTURAL ADHESIVE LOCATIONS 354
WELD LOCATIONS
SPECIFICATIONS
WELD LOCATIONS 371

GAP AND FLUSH

SPECIFICATIONS

GAP AND FLUSH

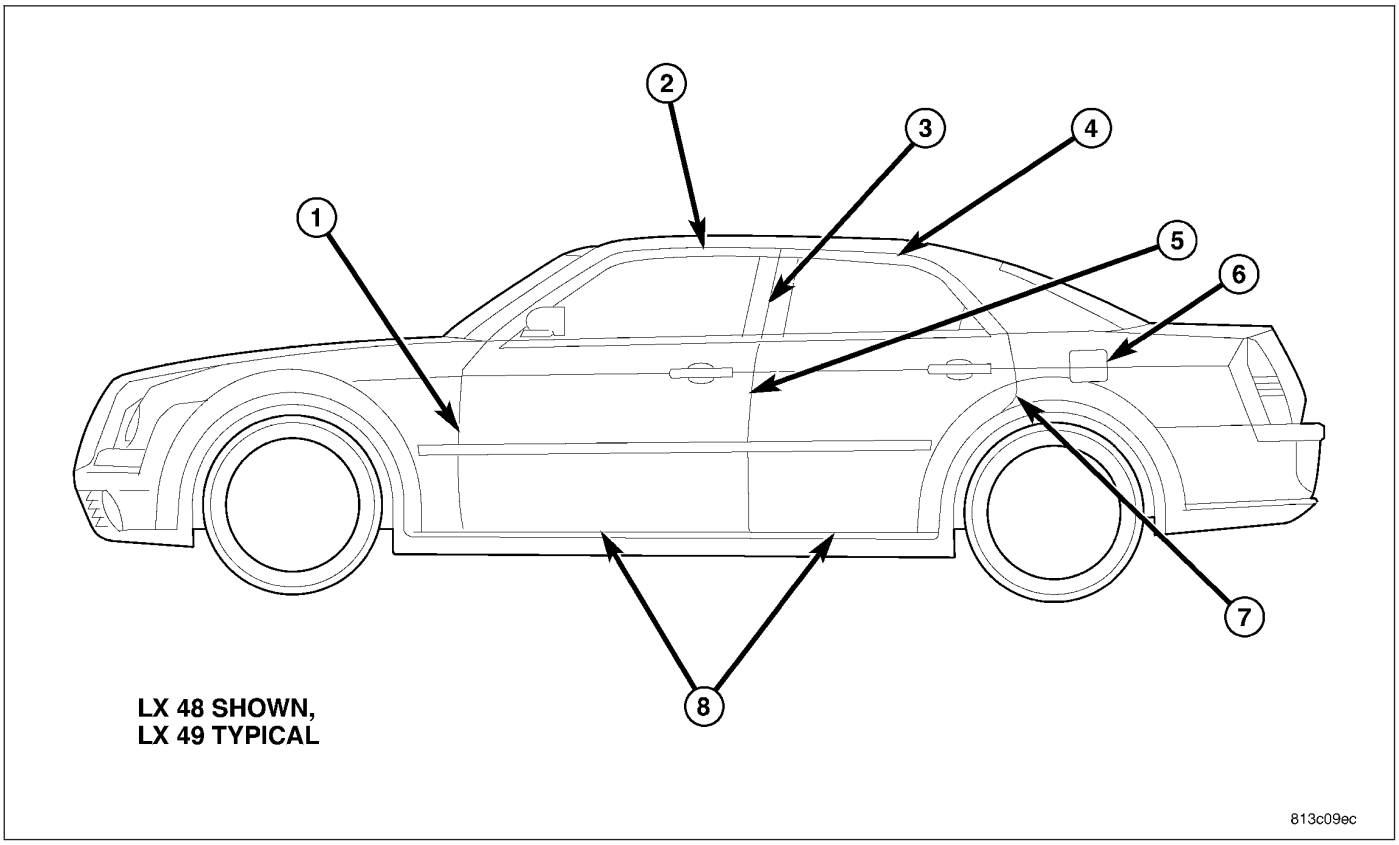

Wagon & Sedan

NOTE: ALL DIMENSIONS ARE IN MILLIMETERS.

WAGON & SEDAN MEASUREMENTS

DIMENSION	LOCATION	GAP	FLUSH
1	FRONT DOOR TO FENDER	4.0 ± 1.0 PARALLEL WITHIN 1.0	FENDER OVERFLUSH 0.8 ± 1.0
2	FRONT DOOR TO ROOF	4.7 +1.5/-1.0 PARALLEL WITHIN 1.5	DOOR UNDERFLUSH 1.5 ± 1.5
3	FRONT DOOR TO REAR DOOR	4.0 ± 1.5	—
4	REAR DOOR TO ROOF	4.7 +1.5/-1.0 CONSISTENT WITHIN 2.O	DOOR UNDERFLUSH 1.5 ± 1.5
5	FRONT DOOR TO REAR DOOR	4.0 ± 1.0 PARALLEL WITHIN 1.0	FRONT DOOR OVERFLUSH 0.0 - 2.0
6	FUEL FILLER DOOR TO QUARTER PANEL	3.0 ± 1.0 UNIFORM WITHIN 1.0	FUEL DOOR UNDERFLUSH 0.5 ± 1.0

DIMENSION	LOCATION	GAP	FLUSH
7	REAR DOOR TO QUARTER PANEL	4.0 ± 1.0 PARALLEL WITHIN 1.0	0.0 ± 1.0
8	FRONT AND REAR DOOR TO SILL	6.0 ± 2.0 PARALLEL WITHIN 2.0	—

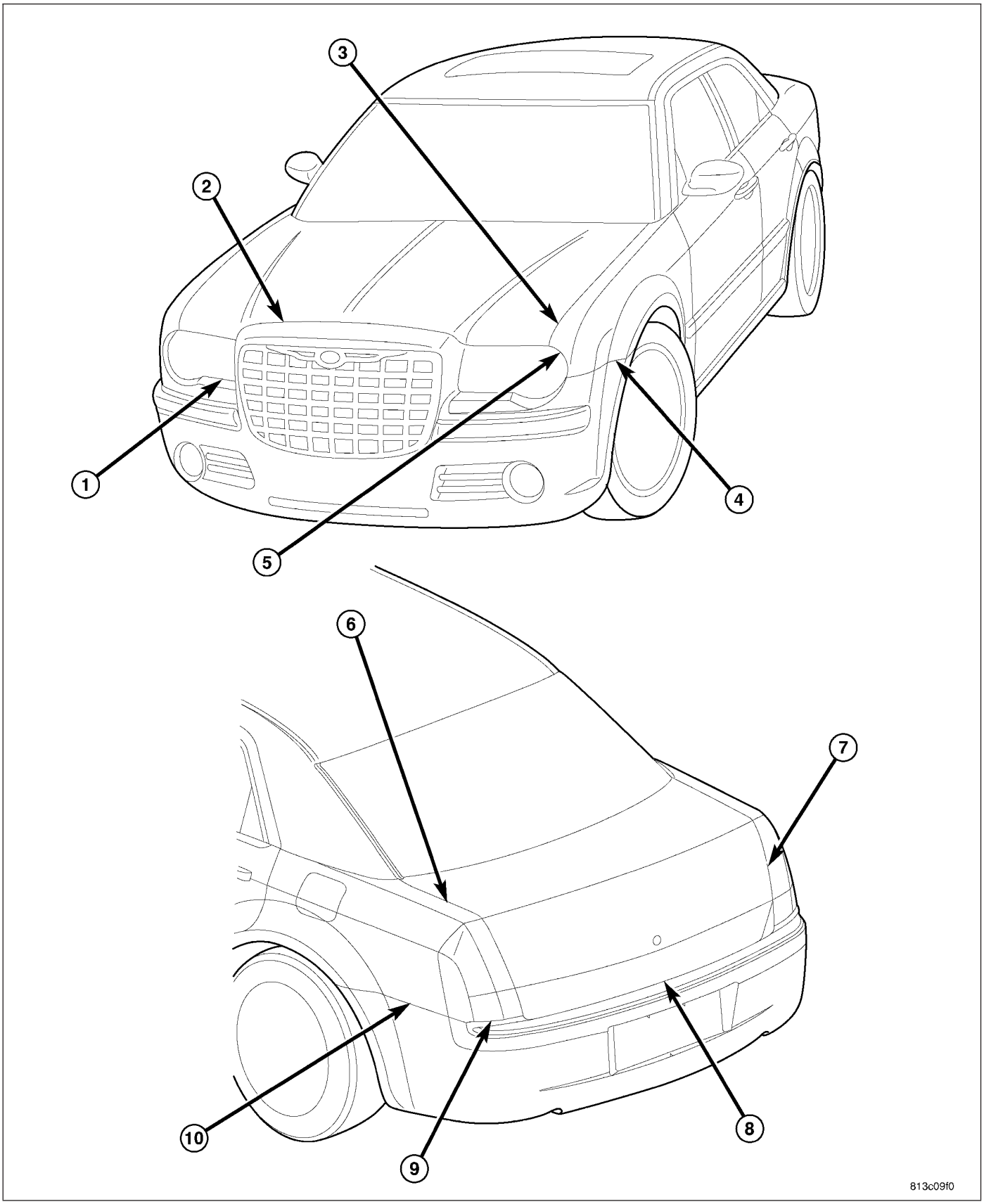

SEDAN ONLY

NOTE: ALL DIMENSIONS ARE IN MILLIMETERS.

SEDAN MEASUREMENTS

DIMENSION	LOCATION	GAP	FLUSH
1	FASCIA TO HEADLAMP	3.0 ± 2.0 PARALLEL WITHIN 1.5 LH/RH DIFFERENCE WITHIN 2.0	—
2	HOOD TO FASCIA	3.5 ± 1.5 PARALLEL WITHIN 2.0	FASCIA OVERFLUSH 1.0 ± 1.5
3	HOOD TO FENDER	3.5 ± 1.0 PARALLEL WITHIN 1.0 LH/RH DIFFERENCE WITHIN 1.0	0.0 ± 1.5
4	FASCIA TO FENDER	0.0 + 1.0	0.0 ± 1.0
5	HEADLAMP TO FENDER	3.5 ± 2.5 LH/RH DIFFERENCE WITHIN 1.5	—
6	DECKLID TO QUARTER PANEL	3.5 ± 1.0 PARALLEL WITHIN 1.0 LH/RH DIFFERENCE WITHIN 1.0	DECKLID UNDERFLUSH 0.8 ± 1.5
7	DECKLID TO TAIL LAMP	4.0 ± 2.0 PARALLEL WITHIN 1.0 LH/RH DIFFERENCE WITHIN 1.0	TAIL LAMP OVERFLUSH 1.0 ± 2.0
8	DECKLID TO FASCIA	6.5 ± 2.0 PARALLEL WITHIN 2.0	—
9	TAIL LAMP TO FASCIA	2.0 ± 1.5 PARALLEL WITHIN 1.5	0.0 ± 1.5
10	FASCIA TO QUARTER PANEL	0.0 + 1.0	0.0 ± 1.0

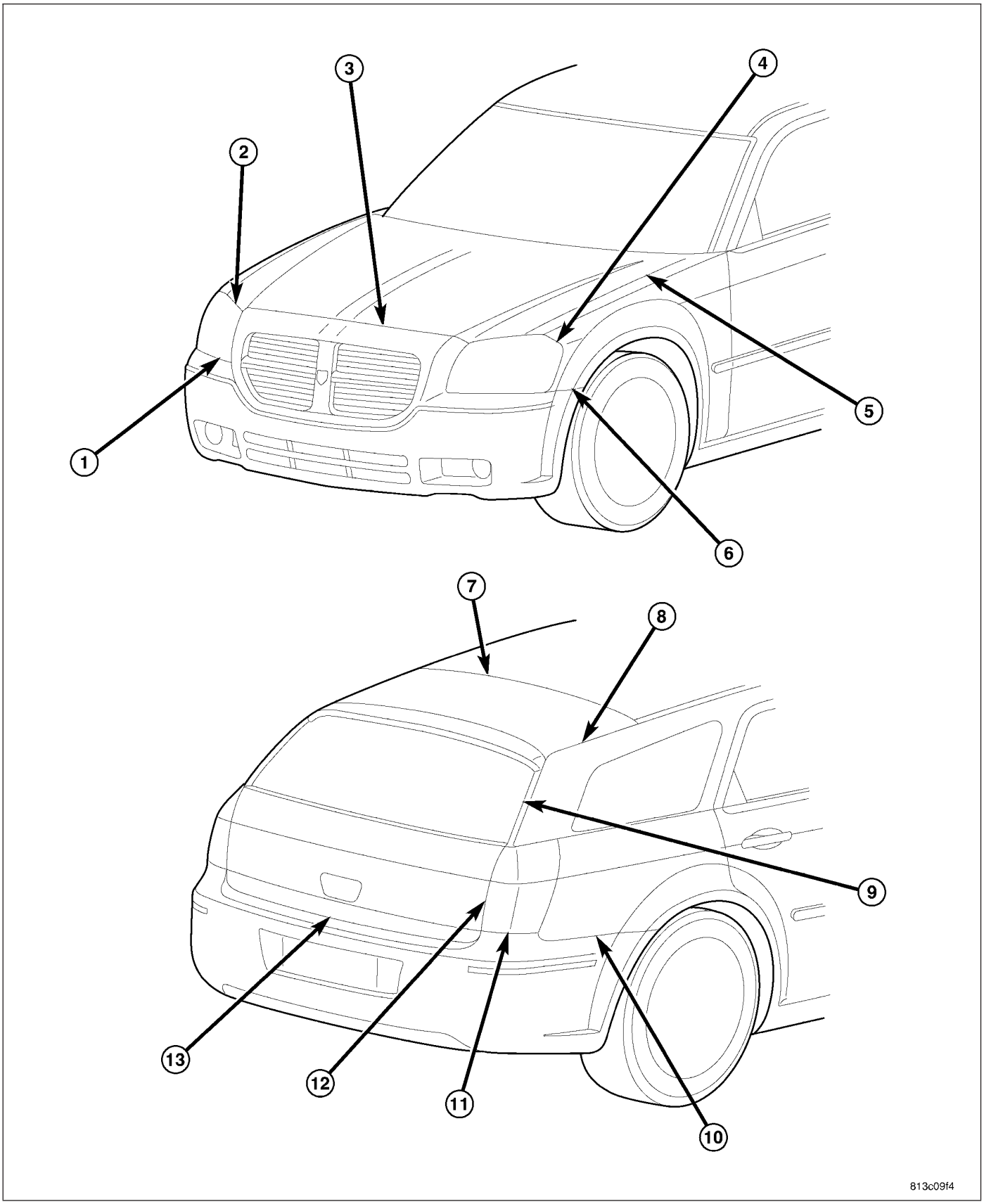

WAGON ONLY

NOTE: ALL DIMENSIONS ARE IN MILLIMETERS.

WAGON MEASUREMENTS

DIMENSION	LOCATION	GAP	FLUSH
1	FASCIA TO HOOD	3.5 ± 1.5	FASCIA 0.5 OVERFLUSH ± 1.5
2	HOOD TO FENDER	3.5 ± 1.0	HOOD 1.0 UNDERFLUSH ± 1.5
3	FRONT DOOR TO ROOF	4.7 +1.5/-1.0	DOOR 1.5 UNDERFLUSH ± 1.5
4	FRONT DOOR TO REAR DOOR	4.0 ± 1.5	—
5	FUEL FILLER DOOR TO QUARTER PANEL	3.0± 1.0	FUEL DOOR 0.5 UNDERFLUSH ± 1.0
6	FRONT DOOR TO REAR DOOR	4.0 ± 1.0	FRONT DOOR 0.0 TO 2.0 OVERFLUSH
7	FRONT AND REAR DOOR TO SILL	6.0 ± 2.0 PARALLEL WITHIN 1.5	—
8	FENDER TO FRONT DOOR	4.0 ± 1.0	FENDER 0.8 OVERFLUSH ±1.0
9	FASCIA TO FENDER	0.0 ± 1.0	FASCIA 0.5 UNDERFLUSH ± 1.0
10	DECK LID TO QUARTER PANEL	3.5 ± 1.0	DECKLID 0.8 UNDERFLUSH ± 1.5
11	REAR DOOR TO ROOF	4.7 +1.5/-1.0	REARDOOR 1.5 UNDERFLUSH ± 1.5
12	REAR DOOR TO FRONT DOOR	5.5 ± 1.5	—
13	REAR DOOR TO QUARTER PANEL	4.0 ± 1.0	0.0 ± 1.0
14	FASCIA TO QUARTER PANEL	0.0 ± 1.0	0.0 ± 1.0
15	TAIL LAMP TO FASCIA	2.0 ± 1.5	TAIL LAMP 0.8 UNDERFLUSH ± 1.5
16	DECK LID TO FASCIA	6.5 ± 2.0	—
17	TAIL LAMP TO DECK LID	4.0 ± 2.0	TAILLAMP 1.0 OVERFLUSH ± 2.0

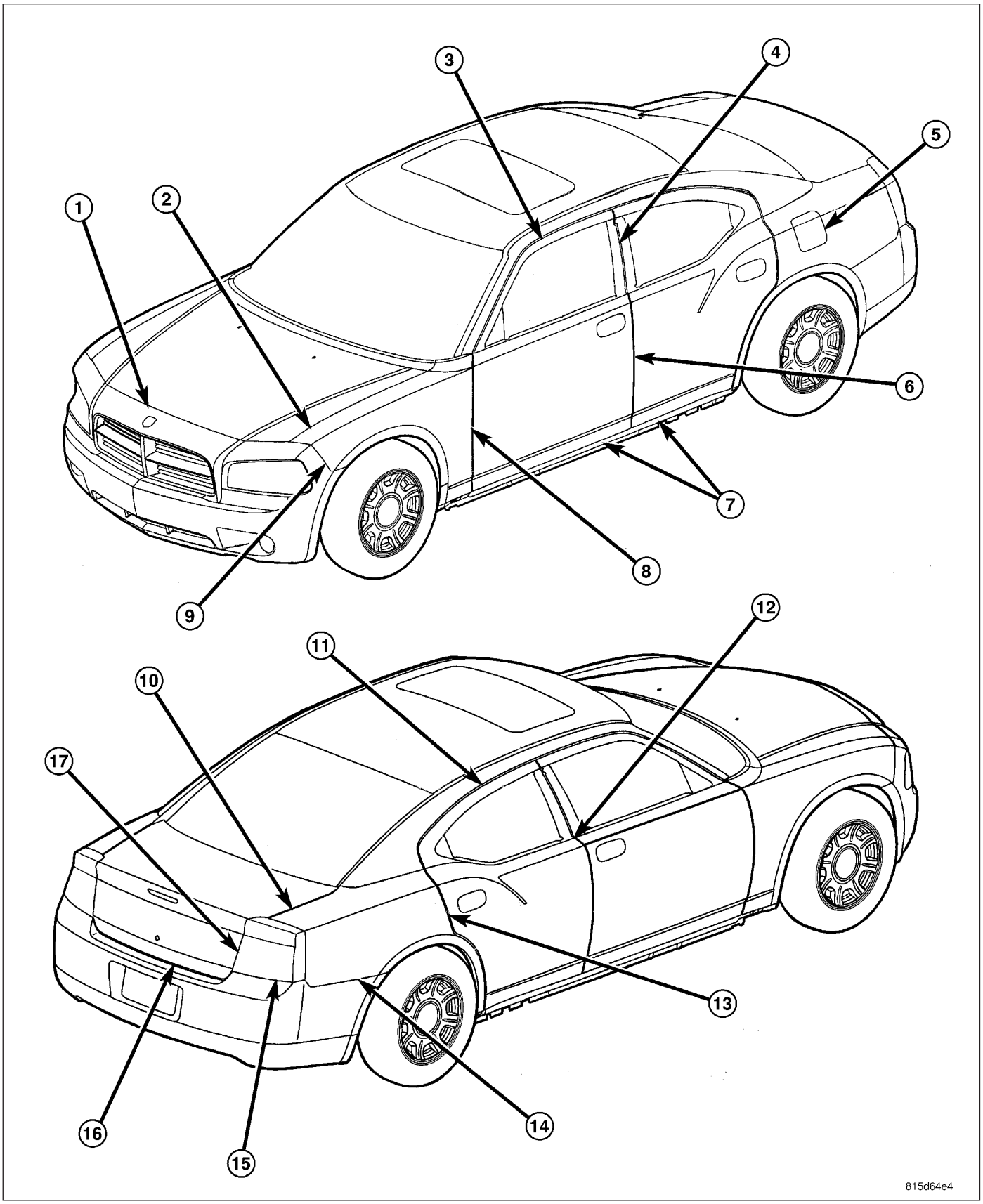

CHARGER

NOTE: ALL DIMENSIONS ARE IN MILLIMETERS.

CHARGER MEASUREMENTS

DIMENSION	LOCATION	GAP	FLUSH
1	HEADLAMP TO FASCIA	4.5 ± 2.0 PARALLEL WITHIN 2.0 LH/RH DIFFERENCE WITHIN 2.0	—
2	HEADLAMP TO HOOD	4.5 ± 2.0 PARALLEL WITHIN 2.0 LH/RH DIFFERENCE WITHIN 2.0	HEADLAMP UNDERFLUSH 1.0 ± 1.5
3	HOOD TO FASCIA	3.5 ± 1.5 PARALLEL WITHIN 2.0	FASCIA OVERFLUSH 1.0 ± 1.5
4	HEADLAMP TO FENDER	3.5 ± 1.5 CONSISTENT WITHIN 2.0 LH/RH DIFFERENCE WITHIN 2.0	HEADLAMP UNDERFLUSH 1.0 ± 1.5
5	FENDER TO HOOD	3.5 ± 1.0 PARALLEL WITHIN 1.0 LH/RH DIFFERENCE WITHIN 1.0	0.0 ± 1.5
6	FASCIA TO FENDER	0.0 ± 1.0	0.0 ± 1.0
7	LIFTGATE TO ROOF	7.5 ± 1.5 PARALLEL WITHIN 1.5	LIFTGATE UNDERFLUSH 1.0 ± 1.5
8	LIFTGATE TO BODY SIDE	5.0 ± 1.5 PARALLEL WITHIN 1.5	—
9	LIFTGATE GLASS TO BODY SIDE	5.0 ± 1.5 PARALLEL WITHIN 2.0 LH/RH DIFFERENCE WITHIN 2.0	LIFTGATE GLASS UNDERFLUSH 1.5 ± 1.5
10	FASCIA TO QUARTER PANEL	0.0 ± 1.0	0.0 ± 1.0
11	FASCIA TO TAIL LAMP	2.0 ± 1.5 PARALLEL WITHIN 1.5 LH/RH DIFFERENCE WITHIN 2.0	0.0 ± 1.5
12	LIFTGATE TO TAIL LAMP	5.0 ± 2.0 PARALLEL WITHIN 1.5 LH/RH DIFFERENCE WITHIN 2.0	TAIL LAMP OVERFLUSH 1.0 ± 2.0
13	LIFTGATE TO FASCIA	7.0 ± 2.0 PARALLEL WITHIN 2.0	—

OPENING DIMENSIONS

SPECIFICATIONS

OPENING DIMENSIONS

Index

DESCRIPTION	FIGURE
WINDSHIELD OPENING	1
FRONT AND REAR DOOR OPENINGS	2
REAR WINDOW OPENING	3
DECKLID OPENING	4
QUARTER WINDOW OPENING	5
LIFTGATE OPENING	6
WINDSHIELD OPENING	7
FRONT AND REAR DOOR OPENINGS	8
REAR WINDOW OPENING	9
DECK LID OPENING	10

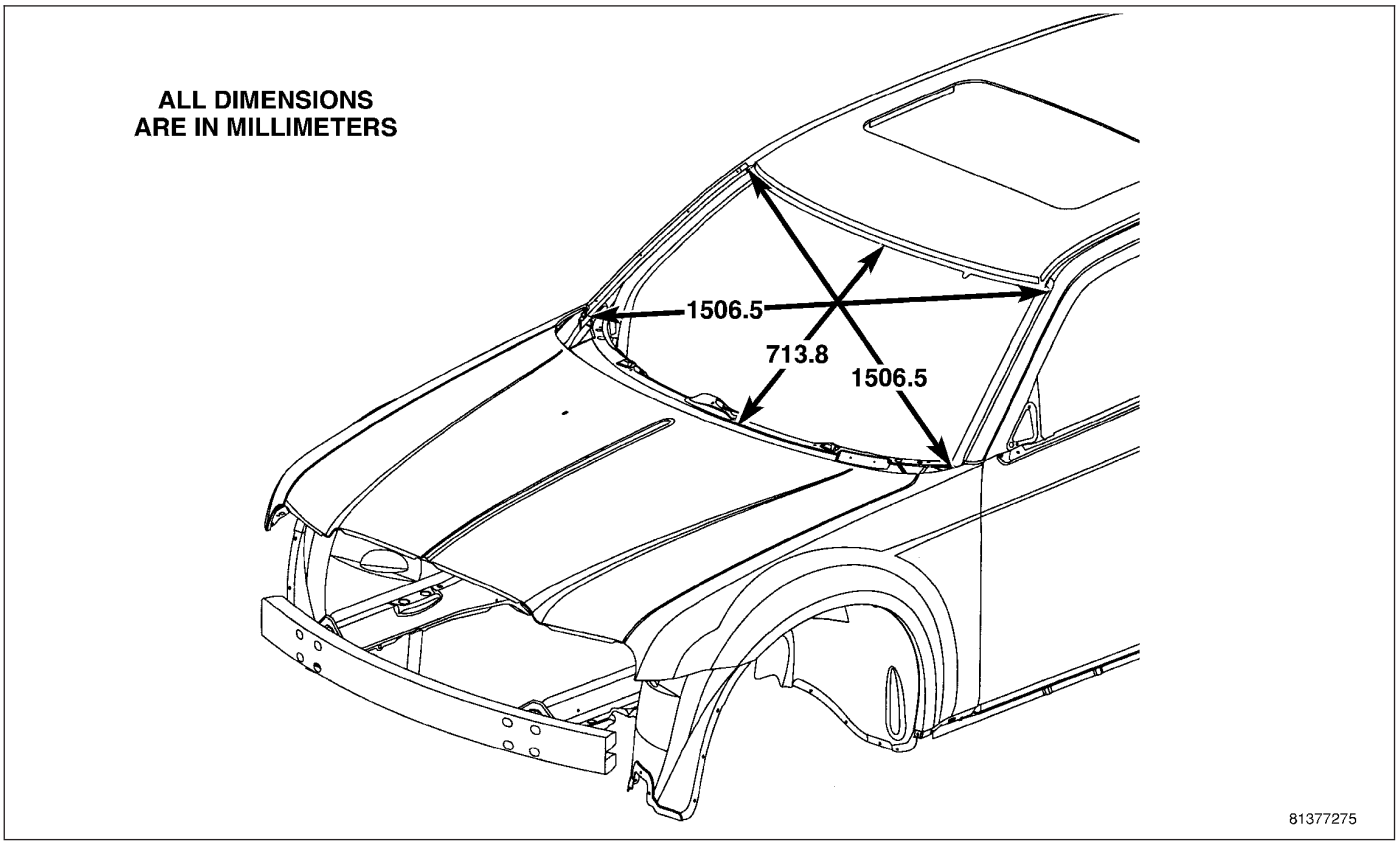

Fig. 1 WINDSHIELD OPENING

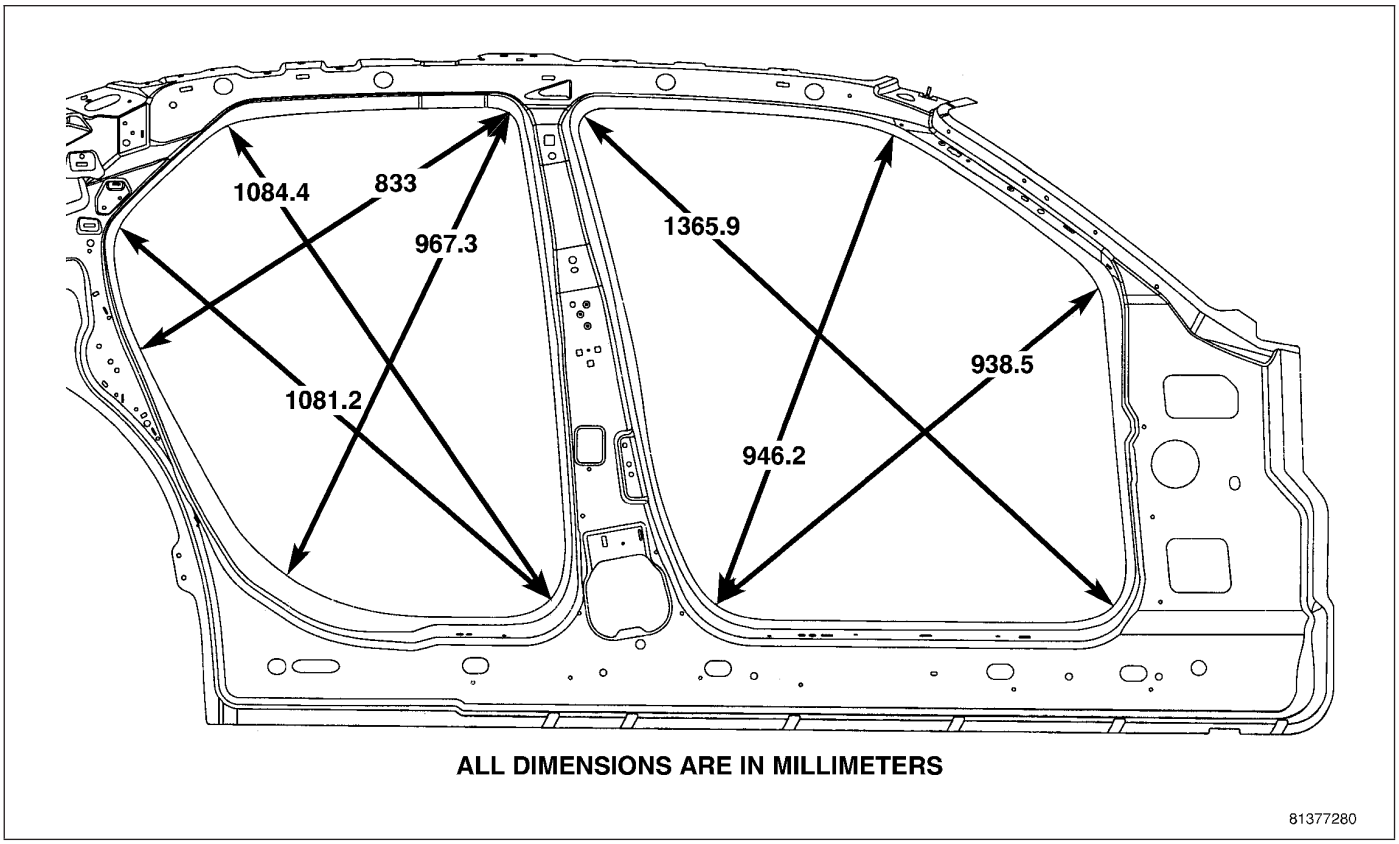

Fig. 2 FRONT AND REAR DOOR OPENINGS

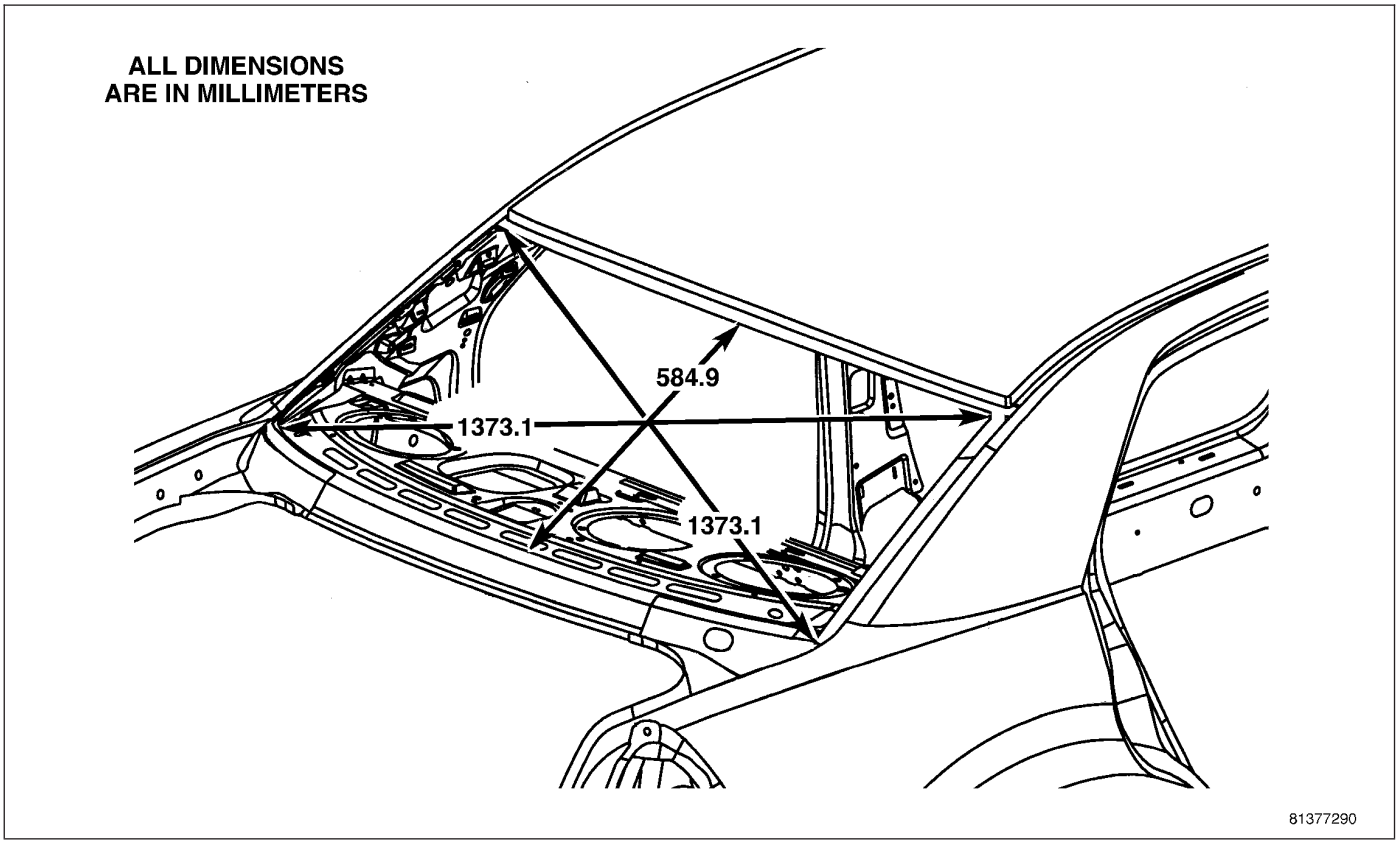

Fig. 3 REAR WINDOW OPENING

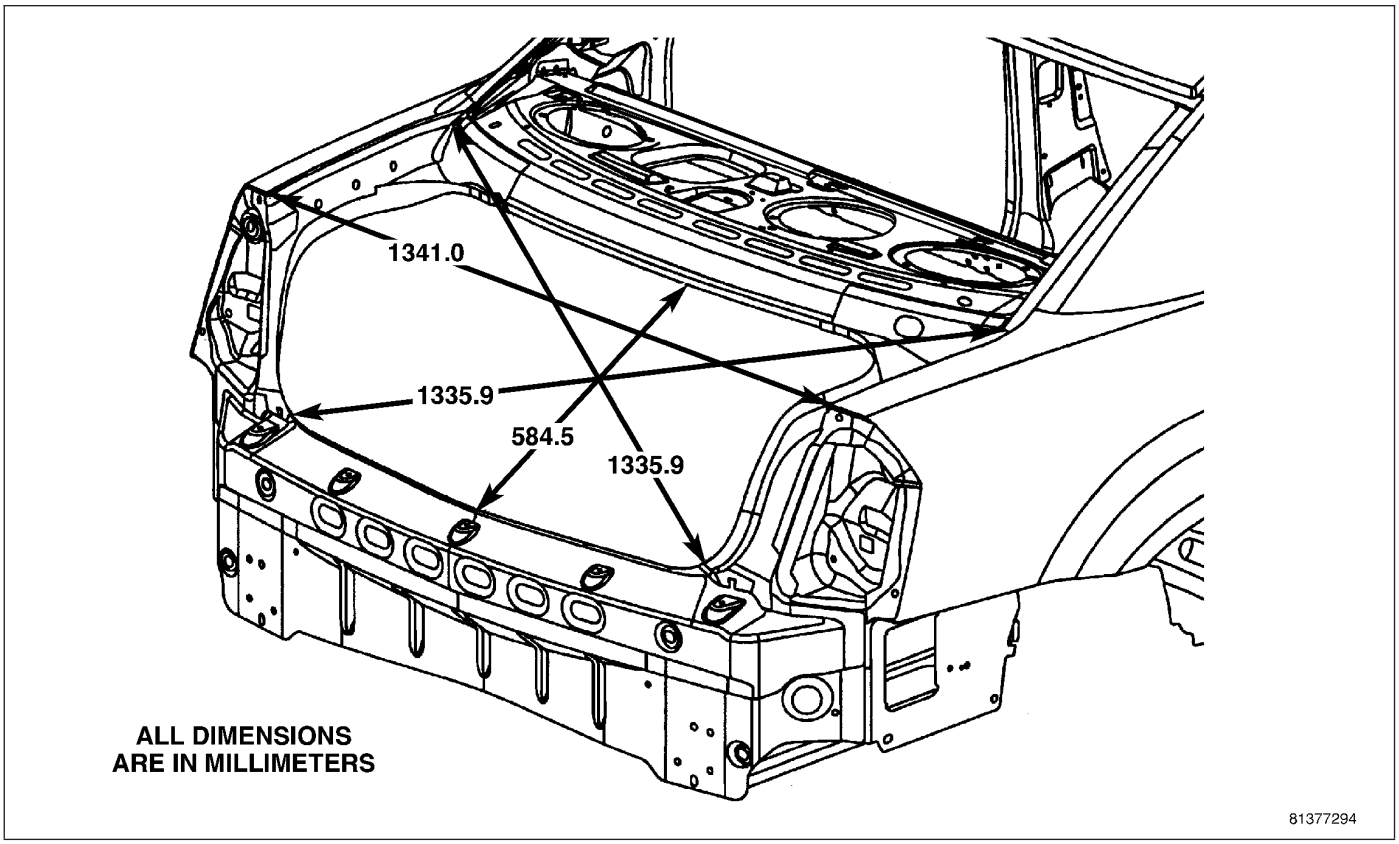

Fig. 4 DECKLID OPENING

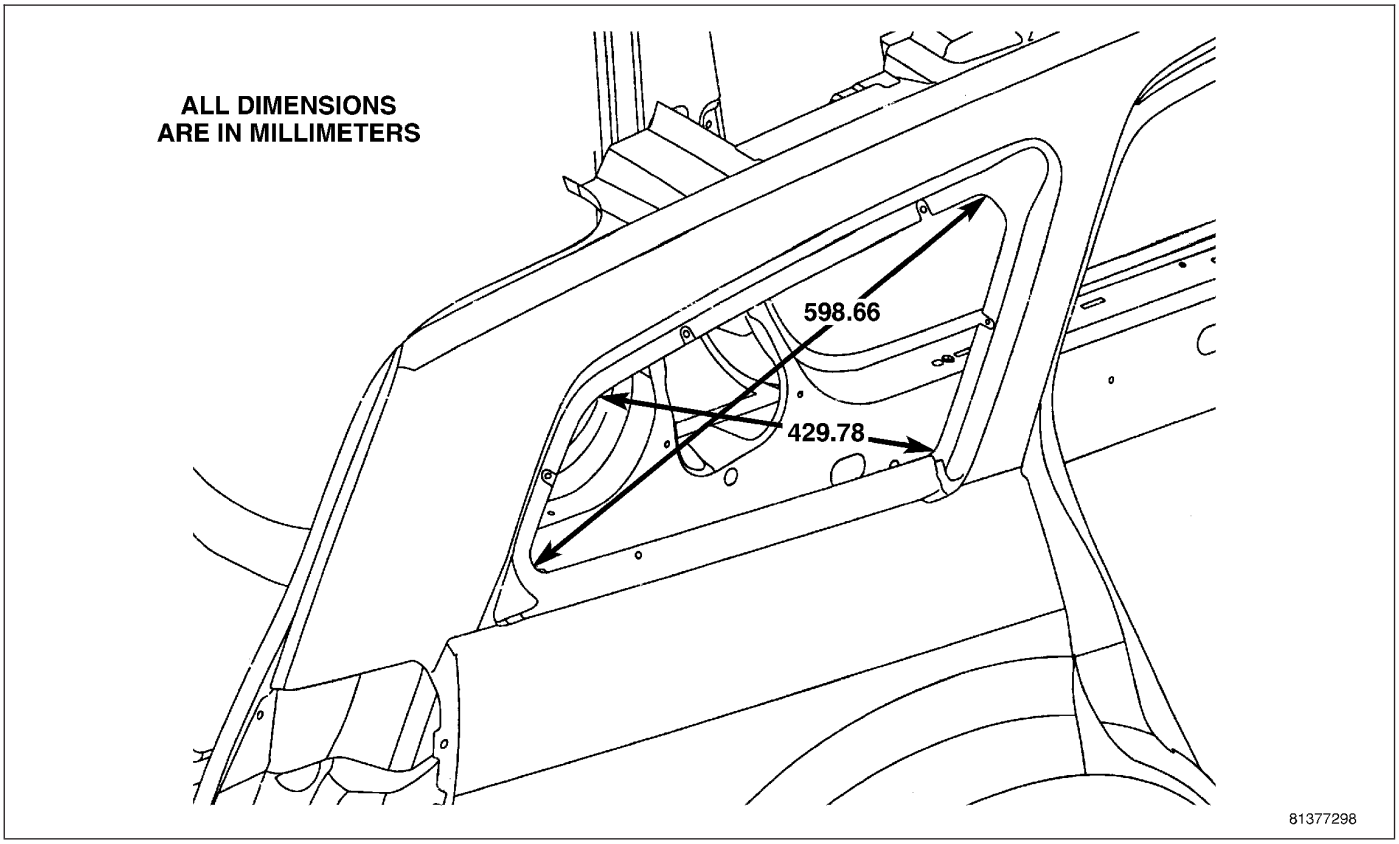

Fig. 5 QUARTER WINDOW OPENING

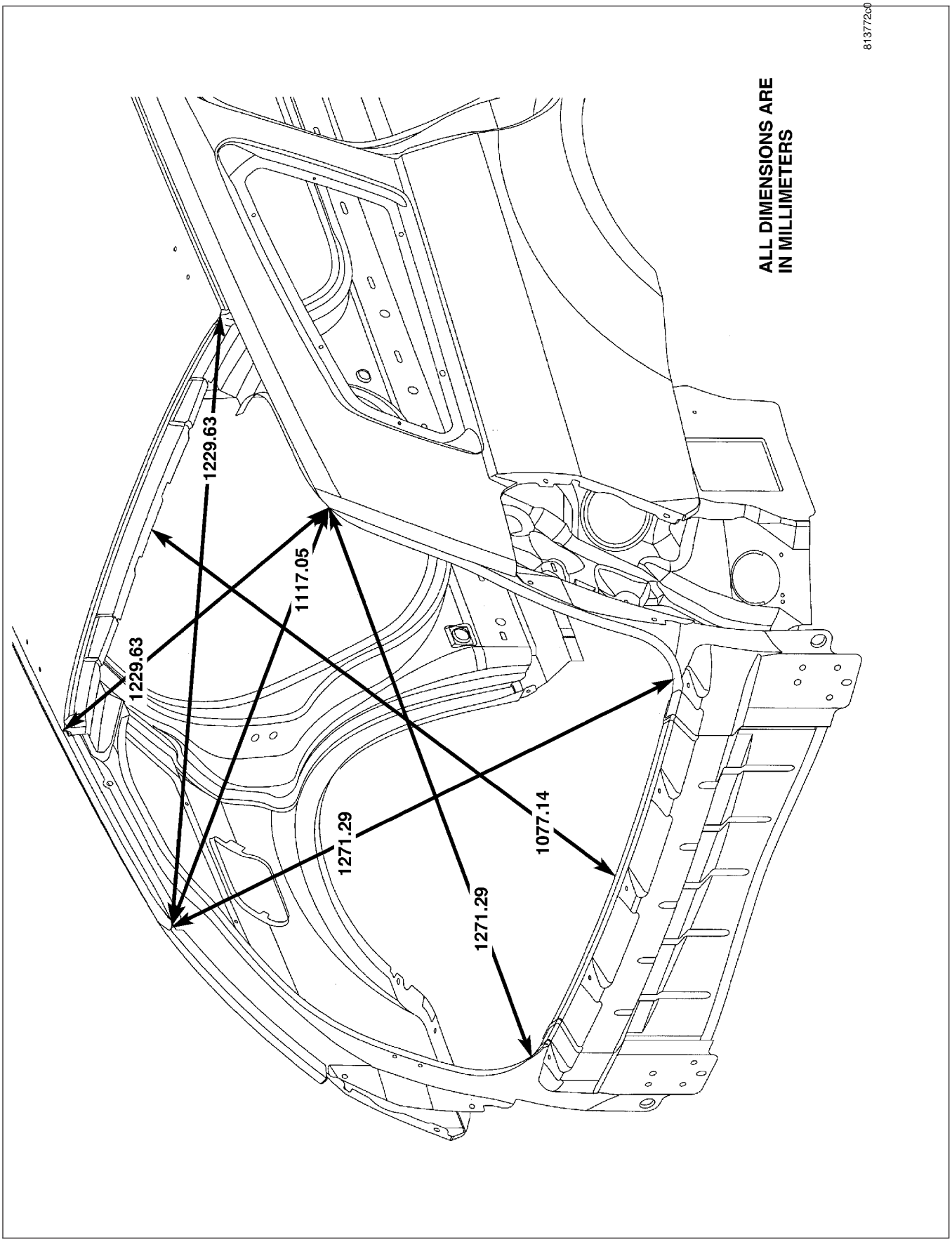

Fig. 6 LIFTGATE OPENING

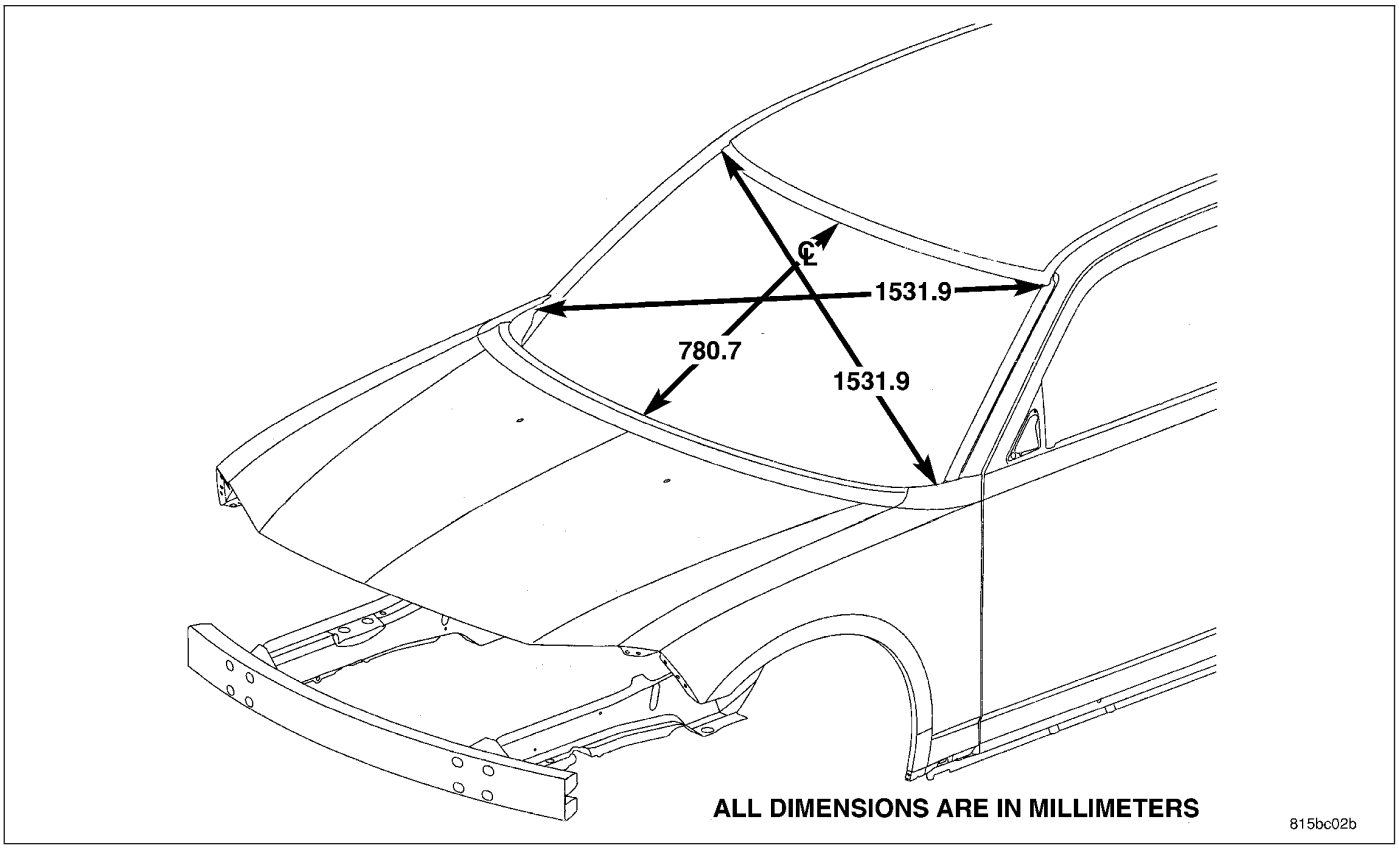

Fig. 7 WINDSHIELD OPENING

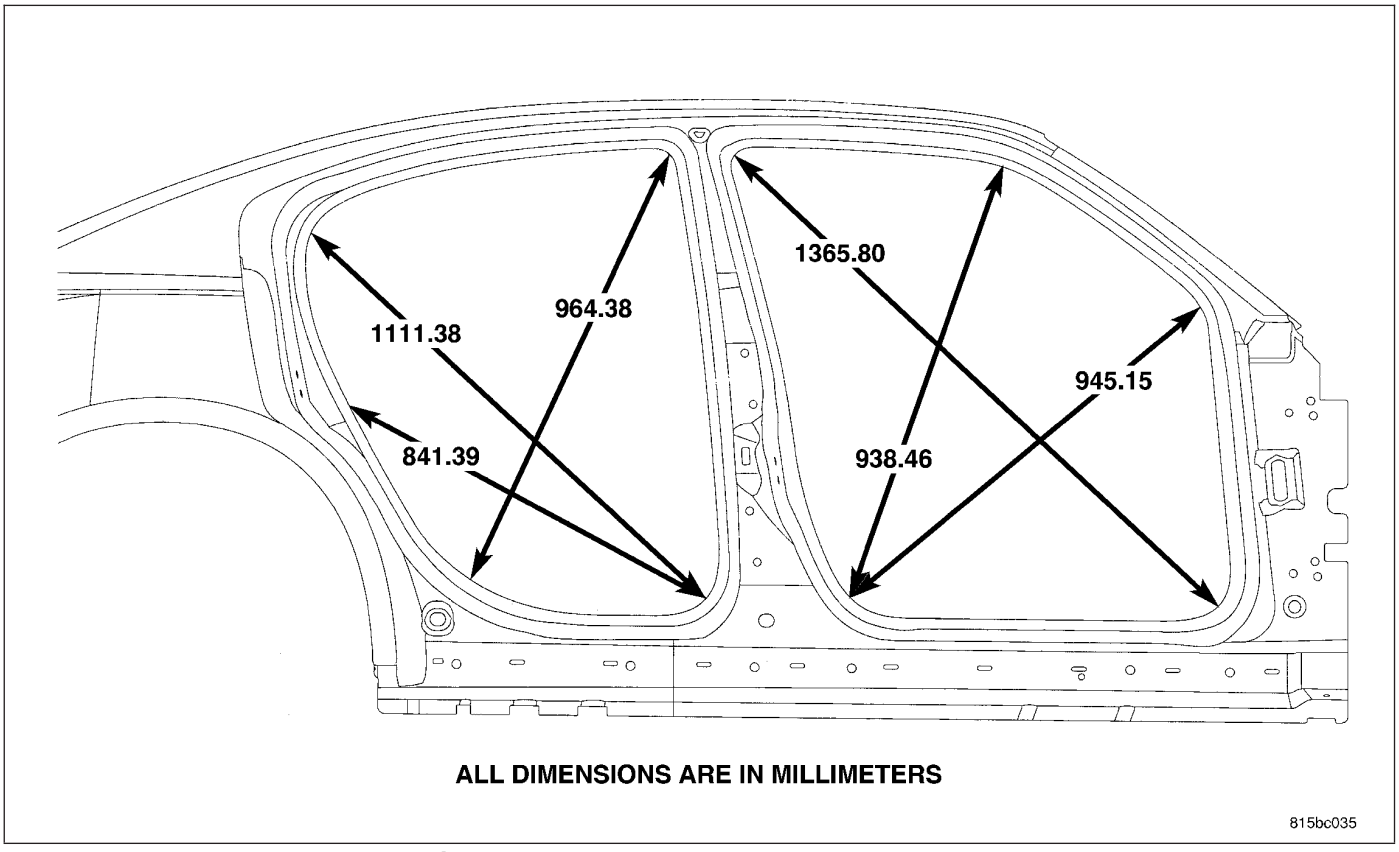

Fig. 8 FRONT AND REAR DOOR OPENINGS

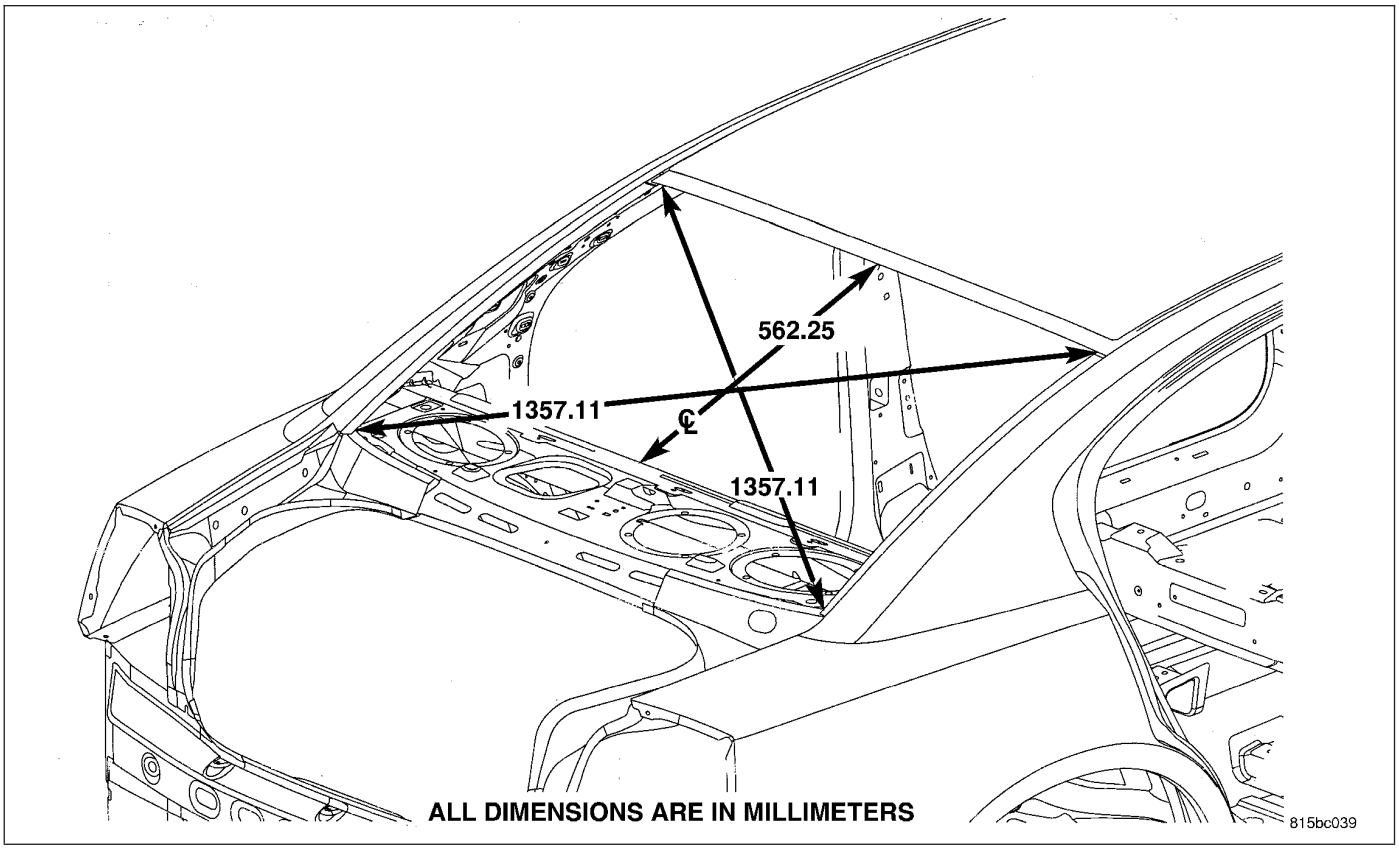

Fig. 9 REAR WINDOW OPENING

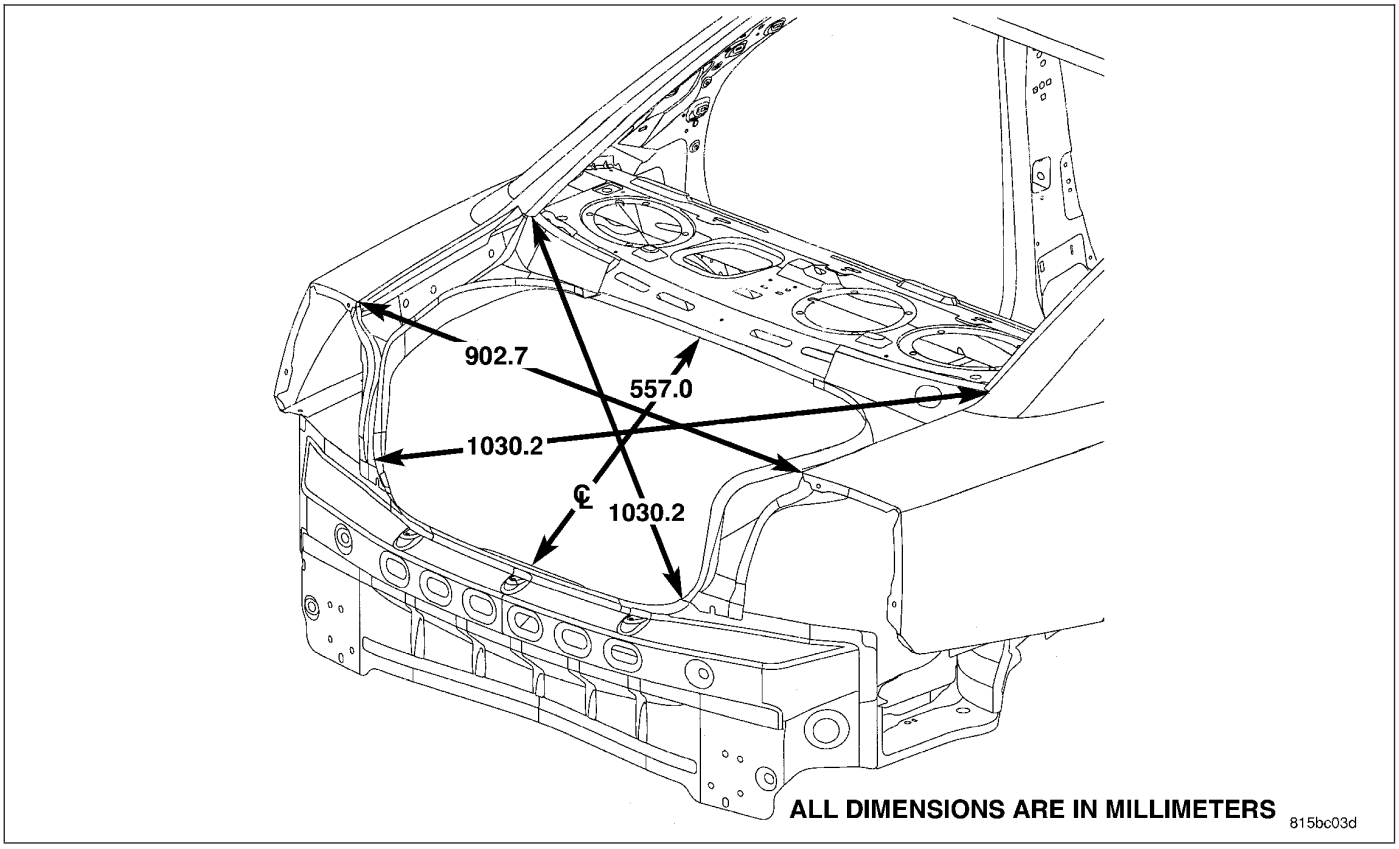

Fig. 10 DECK LID OPENING

SEALER LOCATIONS

SPECIFICATIONS

BODY SEALING LOCATIONS

Index

DESCRIPTION	FIGURE
APPLICATION METHODS	11
Sedan Only . Dodge Charger similar.	
ROOF/C PILLAR AND LOWER DECK PANEL/QUARTER EXTENSION	12
TAIL LAMP AND LOWER DECK	13
DECK LID DRAIN TROUGH	14
Wagon Only	
LIFTGATE OPENING AND DRAIN TROUGH	15
TAIL LAMP OUTER EXTENSION AND LOWER DECK/TROUGH	16
REAR FASCIA MOUNTING SURFACE	17
INNER BODY SIDE APERTURE/LOWER DECK PANEL	18
Sedan & Wagon . Dodge Charger similar.	
COWL AND DASH PANEL	19
UPPER AND LOWER COWL, LOAD BEAM AND DASH PANEL	20
COWL AND INNER BODY SIDE APERTURE	21
FLOOR PAN (1 OF 2)	22
FLOOR PAN (2 OF 2)	23
FLOOR PAN AND INNER BODY SIDE APERTURE AND REAR INNER WHEELHOUSE	24
REAR FLOOR PAN AND REAR SUSPENSION CROSSMEMBER	25
INNER REAR WHEELHOUSE AND BODY SIDE APERTURE (1 OF 2)	26
INNER REAR WHEELHOUSE AND BODY SIDE APERTURE (2 OF 2)	27
REAR INNER WHEELHOUSE	28
INNER/OUTER FRAME RAIL, CENTER FLOOR PAN AND LOWER DECK	29
INNER/OUTER FRAME RAIL AND CENTER FLOOR PAN	30
ROOF PANEL	31
REAR QUARTER EXTENSION & WHEELHOUSE	32
FUEL DOOR OPENING	33
UPPER COWL AND LOAD BEAM	34
FRONT FLOOR PAN	35
CENTER AND REAR FLOOR PAN	36

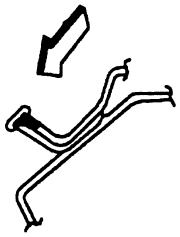

HOLD GUN NOZZLE IN DIRECTION OF ARROW IN ORDER TO EFFECTIVELY SEAL METAL JOINTS.

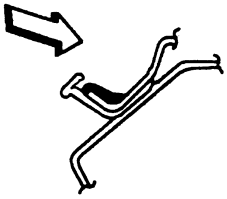

DO NOT HOLD GUN NOZZLE IN DIRECTION OF ARROW. SEALER APPLIED AS SHOWN IS INEFFECTIVE.

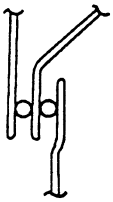

3 METAL THICKNESS

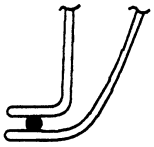

2 METAL THICKNESS

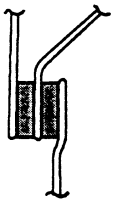

3 METAL THICKNESS

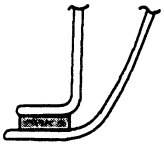

2 METAL THICKNESS

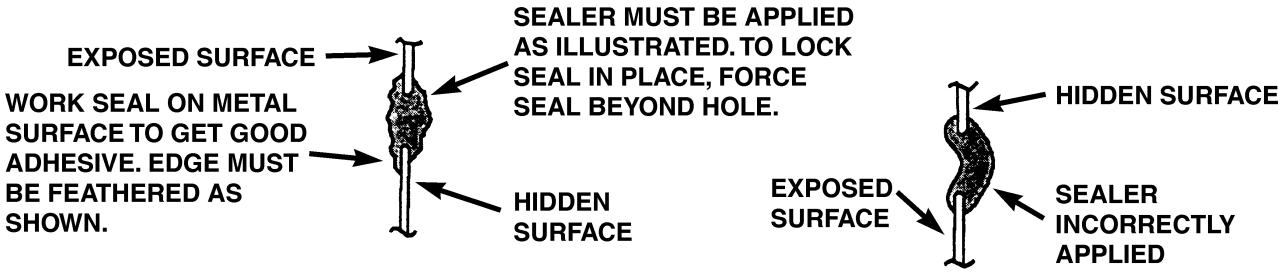

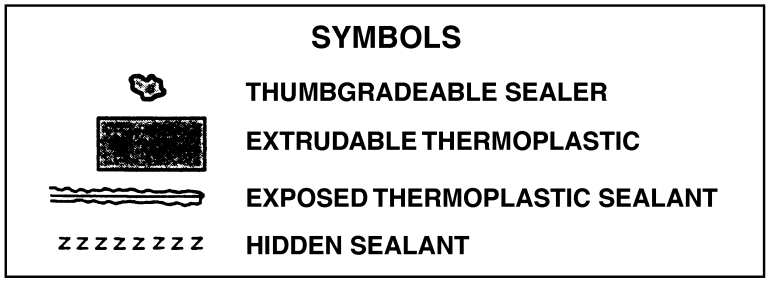

80866cc6

Fig. 11 APPLICATION METHODS

Sedan Only

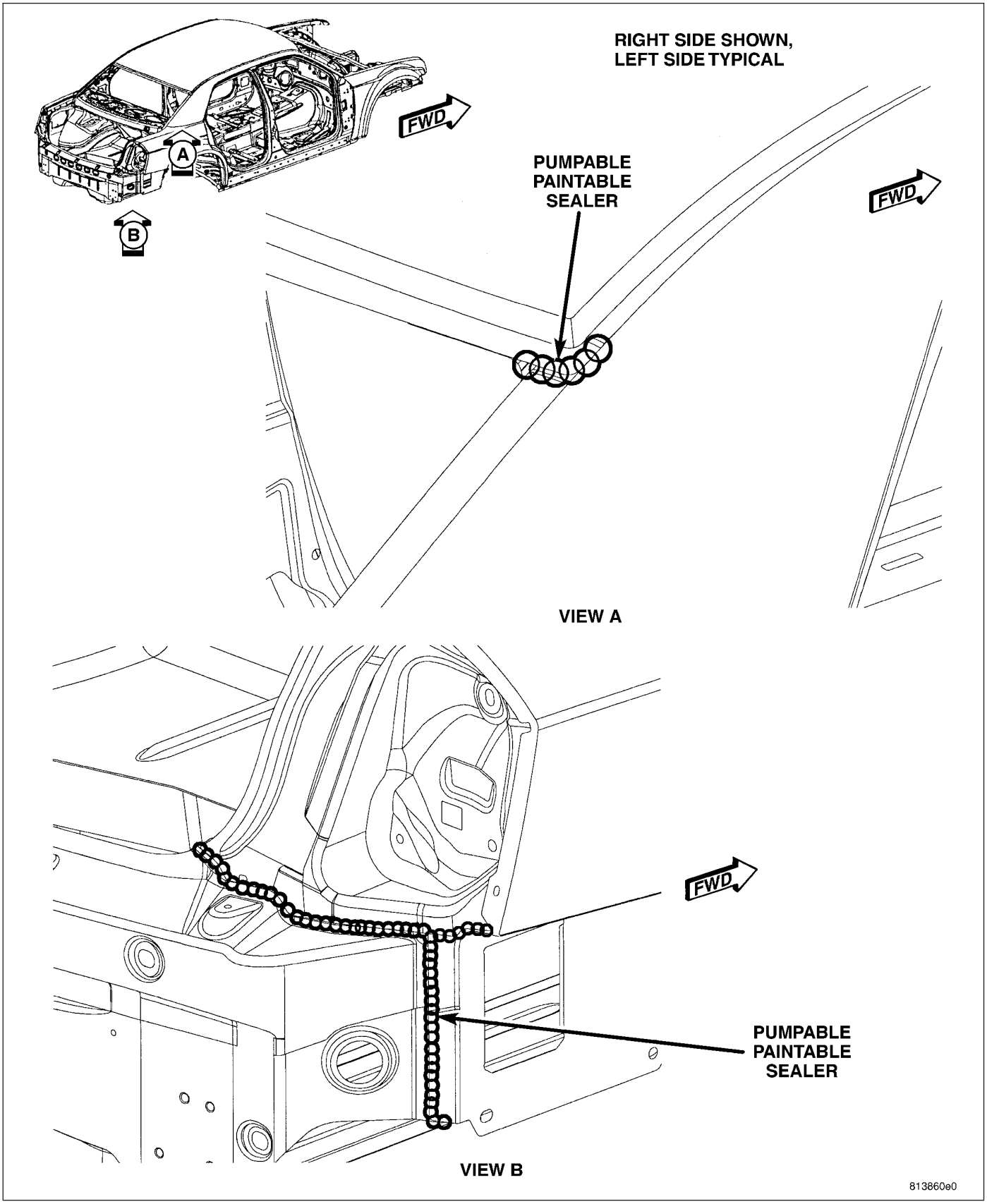

Fig. 12 01 ROOF/C PILLAR AND LOWER DECK PANEL/QUARTER EXTENSION

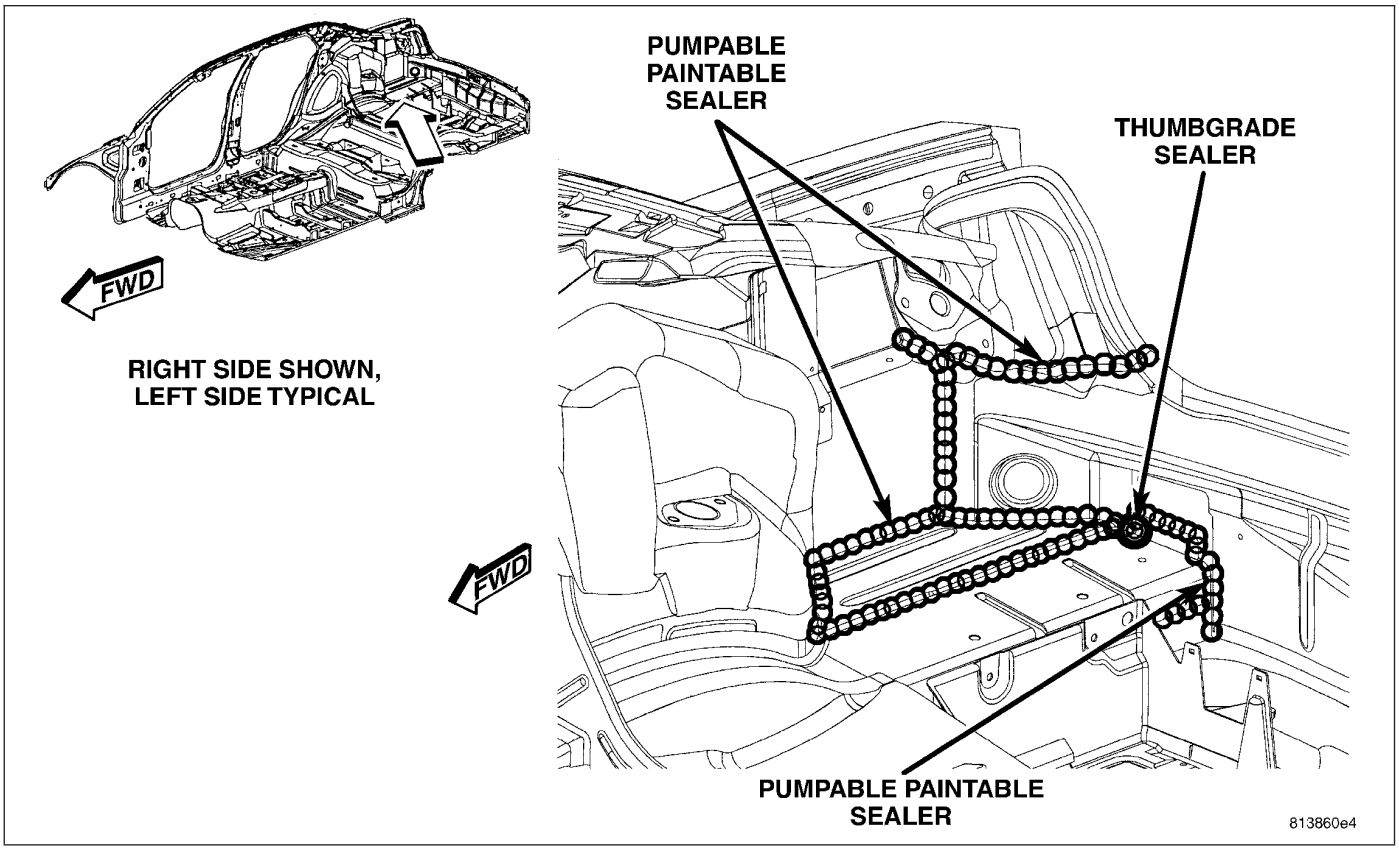

Fig. 13 TAIL LAMP AND LOWER DECK

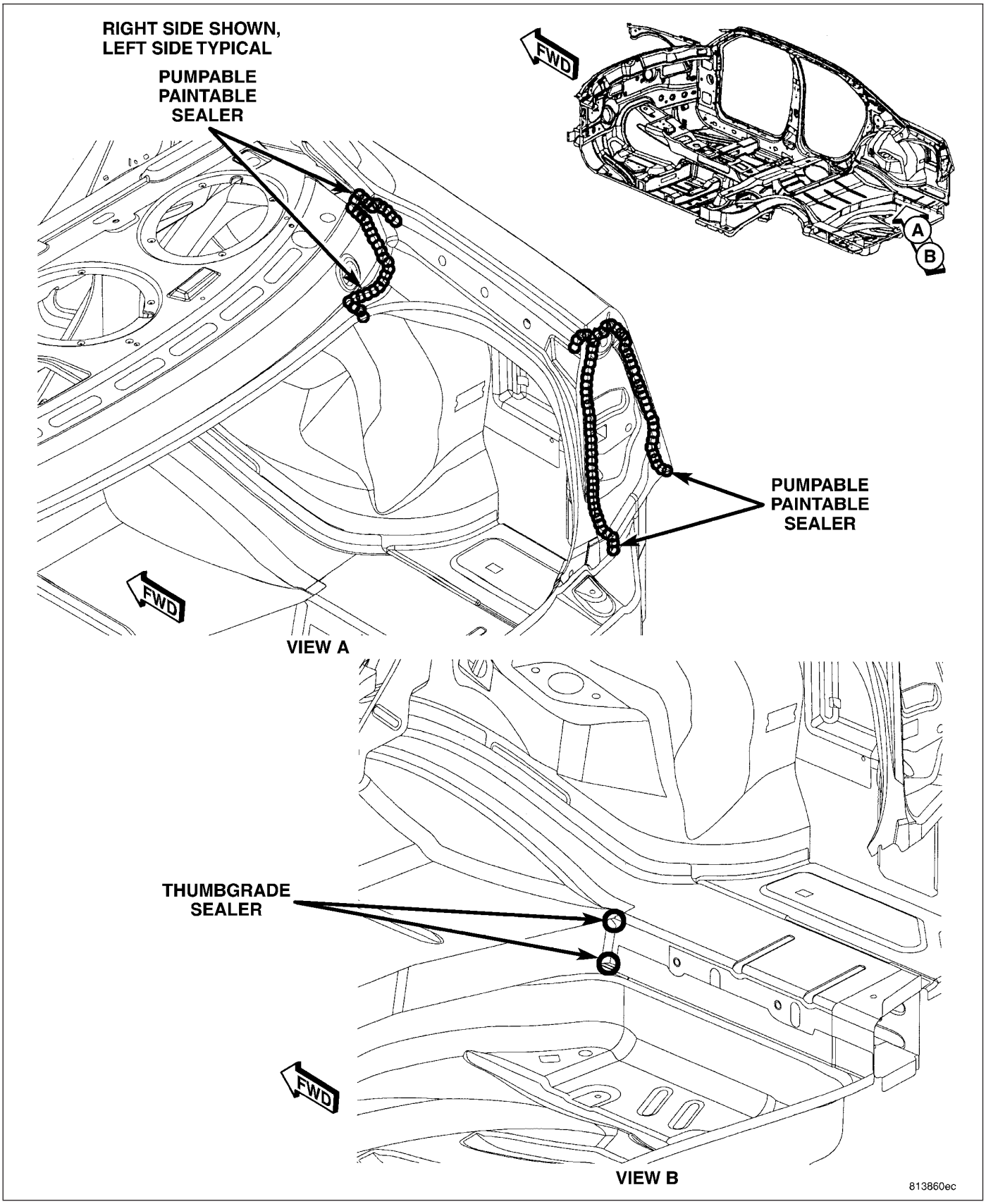

Fig. 14 DECK LID DRAIN TROUGH

Wagon Only

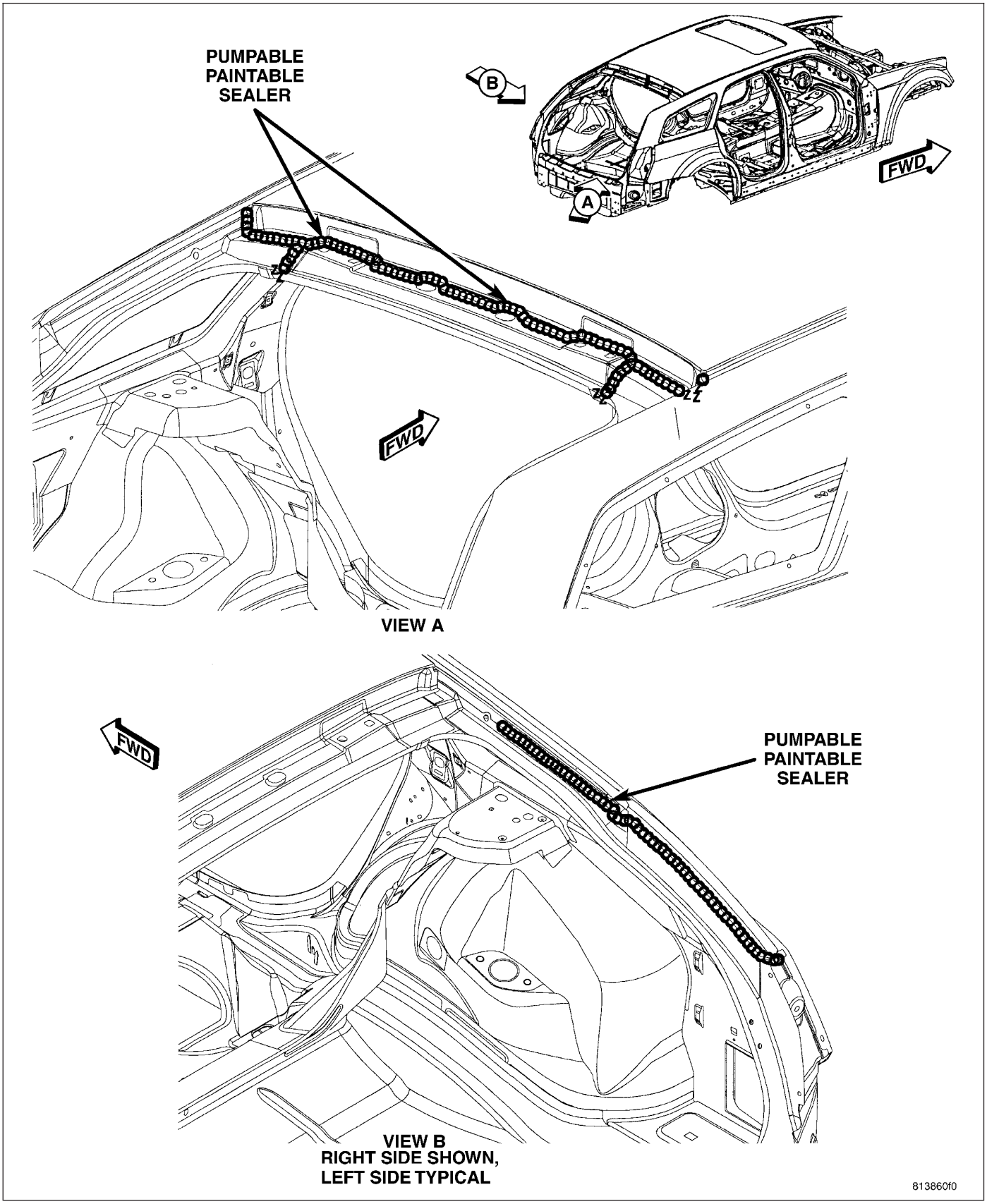

Fig. 15 LIFTGATE OPENING AND DRAIN TROUGH

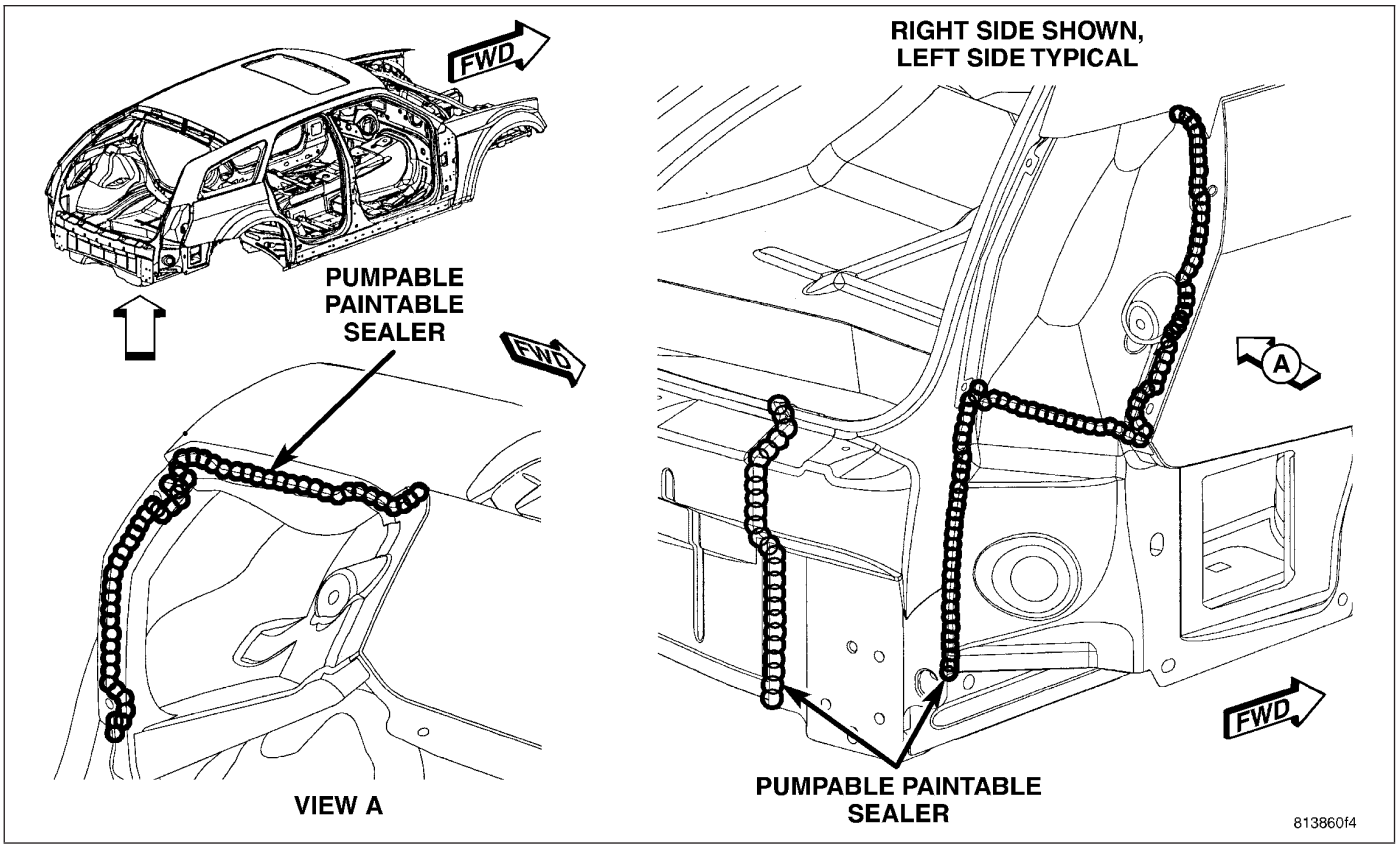

Fig. 16 TAIL LAMP OUTER EXTENSION AND LOWER DECK/TROUGH

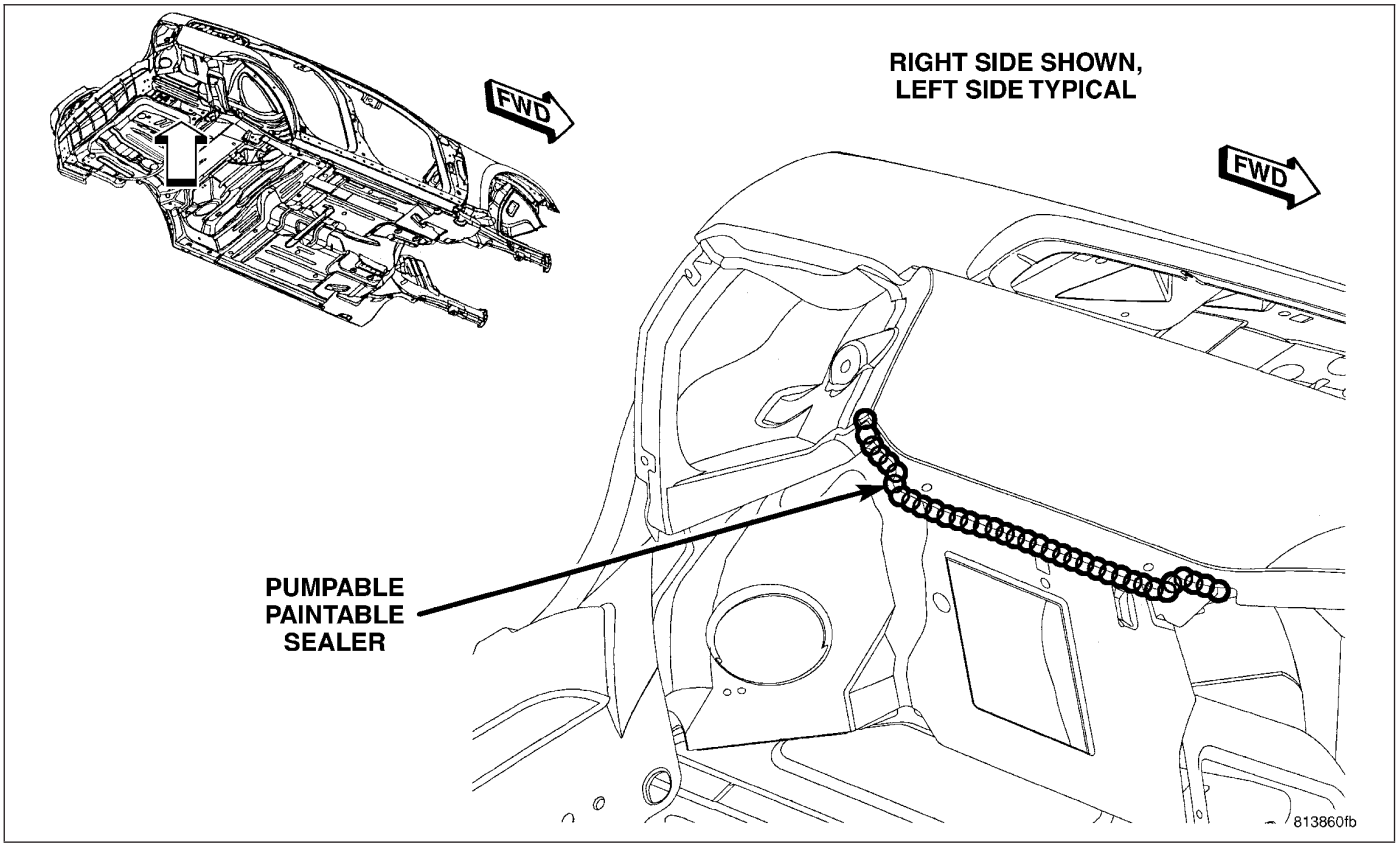

Fig. 17 REAR FASCIA MOUNTING SURFACE

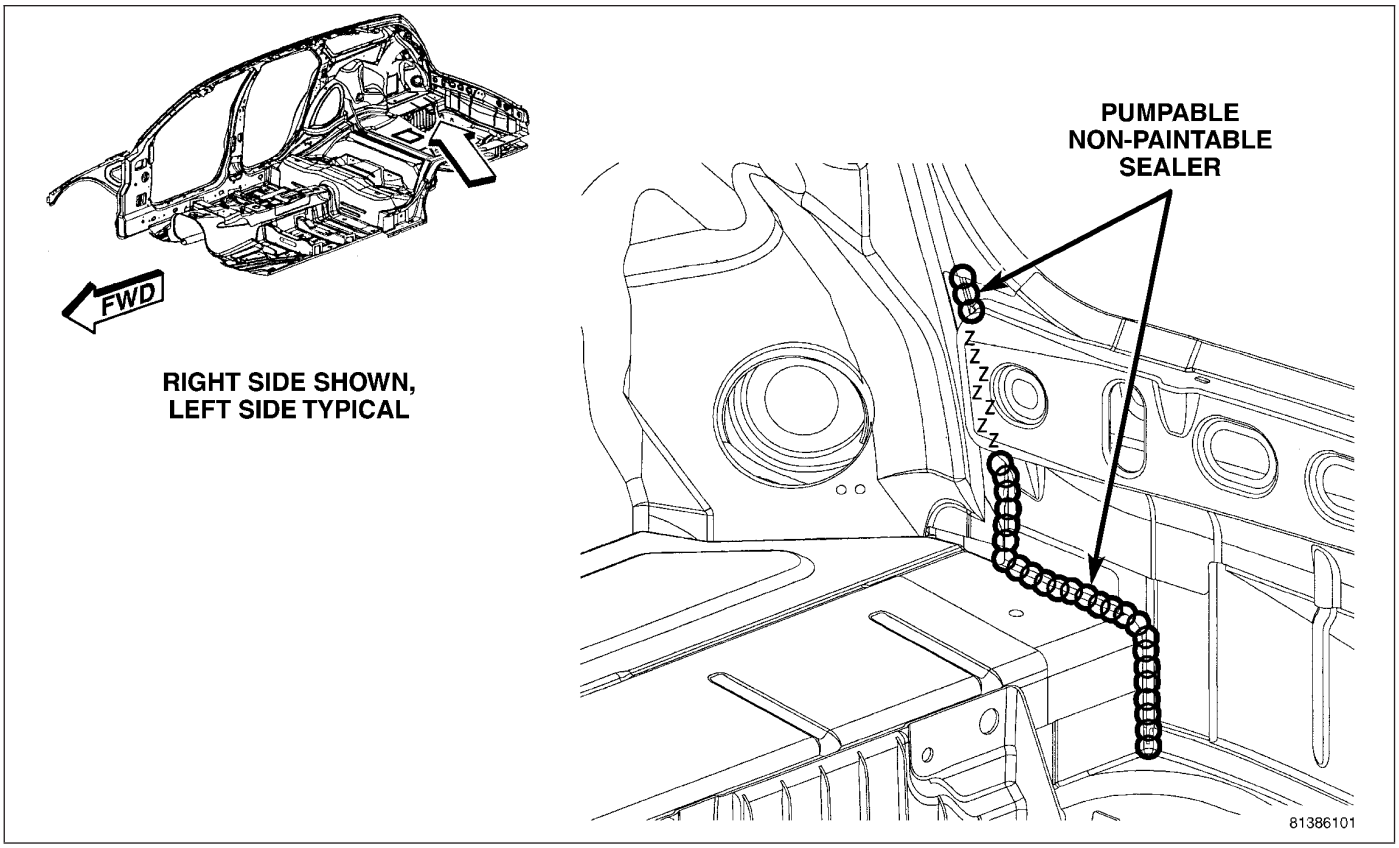

Fig. 18 INNER BODY SIDE APERTURE/LOWER DECK PANEL

Sedan & Wagon

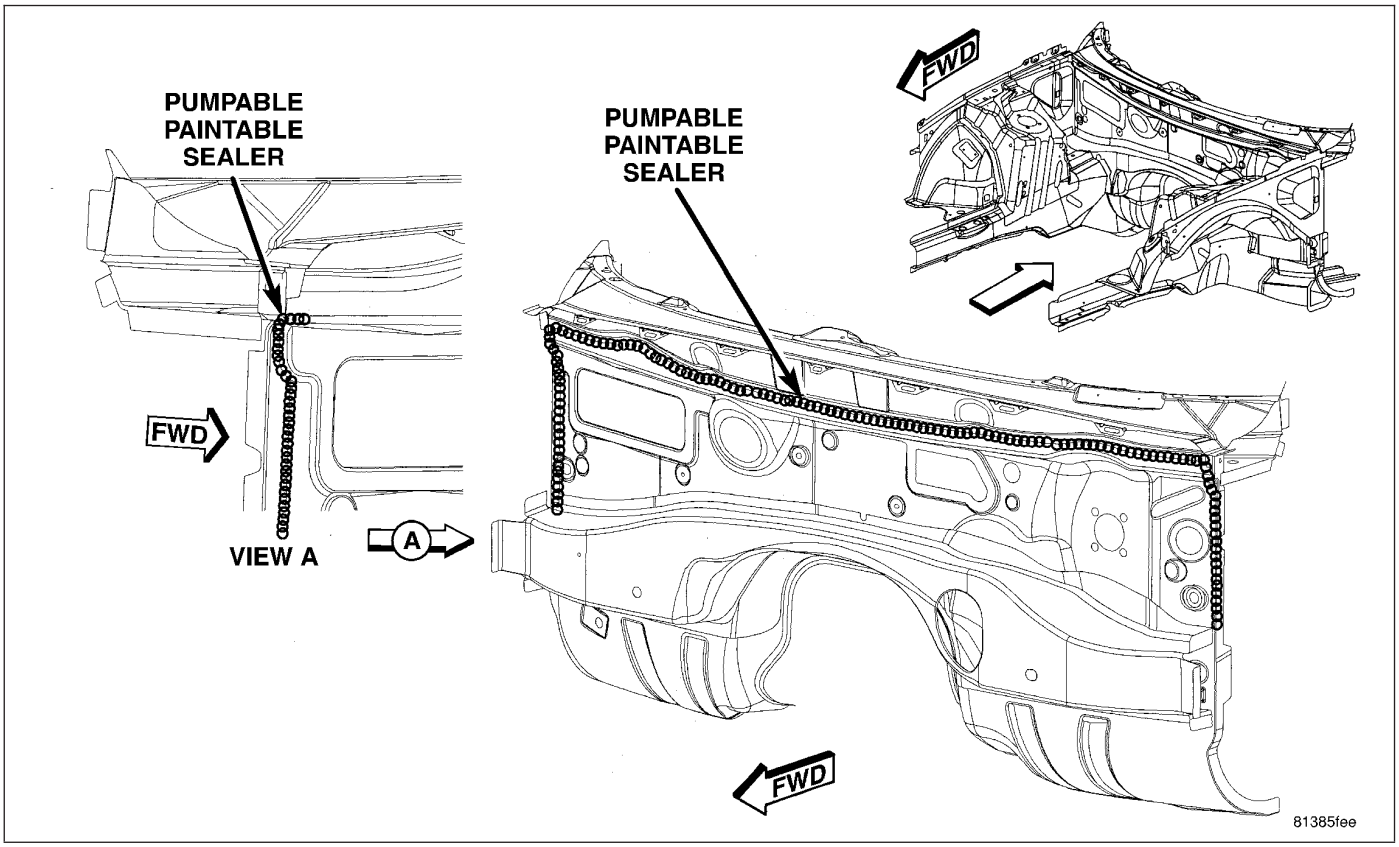

Fig. 19 COWL AND DASH PANEL

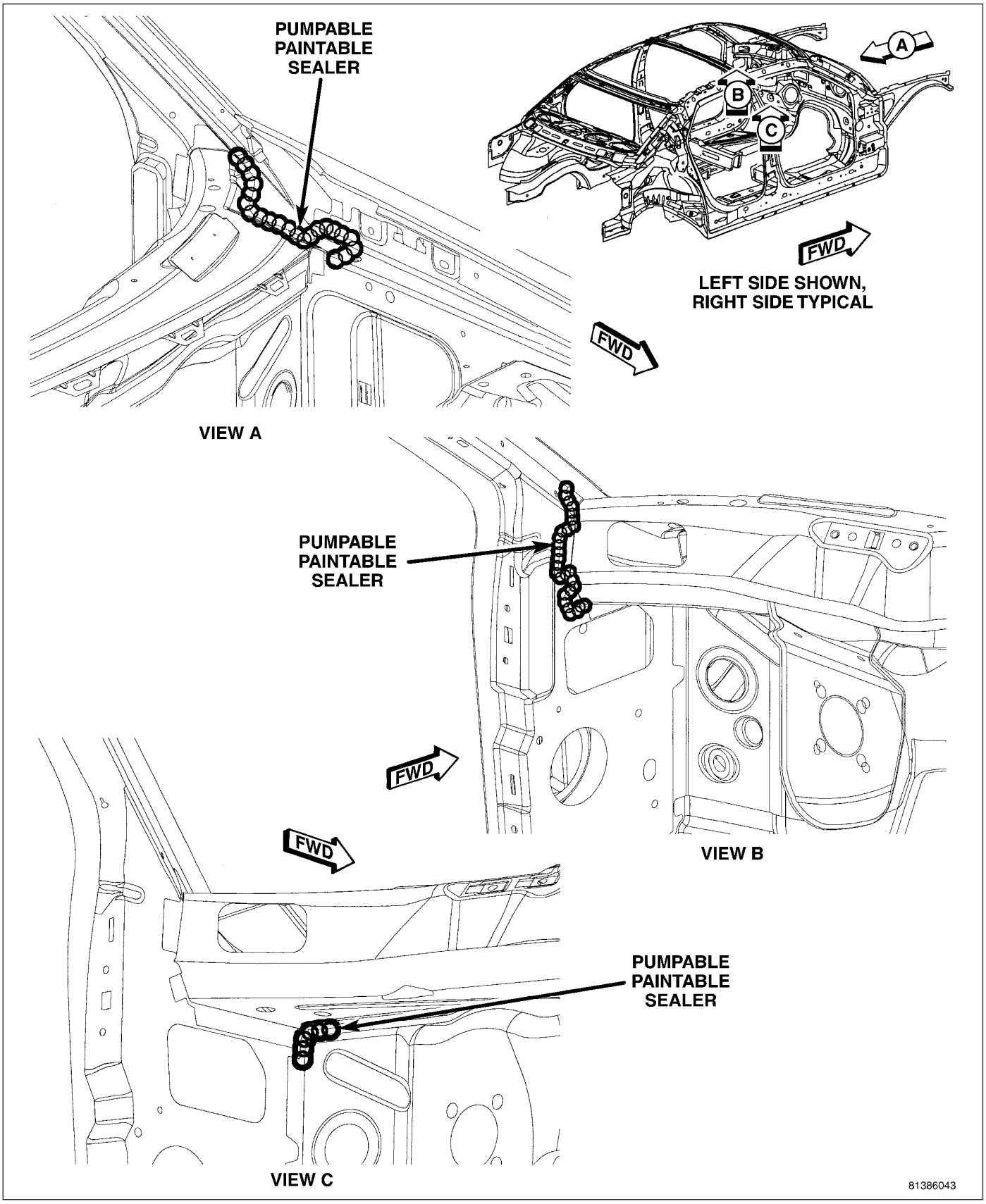

Fig. 20 UPPER AND LOWER COWL, LOAD BEAM AND DASH PANEL

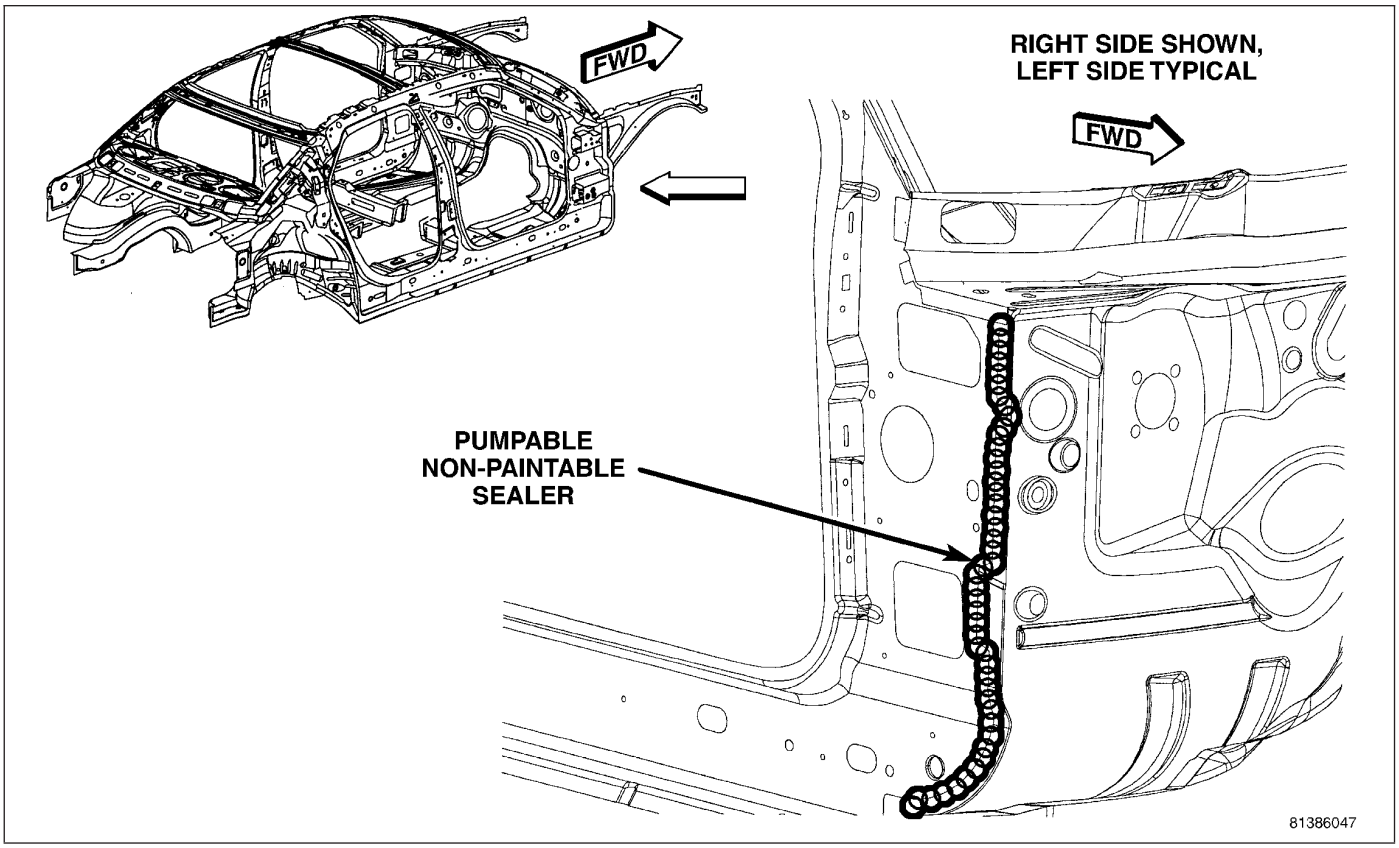

Fig. 21 COWL AND INNER BODY SIDE APERTURE

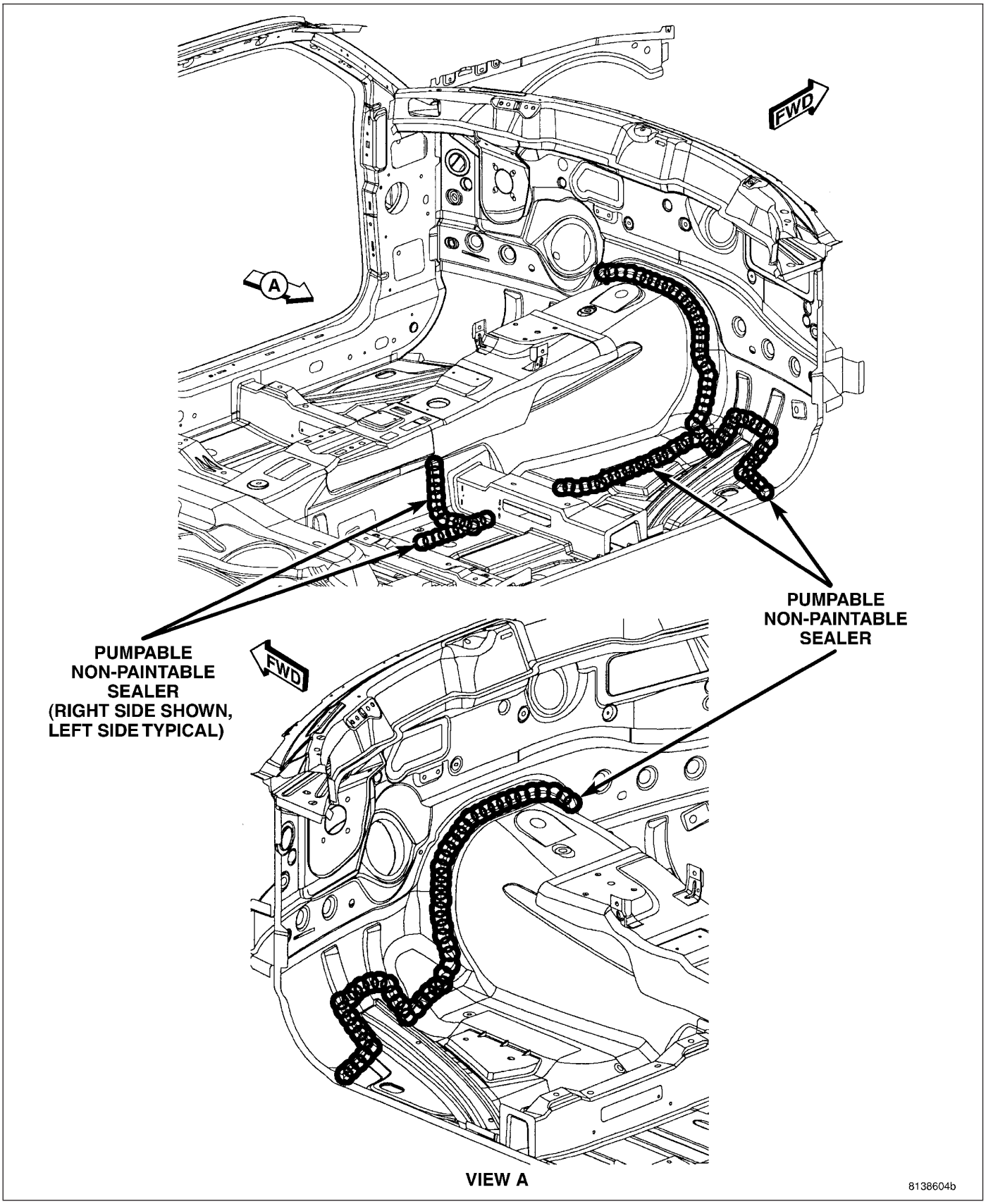

Fig. 22 FLOOR PAN (1 OF 2)

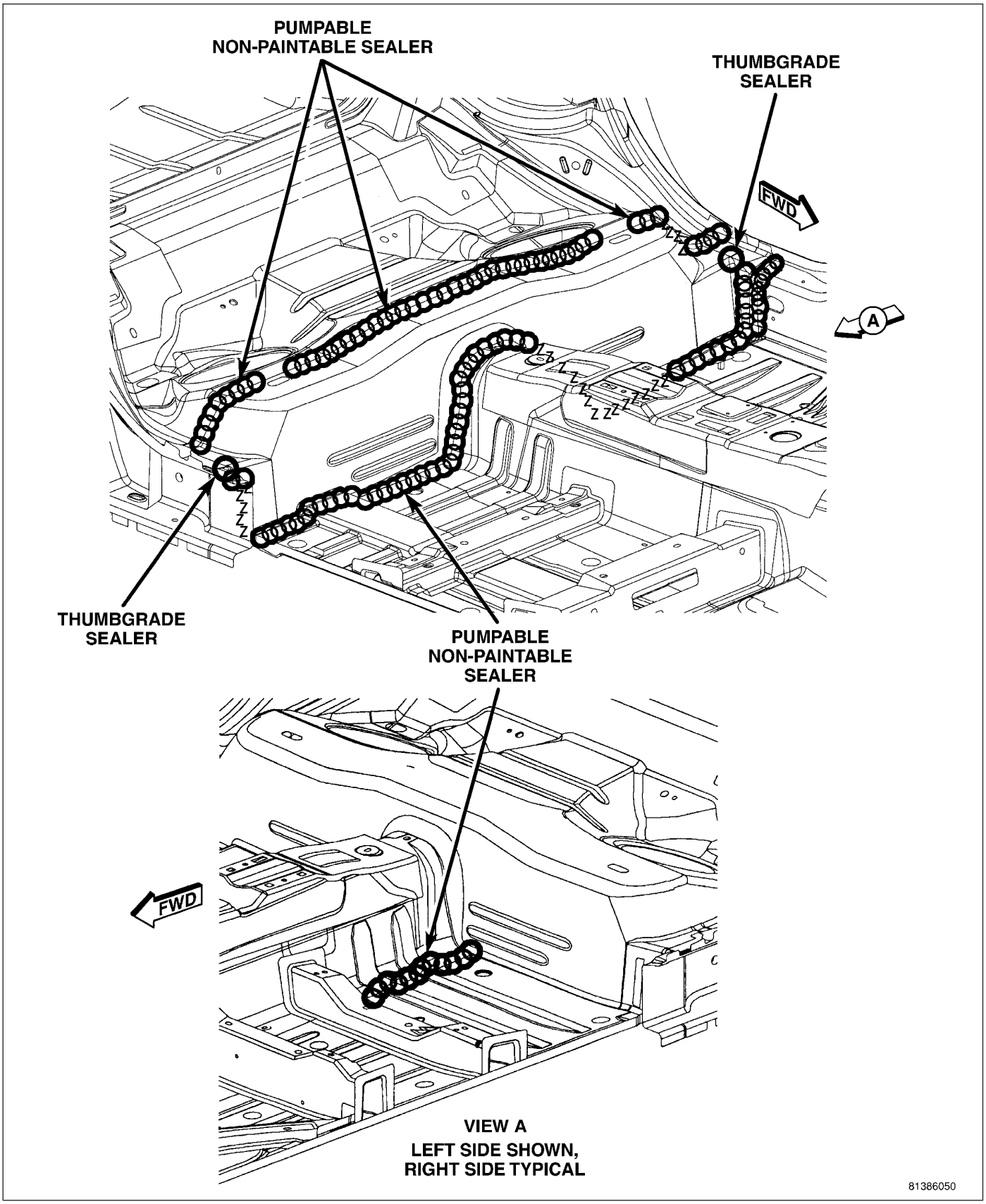

Fig. 23 FLOOR PAN (2 OF 2)

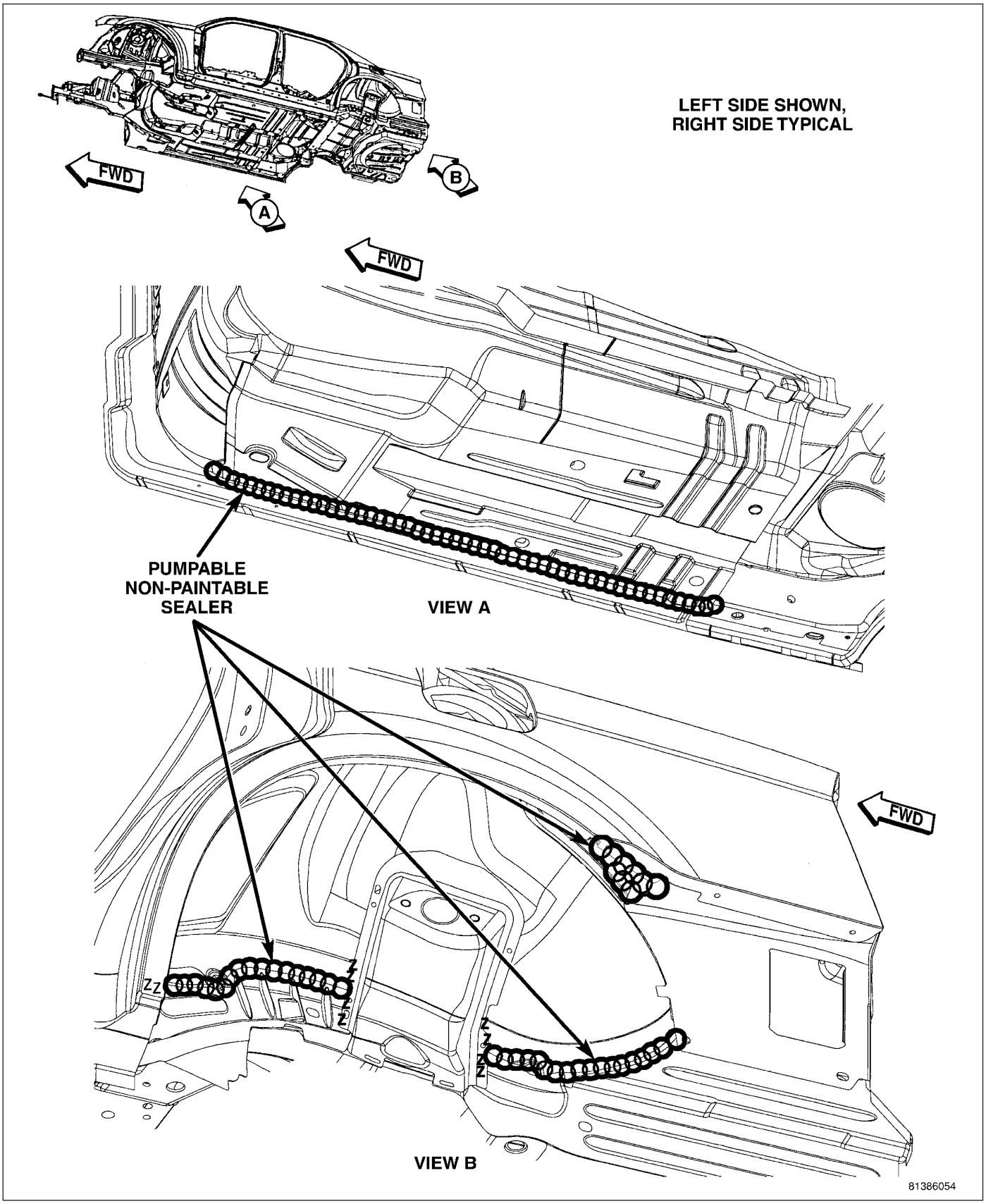

Fig. 24 FLOOR PAN AND INNER BODY SIDE APERTURE AND REAR INNER WHEELHOUSE

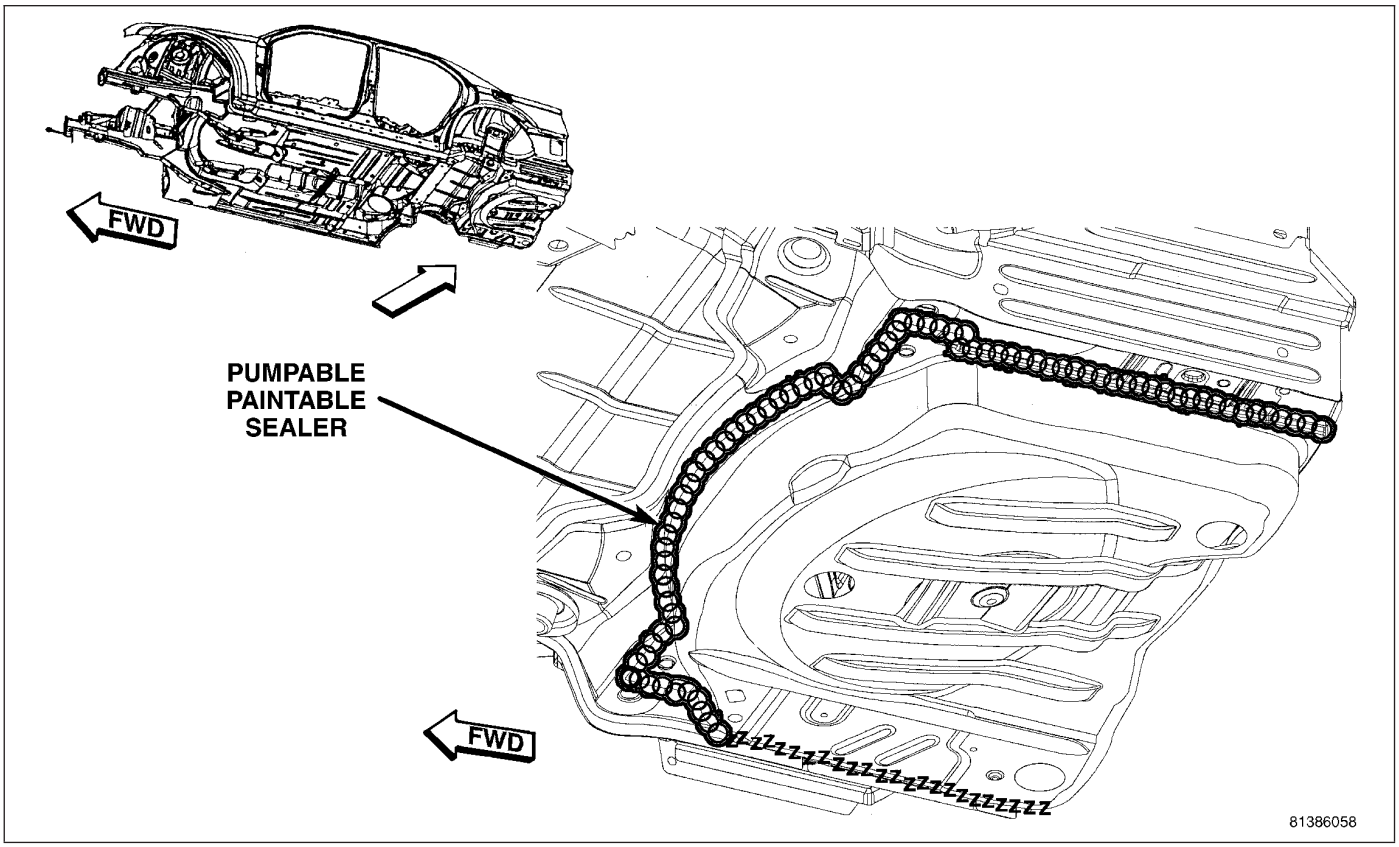

Fig. 25 REAR FLOOR PAN AND REAR SUSPENSION CROSSMEMBER

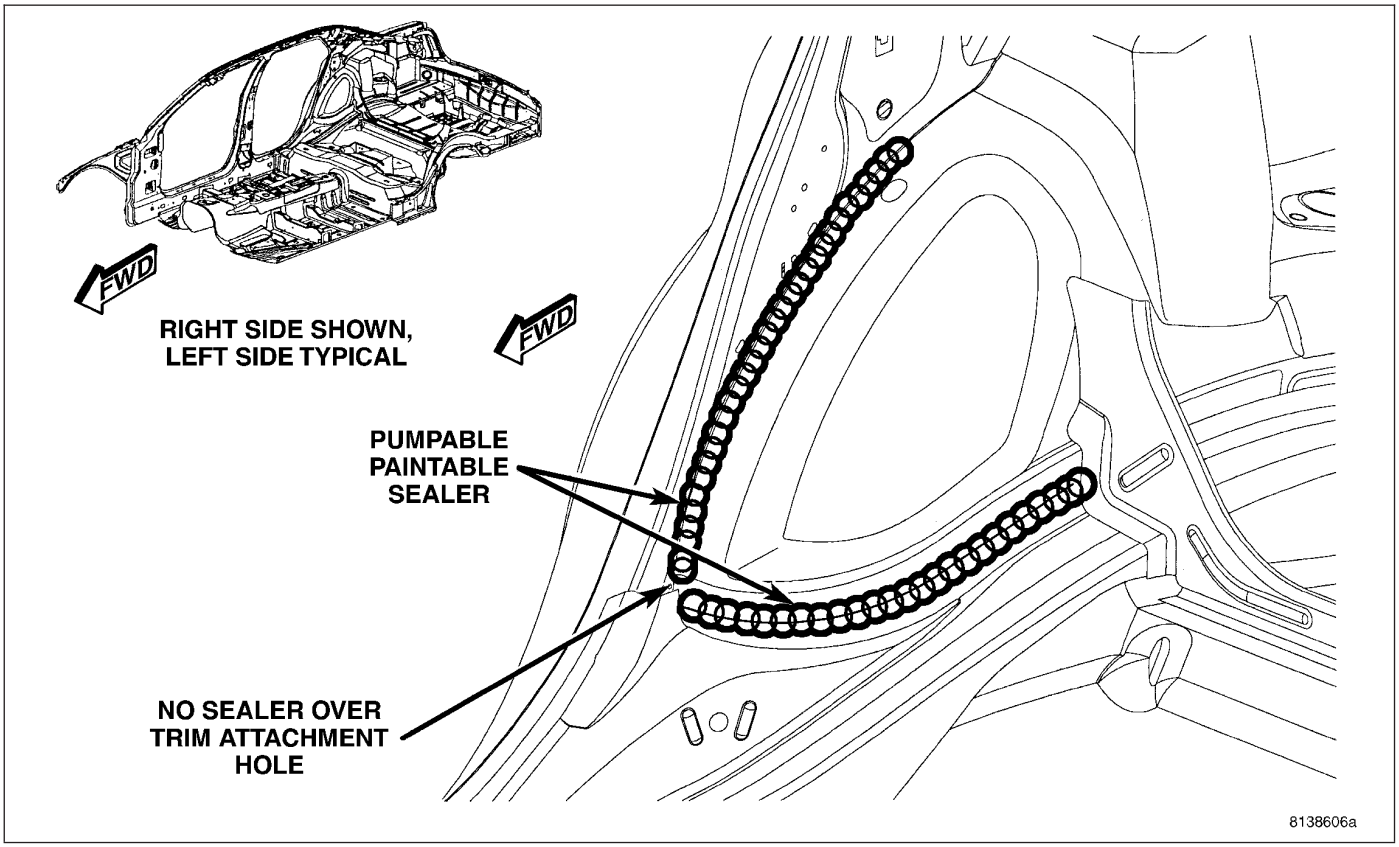

Fig. 26 INNER REAR WHEELHOUSE AND BODY SIDE APERTURE (1 OF 2)

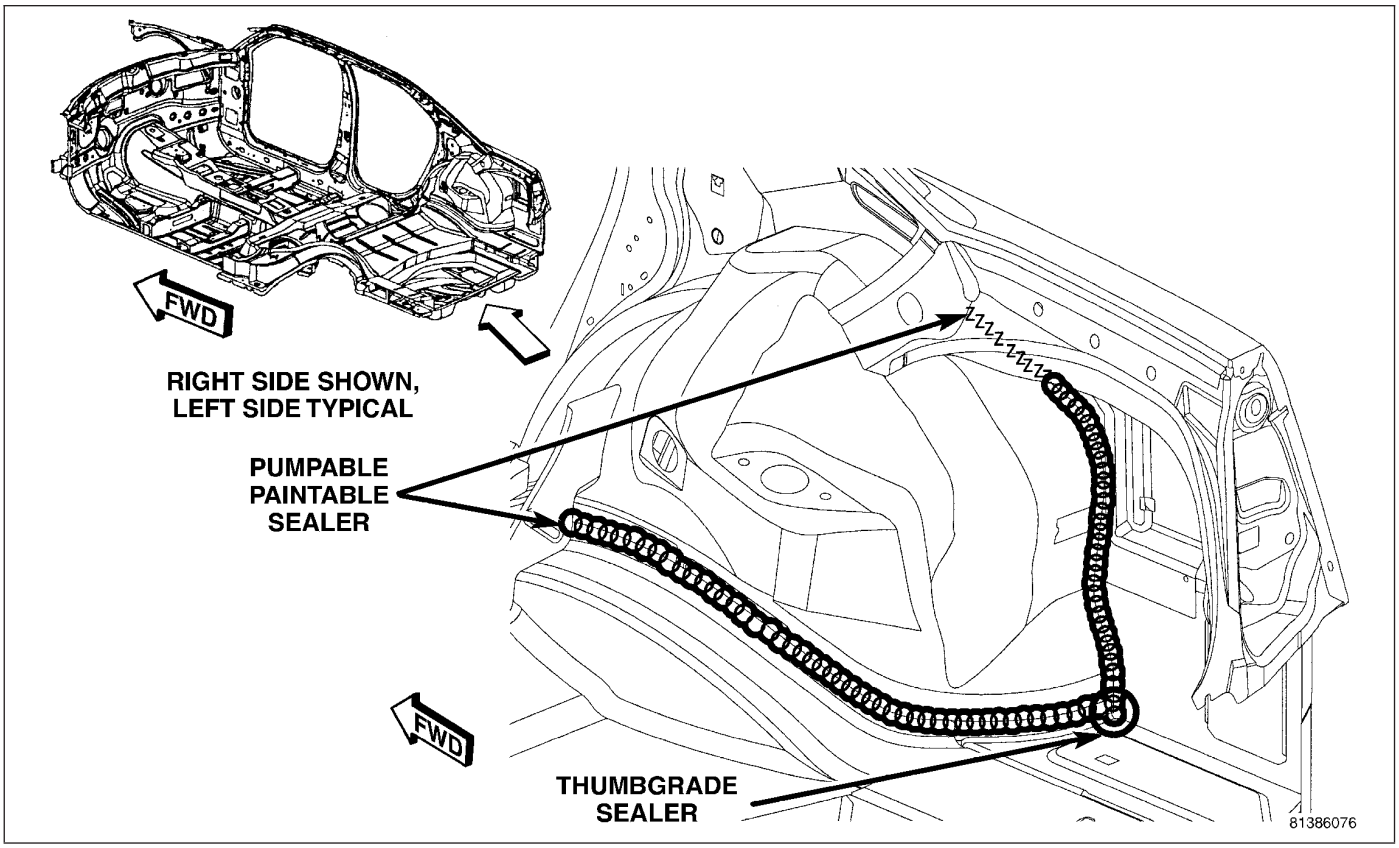

Fig. 27 INNER REAR WHEELHOUSE AND BODY SIDE APERTURE (2 OF 2)

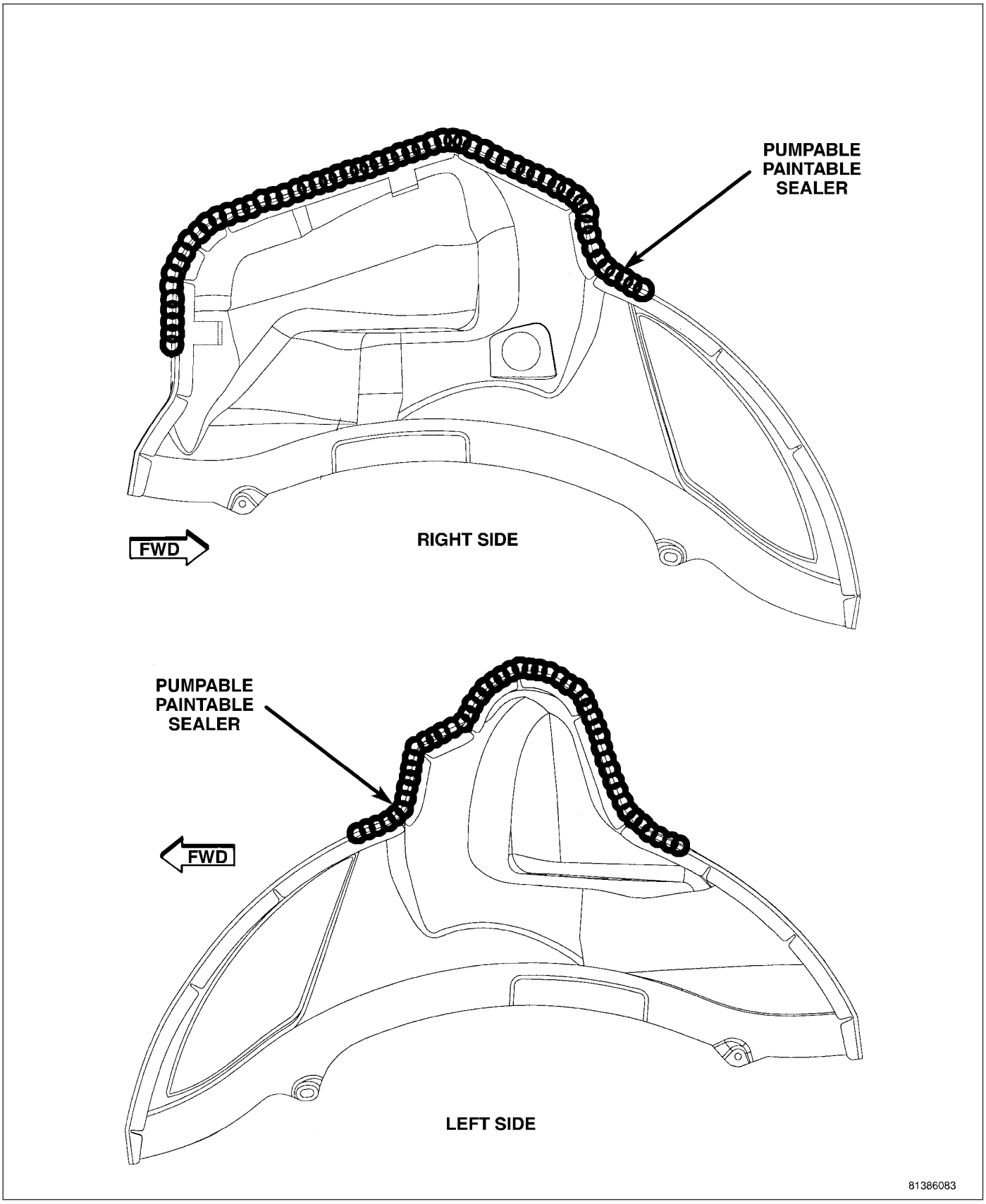

Fig. 28 REAR INNER WHEELHOUSE

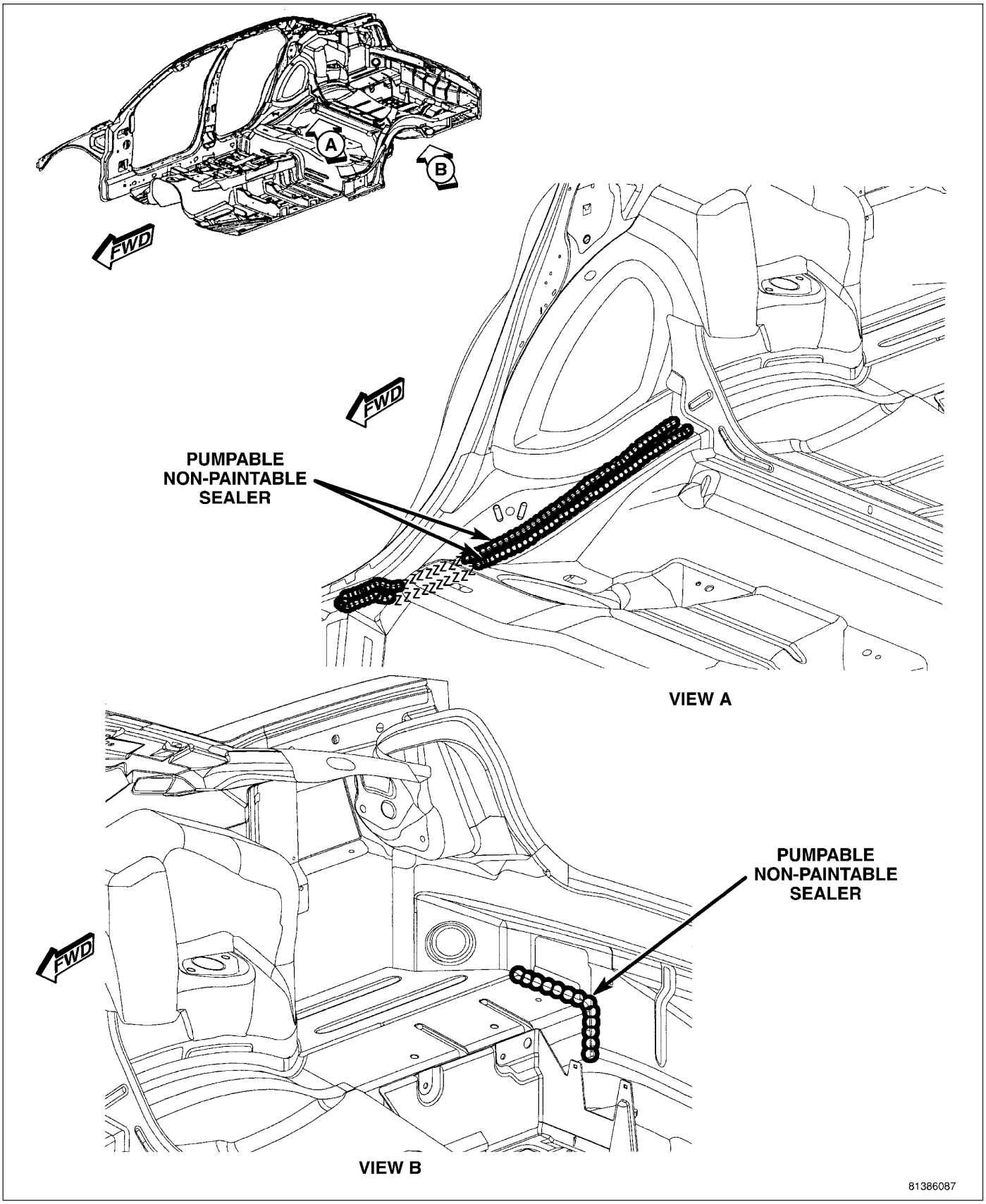

Fig. 29 INNER/OUTER FRAME RAIL, CENTER FLOOR PAN AND LOWER DECK

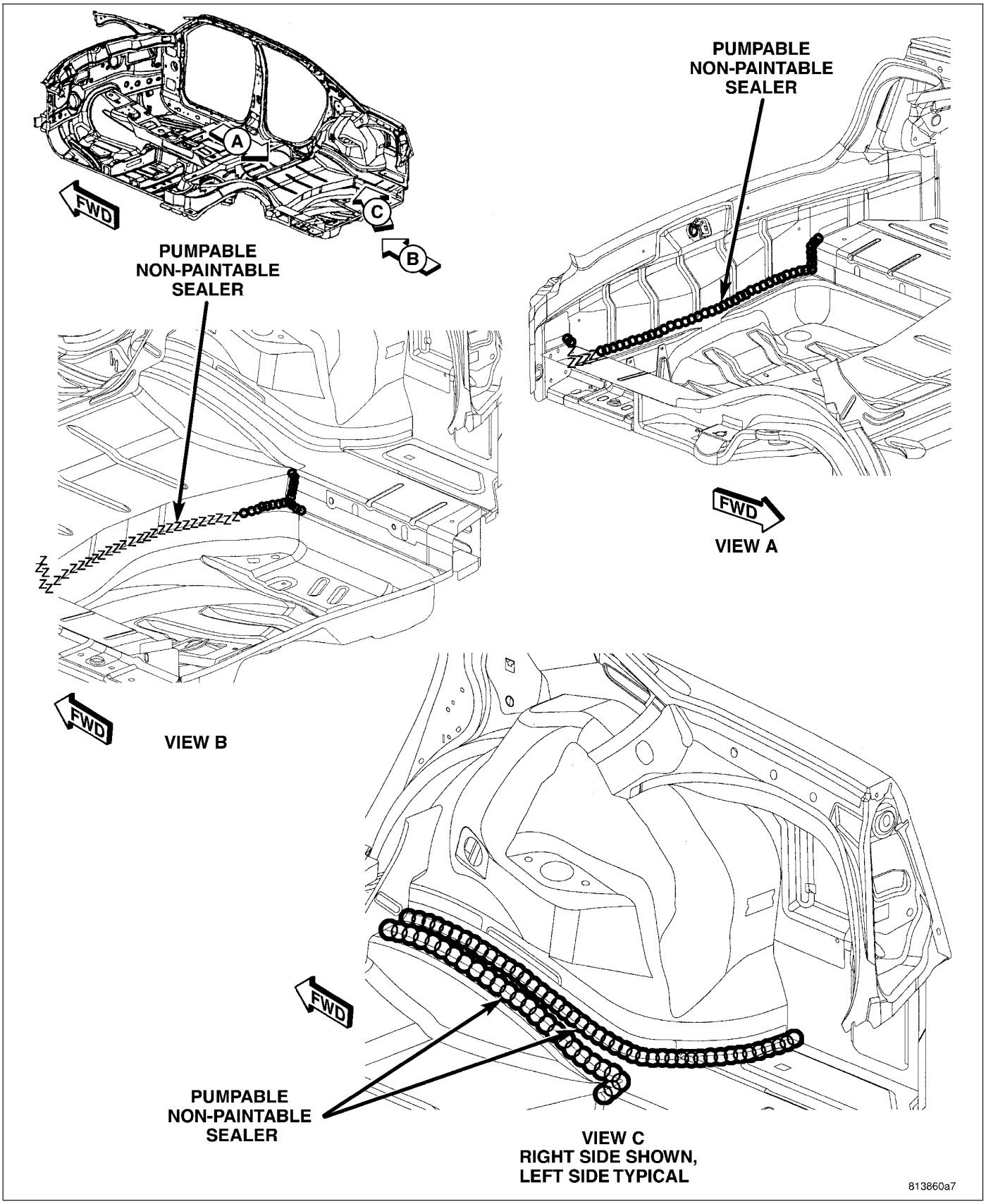

Fig. 30 INNER/OUTER FRAME RAIL AND CENTER FLOOR PAN

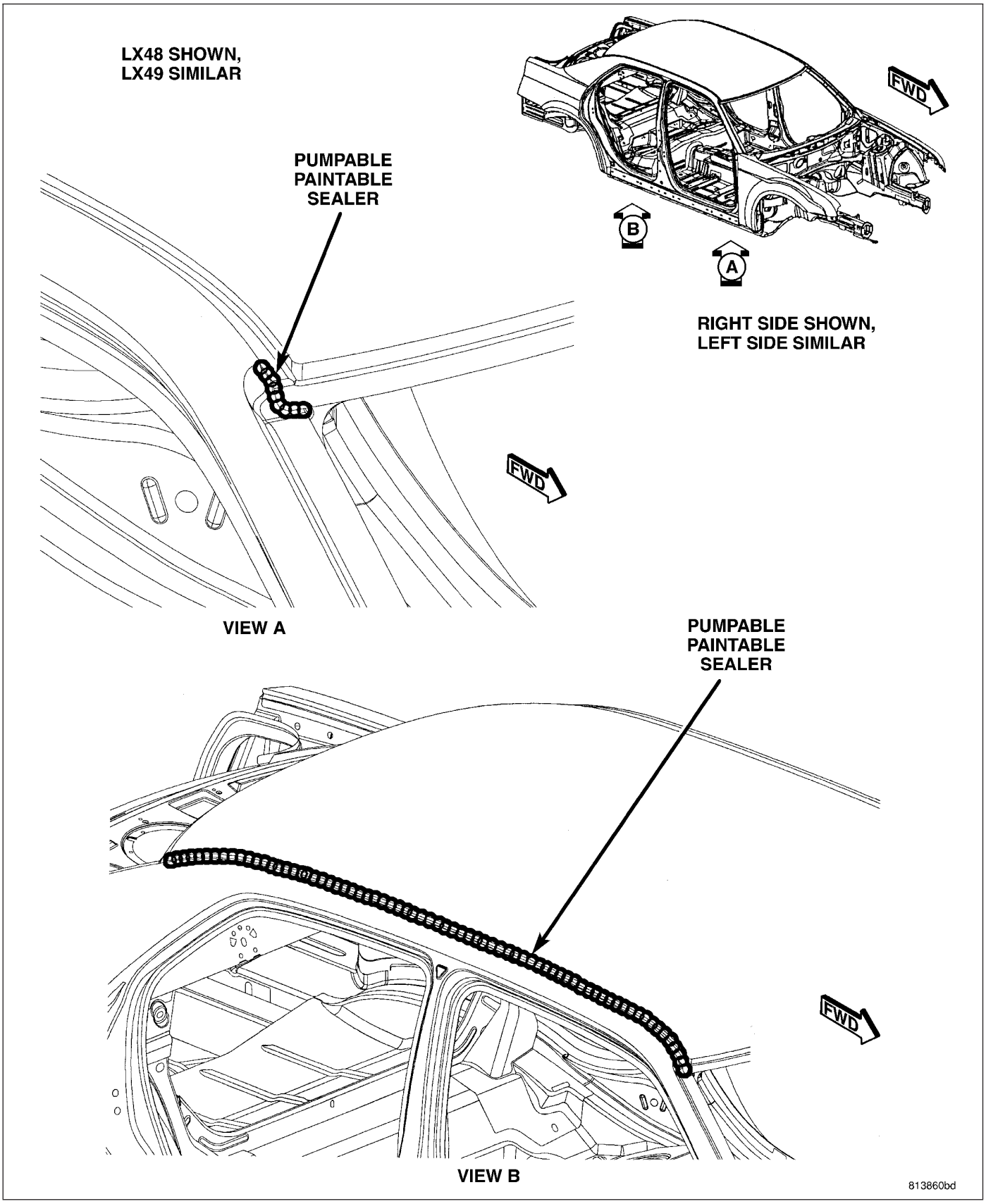

Fig. 31 ROOF PANEL

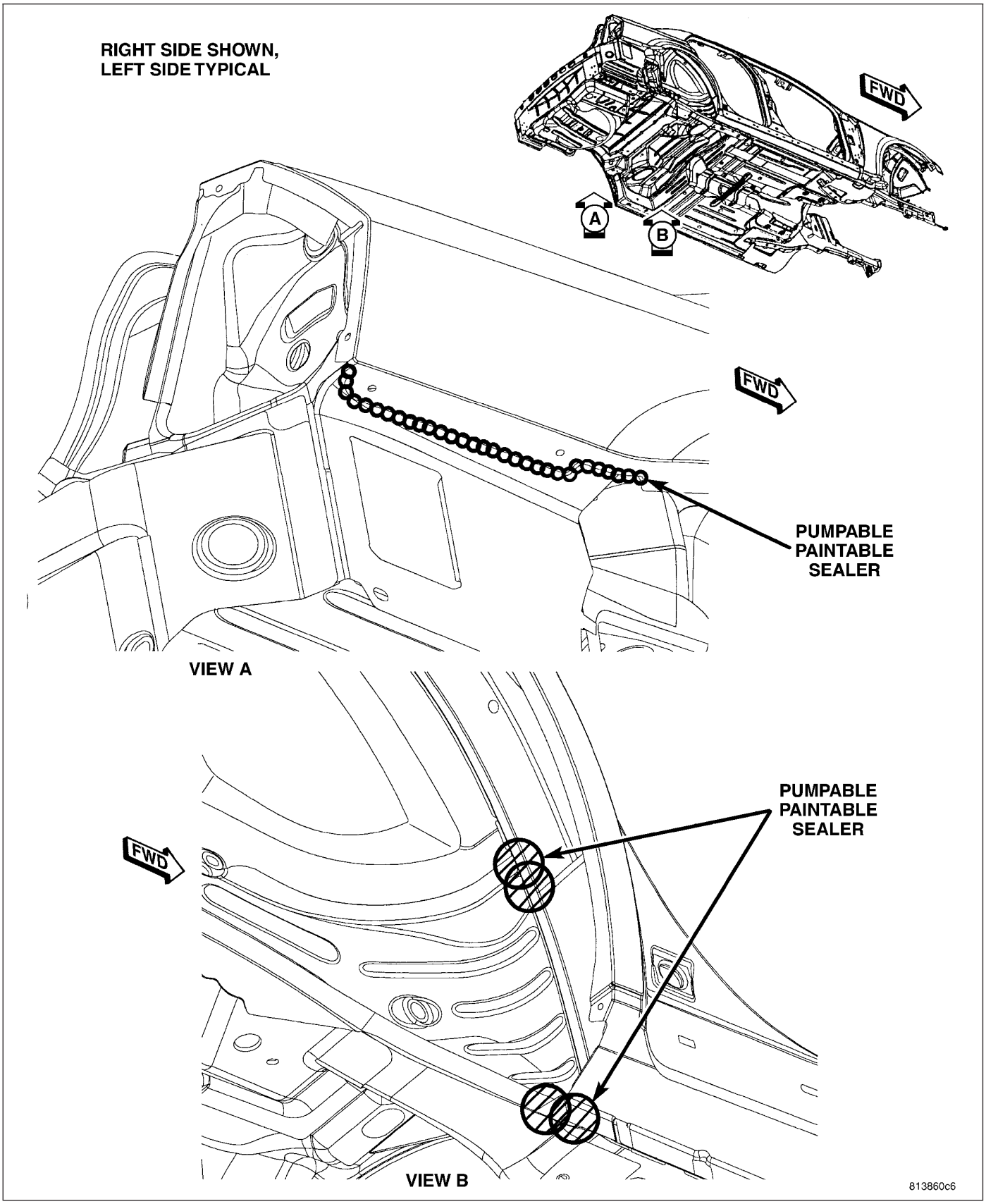

Fig. 32 REAR QUARTER EXTENSION & WHEELHOUSE

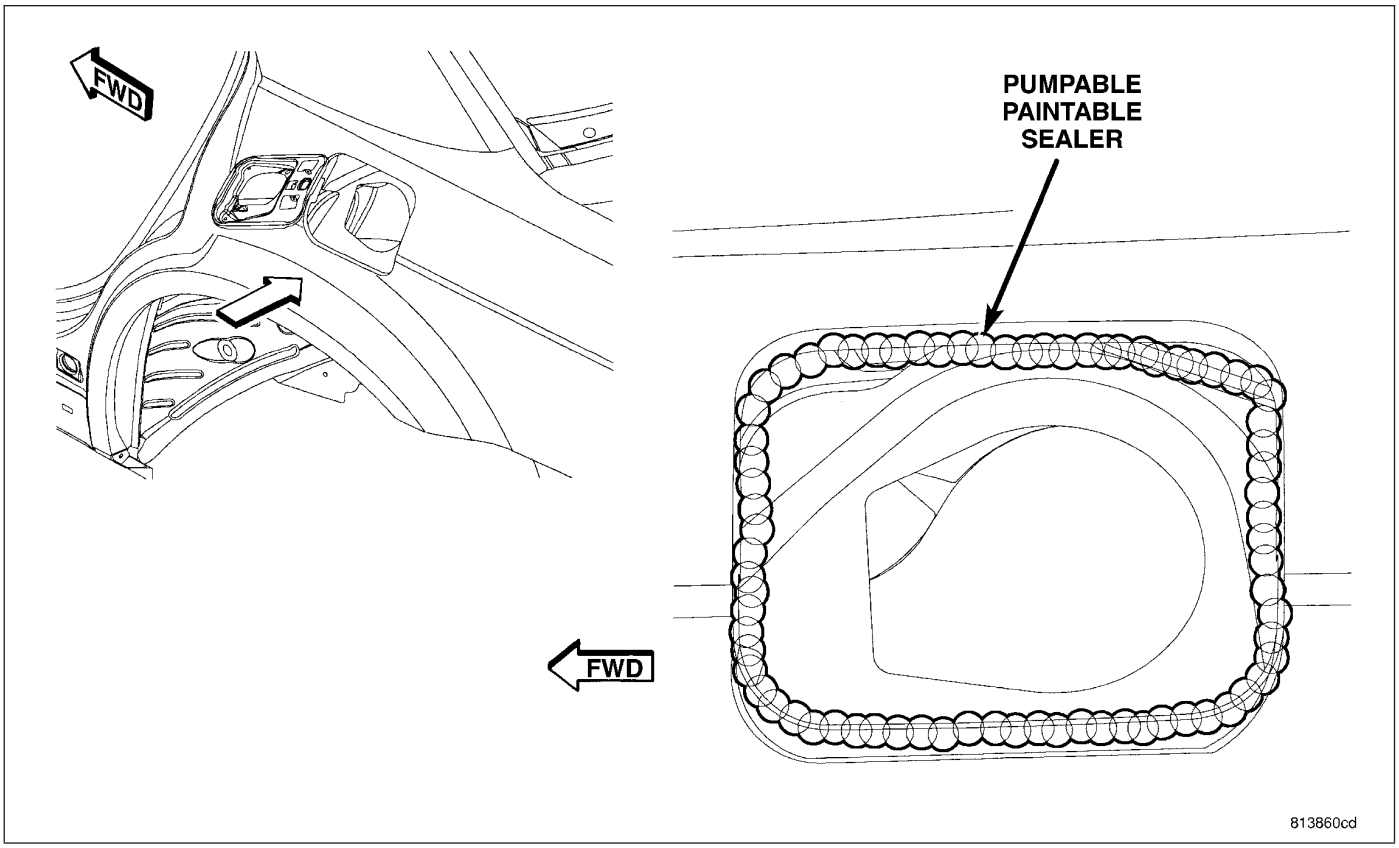

Fig. 33 FUEL DOOR OPENING

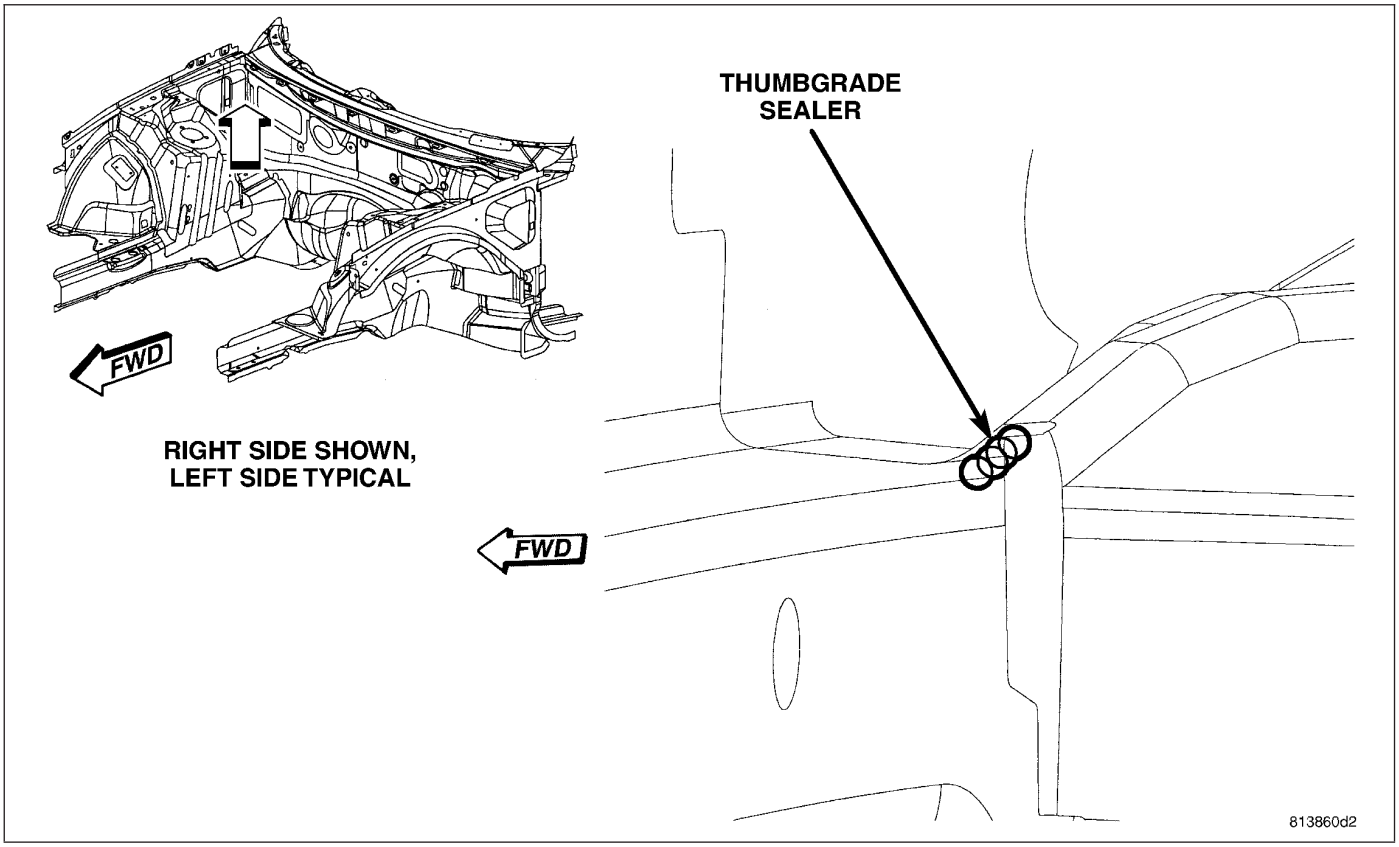

Fig. 34 UPPER COWL AND LOAD BEAM

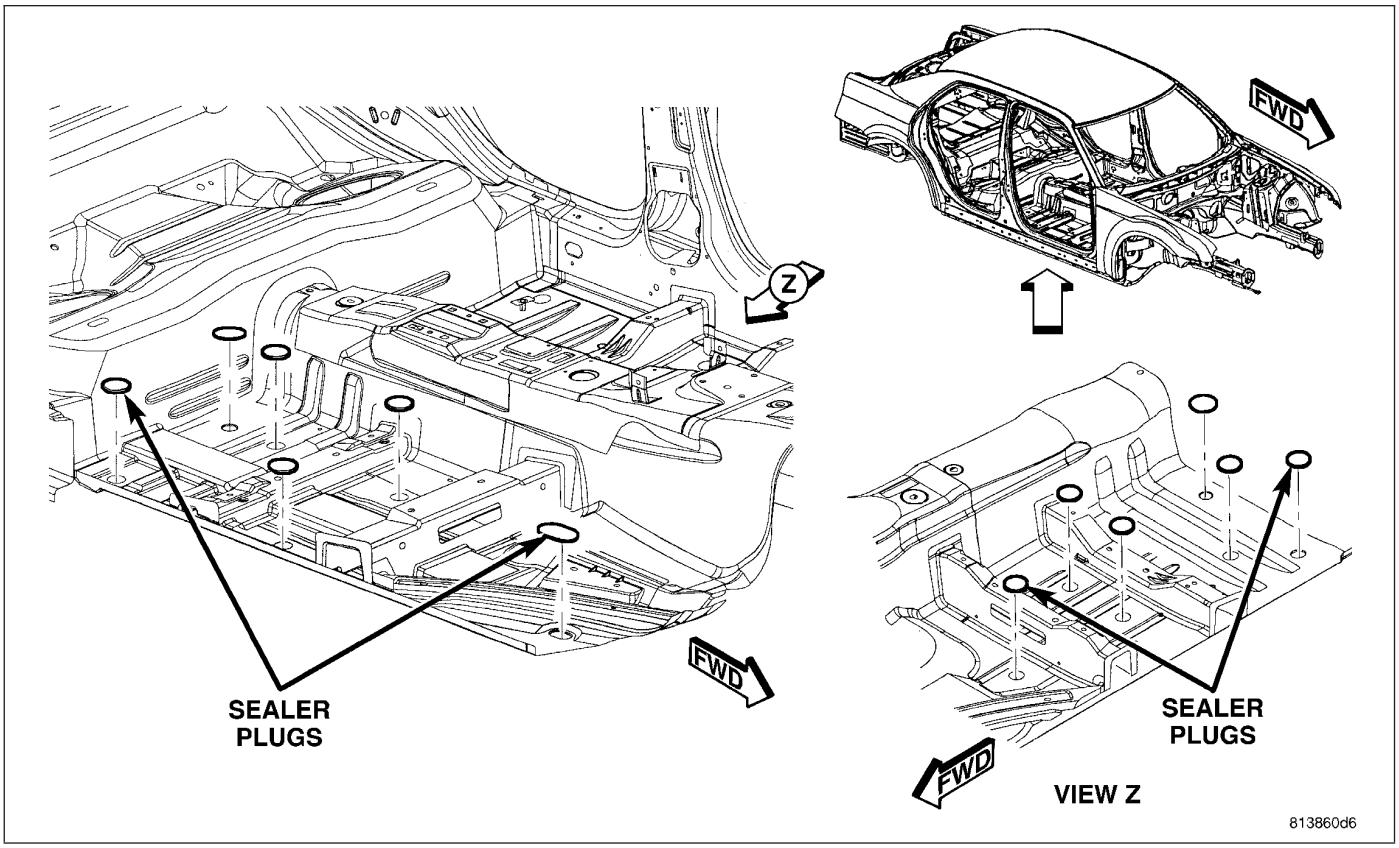

Fig. 35 FRONT FLOOR PAN

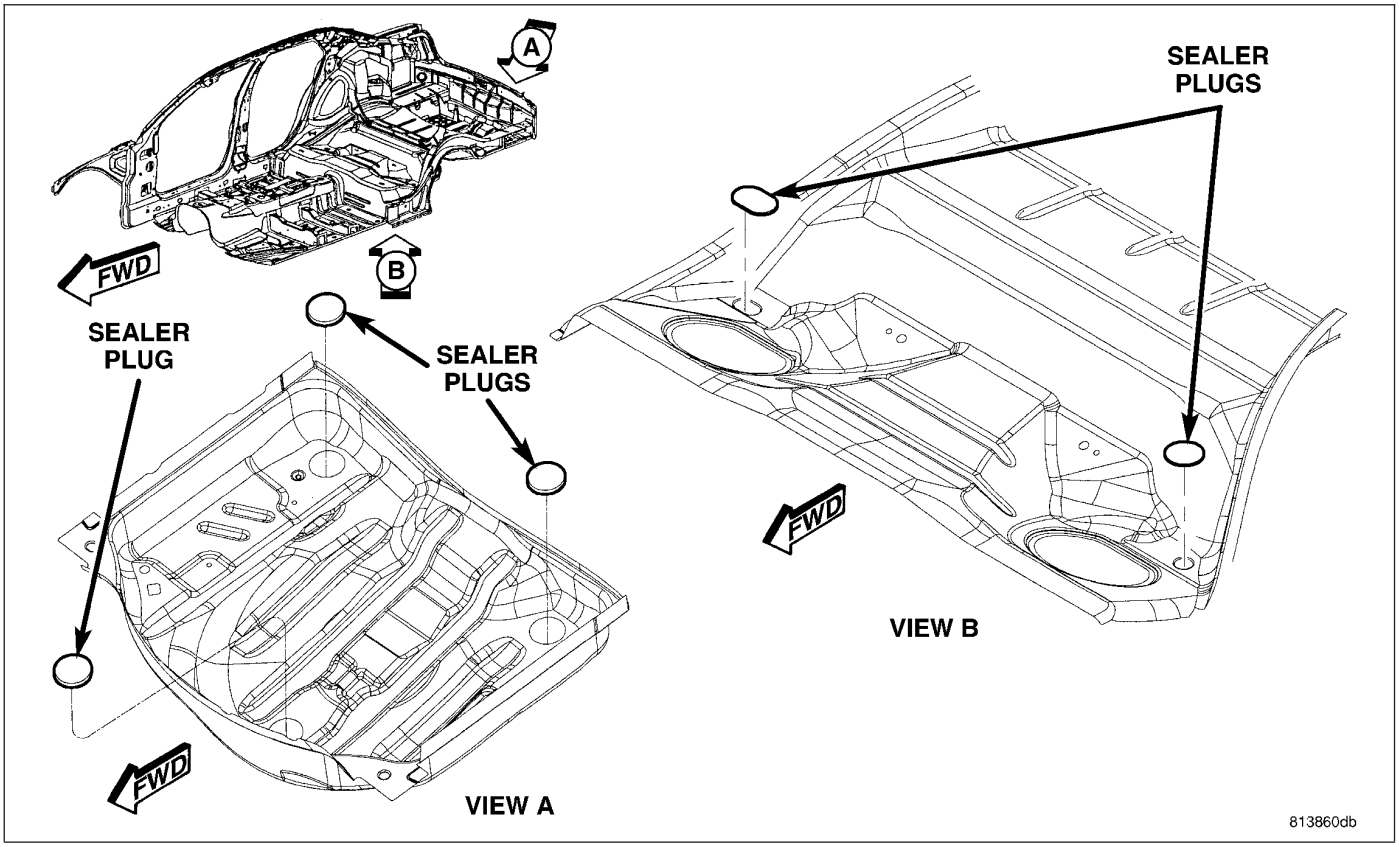

Fig. 36 CENTER AND REAR FLOOR PAN

STRUCTURAL ADHESIVE LOCATIONS

SPECIFICATIONS

STRUCTURAL ADHESIVE LOCATIONS

Index

DESCRIPTION	FIGURE
Sedan Only	
FRAMED BODY IN WHITE (1 OF 3)	37
FRAMED BODY IN WHITE (2 OF 3)	38
FRAMED BODY IN WHITE (3 OF 3)	39
FULL FRAMED BODY IN WHITE (1 OF 4)	40
FULL FRAMED BODY IN WHITE (2 OF 4)	41
FULL FRAMED BODY IN WHITE (3 OF 4)	42
FULL FRAMED BODY IN WHITE (4 OF 4)	43
ROOF	44
Wagon Only	
FRAMED BODY IN WHITE	45
FULL FRAMED BODY IN WHITE (1 OF 2)	46
FULL FRAMED BODY IN WHITE (2 OF 2)	47
ROOF	48
Sedan and Wagon	
REAR LADDER AND FLOOR (1 OF 4)	49
REAR LADDER AND FLOOR (2 OF 4)	50
REAR LADDER AND FLOOR (3 OF 4)	51
REAR LADDER AND FLOOR (4 OF 4)	52
UNDERBODY FRAMING (1 OF 2)	53
UNDERBODY FRAMING (2 OF 2)	54
Charger Only	
FRAMED BODY IN WHITE (1 OF 4)	55
FRAMED BODY IN WHITE (2 OF 4)	56
FRAMED BODY IN WHITE (3 OF 4)	57
FRAMED BODY IN WHITE (4 OF 4)	58
FULL FRAMED BODY IN WHITE (1 OF 2)	59
FULL FRAMED BODY IN WHITE (2 OF 2)	60
ROOF WITH SUNROOF	61

Sedan Only

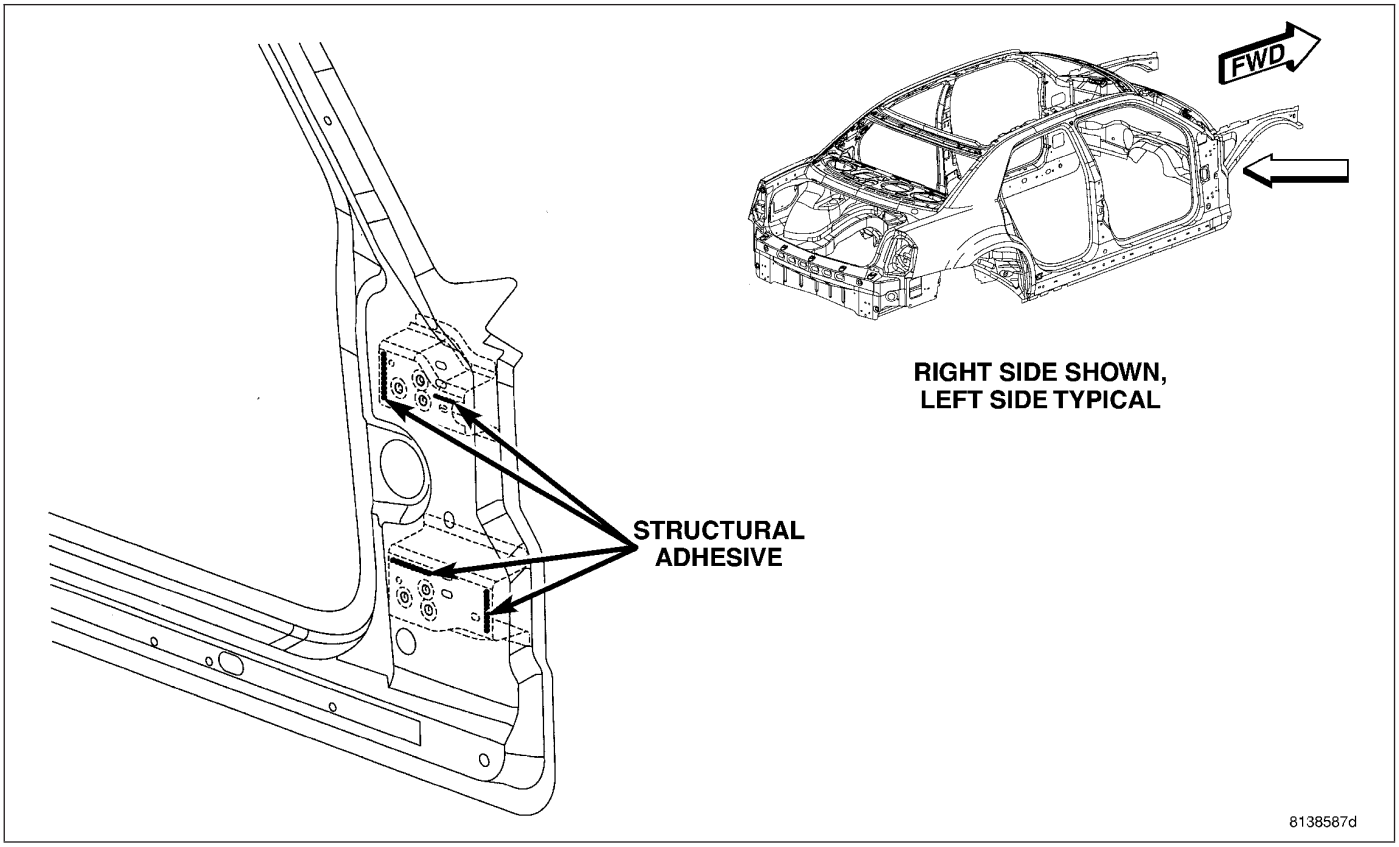

Fig. 37 FRAMED BODY IN WHITE (1 OF 3)

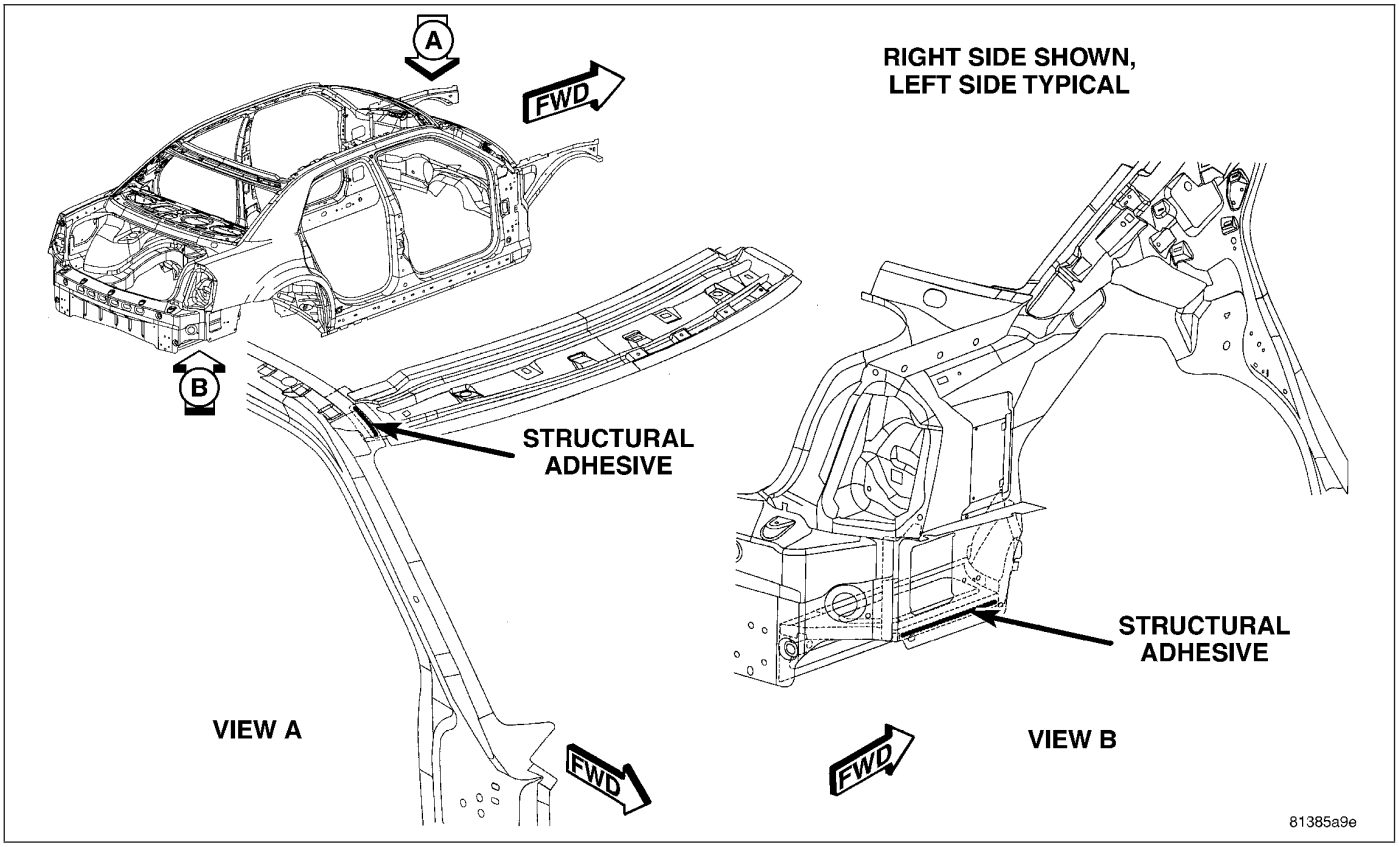

Fig. 38 FRAMED BODY IN WHITE (2 OF 3)

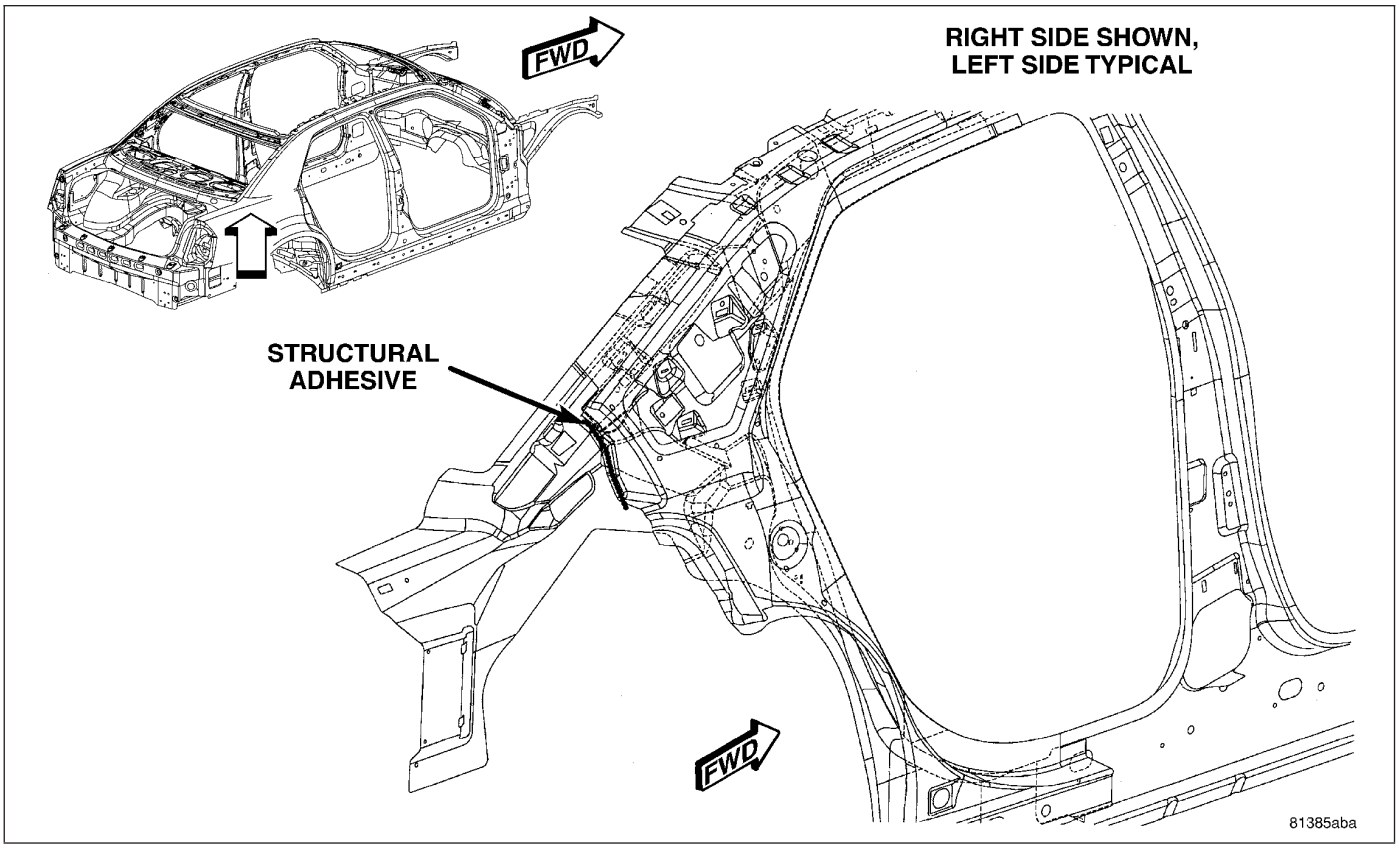

Fig. 39 FRAMED BODY IN WHITE (3 OF 3)

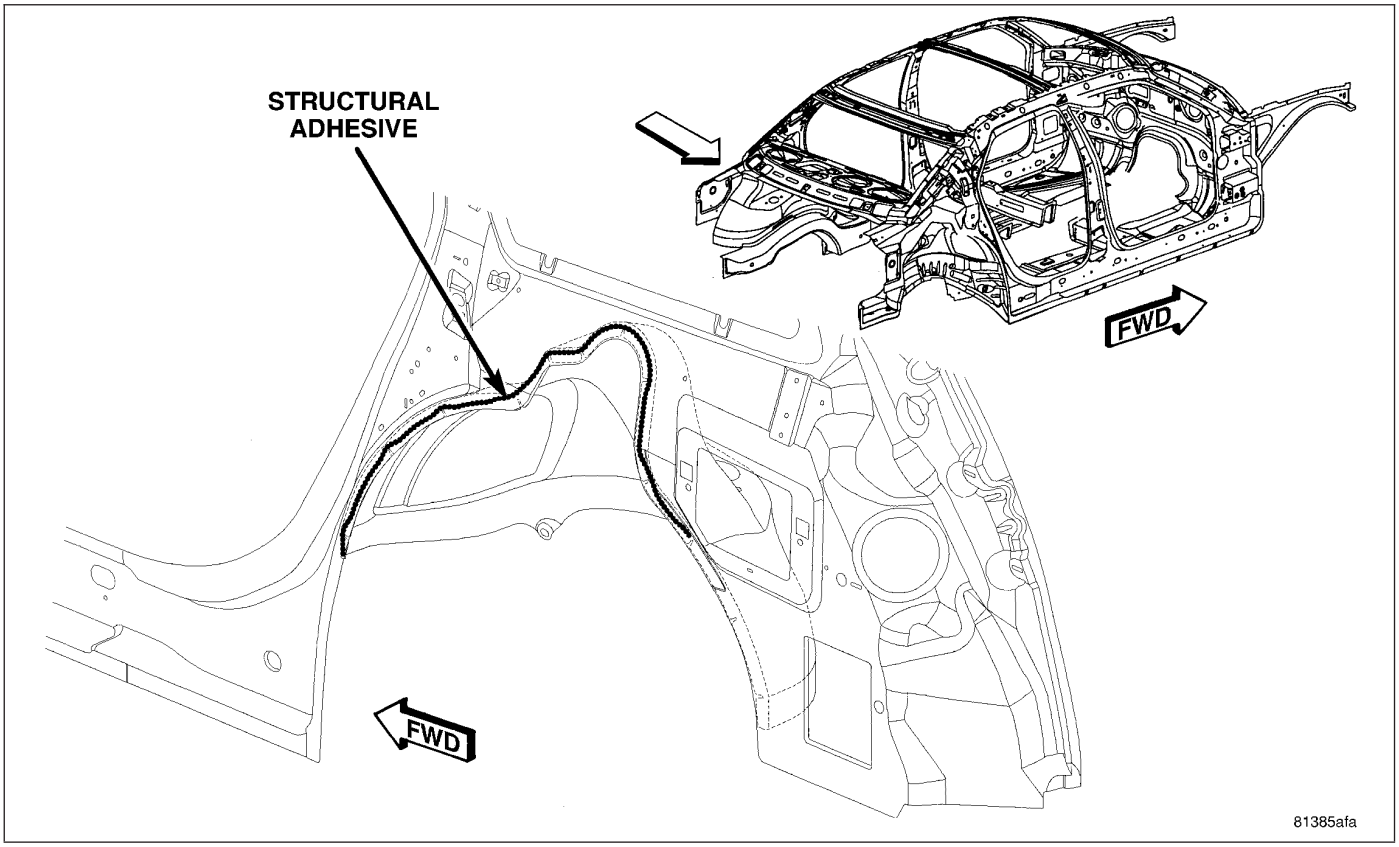

Fig. 40 FULL FRAMED BODY IN WHITE (1 OF 4)

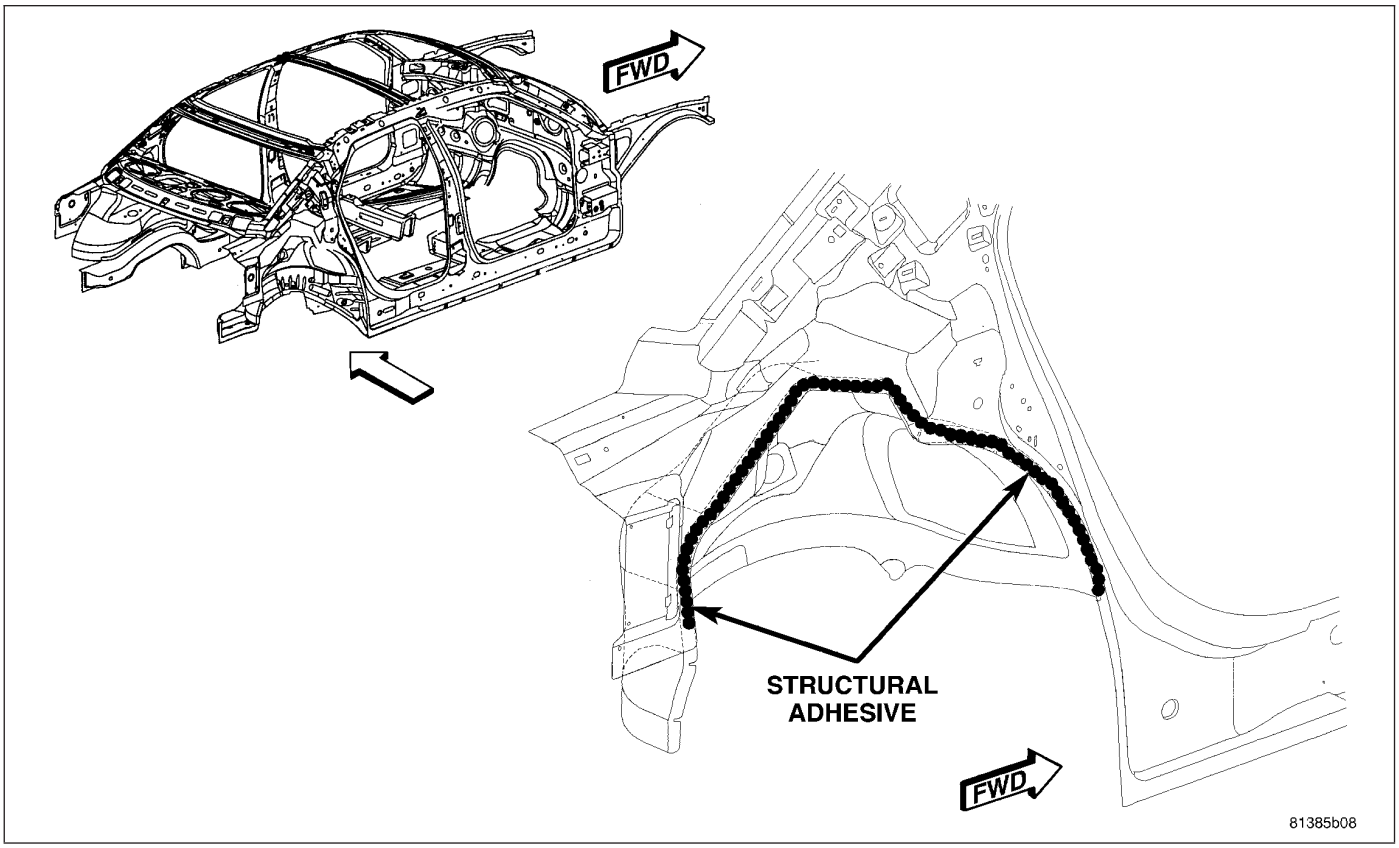

Fig. 41 FULL FRAMED BODY IN WHITE (2 OF 4)

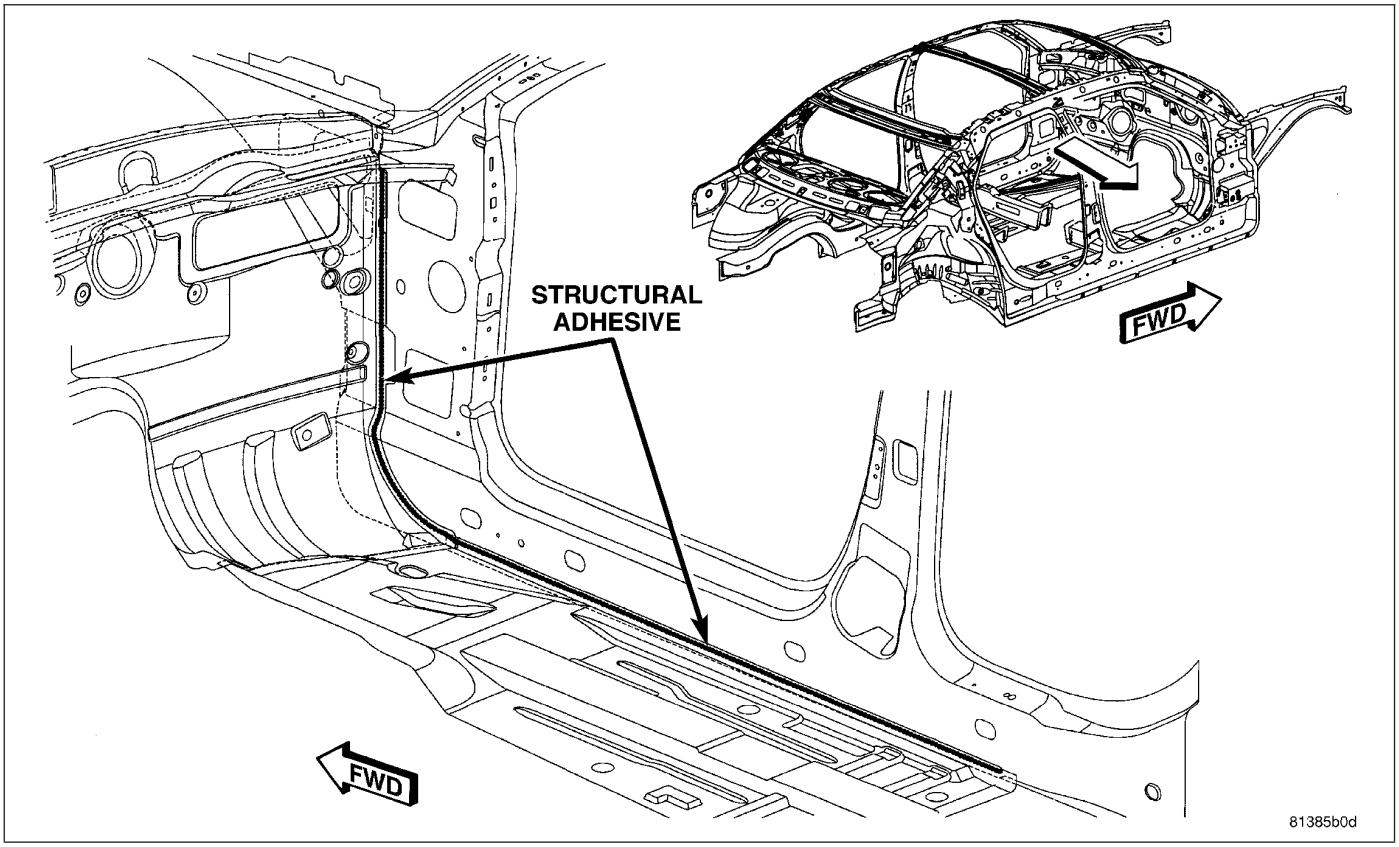

Fig. 42 FULL FRAMED BODY IN WHITE (3 OF 4)

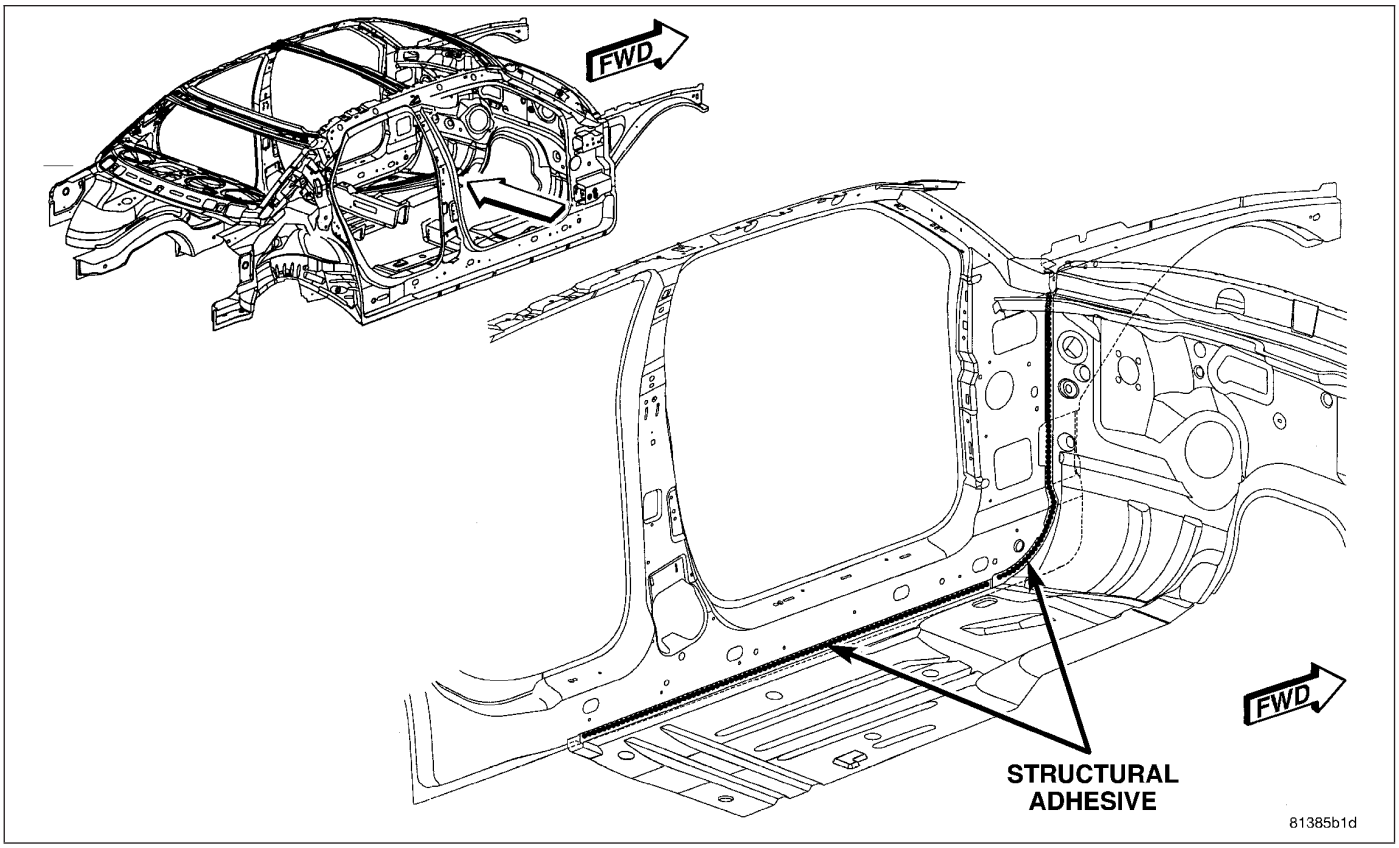

Fig. 43 FULL FRAMED BODY IN WHITE (4 OF 4)

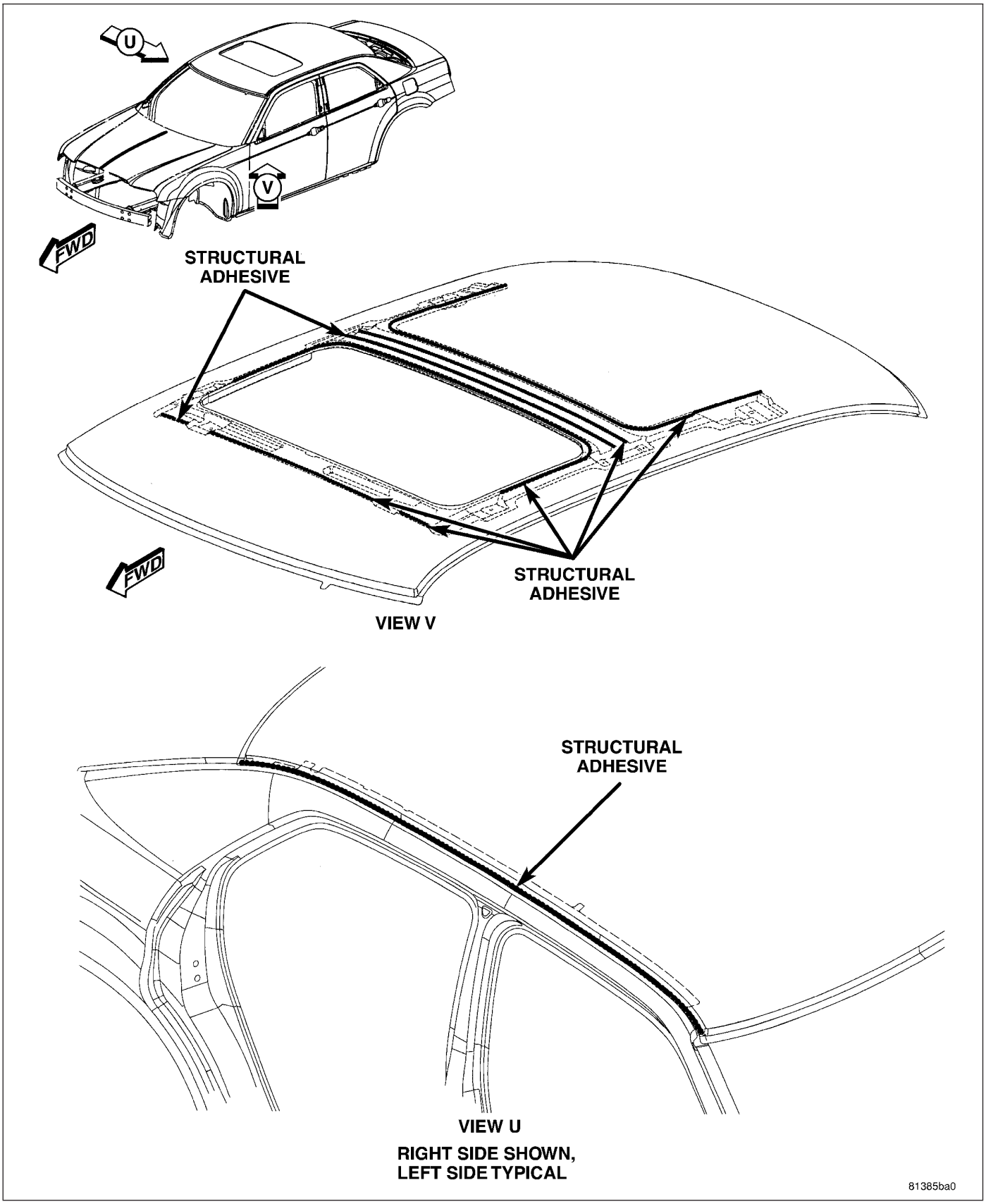
U
V
FWD
STRUCTURAL ADHESIVE
FWD
STRUCTURAL ADHESIVE
VIEW V
STRUCTURAL ADHESIVE
VIEW U
RIGHT SIDE SHOWN, LEFT SIDE TYPICAL
81385ba0

Fig. 44 ROOF

Wagon Only

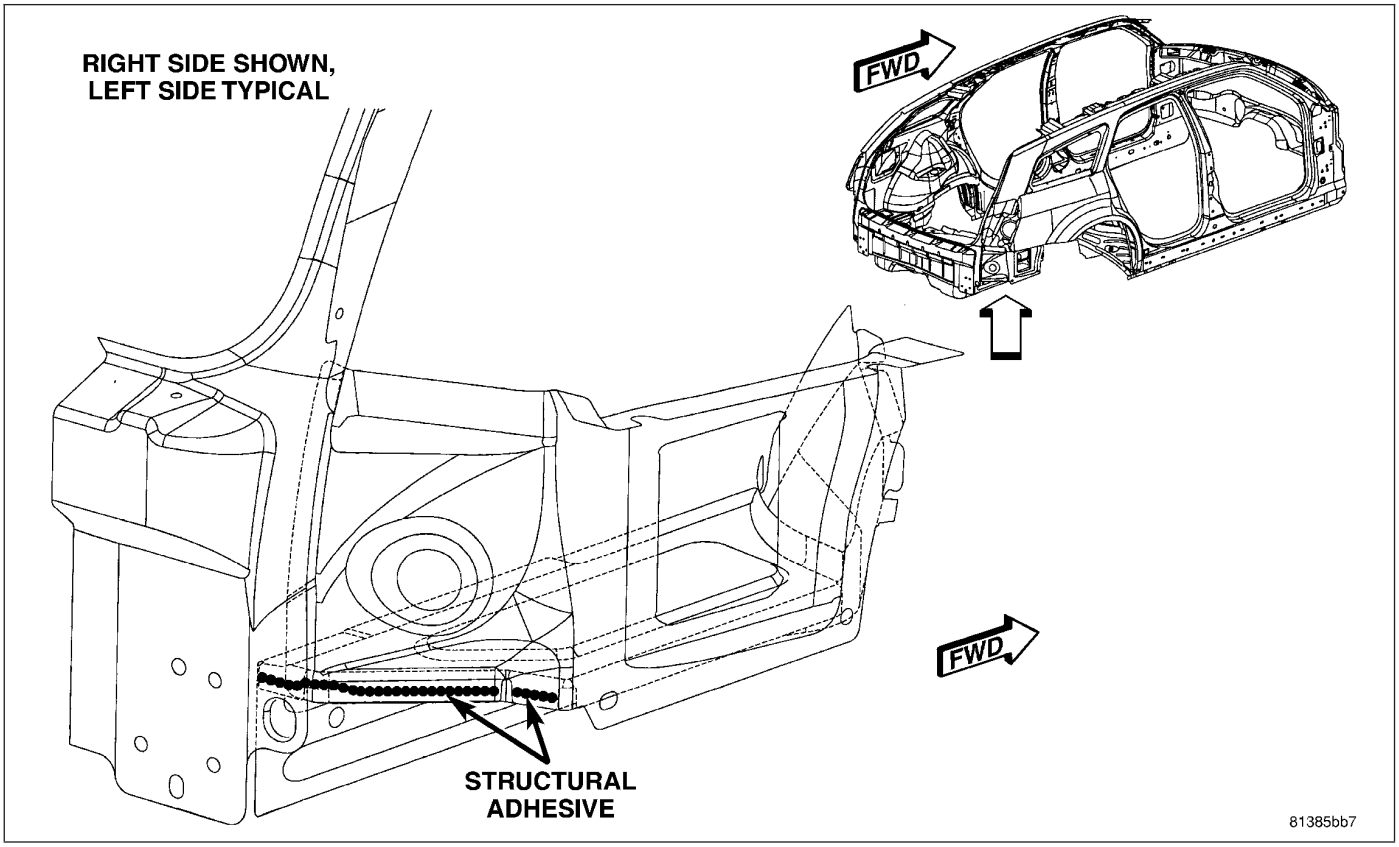

Fig. 45 FRAMED BODY IN WHITE

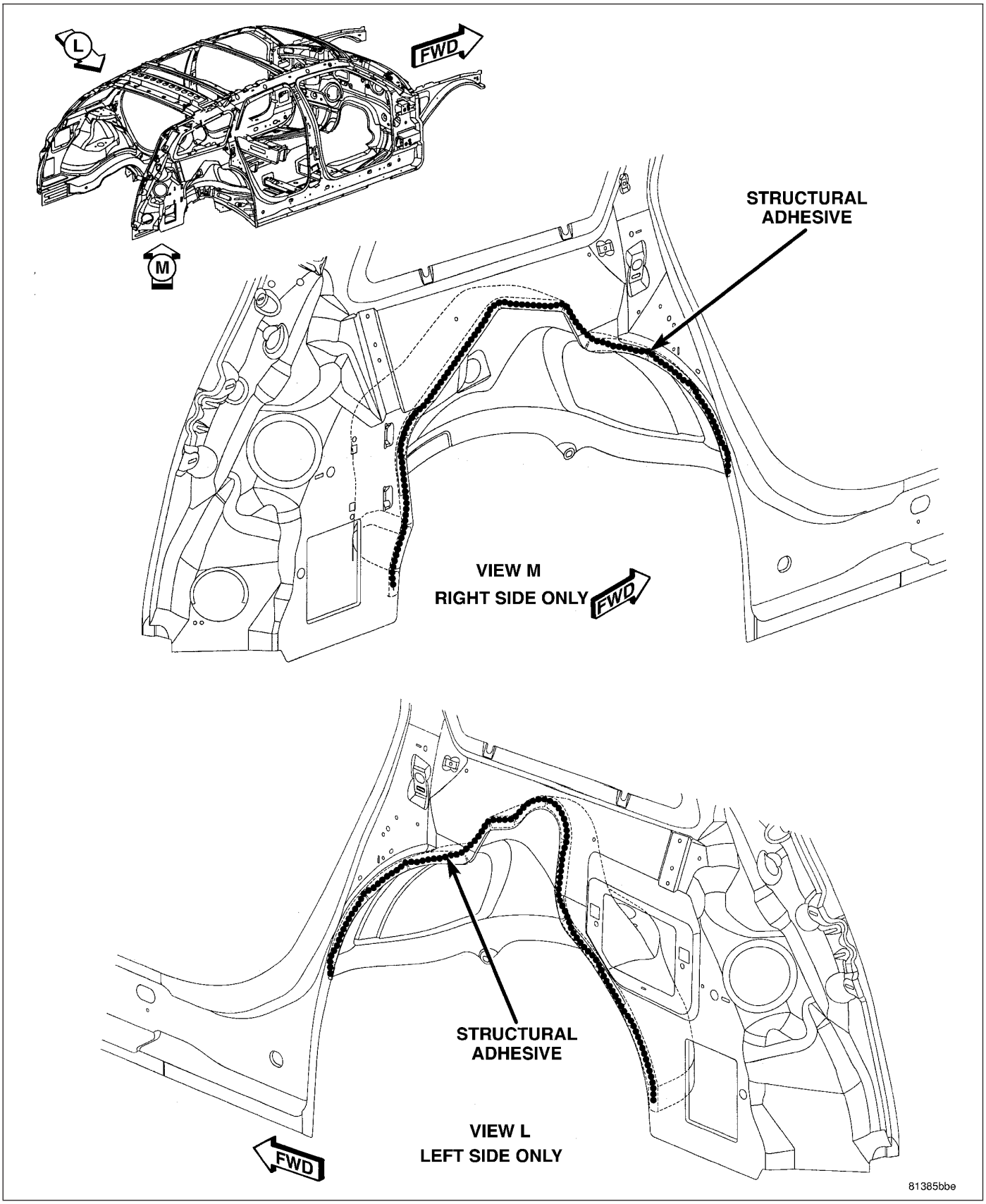

Fig. 46 FULL FRAMED BODY IN WHITE (1 OF 2)

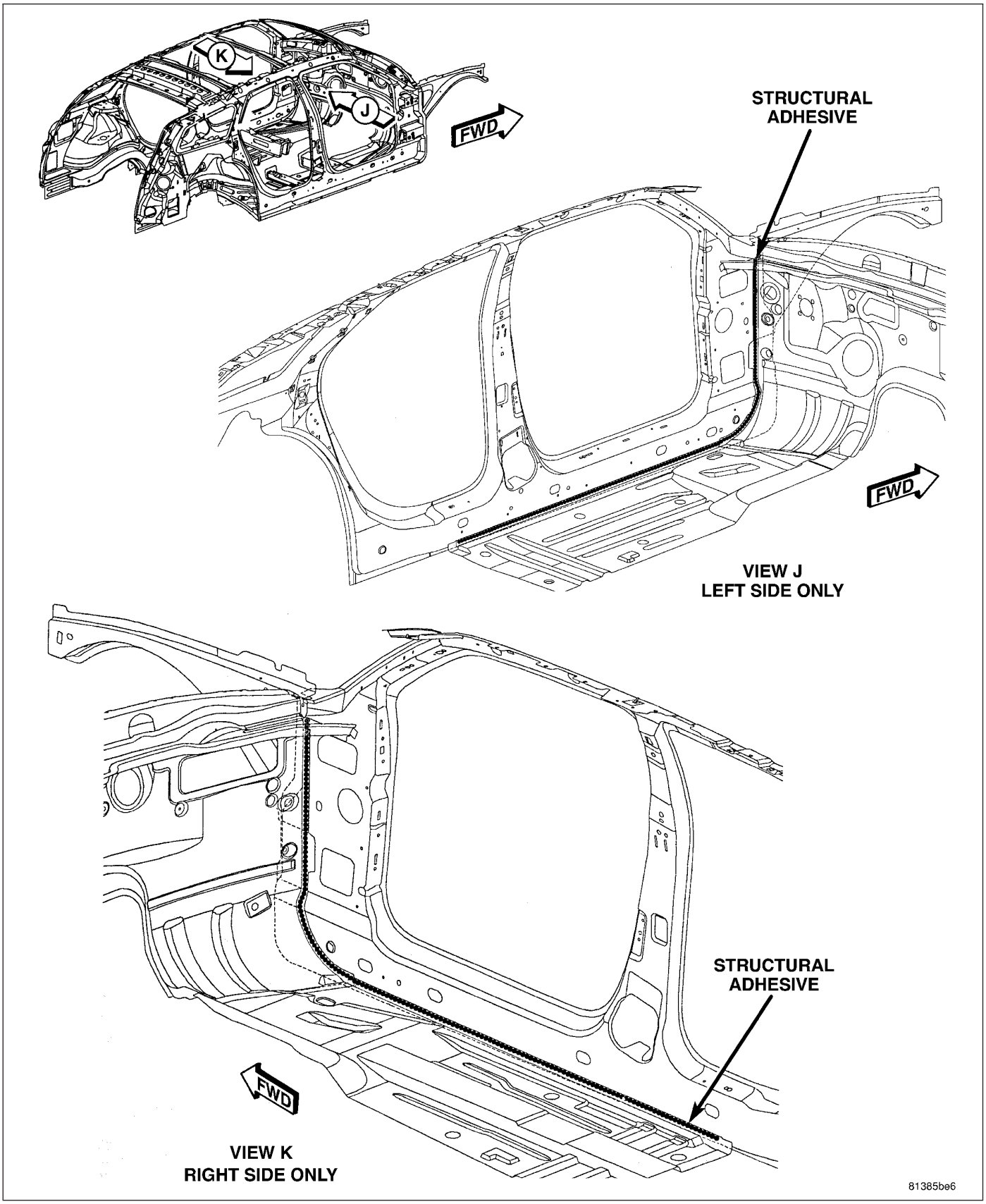

Fig. 47 FULL FRAMED BODY IN WHITE (2 OF 2)

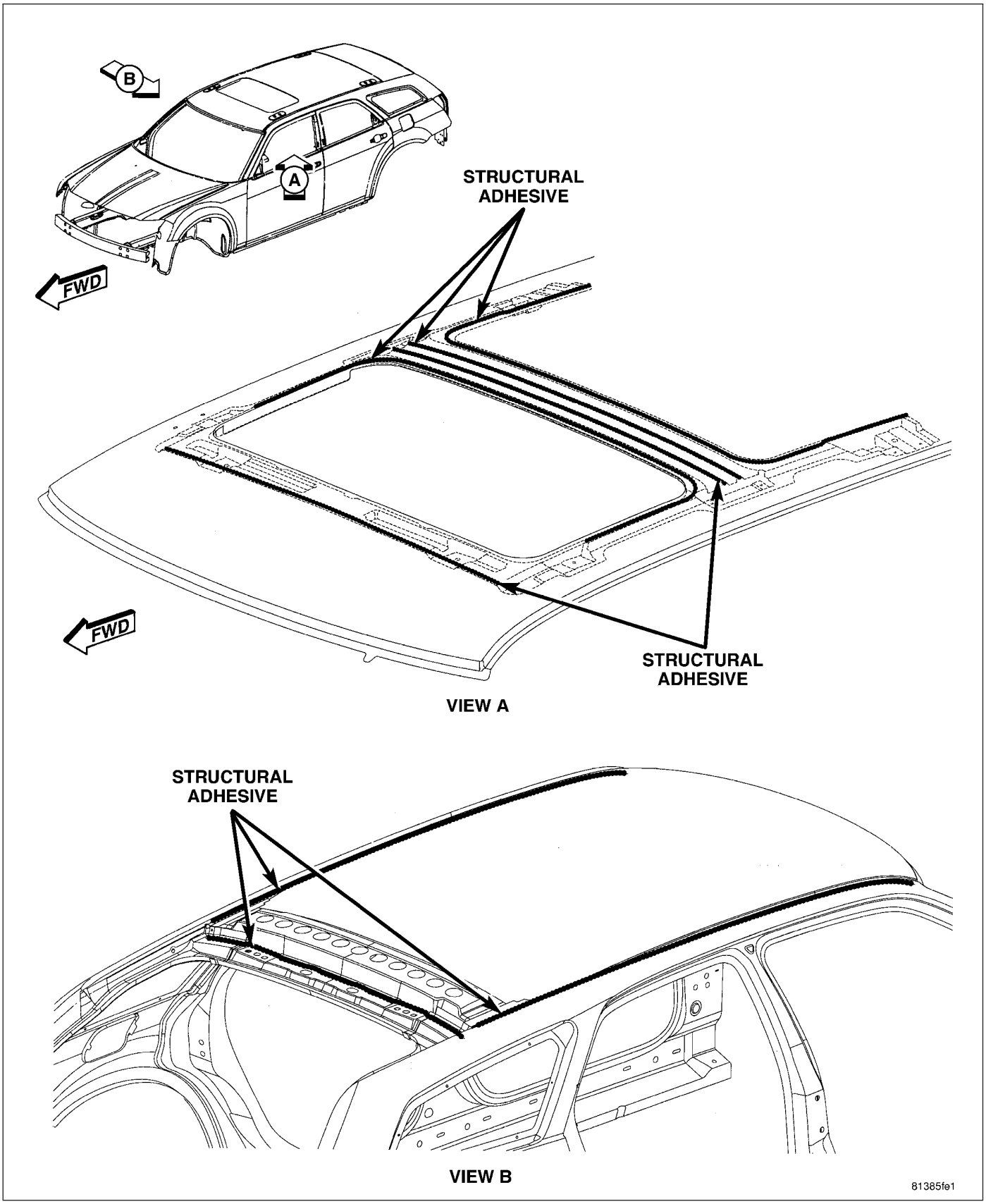
B
A
FWD
STRUCTURAL ADHESIVE
FWD
STRUCTURAL ADHESIVE
VIEW A
STRUCTURAL ADHESIVE
VIEW B
81385fe1

Fig. 48 ROOF

Sedan and Wagon

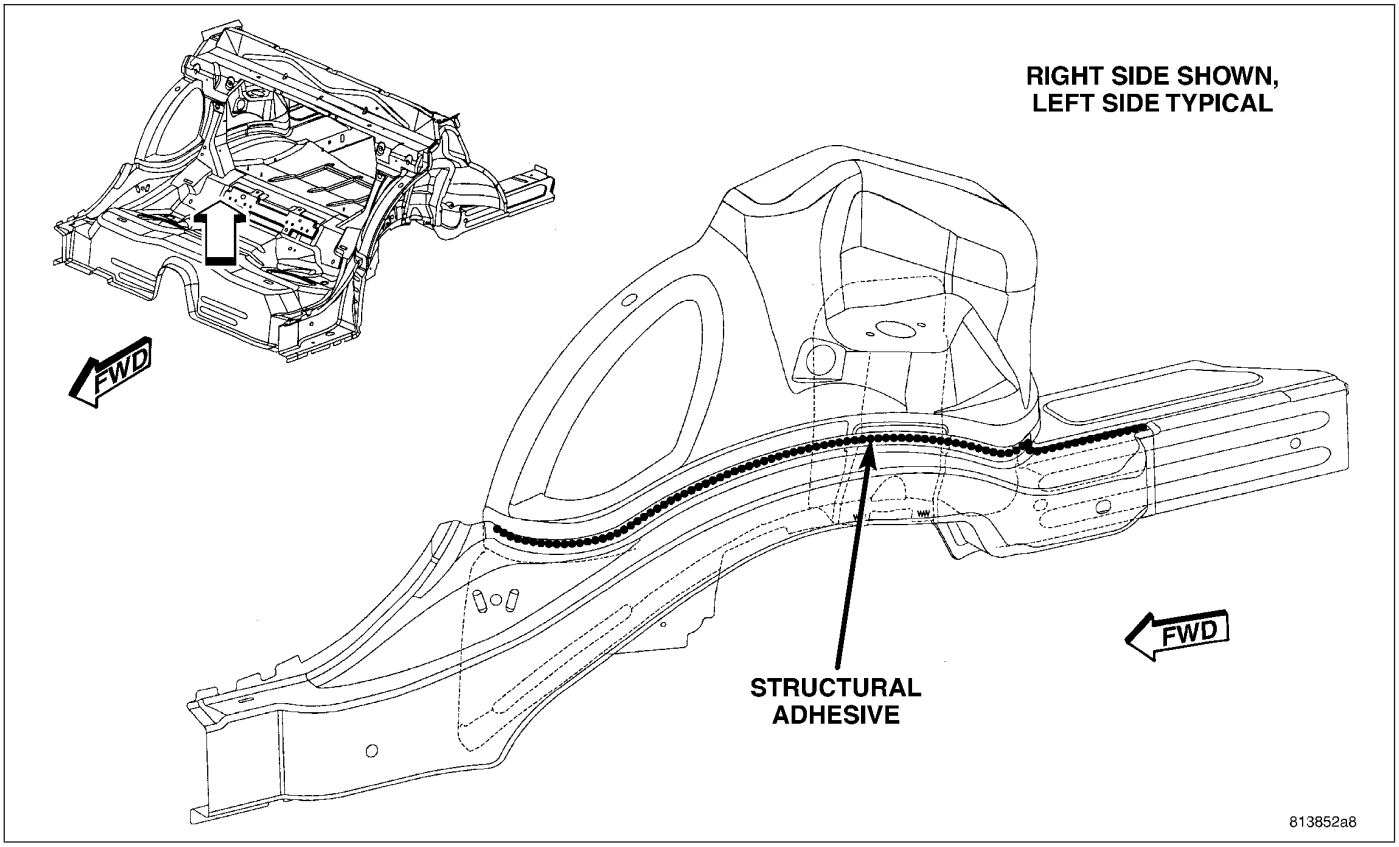

Fig. 49 REAR LADDER AND FLOOR (1 OF 4)

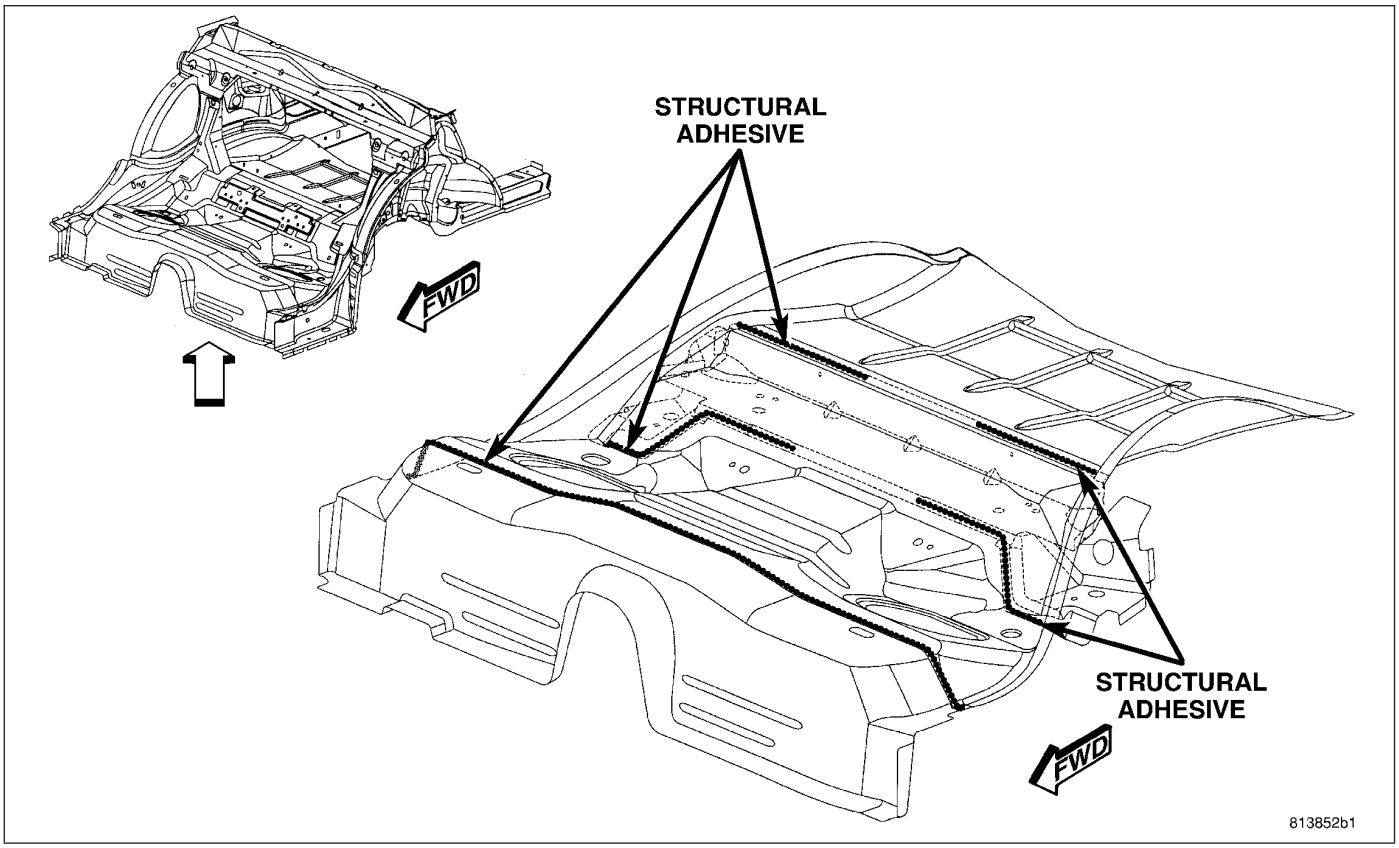

Fig. 50 REAR LADDER AND FLOOR (2 OF 4)

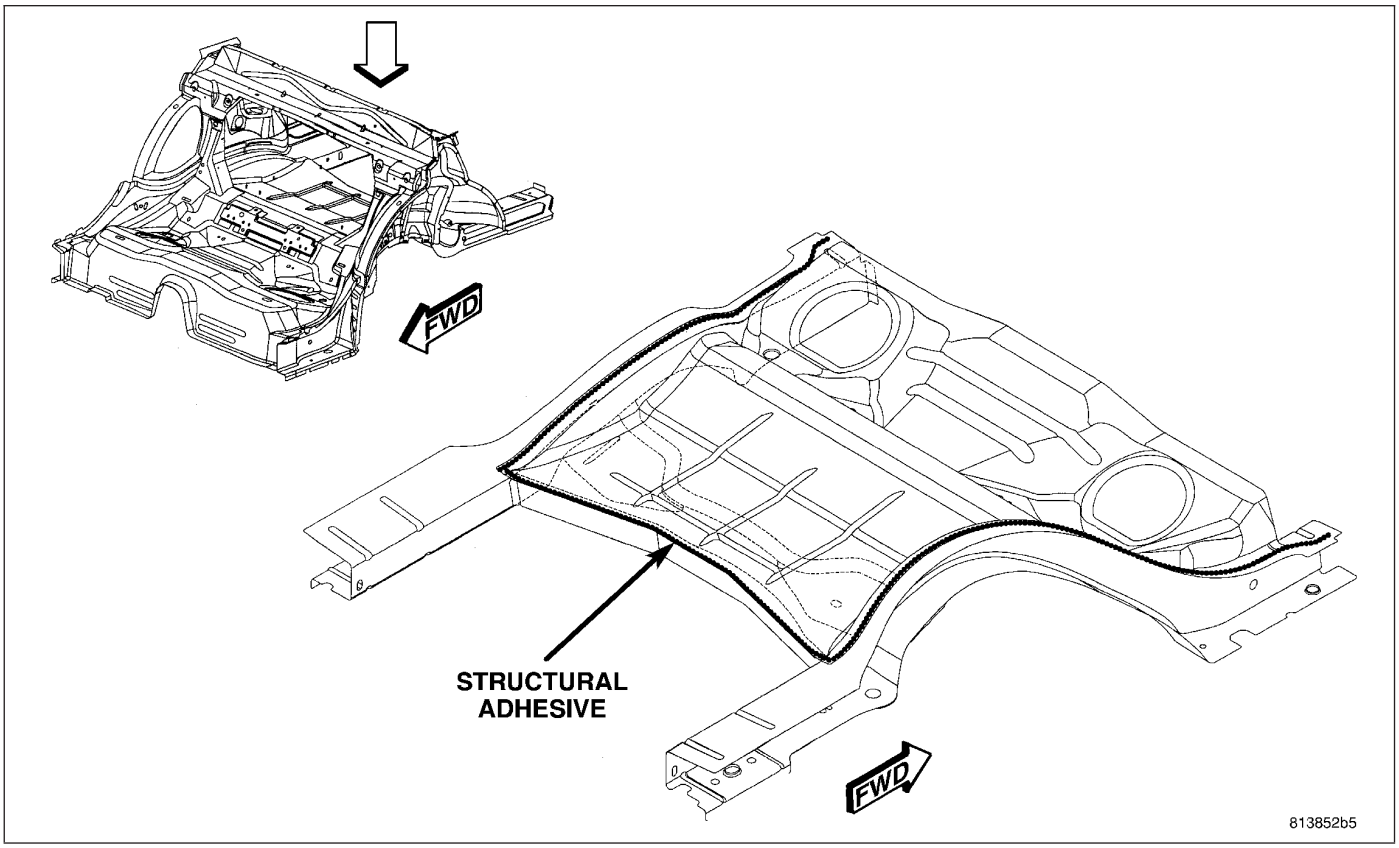

Fig. 51 REAR LADDER AND FLOOR (3 OF 4)

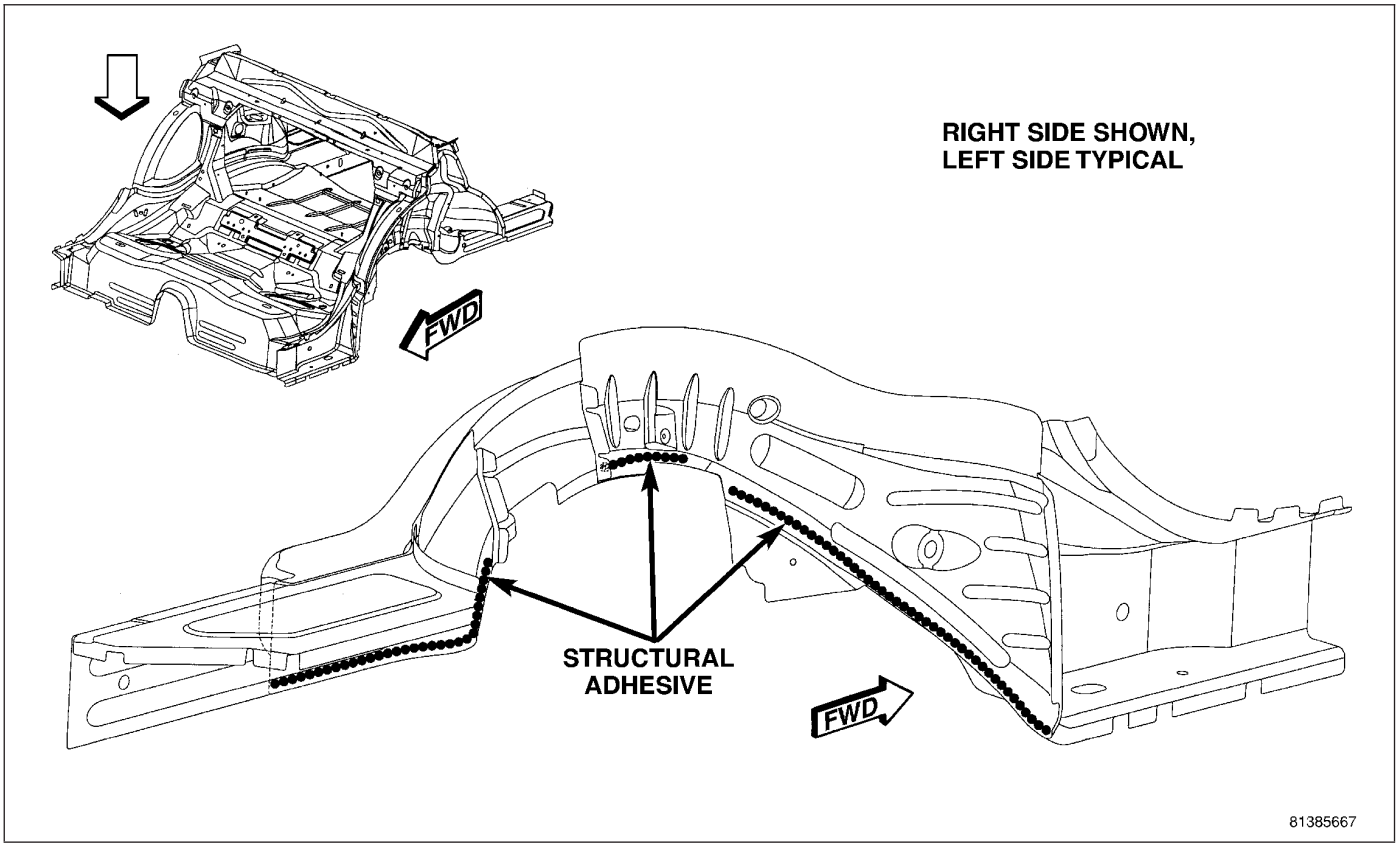

Fig. 52 REAR LADDER AND FLOOR (4 OF 4)

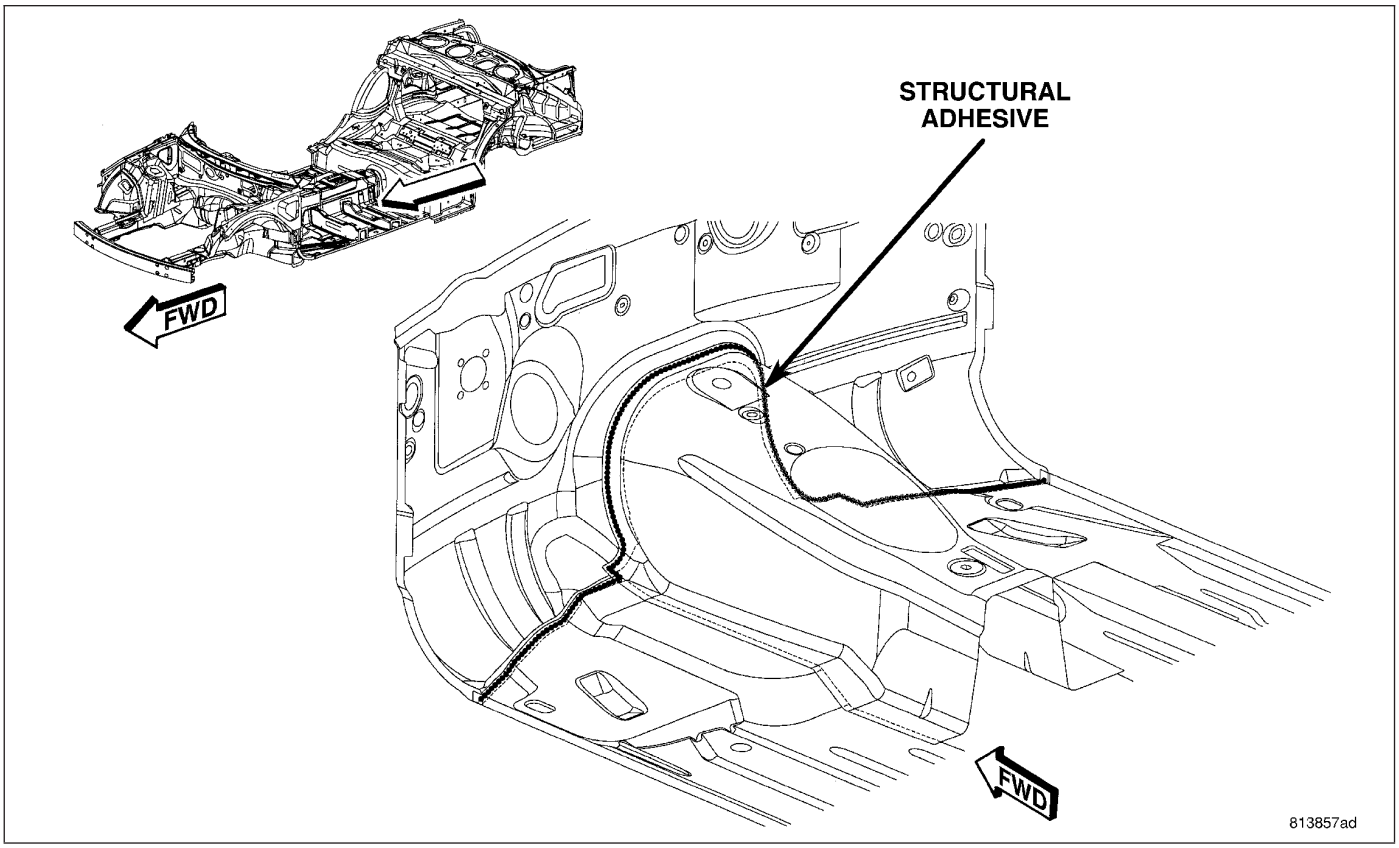

Fig. 53 UNDERBODY FRAMING (1 OF 2)

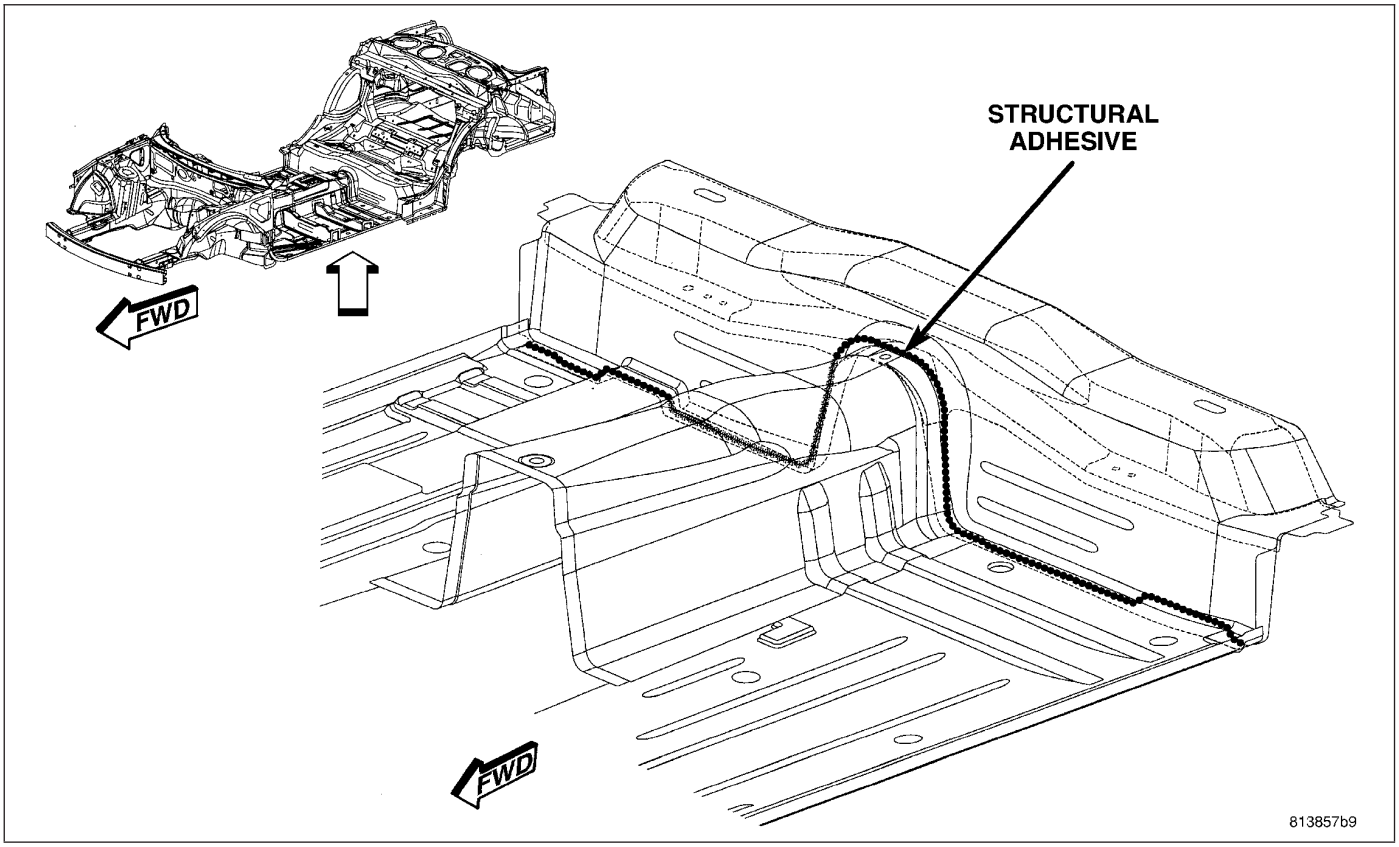

Fig. 54 UNDERBODY FRAMING (2 OF 2)

Charger Only

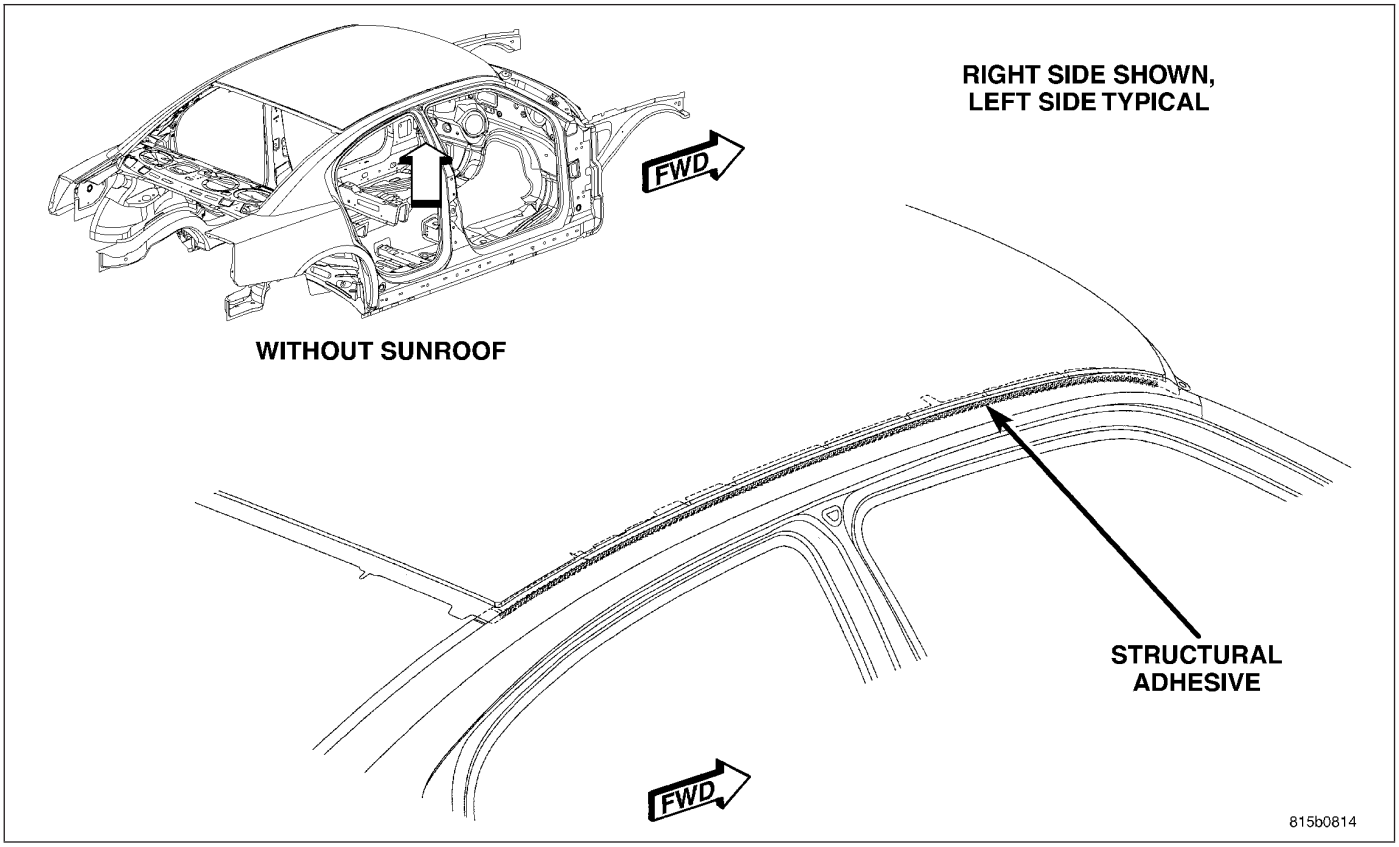

Fig. 55 FRAMED BODY IN WHITE (1 OF 4)

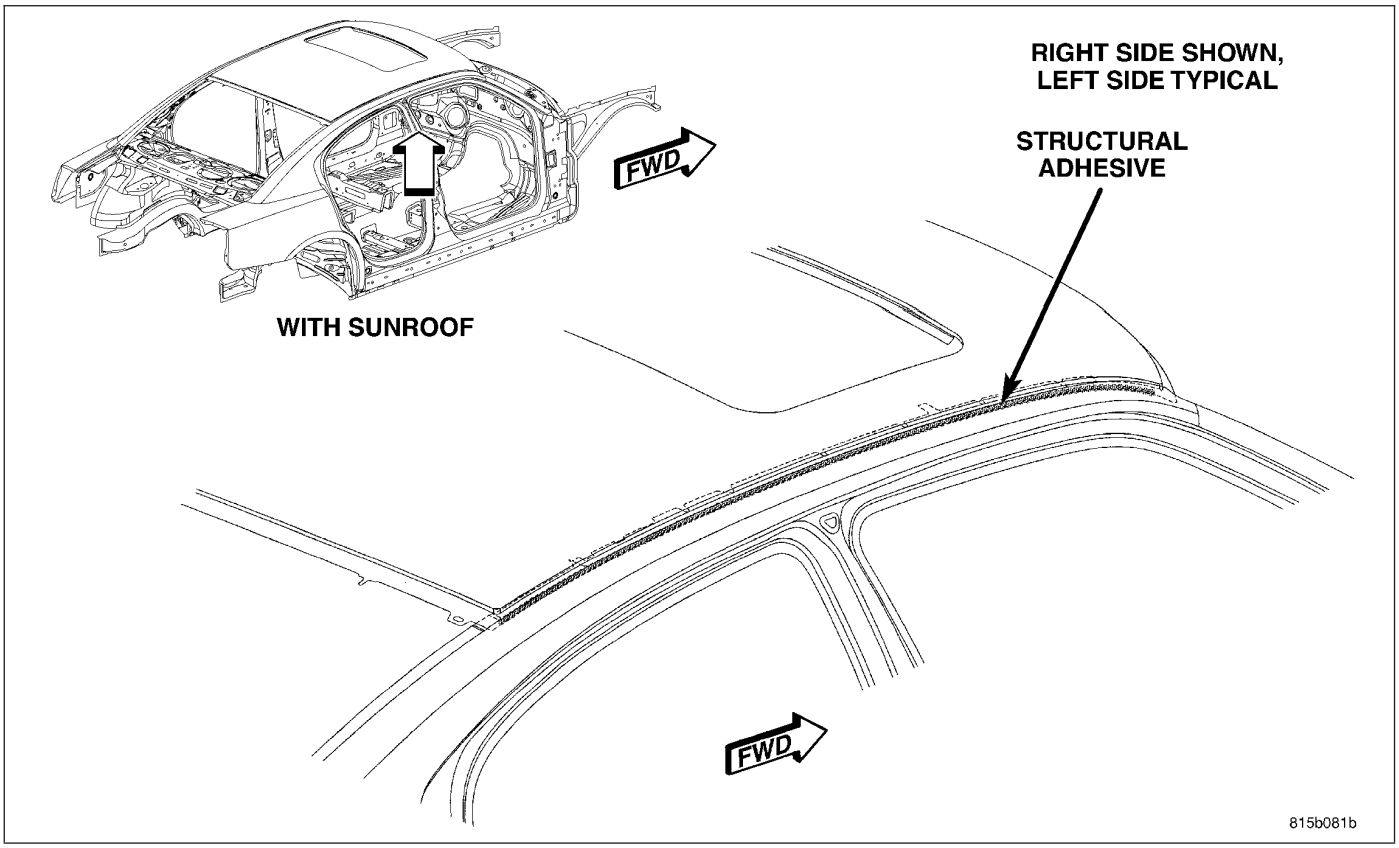

Fig. 56 FRAMED BODY IN WHITE (2 OF 4)

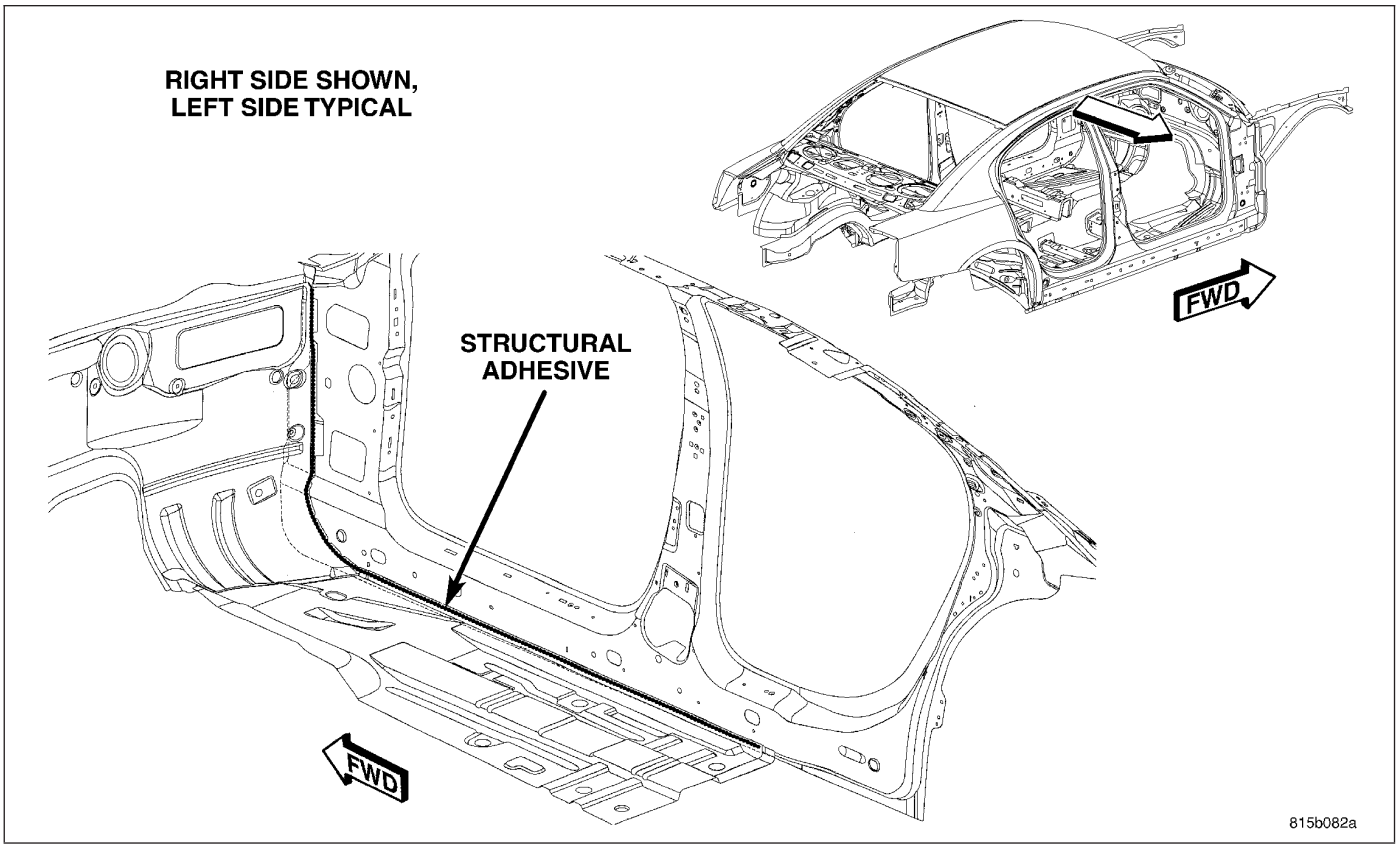

Fig. 57 FRAMED BODY IN WHITE (3 OF 4)

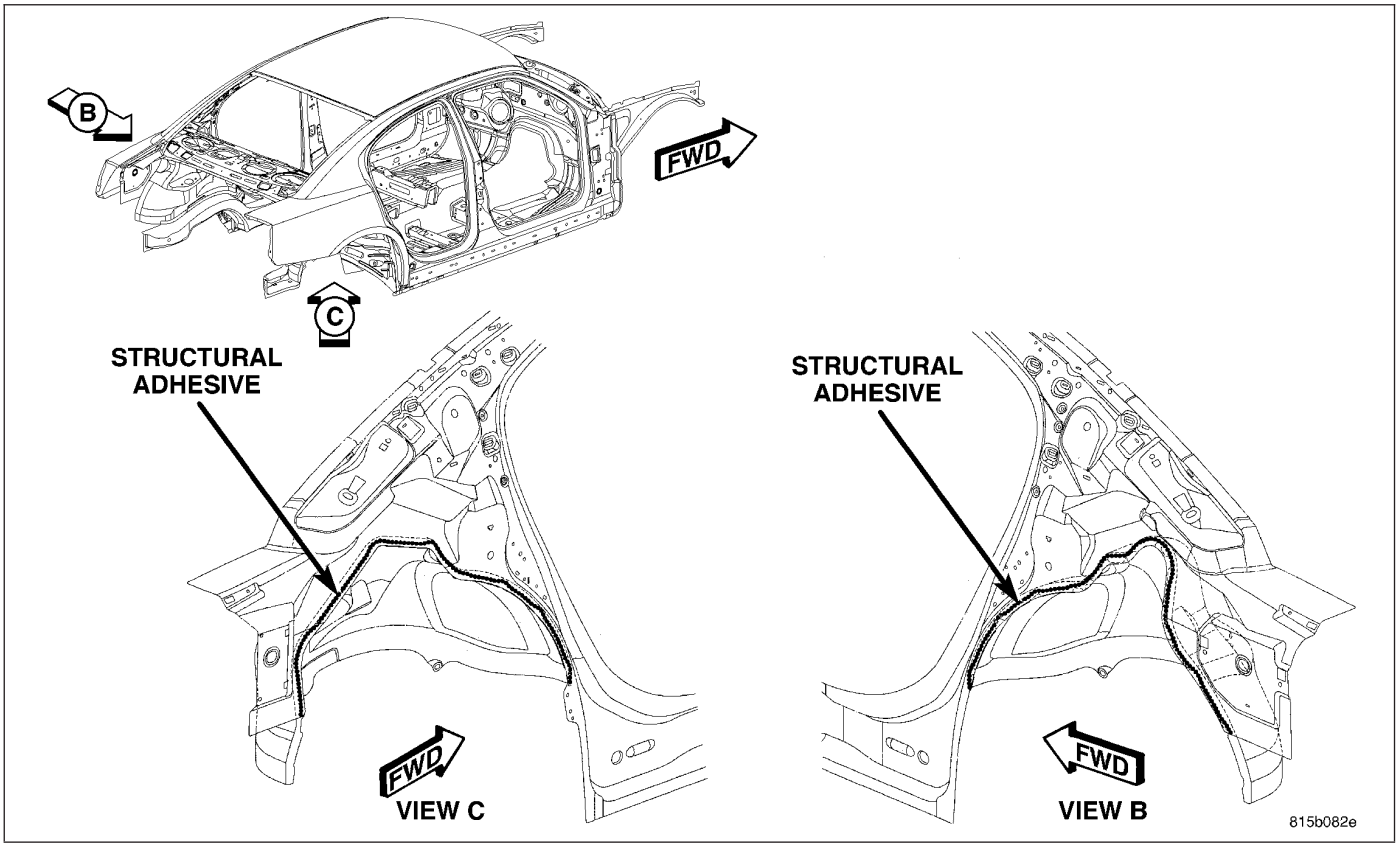

Fig. 58 FRAMED BODY IN WHITE (4 OF 4)

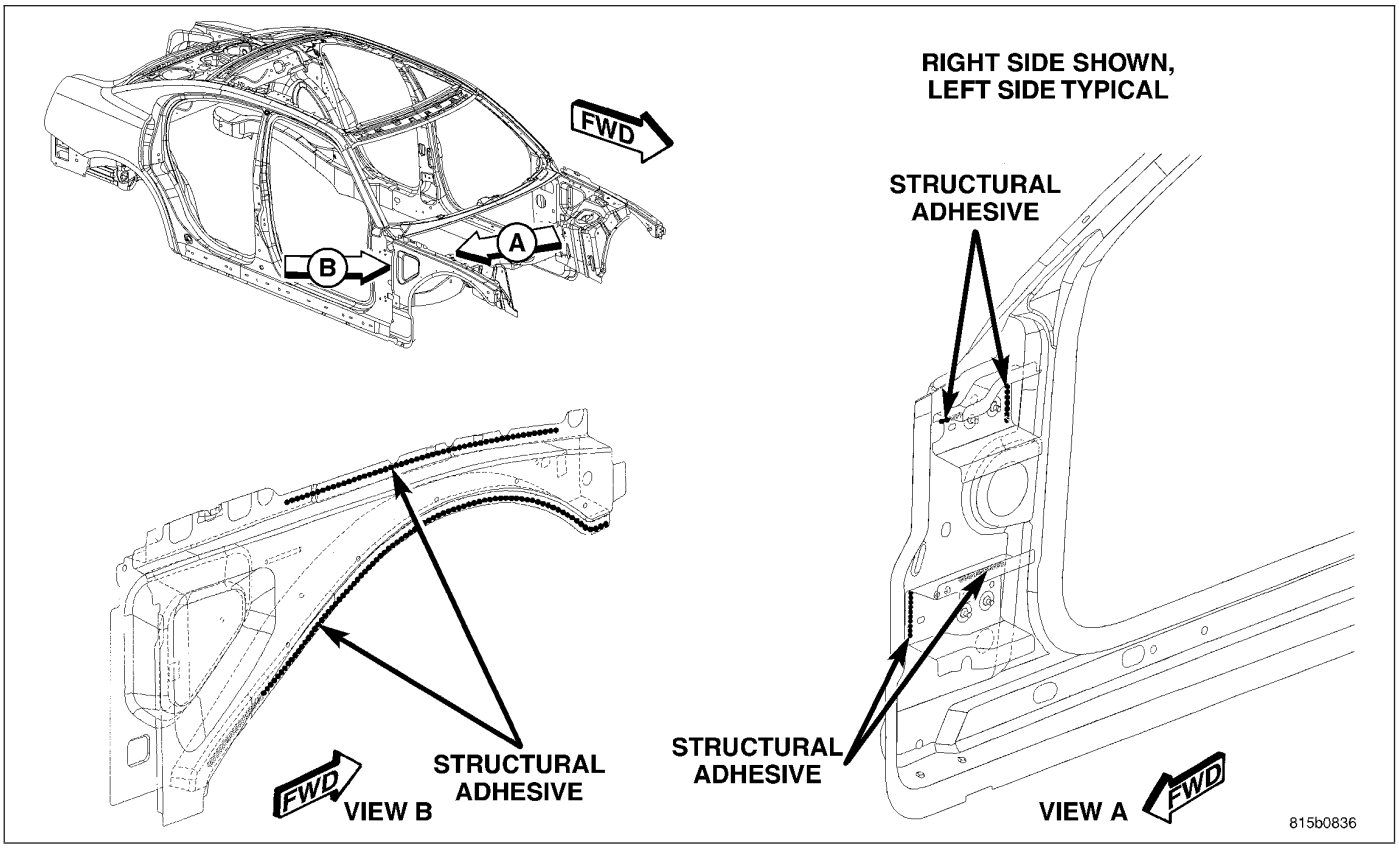

Fig. 59 FULL FRAMED BODY IN WHITE (1 OF 2)

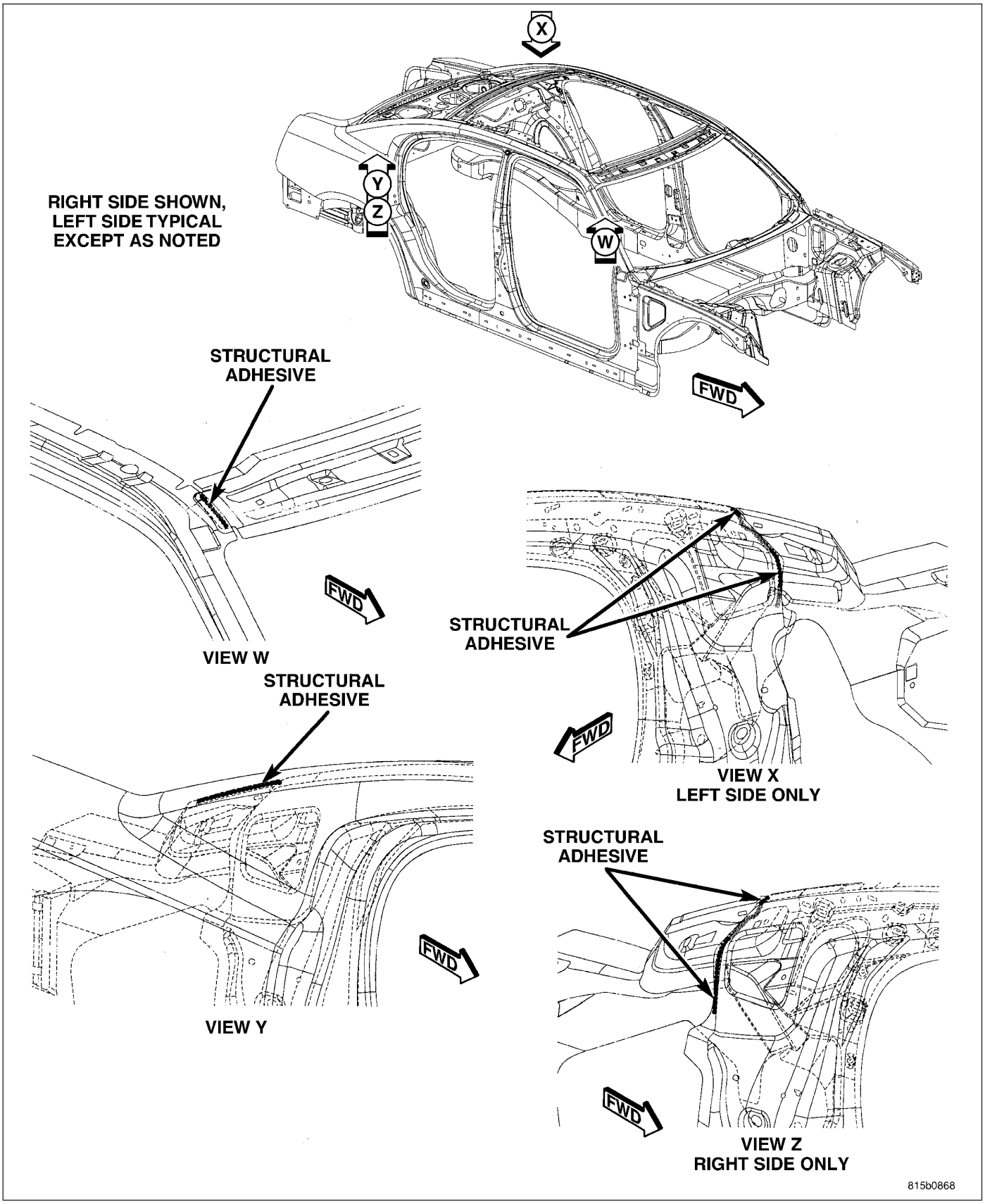

Fig. 60 FULL FRAMED BODY IN WHITE (2 OF 2)

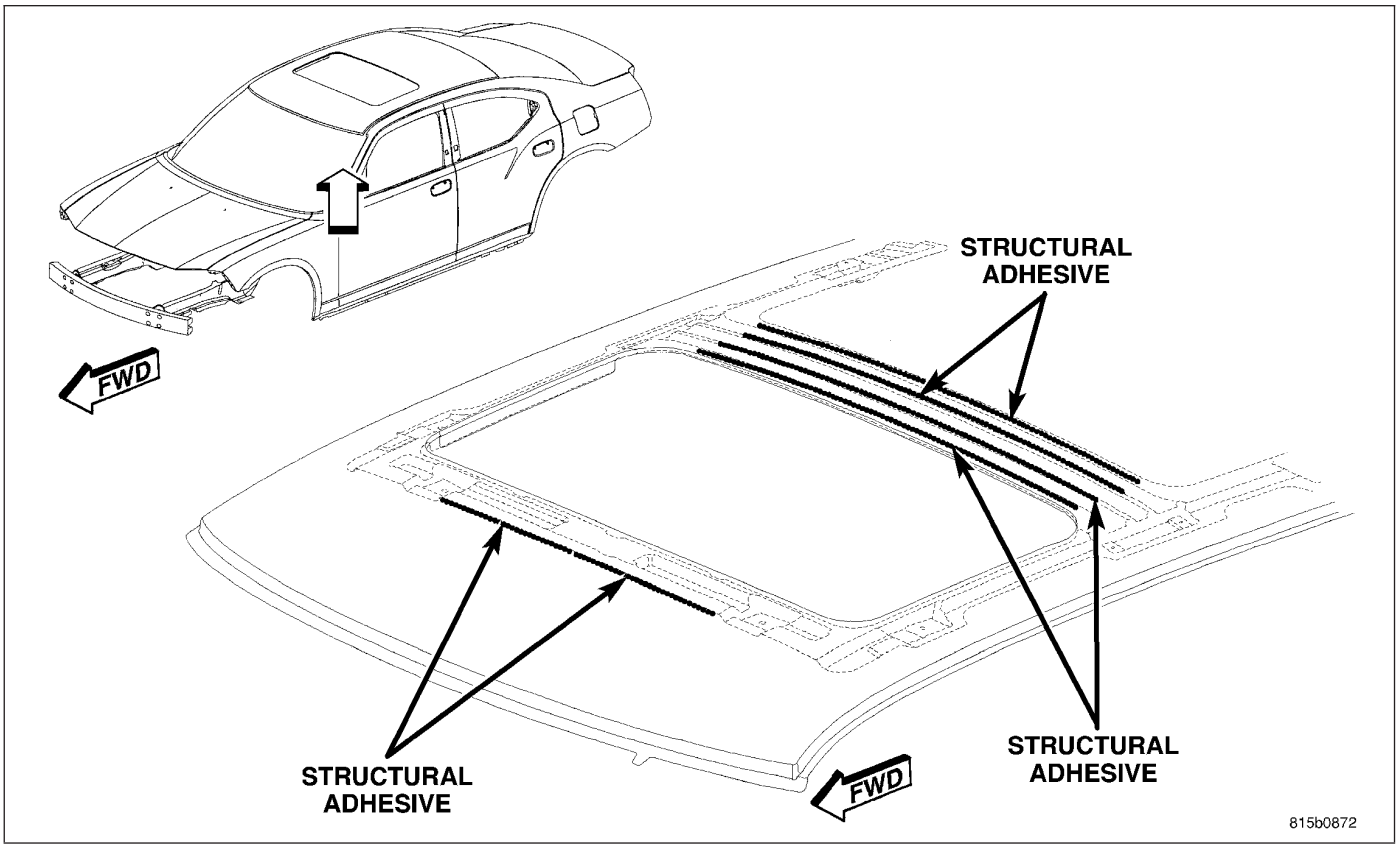

Fig. 61 ROOF WITH SUNROOF

WELD LOCATIONS

SPECIFICATIONS

WELD LOCATIONS

Index

DESCRIPTION	FIGURE
Sedan Only	
UNDERBODY (1 OF 4)	62
UNDERBODY (2 OF 4)	63
UNDERBODY (3 OF 4)	64
UNDERBODY (4 OF 4)	65
UNDERBODY COMPLETE (1 OF 2)	66
UNDERBODY COMPLETE (2 OF 2)	67
INNER BODY SIDE APERTURE (1 OF 7)	68
INNER BODY SIDE APERTURE (2 OF 7)	69
INNER BODY SIDE APERTURE (3 OF 7)	70
INNER BODY SIDE APERTURE (4 OF 7)	71
INNER BODY SIDE APERTURE (5 OF 7)	72
INNER BODY SIDE APERTURE (6 OF 7)	73
INNER BODY SIDE APERTURE (7 OF 7)	74
OUTER BODY SIDE APERTURE (1 OF 5)	75
OUTER BODY SIDE APERTURE (2 OF 5)	76

DESCRIPTION	FIGURE
OUTER BODY SIDE APERTURE (3 OF 5)	77
OUTER BODY SIDE APERTURE (4 OF 5)	78
OUTER BODY SIDE APERTURE (5 OF 5)	79
FRAMED BODY IN WHITE (1 OF 12)	80
FRAMED BODY IN WHITE (2 OF 12)	81
FRAMED BODY IN WHITE (3 OF 12)	82
FRAMED BODY IN WHITE (4 OF 12)	83
FRAMED BODY IN WHITE (5 OF 12)	84
FRAMED BODY IN WHITE (6 OF 12)	85
FRAMED BODY IN WHITE (7 OF 12)	86
FRAMED BODY IN WHITE (8 OF 12)	87
FRAMED BODY IN WHITE (9 OF 12)	88
FRAMED BODY IN WHITE (10 OF 12)	89
FRAMED BODY IN WHITE (11 OF 12)	90
FRAMED BODY IN WHITE (12 OF 12)	91
FRAMED FULL BODY IN WHITE (1 OF 9)	92
FRAMED FULL BODY IN WHITE (2 OF 9)	93
FRAMED FULL BODY IN WHITE (3 OF 9)	94
FRAMED FULL BODY IN WHITE (4 OF 9)	95
FRAMED FULL BODY IN WHITE (5 OF 9)	96
FRAMED FULL BODY IN WHITE (6 OF 9)	97
FRAMED FULL BODY IN WHITE (7 OF 9)	98
FRAMED FULL BODY IN WHITE (8 OF 9	99
FRAMED FULL BODY IN WHITE (9 OF 9)	100
ROOF (1 OF 3)	101
ROOF (2 OF 3)	102
ROOF (3 OF 3)	103
Wagon Only	
OUTER BODY SIDE APERTURE (1 OF 5)	104
OUTER BODY SIDE APERTURE (2 OF 5)	105
OUTER BODY SIDE APERTURE (3 OF 5)	106
OUTER BODY SIDE APERTURE (4 OF 5)	107
OUTER BODY SIDE APERTURE (5 OF 5)	108
INNER BODY SIDE APERTURE	109
FRAMED FULL BODY IN WHITE (1 OF 8)	110
FRAMED FULL BODY IN WHITE (2 OF 8)	111
FRAMED FULL BODY IN WHITE (3 OF 8)	112
FRAMED FULL BODY IN WHITE (4 OF 8)	113
FRAMED FULL BODY IN WHITE (5 OF 8)	114
FRAMED FULL BODY IN WHITE (6 OF 8)	115
FRAMED FULL BODY IN WHITE (7 OF 8)	116
FRAMED FULL BODY IN WHITE (8 OF 8)	117
ROOF (1 OF 4)	118
ROOF (2 OF 4)	119

DESCRIPTION	FIGURE
ROOF (3 OF 4)	120
ROOF (4 OF 4)	121
FRAMED BODY IN WHITE (1 OF 12	122
FRAMED BODY IN WHITE (2 OF 12)	123
FRAMED BODY IN WHITE (3 OF 12)	124
FRAMED BODY IN WHITE (4 OF 12)	125
FRAMED BODY IN WHITE (5 OF 12)	126
FRAMED BODY IN WHITE (6 OF 12)	127
FRAMED BODY IN WHITE (7 OF 12)	128
FRAMED BODY IN WHITE (8 OF 12)	129
FRAMED BODY IN WHITE (9 OF 12)	130
FRAMED BODY IN WHITE (10 OF 12)	131
FRAMED BODY IN WHITE (11 OF 12)	132
FRAMED BODY IN WHITE (12 OF 12)	133
Sedan & Wagon	
DASH/COWL (1 OF 4)	134
DASH/COWL (2 OF 4)	135
DASH/COWL (3 OF 4)	136
DASH/COWL (4 OF 4)	137
FRONT LADDER (1 OF 7)	138
FRONT LADDER (2 OF 7)	139
FRONT LADDER (3 OF 7)	140
FRONT LADDER (4 OF 7)	141
FRONT LADDER (5 OF 7)	142
FRONT LADDER (6 OF 7)	143
FRONT LADDER (7 OF 7)	144
FRONT LADDER, RAILS AND WHEELHOUSE (1 OF 3)	145
FRONT LADDER, RAILS AND WHEELHOUSE (2 OF 3)	146
FRONT LADDER, RAILS AND WHEELHOUSE (3 OF 3)	147
ENGINE BOX (1 OF 6)	148
ENGINE BOX (2 OF 6)	149
ENGINE BOX (3 OF 6)	150
ENGINE BOX (4 OF 6)	151
ENGINE BOX (5 OF 6)	152
ENGINE BOX (6 OF 6)	153
FRONT FLOOR PAN (1 OF 12)	154
FRONT FLOOR PAN (2 OF 12)	155
FRONT FLOOR PAN (3 OF 12)	156
FRONT FLOOR PAN (4 OF 12)	157
FRONT FLOOR PAN (5 OF 12)	158
FRONT FLOOR PAN (6 OF 12)	159
FRONT FLOOR PAN (7 OF 12)	160
FRONT FLOOR PAN (8 OF 12)	161
FRONT FLOOR PAN (9 OF 12)	162

DESCRIPTION	FIGURE
FRONT FLOOR PAN (10 OF 12)	163
FRONT FLOOR PAN (11 OF 12)	164
FRONT FLOOR PAN (12 OF 12)	165
REAR LADDER (1 OF 5)	166
REAR LADDER (2 OF 5)	167
REAR LADDER (3 OF 5)	168
REAR LADDER (4 OF 5)	169
REAR LADDER (5 OF 5)	170
REAR FLOOR/LADDER (1 OF 6)	171
REAR FLOOR/LADDER (2 OF 6)	172
REAR FLOOR/LADDER (3 OF 6)	173
REAR FLOOR/LADDER (4 OF 6)	174
REAR FLOOR/LADDER (5 OF 6)	175
REAR FLOOR/LADDER (6 OF 6)	176
REAR FLOOR/LADDER COMPLETE (1 OF 8)	177
REAR FLOOR/LADDER COMPLETE (2 OF 8)	178
REAR FLOOR/LADDER COMPLETE (3 OF 8)	179
REAR FLOOR/LADDER COMPLETE (4 OF 8)	180
REAR FLOOR/LADDER COMPLETE (5 OF 8)	181
REAR FLOOR/LADDER COMPLETE (6 OF 8)	182
REAR FLOOR/LADDER COMPLETE (7 OF 8)	183
REAR FLOOR/LADDER COMPLETE (8 OF 8)	184
UNDERBODY FRAMING (1 OF 5)	185
UNDERBODY FRAMING (2 OF 5)	186
UNDERBODY FRAMING (3 OF 5)	187
UNDERBODY FRAMING (4 OF 5)	188
UNDERBODY FRAMING (5 OF 5)	189
Charger Only	
UNDERBODY (1 OF 4)	190
UNDERBODY (2 OF 4)	191
UNDERBODY (3 OF 4)	192
UNDERBODY (4 OF 4)	193
UNDERBODY COMPLETE (1 OF 4)	194
UNDERBODY COMPLETE (2 OF 4)	195
UNDERBODY COMPLETE (3 OF 4)	196
UNDERBODY COMPLETE (4 OF 4)	197
INNER BODY SIDE APERTURE (1 OF 6)	198
INNER BODY SIDE APERTURE (2 OF 6)	199
INNER BODY SIDE APERTURE (3 OF 6)	200
INNER BODY SIDE APERTURE (4 OF 6)	201
INNER BODY SIDE APERTURE (5 OF 6)	202
INNER BODY SIDE APERTURE (6 OF 6)	203
OUTER BODY SIDE APERTURE (1 OF 8)	204
OUTER BODY SIDE APERTURE (2 OF 8)	205

DESCRIPTION	FIGURE
OUTER BODY SIDE APERTURE (3 OF 8)	206
OUTER BODY SIDE APERTURE (4 OF 8)	207
OUTER BODY SIDE APERTURE (5 OF 8)	208
OUTER BODY SIDE APERTURE (6 OF 8)	209
OUTER BODY SIDE APERTURE (7 OF 8)	210
OUTER BODY SIDE APERTURE (8 OF 8)	211
FRAMED BODY IN WHITE (1 OF 15)	212
FRAMED BODY IN WHITE (2 OF 15)	213
FRAMED BODY IN WHITE (3 OF 15)	214
FRAMED BODY IN WHITE (4 OF 15)	215
FRAMED BODY IN WHITE (5 OF 15)	216
FRAMED BODY IN WHITE (6 OF 15)	217
FRAMED BODY IN WHITE (7 OF 15)	218
FRAMED BODY IN WHITE (8 OF 15)	219
FRAMED BODY IN WHITE (9 OF 15)	220
FRAMED BODY IN WHITE (10 OF 15)	221
FRAMED BODY IN WHITE (11 OF 15)	222
FRAMED BODY IN WHITE (12 OF 15)	223
FRAMED BODY IN WHITE (13 OF 15)	224
FRAMED BODY IN WHITE (14 OF 15)	225
FRAMED BODY IN WHITE (15 OF 15)	226
FULL FRAMED BODY IN WHITE (1 OF 11)	227
FULL FRAMED BODY IN WHITE (2 OF 11)	228
FULL FRAMED BODY IN WHITE (3 OF 11)	229
FULL FRAMED BODY IN WHITE (4 OF 11)	230
FULL FRAMED BODY IN WHITE (5 OF 11)	231
FULL FRAMED BODY IN WHITE (6 OF 11)	232
FULL FRAMED BODY IN WHITE (7 OF 11)	233
FULL FRAMED BODY IN WHITE (8 OF 11)	234
FULL FRAMED BODY IN WHITE (9 OF 11)	235
FULL FRAMED BODY IN WHITE (10 OF 11)	236
FULL FRAMED BODY IN WHITE (11 OF 11)	237
ROOF (1 OF 2)	238
ROOF (2 OF 2)	239

Sedan Only

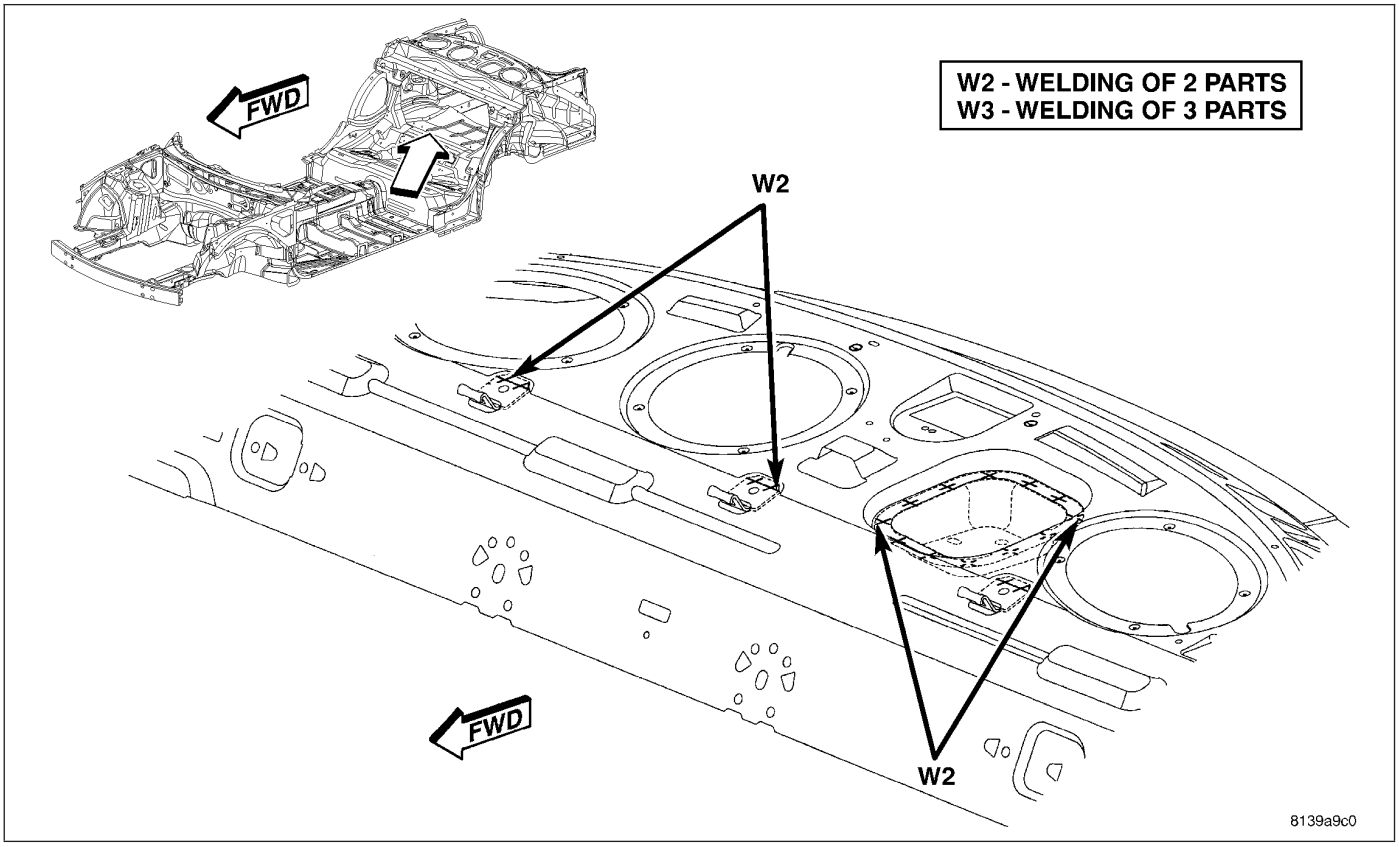

Fig. 62 UNDERBODY (1 OF 4)

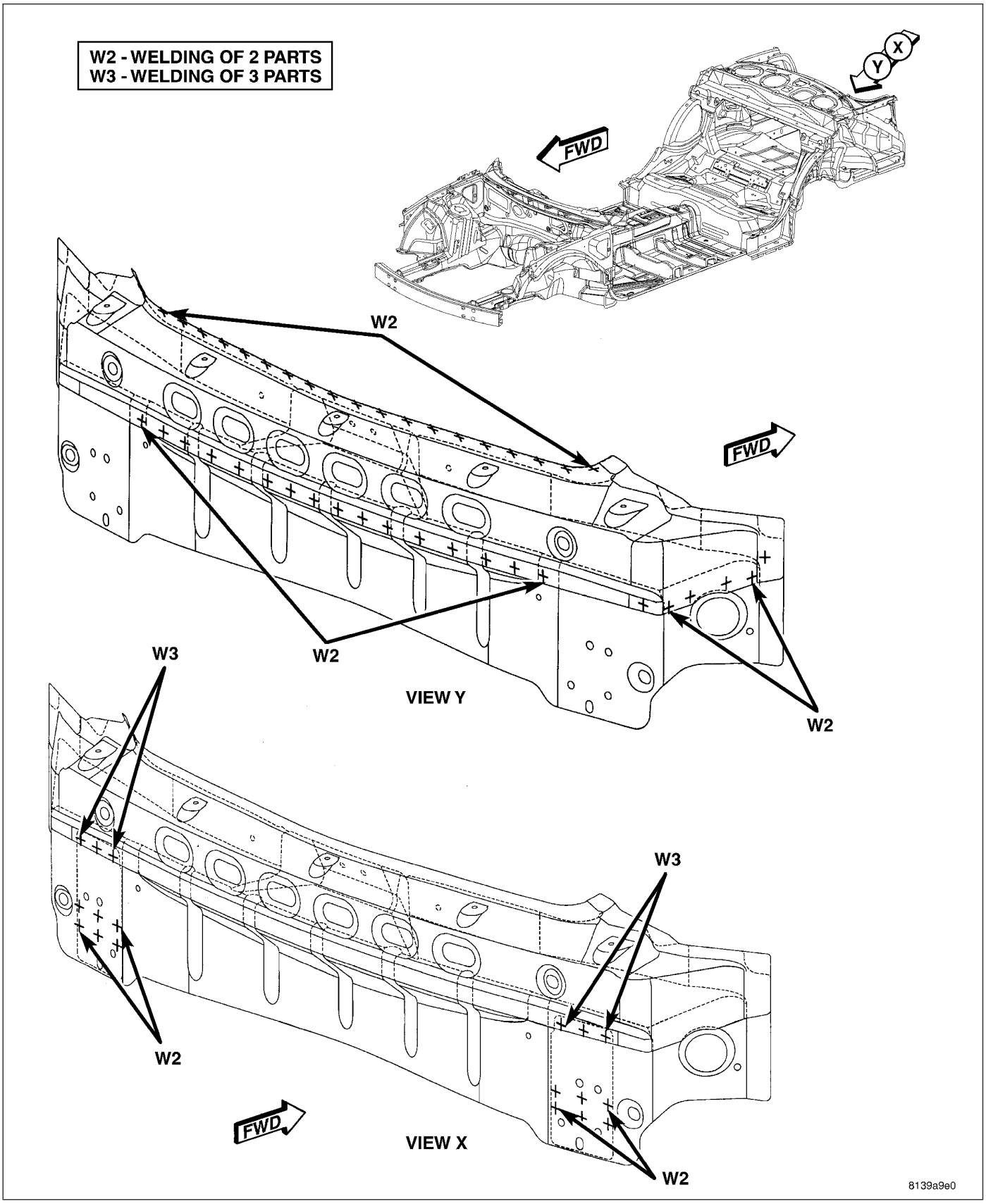

Fig. 63 UNDERBODY (2 OF 4)

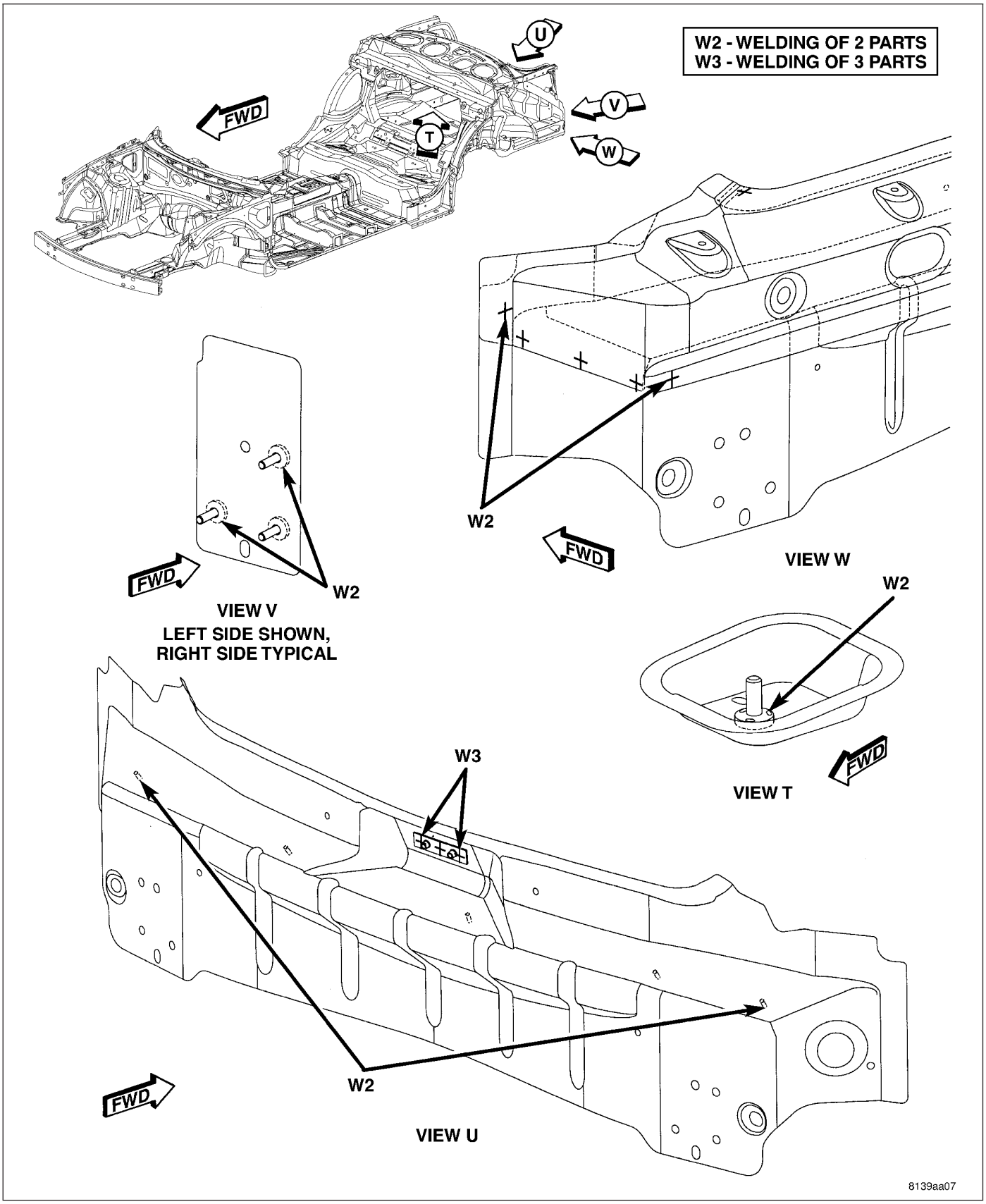

Fig. 64 UNDERBODY (3 OF 4)

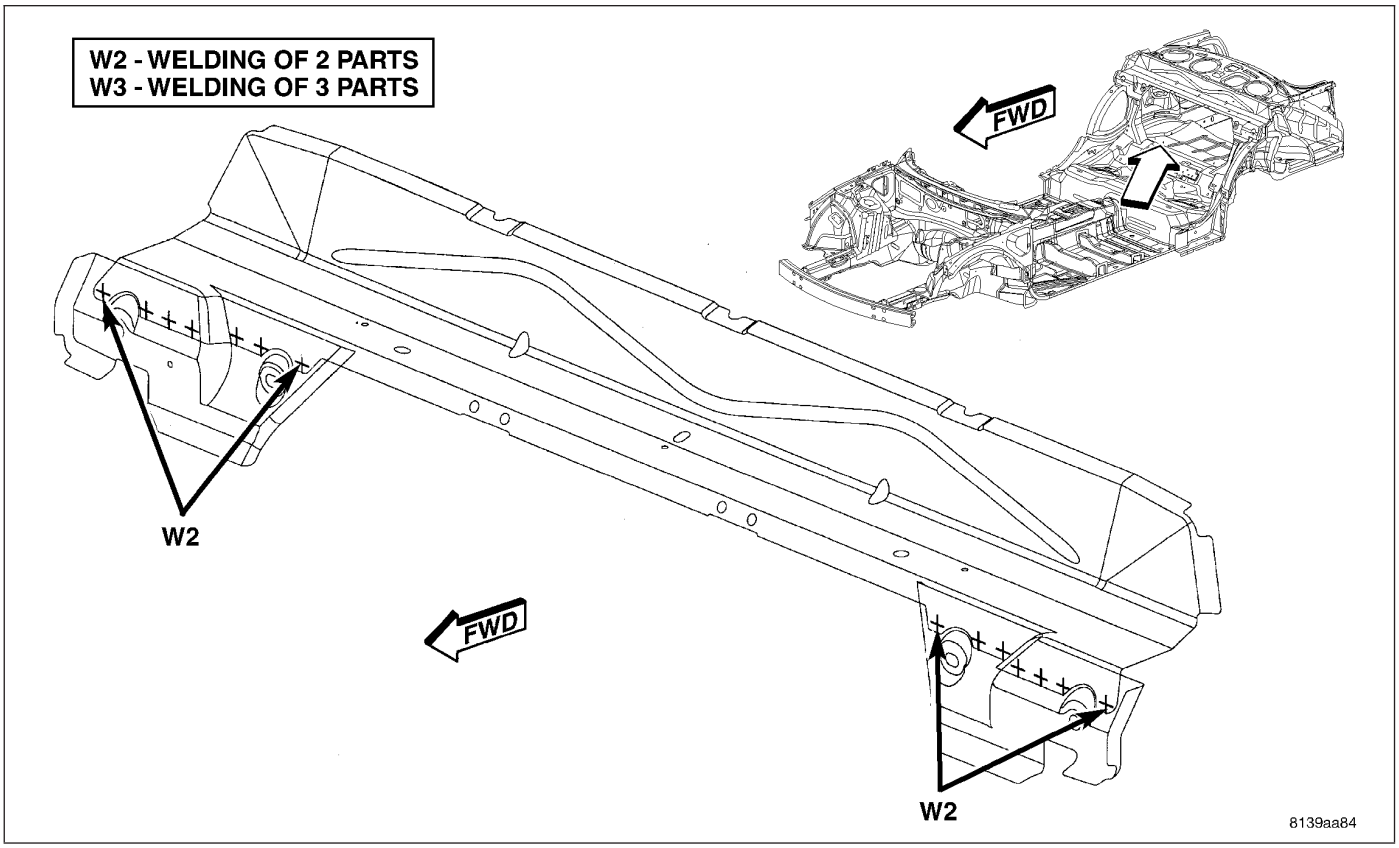

Fig. 65 UNDERBODY (4 OF 4)

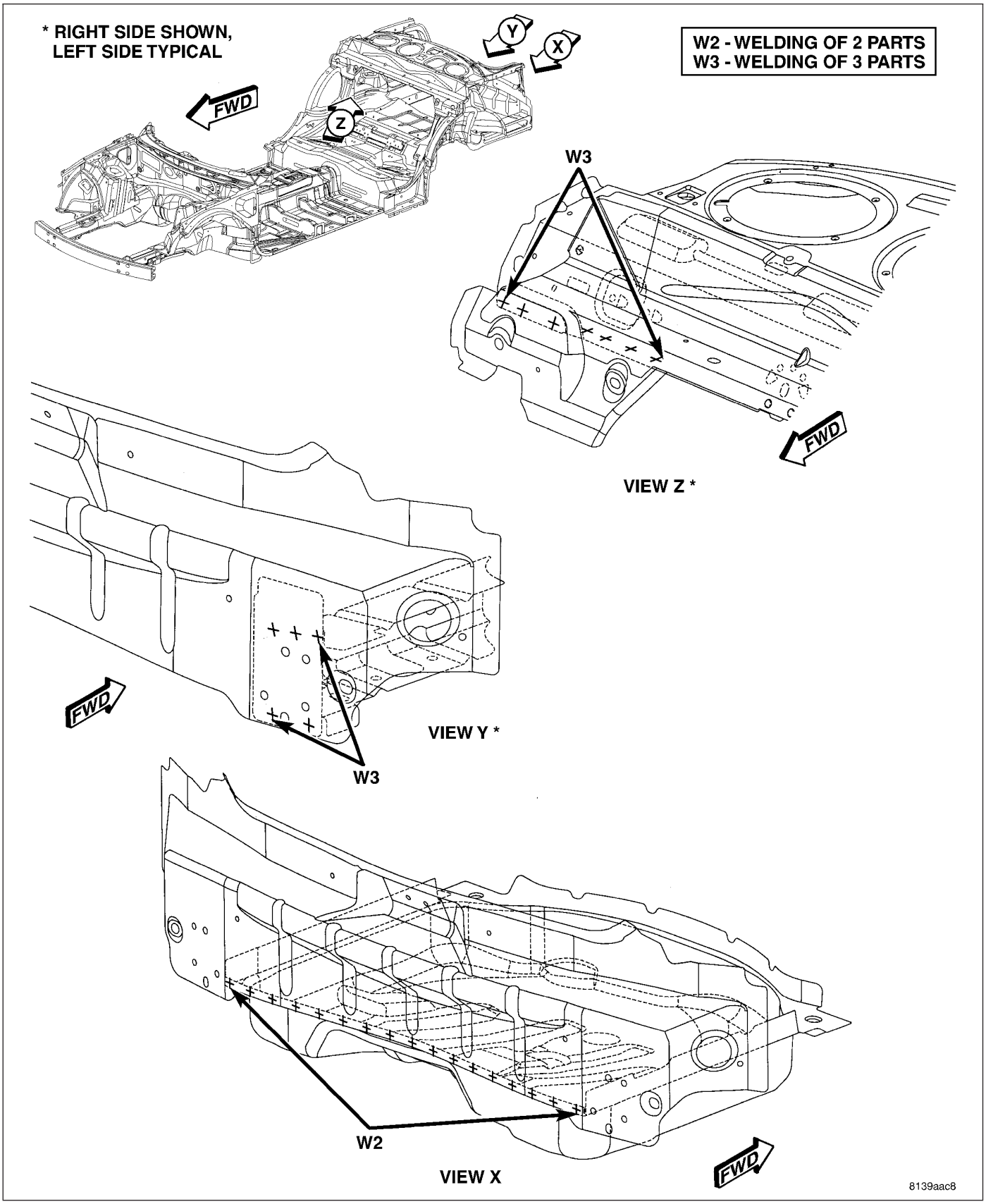

Fig. 66 UNDERBODY COMPLETE (1 OF 2)

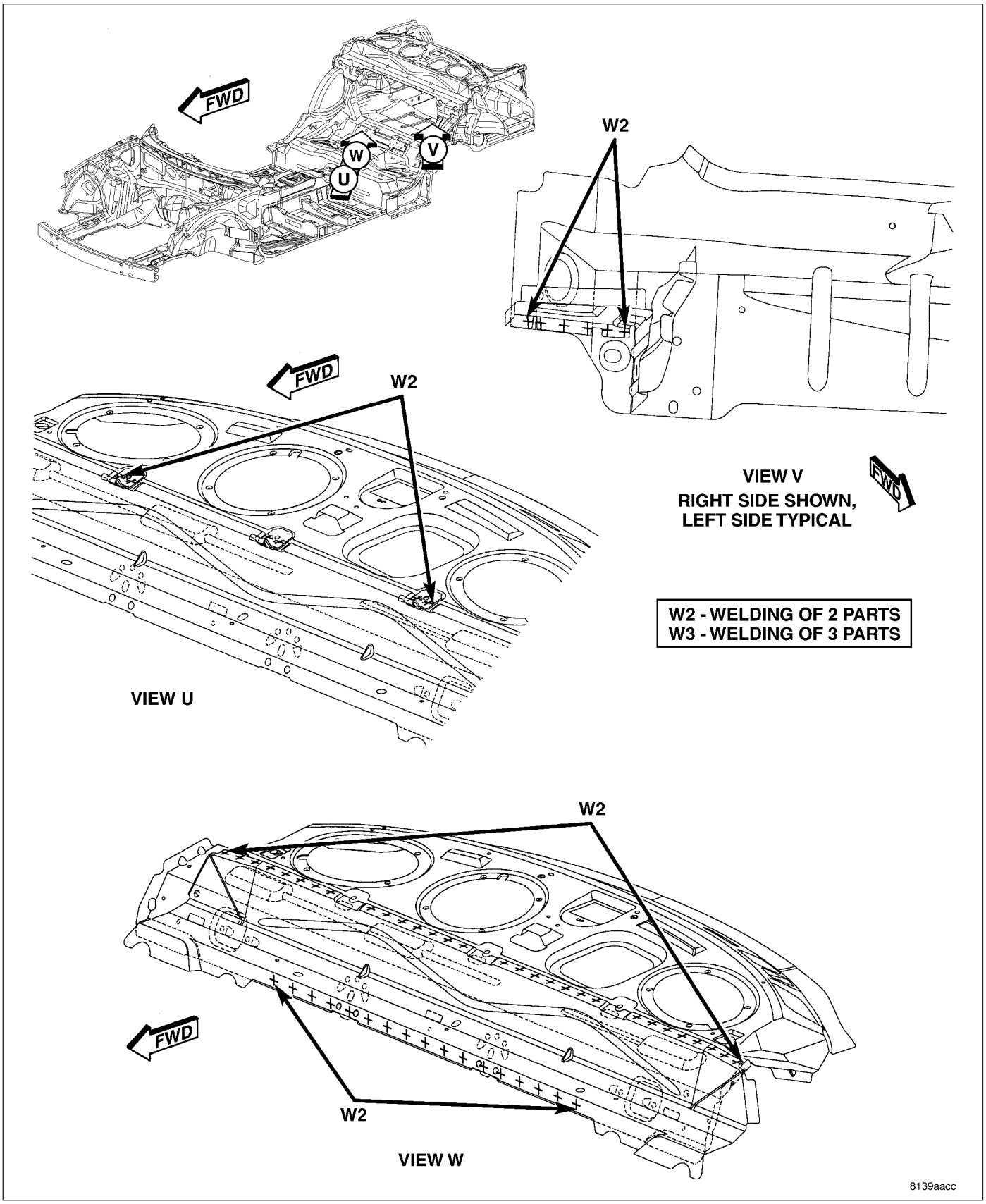

Fig. 67 UNDERBODY COMPLETE (2 OF 2)

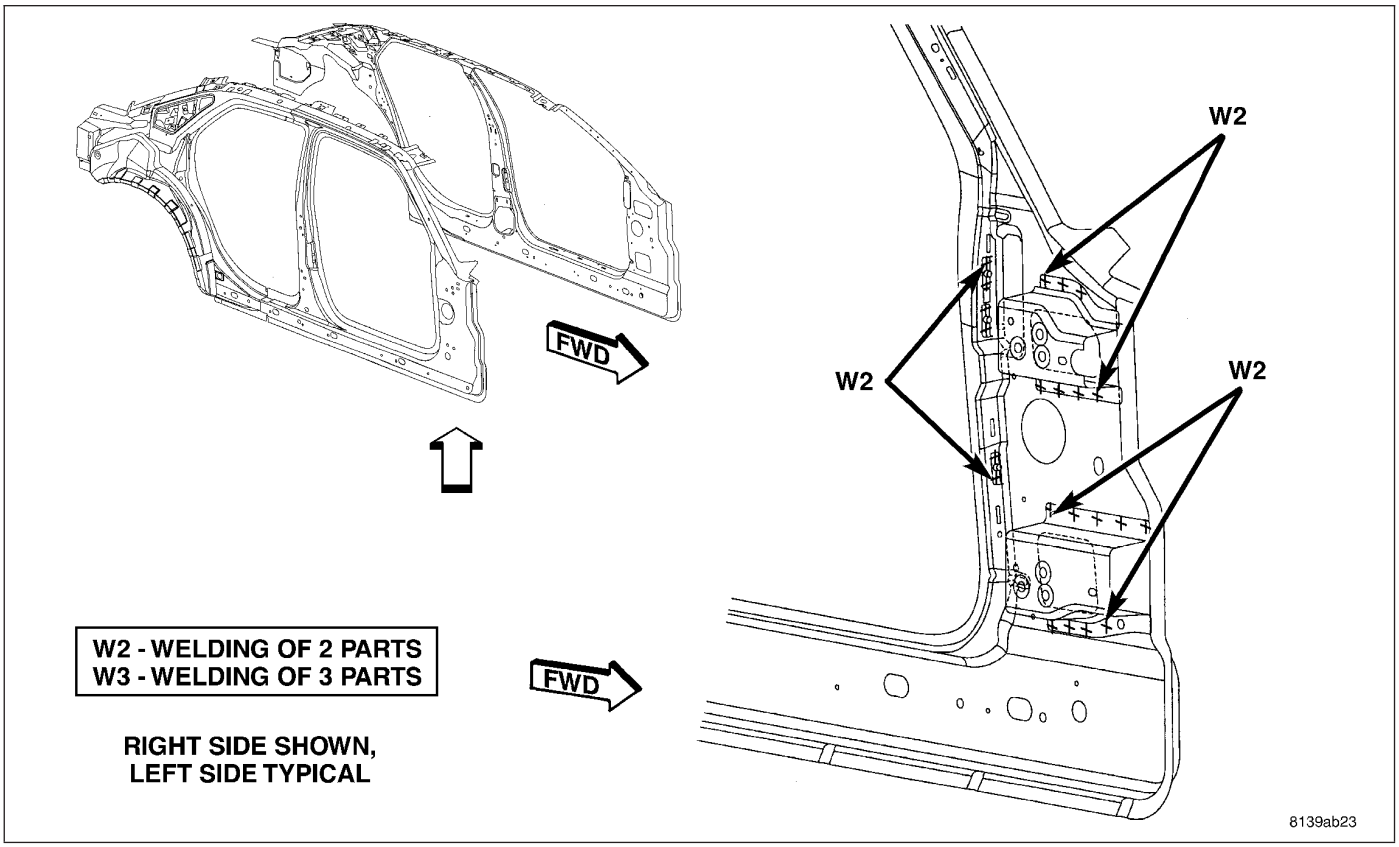

Fig. 68 INNER BODY SIDE APERTURE (1 OF 7)

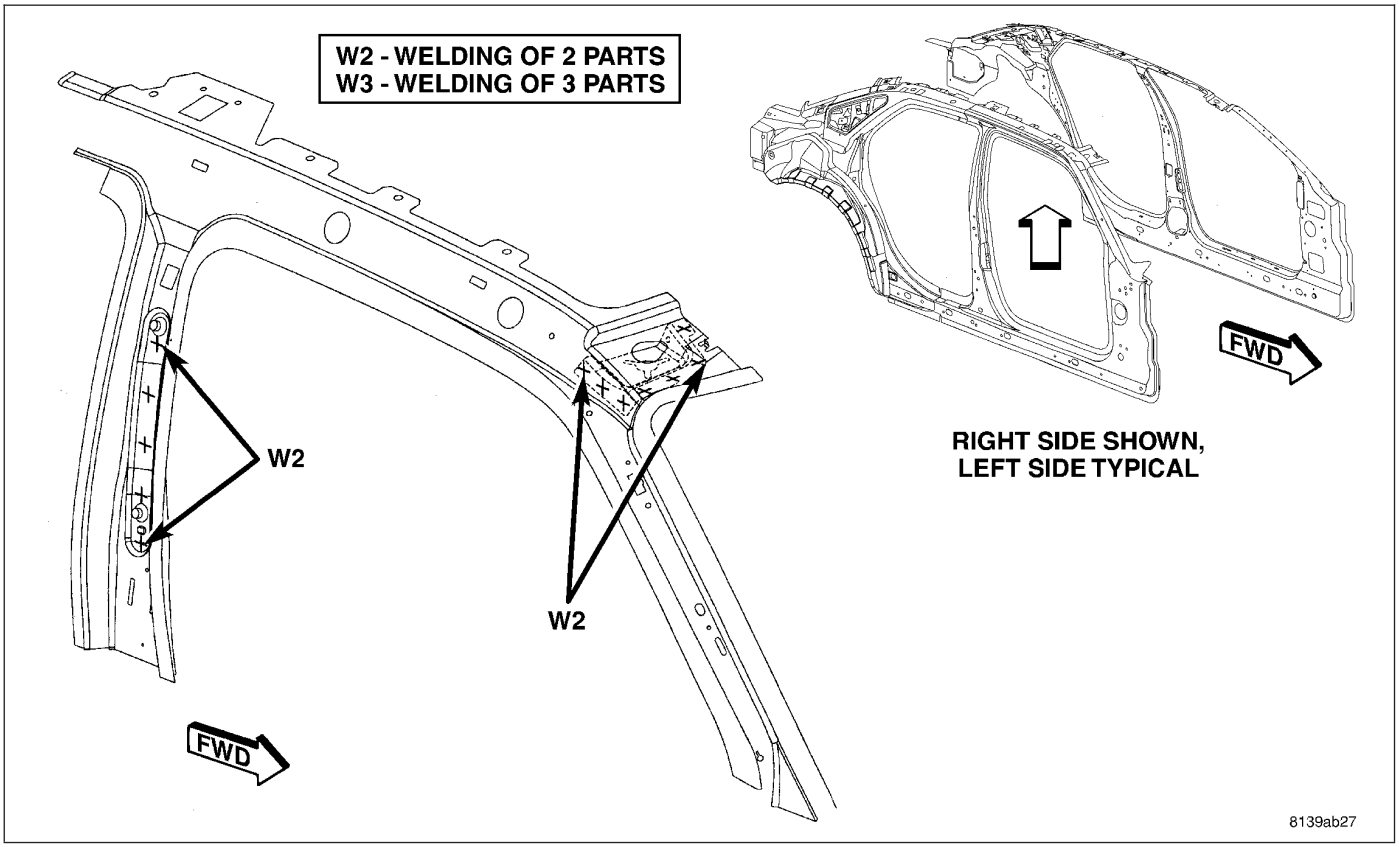

Fig. 69 INNER BODY SIDE APERTURE (2 OF 7)

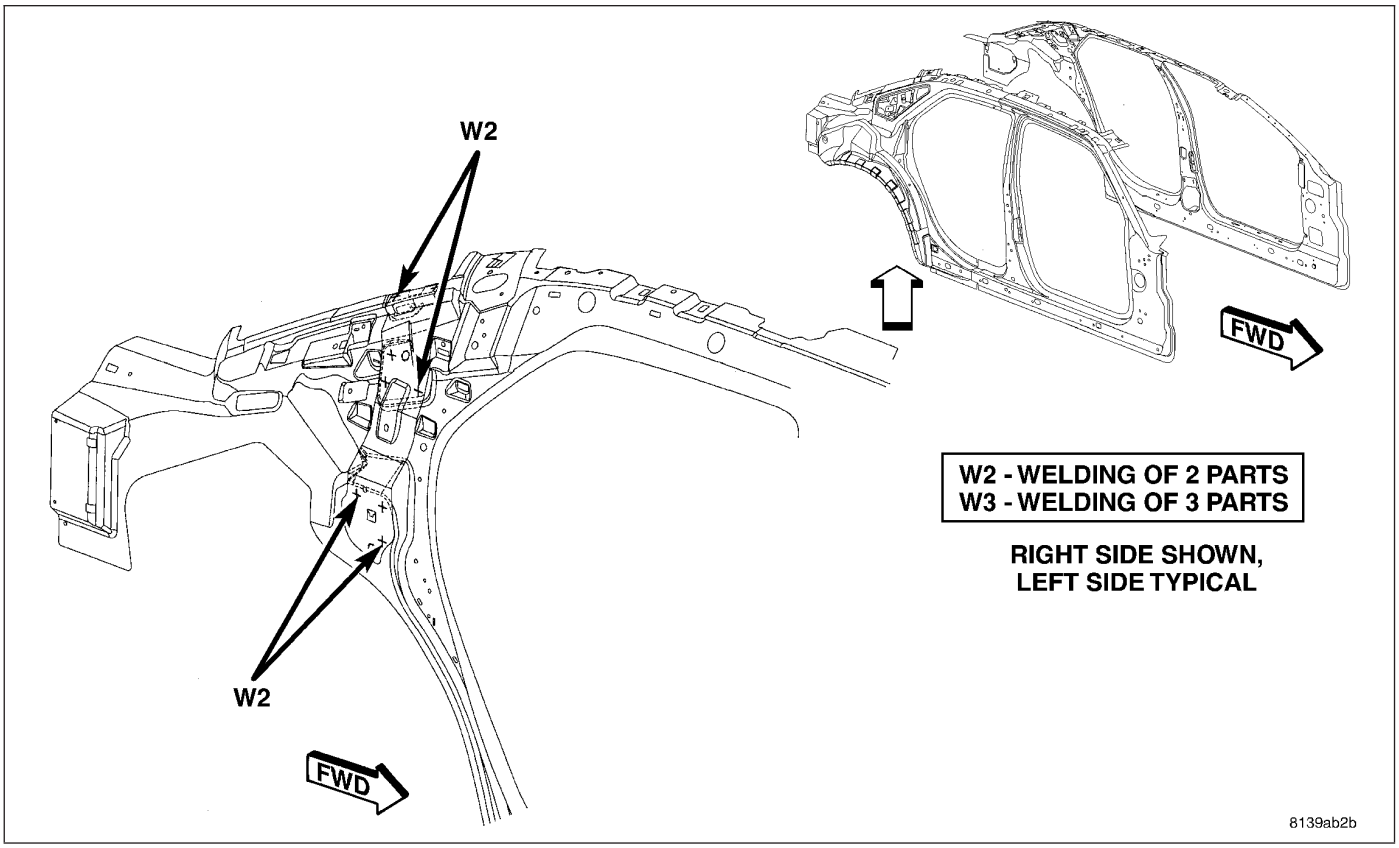

Fig. 70 INNER BODY SIDE APERTURE (3 OF 7)

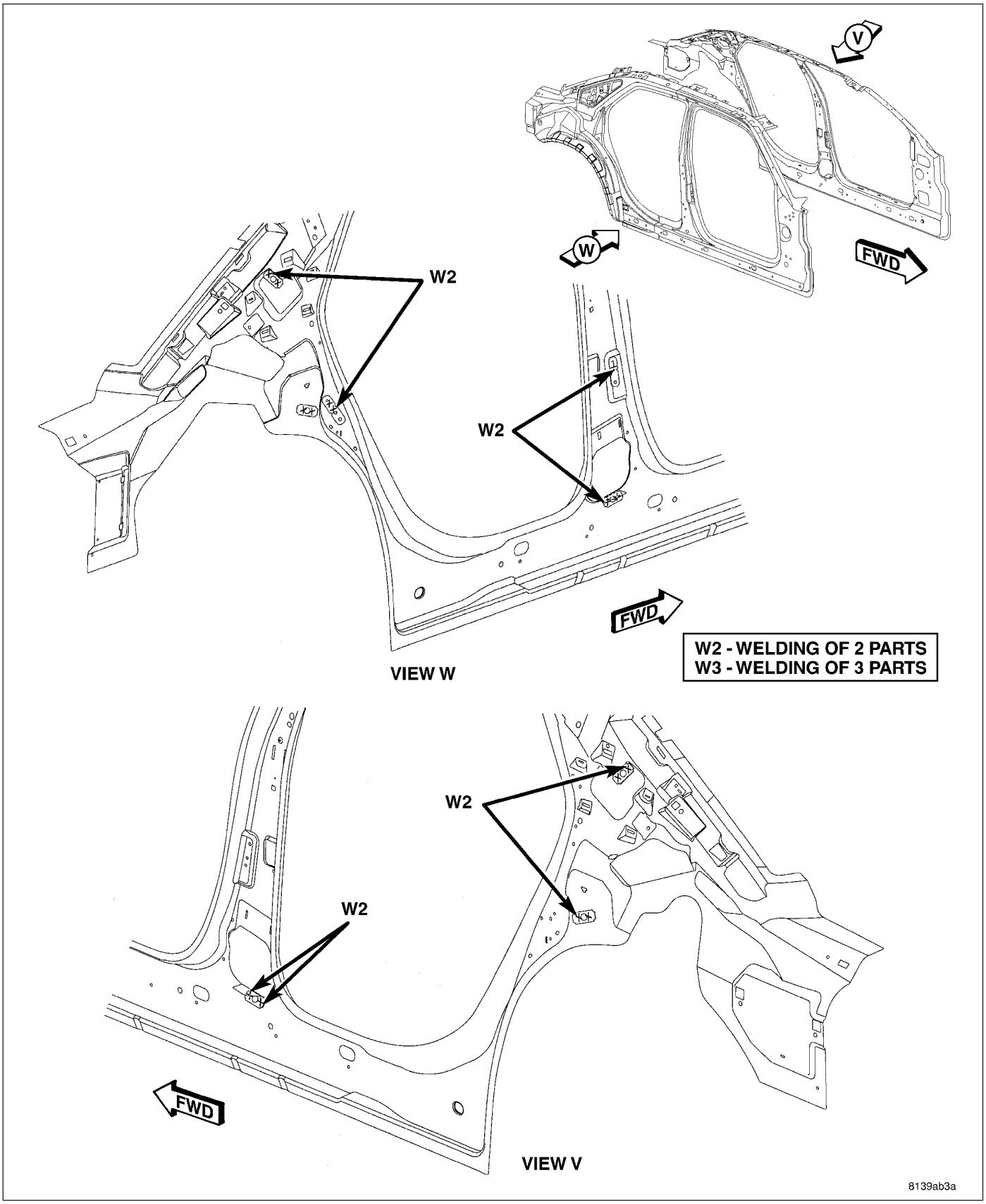

Fig. 71 INNER BODY SIDE APERTURE (4 OF 7)

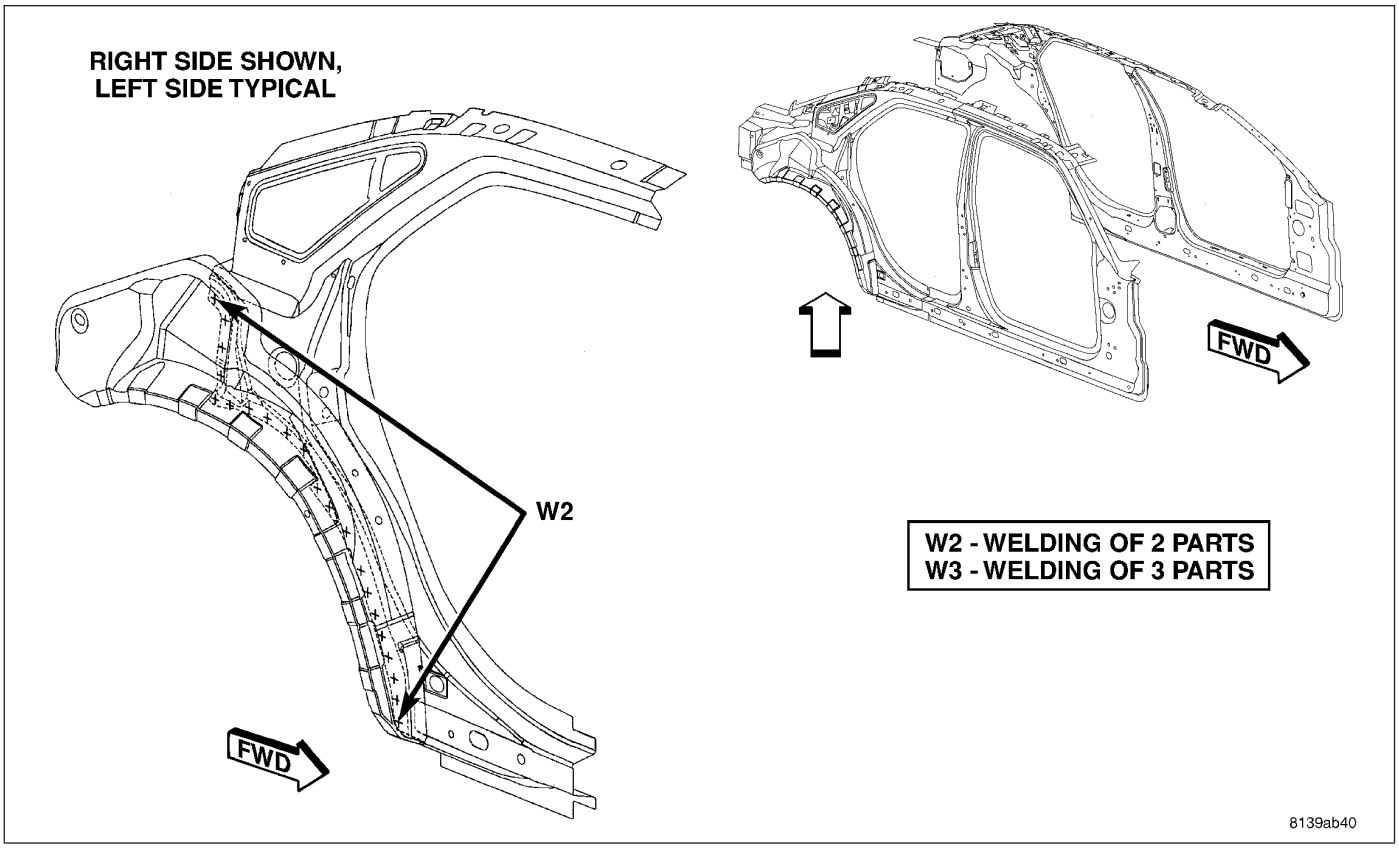

Fig. 72 INNER BODY SIDE APERTURE (5 OF 7)

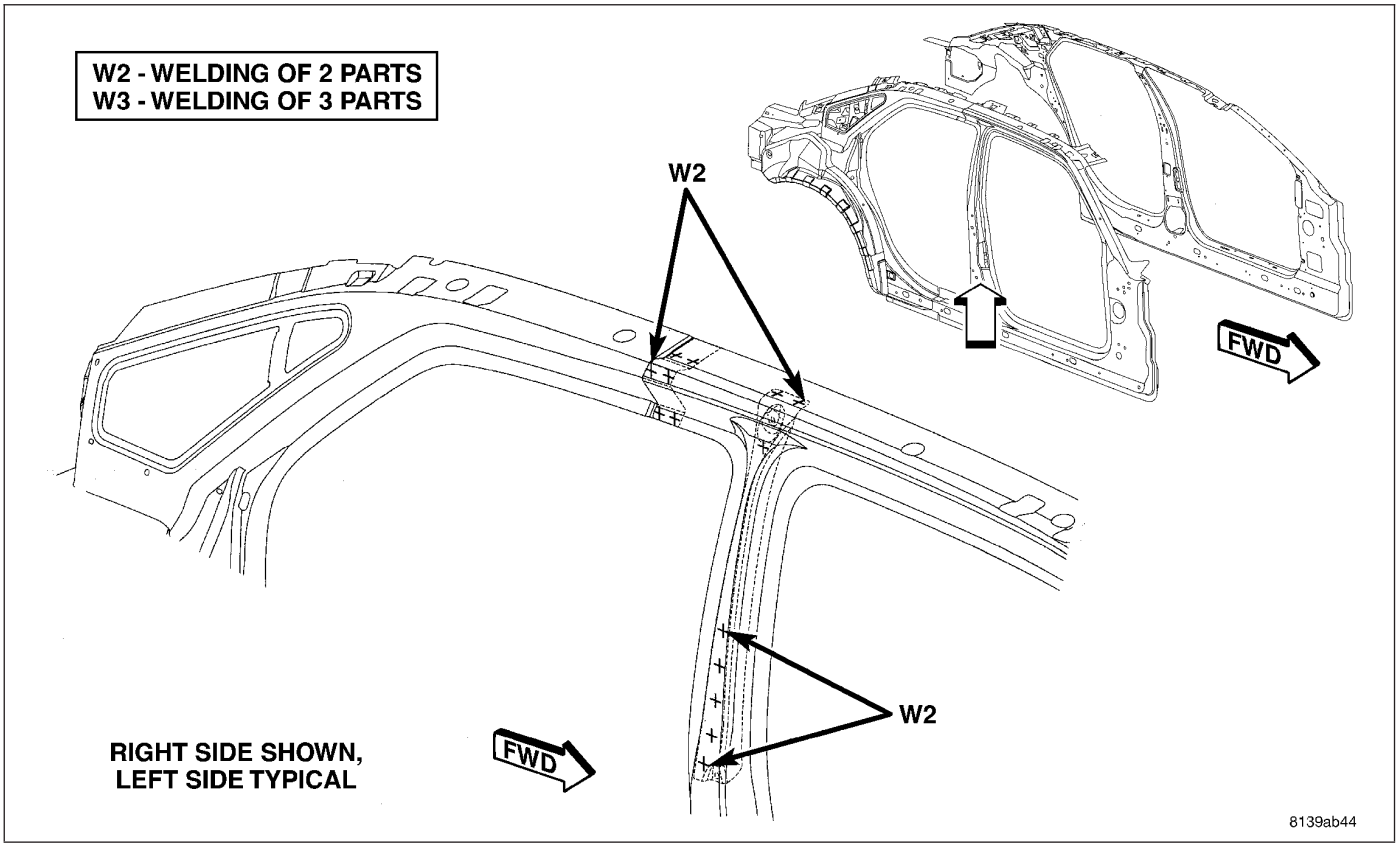

Fig. 73 INNER BODY SIDE APERTURE (6 OF 7)

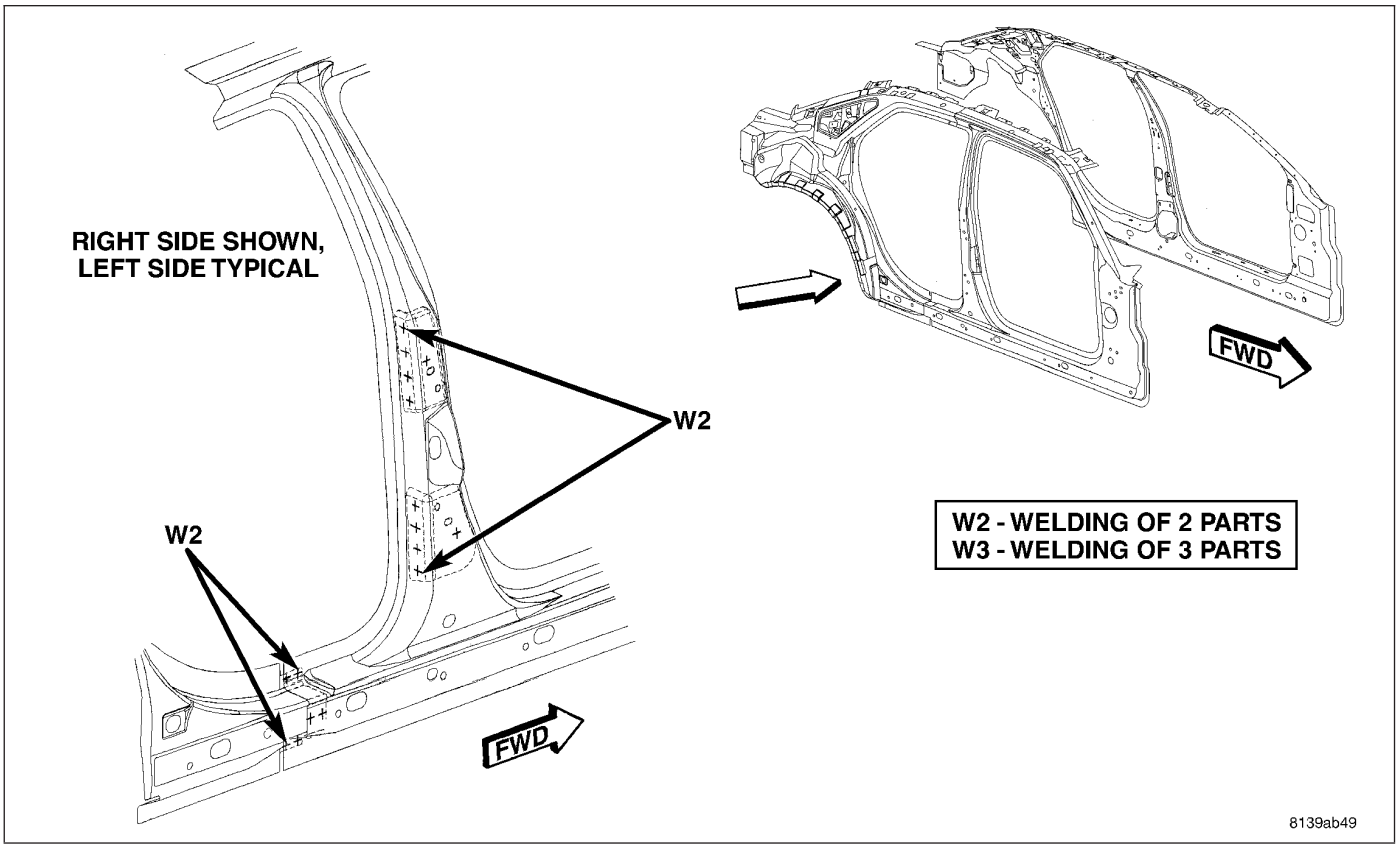

Fig. 74 001 INNER BODY SIDE APERTURE (7 OF 7)

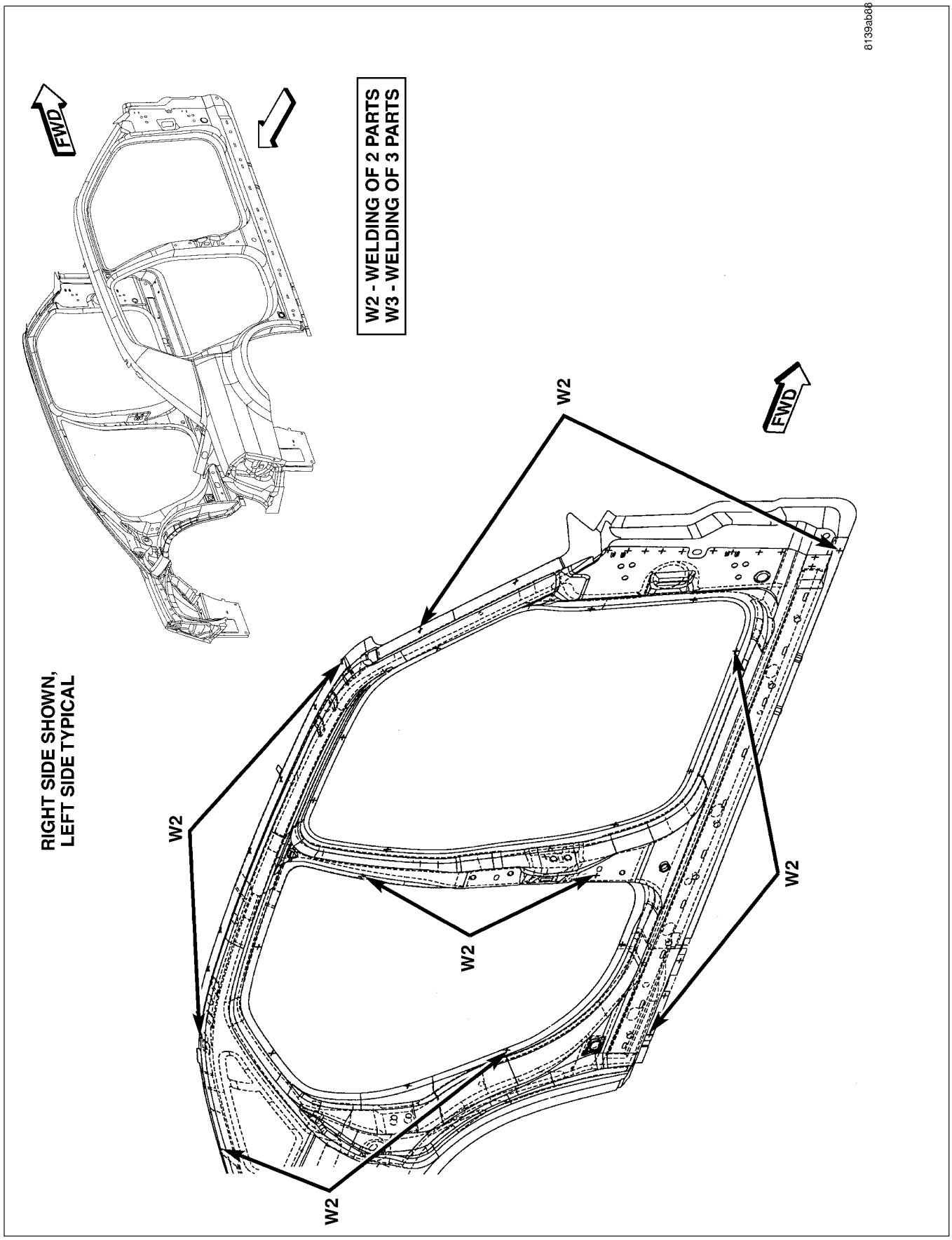

Fig. 75 OUTER BODY SIDE APERTURE (1 OF 5)

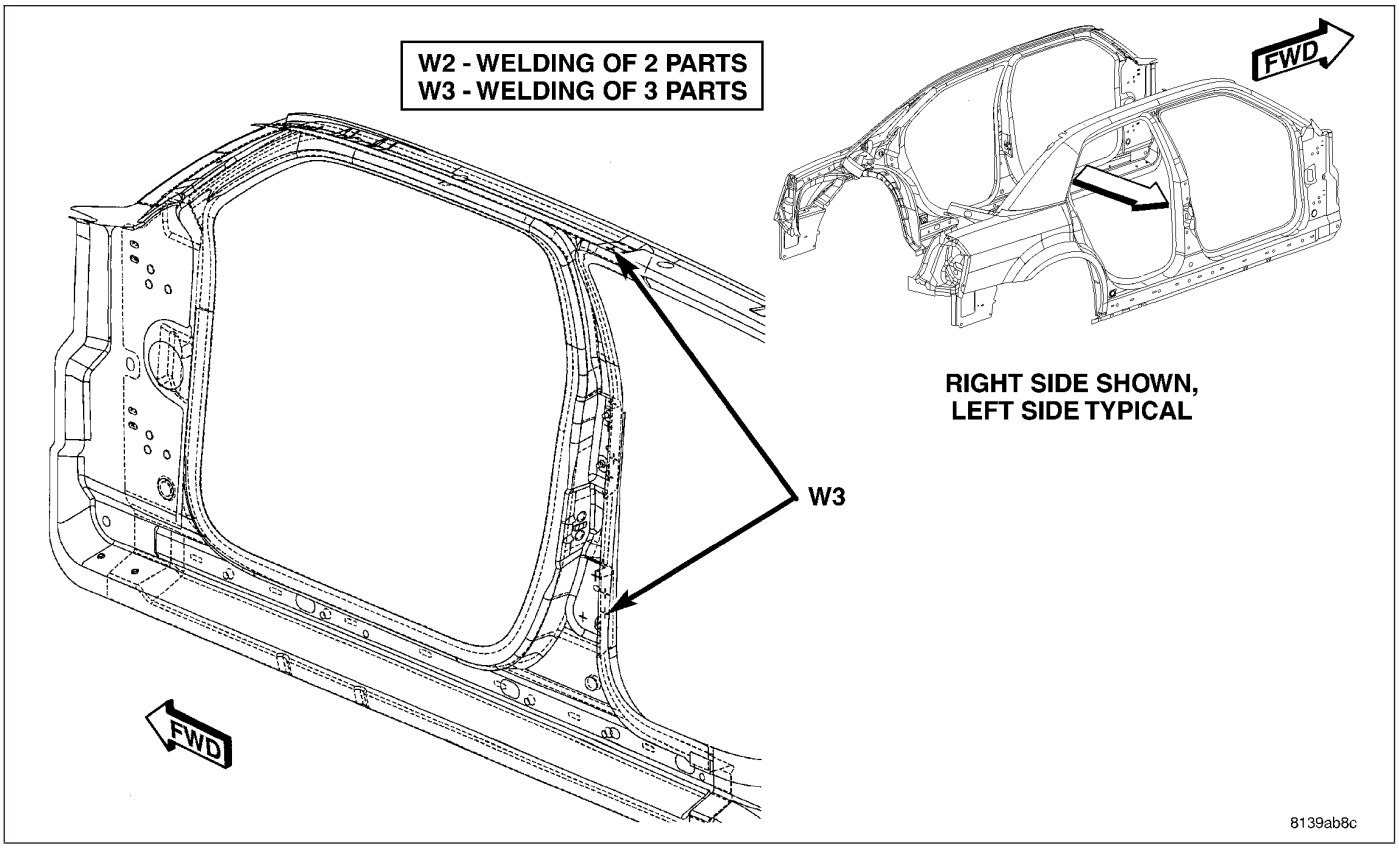

Fig. 76 OUTER BODY SIDE APERTURE (2 OF 5)

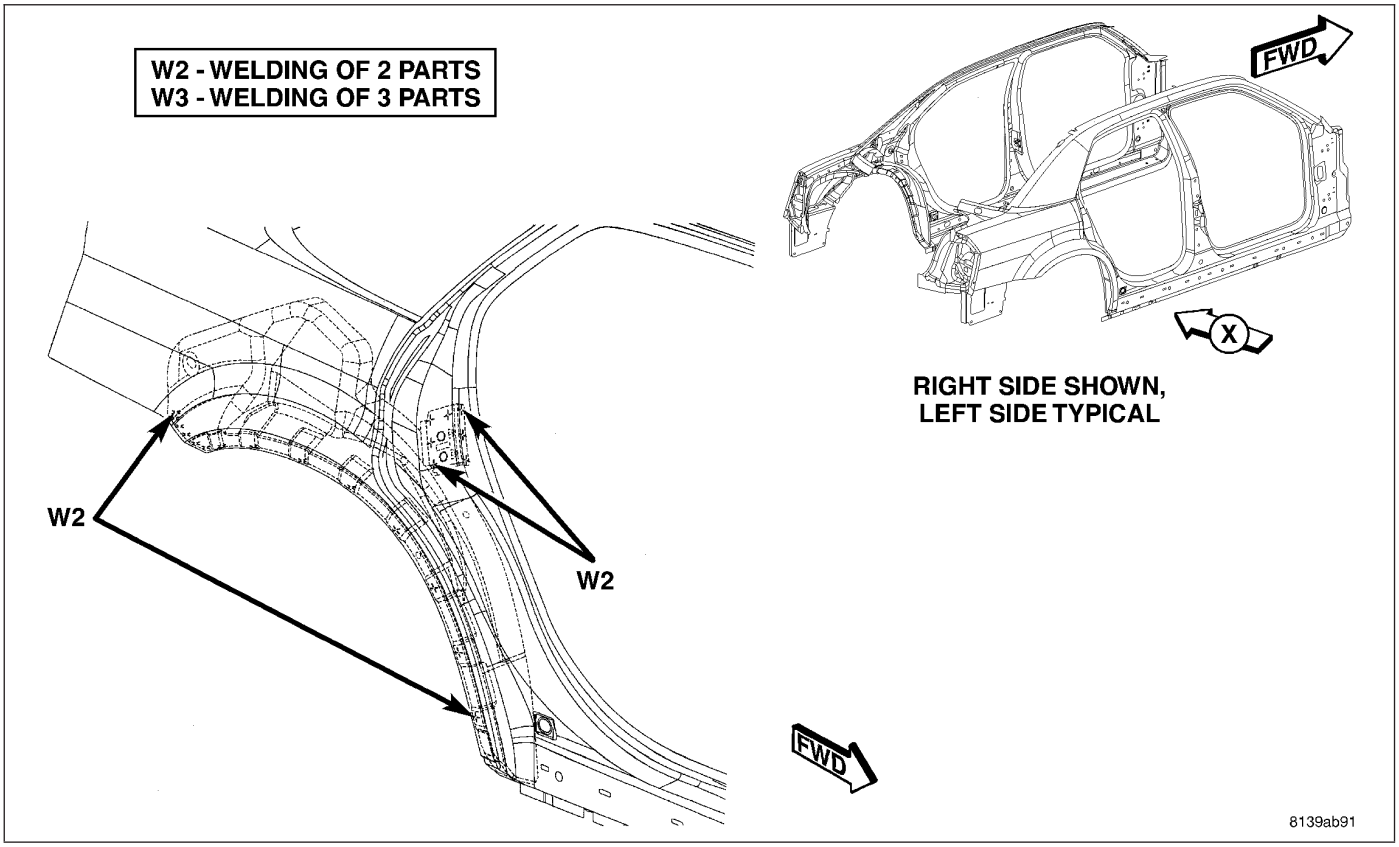

Fig. 77 OUTER BODY SIDE APERTURE (3 OF 5)

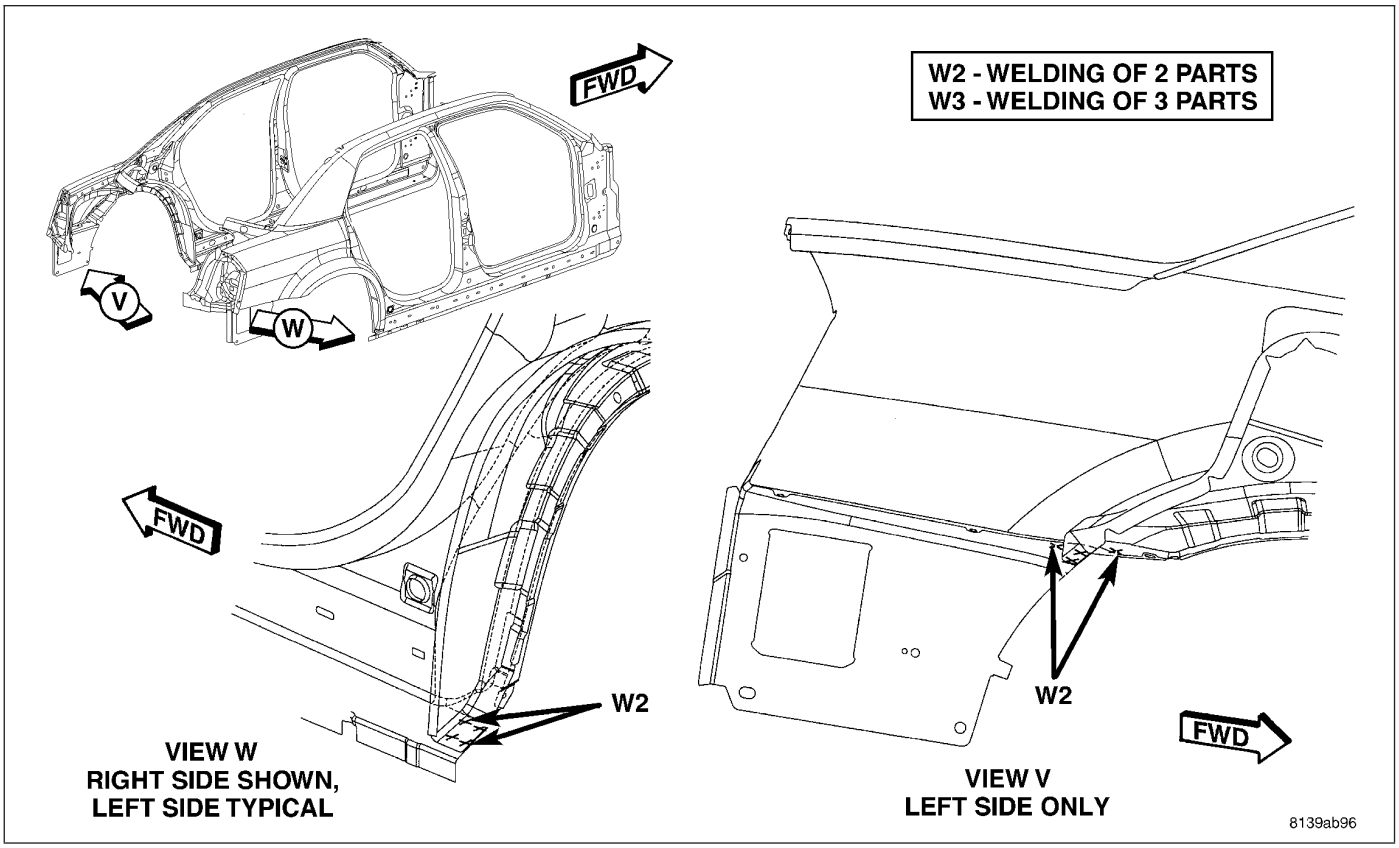

Fig. 78 OUTER BODY SIDE APERTURE (4 OF 5)

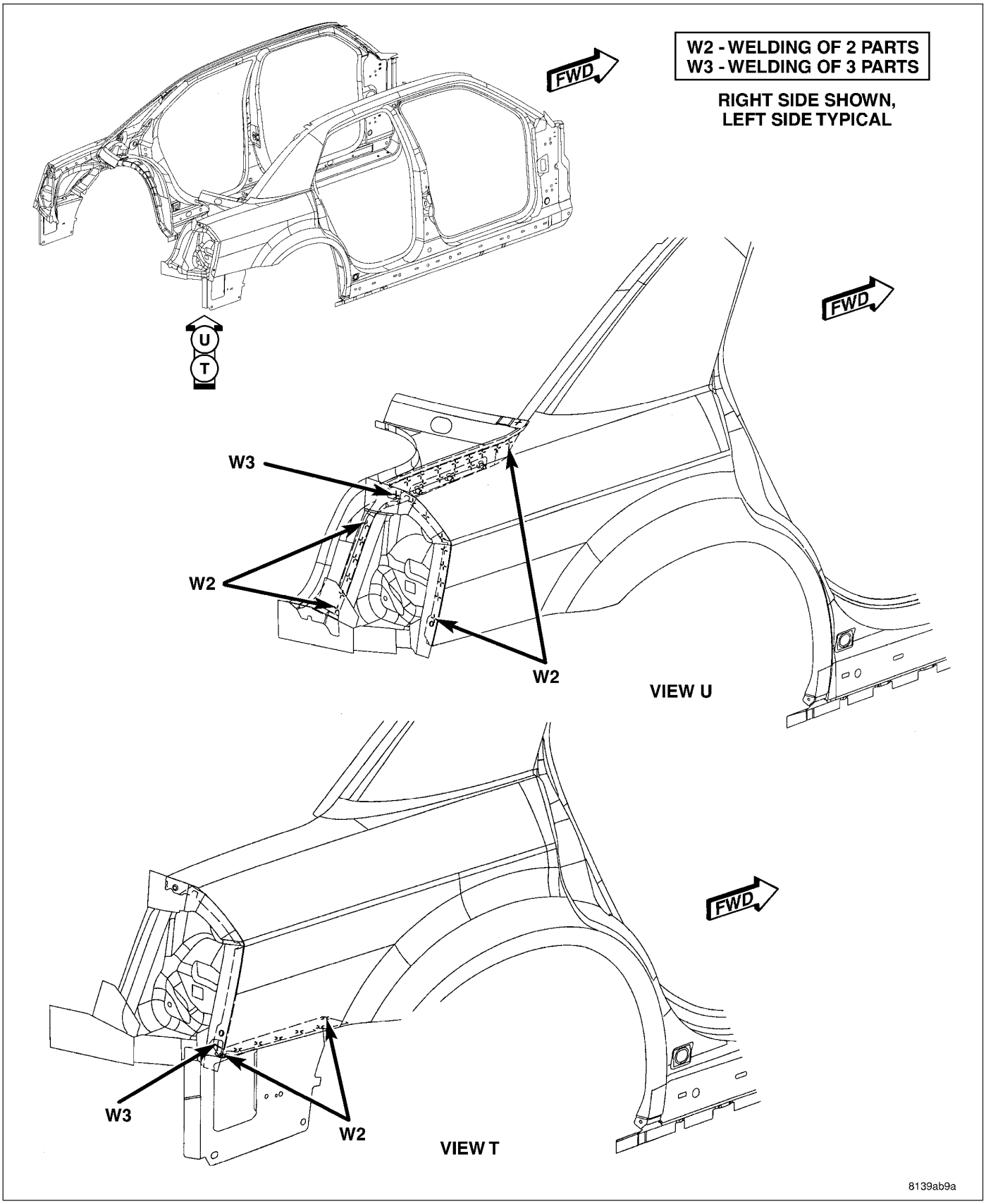

Fig. 79 OUTER BODY SIDE APERTURE (5 OF 5)

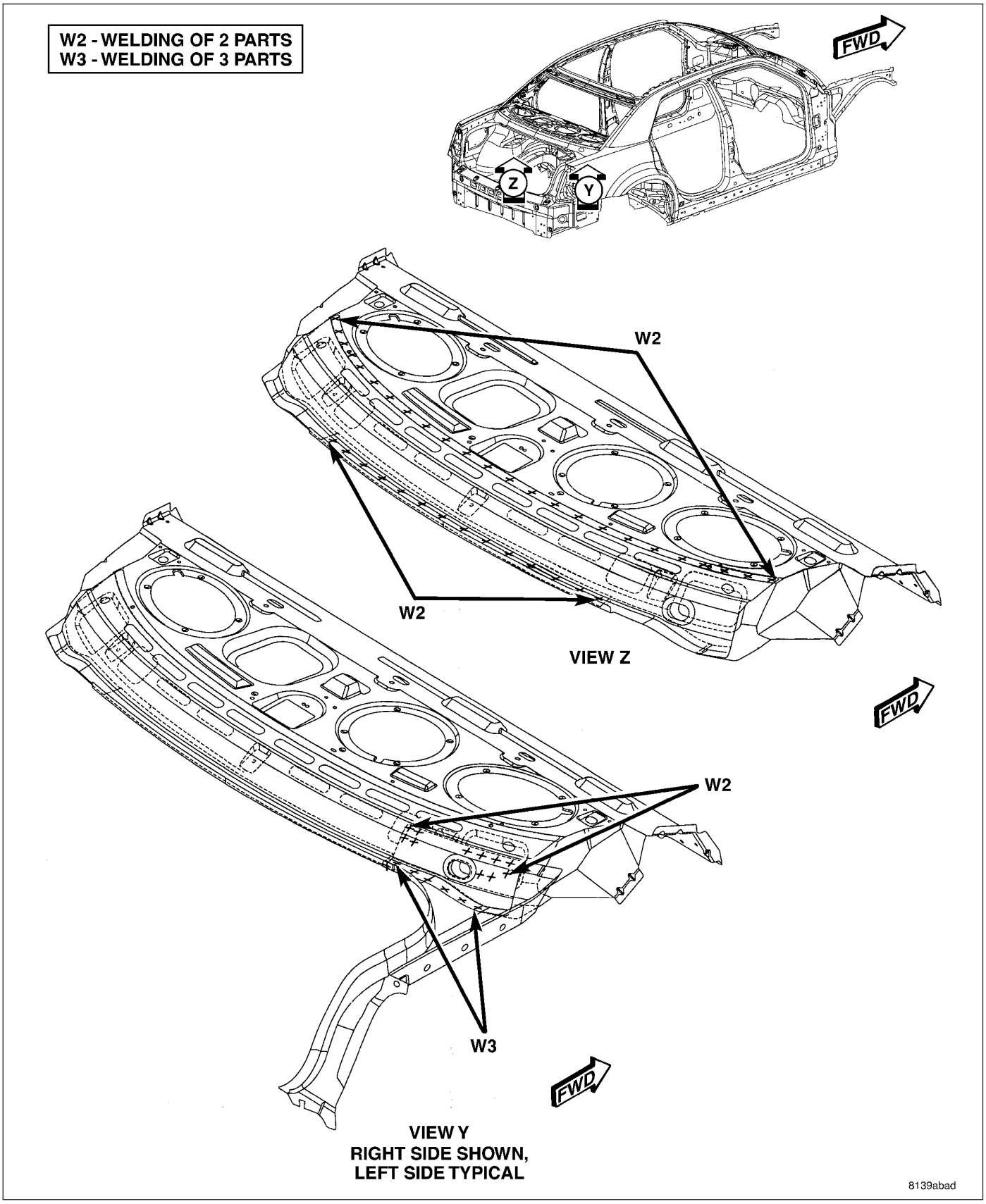

Fig. 80 FRAMED BODY IN WHITE (1 OF 12)

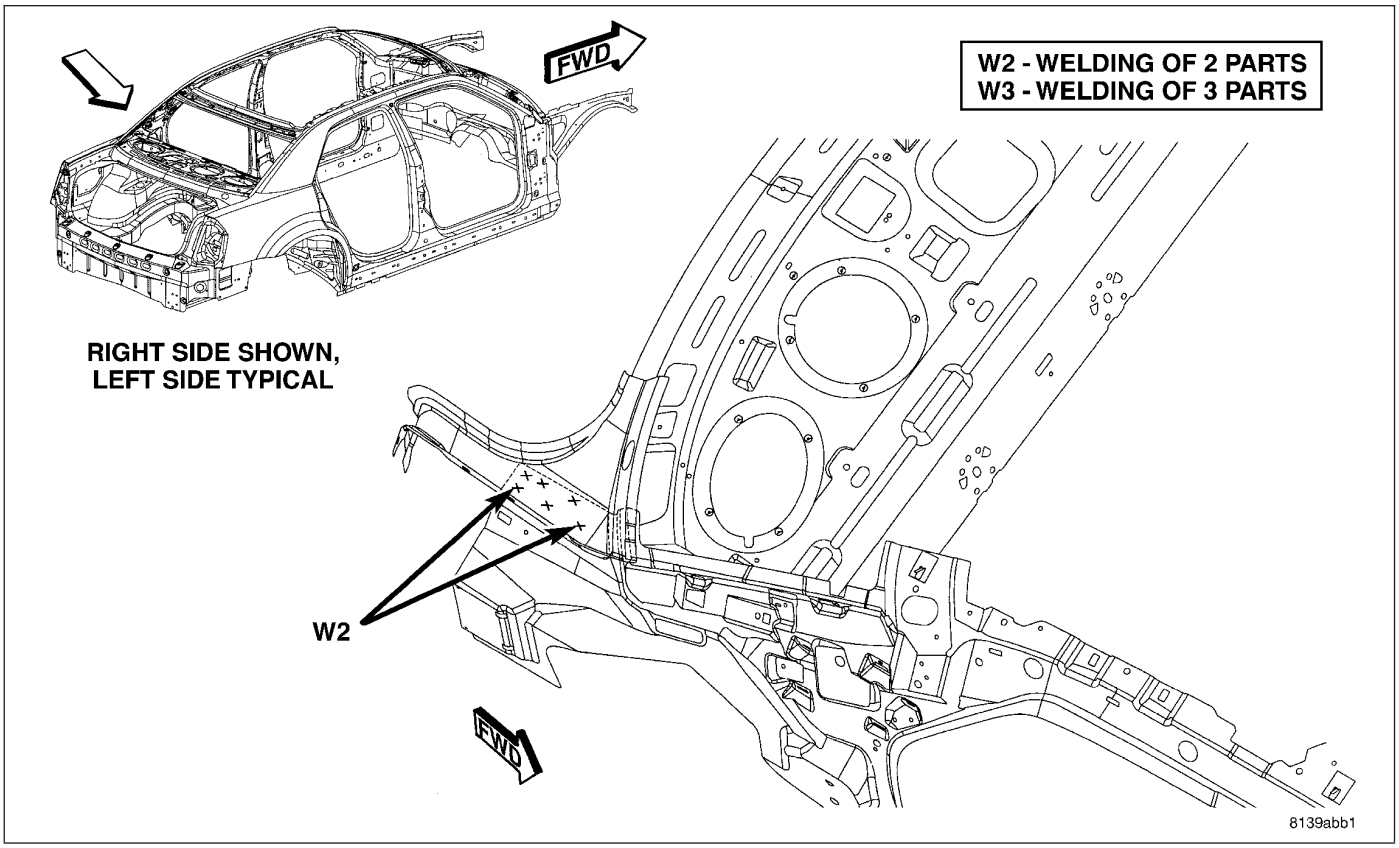

Fig. 81 FRAMED BODY IN WHITE (2 OF 12)

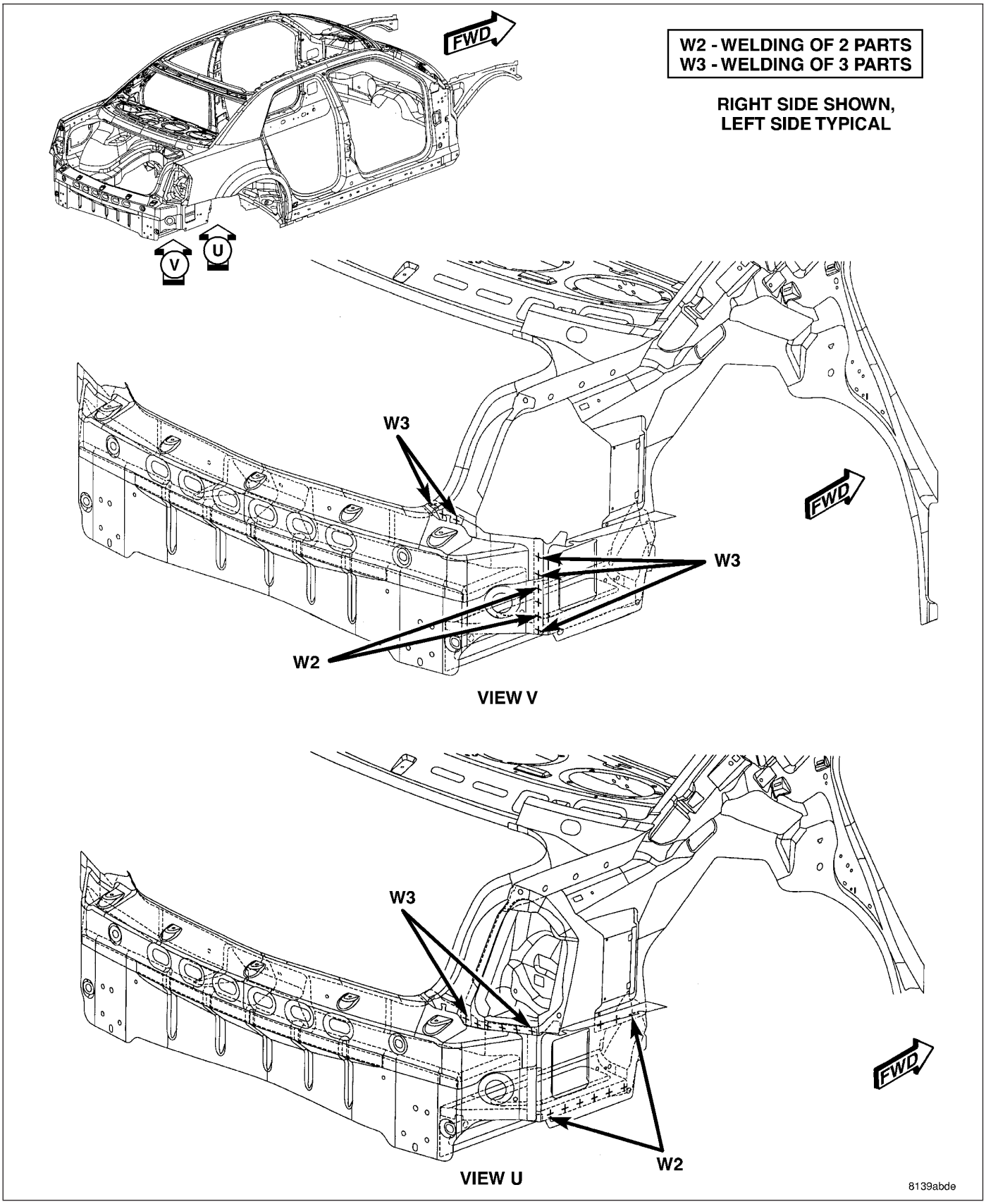

Fig. 82 FRAMED BODY IN WHITE (3 OF 12)

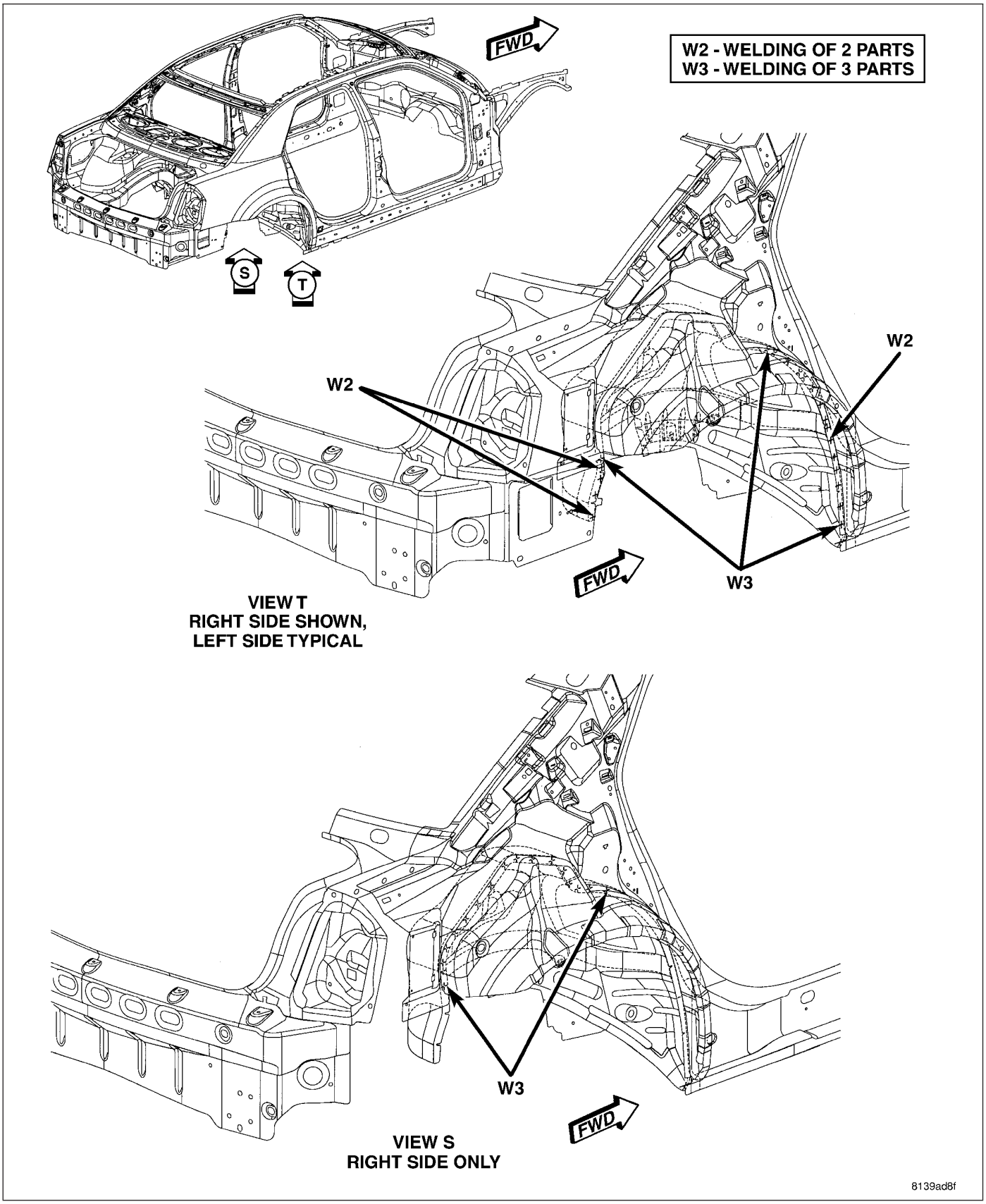

Fig. 83 FRAMED BODY IN WHITE (4 OF 12)

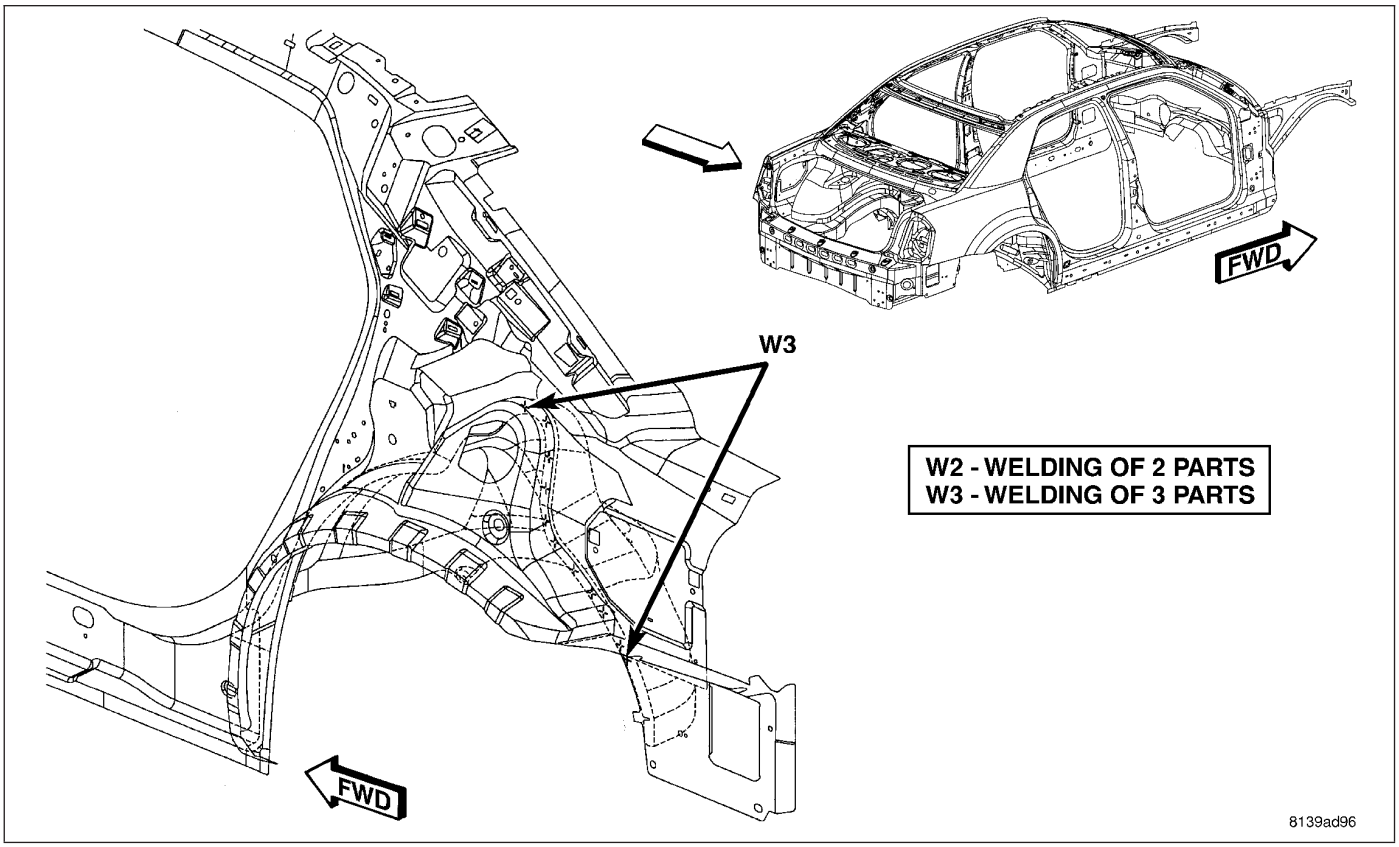

Fig. 84 FRAMED BODY IN WHITE (5 OF 12)

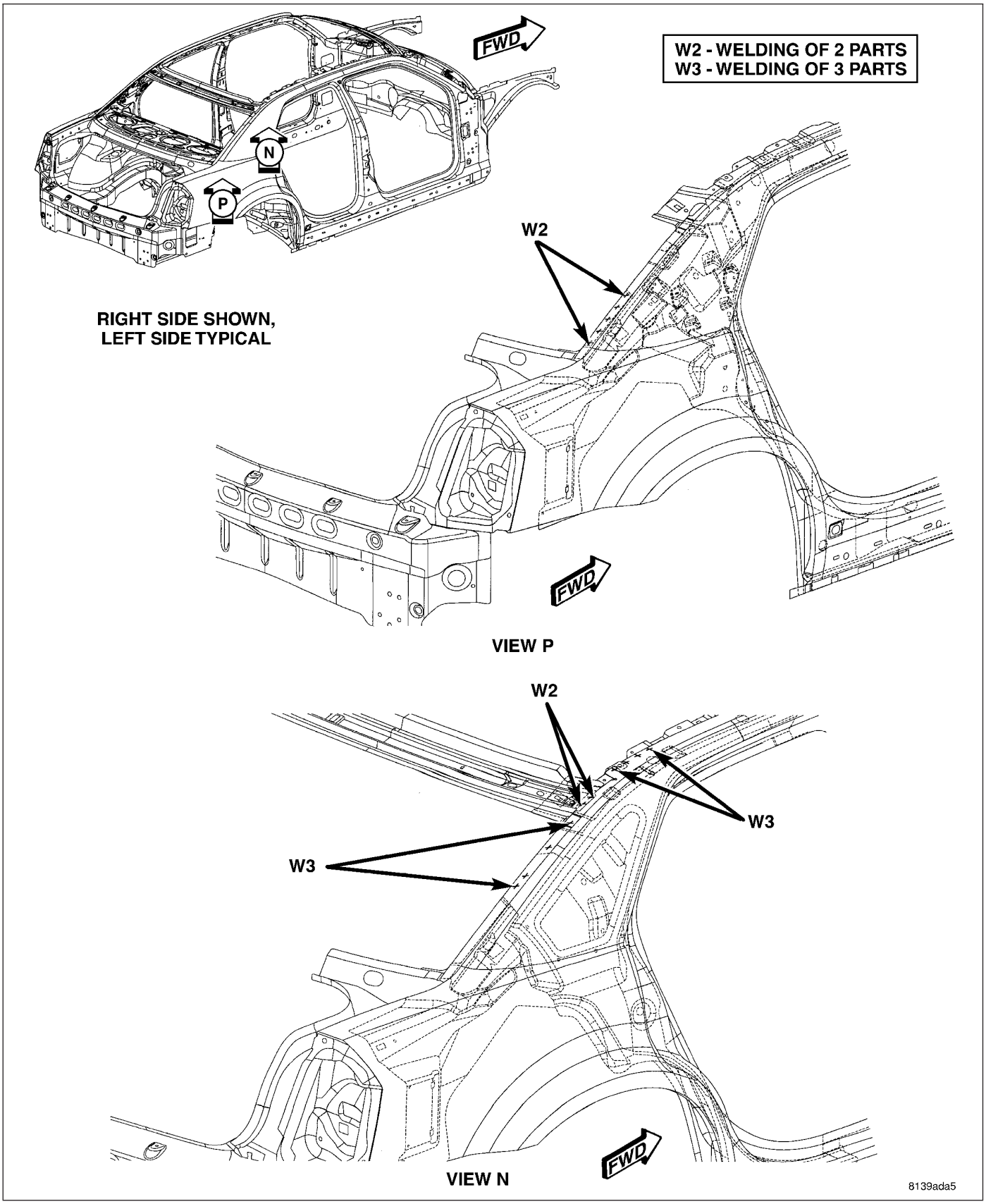

Fig. 85 FRAMED BODY IN WHITE (6 OF 12)

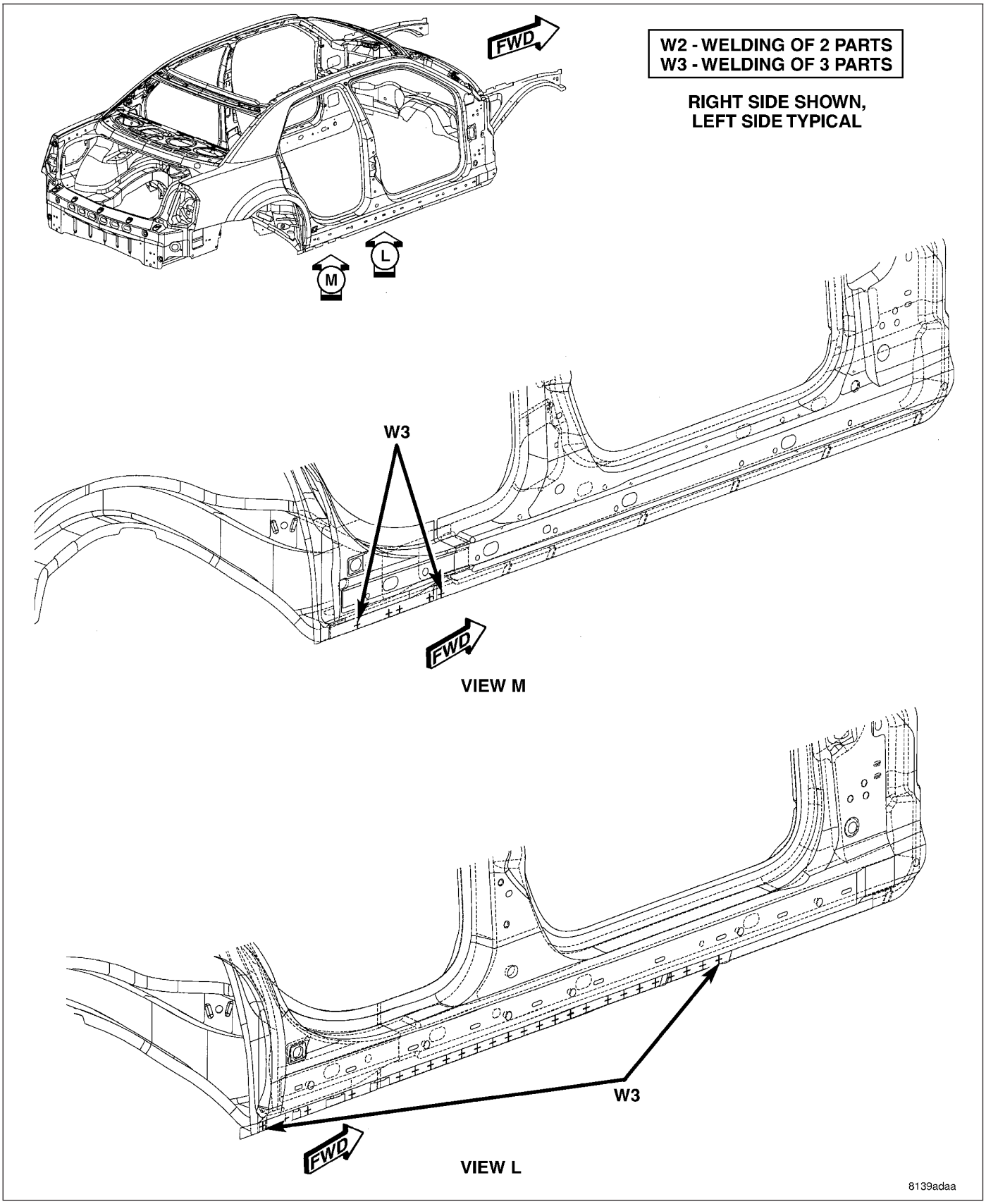

Fig. 86 FRAMED BODY IN WHITE (7 OF 12)

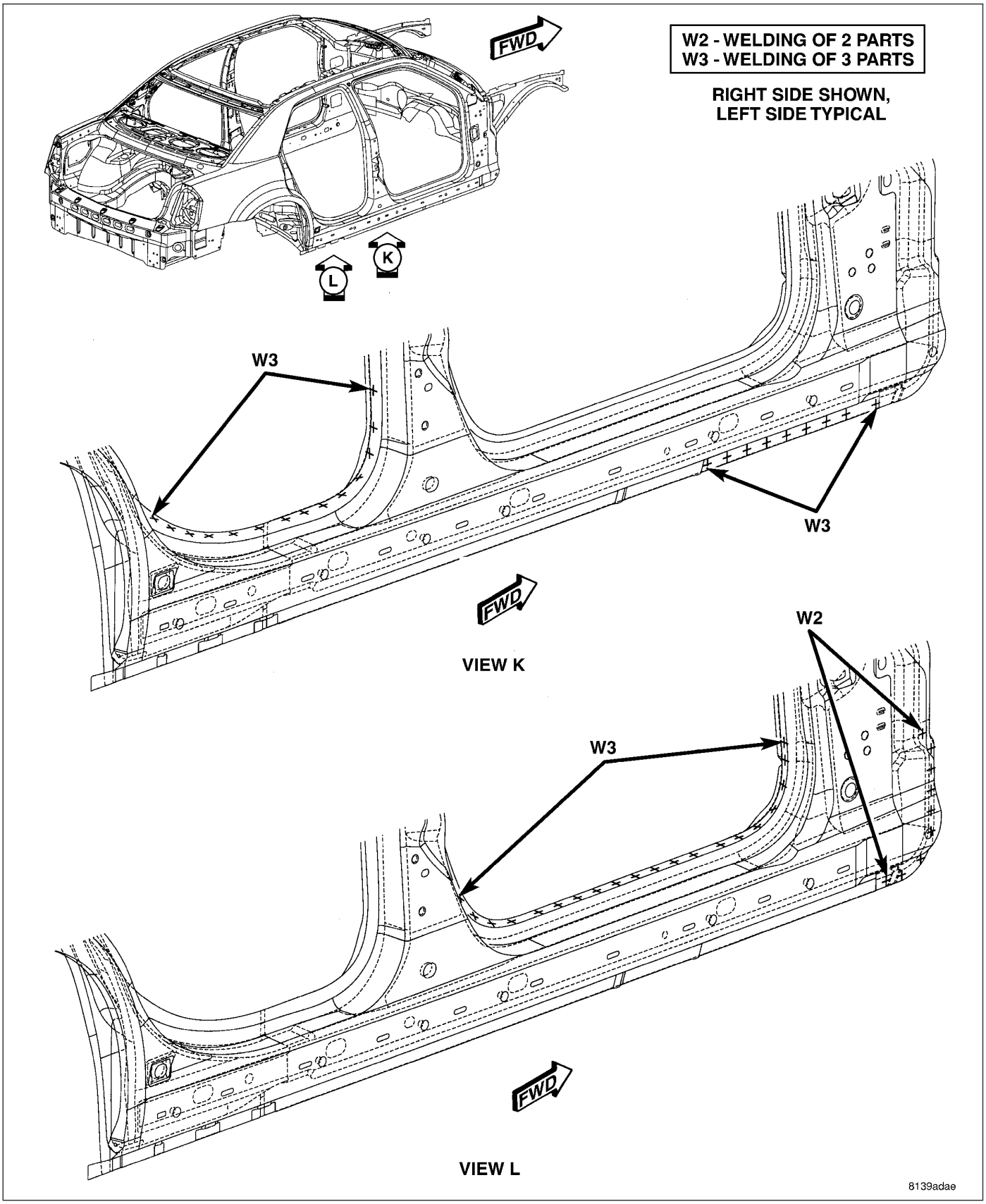

Fig. 87 FRAMED BODY IN WHITE (8 OF 12)

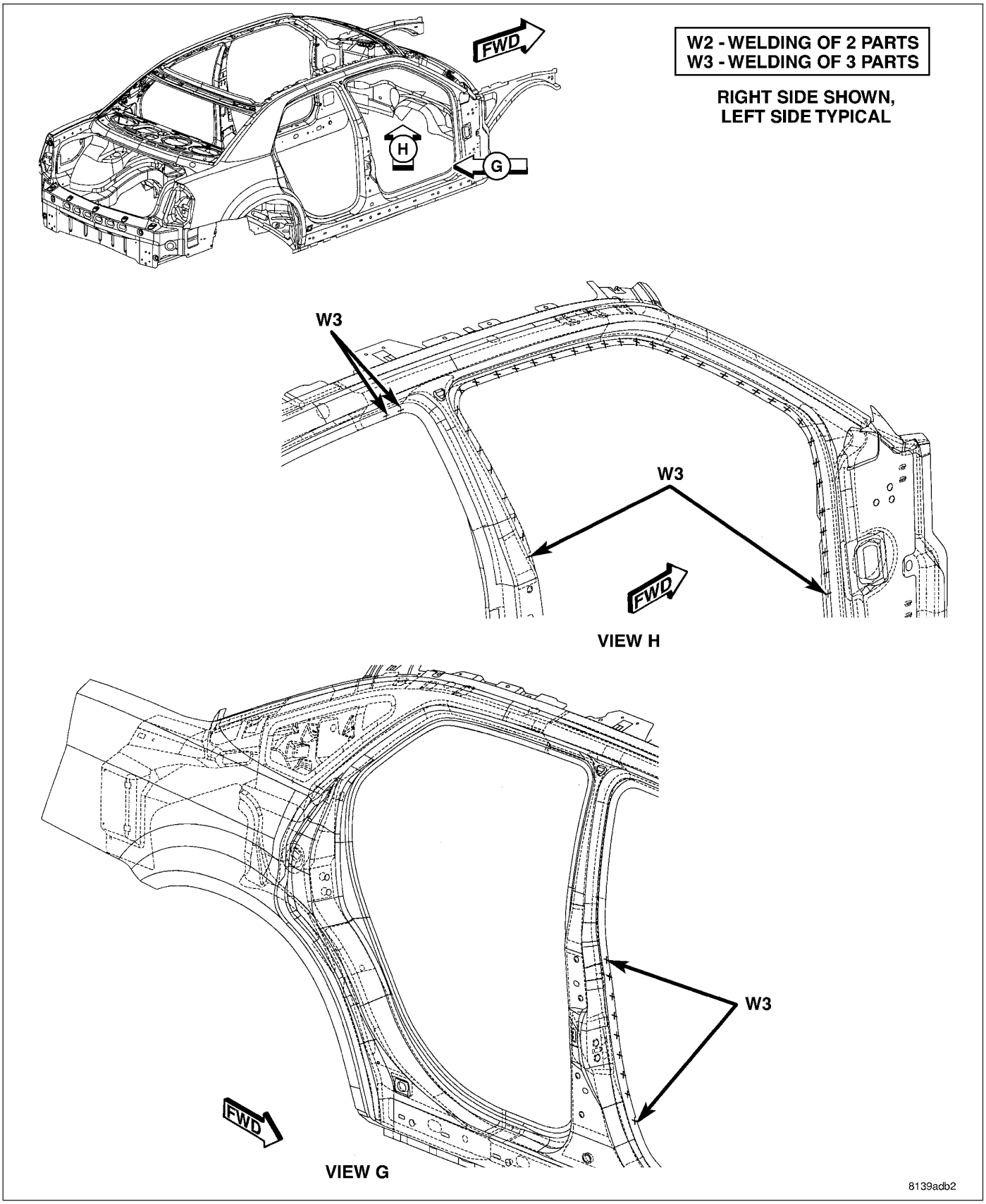

Fig. 88 FRAMED BODY IN WHITE (9 OF 12)

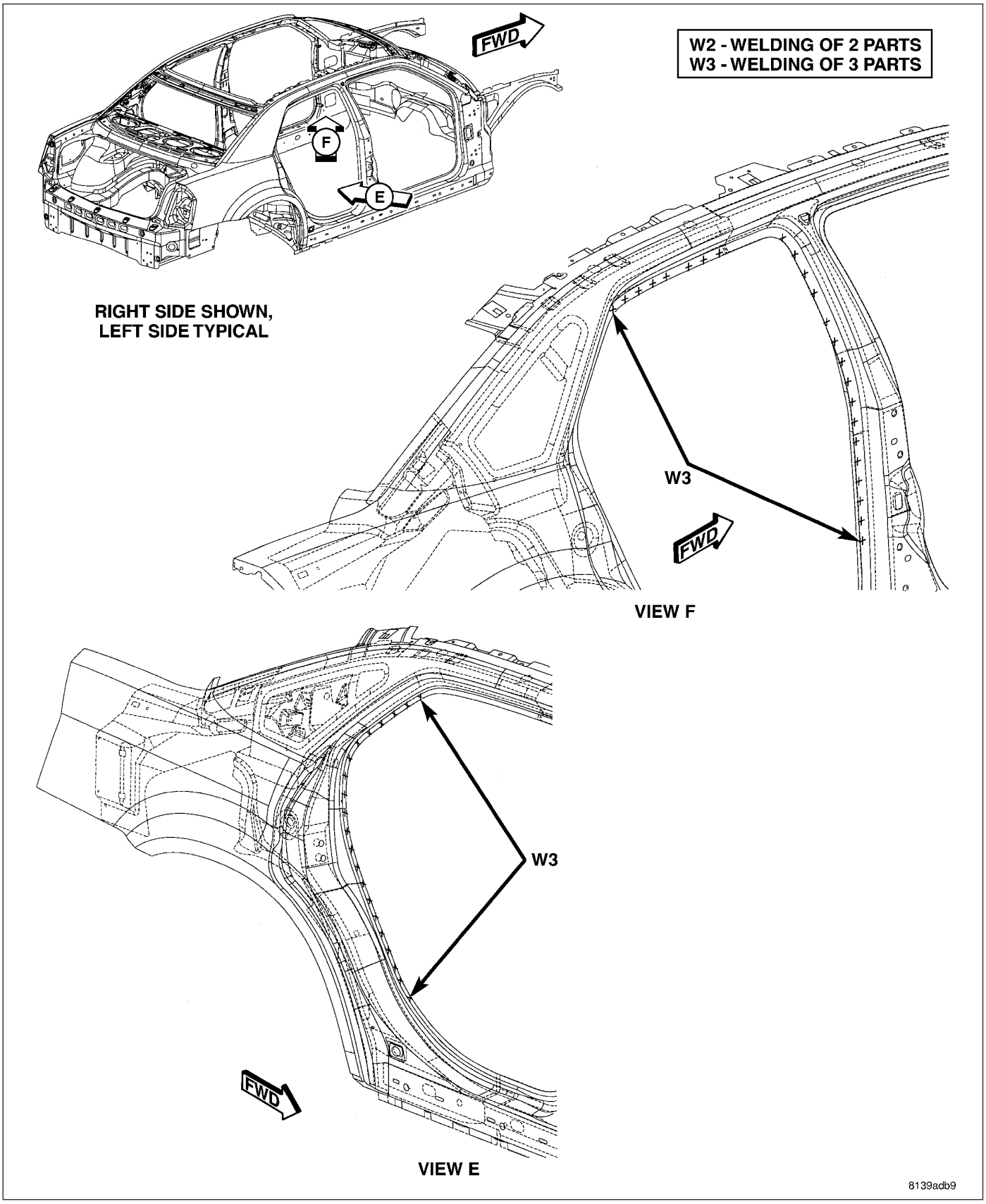

Fig. 89 FRAMED BODY IN WHITE (10 OF 12)

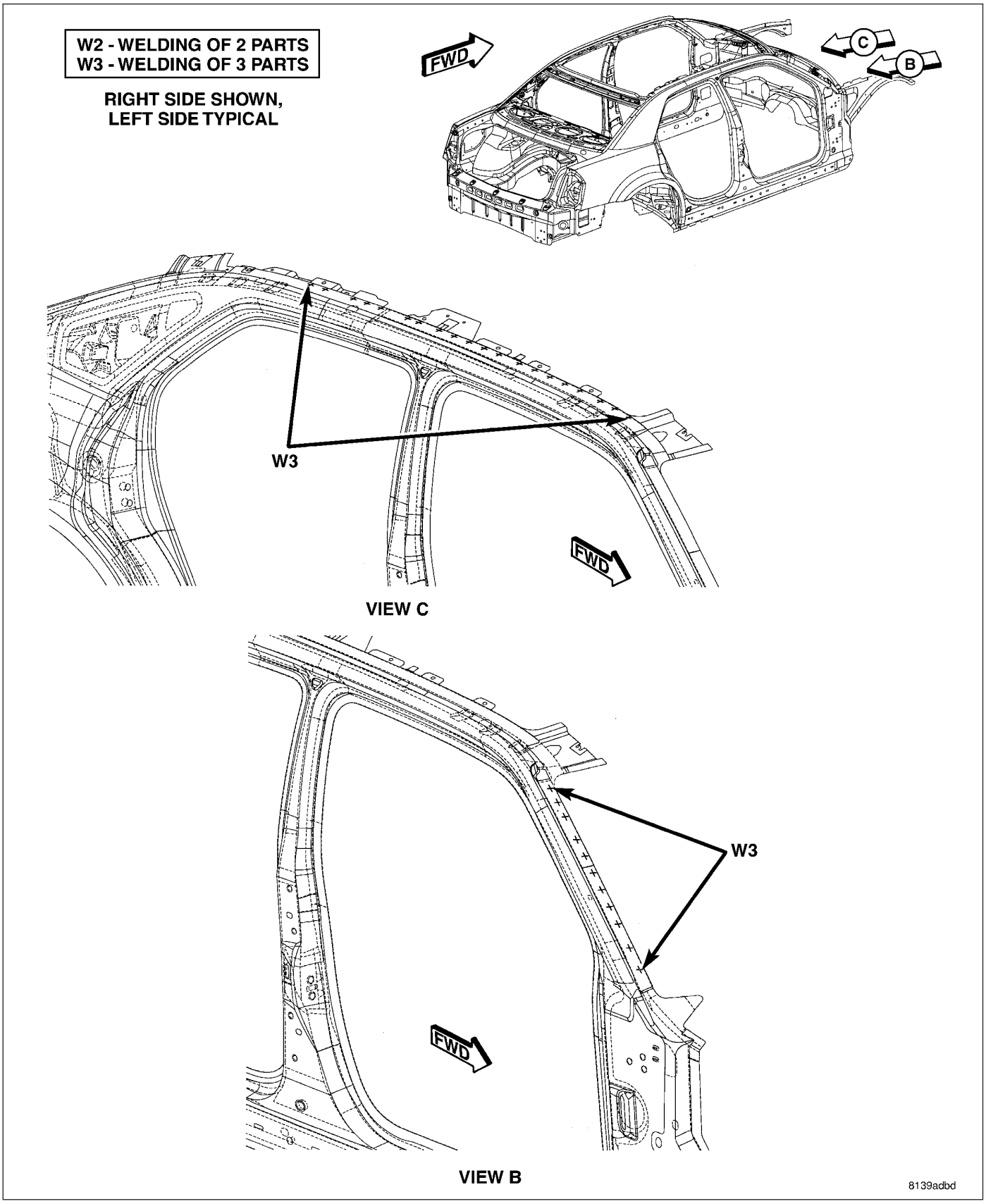

Fig. 90 FRAMED BODY IN WHITE (11 OF 12)

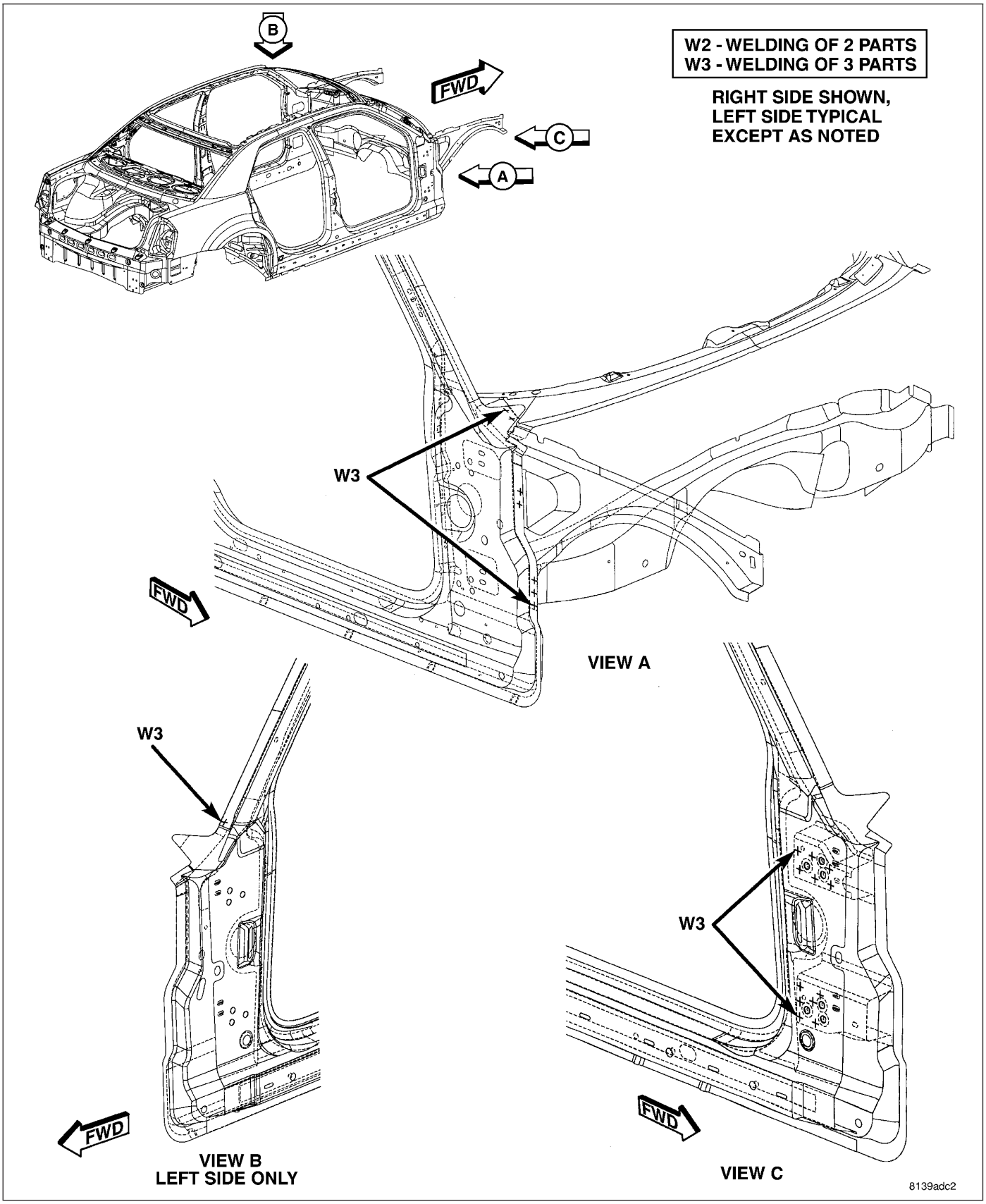

Fig. 91 FRAMED BODY IN WHITE (12 OF 12)

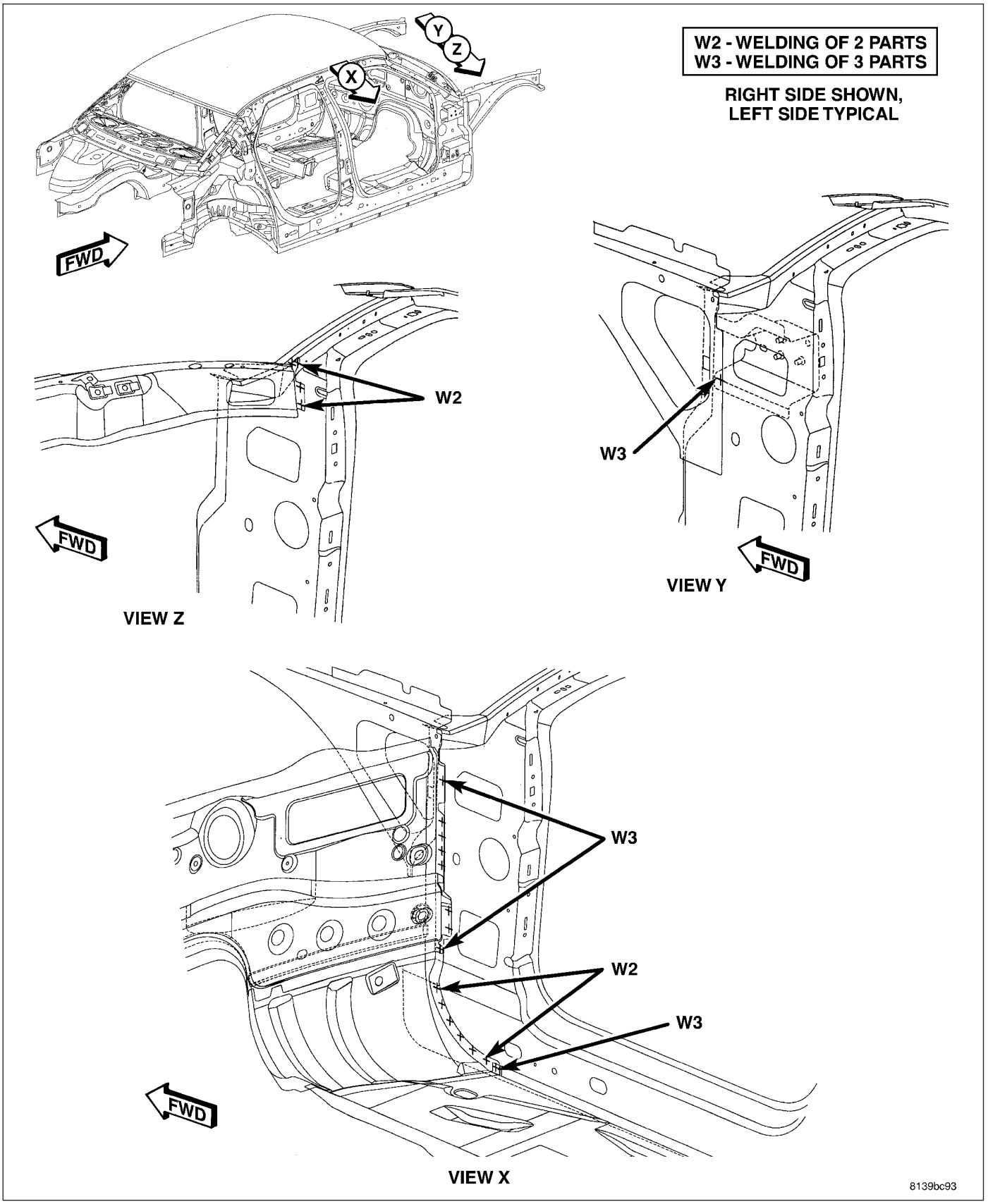

Fig. 92 FRAMED FULL BODY IN WHITE (1 OF 9)

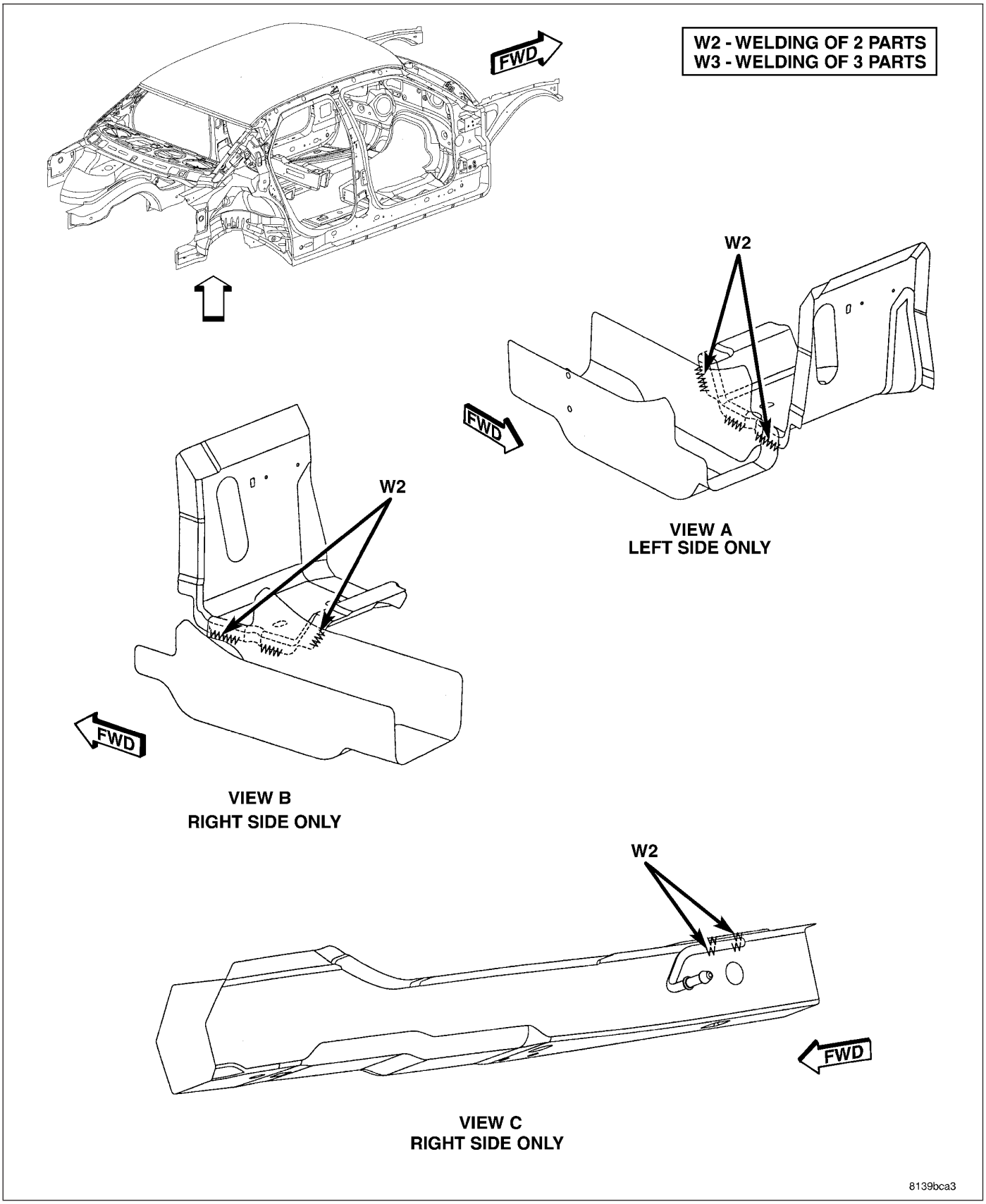

Fig. 93 FRAMED FULL BODY IN WHITE (2 OF 9)

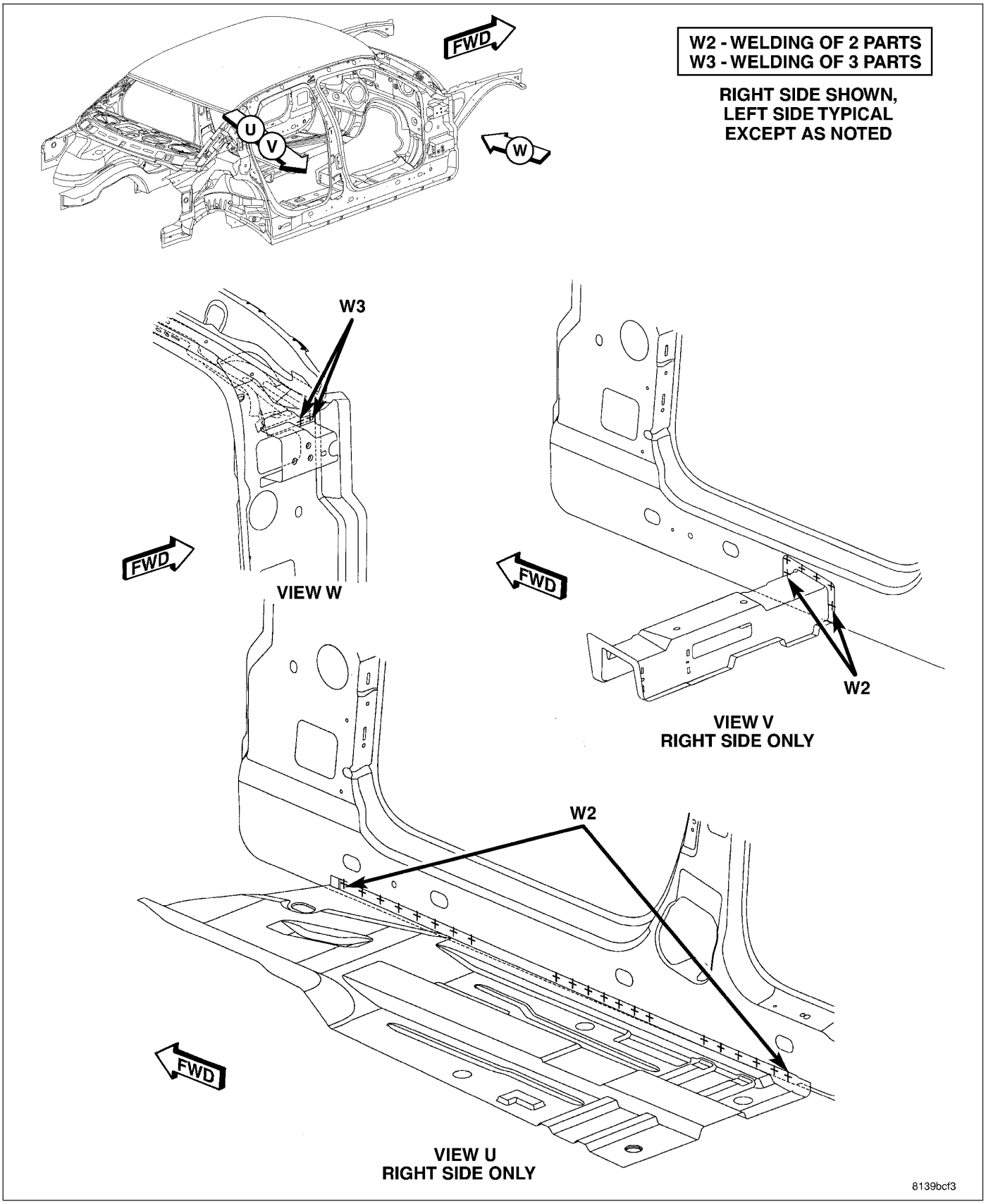

Fig. 94 FRAMED FULL BODY IN WHITE (3 OF 9)

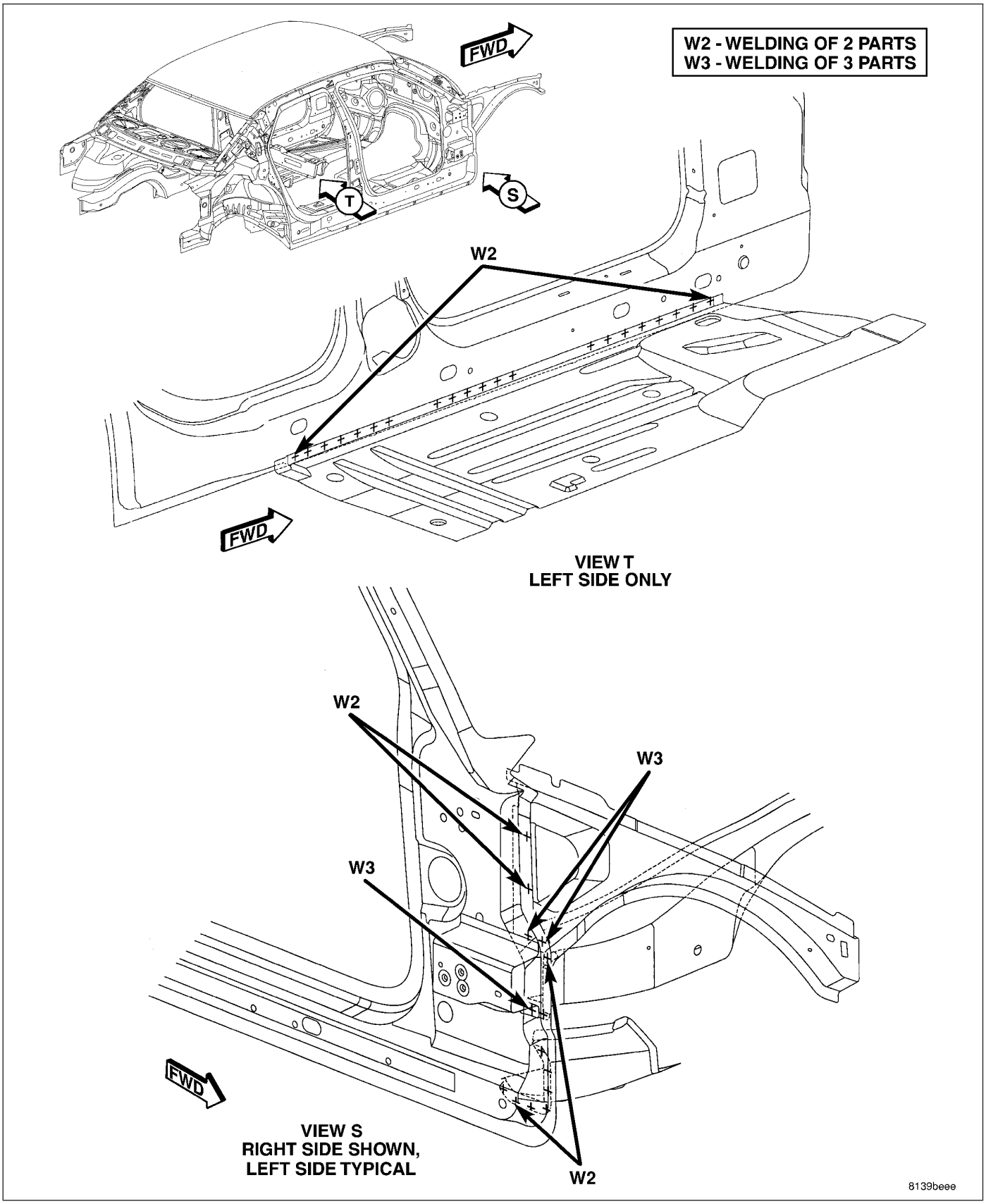

Fig. 95 FRAMED FULL BODY IN WHITE (4 OF 9)

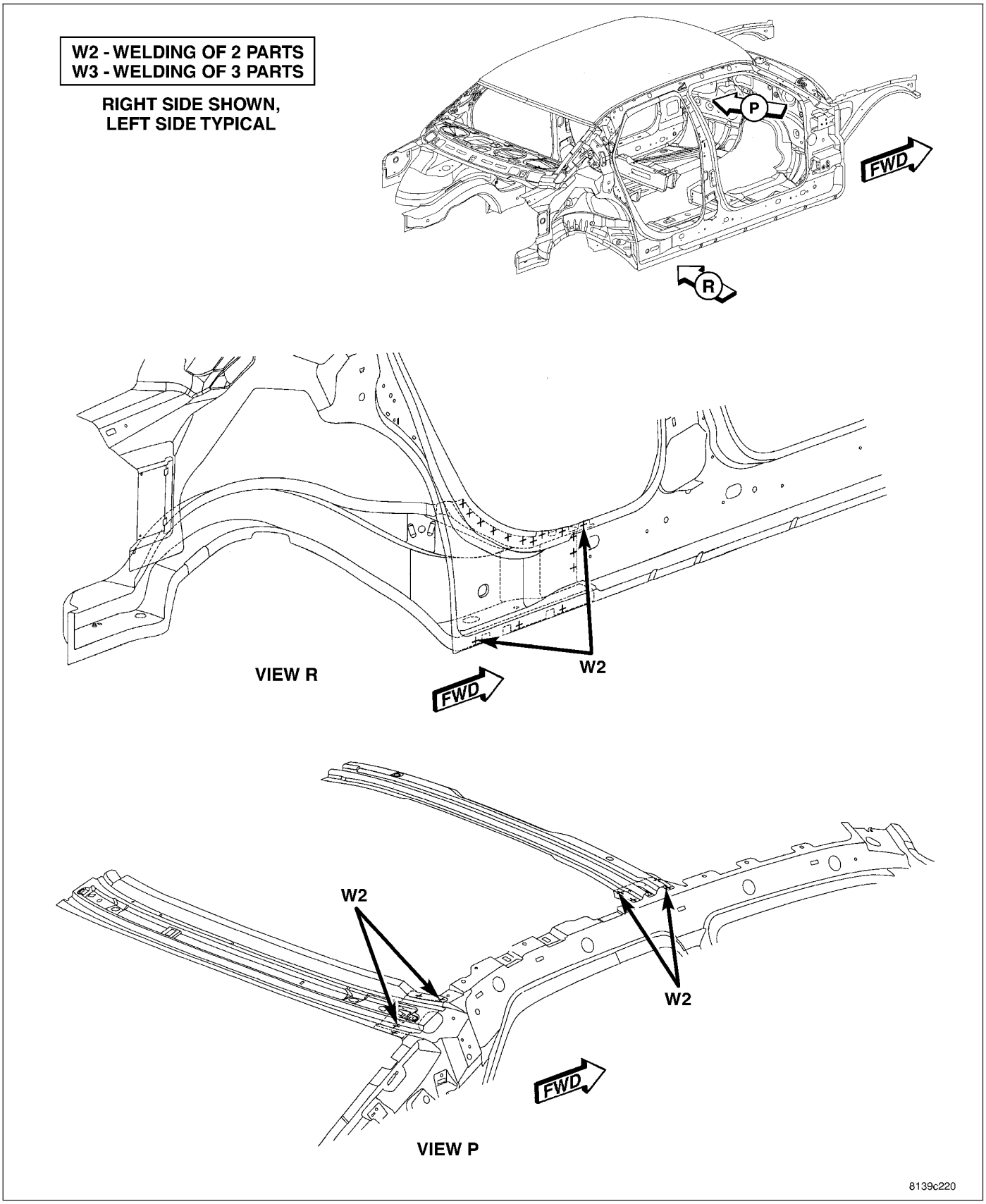

Fig. 96 FRAMED FULL BODY IN WHITE (5 OF 9)

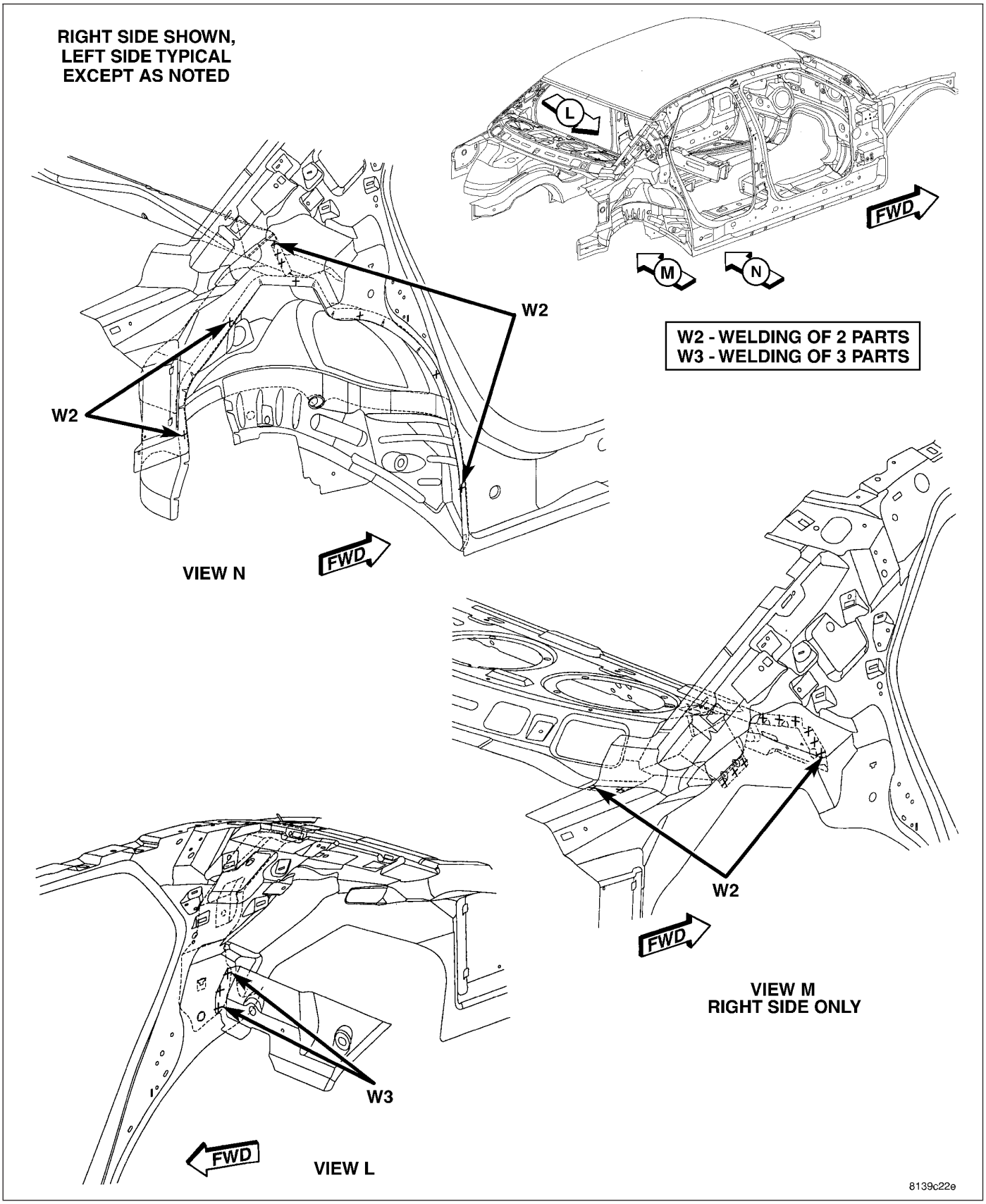

Fig. 97 FRAMED FULL BODY IN WHITE (6 OF 9)

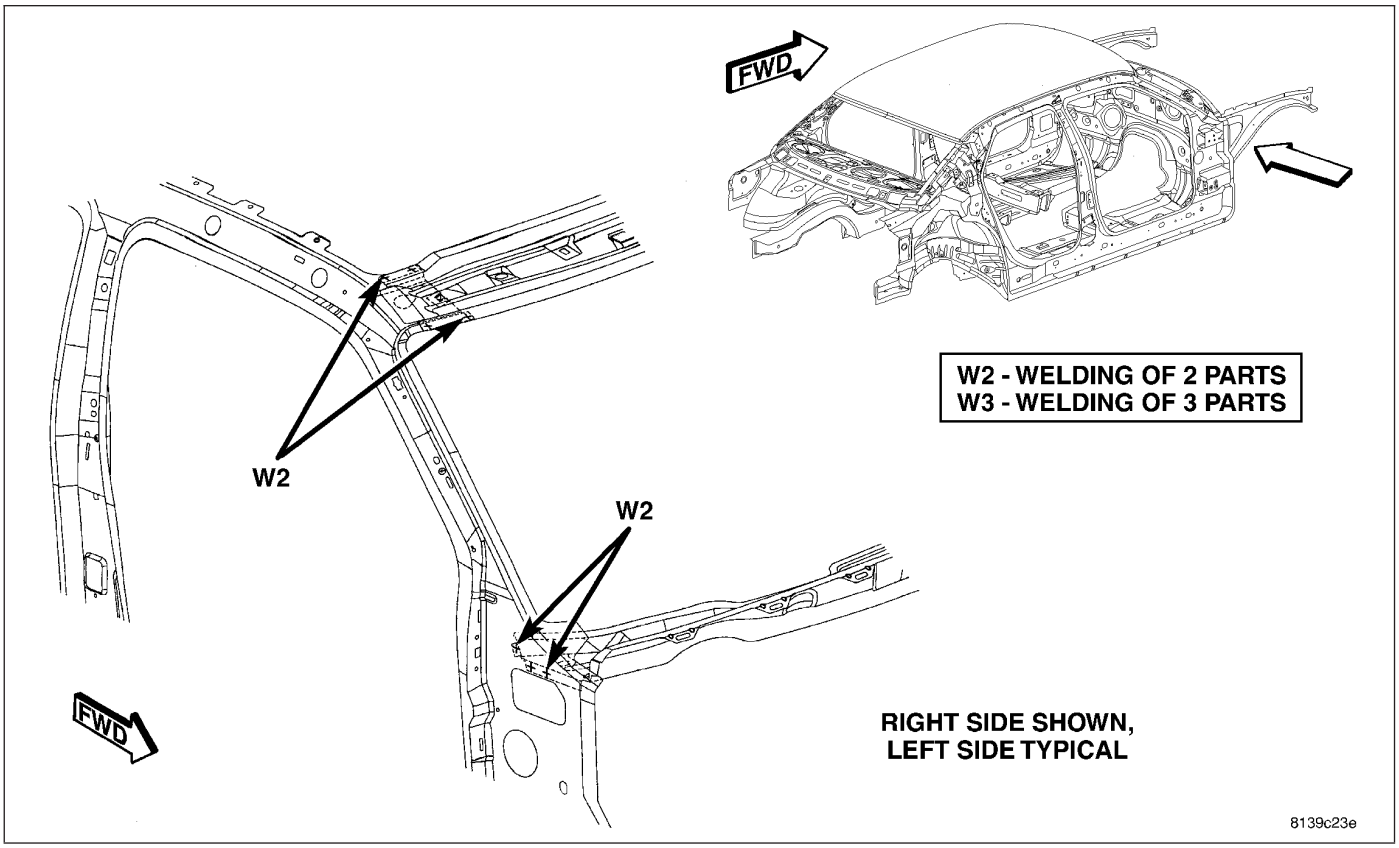

Fig. 98 FRAMED FULL BODY IN WHITE (7 OF 9)

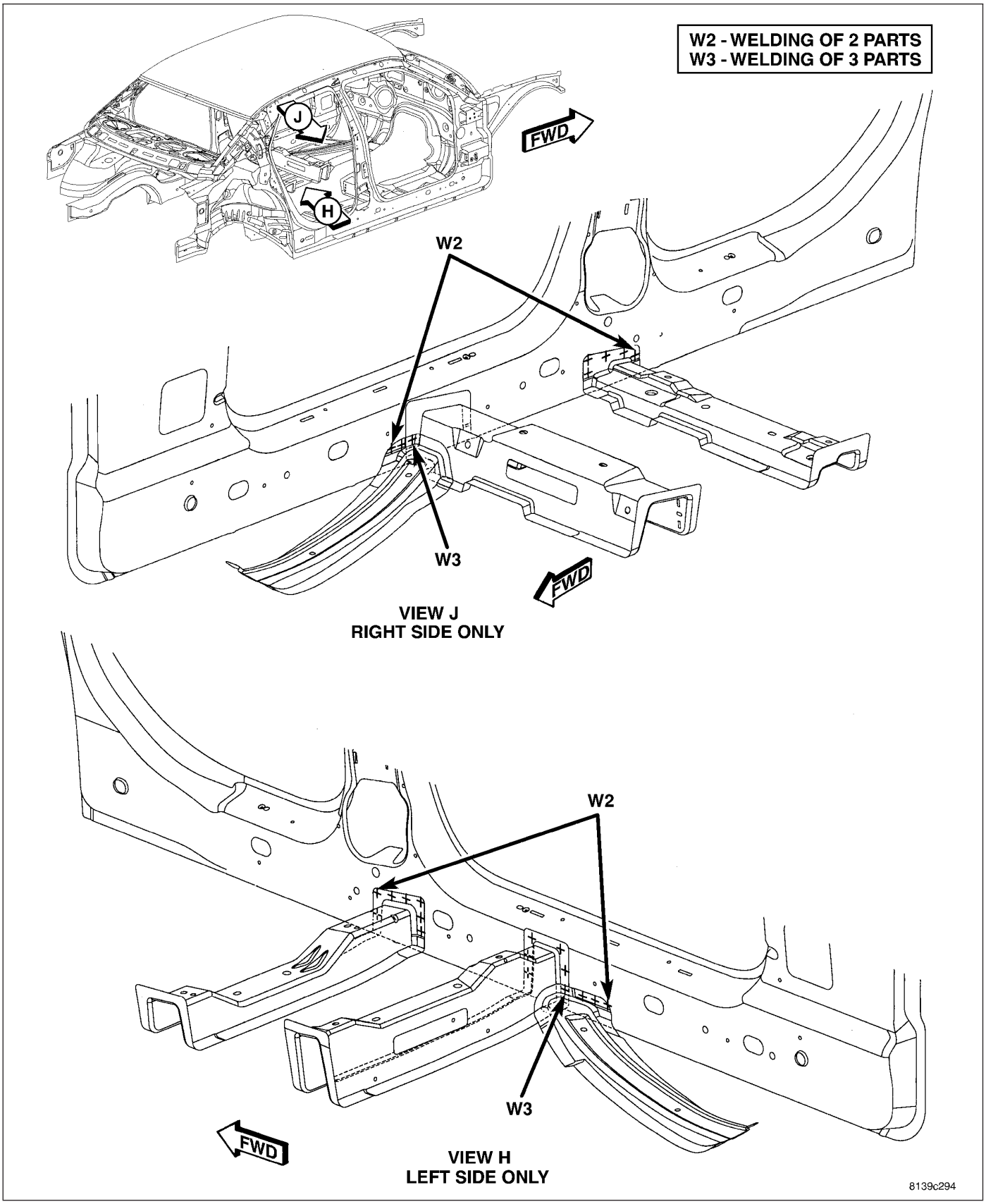

Fig. 99 FRAMED FULL BODY IN WHITE (8 OF 9)

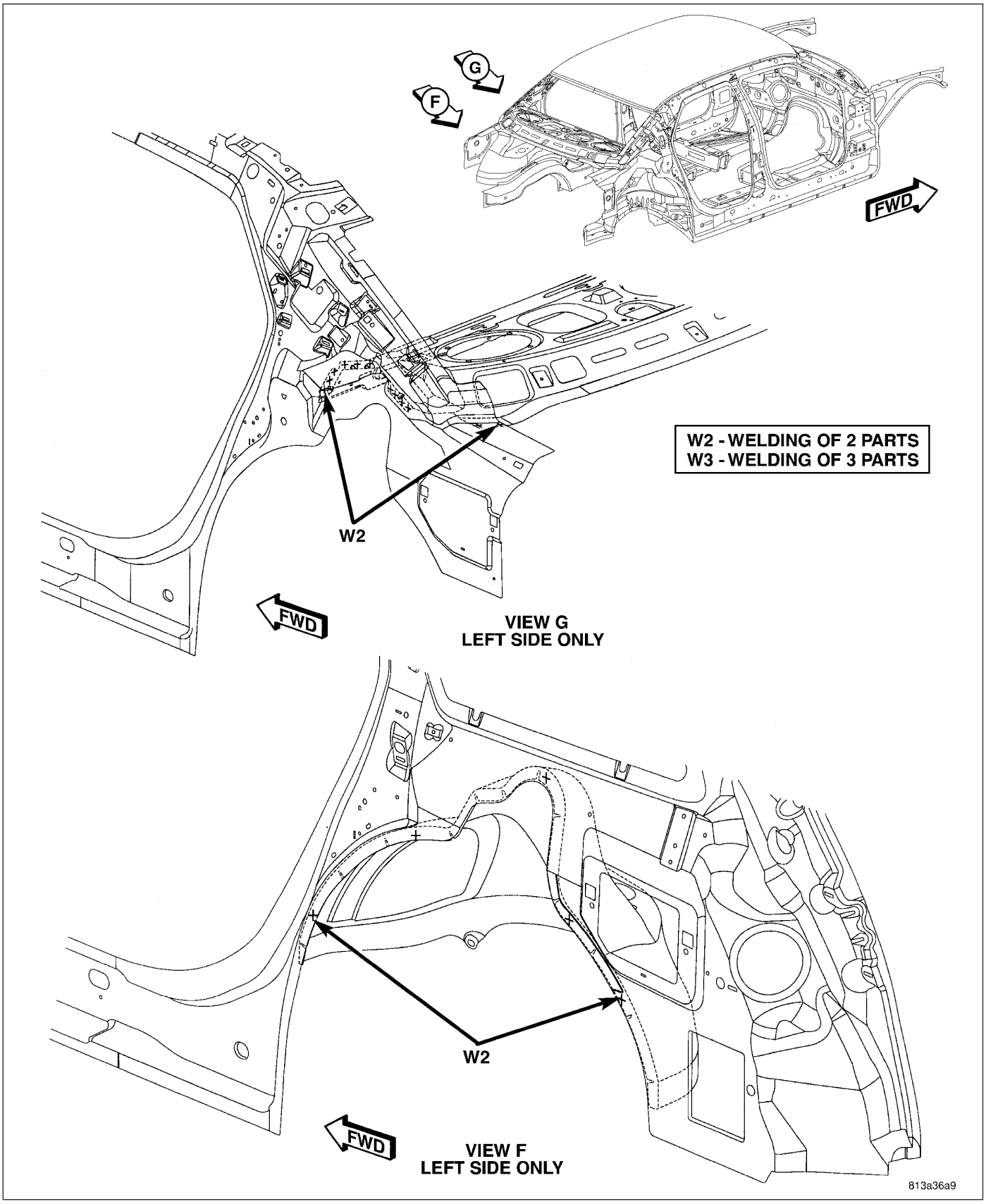

Fig. 100 002 FRAMED FULL BODY IN WHITE (9 OF 9)

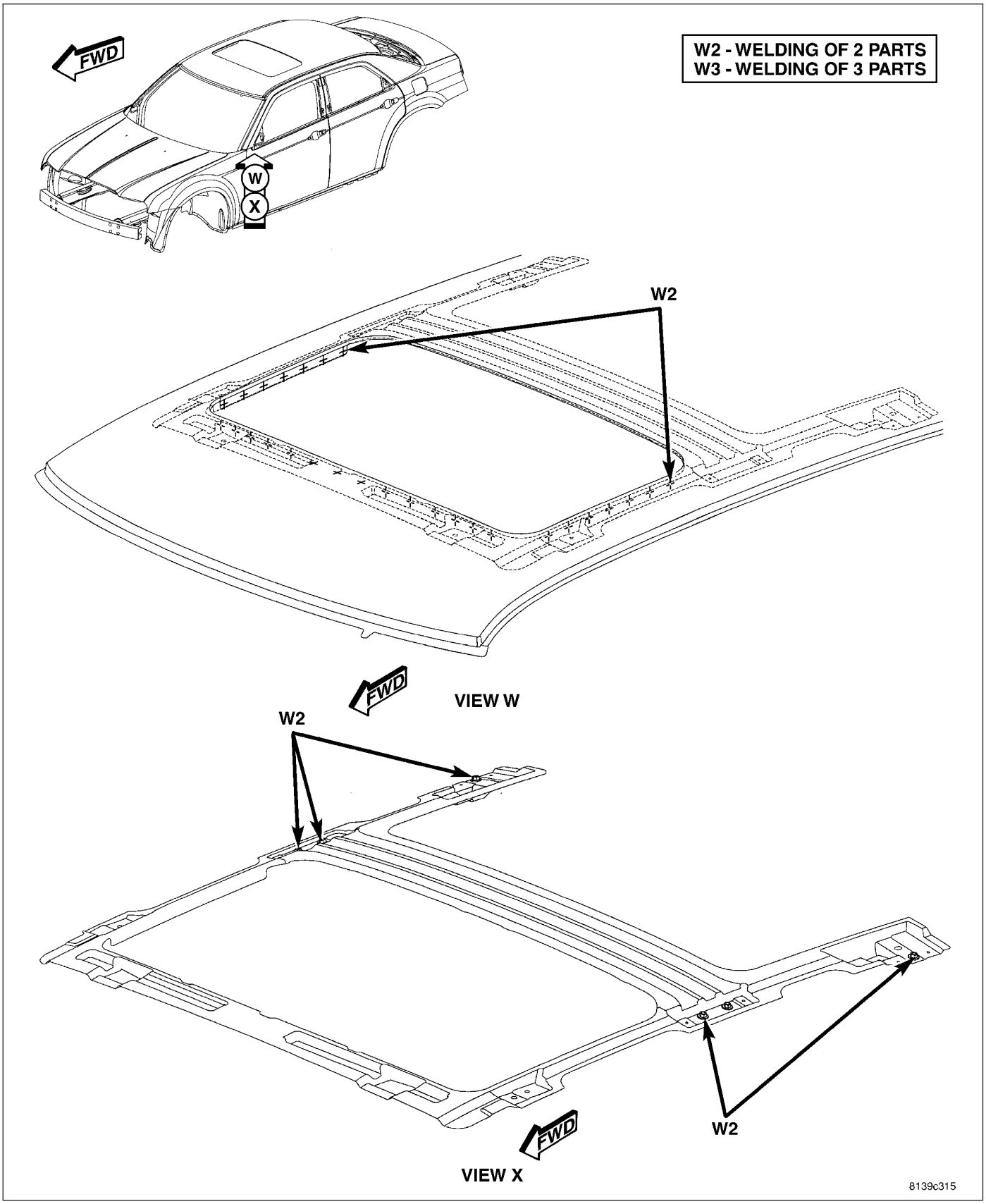

Fig. 101 ROOF (1 OF 3)

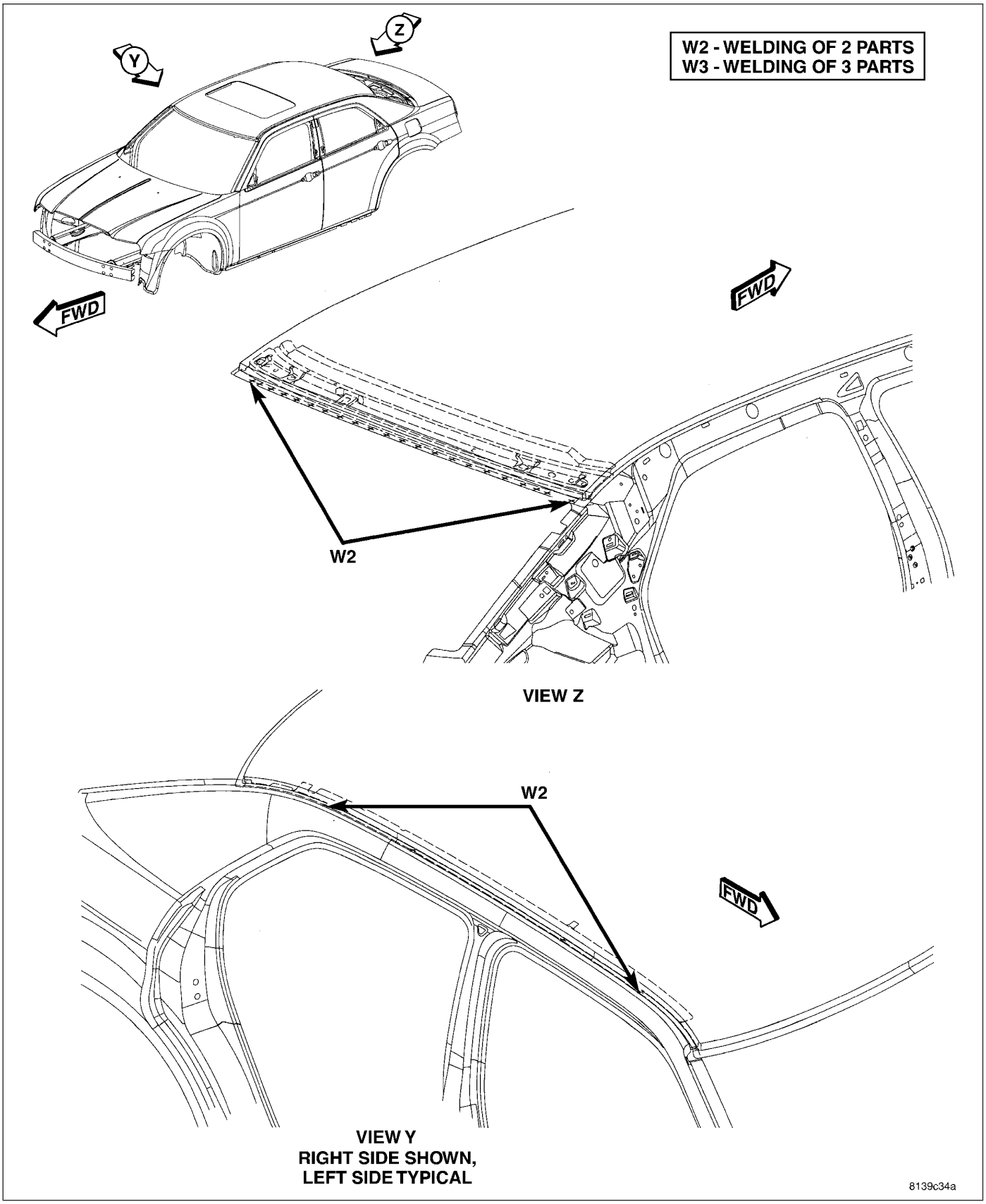

Fig. 102 ROOF (2 OF 3)

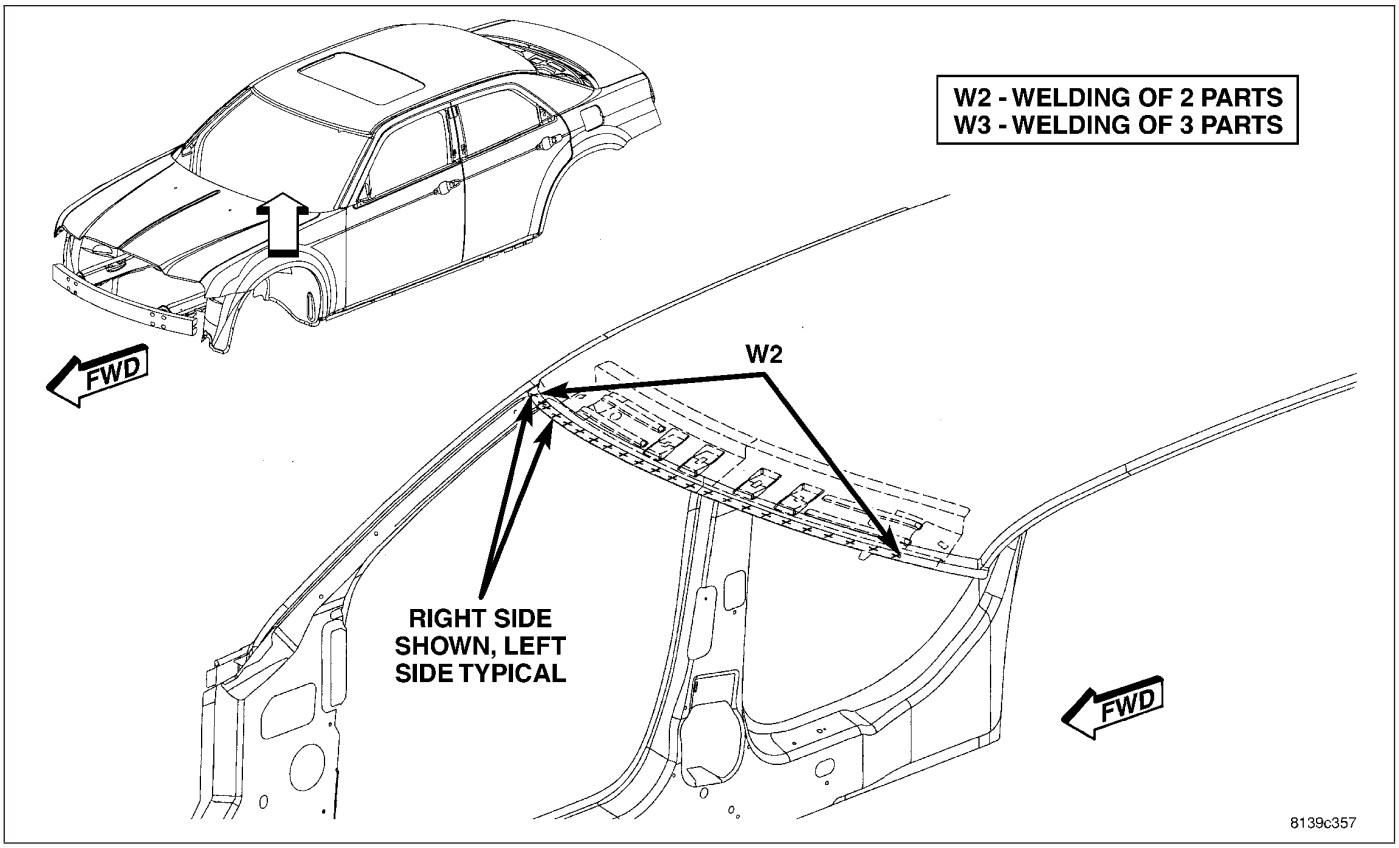

Fig. 103 ROOF (3 OF 3)

Wagon Only

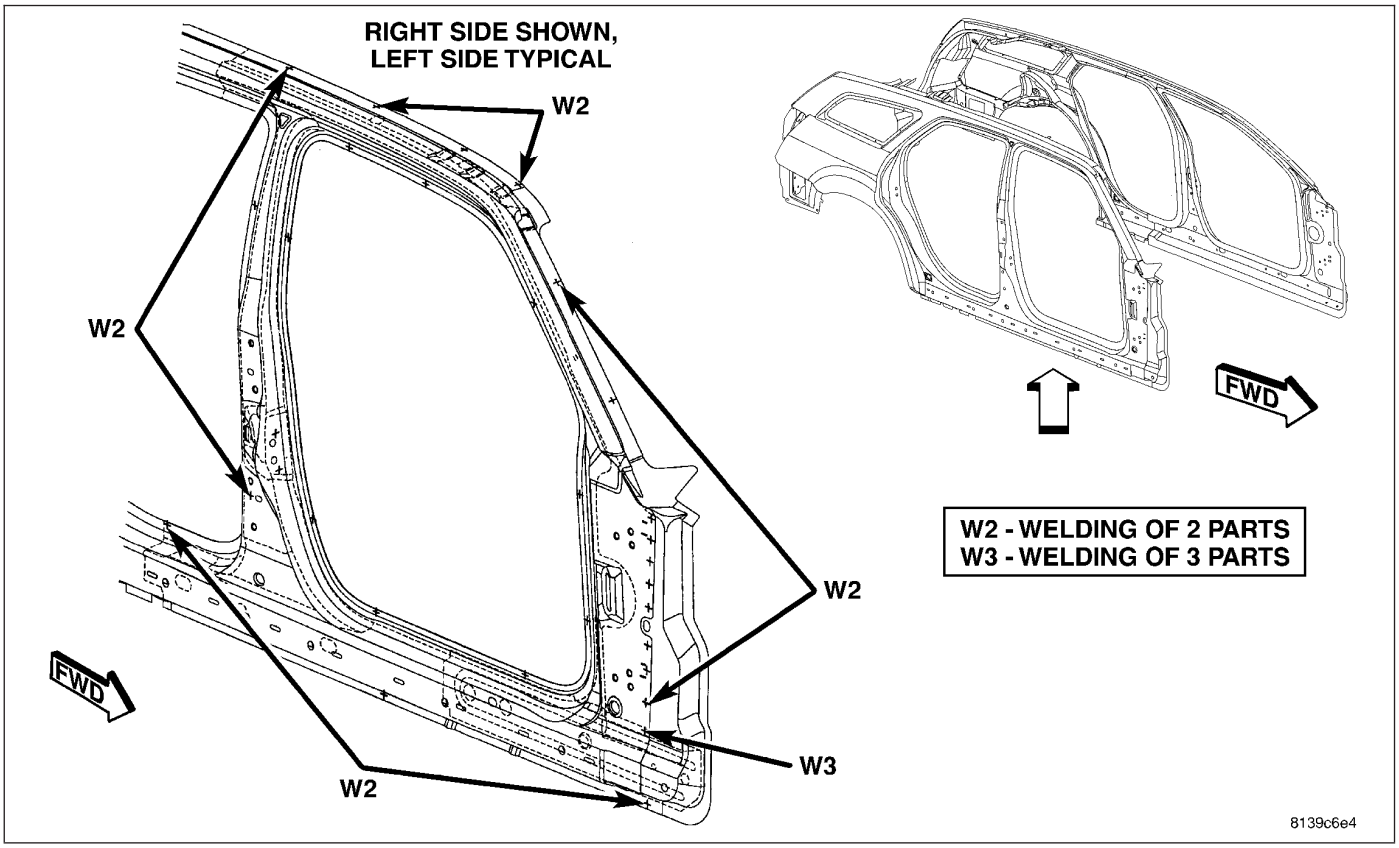

Fig. 104 OUTER BODY SIDE APERTURE (1 OF 5)

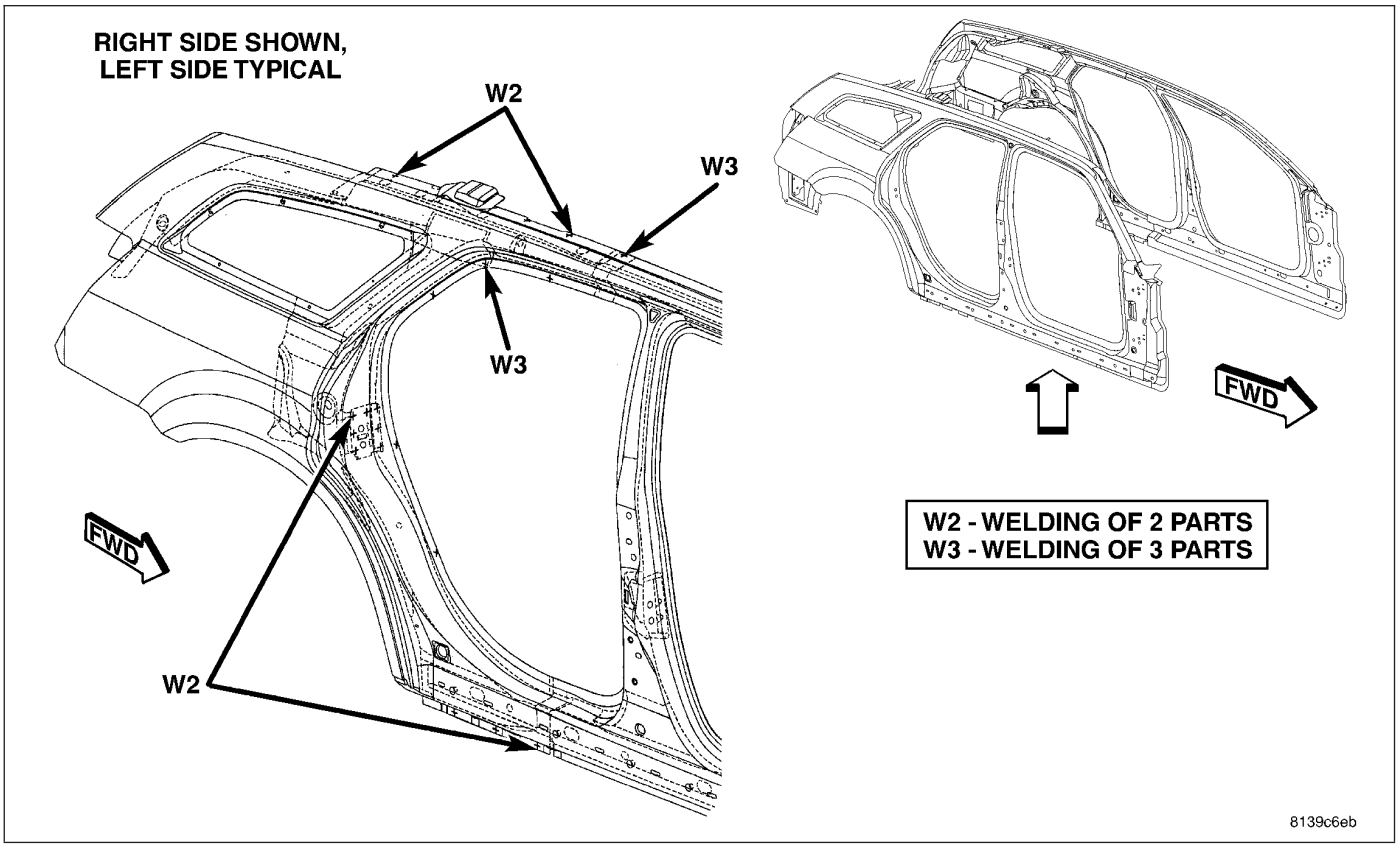

Fig. 105 OUTER BODY SIDE APERTURE (2 OF 5)

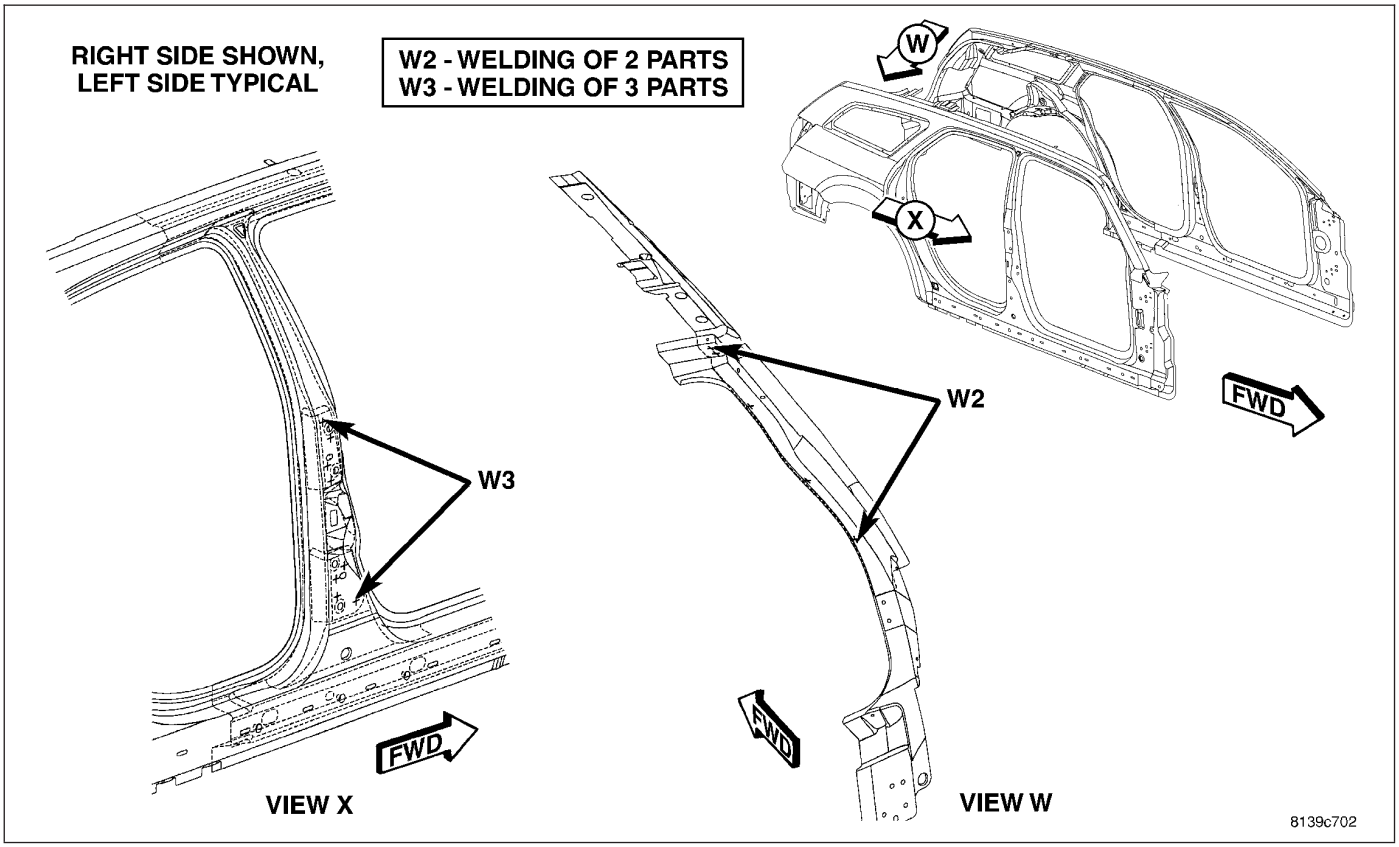

Fig. 106 OUTER BODY SIDE APERTURE (3 OF 5)

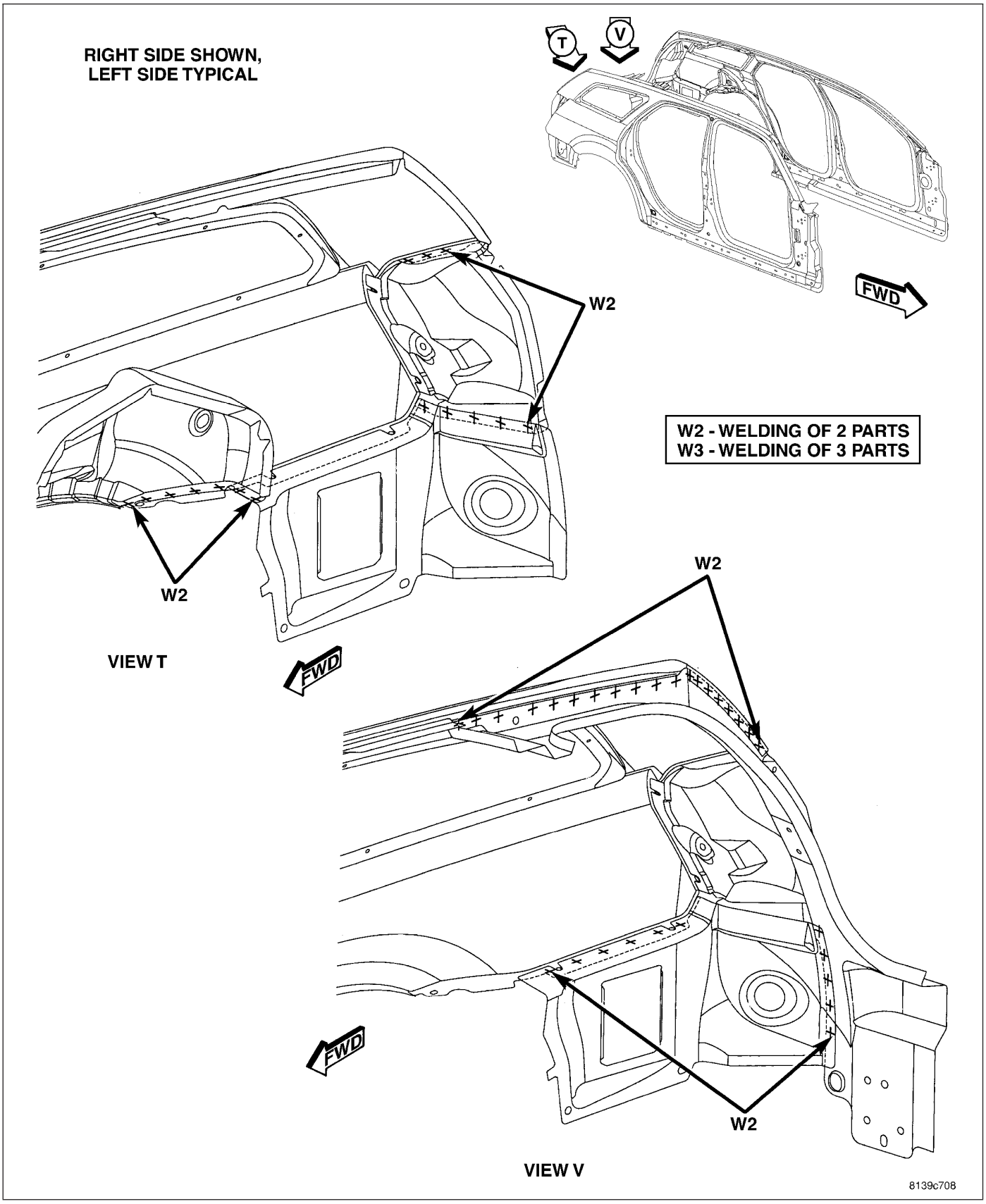

Fig. 107 OUTER BODY SIDE APERTURE (4 OF 5)

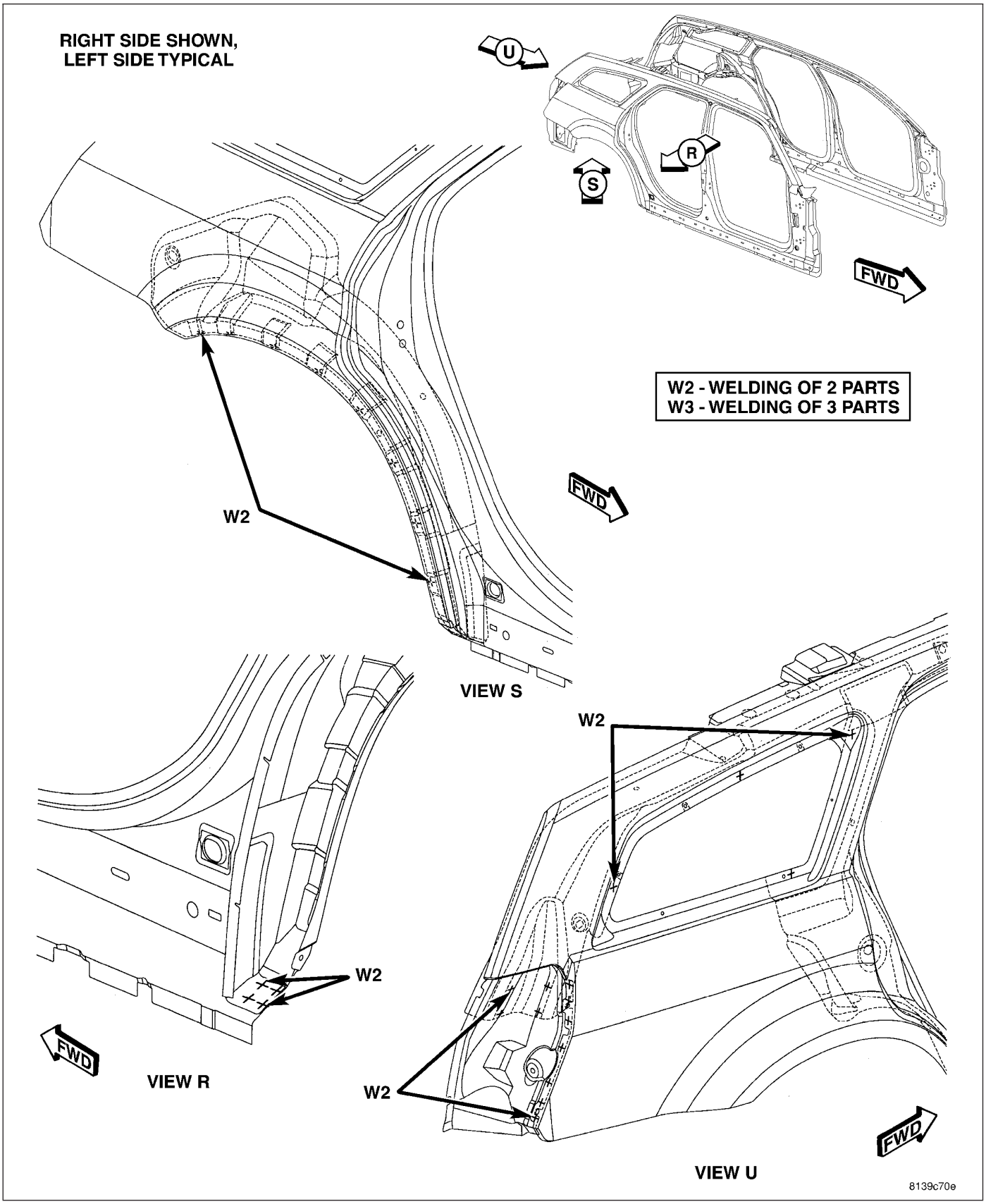

Fig. 108 OUTER BODY SIDE APERTURE (5 OF 5)

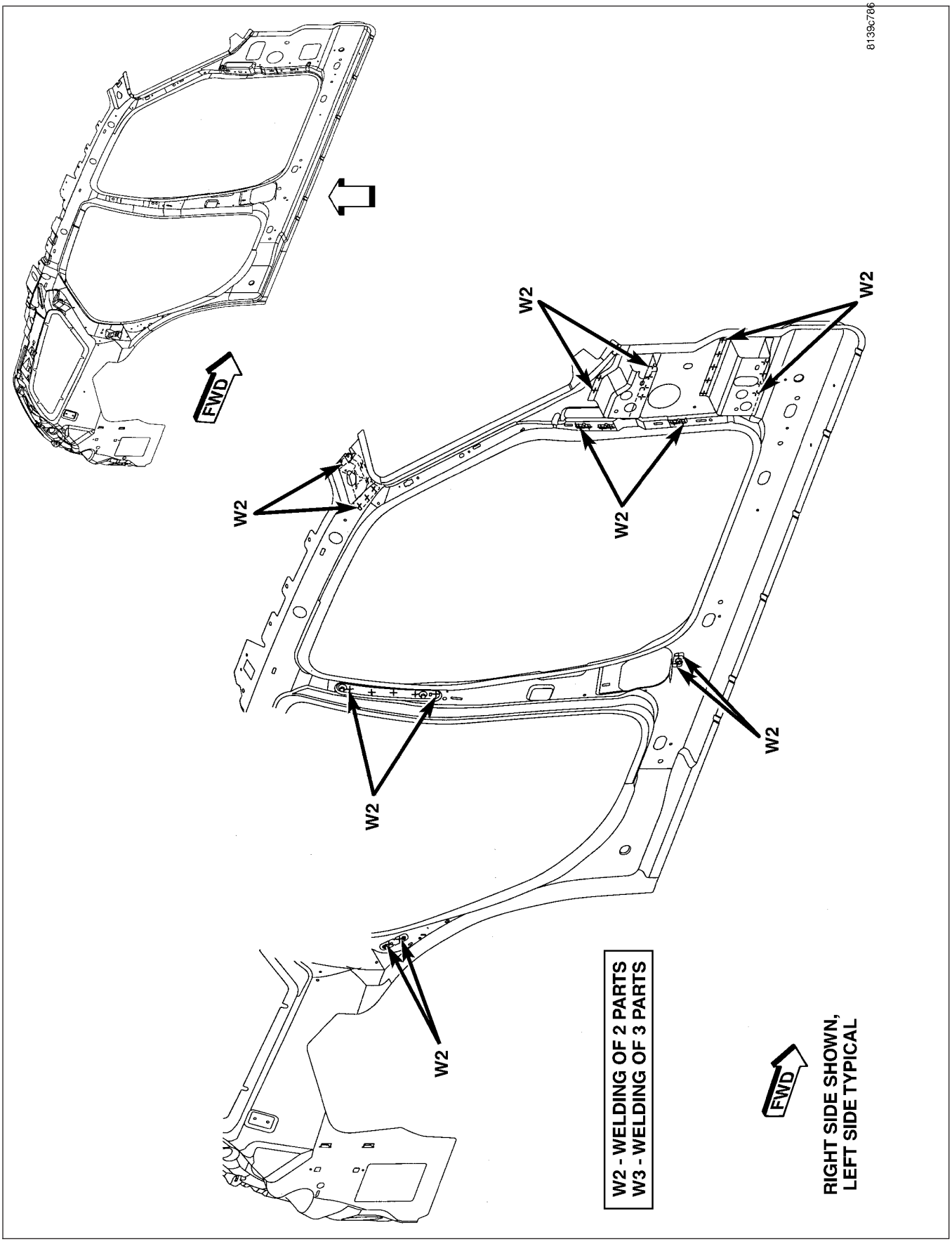

Fig. 109 INNER BODY SIDE APERTURE

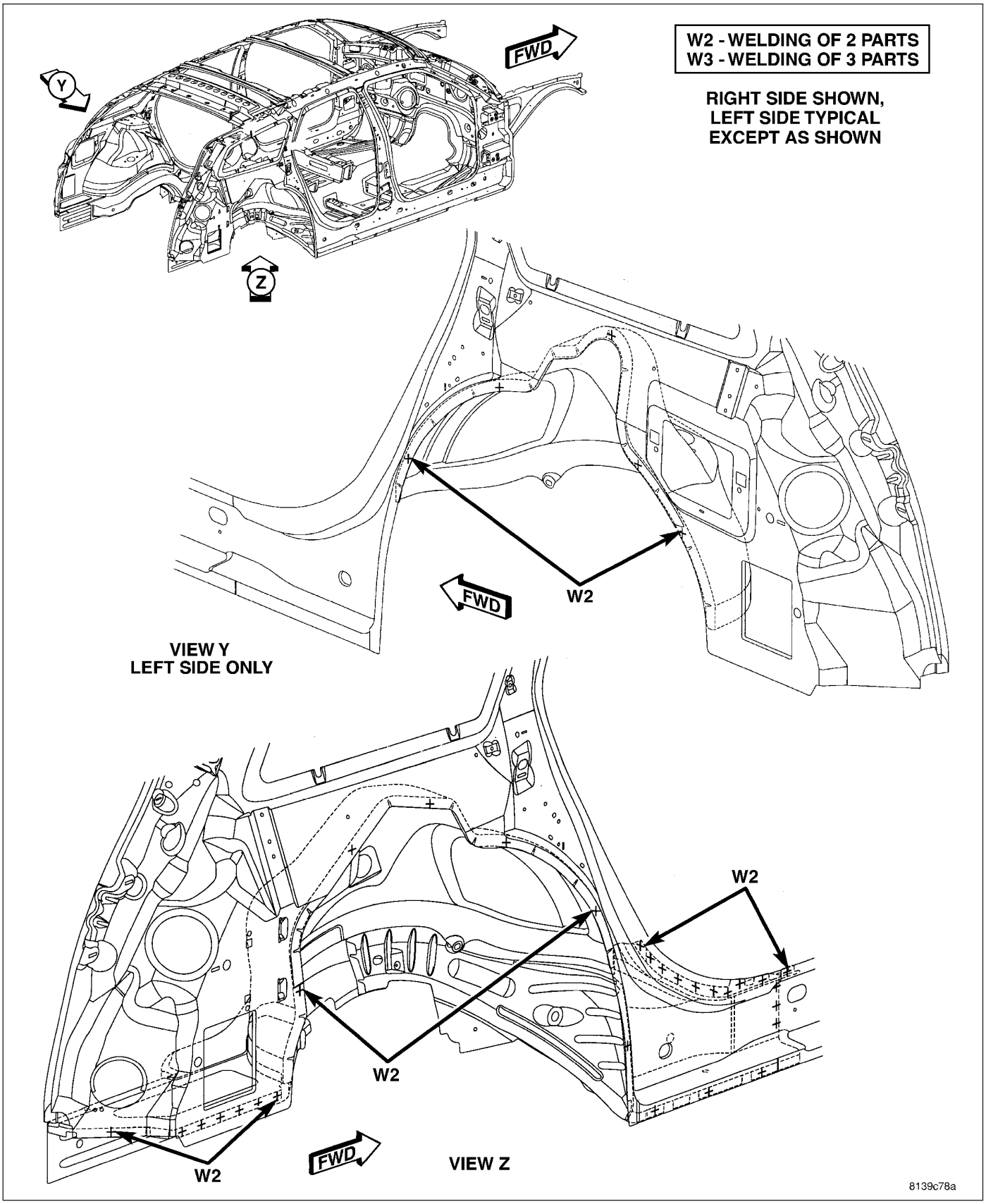

Fig. 110 FRAMED FULL BODY IN WHITE (1 OF 8)

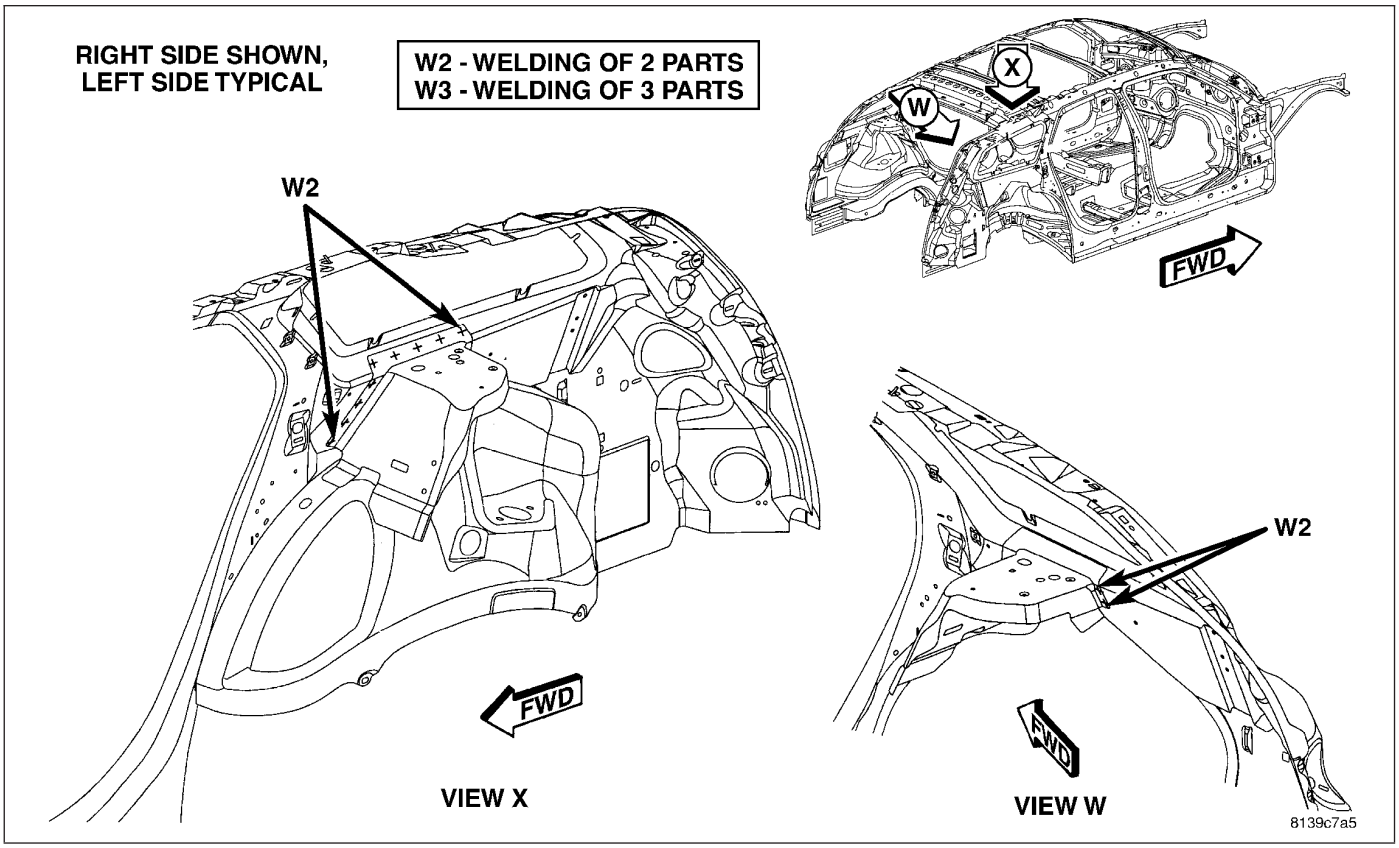

Fig. 111 FRAMED FULL BODY IN WHITE (2 OF 8)

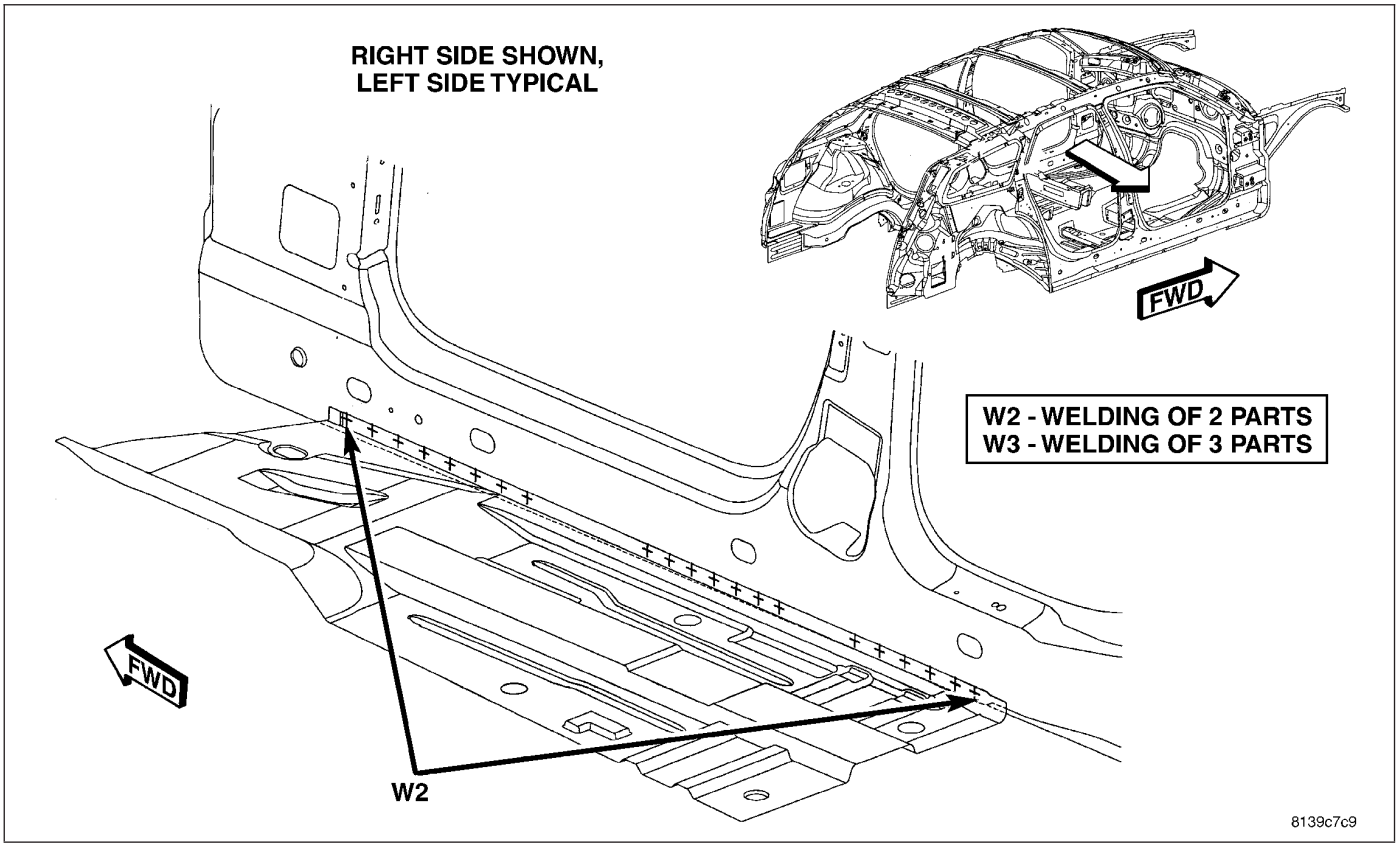

Fig. 112 FRAMED FULL BODY IN WHITE (3 OF 8)

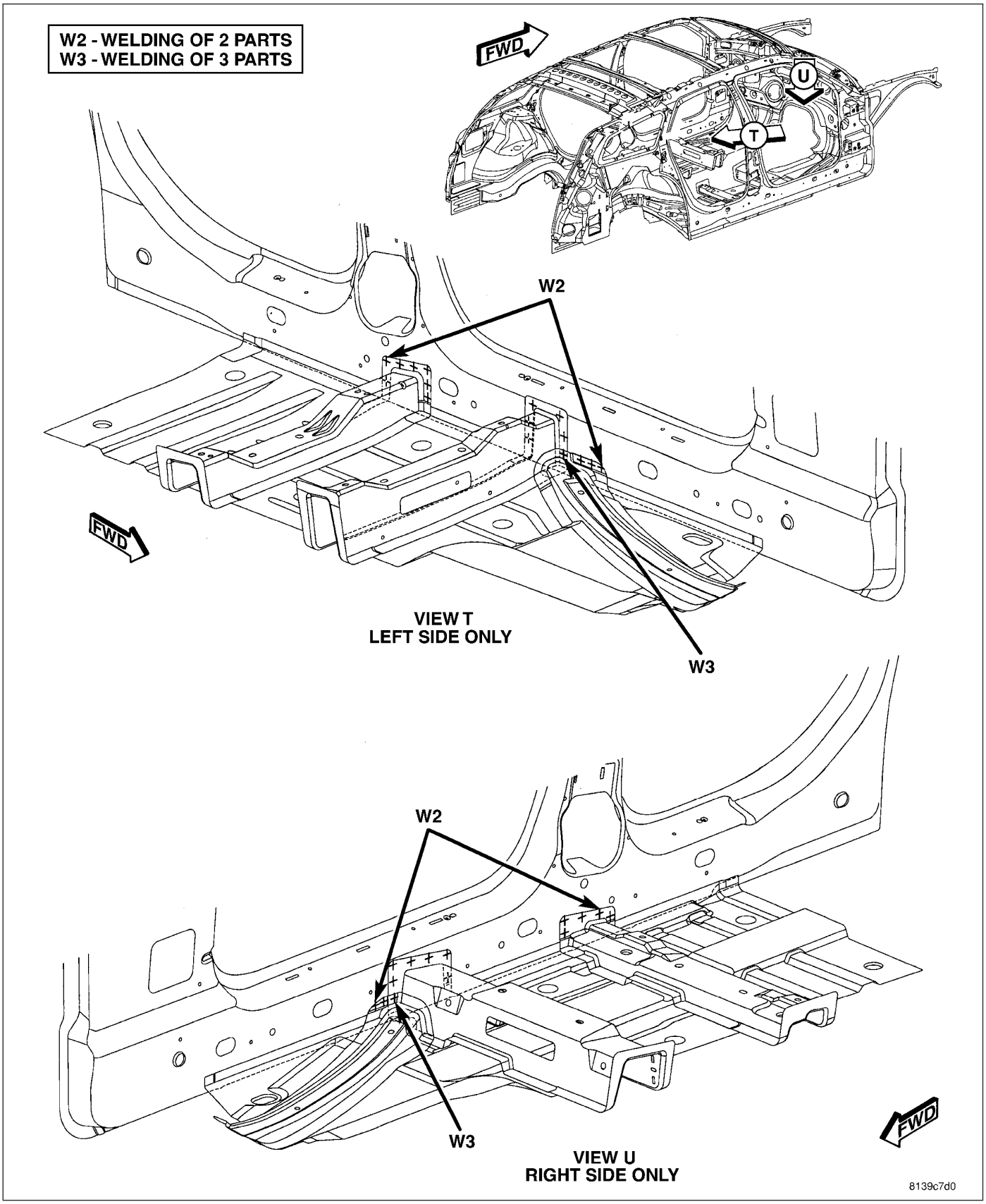

Fig. 113 FRAMED FULL BODY IN WHITE (4 OF 8)

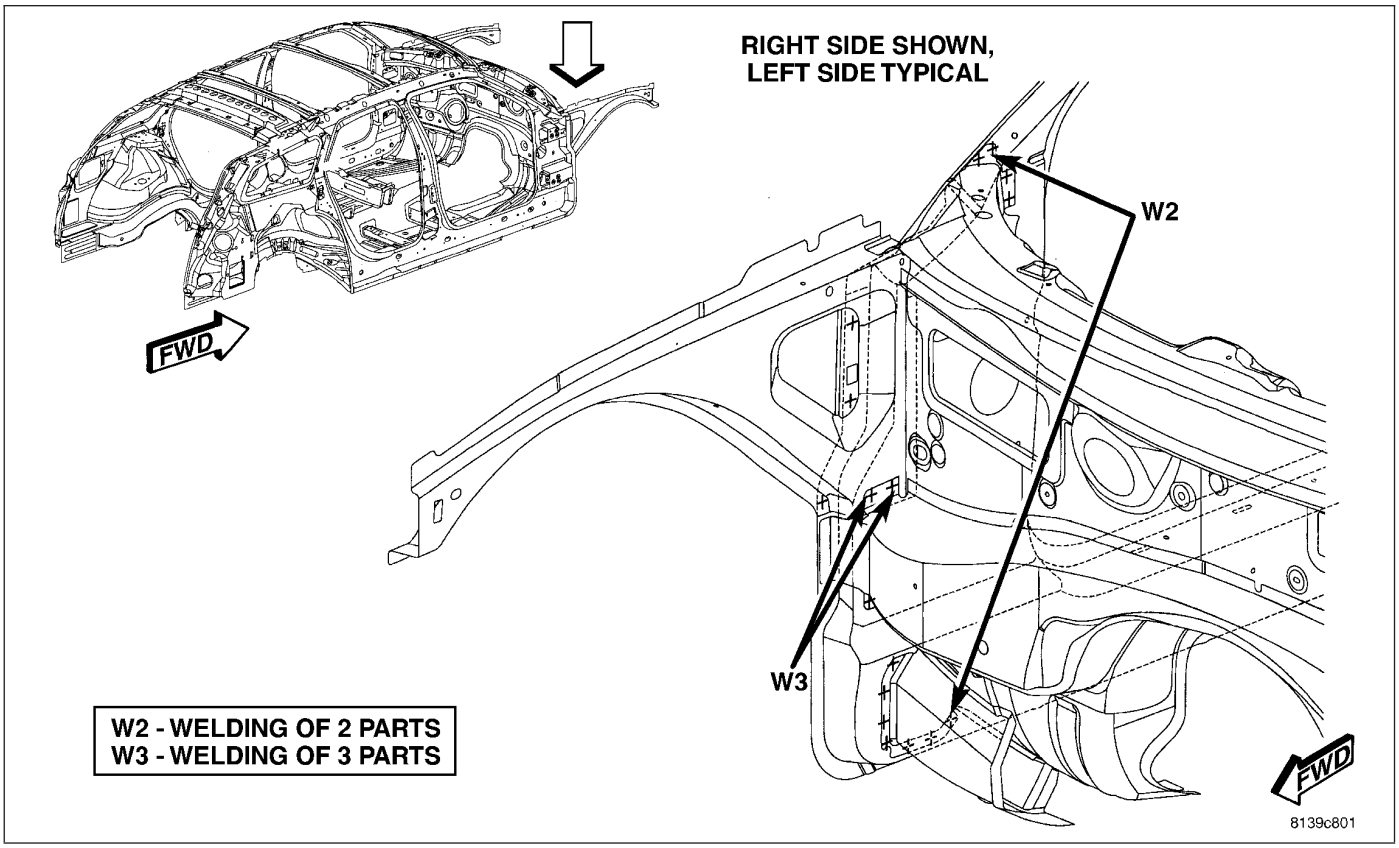

Fig. 114 FRAMED FULL BODY IN WHITE (5 OF 8)

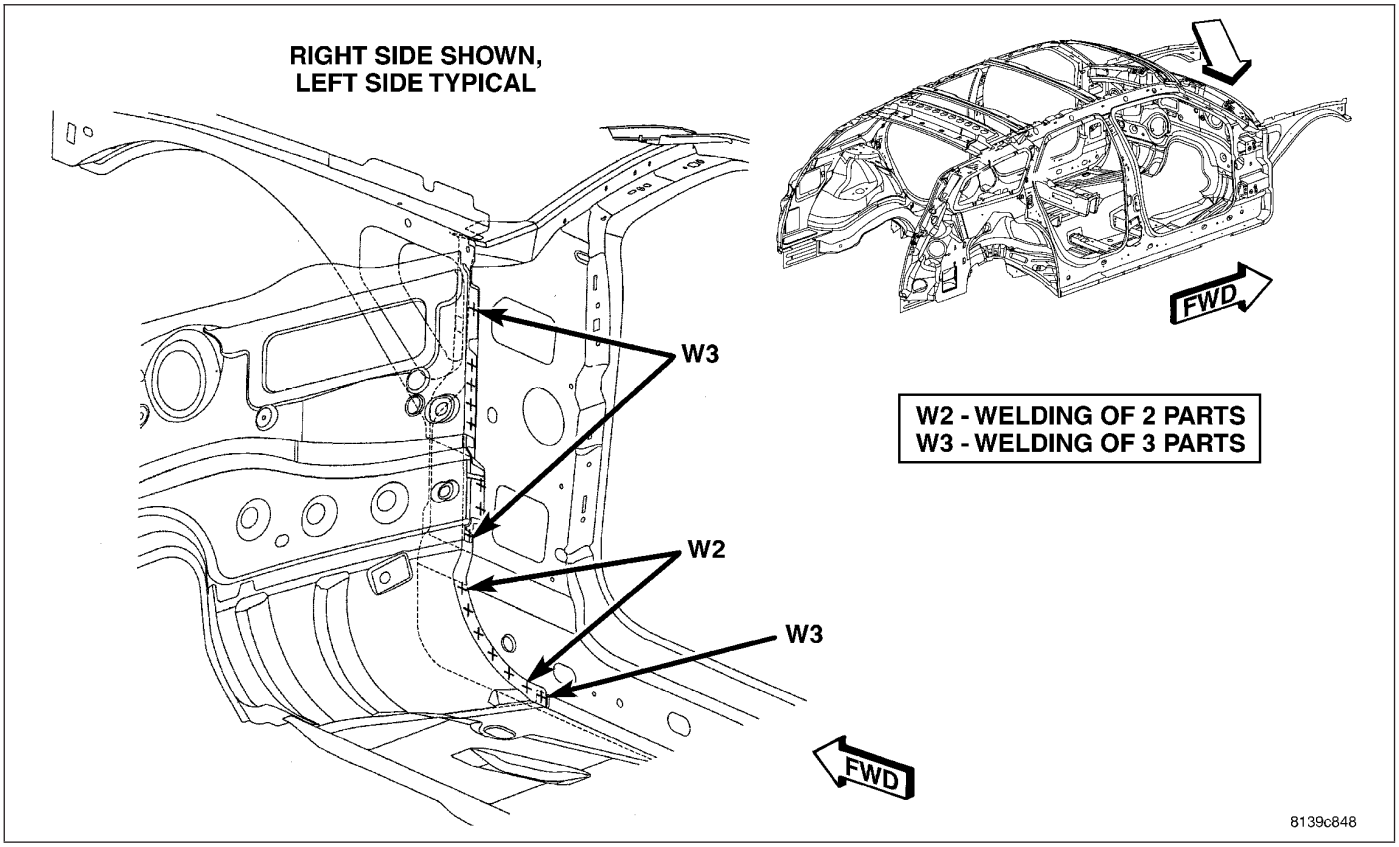

Fig. 115 FRAMED FULL BODY IN WHITE (6 OF 8)

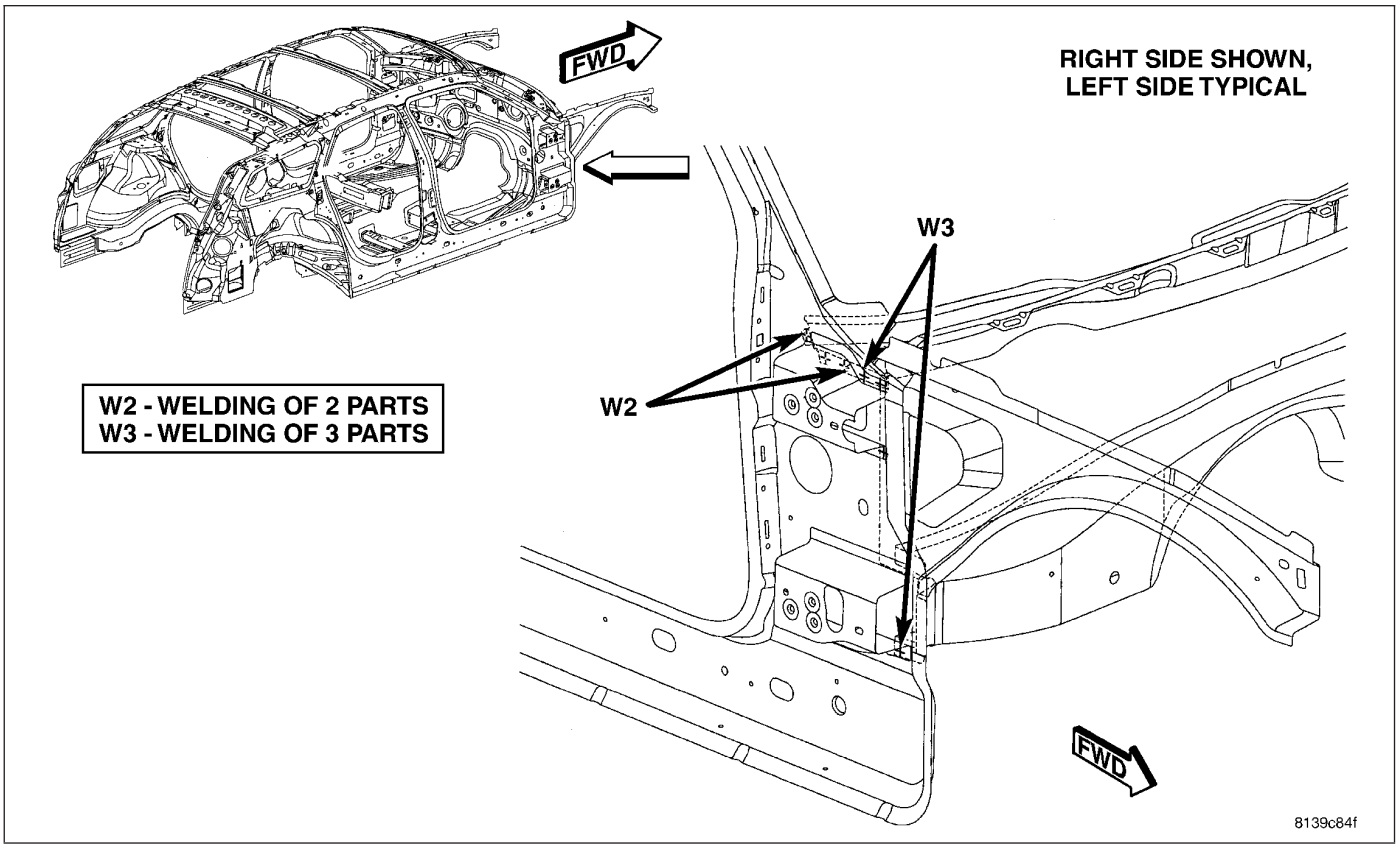

Fig. 116 FRAMED FULL BODY IN WHITE (7 OF 8)

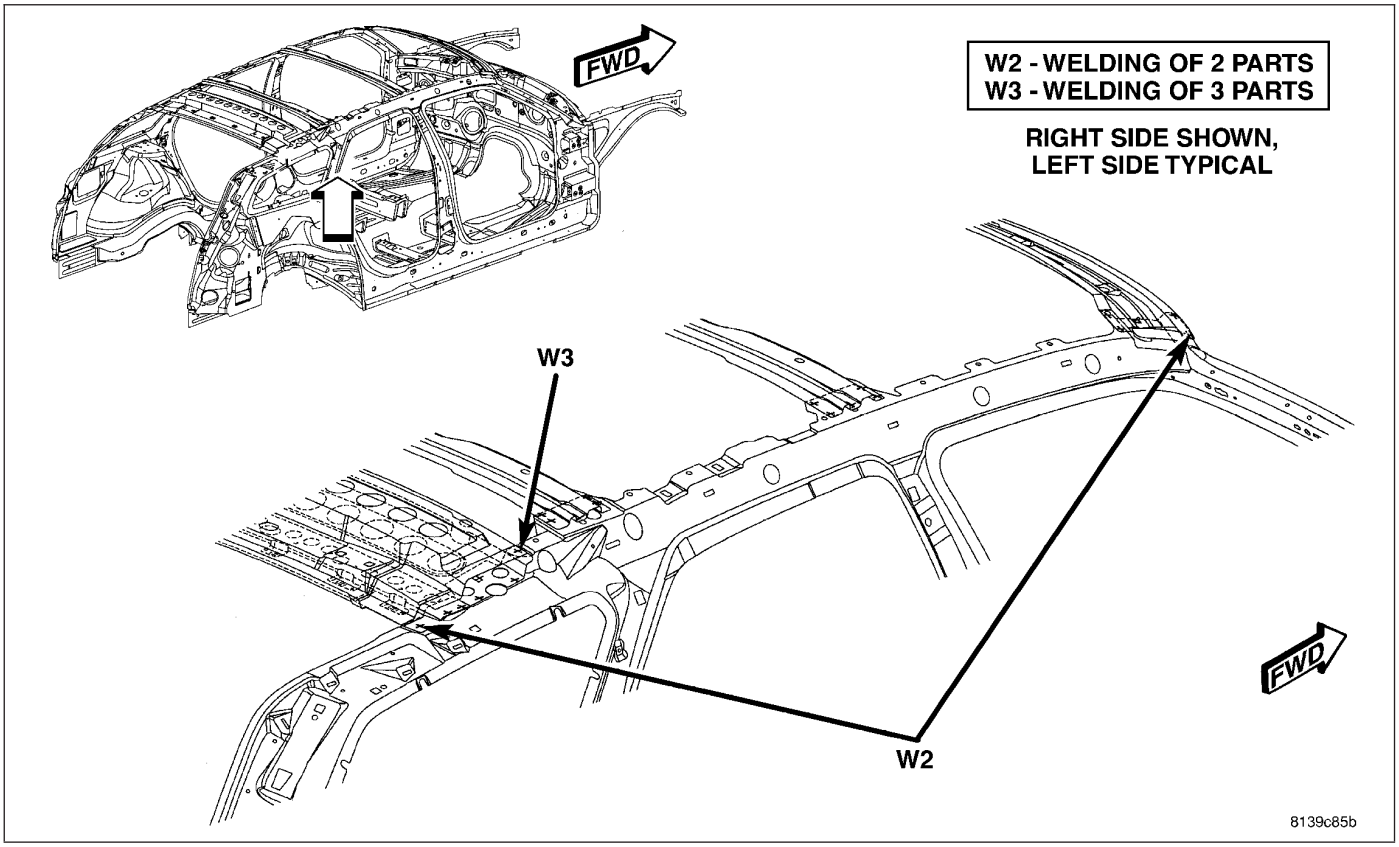

Fig. 117 FRAMED FULL BODY IN WHITE (8 OF 8)

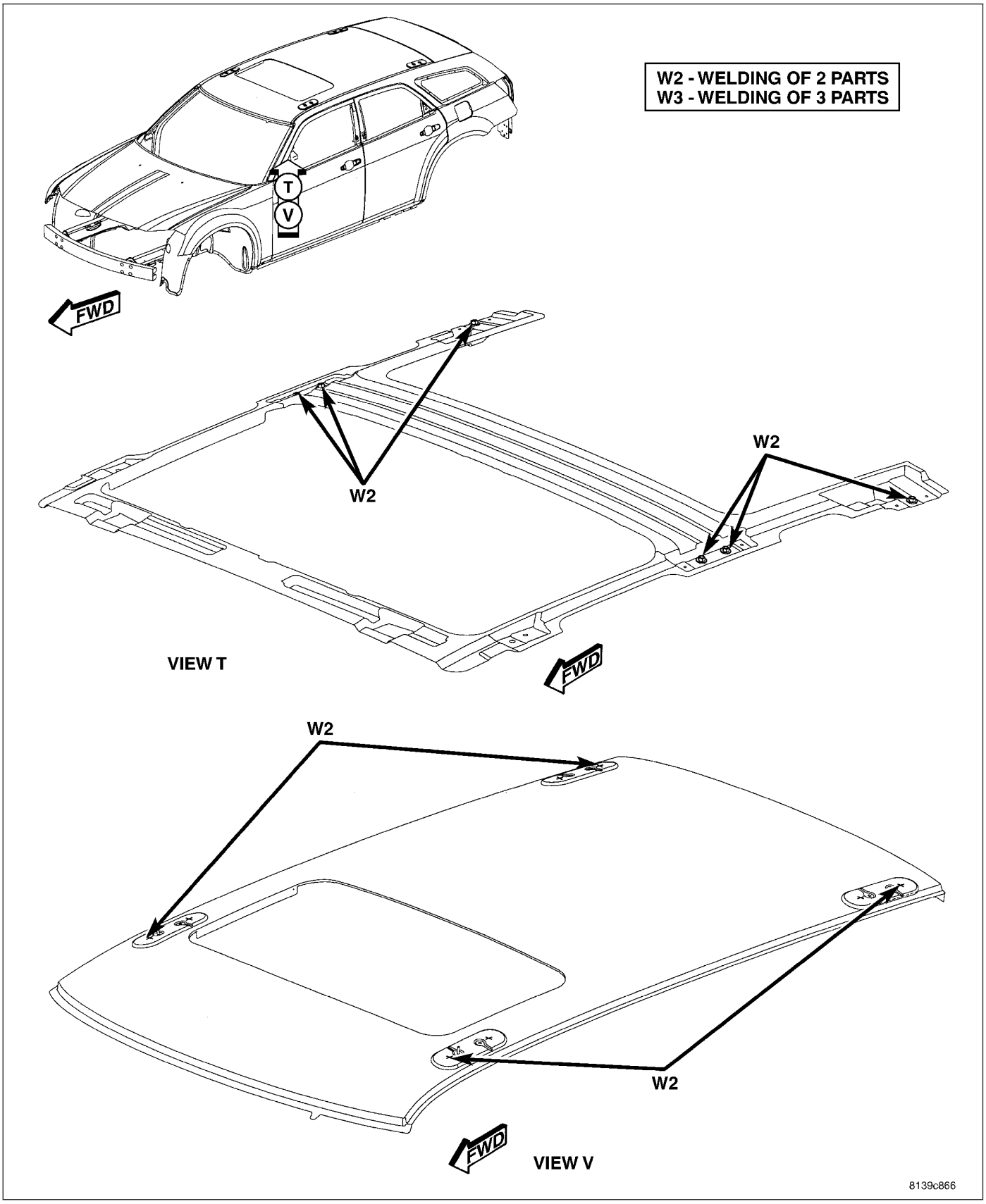

Fig. 118 ROOF (1 OF 4)

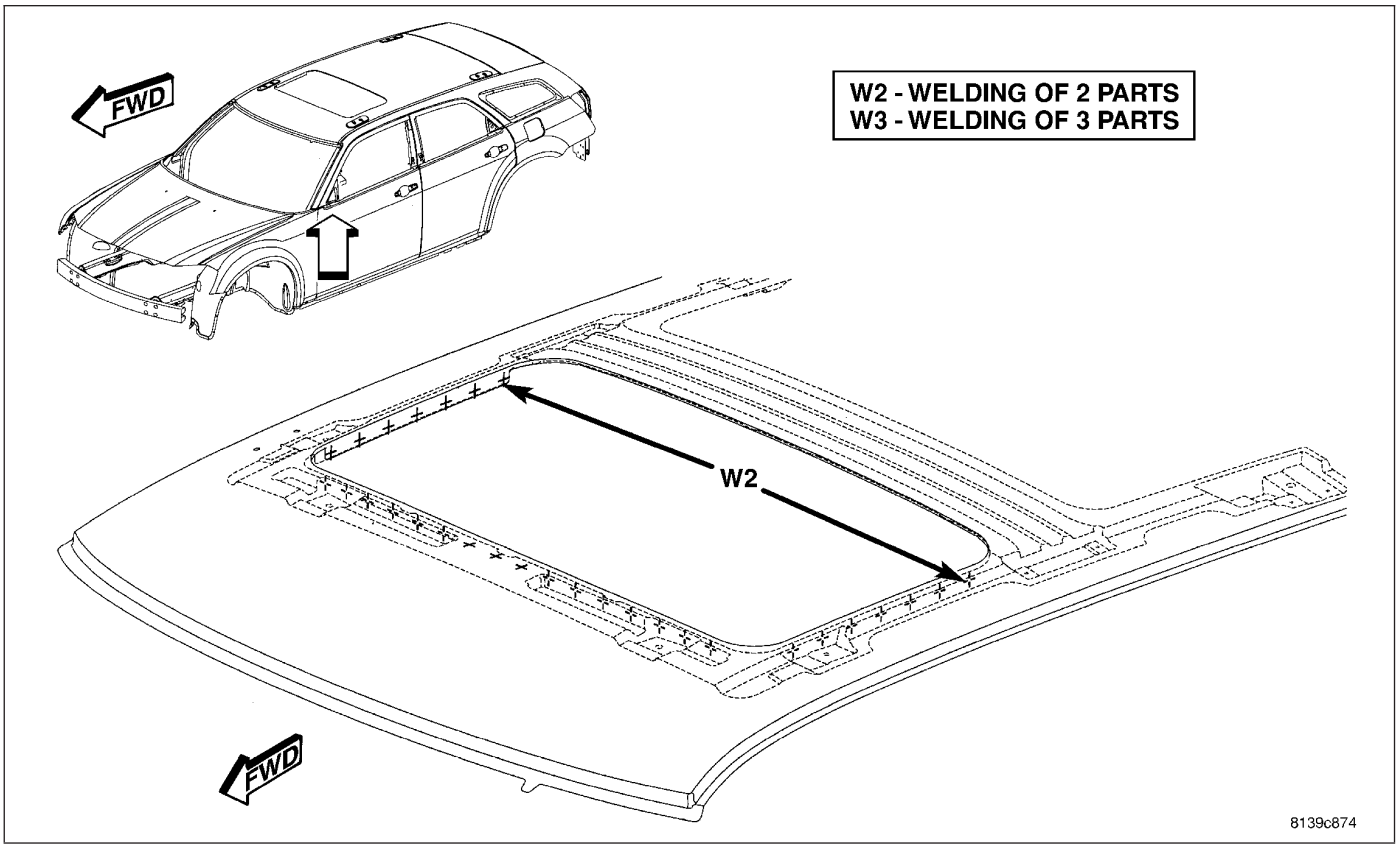

Fig. 119 ROOF (2 OF 4)

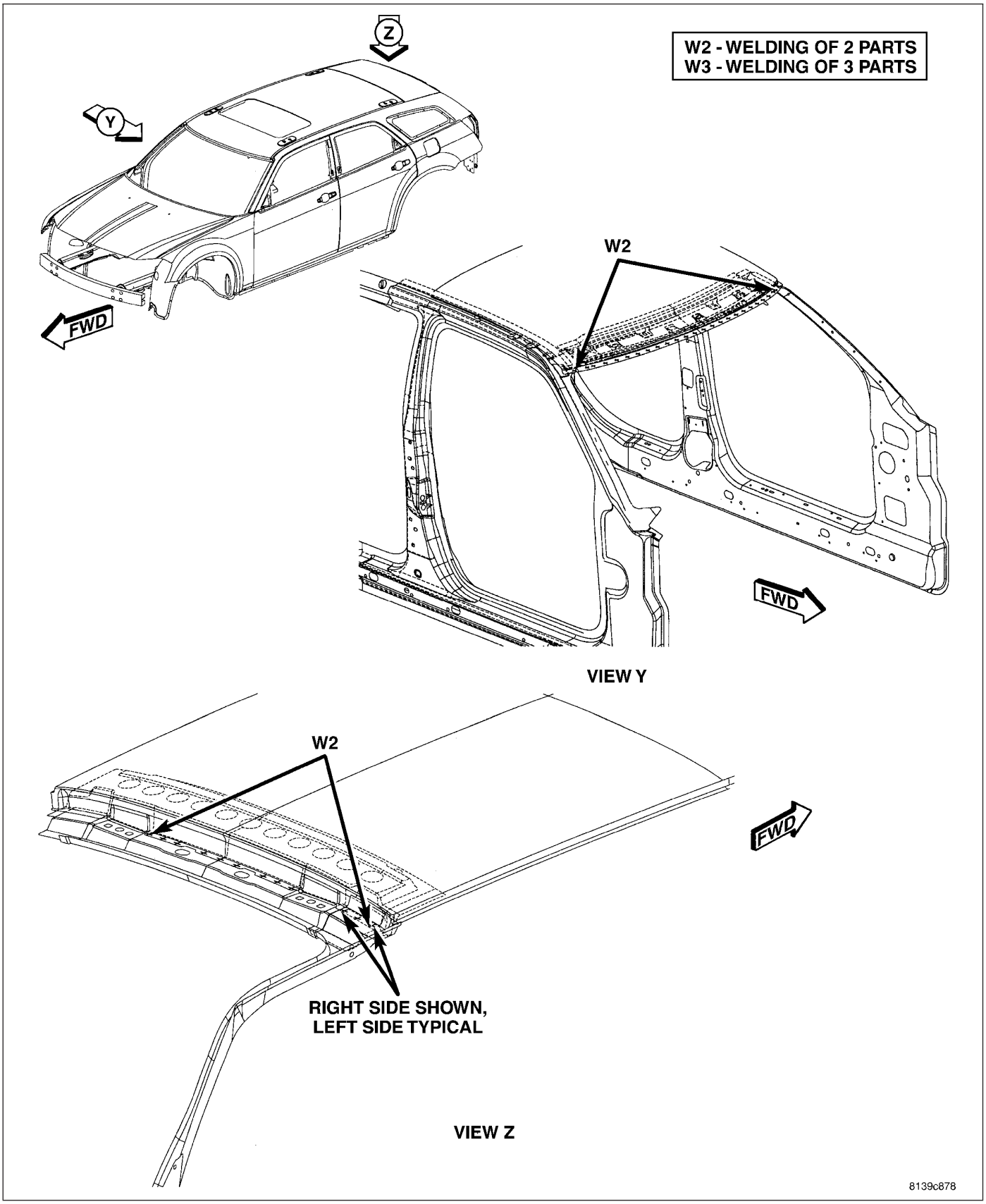

Fig. 120 ROOF (3 OF 4)

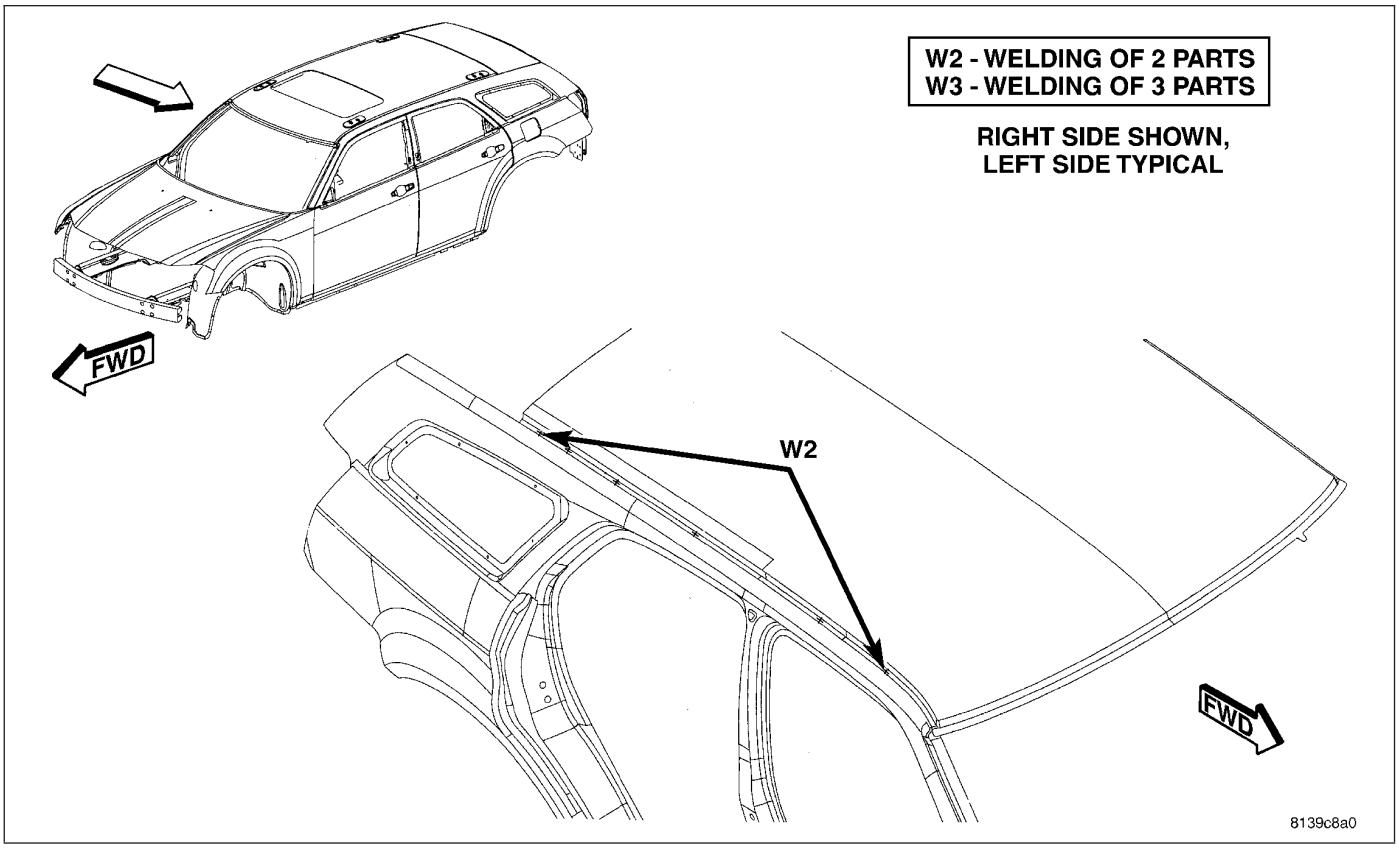

Fig. 121 ROOF (4 OF 4)

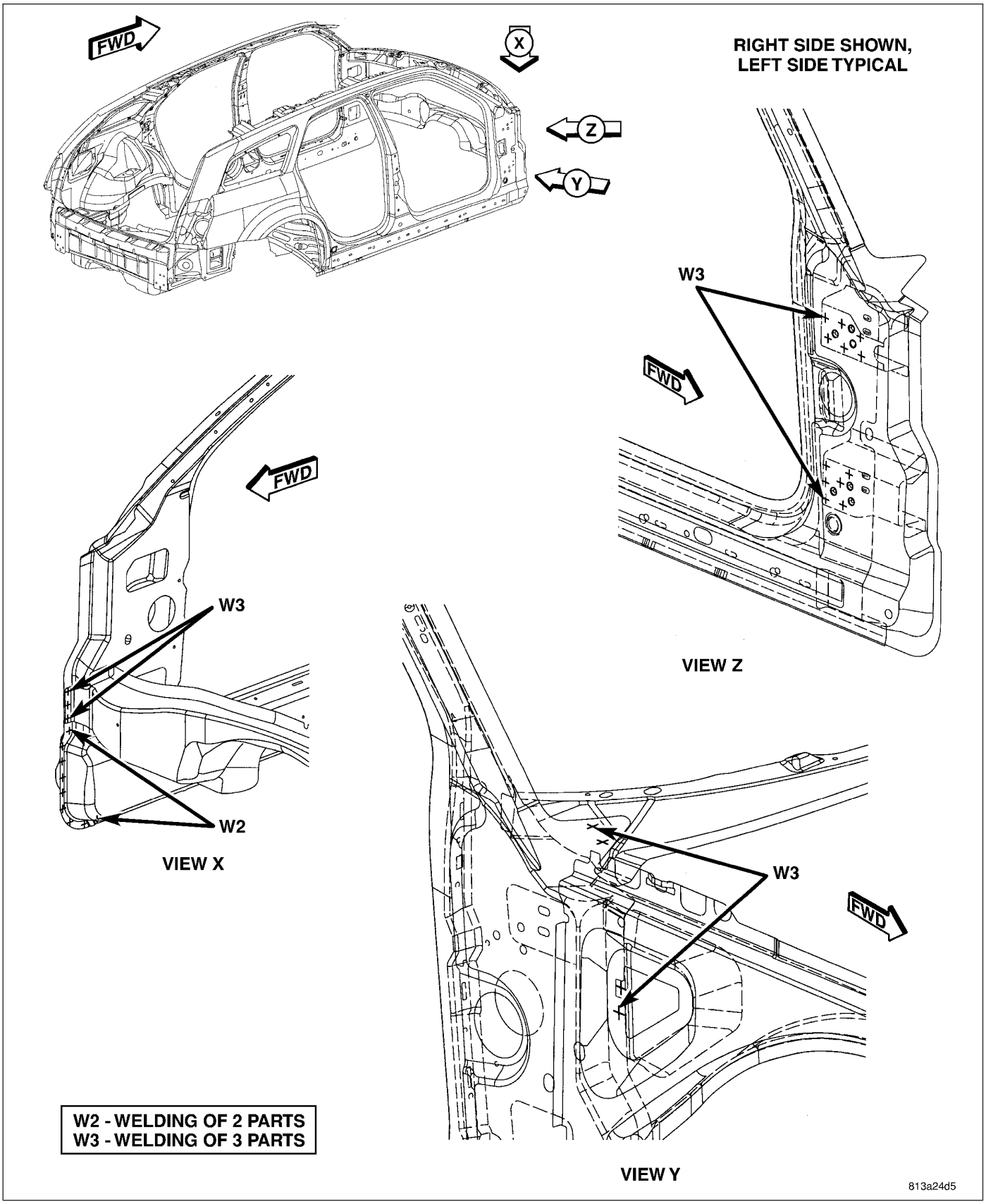

Fig. 122 FRAMED BODY IN WHITE (1 OF 12)

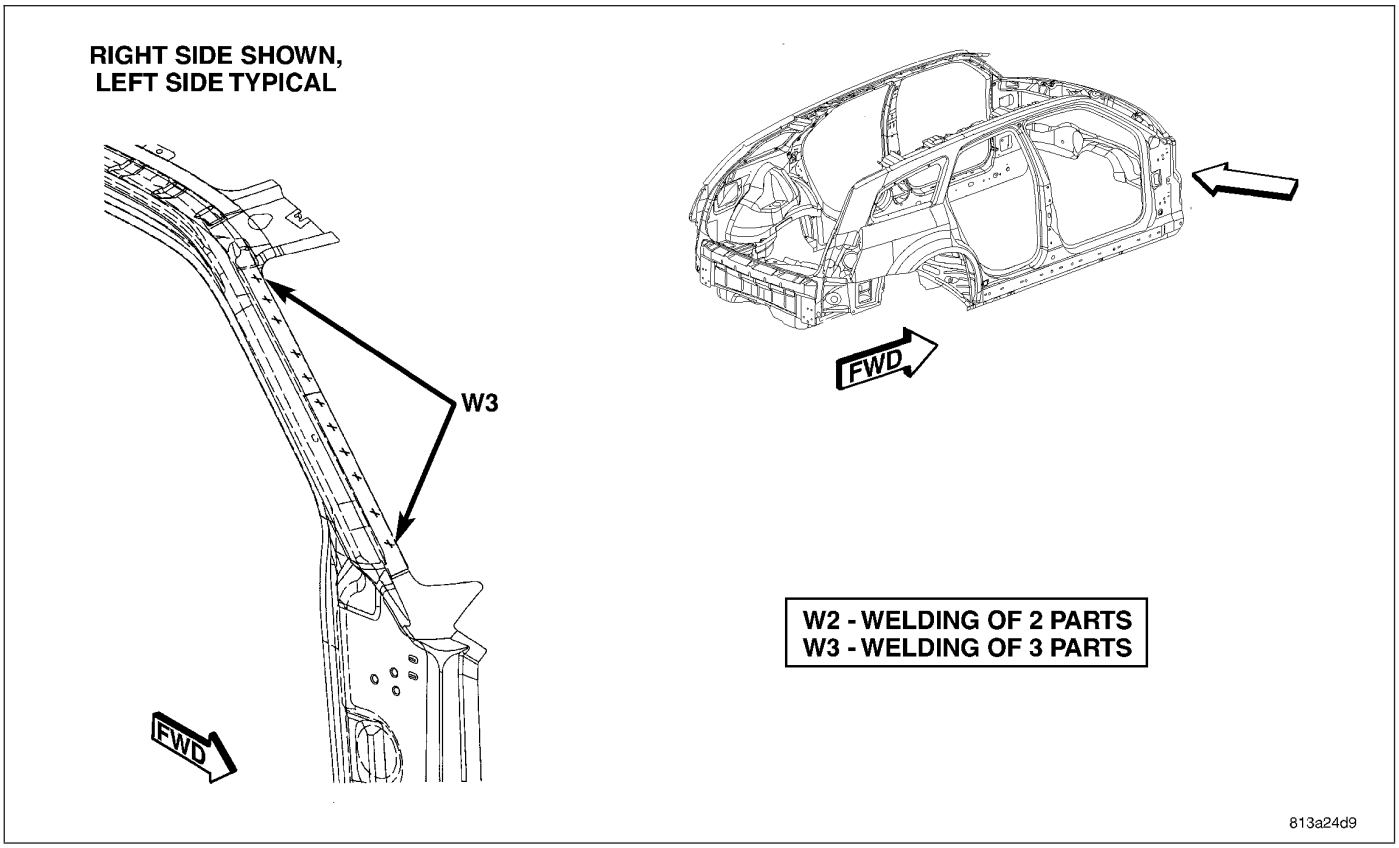

Fig. 123 003 FRAMED BODY IN WHITE (2 OF 12)

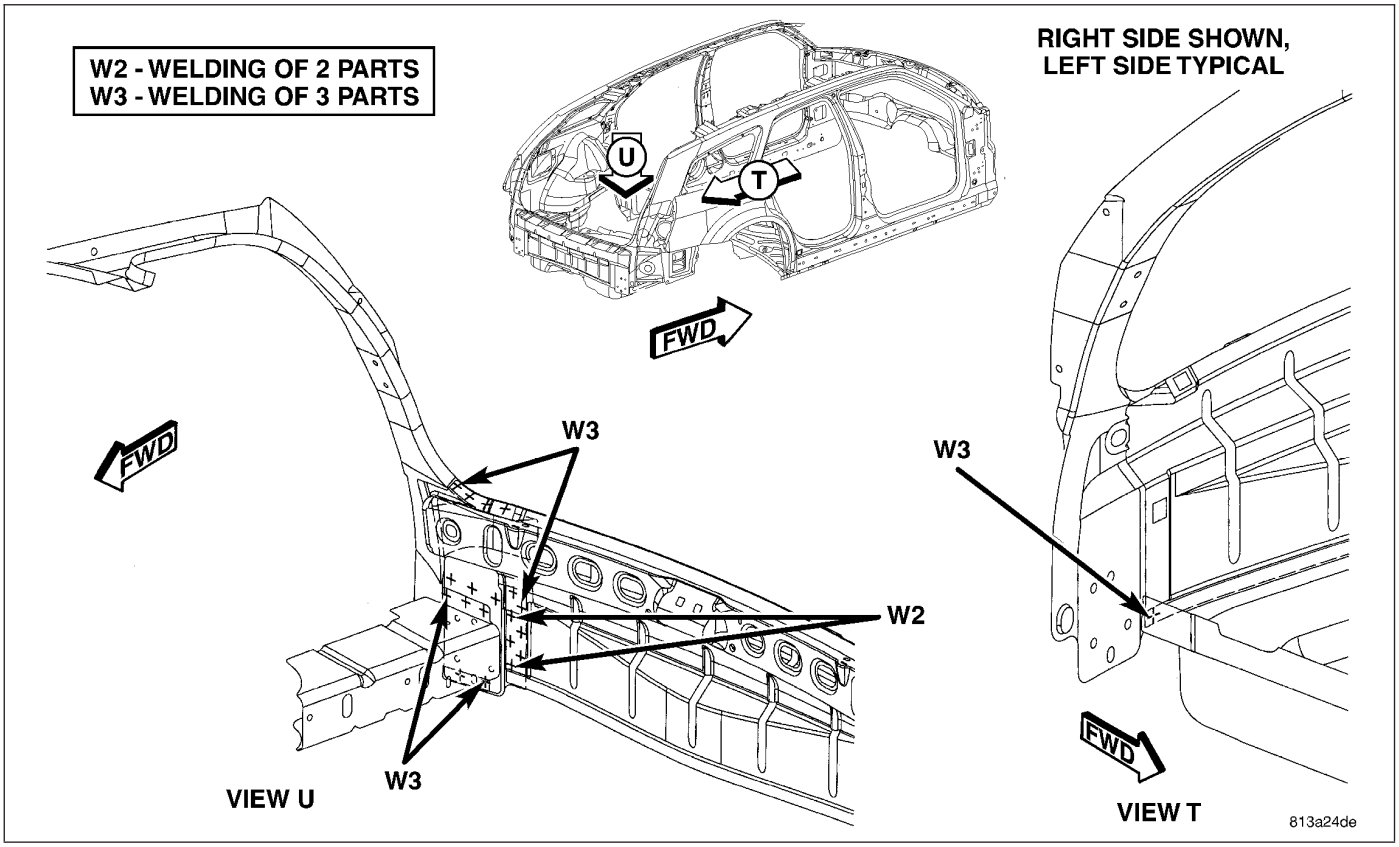

Fig. 124 FRAMED BODY IN WHITE (3 OF 12)

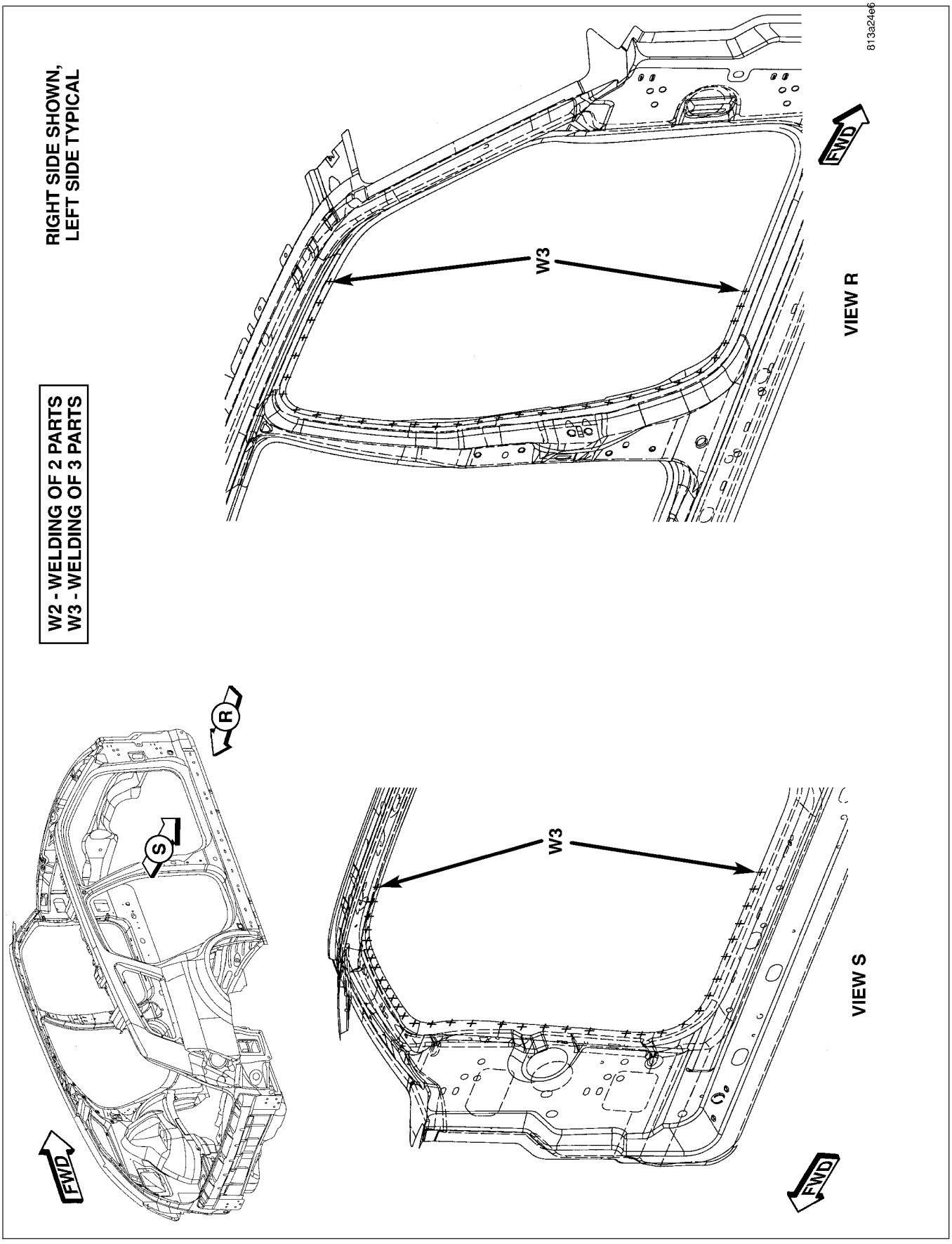

Fig. 125 FRAMED BODY IN WHITE (4 OF 12)

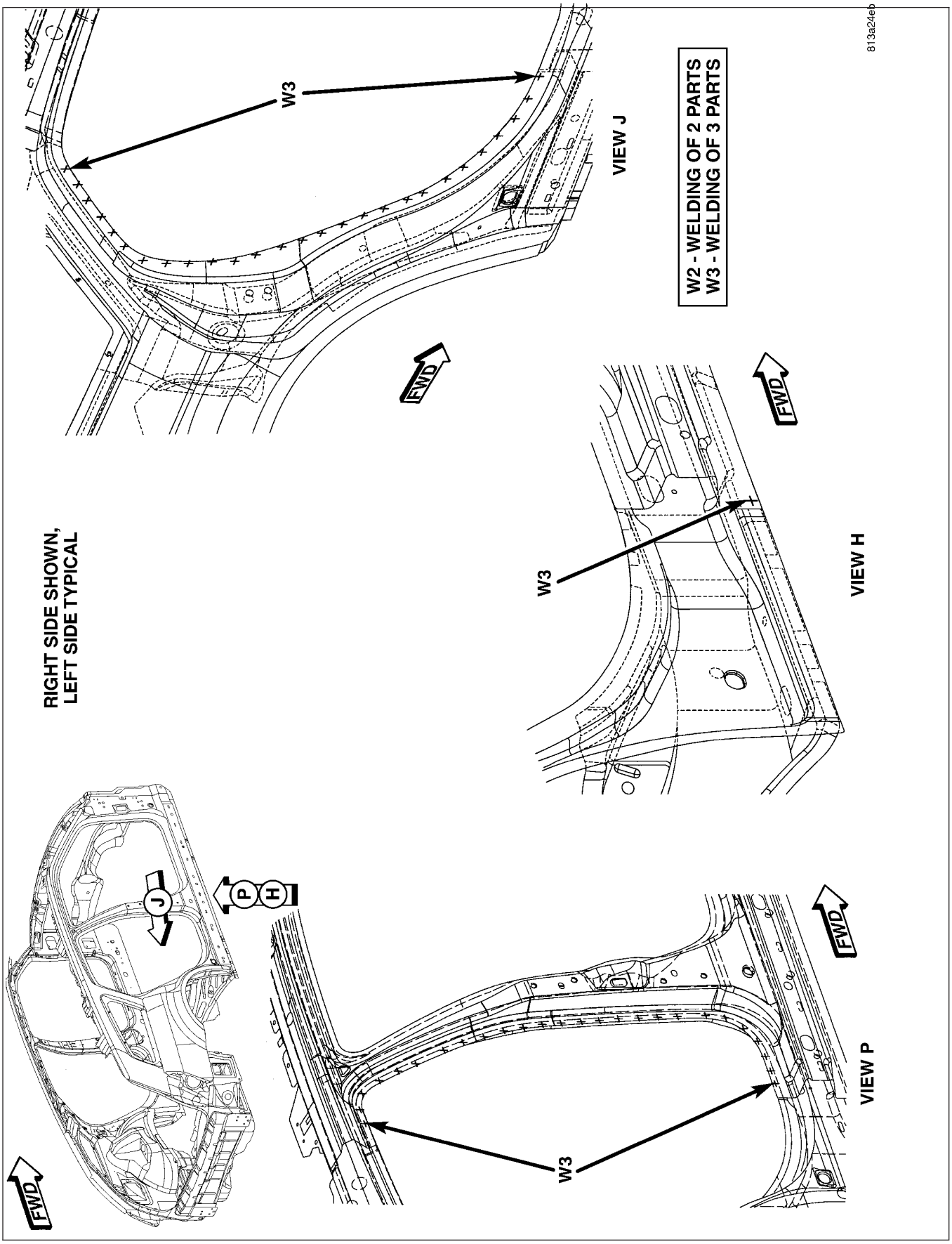

Fig. 126 FRAMED BODY IN WHITE (5 OF 12)

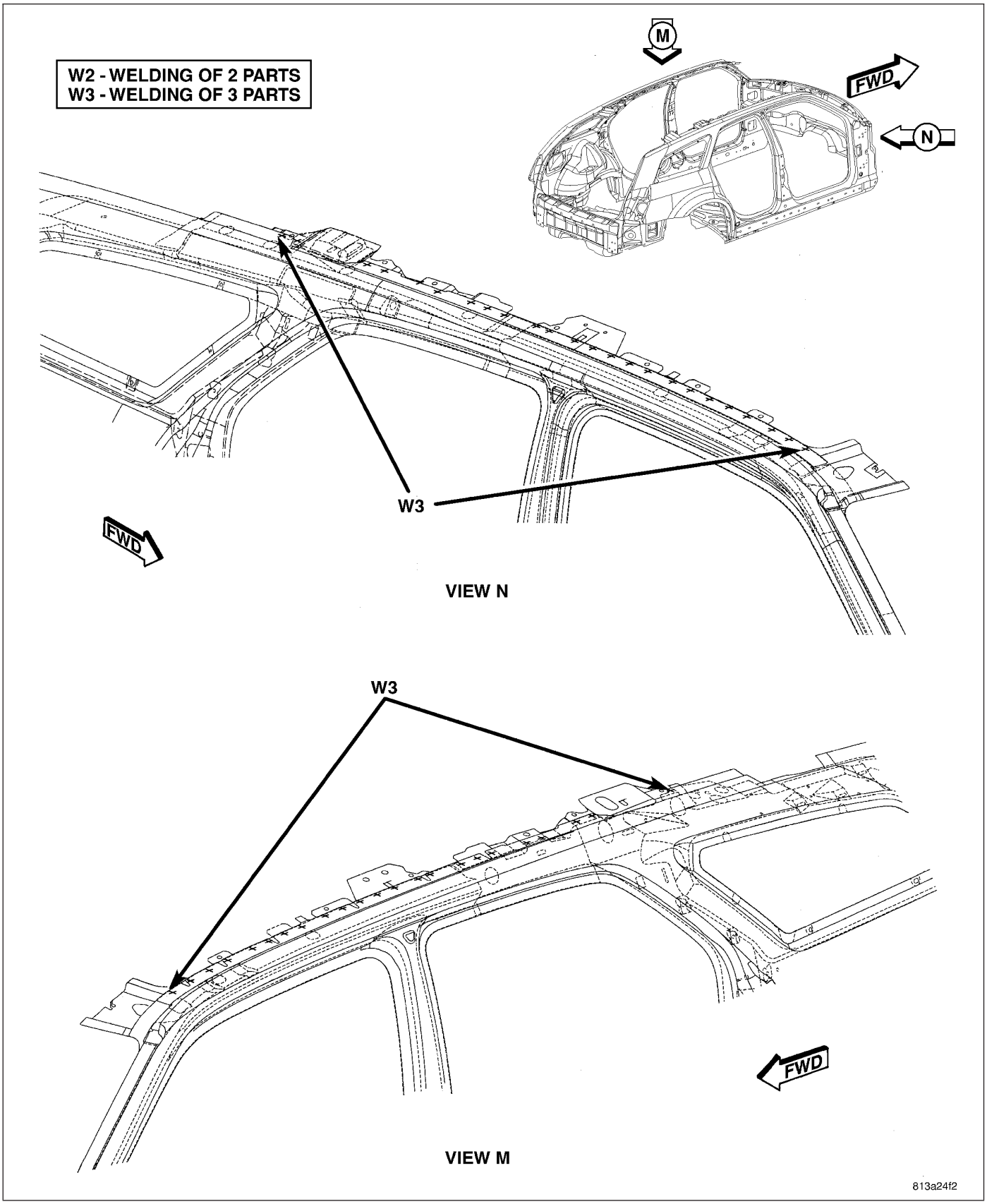

Fig. 127 004 FRAMED BODY IN WHITE (6 OF 12)

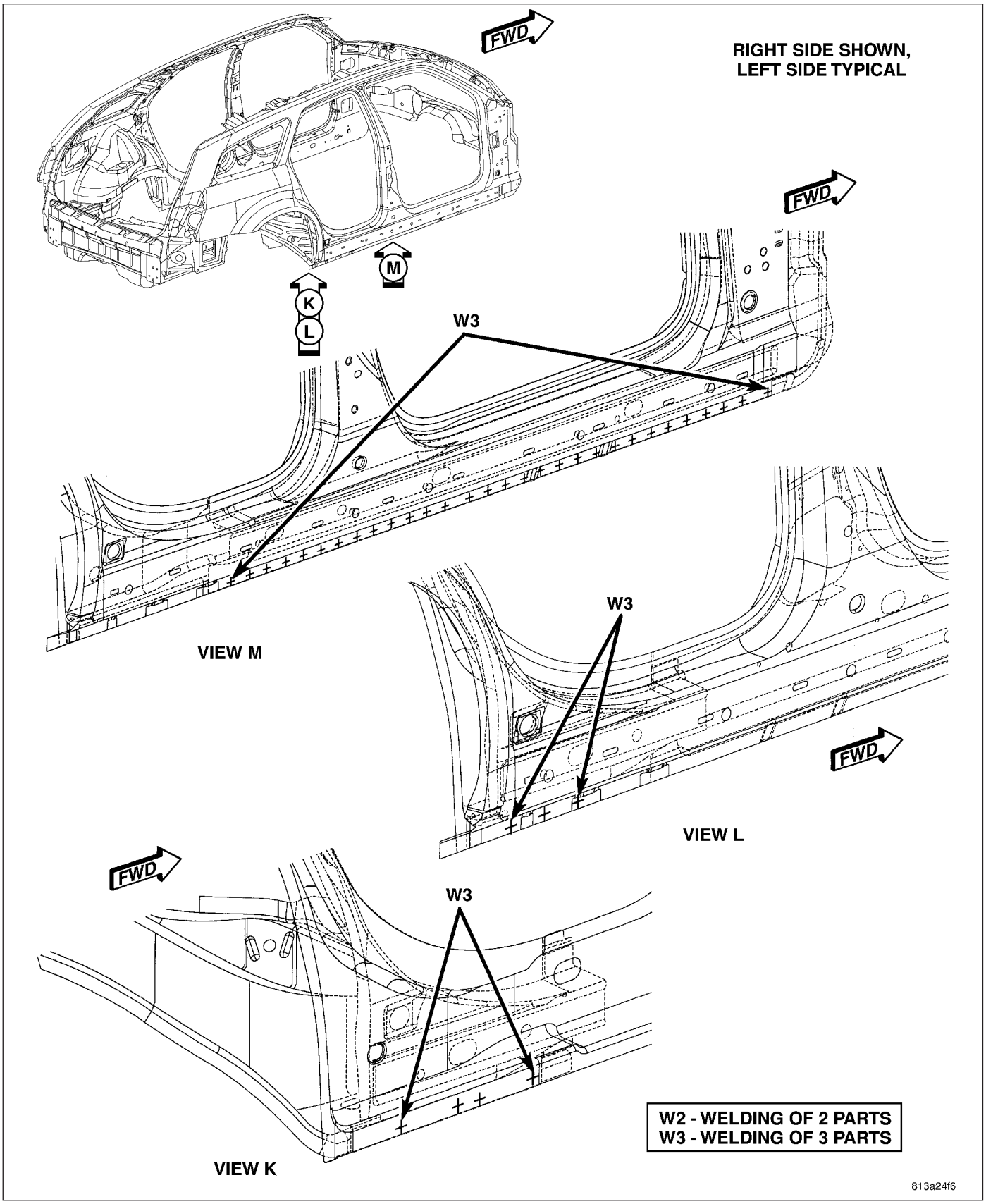

Fig. 128 FRAMED BODY IN WHITE (7 OF 12)

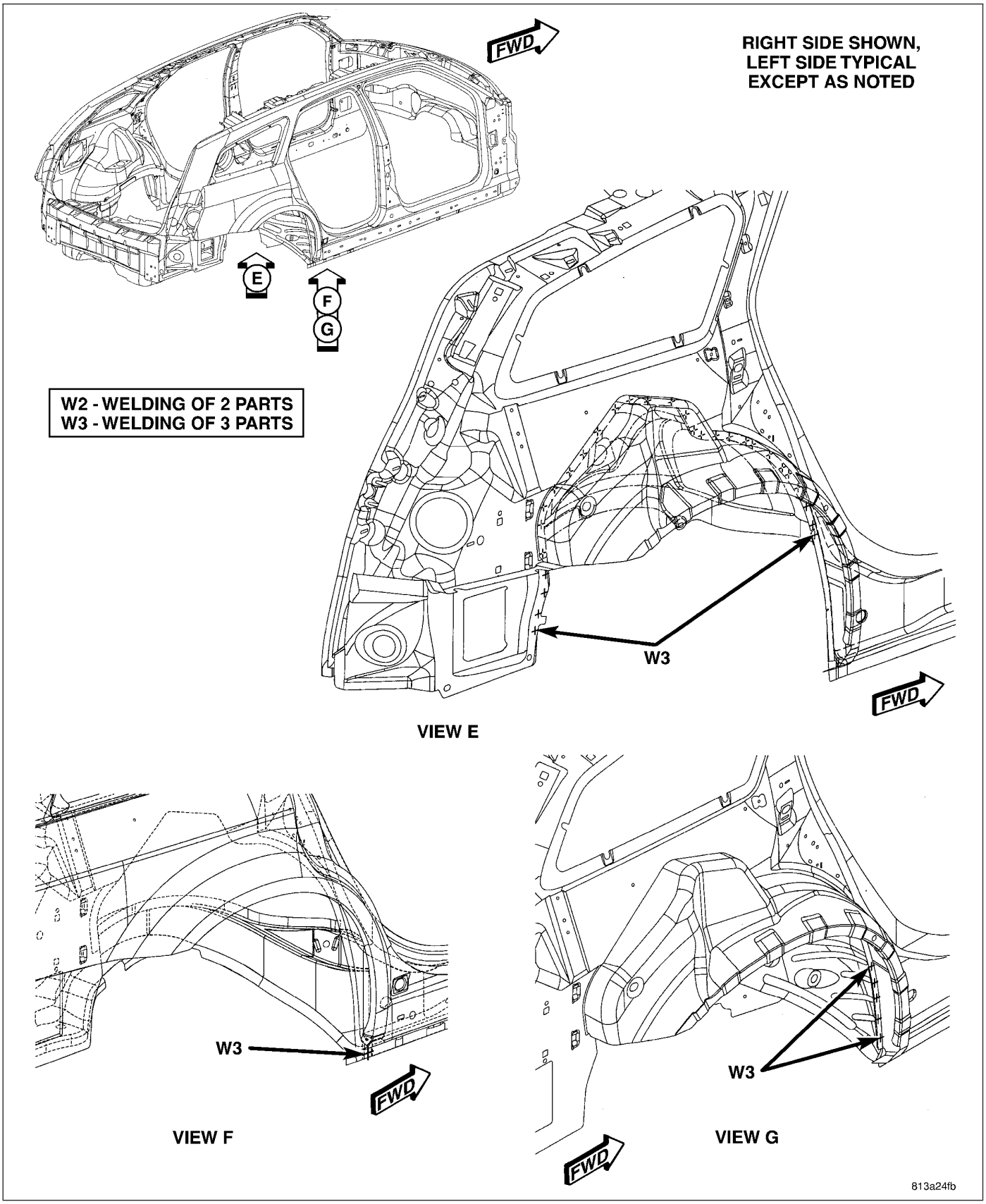

Fig. 129 FRAMED BODY IN WHITE (8 OF 12)

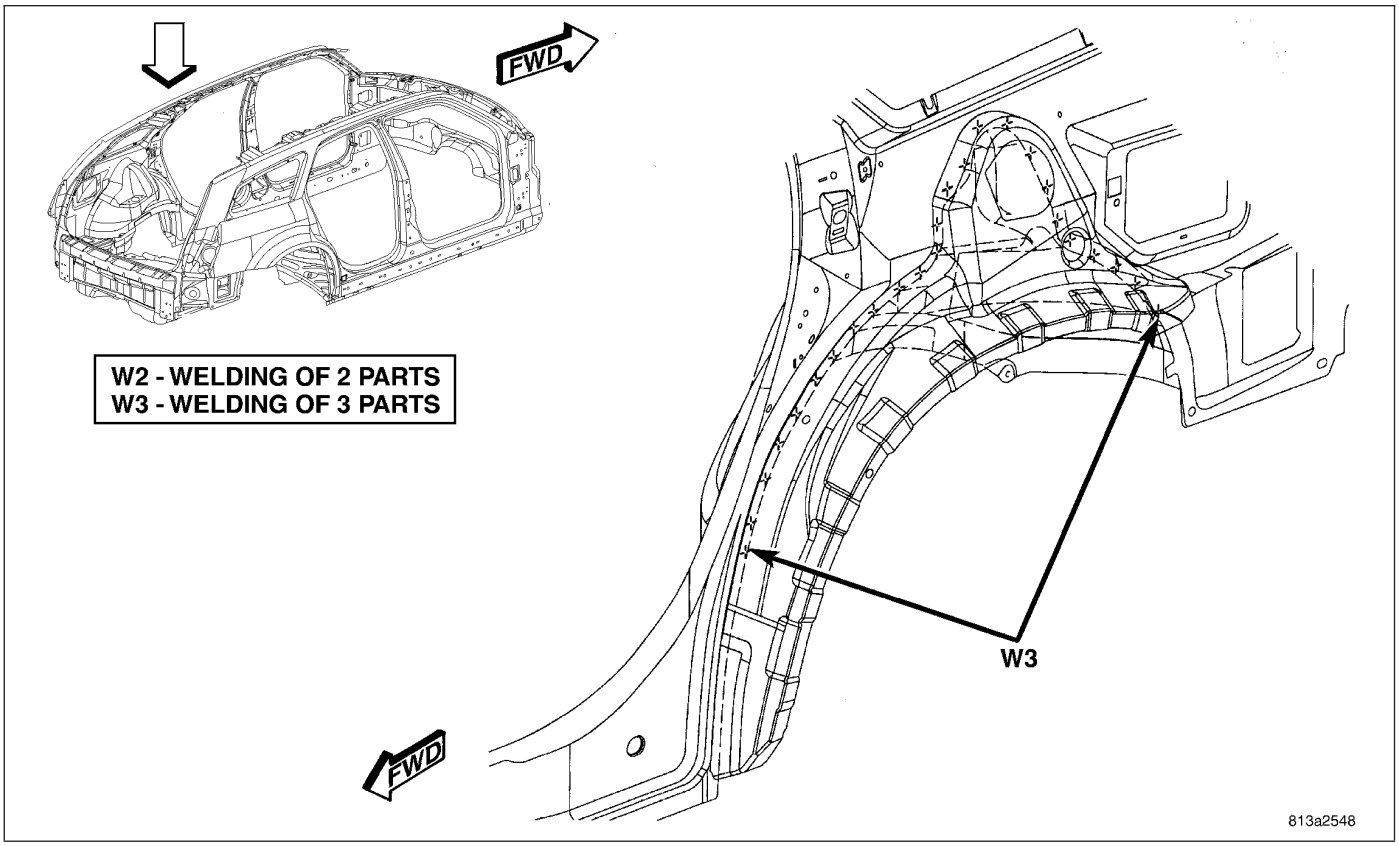

Fig. 130 FRAMED BODY IN WHITE (9 OF 12)

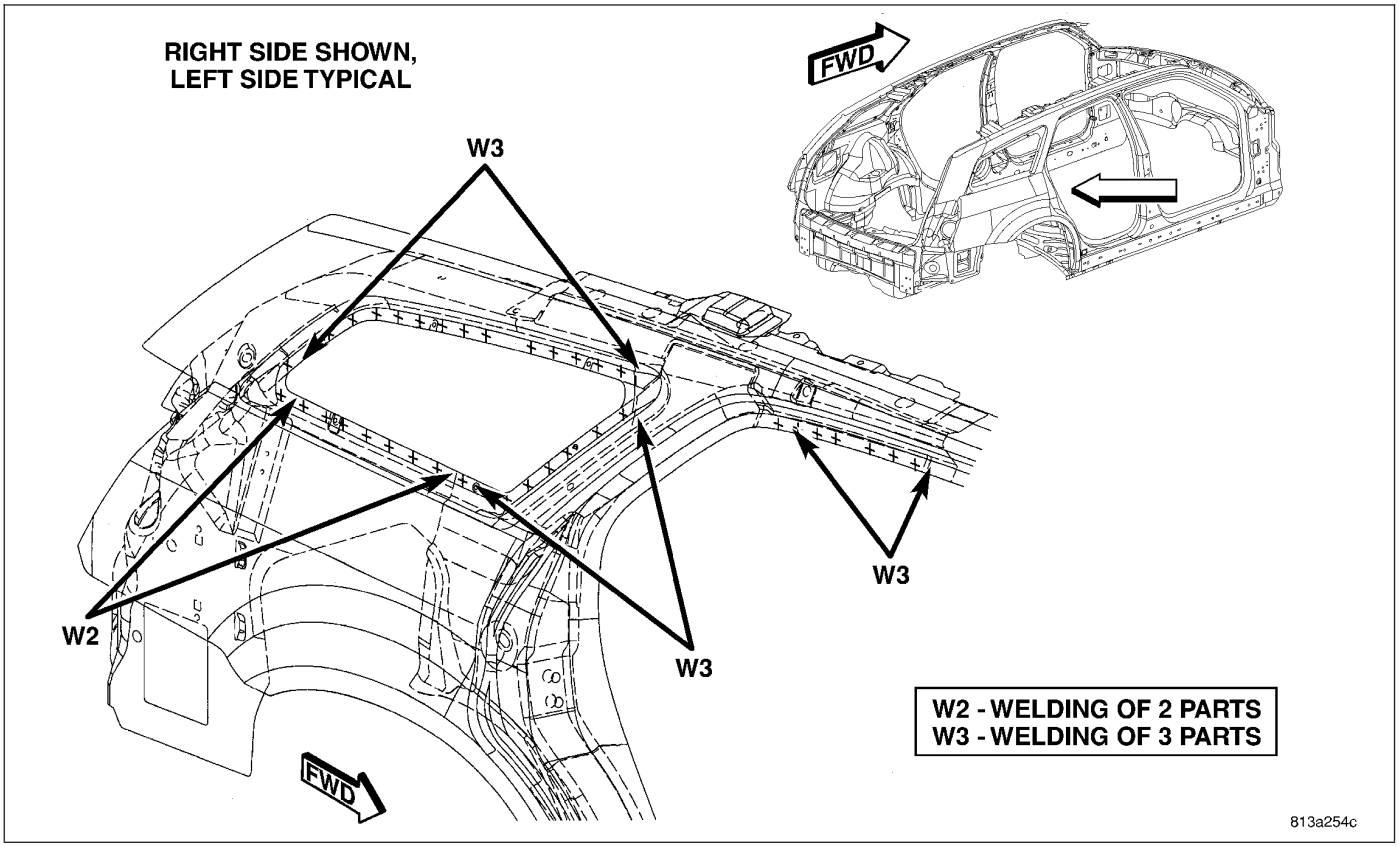

Fig. 131 FRAMED BODY IN WHITE (10 OF 12)

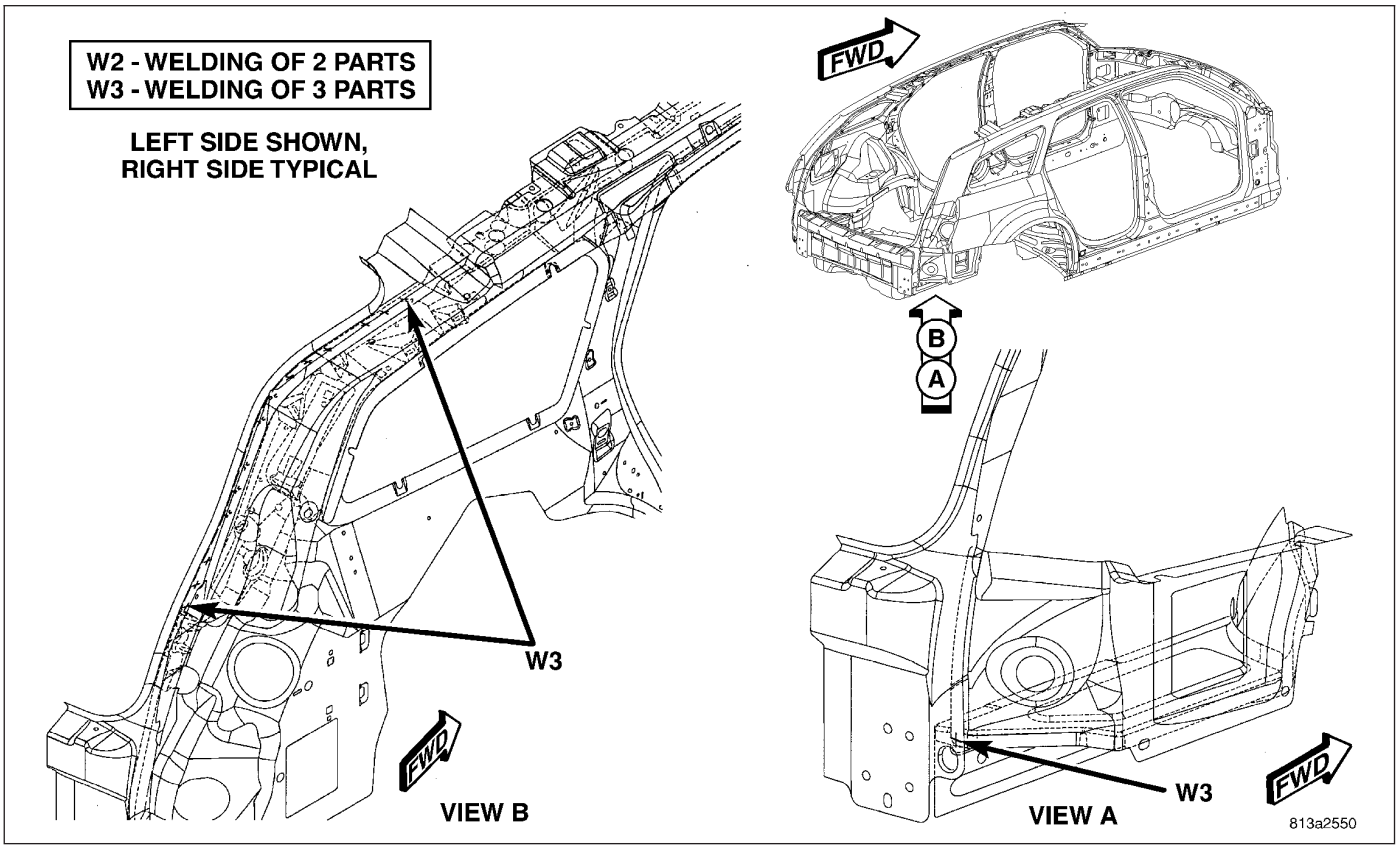

Fig. 132 FRAMED BODY IN WHITE (11 OF 12)

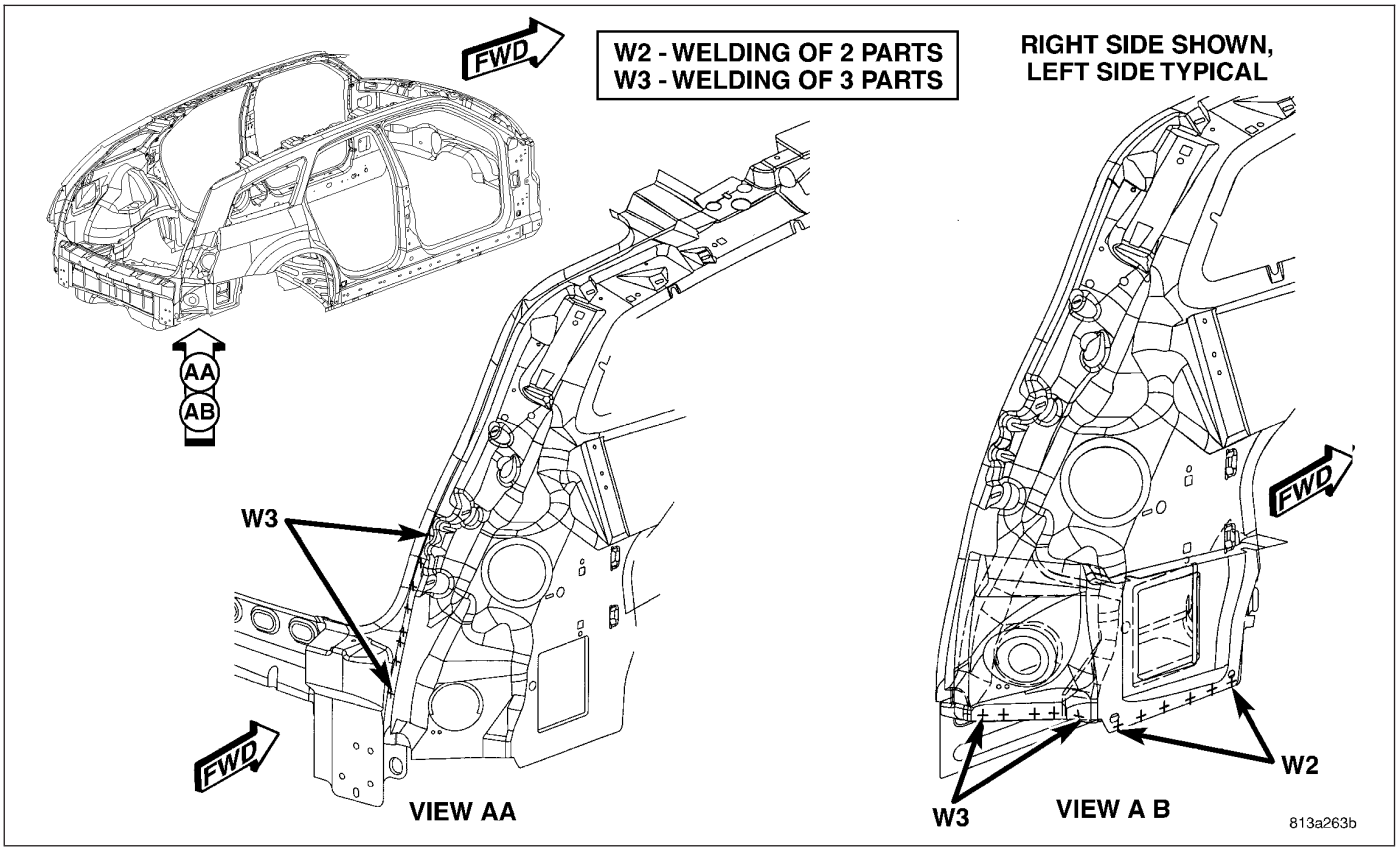

Fig. 133 FRAMED BODY IN WHITE (12 OF 12)

Sedan & Wagon

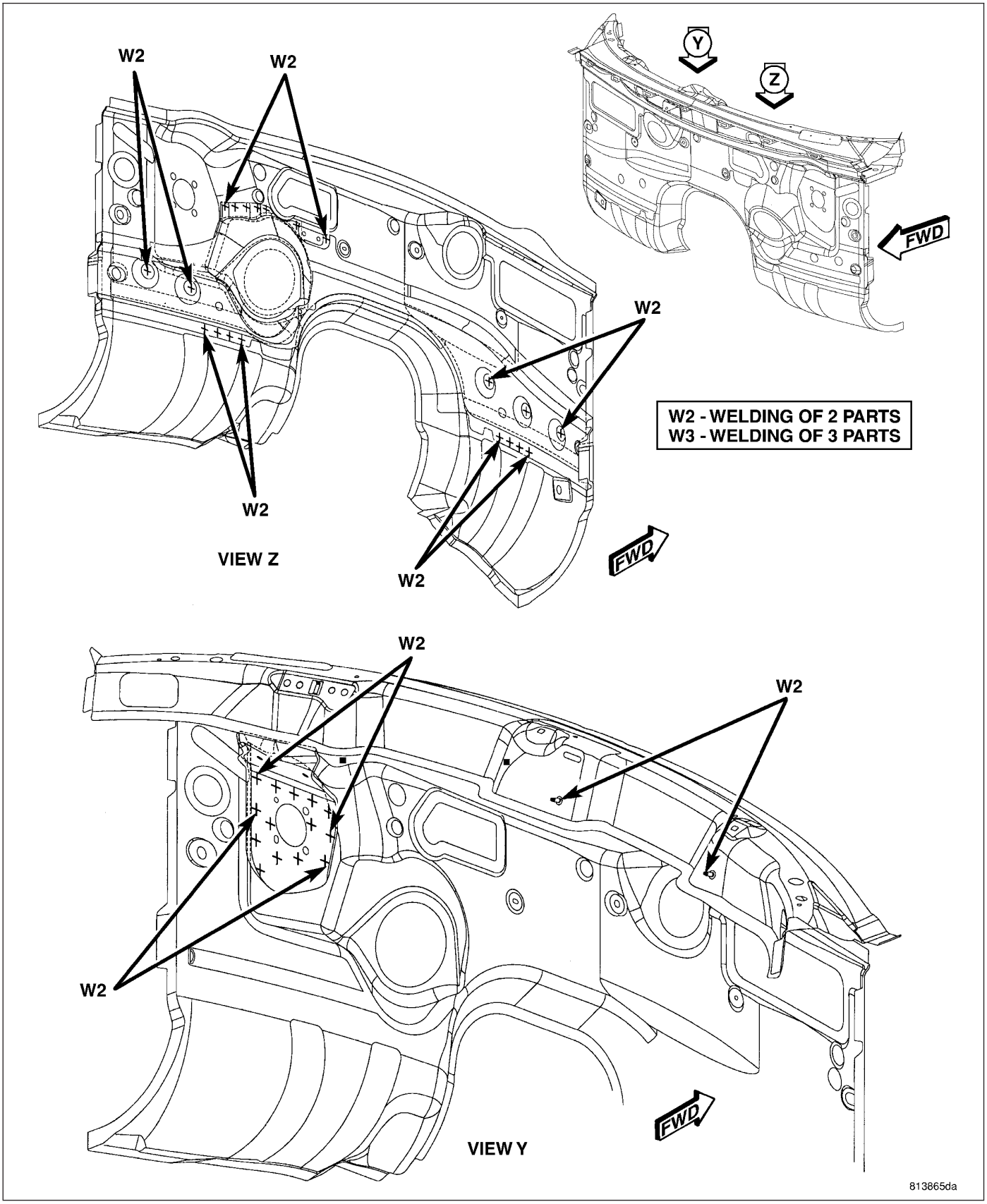

Fig. 134 DASH/COWL (1 OF 4)

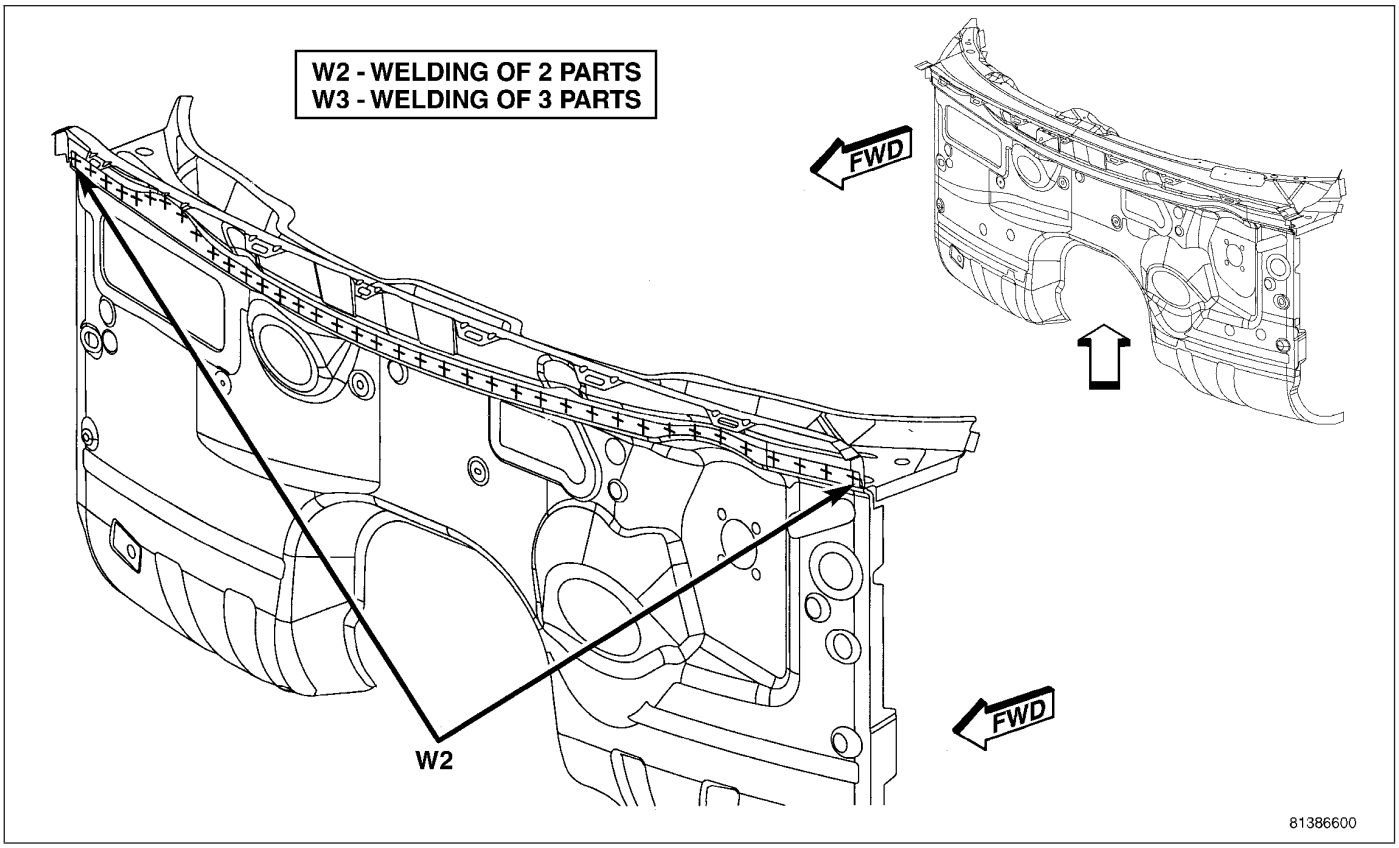

Fig. 135 DASH/COWL (2 OF 4)

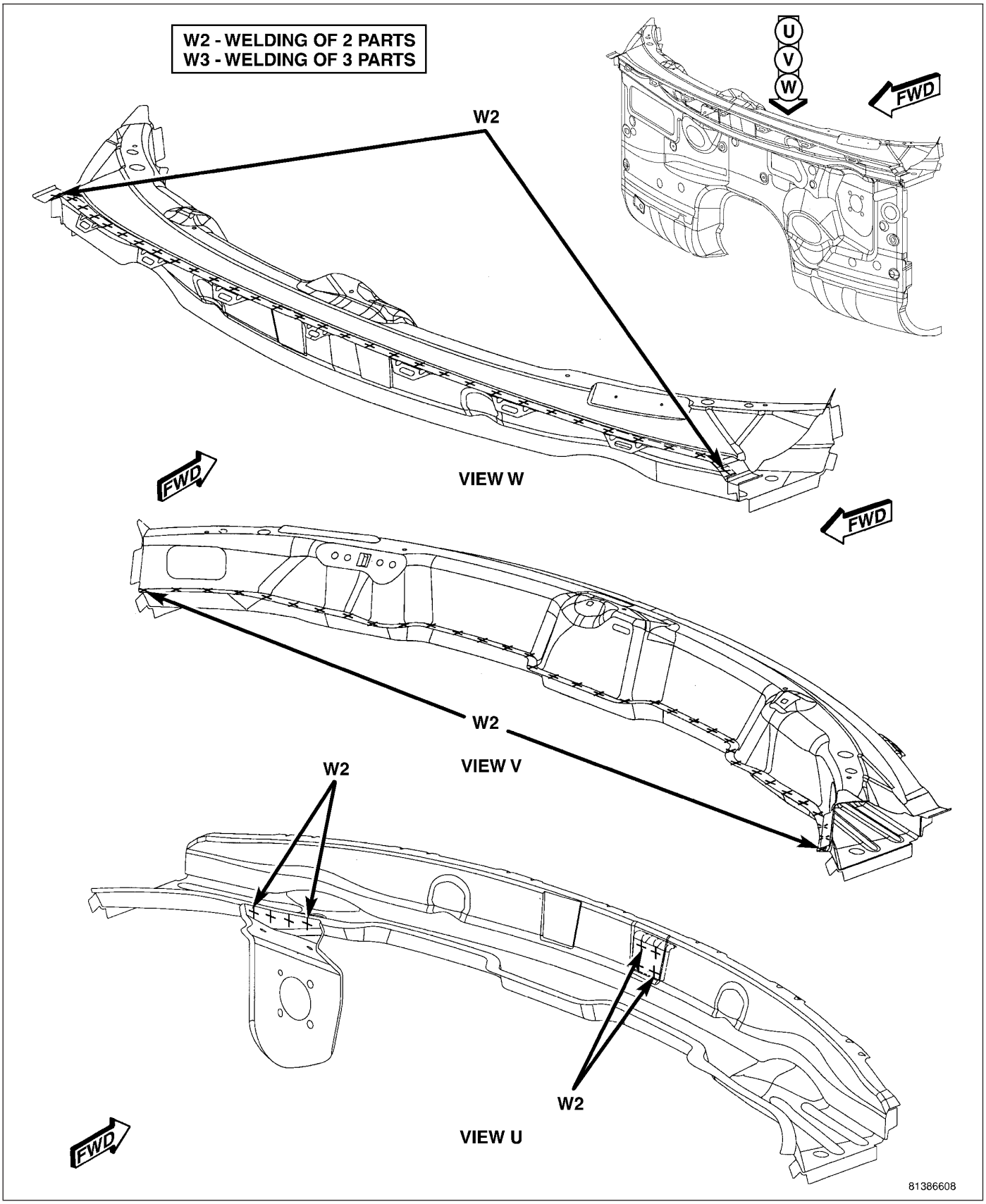

Fig. 136 DASH/COWL (3 OF 4)

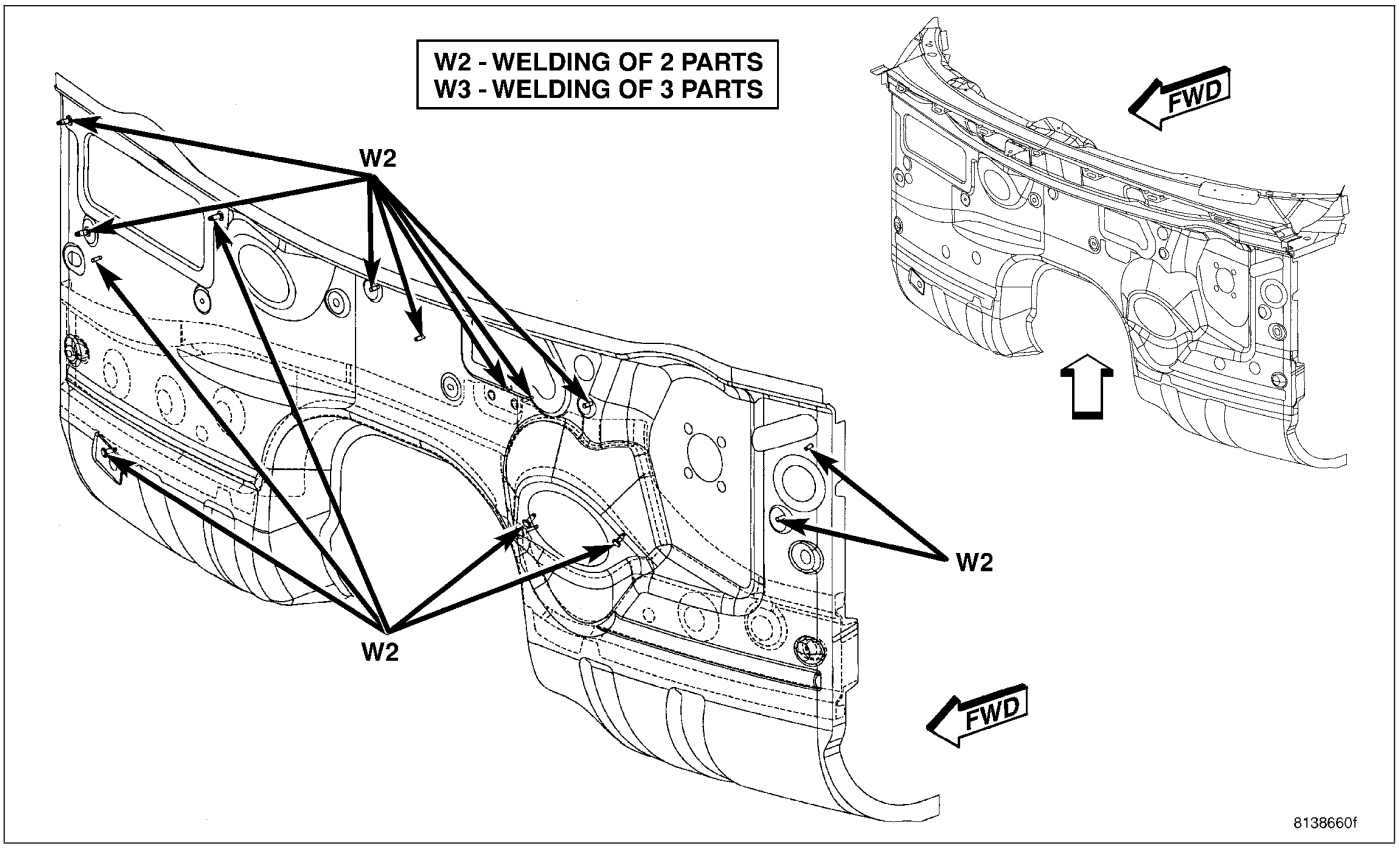

Fig. 137 DASH/COWL (4 OF 4)

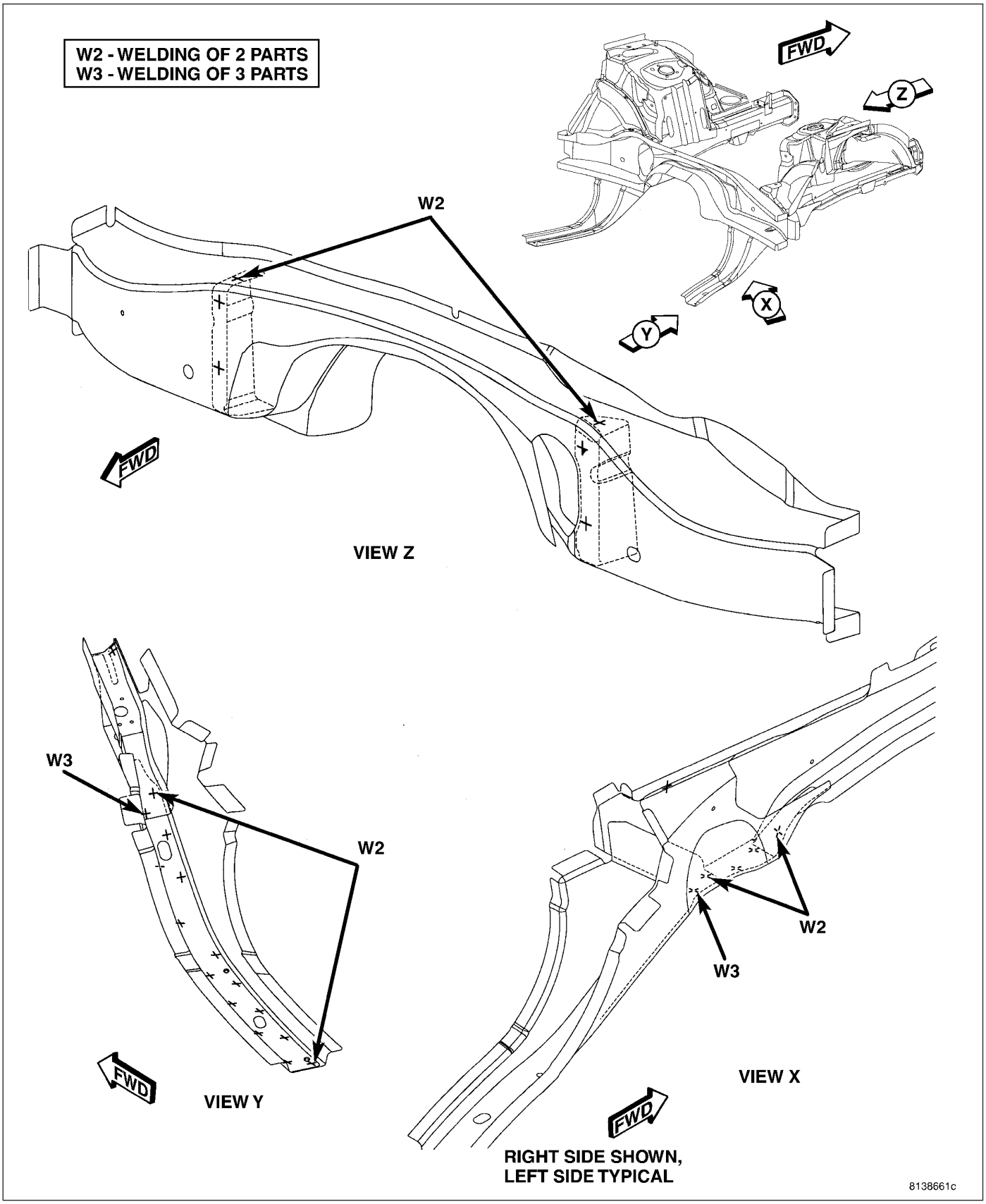

Fig. 138 FRONT LADDER (1 OF 7)

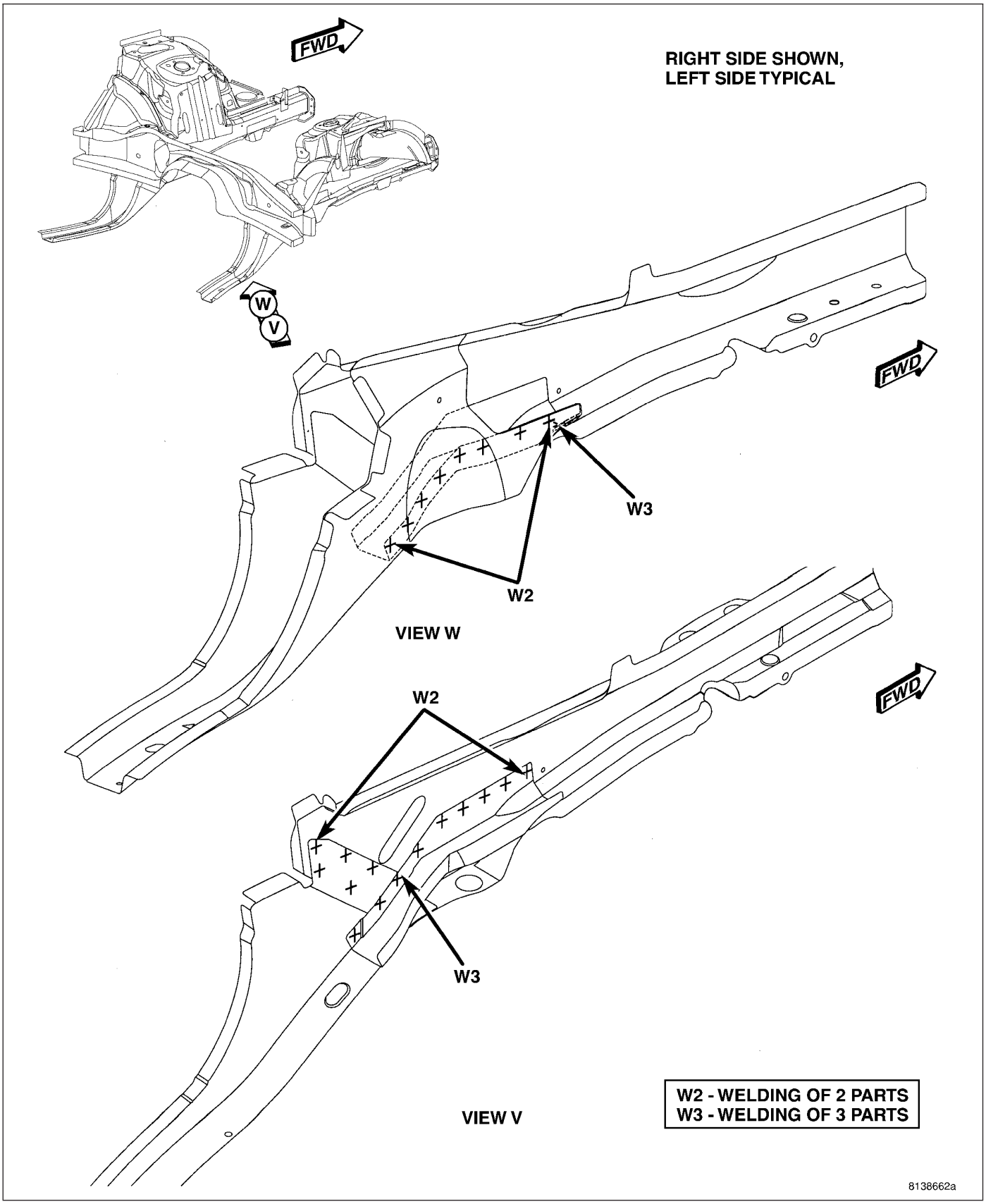

Fig. 139 FRONT LADDER (2 OF 7)

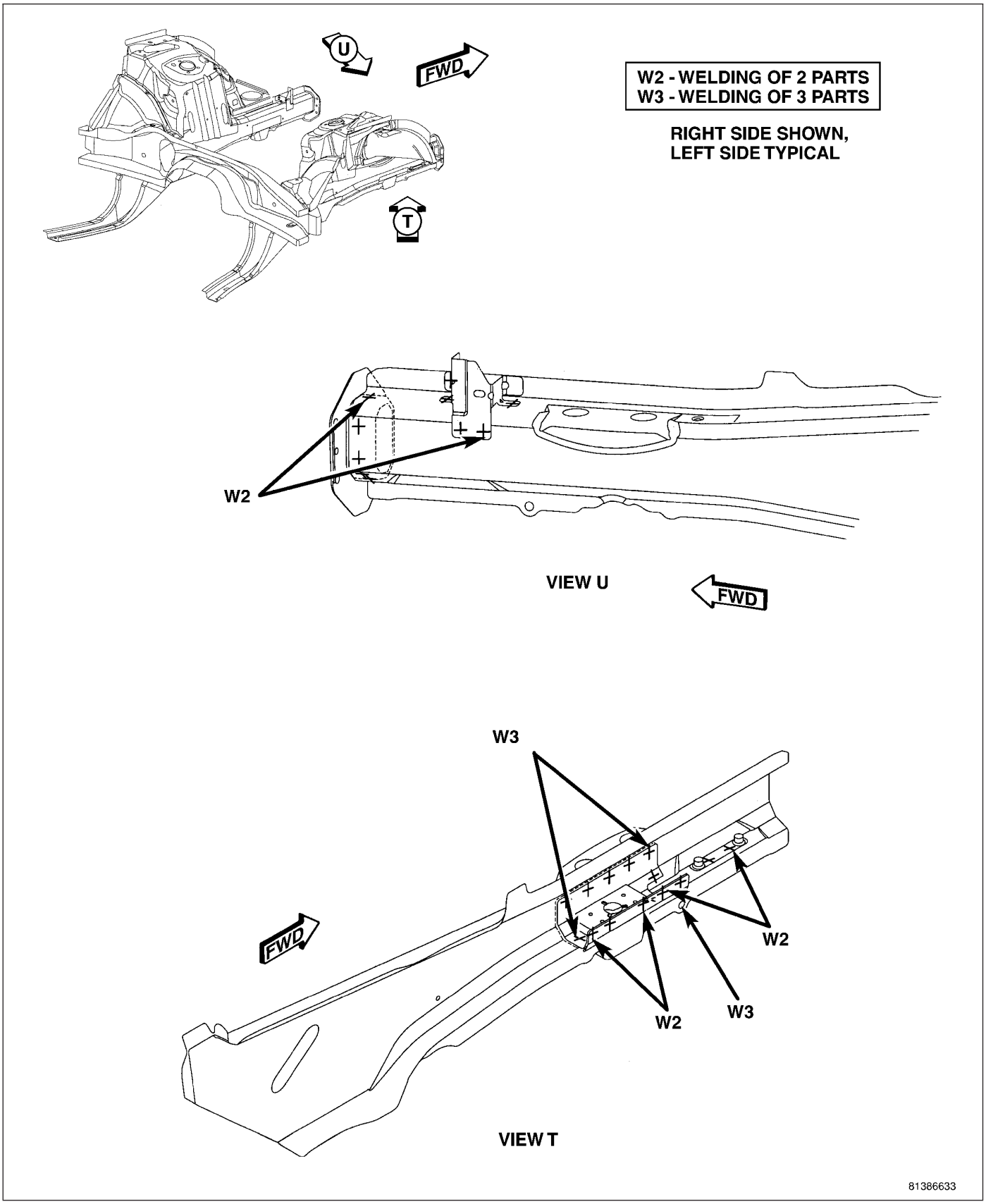

Fig. 140 005 FRONT LADDER (3 OF 7)

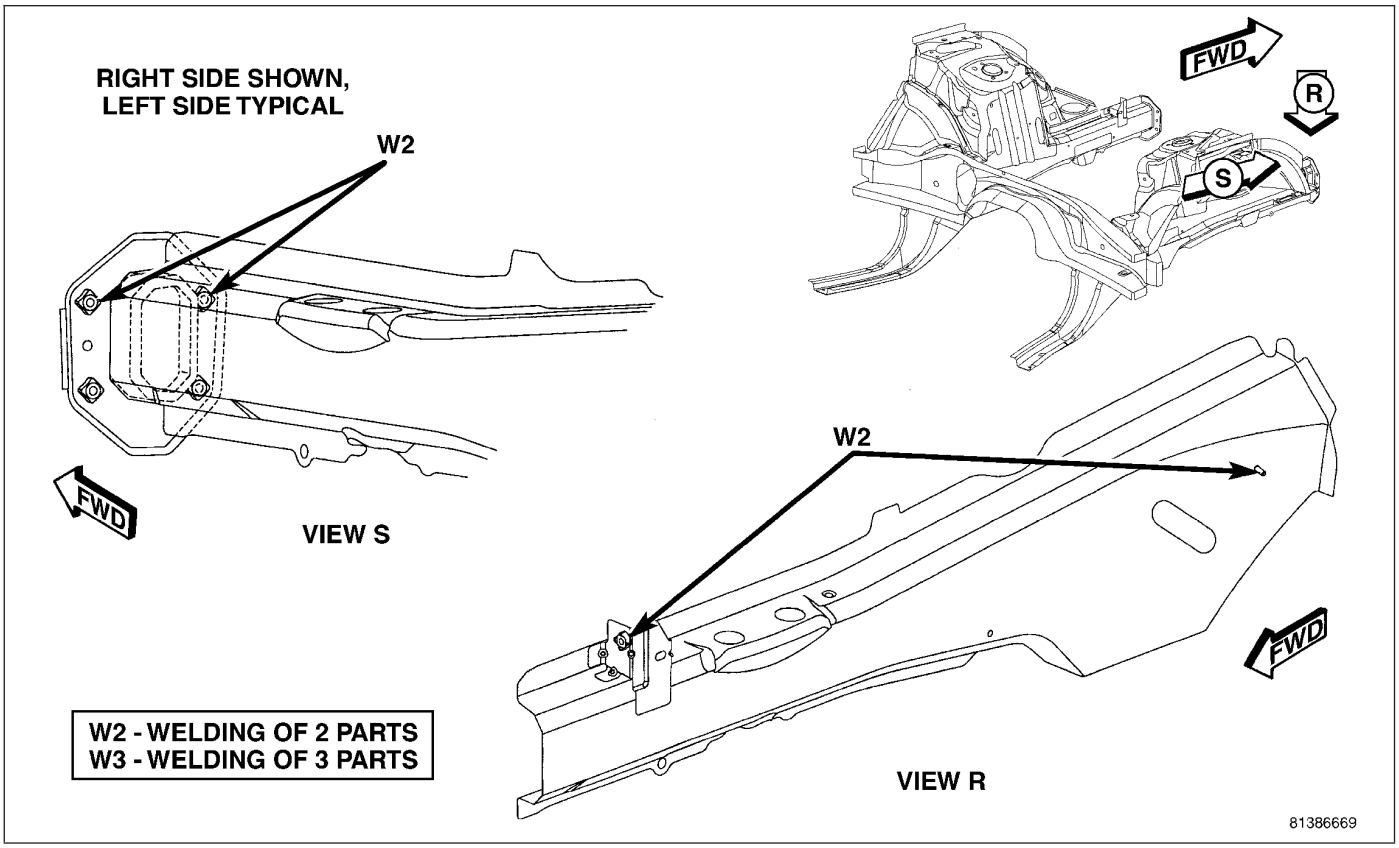

Fig. 141 FRONT LADDER (4 OF 7)

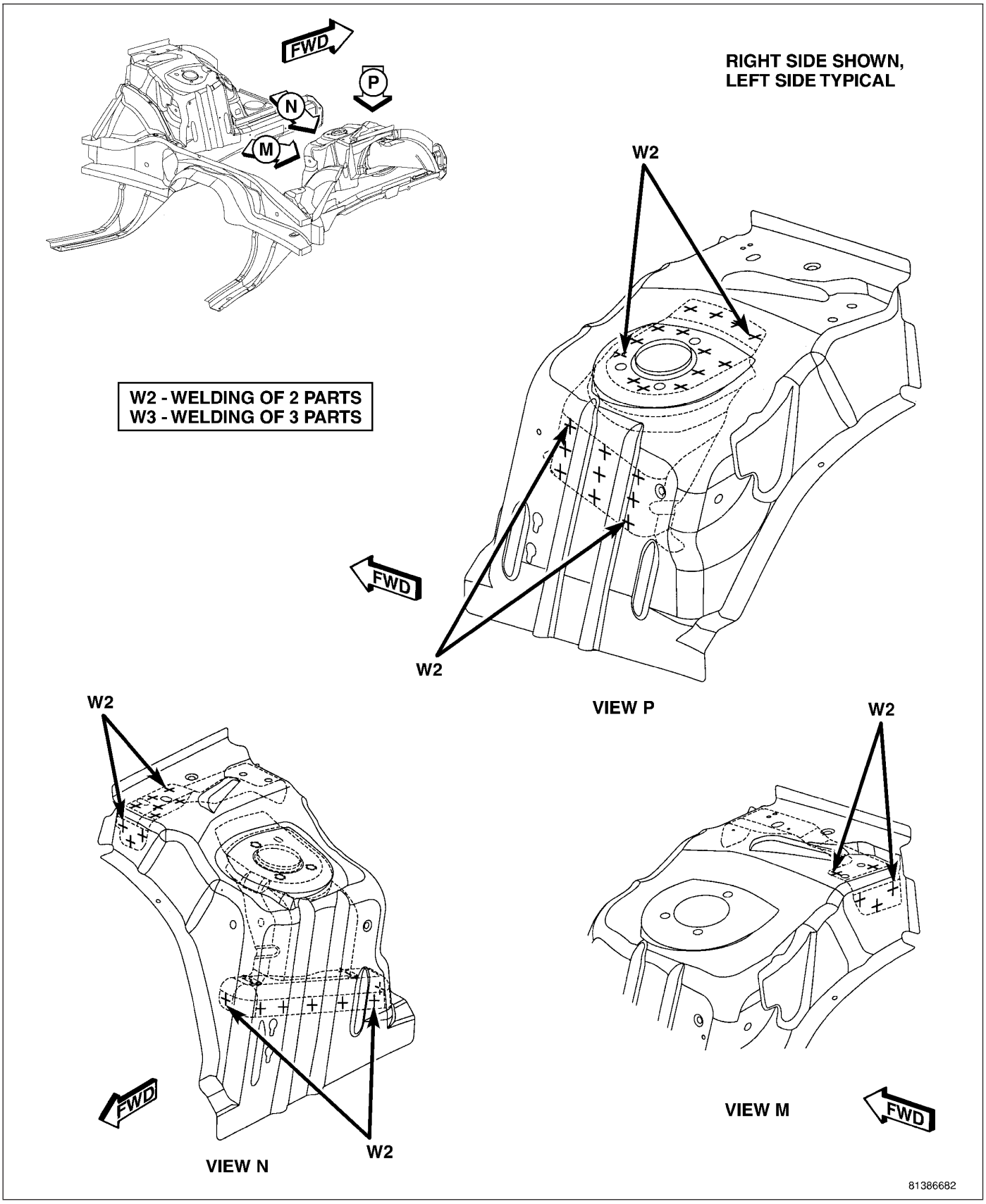

Fig. 142 FRONT LADDER (5 OF 7)

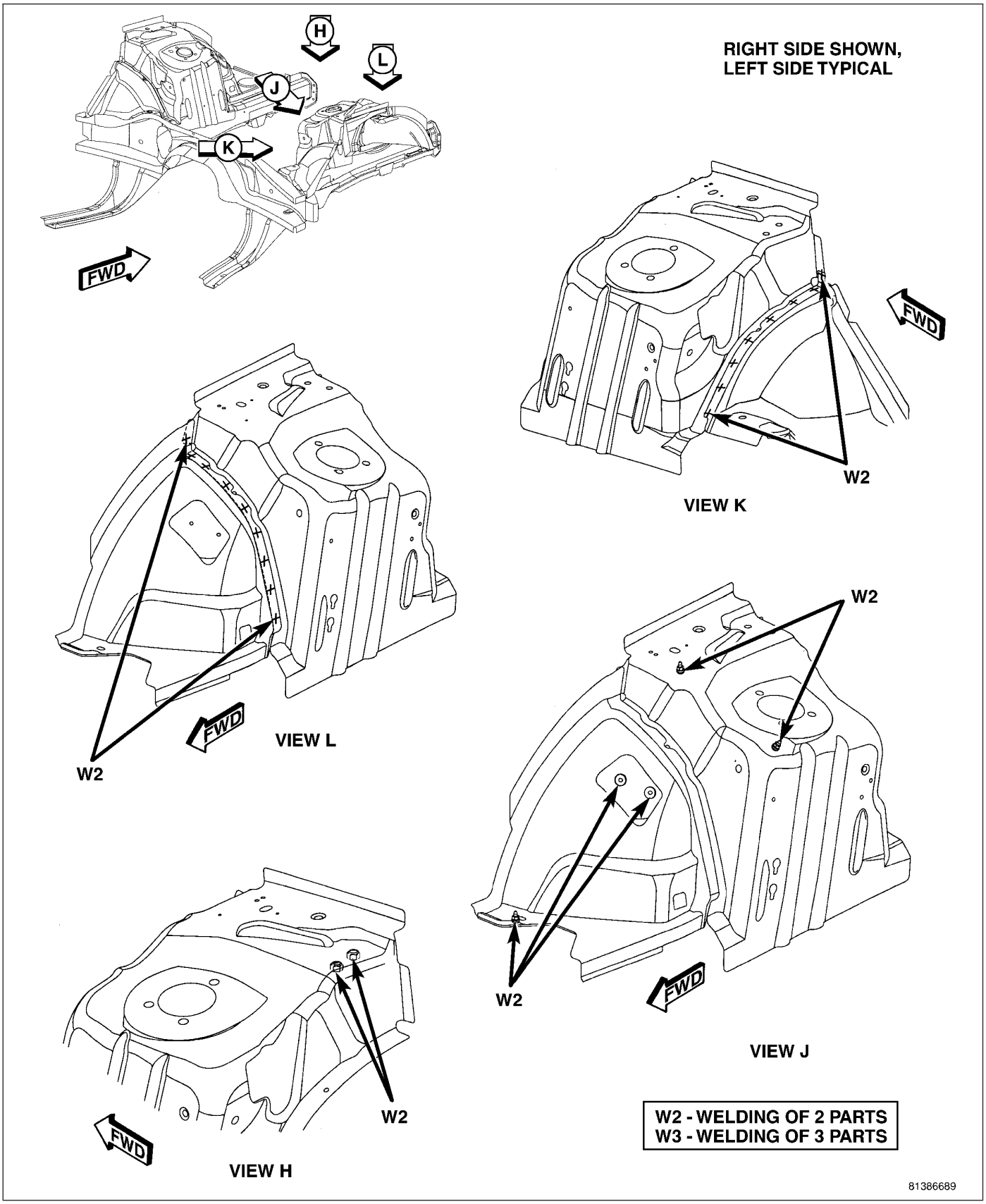

Fig. 143 FRONT LADDER (6 OF 7)

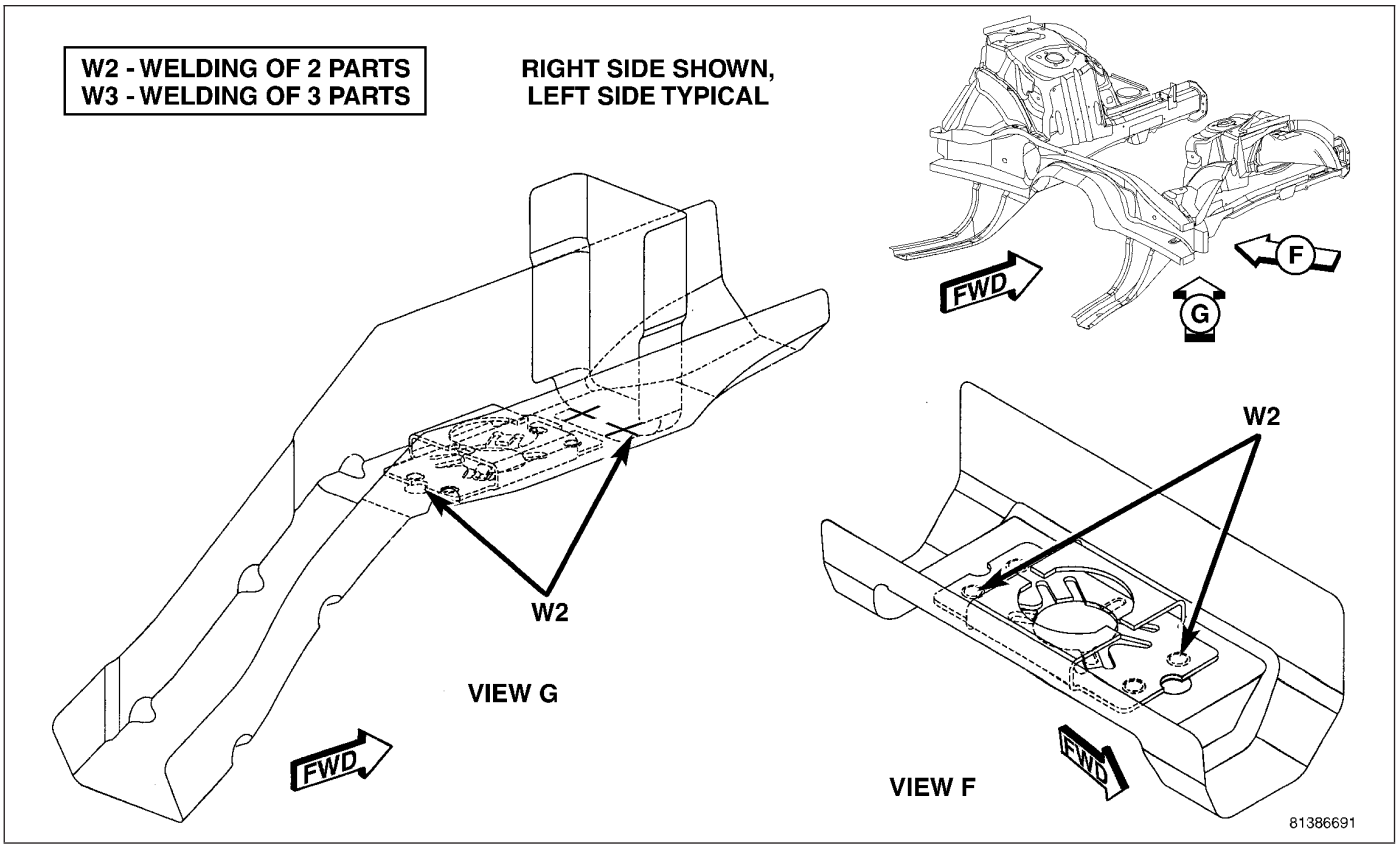

Fig. 144 FRONT LADDER (7 OF 7)

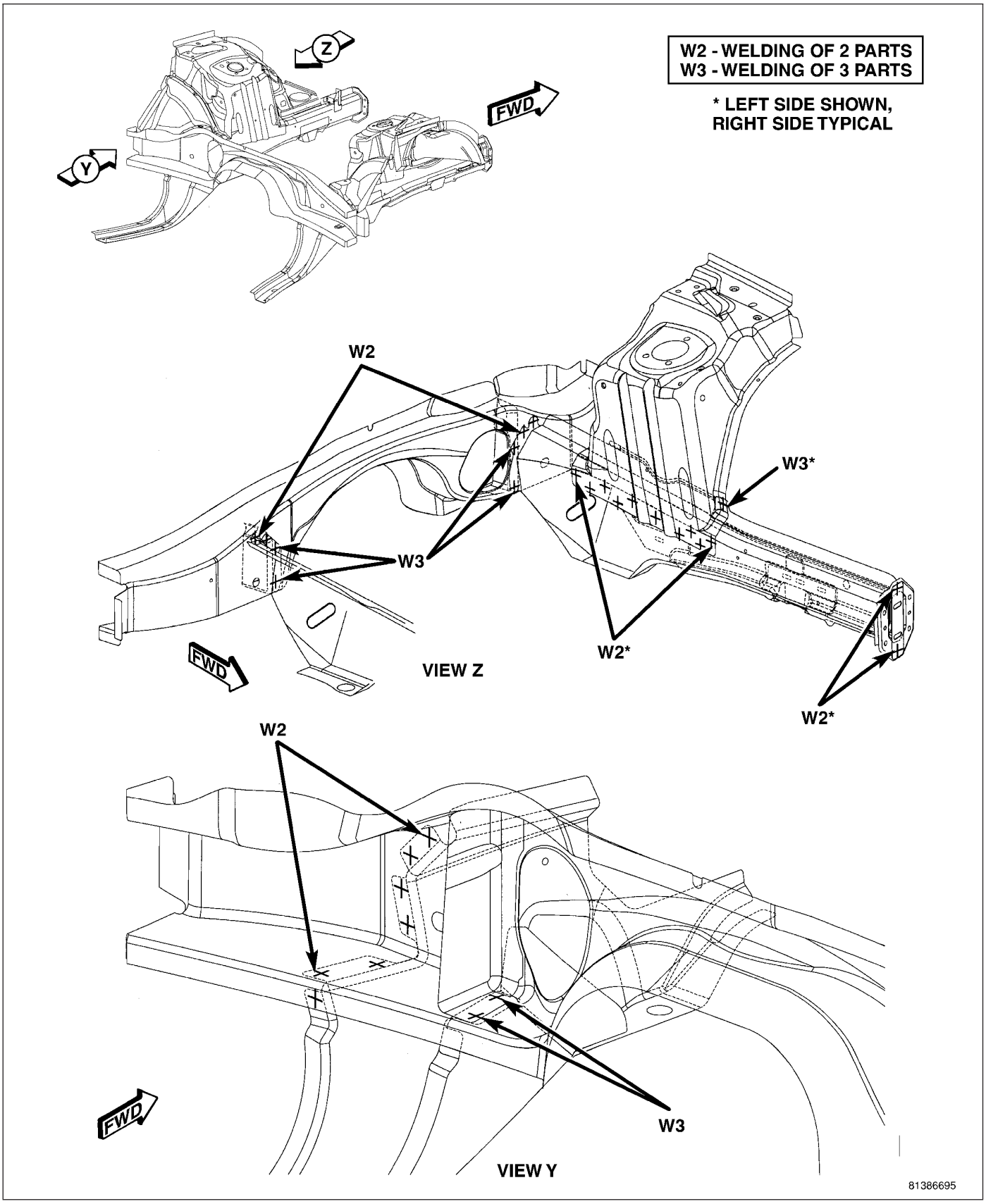

Fig. 145 FRONT LADDER, RAILS AND WHEELHOUSE (1 OF 3)

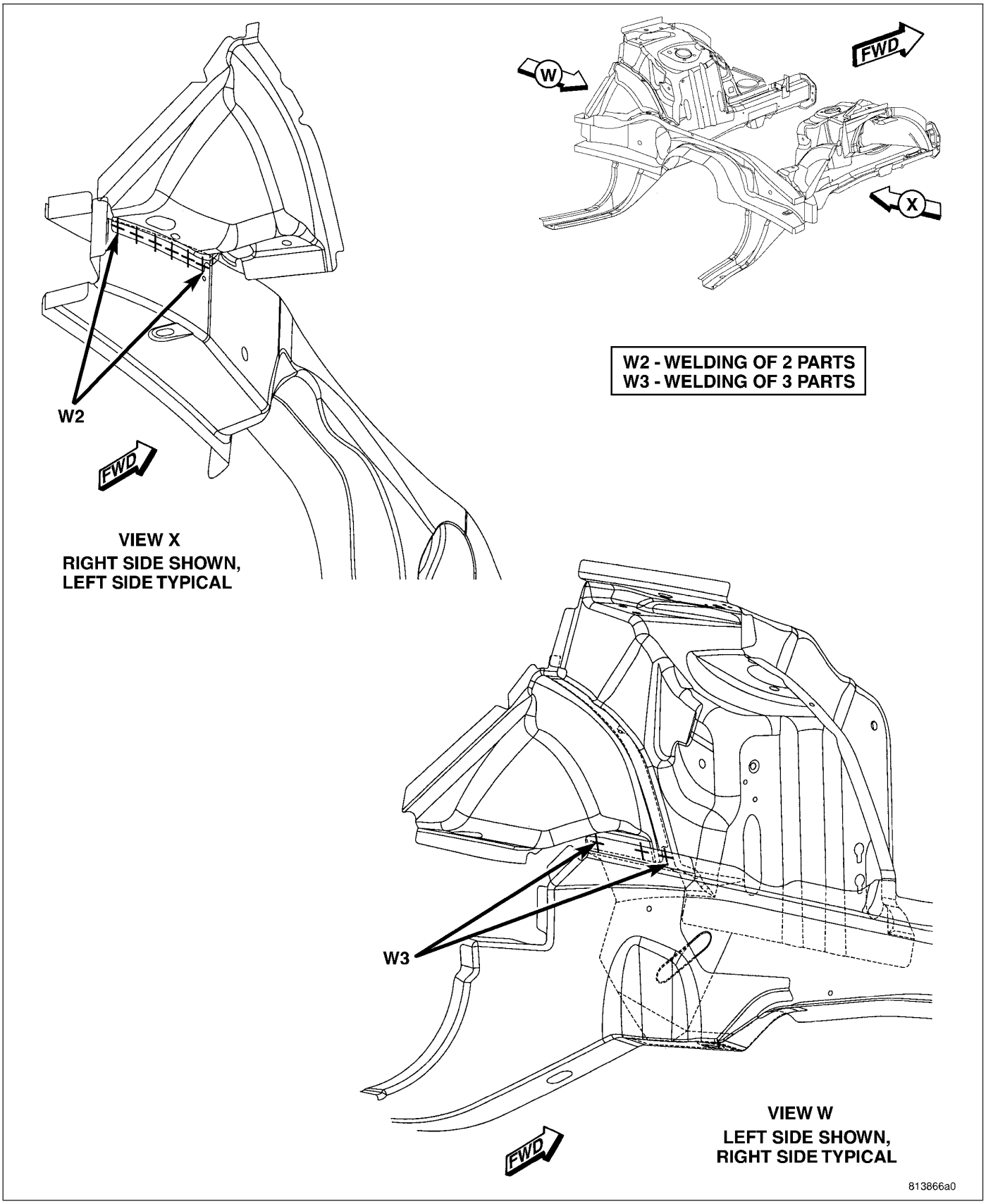

Fig. 146 FRONT LADDER, RAILS AND WHEELHOUSE (2 OF 3)

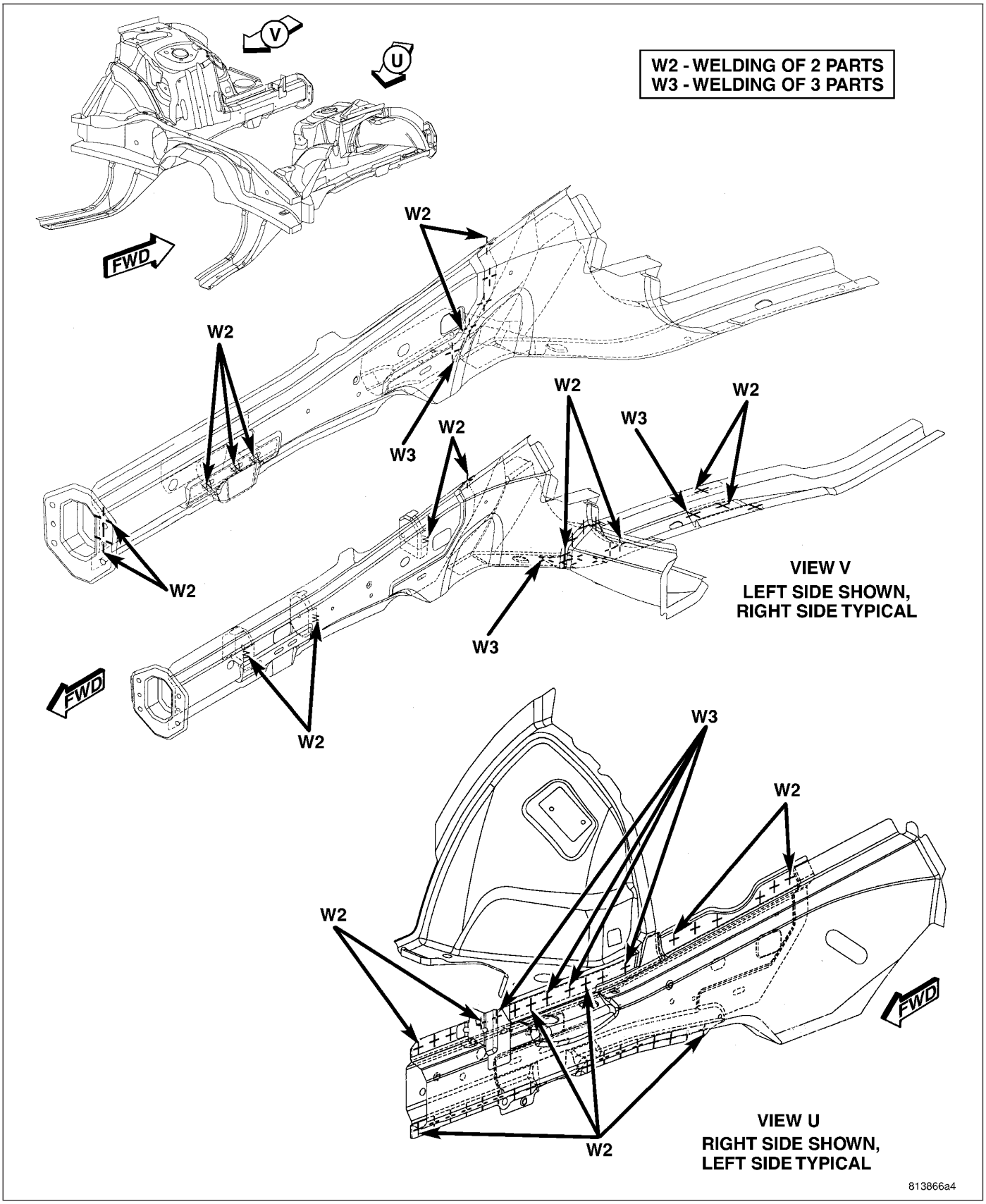

Fig. 147 006 FRONT LADDER, RAILS AND WHEELHOUSE (3 OF 3)

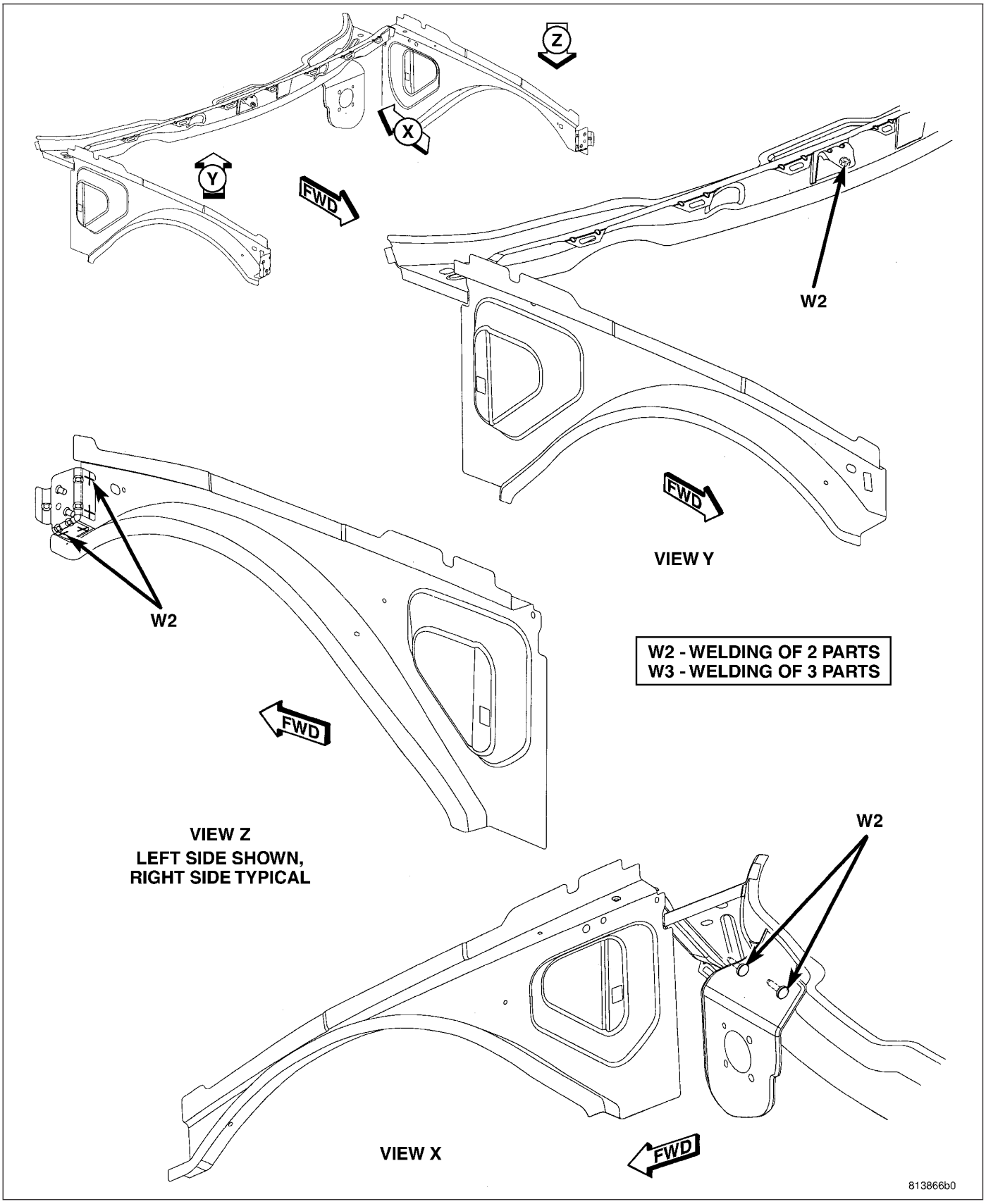

Fig. 148 ENGINE BOX (1 OF 6)

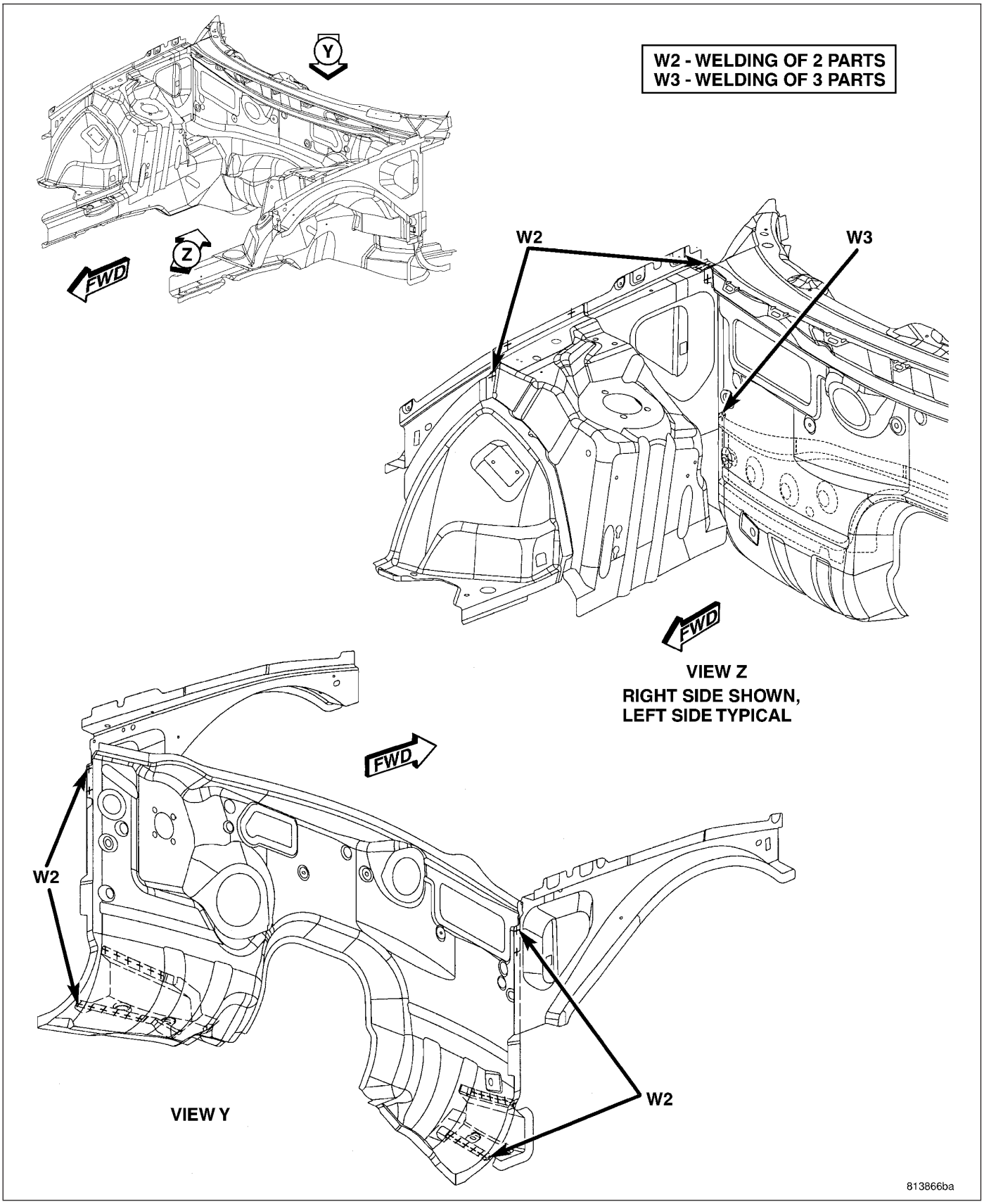

Fig. 149 ENGINE BOX (2 OF 6)

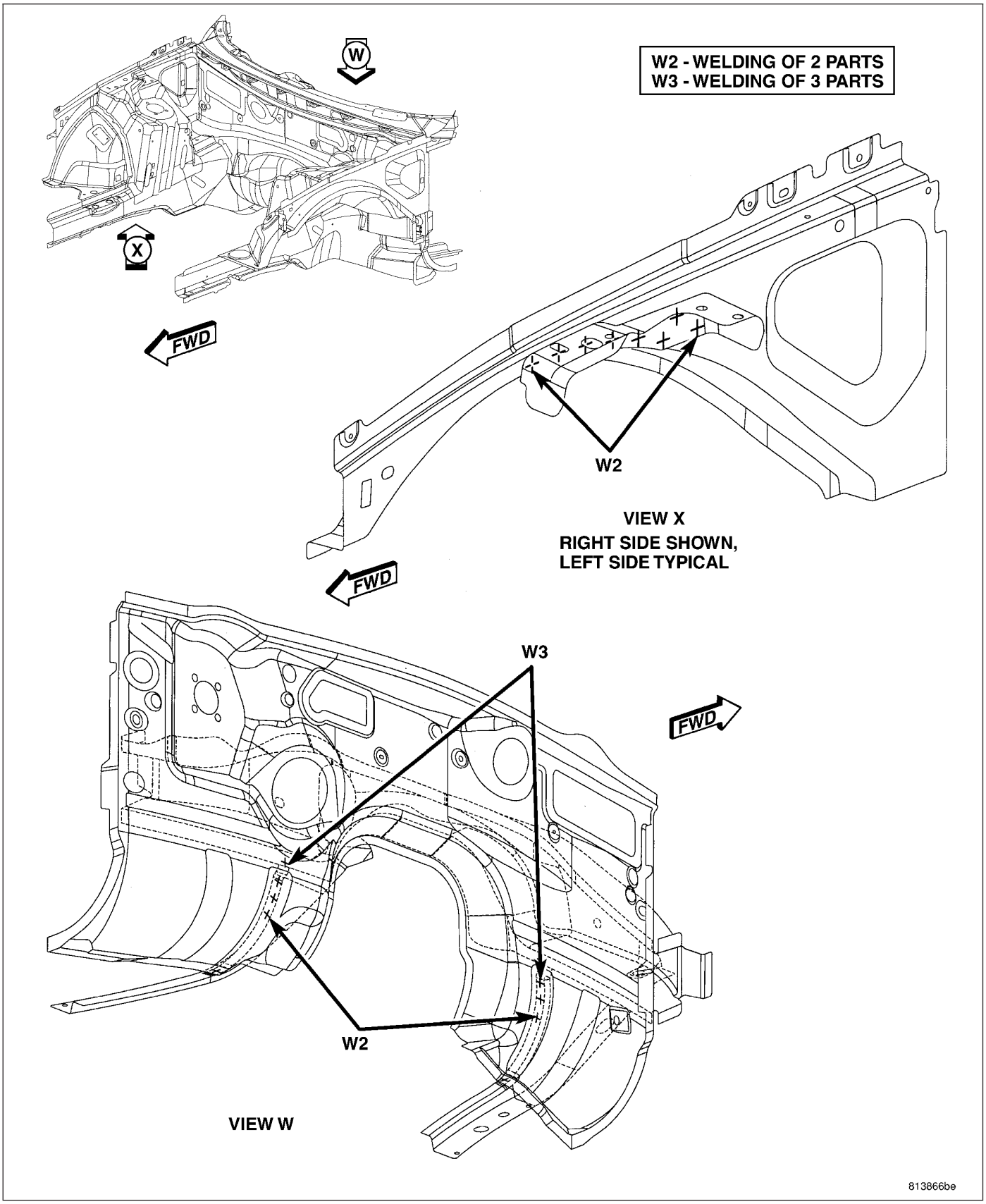

Fig. 150 ENGINE BOX (3 OF 6)

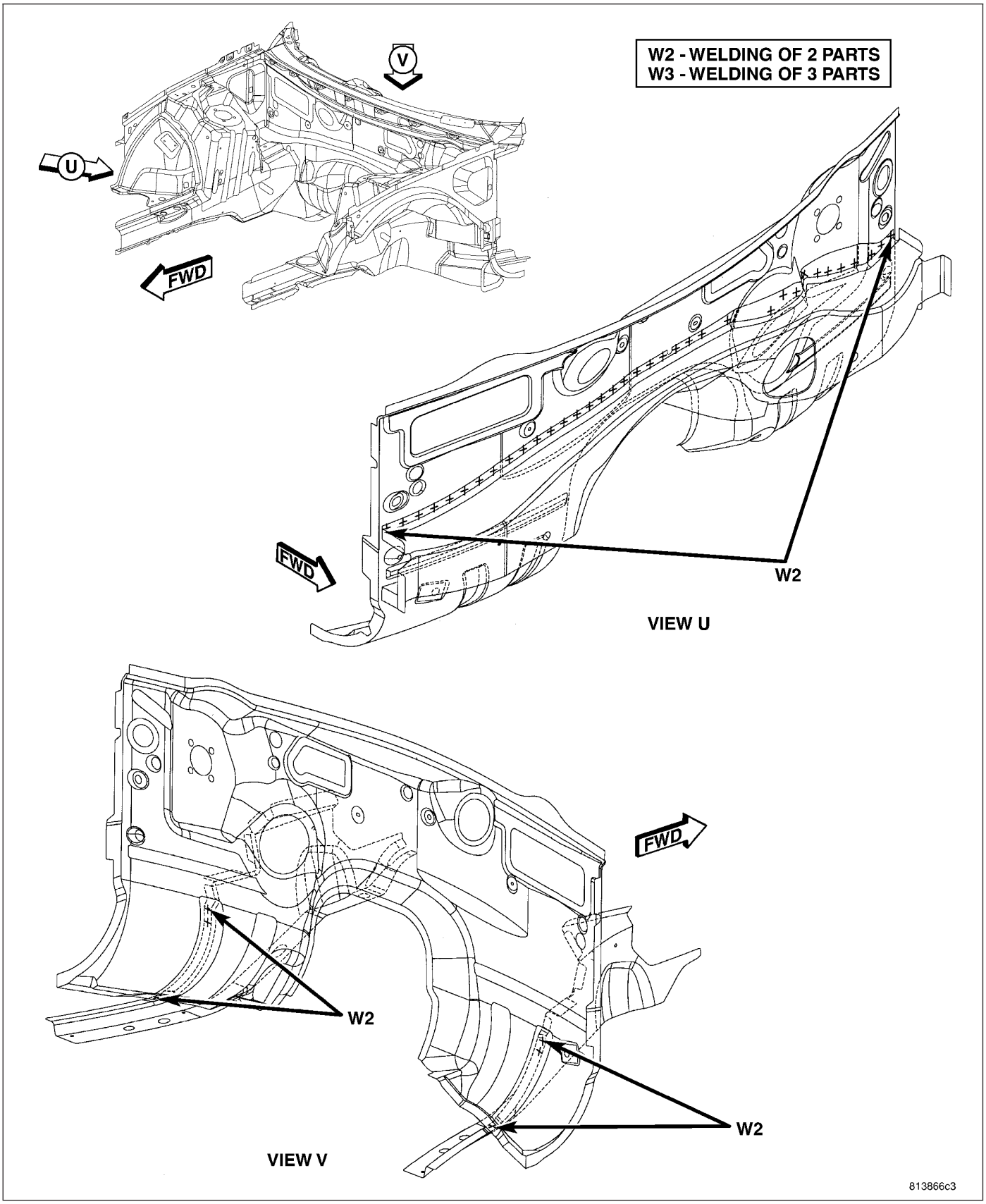

Fig. 151 ENGINE BOX (4 OF 6)

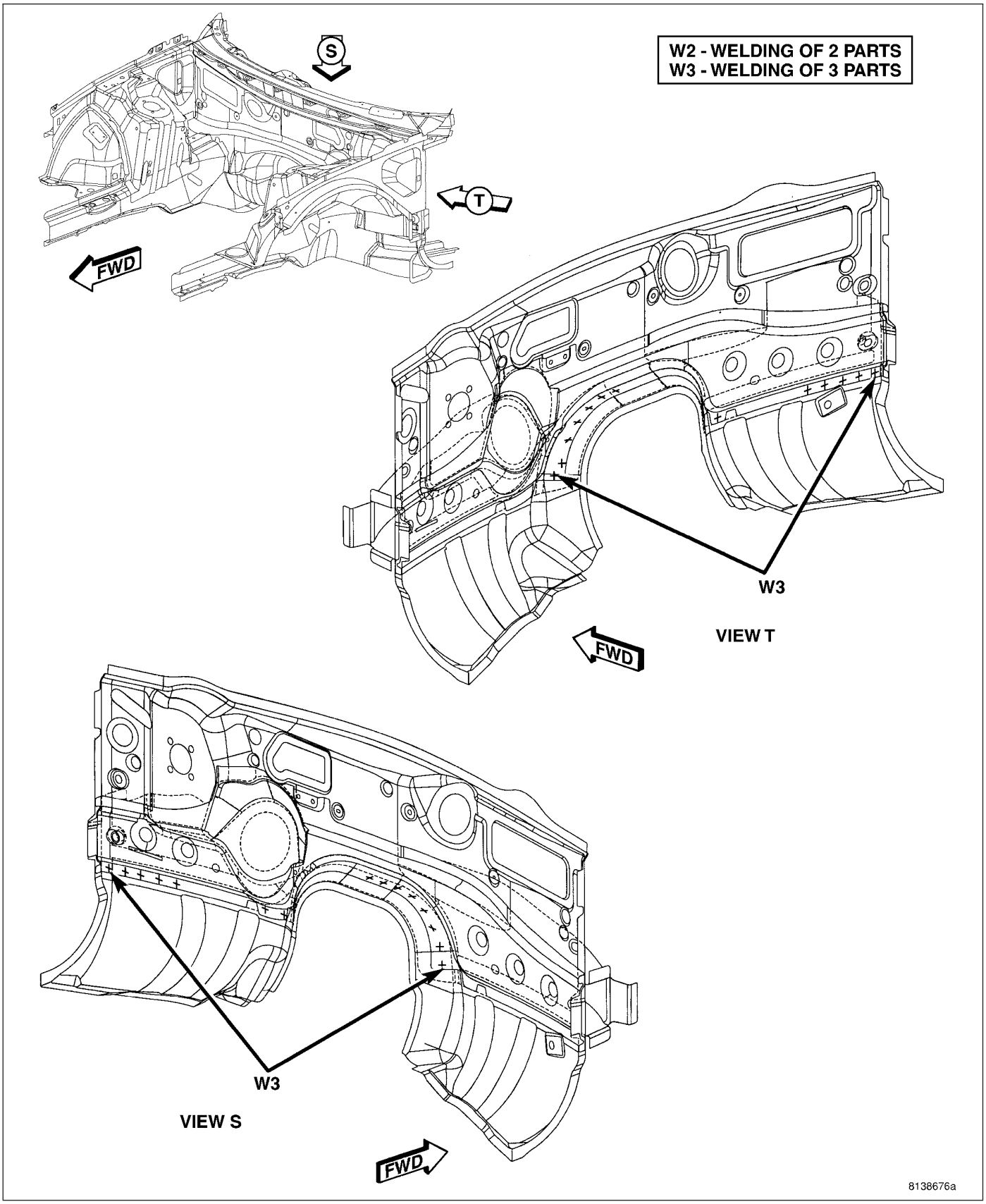

Fig. 152 ENGINE BOX (5 OF 6)

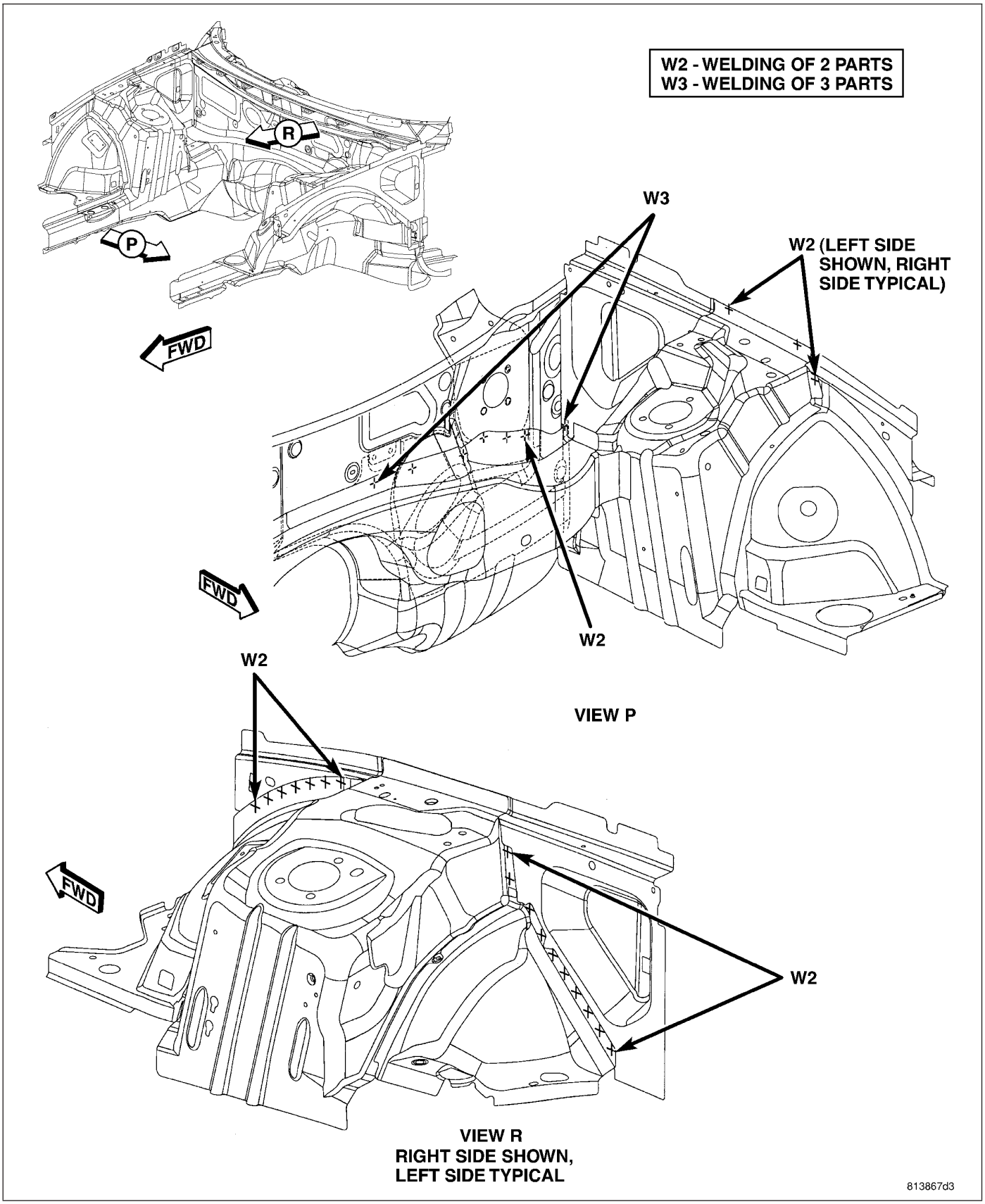

Fig. 153 ENGINE BOX (6 OF 6)

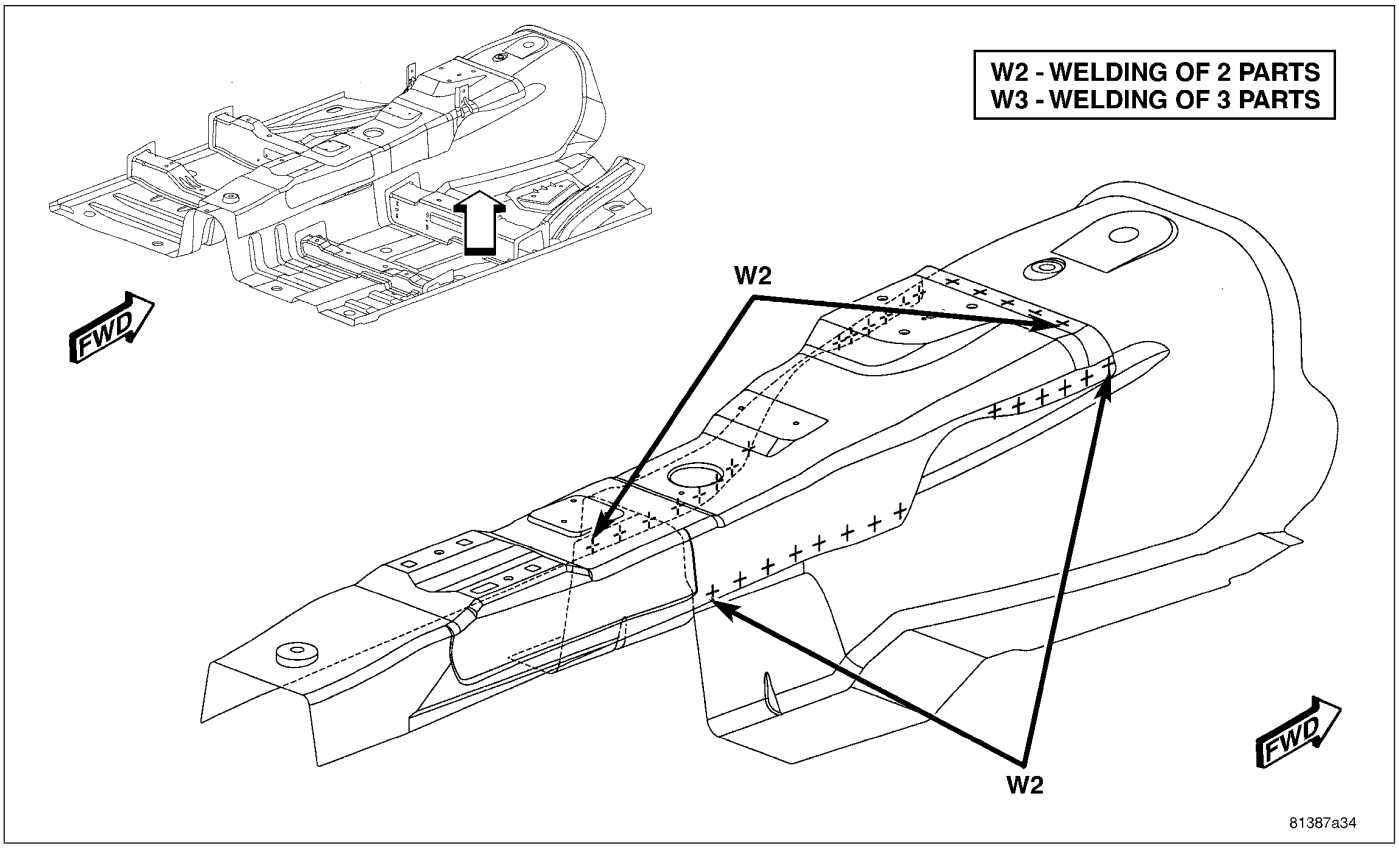

Fig. 154 FRONT FLOOR PAN (1 OF 12)

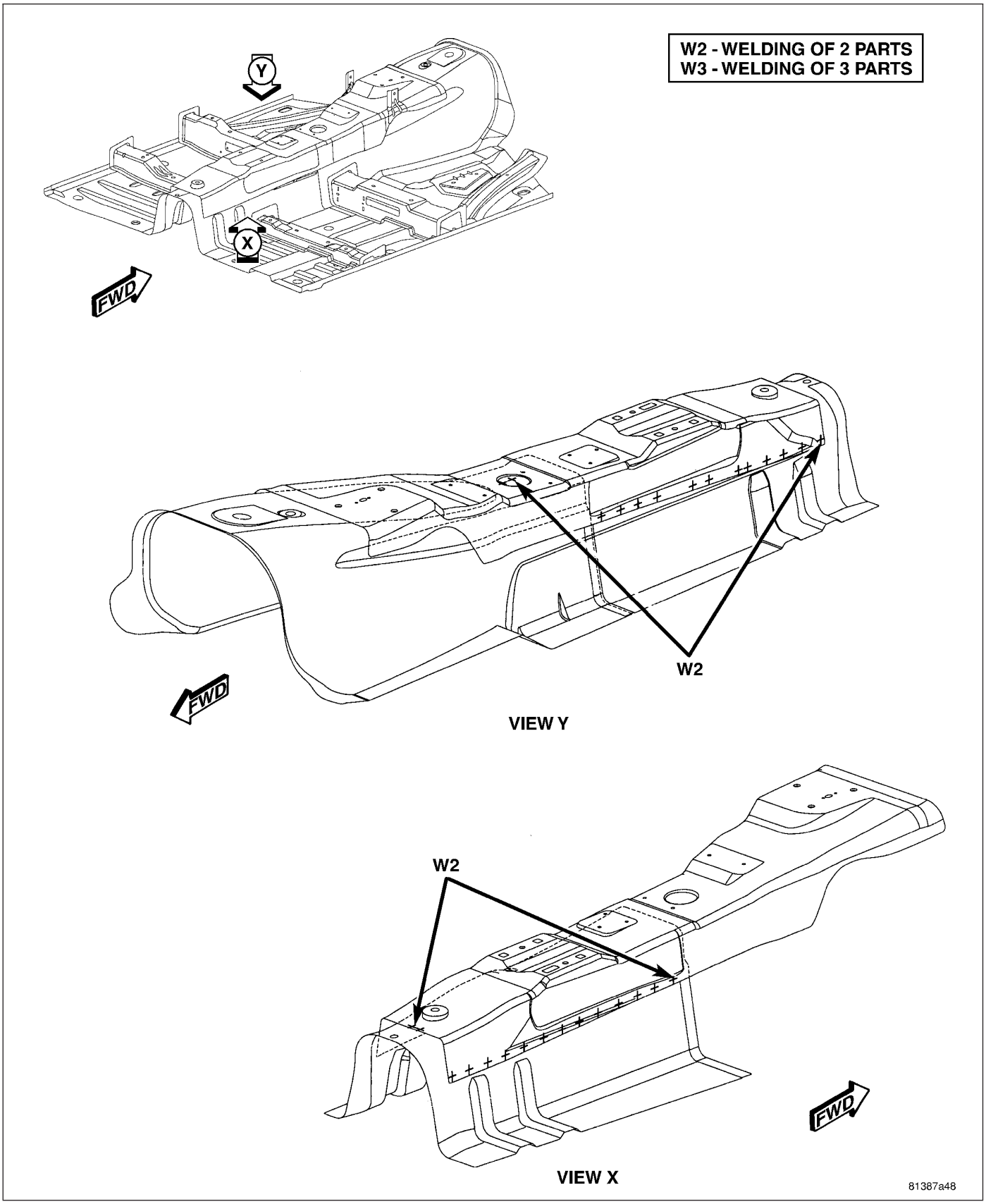

Fig. 155 FRONT FLOOR PAN (2 OF 12)

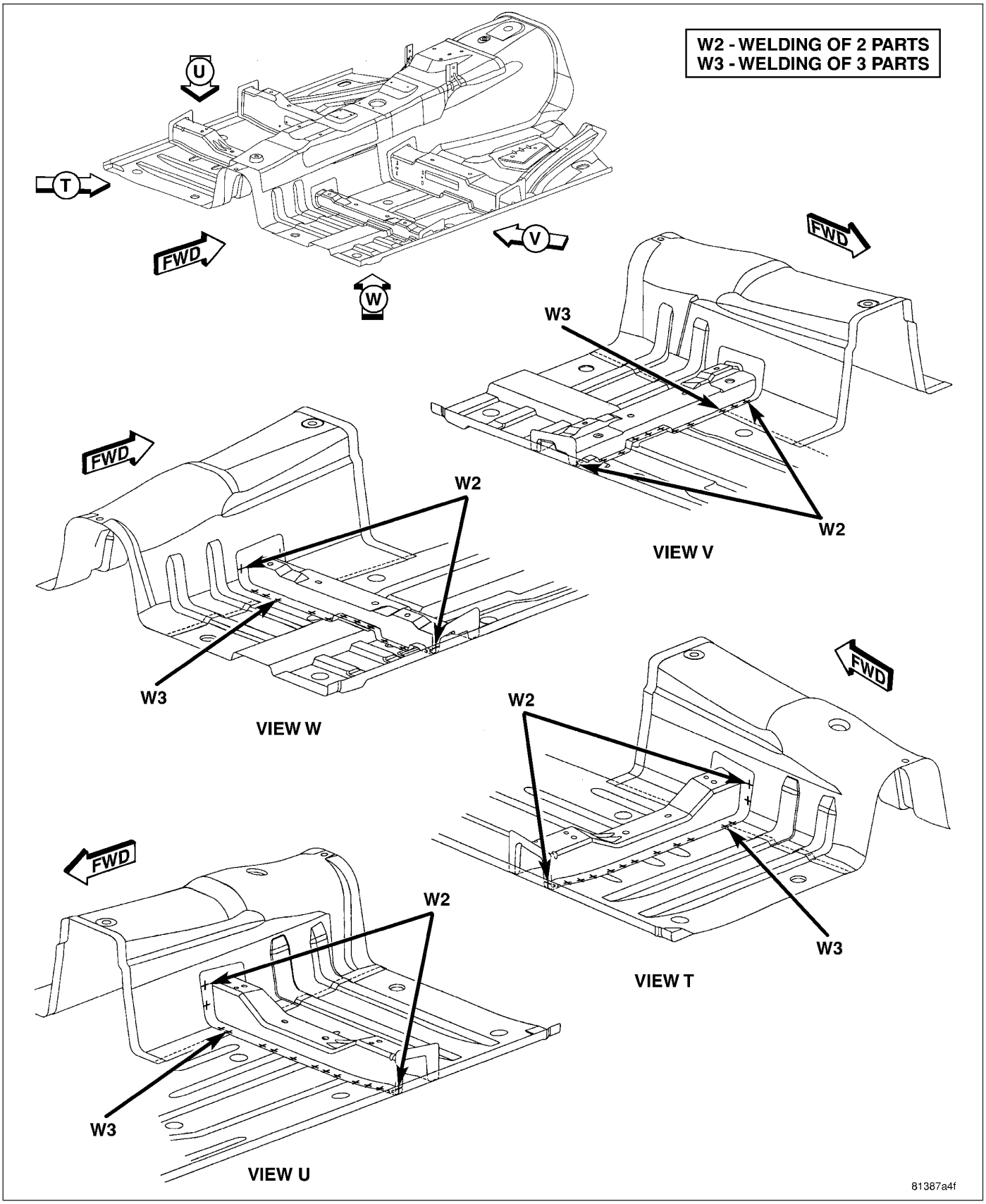

Fig. 156 FRONT FLOOR PAN (3 OF 12)

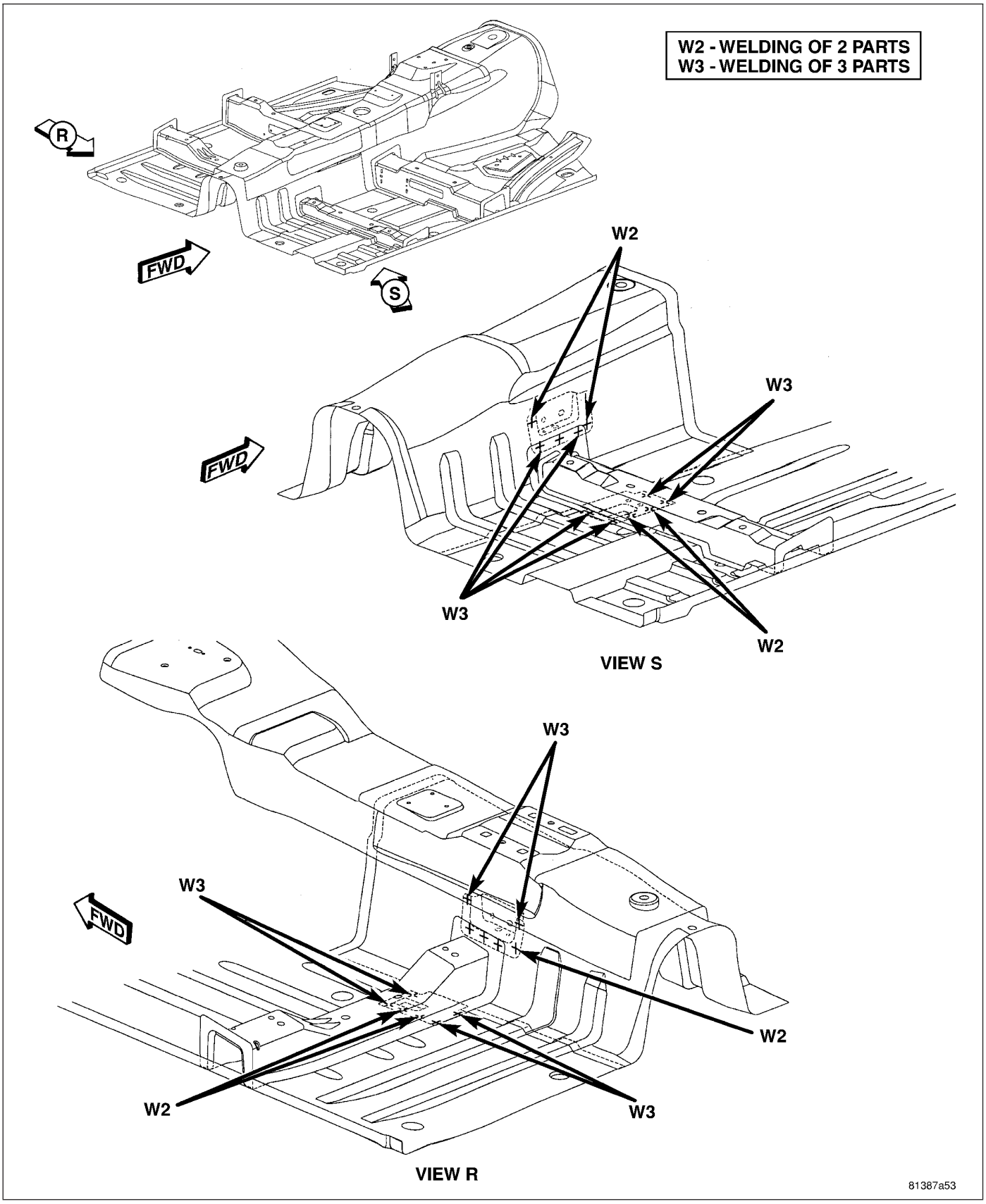

Fig. 157 FRONT FLOOR PAN (4 OF 12)

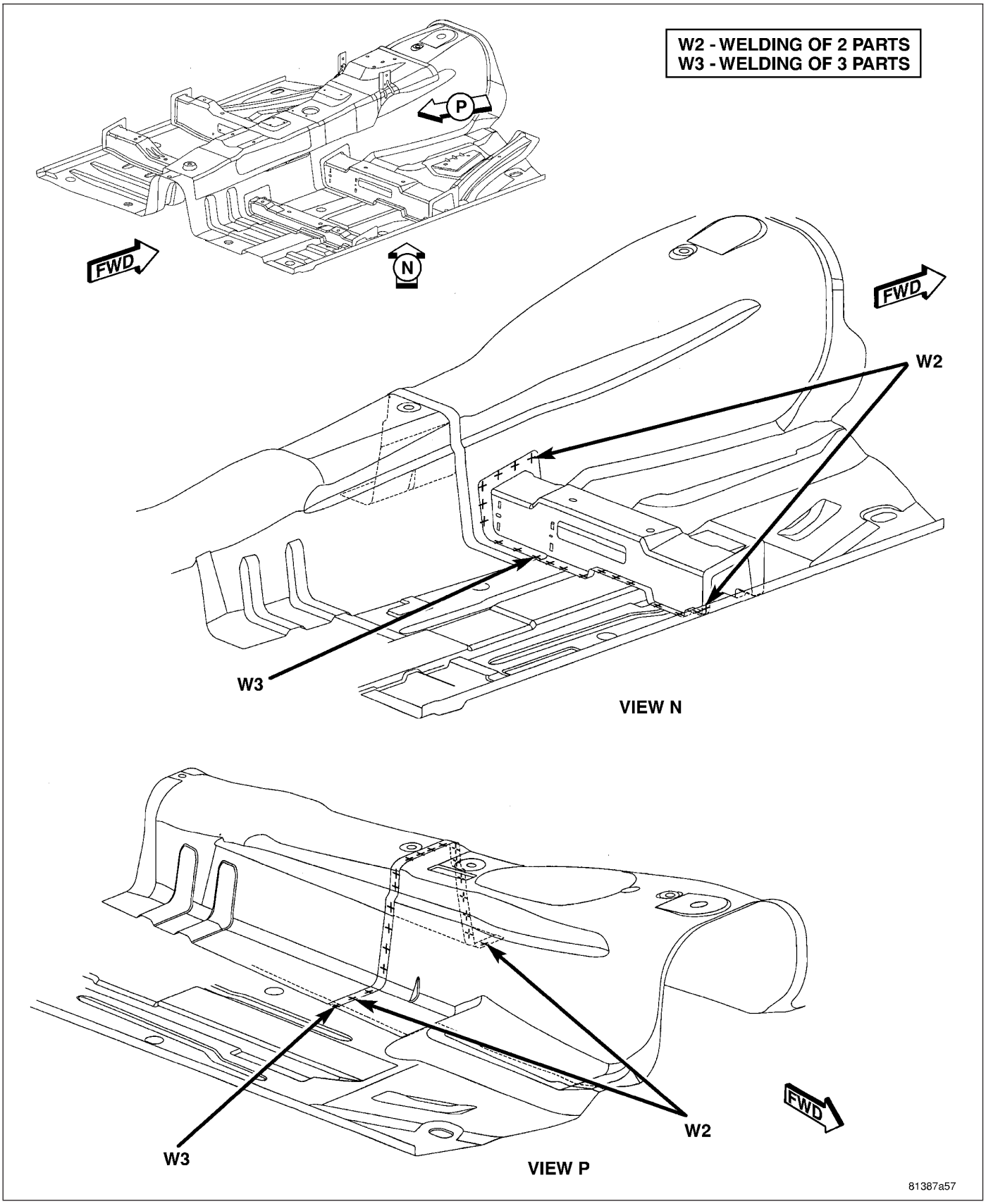

Fig. 158 FRONT FLOOR PAN (5 OF 12)

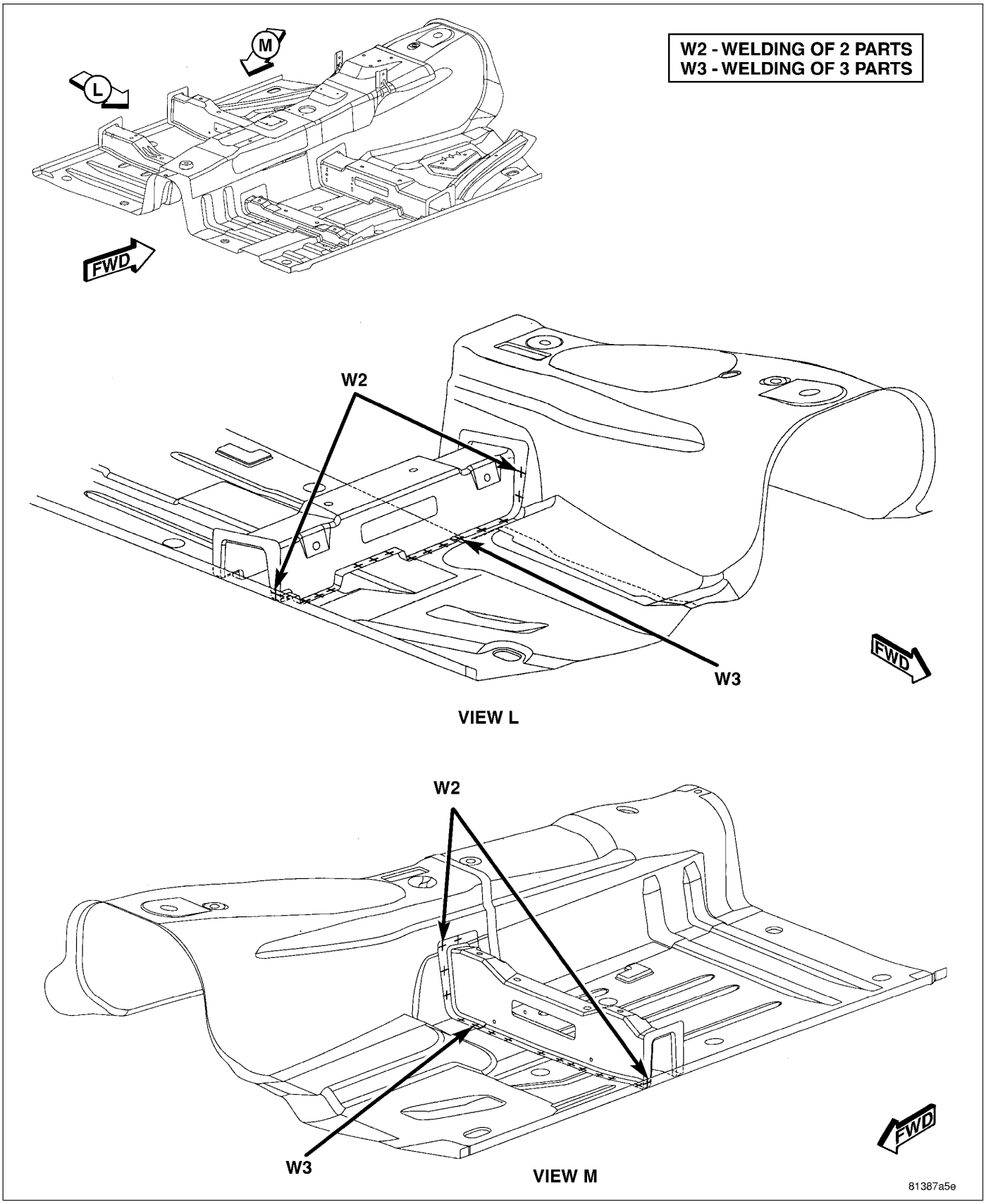

Fig. 159 FRONT FLOOR PAN (6 OF 12)

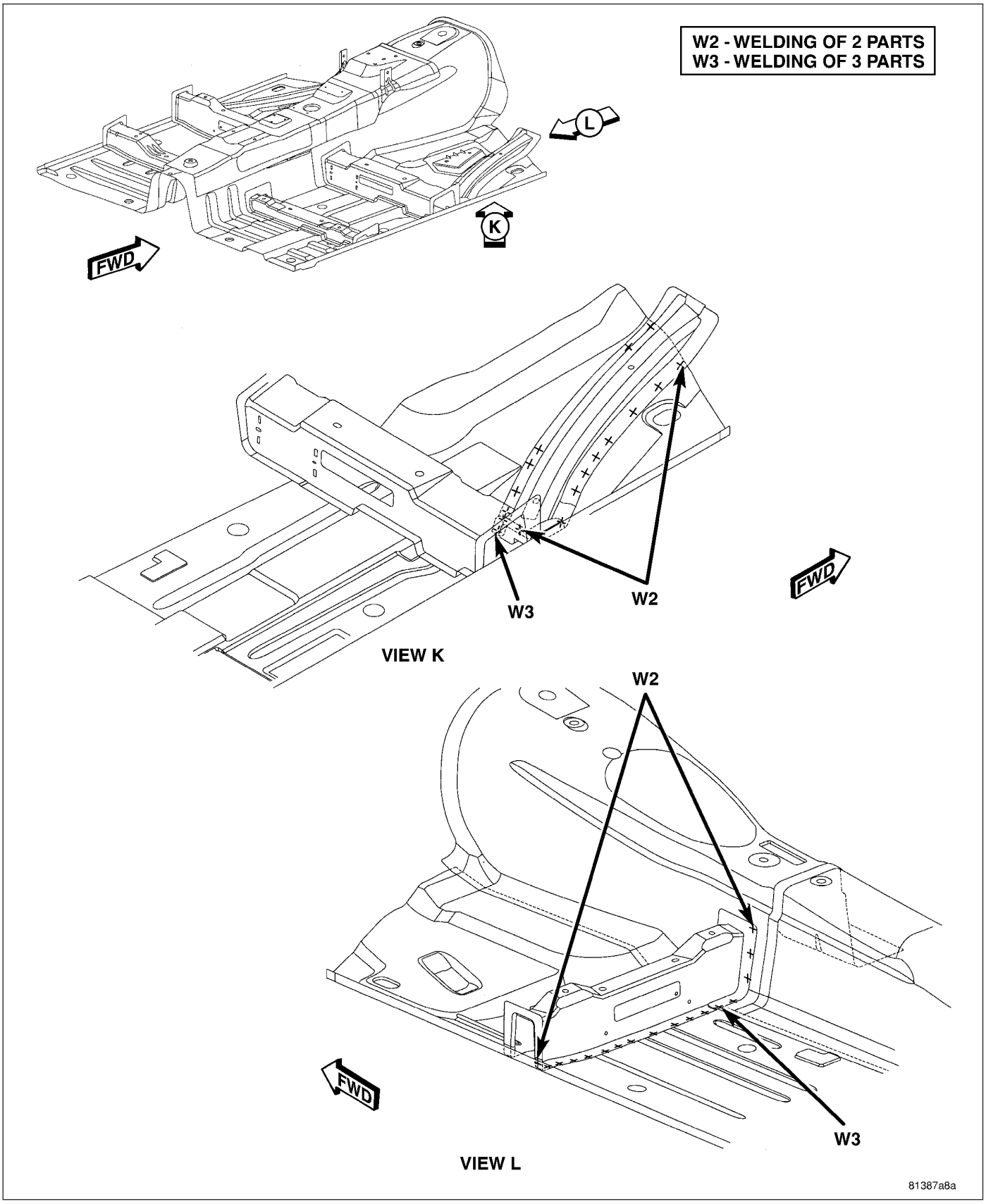

Fig. 160 FRONT FLOOR PAN (7 OF 12)

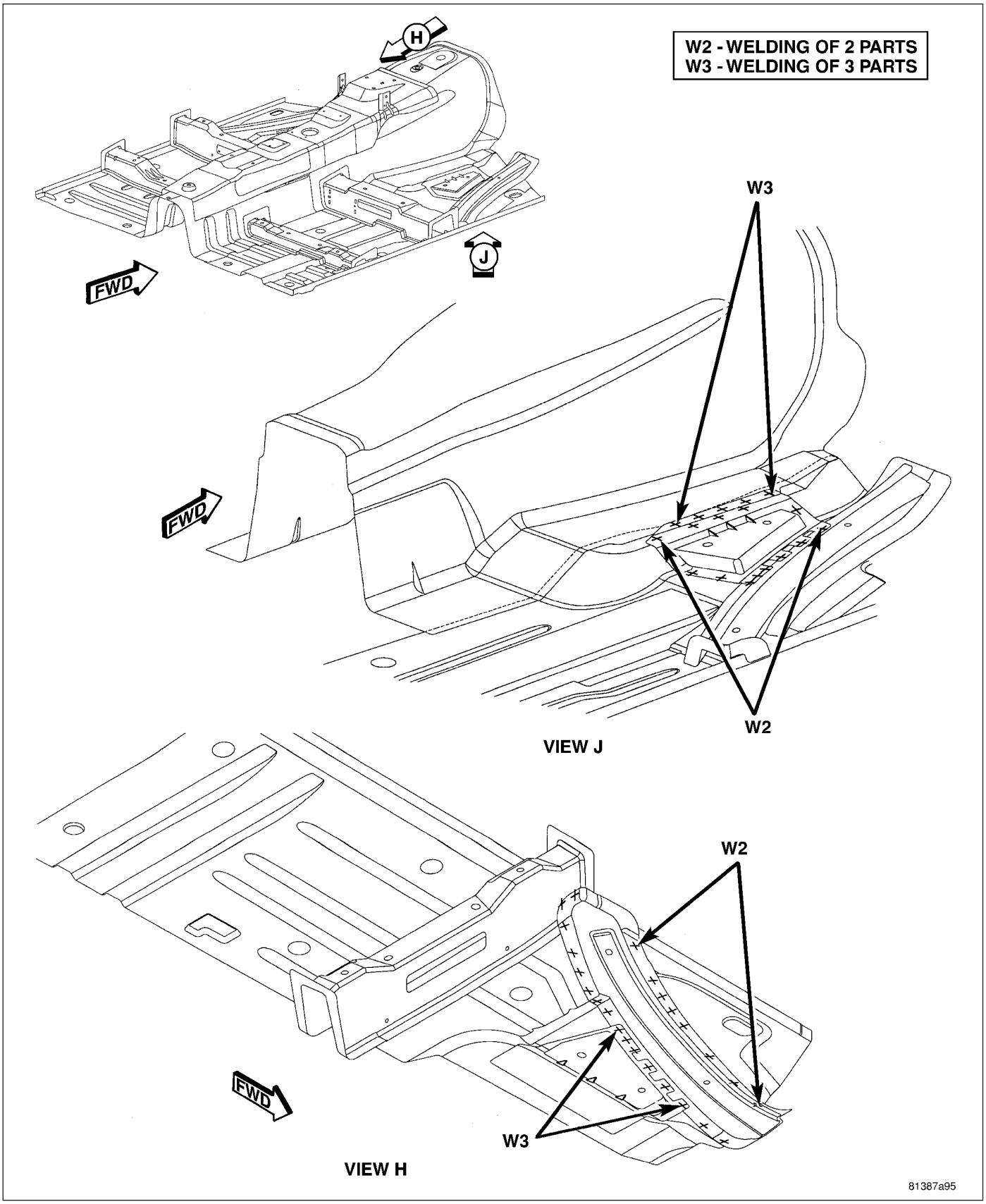

Fig. 161 FRONT FLOOR PAN (8 OF 12)

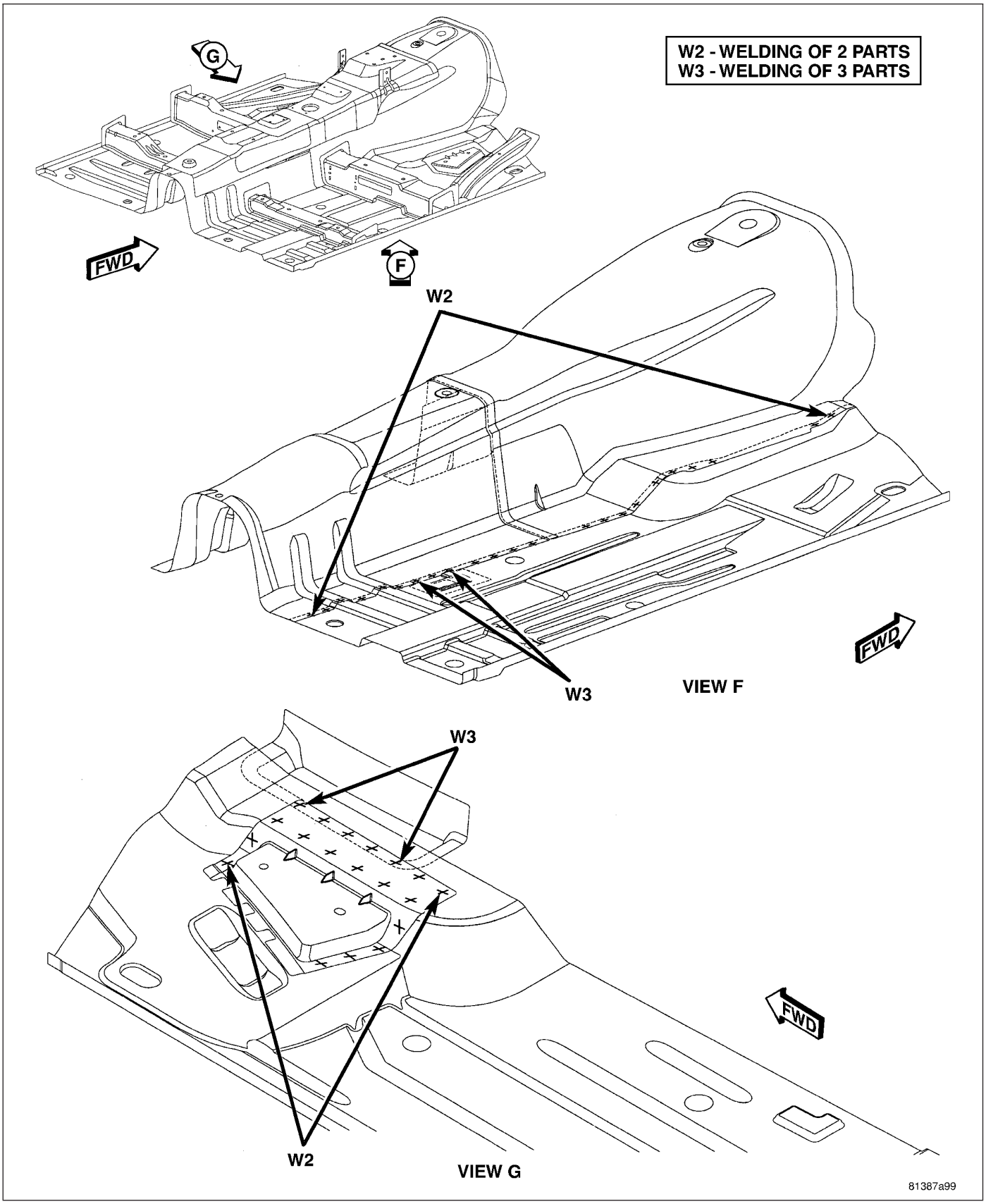

Fig. 162 FRONT FLOOR PAN (9 OF 12)

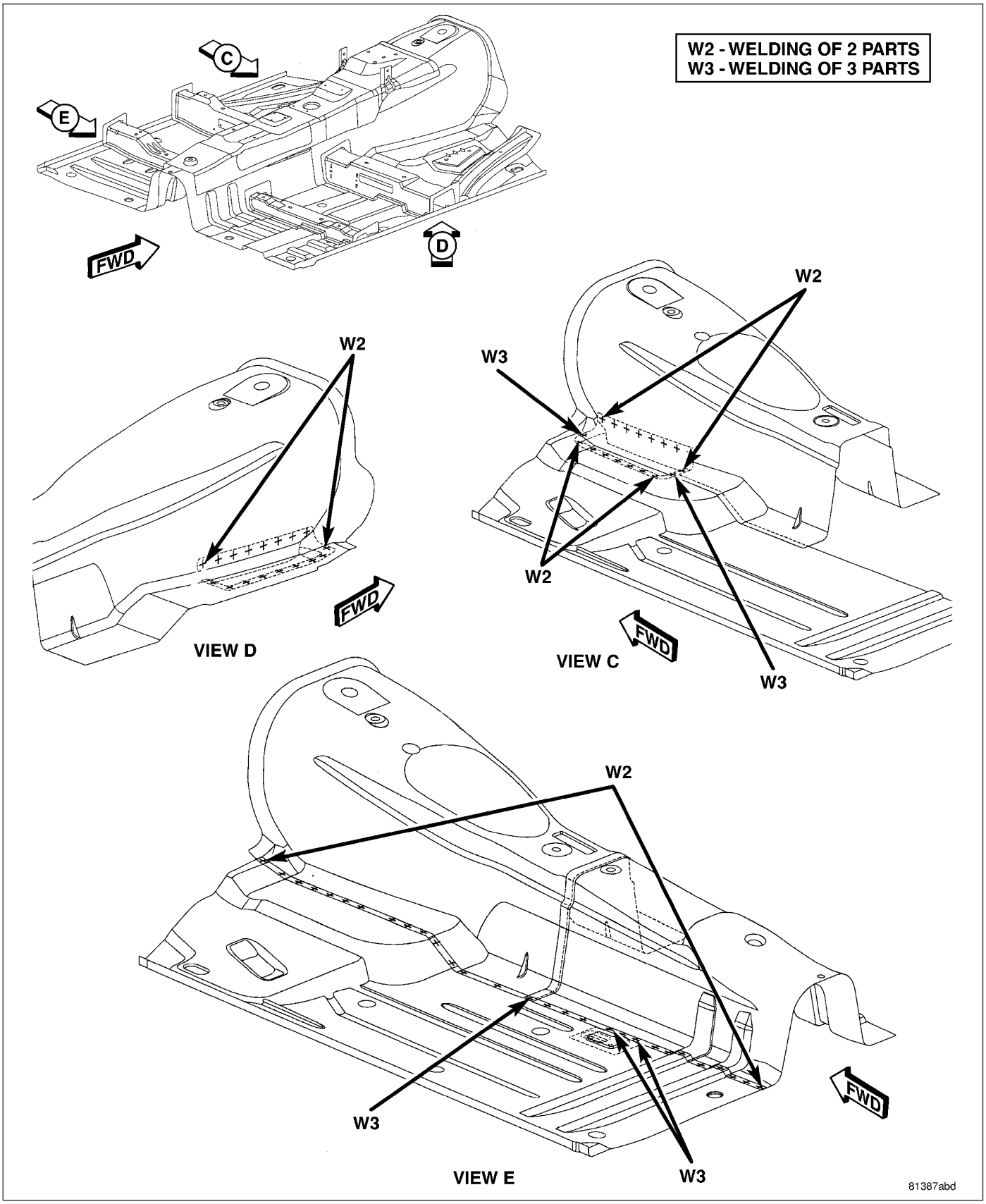

Fig. 163 FRONT FLOOR PAN (10 OF 12)

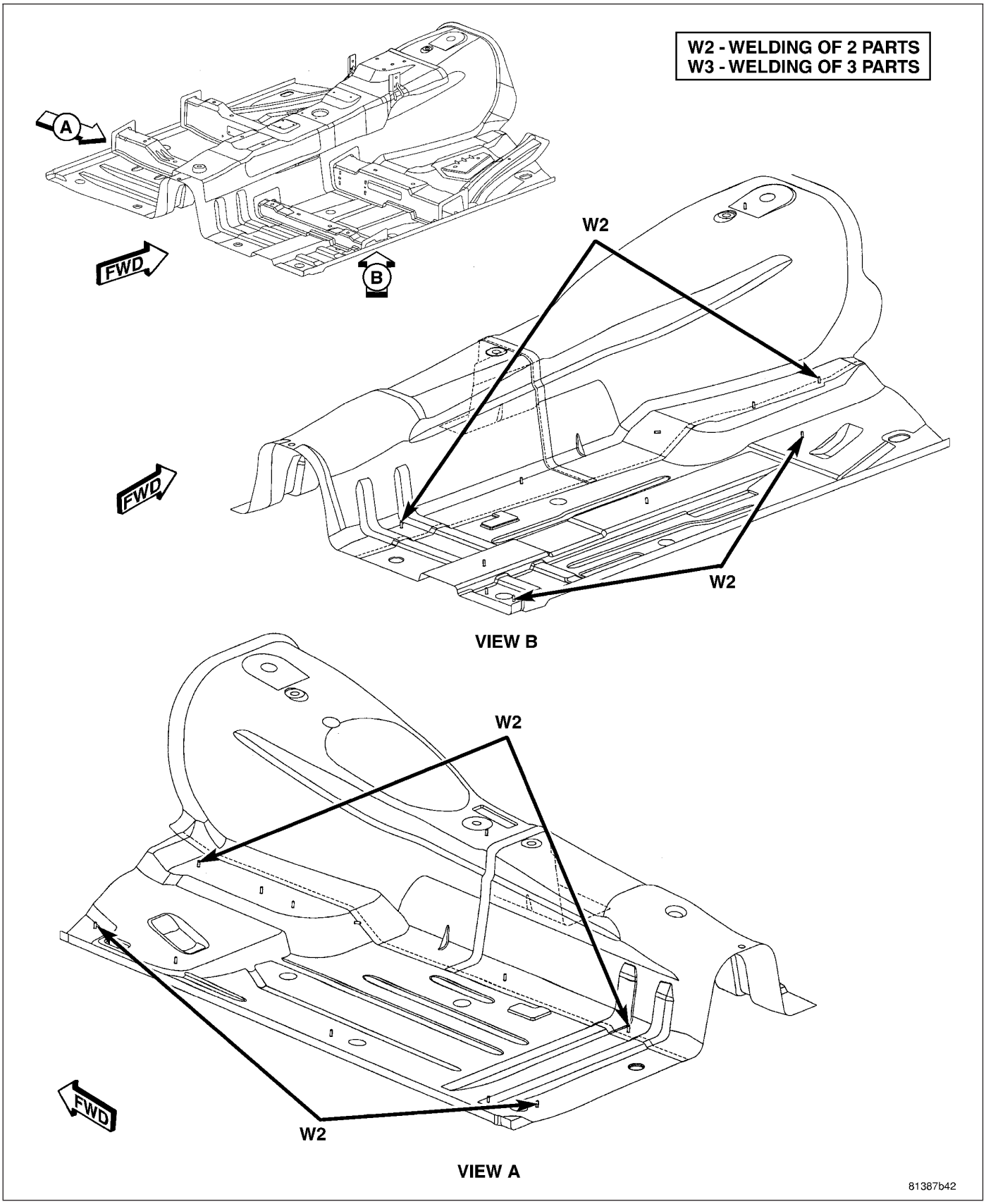

Fig. 164 FRONT FLOOR PAN (11 OF 12)

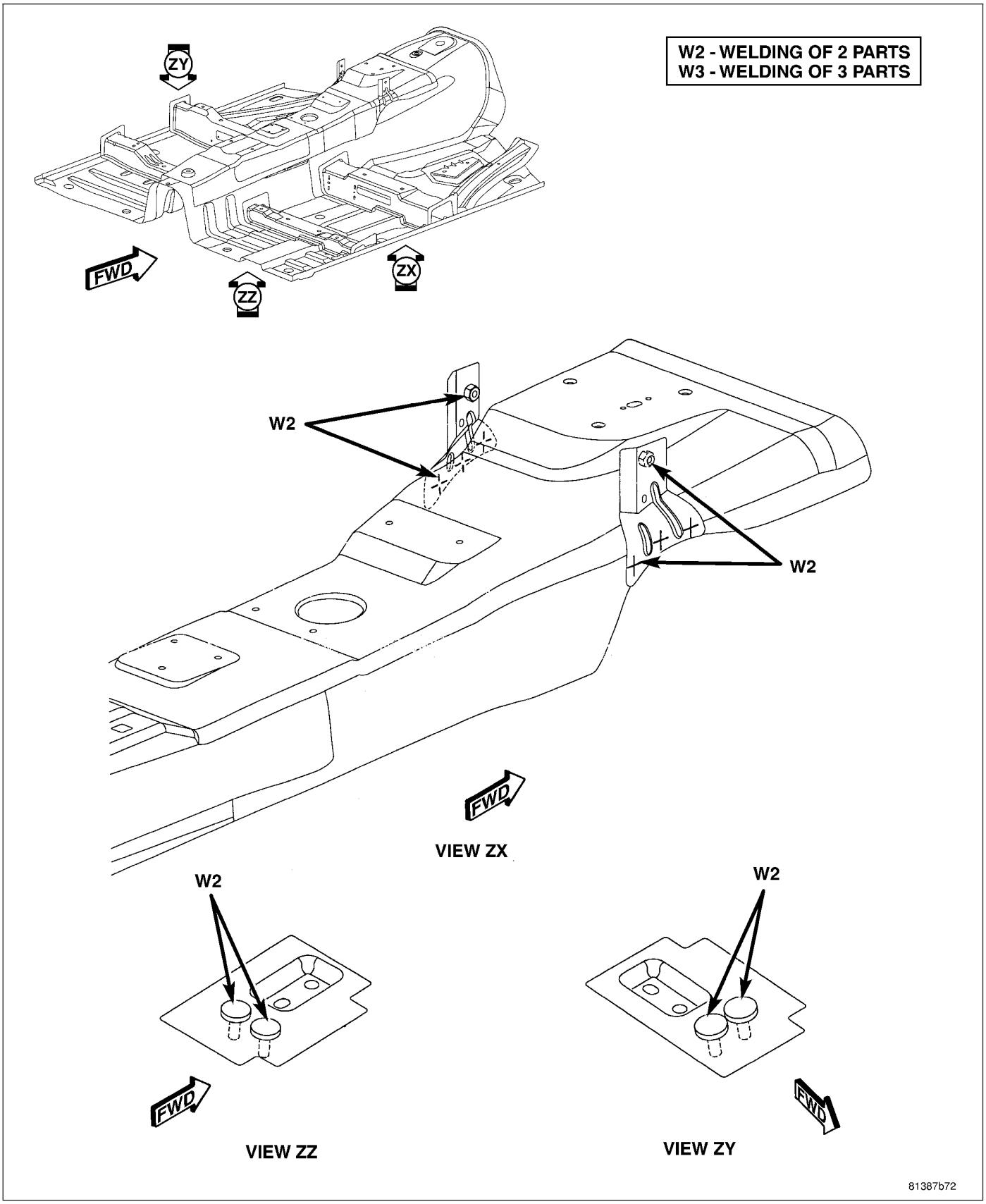

Fig. 165 FRONT FLOOR PAN (12 OF 12)

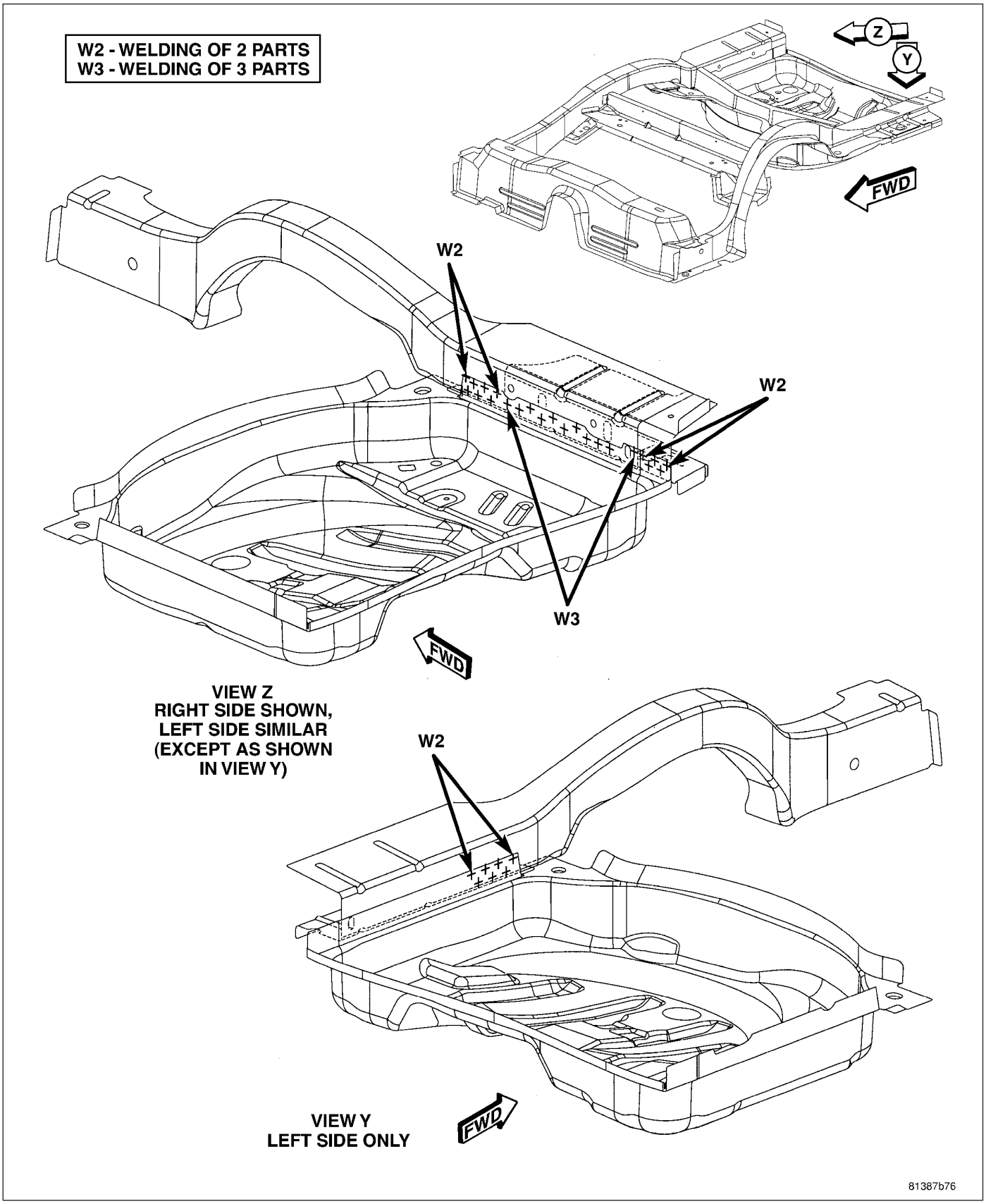

Fig. 166 REAR LADDER (1 OF 5)

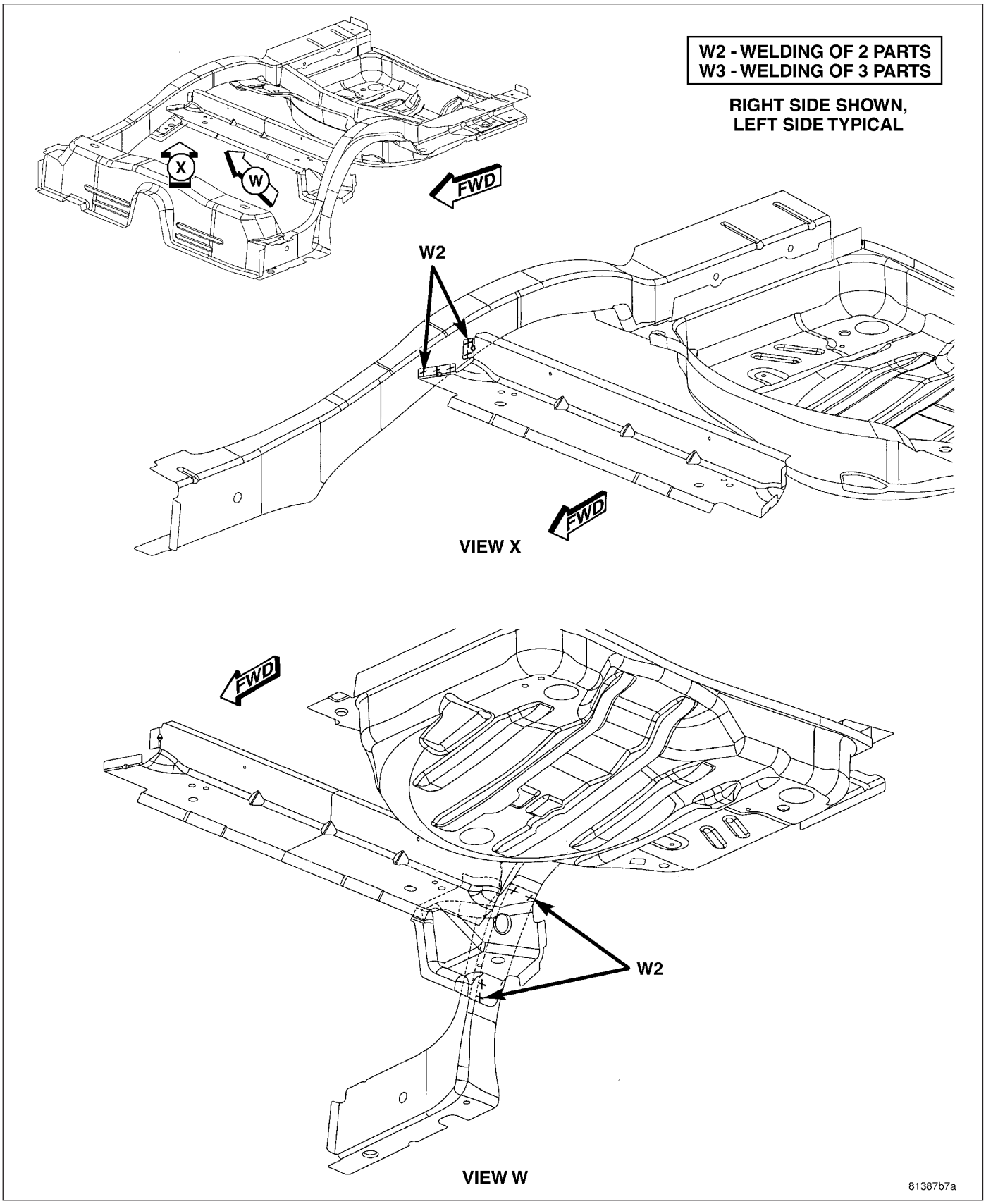

Fig. 167 REAR LADDER (2 OF 5)

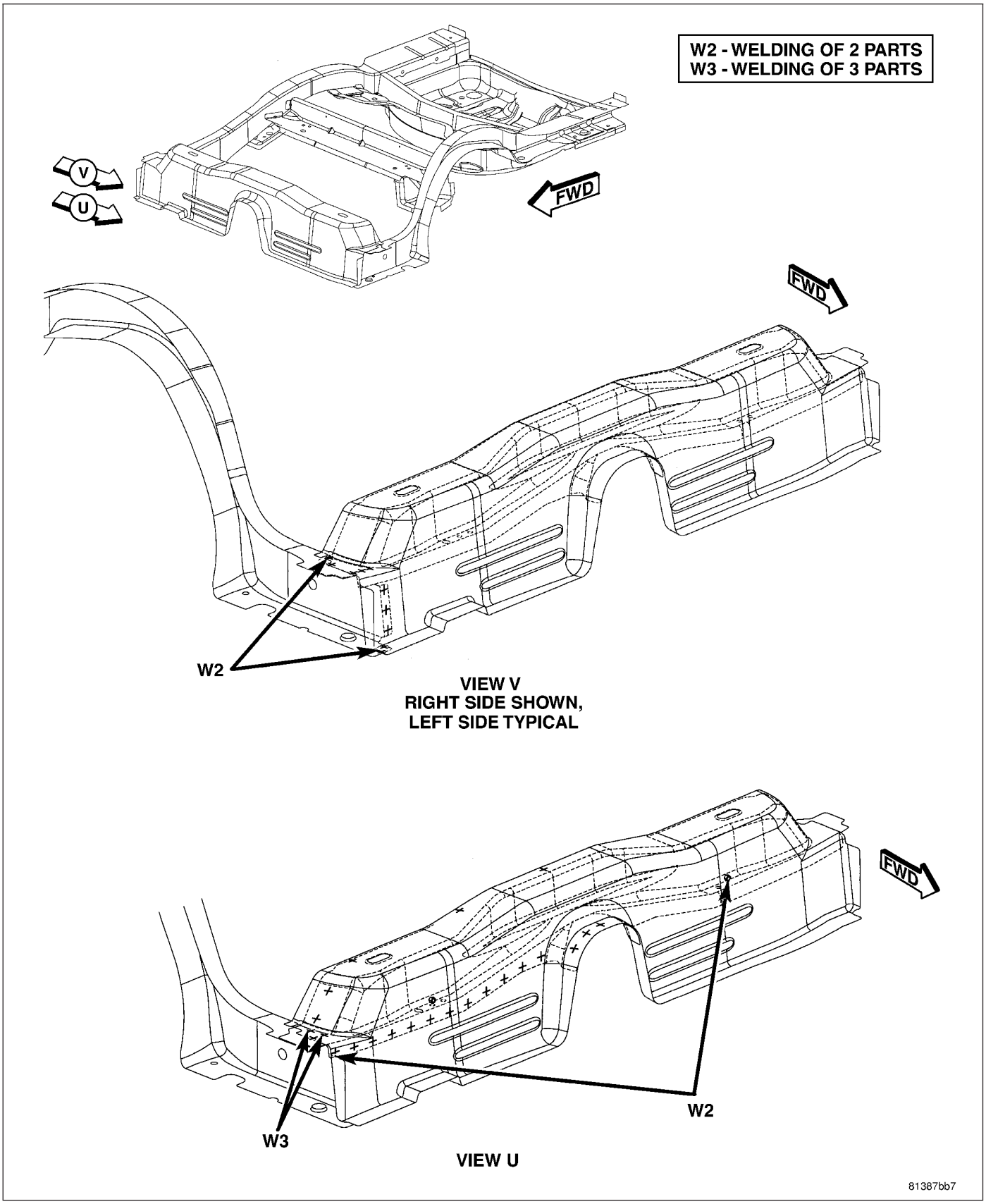

Fig. 168 REAR LADDER (3 OF 5)

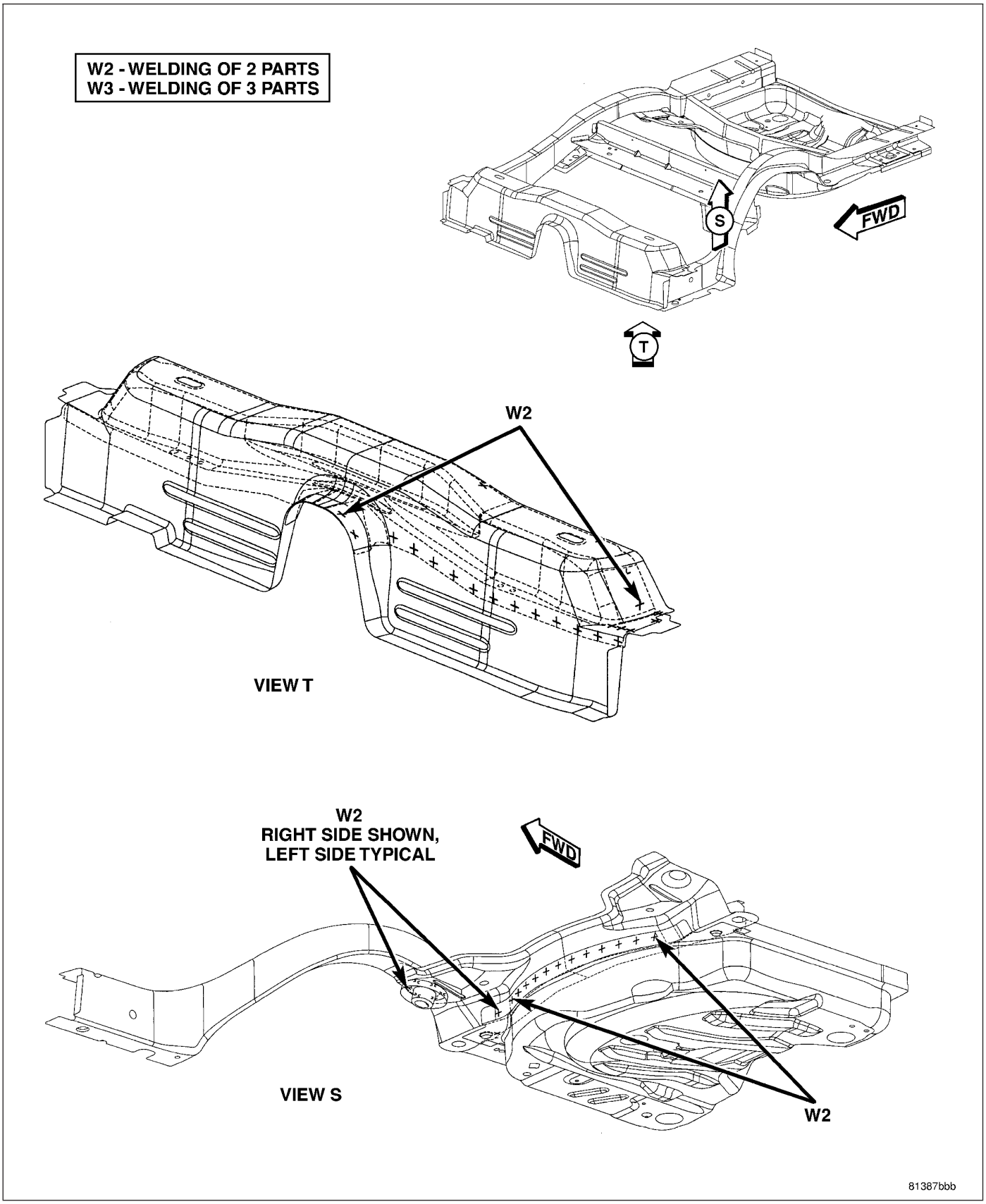

Fig. 169 REAR LADDER (4 OF 5)

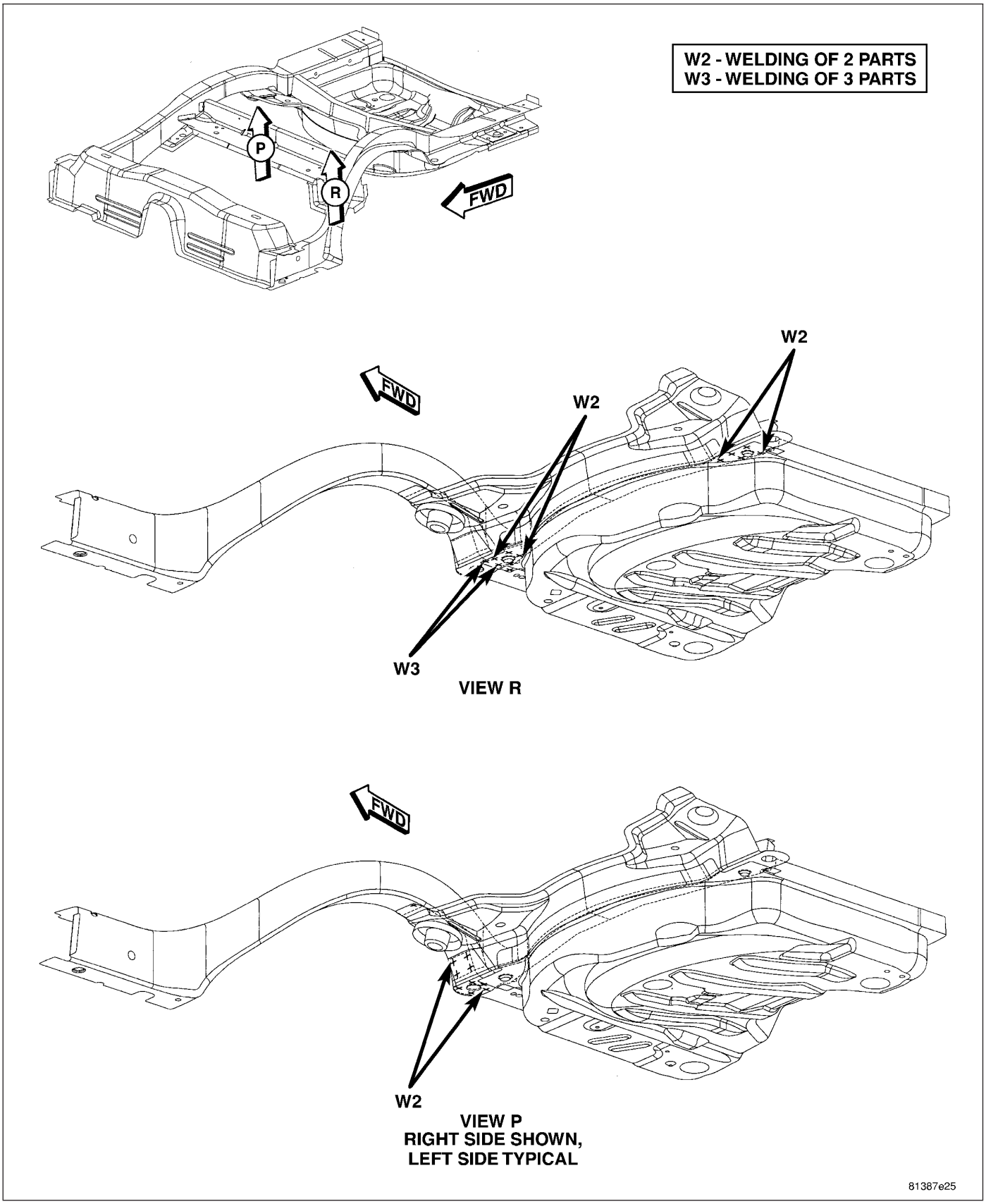

Fig. 170 REAR LADDER (5 OF 5)

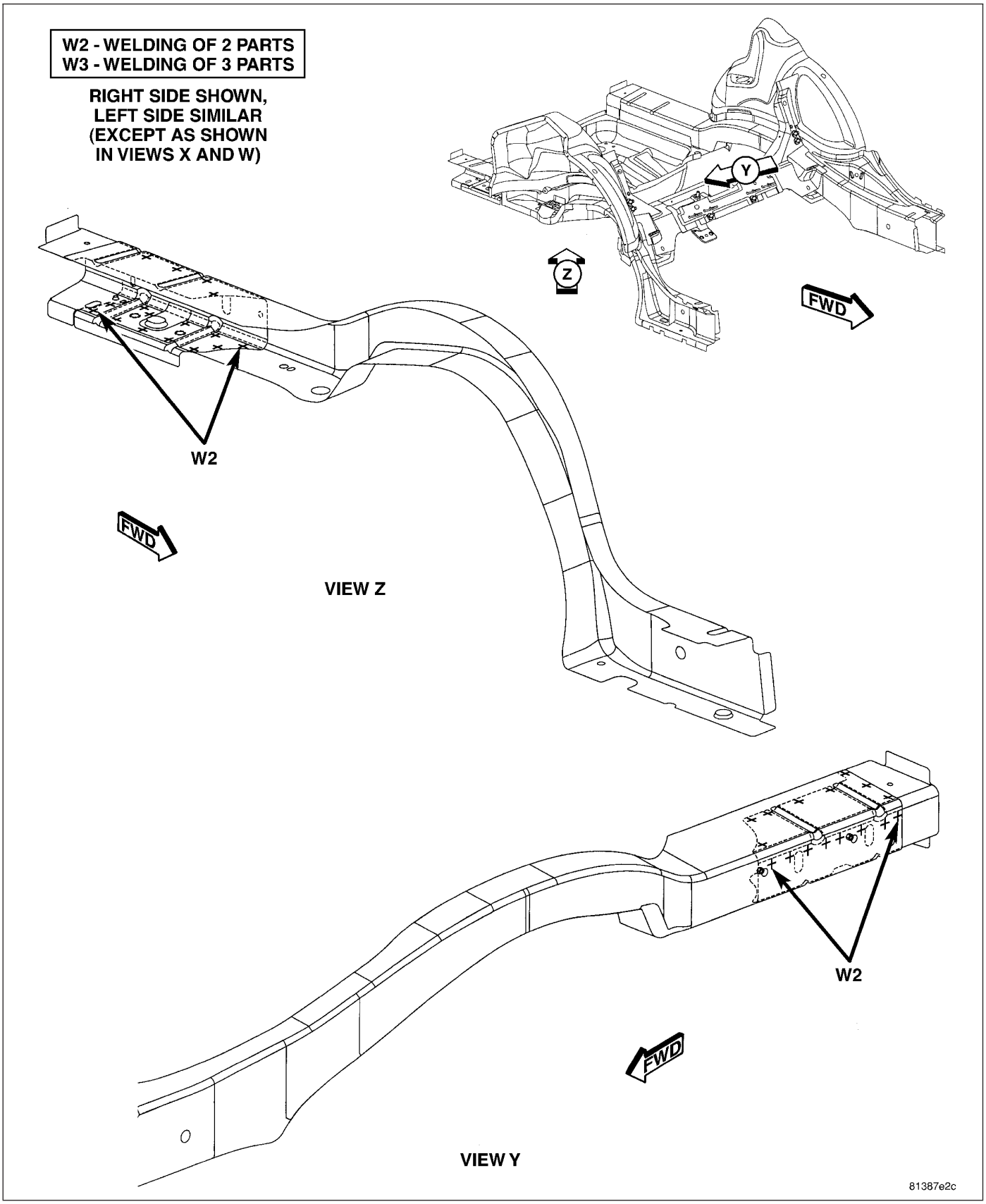

Fig. 171 REAR FLOOR/LADDER (1 OF 6)

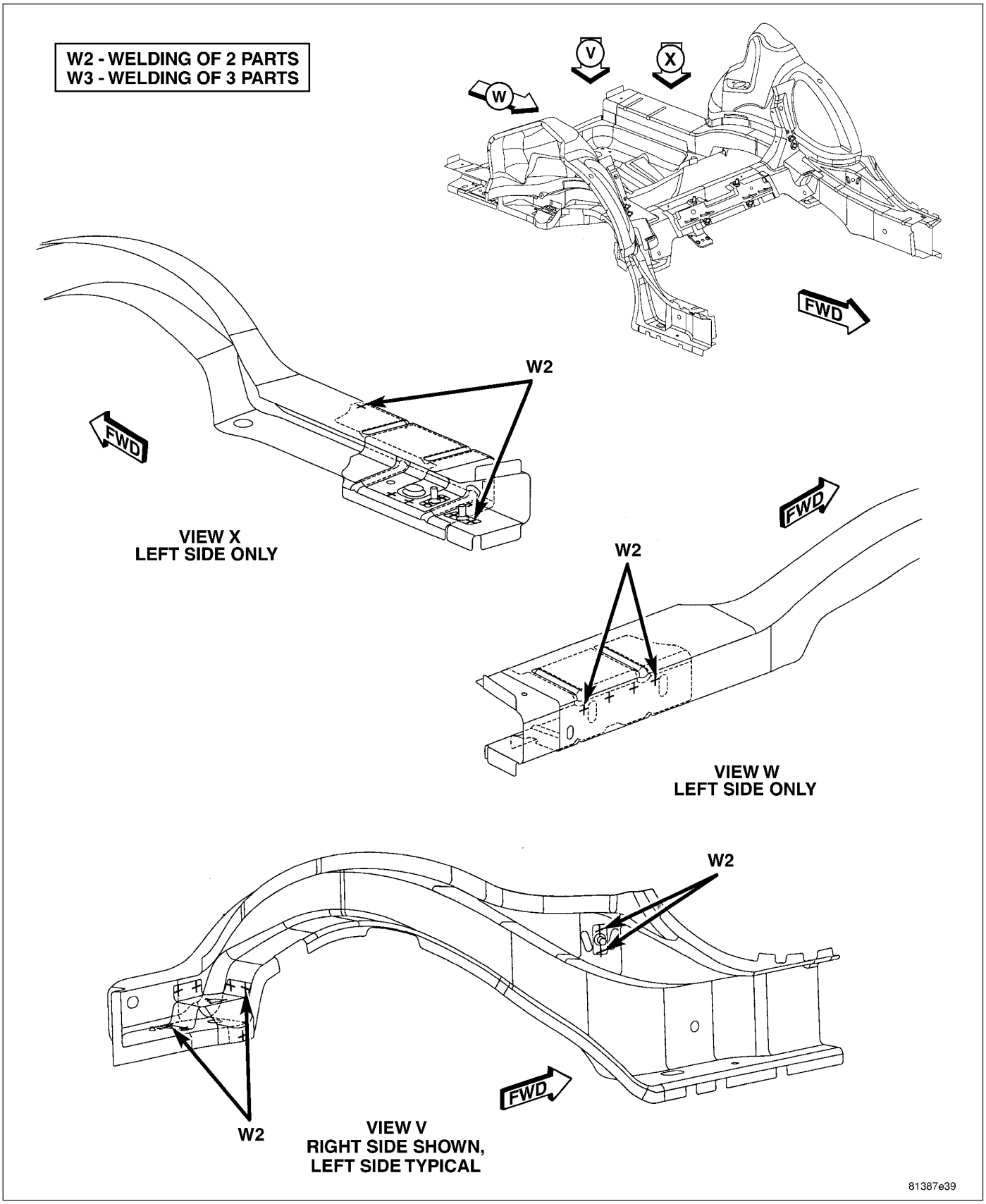

Fig. 172 REAR FLOOR/LADDER (2 OF 6)

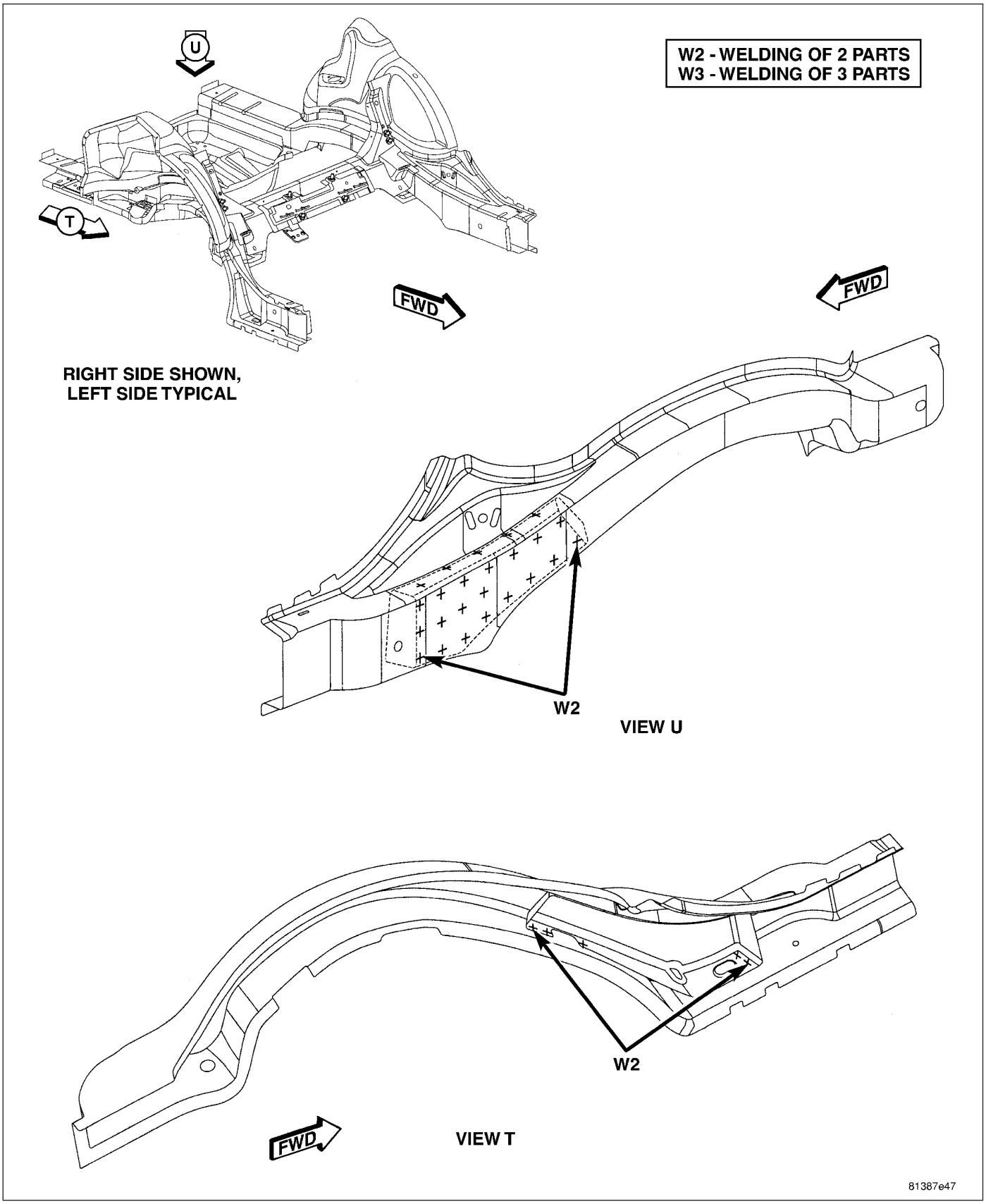

Fig. 173 REAR FLOOR/LADDER (3 OF 6)

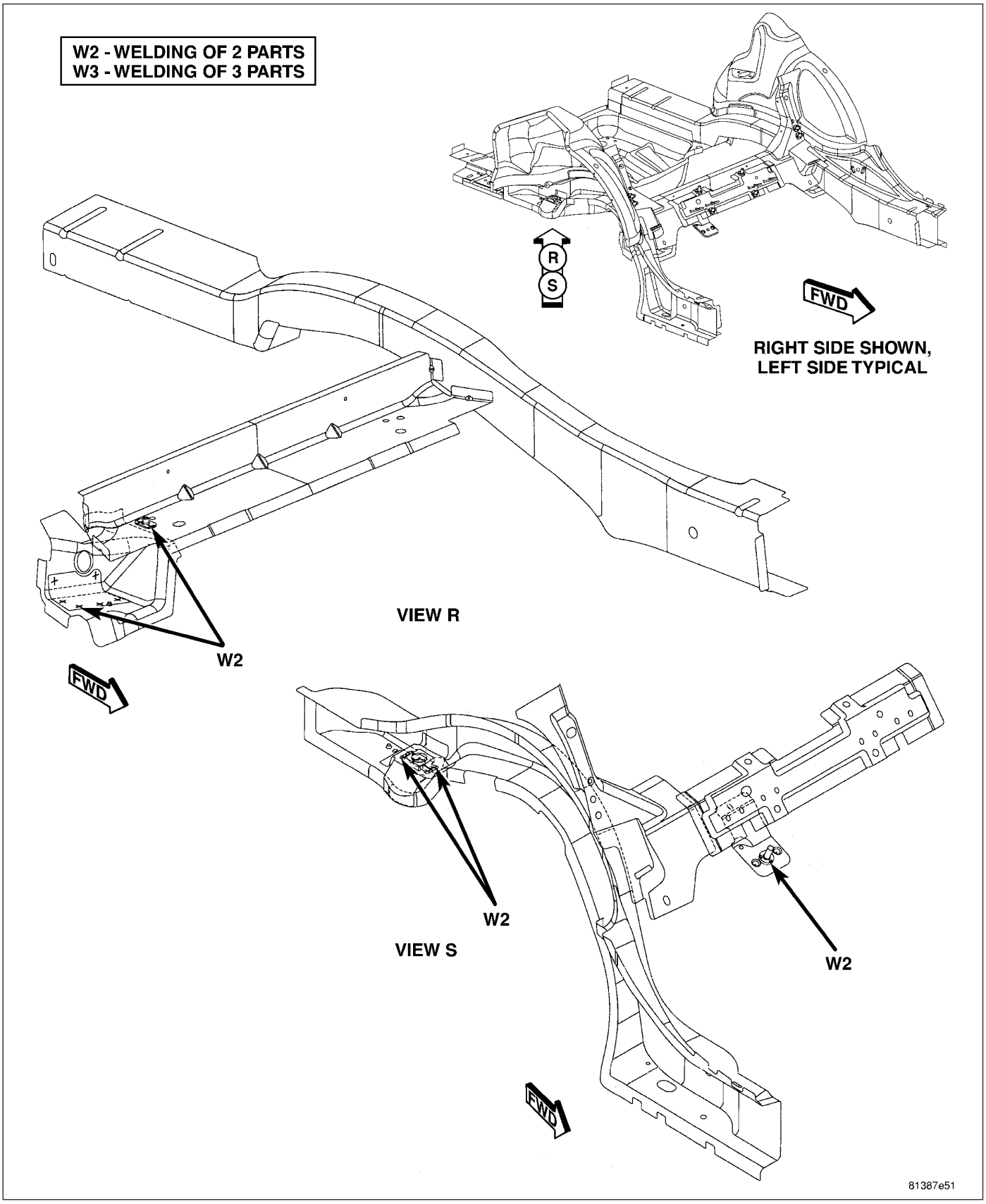

Fig. 174 REAR FLOOR/LADDER (4 OF 6)

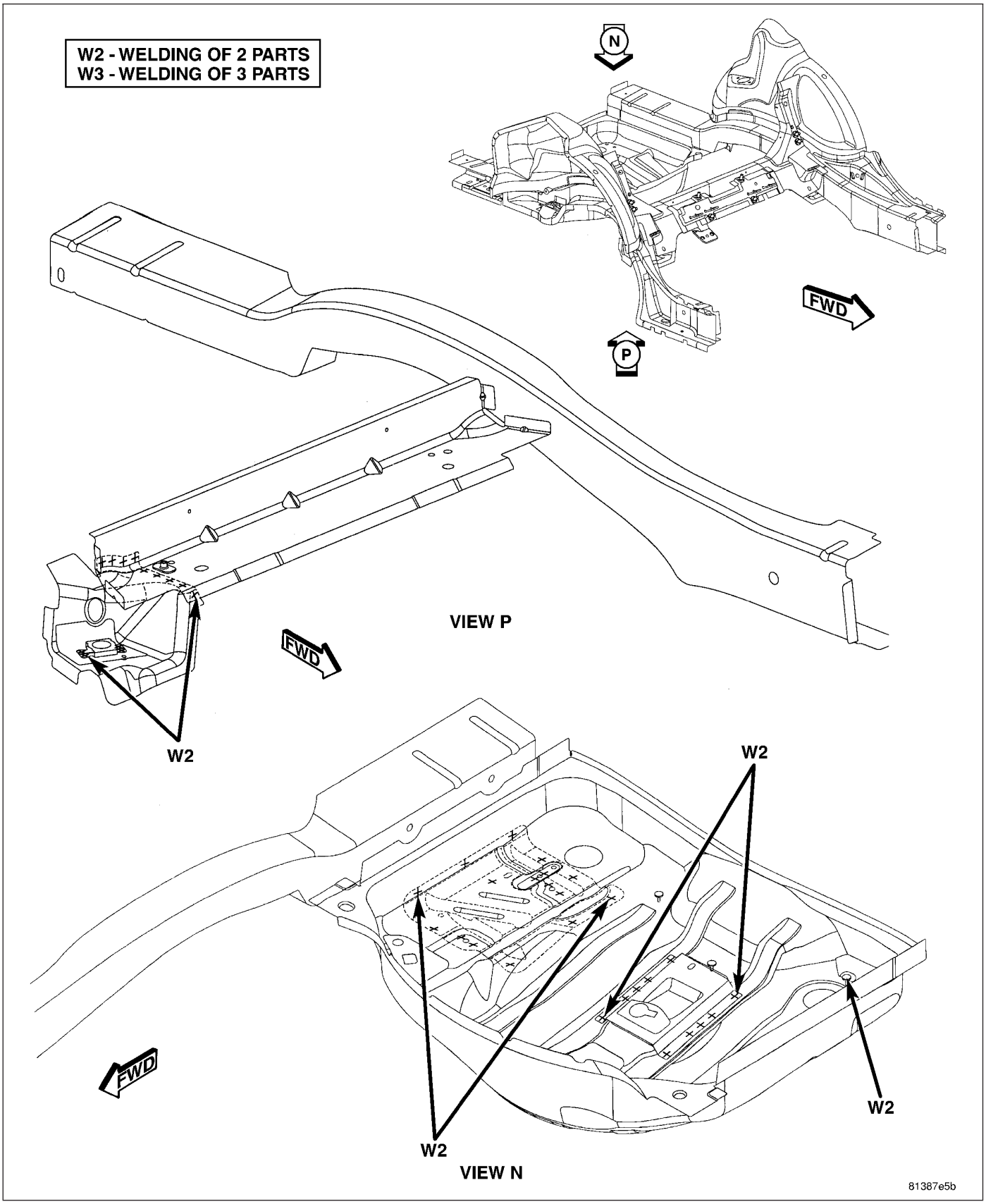

Fig. 175 007 REAR FLOOR/LADDER (5 OF 6)

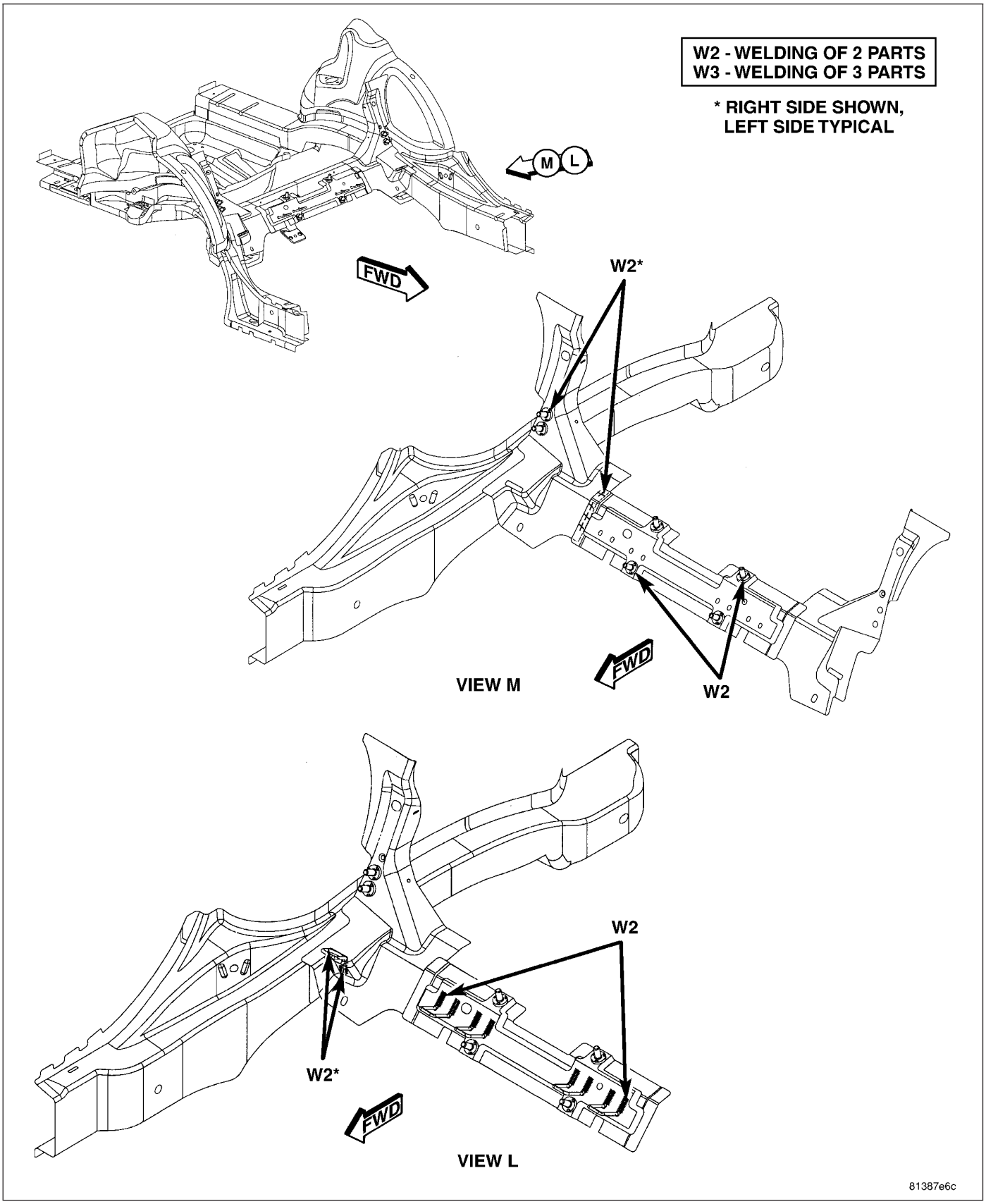

Fig. 176 REAR FLOOR/LADDER (6 OF 6)

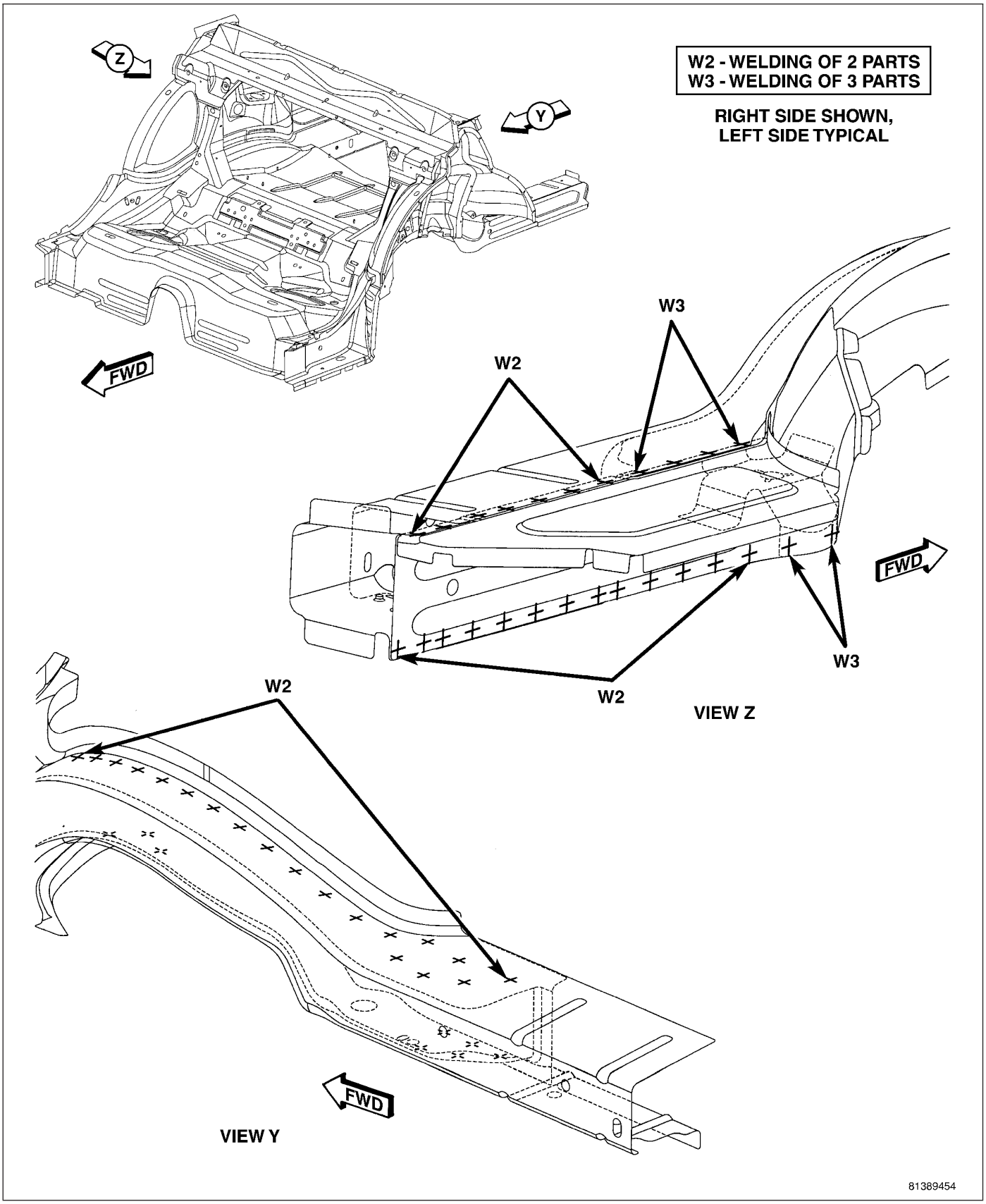

Fig. 177 REAR FLOOR/LADDER COMPLETE (1 OF 8)

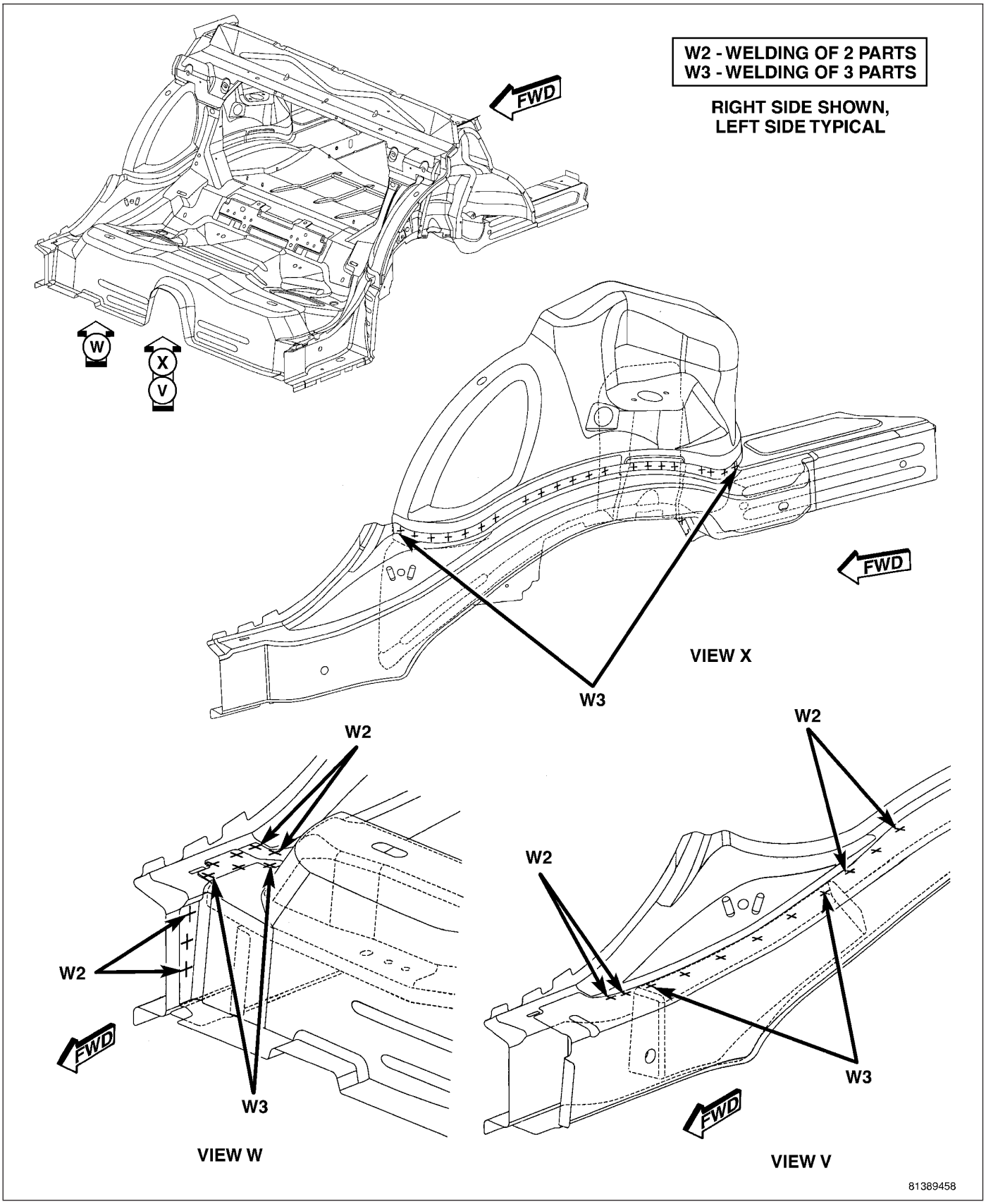

Fig. 178 REAR FLOOR/LADDER COMPLETE (2 OF 8)

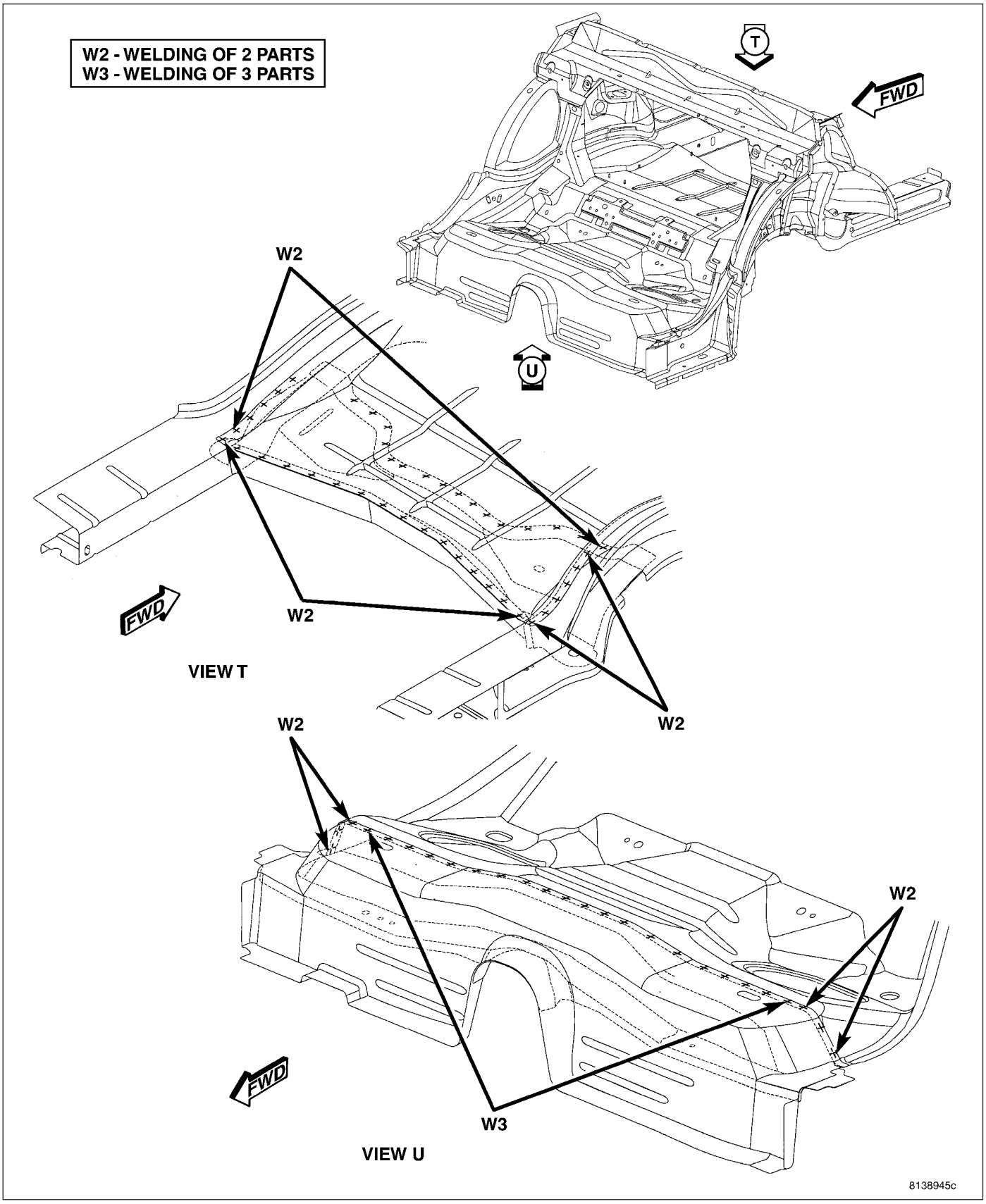

Fig. 179 REAR FLOOR/LADDER COMPLETE (3 OF 8)

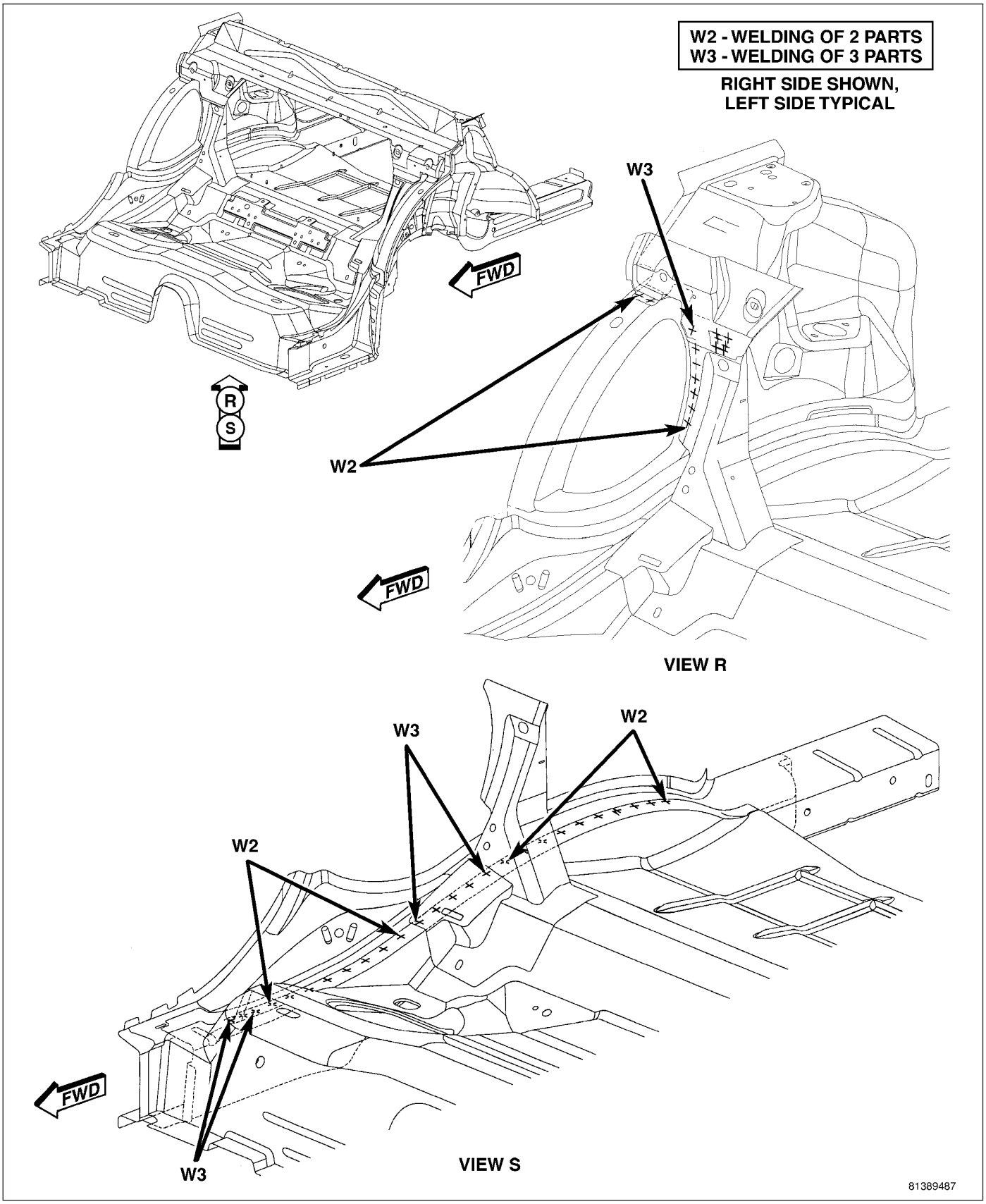

Fig. 180 008 REAR FLOOR/LADDER COMPLETE (4 OF 8)

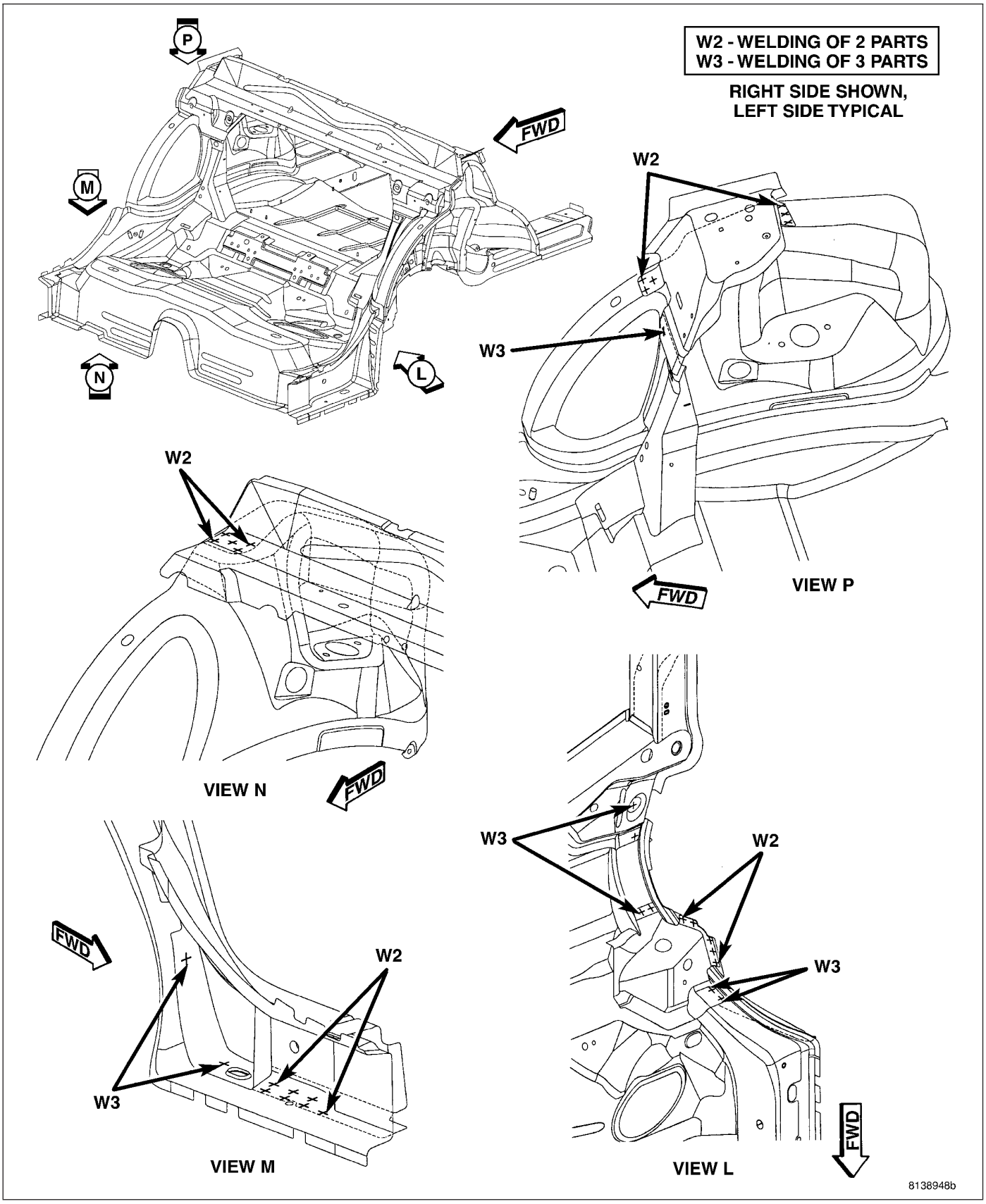

Fig. 181 REAR FLOOR/LADDER COMPLETE (5 OF 8)

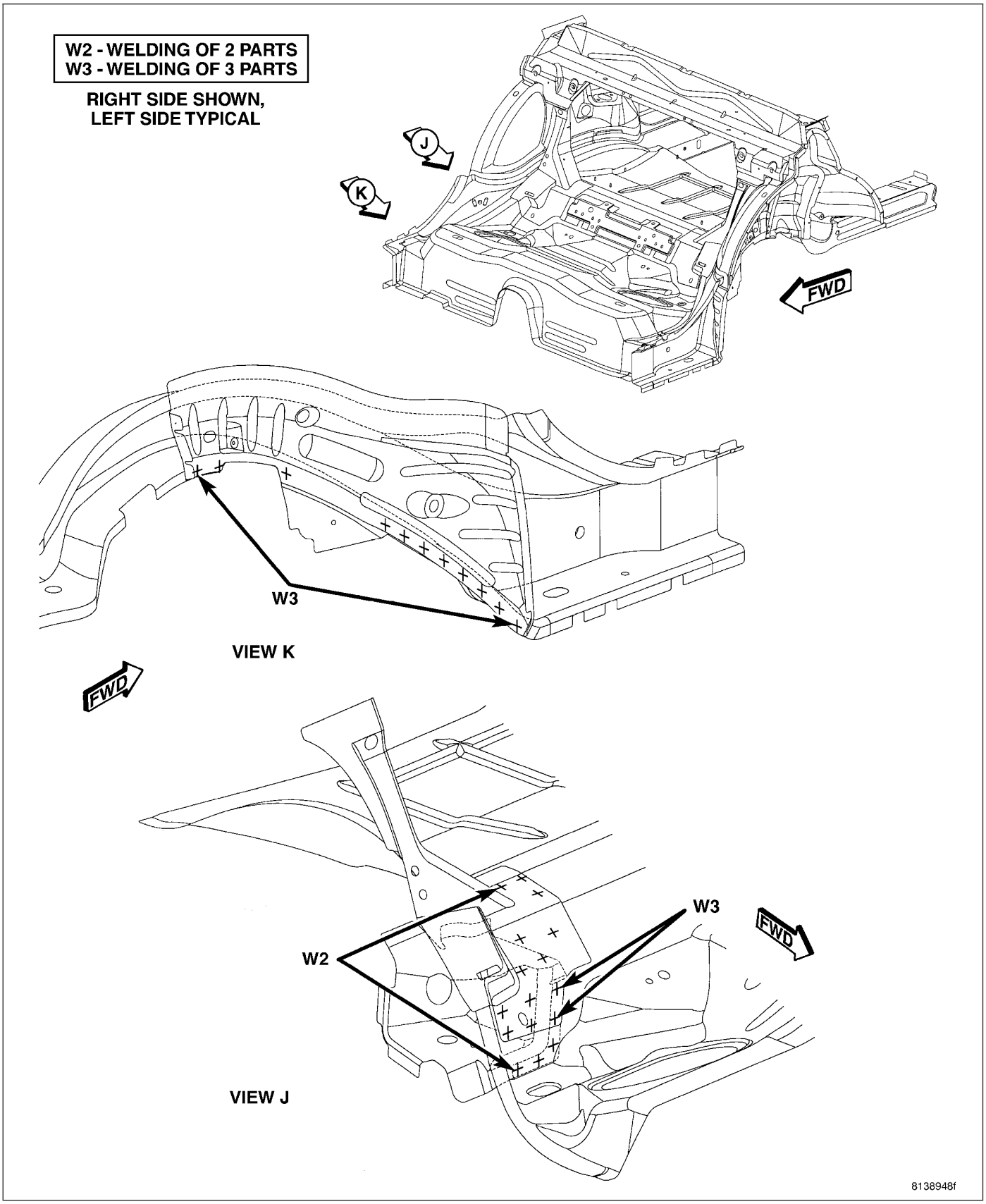

Fig. 182 REAR FLOOR/LADDER COMPLETE (6 OF 8)

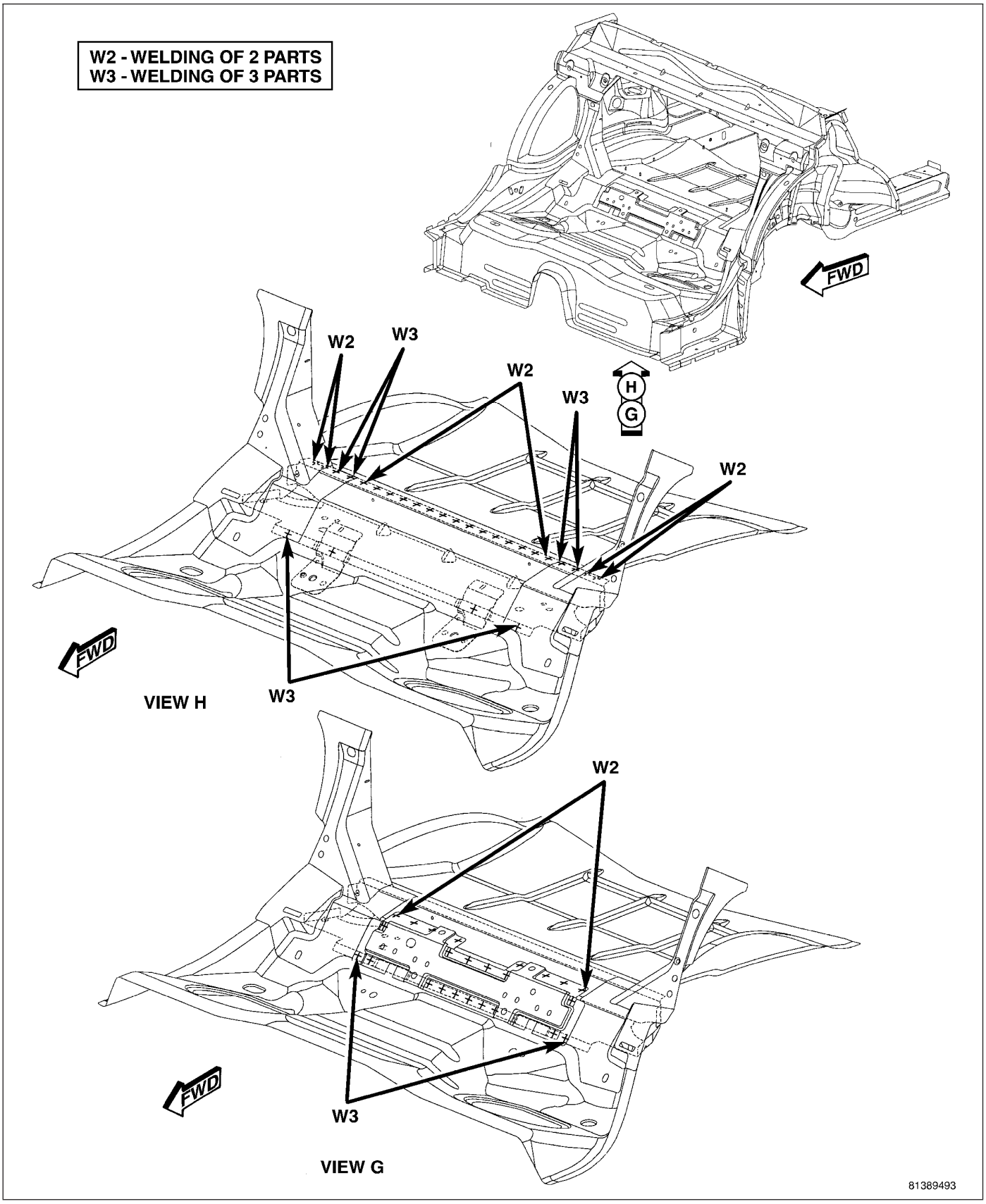

Fig. 183 REAR FLOOR/LADDER COMPLETE (7 OF 8)

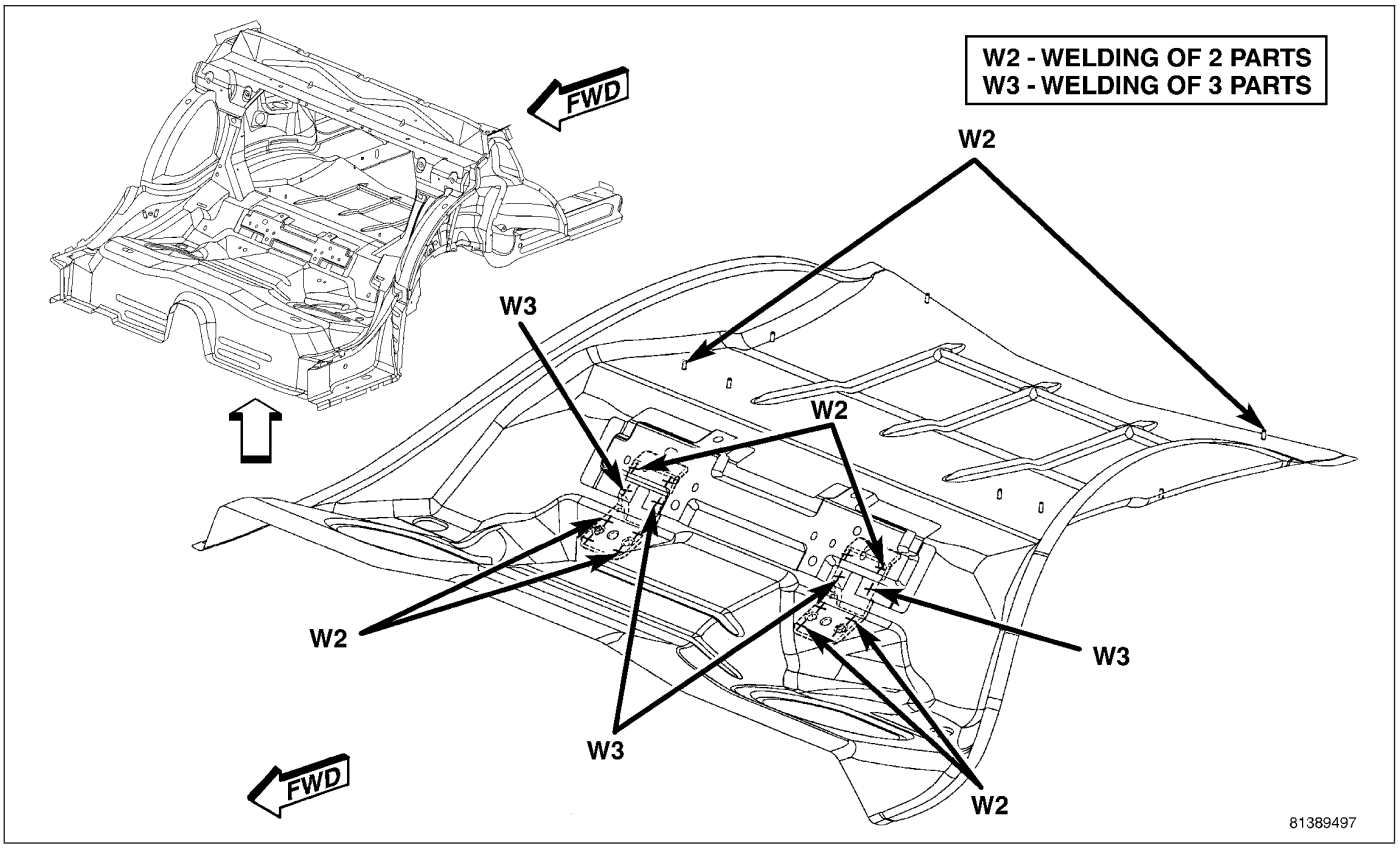

Fig. 184 REAR FLOOR/LADDER COMPLETE (8 OF 8)

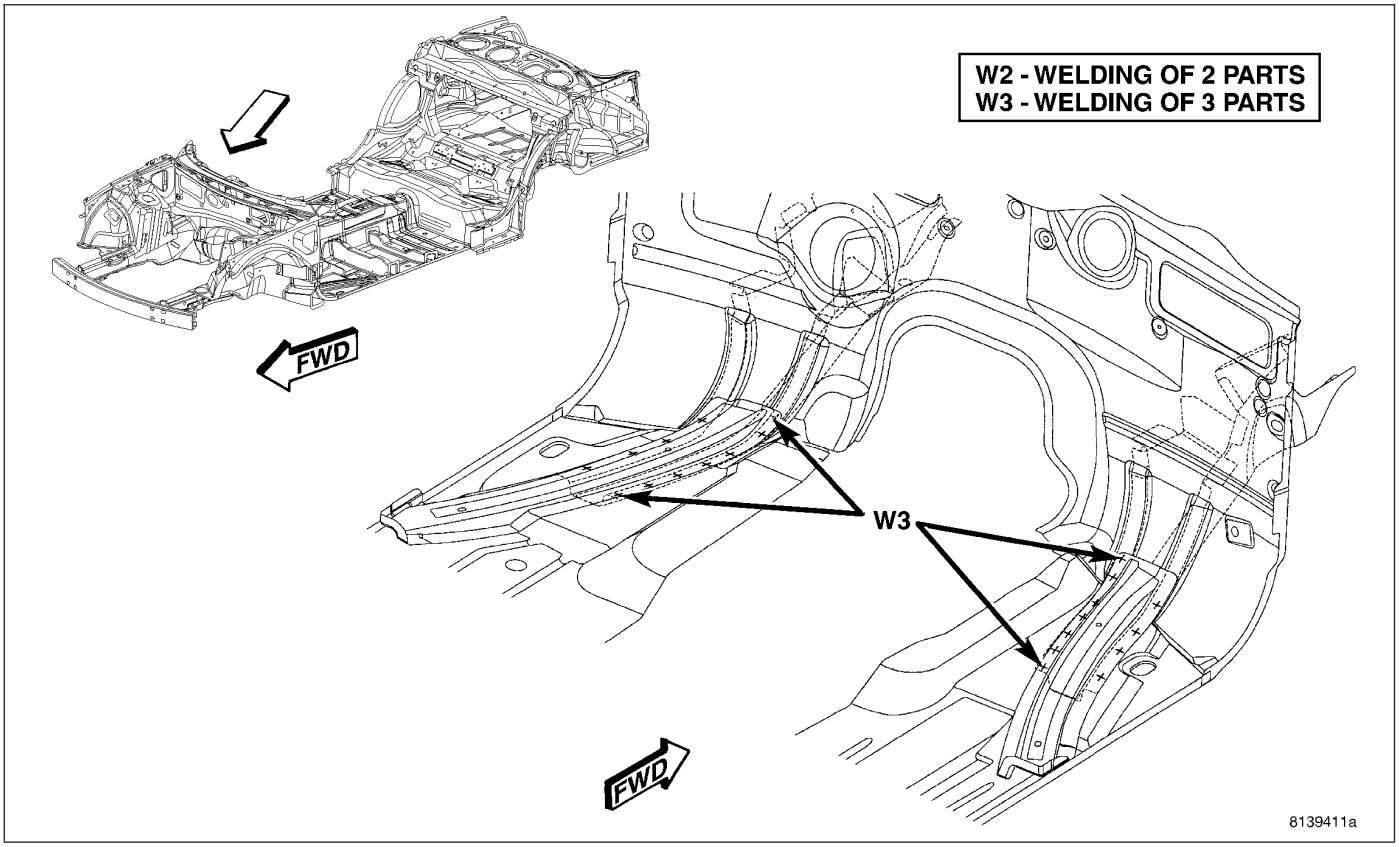

Fig. 185 UNDERBODY FRAMING (1 OF 5)

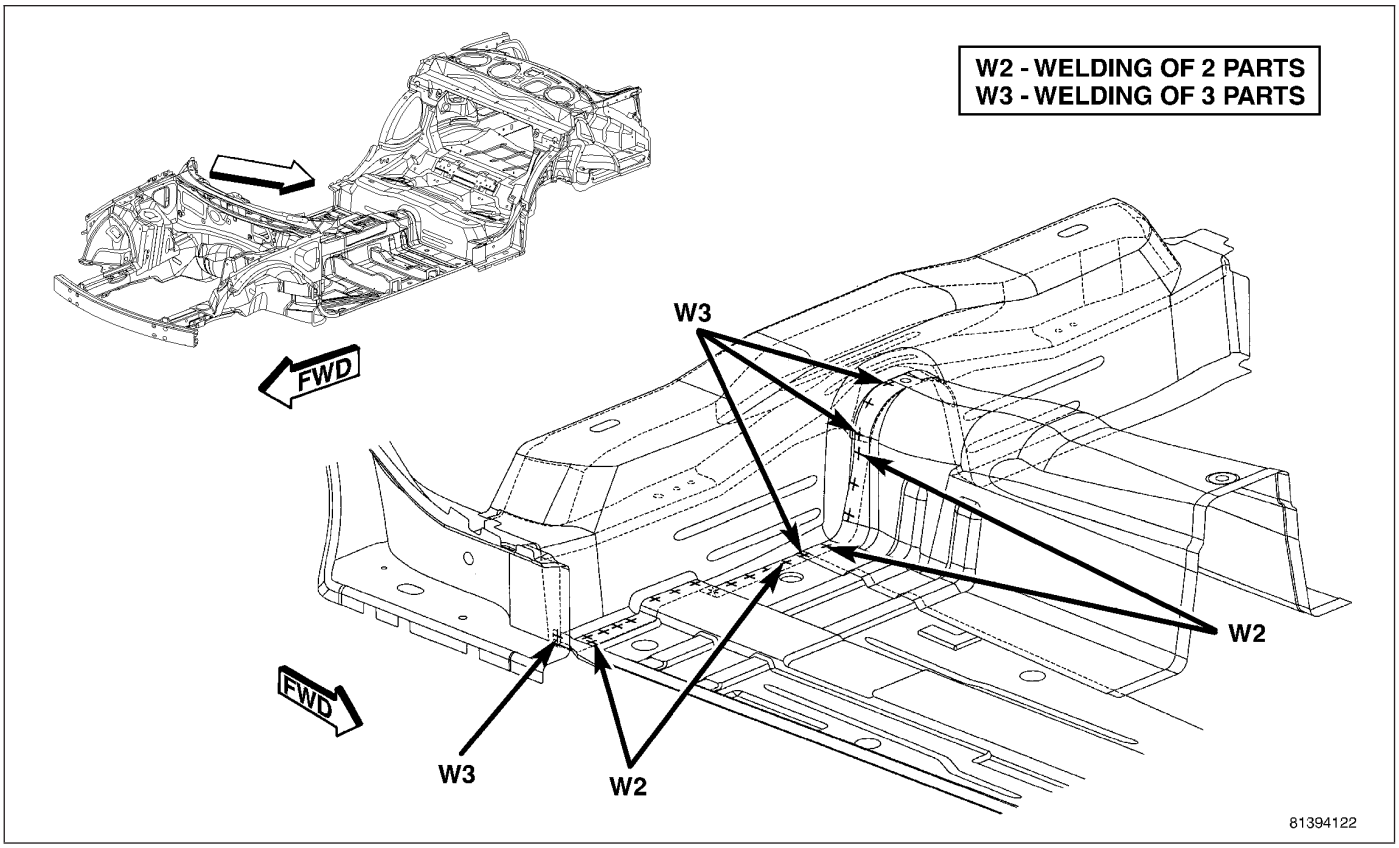

Fig. 186 UNDERBODY FRAMING (2 OF 5)

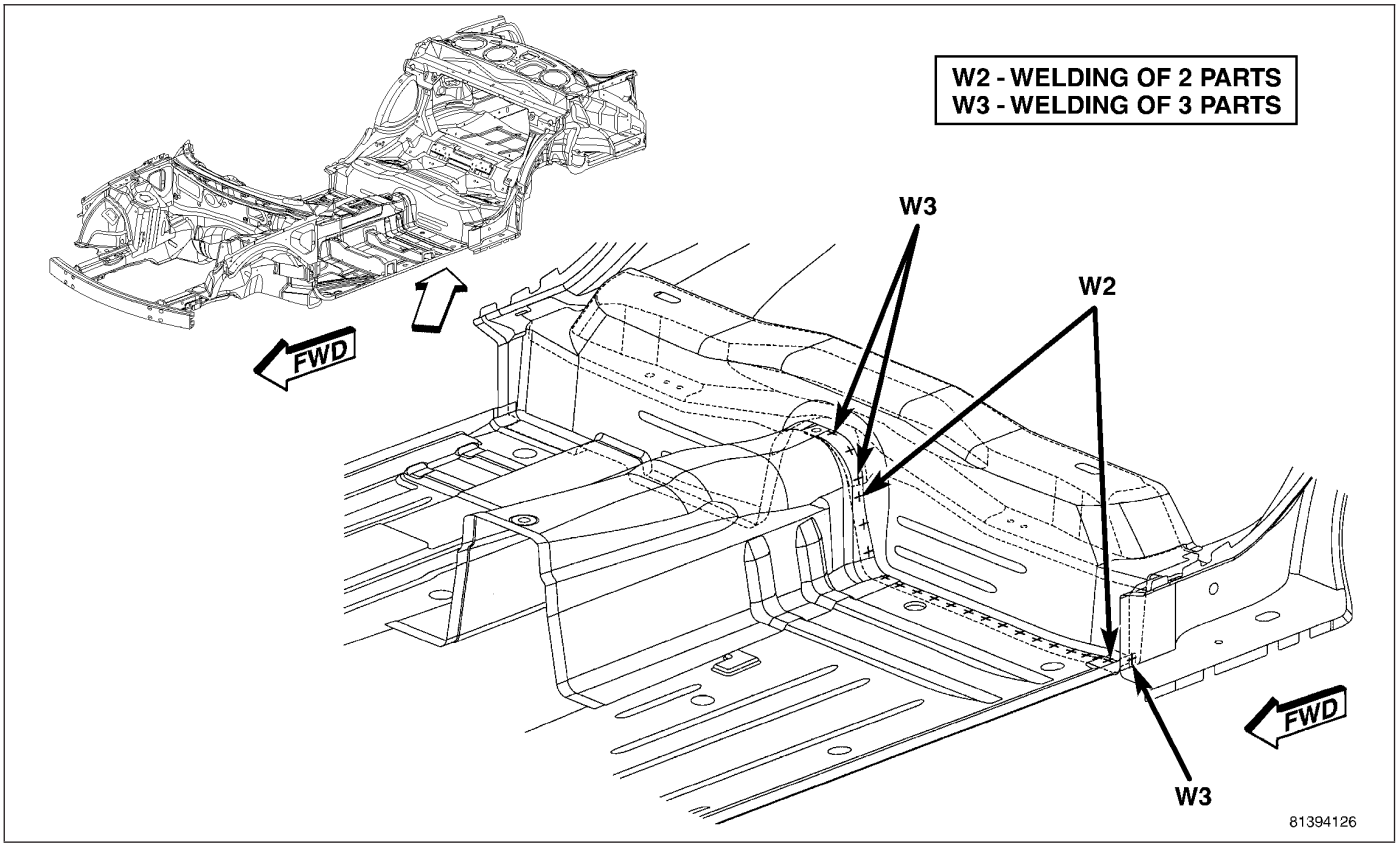

Fig. 187 UNDERBODY FRAMING (3 OF 5)

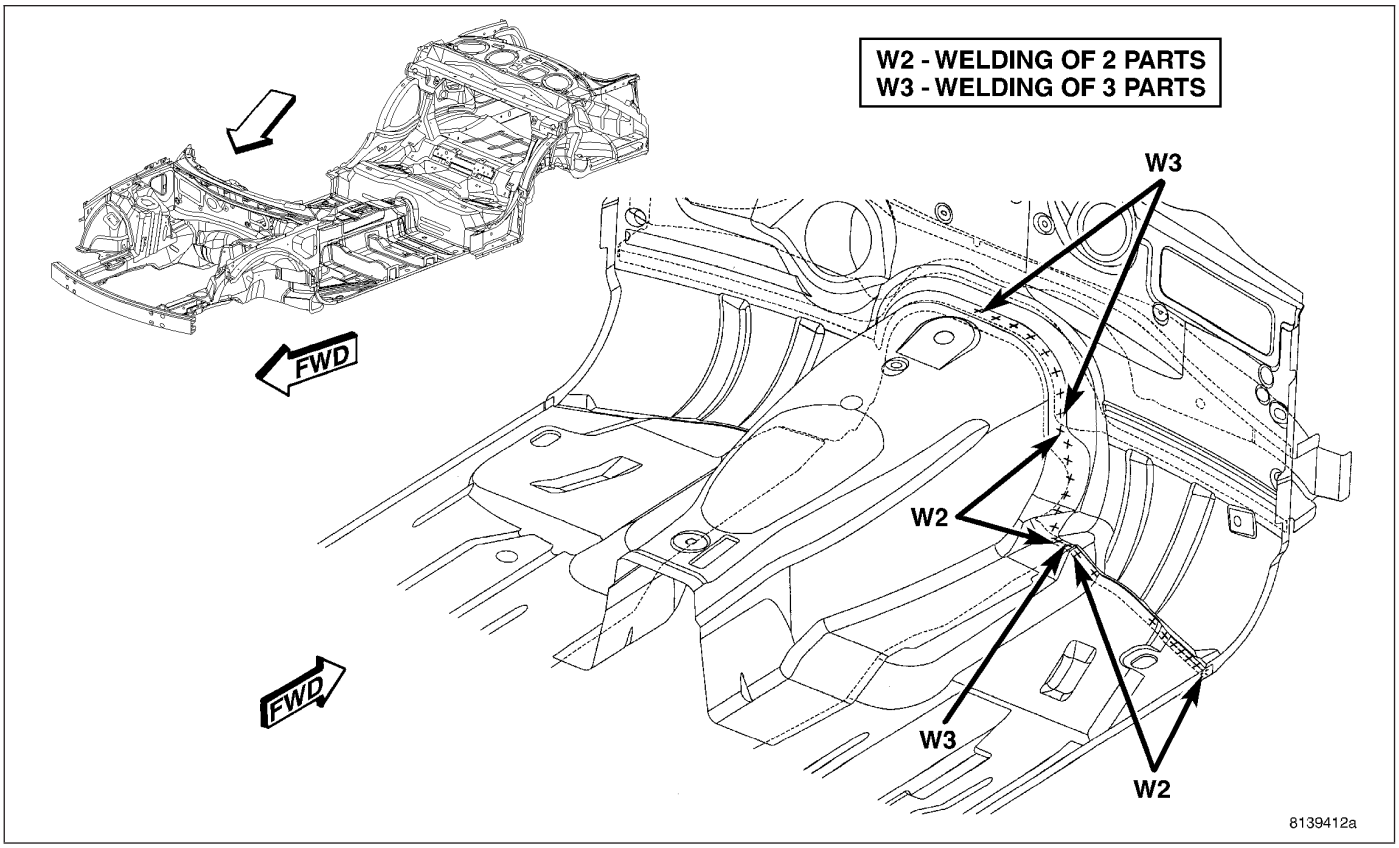

Fig. 188 UNDERBODY FRAMING (4 OF 5)

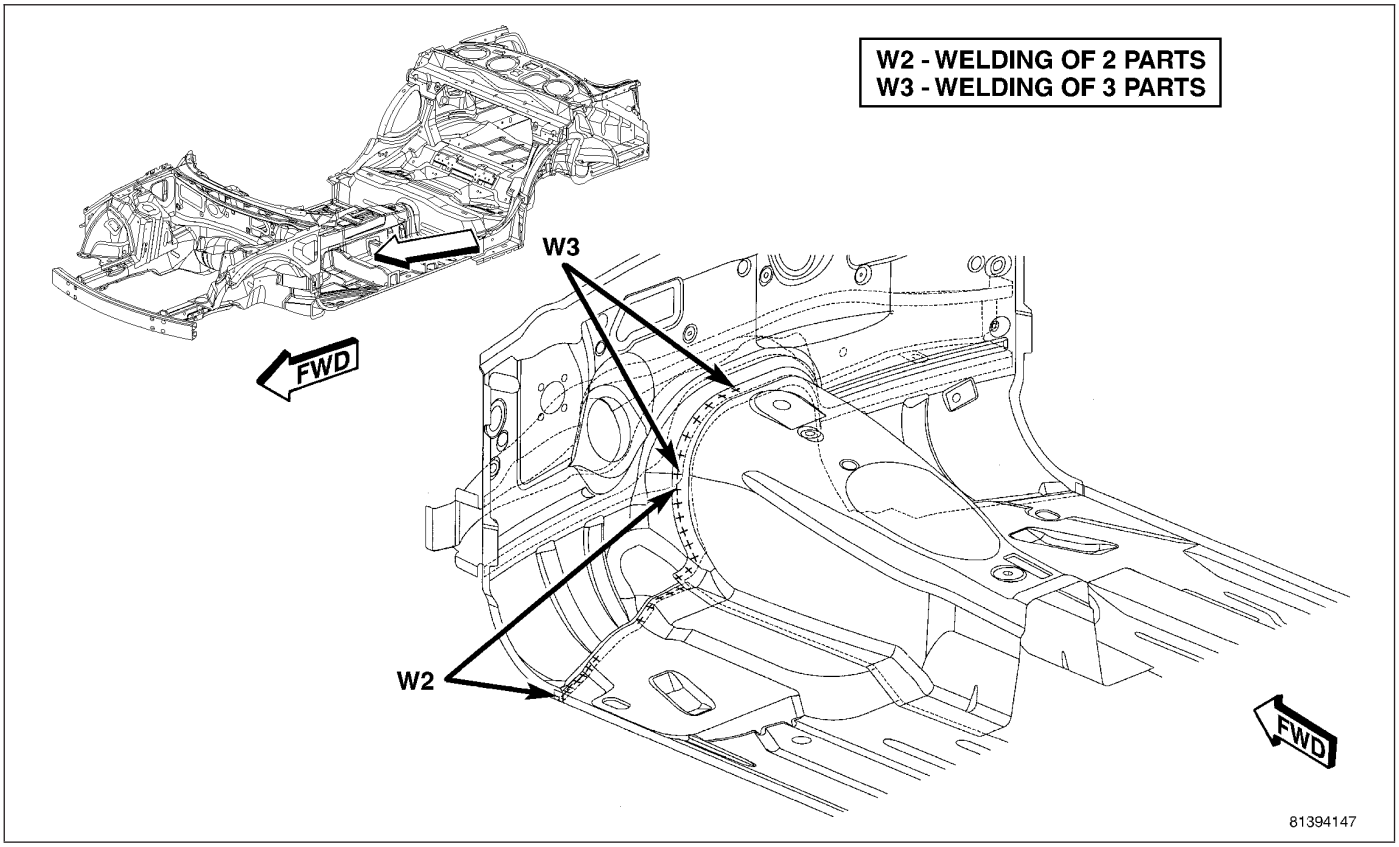

Fig. 189 UNDERBODY FRAMING (5 OF 5)

Charger Only

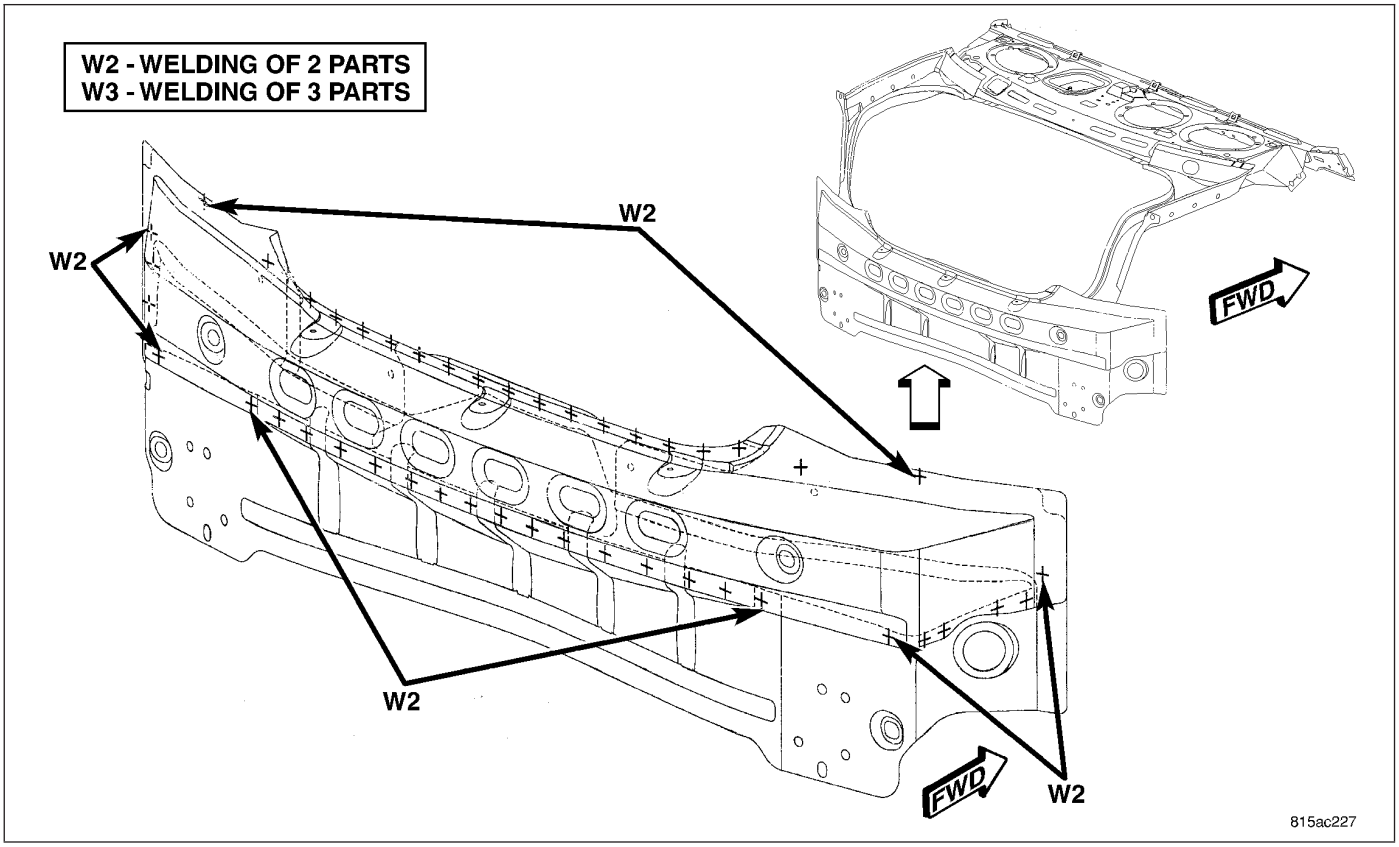

Fig. 190 UNDERBODY (1 OF 4)

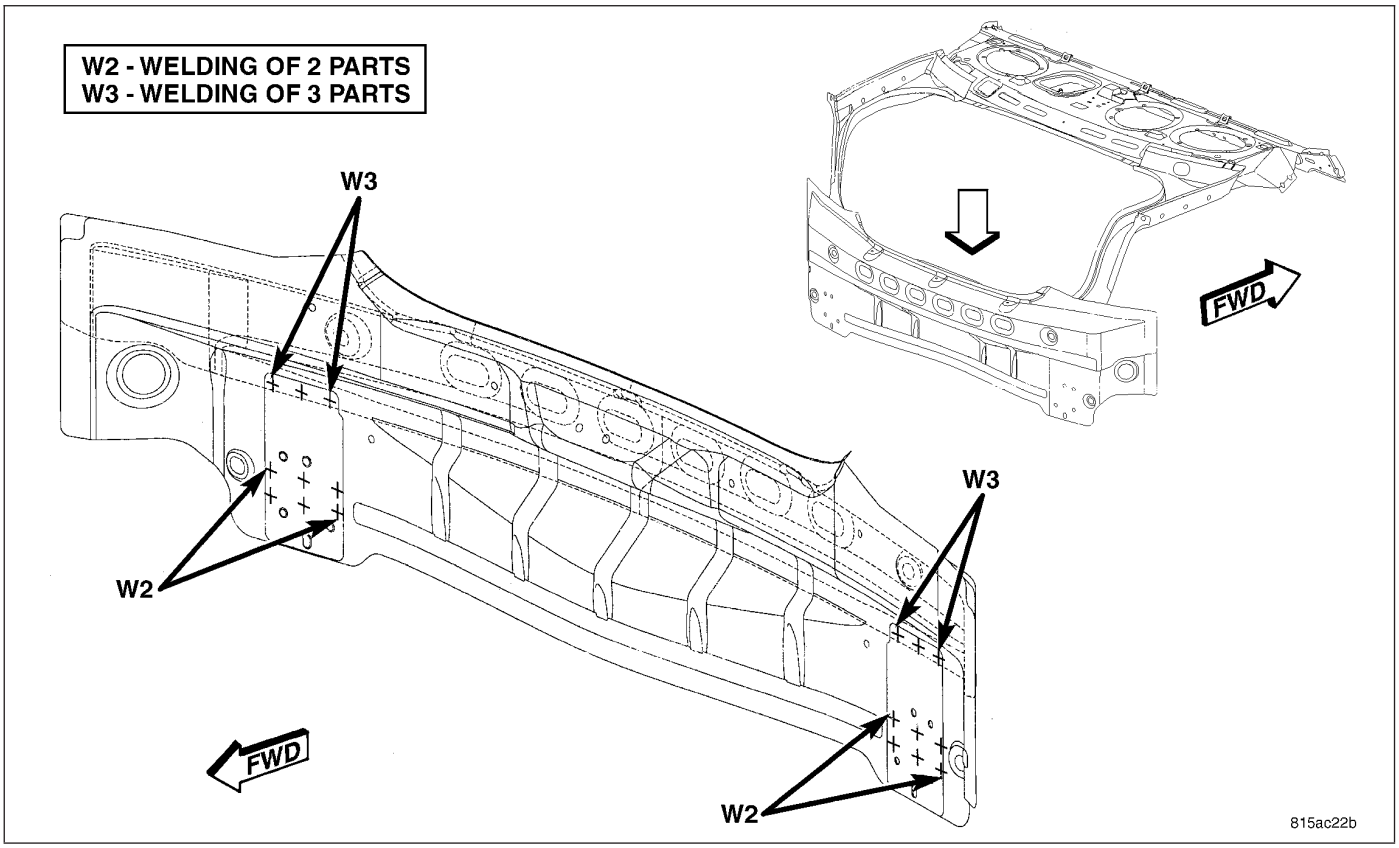

Fig. 191 UNDERBODY (2 OF 4)

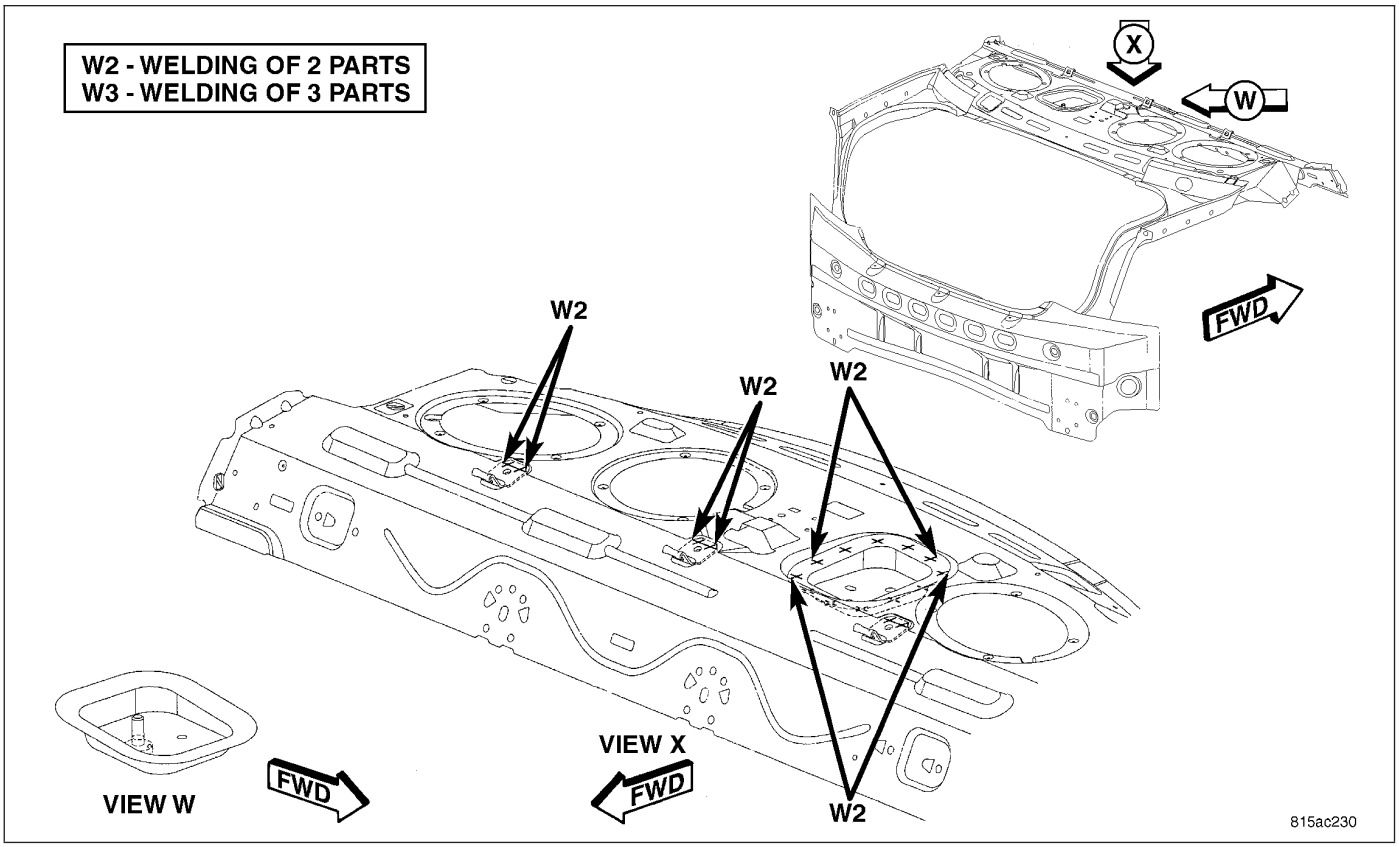

Fig. 192 UNDERBODY (3 OF 4)

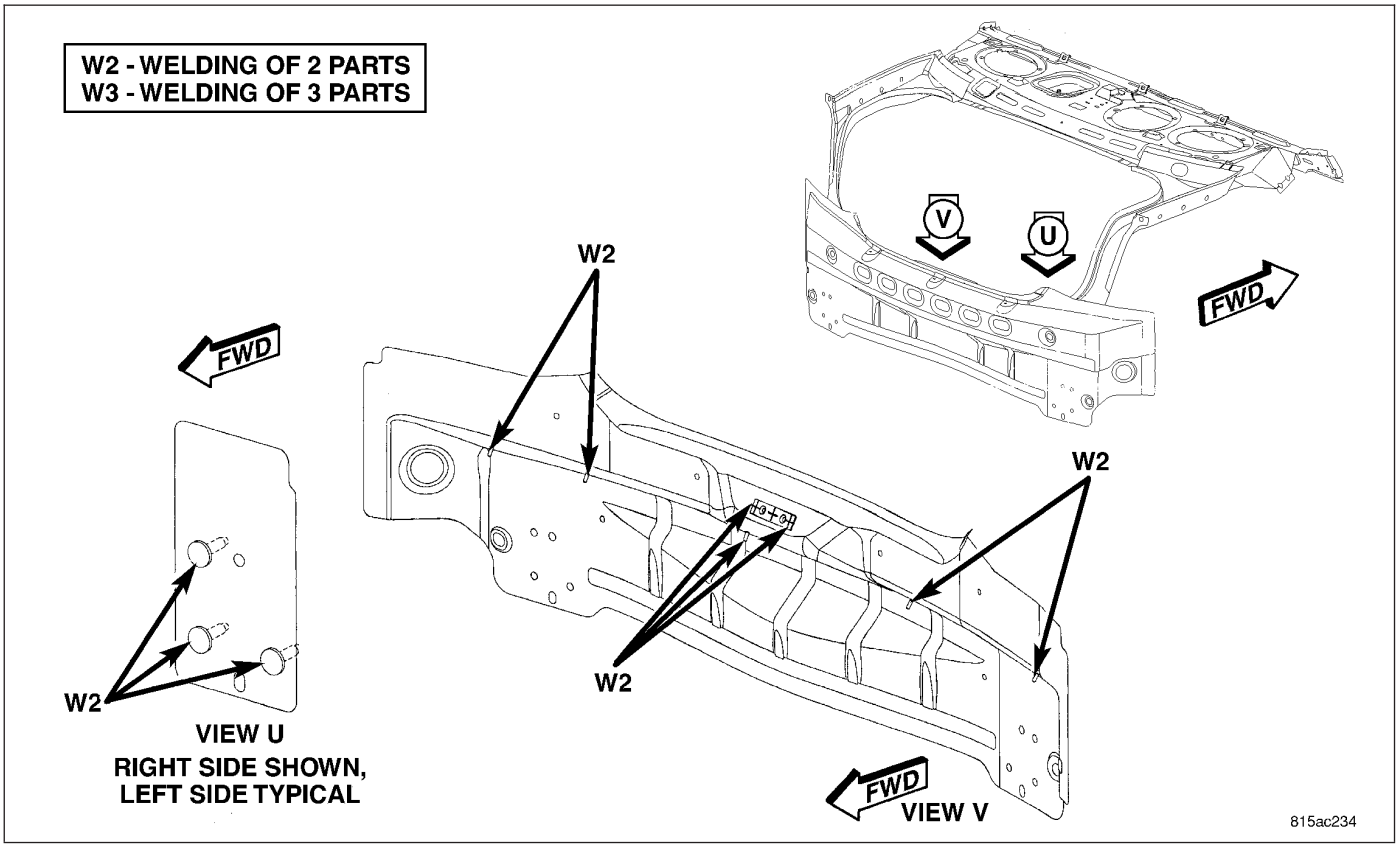

Fig. 193 UNDERBODY (4 OF 4)

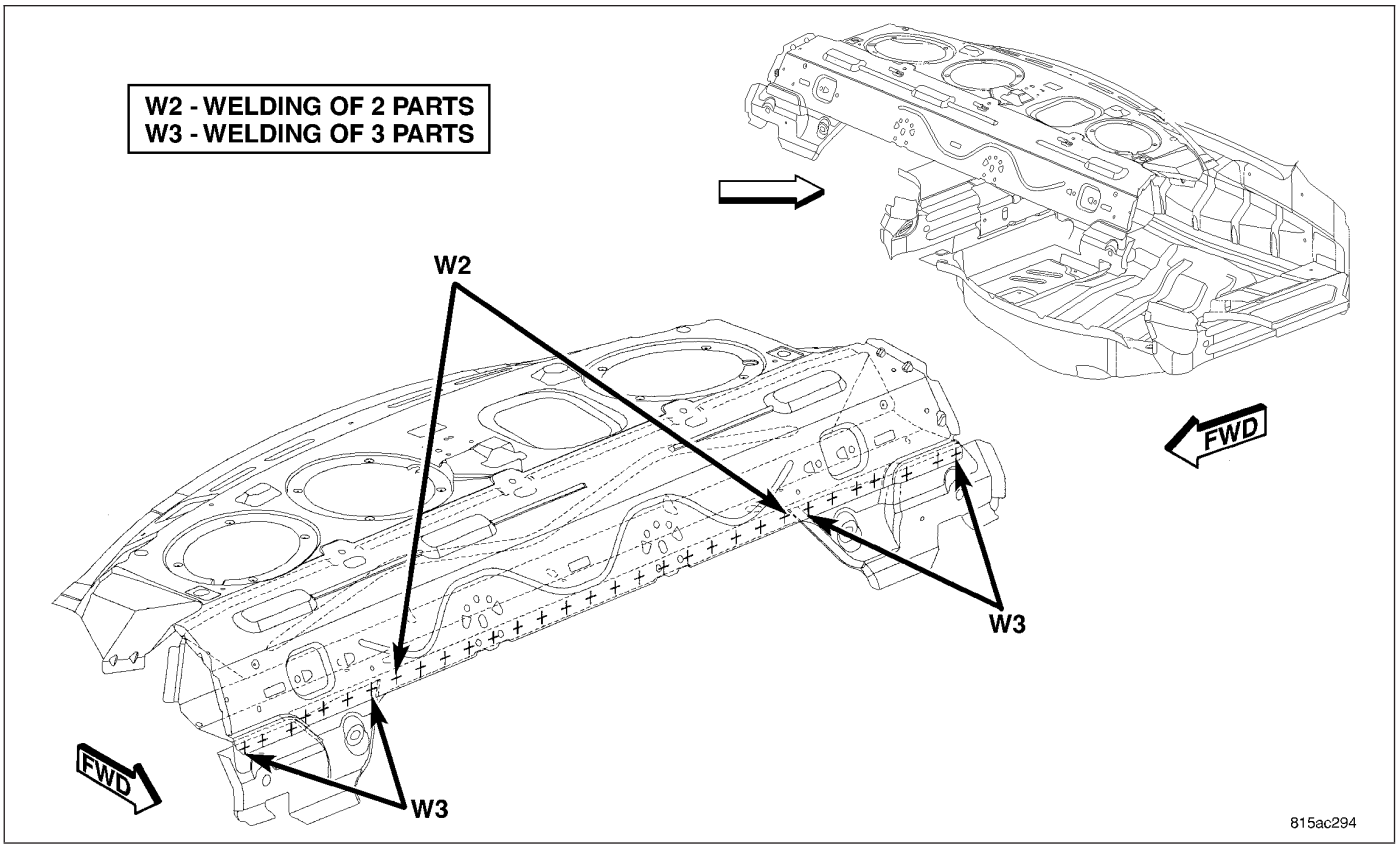

Fig. 194 UNDERBODY COMPLETE (1 OF 4)

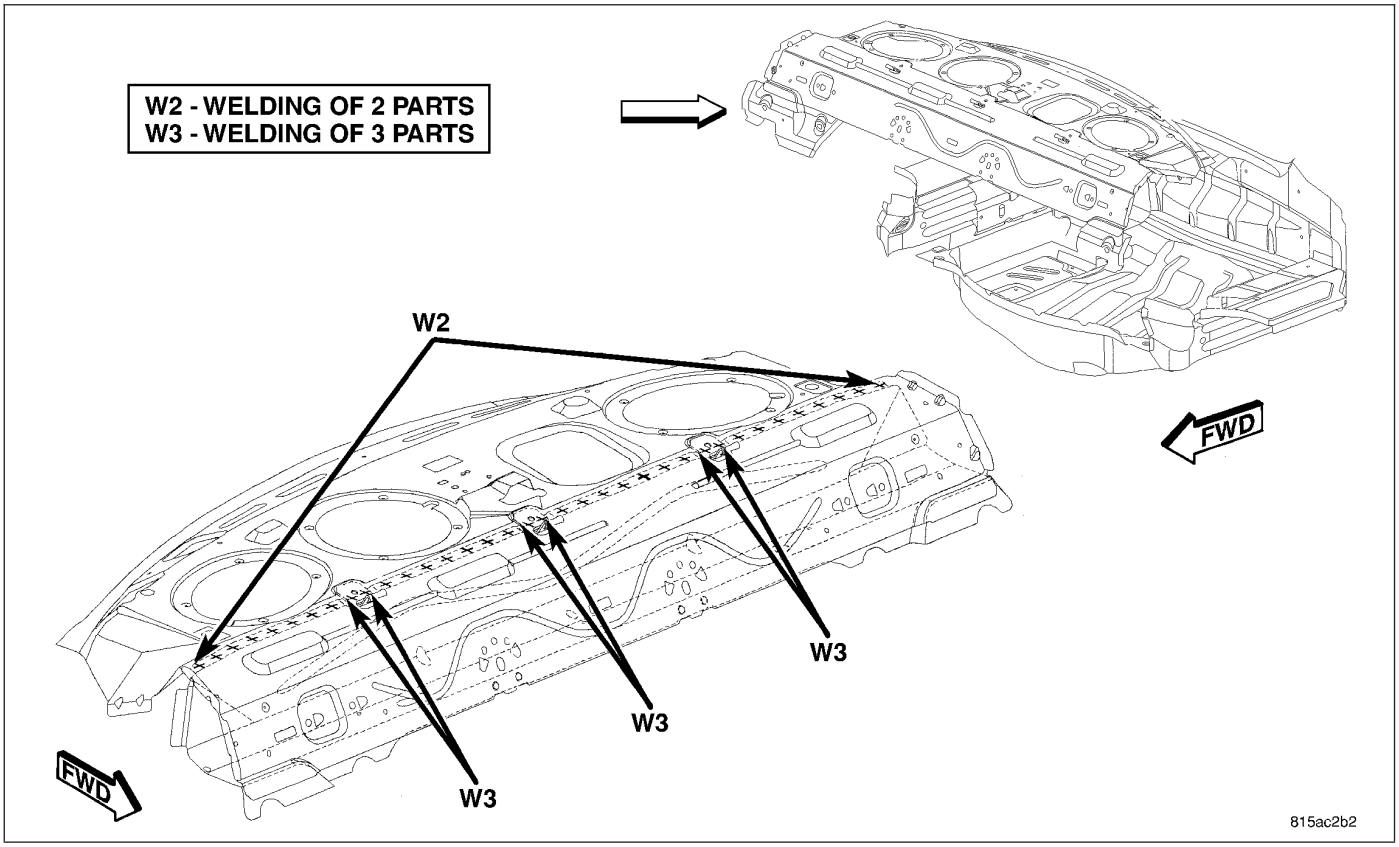

Fig. 195 UNDERBODY COMPLETE (2 OF 4)

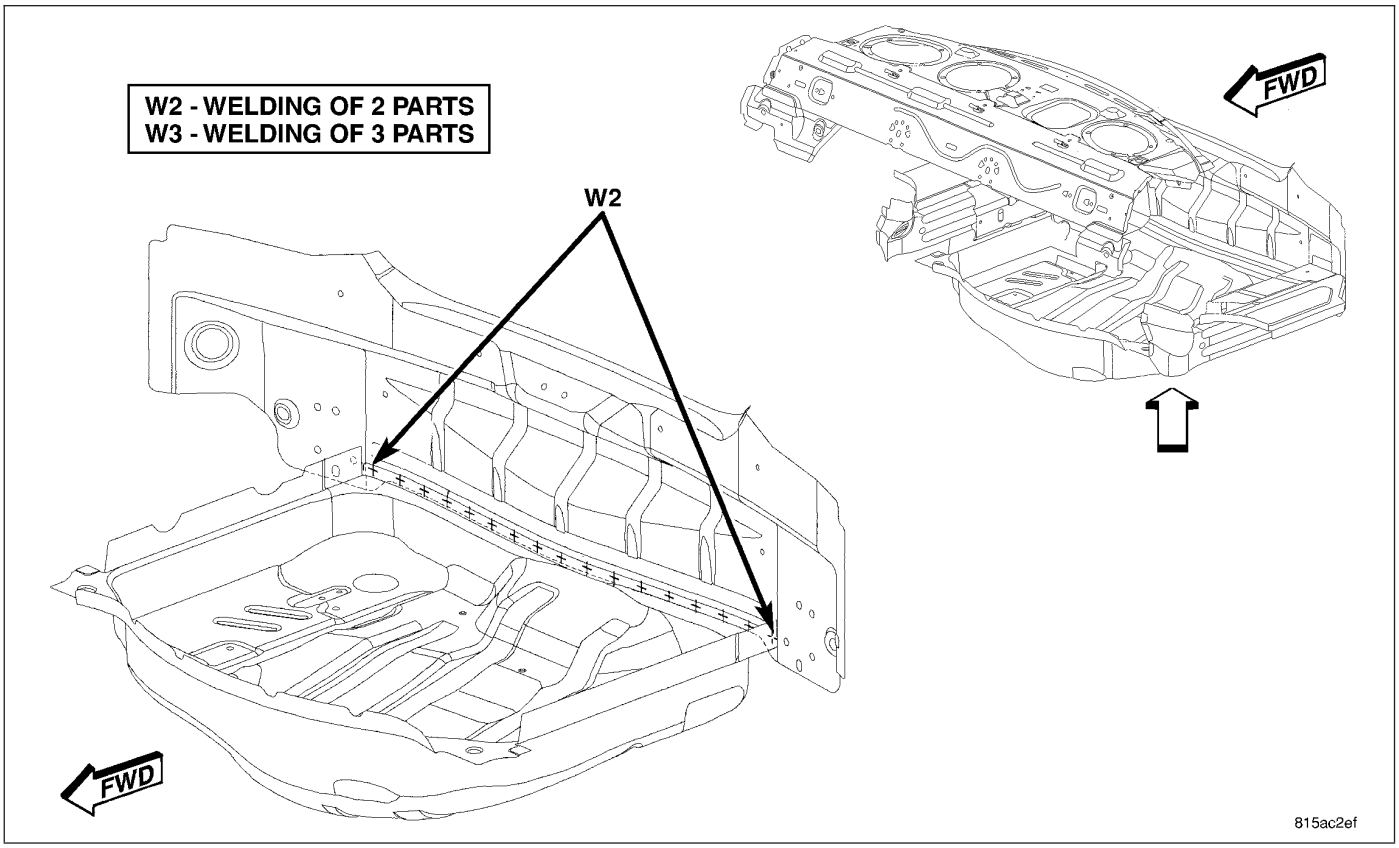

Fig. 196 UNDERBODY COMPLETE (3 OF 4)

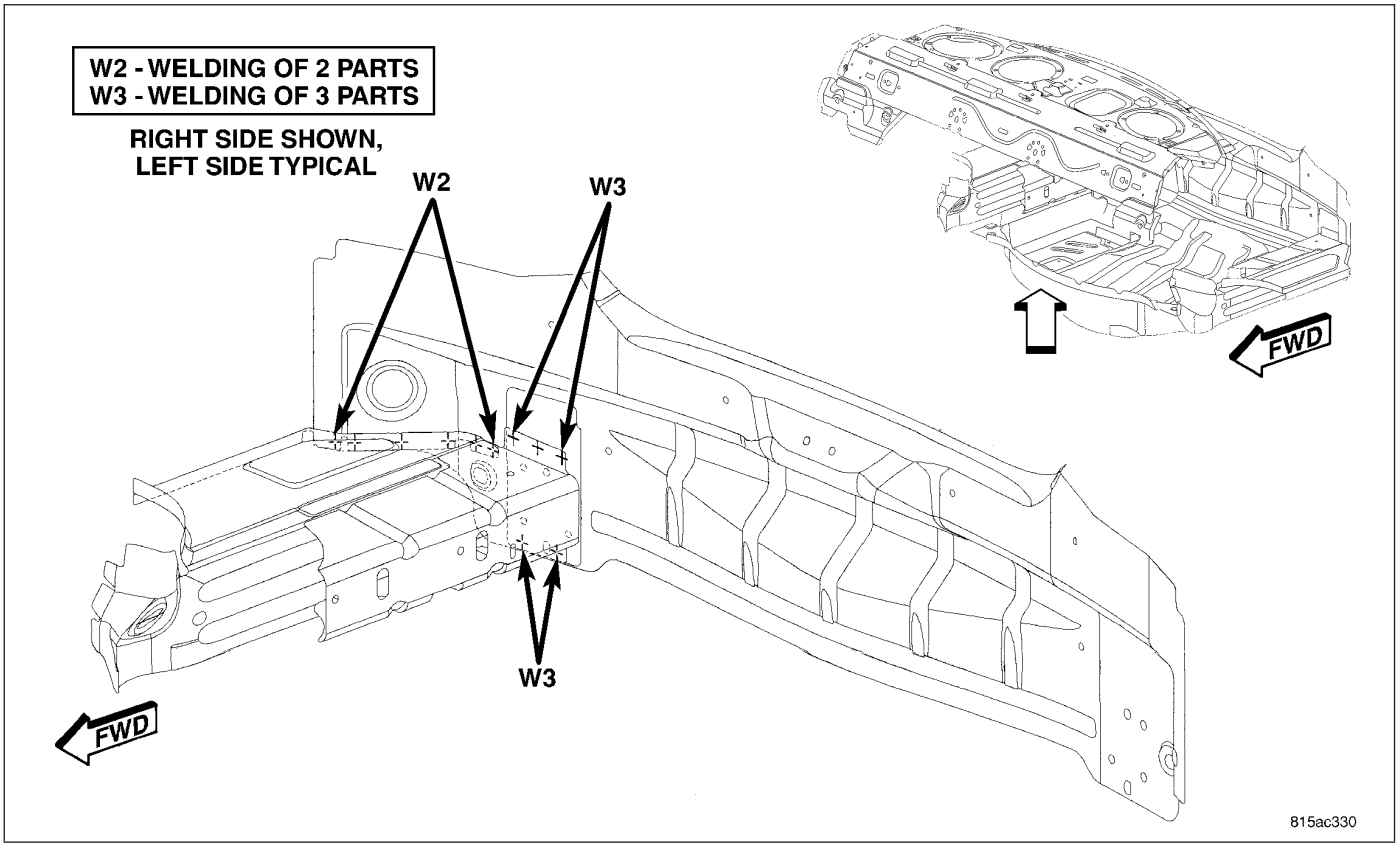

Fig. 197 UNDERBODY COMPLETE (4 OF 4)

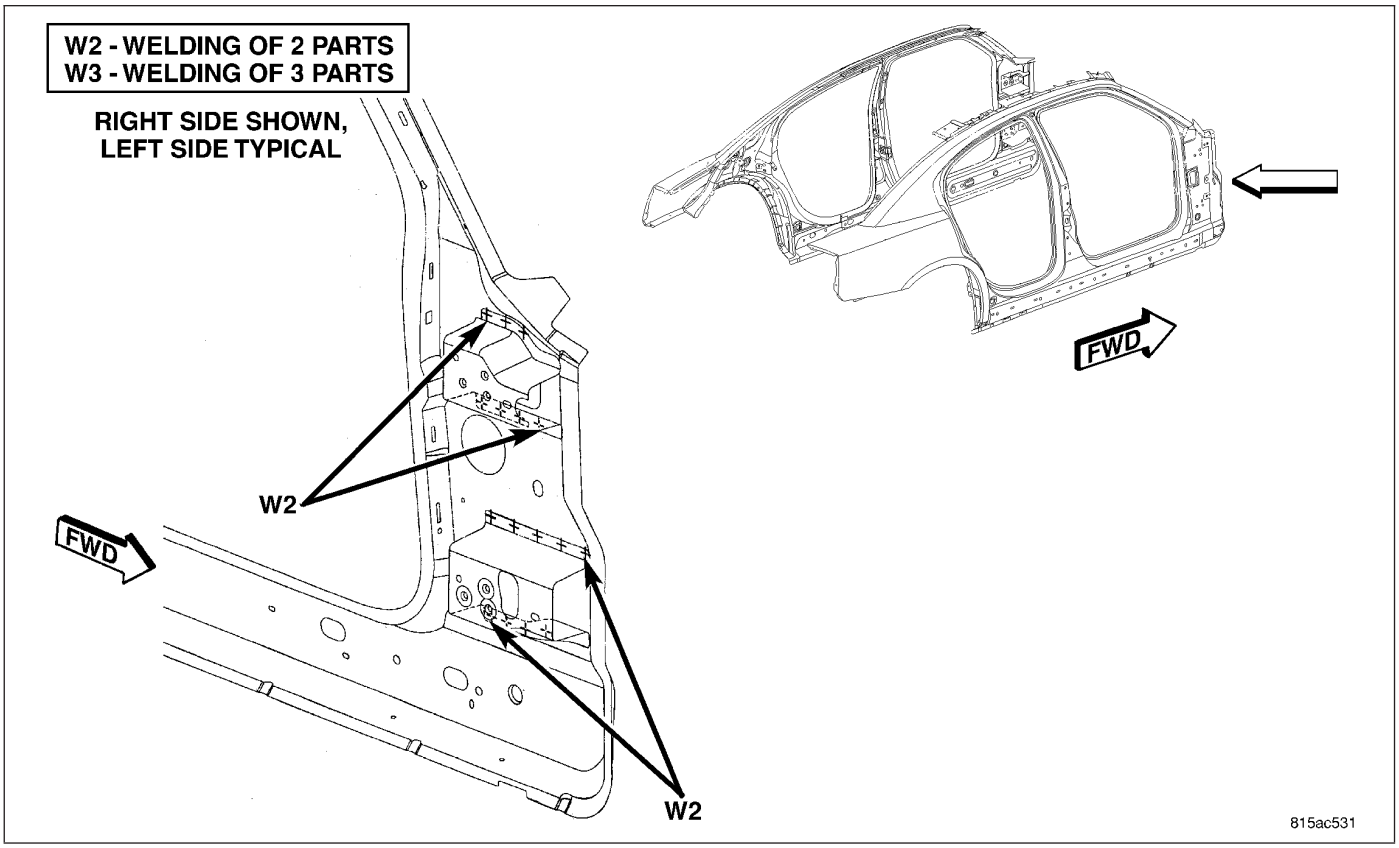

Fig. 198 INNER BODY SIDE APERTURE (1 OF 6)

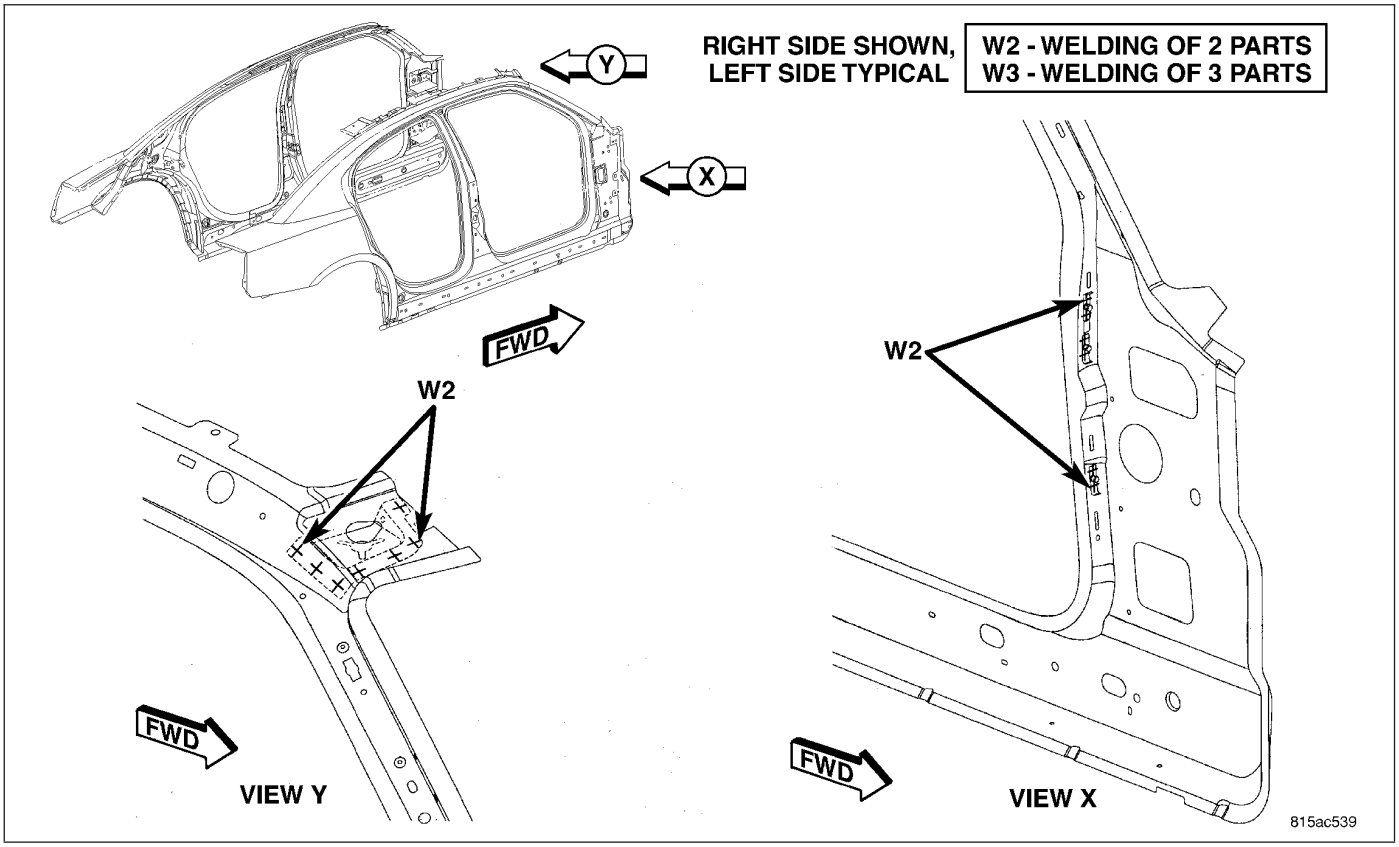

Fig. 199 INNER BODY SIDE APERTURE (2 OF 6)

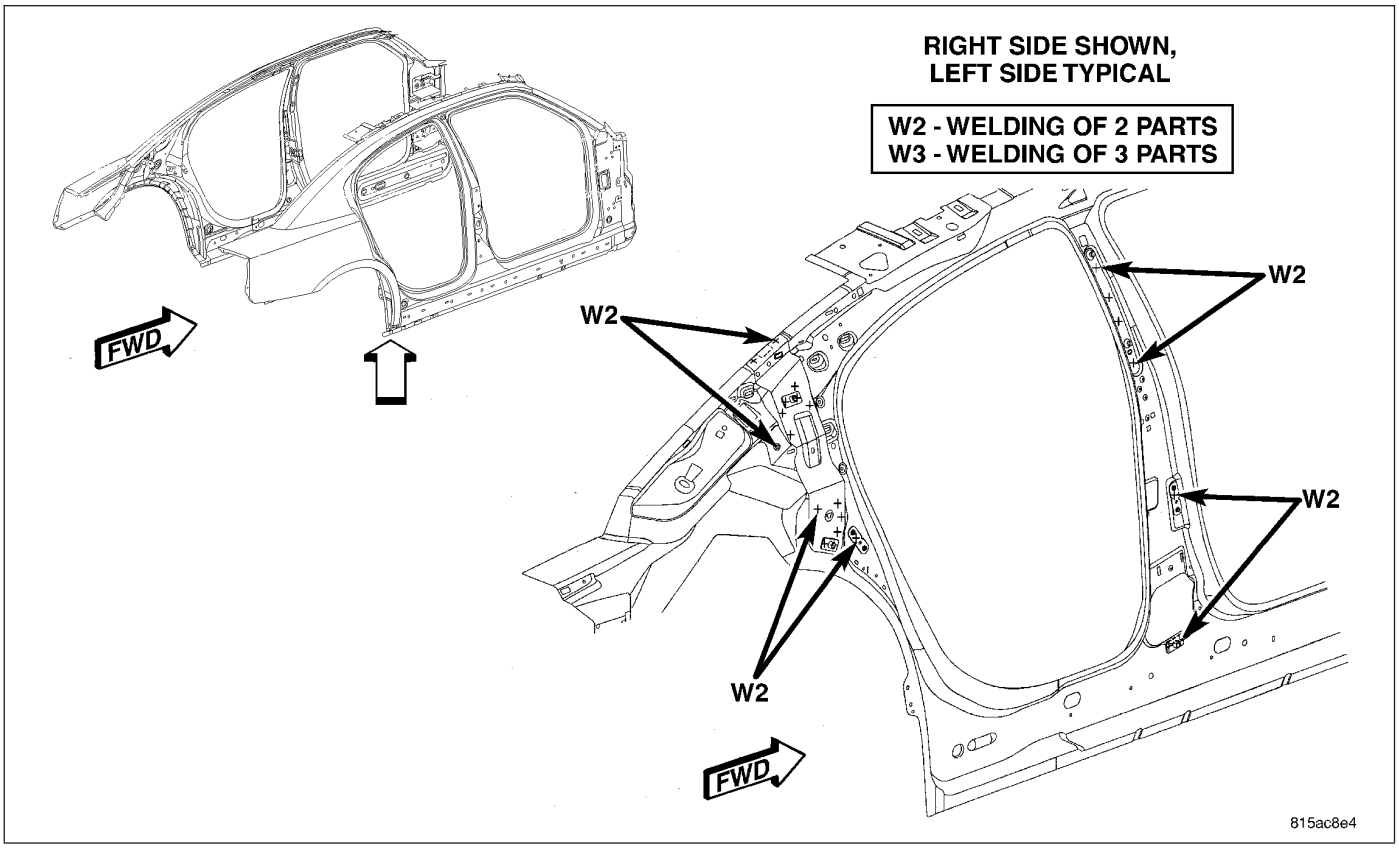

Fig. 200 INNER BODY SIDE APERTURE (3 OF 6)

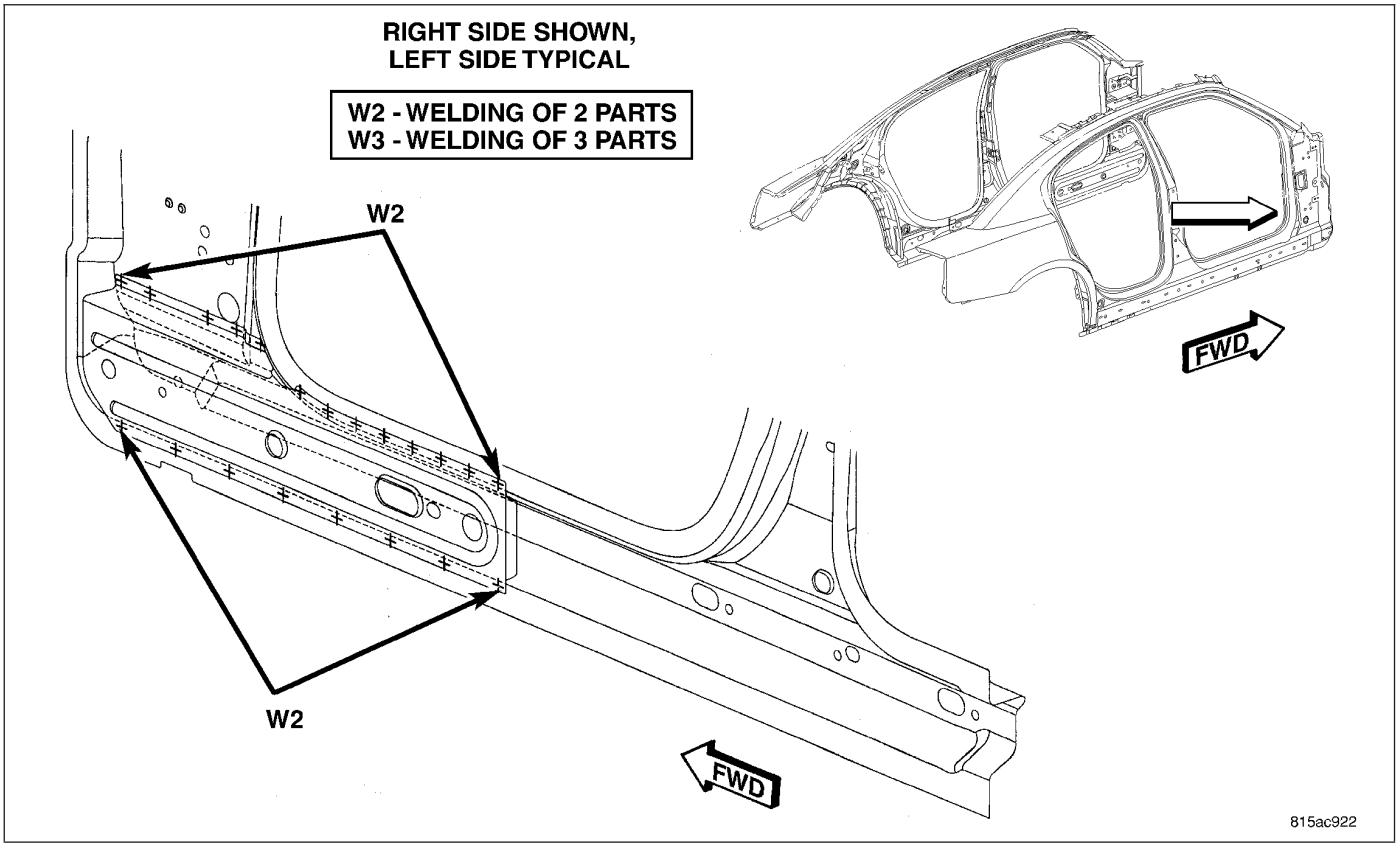

Fig. 201 INNER BODY SIDE APERTURE (4 OF 6)

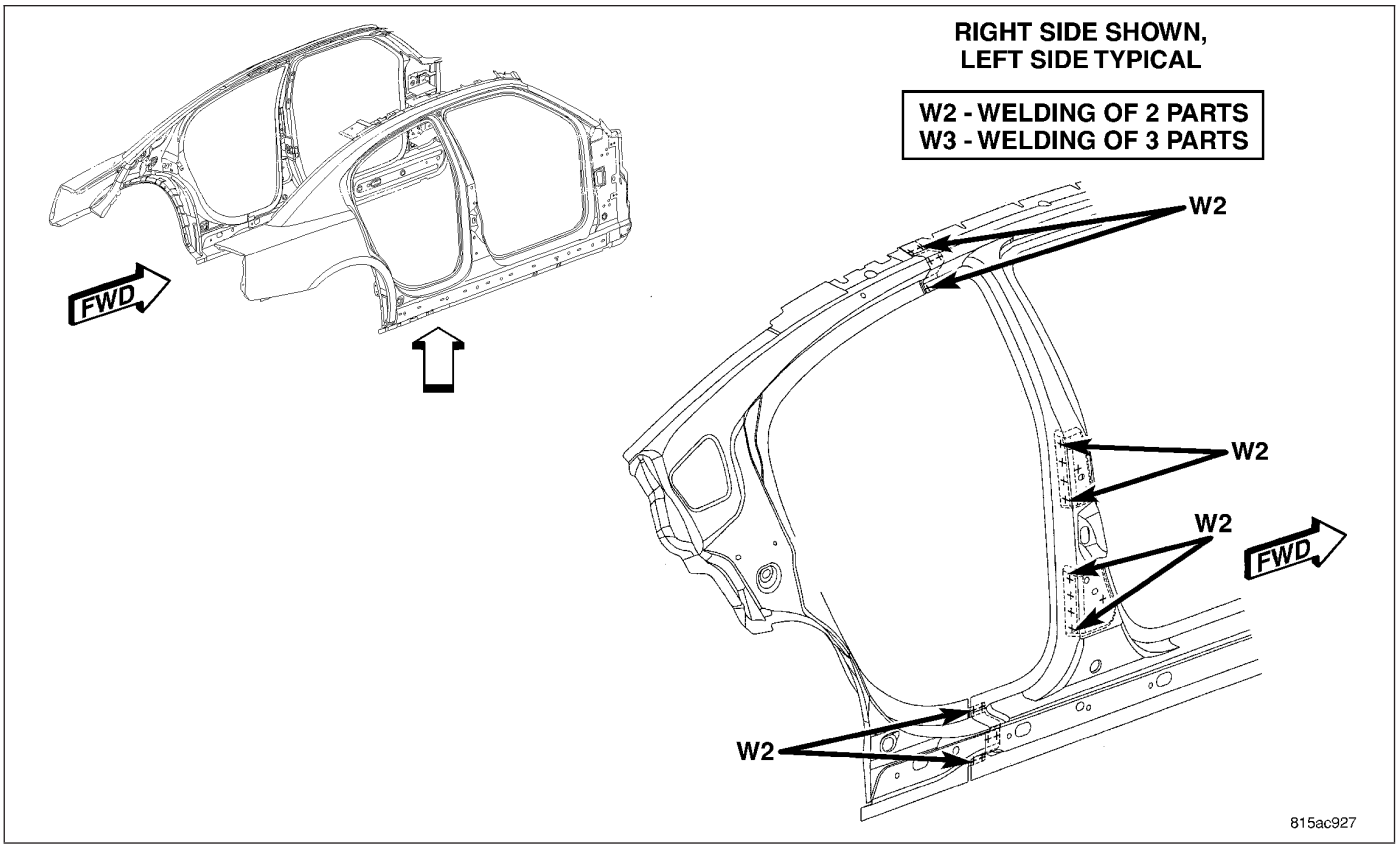

Fig. 202 INNER BODY SIDE APERTURE (5 OF 6)

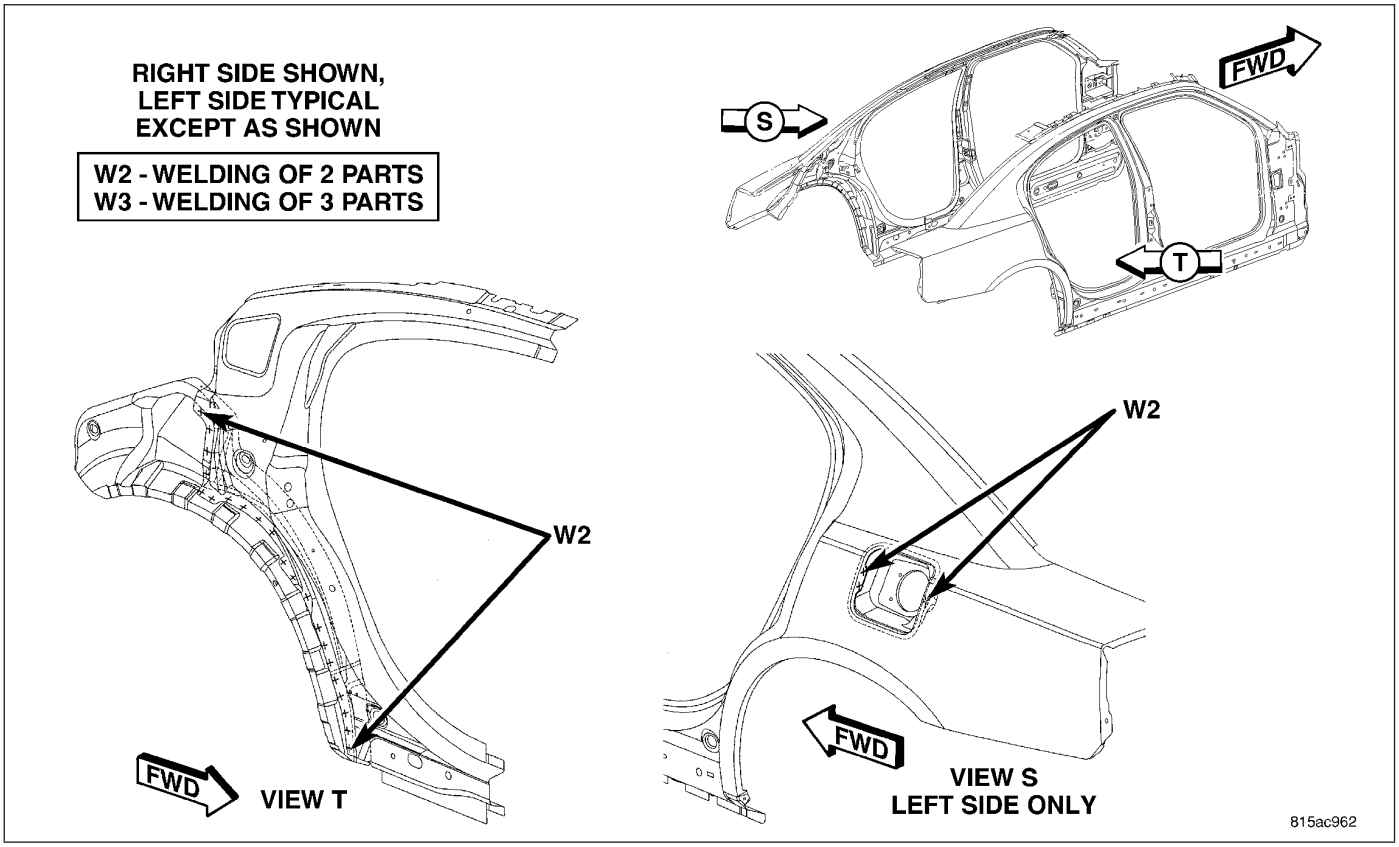

Fig. 203 INNER BODY SIDE APERTURE (6 OF 6)

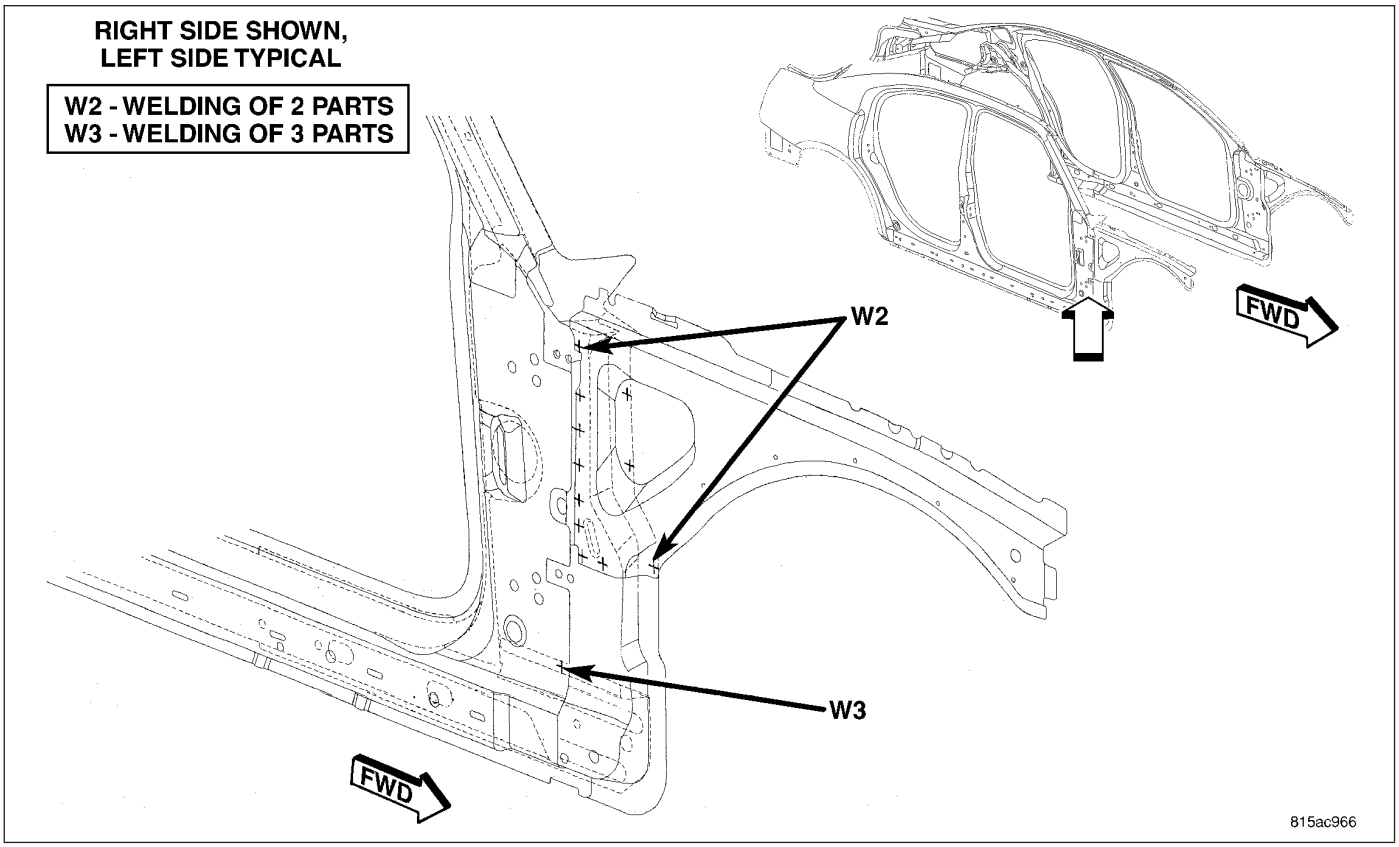

Fig. 204 OUTER BODY SIDE APERTURE (1 OF 8)

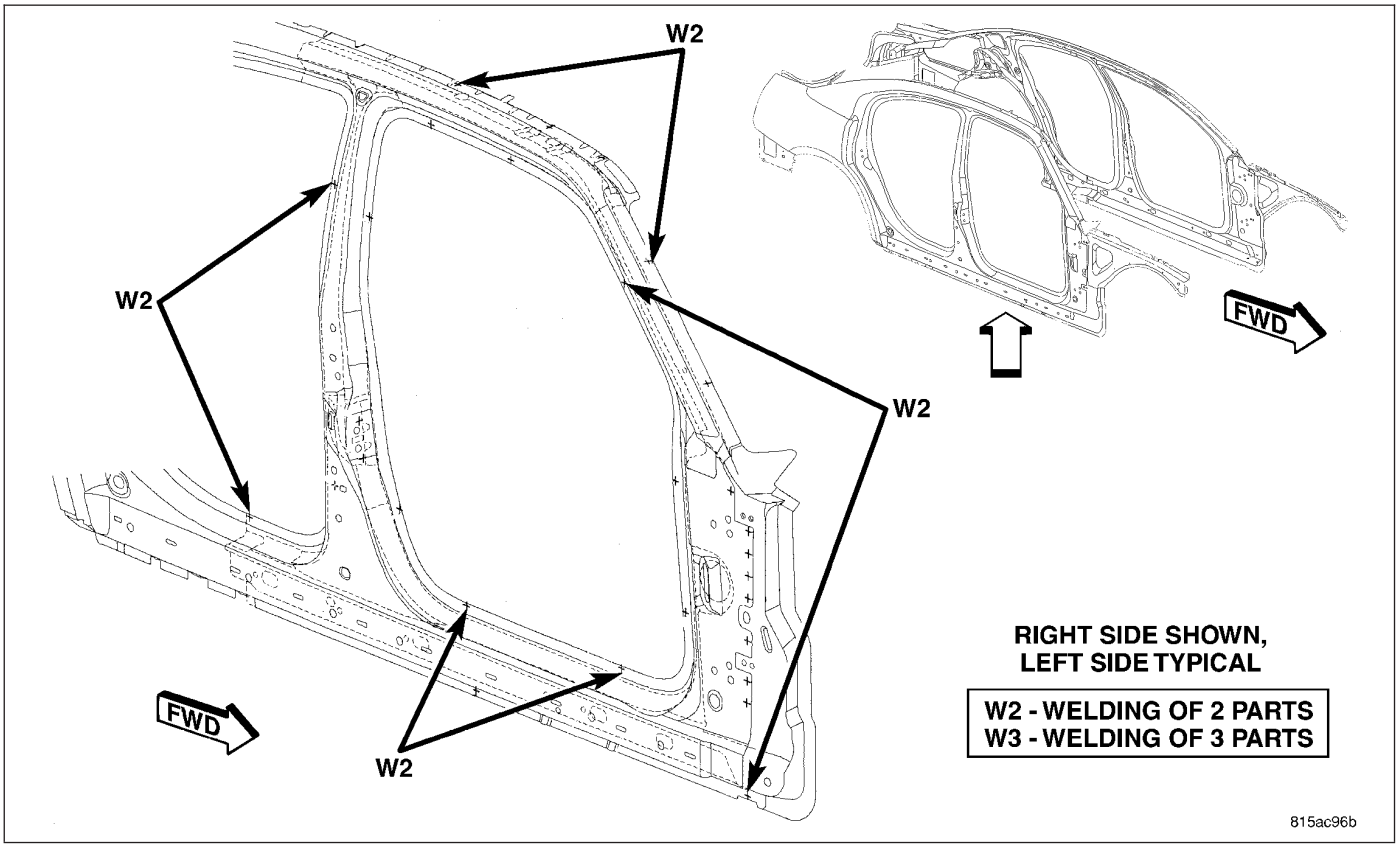

Fig. 205 OUTER BODY SIDE APERTURE (2 OF 8)

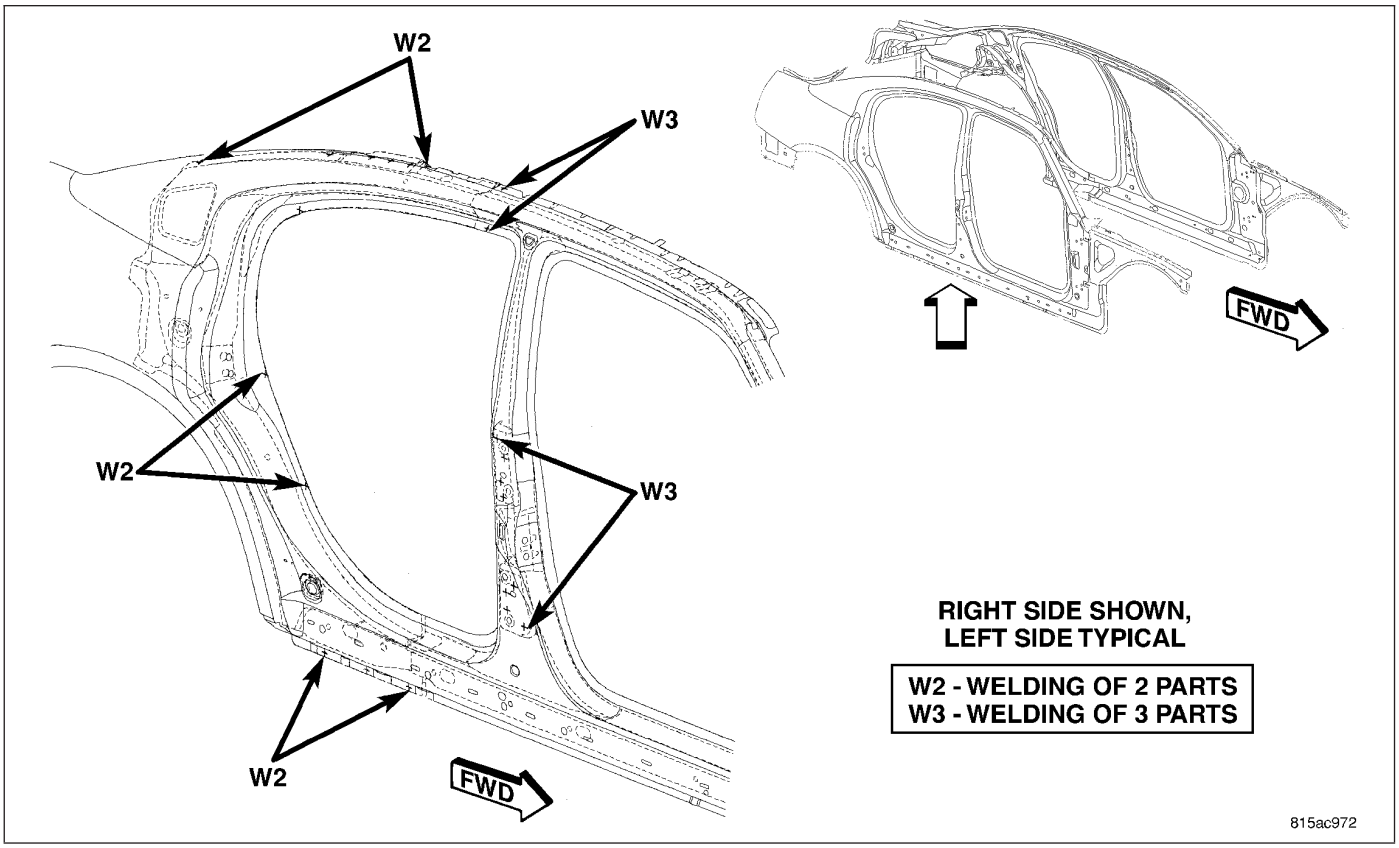

Fig. 206 OUTER BODY SIDE APERTURE (3 OF 8)

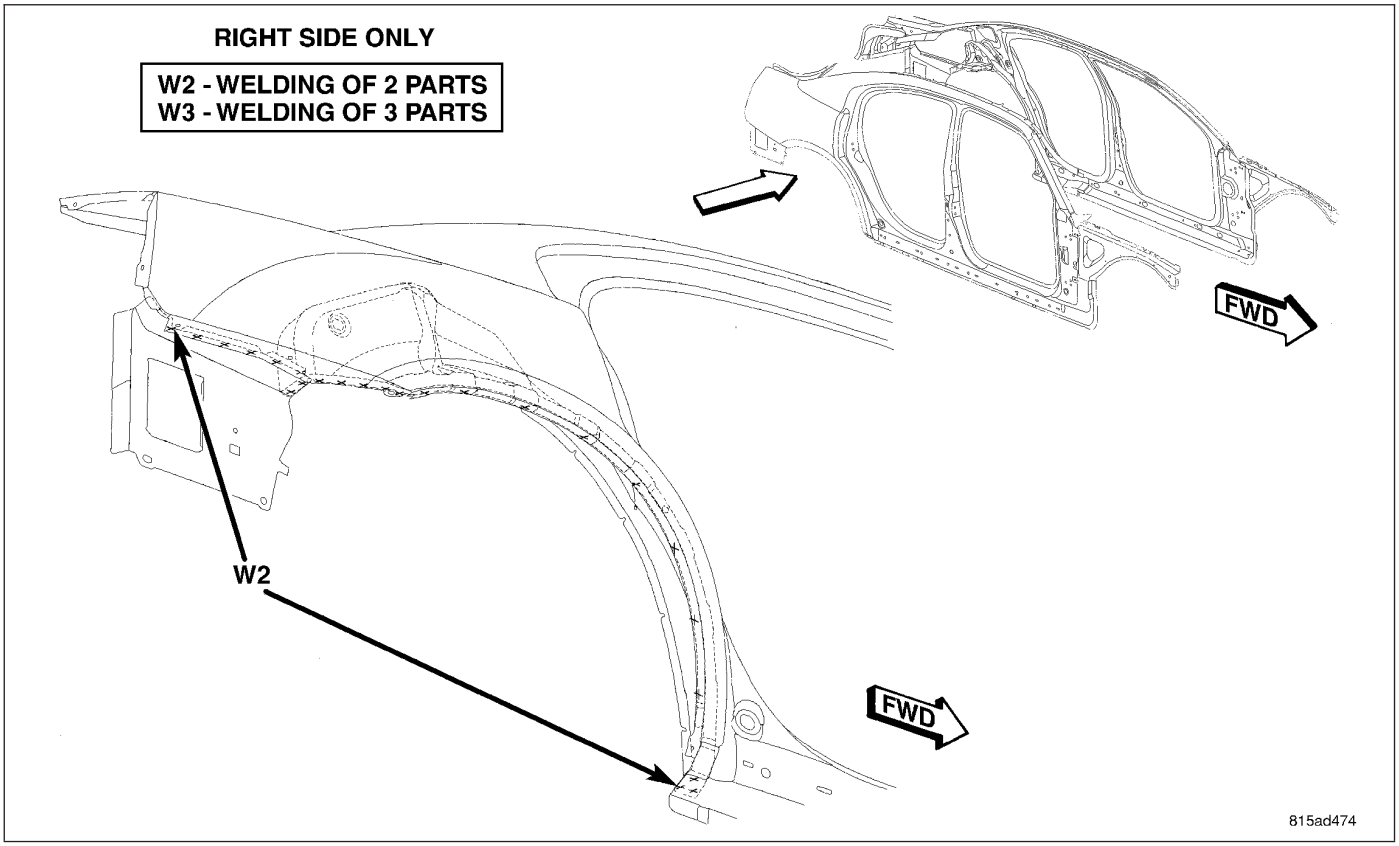

Fig. 207 OUTER BODY SIDE APERTURE (4 OF 8)

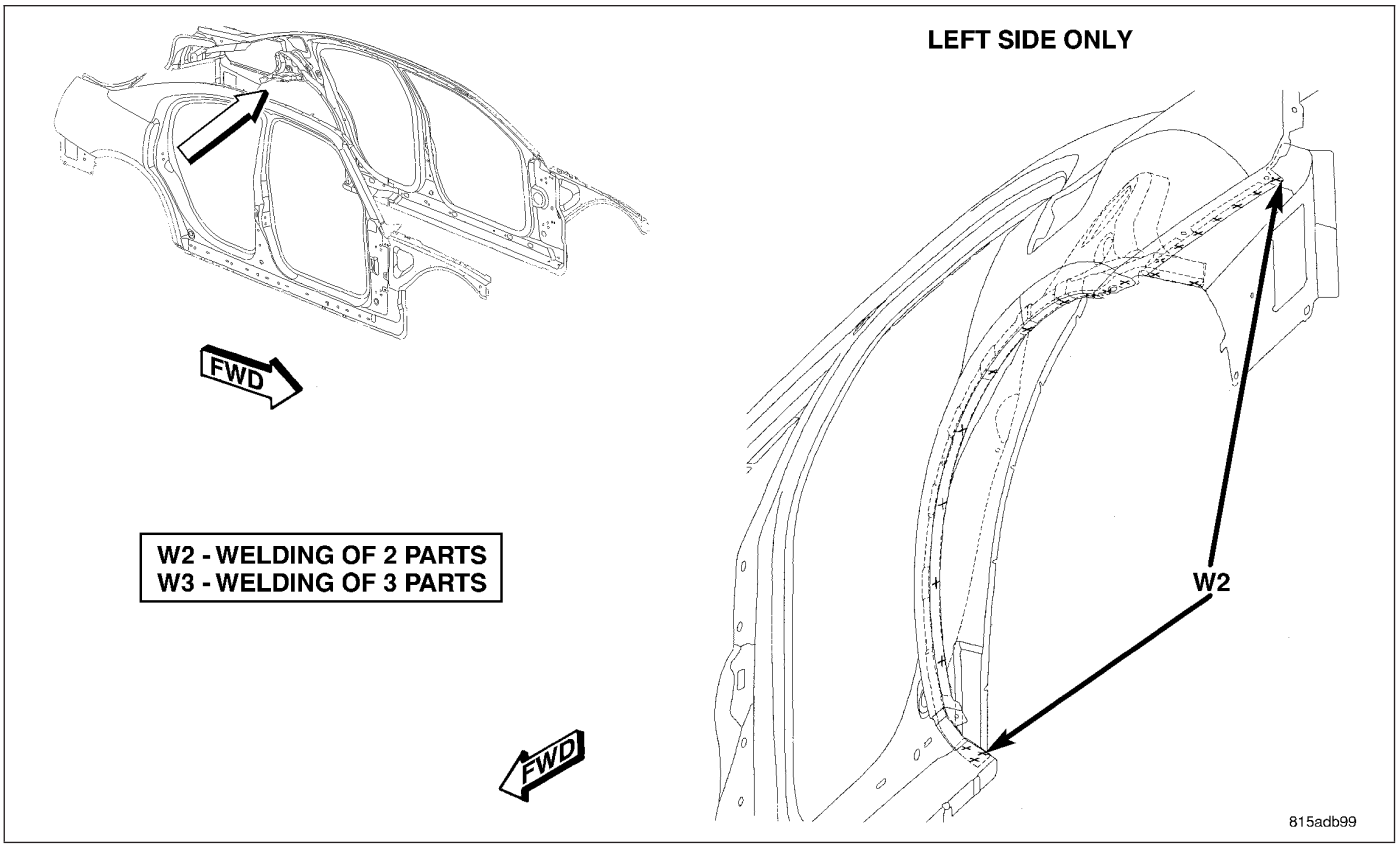

Fig. 208 OUTER BODY SIDE APERTURE (5 OF 8)

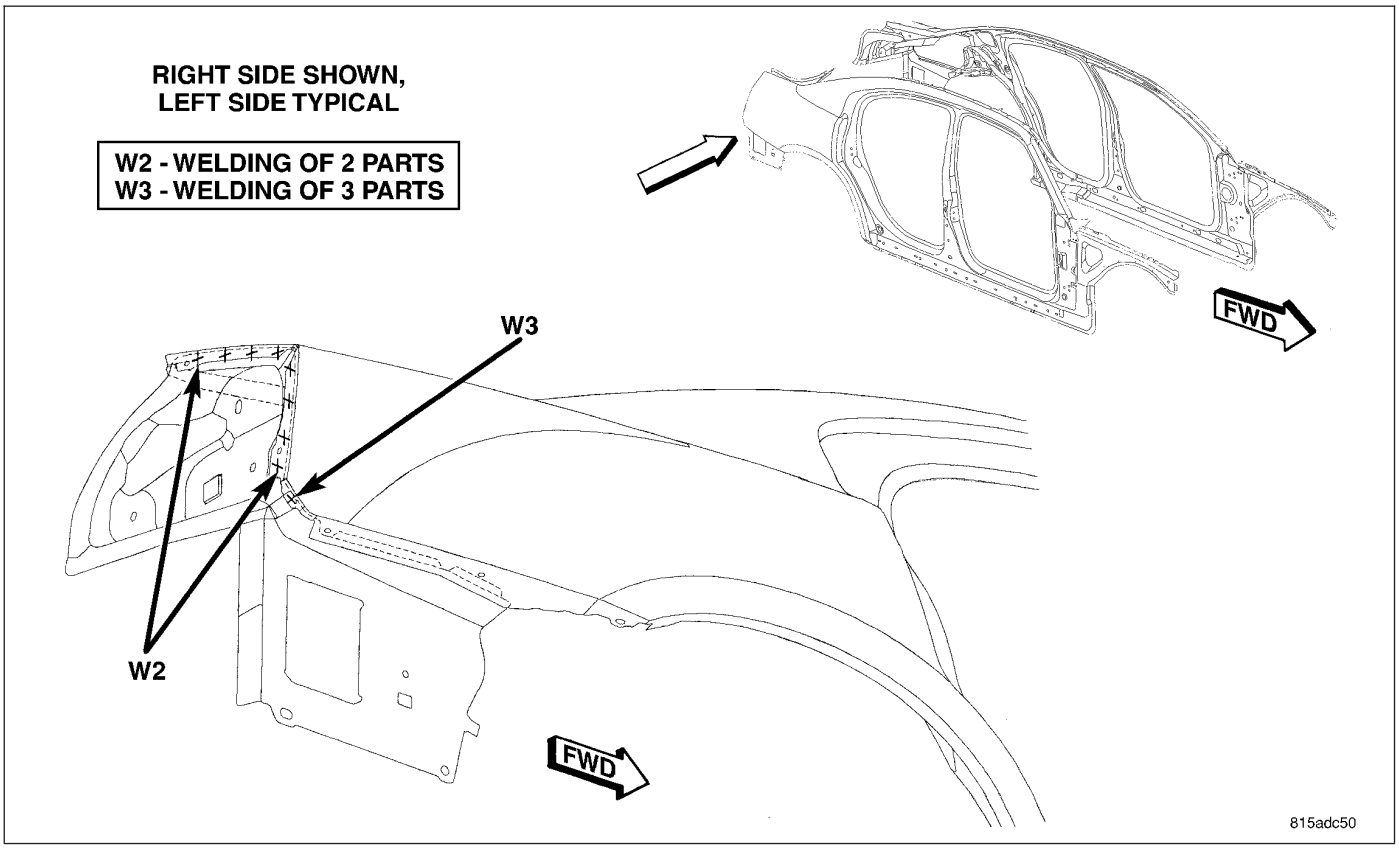

Fig. 209 OUTER BODY SIDE APERTURE (6 OF 8)

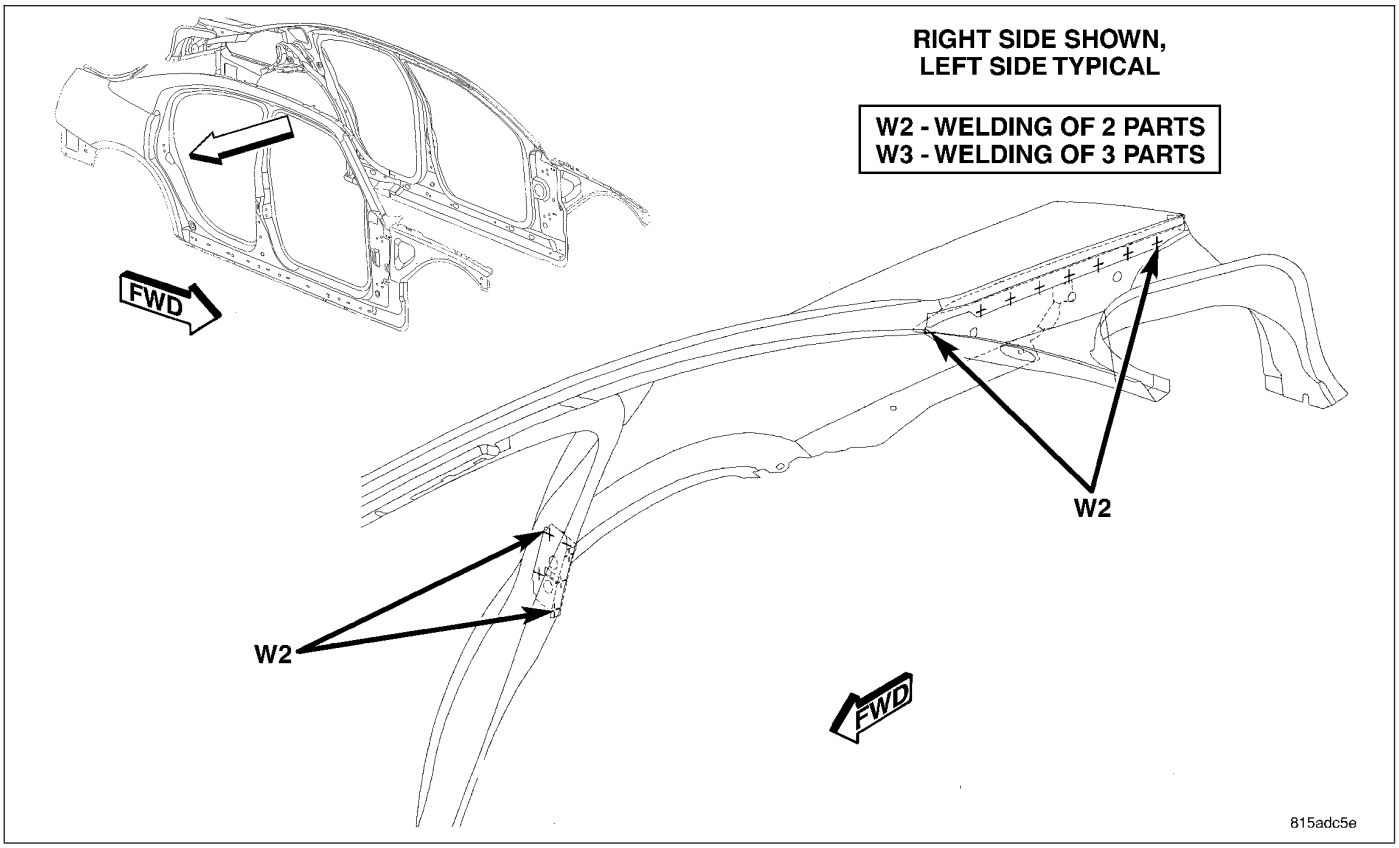

Fig. 210 OUTER BODY SIDE APERTURE (7 OF 8)

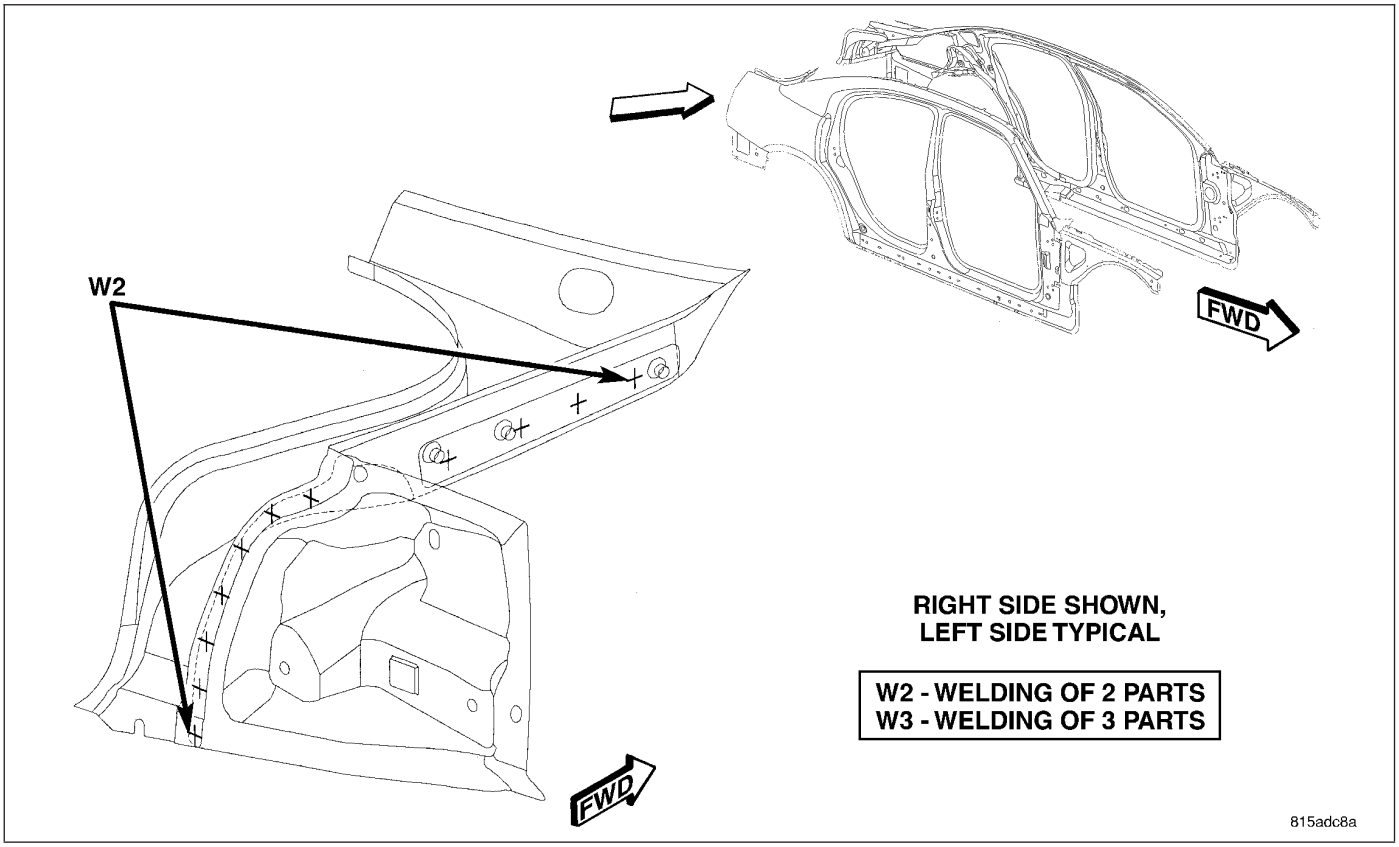

Fig. 211 OUTER BODY SIDE APERTURE (8 OF 8)

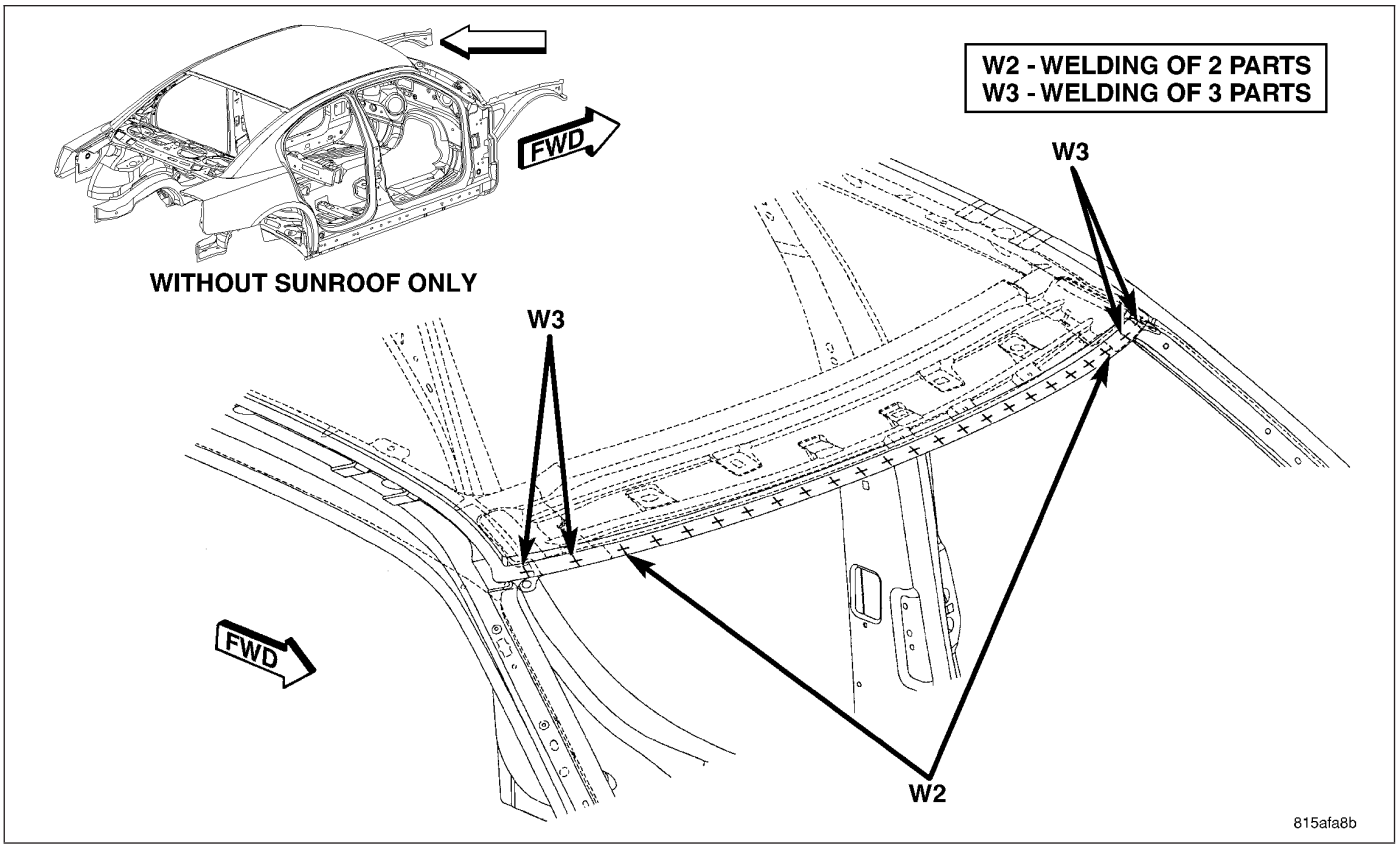

Fig. 212 FRAMED BODY IN WHITE (1 OF 15)

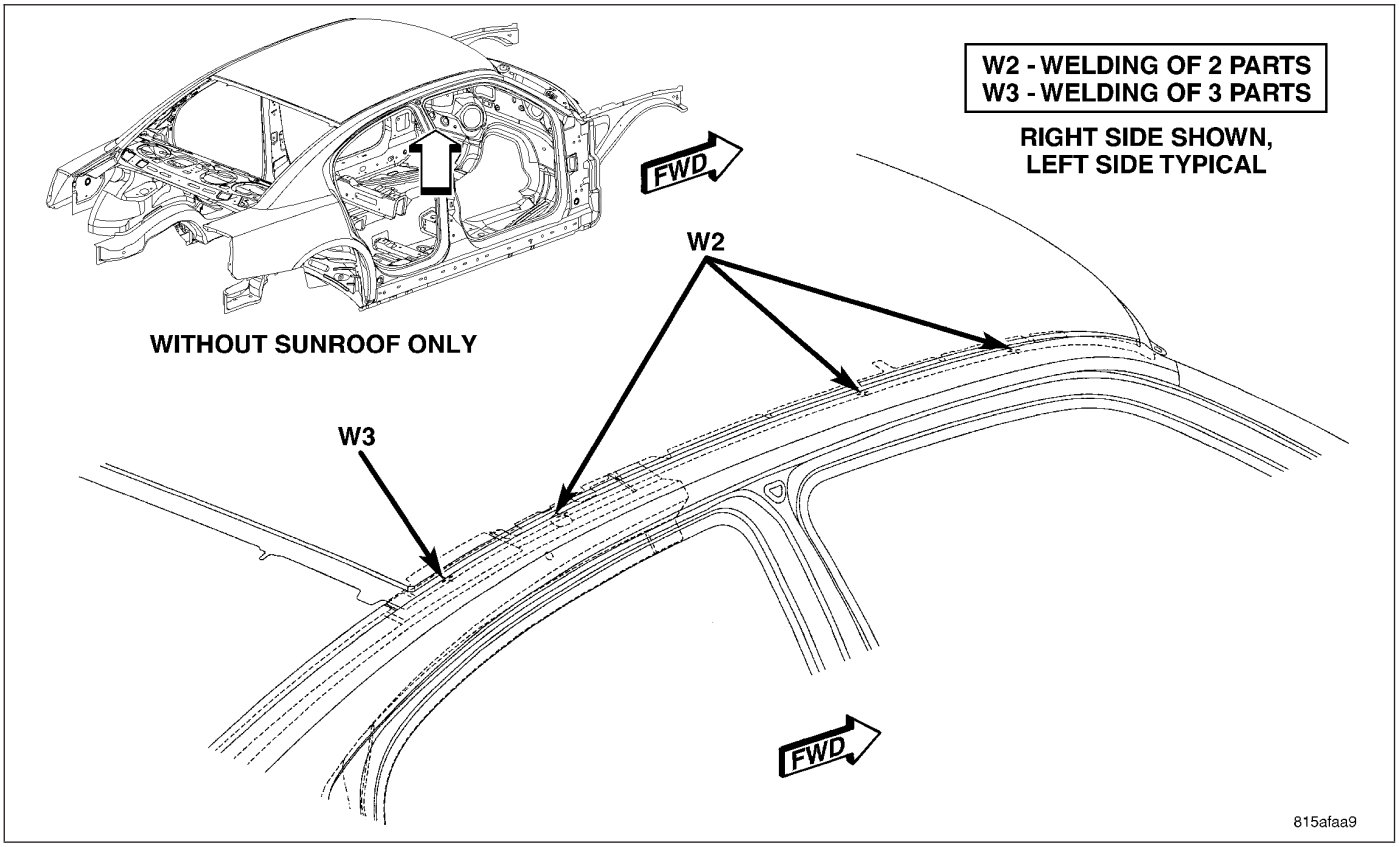

Fig. 213 FRAMED BODY IN WHITE (2 OF 15)

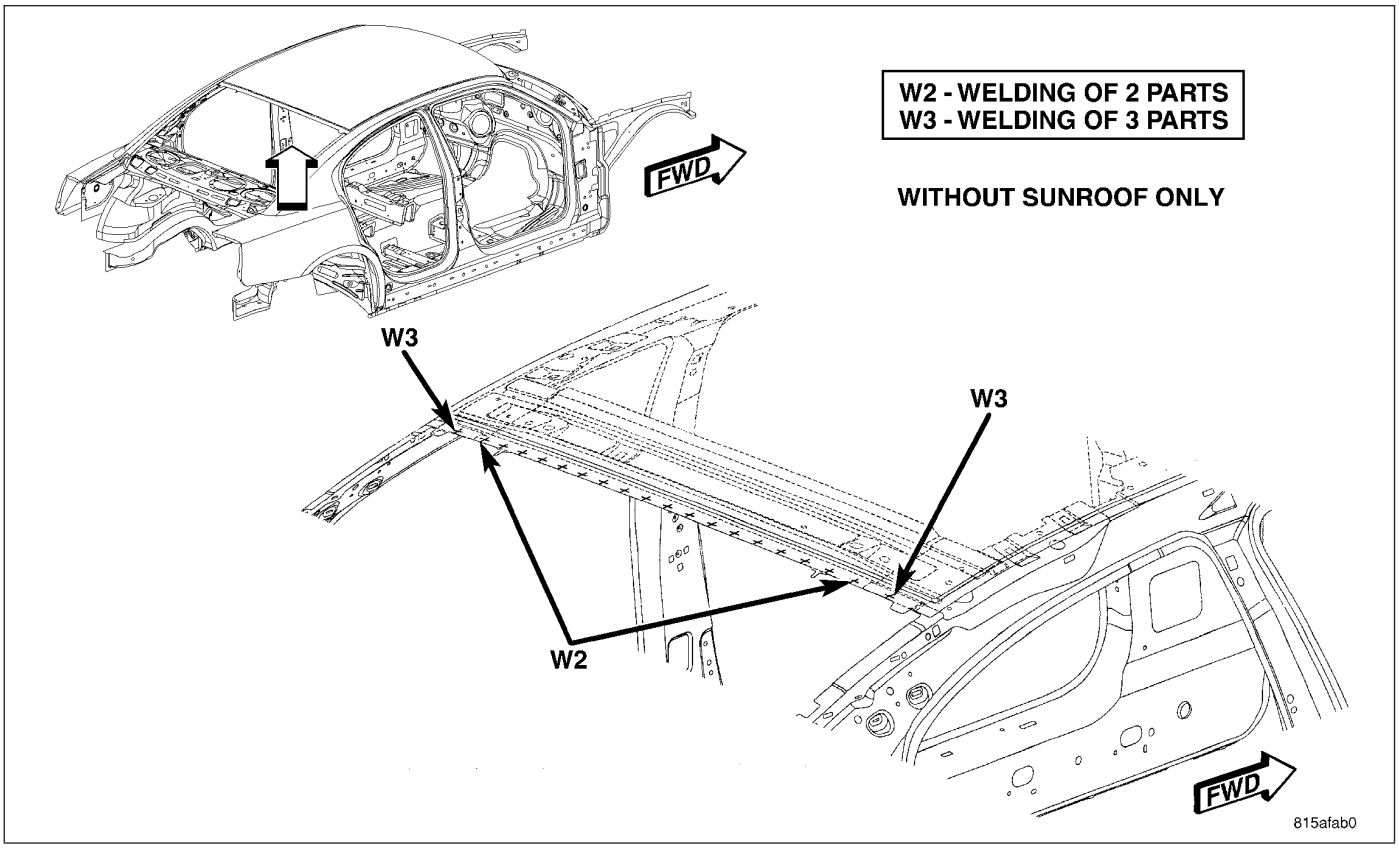

Fig. 214 FRAMED BODY IN WHITE (3 OF 15)

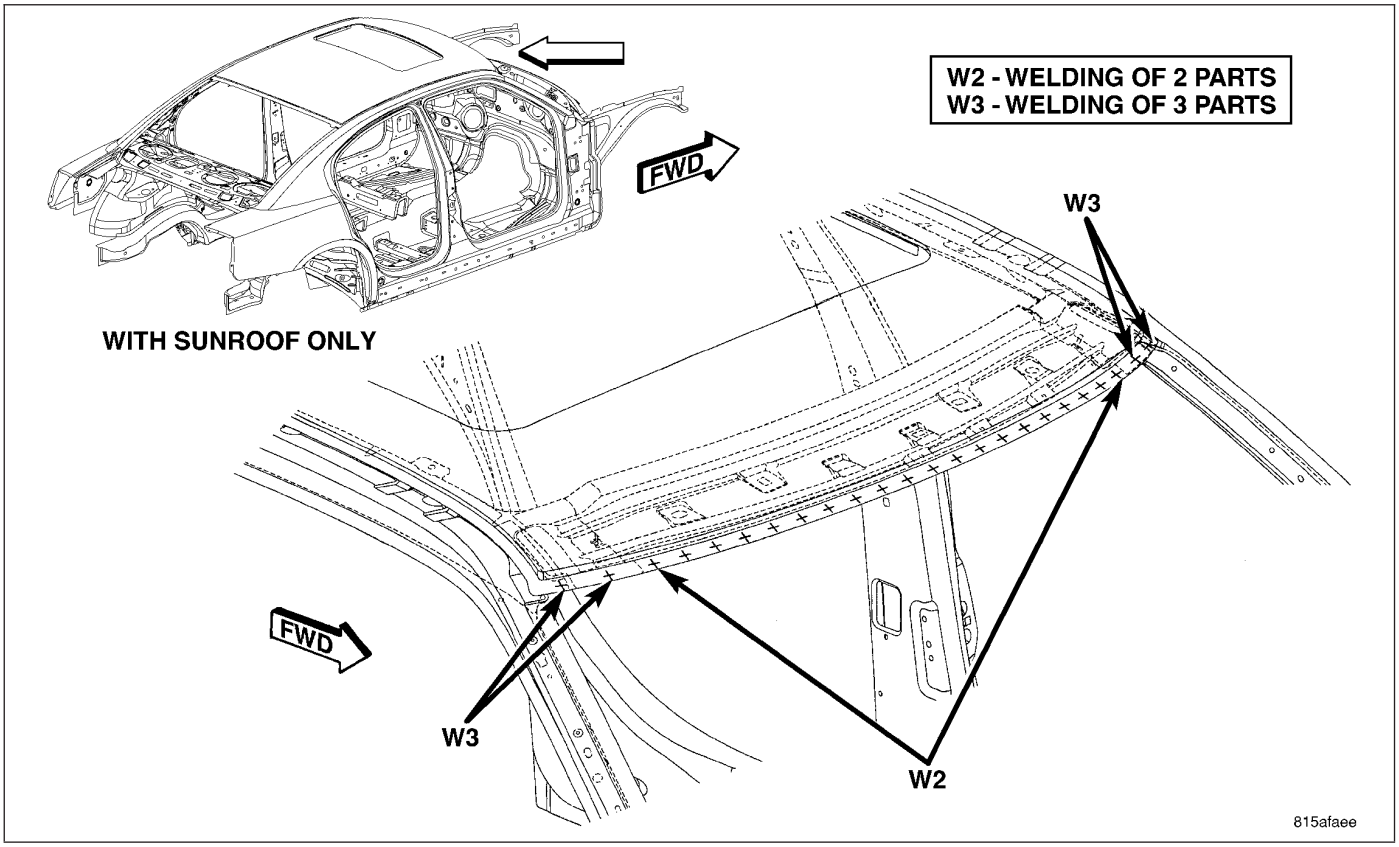

Fig. 215 FRAMED BODY IN WHITE (4 OF 15)

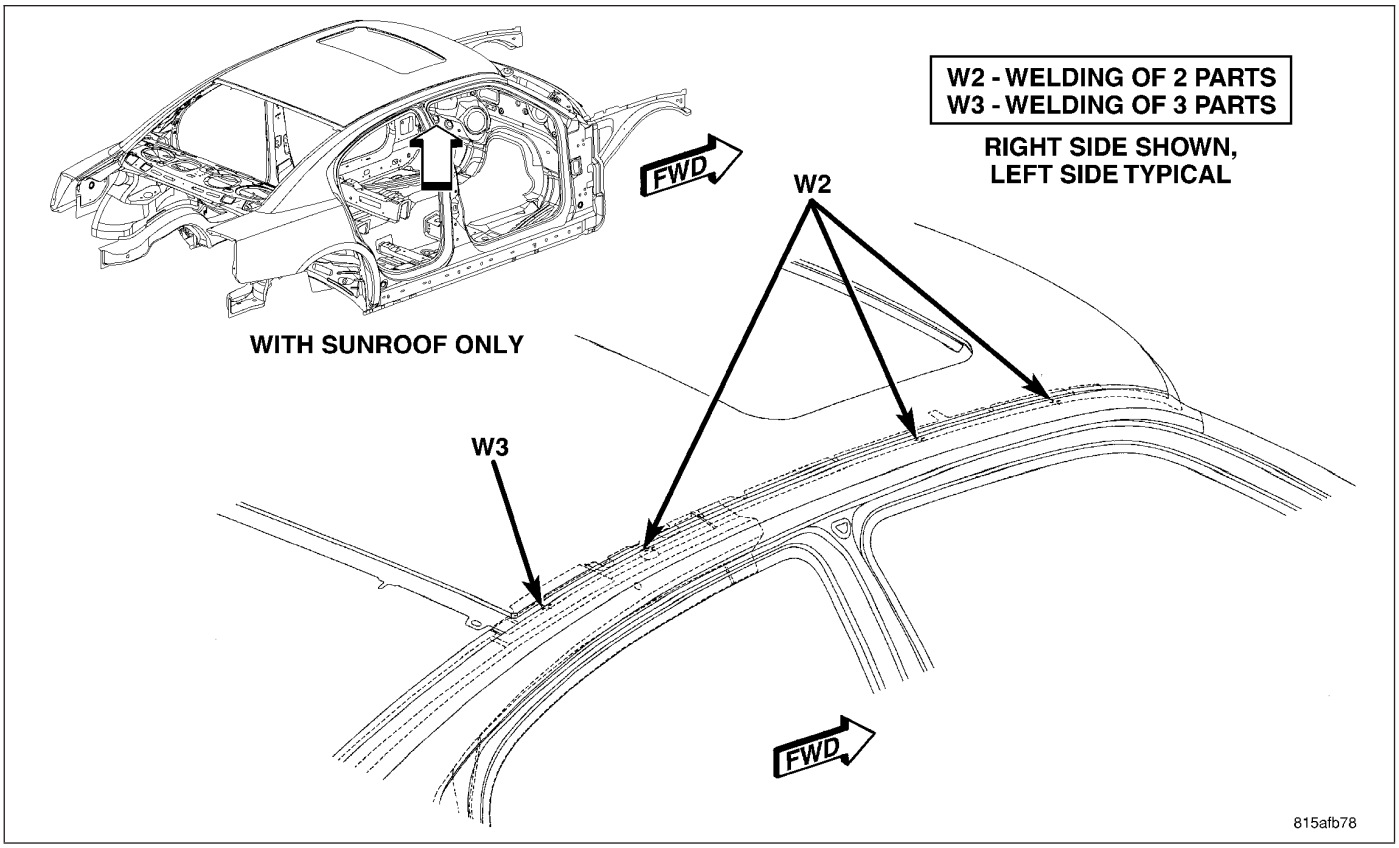

Fig. 216 FRAMED BODY IN WHITE (5 OF 15)

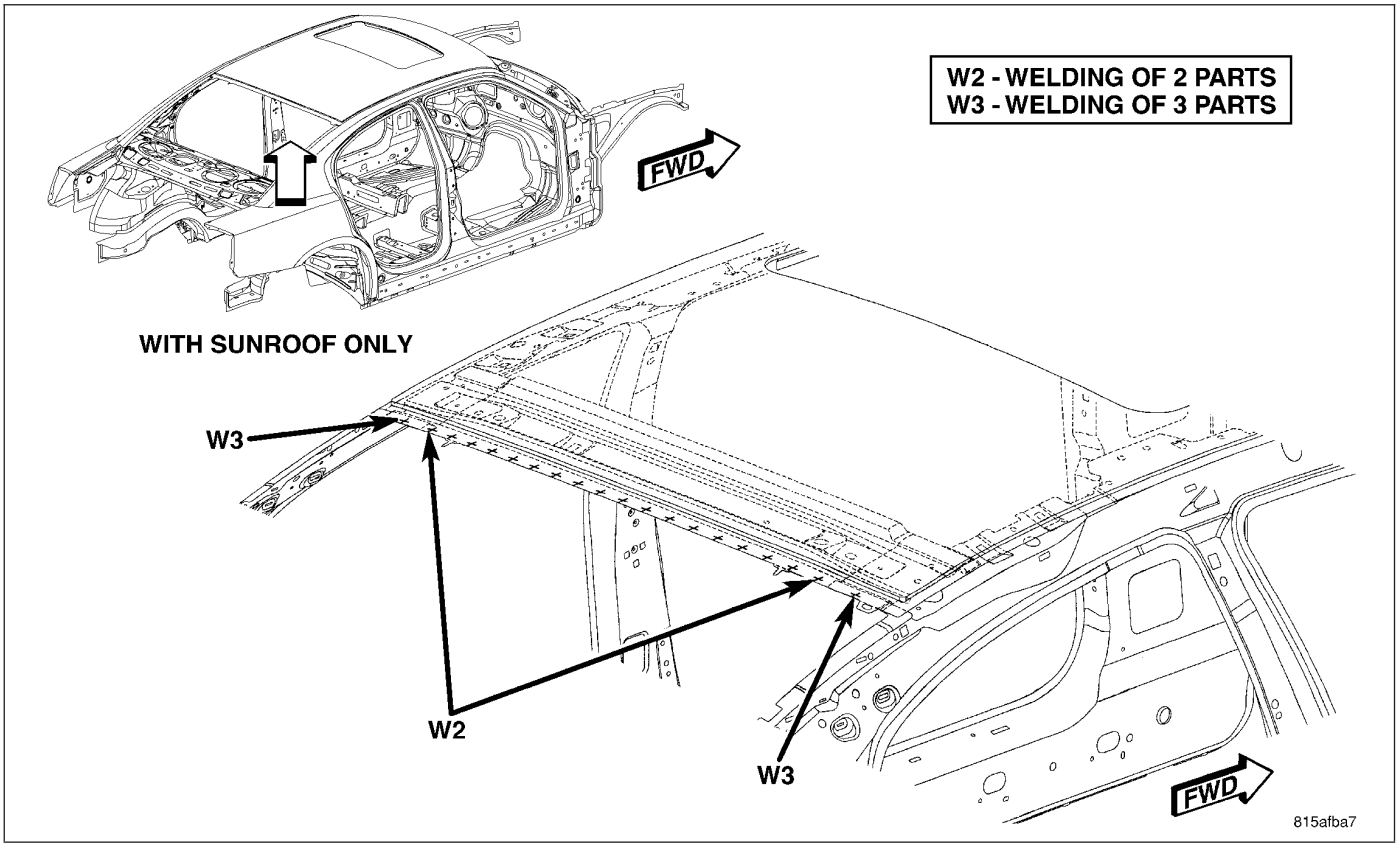

Fig. 217 FRAMED BODY IN WHITE (6 OF 15)

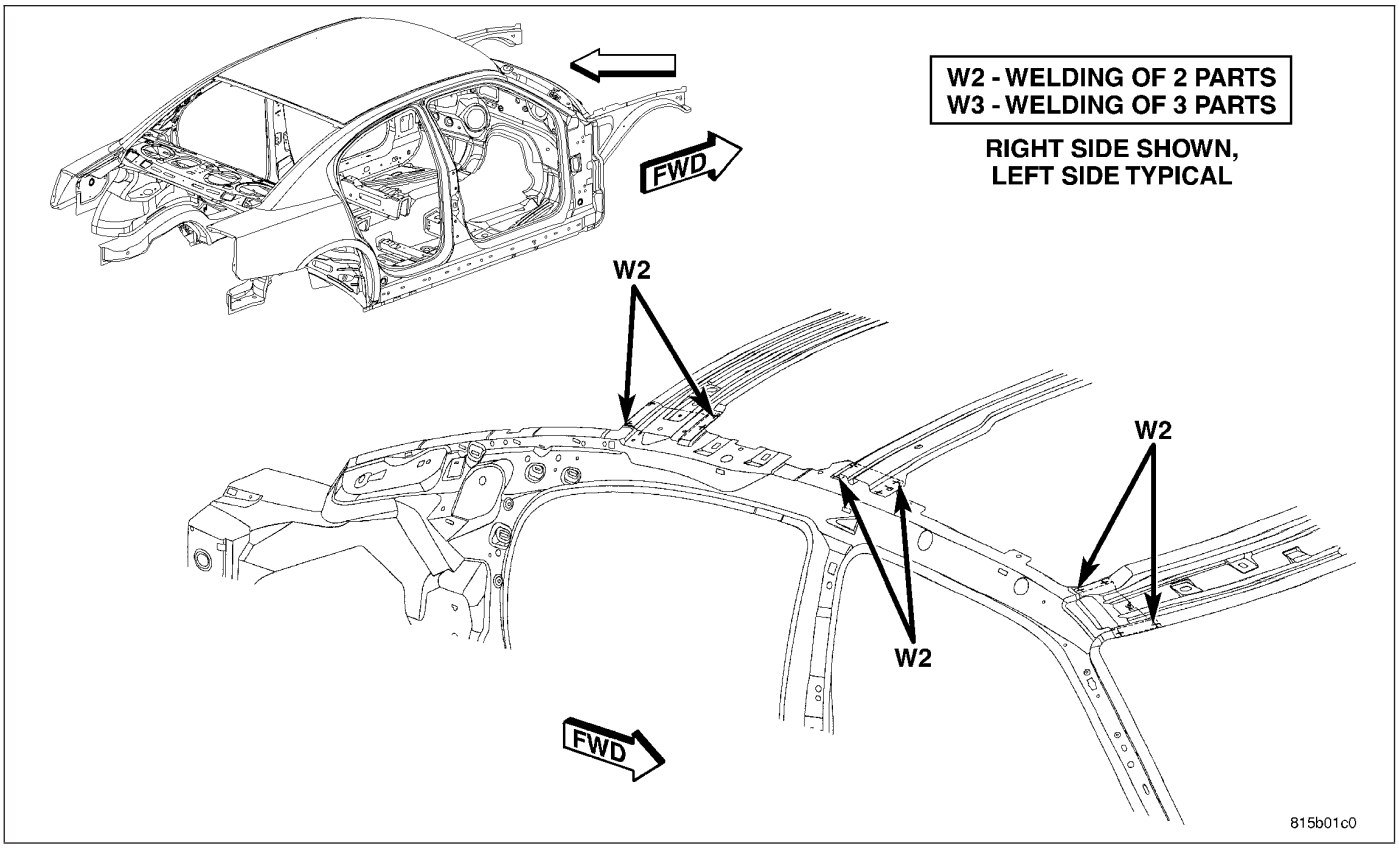

Fig. 218 FRAMED BODY IN WHITE (7 OF 15)

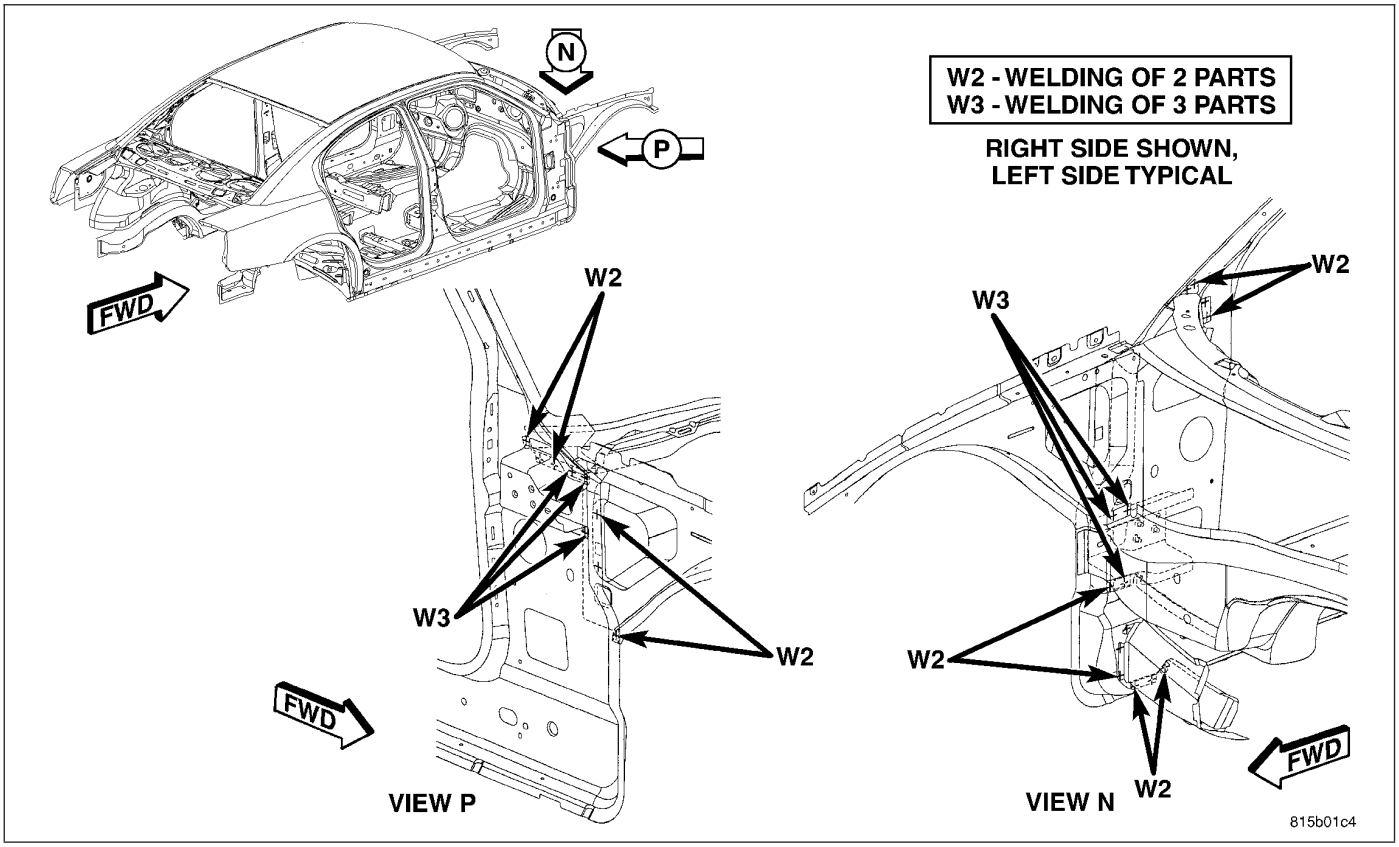

Fig. 219 FRAMED BODY IN WHITE (8 OF 15)

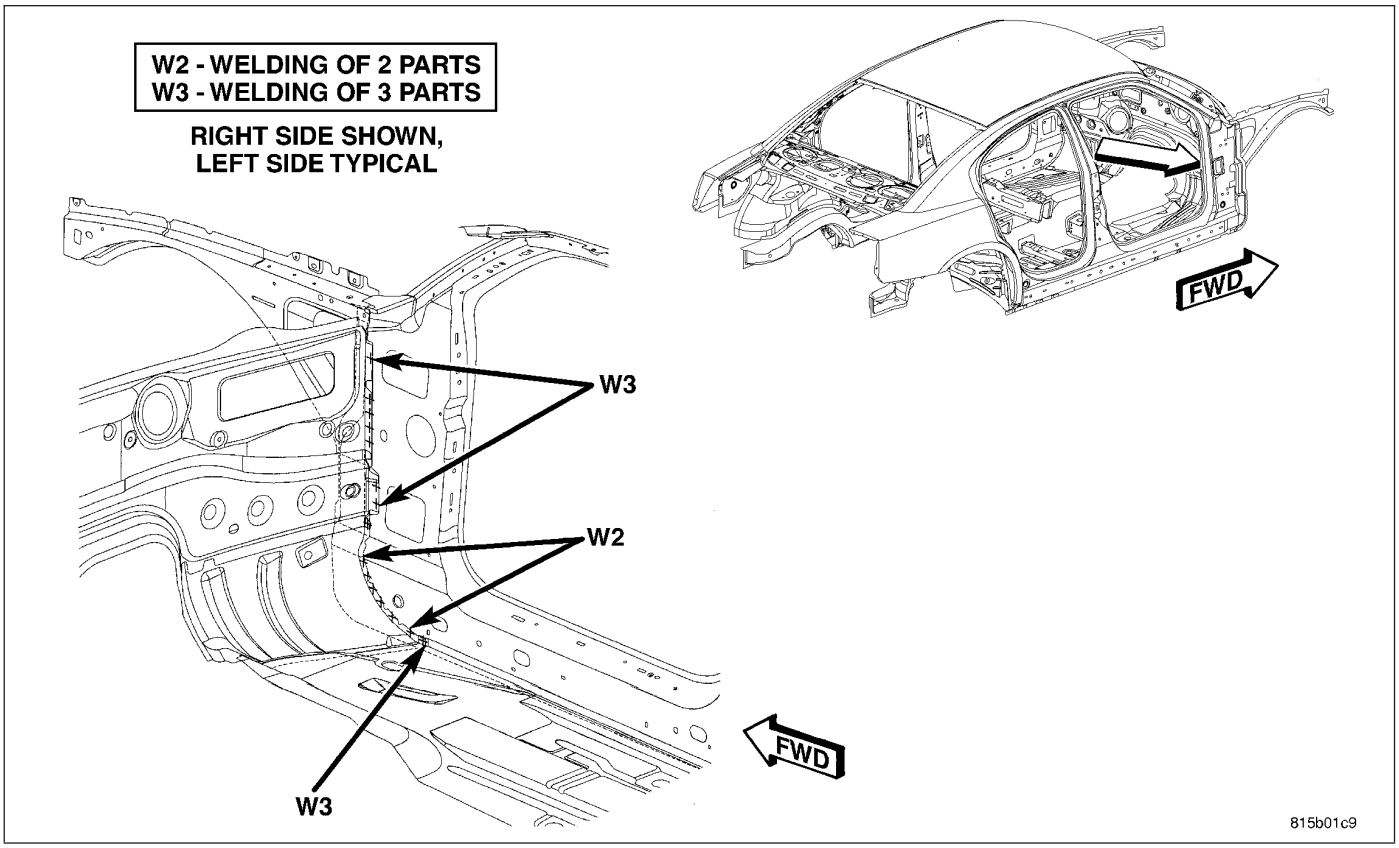

Fig. 220 FRAMED BODY IN WHITE (9 OF 15)

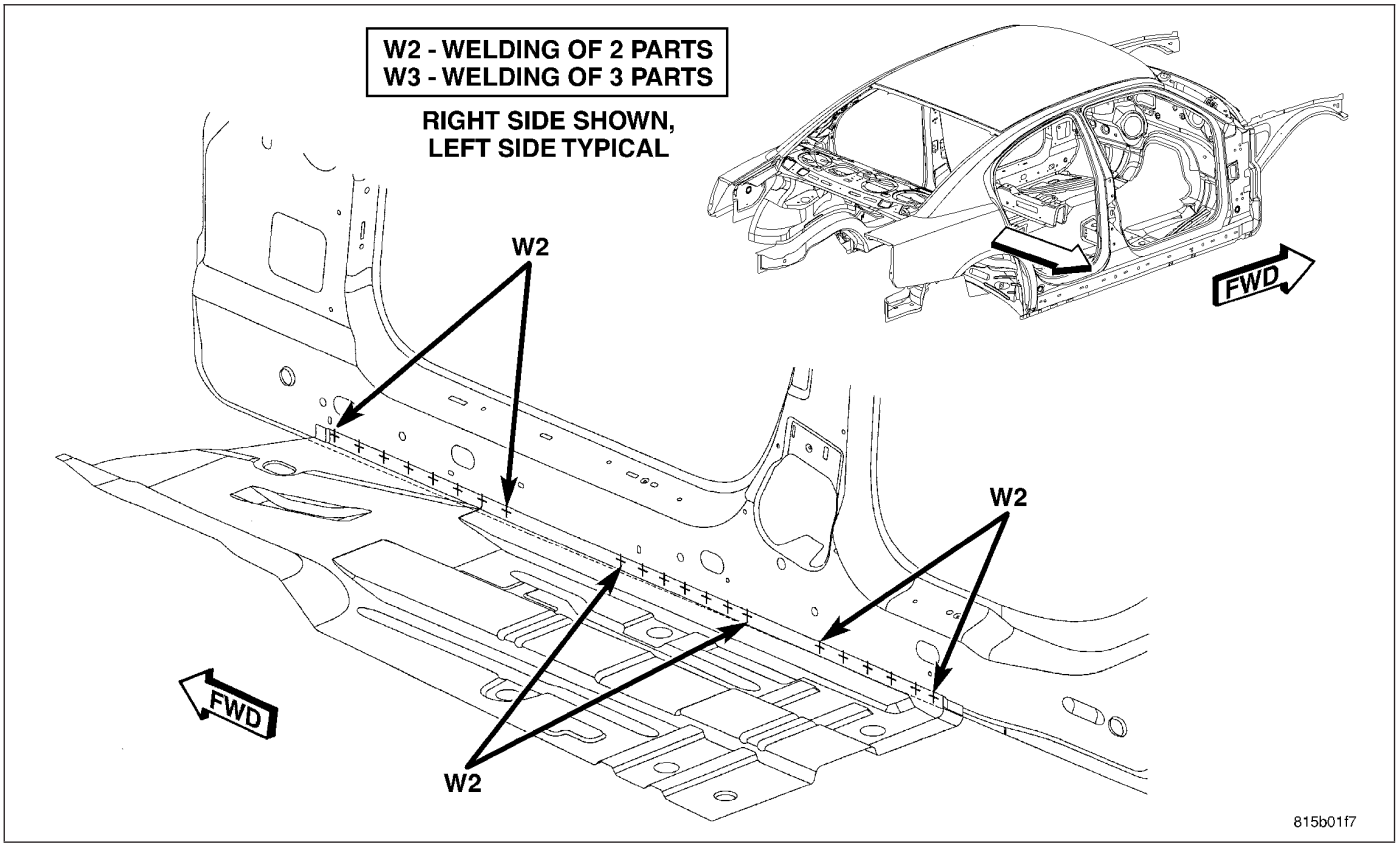

Fig. 221 FRAMED BODY IN WHITE (10 OF 15)

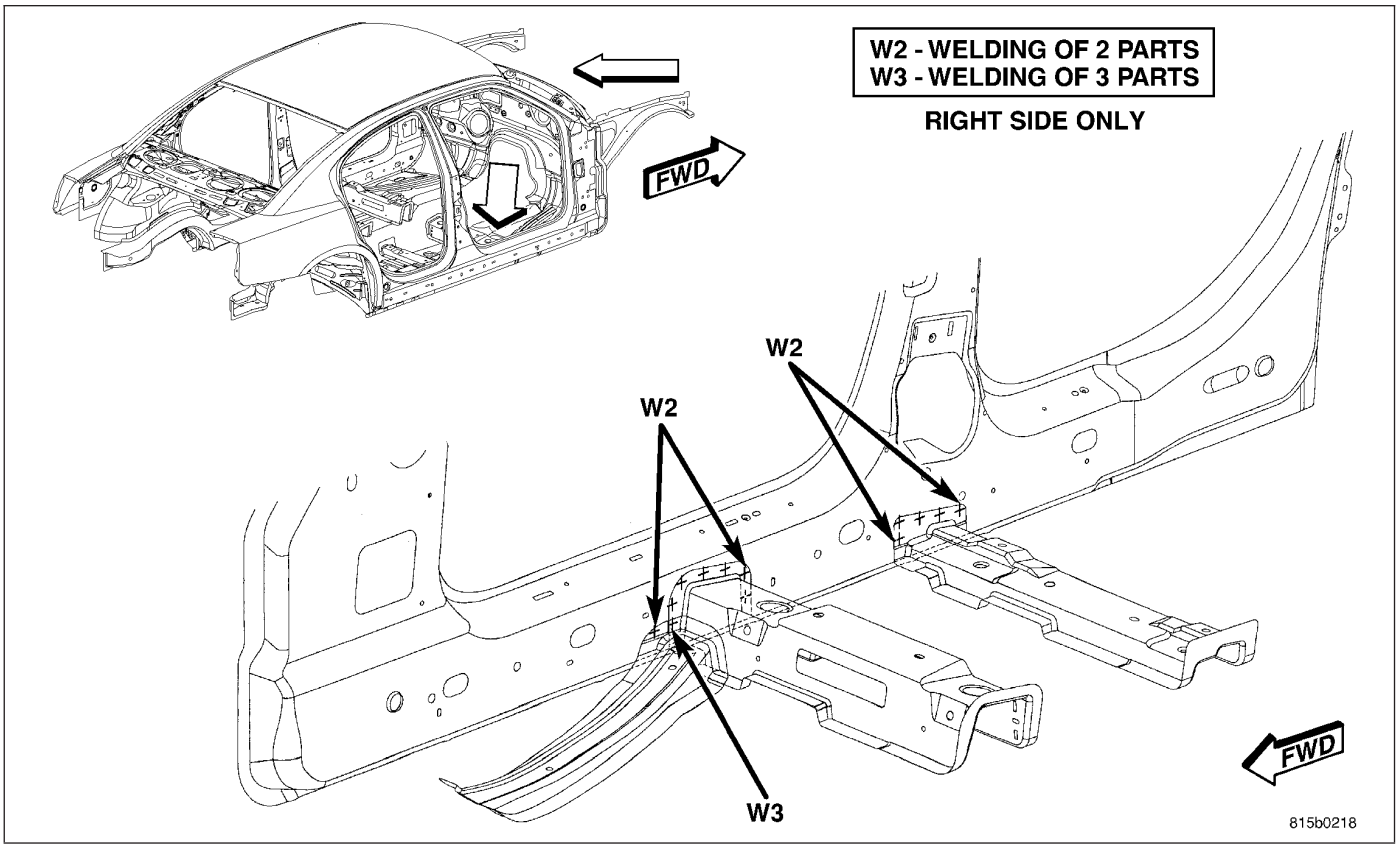

Fig. 222 FRAMED BODY IN WHITE (11 OF 15)

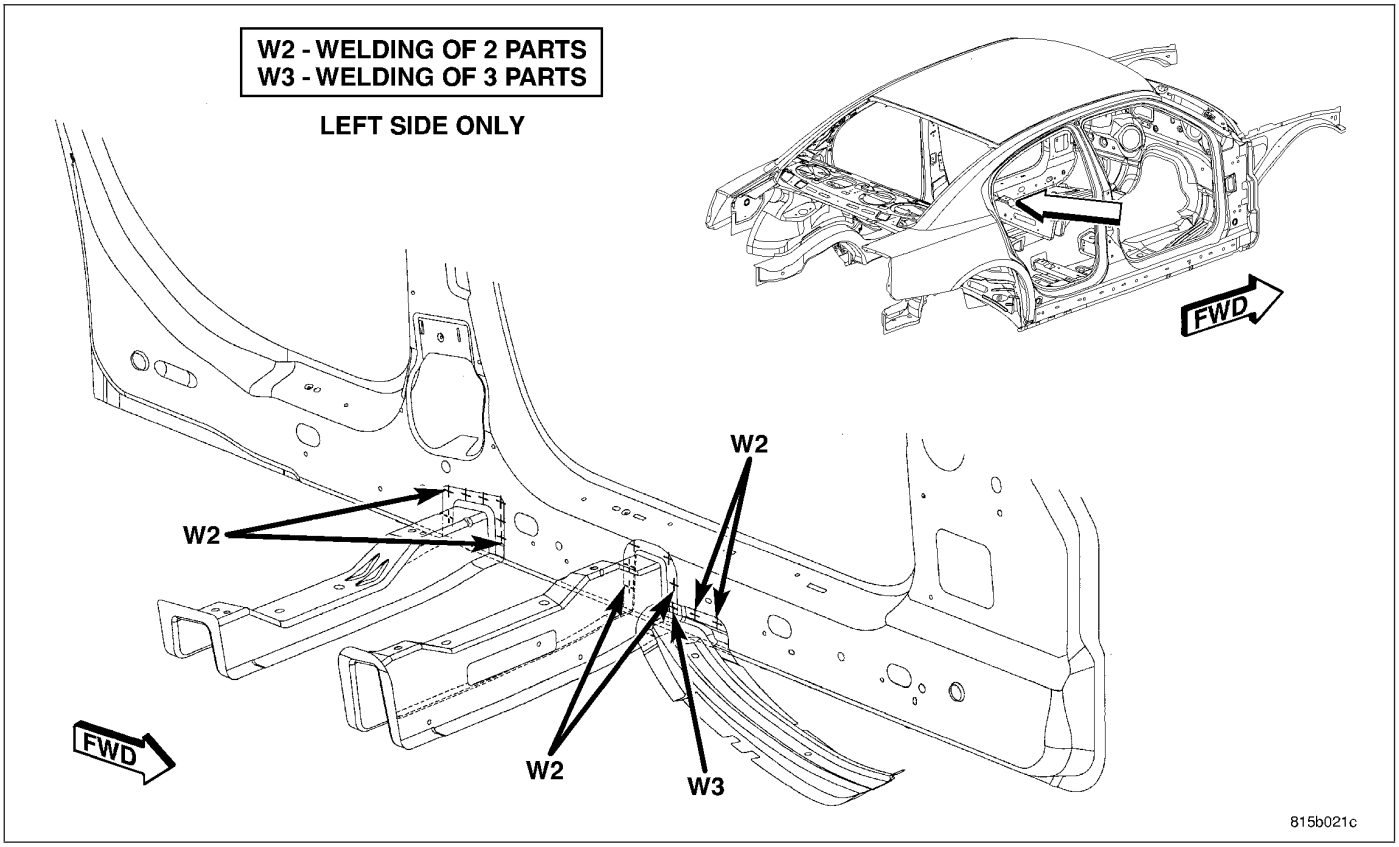

Fig. 223 FRAMED BODY IN WHITE (12 OF 15)

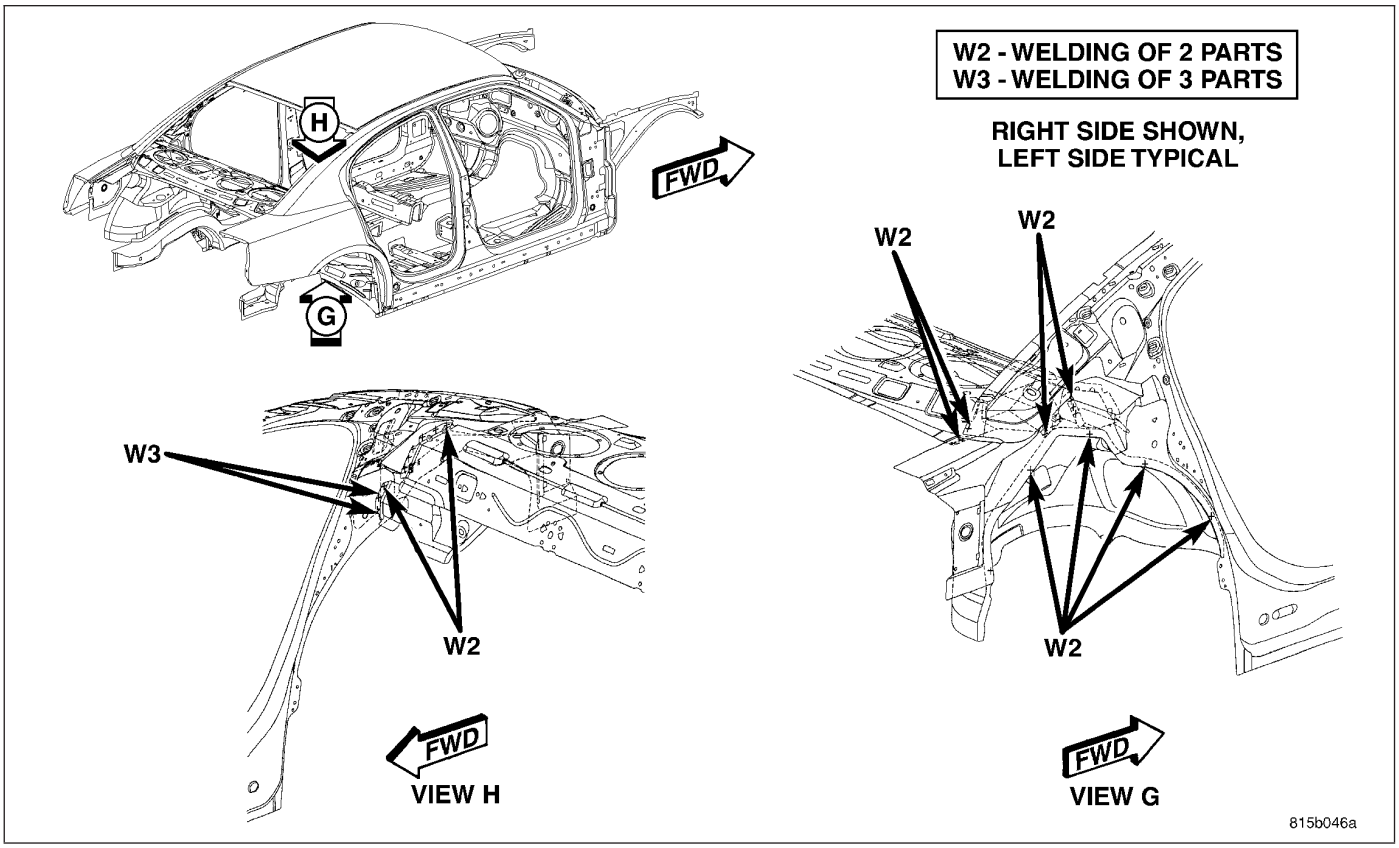

Fig. 224 FRAMED BODY IN WHITE (13 OF 15)

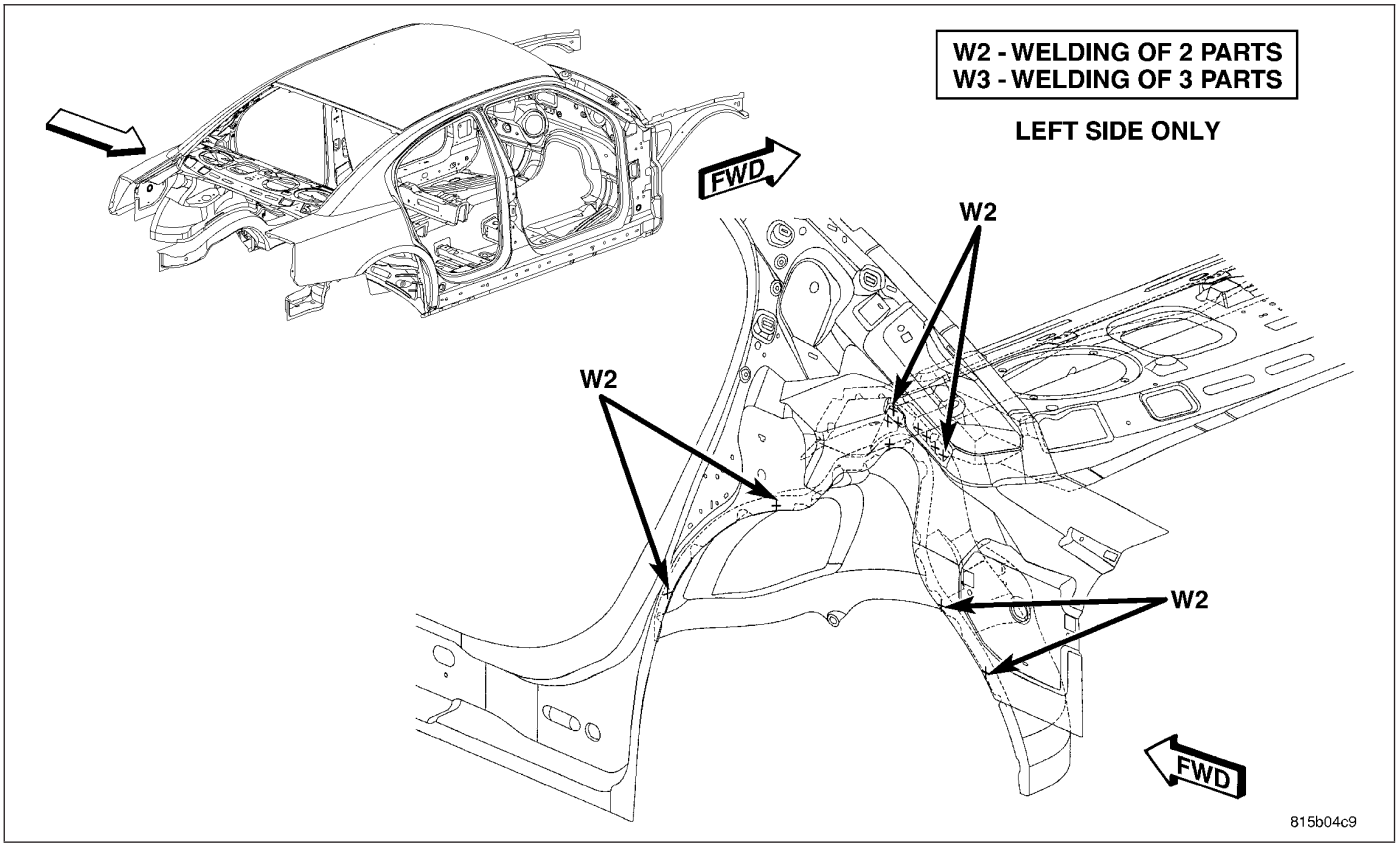

Fig. 225 FRAMED BODY IN WHITE (14 OF 15)

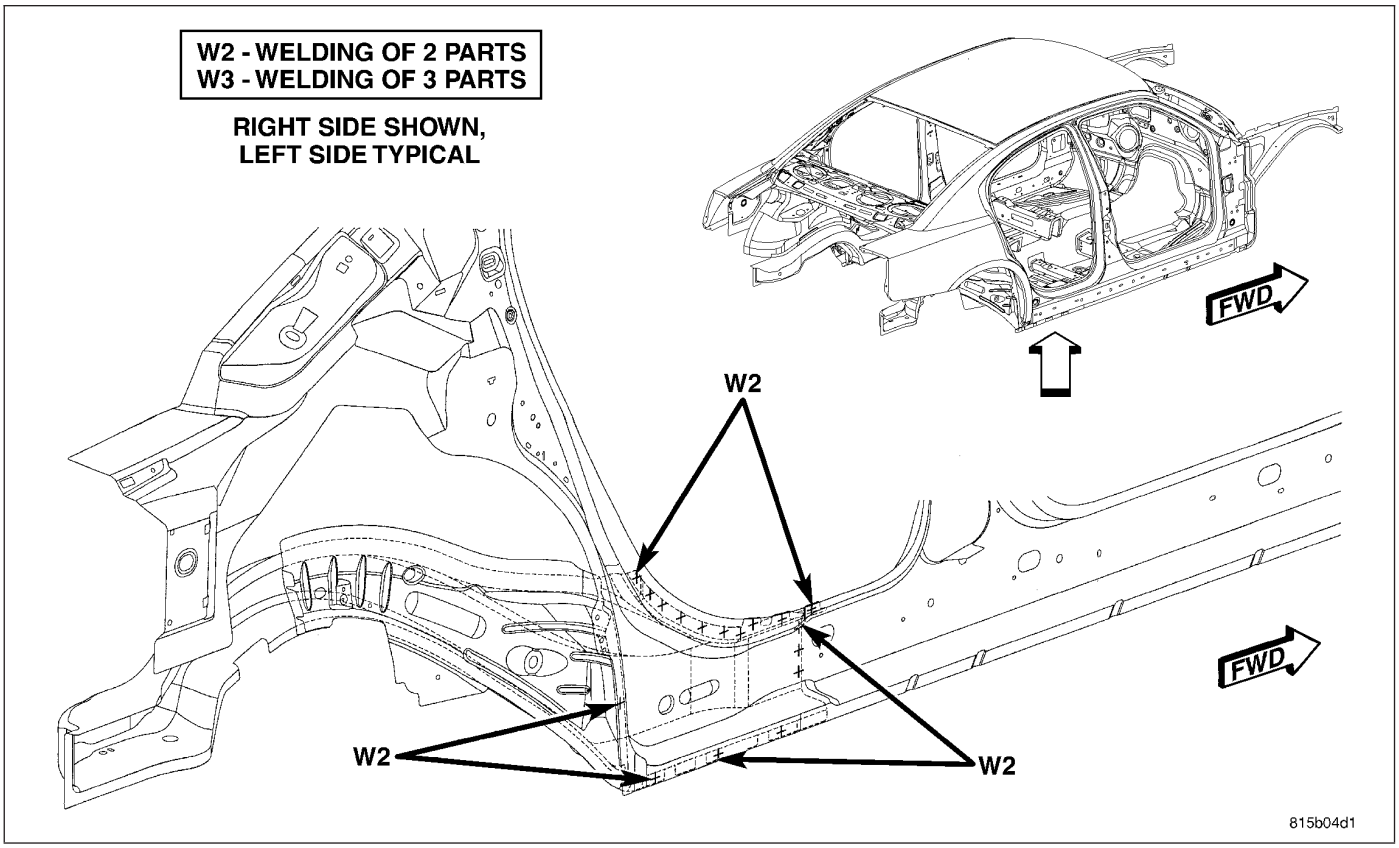

Fig. 226 FRAMED BODY IN WHITE (15 OF 15)

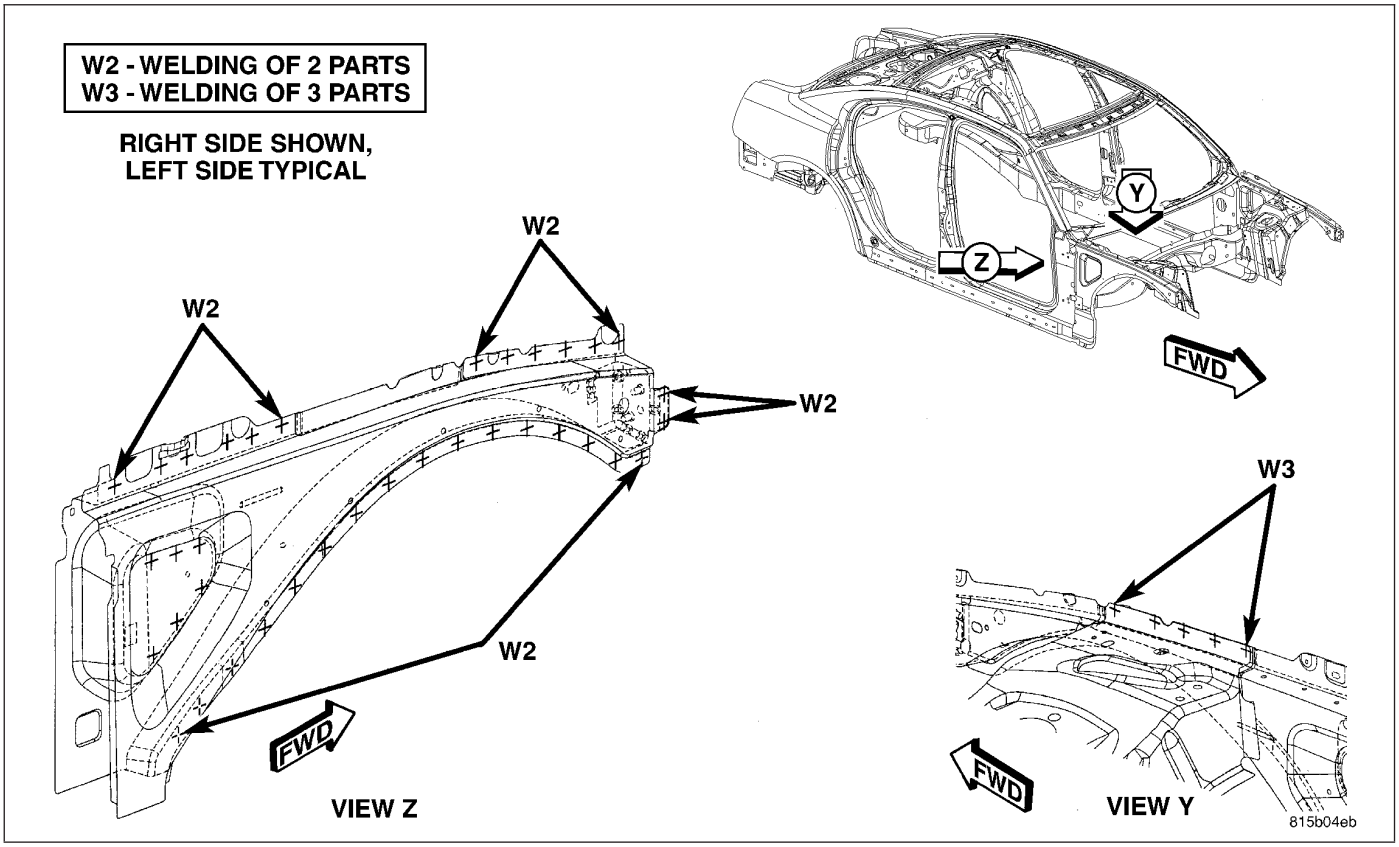

Fig. 227 FULL FRAMED BODY IN WHITE (1 OF 11)

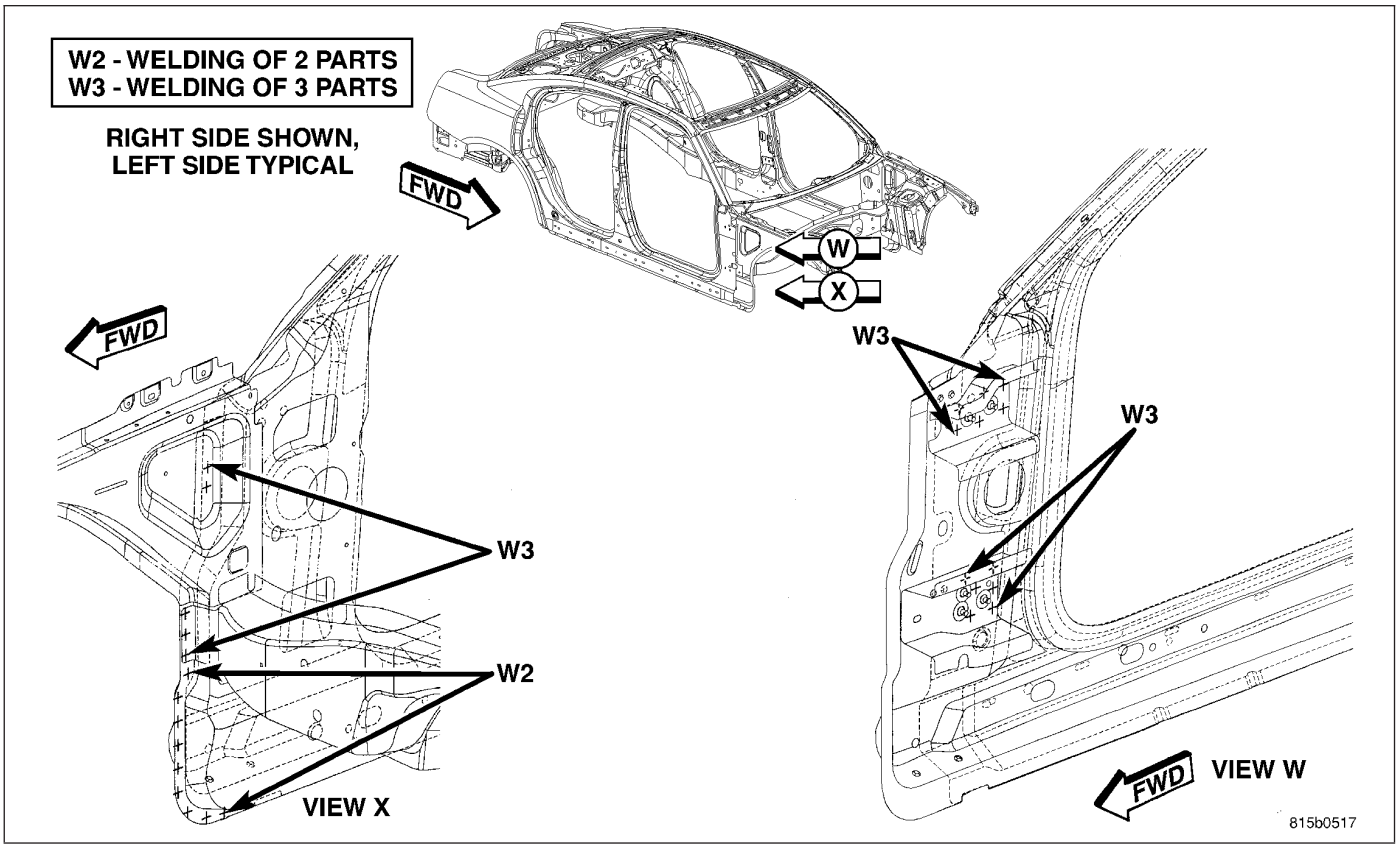

Fig. 228 FULL FRAMED BODY IN WHITE (2 OF 11)

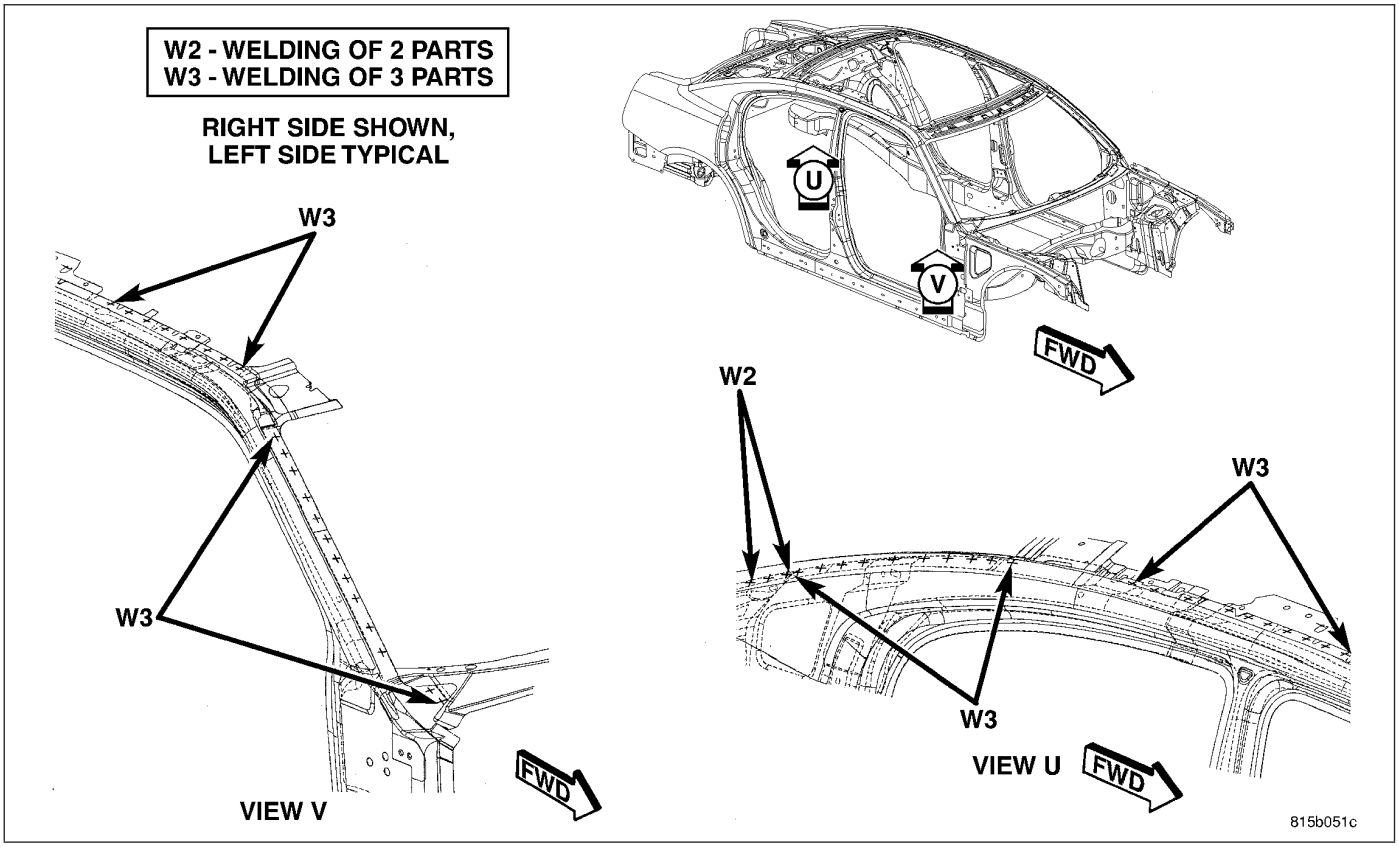

Fig. 229 FULL FRAMED BODY IN WHITE (3 OF 11)

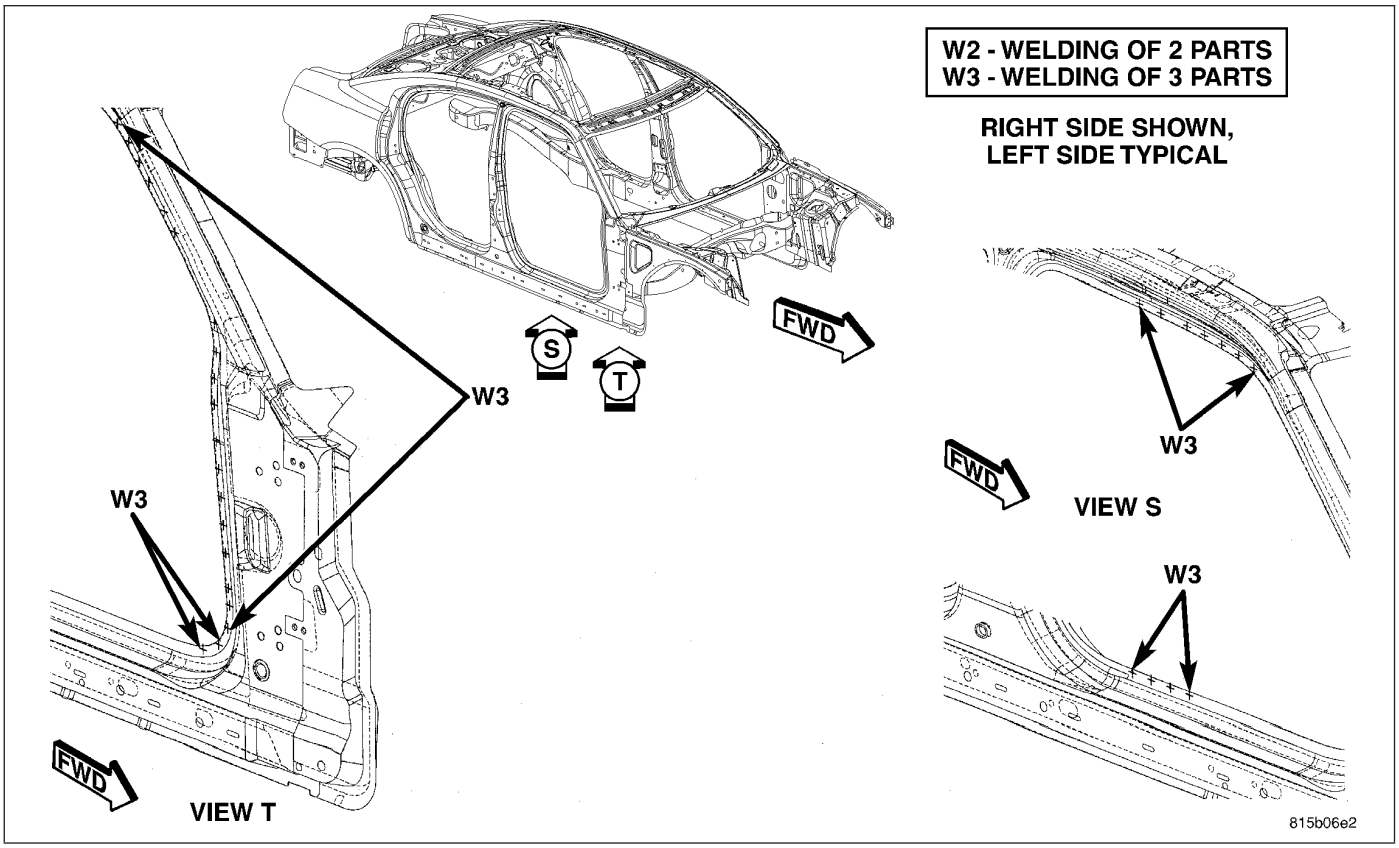

Fig. 230 FULL FRAMED BODY IN WHITE (4 OF 11)

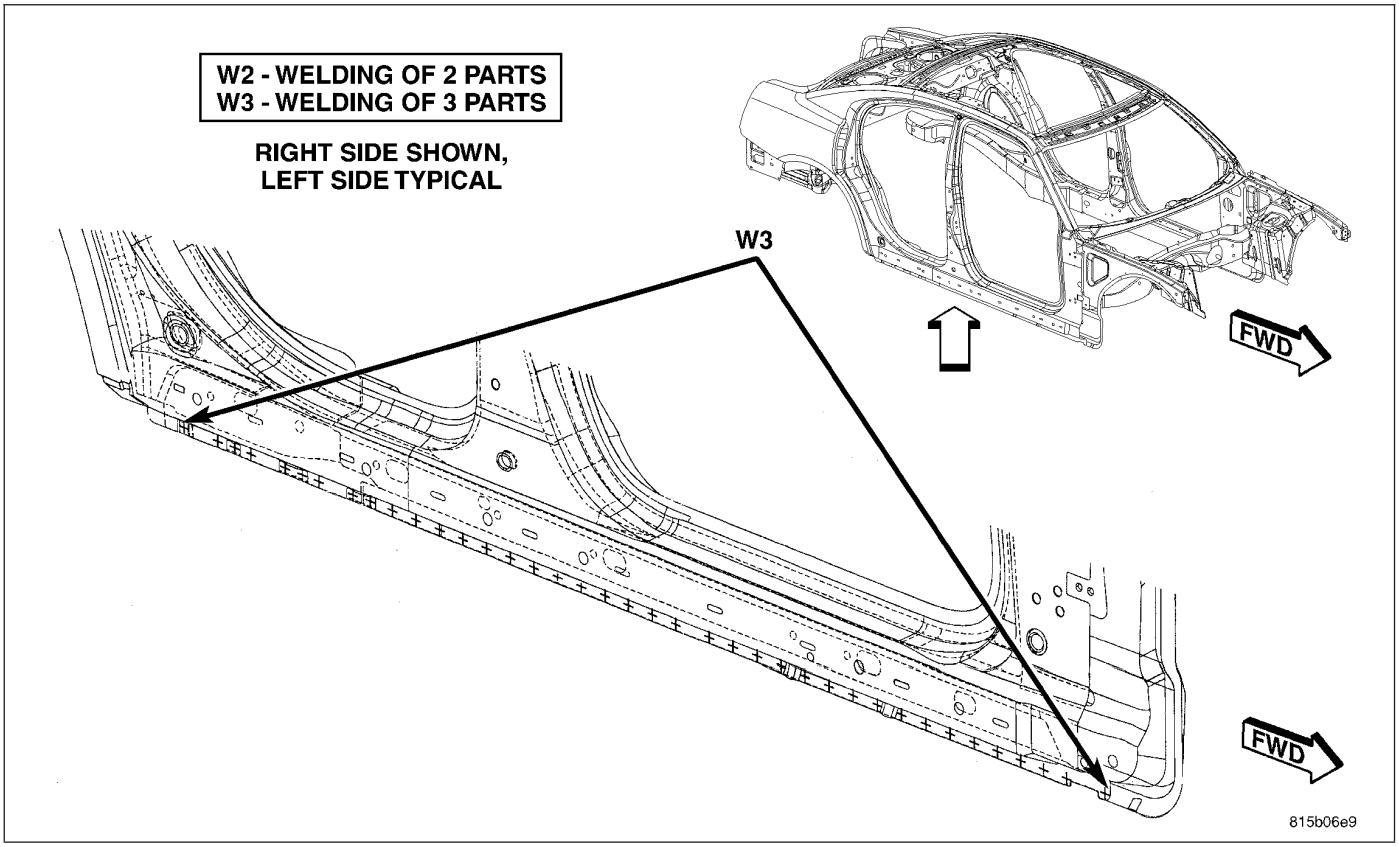

Fig. 231 FULL FRAMED BODY IN WHITE (5 OF 11)

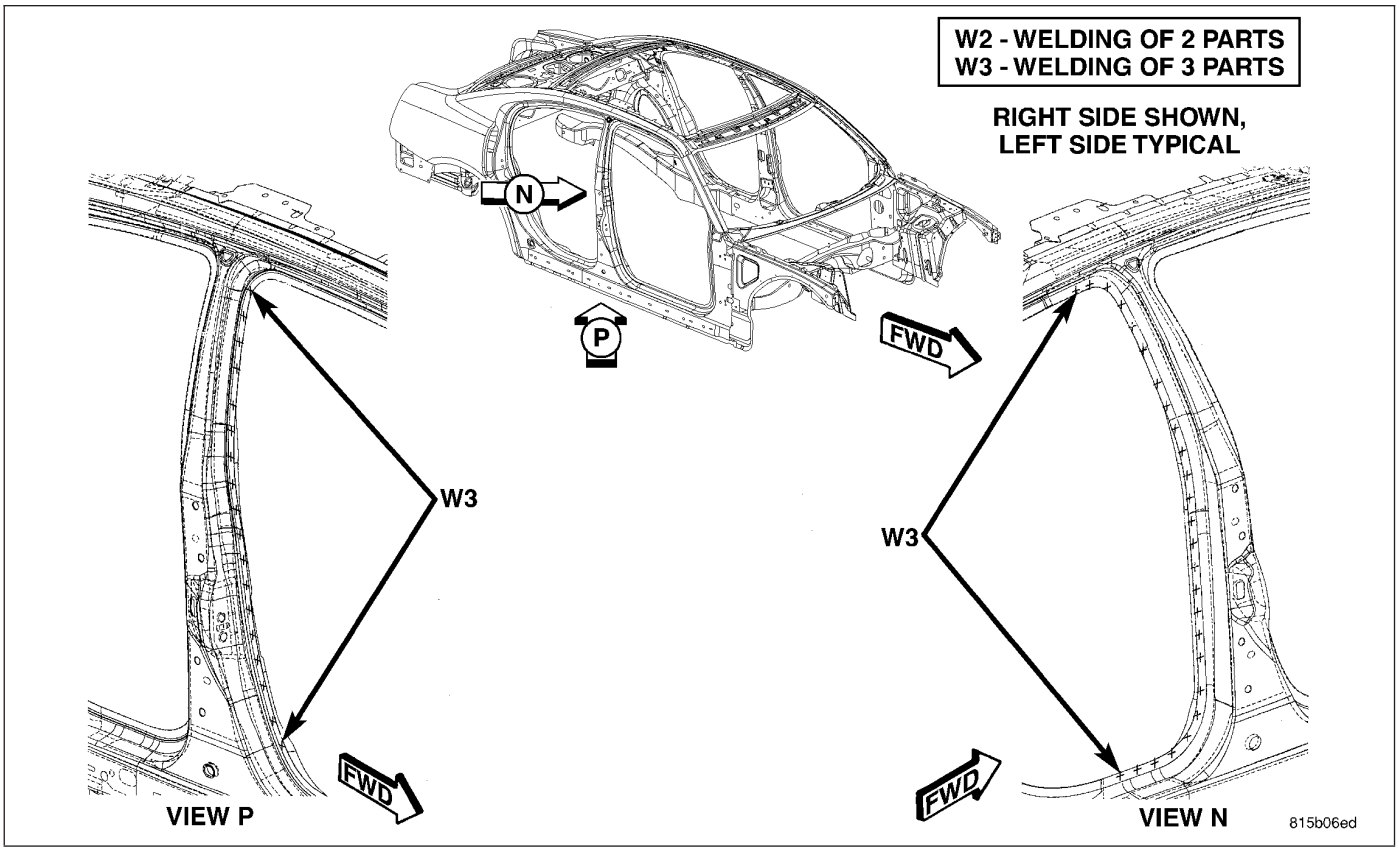

Fig. 232 FULL FRAMED BODY IN WHITE (6 OF 11)

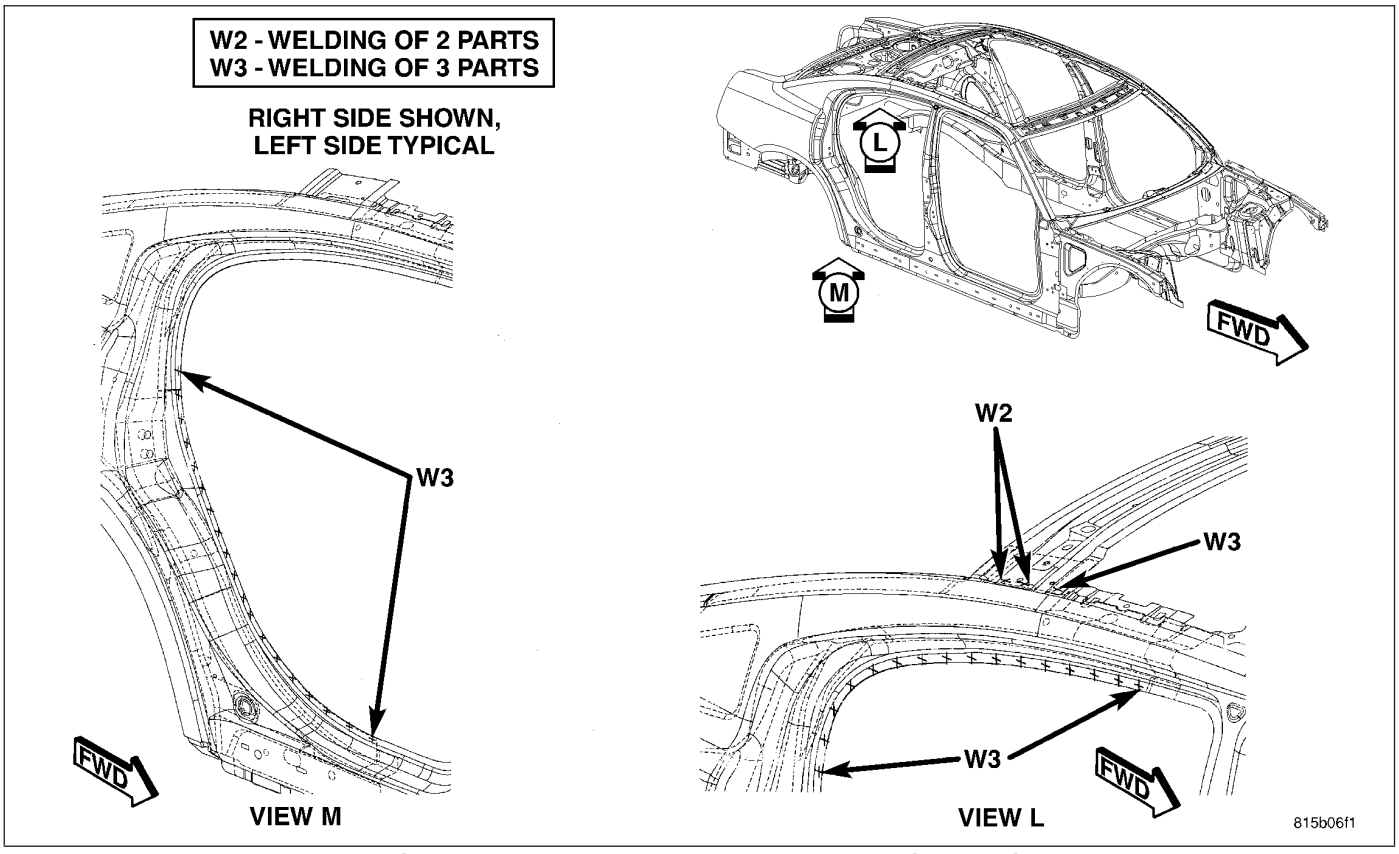

Fig. 233 FULL FRAMED BODY IN WHITE (7 OF 11)

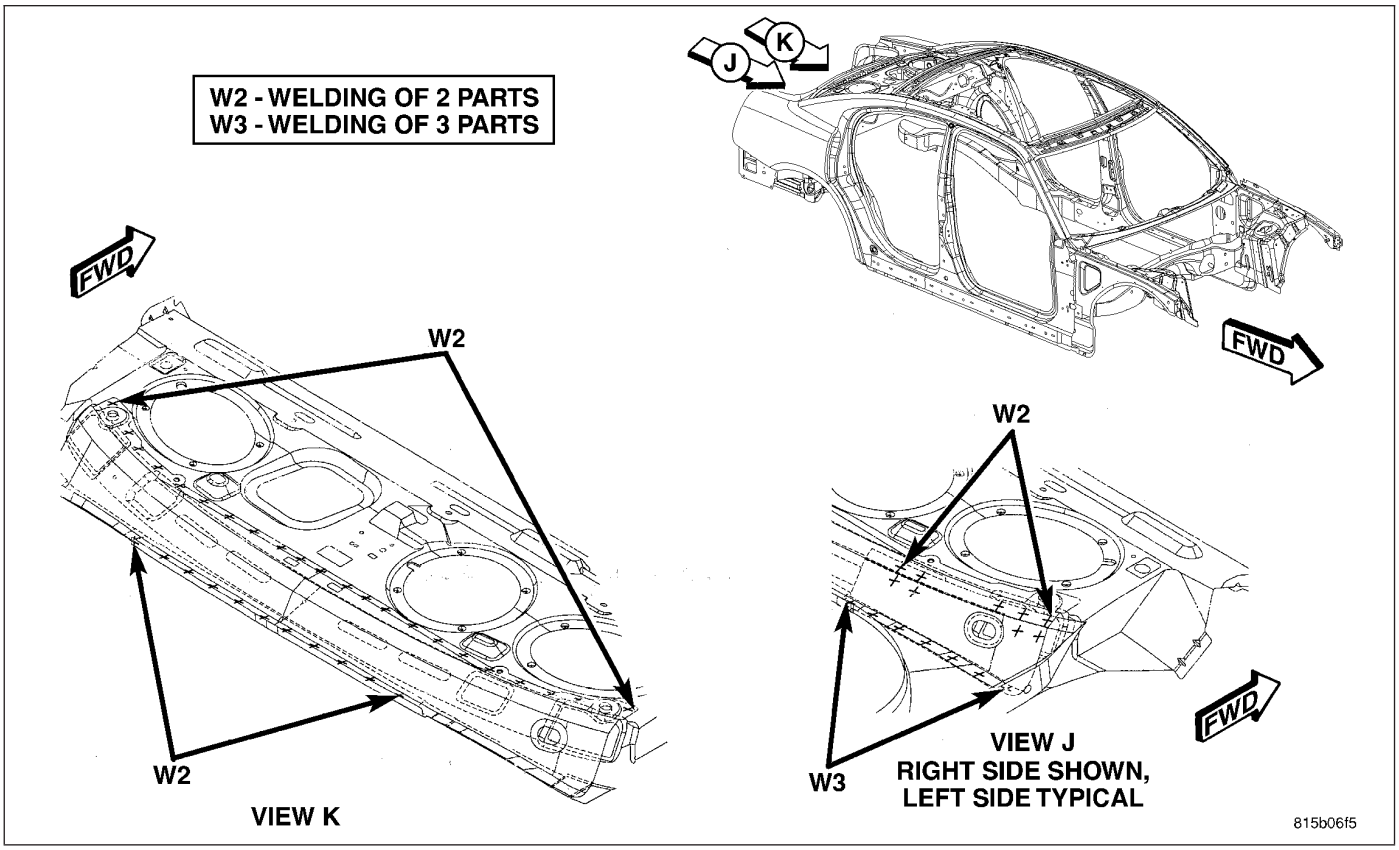

Fig. 234 FULL FRAMED BODY IN WHITE (8 OF 11)

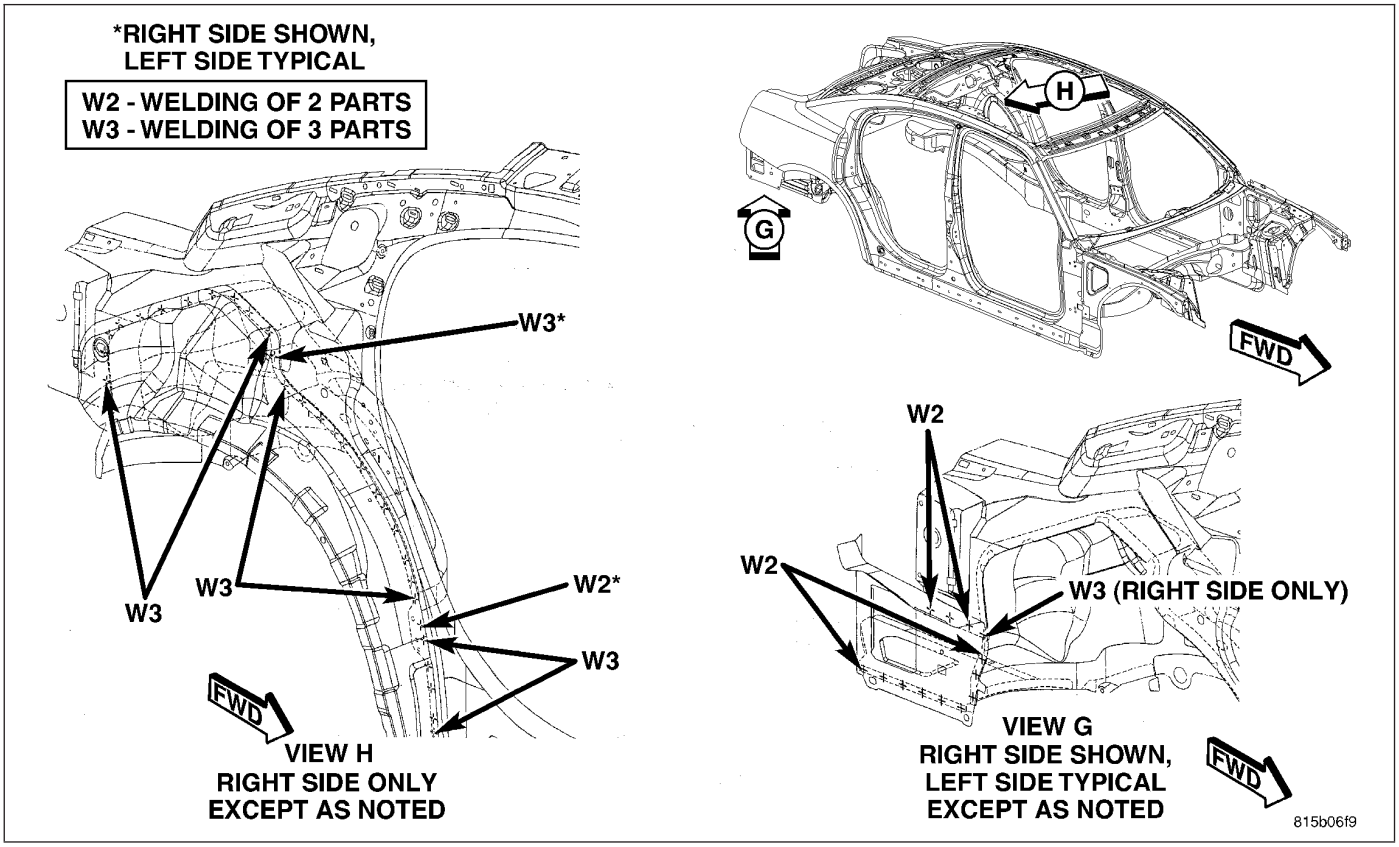

Fig. 235 FULL FRAMED BODY IN WHITE (9 OF 11)

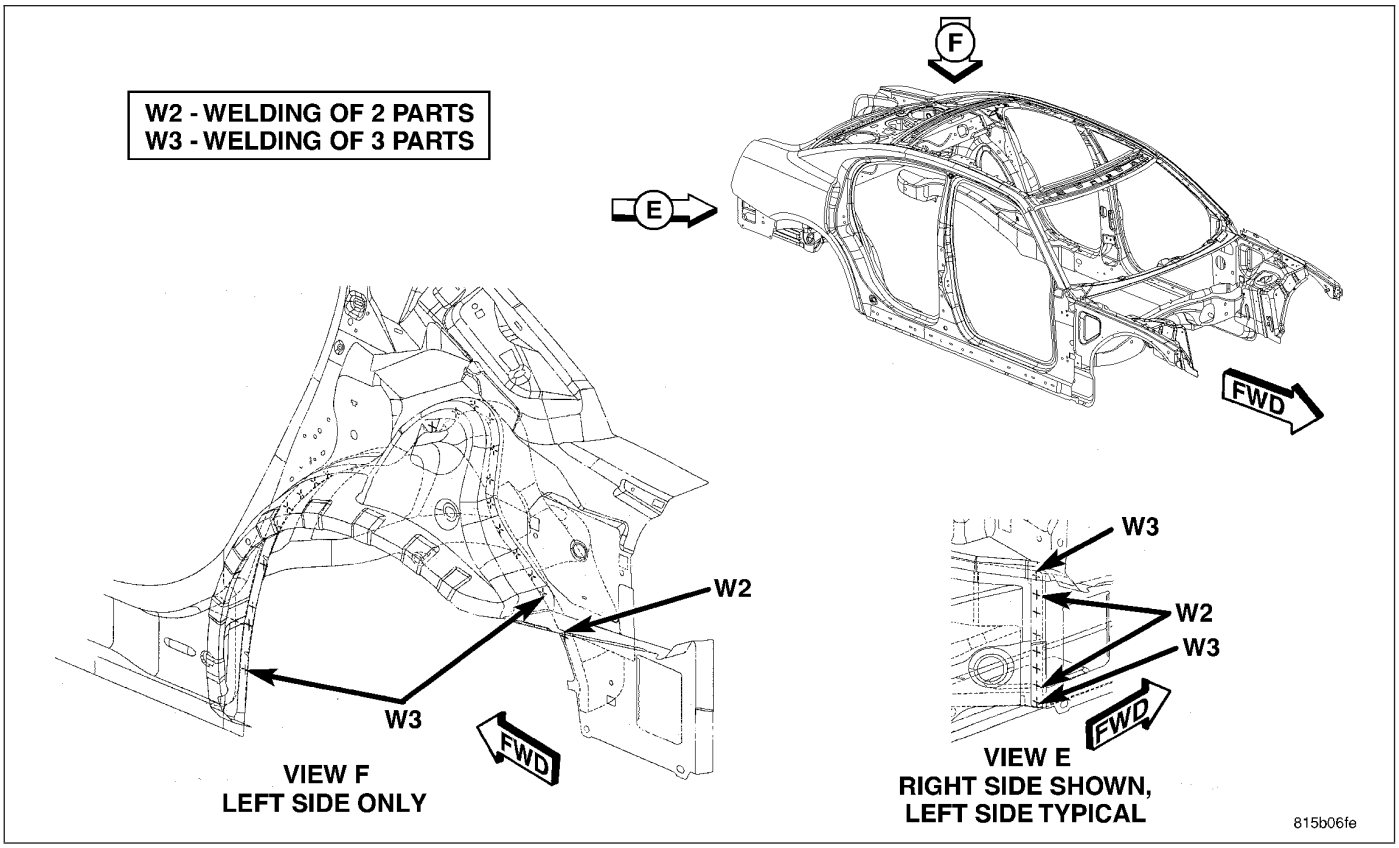

Fig. 236 FULL FRAMED BODY IN WHITE (10 OF 11)

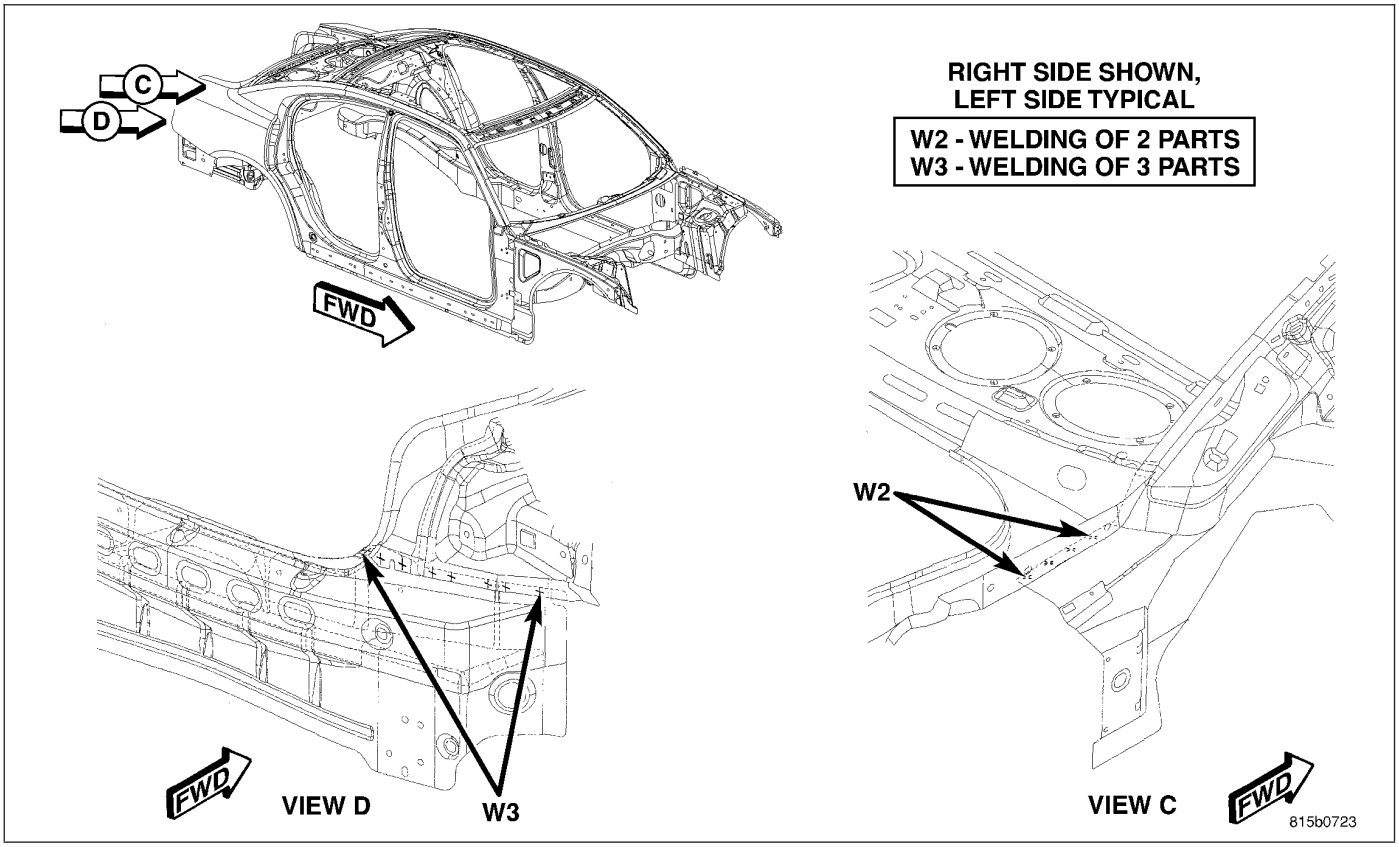

Fig. 237 FULL FRAMED BODY IN WHITE (11 OF 11)

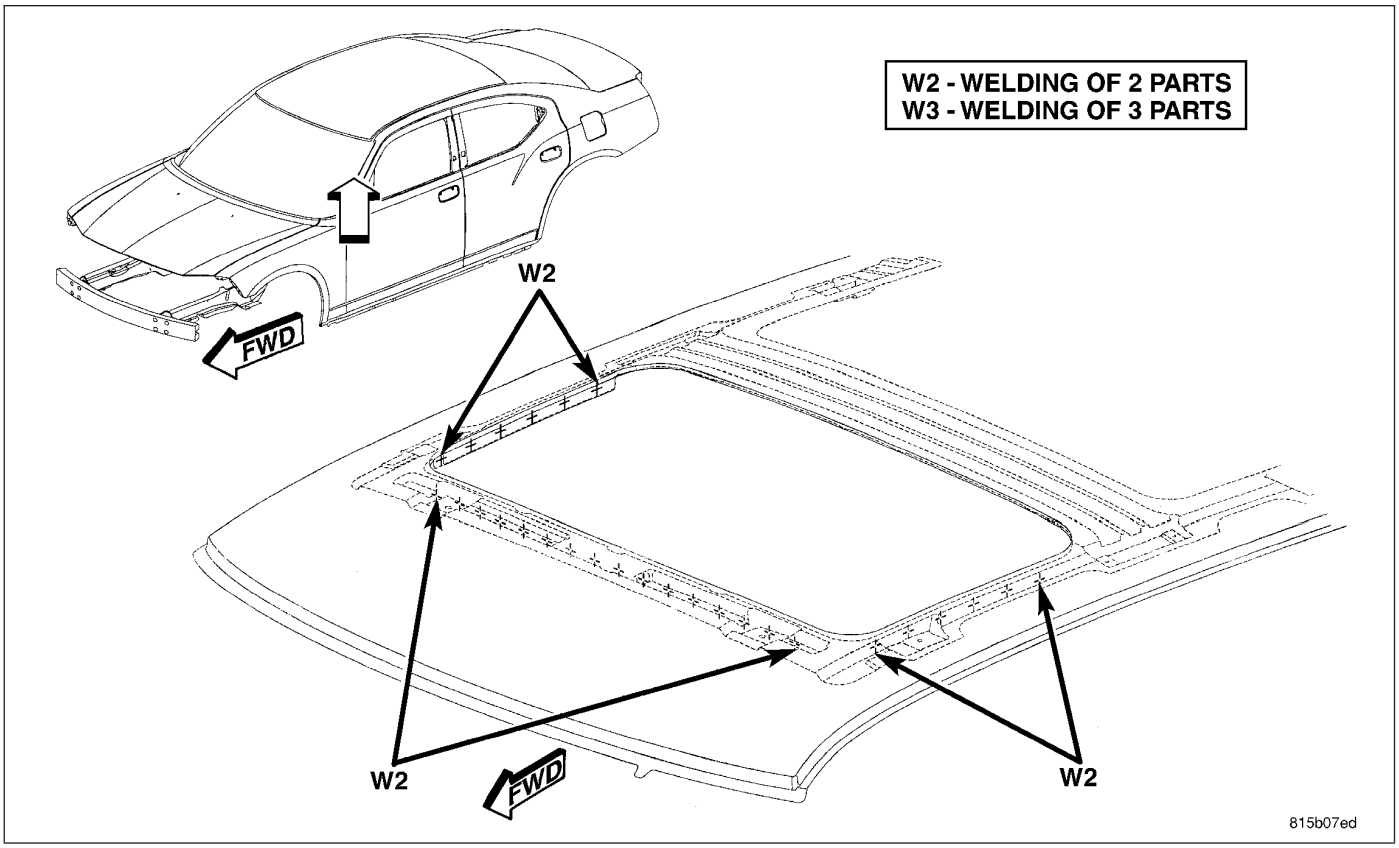

Fig. 238 ROOF (1 OF 2)

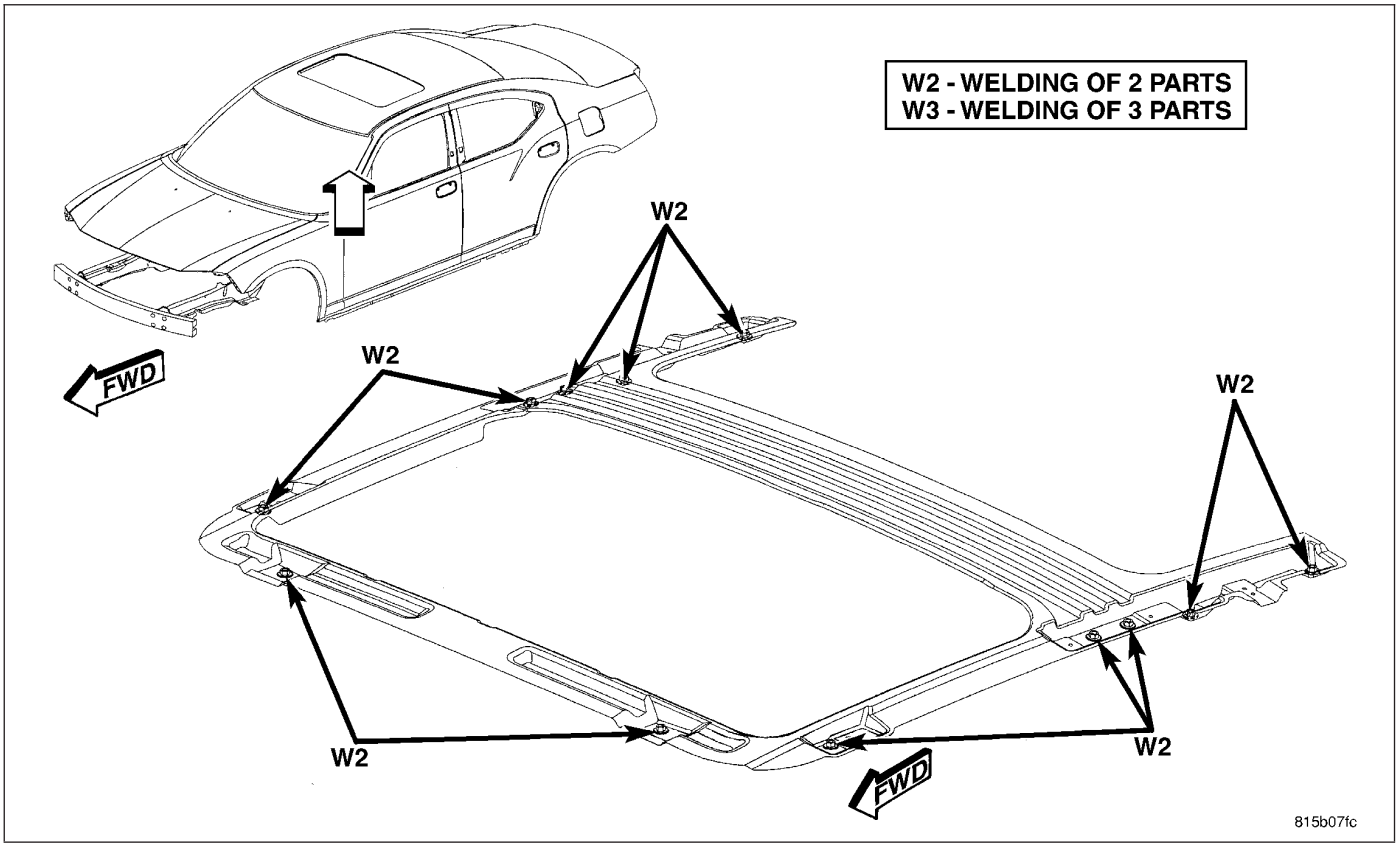

Fig. 239 ROOF (2 OF 2)

HEATING & AIR CONDITIONING

TABLE OF CONTENTS

page

HVAC - ELECTRICAL DIAGNOSTICS. 1

page

HVAC - SERVICE INFORMATION 320

HVAC - ELECTRICAL DIAGNOSTICS

TABLE OF CONTENTS

page

HVAC - ELECTRICAL DIAGNOSTICS
DIAGNOSIS AND TESTING
11–MODE POT OPEN (MTC) 5
12–MODE POT SHORTED (MTC) 6
13–TEMP POT OPEN (MTC) 7
14–TEMP POT SHORTED (MTC) 8
18–BLEND DOOR RANGE TOO SMALL (MTC). 9
21–BLEND DOOR RANGE TOO LARGE (MTC). 12
22–FRONT MODE DOOR RANGE TOO SMALL (MTC) 15
23–FRONT MODE DOOR RANGE TOO LARGE (MTC) 18
31–EVAPORATOR SENSOR OPEN (MTC) 21
32–EVAPORATOR SENSOR SHORTED (MTC). 25
33–A/C MODE SWITCH STUCK (MTC) 28
34–EBL MODE SWITCH STUCK (MTC) 34
35–FAILED COOL DOWN (MTC) 36
36–EEPROM CHECKSUM ERROR (MTC) 37
37–ROM CHECKSUM ERROR (MTC) 38
41–FRONT MODE OVERCURRENT (MTC) 39
43–BLEND OVERCURRENT (MTC) 47
44–RECIRC OVERCURRENT (MTC) 55
45–BLEND DOOR BOUND (MTC) 63
46–FRONT MODE DOOR BOUND (MTC) 68
47–RECIRC DOOR BOUND (MTC) 73
51–RECIRC DOOR RANGE TOO SMALL (MTC). 78
52–RECIRC DOOR RANGE TOO LARGE (MTC). 81
53–FRONT MODE DOOR LINKAGE BROKEN (MTC). 84
55–BLEND DOOR LINKAGE BROKEN (MTC) . . 87
56–RECIRC DOOR LINKAGE BROKEN (MTC). 90

page

61–COMMON DOOR DRIVER CIRCUIT SHORTED TO GROUND (MTC) 93
62–COMMON DOOR DRIVER CIRCUIT SHORTED TO IGNITION (MTC) 101
63–FRONT MODE DOOR DRIVER CIRCUIT SHORTED TO GROUND (MTC) 104
64–FRONT MODE DOOR DRIVER CIRCUIT SHORTED TO IGNITION (MTC) 108
67–BLEND DOOR DRIVER CIRCUIT SHORTED TO GROUND (MTC). 111
68–BLEND DOOR DRIVER CIRCUIT SHORTED TO IGNITION (MTC) 115
69–RECIRC DOOR DRIVER CIRCUIT SHORTED TO GROUND (MTC) 118
71–RECIRC DOOR DRIVER CIRCUIT SHORTED TO IGNITION (MTC) 122
72–SHORT TOO COMPLEX (MTC) 125
73–AC REQUEST OUTPUT SIGNAL TOO HIGH (MTC). 134
74–AC REQUEST OUTPUT SIGNAL TOO LOW (MTC) 136
75–AC REQUEST OUTPUT SIGNAL HIGH WHEN DRIVEN LOW (MTC) 138
76–AC REQUEST OUTPUT SIGNAL LOW WHEN DRIVEN HIGH (MTC). 138
77–EBL OUTPUT SHORTED HIGH 139
81–BLOWER NOT ON HIGH AT START OF COOLDOWN TEST (MTC) 142
82–SENSOR TOO COLD TO START COOLDOWN TEST (MTC) 146
83–SENSOR FAILED OPEN DURING COOLDOWN TEST (MTC) 150
84–SENSOR FAILED SHORTED DURING COOLDOWN TEST (MTC) 150
85–BLOWER NOT ON HIGH DURING COOLDOWN TEST (MTC) 151

B10AC–RIGHT BLEND DOOR CONTROL CIRCUIT OPEN (ATC) 155
B10AD–RIGHT BLEND DOOR TRAVEL TOO SMALL (ATC) 158
B10AE–RIGHT BLEND DOOR TRAVEL TOO LARGE (ATC) 160
B10AF–RIGHT BLEND DOOR ACTUATOR PERFORMANCE (ATC) 162
B10A2–LEFT BLEND DOOR CONTROL CIRCUIT/PERFORMANCE (ATC) 164
B10A5–LEFT BLEND DOOR CONTROL CIRCUIT OPEN (ATC) 174
B10A6–LEFT BLEND DOOR TRAVEL TOO SMALL (ATC) 177
B10A7–LEFT BLEND DOOR TRAVEL TOO LARGE (ATC) 179
B10A8–LEFT BLEND DOOR ACTUATOR PERFORMANCE (ATC) 181
B10A9–RIGHT BLEND DOOR CONTROL CIRCUIT/PERFORMANCE (ATC) 183
B10B2–A/C COOL DOWN TEST PERFORMANCE (ATC) 193
B10B4–CABIN HEATER 1 CONTROL CIRCUIT LOW (FCM) 194
B10B5–CABIN HEATER 1 CONTROL CIRCUIT HIGH (FCM) 198
B10B6–CABIN HEATER 1 CONTROL CIRCUIT OPEN (FCM) 202
B10B8–CABIN HEATER 2 CONTROL CIRCUIT LOW (FCM) 206
B10B9–CABIN HEATER 2 CONTROL CIRCUIT HIGH (FCM) 210
B10BA–CABIN HEATER 2 CONTROL CIRCUIT OPEN (FCM) 214
B100A–RECIRCULATION SWITCH REQUEST INPUT CIRCUIT LOW (ATC) 218
B105B–RECIRCULATION DOOR CONTROL CIRCUIT OPEN (ATC) 220
B105C–RECIRCULATION DOOR TRAVEL RANGE TOO SMALL (ATC) 223
B105D–RECIRCULATION DOOR TRAVEL RANGE TOO LARGE (ATC) 225
B106B–REAR DEFROST CONTROL CIRCUIT LOW (ATC) 227
B106C–REAR DEFROST CONTROL CIRCUIT HIGH (ATC) 230
B1001–A/C SWITCH REQUEST INPUT CIRCUIT LOW (ATC) 233
B1016–REAR DEFROST SWITCH REQUEST INPUT CIRCUIT LOW (ATC) 235
B1031–EVAPORATOR FIN TEMPERATURE SENSOR CIRCUIT LOW (ATC) 237
B1032–EVAPORATOR FIN TEMPERATURE SENSOR CIRCUIT HIGH (ATC) 240
B1034–INFRARED TEMPERATURE SENSOR INPUT CIRCUIT LOW (ATC) 244
B1035–INFRARED TEMPERATURE SENSOR INPUT CIRCUIT HIGH (ATC) 245
B1040–PANEL MODE DOOR 1 CONTROL CIRCUIT/PERFORMANCE (ATC) 246
B1043–PANEL MODE DOOR 1 CONTROL CIRCUIT OPEN (ATC) 256
B1044–PANEL MODE DOOR 1 TRAVEL RANGE TOO SMALL (ATC) 259
B1045–PANEL MODE DOOR 1 TRAVEL RANGE TOO LARGE (ATC) 261
B1058–RECIRCULATION DOOR CONTROL CIRCUIT/PERFORMANCE (ATC) 263
B1082–HVAC MUX CIRCUIT LOW 273
B1083–HVAC MUX CIRCUIT HIGH 276
B1601–LEFT SOLAR SENSOR CIRCUIT LOW (ATC) 279
B1602–LEFT SOLAR SENSOR CIRCUIT HIGH (ATC) 282
B1604–RIGHT SOLAR SENSOR CIRCUIT LOW (ATC) 286
B1605–RIGHT SOLAR SENSOR CIRCUIT HIGH (ATC) 289
B1610–AMBIENT LIGHT SENSOR INPUT CIRCUIT LOW (ATC) 293
B1611–AMBIENT LIGHT SENSOR INPUT CIRCUIT HIGH (ATC) 296
U0019–CAN B BUS (ATC) 300
U0141–LOST COMMUNICATION WITH FRONT CONTROL MODULE (ATC) 303
U0151–LOST COMMUNICATION WITH OCCUPANT RESTRAINT CONTROLLER (ORC) (ATC) 303
U0154–LOST COMMUNICATION WITH OCCUPANT CLASSIFICATION MODULE (ATC) 303
U0155–LOST COMMUNICATION WITH CLUSTER/CCN (ATC) 303
U0156–LOST COMMUNICATION WITH EOM (ATC) 303
U0159–LOST COMMUNICATION WITH PARKING ASSIST CONTROL MODULE (ATC) 303
U0168–LOST COMMUNICATION WITH VEHICLE SECURITY CONTROL MODULE (SKREEM/WCM) (ATC) 304
U0169–LOST COMMUNICATION WITH SUNROOF CONTROL MODULE (ATC) 304
U0181–LOST COMMUNICATION WITH HEADLAMP LEVELING TRANSLATOR (ATC) 304
U0184–LOST COMMUNICATION WITH RADIO (ATC) 304
U0186–LOST COMMUNICATION WITH AUDIO AMPLIFIER (ATC) 304
U0195–LOST COMMUNICATION WITH SDARS (ATC) 305
U0196-LOST COMMUNICATION WITH VEHICLE ENTERTAINMENT CONTROL MODULE (ATC) 305
U0197–LOST COMMUNICATION WITH HANDS FREE PHONE MODULE (ATC) 305

U0199–LOST COMMUNICATION WITH DRIVER DOOR MODULE (ATC) 305
U0200–LOST COMMUNICATION WITH PASSENGER DOOR MODULE (ATC) 305
U0208–LOST COMMUNICATION WITH HEATED SEAT CONTROL MODULE (ATC) . . 306
U0209–LOST COMMUNICATION WITH MEMORY SEAT CONTROL MODULE (ATC) . 306
U0212–LOST COMMUNICATION WITH SCCM - CAN-B (ATC) 306
U0231–LOST COMMUNICATION WITH RAIN SENSING MODULE (ATC) 306
*A/C HEATER CONTROL WILL NOT ENTER DIAGNOSTIC MODE (MTC) 307
*HVAC SYSTEM TEST (ATC) 314
*HVAC SYSTEM TEST (MTC) 317

HVAC - ELECTRICAL DIAGNOSTICS

DIAGNOSIS AND TESTING

11–MODE POT OPEN (MTC)

For a complete wiring diagram **Refer to Section 8W**.

- **When Monitored:**
  With the ignition on.
- **Set Condition:**
  If the mode pot fails the internal self test.

Possible Causes
A/C HEATER CONTROL

NOTE: This DTC must be active for the results of this test to be valid. Do not perform this test if this DTC is stored. Refer to HVAC System Test (MTC) for stored DTC test procedures.

Diagnostic Test

1. REPLACE THE A/C HEATER CONTROL

Repair

Replace the A/C Heater Control in accordance with the Service Information.

Perform BODY VERIFICATION TEST – VER 1. (Refer to 8 - ELECTRICAL/ELECTRONIC CONTROL MODULES/FRONT CONTROL MODULE - DIAGNOSIS AND TESTING).

12–MODE POT SHORTED (MTC)

For a complete wiring diagram **Refer to Section 8W**.

- **When Monitored:**
  With the ignition on.
- **Set Condition:**
  If the mode pot fails the internal self test.

Possible Causes
A/C HEATER CONTROL

NOTE: This DTC must be active for the results of this test to be valid. Do not perform this test if this DTC is stored. Refer to HVAC System Test (MTC) for stored DTC test procedures.

Diagnostic Test

1. REPLACE THE A/C HEATER CONTROL

Repair

Replace the A/C Heater Control in accordance with the Service Information.

Perform BODY VERIFICATION TEST – VER 1. (Refer to 8 - ELECTRICAL/ELECTRONIC CONTROL MODULES/FRONT CONTROL MODULE - DIAGNOSIS AND TESTING).

13–TEMP POT OPEN (MTC)

For a complete wiring diagram **Refer to Section 8W**.

- **When Monitored:**
  With the ignition on.
- **Set Condition:**
  If the temp pot fails the internal self test.

Possible Causes
A/C HEATER CONTROL

NOTE: This DTC must be active for the results of this test to be valid. Do not perform this test if this DTC is stored. Refer to HVAC System Test (MTC) for stored DTC test procedures.

Diagnostic Test

1. REPLACE THE A/C HEATER CONTROL

Repair

Replace the A/C Heater Control in accordance with the Service Information.

Perform BODY VERIFICATION TEST – VER 1. (Refer to 8 - ELECTRICAL/ELECTRONIC CONTROL MODULES/FRONT CONTROL MODULE - DIAGNOSIS AND TESTING).

14–TEMP POT SHORTED (MTC)

For a complete wiring diagram **Refer to Section 8W**.

- **When Monitored:**
  With the ignition on.
- **Set Condition:**
  If the temp pot fails the internal self test.

Possible Causes
A/C HEATER CONTROL

NOTE: This DTC must be active for the results of this test to be valid. Do not perform this test if this DTC is stored. Refer to HVAC System Test (MTC) for stored DTC test procedures.

Diagnostic Test

1. REPLACE THE A/C HEATER CONTROL

Repair

Replace the A/C Heater Control in accordance with the Service Information.

Perform BODY VERIFICATION TEST – VER 1. (Refer to 8 - ELECTRICAL/ELECTRONIC CONTROL MODULES/FRONT CONTROL MODULE - DIAGNOSIS AND TESTING).

18–BLEND DOOR RANGE TOO SMALL (MTC)

For a complete wiring diagram **Refer to Section 8W**.

Theory of Operation

NOTE: Diagnose and repair Actuator Circuit Test faults (DTC 61, 62, 63, 64, 67, 68, 69, 71, and 72) before diagnosing Overcurrent faults (DTC 41, 43, and 44) and Calibration faults (DTC 18, 21, 22, 23, 45, 46, 47, 51, 52, 53, 55, and 56). Diagnose and repair Overcurrent faults (DTC 41, 43, and 44) before diagnosing Calibration faults (DTC 18, 21, 22, 23, 45, 46, 47, 51, 52, 53, 55, and 56).

The purpose of actuator calibration is to determine the total span of door travel between physical stops. To calibrate the actuator, the A/C Heater Control first moves the door to its soft stop, and then counts the number of pulses it takes to move the door to its other stop. An expected range of span is stored in the control's memory. If the A/C Heater Control detects too few commutator pulses when calibrating the left blend door, this DTC will set.

- **When Monitored:**
  During actuator calibration.
- **Set Condition:**
  If the A/C Heater Control detects too few commutator pulses when calibrating the left blend door.

Possible Causes
ACTUATOR CIRCUIT TEST FAULTS PRESENT
OVERCURRENT FAULTS PRESENT
LEFT BLEND DOOR BINDING, OBSTRUCTED
LEFT BLEND DOOR ACTUATOR
A/C HEATER CONTROL

Diagnostic Test

1. VERIFY IF ANY ACTUATOR CIRCUIT TEST FAULTS OR OVERCURRENT FAULTS ARE PRESENT

Turn the ignition on.

Actuate the Clear DTC function by performing the following:

- Turn the blower control on.
- Press the A/C mode switch down, turn the blower control to off, wait until both LEDs illuminate (approximately 5 seconds) and then release the A/C mode switch.
- When the A/C status indicator begins displaying DTCs, set the Mode switch to the floor position, simultaneously press the A/C mode switch and the EBL mode switch down until both LEDs start flashing (approximately 5 seconds) and then release the mode switches. Stored DTCs will clear from memory in approximately two seconds.

Turn the ignition off, wait 10 seconds, and turn the ignition on.

Actuate the Actuator Circuit Test / Door Calibration Function by performing the following:

- Turn the blower control off.
- Press and hold the EBL mode switch down and then turn the blower control on. Continue to hold the EBL mode switch down until the EBL status indicator begins flashing. Then, release the EBL mode switch. While the test / function is running, the EBL status indicator will flash once per second. If the test / function passes, the EBL status indicator will stop flashing. If the test / function fails, the A/C and EBL status indicators will flash alternately. Allow the test / function to run to completion before proceeding.

Actuate the Display DTC function by performing the following:

- Turn the blower control on.
- Press the A/C mode switch down, turn the blower control to off, wait until both LEDs illuminate (approximately 5 seconds) and then release the A/C mode switch.

NOTE: The A/C status indicator displays active DTCs when the EBL status indictor is not illuminated and stored DTCs when the EBL status indicator is illuminated.

Read DTCs from the A/C status indictor.

Does the A/C status indicator display any of the following DTCs: 41, 43, 44, 61, 62, 63, 64, 67, 68, 69,

71, or 72?

Yes >> As present, diagnose and repair the faults in the following order: DTC 72 first, then DTC 62, then DTC 61, then DTCs 64, 68, or 71, then DTCs 63, 67, or 69, and finally DTCs 41, 43, or 44. Refer to the Table Of Contents in this section for a complete list of HVAC related symptoms.

No >> Go To 2

2. INSPECT ACTUATOR & HOUSING ASSEMBLY FOR A CONDITION CAUSING THE LEFT BLEND DOOR TO BIND

Turn the ignition off.

Inspect the actuator, linkage, and housing assembly for a condition causing the left blend door to bind.

Are there any physical or mechanical problems with the door, housing, linkage, or actuator?

Yes >> Repair as necessary in accordance with the Service Information.
Perform BODY VERIFICATION TEST – VER 1. (Refer to 8 - ELECTRICAL/ELECTRONIC CONTROL MODULES/FRONT CONTROL MODULE - DIAGNOSIS AND TESTING).

No >> Go To 3

3. CHECK LEFT BLEND DOOR TRAVEL

Remove the Left Blend Door Actuator from the A/C Heater Housing Assembly.

By hand, attempt to rotate the door in both directions. The door should operate smoothly in both directions over the entire span of travel (approximately 190 degrees).

Does the door operate smoothly in both directions over the entire span of travel?

Yes >> Replace the Left Blend Door Actuator in accordance with the Service Information. Then, Go To 4.

No >> Repair as necessary in accordance with the Service Information.
Perform BODY VERIFICATION TEST – VER 1. (Refer to 8 - ELECTRICAL/ELECTRONIC CONTROL MODULES/FRONT CONTROL MODULE - DIAGNOSIS AND TESTING).

4. VERIFY IF THE FAULT IS STILL PRESENT

Turn the ignition on.

Actuate the Clear DTC function by performing the following:

- Turn the blower control on.
- Press the A/C mode switch down, turn the blower control to off, wait until both LEDs illuminate (approximately 5 seconds) and then release the A/C mode switch.
- When the A/C status indicator begins displaying DTCs, set the Mode switch to the floor position, simultaneously press the A/C mode switch and the EBL mode switch down until both LEDs start flashing (approximately 5 seconds) and then release the mode switches. Stored DTCs will clear from memory in approximately two seconds.

Turn the ignition off, wait 10 seconds, and turn the ignition on.

Actuate the Actuator Circuit Test / Door Calibration Function by performing the following:

- Turn the blower control off.
- Press and hold the EBL mode switch down and then turn the blower control on. Continue to hold the EBL mode switch down until the EBL status indicator begins flashing. Then, release the EBL mode switch. While the test / function is running, the EBL status indicator will flash once per second. If the test / function passes, the EBL status indicator will stop flashing. If the test / function fails, the A/C and EBL status indicators will flash alternately. Allow the test / function to run to completion before proceeding.

Actuate the Display DTC function by performing the following:

- Turn the blower control on.
- Press the A/C mode switch down, turn the blower control to off, wait until both LEDs illuminate (approximately 5 seconds) and then release the A/C mode switch.

NOTE: The A/C status indicator displays active DTCs when the EBL status indictor is not illuminated and stored DTCs when the EBL status indicator is illuminated.
Read DTCs from the A/C status indictor.

Does the A/C status indicator display DTC 18?

Yes >> Replace the A/C Heater Control in accordance with the Service Information.
Perform BODY VERIFICATION TEST – VER 1. (Refer to 8 - ELECTRICAL/ELECTRONIC CONTROL MODULES/FRONT CONTROL MODULE - DIAGNOSIS AND TESTING).

No >> Perform BODY VERIFICATION TEST – VER 1. (Refer to 8 - ELECTRICAL/ELECTRONIC CONTROL MODULES/FRONT CONTROL MODULE - DIAGNOSIS AND TESTING).

21–BLEND DOOR RANGE TOO LARGE (MTC)

For a complete wiring diagram **Refer to Section 8W**.

Theory of Operation

NOTE: Diagnose and repair Actuator Circuit Test faults (DTC 61, 62, 63, 64, 67, 68, 69, 71, and 72) before diagnosing Overcurrent faults (DTC 41, 43, and 44) and Calibration faults (DTC 18, 21, 22, 23, 45, 46, 47, 51, 52, 53, 55, and 56). Diagnose and repair Overcurrent faults (DTC 41, 43, and 44) before diagnosing Calibration faults (DTC 18, 21, 22, 23, 45, 46, 47, 51, 52, 53, 55, and 56).

The purpose of actuator calibration is to determine the total span of door travel between physical stops. To calibrate the actuator, the A/C Heater Control first moves the door to its soft stop, and then counts the number of pulses it takes to move the door to its other stop. An expected range of span is stored in the control's memory. If the A/C Heater Control detects too many commutator pulses when calibrating the left blend door, this DTC will set.

- **When Monitored:**
  During actuator calibration.
- **Set Condition:**
  If the A/C Heater Control detects too many commutator pulses when calibrating the left blend door.

Possible Causes
ACTUATOR CIRCUIT TEST FAULTS PRESENT
OVERCURRENT FAULTS PRESENT
LEFT BLEND DOOR OR A/C HEATER HOUSING COMPONENTS WARPED, WORN, DAMAGED, BROKEN
LEFT BLEND DOOR ACTUATOR
A/C HEATER CONTROL

Diagnostic Test

1. VERIFY IF ANY ACTUATOR CIRCUIT TEST FAULTS OR OVERCURRENT FAULTS ARE PRESENT

Turn the ignition on.

Actuate the Clear DTC function by performing the following:

- Turn the blower control on.
- Press the A/C mode switch down, turn the blower control to off, wait until both LEDs illuminate (approximately 5 seconds) and then release the A/C mode switch.
- When the A/C status indicator begins displaying DTCs, set the Mode switch to the floor position, simultaneously press the A/C mode switch and the EBL mode switch down until both LEDs start flashing (approximately 5 seconds) and then release the mode switches. Stored DTCs will clear from memory in approximately two seconds.

Turn the ignition off, wait 10 seconds, and turn the ignition on.

Actuate the Actuator Circuit Test / Door Calibration Function by performing the following:

- Turn the blower control off.
- Press and hold the EBL mode switch down and then turn the blower control on. Continue to hold the EBL mode switch down until the EBL status indicator begins flashing. Then, release the EBL mode switch. While the test / function is running, the EBL status indicator will flash once per second. If the test / function passes, the EBL status indicator will stop flashing. If the test / function fails, the A/C and EBL status indicators will flash alternately. Allow the test / function to run to completion before proceeding.

Actuate the Display DTC function by performing the following:

- Turn the blower control on.
- Press the A/C mode switch down, turn the blower control to off, wait until both LEDs illuminate (approximately 5 seconds) and then release the A/C mode switch.

NOTE: The A/C status indicator displays active DTCs when the EBL status indictor is not illuminated and stored DTCs when the EBL status indicator is illuminated.

Read DTCs from the A/C status indictor.

Does the A/C status indicator display any of the following DTCs: 41, 43, 44, 61, 62, 63, 64, 67, 68, 69,

71, or 72?

Yes >> As present, diagnose and repair the faults in the following order: DTC 72 first, then DTC 62, then DTC 61, then DTCs 64, 68, or 71, then DTCs 63, 67, or 69, and finally DTCs 41, 43, or 44. Refer to the Table Of Contents in this section for a complete list of HVAC related symptoms.

No >> Go To 2

2. CHECK FOR A BROKEN LEFT BLEND DOOR ACTUATOR

Turn the ignition off.

Remove the Left Blend Door Actuator from the A/C Heater Housing Assembly.

By hand, attempt to rotate the actuator in both directions.

Does the actuator turn in either direction?

Yes >> Replace the Left Blend Door Actuator in accordance with the Service Information.

Perform BODY VERIFICATION TEST – VER 1. (Refer to 8 - ELECTRICAL/ELECTRONIC CONTROL MODULES/FRONT CONTROL MODULE - DIAGNOSIS AND TESTING).

No >> Go To 3

3. CHECK THE LEFT BLEND DOOR & A/C HEATER HOUSING FOR WARPED, WORN, & DAMAGED COMPONENTS

Inspect for excessively worn door linkage and for a damaged or broken A/C Heater Housing Assembly. Inspect for a warped or broken door, and missing door seals. Rotate the door from stop to stop. The door should rotate approximately 190 degrees.

Are there any physical or mechanical problems with the door or housing?

Yes >> Repair as necessary in accordance with the Service Information.

Perform BODY VERIFICATION TEST – VER 1. (Refer to 8 - ELECTRICAL/ELECTRONIC CONTROL MODULES/FRONT CONTROL MODULE - DIAGNOSIS AND TESTING).

No >> Replace the Left Blend Door Actuator in accordance with the Service Information. Then, Go To 4.

4. VERIFY IF THE FAULT IS STILL PRESENT

Turn the ignition on.

Actuate the Clear DTC function by performing the following:

- Turn the blower control on.
- Press the A/C mode switch down, turn the blower control to off, wait until both LEDs illuminate (approximately 5 seconds) and then release the A/C mode switch.
- When the A/C status indicator begins displaying DTCs, set the Mode switch to the floor position, simultaneously press the A/C mode switch and the EBL mode switch down until both LEDs start flashing (approximately 5 seconds) and then release the mode switches. Stored DTCs will clear from memory in approximately two seconds.

Turn the ignition off, wait 10 seconds, and turn the ignition on.

Actuate the Actuator Circuit Test / Door Calibration Function by performing the following:

- Turn the blower control off.
- Press and hold the EBL mode switch down and then turn the blower control on. Continue to hold the EBL mode switch down until the EBL status indicator begins flashing. Then, release the EBL mode switch. While the test / function is running, the EBL status indicator will flash once per second. If the test / function passes, the EBL status indicator will stop flashing. If the test / function fails, the A/C and EBL status indicators will flash alternately. Allow the test / function to run to completion before proceeding.

Actuate the Display DTC function by performing the following:

- Turn the blower control on.
- Press the A/C mode switch down, turn the blower control to off, wait until both LEDs illuminate (approximately 5 seconds) and then release the A/C mode switch.

NOTE: The A/C status indicator displays active DTCs when the EBL status indictor is not illuminated and stored DTCs when the EBL status indicator is illuminated.
Read DTCs from the A/C status indictor.

Does the A/C status indicator display DTC 21?

Yes >> Replace the A/C Heater Control in accordance with the Service Information.
Perform BODY VERIFICATION TEST – VER 1. (Refer to 8 - ELECTRICAL/ELECTRONIC CONTROL MODULES/FRONT CONTROL MODULE - DIAGNOSIS AND TESTING).

No >> Perform BODY VERIFICATION TEST – VER 1. (Refer to 8 - ELECTRICAL/ELECTRONIC CONTROL MODULES/FRONT CONTROL MODULE - DIAGNOSIS AND TESTING).

22–FRONT MODE DOOR RANGE TOO SMALL (MTC)

For a complete wiring diagram **Refer to Section 8W**.

Theory of Operation

NOTE: Diagnose and repair Actuator Circuit Test faults (DTC 61, 62, 63, 64, 67, 68, 69, 71, and 72) before diagnosing Overcurrent faults (DTC 41, 43, and 44) and Calibration faults (DTC 18, 21, 22, 23, 45, 46, 47, 51, 52, 53, 55, and 56). Diagnose and repair Overcurrent faults (DTC 41, 43, and 44) before diagnosing Calibration faults (DTC 18, 21, 22, 23, 45, 46, 47, 51, 52, 53, 55, and 56).

The purpose of actuator calibration is to determine the total span of door travel between physical stops. To calibrate the actuator, the A/C Heater Control first moves the door to its soft stop, and then counts the number of pulses it takes to move the door to its other stop. An expected range of span is stored in the control's memory. If the A/C Heater Control detects too few commutator pulses when calibrating the mode door, this DTC will set.

- **When Monitored:**
  During actuator calibration.
- **Set Condition:**
  If the A/C Heater Control detects too few commutator pulses when calibrating the mode door.

Possible Causes
ACTUATOR CIRCUIT TEST FAULTS PRESENT
OVERCURRENT FAULTS PRESENT
MODE DOOR BINDING, OBSTRUCTED
MODE DOOR ACTUATOR
A/C HEATER CONTROL

Diagnostic Test

1. VERIFY IF ANY ACTUATOR CIRCUIT TEST FAULTS OR OVERCURRENT FAULTS ARE PRESENT

Turn the ignition on.

Actuate the Clear DTC function by performing the following:

- Turn the blower control on.
- Press the A/C mode switch down, turn the blower control to off, wait until both LEDs illuminate (approximately 5 seconds) and then release the A/C mode switch.
- When the A/C status indicator begins displaying DTCs, set the Mode switch to the floor position, simultaneously press the A/C mode switch and the EBL mode switch down until both LEDs start flashing (approximately 5 seconds) and then release the mode switches. Stored DTCs will clear from memory in approximately two seconds.

Turn the ignition off, wait 10 seconds, and turn the ignition on.

Actuate the Actuator Circuit Test / Door Calibration Function by performing the following:

- Turn the blower control off.
- Press and hold the EBL mode switch down and then turn the blower control on. Continue to hold the EBL mode switch down until the EBL status indicator begins flashing. Then, release the EBL mode switch. While the test / function is running, the EBL status indicator will flash once per second. If the test / function passes, the EBL status indicator will stop flashing. If the test / function fails, the A/C and EBL status indicators will flash alternately. Allow the test / function to run to completion before proceeding.

Actuate the Display DTC function by performing the following:

- Turn the blower control on.
- Press the A/C mode switch down, turn the blower control to off, wait until both LEDs illuminate (approximately 5 seconds) and then release the A/C mode switch.

NOTE: The A/C status indicator displays active DTCs when the EBL status indictor is not illuminated and stored DTCs when the EBL status indicator is illuminated.

Read DTCs from the A/C status indictor.

Does the A/C status indicator display any of the following DTCs: 41, 43, 44, 61, 62, 63, 64, 67, 68, 69,

71, or 72?

Yes >> As present, diagnose and repair the faults in the following order: DTC 72 first, then DTC 62, then DTC 61, then DTCs 64, 68, or 71, then DTCs 63, 67, or 69, and finally DTCs 41, 43, or 44. Refer to the Table Of Contents in this section for a complete list of HVAC related symptoms.

No >> Go To 2

2. INSPECT ACTUATOR & HOUSING ASSEMBLY FOR A CONDITION CAUSING THE MODE DOOR TO BIND

Turn the ignition off.

Inspect the actuator, linkage, and housing assembly for a condition causing the mode door to bind.

Are there any physical or mechanical problems with the door, housing, linkage, or actuator?

Yes >> Repair as necessary in accordance with the Service Information.
Perform BODY VERIFICATION TEST – VER 1. (Refer to 8 - ELECTRICAL/ELECTRONIC CONTROL MODULES/FRONT CONTROL MODULE - DIAGNOSIS AND TESTING).

No >> Go To 3

3. CHECK MODE DOOR TRAVEL

Remove the Mode Door Actuator from the A/C Heater Housing Assembly.

By hand, attempt to rotate the door in both directions. The door should operate smoothly in both directions over the entire span of travel (approximately 240 degrees).

Does the door operate smoothly in both directions over the entire span of travel?

Yes >> Replace the Mode Door Actuator in accordance with the Service Information. Then, Go To 4.

No >> Repair as necessary in accordance with the Service Information.
Perform BODY VERIFICATION TEST – VER 1. (Refer to 8 - ELECTRICAL/ELECTRONIC CONTROL MODULES/FRONT CONTROL MODULE - DIAGNOSIS AND TESTING).

4. VERIFY IF THE FAULT IS STILL PRESENT

Turn the ignition on.

Actuate the Clear DTC function by performing the following:

- Turn the blower control on.
- Press the A/C mode switch down, turn the blower control to off, wait until both LEDs illuminate (approximately 5 seconds) and then release the A/C mode switch.
- When the A/C status indicator begins displaying DTCs, set the Mode switch to the floor position, simultaneously press the A/C mode switch and the EBL mode switch down until both LEDs start flashing (approximately 5 seconds) and then release the mode switches. Stored DTCs will clear from memory in approximately two seconds.

Turn the ignition off, wait 10 seconds, and turn the ignition on.

Actuate the Actuator Circuit Test / Door Calibration Function by performing the following:

- Turn the blower control off.
- Press and hold the EBL mode switch down and then turn the blower control on. Continue to hold the EBL mode switch down until the EBL status indicator begins flashing. Then, release the EBL mode switch. While the test / function is running, the EBL status indicator will flash once per second. If the test / function passes, the EBL status indicator will stop flashing. If the test / function fails, the A/C and EBL status indicators will flash alternately. Allow the test / function to run to completion before proceeding.

Actuate the Display DTC function by performing the following:

- Turn the blower control on.
- Press the A/C mode switch down, turn the blower control to off, wait until both LEDs illuminate (approximately 5 seconds) and then release the A/C mode switch.

NOTE: The A/C status indicator displays active DTCs when the EBL status indictor is not illuminated and stored DTCs when the EBL status indicator is illuminated.
Read DTCs from the A/C status indictor.

Does the A/C status indicator display DTC 22?

Yes >> Replace the A/C Heater Control in accordance with the Service Information.
Perform BODY VERIFICATION TEST – VER 1. (Refer to 8 - ELECTRICAL/ELECTRONIC CONTROL MODULES/FRONT CONTROL MODULE - DIAGNOSIS AND TESTING).

No >> Perform BODY VERIFICATION TEST – VER 1. (Refer to 8 - ELECTRICAL/ELECTRONIC CONTROL MODULES/FRONT CONTROL MODULE - DIAGNOSIS AND TESTING).

23–FRONT MODE DOOR RANGE TOO LARGE (MTC)

For a complete wiring diagram **Refer to Section 8W**.

Theory of Operation

NOTE: Diagnose and repair Actuator Circuit Test faults (DTC 61, 62, 63, 64, 67, 68, 69, 71, and 72) before diagnosing Overcurrent faults (DTC 41, 43, and 44) and Calibration faults (DTC 18, 21, 22, 23, 45, 46, 47, 51, 52, 53, 55, and 56). Diagnose and repair Overcurrent faults (DTC 41, 43, and 44) before diagnosing Calibration faults (DTC 18, 21, 22, 23, 45, 46, 47, 51, 52, 53, 55, and 56).

The purpose of actuator calibration is to determine the total span of door travel between physical stops. To calibrate the actuator, the A/C Heater Control first moves the door to its soft stop, and then counts the number of pulses it takes to move the door to its other stop. An expected range of span is stored in the control's memory. If the A/C Heater Control detects too many commutator pulses when calibrating the mode door, this DTC will set.

- **When Monitored:**
  During actuator calibration.
- **Set Condition:**
  If the A/C Heater Control detects too many commutator pulses when calibrating the mode door.

Possible Causes
ACTUATOR CIRCUIT TEST FAULTS PRESENT
OVERCURRENT FAULTS PRESENT
MODE DOOR OR A/C HEATER HOUSING COMPONENTS WARPED, WORN, DAMAGED, BROKEN
MODE DOOR ACTUATOR
A/C HEATER CONTROL

Diagnostic Test

1. VERIFY IF ANY ACTUATOR CIRCUIT TEST FAULTS OR OVERCURRENT FAULTS ARE PRESENT

Turn the ignition on.

Actuate the Clear DTC function by performing the following:

- Turn the blower control on.
- Press the A/C mode switch down, turn the blower control to off, wait until both LEDs illuminate (approximately 5 seconds) and then release the A/C mode switch.
- When the A/C status indicator begins displaying DTCs, set the Mode switch to the floor position, simultaneously press the A/C mode switch and the EBL mode switch down until both LEDs start flashing (approximately 5 seconds) and then release the mode switches. Stored DTCs will clear from memory in approximately two seconds.

Turn the ignition off, wait 10 seconds, and turn the ignition on.

Actuate the Actuator Circuit Test / Door Calibration Function by performing the following:

- Turn the blower control off.
- Press and hold the EBL mode switch down and then turn the blower control on. Continue to hold the EBL mode switch down until the EBL status indicator begins flashing. Then, release the EBL mode switch. While the test / function is running, the EBL status indicator will flash once per second. If the test / function passes, the EBL status indicator will stop flashing. If the test / function fails, the A/C and EBL status indicators will flash alternately. Allow the test / function to run to completion before proceeding.

Actuate the Display DTC function by performing the following:

- Turn the blower control on.
- Press the A/C mode switch down, turn the blower control to off, wait until both LEDs illuminate (approximately 5 seconds) and then release the A/C mode switch.

NOTE: The A/C status indicator displays active DTCs when the EBL status indictor is not illuminated and stored DTCs when the EBL status indicator is illuminated.

Read DTCs from the A/C status indictor.

Does the A/C status indicator display any of the following DTCs: 41, 43, 44, 61, 62, 63, 64, 67, 68, 69,

71, or 72?

Yes >> As present, diagnose and repair the faults in the following order: DTC 72 first, then DTC 62, then DTC 61, then DTCs 64, 68, or 71, then DTCs 63, 67, or 69, and finally DTCs 41, 43, or 44. Refer to the Table Of Contents in this section for a complete list of HVAC related symptoms.

No >> Go To 2

2. CHECK FOR A BROKEN MODE DOOR ACTUATOR

Turn the ignition off.

Remove the Mode Door Actuator from the A/C Heater Housing Assembly.

By hand, attempt to rotate the actuator in both directions.

Does the actuator turn in either direction?

Yes >> Replace the Mode Door Actuator in accordance with the Service Information.

Perform BODY VERIFICATION TEST – VER 1. (Refer to 8 - ELECTRICAL/ELECTRONIC CONTROL MODULES/FRONT CONTROL MODULE - DIAGNOSIS AND TESTING).

No >> Go To 3

3. CHECK THE MODE DOOR & A/C HEATER HOUSING FOR WARPED, WORN, & DAMAGED COMPONENTS

Inspect for excessively worn door linkage and for a damaged or broken A/C Heater Housing Assembly. Inspect for a warped or broken door, and missing door seals. Rotate the door from stop to stop. The door should rotate approximately 240 degrees.

Are there any physical or mechanical problems with the door or housing?

Yes >> Repair as necessary in accordance with the Service Information.

Perform BODY VERIFICATION TEST – VER 1. (Refer to 8 - ELECTRICAL/ELECTRONIC CONTROL MODULES/FRONT CONTROL MODULE - DIAGNOSIS AND TESTING).

No >> Replace the Mode Door Actuator in accordance with the Service Information. Then, Go To 4.

4. VERIFY IF THE FAULT IS STILL PRESENT

Turn the ignition on.

Actuate the Clear DTC function by performing the following:

- Turn the blower control on.
- Press the A/C mode switch down, turn the blower control to off, wait until both LEDs illuminate (approximately 5 seconds) and then release the A/C mode switch.
- When the A/C status indicator begins displaying DTCs, set the Mode switch to the floor position, simultaneously press the A/C mode switch and the EBL mode switch down until both LEDs start flashing (approximately 5 seconds) and then release the mode switches. Stored DTCs will clear from memory in approximately two seconds.

Turn the ignition off, wait 10 seconds, and turn the ignition on.

Actuate the Actuator Circuit Test / Door Calibration Function by performing the following:

- Turn the blower control off.
- Press and hold the EBL mode switch down and then turn the blower control on. Continue to hold the EBL mode switch down until the EBL status indicator begins flashing. Then, release the EBL mode switch. While the test / function is running, the EBL status indicator will flash once per second. If the test / function passes, the EBL status indicator will stop flashing. If the test / function fails, the A/C and EBL status indicators will flash alternately. Allow the test / function to run to completion before proceeding.

Actuate the Display DTC function by performing the following:

- Turn the blower control on.
- Press the A/C mode switch down, turn the blower control to off, wait until both LEDs illuminate (approximately 5 seconds) and then release the A/C mode switch.

NOTE: The A/C status indicator displays active DTCs when the EBL status indictor is not illuminated and stored DTCs when the EBL status indicator is illuminated.
Read DTCs from the A/C status indictor.

Does the A/C status indicator display DTC 23?

Yes >> Replace the A/C Heater Control in accordance with the Service Information.
Perform BODY VERIFICATION TEST – VER 1. (Refer to 8 - ELECTRICAL/ELECTRONIC CONTROL MODULES/FRONT CONTROL MODULE - DIAGNOSIS AND TESTING).

No >> Perform BODY VERIFICATION TEST – VER 1. (Refer to 8 - ELECTRICAL/ELECTRONIC CONTROL MODULES/FRONT CONTROL MODULE - DIAGNOSIS AND TESTING).

31–EVAPORATOR SENSOR OPEN (MTC)

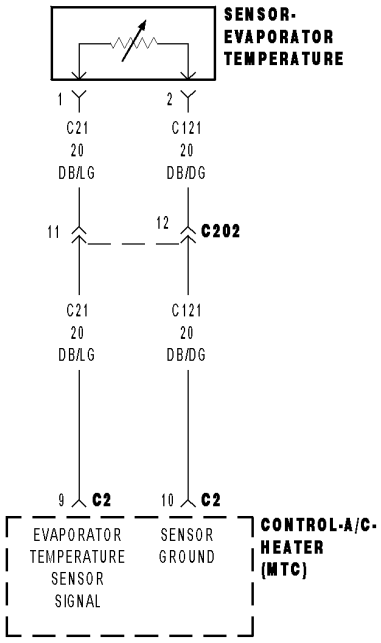

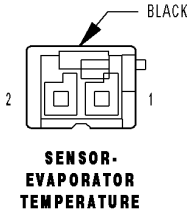

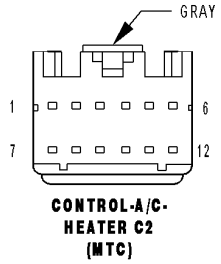

812d20eb

For a complete wiring diagram **Refer to Section 8W**.

- **When Monitored:**
  With the ignition on.
- **Set Condition:**
  If the Evaporator Temperature Sensor input is out of range toward the high voltage threshold.

Possible Causes
(C21) EVAPORATOR TEMPERATURE SENSOR SIGNAL CIRCUIT SHORTED TO VOLTAGE
(C21) EVAPORATOR TEMPERATURE SENSOR SIGNAL CIRCUIT OPEN
(C121) SENSOR GROUND CIRCUIT OPEN
EVAPORATOR TEMPERATURE SENSOR
A/C HEATER CONTROL

NOTE: This DTC must be active for the results of this test to be valid. Do not perform this test if this DTC is stored. Refer to HVAC System Test (MTC) for stored DTC test procedures.

Diagnostic Test

1. CHECK (C21) EVAPORATOR TEMPERATURE SENSOR SIGNAL CIRCUIT FOR A SHORT TO VOLTAGE

Turn the ignition off.

Disconnect the A/C Heater Control C2 harness connector.

Turn the ignition on.

Measure the voltage of the (C21) Evaporator Temperature Sensor Signal circuit.

Is the voltage above 0.2 volts?

Yes >> Repair the (C21) Evaporator Temperature Sensor Signal circuit for a short to voltage.
Perform BODY VERIFICATION TEST – VER 1. (Refer to 8 - ELECTRICAL/ELECTRONIC CONTROL MODULES/ FRONT CONTROL MODULE - DIAGNOSIS AND TESTING).

No >> Go To 2

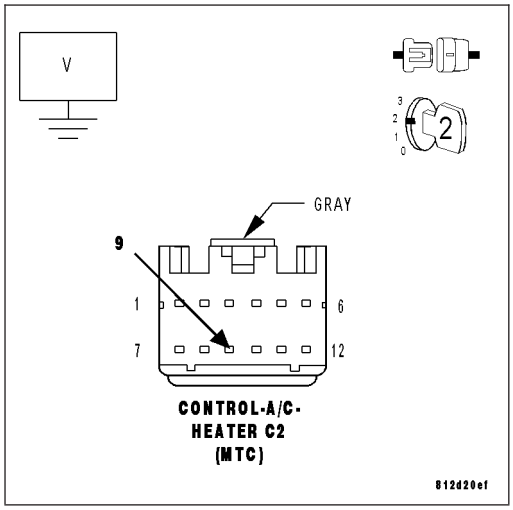

2. CHECK (C21) EVAPORATOR TEMPERATURE SENSOR SIGNAL CIRCUIT, (C121) SENSOR GROUND CIRCUIT, & EVAPORATOR TEMPERATURE SENSOR

Turn the ignition off.

Measure the resistance between the (C21) Evaporator Temperature Sensor Signal circuit and the (C121) Sensor Ground circuit in the A/C Heater Control C2 harness connector. The approximate circuit resistance should be as follows:

- 1468 ohms @ 40°C (104°F)
- 1800 ohms @ 35°C (95°F)
- 2221 ohms @ 30°C (86°F)
- 2757 ohms @ 25°C (77°F)
- 3443 ohms @ 20°C (68°F)
- 4330 ohms @ 15°C (59°F)
- 5485 ohms @ 10°C (50°F)
- 6998 ohms @ 5°C (41°F)
- 7354 ohms @ 4°C (39°F)
- 7731 ohms @ 3°C (37°F)
- 8130 ohms @ 2°C (36°F)
- 8553 ohms @ 1°C (34°F)
- 9000 ohms @ 0°C (32°F)

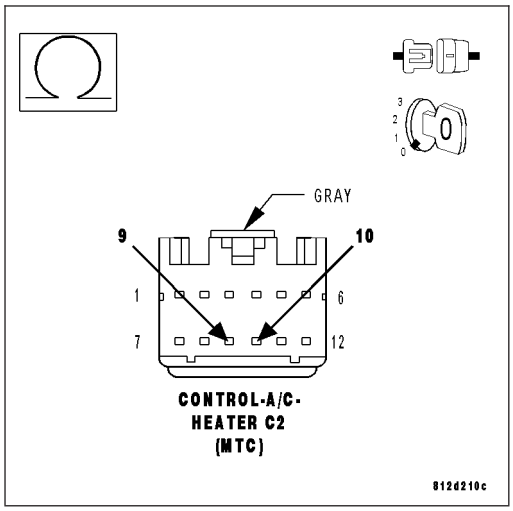

Is the resistance within the specifications?

Yes >> Replace the A/C Heater Control in accordance with the Service Information.
Perform BODY VERIFICATION TEST – VER 1. (Refer to 8 - ELECTRICAL/ELECTRONIC CONTROL MODULES/FRONT CONTROL MODULE - DIAGNOSIS AND TESTING).

No >> Go To 3

3. CHECK (C21) EVAPORATOR TEMPERATURE SENSOR SIGNAL CIRCUIT FOR AN OPEN

Disconnect the Evaporator Temperature Sensor harness connector.

Measure the resistance of the (C21) Evaporator Temperature Sensor Signal circuit between the Evaporator Temperature Sensor harness connector and the A/C Heater Control C2 harness connector.

Is the resistance below 5.0 ohms?

Yes >> Go To 4

No >> Repair the (C21) Evaporator Temperature Sensor Signal circuit for an open.
Perform BODY VERIFICATION TEST – VER 1. (Refer to 8 - ELECTRICAL/ELECTRONIC CONTROL MODULES/FRONT CONTROL MODULE - DIAGNOSIS AND TESTING).

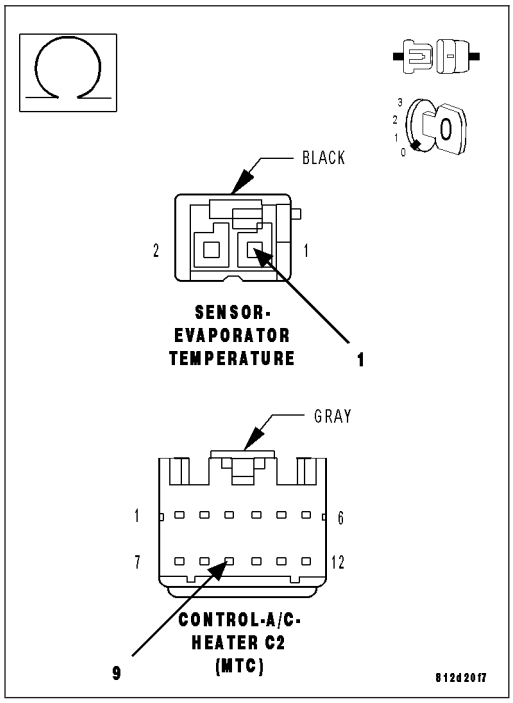

4. CHECK (C121) SENSOR GROUND CIRCUIT FOR AN OPEN

Measure the resistance of the (C121) Sensor Ground circuit between the Evaporator Temperature Sensor harness connector and the A/C Heater Control C2 harness connector.

Is the resistance below 5.0 ohms?

Yes >> Replace the Evaporator Temperature Sensor in accordance with the Service Information.

Perform BODY VERIFICATION TEST – VER 1. (Refer to 8 - ELECTRICAL/ELECTRONIC CONTROL MODULES/ FRONT CONTROL MODULE - DIAGNOSIS AND TESTING).

No >> Repair the (C121) Sensor Ground circuit for an open.

Perform BODY VERIFICATION TEST – VER 1. (Refer to 8 - ELECTRICAL/ELECTRONIC CONTROL MODULES/ FRONT CONTROL MODULE - DIAGNOSIS AND TESTING).

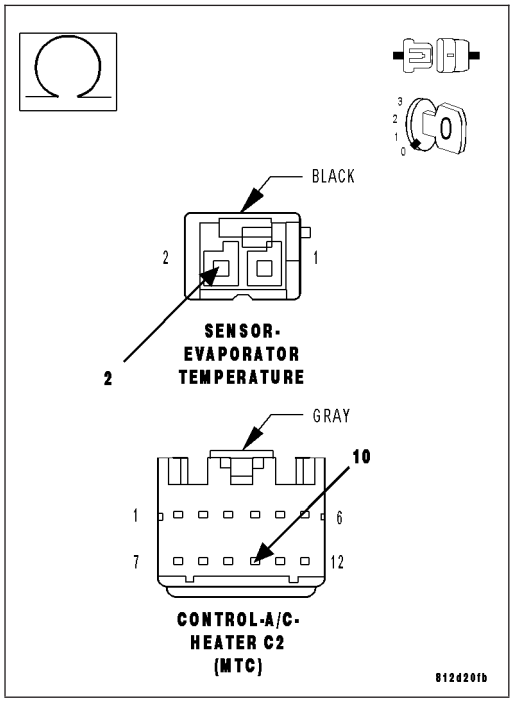

32–EVAPORATOR SENSOR SHORTED (MTC)

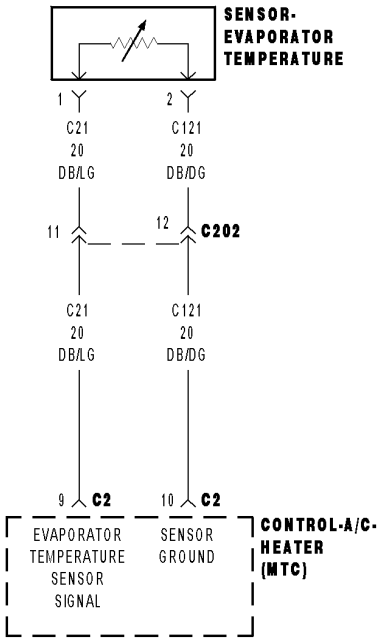

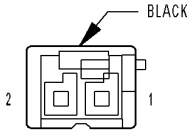

SENSOR-
EVAPORATOR
TEMPERATURE

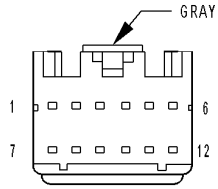

CONTROL-A/C-
HEATER C2
(MTC)

812d20eb

For a complete wiring diagram **Refer to Section 8W**.

- **When Monitored:**
  With the ignition on.
- **Set Condition:**
  If the Evaporator Temperature Sensor input is out of range toward the low voltage threshold.

Possible Causes
(C21) EVAPORATOR TEMPERATURE SENSOR SIGNAL CIRCUIT SHORTED TO GROUND
(C21) EVAPORATOR TEMPERATURE SENSOR SIGNAL CIRCUIT SHORTED TO (C121) SENSOR GROUND CIRCUIT
EVAPORATOR TEMPERATURE SENSOR
A/C HEATER CONTROL

NOTE: This DTC must be active for the results of this test to be valid. Do not perform this test if this DTC is stored. Refer to HVAC System Test (MTC) for stored DTC test procedures.

Diagnostic Test

1. CHECK FOR DTC 32–EVAPORATOR SENSOR SHORTED WITH EVAPORATOR TEMPERATURE SENSOR HARNESS CONNECTOR DISCONNECTED

Turn the ignition off.

Disconnect the Evaporator Temperature Sensor harness connector.

Turn the ignition on.

Actuate the Clear DTC function by performing the following:

- Turn the blower control on.
- Press the A/C mode switch down, turn the blower control to off, wait until both LEDs illuminate (approximately 5 seconds) and then release the A/C mode switch.
- When the A/C status indicator begins displaying DTCs, set the Mode switch to the floor position, simultaneously press the A/C mode switch and the EBL mode switch down until both LEDs start flashing (approximately 5 seconds) and then release the mode switches. Stored DTCs will clear from memory in approximately two seconds.

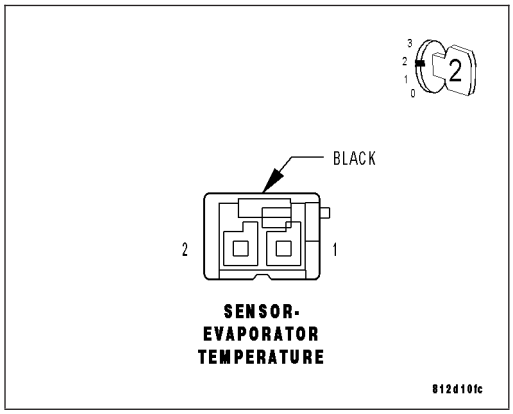

Turn the ignition off, wait 10 seconds, and turn the ignition on.

Actuate the Display DTC function by performing the following:

- Turn the blower control on.
- Press the A/C mode switch down, turn the blower control to off, wait until both LEDs illuminate (approximately 5 seconds) and then release the A/C mode switch.

NOTE: The A/C status indicator displays active DTCs when the EBL status indictor is not illuminated and stored DTCs when the EBL status indicator is illuminated.

Read DTCs from the A/C status indictor.

Does the A/C status indicator display DTC 32?

Yes >> Go To 2

No >> Replace the Evaporator Temperature Sensor in accordance with the Service Information.
Perform BODY VERIFICATION TEST – VER 1. (Refer to 8 - ELECTRICAL/ELECTRONIC CONTROL MODULES/FRONT CONTROL MODULE - DIAGNOSIS AND TESTING).

2. CHECK (C21) EVAPORATOR TEMPERATURE SENSOR SIGNAL CIRCUIT FOR A SHORT TO GROUND

Turn the ignition off.

Disconnect the A/C Heater Control C2 harness connector.

Measure the resistance of the (C21) Evaporator Temperature Sensor Signal circuit between ground and the A/C Heater Control C2 harness connector.

Is the resistance below 10k ohms?

Yes >> Repair the (C21) Evaporator Temperature Sensor Signal circuit for a short to ground.

Perform BODY VERIFICATION TEST – VER 1. (Refer to 8 - ELECTRICAL/ELECTRONIC CONTROL MODULES/ FRONT CONTROL MODULE - DIAGNOSIS AND TESTING).

No >> Go To 3

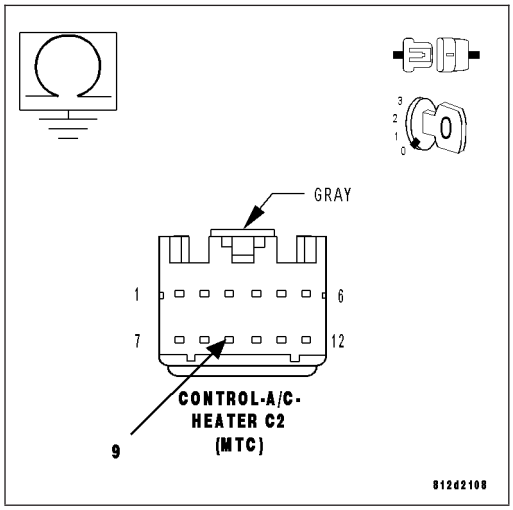

3. CHECK (C21) EVAPORATOR TEMPERATURE SENSOR SIGNAL CIRCUIT FOR A SHORT TO (C121) SENSOR GROUND CIRCUIT

Measure the resistance between the (C21) Evaporator Temperature Sensor Signal circuit and the (C121) Sensor Ground circuit in the A/C Heater Control C2 harness connector.

Is the resistance below 10k ohms?

Yes >> Repair the (C21) Evaporator Temperature Sensor Signal circuit for a short to the (C121) Sensor Ground circuit.

Perform BODY VERIFICATION TEST – VER 1. (Refer to 8 - ELECTRICAL/ELECTRONIC CONTROL MODULES/ FRONT CONTROL MODULE - DIAGNOSIS AND TESTING).

No >> Replace the A/C Heater Control in accordance with the Service Information.

Perform BODY VERIFICATION TEST – VER 1. (Refer to 8 - ELECTRICAL/ELECTRONIC CONTROL MODULES/ FRONT CONTROL MODULE - DIAGNOSIS AND TESTING).

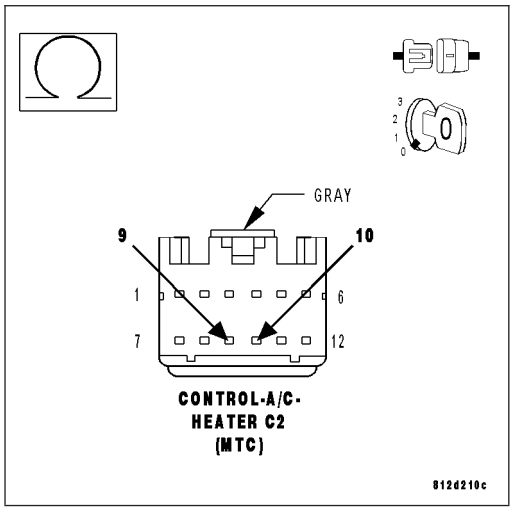

33–A/C MODE SWITCH STUCK (MTC)

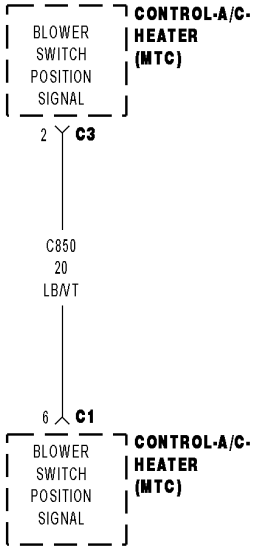

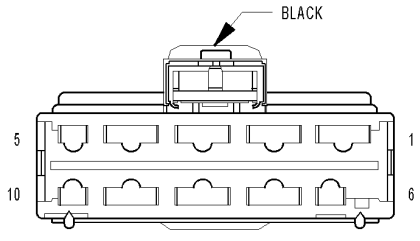

CONTROL-A/C-HEATER C3 (MTC)

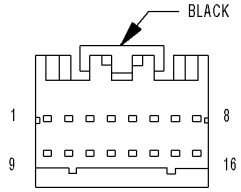

CONTROL-A/C-HEATER C1 (MTC)

815f327e

For a complete wiring diagram **Refer to Section 8W**.

Theory of Operation

The A/C mode switch input changes when the switch is pushed down. A stored DTC 33 indicates that the A/C mode switch was stuck in a pushed position for more than 10 minutes, but has since returned to its normal state. An active DTC 33 indicates that the A/C mode switch is stuck in a pushed position. An active DTC 33 will prevent the control from entering diagnostic mode and performing certain diagnostic functions. It will also prevent proper A/C mode switch and status indicator function. For additional information about the A/C Heater Control's on-board diagnostics, refer to 24 - HEATING & AIR CONDITIONING - DIAGNOSIS AND TESTING.

- **When Monitored:**
  With the ignition on.
- **Set Condition:**
  If the A/C mode switch stays in a pushed position for more than 10 minutes.

Possible Causes
OBJECT HOLDING A/C MODE SWITCH IN A PUSHED POSITION
SUBSTANCE CAUSING A/C MODE SWITCH TO GET STUCK IN A PUSHED POSITION
(C850) BLOWER SWITCH POSITION SIGNAL CIRCUIT SHORTED TO VOLTAGE
(C850) BLOWER SWITCH POSITION SIGNAL CIRCUIT SHORTED TO (Z908) GROUND CIRCUIT
(C850) BLOWER SWITCH POSITION SIGNAL CIRCUIT SHORTED TO (Z909) GROUND CIRCUIT
(C850) BLOWER SWITCH POSITION SIGNAL CIRCUIT SHORTED TO GROUND
(C850) BLOWER SWITCH POSITION SIGNAL CIRCUIT OPEN
A/C STATUS INDICATOR INOPERATIVE
A/C HEATER CONTROL

Diagnostic Test

1. INSPECT THE A/C HEATER CONTROL FOR DAMAGE

Turn the ignition off.

Inspect the A/C Heater Control for damage.

Is the A/C Heater Control damaged?

Yes >> Replace the A/C Heater Control in accordance with the Service Information.
Perform BODY VERIFICATION TEST – VER 1. (Refer to 8 - ELECTRICAL/ELECTRONIC CONTROL MODULES/FRONT CONTROL MODULE - DIAGNOSIS AND TESTING).

No >> Go To 2

2. INSPECT FOR OBJECT OR SUBSTANCE CAUSING THE A/C MODE SWITCH TO STAY OR STICK IN A PUSHED POSITION

Inspect the A/C Heater Control for anything that would cause the A/C mode switch to stay or stick in a pushed position.

Is anything present that would cause the A/C mode switch to stay or stick in a pushed position?

Yes >> Repair as necessary.
Perform BODY VERIFICATION TEST – VER 1. (Refer to 8 - ELECTRICAL/ELECTRONIC CONTROL MODULES/FRONT CONTROL MODULE - DIAGNOSIS AND TESTING).

No >> Go To 3

3. CHECK THE (C850) BLOWER SWITCH POSITION SIGNAL CIRCUIT VOLTAGE

Disconnect the A/C Heater Control C3 harness connector.

Turn the ignition on.

Measure the voltage of the (C850) Blower Switch Position Signal circuit.

What is the voltage?

Below 4.8 Volts
Go To 4

Above 5.2 Volts
Go To 8

4.8 Volts To 5.2 Volts
Go To 9

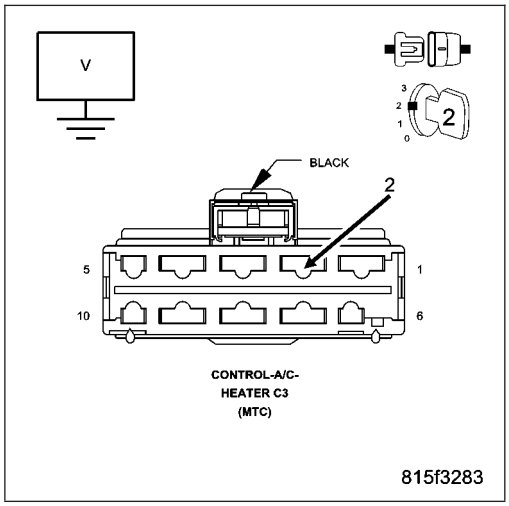

4. CHECK THE (C850) BLOWER SWITCH POSITION SIGNAL CIRCUIT FOR A SHORT TO THE (Z908) GROUND CIRCUIT

Turn the ignition off.

Measure the resistance between the (C850) Blower Switch Position Signal circuit and the (Z908) Ground circuit in the A/C Heater Control C3 harness connector.

Is the resistance below 10K ohms?

Yes >> Repair the (C850) Blower Switch Position Signal circuit for a short to the (Z908) Ground circuit.

Perform BODY VERIFICATION TEST – VER 1. (Refer to 8 - ELECTRICAL/ELECTRONIC CONTROL MODULES/ FRONT CONTROL MODULE - DIAGNOSIS AND TESTING).

No >> Go To 5

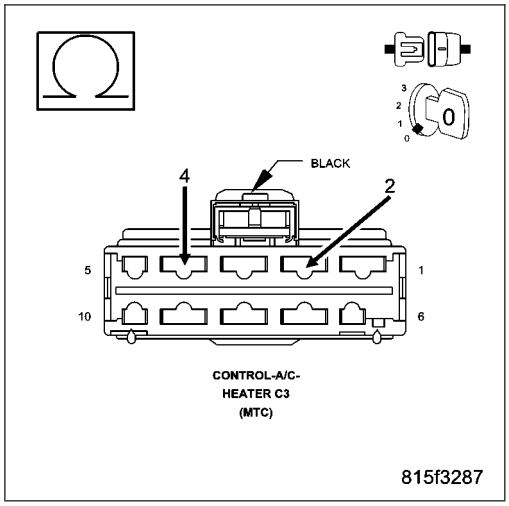

5. CHECK THE (C850) BLOWER SWITCH POSITION SIGNAL CIRCUIT FOR A SHORT TO THE (Z909) GROUND CIRCUIT

Disconnect the A/C Heater Control C1 harness connector.

Measure the resistance between the (C850) Blower Switch Position Signal circuit and the (Z909) Ground circuit in the A/C Heater Control C1 harness connector.

Is the resistance below 10K ohms?

Yes >> Repair the (C850) Blower Switch Position Signal circuit for a short to the (Z909) Ground circuit.

Perform BODY VERIFICATION TEST – VER 1. (Refer to 8 - ELECTRICAL/ELECTRONIC CONTROL MODULES/ FRONT CONTROL MODULE - DIAGNOSIS AND TESTING).

No >> Go To 6

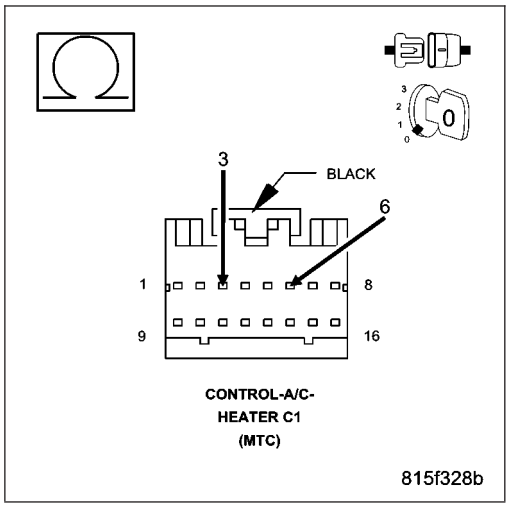

6. CHECK THE (C850) BLOWER SWITCH POSITION SIGNAL CIRCUIT FOR A SHORT TO GROUND

Measure the resistance of the (C850) Blower Switch Position Signal circuit between ground and the A/C Heater Control C3 harness connector.

Is the resistance below 10K ohms?

Yes >> Repair the (C850) Blower Switch Position Signal circuit for a short to ground.

Perform BODY VERIFICATION TEST – VER 1. (Refer to 8 - ELECTRICAL/ELECTRONIC CONTROL MODULES/ FRONT CONTROL MODULE - DIAGNOSIS AND TESTING).

No >> Go To 7

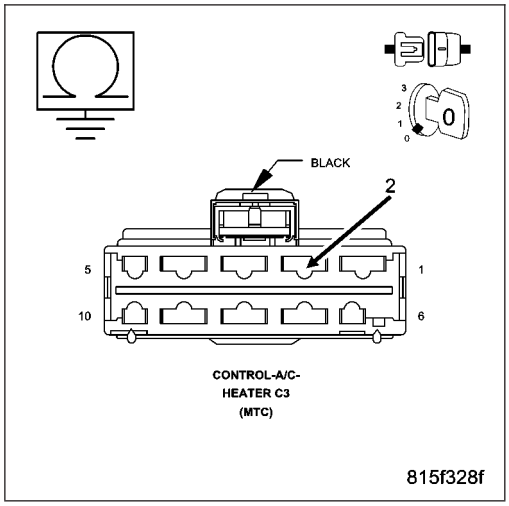

7. CHECK (C850) BLOWER SWITCH POSITION SIGNAL CIRCUIT FOR AN OPEN

Measure the resistance of the (C850) Blower Switch Position Signal circuit between the A/C Heater Control C1 harness connector and the A/C Heater Control C3 harness connector.

Is the resistance below 5.0 ohms?

Yes >> Replace the A/C Heater Control in accordance with the Service Information.

Perform BODY VERIFICATION TEST – VER 1. (Refer to 8 - ELECTRICAL/ELECTRONIC CONTROL MODULES/ FRONT CONTROL MODULE - DIAGNOSIS AND TESTING).

No >> Repair the (C850) Blower Switch Position Signal circuit for an open.

Perform BODY VERIFICATION TEST – VER 1. (Refer to 8 - ELECTRICAL/ELECTRONIC CONTROL MODULES/ FRONT CONTROL MODULE - DIAGNOSIS AND TESTING).

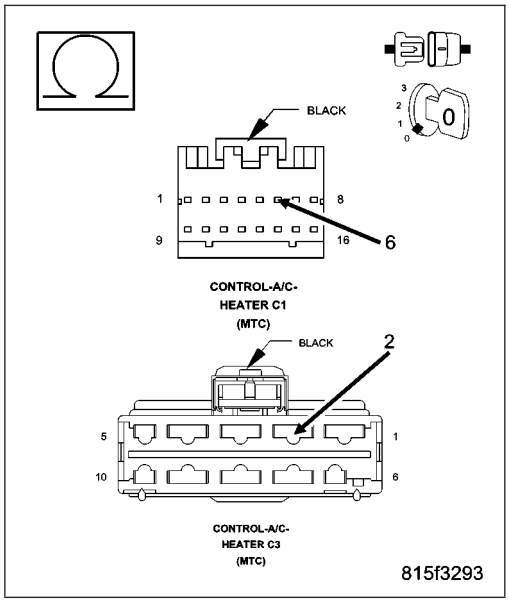

8. CHECK THE (C850) BLOWER SWITCH POSITION SIGNAL CIRCUIT FOR A SHORT TO VOLTAGE

Turn the ignition off.

Disconnect the A/C Heater Control C1 harness connector.

Turn the ignition on.

Measure the voltage of the (C850) Blower Switch Position Signal circuit at the A/C Heater Control C3 harness connector.

Is the voltage above 0.2 volts?

Yes >> Repair the (C850) Blower Switch Position Signal circuit for a short to voltage.

Perform BODY VERIFICATION TEST – VER 1. (Refer to 8 - ELECTRICAL/ELECTRONIC CONTROL MODULES/ FRONT CONTROL MODULE - DIAGNOSIS AND TESTING).

No >> Replace the A/C Heater Control in accordance with the Service Information.

Perform BODY VERIFICATION TEST – VER 1. (Refer to 8 - ELECTRICAL/ELECTRONIC CONTROL MODULES/ FRONT CONTROL MODULE - DIAGNOSIS AND TESTING).

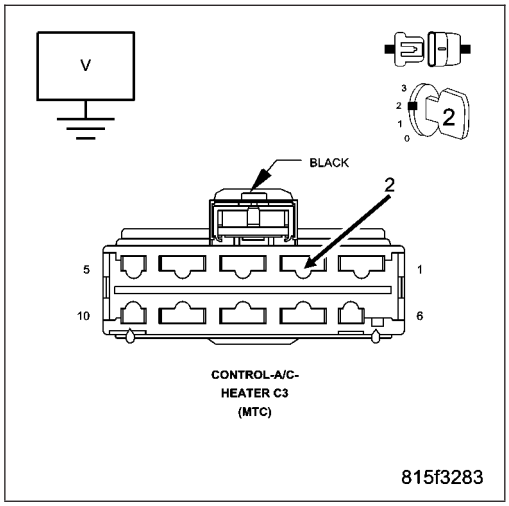

9. CHECK FOR NORMAL A/C MODE SWITCH & STATUS INDICATOR FUNCTION

Turn the ignition off.

Reconnect the A/C Heater Control C3 harness connector.

Turn the ignition on.

Turn the Blower control on.

Press the A/C mode switch on and off several times while observing the A/C status indicator.

Does the A/C status indicator turn on and off with respect to the switch position?

Yes >> Go To 10

No >> Replace the A/C Heater Control in accordance with the Service Information.
Perform BODY VERIFICATION TEST – VER 1. (Refer to 8 - ELECTRICAL/ELECTRONIC CONTROL MODULES/FRONT CONTROL MODULE - DIAGNOSIS AND TESTING).

10. CHECK A/C HEATER CONTROL OPERATION BY ATTEMPTING TO ENTER DIAGNOSTIC MODE

If illuminated, turn off the A/C status indicator and the EBL status indicator.

Actuate the display DTC function by performing the following:

- Turn the blower control on.
- Press the A/C mode switch down, turn the blower control to off, wait until both LEDs illuminate (approximately 5 seconds) and then release the A/C mode switch.

When entry mode is recognized, the A/C status indicator and the EBL status indicator will illuminate for 5 seconds and then display DTCs, if present. The A/C status indicator displays active DTCs when the EBL status indictor is not illuminated and stored DTCs when the EBL status indicator is illuminated. However, if no DTCs are present, both status indicators will turn off and the system will exit diagnostic mode.

Did the A/C Heater Control enter diagnostic mode?

Yes >> Perform BODY VERIFICATION TEST – VER 1. (Refer to 8 - ELECTRICAL/ELECTRONIC CONTROL MODULES/FRONT CONTROL MODULE - DIAGNOSIS AND TESTING).

No >> Replace the A/C Heater Control in accordance with the Service Information.
Perform BODY VERIFICATION TEST – VER 1. (Refer to 8 - ELECTRICAL/ELECTRONIC CONTROL MODULES/FRONT CONTROL MODULE - DIAGNOSIS AND TESTING).

34–EBL MODE SWITCH STUCK (MTC)

For a complete wiring diagram **Refer to Section 8W**.

Theory of Operation

The EBL mode switch input changes when the switch is pushed down. A stored DTC 34 indicates that the EBL mode switch was stuck in a pushed position for more than 10 minutes, but has since returned to its normal state. An active DTC 34 indicates that the EBL mode switch is stuck in a pushed position. An active DTC 34 will prevent the control from performing certain diagnostic functions and it will prevent proper EBL mode switch and status indicator function. For additional information about the A/C Heater Control's on-board diagnostics, refer to 24 - HEATING & AIR CONDITIONING - DIAGNOSIS AND TESTING.

- **When Monitored:**
  With the ignition on.
- **Set Condition:**
  If the EBL mode switch stays in a pushed position for more than 10 minutes.

Possible Causes
OBJECT HOLDING EBL MODE SWITCH IN A PUSHED POSITION
SUBSTANCE CAUSING EBL MODE SWITCH TO GET STUCK IN A PUSHED POSITION
A/C HEATER CONTROL

Diagnostic Test

1. INSPECT THE A/C HEATER CONTROL FOR DAMAGE

Inspect the A/C Heater Control for damage.

Is the A/C Heater Control damaged?

Yes >> Replace the A/C Heater Control in accordance with the Service Information.
Perform BODY VERIFICATION TEST – VER 1. (Refer to 8 - ELECTRICAL/ELECTRONIC CONTROL MODULES/FRONT CONTROL MODULE - DIAGNOSIS AND TESTING).

No >> Go To 2

2. INSPECT FOR OBJECT OR SUBSTANCE CAUSING THE EBL MODE SWITCH TO STAY OR STICK IN A PUSHED POSITION

Inspect the A/C Heater Control for anything that would cause the EBL mode switch to stay or stick in a pushed position.

Is anything present that would cause the EBL mode switch to stay or stick in a pushed position?

Yes >> Repair as necessary.
Perform BODY VERIFICATION TEST – VER 1. (Refer to 8 - ELECTRICAL/ELECTRONIC CONTROL MODULES/FRONT CONTROL MODULE - DIAGNOSIS AND TESTING).

No >> Go To 3

3. CHECK FOR NORMAL EBL MODE SWITCH & STATUS INDICATOR FUNCTION

Turn the ignition on.

Press the EBL mode switch on and off several times while observing the EBL status indicator.

Does the EBL status indicator turn on and off with respect to the switch position?

Yes >> Go To 4

No >> Replace the A/C Heater Control in accordance with the Service Information.
Perform BODY VERIFICATION TEST – VER 1. (Refer to 8 - ELECTRICAL/ELECTRONIC CONTROL MODULES/FRONT CONTROL MODULE - DIAGNOSIS AND TESTING).

4. CHECK A/C HEATER CONTROL OPERATION BY ATTEMPTING TO RUN THE ACTUATOR CALIBRATION FUNCTION

If illuminated, turn off the A/C status indicator and the EBL status indicator.

Actuate the Actuator Circuit Test / Door Calibration Function by performing the following:

- Turn the blower control off.
- Press and hold the EBL mode switch down and then turn the blower control on. Continue to hold the EBL mode switch down until the EBL status indicator begins flashing. Then, release the EBL mode switch.

While the test / function is running, the EBL status indicator will flash once per second. If the test / function passes, the EBL status indicator will stop flashing. If the test / function fails, the A/C and EBL status indicators will flash alternately.

Did the A/C Heater Control run the test / function?

Yes >> Perform BODY VERIFICATION TEST – VER 1. (Refer to 8 - ELECTRICAL/ELECTRONIC CONTROL MODULES/FRONT CONTROL MODULE - DIAGNOSIS AND TESTING).

No >> Replace the A/C Heater Control in accordance with the Service Information.
Perform BODY VERIFICATION TEST – VER 1. (Refer to 8 - ELECTRICAL/ELECTRONIC CONTROL MODULES/FRONT CONTROL MODULE - DIAGNOSIS AND TESTING).

35–FAILED COOL DOWN (MTC)

For a complete wiring diagram **Refer to Section 8W**.

- **When Monitored:**
  When the Cooldown Test is executed.
- **Set Condition:**
  If the A/C system is unable to lower the evaporator temperature 11.11°C (20°F).

Possible Causes
PREREQUISITES NOT MET BEFORE RUNNING THE COOLDOWN TEST
ANOTHER RELATED SYSTEM NOT FUNCTIONING CORRECTLY
POWERTRAIN SYSTEM FAULTS PRESENT

NOTE: This DTC will display as active if the ignition is not cycled after running the Cooldown Test. Otherwise, it will display as stored until cleared.

Diagnostic Test

1. VERIFY THAT ALL OF THE COOLDOWN TEST PREREQUISITES WERE MET

Review the list of Cooldown Test prerequisites.

- **DTC 31 or 32 must not be active.**
- **The refrigerant system must be adequately charged.**
- **The blower motor must operate correctly in all speeds.**
- **The work area ambient temperature must be above 18.3°C (65°F).**
- **The evaporator temperature must be above 18.3°C (65°F).**
- **The A/C compressor must be turned off.**

Were all of the prerequisites met before running the Cooldown Test?

Yes >> Go To 2

No >> Run the Cooldown Test again after all of the prerequisites are met. Then, if DTC 35 is still present, Go To 2. Otherwise, perform BODY VERIFICATION TEST – VER 1. (Refer to 8 - ELECTRICAL/ELECTRONIC CONTROL MODULES/FRONT CONTROL MODULE - DIAGNOSIS AND TESTING).

2. CHECK FOR DTCs IN THE PCM

With the scan tool, select PCM.

Are any DTCs present in the PCM?

Yes >> Diagnose and repair the DTC(s). (Refer to 9 - ENGINE - DIAGNOSIS AND TESTING) for PCM DTCs. Run the Cooldown Test again after the repair is complete.

Perform BODY VERIFICATION TEST – VER 1. (Refer to 8 - ELECTRICAL/ELECTRONIC CONTROL MODULES/FRONT CONTROL MODULE - DIAGNOSIS AND TESTING).

No >> Refer to the Service Information for additional Cooldown Test related diagnostic information and testing procedures. Run the Cooldown Test again after the repair is complete.

Perform BODY VERIFICATION TEST – VER 1. (Refer to 8 - ELECTRICAL/ELECTRONIC CONTROL MODULES/FRONT CONTROL MODULE - DIAGNOSIS AND TESTING).

36–EEPROM CHECKSUM ERROR (MTC)

For a complete wiring diagram **Refer to Section 8W**.

- **When Monitored:**
  With the ignition on.
- **Set Condition:**
  If the calculated checksum does not match the stored value.

Possible Causes
A/C HEATER CONTROL

NOTE: This DTC must be active for the results of this test to be valid. Do not perform this test if this DTC is stored. Refer to HVAC System Test (MTC) for stored DTC test procedures.

Diagnostic Test

1. REPLACE THE A/C HEATER CONTROL

Repair

Replace the A/C Heater Control in accordance with the Service Information.

Perform BODY VERIFICATION TEST – VER 1. (Refer to 8 - ELECTRICAL/ELECTRONIC CONTROL MODULES/FRONT CONTROL MODULE - DIAGNOSIS AND TESTING).

37–ROM CHECKSUM ERROR (MTC)

For a complete wiring diagram **Refer to Section 8W**.

- **When Monitored:**
  With the ignition on.
- **Set Condition:**
  If the calculated checksum does not match the stored value.

Possible Causes
A/C HEATER CONTROL

NOTE: This DTC must be active for the results of this test to be valid. Do not perform this test if this DTC is stored. Refer to HVAC System Test (MTC) for stored DTC test procedures.

Diagnostic Test

1. REPLACE THE A/C HEATER CONTROL

Repair

Replace the A/C Heater Control in accordance with the Service Information.

Perform BODY VERIFICATION TEST – VER 1. (Refer to 8 - ELECTRICAL/ELECTRONIC CONTROL MODULES/FRONT CONTROL MODULE - DIAGNOSIS AND TESTING).

41–FRONT MODE OVERCURRENT (MTC)

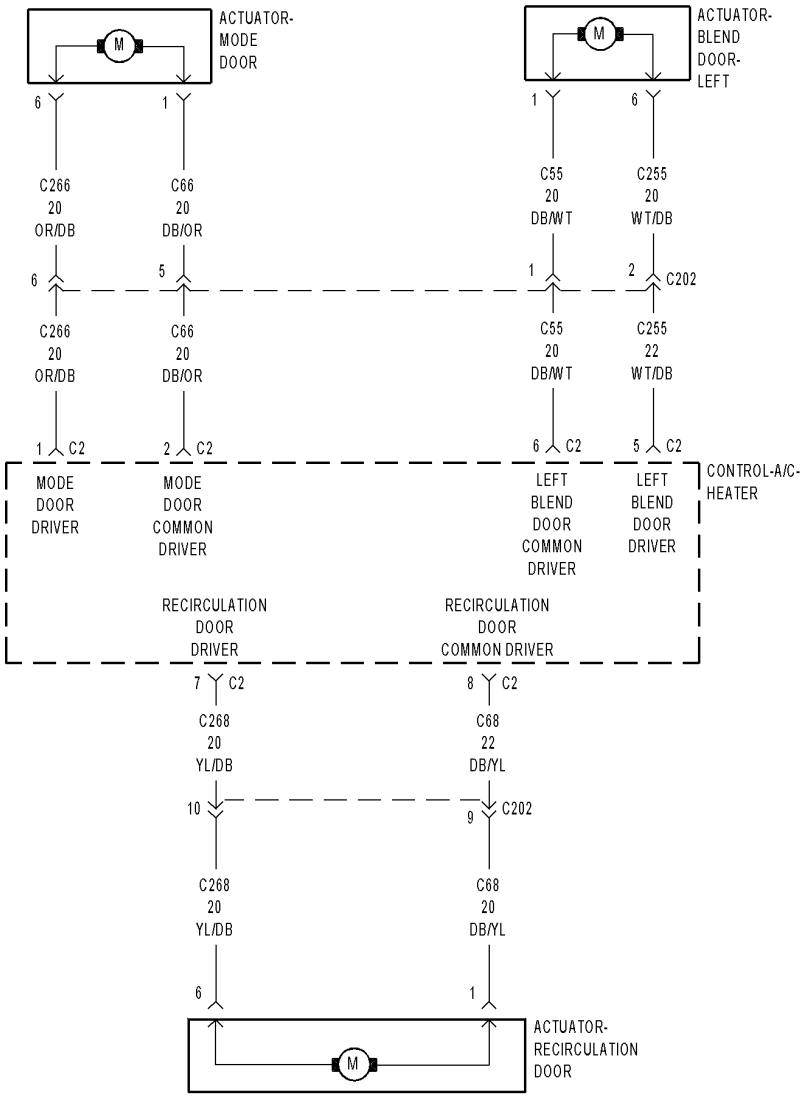

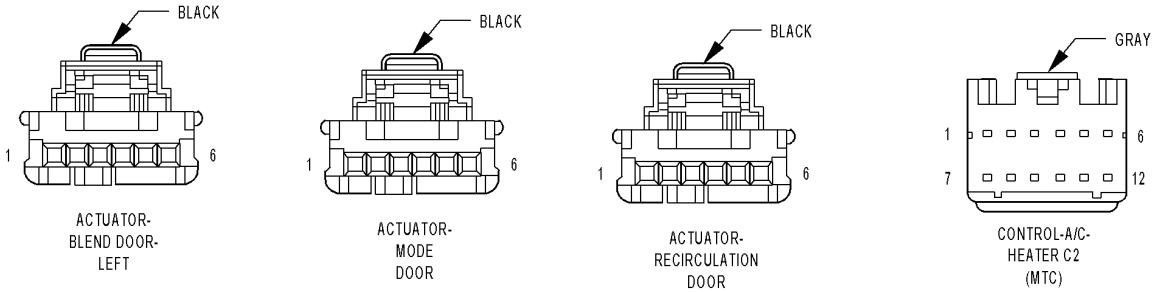

815f3524

For a complete wiring diagram **Refer to Section 8W**.

- **When Monitored:**
  When actuator movement is requested.
- **Set Condition:**
  If the A/C Heater Control detects an excessive current draw on any of the door driver circuits while attempting to drive this door actuator. Note that only one overcurrent DTC can set per ignition cycle.

Possible Causes
DOOR DRIVER CIRCUIT(S) SHORTED TO VOLTAGE
DOOR DRIVER CIRCUIT(S) SHORTED TO GROUND
DOOR DRIVER CIRCUITS SHORTED TOGETHER
MODE DOOR ACTUATOR
LEFT BLEND DOOR ACTUATOR
RECIRCULATION DOOR ACTUATOR
A/C HEATER CONTROL

NOTE: This DTC must be active for the result of this test to be valid. Do not perform this test if this DTC is stored. Refer to HVAC System Test (MTC) for stored DTC test procedures.

Diagnostic Test

1. RUN THE ACTUATOR CIRCUIT TEST / DOOR CALIBRATION FUNCTION & THEN CHECK FOR ACTUATOR CIRCUIT TEST FAULTS

NOTE: Diagnose and repair Actuator Circuit Test faults (DTC 61, 62, 63, 64, 67, 68, 69, 71, and 72) before diagnosing Overcurrent faults (DTC 41, 43, and 44).

Turn the ignition on.

Actuate the Clear DTC function by performing the following:

- Turn the blower control on.
- Press the A/C mode switch down, turn the blower control to off, wait until both LEDs illuminate (approximately 5 seconds) and then release the A/C mode switch.
- When the A/C status indicator begins displaying DTCs, set the Mode switch to the floor position, simultaneously press the A/C mode switch and the EBL mode switch down until both LEDs start flashing (approximately 5 seconds) and then release the mode switches. Stored DTCs will clear from memory in approximately two seconds.

Turn the ignition off, wait 10 seconds, and turn the ignition on.

Actuate the Actuator Circuit Test / Door Calibration Function by performing the following:

- Turn the blower control off.
- Press and hold the EBL mode switch down and then turn the blower control on. Continue to hold the EBL mode switch down until the EBL status indicator begins flashing. Then, release the EBL mode switch. While the test / function is running, the EBL status indicator will flash once per second. If the test / function passes, the EBL status indicator will stop flashing. If the test / function fails, the A/C and EBL status indicators will flash alternately. Allow the test / function to run to completion before proceeding.

Actuate the Display DTC function by performing the following:

- Turn the blower control on.
- Press the A/C mode switch down, turn the blower control to off, wait until both LEDs illuminate (approximately 5 seconds) and then release the A/C mode switch.

NOTE: The A/C status indicator displays active DTCs when the EBL status indictor is not illuminated and stored DTCs when the EBL status indicator is illuminated.
Read DTCs from the A/C status indictor.

Does the A/C status indicator display any of the following DTCs: 61, 62, 63, 64, 67, 68, 69, 71, or 72?

Yes >> As present, diagnose and repair the Actuator Circuit Test faults in the following order: DTC 72 first, then DTC 62, then DTC 61, then DTCs 64, 68, or 71, and finally DTCs 63, 67, or 69. Refer to the Table Of Contents in this section for a complete list of HVAC related symptoms.

Perform BODY VERIFICATION TEST – VER 1. (Refer to 8 - ELECTRICAL/ELECTRONIC CONTROL MODULES/FRONT CONTROL MODULE - DIAGNOSIS AND TESTING).

No >> Go To 2

2. CHECK THE (C266) MODE DOOR DRIVER CIRCUIT FOR A SHORT TO THE (C255) LEFT BLEND DOOR DRIVER CIRCUIT, (C55) LEFT BLEND DOOR COMMON DRIVER CIRCUIT, (C268) RECIRCULATION DOOR DRIVER CIRCUIT, & THE (C68) RECIRCULATION DOOR COMMON DRIVER CIRCUIT

Turn the ignition off.

Disconnect the A/C Heater Control C2 harness connector.

Measure the resistance between the (C266) Mode Door Driver circuit and the (C255) Left Blend Door Driver circuit, (C55) Left Blend Door Common Driver circuit, (C268) Recirculation Door Driver circuit, and the (C68) Recirculation Door Common Driver circuit in the A/C Heater Control C2 harness connector.

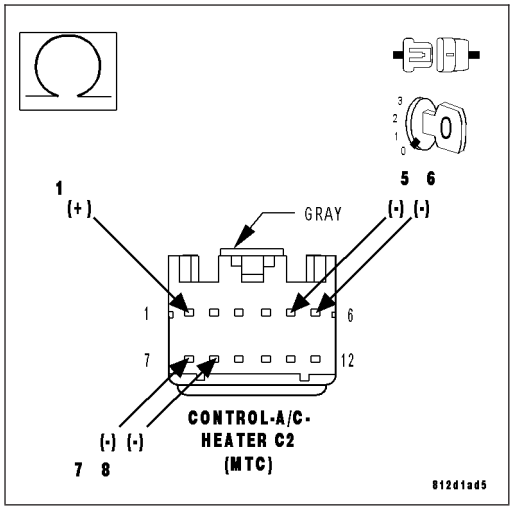

Is the resistance below 10k ohms on any of the circuits?

Yes >> Repair all circuits with a resistance below 10k ohms for a short to the (C266) Mode Door Driver circuit.

Perform BODY VERIFICATION TEST – VER 1. (Refer to 8 - ELECTRICAL/ELECTRONIC CONTROL MODULES/FRONT CONTROL MODULE - DIAGNOSIS AND TESTING).

No >> Go To 3

3. CHECK THE (C66) MODE DOOR COMMON DRIVER CIRCUIT FOR A SHORT TO THE (C255) LEFT BLEND DOOR DRIVER CIRCUIT, (C55) LEFT BLEND DOOR COMMON DRIVER CIRCUIT, (C268) RECIRCULATION DOOR DRIVER CIRCUIT, & THE (C68) RECIRCULATION DOOR COMMON DRIVER CIRCUIT

Measure the resistance between the (C66) Mode Door Common Driver circuit and the (C255) Left Blend Door Driver circuit, (C55) Left Blend Door Common Driver circuit, (C268) Recirculation Door Driver circuit, and the (C68) Recirculation Door Common Driver circuit in the A/C Heater Control C2 harness connector.

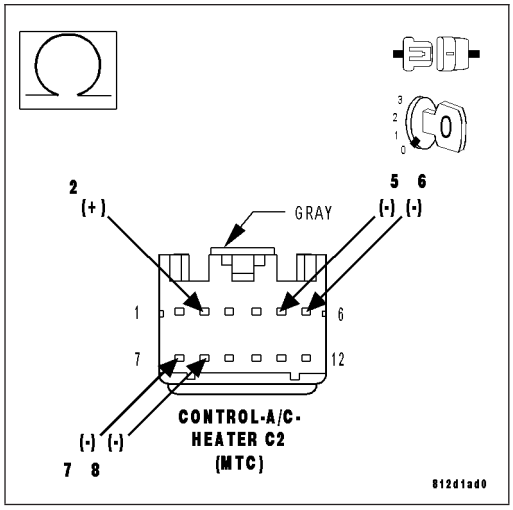

Is the resistance below 10k ohms on any of the circuits?

Yes >> Repair all circuits with a resistance below 10k ohms for a short to the (C66) Mode Door Common Driver circuit.

Perform BODY VERIFICATION TEST – VER 1. (Refer to 8 - ELECTRICAL/ELECTRONIC CONTROL MODULES/FRONT CONTROL MODULE - DIAGNOSIS AND TESTING).

No >> Go To 4

4. CHECK THE (C255) LEFT BLEND DOOR DRIVER CIRCUIT FOR A SHORT TO THE (C268) RECIRCULATION DOOR DRIVER CIRCUIT & THE (C68) RECIRCULATION DOOR COMMON DRIVER CIRCUIT

Measure the resistance between the (C255) Left Blend Door Driver circuit and the (C268) Recirculation Door Driver circuit and the (C68) Recirculation Door Common Driver circuit in the A/C Heater Control C2 harness connector.

Is the resistance below 10k ohms on any of the circuits?

Yes >> Repair all circuits with a resistance below 10k ohms for a short to the (C255) Left Blend Door Driver circuit.

Perform BODY VERIFICATION TEST – VER 1. (Refer to 8 - ELECTRICAL/ELECTRONIC CONTROL MODULES/ FRONT CONTROL MODULE - DIAGNOSIS AND TESTING).

No >> Go To 5

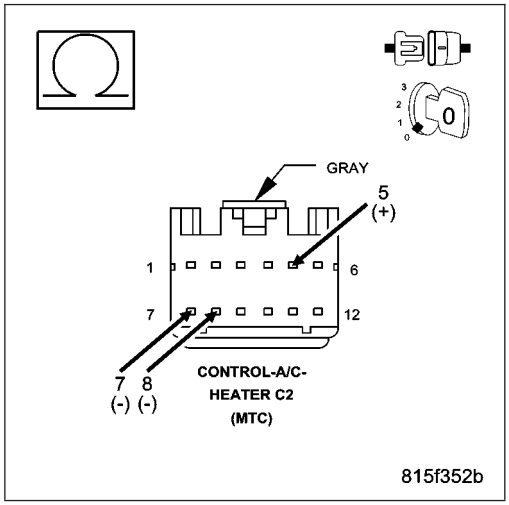

5. CHECK THE (C55) LEFT BLEND DOOR COMMON DRIVER CIRCUIT FOR A SHORT TO THE (C268) RECIRCULATION DOOR DRIVER CIRCUIT & THE (C68) RECIRCULATION DOOR COMMON DRIVER CIRCUIT

Measure the resistance between the (C55) Left Blend Door Common Driver circuit and the (C268) Recirculation Door Driver circuit and the (C68) Recirculation Door Common Driver circuit in the A/C Heater Control C2 harness connector.

Is the resistance below 10k ohms on any of the circuits?

Yes >> Repair all circuits with a resistance below 10k ohms for a short to the (C55) Left Blend Door Common Driver circuit.

Perform BODY VERIFICATION TEST – VER 1. (Refer to 8 - ELECTRICAL/ELECTRONIC CONTROL MODULES/ FRONT CONTROL MODULE - DIAGNOSIS AND TESTING).

No >> Go To 6

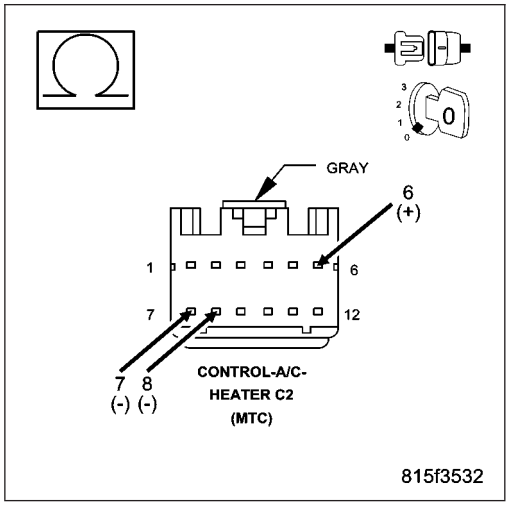

6. CHECK THE MODE DOOR ACTUATOR CIRCUIT RESISTANCE

Measure the resistance between the (C66) Mode Door Common Driver Circuit and the (C266) Mode Door Driver circuit in the A/C Heater Control C2 harness connector.

Is the resistance below 30.0 ohms?

Yes >> Go To 7

No >> Go To 8

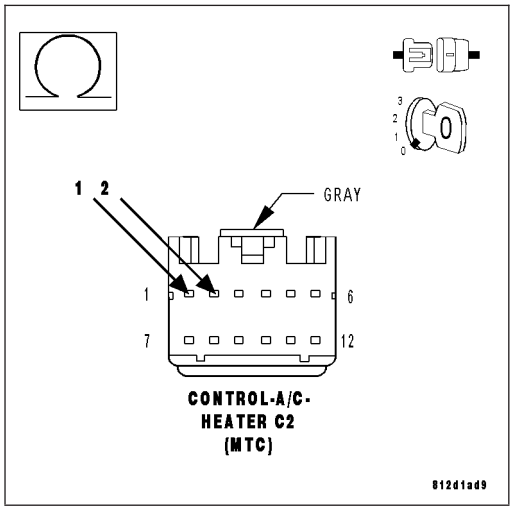

7. CHECK THE (C66) MODE DOOR COMMON DRIVER CIRCUIT FOR A SHORT TO THE (C266) MODE DOOR DRIVER CIRCUIT

Disconnect the Mode Door Actuator harness connector.

Measure the resistance between the (C66) Mode Door Common Driver Circuit and the (C266) Mode Door Driver circuit in the A/C Heater Control C2 harness connector.

Is the resistance below 10k ohms?

Yes >> Repair the (C66) Mode Door Common Driver Circuit for a short to the (C266) Mode Door Driver circuit.

Perform BODY VERIFICATION TEST – VER 1. (Refer to 8 - ELECTRICAL/ELECTRONIC CONTROL MODULES/ FRONT CONTROL MODULE - DIAGNOSIS AND TESTING).

No >> Replace the Mode Door Actuator in accordance with the Service Information.

Perform BODY VERIFICATION TEST – VER 1. (Refer to 8 - ELECTRICAL/ELECTRONIC CONTROL MODULES/ FRONT CONTROL MODULE - DIAGNOSIS AND TESTING).

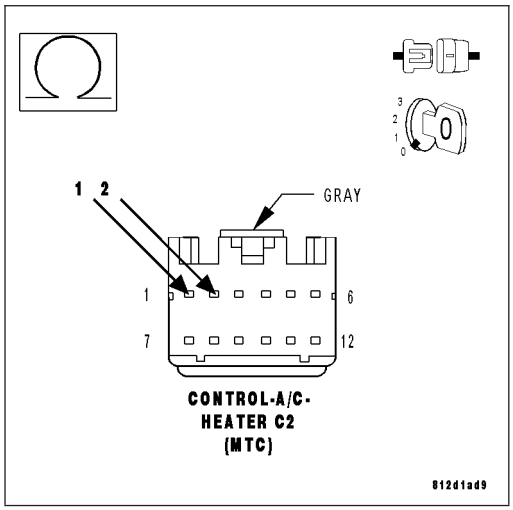

8. CHECK THE LEFT BLEND DOOR ACTUATOR CIRCUIT RESISTANCE

Measure the resistance between the (C55) Left Blend Door Common Driver Circuit and the (C255) Left Blend Door Driver circuit in the A/C Heater Control C2 harness connector.

Is the resistance below 30.0 ohms?

Yes >> Go To 9

No >> Go To 10

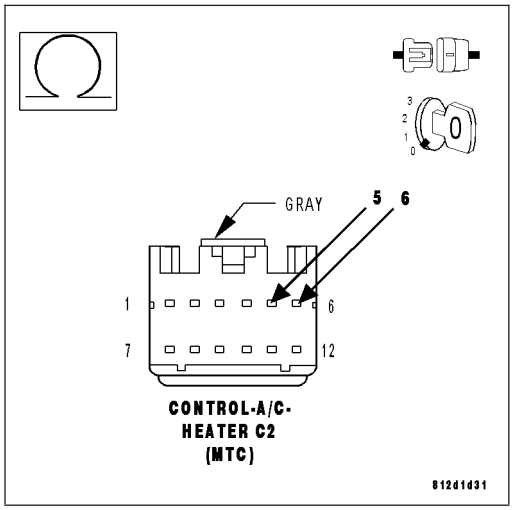

9. CHECK THE (C55) LEFT BLEND DOOR COMMON DRIVER CIRCUIT FOR A SHORT TO THE (C255) LEFT BLEND DOOR DRIVER CIRCUIT

Disconnect the Left Blend Door Actuator harness connector.

Measure the resistance between the (C55) Left Blend Door Common Driver Circuit and the (C255) Left Blend Door Driver circuit in the A/C Heater Control C2 harness connector.

Is the resistance below 10k ohms?

Yes >> Repair the (C55) Left Blend Door Common Driver Circuit for a short to the (C255) Left Blend Door Driver circuit.

Perform BODY VERIFICATION TEST – VER 1. (Refer to 8 - ELECTRICAL/ELECTRONIC CONTROL MODULES/ FRONT CONTROL MODULE - DIAGNOSIS AND TESTING).

No >> Replace the Left Blend Door Actuator in accordance with the Service Information.

Perform BODY VERIFICATION TEST – VER 1. (Refer to 8 - ELECTRICAL/ELECTRONIC CONTROL MODULES/ FRONT CONTROL MODULE - DIAGNOSIS AND TESTING).

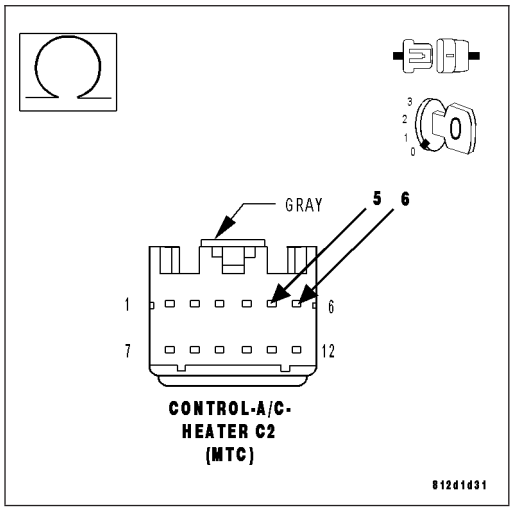

10. CHECK THE RECIRCULATION DOOR ACTUATOR CIRCUIT RESISTANCE

Measure the resistance between the (C68) Recirculation Door Common Driver Circuit and the (C268) Recirculation Door Driver circuit in the A/C Heater Control C2 harness connector.

Is the resistance below 30.0 ohms?

Yes >> Go To 11

No >> Go To 12

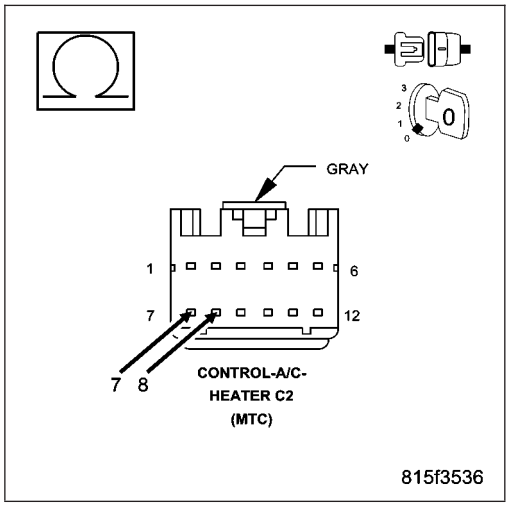

11. CHECK THE (C68) RECIRCULATION DOOR COMMON DRIVER CIRCUIT FOR A SHORT TO THE (C268) RECIRCULATION DOOR DRIVER CIRCUIT

Disconnect the Recirculation Door Actuator harness connector.

Measure the resistance between the (C68) Recirculation Door Common Driver Circuit and the (C268) Recirculation Door Driver circuit in the A/C Heater Control C2 harness connector.

Is the resistance below 10k ohms?

Yes >> Repair the (C68) Recirculation Door Common Driver Circuit for a short to the (C268) Recirculation Door Driver circuit.

Perform BODY VERIFICATION TEST – VER 1. (Refer to 8 - ELECTRICAL/ELECTRONIC CONTROL MODULES/ FRONT CONTROL MODULE - DIAGNOSIS AND TESTING).

No >> Replace the Recirculation Door Actuator in accordance with the Service Information.

Perform BODY VERIFICATION TEST – VER 1. (Refer to 8 - ELECTRICAL/ELECTRONIC CONTROL MODULES/ FRONT CONTROL MODULE - DIAGNOSIS AND TESTING).

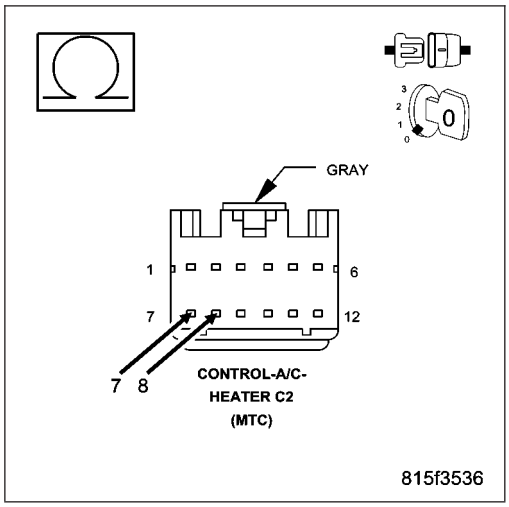

12. VERIFY THAT THE FAULT IS STILL PRESENT

Reconnect the A/C Heater Control C2 harness connector.

Reconnect all of the door actuator harness connectors.

Turn the ignition on.

Actuate the Clear DTC function by performing the following:

- Turn the blower control on.
- Press the A/C mode switch down, turn the blower control to off, wait until both LEDs illuminate (approximately 5 seconds) and then release the A/C mode switch.
- When the A/C status indicator begins displaying DTCs, set the Mode switch to the floor position, simultaneously press the A/C mode switch and the EBL mode switch down until both LEDs start flashing (approximately 5 seconds) and then release the mode switches. Stored DTCs will clear from memory in approximately two seconds.

Turn the ignition off, wait 10 seconds, and turn the ignition on.

Actuate the Actuator Circuit Test / Door Calibration Function by performing the following:

- Turn the blower control off.
- Press and hold the EBL mode switch down and then turn the blower control on. Continue to hold the EBL mode switch down until the EBL status indicator begins flashing. Then, release the EBL mode switch. While the test / function is running, the EBL status indicator will flash once per second. If the test / function passes, the EBL status indicator will stop flashing. If the test / function fails, the A/C and EBL status indicators will flash alternately. Allow the test / function to run to completion before proceeding.

Actuate the Display DTC function by performing the following:

- Turn the blower control on.
- Press the A/C mode switch down, turn the blower control to off, wait until both LEDs illuminate (approximately 5 seconds) and then release the A/C mode switch.

NOTE: The A/C status indicator displays active DTCs when the EBL status indictor is not illuminated and stored DTCs when the EBL status indicator is illuminated.

Read DTCs from the A/C status indictor.

Does the A/C status indicator display DTC 41?

Yes >> Replace the A/C Heater Control in accordance with the Service Information.

Perform BODY VERIFICATION TEST – VER 1. (Refer to 8 - ELECTRICAL/ELECTRONIC CONTROL MODULES/FRONT CONTROL MODULE - DIAGNOSIS AND TESTING).

No >> Using the wiring diagram as a guide, inspect the wiring and connectors for conditions causing an intermittent short that set the original fault. Repair as necessary. Then, if present, diagnose and repair all other DTCs. Refer to the Table of Contents in this Section for a complete list of HVAC related symptoms.

Perform BODY VERIFICATION TEST – VER 1. (Refer to 8 - ELECTRICAL/ELECTRONIC CONTROL MODULES/FRONT CONTROL MODULE - DIAGNOSIS AND TESTING).

43–BLEND OVERCURRENT (MTC)

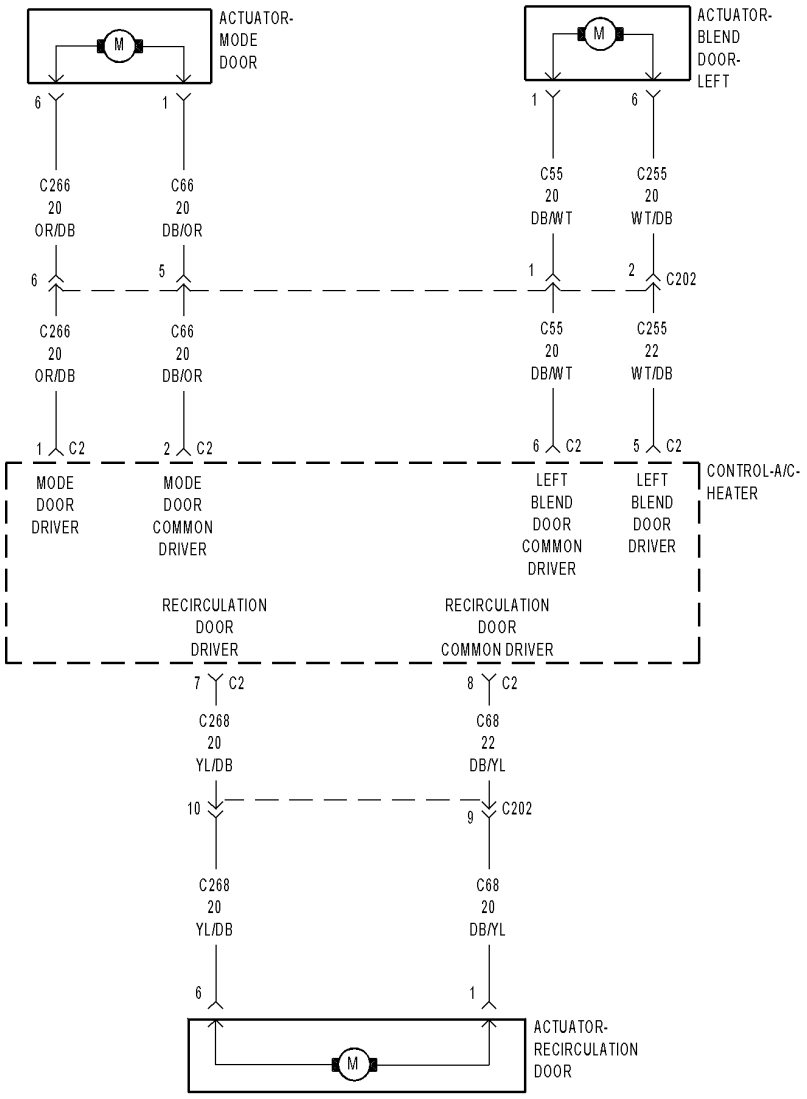

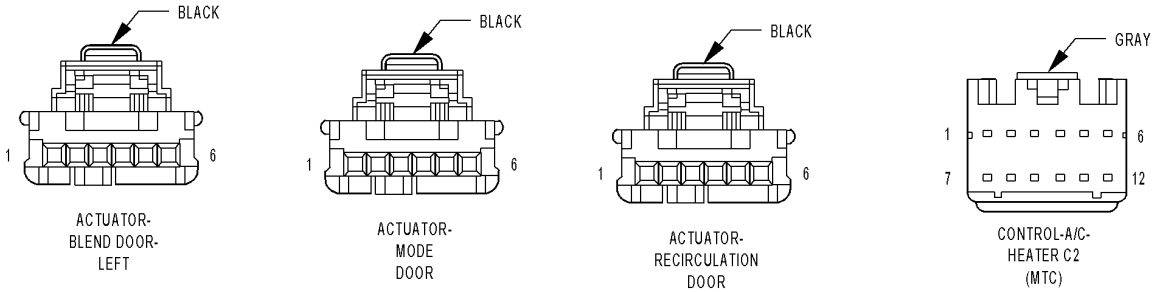

81503524

For a complete wiring diagram **Refer to Section 8W**.

- **When Monitored:**
  When actuator movement is requested.
- **Set Condition:**
  If the A/C Heater Control detects an excessive current draw on any of the door driver circuits while attempting to drive this door actuator. Note that only one overcurrent DTC can set per ignition cycle.

Possible Causes
DOOR DRIVER CIRCUIT(S) SHORTED TO VOLTAGE
DOOR DRIVER CIRCUIT(S) SHORTED TO GROUND
DOOR DRIVER CIRCUITS SHORTED TOGETHER
MODE DOOR ACTUATOR
LEFT BLEND DOOR ACTUATOR
RECIRCULATION DOOR ACTUATOR
A/C HEATER CONTROL

NOTE: This DTC must be active for the result of this test to be valid. Do not perform this test if this DTC is stored. Refer to HVAC System Test (MTC) for stored DTC test procedures.

Diagnostic Test

1. RUN THE ACTUATOR CIRCUIT TEST / DOOR CALIBRATION FUNCTION & THEN CHECK FOR ACTUATOR CIRCUIT TEST FAULTS

NOTE: Diagnose and repair Actuator Circuit Test faults (DTC 61, 62, 63, 64, 67, 68, 69, 71, and 72) before diagnosing Overcurrent faults (DTC 41, 43, and 44).

Turn the ignition on.

Actuate the Clear DTC function by performing the following:

- Turn the blower control on.
- Press the A/C mode switch down, turn the blower control to off, wait until both LEDs illuminate (approximately 5 seconds) and then release the A/C mode switch.
- When the A/C status indicator begins displaying DTCs, set the Mode switch to the floor position, simultaneously press the A/C mode switch and the EBL mode switch down until both LEDs start flashing (approximately 5 seconds) and then release the mode switches. Stored DTCs will clear from memory in approximately two seconds.

Turn the ignition off, wait 10 seconds, and turn the ignition on.

Actuate the Actuator Circuit Test / Door Calibration Function by performing the following:

- Turn the blower control off.
- Press and hold the EBL mode switch down and then turn the blower control on. Continue to hold the EBL mode switch down until the EBL status indicator begins flashing. Then, release the EBL mode switch. While the test / function is running, the EBL status indicator will flash once per second. If the test / function passes, the EBL status indicator will stop flashing. If the test / function fails, the A/C and EBL status indicators will flash alternately. Allow the test / function to run to completion before proceeding.

Actuate the Display DTC function by performing the following:

- Turn the blower control on.
- Press the A/C mode switch down, turn the blower control to off, wait until both LEDs illuminate (approximately 5 seconds) and then release the A/C mode switch.

NOTE: The A/C status indicator displays active DTCs when the EBL status indictor is not illuminated and stored DTCs when the EBL status indicator is illuminated.
Read DTCs from the A/C status indictor.

Does the A/C status indicator display any of the following DTCs: 61, 62, 63, 64, 67, 68, 69, 71, or 72?

Yes >> As present, diagnose and repair the Actuator Circuit Test faults in the following order: DTC 72 first, then DTC 62, then DTC 61, then DTCs 64, 68, or 71, and finally DTCs 63, 67, or 69. Refer to the Table Of Contents in this section for a complete list of HVAC related symptoms.

Perform BODY VERIFICATION TEST – VER 1. (Refer to 8 - ELECTRICAL/ELECTRONIC CONTROL MODULES/FRONT CONTROL MODULE - DIAGNOSIS AND TESTING).

No >> Go To 2

2. CHECK THE (C266) MODE DOOR DRIVER CIRCUIT FOR A SHORT TO THE (C255) LEFT BLEND DOOR DRIVER CIRCUIT, (C55) LEFT BLEND DOOR COMMON DRIVER CIRCUIT, (C268) RECIRCULATION DOOR DRIVER CIRCUIT, & THE (C68) RECIRCULATION DOOR COMMON DRIVER CIRCUIT

Turn the ignition off.

Disconnect the A/C Heater Control C2 harness connector.

Measure the resistance between the (C266) Mode Door Driver circuit and the (C255) Left Blend Door Driver circuit, (C55) Left Blend Door Common Driver circuit, (C268) Recirculation Door Driver circuit, and the (C68) Recirculation Door Common Driver circuit in the A/C Heater Control C2 harness connector.

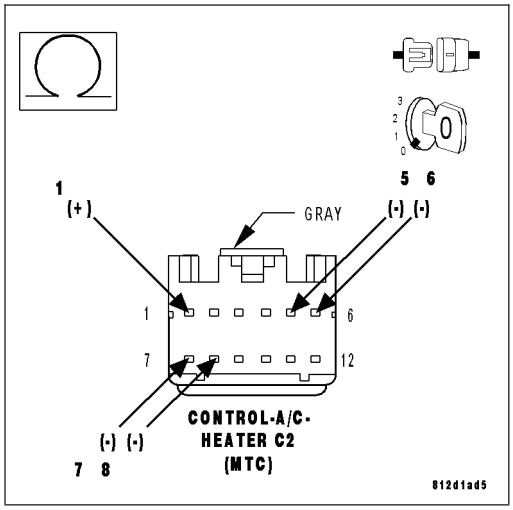

Is the resistance below 10k ohms on any of the circuits?

Yes >> Repair all circuits with a resistance below 10k ohms for a short to the (C266) Mode Door Driver circuit.

Perform BODY VERIFICATION TEST – VER 1. (Refer to 8 - ELECTRICAL/ELECTRONIC CONTROL MODULES/ FRONT CONTROL MODULE - DIAGNOSIS AND TESTING).

No >> Go To 3

3. CHECK THE (C66) MODE DOOR COMMON DRIVER CIRCUIT FOR A SHORT TO THE (C255) LEFT BLEND DOOR DRIVER CIRCUIT, (C55) LEFT BLEND DOOR COMMON DRIVER CIRCUIT, (C268) RECIRCULATION DOOR DRIVER CIRCUIT, & THE (C68) RECIRCULATION DOOR COMMON DRIVER CIRCUIT

Measure the resistance between the (C66) Mode Door Common Driver circuit and the (C255) Left Blend Door Driver circuit, (C55) Left Blend Door Common Driver circuit, (C268) Recirculation Door Driver circuit, and the (C68) Recirculation Door Common Driver circuit in the A/C Heater Control C2 harness connector.

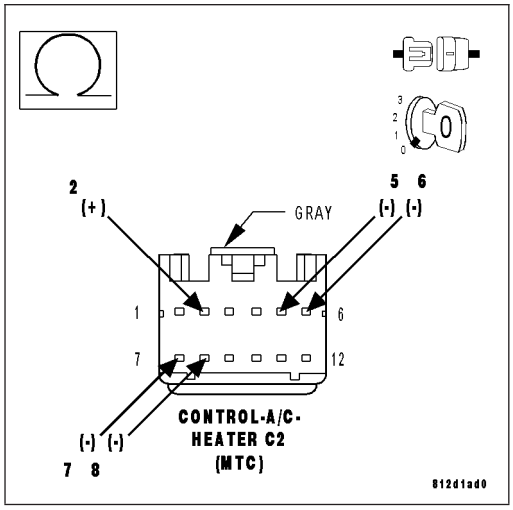

Is the resistance below 10k ohms on any of the circuits?

Yes >> Repair all circuits with a resistance below 10k ohms for a short to the (C66) Mode Door Common Driver circuit.

Perform BODY VERIFICATION TEST – VER 1. (Refer to 8 - ELECTRICAL/ELECTRONIC CONTROL MODULES/ FRONT CONTROL MODULE - DIAGNOSIS AND TESTING).

No >> Go To 4

4. CHECK THE (C255) LEFT BLEND DOOR DRIVER CIRCUIT FOR A SHORT TO THE (C268) RECIRCULATION DOOR DRIVER CIRCUIT & THE (C68) RECIRCULATION DOOR COMMON DRIVER CIRCUIT

Measure the resistance between the (C255) Left Blend Door Driver circuit and the (C268) Recirculation Door Driver circuit and the (C68) Recirculation Door Common Driver circuit in the A/C Heater Control C2 harness connector.

Is the resistance below 10k ohms on any of the circuits?

Yes >> Repair all circuits with a resistance below 10k ohms for a short to the (C255) Left Blend Door Driver circuit.

Perform BODY VERIFICATION TEST – VER 1. (Refer to 8 - ELECTRICAL/ELECTRONIC CONTROL MODULES/ FRONT CONTROL MODULE - DIAGNOSIS AND TESTING).

No >> Go To 5

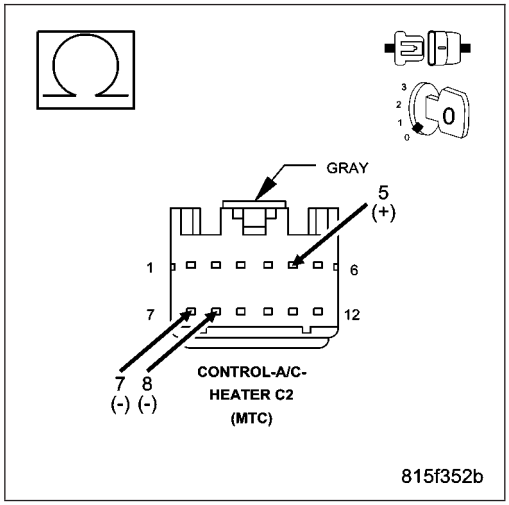

5. CHECK THE (C55) LEFT BLEND DOOR COMMON DRIVER CIRCUIT FOR A SHORT TO THE (C268) RECIRCULATION DOOR DRIVER CIRCUIT & THE (C68) RECIRCULATION DOOR COMMON DRIVER CIRCUIT

Measure the resistance between the (C55) Left Blend Door Common Driver circuit and the (C268) Recirculation Door Driver circuit and the (C68) Recirculation Door Common Driver circuit in the A/C Heater Control C2 harness connector.

Is the resistance below 10k ohms on any of the circuits?

Yes >> Repair all circuits with a resistance below 10k ohms for a short to the (C55) Left Blend Door Common Driver circuit.

Perform BODY VERIFICATION TEST – VER 1. (Refer to 8 - ELECTRICAL/ELECTRONIC CONTROL MODULES/ FRONT CONTROL MODULE - DIAGNOSIS AND TESTING).

No >> Go To 6

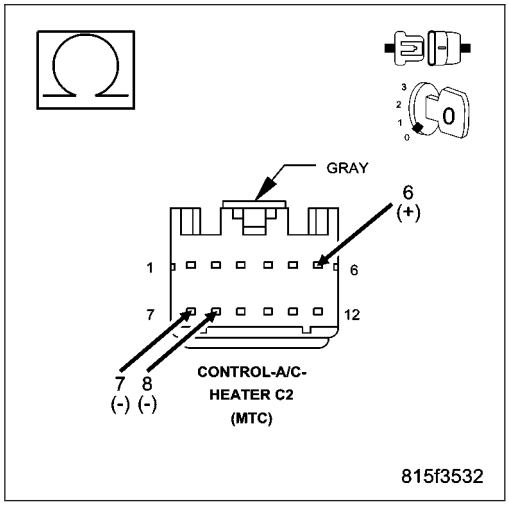

6. CHECK THE MODE DOOR ACTUATOR CIRCUIT RESISTANCE

Measure the resistance between the (C66) Mode Door Common Driver Circuit and the (C266) Mode Door Driver circuit in the A/C Heater Control C2 harness connector.

Is the resistance below 30.0 ohms?

Yes >> Go To 7

No >> Go To 8

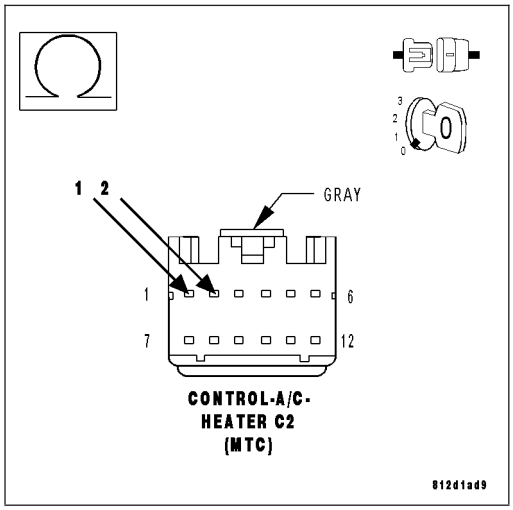

7. CHECK THE (C66) MODE DOOR COMMON DRIVER CIRCUIT FOR A SHORT TO THE (C266) MODE DOOR DRIVER CIRCUIT

Disconnect the Mode Door Actuator harness connector.

Measure the resistance between the (C66) Mode Door Common Driver Circuit and the (C266) Mode Door Driver circuit in the A/C Heater Control C2 harness connector.

Is the resistance below 10k ohms?

Yes >> Repair the (C66) Mode Door Common Driver Circuit for a short to the (C266) Mode Door Driver circuit.

Perform BODY VERIFICATION TEST – VER 1. (Refer to 8 - ELECTRICAL/ELECTRONIC CONTROL MODULES/ FRONT CONTROL MODULE - DIAGNOSIS AND TESTING).

No >> Replace the Mode Door Actuator in accordance with the Service Information.

Perform BODY VERIFICATION TEST – VER 1. (Refer to 8 - ELECTRICAL/ELECTRONIC CONTROL MODULES/ FRONT CONTROL MODULE - DIAGNOSIS AND TESTING).

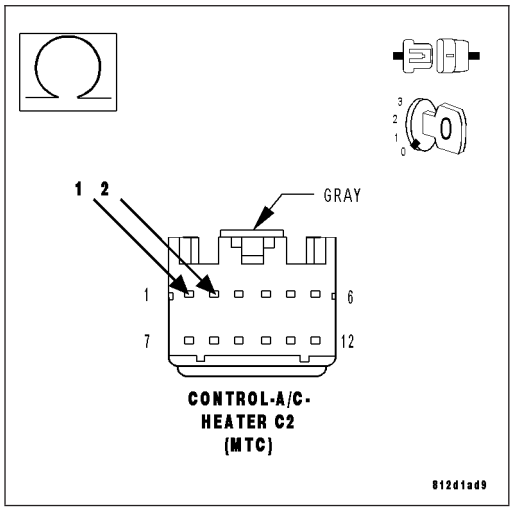

8. CHECK THE LEFT BLEND DOOR ACTUATOR CIRCUIT RESISTANCE

Measure the resistance between the (C55) Left Blend Door Common Driver Circuit and the (C255) Left Blend Door Driver circuit in the A/C Heater Control C2 harness connector.

Is the resistance below 30.0 ohms?

Yes >> Go To 9

No >> Go To 10

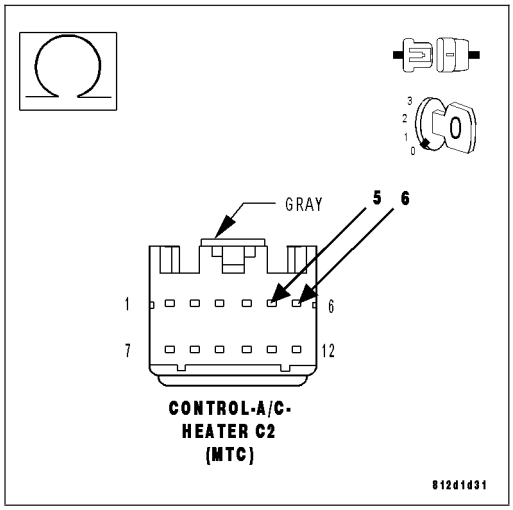

9. CHECK THE (C55) LEFT BLEND DOOR COMMON DRIVER CIRCUIT FOR A SHORT TO THE (C255) LEFT BLEND DOOR DRIVER CIRCUIT

Disconnect the Left Blend Door Actuator harness connector.

Measure the resistance between the (C55) Left Blend Door Common Driver Circuit and the (C255) Left Blend Door Driver circuit in the A/C Heater Control C2 harness connector.

Is the resistance below 10k ohms?

Yes >> Repair the (C55) Left Blend Door Common Driver Circuit for a short to the (C255) Left Blend Door Driver circuit.

Perform BODY VERIFICATION TEST – VER 1. (Refer to 8 - ELECTRICAL/ELECTRONIC CONTROL MODULES/ FRONT CONTROL MODULE - DIAGNOSIS AND TESTING).

No >> Replace the Left Blend Door Actuator in accordance with the Service Information.

Perform BODY VERIFICATION TEST – VER 1. (Refer to 8 - ELECTRICAL/ELECTRONIC CONTROL MODULES/ FRONT CONTROL MODULE - DIAGNOSIS AND TESTING).

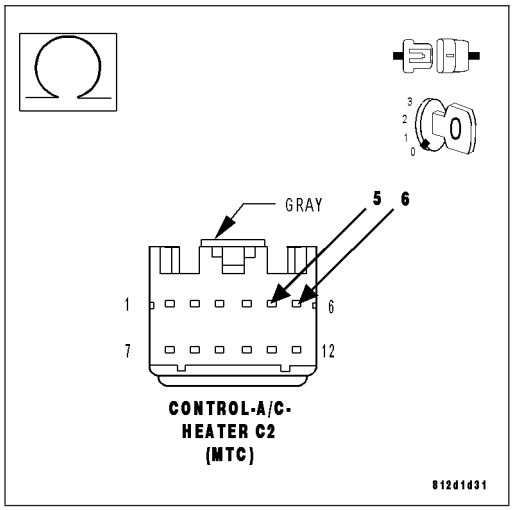

10. CHECK THE RECIRCULATION DOOR ACTUATOR CIRCUIT RESISTANCE

Measure the resistance between the (C68) Recirculation Door Common Driver Circuit and the (C268) Recirculation Door Driver circuit in the A/C Heater Control C2 harness connector.

Is the resistance below 30.0 ohms?

Yes >> Go To 11

No >> Go To 12

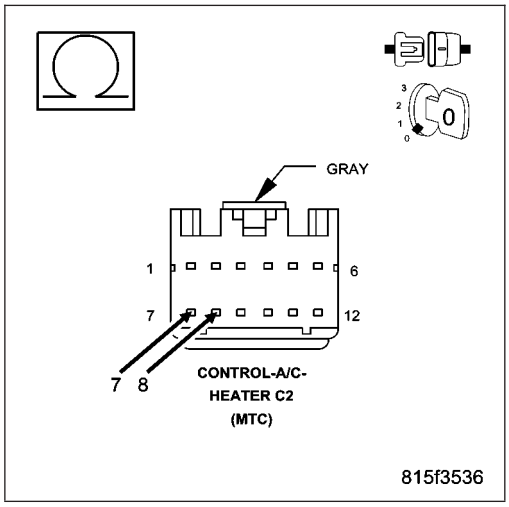

11. CHECK THE (C68) RECIRCULATION DOOR COMMON DRIVER CIRCUIT FOR A SHORT TO THE (C268) RECIRCULATION DOOR DRIVER CIRCUIT

Disconnect the Recirculation Door Actuator harness connector.

Measure the resistance between the (C68) Recirculation Door Common Driver Circuit and the (C268) Recirculation Door Driver circuit in the A/C Heater Control C2 harness connector.

Is the resistance below 10k ohms?

Yes >> Repair the (C68) Recirculation Door Common Driver Circuit for a short to the (C268) Recirculation Door Driver circuit.

Perform BODY VERIFICATION TEST – VER 1. (Refer to 8 - ELECTRICAL/ELECTRONIC CONTROL MODULES/ FRONT CONTROL MODULE - DIAGNOSIS AND TESTING).

No >> Replace the Recirculation Door Actuator in accordance with the Service Information.

Perform BODY VERIFICATION TEST – VER 1. (Refer to 8 - ELECTRICAL/ELECTRONIC CONTROL MODULES/ FRONT CONTROL MODULE - DIAGNOSIS AND TESTING).

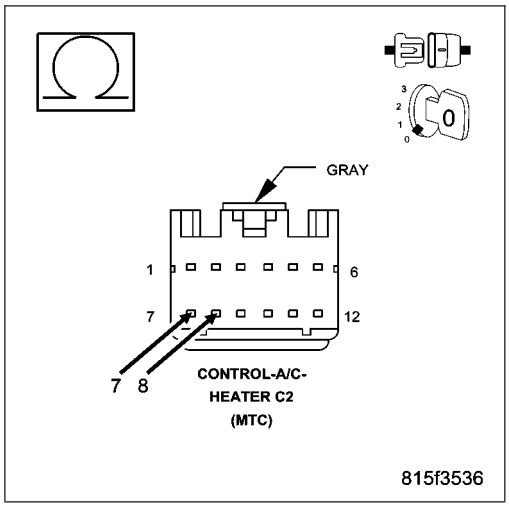

12. VERIFY THAT THE FAULT IS STILL PRESENT

Reconnect the A/C Heater Control C2 harness connector.

Reconnect all of the door actuator harness connectors.

Turn the ignition on.

Actuate the Clear DTC function by performing the following:

- Turn the blower control on.
- Press the A/C mode switch down, turn the blower control to off, wait until both LEDs illuminate (approximately 5 seconds) and then release the A/C mode switch.
- When the A/C status indicator begins displaying DTCs, set the Mode switch to the floor position, simultaneously press the A/C mode switch and the EBL mode switch down until both LEDs start flashing (approximately 5 seconds) and then release the mode switches. Stored DTCs will clear from memory in approximately two seconds.

Turn the ignition off, wait 10 seconds, and turn the ignition on.

Actuate the Actuator Circuit Test / Door Calibration Function by performing the following:

- Turn the blower control off.
- Press and hold the EBL mode switch down and then turn the blower control on. Continue to hold the EBL mode switch down until the EBL status indicator begins flashing. Then, release the EBL mode switch. While the test / function is running, the EBL status indicator will flash once per second. If the test / function passes, the EBL status indicator will stop flashing. If the test / function fails, the A/C and EBL status indicators will flash alternately. Allow the test / function to run to completion before proceeding.

Actuate the Display DTC function by performing the following:

- Turn the blower control on.
- Press the A/C mode switch down, turn the blower control to off, wait until both LEDs illuminate (approximately 5 seconds) and then release the A/C mode switch.

NOTE: The A/C status indicator displays active DTCs when the EBL status indictor is not illuminated and stored DTCs when the EBL status indicator is illuminated.

Read DTCs from the A/C status indictor.

Does the A/C status indicator display DTC 43?

Yes >> Replace the A/C Heater Control in accordance with the Service Information.

Perform BODY VERIFICATION TEST – VER 1. (Refer to 8 - ELECTRICAL/ELECTRONIC CONTROL MODULES/FRONT CONTROL MODULE - DIAGNOSIS AND TESTING).

No >> Using the wiring diagram as a guide, inspect the wiring and connectors for conditions causing an intermittent short that set the original fault. Repair as necessary. Then, if present, diagnose and repair all other DTCs. Refer to the Table of Contents in this Section for a complete list of HVAC related symptoms.

Perform BODY VERIFICATION TEST – VER 1. (Refer to 8 - ELECTRICAL/ELECTRONIC CONTROL MODULES/FRONT CONTROL MODULE - DIAGNOSIS AND TESTING).

44–RECIRC OVERCURRENT (MTC)

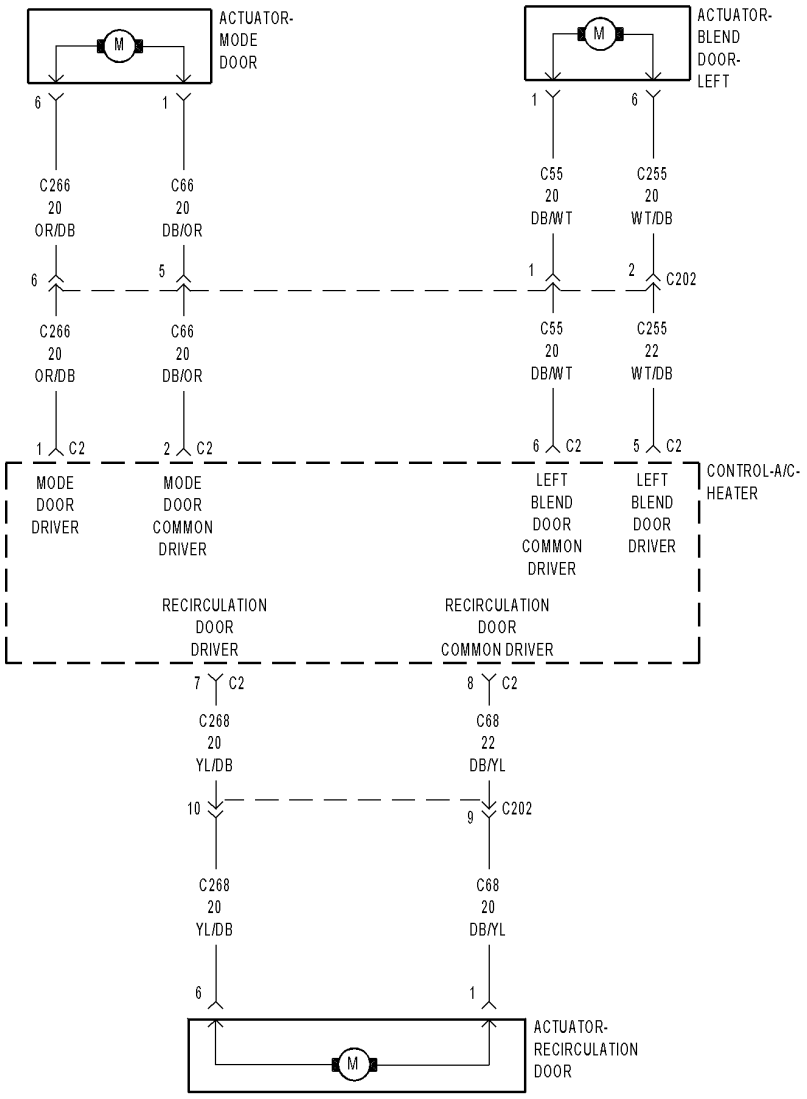

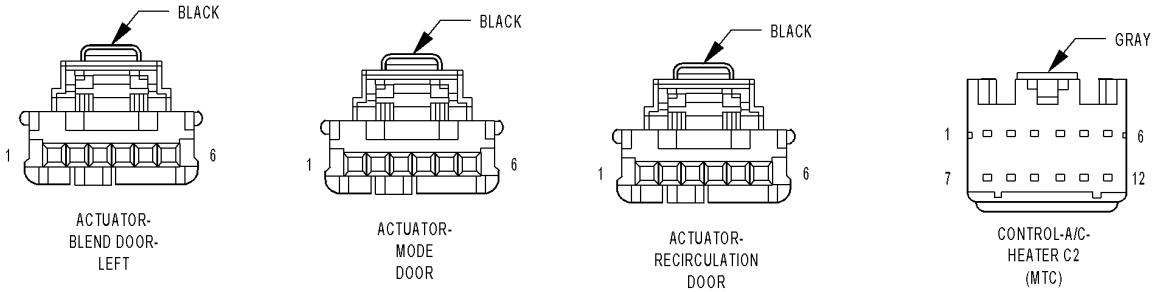

81503524

For a complete wiring diagram **Refer to Section 8W**.

- **When Monitored:**
  When actuator movement is requested.
- **Set Condition:**
  If the A/C Heater Control detects an excessive current draw on any of the door driver circuits while attempting to drive this door actuator. Note that only one overcurrent DTC can set per ignition cycle.

Possible Causes
DOOR DRIVER CIRCUIT(S) SHORTED TO VOLTAGE
DOOR DRIVER CIRCUIT(S) SHORTED TO GROUND
DOOR DRIVER CIRCUITS SHORTED TOGETHER
MODE DOOR ACTUATOR
LEFT BLEND DOOR ACTUATOR
RECIRCULATION DOOR ACTUATOR
A/C HEATER CONTROL

NOTE: This DTC must be active for the result of this test to be valid. Do not perform this test if this DTC is stored. Refer to HVAC System Test (MTC) for stored DTC test procedures.

Diagnostic Test

1. RUN THE ACTUATOR CIRCUIT TEST / DOOR CALIBRATION FUNCTION & THEN CHECK FOR ACTUATOR CIRCUIT TEST FAULTS

NOTE: Diagnose and repair Actuator Circuit Test faults (DTC 61, 62, 63, 64, 67, 68, 69, 71, and 72) before diagnosing Overcurrent faults (DTC 41, 43, and 44).

Turn the ignition on.

Actuate the Clear DTC function by performing the following:

- Turn the blower control on.
- Press the A/C mode switch down, turn the blower control to off, wait until both LEDs illuminate (approximately 5 seconds) and then release the A/C mode switch.
- When the A/C status indicator begins displaying DTCs, set the Mode switch to the floor position, simultaneously press the A/C mode switch and the EBL mode switch down until both LEDs start flashing (approximately 5 seconds) and then release the mode switches. Stored DTCs will clear from memory in approximately two seconds.

Turn the ignition off, wait 10 seconds, and turn the ignition on.

Actuate the Actuator Circuit Test / Door Calibration Function by performing the following:

- Turn the blower control off.
- Press and hold the EBL mode switch down and then turn the blower control on. Continue to hold the EBL mode switch down until the EBL status indicator begins flashing. Then, release the EBL mode switch. While the test / function is running, the EBL status indicator will flash once per second. If the test / function passes, the EBL status indicator will stop flashing. If the test / function fails, the A/C and EBL status indicators will flash alternately. Allow the test / function to run to completion before proceeding.

Actuate the Display DTC function by performing the following:

- Turn the blower control on.
- Press the A/C mode switch down, turn the blower control to off, wait until both LEDs illuminate (approximately 5 seconds) and then release the A/C mode switch.

NOTE: The A/C status indicator displays active DTCs when the EBL status indictor is not illuminated and stored DTCs when the EBL status indicator is illuminated.
Read DTCs from the A/C status indictor.

Does the A/C status indicator display any of the following DTCs: 61, 62, 63, 64, 67, 68, 69, 71, or 72?

Yes >> As present, diagnose and repair the Actuator Circuit Test faults in the following order: DTC 72 first, then DTC 62, then DTC 61, then DTCs 64, 68, or 71, and finally DTCs 63, 67, or 69. Refer to the Table Of Contents in this section for a complete list of HVAC related symptoms.

Perform BODY VERIFICATION TEST – VER 1. (Refer to 8 - ELECTRICAL/ELECTRONIC CONTROL MODULES/FRONT CONTROL MODULE - DIAGNOSIS AND TESTING).

No >> Go To 2

2. CHECK THE (C266) MODE DOOR DRIVER CIRCUIT FOR A SHORT TO THE (C255) LEFT BLEND DOOR DRIVER CIRCUIT, (C55) LEFT BLEND DOOR COMMON DRIVER CIRCUIT, (C268) RECIRCULATION DOOR DRIVER CIRCUIT, & THE (C68) RECIRCULATION DOOR COMMON DRIVER CIRCUIT

Turn the ignition off.

Disconnect the A/C Heater Control C2 harness connector.

Measure the resistance between the (C266) Mode Door Driver circuit and the (C255) Left Blend Door Driver circuit, (C55) Left Blend Door Common Driver circuit, (C268) Recirculation Door Driver circuit, and the (C68) Recirculation Door Common Driver circuit in the A/C Heater Control C2 harness connector.

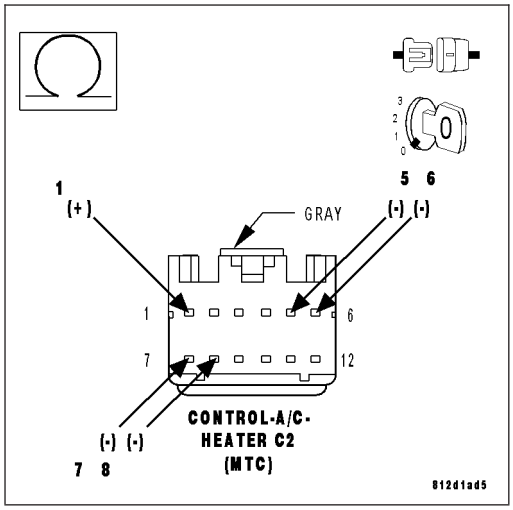

Is the resistance below 10k ohms on any of the circuits?

Yes >> Repair all circuits with a resistance below 10k ohms for a short to the (C266) Mode Door Driver circuit.

Perform BODY VERIFICATION TEST – VER 1. (Refer to 8 - ELECTRICAL/ELECTRONIC CONTROL MODULES/FRONT CONTROL MODULE - DIAGNOSIS AND TESTING).

No >> Go To 3

3. CHECK THE (C66) MODE DOOR COMMON DRIVER CIRCUIT FOR A SHORT TO THE (C255) LEFT BLEND DOOR DRIVER CIRCUIT, (C55) LEFT BLEND DOOR COMMON DRIVER CIRCUIT, (C268) RECIRCULATION DOOR DRIVER CIRCUIT, & THE (C68) RECIRCULATION DOOR COMMON DRIVER CIRCUIT

Measure the resistance between the (C66) Mode Door Common Driver circuit and the (C255) Left Blend Door Driver circuit, (C55) Left Blend Door Common Driver circuit, (C268) Recirculation Door Driver circuit, and the (C68) Recirculation Door Common Driver circuit in the A/C Heater Control C2 harness connector.

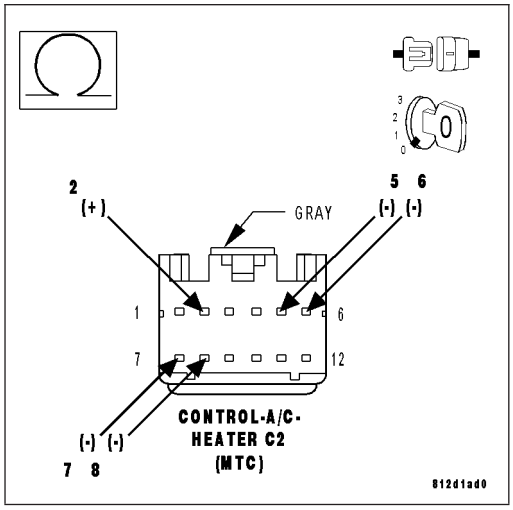

Is the resistance below 10k ohms on any of the circuits?

Yes >> Repair all circuits with a resistance below 10k ohms for a short to the (C66) Mode Door Common Driver circuit.

Perform BODY VERIFICATION TEST – VER 1. (Refer to 8 - ELECTRICAL/ELECTRONIC CONTROL MODULES/FRONT CONTROL MODULE - DIAGNOSIS AND TESTING).

No >> Go To 4

4. CHECK THE (C255) LEFT BLEND DOOR DRIVER CIRCUIT FOR A SHORT TO THE (C268) RECIRCULATION DOOR DRIVER CIRCUIT & THE (C68) RECIRCULATION DOOR COMMON DRIVER CIRCUIT

Measure the resistance between the (C255) Left Blend Door Driver circuit and the (C268) Recirculation Door Driver circuit and the (C68) Recirculation Door Common Driver circuit in the A/C Heater Control C2 harness connector.

Is the resistance below 10k ohms on any of the circuits?

Yes >> Repair all circuits with a resistance below 10k ohms for a short to the (C255) Left Blend Door Driver circuit.

Perform BODY VERIFICATION TEST – VER 1. (Refer to 8 - ELECTRICAL/ELECTRONIC CONTROL MODULES/ FRONT CONTROL MODULE - DIAGNOSIS AND TESTING).

No >> Go To 5

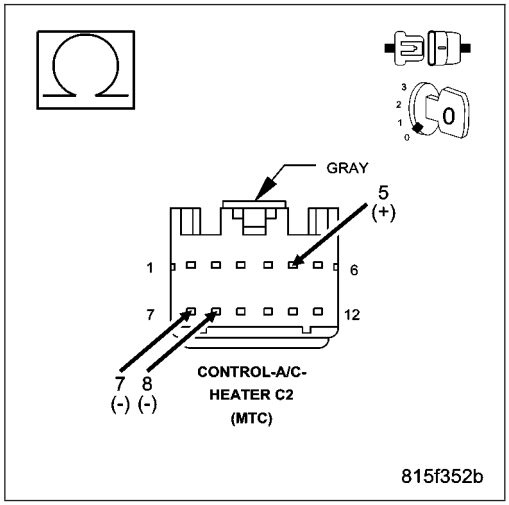

5. CHECK THE (C55) LEFT BLEND DOOR COMMON DRIVER CIRCUIT FOR A SHORT TO THE (C268) RECIRCULATION DOOR DRIVER CIRCUIT & THE (C68) RECIRCULATION DOOR COMMON DRIVER CIRCUIT

Measure the resistance between the (C55) Left Blend Door Common Driver circuit and the (C268) Recirculation Door Driver circuit and the (C68) Recirculation Door Common Driver circuit in the A/C Heater Control C2 harness connector.

Is the resistance below 10k ohms on any of the circuits?

Yes >> Repair all circuits with a resistance below 10k ohms for a short to the (C55) Left Blend Door Common Driver circuit.

Perform BODY VERIFICATION TEST – VER 1. (Refer to 8 - ELECTRICAL/ELECTRONIC CONTROL MODULES/ FRONT CONTROL MODULE - DIAGNOSIS AND TESTING).

No >> Go To 6

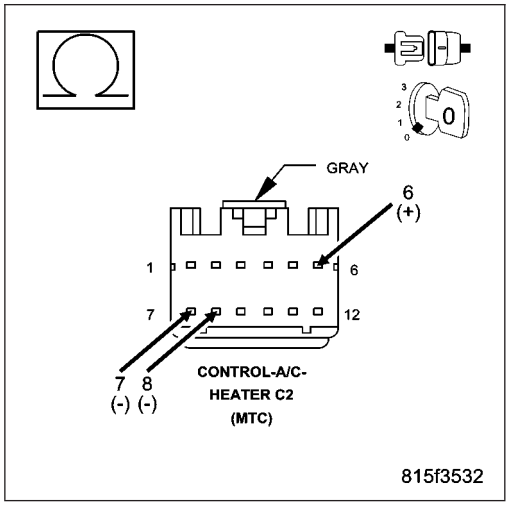

6. CHECK THE MODE DOOR ACTUATOR CIRCUIT RESISTANCE

Measure the resistance between the (C66) Mode Door Common Driver Circuit and the (C266) Mode Door Driver circuit in the A/C Heater Control C2 harness connector.

Is the resistance below 30.0 ohms?

Yes >> Go To 7

No >> Go To 8

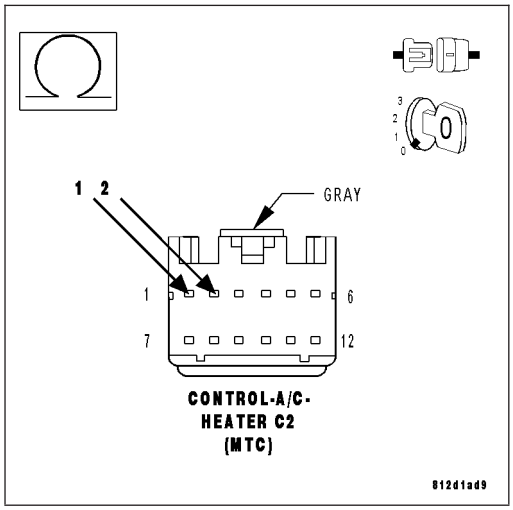

7. CHECK THE (C66) MODE DOOR COMMON DRIVER CIRCUIT FOR A SHORT TO THE (C266) MODE DOOR DRIVER CIRCUIT

Disconnect the Mode Door Actuator harness connector.

Measure the resistance between the (C66) Mode Door Common Driver Circuit and the (C266) Mode Door Driver circuit in the A/C Heater Control C2 harness connector.

Is the resistance below 10k ohms?

Yes >> Repair the (C66) Mode Door Common Driver Circuit for a short to the (C266) Mode Door Driver circuit.

Perform BODY VERIFICATION TEST – VER 1. (Refer to 8 - ELECTRICAL/ELECTRONIC CONTROL MODULES/ FRONT CONTROL MODULE - DIAGNOSIS AND TESTING).

No >> Replace the Mode Door Actuator in accordance with the Service Information.

Perform BODY VERIFICATION TEST – VER 1. (Refer to 8 - ELECTRICAL/ELECTRONIC CONTROL MODULES/ FRONT CONTROL MODULE - DIAGNOSIS AND TESTING).

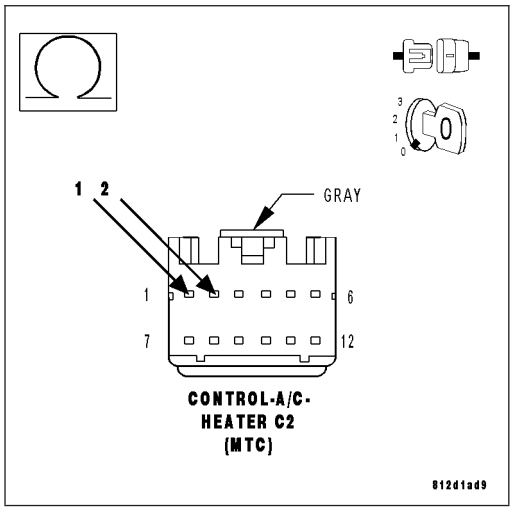

8. CHECK THE LEFT BLEND DOOR ACTUATOR CIRCUIT RESISTANCE

Measure the resistance between the (C55) Left Blend Door Common Driver Circuit and the (C255) Left Blend Door Driver circuit in the A/C Heater Control C2 harness connector.

Is the resistance below 30.0 ohms?

Yes >> Go To 9

No >> Go To 10

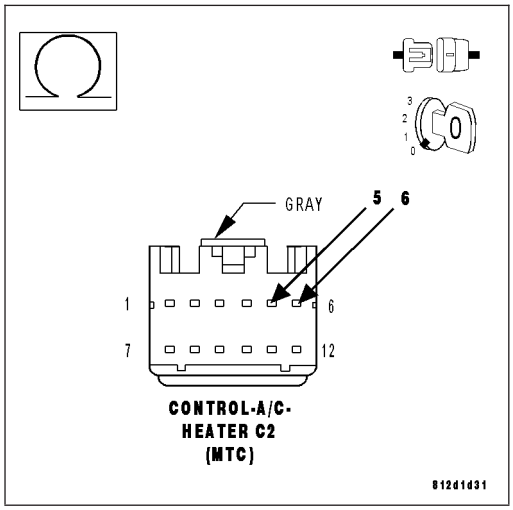

9. CHECK THE (C55) LEFT BLEND DOOR COMMON DRIVER CIRCUIT FOR A SHORT TO THE (C255) LEFT BLEND DOOR DRIVER CIRCUIT

Disconnect the Left Blend Door Actuator harness connector.

Measure the resistance between the (C55) Left Blend Door Common Driver Circuit and the (C255) Left Blend Door Driver circuit in the A/C Heater Control C2 harness connector.

Is the resistance below 10k ohms?

Yes >> Repair the (C55) Left Blend Door Common Driver Circuit for a short to the (C255) Left Blend Door Driver circuit.

Perform BODY VERIFICATION TEST – VER 1. (Refer to 8 - ELECTRICAL/ELECTRONIC CONTROL MODULES/ FRONT CONTROL MODULE - DIAGNOSIS AND TESTING).

No >> Replace the Left Blend Door Actuator in accordance with the Service Information.

Perform BODY VERIFICATION TEST – VER 1. (Refer to 8 - ELECTRICAL/ELECTRONIC CONTROL MODULES/ FRONT CONTROL MODULE - DIAGNOSIS AND TESTING).

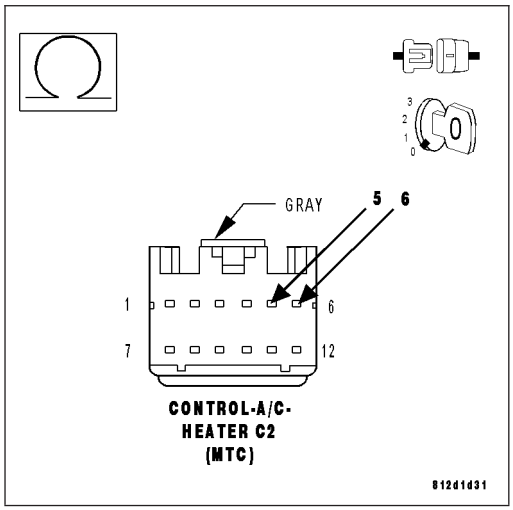

10. CHECK THE RECIRCULATION DOOR ACTUATOR CIRCUIT RESISTANCE

Measure the resistance between the (C68) Recirculation Door Common Driver Circuit and the (C268) Recirculation Door Driver circuit in the A/C Heater Control C2 harness connector.

Is the resistance below 30.0 ohms?

Yes >> Go To 11

No >> Go To 12

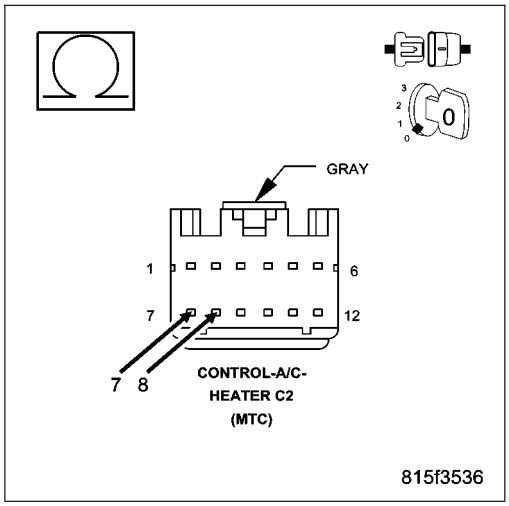

11. CHECK THE (C68) RECIRCULATION DOOR COMMON DRIVER CIRCUIT FOR A SHORT TO THE (C268) RECIRCULATION DOOR DRIVER CIRCUIT

Disconnect the Recirculation Door Actuator harness connector.

Measure the resistance between the (C68) Recirculation Door Common Driver Circuit and the (C268) Recirculation Door Driver circuit in the A/C Heater Control C2 harness connector.

Is the resistance below 10k ohms?

Yes >> Repair the (C68) Recirculation Door Common Driver Circuit for a short to the (C268) Recirculation Door Driver circuit.

Perform BODY VERIFICATION TEST – VER 1. (Refer to 8 - ELECTRICAL/ELECTRONIC CONTROL MODULES/ FRONT CONTROL MODULE - DIAGNOSIS AND TESTING).

No >> Replace the Recirculation Door Actuator in accordance with the Service Information.

Perform BODY VERIFICATION TEST – VER 1. (Refer to 8 - ELECTRICAL/ELECTRONIC CONTROL MODULES/ FRONT CONTROL MODULE - DIAGNOSIS AND TESTING).

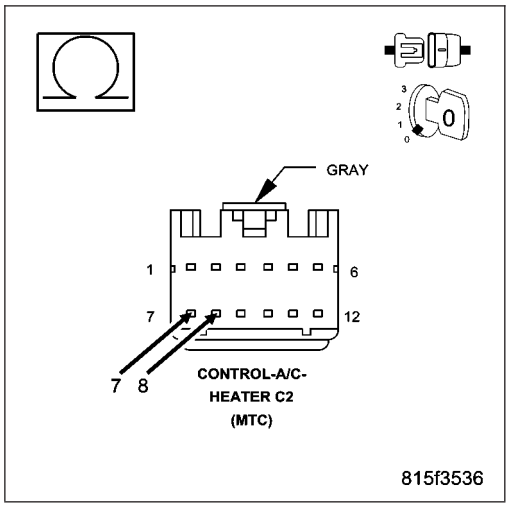

12. VERIFY THAT THE FAULT IS STILL PRESENT

Reconnect the A/C Heater Control C2 harness connector.

Reconnect all of the door actuator harness connectors.

Turn the ignition on.

Actuate the Clear DTC function by performing the following:

- Turn the blower control on.
- Press the A/C mode switch down, turn the blower control to off, wait until both LEDs illuminate (approximately 5 seconds) and then release the A/C mode switch.
- When the A/C status indicator begins displaying DTCs, set the Mode switch to the floor position, simultaneously press the A/C mode switch and the EBL mode switch down until both LEDs start flashing (approximately 5 seconds) and then release the mode switches. Stored DTCs will clear from memory in approximately two seconds.

Turn the ignition off, wait 10 seconds, and turn the ignition on.

Actuate the Actuator Circuit Test / Door Calibration Function by performing the following:

- Turn the blower control off.
- Press and hold the EBL mode switch down and then turn the blower control on. Continue to hold the EBL mode switch down until the EBL status indicator begins flashing. Then, release the EBL mode switch. While the test / function is running, the EBL status indicator will flash once per second. If the test / function passes, the EBL status indicator will stop flashing. If the test / function fails, the A/C and EBL status indicators will flash alternately. Allow the test / function to run to completion before proceeding.

Actuate the Display DTC function by performing the following:

- Turn the blower control on.
- Press the A/C mode switch down, turn the blower control to off, wait until both LEDs illuminate (approximately 5 seconds) and then release the A/C mode switch.

NOTE: The A/C status indicator displays active DTCs when the EBL status indictor is not illuminated and stored DTCs when the EBL status indicator is illuminated.

Read DTCs from the A/C status indictor.

Does the A/C status indicator display DTC 44?

Yes >> Replace the A/C Heater Control in accordance with the Service Information.

Perform BODY VERIFICATION TEST – VER 1. (Refer to 8 - ELECTRICAL/ELECTRONIC CONTROL MODULES/FRONT CONTROL MODULE - DIAGNOSIS AND TESTING).

No >> Using the wiring diagram as a guide, inspect the wiring and connectors for conditions causing an intermittent short that set the original fault. Repair as necessary. Then, if present, diagnose and repair all other DTCs. Refer to the Table of Contents in this Section for a complete list of HVAC related symptoms.

Perform BODY VERIFICATION TEST – VER 1. (Refer to 8 - ELECTRICAL/ELECTRONIC CONTROL MODULES/FRONT CONTROL MODULE - DIAGNOSIS AND TESTING).

45–BLEND DOOR BOUND (MTC)

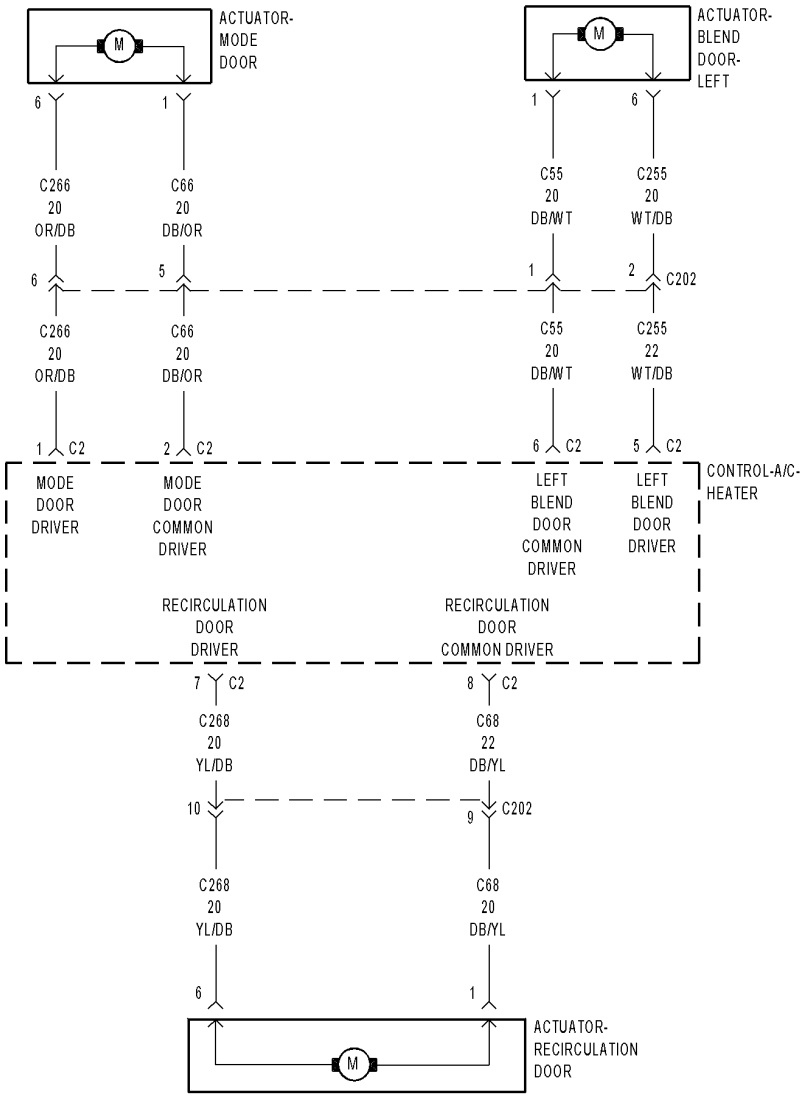

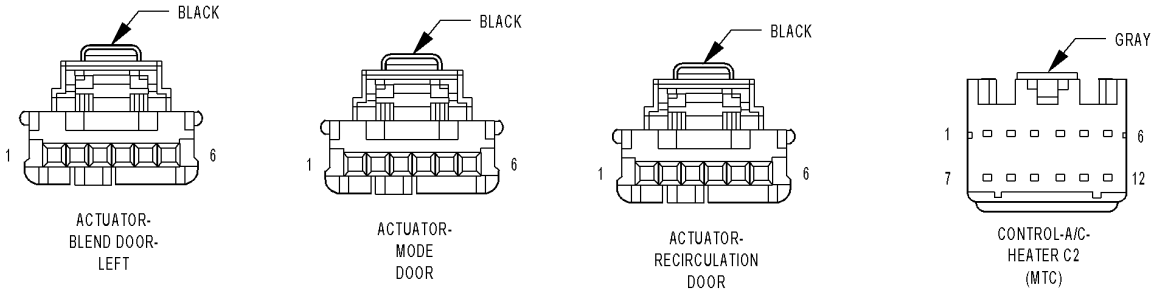

81503524

For a complete wiring diagram **Refer to Section 8W**.

Theory of Operation

NOTE: Diagnose and repair Actuator Circuit Test faults (DTC 61, 62, 63, 64, 67, 68, 69, 71, and 72) before diagnosing Overcurrent faults (DTC 41, 43, and 44) and Calibration faults (DTC 18, 21, 22, 23, 45, 46, 47, 51, 52, 53, 55, and 56). Diagnose and repair Overcurrent faults (DTC 41, 43, and 44) before diagnosing Calibration faults (DTC 18, 21, 22, 23, 45, 46, 47, 51, 52, 53, 55, and 56).

The purpose of actuator calibration is to determine the total span of door travel between physical stops. To calibrate the actuator, the A/C Heater Control first moves the door to its soft stop, and then counts the number of pulses it takes to move the door to its other stop. An expected range of span is stored in the control's memory. If the A/C Heater Control detects no commutator pulses when calibrating the left blend door, this DTC will set.

- **When Monitored:**
  During actuator calibration.
- **Set Condition:**
  If the A/C Heater Control detects no commutator pulses when calibrating the left blend door.

Possible Causes
ACTUATOR CIRCUIT TEST FAULTS PRESENT
OVERCURRENT FAULTS PRESENT
(C255) LEFT BLEND DOOR DRIVER CIRCUIT OPEN
(C55) LEFT BLEND DOOR COMMON DRIVER CIRCUIT OPEN
LEFT BLEND DOOR SEIZED, OBSTRUCTED
LEFT BLEND DOOR ACTUATOR
A/C HEATER CONTROL

Diagnostic Test

1. VERIFY IF ANY ACTUATOR CIRCUIT TEST FAULTS OR OVERCURRENT FAULTS ARE PRESENT

Turn the ignition on.

Actuate the Clear DTC function by performing the following:

- Turn the blower control on.
- Press the A/C mode switch down, turn the blower control to off, wait until both LEDs illuminate (approximately 5 seconds) and then release the A/C mode switch.
- When the A/C status indicator begins displaying DTCs, set the Mode switch to the floor position, simultaneously press the A/C mode switch and the EBL mode switch down until both LEDs start flashing (approximately 5 seconds) and then release the mode switches. Stored DTCs will clear from memory in approximately two seconds.

Turn the ignition off, wait 10 seconds, and turn the ignition on.

Actuate the Actuator Circuit Test / Door Calibration Function by performing the following:

- Turn the blower control off.
- Press and hold the EBL mode switch down and then turn the blower control on. Continue to hold the EBL mode switch down until the EBL status indicator begins flashing. Then, release the EBL mode switch. While the test / function is running, the EBL status indicator will flash once per second. If the test / function passes, the EBL status indicator will stop flashing. If the test / function fails, the A/C and EBL status indicators will flash alternately. Allow the test / function to run to completion before proceeding.

Actuate the Display DTC function by performing the following:

- Turn the blower control on.
- Press the A/C mode switch down, turn the blower control to off, wait until both LEDs illuminate (approximately 5 seconds) and then release the A/C mode switch.

NOTE: The A/C status indicator displays active DTCs when the EBL status indictor is not illuminated and stored DTCs when the EBL status indicator is illuminated.

Read DTCs from the A/C status indictor.

Does the A/C status indicator display any of the following DTCs: 41, 43, 44, 61, 62, 63, 64, 67, 68, 69,

71, or 72?

Yes >> As present, diagnose and repair the faults in the following order: DTC 72 first, then DTC 62, then DTC 61, then DTCs 64, 68, or 71, then DTCs 63, 67, or 69, and finally DTCs 41, 43, or 44. Refer to the Table Of Contents in this section for a complete list of HVAC related symptoms.

No >> Go To 2

2. CHECK THE LEFT BLEND DOOR ACTUATOR CIRCUIT RESISTANCE

Turn the ignition off.

Disconnect the A/C Heater Control C2 harness connector.

Measure the resistance between the (C255) Left Blend Door Driver circuit and the (C55) Left Blend Door Common Driver circuit in the A/C Heater Control C2 harness connector.

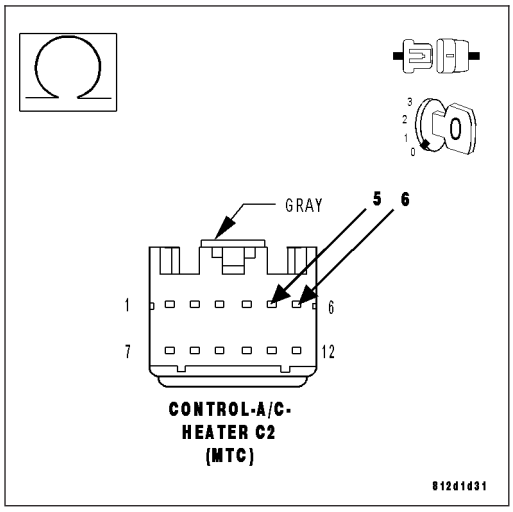

Is the resistance above 70.0 ohms?

Yes >> Go To 3

No >> Go To 5

3. CHECK THE (C255) LEFT BLEND DOOR DRIVER CIRCUIT FOR AN OPEN

Disconnect the Left Blend Door Actuator harness connector.

Measure the resistance of the (C255) Left Blend Door Driver circuit between the A/C Heater Control C2 harness connector and the Left Blend Door Actuator harness connector.

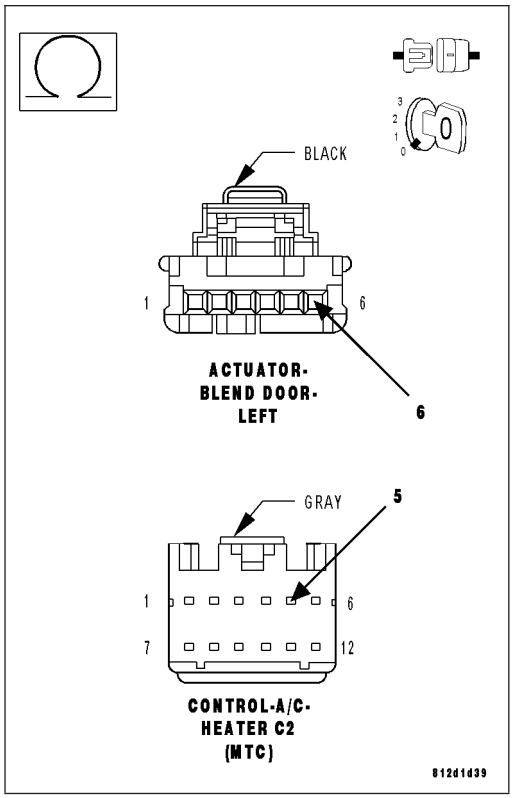

Is the resistance below 5.0 ohms?

Yes >> Go To 4

No >> Repair the (C255) Left Blend Door Driver circuit for an open.

Perform BODY VERIFICATION TEST – VER 1. (Refer to 8 - ELECTRICAL/ELECTRONIC CONTROL MODULES/ FRONT CONTROL MODULE - DIAGNOSIS AND TESTING).

4. CHECK THE (C55) LEFT BLEND DOOR COMMON DRIVER CIRCUIT FOR AN OPEN

Measure the resistance of the (C55) Left Blend Door Common Driver Circuit between the A/C Heater Control C2 harness connector and the Left Blend Door Actuator harness connector.

Is the resistance below 5.0 ohms?

Yes >> Replace the Left Blend Door Actuator in accordance with the Service Information.
Perform BODY VERIFICATION TEST – VER 1. (Refer to 8 - ELECTRICAL/ELECTRONIC CONTROL MODULES/ FRONT CONTROL MODULE - DIAGNOSIS AND TESTING).

No >> Repair the (C55) Left Blend Door Common Driver circuit for an open.
Perform BODY VERIFICATION TEST – VER 1. (Refer to 8 - ELECTRICAL/ELECTRONIC CONTROL MODULES/ FRONT CONTROL MODULE - DIAGNOSIS AND TESTING).

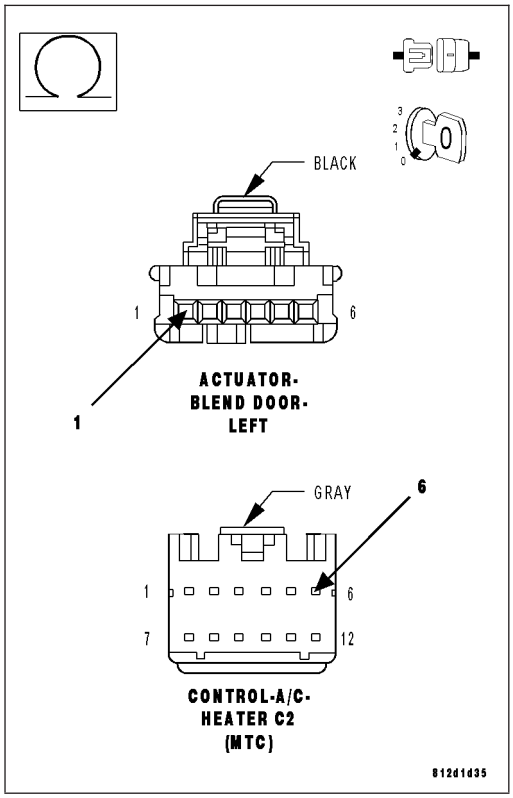

5. INSPECT ACTUATOR & HOUSING ASSEMBLY FOR A CONDITION CAUSING THE LEFT BLEND DOOR TO SEIZE

Turn the ignition off.

Inspect the actuator, linkage, and housing assembly for a condition causing the left blend door to seize.

Are there any physical or mechanical problems with the door, housing, linkage, or actuator?

Yes >> Repair as necessary in accordance with the Service Information.
Perform BODY VERIFICATION TEST – VER 1. (Refer to 8 - ELECTRICAL/ELECTRONIC CONTROL MODULES/FRONT CONTROL MODULE - DIAGNOSIS AND TESTING).

No >> Go To 6

6. CHECK LEFT BLEND DOOR TRAVEL

Remove the Left Blend Door Actuator from the A/C Heater Housing Assembly.

By hand, attempt to rotate the door in both directions. The door should operate smoothly in both directions over the entire span of travel (approximately 190 degrees).

Does the door operate smoothly in both directions over the entire span of travel?

Yes >> Replace the Left Blend Door Actuator in accordance with the Service Information. Then, Go To 7.

No >> Repair as necessary in accordance with the Service Information.
Perform BODY VERIFICATION TEST – VER 1. (Refer to 8 - ELECTRICAL/ELECTRONIC CONTROL MODULES/FRONT CONTROL MODULE - DIAGNOSIS AND TESTING).

7. VERIFY IF THE FAULT IS STILL PRESENT

Turn the ignition on.

Actuate the Clear DTC function by performing the following:

- Turn the blower control on.
- Press the A/C mode switch down, turn the blower control to off, wait until both LEDs illuminate (approximately 5 seconds) and then release the A/C mode switch.
- When the A/C status indicator begins displaying DTCs, set the Mode switch to the floor position, simultaneously press the A/C mode switch and the EBL mode switch down until both LEDs start flashing (approximately 5 seconds) and then release the mode switches. Stored DTCs will clear from memory in approximately two seconds.

Turn the ignition off, wait 10 seconds, and turn the ignition on.

Actuate the Actuator Circuit Test / Door Calibration Function by performing the following:

- Turn the blower control off.
- Press and hold the EBL mode switch down and then turn the blower control on. Continue to hold the EBL mode switch down until the EBL status indicator begins flashing. Then, release the EBL mode switch. While the test / function is running, the EBL status indicator will flash once per second. If the test / function passes, the EBL status indicator will stop flashing. If the test / function fails, the A/C and EBL status indicators will flash alternately. Allow the test / function to run to completion before proceeding.

Actuate the Display DTC function by performing the following:

- Turn the blower control on.
- Press the A/C mode switch down, turn the blower control to off, wait until both LEDs illuminate (approximately 5 seconds) and then release the A/C mode switch.

NOTE: The A/C status indicator displays active DTCs when the EBL status indictor is not illuminated and stored DTCs when the EBL status indicator is illuminated.

Read DTCs from the A/C status indictor.

Does the A/C status indicator display DTC 45?

Yes >> Replace the A/C Heater Control in accordance with the Service Information.
Perform BODY VERIFICATION TEST – VER 1. (Refer to 8 - ELECTRICAL/ELECTRONIC CONTROL MODULES/FRONT CONTROL MODULE - DIAGNOSIS AND TESTING).

No >> Perform BODY VERIFICATION TEST – VER 1. (Refer to 8 - ELECTRICAL/ELECTRONIC CONTROL MODULES/FRONT CONTROL MODULE - DIAGNOSIS AND TESTING).

46–FRONT MODE DOOR BOUND (MTC)

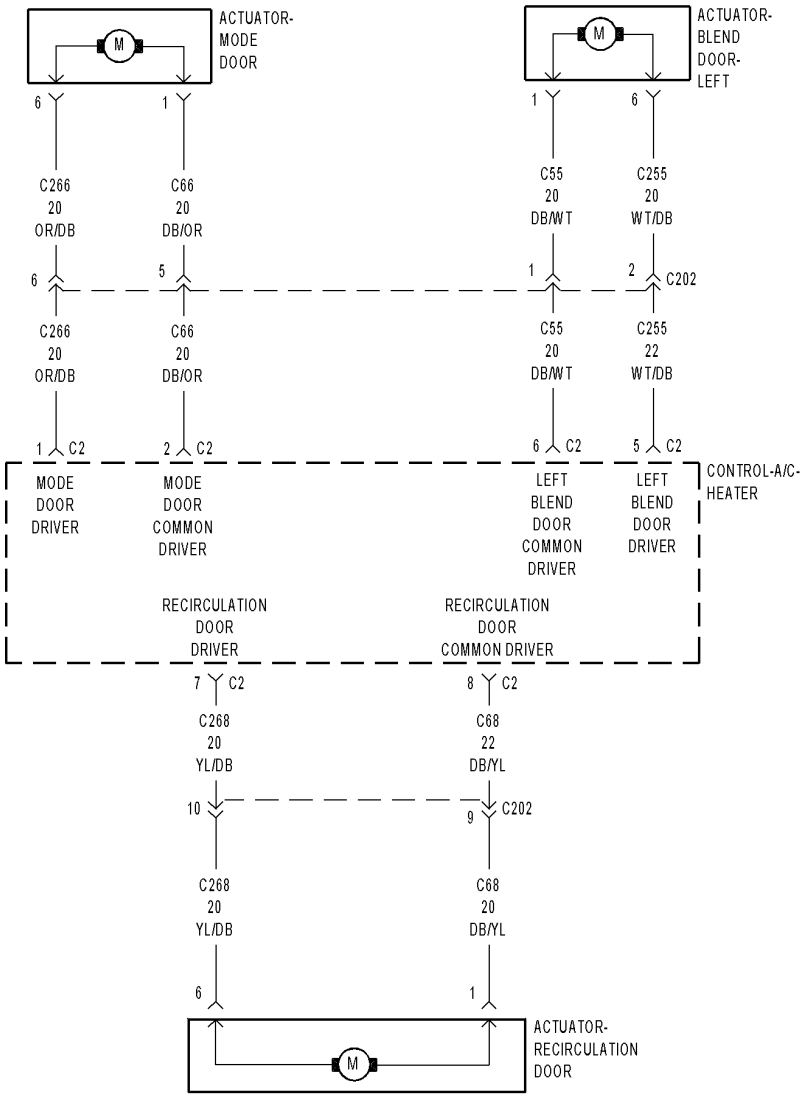

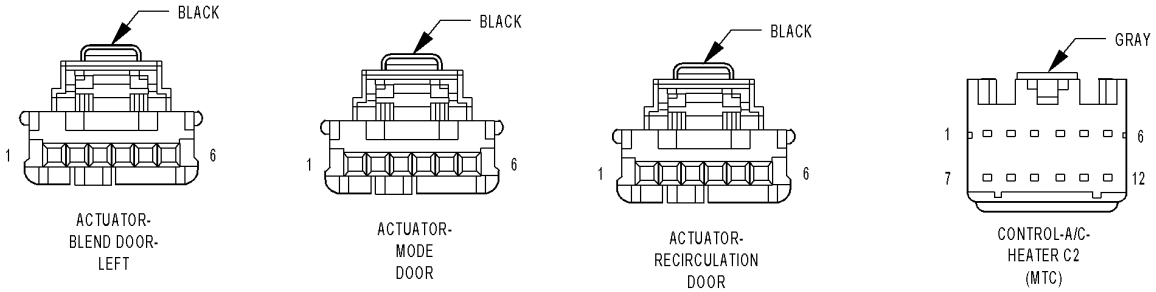

815f3524

For a complete wiring diagram **Refer to Section 8W**.

Theory of Operation

NOTE: Diagnose and repair Actuator Circuit Test faults (DTC 61, 62, 63, 64, 67, 68, 69, 71, and 72) before diagnosing Overcurrent faults (DTC 41, 43, and 44) and Calibration faults (DTC 18, 21, 22, 23, 45, 46, 47, 51, 52, 53, 55, and 56). Diagnose and repair Overcurrent faults (DTC 41, 43, and 44) before diagnosing Calibration faults (DTC 18, 21, 22, 23, 45, 46, 47, 51, 52, 53, 55, and 56).

The purpose of actuator calibration is to determine the total span of door travel between physical stops. To calibrate the actuator, the A/C Heater Control first moves the door to its soft stop, and then counts the number of pulses it takes to move the door to its other stop. An expected range of span is stored in the control's memory. If the A/C Heater Control detects no commutator pulses when calibrating the mode door, this DTC will set.

- **When Monitored:**
  During actuator calibration.
- **Set Condition:**
  If the A/C Heater Control detects no commutator pulses when calibrating the mode door.

Possible Causes
ACTUATOR CIRCUIT TEST FAULTS PRESENT
OVERCURRENT FAULTS PRESENT
(C266) MODE DOOR DRIVER CIRCUIT OPEN
(C66) MODE DOOR COMMON DRIVER CIRCUIT OPEN
MODE DOOR SEIZED, OBSTRUCTED
MODE DOOR ACTUATOR
A/C HEATER CONTROL

Diagnostic Test

1. VERIFY IF ANY ACTUATOR CIRCUIT TEST FAULTS OR OVERCURRENT FAULTS ARE PRESENT

Turn the ignition on.

Actuate the Clear DTC function by performing the following:

- Turn the blower control on.
- Press the A/C mode switch down, turn the blower control to off, wait until both LEDs illuminate (approximately 5 seconds) and then release the A/C mode switch.
- When the A/C status indicator begins displaying DTCs, set the Mode switch to the floor position, simultaneously press the A/C mode switch and the EBL mode switch down until both LEDs start flashing (approximately 5 seconds) and then release the mode switches. Stored DTCs will clear from memory in approximately two seconds.

Turn the ignition off, wait 10 seconds, and turn the ignition on.

Actuate the Actuator Circuit Test / Door Calibration Function by performing the following:

- Turn the blower control off.
- Press and hold the EBL mode switch down and then turn the blower control on. Continue to hold the EBL mode switch down until the EBL status indicator begins flashing. Then, release the EBL mode switch. While the test / function is running, the EBL status indicator will flash once per second. If the test / function passes, the EBL status indicator will stop flashing. If the test / function fails, the A/C and EBL status indicators will flash alternately. Allow the test / function to run to completion before proceeding.

Actuate the Display DTC function by performing the following:

- Turn the blower control on.
- Press the A/C mode switch down, turn the blower control to off, wait until both LEDs illuminate (approximately 5 seconds) and then release the A/C mode switch.

NOTE: The A/C status indicator displays active DTCs when the EBL status indictor is not illuminated and stored DTCs when the EBL status indicator is illuminated.

Read DTCs from the A/C status indictor.

Does the A/C status indicator display any of the following DTCs: 41, 43, 44, 61, 62, 63, 64, 67, 68, 69,

71, or 72?

Yes >> As present, diagnose and repair the faults in the following order: DTC 72 first, then DTC 62, then DTC 61, then DTCs 64, 68, or 71, then DTCs 63, 67, or 69, and finally DTCs 41, 43, or 44. Refer to the Table Of Contents in this section for a complete list of HVAC related symptoms.

No >> Go To 2

2. CHECK THE MODE DOOR ACTUATOR CIRCUIT RESISTANCE

Turn the ignition off.

Disconnect the A/C Heater Control C2 harness connector.

Measure the resistance between the (C266) Mode Door Driver circuit and the (C66) Mode Door Common Driver circuit in the A/C Heater Control C2 harness connector.

Is the resistance above 70.0 ohms?

Yes >> Go To 3

No >> Go To 5

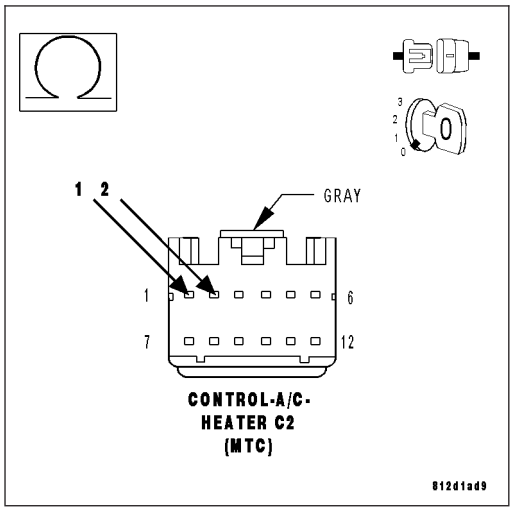

3. CHECK THE (C266) MODE DOOR DRIVER CIRCUIT FOR AN OPEN

Disconnect the Mode Door Actuator harness connector.

Measure the resistance of the (C266) Mode Door Driver circuit between the A/C Heater Control C2 harness connector and the Mode Door Actuator harness connector.

Is the resistance below 5.0 ohms?

Yes >> Go To 4

No >> Repair the (C266) Mode Door Driver circuit for an open.
Perform BODY VERIFICATION TEST – VER 1. (Refer to 8 - ELECTRICAL/ELECTRONIC CONTROL MODULES/ FRONT CONTROL MODULE - DIAGNOSIS AND TESTING).

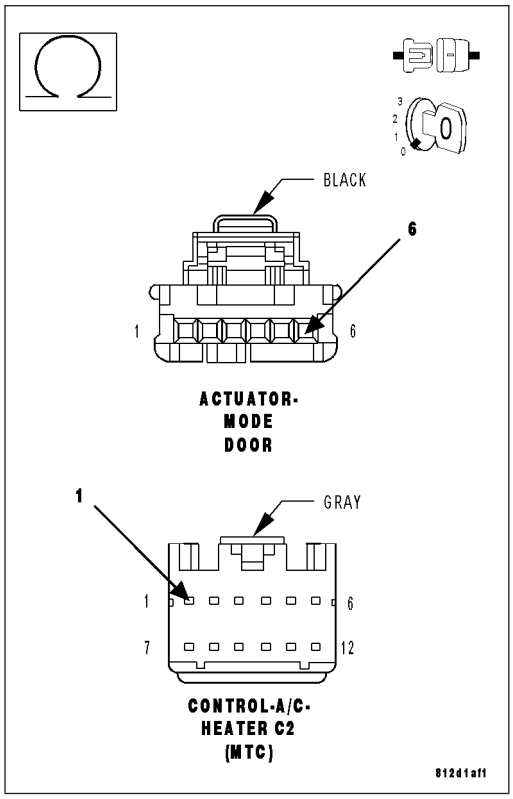

4. CHECK THE (C66) MODE DOOR COMMON DRIVER CIRCUIT FOR AN OPEN

Measure the resistance of the (C66) Mode Door Common Driver Circuit between the A/C Heater Control C2 harness connector and the Mode Door Actuator harness connector.

Is the resistance below 5.0 ohms?

Yes >> Replace the Mode Door Actuator in accordance with the Service Information.
Perform BODY VERIFICATION TEST – VER 1. (Refer to 8 - ELECTRICAL/ELECTRONIC CONTROL MODULES/ FRONT CONTROL MODULE - DIAGNOSIS AND TESTING).

No >> Repair the (C66) Mode Door Common Driver circuit for an open.
Perform BODY VERIFICATION TEST – VER 1. (Refer to 8 - ELECTRICAL/ELECTRONIC CONTROL MODULES/ FRONT CONTROL MODULE - DIAGNOSIS AND TESTING).

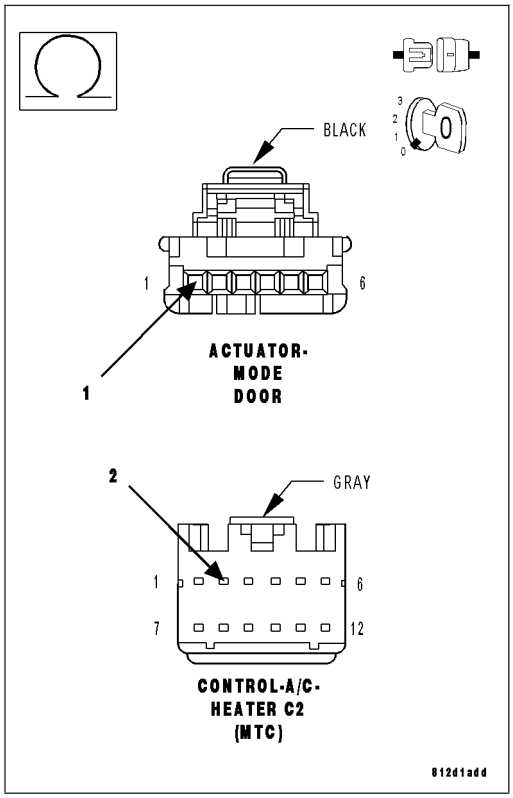

5. INSPECT ACTUATOR & HOUSING ASSEMBLY FOR A CONDITION CAUSING THE MODE DOOR TO SEIZE

Turn the ignition off.

Inspect the actuator, linkage, and housing assembly for a condition causing the mode door to seize.

Are there any physical or mechanical problems with the door, housing, linkage, or actuator?

Yes >> Repair as necessary in accordance with the Service Information.
Perform BODY VERIFICATION TEST – VER 1. (Refer to 8 - ELECTRICAL/ELECTRONIC CONTROL MODULES/FRONT CONTROL MODULE - DIAGNOSIS AND TESTING).

No >> Go To 6

6. CHECK MODE DOOR TRAVEL

Remove the Mode Door Actuator from the A/C Heater Housing Assembly.

By hand, attempt to rotate the door in both directions. The door should operate smoothly in both directions over the entire span of travel (approximately 240 degrees).

Does the door operate smoothly in both directions over the entire span of travel?

Yes >> Replace the Mode Door Actuator in accordance with the Service Information. Then, Go To 7.

No >> Repair as necessary in accordance with the Service Information.
Perform BODY VERIFICATION TEST – VER 1. (Refer to 8 - ELECTRICAL/ELECTRONIC CONTROL MODULES/FRONT CONTROL MODULE - DIAGNOSIS AND TESTING).

7. VERIFY IF THE FAULT IS STILL PRESENT

Turn the ignition on.

Actuate the Clear DTC function by performing the following:

- Turn the blower control on.
- Press the A/C mode switch down, turn the blower control to off, wait until both LEDs illuminate (approximately 5 seconds) and then release the A/C mode switch.
- When the A/C status indicator begins displaying DTCs, set the Mode switch to the floor position, simultaneously press the A/C mode switch and the EBL mode switch down until both LEDs start flashing (approximately 5 seconds) and then release the mode switches. Stored DTCs will clear from memory in approximately two seconds.

Turn the ignition off, wait 10 seconds, and turn the ignition on.

Actuate the Actuator Circuit Test / Door Calibration Function by performing the following:

- Turn the blower control off.
- Press and hold the EBL mode switch down and then turn the blower control on. Continue to hold the EBL mode switch down until the EBL status indicator begins flashing. Then, release the EBL mode switch. While the test / function is running, the EBL status indicator will flash once per second. If the test / function passes, the EBL status indicator will stop flashing. If the test / function fails, the A/C and EBL status indicators will flash alternately. Allow the test / function to run to completion before proceeding.

Actuate the Display DTC function by performing the following:

- Turn the blower control on.
- Press the A/C mode switch down, turn the blower control to off, wait until both LEDs illuminate (approximately 5 seconds) and then release the A/C mode switch.

NOTE: The A/C status indicator displays active DTCs when the EBL status indictor is not illuminated and stored DTCs when the EBL status indicator is illuminated.

Read DTCs from the A/C status indictor.

Does the A/C status indicator display DTC 46?

Yes >> Replace the A/C Heater Control in accordance with the Service Information.
Perform BODY VERIFICATION TEST – VER 1. (Refer to 8 - ELECTRICAL/ELECTRONIC CONTROL MODULES/FRONT CONTROL MODULE - DIAGNOSIS AND TESTING).

No >> Perform BODY VERIFICATION TEST – VER 1. (Refer to 8 - ELECTRICAL/ELECTRONIC CONTROL MODULES/FRONT CONTROL MODULE - DIAGNOSIS AND TESTING).

47–RECIRC DOOR BOUND (MTC)

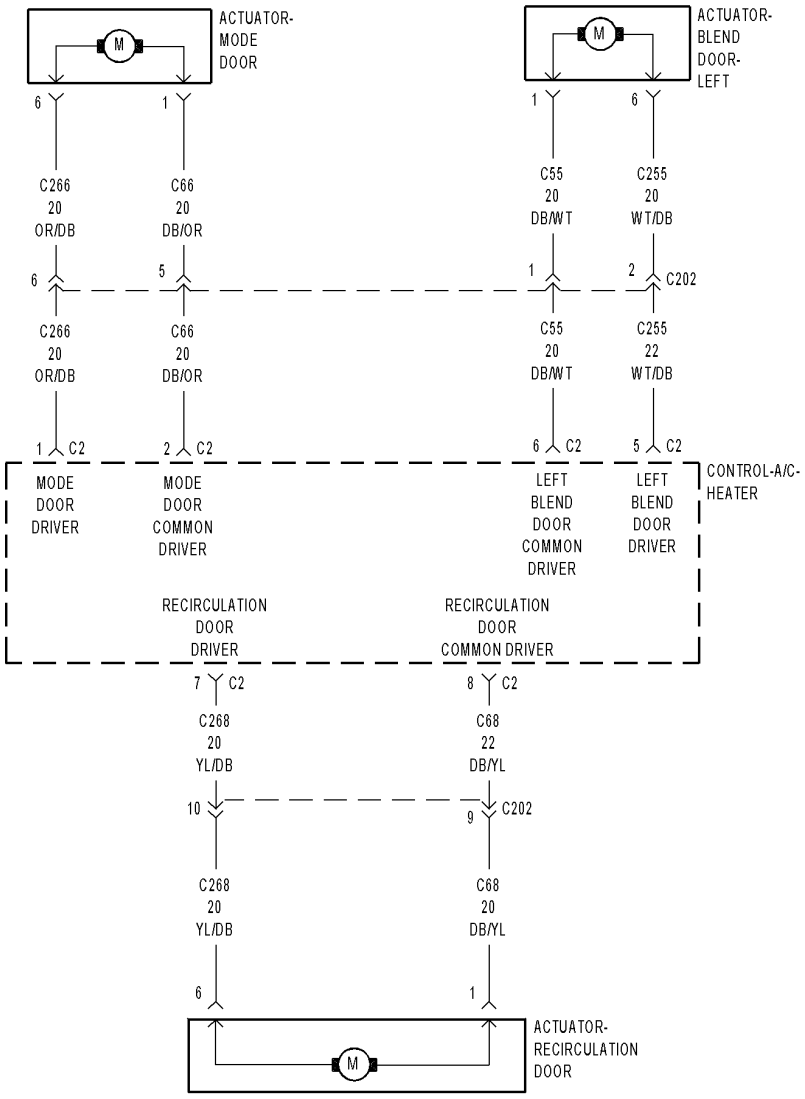

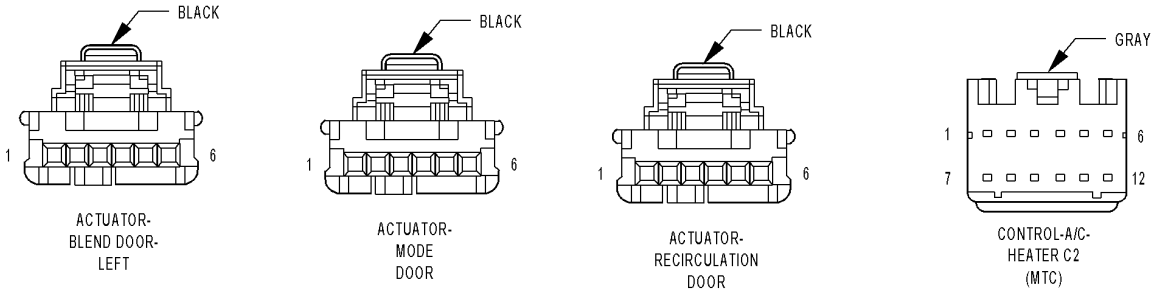

81503524

For a complete wiring diagram **Refer to Section 8W**.

Theory of Operation

NOTE: Diagnose and repair Actuator Circuit Test faults (DTC 61, 62, 63, 64, 67, 68, 69, 71, and 72) before diagnosing Overcurrent faults (DTC 41, 43, and 44) and Calibration faults (DTC 18, 21, 22, 23, 45, 46, 47, 51, 52, 53, 55, and 56). Diagnose and repair Overcurrent faults (DTC 41, 43, and 44) before diagnosing Calibration faults (DTC 18, 21, 22, 23, 45, 46, 47, 51, 52, 53, 55, and 56).

The purpose of actuator calibration is to determine the total span of door travel between physical stops. To calibrate the actuator, the A/C Heater Control first moves the door to its soft stop, and then counts the number of pulses it takes to move the door to its other stop. An expected range of span is stored in the control's memory. If the A/C Heater Control detects no commutator pulses when calibrating the recirculation door, this DTC will set.

- **When Monitored:**
  During actuator calibration.
- **Set Condition:**
  If the A/C Heater Control detects no commutator pulses when calibrating the recirculation door.

Possible Causes
ACTUATOR CIRCUIT TEST FAULTS PRESENT
OVERCURRENT FAULTS PRESENT
(C268) RECIRCULATION DOOR DRIVER CIRCUIT OPEN
(C68) RECIRCULATION DOOR COMMON DRIVER CIRCUIT OPEN
RECIRCULATION DOOR SEIZED, OBSTRUCTED
RECIRCULATION DOOR ACTUATOR
A/C HEATER CONTROL

Diagnostic Test

1. VERIFY IF ANY ACTUATOR CIRCUIT TEST FAULTS OR OVERCURRENT FAULTS ARE PRESENT

Turn the ignition on.

Actuate the Clear DTC function by performing the following:

- Turn the blower control on.
- Press the A/C mode switch down, turn the blower control to off, wait until both LEDs illuminate (approximately 5 seconds) and then release the A/C mode switch.
- When the A/C status indicator begins displaying DTCs, set the Mode switch to the floor position, simultaneously press the A/C mode switch and the EBL mode switch down until both LEDs start flashing (approximately 5 seconds) and then release the mode switches. Stored DTCs will clear from memory in approximately two seconds.

Turn the ignition off, wait 10 seconds, and turn the ignition on.

Actuate the Actuator Circuit Test / Door Calibration Function by performing the following:

- Turn the blower control off.
- Press and hold the EBL mode switch down and then turn the blower control on. Continue to hold the EBL mode switch down until the EBL status indicator begins flashing. Then, release the EBL mode switch. While the test / function is running, the EBL status indicator will flash once per second. If the test / function passes, the EBL status indicator will stop flashing. If the test / function fails, the A/C and EBL status indicators will flash alternately. Allow the test / function to run to completion before proceeding.

Actuate the Display DTC function by performing the following:

- Turn the blower control on.
- Press the A/C mode switch down, turn the blower control to off, wait until both LEDs illuminate (approximately 5 seconds) and then release the A/C mode switch.

NOTE: The A/C status indicator displays active DTCs when the EBL status indictor is not illuminated and stored DTCs when the EBL status indicator is illuminated.

Read DTCs from the A/C status indictor.

Does the A/C status indicator display any of the following DTCs: 41, 43, 44, 61, 62, 63, 64, 67, 68, 69,

71, or 72?

Yes >> As present, diagnose and repair the faults in the following order: DTC 72 first, then DTC 62, then DTC 61, then DTCs 64, 68, or 71, then DTCs 63, 67, or 69, and finally DTCs 41, 43, or 44. Refer to the Table Of Contents in this section for a complete list of HVAC related symptoms.

No >> Go To 2

2. CHECK THE RECIRCULATION DOOR ACTUATOR CIRCUIT RESISTANCE

Turn the ignition off.

Disconnect the A/C Heater Control C2 harness connector.

Measure the resistance between the (C268) Recirculation Door Driver circuit and the (C68) Recirculation Door Common Driver circuit in the A/C Heater Control C2 harness connector.

Is the resistance above 70.0 ohms?

Yes >> Go To 3

No >> Go To 5

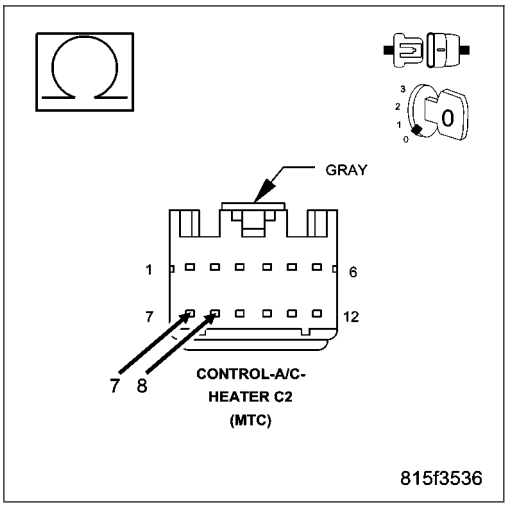

3. CHECK THE (C268) RECIRCULATION DOOR DRIVER CIRCUIT FOR AN OPEN

Disconnect the Recirculation Door Actuator harness connector.

Measure the resistance of the (C268) Recirculation Door Driver circuit between the A/C Heater Control C2 harness connector and the Recirculation Door Actuator harness connector.

Is the resistance below 5.0 ohms?

Yes >> Go To 4

No >> Repair the (C268) Recirculation Door Driver circuit for an open.

Perform BODY VERIFICATION TEST – VER 1. (Refer to 8 - ELECTRICAL/ELECTRONIC CONTROL MODULES/ FRONT CONTROL MODULE - DIAGNOSIS AND TESTING).

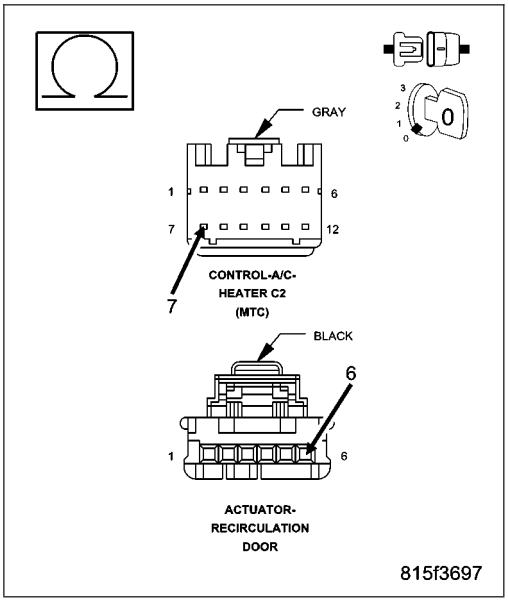

4. CHECK THE (C68) RECIRCULATION DOOR COMMON DRIVER CIRCUIT FOR AN OPEN

Measure the resistance of the (C68) Recirculation Door Common Driver Circuit between the A/C Heater Control C2 harness connector and the Recirculation Door Actuator harness connector.

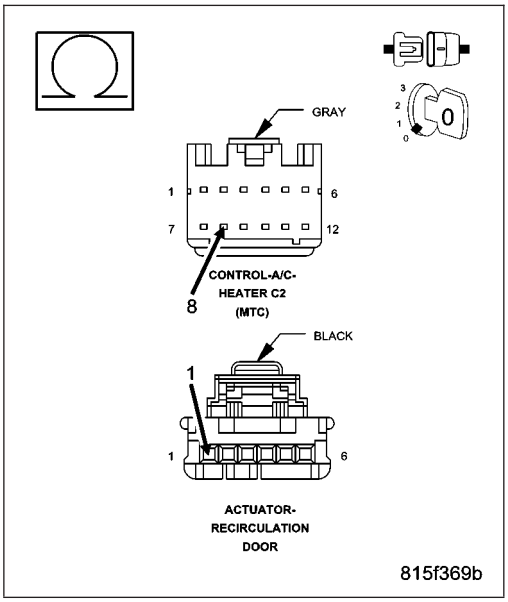

Is the resistance below 5.0 ohms?

Yes >> Replace the Recirculation Door Actuator in accordance with the Service Information.
Perform BODY VERIFICATION TEST – VER 1. (Refer to 8 - ELECTRICAL/ELECTRONIC CONTROL MODULES/ FRONT CONTROL MODULE - DIAGNOSIS AND TESTING).

No >> Repair the (C68) Recirculation Door Common Driver circuit for an open.
Perform BODY VERIFICATION TEST – VER 1. (Refer to 8 - ELECTRICAL/ELECTRONIC CONTROL MODULES/ FRONT CONTROL MODULE - DIAGNOSIS AND TESTING).

5. INSPECT ACTUATOR & HOUSING ASSEMBLY FOR A CONDITION CAUSING THE RECIRCULATION DOOR TO SEIZE

Turn the ignition off.

Inspect the actuator, linkage, and housing assembly for a condition causing the recirculation door to seize.

Are there any physical or mechanical problems with the door, housing, linkage, or actuator?

Yes >> Repair as necessary in accordance with the Service Information.
Perform BODY VERIFICATION TEST – VER 1. (Refer to 8 - ELECTRICAL/ELECTRONIC CONTROL MODULES/FRONT CONTROL MODULE - DIAGNOSIS AND TESTING).

No >> Go To 6

6. CHECK RECIRCULATION DOOR TRAVEL

Remove the Recirculation Door Actuator from the A/C Heater Housing Assembly.

By hand, attempt to rotate the door in both directions. The door should operate smoothly in both directions over the entire span of travel (approximately 100 degrees).

Does the door operate smoothly in both directions over the entire span of travel?

Yes >> Replace the Recirculation Door Actuator in accordance with the Service Information. Then, Go To 7.

No >> Repair as necessary in accordance with the Service Information.
Perform BODY VERIFICATION TEST – VER 1. (Refer to 8 - ELECTRICAL/ELECTRONIC CONTROL MODULES/FRONT CONTROL MODULE - DIAGNOSIS AND TESTING).

7. VERIFY IF THE FAULT IS STILL PRESENT

Turn the ignition on.

Actuate the Clear DTC function by performing the following:

- Turn the blower control on.
- Press the A/C mode switch down, turn the blower control to off, wait until both LEDs illuminate (approximately 5 seconds) and then release the A/C mode switch.
- When the A/C status indicator begins displaying DTCs, set the Mode switch to the floor position, simultaneously press the A/C mode switch and the EBL mode switch down until both LEDs start flashing (approximately 5 seconds) and then release the mode switches. Stored DTCs will clear from memory in approximately two seconds.

Turn the ignition off, wait 10 seconds, and turn the ignition on.

Actuate the Actuator Circuit Test / Door Calibration Function by performing the following:

- Turn the blower control off.
- Press and hold the EBL mode switch down and then turn the blower control on. Continue to hold the EBL mode switch down until the EBL status indicator begins flashing. Then, release the EBL mode switch. While the test / function is running, the EBL status indicator will flash once per second. If the test / function passes, the EBL status indicator will stop flashing. If the test / function fails, the A/C and EBL status indicators will flash alternately. Allow the test / function to run to completion before proceeding.

Actuate the Display DTC function by performing the following:

- Turn the blower control on.
- Press the A/C mode switch down, turn the blower control to off, wait until both LEDs illuminate (approximately 5 seconds) and then release the A/C mode switch.

NOTE: The A/C status indicator displays active DTCs when the EBL status indictor is not illuminated and stored DTCs when the EBL status indicator is illuminated.

Read DTCs from the A/C status indictor.

Does the A/C status indicator display DTC 47?

Yes >> Replace the A/C Heater Control in accordance with the Service Information.
Perform BODY VERIFICATION TEST – VER 1. (Refer to 8 - ELECTRICAL/ELECTRONIC CONTROL MODULES/FRONT CONTROL MODULE - DIAGNOSIS AND TESTING).

No >> Perform BODY VERIFICATION TEST – VER 1. (Refer to 8 - ELECTRICAL/ELECTRONIC CONTROL MODULES/FRONT CONTROL MODULE - DIAGNOSIS AND TESTING).

51–RECIRC DOOR RANGE TOO SMALL (MTC)

For a complete wiring diagram **Refer to Section 8W**.

Theory of Operation

NOTE: Diagnose and repair Actuator Circuit Test faults (DTC 61, 62, 63, 64, 67, 68, 69, 71, and 72) before diagnosing Overcurrent faults (DTC 41, 43, and 44) and Calibration faults (DTC 18, 21, 22, 23, 45, 46, 47, 51, 52, 53, 55, and 56). Diagnose and repair Overcurrent faults (DTC 41, 43, and 44) before diagnosing Calibration faults (DTC 18, 21, 22, 23, 45, 46, 47, 51, 52, 53, 55, and 56).

The purpose of actuator calibration is to determine the total span of door travel between physical stops. To calibrate the actuator, the A/C Heater Control first moves the door to its soft stop, and then counts the number of pulses it takes to move the door to its other stop. An expected range of span is stored in the control's memory. If the A/C Heater Control detects too few commutator pulses when calibrating the recirculation door, this DTC will set.

- **When Monitored:**
  During actuator calibration.
- **Set Condition:**
  If the A/C Heater Control detects too few commutator pulses when calibrating the recirculation door.

Possible Causes
ACTUATOR CIRCUIT TEST FAULTS PRESENT
OVERCURRENT FAULTS PRESENT
RECIRCULATION DOOR BINDING, OBSTRUCTED
RECIRCULATION DOOR ACTUATOR
A/C HEATER CONTROL

Diagnostic Test

1. VERIFY IF ANY ACTUATOR CIRCUIT TEST FAULTS OR OVERCURRENT FAULTS ARE PRESENT

Turn the ignition on.

Actuate the Clear DTC function by performing the following:

- Turn the blower control on.
- Press the A/C mode switch down, turn the blower control to off, wait until both LEDs illuminate (approximately 5 seconds) and then release the A/C mode switch.
- When the A/C status indicator begins displaying DTCs, set the Mode switch to the floor position, simultaneously press the A/C mode switch and the EBL mode switch down until both LEDs start flashing (approximately 5 seconds) and then release the mode switches. Stored DTCs will clear from memory in approximately two seconds.

Turn the ignition off, wait 10 seconds, and turn the ignition on.

Actuate the Actuator Circuit Test / Door Calibration Function by performing the following:

- Turn the blower control off.
- Press and hold the EBL mode switch down and then turn the blower control on. Continue to hold the EBL mode switch down until the EBL status indicator begins flashing. Then, release the EBL mode switch. While the test / function is running, the EBL status indicator will flash once per second. If the test / function passes, the EBL status indicator will stop flashing. If the test / function fails, the A/C and EBL status indicators will flash alternately. Allow the test / function to run to completion before proceeding.

Actuate the Display DTC function by performing the following:

- Turn the blower control on.
- Press the A/C mode switch down, turn the blower control to off, wait until both LEDs illuminate (approximately 5 seconds) and then release the A/C mode switch.

NOTE: The A/C status indicator displays active DTCs when the EBL status indictor is not illuminated and stored DTCs when the EBL status indicator is illuminated.

Read DTCs from the A/C status indictor.

Does the A/C status indicator display any of the following DTCs: 41, 43, 44, 61, 62, 63, 64, 67, 68, 69,

71, or 72?

Yes >> As present, diagnose and repair the faults in the following order: DTC 72 first, then DTC 62, then DTC 61, then DTCs 64, 68, or 71, then DTCs 63, 67, or 69, and finally DTCs 41, 43, or 44. Refer to the Table Of Contents in this section for a complete list of HVAC related symptoms.

No >> Go To 2

2. INSPECT ACTUATOR & HOUSING ASSEMBLY FOR A CONDITION CAUSING THE RECIRCULATION DOOR TO BIND

Turn the ignition off.

Inspect the actuator, linkage, and housing assembly for a condition causing the recirculation door to bind.

Are there any physical or mechanical problems with the door, housing, linkage, or actuator?

Yes >> Repair as necessary in accordance with the Service Information.
Perform BODY VERIFICATION TEST – VER 1. (Refer to 8 - ELECTRICAL/ELECTRONIC CONTROL MODULES/FRONT CONTROL MODULE - DIAGNOSIS AND TESTING).

No >> Go To 3

3. CHECK RECIRCULATION DOOR TRAVEL

Remove the Recirculation Door Actuator from the A/C Heater Housing Assembly.

By hand, attempt to rotate the door in both directions. The door should operate smoothly in both directions over the entire span of travel (approximately 100 degrees).

Does the door operate smoothly in both directions over the entire span of travel?

Yes >> Replace the Recirculation Door Actuator in accordance with the Service Information. Then, Go To 4.

No >> Repair as necessary in accordance with the Service Information.
Perform BODY VERIFICATION TEST – VER 1. (Refer to 8 - ELECTRICAL/ELECTRONIC CONTROL MODULES/FRONT CONTROL MODULE - DIAGNOSIS AND TESTING).

4. VERIFY IF THE FAULT IS STILL PRESENT

Turn the ignition on.

Actuate the Clear DTC function by performing the following:

- Turn the blower control on.
- Press the A/C mode switch down, turn the blower control to off, wait until both LEDs illuminate (approximately 5 seconds) and then release the A/C mode switch.
- When the A/C status indicator begins displaying DTCs, set the Mode switch to the floor position, simultaneously press the A/C mode switch and the EBL mode switch down until both LEDs start flashing (approximately 5 seconds) and then release the mode switches. Stored DTCs will clear from memory in approximately two seconds.

Turn the ignition off, wait 10 seconds, and turn the ignition on.

Actuate the Actuator Circuit Test / Door Calibration Function by performing the following:

- Turn the blower control off.
- Press and hold the EBL mode switch down and then turn the blower control on. Continue to hold the EBL mode switch down until the EBL status indicator begins flashing. Then, release the EBL mode switch. While the test / function is running, the EBL status indicator will flash once per second. If the test / function passes, the EBL status indicator will stop flashing. If the test / function fails, the A/C and EBL status indicators will flash alternately. Allow the test / function to run to completion before proceeding.

Actuate the Display DTC function by performing the following:

- Turn the blower control on.
- Press the A/C mode switch down, turn the blower control to off, wait until both LEDs illuminate (approximately 5 seconds) and then release the A/C mode switch.

NOTE: The A/C status indicator displays active DTCs when the EBL status indictor is not illuminated and stored DTCs when the EBL status indicator is illuminated.
Read DTCs from the A/C status indictor.

Does the A/C status indicator display DTC 51?

Yes >> Replace the A/C Heater Control in accordance with the Service Information.
Perform BODY VERIFICATION TEST – VER 1. (Refer to 8 - ELECTRICAL/ELECTRONIC CONTROL MODULES/FRONT CONTROL MODULE - DIAGNOSIS AND TESTING).

No >> Perform BODY VERIFICATION TEST – VER 1. (Refer to 8 - ELECTRICAL/ELECTRONIC CONTROL MODULES/FRONT CONTROL MODULE - DIAGNOSIS AND TESTING).

52–RECIRC DOOR RANGE TOO LARGE (MTC)

For a complete wiring diagram **Refer to Section 8W**.

Theory of Operation

NOTE: Diagnose and repair Actuator Circuit Test faults (DTC 61, 62, 63, 64, 67, 68, 69, 71, and 72) before diagnosing Overcurrent faults (DTC 41, 43, and 44) and Calibration faults (DTC 18, 21, 22, 23, 45, 46, 47, 51, 52, 53, 55, and 56). Diagnose and repair Overcurrent faults (DTC 41, 43, and 44) before diagnosing Calibration faults (DTC 18, 21, 22, 23, 45, 46, 47, 51, 52, 53, 55, and 56).

The purpose of actuator calibration is to determine the total span of door travel between physical stops. To calibrate the actuator, the A/C Heater Control first moves the door to its soft stop, and then counts the number of pulses it takes to move the door to its other stop. An expected range of span is stored in the control's memory. If the A/C Heater Control detects too many commutator pulses when calibrating the recirculation door, this DTC will set.

- **When Monitored:**
  During actuator calibration.
- **Set Condition:**
  If the A/C Heater Control detects too many commutator pulses when calibrating the recirculation door.

Possible Causes
ACTUATOR CIRCUIT TEST FAULTS PRESENT
OVERCURRENT FAULTS PRESENT
RECIRCULATION DOOR OR A/C HEATER HOUSING COMPONENTS WARPED, WORN, DAMAGED, BROKEN
RECIRCULATION DOOR ACTUATOR
A/C HEATER CONTROL

Diagnostic Test

1. VERIFY IF ANY ACTUATOR CIRCUIT TEST FAULTS OR OVERCURRENT FAULTS ARE PRESENT

Turn the ignition on.

Actuate the Clear DTC function by performing the following:

- Turn the blower control on.
- Press the A/C mode switch down, turn the blower control to off, wait until both LEDs illuminate (approximately 5 seconds) and then release the A/C mode switch.
- When the A/C status indicator begins displaying DTCs, set the Mode switch to the floor position, simultaneously press the A/C mode switch and the EBL mode switch down until both LEDs start flashing (approximately 5 seconds) and then release the mode switches. Stored DTCs will clear from memory in approximately two seconds.

Turn the ignition off, wait 10 seconds, and turn the ignition on.

Actuate the Actuator Circuit Test / Door Calibration Function by performing the following:

- Turn the blower control off.
- Press and hold the EBL mode switch down and then turn the blower control on. Continue to hold the EBL mode switch down until the EBL status indicator begins flashing. Then, release the EBL mode switch. While the test / function is running, the EBL status indicator will flash once per second. If the test / function passes, the EBL status indicator will stop flashing. If the test / function fails, the A/C and EBL status indicators will flash alternately. Allow the test / function to run to completion before proceeding.

Actuate the Display DTC function by performing the following:

- Turn the blower control on.
- Press the A/C mode switch down, turn the blower control to off, wait until both LEDs illuminate (approximately 5 seconds) and then release the A/C mode switch.

NOTE: The A/C status indicator displays active DTCs when the EBL status indictor is not illuminated and stored DTCs when the EBL status indicator is illuminated.

Read DTCs from the A/C status indictor.

Does the A/C status indicator display any of the following DTCs: 41, 43, 44, 61, 62, 63, 64, 67, 68, 69,

71, or 72?

Yes >> As present, diagnose and repair the faults in the following order: DTC 72 first, then DTC 62, then DTC 61, then DTCs 64, 68, or 71, then DTCs 63, 67, or 69, and finally DTCs 41, 43, or 44. Refer to the Table Of Contents in this section for a complete list of HVAC related symptoms.

No >> Go To 2

2. CHECK FOR A BROKEN RECIRCULATION DOOR ACTUATOR

Turn the ignition off.

Remove the Recirculation Door Actuator from the A/C Heater Housing Assembly.

By hand, attempt to rotate the actuator in both directions.

Does the actuator turn in either direction?

Yes >> Replace the Recirculation Door Actuator in accordance with the Service Information.
Perform BODY VERIFICATION TEST – VER 1. (Refer to 8 - ELECTRICAL/ELECTRONIC CONTROL MODULES/FRONT CONTROL MODULE - DIAGNOSIS AND TESTING).

No >> Go To 3

3. CHECK THE RECIRCULATION DOOR & A/C HEATER HOUSING FOR WARPED, WORN, & DAMAGED COMPONENTS

Inspect for excessively worn door linkage and for a damaged or broken A/C Heater Housing Assembly. Inspect for a warped or broken door, and missing door seals. Rotate the door from stop to stop. The door should rotate approximately 100 degrees.

Are there any physical or mechanical problems with the door or housing?

Yes >> Repair as necessary in accordance with the Service Information.
Perform BODY VERIFICATION TEST – VER 1. (Refer to 8 - ELECTRICAL/ELECTRONIC CONTROL MODULES/FRONT CONTROL MODULE - DIAGNOSIS AND TESTING).

No >> Replace the Recirculation Door Actuator in accordance with the Service Information. Then, Go To 4.

4. VERIFY IF THE FAULT IS STILL PRESENT

Turn the ignition on.

Actuate the Clear DTC function by performing the following:

- Turn the blower control on.
- Press the A/C mode switch down, turn the blower control to off, wait until both LEDs illuminate (approximately 5 seconds) and then release the A/C mode switch.
- When the A/C status indicator begins displaying DTCs, set the Mode switch to the floor position, simultaneously press the A/C mode switch and the EBL mode switch down until both LEDs start flashing (approximately 5 seconds) and then release the mode switches. Stored DTCs will clear from memory in approximately two seconds.

Turn the ignition off, wait 10 seconds, and turn the ignition on.

Actuate the Actuator Circuit Test / Door Calibration Function by performing the following:

- Turn the blower control off.
- Press and hold the EBL mode switch down and then turn the blower control on. Continue to hold the EBL mode switch down until the EBL status indicator begins flashing. Then, release the EBL mode switch. While the test / function is running, the EBL status indicator will flash once per second. If the test / function passes, the EBL status indicator will stop flashing. If the test / function fails, the A/C and EBL status indicators will flash alternately. Allow the test / function to run to completion before proceeding.

Actuate the Display DTC function by performing the following:

- Turn the blower control on.
- Press the A/C mode switch down, turn the blower control to off, wait until both LEDs illuminate (approximately 5 seconds) and then release the A/C mode switch.

NOTE: The A/C status indicator displays active DTCs when the EBL status indictor is not illuminated and stored DTCs when the EBL status indicator is illuminated.
Read DTCs from the A/C status indictor.

Does the A/C status indicator display DTC 52?

Yes >> Replace the A/C Heater Control in accordance with the Service Information.
Perform BODY VERIFICATION TEST – VER 1. (Refer to 8 - ELECTRICAL/ELECTRONIC CONTROL MODULES/FRONT CONTROL MODULE - DIAGNOSIS AND TESTING).

No >> Perform BODY VERIFICATION TEST – VER 1. (Refer to 8 - ELECTRICAL/ELECTRONIC CONTROL MODULES/FRONT CONTROL MODULE - DIAGNOSIS AND TESTING).

53–FRONT MODE DOOR LINKAGE BROKEN (MTC)

For a complete wiring diagram **Refer to Section 8W**.

Theory of Operation

NOTE: Diagnose and repair Actuator Circuit Test faults (DTC 61, 62, 63, 64, 67, 68, 69, 71, and 72) before diagnosing Overcurrent faults (DTC 41, 43, and 44) and Calibration faults (DTC 18, 21, 22, 23, 45, 46, 47, 51, 52, 53, 55, and 56). Diagnose and repair Overcurrent faults (DTC 41, 43, and 44) before diagnosing Calibration faults (DTC 18, 21, 22, 23, 45, 46, 47, 51, 52, 53, 55, and 56).

The purpose of actuator calibration is to determine the total span of door travel between physical stops. To calibrate the actuator, the A/C Heater Control first moves the door to its soft stop, and then counts the number of pulses it takes to move the door to its other stop. An expected range of span is stored in the control's memory. If the A/C Heater Control detects and excessive amount of commutator pulses when calibrating the mode door, this DTC will set.

- **When Monitored:**
  During actuator calibration.
- **Set Condition:**
  If the A/C Heater Control detects and excessive amount of commutator pulses when calibrating the mode door.

Possible Causes
ACTUATOR CIRCUIT TEST FAULTS PRESENT
OVERCURRENT FAULTS PRESENT
MODE DOOR OR A/C HEATER HOUSING COMPONENTS DISCONNECTED, MISSING, BROKEN
MODE DOOR ACTUATOR
A/C HEATER CONTROL

Diagnostic Test

1. VERIFY IF ANY ACTUATOR CIRCUIT TEST FAULTS OR OVERCURRENT FAULTS ARE PRESENT

Turn the ignition on.

Actuate the Clear DTC function by performing the following:

- Turn the blower control on.
- Press the A/C mode switch down, turn the blower control to off, wait until both LEDs illuminate (approximately 5 seconds) and then release the A/C mode switch.
- When the A/C status indicator begins displaying DTCs, set the Mode switch to the floor position, simultaneously press the A/C mode switch and the EBL mode switch down until both LEDs start flashing (approximately 5 seconds) and then release the mode switches. Stored DTCs will clear from memory in approximately two seconds.

Turn the ignition off, wait 10 seconds, and turn the ignition on.

Actuate the Actuator Circuit Test / Door Calibration Function by performing the following:

- Turn the blower control off.
- Press and hold the EBL mode switch down and then turn the blower control on. Continue to hold the EBL mode switch down until the EBL status indicator begins flashing. Then, release the EBL mode switch. While the test / function is running, the EBL status indicator will flash once per second. If the test / function passes, the EBL status indicator will stop flashing. If the test / function fails, the A/C and EBL status indicators will flash alternately. Allow the test / function to run to completion before proceeding.

Actuate the Display DTC function by performing the following:

- Turn the blower control on.
- Press the A/C mode switch down, turn the blower control to off, wait until both LEDs illuminate (approximately 5 seconds) and then release the A/C mode switch.

NOTE: The A/C status indicator displays active DTCs when the EBL status indictor is not illuminated and stored DTCs when the EBL status indicator is illuminated.
Read DTCs from the A/C status indictor.

Does the A/C status indicator display any of the following DTCs: 41, 43, 44, 61, 62, 63, 64, 67, 68, 69, 71, or 72?

Yes >> As present, diagnose and repair the faults in the following order: DTC 72 first, then DTC 62, then DTC 61, then DTCs 64, 68, or 71, then DTCs 63, 67, or 69, and finally DTCs 41, 43, or 44. Refer to the Table Of Contents in this section for a complete list of HVAC related symptoms.

No >> Go To 2

2. CHECK FOR A BROKEN MODE DOOR ACTUATOR

Turn the ignition off.

Remove the Mode Door Actuator from the A/C Heater Housing Assembly.

By hand, attempt to rotate the actuator in both directions.

Does the actuator turn in either direction?

Yes >> Replace the Mode Door Actuator in accordance with the Service Information.
Perform BODY VERIFICATION TEST – VER 1. (Refer to 8 - ELECTRICAL/ELECTRONIC CONTROL MODULES/FRONT CONTROL MODULE - DIAGNOSIS AND TESTING).

No >> Go To 3

3. CHECK THE MODE DOOR & A/C HEATER HOUSING FOR DISCONNECTED, MISSING, & BROKEN COMPONENTS

Inspect for disconnected, missing, or broken door linkage. Inspect for a damaged or broken A/C Heater Housing Assembly and a broken door. Rotate the door from stop to stop. The door should rotate approximately 240 degrees.

Are there any physical or mechanical problems with the door or housing?

Yes >> Repair as necessary in accordance with the Service Information.
Perform BODY VERIFICATION TEST – VER 1. (Refer to 8 - ELECTRICAL/ELECTRONIC CONTROL MODULES/FRONT CONTROL MODULE - DIAGNOSIS AND TESTING).

No >> Replace the Mode Door Actuator in accordance with the Service Information. Then, Go To 4.

4. VERIFY IF THE FAULT IS STILL PRESENT

Turn the ignition on.

Actuate the Clear DTC function by performing the following:

- Turn the blower control on.
- Press the A/C mode switch down, turn the blower control to off, wait until both LEDs illuminate (approximately 5 seconds) and then release the A/C mode switch.
- When the A/C status indicator begins displaying DTCs, set the Mode switch to the floor position, simultaneously press the A/C mode switch and the EBL mode switch down until both LEDs start flashing (approximately 5 seconds) and then release the mode switches. Stored DTCs will clear from memory in approximately two seconds.

Turn the ignition off, wait 10 seconds, and turn the ignition on.

Actuate the Actuator Circuit Test / Door Calibration Function by performing the following:

- Turn the blower control off.
- Press and hold the EBL mode switch down and then turn the blower control on. Continue to hold the EBL mode switch down until the EBL status indicator begins flashing. Then, release the EBL mode switch. While the test / function is running, the EBL status indicator will flash once per second. If the test / function passes, the EBL status indicator will stop flashing. If the test / function fails, the A/C and EBL status indicators will flash alternately. Allow the test / function to run to completion before proceeding.

Actuate the Display DTC function by performing the following:

- Turn the blower control on.
- Press the A/C mode switch down, turn the blower control to off, wait until both LEDs illuminate (approximately 5 seconds) and then release the A/C mode switch.

NOTE: The A/C status indicator displays active DTCs when the EBL status indictor is not illuminated and stored DTCs when the EBL status indicator is illuminated.

Read DTCs from the A/C status indictor.

Does the A/C status indicator display DTC 53?

Yes >> Replace the A/C Heater Control in accordance with the Service Information.
Perform BODY VERIFICATION TEST – VER 1. (Refer to 8 - ELECTRICAL/ELECTRONIC CONTROL MODULES/FRONT CONTROL MODULE - DIAGNOSIS AND TESTING).

No >> Perform BODY VERIFICATION TEST – VER 1. (Refer to 8 - ELECTRICAL/ELECTRONIC CONTROL MODULES/FRONT CONTROL MODULE - DIAGNOSIS AND TESTING).

55–BLEND DOOR LINKAGE BROKEN (MTC)

For a complete wiring diagram **Refer to Section 8W**.

Theory of Operation

NOTE: Diagnose and repair Actuator Circuit Test faults (DTC 61, 62, 63, 64, 67, 68, 69, 71, and 72) before diagnosing Overcurrent faults (DTC 41, 43, and 44) and Calibration faults (DTC 18, 21, 22, 23, 45, 46, 47, 51, 52, 53, 55, and 56). Diagnose and repair Overcurrent faults (DTC 41, 43, and 44) before diagnosing Calibration faults (DTC 18, 21, 22, 23, 45, 46, 47, 51, 52, 53, 55, and 56).

The purpose of actuator calibration is to determine the total span of door travel between physical stops. To calibrate the actuator, the A/C Heater Control first moves the door to its soft stop, and then counts the number of pulses it takes to move the door to its other stop. An expected range of span is stored in the control's memory. If the A/C Heater Control detects an excessive amount of commutator pulses when calibrating the left blend door, this DTC will set.

- **When Monitored:**
  During actuator calibration.
- **Set Condition:**
  If the A/C Heater Control detects an excessive amount of commutator pulses when calibrating the left blend door.

Possible Causes
ACTUATOR CIRCUIT TEST FAULTS PRESENT
OVERCURRENT FAULTS PRESENT
LEFT BLEND DOOR OR A/C HEATER HOUSING COMPONENTS DISCONNECTED, MISSING, BROKEN
LEFT BLEND DOOR ACTUATOR
A/C HEATER CONTROL

Diagnostic Test

1. VERIFY IF ANY ACTUATOR CIRCUIT TEST FAULTS OR OVERCURRENT FAULTS ARE PRESENT

Turn the ignition on.

Actuate the Clear DTC function by performing the following:

- Turn the blower control on.
- Press the A/C mode switch down, turn the blower control to off, wait until both LEDs illuminate (approximately 5 seconds) and then release the A/C mode switch.
- When the A/C status indicator begins displaying DTCs, set the Mode switch to the floor position, simultaneously press the A/C mode switch and the EBL mode switch down until both LEDs start flashing (approximately 5 seconds) and then release the mode switches. Stored DTCs will clear from memory in approximately two seconds.

Turn the ignition off, wait 10 seconds, and turn the ignition on.

Actuate the Actuator Circuit Test / Door Calibration Function by performing the following:

- Turn the blower control off.
- Press and hold the EBL mode switch down and then turn the blower control on. Continue to hold the EBL mode switch down until the EBL status indicator begins flashing. Then, release the EBL mode switch. While the test / function is running, the EBL status indicator will flash once per second. If the test / function passes, the EBL status indicator will stop flashing. If the test / function fails, the A/C and EBL status indicators will flash alternately. Allow the test / function to run to completion before proceeding.

Actuate the Display DTC function by performing the following:

- Turn the blower control on.
- Press the A/C mode switch down, turn the blower control to off, wait until both LEDs illuminate (approximately 5 seconds) and then release the A/C mode switch.

NOTE: The A/C status indicator displays active DTCs when the EBL status indictor is not illuminated and stored DTCs when the EBL status indicator is illuminated.
Read DTCs from the A/C status indictor.

Does the A/C status indicator display any of the following DTCs: 41, 43, 44, 61, 62, 63, 64, 67, 68, 69, 71, or 72?

Yes >> As present, diagnose and repair the faults in the following order: DTC 72 first, then DTC 62, then DTC 61, then DTCs 64, 68, or 71, then DTCs 63, 67, or 69, and finally DTCs 41, 43, or 44. Refer to the Table Of Contents in this section for a complete list of HVAC related symptoms.

No >> Go To 2

2. CHECK FOR A BROKEN LEFT BLEND DOOR ACTUATOR

Turn the ignition off.

Remove the Left Blend Door Actuator from the A/C Heater Housing Assembly.

By hand, attempt to rotate the actuator in both directions.

Does the actuator turn in either direction?

Yes >> Replace the Left Blend Door Actuator in accordance with the Service Information.
Perform BODY VERIFICATION TEST – VER 1. (Refer to 8 - ELECTRICAL/ELECTRONIC CONTROL MODULES/FRONT CONTROL MODULE - DIAGNOSIS AND TESTING).

No >> Go To 3

3. CHECK THE LEFT BLEND DOOR & A/C HEATER HOUSING FOR DISCONNECTED, MISSING, & BROKEN COMPONENTS

Inspect for disconnected, missing, or broken door linkage. Inspect for a damaged or broken A/C Heater Housing Assembly and a broken door. Rotate the door from stop to stop. The door should rotate approximately 190 degrees.

Are there any physical or mechanical problems with the door or housing?

Yes >> Repair as necessary in accordance with the Service Information.
Perform BODY VERIFICATION TEST – VER 1. (Refer to 8 - ELECTRICAL/ELECTRONIC CONTROL MODULES/FRONT CONTROL MODULE - DIAGNOSIS AND TESTING).

No >> Replace the Left Blend Door Actuator in accordance with the Service Information. Then, Go To 4.

4. VERIFY IF THE FAULT IS STILL PRESENT

Turn the ignition on.

Actuate the Clear DTC function by performing the following:

- Turn the blower control on.
- Press the A/C mode switch down, turn the blower control to off, wait until both LEDs illuminate (approximately 5 seconds) and then release the A/C mode switch.
- When the A/C status indicator begins displaying DTCs, set the Mode switch to the floor position, simultaneously press the A/C mode switch and the EBL mode switch down until both LEDs start flashing (approximately 5 seconds) and then release the mode switches. Stored DTCs will clear from memory in approximately two seconds.

Turn the ignition off, wait 10 seconds, and turn the ignition on.

Actuate the Actuator Circuit Test / Door Calibration Function by performing the following:

- Turn the blower control off.
- Press and hold the EBL mode switch down and then turn the blower control on. Continue to hold the EBL mode switch down until the EBL status indicator begins flashing. Then, release the EBL mode switch. While the test / function is running, the EBL status indicator will flash once per second. If the test / function passes, the EBL status indicator will stop flashing. If the test / function fails, the A/C and EBL status indicators will flash alternately. Allow the test / function to run to completion before proceeding.

Actuate the Display DTC function by performing the following:

- Turn the blower control on.
- Press the A/C mode switch down, turn the blower control to off, wait until both LEDs illuminate (approximately 5 seconds) and then release the A/C mode switch.

NOTE: The A/C status indicator displays active DTCs when the EBL status indictor is not illuminated and stored DTCs when the EBL status indicator is illuminated.

Read DTCs from the A/C status indictor.

Does the A/C status indicator display DTC 55?

Yes >> Replace the A/C Heater Control in accordance with the Service Information.
Perform BODY VERIFICATION TEST – VER 1. (Refer to 8 - ELECTRICAL/ELECTRONIC CONTROL MODULES/FRONT CONTROL MODULE - DIAGNOSIS AND TESTING).

No >> Perform BODY VERIFICATION TEST – VER 1. (Refer to 8 - ELECTRICAL/ELECTRONIC CONTROL MODULES/FRONT CONTROL MODULE - DIAGNOSIS AND TESTING).

56–RECIRC DOOR LINKAGE BROKEN (MTC)

For a complete wiring diagram **Refer to Section 8W**.

Theory of Operation

NOTE: Diagnose and repair Actuator Circuit Test faults (DTC 61, 62, 63, 64, 67, 68, 69, 71, and 72) before diagnosing Overcurrent faults (DTC 41, 43, and 44) and Calibration faults (DTC 18, 21, 22, 23, 45, 46, 47, 51, 52, 53, 55, and 56). Diagnose and repair Overcurrent faults (DTC 41, 43, and 44) before diagnosing Calibration faults (DTC 18, 21, 22, 23, 45, 46, 47, 51, 52, 53, 55, and 56).

The purpose of actuator calibration is to determine the total span of door travel between physical stops. To calibrate the actuator, the A/C Heater Control first moves the door to its soft stop, and then counts the number of pulses it takes to move the door to its other stop. An expected range of span is stored in the control's memory. If the A/C Heater Control detects and excessive amount of commutator pulses when calibrating the recirculation door, this DTC will set.

- **When Monitored:**
  During actuator calibration.
- **Set Condition:**
  If the A/C Heater Control detects and excessive amount of commutator pulses when calibrating the recirculation door.

Possible Causes
ACTUATOR CIRCUIT TEST FAULTS PRESENT
OVERCURRENT FAULTS PRESENT
RECIRCULATION DOOR OR A/C HEATER HOUSING COMPONENTS DISCONNECTED, MISSING, BROKEN
RECIRCULATION DOOR ACTUATOR
A/C HEATER CONTROL

Diagnostic Test

1. VERIFY IF ANY ACTUATOR CIRCUIT TEST FAULTS OR OVERCURRENT FAULTS ARE PRESENT

Turn the ignition on.

Actuate the Clear DTC function by performing the following:

- Turn the blower control on.
- Press the A/C mode switch down, turn the blower control to off, wait until both LEDs illuminate (approximately 5 seconds) and then release the A/C mode switch.
- When the A/C status indicator begins displaying DTCs, set the Mode switch to the floor position, simultaneously press the A/C mode switch and the EBL mode switch down until both LEDs start flashing (approximately 5 seconds) and then release the mode switches. Stored DTCs will clear from memory in approximately two seconds.

Turn the ignition off, wait 10 seconds, and turn the ignition on.

Actuate the Actuator Circuit Test / Door Calibration Function by performing the following:

- Turn the blower control off.
- Press and hold the EBL mode switch down and then turn the blower control on. Continue to hold the EBL mode switch down until the EBL status indicator begins flashing. Then, release the EBL mode switch. While the test / function is running, the EBL status indicator will flash once per second. If the test / function passes, the EBL status indicator will stop flashing. If the test / function fails, the A/C and EBL status indicators will flash alternately. Allow the test / function to run to completion before proceeding.

Actuate the Display DTC function by performing the following:

- Turn the blower control on.
- Press the A/C mode switch down, turn the blower control to off, wait until both LEDs illuminate (approximately 5 seconds) and then release the A/C mode switch.

NOTE: The A/C status indicator displays active DTCs when the EBL status indictor is not illuminated and stored DTCs when the EBL status indicator is illuminated.
Read DTCs from the A/C status indictor.

Does the A/C status indicator display any of the following DTCs: 41, 43, 44, 61, 62, 63, 64, 67, 68, 69, 71, or 72?

Yes >> As present, diagnose and repair the faults in the following order: DTC 72 first, then DTC 62, then DTC 61, then DTCs 64, 68, or 71, then DTCs 63, 67, or 69, and finally DTCs 41, 43, or 44. Refer to the Table Of Contents in this section for a complete list of HVAC related symptoms.

No >> Go To 2

2. CHECK FOR A BROKEN RECIRCULATION DOOR ACTUATOR

Turn the ignition off.

Remove the Recirculation Door Actuator from the A/C Heater Housing Assembly.

By hand, attempt to rotate the actuator in both directions.

Does the actuator turn in either direction?

Yes >> Replace the Recirculation Door Actuator in accordance with the Service Information.
Perform BODY VERIFICATION TEST – VER 1. (Refer to 8 - ELECTRICAL/ELECTRONIC CONTROL MODULES/FRONT CONTROL MODULE - DIAGNOSIS AND TESTING).

No >> Go To 3

3. CHECK THE RECIRCULATION DOOR & A/C HEATER HOUSING FOR DISCONNECTED, MISSING, & BROKEN COMPONENTS

Inspect for disconnected, missing, or broken door linkage. Inspect for a damaged or broken A/C Heater Housing Assembly and a broken door. Rotate the door from stop to stop. The door should rotate approximately 100 degrees.

Are there any physical or mechanical problems with the door or housing?

Yes >> Repair as necessary in accordance with the Service Information.
Perform BODY VERIFICATION TEST – VER 1. (Refer to 8 - ELECTRICAL/ELECTRONIC CONTROL MODULES/FRONT CONTROL MODULE - DIAGNOSIS AND TESTING).

No >> Replace the Recirculation Door Actuator in accordance with the Service Information. Then, Go To 4.

4. VERIFY IF THE FAULT IS STILL PRESENT

Turn the ignition on.

Actuate the Clear DTC function by performing the following:

- Turn the blower control on.
- Press the A/C mode switch down, turn the blower control to off, wait until both LEDs illuminate (approximately 5 seconds) and then release the A/C mode switch.
- When the A/C status indicator begins displaying DTCs, set the Mode switch to the floor position, simultaneously press the A/C mode switch and the EBL mode switch down until both LEDs start flashing (approximately 5 seconds) and then release the mode switches. Stored DTCs will clear from memory in approximately two seconds.

Turn the ignition off, wait 10 seconds, and turn the ignition on.

Actuate the Actuator Circuit Test / Door Calibration Function by performing the following:

- Turn the blower control off.
- Press and hold the EBL mode switch down and then turn the blower control on. Continue to hold the EBL mode switch down until the EBL status indicator begins flashing. Then, release the EBL mode switch. While the test / function is running, the EBL status indicator will flash once per second. If the test / function passes, the EBL status indicator will stop flashing. If the test / function fails, the A/C and EBL status indicators will flash alternately. Allow the test / function to run to completion before proceeding.

Actuate the Display DTC function by performing the following:

- Turn the blower control on.
- Press the A/C mode switch down, turn the blower control to off, wait until both LEDs illuminate (approximately 5 seconds) and then release the A/C mode switch.

NOTE: The A/C status indicator displays active DTCs when the EBL status indictor is not illuminated and stored DTCs when the EBL status indicator is illuminated.

Read DTCs from the A/C status indictor.

Does the A/C status indicator display DTC 56?

Yes >> Replace the A/C Heater Control in accordance with the Service Information.
Perform BODY VERIFICATION TEST – VER 1. (Refer to 8 - ELECTRICAL/ELECTRONIC CONTROL MODULES/FRONT CONTROL MODULE - DIAGNOSIS AND TESTING).

No >> Perform BODY VERIFICATION TEST – VER 1. (Refer to 8 - ELECTRICAL/ELECTRONIC CONTROL MODULES/FRONT CONTROL MODULE - DIAGNOSIS AND TESTING).

61–COMMON DOOR DRIVER CIRCUIT SHORTED TO GROUND (MTC)

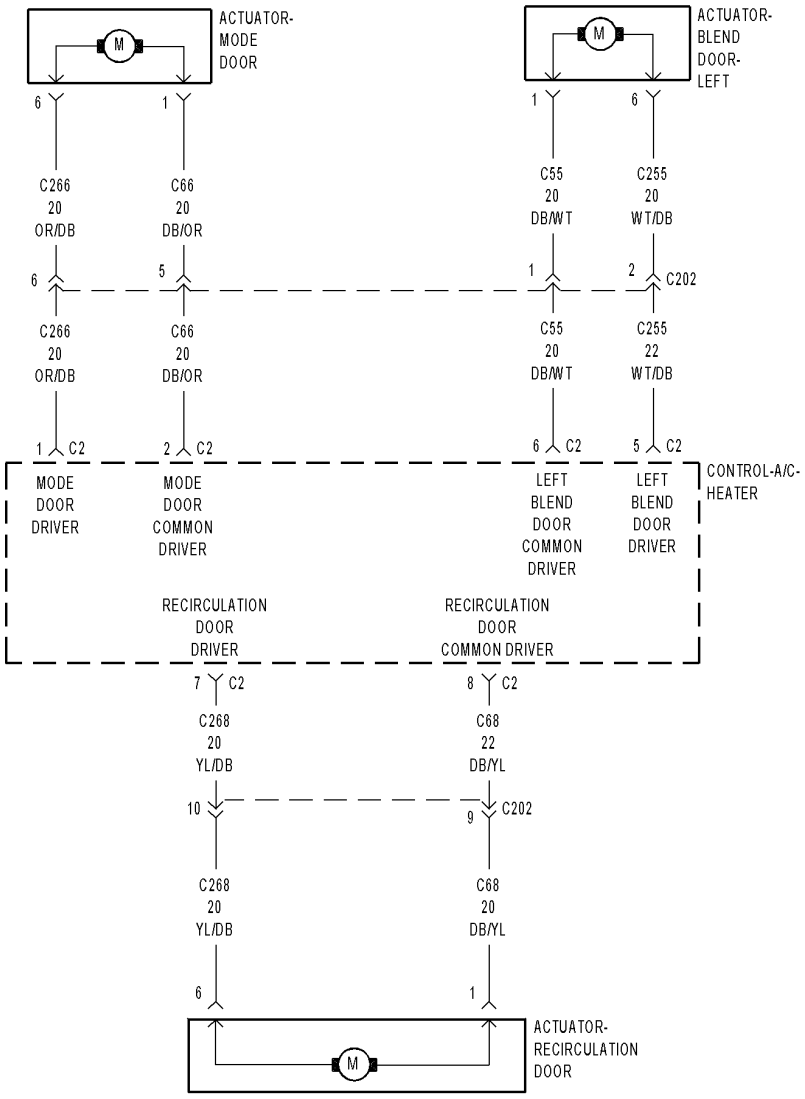

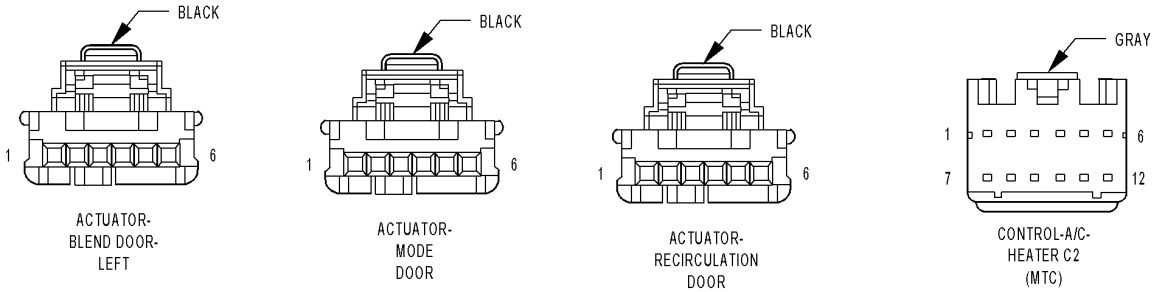

81503524

For a complete wiring diagram **Refer to Section 8W**.

Theory of Operation

NOTE: This DTC will display as active if the ignition is not cycled after running the Actuator Circuit Test / Door Calibration Function. Otherwise, it will display as stored until cleared.
By running the Actuator Circuit Test / Door Calibration Function, the A/C Heater Control can identify up to three door driver circuits shorted simultaneously. A DTC 72 will set if more than three door driver circuits are shorted in the same direction (e.g. four door driver circuits all shorted to ground) or if two or more door driver circuits are shorted with at least one door driver circuit shorted to ignition and one door driver circuit shorted to ground. To ensure a proper diagnosis, diagnose and repair Actuator Circuit Test faults in the following order: If present, diagnose and repair DTC 72 first, then DTC 62, then DTC 61, then DTCs 64, 68, or 71, and finally DTCs 63, 67, or 69. In addition, always test the door driver circuits after each repair by clearing DTCs, and then running the Actuator Circuit Test / Door Calibration Function, and then checking for DTCs.

- **When Monitored:**
  When running the Actuator Circuit Test / Door Calibration Function.
- **Set Condition:**
  If the A/C Heater Control detects a short to ground on the (C66) Mode Door Common Driver circuit / (C55) Left Blend Door Common Driver circuit / (C68) Recirculation Door Common Driver circuit.

Possible Causes
(C66) MODE DOOR COMMON DRIVER CIRCUIT / (C55) LEFT BLEND DOOR COMMON DRIVER CIRCUIT / (C68) RECIRCULATION DOOR COMMON DRIVER CIRCUIT SHORTED TO GROUND
(C66) MODE DOOR COMMON DRIVER CIRCUIT / (C55) LEFT BLEND DOOR COMMON DRIVER CIRCUIT / (C68) RECIRCULATION DOOR COMMON DRIVER CIRCUIT SHORTED TO OTHER DOOR DRIVER CIRCUIT(S)
MODE DOOR ACTUATOR
LEFT BLEND DOOR ACTUATOR
RECIRCULATION DOOR ACTUATOR
A/C HEATER CONTROL

Diagnostic Test

1. CHECK THE (C66) MODE DOOR COMMON DRIVER CIRCUIT, THE (C55) LEFT BLEND DOOR COMMON DRIVER CIRCUIT, & THE (C68) RECIRCULATION DOOR COMMON DRIVER CIRCUIT FOR A SHORT TO GROUND

Turn the ignition off.

Disconnect the A/C Heater Control C2 harness connector.

Measure the resistance of the (C66) Mode Door Common Driver Circuit, the (C55) Left Blend Door Common Driver circuit, and the (C68) Recirculation Door Common Driver circuit between ground and the A/C Heater Control C2 harness connector.

Is the resistance below 10k ohms on any of the circuits?

Yes >> Repair all circuits with a resistance below 10k ohms for a short to ground.
Perform BODY VERIFICATION TEST – VER 1. (Refer to 8 - ELECTRICAL/ELECTRONIC CONTROL MODULES/ FRONT CONTROL MODULE - DIAGNOSIS AND TESTING).

No >> Go To 2

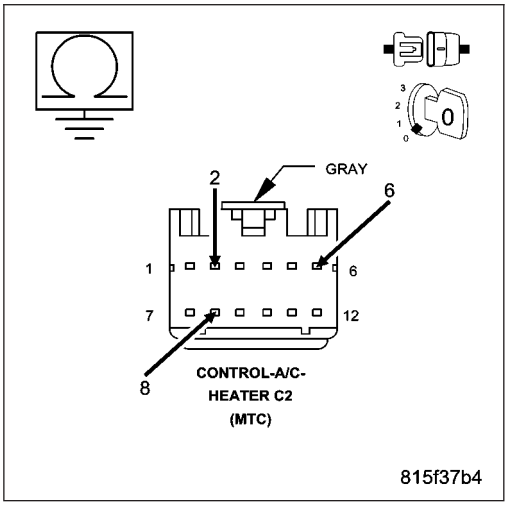

2. CHECK THE (C66) MODE DOOR COMMON DRIVER CIRCUIT FOR A SHORT TO THE (C255) LEFT BLEND DOOR DRIVER CIRCUIT, (C55) LEFT BLEND DOOR COMMON DRIVER CIRCUIT, (C268) RECIRCULATION DOOR DRIVER CIRCUIT, & THE (C68) RECIRCULATION DOOR COMMON DRIVER CIRCUIT

Measure the resistance between the (C66) Mode Door Common Driver circuit and the (C255) Left Blend Door Driver circuit, (C55) Left Blend Door Common Driver circuit, (C268) Recirculation Door Driver circuit, and the (C68) Recirculation Door Common Driver circuit in the A/C Heater Control C2 harness connector.

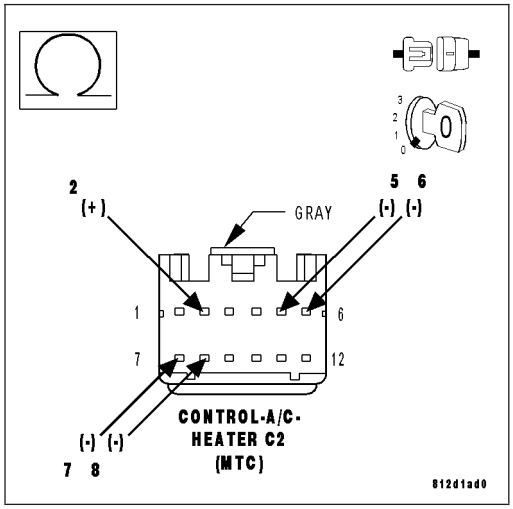

Is the resistance below 10k ohms on any of the circuits?

Yes >> Repair all circuits with a resistance below 10k ohms for a short to the (C66) Mode Door Common Driver circuit.

Perform BODY VERIFICATION TEST – VER 1. (Refer to 8 - ELECTRICAL/ELECTRONIC CONTROL MODULES/ FRONT CONTROL MODULE - DIAGNOSIS AND TESTING).

No >> Go To 3

3. CHECK THE (C55) LEFT BLEND DOOR COMMON DRIVER CIRCUIT FOR A SHORT TO THE (C266) MODE DOOR DRIVER CIRCUIT, (C268) RECIRCULATION DOOR DRIVER CIRCUIT, & THE (C68) RECIRCULATION DOOR COMMON DRIVER CIRCUIT

Measure the resistance between the (C55) Left Blend Door Common Driver circuit and the (C266) Mode Door Driver circuit, (C268) Recirculation Door Driver circuit, and the (C68) Recirculation Door Common Driver circuit in the A/C Heater Control C2 harness connector.

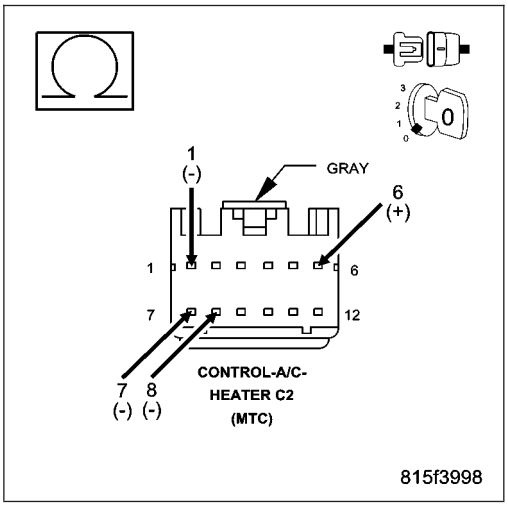

Is the resistance below 10k ohms on any of the circuits?

Yes >> Repair all circuits with a resistance below 10k ohms for a short to the (C55) Left Blend Door Common Driver circuit.

Perform BODY VERIFICATION TEST – VER 1. (Refer to 8 - ELECTRICAL/ELECTRONIC CONTROL MODULES/ FRONT CONTROL MODULE - DIAGNOSIS AND TESTING).

No >> Go To 4

4. CHECK THE (C68) RECIRCULATION DOOR COMMON DRIVER CIRCUIT FOR A SHORT TO THE (C266) MODE DOOR DRIVER CIRCUIT & THE (C255) LEFT BLEND DOOR DRIVER CIRCUIT

Measure the resistance between the (C68) Recirculation Door Common Driver circuit and the (C266) Mode Door Driver circuit and the (C255) Left Blend Door Driver circuit in the A/C Heater Control C2 harness connector.

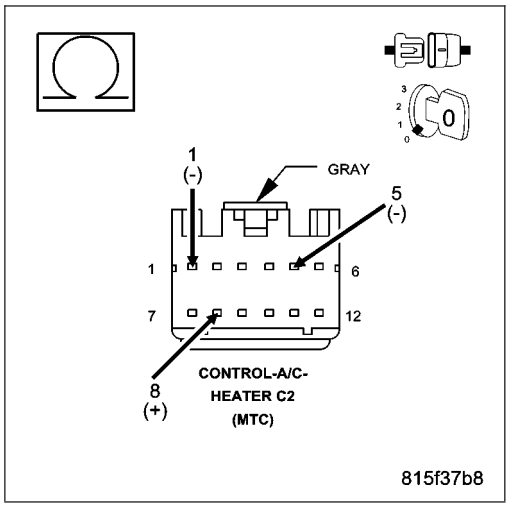

Is the resistance below 10k ohms on any of the circuits?

Yes >> Repair all circuits with a resistance below 10k ohms for a short to the (C68) Recirculation Door Common Driver circuit.

Perform BODY VERIFICATION TEST – VER 1. (Refer to 8 - ELECTRICAL/ELECTRONIC CONTROL MODULES/ FRONT CONTROL MODULE - DIAGNOSIS AND TESTING).

No >> Go To 5

5. CHECK THE MODE DOOR ACTUATOR CIRCUIT RESISTANCE

Measure the resistance between the (C66) Mode Door Common Driver Circuit and the (C266) Mode Door Driver circuit in the A/C Heater Control C2 harness connector.

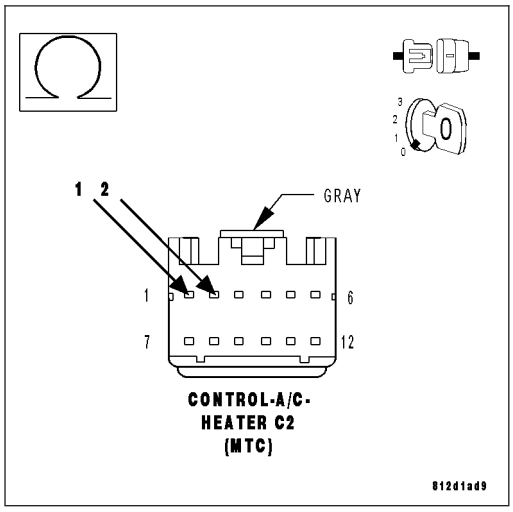

Is the resistance below 30.0 ohms?

Yes >> Go To 6

No >> Go To 7

6. CHECK THE (C66) MODE DOOR COMMON DRIVER CIRCUIT FOR A SHORT TO THE (C266) MODE DOOR DRIVER CIRCUIT

Disconnect the Mode Door Actuator harness connector.

Measure the resistance between the (C66) Mode Door Common Driver Circuit and the (C266) Mode Door Driver circuit in the A/C Heater Control C2 harness connector.

Is the resistance below 10k ohms?

Yes >> Repair the (C66) Mode Door Common Driver Circuit for a short to the (C266) Mode Door Driver circuit.

Perform BODY VERIFICATION TEST – VER 1. (Refer to 8 - ELECTRICAL/ELECTRONIC CONTROL MODULES/ FRONT CONTROL MODULE - DIAGNOSIS AND TESTING).

No >> Replace the Mode Door Actuator in accordance with the Service Information.

Perform BODY VERIFICATION TEST – VER 1. (Refer to 8 - ELECTRICAL/ELECTRONIC CONTROL MODULES/ FRONT CONTROL MODULE - DIAGNOSIS AND TESTING).

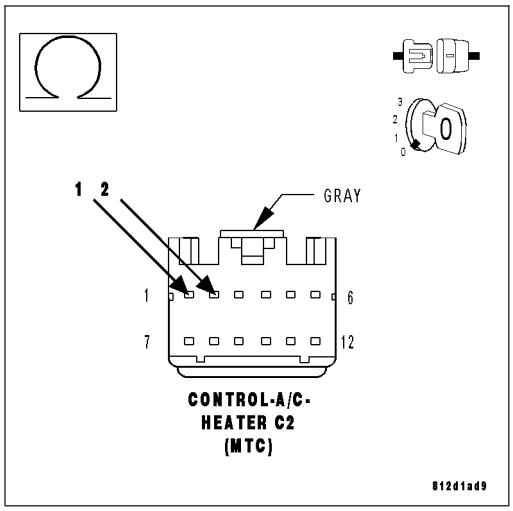

7. CHECK THE LEFT BLEND DOOR ACTUATOR CIRCUIT RESISTANCE

Measure the resistance between the (C55) Left Blend Door Common Driver Circuit and the (C255) Left Blend Door Driver circuit in the A/C Heater Control C2 harness connector.

Is the resistance below 30.0 ohms?

Yes >> Go To 8

No >> Go To 9

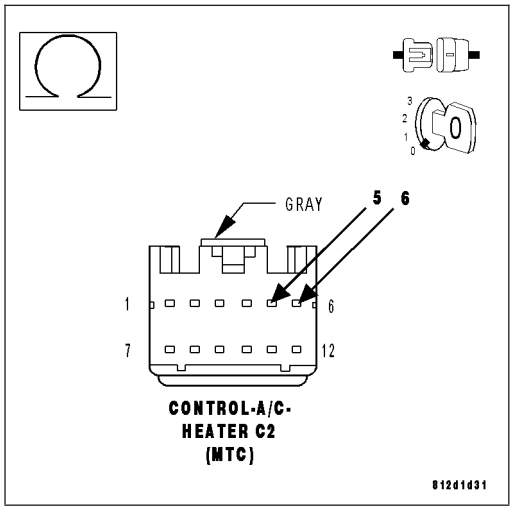

8. CHECK THE (C55) LEFT BLEND DOOR COMMON DRIVER CIRCUIT FOR A SHORT TO THE (C255) LEFT BLEND DOOR DRIVER CIRCUIT

Disconnect the Left Blend Door Actuator harness connector.

Measure the resistance between the (C55) Left Blend Door Common Driver Circuit and the (C255) Left Blend Door Driver circuit in the A/C Heater Control C2 harness connector.

Is the resistance below 10k ohms?

Yes >> Repair the (C55) Left Blend Door Common Driver Circuit for a short to the (C255) Left Blend Door Driver circuit.

Perform BODY VERIFICATION TEST – VER 1. (Refer to 8 - ELECTRICAL/ELECTRONIC CONTROL MODULES/ FRONT CONTROL MODULE - DIAGNOSIS AND TESTING).

No >> Replace the Left Blend Door Actuator in accordance with the Service Information.

Perform BODY VERIFICATION TEST – VER 1. (Refer to 8 - ELECTRICAL/ELECTRONIC CONTROL MODULES/ FRONT CONTROL MODULE - DIAGNOSIS AND TESTING).

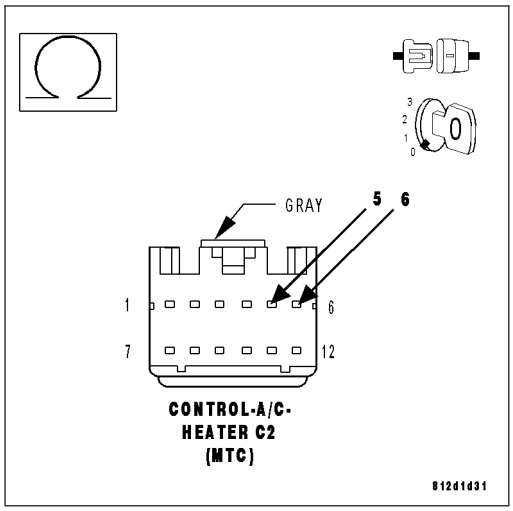

9. CHECK THE RECIRCULATION DOOR ACTUATOR CIRCUIT RESISTANCE

Measure the resistance between the (C68) Recirculation Door Common Driver Circuit and the (C268) Recirculation Door Driver circuit in the A/C Heater Control C2 harness connector.

Is the resistance below 30.0 ohms?

Yes >> Go To 10

No >> Go To 11

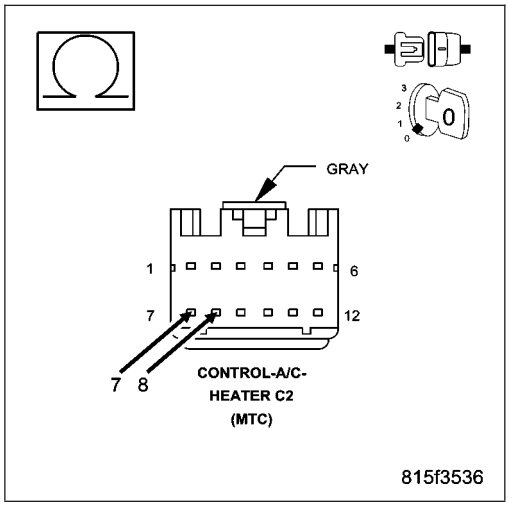

10. CHECK THE (C68) RECIRCULATION DOOR COMMON DRIVER CIRCUIT FOR A SHORT TO THE (C268) RECIRCULATION DOOR DRIVER CIRCUIT

Disconnect the Recirculation Door Actuator harness connector.

Measure the resistance between the (C68) Recirculation Door Common Driver Circuit and the (C268) Recirculation Door Driver circuit in the A/C Heater Control C2 harness connector.

Is the resistance below 10k ohms?

Yes >> Repair the (C68) Recirculation Door Common Driver Circuit for a short to the (C268) Recirculation Door Driver circuit.

Perform BODY VERIFICATION TEST – VER 1. (Refer to 8 - ELECTRICAL/ELECTRONIC CONTROL MODULES/ FRONT CONTROL MODULE - DIAGNOSIS AND TESTING).

No >> Replace the Recirculation Door Actuator in accordance with the Service Information.

Perform BODY VERIFICATION TEST – VER 1. (Refer to 8 - ELECTRICAL/ELECTRONIC CONTROL MODULES/ FRONT CONTROL MODULE - DIAGNOSIS AND TESTING).

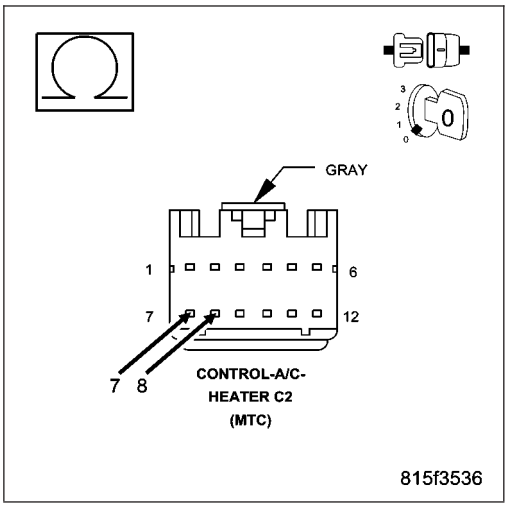

11. VERIFY THAT THE FAULT IS STILL PRESENT

Reconnect the A/C Heater Control C2 harness connector.

Turn the ignition on.

Actuate the Clear DTC function by performing the following:

- Turn the blower control on.
- Press the A/C mode switch down, turn the blower control to off, wait until both LEDs illuminate (approximately 5 seconds) and then release the A/C mode switch.
- When the A/C status indicator begins displaying DTCs, set the Mode switch to the floor position, simultaneously press the A/C mode switch and the EBL mode switch down until both LEDs start flashing (approximately 5 seconds) and then release the mode switches. Stored DTCs will clear from memory in approximately two seconds.

Turn the ignition off, wait 10 seconds, and turn the ignition on.

Actuate the Actuator Circuit Test / Door Calibration Function by performing the following:

- Turn the blower control off.
- Press and hold the EBL mode switch down and then turn the blower control on. Continue to hold the EBL mode switch down until the EBL status indicator begins flashing. Then, release the EBL mode switch. While the test / function is running, the EBL status indicator will flash once per second. If the test / function passes, the EBL status indicator will stop flashing. If the test / function fails, the A/C and EBL status indicators will flash alternately. Allow the test / function to run to completion before proceeding.

Actuate the Display DTC function by performing the following:

- Turn the blower control on.
- Press the A/C mode switch down, turn the blower control to off, wait until both LEDs illuminate (approximately 5 seconds) and then release the A/C mode switch.

NOTE: The A/C status indicator displays active DTCs when the EBL status indictor is not illuminated and stored DTCs when the EBL status indicator is illuminated.
Read DTCs from the A/C status indictor.

Does the A/C status indicator display DTC 61?

Yes >> Replace the A/C Heater Control in accordance with the Service Information.
Perform BODY VERIFICATION TEST – VER 1. (Refer to 8 - ELECTRICAL/ELECTRONIC CONTROL MODULES/FRONT CONTROL MODULE - DIAGNOSIS AND TESTING).

No >> Using the wiring diagram as a guide, inspect the wiring and connectors for conditions causing an intermittent short that set the original fault. Repair as necessary. Then, if present, diagnose and repair all other DTCs. Refer to the Table of Contents in this Section for a complete list of HVAC related symptoms.
Perform BODY VERIFICATION TEST – VER 1. (Refer to 8 - ELECTRICAL/ELECTRONIC CONTROL MODULES/FRONT CONTROL MODULE - DIAGNOSIS AND TESTING).

62–COMMON DOOR DRIVER CIRCUIT SHORTED TO IGNITION (MTC)

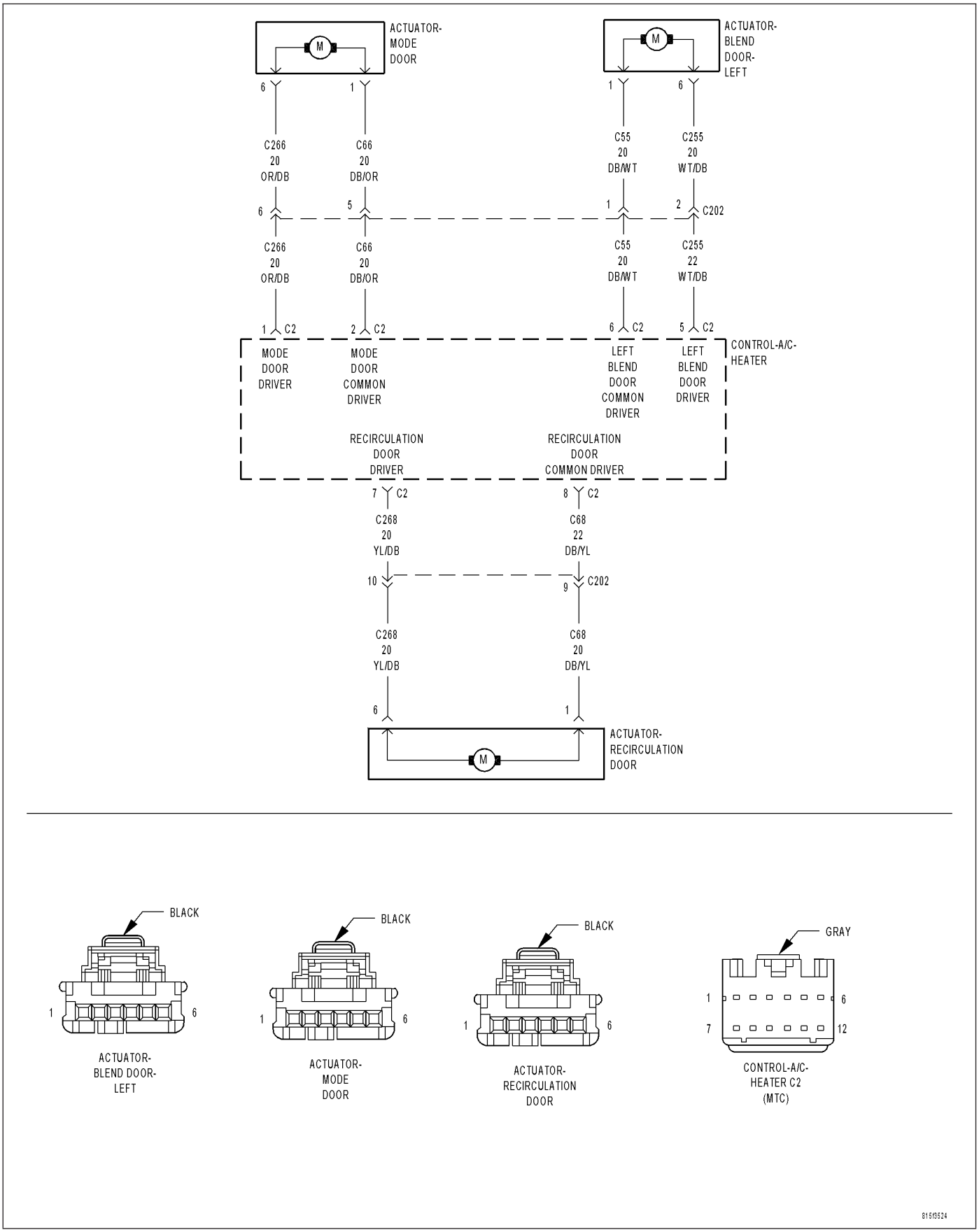

815f3524

For a complete wiring diagram **Refer to Section 8W**.

Theory of Operation

NOTE: This DTC will display as active if the ignition is not cycled after running the Actuator Circuit Test / Door Calibration Function. Otherwise, it will display as stored until cleared.
By running the Actuator Circuit Test / Door Calibration Function, the A/C Heater Control can identify up to three door driver circuits shorted simultaneously. A DTC 72 will set if more than three door driver circuits are shorted in the same direction (e.g. four door driver circuits all shorted to ground) or if two or more door driver circuits are shorted with at least one door driver circuit shorted to ignition and one door driver circuit shorted to ground. To ensure a proper diagnosis, diagnose and repair Actuator Circuit Test faults in the following order: If present, diagnose and repair DTC 72 first, then DTC 62, then DTC 61, then DTCs 64, 68, or 71, and finally DTCs 63, 67, or 69. In addition, always test the door driver circuits after each repair by clearing DTCs, and then running the Actuator Circuit Test / Door Calibration Function, and then checking for DTCs.

- **When Monitored:**
  When running the Actuator Circuit Test / Door Calibration Function.
- **Set Condition:**
  If the A/C Heater Control detects a short to voltage on the (C66) Mode Door Common Driver circuit / (C55) Left Blend Door Common Driver circuit / (C68) Recirculation Door Common Driver circuit.

Possible Causes
(C66) MODE DOOR COMMON DRIVER CIRCUIT / (C55) LEFT BLEND DOOR COMMON DRIVER CIRCUIT / (C68) RECIRCULATION DOOR COMMON DRIVER CIRCUIT SHORTED TO VOLTAGE
A/C HEATER CONTROL

Diagnostic Test

1. CHECK THE (C66) MODE DOOR COMMON DRIVER CIRCUIT, THE (C55) LEFT BLEND DOOR COMMON DRIVER CIRCUIT, & THE (C68) RECIRCULATION DOOR COMMON DRIVER CIRCUIT FOR A SHORT TO VOLTAGE

Turn the ignition off.

Disconnect the A/C Heater Control C2 harness connector.

Turn the ignition on.

Measure the voltage of the (C66) Mode Door Common Driver circuit, (C55) Left Blend Door Common Driver circuit, and the (C68) Recirculation Door Common Driver circuit.

Is the voltage above 0.2 volts on any of the circuits?

Yes >> Repair all circuits with a voltage above 0.2 volts for a short to voltage.
Perform BODY VERIFICATION TEST – VER 1. (Refer to 8 - ELECTRICAL/ELECTRONIC CONTROL MODULES/ FRONT CONTROL MODULE - DIAGNOSIS AND TESTING).

No >> Go To 2

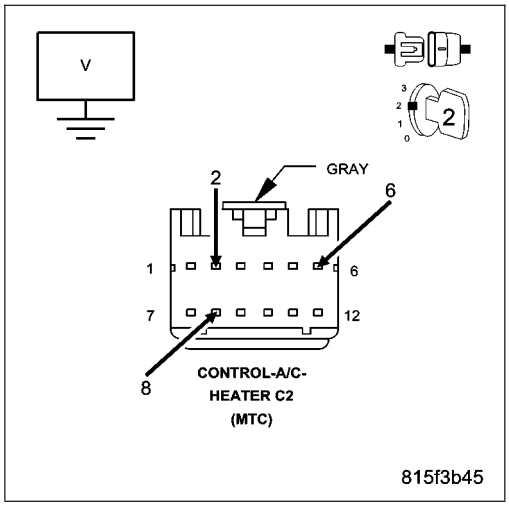

2. VERIFY THAT THE FAULT IS STILL PRESENT

Turn the ignition off.

Reconnect the A/C Heater Control C2 harness connector.

Turn the ignition on.

Actuate the Clear DTC function by performing the following:

- Turn the blower control on.
- Press the A/C mode switch down, turn the blower control to off, wait until both LEDs illuminate (approximately 5 seconds) and then release the A/C mode switch.
- When the A/C status indicator begins displaying DTCs, set the Mode switch to the floor position, simultaneously press the A/C mode switch and the EBL mode switch down until both LEDs start flashing (approximately 5 seconds) and then release the mode switches. Stored DTCs will clear from memory in approximately two seconds.

Turn the ignition off, wait 10 seconds, and turn the ignition on.

Actuate the Actuator Circuit Test / Door Calibration Function by performing the following:

- Turn the blower control off.
- Press and hold the EBL mode switch down and then turn the blower control on. Continue to hold the EBL mode switch down until the EBL status indicator begins flashing. Then, release the EBL mode switch. While the test / function is running, the EBL status indicator will flash once per second. If the test / function passes, the EBL status indicator will stop flashing. If the test / function fails, the A/C and EBL status indicators will flash alternately. Allow the test / function to run to completion before proceeding.

Actuate the Display DTC function by performing the following:

- Turn the blower control on.
- Press the A/C mode switch down, turn the blower control to off, wait until both LEDs illuminate (approximately 5 seconds) and then release the A/C mode switch.

NOTE: The A/C status indicator displays active DTCs when the EBL status indictor is not illuminated and stored DTCs when the EBL status indicator is illuminated.

Read DTCs from the A/C status indictor.

Does the A/C status indicator display DTC 62?

Yes >> Replace the A/C Heater Control in accordance with the Service Information.

Perform BODY VERIFICATION TEST – VER 1. (Refer to 8 - ELECTRICAL/ELECTRONIC CONTROL MODULES/FRONT CONTROL MODULE - DIAGNOSIS AND TESTING).

No >> Using the wiring diagram as a guide, inspect the wiring and connectors for conditions causing an intermittent short that set the original fault. Repair as necessary. Then, if present, diagnose and repair all other DTCs. Refer to the Table of Contents in this Section for a complete list of HVAC related symptoms.

Perform BODY VERIFICATION TEST – VER 1. (Refer to 8 - ELECTRICAL/ELECTRONIC CONTROL MODULES/FRONT CONTROL MODULE - DIAGNOSIS AND TESTING).

63–FRONT MODE DOOR DRIVER CIRCUIT SHORTED TO GROUND (MTC)

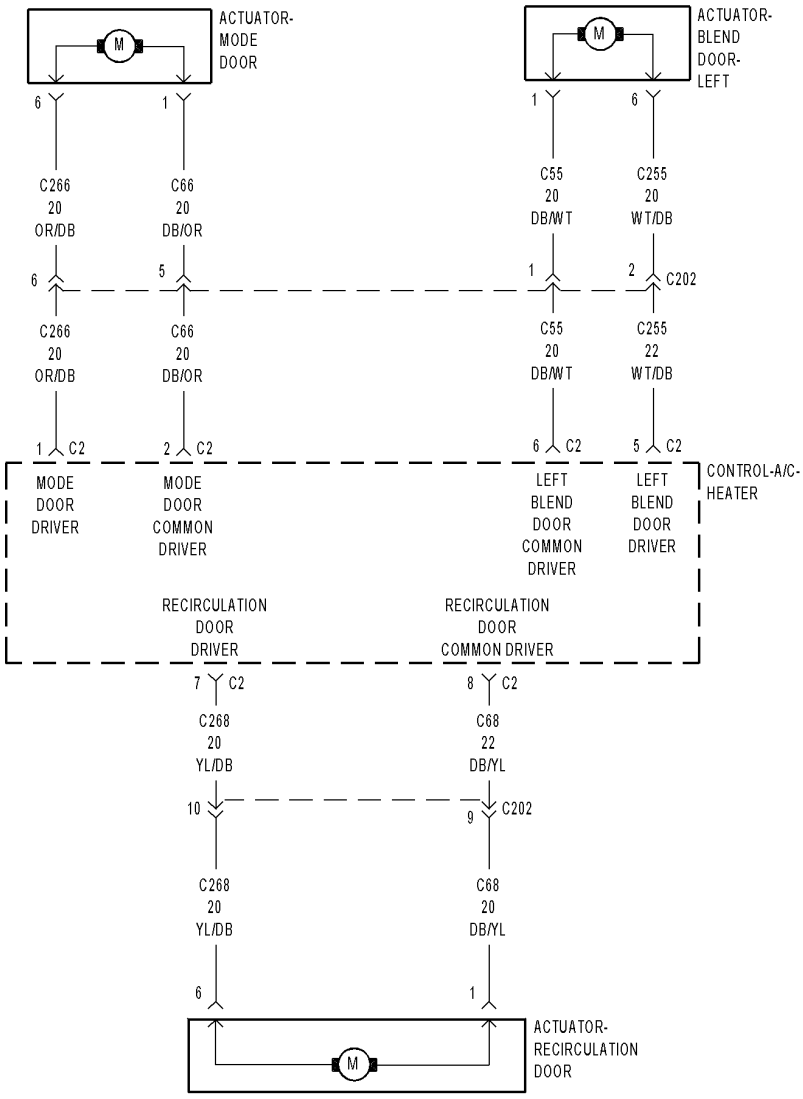

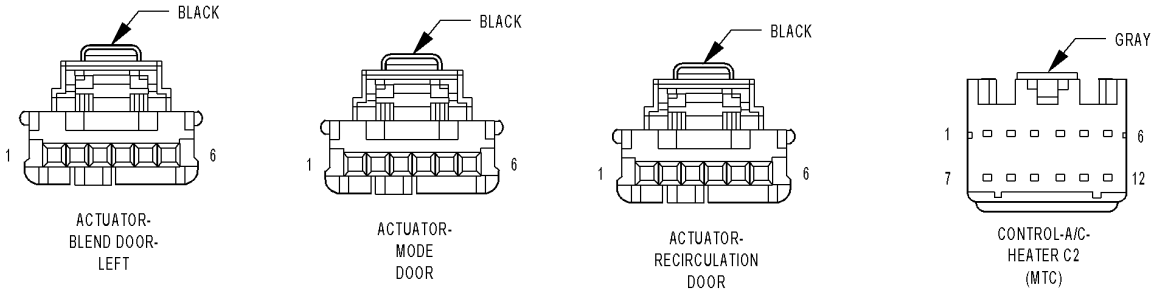

815f3524

For a complete wiring diagram **Refer to Section 8W**.

Theory of Operation

NOTE: This DTC will display as active if the ignition is not cycled after running the Actuator Circuit Test / Door Calibration Function. Otherwise, it will display as stored until cleared.
By running the Actuator Circuit Test / Door Calibration Function, the A/C Heater Control can identify up to three door driver circuits shorted simultaneously. A DTC 72 will set if more than three door driver circuits are shorted in the same direction (e.g. four door driver circuits all shorted to ground) or if two or more door driver circuits are shorted with at least one door driver circuit shorted to ignition and one door driver circuit shorted to ground. To ensure a proper diagnosis, diagnose and repair Actuator Circuit Test faults in the following order: If present, diagnose and repair DTC 72 first, then DTC 62, then DTC 61, then DTCs 64, 68, or 71, and finally DTCs 63, 67, or 69. In addition, always test the door driver circuits after each repair by clearing DTCs, and then running the Actuator Circuit Test / Door Calibration Function, and then checking for DTCs.

- **When Monitored:**
  When running the Actuator Circuit Test / Door Calibration Function.
- **Set Condition:**
  If the A/C Heater Control detects a short to ground on the (C266) Mode Door Driver circuit.

Possible Causes
(C266) FRONT MODE DOOR DRIVER CIRCUIT SHORTED TO GROUND
(C266) FRONT MODE DOOR DRIVER CIRCUIT SHORTED TO (C66) FRONT MODE DOOR COMMON DRIVER CIRCUIT
FRONT MODE DOOR ACTUATOR
A/C HEATER CONTROL

Diagnostic Test

1. CHECK THE (C266) MODE DOOR DRIVER CIRCUIT FOR A SHORT TO GROUND

Turn the ignition off.

Disconnect the A/C Heater Control C2 harness connector.

Measure the resistance of the (C266) Mode Door Driver circuit between ground and the A/C Heater Control C2 harness connector.

Is the resistance below 10k ohms?

Yes >> Repair the (C266) Mode Door Driver circuit for a short to ground.
Perform BODY VERIFICATION TEST – VER 1. (Refer to 8 - ELECTRICAL/ELECTRONIC CONTROL MODULES/ FRONT CONTROL MODULE - DIAGNOSIS AND TESTING).

No >> Go To 2

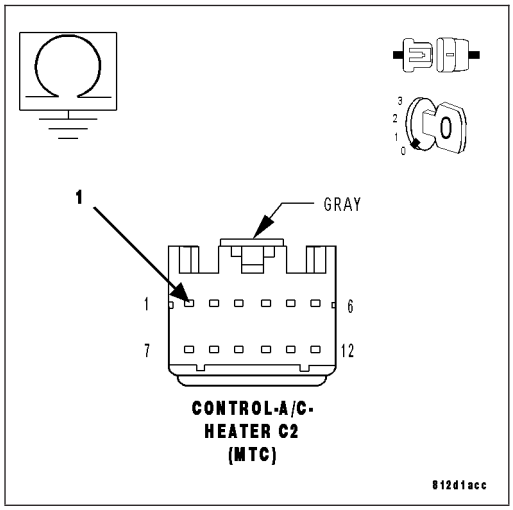

2. CHECK THE MODE DOOR ACTUATOR CIRCUIT RESISTANCE

Measure the resistance between the (C266) Mode Door Driver circuit and the (C66) Mode Door Common Driver circuit in the A/C Heater Control C2 harness connector.

Is the resistance below 30.0 ohms?

Yes >> Go To 3

No >> Go To 4

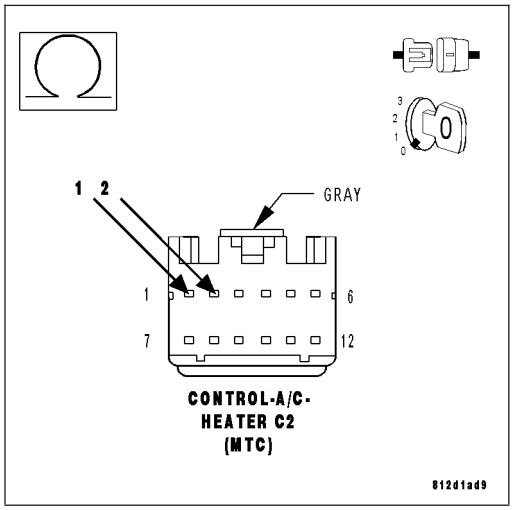

3. CHECK THE (C266) MODE DOOR DRIVER CIRCUIT FOR A SHORT TO THE (C66) MODE DOOR COMMON DRIVER CIRCUIT

Disconnect the Mode Door Actuator harness connector.

Measure the resistance between the (C266) Mode Door Driver circuit and the (C66) Mode Door Common Driver Circuit in the A/C Heater Control C2 harness connector.

Is the resistance below 10k ohms?

Yes >> Repair the (C266) Mode Door Driver circuit for a short to the (C66) Mode Door Common Driver circuit.

Perform BODY VERIFICATION TEST – VER 1. (Refer to 8 - ELECTRICAL/ELECTRONIC CONTROL MODULES/ FRONT CONTROL MODULE - DIAGNOSIS AND TESTING).

No >> Replace the Mode Door Actuator in accordance with the Service Information.

Perform BODY VERIFICATION TEST – VER 1. (Refer to 8 - ELECTRICAL/ELECTRONIC CONTROL MODULES/ FRONT CONTROL MODULE - DIAGNOSIS AND TESTING).

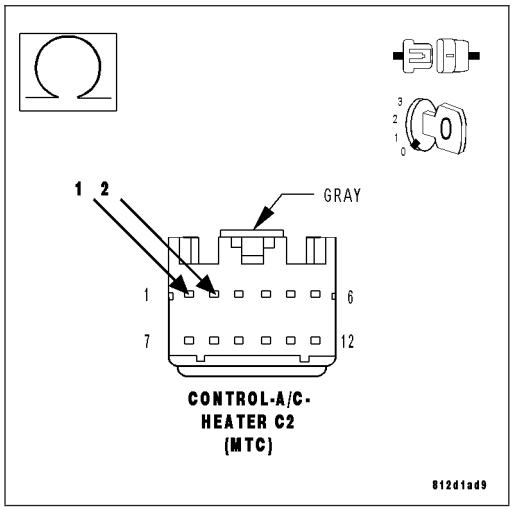

4. VERIFY THAT THE FAULT IS STILL PRESENT

Reconnect the A/C Heater Control C2 harness connector.

Turn the ignition on.

Actuate the Clear DTC function by performing the following:

- Turn the blower control on.
- Press the A/C mode switch down, turn the blower control to off, wait until both LEDs illuminate (approximately 5 seconds) and then release the A/C mode switch.
- When the A/C status indicator begins displaying DTCs, set the Mode switch to the floor position, simultaneously press the A/C mode switch and the EBL mode switch down until both LEDs start flashing (approximately 5 seconds) and then release the mode switches. Stored DTCs will clear from memory in approximately two seconds.

Turn the ignition off, wait 10 seconds, and turn the ignition on.

Actuate the Actuator Circuit Test / Door Calibration Function by performing the following:

- Turn the blower control off.
- Press and hold the EBL mode switch down and then turn the blower control on. Continue to hold the EBL mode switch down until the EBL status indicator begins flashing. Then, release the EBL mode switch. While the test / function is running, the EBL status indicator will flash once per second. If the test / function passes, the EBL status indicator will stop flashing. If the test / function fails, the A/C and EBL status indicators will flash alternately. Allow the test / function to run to completion before proceeding.

Actuate the Display DTC function by performing the following:

- Turn the blower control on.
- Press the A/C mode switch down, turn the blower control to off, wait until both LEDs illuminate (approximately 5 seconds) and then release the A/C mode switch.

NOTE: The A/C status indicator displays active DTCs when the EBL status indictor is not illuminated and stored DTCs when the EBL status indicator is illuminated.

Read DTCs from the A/C status indictor.

Does the A/C status indicator display DTC 63?

Yes >> Replace the A/C Heater Control in accordance with the Service Information.

Perform BODY VERIFICATION TEST – VER 1. (Refer to 8 - ELECTRICAL/ELECTRONIC CONTROL MODULES/FRONT CONTROL MODULE - DIAGNOSIS AND TESTING).

No >> Using the wiring diagram as a guide, inspect the wiring and connectors for conditions causing an intermittent short that set the original fault. Repair as necessary. Then, if present, diagnose and repair all other DTCs. Refer to the Table of Contents in this Section for a complete list of HVAC related symptoms.

Perform BODY VERIFICATION TEST – VER 1. (Refer to 8 - ELECTRICAL/ELECTRONIC CONTROL MODULES/FRONT CONTROL MODULE - DIAGNOSIS AND TESTING).

64–FRONT MODE DOOR DRIVER CIRCUIT SHORTED TO IGNITION (MTC)

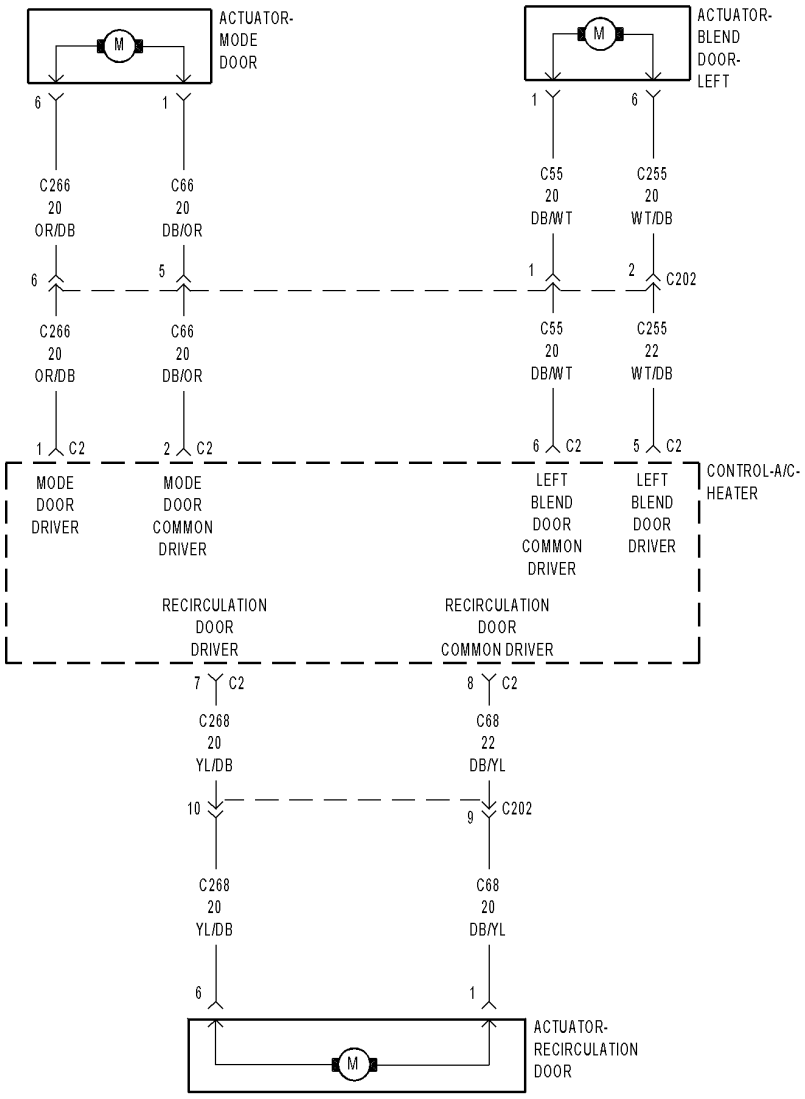

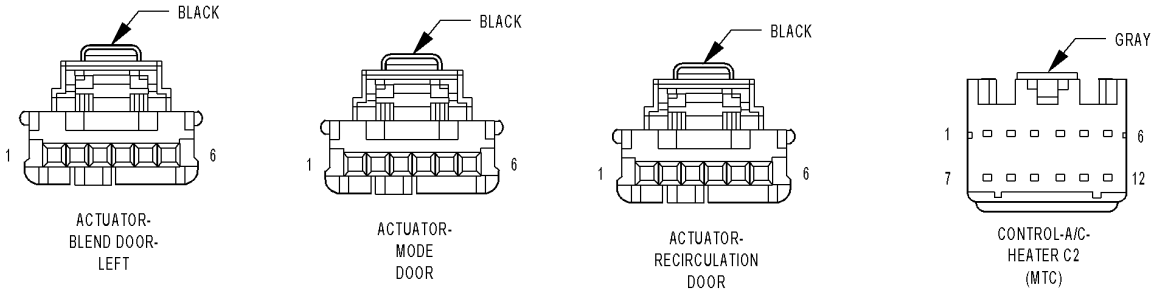

81503524

For a complete wiring diagram **Refer to Section 8W**.

Theory of Operation

NOTE: This DTC will display as active if the ignition is not cycled after running the Actuator Circuit Test / Door Calibration Function. Otherwise, it will display as stored until cleared.
By running the Actuator Circuit Test / Door Calibration Function, the A/C Heater Control can identify up to three door driver circuits shorted simultaneously. A DTC 72 will set if more than three door driver circuits are shorted in the same direction (e.g. four door driver circuits all shorted to ground) or if two or more door driver circuits are shorted with at least one door driver circuit shorted to ignition and one door driver circuit shorted to ground. To ensure a proper diagnosis, diagnose and repair Actuator Circuit Test faults in the following order: If present, diagnose and repair DTC 72 first, then DTC 62, then DTC 61, then DTCs 64, 68, or 71, and finally DTCs 63, 67, or 69. In addition, always test the door driver circuits after each repair by clearing DTCs, and then running the Actuator Circuit Test / Door Calibration Function, and then checking for DTCs.

- **When Monitored:**
  When running the Actuator Circuit Test / Door Calibration Function.
- **Set Condition:**
  If the A/C Heater Control detects a short to voltage on the (C266) Mode Door Driver circuit.

Possible Causes
(C266) MODE DOOR DRIVER CIRCUIT SHORTED TO VOLTAGE
A/C HEATER CONTROL

Diagnostic Test

1. CHECK THE (C266) MODE DOOR DRIVER CIRCUIT FOR A SHORT TO VOLTAGE

Turn the ignition off.
Disconnect the A/C Heater Control C2 harness connector.
Turn the ignition on.
Measure the voltage of the (C266) Mode Door Driver circuit.

Is the voltage above 0.2 volts?

Yes >> Repair the (C266) Mode Door Driver circuit for a short to voltage.
Perform BODY VERIFICATION TEST – VER 1. (Refer to 8 - ELECTRICAL/ELECTRONIC CONTROL MODULES/ FRONT CONTROL MODULE - DIAGNOSIS AND TESTING).

No >> Go To 2

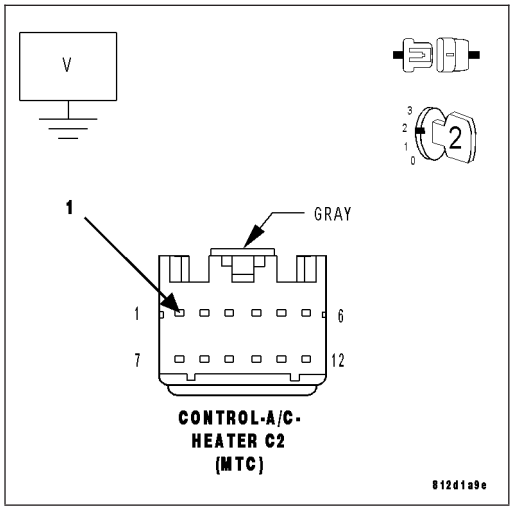

2. VERIFY THAT THE FAULT IS STILL PRESENT

Turn the ignition off.

Reconnect the A/C Heater Control C2 harness connector.

Turn the ignition on.

Actuate the Clear DTC function by performing the following:

- Turn the blower control on.
- Press the A/C mode switch down, turn the blower control to off, wait until both LEDs illuminate (approximately 5 seconds) and then release the A/C mode switch.
- When the A/C status indicator begins displaying DTCs, set the Mode switch to the floor position, simultaneously press the A/C mode switch and the EBL mode switch down until both LEDs start flashing (approximately 5 seconds) and then release the mode switches. Stored DTCs will clear from memory in approximately two seconds.

Turn the ignition off, wait 10 seconds, and turn the ignition on.

Actuate the Actuator Circuit Test / Door Calibration Function by performing the following:

- Turn the blower control off.
- Press and hold the EBL mode switch down and then turn the blower control on. Continue to hold the EBL mode switch down until the EBL status indicator begins flashing. Then, release the EBL mode switch. While the test / function is running, the EBL status indicator will flash once per second. If the test / function passes, the EBL status indicator will stop flashing. If the test / function fails, the A/C and EBL status indicators will flash alternately. Allow the test / function to run to completion before proceeding.

Actuate the Display DTC function by performing the following:

- Turn the blower control on.
- Press the A/C mode switch down, turn the blower control to off, wait until both LEDs illuminate (approximately 5 seconds) and then release the A/C mode switch.

NOTE: The A/C status indicator displays active DTCs when the EBL status indictor is not illuminated and stored DTCs when the EBL status indicator is illuminated.

Read DTCs from the A/C status indictor.

Does the A/C status indicator display DTC 64?

Yes >> Replace the A/C Heater Control in accordance with the Service Information.

Perform BODY VERIFICATION TEST – VER 1. (Refer to 8 - ELECTRICAL/ELECTRONIC CONTROL MODULES/FRONT CONTROL MODULE - DIAGNOSIS AND TESTING).

No >> Using the wiring diagram as a guide, inspect the wiring and connectors for conditions causing an intermittent short that set the original fault. Repair as necessary. Then, if present, diagnose and repair all other DTCs. Refer to the Table of Contents in this Section for a complete list of HVAC related symptoms.

Perform BODY VERIFICATION TEST – VER 1. (Refer to 8 - ELECTRICAL/ELECTRONIC CONTROL MODULES/FRONT CONTROL MODULE - DIAGNOSIS AND TESTING).

67–BLEND DOOR DRIVER CIRCUIT SHORTED TO GROUND (MTC)

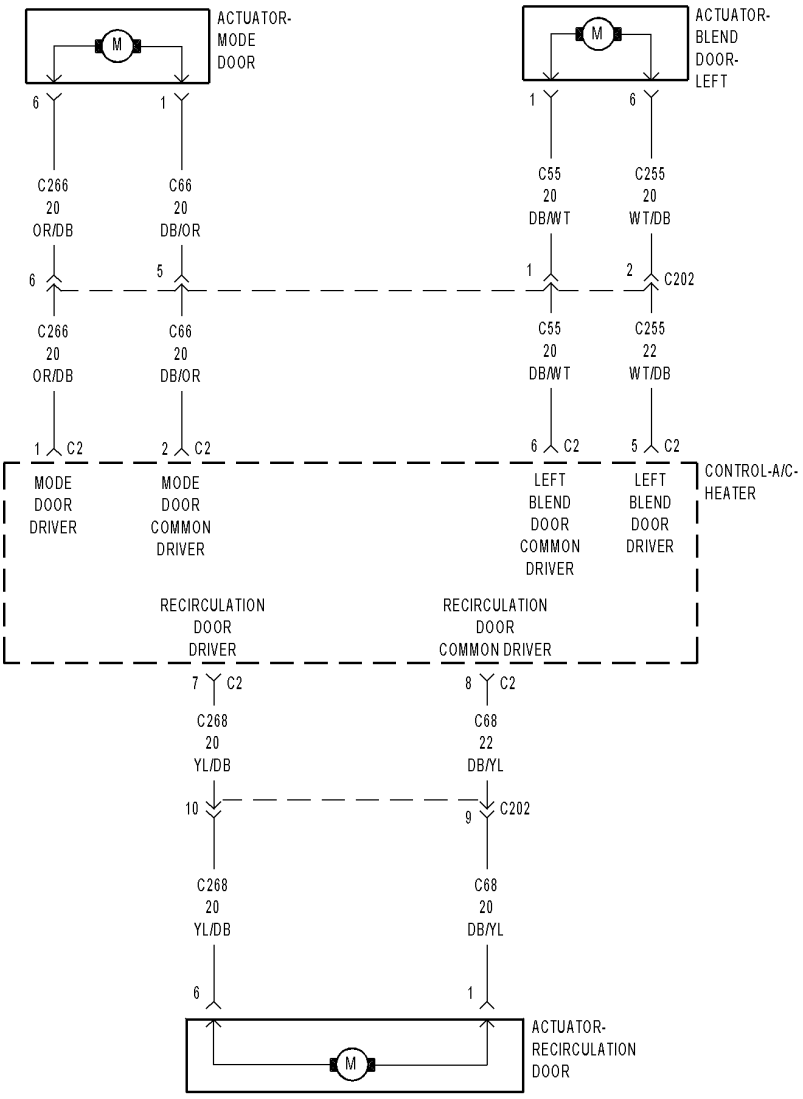

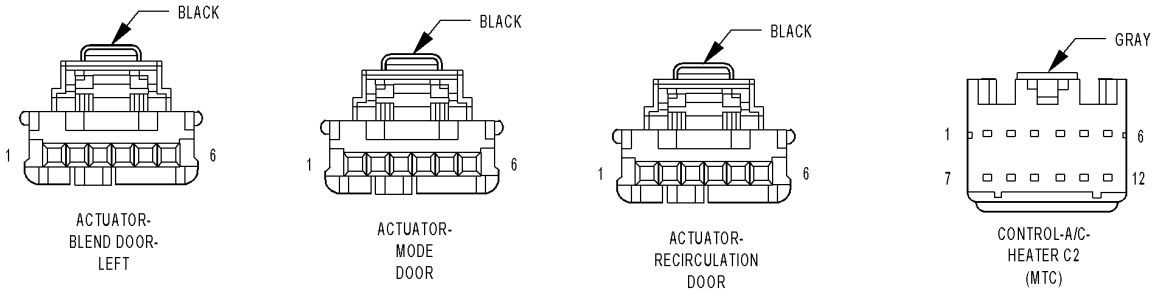

815f3524

For a complete wiring diagram **Refer to Section 8W**.

Theory of Operation

NOTE: This DTC will display as active if the ignition is not cycled after running the Actuator Circuit Test / Door Calibration Function. Otherwise, it will display as stored until cleared.
By running the Actuator Circuit Test / Door Calibration Function, the A/C Heater Control can identify up to three door driver circuits shorted simultaneously. A DTC 72 will set if more than three door driver circuits are shorted in the same direction (e.g. four door driver circuits all shorted to ground) or if two or more door driver circuits are shorted with at least one door driver circuit shorted to ignition and one door driver circuit shorted to ground. To ensure a proper diagnosis, diagnose and repair Actuator Circuit Test faults in the following order: If present, diagnose and repair DTC 72 first, then DTC 62, then DTC 61, then DTCs 64, 68, or 71, and finally DTCs 63, 67, or 69. In addition, always test the door driver circuits after each repair by clearing DTCs, and then running the Actuator Circuit Test / Door Calibration Function, and then checking for DTCs.

- **When Monitored:**
  When running the Actuator Circuit Test / Door Calibration Function.
- **Set Condition:**
  If the A/C Heater Control detects a short to ground on the (C255) Left Blend Door Driver circuit.

Possible Causes
(C255) LEFT BLEND DOOR DRIVER CIRCUIT SHORTED TO GROUND
(C255) LEFT BLEND DOOR DRIVER CIRCUIT SHORTED TO (C55) LEFT BLEND DOOR COMMON DRIVER CIRCUIT
LEFT BLEND DOOR ACTUATOR
A/C HEATER CONTROL

Diagnostic Test

1. CHECK THE (C255) LEFT BLEND DOOR DRIVER CIRCUIT FOR A SHORT TO GROUND

Turn the ignition off.

Disconnect the A/C Heater Control C2 harness connector.

Measure the resistance of the (C255) Left Blend Door Driver circuit between ground and the A/C Heater Control C2 harness connector.

Is the resistance below 10k ohms?

Yes >> Repair the (C255) Left Blend Door Driver circuit for a short to ground.
Perform BODY VERIFICATION TEST – VER 1. (Refer to 8 - ELECTRICAL/ELECTRONIC CONTROL MODULES/ FRONT CONTROL MODULE - DIAGNOSIS AND TESTING).

No >> Go To 2

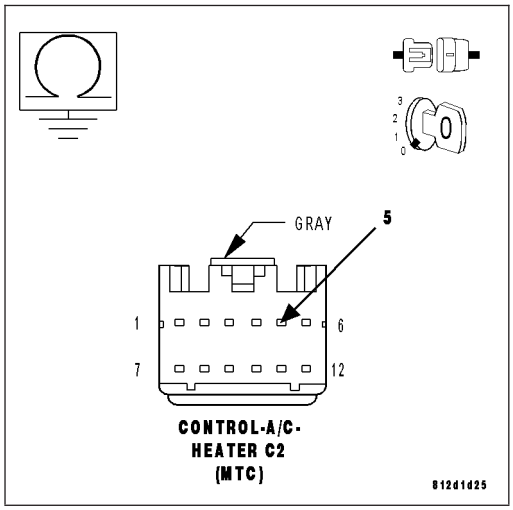

2. CHECK THE LEFT BLEND DOOR ACTUATOR CIRCUIT RESISTANCE

Measure the resistance between the (C255) Left Blend Door Driver circuit and the (C55) Left Blend Door Common Driver circuit in the A/C Heater Control C2 harness connector.

Is the resistance below 30.0 ohms?

Yes >> Go To 3

No >> Go To 4

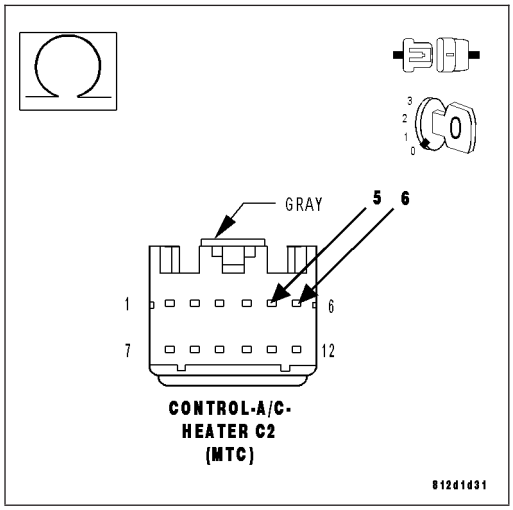

3. CHECK THE (C255) LEFT BLEND DOOR DRIVER CIRCUIT FOR A SHORT TO THE (C55) LEFT BLEND DOOR COMMON DRIVER CIRCUIT

Disconnect the Left Blend Door Actuator harness connector.

Measure the resistance between the (C255) Left Blend Door Driver circuit and the (C55) Left Blend Door Common Driver Circuit in the A/C Heater Control C2 harness connector.

Is the resistance below 10k ohms?

Yes >> Repair the (C255) Left Blend Door Driver circuit for a short to the (C55) Left Blend Door Common Driver circuit.

Perform BODY VERIFICATION TEST – VER 1. (Refer to 8 - ELECTRICAL/ELECTRONIC CONTROL MODULES/ FRONT CONTROL MODULE - DIAGNOSIS AND TESTING).

No >> Replace the Left Blend Door Actuator in accordance with the Service Information.

Perform BODY VERIFICATION TEST – VER 1. (Refer to 8 - ELECTRICAL/ELECTRONIC CONTROL MODULES/ FRONT CONTROL MODULE - DIAGNOSIS AND TESTING).

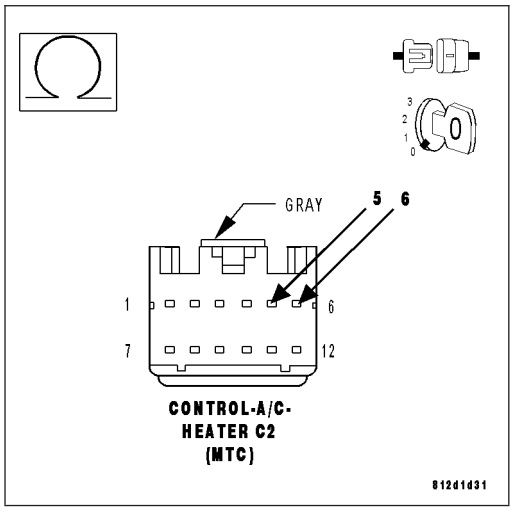

4. VERIFY THAT THE FAULT IS STILL PRESENT

Reconnect the A/C Heater Control C2 harness connector.

Turn the ignition on.

Actuate the Clear DTC function by performing the following:

- Turn the blower control on.
- Press the A/C mode switch down, turn the blower control to off, wait until both LEDs illuminate (approximately 5 seconds) and then release the A/C mode switch.
- When the A/C status indicator begins displaying DTCs, set the Mode switch to the floor position, simultaneously press the A/C mode switch and the EBL mode switch down until both LEDs start flashing (approximately 5 seconds) and then release the mode switches. Stored DTCs will clear from memory in approximately two seconds.

Turn the ignition off, wait 10 seconds, and turn the ignition on.

Actuate the Actuator Circuit Test / Door Calibration Function by performing the following:

- Turn the blower control off.
- Press and hold the EBL mode switch down and then turn the blower control on. Continue to hold the EBL mode switch down until the EBL status indicator begins flashing. Then, release the EBL mode switch. While the test / function is running, the EBL status indicator will flash once per second. If the test / function passes, the EBL status indicator will stop flashing. If the test / function fails, the A/C and EBL status indicators will flash alternately. Allow the test / function to run to completion before proceeding.

Actuate the Display DTC function by performing the following:

- Turn the blower control on.
- Press the A/C mode switch down, turn the blower control to off, wait until both LEDs illuminate (approximately 5 seconds) and then release the A/C mode switch.

NOTE: The A/C status indicator displays active DTCs when the EBL status indictor is not illuminated and stored DTCs when the EBL status indicator is illuminated.

Read DTCs from the A/C status indictor.

Does the A/C status indicator display DTC 67?

Yes >> Replace the A/C Heater Control in accordance with the Service Information.

Perform BODY VERIFICATION TEST – VER 1. (Refer to 8 - ELECTRICAL/ELECTRONIC CONTROL MODULES/FRONT CONTROL MODULE - DIAGNOSIS AND TESTING).

No >> Using the wiring diagram as a guide, inspect the wiring and connectors for conditions causing an intermittent short that set the original fault. Repair as necessary. Then, if present, diagnose and repair all other DTCs. Refer to the Table of Contents in this Section for a complete list of HVAC related symptoms.

Perform BODY VERIFICATION TEST – VER 1. (Refer to 8 - ELECTRICAL/ELECTRONIC CONTROL MODULES/FRONT CONTROL MODULE - DIAGNOSIS AND TESTING).

68–BLEND DOOR DRIVER CIRCUIT SHORTED TO IGNITION (MTC)

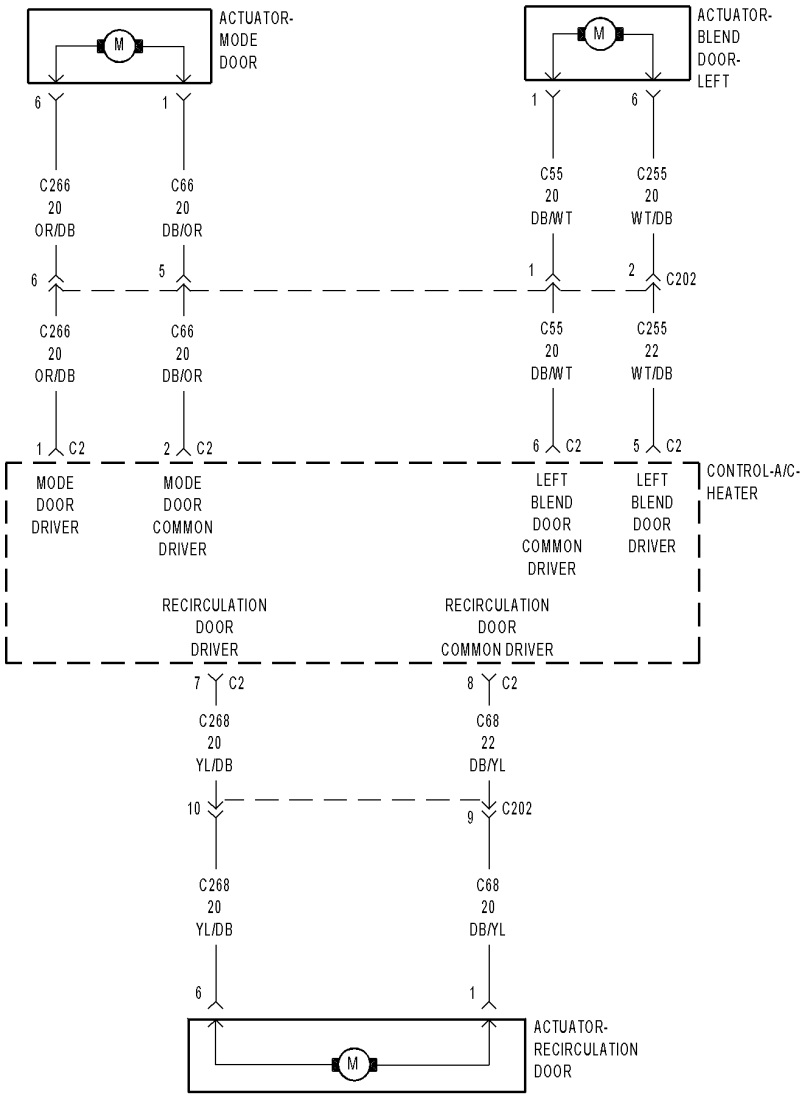

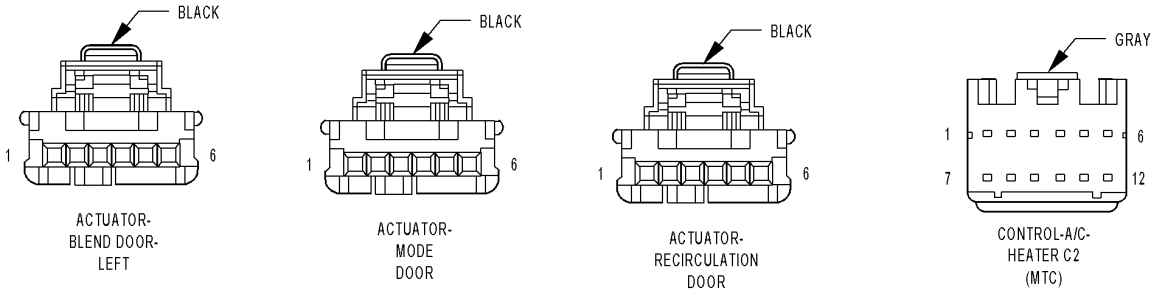

81503524

For a complete wiring diagram **Refer to Section 8W**.

Theory of Operation

NOTE: This DTC will display as active if the ignition is not cycled after running the Actuator Circuit Test / Door Calibration Function. Otherwise, it will display as stored until cleared.
By running the Actuator Circuit Test / Door Calibration Function, the A/C Heater Control can identify up to three door driver circuits shorted simultaneously. A DTC 72 will set if more than three door driver circuits are shorted in the same direction (e.g. four door driver circuits all shorted to ground) or if two or more door driver circuits are shorted with at least one door driver circuit shorted to ignition and one door driver circuit shorted to ground. To ensure a proper diagnosis, diagnose and repair Actuator Circuit Test faults in the following order: If present, diagnose and repair DTC 72 first, then DTC 62, then DTC 61, then DTCs 64, 68, or 71, and finally DTCs 63, 67, or 69. In addition, always test the door driver circuits after each repair by clearing DTCs, and then running the Actuator Circuit Test / Door Calibration Function, and then checking for DTCs.

- **When Monitored:**
  When running the Actuator Circuit Test / Door Calibration Function.
- **Set Condition:**
  If the A/C Heater Control detects a short to voltage on the (C255) Left Blend Door Driver circuit.

Possible Causes
(C255) LEFT BLEND DOOR DRIVER CIRCUIT SHORTED TO VOLTAGE
A/C HEATER CONTROL

Diagnostic Test

1. CHECK THE (C255) LEFT BLEND DOOR DRIVER CIRCUIT FOR A SHORT TO VOLTAGE

Turn the ignition off.
Disconnect the A/C Heater Control C2 harness connector.
Turn the ignition on.
Measure the voltage of the (C255) Left Blend Door Driver circuit.

Is the voltage above 0.2 volts?

Yes >> Repair the (C255) Left Blend Door Driver circuit for a short to voltage.
Perform BODY VERIFICATION TEST – VER 1. (Refer to 8 - ELECTRICAL/ELECTRONIC CONTROL MODULES/ FRONT CONTROL MODULE - DIAGNOSIS AND TESTING).

No >> Go To 2

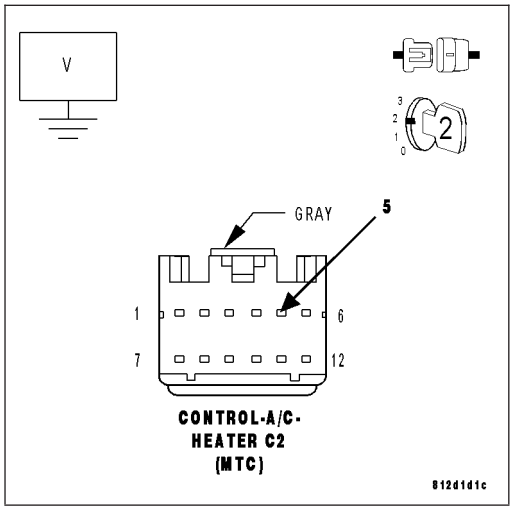

2. VERIFY THAT THE FAULT IS STILL PRESENT

Turn the ignition off.

Reconnect the A/C Heater Control C2 harness connector.

Turn the ignition on.

Actuate the Clear DTC function by performing the following:

- Turn the blower control on.
- Press the A/C mode switch down, turn the blower control to off, wait until both LEDs illuminate (approximately 5 seconds) and then release the A/C mode switch.
- When the A/C status indicator begins displaying DTCs, set the Mode switch to the floor position, simultaneously press the A/C mode switch and the EBL mode switch down until both LEDs start flashing (approximately 5 seconds) and then release the mode switches. Stored DTCs will clear from memory in approximately two seconds.

Turn the ignition off, wait 10 seconds, and turn the ignition on.

Actuate the Actuator Circuit Test / Door Calibration Function by performing the following:

- Turn the blower control off.
- Press and hold the EBL mode switch down and then turn the blower control on. Continue to hold the EBL mode switch down until the EBL status indicator begins flashing. Then, release the EBL mode switch. While the test / function is running, the EBL status indicator will flash once per second. If the test / function passes, the EBL status indicator will stop flashing. If the test / function fails, the A/C and EBL status indicators will flash alternately. Allow the test / function to run to completion before proceeding.

Actuate the Display DTC function by performing the following:

- Turn the blower control on.
- Press the A/C mode switch down, turn the blower control to off, wait until both LEDs illuminate (approximately 5 seconds) and then release the A/C mode switch.

NOTE: The A/C status indicator displays active DTCs when the EBL status indictor is not illuminated and stored DTCs when the EBL status indicator is illuminated.

Read DTCs from the A/C status indictor.

Does the A/C status indicator display DTC 68?

Yes >> Replace the A/C Heater Control in accordance with the Service Information.

Perform BODY VERIFICATION TEST – VER 1. (Refer to 8 - ELECTRICAL/ELECTRONIC CONTROL MODULES/FRONT CONTROL MODULE - DIAGNOSIS AND TESTING).

No >> Using the wiring diagram as a guide, inspect the wiring and connectors for conditions causing an intermittent short that set the original fault. Repair as necessary. Then, if present, diagnose and repair all other DTCs. Refer to the Table of Contents in this Section for a complete list of HVAC related symptoms.

Perform BODY VERIFICATION TEST – VER 1. (Refer to 8 - ELECTRICAL/ELECTRONIC CONTROL MODULES/FRONT CONTROL MODULE - DIAGNOSIS AND TESTING).

69–RECIRC DOOR DRIVER CIRCUIT SHORTED TO GROUND (MTC)

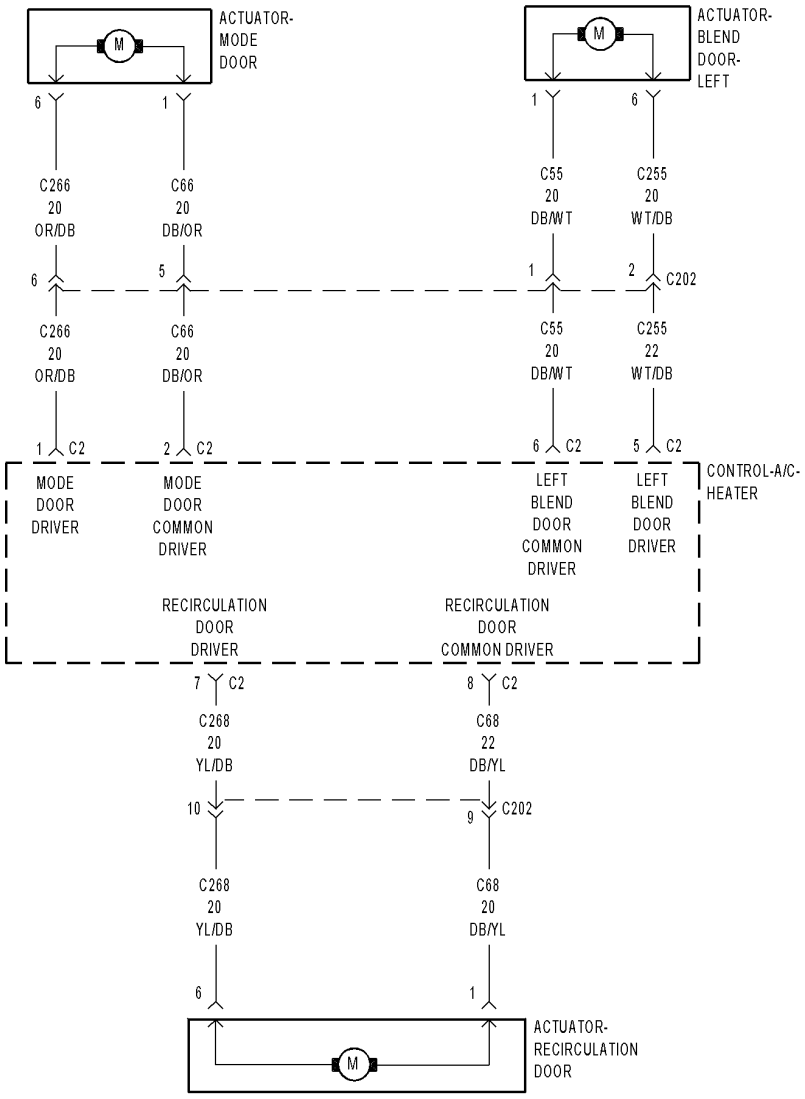

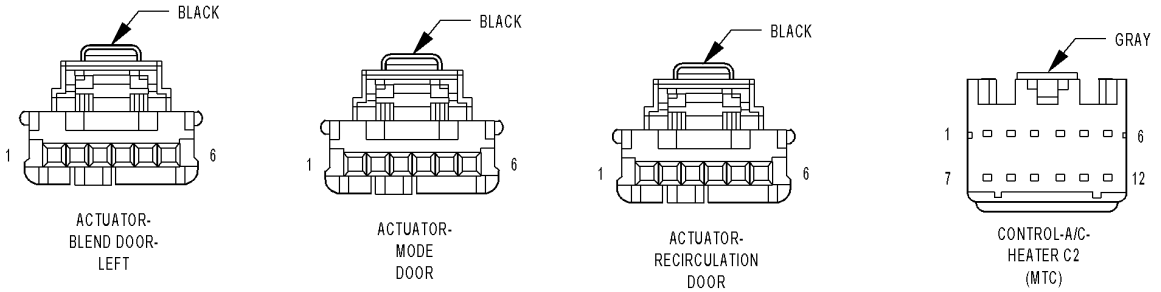

81fd0524

For a complete wiring diagram **Refer to Section 8W**.

Theory of Operation

NOTE: This DTC will display as active if the ignition is not cycled after running the Actuator Circuit Test / Door Calibration Function. Otherwise, it will display as stored until cleared.
By running the Actuator Circuit Test / Door Calibration Function, the A/C Heater Control can identify up to three door driver circuits shorted simultaneously. A DTC 72 will set if more than three door driver circuits are shorted in the same direction (e.g. four door driver circuits all shorted to ground) or if two or more door driver circuits are shorted with at least one door driver circuit shorted to ignition and one door driver circuit shorted to ground. To ensure a proper diagnosis, diagnose and repair Actuator Circuit Test faults in the following order: If present, diagnose and repair DTC 72 first, then DTC 62, then DTC 61, then DTCs 64, 68, or 71, and finally DTCs 63, 67, or 69. In addition, always test the door driver circuits after each repair by clearing DTCs, and then running the Actuator Circuit Test / Door Calibration Function, and then checking for DTCs.

- **When Monitored:**
  When running the Actuator Circuit Test / Door Calibration Function.
- **Set Condition:**
  If the A/C Heater Control detects a short to ground on the (C268) Recirculation Door Driver circuit.

Possible Causes
(C268) RECIRCULATION DOOR DRIVER CIRCUIT SHORTED TO GROUND
(C268) RECIRCULATION DOOR DRIVER CIRCUIT SHORTED TO (C68) RECIRCULATION DOOR COMMON DRIVER CIRCUIT
RECIRCULATION DOOR ACTUATOR
A/C HEATER CONTROL

Diagnostic Test

1. CHECK THE (C268) RECIRCULATION DOOR DRIVER CIRCUIT FOR A SHORT TO GROUND

Turn the ignition off.

Disconnect the A/C Heater Control C2 harness connector.

Measure the resistance of the (C268) Recirculation Door Driver circuit between ground and the A/C Heater Control C2 harness connector.

Is the resistance below 10k ohms?

Yes >> Repair the (C268) Recirculation Door Driver circuit for a short to ground.
Perform BODY VERIFICATION TEST – VER 1. (Refer to 8 - ELECTRICAL/ELECTRONIC CONTROL MODULES/ FRONT CONTROL MODULE - DIAGNOSIS AND TESTING).

No >> Go To 2

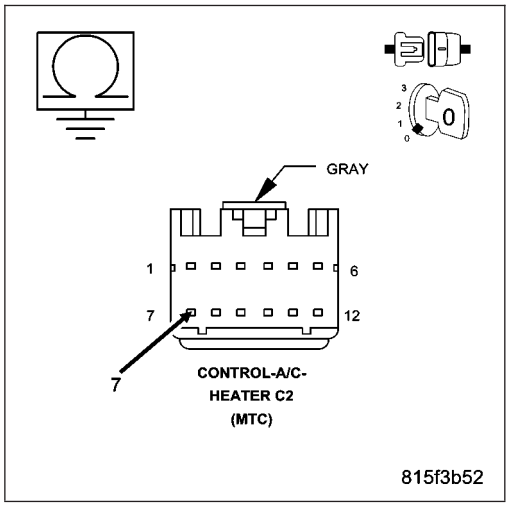

2. CHECK THE RECIRCULATION DOOR ACTUATOR CIRCUIT RESISTANCE

Measure the resistance between the (C268) Recirculation Door Driver circuit and the (C68) Recirculation Door Common Driver circuit in the A/C Heater Control C2 harness connector.

Is the resistance below 30.0 ohms?

Yes >> Go To 3

No >> Go To 4

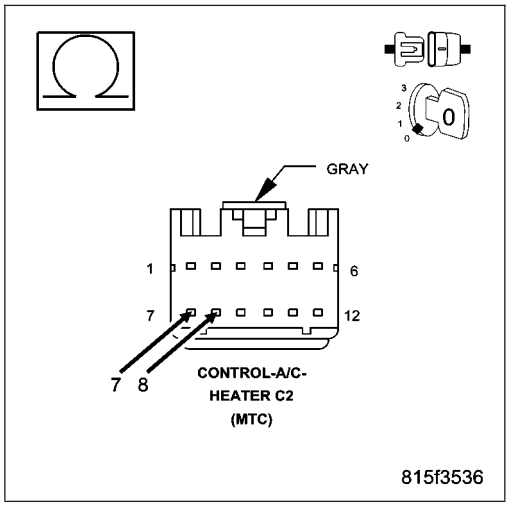

3. CHECK THE (C268) RECIRCULATION DOOR DRIVER CIRCUIT FOR A SHORT TO THE (C68) RECIRCULATION DOOR COMMON DRIVER CIRCUIT

Disconnect the Recirculation Door Actuator harness connector.

Measure the resistance between the (C268) Recirculation Door Driver circuit and the (C68) Recirculation Door Common Driver Circuit in the A/C Heater Control C2 harness connector.

Is the resistance below 10k ohms?

Yes >> Repair the (C268) Recirculation Door Driver circuit for a short to the (C68) Recirculation Door Common Driver circuit.

Perform BODY VERIFICATION TEST – VER 1. (Refer to 8 - ELECTRICAL/ELECTRONIC CONTROL MODULES/ FRONT CONTROL MODULE - DIAGNOSIS AND TESTING).

No >> Replace the Recirculation Door Actuator in accordance with the Service Information.

Perform BODY VERIFICATION TEST – VER 1. (Refer to 8 - ELECTRICAL/ELECTRONIC CONTROL MODULES/ FRONT CONTROL MODULE - DIAGNOSIS AND TESTING).

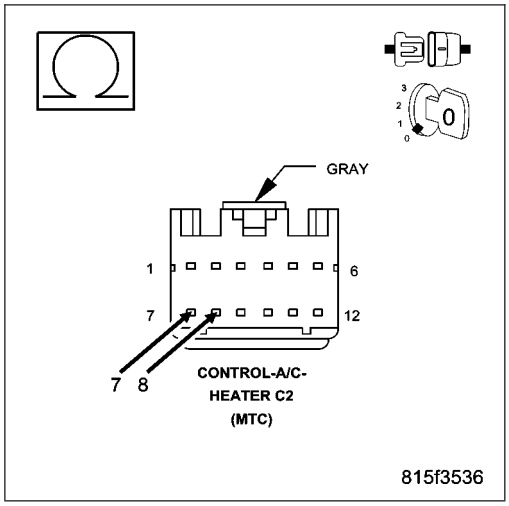

4. VERIFY THAT THE FAULT IS STILL PRESENT

Reconnect the A/C Heater Control C2 harness connector.

Turn the ignition on.

Actuate the Clear DTC function by performing the following:

- Turn the blower control on.
- Press the A/C mode switch down, turn the blower control to off, wait until both LEDs illuminate (approximately 5 seconds) and then release the A/C mode switch.
- When the A/C status indicator begins displaying DTCs, set the Mode switch to the floor position, simultaneously press the A/C mode switch and the EBL mode switch down until both LEDs start flashing (approximately 5 seconds) and then release the mode switches. Stored DTCs will clear from memory in approximately two seconds.

Turn the ignition off, wait 10 seconds, and turn the ignition on.

Actuate the Actuator Circuit Test / Door Calibration Function by performing the following:

- Turn the blower control off.
- Press and hold the EBL mode switch down and then turn the blower control on. Continue to hold the EBL mode switch down until the EBL status indicator begins flashing. Then, release the EBL mode switch. While the test / function is running, the EBL status indicator will flash once per second. If the test / function passes, the EBL status indicator will stop flashing. If the test / function fails, the A/C and EBL status indicators will flash alternately. Allow the test / function to run to completion before proceeding.

Actuate the Display DTC function by performing the following:

- Turn the blower control on.
- Press the A/C mode switch down, turn the blower control to off, wait until both LEDs illuminate (approximately 5 seconds) and then release the A/C mode switch.

NOTE: The A/C status indicator displays active DTCs when the EBL status indictor is not illuminated and stored DTCs when the EBL status indicator is illuminated.

Read DTCs from the A/C status indictor.

Does the A/C status indicator display DTC 69?

Yes >> Replace the A/C Heater Control in accordance with the Service Information.

Perform BODY VERIFICATION TEST – VER 1. (Refer to 8 - ELECTRICAL/ELECTRONIC CONTROL MODULES/FRONT CONTROL MODULE - DIAGNOSIS AND TESTING).

No >> Using the wiring diagram as a guide, inspect the wiring and connectors for conditions causing an intermittent short that set the original fault. Repair as necessary. Then, if present, diagnose and repair all other DTCs. Refer to the Table of Contents in this Section for a complete list of HVAC related symptoms.

Perform BODY VERIFICATION TEST – VER 1. (Refer to 8 - ELECTRICAL/ELECTRONIC CONTROL MODULES/FRONT CONTROL MODULE - DIAGNOSIS AND TESTING).

71–RECIRC DOOR DRIVER CIRCUIT SHORTED TO IGNITION (MTC)

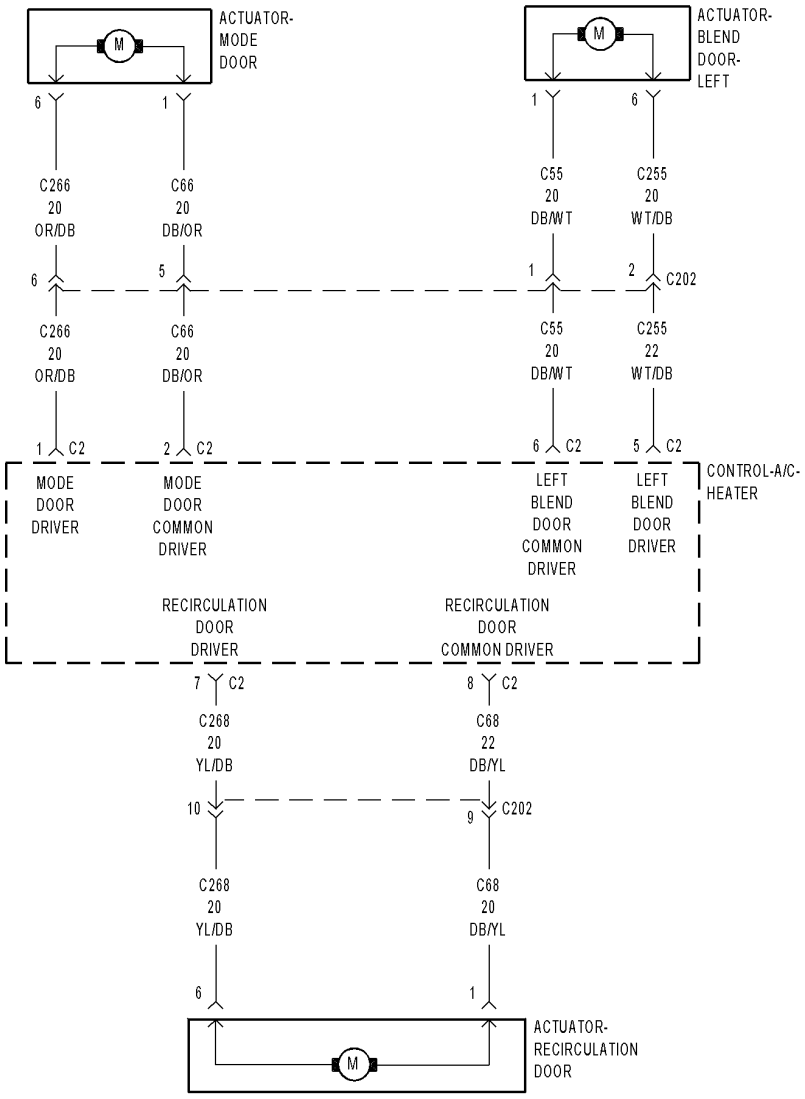

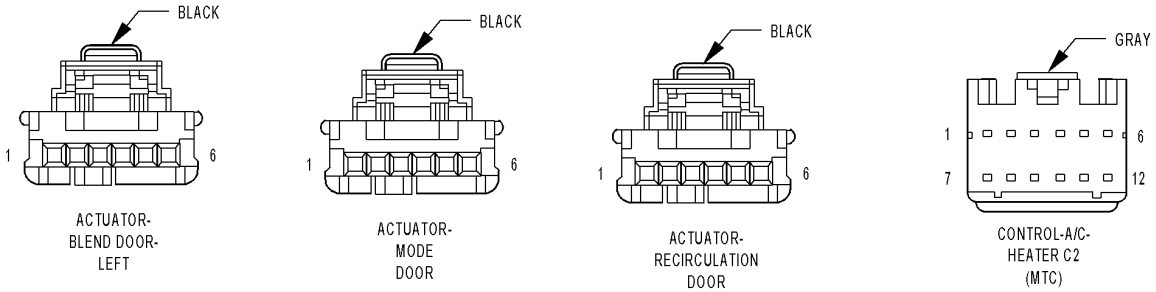

81503524

For a complete wiring diagram **Refer to Section 8W**.

Theory of Operation

NOTE: This DTC will display as active if the ignition is not cycled after running the Actuator Circuit Test / Door Calibration Function. Otherwise, it will display as stored until cleared.
By running the Actuator Circuit Test / Door Calibration Function, the A/C Heater Control can identify up to three door driver circuits shorted simultaneously. A DTC 72 will set if more than three door driver circuits are shorted in the same direction (e.g. four door driver circuits all shorted to ground) or if two or more door driver circuits are shorted with at least one door driver circuit shorted to ignition and one door driver circuit shorted to ground. To ensure a proper diagnosis, diagnose and repair Actuator Circuit Test faults in the following order: If present, diagnose and repair DTC 72 first, then DTC 62, then DTC 61, then DTCs 64, 68, or 71, and finally DTCs 63, 67, or 69. In addition, always test the door driver circuits after each repair by clearing DTCs, and then running the Actuator Circuit Test / Door Calibration Function, and then checking for DTCs.

- **When Monitored:**
  When running the Actuator Circuit Test / Door Calibration Function.
- **Set Condition:**
  If the A/C Heater Control detects a short to voltage on the (C268) Recirculation Door Driver circuit.

Possible Causes
(C268) RECIRCULATION DOOR DRIVER CIRCUIT SHORTED TO VOLTAGE
A/C HEATER CONTROL

Diagnostic Test

1. CHECK THE (C268) RECIRCULATION DOOR DRIVER CIRCUIT FOR A SHORT TO VOLTAGE

Turn the ignition off.
Disconnect the A/C Heater Control C2 harness connector.
Turn the ignition on.
Measure the voltage of the (C268) Recirculation Door Driver circuit.

Is the voltage above 0.2 volts?

Yes >> Repair the (C268) Recirculation Door Driver circuit for a short to voltage.
Perform BODY VERIFICATION TEST – VER 1. (Refer to 8 - ELECTRICAL/ELECTRONIC CONTROL MODULES/ FRONT CONTROL MODULE - DIAGNOSIS AND TESTING).

No >> Go To 2

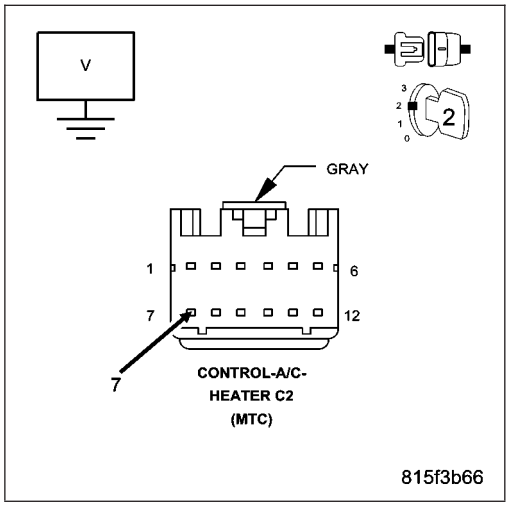

2. VERIFY THAT THE FAULT IS STILL PRESENT

Turn the ignition off.

Reconnect the A/C Heater Control C2 harness connector.

Turn the ignition on.

Actuate the Clear DTC function by performing the following:

- Turn the blower control on.
- Press the A/C mode switch down, turn the blower control to off, wait until both LEDs illuminate (approximately 5 seconds) and then release the A/C mode switch.
- When the A/C status indicator begins displaying DTCs, set the Mode switch to the floor position, simultaneously press the A/C mode switch and the EBL mode switch down until both LEDs start flashing (approximately 5 seconds) and then release the mode switches. Stored DTCs will clear from memory in approximately two seconds.

Turn the ignition off, wait 10 seconds, and turn the ignition on.

Actuate the Actuator Circuit Test / Door Calibration Function by performing the following:

- Turn the blower control off.
- Press and hold the EBL mode switch down and then turn the blower control on. Continue to hold the EBL mode switch down until the EBL status indicator begins flashing. Then, release the EBL mode switch. While the test / function is running, the EBL status indicator will flash once per second. If the test / function passes, the EBL status indicator will stop flashing. If the test / function fails, the A/C and EBL status indicators will flash alternately. Allow the test / function to run to completion before proceeding.

Actuate the Display DTC function by performing the following:

- Turn the blower control on.
- Press the A/C mode switch down, turn the blower control to off, wait until both LEDs illuminate (approximately 5 seconds) and then release the A/C mode switch.

NOTE: The A/C status indicator displays active DTCs when the EBL status indictor is not illuminated and stored DTCs when the EBL status indicator is illuminated.

Read DTCs from the A/C status indictor.

Does the A/C status indicator display DTC 71?

Yes >> Replace the A/C Heater Control in accordance with the Service Information.

Perform BODY VERIFICATION TEST – VER 1. (Refer to 8 - ELECTRICAL/ELECTRONIC CONTROL MODULES/FRONT CONTROL MODULE - DIAGNOSIS AND TESTING).

No >> Using the wiring diagram as a guide, inspect the wiring and connectors for conditions causing an intermittent short that set the original fault. Repair as necessary. Then, if present, diagnose and repair all other DTCs. Refer to the Table of Contents in this Section for a complete list of HVAC related symptoms.

Perform BODY VERIFICATION TEST – VER 1. (Refer to 8 - ELECTRICAL/ELECTRONIC CONTROL MODULES/FRONT CONTROL MODULE - DIAGNOSIS AND TESTING).

72–SHORT TOO COMPLEX (MTC)

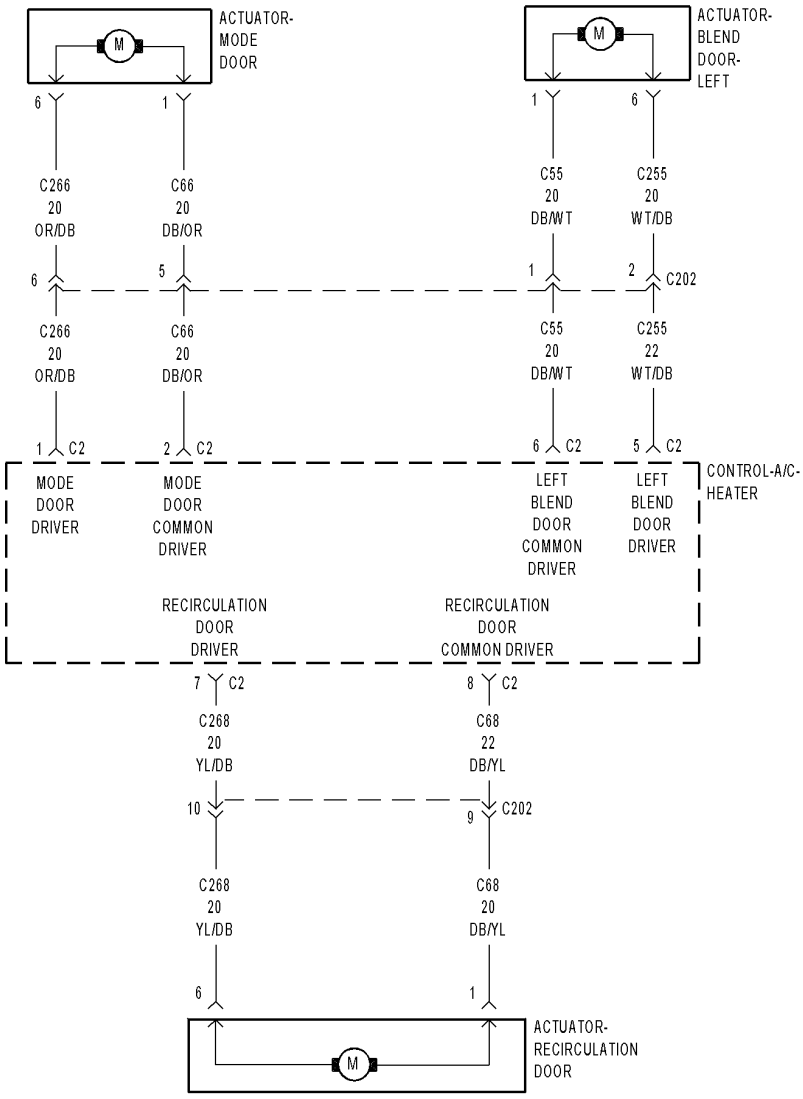

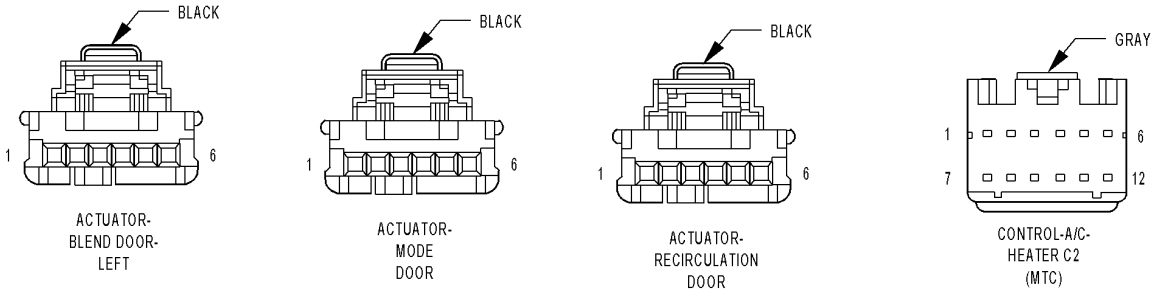

81503524

For a complete wiring diagram **Refer to Section 8W**.

Theory of Operation

NOTE: This DTC will display as active if the ignition is not cycled after running the Actuator Circuit Test / Door Calibration Function. Otherwise, it will display as stored until cleared.
By running the Actuator Circuit Test / Door Calibration Function, the A/C Heater Control can identify up to three door driver circuits shorted simultaneously. A DTC 72 will set if more than three door driver circuits are shorted in the same direction (e.g. four door driver circuits all shorted to ground) or if two or more door driver circuits are shorted with at least one door driver circuit shorted to ignition and one door driver circuit shorted to ground. To ensure a proper diagnosis, diagnose and repair Actuator Circuit Test faults in the following order: If present, diagnose and repair DTC 72 first, then DTC 62, then DTC 61, then DTCs 64, 68, or 71, and finally DTCs 63, 67, or 69. In addition, always test the door driver circuits after each repair by clearing DTCs, and then running the Actuator Circuit Test / Door Calibration Function, and then checking for DTCs.

- **When Monitored:**
  When running the Actuator Circuit Test / Door Calibration Function.
- **Set Condition:**
  If the A/C Heater Control detects more than three door driver circuits shorted in the same direction (e.g. four door driver circuits all shorted to ground) or if two or more door driver circuits are shorted with at least one door driver circuit shorted to voltage and one door driver circuit shorted to ground.

Possible Causes
MORE THAN THREE DOOR DRIVER CIRCUITS SHORTED TO VOLTAGE
MORE THAN THREE DOOR DRIVER CIRCUITS SHORTED TO GROUND
TWO OR MORE DOOR DRIVER CIRCUITS SHORTED WITH AT LEAST ONE SHORTED TO IGNITION AND ONE SHORTED TO GROUND
MODE DOOR ACTUATOR
LEFT BLEND DOOR ACTUATOR
RECIRCULATION DOOR ACTUATOR
A/C HEATER CONTROL

Diagnostic Test

1. CHECK THE (C266) MODE DOOR DRIVER CIRCUIT, (C66) MODE DOOR COMMON DRIVER CIRCUIT, (C255) LEFT BLEND DOOR DRIVER CIRCUIT, (C55) LEFT BLEND DOOR COMMON DRIVER CIRCUIT, (C268) RECIRCULATION DOOR DRIVER CIRCUIT, & (C68) RECIRCULATION DOOR COMMON DRIVER CIRCUIT FOR A SHORT TO VOLTAGE

Turn the ignition off.

Disconnect the A/C Heater Control C2 harness connector.

Turn the ignition on.

Measure the voltage of the (C266) Mode Door Driver circuit, (C66) Mode Door Common Driver circuit, (C255) Left Blend Door Driver circuit, (C55) Left Blend Door Common Driver circuit, (C268) Recirculation Door Driver circuit, and the (C68) Recirculation Door Common Driver circuit.

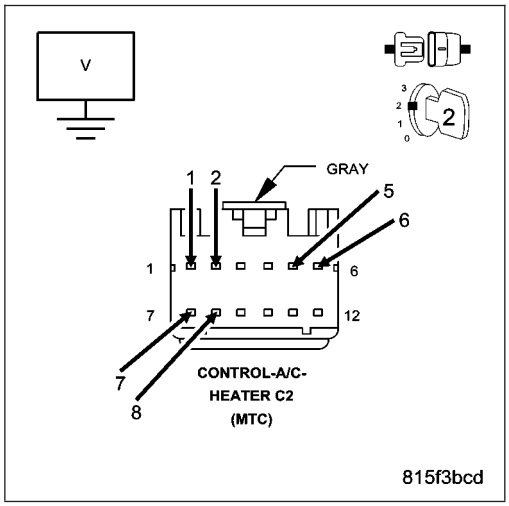

Is the voltage above 0.2 volts on any of the circuits?

Yes >> Repair all circuits with voltage above 0.2 volts for a short to voltage.
Perform BODY VERIFICATION TEST – VER 1. (Refer to 8 - ELECTRICAL/ELECTRONIC CONTROL MODULES/ FRONT CONTROL MODULE - DIAGNOSIS AND TESTING).

No >> Go To 2

2. CHECK THE (C266) MODE DOOR DRIVER CIRCUIT, (C66) MODE DOOR COMMON DRIVER CIRCUIT, (C255) LEFT BLEND DOOR DRIVER CIRCUIT, (C55) LEFT BLEND DOOR COMMON DRIVER CIRCUIT, (C268) RECIRCULATION DOOR DRIVER CIRCUIT, & (C68) RECIRCULATION DOOR COMMON DRIVER CIRCUIT FOR A SHORT TO GROUND

Turn the ignition off.

Measure the resistance of the (C266) Mode Door Driver circuit, (C66) Mode Door Common Driver circuit, (C255) Left Blend Door Driver circuit, (C55) Left Blend Door Common Driver circuit, (C268) Recirculation Door Driver circuit, and the (C68) Recirculation Door Common Driver circuit between ground and the A/C Heater Control C2 harness connector.

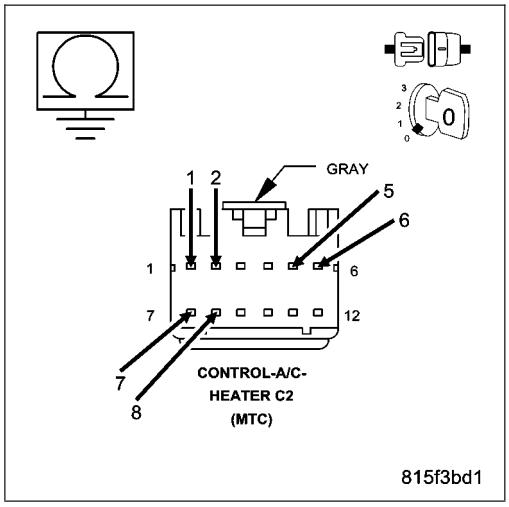

Is the resistance below 10k ohms on any of the circuits?

Yes >> Repair all circuits with a resistance below 10k ohms for a short to ground.

Perform BODY VERIFICATION TEST – VER 1. (Refer to 8 - ELECTRICAL/ELECTRONIC CONTROL MODULES/ FRONT CONTROL MODULE - DIAGNOSIS AND TESTING).

No >> Go To 3

3. CHECK THE (C266) MODE DOOR DRIVER CIRCUIT FOR A SHORT TO THE (C255) LEFT BLEND DOOR DRIVER CIRCUIT, (C55) LEFT BLEND DOOR COMMON DRIVER CIRCUIT, (C268) RECIRCULATION DOOR DRIVER CIRCUIT, & THE (C68) RECIRCULATION DOOR COMMON DRIVER CIRCUIT

Measure the resistance between the (C266) Mode Door Driver circuit and the (C255) Left Blend Door Driver circuit, (C55) Left Blend Door Common Driver circuit, (C268) Recirculation Door Driver circuit, and the (C68) Recirculation Door Common Driver circuit in the A/C Heater Control C2 harness connector.

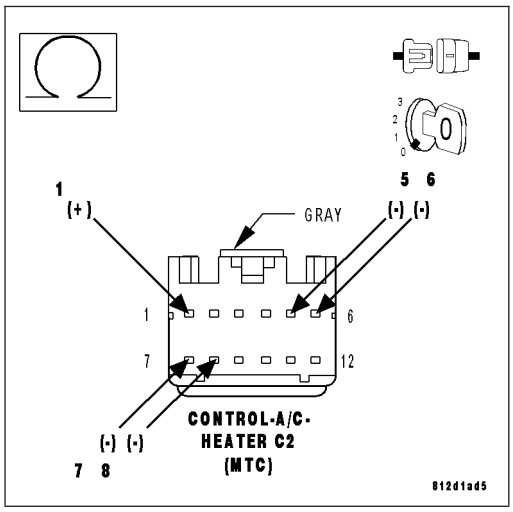

Is the resistance below 10k ohms on any of the circuits?

Yes >> Repair all circuits with a resistance below 10k ohms for a short to the (C266) Mode Door Driver circuit.

Perform BODY VERIFICATION TEST – VER 1. (Refer to 8 - ELECTRICAL/ELECTRONIC CONTROL MODULES/ FRONT CONTROL MODULE - DIAGNOSIS AND TESTING).

No >> Go To 4

4. CHECK THE (C66) MODE DOOR COMMON DRIVER CIRCUIT FOR A SHORT TO THE (C255) LEFT BLEND DOOR DRIVER CIRCUIT, (C55) LEFT BLEND DOOR COMMON DRIVER CIRCUIT, (C268) RECIRCULATION DOOR DRIVER CIRCUIT, & THE (C68) RECIRCULATION DOOR COMMON DRIVER CIRCUIT

Measure the resistance between the (C66) Mode Door Common Driver circuit and the (C255) Left Blend Door Driver circuit, (C55) Left Blend Door Common Driver circuit, (C268) Recirculation Door Driver circuit, and the (C68) Recirculation Door Common Driver circuit in the A/C Heater Control C2 harness connector.

Is the resistance below 10k ohms on any of the circuits?

Yes >> Repair all circuits with a resistance below 10k ohms for a short to the (C66) Mode Door Common Driver circuit.

Perform BODY VERIFICATION TEST – VER 1. (Refer to 8 - ELECTRICAL/ELECTRONIC CONTROL MODULES/ FRONT CONTROL MODULE - DIAGNOSIS AND TESTING).

No >> Go To 5

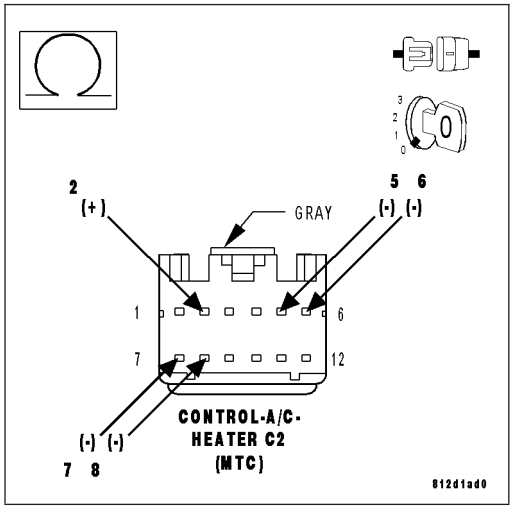

5. CHECK THE (C255) LEFT BLEND DOOR DRIVER CIRCUIT FOR A SHORT TO THE (C268) RECIRCULATION DOOR DRIVER CIRCUIT & THE (C68) RECIRCULATION DOOR COMMON DRIVER CIRCUIT

Measure the resistance between the (C255) Left Blend Door Driver circuit and the (C268) Recirculation Door Driver circuit and the (C68) Recirculation Door Common Driver circuit in the A/C Heater Control C2 harness connector.

Is the resistance below 10k ohms on any of the circuits?

Yes >> Repair all circuits with a resistance below 10k ohms for a short to the (C255) Left Blend Door Driver circuit.

Perform BODY VERIFICATION TEST – VER 1. (Refer to 8 - ELECTRICAL/ELECTRONIC CONTROL MODULES/ FRONT CONTROL MODULE - DIAGNOSIS AND TESTING).

No >> Go To 6

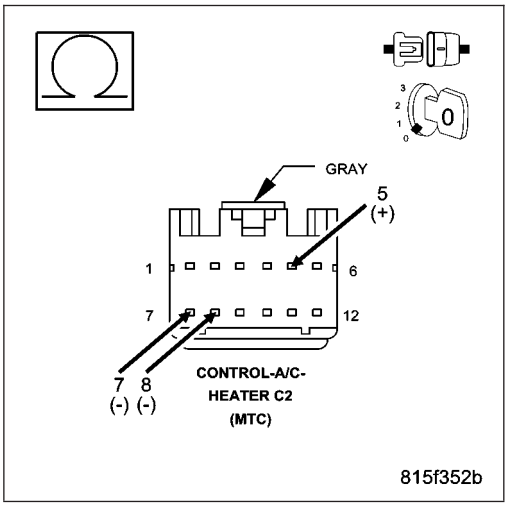

6. CHECK THE (C55) LEFT BLEND DOOR COMMON DRIVER CIRCUIT FOR A SHORT TO THE (C268) RECIRCULATION DOOR DRIVER CIRCUIT & THE (C68) RECIRCULATION DOOR COMMON DRIVER CIRCUIT

Measure the resistance between the (C55) Left Blend Door Common Driver circuit and the (C268) Recirculation Door Driver circuit and the (C68) Recirculation Door Common Driver circuit in the A/C Heater Control C2 harness connector.

Is the resistance below 10k ohms on any of the circuits?

Yes >> Repair all circuits with a resistance below 10k ohms for a short to the (C55) Left Blend Door Common Driver circuit.

Perform BODY VERIFICATION TEST – VER 1. (Refer to 8 - ELECTRICAL/ELECTRONIC CONTROL MODULES/ FRONT CONTROL MODULE - DIAGNOSIS AND TESTING).

No >> Go To 7

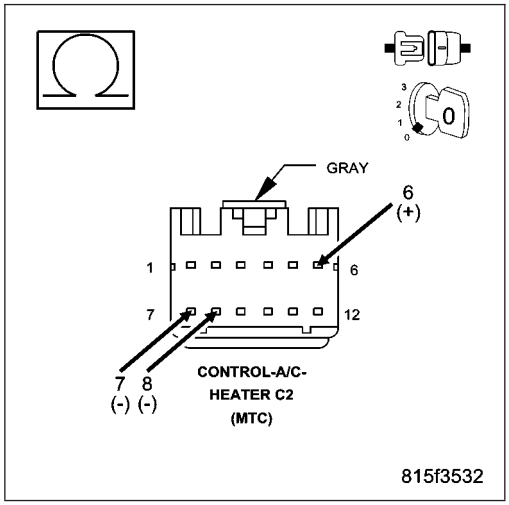

7. CHECK THE MODE DOOR ACTUATOR CIRCUIT RESISTANCE

Measure the resistance between the (C66) Mode Door Common Driver Circuit and the (C266) Mode Door Driver circuit in the A/C Heater Control C2 harness connector.

Is the resistance below 30.0 ohms?

Yes >> Go To 8

No >> Go To 9

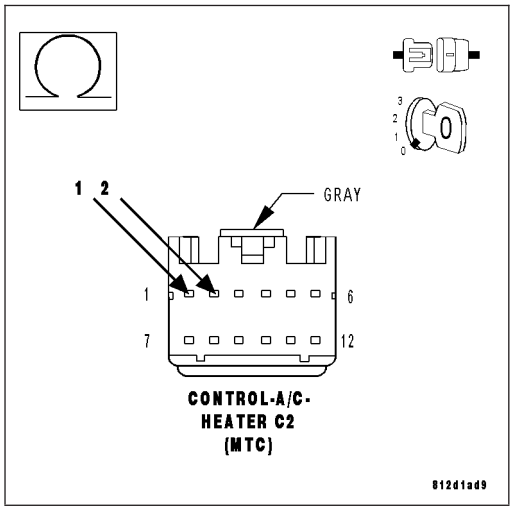

8. CHECK THE (C66) MODE DOOR COMMON DRIVER CIRCUIT FOR A SHORT TO THE (C266) MODE DOOR DRIVER CIRCUIT

Disconnect the Mode Door Actuator harness connector.

Measure the resistance between the (C66) Mode Door Common Driver Circuit and the (C266) Mode Door Driver circuit in the A/C Heater Control C2 harness connector.

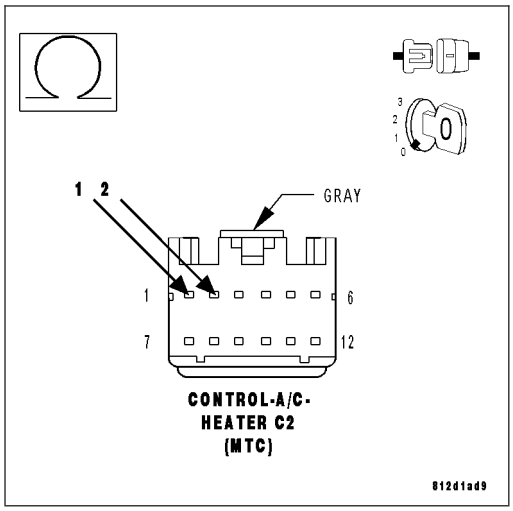

Is the resistance below 10k ohms?

Yes >> Repair the (C66) Mode Door Common Driver Circuit for a short to the (C266) Mode Door Driver circuit.

Perform BODY VERIFICATION TEST – VER 1. (Refer to 8 - ELECTRICAL/ELECTRONIC CONTROL MODULES/ FRONT CONTROL MODULE - DIAGNOSIS AND TESTING).

No >> Replace the Mode Door Actuator in accordance with the Service Information.

Perform BODY VERIFICATION TEST – VER 1. (Refer to 8 - ELECTRICAL/ELECTRONIC CONTROL MODULES/ FRONT CONTROL MODULE - DIAGNOSIS AND TESTING).

9. CHECK THE LEFT BLEND DOOR ACTUATOR CIRCUIT RESISTANCE

Measure the resistance between the (C55) Left Blend Door Common Driver Circuit and the (C255) Left Blend Door Driver circuit in the A/C Heater Control C2 harness connector.

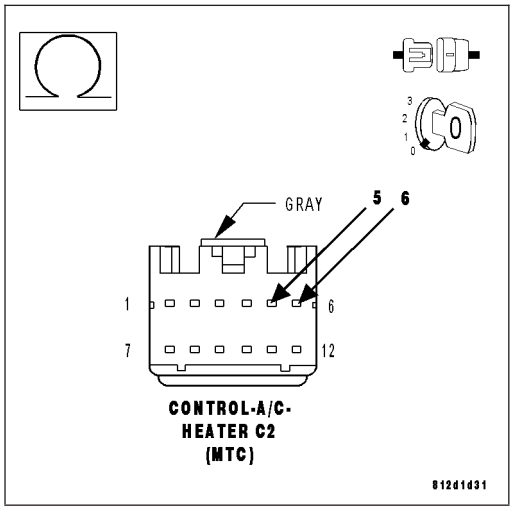

Is the resistance below 30.0 ohms?

Yes >> Go To 10

No >> Go To 11

10. CHECK THE (C55) LEFT BLEND DOOR COMMON DRIVER CIRCUIT FOR A SHORT TO THE (C255) LEFT BLEND DOOR DRIVER CIRCUIT

Disconnect the Left Blend Door Actuator harness connector.

Measure the resistance between the (C55) Left Blend Door Common Driver Circuit and the (C255) Left Blend Door Driver circuit in the A/C Heater Control C2 harness connector.

Is the resistance below 10k ohms?

Yes >> Repair the (C55) Left Blend Door Common Driver Circuit for a short to the (C255) Left Blend Door Driver circuit.

Perform BODY VERIFICATION TEST – VER 1. (Refer to 8 - ELECTRICAL/ELECTRONIC CONTROL MODULES/ FRONT CONTROL MODULE - DIAGNOSIS AND TESTING).

No >> Replace the Left Blend Door Actuator in accordance with the Service Information.

Perform BODY VERIFICATION TEST – VER 1. (Refer to 8 - ELECTRICAL/ELECTRONIC CONTROL MODULES/ FRONT CONTROL MODULE - DIAGNOSIS AND TESTING).

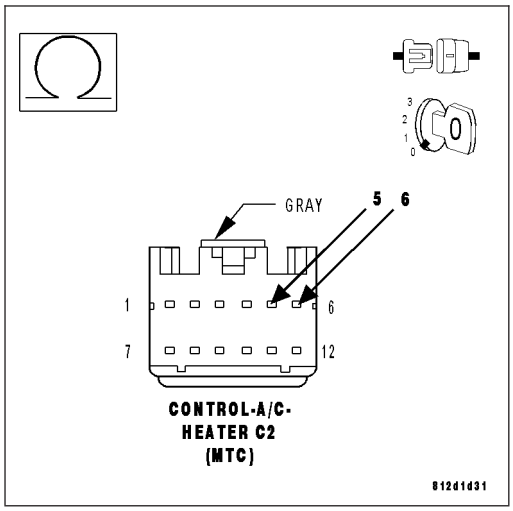

11. CHECK THE RECIRCULATION DOOR ACTUATOR CIRCUIT RESISTANCE

Measure the resistance between the (C68) Recirculation Door Common Driver Circuit and the (C268) Recirculation Door Driver circuit in the A/C Heater Control C2 harness connector.

Is the resistance below 30.0 ohms?

Yes >> Go To 12

No >> Go To 13

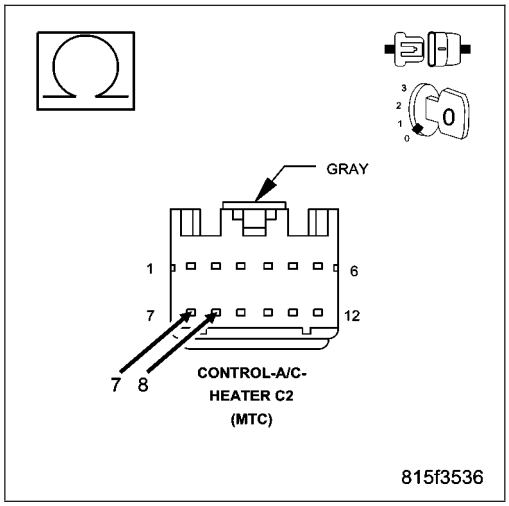

12. CHECK THE (C68) RECIRCULATION DOOR COMMON DRIVER CIRCUIT FOR A SHORT TO THE (C268) RECIRCULATION DOOR DRIVER CIRCUIT

Disconnect the Recirculation Door Actuator harness connector.

Measure the resistance between the (C68) Recirculation Door Common Driver Circuit and the (C268) Recirculation Door Driver circuit in the A/C Heater Control C2 harness connector.

Is the resistance below 10k ohms?

Yes >> Repair the (C68) Recirculation Door Common Driver Circuit for a short to the (C268) Recirculation Door Driver circuit.

Perform BODY VERIFICATION TEST – VER 1. (Refer to 8 - ELECTRICAL/ELECTRONIC CONTROL MODULES/ FRONT CONTROL MODULE - DIAGNOSIS AND TESTING).

No >> Replace the Recirculation Door Actuator in accordance with the Service Information.

Perform BODY VERIFICATION TEST – VER 1. (Refer to 8 - ELECTRICAL/ELECTRONIC CONTROL MODULES/ FRONT CONTROL MODULE - DIAGNOSIS AND TESTING).

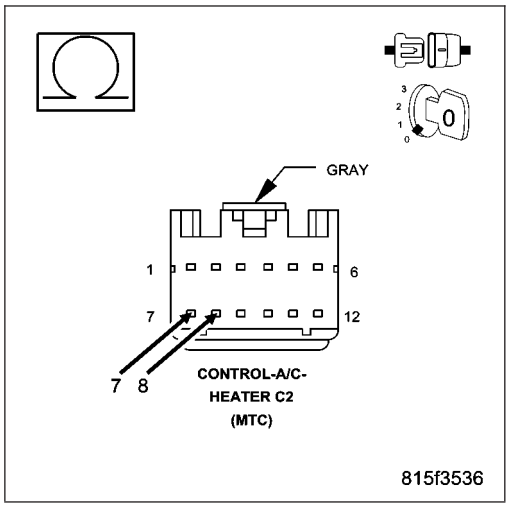

13. VERIFY THAT THE FAULT IS STILL PRESENT

Reconnect the A/C Heater Control C2 harness connector.

Turn the ignition on.

Actuate the Clear DTC function by performing the following:

- Turn the blower control on.
- Press the A/C mode switch down, turn the blower control to off, wait until both LEDs illuminate (approximately 5 seconds) and then release the A/C mode switch.
- When the A/C status indicator begins displaying DTCs, set the Mode switch to the floor position, simultaneously press the A/C mode switch and the EBL mode switch down until both LEDs start flashing (approximately 5 seconds) and then release the mode switches. Stored DTCs will clear from memory in approximately two seconds.

Turn the ignition off, wait 10 seconds, and turn the ignition on.

Actuate the Actuator Circuit Test / Door Calibration Function by performing the following:

- Turn the blower control off.
- Press and hold the EBL mode switch down and then turn the blower control on. Continue to hold the EBL mode switch down until the EBL status indicator begins flashing. Then, release the EBL mode switch. While the test / function is running, the EBL status indicator will flash once per second. If the test / function passes, the EBL status indicator will stop flashing. If the test / function fails, the A/C and EBL status indicators will flash alternately. Allow the test / function to run to completion before proceeding.

Actuate the Display DTC function by performing the following:

- Turn the blower control on.
- Press the A/C mode switch down, turn the blower control to off, wait until both LEDs illuminate (approximately 5 seconds) and then release the A/C mode switch.

NOTE: The A/C status indicator displays active DTCs when the EBL status indictor is not illuminated and stored DTCs when the EBL status indicator is illuminated.
Read DTCs from the A/C status indictor.

Does the A/C status indicator display DTC 72?

Yes >> Replace the A/C Heater Control in accordance with the Service Information.
Perform BODY VERIFICATION TEST – VER 1. (Refer to 8 - ELECTRICAL/ELECTRONIC CONTROL MODULES/FRONT CONTROL MODULE - DIAGNOSIS AND TESTING).

No >> Using the wiring diagram as a guide, inspect the wiring and connectors for conditions causing an intermittent short that set the original fault. Repair as necessary. Then, if present, diagnose and repair all other DTCs. Refer to the Table of Contents in this Section for a complete list of HVAC related symptoms.
Perform BODY VERIFICATION TEST – VER 1. (Refer to 8 - ELECTRICAL/ELECTRONIC CONTROL MODULES/FRONT CONTROL MODULE - DIAGNOSIS AND TESTING).

73–AC REQUEST OUTPUT SIGNAL TOO HIGH (MTC)

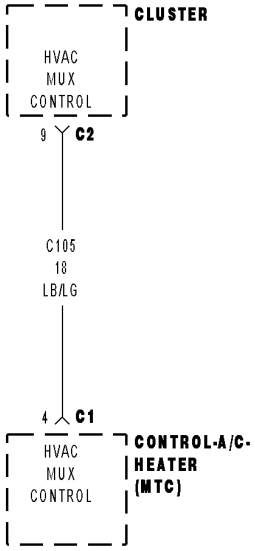

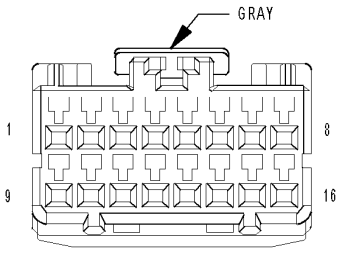

CLUSTER C2

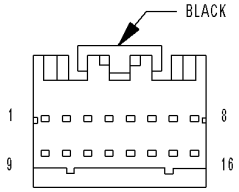

CONTROL-A/C-
HEATER C1
(MTC)

813401bd

For a complete wiring diagram **Refer to Section 8W**.

- **When Monitored:**
  With the ignition on.
- **Set Condition:**
  If the A/C Heater Control detects voltage above 4.49 volts on the (C105) HVAC MUX Control circuit.

Possible Causes
(C105) HVAC MUX CONTROL CIRCUIT SHORTED TO VOLTAGE
INSTRUMENT CLUSTER (CCN)
A/C HEATER CONTROL

NOTE: This DTC must be active for the results of this test to be valid. Do not perform this test if this DTC is stored. Refer to HVAC System Test (MTC) for stored DTC test procedures.

Diagnostic Test

1. CHECK (C105) HVAC MUX CONTROL CIRCUIT VOLTAGE AT A/C HEATER CONTROL C1 HARNESS CONNECTOR

Turn the ignition off.
Disconnect the A/C Heater Control C1 harness connector.
Turn the ignition on.
Measure the voltage of the (C105) HVAC MUX Control circuit.

Is the voltage above 5.2 volts?

Yes >> Go To 2

No >> Replace the A/C Heater Control in accordance with the Service Information.
Perform BODY VERIFICATION TEST – VER 1. (Refer to 8 - ELECTRICAL/ELECTRONIC CONTROL MODULES/ FRONT CONTROL MODULE - DIAGNOSIS AND TESTING).

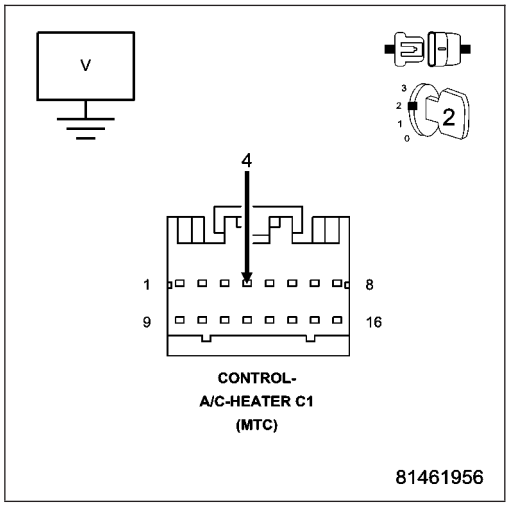

2. CHECK (C105) HVAC MUX CONTROL CIRCUIT FOR A SHORT TO VOLTAGE

Turn the ignition off.
Disconnect the Instrument Cluster C2 harness connector.
Turn the ignition on.
Measure the voltage of the (C105) HVAC MUX Control circuit.

Is the voltage above 0.2 volts?

Yes >> Repair the (C105) HVAC MUX Control circuit for a short to voltage.
Perform BODY VERIFICATION TEST – VER 1. (Refer to 8 - ELECTRICAL/ELECTRONIC CONTROL MODULES/ FRONT CONTROL MODULE - DIAGNOSIS AND TESTING).

No >> Replace the Instrument Cluster (CCN) in accordance with the Service Information.
Perform BODY VERIFICATION TEST – VER 1. (Refer to 8 - ELECTRICAL/ELECTRONIC CONTROL MODULES/ FRONT CONTROL MODULE - DIAGNOSIS AND TESTING).

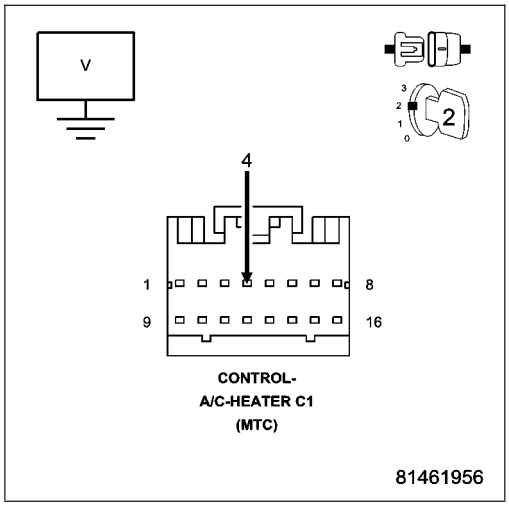

74–AC REQUEST OUTPUT SIGNAL TOO LOW (MTC)

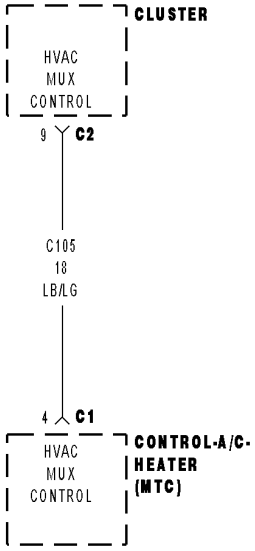

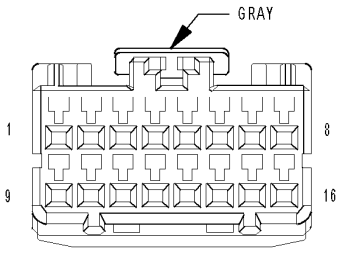

CLUSTER C2

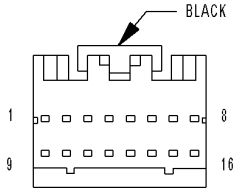

CONTROL-A/C-
HEATER C1
(MTC)

813401bd

For a complete wiring diagram **Refer to Section 8W**.

- **When Monitored:**
  With the ignition on.
- **Set Condition:**
  If the A/C Heater Control detects voltage below 1.51 volts on the (C105) HVAC MUX Control circuit.

Possible Causes
(C105) HVAC MUX CONTROL CIRCUIT SHORTED TO GROUND
(C105) HVAC MUX CONTROL CIRCUIT OPEN
INSTRUMENT CLUSTER (CCN)
A/C HEATER CONTROL

NOTE: This DTC must be active for the results of this test to be valid. Do not perform this test if this DTC is stored. Refer to HVAC System Test (MTC) for stored DTC test procedures.

Diagnostic Test

1. CHECK (C105) HVAC MUX CONTROL CIRCUIT VOLTAGE AT A/C HEATER CONTROL C1 HARNESS CONNECTOR

Turn the ignition off.
Disconnect the A/C Heater Control C1 harness connector.
Turn the ignition on.
Measure the voltage of the (C105) HVAC MUX Control circuit.

Is the voltage below 4.8 volts?

Yes >> Go To 2

No >> Replace the A/C Heater Control in accordance with the Service Information.
Perform BODY VERIFICATION TEST – VER 1. (Refer to 8 - ELECTRICAL/ELECTRONIC CONTROL MODULES/ FRONT CONTROL MODULE - DIAGNOSIS AND TESTING).

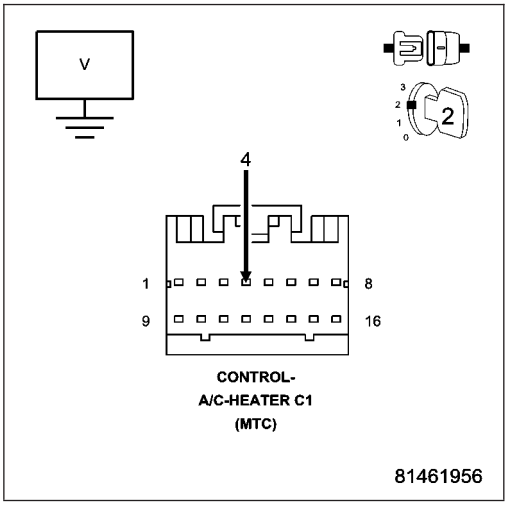

2. CHECK (C105) HVAC MUX CONTROL CIRCUIT FOR A SHORT TO GROUND

Turn the ignition off.
Disconnect the Instrument Cluster C2 harness connector.
Measure the resistance of the (C105) HVAC MUX Control circuit between ground and the A/C Heater Control C1 harness connector.

Is the resistance below 10K ohms?

Yes >> Repair the (C105) HVAC MUX Control circuit for a short to ground.
Perform BODY VERIFICATION TEST – VER 1. (Refer to 8 - ELECTRICAL/ELECTRONIC CONTROL MODULES/ FRONT CONTROL MODULE - DIAGNOSIS AND TESTING).

No >> Go To 3

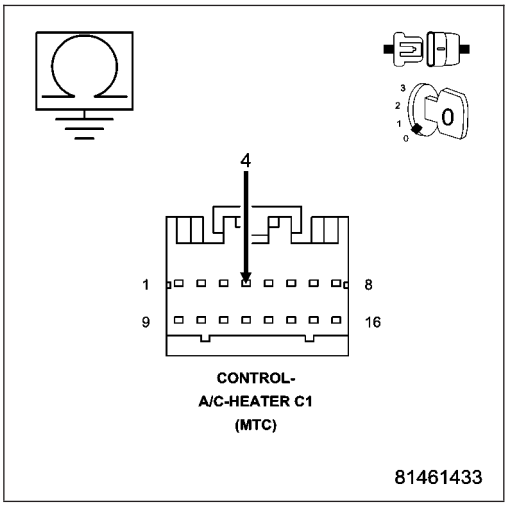

3. CHECK (C105) HVAC MUX CONTROL CIRCUIT FOR AN OPEN

Measure the resistance of the (C105) HVAC MUX Control circuit between the A/C Heater Control C1 harness connector and the Instrument Cluster C2 harness connector.

Is the resistance below 5.0 ohms?

Yes >> Replace the Instrument Cluster (CCN) in accordance with the Service Information.
Perform BODY VERIFICATION TEST – VER 1. (Refer to 8 - ELECTRICAL/ELECTRONIC CONTROL MODULES/ FRONT CONTROL MODULE - DIAGNOSIS AND TESTING).

No >> Repair the (C105) HVAC MUX Control circuit for an open.
Perform BODY VERIFICATION TEST – VER 1. (Refer to 8 - ELECTRICAL/ELECTRONIC CONTROL MODULES/ FRONT CONTROL MODULE - DIAGNOSIS AND TESTING).

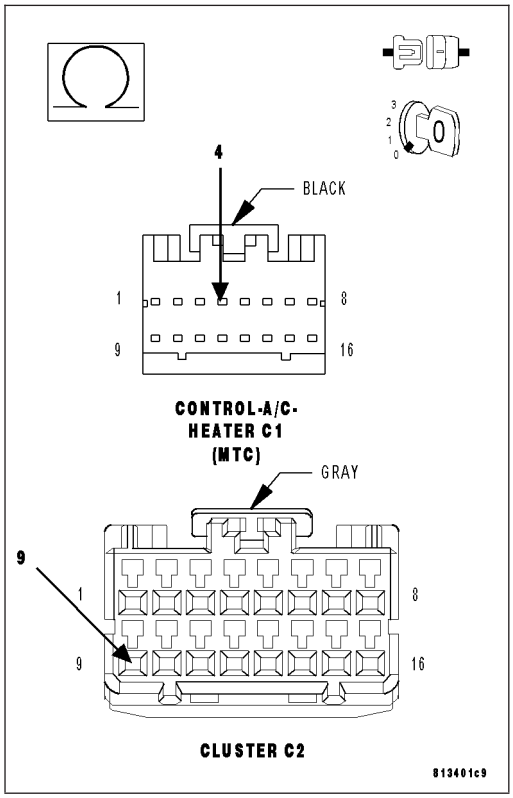

75–AC REQUEST OUTPUT SIGNAL HIGH WHEN DRIVEN LOW (MTC)

For a complete wiring diagram **Refer to Section 8W**.

- **When Monitored:**
  With the ignition on.
- **Set Condition:**
  If the A/C Heater Control detects voltage above 4.49 volts on the (C105) HVAC MUX Control circuit with the A/C switched on.

NOTE: This DTC must be active for the results of this test to be valid. Do not perform this test if this DTC is stored. Refer to HVAC System Test (MTC) for stored DTC test procedures.

Refer to 73–AC REQUEST OUTPUT SIGNAL TOO HIGH for the diagnostic test procedure.

76–AC REQUEST OUTPUT SIGNAL LOW WHEN DRIVEN HIGH (MTC)

For a complete wiring diagram **Refer to Section 8W**.

- **When Monitored:**
  With the ignition on.
- **Set Condition:**
  If the A/C Heater Control detects voltage below 1.51 volts on the (C105) HVAC MUX Control circuit when the A/C is switched off.

NOTE: This DTC must be active for the results of this test to be valid. Do not perform this test if this DTC is stored. Refer to HVAC System Test (MTC) for stored DTC test procedures.

Refer to 74–AC REQUEST OUTPUT SIGNAL TOO LOW for the diagnostic test procedure.

77–EBL OUTPUT SHORTED HIGH

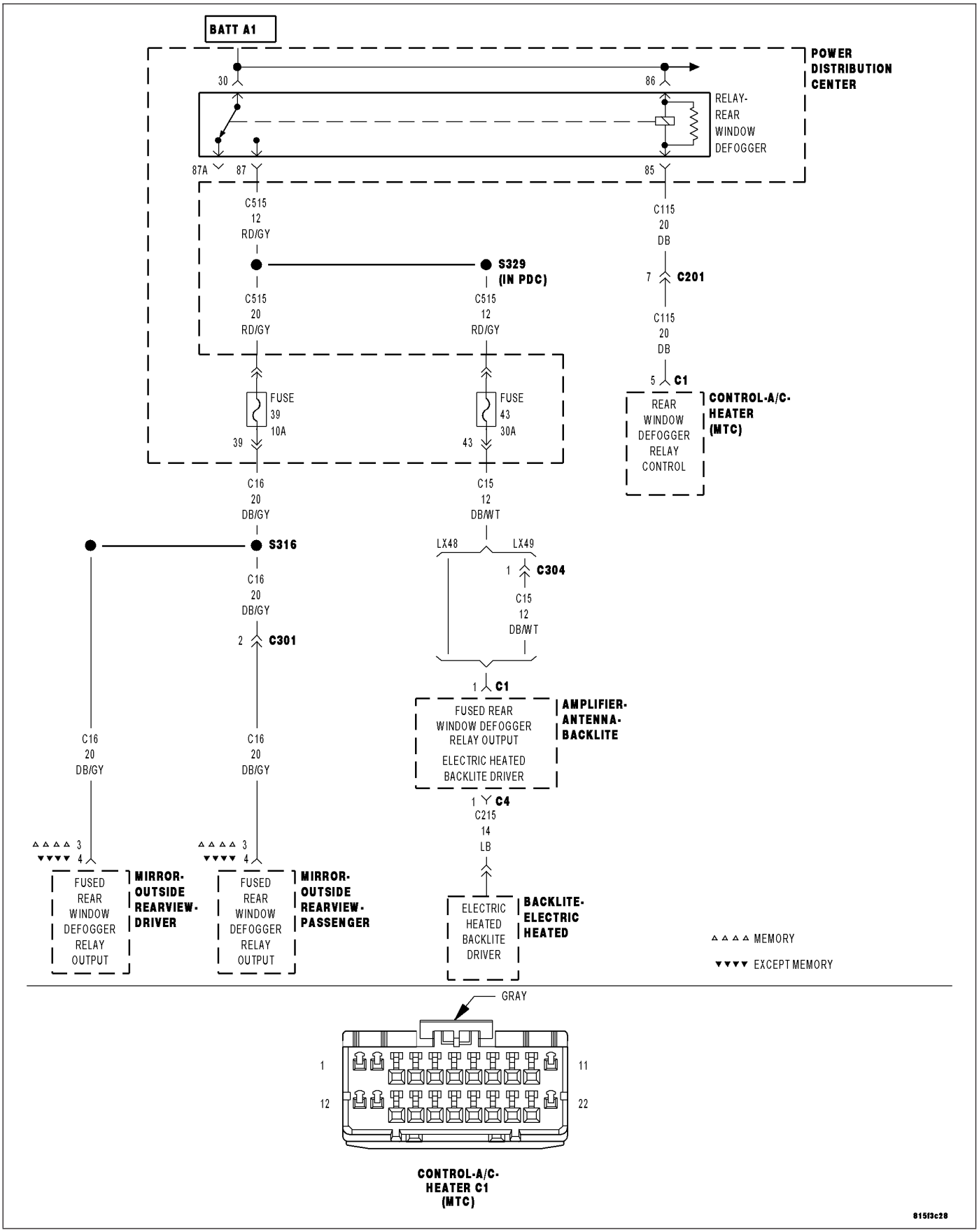

For a complete wiring diagram **Refer to Section 8W**.

- **When Monitored:**
  With the ignition on and the EBL mode switch on.
- **Set Condition:**
  If the A/C Heater Control senses excessive current on the (C115) Defogger Relay Control circuit.

Possible Causes
(C115) DEFOGGER RELAY CONTROL CIRCUIT SHORTED TO BATTERY
EBL RELAY SHORTED
A/C HEATER CONTROL

NOTE: This DTC must be active for the results of this test to be valid. Do not perform this test if this DTC is stored. Refer to HVAC System Test (MTC) for stored DTC test procedures.

Diagnostic Test

1. CHECK FOR A SHORTED EBL RELAY

Turn the ignition off.

Install a known good relay in place of the EBL relay.

Turn the ignition on.

Actuate the Clear DTC function by performing the following:

- Turn the blower control on.
- Press the A/C mode switch down, turn the blower control to off, wait until both LEDs illuminate (approximately 5 seconds) and then release the A/C mode switch.
- When the A/C status indicator begins displaying DTCs, set the Mode switch to the floor position, simultaneously press the A/C mode switch and the EBL mode switch down until both LEDs start flashing (approximately 5 seconds) and then release the mode switches. Stored DTCs will clear from memory in approximately two seconds.

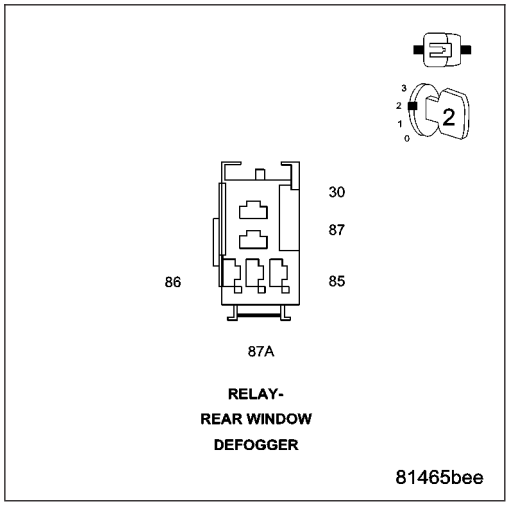

Press the EBL mode switch on.

Actuate the Display DTC function by performing the following:

- Turn the blower control on.
- Press the A/C mode switch down, turn the blower control to off, wait until both LEDs illuminate (approximately 5 seconds) and then release the A/C mode switch.

NOTE: The A/C status indicator displays active DTCs when the EBL status indictor is not illuminated and stored DTCs when the EBL status indicator is illuminated.

Read DTCs from the A/C status indictor.

Does the A/C status indicator display DTC 77?

Yes >> Go To 2

No >> Replace the original EBL Relay in accordance with the Service Information.
Perform BODY VERIFICATION TEST – VER 1. (Refer to 8 - ELECTRICAL/ELECTRONIC CONTROL MODULES/FRONT CONTROL MODULE - DIAGNOSIS AND TESTING).

2. CHECK THE (C115) DEFOGGER RELAY CONTROL CIRCUIT FOR A SHORT TO BATTERY

Turn the ignition off.

Remove the replacement EBL relay.

Disconnect the A/C Heater Control C1 harness connector.

Turn the ignition on.

Measure the voltage of the (C115) Defogger Relay Control circuit.

Is the voltage above 0.2 volts?

Yes >> Repair the (C115) Defogger Relay Control circuit for a short to battery. Reinstall the original EBL relay.

Perform BODY VERIFICATION TEST – VER 1. (Refer to 8 - ELECTRICAL/ELECTRONIC CONTROL MODULES/ FRONT CONTROL MODULE - DIAGNOSIS AND TESTING).

No >> Replace the A/C Heater Control in accordance with the Service Information. Reinstall the original EBL relay.

Perform BODY VERIFICATION TEST – VER 1. (Refer to 8 - ELECTRICAL/ELECTRONIC CONTROL MODULES/ FRONT CONTROL MODULE - DIAGNOSIS AND TESTING).

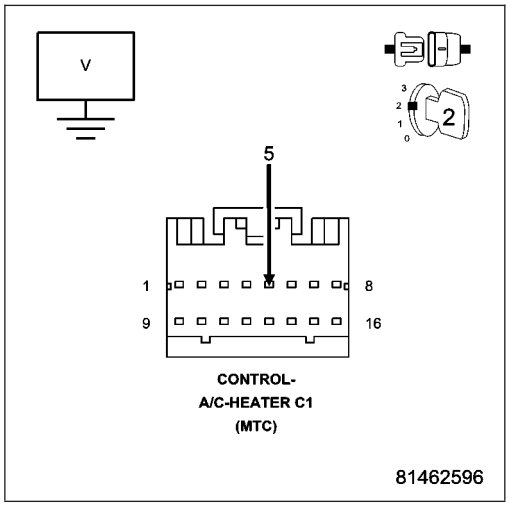

81–BLOWER NOT ON HIGH AT START OF COOLDOWN TEST (MTC)

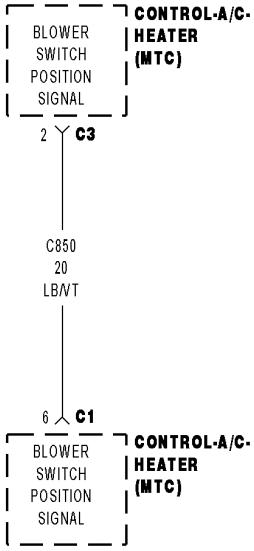

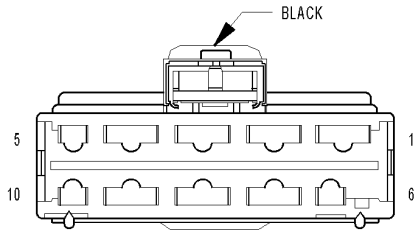

CONTROL-A/C-HEATER C3 (MTC)

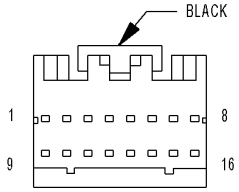

CONTROL-A/C-HEATER C1 (MTC)

815f327e

For a complete wiring diagram **Refer to Section 8W**.

- **When Monitored:**
  When executing the Cooldown Test.
- **Set Condition:**
  If the A/C Heater Control sensed that the blower was not operating at high speed when executing the Cooldown Test.

Possible Causes
BLOWER CONTROL NOT SET TO HIGH SPEED WHEN EXECUTING THE COOLDOWN TEST
BLOWER MOTOR / RELATED CIRCUITS
(C850) BLOWER SWITCH POSITION SIGNAL CIRCUIT SHORTED TO (Z908) GROUND CIRCUIT
(C850) BLOWER SWITCH POSITION SIGNAL CIRCUIT SHORTED TO (Z909) GROUND CIRCUIT
(C850) BLOWER SWITCH POSITION SIGNAL CIRCUIT SHORTED TO GROUND
(C850) BLOWER SWITCH POSITION SIGNAL CIRCUIT OPEN
A/C HEATER CONTROL

NOTE: This DTC will display as active if the ignition is not cycled after running the Cooldown Test. Otherwise, it will display as stored until cleared.

Diagnostic Test

1. CHECK THE BLOWER SPEED SETTING

Was the blower control set to high speed before executing the Cooldown Test?

Yes >> Go To 2

No >> Start the engine, set the blower control to high speed, and then run the Cooldown Test again.
Perform BODY VERIFICATION TEST – VER 1. (Refer to 8 - ELECTRICAL/ELECTRONIC CONTROL MODULES/FRONT CONTROL MODULE - DIAGNOSIS AND TESTING).

2. CHECK THE (C850) BLOWER SWITCH POSITION SIGNAL CIRCUIT FOR A SHORT TO THE (Z908) GROUND CIRCUIT

Turn the ignition off.

Disconnect the A/C Heater Control C3 harness connector.

Measure the resistance between the (C850) Blower Switch Position Signal circuit and the (Z908) Ground circuit in the A/C Heater Control C3 harness connector.

Is the resistance below 10K ohms?

Yes >> Repair the (C850) Blower Switch Position Signal circuit for a short to the (Z908) Ground circuit. Run the Cooldown Test again after the repair is complete.
Perform BODY VERIFICATION TEST – VER 1. (Refer to 8 - ELECTRICAL/ELECTRONIC CONTROL MODULES/FRONT CONTROL MODULE - DIAGNOSIS AND TESTING).

No >> Go To 3

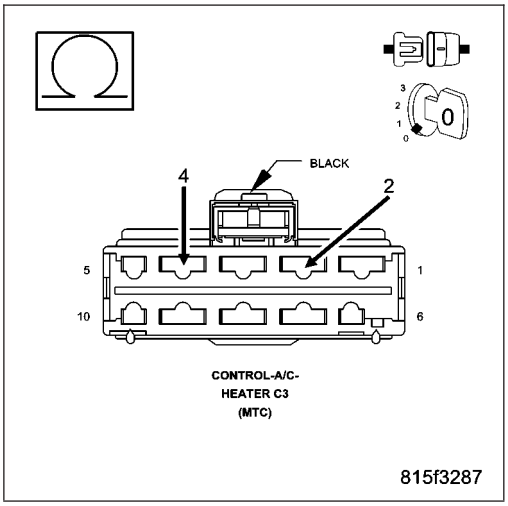

3. CHECK THE (C850) BLOWER SWITCH POSITION SIGNAL CIRCUIT FOR A SHORT TO THE (Z909) GROUND CIRCUIT

Disconnect the A/C Heater Control C1 harness connector.

Measure the resistance between the (C850) Blower Switch Position Signal circuit and the (Z909) Ground circuit in the A/C Heater Control C1 harness connector.

Is the resistance below 10K ohms?

Yes >> Repair the (C850) Blower Switch Position Signal circuit for a short to the (Z909) Ground circuit. Run the Cooldown Test again after the repair is complete.

Perform BODY VERIFICATION TEST – VER 1. (Refer to 8 - ELECTRICAL/ELECTRONIC CONTROL MODULES/ FRONT CONTROL MODULE - DIAGNOSIS AND TESTING).

No >> Go To 4

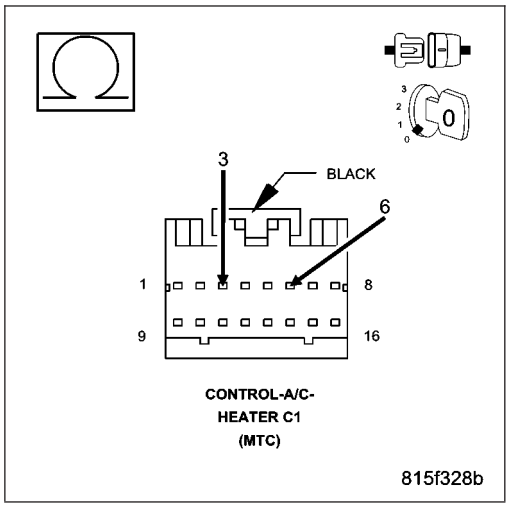

4. CHECK THE (C850) BLOWER SWITCH POSITION SIGNAL CIRCUIT VOLTAGE

Reconnect the A/C Heater Control C1 harness connector.

Turn the ignition on.

Measure the voltage of the (C850) Blower Switch Position Signal circuit.

Is the voltage above 4.8 volts?

Yes >> Check the blower motor and related circuits for the cause of blower operation problems and repair as necessary. Run the Cooldown Test again after the repair is complete.

Perform BODY VERIFICATION TEST – VER 1. (Refer to 8 - ELECTRICAL/ELECTRONIC CONTROL MODULES/ FRONT CONTROL MODULE - DIAGNOSIS AND TESTING).

No >> Go To 5

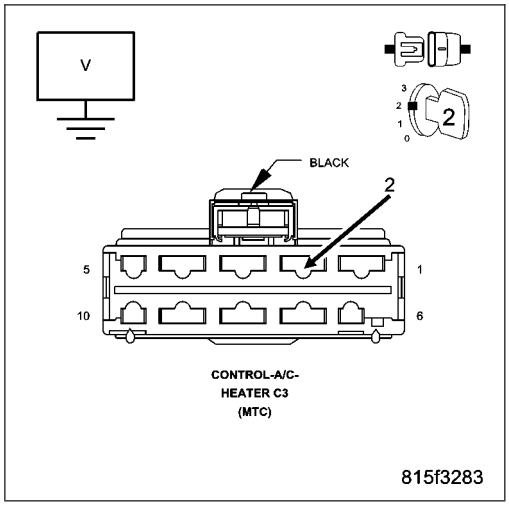

5. CHECK THE (C850) BLOWER SWITCH POSITION SIGNAL CIRCUIT FOR A SHORT TO GROUND

Measure the resistance of the (C850) Blower Switch Position Signal circuit between ground and the A/C Heater Control C3 harness connector.

Is the resistance below 10K ohms?

Yes >> Repair the (C850) Blower Switch Position Signal circuit for a short to ground. Run the Cooldown Test again after the repair is complete.

Perform BODY VERIFICATION TEST – VER 1. (Refer to 8 - ELECTRICAL/ELECTRONIC CONTROL MODULES/ FRONT CONTROL MODULE - DIAGNOSIS AND TESTING).

No >> Go To 6

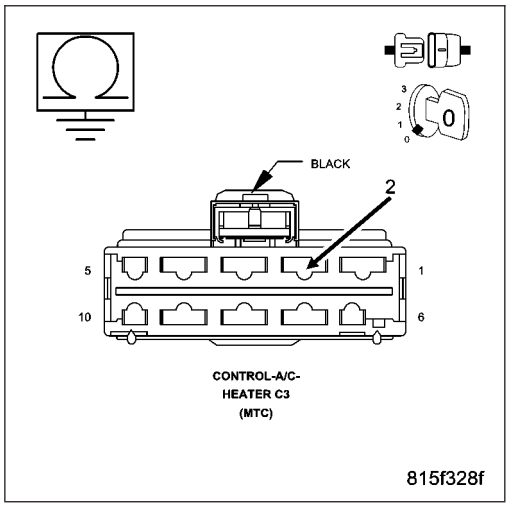

6. CHECK (C850) BLOWER SWITCH POSITION SIGNAL CIRCUIT FOR AN OPEN

Measure the resistance of the (C850) Blower Switch Position Signal circuit between the A/C Heater Control C1 harness connector and the A/C Heater Control C3 harness connector.

Is the resistance below 5.0 ohms?

Yes >> Replace the A/C Heater Control in accordance with the Service Information. Run the Cooldown Test again after the repair is complete.

Perform BODY VERIFICATION TEST – VER 1. (Refer to 8 - ELECTRICAL/ELECTRONIC CONTROL MODULES/ FRONT CONTROL MODULE - DIAGNOSIS AND TESTING)

No >> Repair the (C850) Blower Switch Position Signal circuit for an open. Run the Cooldown Test again after the repair is complete.

Perform BODY VERIFICATION TEST – VER 1. (Refer to 8 - ELECTRICAL/ELECTRONIC CONTROL MODULES/ FRONT CONTROL MODULE - DIAGNOSIS AND TESTING).

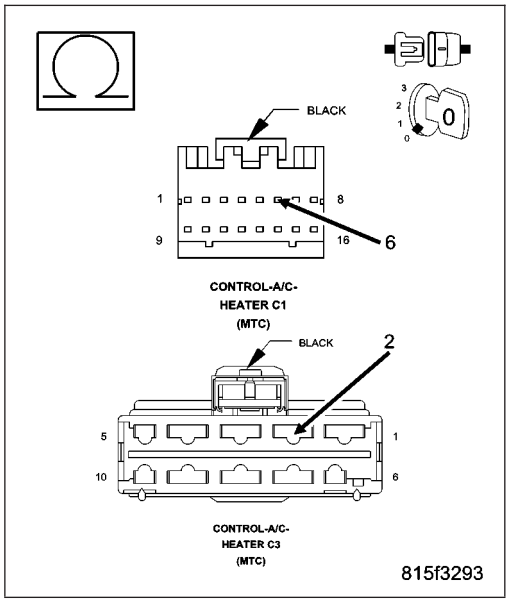

82–SENSOR TOO COLD TO START COOLDOWN TEST (MTC)

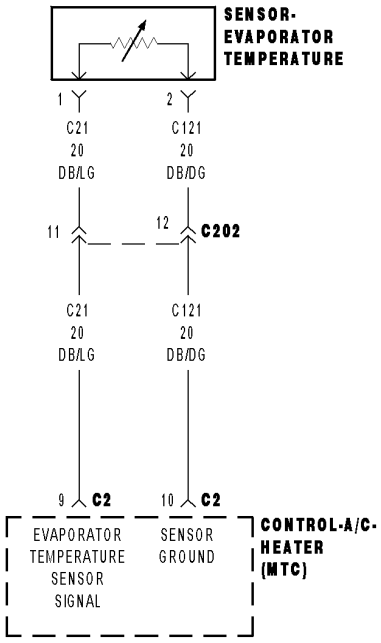

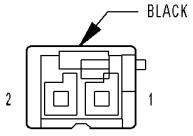

SENSOR-
EVAPORATOR
TEMPERATURE

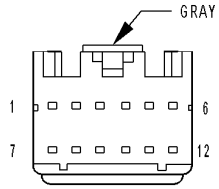

CONTROL-A/C-
HEATER C2
(MTC)

812d20eb

For a complete wiring diagram **Refer to Section 8W**.

- **When Monitored:**
  When executing the Cooldown Test.
- **Set Condition:**
  If the A/C Heater Control senses that the evaporator temperature is below 18.3°C (65°F) when executing the Cooldown Test.

Possible Causes
FAULTS PRESENT IN THE HVAC SYSTEM
EVAPORATOR TEMPERATURE BELOW 18.3°C (65°F) AT START OF COOLDOWN TEST
HIGH RESISTANCE ON (C121) SENSOR GROUND CIRCUIT
HIGH RESISTANCE ON (C21) EVAPORATOR TEMPERATURE SENSOR SIGNAL CIRCUIT
EVAPORATOR TEMPERATURE SENSOR
A/C HEATER CONTROL

NOTE: This DTC will display as active if the ignition is not cycled after running the Cooldown Test. Otherwise, it will display as stored until cleared.

Diagnostic Test

1. CHECK FOR ACTIVE DTC 31, 32, 83, OR 84 IN THE A/C HEATER CONTROL

Turn the ignition on.

Actuate the Display DTC function by performing the following:

- Turn the blower control on.
- Press the A/C mode switch down, turn the blower control to off, wait until both LEDs illuminate (approximately 5 seconds) and then release the A/C mode switch.

NOTE: The A/C status indicator displays active DTCs when the EBL status indictor is not illuminated and stored DTCs when the EBL status indicator is illuminated.

Read DTCs from the A/C status indictor.

Does the A/C status indicator display DTC 31, 32, 83, or 84?

Yes >> Diagnose and repair the DTC(s). Refer to the Table of Contents in this section for a complete list of HVAC related symptoms. Run the Cooldown Test again after the repair is complete.

No >> Go To 2

2. ERASE DTCs IN THE A/C HEATER CONTROL

Actuate the Clear DTC function by performing the following:

- Turn the blower control on.
- Press the A/C mode switch down, turn the blower control to off, wait until both LEDs illuminate (approximately 5 seconds) and then release the A/C mode switch.
- When the A/C status indicator begins displaying DTCs, set the Mode switch to the floor position, simultaneously press the A/C mode switch and the EBL mode switch down until both LEDs start flashing (approximately 5 seconds) and then release the mode switches. Stored DTCs will clear from memory in approximately two seconds.

Turn the ignition off.

>> Go To 3

3. VERIFY IF DTC 82 SET DUE TO EVAPORATOR TEMPERATURE BEING BELOW 18.3°C (65°F)

CAUTION: The work area ambient temperature and the evaporator temperature must be above 18.3°C (65°F) in order to test A/C system performance.

Start the engine.

Set the Mode switch to the panel position.

Press the A/C mode switch off (status indicator not illuminated/compressor not running).

Turn the blower control to high speed. Allow the blower to run for 5 minutes before proceeding.

Turn the blower control off.

Actuate the Cooldown Test by performing the following:

- Press and hold the A/C mode switch down and then turn the blower motor control to high speed. Continue to hold the A/C mode switch down until the A/C status indicator begins flashing, Then, release the mode switch. While the test is running, the A/C status indicator will flash once per second. If the test passes, the A/C status indicator will stop flashing. If the test fails, the A/C and EBL status indicators will flash alternately. Allow the test to run to completion before proceeding.

>> Go To 4

4. CHECK FOR DTCS IN THE A/C HEATER CONTROL

Actuate the Display DTC function by performing the following:

- Turn the blower control on.
- Press the A/C mode switch down, turn the blower control to off, wait until both LEDs illuminate (approximately 5 seconds) and then release the A/C mode switch.

NOTE: The A/C status indicator displays active DTCs when the EBL status indictor is not illuminated and stored DTCs when the EBL status indicator is illuminated.

Read DTCs from the A/C status indictor.

Does the A/C status indicator display DTC 82?

Yes, & No Other DTCs Present
Go To 5

Yes, & Other DTCs Present
Diagnose and repair the other DTC(s). Refer to the Table of Contents in this section for a complete list of HVAC related symptoms. Run the Cooldown Test again after the repair is complete.

No, But Other DTCs Present
Diagnose and repair the DTC(s). Refer to the Table of Contents in this section for a complete list of HVAC related symptoms. Run the Cooldown Test again after the repair is complete.

No, & No Other DTCs Present
Perform additional testing as necessary.

5. CHECK THE (C121) SENSOR GROUND CIRCUIT FOR HIGH RESISTANCE

NOTE: Ensure that the voltmeter leads are connected for positive polarity and that they meet the terminals in the connector. Also ensure that there is a good terminal to wire connection.

Turn the ignition off.

Back probe the (C121) Sensor Ground circuit between the Evaporator Temperature Sensor harness connector and the A/C Heater Control C2 harness connector.

Turn the ignition on.

Is the voltage below 0.10 volts?

Yes >> Go To 6

No >> Repair the (C121) Sensor Ground circuit for high resistance. Run the Cooldown Test again after the repair is complete.

Perform BODY VERIFICATION TEST – VER 1. (Refer to 8 - ELECTRICAL/ELECTRONIC CONTROL MODULES/ FRONT CONTROL MODULE - DIAGNOSIS AND TESTING).

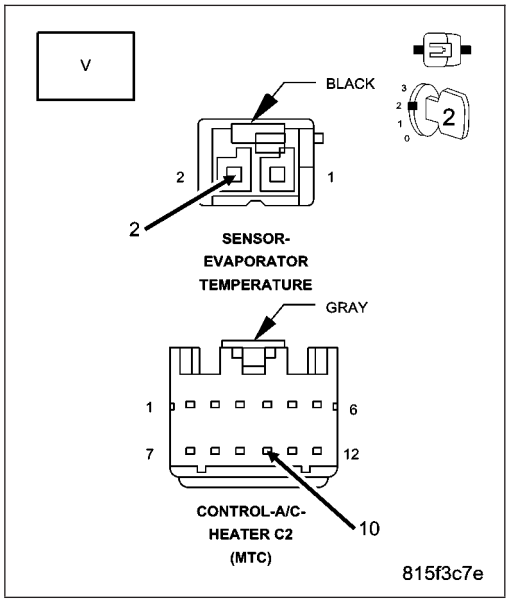

6. CHECK THE (C21) EVAPORATOR TEMPERATURE SENSOR SIGNAL CIRCUIT FOR HIGH RESISTANCE

NOTE: Ensure that the voltmeter leads are connected for positive polarity and that they meet the terminals in the connector. Also ensure that there is a good terminal to wire connection.

Turn the ignition off.

Back probe the (C21) Evaporator Temperature Sensor Signal circuit between the Evaporator Temperature Sensor harness connector and the A/C Heater Control C2 harness connector.

Turn the ignition on.

Is the voltage below 0.10 volts?

Yes >> Replace the A/C Heater Control in accordance with the Service Information. Run the Cooldown Test again after the repair is complete.

Perform BODY VERIFICATION TEST – VER 1. (Refer to 8 - ELECTRICAL/ELECTRONIC CONTROL MODULES/ FRONT CONTROL MODULE - DIAGNOSIS AND TESTING).

No >> Repair the (C21) Evaporator Temperature Sensor Signal circuit for high resistance. Run the Cooldown Test again after the repair is complete.

Perform BODY VERIFICATION TEST – VER 1. (Refer to 8 - ELECTRICAL/ELECTRONIC CONTROL MODULES/FRONT CONTROL MODULE - DIAGNOSIS AND TESTING).

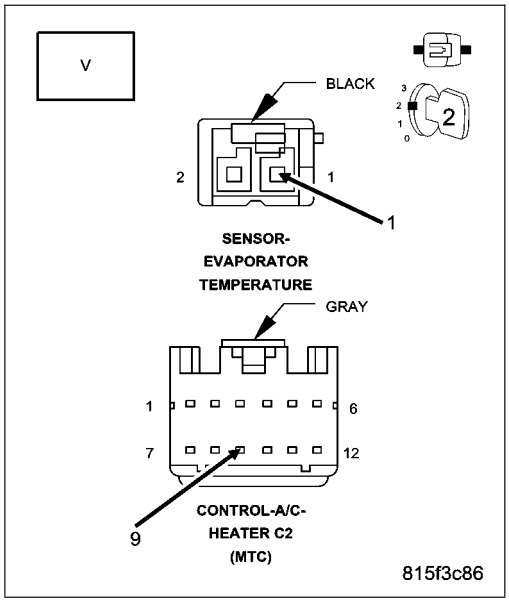

83–SENSOR FAILED OPEN DURING COOLDOWN TEST (MTC)

For a complete wiring diagram **Refer to Section 8W**.

- **When Monitored:**
  When executing the Cooldown Test.
- **Set Condition:**
  If the Evaporator Temperature Sensor input is out of range toward the high voltage threshold when executing the Cooldown Test.

NOTE: This DTC will display as active if the ignition is not cycled after running the Cooldown Test. Otherwise, it will display as stored until cleared.

Refer to 31–EVAPORATOR SENSOR OPEN for the diagnostic test procedure.

84–SENSOR FAILED SHORTED DURING COOLDOWN TEST (MTC)

For a complete wiring diagram **Refer to Section 8W**.

- **When Monitored:**
  When executing the Cooldown Test.
- **Set Condition:**
  If the Evaporator Temperature Sensor input is out of range toward the low voltage threshold when executing the Cooldown Test.

NOTE: This DTC will display as active if the ignition is not cycled after running the Cooldown Test. Otherwise, it will display as stored until cleared.

Refer to 32–EVAPORATOR SENSOR SHORTED for the diagnostic test procedure.

85–BLOWER NOT ON HIGH DURING COOLDOWN TEST (MTC)

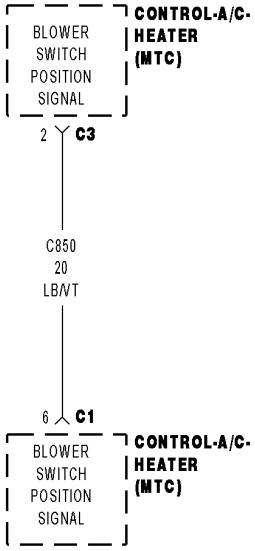

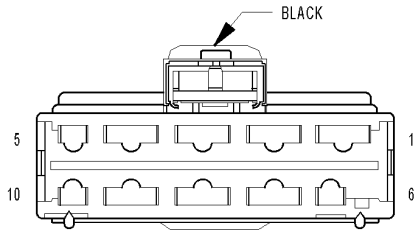

CONTROL-A/C-HEATER C3 (MTC)

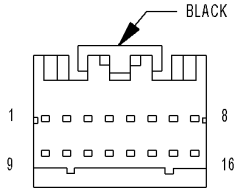

CONTROL-A/C-HEATER C1 (MTC)

815f327e

For a complete wiring diagram **Refer to Section 8W**.

- **When Monitored:**
  When executing the Cooldown Test.
- **Set Condition:**
  If the A/C Heater Control sensed that the blower was not operating at high speed while the Cooldown Test was running.

Possible Causes
BLOWER CONTROL DID NOT REMAIN ON THE HIGH SPEED SETTING DURING THE ENTIRE COOLDOWN TEST
BLOWER MOTOR / RELATED CIRCUITS
(C850) BLOWER SWITCH POSITION SIGNAL CIRCUIT SHORTED TO (Z908) GROUND CIRCUIT
(C850) BLOWER SWITCH POSITION SIGNAL CIRCUIT SHORTED TO (Z909) GROUND CIRCUIT
(C850) BLOWER SWITCH POSITION SIGNAL CIRCUIT SHORTED TO GROUND
(C850) BLOWER SWITCH POSITION SIGNAL CIRCUIT OPEN
A/C HEATER CONTROL

NOTE: This DTC will display as active if the ignition is not cycled after running the Cooldown Test. Otherwise, it will display as stored until cleared.

Diagnostic Test

1. CHECK THE BLOWER SPEED SETTING

Was the blower control set to high speed for the entire Cooldown Test?

Yes >> Go To 2

No >> Start the engine, set the blower control to high speed, and then run the Cooldown Test again.
Perform BODY VERIFICATION TEST – VER 1. (Refer to 8 - ELECTRICAL/ELECTRONIC CONTROL MODULES/FRONT CONTROL MODULE - DIAGNOSIS AND TESTING).

2. CHECK THE (C850) BLOWER SWITCH POSITION SIGNAL CIRCUIT FOR A SHORT TO THE (Z908) GROUND CIRCUIT

Turn the ignition off.

Disconnect the A/C Heater Control C3 harness connector.

Measure the resistance between the (C850) Blower Switch Position Signal circuit and the (Z908) Ground circuit in the A/C Heater Control C3 harness connector.

Is the resistance below 10K ohms?

Yes >> Repair the (C850) Blower Switch Position Signal circuit for a short to the (Z908) Ground circuit. Run the Cooldown Test again after the repair is complete.
Perform BODY VERIFICATION TEST – VER 1. (Refer to 8 - ELECTRICAL/ELECTRONIC CONTROL MODULES/FRONT CONTROL MODULE - DIAGNOSIS AND TESTING).

No >> Go To 3

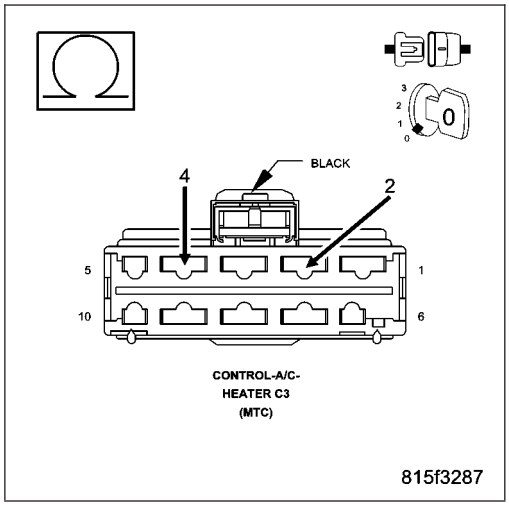

3. CHECK THE (C850) BLOWER SWITCH POSITION SIGNAL CIRCUIT FOR A SHORT TO THE (Z909) GROUND CIRCUIT

Disconnect the A/C Heater Control C1 harness connector.

Measure the resistance between the (C850) Blower Switch Position Signal circuit and the (Z909) Ground circuit in the A/C Heater Control C1 harness connector.

Is the resistance below 10K ohms?

Yes >> Repair the (C850) Blower Switch Position Signal circuit for a short to the (Z909) Ground circuit. Run the Cooldown Test again after the repair is complete.

Perform BODY VERIFICATION TEST – VER 1. (Refer to 8 - ELECTRICAL/ELECTRONIC CONTROL MODULES/ FRONT CONTROL MODULE - DIAGNOSIS AND TESTING).

No >> Go To 4

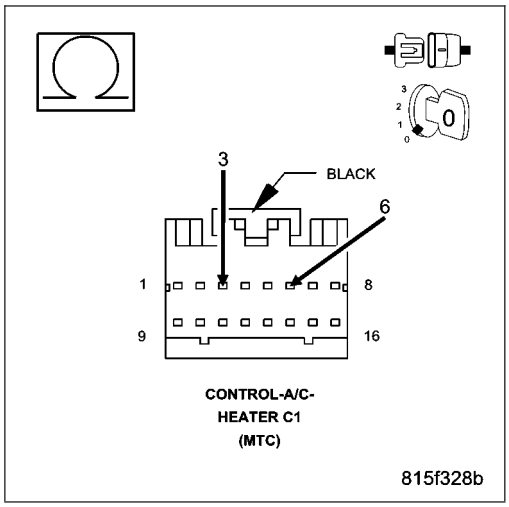

4. CHECK THE (C850) BLOWER SWITCH POSITION SIGNAL CIRCUIT VOLTAGE

Reconnect the A/C Heater Control C1 harness connector.

Turn the ignition on.

Measure the voltage of the (C850) Blower Switch Position Signal circuit.

Is the voltage above 4.8 volts?

Yes >> Check the blower motor and related circuits for the cause of blower operation problems and repair as necessary. Run the Cooldown Test again after the repair is complete.

Perform BODY VERIFICATION TEST – VER 1. (Refer to 8 - ELECTRICAL/ELECTRONIC CONTROL MODULES/ FRONT CONTROL MODULE - DIAGNOSIS AND TESTING).

No >> Go To 5

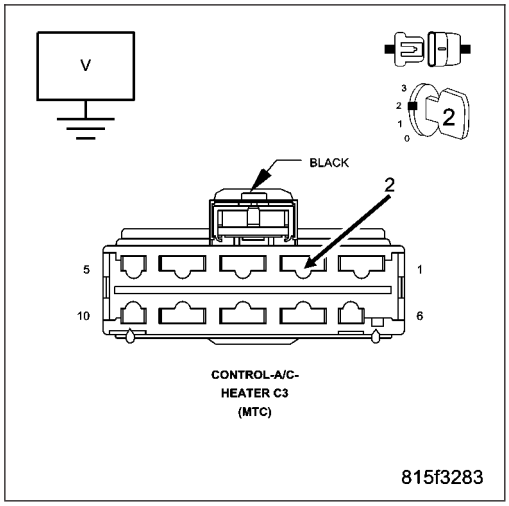

5. CHECK THE (C850) BLOWER SWITCH POSITION SIGNAL CIRCUIT FOR A SHORT TO GROUND

Measure the resistance of the (C850) Blower Switch Position Signal circuit between ground and the A/C Heater Control C3 harness connector.

Is the resistance below 10K ohms?

Yes >> Repair the (C850) Blower Switch Position Signal circuit for a short to ground. Run the Cooldown Test again after the repair is complete.

Perform BODY VERIFICATION TEST – VER 1. (Refer to 8 - ELECTRICAL/ELECTRONIC CONTROL MODULES/ FRONT CONTROL MODULE - DIAGNOSIS AND TESTING).

No >> Go To 6

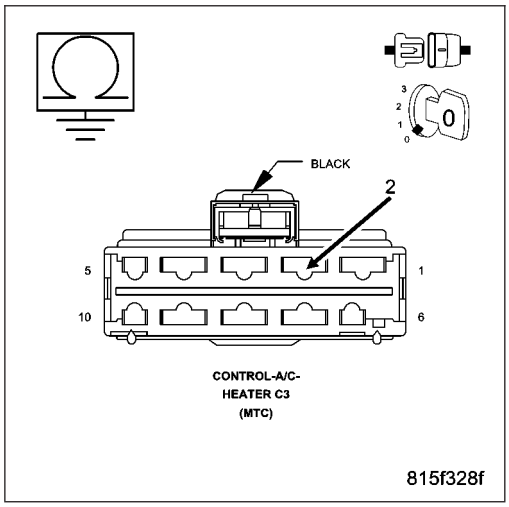

6. CHECK (C850) BLOWER SWITCH POSITION SIGNAL CIRCUIT FOR AN OPEN

Measure the resistance of the (C850) Blower Switch Position Signal circuit between the A/C Heater Control C1 harness connector and the A/C Heater Control C3 harness connector.

Is the resistance below 5.0 ohms?

Yes >> Replace the A/C Heater Control in accordance with the Service Information. Run the Cooldown Test again after the repair is complete.

Perform BODY VERIFICATION TEST – VER 1. (Refer to 8 - ELECTRICAL/ELECTRONIC CONTROL MODULES/ FRONT CONTROL MODULE - DIAGNOSIS AND TESTING)

No >> Repair the (C850) Blower Switch Position Signal circuit for an open. Run the Cooldown Test again after the repair is complete.

Perform BODY VERIFICATION TEST – VER 1. (Refer to 8 - ELECTRICAL/ELECTRONIC CONTROL MODULES/ FRONT CONTROL MODULE - DIAGNOSIS AND TESTING).

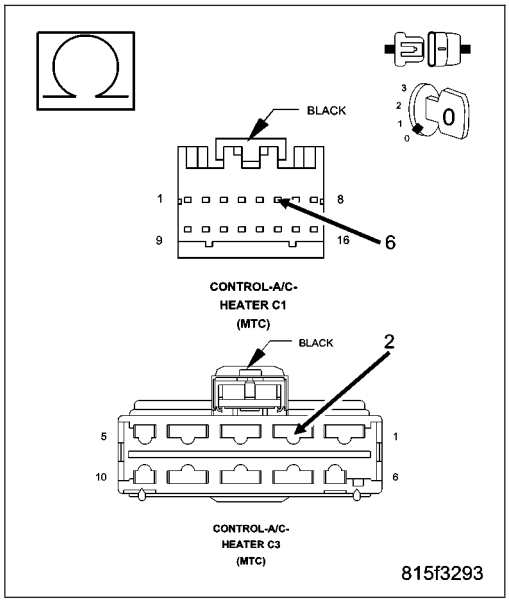

B10AC–RIGHT BLEND DOOR CONTROL CIRCUIT OPEN (ATC)

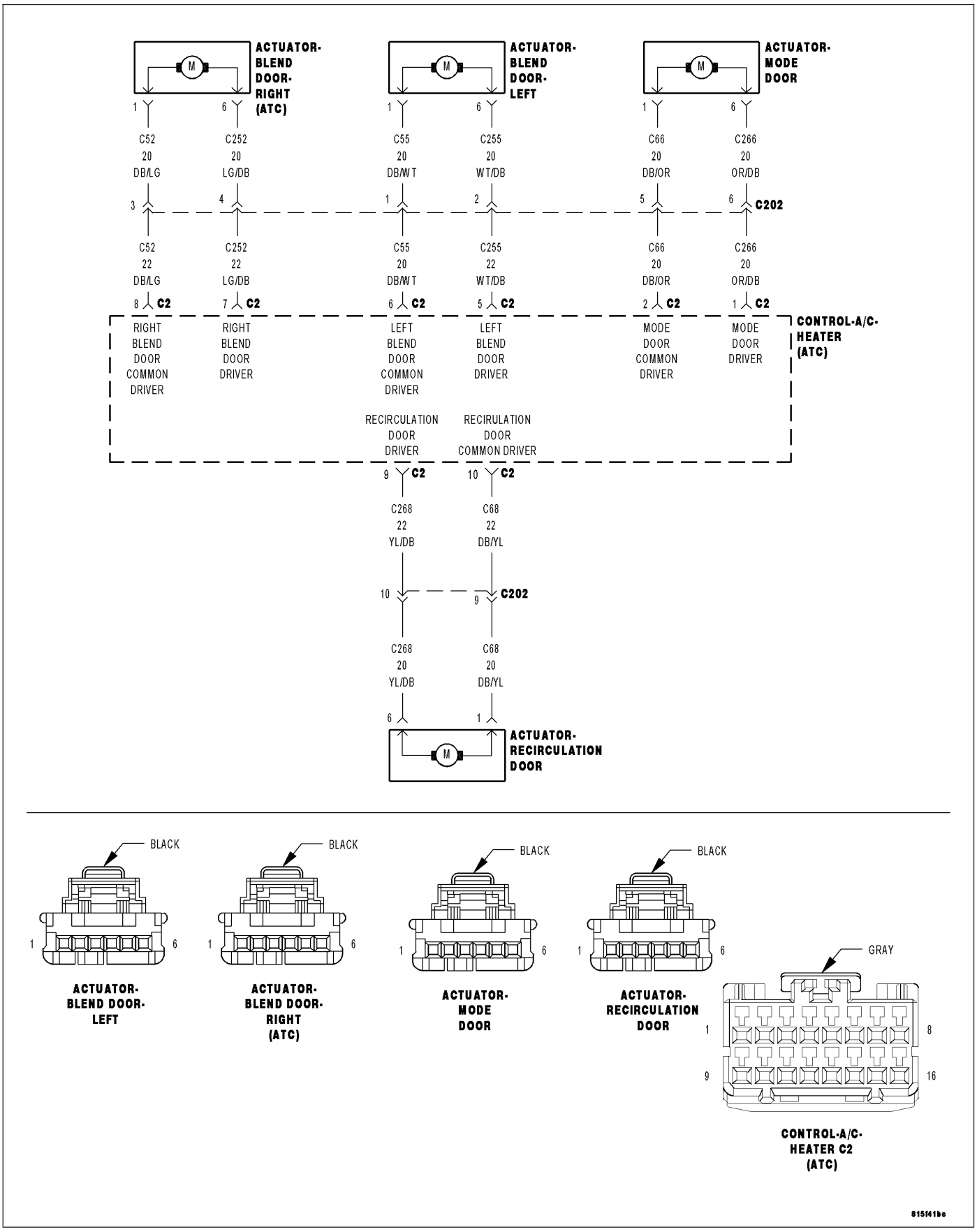

For a complete wiring diagram **Refer to Section 8W**.

- **When Monitored:**
  When actuator movement is requested.
- **Set Condition:**
  If the (C252) Right Blend Door Driver circuit or the (C52) Right Blend Door Common Driver circuit is open.

Possible Causes
(C252) RIGHT BLEND DOOR DRIVER CIRCUIT OPEN
(C52) RIGHT BLEND DOOR COMMON DRIVER CIRCUIT OPEN
RIGHT BLEND DOOR ACTUATOR
A/C HEATER CONTROL

Diagnostic Test

1. CHECK FOR ACTIVE CONTROL CIRCUIT/PERFORMANCE DTCs

Turn the ignition on.

With the scan tool, read active HVAC DTCs.

Does the scan tool display any active: XXXX CONTROL CIRCUIT/PERFORMANCE DTCs?

Yes >> Diagnose and repair the DTC(s). Refer to the Table of Contents in this Section for a complete list of all HVAC related symptoms.

No >> Go To 2

2. CHECK THE RIGHT BLEND DOOR ACTUATOR CIRCUIT RESISTANCE

Turn the ignition off.

Disconnect the A/C Heater Control C2 harness connector.

Measure the resistance between the (C252) Right Blend Door Driver circuit and the (C52) Right Blend Door Common Driver circuit in the A/C Heater Control C2 harness connector.

Is the resistance above 70.0 ohms?

Yes >> Go To 3

No >> Replace the A/C Heater Control in accordance with the Service Information.

Perform BODY VERIFICATION TEST – VER 1. (Refer to 8 - ELECTRICAL/ELECTRONIC CONTROL MODULES/ FRONT CONTROL MODULE - DIAGNOSIS AND TESTING).

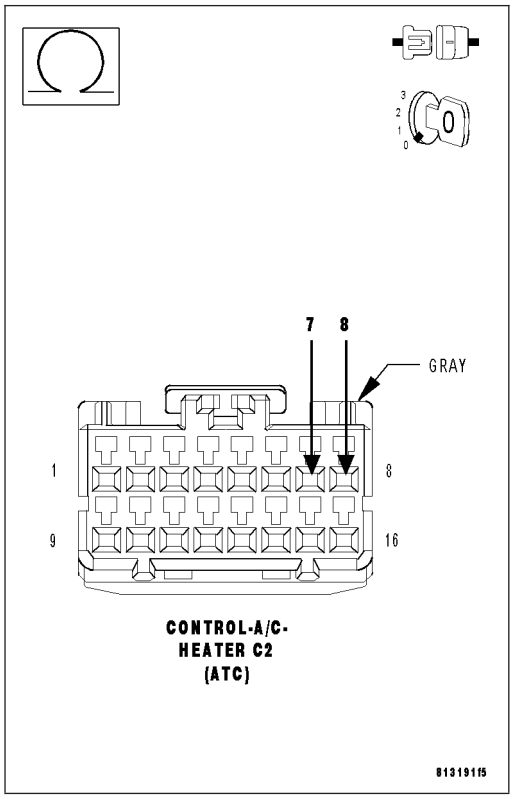

3. CHECK THE (C252) RIGHT BLEND DOOR DRIVER CIRCUIT FOR AN OPEN

Disconnect the Right Blend Door Actuator harness connector.

Measure the resistance of the (C252) Right Blend Door Driver circuit between the Right Blend Door Actuator harness connector and the A/C Heater Control C2 harness connector.

Is the resistance below 5.0 ohms?

Yes >> Go To 4

No >> Repair the (C252) Right Blend Door Driver circuit for an open.

Perform BODY VERIFICATION TEST – VER 1. (Refer to 8 - ELECTRICAL/ELECTRONIC CONTROL MODULES/ FRONT CONTROL MODULE - DIAGNOSIS AND TESTING).

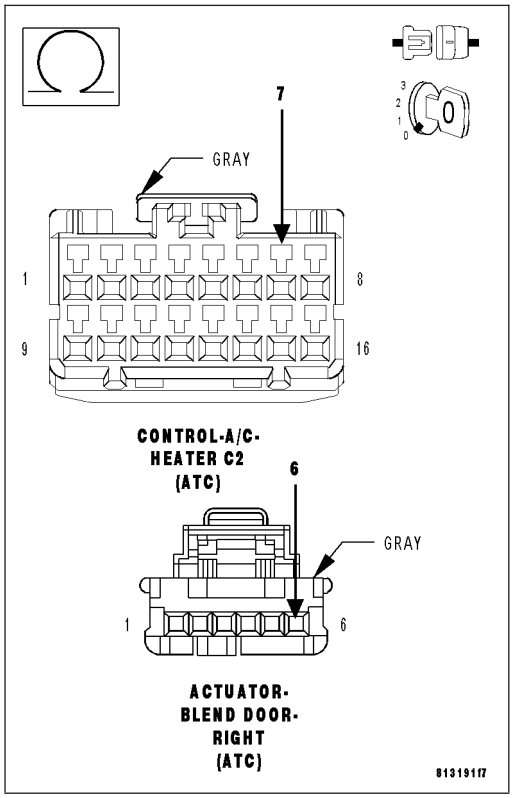

4. CHECK THE (C52) RIGHT BLEND DOOR COMMON DRIVER CIRCUIT FOR AN OPEN

Measure the resistance of the (C52) Right Blend Door Common Driver circuit between the Right Blend Door Actuator harness connector and the A/C Heater Control C2 harness connector.

Is the resistance below 5.0 ohms?

Yes >> Replace the Right Blend Door Actuator in accordance with the Service Information.

Perform BODY VERIFICATION TEST – VER 1. (Refer to 8 - ELECTRICAL/ELECTRONIC CONTROL MODULES/ FRONT CONTROL MODULE - DIAGNOSIS AND TESTING).

No >> Repair the (C52) Right Blend Door Common Driver circuit for an open.

Perform BODY VERIFICATION TEST – VER 1. (Refer to 8 - ELECTRICAL/ELECTRONIC CONTROL MODULES/ FRONT CONTROL MODULE - DIAGNOSIS AND TESTING).

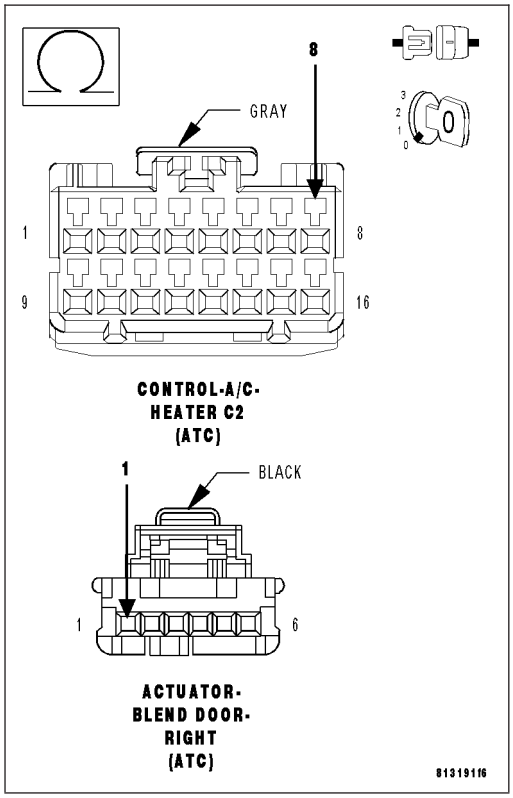

B10AD–RIGHT BLEND DOOR TRAVEL TOO SMALL (ATC)

For a complete wiring diagram **Refer to Section 8W**.

Theory of Operation

The A/C Heater Control calibrates each actuator individually. Automatic calibration occurs upon power up after installing a new A/C Heater Control. Manual calibration occurs by sending a command with the scan tool. The purpose of actuator calibration is to determine the total span of door travel between physical stops. To calibrate the actuator, the A/C Heater Control first moves the door to its soft stop, and then counts the number of pulses it takes to move the door to its other stop. An expected range of span is stored in the control's memory. If the measured calibration value is less than the expected range for this actuator, this DTC will set. Note that the control clears all stored calibration faults at the beginning of the calibration procedure.

- **When Monitored:**
  During actuator calibration.
- **Set Condition:**
  If the total span of the Right Blend Door is less than the low range limit.

Possible Causes
DOOR DRIVER ELECTRICAL CIRCUIT(S)
RIGHT BLEND DOOR SEIZED, BINDING, OBSTRUCTED
RIGHT BLEND DOOR ACTUATOR
A/C HEATER CONTROL

Diagnostic Test

1. CHECK FOR ACTIVE CONTROL CIRCUIT/PERFORMANCE & CONTROL CIRCUIT OPEN DTCs

Turn the ignition on.

With the scan tool, read active HVAC DTCs.

Does the scan tool display any active: XXXX CONTROL CIRCUIT/PERFORMANCE or XXXX CONTROL CIRCUIT OPEN DTCs?

Yes >> Diagnose and repair the DTC(s). If present, diagnose and repair all Control Circuit/Performance DTCs before diagnosing Control Circuit Open DTCs. Refer to the Table of Contents in this Section for a complete list of all HVAC related symptoms.

No >> Go To 2

2. INSPECT ACTUATOR & HOUSING ASSEMBLY FOR A CONDITION CAUSING THE RIGHT BLEND DOOR TO SEIZE OR BIND

Turn the ignition off.

Inspect the actuator, linkage, and housing assembly for a condition causing the right blend door to seize or bind.

Are there any physical or mechanical problems with the door, housing, linkage, or actuator?

Yes >> Repair as necessary in accordance with the Service Information.
Perform BODY VERIFICATION TEST – VER 1. (Refer to 8 - ELECTRICAL/ELECTRONIC CONTROL MODULES/FRONT CONTROL MODULE - DIAGNOSIS AND TESTING).

No >> Go To 3

3. CHECK RIGHT BLEND DOOR TRAVEL

Remove the Right Blend Door Actuator from the A/C Heater Housing Assembly.

By hand, attempt to rotate the door in both directions. The door should operate smoothly in both directions over the entire span of travel (approximately 190 degrees).

Does the door operate smoothly in both directions over the entire span of travel?

Yes >> Replace the Right Blend Door Actuator in accordance with the Service Information. Then, Go To 4.

No >> Repair as necessary in accordance with the Service Information.
Perform BODY VERIFICATION TEST – VER 1. (Refer to 8 - ELECTRICAL/ELECTRONIC CONTROL MODULES/FRONT CONTROL MODULE - DIAGNOSIS AND TESTING).

4. RUN THE ACTUATOR CALIBRATION TEST

Turn the ignition on.

With the scan tool, select System Tests and then select Actuator Calibration Test. When the test is complete, select View DTCs.

Does the scan tool display: B10AD–RIGHT BLEND DOOR TRAVEL RANGE TOO SMALL?

Yes >> Replace the A/C Heater Control in accordance with the Service Information.
Perform BODY VERIFICATION TEST – VER 1. (Refer to 8 - ELECTRICAL/ELECTRONIC CONTROL MODULES/FRONT CONTROL MODULE - DIAGNOSIS AND TESTING).

No >> Perform BODY VERIFICATION TEST – VER 1. (Refer to 8 - ELECTRICAL/ELECTRONIC CONTROL MODULES/FRONT CONTROL MODULE - DIAGNOSIS AND TESTING).

B10AE–RIGHT BLEND DOOR TRAVEL TOO LARGE (ATC)

For a complete wiring diagram **Refer to Section 8W**.

Theory of Operation

The A/C Heater Control calibrates each actuator individually. Automatic calibration occurs upon power up after installing a new A/C Heater Control. Manual calibration occurs by sending a command with the scan tool. The purpose of actuator calibration is to determine the total span of door travel between physical stops. To calibrate the actuator, the A/C Heater Control first moves the door to its soft stop, and then counts the number of pulses it takes to move the door to its other stop. An expected range of span is stored in the control's memory. If the measured calibration value exceeds the expected range for this actuator, this DTC will set. Note that the control clears all stored calibration faults at the beginning of the calibration procedure.

- **When Monitored:**
  During actuator calibration.
- **Set Condition:**
  If the total span of the Right Blend Door exceeds the high range limit.

Possible Causes
DOOR DRIVER ELECTRICAL CIRCUIT(S)
RIGHT BLEND DOOR OR A/C HEATER HOUSING COMPONENTS WARPED, WORN, DAMAGED, MISSING, BROKEN
RIGHT BLEND DOOR ACTUATOR
A/C HEATER CONTROL

Diagnostic Test

1. CHECK FOR ACTIVE CONTROL CIRCUIT/PERFORMANCE & CONTROL CIRCUIT OPEN DTCs

Turn the ignition on.

With the scan tool, read active HVAC DTCs.

Does the scan tool display any active: XXXX CONTROL CIRCUIT/PERFORMANCE or XXXX CONTROL CIRCUIT OPEN DTCs?

Yes >> Diagnose and repair the DTC(s). If present, diagnose and repair all Control Circuit/Performance DTCs before diagnosing Control Circuit Open DTCs. Refer to the Table of Contents in this Section for a complete list of all HVAC related symptoms.

No >> Go To 2

2. CHECK FOR A BROKEN RIGHT BLEND DOOR ACTUATOR

Turn the ignition off.

Remove the Right Blend Door Actuator from the A/C Heater Housing Assembly.

By hand, attempt to rotate the actuator in both directions.

Does the actuator turn in either direction?

Yes >> Replace the Right Blend Door Actuator in accordance with the Service Information.
Perform BODY VERIFICATION TEST – VER 1. (Refer to 8 - ELECTRICAL/ELECTRONIC CONTROL MODULES/FRONT CONTROL MODULE - DIAGNOSIS AND TESTING).

No >> Go To 3

3. CHECK THE RIGHT BLEND DOOR & A/C HEATER HOUSING FOR WARPED, WORN, DAMAGED, MISSING, & BROKEN COMPONENTS

Inspect for excessively worn, disconnected, missing, or broken door linkage. Inspect for a damaged or broken A/C Heater Housing Assembly. Inspect for a warped or broken door, and missing door seals. Rotate the door from stop to stop. The door should rotate approximately 190 degrees.

Are there any physical or mechanical problems with the door or housing?

Yes >> Repair as necessary in accordance with the Service Information.
Perform BODY VERIFICATION TEST – VER 1. (Refer to 8 - ELECTRICAL/ELECTRONIC CONTROL MODULES/FRONT CONTROL MODULE - DIAGNOSIS AND TESTING).

No >> Replace the Right Blend Door Actuator in accordance with the Service Information. Then, Go To 4.

4. RUN THE ACTUATOR THE CALIBRATION TEST

Turn the ignition on.

With the scan tool, select System Tests and then select Actuator Calibration Test. When the test is complete, select View DTCs.

Does the scan tool display: B10AE–RIGHT BLEND DOOR TRAVEL RANGE TOO LARGE?

Yes >> Replace the A/C Heater Control in accordance with the Service Information.
Perform BODY VERIFICATION TEST – VER 1. (Refer to 8 - ELECTRICAL/ELECTRONIC CONTROL MODULES/FRONT CONTROL MODULE - DIAGNOSIS AND TESTING).

No >> Perform BODY VERIFICATION TEST – VER 1. (Refer to 8 - ELECTRICAL/ELECTRONIC CONTROL MODULES/FRONT CONTROL MODULE - DIAGNOSIS AND TESTING).

B10AF–RIGHT BLEND DOOR ACTUATOR PERFORMANCE (ATC)

For a complete wiring diagram **Refer to Section 8W**.

Theory of Operation

The A/C Heater Control monitors the door driver circuits during actuator operation for conditions that prevent proper door operation. If a pulse count error is detected the A/C Heater Control reports the fault as a Actuator Performance DTC. It is important to note that this DTC only indicates that a fault occurred while driving a door actuator and that additional testing is necessary to provide more details about the reported fault.

- **When Monitored:**
  When actuator movement is requested.
- **Set Condition:**
  If the A/C Heater Control detects a pulse count error while attempting to drive this door actuator.

Possible Causes
DOOR DRIVER CIRCUIT(S) SHORTED HIGH, SHORTED LOW, SHORTED TOGETHER, OPEN
DOOR ACTUATOR(S) BINDING, BROKEN
DOOR ACTUATOR(S) LINKAGE BINDING, DISCONNECTED, MISSING, BROKEN
A/C HEATER CONTROL

Diagnostic Test

1. CHECK FOR ACTIVE CONTROL CIRCUIT/PERFORMANCE & CONTROL CIRCUIT OPEN DTCs

Turn the ignition on.

With the scan tool, read active HVAC DTCs.

Does the scan tool display any active: XXXX CONTROL CIRCUIT/PERFORMANCE or XXXX CONTROL CIRCUIT OPEN DTCs?

Yes >> Diagnose and repair the DTC(s). Refer to the Table of Contents in this Section for a complete list of all HVAC related symptoms.

No >> Go To 2

2. RUN ACTUATOR CALIBRATION TEST

With the scan tool, select System Tests and then select Actuator Calibration Test. When the test is complete, select View DTCs.

Does the scan tool display any DTCs?

Yes >> Diagnose and repair the DTC(s). Refer to the Table of Contents in this Section for a complete list of all HVAC related symptoms.

No >> Go To 3

3. CHECK MODE, BLEND & RECIRCULATION DOOR OPERATION

Start the engine.

Set the blower to high speed.

Verify that air flows from the correct vents while setting the Mode control to the Panel position, the Bilvel position, the Floor/Defrost position, and the Defrost position. Then, repeat in the opposite direction.

Set the Mode control to the Panel position.

Set the Driver Blend control to the full cold position.

Set the Passenger Blend control the full cold position.

Verify that the airflow air temperature changes while setting the Driver Blend control to the full hot position. Then, repeat in the opposite direction.

Verify that the airflow air temperature changes while setting the Passenger Blend control to the full hot position. Then, repeat in the opposite direction.

Set the Mode control to any position between Floor and Panel.

Press the Recirc function on. Verify that the sound of the airflow gets louder as the recirculation door opens to bring in recirculated air.

Press the Recirc function off. Verify that the sound of the airflow gets softer as the recirculation door closes to bring in fresh air.

Does each door operate properly?

Yes >> The condition causing the fault has cleared at this time.

Perform BODY VERIFICATION TEST – VER 1. (Refer to 8 - ELECTRICAL/ELECTRONIC CONTROL MODULES/FRONT CONTROL MODULE - DIAGNOSIS AND TESTING).

No >> Remove the door actuator of the affected door from the A/C Heater Housing Assembly. By hand, attempt to rotate the actuator in both directions. Inspect the A/C Heater Housing for damage, for disconnected, missing, or broken linkage, and for broken or binding doors. Repair as necessary in accordance with the Service Information.

Perform BODY VERIFICATION TEST – VER 1. (Refer to 8 - ELECTRICAL/ELECTRONIC CONTROL MODULES/FRONT CONTROL MODULE - DIAGNOSIS AND TESTING).

B10A2–LEFT BLEND DOOR CONTROL CIRCUIT/PERFORMANCE (ATC)

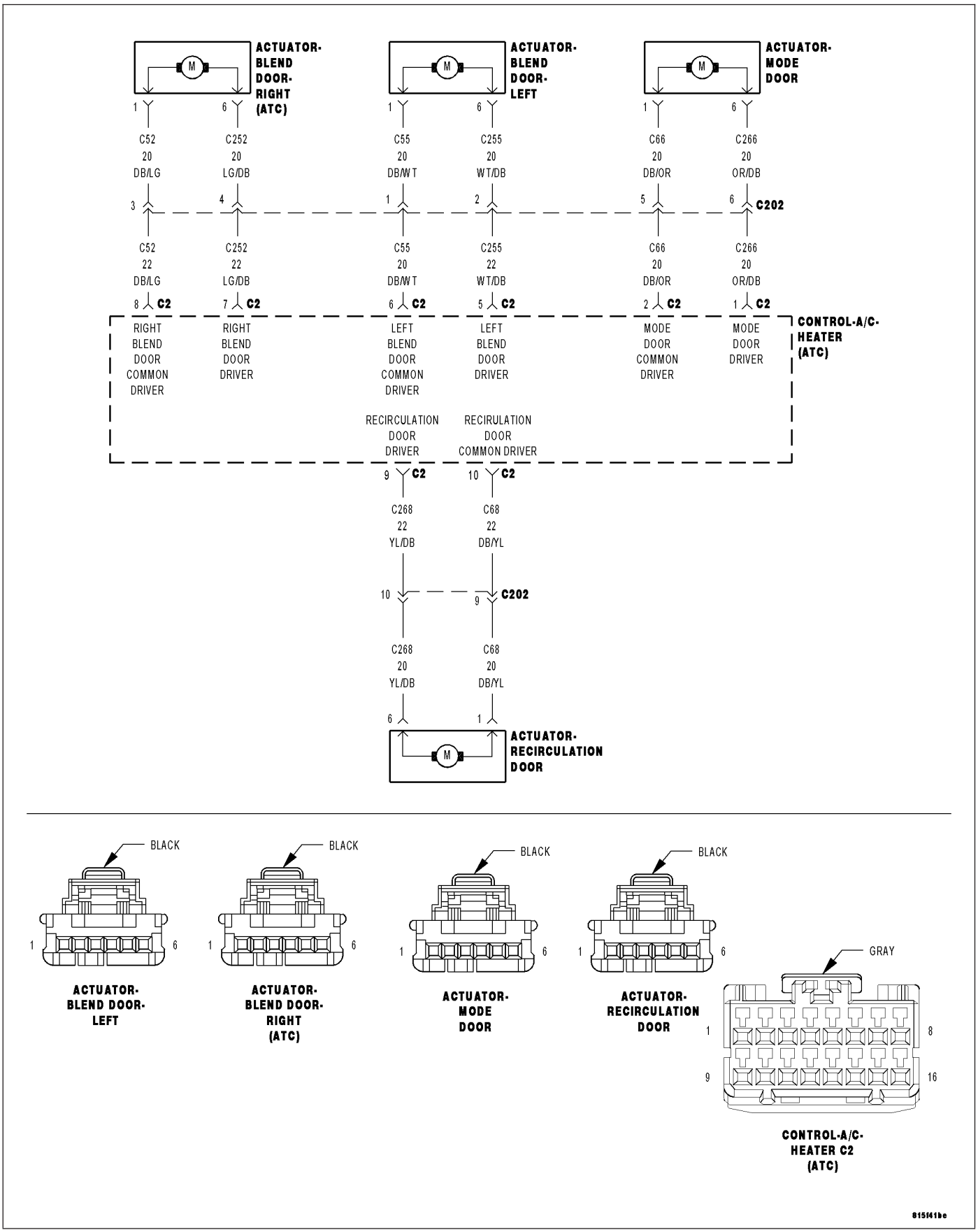

For a complete wiring diagram **Refer to Section 8W**.

Theory of Operation

The A/C Heater Control monitors the door driver circuits during actuator operation for shorts to ground, shorts to battery, and shorts to other door driver circuits. If detected, the A/C Heater Control reports these types of faults as Control Circuit/Performance DTCs.

- **When Monitored:**
  When actuator movement is requested.
- **Set Condition:**
  If the A/C Heater Control detects an excessive current draw on any of the door driver circuits while attempting to drive this door actuator.

Possible Causes
DOOR DRIVER CIRCUIT(S) SHORTED TO VOLTAGE
DOOR DRIVER CIRCUIT(S) SHORTED TO GROUND
DOOR DRIVER CIRCUITS SHORTED TOGETHER
DOOR ACTUATOR(S)
A/C HEATER CONTROL

NOTE: This DTC must be active for the results of this test to be valid. Do not perform this test if this DTC is stored. Refer to HVAC System Test (ATC) for stored DTC test procedures.

Diagnostic Test

1. CHECK THE DOOR DRIVER CIRCUITS FOR A SHORT TO VOLTAGE

Turn the ignition off.

Disconnect the A/C Heater Control C2 harness connector.

Turn the ignition on.

Measure the voltage of the (C266) Mode Door Driver circuit, the (C66) Mode Door Common Driver circuit, the (C255) Left Blend Door Driver circuit, the (C55) Left Blend Door Common Driver circuit, the (C252) Right Blend Door Driver circuit, the (C52) Right Blend Door Common Driver circuit, the (C268) Recirculation Door Driver circuit, and the (C68) Recirculation Door Common Driver circuit.

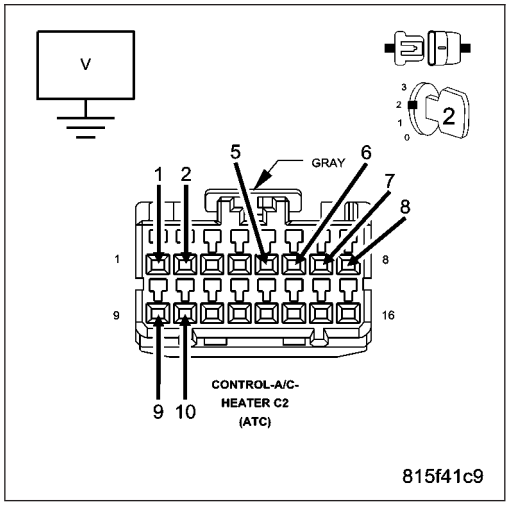

Is the voltage above 0.2 volts on any of the circuits?

Yes >> Repair all circuits with voltage above 0.2 volts for a short to voltage.
Perform BODY VERIFICATION TEST – VER 1. (Refer to 8 - ELECTRICAL/ELECTRONIC CONTROL MODULES/ FRONT CONTROL MODULE - DIAGNOSIS AND TESTING).

No >> Go To 2

2. CHECK THE DOOR DRIVER CIRCUITS FOR A SHORT TO GROUND

Turn the ignition off.

Measure the resistance of the (C266) Mode Door Driver circuit, the (C66) Mode Door Common Driver circuit, the (C255) Left Blend Door Driver circuit, the (C55) Left Blend Door Common Driver circuit, the (C252) Right Blend Door Driver circuit, the (C52) Right Blend Door Common Driver circuit, the (C268) Recirculation Door Driver circuit, and the (C68) Recirculation Door Common Driver circuit between ground and the A/C Heater Control C2 harness connector.

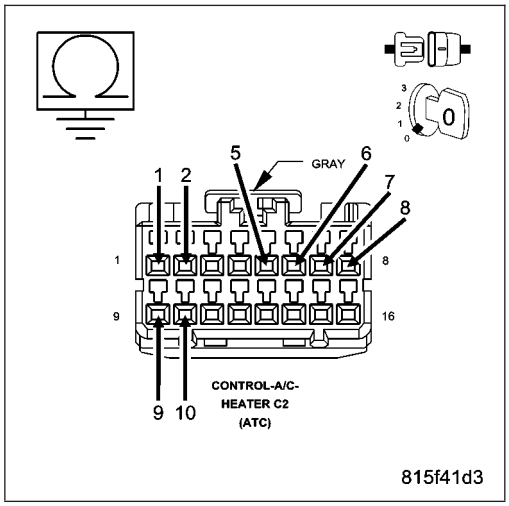

Is the resistance below 10k ohms on any of the circuits?

Yes >> Repair all circuits with a resistance below 10k ohms for a short to ground.

Perform BODY VERIFICATION TEST – VER 1. (Refer to 8 - ELECTRICAL/ELECTRONIC CONTROL MODULES/ FRONT CONTROL MODULE - DIAGNOSIS AND TESTING).

No >> Go To 3

3. CHECK THE (C266) MODE DOOR DRIVER CIRCUIT FOR A SHORT TO THE (C255) LEFT BLEND DOOR DRIVER CIRCUIT, THE (C55) LEFT BLEND DOOR COMMON DRIVER CIRCUIT, THE (C252) RIGHT BLEND DOOR DRIVER CIRCUIT, THE (C52) RIGHT BLEND DOOR COMMON DRIVER CIRCUIT, THE (C268) RECIRCULATION DOOR DRIVER CIRCUIT, & THE (C68) RECIRCULATION DOOR COMMON DRIVER CIRCUIT

Measure the resistance between the (C266) Mode Door Driver circuit and the (C255) Left Blend Door Driver circuit, the (C55) Left Blend Door Common Driver circuit, the (C252) Right Blend Door Driver circuit, the (C52) Right Blend Door Common Driver circuit, the (C268) Recirculation Door Driver circuit, and the (C68) Recirculation Door Common Driver circuit.

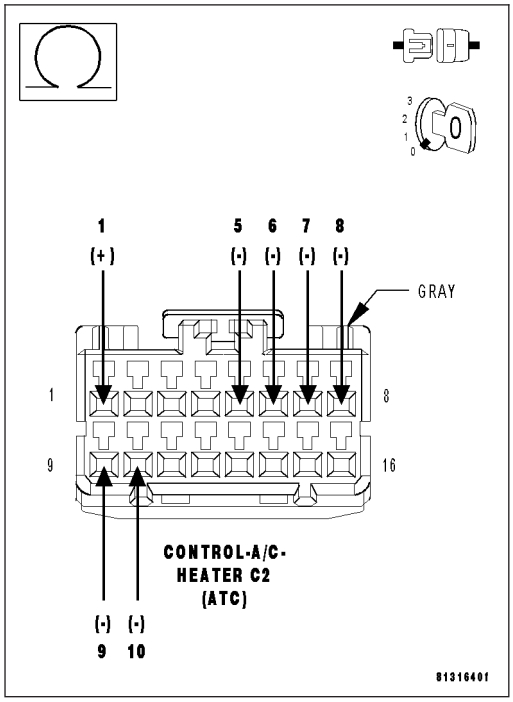

Is the resistance below 10k ohms on any of the circuits?

Yes >> Repair all circuits with a resistance below 10k ohms for a short to the (C266) Mode Door Driver circuit.

Perform BODY VERIFICATION TEST – VER 1. (Refer to 8 - ELECTRICAL/ELECTRONIC CONTROL MODULES/ FRONT CONTROL MODULE - DIAGNOSIS AND TESTING).

No >> Go To 4

4. CHECK THE (C66) MODE DOOR COMMON DRIVER CIRCUIT FOR A SHORT TO THE (C255) LEFT BLEND DOOR DRIVER CIRCUIT, THE (C55) LEFT BLEND DOOR COMMON DRIVER CIRCUIT, THE (C252) RIGHT BLEND DOOR DRIVER CIRCUIT, THE (C52) RIGHT BLEND DOOR COMMON DRIVER CIRCUIT, THE (C268) RECIRCULATION DOOR DRIVER CIRCUIT, & THE (C68) RECIRCULATION DOOR COMMON DRIVER CIRCUIT

Measure the resistance between the (C66) Mode Door Common Driver circuit and the (C255) Left Blend Door Driver circuit, the (C55) Left Blend Door Common Driver circuit, the (C252) Right Blend Door Driver circuit, the (C52) Right Blend Door Common Driver circuit, the (C268) Recirculation Door Driver circuit, and the (C68) Recirculation Door Common Driver circuit.

Is the resistance below 10k ohms on any of the circuits?

Yes >> Repair all circuits with a resistance below 10k ohms for a short to the (C66) Mode Door Common Driver circuit.

Perform BODY VERIFICATION TEST – VER 1. (Refer to 8 - ELECTRICAL/ELECTRONIC CONTROL MODULES/ FRONT CONTROL MODULE - DIAGNOSIS AND TESTING).

No >> Go To 5

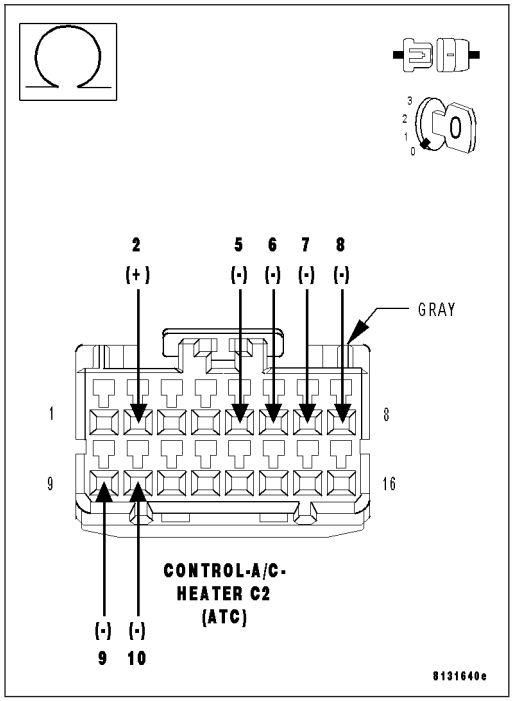

5. CHECK THE (C255) LEFT BLEND DOOR DRIVER CIRCUIT FOR A SHORT TO THE (C252) RIGHT BLEND DOOR DRIVER CIRCUIT, THE (C52) RIGHT BLEND DOOR COMMON DRIVER CIRCUIT, THE (C268) RECIRCULATION DOOR DRIVER CIRCUIT, & THE (C68) RECIRCULATION DOOR COMMON DRIVER CIRCUIT

Measure the resistance between the (C255) Left Blend Door Driver circuit and the (C252) Right Blend Door Driver circuit, the (C52) Right Blend Door Common Driver circuit, the (C268) Recirculation Door Driver circuit, and the (C68) Recirculation Door Common Driver circuit.

Is the resistance below 10k ohms on any of the circuits?

Yes >> Repair all circuits with a resistance below 10k ohms for a short to (C255) Left Blend Door Driver circuit.

Perform BODY VERIFICATION TEST – VER 1. (Refer to 8 - ELECTRICAL/ELECTRONIC CONTROL MODULES/ FRONT CONTROL MODULE - DIAGNOSIS AND TESTING).

No >> Go To 6

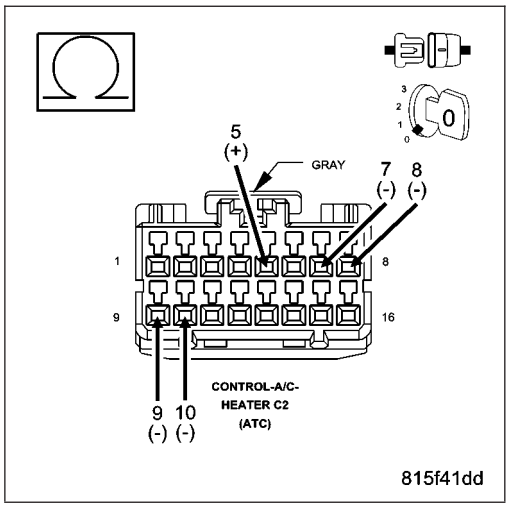

6. CHECK THE (C55) LEFT BLEND DOOR COMMON DRIVER CIRCUIT FOR A SHORT TO THE (C252) RIGHT BLEND DOOR DRIVER CIRCUIT, THE (C52) RIGHT BLEND DOOR COMMON DRIVER CIRCUIT, THE (C268) RECIRCULATION DOOR DRIVER CIRCUIT, & THE (C68) RECIRCULATION DOOR COMMON DRIVER CIRCUIT

Measure the resistance between the (C55) Left Blend Door Common Driver circuit and the (C252) Right Blend Door Driver circuit, the (C52) Right Blend Door Common Driver circuit, the (C268) Recirculation Door Driver circuit, and the (C68) Recirculation Door Common Driver circuit.

Is the resistance below 10k ohms on any of the circuits?

Yes >> Repair all circuits with a resistance below 10k ohms for a short to (C55) Left Blend Door Common Driver circuit.
Perform BODY VERIFICATION TEST – VER 1. (Refer to 8 - ELECTRICAL/ELECTRONIC CONTROL MODULES/ FRONT CONTROL MODULE - DIAGNOSIS AND TESTING).

No >> Go To 7

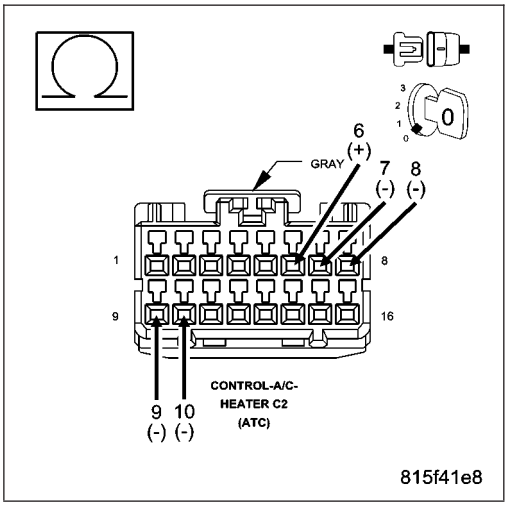

7. CHECK THE (C252) RIGHT BLEND DOOR DRIVER CIRCUIT FOR A SHORT TO THE (C268) RECIRCULATION DOOR DRIVER CIRCUIT & THE (C68) RECIRCULATION DOOR COMMON DRIVER CIRCUIT

Measure the resistance between the (C252) Right Blend Door Driver circuit and the (C268) Recirculation Door Driver circuit and the (C68) Recirculation Door Common Driver circuit.

Is the resistance below 10k ohms on any of the circuits?

Yes >> Repair all circuits with a resistance below 10k ohms for a short to the (C252) Right Blend Door Driver circuit.
Perform BODY VERIFICATION TEST – VER 1. (Refer to 8 - ELECTRICAL/ELECTRONIC CONTROL MODULES/ FRONT CONTROL MODULE - DIAGNOSIS AND TESTING).

No >> Go To 8

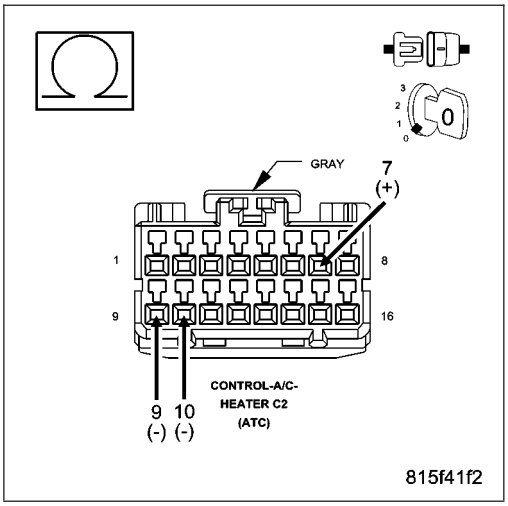

8. CHECK THE (C52) RIGHT BLEND DOOR COMMON DRIVER CIRCUIT FOR A SHORT TO THE (C268) RECIRCULATION DOOR DRIVER CIRCUIT & THE (C68) RECIRCULATION DOOR COMMON DRIVER CIRCUIT

Measure the resistance between the (C52) Right Blend Door Common Driver circuit and the (C268) Recirculation Door Driver circuit and the (C68) Recirculation Door Common Driver circuit.

Is the resistance below 10k ohms on any of the circuits?

Yes >> Repair all circuits with a resistance below 10k ohms for a short to the (C52) Right Blend Door Common Driver circuit.

Perform BODY VERIFICATION TEST – VER 1. (Refer to 8 - ELECTRICAL/ELECTRONIC CONTROL MODULES/ FRONT CONTROL MODULE - DIAGNOSIS AND TESTING).

No >> Go To 9

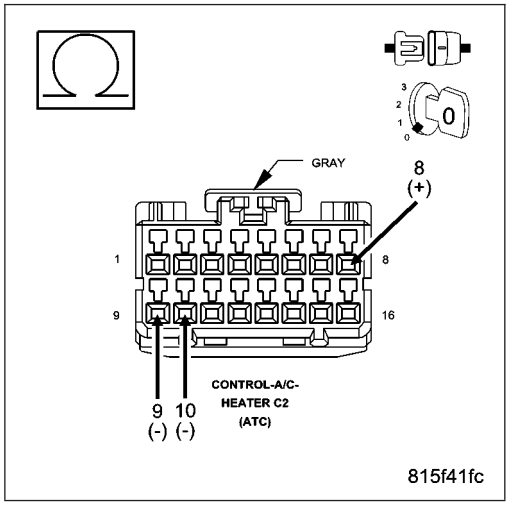

9. CHECK THE MODE DOOR ACTUATOR CIRCUIT RESISTANCE

Measure the resistance between the (C266) Mode Door Driver circuit and the (C66) Mode Door Common Driver circuit in the A/C Heater Control C2 harness connector.

Is the resistance below 30.0 ohms?

Yes >> Go To 10

No >> Go To 11

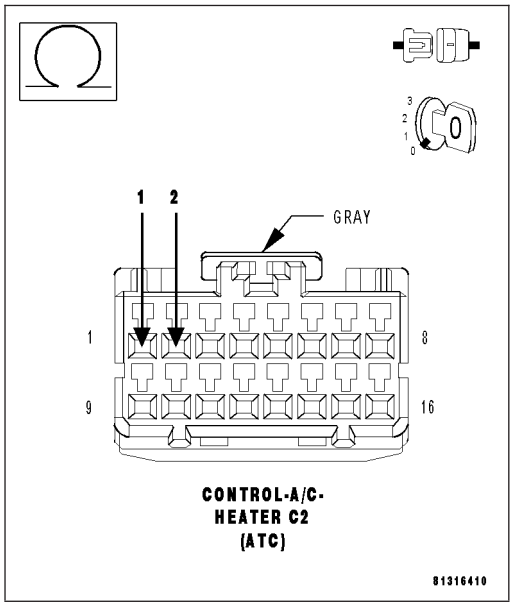

10. CHECK THE (C266) MODE DOOR DRIVER CIRCUIT FOR A SHORT TO THE (C66) MODE DOOR COMMON DRIVER CIRCUIT

Disconnect the Mode Door Actuator harness connector.

Measure the resistance between the (C266) Mode Door Driver circuit and the (C66) Mode Door Common Driver circuit in the A/C Heater Control C2 harness connector.

Is the resistance below 10k ohms?

Yes >> Repair the (C266) Mode Door Driver circuit for a short to the (C66) Mode Door Common Driver circuit.

Perform BODY VERIFICATION TEST – VER 1. (Refer to 8 - ELECTRICAL/ELECTRONIC CONTROL MODULES/ FRONT CONTROL MODULE - DIAGNOSIS AND TESTING).

No >> Replace the Mode Door Actuator in accordance with the Service Information.

Perform BODY VERIFICATION TEST – VER 1. (Refer to 8 - ELECTRICAL/ELECTRONIC CONTROL MODULES/ FRONT CONTROL MODULE - DIAGNOSIS AND TESTING).

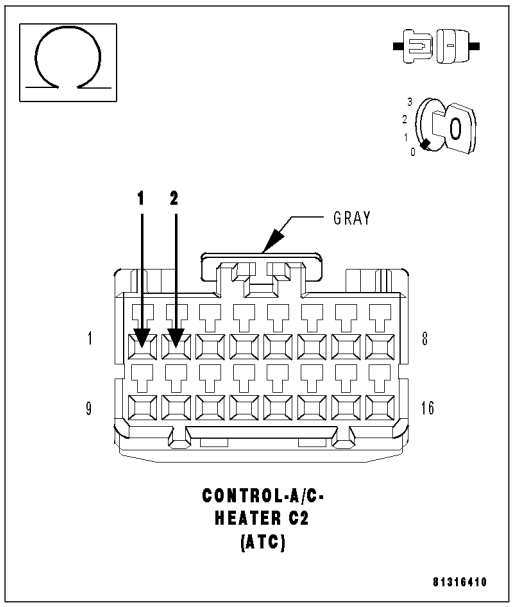

11. CHECK THE LEFT BLEND DOOR ACTUATOR CIRCUIT RESISTANCE

Measure the resistance between the (C255) Left Blend Door Driver circuit and the (C55) Left Blend Door Common Driver circuit in the A/C Heater Control C2 harness connector.

Is the resistance below 30.0 ohms?

Yes >> Go To 12

No >> Go To 13

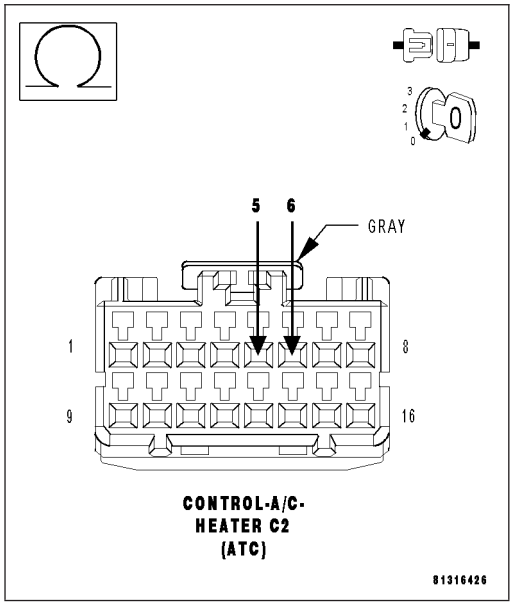

12. CHECK THE (C255) LEFT BLEND DOOR DRIVER CIRCUIT FOR A SHORT TO THE (C55) LEFT BLEND DOOR COMMON DRIVER CIRCUIT

Disconnect the Left Blend Door Actuator harness connector.

Measure the resistance between the (C255) Left Blend Door Driver circuit and the (C55) Left Blend Door Common Driver circuit in the A/C Heater Control C2 harness connector.

Is the resistance below 10k ohms?

Yes >> Repair the (C255) Left Blend Door Driver circuit for a short to the (C55) Left Blend Door Common Driver circuit.

Perform BODY VERIFICATION TEST – VER 1. (Refer to 8 - ELECTRICAL/ELECTRONIC CONTROL MODULES/ FRONT CONTROL MODULE - DIAGNOSIS AND TESTING).

No >> Replace the Left Blend Door Actuator in accordance with the Service Information.

Perform BODY VERIFICATION TEST – VER 1. (Refer to 8 - ELECTRICAL/ELECTRONIC CONTROL MODULES/ FRONT CONTROL MODULE - DIAGNOSIS AND TESTING).

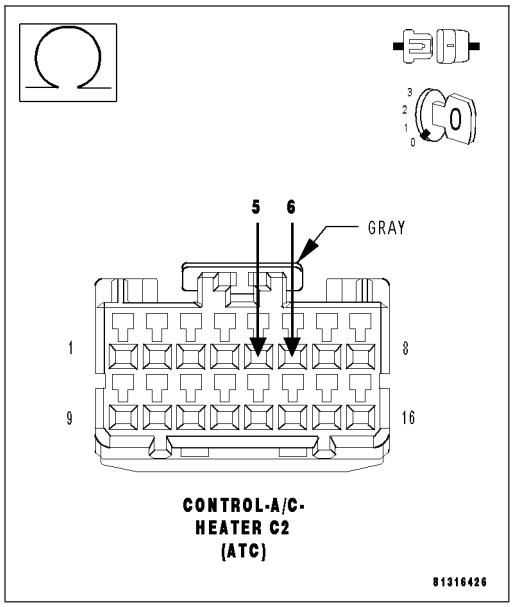

13. CHECK THE RIGHT BLEND DOOR ACTUATOR CIRCUIT RESISTANCE

Measure the resistance between the (C252) Right Blend Door Driver circuit and the (C52) Right Blend Door Common Driver circuit in the A/C Heater Control C2 harness connector.

Is the resistance below 30.0 ohms?

Yes >> Go To 14

No >> Go To 15

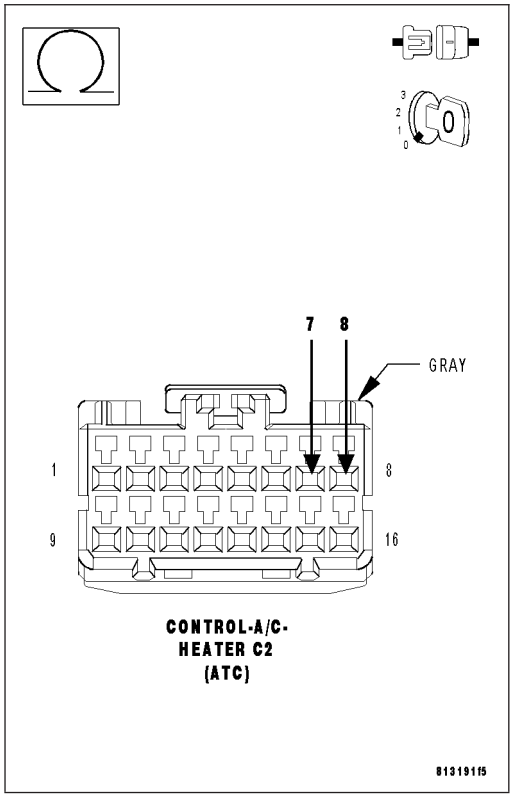

14. CHECK THE (C252) RIGHT BLEND DOOR DRIVER CIRCUIT FOR A SHORT TO THE (C52) RIGHT BLEND DOOR COMMON DRIVER CIRCUIT

Disconnect the Right Blend Door Actuator harness connector.

Measure the resistance between the (C252) Right Blend Door Driver circuit and the (C52) Right Blend Door Common Driver circuit in the A/C Heater Control C2 harness connector.

Is the resistance below 10k ohms?

Yes >> Repair the (C252) Right Blend Door Driver circuit for a short to the (C52) Right Blend Door Common Driver circuit.
Perform BODY VERIFICATION TEST – VER 1. (Refer to 8 - ELECTRICAL/ELECTRONIC CONTROL MODULES/ FRONT CONTROL MODULE - DIAGNOSIS AND TESTING).

No >> Replace the Right Blend Door Actuator in accordance with the Service Information.
Perform BODY VERIFICATION TEST – VER 1. (Refer to 8 - ELECTRICAL/ELECTRONIC CONTROL MODULES/ FRONT CONTROL MODULE - DIAGNOSIS AND TESTING).

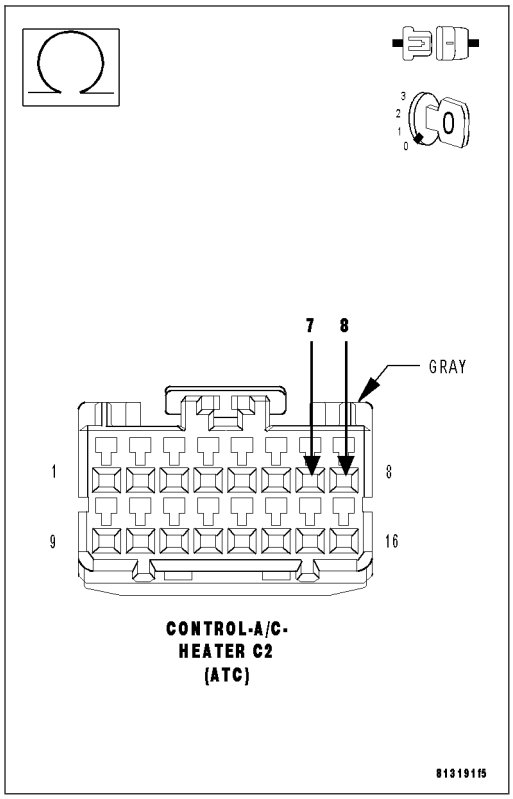

15. CHECK THE RECIRCULATION DOOR ACTUATOR CIRCUIT RESISTANCE

Measure the resistance between the (C268) Recirculation Door Driver circuit and the (C68) Recirculation Door Common Driver circuit in the A/C Heater Control C2 harness connector.

Is the resistance below 30.0 ohms?

Yes >> Go To 16

No >> Go To 17

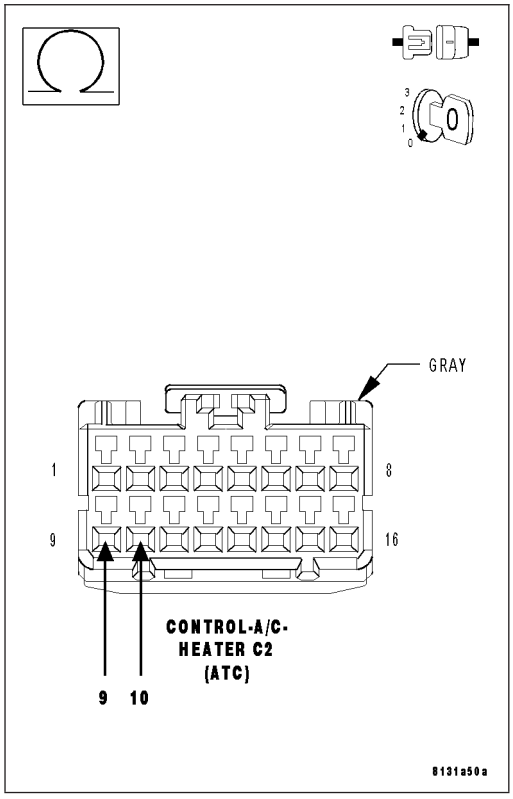

16. CHECK THE (C268) RECIRCULATION DOOR DRIVER CIRCUIT FOR A SHORT TO THE (C68) RECIRCULATION DOOR COMMON DRIVER CIRCUIT

Disconnect the Recirculation Door Actuator harness connector.

Measure the resistance between the (C268) Recirculation Door Driver circuit and the (C68) Recirculation Door Common Driver circuit in the A/C Heater Control C2 harness connector.

Is the resistance below 10k ohms?

Yes >> Repair the (C268) Recirculation Door Driver circuit for a short to the (C68) Recirculation Door Common Driver circuit.

Perform BODY VERIFICATION TEST – VER 1. (Refer to 8 - ELECTRICAL/ELECTRONIC CONTROL MODULES/FRONT CONTROL MODULE - DIAGNOSIS AND TESTING).

No >> Replace the Recirculation Door Actuator in accordance with the Service Information.

Perform BODY VERIFICATION TEST – VER 1. (Refer to 8 - ELECTRICAL/ELECTRONIC CONTROL MODULES/FRONT CONTROL MODULE - DIAGNOSIS AND TESTING).

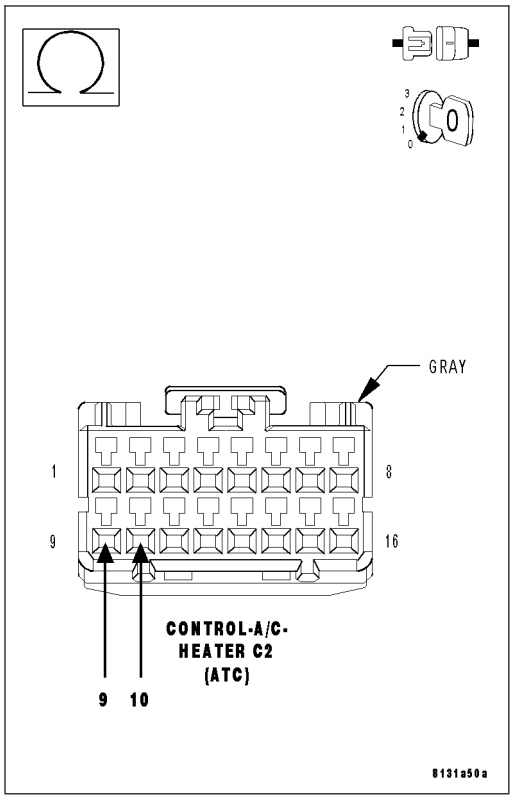

17. RUN THE ACTUATOR CALIBRATION TEST

Reconnect the A/C Heater Control C2 harness connector.

Reconnect the all of the Door Actuator harness connectors.

Turn the ignition on.

With the scan tool, erase HVAC DTCs.

Turn the ignition off, wait 10 seconds, and then turn the ignition on.

With the scan tool, select System Tests and then select Actuator Calibration Test. When the test is complete, select View DTCs.

Does the scan tool only display: B10A2–LEFT BLEND DOOR CONTROL CIRCUIT/PERFORMANCE?

Yes >> Replace the A/C Heater Control in accordance with the Service Information.

Perform BODY VERIFICATION TEST – VER 1. (Refer to 8 - ELECTRICAL/ELECTRONIC CONTROL MODULES/FRONT CONTROL MODULE - DIAGNOSIS AND TESTING).

No, Other DTC(s) Displayed

Diagnose and repair the other DTC(s). Refer to the Table of Contents in this Section for a complete list of all HVAC related symptoms.

No, And No Other DTCs Displayed

Using the wiring diagram as a guide, inspect the wiring and connectors for conditions causing an intermittent short. Repair as necessary.

Perform BODY VERIFICATION TEST – VER 1. (Refer to 8 - ELECTRICAL/ELECTRONIC CONTROL MODULES/FRONT CONTROL MODULE - DIAGNOSIS AND TESTING).

B10A5–LEFT BLEND DOOR CONTROL CIRCUIT OPEN (ATC)

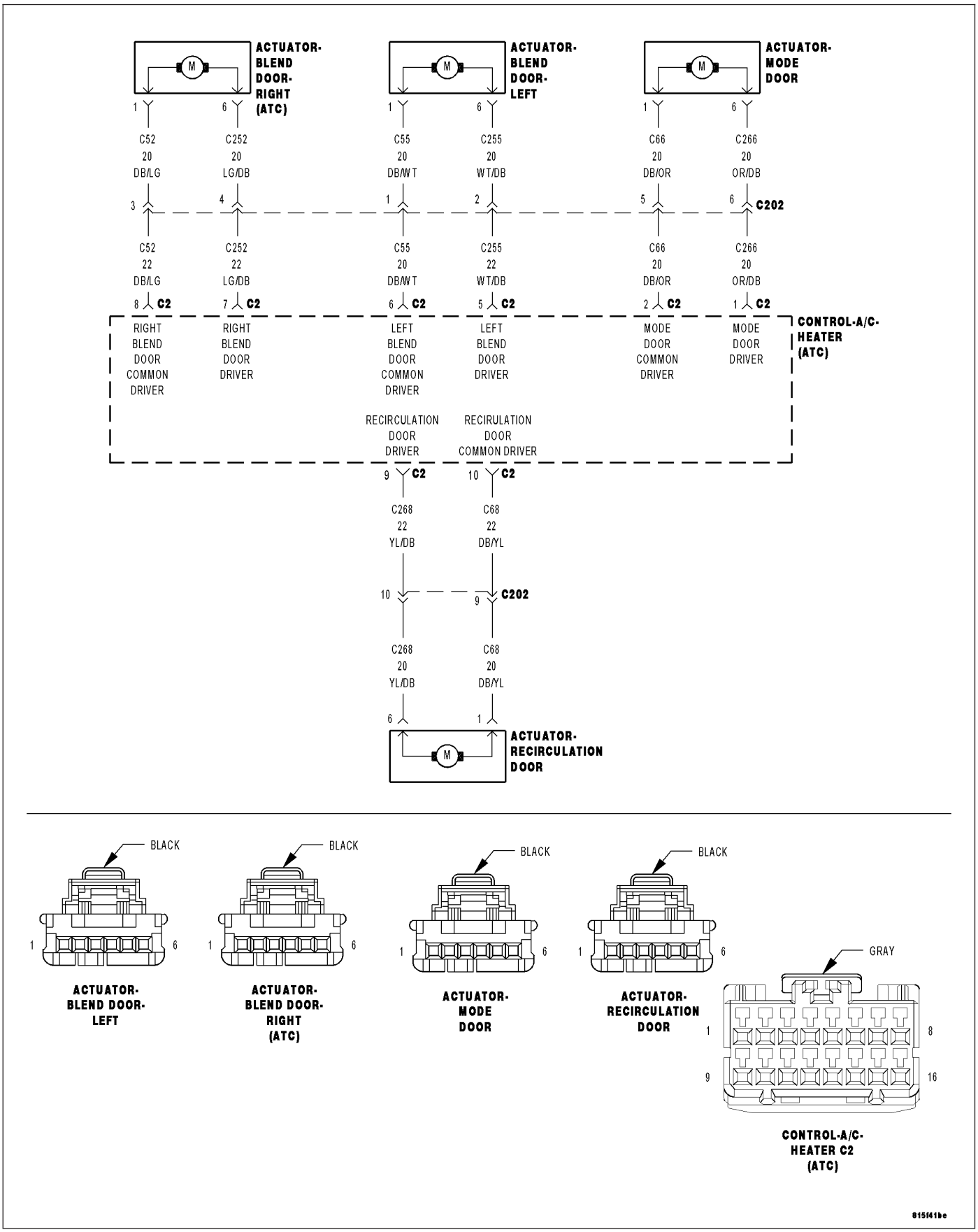

For a complete wiring diagram **Refer to Section 8W**.

- **When Monitored:**
  When actuator movement is requested.
- **Set Condition:**
  If the (C255) Left Blend Door Driver circuit or the (C55) Left Blend Door Common Driver circuit is open.

Possible Causes
(C255) LEFT BLEND DOOR DRIVER CIRCUIT OPEN
(C55) LEFT BLEND DOOR COMMON DRIVER CIRCUIT OPEN
LEFT BLEND DOOR ACTUATOR
A/C HEATER CONTROL

Diagnostic Test

1. CHECK FOR ACTIVE CONTROL CIRCUIT/PERFORMANCE DTCs

Turn the ignition on.

With the scan tool, read active HVAC DTCs.

Does the scan tool display any active: XXXX CONTROL CIRCUIT/PERFORMANCE DTCs?

Yes >> Diagnose and repair the DTC(s). Refer to the Table of Contents in this Section for a complete list of all HVAC related symptoms.

No >> Go To 2

2. CHECK THE LEFT BLEND DOOR ACTUATOR CIRCUIT RESISTANCE

Turn the ignition off.

Disconnect the A/C Heater Control C2 harness connector.

Measure the resistance between the (C255) Left Blend Door Driver circuit and the (C55) Left Blend Door Common Driver circuit in the A/C Heater Control C2 harness connector.

Is the resistance above 70.0 ohms?

Yes >> Go To 3

No >> Replace the A/C Heater Control in accordance with the Service Information.

Perform BODY VERIFICATION TEST – VER 1. (Refer to 8 - ELECTRICAL/ELECTRONIC CONTROL MODULES/ FRONT CONTROL MODULE - DIAGNOSIS AND TESTING).

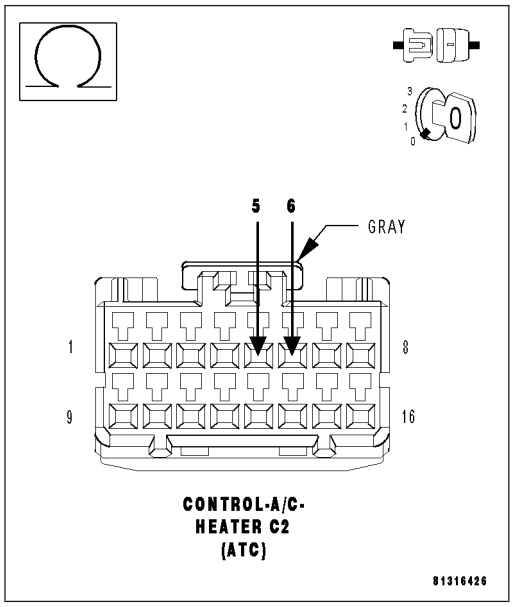

3. CHECK THE (C255) LEFT BLEND DOOR DRIVER CIRCUIT FOR AN OPEN

Disconnect the Left Blend Door Actuator harness connector.

Measure the resistance of the (C255) Left Blend Door Driver circuit between the Left Blend Door Actuator harness connector and the A/C Heater Control C2 harness connector.

Is the resistance below 5.0 ohms?

Yes >> Go To 4

No >> Repair the (C255) Left Blend Door Driver circuit for an open.

Perform BODY VERIFICATION TEST – VER 1. (Refer to 8 - ELECTRICAL/ELECTRONIC CONTROL MODULES/ FRONT CONTROL MODULE - DIAGNOSIS AND TESTING).

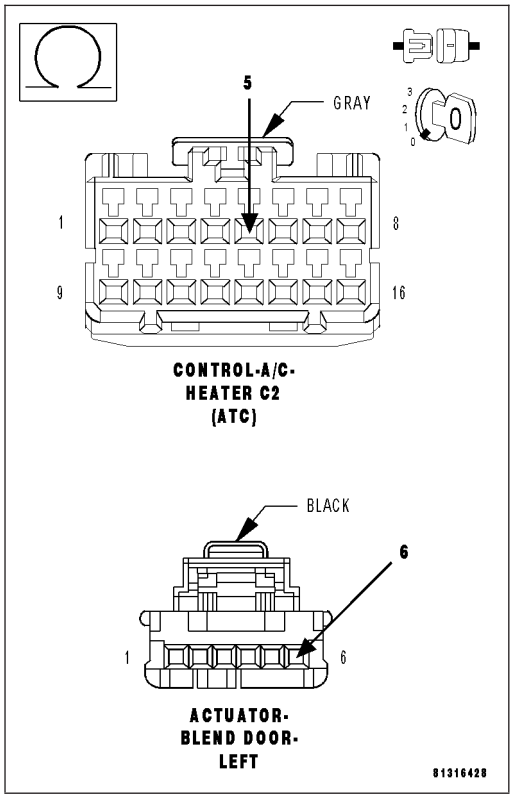

4. CHECK THE (C55) LEFT BLEND DOOR COMMON DRIVER CIRCUIT FOR AN OPEN

Measure the resistance of the (C55) Left Blend Door Common Driver circuit between the Left Blend Door Actuator harness connector and the A/C Heater Control C2 harness connector.

Is the resistance below 5.0 ohms?

Yes >> Replace the Left Blend Door Actuator in accordance with the Service Information.

Perform BODY VERIFICATION TEST – VER 1. (Refer to 8 - ELECTRICAL/ELECTRONIC CONTROL MODULES/ FRONT CONTROL MODULE - DIAGNOSIS AND TESTING).

No >> Repair the (C55) Left Blend Door Common Driver circuit for an open.

Perform BODY VERIFICATION TEST – VER 1. (Refer to 8 - ELECTRICAL/ELECTRONIC CONTROL MODULES/ FRONT CONTROL MODULE - DIAGNOSIS AND TESTING).

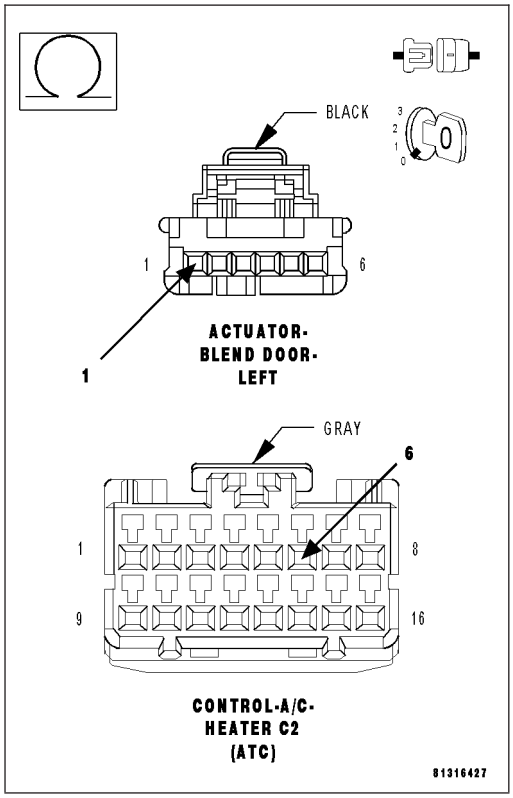

B10A6–LEFT BLEND DOOR TRAVEL TOO SMALL (ATC)

For a complete wiring diagram **Refer to Section 8W**.

Theory of Operation

The A/C Heater Control calibrates each actuator individually. Automatic calibration occurs upon power up after installing a new A/C Heater Control. Manual calibration occurs by sending a command with the scan tool. The purpose of actuator calibration is to determine the total span of door travel between physical stops. To calibrate the actuator, the A/C Heater Control first moves the door to its soft stop, and then counts the number of pulses it takes to move the door to its other stop. An expected range of span is stored in the control's memory. If the measured calibration value is less than the expected range for this actuator, this DTC will set. Note that the control clears all stored calibration faults at the beginning of the calibration procedure.

- **When Monitored:**
  During actuator calibration.
- **Set Condition:**
  If the total span of the Left Blend Door is less than the low range limit.

Possible Causes
DOOR DRIVER ELECTRICAL CIRCUIT(S)
LEFT BLEND DOOR SEIZED, BINDING, OBSTRUCTED
LEFT BLEND DOOR ACTUATOR
A/C HEATER CONTROL

Diagnostic Test

1. CHECK FOR ACTIVE CONTROL CIRCUIT/PERFORMANCE & CONTROL CIRCUIT OPEN DTCs

Turn the ignition on.

With the scan tool, read active HVAC DTCs.

Does the scan tool display any active: XXXX CONTROL CIRCUIT/PERFORMANCE or XXXX CONTROL CIRCUIT OPEN DTCs?

Yes >> Diagnose and repair the DTC(s). If present, diagnose and repair all Control Circuit/Performance DTCs before diagnosing Control Circuit Open DTCs. Refer to the Table of Contents in this Section for a complete list of all HVAC related symptoms.

No >> Go To 2

2. INSPECT ACTUATOR & HOUSING ASSEMBLY FOR A CONDITION CAUSING THE LEFT BLEND DOOR TO SEIZE OR BIND

Turn the ignition off.

Inspect the actuator, linkage, and housing assembly for a condition causing the left blend door to seize or bind.

Are there any physical or mechanical problems with the door, housing, linkage, or actuator?

Yes >> Repair as necessary in accordance with the Service Information.
Perform BODY VERIFICATION TEST – VER 1. (Refer to 8 - ELECTRICAL/ELECTRONIC CONTROL MODULES/FRONT CONTROL MODULE - DIAGNOSIS AND TESTING).

No >> Go To 3

3. CHECK LEFT BLEND DOOR TRAVEL

Remove the Left Blend Door Actuator from the A/C Heater Housing Assembly.

By hand, attempt to rotate the door in both directions. The door should operate smoothly in both directions over the entire span of travel (approximately 190 degrees).

Does the door operate smoothly in both directions over the entire span of travel?

Yes >> Replace the Left Blend Door Actuator in accordance with the Service Information. Then, Go To 4.

No >> Repair as necessary in accordance with the Service Information.
Perform BODY VERIFICATION TEST – VER 1. (Refer to 8 - ELECTRICAL/ELECTRONIC CONTROL MODULES/FRONT CONTROL MODULE - DIAGNOSIS AND TESTING).

4. RUN THE ACTUATOR CALIBRATION TEST

Turn the ignition on.

With the scan tool, select System Tests and then select Actuator Calibration Test. When the test is complete, select View DTCs.

Does the scan tool display: B10A6–LEFT BLEND DOOR TRAVEL RANGE TOO SMALL?

Yes >> Replace the A/C Heater Control in accordance with the Service Information.
Perform BODY VERIFICATION TEST – VER 1. (Refer to 8 - ELECTRICAL/ELECTRONIC CONTROL MODULES/FRONT CONTROL MODULE - DIAGNOSIS AND TESTING).

No >> Perform BODY VERIFICATION TEST – VER 1. (Refer to 8 - ELECTRICAL/ELECTRONIC CONTROL MODULES/FRONT CONTROL MODULE - DIAGNOSIS AND TESTING).

B10A7–LEFT BLEND DOOR TRAVEL TOO LARGE (ATC)

For a complete wiring diagram **Refer to Section 8W**.

Theory of Operation

The A/C Heater Control calibrates each actuator individually. Automatic calibration occurs upon power up after installing a new A/C Heater Control. Manual calibration occurs by sending a command with the scan tool. The purpose of actuator calibration is to determine the total span of door travel between physical stops. To calibrate the actuator, the A/C Heater Control first moves the door to its soft stop, and then counts the number of pulses it takes to move the door to its other stop. An expected range of span is stored in the control's memory. If the measured calibration value exceeds the expected range for this actuator, this DTC will set. Note that the control clears all stored calibration faults at the beginning of the calibration procedure.

- **When Monitored:**
  During actuator calibration.
- **Set Condition:**
  If the total span of the Left Blend Door exceeds the high range limit.

Possible Causes
DOOR DRIVER ELECTRICAL CIRCUIT(S)
LEFT BLEND DOOR OR A/C HEATER HOUSING COMPONENTS WARPED, WORN, DAMAGED, MISSING, BROKEN
LEFT BLEND DOOR ACTUATOR
A/C HEATER CONTROL

Diagnostic Test

1. CHECK FOR ACTIVE CONTROL CIRCUIT/PERFORMANCE & CONTROL CIRCUIT OPEN DTCs

Turn the ignition on.

With the scan tool, read active HVAC DTCs.

Does the scan tool display any active: XXXX CONTROL CIRCUIT/PERFORMANCE or XXXX CONTROL CIRCUIT OPEN DTCs?

Yes >> Diagnose and repair the DTC(s). If present, diagnose and repair all Control Circuit/Performance DTCs before diagnosing Control Circuit Open DTCs. Refer to the Table of Contents in this Section for a complete list of all HVAC related symptoms.

No >> Go To 2

2. CHECK FOR A BROKEN LEFT BLEND DOOR ACTUATOR

Turn the ignition off.

Remove the Left Blend Door Actuator from the A/C Heater Housing Assembly.

By hand, attempt to rotate the actuator in both directions.

Does the actuator turn in either direction?

Yes >> Replace the Left Blend Door Actuator in accordance with the Service Information.
Perform BODY VERIFICATION TEST – VER 1. (Refer to 8 - ELECTRICAL/ELECTRONIC CONTROL MODULES/FRONT CONTROL MODULE - DIAGNOSIS AND TESTING).

No >> Go To 3

3. CHECK THE LEFT BLEND DOOR & A/C HEATER HOUSING FOR WARPED, WORN, DAMAGED, MISSING, & BROKEN COMPONENTS

Inspect for excessively worn, disconnected, missing, or broken door linkage. Inspect for a damaged or broken A/C Heater Housing Assembly. Inspect for a warped or broken door, and missing door seals. Rotate the door from stop to stop. The door should rotate approximately 190 degrees.

Are there any physical or mechanical problems with the door or housing?

Yes >> Repair as necessary in accordance with the Service Information.
Perform BODY VERIFICATION TEST – VER 1. (Refer to 8 - ELECTRICAL/ELECTRONIC CONTROL MODULES/FRONT CONTROL MODULE - DIAGNOSIS AND TESTING).

No >> Replace the Left Blend Door Actuator in accordance with the Service Information. Then, Go To 4.

4. RUN THE ACTUATOR THE CALIBRATION TEST

Turn the ignition on.

With the scan tool, select System Tests and then select Actuator Calibration Test. When the test is complete, select View DTCs.

Does the scan tool display: B10A7–LEFT BLEND DOOR TRAVEL RANGE TOO LARGE?

Yes >> Replace the A/C Heater Control in accordance with the Service Information.
Perform BODY VERIFICATION TEST – VER 1. (Refer to 8 - ELECTRICAL/ELECTRONIC CONTROL MODULES/FRONT CONTROL MODULE - DIAGNOSIS AND TESTING).

No >> Perform BODY VERIFICATION TEST – VER 1. (Refer to 8 - ELECTRICAL/ELECTRONIC CONTROL MODULES/FRONT CONTROL MODULE - DIAGNOSIS AND TESTING).

B10A8–LEFT BLEND DOOR ACTUATOR PERFORMANCE (ATC)

For a complete wiring diagram **Refer to Section 8W**.

Theory of Operation

The A/C Heater Control monitors the door driver circuits during actuator operation for conditions that prevent proper door operation. If a pulse count error is detected the A/C Heater Control reports the fault as a Actuator Performance DTC. It is important to note that this DTC only indicates that a fault occurred while driving a door actuator and that additional testing is necessary to provide more details about the reported fault.

- **When Monitored:**
  When actuator movement is requested.
- **Set Condition:**
  If the A/C Heater Control detects a pulse count error while attempting to drive this door actuator.

Possible Causes
DOOR DRIVER CIRCUIT(S) SHORTED HIGH, SHORTED LOW, SHORTED TOGETHER, OPEN
DOOR ACTUATOR(S) BINDING, BROKEN
DOOR ACTUATOR(S) LINKAGE BINDING, DISCONNECTED, MISSING, BROKEN
A/C HEATER CONTROL

Diagnostic Test

1. CHECK FOR ACTIVE CONTROL CIRCUIT/PERFORMANCE & CONTROL CIRCUIT OPEN DTCs

Turn the ignition on.

With the scan tool, read active HVAC DTCs.

Does the scan tool display any active: XXXX CONTROL CIRCUIT/PERFORMANCE or XXXX CONTROL CIRCUIT OPEN DTCs?

Yes >> Diagnose and repair the DTC(s). Refer to the Table of Contents in this Section for a complete list of all HVAC related symptoms.

No >> Go To 2

2. RUN ACTUATOR CALIBRATION TEST

With the scan tool, select System Tests and then select Actuator Calibration Test. When the test is complete, select View DTCs.

Does the scan tool display any DTCs?

Yes >> Diagnose and repair the DTC(s). Refer to the Table of Contents in this Section for a complete list of all HVAC related symptoms.

No >> Go To 3

3. CHECK MODE, BLEND & RECIRCULATION DOOR OPERATION

Start the engine.

Set the blower to high speed.

Verify that air flows from the correct vents while setting the Mode control to the Panel position, the Bilvel position, the Floor/Defrost position, and the Defrost position. Then, repeat in the opposite direction.

Set the Mode control to the Panel position.

Set the Driver Blend control to the full cold position.

Set the Passenger Blend control the full cold position.

Verify that the airflow air temperature changes while setting the Driver Blend control to the full hot position. Then, repeat in the opposite direction.

Verify that the airflow air temperature changes while setting the Passenger Blend control to the full hot position. Then, repeat in the opposite direction.

Set the Mode control to any position between Floor and Panel.

Press the Recirc function on. Verify that the sound of the airflow gets louder as the recirculation door opens to bring in recirculated air.

Press the Recirc function off. Verify that the sound of the airflow gets softer as the recirculation door closes to bring in fresh air.

Does each door operate properly?

Yes >> The condition causing the fault has cleared at this time.

Perform BODY VERIFICATION TEST – VER 1. (Refer to 8 - ELECTRICAL/ELECTRONIC CONTROL MODULES/FRONT CONTROL MODULE - DIAGNOSIS AND TESTING).

No >> Remove the door actuator of the affected door from the A/C Heater Housing Assembly. By hand, attempt to rotate the actuator in both directions. Inspect the A/C Heater Housing for damage, for disconnected, missing, or broken linkage, and for broken or binding doors. Repair as necessary in accordance with the Service Information.

Perform BODY VERIFICATION TEST – VER 1. (Refer to 8 - ELECTRICAL/ELECTRONIC CONTROL MODULES/FRONT CONTROL MODULE - DIAGNOSIS AND TESTING).

B10A9–RIGHT BLEND DOOR CONTROL CIRCUIT/PERFORMANCE (ATC)

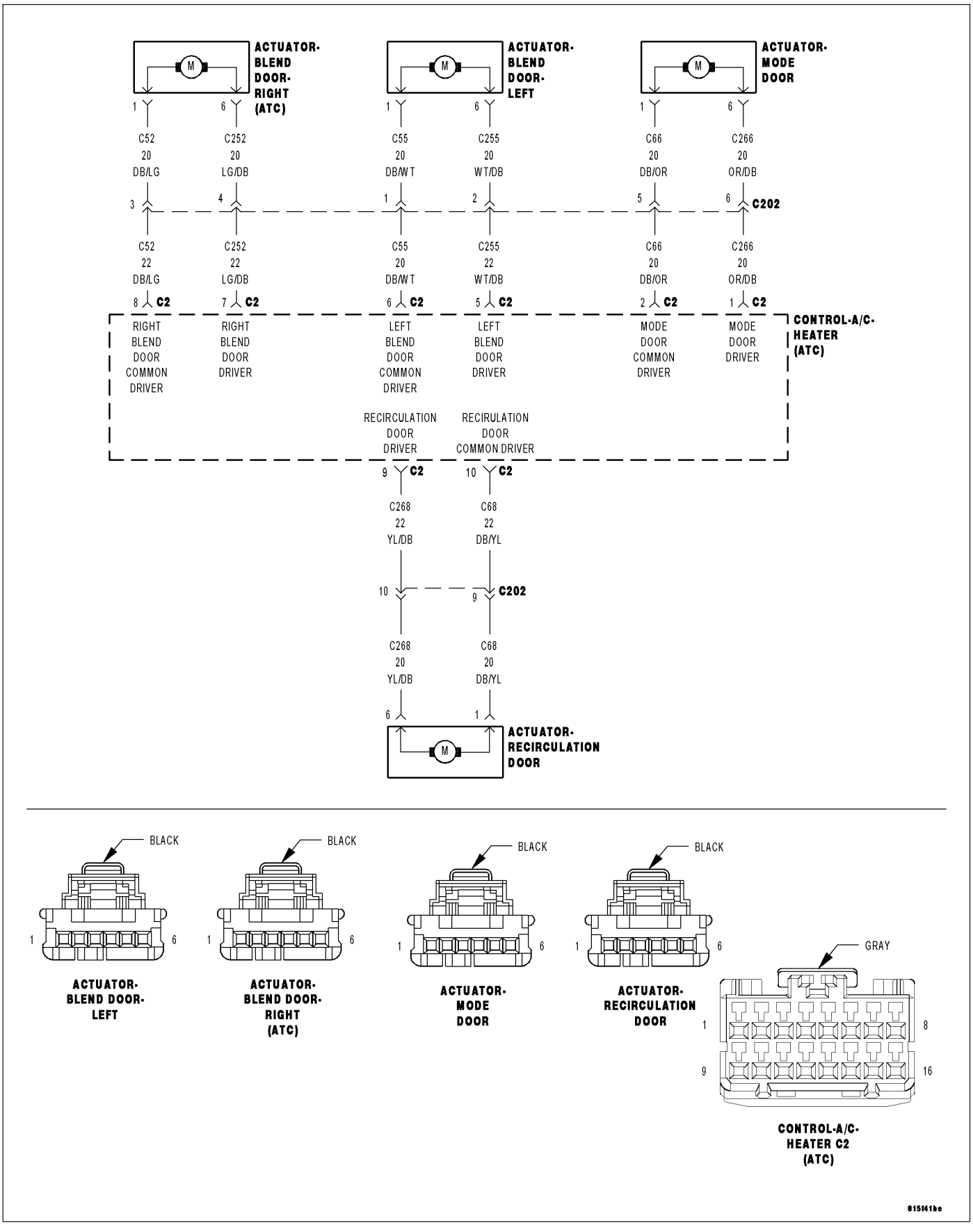

815f41be

For a complete wiring diagram **Refer to Section 8W**.

Theory of Operation

The A/C Heater Control monitors the door driver circuits during actuator operation for shorts to ground, shorts to battery, and shorts to other door driver circuits. If detected, the A/C Heater Control reports these types of faults as Control Circuit/Performance DTCs.

- **When Monitored:**
  When actuator movement is requested.
- **Set Condition:**
  If the A/C Heater Control detects an excessive current draw on any of the door driver circuits while attempting to drive this door actuator.

Possible Causes
DOOR DRIVER CIRCUIT(S) SHORTED TO VOLTAGE
DOOR DRIVER CIRCUIT(S) SHORTED TO GROUND
DOOR DRIVER CIRCUITS SHORTED TOGETHER
DOOR ACTUATOR(S)
A/C HEATER CONTROL

NOTE: This DTC must be active for the results of this test to be valid. Do not perform this test if this DTC is stored. Refer to HVAC System Test (ATC) for stored DTC test procedures.

Diagnostic Test

1. CHECK THE DOOR DRIVER CIRCUITS FOR A SHORT TO VOLTAGE

Turn the ignition off.

Disconnect the A/C Heater Control C2 harness connector.

Turn the ignition on.

Measure the voltage of the (C266) Mode Door Driver circuit, the (C66) Mode Door Common Driver circuit, the (C255) Left Blend Door Driver circuit, the (C55) Left Blend Door Common Driver circuit, the (C252) Right Blend Door Driver circuit, the (C52) Right Blend Door Common Driver circuit, the (C268) Recirculation Door Driver circuit, and the (C68) Recirculation Door Common Driver circuit.

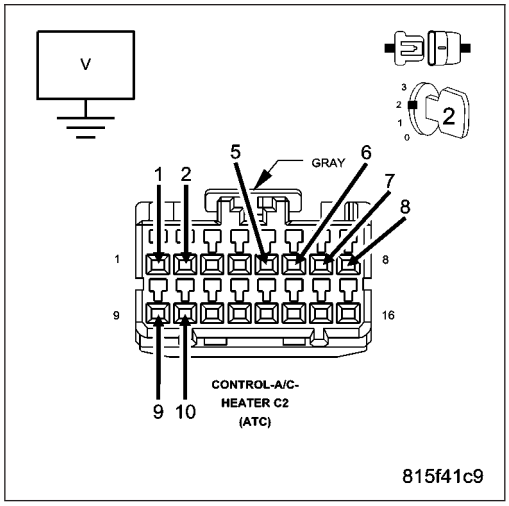

Is the voltage above 0.2 volts on any of the circuits?

Yes >> Repair all circuits with voltage above 0.2 volts for a short to voltage.
Perform BODY VERIFICATION TEST – VER 1. (Refer to 8 - ELECTRICAL/ELECTRONIC CONTROL MODULES/ FRONT CONTROL MODULE - DIAGNOSIS AND TESTING).

No >> Go To 2

2. CHECK THE DOOR DRIVER CIRCUITS FOR A SHORT TO GROUND

Turn the ignition off.

Measure the resistance of the (C266) Mode Door Driver circuit, the (C66) Mode Door Common Driver circuit, the (C255) Left Blend Door Driver circuit, the (C55) Left Blend Door Common Driver circuit, the (C252) Right Blend Door Driver circuit, the (C52) Right Blend Door Common Driver circuit, the (C268) Recirculation Door Driver circuit, and the (C68) Recirculation Door Common Driver circuit between ground and the A/C Heater Control C2 harness connector.

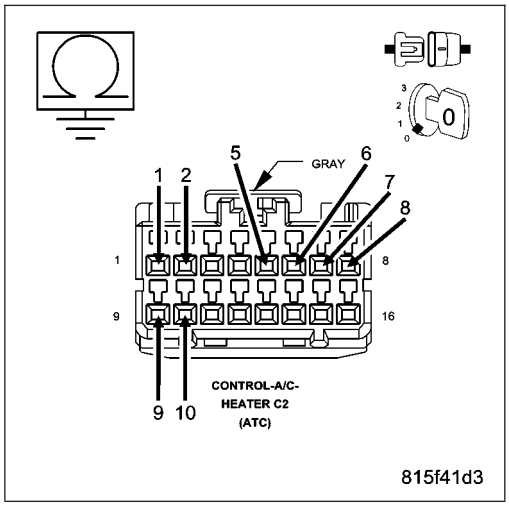

Is the resistance below 10k ohms on any of the circuits?

Yes >> Repair all circuits with a resistance below 10k ohms for a short to ground.

Perform BODY VERIFICATION TEST – VER 1. (Refer to 8 - ELECTRICAL/ELECTRONIC CONTROL MODULES/ FRONT CONTROL MODULE - DIAGNOSIS AND TESTING).

No >> Go To 3

3. CHECK THE (C266) MODE DOOR DRIVER CIRCUIT FOR A SHORT TO THE (C255) LEFT BLEND DOOR DRIVER CIRCUIT, THE (C55) LEFT BLEND DOOR COMMON DRIVER CIRCUIT, THE (C252) RIGHT BLEND DOOR DRIVER CIRCUIT, THE (C52) RIGHT BLEND DOOR COMMON DRIVER CIRCUIT, THE (C268) RECIRCULATION DOOR DRIVER CIRCUIT, & THE (C68) RECIRCULATION DOOR COMMON DRIVER CIRCUIT

Measure the resistance between the (C266) Mode Door Driver circuit and the (C255) Left Blend Door Driver circuit, the (C55) Left Blend Door Common Driver circuit, the (C252) Right Blend Door Driver circuit, the (C52) Right Blend Door Common Driver circuit, the (C268) Recirculation Door Driver circuit, and the (C68) Recirculation Door Common Driver circuit.

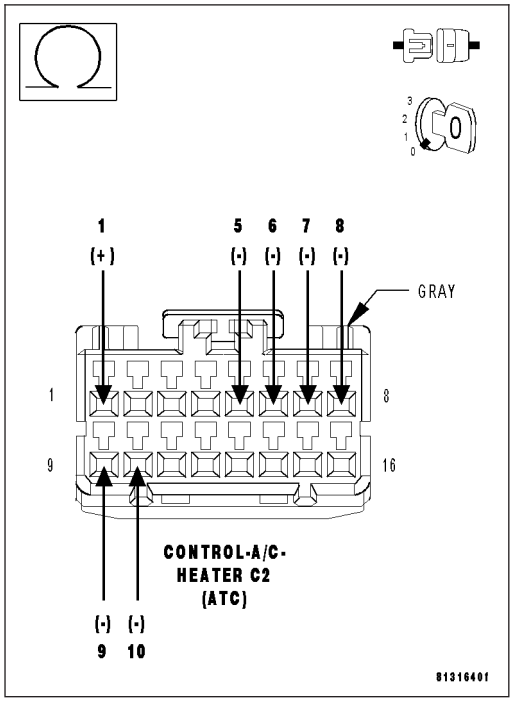

Is the resistance below 10k ohms on any of the circuits?

Yes >> Repair all circuits with a resistance below 10k ohms for a short to the (C266) Mode Door Driver circuit.

Perform BODY VERIFICATION TEST – VER 1. (Refer to 8 - ELECTRICAL/ELECTRONIC CONTROL MODULES/ FRONT CONTROL MODULE - DIAGNOSIS AND TESTING).

No >> Go To 4

4. CHECK THE (C66) MODE DOOR COMMON DRIVER CIRCUIT FOR A SHORT TO THE (C255) LEFT BLEND DOOR DRIVER CIRCUIT, THE (C55) LEFT BLEND DOOR COMMON DRIVER CIRCUIT, THE (C252) RIGHT BLEND DOOR DRIVER CIRCUIT, THE (C52) RIGHT BLEND DOOR COMMON DRIVER CIRCUIT, THE (C268) RECIRCULATION DOOR DRIVER CIRCUIT, & THE (C68) RECIRCULATION DOOR COMMON DRIVER CIRCUIT

Measure the resistance between the (C66) Mode Door Common Driver circuit and the (C255) Left Blend Door Driver circuit, the (C55) Left Blend Door Common Driver circuit, the (C252) Right Blend Door Driver circuit, the (C52) Right Blend Door Common Driver circuit, the (C268) Recirculation Door Driver circuit, and the (C68) Recirculation Door Common Driver circuit.

Is the resistance below 10k ohms on any of the circuits?

Yes >> Repair all circuits with a resistance below 10k ohms for a short to the (C66) Mode Door Common Driver circuit.

Perform BODY VERIFICATION TEST – VER 1. (Refer to 8 - ELECTRICAL/ELECTRONIC CONTROL MODULES/ FRONT CONTROL MODULE - DIAGNOSIS AND TESTING).

No >> Go To 5

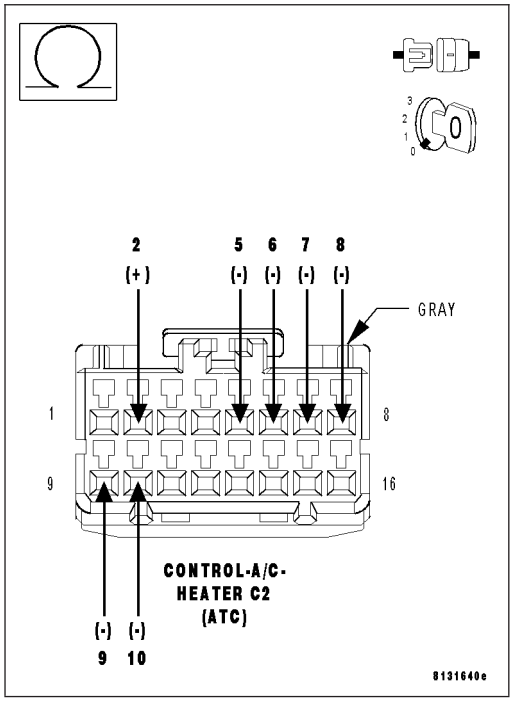

5. CHECK THE (C255) LEFT BLEND DOOR DRIVER CIRCUIT FOR A SHORT TO THE (C252) RIGHT BLEND DOOR DRIVER CIRCUIT, THE (C52) RIGHT BLEND DOOR COMMON DRIVER CIRCUIT, THE (C268) RECIRCULATION DOOR DRIVER CIRCUIT, & THE (C68) RECIRCULATION DOOR COMMON DRIVER CIRCUIT

Measure the resistance between the (C255) Left Blend Door Driver circuit and the (C252) Right Blend Door Driver circuit, the (C52) Right Blend Door Common Driver circuit, the (C268) Recirculation Door Driver circuit, and the (C68) Recirculation Door Common Driver circuit.

Is the resistance below 10k ohms on any of the circuits?

Yes >> Repair all circuits with a resistance below 10k ohms for a short to (C255) Left Blend Door Driver circuit.

Perform BODY VERIFICATION TEST – VER 1. (Refer to 8 - ELECTRICAL/ELECTRONIC CONTROL MODULES/ FRONT CONTROL MODULE - DIAGNOSIS AND TESTING).

No >> Go To 6

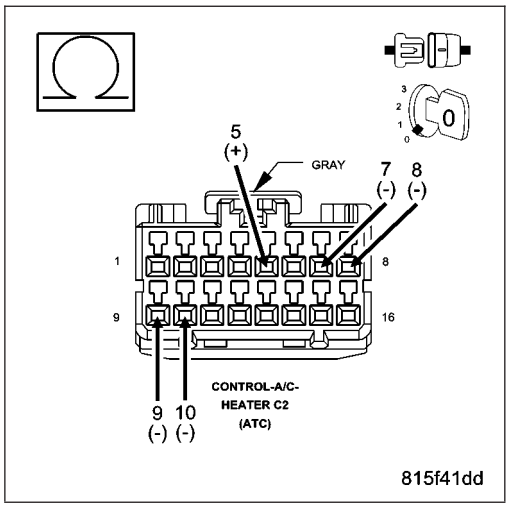

6. CHECK THE (C55) LEFT BLEND DOOR COMMON DRIVER CIRCUIT FOR A SHORT TO THE (C252) RIGHT BLEND DOOR DRIVER CIRCUIT, THE (C52) RIGHT BLEND DOOR COMMON DRIVER CIRCUIT, THE (C268) RECIRCULATION DOOR DRIVER CIRCUIT, & THE (C68) RECIRCULATION DOOR COMMON DRIVER CIRCUIT

Measure the resistance between the (C55) Left Blend Door Common Driver circuit and the (C252) Right Blend Door Driver circuit, the (C52) Right Blend Door Common Driver circuit, the (C268) Recirculation Door Driver circuit, and the (C68) Recirculation Door Common Driver circuit.

Is the resistance below 10k ohms on any of the circuits?

Yes >> Repair all circuits with a resistance below 10k ohms for a short to (C55) Left Blend Door Common Driver circuit.
Perform BODY VERIFICATION TEST – VER 1. (Refer to 8 - ELECTRICAL/ELECTRONIC CONTROL MODULES/ FRONT CONTROL MODULE - DIAGNOSIS AND TESTING).

No >> Go To 7

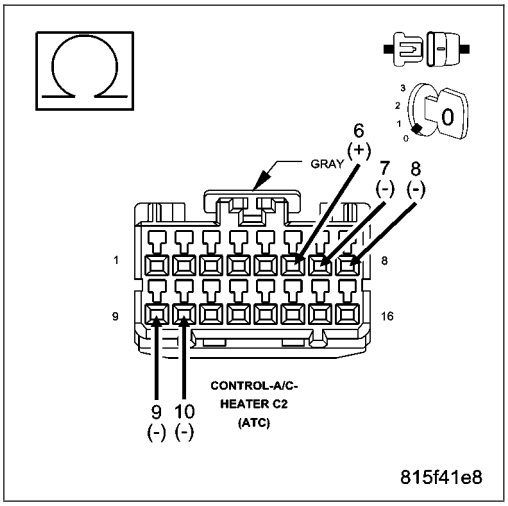

7. CHECK THE (C252) RIGHT BLEND DOOR DRIVER CIRCUIT FOR A SHORT TO THE (C268) RECIRCULATION DOOR DRIVER CIRCUIT & THE (C68) RECIRCULATION DOOR COMMON DRIVER CIRCUIT

Measure the resistance between the (C252) Right Blend Door Driver circuit and the (C268) Recirculation Door Driver circuit and the (C68) Recirculation Door Common Driver circuit.

Is the resistance below 10k ohms on any of the circuits?

Yes >> Repair all circuits with a resistance below 10k ohms for a short to the (C252) Right Blend Door Driver circuit.
Perform BODY VERIFICATION TEST – VER 1. (Refer to 8 - ELECTRICAL/ELECTRONIC CONTROL MODULES/ FRONT CONTROL MODULE - DIAGNOSIS AND TESTING).

No >> Go To 8

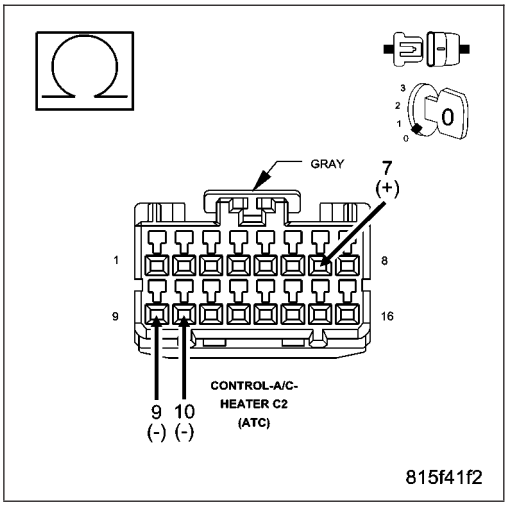

8. CHECK THE (C52) RIGHT BLEND DOOR COMMON DRIVER CIRCUIT FOR A SHORT TO THE (C268) RECIRCULATION DOOR DRIVER CIRCUIT & THE (C68) RECIRCULATION DOOR COMMON DRIVER CIRCUIT

Measure the resistance between the (C52) Right Blend Door Common Driver circuit and the (C268) Recirculation Door Driver circuit and the (C68) Recirculation Door Common Driver circuit.

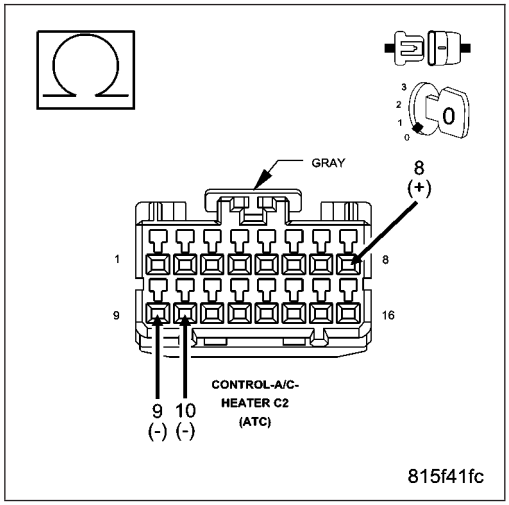

Is the resistance below 10k ohms on any of the circuits?

Yes >> Repair all circuits with a resistance below 10k ohms for a short to the (C52) Right Blend Door Common Driver circuit.
Perform BODY VERIFICATION TEST – VER 1. (Refer to 8 - ELECTRICAL/ELECTRONIC CONTROL MODULES/ FRONT CONTROL MODULE - DIAGNOSIS AND TESTING).

No >> Go To 9

9. CHECK THE MODE DOOR ACTUATOR CIRCUIT RESISTANCE

Measure the resistance between the (C266) Mode Door Driver circuit and the (C66) Mode Door Common Driver circuit in the A/C Heater Control C2 harness connector.

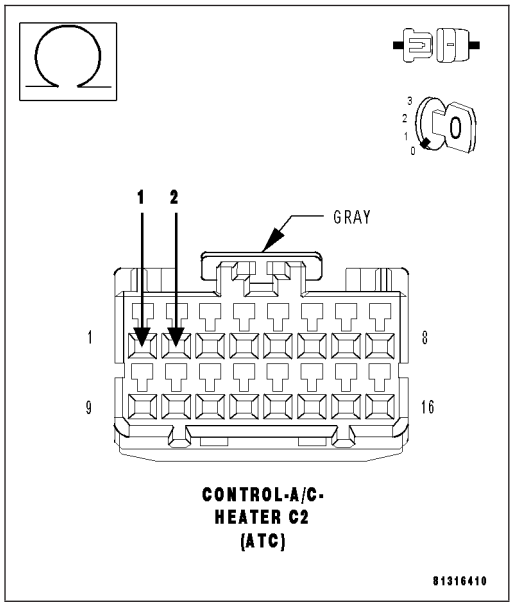

Is the resistance below 30.0 ohms?

Yes >> Go To 10

No >> Go To 11

10. CHECK THE (C266) MODE DOOR DRIVER CIRCUIT FOR A SHORT TO THE (C66) MODE DOOR COMMON DRIVER CIRCUIT

Disconnect the Mode Door Actuator harness connector.

Measure the resistance between the (C266) Mode Door Driver circuit and the (C66) Mode Door Common Driver circuit in the A/C Heater Control C2 harness connector.

Is the resistance below 10k ohms?

Yes >> Repair the (C266) Mode Door Driver circuit for a short to the (C66) Mode Door Common Driver circuit.

Perform BODY VERIFICATION TEST – VER 1. (Refer to 8 - ELECTRICAL/ELECTRONIC CONTROL MODULES/ FRONT CONTROL MODULE - DIAGNOSIS AND TESTING).

No >> Replace the Mode Door Actuator in accordance with the Service Information.

Perform BODY VERIFICATION TEST – VER 1. (Refer to 8 - ELECTRICAL/ELECTRONIC CONTROL MODULES/ FRONT CONTROL MODULE - DIAGNOSIS AND TESTING).

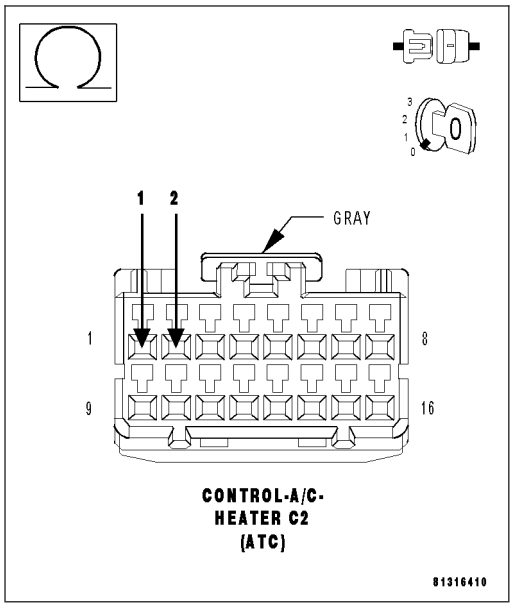

11. CHECK THE LEFT BLEND DOOR ACTUATOR CIRCUIT RESISTANCE

Measure the resistance between the (C255) Left Blend Door Driver circuit and the (C55) Left Blend Door Common Driver circuit in the A/C Heater Control C2 harness connector.

Is the resistance below 30.0 ohms?

Yes >> Go To 12

No >> Go To 13

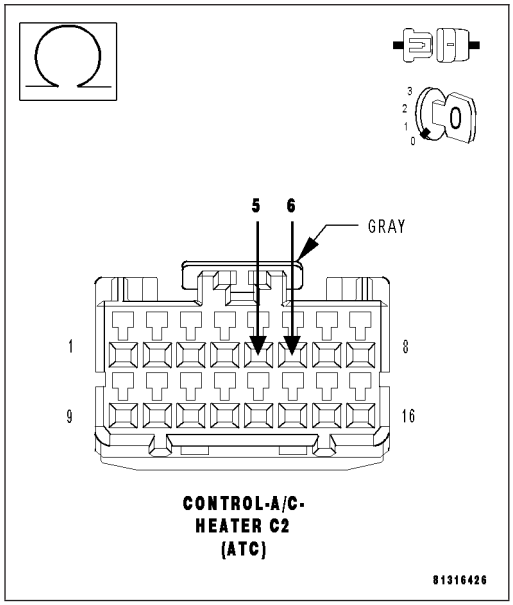

12. CHECK THE (C255) LEFT BLEND DOOR DRIVER CIRCUIT FOR A SHORT TO THE (C55) LEFT BLEND DOOR COMMON DRIVER CIRCUIT

Disconnect the Left Blend Door Actuator harness connector.

Measure the resistance between the (C255) Left Blend Door Driver circuit and the (C55) Left Blend Door Common Driver circuit in the A/C Heater Control C2 harness connector.

Is the resistance below 10k ohms?

Yes >> Repair the (C255) Left Blend Door Driver circuit for a short to the (C55) Left Blend Door Common Driver circuit.

Perform BODY VERIFICATION TEST – VER 1. (Refer to 8 - ELECTRICAL/ELECTRONIC CONTROL MODULES/ FRONT CONTROL MODULE - DIAGNOSIS AND TESTING).

No >> Replace the Left Blend Door Actuator in accordance with the Service Information.

Perform BODY VERIFICATION TEST – VER 1. (Refer to 8 - ELECTRICAL/ELECTRONIC CONTROL MODULES/ FRONT CONTROL MODULE - DIAGNOSIS AND TESTING).

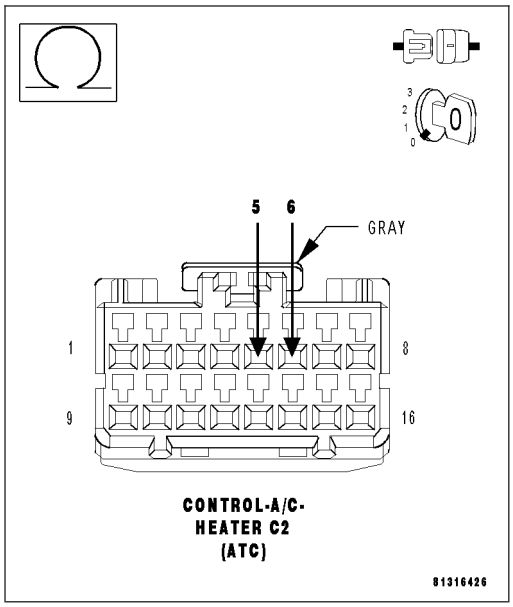

13. CHECK THE RIGHT BLEND DOOR ACTUATOR CIRCUIT RESISTANCE

Measure the resistance between the (C252) Right Blend Door Driver circuit and the (C52) Right Blend Door Common Driver circuit in the A/C Heater Control C2 harness connector.

Is the resistance below 30.0 ohms?

Yes >> Go To 14

No >> Go To 15

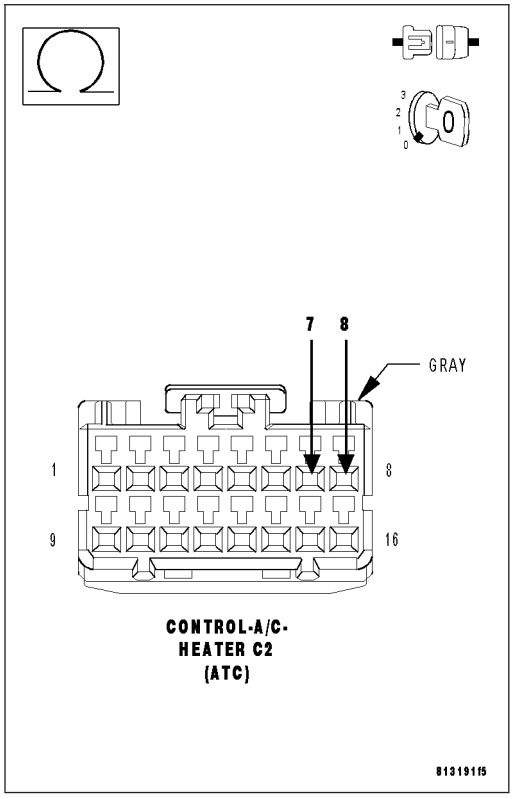

14. CHECK THE (C252) RIGHT BLEND DOOR DRIVER CIRCUIT FOR A SHORT TO THE (C52) RIGHT BLEND DOOR COMMON DRIVER CIRCUIT

Disconnect the Right Blend Door Actuator harness connector.

Measure the resistance between the (C252) Right Blend Door Driver circuit and the (C52) Right Blend Door Common Driver circuit in the A/C Heater Control C2 harness connector.

Is the resistance below 10k ohms?

Yes >> Repair the (C252) Right Blend Door Driver circuit for a short to the (C52) Right Blend Door Common Driver circuit.
Perform BODY VERIFICATION TEST – VER 1. (Refer to 8 - ELECTRICAL/ELECTRONIC CONTROL MODULES/ FRONT CONTROL MODULE - DIAGNOSIS AND TESTING).

No >> Replace the Right Blend Door Actuator in accordance with the Service Information.
Perform BODY VERIFICATION TEST – VER 1. (Refer to 8 - ELECTRICAL/ELECTRONIC CONTROL MODULES/ FRONT CONTROL MODULE - DIAGNOSIS AND TESTING).

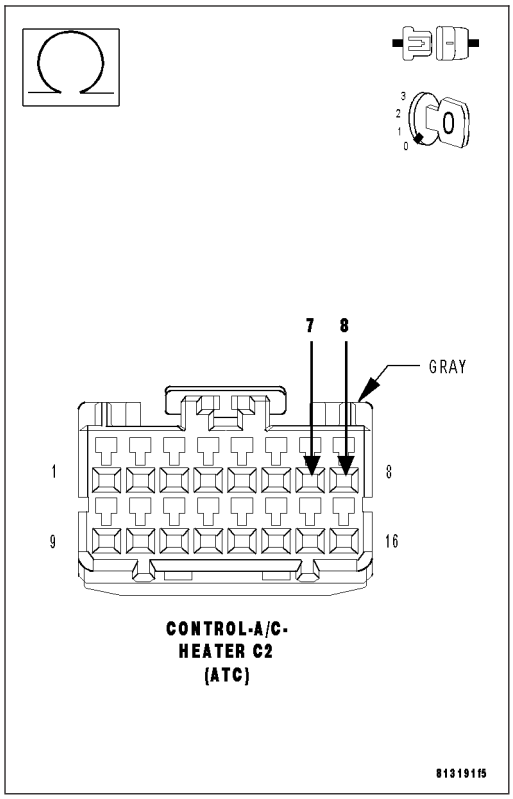

15. CHECK THE RECIRCULATION DOOR ACTUATOR CIRCUIT RESISTANCE

Measure the resistance between the (C268) Recirculation Door Driver circuit and the (C68) Recirculation Door Common Driver circuit in the A/C Heater Control C2 harness connector.

Is the resistance below 30.0 ohms?

Yes >> Go To 16

No >> Go To 17

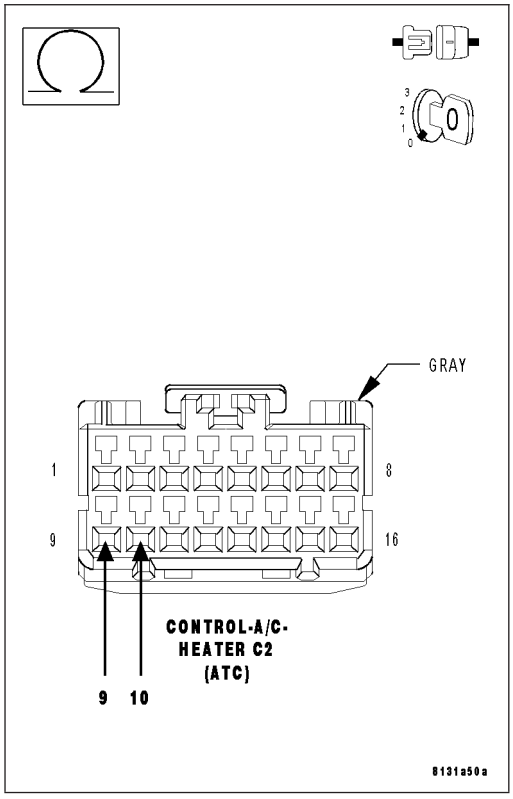

16. CHECK THE (C268) RECIRCULATION DOOR DRIVER CIRCUIT FOR A SHORT TO THE (C68) RECIRCULATION DOOR COMMON DRIVER CIRCUIT

Disconnect the Recirculation Door Actuator harness connector.

Measure the resistance between the (C268) Recirculation Door Driver circuit and the (C68) Recirculation Door Common Driver circuit in the A/C Heater Control C2 harness connector.

Is the resistance below 10k ohms?

Yes >> Repair the (C268) Recirculation Door Driver circuit for a short to the (C68) Recirculation Door Common Driver circuit.

Perform BODY VERIFICATION TEST – VER 1. (Refer to 8 - ELECTRICAL/ELECTRONIC CONTROL MODULES/FRONT CONTROL MODULE - DIAGNOSIS AND TESTING).

No >> Replace the Recirculation Door Actuator in accordance with the Service Information.

Perform BODY VERIFICATION TEST – VER 1. (Refer to 8 - ELECTRICAL/ELECTRONIC CONTROL MODULES/FRONT CONTROL MODULE - DIAGNOSIS AND TESTING).

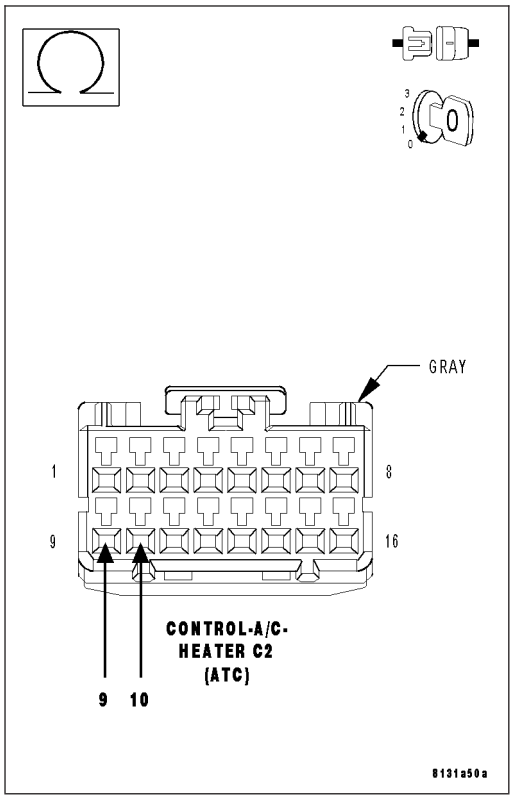

17. RUN THE ACTUATOR CALIBRATION TEST

Reconnect the A/C Heater Control C2 harness connector.

Reconnect the all of the Door Actuator harness connectors.

Turn the ignition on.

With the scan tool, erase HVAC DTCs.

Turn the ignition off, wait 10 seconds, and then turn the ignition on.

With the scan tool, select System Tests and then select Actuator Calibration Test. When the test is complete, select View DTCs.

Does the scan tool only display: B10A9–RIGHT BLEND DOOR CONTROL CIRCUIT/PERFORMANCE?

Yes >> Replace the A/C Heater Control in accordance with the Service Information.

Perform BODY VERIFICATION TEST – VER 1. (Refer to 8 - ELECTRICAL/ELECTRONIC CONTROL MODULES/FRONT CONTROL MODULE - DIAGNOSIS AND TESTING).

No, Other DTC(s) Displayed

Diagnose and repair the other DTC(s). Refer to the Table of Contents in this Section for a complete list of all HVAC related symptoms.

No, And No Other DTCs Displayed

Using the wiring diagram as a guide, inspect the wiring and connectors for conditions causing an intermittent short. Repair as necessary.

Perform BODY VERIFICATION TEST – VER 1. (Refer to 8 - ELECTRICAL/ELECTRONIC CONTROL MODULES/FRONT CONTROL MODULE - DIAGNOSIS AND TESTING).

B10B2–A/C COOL DOWN TEST PERFORMANCE (ATC)

For a complete wiring diagram **Refer to Section 8W**.

- **When Monitored:**
  When the Cooldown Test is executed.
- **Set Condition:**
  If the A/C system is unable to lower the evaporator temperature 11.11°C (20°F) within two minutes.

Possible Causes
PREREQUISITES NOT MET BEFORE RUNNING THE TEST
ANOTHER RELATED SYSTEM NOT FUNCTIONING CORRECTLY
POWERTRAIN SYSTEM FAULTS PRESENT

Diagnostic Test

1. VERIFY THAT ALL OF THE COOLDOWN TEST PREREQUISITES WERE MET

Review the list of Cooldown Test prerequisites.

- **DTCs B1031 and B1032 must not be active.**
- **The refrigerant system must be adequately charged.**
- **The blower motor must operate correctly in all speeds.**
- **The work area ambient temperature must be above 18.3°C (65°F).**
- **The evaporator temperature must be above 18.3°C (65°F).**
- **The A/C compressor must be turned off.**

Were all of the prerequisites met before running the Cooldown Test?

Yes >> Go To 2

No >> Run the Cooldown Test again after all of the prerequisites are met. Then, if DTC B10B2 is still active, Go To 2. Otherwise, Perform BODY VERIFICATION TEST – VER 1. (Refer to 8 - ELECTRICAL/ELECTRONIC CONTROL MODULES/FRONT CONTROL MODULE - DIAGNOSIS AND TESTING).

2. CHECK FOR DTCs IN THE PCM

With the scan tool, select PCM.

Are any DTCs present in the PCM?

Yes >> Diagnose and repair the DTC(s). (Refer to 9 - ENGINE - DIAGNOSIS AND TESTING) for PCM DTCs. Run the Cooldown Test again after the repair is complete.
Perform BODY VERIFICATION TEST – VER 1. (Refer to 8 - ELECTRICAL/ELECTRONIC CONTROL MODULES/FRONT CONTROL MODULE - DIAGNOSIS AND TESTING).

No >> Refer to the Service Information for additional Cooldown Test related diagnostic information and testing procedures. Run the Cooldown Test again after the repair is complete.
Perform BODY VERIFICATION TEST – VER 1. (Refer to 8 - ELECTRICAL/ELECTRONIC CONTROL MODULES/FRONT CONTROL MODULE - DIAGNOSIS AND TESTING).

B10B4–CABIN HEATER 1 CONTROL CIRCUIT LOW (FCM)

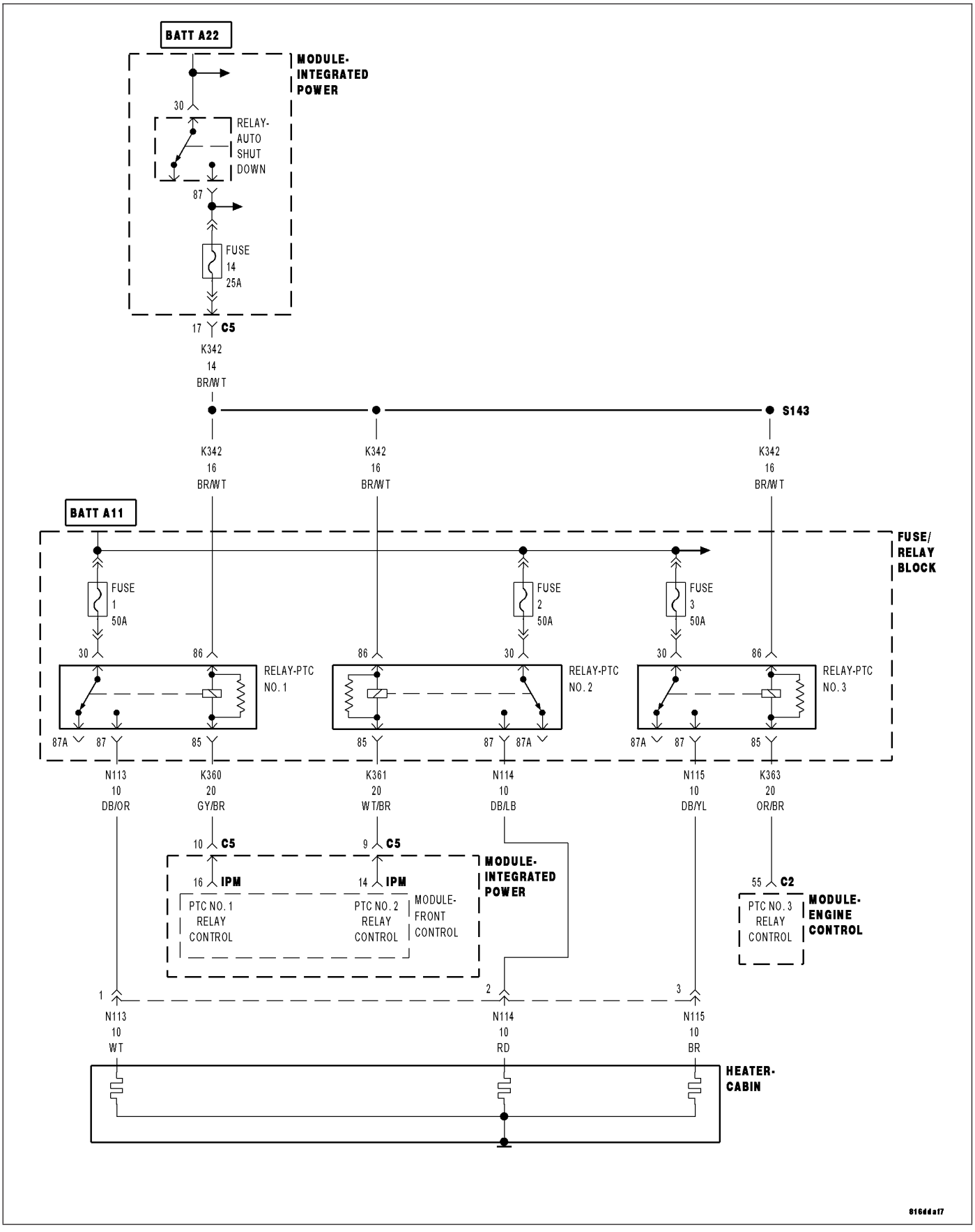

For a complete wiring diagram **Refer to Section 8W**

- **When Monitored:**
  With the ignition on, the ASD Relay energized, and the PTC No. 1 Relay command on.
- **Set Condition:**
  If the Front Control Module (FCM) detects that the (K360) PTC No. 1 Relay Control circuit is shorted to ground.

Possible Causes
(K342) FUSED ASD RELAY OUTPUT CIRCUIT OPEN OR HIGH RESISTANCE
(K360) PTC NO. 1 RELAY CONTROL CIRCUIT SHORTED TO GROUND
(K360) PTC NO. 1 RELAY CONTROL CIRCUIT OPEN OR HIGH RESISTANCE
PTC NO. 1 RELAY
FRONT CONTROL MODULE (FCM)

Diagnostic Test

1. VERIFY THAT THE DTC IS ACTIVE

WARNING: WHEN THE ENGINE IS OPERATING, DO NOT STAND IN A DIRECT LINE WITH THE FAN. DO NOT PUT YOUR HANDS NEAR THE PULLEYS, BELTS OR FAN. DO NOT WEAR LOOSE CLOTHING.

NOTE: If the FCM detects and stores a DTC, the FCM also stores the environmental conditions under which the DTC was set.

NOTE: Before erasing stored DTCs, record these conditions. Attempting to duplicate these conditions may assist when checking for an active DTC.

Turn the ignition on.

With the scan tool, erase FCM DTCs.

With the scan tool, actuate the PTC No. 1 Relay.

Monitor the scan tool for at least two minutes.

With the scan tool, read FCM DTCs.

Is the status Active for this DTC?

Yes >> Go To 2

No >> Check for an intermittent condition by inspecting the related wiring harness for chaffed, pierced, pinched, and partially broken wires. Also, inspect the related connectors for broken, bent, pushed out, spread, corroded, or contaminated terminals.

2. CHECK (K342) FUSED ASD RELAY OUTPUT CIRCUIT FOR AN OPEN OR HIGH RESISTANCE

Turn the ignition off.

Remove the PTC No. 1 Relay.

Turn the ignition on.

Using a 12 volt test light connected to ground, check the (K342) Fused ASD Relay Output circuit in the PTC No. 1 Relay connector.

NOTE: The test light should illuminate brightly. Compare the brightness to that of a direct connection to the battery.

Does the test light illuminate brightly?

Yes >> Go To 3

No >> Repair the (K342) Fused ASD Relay Output circuit for an open or high resistance.
Perform the BODY VERIFICATION TEST VER 1. (Refer to 8 - ELECTRICAL/ELECTRONIC CONTROL MODULES/ FRONT CONTROL MODULE - DIAGNOSIS AND TESTING).

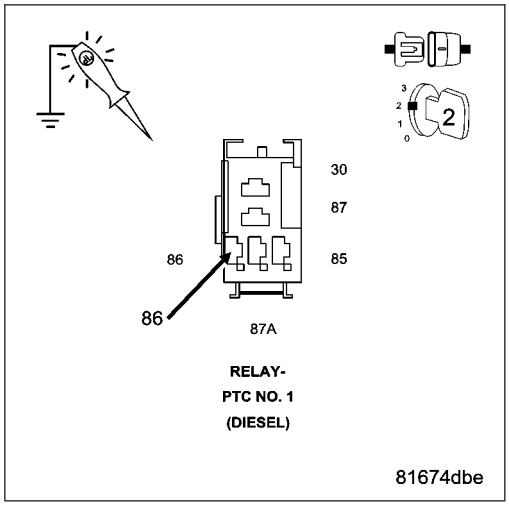

3. CHECK (K360) PTC NO. 1 RELAY CONTROL CIRCUIT FOR A SHORT TO GROUND

Turn the ignition off.

Disconnect the FCM from the Power Module.

Measure the resistance between ground and the (K360) PTC No. 1 Relay Control circuit in the PTC No. 1 Relay connector.

Is the resistance above 10.0 ohms?

Yes >> Go To 4

No >> Repair the (K360) PTC No. 1 Relay Control circuit for a short to ground.

Perform the BODY VERIFICATION TEST VER 1. (Refer to 8 - ELECTRICAL/ELECTRONIC CONTROL MODULES/ FRONT CONTROL MODULE - DIAGNOSIS AND TESTING).

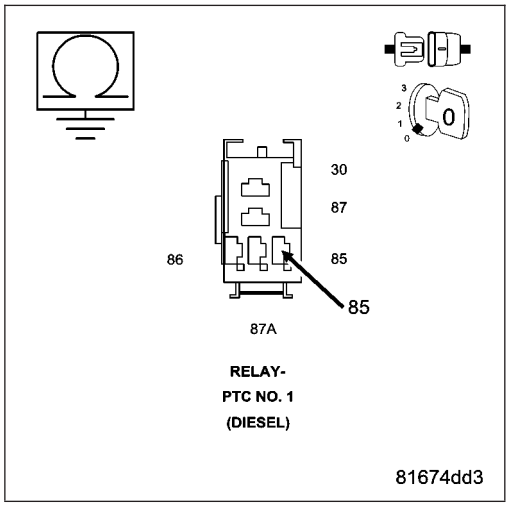

4. CHECK (K360) PTC NO. 1 RELAY CONTROL CIRCUIT FOR AN OPEN OR HIGH RESISTANCE

Measure the resistance of the (K360) PTC No. 1 Relay Control circuit between the PTC No. 1 Relay connector and the FCM connector.

Is the resistance below 10.0 ohms?

Yes >> Go To 5

No >> Repair the (K360) PTC No. 1 Relay Control circuit for an open or high resistance.

Perform the BODY VERIFICATION TEST VER 1. (Refer to 8 - ELECTRICAL/ELECTRONIC CONTROL MODULES/ FRONT CONTROL MODULE - DIAGNOSIS AND TESTING).

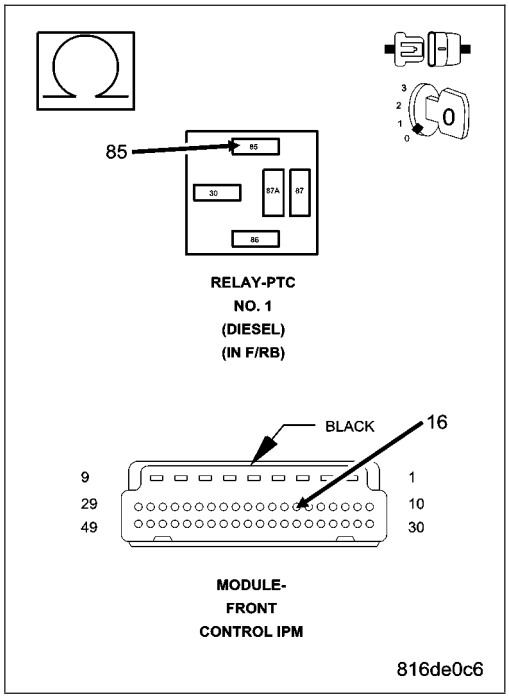

5. CHECK PTC NO. 1 RELAY

Install the FCM.

Install a substitute PTC No. 1 Relay in place of the vehicle's PTC No. 1 Relay.

Turn the ignition on.

With the scan tool, erase FCM DTCs.

With the scan tool, actuate the PTC No. 1 Relay.

Monitor the scan tool for at least two minutes.

With the scan tool, read FCM DTCs.

Is the status Active for this DTC?

Yes >> Go To 6

No >> Replace the PTC No. 1 Relay in accordance with the Service Information.

Perform the BODY VERIFICATION TEST VER 1. (Refer to 8 - ELECTRICAL/ELECTRONIC CONTROL MODULES/ FRONT CONTROL MODULE - DIAGNOSIS AND TESTING).

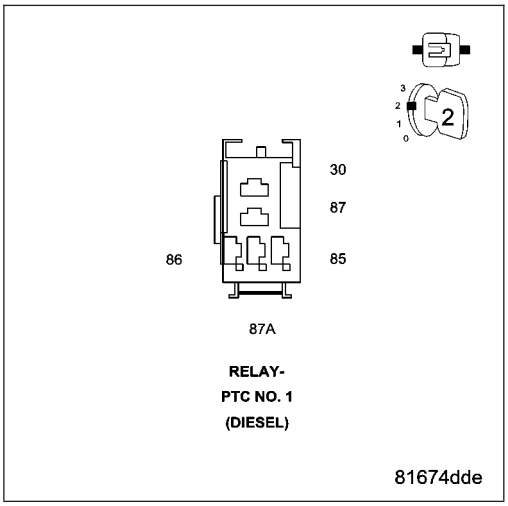

6. INSPECT RELATED WIRING & CHECK FOR TSBs

Turn the ignition off.

Using the wiring diagram/schematic as a guide, inspect the wiring and connectors between the PTC No. 1 Relay and the FCM.

Look for any chafed, pierced, pinched, or partially broken wires.

Look for broken, bent, pushed out or corroded terminals.

Refer to any Technical Service Bulletins that may apply.

Were any problems found?

Yes >> Repair as necessary.

Perform the BODY VERIFICATION TEST VER 1. (Refer to 8 - ELECTRICAL/ELECTRONIC CONTROL MODULES/FRONT CONTROL MODULE - DIAGNOSIS AND TESTING).

No >> Replace the FCM in accordance with the Service Information.

Perform the BODY VERIFICATION TEST VER 1. (Refer to 8 - ELECTRICAL/ELECTRONIC CONTROL MODULES/FRONT CONTROL MODULE - DIAGNOSIS AND TESTING).

B10B5–CABIN HEATER 1 CONTROL CIRCUIT HIGH (FCM)

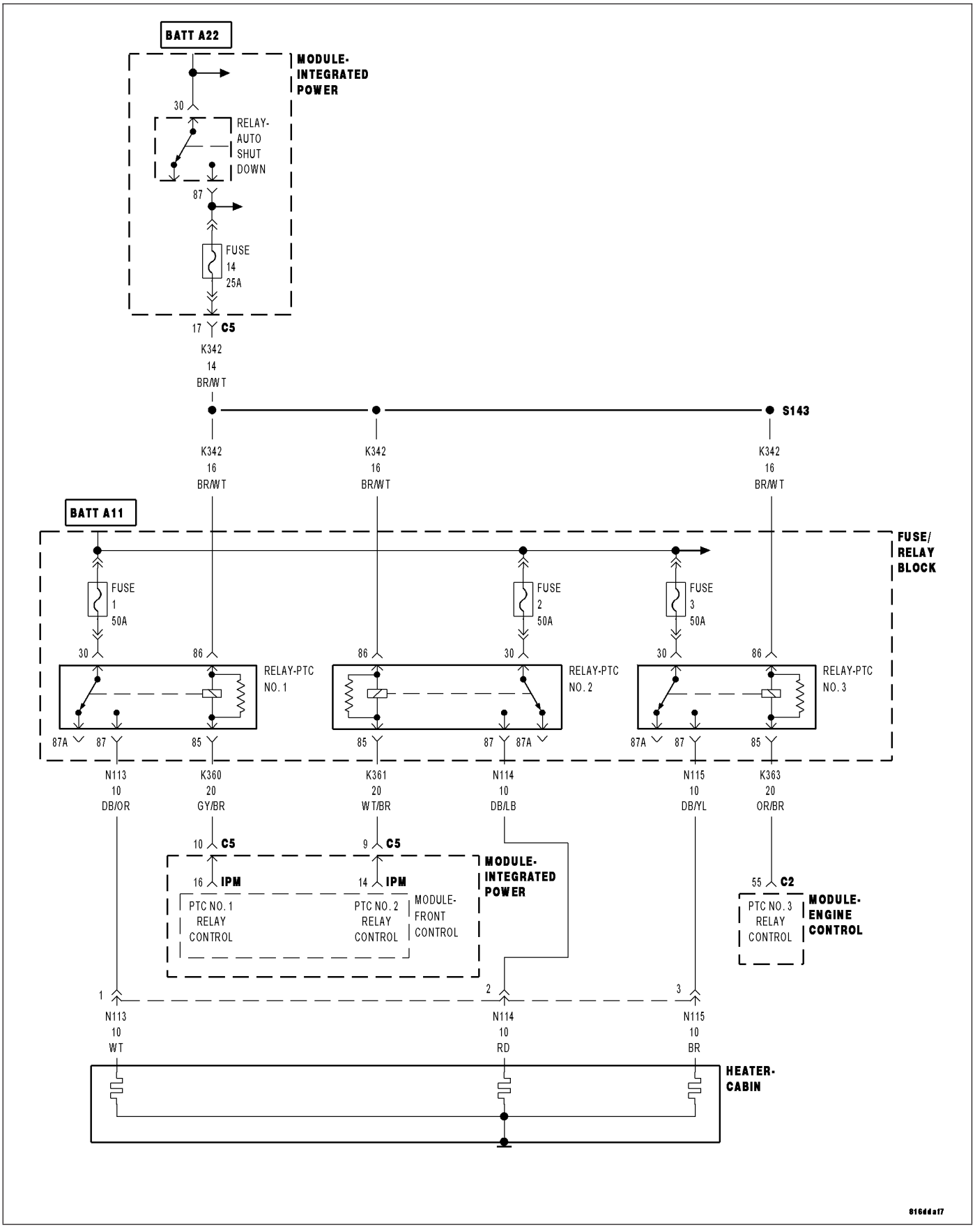

For a complete wiring diagram **Refer to Section 8W**

- **When Monitored:**
  With the ignition on, the ASD Relay energized, and the PTC No. 1 Relay command on.
- **Set Condition:**
  If the Front Control Module (FCM) detects that the (K360) PTC No. 1 Relay Control circuit is shorted to voltage.

Possible Causes
(K360) PTC NO. 1 RELAY CONTROL CIRCUIT SHORTED TO VOLTAGE
(K360) PTC NO. 1 RELAY CONTROL CIRCUIT OPEN OR HIGH RESISTANCE
PTC NO. 1 RELAY
FRONT CONTROL MODULE (FCM)

Diagnostic Test

1. VERIFY THAT THE DTC IS ACTIVE

WARNING: WHEN THE ENGINE IS OPERATING, DO NOT STAND IN A DIRECT LINE WITH THE FAN. DO NOT PUT YOUR HANDS NEAR THE PULLEYS, BELTS OR FAN. DO NOT WEAR LOOSE CLOTHING.

NOTE: If the FCM detects and stores a DTC, the FCM also stores the environmental conditions under which the DTC was set.

NOTE: Before erasing stored DTCs, record these conditions. Attempting to duplicate these conditions may assist when checking for an active DTC.

Turn the ignition on.

With the scan tool, erase FCM DTCs.

With the scan tool, actuate the PTC No. 1 Relay.

Monitor the scan tool for at least two minutes.

With the scan tool, read FCM DTCs.

Is the status Active for this DTC?

Yes >> Go To 2

No >> Check for an intermittent condition by inspecting the related wiring harness for chaffed, pierced, pinched, and partially broken wires. Also, inspect the related connectors for broken, bent, pushed out, spread, corroded, or contaminated terminals.

2. CHECK PTC NO. 1 RELAY

With the scan tool, erase FCM DTCs.

Turn the ignition off.

Remove the PTC No. 1 Relay.

Turn the ignition on.

With the scan tool, actuate the PTC No. 1 Relay.

With the scan tool, read FCM DTCs.

NOTE: The scan tool should display an open circuit DTC with the PTC No. 1 Relay removed.

Does the scan tool display: B10B5–CABIN HEATER 1 CONTROL CIRCUIT HIGH?

Yes >> Go To 3

No >> Replace the PTC No. 1 Relay in accordance with the Service Information.

Perform the BODY VERIFICATION TEST VER 1. (Refer to 8 - ELECTRICAL/ELECTRONIC CONTROL MODULES/ FRONT CONTROL MODULE - DIAGNOSIS AND TESTING).

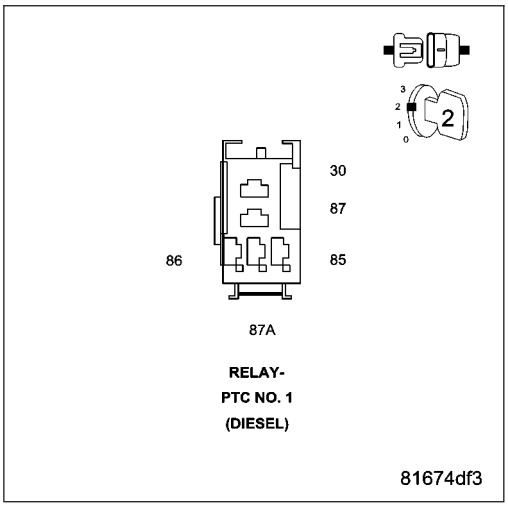

3. CHECK (K360) PTC NO. 1 RELAY CONTROL CIRCUIT FOR A SHORT TO VOLTAGE

Turn the ignition off.

Disconnect the FCM from the Power Module.

Remove the ASD Relay from the IPM.

Connect a jumper wire between cavity 30 and cavity 87 of the ASD Relay Connector.

Turn the ignition on.

Measure the voltage of the (K360) PTC No. 1 Relay Control circuit in the PTC No. 1 Relay connector.

Is there any voltage present?

Yes >> Repair the (K360) PTC No. 1 Relay Control circuit for a short to voltage.

Perform the BODY VERIFICATION TEST VER 1. (Refer to 8 - ELECTRICAL/ELECTRONIC CONTROL MODULES/ FRONT CONTROL MODULE - DIAGNOSIS AND TESTING).

No >> Go To 4

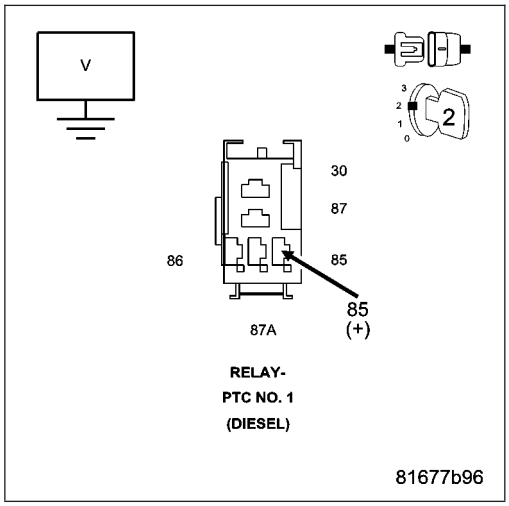

4. CHECK (K360) PTC NO. 1 RELAY CONTROL CIRCUIT FOR AN OPEN OR HIGH RESISTANCE

Turn the ignition off.

Measure the resistance of the (K360) PTC No. 1 Relay Control circuit between the PTC No. 1 Relay connector and the FCM connector.

Is the resistance below 10.0 ohms?

Yes >> Go To 5

No >> Repair the (K360) PTC No. 1 Relay Control circuit for an open or high resistance.

Perform the BODY VERIFICATION TEST VER 1. (Refer to 8 - ELECTRICAL/ELECTRONIC CONTROL MODULES/ FRONT CONTROL MODULE - DIAGNOSIS AND TESTING).

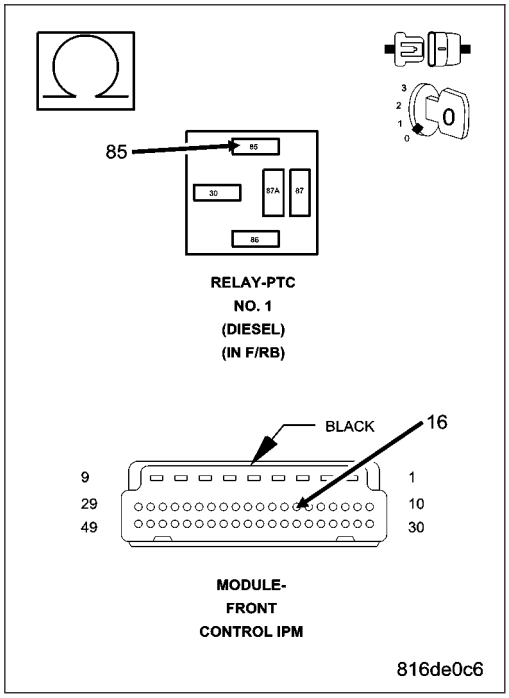

5. INSPECT RELATED WIRING & CHECK FOR TSBs

Using the wiring diagram/schematic as a guide, inspect the wiring and connectors between the PTC No. 1 Relay and the FCM.

Look for any chafed, pierced, pinched, or partially broken wires.

Look for broken, bent, pushed out or corroded terminals.

Refer to any Technical Service Bulletins that may apply.

Were any problems found?

Yes >> Repair as necessary.
Perform the BODY VERIFICATION TEST VER 1. (Refer to 8 - ELECTRICAL/ELECTRONIC CONTROL MODULES/FRONT CONTROL MODULE - DIAGNOSIS AND TESTING).

No >> Replace the FCM in accordance with the Service Information.
Perform the BODY VERIFICATION TEST VER 1. (Refer to 8 - ELECTRICAL/ELECTRONIC CONTROL MODULES/FRONT CONTROL MODULE - DIAGNOSIS AND TESTING).

B10B6–CABIN HEATER 1 CONTROL CIRCUIT OPEN (FCM)

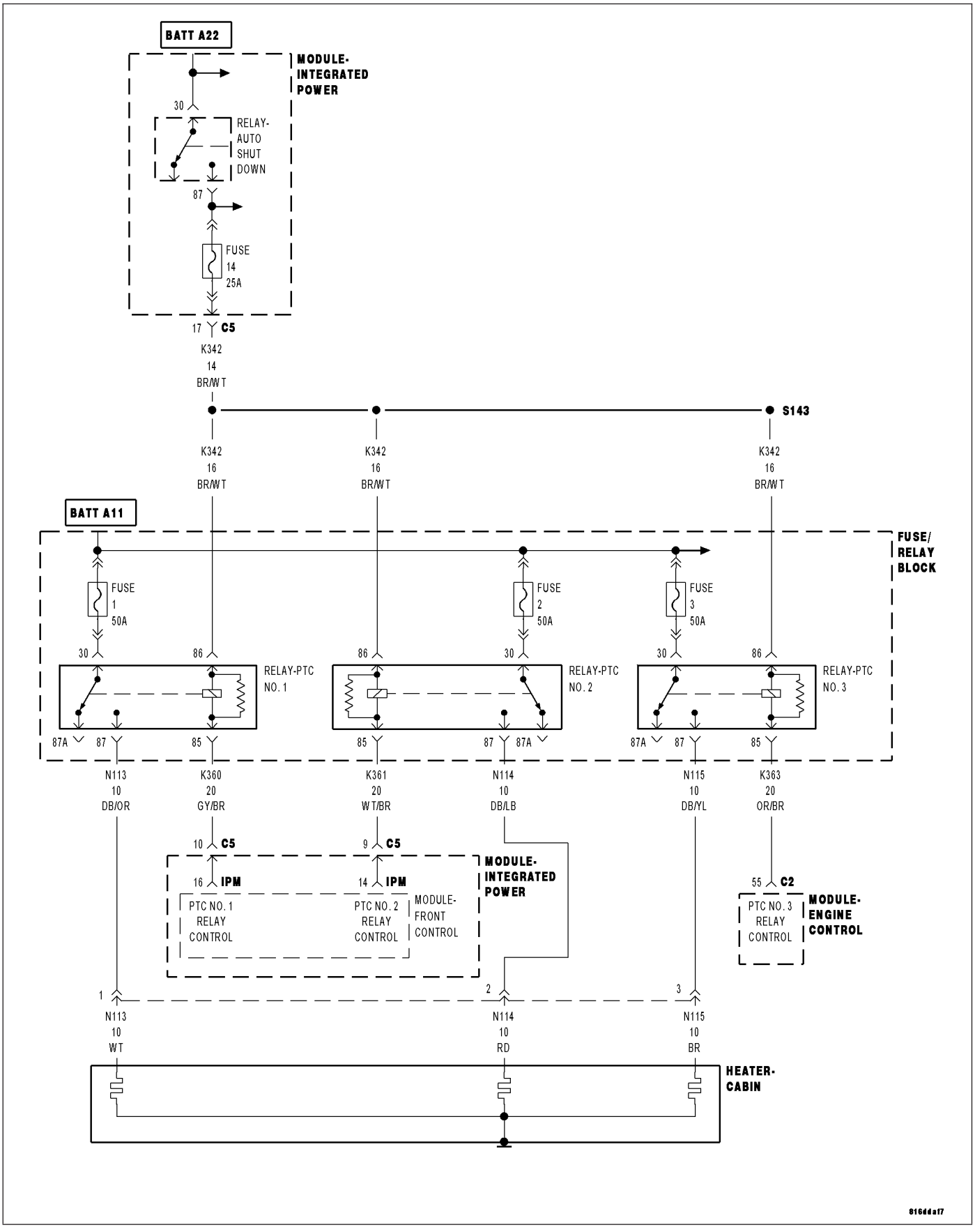

For a complete wiring diagram **Refer to Section 8W**

- **When Monitored:**
  With the ignition on, the ASD Relay energized, and the PTC No. 1 Relay command on.
- **Set Condition:**
  If the Front Control Module (FCM) detects that the (K360) PTC No. 1 Relay Control circuit is open.

Possible Causes
(K342) FUSED ASD RELAY OUTPUT CIRCUIT OPEN OR HIGH RESISTANCE
(K360) PTC NO. 1 RELAY CONTROL CIRCUIT SHORTED TO GROUND
(K360) PTC NO. 1 RELAY CONTROL CIRCUIT OPEN OR HIGH RESISTANCE
PTC NO. 1 RELAY
FRONT CONTROL MODULE (FCM)

Diagnostic Test

1. VERIFY THAT THE DTC IS ACTIVE

WARNING: WHEN THE ENGINE IS OPERATING, DO NOT STAND IN A DIRECT LINE WITH THE FAN. DO NOT PUT YOUR HANDS NEAR THE PULLEYS, BELTS OR FAN. DO NOT WEAR LOOSE CLOTHING.

NOTE: If the FCM detects and stores a DTC, the FCM also stores the environmental conditions under which the DTC was set.

NOTE: Before erasing stored DTCs, record these conditions. Attempting to duplicate these conditions may assist when checking for an active DTC.

Turn the ignition on.

With the scan tool, erase FCM DTCs.

With the scan tool, actuate the PTC No. 1 Relay.

Monitor the scan tool for at least two minutes.

With the scan tool, read FCM DTCs.

Is the status Active for this DTC?

Yes >> Go To 2

No >> Check for an intermittent condition by inspecting the related wiring harness for chaffed, pierced, pinched, and partially broken wires. Also, inspect the related connectors for broken, bent, pushed out, spread, corroded, or contaminated terminals.

2. CHECK (K342) FUSED ASD RELAY OUTPUT CIRCUIT FOR AN OPEN OR HIGH RESISTANCE

Turn the ignition off.

Remove the PTC No. 1 Relay.

Turn the ignition on.

Using a 12 volt test light connected to ground, check the (K342) Fused ASD Relay Output circuit in the PTC No. 1 Relay connector.

NOTE: The test light should illuminate brightly. Compare the brightness to that of a direct connection to the battery.

Does the test light illuminate brightly?

Yes >> Go To 3

No >> Repair the (K342) Fused ASD Relay Output circuit for an open or high resistance.
Perform the BODY VERIFICATION TEST VER 1. (Refer to 8 - ELECTRICAL/ELECTRONIC CONTROL MODULES/ FRONT CONTROL MODULE - DIAGNOSIS AND TESTING).

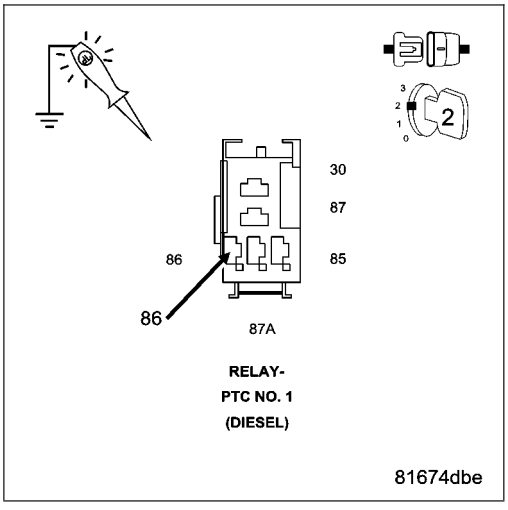

3. CHECK (K360) PTC NO. 1 RELAY CONTROL CIRCUIT FOR A SHORT TO GROUND

Turn the ignition off.

Disconnect the FCM from the Power Module.

Measure the resistance between ground and the (K360) PTC No. 1 Relay Control circuit in the PTC No. 1 Relay connector.

Is the resistance above 10.0 ohms?

Yes >> Go To 4

No >> Repair the (K360) PTC No. 1 Relay Control circuit for a short to ground.

Perform the BODY VERIFICATION TEST VER 1. (Refer to 8 - ELECTRICAL/ELECTRONIC CONTROL MODULES/ FRONT CONTROL MODULE - DIAGNOSIS AND TESTING).

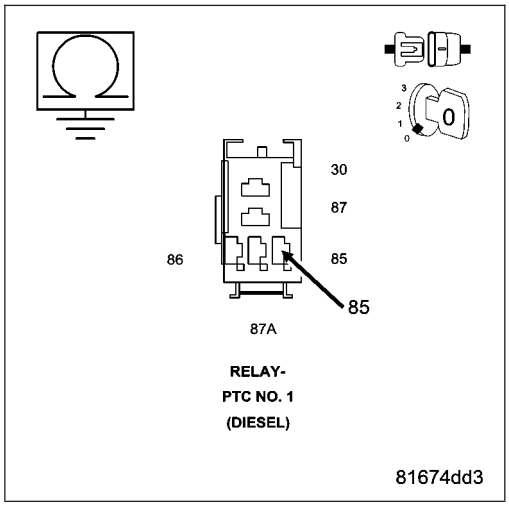

4. CHECK (K360) PTC NO. 1 RELAY CONTROL CIRCUIT FOR AN OPEN OR HIGH RESISTANCE

Measure the resistance of the (K360) PTC No. 1 Relay Control circuit between the PTC No. 1 Relay connector and the FCM connector.

Is the resistance below 10.0 ohms?

Yes >> Go To 5

No >> Repair the (K360) PTC No. 1 Relay Control circuit for an open or high resistance.

Perform the BODY VERIFICATION TEST VER 1. (Refer to 8 - ELECTRICAL/ELECTRONIC CONTROL MODULES/ FRONT CONTROL MODULE - DIAGNOSIS AND TESTING).

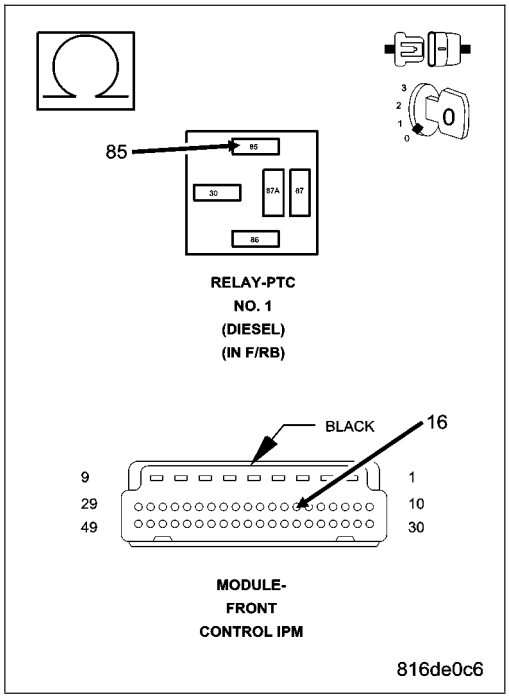

5. CHECK PTC NO. 1 RELAY

Install the FCM.

Install a substitute PTC No. 1 Relay in place of the vehicle's PTC No. 1 Relay.

Turn the ignition on.

With the scan tool, erase FCM DTCs.

With the scan tool, actuate the PTC No. 1 Relay.

Monitor the scan tool for at least two minutes.

With the scan tool, read FCM DTCs.

Is the status Active for this DTC?

Yes >> Go To 6

No >> Replace the PTC No. 1 Relay in accordance with the Service Information.

Perform the BODY VERIFICATION TEST VER 1. (Refer to 8 - ELECTRICAL/ELECTRONIC CONTROL MODULES/ FRONT CONTROL MODULE - DIAGNOSIS AND TESTING).

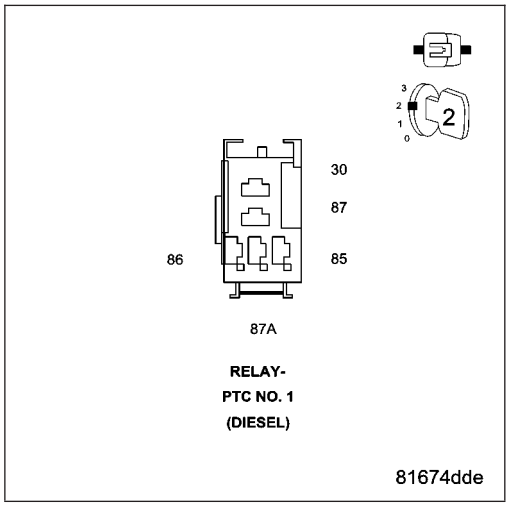

6. INSPECT RELATED WIRING & CHECK FOR TSBs

Turn the ignition off.

Using the wiring diagram/schematic as a guide, inspect the wiring and connectors between the PTC No. 1 Relay and the FCM.

Look for any chafed, pierced, pinched, or partially broken wires.

Look for broken, bent, pushed out or corroded terminals.

Refer to any Technical Service Bulletins that may apply.

Were any problems found?

Yes >> Repair as necessary.

Perform the BODY VERIFICATION TEST VER 1. (Refer to 8 - ELECTRICAL/ELECTRONIC CONTROL MODULES/FRONT CONTROL MODULE - DIAGNOSIS AND TESTING).

No >> Replace the FCM in accordance with the Service Information.

Perform the BODY VERIFICATION TEST VER 1. (Refer to 8 - ELECTRICAL/ELECTRONIC CONTROL MODULES/FRONT CONTROL MODULE - DIAGNOSIS AND TESTING).

B10B8–CABIN HEATER 2 CONTROL CIRCUIT LOW (FCM)

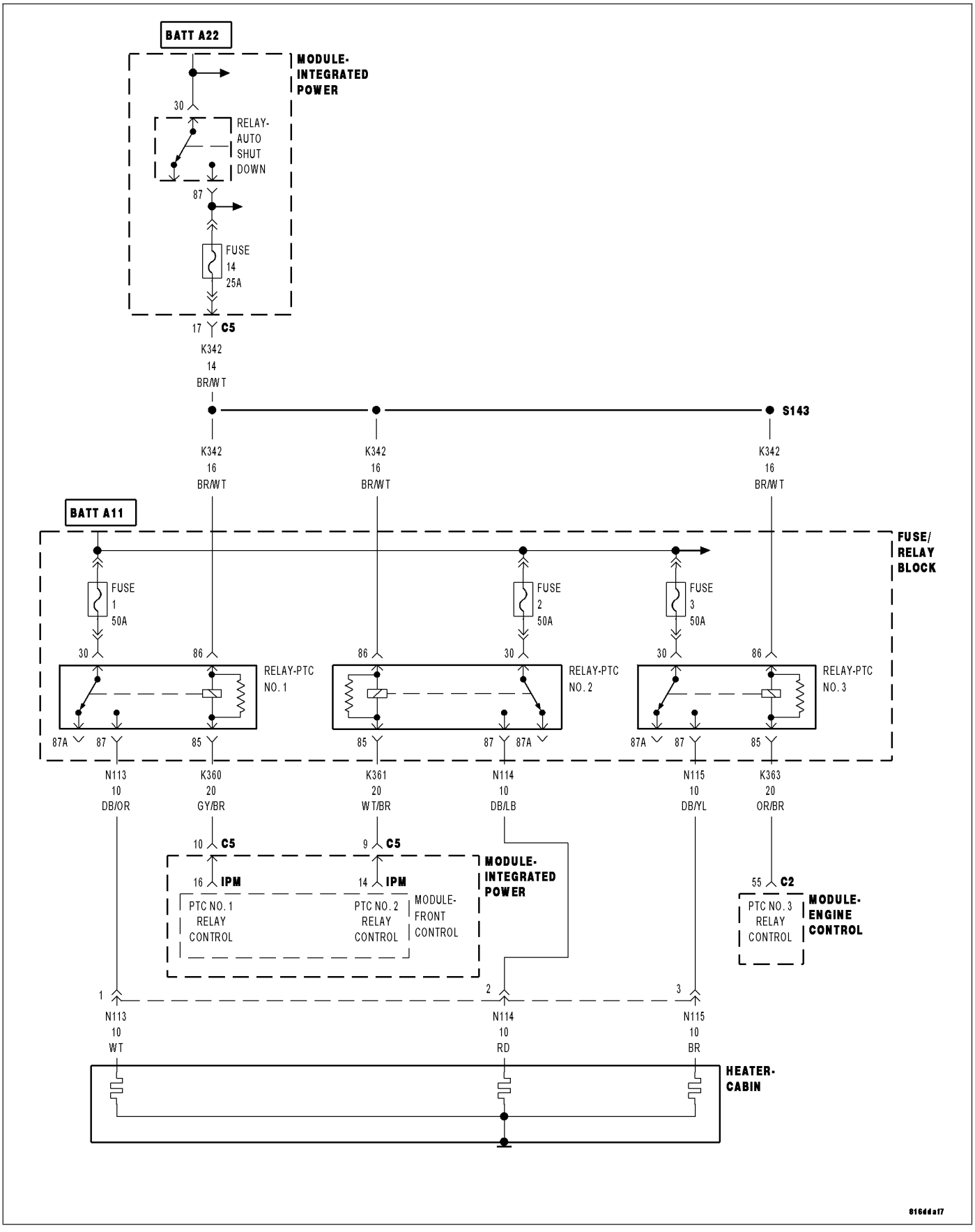

For a complete wiring diagram **Refer to Section 8W**

- **When Monitored:**
  With the ignition on, the ASD Relay energized, and the PTC No. 2 Relay command on.
- **Set Condition:**
  If the Front Control Module (FCM) detects that the (K361) PTC No. 2 Relay Control circuit is shorted to ground.

Possible Causes
(K342) FUSED ASD RELAY OUTPUT CIRCUIT OPEN OR HIGH RESISTANCE
(K361) PTC NO. 2 RELAY CONTROL CIRCUIT SHORTED TO GROUND
(K361) PTC NO. 2 RELAY CONTROL CIRCUIT OPEN OR HIGH RESISTANCE
PTC NO. 2 RELAY
FRONT CONTROL MODULE (FCM)

Diagnostic Test

1. VERIFY THAT THE DTC IS ACTIVE

WARNING: WHEN THE ENGINE IS OPERATING, DO NOT STAND IN A DIRECT LINE WITH THE FAN. DO NOT PUT YOUR HANDS NEAR THE PULLEYS, BELTS OR FAN. DO NOT WEAR LOOSE CLOTHING.

NOTE: If the FCM detects and stores a DTC, the FCM also stores the environmental conditions under which the DTC was set.

NOTE: Before erasing stored DTCs, record these conditions. Attempting to duplicate these conditions may assist when checking for an active DTC.

Turn the ignition on.

With the scan tool, erase FCM DTCs.

With the scan tool, actuate the PTC No. 2 Relay.

Monitor the scan tool for at least two minutes.

With the scan tool, read FCM DTCs.

Is the status Active for this DTC?

Yes >> Go To 2

No >> Check for an intermittent condition by inspecting the related wiring harness for chaffed, pierced, pinched, and partially broken wires. Also, inspect the related connectors for broken, bent, pushed out, spread, corroded, or contaminated terminals.

2. CHECK (K342) FUSED ASD RELAY OUTPUT CIRCUIT FOR AN OPEN OR HIGH RESISTANCE

Turn the ignition off.

Remove the PTC No. 2 Relay.

Turn the ignition on.

Using a 12 volt test light connected to ground, check the (K342) Fused ASD Relay Output circuit in the PTC No. 2 Relay harness connector.

NOTE: The test light should illuminate brightly. Compare the brightness to that of a direct connection to the battery.

Does the test light illuminate brightly?

Yes >> Go To 3

No >> Repair the (K342) Fused ASD Relay Output circuit for an open or high resistance.
Perform the BODY VERIFICATION TEST VER 1. (Refer to 8 - ELECTRICAL/ELECTRONIC CONTROL MODULES/ FRONT CONTROL MODULE - DIAGNOSIS AND TESTING).

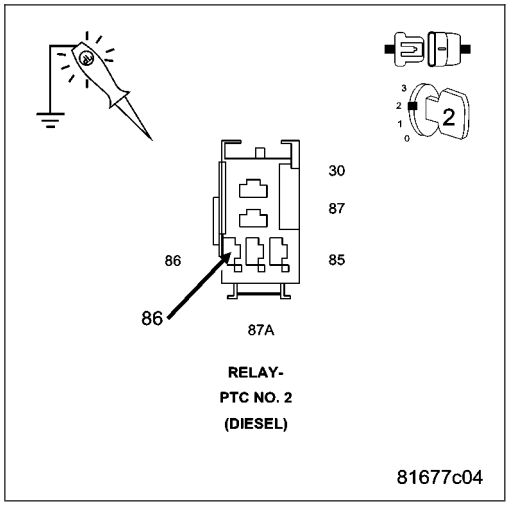

3. CHECK (K361) PTC NO. 2 RELAY CONTROL CIRCUIT FOR A SHORT TO GROUND

Turn the ignition off.

Disconnect the FCM from the Power Module.

Measure the resistance between ground and the (K361) PTC No. 2 Relay Control circuit in the PTC No. 2 Relay connector.

Is the resistance above 10.0 ohms?

Yes >> Go To 4

No >> Repair the (K361) PTC No. 2 Relay Control circuit for a short to ground.

Perform the BODY VERIFICATION TEST VER 1. (Refer to 8 - ELECTRICAL/ELECTRONIC CONTROL MODULES/ FRONT CONTROL MODULE - DIAGNOSIS AND TESTING).

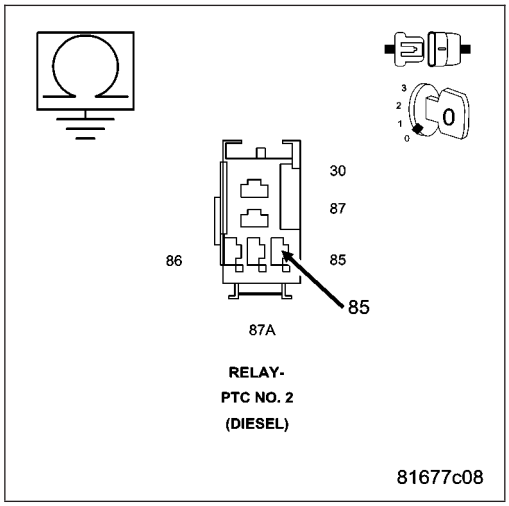

4. CHECK (K361) PTC NO. 2 RELAY CONTROL CIRCUIT FOR AN OPEN OR HIGH RESISTANCE

Measure the resistance of the (K361) PTC No. 2 Relay Control circuit between the PTC No. 2 Relay connector and the FCM connector.

Is the resistance below 10.0 ohms?

Yes >> Go To 5

No >> Repair the (K361) PTC No. 2 Relay Control circuit for an open or high resistance.

Perform the BODY VERIFICATION TEST VER 1. (Refer to 8 - ELECTRICAL/ELECTRONIC CONTROL MODULES/ FRONT CONTROL MODULE - DIAGNOSIS AND TESTING).

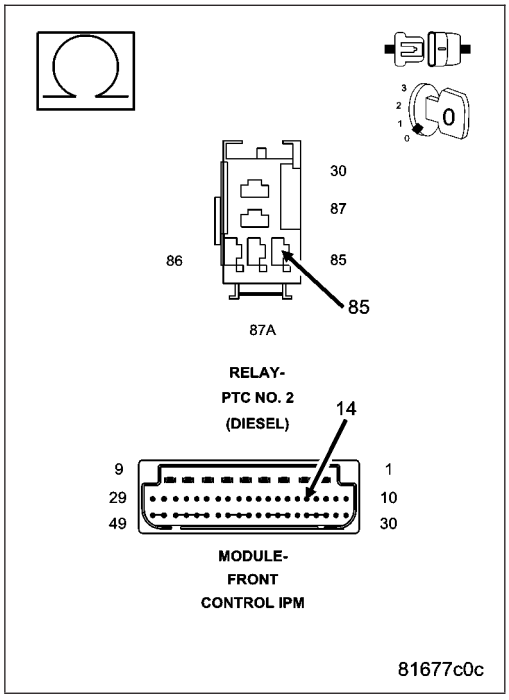

5. CHECK PTC NO. 2 RELAY

Install the FCM.

Install a substitute PTC No. 2 Relay in place of the vehicle's PTC No. 2 Relay.

Turn the ignition on.

With the scan tool, erase FCM DTCs.

With the scan tool, actuate the PTC No. 2 Relay.

Monitor the scan tool for at least two minutes.

With the scan tool, read FCM DTCs.

Is the status Active for this DTC?

Yes >> Go To 6

No >> Replace the PTC No. 2 Relay in accordance with the Service Information.

Perform the BODY VERIFICATION TEST VER 1. (Refer to 8 - ELECTRICAL/ELECTRONIC CONTROL MODULES/ FRONT CONTROL MODULE - DIAGNOSIS AND TESTING).

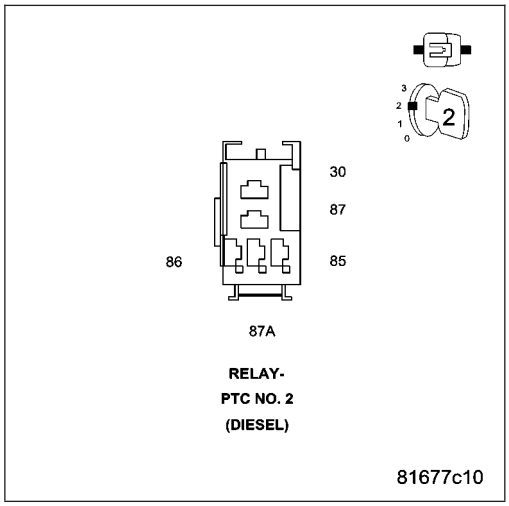

6. INSPECT RELATED WIRING & CHECK FOR TSBs

Turn the ignition off.

Using the wiring diagram/schematic as a guide, inspect the wiring and connectors between the PTC No. 2 Relay and the FCM.

Look for any chafed, pierced, pinched, or partially broken wires.

Look for broken, bent, pushed out or corroded terminals.

Refer to any Technical Service Bulletins that may apply.

Were any problems found?

Yes >> Repair as necessary.

Perform the BODY VERIFICATION TEST VER 1. (Refer to 8 - ELECTRICAL/ELECTRONIC CONTROL MODULES/FRONT CONTROL MODULE - DIAGNOSIS AND TESTING).

No >> Replace the Front Control Module (FCM) in accordance with the Service Information.

Perform the BODY VERIFICATION TEST VER 1. (Refer to 8 - ELECTRICAL/ELECTRONIC CONTROL MODULES/FRONT CONTROL MODULE - DIAGNOSIS AND TESTING).

B10B9–CABIN HEATER 2 CONTROL CIRCUIT HIGH (FCM)

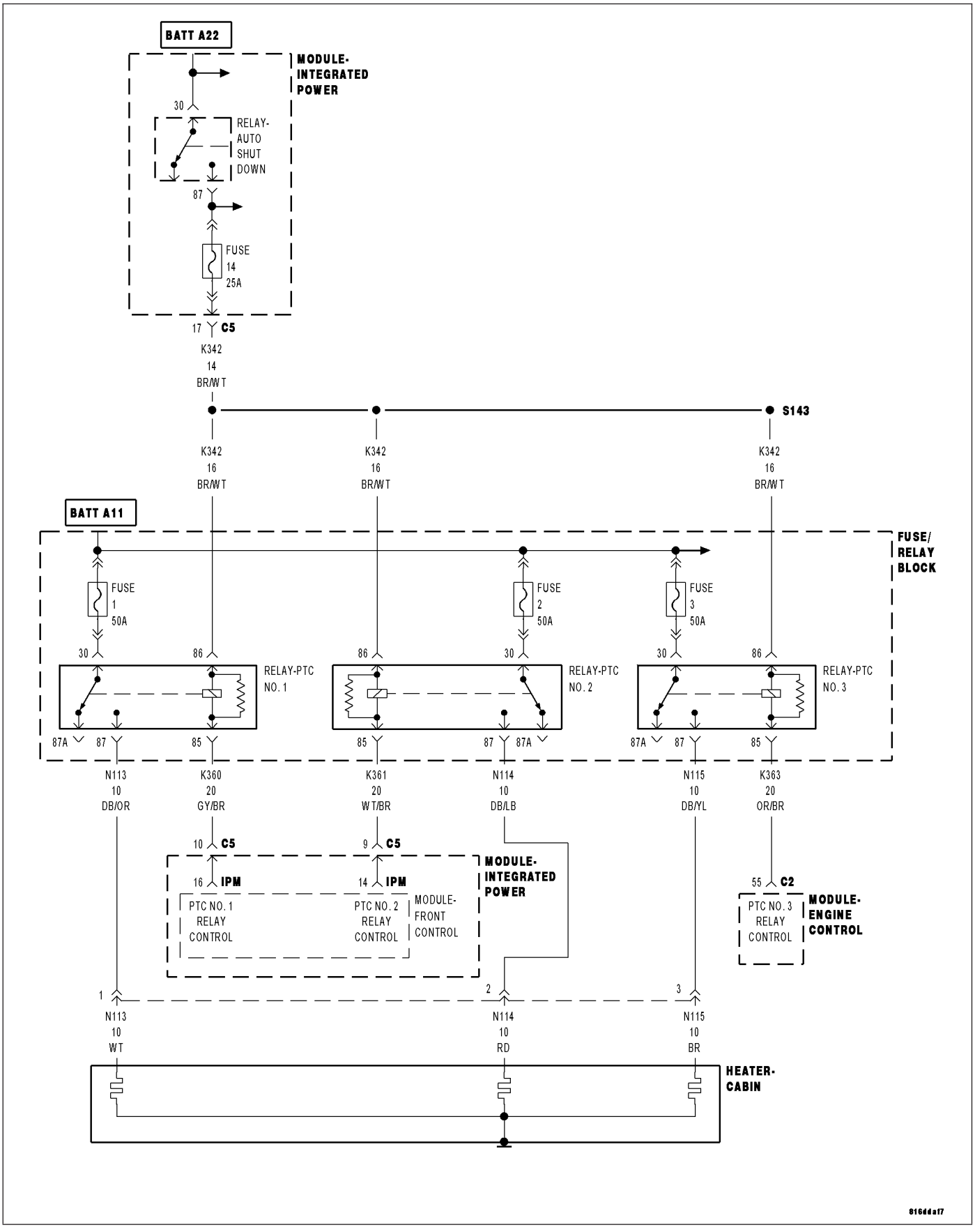

For a complete wiring diagram **Refer to Section 8W**

- **When Monitored:**
  With the ignition on, the ASD Relay energized, and the PTC No. 2 Relay command on.
- **Set Condition:**
  If the Front Control Module (FCM) detects that the (K361) PTC No. 2 Relay Control circuit voltage is shorted to voltage.

Possible Causes
(K361) PTC NO. 2 RELAY CONTROL CIRCUIT SHORTED TO VOLTAGE
(K361) PTC NO. 2 RELAY CONTROL CIRCUIT OPEN OR HIGH RESISTANCE
PTC NO. 2 RELAY
FRONT CONTROL MODULE (FCM)

Diagnostic Test

1. VERIFY THAT THE DTC IS ACTIVE

WARNING: WHEN THE ENGINE IS OPERATING, DO NOT STAND IN A DIRECT LINE WITH THE FAN. DO NOT PUT YOUR HANDS NEAR THE PULLEYS, BELTS OR FAN. DO NOT WEAR LOOSE CLOTHING.

NOTE: If the FCM detects and stores a DTC, the FCM also stores the environmental conditions under which the DTC was set.

NOTE: Before erasing stored DTCs, record these conditions. Attempting to duplicate these conditions may assist when checking for an active DTC.

Turn the ignition on.

With the scan tool, erase FCM DTCs.

With the scan tool, actuate the PTC No. 2 Relay.

Monitor the scan tool for at least two minutes.

With the scan tool, read FCM DTCs.

Is the status Active for this DTC?

Yes >> Go To 2

No >> Check for an intermittent condition by inspecting the related wiring harness for chaffed, pierced, pinched, and partially broken wires. Also, inspect the related connectors for broken, bent, pushed out, spread, corroded, or contaminated terminals.

2. CHECK PTC NO. 2 RELAY

With the scan tool, erase FCM DTCs.

Turn the ignition off.

Remove the PTC No. 2 Relay.

Turn the ignition on.

With the scan tool, actuate the PTC No. 2 Relay.

With the scan tool, read FCM DTCs.

NOTE: The scan tool should display an open circuit DTC with the PTC No. 2 Relay removed.

Does the scan tool display: B10B9–CABIN HEATER 2 CONTROL CIRCUIT HIGH?

Yes >> Go To 3

No >> Replace the PTC No. 2 Relay in accordance with the Service Information.

Perform the BODY VERIFICATION TEST VER 1. (Refer to 8 - ELECTRICAL/ELECTRONIC CONTROL MODULES/ FRONT CONTROL MODULE - DIAGNOSIS AND TESTING).

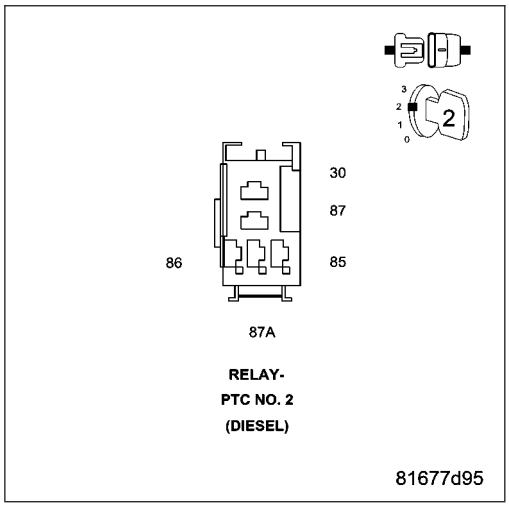

3. CHECK (K361) PTC NO. 2 RELAY CONTROL CIRCUIT FOR A SHORT TO VOLTAGE

Turn the ignition off.

Disconnect the FCM from the Power Module.

Remove the ASD Relay from the IPM.

Connect a jumper wire between cavity 30 and cavity 87 of the ASD Relay Connector.

Turn the ignition on.

Measure the voltage of the (K361) PTC No. 2 Relay Control circuit in the PTC No. 2 Relay connector.

Is there any voltage present?

Yes >> Repair the (K361) PTC No. 2 Relay Control circuit for a short to voltage.

Perform the BODY VERIFICATION TEST VER 1. (Refer to 8 - ELECTRICAL/ELECTRONIC CONTROL MODULES/ FRONT CONTROL MODULE - DIAGNOSIS AND TESTING).

No >> Go To 4

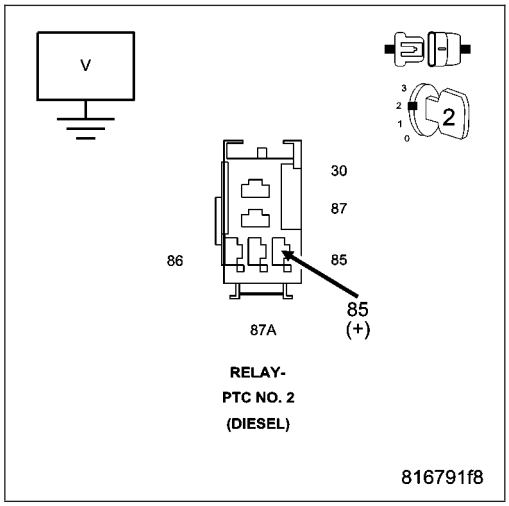

4. CHECK (K361) PTC NO. 2 RELAY CONTROL FOR AN OPEN OR HIGH RESISTANCE

Turn the ignition off.

Measure the resistance of the (K361) PTC No. 2 Relay Control circuit between the PTC No. 2 Relay connector and the FCM connector.

Is the resistance below 10.0 ohms?

Yes >> Go To 5

No >> Repair the (K361) PTC No. 2 Relay Control circuit for an open or high resistance.

Perform the BODY VERIFICATION TEST VER 1. (Refer to 8 - ELECTRICAL/ELECTRONIC CONTROL MODULES/ FRONT CONTROL MODULE - DIAGNOSIS AND TESTING).

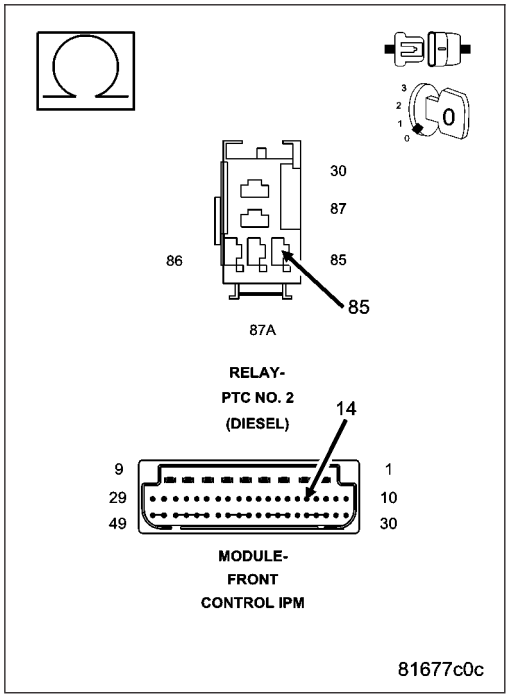

5. INSPECT RELATED WIRING & CHECK FOR TSBs

Using the wiring diagram/schematic as a guide, inspect the wiring and connectors between the PTC No. 2 Relay and the FCM.

Look for any chafed, pierced, pinched, or partially broken wires.

Look for broken, bent, pushed out or corroded terminals.

Refer to any Technical Service Bulletins that may apply.

Were any problems found?

Yes >> Repair as necessary.
Perform the BODY VERIFICATION TEST VER 1. (Refer to 8 - ELECTRICAL/ELECTRONIC CONTROL MODULES/FRONT CONTROL MODULE - DIAGNOSIS AND TESTING).

No >> Replace the FCM in accordance with the Service Information.
Perform the BODY VERIFICATION TEST VER 1. (Refer to 8 - ELECTRICAL/ELECTRONIC CONTROL MODULES/FRONT CONTROL MODULE - DIAGNOSIS AND TESTING).

B10BA–CABIN HEATER 2 CONTROL CIRCUIT OPEN (FCM)

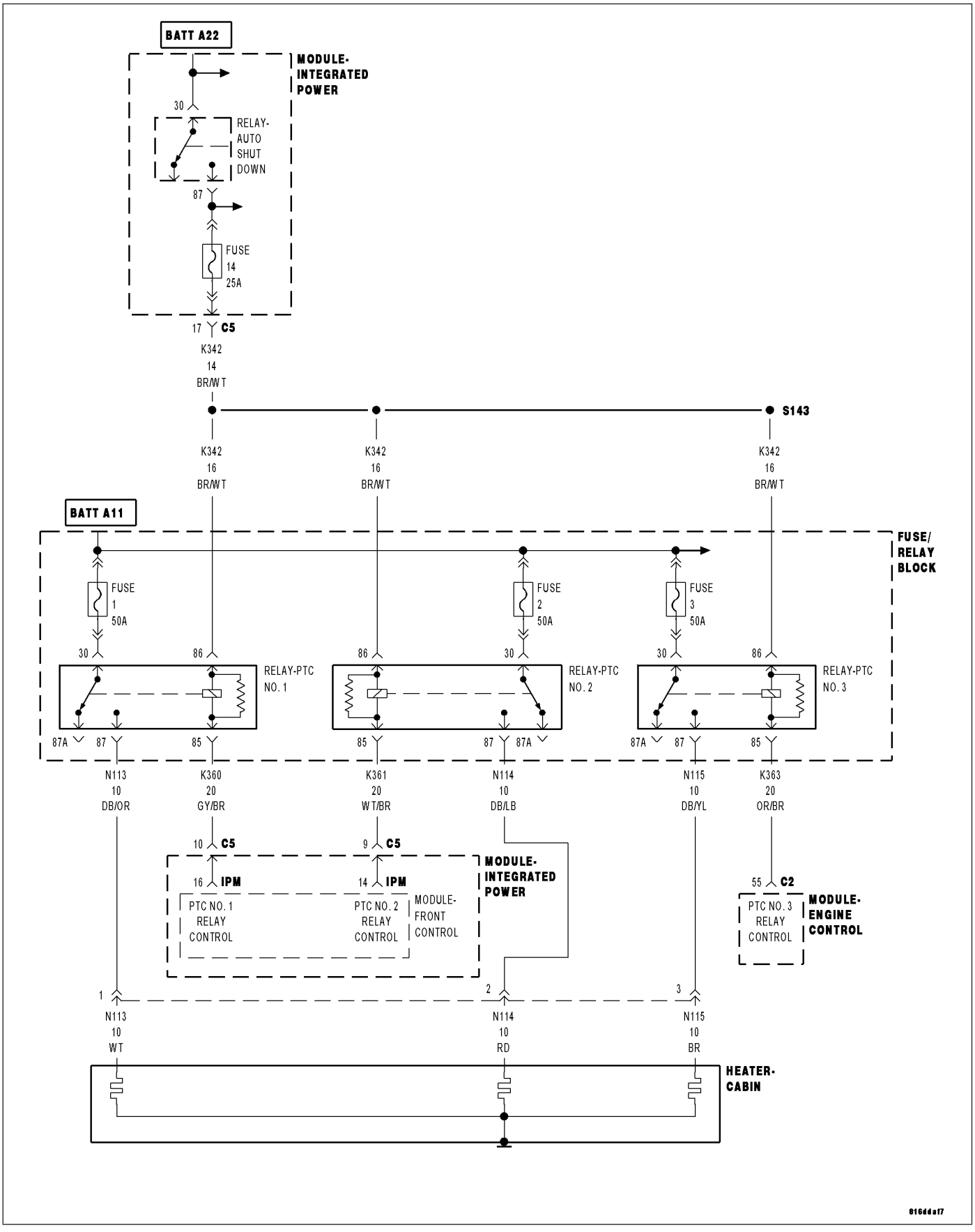

For a complete wiring diagram **Refer to Section 8W**

- **When Monitored:**
  With the ignition on, the ASD Relay energized, and the PTC No. 2 Relay command on.
- **Set Condition:**
  If the Front Control Module (FCM) detects that the (K361) PTC No. 2 Relay Control circuit is open.

Possible Causes
(K342) FUSED ASD RELAY OUTPUT CIRCUIT OPEN OR HIGH RESISTANCE
(K361) PTC NO. 2 RELAY CONTROL CIRCUIT SHORTED TO GROUND
(K361) PTC NO. 2 RELAY CONTROL CIRCUIT OPEN OR HIGH RESISTANCE
PTC NO. 2 RELAY
FRONT CONTROL MODULE (FCM)

Diagnostic Test

1. VERIFY THAT THE DTC IS ACTIVE

WARNING: WHEN THE ENGINE IS OPERATING, DO NOT STAND IN A DIRECT LINE WITH THE FAN. DO NOT PUT YOUR HANDS NEAR THE PULLEYS, BELTS OR FAN. DO NOT WEAR LOOSE CLOTHING.

NOTE: If the FCM detects and stores a DTC, the FCM also stores the environmental conditions under which the DTC was set.

NOTE: Before erasing stored DTCs, record these conditions. Attempting to duplicate these conditions may assist when checking for an active DTC.

Turn the ignition on.

With the scan tool, erase FCM DTCs.

With the scan tool, actuate the PTC No. 2 Relay.

Monitor the scan tool for at least two minutes.

With the scan tool, read FCM DTCs.

Is the status Active for this DTC?

Yes >> Go To 2

No >> Check for an intermittent condition by inspecting the related wiring harness for chaffed, pierced, pinched, and partially broken wires. Also, inspect the related connectors for broken, bent, pushed out, spread, corroded, or contaminated terminals.

2. CHECK (K342) FUSED ASD RELAY OUTPUT CIRCUIT FOR AN OPEN OR HIGH RESISTANCE

Turn the ignition off.

Remove the PTC No. 2 Relay.

Turn the ignition on.

Using a 12 volt test light connected to ground, check the (K342) Fused ASD Relay Output circuit in the PTC No. 2 Relay harness connector.

NOTE: The test light should illuminate brightly. Compare the brightness to that of a direct connection to the battery.

Does the test light illuminate brightly?

Yes >> Go To 3

No >> Repair the (K342) Fused ASD Relay Output circuit for an open or high resistance.
Perform the BODY VERIFICATION TEST VER 1. (Refer to 8 - ELECTRICAL/ELECTRONIC CONTROL MODULES/ FRONT CONTROL MODULE - DIAGNOSIS AND TESTING).

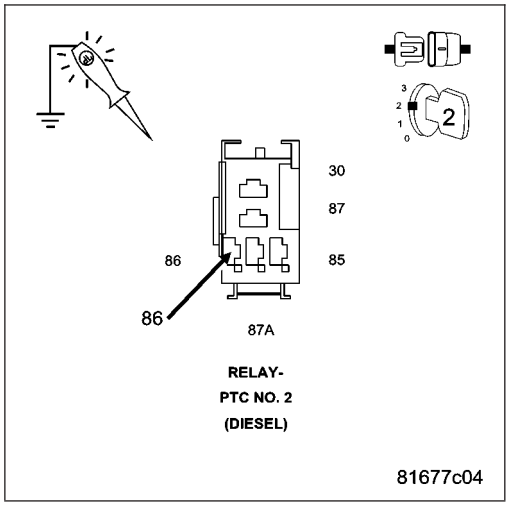

3. CHECK (K361) PTC NO. 2 RELAY CONTROL CIRCUIT FOR A SHORT TO GROUND

Turn the ignition off.

Disconnect the FCM from the Power Module.

Measure the resistance between ground and the (K361) PTC No. 2 Relay Control circuit in the PTC No. 2 Relay connector.

Is the resistance above 10.0 ohms?

Yes >> Go To 4

No >> Repair the (K361) PTC No. 2 Relay Control circuit for a short to ground.

Perform the BODY VERIFICATION TEST VER 1. (Refer to 8 - ELECTRICAL/ELECTRONIC CONTROL MODULES/ FRONT CONTROL MODULE - DIAGNOSIS AND TESTING).

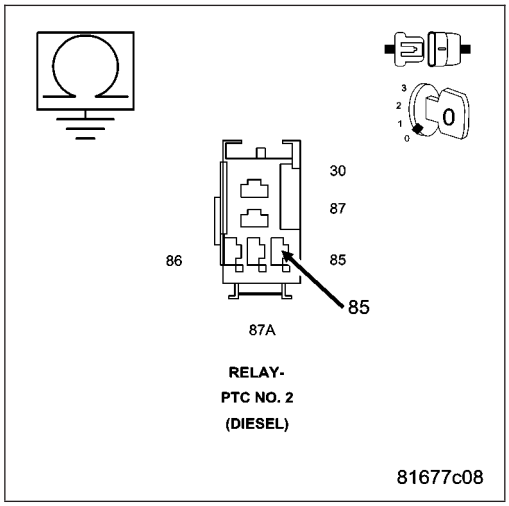

4. CHECK (K361) PTC NO. 2 RELAY CONTROL CIRCUIT FOR AN OPEN OR HIGH RESISTANCE

Measure the resistance of the (K361) PTC No. 2 Relay Control circuit between the PTC No. 2 Relay connector and the FCM connector.

Is the resistance below 10.0 ohms?

Yes >> Go To 5

No >> Repair the (K361) PTC No. 2 Relay Control circuit for an open or high resistance.

Perform the BODY VERIFICATION TEST VER 1. (Refer to 8 - ELECTRICAL/ELECTRONIC CONTROL MODULES/ FRONT CONTROL MODULE - DIAGNOSIS AND TESTING).

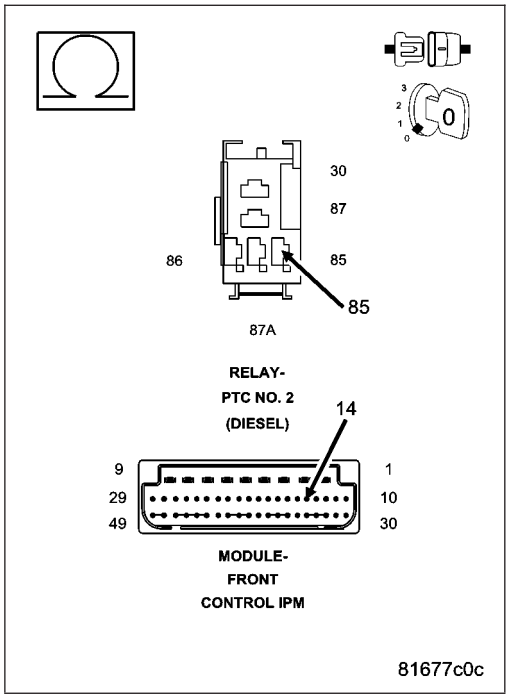

5. CHECK PTC NO. 2 RELAY

Install the FCM.

Install a substitute PTC No. 2 Relay in place of the vehicle's PTC No. 2 Relay.

Turn the ignition on.

With the scan tool, erase FCM DTCs.

With the scan tool, actuate the PTC No. 2 Relay.

Monitor the scan tool for at least two minutes.

With the scan tool, read FCM DTCs.

Is the status Active for this DTC?

Yes >> Go To 6

No >> Replace the PTC No. 2 Relay in accordance with the Service Information.

Perform the BODY VERIFICATION TEST VER 1. (Refer to 8 - ELECTRICAL/ELECTRONIC CONTROL MODULES/ FRONT CONTROL MODULE - DIAGNOSIS AND TESTING).

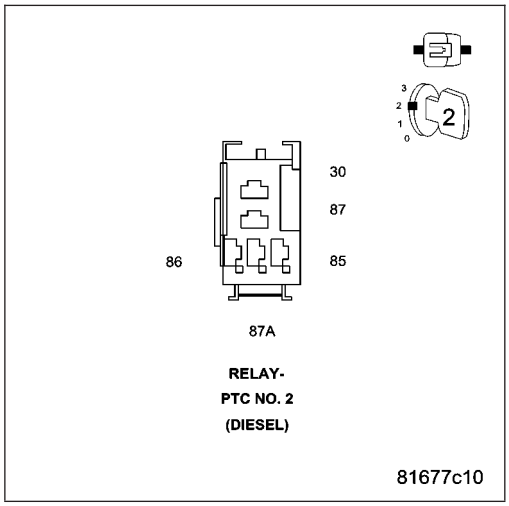

6. INSPECT RELATED WIRING & CHECK FOR TSBs

Using the wiring diagram/schematic as a guide, inspect the wiring and connectors between the PTC No. 2 Relay and the FCM.

Look for any chafed, pierced, pinched, or partially broken wires.

Look for broken, bent, pushed out or corroded terminals.

Refer to any Technical Service Bulletins that may apply.

Were any problems found?

Yes >> Repair as necessary.

Perform the BODY VERIFICATION TEST VER 1. (Refer to 8 - ELECTRICAL/ELECTRONIC CONTROL MODULES/FRONT CONTROL MODULE - DIAGNOSIS AND TESTING).

No >> Replace the FCM in accordance with the Service Information.

Perform the BODY VERIFICATION TEST VER 1. (Refer to 8 - ELECTRICAL/ELECTRONIC CONTROL MODULES/FRONT CONTROL MODULE - DIAGNOSIS AND TESTING).

B100A–RECIRCULATION SWITCH REQUEST INPUT CIRCUIT LOW (ATC)

For a complete wiring diagram **Refer to Section 8W**.

Theory of Operation

The switch input changes when the switch is pushed down. A stored DTC B100A indicates that the Recirculation mode switch was stuck in a pushed position for more than 10 minutes, but has since returned to its normal state. An active DTC B100A indicates that the Recirculation mode switch is stuck in a pushed position. An active DTC B100A will prevent proper Recirculation mode switch and status indicator function.

- **When Monitored:**
  With the ignition on.
- **Set Condition:**
  If the Recirculation mode switch stays in a pushed position for more than 10 minutes.

Possible Causes
OBJECT HOLDING RECIRCULATION MODE SWITCH IN A PUSHED POSITION
SUBSTANCE CAUSING RECIRCULATION MODE SWITCH TO GET STUCK IN A PUSHED POSITION
A/C HEATER CONTROL

Diagnostic Test

1. INSPECT THE A/C HEATER CONTROL FOR DAMAGE

Inspect the A/C Heater Control for damage.

Is the A/C Heater Control damaged?

Yes >> Replace the A/C Heater Control in accordance with the Service Information.
Perform BODY VERIFICATION TEST – VER 1. (Refer to 8 - ELECTRICAL/ELECTRONIC CONTROL MODULES/FRONT CONTROL MODULE - DIAGNOSIS AND TESTING).

No >> Go To 2

2. INSPECT FOR OBJECT OR SUBSTANCE CAUSING THE RECIRCULATION MODE SWITCH TO STAY OR STICK IN A PUSHED POSITION

Inspect the A/C Heater Control for anything that would cause the Recirculation mode switch to stay or stick in a pushed position.

Is anything present that would cause the Recirculation mode switch to stay or stick in a pushed position?

Yes >> Repair as necessary.
Perform BODY VERIFICATION TEST – VER 1. (Refer to 8 - ELECTRICAL/ELECTRONIC CONTROL MODULES/FRONT CONTROL MODULE - DIAGNOSIS AND TESTING).

No >> Go To 3

3. CHECK FOR NORMAL RECIRCULATION MODE SWITCH & STATUS INDICATOR FUNCTION

Turn the ignition on.

Set the Mode control to any position between Panel and Floor.

Press the Recirculation mode switch on and off several times while observing the Recirculation status indicator.

Does the Recirculation status indicator turn on and off?

Yes >> Go To 4

No >> Replace the A/C Heater Control in accordance with the Service Information.
Perform BODY VERIFICATION TEST – VER 1. (Refer to 8 - ELECTRICAL/ELECTRONIC CONTROL MODULES/FRONT CONTROL MODULE - DIAGNOSIS AND TESTING).

4. VERIFY THAT DTC B100A–RECIRCULATION SWITCH REQUEST INPUT CIRCUIT LOW IS STILL ACTIVE

With the scan tool, erase HVAC DTCs.

Turn the ignition off, wait 10 seconds, and then turn the ignition on. Wait 10 minutes before proceeding.

With the scan tool, read HVAC DTCs.

Does the scan tool display active: B100A–RECIRCULATION SWITCH REQUEST INPUT CIRCUIT LOW?

Yes >> Replace the A/C Heater Control in accordance with the Service Information.
Perform BODY VERIFICATION TEST – VER 1. (Refer to 8 - ELECTRICAL/ELECTRONIC CONTROL MODULES/FRONT CONTROL MODULE - DIAGNOSIS AND TESTING).

No >> Perform BODY VERIFICATION TEST – VER 1. (Refer to 8 - ELECTRICAL/ELECTRONIC CONTROL MODULES/FRONT CONTROL MODULE - DIAGNOSIS AND TESTING).

B105B–RECIRCULATION DOOR CONTROL CIRCUIT OPEN (ATC)

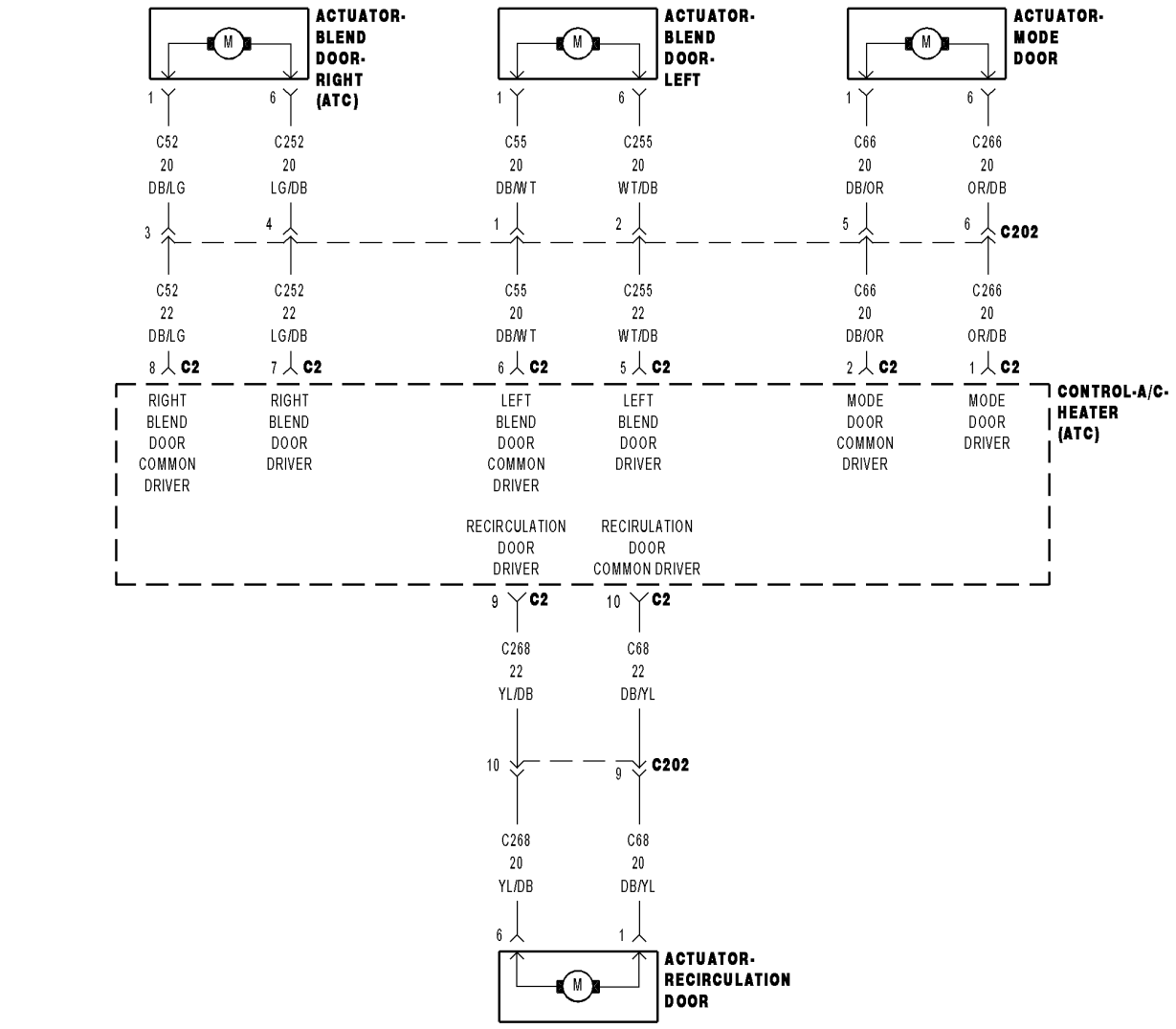

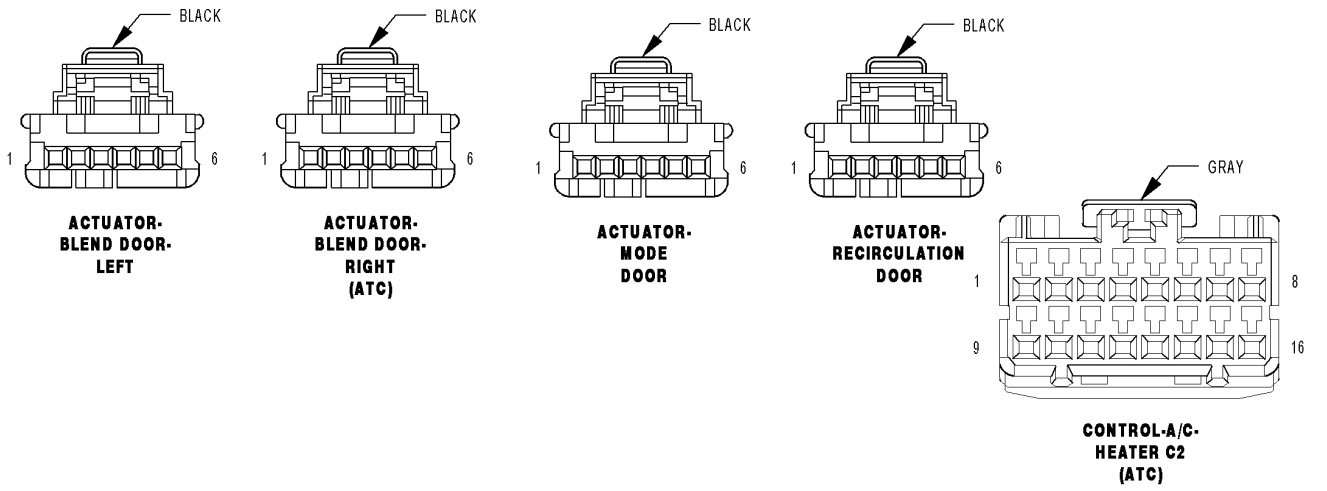

815f41be

For a complete wiring diagram **Refer to Section 8W**.

- **When Monitored:**
  When actuator movement is requested.
- **Set Condition:**
  If the (C268) Recirculation Door Driver circuit or the (C68) Recirculation Door Common Driver circuit is open.

Possible Causes
(C268) RECIRCULATION DOOR DRIVER CIRCUIT OPEN
(C68) RECIRCULATION DOOR COMMON DRIVER CIRCUIT OPEN
RECIRCULATION DOOR ACTUATOR
A/C HEATER CONTROL

Diagnostic Test

1. CHECK FOR ACTIVE CONTROL CIRCUIT/PERFORMANCE DTCs

Turn the ignition on.

With the scan tool, read active HVAC DTCs.

Does the scan tool display any active: XXXX CONTROL CIRCUIT/PERFORMANCE DTCs?

Yes >> Diagnose and repair the DTC(s). Refer to the Table of Contents in this Section for a complete list of all HVAC related symptoms.

No >> Go To 2

2. CHECK THE RECIRCULATION DOOR ACTUATOR CIRCUIT RESISTANCE

Turn the ignition off.

Disconnect the A/C Heater Control C2 harness connector.

Measure the resistance between the (C268) Recirculation Door Driver circuit and the (C68) Recirculation Door Common Driver circuit in the A/C Heater Control C2 harness connector.

Is the resistance above 70.0 ohms?

Yes >> Go To 3

No >> Replace the A/C Heater Control in accordance with the Service Information.
Perform BODY VERIFICATION TEST – VER 1. (Refer to 8 - ELECTRICAL/ELECTRONIC CONTROL MODULES/ FRONT CONTROL MODULE - DIAGNOSIS AND TESTING).

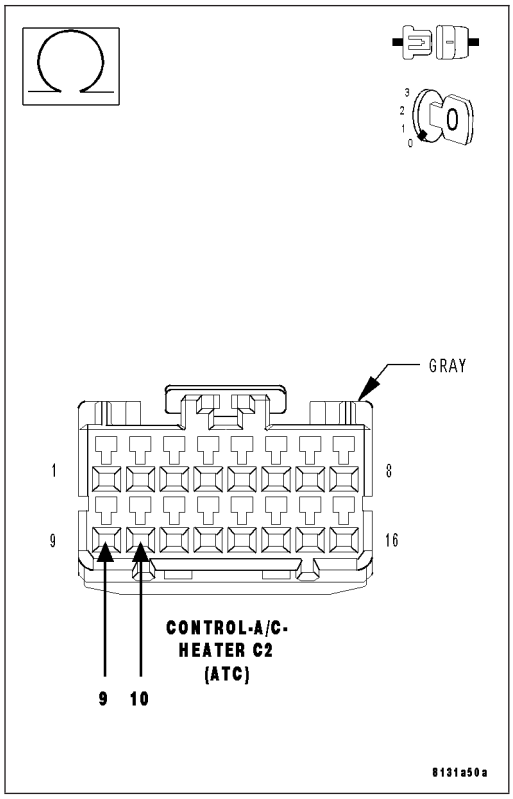

3. CHECK THE (C268) RECIRCULATION DOOR DRIVER CIRCUIT FOR AN OPEN

Disconnect the Recirculation Door Actuator harness connector.

Measure the resistance of the (C268) Recirculation Door Driver circuit between the Recirculation Door Actuator harness connector and the A/C Heater Control C2 harness connector.

Is the resistance below 5.0 ohms?

Yes >> Go To 4

No >> Repair the (C268) Recirculation Door Driver circuit for an open.

Perform BODY VERIFICATION TEST – VER 1. (Refer to 8 - ELECTRICAL/ELECTRONIC CONTROL MODULES/ FRONT CONTROL MODULE - DIAGNOSIS AND TESTING).

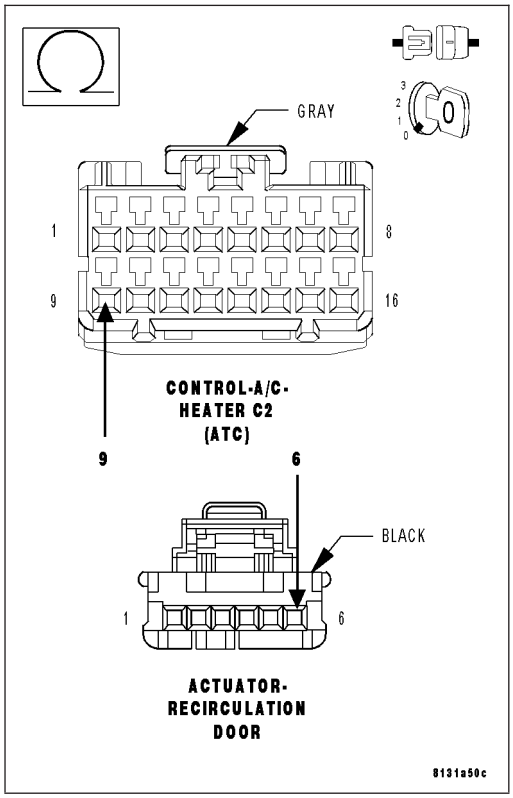

4. CHECK THE (C68) RECIRCULATION DOOR COMMON DRIVER CIRCUIT FOR AN OPEN

Measure the resistance of the (C68) Recirculation Door Common Driver circuit between the Recirculation Door Actuator harness connector and the A/C Heater Control C2 harness connector.

Is the resistance below 5.0 ohms?

Yes >> Replace the Recirculation Door Actuator in accordance with the Service Information.

Perform BODY VERIFICATION TEST – VER 1. (Refer to 8 - ELECTRICAL/ELECTRONIC CONTROL MODULES/ FRONT CONTROL MODULE - DIAGNOSIS AND TESTING).

No >> Repair the (C68) Recirculation Door Common Driver circuit for an open.

Perform BODY VERIFICATION TEST – VER 1. (Refer to 8 - ELECTRICAL/ELECTRONIC CONTROL MODULES/ FRONT CONTROL MODULE - DIAGNOSIS AND TESTING).

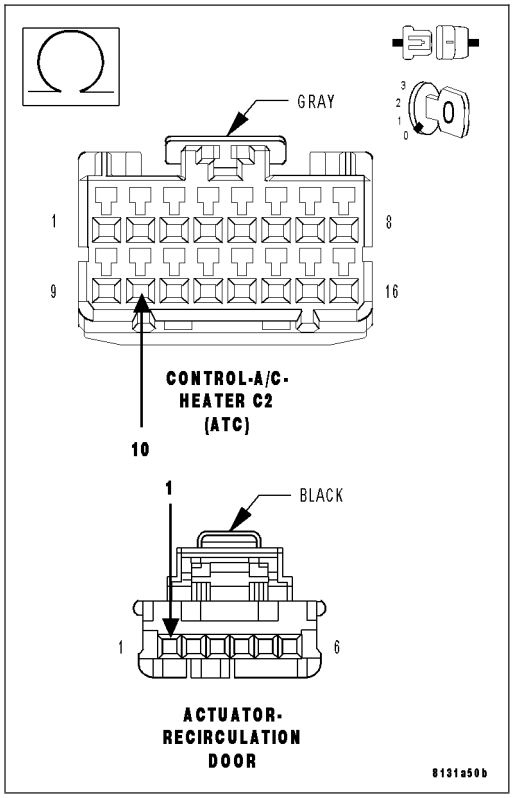

B105C–RECIRCULATION DOOR TRAVEL RANGE TOO SMALL (ATC)

For a complete wiring diagram **Refer to Section 8W**.

Theory of Operation

The A/C Heater Control calibrates each actuator individually. Automatic calibration occurs upon power up after installing a new A/C Heater Control. Manual calibration occurs by sending a command with the scan tool. The purpose of actuator calibration is to determine the total span of door travel between physical stops. To calibrate the actuator, the A/C Heater Control first moves the door to its soft stop, and then counts the number of pulses it takes to move the door to its other stop. An expected range of span is stored in the control's memory. If the measured calibration value is less than the expected range for this actuator, this DTC will set. Note that the control clears all stored calibration faults at the beginning of the calibration procedure.

- **When Monitored:**
  During actuator calibration.
- **Set Condition:**
  If the total span of the Recirculation Door is less than the low range limit.

Possible Causes
DOOR DRIVER ELECTRICAL CIRCUIT(S)
RECIRCULATION DOOR SEIZED, BINDING, OBSTRUCTED
RECIRCULATION DOOR ACTUATOR
A/C HEATER CONTROL

Diagnostic Test

1. CHECK FOR ACTIVE CONTROL CIRCUIT/PERFORMANCE & CONTROL CIRCUIT OPEN DTCs

Turn the ignition on.

With the scan tool, read active HVAC DTCs.

Does the scan tool display any active: XXXX CONTROL CIRCUIT/PERFORMANCE or XXXX CONTROL CIRCUIT OPEN DTCs?

Yes >> Diagnose and repair the DTC(s). If present, diagnose and repair all Control Circuit/Performance DTCs before diagnosing Control Circuit Open DTCs. Refer to the Table of Contents in this Section for a complete list of all HVAC related symptoms.

No >> Go To 2

2. INSPECT ACTUATOR & HOUSING ASSEMBLY FOR A CONDITION CAUSING THE RECIRCULATION DOOR TO SEIZE OR BIND

Turn the ignition off.

Inspect the actuator, linkage, and housing assembly for a condition causing the recirculation door to seize or bind.

Are there any physical or mechanical problems with the door, housing, linkage, or actuator?

Yes >> Repair as necessary in accordance with the Service Information.
Perform BODY VERIFICATION TEST – VER 1. (Refer to 8 - ELECTRICAL/ELECTRONIC CONTROL MODULES/FRONT CONTROL MODULE - DIAGNOSIS AND TESTING).

No >> Go To 3

3. CHECK RECIRCULATION DOOR TRAVEL

Remove the Recirculation Door Actuator from the A/C Heater Housing Assembly.

By hand, attempt to rotate the door in both directions. The door should operate smoothly in both directions over the entire span of travel (approximately 100 degrees).

Does the door operate smoothly in both directions over the entire span of travel?

Yes >> Replace the Recirculation Door Actuator in accordance with the Service Information. Then, Go To 4.

No >> Repair as necessary in accordance with the Service Information.
Perform BODY VERIFICATION TEST – VER 1. (Refer to 8 - ELECTRICAL/ELECTRONIC CONTROL MODULES/FRONT CONTROL MODULE - DIAGNOSIS AND TESTING).

4. RUN THE ACTUATOR CALIBRATION TEST

Turn the ignition on.

With the scan tool, select System Tests and then select Actuator Calibration Test. When the test is complete, select View DTCs.

Does the scan tool display: B105C–RECIRCULATION DOOR TRAVEL RANGE TOO SMALL?

Yes >> Replace the A/C Heater Control in accordance with the Service Information.
Perform BODY VERIFICATION TEST – VER 1. (Refer to 8 - ELECTRICAL/ELECTRONIC CONTROL MODULES/FRONT CONTROL MODULE - DIAGNOSIS AND TESTING).

No >> Perform BODY VERIFICATION TEST – VER 1. (Refer to 8 - ELECTRICAL/ELECTRONIC CONTROL MODULES/FRONT CONTROL MODULE - DIAGNOSIS AND TESTING).

B105D–RECIRCULATION DOOR TRAVEL RANGE TOO LARGE (ATC)

For a complete wiring diagram **Refer to Section 8W**.

Theory of Operation

The A/C Heater Control calibrates each actuator individually. Automatic calibration occurs upon power up after installing a new A/C Heater Control. Manual calibration occurs by sending a command with the scan tool. The purpose of actuator calibration is to determine the total span of door travel between physical stops. To calibrate the actuator, the A/C Heater Control first moves the door to its soft stop, and then counts the number of pulses it takes to move the door to its other stop. An expected range of span is stored in the control's memory. If the measured calibration value exceeds the expected range for this actuator, this DTC will set. Note that the control clears all stored calibration faults at the beginning of the calibration procedure.

- **When Monitored:**
  During actuator calibration.
- **Set Condition:**
  If the total span of the Recirculation Door exceeds the high range limit.

Possible Causes
DOOR DRIVER ELECTRICAL CIRCUIT(S)
RECIRCULATION DOOR OR A/C HEATER HOUSING COMPONENTS WARPED, WORN, DAMAGED, MISSING, BROKEN
RECIRCULATION DOOR ACTUATOR
A/C HEATER CONTROL

Diagnostic Test

1. CHECK FOR ACTIVE CONTROL CIRCUIT/PERFORMANCE & CONTROL CIRCUIT OPEN DTCs

Turn the ignition on.

With the scan tool, read active HVAC DTCs.

Does the scan tool display any active: XXXX CONTROL CIRCUIT/PERFORMANCE or XXXX CONTROL CIRCUIT OPEN DTCs?

Yes >> Diagnose and repair the DTC(s). If present, diagnose and repair all Control Circuit/Performance DTCs before diagnosing Control Circuit Open DTCs. Refer to the Table of Contents in this Section for a complete list of all HVAC related symptoms.

No >> Go To 2

2. CHECK FOR A BROKEN RECIRCULATION DOOR ACTUATOR

Turn the ignition off.

Remove the Recirculation Door Actuator from the A/C Heater Housing Assembly.

By hand, attempt to rotate the actuator in both directions.

Does the actuator turn in either direction?

Yes >> Replace the Recirculation Door Actuator in accordance with the Service Information.
Perform BODY VERIFICATION TEST – VER 1. (Refer to 8 - ELECTRICAL/ELECTRONIC CONTROL MODULES/FRONT CONTROL MODULE - DIAGNOSIS AND TESTING).

No >> Go To 3

3. CHECK THE RECIRCULATION DOOR & A/C HEATER HOUSING FOR WARPED, WORN, DAMAGED, MISSING, & BROKEN COMPONENTS

Inspect for excessively worn, disconnected, missing, or broken door linkage. Inspect for a damaged or broken A/C Heater Housing Assembly. Inspect for a warped or broken door, and missing door seals. Rotate the door from stop to stop. The door should rotate approximately 100 degrees.

Are there any physical or mechanical problems with the door or housing?

Yes >> Repair as necessary in accordance with the Service Information.
Perform BODY VERIFICATION TEST – VER 1. (Refer to 8 - ELECTRICAL/ELECTRONIC CONTROL MODULES/FRONT CONTROL MODULE - DIAGNOSIS AND TESTING).

No >> Replace the Recirculation Door Actuator in accordance with the Service Information. Then, Go To 4.

4. RUN THE ACTUATOR CALIBRATION TEST

Turn the ignition on.

With the scan tool, select System Tests and then select Actuator Calibration Test. When the test is complete, select View DTCs.

Does the scan tool display: B105D–RECIRCULATION DOOR TRAVEL RANGE TOO LARGE?

Yes >> Replace the A/C Heater Control in accordance with the Service Information.
Perform BODY VERIFICATION TEST – VER 1. (Refer to 8 - ELECTRICAL/ELECTRONIC CONTROL MODULES/FRONT CONTROL MODULE - DIAGNOSIS AND TESTING).

No >> Perform BODY VERIFICATION TEST – VER 1. (Refer to 8 - ELECTRICAL/ELECTRONIC CONTROL MODULES/FRONT CONTROL MODULE - DIAGNOSIS AND TESTING).

B106B–REAR DEFROST CONTROL CIRCUIT LOW (ATC)

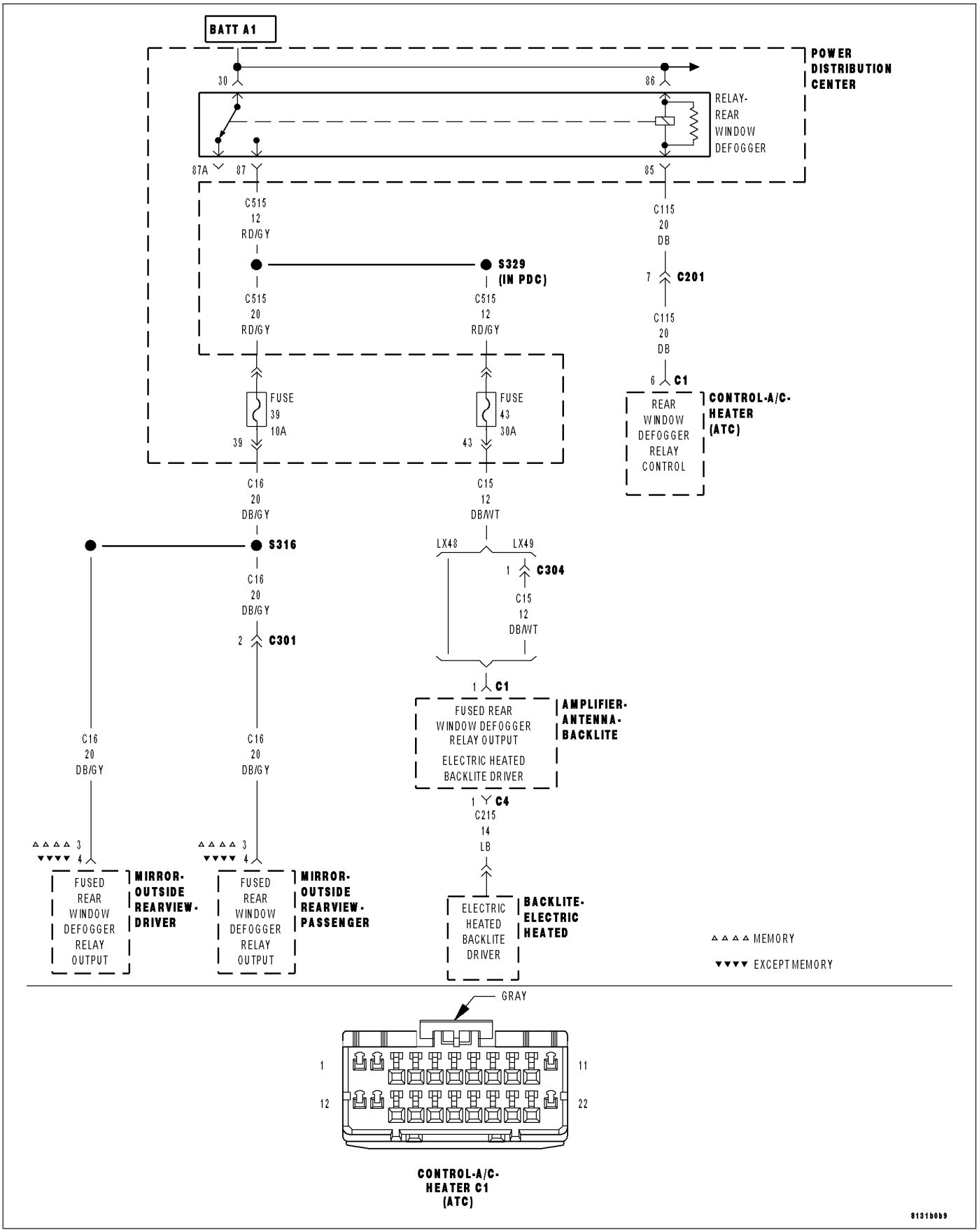

For a complete wiring diagram **Refer to Section 8W**.

- **When Monitored:**
  With ignition on.
- **Set Condition:**
  If the EBL output is turned off and the (C115) Rear Window Defogger Relay Control circuit is either shorted to ground or open.

Possible Causes
(C115) REAR WINDOW DEFOGGER RELAY CONTROL CIRCUIT SHORTED TO GROUND
(C115) REAR WINDOW DEFOGGER RELAY CONTROL CIRCUIT OPEN
REAR WINDOW DEFOGGER RELAY
A/C HEATER CONTROL

NOTE: This DTC must be active for the results of this test to be valid. Do not perform this test if this DTC is stored. Refer to HVAC System Test (ATC) for stored DTC test procedures.

Diagnostic Test

1. INSTALL A SUBSTITUTE REAR WINDOW DEFOGGER RELAY & THEN CHECK FOR DTC B106B–REAR DEFROST CONTROL CIRCUIT LOW

Turn the ignition on.
Verify that the EBL mode switch is off.
Turn the ignition off.
Install a substitute Rear Window Defogger Relay.
Turn the ignition on.
With the scan tool, erase HVAC DTCs.
Turn the ignition off, wait 10 seconds, and turn the ignition on.
With the scan tool, read HVAC DTCs.

Does the scan tool display: B106B–REAR DEFROST CONTROL CIRCUIT LOW?

Yes >> Go To 2

No >> Replace the original Rear Window Defogger Relay in accordance with the Service Information.
Perform BODY VERIFICATION TEST – VER 1. (Refer to 8 - ELECTRICAL/ELECTRONIC CONTROL MODULES/ FRONT CONTROL MODULE - DIAGNOSIS AND TESTING).

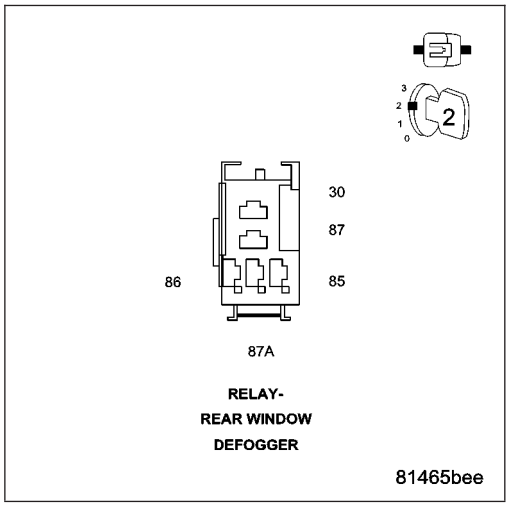

2. CHECK (C115) REAR WINDOW DEFOGGER RELAY CONTROL CIRCUIT FOR A SHORT TO GROUND

Turn the ignition off.

Remove the substitute Rear Window Defogger Relay.

Disconnect the A/C Heater Control C1 harness connector.

Measure the resistance of the (C115) Rear Window Defogger Relay Control circuit between ground and the A/C Heater Control C1 harness connector.

Is the resistance below 10k ohms?

Yes >> Repair the (C115) Rear Window Defogger Relay Control circuit for a short to ground. Reinstall the original Rear Window Defogger Relay.

Perform BODY VERIFICATION TEST – VER 1. (Refer to 8 - ELECTRICAL/ELECTRONIC CONTROL MODULES/ FRONT CONTROL MODULE - DIAGNOSIS AND TESTING).

No >> Go To 3

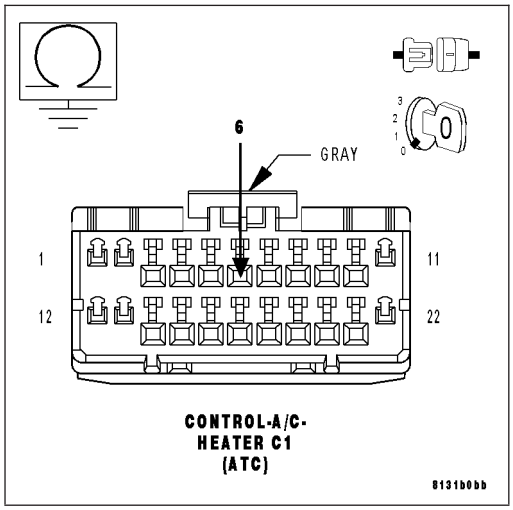

3. CHECK (C115) REAR WINDOW DEFOGGER RELAY CONTROL CIRCUIT FOR AN OPEN

Measure the resistance of the (C115) Rear Window Defogger Relay Control circuit between the Rear Window Defogger Relay connector terminal 85 in the PDC and the A/C Heater Control C1 harness connector.

Is the resistance below 5.0 ohms?

Yes >> Replace the A/C Heater Control in accordance with the Service Information. Reinstall the original Rear Window Defogger Relay.

Perform BODY VERIFICATION TEST – VER 1. (Refer to 8 - ELECTRICAL/ELECTRONIC CONTROL MODULES/ FRONT CONTROL MODULE - DIAGNOSIS AND TESTING).

No >> Repair the (C115) Rear Window Defogger Relay Control circuit for an open. Reinstall the original Rear Window Defogger Relay.

Perform BODY VERIFICATION TEST – VER 1. (Refer to 8 - ELECTRICAL/ELECTRONIC CONTROL MODULES/ FRONT CONTROL MODULE - DIAGNOSIS AND TESTING).

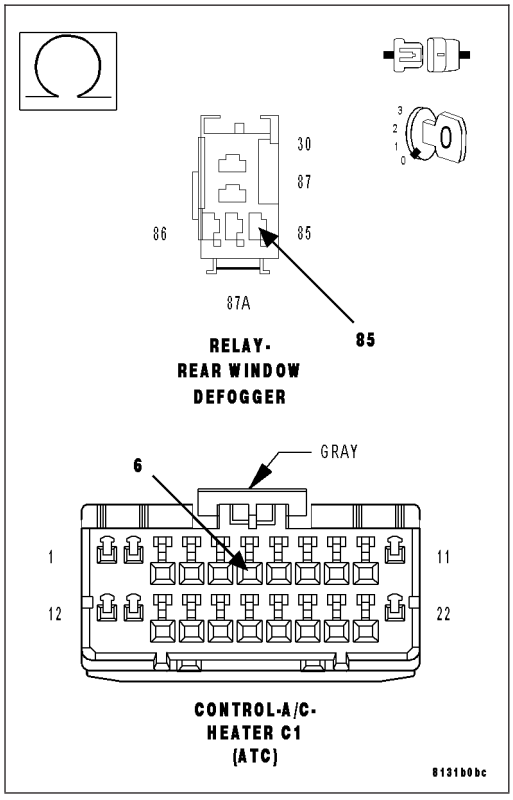

B106C–REAR DEFROST CONTROL CIRCUIT HIGH (ATC)

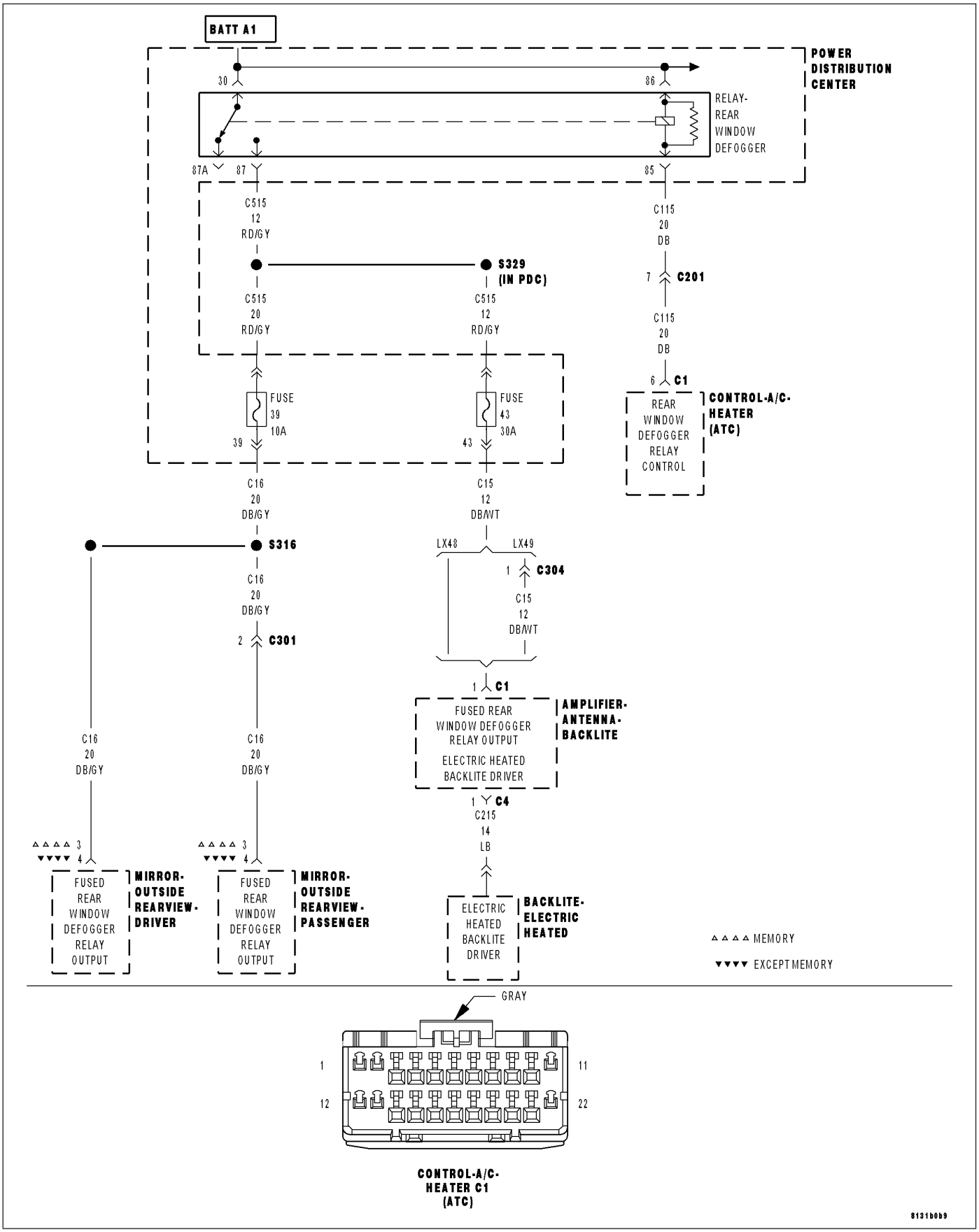

For a complete wiring diagram **Refer to Section 8W**.

- **When Monitored:**
  With ignition on.
- **Set Condition:**
  If the EBL output is turned on and the (C115) Rear Window Defogger Relay Control circuit is either shorted to voltage or open.

Possible Causes
(C115) REAR WINDOW DEFOGGER RELAY CONTROL CIRCUIT SHORTED TO VOLTAGE
(C115) REAR WINDOW DEFOGGER RELAY CONTROL CIRCUIT OPEN
REAR WINDOW DEFOGGER RELAY
A/C HEATER CONTROL

NOTE: This DTC must be active for the results of this test to be valid. Do not perform this test if this DTC is stored. Refer to HVAC System Test (ATC) for stored DTC test procedures.

Diagnostic Test

1. INSTALL A SUBSTITUTE REAR WINDOW DEFOGGER RELAY & THEN CHECK FOR DTC B106C–REAR DEFROST CONTROL CIRCUIT HIGH

Turn the ignition on.
Verify that the EBL mode switch is off.
Turn the ignition off.
Install a substitute Rear Window Defogger Relay.
Turn the ignition on.
With the scan tool, erase HVAC DTCs.
Turn the ignition off, wait 10 seconds, and turn the ignition on.
Press the EBL mode switch is on.
With the scan tool, read HVAC DTCs.

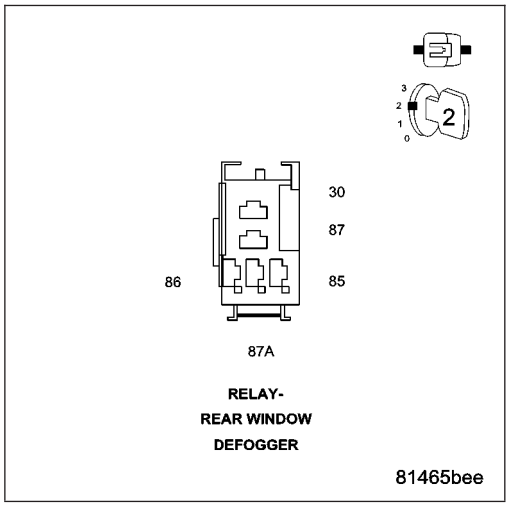

Does the scan tool display: B106C–REAR DEFROST CONTROL CIRCUIT HIGH?

Yes >> Go To 2

No >> Replace the original Rear Window Defogger Relay in accordance with the Service Information.
Perform BODY VERIFICATION TEST – VER 1. (Refer to 8 - ELECTRICAL/ELECTRONIC CONTROL MODULES/ FRONT CONTROL MODULE - DIAGNOSIS AND TESTING).

2. CHECK (C115) REAR WINDOW DEFOGGER RELAY CONTROL CIRCUIT FOR A SHORT TO VOLTAGE

Turn the ignition on.

Verify that the EBL mode switch is off.

Turn the ignition off.

Remove the substitute Rear Window Defogger Relay.

Disconnect the A/C Heater Control C1 harness connector.

Turn the ignition on.

Measure the voltage of the (C115) Rear Window Defogger Relay Control circuit.

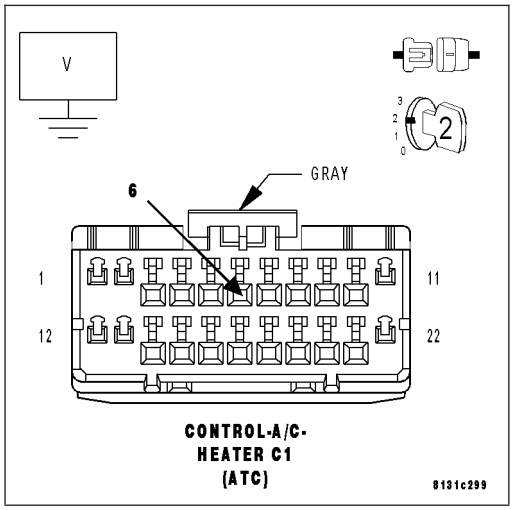

Is the voltage above 0.2 volts?

Yes >> Repair the (C115) Rear Window Defogger Relay Control circuit for a short to voltage. Reinstall the original Rear Window Defogger Relay.

Perform BODY VERIFICATION TEST – VER 1. (Refer to 8 - ELECTRICAL/ELECTRONIC CONTROL MODULES/ FRONT CONTROL MODULE - DIAGNOSIS AND TESTING).

No >> Go To 3

3. CHECK (C115) REAR WINDOW DEFOGGER RELAY CONTROL CIRCUIT FOR AN OPEN

Turn the ignition off.

Measure the resistance of the (C115) Rear Window Defogger Relay Control circuit between the Rear Window Defogger Relay connector terminal 85 in the PDC and the A/C Heater Control C1 harness connector.

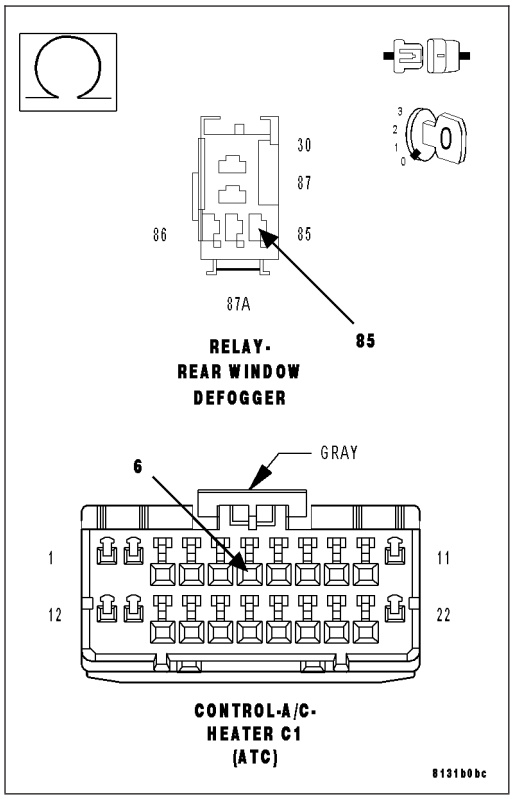

Is the resistance below 5.0 ohms?

Yes >> Replace the A/C Heater Control in accordance with the Service Information. Reinstall the original Rear Window Defogger Relay.

Perform BODY VERIFICATION TEST – VER 1. (Refer to 8 - ELECTRICAL/ELECTRONIC CONTROL MODULES/ FRONT CONTROL MODULE - DIAGNOSIS AND TESTING).

No >> Repair the (C115) Rear Window Defogger Relay Control circuit for an open. Reinstall the original Rear Window Defogger Relay.

Perform BODY VERIFICATION TEST – VER 1. (Refer to 8 - ELECTRICAL/ELECTRONIC CONTROL MODULES/ FRONT CONTROL MODULE - DIAGNOSIS AND TESTING).

B1001–A/C SWITCH REQUEST INPUT CIRCUIT LOW (ATC)

For a complete wiring diagram **Refer to Section 8W**.

Theory of Operation

The switch input changes when the switch is pushed down. A stored DTC B1001 indicates that the A/C mode switch was stuck in a pushed position for more than 10 minutes, but has since returned to its normal state. An active DTC B1001 indicates that the A/C mode switch is stuck in a pushed position. An active DTC B1001 will prevent proper A/C mode switch and status indicator function.

- **When Monitored:**
  With the ignition on.
- **Set Condition:**
  If the A/C mode switch stays in a pushed position for more than 10 minutes.

Possible Causes
OBJECT HOLDING A/C MODE SWITCH IN A PUSHED POSITION
SUBSTANCE CAUSING A/C MODE SWITCH TO GET STUCK IN A PUSHED POSITION
A/C HEATER CONTROL

Diagnostic Test

1. INSPECT THE A/C HEATER CONTROL FOR DAMAGE

Inspect the A/C Heater Control for damage.

Is the A/C Heater Control damaged?

Yes >> Replace the A/C Heater Control in accordance with the Service Information.
Perform BODY VERIFICATION TEST – VER 1. (Refer to 8 - ELECTRICAL/ELECTRONIC CONTROL MODULES/FRONT CONTROL MODULE - DIAGNOSIS AND TESTING).

No >> Go To 2

2. INSPECT FOR OBJECT OR SUBSTANCE CAUSING THE A/C MODE SWITCH TO STAY OR STICK IN A PUSHED POSITION

Inspect the A/C Heater Control for anything that would cause the A/C mode switch to stay or stick in a pushed position.

Is anything present that would cause the A/C mode switch to stay or stick in a pushed position?

Yes >> Repair as necessary.
Perform BODY VERIFICATION TEST – VER 1. (Refer to 8 - ELECTRICAL/ELECTRONIC CONTROL MODULES/FRONT CONTROL MODULE - DIAGNOSIS AND TESTING).

No >> Go To 3

3. CHECK FOR NORMAL A/C MODE SWITCH & STATUS INDICATOR FUNCTION

Turn the ignition on.

Set the Blower control to any position except Off.

Set the Mode control to any position except Auto.

Press the A/C mode switch on and off several times while observing the A/C status indicator.

Does the A/C status indicator turn on and off?

Yes >> Go To 4

No >> Replace the A/C Heater Control in accordance with the Service Information.
Perform BODY VERIFICATION TEST – VER 1. (Refer to 8 - ELECTRICAL/ELECTRONIC CONTROL MODULES/FRONT CONTROL MODULE - DIAGNOSIS AND TESTING).

4. VERIFY THAT DTC B1001–A/C SWITCH REQUEST INPUT CIRCUIT LOW IS STILL ACTIVE

With the scan tool, erase HVAC DTCs.

Turn the ignition off, wait 10 seconds, and then turn the ignition on. Wait 10 minutes before proceeding.

With the scan tool, read HVAC DTCs.

Does the scan tool display active: B1001–A/C SWITCH REQUEST INPUT CIRCUIT LOW?

Yes >> Replace the A/C Heater Control in accordance with the Service Information.
Perform BODY VERIFICATION TEST – VER 1. (Refer to 8 - ELECTRICAL/ELECTRONIC CONTROL MODULES/FRONT CONTROL MODULE - DIAGNOSIS AND TESTING).

No >> Perform BODY VERIFICATION TEST – VER 1. (Refer to 8 - ELECTRICAL/ELECTRONIC CONTROL MODULES/FRONT CONTROL MODULE - DIAGNOSIS AND TESTING).

B1016–REAR DEFROST SWITCH REQUEST INPUT CIRCUIT LOW (ATC)

For a complete wiring diagram **Refer to Section 8W**.

Theory of Operation

The switch input changes when the switch is pushed down. A stored DTC B1016 indicates that the EBL mode switch was stuck in a pushed position for more than 10 minutes, but has since returned to its normal state. An active DTC B1016 indicates that the EBL mode switch is stuck in a pushed position. An active DTC B1016 will prevent proper EBL mode switch and status indicator function.

- **When Monitored:**
  With the ignition on.
- **Set Condition:**
  If the EBL mode switch stays in a pushed position for more than 10 minutes.

Possible Causes
OBJECT HOLDING EBL MODE SWITCH IN A PUSHED POSITION
SUBSTANCE CAUSING EBL MODE SWITCH TO GET STUCK IN A PUSHED POSITION
A/C HEATER CONTROL

Diagnostic Test

1. INSPECT THE A/C HEATER CONTROL FOR DAMAGE

Inspect the A/C Heater Control for damage.

Is the A/C Heater Control damaged?

Yes >> Replace the A/C Heater Control in accordance with the Service Information.
Perform BODY VERIFICATION TEST – VER 1. (Refer to 8 - ELECTRICAL/ELECTRONIC CONTROL MODULES/FRONT CONTROL MODULE - DIAGNOSIS AND TESTING).

No >> Go To 2

2. INSPECT FOR OBJECT OR SUBSTANCE CAUSING THE EBL MODE SWITCH TO STAY OR STICK IN A PUSHED POSITION

Inspect the A/C Heater Control for anything that would cause the EBL mode switch to stay or stick in a pushed position.

Is anything present that would cause the EBL mode switch to stay or stick in a pushed position?

Yes >> Repair as necessary.
Perform BODY VERIFICATION TEST – VER 1. (Refer to 8 - ELECTRICAL/ELECTRONIC CONTROL MODULES/FRONT CONTROL MODULE - DIAGNOSIS AND TESTING).

No >> Go To 3

3. CHECK FOR NORMAL EBL MODE SWITCH & STATUS INDICATOR FUNCTION

Turn the ignition on.

Press the EBL mode switch on and off several times while observing the EBL status indicator.

Does the EBL status indicator turn on and off?

Yes >> Go To 4

No >> Replace the A/C Heater Control in accordance with the Service Information.
Perform BODY VERIFICATION TEST – VER 1. (Refer to 8 - ELECTRICAL/ELECTRONIC CONTROL MODULES/FRONT CONTROL MODULE - DIAGNOSIS AND TESTING).

4. VERIFY THAT DTC B1016–REAR DEFROST SWITCH REQUEST INPUT CIRCUIT LOW IS STILL ACTIVE

With the scan tool, erase HVAC DTCs.

Turn the ignition off, wait 10 seconds, and then turn the ignition on. Wait 10 minutes before proceeding.

With the scan tool, read HVAC DTCs.

Does the scan tool display active: B1016–REAR DEFROST SWITCH REQUEST INPUT CIRCUIT LOW?

Yes >> Replace the A/C Heater Control in accordance with the Service Information.
Perform BODY VERIFICATION TEST – VER 1. (Refer to 8 - ELECTRICAL/ELECTRONIC CONTROL MODULES/FRONT CONTROL MODULE - DIAGNOSIS AND TESTING).

No >> Perform BODY VERIFICATION TEST – VER 1. (Refer to 8 - ELECTRICAL/ELECTRONIC CONTROL MODULES/FRONT CONTROL MODULE - DIAGNOSIS AND TESTING).

B1031–EVAPORATOR FIN TEMPERATURE SENSOR CIRCUIT LOW (ATC)

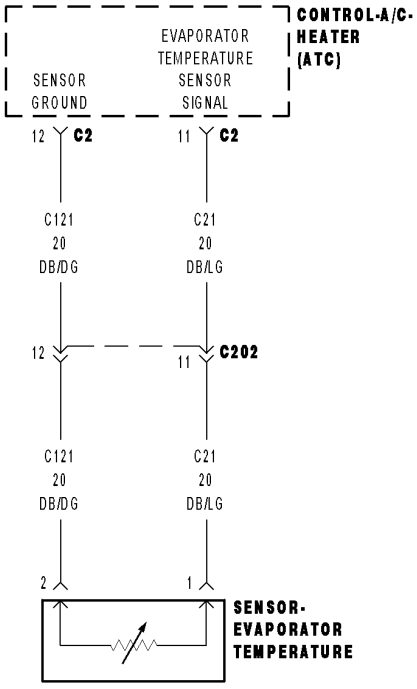

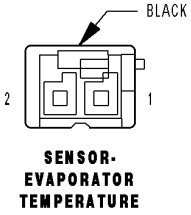

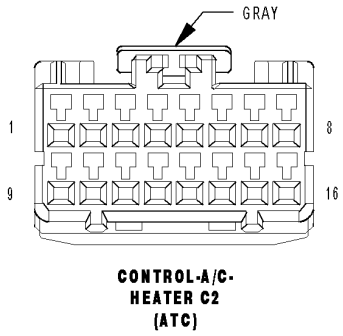

812d10d9

For a complete wiring diagram **Refer to Section 8W**.

- **When Monitored:**
  With the ignition on.
- **Set Condition:**
  If the Evaporator Temperature Sensor input is out of range toward the low voltage threshold.

Possible Causes
(C21) EVAPORATOR TEMPERATURE SENSOR SIGNAL CIRCUIT SHORTED TO GROUND
(C21) EVAPORATOR TEMPERATURE SENSOR SIGNAL CIRCUIT SHORTED TO (C121) SENSOR GROUND CIRCUIT
EVAPORATOR TEMPERATURE SENSOR
A/C HEATER CONTROL

NOTE: This DTC must be active for the results of this test to be valid. Do not perform this test if this DTC is stored. Refer to HVAC System Test (ATC) for stored DTC test procedures.

Diagnostic Test

1. CHECK FOR DTC B1031–EVAPORATOR FIN TEMPERATURE SENSOR CIRCUIT LOW WITH EVAPORATOR TEMPERATURE SENSOR HARNESS CONNECTOR DISCONNECTED

Turn the ignition off.
Disconnect the Evaporator Temperature Sensor harness connector.
Turn the ignition on.
With the scan tool, erase HVAC DTCs.
Turn the ignition off, wait 10 seconds, and turn the ignition on.
With the scan tool, read HVAC DTCs.

Does the scan tool display: B1031–EVAPORATOR FIN TEMPERATURE SENSOR CIRCUIT LOW?

Yes >> Go To 2

No >> Replace the Evaporator Temperature Sensor in accordance with the Service Information.
Perform BODY VERIFICATION TEST – VER 1. (Refer to 8 - ELECTRICAL/ELECTRONIC CONTROL MODULES/ FRONT CONTROL MODULE - DIAGNOSIS AND TESTING).

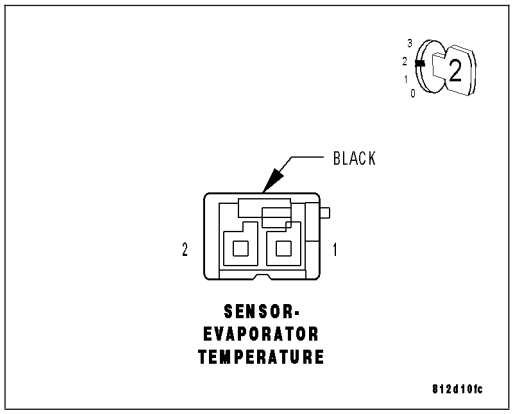

2. CHECK (C21) EVAPORATOR TEMPERATURE SENSOR SIGNAL CIRCUIT FOR A SHORT TO GROUND

Turn the ignition off.

Disconnect the A/C Heater Control C2 harness connector.

Measure the resistance of the (C21) Evaporator Temperature Sensor Signal circuit between ground and the A/C Heater Control C2 harness connector.

Is the resistance below 10k ohms?

Yes >> Repair the (C21) Evaporator Temperature Sensor Signal circuit for a short to ground.

Perform BODY VERIFICATION TEST – VER 1. (Refer to 8 - ELECTRICAL/ELECTRONIC CONTROL MODULES/ FRONT CONTROL MODULE - DIAGNOSIS AND TESTING).

No >> Go To 3

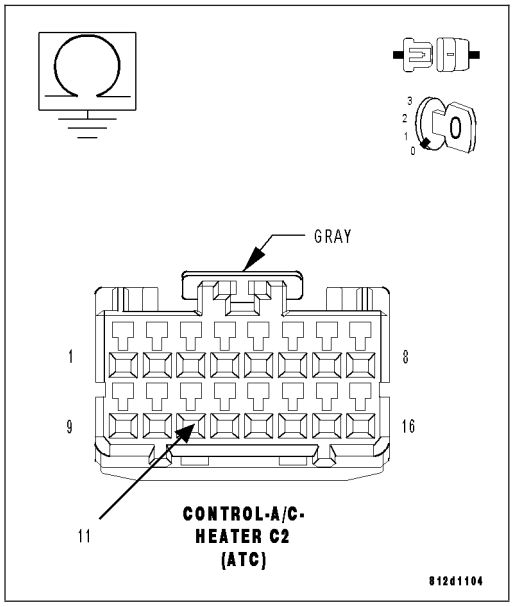

3. CHECK (C21) EVAPORATOR TEMPERATURE SENSOR SIGNAL CIRCUIT FOR A SHORT TO (C121) SENSOR GROUND CIRCUIT

Measure the resistance between the (C21) Evaporator Temperature Sensor Signal circuit and the (C121) Sensor Ground circuit in the A/C Heater Control C2 harness connector.

Is the resistance below 10k ohms?

Yes >> Repair the (C21) Evaporator Temperature Sensor Signal circuit for a short to the (C121) Sensor Ground circuit.

Perform BODY VERIFICATION TEST – VER 1. (Refer to 8 - ELECTRICAL/ELECTRONIC CONTROL MODULES/ FRONT CONTROL MODULE - DIAGNOSIS AND TESTING).

No >> Replace the A/C Heater Control in accordance with the Service Information.

Perform BODY VERIFICATION TEST – VER 1. (Refer to 8 - ELECTRICAL/ELECTRONIC CONTROL MODULES/ FRONT CONTROL MODULE - DIAGNOSIS AND TESTING).

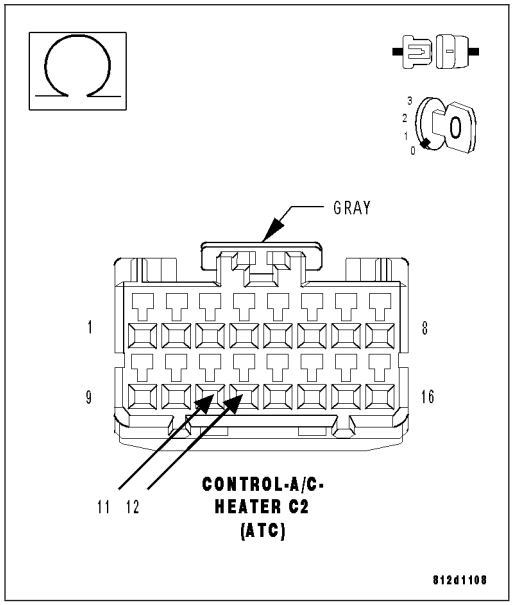

B1032–EVAPORATOR FIN TEMPERATURE SENSOR CIRCUIT HIGH (ATC)

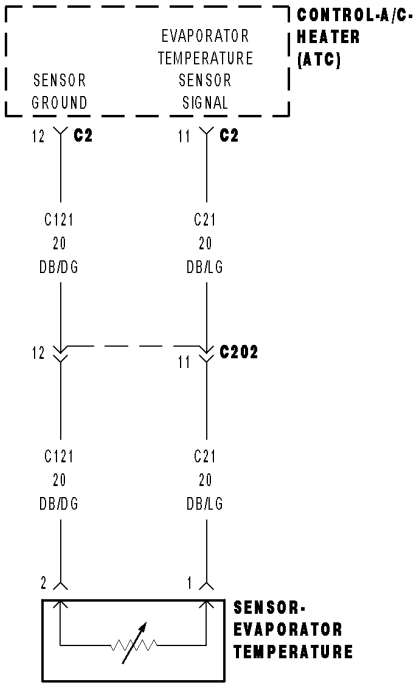

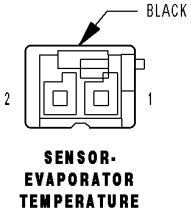

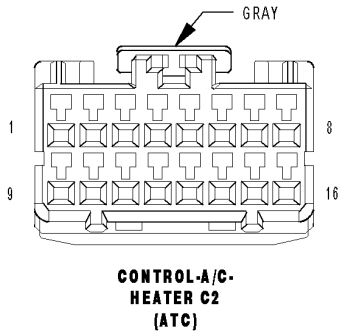

812d10d9

For a complete wiring diagram **Refer to Section 8W**.

- **When Monitored:**
  With the ignition on.
- **Set Condition:**
  If the Evaporator Temperature Sensor input is out of range toward the high voltage threshold.

Possible Causes
(C21) EVAPORATOR TEMPERATURE SENSOR SIGNAL CIRCUIT SHORTED TO VOLTAGE
(C21) EVAPORATOR TEMPERATURE SENSOR SIGNAL CIRCUIT OPEN
(C121) SENSOR GROUND CIRCUIT OPEN
EVAPORATOR TEMPERATURE SENSOR
A/C HEATER CONTROL

NOTE: This DTC must be active for the results of this test to be valid. Do not perform this test if this DTC is stored. Refer to HVAC System Test (ATC) for stored DTC test procedures.

Diagnostic Test

1. CHECK (C21) EVAPORATOR TEMPERATURE SENSOR SIGNAL CIRCUIT FOR A SHORT TO VOLTAGE

Turn the ignition off.

Disconnect the A/C Heater Control C2 harness connector.

Turn the ignition on.

Measure the voltage of the (C21) Evaporator Temperature Sensor Signal circuit.

Is the voltage above 0.2 volts?

Yes >> Repair the (C21) Evaporator Temperature Sensor Signal circuit for a short to voltage.
Perform BODY VERIFICATION TEST – VER 1. (Refer to 8 - ELECTRICAL/ELECTRONIC CONTROL MODULES/ FRONT CONTROL MODULE - DIAGNOSIS AND TESTING).

No >> Go To 2

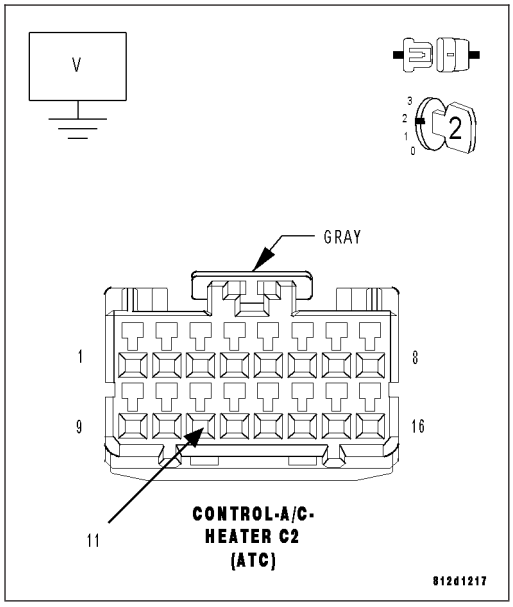

2. CHECK (C21) EVAPORATOR TEMPERATURE SENSOR SIGNAL CIRCUIT, (C121) SENSOR GROUND CIRCUIT, & EVAPORATOR TEMPERATURE SENSOR

Turn the ignition off.

Measure the resistance between the (C21) Evaporator Temperature Sensor Signal circuit and the (C121) Sensor Ground circuit in the A/C Heater Control C2 harness connector. The approximate circuit resistance should be as follows:

- 1468 ohms @ 40°C (104°F)
- 1800 ohms @ 35°C (95°F)
- 2221 ohms @ 30°C (86°F)
- 2757 ohms @ 25°C (77°F)
- 3443 ohms @ 20°C (68°F)
- 4330 ohms @ 15°C (59°F)
- 5485 ohms @ 10°C (50°F)
- 6998 ohms @ 5°C (41°F)
- 7354 ohms @ 4°C (39°F)
- 7731 ohms @ 3°C (37°F)
- 8130 ohms @ 2°C (36°F)
- 8553 ohms @ 1°C (34°F)
- 9000 ohms @ 0°C (32°F)

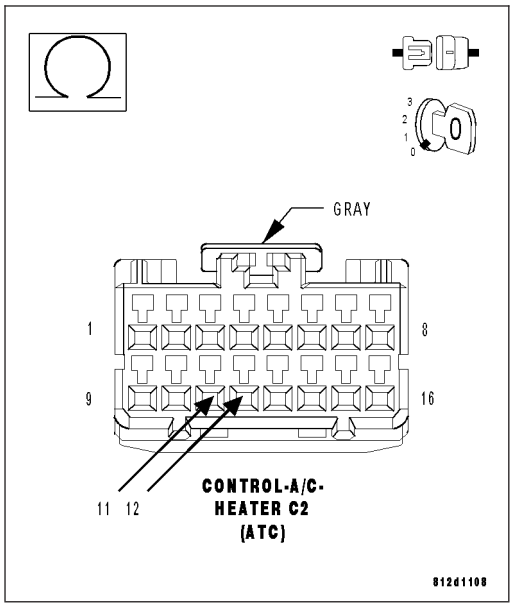

Is the resistance within the specifications?

Yes >> Replace the A/C Heater Control in accordance with the Service Information.
Perform BODY VERIFICATION TEST – VER 1. (Refer to 8 - ELECTRICAL/ELECTRONIC CONTROL MODULES/FRONT CONTROL MODULE - DIAGNOSIS AND TESTING).

No >> Go To 3

3. CHECK (C21) EVAPORATOR TEMPERATURE SENSOR SIGNAL CIRCUIT FOR AN OPEN

Disconnect the Evaporator Temperature Sensor harness connector.

Measure the resistance of the (C21) Evaporator Temperature Sensor Signal circuit between the A/C Heater Control C2 harness connector and the Evaporator Temperature Sensor harness connector.

Is the resistance below 5.0 ohms?

Yes >> Go To 4

No >> Repair the (C21) Evaporator Temperature Sensor Signal circuit for an open.
Perform BODY VERIFICATION TEST – VER 1. (Refer to 8 - ELECTRICAL/ELECTRONIC CONTROL MODULES/FRONT CONTROL MODULE - DIAGNOSIS AND TESTING).

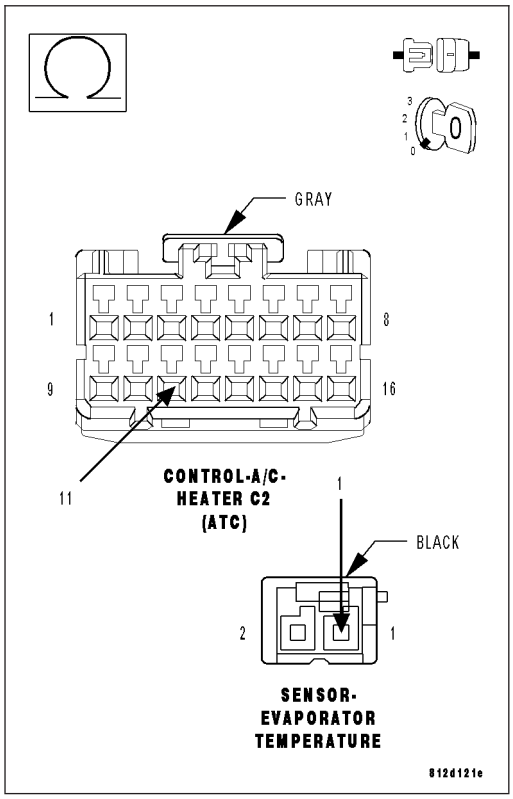

4. CHECK (C121) SENSOR GROUND CIRCUIT FOR AN OPEN

Measure the resistance of the (C121) Sensor Ground circuit between the A/C Heater Control C2 harness connector and the Evaporator Temperature Sensor harness connector.

Is the resistance below 5.0 ohms?

Yes >> Replace the Evaporator Temperature Sensor in accordance with the Service Information.
Perform BODY VERIFICATION TEST – VER 1. (Refer to 8 - ELECTRICAL/ELECTRONIC CONTROL MODULES/ FRONT CONTROL MODULE - DIAGNOSIS AND TESTING).

No >> Repair the (C121) Sensor Ground circuit for an open.
Perform BODY VERIFICATION TEST – VER 1. (Refer to 8 - ELECTRICAL/ELECTRONIC CONTROL MODULES/ FRONT CONTROL MODULE - DIAGNOSIS AND TESTING).

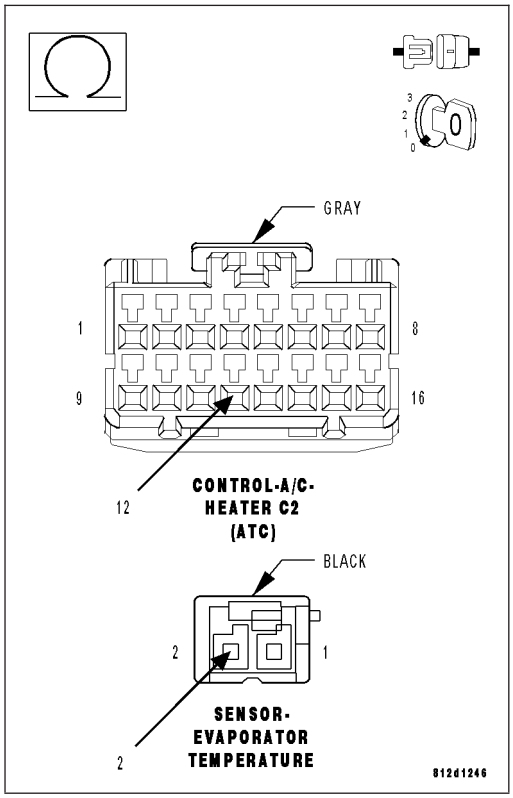

B1034–INFRARED TEMPERATURE SENSOR INPUT CIRCUIT LOW (ATC)

For a complete wiring diagram **Refer to Section 8W**.

- **When Monitored:**
  With the ignition on.
- **Set Condition:**
  If the IR Sensor fails the internal self test.

Possible Causes
A/C HEATER CONTROL

NOTE: This DTC must be active for the results of this test to be valid. Do not perform this test if this DTC is stored. Refer to HVAC System Test (ATC) for stored DTC test procedures.

Diagnostic Test

1. REPLACE THE A/C HEATER CONTROL

Repair

Replace the A/C Heater Control in accordance with the Service Information.

Perform BODY VERIFICATION TEST – VER 1. (Refer to 8 - ELECTRICAL/ELECTRONIC CONTROL MODULES/FRONT CONTROL MODULE - DIAGNOSIS AND TESTING).

B1035–INFRARED TEMPERATURE SENSOR INPUT CIRCUIT HIGH (ATC)

For a complete wiring diagram **Refer to Section 8W**.

- **When Monitored:**
  With the ignition on.
- **Set Condition:**
  If the IR Sensor fails the internal self test.

Possible Causes
A/C HEATER CONTROL

NOTE: This DTC must be active for the results of this test to be valid. Do not perform this test if this DTC is stored. Refer to HVAC System Test (ATC) for stored DTC test procedures.

Diagnostic Test

1. REPLACE THE A/C HEATER CONTROL

Repair

Replace the A/C Heater Control in accordance with the Service Information.

Perform BODY VERIFICATION TEST – VER 1. (Refer to 8 - ELECTRICAL/ELECTRONIC CONTROL MODULES/FRONT CONTROL MODULE - DIAGNOSIS AND TESTING).

B1040–PANEL MODE DOOR 1 CONTROL CIRCUIT/PERFORMANCE (ATC)

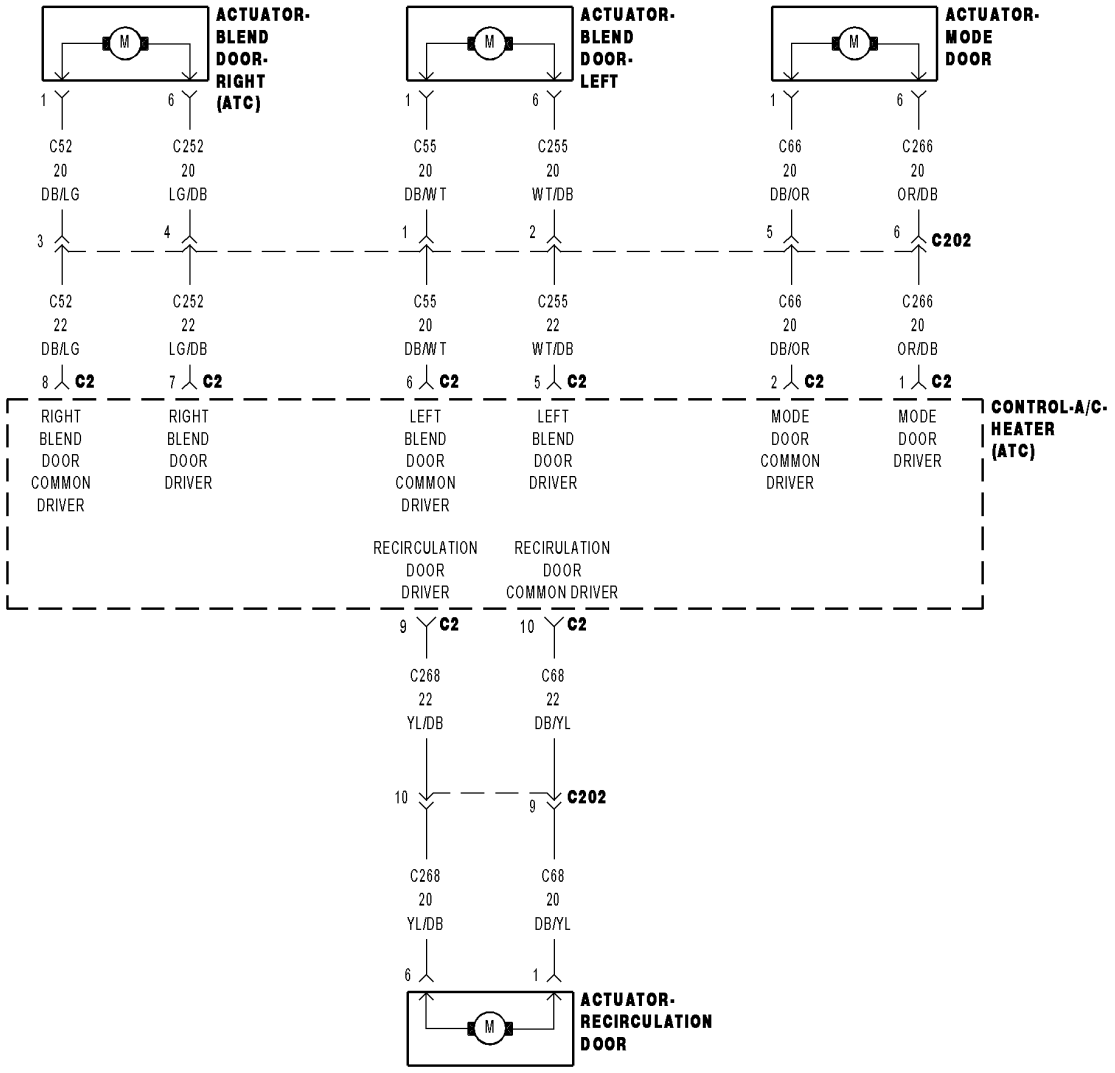

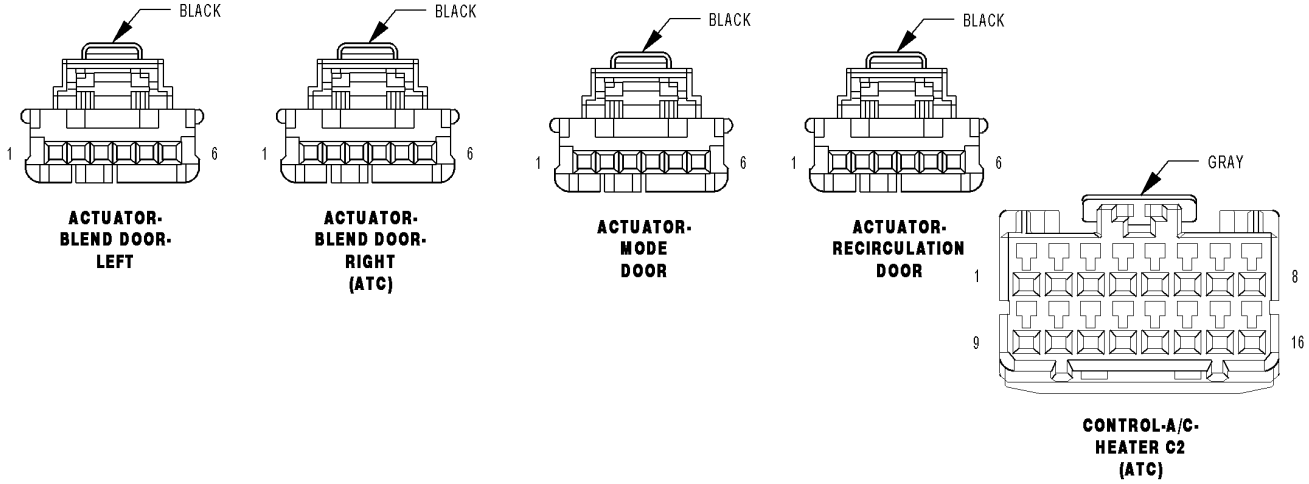

815f41be

For a complete wiring diagram **Refer to Section 8W**.

Theory of Operation

The A/C Heater Control monitors the door driver circuits during actuator operation for shorts to ground, shorts to battery, and shorts to other door driver circuits. If detected, the A/C Heater Control reports these types of faults as Control Circuit/Performance DTCs.

- **When Monitored:**
  When actuator movement is requested.
- **Set Condition:**
  If the A/C Heater Control detects an excessive current draw on any of the door driver circuits while attempting to drive this door actuator.

Possible Causes
DOOR DRIVER CIRCUIT(S) SHORTED TO VOLTAGE
DOOR DRIVER CIRCUIT(S) SHORTED TO GROUND
DOOR DRIVER CIRCUITS SHORTED TOGETHER
DOOR ACTUATOR(S)
A/C HEATER CONTROL

NOTE: This DTC must be active for the results of this test to be valid. Do not perform this test if this DTC is stored. Refer to HVAC System Test (ATC) for stored DTC test procedures.

Diagnostic Test

1. CHECK THE DOOR DRIVER CIRCUITS FOR A SHORT TO VOLTAGE

Turn the ignition off.

Disconnect the A/C Heater Control C2 harness connector.

Turn the ignition on.

Measure the voltage of the (C266) Mode Door Driver circuit, the (C66) Mode Door Common Driver circuit, the (C255) Left Blend Door Driver circuit, the (C55) Left Blend Door Common Driver circuit, the (C252) Right Blend Door Driver circuit, the (C52) Right Blend Door Common Driver circuit, the (C268) Recirculation Door Driver circuit, and the (C68) Recirculation Door Common Driver circuit.

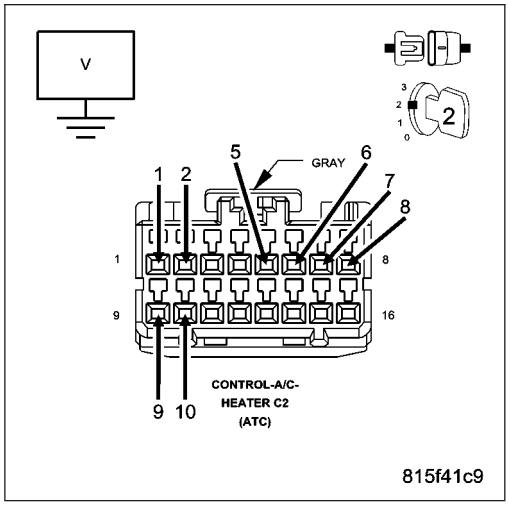

Is the voltage above 0.2 volts on any of the circuits?

Yes >> Repair all circuits with voltage above 0.2 volts for a short to voltage.
Perform BODY VERIFICATION TEST – VER 1. (Refer to 8 - ELECTRICAL/ELECTRONIC CONTROL MODULES/ FRONT CONTROL MODULE - DIAGNOSIS AND TESTING).

No >> Go To 2

2. CHECK THE DOOR DRIVER CIRCUITS FOR A SHORT TO GROUND

Turn the ignition off.

Measure the resistance of the (C266) Mode Door Driver circuit, the (C66) Mode Door Common Driver circuit, the (C255) Left Blend Door Driver circuit, the (C55) Left Blend Door Common Driver circuit, the (C252) Right Blend Door Driver circuit, the (C52) Right Blend Door Common Driver circuit, the (C268) Recirculation Door Driver circuit, and the (C68) Recirculation Door Common Driver circuit between ground and the A/C Heater Control C2 harness connector.

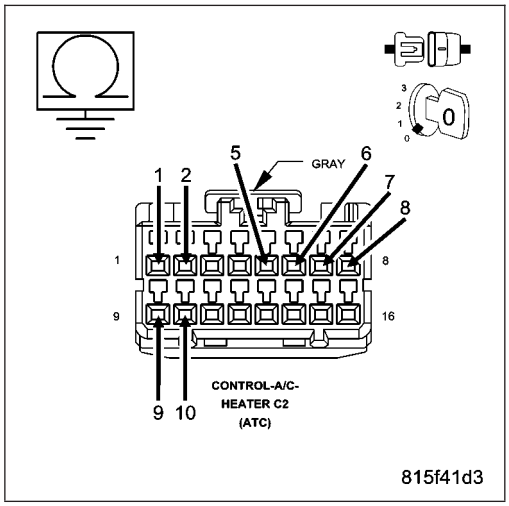

Is the resistance below 10k ohms on any of the circuits?

Yes >> Repair all circuits with a resistance below 10k ohms for a short to ground.

Perform BODY VERIFICATION TEST – VER 1. (Refer to 8 - ELECTRICAL/ELECTRONIC CONTROL MODULES/ FRONT CONTROL MODULE - DIAGNOSIS AND TESTING).

No >> Go To 3

3. CHECK THE (C266) MODE DOOR DRIVER CIRCUIT FOR A SHORT TO THE (C255) LEFT BLEND DOOR DRIVER CIRCUIT, THE (C55) LEFT BLEND DOOR COMMON DRIVER CIRCUIT, THE (C252) RIGHT BLEND DOOR DRIVER CIRCUIT, THE (C52) RIGHT BLEND DOOR COMMON DRIVER CIRCUIT, THE (C268) RECIRCULATION DOOR DRIVER CIRCUIT, & THE (C68) RECIRCULATION DOOR COMMON DRIVER CIRCUIT

Measure the resistance between the (C266) Mode Door Driver circuit and the (C255) Left Blend Door Driver circuit, the (C55) Left Blend Door Common Driver circuit, the (C252) Right Blend Door Driver circuit, the (C52) Right Blend Door Common Driver circuit, the (C268) Recirculation Door Driver circuit, and the (C68) Recirculation Door Common Driver circuit.

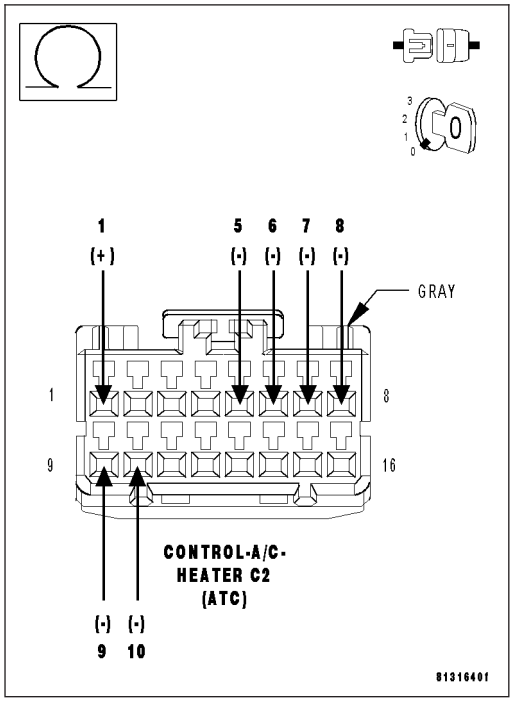

Is the resistance below 10k ohms on any of the circuits?

Yes >> Repair all circuits with a resistance below 10k ohms for a short to the (C266) Mode Door Driver circuit.

Perform BODY VERIFICATION TEST – VER 1. (Refer to 8 - ELECTRICAL/ELECTRONIC CONTROL MODULES/ FRONT CONTROL MODULE - DIAGNOSIS AND TESTING).

No >> Go To 4

4. CHECK THE (C66) MODE DOOR COMMON DRIVER CIRCUIT FOR A SHORT TO THE (C255) LEFT BLEND DOOR DRIVER CIRCUIT, THE (C55) LEFT BLEND DOOR COMMON DRIVER CIRCUIT, THE (C252) RIGHT BLEND DOOR DRIVER CIRCUIT, THE (C52) RIGHT BLEND DOOR COMMON DRIVER CIRCUIT, THE (C268) RECIRCULATION DOOR DRIVER CIRCUIT, & THE (C68) RECIRCULATION DOOR COMMON DRIVER CIRCUIT

Measure the resistance between the (C66) Mode Door Common Driver circuit and the (C255) Left Blend Door Driver circuit, the (C55) Left Blend Door Common Driver circuit, the (C252) Right Blend Door Driver circuit, the (C52) Right Blend Door Common Driver circuit, the (C268) Recirculation Door Driver circuit, and the (C68) Recirculation Door Common Driver circuit.

Is the resistance below 10k ohms on any of the circuits?

Yes >> Repair all circuits with a resistance below 10k ohms for a short to the (C66) Mode Door Common Driver circuit.

Perform BODY VERIFICATION TEST – VER 1. (Refer to 8 - ELECTRICAL/ELECTRONIC CONTROL MODULES/ FRONT CONTROL MODULE - DIAGNOSIS AND TESTING).

No >> Go To 5

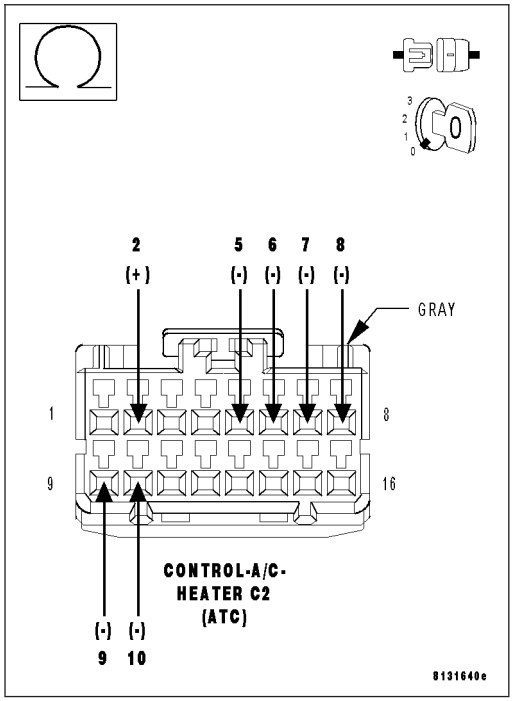

5. CHECK THE (C255) LEFT BLEND DOOR DRIVER CIRCUIT FOR A SHORT TO THE (C252) RIGHT BLEND DOOR DRIVER CIRCUIT, THE (C52) RIGHT BLEND DOOR COMMON DRIVER CIRCUIT, THE (C268) RECIRCULATION DOOR DRIVER CIRCUIT, & THE (C68) RECIRCULATION DOOR COMMON DRIVER CIRCUIT

Measure the resistance between the (C255) Left Blend Door Driver circuit and the (C252) Right Blend Door Driver circuit, the (C52) Right Blend Door Common Driver circuit, the (C268) Recirculation Door Driver circuit, and the (C68) Recirculation Door Common Driver circuit.

Is the resistance below 10k ohms on any of the circuits?

Yes >> Repair all circuits with a resistance below 10k ohms for a short to (C255) Left Blend Door Driver circuit.

Perform BODY VERIFICATION TEST – VER 1. (Refer to 8 - ELECTRICAL/ELECTRONIC CONTROL MODULES/ FRONT CONTROL MODULE - DIAGNOSIS AND TESTING).

No >> Go To 6

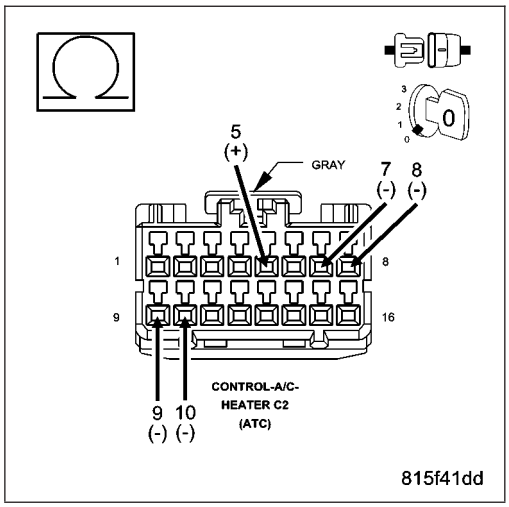

6. CHECK THE (C55) LEFT BLEND DOOR COMMON DRIVER CIRCUIT FOR A SHORT TO THE (C252) RIGHT BLEND DOOR DRIVER CIRCUIT, THE (C52) RIGHT BLEND DOOR COMMON DRIVER CIRCUIT, THE (C268) RECIRCULATION DOOR DRIVER CIRCUIT, & THE (C68) RECIRCULATION DOOR COMMON DRIVER CIRCUIT

Measure the resistance between the (C55) Left Blend Door Common Driver circuit and the (C252) Right Blend Door Driver circuit, the (C52) Right Blend Door Common Driver circuit, the (C268) Recirculation Door Driver circuit, and the (C68) Recirculation Door Common Driver circuit.

Is the resistance below 10k ohms on any of the circuits?

Yes >> Repair all circuits with a resistance below 10k ohms for a short to (C55) Left Blend Door Common Driver circuit.
Perform BODY VERIFICATION TEST – VER 1. (Refer to 8 - ELECTRICAL/ELECTRONIC CONTROL MODULES/ FRONT CONTROL MODULE - DIAGNOSIS AND TESTING).

No >> Go To 7

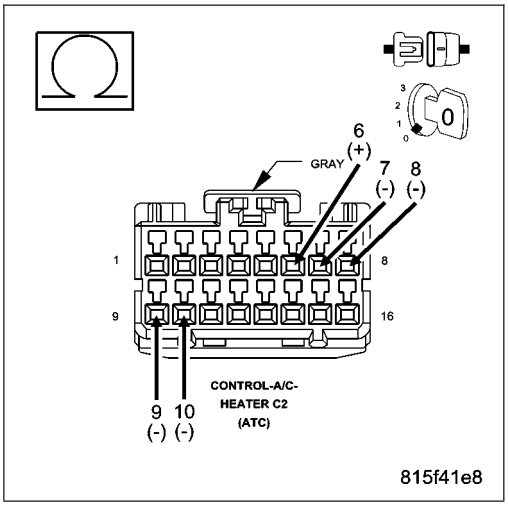

7. CHECK THE (C252) RIGHT BLEND DOOR DRIVER CIRCUIT FOR A SHORT TO THE (C268) RECIRCULATION DOOR DRIVER CIRCUIT & THE (C68) RECIRCULATION DOOR COMMON DRIVER CIRCUIT

Measure the resistance between the (C252) Right Blend Door Driver circuit and the (C268) Recirculation Door Driver circuit and the (C68) Recirculation Door Common Driver circuit.

Is the resistance below 10k ohms on any of the circuits?

Yes >> Repair all circuits with a resistance below 10k ohms for a short to the (C252) Right Blend Door Driver circuit.
Perform BODY VERIFICATION TEST – VER 1. (Refer to 8 - ELECTRICAL/ELECTRONIC CONTROL MODULES/ FRONT CONTROL MODULE - DIAGNOSIS AND TESTING).

No >> Go To 8

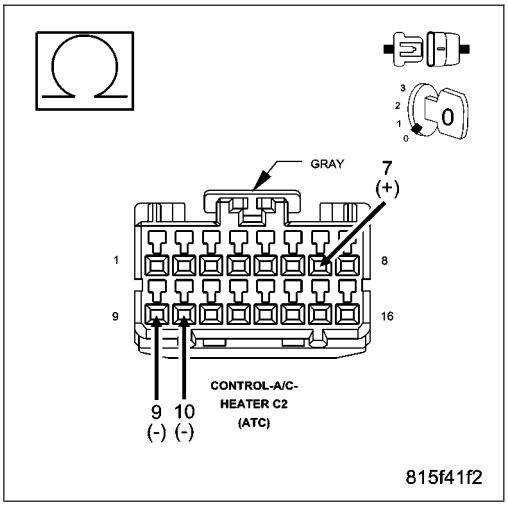

8. CHECK THE (C52) RIGHT BLEND DOOR COMMON DRIVER CIRCUIT FOR A SHORT TO THE (C268) RECIRCULATION DOOR DRIVER CIRCUIT & THE (C68) RECIRCULATION DOOR COMMON DRIVER CIRCUIT

Measure the resistance between the (C52) Right Blend Door Common Driver circuit and the (C268) Recirculation Door Driver circuit and the (C68) Recirculation Door Common Driver circuit.

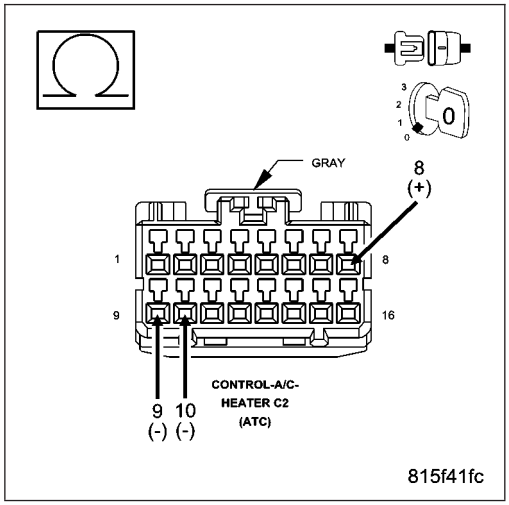

Is the resistance below 10k ohms on any of the circuits?

Yes >> Repair all circuits with a resistance below 10k ohms for a short to the (C52) Right Blend Door Common Driver circuit.

Perform BODY VERIFICATION TEST – VER 1. (Refer to 8 - ELECTRICAL/ELECTRONIC CONTROL MODULES/ FRONT CONTROL MODULE - DIAGNOSIS AND TESTING).

No >> Go To 9

9. CHECK THE MODE DOOR ACTUATOR CIRCUIT RESISTANCE

Measure the resistance between the (C266) Mode Door Driver circuit and the (C66) Mode Door Common Driver circuit in the A/C Heater Control C2 harness connector.

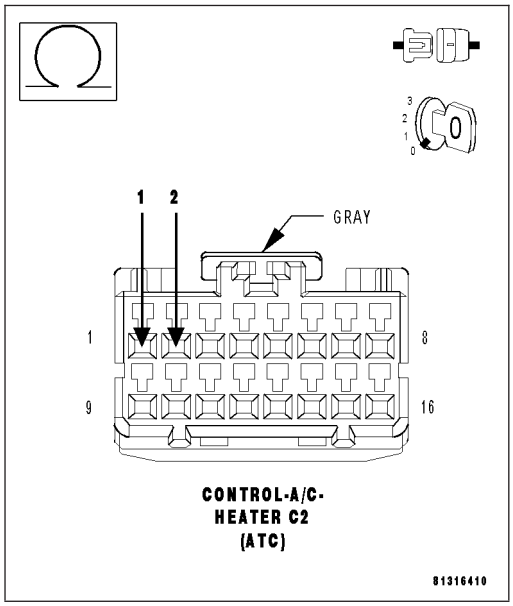

Is the resistance below 30.0 ohms?

Yes >> Go To 10

No >> Go To 11

10. CHECK THE (C266) MODE DOOR DRIVER CIRCUIT FOR A SHORT TO THE (C66) MODE DOOR COMMON DRIVER CIRCUIT

Disconnect the Mode Door Actuator harness connector.

Measure the resistance between the (C266) Mode Door Driver circuit and the (C66) Mode Door Common Driver circuit in the A/C Heater Control C2 harness connector.

Is the resistance below 10k ohms?

Yes >> Repair the (C266) Mode Door Driver circuit for a short to the (C66) Mode Door Common Driver circuit.

Perform BODY VERIFICATION TEST – VER 1. (Refer to 8 - ELECTRICAL/ELECTRONIC CONTROL MODULES/ FRONT CONTROL MODULE - DIAGNOSIS AND TESTING).

No >> Replace the Mode Door Actuator in accordance with the Service Information.

Perform BODY VERIFICATION TEST – VER 1. (Refer to 8 - ELECTRICAL/ELECTRONIC CONTROL MODULES/ FRONT CONTROL MODULE - DIAGNOSIS AND TESTING).

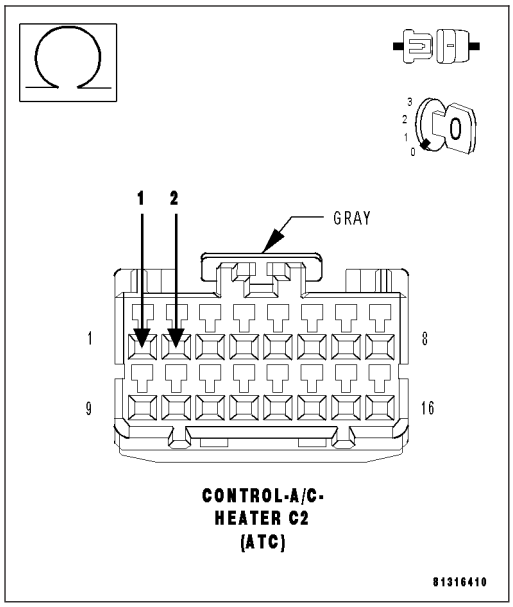

11. CHECK THE LEFT BLEND DOOR ACTUATOR CIRCUIT RESISTANCE

Measure the resistance between the (C255) Left Blend Door Driver circuit and the (C55) Left Blend Door Common Driver circuit in the A/C Heater Control C2 harness connector.

Is the resistance below 30.0 ohms?

Yes >> Go To 12

No >> Go To 13

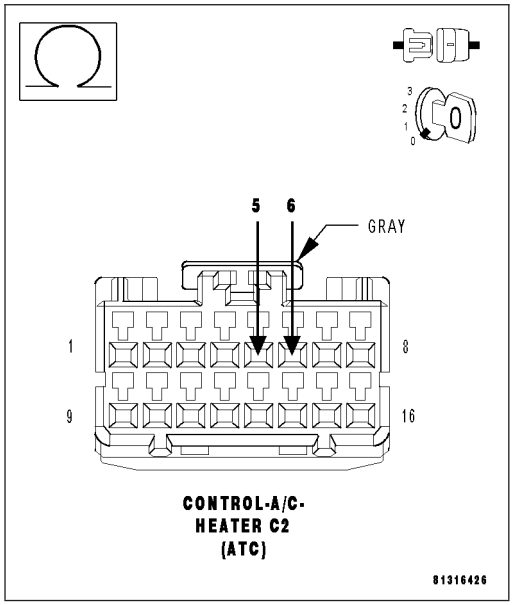

12. CHECK THE (C255) LEFT BLEND DOOR DRIVER CIRCUIT FOR A SHORT TO THE (C55) LEFT BLEND DOOR COMMON DRIVER CIRCUIT

Disconnect the Left Blend Door Actuator harness connector.

Measure the resistance between the (C255) Left Blend Door Driver circuit and the (C55) Left Blend Door Common Driver circuit in the A/C Heater Control C2 harness connector.

Is the resistance below 10k ohms?

Yes >> Repair the (C255) Left Blend Door Driver circuit for a short to the (C55) Left Blend Door Common Driver circuit.

Perform BODY VERIFICATION TEST – VER 1. (Refer to 8 - ELECTRICAL/ELECTRONIC CONTROL MODULES/ FRONT CONTROL MODULE - DIAGNOSIS AND TESTING).

No >> Replace the Left Blend Door Actuator in accordance with the Service Information.

Perform BODY VERIFICATION TEST – VER 1. (Refer to 8 - ELECTRICAL/ELECTRONIC CONTROL MODULES/ FRONT CONTROL MODULE - DIAGNOSIS AND TESTING).

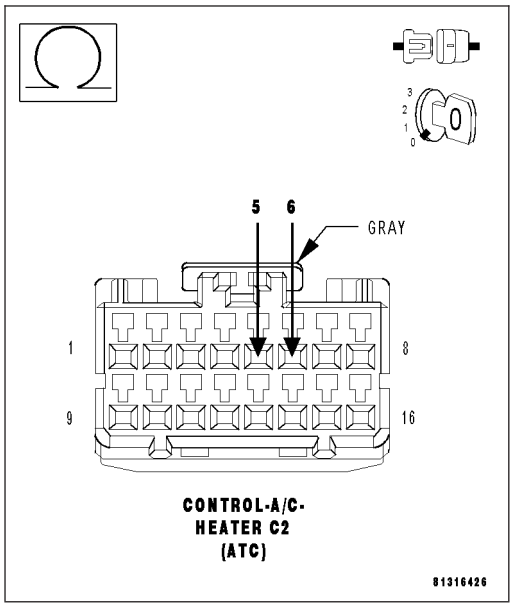

13. CHECK THE RIGHT BLEND DOOR ACTUATOR CIRCUIT RESISTANCE

Measure the resistance between the (C252) Right Blend Door Driver circuit and the (C52) Right Blend Door Common Driver circuit in the A/C Heater Control C2 harness connector.

Is the resistance below 30.0 ohms?

Yes >> Go To 14

No >> Go To 15

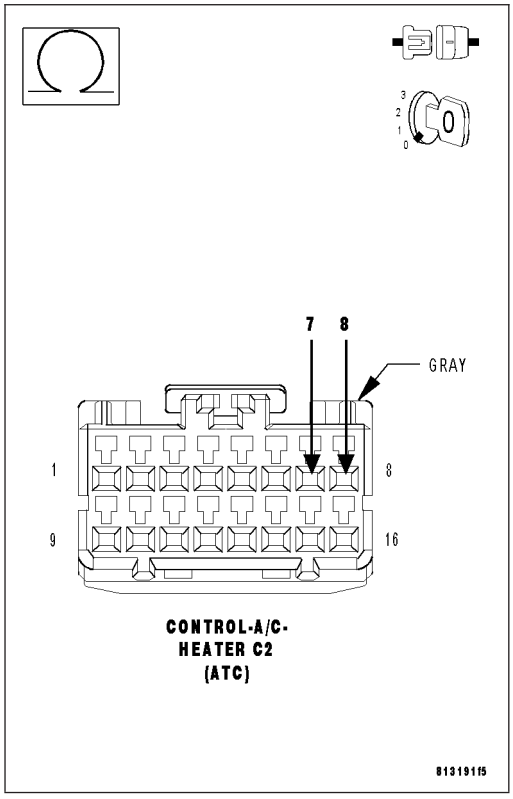

14. CHECK THE (C252) RIGHT BLEND DOOR DRIVER CIRCUIT FOR A SHORT TO THE (C52) RIGHT BLEND DOOR COMMON DRIVER CIRCUIT

Disconnect the Right Blend Door Actuator harness connector.

Measure the resistance between the (C252) Right Blend Door Driver circuit and the (C52) Right Blend Door Common Driver circuit in the A/C Heater Control C2 harness connector.

Is the resistance below 10k ohms?

Yes >> Repair the (C252) Right Blend Door Driver circuit for a short to the (C52) Right Blend Door Common Driver circuit.
Perform BODY VERIFICATION TEST – VER 1. (Refer to 8 - ELECTRICAL/ELECTRONIC CONTROL MODULES/ FRONT CONTROL MODULE - DIAGNOSIS AND TESTING).

No >> Replace the Right Blend Door Actuator in accordance with the Service Information.
Perform BODY VERIFICATION TEST – VER 1. (Refer to 8 - ELECTRICAL/ELECTRONIC CONTROL MODULES/ FRONT CONTROL MODULE - DIAGNOSIS AND TESTING).

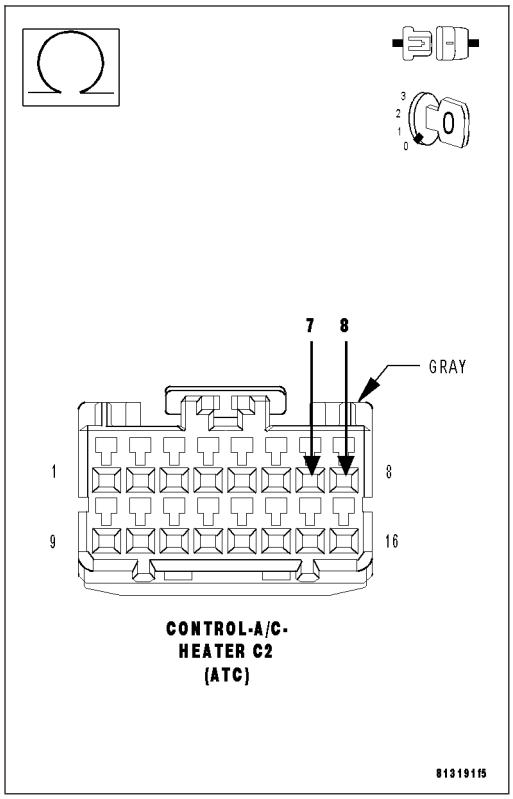

15. CHECK THE RECIRCULATION DOOR ACTUATOR CIRCUIT RESISTANCE

Measure the resistance between the (C268) Recirculation Door Driver circuit and the (C68) Recirculation Door Common Driver circuit in the A/C Heater Control C2 harness connector.

Is the resistance below 30.0 ohms?

Yes >> Go To 16

No >> Go To 17

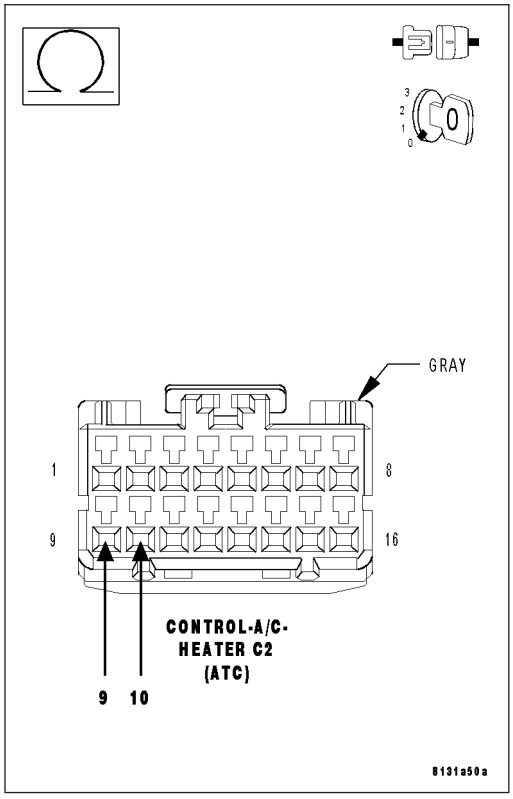

16. CHECK THE (C268) RECIRCULATION DOOR DRIVER CIRCUIT FOR A SHORT TO THE (C68) RECIRCULATION DOOR COMMON DRIVER CIRCUIT

Disconnect the Recirculation Door Actuator harness connector.

Measure the resistance between the (C268) Recirculation Door Driver circuit and the (C68) Recirculation Door Common Driver circuit in the A/C Heater Control C2 harness connector.

Is the resistance below 10k ohms?

Yes >> Repair the (C268) Recirculation Door Driver circuit for a short to the (C68) Recirculation Door Common Driver circuit.

Perform BODY VERIFICATION TEST – VER 1. (Refer to 8 - ELECTRICAL/ELECTRONIC CONTROL MODULES/FRONT CONTROL MODULE - DIAGNOSIS AND TESTING).

No >> Replace the Recirculation Door Actuator in accordance with the Service Information.

Perform BODY VERIFICATION TEST – VER 1. (Refer to 8 - ELECTRICAL/ELECTRONIC CONTROL MODULES/FRONT CONTROL MODULE - DIAGNOSIS AND TESTING).

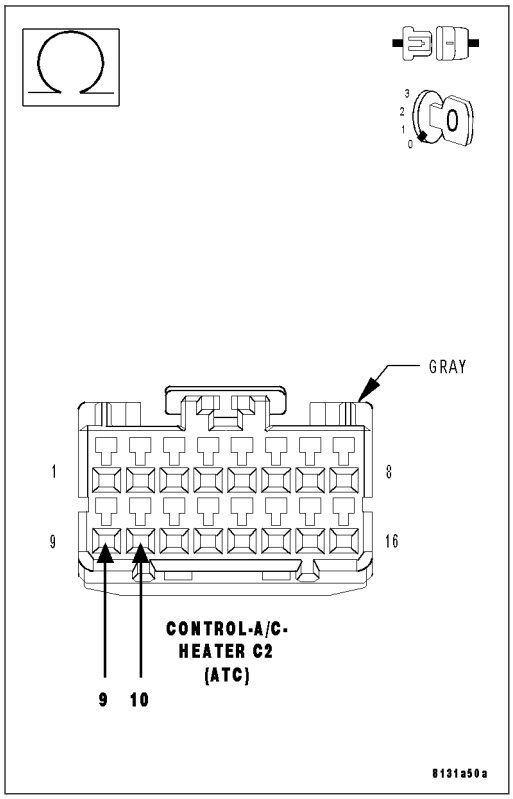

17. RUN THE ACTUATOR CALIBRATION TEST

Reconnect the A/C Heater Control C2 harness connector.

Reconnect the all of the Door Actuator harness connectors.

Turn the ignition on.

With the scan tool, erase HVAC DTCs.

Turn the ignition off, wait 10 seconds, and then turn the ignition on.

With the scan tool, select System Tests and then select Actuator Calibration Test. When the test is complete, select View DTCs.

Does the scan tool only display: B1040–PANEL MODE DOOR 1 CONTROL CIRCUIT/PERFORMANCE?

Yes >> Replace the A/C Heater Control in accordance with the Service Information.

Perform BODY VERIFICATION TEST – VER 1. (Refer to 8 - ELECTRICAL/ELECTRONIC CONTROL MODULES/FRONT CONTROL MODULE - DIAGNOSIS AND TESTING).

No, Other DTC(s) Displayed

Diagnose and repair the other DTC(s). Refer to the Table of Contents in this Section for a complete list of all HVAC related symptoms.

No, And No Other DTCs Displayed

Using the wiring diagram as a guide, inspect the wiring and connectors for conditions causing an intermittent short. Repair as necessary.

Perform BODY VERIFICATION TEST – VER 1. (Refer to 8 - ELECTRICAL/ELECTRONIC CONTROL MODULES/FRONT CONTROL MODULE - DIAGNOSIS AND TESTING).

B1043–PANEL MODE DOOR 1 CONTROL CIRCUIT OPEN (ATC)

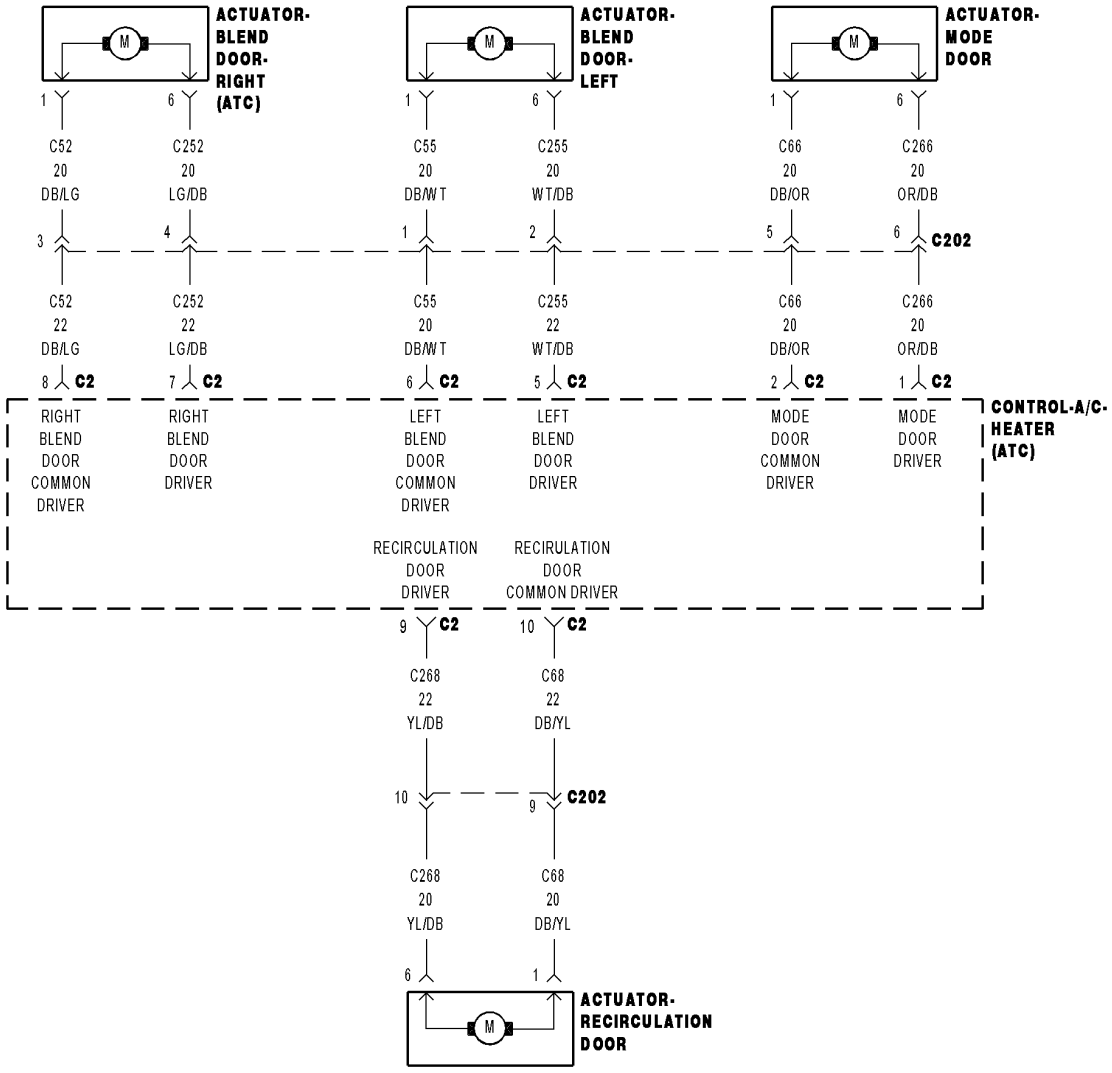

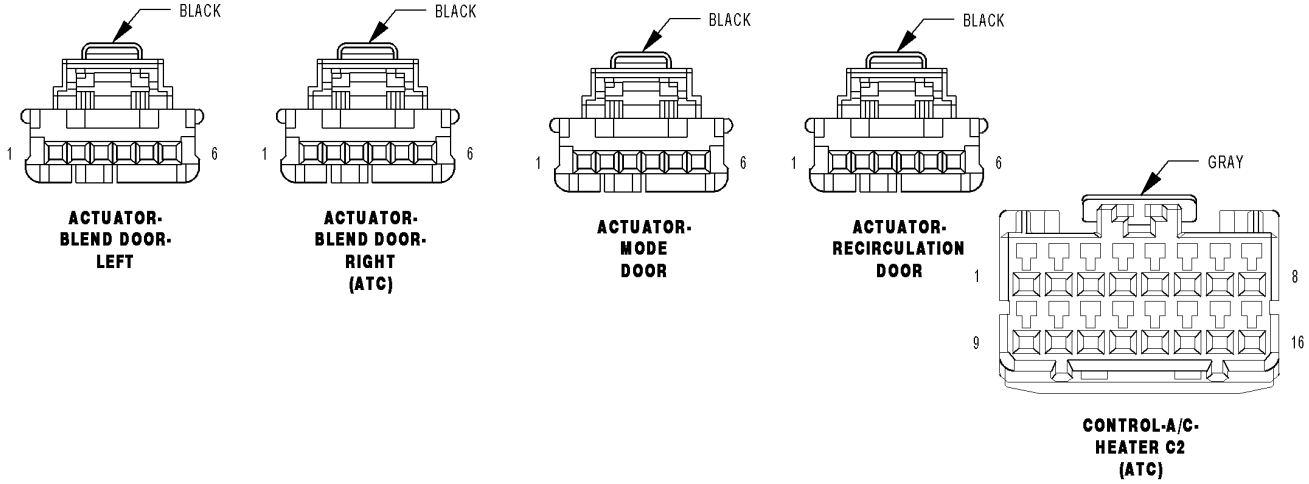

815f41be

For a complete wiring diagram **Refer to Section 8W**.

- **When Monitored:**
  When actuator movement is requested.
- **Set Condition:**
  If the (C266) Mode Door Driver circuit or the (C66) Mode Door Common Driver circuit is open.

Possible Causes
(C266) MODE DOOR DRIVER CIRCUIT OPEN
(C66) MODE DOOR COMMON DRIVER CIRCUIT OPEN
MODE DOOR ACTUATOR
A/C HEATER CONTROL

Diagnostic Test

1. CHECK FOR ACTIVE CONTROL CIRCUIT/PERFORMANCE DTCs

Turn the ignition on.

With the scan tool, read active HVAC DTCs.

Does the scan tool display any active: XXXX CONTROL CIRCUIT/PERFORMANCE DTCs?

Yes >> Diagnose and repair the DTC(s). Refer to the Table of Contents in this Section for a complete list of all HVAC related symptoms.

No >> Go To 2

2. CHECK THE MODE DOOR ACTUATOR CIRCUIT RESISTANCE

Turn the ignition off.

Disconnect the A/C Heater Control C2 harness connector.

Measure the resistance between the (C266) Mode Door Driver circuit and the (C66) Mode Door Common Driver circuit in the A/C Heater Control C2 harness connector.

Is the resistance above 70.0 ohms?

Yes >> Go To 3

No >> Replace the A/C Heater Control in accordance with the Service Information.

Perform BODY VERIFICATION TEST – VER 1. (Refer to 8 - ELECTRICAL/ELECTRONIC CONTROL MODULES/ FRONT CONTROL MODULE - DIAGNOSIS AND TESTING).

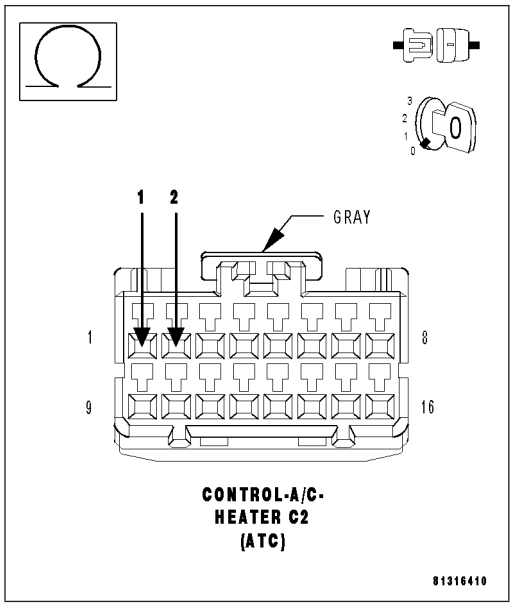

3. CHECK THE (C266) MODE DOOR DRIVER CIRCUIT FOR AN OPEN

Disconnect the Mode Door Actuator harness connector.

Measure the resistance of the (C266) Mode Door Driver circuit between the Mode Door Actuator harness connector and the A/C Heater Control C2 harness connector.

Is the resistance below 5.0 ohms?

Yes >> Go To 4

No >> Repair the (C266) Mode Door Driver circuit for an open.

Perform BODY VERIFICATION TEST – VER 1. (Refer to 8 - ELECTRICAL/ELECTRONIC CONTROL MODULES/ FRONT CONTROL MODULE - DIAGNOSIS AND TESTING).

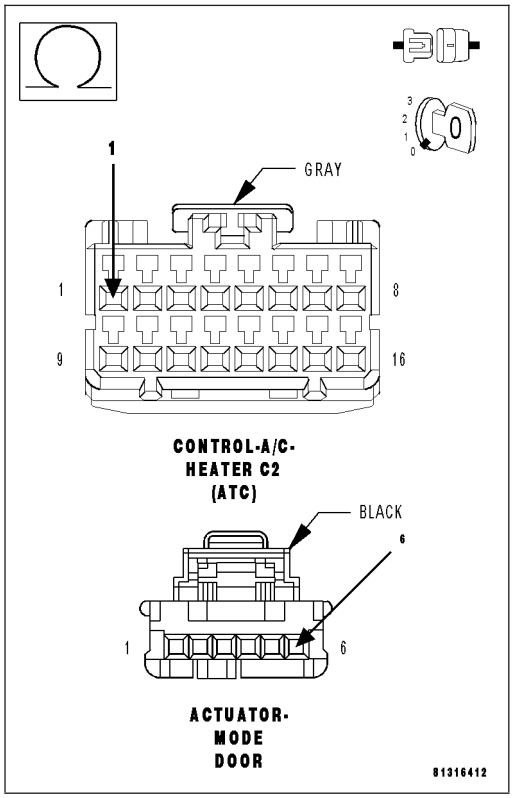

4. CHECK THE (C66) MODE DOOR COMMON DRIVER CIRCUIT FOR AN OPEN

Measure the resistance of the (C66) Mode Door Common Driver circuit between the Mode Door Actuator harness connector and the A/C Heater Control C2 harness connector.

Is the resistance below 5.0 ohms?

Yes >> Replace the Mode Door Actuator in accordance with the Service Information.

Perform BODY VERIFICATION TEST – VER 1. (Refer to 8 - ELECTRICAL/ELECTRONIC CONTROL MODULES/ FRONT CONTROL MODULE - DIAGNOSIS AND TESTING).

No >> Repair the (C66) Mode Door Common Driver circuit for an open.

Perform BODY VERIFICATION TEST – VER 1. (Refer to 8 - ELECTRICAL/ELECTRONIC CONTROL MODULES/ FRONT CONTROL MODULE - DIAGNOSIS AND TESTING).

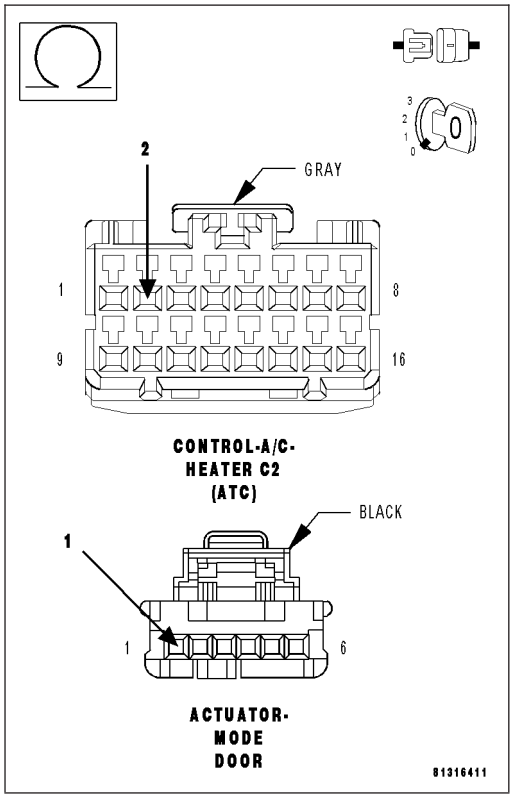

B1044–PANEL MODE DOOR 1 TRAVEL RANGE TOO SMALL (ATC)

For a complete wiring diagram **Refer to Section 8W**.

Theory of Operation

The A/C Heater Control calibrates each actuator individually. Automatic calibration occurs upon power up after installing a new A/C Heater Control. Manual calibration occurs by sending a command with the scan tool. The purpose of actuator calibration is to determine the total span of door travel between physical stops. To calibrate the actuator, the A/C Heater Control first moves the door to its soft stop, and then counts the number of pulses it takes to move the door to its other stop. An expected range of span is stored in the control's memory. If the measured calibration value is less than the expected range for this actuator, this DTC will set. Note that the control clears all stored calibration faults at the beginning of the calibration procedure.

- **When Monitored:**
  During actuator calibration.
- **Set Condition:**
  If the total span of the Mode Door is less than the low range limit.

Possible Causes
DOOR DRIVER ELECTRICAL CIRCUIT(S)
MODE DOOR SEIZED, BINDING, OBSTRUCTED
MODE DOOR ACTUATOR
A/C HEATER CONTROL

Diagnostic Test

1. CHECK FOR ACTIVE CONTROL CIRCUIT/PERFORMANCE & CONTROL CIRCUIT OPEN DTCs

Turn the ignition on.

With the scan tool, read active HVAC DTCs.

Does the scan tool display any active: XXXX CONTROL CIRCUIT/PERFORMANCE or XXXX CONTROL CIRCUIT OPEN DTCs?

Yes >> Diagnose and repair the DTC(s). If present, diagnose and repair all Control Circuit/Performance DTCs before diagnosing Control Circuit Open DTCs. Refer to the Table of Contents in this Section for a complete list of all HVAC related symptoms.

No >> Go To 2

2. INSPECT ACTUATOR & HOUSING ASSEMBLY FOR A CONDITION CAUSING THE MODE DOOR TO SEIZE OR BIND

Turn the ignition off.

Inspect the actuator, linkage, and housing assembly for a condition causing the mode door to seize or bind.

Are there any physical or mechanical problems with the door, housing, linkage, or actuator?

Yes >> Repair as necessary in accordance with the Service Information.
Perform BODY VERIFICATION TEST – VER 1. (Refer to 8 - ELECTRICAL/ELECTRONIC CONTROL MODULES/FRONT CONTROL MODULE - DIAGNOSIS AND TESTING).

No >> Go To 3

3. CHECK MODE DOOR TRAVEL

Remove the Mode Door Actuator from the A/C Heater Housing Assembly.

By hand, attempt to rotate the door in both directions. The door should operate smoothly in both directions over the entire span of travel (approximately 240 degrees).

Does the door operate smoothly in both directions over the entire span of travel?

Yes >> Replace the Mode Door Actuator in accordance with the Service Information. Then, Go To 4.

No >> Repair as necessary in accordance with the Service Information.
Perform BODY VERIFICATION TEST – VER 1. (Refer to 8 - ELECTRICAL/ELECTRONIC CONTROL MODULES/FRONT CONTROL MODULE - DIAGNOSIS AND TESTING).

4. RUN THE ACTUATOR CALIBRATION TEST

Turn the ignition on.

With the scan tool, select System Tests and then select Actuator Calibration Test. When the test is complete, select View DTCs.

Does the scan tool display: B1044–PANEL MODE DOOR 1 TRAVEL RANGE TOO SMALL?

Yes >> Replace the A/C Heater Control in accordance with the Service Information.
Perform BODY VERIFICATION TEST – VER 1. (Refer to 8 - ELECTRICAL/ELECTRONIC CONTROL MODULES/FRONT CONTROL MODULE - DIAGNOSIS AND TESTING).

No >> Perform BODY VERIFICATION TEST – VER 1. (Refer to 8 - ELECTRICAL/ELECTRONIC CONTROL MODULES/FRONT CONTROL MODULE - DIAGNOSIS AND TESTING).

B1045–PANEL MODE DOOR 1 TRAVEL RANGE TOO LARGE (ATC)

For a complete wiring diagram **Refer to Section 8W**.

Theory of Operation

The A/C Heater Control calibrates each actuator individually. Automatic calibration occurs upon power up after installing a new A/C Heater Control. Manual calibration occurs by sending a command with the scan tool. The purpose of actuator calibration is to determine the total span of door travel between physical stops. To calibrate the actuator, the A/C Heater Control first moves the door to its soft stop, and then counts the number of pulses it takes to move the door to its other stop. An expected range of span is stored in the control's memory. If the measured calibration value exceeds the expected range for this actuator, this DTC will set. Note that the control clears all stored calibration faults at the beginning of the calibration procedure.

- **When Monitored:**
  During actuator calibration.
- **Set Condition:**
  If the total span of the Mode Door exceeds the high range limit.

Possible Causes
DOOR DRIVER ELECTRICAL CIRCUIT(S)
MODE DOOR OR A/C HEATER HOUSING COMPONENTS WARPED, WORN, DAMAGED, MISSING, BROKEN
MODE DOOR ACTUATOR
A/C HEATER CONTROL

Diagnostic Test

1. CHECK FOR ACTIVE CONTROL CIRCUIT/PERFORMANCE & CONTROL CIRCUIT OPEN DTCs

Turn the ignition on.

With the scan tool, read active HVAC DTCs.

Does the scan tool display any active: XXXX CONTROL CIRCUIT/PERFORMANCE or XXXX CONTROL CIRCUIT OPEN DTCs?

Yes >> Diagnose and repair the DTC(s). If present, diagnose and repair all Control Circuit/Performance DTCs before diagnosing Control Circuit Open DTCs. Refer to the Table of Contents in this Section for a complete list of all HVAC related symptoms.

No >> Go To 2

2. CHECK FOR A BROKEN MODE DOOR ACTUATOR

Turn the ignition off.

Remove the Mode Door Actuator from the A/C Heater Housing Assembly.

By hand, attempt to rotate the actuator in both directions.

Does the actuator turn in either direction?

Yes >> Replace the Mode Door Actuator in accordance with the Service Information.
Perform BODY VERIFICATION TEST – VER 1. (Refer to 8 - ELECTRICAL/ELECTRONIC CONTROL MODULES/FRONT CONTROL MODULE - DIAGNOSIS AND TESTING).

No >> Go To 3

3. CHECK THE MODE DOOR & A/C HEATER HOUSING FOR WARPED, WORN, DAMAGED, MISSING, & BROKEN COMPONENTS

Inspect for excessively worn, disconnected, missing, or broken door linkage. Inspect for a damaged or broken A/C Heater Housing Assembly. Inspect for a warped or broken door, and missing door seals. Rotate the door from stop to stop. The door should rotate approximately 240 degrees.

Are there any physical or mechanical problems with the door or housing?

Yes >> Repair as necessary in accordance with the Service Information.
Perform BODY VERIFICATION TEST – VER 1. (Refer to 8 - ELECTRICAL/ELECTRONIC CONTROL MODULES/FRONT CONTROL MODULE - DIAGNOSIS AND TESTING).

No >> Replace the Mode Door Actuator in accordance with the Service Information. Then, Go To 4.

4. RUN THE ACTUATOR THE CALIBRATION TEST

Turn the ignition on.

With the scan tool, select System Tests and then select Actuator Calibration Test. When the test is complete, select View DTCs.

Does the scan tool display: B1045–PANEL MODE DOOR 1 TRAVEL RANGE TOO LARGE?

Yes >> Replace the A/C Heater Control in accordance with the Service Information.
Perform BODY VERIFICATION TEST – VER 1. (Refer to 8 - ELECTRICAL/ELECTRONIC CONTROL MODULES/FRONT CONTROL MODULE - DIAGNOSIS AND TESTING).

No >> Perform BODY VERIFICATION TEST – VER 1. (Refer to 8 - ELECTRICAL/ELECTRONIC CONTROL MODULES/FRONT CONTROL MODULE - DIAGNOSIS AND TESTING).

B1058–RECIRCULATION DOOR CONTROL CIRCUIT/PERFORMANCE (ATC)

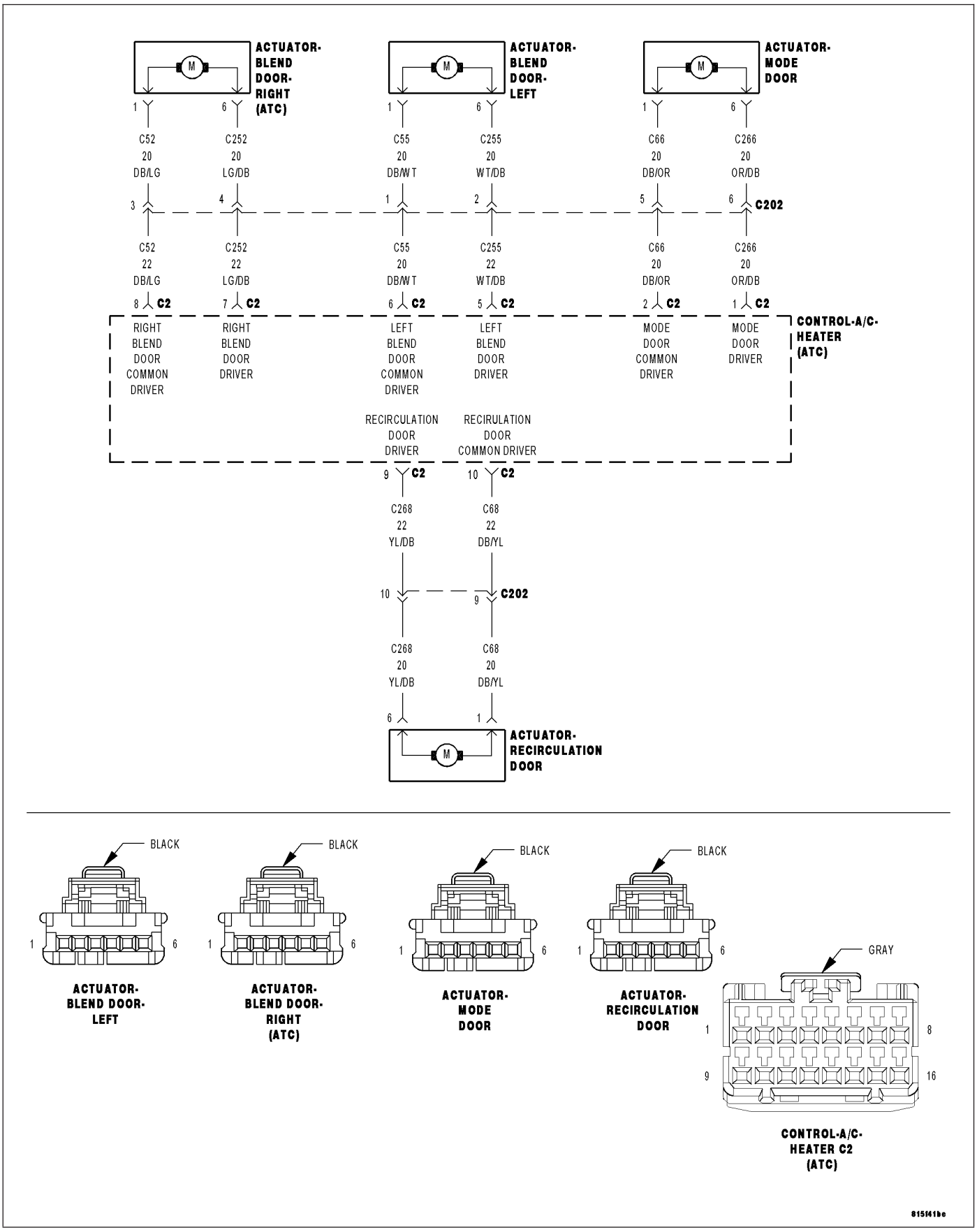

815f41be

For a complete wiring diagram **Refer to Section 8W**.

Theory of Operation

The A/C Heater Control monitors the door driver circuits during actuator operation for shorts to ground, shorts to battery, and shorts to other door driver circuits. If detected, the A/C Heater Control reports these types of faults as Control Circuit/Performance DTCs.

- **When Monitored:**
  When driving the Recirculation Door Actuator.
- **Set Condition:**
  If the A/C Heater Control detects an excessive current draw on any of the door driver circuits while attempting to drive this door actuator.

Possible Causes
DOOR DRIVER CIRCUIT(S) SHORTED TO VOLTAGE
DOOR DRIVER CIRCUIT(S) SHORTED TO GROUND
DOOR DRIVER CIRCUITS SHORTED TOGETHER
DOOR ACTUATOR(S)
A/C HEATER CONTROL

NOTE: This DTC must be active for the results of this test to be valid. Do not perform this test if this DTC is stored. Refer to HVAC System Test (ATC) for stored DTC test procedures.

Diagnostic Test

1. CHECK THE DOOR DRIVER CIRCUITS FOR A SHORT TO VOLTAGE

Turn the ignition off.

Disconnect the A/C Heater Control C2 harness connector.

Turn the ignition on.

Measure the voltage of the (C266) Mode Door Driver circuit, the (C66) Mode Door Common Driver circuit, the (C255) Left Blend Door Driver circuit, the (C55) Left Blend Door Common Driver circuit, the (C252) Right Blend Door Driver circuit, the (C52) Right Blend Door Common Driver circuit, the (C268) Recirculation Door Driver circuit, and the (C68) Recirculation Door Common Driver circuit.

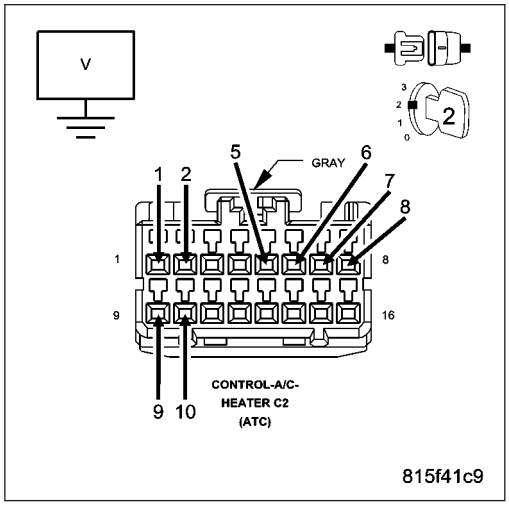

Is the voltage above 0.2 volts on any of the circuits?

Yes >> Repair all circuits with voltage above 0.2 volts for a short to voltage.
Perform BODY VERIFICATION TEST – VER 1. (Refer to 8 - ELECTRICAL/ELECTRONIC CONTROL MODULES/ FRONT CONTROL MODULE - DIAGNOSIS AND TESTING).

No >> Go To 2

2. CHECK THE DOOR DRIVER CIRCUITS FOR A SHORT TO GROUND

Turn the ignition off.

Measure the resistance of the (C266) Mode Door Driver circuit, the (C66) Mode Door Common Driver circuit, the (C255) Left Blend Door Driver circuit, the (C55) Left Blend Door Common Driver circuit, the (C252) Right Blend Door Driver circuit, the (C52) Right Blend Door Common Driver circuit, the (C268) Recirculation Door Driver circuit, and the (C68) Recirculation Door Common Driver circuit between ground and the A/C Heater Control C2 harness connector.

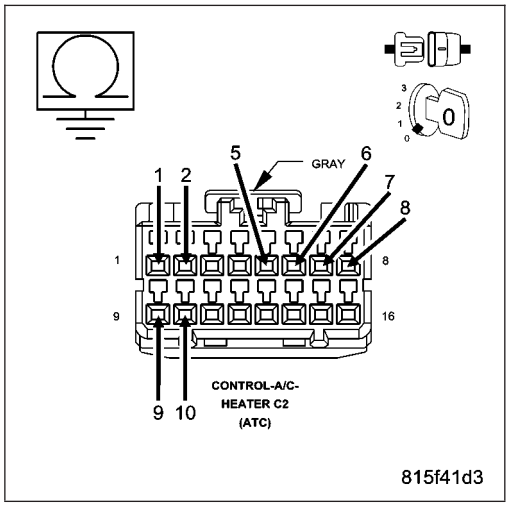

Is the resistance below 10k ohms on any of the circuits?

Yes >> Repair all circuits with a resistance below 10k ohms for a short to ground.

Perform BODY VERIFICATION TEST – VER 1. (Refer to 8 - ELECTRICAL/ELECTRONIC CONTROL MODULES/ FRONT CONTROL MODULE - DIAGNOSIS AND TESTING).

No >> Go To 3

3. CHECK THE (C266) MODE DOOR DRIVER CIRCUIT FOR A SHORT TO THE (C255) LEFT BLEND DOOR DRIVER CIRCUIT, THE (C55) LEFT BLEND DOOR COMMON DRIVER CIRCUIT, THE (C252) RIGHT BLEND DOOR DRIVER CIRCUIT, THE (C52) RIGHT BLEND DOOR COMMON DRIVER CIRCUIT, THE (C268) RECIRCULATION DOOR DRIVER CIRCUIT, & THE (C68) RECIRCULATION DOOR COMMON DRIVER CIRCUIT

Measure the resistance between the (C266) Mode Door Driver circuit and the (C255) Left Blend Door Driver circuit, the (C55) Left Blend Door Common Driver circuit, the (C252) Right Blend Door Driver circuit, the (C52) Right Blend Door Common Driver circuit, the (C268) Recirculation Door Driver circuit, and the (C68) Recirculation Door Common Driver circuit.

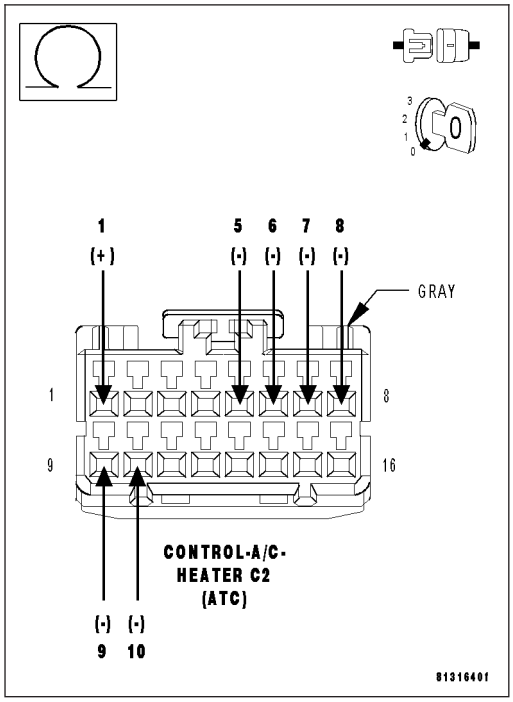

Is the resistance below 10k ohms on any of the circuits?

Yes >> Repair all circuits with a resistance below 10k ohms for a short to the (C266) Mode Door Driver circuit.

Perform BODY VERIFICATION TEST – VER 1. (Refer to 8 - ELECTRICAL/ELECTRONIC CONTROL MODULES/ FRONT CONTROL MODULE - DIAGNOSIS AND TESTING).

No >> Go To 4

4. CHECK THE (C66) MODE DOOR COMMON DRIVER CIRCUIT FOR A SHORT TO THE (C255) LEFT BLEND DOOR DRIVER CIRCUIT, THE (C55) LEFT BLEND DOOR COMMON DRIVER CIRCUIT, THE (C252) RIGHT BLEND DOOR DRIVER CIRCUIT, THE (C52) RIGHT BLEND DOOR COMMON DRIVER CIRCUIT, THE (C268) RECIRCULATION DOOR DRIVER CIRCUIT, & THE (C68) RECIRCULATION DOOR COMMON DRIVER CIRCUIT

Measure the resistance between the (C66) Mode Door Common Driver circuit and the (C255) Left Blend Door Driver circuit, the (C55) Left Blend Door Common Driver circuit, the (C252) Right Blend Door Driver circuit, the (C52) Right Blend Door Common Driver circuit, the (C268) Recirculation Door Driver circuit, and the (C68) Recirculation Door Common Driver circuit.

Is the resistance below 10k ohms on any of the circuits?

Yes >> Repair all circuits with a resistance below 10k ohms for a short to the (C66) Mode Door Common Driver circuit.

Perform BODY VERIFICATION TEST – VER 1. (Refer to 8 - ELECTRICAL/ELECTRONIC CONTROL MODULES/ FRONT CONTROL MODULE - DIAGNOSIS AND TESTING).

No >> Go To 5

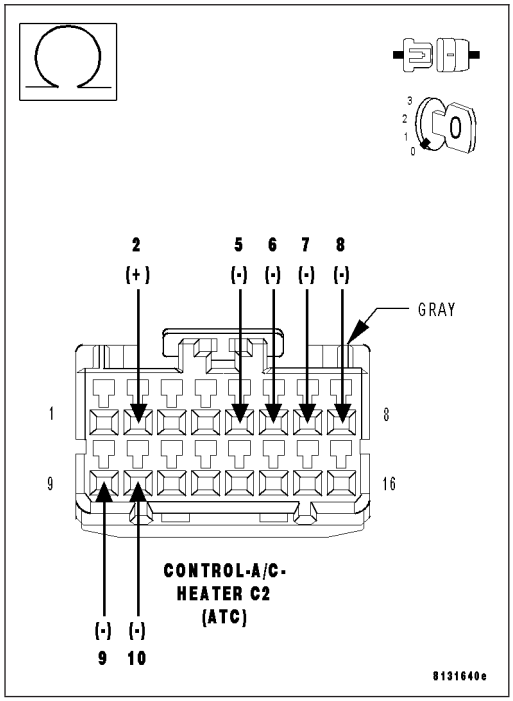

5. CHECK THE (C255) LEFT BLEND DOOR DRIVER CIRCUIT FOR A SHORT TO THE (C252) RIGHT BLEND DOOR DRIVER CIRCUIT, THE (C52) RIGHT BLEND DOOR COMMON DRIVER CIRCUIT, THE (C268) RECIRCULATION DOOR DRIVER CIRCUIT, & THE (C68) RECIRCULATION DOOR COMMON DRIVER CIRCUIT

Measure the resistance between the (C255) Left Blend Door Driver circuit and the (C252) Right Blend Door Driver circuit, the (C52) Right Blend Door Common Driver circuit, the (C268) Recirculation Door Driver circuit, and the (C68) Recirculation Door Common Driver circuit.

Is the resistance below 10k ohms on any of the circuits?

Yes >> Repair all circuits with a resistance below 10k ohms for a short to (C255) Left Blend Door Driver circuit.

Perform BODY VERIFICATION TEST – VER 1. (Refer to 8 - ELECTRICAL/ELECTRONIC CONTROL MODULES/ FRONT CONTROL MODULE - DIAGNOSIS AND TESTING).

No >> Go To 6

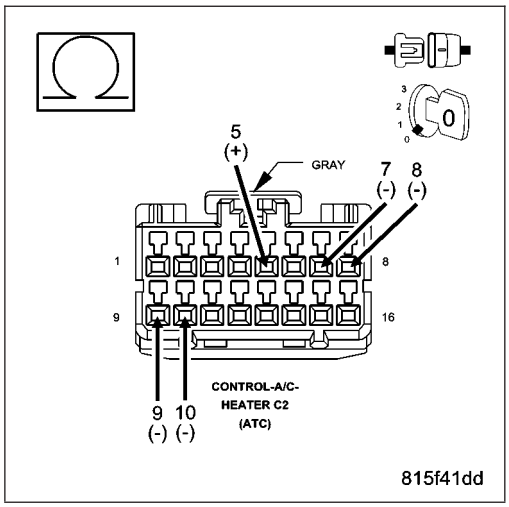

6. CHECK THE (C55) LEFT BLEND DOOR COMMON DRIVER CIRCUIT FOR A SHORT TO THE (C252) RIGHT BLEND DOOR DRIVER CIRCUIT, THE (C52) RIGHT BLEND DOOR COMMON DRIVER CIRCUIT, THE (C268) RECIRCULATION DOOR DRIVER CIRCUIT, & THE (C68) RECIRCULATION DOOR COMMON DRIVER CIRCUIT

Measure the resistance between the (C55) Left Blend Door Common Driver circuit and the (C252) Right Blend Door Driver circuit, the (C52) Right Blend Door Common Driver circuit, the (C268) Recirculation Door Driver circuit, and the (C68) Recirculation Door Common Driver circuit.

Is the resistance below 10k ohms on any of the circuits?

Yes >> Repair all circuits with a resistance below 10k ohms for a short to (C55) Left Blend Door Common Driver circuit.
Perform BODY VERIFICATION TEST – VER 1. (Refer to 8 - ELECTRICAL/ELECTRONIC CONTROL MODULES/ FRONT CONTROL MODULE - DIAGNOSIS AND TESTING).

No >> Go To 7

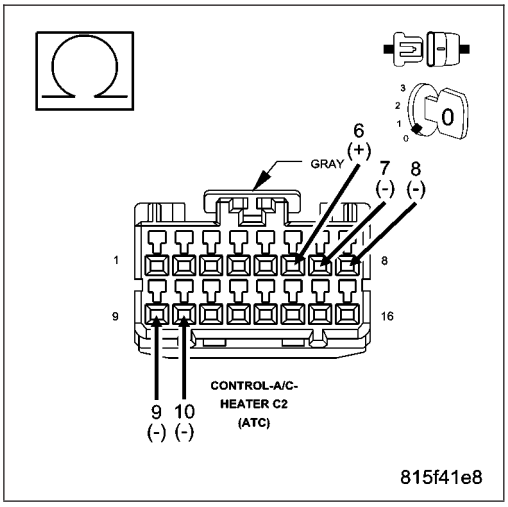

7. CHECK THE (C252) RIGHT BLEND DOOR DRIVER CIRCUIT FOR A SHORT TO THE (C268) RECIRCULATION DOOR DRIVER CIRCUIT & THE (C68) RECIRCULATION DOOR COMMON DRIVER CIRCUIT

Measure the resistance between the (C252) Right Blend Door Driver circuit and the (C268) Recirculation Door Driver circuit and the (C68) Recirculation Door Common Driver circuit.

Is the resistance below 10k ohms on any of the circuits?

Yes >> Repair all circuits with a resistance below 10k ohms for a short to the (C252) Right Blend Door Driver circuit.
Perform BODY VERIFICATION TEST – VER 1. (Refer to 8 - ELECTRICAL/ELECTRONIC CONTROL MODULES/ FRONT CONTROL MODULE - DIAGNOSIS AND TESTING).

No >> Go To 8

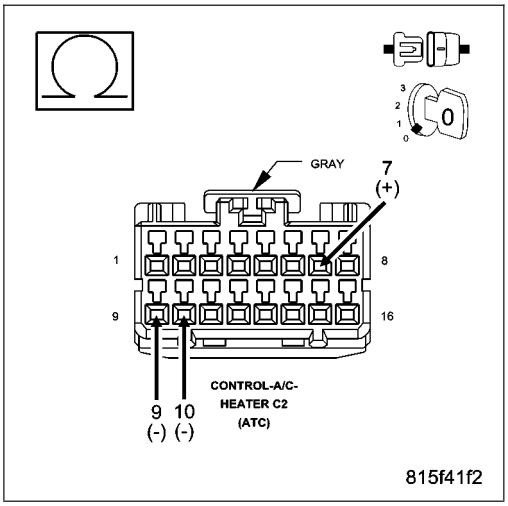

8. CHECK THE (C52) RIGHT BLEND DOOR COMMON DRIVER CIRCUIT FOR A SHORT TO THE (C268) RECIRCULATION DOOR DRIVER CIRCUIT & THE (C68) RECIRCULATION DOOR COMMON DRIVER CIRCUIT

Measure the resistance between the (C52) Right Blend Door Common Driver circuit and the (C268) Recirculation Door Driver circuit and the (C68) Recirculation Door Common Driver circuit.

Is the resistance below 10k ohms on any of the circuits?

Yes >> Repair all circuits with a resistance below 10k ohms for a short to the (C52) Right Blend Door Common Driver circuit.

Perform BODY VERIFICATION TEST – VER 1. (Refer to 8 - ELECTRICAL/ELECTRONIC CONTROL MODULES/ FRONT CONTROL MODULE - DIAGNOSIS AND TESTING).

No >> Go To 9

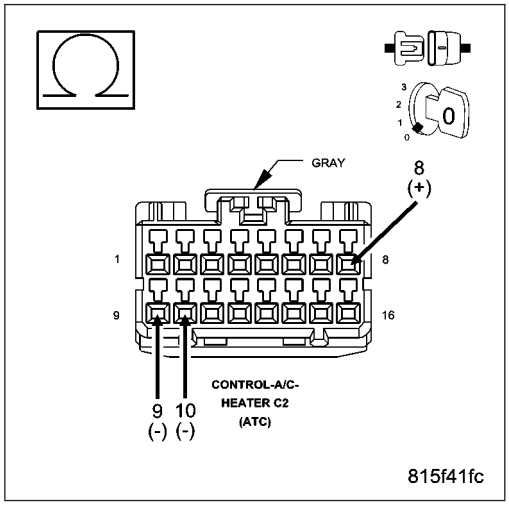

9. CHECK THE MODE DOOR ACTUATOR CIRCUIT RESISTANCE

Measure the resistance between the (C266) Mode Door Driver circuit and the (C66) Mode Door Common Driver circuit in the A/C Heater Control C2 harness connector.

Is the resistance below 30.0 ohms?

Yes >> Go To 10

No >> Go To 11

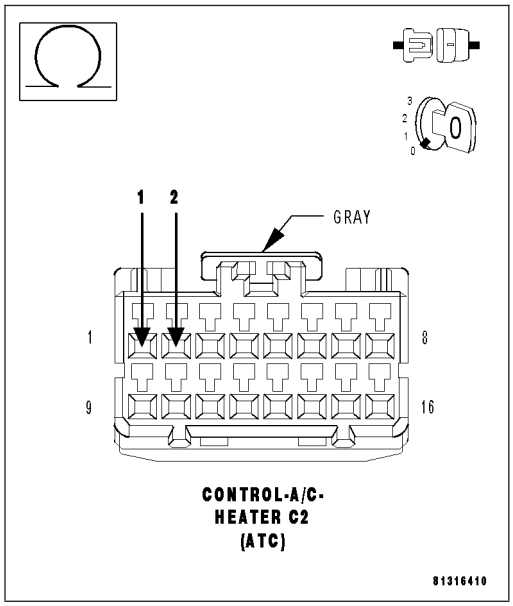

10. CHECK THE (C266) MODE DOOR DRIVER CIRCUIT FOR A SHORT TO THE (C66) MODE DOOR COMMON DRIVER CIRCUIT

Disconnect the Mode Door Actuator harness connector.

Measure the resistance between the (C266) Mode Door Driver circuit and the (C66) Mode Door Common Driver circuit in the A/C Heater Control C2 harness connector.

Is the resistance below 10k ohms?

Yes >> Repair the (C266) Mode Door Driver circuit for a short to the (C66) Mode Door Common Driver circuit.

Perform BODY VERIFICATION TEST – VER 1. (Refer to 8 - ELECTRICAL/ELECTRONIC CONTROL MODULES/ FRONT CONTROL MODULE - DIAGNOSIS AND TESTING).

No >> Replace the Mode Door Actuator in accordance with the Service Information.

Perform BODY VERIFICATION TEST – VER 1. (Refer to 8 - ELECTRICAL/ELECTRONIC CONTROL MODULES/ FRONT CONTROL MODULE - DIAGNOSIS AND TESTING).

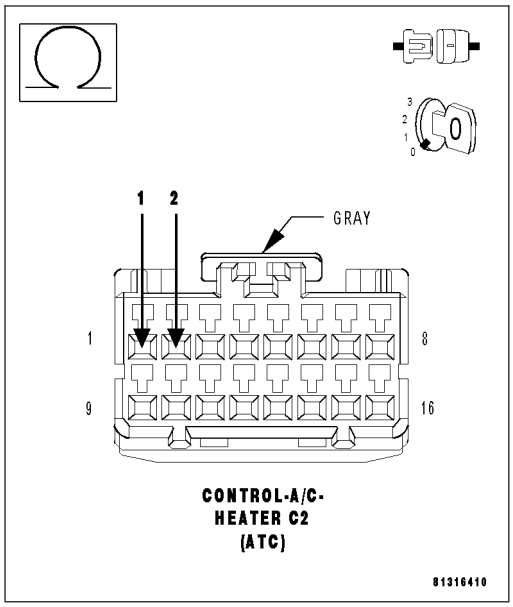

11. CHECK THE LEFT BLEND DOOR ACTUATOR CIRCUIT RESISTANCE

Measure the resistance between the (C255) Left Blend Door Driver circuit and the (C55) Left Blend Door Common Driver circuit in the A/C Heater Control C2 harness connector.

Is the resistance below 30.0 ohms?

Yes >> Go To 12

No >> Go To 13

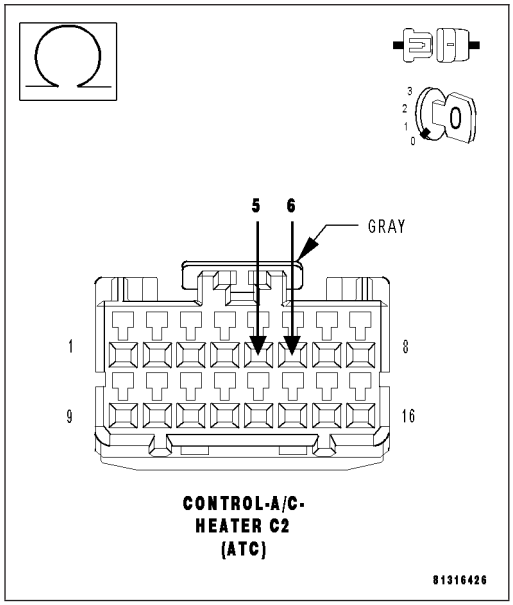

12. CHECK THE (C255) LEFT BLEND DOOR DRIVER CIRCUIT FOR A SHORT TO THE (C55) LEFT BLEND DOOR COMMON DRIVER CIRCUIT

Disconnect the Left Blend Door Actuator harness connector.

Measure the resistance between the (C255) Left Blend Door Driver circuit and the (C55) Left Blend Door Common Driver circuit in the A/C Heater Control C2 harness connector.

Is the resistance below 10k ohms?

Yes >> Repair the (C255) Left Blend Door Driver circuit for a short to the (C55) Left Blend Door Common Driver circuit.

Perform BODY VERIFICATION TEST – VER 1. (Refer to 8 - ELECTRICAL/ELECTRONIC CONTROL MODULES/ FRONT CONTROL MODULE - DIAGNOSIS AND TESTING).

No >> Replace the Left Blend Door Actuator in accordance with the Service Information.

Perform BODY VERIFICATION TEST – VER 1. (Refer to 8 - ELECTRICAL/ELECTRONIC CONTROL MODULES/ FRONT CONTROL MODULE - DIAGNOSIS AND TESTING).

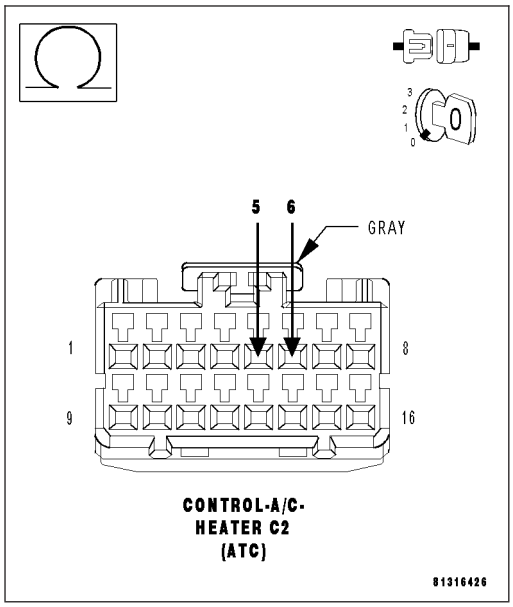

13. CHECK THE RIGHT BLEND DOOR ACTUATOR CIRCUIT RESISTANCE

Measure the resistance between the (C252) Right Blend Door Driver circuit and the (C52) Right Blend Door Common Driver circuit in the A/C Heater Control C2 harness connector.

Is the resistance below 30.0 ohms?

Yes >> Go To 14

No >> Go To 15

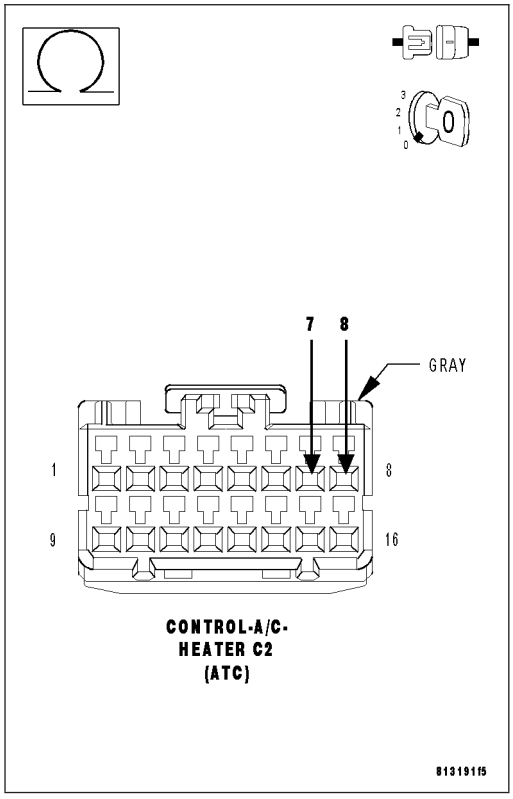

14. CHECK THE (C252) RIGHT BLEND DOOR DRIVER CIRCUIT FOR A SHORT TO THE (C52) RIGHT BLEND DOOR COMMON DRIVER CIRCUIT

Disconnect the Right Blend Door Actuator harness connector.

Measure the resistance between the (C252) Right Blend Door Driver circuit and the (C52) Right Blend Door Common Driver circuit in the A/C Heater Control C2 harness connector.

Is the resistance below 10k ohms?

Yes >> Repair the (C252) Right Blend Door Driver circuit for a short to the (C52) Right Blend Door Common Driver circuit.
Perform BODY VERIFICATION TEST – VER 1. (Refer to 8 - ELECTRICAL/ELECTRONIC CONTROL MODULES/ FRONT CONTROL MODULE - DIAGNOSIS AND TESTING).

No >> Replace the Right Blend Door Actuator in accordance with the Service Information.
Perform BODY VERIFICATION TEST – VER 1. (Refer to 8 - ELECTRICAL/ELECTRONIC CONTROL MODULES/ FRONT CONTROL MODULE - DIAGNOSIS AND TESTING).

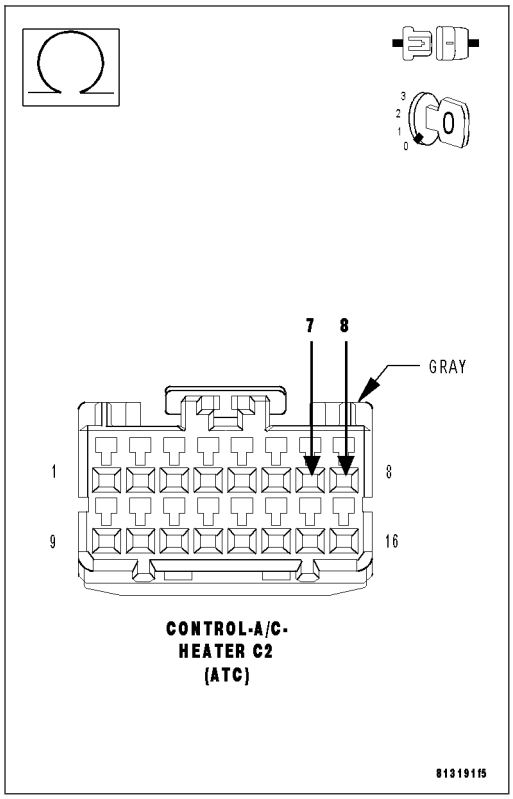

15. CHECK THE RECIRCULATION DOOR ACTUATOR CIRCUIT RESISTANCE

Measure the resistance between the (C268) Recirculation Door Driver circuit and the (C68) Recirculation Door Common Driver circuit in the A/C Heater Control C2 harness connector.

Is the resistance below 30.0 ohms?

Yes >> Go To 16

No >> Go To 17

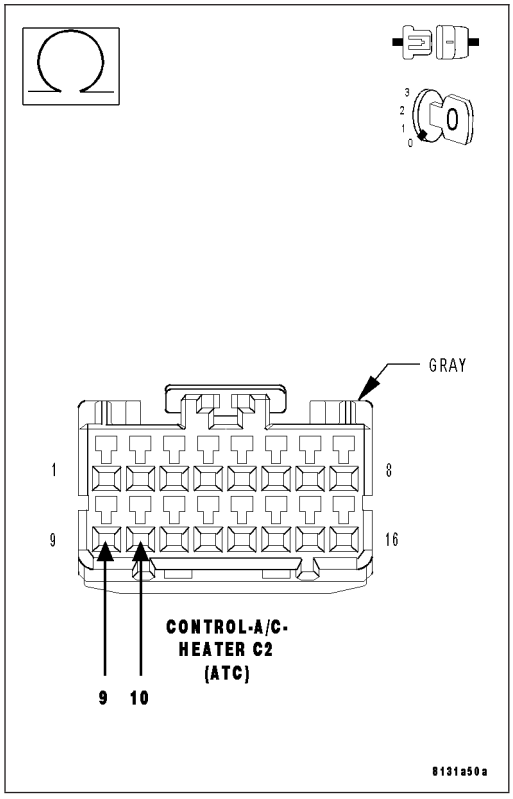

16. CHECK THE (C268) RECIRCULATION DOOR DRIVER CIRCUIT FOR A SHORT TO THE (C68) RECIRCULATION DOOR COMMON DRIVER CIRCUIT

Disconnect the Recirculation Door Actuator harness connector.

Measure the resistance between the (C268) Recirculation Door Driver circuit and the (C68) Recirculation Door Common Driver circuit in the A/C Heater Control C2 harness connector.

Is the resistance below 10k ohms?

Yes >> Repair the (C268) Recirculation Door Driver circuit for a short to the (C68) Recirculation Door Common Driver circuit.

Perform BODY VERIFICATION TEST – VER 1. (Refer to 8 - ELECTRICAL/ELECTRONIC CONTROL MODULES/FRONT CONTROL MODULE - DIAGNOSIS AND TESTING).

No >> Replace the Recirculation Door Actuator in accordance with the Service Information.

Perform BODY VERIFICATION TEST – VER 1. (Refer to 8 - ELECTRICAL/ELECTRONIC CONTROL MODULES/FRONT CONTROL MODULE - DIAGNOSIS AND TESTING).

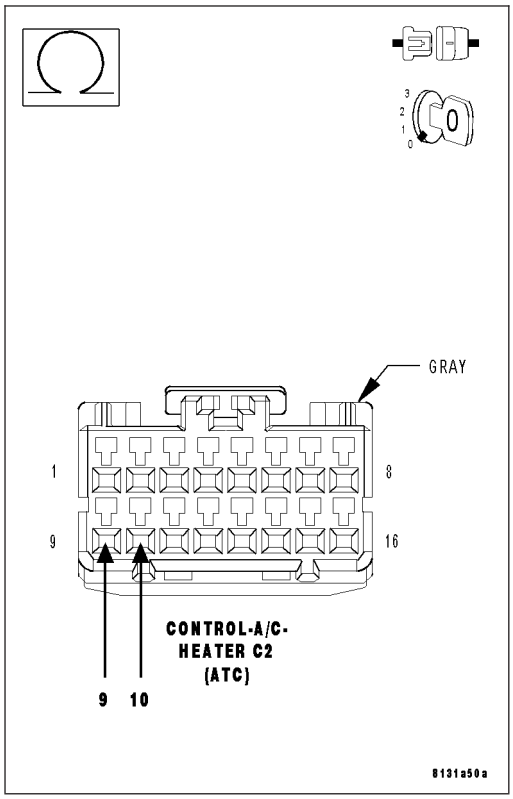

17. RUN THE ACTUATOR CALIBRATION TEST

Reconnect the A/C Heater Control C2 harness connector.

Reconnect the all of the Door Actuator harness connectors.

Turn the ignition on.

With the scan tool, erase HVAC DTCs.

Turn the ignition off, wait 10 seconds, and then turn the ignition on.

With the scan tool, select System Tests and then select Actuator Calibration Test. When the test is complete, select View DTCs.

Does the scan tool only display: B1058–RECIRCULATION DOOR CONTROL CIRCUIT/PERFORMANCE?

Yes >> Replace the A/C Heater Control in accordance with the Service Information.

Perform BODY VERIFICATION TEST – VER 1. (Refer to 8 - ELECTRICAL/ELECTRONIC CONTROL MODULES/FRONT CONTROL MODULE - DIAGNOSIS AND TESTING).

No, Other DTC(s) Displayed

Diagnose and repair the other DTC(s). Refer to the Table of Contents in this Section for a complete list of all HVAC related symptoms.

No, And No Other DTCs Displayed

Using the wiring diagram as a guide, inspect the wiring and connectors for conditions causing an intermittent short. Repair as necessary.

Perform BODY VERIFICATION TEST – VER 1. (Refer to 8 - ELECTRICAL/ELECTRONIC CONTROL MODULES/FRONT CONTROL MODULE - DIAGNOSIS AND TESTING).

B1082–HVAC MUX CIRCUIT LOW

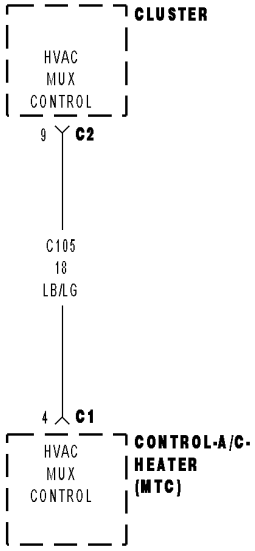

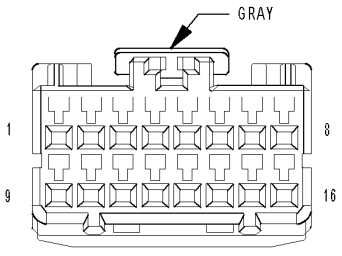

CLUSTER C2

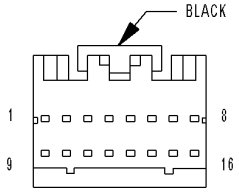

CONTROL-A/C-
HEATER C1
(MTC)

813401bd

For a complete wiring diagram **Refer to Section 8W**.

- **When Monitored:**
  With the ignition on.
- **Set Condition:**
  If the Instrument Cluster (CCN) detects voltage below 0.55 volts for 10 seconds on the (C105) HVAC MUX Control circuit.

Possible Causes
(C105) HVAC MUX CONTROL CIRCUIT SHORTED TO GROUND
INSTRUMENT CLUSTER (CCN)
A/C HEATER CONTROL

Diagnostic Test

1. VERIFY DTC B1082-HVAC MUX CIRCUIT LOW IS ACTIVE

Turn the ignition on.
With the scan tool, erase CCN DTCs.
Turn the ignition off, wait 10 seconds, and turn the ignition on.
With the scan tool, read CCN DTCs.

Does the scan tool display active: B1082–HVAC MUX CIRCUIT LOW?

Yes >> Go To 2

No >> Check for an intermittent condition by inspecting the related wiring harness for chafed, pierced, pinched, and partially broken wires. Also, inspect the related connectors for broken, bent, pushed out, spread, corroded, or contaminated terminals.
Perform BODY VERIFICATION TEST - VER 1. (Refer to BODY VERIFICATION TEST - VER 1).

2. CHECK FOR DTC B1082-HVAC MUX CIRCUIT LOW WITH A/C HEATER CONTROL C1 HARNESS CONNECTOR DISCONNECTED

Turn the ignition off.
Disconnect the A/C Heater Control C1 harness connector.
Turn the ignition on.
With the scan tool, erase CCN DTCs.
Turn the ignition off, wait 10 seconds, and turn the ignition on.
With the scan tool, read CCN DTCs.

Does the scan tool display: B1082–HVAC MUX CIRCUIT LOW?

Yes >> Go To 3

No >> Replace the A/C Heater Control in accordance with the Service Information.
Perform BODY VERIFICATION TEST - VER 1. (Refer to BODY VERIFICATION TEST - VER 1).

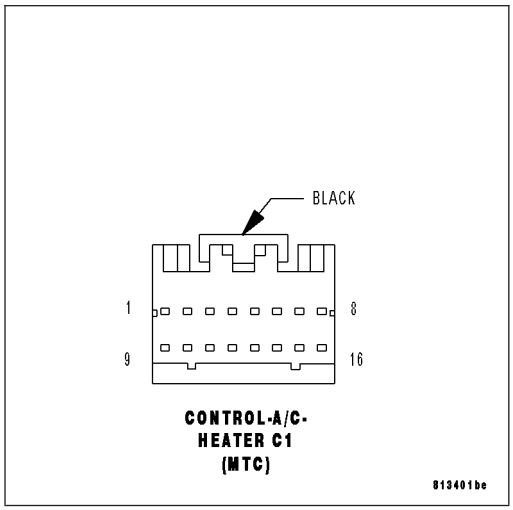

3. CHECK (C105) HVAC MUX CONTROL CIRCUIT FOR A SHORT TO GROUND

Turn the ignition off.

Disconnect the Instrument Cluster C2 harness connector.

Measure the resistance of the (C105) HVAC MUX Control circuit between ground and the A/C Heater Control C1 harness connector.

Is the resistance below 10k ohms?

Yes >> Repair the (C105) HVAC MUX Control circuit for a short to ground.

Perform BODY VERIFICATION TEST - VER 1. (Refer to BODY VERIFICATION TEST - VER 1).

No >> Replace the Instrument Cluster (CCN) in accordance with the Service Information.

Perform BODY VERIFICATION TEST - VER 1. (Refer to BODY VERIFICATION TEST - VER 1).

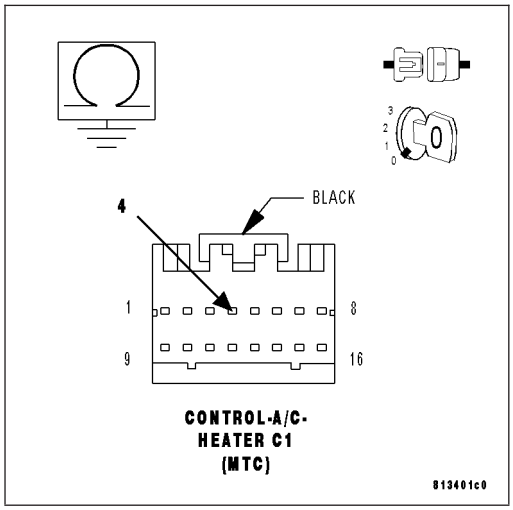

B1083–HVAC MUX CIRCUIT HIGH

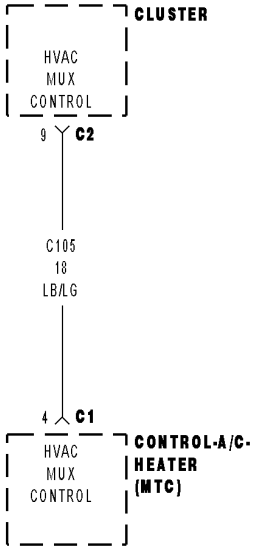

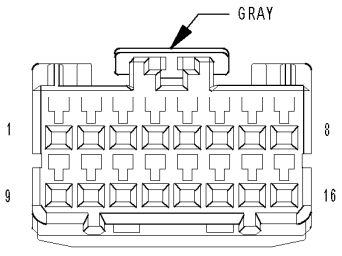

CLUSTER C2

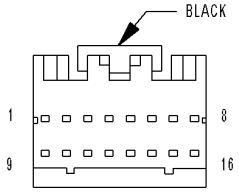

CONTROL-A/C-
HEATER C1
(MTC)

813401bd

For a complete wiring diagram **Refer to Section 8W**.

- **When Monitored:**
  With the ignition on.
- **Set Condition:**
  If the Instrument Cluster (CCN) detects voltage above 4.5 volts for 10 seconds on the (C105) HVAC MUX Control circuit.

Possible Causes
(C105) HVAC MUX CONTROL CIRCUIT SHORTED TO VOLTAGE
(C105) HVAC MUX CONTROL CIRCUIT OPEN
INSTRUMENT CLUSTER (CCN)
A/C HEATER CONTROL

Diagnostic Test

1. VERIFY DTC B1083–HVAC MUX CIRCUIT HIGH IS ACTIVE

Turn the ignition on.
With the scan tool, erase CCN DTCs.
Turn the ignition off, wait 10 seconds, and turn the ignition on.
With the scan tool, read CCN DTCs.

Does the scan tool display active: B1083–HVAC MUX CIRCUIT HIGH?

Yes >> Go To 2

No >> Check for an intermittent condition by inspecting the related wiring harness for chafed, pierced, pinched, and partially broken wires. Also, inspect the related connectors for broken, bent, pushed out, spread, corroded, or contaminated terminals.
Perform BODY VERIFICATION TEST - VER 1. (Refer to BODY VERIFICATION TEST - VER 1).

2. CHECK (C105) HVAC MUX CONTROL CIRCUIT VOLTAGE AT A/C HEATER CONTROL C1 HARNESS CONNECTOR

Turn the ignition off.
Disconnect the A/C Heater Control C1 harness connector.
Turn the ignition on.
Measure the voltage of the (C105) HVAC MUX Control circuit.

What is the voltage?

Below 4.8 Volts
Go To 3

4.8 to 5.2 Volts
Replace the A/C Heater Control in accordance with the Service Information.
Perform BODY VERIFICATION TEST - VER 1. (Refer to BODY VERIFICATION TEST - VER 1).

Above 5.2 Volts
Go To 4

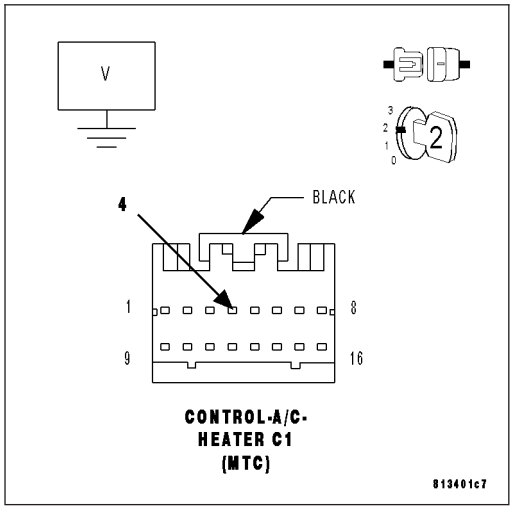

3. CHECK (C105) HVAC MUX CONTROL CIRCUIT FOR AN OPEN

Turn the ignition off.

Disconnect the Instrument Cluster C2 harness connector.

Measure the resistance of the (C105) HVAC MUX Control circuit between the A/C Heater Control C1 harness connector and the Instrument Cluster C2 harness connector.

Is the resistance below 5.0 ohms?

Yes >> Replace the Instrument Cluster (CCN) in accordance with the Service Information.
Perform BODY VERIFICATION TEST - VER 1. (Refer to BODY VERIFICATION TEST - VER 1).

No >> Repair the (C105) HVAC MUX Control circuit for an open.
Perform BODY VERIFICATION TEST - VER 1. (Refer to BODY VERIFICATION TEST - VER 1).

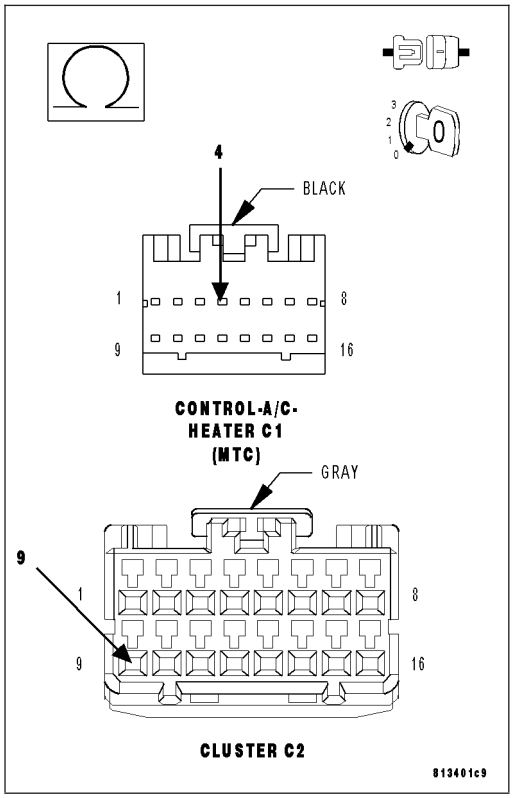

4. CHECK (C105) HVAC MUX CONTROL CIRCUIT FOR A SHORT TO VOLTAGE

Turn the ignition off.

Disconnect the Instrument Cluster C2 harness connector.

Turn the ignition on.

Measure the voltage of the (C105) HVAC MUX Control circuit.

Is the voltage above 0.2 volts?

Yes >> Repair the (C105) HVAC MUX Control circuit for a short to voltage.
Perform BODY VERIFICATION TEST - VER 1. (Refer to BODY VERIFICATION TEST - VER 1).

No >> Replace the Instrument Cluster (CCN) in accordance with the Service Information.
Perform BODY VERIFICATION TEST - VER 1. (Refer to BODY VERIFICATION TEST - VER 1).

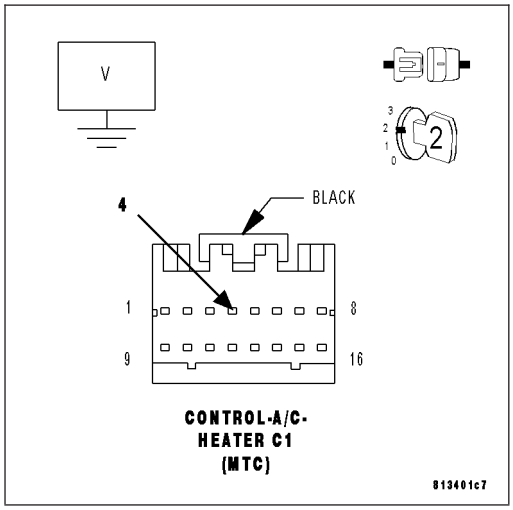

B1601–LEFT SOLAR SENSOR CIRCUIT LOW (ATC)

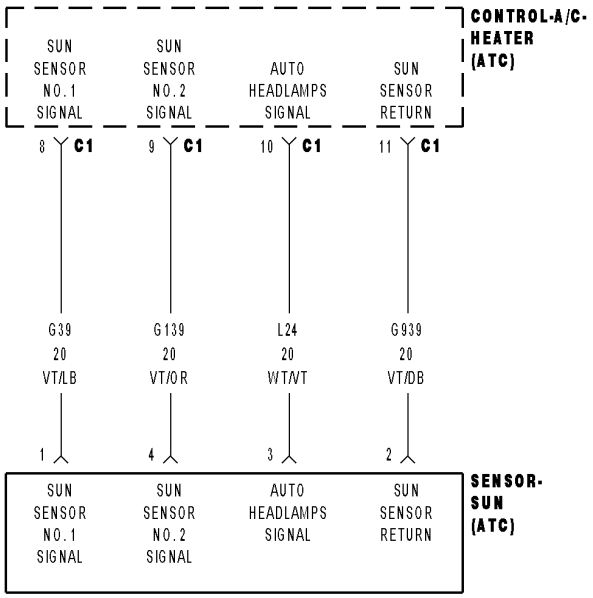

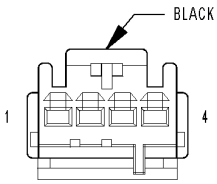

SENSOR-SUN (ATC)

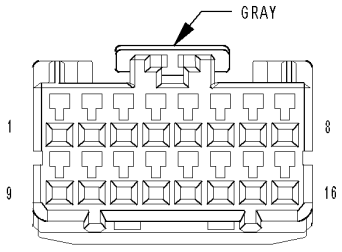

CONTROL-A/C-HEATER C2 (ATC)

812d36da

For a complete wiring diagram **Refer to Section 8W**.

- **When Monitored:**
  With ignition on.
- **Set Condition:**
  If the Left Sunload Sensor input is out of range toward the low voltage threshold.

Possible Causes
(G39) SUN SENSOR NO. 1 SIGNAL CIRCUIT SHORTED TO GROUND
(G39) SUN SENSOR NO. 1 SIGNAL CIRCUIT SHORTED TO (G939) SUN SENSOR RETURN CIRCUIT
SUN SENSOR
A/C HEATER CONTROL

NOTE: This DTC must be active for the results of this test to be valid. Do not perform this test if this DTC is stored. Refer to HVAC System Test (ATC) for stored DTC test procedures.

Diagnostic Test

1. CHECK FOR DTC B1601–LEFT SOLAR SENSOR CIRCUIT LOW WITH SUN SENSOR HARNESS CONNECTOR DISCONNECTED

Turn the ignition off.
Disconnect the Sun Sensor harness connector.
Turn the ignition on.
With the scan tool, erase HVAC DTCs.
Turn the ignition off, wait 10 seconds, and turn the ignition on.
With the scan tool, read HVAC DTCs.

Does the scan tool display: B1601–LEFT SOLAR SENSOR CIRCUIT LOW?

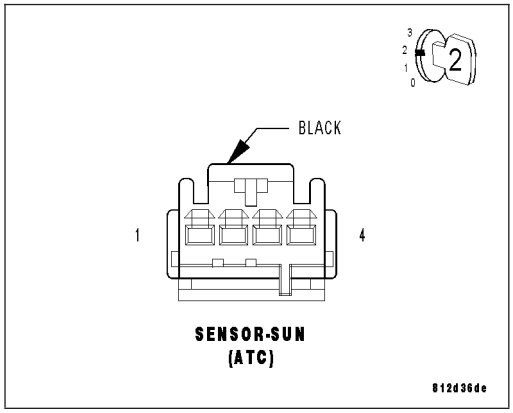

Yes >> Go To 2

No >> Replace the Sun Sensor in accordance with the Service Information.
Perform BODY VERIFICATION TEST – VER 1. (Refer to 8 - ELECTRICAL/ELECTRONIC CONTROL MODULES/ FRONT CONTROL MODULE - DIAGNOSIS AND TESTING).

2. CHECK (G39) SUN SENSOR NO. 1 SIGNAL CIRCUIT FOR A SHORT TO GROUND

Turn the ignition off.
Disconnect the A/C Heater Control C1 harness connector.
Measure the resistance of the (G39) Sun Sensor No. 1 Signal circuit between ground and the A/C Heater Control C1 harness connector.

Is the resistance below 10k ohms?

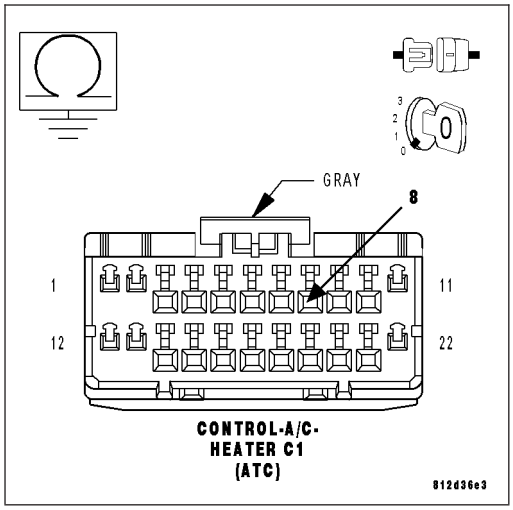

Yes >> Repair the (G39) Sun Sensor No. 1 Signal circuit for a short to ground.
Perform BODY VERIFICATION TEST – VER 1. (Refer to 8 - ELECTRICAL/ELECTRONIC CONTROL MODULES/ FRONT CONTROL MODULE - DIAGNOSIS AND TESTING).

No >> Go To 3

3. CHECK (G39) SUN SENSOR NO. 1 SIGNAL CIRCUIT FOR A SHORT TO (G939) SUN SENSOR RETURN CIRCUIT

Measure the resistance between the (G39) Sun Sensor No. 1 Signal circuit and the (G939) Sun Sensor Return circuit in the A/C Heater Control C1 harness connector.

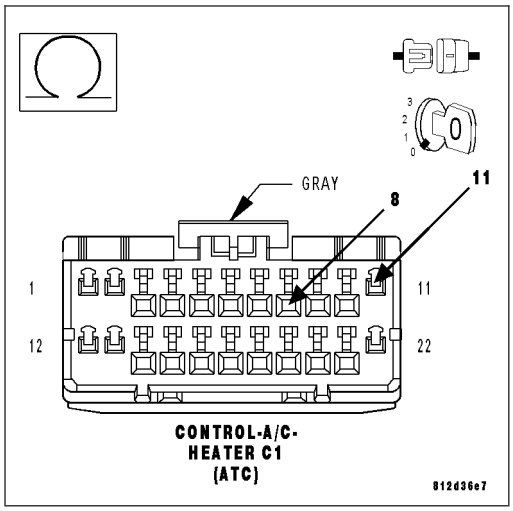

Is the resistance below 10k ohms?

Yes >> Repair the (G39) Sun Sensor No. 1 Signal circuit for a short to the (G939) Sun Sensor Return circuit.

Perform BODY VERIFICATION TEST – VER 1. (Refer to 8 - ELECTRICAL/ELECTRONIC CONTROL MODULES/ FRONT CONTROL MODULE - DIAGNOSIS AND TESTING).

No >> Replace the A/C Heater Control in accordance with the Service Information.

Perform BODY VERIFICATION TEST – VER 1. (Refer to 8 - ELECTRICAL/ELECTRONIC CONTROL MODULES/ FRONT CONTROL MODULE - DIAGNOSIS AND TESTING).

B1602–LEFT SOLAR SENSOR CIRCUIT HIGH (ATC)

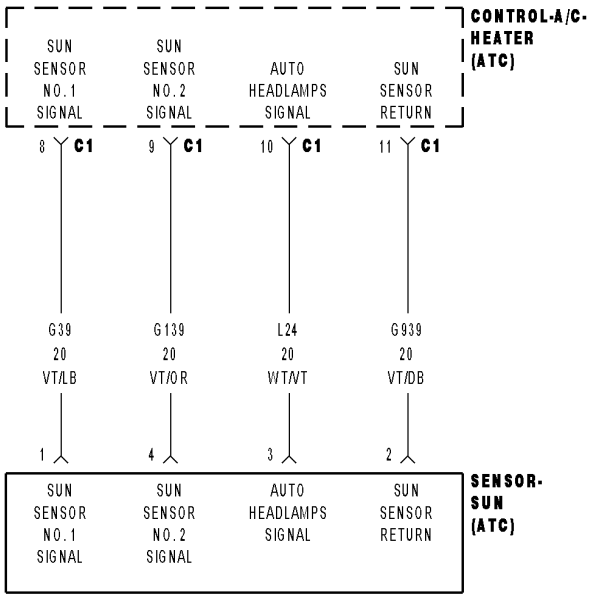

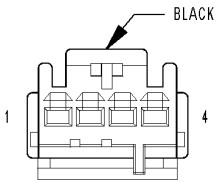

SENSOR-SUN (ATC)

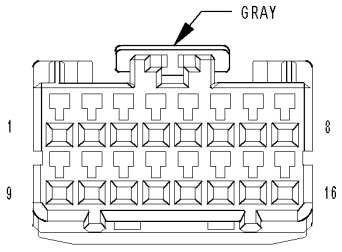

CONTROL-A/C-HEATER C2 (ATC)

812d36da

For a complete wiring diagram **Refer to Section 8W**.

- **When Monitored:**
  With the ignition on.
- **Set Condition:**
  If the Left Sunload Sensor input is out of range toward the high voltage threshold.

Possible Causes
(G39) SUN SENSOR NO. 1 SIGNAL CIRCUIT OPEN
(G39) SUN SENSOR NO. 1 SIGNAL CIRCUIT SHORTED TO VOLTAGE
(G939) SUN SENSOR RETURN CIRCUIT OPEN
SUN SENSOR
A/C HEATER CONTROL

NOTE: This DTC must be active for the results of this test to be valid. Do not perform this test if this DTC is stored. Refer to HVAC System Test (ATC) for stored DTC test procedures.

Diagnostic Test

1. CHECK (G39) SUN SENSOR NO. 1 SIGNAL CIRCUIT VOLTAGE

Turn the ignition off.
Disconnect the Sun Sensor harness connector.
Turn the ignition on.
Measure the voltage of the (G39) Sun Sensor No. 1 Signal circuit.

What voltage is present?

Above 5.2 Volts
Go To 2

4.8 Volts to 5.2 Volts
Go To 3

Below 4.8 Volts
Go To 5

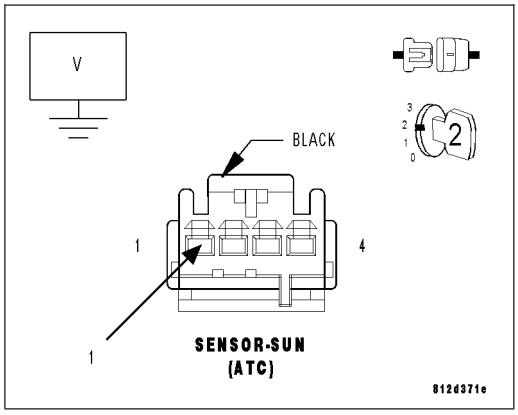

2. CHECK (G39) SUN SENSOR NO. 1 SIGNAL CIRCUIT FOR A SHORT TO VOLTAGE

Turn the ignition off.
Disconnect the A/C Heater Control C1 harness connector.
Turn the ignition on.
Measure the voltage of the (G39) Sun Sensor No. 1 Signal circuit.

Is the voltage above 0.2 volts?

Yes >> Repair the (G39) Sun Sensor No. 1 Signal circuit for a short to voltage.
Perform BODY VERIFICATION TEST – VER 1. (Refer to 8 - ELECTRICAL/ELECTRONIC CONTROL MODULES/ FRONT CONTROL MODULE - DIAGNOSIS AND TESTING).

No >> Replace the A/C Heater Control in accordance with the Service Information.
Perform BODY VERIFICATION TEST – VER 1. (Refer to 8 - ELECTRICAL/ELECTRONIC CONTROL MODULES/FRONT CONTROL MODULE - DIAGNOSIS AND TESTING).

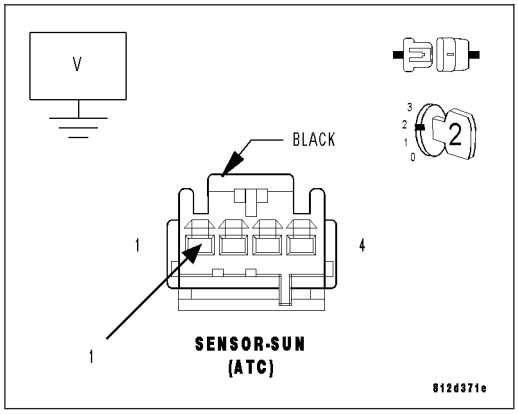

3. CHECK (G939) SUN SENSOR RETURN CIRCUIT FUNCTION

Turn the ignition off.

Connect a jumper wire between the (G39) Sun Sensor No. 1 Signal circuit and the (G939) Sun Sensor Return circuit in the Sun Sensor harness connector.

Turn the ignition on.

With the scan tool in HVAC, select Data Display and read the Left Solar Sensor voltage.

Is the voltage below 0.2 volts?

Yes >> Replace the Sun Sensor in accordance with the Service Information.

Perform BODY VERIFICATION TEST – VER 1. (Refer to 8 - ELECTRICAL/ELECTRONIC CONTROL MODULES/ FRONT CONTROL MODULE - DIAGNOSIS AND TESTING).

No >> Go To 4

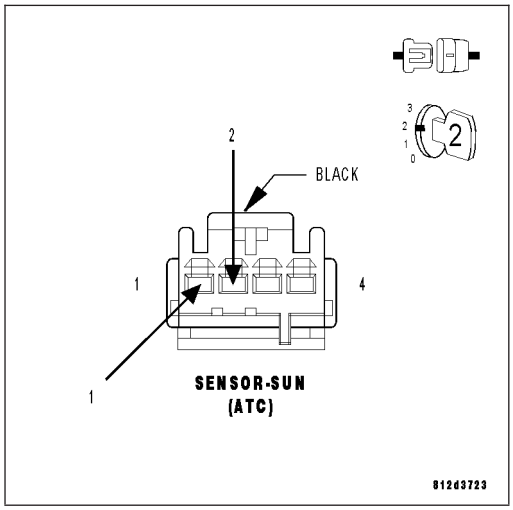

4. CHECK (G939) SUN SENSOR RETURN CIRCUIT FOR AN OPEN

Turn the ignition off.

Disconnect the A/C Heater Control C1 harness connector.

Measure the resistance of the (G939) Sun Sensor Return circuit between the Sun Sensor harness connector and the A/C Heater Control C1 harness connector.

Is the resistance below 5.0 ohms?

Yes >> Replace the A/C Heater Control in accordance with the Service Information.

Perform BODY VERIFICATION TEST – VER 1. (Refer to 8 - ELECTRICAL/ELECTRONIC CONTROL MODULES/ FRONT CONTROL MODULE - DIAGNOSIS AND TESTING).

No >> Repair the (G939) Sun Sensor Return circuit for an open.

Perform BODY VERIFICATION TEST – VER 1. (Refer to 8 - ELECTRICAL/ELECTRONIC CONTROL MODULES/ FRONT CONTROL MODULE - DIAGNOSIS AND TESTING).

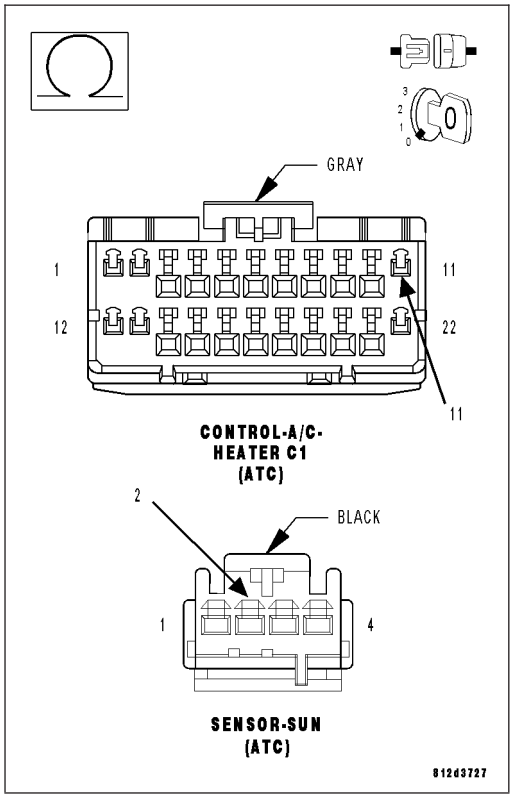

5. CHECK (G39) SUN SENSOR NO. 1 SIGNAL CIRCUIT FOR AN OPEN

Turn the ignition off.

Disconnect the A/C Heater Control C1 harness connector.

Measure the resistance of the (G39) Sun Sensor No. 1 Signal circuit between the Sun Sensor harness connector and the A/C Heater Control C1 harness connector.

Is the resistance below 5.0 ohms?

Yes >> Replace the A/C Heater Control in accordance with the Service Information.

Perform BODY VERIFICATION TEST – VER 1. (Refer to 8 - ELECTRICAL/ELECTRONIC CONTROL MODULES/ FRONT CONTROL MODULE - DIAGNOSIS AND TESTING).

No >> Repair the (G39) Sun Sensor No. 1 Signal circuit for an open.

Perform BODY VERIFICATION TEST – VER 1. (Refer to 8 - ELECTRICAL/ELECTRONIC CONTROL MODULES/ FRONT CONTROL MODULE - DIAGNOSIS AND TESTING).

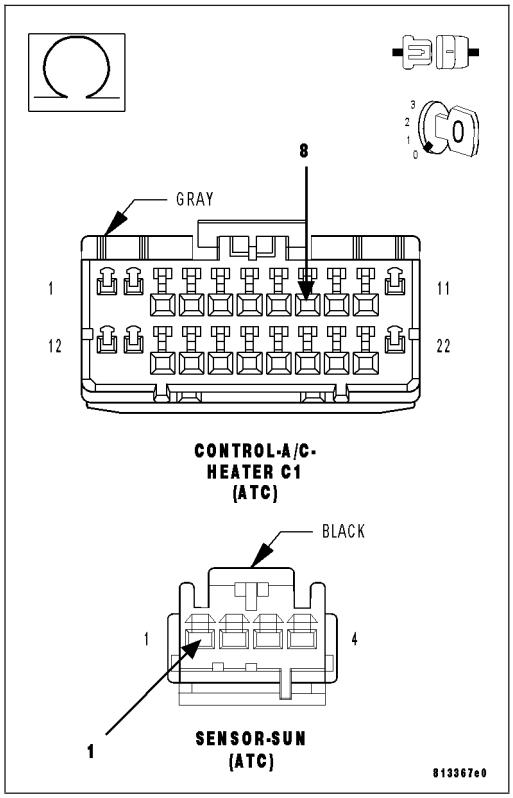

B1604–RIGHT SOLAR SENSOR CIRCUIT LOW (ATC)

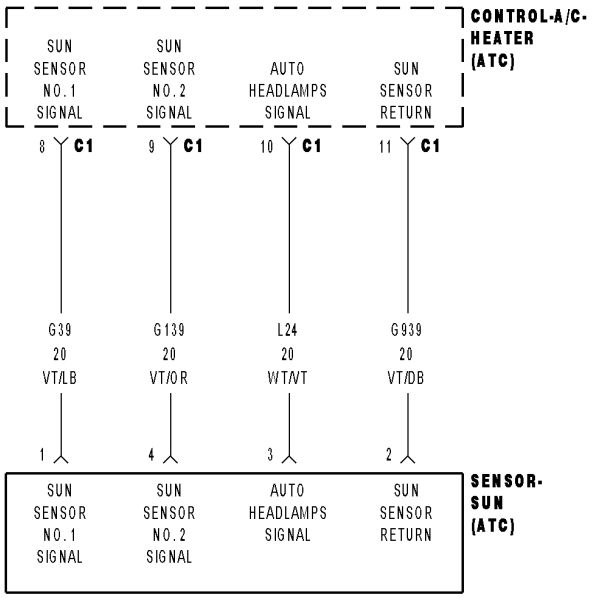

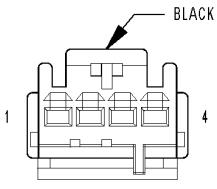

SENSOR-SUN (ATC)

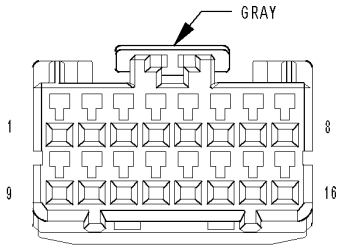

CONTROL-A/C-HEATER C2 (ATC)

812d1bed

For a complete wiring diagram **Refer to Section 8W**.

- **When Monitored:**
  With the ignition on.
- **Set Condition:**
  If the Right Sunload Sensor input is out of range toward the low voltage threshold.

Possible Causes
(G139) SUN SENSOR NO. 2 SIGNAL CIRCUIT SHORTED TO GROUND
(G139) SUN SENSOR NO. 2 SIGNAL CIRCUIT SHORTED TO (G939) SUN SENSOR RETURN CIRCUIT
SUN SENSOR
A/C HEATER CONTROL

NOTE: This DTC must be active for the results of this test to be valid. Do not perform this test if this DTC is stored. Refer to HVAC System Test (ATC) for stored DTC test procedures.

Diagnostic Test

1. CHECK FOR DTC B1604–RIGHT SOLAR SENSOR CIRCUIT LOW WITH SUN SENSOR HARNESS CONNECTOR DISCONNECTED

Turn the ignition off.
Disconnect the Sun Sensor harness connector.
Turn the ignition on.
With the scan tool, erase HVAC DTCs.
Turn the ignition off, wait 10 seconds, and turn the ignition on.
With the scan tool, read HVAC DTCs.

Does the scan tool display: B1604–RIGHT SOLAR SENSOR CIRCUIT LOW?

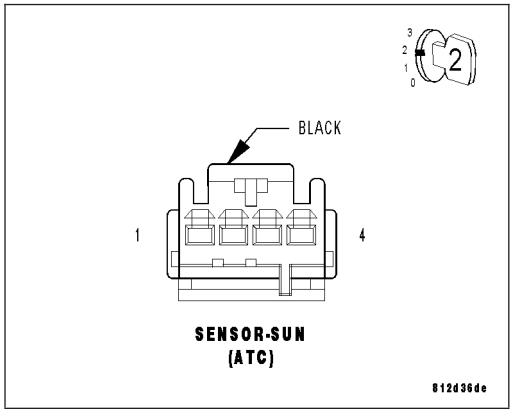

Yes >> Go To 2

No >> Replace the Sun Sensor in accordance with the Service Information.
Perform BODY VERIFICATION TEST – VER 1. (Refer to 8 - ELECTRICAL/ELECTRONIC CONTROL MODULES/ FRONT CONTROL MODULE - DIAGNOSIS AND TESTING).

2. CHECK (G139) SUN SENSOR NO. 2 SIGNAL CIRCUIT FOR A SHORT TO GROUND

Turn the ignition off.
Disconnect the A/C Heater Control C1 harness connector.
Measure the resistance of the (G139) Sun Sensor No. 2 Signal circuit between ground and the A/C Heater Control C1 harness connector.

Is the resistance below 10k ohms?

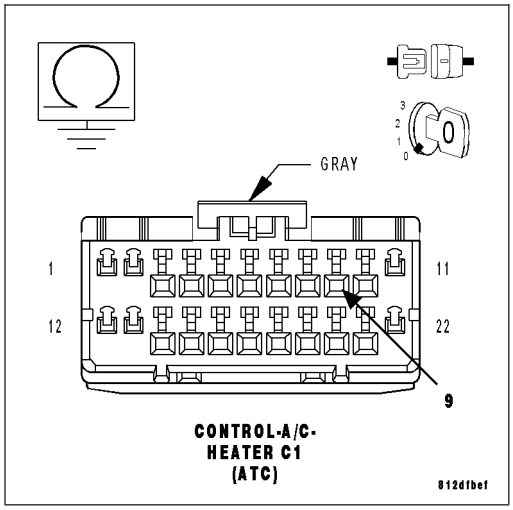

Yes >> Repair the (G139) Sun Sensor No. 2 Signal circuit for a short to ground.
Perform BODY VERIFICATION TEST – VER 1. (Refer to 8 - ELECTRICAL/ELECTRONIC CONTROL MODULES/ FRONT CONTROL MODULE - DIAGNOSIS AND TESTING).

No >> Go To 3

3. CHECK (G139) SUN SENSOR NO. 2 SIGNAL CIRCUIT FOR A SHORT TO (G939) SUN SENSOR RETURN CIRCUIT

Measure the resistance between the (G139) Sun Sensor No. 2 Signal circuit and the (G939) Sun Sensor Return circuit in the A/C Heater Control C1 harness connector.

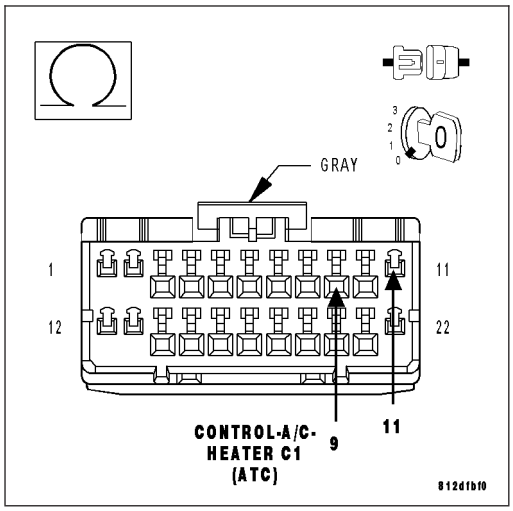

Is the resistance below 10k ohms?

Yes >> Repair the (G139) Sun Sensor No. 2 Signal circuit for a short to the (G939) Sun Sensor Return circuit.

Perform BODY VERIFICATION TEST – VER 1. (Refer to 8 - ELECTRICAL/ELECTRONIC CONTROL MODULES/ FRONT CONTROL MODULE - DIAGNOSIS AND TESTING).

No >> Replace the A/C Heater Control in accordance with the Service Information.

Perform BODY VERIFICATION TEST – VER 1. (Refer to 8 - ELECTRICAL/ELECTRONIC CONTROL MODULES/ FRONT CONTROL MODULE - DIAGNOSIS AND TESTING).

B1605–RIGHT SOLAR SENSOR CIRCUIT HIGH (ATC)

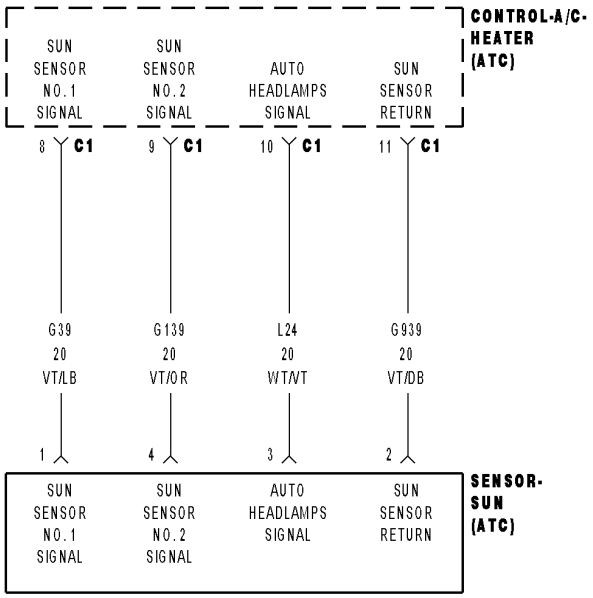

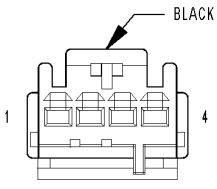

SENSOR-SUN (ATC)

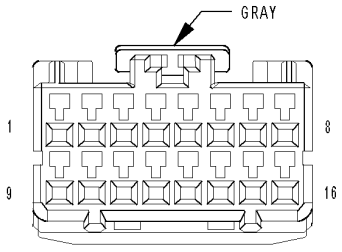

CONTROL-A/C-HEATER C2 (ATC)

812d1bed

For a complete wiring diagram **Refer to Section 8W**.

- **When Monitored:**
  With the ignition on.
- **Set Condition:**
  If the Right Sunload Sensor input is out of range toward the high voltage threshold.

Possible Causes
(G139) SUN SENSOR NO. 2 SIGNAL CIRCUIT OPEN
(G139) SUN SENSOR NO. 2 SIGNAL CIRCUIT SHORTED TO VOLTAGE
(G939) SUN SENSOR RETURN CIRCUIT OPEN
SUN SENSOR
A/C HEATER CONTROL

NOTE: This DTC must be active for the results of this test to be valid. Do not perform this test if this DTC is stored. Refer to HVAC System Test (ATC) for stored DTC test procedures.

Diagnostic Test

1. CHECK (G139) SUN SENSOR NO. 2 SIGNAL CIRCUIT VOLTAGE

Turn the ignition off.
Disconnect the Sun Sensor harness connector.
Turn the ignition on.
Measure the voltage of the (G139) Sun Sensor No. 2 Signal circuit.

What voltage is present?

Above 5.2 Volts
Go To 2

4.8 Volts to 5.2 Volts
Go To 3

Below 4.8 Volts
Go To 5

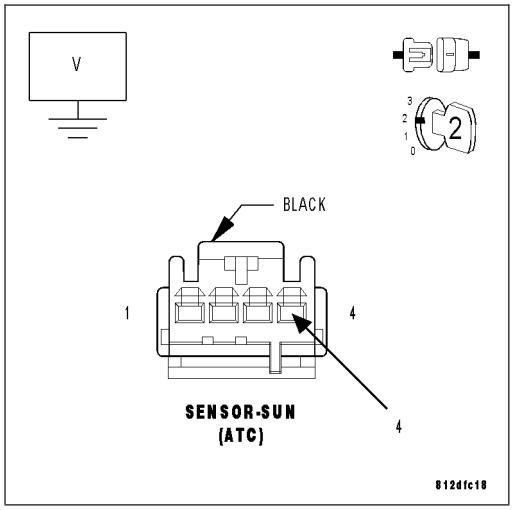

2. CHECK (G139) SUN SENSOR NO. 2 SIGNAL CIRCUIT FOR A SHORT TO VOLTAGE

Turn the ignition off.
Disconnect the A/C Heater Control C1 harness connector.
Turn the ignition on.
Measure the voltage of the (G139) Sun Sensor No. 2 Signal circuit.

Is the voltage above 0.2 volts?

Yes >> Repair the (G139) Sun Sensor No. 2 Signal circuit for a short to voltage.
Perform BODY VERIFICATION TEST – VER 1. (Refer to 8 - ELECTRICAL/ELECTRONIC CONTROL MODULES/ FRONT CONTROL MODULE - DIAGNOSIS AND TESTING).

No >> Replace the A/C Heater Control in accordance with the Service Information.
Perform BODY VERIFICATION TEST – VER 1. (Refer to 8 - ELECTRICAL/ELECTRONIC CONTROL MODULES/ FRONT CONTROL MODULE - DIAGNOSIS AND TEST-

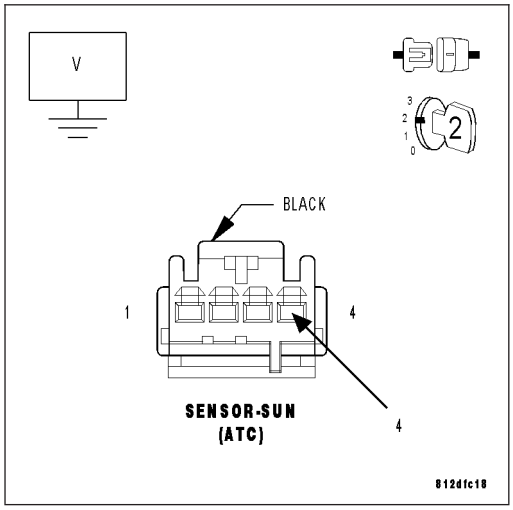

ING).

3. CHECK (G939) SUN SENSOR RETURN CIRCUIT FUNCTION

Turn the ignition off.

Connect a jumper wire between the (G139) Sun Sensor No. 2 Signal circuit and the (G939) Sun Sensor Return circuit in the Sun Sensor harness connector.

Turn the ignition on.

With the scan tool in HVAC, select Data Display and read the Right Solar Sensor voltage.

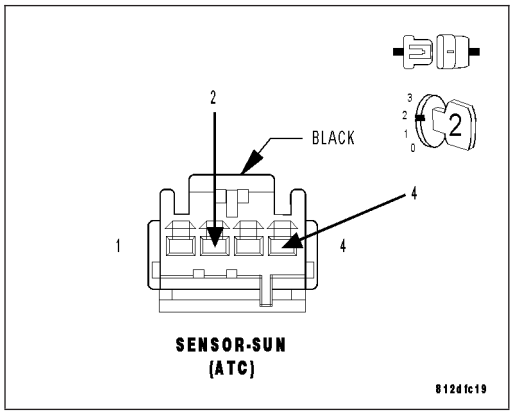

Is the voltage below 0.2 volts?

Yes >> Replace the Sun Sensor in accordance with the Service Information.

Perform BODY VERIFICATION TEST – VER 1. (Refer to 8 - ELECTRICAL/ELECTRONIC CONTROL MODULES/ FRONT CONTROL MODULE - DIAGNOSIS AND TESTING).

No >> Go To 4

4. CHECK (G939) SUN SENSOR RETURN CIRCUIT FOR AN OPEN

Turn the ignition off.

Disconnect the A/C Heater Control C1 harness connector.

Measure the resistance of the (G939) Sun Sensor Return circuit between the Sun Sensor harness connector and the A/C Heater Control C1 harness connector.

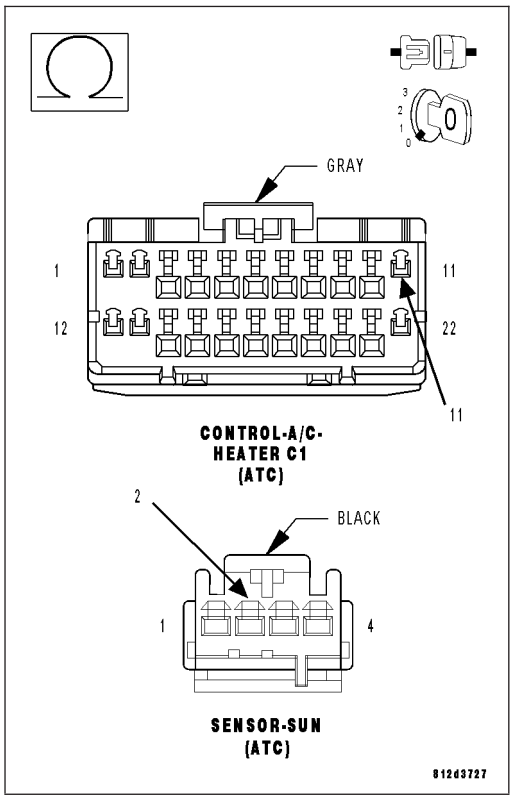

Is the resistance below 5.0 ohms?

Yes >> Replace the A/C Heater Control in accordance with the Service Information.

Perform BODY VERIFICATION TEST – VER 1. (Refer to 8 - ELECTRICAL/ELECTRONIC CONTROL MODULES/ FRONT CONTROL MODULE - DIAGNOSIS AND TESTING).

No >> Repair the (G939) Sun Sensor Return circuit for an open.

Perform BODY VERIFICATION TEST – VER 1. (Refer to 8 - ELECTRICAL/ELECTRONIC CONTROL MODULES/ FRONT CONTROL MODULE - DIAGNOSIS AND TESTING).

5. CHECK (G139) SUN SENSOR NO. 2 SIGNAL CIRCUIT FOR AN OPEN

Turn the ignition off.

Disconnect the A/C Heater Control C1 harness connector.

Measure the resistance of the (G139) Sun Sensor No. 2 Signal circuit between the Sun Sensor harness connector and the A/C Heater Control C1 harness connector.

Is the resistance below 5.0 ohms?

Yes >> Replace the A/C Heater Control in accordance with the Service Information.

Perform BODY VERIFICATION TEST – VER 1. (Refer to 8 - ELECTRICAL/ELECTRONIC CONTROL MODULES/ FRONT CONTROL MODULE - DIAGNOSIS AND TESTING).

No >> Repair the (G139) Sun Sensor No. 2 Signal circuit for an open.

Perform BODY VERIFICATION TEST – VER 1. (Refer to 8 - ELECTRICAL/ELECTRONIC CONTROL MODULES/ FRONT CONTROL MODULE - DIAGNOSIS AND TESTING).

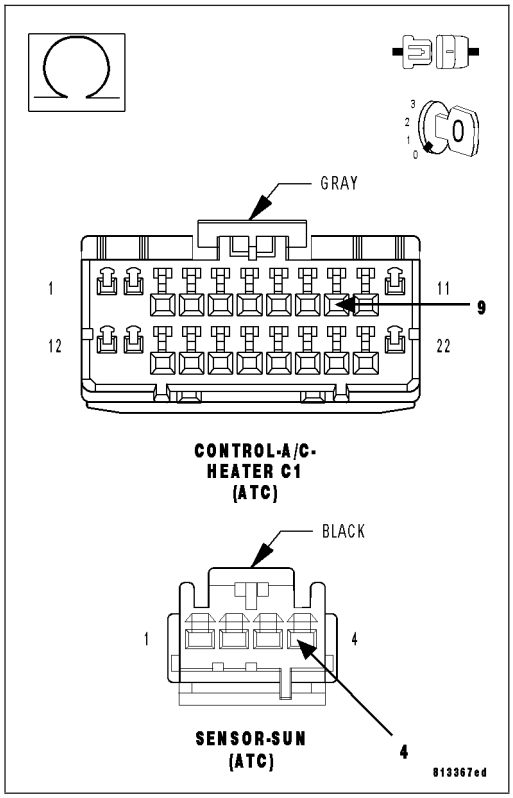

B1610–AMBIENT LIGHT SENSOR INPUT CIRCUIT LOW (ATC)

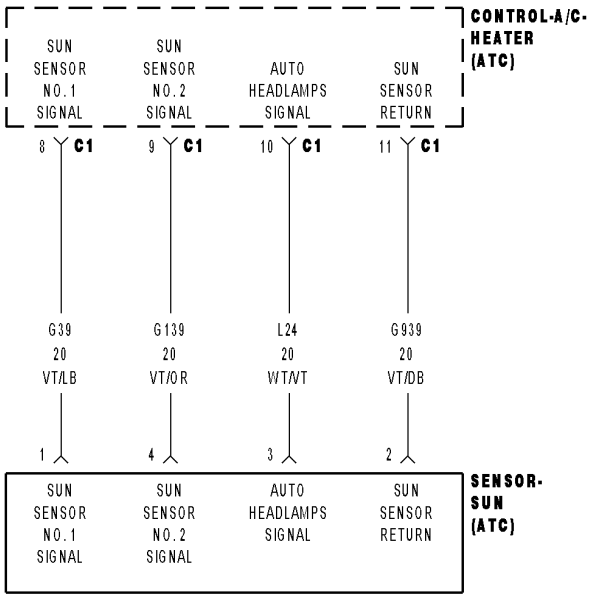

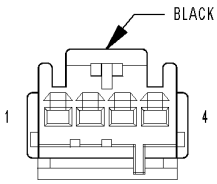

SENSOR-SUN (ATC)

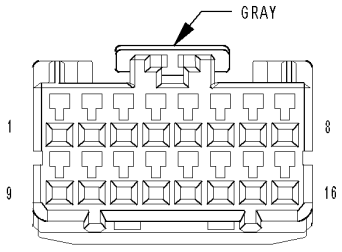

CONTROL-A/C-HEATER C2 (ATC)

812e0610

For a complete wiring diagram **Refer to Section 8W**.

- **When Monitored:**
  With the ignition on.
- **Set Condition:**
  If the Ambient Light Sensor input is out of range toward the low voltage threshold.

Possible Causes
(L24) AUTO HEADLAMPS SIGNAL CIRCUIT SHORTED TO GROUND
(L24) AUTO HEADLAMPS SIGNAL CIRCUIT SHORTED TO (G939) SUN SENSOR RETURN CIRCUIT
SUN SENSOR
A/C HEATER CONTROL

NOTE: This DTC must be active for the results of this test to be valid. Do not perform this test if this DTC is stored. Refer to HVAC System Test (ATC) for stored DTC test procedures.

Diagnostic Test

1. CHECK FOR DTC B1610–AMBIENT LIGHT SENSOR INPUT CIRCUIT LOW WITH SUN SENSOR HARNESS CONNECTOR DISCONNECTED

Turn the ignition off.
Disconnect the Sun Sensor harness connector.
Turn the ignition on.
With the scan tool, erase HVAC DTCs.
Turn the ignition off, wait 10 seconds, and turn the ignition on.
With the scan tool, read HVAC DTCs.

Does the scan tool display: B1610–AMBIENT LIGHT SENSOR INPUT CIRCUIT LOW?

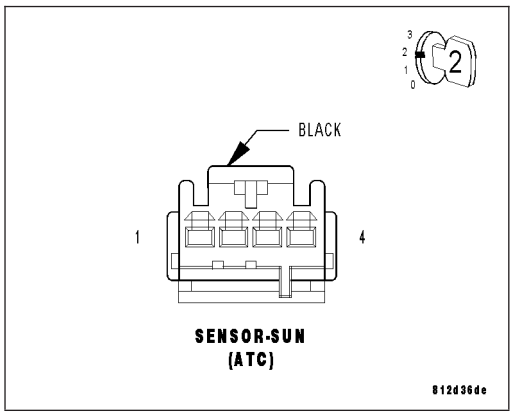

Yes >> Go To 2

No >> Replace the Sun Sensor in accordance with the Service Information.
Perform BODY VERIFICATION TEST – VER 1. (Refer to 8 - ELECTRICAL/ELECTRONIC CONTROL MODULES/ FRONT CONTROL MODULE - DIAGNOSIS AND TESTING).

2. CHECK (L24) AUTO HEADLAMPS SIGNAL CIRCUIT FOR A SHORT TO GROUND

Turn the ignition off.
Disconnect the A/C Heater Control C1 harness connector.
Measure the resistance of the (L24) Auto Headlamps Signal circuit between ground and the A/C Heater Control C1 harness connector.

Is the resistance below 10k ohms?

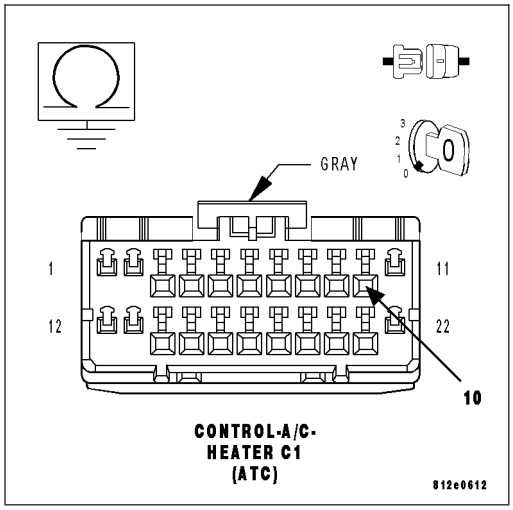

Yes >> Repair the (L24) Auto Headlamps Signal circuit for a short to ground.
Perform BODY VERIFICATION TEST – VER 1. (Refer to 8 - ELECTRICAL/ELECTRONIC CONTROL MODULES/ FRONT CONTROL MODULE - DIAGNOSIS AND TESTING).

No >> Go To 3

3. CHECK (L24) AUTO HEADLAMPS SIGNAL CIRCUIT FOR A SHORT TO (G939) SUN SENSOR RETURN CIRCUIT

Measure the resistance between the (L24) Auto Headlamps Signal circuit and the (G939) Sun Sensor Return circuit in the A/C Heater Control C1 harness connector.

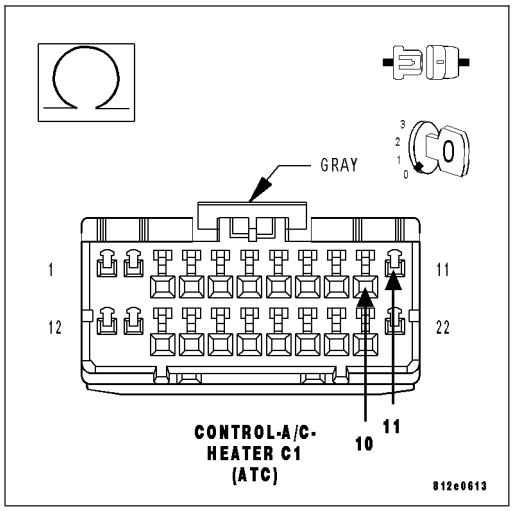

Is the resistance below 10k ohms?

Yes >> Repair the (L24) Auto Headlamps Signal circuit for a short to the (G939) Sun Sensor Return circuit.

Perform BODY VERIFICATION TEST – VER 1. (Refer to 8 - ELECTRICAL/ELECTRONIC CONTROL MODULES/ FRONT CONTROL MODULE - DIAGNOSIS AND TESTING).

No >> Replace the A/C Heater Control in accordance with the Service Information.

Perform BODY VERIFICATION TEST – VER 1. (Refer to 8 - ELECTRICAL/ELECTRONIC CONTROL MODULES/ FRONT CONTROL MODULE - DIAGNOSIS AND TESTING).

B1611–AMBIENT LIGHT SENSOR INPUT CIRCUIT HIGH (ATC)

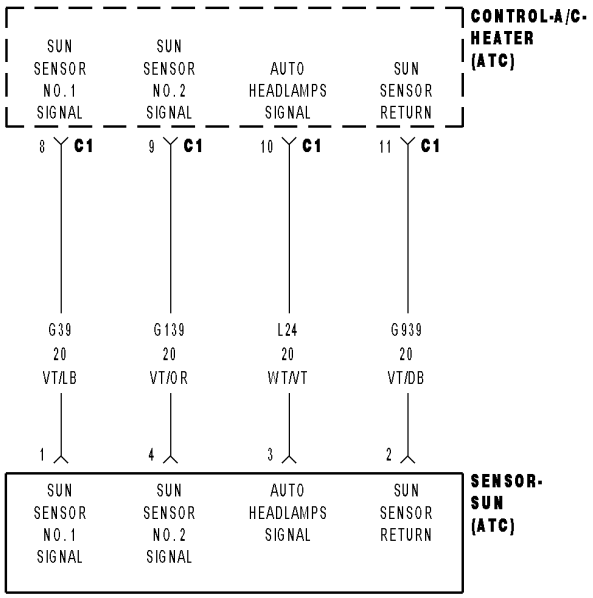

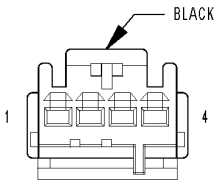

SENSOR-SUN (ATC)

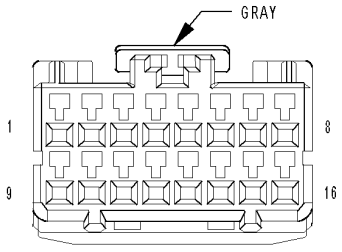

CONTROL-A/C-HEATER C2 (ATC)

812e0610

For a complete wiring diagram **Refer to Section 8W**.

- **When Monitored:**
  With the ignition on.
- **Set Condition:**
  If the Ambient Light Sensor input is out of range toward the high voltage threshold.

Possible Causes
(L24) AUTO HEADLAMPS SIGNAL CIRCUIT OPEN
(L24) AUTO HEADLAMPS SIGNAL CIRCUIT SHORTED TO VOLTAGE
(G939) SUN SENSOR RETURN CIRCUIT OPEN
SUN SENSOR
A/C HEATER CONTROL

NOTE: This DTC must be active for the results of this test to be valid. Do not perform this test if this DTC is stored. Refer to HVAC System Test (ATC) for stored DTC test procedures.

Diagnostic Test

1. CHECK (L24) AUTO HEADLAMPS SIGNAL CIRCUIT VOLTAGE

Turn the ignition off.
Disconnect the Sun Sensor harness connector.
Turn the ignition on.
Measure the voltage of the (L24) Auto Headlamps Signal circuit.

What voltage is present?

Above 5.2 Volts
Go To 2

4.8 Volts to 5.2 Volts
Go To 3

Below 4.8 Volts
Go To 5

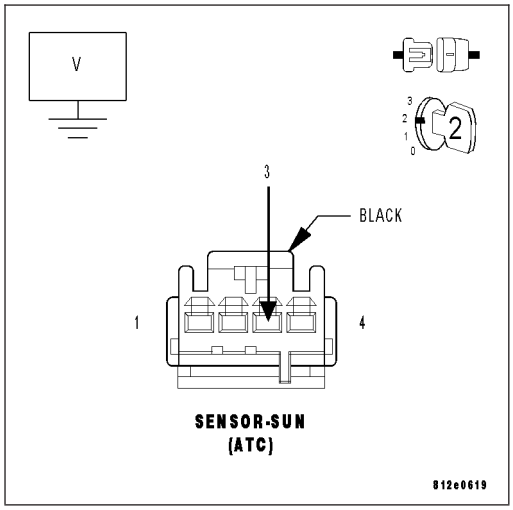

2. CHECK (L24) AUTO HEADLAMPS SIGNAL CIRCUIT FOR A SHORT TO VOLTAGE

Turn the ignition off.
Disconnect the A/C Heater Control C1 harness connector.
Turn the ignition on.
Measure the voltage of the (L24) Auto Headlamps Signal circuit.

Is the voltage above 0.2 volts?

Yes >> Repair the (L24) Auto Headlamps Signal circuit for a short to voltage.
Perform BODY VERIFICATION TEST – VER 1. (Refer to 8 - ELECTRICAL/ELECTRONIC CONTROL MODULES/ FRONT CONTROL MODULE - DIAGNOSIS AND TESTING).

No >> Replace the A/C Heater Control in accordance with the Service Information.
Perform BODY VERIFICATION TEST – VER 1. (Refer to 8 - ELECTRICAL/ELECTRONIC CONTROL MODULES/ FRONT CONTROL MODULE - DIAGNOSIS AND TEST-

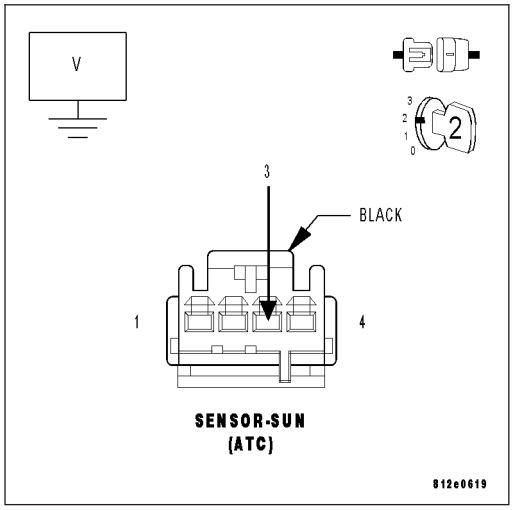

ING).

3. CHECK (G939) SUN SENSOR RETURN CIRCUIT FUNCTION

Turn the ignition off.

Connect a jumper wire between the (L24) Auto Headlamps Signal circuit and the (G939) Sun Sensor Return circuit in the Sun Sensor harness connector.

Turn the ignition on.

With the scan tool in HVAC, select Data Display and read the Ambient Light Sensor voltage.

Is the voltage below 0.2 volts?

Yes >> Replace the Sun Sensor in accordance with the Service Information.

Perform BODY VERIFICATION TEST – VER 1. (Refer to 8 - ELECTRICAL/ELECTRONIC CONTROL MODULES/ FRONT CONTROL MODULE - DIAGNOSIS AND TESTING).

No >> Go To 4

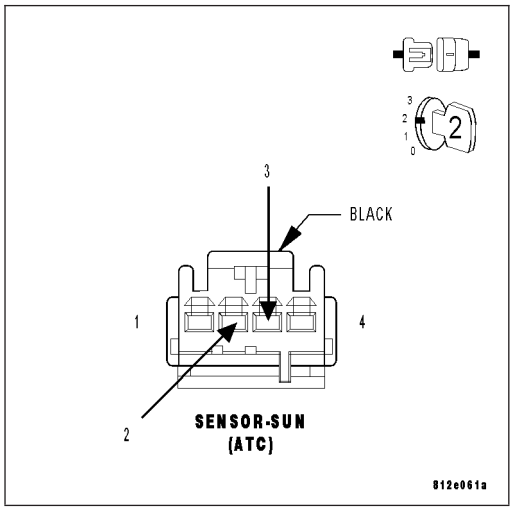

4. CHECK (G939) SUN SENSOR RETURN CIRCUIT FOR AN OPEN

Turn the ignition off.

Disconnect the A/C Heater Control C1 harness connector.

Measure the resistance of the (G939) Sun Sensor Return circuit between the Sun Sensor harness connector and the A/C Heater Control C1 harness connector.

Is the resistance below 5.0 ohms?

Yes >> Replace the A/C Heater Control in accordance with the Service Information.

Perform BODY VERIFICATION TEST – VER 1. (Refer to 8 - ELECTRICAL/ELECTRONIC CONTROL MODULES/ FRONT CONTROL MODULE - DIAGNOSIS AND TESTING).

No >> Repair the (G939) Sun Sensor Return circuit for an open.

Perform BODY VERIFICATION TEST – VER 1. (Refer to 8 - ELECTRICAL/ELECTRONIC CONTROL MODULES/ FRONT CONTROL MODULE - DIAGNOSIS AND TESTING).

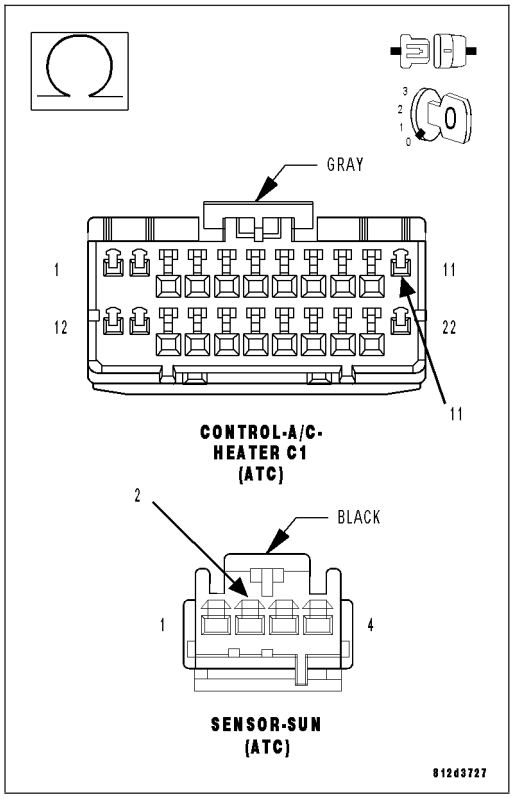

5. CHECK (L24) AUTO HEADLAMPS SIGNAL CIRCUIT FOR AN OPEN

Turn the ignition off.

Disconnect the A/C Heater Control C1 harness connector.

Measure the resistance of the (L24) Auto Headlamps Signal circuit between the Sun Sensor harness connector and the A/C Heater Control C1 harness connector.

Is the resistance below 5.0 ohms?

Yes >> Replace the A/C Heater Control in accordance with the Service Information.

Perform BODY VERIFICATION TEST – VER 1. (Refer to 8 - ELECTRICAL/ELECTRONIC CONTROL MODULES/ FRONT CONTROL MODULE - DIAGNOSIS AND TESTING).

No >> Repair the (L24) Auto Headlamps Signal circuit for an open.

Perform BODY VERIFICATION TEST – VER 1. (Refer to 8 - ELECTRICAL/ELECTRONIC CONTROL MODULES/ FRONT CONTROL MODULE - DIAGNOSIS AND TESTING).

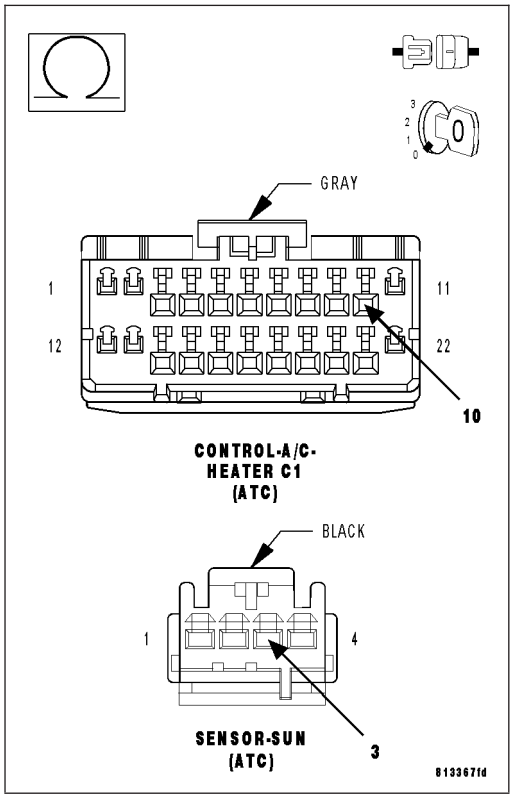

U0019–CAN B BUS (ATC)

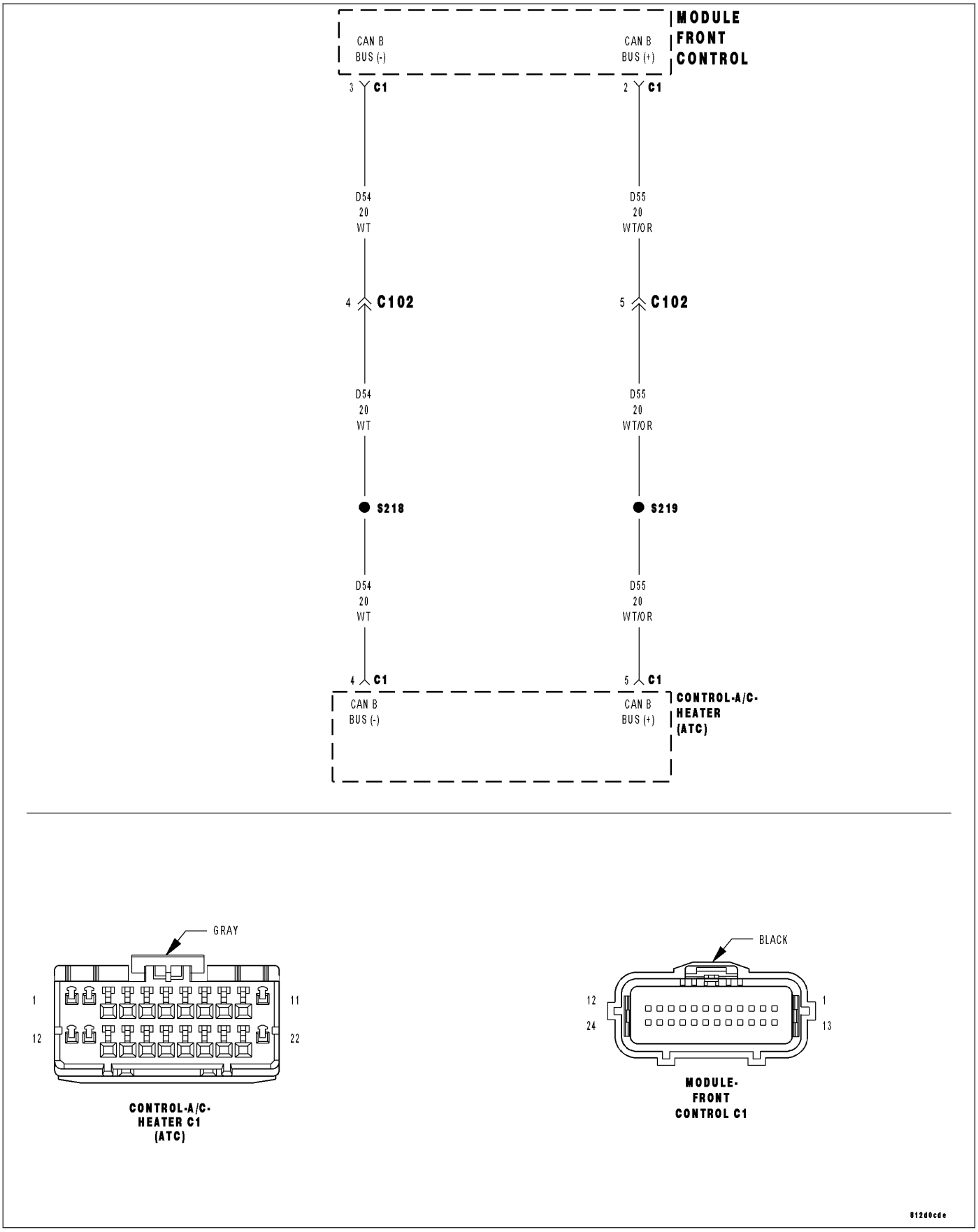

For a complete wiring diagram **Refer to Section 8W**.

- **When Monitored:**
  Continuously
- **Set Condition:**
  If the CAN B Bus (+) or CAN B Bus (-) circuit is open, shorted to voltage, or shorted to ground.

Possible Causes
ACTIVE U0019 CAN B BUS DTC IN FRONT CONTROL MODULE
(D55) CAN B BUS (+) CIRCUIT OPEN
(D54) CAN B BUS (-) CIRCUIT OPEN
A/C HEATER CONTROL

Diagnostic Test

1. VERIFY DTC U0019–CAN B BUS IS ACTIVE

Turn the ignition on.

With the scan tool, read HVAC DTCs.

Does the scan tool display active: U0019–CAN B BUS?

Yes >> Go To 2

No >> If the DTC is stored, check for an intermittent condition by inspecting the related wiring harness for chafed, pierced, pinched, and partially broken wires. Also, inspect the related connectors for broken, bent, pushed out, spread, corroded, or contaminated terminals.

Perform BODY VERIFICATION TEST – VER 1. (Refer to 8 - ELECTRICAL/ELECTRONIC CONTROL MODULES/FRONT CONTROL MODULE - DIAGNOSIS AND TESTING).

2. CHECK FOR ACTIVE CAN B BUS RELATED DTCS IN THE FRONT CONTROL MODULE (FCM)

With the scan tool, read Front Control Module (FCM) DTCs

Does the scan tool display any active CAN B BUS related DTCs?

Yes >> Diagnose and repair the DTC(s). (Refer to 8 - ELECTRICAL/ELECTRONIC CONTROL MODULES - DIAGNOSIS AND TESTING).

No >> Go To 3

3. CHECK (D55) CAN B BUS (+) CIRCUIT FOR AN OPEN

Turn the ignition off.

Disconnect the negative battery cable.

Disconnect the A/C Heater Control C1 harness connector.

Disconnect the Front Control Module (FCM) C1 harness connector.

Measure the resistance of the (D55) CAN B Bus (+) circuit between the Front Control Module C1 harness connector and the A/C Heater Control C1 harness connector.

Is the resistance below 2.0 ohms?

Yes >> Go To 4

No >> Repair the (D55) CAN B Bus (+) circuit for an open.
Perform BODY VERIFICATION TEST – VER 1. (Refer to 8 - ELECTRICAL/ELECTRONIC CONTROL MODULES/ FRONT CONTROL MODULE - DIAGNOSIS AND TESTING).

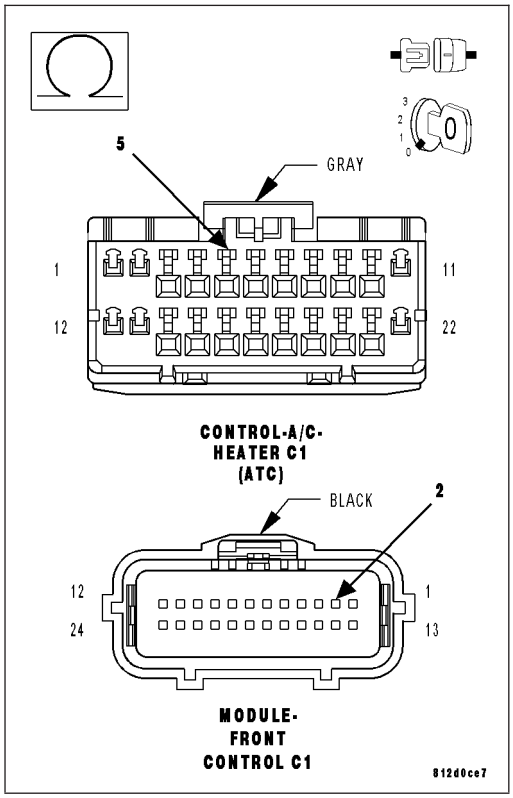

4. CHECK (D54) CAN B BUS (–) CIRCUIT FOR AN OPEN

Measure the resistance of the (D54) CAN B Bus (–) circuit between the Front Control Module C1 connector and the A/C Heater Control C1 harness connector.

Is the resistance below 2.0 ohms?

Yes >> Replace the A/C Heater Control in accordance with the Service Information.
Perform BODY VERIFICATION TEST – VER 1. (Refer to 8 - ELECTRICAL/ELECTRONIC CONTROL MODULES/ FRONT CONTROL MODULE - DIAGNOSIS AND TESTING).

No >> Repair the (D54) CAN B Bus (–) circuit for an open.
Perform BODY VERIFICATION TEST – VER 1. (Refer to 8 - ELECTRICAL/ELECTRONIC CONTROL MODULES/ FRONT CONTROL MODULE - DIAGNOSIS AND TESTING).

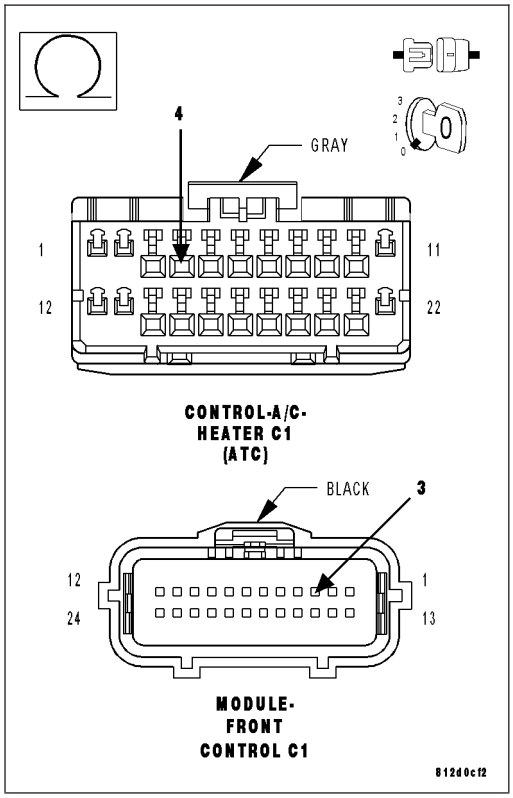

U0141–LOST COMMUNICATION WITH FRONT CONTROL MODULE (ATC)

For a complete wiring diagram **Refer to Section 8W**.

- **When Monitored:**
  With the ignition on.
- **Set Condition:**
  If the A/C Heater Control looses communication with the Front Control Module (FCM).

(Refer to 8 - ELECTRICAL/ELECTRONIC CONTROL MODULES - DIAGNOSIS AND TESTING) for the diagnostic test procedure.

U0151–LOST COMMUNICATION WITH OCCUPANT RESTRAINT CONTROLLER (ORC) (ATC)

For a complete wiring diagram **Refer to Section 8W**.

- **When Monitored:**
  With the ignition on.
- **Set Condition:**
  If the A/C Heater Control looses communication with the Occupant Restraint Controller (ORC).

(Refer to 8 - ELECTRICAL/ELECTRONIC CONTROL MODULES - DIAGNOSIS AND TESTING) for the diagnostic test procedure.

U0154–LOST COMMUNICATION WITH OCCUPANT CLASSIFICATION MODULE (ATC)

For a complete wiring diagram **Refer to Section 8W**.

- **When Monitored:**
  With the ignition on.
- **Set Condition:**
  If the A/C Heater Control looses communication with the Occupant Classification Module (OCM).

(Refer to 8 - ELECTRICAL/ELECTRONIC CONTROL MODULES - DIAGNOSIS AND TESTING) for the diagnostic test procedure.

U0155–LOST COMMUNICATION WITH CLUSTER/CCN (ATC)

For a complete wiring diagram **Refer to Section 8W**.

- **When Monitored:**
  With the ignition on.
- **Set Condition:**
  If the A/C Heater Control looses communication with the Cluster (CCN).

(Refer to 8 - ELECTRICAL/ELECTRONIC CONTROL MODULES - DIAGNOSIS AND TESTING) for the diagnostic test procedure.

U0156–LOST COMMUNICATION WITH EOM (ATC)

For a complete wiring diagram **Refer to Section 8W**.

- **When Monitored:**
  With the ignition on.
- **Set Condition:**
  If the A/C Heater Control looses communication with the Compass Temperature Module (EOM).

(Refer to 8 - ELECTRICAL/ELECTRONIC CONTROL MODULES - DIAGNOSIS AND TESTING) for the diagnostic test procedure.

U0159–LOST COMMUNICATION WITH PARKING ASSIST CONTROL MODULE (ATC)

For a complete wiring diagram **Refer to Section 8W**.

- **When Monitored:**
  With the ignition on.
- **Set Condition:**
  If the A/C Heater Control looses communication with the Parktronics (PTS).

(Refer to 8 - ELECTRICAL/ELECTRONIC CONTROL MODULES - DIAGNOSIS AND TESTING) for the diagnostic test procedure.

U0168–LOST COMMUNICATION WITH VEHICLE SECURITY CONTROL MODULE (SKREEM/WCM) (ATC)

For a complete wiring diagram **Refer to Section 8W**.

- **When Monitored:**
  With the ignition on.
- **Set Condition:**
  If the A/C Heater Control looses communication with the Vehicle Security Control Module (SKREEM/WCM).

(Refer to 8 - ELECTRICAL/ELECTRONIC CONTROL MODULES - DIAGNOSIS AND TESTING) for the diagnostic test procedure.

U0169–LOST COMMUNICATION WITH SUNROOF CONTROL MODULE (ATC)

For a complete wiring diagram **Refer to Section 8W**.

- **When Monitored:**
  With the ignition on.
- **Set Condition:**
  If the A/C Heater Control looses communication with the Sunroof Control Module (SCM).

(Refer to 8 - ELECTRICAL/ELECTRONIC CONTROL MODULES - DIAGNOSIS AND TESTING) for the diagnostic test procedure.

U0181–LOST COMMUNICATION WITH HEADLAMP LEVELING TRANSLATOR (ATC)

For a complete wiring diagram **Refer to Section 8W**.

- **When Monitored:**
  With the ignition on.
- **Set Condition:**
  If the A/C Heater Control looses communication with the Headlamp Leveling Translator.

(Refer to 8 - ELECTRICAL/ELECTRONIC CONTROL MODULES - DIAGNOSIS AND TESTING) for the diagnostic test procedure.

U0184–LOST COMMUNICATION WITH RADIO (ATC)

For a complete wiring diagram **Refer to Section 8W**.

- **When Monitored:**
  With the ignition on.
- **Set Condition:**
  If the A/C Heater Control looses communication with the Radio.

(Refer to 8 - ELECTRICAL/ELECTRONIC CONTROL MODULES - DIAGNOSIS AND TESTING) for the diagnostic test procedure.

U0186–LOST COMMUNICATION WITH AUDIO AMPLIFIER (ATC)

For a complete wiring diagram **Refer to Section 8W**.

- **When Monitored:**
  With the ignition on.
- **Set Condition:**
  If the A/C Heater Control looses communication with the Amplifier (AMP).

(Refer to 8 - ELECTRICAL/ELECTRONIC CONTROL MODULES - DIAGNOSIS AND TESTING) for the diagnostic test procedure.

U0195–LOST COMMUNICATION WITH SDARS (ATC)

For a complete wiring diagram **Refer to Section 8W**.

- **When Monitored:**
  With the ignition on.
- **Set Condition:**
  If the A/C Heater Control looses communication with the Satellite Audio Receiver (SDARS).

(Refer to 8 - ELECTRICAL/ELECTRONIC CONTROL MODULES - DIAGNOSIS AND TESTING) for the diagnostic test procedure.

U0196-LOST COMMUNICATION WITH VEHICLE ENTERTAINMENT CONTROL MODULE (ATC)

For a complete wiring diagram **Refer to Section 8W**.

- **When Monitored:**
  With the ignition on.
- **Set Condition:**
  If the A/C Heater Control looses communication with the Vehicle Entertainment System (VES).

(Refer to 8 - ELECTRICAL/ELECTRONIC CONTROL MODULES - DIAGNOSIS AND TESTING) for the diagnostic test procedure.

U0197–LOST COMMUNICATION WITH HANDS FREE PHONE MODULE (ATC)

For a complete wiring diagram **Refer to Section 8W**.

- **When Monitored:**
  With the ignition on.
- **Set Condition:**
  If the A/C Heater Control looses communication with the Hands Free Phone Module (HFM).

(Refer to 8 - ELECTRICAL/ELECTRONIC CONTROL MODULES - DIAGNOSIS AND TESTING) for the diagnostic test procedure.

U0199–LOST COMMUNICATION WITH DRIVER DOOR MODULE (ATC)

For a complete wiring diagram **Refer to Section 8W**.

- **When Monitored:**
  With the ignition on.
- **Set Condition:**
  If the A/C Heater Control looses communication with the Driver Door Module (DDM).

(Refer to 8 - ELECTRICAL/ELECTRONIC CONTROL MODULES - DIAGNOSIS AND TESTING) for the diagnostic test procedure.

U0200–LOST COMMUNICATION WITH PASSENGER DOOR MODULE (ATC)

For a complete wiring diagram **Refer to Section 8W**.

- **When Monitored:**
  With the ignition on.
- **Set Condition:**
  If the A/C Heater Control looses communication with the Passenger Door Module (PDM).

(Refer to 8 - ELECTRICAL/ELECTRONIC CONTROL MODULES - DIAGNOSIS AND TESTING) for the diagnostic test procedure.

U0208–LOST COMMUNICATION WITH HEATED SEAT CONTROL MODULE (ATC)

For a complete wiring diagram **Refer to Section 8W**.

- **When Monitored:**
  With the ignition on.
- **Set Condition:**
  If the A/C Heater Control looses communication with the Heated Seat Module (HSM).

(Refer to 8 - ELECTRICAL/ELECTRONIC CONTROL MODULES - DIAGNOSIS AND TESTING) for the diagnostic test procedure.

U0209–LOST COMMUNICATION WITH MEMORY SEAT CONTROL MODULE (ATC)

For a complete wiring diagram **Refer to Section 8W**.

- **When Monitored:**
  With the ignition on.
- **Set Condition:**
  If the A/C Heater Control looses communication with the Memory Seat Module (MSM).

(Refer to 8 - ELECTRICAL/ELECTRONIC CONTROL MODULES - DIAGNOSIS AND TESTING) for the diagnostic test procedure.

U0212–LOST COMMUNICATION WITH SCCM - CAN-B (ATC)

For a complete wiring diagram **Refer to Section 8W**.

- **When Monitored:**
  With the ignition on.
- **Set Condition:**
  If the A/C Heater Control looses communication with the Steering Column Control Module (SCCM).

(Refer to 8 - ELECTRICAL/ELECTRONIC CONTROL MODULES - DIAGNOSIS AND TESTING) for the diagnostic test procedure.

U0231–LOST COMMUNICATION WITH RAIN SENSING MODULE (ATC)

For a complete wiring diagram **Refer to Section 8W**.

- **When Monitored:**
  With the ignition on.
- **Set Condition:**
  If the A/C Heater Control looses communication with the Rain Sensing Module (RSM).

(Refer to 8 - ELECTRICAL/ELECTRONIC CONTROL MODULES - DIAGNOSIS AND TESTING) for the diagnostic test procedure.

*A/C HEATER CONTROL WILL NOT ENTER DIAGNOSTIC MODE (MTC)

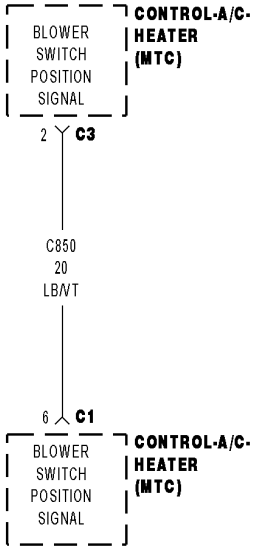

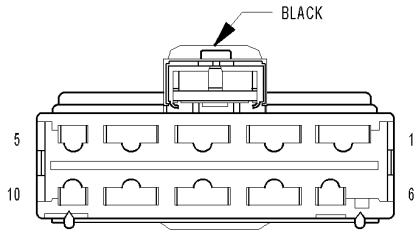

CONTROL-A/C-HEATER C3 (MTC)

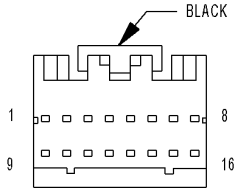

CONTROL-A/C-HEATER C1 (MTC)

815f327e

For a complete wiring diagram **Refer to Section 8W**.

Theory of Operation

An active DTC 33 will prevent the control from entering diagnostic mode and performing certain diagnostic functions, it will also prevent proper A/C mode switch and status indicator function. An active DTC 34 will prevent the control from performing certain diagnostic functions and it will prevent proper EBL mode switch and status indicator function. In addition, a short or an open (C41) Blower Switch Position Signal circuit will also prevent the control from entering diagnostic mode. For additional information about the A/C Heater Control's on-board diagnostics, refer to 24 - HEATING & AIR CONDITIONING - DIAGNOSIS AND TESTING.

Possible Causes
OBJECT HOLDING A/C MODE SWITCH / EBL MODE SWITCH IN A PUSHED POSITION
SUBSTANCE CAUSING A/C MODE SWITCH / EBL MODE SWITCH TO GET STUCK IN A PUSHED POSITION
(C850) BLOWER SWITCH POSITION SIGNAL CIRCUIT SHORTED TO VOLTAGE
(C850) BLOWER SWITCH POSITION SIGNAL CIRCUIT SHORTED TO (Z908) GROUND CIRCUIT
(C850) BLOWER SWITCH POSITION SIGNAL CIRCUIT SHORTED TO (Z909) GROUND CIRCUIT
(C850) BLOWER SWITCH POSITION SIGNAL CIRCUIT SHORTED TO GROUND
(C850) BLOWER SWITCH POSITION SIGNAL CIRCUIT OPEN
A/C STATUS INDICATOR / EBL STATUS INDICATOR INOPERATIVE
A/C HEATER CONTROL

Diagnostic Test

1. INSPECT THE A/C HEATER CONTROL FOR DAMAGE

Turn the ignition off.

Inspect the A/C Heater Control for damage.

Is the A/C Heater Control damaged?

Yes >> Replace the A/C Heater Control in accordance with the Service Information.
Perform BODY VERIFICATION TEST – VER 1. (Refer to 8 - ELECTRICAL/ELECTRONIC CONTROL MODULES/FRONT CONTROL MODULE - DIAGNOSIS AND TESTING).

No >> Go To 2

2. INSPECT FOR OBJECT OR SUBSTANCE CAUSING THE A/C MODE SWITCH OR EBL MODE SWITCH TO STAY OR STICK IN A PUSHED POSITION

Inspect the A/C Heater Control for anything that would cause the A/C mode switch or the EBL mode switch to stay or stick in a pushed position.

Is anything present that would cause the A/C mode switch or EBL mode switch to stay or stick in a pushed position?

Yes >> Repair as necessary.
Perform BODY VERIFICATION TEST – VER 1. (Refer to 8 - ELECTRICAL/ELECTRONIC CONTROL MODULES/FRONT CONTROL MODULE - DIAGNOSIS AND TESTING).

No >> Go To 3

3. CHECK THE (C850) BLOWER SWITCH POSITION SIGNAL CIRCUIT VOLTAGE

Disconnect the A/C Heater Control C3 harness connector.

Turn the ignition on.

Measure the voltage of the (C850) Blower Switch Position Signal circuit.

What is the voltage?

Below 4.8 Volts
Go To 4

Above 5.2 Volts
Go To 8

4.8 Volts To 5.2 Volts
Go To 9

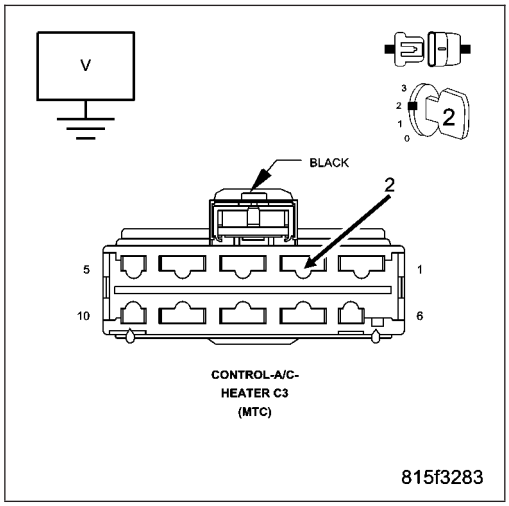

4. CHECK THE (C850) BLOWER SWITCH POSITION SIGNAL CIRCUIT FOR A SHORT TO THE (Z908) GROUND CIRCUIT

Turn the ignition off.

Measure the resistance between the (C850) Blower Switch Position Signal circuit and the (Z908) Ground circuit in the A/C Heater Control C3 harness connector.

Is the resistance below 10K ohms?

Yes >> Repair the (C850) Blower Switch Position Signal circuit for a short to the (Z908) Ground circuit.

Perform BODY VERIFICATION TEST – VER 1. (Refer to 8 - ELECTRICAL/ELECTRONIC CONTROL MODULES/ FRONT CONTROL MODULE - DIAGNOSIS AND TESTING).

No >> Go To 5

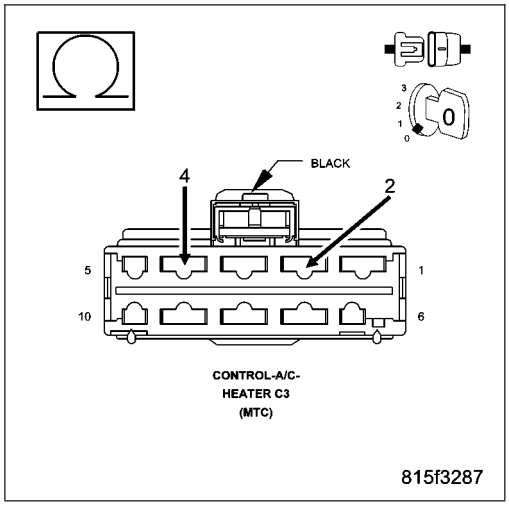

5. CHECK THE (C850) BLOWER SWITCH POSITION SIGNAL CIRCUIT FOR A SHORT TO THE (Z909) GROUND CIRCUIT

Disconnect the A/C Heater Control C1 harness connector.

Measure the resistance between the (C850) Blower Switch Position Signal circuit and the (Z909) Ground circuit in the A/C Heater Control C1 harness connector.

Is the resistance below 10K ohms?

Yes >> Repair the (C850) Blower Switch Position Signal circuit for a short to the (Z909) Ground circuit.

Perform BODY VERIFICATION TEST – VER 1. (Refer to 8 - ELECTRICAL/ELECTRONIC CONTROL MODULES/ FRONT CONTROL MODULE - DIAGNOSIS AND TESTING).

No >> Go To 6

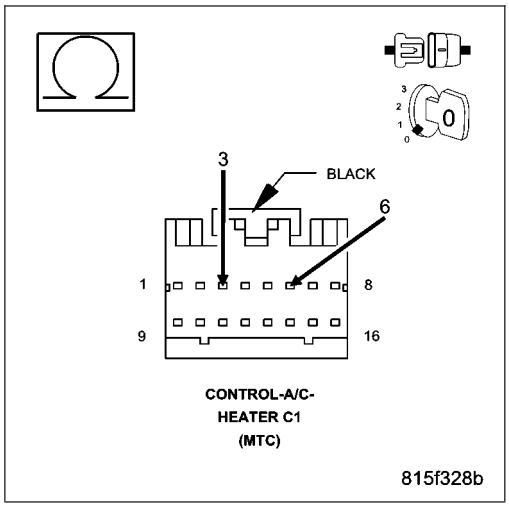

6. CHECK THE (C850) BLOWER SWITCH POSITION SIGNAL CIRCUIT FOR A SHORT TO GROUND

Measure the resistance of the (C850) Blower Switch Position Signal circuit between ground and the A/C Heater Control C3 harness connector.

Is the resistance below 10K ohms?

Yes >> Repair the (C850) Blower Switch Position Signal circuit for a short to ground.

Perform BODY VERIFICATION TEST – VER 1. (Refer to 8 - ELECTRICAL/ELECTRONIC CONTROL MODULES/ FRONT CONTROL MODULE - DIAGNOSIS AND TESTING).

No >> Go To 7

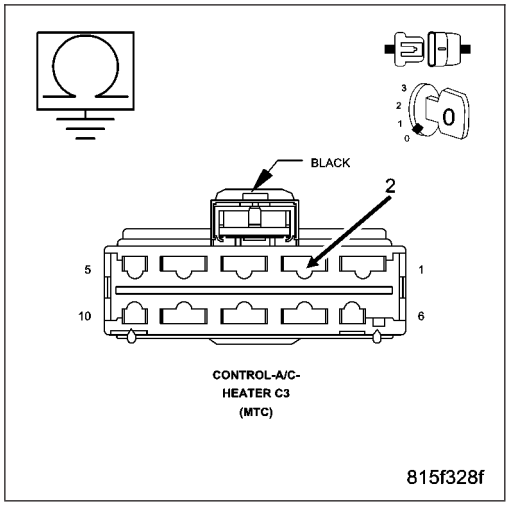

7. CHECK (C850) BLOWER SWITCH POSITION SIGNAL CIRCUIT FOR AN OPEN

Measure the resistance of the (C850) Blower Switch Position Signal circuit between the A/C Heater Control C1 harness connector and the A/C Heater Control C3 harness connector.

Is the resistance below 5.0 ohms?

Yes >> Replace the A/C Heater Control in accordance with the Service Information.
Perform BODY VERIFICATION TEST – VER 1. (Refer to 8 - ELECTRICAL/ELECTRONIC CONTROL MODULES/ FRONT CONTROL MODULE - DIAGNOSIS AND TESTING).

No >> Repair the (C850) Blower Switch Position Signal circuit for an open.
Perform BODY VERIFICATION TEST – VER 1. (Refer to 8 - ELECTRICAL/ELECTRONIC CONTROL MODULES/ FRONT CONTROL MODULE - DIAGNOSIS AND TESTING).

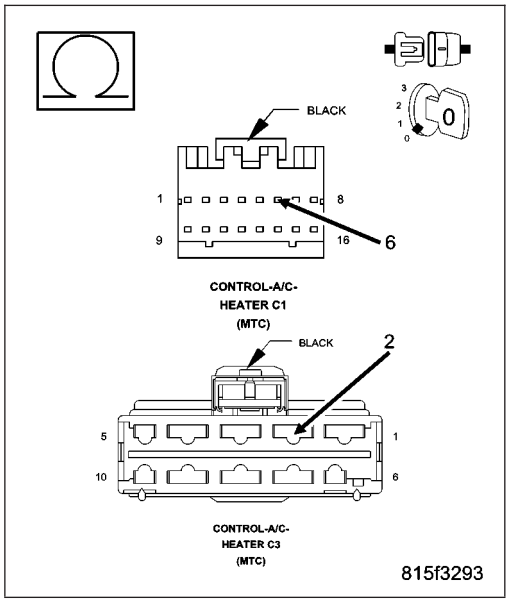

8. CHECK THE (C850) BLOWER SWITCH POSITION SIGNAL CIRCUIT FOR A SHORT TO VOLTAGE

Turn the ignition off.

Disconnect the A/C Heater Control C1 harness connector.

Turn the ignition on.

Measure the voltage of the (C850) Blower Switch Position Signal circuit at the A/C Heater Control C3 harness connector.

Is the voltage above 0.2 volts?

Yes >> Repair the (C850) Blower Switch Position Signal circuit for a short to voltage.
Perform BODY VERIFICATION TEST – VER 1. (Refer to 8 - ELECTRICAL/ELECTRONIC CONTROL MODULES/ FRONT CONTROL MODULE - DIAGNOSIS AND TESTING).

No >> Replace the A/C Heater Control in accordance with the Service Information.
Perform BODY VERIFICATION TEST – VER 1. (Refer to 8 - ELECTRICAL/ELECTRONIC CONTROL MODULES/ FRONT CONTROL MODULE - DIAGNOSIS AND TESTING).

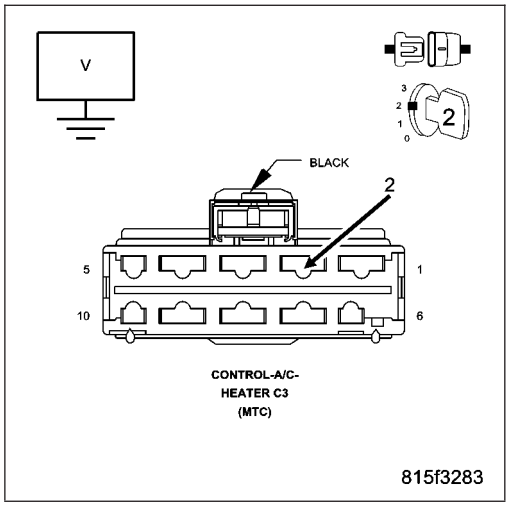

9. CHECK FOR NORMAL A/C MODE SWITCH & STATUS INDICATOR FUNCTION

Turn the ignition off.

Reconnect the A/C Heater Control C3 harness connector.

Turn the ignition on.

Turn the blower control on.

Press the A/C mode switch on and off several times while observing the A/C status indicator.

Does the A/C status indicator turn on and off with respect to the switch position?

Yes >> Go To 10

No >> Replace the A/C Heater Control in accordance with the Service Information.
Perform BODY VERIFICATION TEST – VER 1. (Refer to 8 - ELECTRICAL/ELECTRONIC CONTROL MODULES/FRONT CONTROL MODULE - DIAGNOSIS AND TESTING).

10. CHECK FOR NORMAL EBL MODE SWITCH & STATUS INDICATOR FUNCTION

Turn the blower control off.

Press the EBL mode switch on and off several times while observing the EBL status indicator.

Does the EBL status indicator turn on and off with respect to the switch position?

Yes >> Go To 11

No >> Replace the A/C Heater Control in accordance with the Service Information.
Perform BODY VERIFICATION TEST – VER 1. (Refer to 8 - ELECTRICAL/ELECTRONIC CONTROL MODULES/FRONT CONTROL MODULE - DIAGNOSIS AND TESTING).

11. CHECK THE A/C HEATER CONTROL BY ATTEMPTING TO ENTER DIAGNOSTIC MODE

If illuminated, turn off the A/C status indicator and the EBL status indicator.

Actuate the display DTC function by performing the following:

- Turn the blower control on.
- Press the A/C mode switch down, turn the blower control to off, wait until both LEDs illuminate (approximately 5 seconds) and then release the A/C mode switch.

When entry mode is recognized, the A/C status indicator and the EBL status indicator will illuminate for 5 seconds and then, if present, will begin displaying DTCs. The A/C status indicator displays active DTCs when the EBL status indictor is not illuminated and stored DTCs when the EBL status indicator is illuminated. However, if no DTCs are present, both status indicators will turn off and the system will exit diagnostic mode.

Did the A/C Heater Control enter diagnostic mode?

Yes >> Go To 12

No >> Replace the A/C Heater Control in accordance with the Service Information.
Perform BODY VERIFICATION TEST – VER 1. (Refer to 8 - ELECTRICAL/ELECTRONIC CONTROL MODULES/FRONT CONTROL MODULE - DIAGNOSIS AND TESTING).

12. CHECK THE A/C HEATER CONTROL BY ATTEMPTING TO RUN THE ACTUATOR CIRCUIT TEST/ DOOR CALIBRATION FUNCTION

Turn the ignition off, wait 10 seconds, then turn the ignition on.

If illuminated, turn off the A/C status indicator and the EBL status indicator.

Actuate the Actuator Circuit Test / Door Calibration Function by performing the following:

- Turn the blower control off.
- Press and hold the EBL mode switch down and then turn the blower control on. Continue to hold the EBL mode switch down until the EBL status indicator begins flashing. Then, release the EBL mode switch.

While the test / function is running, the EBL status indicator will flash once per second. If the test / function passes, the EBL status indicator will stop flashing. If the test / function fails, the A/C and EBL status indicators will flash alternately.

Did the A/C Heater Control run the test / function?

Yes >> Perform BODY VERIFICATION TEST – VER 1. (Refer to 8 - ELECTRICAL/ELECTRONIC CONTROL MODULES/FRONT CONTROL MODULE - DIAGNOSIS AND TESTING).

No >> Replace the A/C Heater Control in accordance with the Service Information.
Perform BODY VERIFICATION TEST – VER 1. (Refer to 8 - ELECTRICAL/ELECTRONIC CONTROL MODULES/FRONT CONTROL MODULE - DIAGNOSIS AND TESTING).

*HVAC SYSTEM TEST (ATC)

For a complete wiring diagram **Refer to Section 8W**.

Theory of Operation

The HVAC System Test provides a starting point in the diagnostic process by identifying the appropriate diagnostic procedure or system test to perform when diagnosing a given symptom, condition, or DTC. It also provides a means for testing the entire HVAC system by utilizing the A/C Heater Control's On-Board System Tests. The On-Board System Tests can also assist in diagnosing stored DTCs. (Refer to 24 - HEATING & AIR CONDITIONING - DIAGNOSIS AND TESTING) for additional information about on-board diagnostics.

Diagnostic Test

1. HVAC SYSTEM TEST

NOTE: Diagnose and repair all active DTCs before diagnosing and repairing stored DTCs.

Make a selection based on the symptom, condition, or DTC that you want to diagnose.

For Any Active DTC
Refer to the Table of Contents in this Section for a complete list of all HVAC related symptoms.

Scan Tool Indicates HVAC Not Active On Bus
(Refer to 8 - ELECTRICAL/ELECTRONIC CONTROL MODULES - DIAGNOSIS AND TESTING)

Complete HVAC System Test
Go To 2

A/C System Performance Test
Go To 2

General System Operation & Function Test
Go To 3

Actuator Calibration Test
Go To 4

2. A/C SYSTEM PERFORMANCE TEST

NOTE: The following are prerequisites of the Cooldown Test. Verify each of the following before running the test:

- **If active, diagnose and repair DTC B1031 or B1032 before proceeding. Refer to the Table of Contents in this Section for a complete list of HVAC related symptoms.**
- **Verify that the refrigerant system has an adequate charge. Check and repair as necessary before proceeding. (Refer to 24 - HEATING & AIR CONDITIONING/PLUMBING - DIAGNOSIS AND TESTING).**
- **Verify that the blower motor operates correctly in all speeds. Diagnose and repair all blower related faults before proceeding.**
- **Verify that the work area ambient temperature is above 18.3°C (65°F) before proceeding. Move the vehicle to a warmer work area if necessary.**
- **Verify that the evaporator temperature is above 18.3°C (65°F) before proceeding.**
- **Verify that the A/C compressor is not running. If the A/C compressor is running, turn the A/C off and allow the evaporator to warm up before proceeding.**

Once all of the prerequisites have been met, actuate the Cooldown Test by performing the following:

Start the engine.

With the scan tool in HVAC, select System Tests and then select Cooldown test.

NOTE: The Cooldown Test can take up to two minutes to run. While the test is running, the A/C status indicator will flash. If the test passes, the A/C status indicator will stop flashing. However, if the test fails, both the A/C and EBL status indicators will flash alternately and an active DTC B10B2 will set. The status indicators will continue to flash until either a successful Cooldown Test is executed or until the vehicle is driven a specified number of miles or after 5 ignition cycles. In addition, DTC B10B2 will remain active until a successful Cooldown Test is executed. The test will stop running if any of the following occurs:

- **The ignition is turned off.**
- **The A/C compressor is requested off.**
- **DTC B1031 or B1032 sets during the test.**

Allow the test to run to completion before proceeding.

With the scan tool, select View DTCs.

Does the scan tool display any DTCs?

Yes >> Diagnose and Repair the DTC(s). Refer to the Table of Contents in this Section for a complete list of HVAC related symptoms. Run the Cooldown Test again after the repair is complete.

No >> As necessary, either Go To 3, or 4, or Perform BODY VERIFICATION TEST – VER 1. (Refer to 8 - ELECTRICAL/ELECTRONIC CONTROL MODULES/FRONT CONTROL MODULE - DIAGNOSIS AND TESTING).

3. GENERAL SYSTEM OPERATION & FUNCTION TEST

NOTE: If at anytime a DTC becomes active during this test, proceed to the conclusion question.

NOTE: If multiple DTCs become active, diagnose those that relate to a short circuit first.

If not done so previously, start the engine.

Turn the blower control to manual low.

Turn the Left and Right Blend controls to full cold.

Turn the Mode control to panel.

Monitor the scan tool for active HVAC DTCs while performing the following test steps.

Press the A/C mode switch on, wait 30 seconds, press it off, and then proceed to the next step.

Press the Rear Defrost mode switch on, wait 30 seconds, press it off, and then proceed to the next step.

Press the Recirculation mode switch on, wait 30 seconds, press it off, and then proceed to the next step.

Turn the Left Blend control to full hot, wait 30 seconds, turn it to full cold, and then proceed to the next step.

Turn the Right Blend control to full hot, wait 30 seconds, turn it to full cold, and then proceed to the next step.

Turn the Mode control to every door position. Leave it in each position for 30 seconds.

Does the scan tool display any active DTCs?

Yes >> Diagnose and repair the DTC(s). Refer to the Table of Contents in this Section for a complete list of HVAC related symptoms.

No >> If you are here due to a stored DTC, it is possible that a technician may not have erased the DTC following a repair. If possible, verify if the vehicle was recently in for this type of service. Otherwise, either Go To 4 or visually inspect the related wiring harness for chafed, pierced, pinched, and partially broken wires and the wiring harness connectors for broken, bent, pushed out, and corroded terminals, and repair as necessary.

Perform BODY VERIFICATION TEST – VER 1. (Refer to 8 - ELECTRICAL/ELECTRONIC CONTROL MODULES/FRONT CONTROL MODULE - DIAGNOSIS AND TESTING).

4. ACTUATOR CALIBRATION TEST

If not done so previously, start the engine.

With the scan tool, select System Tests and then select Actuator Calibration Test. When the test is complete, select View DTCs.

Does the scan tool display any DTCs?

Yes >> Diagnose and repair the DTC(s). Refer to the Table of Contents in this Section for a complete list of all HVAC related symptoms.

No >> No problem found. However, if you are here due to a stored DTC, it is possible that a technician may not have erased the DTC following a repair. If possible, verify if the vehicle was recently in for this type of service. Otherwise, visually inspect the related wiring harness for chafed, pierced, pinched, and partially broken wires and the wiring harness connectors for broken, bent, pushed out, and corroded terminals, and repair as necessary.

Perform BODY VERIFICATION TEST – VER 1. (Refer to 8 - ELECTRICAL/ELECTRONIC CONTROL MODULES/FRONT CONTROL MODULE - DIAGNOSIS AND TESTING).

*HVAC SYSTEM TEST (MTC)

For a complete wiring diagram **Refer to Section 8W**.

Theory of Operation

The HVAC System Test provides a starting point in the diagnostic process by identifying the appropriate diagnostic procedure or system test to perform when diagnosing a given symptom, condition, or DTC. It also provides a means for testing the entire HVAC system by utilizing the A/C Heater Control's On-Board System Tests. The On-Board System Tests can also assist in diagnosing stored DTCs. (Refer to 24 - HEATING & AIR CONDITIONING - DIAGNOSIS AND TESTING) for additional information about on-board diagnostics.

Diagnostic Test

1. HVAC SYSTEM TEST

NOTE: Diagnose and repair all active DTCs before diagnosing and repairing stored DTCs.

Make a selection based on the symptom, condition, or DTC that you want to diagnose.

For Any Active DTC
Refer to the Table of Contents in this Section for a complete list of all HVAC related symptoms.

Complete HVAC System Test
Go To 2

A/C System Performance Test
Go To 2

General System Operation & Function Test
Go To 3

Actuator Ckt Test / Door Cal Function
Go To 4

Control Won't Display Active / Stored DTCs
Refer to *A/C Heater Control Will Not Enter Diagnostic Mode for the diagnostic test procedure.

Control Won't Run System Tests
Refer to *A/C Heater Control Will Not Enter Diagnostic Mode for the diagnostic test procedure.

2. A/C SYSTEM PERFORMANCE TEST

NOTE: The following are prerequisites of the Cooldown Test. Verify each of the following before running the test:

- **If active, diagnose and repair DTC 31 or 32 before proceeding. Refer to the Table of Contents in this Section for a complete list of HVAC related symptoms.**
- **Verify that the refrigerant system has an adequate charge. Check and repair as necessary before proceeding (Refer to 24 - HEATING & AIR CONDITIONING/PLUMBING - DIAGNOSIS AND TESTING).**
- **Verify that the blower motor operates correctly in all speeds. Diagnose and repair all blower related faults before proceeding.**
- **Verify that the work area ambient temperature is above 18.3°C (65°F) before proceeding. Move the vehicle to a warmer work area if necessary.**
- **Verify that the evaporator temperature is above 18.3°C (65°F) before proceeding.**
- **Verify that the A/C compressor is not running. If the compressor is running, turn the A/C off and allow the evaporator to warm up before proceeding.**

Once all of the prerequisites have been met, actuate the Cooldown Test by performing the following:

- If not done so previously, start the engine.
- Press and hold the A/C mode switch down and then turn the blower motor control to high speed. Continue to hold the A/C mode switch down until the A/C status indicator begins flashing, Then, release the mode switch.

NOTE: The Cooldown Test can take up to 90 seconds to run. While the test is running, the A/C status indicator will flash once per second. If the test passes, the A/C status indicator will stop flashing. If the test fails, the A/C and EBL status indicators will flash alternately. The test will stop running if the either ignition is turned off, or the blower control is turned to any position other than high, or if DTC 83 or 84 sets during the test. Allow the test to run to completion before proceeding.

Actuate the Display DTC function by performing the following:

- Turn the blower control on.
- Press the A/C mode switch down, turn the blower control to off, wait until both LEDs illuminate (approximately 5 seconds) and then release the A/C mode switch.

NOTE: The A/C Heater Control will display a DTC for every fault that it detects, not just DTCs specific to A/C performance.

NOTE: The A/C status indicator displays active DTCs when the EBL status indictor is not illuminated and stored DTCs when the EBL status indicator is illuminated.

Read DTCs from the A/C status indictor.

Does the A/C status indicator display any DTCs?

Yes >> Diagnose and Repair the DTC(s). Refer to the Table of Contents in this Section for a complete list of HVAC related symptoms. Run the Cooldown Test again after the repair is complete.

No >> As necessary, either Go To 3 or 4, or Perform BODY VERIFICATION TEST – VER 1. (Refer to 8 - ELECTRICAL/ELECTRONIC CONTROL MODULES/FRONT CONTROL MODULE - DIAGNOSIS AND TESTING).

3. GENERAL SYSTEM OPERATION & FUNCTION TEST

If not done so previously, start the engine.

Turn the blower control on.

Turn the Blend control to full cold.

Turn the Mode control to panel.

Press the A/C mode switch on, wait 30 seconds, press it off, and then proceed to the next step.

Press the EBL mode switch on, wait 30 seconds, press it off, and then proceed to the next step.

Turn the Blend control to full hot, wait 30 seconds, turn it to full cold, and then proceed to the next step.

Turn the Mode control to every door position. Leave it in each position for 30 seconds. When complete, proceed to the next step.

Actuate the Display DTC function by performing the following:

- Turn the blower control on.
- Press the A/C mode switch down, turn the blower control to off, wait until both LEDs illuminate (approximately 5 seconds) and then release the A/C mode switch.

NOTE: The A/C status indicator displays active DTCs when the EBL status indictor is not illuminated and stored DTCs when the EBL status indicator is illuminated.

NOTE: If multiple DTCs are active, diagnose those that relate to a short circuit first.

Read DTCs from the A/C status indictor.

Does the A/C status indicator display any DTCs?

Yes >> Diagnose and repair the DTC(s). Go To 4 if Overcurrent faults (DTC 41, 43, or 44) are present and run the Actuator Circuit Test / Door Calibration Function. Otherwise, refer to the Table of Contents in this Section for a complete list of HVAC related symptoms.

No >> If you are here due to a stored DTC, it is possible that a technician may not have erased the DTC following a repair. If possible, verify if the vehicle was recently in for this type of service. Otherwise, either Go To 4 or visually inspect the related wiring harness for chafed, pierced, pinched, and partially broken wires and the wiring harness connectors for broken, bent, pushed out, and corroded terminals, and repair as necessary.

Perform BODY VERIFICATION TEST – VER 1. (Refer to 8 - ELECTRICAL/ELECTRONIC CONTROL MODULES/FRONT CONTROL MODULE - DIAGNOSIS AND TESTING).

4. ACTUATOR CIRCUIT TEST / DOOR CALIBRATION FUNCTION

NOTE: By running the Actuator Circuit Test / Door Calibration Function, the A/C Heater Control can identify up to three door driver circuits shorted simultaneously. A DTC 72 will set if more than three door driver circuits are shorted in the same direction (e.g. four door driver circuits all shorted to ground) or if two or more door driver circuits are shorted with at least one door driver circuit shorted to ignition and one door driver circuit shorted to ground. To ensure a proper diagnosis, diagnose and repair Actuator Circuit Test faults in the following order: If present, diagnose and repair DTC 72 first, then DTC 62, then DTC 61, then DTCs 64, 68, or 71, and finally DTCs 63, 67, or 69. In addition, always test the door driver circuits after each repair by clearing DTCs, and then running the Actuator Circuit Test / Door Calibration Function, and then checking for DTCs.

NOTE: Diagnose and repair Actuator Circuit Test faults (DTC 61, 62, 63, 64, 67, 68, 69, 71, and 72) before diagnosing Overcurrent faults (DTC 41, 43, and 44) and Calibration faults (DTC 18, 21, 22, 23, 45, 46, 47, 51, 52, 53, 55, and 56). Diagnose and repair Overcurrent faults (DTC 41, 43, and 44) before diagnosing Calibration faults (DTC 18, 21, 22, 23, 45, 46, 47, 51, 52, 53, 55, and 56).

If not done so previously, turn the ignition on.

Actuate the Clear DTC function by performing the following:

- Turn the blower control on.
- Press the A/C mode switch down, turn the blower control to off, wait until both LEDs illuminate (approximately 5 seconds) and then release the A/C mode switch.
- When the A/C status indicator begins flashing DTCs, set the Mode switch to the floor position, simultaneously press the A/C mode switch and the EBL mode switch down until both LEDs start flashing (approximately 5 seconds) and then release the mode switches. Stored DTCs will clear from memory in approximately two seconds. However, if no DTCs were present, both status indicators will tun off and the system will exit diagnostic mode.

Turn the ignition off, wait 10 seconds, and turn the ignition on.

Actuate the Actuator Circuit Test / Door Calibration Function by performing the following:

- Turn the blower control off.
- Press and hold the EBL mode switch down and then turn the blower control on. Continue to hold the EBL mode switch down until the EBL status indicator begins flashing. Then, release the EBL mode switch. While the test / function is running, the EBL status indicator will flash once per second. If the test / function passes, the EBL status indicator will stop flashing. If the test / function fails, the A/C and EBL status indicators will flash alternately. Allow the test / function to run to completion before proceeding.

Actuate the Display DTC function by performing the following:

- Turn the blower control on.
- Press the A/C mode switch down, turn the blower control to off, wait until both LEDs illuminate (approximately 5 seconds) and then release the A/C mode switch.

NOTE: The A/C Heater Control will display a DTC for every fault that it detects, not just DTCs specific to door function.

NOTE: The A/C status indicator displays active DTCs when the EBL status indictor is not illuminated and stored DTCs when the EBL status indicator is illuminated.

Read DTCs from the A/C status indictor.

Does the A/C status indicator display any DTCs?

Yes >> Diagnose and repair the DTC(s). Refer to the Table of Contents in this Section for a complete list of all HVAC related symptoms.

No >> No problem found. However, if you are here due to a stored DTC, it is possible that a technician may not have erased the DTC following a repair. If possible, verify if the vehicle was recently in for this type of service. Otherwise, visually inspect the related wiring harness for chafed, pierced, pinched, and partially broken wires and the wiring harness connectors for broken, bent, pushed out, and corroded terminals, and repair as necessary.

Perform BODY VERIFICATION TEST – VER 1. (Refer to 8 - ELECTRICAL/ELECTRONIC CONTROL MODULES/FRONT CONTROL MODULE - DIAGNOSIS AND TESTING).

HVAC - SERVICE INFORMATION

TABLE OF CONTENTS

page

HVAC - SERVICE INFORMATION
DESCRIPTION
HEATING AND AIR CONDITIONING SYSTEMS. 321
OPERATION 322
DIAGNOSIS AND TESTING
HEATING AND A/C SYSTEMS 323
A/C PERFORMANCE 329
HEATER PERFORMANCE 332

page

SPECIFICATIONS
A/C SYSTEM 334
TORQUE 334
SPECIAL TOOLS
HEATING-A/C SYSTEM 336
CONTROLS 337
DISTRIBUTION 377
PLUMBING 422
HEATER-CABIN 470

HVAC - SERVICE INFORMATION

DESCRIPTION

HEATING AND AIR CONDITIONING SYSTEMS

A manual temperature control (MTC) single zone type heating-A/C system or a fully adjustable automatic temperature control (ATC) dual zone type heating-A/C system is available on this vehicle.

To maintain the performance level of the heating, ventilation and air conditioning (HVAC) system, the engine cooling system must be properly maintained. The use of a bug screen is not recommended. Any obstructions in front of the radiator or A/C condenser will reduce the performance of the A/C and engine cooling systems.

The engine cooling system includes the radiator, thermostat, radiator hoses and the engine coolant pump. Refer to 7 - Cooling for more information before opening or attempting any service to the engine cooling system.

NOTE: LHD model shown. RHD model similar.

All vehicles are equipped with a common heater, ventilation and air conditioning (HVAC) housing (1). The heating-A/C system combines A/C, heating, and ventilating capabilities in a single HVAC housing mounted within the passenger compartment beneath the instrument panel. The HVAC housing includes:

- Recirculation-air door and actuator (2)
- Blend-air door(s) and actuator(s) (3)
- Blower motor (4)
- Blower motor resistor (MTC) or blower motor power module (ATC) (5)
- Evaporator temperature sensor (6)
- Mode-air doors and actuator (7)
- Heater core (8)
- A/C evaporator (9)

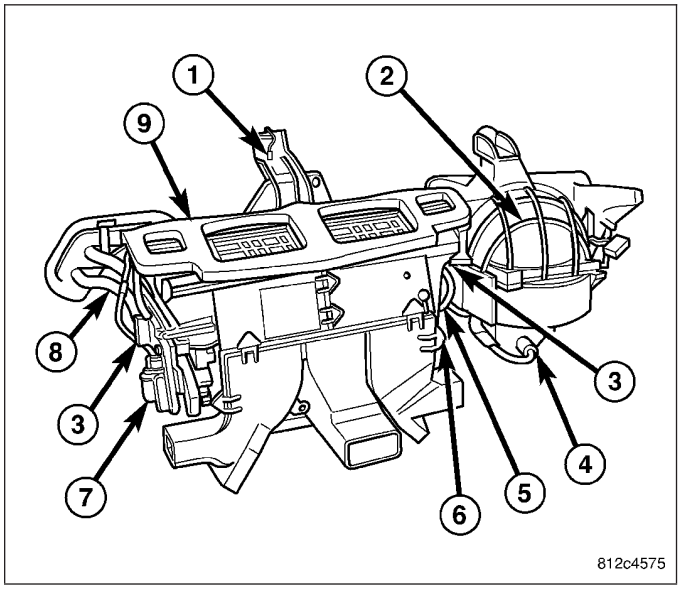

NOTE: An electric positive temperature coefficient (PTC) heater is used on vehicles when equipped with the 3.0L diesel engine. The PTC heater unit compensates for the lower engine coolant temperatures produced by the diesel engine. The PTC heater unit is mounted in the HVAC air distribution housing, downstream of the heater core. For more information, refer to 24 - HEATING & AIR CONDITIONING/CABIN HEATER/HEATER UNIT - DESCRIPTION.

Based upon the system and selected mode, conditioned air can exit the HVAC housing through one or a combination of the three main housing outlets: defrost, panel or floor. The defrost and panel outlets are located on the top of the HVAC housing and the floor outlets are located on the bottom of the HVAC housing. Once the conditioned air exits the HVAC housing, it is further directed through molded plastic ducts to the outlets within the vehicle interior. These outlets and their locations are as follows:

- **Defroster Outlets** - Two large defroster outlets are located near the center of the instrument panel top cover, near the base of the windshield.
- **Side Window Demister Outlets** - There are two side window demister outlets, one is located at each outboard end of the instrument panel top cover, near the belt line at the A-pillars.
- **Panel Outlets** - There are four panel outlets in the instrument panel, one located near each outboard end of the instrument panel facing the rear of the vehicle and one located on each side of the instrument panel center bezel.
- **Floor Outlets** - There is one floor outlet located above each side of the floor panel center tunnel near the dash panel. There is also one outlet located under each front seat.
- **Console Outlets** - There are two console outlets located at the back of the center floor console facing the rear of the vehicle.

OPERATION

Both the manual temperature control (MTC) and the automatic temperature control (ATC) heating-A/C system used in this vehicle are blend-air type systems. In a blend-air system, a blend-air door controls the amount of conditioned air that is allowed to flow through, or around, the heater core. In the available dual zone system, two blend-air doors are used to provide completely independent side-to-side temperature control of the discharge air. The temperature control(s) determines the discharge air temperature(s) by operating the blend door actuator(s), which move the blend-air door(s). This design allows almost immediate control of output air temperature(s).

The heating-A/C system pulls outside (ambient) air through the cowl opening at the base of the windshield, then into the air inlet housing and through the A/C evaporator (3). Air flow can be directed either through or around the heater core (1). This is done by adjusting the blend-air door(s) (2) with the temperature control(s) located on the A/C-heater control in the instrument panel. The air flow can then be directed from the panel, floor and defrost outlets in various combinations using the mode control located on the A/C-heater control. Air flow velocity can be adjusted with the blower speed control located on the A/C-heater control.

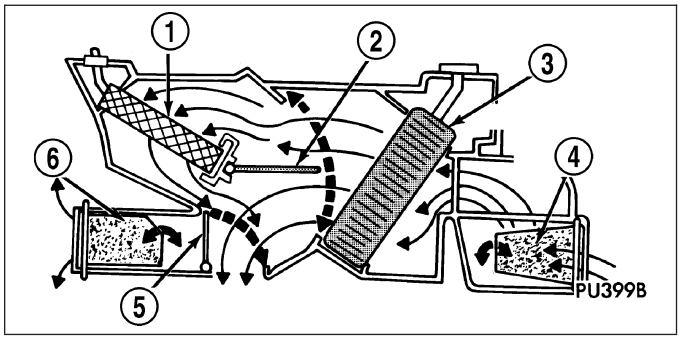

The outside (fresh) air intake can be shut off by selecting the Recirculation Mode with the mode control. This will operate an electrically actuated recirculation-air door (4) that closes off the fresh air intake and recirculates the air that is already inside the vehicle.

The A/C compressor can be engaged in any mode by pressing the snowflake, A/C on/off button. It can also be engaged by placing the mode control in the mix to defrost positions. This will remove heat and humidity from the air before it is directed through or around the heater core. The mode control on the A/C-heater control is used to also direct the conditioned air to the selected system outlets. The mode control uses an electric actuator to control the mode-air doors (5 and 6).

The two slot-type defroster outlets receive airflow from the HVAC housing through the molded plastic defroster ducts, which connect to the HVAC housing defroster outlets. The airflow from the defroster outlets is directed by fixed vanes in the defroster outlet grilles and cannot be adjusted. The defroster outlet grilles are integral to the instrument panel top cover.

The side window demister outlets receive airflow from the HVAC housing through the molded plastic demister ducts. The demisters direct air from the HVAC housing through the outlets located on the top corners of the instrument panel. The airflow from the side window demister outlets is directed by fixed vanes in the demister outlet grilles and cannot be adjusted. The side window demister outlet grilles are serviceable from the instrument panel. The demisters operate when the controls are set in Heat, Bi-level, Mix and Defrost modes.

The four instrument panel outlets receive airflow from the HVAC housing through two molded plastic main panel ducts. One duct directs air flow out of the right side instrument panel outlets, while the other duct delivers air flow to the left side outlets. Each of these outlets can be individually adjusted to direct the flow of air.

The floor outlets receive airflow from the HVAC housing through the floor distribution ducts which are integral to the rear cover of the HVAC air distribution housing. Two plastic rear distribution ducts and one center console duct attach to the rear cover and provide conditioned air to the rear seating positions. The two console outlets can be individually adjusted to direct the flow of air, but the floor outlets cannot be adjusted.

NOTE: It is important to keep the HVAC air intake opening clear of debris. Leaf particles and other debris that is small enough to pass through the cowl opening screen can accumulate within the HVAC housing. The closed, warm, damp and dark environment created within the housing is ideal for the growth of certain molds, mildews and other fungi. Any accumulation of decaying plant matter provides an additional food source for fungal spores, which enter the housing with the fresh intake-air. Excess debris, as well as objectionable odors created by decaying plant matter and growing fungi can be discharged into the passenger compartment during heater-A/C operation if the air intake opening is not kept clear of debris.

The A/C system is designed for the use of non-CFC, R-134a refrigerant and uses an A/C expansion valve to meter the flow of refrigerant to the A/C evaporator. The A/C evaporator cools and dehumidifies the incoming air prior to blending it with the heated air. To maintain minimum evaporator temperatures and prevent evaporator freezing, an

evaporator temperature sensor is used. The sensor is located downstream of the evaporator and supplies an evaporator temperature signal to the A/C-heater control. For the ATC system, the A/C-heater control broadcasts the A/C request on the controller area network (CAN) B bus, where it is read and processed by the front control module (FCM), which in turn broadcasts it on the CAN C bus, where it is read and processed by the powertrain control module (PCM). For the MTC system, the A/C-heater control sends the request for A/C to the CCN via a dedicated mux circuit. The CCN then broadcasts the A/C request on the CAN B bus, where it is read and processed by the FCM, which in turn broadcasts it on the CAN C bus, where it is read and processed by the PCM.

DIAGNOSIS AND TESTING

HEATING AND A/C SYSTEMS

ON-BOARD DIAGNOSTICS

CAUTION: Do not exchange A/C-Heater Controls from vehicle to vehicle. Software versions differ between models and model years. Installing an A/C-Heater Control with software that is incompatible for a given vehicle can result in either improper or failed HVAC system operation.

SETTING FAULTS - ATC AND MTC SYSTEMS

Both the automatic temperature control (ATC) and the manual temperature control (MTC) systems are controlled by the A/C-heater control located on the center bezel of the instrument panel. The ATC system communicates on the controller area network (CAN) B bus and is fully addressable with a scan tool. The MTC system is NOT connected to the CAN bus and is NOT addressable with a scan tool.

The A/C-heater control's primary means of fault detection for both heating-A/C systems is through active and stored diagnostic trouble codes (DTCs). The control continuously monitors various internal parameters during normal system operation. If it detects a fault, both an active and a stored diagnostic trouble code (DTC) will set for that parameter. When the offending parameter returns to an acceptable value, the control automatically clears the active DTC. However, the stored DTC remains until cleared (either manually or automatically). Note that DTCs will not set or clear if supply voltage is low.

The A/C-heater control's secondary means of fault detection for both heating-A/C systems is through system tests. For ATC systems, these tests include the HVAC System Test, the Cooldown Test, and Actuator Calibration. For MTC systems, these tests include the HVAC System Test, the Cooldown Test, Actuator Calibration (new MTC installation only), and the Actuator Circuit Test / Door Calibration Function. Refer to System Tests in this Section for a detailed description of each test.

DISPLAYING FAULTS AND READING FAULTS - ATC SYSTEM

Use a scan tool to display DTCs stored in the A/C-heater control of the ATC system (Refer to 24 - HVAC - Electrical Diagnostics for more information).

DISPLAYING FAULTS AND READING FAULTS - MTC SYSTEM

Use the A/C-heater control to display DTCs stored in the A/C-heater control of the MTC system. Refer to Entering Display DTC Mode - MTC System; Display Sequencing - MTC System; Reading Diagnostic Trouble Codes - MTC System; Active DTCs - ATC and MTC Systems; Stored DTCs - ATC and MTC Systems; and Clearing Faults - MTC System in this section for additional information.

ENTERING DISPLAY DTC MODE - MTC SYSTEM

To enter the MTC system's Display DTC Mode, perform the following:

NOTE: An active DTC 33 will prevent the control from entering diagnostic mode and performing certain diagnostic functions. It will also prevent proper A/C mode switch and status indicator function. If this occurs, refer to *A/C HEATER CONTROL WILL NOT ENTER DIAGNOSTIC MODE (MTC) in 24 - HVAC - Electrical Diagnostics for the diagnostic test procedure.

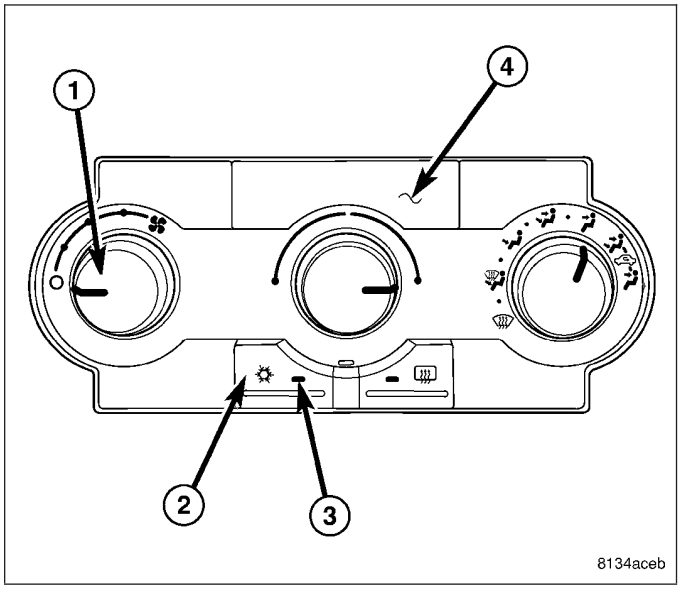

1. Turn the ignition to the On position.
2. Turn the blower motor control (1) to the On position.
3. Press the A/C mode switch (2) down, turn the blower motor control to the Off position, wait until both LEDs illuminate (approximately 5 seconds) and then release the A/C switch. If there are active or stored DTCs to display, the A/C status indicator (3) will begin to flash. If there are no active or stored DTCs to display, the LEDs on the A/C-heater control (4) will turn off and the system will automatically exit the mode of operation.
4. To manually exit Display DTC Mode, either turn the ignition off or disconnect the negative battery cable from the battery.

DISPLAY SEQUENCING - MTC SYSTEM

MTC system DTCs will display in ascending numerical order but not in chronological order. Active DTCs will display before stored DTCs. If there are active and stored DTCs for the same parameter, the A/C-heater control will NOT display the stored DTC for that parameter. The EBL status indicator will illuminate and remain illuminated while the A/C-heater control is displaying stored DTCs. After displaying all active and stored DTCs, the A/C-heater control restarts at the beginning, displaying all DTCs again. To restart the sequence from the beginning while the A/C-heater control is displaying DTCs, press the EBL mode switch down, and then release it. This will cause the A/C-heater control to quit displaying the present code, turn off all LEDs for 2.0 seconds, and then it will begin flashing all DTCs again from the beginning.

READING DIAGNOSTIC TROUBLE CODES - MTC SYSTEM

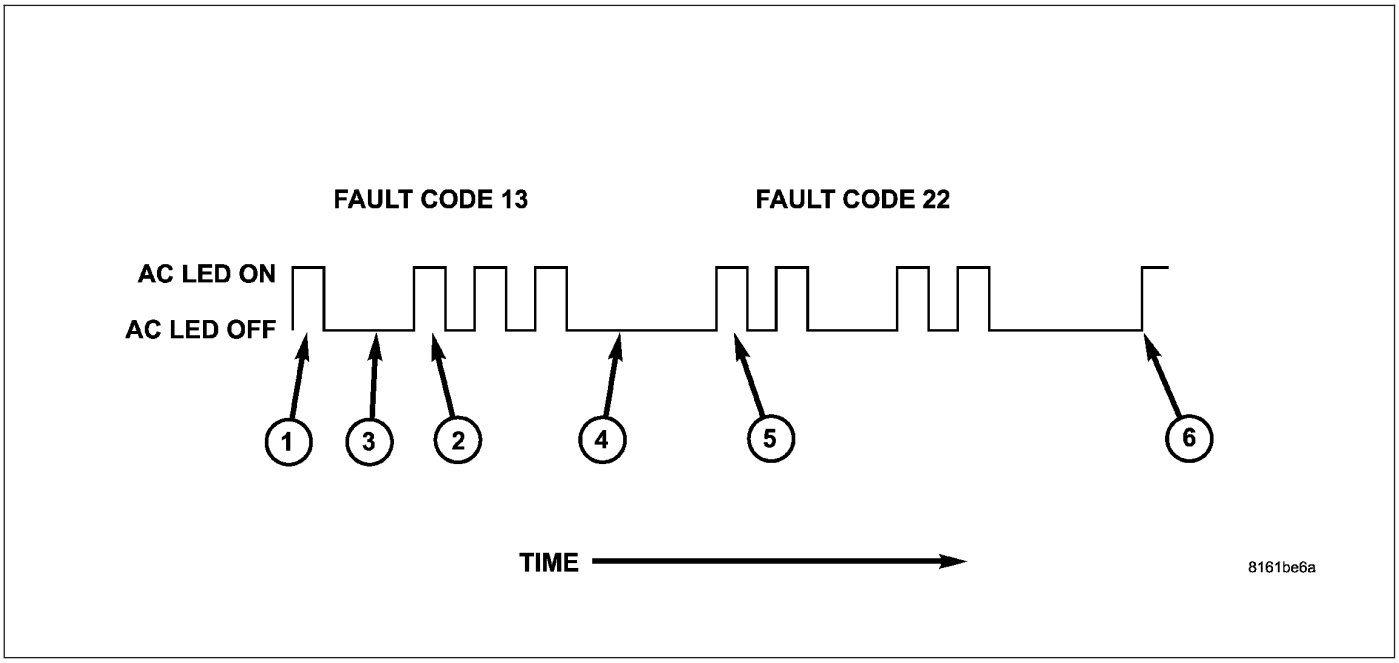

All active and stored DTCs for the MTC system have an assigned code number. The A/C status indicator flashes in a series of pulses to display the code numbers. Each pulse has an indicator on time of 0.5 seconds. The tens unit value (1) is flashed first followed by the ones unit value (2). A 2.0 second indicator off-time (3) separates the unit values. When displaying multiple DTCs, the A/C status indicator will go off for five seconds (4) before displaying the next DTC (5). After displaying all DTCs (6), the sequence will repeat until exiting Display DTC Mode.

ACTIVE DTCs - ATC AND MTC SYSTEMS

Refer to 24 - HVAC - Electrical Diagnostics to diagnose HVAC system DTCs.

STORED DTCs - ATC AND MTC SYSTEMS

The HVAC System Test, found in 24 - HVAC - Electrical Diagnostics, provides a means for diagnosing stored DTCs. The HVAC System Test consists of multiple diagnostic procedures which cover:

- A/C System Performance
- System Controls
- Air-door Functionality

Either perform the entire diagnostic procedure for a complete system test or perform an individual procedure if diagnosing a specific symptom, condition, or DTC.

CLEARING FAULTS - ATC SYSTEM

For every fault that sets, the A/C-heater control maintains an independent count of the number of key cycles since the active DTC cleared, the odometer reading when the DTC set, and the elapsed ignition on time that the DTC was active. When the number of key cycles (by parameter) reaches a global number, the system automatically clears all of the information associated with that DTC. A loss of battery voltage will also clear all active DTCs and associated data from memory. However, upon reconnecting the battery and activating the A/C-heater control (″Ignition″ line going ″HIGH″), the system will again evaluate all parameters and will set active DTCs for parameters outside of acceptable limits.

DTCs can also be cleared manually from the A/C-heater control (which also resets key cycle counters). Use a scan tool to clear DTCs stored in the A/C-heater control of the ATC system (Refer to 24 - HVAC - Electrical Diagnostics for more information).

CLEARING FAULTS - MTC SYSTEM

To clear DTCs stored in the A/C-heater control of the MTC system, perform the following:

NOTE: An active DTC 33 will prevent the control from entering diagnostic mode and performing certain diagnostic functions. It will also prevent proper A/C mode switch and status indicator function. If this occurs, refer to *A/C HEATER CONTROL WILL NOT ENTER DIAGNOSTIC MODE (MTC) in 24 - HVAC - Electrical Diagnostics for the diagnostic test procedure.

NOTE: An active DTC 34 will prevent the control from performing certain diagnostic functions and it will prevent proper EBL mode switch and status indicator function. If active, diagnose and repair DTC 34 before proceeding. Refer to 24 - HVAC - Electrical Diagnostics for the diagnostic test procedure.

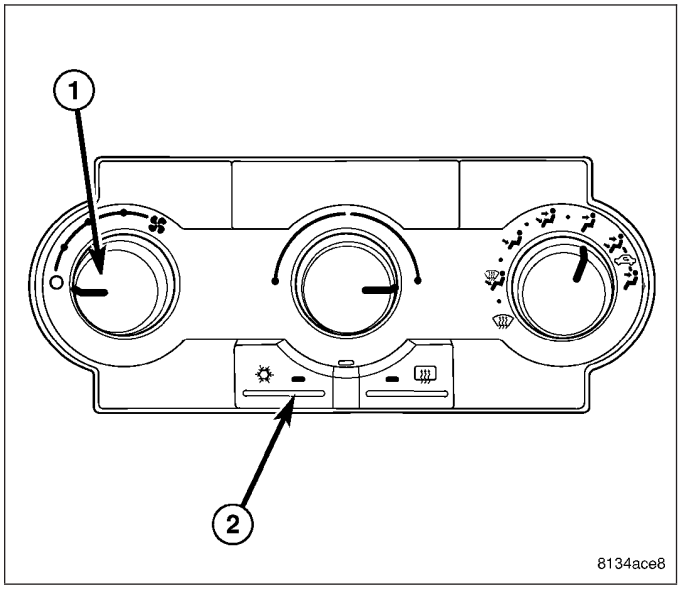

1. Turn the ignition to the On position.
2. Turn the blower motor control (1) to the On position.
3. Press the A/C mode switch (2) down, turn the blower motor control to the Off position, wait until both LEDs illuminate (approximately 5 seconds) and then release the A/C mode switch.
4. When the A/C status indicator begins flashing DTCs, set the Mode switch to the floor position, simultaneously press the A/C mode switch and the EBL mode switch down until both LEDs start flashing (approximately 5 seconds) and then release the mode switches. Stored DTCs will clear from memory in approximately two seconds.

SYSTEM TESTS

HVAC SYSTEM TEST - ATC AND MTC SYSTEMS

The HVAC System Test, found in 24 - HVAC - Electrical Diagnostics, provides a starting point in the diagnostic process by identifying the appropriate diagnostic procedure or system test to perform when diagnosing a given symptom, condition, or DTC. It also provides a means for testing the entire HVAC system by utilizing the A/C-heater control's On-Board System Tests. The On-Board System Tests can also assist in diagnosing stored DTCs.

ACTUATOR CALIBRATION - ATC SYSTEM

The Actuator Calibration function homes and repositions the air-door actuators, removes accumulated positioning errors, and checks for air-door span faults. Once actuated, the entire process takes approximately 90 seconds. Upon completion, all air-door actuators should return to the position that the system is currently requesting. Running the Actuator Calibration function is the only way to detect air-door travel too large faults and air-door travel too small faults. These faults, if present, will display on the scan tool after running the Actuator Calibration function.

STARTING ACTUATOR CALIBRATION - ATC SYSTEM

Use a scan tool to start the Actuator Calibration function.

ACTUATOR CALIBRATION - MTC SYSTEM

NOTE: Diagnose and repair Actuator Circuit Test faults (DTC 61, 62, 63, 64, 65, 66, 67, 68, 69, 71, and 72) before diagnosing Overcurrent faults (DTC 41, 42, 43, and 44) and Calibration faults (DTC 18, 21, 22, 23, 24, 25, 45, 46, 47, 48, 51, 52, 53, 54, 55, and 56). Diagnose and repair Overcurrent faults (DTC 41, 42, 43, and 44) before diagnosing Calibration faults (DTC 18, 21, 22, 23, 24, 25, 45, 46, 47, 48, 51, 52, 53, 54, 55, and 56).

The A/C-Heater Control automatically runs the Actuator Calibration function upon ignition on after installing a new A/C-Heater Control. The Actuator Calibration function homes and repositions the air-door actuators, removes accu-

mulated positioning errors, and checks for air-door span faults. Once actuated, the entire process takes approximately 90 seconds. Upon completion, all air-door actuators should return to the position that the system is currently requesting. Running the Actuator Calibration function is the only way to detect air-door travel too large faults, air-door travel too small faults, air-door bound faults, and air-door broken linkage faults. These faults, if present, will display when checking for DTCs in the A/C-heater control.

STARTING ACTUATOR CALIBRATION MANUALLY - MTC SYSTEM

Refer to Starting The Actuator Circuit Test / Door Calibration Function - MTC System in this section.

ACTUATOR CIRCUIT TEST / DOOR CALIBRATION FUNCTION - MTC SYSTEM

NOTE: Diagnose and repair Actuator Circuit Test faults (DTC 61, 62, 63, 64, 65, 66, 67, 68, 69, 71, and 72) before diagnosing Overcurrent faults (DTC 41, 42, 43, and 44) and Calibration faults (DTC 18, 21, 22, 23, 24, 25, 45, 46, 47, 48, 51, 52, 53, 54, 55, and 56). Diagnose and repair Overcurrent faults (DTC 41, 42, 43, and 44) before diagnosing Calibration faults (DTC 18, 21, 22, 23, 24, 25, 45, 46, 47, 48, 51, 52, 53, 54, 55, and 56).

The Actuator Circuit Test / Door Calibration function first tests the air-door electrical circuits for shorts and then it homes and repositions the air-doors to remove accumulated positioning errors and to check for air-door span faults. This test / function supplements the continuous actuator drive system diagnostics and can provide greater detail about shorted air-door electrical circuits by identifying up to three door driver circuits shorted simultaneously. This test will also detect air-door travel too large faults, air-door travel too small faults, air-door bound faults, and air-door broken linkage faults. The Actuator Circuit Test / Door Calibration function must be manually actuated. Faults detected will display when checking for DTCs in the A/C-heater control.

STARTING THE ACTUATOR CIRCUIT TEST / DOOR CALIBRATION FUNCTION - MTC SYSTEM

NOTE: By running the Actuator Circuit Test / Door Calibration Function, the A/C-Heater Control can identify up to three door driver circuits shorted simultaneously. A DTC 72 will set if more than three door driver circuits are shorted in the same direction (e.g. four door driver circuits all shorted to ground) or if two or more door driver circuits are shorted with at least one door driver circuit shorted to ignition and one door driver circuit shorted to ground. To ensure a proper diagnosis, diagnose and repair Actuator Circuit Test faults in the following order: If present, diagnose and repair DTC 72 first, then DTC 62, then DTC 61, then DTCs 64, 66, 68, or 71, and finally DTCs 63, 65, 67, or 69. In addition, always test the door driver circuits after each repair by clearing DTCs, and then running the Actuator Circuit Test / Door Calibration Function, and then checking for DTCs.

To start the Actuator Circuit Test / Door Calibration function for the MTC system, perform the following:

NOTE: An active DTC 34 will prevent the control from performing certain diagnostic functions and it will prevent proper EBL mode switch and status indicator function. If this occurs, diagnose and repair DTC 34 before running the Actuator Circuit Test / Door Calibration function. Refer to 24 - HVAC - Electrical Diagnostics for the diagnostic test procedure.

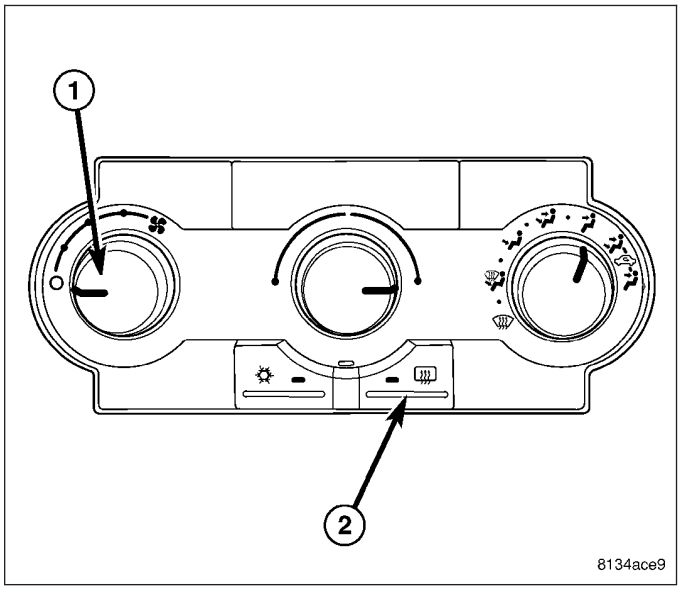

1. Turn the ignition to the On position.
2. Turn the blower motor control (1) to the Off position.
3. Press and hold the EBL mode switch (2) down and then turn the blower motor control on. Continue to hold the EBL mode switch down until the EBL status indicator begins flashing. Then, release the mode switch. While the test / function is running, the EBL status indicator will flash once per second. If the test / function passes, the EBL status indica-

tor will stop flashing. However, if the test / function fails, the A/C and EBL status indicators will flash alternately. Faults detected will display when checking for DTCs in the A/C-heater control.

COOLDOWN TEST - ATC AND MTC SYSTEMS

The Cooldown Test checks A/C system performance by measuring the system's ability to lower the evaporator temperature 11.11° C (20° F) as measured by the evaporator temperature sensor. The following are prerequisites of the Cooldown Test. Verify each of the following before running the Cooldown Test:

- For the ATC system, the Cooldown Test will NOT start if DTC B1031 or B1032 is active. If active, diagnose and repair either DTC before proceeding (Refer to 24 - HVAC - Electrical Diagnostics for a complete list of HVAC related symptoms).
- For the MTC system, the Cooldown Test will NOT start if DTC 31 or 32 is active. If active, diagnose and repair either DTC before proceeding (Refer to 24 - HVAC - Electrical Diagnostics for a complete list of HVAC related symptoms).
- For both systems, verify that the refrigerant system has an adequate charge. Check and repair as necessary before proceeding (Refer to 24 - HEATING & AIR CONDITIONING/PLUMBING - DIAGNOSIS AND TESTING - REFRIGERANT SYSTEM LEAKS).
- For both systems, verify that the blower motor operates correctly in all speeds. Diagnose and repair all blower motor related faults before proceeding.
- For both systems, verify that the ambient temperature of the work area is above 18.3° C (65° F) before proceeding. Move the vehicle to a warmer work area if necessary.
- For both systems, verify that the evaporator temperature is above 18.3° C (65° F) before proceeding.
- For both systems, verify that the A/C compressor is NOT running. If the A/C compressor is running, turn the A/C off and allow the evaporator to warm up before proceeding.

STARTING THE COOLDOWN TEST - ATC SYSTEM

Once all of the prerequisites have been met, the Cooldown Test for the ATC system can be actuated by sending a command with a scan tool. Once started, the ATC A/C-heater control automatically sets the blower speed and positions the air-doors for optimal A/C performance. It also sends a request for A/C operation on the CAN B bus. The Cooldown Test can take up to two minutes to run and, will stop running if any of the following occurs:

- The ignition is turned off.
- The A/C compressor is requested off.
- DTC B1031 or B1032 sets during the Cooldown Test.

While the Cooldown Test is running, the A/C status indicator will flash. During this time the A/C-heater control will ignore most of its inputs. If the ATC system passes the test, the A/C status indicator will stop flashing. However, if the ATC system fails the test, both the A/C and EBL status indicators will flash alternately and an active DTC B10B2 will set. The status indicators will continue to flash until either a successful Cooldown Test is executed or until the vehicle is driven a specified number of miles or after 5 ignition cycles. In addition, DTC B10B2 will remain active until a successful Cooldown Test is executed. Always check for DTCs in the A/C-heater control after running the Cooldown Test.

STARTING THE COOLDOWN TEST - MTC SYSTEM

Once all of the prerequisites have been met, the Cooldown Test for the MTC system can be actuated by performing the following:

NOTE: An active DTC 33 will prevent the control from entering diagnostic mode and performing certain diagnostic functions. It will also prevent proper A/C mode switch and status indicator function. If this occurs, refer to *A/C HEATER CONTROL WILL NOT ENTER DIAGNOSTIC MODE (MTC) in 24 - HVAC - Electrical Diagnostics for the diagnostic test procedure.

1. Verify that the ignition is in the Off position.
2. Turn the blower motor control (1) to the Off position.
3. Start the engine.
4. Press and hold the A/C mode switch (2) down and then turn the blower motor control to high speed. Continue to hold the A/C mode switch down until the A/C status indicator begins flashing, Then, release the mode switch.

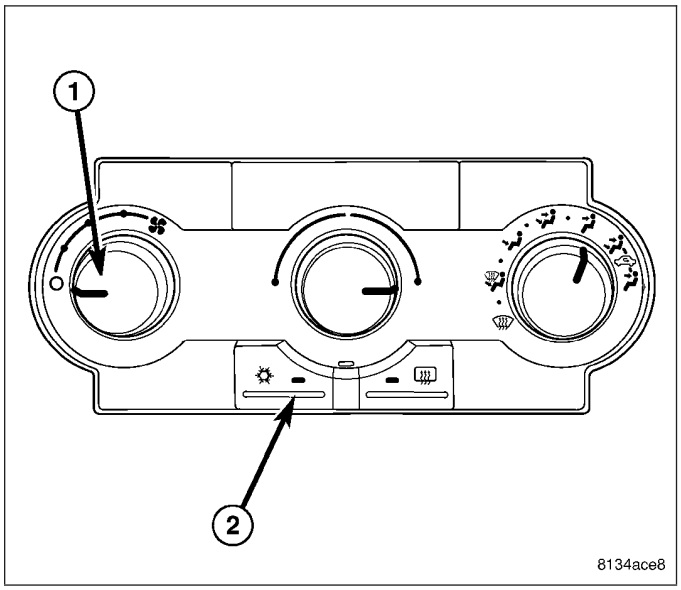

Once actuated, the MTC A/C-heater control automatically positions the air-doors for optimal A/C performance and sends a request for A/C operation to the cluster (CCN) via hardwired circuits. The Cooldown Test can take up to two minutes to run. The test will stop running if any of the following occurs:

- The ignition is turned to the Off position.
- The blower motor control is turned to the any position other than high speed.
- DTC 83 or 84 sets during the Cooldown Test.

While the Cooldown Test is running, the A/C status indicator will flash. During this time the A/C-heater control will ignore most of its inputs. If the MTC system passes the test, the A/C status indicator will stop flashing. However, if the MTC system fails the test, both the A/C and EBL status indicators will flash alternately and an active DTC 35 will set. The status indicators will continue to flash until either a successful Cooldown Test is executed or until the vehicle's ignition on time has exceeded a specified value. In addition, DTC 35 will remain active until a successful Cooldown Test is executed. Always check for and diagnose DTCs present in the A/C-heater control after running the Cooldown Test. If the Cooldown Test fails, service the heating-A/C system as required.

A/C PERFORMANCE

The A/C system is designed to provide the passenger compartment with low temperature and low humidity air. The A/C evaporator, located in the HVAC housing is cooled to temperatures near the freezing point. As warm damp air passes over the fins of the A/C evaporator, the air transfers its heat to the refrigerant in the evaporator coils and the moisture in the air condenses on the evaporator fins. During periods of high heat and humidity, an A/C system will be more effective in the Recirculation mode (max-A/C). With the system in the Recirculation mode, only air from the passenger compartment passes through the A/C evaporator. As the passenger compartment air dehumidifies, the A/C system performance levels rise.

Humidity has an important bearing on the temperature of the air delivered to the interior of the vehicle. It is important to understand the effect that humidity has on the performance of the A/C system. When humidity is high, the A/C evaporator has to perform a double duty. It must lower the air temperature, and it must lower the temperature of the moisture in the air that condenses on the evaporator fins. Condensing the moisture in the air transfers heat energy into the evaporator fins and coils. This reduces the amount of heat the A/C evaporator can absorb from the air. High humidity greatly reduces the ability of the A/C evaporator to lower the temperature of the air.

However, evaporator capacity used to reduce the amount of moisture in the air is not wasted. Wringing some of the moisture out of the air entering the vehicle adds to the comfort of the passengers. Although, an owner may expect too much from their A/C system on humid days. A performance test is the best way to determine whether the system is performing up to design standards. This test also provides valuable clues as to the possible cause of trouble

with the A/C system. The ambient air temperature in the location where the vehicle will be tested must be a minimum of 21° C (70° F) for this test.

A/C PERFORMANCE TEST

WARNING: Refer to the applicable warnings and cautions for this system before performing the following operation (Refer to 24 - HEATING & AIR CONDITIONING/PLUMBING - WARNINGS) and (Refer to 24 - HEATING & AIR CONDITIONING/PLUMBING - CAUTIONS). Failure to follow the warnings and cautions could result in possible personal injury or death.

NOTE: When connecting the service equipment coupling to the line fitting, verify that the valve of the coupling is fully closed. This will reduce the amount of effort required to make the connection.

NOTE: The work area ambient temperature must be above 16° C (60° F) and the evaporator temperature must be above 18° C (65 F) prior to conducting the A/C Performance Test.

1. Conduct the A/C System Performance Test (Cooldown Test) found within the HVAC System Test (refer to 24 - HVAC Electrical Diagnostics). If no diagnostic trouble codes (DTCs) are found in the A/C-heater control or the powertrain control module (PCM) or engine control module (ECM), depending on engine application, go to Step 2. If any DTCs are found, repair as required, then proceed to Step 2.
2. Connect a tachometer and a manifold gauge set or an A/C recycling/charging station.
3. Operate the heating-A/C system under the following conditions.
   - Engine at 1,000 rpm at operating temperature
   - Doors and windows closed
   - Transmission in Park
   - A/C-heater controls set to Recirculation mode (max-A/C), full cool, panel mode, high blower and with A/C compressor engaged. If the A/C compressor does not engage, see the A/C System Diagnosis chart.
4. Insert a thermometer in the driver side center panel air outlet and operate the A/C system until the thermometer temperature stabilizes.
5. With the A/C compressor clutch engaged, compare the air temperature at the center panel outlet and the A/C compressor discharge pressure (high side) to the A/C Performance Temperature and Pressure chart. The compressor clutch may cycle, depending upon the ambient temperature and humidity. If the clutch cycles, use the readings obtained before the clutch disengaged.

A/C PERFORMANCE TEMPERATURE AND PRESSURE

Ambient Air Temperature	21°C (70°F)	27°C (80°F)	32°C (90°F)	38°C (100°F)	43°C (110°F)
Maximum Allowable Air Temperature at Center Panel Outlet	9°C (48°F)	9°C (48°F)	12°C (54°F)	15°C (59°F)	18°C (65°F)
Suction Pressure at Service Port (Low Side)	138 to 207 kPa (20 to 30 psi)	138 to 207 kPa (20 to 30 psi)	207 to 276 kPa (30 to 40 psi)	207 to 276 kPa (30 to 40 psi)	241 to 310 kPa (35 to 45 psi)
Discharge Pressure at Service Port (High Side)	1034 to 1724 kPa (150 to 250 psi)	1379 to 2068 kPa (200 to 300 psi)	1551 to 2241 kPa (225 to 325 psi)	1724 to 2413 kPa (250 to 350 psi)	2068 to 2758 kPa (300 to 400 psi)

6. If the air outlet temperature fails to meet the specifications in the A/C Performance Temperature and Pressure chart, or if the A/C compressor discharge pressure is high, refer to the A/C System Diagnosis chart.

A/C SYSTEM DIAGNOSIS

Condition	Possible Causes	Correction
Rapid A/C compressor clutch cycling (ten or more cycles per minute).	Low refrigerant system charge.	See Refrigerant System Leaks in this group. Test the refrigerant system for leaks. Repair, evacuate and charge the refrigerant system, if required.
Equal pressures, but the compressor clutch does not engage.	1. No refrigerant in the refrigerant system.	1. See Refrigerant System Leaks in this group. Test the refrigerant system for leaks. Repair, evacuate and charge the refrigerant system, if required.
	2. Faulty fuse.	2. Check the fuses in the Integrated Power Module. Repair the shorted circuit or component and replace the fuses, if required. Refer to Group 8.
	3. Faulty A/C compressor clutch coil.	3. See A/C Compressor Clutch Coil in this group. Test the compressor clutch coil and replace, if required.
	4. Faulty A/C compressor clutch relay.	4. See A/C Compressor Clutch Relay in this group. Test the compressor clutch relay and relay circuits. Repair the circuits or replace the relay, if required.
	5. Improperly installed or faulty evaporator temperature sensor.	5. See Evaporator Temperature Sensor in this group. Test the sensor and replace, if required.
	6. Faulty A/C pressure transducer.	6. See A/C Pressure Transducer in this group. Test the sensor and replace, if required.
	7. Faulty Powertrain Control Module (PCM) or Engine Control Module (ECM).	7. Refer to Group 9 - Engine Electrical Diagnostics for testing of the PCM/ECM. Test the PCM/ECM and replace, if required.
Normal pressures, but A/C Performance Test air temperatures at center panel outlet are too high.	1. Excessive refrigerant oil in system.	1. See Refrigerant Oil Level in this group. Recover the refrigerant from the refrigerant system and inspect the refrigerant oil content. Restore the refrigerant oil to the proper level, if required.
	2. Blend door actuator (s) improperly installed or faulty.	2. See Blend Door Actuator in this group. Inspect the actuator(s) for proper operation and replace, if required.
	3. Blend-air door(s) inoperative or sealing improperly.	3. See HVAC Housing in this group. Inspect the blend-air door(s) for proper operation and sealing. Repair if required.
The low side pressure is normal or slightly low, and the high side pressure is too low.	1. Low refrigerant system charge.	1. See Refrigerant System Leaks in this group. Test the refrigerant system for leaks. Repair, evacuate and charge the refrigerant system, if required.
	2. Refrigerant flow through the A/C evaporator is restricted.	2. See A/C Evaporator in this group. Replace the restricted A/C evaporator, if required.
	3. Faulty A/C compressor.	3. See A/C Compressor in this group. Replace the A/C compressor, if required.

Condition	Possible Causes	Correction
The low side pressure is normal or slightly high, and the high side pressure is too high.	1. A/C condenser air flow restricted.	1. Check the A/C condenser for damaged fins, foreign objects obstructing air flow through the condenser fins, and missing or improperly installed air seals. Clean, repair, or replace components as required.
	2. Refrigerant flow through the receiver/drier is restricted.	2. See Receiver/Drier in this group. Replace the restricted receiver/drier, if required.
	3. Inoperative radiator cooling fan.	3. Test the radiator cooling fan and replace, if required. Refer to Group 7 - Cooling.
	4. Refrigerant system overcharged.	4. See Refrigerant System Charge in this group. Recover the refrigerant from the refrigerant system. Charge the refrigerant system to the proper level, if required.
	5. Air in the refrigerant system.	5. See Refrigerant System Leaks in this group. Test the refrigerant system for leaks. Repair, evacuate and charge the refrigerant system, if required.
	6. Engine overheating.	6. Test the engine cooling system and repair, if required. Refer to Group 7 - Cooling.
The low side pressure is too high, and the high side pressure is too low.	1. Accessory drive belt slipping.	1. Inspect the accessory drive belt condition and tension. Repair as required. Refer to Group 7 - Cooling.
	2. Faulty A/C expansion valve.	2. See A/C Expansion Valve in this group. Replace the valve, if required.
	3. Faulty A/C compressor.	3. See A/C Compressor in this group. Replace the A/C compressor, if required.
The low side pressure is too low, and the high side pressure is too high.	1. Restricted refrigerant flow through the refrigerant lines.	1. See Liquid Line, Suction Line and Discharge Line in this group. Inspect the refrigerant lines for kinks, tight bends or improper routing. Correct the routing or replace the refrigerant line, if required.
	2. Restricted refrigerant flow through the A/C expansion valve.	2. See A/C Expansion Valve in this group. Replace the valve, if required.
	3. Restricted refrigerant flow through the A/C condenser.	3. See A/C Condenser in this group. Replace the restricted A/C condenser, if required.

HEATER PERFORMANCE

Before performing the following tests, refer to Group 7 - Cooling for the procedures to check the engine coolant level and flow, engine coolant reserve/recovery system operation, accessory drive belt condition and tension, radiator air flow and the fan drive operation. Perform the A/C System Performance Test, which is found within the HVAC System Test (refer to 24 - HVAC Electrical Diagnostics). If any diagnostic trouble codes (DTCs) are found in the A/C-heater control or the powertrain control module (PCM), repair as necessary.

MAXIMUM HEATER OUTPUT

Engine coolant is delivered to the heater core through two heater hoses. With the engine idling at normal operating temperature, set the temperature control to the full hot position, the mode control to the floor position, and the blower motor control to the highest speed position. Using a test thermometer, check the temperature of the air being discharged at the front floor outlets. Compare the test thermometer reading to the Heater Temperature Reference chart.

HEATER TEMPERATURE REFERENCE

Ambient Air Temperature	16° C (60° F)	21° C (70° F)	27° C (80° F)	32° C (90° F)
Minimum Heater System Air Outlet Temperature	52° C (125° F)	56° C (133° F)	59° C (139° F)	62° C (144° F)

If the heater outlet air temperature is below the minimum specification, refer to Group 7 - Cooling. Both of the heater hoses should be hot to the touch. The coolant return heater hose should be slightly cooler than the coolant supply heater hose. If the return hose is much cooler than the supply hose, locate and repair the engine coolant flow obstruction in the cooling system. Refer to Group 7 - Cooling for more information.

OBSTRUCTED COOLANT FLOW

Possible locations or causes of obstructed coolant flow are as follows:

- Faulty water pump.
- Faulty thermostat.
- Pinched or kinked heater hoses.
- Improper heater hose routing.
- Plugged heater hoses or supply and return ports at the cooling system connections.
- Plugged heater core.

If proper coolant flow through the cooling system is verified, and heater outlet air temperature is low, a mechanical problem may exist.

MECHANICAL PROBLEMS

Possible locations or causes of insufficient heat due to mechanical problems are as follows:

- Obstructed cowl air intake.
- Obstructed heater system outlets.
- Faulty engine thermostat.
- Faulty blower motor system.
- Faulty A/C-heater control.
- Faulty blend door actuator(s).
- Faulty, obstructed or improperly installed blend-air door.

TEMPERATURE CONTROL

If the heater outlet air temperature cannot be adjusted with the temperature control on the A/C-heater control, the following could require service:

- Faulty A/C-heater control.
- Faulty blend door actuator(s).
- Faulty, obstructed or improperly installed blend-air door.
- Improper engine coolant temperature.
- Faulty related wiring harness or connectors.

SPECIFICATIONS

A/C SYSTEM

Item	Description	Notes
A/C Compressor	Denso 10S17	ND-8 PAG oil
Freeze–up Control	Evaporator Temperature Sensor	HVAC housing mounted
Low psi Control	A/C Pressure Transducer	Liquid line mounted - opens below 110 kPa (16 psi), closes above 220 kPa (32 psi)
High psi Control	A/C Pressure Transducer	Liquid line mounted - opens above 3219 kPa (476 psi), closed below 2937 kPa (426 psi)
Refrigerant Capacity	Refer to the A/C Underhood Specification Label located in the engine compartment	R-134a refrigerant
A/C Clutch Coil Draw	3.3 amps	@ 12V ± 0.5V @ 21° C (70° F)
A/C Clutch Coil Resistance	3.6 ± 0.2 ohms	When measured across coil lead connector
A/C Clutch Air Gap	0.35 - 0.60 mm (0.014 - 0.024 in.)	

TORQUE

Description	N·m	Ft. Lbs.	In. Lbs.
All Screws NOT Listed Below	2	—	17
A/C Compressor to 2.7L Engine Front Bolts	26	19	—
A/C Compressor to 2.7L Engine Rear Bolt	50	37	—
A/C Compressor to 3.0L Engine Bolts	26	19	—
A/C Compressor to 3.5L Engine Bolts	26	19	—
A/C Compressor to 5.7L/6.1L Engine Bolts	50	37	—
A/C Condenser to Radiator Bolts	5	—	44
A/C Expansion Valve to Evaporator Tube Tapping Block Bolts	11	—	97
Air Distribution Housing Halves Screws	2.2	—	20
Air Distribution Housing to HVAC Housing Screws	2.2	—	20
Air Inlet Housing to HVAC Housing Screws	2.2	—	20
Blower Motor Screws	2.2	—	20
Compressor Shaft Bolt	19	—	168
Flange to HVAC Housing Screws	2.2	—	20

Description	N·m	Ft. Lbs.	In. Lbs.
Floor Console Duct to Floor Panel Screws	2.2	—	20
Fresh Air Inlet Housing/ Water Separator Filter Housing to Dash Panel Nuts	7	—	62
Heater Core Retaining Bracket to Air Distribution Housing Screw	2.2	—	20
HVAC Housing Halves Screws	2.2	—	20
HVAC Housing to Engine Side of Dash Panel Nuts	7	—	62
HVAC Housing to Passenger Side of Dash Panel Nuts	3	—	26
Instrument Panel/demister Ducts to Instrument Panel Screw	2.2	—	20
Liquid Line Front to Rear Section Nut	22	16	—
PTC Heater Unit Screws	2.2	–	20
Refrigerant Lines to A/C Expansion Valve Nut	23	17	—
Refrigerant Line to A/C Compressor Nut	23	17	—
Refrigerant Line to A/C Condenser Nut	22	16	—
Refrigerant Line Bracket to Strut Tower Bolt	11	—	97
Receiver/drier to A/C Condenser Bolt	22	16	—
Receiver/drier Bracket to A/C Condenser Screw	5	—	44
Suction Line Front to Rear Section Nut	22	16	—
Strut Support to Strut Tower Bolts	38	28	—

SPECIAL TOOLS

HEATING-A/C SYSTEM

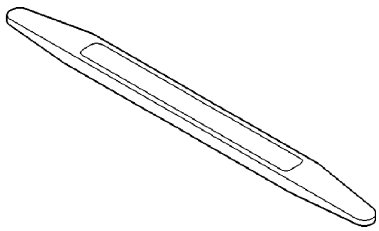

Trim Stick C-4755

CONTROLS

TABLE OF CONTENTS

page

ACTUATOR-BLEND DOOR
DESCRIPTION 338
OPERATION 338
REMOVAL 338
INSTALLATION 340
ACTUATOR-MODE DOOR
DESCRIPTION 342
OPERATION 342
REMOVAL 342
INSTALLATION 343
ACTUATOR-RECIRCULATION DOOR
DESCRIPTION 345
OPERATION 345
REMOVAL 345
INSTALLATION 346
CLUTCH-A/C COMPRESSOR
DESCRIPTION 348
OPERATION 348
DIAGNOSIS AND TESTING
A/C COMPRESSOR CLUTCH COIL 348
STANDARD PROCEDURE
A/C CLUTCH PLATE INSPECTION 349
A/C CLUTCH BREAK-IN 350
REMOVAL 350
INSTALLATION 351
CONTROL-A/C-HEATER
DESCRIPTION
MANUAL SINGLE ZONE 355
AUTOMATIC DUAL ZONE 355
REMOVAL 356
INSTALLATION 358
MODULE-POWER-BLOWER MOTOR
DESCRIPTION 359
OPERATION 359
REMOVAL 359
INSTALLATION 360
RELAY-A/C CLUTCH
DESCRIPTION 361

page

OPERATION 361
REMOVAL 362
INSTALLATION 362
RESISTOR-BLOWER MOTOR
DESCRIPTION 363
OPERATION 363
DIAGNOSIS AND TESTING
BLOWER MOTOR RESISTOR 363
REMOVAL 364
INSTALLATION 365
SENSOR-AMBIENT AIR TEMPERATURE
DESCRIPTION 366
OPERATION 366
REMOVAL 366
INSTALLATION 367
SENSOR-EVAPORATOR TEMPERATURE
DESCRIPTION 368
OPERATION 368
REMOVAL 368
INSTALLATION 369
SENSOR-INFRARED
DESCRIPTION 370
OPERATION 370
SENSOR-SUN
DESCRIPTION 371
OPERATION 371
DIAGNOSIS AND TESTING
SUN SENSOR 371
REMOVAL 372
INSTALLATION 373
TRANSDUCER-A/C PRESSURE
DESCRIPTION 375
OPERATION 375
REMOVAL 375
INSTALLATION 376

ACTUATOR-BLEND DOOR

DESCRIPTION

The blend door actuators (1) are reversible, 12 volt direct current (DC), servo motors. Models equipped with the MTC single zone heating-A/C system have a single blend-air door, which is controlled by a single blend door actuator. Models with the ATC dual zone heating-A/C system have two blend-air doors, which are controlled by two blend door actuators.

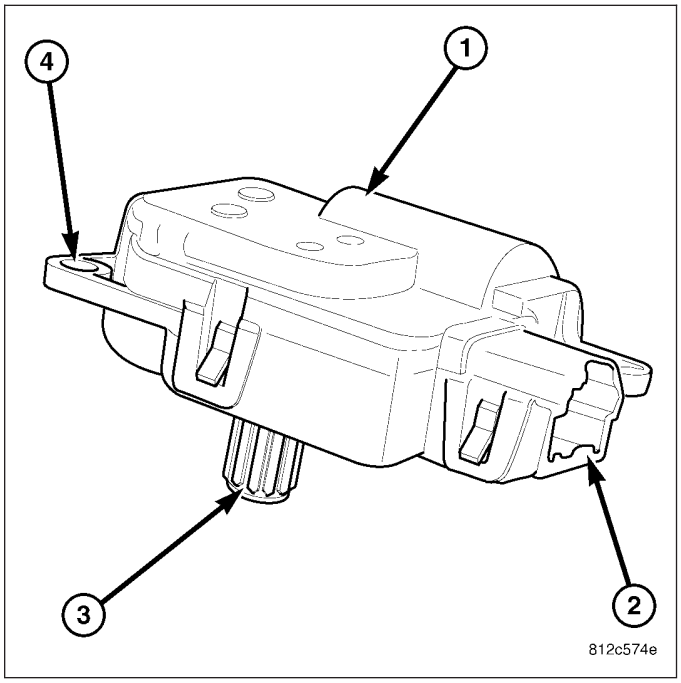

The blend door actuator for the single zone heating-A/C system is located on the driver side end of the HVAC air distribution housing, close to the dash panel.

For the dual zone heating-A/C system, the same blend door actuator used for the single zone system becomes the driver side blend door actuator, which is mechanically connected to only the driver side blend-air door. A second separate blend door actuator is also located on the passenger side of the HVAC air distribution housing which is mechanically connected to only the passenger side blend-air door.

The blend door actuators are interchangeable with each other, as well as with the actuators for the mode-air door and the recirculation-air door. Each actuator is contained within an identical black molded plastic housing with an integral wire connector receptacle (2). Each actuator also has an identical output shaft with splines (3) that connect it to its respective door linkage and three integral mounting tabs (4) that allow the actuator to be secured to the HVAC housing. The blend door actuators do not require mechanical indexing to the blend-air doors, as they are electronically calibrated by the A/C-heater control.

OPERATION

The blend door actuators are connected to the A/C-heater control through the vehicle electrical system by a dedicated two-wire lead and connector of the HVAC wire harness. The blend door actuator(s) can move the blend-air door(s) in two directions. When the A/C-heater control pulls the voltage on one side of the motor connection high and the other connection low, the blend-air door will move in one direction. When the A/C-heater control reverses the polarity of the voltage to the motor, the blend-air door moves in the opposite direction.

When the A/C-heater control makes the voltage to both connections high or both connections low, the blend-air door(s) stops and will not move. The A/C-heater control uses a pulse-count positioning system to monitor the operation and relative position of the blend door actuators and the blend-air doors. The A/C-heater control learns the blend-air doors stop positions during the calibration procedure and will store a diagnostic trouble code (DTC) for any problems it detects in the blend door actuator circuits.

(Refer to 24 - HEATING & AIR CONDITIONING - DIAGNOSIS AND TESTING - HEATING AND A/C SYSTEMS) and to 24 - HVAC Electrical Diagnostics for more information.

The blend door actuator(s) cannot be adjusted or repaired and, if faulty or damaged, they must be replaced.

REMOVAL

WARNING: On vehicles equipped with airbags, disable the airbag system before attempting any steering wheel, steering column, or instrument panel component diagnosis or service. Disconnect and isolate the negative battery (ground) cable, then wait two minutes for the airbag system capacitor to discharge before performing further diagnosis or service. This is the only sure way to disable the airbag system. Failure to take the proper precautions could result in accidental airbag deployment and possible personal injury or death.

NOTE: The single zone heater-A/C system is equipped with a single blend door actuator. The dual zone system has two blend door actuators, one for the driver side blend-air door and one for the passenger side blend-air door.

SINGLE ZONE/DUAL ZONE DRIVER SIDE

NOTE: LHD model shown in illustration. RHD model similar.

1. Disconnect and isolate the negative battery cable.
2. Remove the instrument panel silencer from the driver side of the instrument panel (Refer to 23 - BODY/INSTRUMENT PANEL/INSTRUMENT PANEL SILENCER - REMOVAL).
3. Remove the three screws (1) that secure the blend door actuator (2) to the driver side of the HVAC air distribution housing (3).
4. Remove the blend door actuator from the air distribution housing and disconnect the HVAC wire harness connector (4) and remove the actuator from the vehicle.

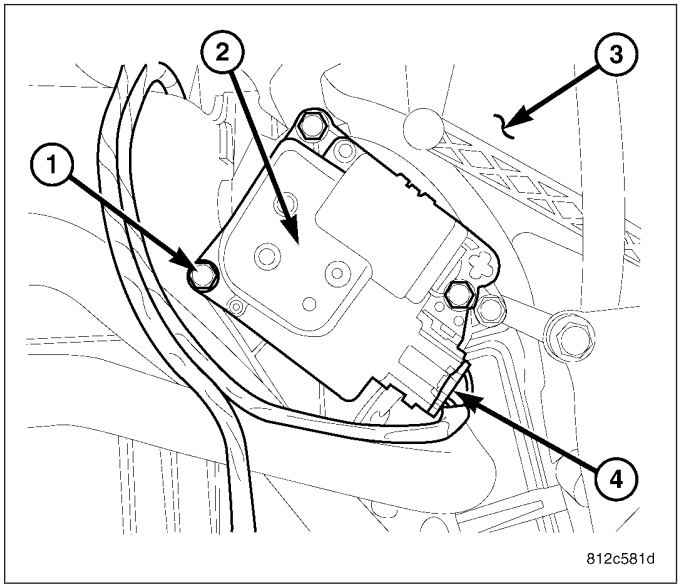

DUAL ZONE PASSENGER SIDE

NOTE: LHD model shown in illustration. RHD model similar.

1. Disconnect and isolate the negative battery cable.
2. Remove the glove box from the instrument panel (Refer to 23 - BODY/INSTRUMENT PANEL/ GLOVE BOX - REMOVAL).
3. Remove the three screws (1) that secure the blend door actuator (2) to the passenger side of the HVAC air distribution housing (3).
4. Remove the blend door actuator from the air distribution housing and disconnect the HVAC wire harness connector (4) and remove the actuator from the vehicle.

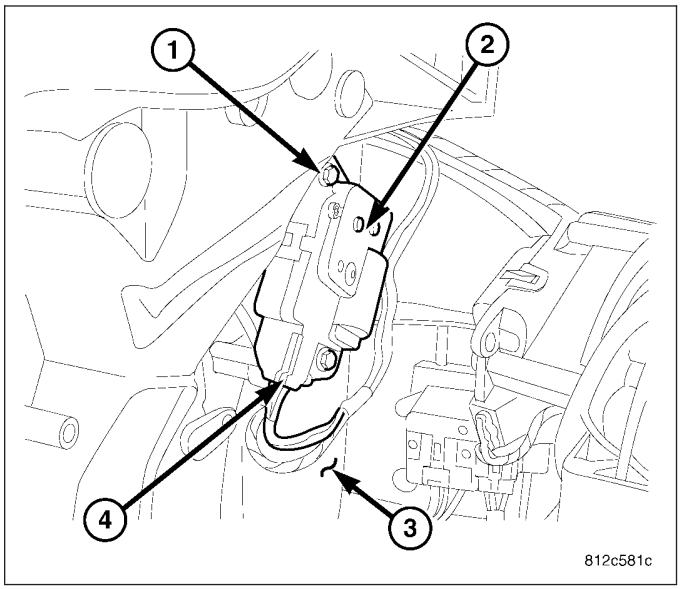

INSTALLATION

NOTE: The single zone heater-A/C system is equipped with a single blend door actuator. The dual zone system has two blend door actuators, one for the driver side blend-air door and one for the passenger side blend-air door.

SINGLE ZONE/DUAL ZONE DRIVER SIDE

NOTE: LHD model shown in illustrations. RHD model similar.

1. Position the blend door actuator (1) into the vehicle.
2. Install the blend door actuator onto the driver side of the HVAC air distribution housing (2). If necessary, rotate the actuator slightly to align the splines on the actuator output shaft (3) with those on the blend door cam (4).

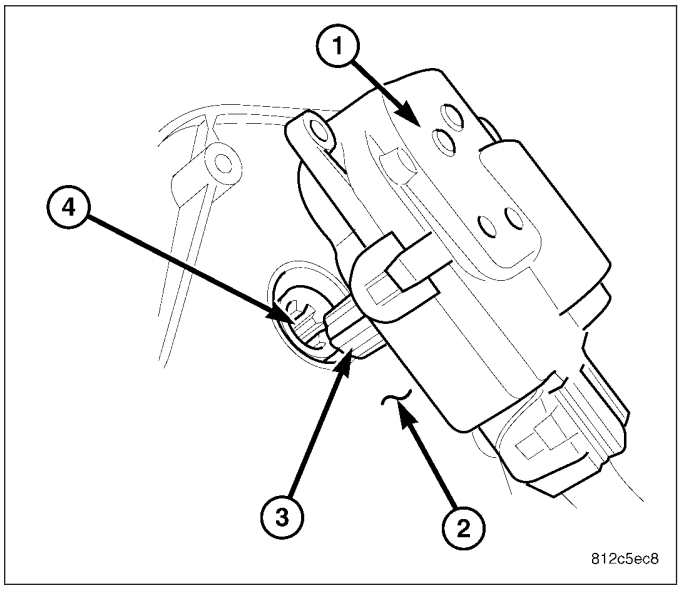

3. Install the screws (1) that secure the blend door actuator (2) to the air distribution housing (3). Tighten the screws to 2 N·m (17 in. lbs.).
4. Connect the HVAC wire harness connector (4) to the blend door actuator.
5. Install the instrument panel silencer onto the driver side of the instrument panel (Refer to 23 - BODY/ INSTRUMENT PANEL/INSTRUMENT PANEL SILENCER - INSTALLATION).
6. Reconnect the negative battery cable.

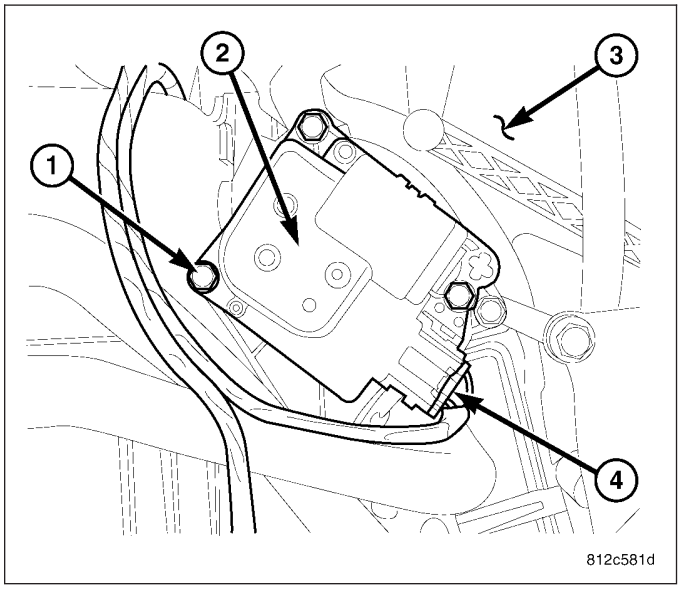

DUAL ZONE PASSENGER SIDE

NOTE: LHD model shown in illustrations. RHD model similar.

1. Position the blend door actuator (1) into the vehicle.
2. Install the blend door actuator onto the passenger side of the HVAC air distribution housing (2). If necessary, rotate the actuator slightly to align the splines on the actuator output shaft (3) with those on the blend door cam (4).

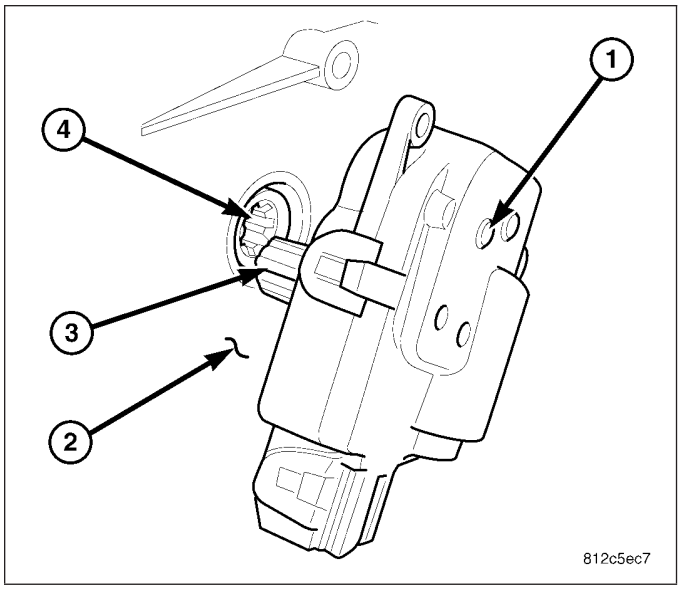

3. Install the screws (1) that secure the blend door actuator (2) to the air distribution housing (3). Tighten the screws to 2 N·m (17 in. lbs.).
4. Connect the HVAC wire harness connector (4) to the blend door actuator.
5. Install the glove box into the instrument panel (Refer to 23 - BODY/INSTRUMENT PANEL/ GLOVE BOX - INSTALLATION).
6. Reconnect the negative battery cable.

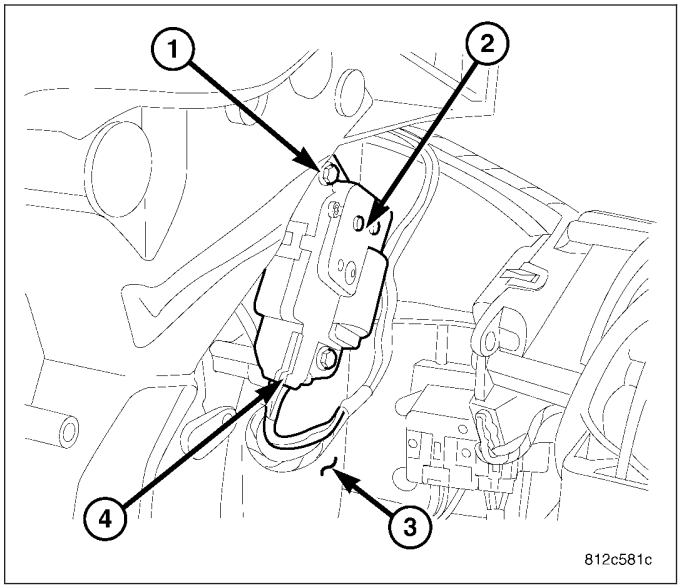

ACTUATOR-MODE DOOR

DESCRIPTION

The mode door actuator (1) is a reversible, 12–volt direct current (DC), servo motor. The mode door actuator is located on the driver side end of the HVAC air distribution housing, close to the instrument panel. The mode door actuator is mechanically connected to the floor, defrost/demist and the panel-air doors.

The mode door actuator is interchangeable with the actuators for the blend-air door(s) and the recirculation-air door. Each actuator is contained within an identical black molded plastic housing with an integral wire connector receptacle (2). Each actuator also has an identical output shaft with splines (3) that connect it to its door linkage and three integral mounting tabs (4) that allow the actuator to be secured to the HVAC housing. The mode door actuator does not require mechanical indexing to the mode-air doors, as it is electronically calibrated by the A/C-heater control.

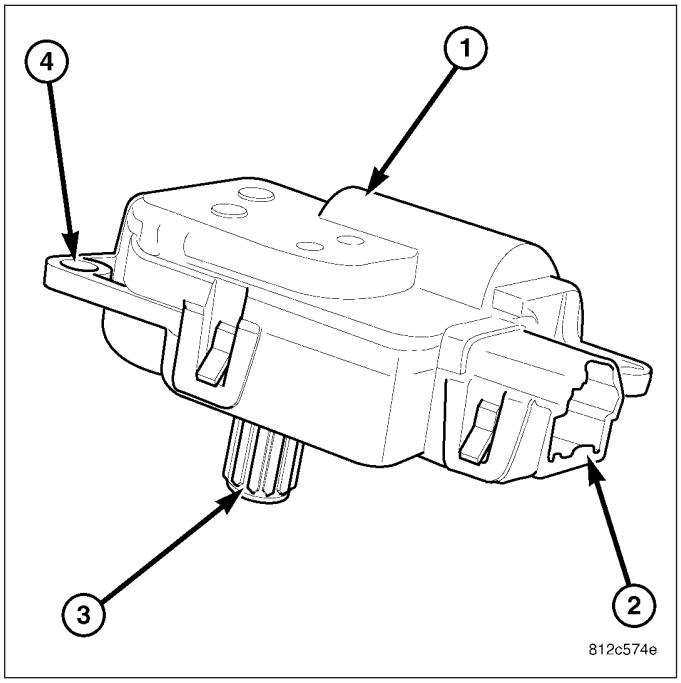

OPERATION

The mode door actuator is connected to the A/C-heater control through the vehicle electrical system by a dedicated two-wire lead and connector of the HVAC wire harness. The mode door actuator can move the floor, defrost/demist and the panel-air doors in two directions. When the A/C-heater control pulls the voltage on one side of the motor connection high and the other connection low, the mode-air doors will move in one direction. When the A/C-heater control reverses the polarity of the voltage to the motor, the mode-air doors moves in the opposite direction.

When the A/C-heater control makes the voltage to both connections high or both connections low, the mode-air doors stop and will not move. The A/C-heater control uses a pulse-count positioning system to monitor the operation and relative position of the mode door actuator and the mode-air doors. The A/C-heater control learns the mode-air doors stop position during the calibration procedure and will store a diagnostic trouble code (DTC) for any problems it detects in the mode door actuator circuits.

(Refer to 24 - HEATING & AIR CONDITIONING - DIAGNOSIS AND TESTING) and to 24 - HVAC Electrical Diagnostics for more information.

The mode door actuator cannot be adjusted or repaired and, if faulty or damaged, it must be replaced.

REMOVAL

WARNING: On vehicles equipped with airbags, disable the airbag system before attempting any steering wheel, steering column, or instrument panel component diagnosis or service. Disconnect and isolate the negative battery (ground) cable, then wait two minutes for the airbag system capacitor to discharge before performing further diagnosis or service. This is the only sure way to disable the airbag system. Failure to take the proper precautions could result in accidental airbag deployment and possible personal injury or death.

NOTE: LHD model shown. RHD model similar

1. Disconnect and isolate the negative battery cable.
2. Remove the instrument panel silencer from the driver side of the instrument panel (Refer to 23 - BODY/INSTRUMENT PANEL/INSTRUMENT PANEL SILENCER - REMOVAL).
3. Remove the screws (1) that secure the mode door actuator (2) to the driver side of the HVAC air distribution housing (3).
4. Remove the mode door actuator from the air distribution housing and disconnect the HVAC wire harness connector (4) and remove the actuator from the vehicle.

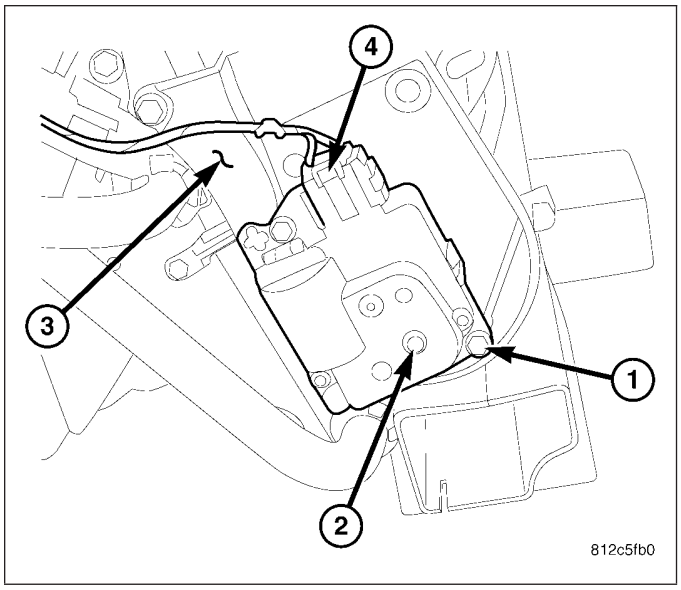

INSTALLATION

NOTE: LHD model shown in illustrations. RHD model similar.

1. Position the mode door actuator (1) into the vehicle.
2. Install the mode door actuator onto the driver side of the HVAC air distribution housing (2). If necessary, rotate the actuator slightly to align the splines on the actuator output shaft (3) with those on the mode door cam (4).

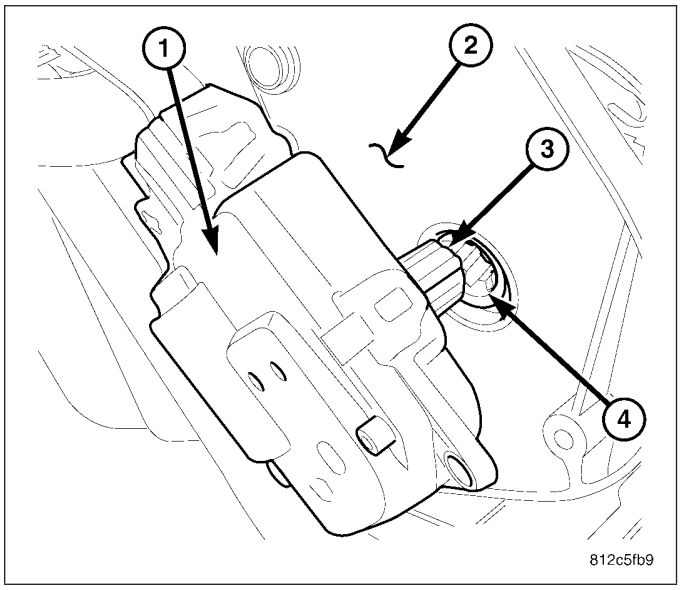

3. Install the screws (1) that secure the mode door actuator (2) to the driver side of the air distribution housing (3). Tighten the screws to 2 N·m (17 in. lbs.).
4. Connect the HVAC wire harness connector (4) to the mode door actuator.
5. Install the instrument panel silencer onto the driver side of the instrument panel (Refer to 23 - BODY/ INSTRUMENT PANEL/INSTRUMENT PANEL SILENCER - INSTALLATION).
6. Reconnect the negative battery cable.

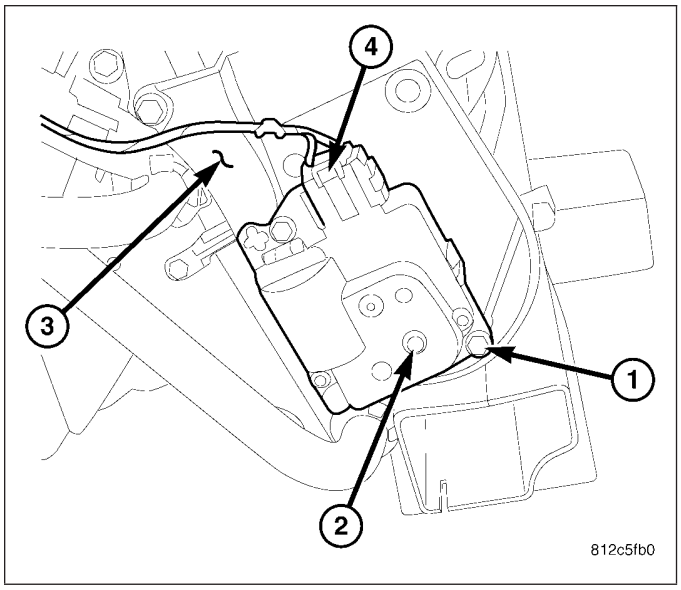

ACTUATOR-RECIRCULATION DOOR

DESCRIPTION

The recirculation door actuator (1) is a reversible, 12 volt direct current (DC), servo motor. The recirculation door actuator is located on the inboard side of the HVAC air inlet housing and is directly connected to the pivot shaft of the recirculation-air door.

The recirculation door actuator is interchangeable with the actuators for the blend-air door(s) and the mode-air doors. Each actuator is contained within an identical black molded plastic housing with an integral wire connector receptacle (2). Each actuator also has an identical output shaft with splines (3) that connect it to its door linkage and three integral mounting tabs (4) that allow the actuator to be secured to the air inlet housing. The recirculation door actuator does not require mechanical indexing to the recirculation-air door, as it is electronically calibrated by the A/C-heater control.

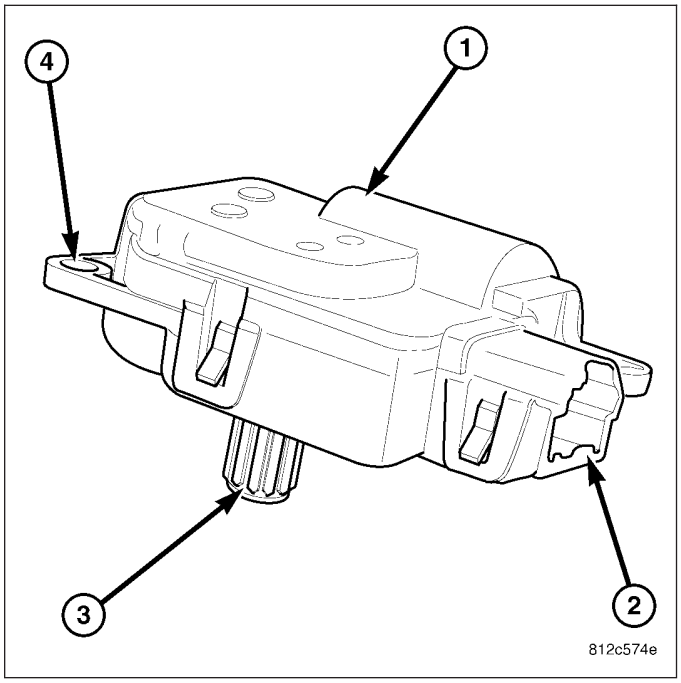

OPERATION

The recirculation door actuator is connected to the A/C-heater control through the vehicle electrical system by a dedicated two-wire lead and connector of the HVAC wire harness. The recirculation door actuator can move the recirculation-air door in two directions. When the A/C-heater control pulls the voltage on one side of the motor connection high and the other connection low, the recirculation-air door will move in one direction. When the A/C-heater control reverses the polarity of the voltage to the motor, the recirculation-air door moves in the opposite direction.

When the A/C-heater control makes the voltage to both connections high or both connections low, the recirculation-air door stops and will not move.

On ATC equipped vehicles, the A/C-heater control uses a pulse-count positioning system to monitor the operation and relative position of the recirculation door actuator and the recirculation-air door. The A/C-heater control learns the recirculation-air door stop positions during the calibration procedure and will store a diagnostic trouble code (DTC) for any problems it detects in the recirculation door actuator circuits.

On MTC equipped vehicles, the A/C-heater control uses a timer-type calibration procedure to check relative position of the recirculation door actuator and the recirculation-air door. The A/C-heater control learns the recirculation-air door stop positions during the calibration procedure and will store a diagnostic trouble code (DTC) for any problems it detects in the recirculation door actuator circuits.

(Refer to 24 - HEATING & AIR CONDITIONING - DIAGNOSIS AND TESTING) and to 24 - HVAC Electrical Diagnostics for more information.

The recirculation door actuator cannot be adjusted or repaired and, if faulty or damaged, it must be replaced.

REMOVAL

WARNING: On vehicles equipped with airbags, disable the airbag system before attempting any steering wheel, steering column, or instrument panel component diagnosis or service. Disconnect and isolate the negative battery (ground) cable, then wait two minutes for the airbag system capacitor to discharge before performing further diagnosis or service. This is the only sure way to disable the airbag system. Failure to take the proper precautions could result in accidental airbag deployment and possible personal injury or death.

NOTE: LHD model shown. RHD model similar.

1. Disconnect and isolate the negative battery cable.
2. Remove the glove box from the instrument panel (Refer to 23 - BODY/INSTRUMENT PANEL/ GLOVE BOX - REMOVAL).
3. Remove the three screws (1) that secure the recirculation door actuator (2) to the HVAC air inlet housing (3).
4. Remove the recirculation door actuator from the air inlet housing and disconnect the HVAC wire harness connector (4) and remove the actuator from the vehicle.

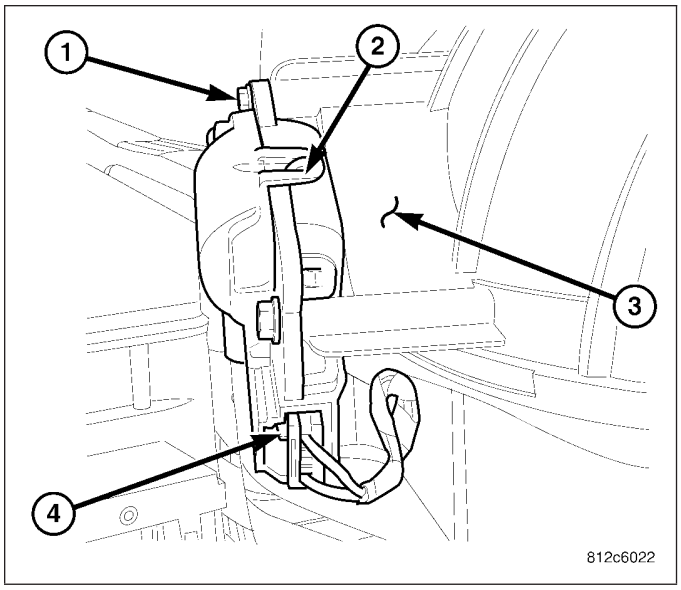

INSTALLATION

NOTE: LHD model shown in illustrations. RHD model similar.

1. Position the recirculation door actuator (1) into the vehicle.
2. Install the recirculation door actuator onto the HVAC air inlet housing (2). If necessary, rotate the actuator slightly to align the splines on the actuator output shaft (3) with those on the recirculation door pivot shaft (4).

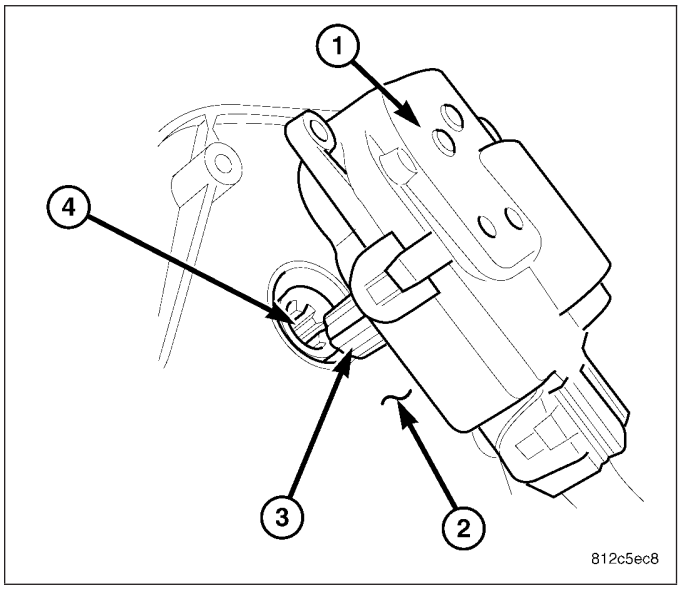

3. Install the three screws (1) that secure the recirculation door actuator (2) to the air inlet housing (3). Tighten the screws to 2 N·m (17 in. lbs.).
4. Connect the HVAC wire harness connector (4) to the recirculation door actuator.
5. Install the glove box into the instrument panel (Refer to 23 - BODY/INSTRUMENT PANEL/ GLOVE BOX - INSTALLATION).
6. Reconnect the negative battery cable.

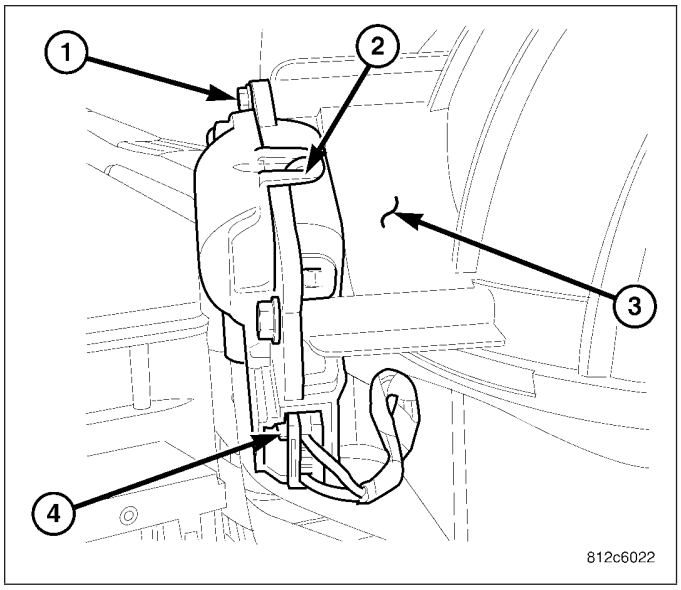

CLUTCH-A/C COMPRESSOR

DESCRIPTION

NOTE: Typical A/C clutch assembly shown.

The A/C compressor clutch assembly consists of a stationary electromagnetic A/C clutch field coil (4), pulley bearing and pulley assembly (3), clutch plate (2) and shims (7). These components provide the means to engage and disengage the A/C compressor from the engine accessory drive belt.

The A/C clutch field coil and the pulley bearing and pulley assembly are both retained on the nose of the A/C compressor with snap rings (5 and 6). The clutch plate is splined to the compressor shaft and secured with a bolt (1).

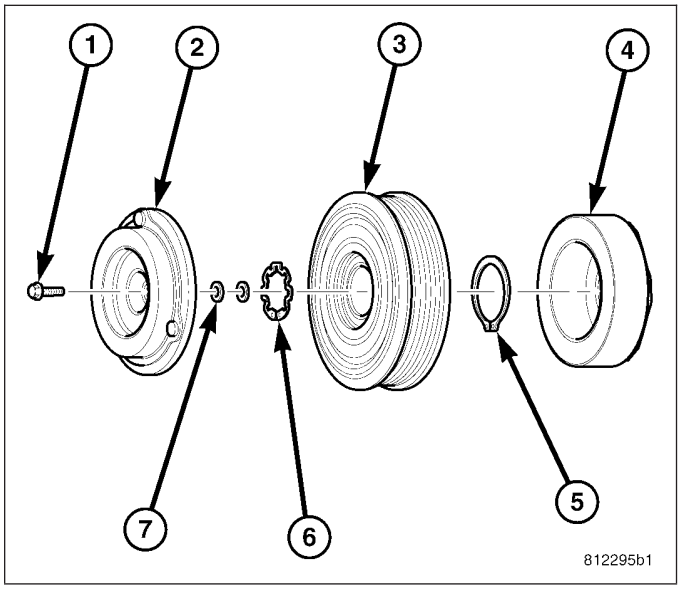

OPERATION

The A/C compressor clutch components provide the means to engage and disengage the A/C compressor from the engine accessory drive belt. When the electromagnetic A/C clutch field coil is energized, it magnetically draws the clutch plate into contact with the clutch pulley and drives the compressor shaft. When the coil is not energized, the pulley freewheels on the clutch hub bearing, which is part of the pulley assembly.

A/C compressor clutch engagement is controlled by the powertrain control module (PCM) or the engine control module (ECM), depending on engine application.

The A/C compressor clutch components cannot be repaired and, if faulty or damaged, they must be replaced.

DIAGNOSIS AND TESTING

A/C COMPRESSOR CLUTCH COIL

The A/C compressor clutch coil electrical circuit is controlled by the powertrain control module (PCM) or engine control module (ECM) depending on engine appilication) through the A/C clutch relay. The A/C clutch coil can be tested by either measuring clutch field coil resistance or by measuring current draw. Begin testing of a suspected compressor clutch coil problem by performing the preliminary checks.

PRELIMINARY CHECKS

1. If the A/C compressor clutch will not engage, refer to 24 - HVAC Electrical Diagnostics to perform the A/C System Performance Test, which is found within the HVAC System Test. If no diagnostic trouble codes (DTCs) are found in the A/C-heater control or the PCM/ECM, go to Step 2. If any DTCs are found, repair as required.
2. If the A/C compressor clutch still will not engage, verify the refrigerant charge level (Refer to 24 - HEATING & AIR CONDITIONING/PLUMBING - DIAGNOSIS AND TESTING - REFRIGERANT SYSTEM LEAKS). If the refrigerant charge level is OK, go to COIL RESISTANCE TEST and/or COIL CURRENT DRAW TEST . If the refrigerant charge level is not OK, adjust the refrigerant charge as required.

COIL RESISTANCE TEST

1. Disconnect and isolate the negative battery cable.
2. Disconnect the wire harness connector from the A/C clutch field coil connector.
3. Use an ohm meter and measure the resistance of the clutch field coil at the field coil connector terminals.

4. Refer to the A/C Clutch Field Coil Specifications chart for the acceptable A/C clutch coil resistance. Specifications apply for a work area temperature of 21° C (70° F).
   a. If the A/C clutch coil reading is below specifications, the coil is shorted and must be replaced.
   b. If the A/C clutch coil reading is above specifications, the coil is open and must be replaced.

COIL CURRENT DRAW TEST

1. Verify the battery state of charge (Refer to 8 - ELECTRICAL/BATTERY SYSTEM/BATTERY - DIAGNOSIS AND TESTING).
2. Connect an ammeter (0 to 10 ampere scale selected) in series with the clutch field coil feed terminal. Connect a voltmeter (0 to 20 volt scale selected) to measure voltage across the battery and the clutch coil.
3. With the A/C-heater control in the A/C mode and the blower motor at low speed, start the engine and allow it to run at a normal idle speed.
4. The A/C clutch should engage immediately, and the clutch field coil supply voltage should be within two volts of the battery voltage. If the field coil supply voltage is OK, go to Step 5. If the field coil supply voltage is not within two volts of battery voltage, test the clutch feild coil feed circuit for excessive voltage drop and repair as necessary.
5. Refer to the A/C Clutch Field Coil Specifications chart for the acceptable A/C clutch field coil current draw. Specifications apply for a work area temperature of 21° C (70° F). If voltage is more than 12.5 volts, add electrical loads by turning on electrical accessories until voltage reads below 12.5 volts.
   a. If the A/C clutch field coil current reading is zero, the coil is open and must be replaced.
   b. If the A/C clutch field coil current reading is above specifications, the coil is shorted and must be replaced.

A/C CLUTCH FIELD COIL SPECIFICATIONS

A/C Compressor	Current Draw	Coil Resistance
Denso 10S17	3.3 amps @ 11.5 - 12.5 volts	3.6 ± 0.2 ohms

STANDARD PROCEDURE

A/C CLUTCH PLATE INSPECTION

NOTE: The A/C clutch can be serviced in the vehicle. The refrigerant system can remain fully-charged during compressor clutch, pulley and bearing assembly, or coil replacement.

Examine the friction surfaces of the pulley and the clutch plate (2) for wear. The pulley and clutch plate should be replaced if there is excessive wear or scoring.

If the friction surfaces are oily, inspect the shaft and nose area of the A/C compressor (1) for refrigerant oil. If refrigerant oil is found, the compressor shaft seal is leaking and the A/C compressor must be replaced.

Check the pulley bearing for roughness or excessive leakage of grease. Replace the pulley and bearing assembly, if required.

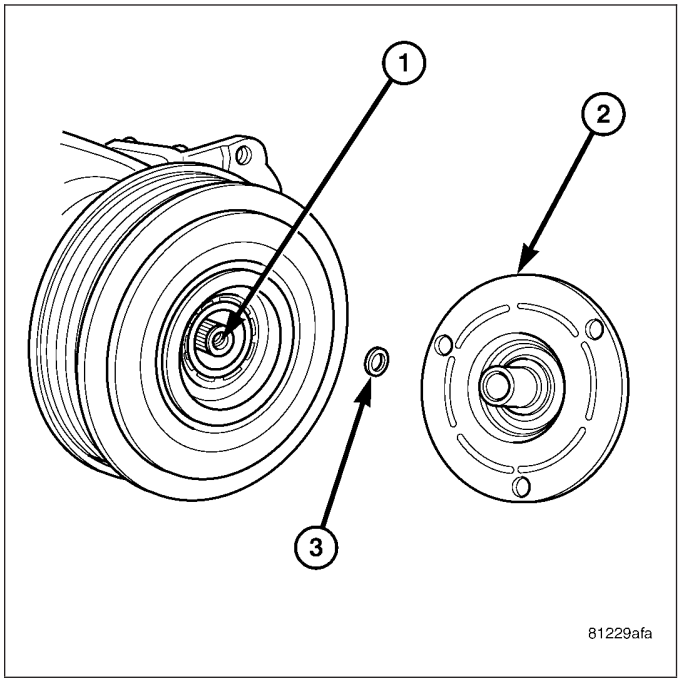

A/C CLUTCH BREAK-IN

After a new A/C compressor clutch has been installed, cycle the compressor clutch approximately 20 times (5 seconds on, then 5 seconds off). During this procedure, set the A/C-heater controls to the A/C Recirculation Mode, the blower motor in the highest speed position, and the engine speed at 1500 to 2000 rpm. This procedure (burnishing) will seat the opposing friction surfaces and provide a higher compressor clutch torque capability.

REMOVAL

NOTE: The compressor clutch assembly can be serviced with the refrigerant system fully-charged.

NOTE: Typical A/C compressor shown in illustrations.

1. Disconnect and isolate the negative battery cable.
2. Remove the accessory drive belt (Refer to 7 - COOLING/ACCESSORY DRIVE/BELTS-DRIVE - REMOVAL).
3. Disconnect the engine wire harness from the compressor clutch field coil connector (1) located on the top of the A/C compressor (5).

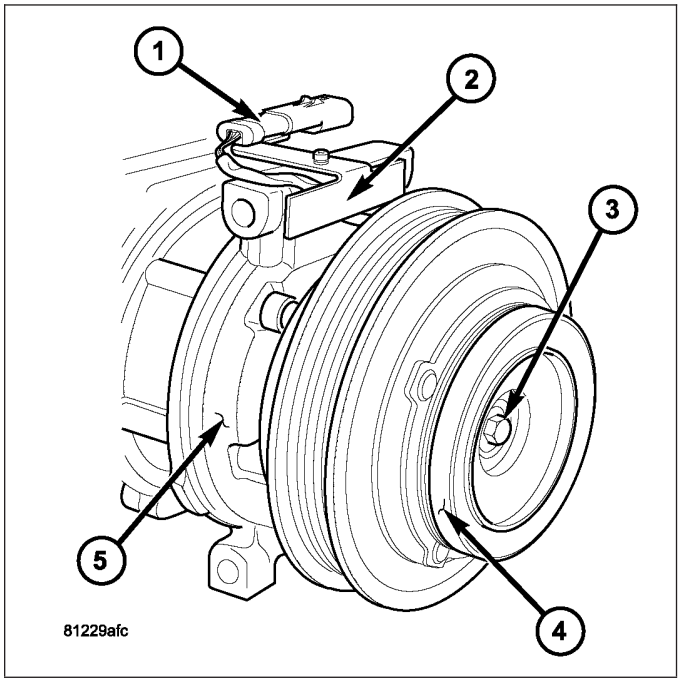

NOTE: Some models (depending on engine application) may require the A/C compressor to be removed from its installed location to gain access to the compressor shaft bolt and/or pulley and field coil snap rings. However, the refrigerant system can still remain fully charged.

4. If required, remove the bolts that secure the A/C compressor to the engine and support the A/C compressor.
5. Carefully remove the compressor clutch field coil connector and wire lead from the connector bracket (2).
6. Remove the compressor shaft bolt (3). A band-type oil filter wrench or a strap wrench may be used to hold the clutch plate (4) from rotating during bolt removal.

CAUTION: Do not pry between the clutch plate and the pulley and bearing assembly to remove the clutch plate from the compressor shaft as this may damage the clutch plate.

NOTE: Use care not to lose any clutch shim(s) during removal of the clutch plate, as they may be reused during the clutch plate installation process.

7. Tap the clutch plate (2) lightly with a plastic mallet to release it from the splines on the compressor shaft (1) and remove the clutch plate and shim(s) (3).

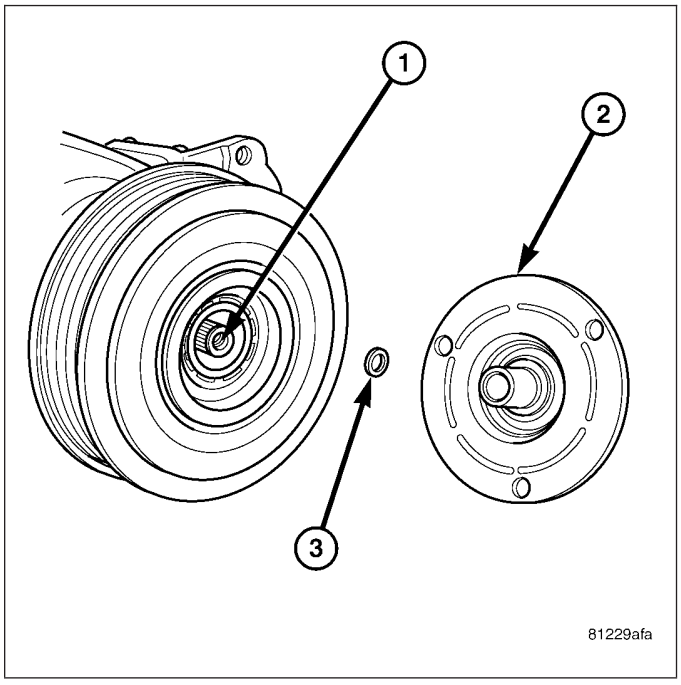

8. Using snap ring pliers (2), remove the snap ring (1) that secures the pulley and bearing assembly (3) to the front of the A/C compressor and remove the pulley and bearing assembly.

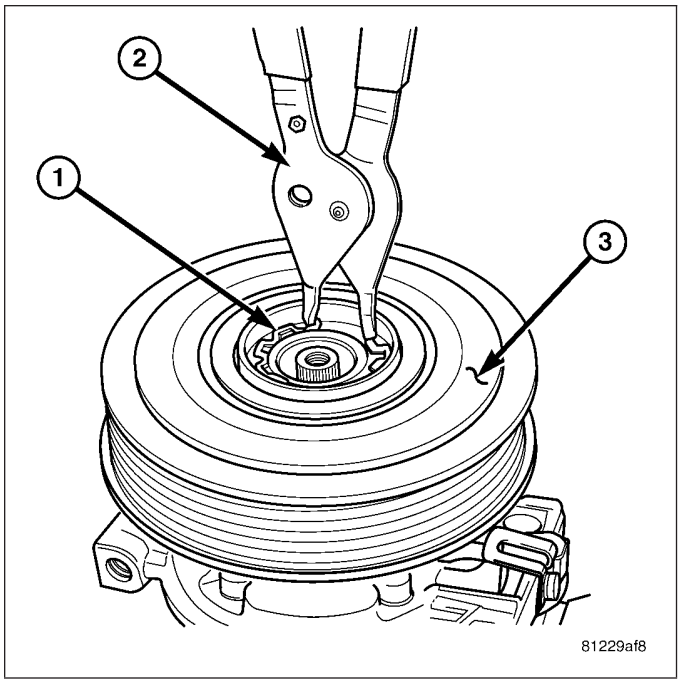

9. Using snap ring pliers (1), remove the snap ring (4) that secures the compressor clutch field coil (2) to the front of the A/C compressor (3) and remove the field coil.

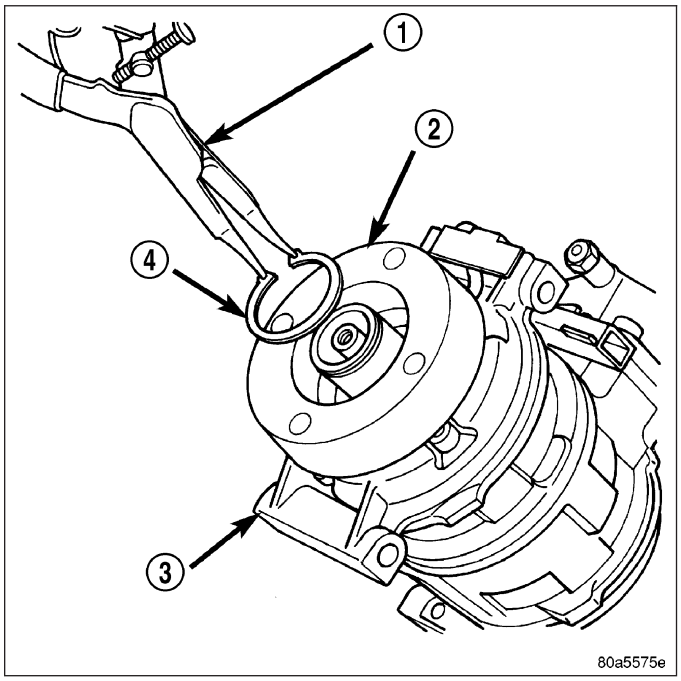

INSTALLATION

NOTE: Typical A/C compressor shown in illustrations.

1. Align the dowel pin on the back of the compressor clutch field coil (2) with the hole in the front of the A/C compressor (3) and position the field coil onto the compressor. Be certain that the compressor clutch field coil wire lead is properly routed so that it is not pinched between the A/C compressor and the field coil.

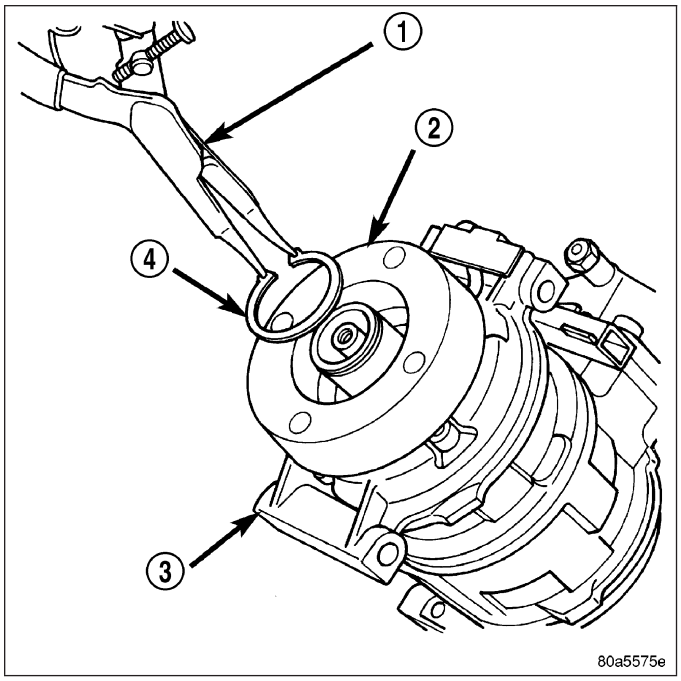

CAUTION: The snap ring must be fully and properly seated in the groove or it will vibrate out, resulting in a clutch failure and severe damage to the A/C compressor.

NOTE: A new snap ring must be used to secure the compressor clutch field coil to the A/C compressor. The bevel side of the snap ring must face outward and both snap ring eyelets must be oriented to the right or to the left of the field coil dowel pin location on the A/C compressor.

2. Using snap ring pliers (1), install the snap ring (4) that secures the compressor clutch field coil to the front of the A/C compressor. Be certain that the snap ring is fully and properly seated in the groove and oriented correctly.

CAUTION: Be certain to position the compressor clutch field coil wire lead so that it is not damaged during A/C compressor pulley and bearing installation.

CAUTION: When installing the pulley and bearing assembly, DO NOT mar the friction surfaces of the pulley or premature failure of the clutch will result.

3. Install the pulley and bearing assembly (1) onto the front of the A/C compressor. If necessary, tap the pulley gently with a block of wood (2) placed on the pulley friction surface.

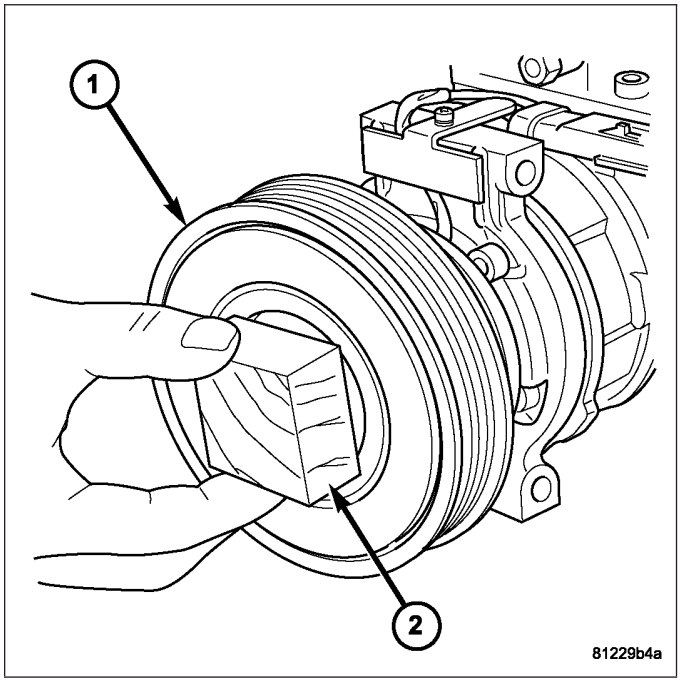

CAUTION: The snap ring must be fully and properly seated in the groove or it will vibrate out, resulting in a clutch failure and severe damage to the A/C compressor.

NOTE: A new snap ring must be used to secure the pulley and bearing assembly to the A/C compressor. The bevel side of the snap ring must face outward.

4. Using snap ring pliers (2), install the snap ring (1) that secures the pulley and bearing assembly (3) to the front of the A/C compressor. Be certain that the snap ring is fully and properly seated in the groove.

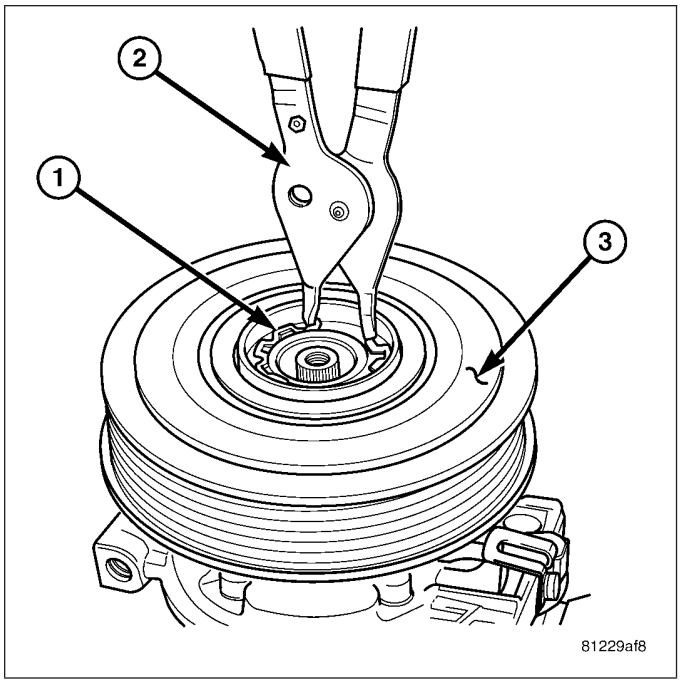

5. If the original clutch plate (2) and pulley and bearing assembly are to be reused, reinstall the original shim(s) (3) onto the compressor shaft (1). If a new clutch plate and pulley and bearing assembly are being used, install a trial stack of shims 2.54 mm (0.010 in.) thick onto the compressor shaft.

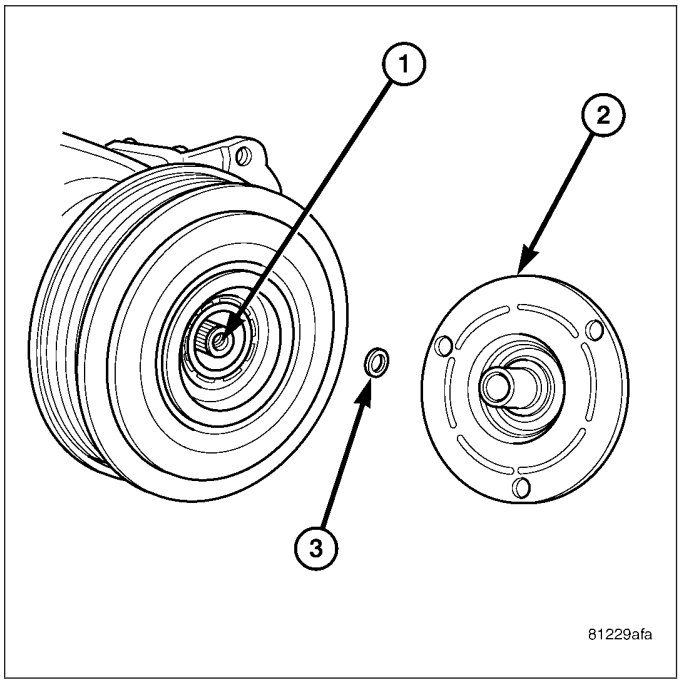

6. Install the clutch plate (4) onto the front of the A/C compressor (5).
7. Install the compressor shaft bolt (3). Tighten the bolt to 19 N·m (168 in. lbs.).

NOTE: The shims may compress after tightening the shaft bolt. Check the air gap in four or more places to verify the air gap is correct. Spin the pulley before performing a final check of the air gap.

NOTE: On models with the clutch plate recessed into the pulley, use a 90° wire gap gauge to measure the clutch air gap. On other models, use a blade type feeler gauge to measure the air gap.

8. With the clutch plate assembled tight against the shim(s), measure the air gap between the clutch plate and the pulley and bearing assembly. The air gap should be between 0.35 - 0.60 mm (0.014 - 0.024 in.). If the air gap is not between specifications, add or subtract shims as needed until the correct air gap is obtained.

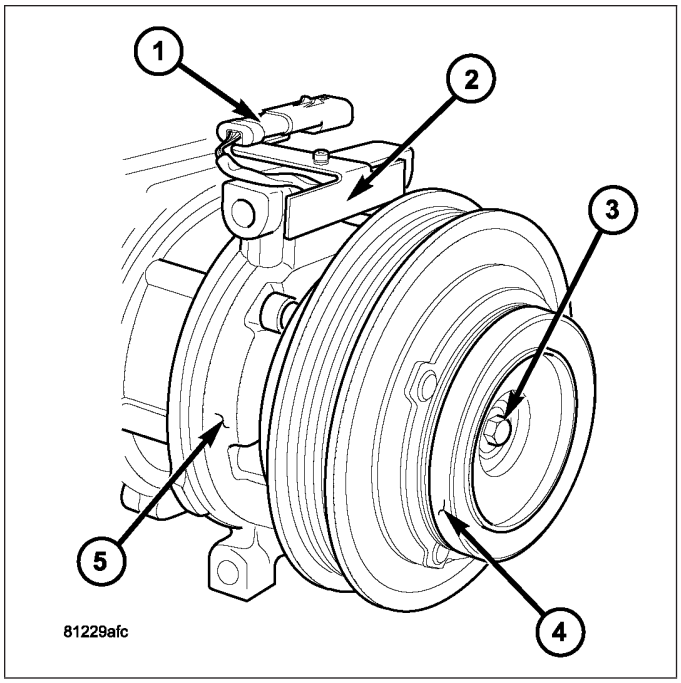

CAUTION: Be certain that the compressor clutch field coil wire lead is routed so that it is not pinched between the A/C compressor and the field coil connector bracket.

9. Carefully route the compressor clutch field coil wire lead behind the connector bracket (2).
10. Install the compressor clutch field coil connector (1) onto the connector bracket.
11. If removed, position the A/C compressor to the engine and install the retaining bolts (Refer to 24 - HEATING & AIR CONDITIONING/PLUMBING/COMPRESSOR-A/C - INSTALLATION).
12. Connect the engine wire harness to the compressor clutch field coil connector.
13. Install the accessory drive belt (Refer to 7 - COOLING/ACCESSORY DRIVE/BELTS-DRIVE - INSTALLATION).
14. Reconnect the negative battery cable.

CONTROL-A/C-HEATER

DESCRIPTION

MANUAL SINGLE ZONE

The A/C-heater control (1) for the manual temperature control (MTC) single zone heating-A/C system allows one temperature setting for the entire vehicle. All controls are identified by ISO graphic symbols.

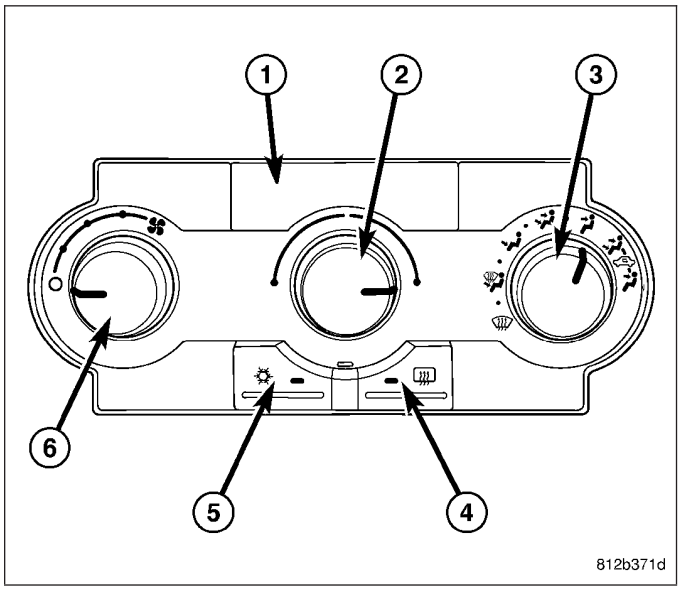

The A/C-heater control and integral computer is located in the instrument panel and contains:

- a rotary control knob for temperature control of the discharged air (2).
- a rotary control knob for recirculation and mode control of the discharged air (3).
- a push button rear window defogger on/off control (4). The defogger button contains an LED that illuminates when the rear window defogger system is in operation.
- a push button A/C on/off control (5). The Snowflake button contains an LED that illuminates when the A/C system is in operation.
- a rotary control knob for fan speed selection and turning the heating-A/C system off (6).

Prior to replacing an A/C-heater control, check for any diagnostic trouble codes (DTCs) related to the heating-A/C system and run the calibration procedure to verify that the concern is not a system issue (Refer to 24 - HEATING & AIR CONDITIONING - DIAGNOSIS AND TESTING - HEATING AND A/C SYSTEMS) and to 24 - HVAC Electrical Diagnostics for more information.

The A/C-heater control cannot be repaired and, if faulty or damaged, it must be replaced.

AUTOMATIC DUAL ZONE

The A/C-heater control (1) for the automatic temperature control (ATC) dual zone heating-A/C system allows both the driver and the front seat passenger the ability to individually regulate air temperature for their side of the vehicle. All controls are identified by ISO graphic symbols.

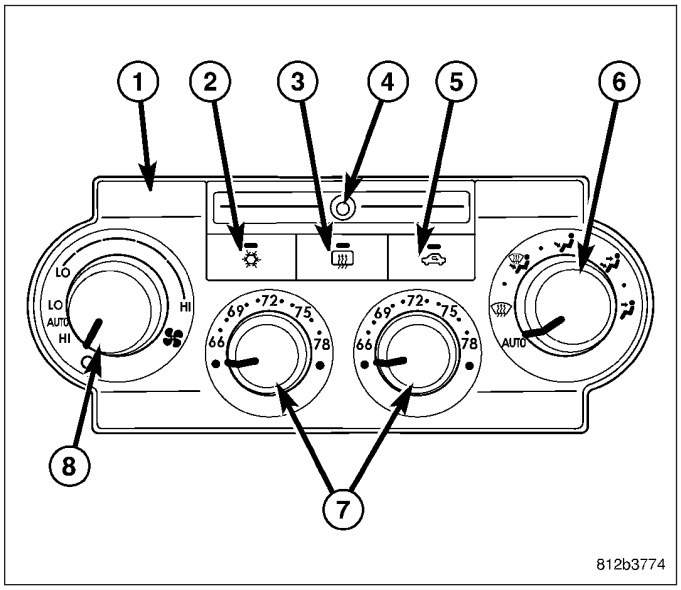

The ATC A/C-heater control and integral computer is located in the instrument panel and contains:

- a push button A/C on/off control (2). The Snowflake button contains an LED that illuminates when the A/C system is in operation.
- a push button rear window defogger on/off control (3). The defogger button contains an LED that illuminates when the rear window defogger system is in operation.
- an infrared sensor (4) that detects thermal radiation emitted by the front seat occupants and their surroundings
- a push button air recirculation control (5). The Recirculation button contains an LED that illuminates when the recirculation function is manually activated.
- a rotary control knob for mode control of the discharged air (6).
- two rotary control knobs for individual driver and front seat passenger temperature control of the discharged air (7).

- a rotary control knob for manual and automatic fan speed selection and turning the heating-A/C system off (8).
- Auto mode provides variable air recirculation under high temperature and humidity conditions. Because recirculation is generally accompanied by increased fan noise, the proportion of recirculated to outside air gradually approaches full recirculation over a broad temperature range.

The A/C-heater control for the ATC dual zone heating-A/C system is diagnosed using a scan tool. Prior to replacing an A/C-heater control, run the calibration procedure to verify that the concern is not a system issue.)Refer to 24 - HEATING & AIR CONDITIONING - DIAGNOSIS AND TESTING - HEATING AND A/C SYSTEMS) and to 24 - HVAC Electrical Diagnostics for more information.

NOTE: ATC A/C-heater controls are NOT interchangeable between other model years or other vehicle lines. If replacement of the A/C-heater control is required, only use the control designed for the vehicle being serviced.

The A/C-heater control cannot be repaired and, if faulty or damaged, it must be replaced.

The A/C-heater control utilizes integrated circuitry and information carried on the controller area network (CAN) B bus to monitor many sensors and switch inputs throughout the vehicle. In response to those inputs, the internal circuitry and programming of the A/C-heater control allows it to control electronic functions and features of the ATC heating-A/C system.

Some of the inputs received by the A/C-heater control of the ATC heating-A/C system on the CAN B bus are as follows:

- Dimming
- Refrigerant Pressure
- A/C Clutch Engage
- Vehicle Identification Number
- Vehicle Odometer
- Engine Coolant Temperature
- Ambient Air Temperature
- System Voltage
- Vehicle Speed
- Engine Speed

Some of the messages broadcasted by the A/C-heater control of the ATC heating-A/C system on the CAN B bus are as follows:

- A/C Request
- A/C Select
- EBL Status
- Auto Headlamp Signal

REMOVAL

WARNING: On vehicles equipped with airbags, disable the airbag system before attempting any steering wheel, steering column, or instrument panel component diagnosis or service. Disconnect and isolate the negative battery (ground) cable, then wait two minutes for the airbag system capacitor to discharge before performing further diagnosis or service. This is the only sure way to disable the airbag system. Failure to take the proper precautions could result in accidental airbag deployment and possible personal injury or death.

NOTE: ATC A/C-heater controls are NOT interchangeable between other model years or other vehicle lines. If replacement of the A/C-heater control is required, only use the control designed for the vehicle being serviced.

1. Disconnect and isolate the negative battery cable.
2. Remove the center bezel (1) from the instrument panel (2), disconnect the wire harness connector(s) (3) from the A/C-heater control (4) and place the center bezel on a workbench (Refer to 23 - BODY/ INSTRUMENT PANEL/INSTRUMENT PANEL CENTER BEZEL - REMOVAL).

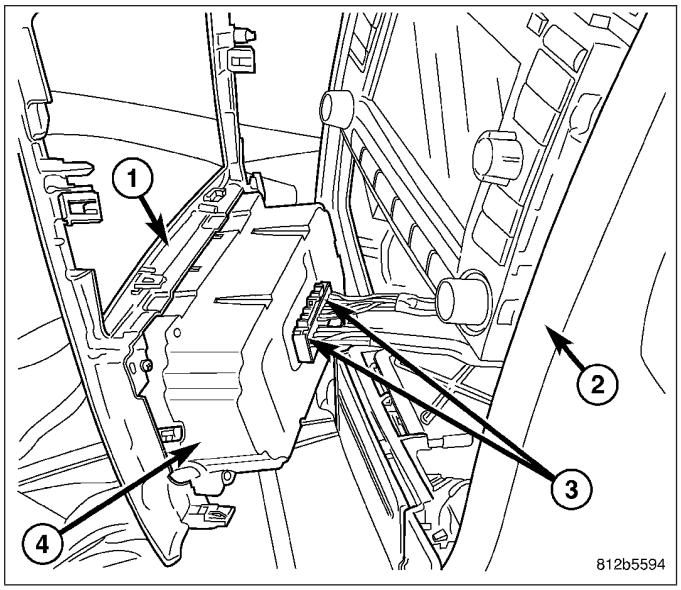

3. Remove the four screws (1) that secure the A/C-heater control (2) to the instrument panel center bezel (3).
4. Remove the A/C-heater control from the instrument panel center bezel.

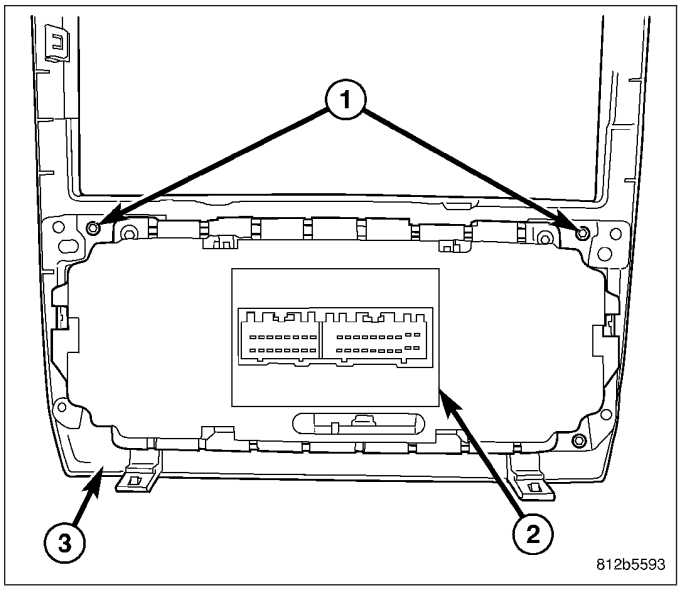

INSTALLATION

1. Position the A/C-heater control (2) into the instrument panel center bezel (3).
2. Install the four screws (1) that secure the A/C-heater control to the instrument panel center bezel. Tighten the screws to 2 N·m (17 in. lbs.).

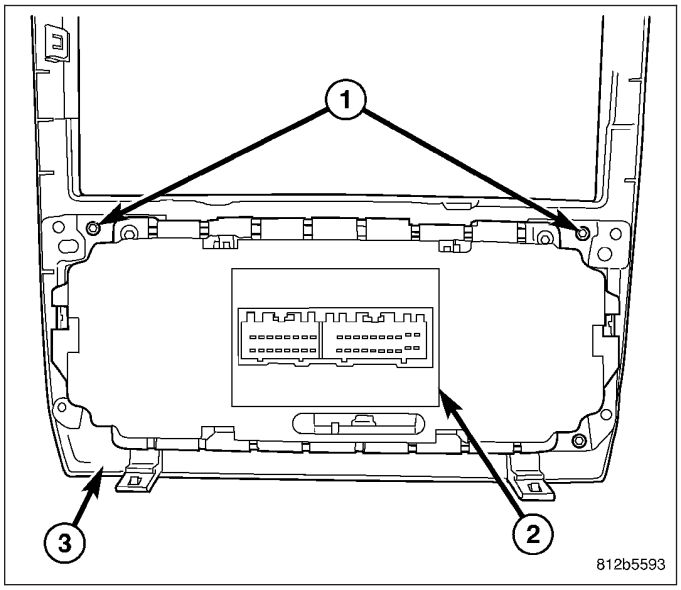

3. Connect the wire harness connector(s) (3) to the A/C-heater control (4) and install the instrument panel center bezel (1) to the instrument panel (2) (Refer to 23 - BODY/INSTRUMENT PANEL/INSTRUMENT PANEL CENTER BEZEL - INSTALLATION).
4. Reconnect the negative battery cable.
5. Initiate the Actuator Calibration function using a scan tool. Refer to HVAC System Test, found in 24 - HVAC - Electrical Diagnostics.

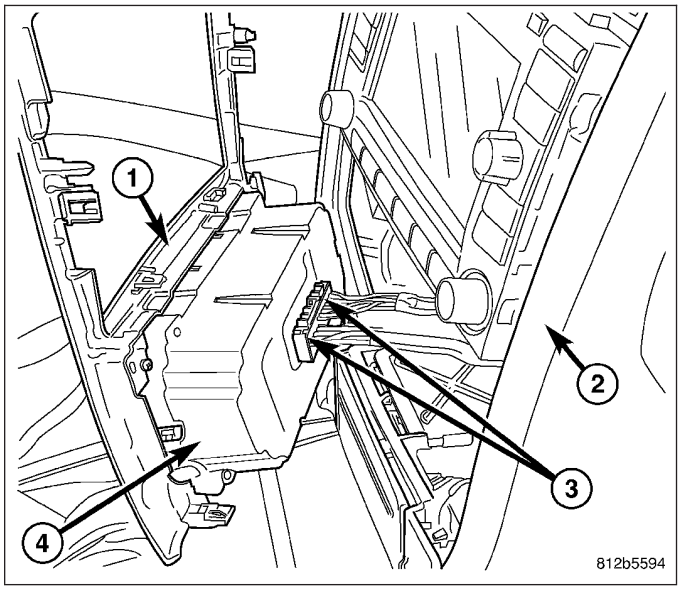

MODULE-POWER-BLOWER MOTOR

DESCRIPTION

A blower motor power module is used on this model when it is equipped with the automatic temperature control (ATC) heating-A/C system. Models equipped with the manual temperature control (MTC) heating-A/C system use a blower motor resistor, instead of the blower motor power module (Refer to 24 - HEATING & AIR CONDITIONING/CONTROLS/RESISTOR-BLOWER MOTOR - DESCRIPTION).

The blower motor power module is mounted to the rear of the HVAC housing, directly behind the glove box. The blower motor power module consists of a molded plastic mounting plate with two integral connector receptacles (1). Concealed behind the mounting plate is the power module electronic circuitry and a large finned heat sink (2).

The blower motor power module is accessed for service by removing the glove box.

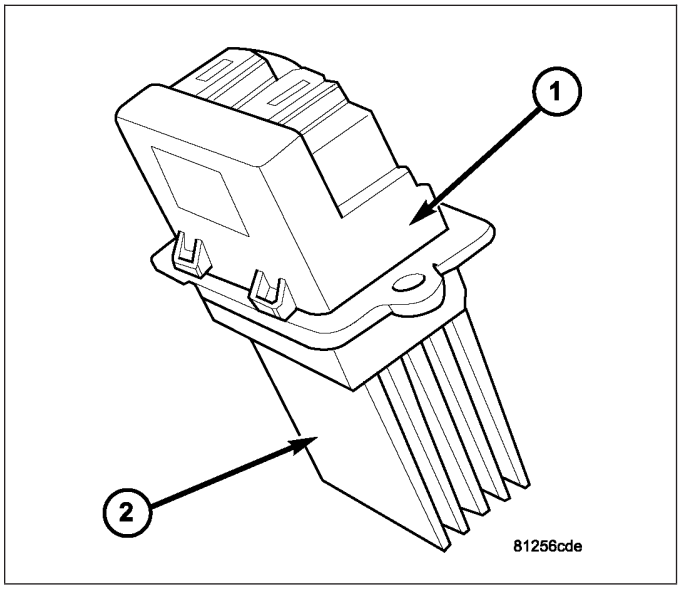

OPERATION

The blower motor power module is connected to the vehicle electrical system through a dedicated lead and connector of the HVAC wire harness. A second connector receptacle receives the wire harness connector from the blower motor. The blower motor power module allows the microprocessor-based automatic temperature control (ATC) A/C-heater control to calculate and provide infinitely variable blower motor speeds based upon either manual blower switch input or the ATC programming using a pulse width modulated (PWM) circuit strategy.

The PWM voltage is applied to a comparator circuit which compares the PWM signal voltage to the blower motor feedback voltage. The resulting output drives the power module circuitry, which provides a linear output voltage to change or maintain the desired blower speed.

The blower motor power module can be diagnosed using a scan tool.

The blower motor power module cannot be adjusted or repaired and, if faulty or damaged, it must be replaced.

REMOVAL

WARNING: On vehicles equipped with airbags, disable the airbag system before attempting any steering wheel, steering column, or instrument panel component diagnosis or service. Disconnect and isolate the negative battery (ground) cable, then wait two minutes for the airbag system capacitor to discharge before performing further diagnosis or service. This is the only sure way to disable the airbag system. Failure to take the proper precautions could result in accidental airbag deployment and possible personal injury or death.

WARNING: The heat sink for the blower motor power module may get very hot during normal operation. If the blower motor was turned on prior to servicing the blower motor power module, wait five minutes to allow the heat sink to cool before performing diagnosis or service. Failure to take this precaution can result in possible personal injury.

NOTE: LHD model shown. RHD model similar.

1. Disconnect and isolate the negative battery cable.
2. Remove the glove box from the instrument panel (Refer to 23 - BODY/INSTRUMENT PANEL/ GLOVE BOX - REMOVAL).
3. Disconnect the two wire harness connectors (1) from the blower motor power module (2).
4. Remove the two screws (3) that secure the blower motor power module to the HVAC housing (4) and remove the power module.

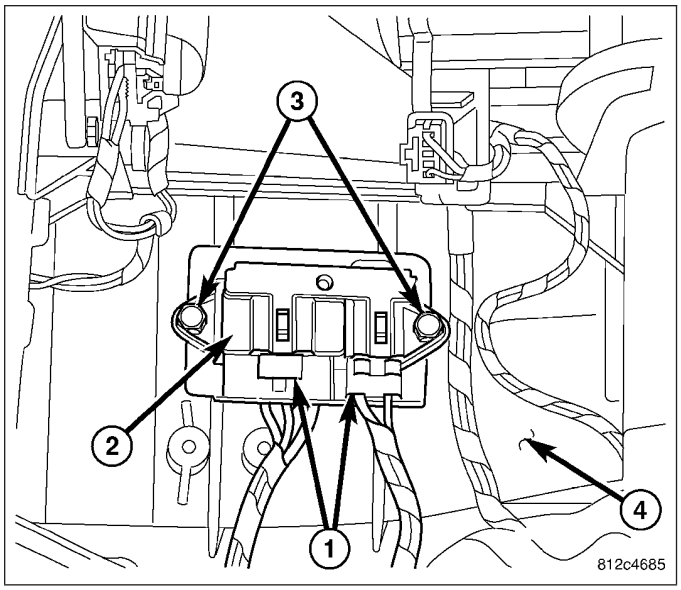

INSTALLATION

NOTE: LHD model shown. RHD model similar.

1. Position the blower motor power module (2) into the HVAC housing (4).
2. Install the two screws (3) that secure the blower motor power module to the HVAC housing. Tighten the screws to 2 N·m (17 in. lbs.).
3. Connect the two wire harness connectors (1) to the blower motor power module.
4. Install the glove box into the instrument panel (Refer to 23 - BODY/INSTRUMENT PANEL/ GLOVE BOX - INSTALLATION).
5. Reconnect the negative battery cable.

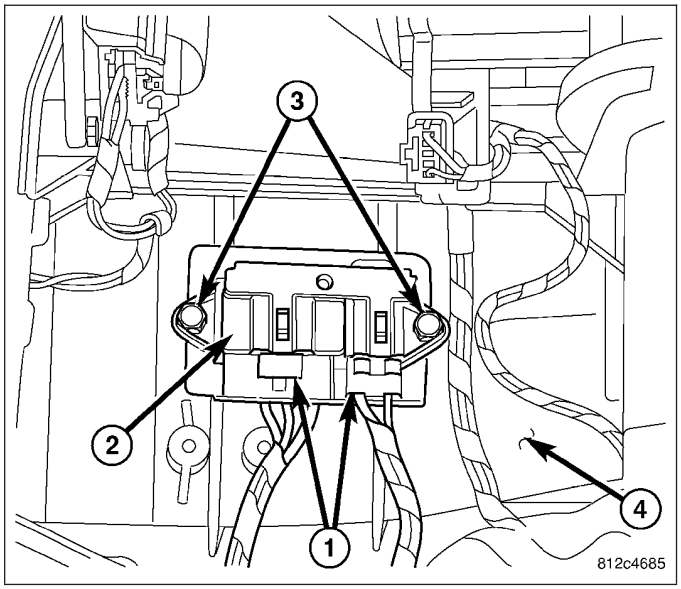

RELAY-A/C CLUTCH

DESCRIPTION

The A/C clutch relay (1) is an International Standards Organization (ISO) micro-relay. Relays conforming to the ISO specifications have common physical dimensions, current capacities, terminal functions and patterns (2). The ISO micro-relay terminal functions are the same as a conventional ISO relay. However, the ISO micro-relay terminal pattern (or footprint) is different, the current capacity is lower, and the physical dimensions are smaller than those of the conventional ISO relay.

The A/C clutch relay is located in the integrated power module (IPM) in the engine compartment.

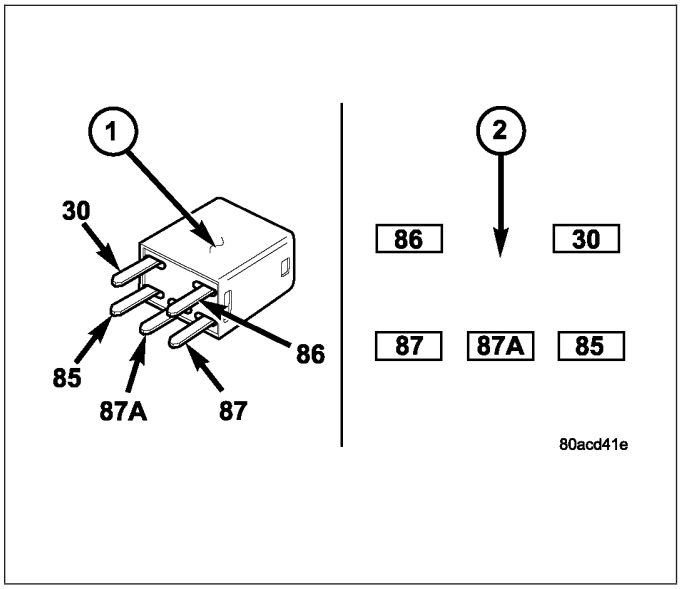

OPERATION

The ISO-standard A/C clutch micro-relay is an electromechanical switch that uses a low current input controlled by the powertrain control module (PCM) to control the high current output to the A/C clutch field coil. The movable, common feed relay contact is held against the fixed, normally closed relay contact by spring pressure. When the electromagnetic relay coil is energized, it draws the movable common feed relay contact away from the fixed, normally closed relay contact and, holds it against the fixed, normally open relay contact. This action allows high current to flow to the A/C clutch field coil.

When the relay coil is de-energized, spring pressure returns the movable relay contact back against the fixed, normally closed contact point. The resistor or diode is connected in parallel with the relay coil, and helps to dissipate voltage spikes and electromagnetic interference that can be generated as the electromagnetic field of the relay coil collapses.

The A/C clutch relay terminals are connected to the vehicle electrical system through a receptacle in the integrated power module (IPM). The inputs and outputs of the A/C clutch relay include:

- The common feed terminal (30) receives fused battery current at all times.
- The coil ground terminal (85) receives a ground through the A/C clutch relay control circuit only when the PCM electronically pulls the circuit to ground.
- The coil battery terminal (86) receives fused battery current through a fused ignition switch output (run-start) circuit only when the ignition switch is in the On or Start positions.
- The normally open terminal (87) provides battery current to the A/C clutch coil through the A/C clutch relay output circuit only when the A/C clutch relay coil is energized.
- The normally closed terminal (87A) is not connected to any circuit in this application, but provides a battery current output only when the A/C clutch relay coil is de-energized.

The A/C clutch relay cannot be repaired and, if faulty or damaged, it must be replaced. Refer to the appropriate wiring information for diagnosis and testing of the ISO-standard micro-relay and for complete HVAC wiring diagrams.

REMOVAL

1. Disconnect and isolate the negative battery cable.
2. Open the cover of the integrated power module (IPM) (1) located in the engine compartment.
3. Remove the A/C clutch relay (2) from the IPM.

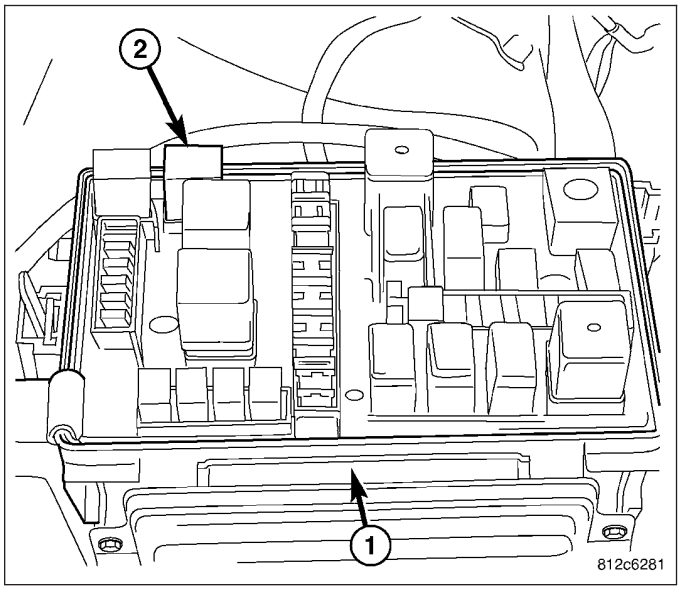

INSTALLATION

1. Position the A/C clutch relay (2) into the receptacle of the integrated power module (IPM) (1).
2. Align the A/C clutch relay terminals with the terminal cavities in the IPM receptacle and push down firmly on the relay until the terminals are fully seated.
3. Close the cover of the IPM.
4. Reconnect the negative battery cable.

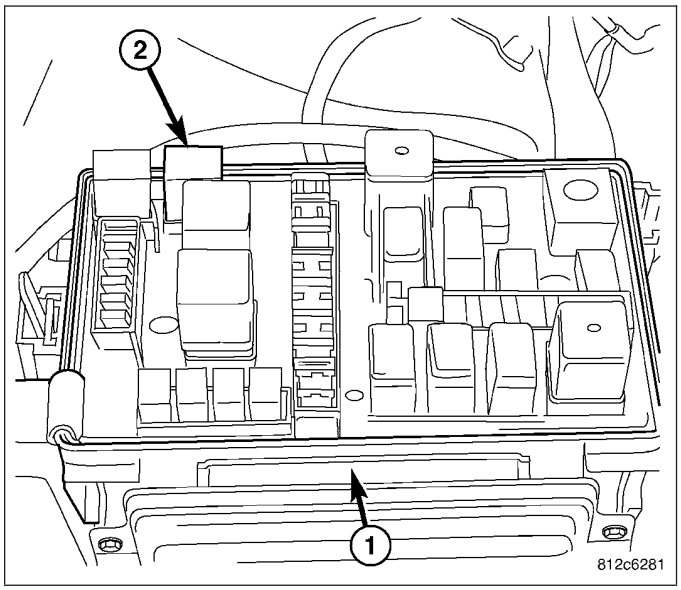

RESISTOR-BLOWER MOTOR

DESCRIPTION

A blower motor resistor is used on vehicles equipped with the manual temperature control (MTC) heating-A/C system. Vehicles equipped with the automatic temperature control (ATC) heating-A/C system use a blower motor power module, instead of the blower motor resistor (Refer to 24 - HEATING & AIR CONDITIONING/CONTROLS/MODULE-POWER-BLOWER MOTOR - DESCRIPTION).

The blower motor resistor is mounted to the rear of the HVAC housing, directly behind the glove box. The blower motor resistor consists of a molded plastic mounting plate (1) with an integral wire connector receptacle (2). Concealed behind the mounting plate are coiled resistor wires contained within a ceramic heat sink (3).

The blower motor resistor is accessed for service by removing the glove box.

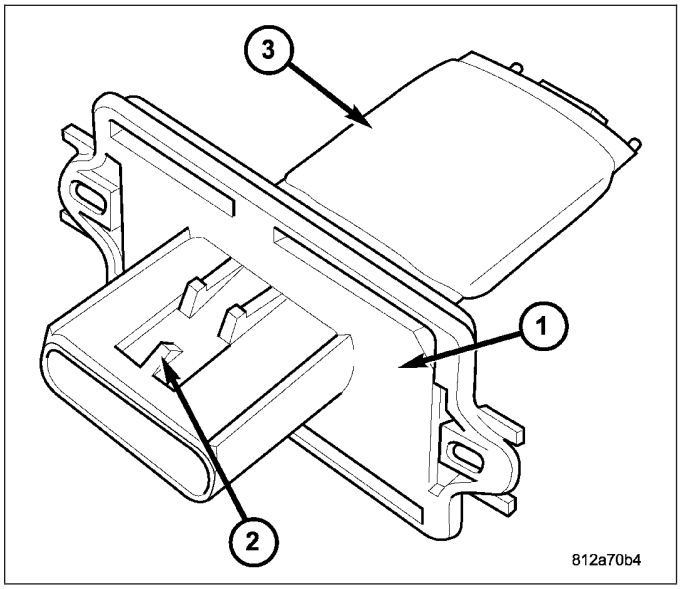

OPERATION

The blower motor resistor is connected to the vehicle electrical system through a dedicated wire lead and connector of the HVAC wire harness. The blower motor resistor has multiple resistor wires, each of which will reduce the current flow through the blower motor to change the blower motor speed.

The blower motor control in the MTC heating-A/C system directs the ground path for the blower motor through the correct resistor wire to obtain the selected speed. With the blower motor control in the lowest speed position, the ground path for the blower motor is applied through all of the resistor wires. Each higher speed selected with the blower motor control applies the blower motor ground path through fewer of the resistor wires, increasing the blower motor speed.

The blower motor resistor cannot be adjusted or repaired and, if faulty or damaged (such as a cracked ceramic heat sink), it must be replaced.

DIAGNOSIS AND TESTING

BLOWER MOTOR RESISTOR

WARNING: On vehicles equipped with airbags, disable the airbag system before attempting any steering wheel, steering column, or instrument panel component diagnosis or service. Disconnect and isolate the negative battery (ground) cable, then wait two minutes for the airbag system capacitor to discharge before performing further diagnosis or service. This is the only sure way to disable the airbag system. Failure to take the proper precautions could result in accidental airbag deployment and possible personal injury or death.

NOTE: For circuit descriptions and diagrams, refer to the appropriate wiring information. The wiring information includes wiring diagrams, proper wire and connector repair procedures, further details on wire harness routing and retention, as well as pin-out and location views for the various wire harness connectors, splices and grounds.

1. Disconnect and isolate the negative battery cable.
2. Disconnect the wire harness connector from the blower motor resistor (Refer to 24 - HEATING & AIR CONDITIONING/CONTROLS/RESISTOR-BLOWER MOTOR - REMOVAL).

3. Using an ohmmeter, check for continuity between all of the blower motor resistor terminals. In each case there should be continuity. If OK, repair the wire harness circuits between the blower motor speed control and the blower motor resistor or blower motor as required. If not OK, replace the faulty blower motor resistor.

REMOVAL

WARNING: On vehicles equipped with airbags, disable the airbag system before attempting any steering wheel, steering column, or instrument panel component diagnosis or service. Disconnect and isolate the negative battery (ground) cable, then wait two minutes for the airbag system capacitor to discharge before performing further diagnosis or service. This is the only sure way to disable the airbag system. Failure to take the proper precautions could result in accidental airbag deployment and possible personal injury or death.

WARNING: The blower motor resistor may get very hot during normal operation. If the blower motor was turned on prior to servicing the blower motor resistor, wait five minutes to allow the blower motor resistors to cool before performing diagnosis or service. Failure to take this precaution can result in possible personal injury.

CAUTION: Do not operate the blower motor with the blower motor resistor removed from the circuit. Failure to take this precaution can result in vehicle damage.

NOTE: LHD model shown. RHD model similar.

1. Disconnect and isolate the negative battery cable.
2. Remove the glove box from the instrument panel (Refer to 23 - BODY/INSTRUMENT PANEL/ GLOVE BOX - REMOVAL).
3. Disengage the wire harness connector locking tab (1) and disconnect the wire harness connector (2) from the blower motor resistor (3).
4. Remove the two screws (4) that secure the blower motor resistor to the HVAC housing (5) and remove the resistor.

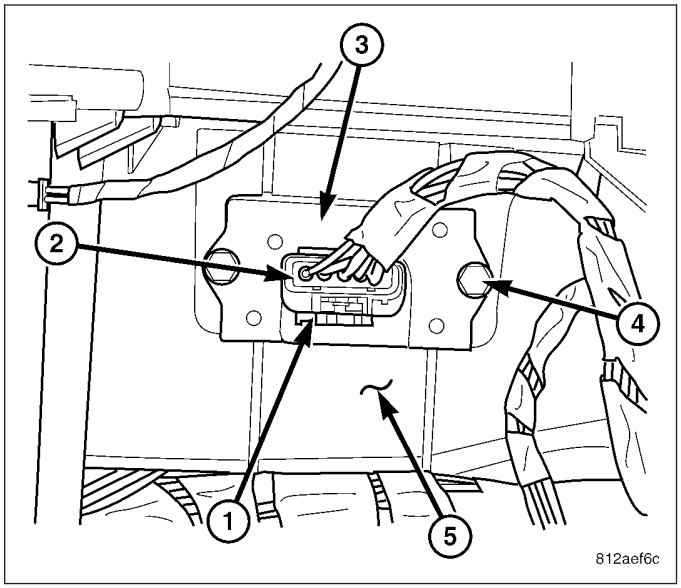

INSTALLATION

NOTE: LHD model shown. RHD model similar.

1. Position the blower motor resistor (3) into the HVAC housing (5).
2. Install the two screws (4) that secure the blower motor resistor to the HVAC housing. Tighten the screws to 2 N·m (17 in. lbs.).
3. Connect the wire harness connector (2) to the blower motor resistor and engage the wire harness connector locking tab (1).
4. Install the glove box into the instrument panel (Refer to 23 - BODY/INSTRUMENT PANEL/ GLOVE BOX - INSTALLATION).
5. Reconnect the negative battery cable.

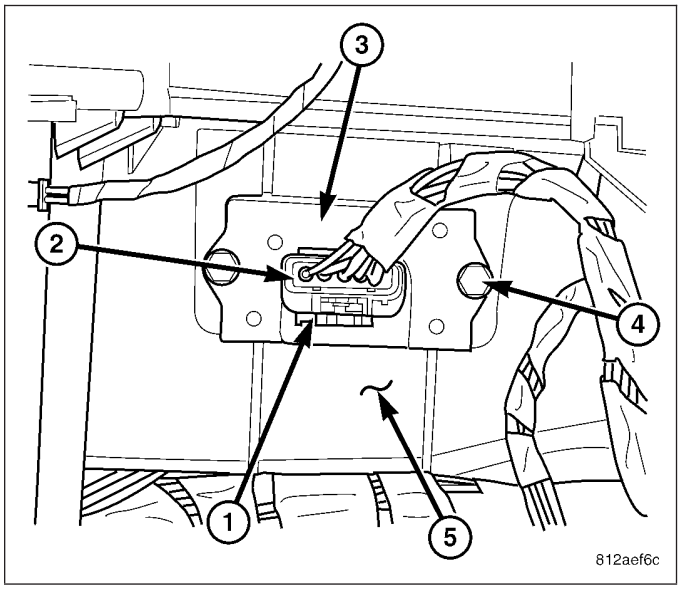

SENSOR-AMBIENT AIR TEMPERATURE

DESCRIPTION

The ambient air temperature sensor is a variable resistor that monitors the air temperature outside of the vehicle. The ATC system uses the sensor data to maintain optimum cabin temperature levels. The ambient air temperature sensor is mounted onto the bottom of the front bumper beam.

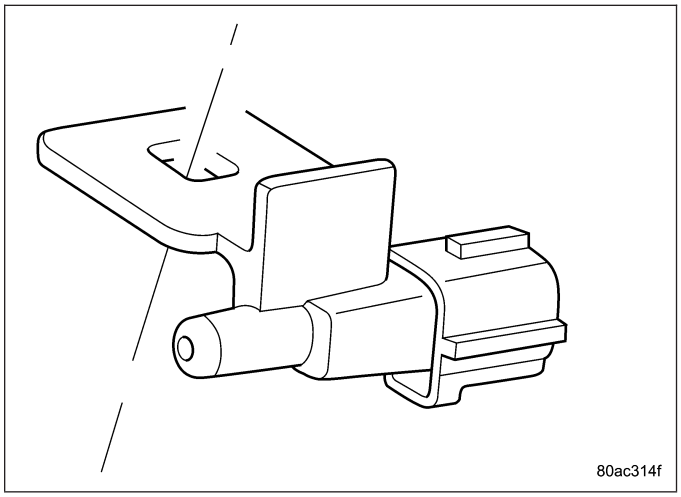

OPERATION

The ambient air temperature sensor is a variable resistor that operates on a 5-volt reference signal sent by the front control module (FCM). The ambient air temperature sensor is connected to the FMC through a two-wire lead and connector of the vehicle wire harness. The ambient air temperature sensor changes its internal resistance in response to changes in the outside air temperature, which either increases or decreases the reference signal voltage read by the FCM. The FCM converts and broadcasts the sensor data over the controller area network (CAN) B bus, where it is read by the ATC A/C-heater control and other vehicle control modules.

The ambient air temperature sensor is diagnosed using the scan tool. Refer to 9 - Engine Electrical Diagnostics for more information.

The ambient air temperature sensor cannot be adjusted or repaired and, if faulty or damaged, it must be replaced.

REMOVAL

1. Disconnect and isolate the negative battery cable.
2. Raise and support the vehicle.
3. Remove the front end splash shields (Refer to 23 - BODY/EXTERIOR/FRONT END SPLASH SHIELDS - REMOVAL).
4. Disconnect the wire harness connector (1) from the ambient air temperature sensor (2).
5. Remove the push pin (3) that secures the ambient air temperature sensor to the bottom of the front bumper beam (4).
6. Remove the ambient air temperature sensor from the front bumper beam.

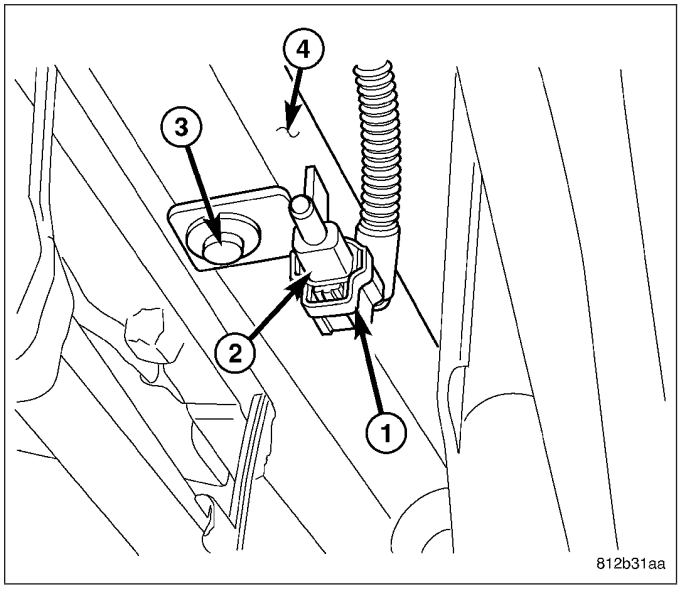

INSTALLATION

1. Position the ambient air temperature sensor (2) onto the bottom of the front bumper beam (4).
2. Install the push pin (3) that secures the ambient air temperature sensor to the front bumper beam.
3. Connect the wire harness connector (1) to the ambient air temperature sensor.
4. Install the front end splash shields (Refer to 23 - BODY/EXTERIOR/FRONT END SPLASH SHIELDS - INSTALLATION).
5. Lower the vehicle.
6. Reconnect the negative battery cable.

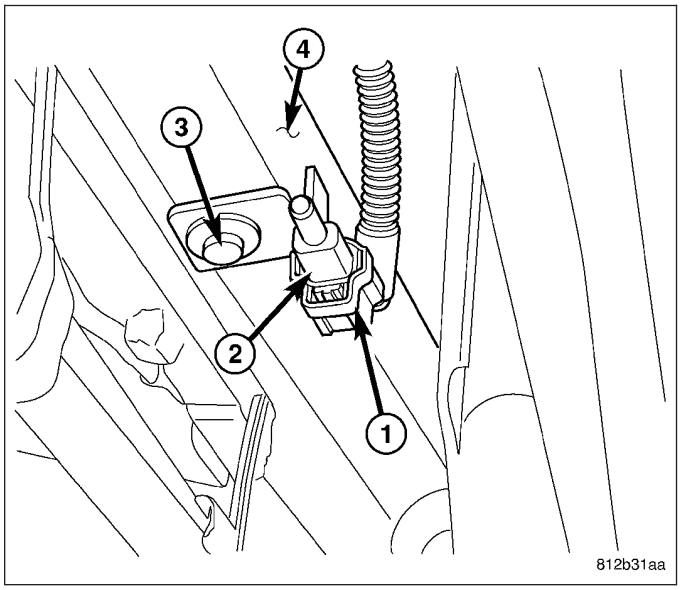

SENSOR-EVAPORATOR TEMPERATURE

DESCRIPTION

NOTE: LHD model shown. RHD model similar.

The evaporator temperature sensor (1) measures the temperature of the conditioned air downstream of the A/C evaporator (2). The evaporator temperature sensor is an electrical thermistor within a molded plastic case that is inserted into the HVAC housing (3) near the coldest point of the A/C evaporator. Two terminals within the connector receptacle (4) connect the sensor to the vehicle electrical system through a wire lead and connector of the HVAC wire harness.

The external location of the evaporator temperature sensor allows the sensor to be removed or installed without disturbing the refrigerant in the A/C system.

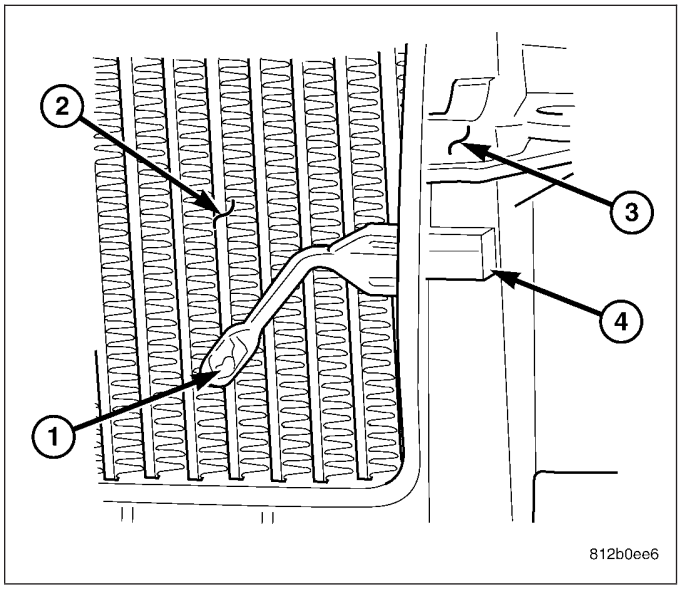

OPERATION

The evaporator temperature sensor is a thermistor that operates on a 5-volt reference signal sent out by the A/C-heater control. The sensor connects to the A/C-heater control through a two-wire lead and connector of the HVAC wire harness. The sensor monitors the temperature of the conditioned air downstream of the A/C evaporator and changes its internal resistance in response to changes in the air temperature. As the temperature increases, the sensor's resistance decreases which increases the reference signal voltage read by the A/C-heater control. As the temperature decreases, the sensor's resistance increases which decreases the reference signal voltage read by the A/C-heater control.

The A/C-heater control also uses the reference signal voltage as an indication that conditions are correct to request A/C operation, should the operator (manually) or the A/C-heater control (automatically) so desire this function. For the ATC system, the A/C-heater control broadcasts the A/C request on the controller area network (CAN) B bus, where it is read and processed by the front control module (FCM), which in turn broadcasts it on the CAN C bus, where it is read and processed by the powertrain control module (PCM). For the MTC system, the A/C-heater control sends the request for A/C to the CCN via a dedicated mux circuit. The CCN then broadcasts the A/C request on the CAN B bus, where it is read and processed by the FCM, which in turn broadcasts it on the CAN C bus, where it is read and processed by the PCM.

The evaporator temperature sensor is diagnosed using a scan tool (Refer to 24 - HEATING & AIR CONDITIONING - DIAGNOSIS AND TESTING - HEATING AND A/C SYSTEMS) and to 24 - HVAC Electrical Diagnostics for more information.

The evaporator temperature sensor cannot be adjusted or repaired and, if faulty or damaged, it must be replaced.

REMOVAL

WARNING: On vehicles equipped with airbags, disable the airbag system before attempting any steering wheel, steering column, or instrument panel component diagnosis or service. Disconnect and isolate the negative battery (ground) cable, then wait two minutes for the airbag system capacitor to discharge before performing further diagnosis or service. This is the only sure way to disable the airbag system. Failure to take the proper precautions could result in accidental airbag deployment and possible personal injury or death.

NOTE: LHD model shown. RHD model similar.

1. Disconnect and isolate the negative battery cable.
2. Remove the glove box from the instrument panel (Refer to 23 - BODY/INSTRUMENT PANEL/ GLOVE BOX - REMOVAL).
3. Disconnect the HVAC wire harness connector (1) from the evaporator temperature sensor (2) located on the HVAC housing (3) and remove the sensor.

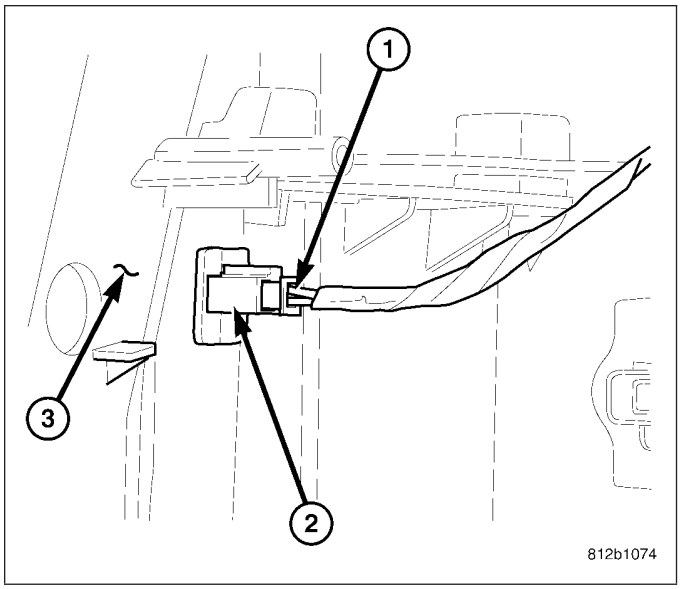

INSTALLATION

NOTE: LHD model shown. RHD model similar.

1. Install the evaporator temperature sensor (2) into HVAC housing (3).
2. Connect the HVAC wire harness connector (1) to the evaporator temperature sensor.
3. Install the glove box into the instrument panel (Refer to 23 - BODY/INSTRUMENT PANEL/ GLOVE BOX - INSTALLATION).
4. Reconnect the negative battery cable.

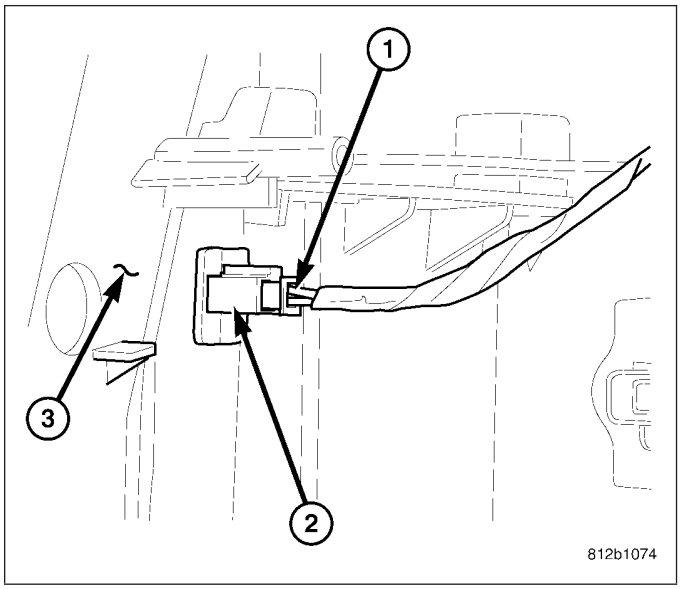

SENSOR-INFRARED

DESCRIPTION

The infrared sensor is used only on models equipped with the automatic temperature control (ATC) heating -A/C system. The infrared temperature sensor consists of a infrared transducer concealed behind a clear lens (1) located within the instrument panel mounted A/C-heater control (2).

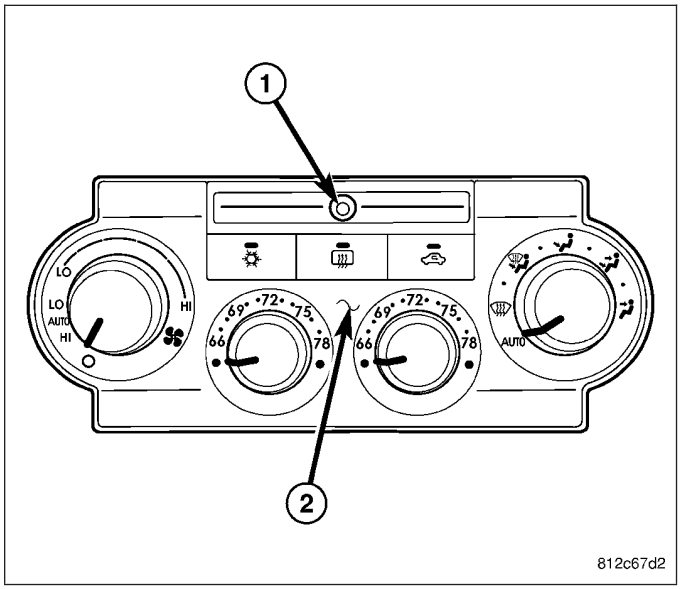

OPERATION

The infrared sensor detects thermal radiation emitted by the driver and front passenger seat occupants and their surroundings and converts its data into a linear pulse width modulated (PWM) output signal which is read by the automatic temperature control (ATC) A/C-heater control. The ATC A/C-heater control uses the infrared sensor data as one of the inputs necessary to automatically control the interior cabin temperature level. By using thermal radiation (surface temperature) measurement, rather than an air temperature measurement, the ATC heating-A/C system is able to adjust itself to the comfort level as perceived by the occupant. This allows the ATC system to compensate for other ambient conditions affecting comfort levels, such as solar heat gain or evaporative heat loss.

The ATC system logic responds to the infrared sensor message by calculating and adjusting the air flow temperature and air flow rate needed to properly obtain and maintain the selected comfort level temperature of the occupants. The A/C-heater control continually monitors the infrared sensor circuits, and will store diagnostic trouble codes (DTCs) for any problem it detects.

The infrared sensor is diagnosed using a scan tool (Refer to 24 - HEATING & AIR CONDITIONING - DIAGNOSIS AND TESTING - HEATING AND A/C SYSTEMS) and to 24 - HVAC Electrical Diagnostics for more information.

The infrared sensor cannot be adjusted or repaired and, if faulty or damaged, the entire ATC A/C-heater control must be replaced.

SENSOR-SUN

DESCRIPTION

The automatic temperature control (ATC) heating-A/C system uses a sun sensor assembly (1) to measure sun light intensity. The sun sensor assembly incorporates two sun sensors (2) within a molded plastic case which is mounted to the instrument panel and a clear lens (3) that protrudes through the defroster grille. The wire harness receptacle (4) connects the sun sensors to the vehicle electrical system through a wire lead and connector of the instrument panel wire harness.

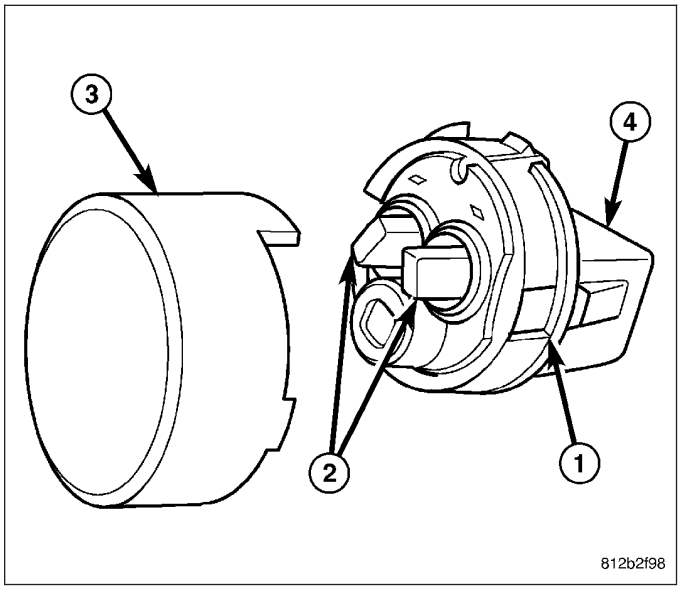

OPERATION

The ATC heating-A/C system uses two sun sensors to balance the system in response to side-to-side variations in sun light intensity. Passengers in sun and shadow require different functional settings because they experience very different temperatures. The sun sensor assembly provides data to the A/C heater control to help determine proper mode and blend-air door positions and blower motor speeds. The sun sensors are not thermistor type sensors, but rather photo diodes. For this reason the sun sensors responds to sun light intensity rather than temperature. The sun sensor assembly is also used to sense day and night conditions for automatic headlight control, if equipped.

The sun sensor is diagnosed using a scan tool (Refer to 24 - HEATING & AIR CONDITIONING - DIAGNOSIS AND TESTING - HEATING AND A/C SYSTEMS) and to 24 - HVAC Electrical Diagnostics for more information.

The sun sensor assembly cannot be adjusted or repaired and, if faulty or damaged, it must be replaced.

DIAGNOSIS AND TESTING

SUN SENSOR

WARNING: On vehicles equipped with airbags, disable the airbag system before attempting any steering wheel, steering column, or instrument panel component diagnosis or service. Disconnect and isolate the negative battery (ground) cable, then wait two minutes for the airbag system capacitor to discharge before performing further diagnosis or service. This is the only sure way to disable the airbag system. Failure to take the proper precautions could result in an accidental airbag deployment and possible personal injury or death.

The sun sensor assembly is located so that the sun rays will hit the sensors in the same way that it will hit the driver and the passenger. It is important that the area in front of the sun sensor assembly be unobstructed. Check for the following:

- Windshield wipers are properly adjusted.
- Defroster grille or sun sensor is properly installed. The sun sensor lens should protrude above the defroster grille.
- Any stickers on the windshield are not directly in front of the sun sensor.
- Any items laying on top of the instrument panel are not covering the sun sensor.

If the vehicle exhibits a lack of passenger comfort in sunny weather such as in the early afternoon, inspect the position of the sun sensor assembly. The sun sensor lens should protrude above the defroster grille to insure proper operation. If the sun sensor is not properly positioned, perform the following procedure:

1. Confirm that the defroster grille is properly installed. If not, repair as required.
2. Remove the defroster grille (Refer to 23 - BODY/INSTRUMENT PANEL/DEFROSTER GRILLE - REMOVAL).
3. Verify that the sun sensor is properly installed to the instrument panel (Refer to 24 - HEATING & AIR CONDITIONING/CONTROLS/SENSOR-SUN - INSTALLATION).
4. Install the defroster grille (Refer to 23 - BODY/INSTRUMENT PANEL/DEFROSTER GRILLE - INSTALLATION).

The A/C-heater control continually monitors the sun sensor circuits and will store diagnostic trouble codes (DTCs) for any problem it detects. The sun sensor can be tested in the vehicle with a scan tool (Refer to 24 - HEATING & AIR CONDITIONING - DIAGNOSIS AND TESTING - HEATING AND A/C SYSTEMS) and to 24 - HVAC Electrical Diagnostics for more information.

REMOVAL

WARNING: On vehicles equipped with airbags, disable the airbag system before attempting any steering wheel, steering column, or instrument panel component diagnosis or service. Disconnect and isolate the negative battery (ground) cable, then wait two minutes for the airbag system capacitor to discharge before performing further diagnosis or service. This is the only sure way to disable the airbag system. Failure to take the proper precautions could result in an accidental airbag deployment and possible personal injury or death.

1. Disconnect and isolate the negative battery cable.
2. Remove the defroster grille (Refer to 23 - BODY/INSTRUMENT PANEL/DEFROSTER GRILLE - REMOVAL).
3. Using a trim stick or another suitable wide flat-blade tool (1), gently pry between both sides of the sun sensor assembly (2) and the instrument panel (3) to release the snap clip retainers that secure the sun sensor.

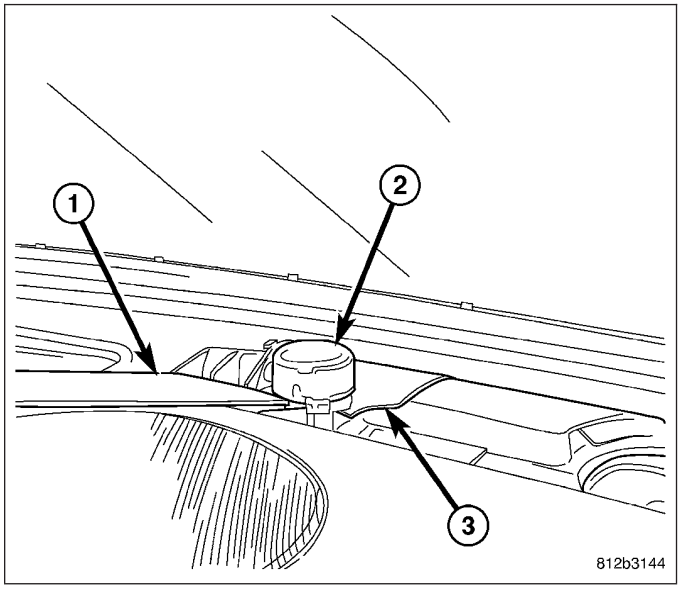

4. Disconnect the wire harness connector (1) from the sun sensor assembly (2).
5. Remove the sun sensor assembly from the instrument panel (3).

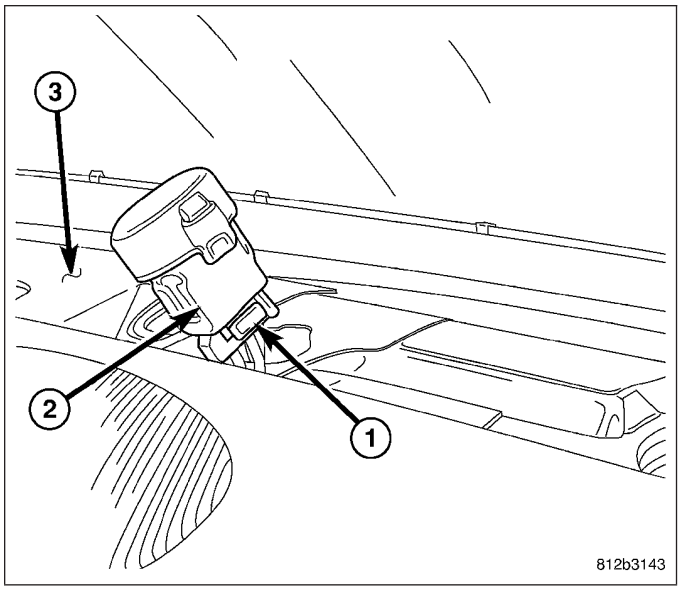

INSTALLATION

1. Position the sun sensor assembly (2) near the instrument panel (3).
2. Connect the wiring harness connector (1) to the sun sensor assembly (2).

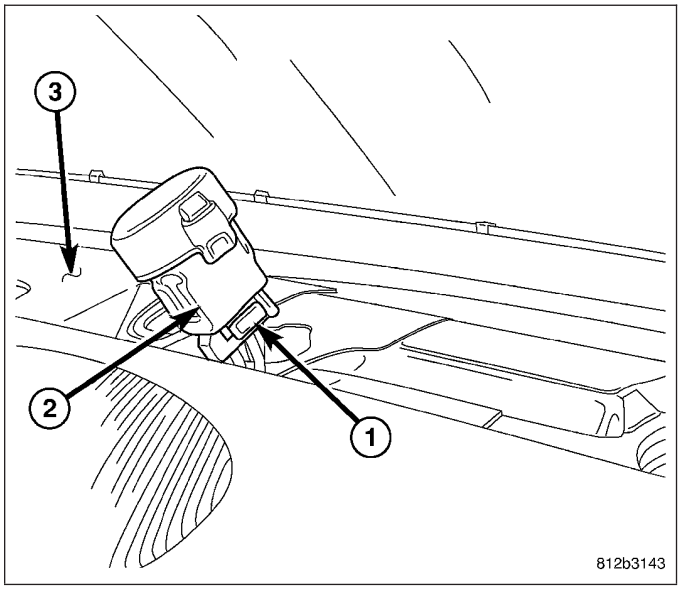

3. Align the tab on the sun sensor assembly (1) with the opening in the instrument panel (2).
4. Gently push the sun sensor assembly into the instrument panel until the sensor snap clip retainers (3) are securely engaged.
5. Install the defroster grille (Refer to 23 - BODY/INSTRUMENT PANEL/DEFROSTER GRILLE - INSTALLATION).
6. Reconnect the negative battery cable.

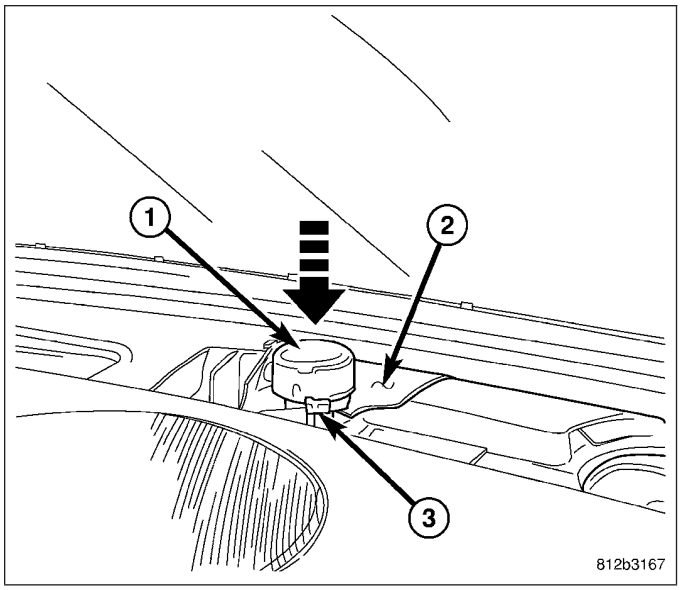

TRANSDUCER-A/C PRESSURE

DESCRIPTION

The A/C pressure transducer (1) is a switch that is installed on a fitting located on the A/C liquid line. An internally threaded fitting on the A/C pressure transducer connects it to the externally threaded Schrader-type fitting on the A/C liquid line. A rubber O-ring seals the connection between the A/C pressure transducer and the liquid line fitting. The A/C pressure transducer is connected to the vehicle electrical system by a molded plastic connector with three terminals.

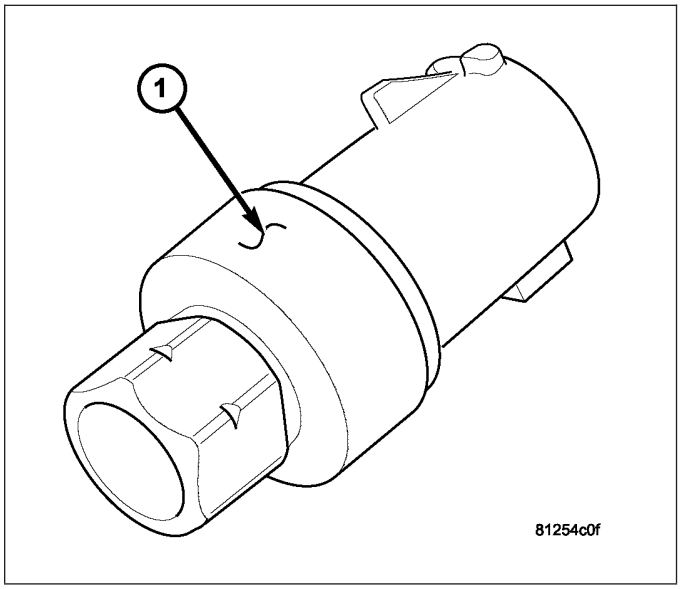

OPERATION

The A/C pressure transducer monitors the pressures in the high side of the refrigerant system through its connection to a fitting on the A/C liquid line. The A/C pressure transducer will change its internal resistance in response to the pressures it monitors. A Schrader-type valve in the liquid line fitting permits the A/C pressure transducer to be removed or installed without disturbing the refrigerant in the A/C system.

The powertrain control module (PCM) provides a five volt reference signal and a sensor ground to the A/C pressure transducer, then monitors the output voltage of the A/C pressure transducer on a sensor return circuit to determine refrigerant pressure. The PCM is programmed to respond to the A/C pressure transducer and other sensor inputs by controlling the operation of the A/C compressor clutch and the radiator cooling fan to help optimize A/C system performance and to protect the system components from damage. The PCM will disengage the A/C compressor clutch when high side pressure rises above 3082 kPa (447 psi) and re-engage the clutch when high side pressure drops below 2937 kPa (426 psi). The A/C pressure transducer will also disengage the A/C compressor clutch if the high side pressure drops below 110 kPa (16 psi) and will re-engage the clutch when the high side pressure rises above 221 kPa (32 psi). If the refrigerant pressure rises above 1655 kPa (240 psi), the PCM will actuate the cooling fan. The A/C pressure transducer input to the PCM will also prevent the A/C compressor clutch from engaging when ambient temperatures are below about 4.5° C (40° F) due to the pressure/temperature relationship of the refrigerant.

The A/C pressure transducer cannot be adjusted or repaired and, if faulty or damaged, it must be replaced.

The A/C pressure transducer is diagnosed using a scan tool. Refer to 9 - Engine Electrical Diagnostics for more information.

REMOVAL

NOTE: It is not necessary to discharge the refrigerant system to replace the A/C pressure transducer.

NOTE: LHD model shown. RHD model similar.

1. Disconnect and isolate the negative battery cable.
2. Disconnect the wire harness connector (1) from the A/C pressure transducer (2).
3. Remove the A/C pressure transducer from the A/C liquid line (3) and remove and discard the O-ring seal.

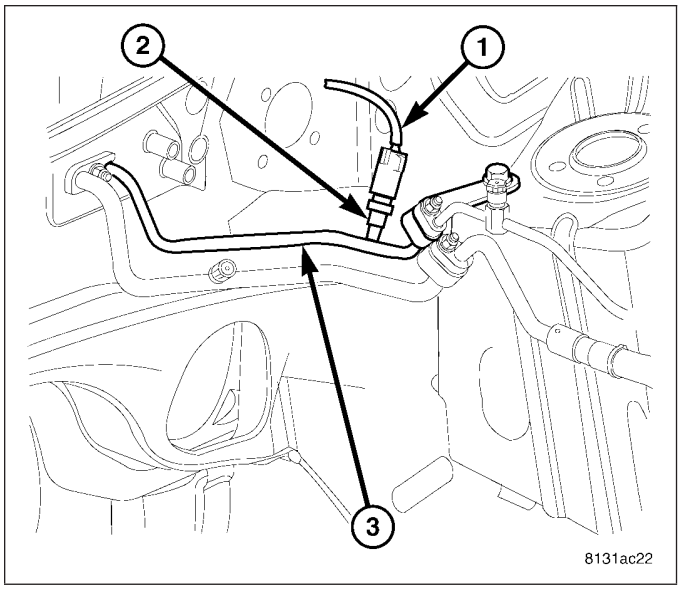

.

INSTALLATION

NOTE: Use only the specified O-ring as it is made of special material for R-134a. Use only refrigerant oil of the type required for the A/C compressor.

NOTE: LHD model shown. RHD model similar.

1. Lubricate a new rubber O-ring seal with clean refrigerant oil and install it onto the liquid line fitting.
2. Install the A/C pressure transducer (2) onto the A/C liquid line (3). Tighten the A/C pressure transducer securely.
3. Connect the wire harness connector (1) to the A/C pressure transducer.
4. Reconnect the negative battery cable.

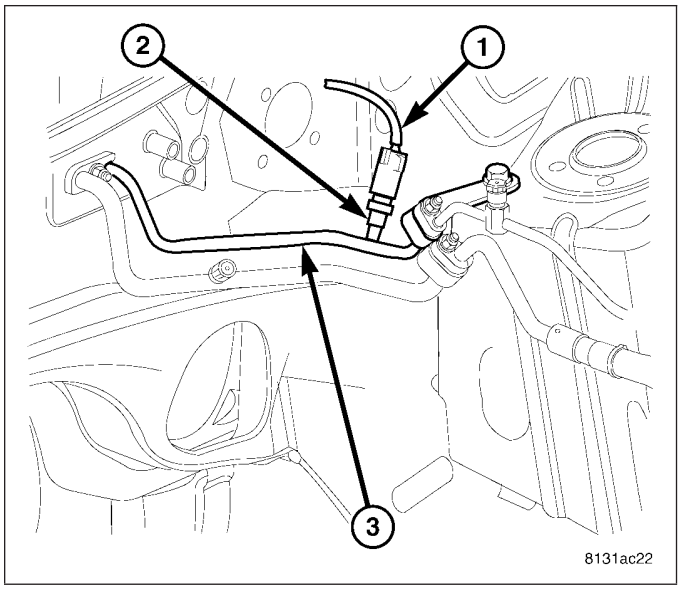

DISTRIBUTION

TABLE OF CONTENTS

page

DUCT-DEFROSTER
REMOVAL 378
INSTALLATION 378
DUCT-FLOOR CONSOLE
REMOVAL 379
INSTALLATION 379
DUCT-FLOOR DISTRIBUTION
REMOVAL 380
INSTALLATION 381
DUCT-INSTRUMENT PANEL
REMOVAL 383
INSTALLATION 383
DUCT-INSTRUMENT PANEL DEMISTER
REMOVAL 385
INSTALLATION 385
FILTER-PARTICULATE AIR
DESCRIPTION 387
REMOVAL 387
INSTALLATION 388
HOUSING-HVAC
DESCRIPTION 390
REMOVAL
HOUSING-AIR DISTRIBUTION 390
HOUSING-AIR INLET 392
HOUSING-HVAC ASSEMBLY 393
HOUSING-FRESH AIR INLET 394
DISASSEMBLY
HOUSING-AIR DISTRIBUTION 396
HOUSING-AIR INLET 399
HOUSING-HVAC 400
ASSEMBLY
HOUSING-AIR DISTRIBUTION 402
HOUSING-AIR INLET 406
HOUSING-HVAC 407
INSTALLATION
HOUSING-AIR DISTRIBUTION 409
HOUSING-AIR INLET 411
HOUSING-HVAC ASSEMBLY 411
HOUSING-FRESH AIR INLET 412
MOTOR-BLOWER
DESCRIPTION 414
OPERATION 414
DIAGNOSIS AND TESTING
BLOWER MOTOR 414
REMOVAL 415
INSTALLATION 416
OUTLETS-AIR
DESCRIPTION
CHRYSLER 417
DODGE 417
REMOVAL
AIR OUTLET - CHRYSLER 418
AIR OUTLET - DODGE 418
AIR OUTLET BARRELS - DODGE 419
INSTALLATION
AIR OUTLET - CHRYSLER 420
AIR OUTLET - DODGE 420
AIR OUTLET BARRELS - DODGE 420

DUCT-DEFROSTER

REMOVAL

WARNING: On vehicles equipped with airbags, disable the airbag system before attempting any steering wheel, steering column, or instrument panel component diagnosis or service. Disconnect and isolate the battery negative (ground) cable, then wait two minutes for the airbag system capacitor to discharge before performing further diagnosis or service. This is the only sure way to disable the airbag system. Failure to take the proper precautions could result in accidental airbag deployment and possible personal injury or death.

NOTE: Take the proper precautions to protect the front face of the instrument panel from cosmetic damage.

NOTE: LHD model shown. RHD model similar.

1. Remove the instrument panel and place it on a workbench (Refer to 23 - BODY/INSTRUMENT PANEL/INSTRUMENT PANEL ASSEMBLY - REMOVAL).
2. Remove the four screws (1) that secure the defroster duct (2) to the top of the HVAC air distribution housing (3) and remove the duct.

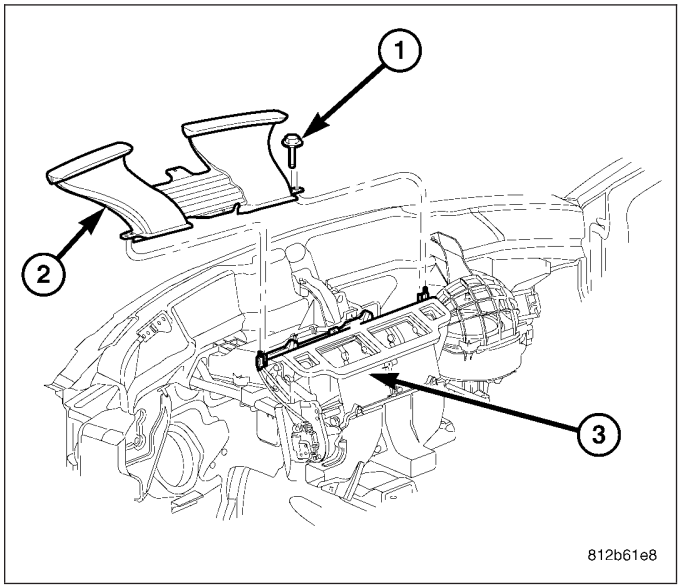

INSTALLATION

NOTE: LHD model shown. RHD model similar.

1. Position the defroster duct (2) onto the top of the HVAC air distribution housing (3).
2. Install the four screws (1) that secure the defroster duct to the air distribution housing. Tighten the screws to 2 N·m (17 in. lbs.).
3. Install the instrument panel (Refer to 23 - BODY/INSTRUMENT PANEL/INSTRUMENT PANEL ASSEMBLY - INSTALLATION).

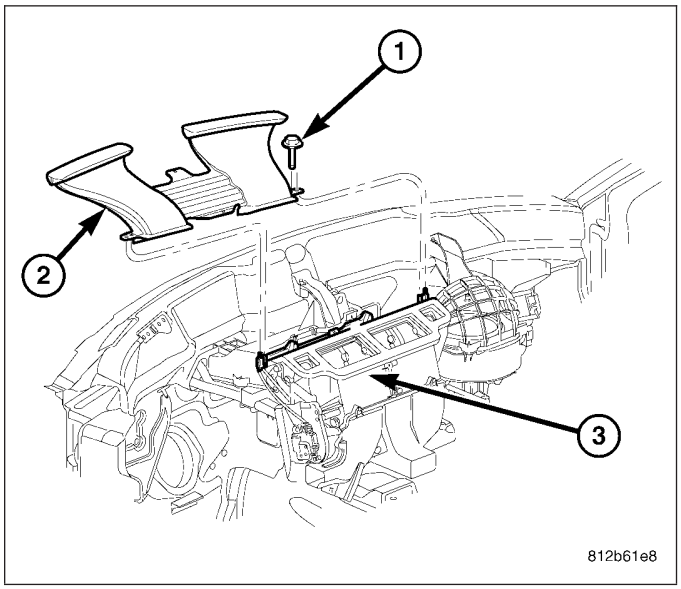

DUCT-FLOOR CONSOLE

REMOVAL

NOTE: LHD model shown. RHD model similar.

1. Remove the center floor console (Refer to 23 - BODY/INTERIOR/CENTER CONSOLE - REMOVAL).
2. Remove the two screws (1) that secure the floor console duct (2) to the center floor panel (3).
3. Disconnect the floor console duct from the floor distribution duct (4) and remove the floor console duct from the vehicle.

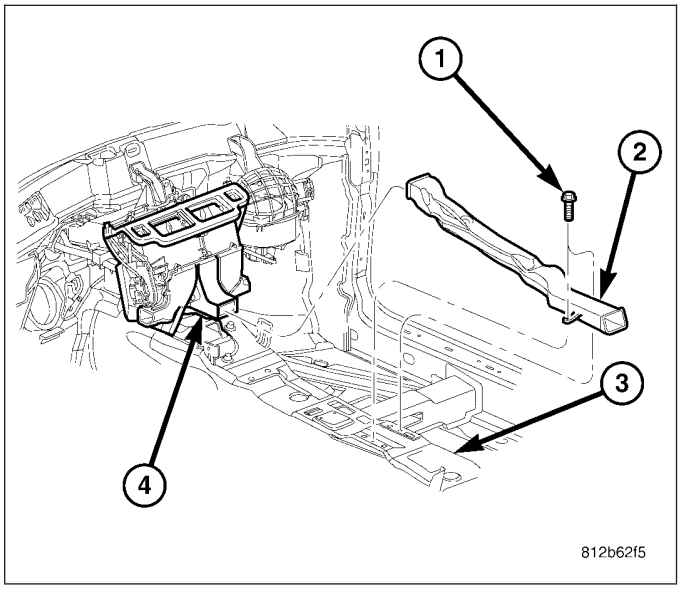

INSTALLATION

NOTE: LHD model shown. RHD model similar.

1. Position the floor console duct (2) into the vehicle.
2. Connect the floor console duct to the floor distribution duct (4).
3. Install the two screws (1) that secure the floor console duct to the center floor panel (3). Tighten the screws to 2.2 N·m (20 in. lbs.).
4. Install the center floor console (Refer to 23 - BODY/INTERIOR/CENTER CONSOLE - INSTALLATION).

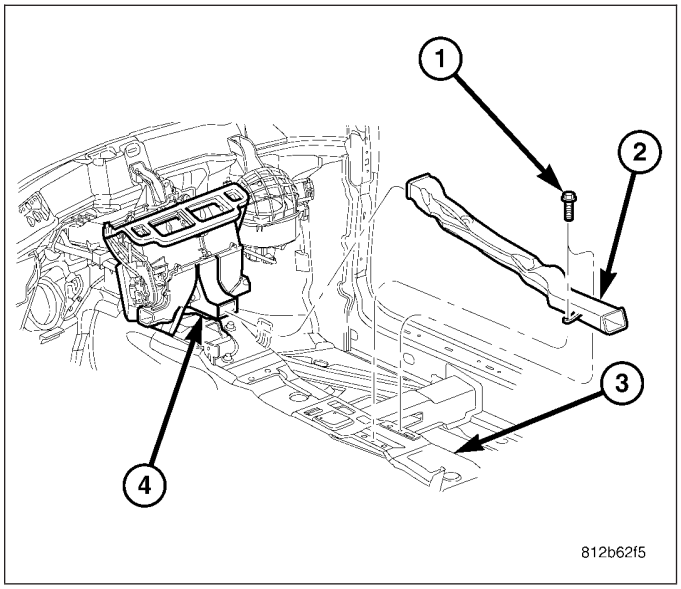

DUCT-FLOOR DISTRIBUTION

REMOVAL

WARNING: On vehicles equipped with airbags, disable the airbag system before attempting any steering wheel, steering column, or instrument panel component diagnosis or service. Disconnect and isolate the battery negative (ground) cable, then wait two minutes for the airbag system capacitor to discharge before performing further diagnosis or service. This is the only sure way to disable the airbag system. Failure to take the proper precautions could result in accidental airbag deployment and possible personal injury or death.

NOTE: Take the proper precautions to protect the front face of the instrument panel from cosmetic damage.

FRONT FLOOR DISTRIBUTION DUCT

NOTE: LHD model shown. RHD model similar.

1. Remove the HVAC air distribution housing (Refer to 24 - HEATING & AIR CONDITIONING/DISTRIBUTION/HOUSING-HVAC - HOUSING-AIR DISTRIBUTION - REMOVAL).
2. Remove the six screws (1) that secure the front floor distribution duct (2) to the bottom of the air distribution housing (3) and remove the duct.

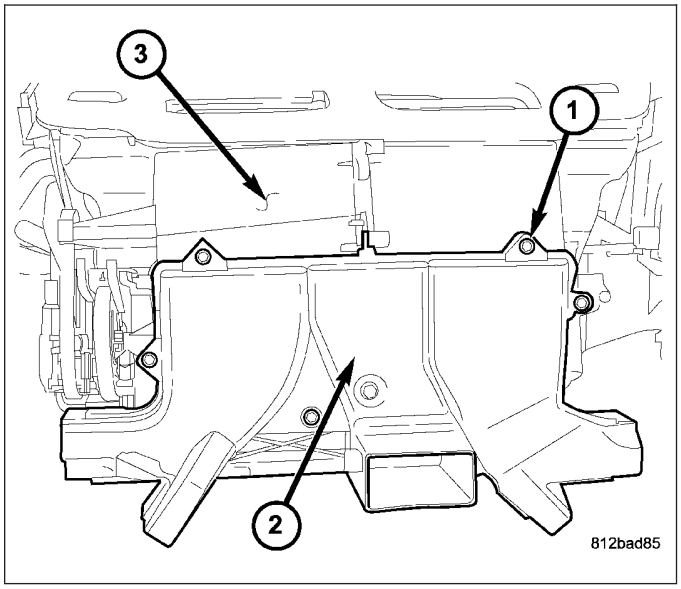

INTERMEDIATE FLOOR DISTRIBUTION DUCTS

NOTE: LHD model shown. RHD model similar.

1. Remove the center floor console (Refer to 23 - BODY/INTERIOR/FLOOR CONSOLE - REMOVAL).
2. Remove the front seats (Refer to 23 - BODY/SEATS/SEAT - REMOVAL).
3. Roll back the front floor carpet from under the instrument panel toward the rear of the vehicle (Refer to 23 - BODY/INTERIOR/CARPETS AND FLOOR MATS - REMOVAL).
4. Remove the push pin fastener (1) that secures the passenger side front intermediate floor distribution duct (2) to the floor support (4).
5. Disconnect the passenger side front intermediate floor distribution duct from the front floor distribution duct (8).
6. Disconnect the passenger side front intermediate floor distribution duct from the passenger side rear intermediate floor distribution duct (3).

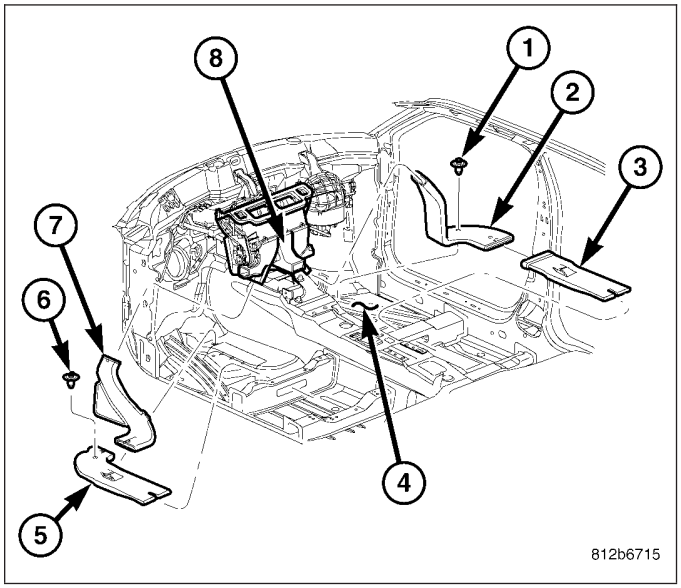

7. Remove the passenger side rear intermediate floor distribution duct from the floor support.
8. Remove the push pin fastener (6) that secures the driver side rear intermediate floor distribution duct (5) to the floor support.
9. Disconnect the driver side front intermediate floor distribution duct (7) from the front floor distribution duct.
10. Disconnect the driver side front intermediate floor distribution duct from the driver side rear intermediate floor distribution duct.
11. Remove the driver side rear intermediate floor distribution duct from the floor support.

INSTALLATION

FRONT FLOOR DISTRIBUTION DUCT

NOTE: LHD model shown. RHD model similar.

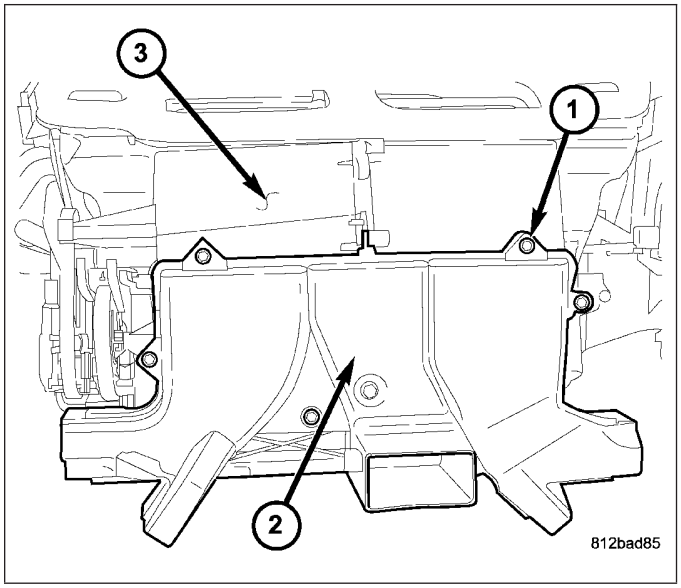

1. Position the front floor distribution duct (2) to the bottom of the HVAC air distribution housing (3).
2. Install the six screws (1) that secure the front floor distribution duct to the air distribution housing. Tighten the screws to 2 N·m (17 in. lbs.).
3. Install the air distribution housing (Refer to 24 - HEATING & AIR CONDITIONING/DISTRIBUTION/ HOUSING-HVAC - HOUSING-AIR DISTRIBUTION - INSTALLATION).

INTERMEDIATE FLOOR DISTRIBUTION DUCTS

NOTE: LHD model shown. RHD model similar.

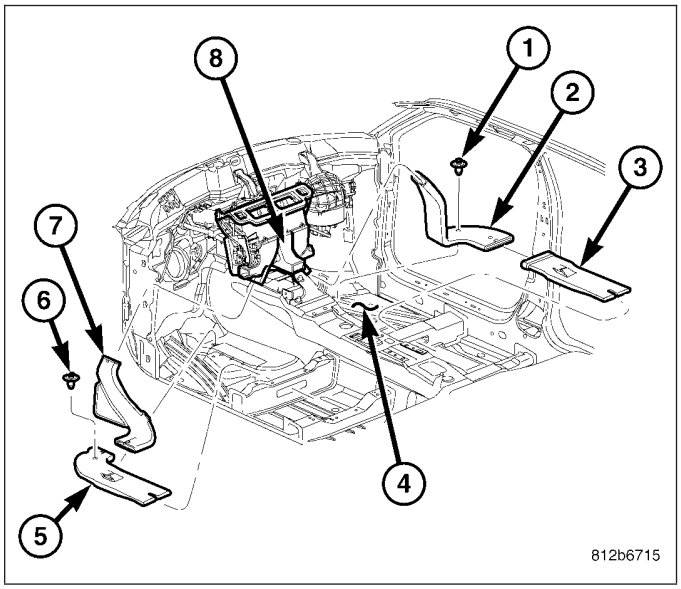

1. Install the driver side rear intermediate floor distribution duct (5) and the passenger side rear intermediate floor distribution duct (3) into the slots in the floor support (4).
2. Connect the driver side front intermediate floor distribution duct (7) to the driver side rear intermediate floor distribution duct.
3. Connect the driver side front intermediate floor distribution duct to the front floor distribution duct (8).
4. Install the push-pin fastener (6) that secures the driver side rear intermediate floor distribution duct to the floor support.
5. Connect the passenger side front intermediate floor distribution duct (2) to the passenger side rear intermediate floor distribution duct.
6. Connect the passenger side front intermediate floor distribution duct to the front floor distribution duct.
7. Install the push-pin fastener (1) that secures the passenger side front intermediate floor distribution duct to the floor support.

8. Install the carpet onto the front floor panel and under the instrument panel (Refer to 23 - BODY/INTERIOR/CARPETS AND FLOOR MATS - INSTALLATION).
9. Install the front seats (Refer to 23 - BODY/SEATS/SEAT - INSTALLATION).
10. Install the center floor console (Refer to 23 - BODY/INTERIOR/FLOOR CONSOLE - INSTALLATION).

DUCT-INSTRUMENT PANEL

REMOVAL

WARNING: On vehicles equipped with airbags, disable the airbag system before attempting any steering wheel, steering column, or instrument panel component diagnosis or service. Disconnect and isolate the battery negative (ground) cable, then wait two minutes for the airbag system capacitor to discharge before performing further diagnosis or service. This is the only sure way to disable the airbag system. Failure to take the proper precautions could result in accidental airbag deployment and possible personal injury or death.

NOTE: Take the proper precautions to protect the front face of the instrument panel from cosmetic damage.

NOTE: LHD model shown. RHD model similar.

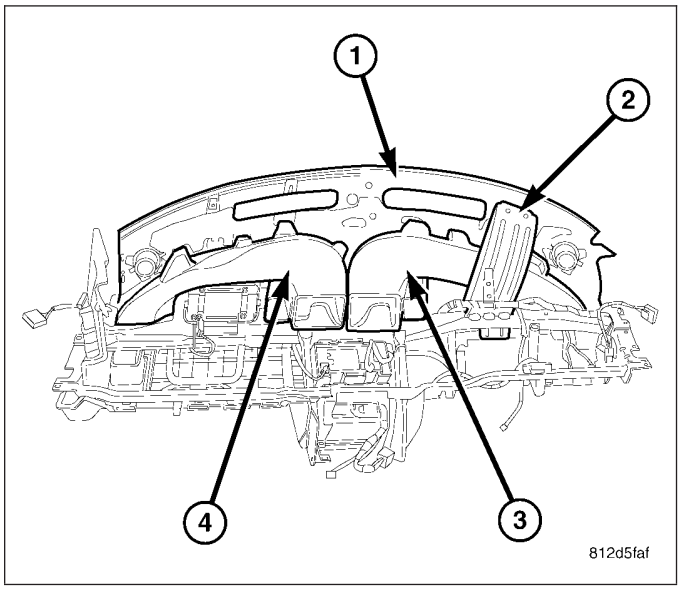

1. Remove the instrument panel and place it on a workbench (Refer to 23 - BODY/INSTRUMENT PANEL/INSTRUMENT PANEL ASSEMBLY - REMOVAL).
2. Remove the screw that secures the instrument panel top pad (1) to the reinforcement bracket (2).
3. Remove the four screws that secure the driver side instrument panel duct and demister duct assembly (3) to the instrument panel and remove the duct assembly.
4. Remove the four screws that secure the passenger side instrument panel duct and demister duct assembly (4) to the instrument panel and remove the duct assembly.

INSTALLATION

NOTE: LHD model shown. RHD model similar.

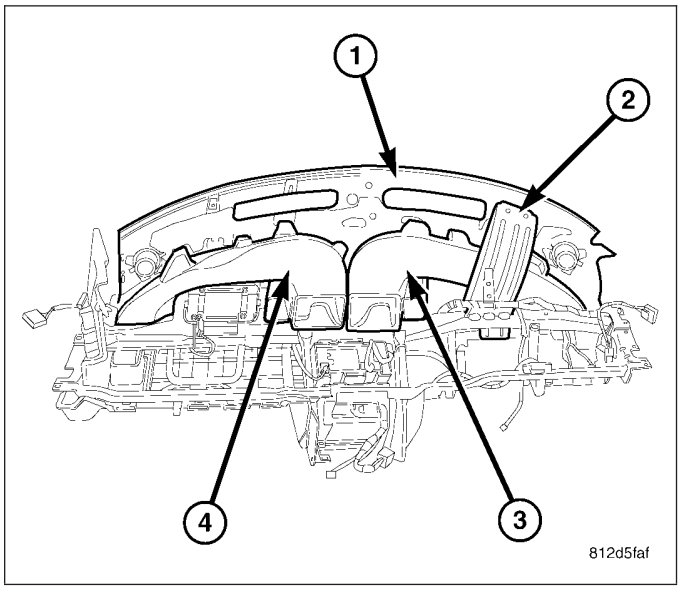

1. Position the passenger side instrument panel duct and demister duct assembly (4) into the instrument panel.
2. Install the passenger side instrument panel duct and demister duct assembly onto the outlets of the instrument panel. Make sure that the ducts are correctly installed over the instrument panel and demister outlet seals.
3. Install the four screws that secure the passenger side instrument panel duct and demister duct assembly to the instrument panel. Tighten the screws to 2.2 N·m (20 in. lbs.).
4. Position the driver side instrument panel duct and demister duct assembly (3) into the instrument panel.
5. Install the driver side instrument panel duct and demister duct assembly onto the outlets of the instrument panel. Make sure that the ducts are correctly installed over the instrument panel and demister outlet seals.
6. Install the four screws that secure the driver side instrument panel duct and demister duct assembly to the instrument panel. Tighten the screws to 2.2 N·m (20 in. lbs.).

7. Install the screw that secures the instrument panel top pad (1) to the reinforcement bracket (2). Tighten the screw to 2.2 N·m (20 in. lbs.).
8. Install the instrument panel (Refer to 23 - BODY/INSTRUMENT PANEL/INSTRUMENT PANEL ASSEMBLY - INSTALLATION).

DUCT-INSTRUMENT PANEL DEMISTER

REMOVAL

WARNING: On vehicles equipped with airbags, disable the airbag system before attempting any steering wheel, steering column, or instrument panel component diagnosis or service. Disconnect and isolate the battery negative (ground) cable, then wait two minutes for the airbag system capacitor to discharge before performing further diagnosis or service. This is the only sure way to disable the airbag system. Failure to take the proper precautions could result in accidental airbag deployment and possible personal injury or death.

NOTE: Take the proper precautions to protect the front face of the instrument panel from cosmetic damage.

NOTE: LHD model shown. RHD model similar.

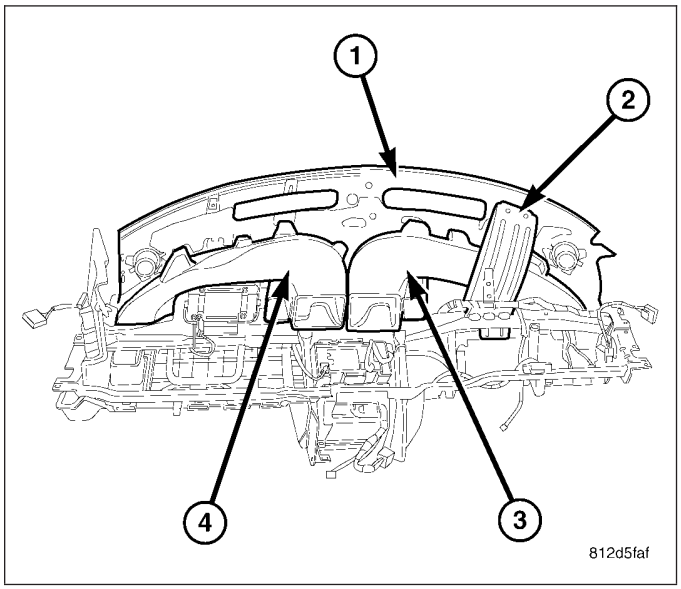

1. Remove the instrument panel and place it on a workbench (Refer to 23 - BODY/INSTRUMENT PANEL/INSTRUMENT PANEL ASSEMBLY - REMOVAL).
2. Remove the screw that secures the instrument panel top pad (1) to the reinforcement bracket (2).
3. Remove the four screws that secure the driver side instrument panel duct and demister duct assembly (3) to the instrument panel and remove the duct assembly.
4. Remove the four screws that secure the passenger side instrument panel duct and demister duct assembly (4) to the instrument panel and remove the duct assembly.

INSTALLATION

NOTE: LHD model shown. RHD model similar.

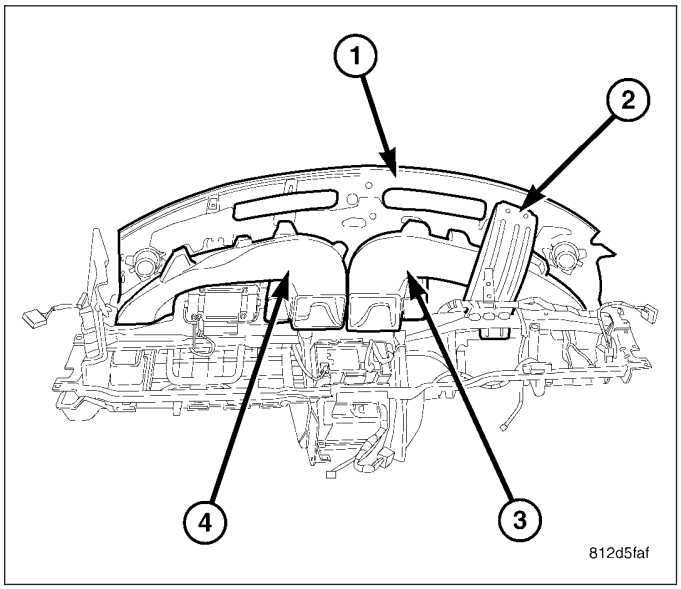

1. Position the passenger side instrument panel duct and demister duct assembly (4) into the instrument panel.
2. Install the passenger side instrument panel duct and demister duct assembly onto the outlets of the instrument panel. Make sure that the ducts are correctly installed over the instrument panel and demister outlet seals.
3. Install the four screws that secure the passenger side instrument panel duct and demister duct assembly to the instrument panel. Tighten the screws to 2.2 N·m (20 in. lbs.).
4. Position the driver side instrument panel duct and demister duct assembly (3) into the instrument panel.
5. Install the driver side instrument panel duct and demister duct assembly onto the outlets of the instrument panel. Make sure that the ducts are correctly installed over the instrument panel and demister outlet seals.
6. Install the four screws that secure the driver side instrument panel duct and demister duct assembly to the instrument panel. Tighten the screws to 2.2 N·m (20 in. lbs.).

7. Install the screw that secures the instrument panel top pad (1) to the reinforcement bracket (2). Tighten the screw to 2.2 N·m (20 in. lbs.).
8. Install the instrument panel (Refer to 23 - BODY/INSTRUMENT PANEL/INSTRUMENT PANEL ASSEMBLY - INSTALLATION).

FILTER-PARTICULATE AIR

DESCRIPTION

Some models are equipped with a particulate air filter (1) that helps purify the outside air entering the HVAC housing. The filter is mounted in the engine compartment, inside of the fresh air inlet housing of the heating-A/C system.

The filter should be replaced at least every 24,000 km (15,000 miles) or each year and checked if heating-A/C system performance seems lower than expected. The particulate air filter is labeled with “REAR OF VEHICLE” and an arrow (2) to indicate air flow direction through the filter.

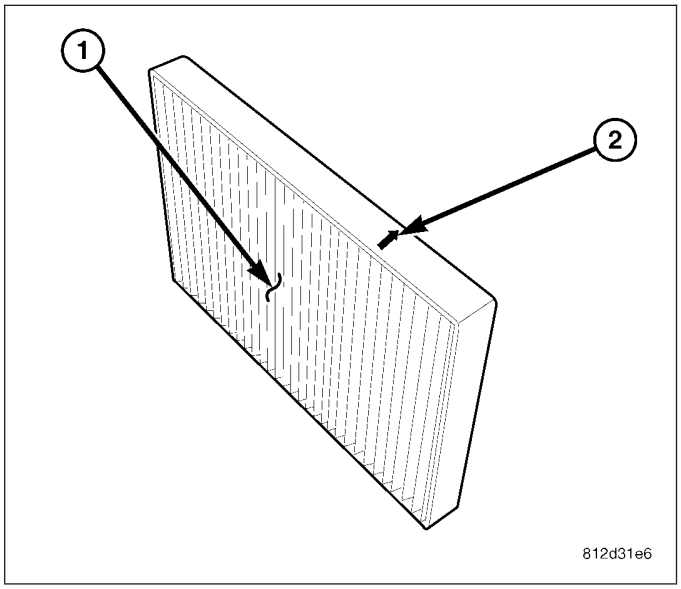

REMOVAL

NOTE: LHD model shown in illustrations. RHD model similar.

1. Remove the air inlet grille (1) from the wiper module screen (2) located near the dash panel in the engine compartment.
2. Open the filter door (3) on the top of the particulate air filter housing (4) located inside of the dash panel plenum (5).

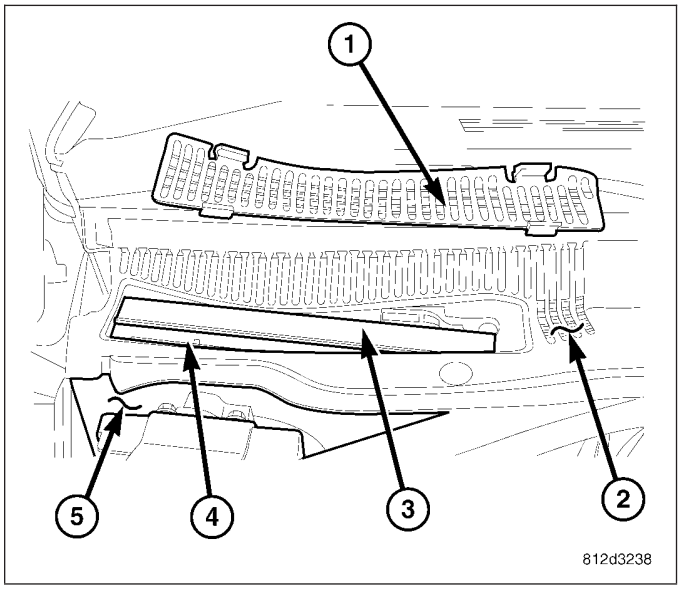

NOTE: To aid in reinstallation, note the installed position of the particulate air filter prior to removal of the filter.

3. Remove the particulate air filter (1) from the particulate air filter housing (2) located inside of the dash panel plenum (3). Note the direction of air flow indicated by an arrow (4) on the filter.

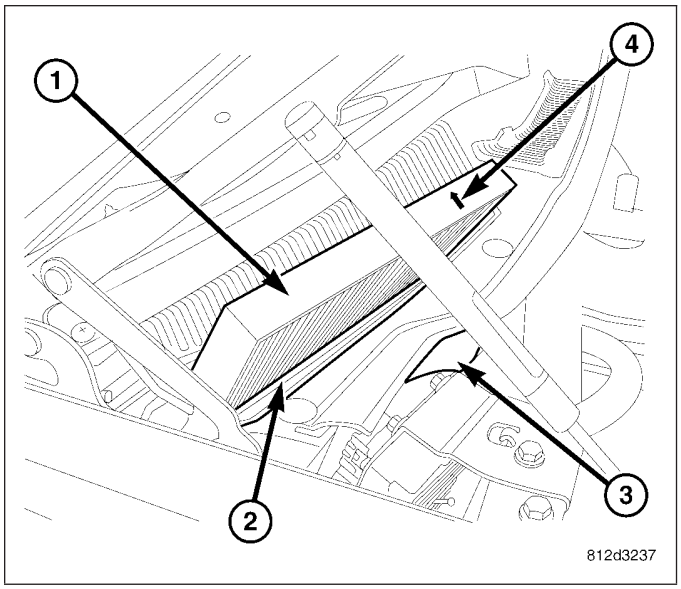

INSTALLATION

NOTE: The particulate air filter is labeled with "REAR OF VEHICLE" and an arrow to indicate air flow direction through the filter. Make sure to properly install the particulate air filter. Failure to properly install the filter will result in the need to replace the filter sooner than required by design.

NOTE: LHD model shown in illustrations. RHD model similar.

1. Install the particulate air filter (1) into the particulate air filter housing (2) located inside of the dash panel plenum (3). Insert the particulate air filter down directly into the filter housing with the arrow (4) on the filter pointing to the rear of the vehicle. The particulate air filter is held in place by friction between the filter element and the filter housing, so no fasteners are required.

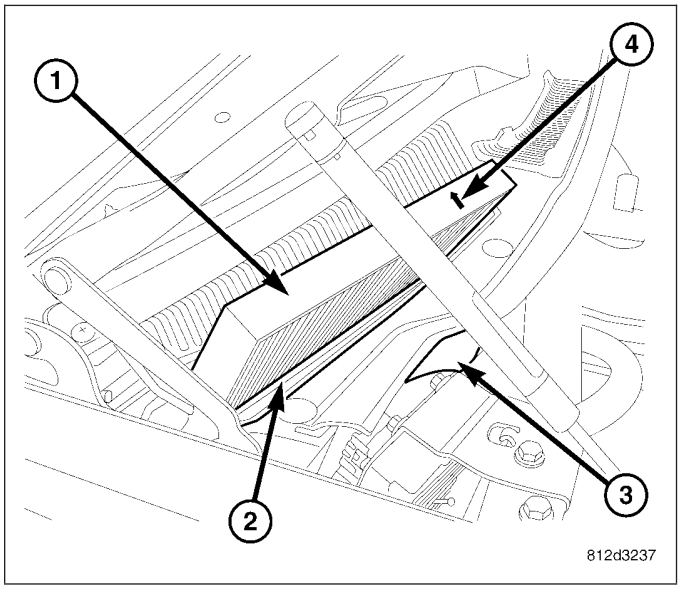

2. Close the filter door (3) on the top of the particulate air filter housing (4) located inside of the dash panel plenum (5).
3. Install the air inlet grille (1) onto the wiper module screen (2).

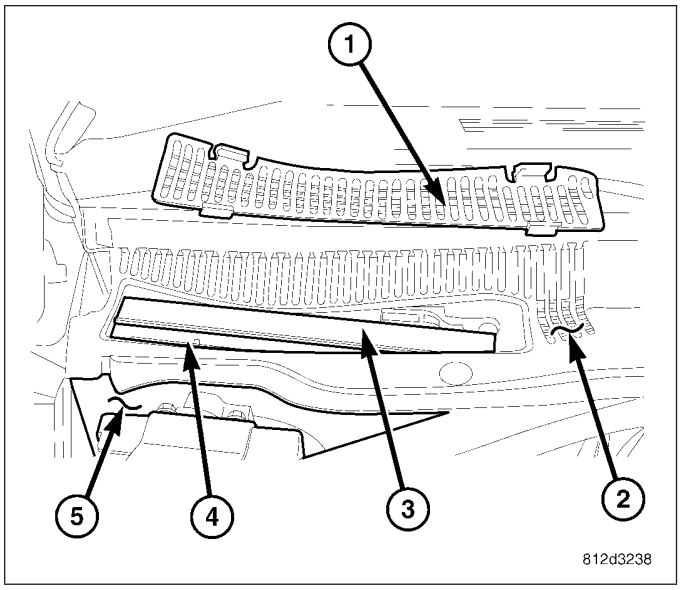

HOUSING-HVAC

DESCRIPTION

NOTE: LHD model shown. RHD model similar.

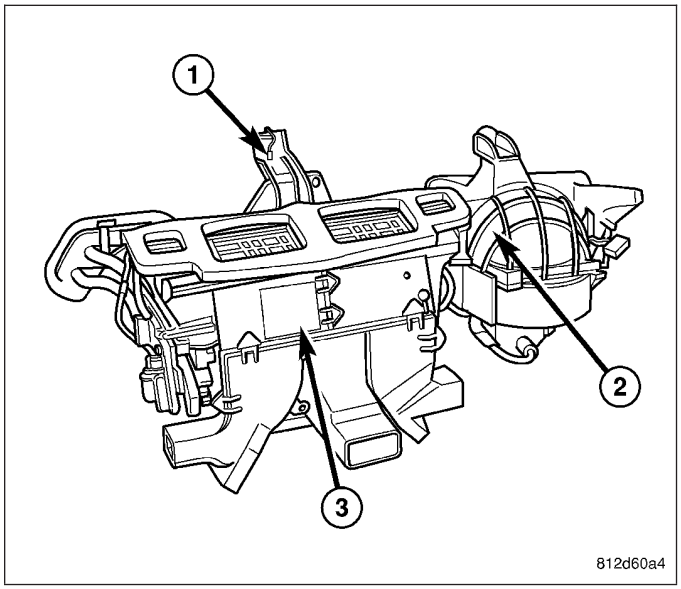

All models are equipped with a common HVAC housing assembly that combines A/C and heating capabilities into a single unit mounted within the passenger compartment. The HVAC housing assembly consists of three separate housings:

- **HVAC housing** — The HVAC housing (1) is mounted to the dash panel behind the instrument panel and contains the A/C evaporator and the blower motor resistor or power model, depending on application. The HVAC housing consists of a upper and a lower housing that are attached together and has mounting provisions for the air inlet housing, blower motor, air distribution housing and the HVAC wire harness.
- **Air inlet housing** — The air inlet housing (2) is mounted to the right end of the HVAC housing and contains the recirculation-air door and actuator.
- **Air distribution housing** — The air distribution housing (3) is mounted to the rear of the HVAC housing and contains the heater core, blend-air door(s) and actuator(s), mode-air doors and actuator and door linkage.

The heating-A/C system is a blend-air type system. The blend-air doors control the amount of conditioned air that is allowed to flow through, or around, the heater core. The dual zone heating A/C system uses two blend door actuators while the single zone system uses only one blend door actuator.

The A/C system is designed for the use of a non-CFC, R-134a refrigerant and uses an A/C evaporator to cool and dehumidify the incoming air prior to blending it with the heated air. A temperature control determines the discharge air temperature by operating the blend door actuator(s), which moves the blend-air door(s). This allows an almost immediate control of the output air temperature of the system. The mode door actuator operates the mode-air doors which direct the flow of the conditioned air out the various air outlets, depending on the mode selected. The recirculation door actuator operates the recirculation-air door which closes off the fresh air intake and recirculates the air already inside the vehicle. The electric door actuators are connected to the vehicle electrical system by the HVAC wire harness. The blower motor controls the velocity of air flowing through the HVAC housing assembly by spinning the blower wheel within the HVAC housing at the selected speed by use of the blower motor resistor or power model, depending on application.

The air distribution housing must be removed from the HVAC housing and disassembled for service of the mode-air and blend-air doors. The air inlet housing must be removed from HVAC housing and disassembled for service of the recirculation-air door. The HVAC housing must be removed from the vehicle and disassembled for service of the A/C evaporator.

REMOVAL

HOUSING-AIR DISTRIBUTION

WARNING: Refer to the applicable warnings and cautions for this system before performing the following operation (Refer to 24 - HEATING & AIR CONDITIONING/PLUMBING - WARNINGS) and (Refer to 24 - HEATING & AIR CONDITIONING/PLUMBING - CAUTIONS). Failure to follow the warnings and cautions could result in possible personal injury or death.

WARNING: On vehicles equipped with airbags, disable the airbag system before attempting any steering wheel, steering column, or instrument panel component diagnosis or service. Disconnect and isolate the negative battery (ground) cable, then wait two minutes for the airbag system capacitor to discharge before performing further diagnosis or service. This is the only sure way to disable the airbag system. Failure to take the proper precautions could result in accidental airbag deployment and possible personal injury or death.

NOTE: The air distribution housing must be removed from the HVAC housing and disassembled for service of the mode-air and blend-air doors.

NOTE: LHD model shown in illustrations. RHD model similar.

1. Drain the engine cooling system (Refer to 7 - COOLING - STANDARD PROCEDURE - COOLING SYSTEM DRAIN).
2. Disconnect and isolate the negative battery cable.
3. Remove the instrument panel from the passenger compartment (Refer to 23 - BODY/INSTRUMENT PANEL/INSTRUMENT PANEL ASSEMBLY - REMOVAL).
4. Remove the defroster ducts (Refer to 24 - HEATING & AIR CONDITIONING/DISTRIBUTION/DUCT-DEFROSTER - REMOVAL).
5. Remove the floor console duct (Refer to 24 - HEATING & AIR CONDITIONING/DISTRIBUTION/DUCT-FLOOR CONSOLE - REMOVAL).
6. Disconnect the HVAC wire harness (1) from the mode door actuator (2) and the blend door actuator (3) located on the driver side of the air distribution housing (4).

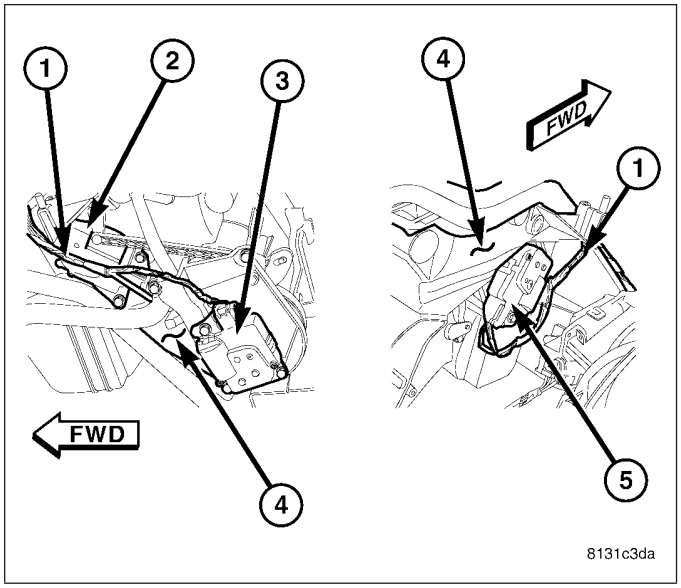

7. If equipped with dual zone heating-A/C, disconnect the HVAC wire harness from the blend door actuator (5) located on the passenger side of the air distribution housing.
8. Remove the two screws (1) that secure the flange (2) to the front of the HVAC housing (3).
9. Remove the flange and the heater core tubes (4) from the HVAC housing.

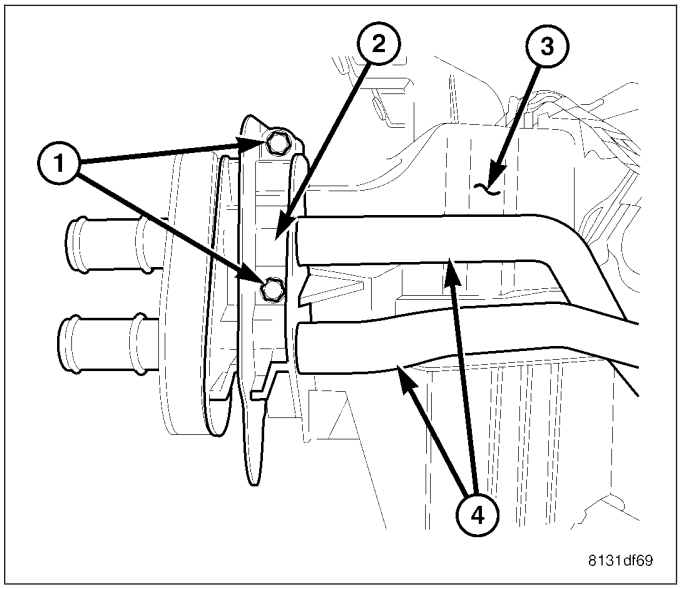

NOTE: Take proper precautions to protect the carpeting from spilled engine coolant. Have absorbent toweling readily available to clean up any spills.

10. Remove the two retaining clamps (1) that secure the heater core tubes (2) to the heater core (3).
11. Disconnect the heater core tubes from the heater core and remove and discard the O-ring seals.
12. Install plugs in, or tape over the opened heater core tubes and heater core ports.

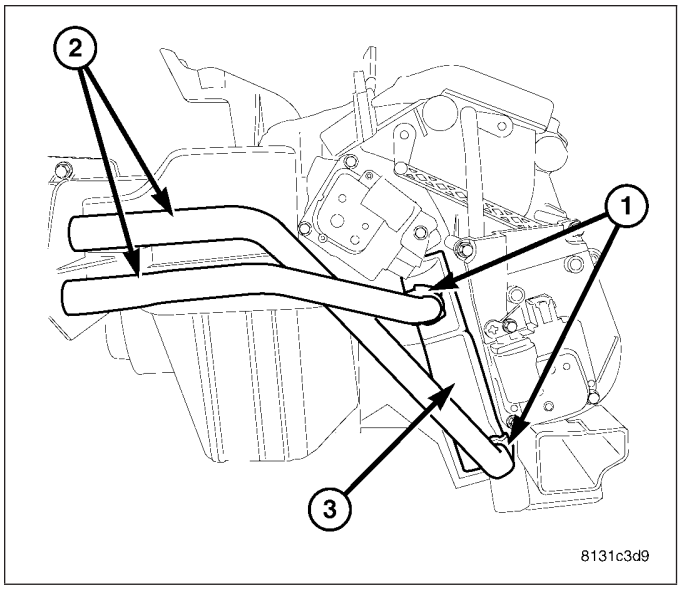

13. Remove the two screws (1) that secure the air distribution housing (2) to the rear of the HVAC housing (3).
14. Tilt the top of the air distribution housing rearward to disconnect the distribution housing from the tab-and-slot type retainers located at the bottom of the housing.
15. Disconnect the air distribution housing from rear floor distribution ducts.
16. Remove the air distribution housing from the vehicle.
17. If required, disassemble the air distribution housing (Refer to 24 - HEATING & AIR CONDITIONING/DISTRIBUTION/HOUSING-HVAC - HOUSING-AIR DISTRIBUTION - DISASSEMBLY).

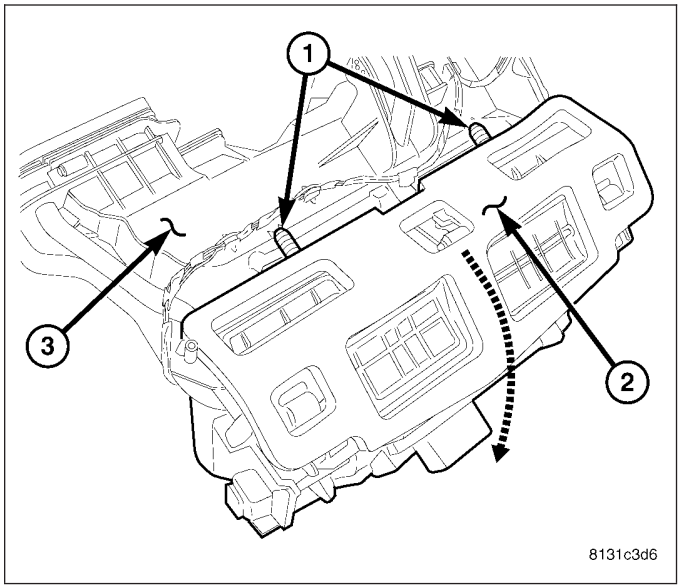

HOUSING-AIR INLET

WARNING: Refer to the applicable warnings and cautions for this system before performing the following operation (Refer to 24 - HEATING & AIR CONDITIONING/PLUMBING - WARNINGS) and (Refer to 24 - HEATING & AIR CONDITIONING/PLUMBING - CAUTIONS). Failure to follow the warnings and cautions could result in possible personal injury or death.

WARNING: On vehicles equipped with airbags, disable the airbag system before attempting any steering wheel, steering column, or instrument panel component diagnosis or service. Disconnect and isolate the negative battery (ground) cable, then wait two minutes for the airbag system capacitor to discharge before performing further diagnosis or service. This is the only sure way to disable the airbag system. Failure to take the proper precautions could result in accidental airbag deployment and possible personal injury or death.

NOTE: The air inlet housing must be removed from HVAC housing and disassembled for service of the recirculation-air door.

NOTE: LHD model shown. RHD model similar.

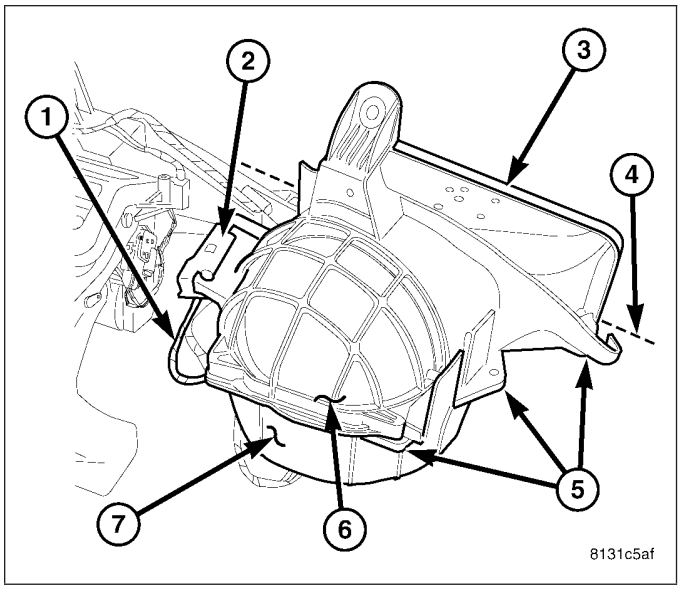

1. Disconnect and isolate the negative battery cable.
2. Remove the HVAC housing assembly (Refer to 24 - HEATING & AIR CONDITIONING/DISTRIBUTION/HOUSING-HVAC - HOUSING-HVAC ASSEMBLY - REMOVAL).
3. Disconnect the HVAC wire harness (1) from the recirculation door actuator (2).
4. Carefully cut the foam seal (3) along the parting line (4) of the air inlet housing (6). If the seal is deformed or damaged, it must be replaced.
5. Remove the five screws (5) that secure the air inlet housing to HVAC housing (7).
6. Remove the air inlet housing from the HVAC housing.
7. If required, disassemble the air inlet housing (Refer to 24 - HEATING & AIR CONDITIONING/DISTRIBUTION/HOUSING-HVAC - HOUSING-AIR INLET - DISASSEMBLY).

HOUSING-HVAC ASSEMBLY

WARNING: Refer to the applicable warnings and cautions for this system before performing the following operation (Refer to 24 - HEATING & AIR CONDITIONING/PLUMBING - WARNINGS) and (Refer to 24 - HEATING & AIR CONDITIONING/PLUMBING - CAUTIONS). Failure to follow the warnings and cautions could result in possible personal injury or death.

WARNING: On vehicles equipped with airbags, disable the airbag system before attempting any steering wheel, steering column, or instrument panel component diagnosis or service. Disconnect and isolate the negative battery (ground) cable, then wait two minutes for the airbag system capacitor to discharge before performing further diagnosis or service. This is the only sure way to disable the airbag system. Failure to take the proper precautions could result in accidental airbag deployment and possible personal injury or death.

NOTE: The HVAC housing must be removed from the vehicle and disassembled for service of the A/C evaporator.

NOTE: LHD model shown in illustrations. RHD model similar.

1. Recover the refrigerant from the refrigerant system (Refer to 24 - HEATING & AIR CONDITIONING/ PLUMBING - STANDARD PROCEDURE - REFRIGERANT SYSTEM RECOVERY).
2. Drain the engine cooling system (Refer to 7 - COOLING - STANDARD PROCEDURE - COOLING SYSTEM DRAIN).
3. Disconnect and isolate the negative battery cable.
4. Remove the fresh air inlet housing from the dash panel (Refer to 24 - HEATING & AIR CONDITIONING/DISTRIBUTION/HOUSING-HVAC - HOUSING-FRESH AIR INLET - REMOVAL).
5. Disconnect the A/C liquid line and the A/C suction line from the A/C evaporator (Refer to 24 - HEATING & AIR CONDITIONING/PLUMBING/LINE-A/C LIQUID - REMOVAL).
6. Disconnect the heater hoses from the heater core tubes.

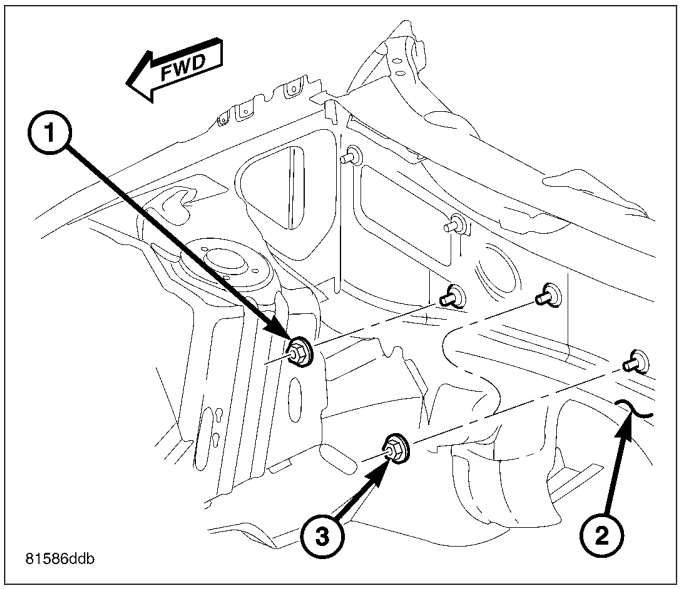

7. Remove the three nuts (1 and 3) that secure the HVAC housing to the engine compartment side of the dash panel (2).
8. Remove the instrument panel from the passenger compartment (Refer to 23 - BODY/INSTRUMENT PANEL/INSTRUMENT PANEL ASSEMBLY - REMOVAL).
9. Disconnect the floor console duct (Refer to 24 - HEATING & AIR CONDITIONING/DISTRIBUTION/ DUCT-FLOOR CONSOLE - REMOVAL).
10. Disconnect the rear floor distribution ducts (Refer to 24 - HEATING & AIR CONDITIONING/DISTRIBUTION/DUCT-FLOOR DISTRIBUTION - REMOVAL).
11. Remove the defroster ducts (Refer to 24 - HEATING & AIR CONDITIONING/DISTRIBUTION/ DUCT-DEFROSTER - REMOVAL).
12. Remove the two nuts (1) that secure the HVAC housing (2) to the passenger compartment side of the dash panel (5).
13. Pull the HVAC housing assembly rearward so that the mounting studs clear the dash panel.

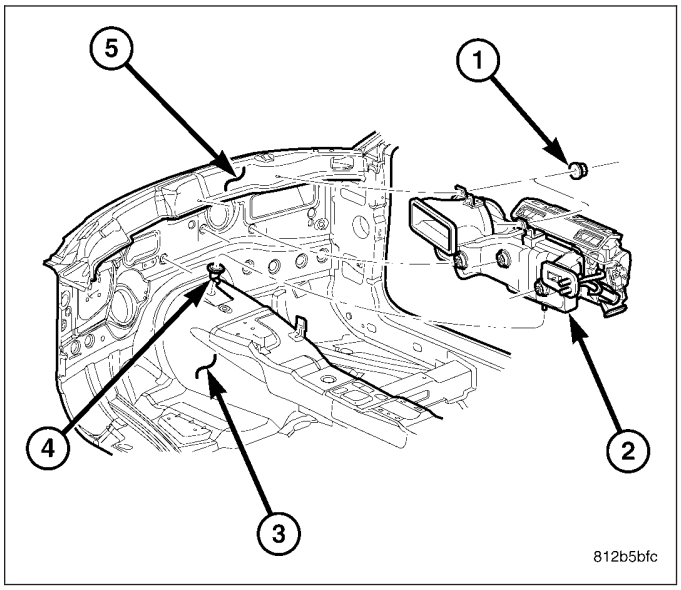

14. Lift the HVAC housing assembly upwards so that the condensate drain tube clears the grommet (4) in the floor panel (3) and remove the HVAC housing assembly from the passenger compartment.
15. If required, disassemble the HVAC housing assembly (Refer to 24 - HEATING & AIR CONDITIONING/DISTRIBUTION/HOUSING-HVAC - HOUSING-HVAC ASSEMBLY - DISASSEMBLY).

HOUSING-FRESH AIR INLET

WARNING: Refer to the applicable warnings and cautions for this system before performing the following operation (Refer to 24 - HEATING & AIR CONDITIONING/PLUMBING - WARNINGS) and (Refer to 24 - HEATING & AIR CONDITIONING/PLUMBING - CAUTIONS). Failure to follow the warnings and cautions could result in possible personal injury or death.

NOTE: The fresh air inlet housing must be removed from the vehicle for removal of the HVAC housing.

NOTE: LHD model shown in illustrations. RHD model similar.

1. Disconnect and isolate the negative battery cable.
2. Remove the cowl top panel from the dash panel (Refer to 23 - BODY/EXTERIOR/PANEL-COWL TOP - REMOVAL).
3. Remove the two bolts (1) that secure the strut support (2) to the driver side strut tower (3).
4. Disengage the wiper motor (5) from the bracket (4) located on the strut support.

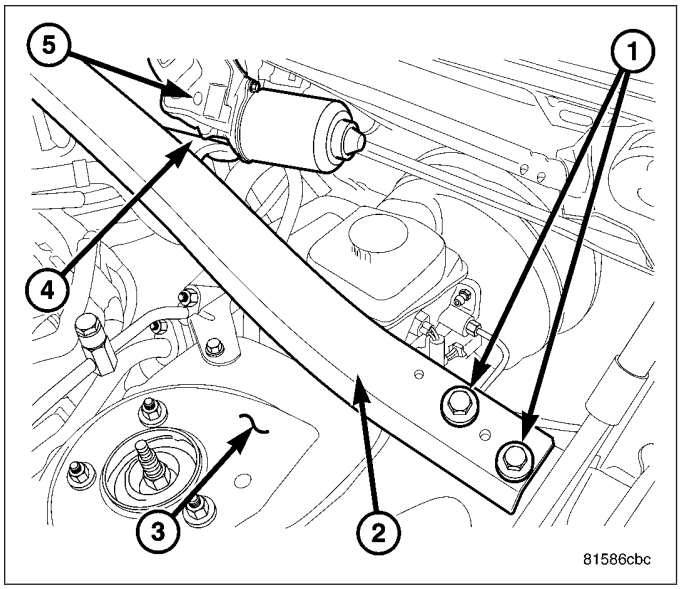

5. Disengage the retainer that secures the wire harness (4) to the bottom of the strut support (3).
6. On LHD models, remove the purge solenoid (5) from its mounting bracket and position the solenoid out of the way.
7. Remove the two bolts (1) that secure the strut support to the passenger side strut tower (6) and remove the support from the engine compartment.
8. Position the powertrain control module (PCM) or the engine control module (ECM) (2) (depending on engine application) out of the way.

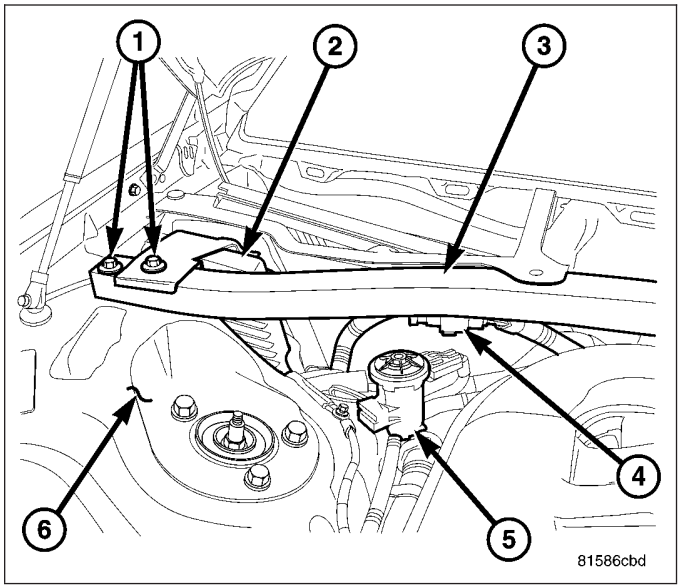

9. Remove the push-pin retainer (1) that secures the fresh air inlet housing (2) to the passenger side inner fender (6).
10. Disengage the wire harness retainer (3) from inside the bottom of the fresh air inlet housing, if equipped.
11. Remove the push-pin retainer (5) that secures the insulator (4) to the front of the fresh air inlet housing and position the insulator out of the way.

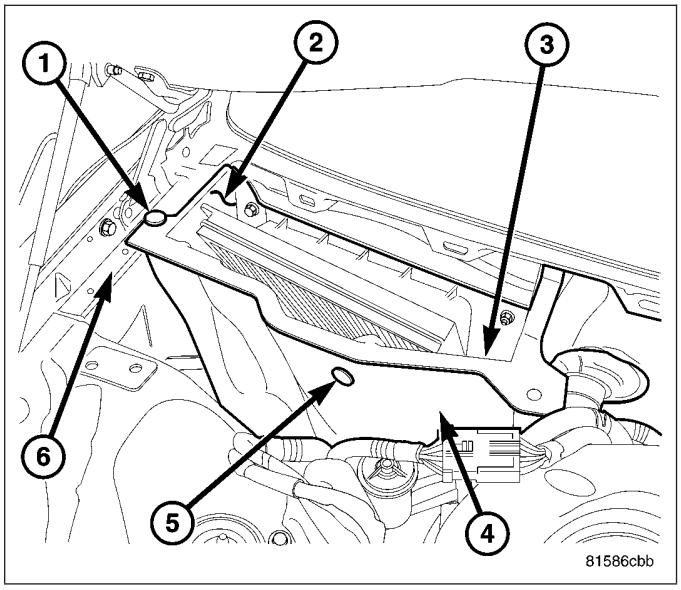

12. Remove the two nuts (1) that secure the fresh air inlet housing (4) and water separator (2) or particulate air filter (6) and filter housing (5) (depending on application) to the dash panel (3).
13. Remove the fresh air inlet housing and water separator or particulate air filter and filter housing (depending on application) as an assembly from the dash panel.

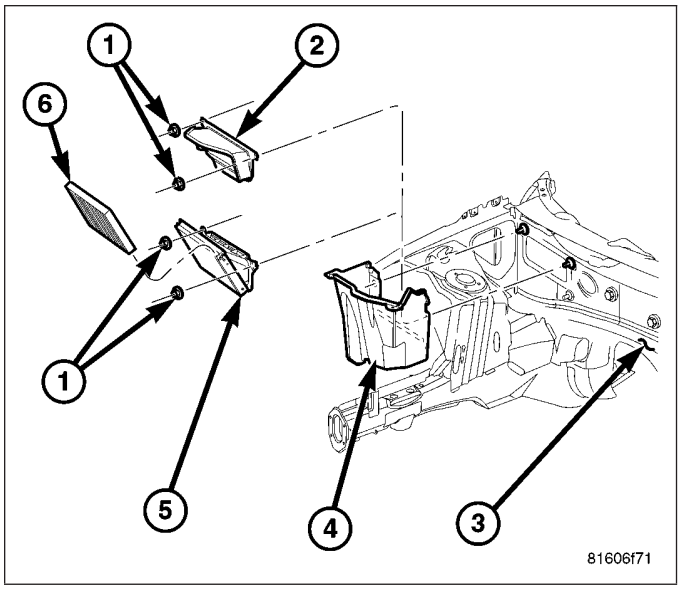

DISASSEMBLY

HOUSING-AIR DISTRIBUTION

NOTE: The air distribution housing must be removed from the HVAC housing and disassembled for service of the mode-air and blend-air doors.

NOTE: LHD model shown in illustrations. RHD model similar.

1. Remove the air distribution housing (1) from the HVAC housing and place it on a workbench (Refer to 24 - HEATING & AIR CONDITIONING/DISTRIBUTION/HOUSING-HVAC - HOUSING-AIR DISTRIBUTION - REMOVAL).
2. Remove the screws (2) that secure the mode door actuator (4) and the blend door actuator (7) to the driver side of the air distribution housing and remove the actuators.
3. Remove the screws (5) that secure the blend door actuator mounting bracket (6) and the mode door actuator mounting bracket (3) to the driver side of the air distribution housing and remove the mounting brackets.

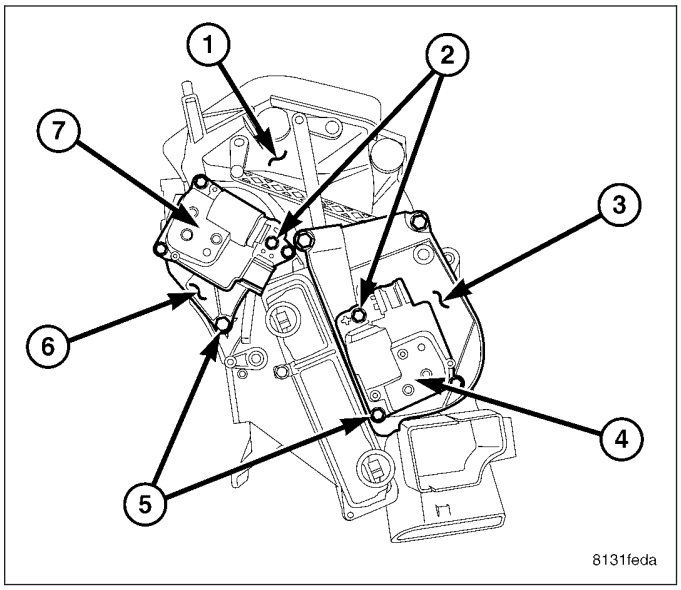

4. Remove the instrument panel door linkage (3) from the pivot shaft located on the driver side of the air distribution housing (8) and carefully disconnect the linkage rod (2) from the instrument panel door lever (1).
5. Remove the defrost/demister door linkage (7) from the pivot shaft on the air distribution housing and carefully disconnect the linkage rod (12) from the defrost/demister door lever (11).
6. Remove the mode door cam (6) from the air distribution housing.
7. Remove the floor door linkage (5) from the floor door lever (4) and the air distribution housing.
8. Remove the blend door cam (9) from the blend door lever (10) and the air distribution housing.

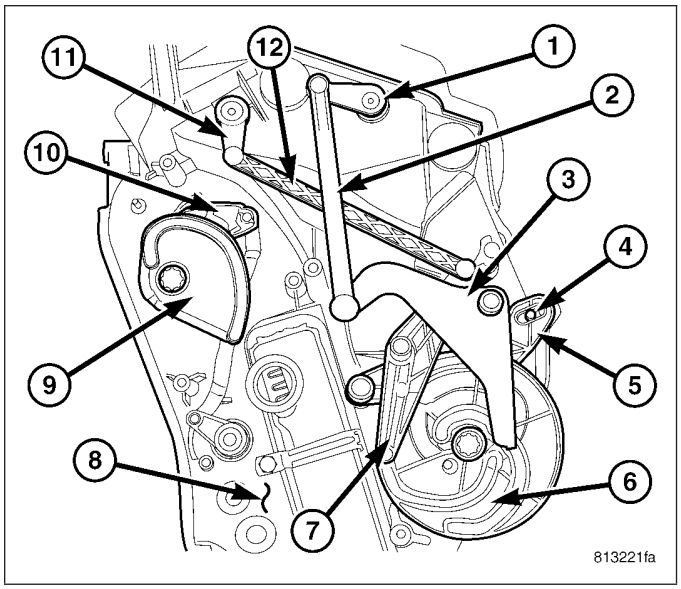

9. Remove the screw (1) that secures the heater core retaining bracket (2) to the driver side of the air distribution housing (3) and remove the bracket.
10. Carefully pull the heater core (4) out of the air distribution housing.

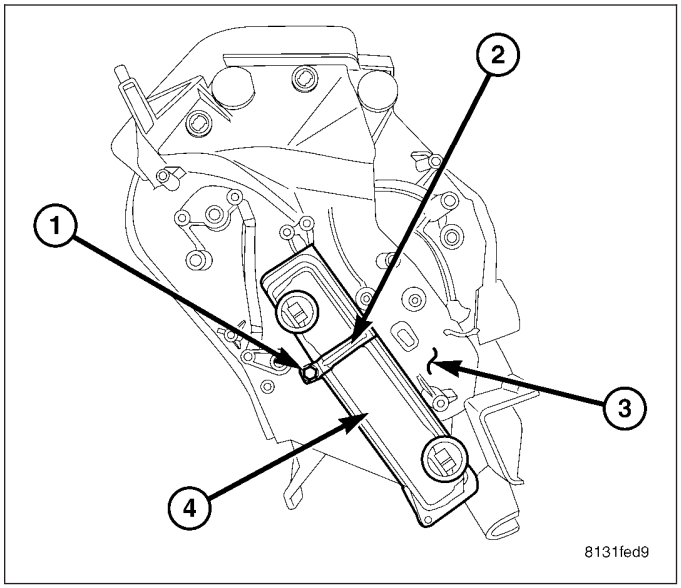

11. If equipped with dual zone heating-A/C, remove the screws (1) that secure the blend door actuator (2) to the passenger side of the air distribution housing (3) and remove the actuator.
12. Remove the screws (4) that secure the blend door actuator mounting bracket (5) to the passenger side of the air distribution housing and remove the mounting bracket.

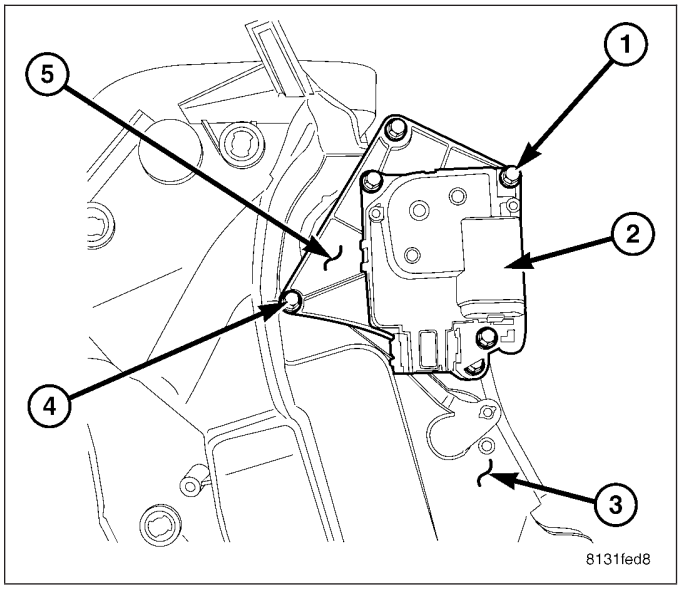

13. If equipped with dual zone heating-A/C, remove the blend door cam (1) from blend door lever (2) and the pivot shaft located on the passenger side of the air distribution housing (3).

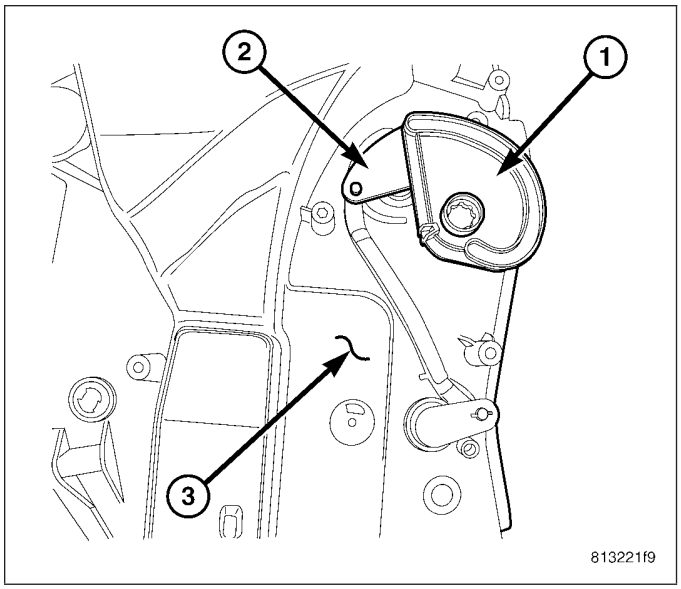

14. Remove the six screws (1) that secure the front floor distribution duct (2) to the bottom of the air distribution housing (3) and remove the duct.

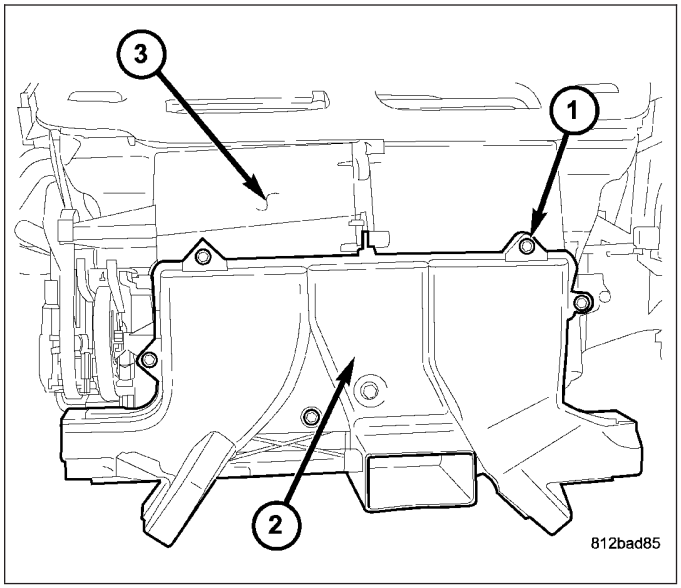

15. Carefully cut the foam seal (1) along the parting line (2) of the two halves of the air distribution housing (3). If the seal is deformed or damaged, it must be replaced.
16. Remove the screws (4) that secure the two halves of the air distribution housing together.

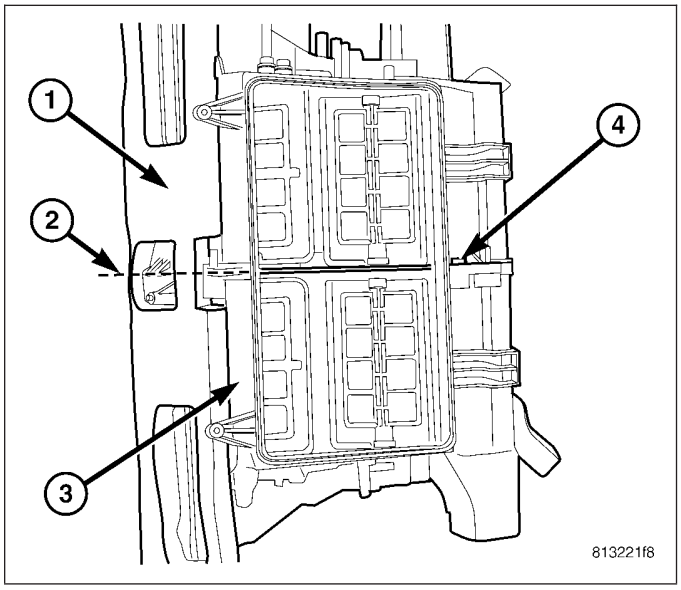

17. Carefully separate the left half of the air distribution housing (1) from the right half of the housing (2).
18. Remove the center partition (3).

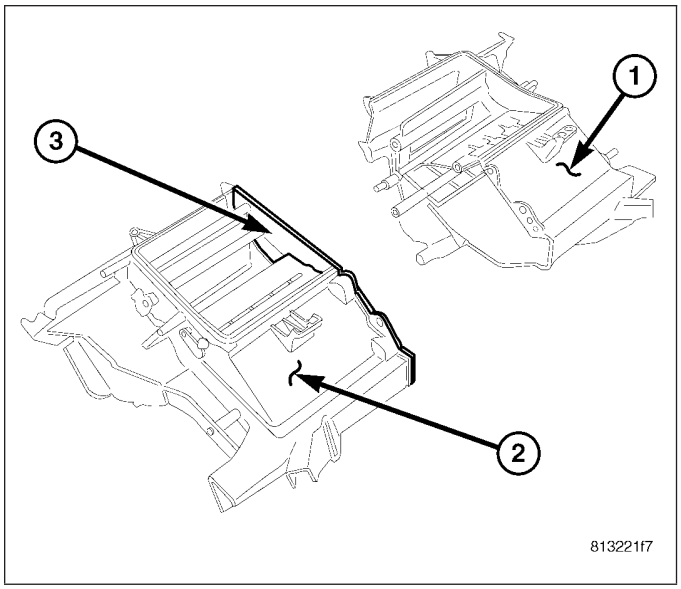

19. To remove the air doors (1) from the air distribution housing (2), first carefully push down on the tab (3) of the air door lever (4) located in the pivot shaft of the air door being removed.

NOTE: If the seal on the air door is deformed or damaged, the air door must be replaced.

20. Gently pull the air door lever out of the pivot shaft and remove the air door(s) from the air distribution housing as required.

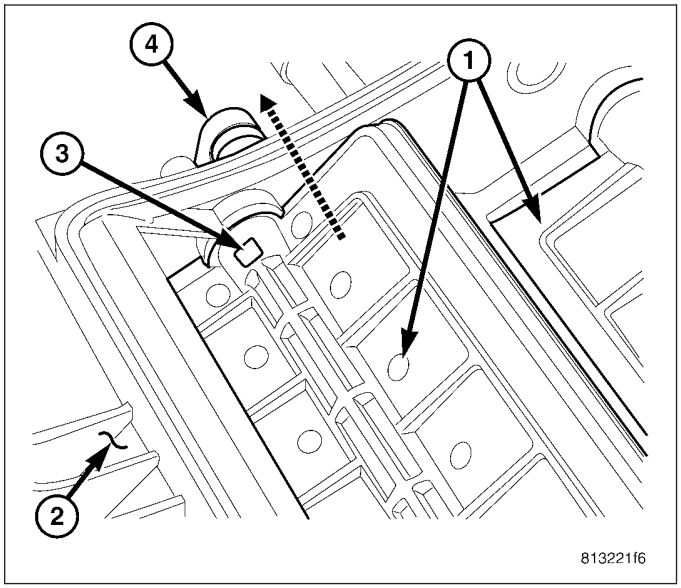

HOUSING-AIR INLET

NOTE: The air inlet housing must be removed from HVAC housing and disassembled for service of the recirculation-air door.

NOTE: LHD model shown. RHD model similar.

1. Remove the air inlet housing (1) from the HVAC housing and place it on a workbench (Refer to 24 - HEATING & AIR CONDITIONING/DISTRIBUTION/ HOUSING-HVAC - HOUSING-AIR INLET - REMOVAL)
2. Remove the three screws (2) that secure the recirculation door actuator (3) to the air inlet housing and remove the actuator.
3. Remove the recirculation-air door (4) from the air inlet housing.

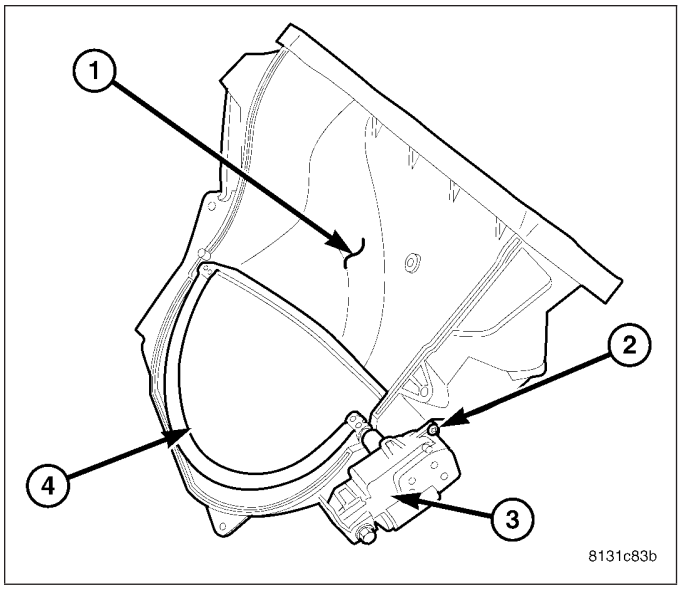

HOUSING-HVAC

NOTE: The HVAC housing must be removed from the vehicle and disassembled for service of the A/C evaporator.

NOTE: LHD model shown in illustrations. RHD model similar.

1. Remove the HVAC housing assembly and place it on a workbench (Refer to 24 - HEATING & AIR CONDITIONING/DISTRIBUTION /HOUSING-HVAC - HOUSING-HVAC ASSEMBLY - REMOVAL).
2. Remove the air distribution housing (3) from the HVAC housing (1) (Refer to 24 - HEATING & AIR CONDITIONING/DISTRIBUTION/HOUSING-HVAC - HOUSING-AIR DISTRIBUTION - REMOVAL).
3. Remove the air inlet housing (2) from the HVAC housing (Refer to 24 - HEATING & AIR CONDITIONING/DISTRIBUTION/HOUSING-HVAC - HOUSING-AIR INLET - REMOVAL).

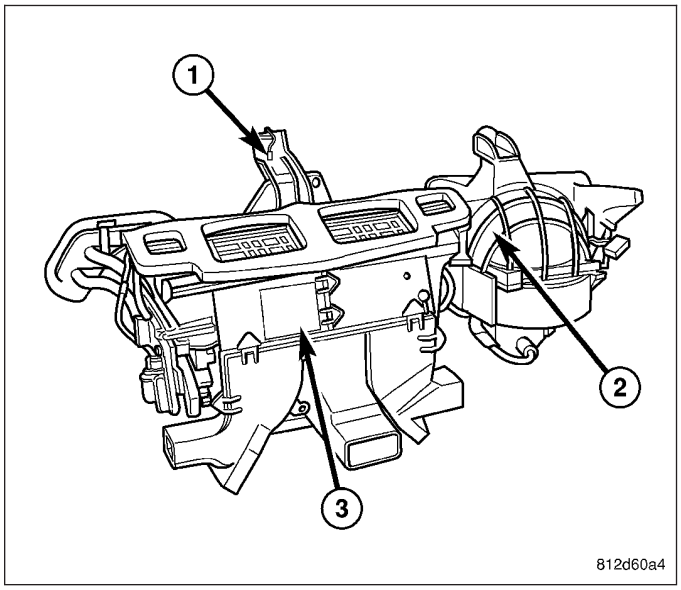

4. Remove the two screws (1) that secure the flange (2) to the front of the HVAC housing (3).
5. Remove the flange and the heater core tubes (4) from the HVAC housing.

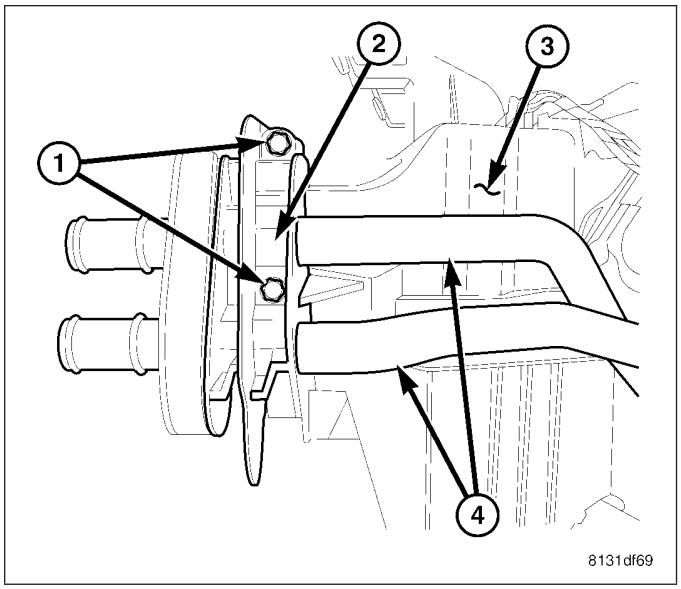

6. Disconnect the HVAC wiring harness (1) from the evaporator temperature sensor (2), blower motor resistor or power module (3) (depending on application) and the blower motor (4).
7. Disengage the two HVAC wire harness retainers (5) from the blower motor and remove the blower motor from the HVAC housing (Refer to 24 - HEATING & AIR CONDITIONING/DISTRIBUTION/MOTOR-BLOWER - REMOVAL).
8. Remove the blower motor resistor or power module, depending on application (Refer to 24 - HEATING & AIR CONDITIONING/CONTROLS/RESISTOR-BLOWER MOTOR - REMOVAL) or (Refer to 24 - HEATING & AIR CONDITIONING/CONTROLS/MODULE-POWER-BLOWER MOTOR - REMOVAL).
9. Remove the evaporator temperature sensor (Refer to 24 - HEATING & AIR CONDITIONING/CONTROLS/SENSOR-EVAPORATOR TEMPERATURE - REMOVAL).

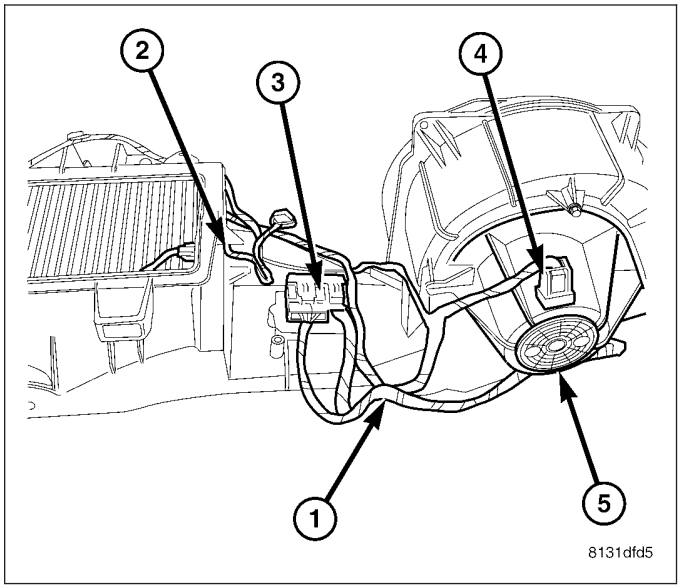

10. Remove the two bolts (1) that secure the A/C expansion valve (2) to the evaporator tube tapping block located within the foam seal (3).
11. Remove the A/C expansion valve from the evaporator tube tapping block and foam seal.
12. Remove the O-ring seals from the evaporator tube fittings and discard.
13. Install plugs in, or tape over the opened evaporator tube fittings and all expansion valve ports.

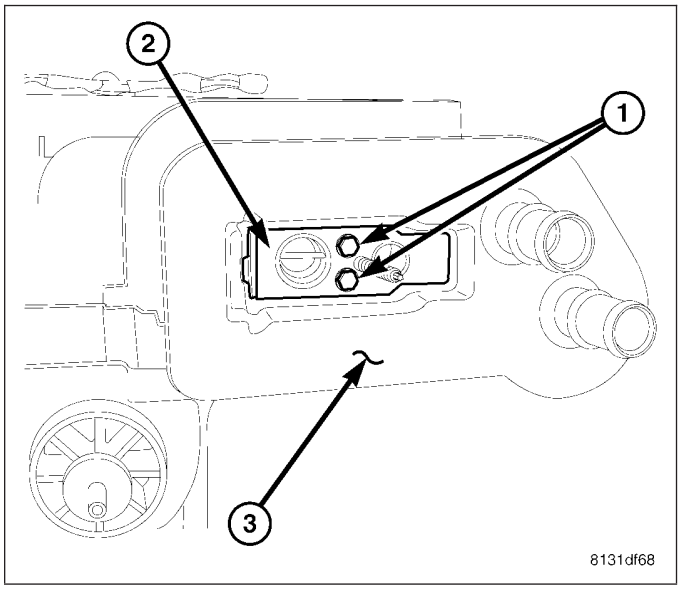

14. Remove the HVAC wiring harness (1).
15. Remove the ten screws (2) that secure the upper half of the HVAC housing (3) to the lower half of the HVAC housing (4).
16. Separate the two halves of the HVAC housing.

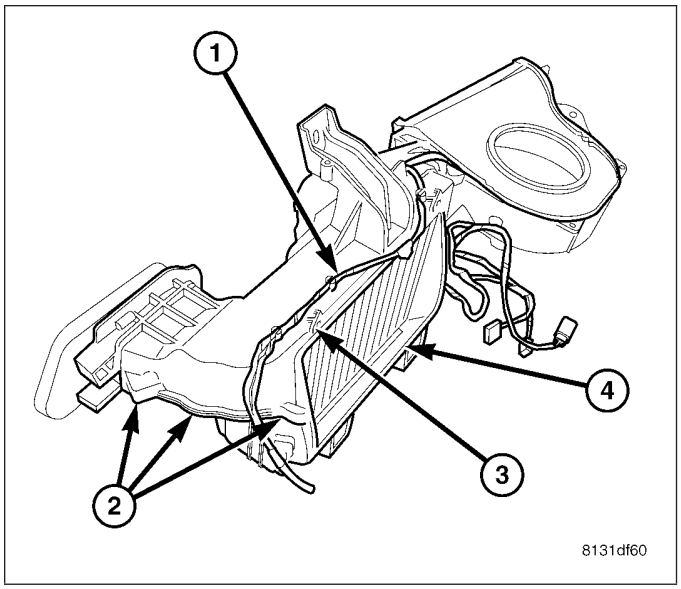

17. Carefully lift the A/C evaporator (1) and foam seal (2) out of the lower half of the HVAC housing (3).
18. If required, remove the foam seal from the tapping block of the A/C evaporator. If the seal is deformed or damaged, it must be replaced.

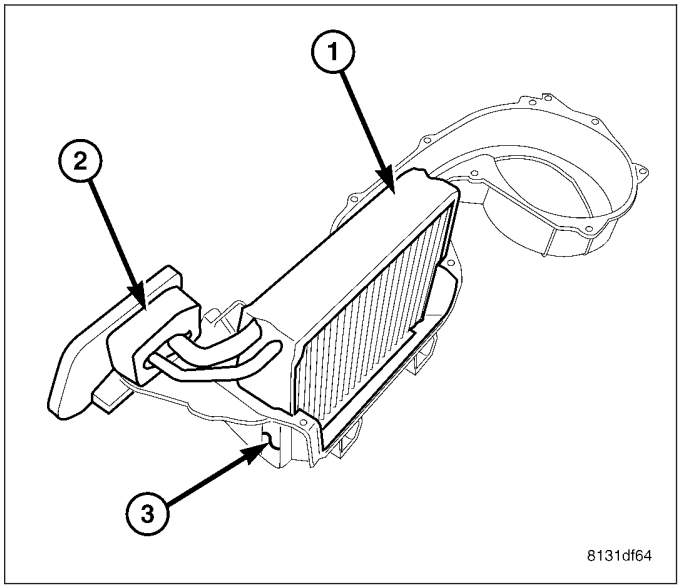

ASSEMBLY

HOUSING-AIR DISTRIBUTION

NOTE: The air distribution housing must be removed from the HVAC housing and disassembled for service of the mode-air and blend-air doors.

NOTE: LHD model shown in illustrations. RHD model similar.

1. Install the air door(s) (1) into the air distribution housing (2) as required. Align the air door with the pivot shaft hole in the housing.
2. Align and install the air door lever (4) into the pivot shaft of the air door. Make sure that the tab (3) on the door lever is securely engaged to the pivot shaft.

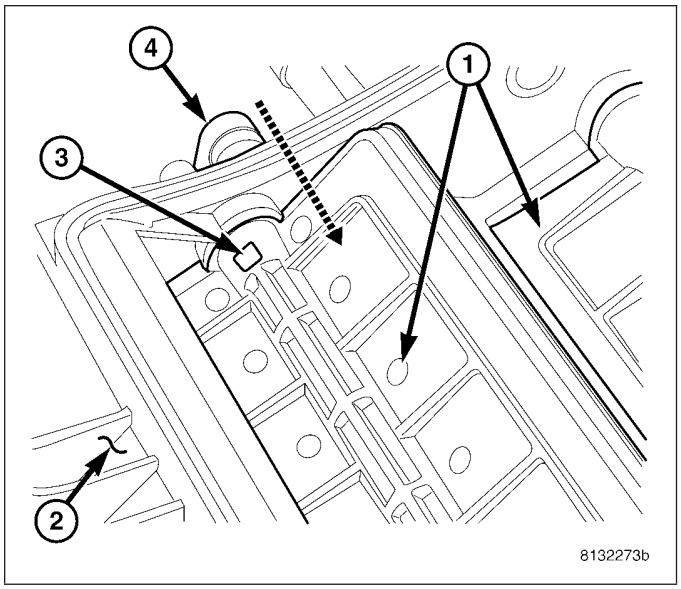

3. Align the air door pivot shafts with the pivot holes in the center partition (3) and install the partition onto the left half of the air distribution housing (1).
4. Align the air door pivot shafts to each other and carefully install the left half of the air distribution housing to the right half of the housing (2).

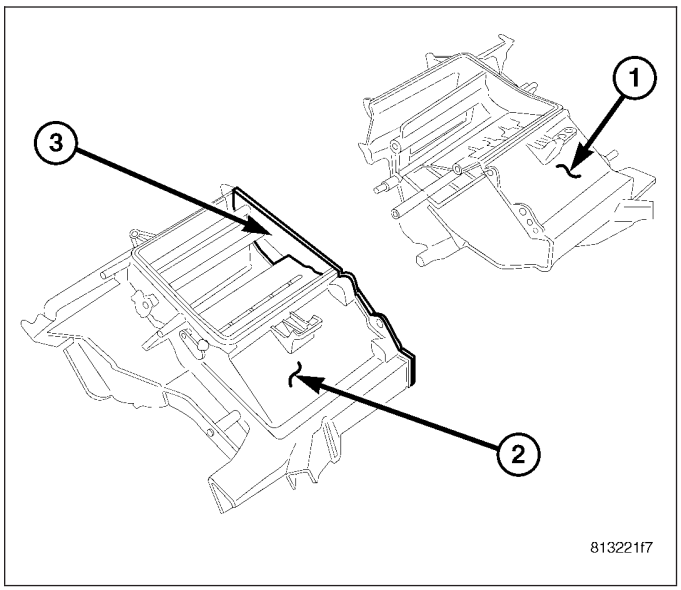

5. Install the screws (4) that secure the two halves of the air distribution housing (3) together. Tighten the screws to 2.2 N·m (20 in. lbs.).
6. Inspect the foam seal (1), especially at the parting line (2). If the seal is deformed or damaged, it must be replaced.

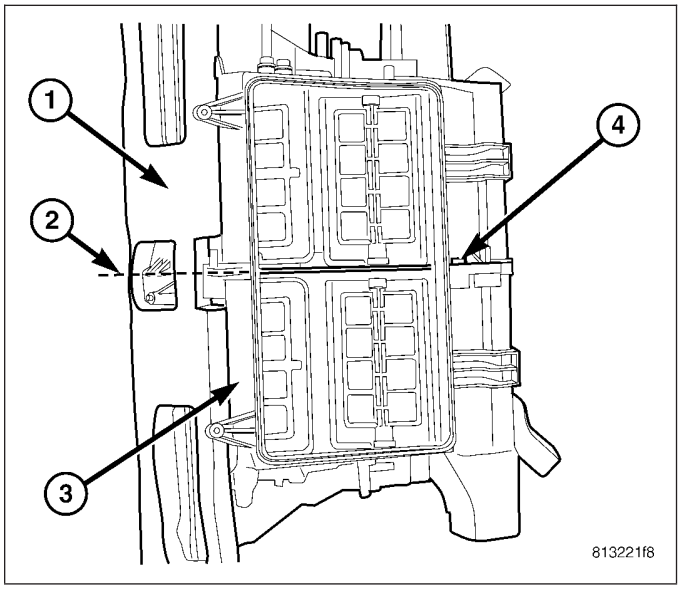

7. Position the front floor distribution duct (2) onto the air distribution housing (3).
8. Install the six screws (1) that secure the front floor distribution duct to the air distribution housing. Tighten the screws to 2 N·m (17 in. lbs.).

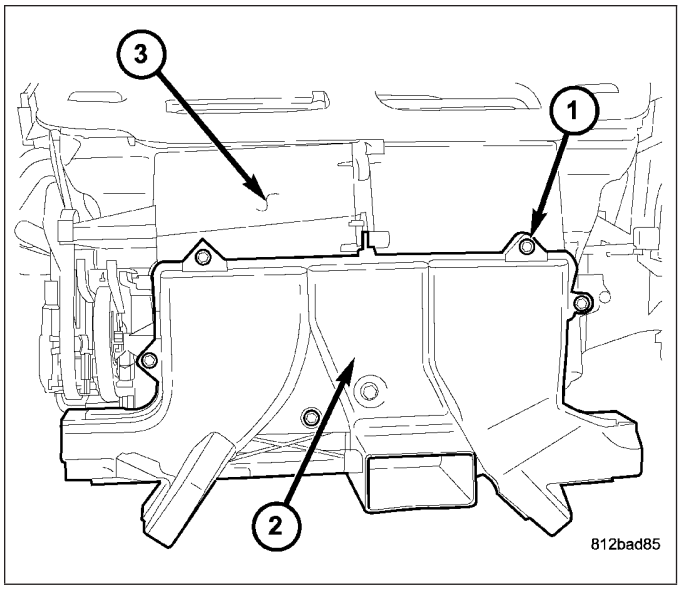

9. If equipped with dual zone heating-A/C, install the blend door cam (1) onto the blend door lever (2) and the pivot shaft located on the passenger side of the air distribution housing (3).

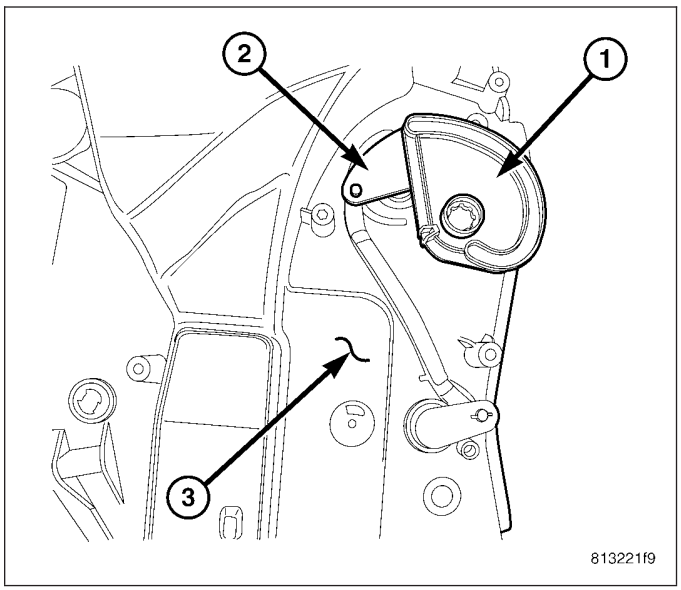

10. If equipped with dual zone heating-A/C, position the blend door actuator mounting bracket (5) onto the passenger side of the air distribution housing (3).
11. Install the screws (4) that secure the blend door actuator mounting bracket to the air distribution housing. Tighten the screws to 2 N·m (17 in. lbs.).
12. Position the blend door actuator (2) onto the air distribution housing. If necessary, rotate the actuator slightly to align the splines on the actuator output shaft with those on the blend door cam (Refer to 24 - HEATING & AIR CONDITIONING/CONTROLS/ACTUATOR-BLEND DOOR - INSTALLATION).
13. Install the screws (1) that secure the blend door actuator to the air distribution housing. Tighten the screws to 2 N·m (17 in. lbs.).

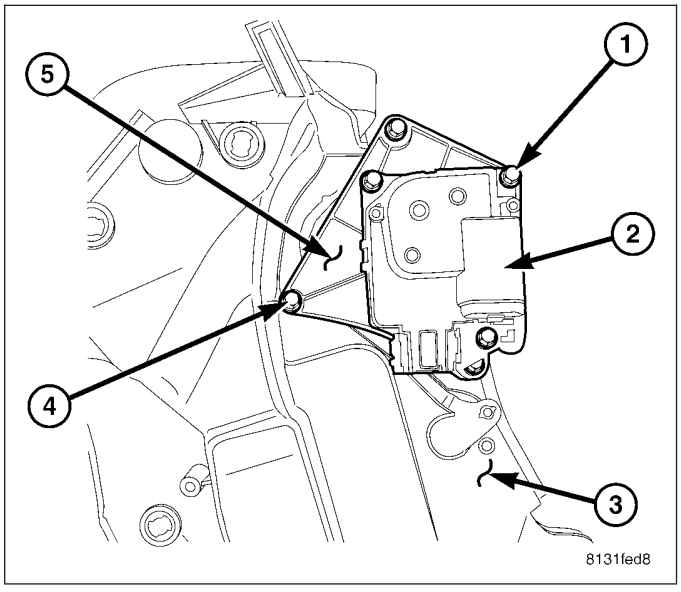

14. Carefully install the heater core (4) into the driver side of the HVAC air distribution housing (3).
15. Install heater core retaining bracket (2) onto the air distribution housing.
16. Install the screw (1) that secures the heater core retaining bracket onto the air distribution housing. Tighten the screw to 2.2 N·m (20 in. lbs.).

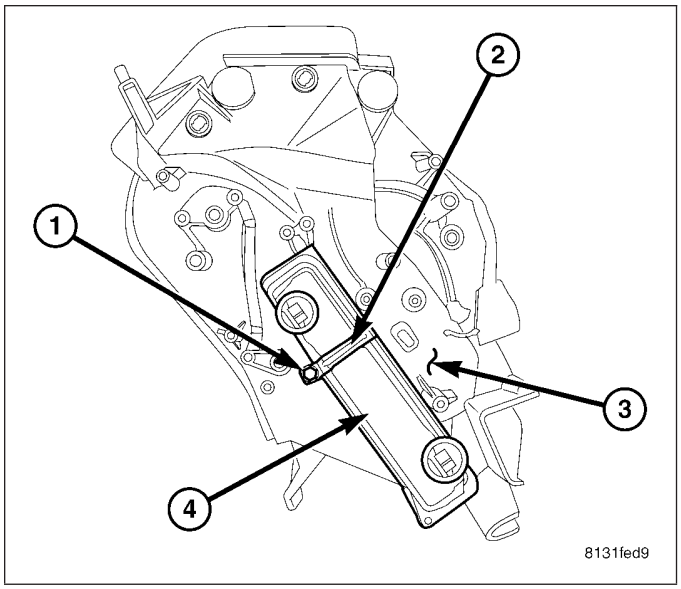

17. Install the blend door cam (9) onto the blend door lever (10) and the pivot shaft located on the driver side of the air distribution housing (8).
18. Install the floor door linkage (5) onto the floor door lever (4) and the pivot shaft on air distribution housing.

NOTE: Align the guide pin on the floor door linkage with the guides on the mode door cam during installation of the floor door linkage.

19. Install the mode door cam (6) onto the pivot shaft on air distribution housing.
20. Connect the defrost/demister door linkage rod (12) onto the defrost/demister door lever (11).

NOTE: Align the guide pin on the defrost/demister linkage with the guides on the mode door cam during installation of the defrost/demister linkage.

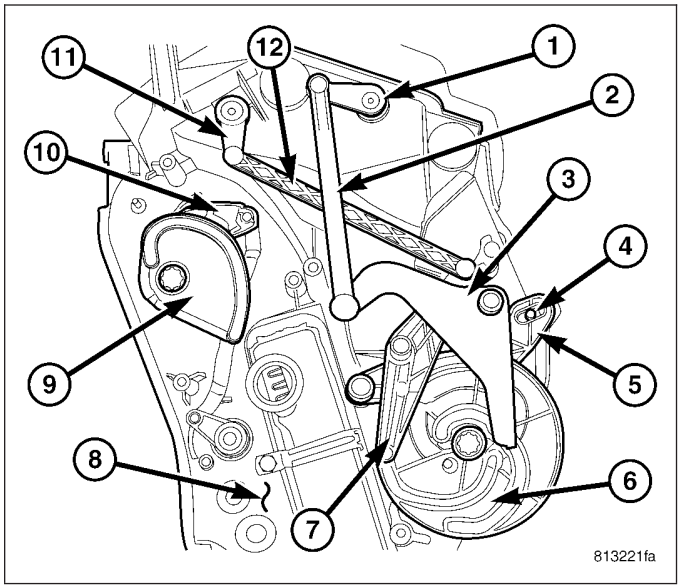

21. Install the defrost/demister linkage (7) onto the pivot shaft on air distribution housing.
22. Connect the instrument panel door linkage rod (2) onto the instrument panel door lever (1).

NOTE: Align the guide pin on the instrument panel linkage with the guides on the mode door cam during installation of the instrument panel linkage.

23. Install the instrument panel linkage (3) onto the pivot shaft on air distribution housing.

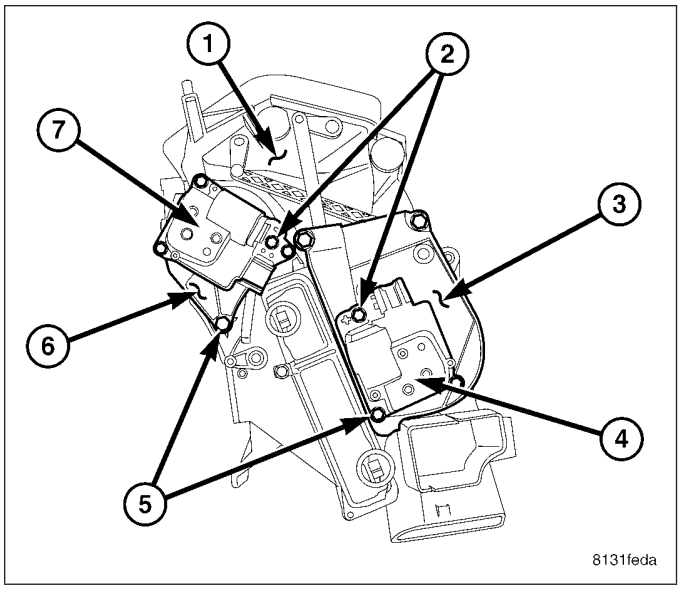

24. Position the blend door actuator mounting bracket (6) and the mode door actuator mounting bracket (3) onto the driver side of the air distribution housing (1).
25. Install the screws (5) that secure the mounting brackets to the air distribution housing. Tighten the screws to 2 N·m (17 in. lbs.).
26. Position the blend door actuator (7) onto the air distribution housing. If necessary, rotate the actuator slightly to align the splines on the actuator output shaft with those on the blend door cam (Refer to 24 - HEATING & AIR CONDITIONING/CONTROLS/ACTUATOR-BLEND DOOR - INSTALLATION).
27. Position the mode door actuator (4) onto the air distribution housing. If necessary, rotate the actuator slightly to align the splines on the actuator output shaft with those on the mode door cam (Refer to 24 - HEATING & AIR CONDITIONING/CONTROLS/ACTUATOR-MODE DOOR - INSTALLATION).
28. Install the screws (2) that secure the blend door actuator to the air distribution housing. Tighten the screws to 2 N·m (17 in. lbs.).
29. Position the mode door actuator mounting bracket (6) onto the driver side of the air distribution housing (1).
30. Install the screws that secure the blend door actuator mounting bracket to the air distribution housing. Tighten the screws to 2 N·m (17 in. lbs.).
31. Position the blend door actuator (7) onto the air distribution housing. If necessary, rotate the actuator slightly to align the splines on the actuator output shaft with those on the blend-air door linkage (Refer to 24 - HEATING & AIR CONDITIONING/CONTROLS/ACTUATOR-BLEND DOOR - INSTALLATION).
32. Install the screws (2) that secure the blend door and mode door actuators to the air distribution housing. Tighten the screws to 2 N·m (17 in. lbs.).
33. Install the air distribution housing onto the HVAC housing (Refer to 24 - HEATING & AIR CONDITIONING/DISTRIBUTION/HOUSING-HVAC - HOUSING-AIR DISTRIBUTION - INSTALLATION).

HOUSING-AIR INLET

NOTE: The air inlet housing must be removed from HVAC housing and disassembled for service of the recirculation-air door.

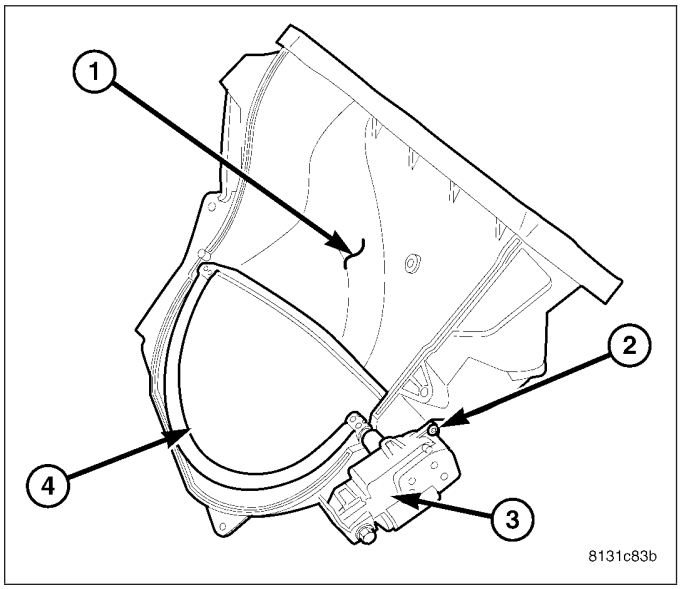

NOTE: LHD model shown. RHD model similar.

1. Position the recirculation-air door (4) into the air inlet housing (1).

CAUTION: Make sure that the recirculation-air door pivot shaft is properly seated in the pivot seats located on the air inlet housing.

2. Install the recirculation door actuator (3) onto the air inlet housing. If necessary, rotate the actuator slightly to align the splines on the actuator output shaft with those on the recirculation door pivot shaft (Refer to 24 - HEATING & AIR CONDITIONING/CONTROLS/ACTUATOR-RECIRCULATION DOOR - INSTALLATION).
3. Install the three screws (2) that secure the recirculation door actuator to the air inlet housing. Tighten the screws to 2 N·m (17 in. lbs.).

4. Install the air inlet housing onto the HVAC housing (Refer to 24 - HEATING & AIR CONDITIONING/DISTRIBUTION/HOUSING-HVAC - HOUSING-AIR INLET - INSTALLATION).

HOUSING-HVAC

NOTE: LHD model shown in illustrations. RHD model similar.

1. If removed, install the foam seal (2) over the tapping block of the A/C evaporator (1). If the seal is deformed or damaged, it must be replaced.
2. Install the A/C evaporator into the lower half of the HVAC housing (3). Make sure that the evaporator drain within the HVAC housing is clean and unrestricted and that the insulator around the A/C evaporator is properly installed.

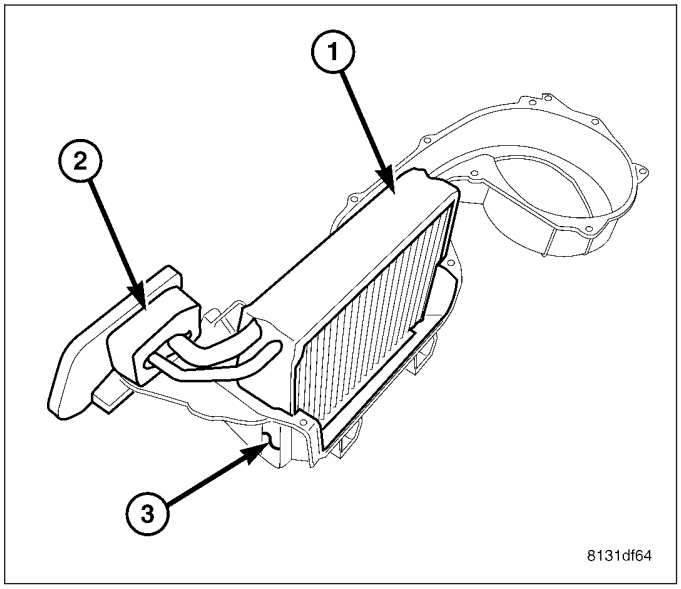

3. Install the upper half of the HVAC housing (3) onto the lower half of the HVAC housing (4).
4. Install the screws (2) that secure the two halves of the HVAC housing together. Tighten the screws to 2.2 N·m (20 in lbs.).
5. Install the HVAC wiring harness (1). Make sure the harness is routed through all wiring retainers.

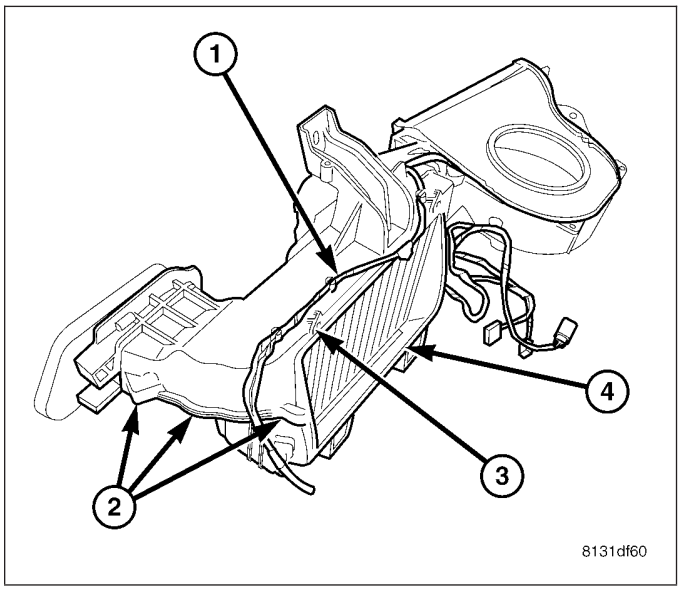

6. Remove the tape or plugs from the evaporator tube fittings and all of the expansion valve ports.
7. Lubricate new rubber O-ring seals with clean refrigerant oil and install them on the evaporator tube fittings. Use only the specified O-rings as they are made of a special material for the R-134a system. Use only refrigerant oil of the type recommended for the A/C compressor in the vehicle.
8. Install the A/C expansion valve (2) onto the evaporator tube tapping block located within the foam seal (3).
9. Install the two bolts (1) that secure the A/C expansion valve to the evaporator tube tapping block. Tighten the bolts to 11 N·m (97 in. lbs.).

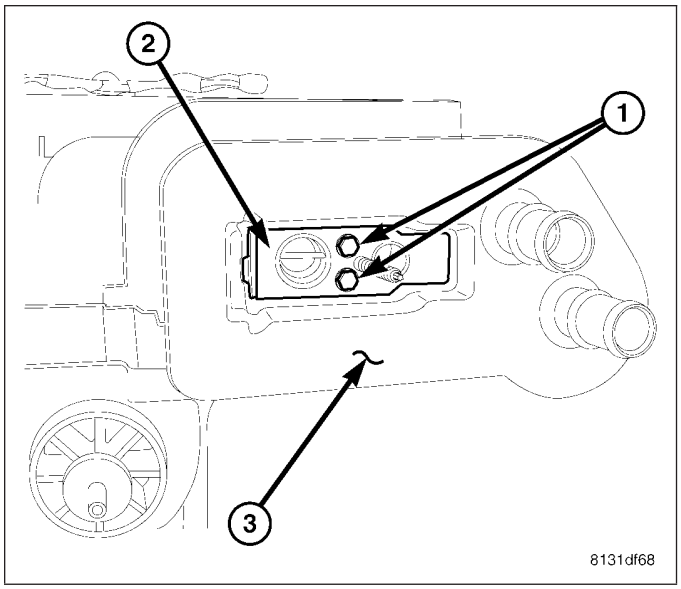

10. Install the evaporator temperature sensor (2) (Refer to 24 - HEATING & AIR CONDITIONING/CONTROLS/EVAPORATOR TEMPERATURE SENSOR - INSTALLATION).
11. Install the blower motor resistor or power module (3), depending on application (Refer to 24 - HEATING & AIR CONDITIONING/CONTROLS/RESISTOR-BLOWER MOTOR - INSTALLATION) or (Refer to 24 - HEATING & AIR CONDITIONING/CONTROLS/MODULE-POWER-BLOWER MOTOR - INSTALLATION).
12. Install the blower motor (4) (Refer to 24 - HEATING & AIR CONDITIONING/DISTRIBUTION/MOTOR-BLOWER - INSTALLATION).
13. Connect the HVAC wire harness (1) to the evaporator temperature sensor, blower motor resistor or power module (depending on application) and the blower motor.
14. Install the two HVAC wire harness retainers (5) onto the blower motor.
15. Install the heater core tubes (4) and the flange (2) to the front of the HVAC housing (3).
16. Install the two screws (1) that secure the flange to the HVAC housing. Tighten the screws to 2.2 N·m (20 in. lbs.).

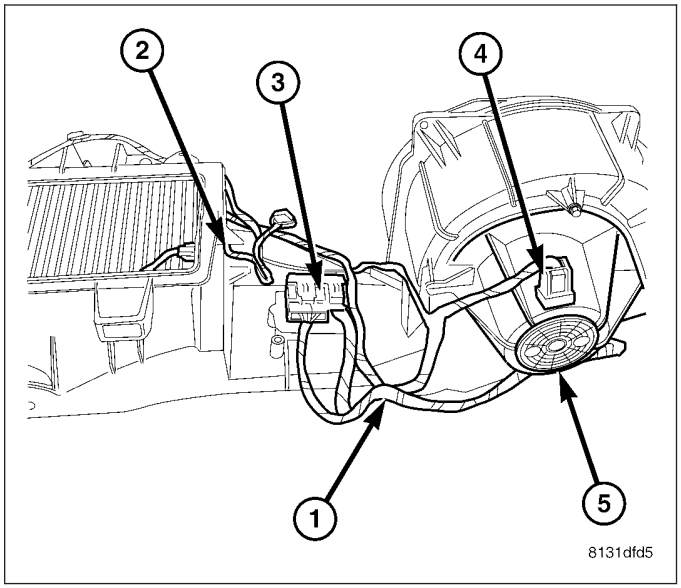

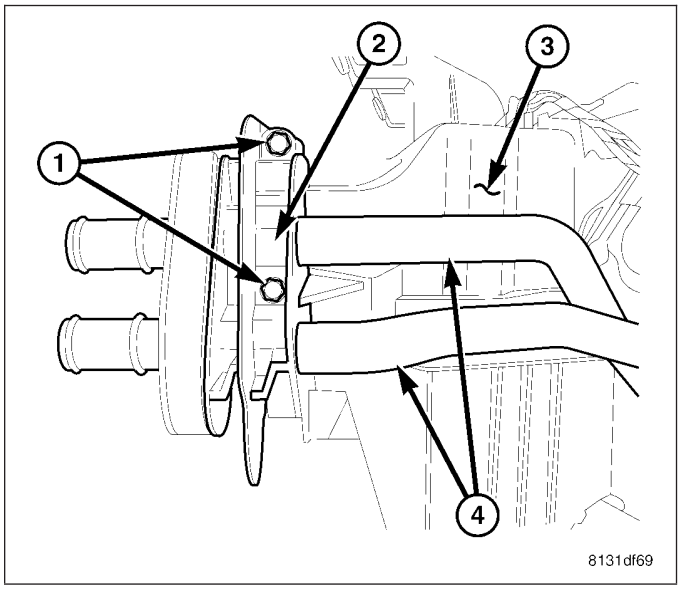

17. Install the air inlet housing (2) onto the HVAC housing (1) (Refer to 24 - HEATING & AIR CONDITIONING/DISTRIBUTION/HOUSING-HVAC - HOUSING- AIR INLET - INSTALLATION).
18. Install the air distribution housing (3) onto the HVAC housing (Refer to 24 - HEATING & AIR CONDITIONING/DISTRIBUTION/HOUSING-HVAC - HOUSING-AIR DISTRIBUTION - INSTALLATION).
19. Install the HVAC housing assembly (Refer to 24 - HEATING & AIR CONDITIONING/DISTRIBUTION/HOUSING-HVAC - HOUSING-HVAC ASSEMBLY - INSTALLATION).

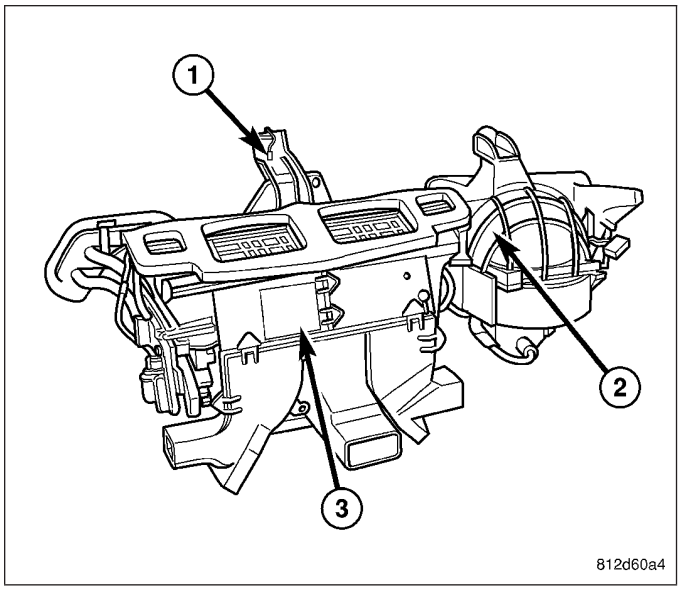

INSTALLATION

HOUSING-AIR DISTRIBUTION

NOTE: LHD model shown in illustrations. RHD model similar.

NOTE: The air distribution housing must be removed from the HVAC housing and disassembled for service of the mode-air and blend-air doors.

1. Position the air distribution housing (1) into the vehicle.
2. Install the air distribution housing onto the rear of the HVAC housing (2) by inserting the tabs on the bottom of the distribution housing into the slots located on the bottom of the HVAC housing and tipping the distribution housing forward until it is properly aligned with the HVAC housing.
3. Connect the floor distribution ducts to the air distribution housing.
4. Install the screws (3) that secure the air distribution housing to the HVAC housing. Tighten the screws to 2.2 N·m (20 in. lbs.).

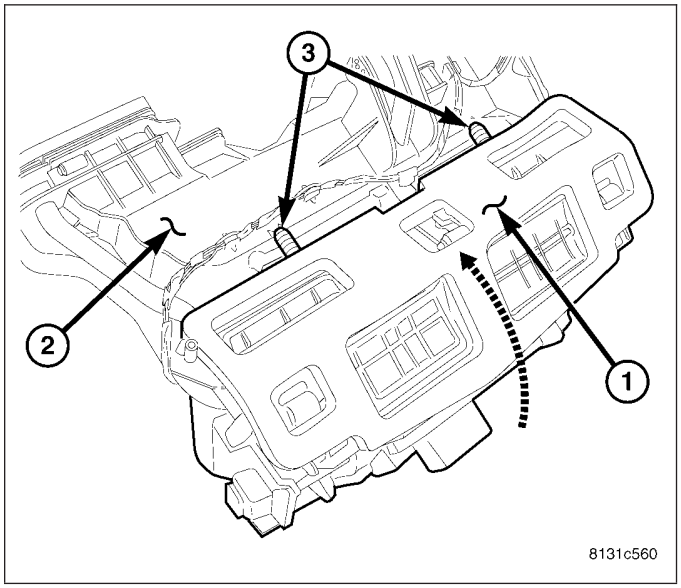

5. Remove the tape or plugs from the heater core tubes and heater core ports.
6. Lubricate new rubber O-ring seals with clean engine coolant and install them onto the heater core tube fittings. Use only the specified O-ring as they are made of a special material for the engine cooling system.
7. Install the heater core tubes (2) onto the heater core (3).
8. Install the two retaining clamps (1) that secure the heater core tubes to the heater core. Make sure that the clamps are installed correctly and securely.

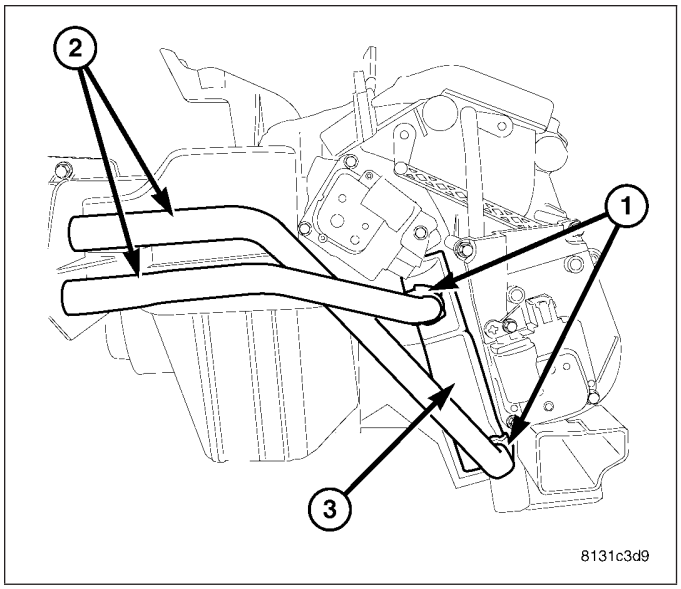

9. Install the heater core tubes (4) and the flange (2) to the front of the HVAC housing (3).
10. Install the two screws (1) that secure the flange to the HVAC housing. Tighten the screws to 2.2 N·m (20 in. lbs.).

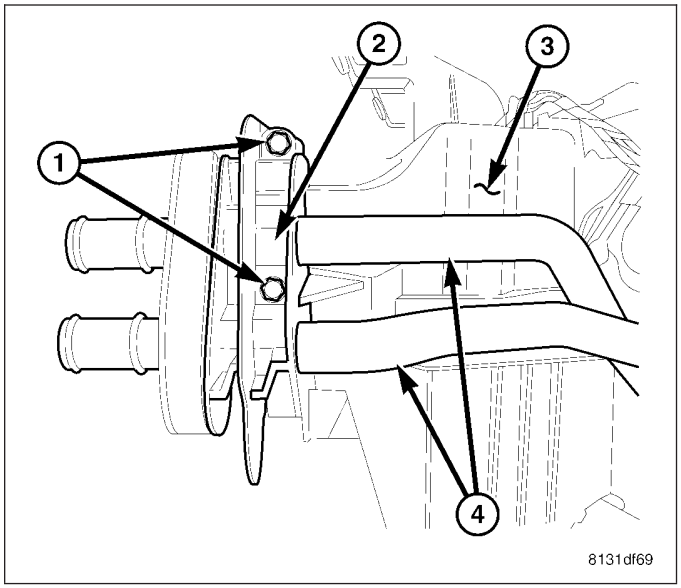

11. Connect the HVAC wire harness (1) to the mode door actuator (2) and the blend door actuator (3) located on the driver side of the air distribution housing (4).
12. If equipped with dual zone heating-A/C, connect the HVAC wire harness to the blend door actuator (5) located on the passenger side of the air distribution housing.
13. Install the floor console duct (Refer to 24 - HEATING & AIR CONDITIONING/DISTRIBUTION/DUCT-FLOOR CONSOLE - INSTALLATION).
14. Install the defroster ducts (Refer to 24 - HEATING & AIR CONDITIONING/DISTRIBUTION/DUCT-DEFROSTER - INSTALLATION).
15. Install the instrument panel (Refer to 23 - BODY/INSTRUMENT PANEL/INSTRUMENT PANEL ASSEMBLY - INSTALLATION).
16. Reconnect the negative battery cable.

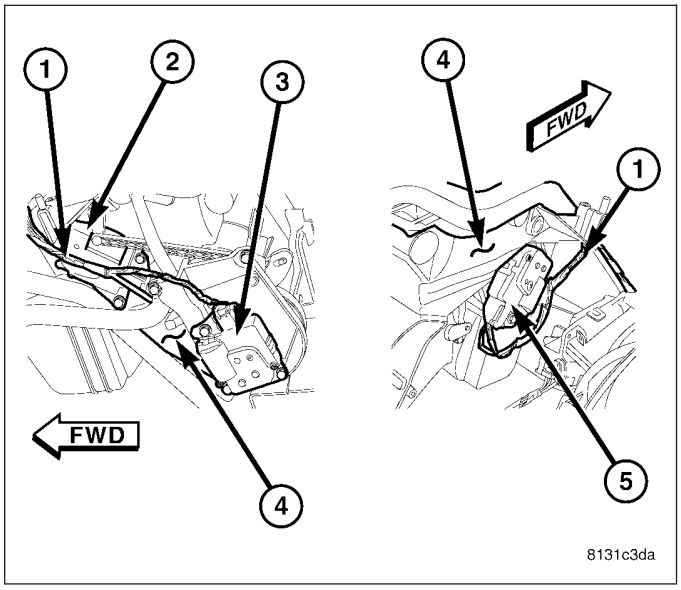

17. Refill the engine cooling system (Refer to 7 - COOLING - STANDARD PROCEDURE - COOLING SYSTEM REFILL).

HOUSING-AIR INLET

NOTE: The air inlet housing must be removed from HVAC housing and disassembled for service of the recirculation-air door.

NOTE: LHD model shown. RHD model similar.

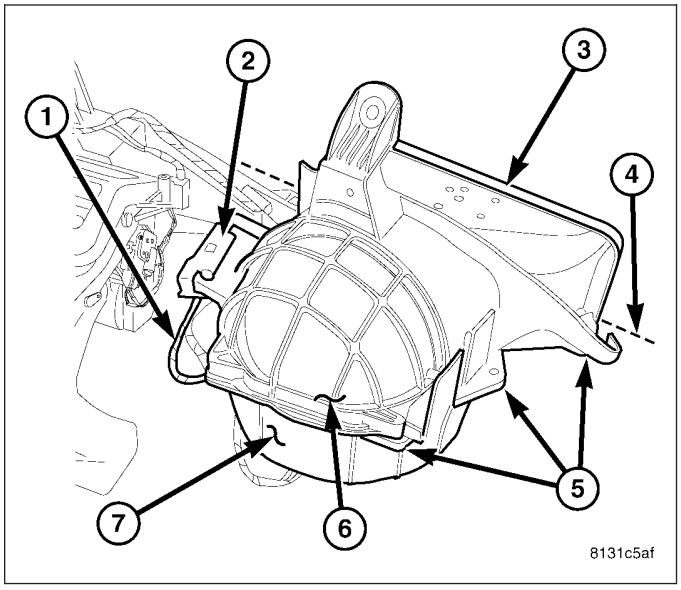

1. Position the air inlet housing (6) onto the HVAC housing (7).

CAUTION: Make sure that the recirculation-air door pivot shaft is properly seated in the pivot seats located on the top of the HVAC housing.

2. Install the five screws (5) that secure the air inlet housing to the HVAC housing. Tighten the screws to 2.2 N·m (20 in. lbs.).
3. Inspect the foam seal (3). If the seal is deformed or damaged, it must be replaced.
4. Connect the HVAC wire harness (1) to the recirculation door actuator (2).
5. Install the HVAC housing assembly (Refer to 24 - HEATING & AIR CONDITIONING/DISTRIBUTION/HOUSING-HVAC - HOUSING-HVAC ASSEMBLY - INSTALLATION)
6. Reconnect the negative battery cable.

HOUSING-HVAC ASSEMBLY

NOTE: The HVAC housing must be removed from the vehicle and disassembled for service of the A/C evaporator.

NOTE: LHD model shown in illustrations. RHD model similar.

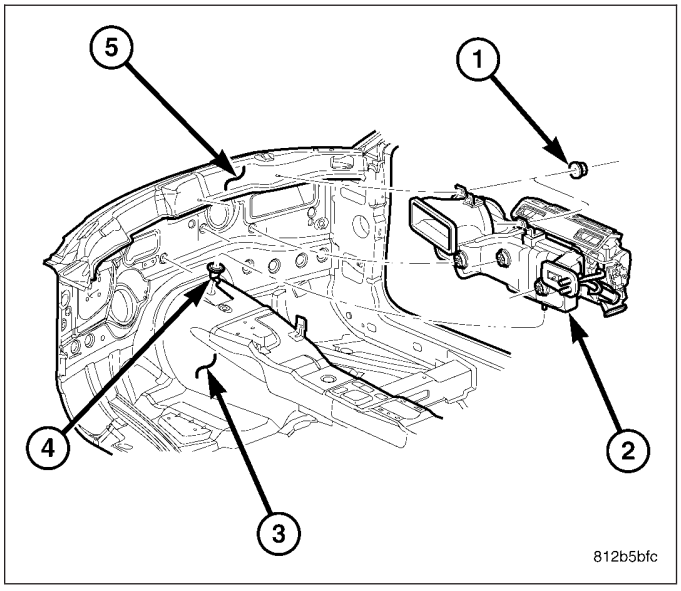

1. Position the HVAC housing (2) into the passenger compartment with the mounting studs in their proper locations in the dash panel (5) and the condensate drain tube into the grommet (4) on the floor panel (3).
2. Install the two nuts (1) that secure the HVAC housing to the passenger compartment side of the dash panel. Tighten the nuts to 3 N·m (26 in. lbs.).
3. Install the defroster ducts (Refer to 24 - HEATING & AIR CONDITIONING/DISTRIBUTION/DUCT-DEFROSTER - INSTALLATION).
4. Connect the floor distribution ducts (Refer to 24 - HEATING & AIR CONDITIONING/DISTRIBUTION - FRONT/DUCT-FLOOR DISTRIBUTION - INSTALLATION).
5. Connect the floor console duct (Refer to 24 - HEATING & AIR CONDITIONING/DISTRIBUTION/DUCT-FLOOR CONSOLE - INSTALLATION).
6. Install the instrument panel (Refer to 23 - BODY/INSTRUMENT PANEL/INSTRUMENT PANEL ASSEMBLY - INSTALLATION).

7. Install the three nuts (1 and 3) that secure the HVAC housing to the engine compartment side of the dash panel (2). Tighten the nuts to 7 N·m (62 in. lbs.).
8. Connect the heater hoses to the heater core tubes.
9. Connect the A/C suction line and A/C liquid line to the A/C evaporator (Refer to 24 - HEATING & AIR CONDITIONING/PLUMBING /LINE-A/C LIQUID - INSTALLATION).
10. Install the fresh air inlet housing to the engine compartment side of the dash panel. (Refer to 24 - HEATING & AIR CONDITIONING/DISTRIBUTION/HOUSING-HVAC - HOUSING-FRESH AIR INLET - INSTALLATION).
11. Reconnect the negative battery cable.
12. If the heater core is being replaced, flush the cooling system (Refer to 7 - COOLING - STANDARD PROCEDURE - COOLING SYSTEM CLEANING/REVERSE FLUSHING).

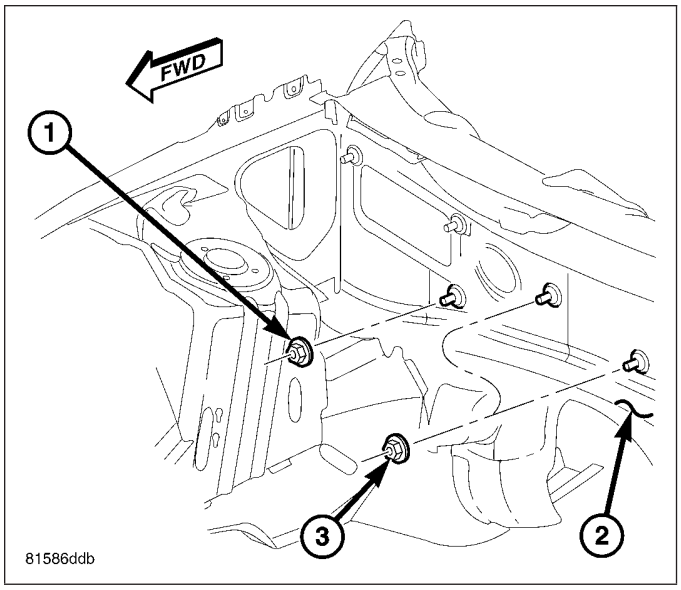

13. Refill the engine cooling system (Refer to 7 - COOLING - STANDARD PROCEDURE - COOLING SYSTEM REFILL).
14. Evacuate the refrigerant system (Refer to 24 - HEATING & AIR CONDITIONING/PLUMBING - STANDARD PROCEDURE - REFRIGERANT SYSTEM EVACUATE).
15. Charge the refrigerant system (Refer to 24 - HEATING & AIR CONDITIONING/PLUMBING - STANDARD PROCEDURE - REFRIGERANT SYSTEM CHARGE).

HOUSING-FRESH AIR INLET

NOTE: The fresh air inlet housing must be removed from the vehicle for removal of the HVAC housing.

NOTE: LHD model shown in illustrations. RHD model similar.

1. Position the fresh air inlet housing (4) and water separator (2) or particulate air filter (6) and filter housing (5) (depending on application) as an assembly onto the engine compartment side of the dash panel (3).
2. Install the two nuts (1) that secure the fresh air inlet housing and water separator or filter housing (depending on application) to the dash panel. Tighten the nuts to 7 N·m (62 in. lbs.).

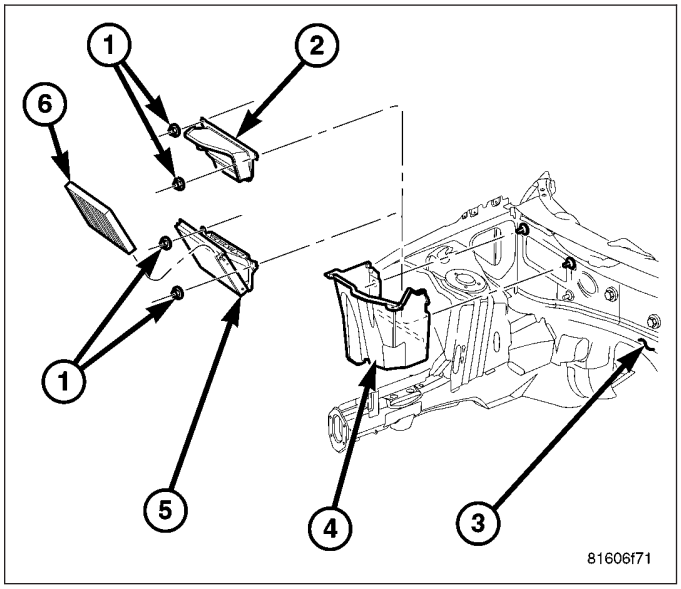

3. Position the insulator (4) into its installed location and install the push-pin retainer (5) that secures the insulator to the front of the fresh air inlet housing (2).
4. Install the push-pin retainer (1) that secures the fresh air inlet housing to the right inner fender (6).
5. Reach under the fresh air inlet housing and install the wire harness retainer (3) into the bottom of the air inlet housing, if equipped.

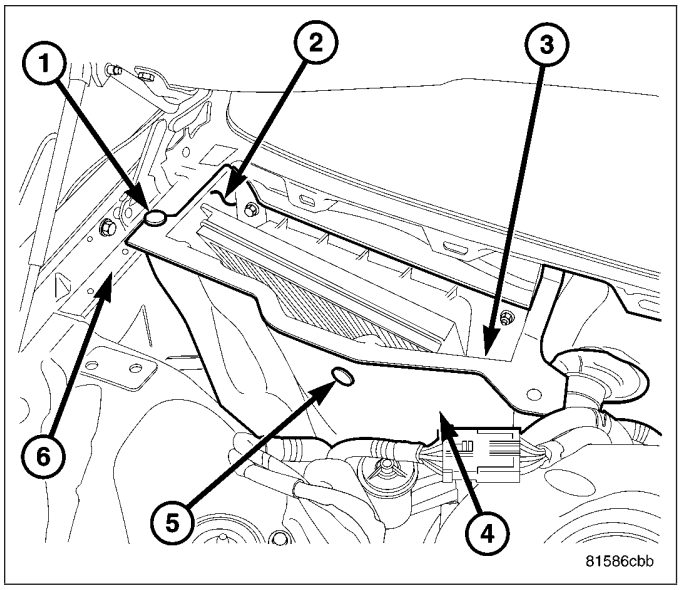

6. Position the powertrain control module (PCM) or the engine control module (ECM) (2) (depending on engine application) into its installed location.
7. Position the strut support (3) into the engine compartment and loosely install the two bolts (1) that secure the strut support and the ECM/PCM to the passenger side strut tower (6).
8. On LHD models, install the purge solenoid (5) onto its mounting bracket located on the right strut tower.
9. Engage the retainer that secures the wire harness (4) to the bottom of the strut support.

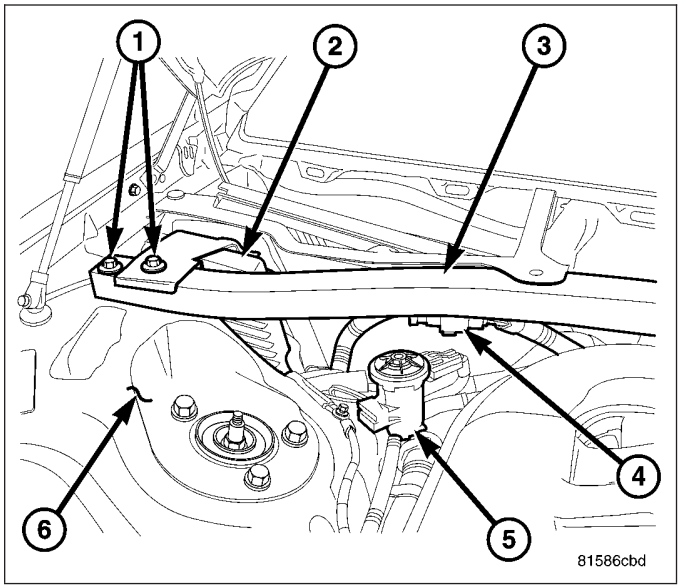

10. Engage the wiper motor (5) to the bracket (4) located on the strut support (2).
11. Position the strut support to the driver side strut tower and loosely install the two bolts (1) that secure the support to the tower.
12. Tighten all four bolts that secure the strut support to 38 N·m (28 ft. lbs.).
13. Install the cowl top panel onto the dash panel (Refer to 23 - BODY/EXTERIOR/PANEL-COWL TOP - INSTALLATION).
14. Reconnect the negative battery cable.

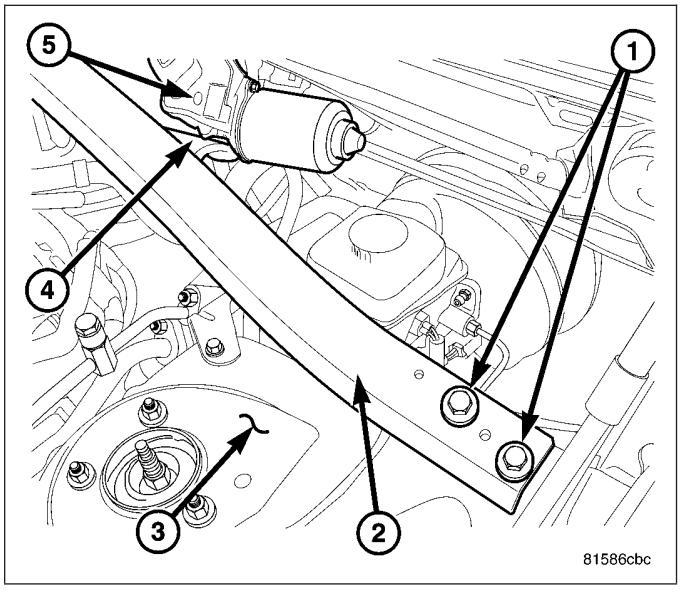

MOTOR-BLOWER

DESCRIPTION

The blower motor (1) is a 12-volt, direct current (DC) motor mounted within a plastic housing with an integral wire harness connector (2) and squirrel cage-type blower wheel (3) that is secured to the blower motor shaft (4). The blower motor wheel is located in the HVAC air inlet housing which is mounted to the passenger side end of the HVAC housing. The blower motor can be accessed for service from underneath the instrument panel.

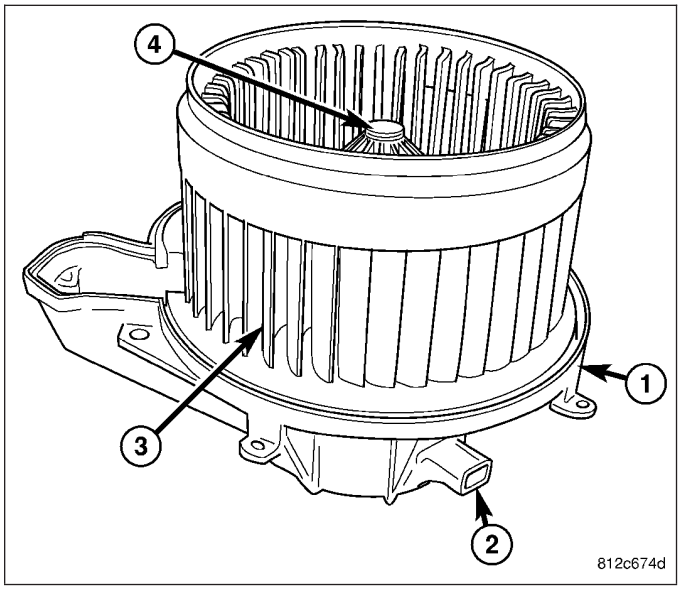

OPERATION

The blower motor is used to control the velocity of air moving through the HVAC housing by spinning the blower wheel within the HVAC air inlet housing at the selected speed or, in the ATC system, at the selected or programmed speed.

On models equipped with the manual temperature control (MTC) heating-A/C system, the blower motor will operate whenever the ignition switch is in the On position and the blower motor control in any position except Off. On models equipped with the automatic temperature control (ATC) system, the blower motor will operate whenever the ignition switch is in the On position and the A/C-heater control power is turned on.

For the MTC system, blower motor speed is controlled by directing the ground path for the blower motor through the correct resistor wire to obtain the selected speed.

For the ATC system, blower motor speed is controlled by the blower motor power module which provides the blower motor with power and a path to ground. The blower motor power module also sends a blower control signal to the A/C-heater control. Using input from the blower motor control (manual mode) or sensor data (automatic mode), the A/C-heater control processes the blower control signal from the power module and sets the speed at which the blower motor will run.

The blower motor and blower wheel are factory balanced and cannot be adjusted or repaired. If faulty or damaged, the blower motor and blower wheel must be replaced as an assembly.

DIAGNOSIS AND TESTING

BLOWER MOTOR

WARNING: On vehicles equipped with airbags, disable the airbag system before attempting any steering wheel, steering column, or instrument panel component diagnosis or service. Disconnect and isolate the negative battery (ground) cable, then wait two minutes for the airbag system capacitor to discharge before performing further diagnosis or service. Failure to take the proper precautions could result in accidental airbag deployment and possible personal injury or death.

NOTE: For circuit descriptions and diagrams, refer to Air Conditioning/Heater in Group 8W - Wiring Diagrams.

OPERATION

Possible causes of an inoperative blower motor include:

- Faulty fuse
- Faulty blower motor resistor or power module (depending on application)
- Faulty blower motor switch
- Faulty mode control switch
- Faulty blower motor
- Faulty blower motor circuit wiring or wire harness connectors

Possible causes of the blower motor not operating in all speeds include:

- Faulty fuse
- Faulty blower motor resistor or power module (depending on application)
- Faulty blower motor switch
- Faulty blower motor
- Faulty blower motor circuit wiring or wire harness connectors

VIBRATION

Possible causes of blower motor vibration include:

- Improper blower motor mounting
- Improper blower wheel mounting
- Deformed blower wheel
- Out of balance blower wheel due to foreign material in the wheel
- Faulty blower motor

NOISE

To determine if the blower motor is the source of the noise, simply switch the blower motor from Off to On. To verify that the blower motor is the source of the noise, unplug the blower motor wire harness connector and operate the heater-A/C system. If the noise goes away, possible causes include:

- Foreign material in the HVAC air inlet housing
- Improper blower motor mounting
- Improper blower wheel mounting
- Faulty blower motor

REMOVAL

WARNING: On vehicles equipped with airbags, disable the airbag system before attempting any steering wheel, steering column, or instrument panel component diagnosis or service. Disconnect and isolate the negative battery (ground) cable, then wait two minutes for the airbag system capacitor to discharge before performing further diagnosis or service. This is the only sure way to disable the airbag system. Failure to take the proper precautions could result in accidental airbag deployment and possible personal injury or death.

NOTE: LHD model shown. RHD model similar.

1. Disconnect and isolate the negative battery cable.
2. Remove the instrument panel silencer from the passenger side of the instrument panel (Refer to 23 - BODY/INSTRUMENT PANEL/INSTRUMENT PANEL SILENCER - REMOVAL)
3. Disengage the wire harness connector locking tab and disconnect the wire harness connector (1) and wire harness retainers from the blower motor (2).
4. Remove the four screws (3) that secure the blower motor to the HVAC housing (4).
5. Remove the blower motor from the HVAC housing.

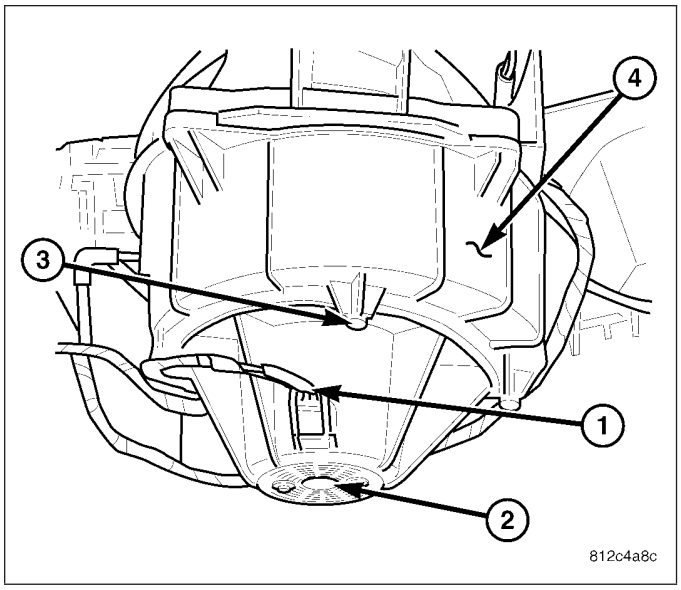

INSTALLATION

NOTE: LHD model shown. RHD model similar.

1. Position the blower motor (2) into the HVAC housing (4).
2. Install the four screws (3) that secure the blower motor to the HVAC housing. Tighten the screws to 2.2 N·m (20 in. lbs.).
3. Connect the wire harness connector (1) to the blower motor and engage the wire harness connector locking tab.
4. Install the HVAC wire harness retainers onto the blower motor.
5. Install the instrument panel silencer onto the passenger side of the instrument panel (Refer to 23 - BODY/INSTRUMENT PANEL/INSTRUMENT PANEL SILENCER - INSTALLATION)
6. Reconnect the negative battery cable.

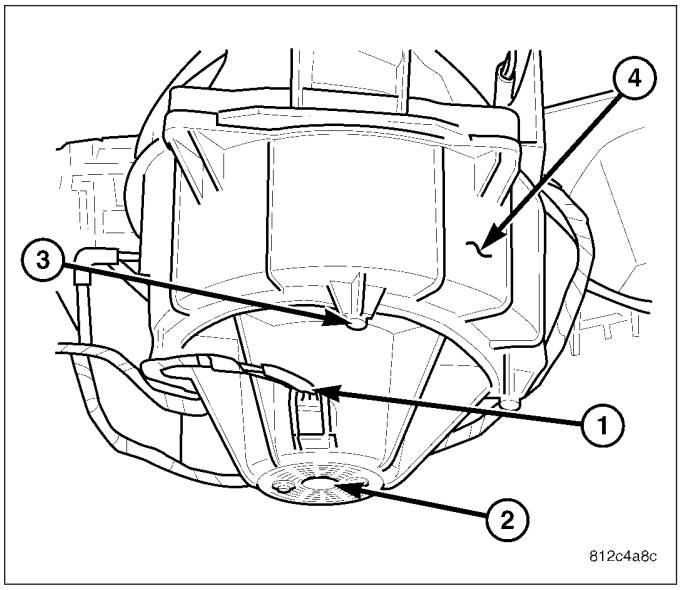

OUTLETS-AIR

DESCRIPTION

CHRYSLER

NOTE: LHD model shown. RHD model similar.

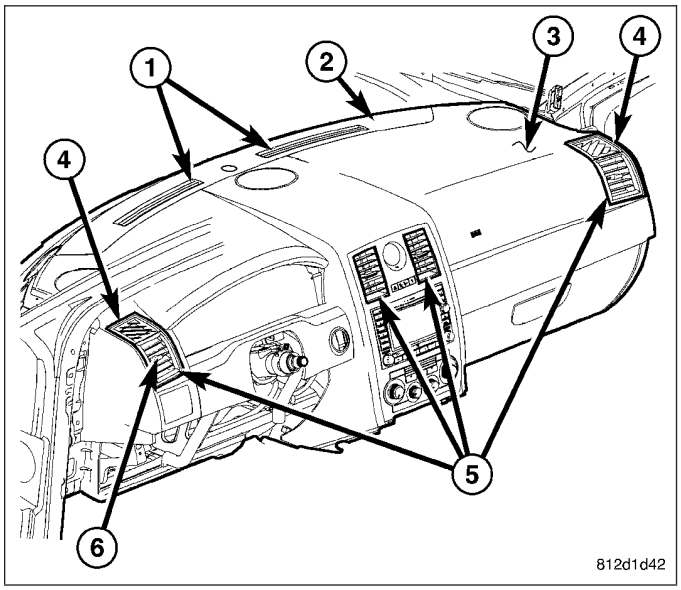

There are two defroster air outlets (1) in the defroster grille (2) located on the top of the instrument panel (3). The airflow from the defroster outlets is directed by fixed vanes in the defroster grille and cannot be adjusted. The defroster air outlets are not serviceable from the defroster grille (Refer to 23 - BODY/INSTRUMENT PANEL/DEFROSTER GRILLE - REMOVAL).

There are two side window demister air outlets (4). One located on each end of the instrument panel top cover. The airflow from the side window demister air outlets is directed by fixed vanes in the outlets and cannot be adjusted. The side window demister air outlets are only serviced with the outboard instrument panel air outlets.

There are four instrument panel air outlets (5). One air outlet is located near each outboard end of the instrument panel facing the rear of the vehicle and two air outlets are located at the top of the instrument panel center bezel. Each of the instrument panel air outlets contain a non-serviceable grille with movable vanes (6) that are used to direct or shut off the flow of the conditioned air leaving the instrument panel outlets. Only the outboard instrument panel air outlets can be serviced separately. For service of the other instrument panel air outlets, refer to 23 - BODY/INSTRUMENT PANEL/INSTRUMENT PANEL CENTER BEZEL - REMOVAL.

DODGE

NOTE: LHD model shown. RHD model similar.

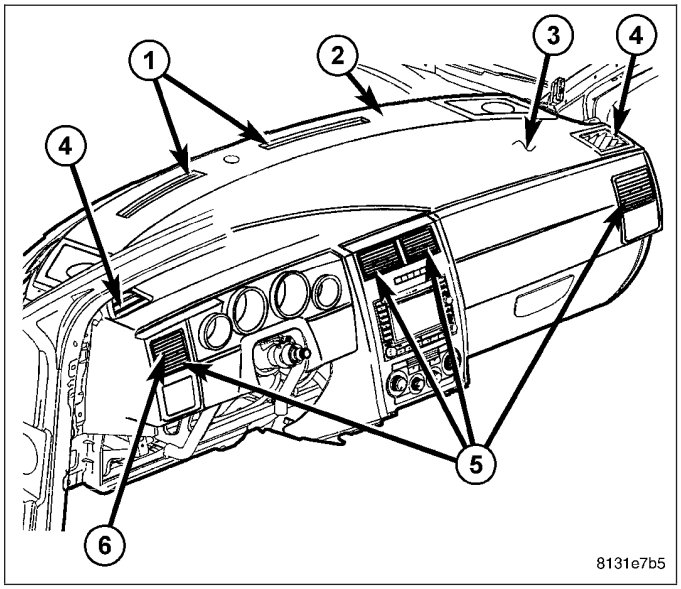

There are two defroster air outlets (1) in the defroster grille (2) located on the top of the instrument panel (3). The airflow from the defroster outlets is directed by fixed vanes in the defroster grille and cannot be adjusted. The defroster air outlets are not serviceable from the defroster grille (Refer to 23 - BODY/INSTRUMENT PANEL/DEFROSTER GRILLE - REMOVAL).

There are two side window demister air outlets (4). One located on each end of the instrument panel top cover. The airflow from the side window demister air outlets is directed by fixed vanes in the outlets and cannot be adjusted. The side window demister air outlets are not serviceable from the instrument panel top pad (Refer to 23 - BODY/INSTRUMENT PANEL/INSTRUMENT PANEL TOP PAD - REMOVAL).

There are four instrument panel air outlets (5). One air outlet is located near each outboard end of the instrument panel facing the rear of the vehicle and two air outlets are located at the top of the instrument panel center bezel. Each of the instrument panel air outlets contain a replaceable grille with movable vanes (6) that are used to direct or shut off the flow of the conditioned air leaving the instrument panel outlets. Only the passenger side outboard instrument panel air outlet can be serviced separately. For service of the other instrument panel air outlets,

refer to 23 - BODY/INSTRUMENT PANEL/CLUSTER BEZEL - REMOVAL and 23 - BODY/INSTRUMENT PANEL/ INSTRUMENT PANEL CENTER BEZEL - REMOVAL.

REMOVAL

AIR OUTLET - CHRYSLER

NOTE: Only the outboard instrument panel air outlets can be serviced separately. For service of the other instrument panel air outlets refer to 23 - BODY/INSTRUMENT PANEL/INSTRUMENT PANEL CENTER BEZEL - REMOVAL.

NOTE: LHD model shown. RHD model similar.

1. Using a trim stick or another suitable wide flat-bladed tool (1), gently pry on both sides of the outboard instrument panel air outlet(s) (2) until the air outlet snap clip retainers are released from the face of the instrument panel (3).
2. Gently slide the air outlet(s) rearward to release the top of the outlet (demister outlet) from the instrument panel.

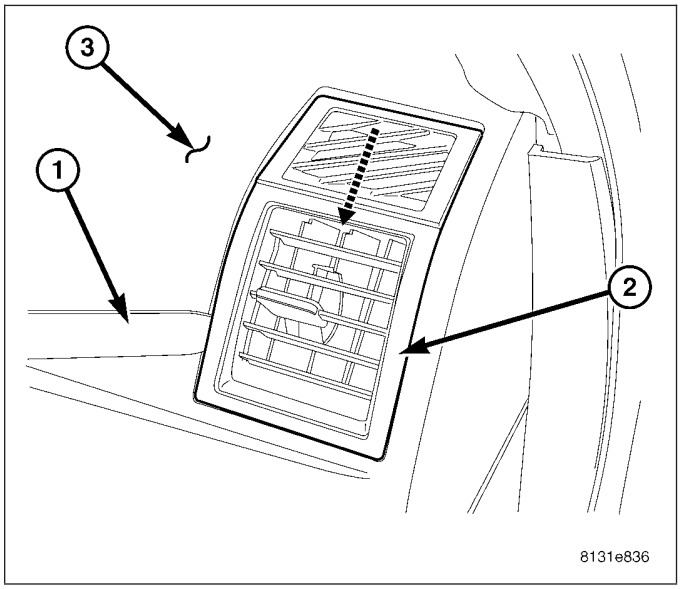

AIR OUTLET - DODGE

NOTE: Only the outboard passenger side instrument panel air outlet can be serviced separately. For service of the other instrument panel air outlets refer to 23 - BODY/INSTRUMENT PANEL/CLUSTER BEZEL - REMOVAL and to 23 - BODY/INSTRUMENT PANEL/INSTRUMENT PANEL CENTER BEZEL - REMOVAL.

NOTE: LHD model shown in illustrations. RHD model similar.

1. Rotate the top of the outboard passenger side air outlet barrel (1) downwards.

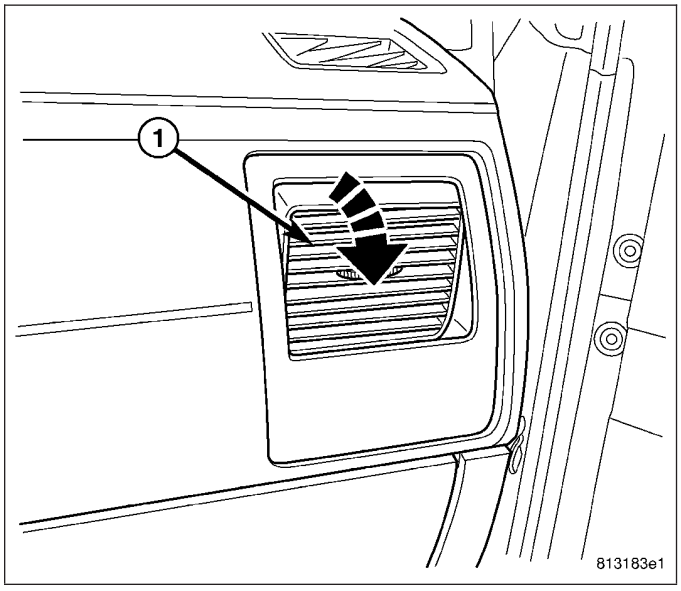

2. Gently pull out on the bottom edge of the air outlet (1) to release the snap clip retainers that secure the outlet to the instrument panel (2).
3. Remove the air outlet from the instrument panel.

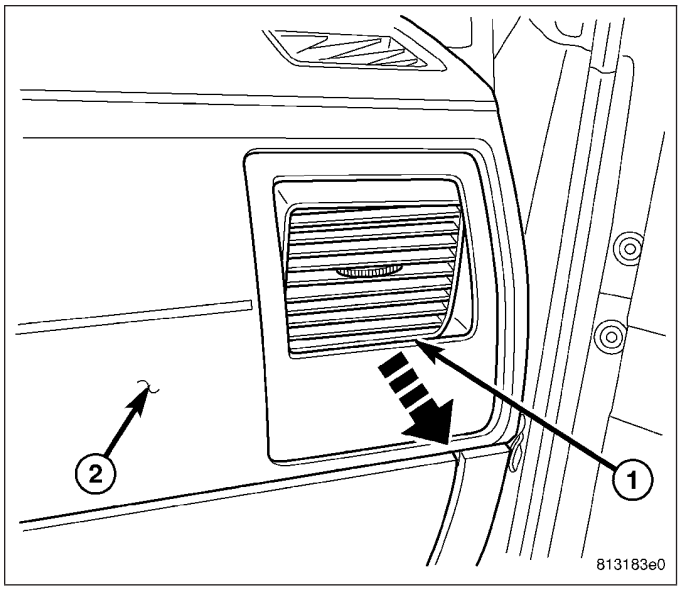

AIR OUTLET BARRELS - DODGE

NOTE: The instrument panel air outlet barrels are retained to the pivots within the air outlets by a snap fit.

NOTE: LHD model shown. RHD model similar.

1. Using a trim stick or another suitable wide flat-bladed tool (1), gently pry the air outlet barrel(s) (2) out of the instrument panel air outlet(s) (3) as required.

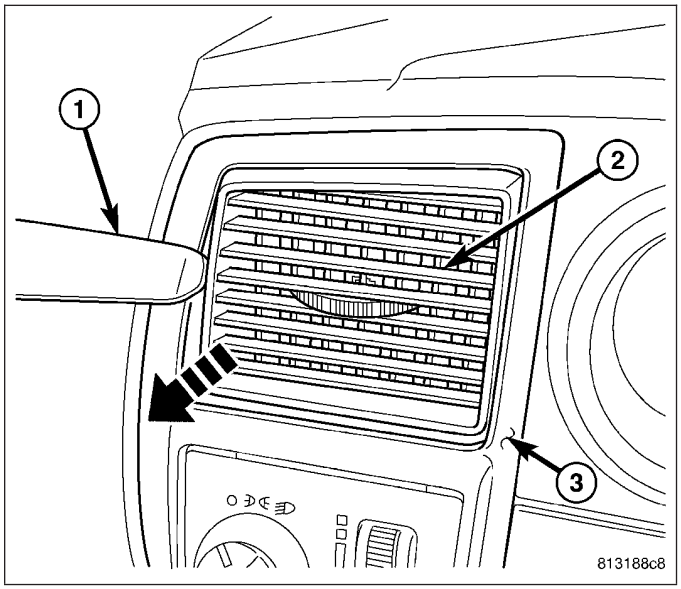

INSTALLATION

AIR OUTLET - CHRYSLER

NOTE: LHD model shown. RHD model similar.

1. Position the outboard air outlet (1) into its location on the instrument panel (2).

NOTE: Make sure that the air outlet is properly aligned to the duct within the instrument panel opening and that the foam seal on the outlet is properly installed.

2. Align the air outlet foam seal (3) with the duct in the instrument panel (4) and slide the top portion of the air outlet into the instrument panel top pad. Gently push on the sides of the air outlet until the snap clip retainers on the outlet are fully engaged to the instrument panel.

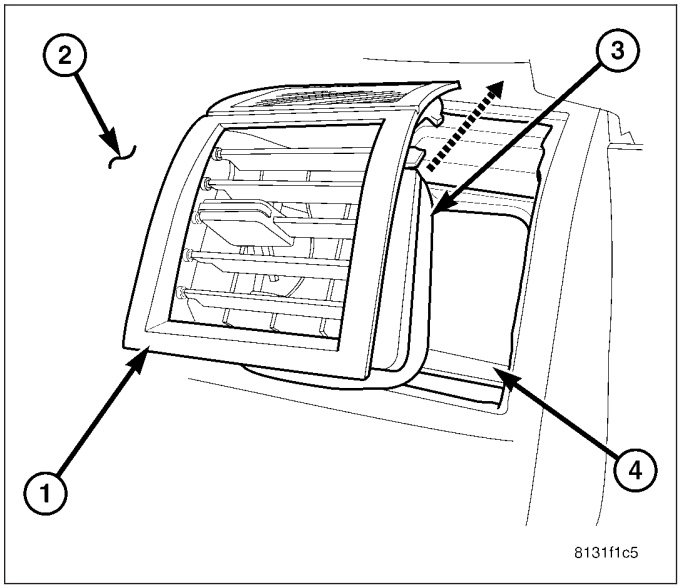

AIR OUTLET - DODGE

NOTE: LHD model shown. RHD model similar.

1. Position the air outlet (1) into its location on the outboard passenger side of the instrument panel (2).

NOTE: Make sure that the air outlet is properly aligned to the duct within the instrument panel opening and that the foam seal on the outlet is properly installed.

2. Align the air outlet foam seal (3) with the duct in the instrument panel (4) and gently push on the air outlet until the snap clip retainers on the outlet are fully engaged to the instrument panel.

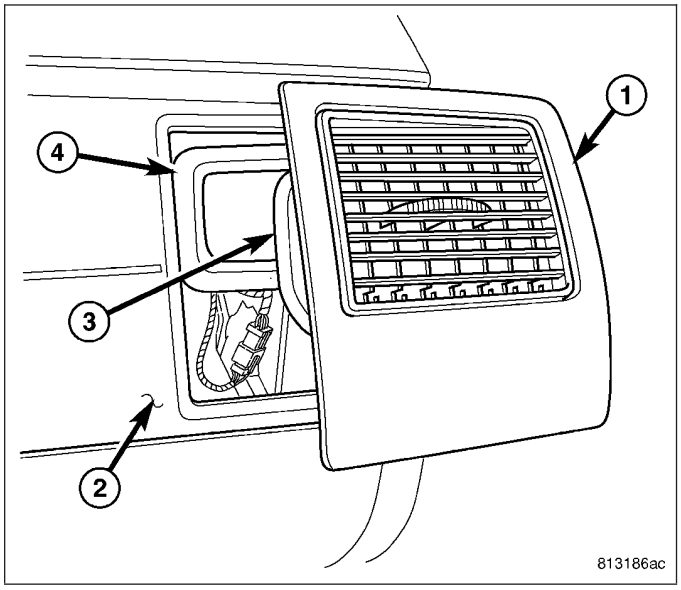

AIR OUTLET BARRELS - DODGE

NOTE: LHD model shown in illustration. RHD model similar.

1. Install the air outlet barrel (1) onto the pivot shaft (2) on the right side of the instrument panel air outlet (3).

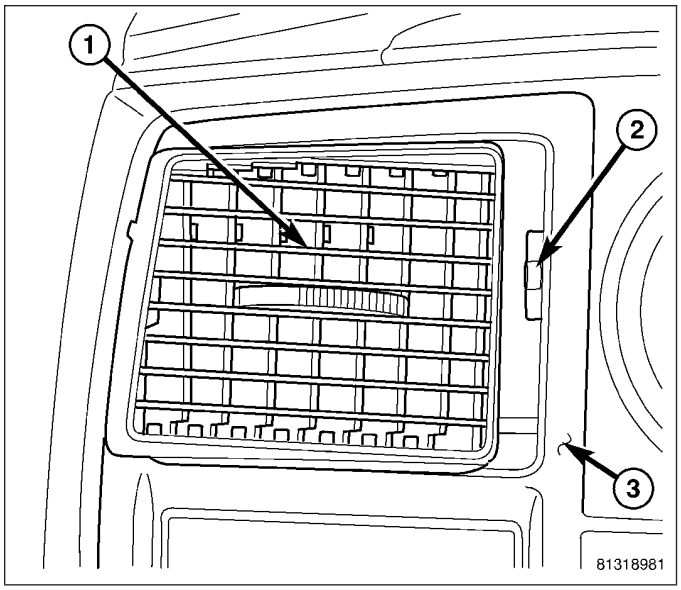

2. Gently push the air outlet barrel (1) onto the pivot shaft (2) on the left side of the instrument panel air outlet (3).

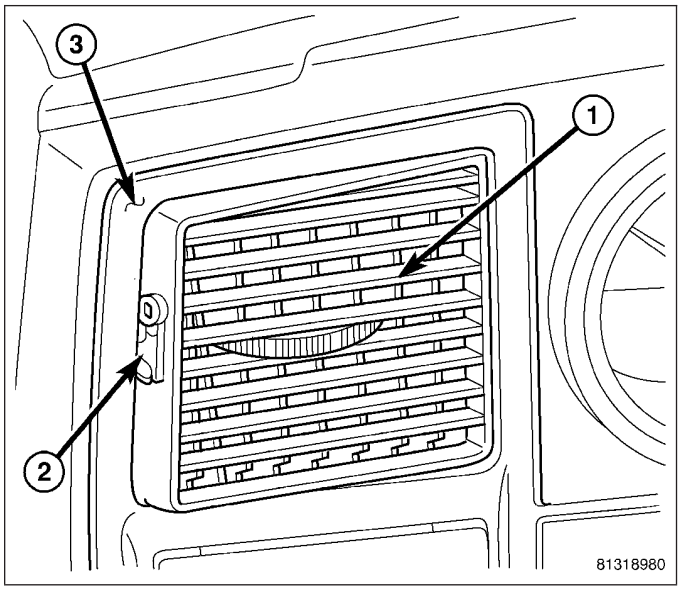

PLUMBING

TABLE OF CONTENTS

page

PLUMBING
DESCRIPTION 423
OPERATION 423
WARNING 423
CAUTION 424
DIAGNOSIS AND TESTING
REFRIGERANT SYSTEM LEAKS 425
STANDARD PROCEDURE
REFRIGERANT SYSTEM SERVICE EQUIPMENT 426
REFRIGERANT SYSTEM RECOVERY 427
REFRIGERANT SYSTEM EVACUATE 427
REFRIGERANT SYSTEM CHARGE 428
COMPRESSOR-A/C
DESCRIPTION
A/C COMPRESSOR 429
HIGH PRESSURE RELIEF VALVE 429
OPERATION
A/C COMPRESSOR 429
HIGH PRESSURE RELIEF VALVE 429
DIAGNOSIS AND TESTING
A/C COMPRESSOR 430
REMOVAL
2.7L ENGINE 430
3.0L ENGINE 431
3.5L ENGINE 432
5.7L/6.1L ENGINES 433
INSTALLATION
2.7L ENGINE 434
3.0L ENGINE 436
3.5L ENGINE 437
5.7L/6.1L ENGINES 438
CONDENSER-A/C
DESCRIPTION 440
OPERATION 440
REMOVAL 440
INSTALLATION 441
CORE-HEATER
DESCRIPTION 442
OPERATION 442
REMOVAL 442
INSTALLATION 443

page

CORE-VALVE-SERVICE PORT
DESCRIPTION 445
REMOVAL 445
INSTALLATION 446
EVAPORATOR-A/C
DESCRIPTION 447
OPERATION 447
REMOVAL 447
INSTALLATION 448
LINE-A/C DISCHARGE
DESCRIPTION 449
REMOVAL 449
INSTALLATION 450
LINE-A/C LIQUID
DESCRIPTION 452
REMOVAL 452
INSTALLATION 454
LINE-A/C SUCTION
DESCRIPTION 457
REMOVAL 457
INSTALLATION 459
OIL-A/C REFRIGERANT
DESCRIPTION 461
OPERATION 461
STANDARD PROCEDURE
REFRIGERANT OIL LEVEL 461
RECEIVER/DRIER-A/C
DESCRIPTION 463
OPERATION 463
REMOVAL 463
INSTALLATION 464
REFRIGERANT-A/C
DESCRIPTION 465
OPERATION 465
VALVE-A/C EXPANSION
DESCRIPTION 466
OPERATION 466
DIAGNOSIS AND TESTING
A/C EXPANSION VALVE 466
REMOVAL 467
INSTALLATION 468

PLUMBING

DESCRIPTION

The A/C refrigerant lines and hoses are used to carry the refrigerant between the various A/C system components. The refrigerant lines and hoses for the R-134a system on this vehicle consist of a barrier-hose design with a nylon tube sandwiched between rubber layers. The nylon tube helps to contain the R-134a refrigerant, which has a smaller molecular structure than R-12 refrigerant. The ends of the refrigerant lines are made from lightweight aluminum or steel, and commonly use braze-less fittings.

Any kinks or sharp bends in the refrigerant lines and hoses will reduce the capacity of the entire A/C system and can reduce the flow of refrigerant in the system. The radius of all bends in the flexible hose refrigerant lines should be at least ten times the diameter of the hose and the refrigerant lines should be routed so they are at least 80 millimeters (3 inches) away from the exhaust manifold(s) and exhaust pipe(s).

OPERATION

High pressures are produced in the refrigerant system when the A/C compressor is operating. Extreme care must be exercised to make sure that each of the refrigerant system connections is pressure-tight and leak free. It is a good practice to inspect all flexible hose refrigerant lines at least once a year to make sure they are in good condition and properly routed.

The refrigerant lines and hoses are coupled to other A/C system components with block-type fittings. A flat steel gasket with an integral O-ring (dual plane seal) is used to mate the refrigerant line fittings with A/C system components to ensure the integrity of the refrigerant system.

The refrigerant lines and hoses cannot be repaired and, if faulty or damaged, they must be replaced.

WARNING

WARNING: The A/C system contains refrigerant under high pressure. Repairs should only be performed by qualified service personnel. Severe personal injury or death may result from improper service procedures.

WARNING: Avoid breathing the refrigerant and refrigerant oil vapor or mist. Exposure may irritate the eyes, nose, and/or throat. Wear eye protection when servicing the A/C refrigerant system. Serious eye injury can result from direct contact with the refrigerant. If eye contact occurs, seek medical attention immediately.

WARNING: Do not expose the refrigerant to open flame. Poisonous gas is created when refrigerant is burned. An electronic leak detector is recommended. Severe personal injury or death may result from improper service procedures.

WARNING: If accidental system discharge occurs, ventilate the work area before resuming service. Large amounts of refrigerant released in a closed work area will displace the oxygen and cause suffocation and death.

WARNING: The evaporation rate of R-134a refrigerant at average temperature and altitude is extremely high. As a result, anything that comes in contact with the refrigerant will freeze. Always protect the skin or delicate objects from direct contact with the refrigerant.

WARNING: The R-134a service equipment or the vehicle refrigerant system should not be pressure tested or leak tested with compressed air. Some mixtures of air and R-134a have been shown to be combustible at elevated pressures. These mixtures are potentially dangerous, and may result in fire or explosion causing property damage, personal injury or death.

WARNING: The engine cooling system is designed to develop internal pressures up to 145 kilopascals (21 pounds per square inch). Do not remove or loosen the coolant pressure cap, cylinder block drain plugs, radiator drain, radiator hoses, heater hoses, or hose clamps while the engine cooling system is hot and under pressure. Allow the vehicle to cool for a minimum of 15 minutes before opening the cooling system for service. Failure to observe this warning can result in serious burns from the heated engine coolant.

CAUTION

CAUTION: Never add R-12 to a refrigerant system designed to use R-134a. Do not use R-12 equipment or parts on an R-134a A/C system. These refrigerants are not compatible and damage to the A/C system will result.

CAUTION: Never use R-12 refrigerant oil in an A/C system designed to use R-134a refrigerant oil. These refrigerant oils are not compatible and damage to the A/C system will result.

CAUTION: The use of A/C system sealers may result in damage to A/C refrigerant recovery/evacuation/recharging equipment and/or A/C system. Many federal, state/provincial and local regulations prohibit the recharge of A/C systems with known leaks. DaimlerChrysler recommends the detection of A/C system leaks through the use of approved leak detectors and fluorescent leak detection dyes. Vehicles found with A/C system sealers should be treated as contaminated and replacement of the entire A/C refrigerant system is recommended. A/C systems found to be contaminated with A/C system sealers, A/C stop-leak products or seal conditioners voids the warranty for the A/C system.

CAUTION: Recover the refrigerant before opening any fitting or connection. Open the fittings with caution, even after the system has been discharged. Never open or loosen a connection before recovering the refrigerant.

CAUTION: If equipped, do not remove the secondary retention clip from any spring-lock coupler connection while the refrigerant system is under pressure. Recover the refrigerant before removing the secondary retention clip. Open the fittings with caution, even after the system has been discharged. Never open or loosen a connection before recovering the refrigerant.

CAUTION: The internal parts of the A/C system will remain stable as long as moisture-free refrigerant and refrigerant oil is used. Abnormal amounts of dirt, moisture or air can upset the chemical stability. This may cause operational troubles or even serious damage if present in more than very small quantities. Before disconnecting a component, clean the outside of the fittings thoroughly to prevent contamination from entering the refrigerant system. Keep service tools and the work area clean. Do not open the refrigerant system or uncap a replacement component until you are ready to service the system. Immediately after disconnecting a component from the refrigerant system, seal the open fittings with a cap or plug. This will prevent contamination from entering the A/C system.

CAUTION: Refrigerant oil will absorb moisture from the atmosphere if left uncapped. Do not open a container of refrigerant oil until you are ready to use it. Replace the cap on the oil container immediately after using. Store refrigerant oil only in a clean, airtight, and moisture-free container.

CAUTION: Do not overcharge the refrigerant system. Overcharging will cause excessive compressor head pressure and can cause compressor noise and A/C system failure.

DIAGNOSIS AND TESTING

REFRIGERANT SYSTEM LEAKS

WARNING: R-134a service equipment or vehicle A/C system should not be pressure tested or leak tested with compressed air. Mixture of air and R-134a can be combustible at elevated pressures. These mixtures are potentially dangerous and may result in fire or explosion causing property damage, personal injury or death.
Avoid breathing A/C refrigerant and lubricant vapor or mist. Exposure may irritate eyes, nose and throat. Use only approved service equipment meeting SAE requirements to discharge an R-134a system. If accidental system discharge occurs, ventilate work area before resuming service.

NOTE: If the A/C refrigerant system charge is empty or low, a leak in the A/C system is likely. Visually inspect all A/C lines, fittings and components for an oily residue. Oil residue can be an indicator of an A/C system leak location.

NOTE: The only way to correctly determine if the refrigerant system is fully charged with R-134a is to completely evacuate and recharge the A/C system.

Connect a suitable manifold gauge set and determine if the static A/C system pressure is above or below 345 kPa (50 psi) (refer to 24 - HEATING & AIR CONDITIONING/PLUMBING - STANDARD PROCEDURE - REFRIGERANT SYSTEM SERVICE EQUIPMENT). If less than 345 kPa (50 psi), proceed to SYSTEM EMPTY . If greater than 345 kPa (50 psi), go to SYSTEM LOW .

SYSTEM EMPTY

1. Evacuate the refrigerant system to the lowest degree of vacuum possible (approximately -88 kPa (- 26 in. Hg) or greater vacuum) (Refer to 24 - HEATING & AIR CONDITIONING/PLUMBING - STANDARD PROCEDURE - REFRIGERANT SYSTEM EVACUATE). Determine if the system holds a vacuum for 15 minutes. If vacuum is held, a leak is probably not present. If system will not maintain vacuum level, proceed to Step 2.
2. Prepare and dispense 0.284 kilograms (10 ounces) of R-134a refrigerant into the evacuated refrigerant system (Refer to 24 - HEATING & AIR CONDITIONING/PLUMBING - STANDARD PROCEDURE - REFRIGERANT SYSTEM CHARGE) and proceed to Step 1 of the System Low procedure.

SYSTEM LOW

1. Position the vehicle in a wind free work area. This will aid in detecting small leaks.
2. Operate the heating-A/C system with the engine at idle under the following conditions for at least 5 minutes.
   - Doors or windows open
   - Transmission in Park
   - A/C-heater controls set to outside air, full cool, panel mode, high blower and with A/C compressor engaged

CAUTION: A leak detector only designed for R-12 refrigerant will not detect leaks in an R-134a refrigerant system.

3. Shut the vehicle Off and wait 2-7 minutes. Then use an electronic leak detector that is designed to detect R-134a refrigerant and search for leaks. Fittings, lines or components that appear to be oily usually indicate a refrigerant leak. To inspect the A/C evaporator for leaks, insert the leak detector probe into the drain tube opening or an air outlet. A dye for R-134a is available to aid in leak detection. Use only DaimlerChrysler approved refrigerant dye.

STANDARD PROCEDURE

REFRIGERANT SYSTEM SERVICE EQUIPMENT

WARNING: Eye protection must be worn when servicing an A/C refrigerant system. Turn all valves off (rotate clockwise) on the equipment being used before connecting or disconnecting service equipment from the refrigerant system. Failure to observe these warnings may result in personal injury or death.

WARNING: Refer to the applicable warnings and cautions for this system before performing the following operation (Refer to 24 - HEATING & AIR CONDITIONING/PLUMBING - WARNINGS) and (Refer to 24 - HEATING & AIR CONDITIONING/PLUMBING - CAUTIONS). Failure to follow the warnings and cautions could result in possible personal injury or death.

When servicing the A/C system, an R-134a refrigerant recovery/recycling/charging station that meets SAE standard J2210 must be used (1). Contact an automotive service equipment supplier for refrigerant recovery/recycling/charging equipment. Refer to the operating instructions supplied by the equipment manufacturer for proper care and use of this equipment.

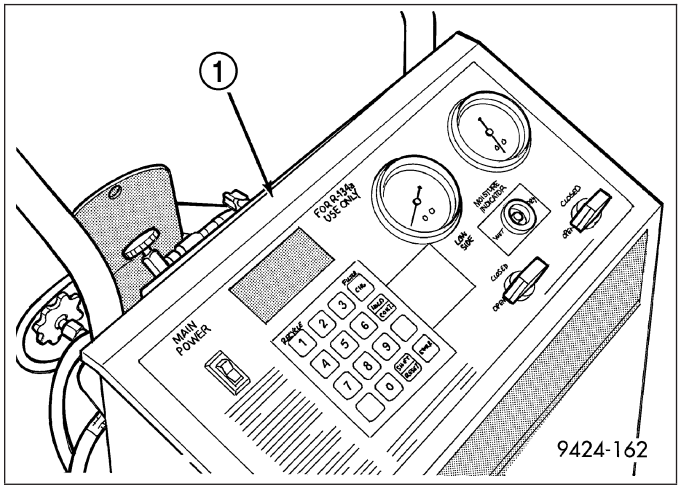

A manifold gauge set (1) may be needed with some recovery/recycling/charging equipment. The manifold gauge set should have manual shut-off valves (2 and 6), or automatic back-flow valves located at the service port connector end of the manifold gauge set hoses (4 and 5). This will prevent refrigerant from being released into the atmosphere.

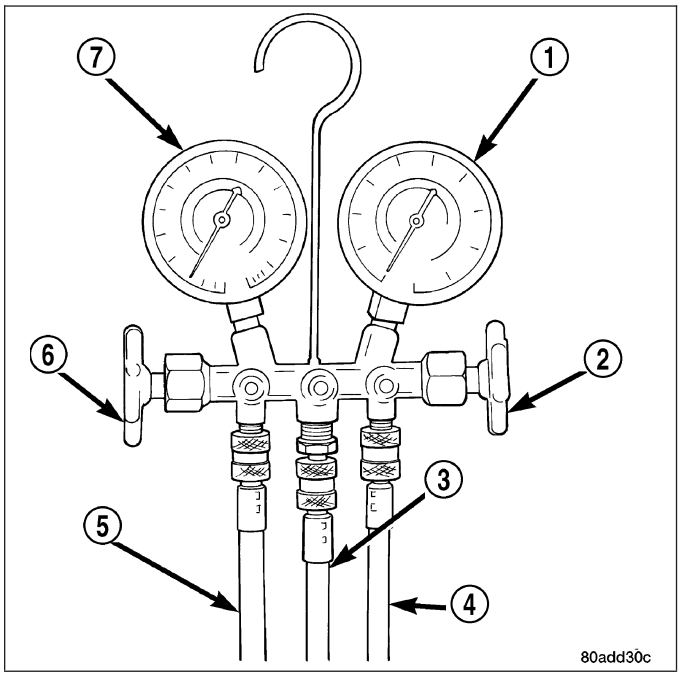

MANIFOLD GAUGE SET CONNECTIONS

CAUTION: Do not use an R-12 manifold gauge set on an R-134a system. The refrigerants are not compatible and system damage will result.

RECOVERY/RECYCLING/EVACUATION/CHARGING HOSE – The center manifold hose (Yellow, or White, with Black stripe) (3) is used to recover, evacuate, and charge the refrigerant system. When the low or high pressure valves on the manifold gauge set are opened, the refrigerant in the system will escape through this hose.

HIGH PRESSURE GAUGE HOSE – The high pressure hose (Red with Black stripe) (4) attaches to the high side service port. This service port is located on the A/C liquid line next to the left shock tower. On this model, an A/C pressure transducer is also installed on the liquid line. A/C high-side pressures can be read using a scan tool. Refer to 9 - Engine Electrical Diagnostics for more information.

LOW PRESSURE GAUGE HOSE – The low pressure hose (Blue with Black stripe) (5) attaches to the low side service port. This service port is located on the A/C suction line behind the left shock tower.

REFRIGERANT SYSTEM RECOVERY

WARNING: Refer to the applicable warnings and cautions for this system before performing the following operation (Refer to 24 - HEATING & AIR CONDITIONING/PLUMBING - WARNINGS) and (Refer to 24 - HEATING & AIR CONDITIONING/PLUMBING - CAUTIONS). Failure to follow the warnings and cautions could result in possible personal injury or death.

An R-134a refrigerant recovery/recycling/charging station (1) that meets SAE standard J2210 must be used to recover the refrigerant from the R-134a refrigerant system. Refer to the operating instructions supplied by the equipment manufacturer for the proper care and use of this equipment.

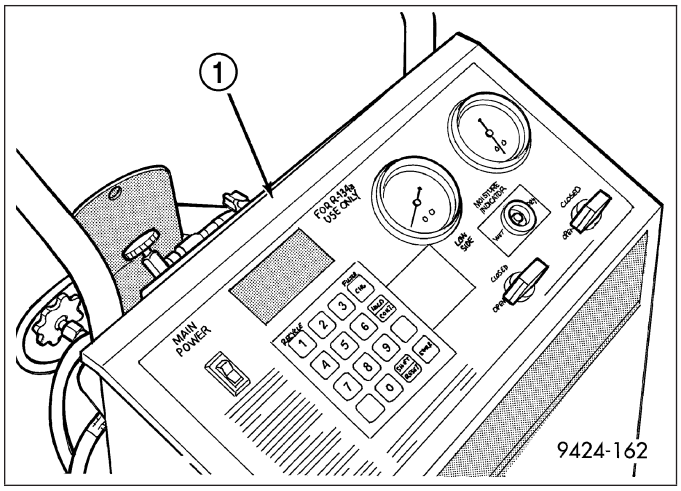

REFRIGERANT SYSTEM EVACUATE

NOTE: Special effort must be used to prevent moisture from entering the A/C system oil. Moisture in the oil is very difficult to remove and will cause a reliability problem with the A/C compressor.

If an A/C compressor designed to use R-134a refrigerant is left open to the atmosphere for an extended period of time. It is recommended that the refrigerant oil be drained and replaced with new oil or a new A/C compressor be used. This will eliminate the possibility of contaminating the refrigerant system.

If the refrigerant system has been open to the atmosphere, it must be evacuated before the system can be filled. Moisture and air mixed with the refrigerant will raise the compressor head pressure above acceptable operating levels. This will reduce the performance of the A/C system and damage the A/C compressor. Moisture will boil at near room temperature when exposed to vacuum. To evacuate the refrigerant system:

NOTE: When connecting the service equipment coupling to the line fitting, verify that the valve of the coupling is fully closed. This will reduce the amount of effort required to make the connection.

1. Recover the refrigerant system (refer to 24 - HEATING & AIR CONDITIONING/PLUMBING - STANDARD PROCEDURE - REFRIGERANT SYSTEM RECOVERY).
2. Connect a suitable charging station, refrigerant recovery machine or a manifold gauge set with vacuum pump and refrigerant recovery equipment (refer to 24 - HEATING & AIR CONDITIONING/PLUMBING - STANDARD PROCEDURE - REFRIGERANT SYSTEM SERVICE EQUIPMENT).
3. Open the suction and discharge valves and start the vacuum pump. The vacuum pump should run a minimum of 45 minutes prior to charge to eliminate all moisture in system. When the suction gauge reads to the lowest degree of vacuum possible (approximately -88 kPa (- 26 in. Hg) or greater) for 30 minutes, close all valves and

turn off vacuum pump. If the system fails to reach specified vacuum, the refrigerant system likely has a leak that must be corrected. If the refrigerant system maintains specified vacuum for at least 30 minutes, start the vacuum pump, open the suction and discharge valves. Then allow the system to evacuate an additional 10 minutes.

4. Close all valves. Turn off and disconnect the vacuum pump.
5. Charge the refrigerant system (refer to 24 - HEATING & AIR CONDITIONING/PLUMBING - STANDARD PROCEDURE - REFRIGERANT SYSTEM CHARGE).

REFRIGERANT SYSTEM CHARGE

WARNING: Refer to the applicable warnings and cautions for this system before performing the following operation (Refer to 24 - HEATING & AIR CONDITIONING/PLUMBING - WARNINGS) and (Refer to 24 - HEATING & AIR CONDITIONING/PLUMBING - CAUTIONS). Failure to follow the warnings and cautions could result in possible personal injury or death.

NOTE: Always refer to the Underhood HVAC Specification Label for the refrigerant fill specification of the vehicle being serviced.

After all refrigerant system leaks have been repaired and the refrigerant system has been evacuated, a refrigerant charge can be injected into the system. For the proper amount of the refrigerant charge, refer to the Underhood HVAC Specification Label.

An R-134a refrigerant recovery/recycling/charging station that meets SAE Standard J2210 must be used to charge the refrigerant system with R-134a refrigerant. Refer to the operating instructions supplied by the equipment manufacturer for proper care and use of this equipment.

CHARGING PROCEDURE

CAUTION: A small amount of refrigerant oil is removed from the A/C system each time the refrigerant system is recovered and evacuated. Before charging the A/C system, you MUST replenish any oil lost during the recovery process. Refer the equipment manufacturer instructions for more information.

1. Evacuate the refrigerant system (Refer to 24 - HEATING & AIR CONDITIONING/PLUMBING - STANDARD PROCEDURE - REFRIGERANT SYSTEM EVACUATE).
2. A manifold gauge set and an R-134a refrigerant recovery/recycling/charging station that meets SAE standard J2210 should be connected to the refrigerant system.
3. Measure the proper amount of refrigerant and heat it to 52° C (125° F) with the charging station. See the operating instructions supplied by the equipment manufacturer for proper use of this equipment.
4. Open both the suction and discharge valves, then open the charge valve to allow the heated refrigerant to flow into the system.
5. When the transfer of refrigerant has stopped, close both the suction and discharge valves.
6. If all of the refrigerant charge did not transfer from the dispensing device, open all of the windows in the vehicle and set the heating-A/C system controls so that the A/C compressor is engaged and the blower motor is operating at its lowest speed setting. Run the engine at a steady high idle (about 1400 rpm). If the A/C compressor does not engage, test the compressor clutch control circuit and repair as required.
7. Open the low-side valve to allow the remaining refrigerant to transfer to the refrigerant system.

WARNING: Take care not to open the discharge (high pressure) valve at this time. Failure to follow this warning could result in possible personal injury or death.

8. Disconnect the charging station and manifold gauge set from the refrigerant system service ports.
9. Reinstall the caps onto the refrigerant system service ports.

COMPRESSOR-A/C

DESCRIPTION

A/C COMPRESSOR

The A/C system uses a Denso 10S17C ten cylinder, double-acting swash plate-type A/C compressor (1). This A/C compressor has a fixed displacement of 170 cubic centimeters (10.374 cubic inches), and has both the suction and discharge ports (2) located on the cylinder head (3) at the rear of the compressor.

A label identifying the use of R-134a refrigerant is located on the A/C compressor.

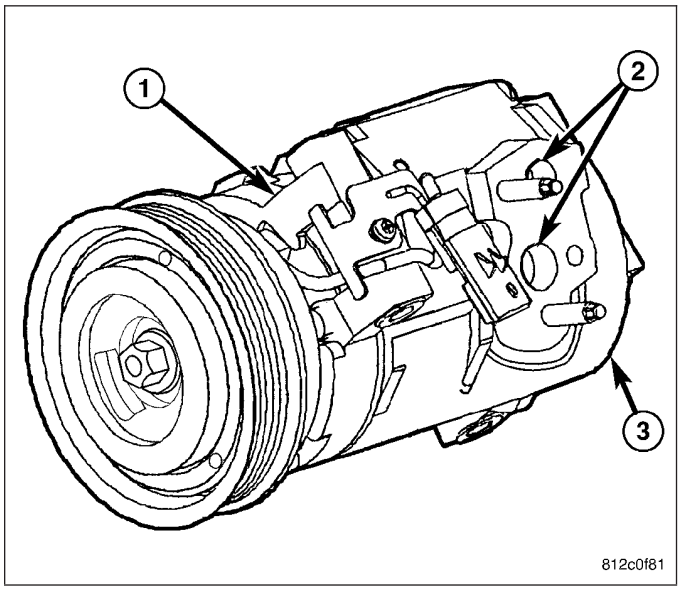

HIGH PRESSURE RELIEF VALVE

A high pressure relief valve is located on the compressor cylinder head, which is at the rear of the A/C compressor (Refer to 24 - HEATING & AIR CONDITIONING/PLUMBING/COMPRESSOR-A/C - DESCRIPTION). This mechanical valve is designed to vent refrigerant from the A/C system to protect against damage to the A/C compressor and other A/C system components, caused by condenser air flow restriction or an overcharge of refrigerant.

OPERATION

A/C COMPRESSOR

The A/C compressor is driven by the engine through an electric clutch, drive pulley and belt arrangement. The A/C compressor is lubricated by refrigerant oil that is circulated throughout the refrigerant system with the refrigerant.

The A/C compressor draws in low-pressure refrigerant vapor from the A/C evaporator through its suction port. It then compresses the refrigerant into a high-pressure, high-temperature refrigerant vapor, which is then pumped to the A/C condenser through the compressor discharge port.

The A/C compressor cannot be repaired and, if faulty or damaged, it must be replaced. The compressor clutch, pulley and bearing assembly, and clutch field coil are available for service. If an internal failure of the A/C compressor has occurred, the receiver/drier must also be replaced.

HIGH PRESSURE RELIEF VALVE

The high pressure relief valve vents refrigerant from the A/C system when a discharge pressure of 3445 to 4135 kPa (500 to 600 psi) or above is reached. The high pressure relief valve closes with a minimum discharge pressure of 2756 kPa (400 psi) is reached.

The high pressure relief valve vents only enough refrigerant to reduce the A/C system pressure, and then re-seats itself. The majority of the refrigerant is conserved in the A/C system. If the high pressure relief valve vents refrigerant, it does not mean the valve is faulty.

The high pressure relief valve is factory-calibrated and cannot be adjusted or repaired, and must not be removed or otherwise disturbed. The valve is only serviced as a part of the A/C compressor.

DIAGNOSIS AND TESTING

A/C COMPRESSOR

When investigating an A/C system related noise, you must first know the conditions under which the noise occurs. These conditions include: weather, vehicle speed, transmission in gear or neutral, engine speed, engine temperature, and any other special conditions. Noises that develop during A/C operation can often be misleading. For example: What sounds like a failed front engine bearing or connecting rod, may be caused by loose bolts, nuts, mounting brackets or a loose compressor clutch assembly.

Drive belts are speed sensitive. At different engine speeds and depending upon drive belt tension, drive belts can develop noises that are mistaken for an A/C compressor noise. Improper drive belt tension can cause a misleading noise when the compressor clutch is engaged, which may not occur when the compressor clutch is disengaged. Check the accessory drive belt condition and tension as described in Cooling before beginning this procedure.

1. Select a quiet area for testing. Duplicate the complaint conditions as much as possible. Turn the A/C compressor On and Off several times to clearly identify the compressor noise. Listen to the A/C compressor while the clutch is engaged and disengaged. Probe the A/C compressor with an engine stethoscope or a long screwdriver with the handle held to your ear to better localize the source of the noise.
2. Loosen all of the compressor mounting hardware and retighten. Check the compressor clutch retainer. Be certain that the clutch field coil is mounted securely to the A/C compressor, and that the clutch plate and pulley are properly aligned and have the correct air gap (Refer to 24 - HEATING & AIR CONDITIONING/CONTROLS/CLUTCH-A/C COMPRESSOR - INSTALLATION).
3. To duplicate high-ambient temperature conditions (high head pressure), restrict the air flow through the A/C condenser. Install a manifold gauge set or a scan tool to be certain that the discharge pressure does not exceed 2760 kPa (400 psi).
4. Check the refrigerant system plumbing for incorrect routing, rubbing or interference, which can cause unusual noises. Also check the refrigerant lines and hoses for kinks or sharp bends that will restrict refrigerant flow, which can cause noises (Refer to 24 - HEATING & AIR CONDITIONING/PLUMBING - DESCRIPTION - REFRIGERANT LINES).
5. If the noise is from opening and closing of the high pressure relief valve, recover, evacuate and recharge the refrigerant system (Refer to 24 - HEATING & AIR CONDITIONING/PLUMBING - STANDARD PROCEDURE - REFRIGERANT SYSTEM RECOVERY), (Refer to 24 - HEATING & AIR CONDITIONING/PLUMBING - STANDARD PROCEDURE - REFRIGERANT SYSTEM EVACUATE) and (Refer to 24 - HEATING & AIR CONDITIONING/PLUMBING - STANDARD PROCEDURE - REFRIGERANT SYSTEM CHARGE).
6. If the high pressure relief valve still does not seat properly, replace the A/C compressor (Refer to 24 - HEATING & AIR CONDITIONING/PLUMBING/COMPRESSOR-A/C - REMOVAL).

REMOVAL

2.7L ENGINE

WARNING: Refer to the applicable warnings and cautions for this system before performing the following operation (Refer to 24 - HEATING & AIR CONDITIONING/PLUMBING - WARNINGS) and (Refer to 24 - HEATING & AIR CONDITIONING/PLUMBING - CAUTIONS). Failure to follow the warnings and cautions could result in possible personal injury or death.

NOTE: The A/C compressor may be removed and repositioned without disconnecting the refrigerant lines or discharging the refrigerant system. Discharging is not necessary if servicing the compressor clutch, clutch field coil, engine, engine cylinder head or the generator.

NOTE: If an internal failure of the A/C compressor has occurred, the receiver/drier must be replaced.

1. Recover the refrigerant from the refrigerant system (Refer to 24 - HEATING & AIR CONDITIONING/ PLUMBING - STANDARD PROCEDURE - REFRIGERANT SYSTEM RECOVERY).
2. Disconnect and isolate the negative battery cable.
3. Remove the air cleaner housing (Refer to 9 - ENGINE/AIR INTAKE SYSTEM/AIR CLEANER HOUSING - REMOVAL).
4. Remove the acessory drive belt (Refer to 7 - COOLING/ACCESSORY DRIVE/BELTS-DRIVE - REMOVAL).
5. Disconnect the wire harness connector from the compressor clutch field coil connector (1).
6. Remove the nuts (2) that secure the A/C suction line (3) and A/C discharge line (4) to the A/C compressor (5).
7. Disconnect the suction and discharge lines from the A/C compressor and remove and discard the dual plane seals.

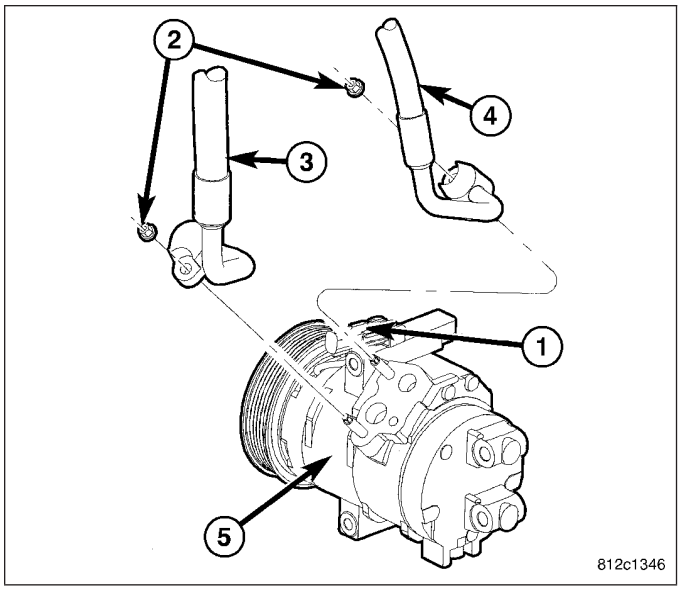

8. Install plugs in, or tape over all of the opened refrigerant line fittings and the compressor ports.
9. Raise and support the vehicle.
10. Remove the front end splash shield (Refer to 23 - BODY/EXTERIOR/FRONT END SPLASH SHIELDS - REMOVAL).

NOTE: The bolt that secures the transmission cooler line bracket to the A/C compressor cannot be fully removed until the compressor is positioned away from the cylinder block.

11. Fully loosen the bolt (3) that secures the automatic transmission cooler line bracket (4) and A/C compressor (5) to the cylinder block (6).
12. Support the A/C compressor and remove the bolts (1 and 2) that secure the compressor to the cylinder block.

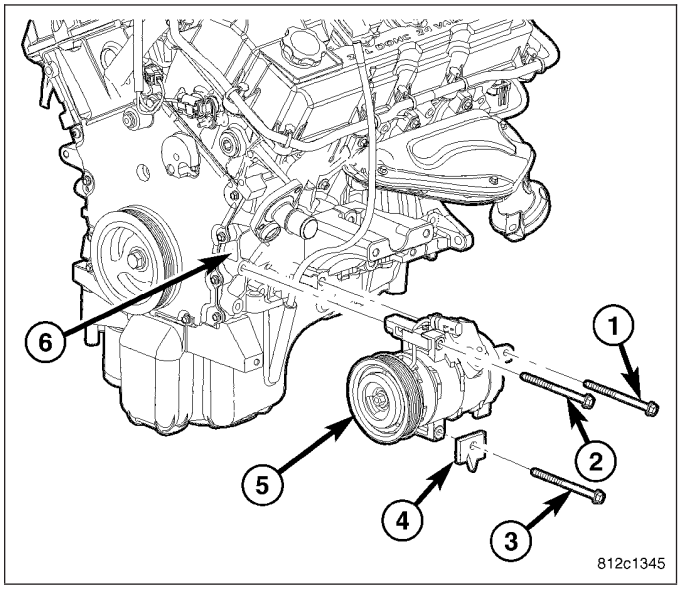

CAUTION: Use care not to deform or damage the automatic transmission cooler lines and retaining bracket when repositioning the A/C compressor.

13. Position the A/C compressor to gain clearance to the remove the bolt that secures the automatic transmission cooler line bracket to the compressor.
14. Remove the bolt that secures the automatic transmission cooler line bracket to the A/C compressor and remove the compressor from the engine compartment.

3.0L ENGINE

WARNING: Refer to the applicable warnings and cautions for this system before performing the following operation (Refer to 24 - HEATING & AIR CONDITIONING/PLUMBING - WARNINGS) and (Refer to 24 - HEATING & AIR CONDITIONING/PLUMBING - CAUTIONS). Failure to follow the warnings and cautions could result in possible personal injury or death.

NOTE: The A/C compressor may be removed and repositioned without disconnecting the refrigerant lines or discharging the refrigerant system. Discharging is not necessary if servicing the compressor clutch, clutch field coil or engine.

NOTE: If an internal failure of the A/C compressor has occurred, the receiver/drier must be replaced.

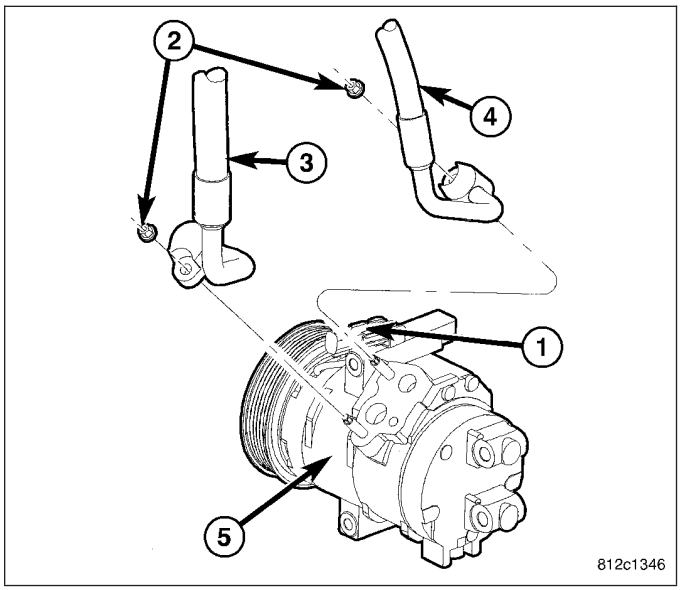

1. Recover the refrigerant from the refrigerant system (Refer to 24 - HEATING & AIR CONDITIONING/ PLUMBING - STANDARD PROCEDURE - REFRIGERANT SYSTEM RECOVERY).
2. Disconnect and isolate the negative battery cable.
3. Remove the air cleaner housing (Refer to 9 - ENGINE/AIR INTAKE SYSTEM/AIR CLEANER HOUSING - REMOVAL).
4. Remove the accessory drive belt (Refer to 7 - COOLING/ACCESSORY DRIVE/BELTS-DRIVE - REMOVAL).
5. Disconnect the engine wire harness from the compressor clutch field coil connector (1).
6. Remove the nuts (2) that secure the A/C suction line (3) and A/C discharge line (4) to the A/C compressor (5).
7. Disconnect the suction and discharge lines from the A/C compressor and remove and discard the dual plane seals.
8. Install plugs in, or tape over all of the opened refrigerant line fittings and the compressor ports.
9. Raise and support the vehicle.
10. Remove the front end splash shield (Refer to 23 - BODY/EXTERIOR/FRONT END SPLASH SHIELDS - REMOVAL).
11. Support the A/C compressor (4) and remove the three bolts (1and 2) that secure the compressor and the automatic transmission cooler line bracket (3) to the cylinder block (5).
12. Position the cooler lines out of the way and remove the A/C compressor from the engine compartment.

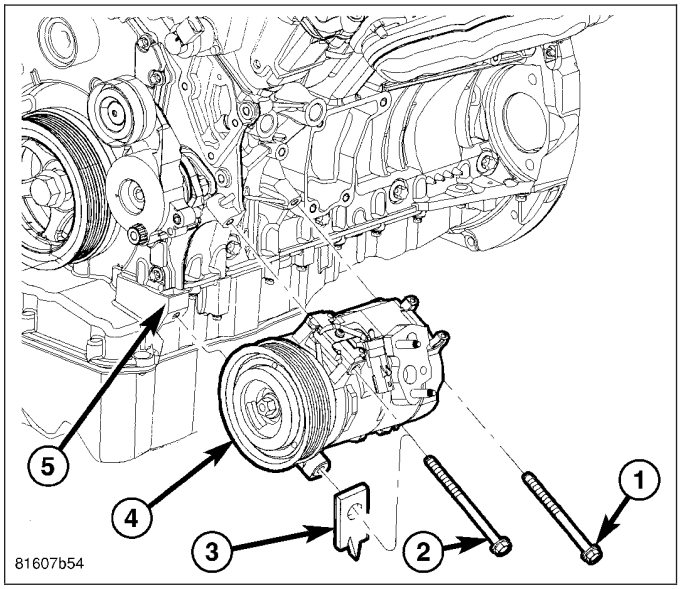

3.5L ENGINE

WARNING: Refer to the applicable warnings and cautions for this system before performing the following operation (Refer to 24 - HEATING & AIR CONDITIONING/PLUMBING - WARNINGS) and (Refer to 24 - HEATING & AIR CONDITIONING/PLUMBING - CAUTIONS). Failure to follow the warnings and cautions could result in possible personal injury or death.

NOTE: The A/C compressor may be removed and repositioned without disconnecting the refrigerant lines or discharging the refrigerant system. Discharging is not necessary if servicing the compressor clutch, clutch field coil, engine, engine cylinder head or the generator.

NOTE: If an internal failure of the A/C compressor has occurred, the receiver/drier must be replaced.

1. Recover the refrigerant from the refrigerant system (Refer to 24 - HEATING & AIR CONDITIONING/ PLUMBING - STANDARD PROCEDURE - REFRIGERANT SYSTEM RECOVERY).
2. Disconnect and isolate the negative battery cable.
3. Remove the air cleaner housing (Refer to 9 - ENGINE/AIR INTAKE SYSTEM/AIR CLEANER HOUSING - REMOVAL).
4. Remove the accessory drive belt (Refer to 7 - COOLING/ACCESSORY DRIVE/BELTS-DRIVE - REMOVAL).
5. Disconnect the engine wire harness from the compressor clutch field coil connector (1).
6. Remove the nuts (2) that secure the A/C suction line (3) and A/C discharge line (4) to the A/C compressor (5).
7. Disconnect the suction and discharge lines from the A/C compressor and remove and discard the dual plane seals.

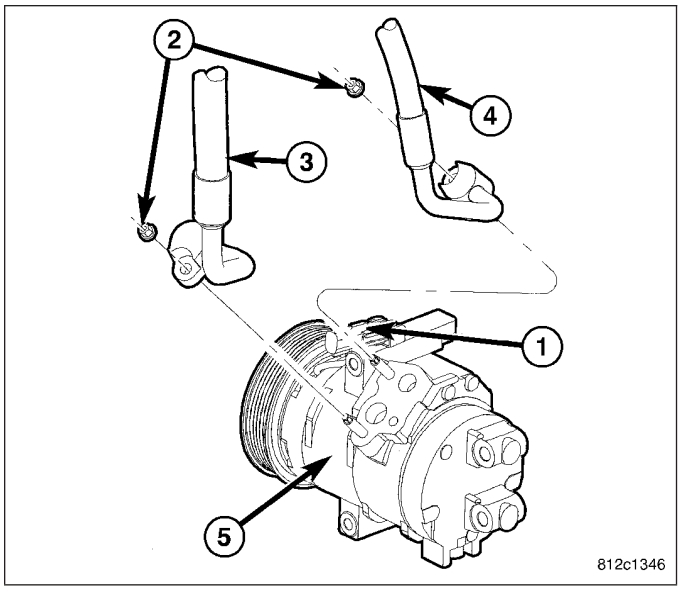

8. Install plugs in, or tape over all of the opened refrigerant line fittings and the compressor ports.
9. Raise and support the vehicle.
10. Remove the front end splash shield (Refer to 23 - BODY/EXTERIOR/FRONT END SPLASH SHIELDS - REMOVAL).

NOTE: The bolt that secures the transmission cooler line bracket to the A/C compressor cannot be fully removed until the compressor is positioned away from the cylinder block.

11. Fully loosen the bolt (3) that secures the automatic transmission cooler line bracket (4) and A/C compressor (5) to the cylinder block (6).
12. Support the A/C compressor and remove the bolts (1 and 2) that secure the compressor to the cylinder block.

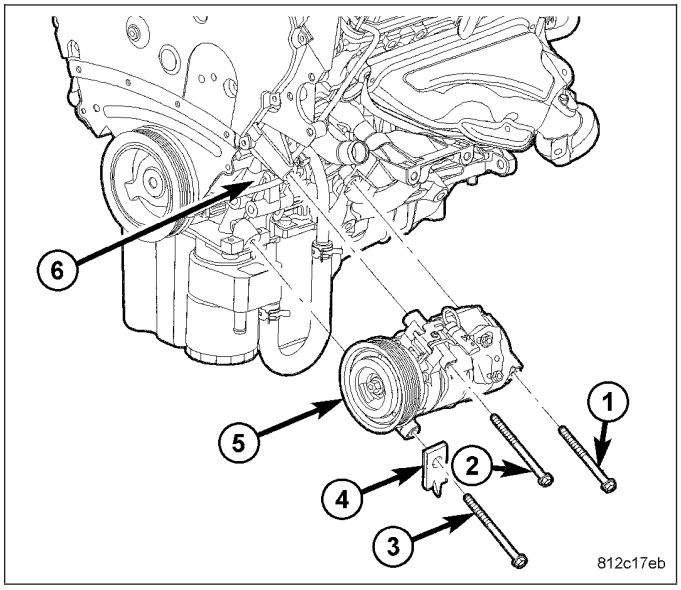

CAUTION: Use care not to deform or damage the automatic transmission cooler lines and retaining bracket when repositioning the A/C compressor.

13. Position the A/C compressor to gain clearance to the remove the bolt that secures the automatic transmission cooler line bracket to the compressor.
14. Remove the bolt that secures the automatic transmission cooler line bracket to the A/C compressor and remove the compressor from the engine compartment.

5.7L/6.1L ENGINES

WARNING: Refer to the applicable warnings and cautions for this system before performing the following operation (Refer to 24 - HEATING & AIR CONDITIONING/PLUMBING - WARNINGS) and (Refer to 24 - HEATING & AIR CONDITIONING/PLUMBING - CAUTIONS). Failure to follow the warnings and cautions could result in possible personal injury or death.

NOTE: The A/C compressor may be removed and repositioned without disconnecting the refrigerant lines or discharging the refrigerant system. Discharging is not necessary if servicing the compressor clutch, clutch field coil, engine, engine cylinder head or the generator.

NOTE: If an internal failure of the A/C compressor has occurred, the receiver/drier must be replaced.

1. Recover the refrigerant from the refrigerant system (Refer to 24 - HEATING & AIR CONDITIONING/ PLUMBING - STANDARD PROCEDURE - REFRIGERANT SYSTEM RECOVERY).
2. Disconnect and isolate the negative battery cable.
3. Remove the air cleaner housing (Refer to 9 - ENGINE/AIR INTAKE SYSTEM/AIR CLEANER HOUSING - REMOVAL).
4. Remove the accessory drive belt (Refer to 7 - COOLING/ACCESSORY DRIVE/BELTS-DRIVE - REMOVAL).
5. Disconnect the engine wire harness from the compressor clutch field coil connector (1).
6. Remove the nuts (2) that secure the A/C suction line (3) and A/C discharge line (4) to the A/C compressor (5).
7. Disconnect the suction and discharge lines from the A/C compressor and remove and discard the dual plane seals.

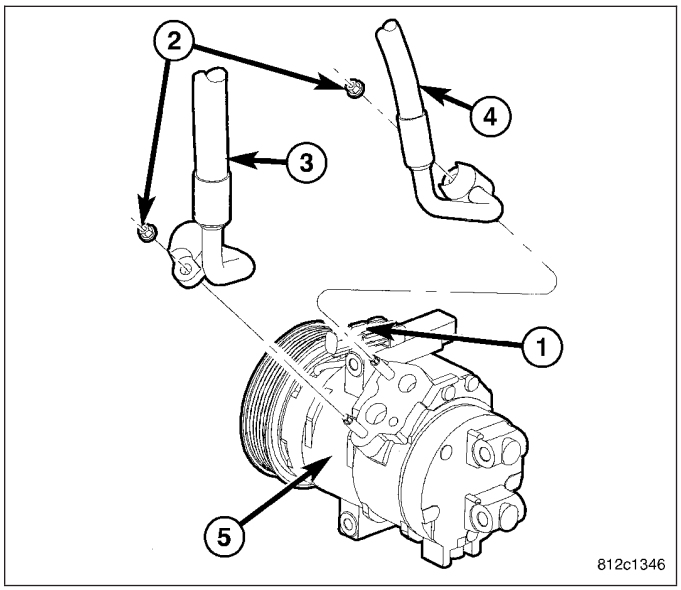

8. Install plugs in, or tape over all of the opened refrigerant line fittings and the compressor ports.

NOTE: 5.7L engine shown in illustration. 6.1L similar.

9. Raise and support the vehicle.
10. Remove the front end splash shield (Refer to 23 - BODY/EXTERIOR/FRONT END SPLASH SHIELDS - REMOVAL).
11. Support the A/C compressor (3) and remove the bolts (1) that secure the automatic transmission cooler line bracket (2) and the compressor to the cylinder block (4).
12. Position the cooler lines out of the way and remove the A/C compressor from the engine compartment.

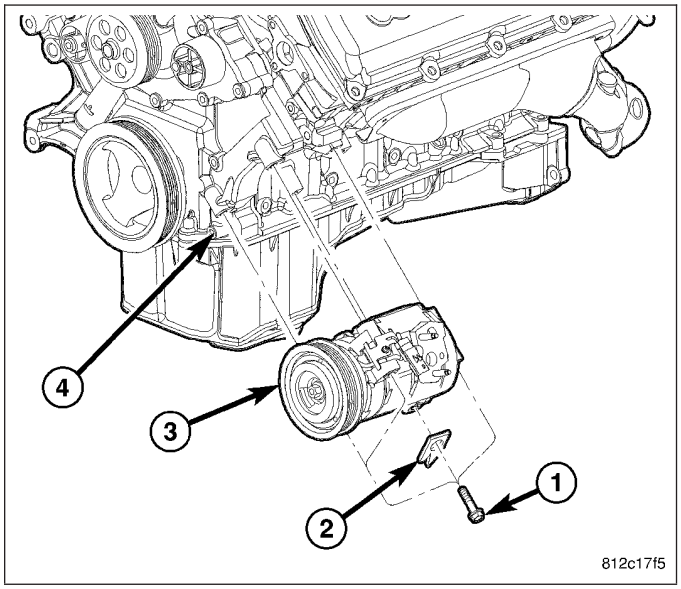

INSTALLATION

2.7L ENGINE

NOTE: Be certain to check the refrigerant oil level if the A/C compressor is being replaced (Refer to 24 - HEATING & AIR CONDITIONING/PLUMBING/REFRIGERANT OIL - STANDARD PROCEDURE - REFRIGERANT OIL LEVEL). Use only refrigerant oil of the type recommended for the A/C compressor in the vehicle.

NOTE: If an internal failure of the A/C compressor has occurred, the receiver/drier must be replaced.

CAUTION: Use care not to deform or damage the automatic transmission cooler lines and retaining bracket when repositioning the A/C compressor.

NOTE: The bolt that secures the transmission cooler line bracket to the A/C compressor must be installed through the bracket and the lower front mounting hole of the compressor prior to final positioning of the compressor to the cylinder block.

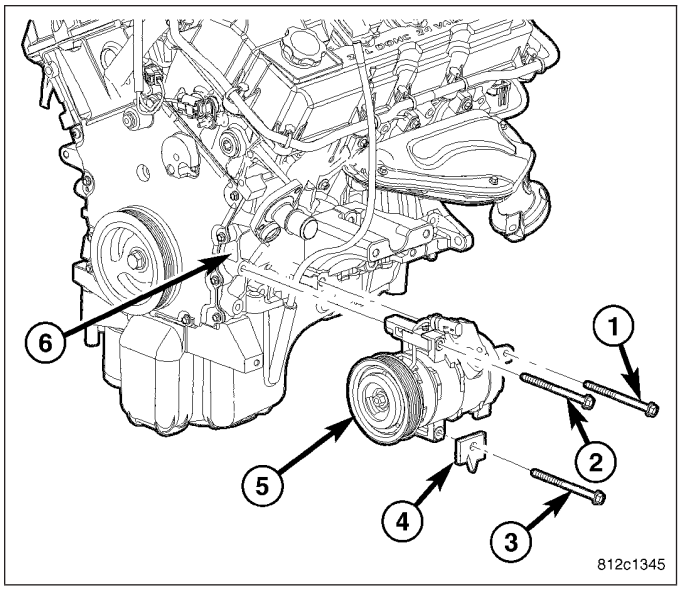

1. Loosely install the bolt (3) that secures the automatic transmission cooler line bracket (4) to the A/C compressor (5) and position the compressor, bracket and bolt to the cylinder block (6).
2. Loosely install the bolts (1 and 2) that secure the A/C compressor to the cylinder block.
3. Tighten the three bolts in the following order:
   1. Upper front bolt to 26 N·m (19 ft. lbs.).
   2. Lower front bolt to 26 N·m (19 ft. lbs.).
   3. Rear bolt to 50 N·m (37 ft. lbs.).
4. Install the front end splash shields (Refer to 23 - BODY/EXTERIOR/FRONT END SPLASH SHIELDS - INSTALLATION).
5. Lower the vehicle.
6. Remove the tape or plugs from the opened fittings on the A/C suction line (3) and the A/C discharge line (4) and the compressor ports.
7. Lubricate the new dual plane seals with clean refrigerant oil and install them onto the suction and the discharge line fittings. Use only the specified seals as they are made of a special material for the R-134a system. Use only refrigerant oil of the type recommended for the A/C compressor in the vehicle.
8. Connect the suction and discharge lines onto the A/C compressor (5).
9. Install the nuts (2) that secure the suction and discharge lines to the A/C compressor. Tighten the nuts to 23 N·m (17 ft. lbs.).
10. Connect the engine wire harness to the compressor clutch field coil connector (1).
11. Install the accessory drive belt (Refer to 7 - COOLING/ACCESSORY DRIVE/BELTS-DRIVE - INSTALLATION).

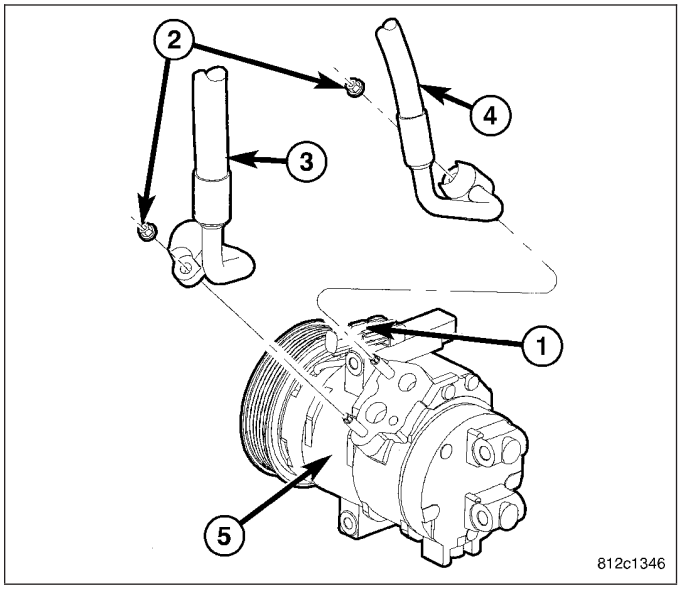

12. Replace the receiver/drier if the A/C compressor is being replaced due to an internal failure (Refer to 24 - HEATING & AIR CONDITIONING/PLUMBING/RECEIVER/DRIER - REMOVAL) and (Refer to 24 - HEATING & AIR CONDITIONING/PLUMBING/RECEIVER/DRIER - INSTALLATION).
13. Install the air cleaner housing (Refer to 9 - ENGINE/AIR INTAKE SYSTEM/AIR CLEANER HOUSING - INSTALLATION).
14. Reconnect the negative battery cable.
15. Evacuate the refrigerant system (Refer to 24 - HEATING & AIR CONDITIONING/PLUMBING - STANDARD PROCEDURE - REFRIGERANT SYSTEM EVACUATE).
16. Charge the refrigerant system (Refer to 24 - HEATING & AIR CONDITIONING/PLUMBING - STANDARD PROCEDURE - REFRIGERANT SYSTEM CHARGE).

3.0L ENGINE

NOTE: Be certain to check the refrigerant oil level if the A/C compressor is being replaced (Refer to 24 - HEATING & AIR CONDITIONING/PLUMBING/REFRIGERANT OIL - STANDARD PROCEDURE - REFRIGERANT OIL LEVEL). Use only refrigerant oil of the type recommended for the A/C compressor in the vehicle.

NOTE: If an internal failure of the A/C compressor has occurred, the receiver/drier must be replaced.

1. Position the A/C compressor (4) into the engine compartment.
2. Loosely install the three bolts (1 and 2) that secure the A/C compressor and the automatic transmission cooler line bracket to the cylinder block (5).
3. Tighten the three bolts in the following order to 26 N·m (19 ft. lbs.):
   1. Upper front bolt.
   2. Lower front bolt.
   3. Rear bolt.
4. Install the front end splash shields (Refer to 23 - BODY/EXTERIOR/FRONT END SPLASH SHIELDS - INSTALLATION).
5. Lower the vehicle.

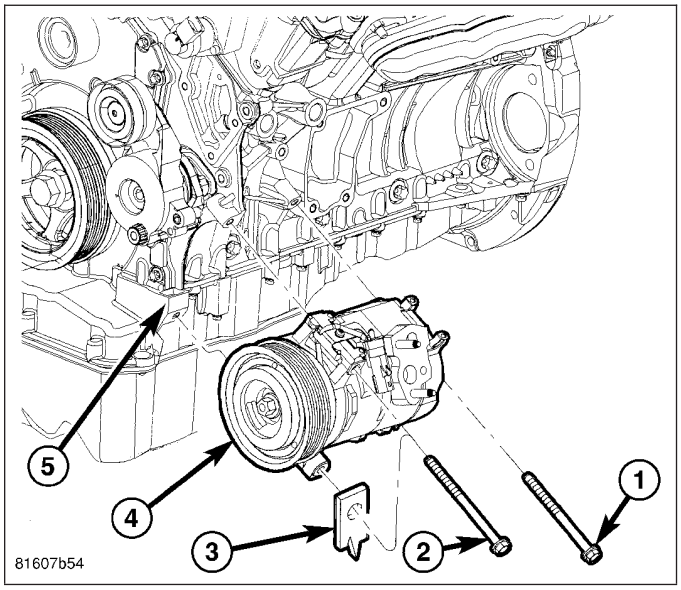

6. Remove the tape or plugs from the opened fittings on the A/C suction line (3) and the A/C discharge line (4) and the compressor ports.
7. Lubricate new dual plane seals with clean refrigerant oil and install them onto the suction and the discharge line fittings. Use only the specified seals as they are made of a special material for the R-134a system. Use only refrigerant oil of the type recommended for the A/C compressor in the vehicle.
8. Connect the suction and discharge lines onto the A/C compressor (5).
9. Install the nuts (2) that secure the suction and discharge lines to the A/C compressor. Tighten the nuts to 23 N·m (17 ft. lbs.).
10. Connect the engine wire harness to the compressor clutch field coil connector (1).
11. Install the accessory drive belt (Refer to 7 - COOLING/ACCESSORY DRIVE/BELTS-DRIVE - INSTALLATION).

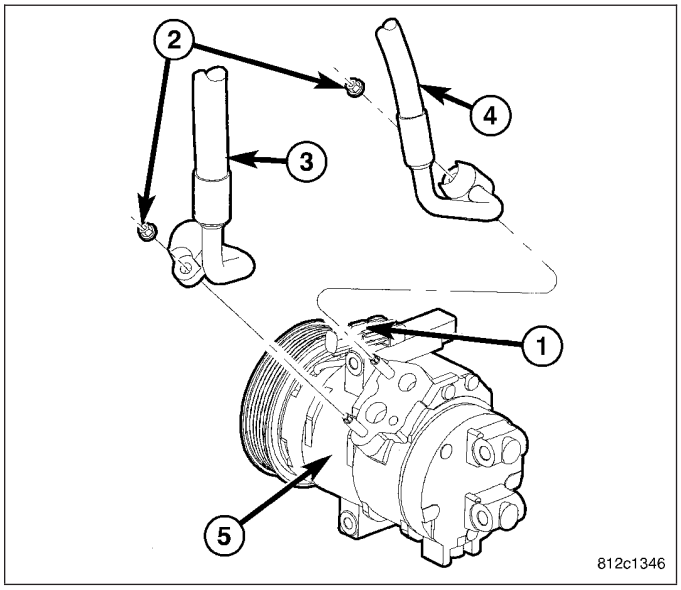

12. Replace the receiver/drier if the A/C compressor is being replaced due to an internal failure (Refer to 24 - HEATING & AIR CONDITIONING/PLUMBING/RECEIVER/DRIER - REMOVAL) and (Refer to 24 - HEATING & AIR CONDITIONING/PLUMBING/RECEIVER/DRIER - INSTALLATION).
13. Install the air cleaner housing (Refer to 9 - ENGINE/AIR INTAKE SYSTEM/AIR CLEANER HOUSING - INSTALLATION).
14. Reconnect the negative battery cable.
15. Evacuate the refrigerant system (Refer to 24 - HEATING & AIR CONDITIONING/PLUMBING - STANDARD PROCEDURE - REFRIGERANT SYSTEM EVACUATE).

16. Charge the refrigerant system (Refer to 24 - HEATING & AIR CONDITIONING/PLUMBING - STANDARD PROCEDURE - REFRIGERANT SYSTEM CHARGE).

3.5L ENGINE

NOTE: Be certain to check the refrigerant oil level if the A/C compressor is being replaced (Refer to 24 - HEATING & AIR CONDITIONING/PLUMBING/REFRIGERANT OIL - STANDARD PROCEDURE - REFRIGERANT OIL LEVEL). Use only refrigerant oil of the type recommended for the A/C compressor in the vehicle.

NOTE: If an internal failure of the A/C compressor has occurred, the receiver/drier must be replaced.

CAUTION: Use care not to deform or damage the automatic transmission cooler lines and retaining bracket when repositioning the A/C compressor.

NOTE: The bolt that secures the transmission cooler line bracket to the A/C compressor must be installed through the bracket and the lower front mounting hole of the compressor prior to final positioning of the compressor to the cylinder block.

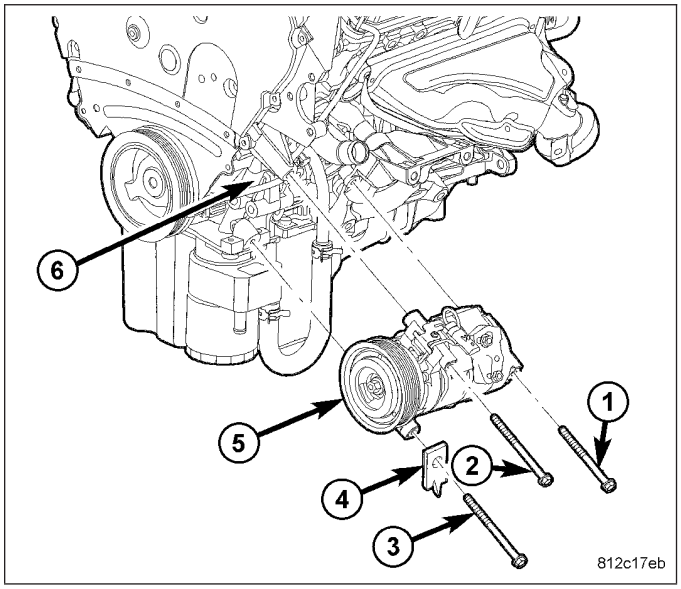

1. Loosely install the bolt (3) that secures the automatic transmission cooler line bracket (4) to the A/C compressor (5) and position the compressor, bracket and bolt to the cylinder block (6).
2. Loosely install the bolts (1 and 2) that secure the A/C compressor to the cylinder block.
3. Tighten all three bolts that secure the A/C compressor to the engine in the following order to 26 N·m (19 ft. lbs.):
   1. Upper front bolt.
   2. Lower front bolt.
   3. Rear bolt.
4. Install the front end splash shields (Refer to 23 - BODY/EXTERIOR/FRONT END SPLASH SHIELDS - INSTALLATION).
5. Lower the vehicle.
6. Remove the tape or plugs from the opened fittings on the A/C suction line (3) and the A/C discharge line (4) and the compressor ports.
7. Lubricate new dual plane seals with clean refrigerant oil and install them onto the suction and the discharge line fittings. Use only the specified seals as they are made of a special material for the R-134a system. Use only refrigerant oil of the type recommended for the A/C compressor in the vehicle.
8. Connect the suction and discharge lines onto the A/C compressor (5).
9. Install the nuts (2) that secure the suction and discharge lines to the A/C compressor. Tighten the nuts to 23 N·m (17 ft. lbs.).
10. Connect the engine wire harness to the compressor clutch field coil connector (1).

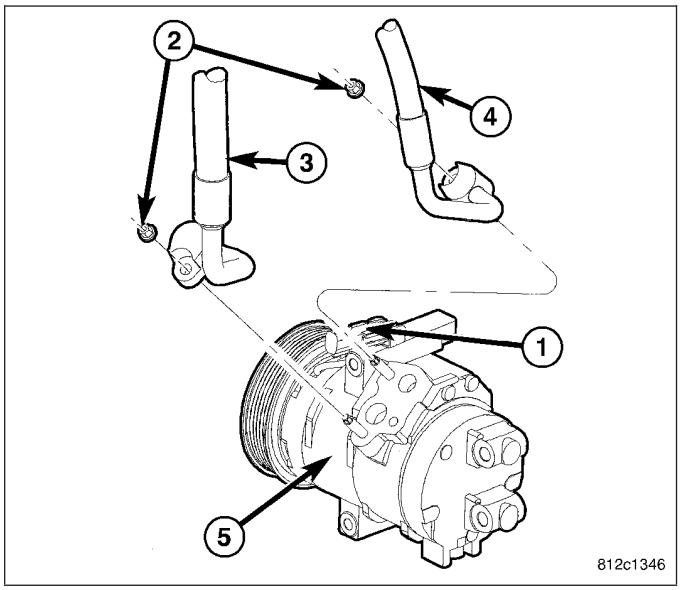

11. Install the accessory drive belt (Refer to 7 - COOLING/ACCESSORY DRIVE/BELTS-DRIVE - INSTALLATION).
12. Replace the receiver/drier if the A/C compressor is being replaced due to an internal failure (Refer to 24 - HEATING & AIR CONDITIONING/PLUMBING/RECEIVER/DRIER - REMOVAL) and (Refer to 24 - HEATING & AIR CONDITIONING/PLUMBING/RECEIVER/DRIER - INSTALLATION).
13. Install the air cleaner housing (Refer to 9 - ENGINE/AIR INTAKE SYSTEM/AIR CLEANER HOUSING - INSTALLATION).
14. Reconnect the negative battery cable.
15. Evacuate the refrigerant system (Refer to 24 - HEATING & AIR CONDITIONING/PLUMBING - STANDARD PROCEDURE - REFRIGERANT SYSTEM EVACUATE).
16. Charge the refrigerant system (Refer to 24 - HEATING & AIR CONDITIONING/PLUMBING - STANDARD PROCEDURE - REFRIGERANT SYSTEM CHARGE).

5.7L/6.1L ENGINES

NOTE: Be certain to check the refrigerant oil level if the A/C compressor is being replaced (Refer to 24 - HEATING & AIR CONDITIONING/PLUMBING/REFRIGERANT OIL - STANDARD PROCEDURE - REFRIGERANT OIL LEVEL). Use only refrigerant oil of the type recommended for the A/C compressor in the vehicle.

NOTE: If an internal failure of the A/C compressor has occurred, the receiver/drier must be replaced.

NOTE: 5.7L engine shown in illustration. 6.1L engine similar.

1. Position the A/C compressor (3) into the engine compartment.
2. Loosely install the three bolts (1) that secure the A/C compressor and the automatic transmission cooler line bracket (2) to the cylinder block (4).
3. Tighten the three bolts in the following order to 50 N·m (37 ft. lbs.):
   1. Upper front bolt.
   2. Lower front bolt.
   3. Rear bolt.
4. Install the front end splash shields (Refer to 23 - BODY/EXTERIOR/FRONT END SPLASH SHIELDS - INSTALLATION).
5. Lower the vehicle.

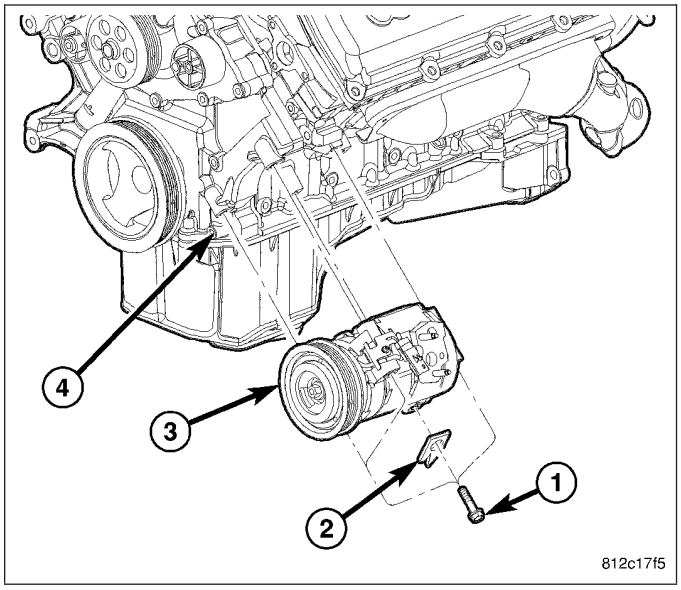

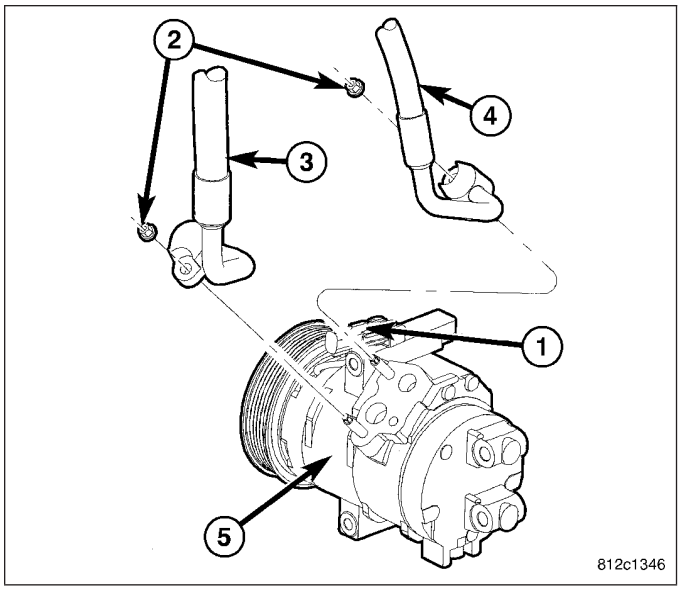

6. Remove the tape or plugs from the opened fittings on the A/C suction line (3) and the A/C discharge line (4) and the compressor ports.
7. Lubricate new dual plane seals with clean refrigerant oil and install them onto the suction and the discharge line fittings. Use only the specified seals as they are made of a special material for the R-134a system. Use only refrigerant oil of the type recommended for the A/C compressor in the vehicle.
8. Connect the suction and discharge lines onto the A/C compressor (5).
9. Install the nuts (2) that secure the suction and discharge lines to the A/C compressor. Tighten the nuts to 23 N·m (17 ft. lbs.).
10. Connect the engine wire harness to the compressor clutch field coil connector (1).
11. Install the accessory drive belt (Refer to 7 - COOLING/ACCESSORY DRIVE/BELTS-DRIVE - INSTALLATION).
12. Replace the receiver/drier if the A/C compressor is being replaced due to an internal failure (Refer to 24 - HEATING & AIR CONDITIONING/PLUMBING/RECEIVER/DRIER - REMOVAL) and (Refer to 24 - HEATING & AIR CONDITIONING/PLUMBING/RECEIVER/DRIER - INSTALLATION).
13. Install the air cleaner housing (Refer to 9 - ENGINE/AIR INTAKE SYSTEM/AIR CLEANER HOUSING - INSTALLATION).
14. Reconnect the negative battery cable.
15. Evacuate the refrigerant system (Refer to 24 - HEATING & AIR CONDITIONING/PLUMBING - STANDARD PROCEDURE - REFRIGERANT SYSTEM EVACUATE).
16. Charge the refrigerant system (Refer to 24 - HEATING & AIR CONDITIONING/PLUMBING - STANDARD PROCEDURE - REFRIGERANT SYSTEM CHARGE).

CONDENSER-A/C

DESCRIPTION

The A/C condenser (1) is located in the front of the engine compartment behind the front fascia. The A/C condenser is a heat exchanger that allows the high-pressure refrigerant gas being discharged by the A/C compressor to give up its heat to the air passing over the condenser fins, which causes the refrigerant to cool and change to a liquid state.

The A/C condenser is equipped with an integral automatic transmission cooler (2), a tapping block (3) for the receiver/drier (4) and mounting provisions for the power steering cooler (5).

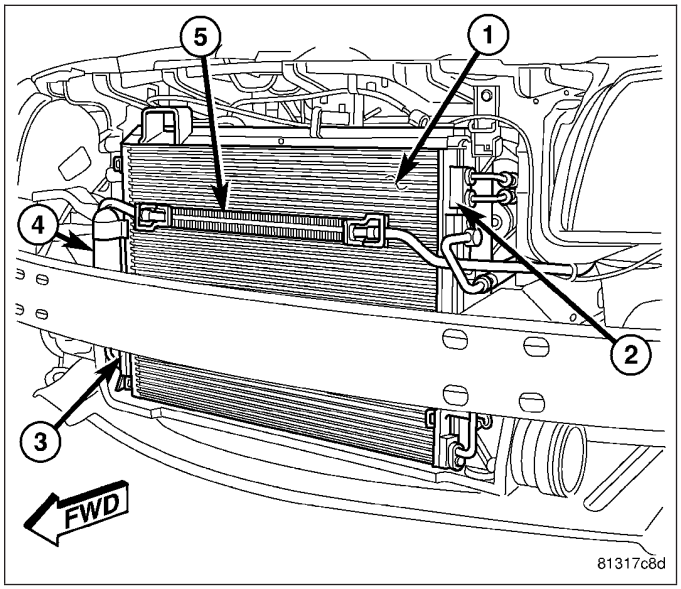

OPERATION

When air passes through the fins of the A/C condenser, the high-pressure refrigerant gas within the A/C condenser gives up its heat. The refrigerant then condenses as it leaves the A/C condenser and becomes a high-pressure liquid. The volume of air flowing over the condenser fins is critical to the proper cooling performance of the A/C system. Therefore, it is important that there are no objects placed in front of the radiator grille openings at the front of the vehicle or foreign material on the condenser fins that might obstruct proper air flow. Also, any factory-installed air seals or shrouds must be properly reinstalled following radiator or A/C condenser service.

The A/C condenser cannot be repaired and, if faulty or damaged, it must be replaced.

REMOVAL

WARNING: Refer to the applicable warnings and cautions for this system before performing the following operation (Refer to 24 - HEATING & AIR CONDITIONING/PLUMBING - WARNINGS) and (Refer to 24 - HEATING & AIR CONDITIONING/PLUMBING - CAUTIONS). Failure to follow the warnings and cautions could result in possible personal injury or death.

1. Recover the refrigerant from the refrigerant system (Refer to 24 - HEATING & AIR CONDITIONING/PLUMBING - STANDARD PROCEDURE - REFRIGERANT SYSTEM RECOVERY).
2. Disconnect and isolate the negative battery cable.
3. Remove the front fascia (Refer to 23 - BODY/EXTERIOR/FRONT FASCIA - REMOVAL).
4. Disconnect the automatic transmission cooler lines (1) from the left end of the A/C condenser (5) (Refer to 7 - COOLING/TRANSMISSION - STANDARD PROCEDURE - TRANSMISSION COOLER LINE QUICK CONNECT FITTING).
5. Install plugs in, or tape over the automatic transmission cooler line fittings and the cooler ports.
6. If equipped with the 3.0L diesel engine, remove the charge air cooler.

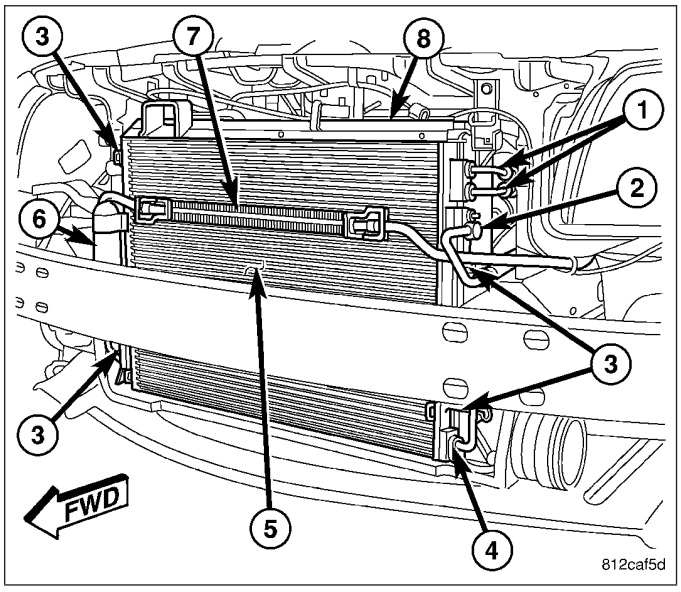

7. Disconnect the A/C discharge line (2) and the A/C liquid line (4) from A/C condenser (Refer to 24 - HEATING & AIR CONDITIONING/PLUMBING/LINE-A/C LIQUID - REMOVAL) and (Refer to 24 - HEATING & AIR CONDITIONING/PLUMBING/LINE-A/C DISCHARGE - REMOVAL).
8. Position the power steering fluid cooler (7) out of the way (Refer to 19 - STEERING/PUMP/FLUID COOLER - REMOVAL).
9. Remove the receiver/drier (6) from the A/C condenser (Refer to 24 - HEATING & AIR CONDITIONING/PLUMBING/RECEIVER/DRIER-A/C - REMOVAL).
10. Remove the four bolts (3) that secure A/C condenser to the radiator (8).
11. Carefully tilt the bottom of the A/C condenser forward and lower the condenser out of the vehicle.
12. If required, place the A/C condenser onto a workbench and remove the power steering cooler brackets.

INSTALLATION

NOTE: If the A/C condenser is being replaced, add 30 milliliters (1 fluid ounce) of refrigerant oil to the refrigerant system. Use only refrigerant oil of the type recommended for the A/C compressor in the vehicle.

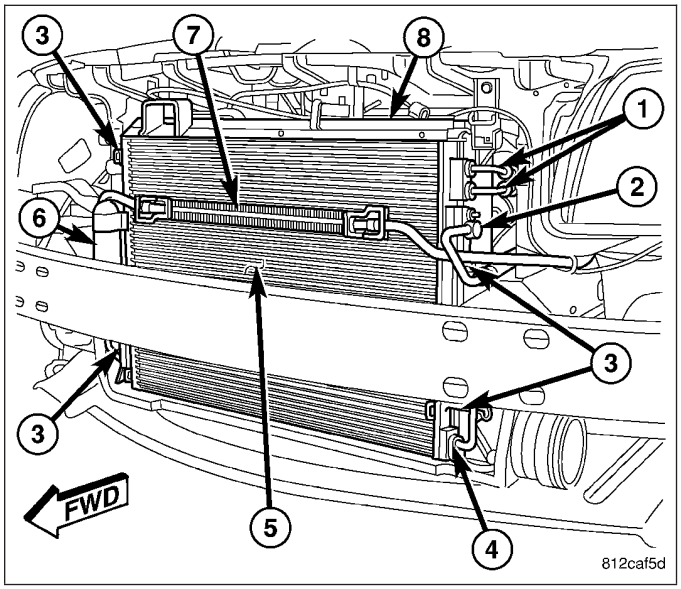

1. If required, install the power steering cooler brackets onto the A/C condenser.
2. Carefully position the A/C condenser (5) onto the radiator (8).
3. Install the four bolts (3) that secure the A/C condenser to the radiator. Tighten the bolts to 5 N·m (44 in. lbs.).
4. Install the receiver/drier (6) onto the A/C condenser (Refer to 24 - HEATING & AIR CONDITIONING/PLUMBING/RECEIVER/DRIER-A/C - INSTALLATION).
5. Install the power steering fluid cooler (7) onto the A/C condenser (Refer to 19 - STEERING/PUMP/FLUID COOLER - INSTALLATION).
6. Connect the A/C discharge line (2) and the A/C liquid line (4) onto the A/C condenser (Refer to 24 - HEATING & AIR CONDITIONING/PLUMBING/LINE-A/C DISCHARGE - INSTALLATION) and (Refer to 24 - HEATING & AIR CONDITIONING/PLUMBING/LINE-A/C LIQUID - INSTALLATION).
7. If equipped with the 3.0L diesel engine, install the charge air cooler.
8. Remove the tape or plugs from the automatic transmission cooler lines (1) and the cooler ports.
9. Connect the automatic transmission cooler lines to the cooler ports at the top of the A/C condenser (Refer to 7 - COOLING/TRANSMISSION - STANDARD PROCEDURE - TRANSMISSION COOLER LINE QUICK CONNECT FITTING).
10. Install the front fascia (Refer to 23 - BODY/EXTERIOR/FRONT FASCIA - INSTALLATION).
11. Reconnect the negative battery cable.
12. Evacuate the refrigerant system (Refer to 24 - HEATING & AIR CONDITIONING/PLUMBING - STANDARD PROCEDURE - REFRIGERANT SYSTEM EVACUATE).
13. Charge the refrigerant system (Refer to 24 - HEATING & AIR CONDITIONING/PLUMBING - STANDARD PROCEDURE - REFRIGERANT SYSTEM CHARGE).
14. Check the automatic transmission fluid level (Refer to 21 - TRANSMISSION/TRANSAXLE/AUTOMATIC/FLUID AND FILTER - STANDARD PROCEDURE - CHECK OIL LEVEL). Fill as required (Refer to 21 - TRANSMISSION/TRANSAXLE/AUTOMATIC /FLUID AND FILTER - STANDARD PROCEDURE - TRANSMISSION FILL).

CORE-HEATER

DESCRIPTION

NOTE: LHD model shown. RHD model similar.

The heater core (1) is mounted into the driver side of HVAC air distribution housing (2), located behind the instrument panel. The heater core is a heat exchanger made of rows of tubes and fins and is secured to the air distribution housing by a plastic retaining bracket (3). The heater core tubes (4) are attached to the side of the heater core and are secured to the HVAC housing by a removable flange (5).

The heater core can be serviced in the vehicle without removing the instrument panel.

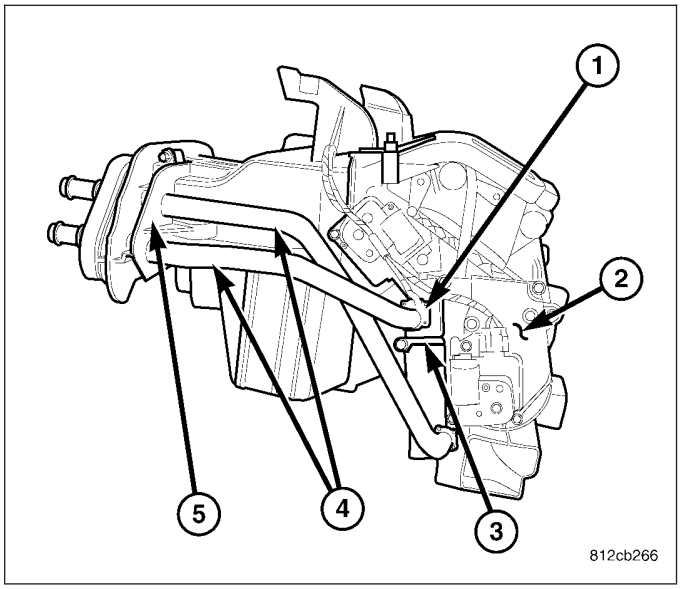

OPERATION

Engine coolant is circulated through the heater hoses to the heater core at all times. As the coolant flows through the heater core, heat is removed from the engine and is transferred to the heater core tubes and fins. Air directed through the heater core picks up the heat from the heater core fins. The blend-air door(s) allows control of the heater output air temperature by regulating the amount of air flowing through the heater core. The blower motor speed controls the volume of air flowing through the HVAC housing.

The heater core cannot be repaired and, if faulty or damaged, it must be replaced.

REMOVAL

WARNING: On vehicles equipped with airbags, disable the airbag system before attempting any steering wheel, steering column, or instrument panel component diagnosis or service. Disconnect and isolate the negative battery (ground) cable, then wait two minutes for the airbag system capacitor to discharge before performing further diagnosis or service. This is the only sure way to disable the airbag system. Failure to take the proper precautions could result in accidental airbag deployment and possible personal injury or death.

NOTE: LHD model shown. RHD model similar.

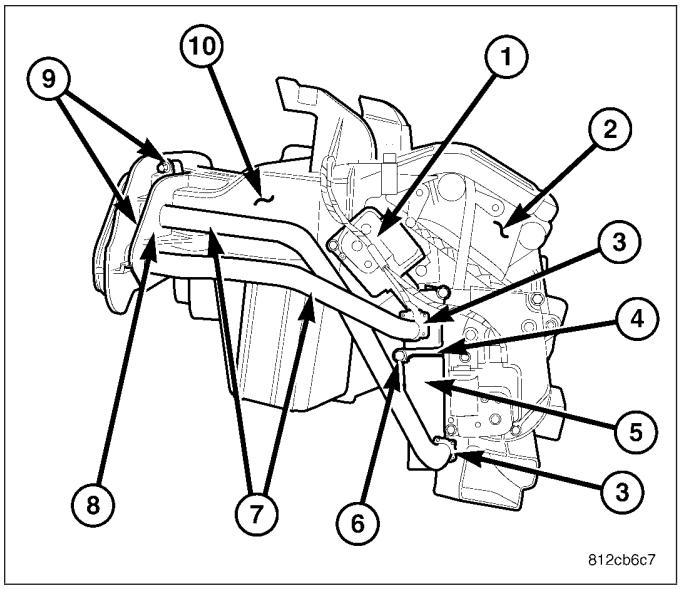

1. Drain the engine cooling system (Refer to 7 - COOLING - STANDARD PROCEDURE - COOLING SYSTEM DRAIN).
2. Disconnect and isolate the negative battery cable.
3. Carefully disconnect the heater hoses from the heater core tubes (7).
4. Remove the instrument panel silencer from the driver side of the instrument panel (Refer to 23 - BODY/INSTRUMENT PANEL/INSTRUMENT PANEL SILENCER - REMOVAL).
5. On LHD models, remove the blend door actuator (1) from the driver side of the HVAC air distribution housing (2) (Refer to 24 - HEATING & AIR CONDITIONING/CONTROLS/ACTUATOR-BLEND DOOR - REMOVAL).
6. On RHD models, position the parking brake bracket out of the way and remove the steering column (Refer to 19 - STEERING/COLUMN - REMOVAL).
7. Remove the two screws (9) that secure the flange (8) to the front of the HVAC housing (10) near the dash panel.
8. Remove the flange from the HVAC housing.

NOTE: Take proper precautions to protect the carpeting from spilled engine coolant. Have absorbent toweling readily available to clean up any spills.

9. Remove the retaining clamps (3) that secure the heater core tubes to the heater core (5).
10. Disconnect the heater core tubes from the heater core and remove and discard the O-ring seals.
11. Carefully pull the heater core tubes through the dash panel.
12. Install plugs in, or tape over the opened heater core ports.
13. Remove the screw (6) that secures the heater core retaining bracket (4) to the driver side of the HVAC air distribution housing (2).
14. Remove the heater core retaining bracket from the air distribution housing.
15. Carefully pull the heater core out of the air distribution housing.

INSTALLATION

NOTE: LHD model shown. RHD model similar.

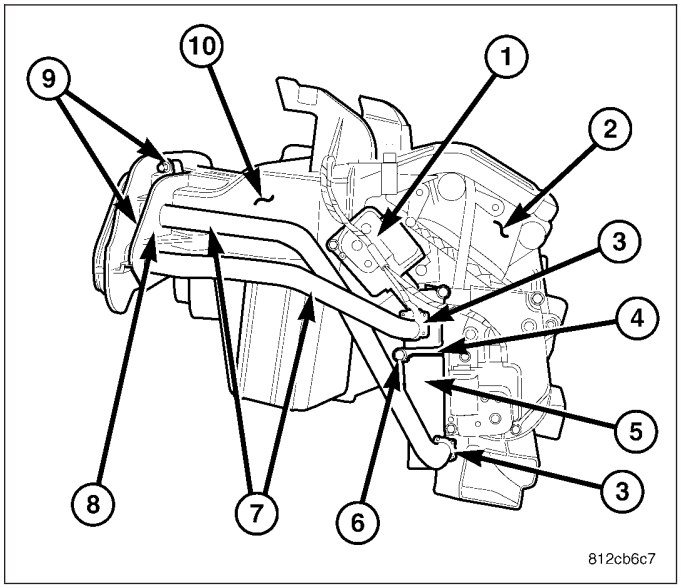

1. Carefully install the heater core (5) into the driver side of the HVAC air distribution housing (2).
2. Install heater core retaining bracket (4) onto the air distribution housing.
3. Install the screw (6) that secures the heater core retaining bracket onto the air distribution housing. Tighten the screw to 2.2 N·m (20 in. lbs.).
4. Remove the tape or plugs from the heater core ports.
5. Lubricate new rubber O-ring seals with clean engine coolant and install them onto the heater core tube fittings. Use only the specified O-rings as they are made of a special material for the engine cooling system.
6. Install the heater core tubes (7) through the dash panel and onto the heater core.

7. Install the two retaining clamps (3) that secure the heater core tubes to the heater core. Make sure that the clamps are installed correctly and securely.
8. Install the flange (8) over the heater core tubes and onto the HVAC housing (10) near the dash panel.
9. Install the two screws (9) that secure the flange to the HVAC housing. Tighten the screws to 2.2 N·m (20 in. lbs.).
10. On LHD models, install the blend door actuator (1) to the driver side of the air distribution housing (Refer to 24 - HEATING & AIR CONDITIONING/CONTROLS/ACTUATOR-BLEND DOOR - INSTALLATION).
11. On RHD models, install the steering column and parking brake bracket (Refer to 19 - STEERING/COLUMN - INSTALLATION).
12. Install the instrument panel silencer onto the driver side of the instrument panel (Refer to 23 - BODY/INSTRUMENT PANEL/INSTRUMENT PANEL SILENCER - INSTALLATION).
13. Connect the heater hoses to the heater core tubes.
14. Connect the negative battery cable.
15. If the heater core is being replaced, flush the cooling system (Refer to 7 - COOLING - STANDARD PROCEDURE - COOLING SYSTEM CLEANING/REVERSE FLUSHING).
16. Refill the engine cooling system (Refer to 7 - COOLING - STANDARD PROCEDURE - COOLING SYSTEM REFILL).

CORE-VALVE-SERVICE PORT

DESCRIPTION

NOTE: LHD model shown. RHD model similar.

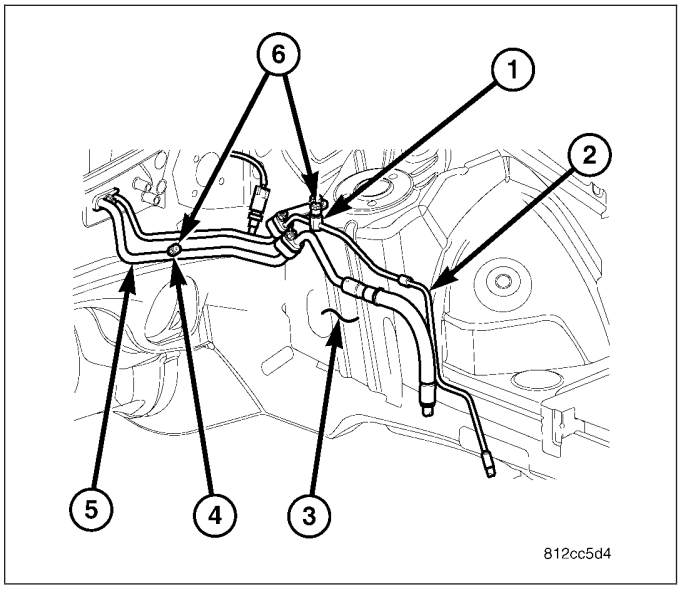

Refrigerant system service ports are used to recover, recycle, evacuate, charge and test the A/C refrigerant system. Unique sizes are used on the two service ports for the R-134a refrigerant system to ensure the system is not accidentally contaminated with R-12 refrigerant or by service equipment used for R-12 refrigerant.

The high side service port (1) is located on the liquid line (2) near the left shock tower (3). The low side service port (4) is located on the suction line (5) near the left shock tower. Both the high side and low side A/C service port valve cores are serviceable.

NOTE: The protective cap aids in service port sealing and helps protect the refrigerant system from contamination. Remember to always reinstall the protective cap onto the service port when refrigerant system service is complete.

Each of the service ports has a threaded plastic protective cap (6) installed over it from the factory. The service port caps are serviceable items.

REMOVAL

WARNING: Refer to the applicable warnings and cautions for this system before performing the following operation (Refer to 24 - HEATING & AIR CONDITIONING/PLUMBING - WARNING) and (Refer to 24 - HEATING & AIR CONDITIONING/PLUMBING - CAUTION). Failure to follow the warnings and cautions could result in possible personal injury or death.

NOTE: Typical A/C service port shown.

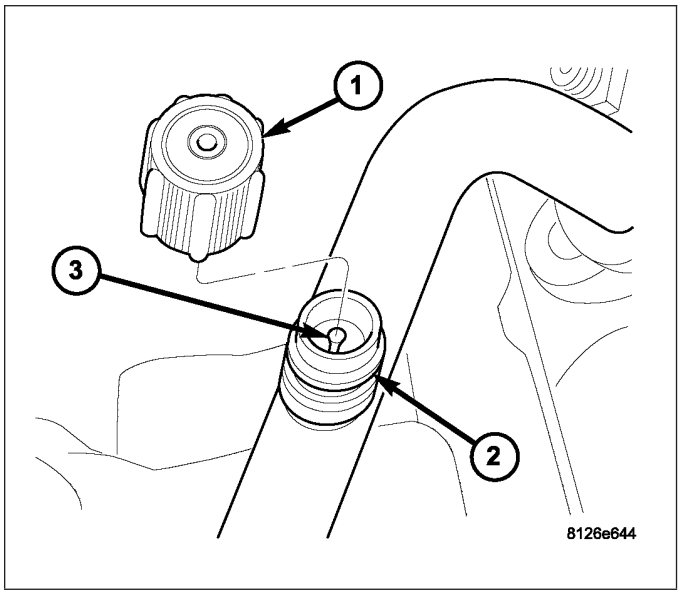

1. Remove the protective cap (1) from the service port (2).
2. Recover the refrigerant from the refrigerant system (refer to 24 - HEATING & AIR CONDITIONING/ PLUMBING - STANDARD PROCEDURE - REFRIGERANT SYSTEM RECOVERY).
3. Using a Schrader-type valve core tool, remove the valve core (3) from the service port.
4. Install a plug in or tape over the opened service port(s).

INSTALLATION

NOTE: Typical A/C service port shown.

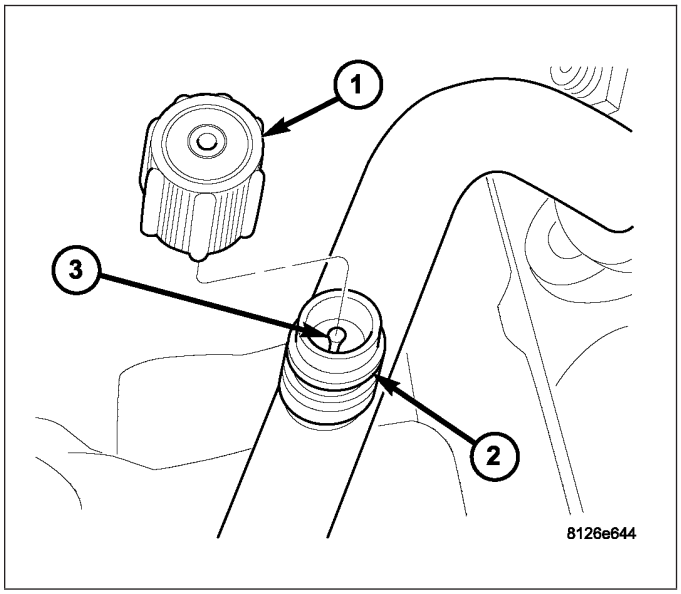

1. Lubricate the valve core (3) with clean refrigerant oil prior to installation. Use only refrigerant oil of the type recommended for the A/C compressor in the vehicle.
2. Remove the tape or plug from the service port (2).

CAUTION: A valve core that is not fully seated in the A/C service port can result in damage to the valve during refrigerant system evacuation and charge. Such damage may result in a loss of system refrigerant while uncoupling the charge adapters.

3. Using a Schrader-type valve core tool, install and tighten the valve core into the service port(s).
4. Evacuate the refrigerant system (r to 24 - HEATING & AIR CONDITIONING/PLUMBING - STANDARD PROCEDURE - REFRIGERANT SYSTEM EVACUATE).
5. Charge the refrigerant system (refer to 24 - HEATING & AIR CONDITIONING/PLUMBING - STANDARD PROCEDURE - REFRIGERANT SYSTEM CHARGE).

NOTE: The protective cap helps aid in service port sealing and helps protect the refrigerant system from contamination. Remember to always reinstall the protective cap onto the service port when refrigerant system service is complete.

6. Install the protective cap (1) onto the service port.

EVAPORATOR-A/C

DESCRIPTION

NOTE: LHD model shown. RHD model similar.

The A/C evaporator (1) for the heating-A/C system is located within the HVAC housing, behind the instrument panel. The A/C evaporator and its insulator (2) are positioned in the HVAC housing so that all air entering the housing must pass over the evaporator fins before it is distributed through the heating-A/C system ducts and outlets. However, air passing over the evaporator fins will only be conditioned when the A/C compressor is engaged and circulating refrigerant through the A/C evaporator.

The A/C evaporator tubes (3) are connected and sealed to the A/C expansion valve by use of rubber O-rings (4) and a tapping block (5).

The A/C evaporator can only be serviced by removing and disassembling the HVAC housing assembly.

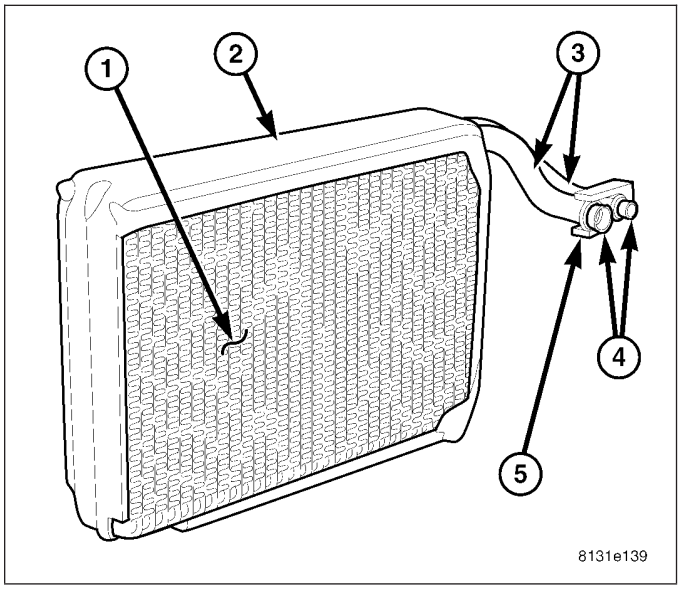

OPERATION

Refrigerant enters the A/C evaporator from the A/C expansion valve as a low-temperature, low-pressure mixture of liquid and gas. As air flows over the fins of the A/C evaporator, the humidity in the air condenses on the fins, and the heat from the air is absorbed by the refrigerant. Heat absorption causes the refrigerant to boil and vaporize. The refrigerant becomes a low-pressure gas when it leaves the A/C evaporator.

The A/C evaporator cannot be repaired and, if faulty or damaged, it must be replaced.

REMOVAL

NOTE: LHD model shown. RHD model similar.

1. Remove the HVAC housing assembly (Refer to 24 - HEATING & AIR CONDITIONING/DISTRIBUTION/HOUSING-HVAC - HOUSING-HVAC ASSEMBLY - REMOVAL).
2. Disassemble the HVAC housing as necessary to access the A/C evaporator (1) (Refer to 24 - HEATING & AIR CONDITIONING/DISTRIBUTION/HOUSING-HVAC - DISASSEMBLY).
3. Carefully lift the A/C evaporator and the foam seal (2) out of the lower half of the HVAC housing (3).
4. If required, remove the foam seal from the tapping block of the A/C evaporator. If the seal is deformed or damaged, it must be replaced.

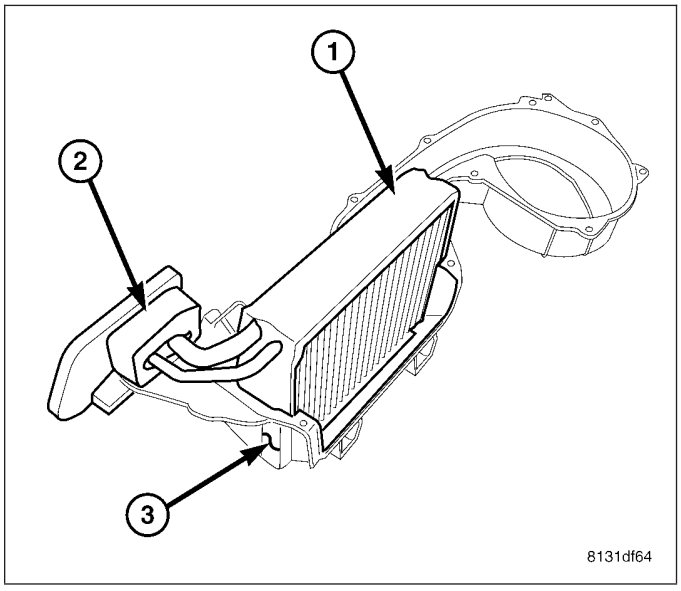

INSTALLATION

NOTE: If the front A/C evaporator is being replaced, add 60 milliliters (2 fluid ounces) of refrigerant oil to the refrigerant system. Use only refrigerant oil of the type recommended for the A/C compressor in the vehicle.

NOTE: LHD model shown. RHD model similar.

1. If removed, install the foam seal (2) over the tapping block of the A/C evaporator (1). If the seal is deformed or damaged, it must be replaced.
2. Install the A/C evaporator into the lower half of the HVAC housing (3). Make sure that the evaporator drain within the HVAC housing is clean and unrestricted and that the insulator around the A/C evaporator is properly installed.
3. Assemble the HVAC housing (Refer to 24 - HEATING & AIR CONDITIONING/DISTRIBUTION/HOUSING-HVAC - ASSEMBLY).
4. Install the HVAC housing assembly (Refer to 24 - HEATING & AIR CONDITIONING/DISTRIBUTION/HOUSING-HVAC - HOUSING-HVAC ASSEMBLY - INSTALLATION).

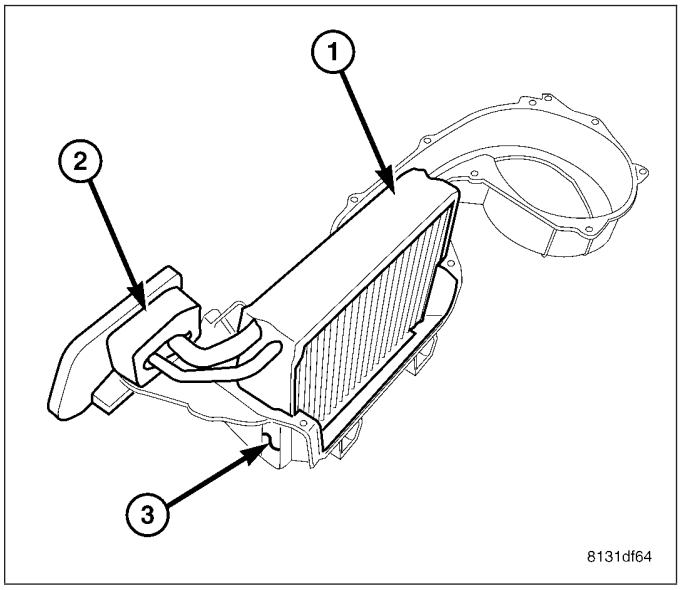

LINE-A/C DISCHARGE

DESCRIPTION

The A/C discharge line (1) is the refrigerant line that carries refrigerant from the A/C compressor to the A/C condenser (2).

CAUTION: Use only seals specified for the vehicle. Failure to use the correct seals will cause the refrigerant system connections to leak.

The A/C discharge line has no serviceable parts except for the dual plane seals. The seals used on the connections are made from a special type of rubber not affected by R-134a refrigerant. The seals must be replaced whenever the A/C discharge line is removed and installed.

The A/C discharge line cannot be repaired and, if leaking or damaged, it must be replaced.

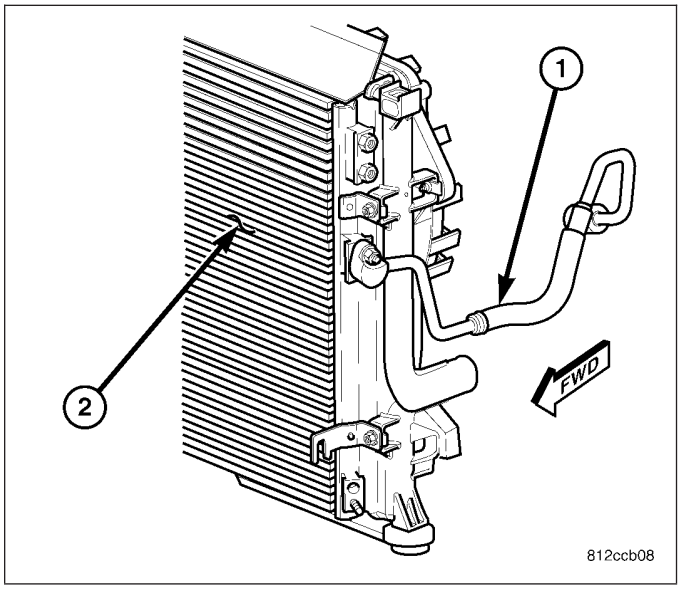

REMOVAL

WARNING: Refer to the applicable warnings and cautions for this system before performing the following operation (Refer to 24 - HEATING & AIR CONDITIONING/PLUMBING - WARNINGS) and (Refer to 24 - HEATING & AIR CONDITIONING/PLUMBING - CAUTIONS). Failure to follow the warnings and cautions could result in possible personal injury or death.

1. Recover the refrigerant from the refrigerant system (Refer to 24 - HEATING & AIR CONDITIONING/PLUMBING - STANDARD PROCEDURE - REFRIGERANT SYSTEM RECOVERY).
2. Disconnect and isolate the negative battery cable.
3. Remove the air cleaner housing (Refer to 9 - ENGINE/AIR INTAKE SYSTEM/AIR CLEANER HOUSING - REMOVAL).
4. Reach through the headlamp opening in the upper radiator support and remove the nut (1) that secures the A/C discharge line (2) to the A/C condenser (5).
5. Disconnect the A/C discharge line from the A/C condenser and remove and discard the dual plane seal.
6. Install plugs in, or tape over the discharge line fitting and condenser inlet port.

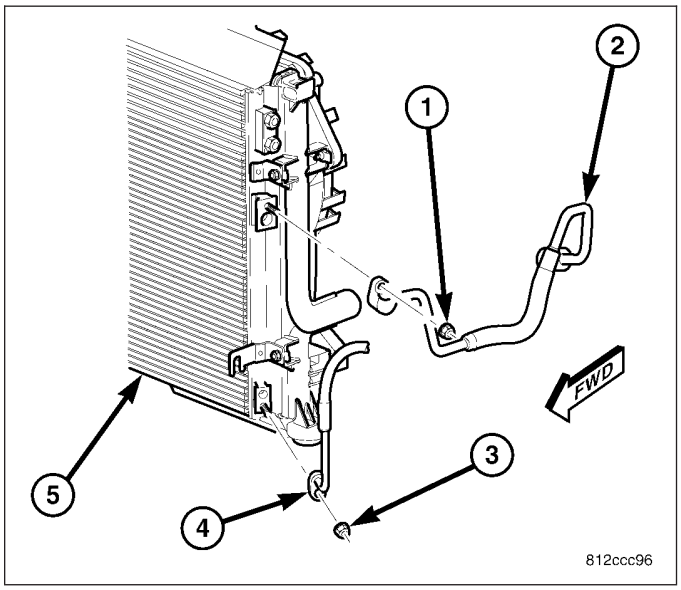

7. Remove the nut (2) that secures the A/C discharge line (4) to the A/C compressor (5).
8. Disconnect the A/C discharge line from the A/C compressor and remove and discard the dual plane seal.
9. Install plugs in, or tape over the opened refrigerant line fitting and the compressor port.
10. Remove the A/C discharge line from the engine compartment.

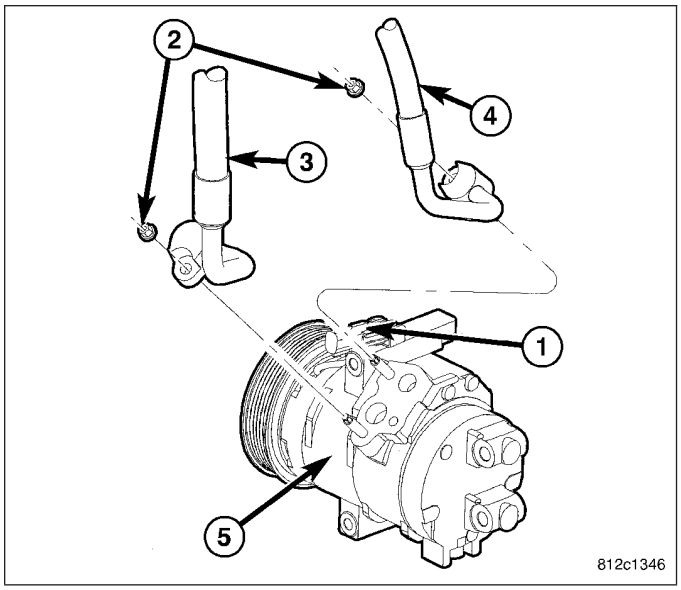

INSTALLATION

1. Position the A/C discharge line (2) into the engine compartment.
2. Remove the tape or plugs from the opened discharge line fitting and the inlet port on the A/C condenser (5).
3. Lubricate a new dual plane seal with clean refrigerant oil and install it onto the discharge line fitting. Use only the specified seal as it is made of a special material for the R-134a system. Use only refrigerant oil of the type recommended for the A/C compressor in the vehicle.
4. Install the A/C discharge line onto the A/C condenser.
5. Reach through the headlamp opening in the upper radiator support and install the nut (1) that secures the A/C discharge line to the A/C condenser. Tighten the nut to 22 N·m (16 ft. lbs.).

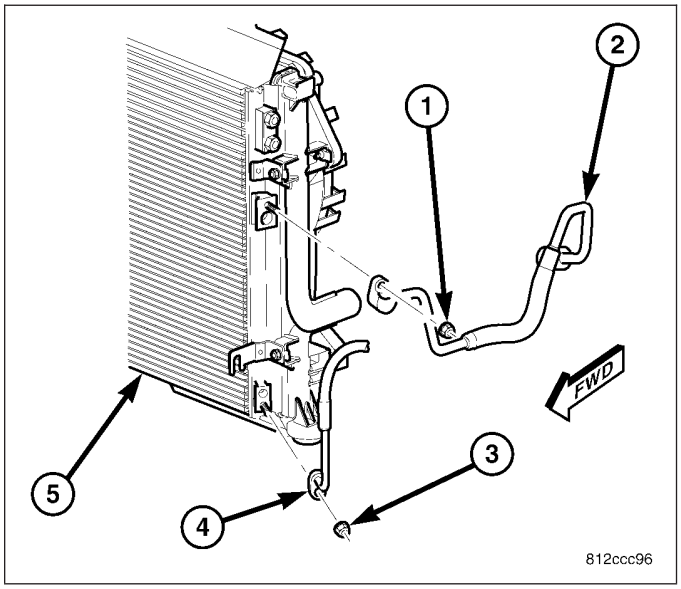

6. Remove the tape or plugs from the opened fitting on the A/C discharge line (4) and the outlet port on the A/C compressor (5).
7. Lubricate a new dual plane seal with clean refrigerant oil and install it onto the discharge line fitting. Use only the specified seal as it is made of a special material for the R-134a system. Use only refrigerant oil of the type recommended for the A/C compressor in the vehicle.
8. Install the A/C discharge line onto the A/C compressor.
9. Install the nut (2) that secures the A/C discharge line to the A/C compressor. Tighten the nut to 23 N·m (17 ft. lbs.).
10. Install the air cleaner housing (Refer to 9 - ENGINE/AIR INTAKE SYSTEM/AIR CLEANER HOUSING - INSTALLATION).

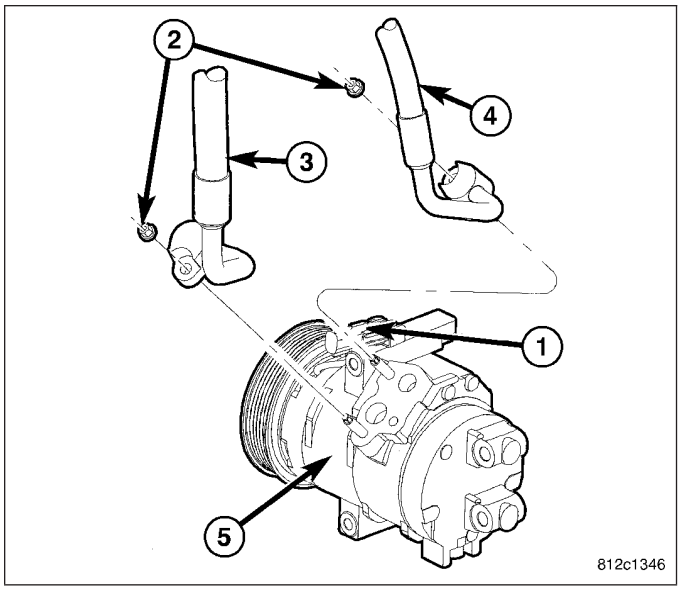

11. Reconnect the negative battery cable.
12. Evacuate the refrigerant system (Refer to 24 - HEATING & AIR CONDITIONING/PLUMBING - STANDARD PROCEDURE - REFRIGERANT SYSTEM EVACUATE).
13. Charge the refrigerant system (Refer to 24 - HEATING & AIR CONDITIONING/PLUMBING - STANDARD PROCEDURE - REFRIGERANT SYSTEM CHARGE).

LINE-A/C LIQUID

DESCRIPTION

NOTE: LHD model shown. RHD model similar.

The A/C liquid line is the refrigerant line that carries refrigerant from the A/C condenser to the A/C evaporator. The A/C liquid line is serviced in two sections. The front section of the liquid line (1) connects to the rear section of the liquid line (5) with a nut (2) and includes the high side service port (8). The rear section of the A/C liquid line includes the fitting for the A/C pressure transducer (6) and a mounting bracket (7) and is secured to the A/C expansion valve by a tapping plate (4). The rear section of the A/C liquid line is serviced as an assembly with the rear section of the A/C suction line (3).

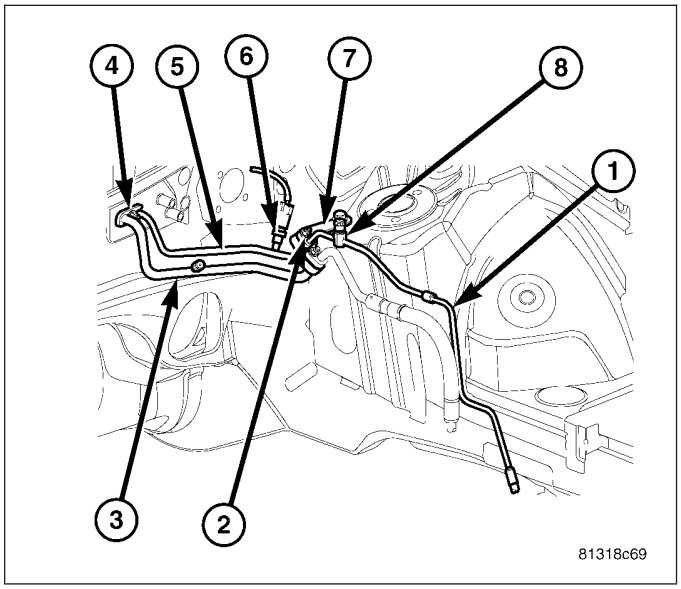

CAUTION: Use only seals specified for the vehicle. Failure to use the correct seals will cause the refrigerant system connections to leak.

The A/C liquid line has no serviceable parts except for the dual plane seals, high-side service port valve and it's protective cap. The seals used on the connections are made from a special type of rubber not affected by R-134a refrigerant. The seals must be replaced whenever the A/C liquid line is removed and installed.

If either section of the A/C liquid line is found to be leaking or damaged, it must be replaced.

REMOVAL

WARNING: Refer to the applicable warnings and cautions for this system before performing the following operation (Refer to 24 - HEATING & AIR CONDITIONING/PLUMBING - WARNINGS) and (Refer to 24 - HEATING & AIR CONDITIONING/PLUMBING - CAUTIONS). Failure to follow the warnings and cautions could result in possible personal injury or death.

NOTE: The A/C liquid line is serviced in two sections. The rear section of the liquid line is serviced as an assembly with the rear section of the A/C suction line.

FRONT SECTION

1. Recover the refrigerant from the refrigerant system (Refer to 24 - HEATING & AIR CONDITIONING/ PLUMBING - STANDARD PROCEDURE - REFRIGERANT SYSTEM RECOVERY).
2. Disconnect and isolate the negative battery cable.
3. Remove the air cleaner housing (Refer to 9 - ENGINE/AIR INTAKE SYSTEM/AIR CLEANER HOUSING - REMOVAL).
4. Raise and support the vehicle.
5. Remove the front end splash shields (Refer to 23 - BODY/EXTERIOR/FRONT END SPLASH SHIELDS - REMOVAL).
6. Remove the nut (3) that secures the front section of the A/C liquid line (4) to the A/C condenser (5).
7. Disconnect the A/C liquid line from the A/C condenser and remove and discard the dual plane seal.
8. Install plugs in, or tape over the opened liquid line fitting and condenser outlet port.

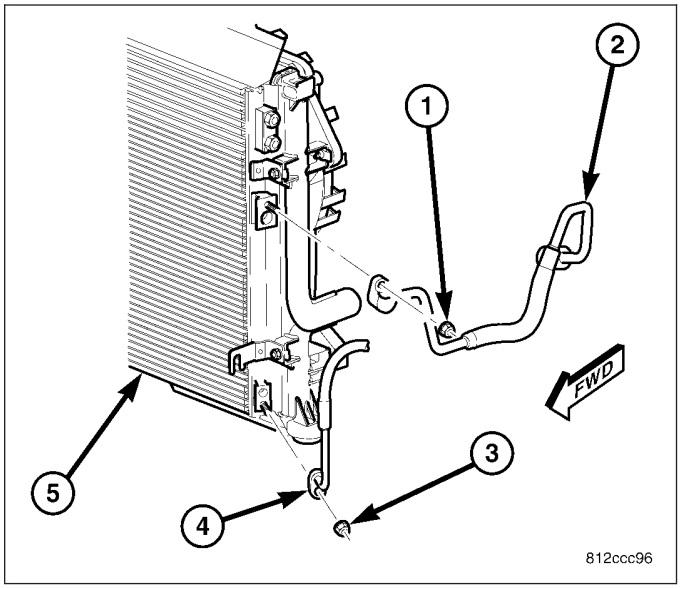

NOTE: LHD model shown. RHD model similar.

9. Lower the vehicle.
10. Remove the nut (1) that secures the front section of the A/C liquid line (2) to the rear section of the liquid line (3).
11. Disconnect the front section of the A/C liquid line from the rear section of the liquid line and remove and discard the dual plane seal.
12. Install plugs in, or tape over the opened liquid line fittings.
13. Remove the front section of the A/C liquid line from the engine compartment.

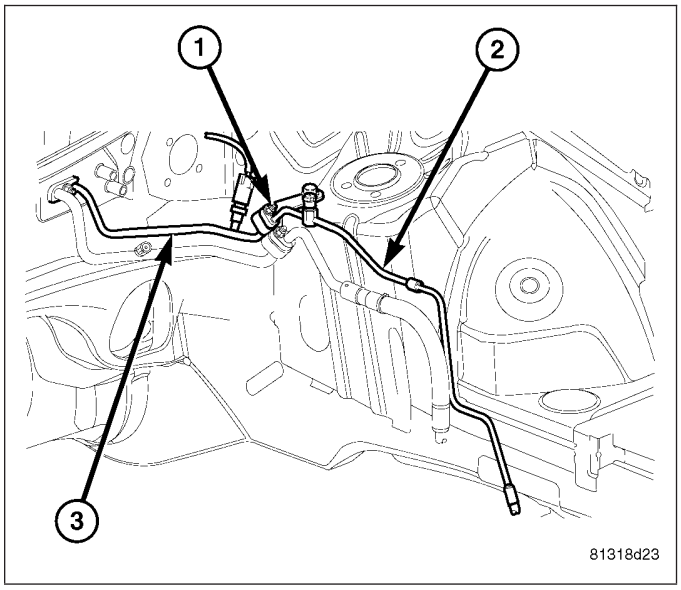

REAR SECTION

NOTE: LHD model shown. RHD model similar.

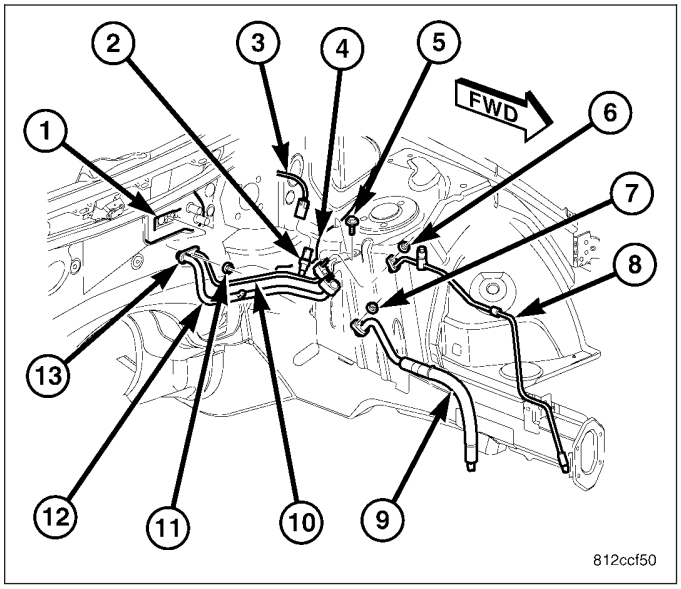

1. Recover the refrigerant from the refrigerant system (Refer to 24 - HEATING & AIR CONDITIONING/ PLUMBING - STANDARD PROCEDURE - REFRIGERANT SYSTEM RECOVERY).
2. Disconnect and isolate the negative battery cable.
3. Remove the air cleaner housing (Refer to 9 - ENGINE/AIR INTAKE SYSTEM/AIR CLEANER HOUSING - REMOVAL).
4. Remove the nut (6) that secures the front section of the A/C liquid line (8) to the rear section of the liquid line (10).
5. Disconnect the front section of the A/C liquid line from the rear section of the liquid line and remove and discard the dual plane seal.
6. Install plugs in, or tape over the opened liquid line fittings.
7. Remove the nut (7) that secures the front section of the A/C suction line (9) to the rear section of the suction line (12).
8. Disconnect the front section of the A/C suction line from the rear section of the suction line and remove and discard the dual plane seal.
9. Install plugs in, or tape over the opened suction line fittings.
10. Disconnect the wire harness (3) from the A/C pressure transducer (2).
11. Remove the bolt (5) that secures the refrigerant line mounting bracket to the left front shock tower (4).
12. Remove the nut (11) that secures the liquid and suction line tapping block (13) to the A/C expansion valve (1).
13. Disconnect the rear section of the A/C liquid and suction lines from the A/C expansion valve.
14. Remove the dual plane seal from the suction and liquid line fittings and discard.
15. Install plugs in, or tape over the opened suction and liquid line fittings and the expansion valve ports.
16. Remove the rear section of the A/C liquid and suction lines as an assembly from the engine compartment.
17. If required, remove the A/C pressure transducer from the rear section of the A/C liquid line (Refer to 24 - HEATING & AIR CONDITIONING/CONTROLS/TRANSDUCER-A/C PRESSURE - REMOVAL).

INSTALLATION

NOTE: The A/C liquid line is serviced in two sections. The rear section of the liquid line is serviced as an assembly with the rear section of the A/C suction line.

FRONT SECTION

NOTE: LHD model shown. RHD model similar.

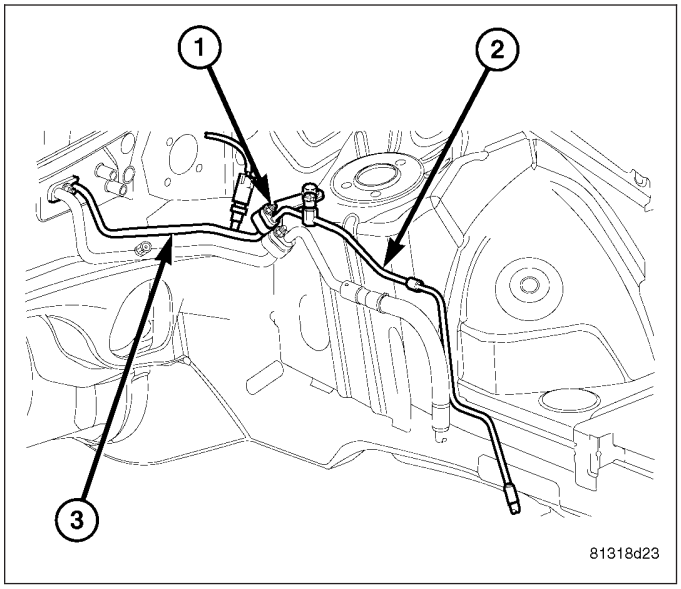

1. Position the front section of the liquid line (2) into the engine compartment.
2. Remove the tape or plugs from the fittings that connect the front section of the A/C liquid line to the rear section of the A/C liquid line (3).
3. Lubricate a new dual plane seal with clean refrigerant oil and install it onto the liquid line fitting. Use only the specified seal as it is made of a special material for the R-134a system. Use only refrigerant oil of the type recommended for the A/C compressor in the vehicle.
4. Connect the front section of the A/C liquid line to the rear section of the A/C liquid line.
5. Install the nut (1) that secures the front section of the A/C liquid line to the rear section of the A/C liquid line. Tighten the nut to 22 N·m (16 ft. lbs.).
6. Raise and support the vehicle.

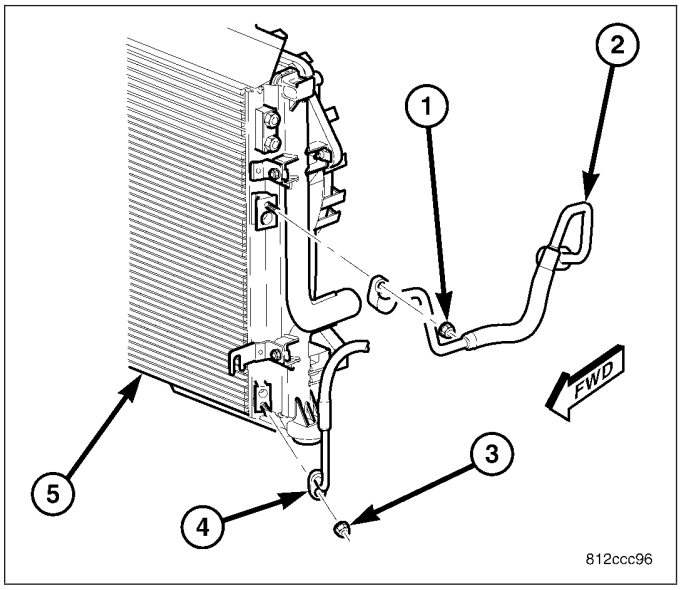

7. Remove the tape or plugs from the fitting on the front section of the A/C liquid line (4) and the outlet port of the A/C condenser (5).
8. Lubricate a new dual plane seal with clean refrigerant oil and install it onto the liquid line fitting. Use only the specified seal as it is made of a special material for the R-134a system. Use only refrigerant oil of the type recommended for the A/C compressor in the vehicle.
9. Connect the A/C liquid line to the A/C condenser.
10. Install the nut (3) that secures the front section of the A/C liquid line to the A/C condenser. Tighten the nut to 22 N·m (16 ft. lbs.).
11. Install the front end splash shields (Refer to 23 - BODY/EXTERIOR/FRONT END SPLASH SHIELDS - INSTALLATION).
12. Lower the vehicle.
13. Install the air cleaner housing (Refer to 9 - ENGINE/AIR INTAKE SYSTEM/AIR CLEANER HOUSING - INSTALLATION).
14. Reconnect the negative battery cable.
15. Evacuate the refrigerant system (Refer to 24 - HEATING & AIR CONDITIONING/PLUMBING - STANDARD PROCEDURE - REFRIGERANT SYSTEM EVACUATE).
16. Charge the refrigerant system (Refer to 24 - HEATING & AIR CONDITIONING/PLUMBING - STANDARD PROCEDURE - REFRIGERANT SYSTEM CHARGE).

REAR SECTION

NOTE: LHD model shown. RHD model similar.

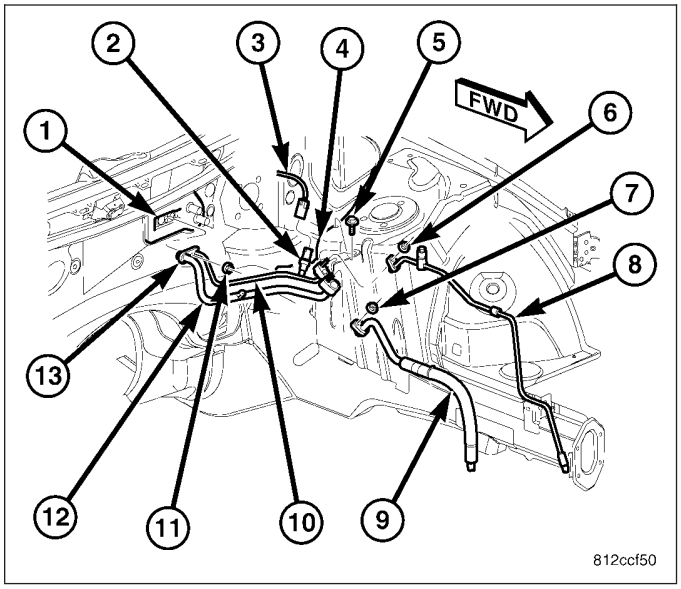

1. If removed, install the A/C pressure transducer (2) onto the A/C liquid line (10) (Refer to 24 - HEATING & AIR CONDITIONING/CONTROLS/A/C PRESSURE TRANSDUCER - INSTALLATION).
2. Position the rear section of the A/C liquid line (10) and the rear section of the A/C suction line (12) as an assembly into the engine compartment.
3. Remove the tape or plugs from the suction and liquid line fittings and the ports in the A/C expansion valve (1).
4. Lubricate a new dual plane seal with clean refrigerant oil and install it onto the suction and liquid line fittings. Use only the specified seal as it is made of a special material for the R-134a system. Use only refrigerant oil of the type recommended for the A/C compressor in the vehicle.
5. Connect the rear section of the A/C liquid and suction lines to the A/C expansion valve.
6. Install the nut (11) that secures the liquid and suction line tapping block (13) to the A/C expansion valve. Tighten the nut to 23 N·m (17 ft. lbs.).
7. Install the bolt (5) that secures the refrigerant line mounting bracket to the left front shock tower (4). Tighten the bolt to 11 N·m (97 in. lbs.).
8. Connect the wire harness (3) to the A/C pressure transducer.
9. Remove the tape or plugs from the fittings that connect the front section of the A/C liquid line (8) to the rear section of the A/C liquid line.
10. Lubricate a new dual plane seal with clean refrigerant oil and install it onto the liquid line fitting. Use only the specified seal as it is made of a special material for the R-134a system. Use only refrigerant oil of the type recommended for the A/C compressor in the vehicle.
11. Connect the front section of the A/C liquid line to the rear section of the A/C liquid line.
12. Install the nut (6) that secures the front section of the A/C liquid line to the rear section of the A/C liquid line. Tighten the nut to 22 N·m (16 ft. lbs.).
13. Remove the tape or plugs from the fittings that connect the front section of the A/C suction line (9) to the rear section of the A/C suction line.
14. Lubricate a new dual plane seal with clean refrigerant oil and install it onto the suction line fitting. Use only the specified seal as it is made of a special material for the R-134a system. Use only refrigerant oil of the type recommended for the A/C compressor in the vehicle.
15. Connect the front section of the A/C suction line to the rear section of the A/C suction line.
16. Install the nut (7) that secures the front section of the A/C suction line to the rear section of the A/C suction line. Tighten the nut to 22 N·m (16 ft. lbs.).
17. Install the air cleaner housing (Refer to 9 - ENGINE/AIR INTAKE SYSTEM/AIR CLEANER HOUSING - REMOVAL).
18. Reconnect the negative battery cable.
19. Evacuate the refrigerant system (Refer to 24 - HEATING & AIR CONDITIONING/PLUMBING - STANDARD PROCEDURE - REFRIGERANT SYSTEM EVACUATE).
20. Charge the refrigerant system (Refer to 24 - HEATING & AIR CONDITIONING/PLUMBING - STANDARD PROCEDURE - REFRIGERANT SYSTEM CHARGE).

LINE-A/C SUCTION

DESCRIPTION

NOTE: LHD model shown. RHD model similar.

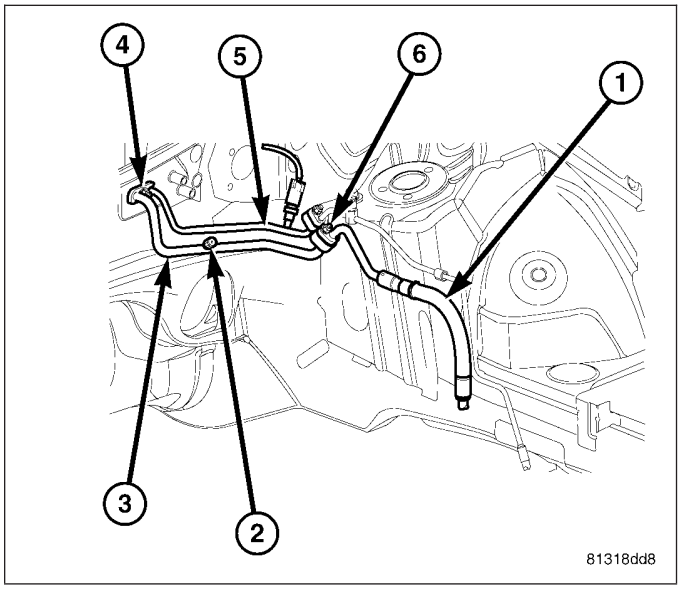

The A/C suction line is the refrigerant line that carries refrigerant from the A/C evaporator to the A/C compressor. The A/C suction line is serviced in two sections. The front section of the suction line (1) connects to the rear section of the suction line (3) with a nut (6). The rear section of the A/C suction line includes the low side service port (2) and is secured to the A/C expansion valve by a tapping plate (4). The rear section of the A/C suction line is serviced as an assembly with the rear section of the A/C liquid line (5).

CAUTION: Use only seals specified for the vehicle. Failure to use the correct seals will cause the refrigerant system connections to leak.

The A/C suction line has no serviceable parts except for the dual plane seals, low-side service port valve and its protective cap. The seals used on the connections are made from a special type of rubber not affected by R-134a refrigerant. The seals must be replaced whenever the A/C suction line is removed and installed.

If either section of the A/C suction line is found to be leaking or damaged, it must be replaced.

REMOVAL

WARNING: Refer to the applicable warnings and cautions for this system before performing the following operation (Refer to 24 - HEATING & AIR CONDITIONING/PLUMBING - WARNINGS) and (Refer to 24 - HEATING & AIR CONDITIONING/PLUMBING - CAUTIONS). Failure to follow the warnings and cautions could result in possible personal injury or death.

NOTE: The A/C suction line is serviced in two sections. The rear section of the suction line is serviced as an assembly with the rear section of the A/C liquid line.

FRONT SECTION

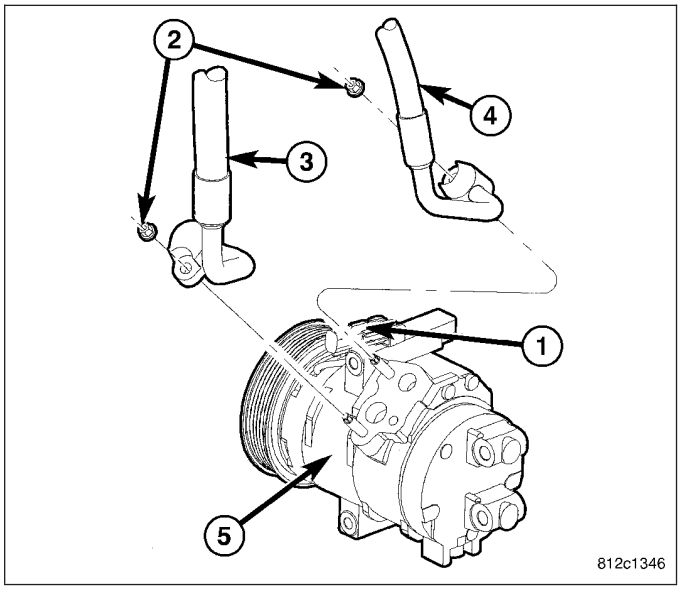

1. Recover the refrigerant from the refrigerant system (Refer to 24 - HEATING & AIR CONDITIONING/PLUMBING - STANDARD PROCEDURE - REFRIGERANT SYSTEM RECOVERY).
2. Disconnect and isolate the negative battery cable.
3. Remove the air cleaner housing (Refer to 9 - ENGINE/AIR INTAKE SYSTEM/AIR CLEANER HOUSING - REMOVAL).
4. Remove the nut (2) that secures the front section of the A/C suction line (3) to the A/C compressor (5).
5. Disconnect the A/C suction line from the A/C compressor and remove and discard the dual plane seal.
6. Install plugs in, or tape over the opened suction line fitting and compressor inlet port.

NOTE: LHD model shown. RHD model similar.

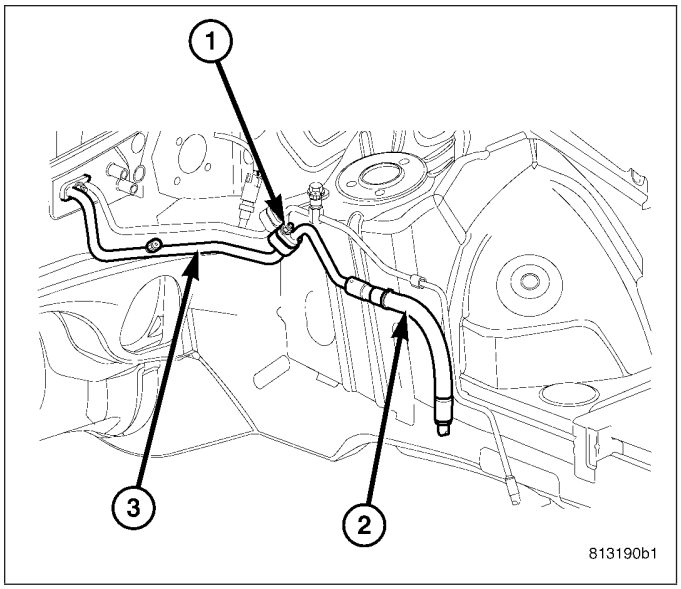

7. Remove the nut (1) that secures the front section of the A/C suction line (2) to the rear section of the suction line (3).
8. Disconnect the front section of the A/C suction line from the rear section of the suction line and remove and discard the dual plane seal.
9. Install plugs in, or tape over the opened suction line fittings.
10. Remove the front section of the A/C suction line from the engine compartment.

REAR SECTION

NOTE: LHD model shown. RHD model similar.

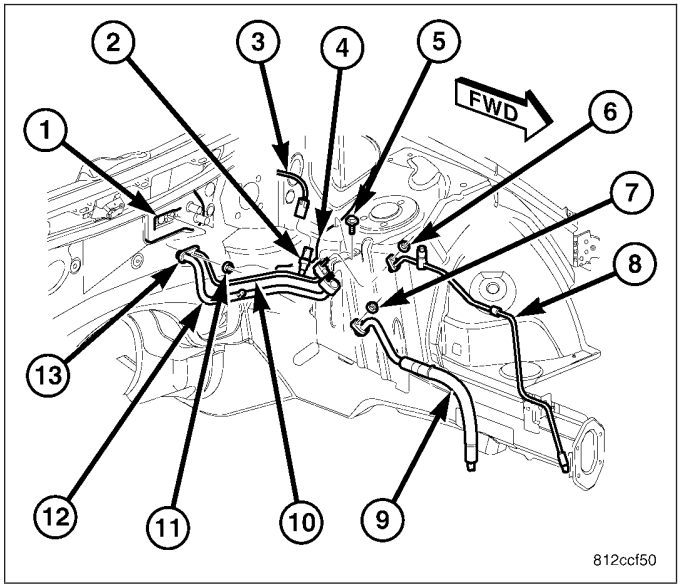

1. Recover the refrigerant from the refrigerant system (Refer to 24 - HEATING & AIR CONDITIONING/ PLUMBING - STANDARD PROCEDURE - REFRIGERANT SYSTEM RECOVERY).
2. Disconnect and isolate the negative battery cable.
3. Remove the air cleaner housing (Refer to 9 - ENGINE/AIR INTAKE SYSTEM/AIR CLEANER HOUSING - REMOVAL).
4. Remove the nut (7) that secures the front section of the A/C suction line (9) to the rear section of the suction line (12).
5. Disconnect the front section of the A/C suction line from the rear section of the suction line and remove and discard the dual plane seal.
6. Install plugs in, or tape over the opened suction line fittings.
7. Remove the nut (6) that secures the front section of the A/C liquid line (8) to the rear section of the liquid line (10).
8. Disconnect the front section of the A/C liquid line from the rear section of the liquid line and remove and discard the dual plane seal.
9. Install plugs in, or tape over the opened liquid line fittings.
10. Disconnect the wire harness (3) from the A/C pressure transducer (2).
11. Remove the bolt (5) that secures the refrigerant line mounting bracket to the left front shock tower (4).
12. Remove the nut (11) that secures the liquid and suction line tapping block (13) to the A/C expansion valve (1).
13. Disconnect the rear section of the A/C suction and liquid lines from the A/C expansion valve.
14. Remove the dual plane seal from the suction and liquid line fittings and discard.
15. Install plugs in, or tape over the opened suction and liquid line fittings and the expansion valve ports.
16. Remove the rear section of the A/C suction and liquid lines as an assembly from the engine compartment.
17. If required, remove the A/C pressure transducer from the rear section of the A/C liquid line (Refer to 24 - HEATING & AIR CONDITIONING/CONTROLS/TRANSDUCER-A/C PRESSURE - REMOVAL).

INSTALLATION

NOTE: The A/C suction line is serviced in two sections. The rear section of the suction line is serviced as an assembly with the rear section of the A/C liquid line.

FRONT SECTION

NOTE: LHD model shown. RHD model similar.

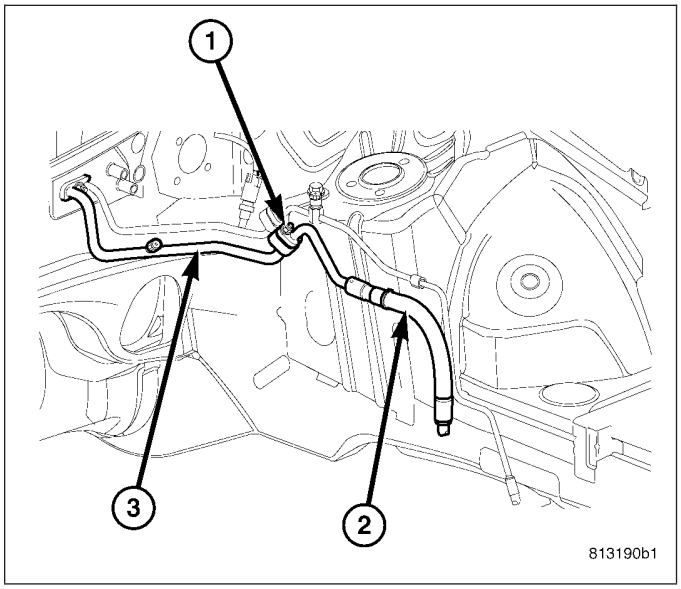

1. Position the front section of the A/C suction line (2) into the engine compartment.
2. Remove the tape or plugs from the fittings that connect the front section of the A/C suction line to the rear section of the A/C suction line (3).
3. Lubricate a new dual plane seal with clean refrigerant oil and install it onto the suction line fitting. Use only the specified seal as it is made of a special material for the R-134a system. Use only refrigerant oil of the type recommended for the A/C compressor in the vehicle.
4. Connect the front section of the A/C suction line to the rear section of the A/C suction line.
5. Install the nut (1) that secures the front section of the A/C suction line to the rear section of the A/C suction line. Tighten the nut to 22 N·m (16 ft. lbs.).

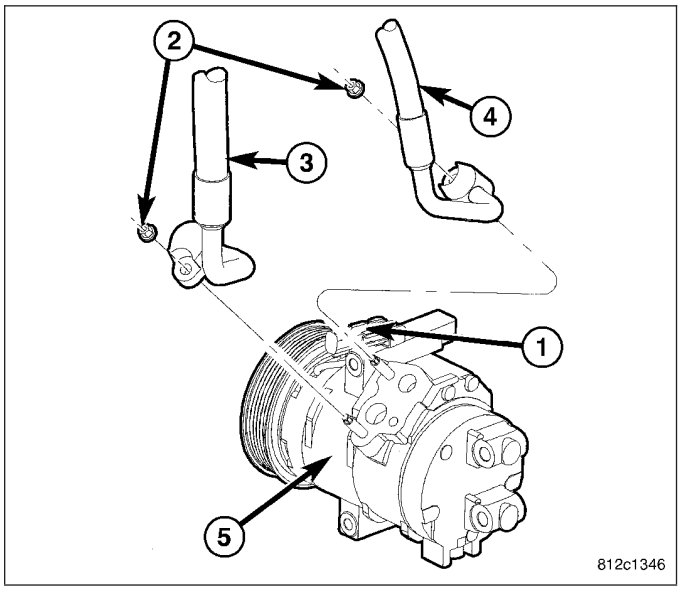

6. Remove the tape or plugs from the fitting on the front section of the A/C suction line (3) and the inlet port of the A/C compressor (5).
7. Lubricate a new dual plane seal with clean refrigerant oil and install it onto the suction line fitting. Use only the specified seal as it is made of a special material for the R-134a system. Use only refrigerant oil of the type recommended for the A/C compressor in the vehicle.
8. Connect the A/C suction line to the A/C compressor.
9. Install the nut (2) that secures the front section of the A/C suction line to the A/C compressor. Tighten the nut to 23 N·m (17 ft. lbs.).
10. Install the air cleaner housing (Refer to 9 - ENGINE/AIR INTAKE SYSTEM/AIR CLEANER HOUSING - INSTALLATION).
11. Reconnect the negative battery cable.
12. Evacuate the refrigerant system (Refer to 24 - HEATING & AIR CONDITIONING/PLUMBING - STANDARD PROCEDURE - REFRIGERANT SYSTEM EVACUATE).
13. Charge the refrigerant system (Refer to 24 - HEATING & AIR CONDITIONING/PLUMBING - STANDARD PROCEDURE - REFRIGERANT SYSTEM CHARGE).

REAR SECTION

NOTE: LHD model shown. RHD model similar.

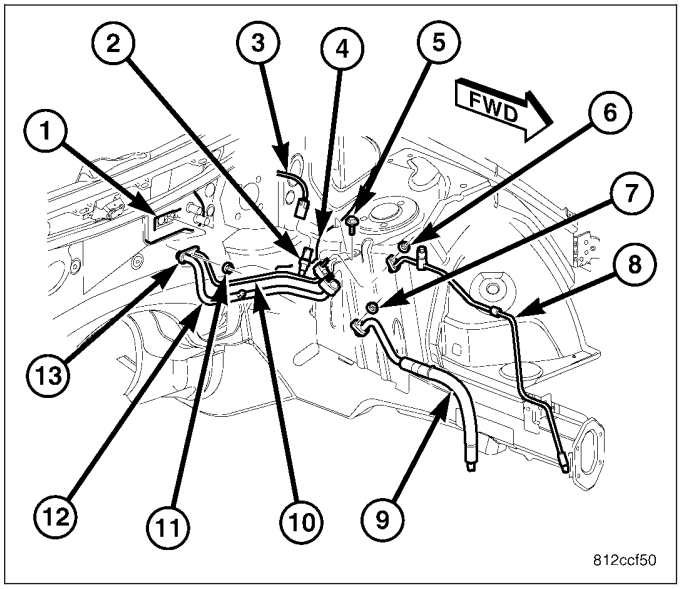

1. If removed, install the A/C pressure transducer (2) onto the A/C liquid line (10) (Refer to 24 - HEATING & AIR CONDITIONING/CONTROLS/A/C PRESSURE TRANSDUCER - INSTALLATION).
2. Position the rear section of the A/C suction line (12) and the rear section of the A/C liquid line (10) as an assembly into the engine compartment.
3. Remove the tape or plugs from the suction and liquid line fittings and the ports in the A/C expansion valve (1).
4. Lubricate a new dual plane seal with clean refrigerant oil and install it onto the suction and liquid line fittings. Use only the specified seal as it made of a special material for the R-134a system. Use only refrigerant oil of the type recommended for the A/C compressor in the vehicle.
5. Connect the rear section of the A/C liquid and suction lines to the A/C expansion valve.
6. Install the nut (11) that secures the liquid and suction line tapping block (13) to the A/C expansion valve. Tighten the nut to 23 N·m (17 ft. lbs.).
7. Install the bolt (5) that secures the refrigerant line mounting bracket to the left front shock tower (4). Tighten the bolt to 11 N·m (97 in. lbs.).
8. Connect the wire harness (3) to the A/C pressure transducer.
9. Remove the tape or plugs from the fittings that connect the front section of the A/C liquid line (8) to the rear section of the A/C liquid line.
10. Lubricate a new dual plane seal with clean refrigerant oil and install it onto the liquid line fitting. Use only the specified seal as it is made of a special material for the R-134a system. Use only refrigerant oil of the type recommended for the A/C compressor in the vehicle.
11. Connect the front section of the A/C liquid line to the rear section of the A/C liquid line.
12. Install the nut (6) that secures the front section of the A/C liquid line to the rear section of the A/C liquid line. Tighten the nut to 22 N·m (16 ft. lbs.).
13. Remove the tape or plugs from the fittings that connect the front section of the A/C suction line (9) to the rear section of the A/C suction line.
14. Lubricate a new dual plane seal with clean refrigerant oil and install it onto the suction line fitting. Use only the specified seal as it is made of a special material for the R-134a system. Use only refrigerant oil of the type recommended for the A/C compressor in the vehicle.
15. Connect the front section of the A/C suction line to the rear section of the A/C suction line.
16. Install the nut (7) that secures the front section of the A/C suction line to the rear section of the A/C suction line. Tighten the nut to 22 N·m (16 ft. lbs.).
17. Install the air cleaner housing (Refer to 9 - ENGINE/AIR INTAKE SYSTEM/AIR CLEANER HOUSING - REMOVAL).
18. Reconnect the negative battery cable.
19. Evacuate the refrigerant system (Refer to 24 - HEATING & AIR CONDITIONING/PLUMBING - STANDARD PROCEDURE - REFRIGERANT SYSTEM EVACUATE).
20. Charge the refrigerant system (Refer to 24 - HEATING & AIR CONDITIONING/PLUMBING - STANDARD PROCEDURE - REFRIGERANT SYSTEM CHARGE).

OIL-A/C REFRIGERANT

DESCRIPTION

The refrigerant oil used in R-134a refrigerant systems is a synthetic-based, polyalkylene glycol (PAG), wax-free lubricant. Mineral-based R-12 refrigerant oils are not compatible with PAG oils, and should never be introduced to an R-134a refrigerant system.

There are different PAG oils available, and each contains a different additive package. The Denso 10S17 A/C compressor used in this vehicle is designed to use ND-8 PAG refrigerant oil. Use only this type of refrigerant oil the refrigerant system.

OPERATION

After performing any refrigerant recovery or recycling operation, always replenish the refrigerant system with the same amount of the recommended refrigerant oil as was removed. Too little refrigerant oil can cause A/C compressor damage, and too much can reduce A/C system performance.

PAG refrigerant oil is more hygroscopic than mineral oil, and will absorb any moisture it comes into contact with, even moisture in the air. The PAG oil container should always be kept tightly capped until it is ready to be used. After use, recap the oil container immediately to prevent moisture contamination.

STANDARD PROCEDURE

REFRIGERANT OIL LEVEL

When an A/C system is assembled at the factory, all components except the A/C compressor are refrigerant oil free. After the refrigerant system has been charged and operated, the refrigerant oil in the A/C compressor is dispersed throughout the refrigerant system. The receiver/drier, A/C evaporator, A/C condenser and the A/C compressor will each retain a significant amount of the needed refrigerant oil.

It is important to have the correct amount of refrigerant oil in the A/C system. This ensures proper lubrication of the A/C compressor. Too little oil will result in damage to the A/C compressor, while too much oil will reduce the cooling capacity of the A/C system and consequently result in higher discharge air temperatures.

CAUTION: The oil used in the Denso 10S17 A/C compressor is ND-8 PAG R-134a refrigerant oil. Only refrigerant oil of the same type should be used to service the A/C system. Do not use any other refrigerant oil. The oil container should be kept tightly capped until it is ready for use and then tightly capped after use to prevent contamination from dirt and moisture. Refrigerant oil will quickly absorb any moisture it comes in contact with, therefore, special effort must be used to keep all R-134a system components moisture-free. Moisture in the refrigerant oil is very difficult to remove and will cause a reliability problem with the A/C compressor.

NOTE: Most reclaim/recycling equipment will measure the lubricant being removed during recovery. This amount of lubricant should be added back into the system. Refer to the reclaim/recycling equipment manufacturers instructions.

It will not be necessary to check the oil level in the A/C compressor or to add oil, unless there has been an oil loss. An oil loss may occur due to a rupture or leak from a refrigerant line, a connector fitting, a component, or a component seal. If a leak occurs, add 30 milliliters (1 fluid ounce) of refrigerant oil to the refrigerant system after the repair has been made. Refrigerant oil loss will be evident at the leak point by the presence of a wet, shiny surface around the leak.

Refrigerant oil must be added when a receiver/drier, A/C evaporator or A/C condenser is replaced. See the Refrigerant Oil Capacities chart. When an A/C compressor is replaced, the refrigerant oil must be drained from the old compressor and measured. Drain all of the refrigerant oil from the new A/C compressor, then fill the new compressor with the same amount of refrigerant oil that was drained out of the old compressor.

REFRIGERANT OIL CAPACITIES

COMPONENT	ml.	oz.
Total System Fill	180 ml.	6.1 oz.
A/C Condenser	30 ml.	1.0 oz.
A/C Evaporator	60 ml.	2.0 oz.
Receiver/drier	30 ml.	1.0 oz.
A/C Compressor	Drain and measure the oil from the old compressor - see previous text.	

RECEIVER/DRIER-A/C

DESCRIPTION

The receiver/drier (1) stores unnecessary refrigerant, filters the refrigerant, helps remove moisture from the refrigerant and retains any refrigerant vapor that may leave the A/C condenser (2) until it becomes a liquid. The receiver/drier is installed on the high-side of the A/C system and is connected directly to the right end of the A/C condenser. The receiver/drier can be easily serviced by removing the front fascia.

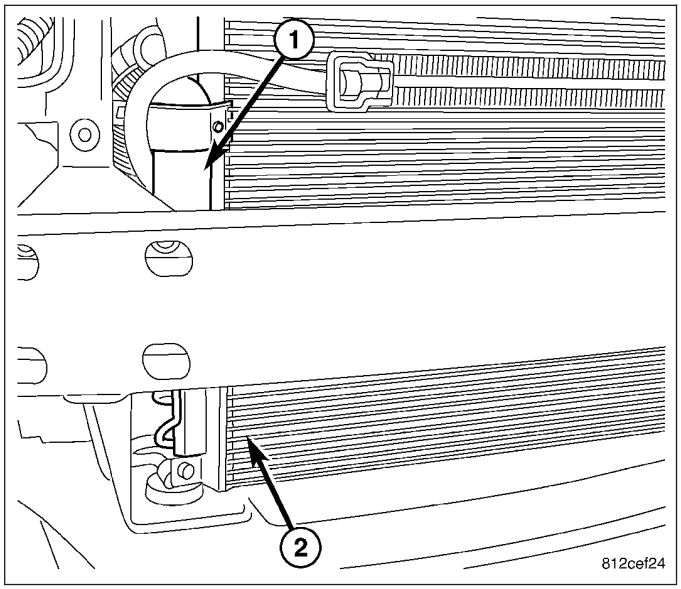

OPERATION

The receiver/drier performs a filtering action to prevent foreign material in the refrigerant from contaminating the A/C expansion valve. Refrigerant enters the receiver/drier as a high-pressure, low temperature liquid. Desiccant inside the receiver/drier absorbs any moisture which may have entered and become trapped within the refrigerant system. In addition, during periods of high demand operation of the A/C system, the receiver/drier acts as a reservoir to store surplus refrigerant.

The receiver/drier cannot be repaired. If the receiver/drier is faulty or damaged, or if an internal failure of the A/C compressor has occurred, the receiver/drier must be replaced.

REMOVAL

WARNING: Refer to the applicable warnings and cautions for this system before performing the following operation (Refer to 24 - HEATING & AIR CONDITIONING/PLUMBING - WARNINGS) and (Refer to 24 - HEATING & AIR CONDITIONING/PLUMBING - CAUTIONS). Failure to follow the warnings and cautions could result in possible personal injury or death.

1. Recover the refrigerant from the refrigerant system (Refer to 24 - HEATING & AIR CONDITIONING/PLUMBING - STANDARD PROCEDURE - REFRIGERANT SYSTEM RECOVERY).
2. Disconnect and isolate the negative battery cable.
3. Remove the front fascia (Refer to 23 - BODY/EXTERIOR/FRONT FASCIA - REMOVAL).
4. Remove the screw (1) that secures the receiver/drier mounting bracket (2) to the right end of the A/C condenser (3).
5. Remove the bolt (4) that secures the receiver/drier (5) to the A/C condenser.
6. Disconnect the receiver/drier from the A/C condenser and remove and discard the dual-plane seal.

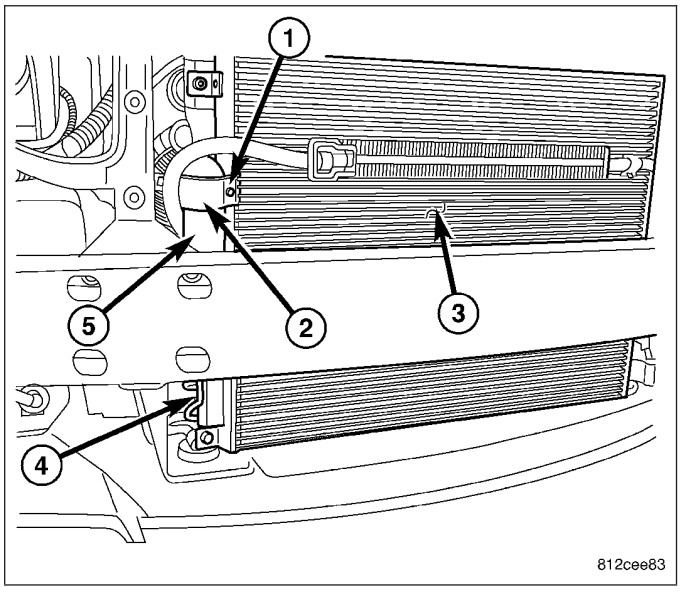

7. Install plugs in, or tape over the opened receiver/drier fitting and the condenser ports.

INSTALLATION

NOTE: If the receiver/drier is being replaced, add 30 milliliters (1 fluid ounce) of refrigerant oil to the refrigerant system. Use only the refrigerant oil of the type recommended for the A/C compressor in the vehicle.

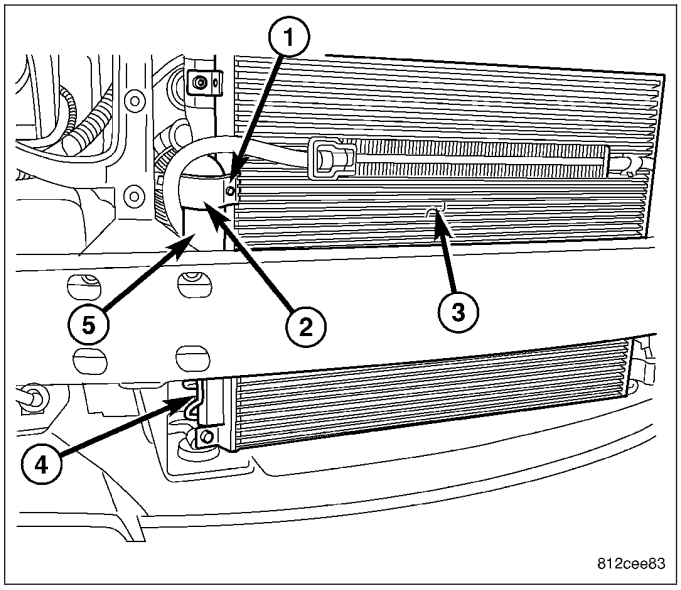

1. Position the receiver/drier (5) into the engine compartment.
2. Remove the tape or plugs from the receiver/drier fitting and the ports of the A/C condenser (3).
3. Lubricate a new dual-plane seal with clean refrigerant oil and install it onto the receiver/drier fitting. Use only the specified seal as it is made of a special material for the R-134a system. Use only refrigerant oil of the type recommended for the A/C compressor in the vehicle.
4. Connect the receiver/drier to the right end of the A/C condenser.
5. Install the bolt (4) that secures the receiver/drier to the A/C condenser. Tighten the bolt to 22 N·m (16 ft. lbs.).
6. Install the receiver/drier mounting bracket (2) onto the A/C condenser.
7. Install the screw (1) that secures the receiver/drier mounting bracket onto the A/C condenser. Tighten the screw to to 5 N·m (44 in. lbs.).
8. Install the front fascia (Refer to 23 - BODY/EXTERIOR/FRONT FASCIA - INSTALLATION).
9. Reconnect the negative battery cable.
10. Evacuate the refrigerant system (Refer to 24 - HEATING & AIR CONDITIONING/PLUMBING - STANDARD PROCEDURE - REFRIGERANT SYSTEM EVACUATE).
11. Charge the refrigerant system (Refer to 24 - HEATING & AIR CONDITIONING/PLUMBING - STANDARD PROCEDURE - REFRIGERANT SYSTEM CHARGE).

REFRIGERANT-A/C

DESCRIPTION

The refrigerant used in this air conditioning system is a HydroFluoroCarbon (HFC), type R-134a. Unlike R-12, which is a ChloroFluoroCarbon (CFC), R-134a refrigerant does not contain ozone-depleting chlorine. R-134a refrigerant is a non-toxic, non-flammable, clear, and colorless liquefied gas.

Even though R-134a does not contain chlorine, it must be reclaimed and recycled just like CFC-type refrigerants. This is because R-134a is a greenhouse gas and can contribute to global warming.

OPERATION

R-134a refrigerant is not compatible with R-12 refrigerant in an A/C system. Even a small amount of R-12 refrigerant added to an R-134a refrigerant system will cause A/C compressor failure, refrigerant oil sludge or poor A/C system performance. In addition, the polyalkylene glycol (PAG) synthetic refrigerant oils used in an R-134a refrigerant system are not compatible with the mineral-based refrigerant oils used in an R-12 refrigerant system.

R-134a refrigerant system service ports, service tool couplers and refrigerant dispensing bottles have all been designed with unique fittings to ensure that an R-134a refrigerant system is not accidentally contaminated with the wrong refrigerant (R-12). There are also labels posted in the engine compartment of the vehicle and on the A/C compressor to identify that the A/C system is equipped with R-134a refrigerant.

VALVE-A/C EXPANSION

DESCRIPTION

The A/C expansion valve controls the amount of refrigerant entering the A/C evaporator and is of a thermostatic expansion valve (TXV) design. The A/C expansion valve consists of an aluminum H-valve type body (1) with an integral thermal sensor (2) and is located at the dash panel between the A/C refrigerant lines and the A/C evaporator.

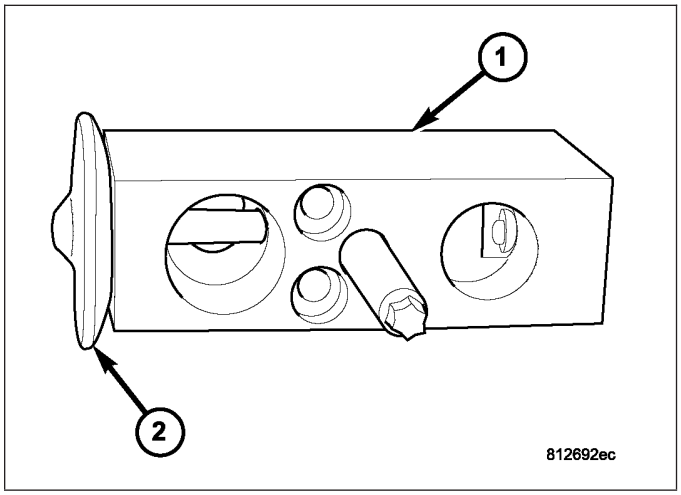

OPERATION

The A/C expansion valve controls the high-pressure, low temperature liquid refrigerant from the liquid line and converts it into a low-pressure, low-temperature mixture of liquid and gas before it enters the A/C evaporator. A mechanical sensor in the A/C expansion valve monitors the temperature and pressure of the refrigerant leaving the A/C evaporator through the suction line, and adjusts the orifice size at the liquid line port to let the proper amount of refrigerant into the A/C evaporator to meet the vehicle A/C cooling requirements. Controlling the refrigerant flow through the A/C evaporator ensures that none of the refrigerant leaving the A/C evaporator is still in a liquid state, which could damage the A/C compressor.

The A/C expansion valve is factory calibrated and cannot be adjusted or repaired and, if faulty or damaged, it must be replaced.

DIAGNOSIS AND TESTING

A/C EXPANSION VALVE

WARNING: Refer to the applicable warnings and cautions for this system before performing the following operation (Refer to 24 - HEATING & AIR CONDITIONING/PLUMBING - WARNINGS) and (Refer to 24 - HEATING & AIR CONDITIONING/PLUMBING - CAUTIONS). Failure to follow the warnings and cautions could result in possible personal injury or death.

NOTE: The A/C expansion valve should only be tested following testing of the A/C compressor.

NOTE: Liquid CO^2 is required to test the A/C expansion valve. This material is available from most welding supply facilities. Liquid CO^2 is also available from companies which service and sell fire extinguishers.

When testing the A/C expansion valve, the work area and the vehicle temperature must be 21° to 27° C (70° to 85° F). To test the expansion valve:

1. Connect a charging station or manifold gauge set to the refrigerant system service ports. Verify the refrigerant charge level.
2. Close all doors, windows and vents to the passenger compartment.
3. Set the A/C-heater controls so that the A/C compressor is operating, the temperature control is in the highest temperature position, the mode-air doors is directing air output to the floor and the blower motor operating is operating at the highest speed.

4. Start the engine and allow it to idle. After the engine has reached normal operating temperature, allow the passenger compartment to heat up. This will create the need for maximum refrigerant flow into the A/C evaporator.
5. If the refrigerant charge is sufficient, the discharge (high pressure) gauge should read 827 kPa to 1655 kPa (120 psi to 240 psi). The suction (low pressure) gauge should read 207 kPa to 345 kPa (30 psi to 50 psi). If OK, go to Step 6. If not OK, replace the faulty A/C expansion valve.

WARNING:
Protect the skin and eyes from exposure to liquid CO^2 or personal injury can result.

6. If the suction (low pressure) gauge reads within the specified range, freeze the A/C expansion valve for 30 seconds using liquid CO^2 or another suitable super-cold material.**Do not spray R-134a or R-12 refrigerant on the A/C expansion valve for this test.** The suction (low pressure) gauge reading should drop by 69 kPa (10 psi). If OK, go to Step 7 If not OK, replace the faulty A/C expansion valve.
7. Allow the expansion valve control head to thaw. The suction (low pressure) gauge reading should stabilize at 207 kPa to 345 kPa (30 psi to 50 psi). If not OK, replace the faulty A/C expansion valve.
8. When expansion valve testing is complete, test the overall A/C system performance (Refer to 24 - HEATING & AIR CONDITIONING - DIAGNOSIS AND TESTING - A/C PERFORMANCE TEST).

REMOVAL

WARNING: Refer to the applicable warnings and cautions for this system before performing the following operation (Refer to 24 - HEATING & AIR CONDITIONING/PLUMBING - WARNINGS) and (Refer to 24 - HEATING & AIR CONDITIONING/PLUMBING - CAUTIONS). Failure to follow the warnings and cautions could result in possible personal injury or death.

NOTE: LHD model shown in illustrations. RHD model similar.

1. Recover the refrigerant from the refrigerant system (Refer to 24 - HEATING & AIR CONDITIONING/ PLUMBING - STANDARD PROCEDURE - REFRIGERANT SYSTEM RECOVERY).
2. Disconnect and isolate the negative battery cable.
3. Remove the bolt (5) that secures the refrigerant line mounting bracket (6) to the left front shock tower (4).
4. Remove the nut (9) that secures the refrigerant line tapping block (10) to the A/C expansion valve (1).
5. Disconnect the wire harness (3) from the A/C pressure transducer (2) to help allow access to the A/C expansion valve.
6. Disconnect the A/C suction line (7) and the A/C liquid line (8) from the A/C expansion valve and position the refrigerant lines out of the way.
7. Remove the dual plane seal from the suction and liquid line fittings and discard.

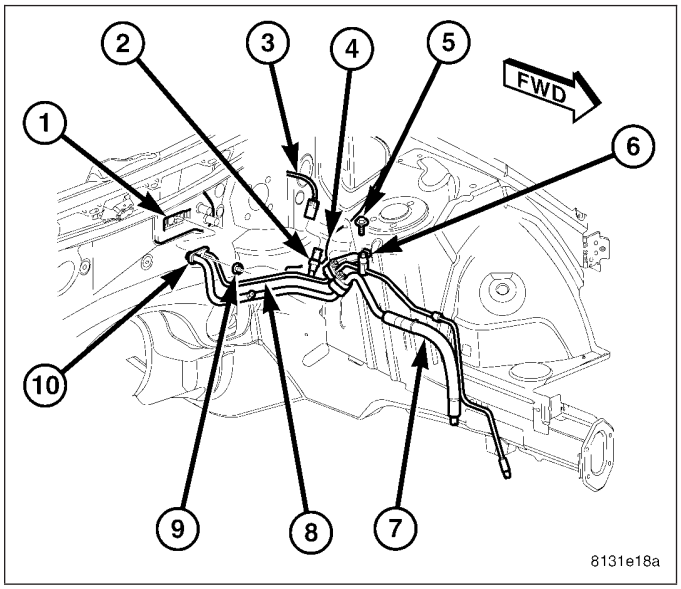

8. Install plugs in, or tape over the opened suction and liquid line fittings.

9. Remove the two bolts (1) that secure the A/C expansion valve (2) to the evaporator tube tapping block located within the foam seal (3).
10. Remove the A/C expansion valve from the evaporator tube tapping block and foam seal.
11. Remove the dual plane seal from the evaporator tube fittings and discard.
12. Install plugs in, or tape over the opened evaporator tube fittings and all expansion valve ports.

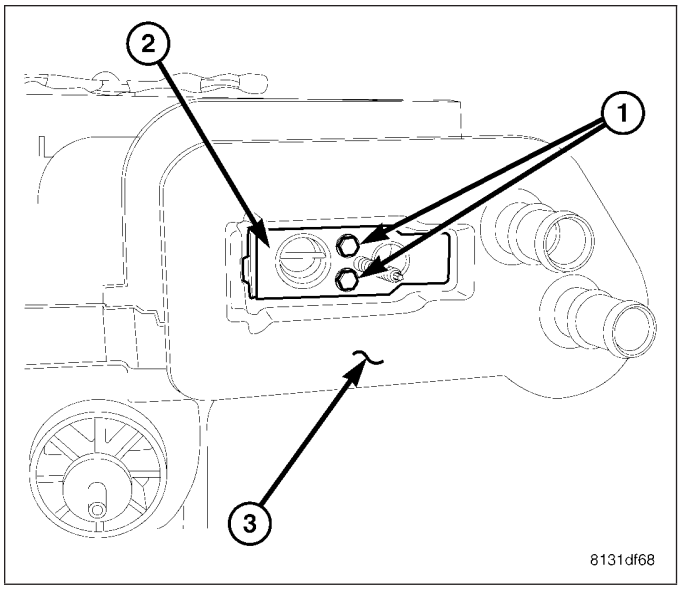

INSTALLATION

NOTE: LHD model shown in illustrations. RHD model similar.

1. Remove the tape or plugs from the evaporator tube fittings and all of the expansion valve ports.
2. Lubricate a new dual plane seal with clean refrigerant oil and install it onto the evaporator tube fittings. Use only the specified seal as it is made of a special material for the R-134a system. Use only refrigerant oil of the type recommended for the A/C compressor in the vehicle.
3. Install the A/C expansion valve (2) onto the evaporator tube tapping block located within the foam seal (3).
4. Install the two bolts (1) that secure the A/C expansion valve to the evaporator tube tapping block. Tighten the bolts to 11 N·m (97 in. lbs.).

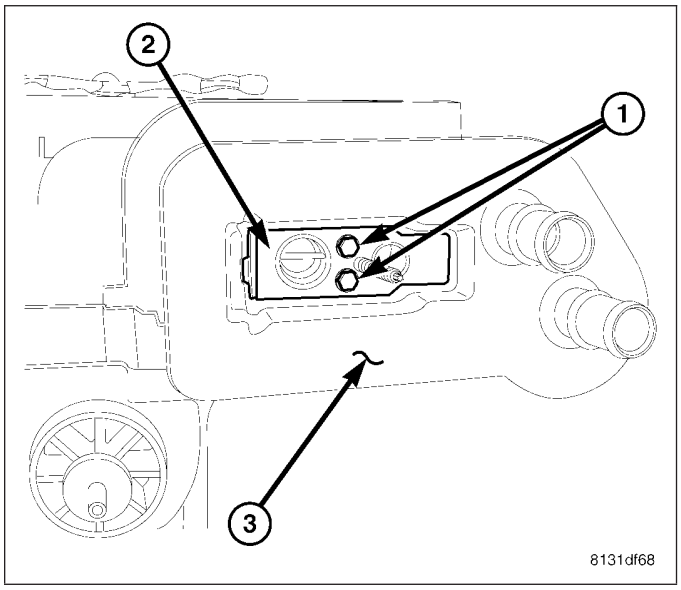

5. Remove the tape or plugs from the suction and liquid line fittings.
6. Lubricate a new dual plane seal with clean refrigerant oil and install it onto the suction and liquid line fittings. Use only the specified seal as it is made of a special material for the R-134a system. Use only refrigerant oil of the type recommended for the A/C compressor in the vehicle.
7. Connect the A/C suction line (7) and the A/C liquid line (8) to the A/C expansion valve (1).
8. Install the nut (9) that secures the refrigerant line tapping block (10) to the A/C expansion valve. Tighten the nut to 23 N·m (17 ft. lbs.).
9. Install the bolt (5) that secures the refrigerant line mounting bracket (6) to the left front shock tower (4). Tighten the bolt to 11 N·m (97 in. lbs.).
10. Connect the wire harness (3) to the A/C pressure transducer (2).

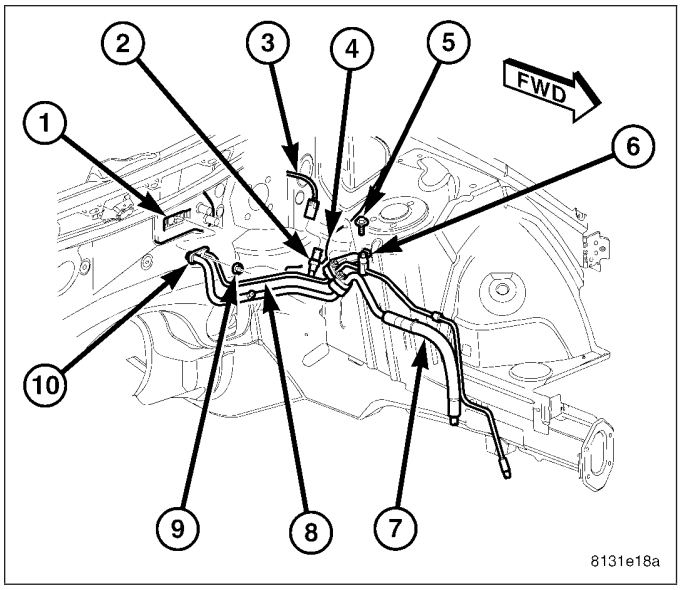

11. Reconnect the negative battery cable.
12. Evacuate the refrigerant system (Refer to 24 - HEATING & AIR CONDITIONING/PLUMBING - STANDARD PROCEDURE - REFRIGERANT SYSTEM EVACUATE).
13. Recharge the refrigerant system (Refer to 24 - HEATING & AIR CONDITIONING/PLUMBING - STANDARD PROCEDURE - REFRIGERANT SYSTEM CHARGE).

HEATER-CABIN

TABLE OF CONTENTS

page

HEATER UNIT
DESCRIPTION 471
OPERATION 471
DIAGNOSIS AND TESTING
POSITIVE TEMPERATURE COEFFICIENT (PTC) HEATER UNIT 471
REMOVAL 472
INSTALLATION 473
RELAY-HEATER UNIT
DESCRIPTION 474
OPERATION 474
REMOVAL 475
INSTALLATION 475

HEATER UNIT

DESCRIPTION

NOTE: LHD model shown. RHD model similar.

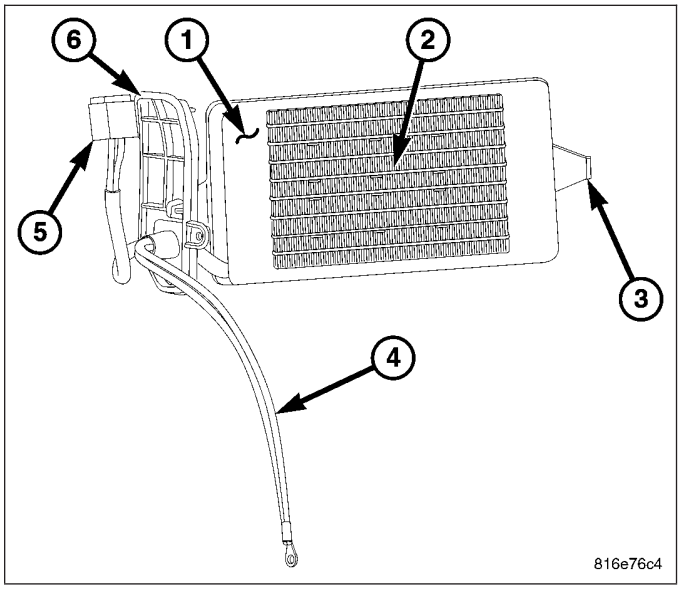

An electric positive temperature coefficient (PTC) heater unit (1) is used on vehicles when equipped with the 3.0L diesel engine. The PTC heater unit aids in passenger compartment heating by compensating for the slower warm up rate of the diesel engine.

The PTC heater unit is located in the HVAC air distribution housing, downstream of the heater core and is controlled by the diesel engine control module (ECM) through three relays.

The PTC heater consists of three heating elements with fins (2) that transfer the heat to the conditioned air flowing within the air distribution housing and a retaining feature (3) that is molded onto end of the PTC heater unit to support the heater unit inside the air distribution housing. The PTC heater unit is connected to the vehicle electrical system by a ground strap (4) and a plastic wire connector with three terminals (5) which is connected to the headlamp and dash wire harness. If service of the PTC heater unit is required, a plastic mounting plate (6) is provided with the replacement heater unit.

The PTC heater unit can be accessed for service from underneath the instrument panel.

OPERATION

The positive temperature coefficient (PTC) heater unit dissipates 1 kW of electrical power through 3 heating bars. The diesel engine control module (ECM) controls the three relays for the PTC heater unit. The PTC heater unit is split into three ″banks″. Control logic calls for all PTC heaters to be on all of the time, however, due to limitations in electrical power some of the elements may be turned off occasionally based on alternator load. This allows for lower in-rush current and optimum battery charging. Electrical power output is between 900-1050 W.

The control system for the PTC heater unit is diagnosed using a scan tool. Prior to replacing a PTC heater unit, check for any diagnostic trouble codes (DTCs) related to the ECM, FCM and heating-A/C system. Run the calibration procedure to verify that the concern is not a heating-A/C system issue (Refer to 24 - HEATING & AIR CONDITIONING - DIAGNOSIS AND TESTING - HEATING AND A/C SYSTEMS) and to 24 - HVAC Electrical Diagnostics for more information.

The PTC heater unit cannot be adjusted or repaired and, if faulty or damaged, it must be replaced.

DIAGNOSIS AND TESTING

POSITIVE TEMPERATURE COEFFICIENT (PTC) HEATER UNIT

WARNING: On vehicles equipped with airbags, disable the airbag system before attempting any steering wheel, steering column, or instrument panel component diagnosis or service. Disconnect and isolate the negative battery (ground) cable, then wait two minutes for the airbag system capacitor to discharge before performing further diagnosis or service. This is the only sure way to disable the airbag system. Failure to take the proper precautions could result in accidental airbag deployment and possible personal injury or death.

NOTE: For circuit descriptions and diagrams, refer to the appropriate wiring information. The wiring information includes wiring diagrams, proper wire and connector repair procedures, further details on wire harness routing and retention, as well as pin-out and location views for the various wire harness connectors, splices and grounds.

Prior to replacing the positive temperature coefficient (PTC) heater unit, check the fuses located in the two diesel accessory fuse blocks and check for any diagnostic trouble codes (DTCs) related to the engine control module (ECM), front control module (FCM) and the heating-A/C system and repair as necessary. Also, run the calibration procedure to verify that the concern is not a heating-A/C system issue (Refer to 24 - HEATING & AIR CONDITIONING - DIAGNOSIS AND TESTING - HEATING AND A/C SYSTEMS) and to 24 - HVAC Electrical Diagnostics for more information.

1. Disconnect and isolate the negative battery cable.
2. Disconnect the wire harness connector from the PTC heater unit (Refer to 24 - HEATING & AIR CONDITIONING/CABIN HEATER/HEATER UNIT - REMOVAL).
3. Using an ohmmeter, check for continuity between each of the terminals of the PTC wire lead connector and the PTC heater ground strap. In each case there should be continuity. If OK, verify the PTC ground strap has a good connection to the body and/or repair the wire harness circuits between the PTC heater unit, ECM and the FCM. If NOT OK, replace the PTC heater unit.

REMOVAL

WARNING: On vehicles equipped with airbags, disable the airbag system before attempting any steering wheel, steering column, or instrument panel component diagnosis or service. Disconnect and isolate the negative battery (ground) cable, then wait two minutes for the airbag system capacitor to discharge before performing further diagnosis or service. This is the only sure way to disable the airbag system. Failure to take the proper precautions could result in accidental airbag deployment and possible personal injury or death

NOTE: LHD model shown. RHD model similar.

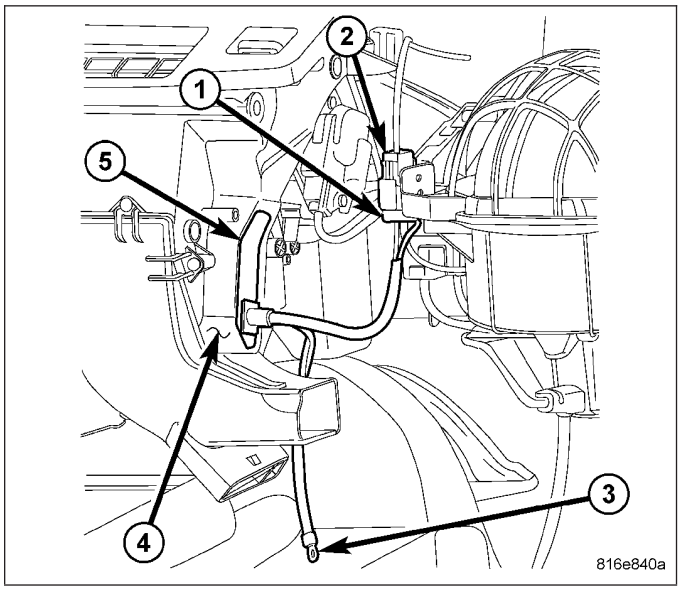

1. Disconnect and isolate the negative battery cable.
2. Remove the glove box bin from the instrument panel (Refer to 23 - BODY/INSTRUMENT PANEL/BIBN-GLOVE BOX - REMOVAL).
3. Disconnect the wire harness connector (1) of the positive temperature coefficient (PTC) heater unit from the headlamp and dash wire harness lead (2).
4. Remove the PTC ground strap (3) from the body.

WARNING: Use care when cutting the air distribution housing to remove the PTC heater unit. Failure to take proper precautions could result in possible personal injury.

CAUTION: Use a sharp utility knife or a hot knife to cut the air distribution housing around the PTC heater unit. Do not use a saw of any kind or damage to the air distribution housing will result.

5. Carefully cut the passenger side of the air distribution housing (4) around the PTC heater unit following the cut line (5) molded into the side of the housing.
6. Remove the PTC heater unit from the air distribution housing by pulling it straight out of the housing.

INSTALLATION

NOTE: LHD model shown. RHD model similar.

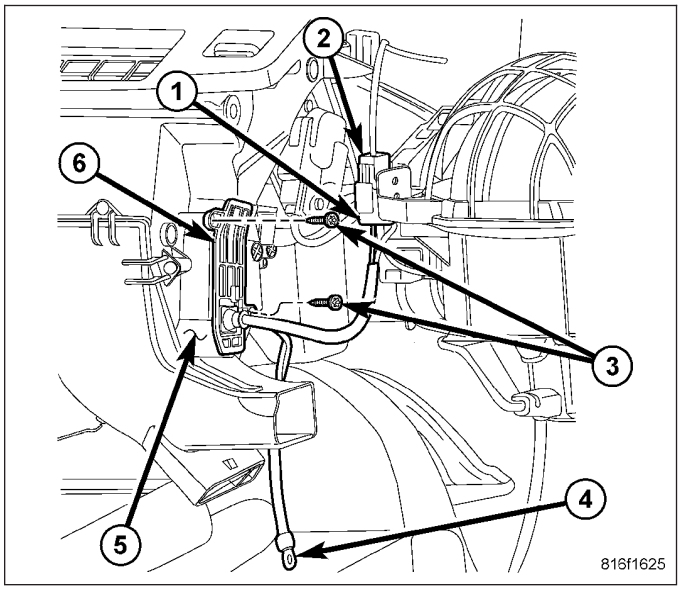

1. Position the positive temperature coefficient (PTC) heater unit and adapter plate (6) into the passenger side of the air distribution housing (5). Make sure to engage the end of the heater unit into the molded locator area in the driver side of the air distribution housing and make sure that the rubber wiring grommet is fully engage over the adapter plate.
2. Install the two screws (3) that secure the PTC heater unit to the air distribution housing. Tighten the screws to 2.2 N·m (20 in. lbs.).
3. Install the PTC ground strap (4). Tighten the retainer securely to ensure a good ground.
4. Connect the PTC wire harness connector (1) to the headlamp and dash wire harness lead (2).
5. Install the glove box bin (Refer to 23 - BODY/INSTRUMENT PANEL/BIB-GLOVE BOX - INSTALLATION).
6. Reconnect the negative battery cable.

RELAY-HEATER UNIT

DESCRIPTION

Three relays (1) are used for the electric positive temperature coefficient (PTC) heater system when equipped with the 3.0L diesel engine. The relays are International Standards Organization (ISO)-type relays. Relays conforming to the ISO specifications have common physical dimensions, current capacities, terminal functions and patterns (2). The PTC relays are electromechanical devices that switch fused battery current directly to the heating elements of the PTC heater unit as determined by the engine control module (ECM). The PTC relays are energized when provided a ground path by the ECM and the front control (FCM).

The three PTC relays are located in the diesel accessory fuse/relay block in the engine compartment.

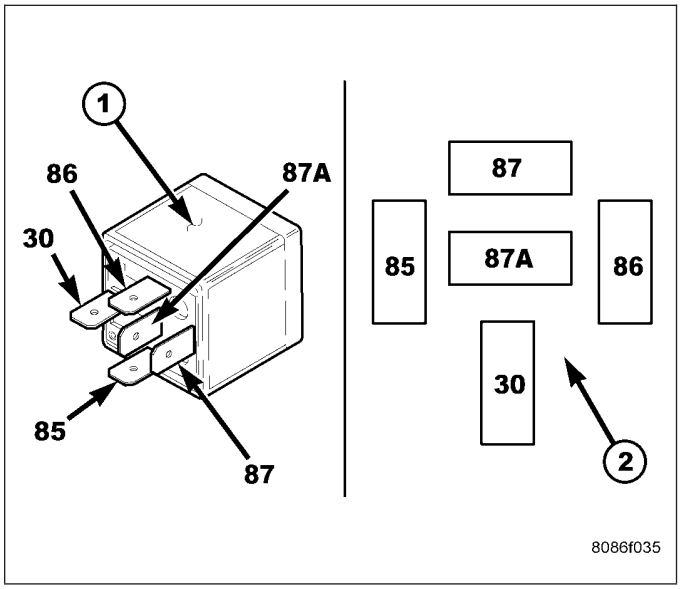

OPERATION

The three ISO-standard relays (1) used for the electric positive temperature coefficient (PTC) heater system are electromechanical switches that use a low current ASD power input to control the high current fused battery power output to the PTC heater unit. On each relay, the movable, common feed relay contact is held against the fixed, normally closed relay contact by spring pressure. When the electromagnetic relay coil is energized, it draws the movable common feed relay contact away from the fixed, normally closed relay contact and, holds it against the fixed, normally open relay contact. This action allows high current to flow to one or more of the heating elements of the PTC heater.

When the relay coil is de-energized, spring pressure returns the movable relay contact back against the fixed, normally closed contact point. The resistor or diode is connected in parallel with the relay coil, and helps to dissipate voltage spikes and electromagnetic interference that can be generated as the electromagnetic field of the relay coil collapses.

The terminals for the PTC relays are connected to the vehicle electrical system through receptacles in the diesel accessory fuse/relay block. The inputs and outputs of the PTC relays include:

- Terminals (30) receive fused battery current at all times.
- Terminals (85) are connected to a control circuit (ground circuit) of the engine control module (ECM) or front control module (FCM) (depending on the relay).
- Terminals (86) receive fused battery current through the ASD relay only when the ASD relay coil is energized.
- Terminals (87) provide fused battery current to the PTC heating elements through the PTC relays only when the PTC relay coil is energized.
- Terminals (87A) are not connected to any circuit in this application, but provide battery current output only when the PTC relay coil is de-energized.

The three PTC relays cannot be repaired and, if faulty or damaged, they must be replaced. Refer to the appropriate wiring information for diagnosis and testing of the ISO-standard relays and for complete ECM, FCM and HVAC wiring diagrams.

REMOVAL

NOTE: LHD model shown. RHD model similar.

1. Disconnect and isolate the negative battery cable.
2. Open the cover (1) of the diesel accessory fuse/relay block (2) located in the engine compartment behind the right side shock tower (3).
3. Remove the positive temperature coefficient (PTC) relays as necessary from the fuse/relay block.

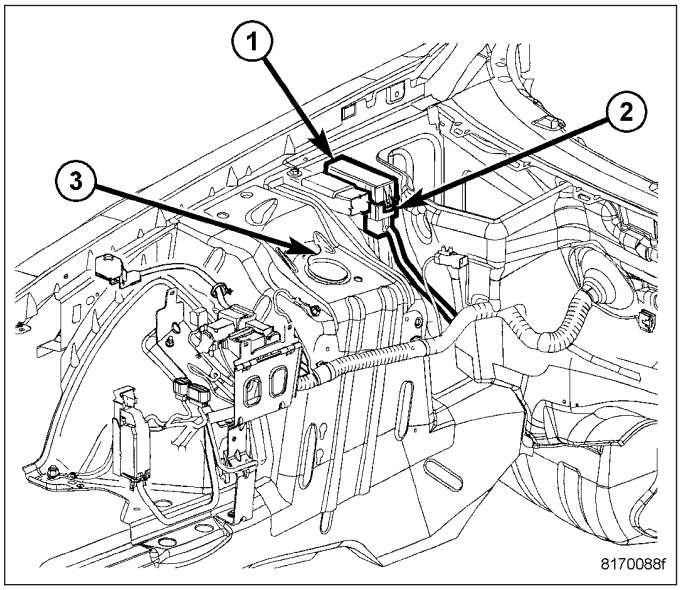

INSTALLATION

NOTE: LHD model shown. RHD model similar.

1. Position the positive temperature coefficient (PTC) relays as necessary into the proper receptacle of the diesel accessory fuse/relay block (2) located behind the right side shock tower (3).
2. Align the PTC relay terminals with the terminal cavities in the fuse/relay block and push down firmly on each relay until the terminals are fully seated.
3. Close the cover (1) of the diesel accessory fuse/relay block
4. Reconnect the negative battery cable.

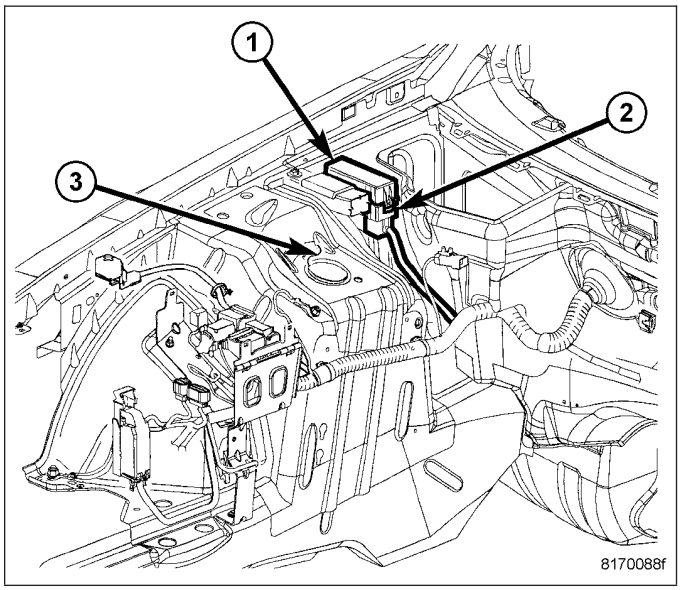

EMISSIONS CONTROL

TABLE OF CONTENTS

page

EMISSIONS CONTROL
DESCRIPTION
MONITORED COMPONENT 2
VEHICLE EMISSION CONTROL INFORMATION LABEL. 7
TRIP DEFINITION 7
NON-MONITORED CIRCUITS 7
MONITORED SYSTEMS 8
HIGH AND LOW LIMITS 11
OPERATION
SYSTEM 11
STATE DISPLAY TEST MODE 12
EVAPORATIVE EMISSIONS 13
EXHAUST GAS RECIRCULATION 33
ON-BOARD DIAGNOSTICS 60

EMISSIONS CONTROL

DESCRIPTION

MONITORED COMPONENT

There are several components that will affect vehicle emissions if they malfunction. If one of these components malfunctions the Malfunction Indicator Lamp (Check Engine) will illuminate.

Some of the component monitors are checking for proper operation of the part. Electrically operated components now have input (rationality) and output (functionality) checks as well as continuity tests (opens/shorts). Previously, a component like the Throttle Position sensor (TPS) was checked by the PCM for an open or shorted circuit. If one of these conditions occurred, a DTC was set. Now there is a check to ensure that the component is working. This is done by watching for a TPS indication of a greater or lesser throttle opening than MAP and engine rpm indicate. In the case of the TPS, if engine vacuum is high and engine rpm is 1600 or greater and the TPS indicates a large throttle opening, a DTC will be set. The same applies to low vacuum and 1600 rpm.

Any component that has an associated limp in will set a fault after 1 trip with the malfunction present.

Refer to the Diagnostic Trouble Codes Description Charts in this section and the appropriate Powertrain Diagnostic Procedure Manual for diagnostic procedures.

The following is a list of the monitored components:

- Catalyst Monitor
- Comprehensive Components
- EGR (if equipped)
- Fuel Control (rich/lean)
- Oxygen Sensor Monitor
- Oxygen Sensor Heater Monitor
- Purge
- Misfire
- Natural Vacuum Leak Detection (NVLD)

COMPREHENSIVE COMPONENTS

Along with the major monitors, OBD II requires that the diagnostic system monitor any component that could affect emissions levels. In many cases, these components were being tested under OBD I. The OBD I requirements focused mainly on testing emissions-related components for electrical opens and shorts.

However, OBD II also requires that inputs from powertrain components to the PCM be tested for **rationality**, and that outputs to powertrain components from the PCM be tested for **functionality**. Methods for monitoring the various Comprehensive Component monitoring include:

1. Circuit Continuity
   - Open
   - Shorted high
   - Shorted to ground
2. Rationality or Proper Functioning
   - Inputs tested for rationality
   - Outputs tested for functionality

NOTE: Comprehensive component monitors are continuous. Therefore, enabling conditions do not apply. All will set a DTC and illuminate the MIL in 1- trip.

Input Rationality—While input signals to the PCM are constantly being monitored for electrical opens and shorts, they are also tested for rationality. This means that the input signal is compared against other inputs and information to see if it makes sense under the current conditions.

PCM sensor inputs that are checked for rationality include:

- Manifold Absolute Pressure (MAP) Sensor
- Oxygen Sensor (O2S) (slow response)

- Engine Coolant Temperature (ECT) Sensor
- Camshaft Position (CMP) Sensor
- Vehicle Speed Sensor
- Crankshaft Position (CKP) Sensor
- Intake Air Temperature (IAT) Sensor
- Throttle Position (TPS) Sensor
- Ambient/Battery Temperature Sensors
- Power Steering Switch
- Oxygen Sensor Heater
- Engine Controller
- Brake Switch
- Natural Vacuum Leak Detection (NVLD)
- P/N Switch
- Trans Controls

Output Functionality—PCM outputs are tested for functionality in addition to testing for opens and shorts. When the PCM provides a voltage to an output component, it can verify that the command was carried out by monitoring specific input signals for expected changes. For example, when the PCM commands the Idle Air Control (IAC) Motor to a specific position under certain operating conditions, it expects to see a specific (target) idle speed (RPM). If it does not, it stores a DTC.

PCM outputs monitored for functionality include:

- Fuel Injectors
- Ignition Coils
- Torque Converter Clutch Solenoid
- Idle Air Control
- Purge Solenoid
- EGR Solenoid
- Radiator Fan Control
- Trans Controls

OXYGEN SENSOR (O2S) MONITOR

DESCRIPTION—Effective control of exhaust emissions is achieved by an oxygen feedback system. The most important element of the feedback system is the O2S. The O2S is located in the exhaust path. Once it reaches operating temperature 300° to 350°C (572° to 662°F), the sensor generates a voltage that is inversely proportional to the amount of oxygen in the exhaust. When there is a large amount of oxygen in the exhaust caused by a lean condition, misfire or exhaust leak, the sensor produces a low voltage, below 450 mV. When the oxygen content is lower, caused by a rich condition, the sensor produces a higher voltage, above 450mV.

The information obtained by the sensor is used to calculate the fuel injector pulse width. The PCM is programmed to maintain the optimum air/fuel ratio. At this mixture ratio, the catalyst works best to remove hydrocarbons (HC), carbon monoxide (CO) and nitrous oxide (NOx) from the exhaust.

The O2S is also the main sensing element for the EGR, Catalyst and Fuel Monitors, and purge.

The O2S may fail in any or all of the following manners:

- Slow response rate (Big Slope)
- Reduced output voltage (Half Cycle)
- Heater Performance

Slow Response Rate (Big Slope)—Response rate is the time required for the sensor to switch from lean to rich signal output once it is exposed to a richer than optimum A/F mixture or vice versa. As the PCM adjusts the air/fuel ratio, the sensor must be able to rapidly detect the change. As the sensor ages, it could take longer to detect the changes in the oxygen content of the exhaust gas. The rate of change that an oxygen sensor experiences is called 'Big Slope'. The PCM checks the oxygen sensor voltage in increments of a few milliseconds.

Reduced Output Voltage (Half Cycle)—The output voltage of the O2S ranges from 2.5 to 5 volt. A good sensor can easily generate any output voltage in this range as it is exposed to different concentrations of oxygen. To detect a shift in the A/F mixture (lean or rich), the output voltage has to change beyond a threshold value. A malfunctioning

sensor could have difficulty changing beyond the threshold value. Many times the condition is only temporey and the sensor will recover. Under normal conditions the voltage signal surpasses the threshold, and a counter is incremented by one. This is called the Half Cycle Counter.

Heater Performance—The heater is tested by a separate monitor. Refer to the Oxygen Sensor Heater Monitor.

OPERATION—As the Oxygen Sensor signal switches, the PCM monitors the half cycle and big slope signals from the oxygen sensor. If during the test neither counter reaches a predetermined value, a malfunction is entered and a Freeze Frame is stored. Only one counter reaching its predetermined value is needed for the monitor to pass.

The Oxygen Sensor Signal Monitor is a two trip monitor that is tested only once per trip. When the Oxygen Sensor fails the test in two consecutive trips, the MIL is illuminated and a DTC is set. The MIL is extinguished when the Oxygen Sensor monitor passes in three consecutive trips. The DTC is erased from memory after 40 consecutive warm-up cycles without test failure.

Enabling Conditions—The following conditions must typically be met for the PCM to run the oxygen sensor monitor:

- Battery voltage
- Engine temperature
- Engine run time
- Engine run time at a predetermined speed
- Engine run time at a predetermined speed and throttle opening
- Transmission in gear (automatic only)
- Fuel system in Closed Loop
- Long Term Adaptive (within parameters)
- Power Steering Switch in low PSI (no load)
- Engine at idle
- Fuel level above 15%
- Ambient air temperature
- Barometric pressure
- Engine RPM within acceptable range of desired idle
- Closed throttle speed

Pending Conditions—The Task Manager typically does not run the Oxygen Sensor Signal Monitor if overlapping monitors are running or the MIL is illuminated for any of the following:

- Misfire Monitor
- Front Oxygen Sensor and Heater Monitor
- MAP Sensor
- Vehicle Speed Sensor
- Engine Coolant Temperature Sensor
- Throttle Position Sensor
- Engine Controller Self Test Faults
- Cam or Crank Sensor
- Injector and Coil
- Idle Air Control Motor
- EVAP Electrical
- EGR Solenoid Electrical
- Intake Air Temperature
- 5 Volt Feed

Conflict—The Task Manager does not run the Oxygen Sensor Monitor if any of the following conditions are present:

- A/C ON (A/C clutch cycling temporarily suspends monitor)
- Purge flow in progress
- Ethenal content learn is taking place and the ethenal used once flag is set

Suspend—The Task Manager suspends maturing a fault for the Oxygen Sensor Monitor if an of the following are present:

- Oxygen Sensor Heater Monitor, Priority 1

- Misfire Monitor, Priority 2

OXYGEN SENSOR HEATER MONITOR (NGC)

DESCRIPTION—If the Oxygen sensor (O2S) DTC as well as a O2S heater DTC is present, the O2S Heater DTC MUST be repaired first. After the O2S Heater is repaired, verify that the sensor circuit is operating correctly.

The voltage reading taken from the O2S are very temperature sensitive. The readings taken from the O2S are not accurate below 300 degrees C. Heating the O2S is done to allow the engine controller to shift to closed loop control as soon as possible. The heating element used to heat the O2S must be tested to ensure that it is heating the sensor properly. Starting with the introduction on the NGC module the strategy for checking the heater circuit has changed. The heater resistance is checked by the NGC almost immediately after the engine is started. The same O2S heater return pin used to read the heater resistance is capable of detecting an open circuit, a shorted high or shorted low condition.

CATALYST MONITOR

To comply with clean air regulations, vehicles are equipped with catalytic converters. These converters reduce the emission of hydrocarbons, oxides of nitrogen and carbon monoxide.

Normal vehicle miles or engine misfire can cause a catalyst to decay. A meltdown of the ceramic core can cause a reduction of the exhaust passage. This can increase vehicle emissions and deteriorate engine performance, driveability and fuel economy.

The catalyst monitor uses dual oxygen sensors (O2S's) to monitor the efficiency of the converter. The dual O2S strategy is based on the fact that as a catalyst deteriorates, its oxygen storage capacity and its efficiency are both reduced. By monitoring the oxygen storage capacity of a catalyst, its efficiency can be indirectly calculated. The upstream O2S is used to detect the amount of oxygen in the exhaust gas before the gas enters the catalytic converter. The PCM calculates the A/F mixture from the output of the O2S. A low voltage indicates high oxygen content (lean mixture). A high voltage indicates a low content of oxygen (rich mixture).

When the upstream O2S detects a high oxygen condition, there is an abundance of oxygen in the exhaust gas. A functioning converter would store this oxygen so it can use it for the oxidation of HC and CO. As the converter absorbs the oxygen, there will be a lack of oxygen downstream of the converter. The output of the downstream O2S will indicate limited activity in this condition.

As the converter loses the ability to store oxygen, the condition can be detected from the behavior of the downstream O2S. When the efficiency drops, no chemical reaction takes place. This means the concentration of oxygen will be the same downstream as upstream. The output voltage of the downstream O2S copies the voltage of the upstream sensor. The only difference is a time lag (seen by the PCM) between the switching of the O2S's.

To monitor the system, the number of lean-to-rich switches of upstream and downstream O2S's is counted. The ratio of downstream switches to upstream switches is used to determine whether the catalyst is operating properly. An effective catalyst will have fewer downstream switches than it has upstream switches i.e., a ratio closer to zero. For a totally ineffective catalyst, this ratio will be one-to-one, indicating that no oxidation occurs in the device.

The system must be monitored so that when catalyst efficiency deteriorates and exhaust emissions increase to over the legal limit, the MIL (check engine lamp) will be illuminated.

Monitor Operation—To monitor catalyst efficiency, the PCM expands the rich and lean switch points of the heated oxygen sensor. With extended switch points, the air/fuel mixture runs richer and leaner to overburden the catalytic converter. Once the test is started, the air/fuel mixture runs rich and lean and the O2 switches are counted. A switch is counted when an oxygen sensor signal goes from below the lean threshold to above the rich threshold. The number of Rear O2 sensor switches is divided by the number of Front O2 sensor switches to determine the switching ratio.

The test runs for 20 seconds. As catalyst efficiency deteriorated over the life of the vehicle, the switch rate at the downstream sensor approaches that of the upstream sensor. If at any point during the test period the switch ratio reaches a predetermined value, a counter is incremented by one. The monitor is enabled to run another test during that trip. When the test fails three times, the counter increments to three, a malfunction is entered, and a Freeze Frame is stored. When the counter increments to three during the next trip, the code is matured and the MIL is illuminated. If the test passes the first, no further testing is conducted during that trip.

The MIL is extinguished after three consecutive good trips. The good trip criteria for the catalyst monitor is more stringent than the failure criteria. In order to pass the test and increment one good trip, the downstream sensor

switch rate must be less than 80% of the upstream rate (60% for manual transmissions). The failure percentages are 90% and 70% respectively.

Enabling Conditions—The following conditions must typically be met before the PCM runs the catalyst monitor. Specific times for each parameter may be different from engine to engine.

- Accumulated drive time
- Enable time
- Ambient air temperature
- Barometric pressure
- Catalyst warm-up counter
- Engine coolant temperature
- Accumulated throttle position sensor
- Vehicle speed
- MAP
- RPM
- Engine in closed loop
- Fuel level

Pending Conditions—

- Misfire DTC
- Front Oxygen Sensor Response
- Front Oxygen Sensor Heater Monitor
- Front Oxygen Sensor Electrical
- Rear Oxygen Sensor Rationality (middle check)
- Rear Oxygen Sensor Heater Monitor
- Rear Oxygen Sensor Electrical
- Fuel System Monitor
- All TPS faults
- All MAP faults
- All ECT sensor faults
- Purge flow solenoid functionality
- Purge flow solenoid electrical
- All PCM self test faults
- All CMP and CKP sensor faults
- All injector and ignition electrical faults
- Idle Air Control (IAC) motor functionality
- Vehicle Speed Sensor
- Brake switch
- Intake air temperature

Conflict—The catalyst monitor does not run if any of the following are conditions are present:

- EGR Monitor in progress
- Fuel system rich intrusive test in progress
- EVAP Monitor in progress
- Time since start is less than 60 seconds
- Low fuel level
- Low ambient air temperature
- Ethanel content learn is taking place and the ethenal used once flag is set

Suspend—The Task Manager does not mature a catalyst fault if any of the following are present:

- Oxygen Sensor Monitor, Priority 1
- Upstream Oxygen Sensor Heater, Priority 1
- EGR Monitor, Priority 1
- EVAP Monitor, Priority 1

- Fuel System Monitor, Priority 2
- Misfire Monitor, Priority 2

VEHICLE EMISSION CONTROL INFORMATION LABEL

All models have a Vehicle Emission Control Information (VECI) Label. Chrysler permanently attaches the label in the engine compartment. It cannot be removed without defacing information and destroying the label.

The label contains the vehicle's emission specifications and vacuum hose routings. All hoses must be connected and routed according to the label.

TRIP DEFINITION

A "Trip" means vehicle operation (following an engine-off period) of duration and driving mode such that all components and systems are monitored at least once by the diagnostic system. The monitors must successfully pass before the PCM can verify that a previously malfunctioning component is meeting the normal operating conditions of that component. For misfire or fuel system malfunction, the MIL may be extinguished if the fault does not recur when monitored during three subsequent sequential driving cycles in which conditions are similar to those under which the malfunction was first determined.

Anytime the MIL is illuminated, a DTC is stored. The DTC can self erase only after the MIL has been extinguished. Once the MIL is extinguished, the PCM must pass the diagnostic test for the most recent DTC for 40 warm-up cycles (80 warm-up cycles for the Fuel System Monitor and the Misfire Monitor). A warm-up cycle can best be described by the following:

- The engine must be running
- A rise of 40°F in engine temperature must occur from the time when the engine was started
- Engine coolant temperature must crossover 160°F
- A "driving cycle" that consists of engine start up and engine shut off.

Once the above conditions occur, the PCM is considered to have passed a warm-up cycle. Due to the conditions required to extinguish the MIL and erase the DTC, it is most important that after a repair has been made, all DTC's be erased and the repair verified by running 1 good trip.

NON-MONITORED CIRCUITS

The PCM does not monitor all circuits, systems and conditions that could have malfunctions causing driveability problems. However, problems with these systems may cause the PCM to store diagnostic trouble codes for other systems or components. For example, a fuel pressure problem will not register a fault directly, but could cause a rich/lean condition or misfire. This could cause the PCM to store an oxygen sensor or misfire diagnostic trouble code.

The major non-monitored circuits are listed below along with examples of failures modes that do not directly cause the PCM to set a DTC, but for a system that is monitored.

FUEL PRESSURE

The fuel pressure regulator controls fuel system pressure. The PCM cannot detect a clogged fuel pump inlet filter, clogged in-line fuel filter, or a pinched fuel supply or return line. However, these could result in a rich or lean condition causing the PCM to store an oxygen sensor, fuel system, or misfire diagnostic trouble code.

SECONDARY IGNITION CIRCUIT

The PCM cannot detect an inoperative ignition coil, fouled or worn spark plugs, ignition cross firing, or open spark plug cables. The misfire will however, increase the oxygen content in the exhaust, deceiving the PCM in to thinking the fuel system is too lean. Also see misfire detection. There are DTC's that can detect misfire and Ionization shorts in the secondary ignition circuit, refer to the Powertrain Diagnostic for more information.

CYLINDER COMPRESSION

The PCM cannot detect uneven, low, or high engine cylinder compression. Low compression lowers O2 content in the exhaust. Leading to fuel system, oxygen sensor, or misfire detection fault.

EXHAUST SYSTEM

The PCM cannot detect a plugged, restricted or leaking exhaust system. It may set a EGR (if equipped) or Fuel system or O2S fault.

FUEL INJECTOR MECHANICAL MALFUNCTIONS

The PCM cannot determine if a fuel injector is clogged, the needle is sticking or if the wrong injector is installed. However, these could result in a rich or lean condition causing the PCM to store a diagnostic trouble code for either misfire, an oxygen sensor, or the fuel system.

EXCESSIVE OIL CONSUMPTION

Although the PCM monitors engine exhaust oxygen content when the system is in closed loop, it cannot determine excessive oil consumption.

THROTTLE BODY AIR FLOW

The PCM cannot detect a clogged or restricted air cleaner inlet or filter element.

VACUUM ASSIST

The PCM cannot detect leaks or restrictions in the vacuum circuits of vacuum assisted engine control system devices. However, these could cause the PCM to store a MAP sensor diagnostic trouble code and cause a high idle condition.

PCM SYSTEM GROUND

The PCM cannot determine a poor system ground. However, one or more diagnostic trouble codes may be generated as a result of this condition. The module should be mounted to the body at all times, including when diagnostics are performed.

PCM CONNECTOR ENGAGEMENT

The PCM may not be able to determine spread or damaged connector pins. However, it might store diagnostic trouble codes as a result of spread connector pins.

MONITORED SYSTEMS

There are new electronic circuit monitors that check fuel, emission, engine and ignition performance. These monitors use information from various sensor circuits to indicate the overall operation of the fuel, engine, ignition and emission systems and thus the emissions performance of the vehicle.

The fuel, engine, ignition and emission systems monitors do not indicate a specific component problem. They do indicate that there is an implied problem within one of the systems and that a specific problem must be diagnosed.

If any of these monitors detect a problem affecting vehicle emissions, the Malfunction Indicator (Check Engine) Lamp will be illuminated. These monitors generate Diagnostic Trouble Codes that can be displayed with the a scan tool.

The following is a list of the system monitors:

- EGR Monitor (if equipped)
- Misfire Monitor
- Fuel System Monitor
- Oxygen Sensor Monitor
- Oxygen Sensor Heater Monitor
- Catalyst Monitor
- Evaporative System Leak Detection Monitor

Following is a description of each system monitor, and its DTC.

Refer to the appropriate Powertrain Diagnostics Procedures manual for diagnostic procedures.

OXYGEN SENSOR (O2S) MONITOR

Effective control of exhaust emissions is achieved by an oxygen feedback system. The most important element of the feedback system is the O2S. The O2S is located in the exhaust path. Once it reaches operating temperatures of 300° to 350°C (572° to 662°F), the sensor generates a voltage that is inversely proportional to the amount of oxygen in the exhaust. The information obtained by the sensor is used to calculate the fuel injector pulse width. The PCM is programmed to maintain the optimum air/fuel ratio. At this mixture ratio, the catalyst works best to remove hydrocarbons (HC), carbon monoxide (CO) and nitrous oxide (NOx) from the exhaust.

The O2S is also the main sensing element for the EGR (if equipped), Catalyst and Fuel Monitors.

The O2S may fail in any or all of the following manners:

- Slow response rate
- Reduced output voltage
- Dynamic shift
- Shorted or open circuits

Response rate is the time required for the sensor to switch from lean to rich once it is exposed to a richer than optimum A/F mixture or vice versa. As the sensor starts malfunctioning, it could take longer to detect the changes in the oxygen content of the exhaust gas.

The output voltage of the O2S ranges from 0 to 1 volt (voltages are offset by 2.5 volts on NGC vehicles). A good sensor can easily generate any output voltage in this range as it is exposed to different concentrations of oxygen. To detect a shift in the A/F mixture (lean or rich), the output voltage has to change beyond a threshold value. A malfunctioning sensor could have difficulty changing beyond the threshold value.

OXYGEN SENSOR HEATER MONITOR

If there is an oxygen sensor (O2S) DTC as well as a O2S heater DTC, the O2S heater fault MUST be repaired first. After the O2S fault is repaired, verify that the heater circuit is operating correctly.

Effective control of exhaust emissions is achieved by an oxygen feedback system. The most important element of the feedback system is the O2S. The O2S is located in the exhaust path. Once it reaches operating temperatures of 300° to 350°C (572 ° to 662°F), the sensor generates a voltage that is inversely proportional to the amount of oxygen in the exhaust. The information obtained by the sensor is used to calculate the fuel injector pulse width. This maintains a 14.7 to 1 Air Fuel (A/F) ratio. At this mixture ratio, the catalyst works best to remove hydrocarbons (HC), carbon monoxide (CO) and nitrogen oxide (NOx) from the exhaust.

The voltage readings taken from the O2S are very temperature sensitive. The readings are not accurate below 300°C. Heating of the O2S is done to allow the engine controller to shift to closed loop control as soon as possible. The heating element used to heat the O2S must be tested to ensure that it is heating the sensor properly.

The O2S circuit is monitored for a drop in voltage. The sensor output is used to test the heater by isolating the effect of the heater element on the O2S output voltage from the other effects.

EGR MONITOR (if equipped)

The Powertrain Control Module (PCM) performs an on-board diagnostic check of the EGR system.

The EGR monitor is used to test whether the EGR system is operating within specifications. The diagnostic check activates only during selected engine/driving conditions. When the conditions are met, the EGR is turned off (solenoid energized) and the O2S compensation control is monitored. Turning off the EGR shifts the air fuel (A/F) ratio in the lean direction. The O2S data should indicate an increase in the O2 concentration in the combustion chamber when the exhaust gases are no longer recirculated. While this test does not directly measure the operation of the EGR system, it can be inferred from the shift in the O2S data whether the EGR system is operating correctly. Because the O2S is being used, the O2S test must pass its test before the EGR test. Also looks at EGR linear potentiometer for feedback.

MISFIRE MONITOR

Excessive engine misfire results in increased catalyst temperature and causes an increase in HC emissions. Severe misfires could cause catalyst damage. To prevent catalytic convertor damage, the PCM monitors engine misfire.

The Powertrain Control Module (PCM) monitors for misfire during most engine operating conditions (positive torque) by looking at changes in the crankshaft speed. If a misfire occurs the speed of the crankshaft will vary more than normal.

The PCM can detect and compensate for variances in the engine and its components. To learn these variations, the PCM uses the input of the actual crankshaft rotation pattern and ideal crankshaft rotation pattern that has been calibrated into the PCM. The PCM then compares the two patterns. The variation between the two values is the Adaptive Numerator. If the Adaptive Numerator is not learned by the PCM, the misfire monitor will not run and the Multi-Cylinder Displacement System (MDS) will not operate. Without MDS operation, the customer will experience decreased fuel economy. If the customer experiences decrease fuel economy, use the scan tool to ensure that the Adaptive Numerator is learned.

FUEL SYSTEM MONITOR

To comply with clean air regulations, vehicles are equipped with catalytic converters. These converters reduce the emission of hydrocarbons, oxides of nitrogen and carbon monoxide. The catalyst works best when the air fuel (A/F) ratio is at or near the optimum of 14.7 to 1.

The PCM is programmed to maintain the optimum air/fuel ratio. This is done by making short term corrections in the fuel injector pulse width based on the O2S output. The programmed memory acts as a self calibration tool that the engine controller uses to compensate for variations in engine specifications, sensor tolerances and engine fatigue over the life span of the engine. By monitoring the actual air-fuel ratio with the O2S (short term) and multiplying that with the program long-term (adaptive) memory and comparing that to the limit, it can be determined whether it will pass an emissions test. If a malfunction occurs such that the PCM cannot maintain the optimum A/F ratio, then the MIL will be illuminated.

CATALYST MONITOR

To comply with clean air regulations, vehicles are equipped with catalytic converters. These converters reduce the emission of hydrocarbons, oxides of nitrogen and carbon monoxide.

Normal vehicle miles or engine misfire can cause a catalyst to decay. A meltdown of the ceramic core can cause a reduction of the exhaust passage. This can increase vehicle emissions and deteriorate engine performance, driveability and fuel economy.

The catalyst monitor uses dual oxygen sensors (O2S's) to monitor the efficiency of the converter. The dual O2S's strategy is based on the fact that as a catalyst deteriorates, its oxygen storage capacity and its efficiency are both reduced. By monitoring the oxygen storage capacity of a catalyst, its efficiency can be indirectly calculated. The upstream O2S is used to detect the amount of oxygen in the exhaust gas before the gas enters the catalytic converter. The PCM calculates the A/F mixture from the output of the O2S. A low voltage indicates high oxygen content (lean mixture). A high voltage indicates a low content of oxygen (rich mixture).

When the upstream O2S detects a lean condition, there is an abundance of oxygen in the exhaust gas. A functioning converter would store this oxygen so it can use it for the oxidation of HC and CO. As the converter absorbs the oxygen, there will be a lack of oxygen downstream of the converter. The output of the downstream O2S will indicate limited activity in this condition.

As the converter loses the ability to store oxygen, the condition can be detected from the behavior of the downstream O2S. When the efficiency drops, no chemical reaction takes place. This means the concentration of oxygen will be the same downstream as upstream. The output voltage of the downstream O2S copies the voltage of the upstream sensor. The only difference is a time lag (seen by the PCM) between the switching of the O2S's.

To monitor the system, the number of lean-to-rich switches of upstream and downstream O2S's is counted. The ratio of downstream switches to upstream switches is used to determine whether the catalyst is operating properly. An effective catalyst will have fewer downstream switches than it has upstream switches i.e., a ratio closer to zero. For a totally ineffective catalyst, this ratio will be one-to-one, indicating that no oxidation occurs in the device.

The system must be monitored so that when catalyst efficiency deteriorates and exhaust emissions increase to over the legal limit, the MIL (Check Engine lamp) will be illuminated.

NATURAL VACUUM LEAK DETECTION (NVLD)

The Natural Vacuum Leak Detection (NVLD) system is the next generation evaporative leak detection system that will first be used on vehicles equipped with the Next Generation Controller (NGC). This new system replaces the leak detection pump as the method of evaporative system leak detection. This is to detect a leak equivalent to a 0.020″ (0.5 mm) hole. This system has the capability to detect holes of this size very dependably.

The basic leak detection theory employed with NVLD is the ″Gas Law″. This is to say that the pressure in a sealed vessel will change if the temperature of the gas in the vessel changes. The vessel will only see this effect if it is indeed sealed. Even small leaks will allow the pressure in the vessel to come to equilibrium with the ambient pres-

sure. In addition to the detection of very small leaks, this system has the capability of detecting medium as well as large evaporative system leaks.

The NVLD seals the canister vent during engine off conditions. If the EVAP system has a leak of less than the failure threshold, the evaporative system will be pulled into a vacuum, either due to the cool down from operating temperature or diurnal ambient temperature cycling. The diurnal effect is considered one of the primary contributors to the leak determination by this diagnostic. When the vacuum in the system exceeds about 1″ H2O (0.25 KPA), a vacuum switch closes. The switch closure sends a signal to the NGC. The NGC, via appropriate logic strategies (described below), utilizes the switch signal, or lack thereof, to make a determination of whether a leak is present.

The NVLD device is designed with a normally open vacuum switch, a normally closed solenoid, and a seal, which is actuated by both the solenoid and a diaphragm. The NVLD is located on the atmospheric vent side of the canister. The NVLD assembly may be mounted on top of the canister outlet, or in-line between the canister and atmospheric vent filter. The normally open vacuum switch will close with about 1″ H2O (0.25 KPA) vacuum in the evaporative system. The diaphragm actuates the switch. This is above the opening point of the fuel inlet check valve in the fill tube so cap off leaks can be detected. Submerged fill systems must have recirculation lines that do not have the in-line normally closed check valve that protects the system from failed nozzle liquid ingestion, in order to detect cap off conditions.

The normally closed valve in the NVLD is intended to maintain the seal on the evaporative system during the engine off condition. If vacuum in the evaporative system exceeds 3″ to 6″ H2O (0.75 to 1.5 KPA), the valve will be pulled off the seat, opening the seal. This will protect the system from excessive vacuum as well as allowing sufficient purge flow in the event that the solenoid was to become inoperative.

The solenoid actuates the valve to unseal the canister vent while the engine is running. It also will be used to close the vent during the medium and large leak tests and during the purge flow check. This solenoid requires initial 1.5 amps of current to pull the valve open but after 100 ms. will be duty cycled down to an average of about 150 mA for the remainder of the drive cycle.

Another feature in the device is a diaphragm that will open the seal in the NVLD with pressure in the evaporative system. The device will ″blow off″ at about 0.5″ H2O (0.12 KPA) pressure to permit the venting of vapors during refueling. An added benefit to this is that it will also allow the tank to ″breathe″ during increasing temperatures, thus limiting the pressure in the tank to this low level. This is beneficial because the induced vacuum during a subsequent declining temperature will achieve the switch closed (pass threshold) sooner than if the tank had to decay from a built up pressure.

The device itself has 3 wires: Switch sense, solenoid driver and ground. The NGC utilizes a high-side driver to energize and duty-cycle the solenoid.

HIGH AND LOW LIMITS

The PCM compares input signal voltages from each input device with established high and low limits for the device. If the input voltage is not within limits and other criteria are met, the PCM stores a diagnostic trouble code in memory. Other diagnostic trouble code criteria might include engine RPM limits or input voltages from other sensors or switches that must be present before verifying a diagnostic trouble code condition.

OPERATION

SYSTEM

The Powertrain Control Module (PCM) monitors many different circuits in the fuel injection, ignition, emission and engine systems. If the PCM senses a problem with a monitored circuit often enough to indicate an actual problem, it stores a Diagnostic Trouble Code (DTC) in the PCM's memory. If the code applies to a non-emissions related component or system, and the problem is repaired or ceases to exist, the PCM cancels the code after 40 warmup cycles. Diagnostic trouble codes that affect vehicle emissions illuminate the Malfunction Indicator Lamp (MIL). Refer to Malfunction Indicator Lamp in this section.

Certain criteria must be met before the PCM stores a DTC in memory. The criteria may be a specific range of engine RPM, engine temperature, and/or input voltage to the PCM.

The PCM might not store a DTC for a monitored circuit even though a malfunction has occurred. This may happen because one of the DTC criteria for the circuit has not been met. **For example**, assume the diagnostic trouble code criteria requires the PCM to monitor the circuit only when the engine operates between 750 and 2000 RPM. Suppose the sensor's output circuit shorts to ground when engine operates above 2400 RPM (resulting in 0 volt input

to the PCM). Because the condition happens at an engine speed above the maximum threshold (2000 rpm), the PCM will not store a DTC.

There are several operating conditions for which the PCM monitors and sets DTC's. Refer to Monitored Systems, Components, and Non-Monitored Circuits in this section.

NOTE: Various diagnostic procedures may actually cause a diagnostic monitor to set a DTC. For instance, pulling a spark plug wire to perform a spark test may set the misfire code. When a repair is completed and verified, use the scan tool to erase all DTC's and extinguish the MIL.

Technicians can display stored DTC's. For obtaining the DTC information, use the Data Link Connector with the scan tool.

STATE DISPLAY TEST MODE

OPERATION

The switch inputs to the Powertrain Control Module (PCM) have two recognized states; HIGH and LOW. For this reason, the PCM cannot recognize the difference between a selected switch position versus an open circuit, a short circuit, or a defective switch. If the State Display screen shows the change from HIGH to LOW or LOW to HIGH, assume the entire switch circuit to the PCM functions properly. From the state display screen, access either State Display Inputs and Outputs or State Display Sensors.

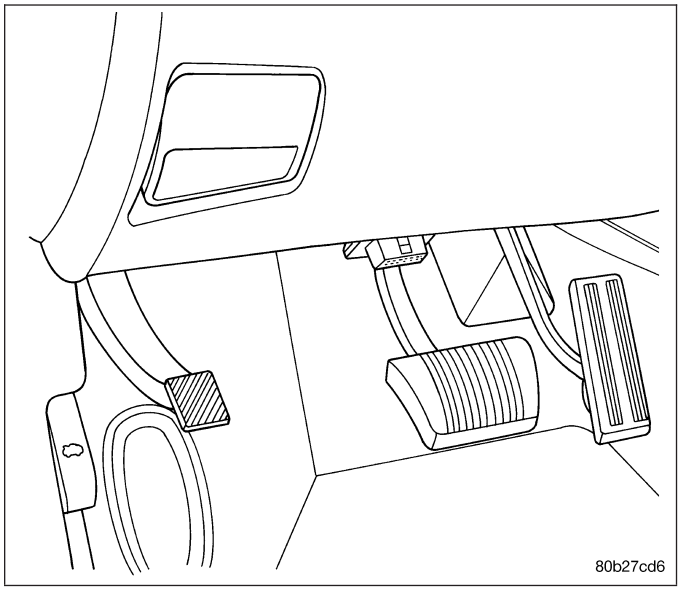

EVAPORATIVE EMISSIONS

TABLE OF CONTENTS

page

EVAPORATIVE EMISSIONS
DIAGNOSIS AND TESTING
OBD II MONITOR INFORMATION 14
OBD II MONITOR RUN PROCESS 15
SOLENOID-PROPORTIONAL PURGE
REMOVAL 17
INSTALLATION 17
ASSEMBLY-NATURAL VAC LEAK DETECTION
REMOVAL 19
INSTALLATION 21

page

PCV VALVE
REMOVAL
5.7L 23
6.1L 24
INSTALLATION
5.7L 24
6.1L 25
CANISTER-VAPOR
REMOVAL 27
INSTALLATION 30

EVAPORATIVE EMISSIONS

DIAGNOSIS AND TESTING

OBD II MONITOR INFORMATION

Comprehensive Components Monitor (Includes All Engine Hardware Sensor, Switches, Solenoids, etc.)	Major Monitors Non Fuel Control & Non Misfire (Monitors Entire Emission System)	Major Monitors Fuel Control & misfire (Monitors Entire System)
Most are one trip Faults	Most are Two Trips Faults	Two Trip Faults
Usually Turns on The Mill and Sets DTC After One Failure	Turns On The Mil and Sets DTC after Two Consecutive Failure	The Mil and Sets DTC After Two Consecutive Failure
Priority 3	**Priority 1 or 3**	**Priority 2 or 4**
All Checked For Continuity	Done Stop Test = Yes	**Fuel Control Monitor**
Open Short To Ground Short To Voltage	Oxygen Sensor Heater Oxygen Sensor Response Catalytic Converter	Monitors Fuel Control System For: Fuel System Lean
Inputs Checked For Rationality	Efficiency Except EWMA	Fuel System Rich
Outputs Checked For Functionality	up to 6 test per trip and a one trip fault (SBEC) and two trip fault on (JTEC)	Requires 3 Consecutive Fuel System Good Trips to Extinguish the MIL
	EGR System	**Misfire Monitor**
	Evaporative Emission System (purge and leak) Non-LDP LDP	Monitors for Engine Misfire At: 4 X 1000 RPM Counter (4000 Revs) (Type B) **200 X 3 (600) RPM counter (Type A)
Requires 3 Consecutive Global Good Trips to Extinguish the MIL*	Requires 3 Consecutive Global Good Trips to Extinguish the MIL*	Requires 3 Consecutive Global Good Trips to Extinguish the MIL
*40 Warm Up Cycles are required to erase DTCs after the MIL has been extinguished		** Type A misfire is a one trip failure on pre-1999, 2 trip failure on 1999 and later. The MIL will illuminate at the first or second failure, based on MY.

OBD II MONITOR RUN PROCESS

The following procedure has been established to assist Daimler Chrysler Dealer Technicians in the field with enabling and running OBD II Monitors. The order listed in the following procedure is intended to allow the technician to effectively complete each monitor and to set the CARB Readiness Status in the least time possible.

NOTE:
- **Once the monitor run process has begun, do not turn off the ignition. By turning the ignition key off, monitor enabling conditions will be lost. NVLD Monitor runs after key off.**
- **By performing a Battery Disconnect, or Selecting Erase DTCs, the CARB Readiness and all additional OBD II information will be cleared.**

Monitor Preliminary Checks:

1. Plug a SCAN TOOL into the vehicle's Data Link Connector (DLC).
2. Turn the ignition, KEY ON - ENGINE OFF. Watch for MIL lamp illumination during the bulb check. MIL lamp must have illuminated, if not, repair MIL lamp.
3. On the SCAN TOOL Select #1Stand-alone.
4. Select No.1 1998-2004 Diagnostics.
5. Select No.1 Engine.
6. Select No.2 DTCs and Related Functions.
7. Select No.1 Read DTCs.
   - Verify that No Emissions Related DTCs are Present.
   - * If an Emissions DTC is Present, the OBD II Monitors may not run and the CARB Readiness will not update.
   - The Emissions related DTC, will need to be repaired, then cleared. By clearing DTCs, the OBD Monitors will need to be run and completed to set the CARB Readiness Status.
8. Return to Engine Select Function Menu and Select No. 9, OBD II Monitors.
9. Select No. 3 CARB Readiness Status.

Do all the CARB Readiness Status Locations read YES?.
- *YES, then all monitors have been completed and this vehicle is ready to be I/M or Emission Tested.
- *NO, then the following procedure needs to be followed to run/complete all available monitors.

NOTE:
- **Only the monitors, which are not YES in the CARB Readiness Status, need to be completed.**
- **Specific criteria need to be met for each monitor. Each monitor has a Pre-Test screen to assist in running the monitor. For additional information, refer to the DaimlerChrysler Corporation Technical Training Workbook titled On Board Diagnostics: OBD II/EOBD, part number 81-699-01050.**
- **The most efficient order to run the monitors has been outlined below, including suggestions to aid the process.**

Natural Vacuum Leak Detection with Purge Monitor

This monitor requires a cool down cycle, usually an overnight soak for at least 8 hours without the engine running. The ambient temperature must decrease overnight - parking the vehicle outside is advised. To run this test the fuel level must be between 15-85% full. For the monitor run conditions select the EVAP MON PRE-TEST in the SCAN TOOL, OBD II Monitors Menu.The Purge monitor will run if the small leak test reports a pass. Criteria for NVLD monitor:
- Engine off time greater than @ one hour.
- Fuel Level between 15% and 85 %.
- Start Up ECT and IAT within 10° C (18° F).
- Vehicle started and run until Purge Monitor reports a result.

NOTE: If the vehicle does not report a result and the conditions where correct. It may take up to two weeks to fail the small leak monitor. DO NOT use this test to attempt to determine a fault. Use the appropriate service information procedure for finding a small leak. If there are no faults and the conditions are correct this test will run and report a pass. Note the Small leak test can find leaks less than 10 thousands of an inch. If a small leak is present it takes approximately one week of normal driving to report a failure.

Catalyst / O2 Monitor

With NGC, Catalyst and O2 Monitor information are acquired and processed at the same time. Most vehicles will need to be driven at highway speed (< 50 mph) for a few minutes.Some trucks run the monitor at idle in drive. If the vehicle is equipped with a manual transmission, using 4th gear may assist in meeting the monitor running criteria. For the monitor run conditions, select the BANK 1 CAT MON PRE-TEST in the SCAN TOOL, OBD II Monitors Menu.

EGR Monitor

The EGR monitor now runs in a closed throttle decel or at idle on a warm vehicle. However, it is necessary to maintain the TPS, Map and RPM ranges to allow the monitor to complete itself. For the monitor run conditions, select the EGR PRE-TEST in the SCAN TOOL, OBD II Monitors Menu.

O2 Sensor Heater Monitor

This monitor is now continuously running once the heaters are energized. Pass information will be processed at power down. For the monitor run conditions, select the O2S HEATER MON PRE-TEST in the SCAN TOOL, OBD II Monitors Menu.

SOLENOID-PROPORTIONAL PURGE

REMOVAL

The solenoid attaches to a bracket near the right rear of the engine. The solenoid will not operate unless it is installed correctly.

1. Location for 5.7L engine.

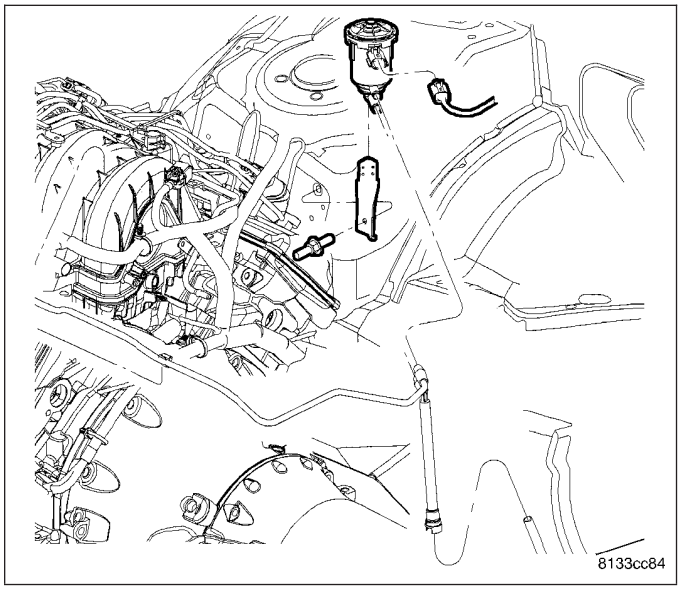

2. Location for 2.7 and 3.5L engine.
3. Disconnect electrical connector from solenoid.
4. Disconnect vacuum tubes from solenoid.
5. Remove solenoid from bracket.

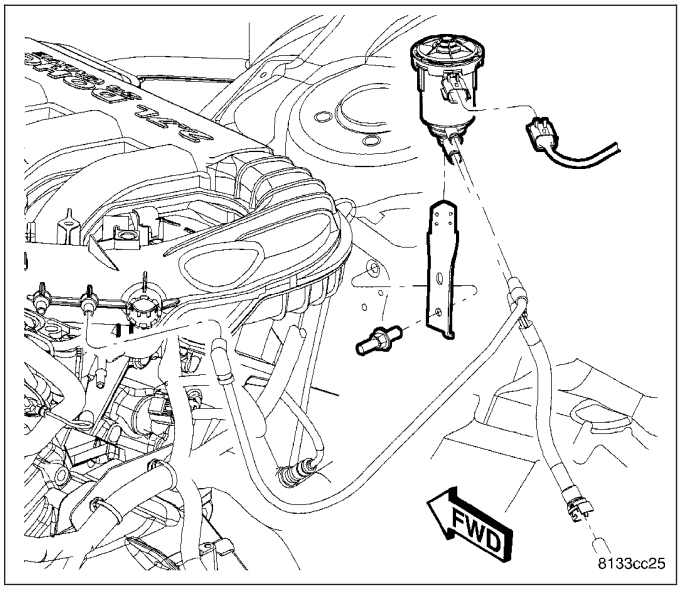

INSTALLATION

The solenoid attaches to a bracket near the air cleaner. The solenoid will not operate unless it is installed correctly. The top of the solenoid has TOP printed on it. The solenoid will not operate unless it is installed correctly.

1. Location for 2.7 and 3.5L engines.

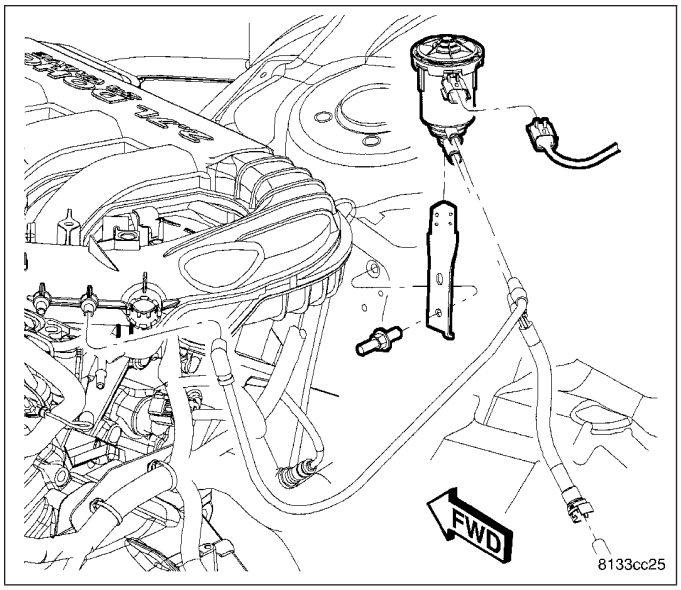

2. Location for 5.7L engine.
3. Install solenoid on bracket.
4. Connect vacuum tube to solenoid.
5. Connect electrical connector to solenoid.

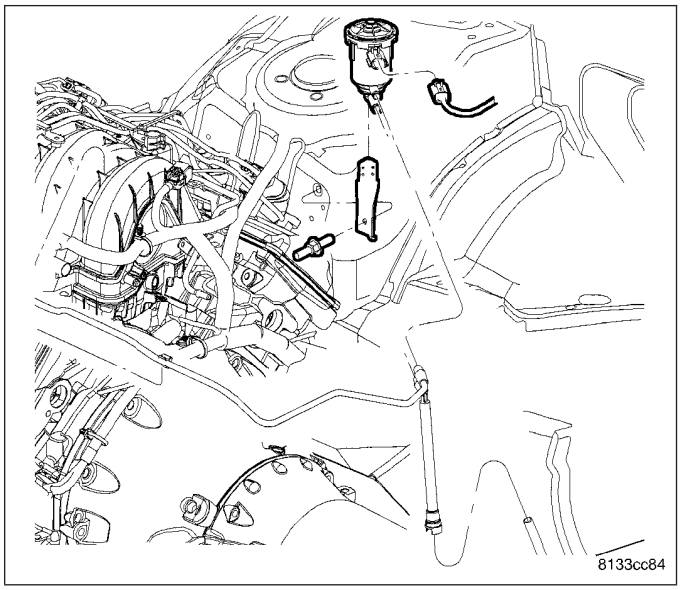

ASSEMBLY-NATURAL VAC LEAK DETECTION

REMOVAL

1. Disconnect negative battery cable.
2. Raise and support vehicle.
3. Remove the right rear tire.
4. Remove the inner splash shield.
5. Natural Vacuum Leak Detection Pump (NVLD) location.

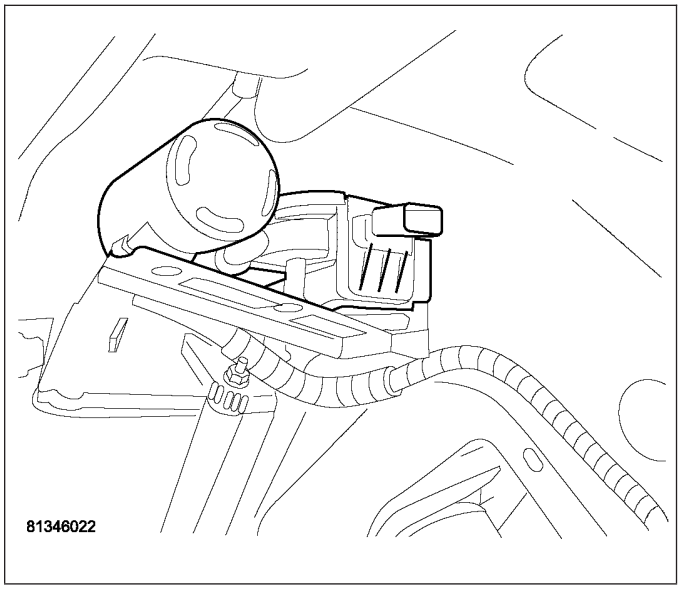

6. Remove vapor canister and NVLD pump assembly from vehicle.

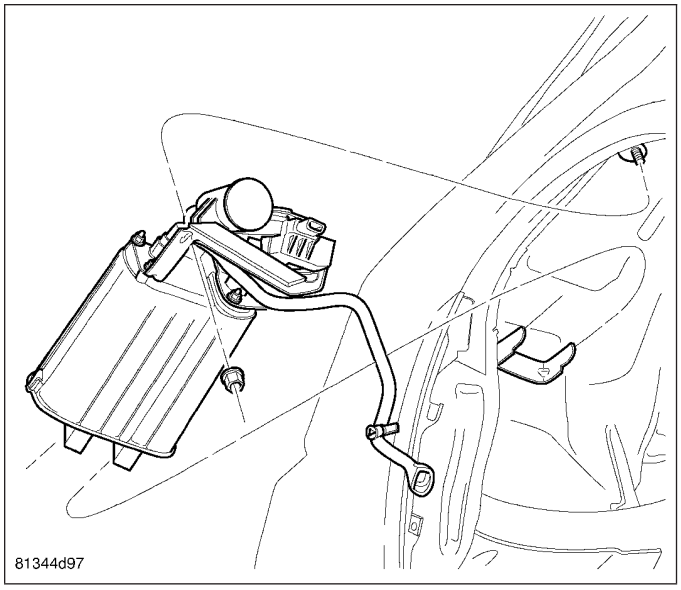

7. Squeeze tab and pull pump from bracket.

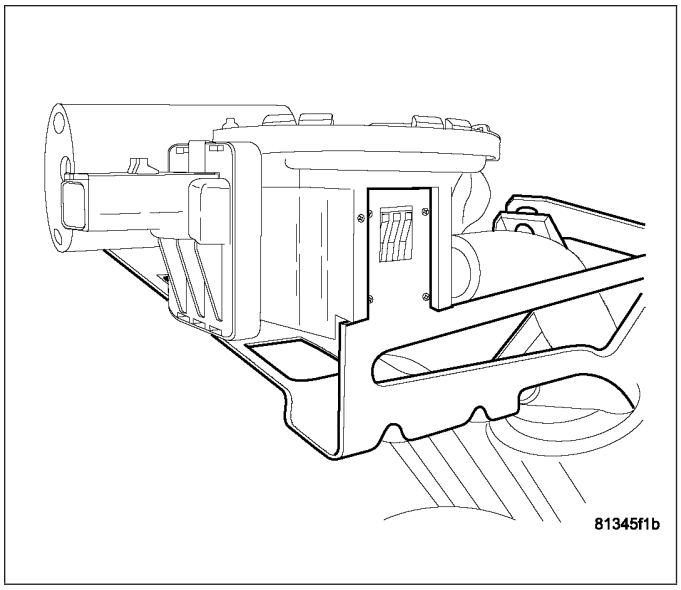

8. Remove hoses from pump assembly and remove pump.

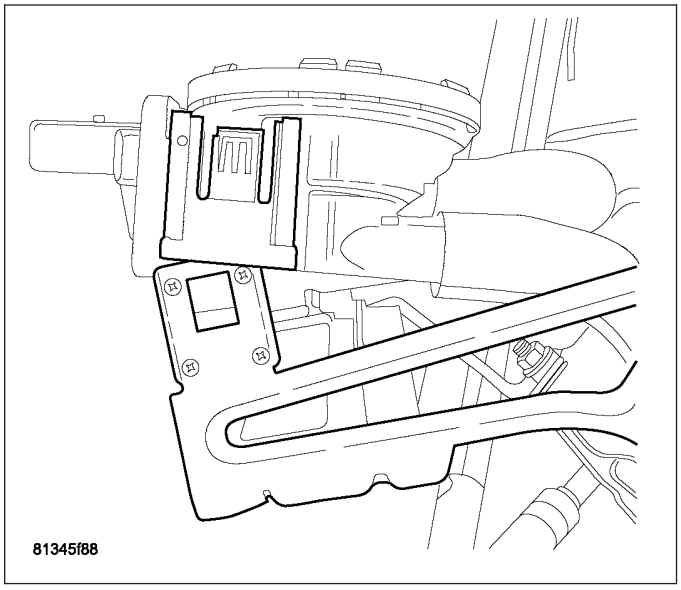

INSTALLATION

1. Install pump assembly to hoses.

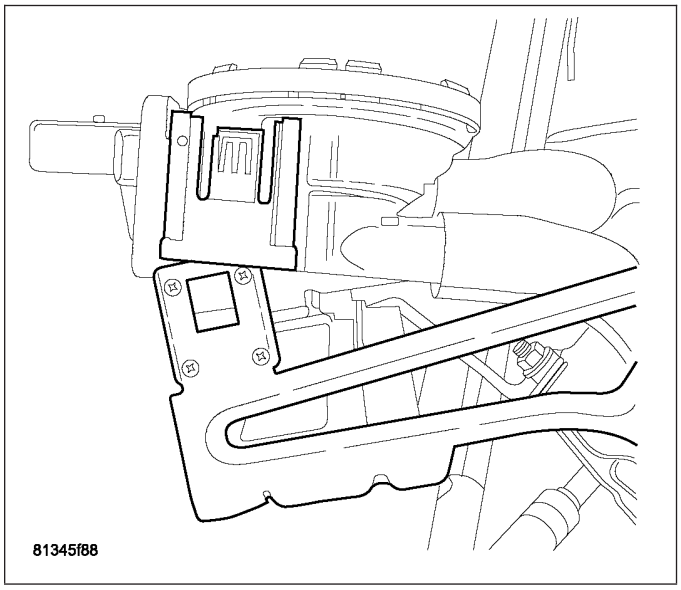

2. Install pump assembly to bracket.

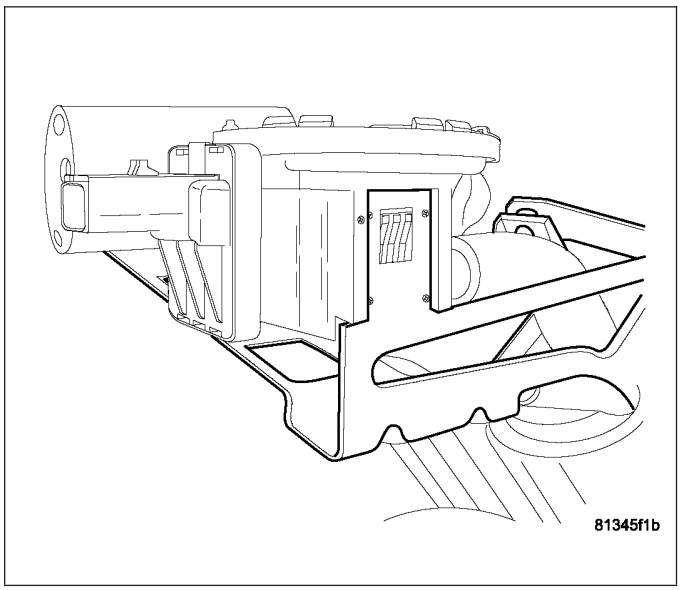

3. Install vapor canister and pump assembly to vehicle.

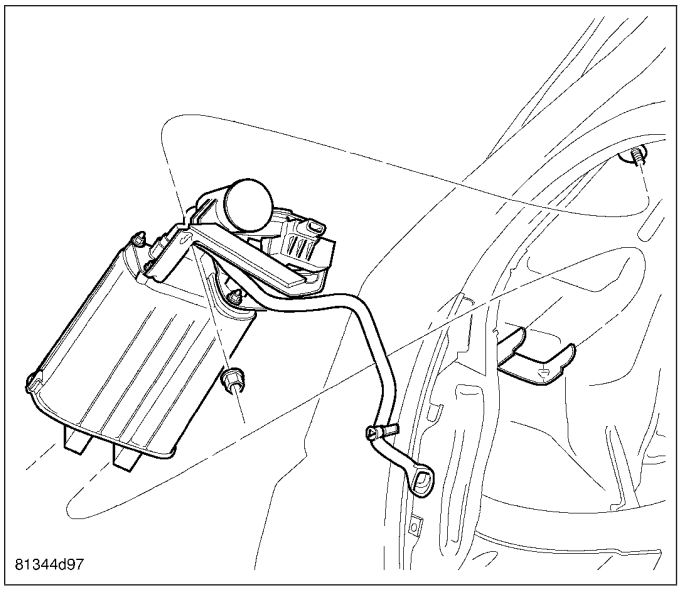

4. Install inner splash shield.
5. Install right rear tire.
6. Lower vehicle.
7. Connect negative battery cable.

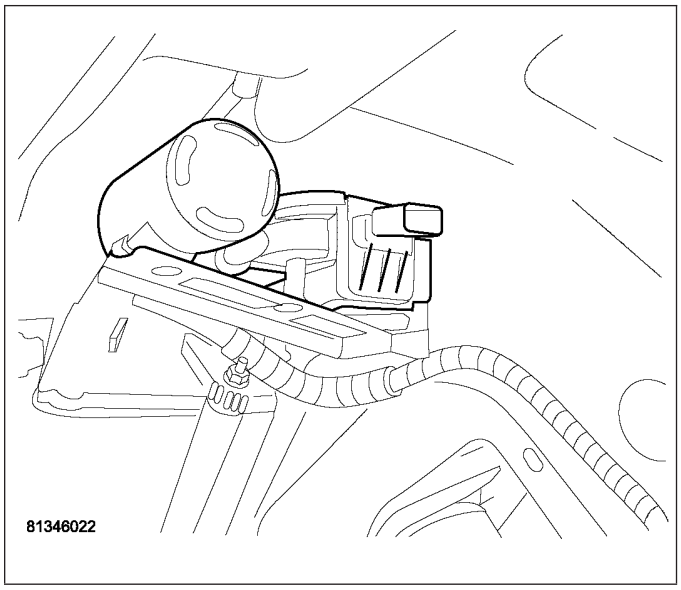

PCV VALVE

REMOVAL

5.7L

The PCV valve (3) is mounted into the top/right side of the intake manifold (2).

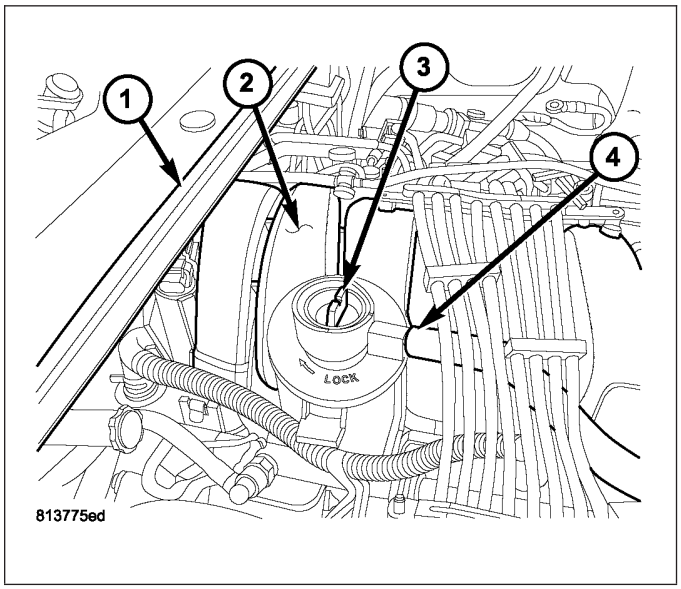

1. The PCV valve (1) is sealed to the intake manifold with two O-rings (2).
2. Remove PCV valve by rotating counter-clockwise 90 degrees until locating tabs (3) have been freed. After tabs have cleared, pull valve straight up from intake manifold.
3. After valve is removed, check condition of two valve O-rings (2).

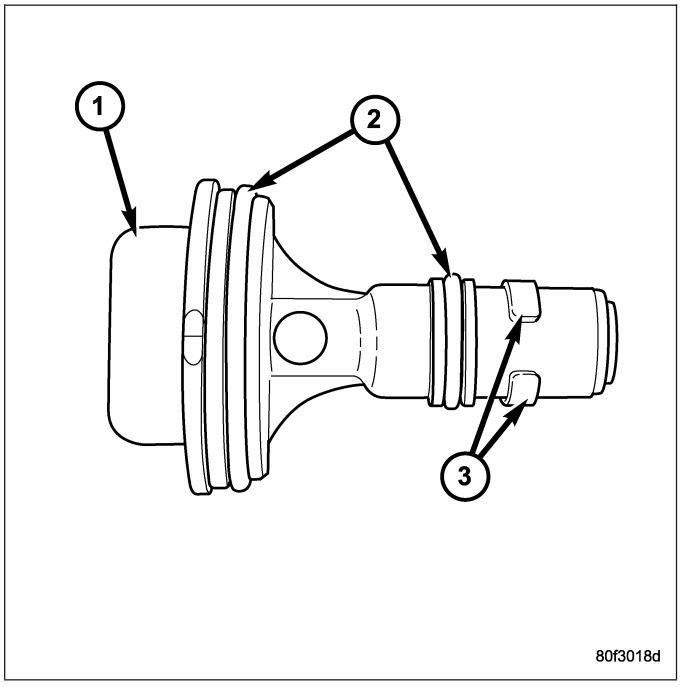

6.1L

The PCV valve (1) is threaded into the right-front corner of the intake manifold.

1. Remove rubber hose (2) from PCV valve.
2. Unscrew PCV valve (1) from intake manifold.

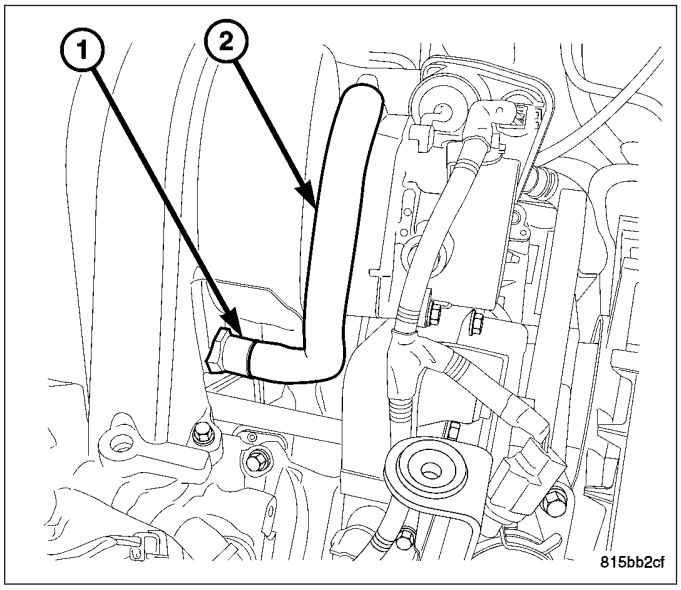

INSTALLATION

5.7L

1. Clean out intake manifold opening.
2. Check condition of two O-rings (2) on PCV valve (1).
3. Apply engine oil to two O-rings.

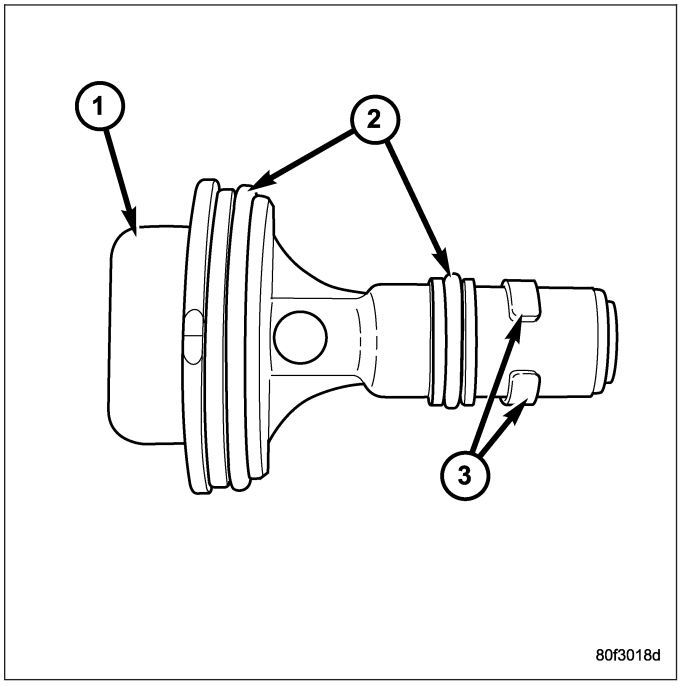

4. Place PCV valve (3) into intake manifold and rotate 90 degrees clockwise for installation.

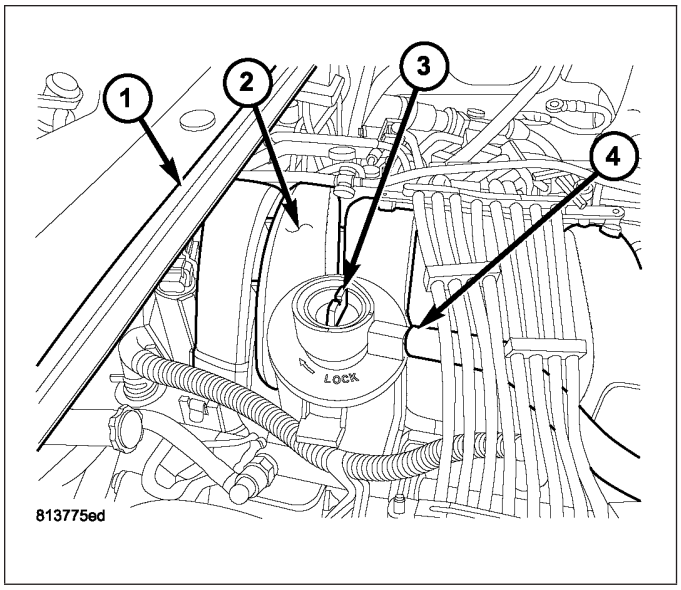

6.1L

1. Check condition of PCV valve o-ring (2).
2. Check condition of PCV valve threads (3). Clean if necessary.

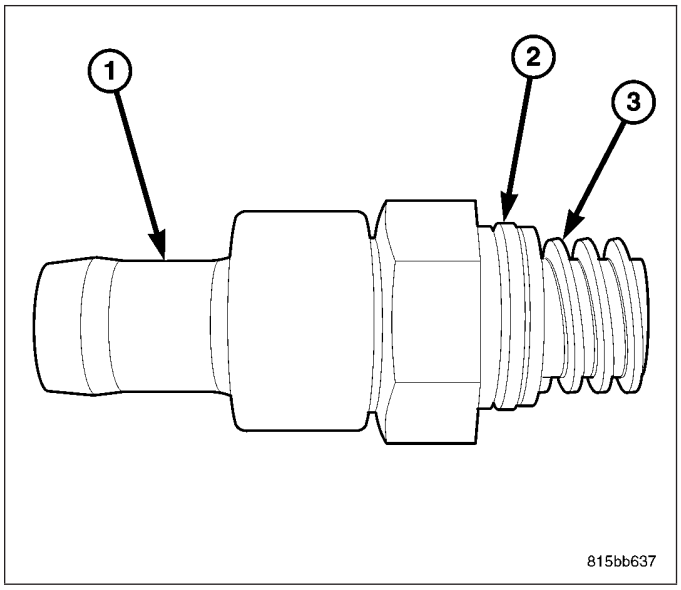

The PCV valve (1) is threaded into the right-front corner of the intake manifold.

3. Install valve (1) into intake manifold.
4. Install rubber hose (2) to valve.

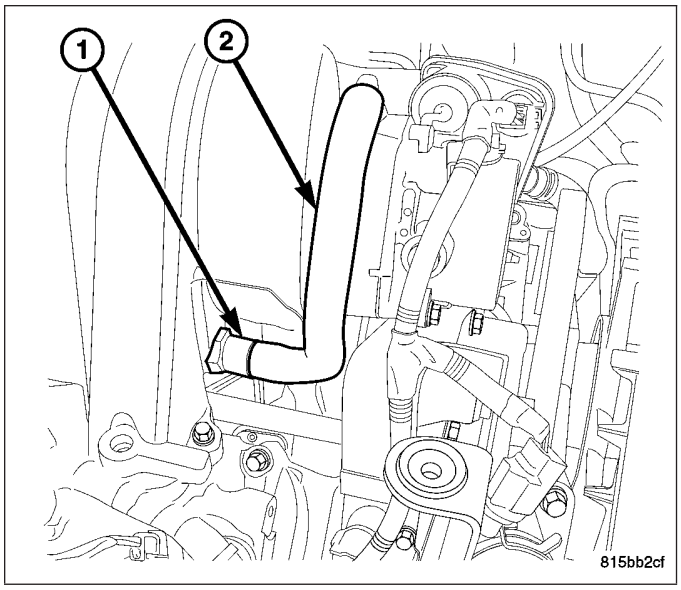

CANISTER-VAPOR

REMOVAL

1. Disconnect negative battery cable.
2. Raise vehicle and support.
3. Remove the right rear tire.
4. Remove the inner splash shield.

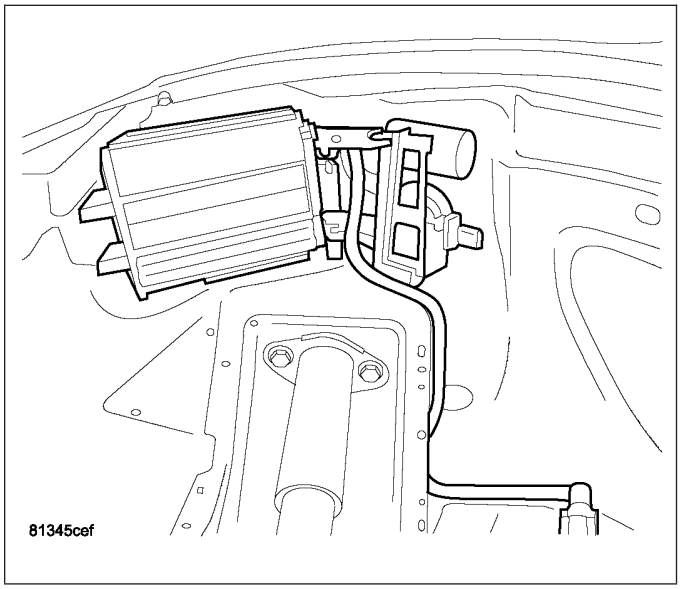

5. Disconnect the EVAP line.
6. Unlock and disconnect electrical connector from pump.

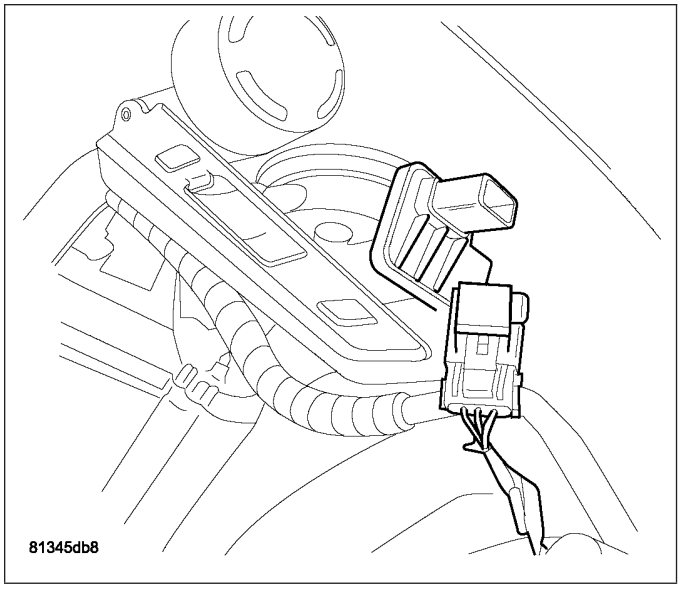

7. Remove mounting nut.

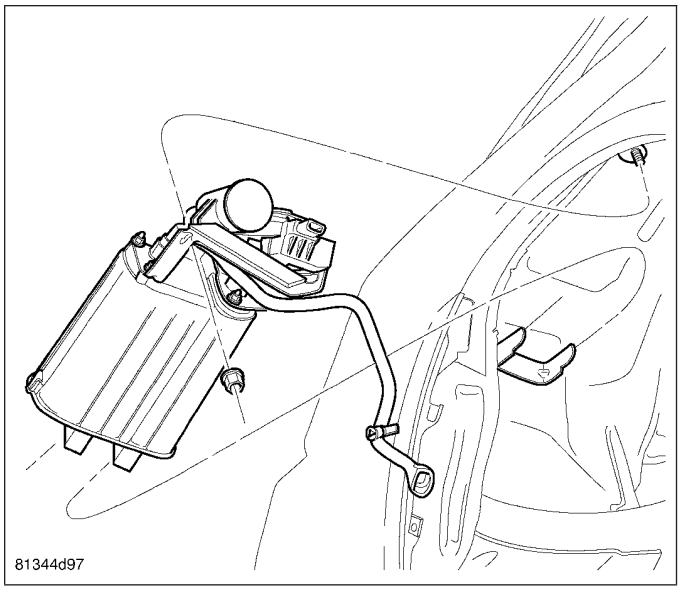

8. Slide assembly forward off of rear mounting brackets.

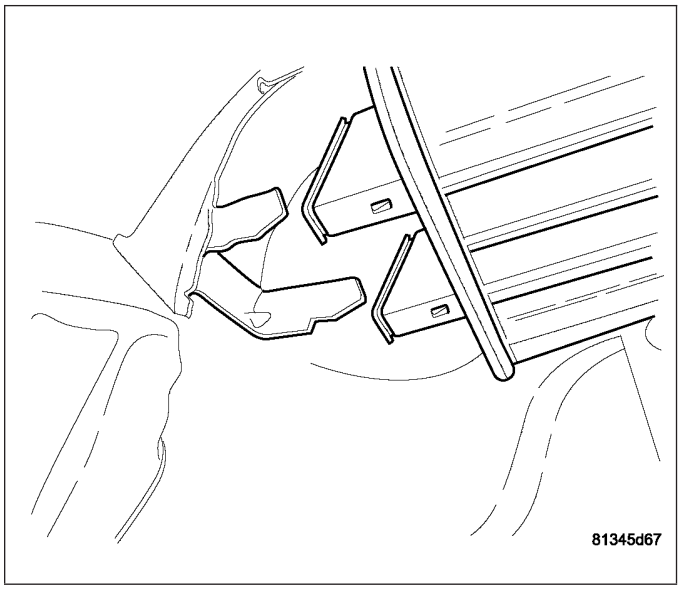

9. Make sure that you do not lose the rubber mounts in canister brackets.

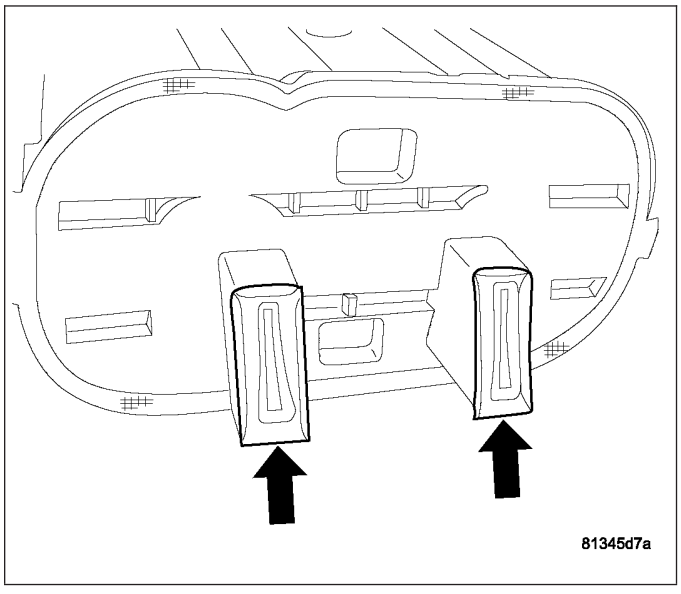

10. Disconnect vapor lines from EVAP canister.

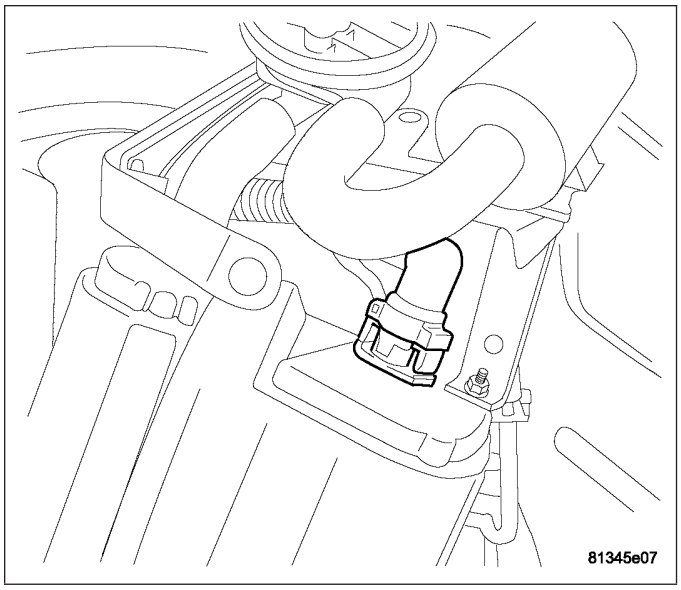

11. Squeeze connector and pull.

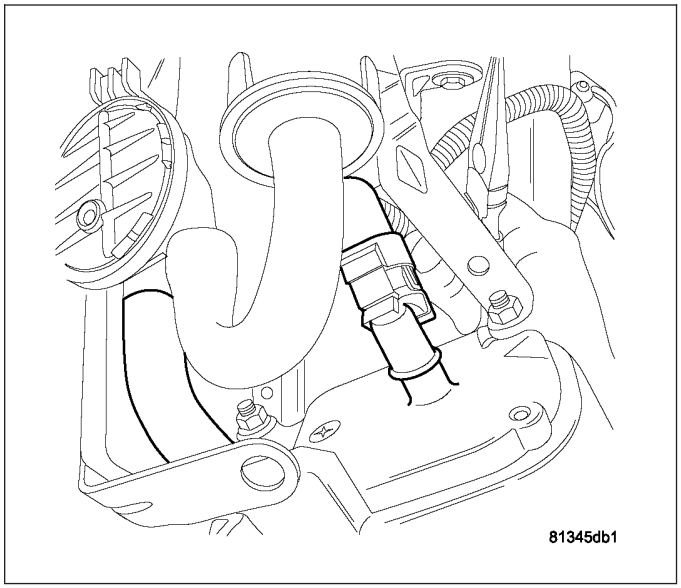

12. Remove mounting nuts from canister.
13. Remove vapor canister from bracket.

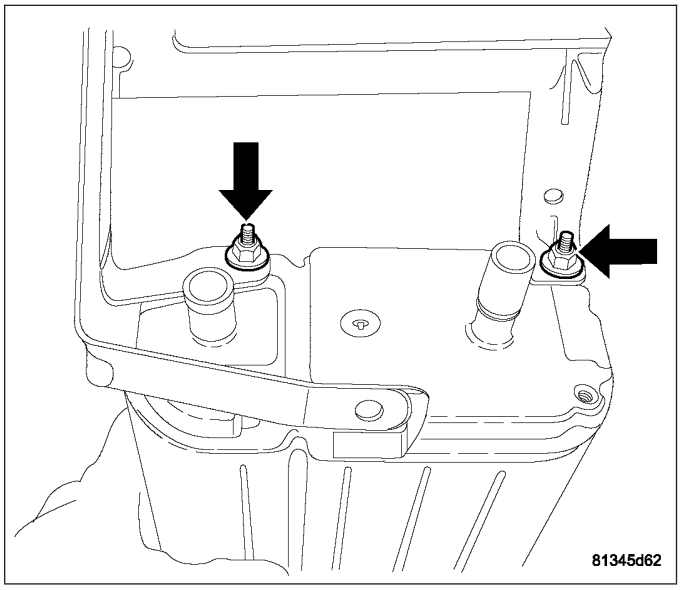

INSTALLATION

1. Install canister to bracket and tighten nuts.

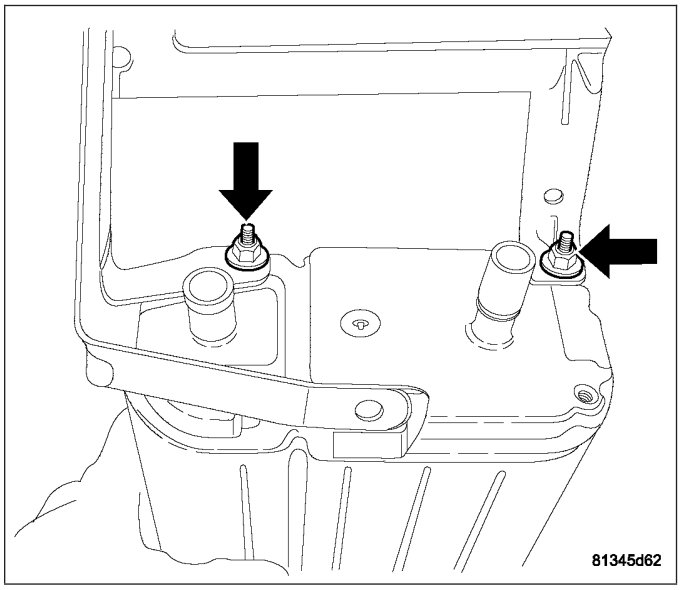

2. Connect hoses to vapor canister.

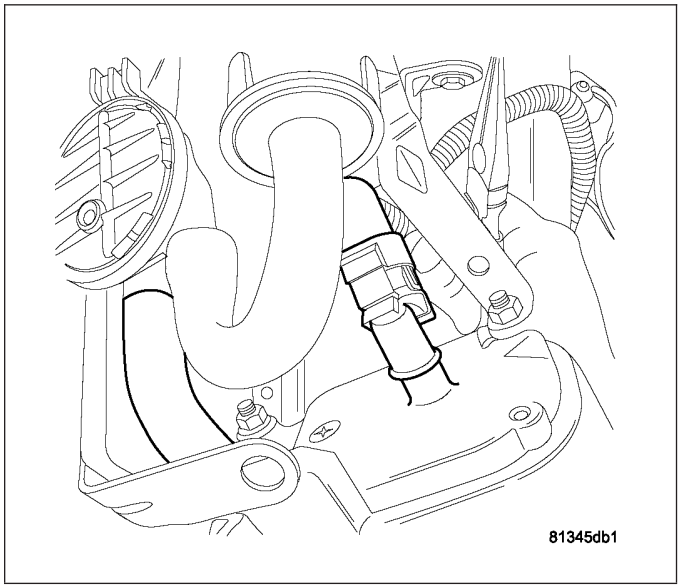

3. Hose connected.

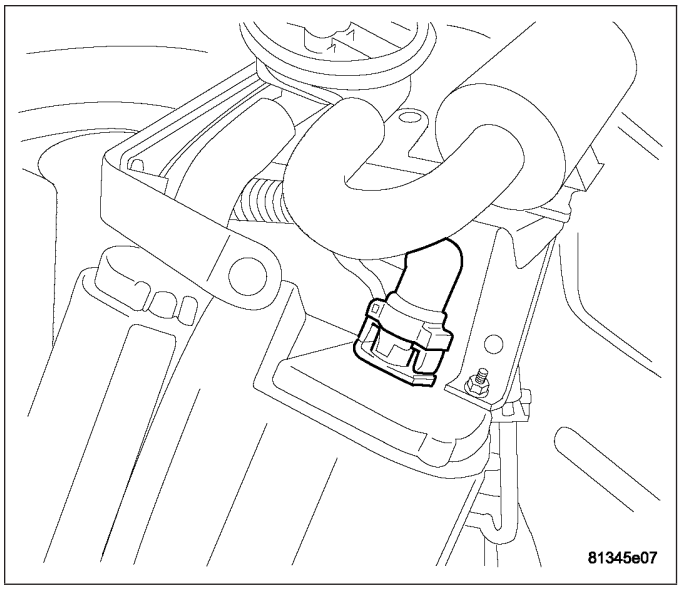

4. Install rubber isolator in canister brackets.

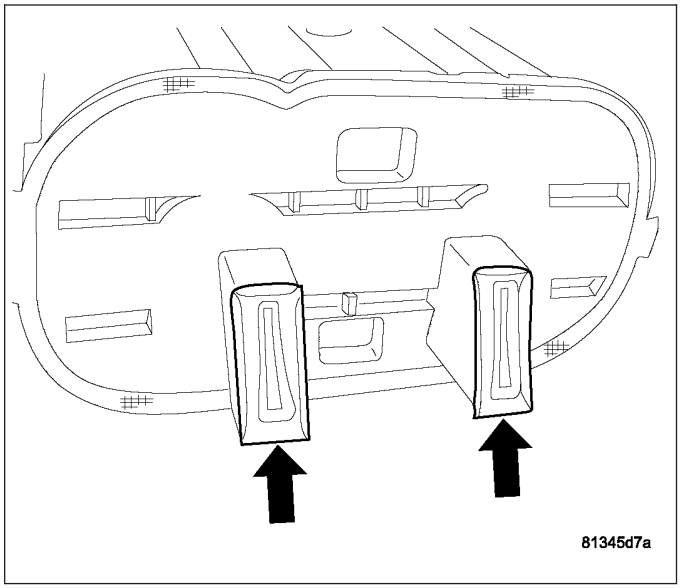

5. Slide canister brackets with rubber isolators onto mounting brackets.

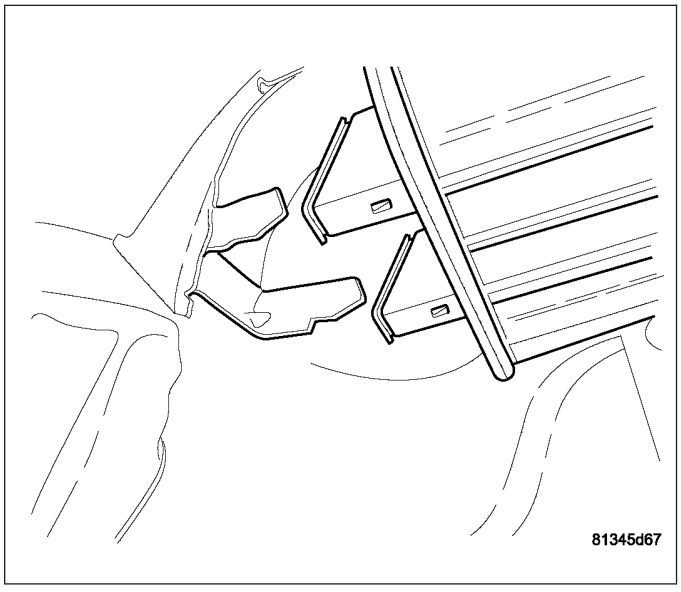

6. Install assembly mounting nut.

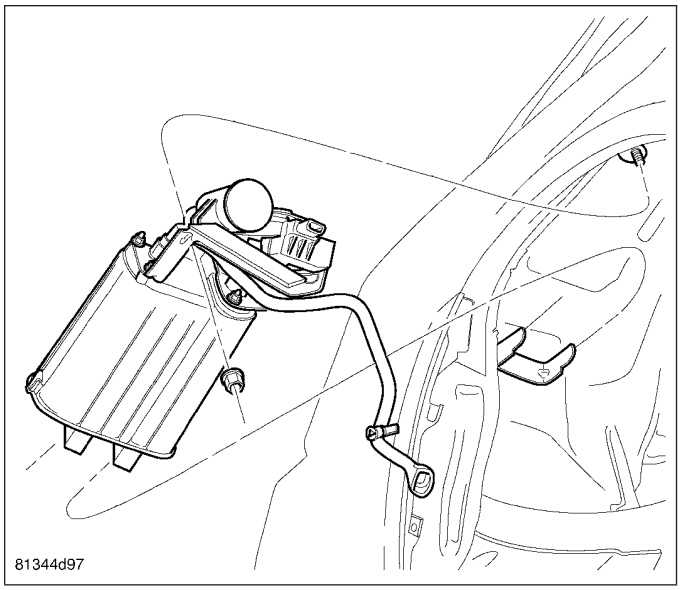

7. Connect electrical connector to pump and lock.

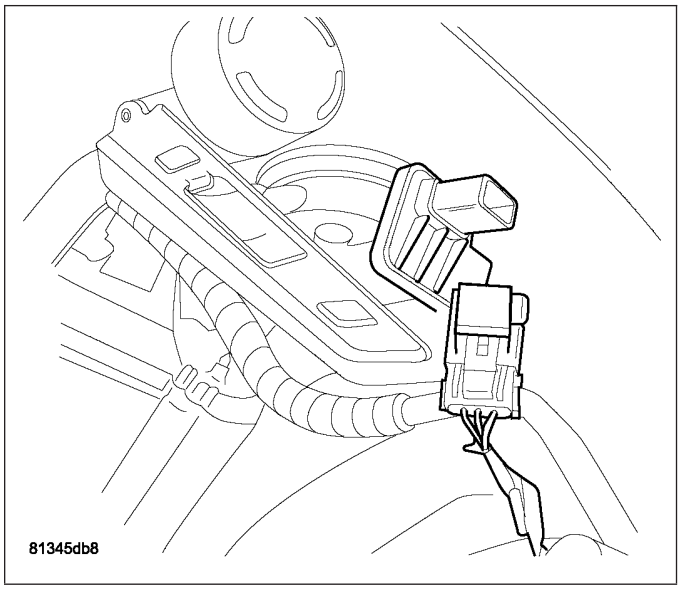

8. Connect the EVAP line.
9. Install the inner splash shield.
10. Install tire.
11. Lower vehicle.
12. Connect negative battery cable.

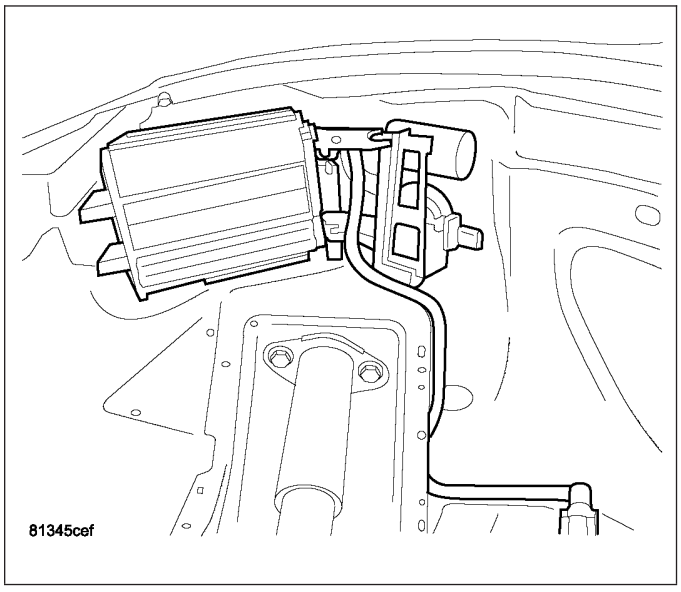

EXHAUST GAS RECIRCULATION

TABLE OF CONTENTS

page

EXHAUST GAS RECIRCULATION
SPECIFICATIONS
TORQUE 34
TUBE-EXHAUST GAS RECIRCULATION
REMOVAL
2.7L - LOWER TUBE 35
2.7L - UPPER TUBE 37
3.5L 39
INSTALLATION
2.7L - LOWER TUBE 41
2.7L - UPPER TUBE 43
3.5L 44
ASSEMBLY-EXHAUST GAS RECIRC VALVE
DESCRIPTION 47
OPERATION 47

page

REMOVAL
2.7L 47
3.5L 49
5.7L 51
3.0L - DIESEL 53
INSTALLATION
2.7L 53
3.5L 55
5.7L 57
3.0L - DIESEL 58
SENSOR - EGR BACK PRESSURE
DESCRIPTION 59
OPERATION 59
REMOVAL 59
INSTALLATION 59

EXHAUST GAS RECIRCULATION

SPECIFICATIONS

TORQUE

DESCRIPTION	N·m	Ft. Lbs.	In. Lbs.
Tube to Exhaust Manifold Bolts	31	23	275
Tube to EGR valve Bolts	11	-	95
EGR Valve to Cyl. Head Bolts	31	23	275

TUBE-EXHAUST GAS RECIRCULATION

REMOVAL

2.7L - LOWER TUBE

1. Disconnect negative battery cable.

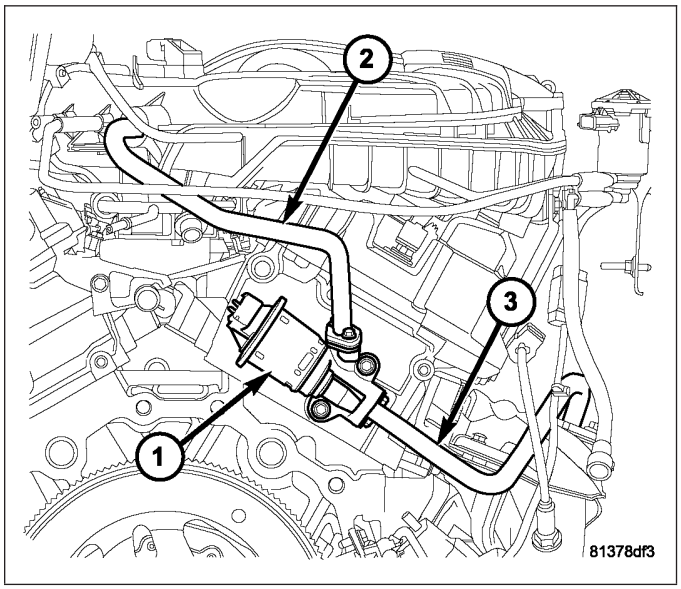

2. Remove purge solenoid from bracket.

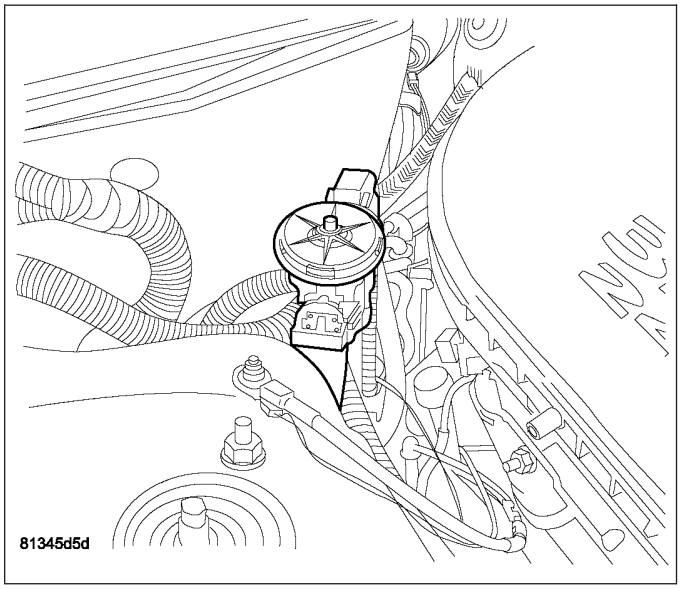

3. Relocate the purge solenoid.
4. Unlock and disconnect the electrical connector from EGR valve.

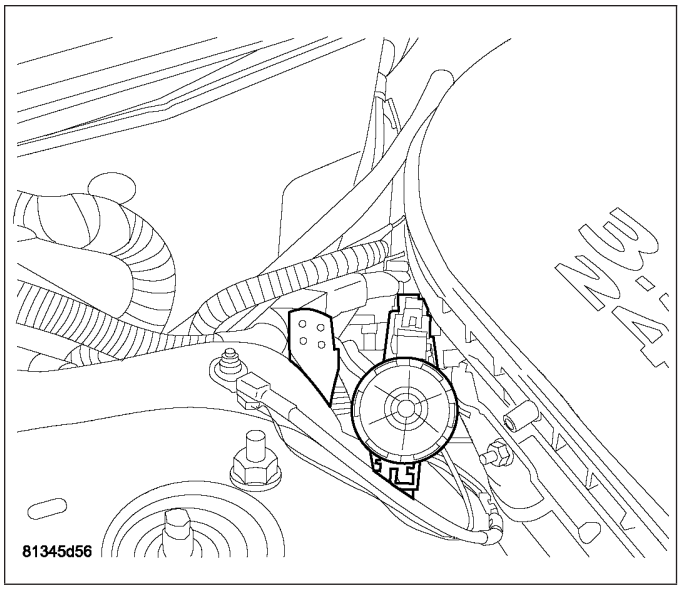

5. Remove the bolts from the lower tube to exhaust manifold.
6. Remove the lower tube bolts to EGR valve.
7. Remove lower tube from vehicle.
8. When removing EGR upper tube assembly being careful not to drop the silicone rubber seals in the intake manifold. Clean gasket surfaces on the EGR valve. Note that any loose dirt can lodge between the pintle and the seat and cause valve leakage that will give a rough idle and depressed manifold vacuum.
9. Clean mounting surface.

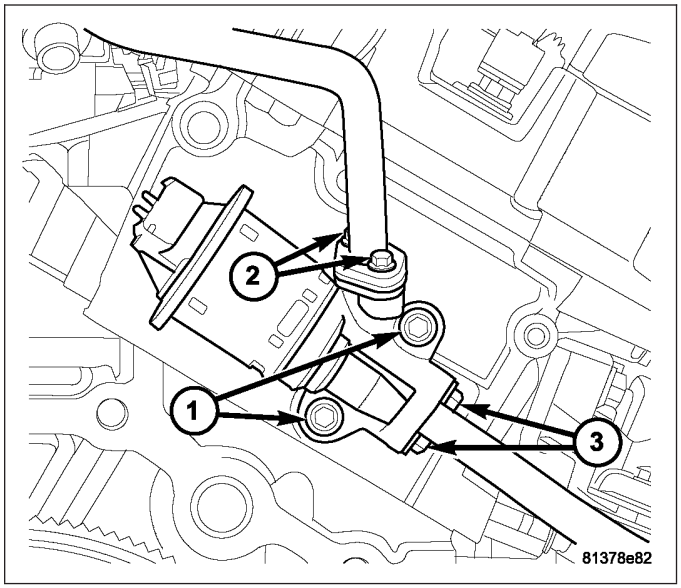

2.7L - UPPER TUBE

1. EGR system components and location. Upper tube (2), EGR valve (1), and Lower tube (3).
2. Disconnect negative battery cable.

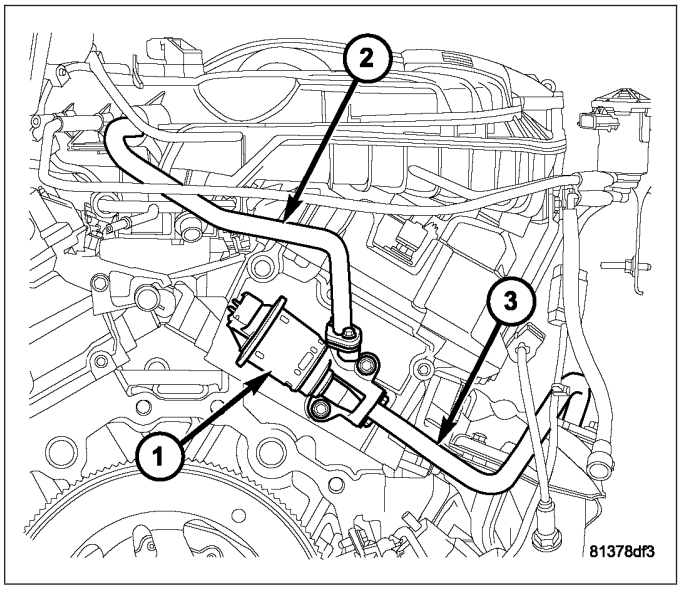

3. Remove purge solenoid from bracket.

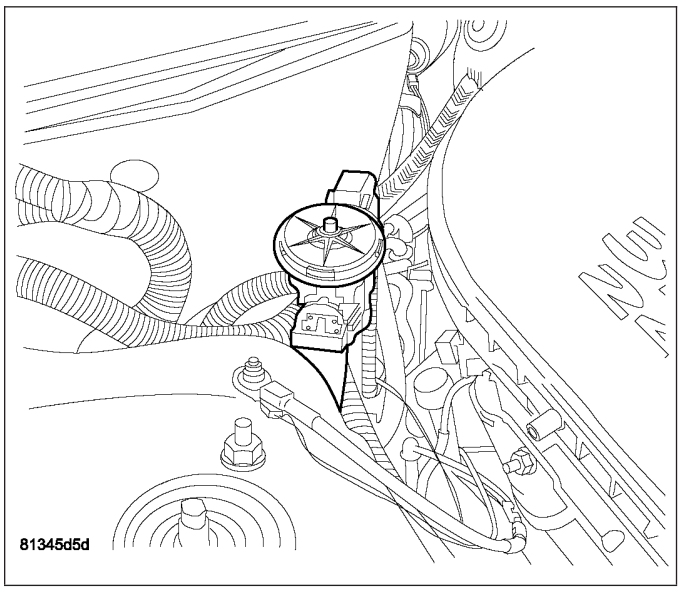

4. Relocate the purge solenoid.
5. Unlock and disconnect the electrical connector from EGR valve.

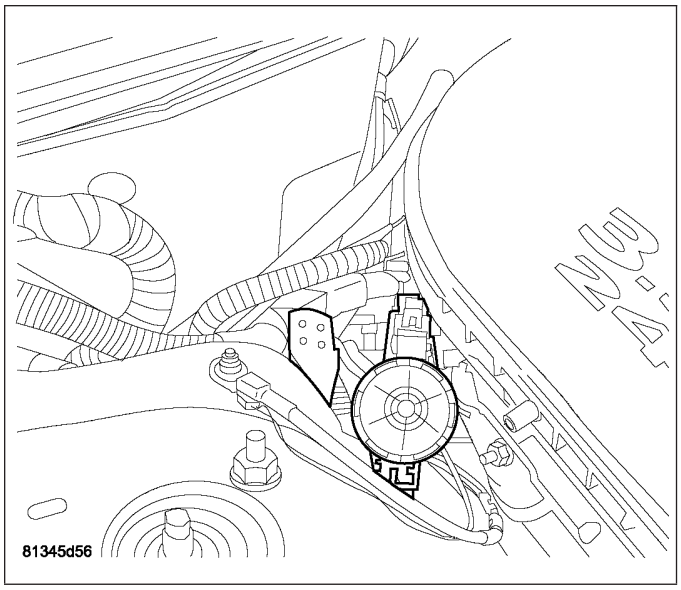

6. Remove upper tube bolts to EGR valve (2).
7. Remove upper tube from intake manifold.
8. When removing EGR upper tube assembly being careful not to drop the silicone rubber seals in the intake manifold. Clean gasket surfaces on the EGR valve. Note that any loose dirt can lodge between the pintle and the seat and cause valve leakage that will give a rough idle and depressed manifold vacuum.
9. Clean mounting surface.

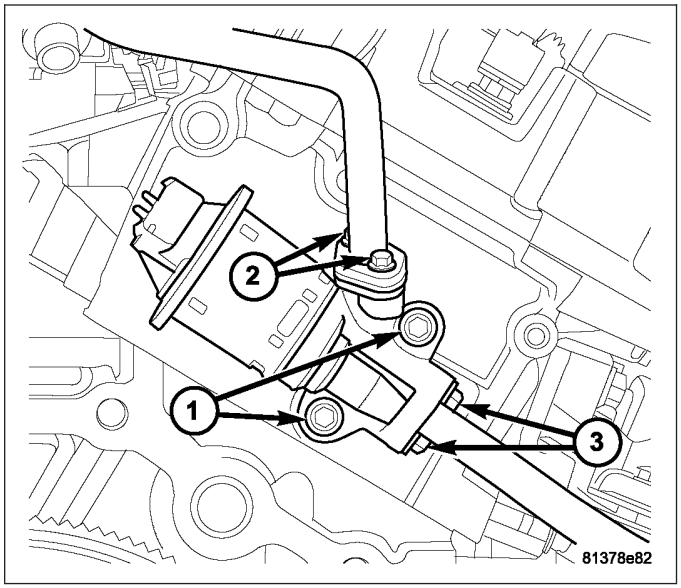

3.5L

1. Disconnect negative battery cable.
2. Remove purge solenoid from bracket.

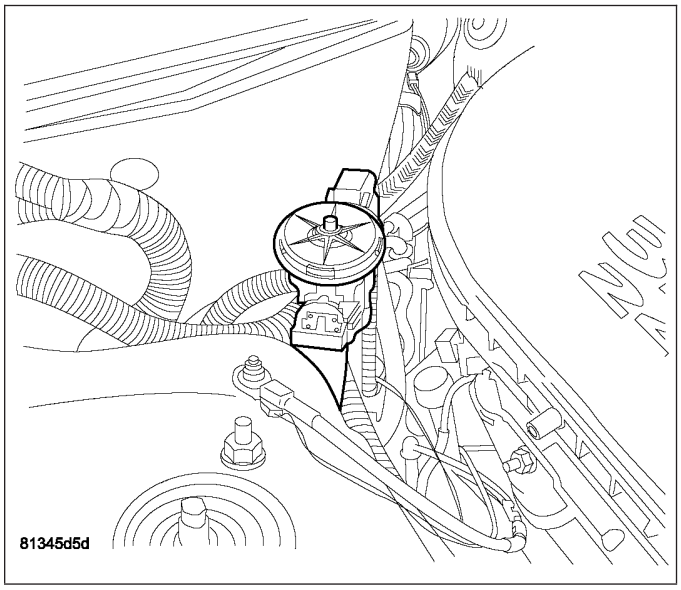

3. Relocate the purge solenoid.

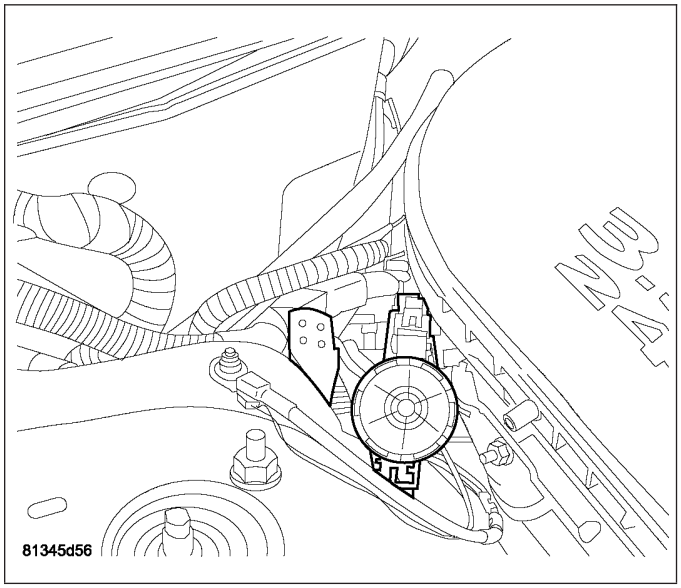

4. Unlock and disconnect the electrical connector from EGR valve.
5. Remove the wiper module, (Refer to 8 - ELECTRICAL/WIPERS/WASHERS/WIPER MODULE - REMOVAL).
6. Remove shock tower brace and relocate.
7. Remove the upper intake manifold, (Refer to 9 - ENGINE/MANIFOLDS/INTAKE MANIFOLD - REMOVAL).

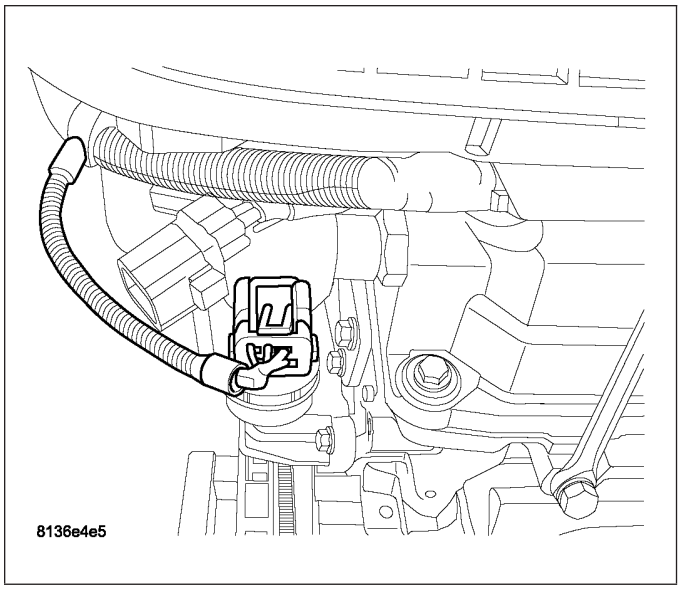

8. EGR valve (2) and tube (1).

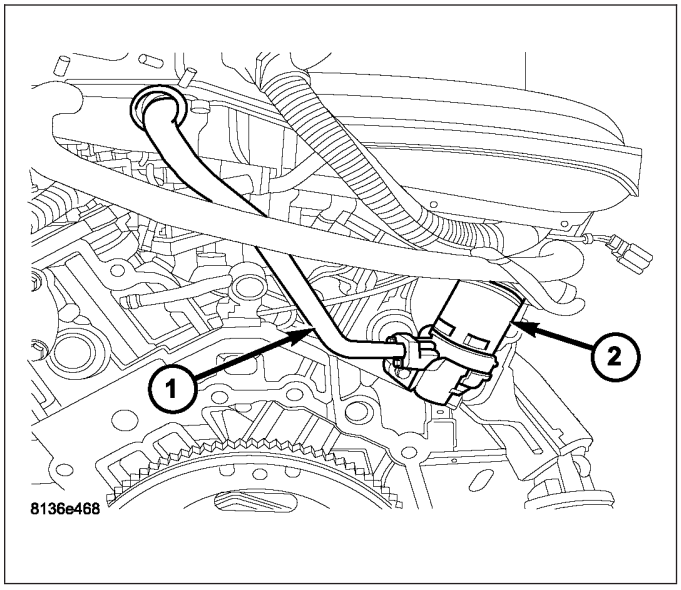

9. Remove tube bolts (1) to EGR valve (2).
10. Remove tube (1) from intake manifold.
11. When removing EGR upper tube assembly being careful not to drop the silicone rubber seals in the intake manifold. Clean gasket surfaces on the EGR valve. Note that any loose dirt can lodge between the pintle and the seat and cause valve leakage that will give a rough idle and depressed manifold vacuum.
12. Clean mounting surface.

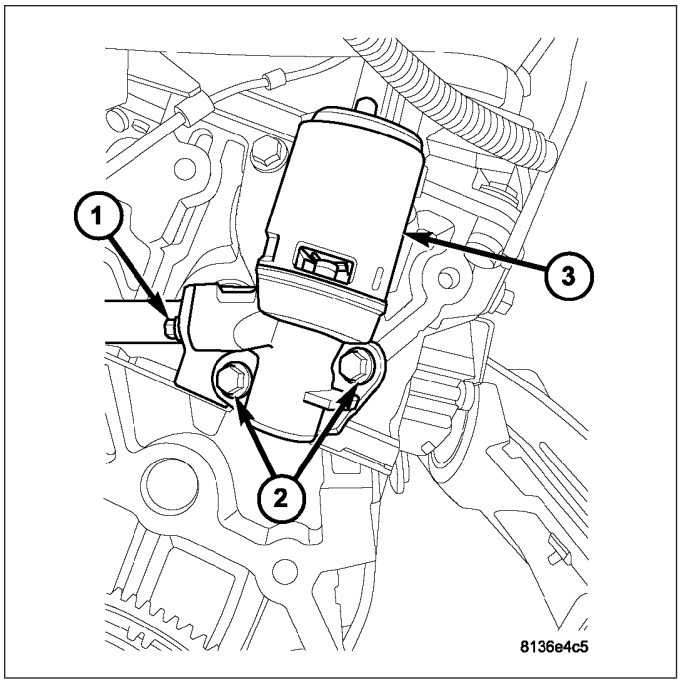

INSTALLATION

2.7L - LOWER TUBE

1. Clean mounting surface.

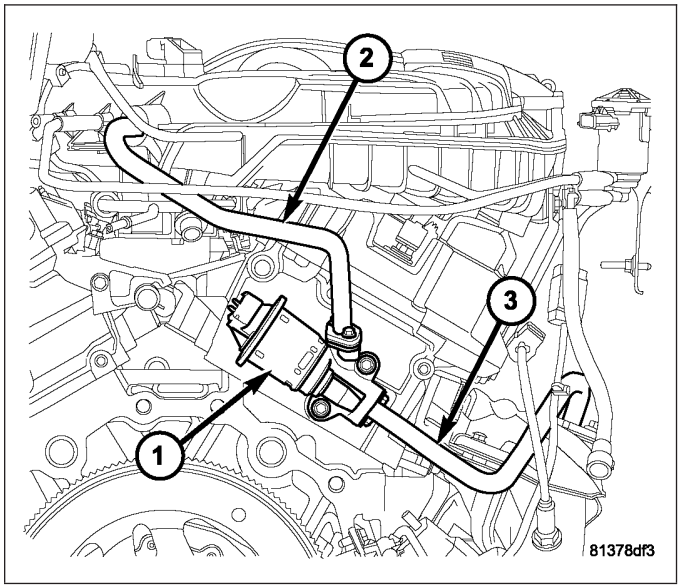

2. Install the lower tube to vehicle.
3. Install the lower tube bolts to EGR valve.
4. Install the lower tube bolts to exhaust manifold.
5. Tighten the lower tube to EGR valve bolts to 11 N·m (95 in. lbs.) torque.
6. Tighten the lower tube to exhaust manifold bolts to 31 N·m (275 in. lbs.) torque.

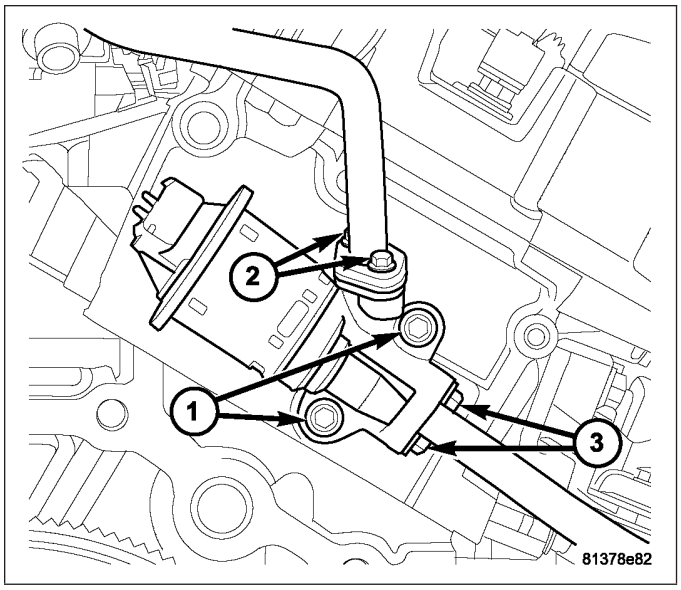

7. Connect the electrical connector to EGR valve and lock.
8. Relocate the purge solenoid.
9. Install purge solenoid to bracket.
10. Connect negative battery cable.

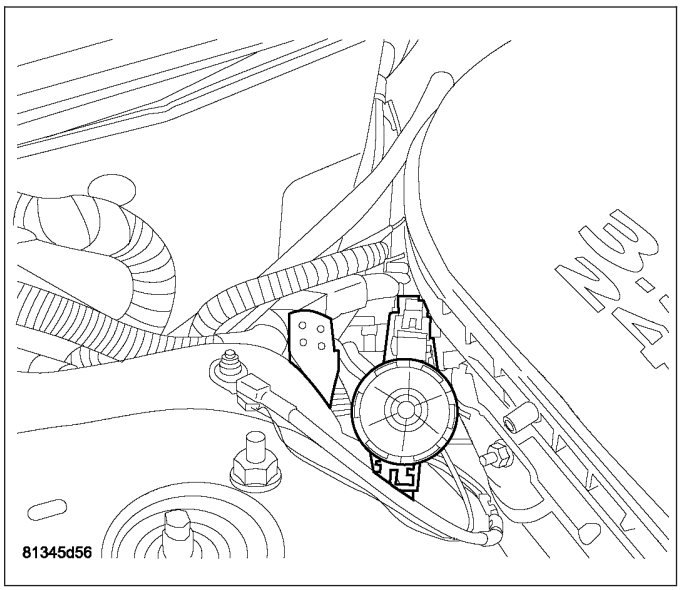

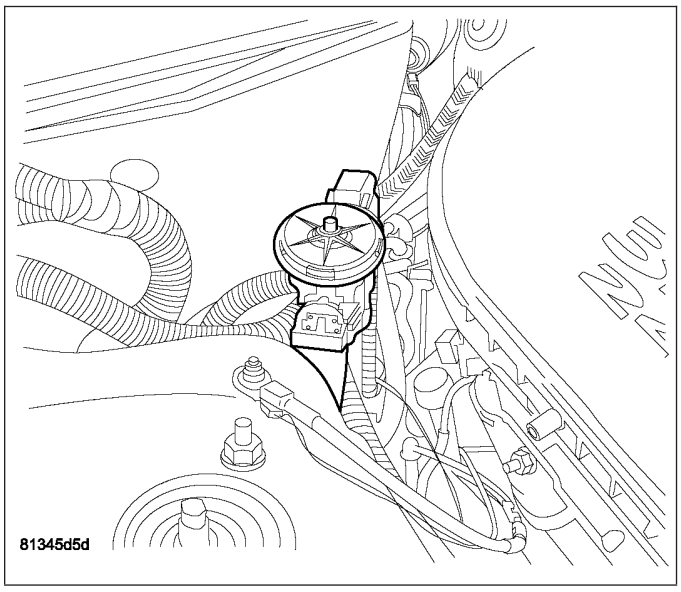

2.7L - UPPER TUBE

1. Clean mounting surface.
2. Inspect rubber silicone seals on intake manifold end of EGR tube.
3. Install upper tube into the intake manifold, being careful that the silicone rubber seals are correctly installed and undamaged..
4. Install new gasket between the EGR valve and tube and install bolts (2).
5. Tighten the upper tube to EGR valve bolts to 11 N·m (95 in. lbs.) torque.

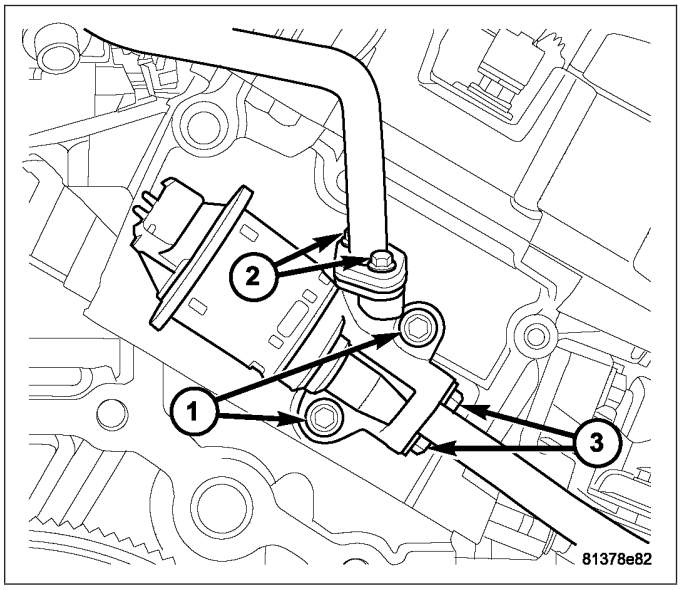

6. Connect the electrical connector to EGR valve and lock.
7. Relocate the purge solenoid.

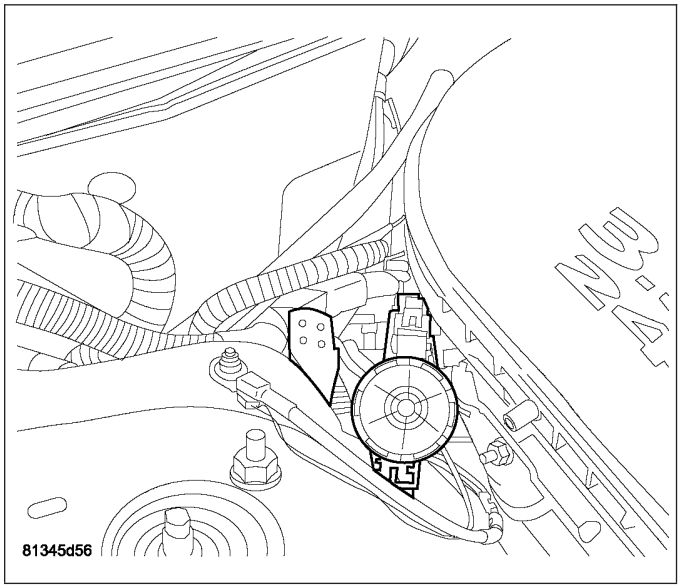

8. Install purge solenoid to bracket.
9. Connect negative battery cable.

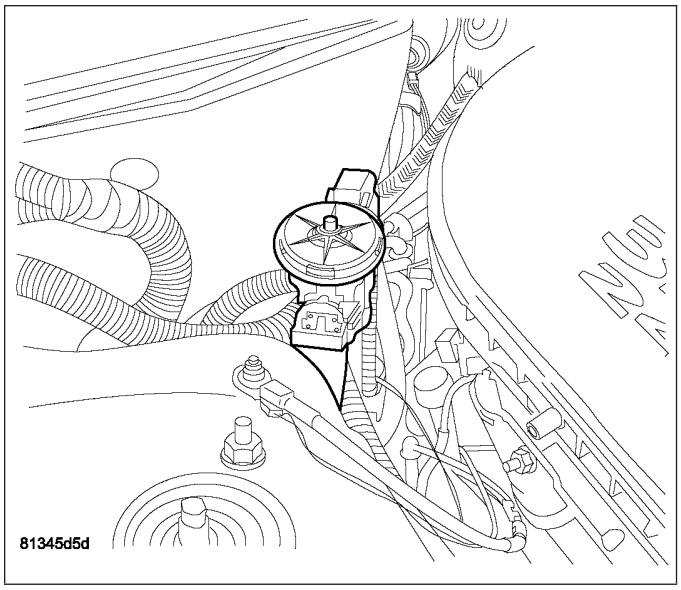

3.5L

1. Clean mounting surface.
2. Inspect rubber silicone seals on intake manifold end of EGR tube.
3. Install tube into the intake manifold being careful that the silicone rubber seals are correctly installed and undamaged.

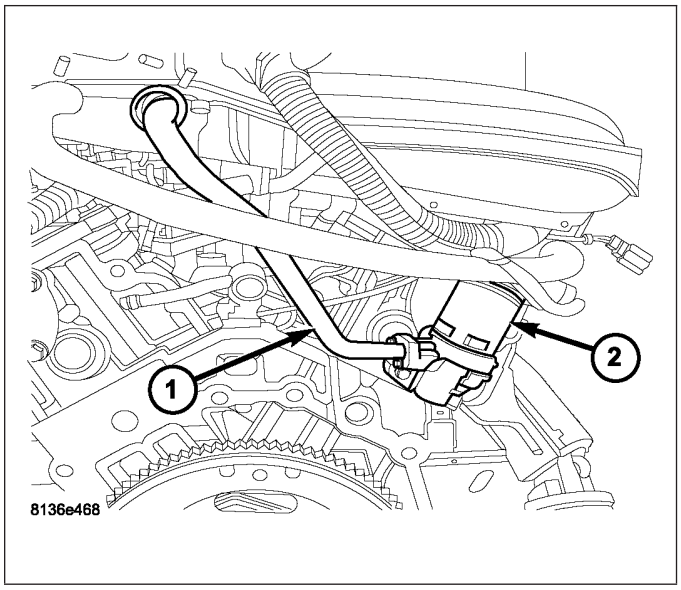

4. Install the tube bolts to EGR valve.
5. Tighten the EGR tube to EGR valve bolts to 11 N·m (95 in. lbs.) torque.

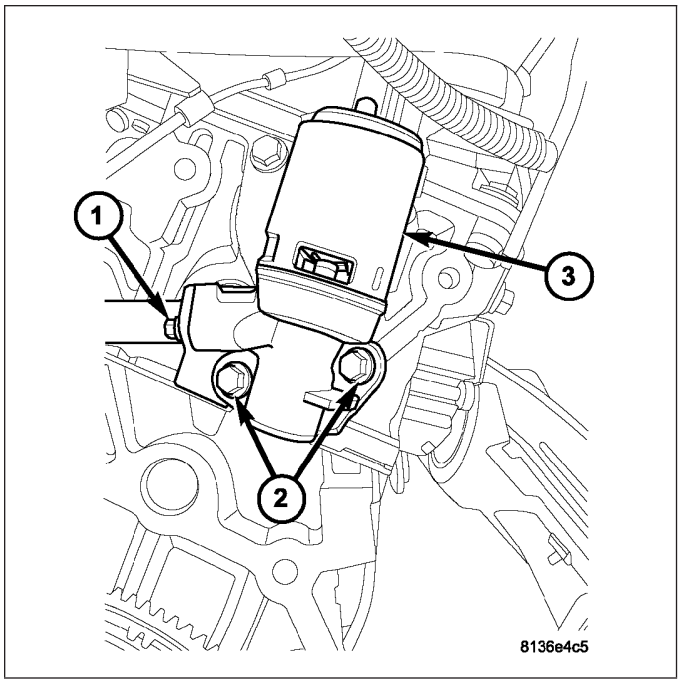

6. Connect the electrical connector to EGR valve and lock.
7. Install upper intake manifold, (Refer to 9 - ENGINE/ MANIFOLDS/INTAKE MANIFOLD - INSTALLATION).
8. Install the shock tower brace.
9. Install the wiper module, (Refer to 8 - ELECTRICAL/WIPERS/WASHERS/WIPER MODULE - INSTALLATION).
10. Relocate the purge solenoid.

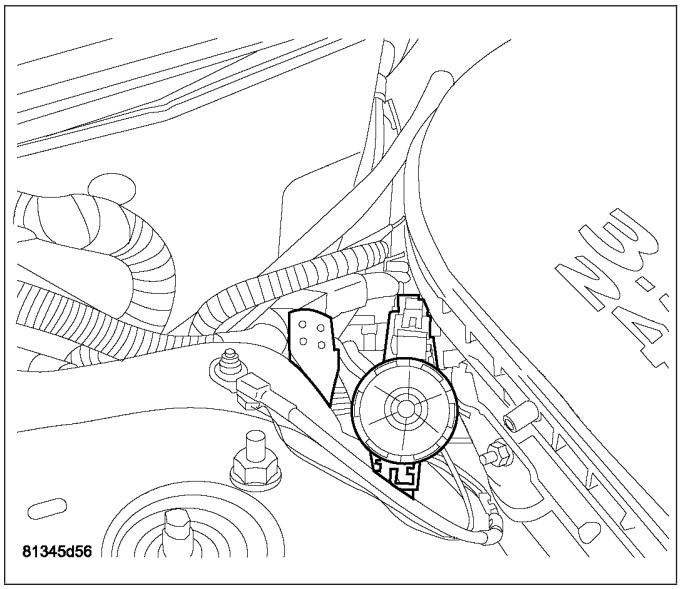

11. Install purge solenoid to bracket.
12. Connect negative battery cable.

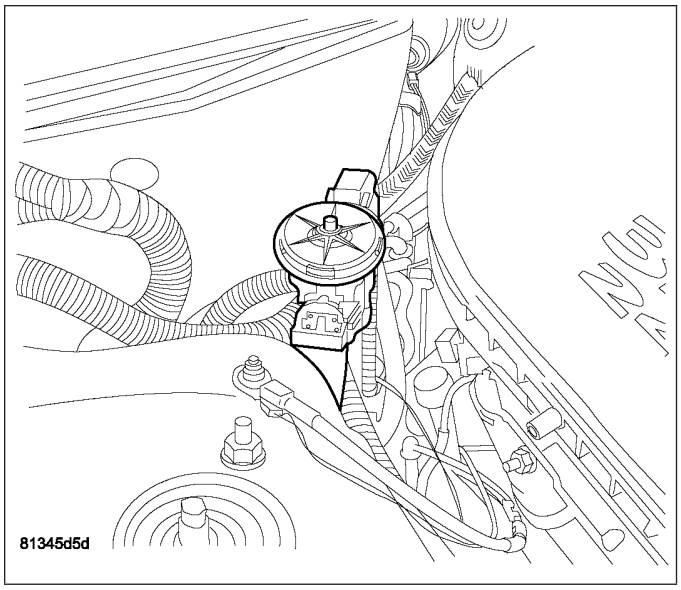

ASSEMBLY-EXHAUST GAS RECIRC VALVE

DESCRIPTION

The EGR valve consists of three major components. First there is the pintle, valve seat, and housing which contains and regulates the gas flow. Second there is the armature, return spring, and solenoid coil to provide the operating force to regulate the flow by changing the pintle position. The solenoid coil assembly is in parallel with a diode and connects to the two connectors in the connector assembly. The third major component which senses pintle position and is connected to the three connectors in the electrical connector.

OPERATION

The exhaust gas recirculation flow is determined by the engine controller. For a given set of conditions, the engine controller knows the ideal exhaust gas recirculation flow to optimize NOx and fuel economy as a function of the pintle position. Pintle position is obtained from the position sensor. The engine controller adjusts the duty cycle of 128 Hz power supplied to the solenoid coil to obtain the correct position.

REMOVAL

2.7L

1. EGR system components and location. Upper tube (2), EGR valve (1), and Lower tube (3).
2. Disconnect negative battery cable.

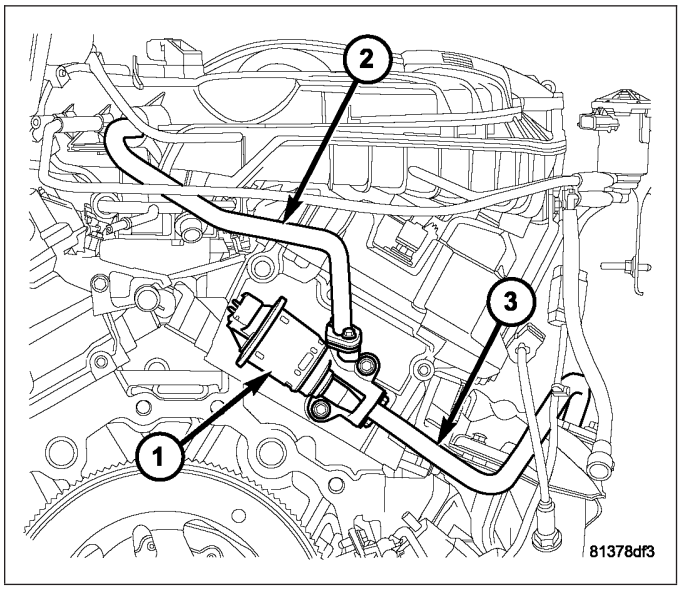

3. Remove purge solenoid from bracket.

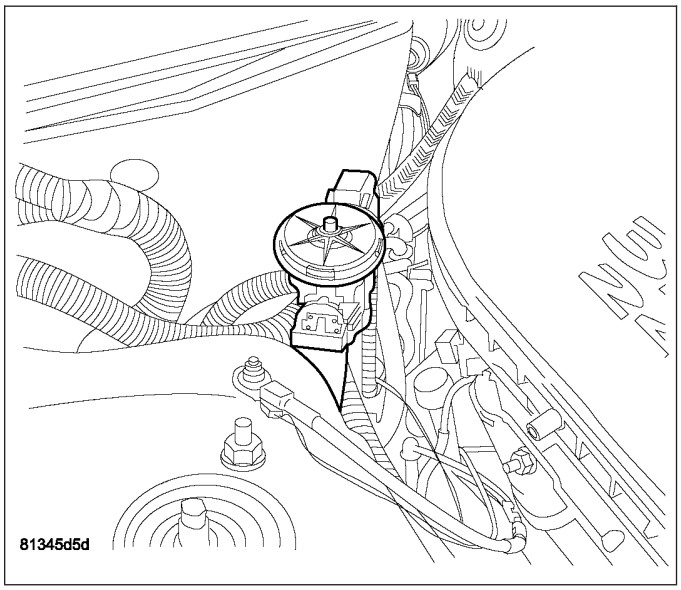

4. Relocate the purge solenoid.
5. Unlock and disconnect the electrical connector from EGR valve.

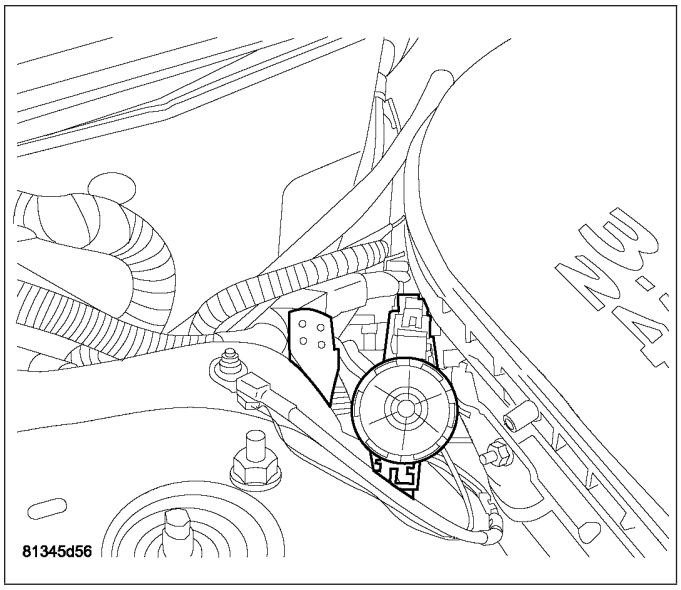

6. Remove the bolts from the EGR tube to exhaust manifold.
7. Remove the lower tube bolts to EGR valve and remove tube(3).
8. Remove upper tube bolts to EGR valve (2).
9. Remove the EGR valve mounting bolts (1).
10. Remove valve from vehicle.
11. Clean mounting surface.

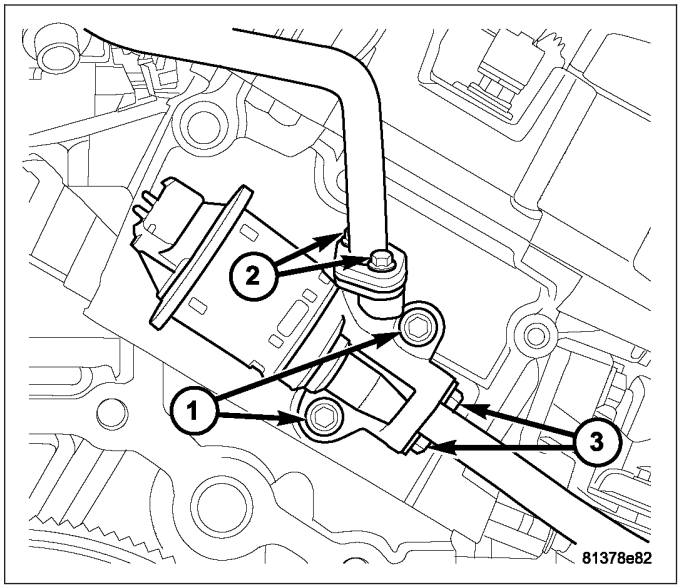

3.5L

1. Disconnect negative battery cable.
2. Remove purge solenoid from bracket.

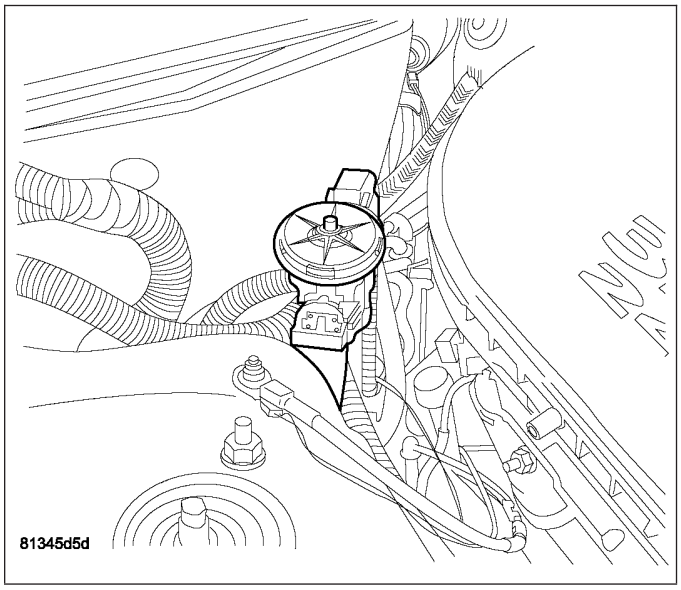

3. Relocate the purge solenoid.

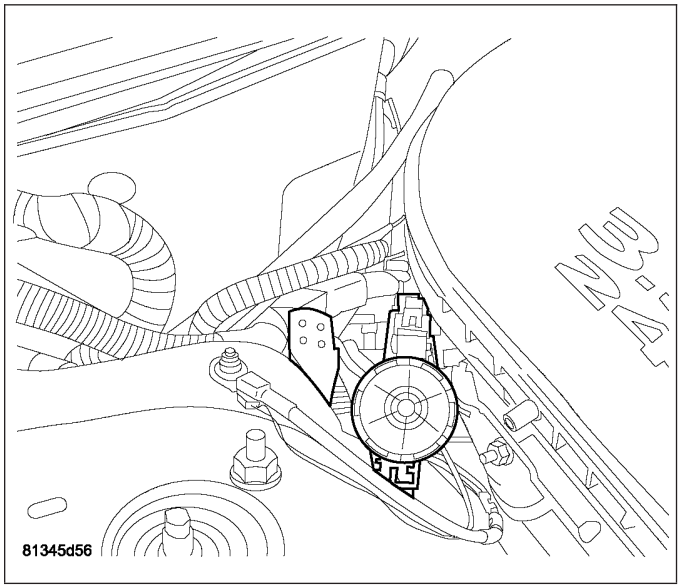

4. Unlock and disconnect the electrical connector from EGR valve.
5. Remove the wiper module, (Refer to 8 - ELECTRICAL/WIPERS/WASHERS/WIPER MODULE - REMOVAL).
6. Remove shock tower brace and relocate.
7. Remove the upper intake manifold, (Refer to 9 - ENGINE/MANIFOLDS/INTAKE MANIFOLD - REMOVAL).

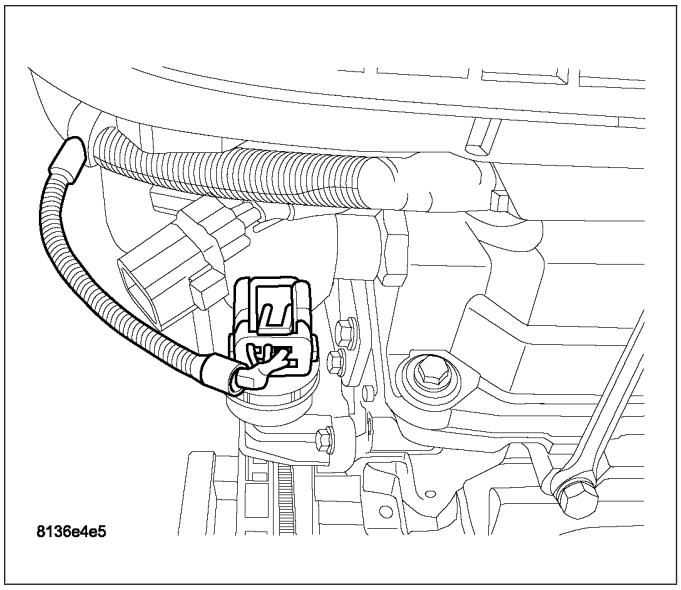

8. EGR valve (2) and tube (1).

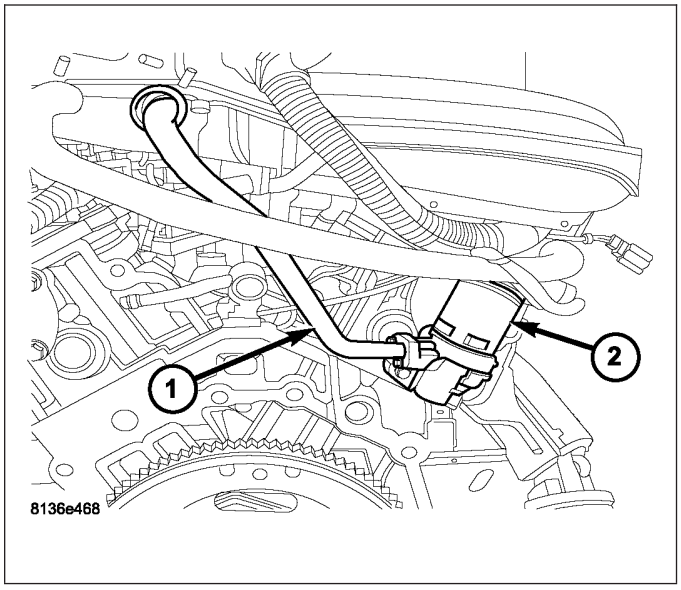

9. Remove tube bolts (1) to EGR valve (3).
10. Remove tube (1) from intake manifold.
11. When removing EGR upper tube assembly being careful not to drop the silicone rubber seals in the intake manifold. Clean gasket surfaces on the EGR valve. Note that any loose dirt can lodge between the pintle and the seat and cause valve leakage that will give a rough idle and depressed manifold vacuum.
12. Remove EGR valve mounting bolts (2).
13. Remove EGR valve from vehicle.
14. Clean mounting surface.

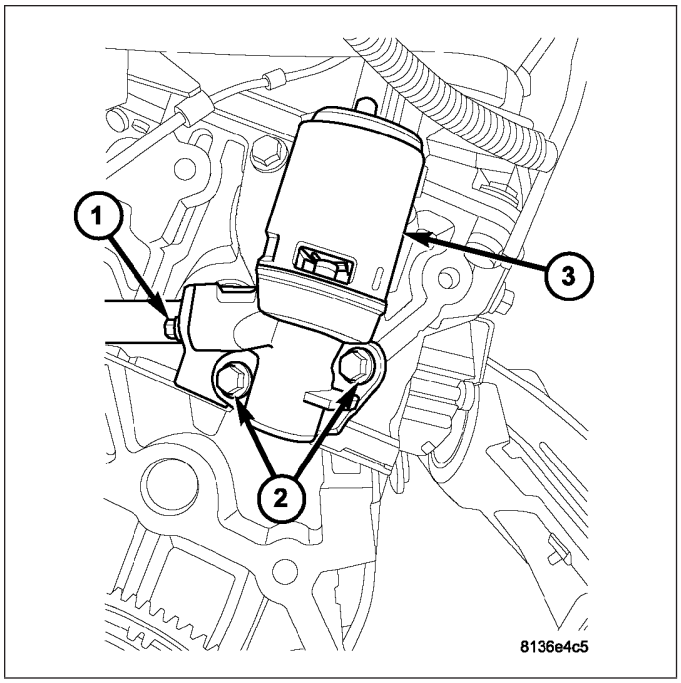

5.7L

The electronic EGR valve and solenoid assembly (3) is attached to the front of the right cylinder head (1). An exhaust gas routing tube connects the EGR valve to the intake manifold.

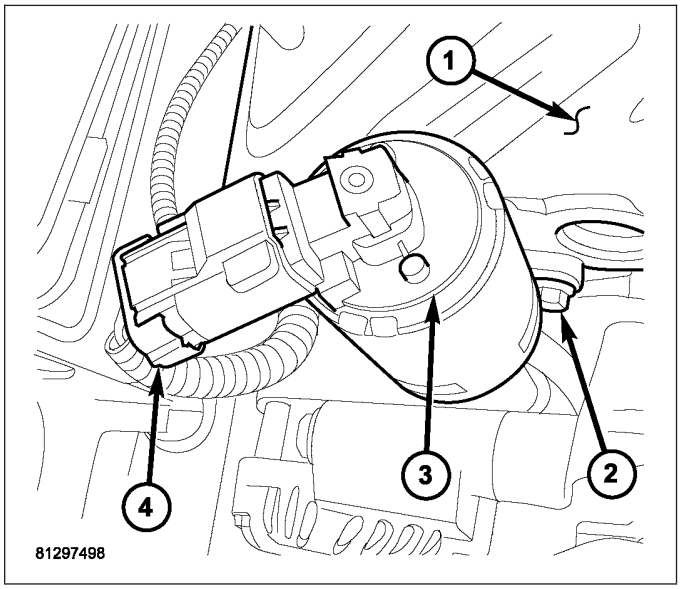

1. Disconnect electrical connector (1) from EGR solenoid (2).
2. Remove two bolts (3) connecting EGR tube (4) to valve assembly.
3. Remove gasket located between EGR tube flange and EGR valve assembly.

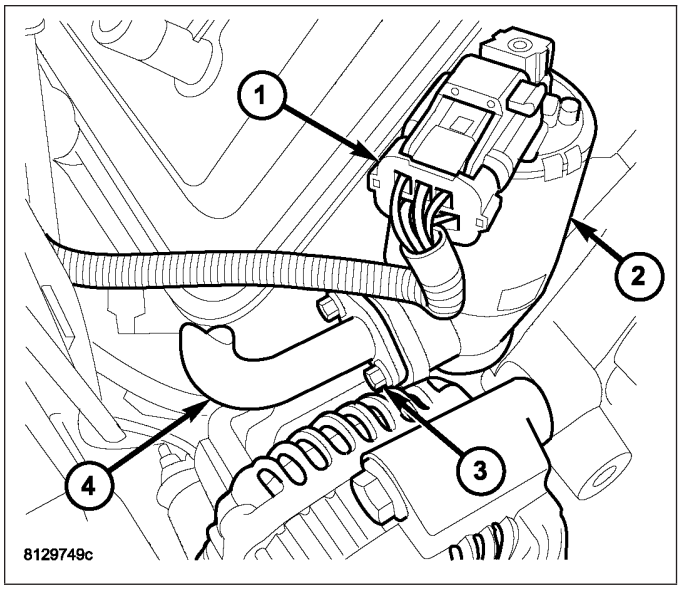

4. Remove two mounting bolts (2).
5. Separate valve assembly (3) from cylinder head (1).
6. Remove and discard metal gasket located between cylinder head and valve assembly.

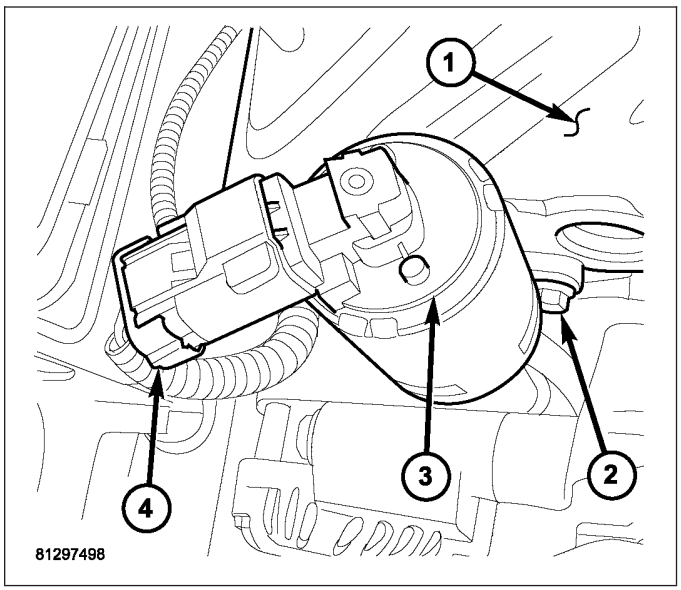

3.0L - DIESEL

1. Disconnect the negative battery cable.
2. Remove engine cover (Refer to 9 - ENGINE - REMOVAL).
3. Disconnect the EGR valve wiring harness connector.
4. Remove EGR valve retaining bolts and valve, discard the gasket.

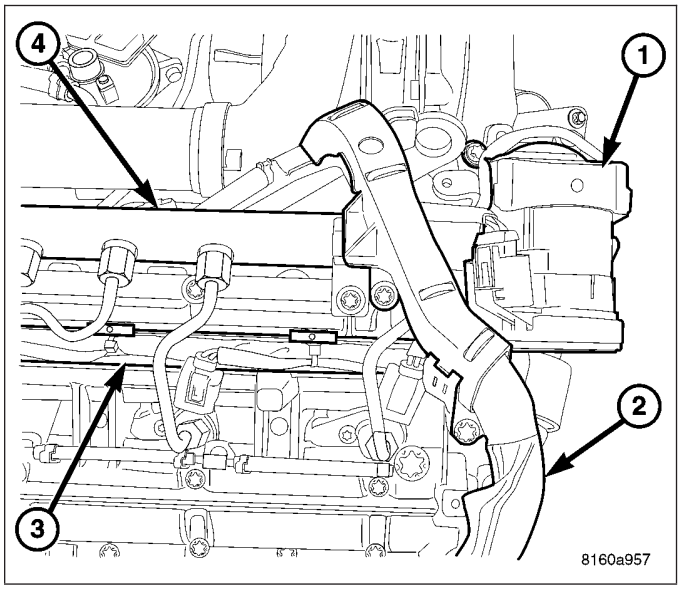

INSTALLATION

2.7L

1. Clean mounting surface.

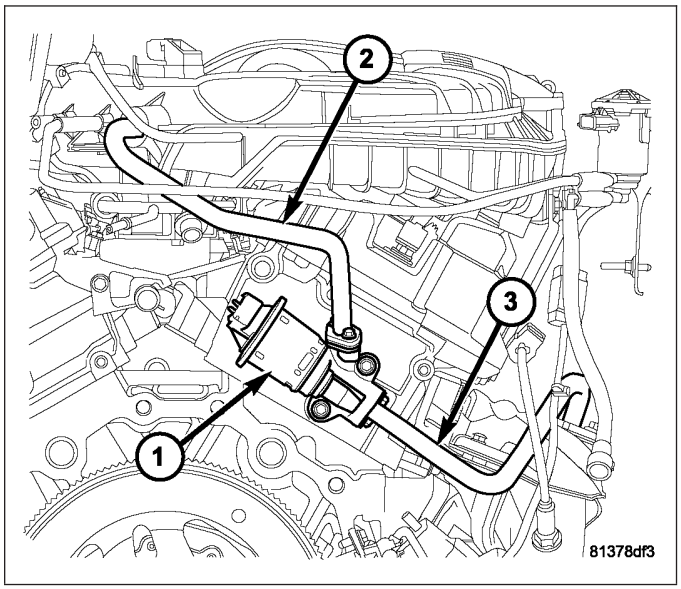

2. Install EGR valve.
3. Install the EGR valve mounting bolts (1).
4. Inspect rubber silicone seals on intake manifold end of EGR tube.
5. Install upper tube into the intake manifold, being careful that the silicone rubber seals are correctly installed and undamaged..
6. Install new gasket between the EGR valve and upper tube and install bolts (2).
7. Install the lower tube to exhaust manifold.
8. Install new gasket between the EGR valve and lower tube and install bolts (3).
9. Tighten the lower tube to EGR valve bolts (3) to 11 N·m (95 in. lbs.) torque.
10. Tighten the lower tube to exhaust manifold bolts to 31 N·m (275 in. lbs.) torque.
11. Tighten the upper tube to EGR valve bolts (2) to 11 N·m (95 in. lbs.) torque.

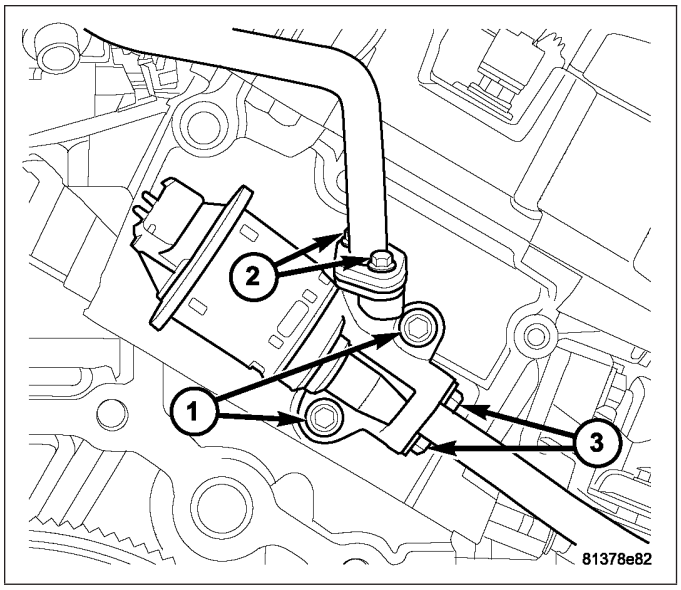

12. Tighten EGR valve to cylinder head bolts (1) to 31 N·m (275 in. lbs.) torque.
13. Connect the electrical connector to EGR valve and lock.
14. Relocate the purge solenoid.

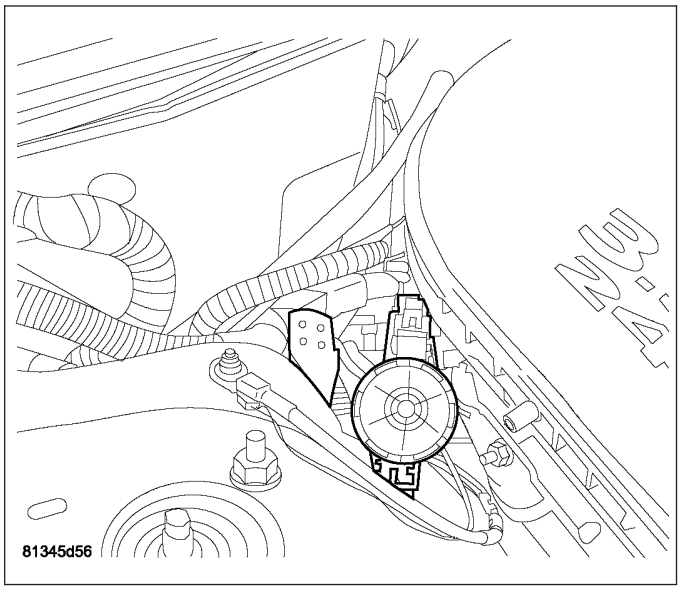

15. Install purge solenoid to bracket.
16. Connect negative battery cable.

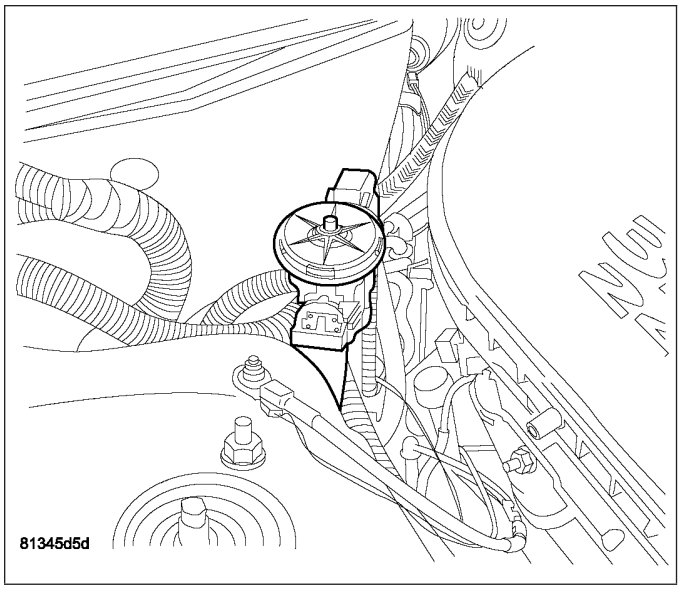

3.5L

1. Clean mounting surface.
2. Inspect rubber silicone seals on intake manifold end of EGR tube.
3. Install tube into the intake manifold being careful that the silicone rubber seals are correctly installed and undamaged.

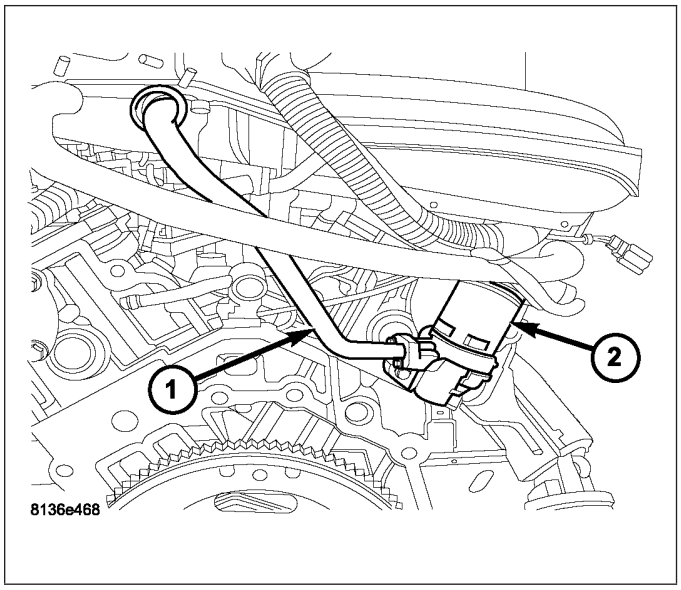

4. Install new gasket between the EGR valve (3) and tube and install bolts (1).
5. Tighten the EGR tube to EGR valve bolts to 11 N·m (95 in. lbs.) torque.

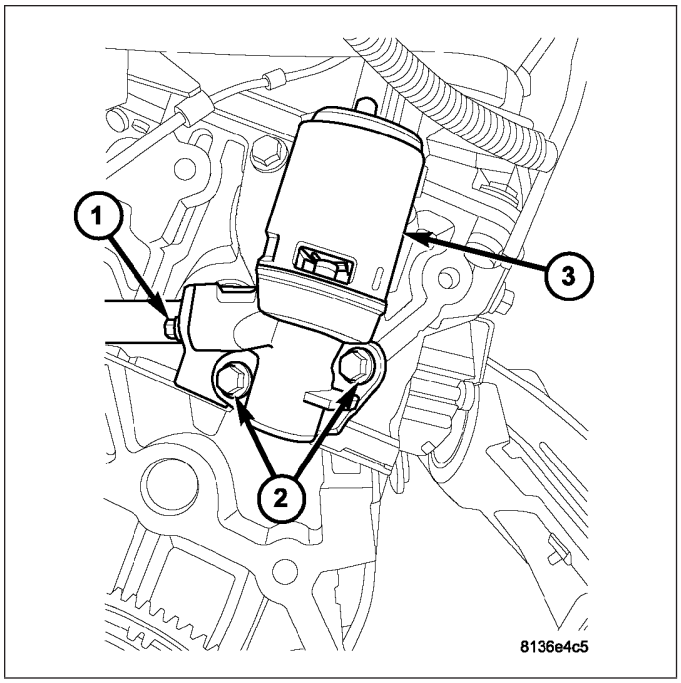

6. Connect the electrical connector to EGR valve and lock.
7. Install upper intake manifold, (Refer to 9 - ENGINE/ MANIFOLDS/INTAKE MANIFOLD - INSTALLATION).
8. Install the shock tower brace.
9. Install the wiper module, (Refer to 8 - ELECTRICAL/WIPERS/WASHERS/WIPER MODULE - INSTALLATION).
10. Relocate the purge solenoid.

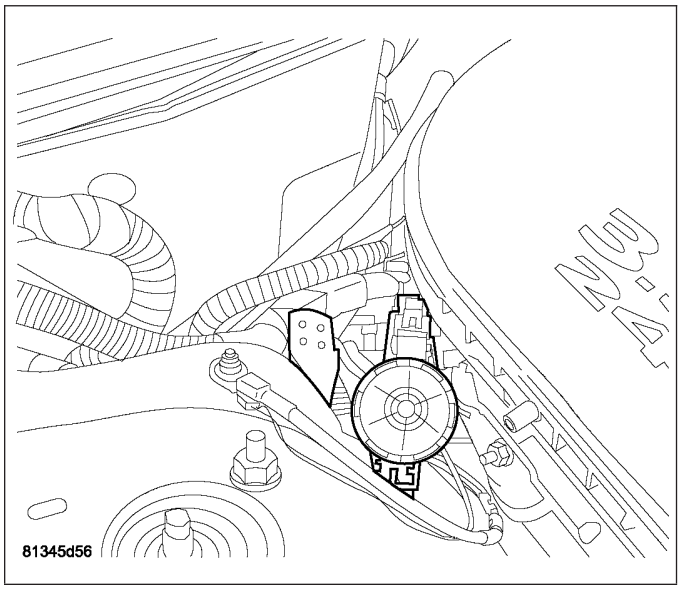

11. Install purge solenoid to bracket.
12. Connect negative battery cable.

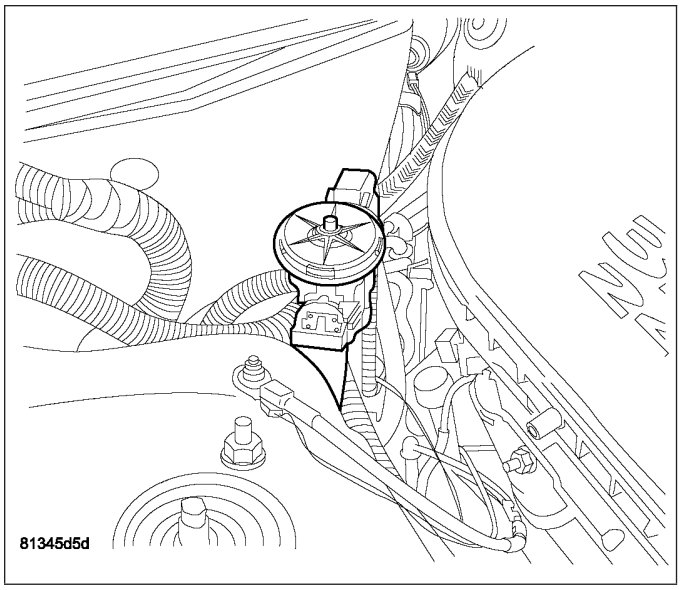

5.7L

1. Position a new metal gasket between cylinder head (1) and valve assembly (3).
2. Install two mounting bolts (2) and tighten. Refer to Torque Specifications.

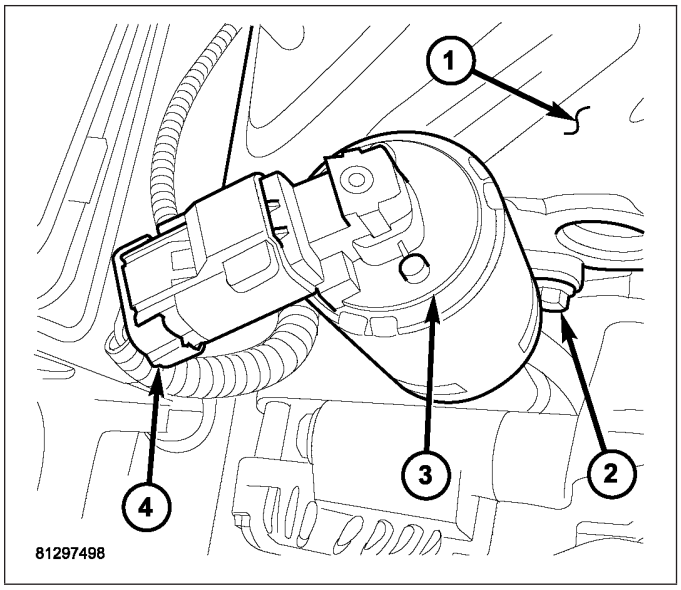

3. Clean EGR tube where it joins EGR valve.
4. Position new gasket between EGR tube flange and EGR valve assembly.
5. Install two bolts (3) connecting EGR tube (4) to valve assembly (2). Tighten bolts. Refer to Torque Specifications.
6. Connect electrical connector (1) to EGR solenoid (2).

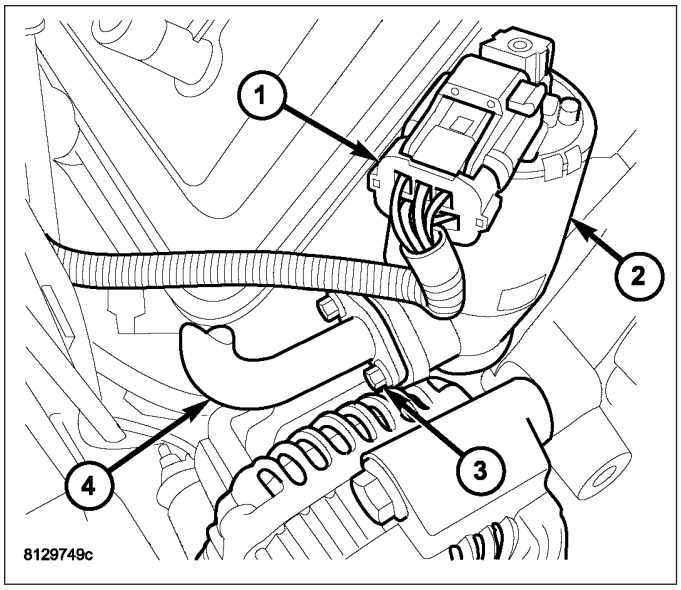

3.0L - DIESEL

1. Clean EGR valve sealing surfaces.
2. Lubricate the seal and install the EGR valve in intake manifold. Tighten EGR valve retaining bolts to 9 N·m (80 lbs.in).
3. Connect the EGR valve wiring harness connector.
4. Install engine cover. (Refer to 9 - ENGINE - INSTALLATION)
5. Connect the negative battery cable. (Refer to 8 - ELECTRICAL/BATTERY SYSTEM/CABLES - INSTALLATION)

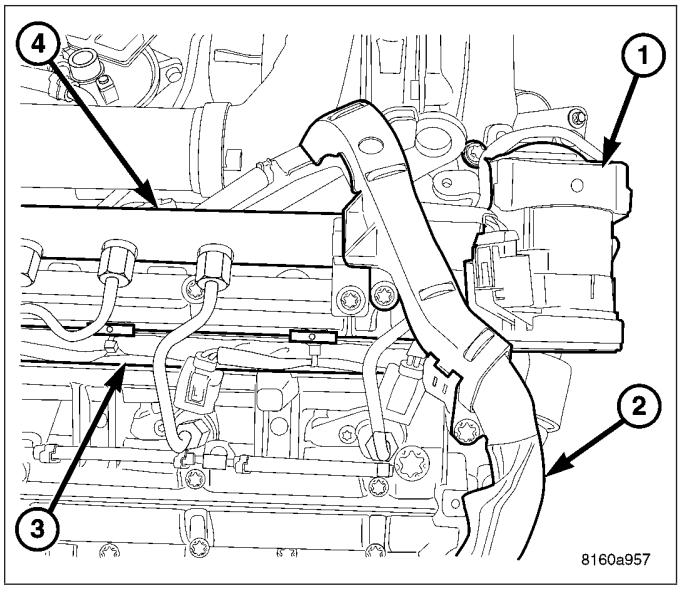

SENSOR - EGR BACK PRESSURE

DESCRIPTION

The EGR back pressure sensor is located in the exhaust stream next to the EGR valve. The sensor determines the exhaust pressure before the catalytic converter. The ECM uses the EGR back pressure sensor for engine protection and exhaust gas turbocharger protection.

OPERATION

The exhaust gas effects a sensor membrane that acts against a potentiometer internal to the sensor. The potentiometer changes the resistance value and thus influences the signal voltage of the sensor.

REMOVAL

1. Disconnect the negative battery cable.
2. Remove the engine cover.
3. Disconnect the sensor electrical sensor.
4. Remove the sensor.

INSTALLATION

1. Install the EGR back pressure sensor.
2. Connect the engine wiring harness electrical connector.
3. Install the engine cover.
4. Connect the negative battery cable.

ON-BOARD DIAGNOSTICS

TABLE OF CONTENTS

page

TASK MANAGER
DESCRIPTION 61
OPERATION 61

TASK MANAGER

DESCRIPTION

The PCM is responsible for efficiently coordinating the operation of all the emissions-related components. The PCM is also responsible for determining if the diagnostic systems are operating properly. The software designed to carry out these responsibilities is call the “Task Manager”.

OPERATION

The Task Manager determines when tests happen and when functions occur. Many of the diagnostic steps required by OBD II must be performed under specific operating conditions. The Task Manager software organizes and prioritizes the diagnostic procedures. The job of the Task Manager is to determine if conditions are appropriate for tests to be run, monitor the parameters for a trip for each test, and record the results of the test. Following are the responsibilities of the Task Manager software:

- Test Sequence
- MIL Illumination
- Diagnostic Trouble Codes (DTCs)
- Trip Indicator
- Freeze Frame Data Storage
- Similar Conditions Window

Test Sequence

In many instances, emissions systems must fail diagnostic tests more than once before the PCM illuminates the MIL. These tests are known as ’two trip monitors.’ Other tests that turn the MIL lamp on after a single failure are known as ’one trip monitors.’ A trip is defined as ’start the vehicle and operate it to meet the criteria necessary to run the given monitor.’

Many of the diagnostic tests must be performed under certain operating conditions. However, there are times when tests cannot be run because another test is in progress (conflict), another test has failed (pending) or the Task Manager has set a fault that may cause a failure of the test (suspend).

Pending

Under some situations the Task Manager will not run a monitor if the MIL is illuminated and a fault is stored from another monitor. In these situations, the Task Manager postpones monitors **pending** resolution of the original fault. The Task Manager does not run the test until the problem is remedied.

For example, when the MIL is illuminated for an Oxygen Sensor fault, the Task Manager does not run the Catalyst Monitor until the Oxygen Sensor fault is remedied. Since the Catalyst Monitor is based on signals from the Oxygen Sensor, running the test would produce inaccurate results.

Conflict

There are situations when the Task Manager does not run a test if another monitor is in progress. In these situations, the effects of another monitor running could result in an erroneous failure. If this **conflict** is present, the monitor is not run until the conflicting condition passes. Most likely the monitor will run later after the conflicting monitor has passed.

For example, if the Fuel System Monitor is in progress, the Task Manager does not run the catalyst Monitor. Since both tests monitor changes in air/fuel ratio and adaptive fuel compensation, the monitors will conflict with each other.

Suspend

Occasionally the Task Manager may not allow a two trip fault to mature. The Task Manager will **suspend** the maturing of a fault if a condition exists that may induce an erroneous failure. This prevents illuminating the MIL for the wrong fault and allows more precise diagnosis.

For example, if the PCM is storing a one trip fault for the Oxygen Sensor and the catalyst monitor, the Task Manager may still run the catalyst Monitor but will suspend the results until the Oxygen Sensor Monitor either passes or fails. At that point the Task Manager can determine if the catalyst system is actually failing or if an Oxygen Sensor is failing.

MIL Illumination

The PCM Task Manager carries out the illumination of the MIL. The Task Manager triggers MIL illumination upon test failure, depending on monitor failure criteria.

The Task Manager Screen shows both a Requested MIL state and an Actual MIL state. When the MIL is illuminated upon completion of a test for a good trip, the Requested MIL state changes to OFF. However, the MIL remains illuminated until the next key cycle. (On some vehicles, the MIL will actually turn OFF during the thirdgood trip) During the key cycle for the third good trip, the Requested MIL state is OFF, while the Actual MIL state is ON. After the next key cycle, the MIL is not illuminated and both MIL states read OFF.

Diagnostic Trouble Codes (DTCs)

With OBD II, different DTC faults have different priorities according to regulations. As a result, the priorities determine MIL illumination and DTC erasure. DTCs are entered according to individual priority. DTCs with a higher priority overwrite lower priority DTCs.

Priorities

- Priority 1 One-Trip Failure of Non-Fuel or Non-Mis-Fire Fault (e.g., Cat Mon Failure)
- Priority 3 Matured Fault (either One-Trip or Two-Trip) Non-Fuel & Non-Mis-Fire
- Priority 4 One-Trip Failure of Fuel System or Mis-Fire Fault
- Priority 6 Matured Fault for Fuel System or Mis-Fire (either One-Trip or Two-Trip)

Non-emissions related failures have no priority. One trip failures of two trip faults have low priority. Two trip failures or matured faults have higher priority. One and two trip failures of fuel system and misfire monitor take precedence over non-fuel system and non-misfire failures.

DTC Self Erasure

With one trip components or systems, the MIL is illuminated upon test failure and DTCs are stored.

Two trip monitors are components requiring failure in two consecutive trips for MIL illumination. Upon failure of the first test, the Task Manager enters a maturing code. If the component fails the test for a second time the code matures and a DTC is set.

After three good trips the MIL is extinguished and the Task Manager automatically switches the trip counter to a warm-up cycle counter. DTCs are automatically erased following 40 warm-up cycles if the component does not fail again.

For misfire and fuel system monitors, the component must pass the test under a Similar Conditions Window in order to record a good trip. A Similar Conditions Window is when engine RPM is within ±375 RPM and load is within ±20% of when the fault occurred.

NOTE: It is important to understand that a component does not have to fail under a similar window of operation to mature. It must pass the test under a Similar Conditions Window when it failed to record a Good Trip for DTC erasure for misfire and fuel system monitors.

DTCs can be erased anytime with a scan tool. Erasing the DTC with the scan tool erases all OBD II information. The scan tool automatically displays a warning that erasing the DTC will also erase all OBD II monitor data. This includes all counter information for warm-up cycles, trips and Freeze Frame.

Trip Indicator

The **Trip** is essential for running monitors and extinguishing the MIL. In OBD II terms, a trip is a set of vehicle operating conditions that must be met for a specific monitor to run. All trips begin with a key cycle.

Good Trip

The Good Trip counters are as follows:

- Global Good Trip
- Fuel System Good Trip
- Misfire Good Trip
- Alternate Good Trip (appears as a Global Good Trip on scan tool)
    - Comprehensive Components
    - Major Monitor

- Warm-Up Cycles

Global Good Trip

To increment a Global Good Trip, the Oxygen sensor and Catalyst efficiency monitors must have run and passed, and 2 minutes of engine run time.

Fuel System Good Trip

To count a good trip (three required) and turn off the MIL, the following conditions must occur:

- Engine in closed loop
- Operating in Similar Conditions Window
- Short Term multiplied by Long Term less than threshold
- Less than threshold for a predetermined time

If all of the previous criteria are met, the PCM will count a good trip (three required) and turn off the MIL.

Misfire Good Trip

If the following conditions are met the PCM will count one good trip (three required) in order to turn off the MIL:

- Operating in Similar Condition Window
- 1000 engine revolutions with no misfire

Alternate Good Trip

Alternate Good Trips are used in place of Global Good Trips for Comprehensive Components and Major Monitors. If the Task Manager cannot run a Global Good Trip because a component fault is stopping the monitor from running, it will attempt to count an Alternate Good Trip.

The Task Manager counts an Alternate Good Trip for Comprehensive components when the following conditions are met:

- Two minutes of engine run time, idle or driving
- No other faults occur

The Task Manager counts an Alternate Good Trip for a Major Monitor when the monitor runs and passes. Only the Major Monitor that failed needs to pass to count an Alternate Good Trip.

Warm-Up Cycles

Once the MIL has been extinguished by the Good Trip Counter, the PCM automatically switches to a Warm-Up Cycle Counter that can be viewed on the scan tool. Warm-Up Cycles are used to erase DTCs and Freeze Frames. Forty Warm-Up cycles must occur in order for the PCM to self-erase a DTC and Freeze Frame. A Warm-Up Cycle is defined as follows:

- Engine coolant temperature must start below and rise above 160° F
- Engine coolant temperature must rise by 40° F
- No further faults occur

Freeze Frame Data Storage

Once a failure occurs, the Task Manager records several engine operating conditions and stores it in a Freeze Frame. The Freeze Frame is considered one frame of information taken by an on-board data recorder. When a fault occurs, the PCM stores the input data from various sensors so that technicians can determine under what vehicle operating conditions the failure occurred.

The data stored in Freeze Frame is usually recorded when a system fails the first time for two trip faults. Freeze Frame data will only be overwritten by a different fault with a higher priority.

CAUTION: Erasing DTCs, either with the scan tool; or by disconnecting the battery, also clears all Freeze Frame data.

Similar Conditions Window

The Similar Conditions Window displays information about engine operation during a monitor. Absolute MAP (engine load) and Engine RPM are stored in this window when a failure occurs. There are two different Similar conditions Windows: Fuel System and Misfire.

FUEL SYSTEM

- **Fuel System Similar Conditions Window** — An indicator that 'Absolute MAP When Fuel Sys Fail' and 'RPM When Fuel Sys Failed' are all in the same range when the failure occurred. Indicated by switching from 'NO' to 'YES'.
- **Absolute MAP When Fuel Sys Fail** — The stored MAP reading at the time of failure. Informs the user at what engine load the failure occurred.
- **Absolute MAP** — A live reading of engine load to aid the user in accessing the Similar Conditions Window.
- **RPM When Fuel Sys Fail** — The stored RPM reading at the time of failure. Informs the user at what engine RPM the failure occurred.
- **Engine RPM** — A live reading of engine RPM to aid the user in accessing the Similar Conditions Window.
- **Adaptive Memory Factor** — The PCM utilizes both Short Term Compensation and Long Term Adaptive to calculate the Adaptive Memory Factor for total fuel correction.
- **Upstream O2S Volts** — A live reading of the Oxygen Sensor to indicate its performance. For example, stuck lean, stuck rich, etc.
- **SCW Time in Window (Similar Conditions Window Time in Window)** - A timer used by the PCM that indicates that, after all Similar Conditions have been met, if there has been enough good engine running time in the SCW without failure detected. This timer is used to increment a Good Trip.
- **Fuel System Good Trip Counter** — A Trip Counter used to turn OFF the MIL for Fuel System DTCs. To increment a Fuel System Good Trip, the engine must be in the Similar Conditions Window, Adaptive Memory Factor must be less than calibrated threshold and the Adaptive Memory Factor must stay below that threshold for a calibrated amount of time.
- **Test Done This Trip** — Indicates that the monitor has already been run and completed during the current trip.

MISFIRE

- **Same Misfire Warm-Up State** — Indicates if the misfire occurred when the engine was warmed up (above 160° F).
- **In Similar Misfire Window** — An indicator that 'Absolute MAP When Misfire Occurred' and 'RPM When Misfire Occurred' are all in the same range when the failure occurred. Indicated by switching from 'NO' to 'YES'.
- **Absolute MAP When Misfire Occurred** — The stored MAP reading at the time of failure. Informs the user at what engine load the failure occurred.
- **Absolute MAP** — A live reading of engine load to aid the user in accessing the Similar Conditions Window.
- **RPM When Misfire Occurred** — The stored RPM reading at the time of failure. Informs the user at what engine RPM the failure occurred.
- **Engine RPM** — A live reading of engine RPM to aid the user in accessing the Similar Conditions Window.
- **Adaptive Memory Factor** — The PCM utilizes both Short Term Compensation and Long Term Adaptive to calculate the Adaptive Memory Factor for total fuel correction.
- **200 Rev Counter** — Counts 0–100 720 degree cycles.
- **SCW Cat 200 Rev Counter** — Counts when in similar conditions.
- **SCW FTP 1000 Rev Counter** — Counts 0–4 when in similar conditions.
- **Misfire Good Trip Counter** — Counts up to three to turn OFF the MIL.

Description	Group-Page
A-PILLAR TRIM	23-166
ACCUMULATOR	21-751
ACTUATOR-BLEND DOOR	24-338
ACTUATOR-INTAKE PORT SWIRL	14-230
ACTUATOR-MANIFOLD TUNE VALVE	14-196
ACTUATOR-MODE DOOR	24-342
ACTUATOR-RECIRCULATION DOOR	24-345
ADJUSTERS-FRONT	23-231
ADJUSTERS-HYDRAULIC LASH	9-1977
AIR INLET- FRESH AIR DUCT	23-129
AIR INTAKE SYSTEM	9-2318, 9-2483
AMPLIFIER	8A-135
ANTENNA - NAVIGATION	8A-139
ANTENNA - SATELLITE RADIO	8A-137
ANTENNA CABLE	8A-141
ANTENNA CABLE-INSTRUMENT PANEL	8A-142
ANTENNA-REAR GLASS INTEGRAL	8A-140
ARM - LOWER CONTROL - AWD	2-38
ARM - LOWER CONTROL - RWD	2-45
ARM - UPPER CONTROL	2-84
ARMREST-REAR	23-236
ARMS-ROCKER	9-1979
ASH RECEIVER	23-132
ASSEMBLY-EXHAUST GAS RECIRC VALVE.	25-47
ASSEMBLY-INPUT CLUTCH	21-768
ASSEMBLY-INSTRUMENT PANEL	23-134
ASSEMBLY-MODULE	23-292
ASSEMBLY-NATURAL VAC LEAK DETECTION	25-19
ASSEMBLY-TRANSMISSION SOLENOID/ PRESSURE SWITCH	21-820
AUDIO - ELECTRICAL DIAGNOSTICS	8A-3
AUDIO/VIDEO - SERVICE INFORMATION	8A-132
AUTO HEADLAMP SENSOR	8L-80
AUTOMATIC TRANSMISSION 42RLE - ELECTRICAL DIAGNOSTICS	21-463
AUTOMATIC TRANSMISSION 42RLE - SERVICE INFORMATION	21-655
AUTOMATIC TRANSMISSION NAG1 - ELECTRICAL DIAGNOSTICS	21-3
AUTOMATIC TRANSMISSION NAG1 - SERVICE INFORMATION	21-264
AUTOMATIC TRANSMISSION NAG1 - SHIFTER DIAGNOSTICS	21-221
B-PILLAR TRIM	23-168
B1-HOLDING CLUTCH	21-394
B2-HOLDING CLUTCH	21-399
BACKLITE	23-274
BALL JOINT - LOWER	2-36
BALL JOINT - UPPER	2-83
BAR - STABILIZER	2-181, 2-71
BASE COAT/CLEAR COAT FINISH	23-224
BATTERY CABLES	8F-20
BATTERY HOLDDOWN	8F-19
BATTERY SYSTEM	8F-2
BATTERY TRAY	8F-39
BATTERY	8F-9
BEARING -CONNECTING ROD	9-2189
BEARING -CRANKSHAFT MAIN	9-2197
BEARING-CENTER	3-15
BEARING-DIFFERENTIAL CASE	3-160, 3-230
BEARING-OUTPUT SHAFT	21-426, 21-798
BEARINGS	21-753
BEARINGS-CONNECTING ROD	9-1984
BEARINGS-CRANKSHAFT MAIN	9-1993, 9-2374, 9-2542
BELLY PAN	23-93
BELT TENSIONER	7-24
BELT-TIMING AND SPROCKETS	9-2274
BEZEL-CENTER	23-144
BEZEL-CLUSTER	23-148
BIN-GLOVE BOX	23-152
BLOCK -CYLINDER	9-2187
BODY CODE PLATE	Intro.-2
BODY	23-2
BODY-VALVE	21-836
BOOSTER - POWER BRAKE	5-113
BOOSTER-ACTIVE BRAKE - MK25	5-422
BOOT-CV INNER	3-33
BOOT-CV OUTER	3-38
BRAKES - ABS ELECTRICAL DIAGNOSTICS	5-175
BRAKES - ABS SERVICE INFORMATION	5-386
BRAKES - BASE	5-3
BUMPER	23-17, 23-209
BUMPER-ADJUSTMENT	23-118
BUMPER-FRONT	13-3
BUMPER-REAR	13-4
BUMPERS	13-2
BUSHING-DIFFERENTIAL MOUNT	13-20
BUSHING-REAR CROSSMEMBER FRONT MOUNT	13-40
BUSHING-REAR CROSSMEMBER REAR MOUNT	13-64
BUSHING-REAR CROSSMEMBER SPRING LINK	13-85
C-PILLAR TRIM	23-171
CABLE - PARKING BRAKE FRONT	5-149
CABLE - PARKING BRAKE REAR	5-156
CABLE - REMOTE LOCK ACTUATOR	23-89
CABLE-GEARSHIFT	21-387, 21-762
CABLE-PARK LOCK	21-432, 21-806
CALIPER - FRONT DISC BRAKE - SRT8	5-56
CALIPER - FRONT SINGLE PISTON DISC BRAKE	5-35
CALIPER - FRONT TWIN PISTON DISC BRAKE	5-43
CALIPER - REAR DISC BRAKE - SRT8	5-69
CALIPER - REAR DISC BRAKE	5-61
CAMBER LINK	2-121
CAMSHAFT OIL SEAL(S)	9-2676
CAMSHAFT	9-2355, 9-2523
CAMSHAFT(S)	9-1947, 9-2165, 9-2691
CANISTER-VAPOR	25-27
CAPACITOR-IGNITION COIL	8I-48
CARPET	23-175
CATALYTIC CONVERTER	11-7
CENTER HIGH MOUNTED STOP LAMP	8L-82
CHAIN AND SPROCKETS-TIMING	9-2080
CHANNEL-DRAIN	23-296
CHARGE AIR COOLER AND PLUMBING	11-30
CHARGING	8F-42
CHECK VALVE	8R-69
CHILD RESTRAINT ANCHOR	8O-372
CHIME/BUZZER - ELECTRICAL DIAGNOSTICS	8B-3
CHIME/BUZZER - SERVICE INFORMATION	8B-60
CLADDING-BODY SIDE	23-95
CLOCK - SERVICE INFORMATION	8C-2
CLOCKSPRING	8O-374
CLUSTER LENS	8J-70
CLUTCH-A/C COMPRESSOR	24-348
CLUTCH-FREEWHEELING	21-383
CLUTCHES-DRIVING	21-758
CLUTCHES-HOLDING	21-392, 21-767
CLUTCHES-INPUT	21-405
COIL-IGNITION	8I-41
COLLAR-STRUCTURAL	9-2017
COLUMN ELECTRICAL DIAGNOSIS	19-15
COLUMN SERVICE INFORMATION	19-112
COMMUNICATION	8E-258
COMPRESSION LINK	2-130
COMPRESSOR-A/C	24-429
CONDENSER-A/C	24-440
CONNECTOR	8W-01-15
CONNECTOR/GROUND/SPLICE LOCATION	8W-91-2
CONSOLE-FLOOR	23-180
CONTACT-TEMPERATURE SENSOR/PARK-NEUTRAL	21-450
CONTROL-A/C-HEATER	24-355
CONVERTER-TORQUE	21-453, 21-823
COOLANT RECOVERY CONTAINER	7-45
COOLANT	7-40
COOLER & LINES-OIL	9-2038
COOLER ENGINE OIL	9-2433
COOLER-ENGINE OIL	9-2235
COOLING	7-2
CORE-HEATER	24-442
CORE-VALVE-SERVICE PORT	24-445
COUPLING-STEERING	19-157
COVER CYLINDER HEAD - LEFT	9-2167
COVER CYLINDER HEAD - RIGHT	9-2169
COVER	23-19
COVER(S)-CYLINDER HEAD	9-1952
COVER-CYLINDER HEAD	9-2329, 9-2497
COVER-DIFFERENTIAL	3-162, 3-232
COVER-FRONT TIMING BELT	9-2270
COVER-GUIDE MECHANISM	23-298
COVER-REAR TIMING BELT	9-2272
COVER-STEERING COLUMN OPENING	23-154
COVER-STRUCTURAL	9-2394, 9-2562
COVER-TIMING CHAIN	9-2077
COVER-TIMING	9-2441, 9-2591
COWL EXTENSION TRIM	23-116
COWL TRIM	23-183
CRANKSHAFT MAIN BEARINGS	9-2720
CRANKSHAFT OIL SEAL - REAR	9-2725
CRANKSHAFT	9-1986, 9-2191, 9-2365, 9-2533, 9-2716
CROSSMEMBER-ENGINE CRADLE	13-88
CROSSMEMBER-HEADLAMP MOUNTING	23-102
CROSSMEMBER-REAR	13-98
CURTAIN AIRBAG	8O-378
CUSHION/COVER-CUSHION - FRONT	23-237
CUSHION/COVER-CUSHION - SECOND ROW	23-239
CUSHION/COVER-SEAT BACK - FRONT	23-246
CUSHION/COVER-SEAT BACK - SECOND ROW	23-249
CYLINDER HEAD COVER	9-2701
CYLINDER HEAD	9-1935, 9-2320, 9-2487, 9-2638
CYLINDER HEAD(S)	9-2135
CYLINDER LINERS	9-2728
CYLINDER-IGNITION KEY AND LOCK	8I-60
D-PILLAR TRIM	23-185
DAMPER - CRANKSHAFT	9-2217
DAMPER - VIBRATION	9-2736
DAMPER-CRANKSHAFT	9-2010, 9-2392, 9-2560
DECKLID - SPOILER	23-30
DECKLID	23-20
DEFLECTOR-WIND	23-300
DIFFERENTIAL	3-144, 3-213
DIODE	8W-01-19
DOME LAMP - POLICE	8L-153
DOOR - FRONT	23-32
DOOR COURTESY LAMP	8L-154
DOOR	23-33, 23-63
DRIVE BELT	7-29
DRIVER AIRBAG TRIM COVER	8O-386
DRIVER AIRBAG	8O-383
DUCT-DEFROSTER	24-378
DUCT-FLOOR CONSOLE	24-379
DUCT-FLOOR DISTRIBUTION	24-380
DUCT-INSTRUMENT PANEL DEMISTER	24-385
DUCT-INSTRUMENT PANEL	24-383
ELECTRONIC CONTROL MODULES - ELECTRICAL DIAGNOSTICS	8E-3
ELECTRONIC CONTROL MODULES - SERVICE INFORMATION	8E-243
ELECTRONIC VEHICLE INFORMATION CENTER	8M-158
ELEMENT-AIR CLEANER	9-2132, 9-2634
EMISSIONS CONTROL	25-2
ENGINE - 2.7L DOHC - SERVICE INFORMATION	9-1901
ENGINE - 3.0L TD SERVICE INFORMATION	9-2604
ENGINE - 3.5L - SERVICE INFORMATION	9-2098
ENGINE - 5.7L SERVICE INFORMATION	9-2287
ENGINE - 6.1L SERVICE INFORMATION	9-2454
ENGINE BLOCK HEATER	7-46
ENGINE BLOCK	9-1981, 9-2354, 9-2522, 9-2714
ENGINE COOLANT TEMP SENSOR	7-49
ENGINE COOLANT THERMOSTAT	7-53
ENGINE ELECTRICAL DIAGNOSTICS - DIESEL	9-1043
ENGINE ELECTRICAL DIAGNOSTICS	9-6
ENGINE MOUNTING	9-2220
ENGINE MOUNTING-FRONT	9-2397, 9-2563
EVAPORATIVE EMISSIONS	25-14
EVAPORATOR-A/C	24-447
EXHAUST GAS RECIRCULATION	25-34
EXHAUST MANIFOLD	9-2770
EXHAUST SYSTEM	11-2
EXTERIOR HANDLE	23-37, 23-67
FAN-RADIATOR	7-73
FASCIA-FRONT	13-5
FASCIA-REAR	13-11
FASTENER IDENTIFICATION	Intro.-5
FASTENER USAGE	Intro.-7
FILTER -OIL	9-2237
FILTER-ENGINE OIL	9-2414, 9-2575
FILTER-OIL	9-2040
FILTER-PARTICULATE AIR	24-387
FINESSE SANDING/BUFFING & POLISHING	23-225
FITTING-QUICK CONNECT	14-108
FLEX PLATE	9-2380, 9-2548, 9-2727
FLUID - CAPACITIES & RECOMMENDED	04-2
FLUID AND FILTER	21-379, 21-759

Description	Group-Page
FLUID CAPACITIES	00-10
FLUID COOLER	19-234
FLUID FILL AND CHECK LOCATIONS	00-11
FLUID TYPES	00-5
FOG LAMP UNIT	8L-85
FRAME	13-15
FRONT AXLE - 175 FIA	3-58
FRONT FLOOR FOOT REST	23-186
FRONT PARK/TURN SIGNAL LAMP	8L-91
FRONT SEAT BELT HEIGHT ADJUSTER	8O-388
FRONT SIDE MARKER LAMP UNIT - CHARGER	8L-90
FRONT SIDE MARKER LAMP	8L-87
FRONT WIPER MODULE	8R-70
FRONT WIPER MOTOR	8R-75
FRONT	2-4
FUEL DELIVERY - DIESEL	14-100
FUEL DELIVERY	14-2
FUEL INJECTION - DIESEL	14-229
FUEL INJECTION	14-169
FUEL LINES	14-98
FUEL TANK FILLER TUBE	14-85
FUSE LOCATIONS & TYPES	04-4
GAP AND FLUSH	23-318
GAS PROP	23-210
GEAR	19-198
GEAR-PINION/RING	3-164, 3-234
GEARTRAIN-PLANETARY	21-435, 21-809
GENERATOR	8F-45
GLASS RUN CHANNEL	23-70
GLASS	23-302, 23-40, 23-68
GLASS-LIFTGATE	23-278
GLASS-QUARTER	23-282
GLASS-SIDE VIEW MIRROR	23-114
GRID-REAR WINDOW DEFOGGER	8G-4
GRILLE	23-98
GRILLE-DEFROSTER	23-156
GUIDE-SUNROOF GLASS	23-306
HANDS FREE MODULE	8T-59
HEADLAMP LEVEL SENSOR - EXPORT	8L-108
HEADLAMP LEVELING MODULE - EXPORT	8L-106
HEADLAMP UNIT	8L-113
HEADLAMP WASHER HOSE	8R-83
HEADLAMP WASHER PUMP MOTOR	8R-84
HEADLAMP WASHER	8R-81
HEADLAMP	8L-92
HEADLINER	23-187
HEAT SHIELDS	11-13
HEATED GLASS - SERVICE INFORMATION	8G-2
HEATED MIRRORS - SERVICE INFORMATION	8G-9
HEATED SEATS - ELECTRICAL DIAGNOSTICS	8G-11
HEATED SEATS - SERVICE INFORMATION	8G-74
HEATER SUPPLY TUBE	7-60
HEATER UNIT	24-471
HEATER-CUSHION PAD	8G-76
HINGE	23-119, 23-212, 23-23, 23-42, 23-71
HOISTING	00-20
HOOD AJAR SWITCH - EXPORT	8Q-130
HOOD	23-120
HOOD-BEZEL	23-130
HORN - ELECTRICAL DIAGNOSTICS	8H-2
HORN SYSTEM- SERVICE INFORMATION	8H-17
HORN	8H-18
HOSE - PRESSURE	19-241
HOSE - RETURN	19-257
HOSE - SUPPLY	19-275
HOSE-DRAIN	23-310
HOUSING-AIR CLEANER	9-1934, 9-2134, 9-2636
HOUSING-COOLANT OUTLET	7-43
HOUSING-HVAC	24-390
HUB AND BEARING	2-8, 2-95
HVAC - ELECTRICAL DIAGNOSTICS	24-4
HVAC - SERVICE INFORMATION	24-321
HYDRAULIC CONTROL UNIT	5-423
HYDRAULIC LIFTERS	9-2712
HYDRAULIC/MECHANICAL	5-18
IDLER PULLEY	7-35
IGNITION SYSTEM - ELECTRICAL DIAGNOSTICS	8I-2
IGNITION SYSTEM - SERVICE INFORMATION	8I-32
IMPACT SENSOR	8O-391
INJECTOR-FUEL	14-183, 14-233
INSTRUMENT CLUSTER - ELECTRICAL DIAGNOSTICS	8J-2
INSTRUMENT CLUSTER - SERVICE INFORMATION	8J-46
INSTRUMENT PANEL SWITCH POD	8J-71
INTAKE MANIFOLD	9-2764
INTEGRATED CONTROL UNIT - MK25	5-424
INTEGRATED CONTROL UNIT - MK25E	5-430
INTEGRATED POWER MODULE	8W-97-3
INTERNATIONAL SYMBOLS	00-2
INTERNATIONAL SYMBOLS	Intro.-8
INTRUSION MODULE - EXPORT	8Q-132
INTRUSION SENSOR - EXPORT	8Q-134
JUMP STARTING	00-22
JUNCTION BLOCK	5-79
KNUCKLE - AWD	2-15
KNUCKLE - RWD	2-23
KNUCKLE	2-108
LAMPS/LIGHTING - EXTERIOR - ELECTRICAL DIAGNOSTICS	8L-2
LAMPS/LIGHTING - EXTERIOR - SERVICE INFORMATION	8L-73
LAMPS/LIGHTING - INTERIOR - ELECTRICAL DIAGNOSTICS	8L-145
LAMPS/LIGHTING - INTERIOR - SERVICE INFORMATION	8L-152
LATCH HANDLE	23-214
LATCH RELEASE CABLE	23-123
LATCH STRIKER	23-125, 23-215, 23-27
LATCH	23-121, 23-213, 23-25, 23-44, 23-73
LATCH-GLOVE BOX	23-157
LEFT MOUNT	9-2741
LEVER - PARKING BRAKE	5-161
LEVER-ELECTRONIC TELESCOPING	19-164
LEVER-GEAR SHIFT	19-169
LICENSE PLATE LAMP UNIT	8L-119
LIFTGATE LAMP	8L-156
LIFTGATE OPENING UPPER TRIM	23-192
LIFTGATE SCUFF PLATE	23-193
LIFTGATE	23-216
LINE-A/C DISCHARGE	24-449
LINE-A/C LIQUID	24-452
LINE-A/C SUCTION	24-457
LINES-HIGH PRESSURE	14-114
LOCK CYLINDER - POLICE ONLY	23-206
LOCK CYLINDER	23-50
LOCK CYLINDER-GLOVE BOX	23-158
LUBRICATION POINTS	00-12
LUBRICATION	9-2032, 9-2229, 9-2411, 9-2572, 9-2743
MAINTENANCE SCHEDULES	00-13
MAINTENANCE SCHEDULES	04-8
MANIFOLD - EXHAUST	9-2436, 9-2587
MANIFOLD - INTAKE	9-2256, 9-2434, 9-2585
MANIFOLD-EXHAUST LEFT	9-2265
MANIFOLD-EXHAUST RIGHT	9-2267
MANIFOLD-EXHAUST	9-2068
MANIFOLD-INTAKE	9-2060
MANUFACTURE PLATE	Intro.-9
MASTER CYLINDER	5-83
MECHANISM-BRAKE TRANSMISSION SHIFT INTERLOCK	21-351, 21-754
MECHANISM-SHIFT	21-439, 21-813
MESSAGE CENTER - ELECTRICAL DIAGNOSTICS	8M-3
METRIC SYSTEM	Intro.-10
MIRROR-INSIDE REARVIEW	23-200
MIRROR-INSIDE REARVIEW	8N-116
MIRROR-SIDE VIEW	23-112
MODULE	8M-137
MODULE-ANTENNA	8A-143
MODULE-ANTILOCK BRAKE - MK25	8E-245
MODULE-ANTILOCK BRAKE - MK25E	8E-250
MODULE-DOOR	8E-261
MODULE-ENGINE CONTROL	8E-263
MODULE-FRONT CONTROL	8E-270
MODULE-FUEL PUMP	14-134, 14-46
MODULE-HEATED SEATS	8G-79
MODULE-PARK ASSIST DISPLAY-FRONT	8B-63
MODULE-POWER-BLOWER MOTOR	24-359
MODULE-POWERTRAIN CONTROL	8E-278
MODULE-SEAT MEMORY	8E-274
MODULE-STEERING COLUMN CONTROL	19-173
MODULE-STEERING CONTROL	8E-277
MODULE-TRANSMISSION CONTROL	8E-296
MOTOR	23-312
MOTOR-BLOWER	24-414
MOTOR-BOOST PRESSURE SERVO	11-32
MOTOR-SEAT ADJUSTER	8N-191
MOTOR/MODULE-SUNROOF	8N-223
MOUNT - REAR	9-2227
MOUNT - RIGHT	9-2224
MOUNT -LEFT	9-2221
MOUNT LEFT - AWD	9-2223
MOUNT RIGHT - AWD	9-2226
MOUNT-LEFT	9-2021
MOUNT-REAR	9-2030
MOUNT-RIGHT	9-2026
MOUNTING-ENGINE REAR	9-2408, 9-2569
MUFFLER	11-14
MULTI-FUNCTION SWITCH	8L-122
NAVIGATION/TELECOMMUNICATION - ELECTRICAL DIAGNOSTICS	8T-3
NAVIGATION/TELECOMMUNICATION - SERVICE INFORMATION	8T-56
NOISE SUPPRESSION COMPONENTS-RADIO	8A-146
OCCUPANT CLASSIFICATION MODULE	8O-396
OCCUPANT RESTRAINT CONTROLLER	8O-399
OIL COOLER	9-2762
OIL FILTER	9-2745
OIL JET	9-2758
OIL PAN	9-2746
OIL PRESSURE RELIEF VALVE	9-2753
OIL PRESSURE SENDING UNIT	9-2754
OIL PUMP	9-2756
OIL	9-2036, 9-2232, 9-2413, 9-2574, 9-2744
OIL-A/C REFRIGERANT	24-461
OPENING DIMENSIONS	23-326
OUTLETS-AIR	24-417
OVERHEAD CONSOLE - ELECTRICAL DIAGNOSTICS	8M-142
OVERHEAD CONSOLE - SERVICE INFORMATION	8M-156
PADS - FRONT BRAKE	5-20
PADS - FRONT/REAR BRAKE - SRT8	5-28
PADS - REAR BRAKE	5-24
PAINT CODE	23-226
PAINT TOUCH-UP	23-227
PAINT	23-223
PAN - OIL	9-2238
PAN-ENGINE OIL	9-2415
PAN-ENGINE OIL-AWD	9-2421
PAN-OIL	9-2043, 9-2576
PANEL-COWL TOP	23-96
PARK ASSIST MODULE	8B-65
PARK ASSIST SENSOR	8B-69
PARKING BRAKE	5-148
PARTICULATE FILTER	11-21
PARTS AND LUBRICANT RECOMMENDATIONS	00-3
PASSENGER AIRBAG	8O-404
PCV VALVE	25-23
PCV	9-2760
PEDAL - ADJUSTABLE BRAKE	5-107
PEDAL	5-100
PEDAL-ACCELERATOR	14-176
PISTON & CONNECTING ROD	9-2384, 9-2552, 9-2729
PLANETARY-TRANSFER CASE	21-889
PLATE - FLEX	9-2207
PLATE-FLEX	9-2001
PLUG-GLOW	8I-70
PLUG-SPARK	8I-72
PLUMBING	24-423
POWER DISTRIBUTION CENTER	8W-97-6
POWER DISTRIBUTION	8W-97-2
POWER LOCKS - ELECTRICAL DIAGNOSTICS	8N-2
POWER LOCKS - SERVICE INFORMATION	8N-51
POWER MIRRORS - ELECTRICAL DIAGNOSTICS	8N-59
POWER MIRRORS - SERVICE INFORMATION	8N-115
POWER OUTLET	8W-97-7
POWER SEAT RECLINER	8N-197
POWER SEATS - ELECTRICAL DIAGNOSTICS	8N-120
POWER SEATS - SERVICE INFORMATION	8N-185
POWER TOP - ELECTRICAL DIAGNOSIS	8N-202
POWER TOP - SUNROOF SERVICE INFO	8N-221
POWER WINDOW SWITCH	8N-292
POWER WINDOWS - ELECTRICAL DIAGNOSTICS	8N-229

Description	Group-Page
POWER WINDOWS - SERVICE INFORMATION	8N-291
PULLEY	19-280
PUMP - OIL	9-2250
PUMP	19-219
PUMP-ENGINE OIL	9-2430, 9-2582
PUMP-HIGH PRESSURE FUEL	14-103
PUMP-OIL	9-2054
PUMP-OIL	21-423, 21-795
QUARTER TRIM PANEL	23-194
QUARTER TRIM SPEAKER BEZEL	23-197
QUICK CONNECT FITTING	14-95
RACK-LUGGAGE - CROSSBAR	23-101
RACK-LUGGAGE	23-99
RADIATOR PRESSURE CAP	7-65
RADIATOR	7-62
RADIO	8A-147
RAIL-FUEL	14-255, 14-56
READING LAMP	8L-158
REAR AXLE - 198RII	3-107
REAR AXLE - 210RII	3-176
REAR AXLE - 215RII	3-247
REAR DOOR SILL SCUFF PLATE	23-198
REAR SHELF TRIM PANEL	23-199
REAR WIPER MOTOR - WAGON ONLY	8R-88
REAR	2-92
RECEIVER-SATELLITE	8A-149
RECEIVER/DRIER-A/C	24-463
REFRIGERANT-A/C	24-465
REGULATOR-FUEL PRESSURE	14-34
RELAY-A/C CLUTCH	24-361
RELAY-GLOW PLUG	8I-71
RELAY-HEATER UNIT	24-474
RELAY-REAR WINDOW DEFOGGER	8G-5
RELAY-TRANSMISSION CONTROL	21-831
REMOTE KEYLESS ENTRY TRANSMITTER	8N-56
REPEATER LAMP - EXPORT	8L-124
REPLACEMENT BULBS	04-15
RESERVOIR - MASTER CYLINDER FLUID	5-75
RESERVOIR	19-282
RESISTOR-BLOWER MOTOR	24-363
RESONATOR - 5.7L	11-19
RESONATOR - 6.1L	11-20
RESTRAINTS - ELECTRICAL DIAGNOSTICS	8O-4
RESTRAINTS - SERVICE INFORMATION	8O-364
RETAINER-CRANK REAR OIL - SEAL	9-2379, 9-2547
RIGHT MOUNT	9-2742
RING - PISTON	9-2213
RINGS-PISTON	9-2007, 9-2389, 9-2557
RISER-FRONT	23-256
ROCKER ARM SHAFT/ ROCKER ARM / LASH ADJUSTER	9-2175
ROCKER ARM	9-2337, 9-2505
ROCKER ARMS	9-2710
ROD - PISTON & CONNECTING	9-2208
ROD-PISTON & CONNECTING	9-2002
ROD-PROP	23-126
ROTOR	5-126
SEAL - AXLE SHAFT	3-266
SEAL - CRANKSHAFT OIL - FRONT	9-2721
SEAL - CRANKSHAFT OIL REAR	9-2204
SEAL - PINION FLANGE	3-261
SEAL -CAMSHAFT OIL	9-2153
SEAL -CRANKSHAFT OIL FRONT	9-2203
SEAL -VALVE STEM	9-2183
SEAL- CRANKSHAFT FRONT OIL	9-1995
SEAL-AXLE SHAFT	3-137, 3-206, 3-99
SEAL-CRANKSHAFT OIL-FRONT	9-2375, 9-2543
SEAL-CRANKSHAFT OIL-REAR	9-2377, 9-2545
SEAL-CRANKSHAFT REAR OIL	9-1996
SEAL-FRONT OUTPUT SHAFT	21-894
SEAL-OIL PUMP	21-810
SEAL-OUTPUT SHAFT	21-430, 21-802
SEAL-PINION FLANGE	3-139, 3-208
SEAL-PINION	3-103
SEAL-REAR OUTPUT SHAFT	21-896
SEAL-TORQUE CONVERTER HUB	21-461
SEALER LOCATIONS	23-332
SEALS-VALVE GUIDE	9-2342, 9-2510
SEALS-VALVE STEM	9-1976
SEAT BELT AND RETRACTOR	8O-413
SEAT BELT BUCKLE	8O-425
SEAT BELT TENSIONER	8O-427
SEAT TRACK POSITION SENSOR	8O-428
SEAT WEIGHT SENSOR	8O-430
SEAT-FRONT	23-259
SEATS	23-229
SENSOR - BRAKE FLUID LEVEL	5-17
SENSOR - EGR BACK PRESSURE	25-59
SENSOR - TPM	22-62
SENSOR-ACCELERATOR PEDAL POSITION	14-238
SENSOR-AMBIENT AIR TEMPERATURE	24-366
SENSOR-AMBIENT AIR TEMPERATURE	8M-170
SENSOR-BOOST PRESSURE	14-247
SENSOR-BRAKE PRESSURE - MK25	5-396
SENSOR-CAMSHAFT POSITION	14-240
SENSOR-CAMSHAFT POSITION	8I-34
SENSOR-CRANKSHAFT POSITION	14-178, 14-242
SENSOR-DYNAMICS (ESP)	5-393
SENSOR-EVAPORATOR TEMPERATURE	24-368
SENSOR-FRONT WHEEL SPEED	5-409
SENSOR-FUEL LEVEL SENDING UNIT	14-144
SENSOR-FUEL LEVEL	14-10
SENSOR-FUEL PRESSURE	14-244
SENSOR-FUEL TEMPERATURE	14-251
SENSOR-INFRARED	24-370
SENSOR-INLET AIR TEMPERATURE	14-187
SENSOR-INPUT SPEED	21-791
SENSOR-INTAKE AIR TEMPERATURE	14-249
SENSOR-KNOCK	8I-63
SENSOR-MANIFOLD ABSOLUTE PRESSURE	14-201
SENSOR-MASS AIR FLOW (MAF)	14-245
SENSOR-OUTPUT SPEED	21-804
SENSOR-OXYGEN	14-212
SENSOR-RAIN	8R-85
SENSOR-REAR WHEEL SPEED	5-415
SENSOR-STEERING ANGLE	5-404
SENSOR-SUN	24-371
SENSOR-TRANSMISSION RANGE	21-832
SENSOR-TRANSMISSION TEMPERATURE	21-835
SENSOR-TRAVEL - MK25	5-400
SENSOR-VARIABLE LINE PRESSURE	21-793
SENSOR-WATER IN FUEL	14-107
SENSORS-INPUT SPEED	21-422
SENTRY KEY REMOTE ENTRY MODULE	8Q-139
SEPARATOR-FILTER FUEL AND WATER	14-102
SHAFT LOCK MODULE - EXPORT	8Q-138
SHAFT-HALF (FRONT)	3-19
SHAFT-HALF (REAR)	3-42
SHAFT-INTERMEDIATE	3-56
SHAFT-INTERMEDIATE	19-160
SHAFT-PROPELLER	3-2
SHIELD-WHEELHOUSE - FRONT	23-106
SHIELD-WHEELHOUSE - REAR	23-108
SHOCK ABSORBER	2-162
SHOCK ASSEMBLY	2-55
SHOE AND LINING - PARKING BRAKE	5-169
SHORT RUNNER VALVE	14-216
SHROUD	19-185
SHROUD-ROLL TOP	19-186
SILENCER-INSTRUMENT PANEL	23-162
SOLENOID - FUEL QUANTITY	14-253
SOLENOID	21-445, 21-818
SOLENOID-FUEL PRESSURE	14-252
SOLENOID-MDS	9-2395
SOLENOID-PRESSURE CONTROL	21-811
SOLENOID-PROPORTIONAL PURGE	25-17
SPEAKER	8A-153
SPEED CONTROL	8P-2
SPOILER	23-110
SPOT LAMP - POLICE	8L-134
SPOT LAMP ASSEMBLY - POLICE	8L-135
SPRING -VALVE	9-2184
SPRING LINK	2-132
SPRING	2-173
SPRINGS-VALVE	9-1968, 9-2343, 9-2511
STARTER MOTOR	8F-79
STARTING	8F-73
STATIONARY GLASS	23-273
STEERING	19-2
STRIKER	23-51, 23-77
STRIKER-LATCH-GLOVE BOX	23-164
STRIKER-SEAT BACK LATCH - SECOND ROW	23-264
STRUCTURAL ADHESIVE LOCATIONS	23-354
STRUT - TENSION	2-78
STUDS - FRONT	22-84
STUDS - REAR	22-85
SUNROOF - SERVICE INFORMATION	23-288
SUNSHADE	23-313
SUPPORT CYLINDER	23-127, 23-28
SUPPORT-LUMBAR	23-268
SUSPENSION	2-2
SWITCH - STOP LAMP	8L-125
SWITCH - SUNROOF	8N-226
SWITCH-ADJUSTABLE PEDALS	5-15
SWITCH-ESP	5-420
SWITCH-HEADLAMP	8L-112
SWITCH-HEATED SEAT	8G-82
SWITCH-HORN	8H-19
SWITCH-IGNITION	8I-50
SWITCH-MIRROR	8N-117
SWITCH-OIL PRESSURE SENSOR	9-2249
SWITCH-OIL PRESSURE	9-2052
SWITCH-REAR WINDOW DEFOGGER	8G-7
SWITCH-REMOTE RADIO	8A-159
SWITCH-SEAT	8N-198
SWITCH-SUNROOF	23-315
SWITCH-TRACTION CONTROL/ASR	5-421
SWITCH-WINDOW/DOOR LOCK	8N-54
TAIL LAMP UNIT	8L-129
TANK-FUEL	14-115, 14-66
TAPPETS-HYDRAULIC ROLLER	9-2381, 9-2549
TASK MANAGER	25-61
TENSION LINK	2-141
TENSIONER - TIMING BELT & PULLEY	9-2282
TENSIONER - TIMING CHAIN	9-2451, 9-2601
TENSIONER-TIMING CHAIN	9-2089
TERMINAL	8W-01-20
THROTTLE BODY	14-218
TIE ROD - OUTER	19-211
TIMING CHAIN & SPROCKETS	9-2445, 9-2595
TIMING CHAIN AND SPROCKETS	9-2780
TIMING CHAIN COVER	9-2774
TIMING CHAIN TENSIONER	9-2789
TIRE PRESSURE MONITORING - ELECTRICAL DIAGNOSIS	22-16
TIRE PRESSURE MONITORING - SERVICE INFORMATION	22-60
TIRES	22-74
TIRES/WHEELS	22-3
TOE LINK	2-150
TORQUE REFERENCES	Intro.-12
TOWING	00-24
TRAILER TOWING	04-17
TRANSDUCER-A/C PRESSURE	24-375
TRANSFER CASE - MS140 - SERVICE INFORMATION	21-860
TRANSMISSION COOLER LINES	7-78
TRANSMISSION COOLER	7-77
TRANSMISSION	7-75
TRANSPONDER - TPM	22-71
TRANSPONDER KEY	8Q-145
TRIM LACE	23-316
TRIM PANEL	23-218, 23-52, 23-78
TRUNK LINING	23-203
TRUNK REAR TRIM PANEL	23-204
TUBE -SPARK PLUG	9-2182
TUBE-EXHAUST GAS RECIRCULATION	25-35
TUBES/HOSES	5-147
TURBOCHARGER SYSTEM	11-23
TURBOCHARGER	11-24
UNDERHOOD LAMP - POLICE	8L-141
UNDERHOOD LAMP UNIT - POLICE	8L-143
UNIT-ELECTROHYDRAULIC CONTROL	21-355
UNIVERSAL TRANSMITTER	8M-166
VACUUM PUMP	9-2739
VALVE - PROPORTIONING	5-125
VALVE TIMING	9-2074, 9-2269
VALVE-A/C EXPANSION	24-466
VALVES & SEATS - INTAKE/EXHAUST	9-2335, 9-2503
VALVES & SEATS -INTAKE/EXHAUST	9-2171
VALVES & SEATS-INTAKE/EXHAUST	9-1961
VECI LABEL	Intro.-13
VEHICLE CERTIFICATION LABEL	Intro.-17
VEHICLE IDENTIFICATION NUMBER	Intro.-14
VEHICLE THEFT SECURITY - ELECTRICAL DIAGNOSTICS	8Q-3
VEHICLE THEFT SECURITY - SERVICE INFORMATION	8Q-125
VOLTAGE REGULATOR	8F-71
VTSS/SKIS INDICATOR LAMP	8Q-148
WASHER FLUID LEVEL SWITCH	8R-93
WASHER PUMP MOTOR	8R-95
WASHER RESERVOIR	8R-97
WATER PUMP	7-67
WATERSHIELD	23-57, 23-83

Description	Group-Page
WELD LOCATIONS	23-371
WHEEL ALIGNMENT	2-203
WHEEL-STEERING	19-195
WHEELS	22-80
WINDAGE TRAY	9-2013
WINDOW REGULATOR	23-58, 23-85
WINDSHIELD	23-283
WIPER ARMS	8R-102
WIPERS/WASHERS - ELECTRICAL DIAGNOSTICS	8R-2
WIPERS/WASHERS - SERVICE INFORMATION	8R-64
WIRING DIAGRAM INFORMATION	8W-01-2

BODY DIAGNOSTICS

Description	Group-Page
11–MODE POT OPEN (MTC)	24-5
12–MODE POT SHORTED (MTC)	24-6
13–TEMP POT OPEN (MTC)	24-7
14–TEMP POT SHORTED (MTC)	24-8
18–BLEND DOOR RANGE TOO SMALL (MTC)	24-9
21–BLEND DOOR RANGE TOO LARGE (MTC)	24-12
22–FRONT MODE DOOR RANGE TOO SMALL (MTC)	24-15
23–FRONT MODE DOOR RANGE TOO LARGE (MTC)	24-18
31–EVAPORATOR SENSOR OPEN (MTC)	24-21
32–EVAPORATOR SENSOR SHORTED (MTC)	24-25
33–A/C MODE SWITCH STUCK (MTC)	24-28
34–EBL MODE SWITCH STUCK (MTC)	24-34
35–FAILED COOL DOWN (MTC)	24-36
36–EEPROM CHECKSUM ERROR (MTC)	24-37
37–ROM CHECKSUM ERROR (MTC)	24-38
41–FRONT MODE OVERCURRENT (MTC)	24-39
43–BLEND OVERCURRENT (MTC)	24-47
44–RECIRC OVERCURRENT (MTC)	24-55
45–BLEND DOOR BOUND (MTC)	24-63
46–FRONT MODE DOOR BOUND (MTC)	24-68
47–RECIRC DOOR BOUND (MTC)	24-73
51–RECIRC DOOR RANGE TOO SMALL (MTC)	24-78
52–RECIRC DOOR RANGE TOO LARGE (MTC)	24-81
53–FRONT MODE DOOR LINKAGE BROKEN (MTC)	24-84
55–BLEND DOOR LINKAGE BROKEN (MTC)	24-87
56–RECIRC DOOR LINKAGE BROKEN (MTC)	24-90
61–COMMON DOOR DRIVER CIRCUIT SHORTED TO GROUND (MTC)	24-93
62–COMMON DOOR DRIVER CIRCUIT SHORTED TO IGNITION (MTC)	24-101
63–FRONT MODE DOOR DRIVER CIRCUIT SHORTED TO GROUND (MTC)	24-104
64–FRONT MODE DOOR DRIVER CIRCUIT SHORTED TO IGNITION (MTC)	24-108
67–BLEND DOOR DRIVER CIRCUIT SHORTED TO GROUND (MTC)	24-111
68–BLEND DOOR DRIVER CIRCUIT SHORTED TO IGNITION (MTC)	24-115
69–RECIRC DOOR DRIVER CIRCUIT SHORTED TO GROUND (MTC)	24-118
71–RECIRC DOOR DRIVER CIRCUIT SHORTED TO IGNITION (MTC)	24-122
72–SHORT TOO COMPLEX (MTC)	24-125
73–AC REQUEST OUTPUT SIGNAL TOO HIGH (MTC)	24-134
74–AC REQUEST OUTPUT SIGNAL TOO LOW (MTC)	24-136
75–AC REQUEST OUTPUT SIGNAL HIGH WHEN DRIVEN LOW (MTC)	24-138
76–AC REQUEST OUTPUT SIGNAL LOW WHEN DRIVEN HIGH (MTC)	24-138
77–EBL OUTPUT SHORTED HIGH	24-139
81–BLOWER NOT ON HIGH AT START OF COOLDOWN TEST (MTC)	24-142
82–SENSOR TOO COLD TO START COOLDOWN TEST (MTC)	24-146
83–SENSOR FAILED OPEN DURING COOLDOWN TEST (MTC)	24-150
84–SENSOR FAILED SHORTED DURING COOLDOWN TEST (MTC)	24-150
85–BLOWER NOT ON HIGH DURING COOLDOWN TEST (MTC)	24-151
B1001–A/C SWITCH REQUEST INPUT CIRCUIT LOW (ATC)	24-233
B100A–RECIRCULATION SWITCH REQUEST INPUT CIRCUIT LOW (ATC)	24-218
B1016–REAR DEFROST SWITCH REQUEST INPUT CIRCUIT LOW (ATC)	24-235
B1031–EVAPORATOR FIN TEMPERATURE SENSOR CIRCUIT LOW (ATC)	24-237
B1032–EVAPORATOR FIN TEMPERATURE SENSOR CIRCUIT HIGH (ATC)	24-240
B1034–INFRARED TEMPERATURE SENSOR INPUT CIRCUIT LOW (ATC)	24-244
B1035–INFRARED TEMPERATURE SENSOR INPUT CIRCUIT HIGH (ATC)	24-245
B1040–PANEL MODE DOOR 1 CONTROL CIRCUIT/PERFORMANCE (ATC)	24-246
B1043–PANEL MODE DOOR 1 CONTROL CIRCUIT OPEN (ATC)	24-256
B1044–PANEL MODE DOOR 1 TRAVEL RANGE TOO SMALL (ATC)	24-259
B1045–PANEL MODE DOOR 1 TRAVEL RANGE TOO LARGE (ATC)	24-261
B1058–RECIRCULATION DOOR CONTROL CIRCUIT/PERFORMANCE (ATC)	24-263
B105B–RECIRCULATION DOOR CONTROL CIRCUIT OPEN (ATC)	24-220
B105C–RECIRCULATION DOOR TRAVEL RANGE TOO SMALL (ATC)	24-223
B105D–RECIRCULATION DOOR TRAVEL RANGE TOO LARGE (ATC)	24-225
B106B–REAR DEFROST CONTROL CIRCUIT LOW (ATC)	24-227
B106C–REAR DEFROST CONTROL CIRCUIT HIGH (ATC)	24-230
B1082–HVAC MUX CIRCUIT LOW	24-273
B1083–HVAC MUX CIRCUIT HIGH	24-276
B1084-LEFT HEATED SEAT SWITCH INPUT CIRCUIT/PERFORMANCE	8G-12
B1087-RIGHT HEATED SEAT SWITCH INPUT CIRCUIT/PERFORMANCE	8G-15
B1092-FRONT LEFT SEAT HEATER CONTROL CIRCUIT LOW	8G-18
B1094-FRONT LEFT SEAT HEATER CONTROL CIRCUIT OPEN	8G-22
B1096-FRONT RIGHT SEAT HEATER CONTROL CIRCUIT LOW	8G-26
B1098-FRONT RIGHT SEAT HEATER CONTROL CIRCUIT OPEN	8G-30
B10A2–LEFT BLEND DOOR CONTROL CIRCUIT/PERFORMANCE (ATC)	24-164
B10A5–LEFT BLEND DOOR CONTROL CIRCUIT OPEN (ATC)	24-174
B10A6–LEFT BLEND DOOR TRAVEL TOO SMALL (ATC)	24-177
B10A7–LEFT BLEND DOOR TRAVEL TOO LARGE (ATC)	24-179
B10A8–LEFT BLEND DOOR ACTUATOR PERFORMANCE (ATC)	24-181
B10A9–RIGHT BLEND DOOR CONTROL CIRCUIT/PERFORMANCE (ATC)	24-183
B10AC–RIGHT BLEND DOOR CONTROL CIRCUIT OPEN (ATC)	24-155
B10AD–RIGHT BLEND DOOR TRAVEL TOO SMALL (ATC)	24-158
B10AE–RIGHT BLEND DOOR TRAVEL TOO LARGE (ATC)	24-160
B10AF–RIGHT BLEND DOOR ACTUATOR PERFORMANCE (ATC)	24-162
B10B2–A/C COOL DOWN TEST PERFORMANCE (ATC)	24-193
B10B4–CABIN HEATER 1 CONTROL CIRCUIT LOW (FCM)	24-194
B10B5–CABIN HEATER 1 CONTROL CIRCUIT HIGH (FCM)	24-198
B10B6–CABIN HEATER 1 CONTROL CIRCUIT OPEN (FCM)	24-202
B10B8–CABIN HEATER 2 CONTROL CIRCUIT LOW (FCM)	24-206
B10B9–CABIN HEATER 2 CONTROL CIRCUIT HIGH (FCM)	24-210
B10BA–CABIN HEATER 2 CONTROL CIRCUIT OPEN (FCM)	24-214
B1200-AIRBAG WARNING INDICATOR CIRCUIT LOW	8J-3
B1202-AIRBAG WARNING INDICATOR CIRCUIT OPEN	8J-4
B1203-SRS WARNING INDICATOR CIRCUIT/PERFORMANCE	8O-5
B1204-PASSENGER AIRBAG INDICATOR CIRCUIT LOW	8O-7
B1205-PASSENGER AIRBAG INDICATOR CIRCUIT HIGH	8O-11
B1206-PASSENGER AIRBAG INDICATOR CIRCUIT OPEN	8O-15
B1207-PASSENGER AIRBAG INDICATOR CIRCUIT SHORTED TOGETHER	8O-19
B120E-LEFT HEATED SEAT HI INDICATOR CONTROL CIRCUIT HIGH	8G-34
B120F-LEFT HEATED SEAT HI INDICATOR CONTROL CIRCUIT OPEN	8G-37
B1216-LEFT HEATED SEAT LO INDICATOR CONTROL CIRCUIT HIGH	8G-41
B1217-LEFT HEATED SEAT LO INDICATOR CONTROL CIRCUIT OPEN	8G-44
B121A-RIGHT HEATED SEAT HI INDICATOR CONTROL CIRCUIT HIGH	8G-48
B121B-RIGHT HEATED SEAT HI INDICATOR CONTROL CIRCUIT OPEN	8G-51
B1222-RIGHT HEATED SEAT LO INDICATOR CONTROL CIRCUIT HIGH	8G-55
B1223-RIGHT HEATED SEAT LO INDICATOR CONTROL CIRCUIT OPEN	8G-58
B1225-REAR WIPER INDICATOR CONTROL CIRCUIT LOW	8J-5
B1226-REAR WIPER INDICATOR CONTROL CIRCUIT HIGH	8J-8
B1401-FRONT LEFT AUDIO SPEAKER OUTPUT CIRCUIT LOW	8A-96
B1402-FRONT LEFT AUDIO SPEAKER OUTPUT CIRCUIT HIGH	8A-98
B1403-FRONT LEFT AUDIO SPEAKER OUTPUT CIRCUIT OPEN	8A-101
B1405-FRONT RIGHT AUDIO SPEAKER OUTPUT CIRCUIT LOW	8A-103
B1406-FRONT RIGHT AUDIO SPEAKER OUTPUT CIRCUIT HIGH	8A-105
B1407-FRONT RIGHT AUDIO SPEAKER OUTPUT CIRCUIT OPEN	8A-108
B1409-REAR LEFT AUDIO SPEAKER OUTPUT CIRCUIT LOW	8A-110
B140A-REAR LEFT AUDIO SPEAKER OUTPUT CIRCUIT HIGH	8A-112
B140B-REAR LEFT AUDIO SPEAKER OUTPUT CIRCUIT OPEN	8A-115

Description	Group-Page
B140D-REAR RIGHT AUDIO SPEAKER OUTPUT CIRCUIT LOW	8A-117
B140E-REAR RIGHT AUDIO SPEAKER OUTPUT CIRCUIT HIGH	8A-119
B140F-REAR RIGHT AUDIO SPEAKER OUTPUT CIRCUIT OPEN	8A-122
B1421-AUDIO CD READ ERROR/ INOPERABLE DISC	8A-124
B1422-AUDIO DVD READ ERROR/ INOPERABLE DISC	8A-125
B1429-RADIO DISPLAY HIGH TEMPERATURE	8A-126
B142A-RADIO UNIT HIGH TEMPERATURE	8A-127
B142D-AUDIO ANTENNA NOT CONNECTED	8A-128
B142E-GPS ANTENNA NOT CONNECTED	8A-129
B1460-CHANNEL 1 AUDIO SPEAKER OUTPUT CIRCUIT PERFORMANCE	8A-9
B1461-CHANNEL 1 AUDIO SPEAKER OUTPUT CIRCUIT LOW	8A-10
B1462-CHANNEL 1 AUDIO SPEAKER OUTPUT CIRCUIT HIGH	8A-13
B1463-CHANNEL 1 AUDIO SPEAKER OUTPUT CIRCUIT OPEN	8A-16
B1464-CHANNEL 1 AUDIO SPEAKER OUTPUT CIRCUIT SHORTED TOGETHER	8A-19
B1465-CHANNEL 2 AUDIO SPEAKER OUTPUT CIRCUIT PERFORMANCE	8A-22
B1466-CHANNEL 2 AUDIO SPEAKER OUTPUT CIRCUIT LOW	8A-23
B1467-CHANNEL 2 AUDIO SPEAKER OUTPUT CIRCUIT HIGH	8A-26
B1468-CHANNEL 2 AUDIO SPEAKER OUTPUT CIRCUIT OPEN	8A-29
B1469-CHANNEL 2 AUDIO SPEAKER OUTPUT CIRCUIT SHORTED TOGETHER	8A-32
B146A-CHANNEL 3 AUDIO SPEAKER OUTPUT CIRCUIT PERFORMANCE	8A-35
B146B-CHANNEL 3 AUDIO SPEAKER OUTPUT CIRCUIT LOW	8A-36
B146C-CHANNEL 3 AUDIO SPEAKER OUTPUT CIRCUIT HIGH	8A-39
B146D-CHANNEL 3 AUDIO SPEAKER OUTPUT CIRCUIT OPEN	8A-41
B146E-CHANNEL 3 AUDIO SPEAKER OUTPUT CIRCUIT SHORTED TOGETHER	8A-44
B146F-CHANNEL 4 AUDIO SPEAKER OUTPUT CIRCUIT PERFORMANCE	8A-46
B1470-CHANNEL 4 AUDIO SPEAKER OUTPUT CIRCUIT LOW	8A-47
B1471-CHANNEL 4 AUDIO SPEAKER OUTPUT CIRCUIT HIGH	8A-50
B1472-CHANNEL 4 AUDIO SPEAKER OUTPUT CIRCUIT OPEN	8A-52
B1473-CHANNEL 4 AUDIO SPEAKER OUTPUT CIRCUIT SHORTED TOGETHER	8A-55
B1474-CHANNEL 5 AUDIO SPEAKER OUTPUT CIRCUIT PERFORMANCE	8A-57
B1475-CHANNEL 5 AUDIO SPEAKER OUTPUT CIRCUIT LOW	8A-58
B1476-CHANNEL 5 AUDIO SPEAKER OUTPUT CIRCUIT HIGH	8A-61
B1477-CHANNEL 5 AUDIO SPEAKER OUTPUT CIRCUIT OPEN	8A-63
B1478-CHANNEL 5 AUDIO SPEAKER OUTPUT CIRCUIT SHORTED TOGETHER	8A-66
B1479-CHANNEL 6 AUDIO SPEAKER OUTPUT CIRCUIT PERFORMANCE	8A-68
B147A-CHANNEL 6 AUDIO SPEAKER OUTPUT CIRCUIT LOW	8A-69
B147B-CHANNEL 6 AUDIO SPEAKER OUTPUT CIRCUIT HIGH	8A-72
B147C-CHANNEL 6 AUDIO SPEAKER OUTPUT CIRCUIT OPEN	8A-74
B147D-CHANNEL 6 AUDIO SPEAKER OUTPUT CIRCUIT SHORTED TOGETHER	8A-77
B147E-CHANNEL 7 AUDIO SPEAKER OUTPUT CIRCUIT PERFORMANCE	8A-79
B147F-CHANNEL 7 AUDIO SPEAKER OUTPUT CIRCUIT LOW	8A-80
B1480-CHANNEL 7 AUDIO SPEAKER OUTPUT CIRCUIT HIGH	8A-83
B1481-CHANNEL 7 AUDIO SPEAKER OUTPUT CIRCUIT OPEN	8A-85
B1482-CHANNEL 7 AUDIO SPEAKER OUTPUT CIRCUIT SHORTED TOGETHER	8A-88
B1488–CABIN EQ MISMATCH PERFORMANCE	8A-7
B1601–LEFT SOLAR SENSOR CIRCUIT LOW (ATC)	24-279
B1602–LEFT SOLAR SENSOR CIRCUIT HIGH (ATC)	24-282
B1604–RIGHT SOLAR SENSOR CIRCUIT LOW (ATC)	24-286
B1605–RIGHT SOLAR SENSOR CIRCUIT HIGH (ATC)	24-289
B1607-HEADLAMP SWITCH INPUT CIRCUIT LOW	8L-59
B1608-HEADLAMP SWITCH INPUT CIRCUIT HIGH	8L-62
B160A-PANEL DIMMER INPUT CIRCUIT LOW	8J-10
B160B-PANEL DIMMER INPUT CIRCUIT HIGH	8J-13
B1610–AMBIENT LIGHT SENSOR INPUT CIRCUIT LOW (ATC)	24-293
B1611–AMBIENT LIGHT SENSOR INPUT CIRCUIT HIGH (ATC)	24-296
B1613-PANEL ILLUMINATION CONTROL CIRCUIT LOW	8J-17
B1614-PANEL ILLUMINATION CONTROL CIRCUIT HIGH	8J-22
B161B-COURTESY/DOME LAMP CONTROL CIRCUIT LOW	8L-146
B161F-READING LAMP CONTROL CIRCUIT LOW	8L-148
B162B-LEFT LOW BEAM CONTROL CIRCUIT LOW	8L-3
B162F-RIGHT LOW BEAM CONTROL CIRCUIT LOW	8L-5
B1630-RIGHT LOW BEAM CONTROL CIRCUIT HIGH	8L-7
B1633-LEFT HI BEAM CONTROL CIRCUIT LOW	8L-9
B1634-LEFT HI BEAM CONTROL CIRCUIT HIGH	8L-11
B1637-RIGHT HI BEAM CONTROL CIRCUIT LOW	8L-13
B1638-RIGHT HI BEAM CONTROL CIRCUIT HIGH	8L-15
B163B-FRONT LEFT TURN CONTROL CIRCUIT LOW	8L-17
B163C-FRONT LEFT TURN CONTROL CIRCUIT HIGH	8L-20
B163F-FRONT RIGHT TURN CONTROL CIRCUIT LOW	8L-23
B1640-FRONT RIGHT TURN CONTROL CIRCUIT HIGH	8L-26
B1643-REAR LEFT TURN CONTROL CIRCUIT LOW	8L-29
B1644-REAR LEFT TURN CONTROL CIRCUIT HIGH	8L-32
B1647-REAR RIGHT TURN CONTROL CIRCUIT LOW	8L-35
B1648-REAR RIGHT TURN CONTROL CIRCUIT HIGH	8L-38
B1659-FRONT FOG LAMP CONTROL CIRCUIT LOW	8L-41
B165C-PARK LAMP CONTROL CIRCUIT LOW	8L-50
B165D-PARK LAMP CONTROL CIRCUIT HIGH	8L-52
B1660-FRONT FOG LAMP CONTROL CIRCUIT HIGH	8L-43
B1661-FRONT FOG LAMP CONTROL CIRCUIT OPEN	8L-45
B1667-REVERSE LAMP CONTROL CIRCUIT LOW	8L-54
B1668-REVERSE LAMP CONTROL CIRCUIT HIGH	8L-56
B167A-LEFT FRONT HEADLAMP LIGHT SOURCE CIRCUIT	8L-65
B167B-RIGHT FRONT HEADLAMP LIGHT SOURCE CIRCUIT	8L-67
B168F-FRONT FOG LAMP SWITCH STUCK	8L-47
B1694-ACCESSORY DIMMING CONTROL CIRCUIT HIGH	8J-24
B1695-ACCESSORY DIMMING CONTROL CIRCUIT OPEN	8J-26
B16A4–PASSENGER WINDOW SWITCH BACKLIGHTING CIRCUIT LOW – PDM	8N-280
B16A5–PASSENGER WINDOW SWITCH BACKLIGHTING CIRCUIT HIGH – PDM	8N-283
B1801–DRIVER DOOR LOCK/UNLOCK SWITCH CIRCUIT LOW — CLUSTER	8N-3
B1803–DRIVER DOOR LOCK/UNLOCK SWITCH CIRCUIT STUCK LOCK— CLUSTER	8N-6
B1804–DRIVER DOOR LOCK/UNLOCK SWITCH CIRCUIT STUCK UNLOCK— CLUSTER	8N-9
B1806–PASSENGER DOOR LOCK/UNLOCK SWITCH CIRCUIT LOW — CLUSTER	8N-12
B1808–PASSENGER DOOR LOCK/UNLOCK SWITCH CIRCUIT STUCK LOCK — CLUSTER	8N-15
B1809–PASSENGER DOOR LOCK/UNLOCK SWITCH CIRCUIT STUCK UNLOCK — CLUSTER	8N-18
B1826–TRUNK RELEASE SWITCH INPUT CIRCUIT LOW	8N-21
B1841–SUNROOF OPEN SWITCH INPUT CIRCUIT HIGH	8N-203
B1844–SUNROOF CLOSE SWITCH INPUT CIRCUIT HIGH	8N-206
B1847–SUNROOF VENT SWITCH INPUT CIRCUIT HIGH	8N-209
B1849–SUNROOF MOTOR CONTROL CIRCUIT/PERFORMANCE (STALLED)	8N-212
B1852–DRIVER WINDOW SWITCH CIRCUIT STUCK – DDM	8N-230
B1854–DRIVER WINDOW MOTOR CONTROL CIRCUIT LOW – DDM	8N-233
B1855–DRIVER WINDOW MOTOR CONTROL CIRCUIT HIGH – DDM	8N-236
B1858–DRIVER WINDOW POSITION SENSOR POWER SUPPLY LOW – DDM	8N-239
B1859–DRIVER WINDOW POSITION SENSOR POWER SUPPLY HIGH – DDM	8N-242

Description	Group-Page
B185A-DRIVER WINDOW POSITION SENSOR CIRCUIT PERFORMANCE - DDM	8N-244
B185D-PASSENGER WINDOW SWITCH CIRCUIT STUCK - PDM	8N-250
B185F–PASSENGER WINDOW MOTOR CONTROL CIRCUIT LOW – PDM	8N-253
B1860–PASSENGER WINDOW MOTOR CONTROL CIRCUIT HIGH – PDM	8N-256
B1863–PASSENGER WINDOW POSITION SENSOR POWER SUPPLY LOW – PDM	8N-259
B1864–PASSENGER WINDOW POSITION SENSOR POWER SUPPLY HIGH – PDM	8N-262
B1865–PASSENGER WINDOW POSITION SENSOR CIRCUIT PERFORMANCE - PDM	8N-264
B1868–DRIVER PASSENGER WINDOW SWITCH CIRCUIT STUCK – DDM	8N-270
B1A20-PRE-ARM TIMEOUT	8Q-4
B1A24–KEY NOT PROGRAMMED	8Q-5
B1A25-INVALID KEY	8Q-6
B1A26–MAXIMUM NUMBER OF KEYS PROGRAMMED	8Q-9
B1A27–SKREEM PROGRAMMING PERFORMANCE	8Q-10
B1A28-ECM MISMATCH WITH SKIM	8Q-11
B1A29-SKIM BASESTATION MISMATCH	8Q-14
B1A2A-KEY 1 COMMUNICATION ERROR	8Q-17
B1A2BA-KEY 2 COMMUNICATION ERROR	8Q-20
B1A2C-KEY 3 COMMUNICATION ERROR	8Q-23
B1A2D-KEY 4 COMMUNICATION ERROR	8Q-26
B1A2E-KEY 5 COMMUNICATION ERROR	8Q-29
B1A2F-KEY 6 COMMUNICATION ERROR	8Q-32
B1A30-KEY 7 COMMUNICATION ERROR	8Q-35
B1A31-KEY 8 COMMUNICATION ERROR	8Q-38
B1A35-UNIDENTIFIED KEY COMMUNICATION ERROR	8Q-41
B1A37–SECURITY TRANSMITTER SENSOR CIRCUIT LOW	8Q-44
B1A38–SECURITY TRANSMITTER SENSOR CIRCUIT HIGH	8Q-47
B1A3A–SECURITY RECEIVER SENSOR CIRCUIT LOW	8Q-49
B1A3B–SECURITY RECEIVER SENSOR CIRCUIT HIGH	8Q-52
B1A3C-INTERNAL SIREN BATTERY	8Q-54
B1A3D-SIREN BATTERY TAMPER / LOSS OF POWER SUPPLY	8Q-56
B1A3E-SIREN / ITM MISMATCH	8Q-59
B1A3F-ITM ARMING SEQUENCE PERFORMANCE	8Q-60
B1A41-SECURITY TRANSMITTER SENSOR CIRCUIT OPEN	8Q-61
B1A42-SECURITY TRANSMITTER SENSOR CIRCUIT SHORTED TOGETHER	8Q-65
B1A43-SECURITY TRANSMITTER SENSOR RETURN CIRCUIT LOW	8Q-68
B1A44-SECURITY RECEIVER SENSOR CIRCUIT OPEN	8Q-70
B1A45-SECURITY RECEIVER SENSOR CIRCUIT SHORTED TOGETHER	8Q-74
B1A46-SECURITY RECEIVER SENSOR RETURN CIRCUIT LOW	8Q-77
B1A47-SECURITY TRANSMITTER/ RECEIVER SENSOR RETURN CIRCUIT HIGH	8Q-79
B1B00-DRIVER AIRBAG SQUIB 1 CIRCUIT LOW	8O-23
B1B01-DRIVER AIRBAG SQUIB 1 CIRCUIT HIGH	8O-27
B1B02-DRIVER AIRBAG SQUIB 1 CIRCUIT OPEN	8O-31
B1B03-DRIVER AIRBAG SQUIB 1 CIRCUIT SHORTED TOGETHER	8O-36
B1B04-DRIVER AIRBAG SQUIB 2 CIRCUIT LOW	8O-40
B1B05-DRIVER AIRBAG SQUIB 2 CIRCUIT HIGH	8O-44
B1B06-DRIVER AIRBAG SQUIB 2 CIRCUIT OPEN	8O-48
B1B07-DRIVER AIRBAG SQUIB 2 CIRCUIT SHORTED TOGETHER	8O-53
B1B08-PASSENGER AIRBAG SQUIB 1 CIRCUIT LOW	8O-57
B1B09-PASSENGER AIRBAG SQUIB 1 CIRCUIT HIGH	8O-60
B1B0A-PASSENGER AIRBAG SQUIB 1 CIRCUIT OPEN	8O-63
B1B0B-PASSENGER AIRBAG SQUIB 1 CIRCUIT SHORTED TOGETHER	8O-67
B1B0C-PASSENGER AIRBAG SQUIB 2 CIRCUIT LOW	8O-70
B1B0D-PASSENGER AIRBAG SQUIB 2 CIRCUIT HIGH	8O-73
B1B0E-PASSENGER AIRBAG SQUIB 2 CIRCUIT OPEN	8O-76
B1B0F-PASSENGER AIRBAG SQUIB 2 CIRCUIT SHORTED TOGETHER	8O-80
B1B18-LEFT SIDE CURTAIN SQUIB 1 CIRCUIT LOW	8O-83
B1B19-LEFT SIDE CURTAIN SQUIB 1 CIRCUIT HIGH	8O-87
B1B1A-LEFT SIDE CURTAIN SQUIB 1 CIRCUIT OPEN	8O-90
B1B1B-LEFT SIDE CURTAIN SQUIB 1 CIRCUIT SHORTED TOGETHER	8O-94
B1B20-RIGHT SIDE CURTAIN SQUIB 1 CIRCUIT LOW	8O-97
B1B21-RIGHT SIDE CURTAIN SQUIB 1 CIRCUIT HIGH	8O-100
B1B22-RIGHT SIDE CURTAIN SQUIB 1 CIRCUIT OPEN	8O-103
B1B23-RIGHT SIDE CURTAIN SQUIB 1 CIRCUIT SHORTED TOGETHER	8O-107
B1B28-1ST ROW DRIVER SEAT BELT PRETENSIONER CIRCUIT LOW	8O-110
B1B29-1ST ROW DRIVER SEAT BELT PRETENSIONER CIRCUIT HIGH	8O-113
B1B2A-1ST ROW DRIVER SEAT BELT PRETENSIONER CIRCUIT OPEN	8O-117
B1B2B-1ST ROW DRIVER SEAT BELT PRETENSIONER CIRCUIT SHORTED TOGETHER	8O-121
B1B2C-1ST ROW PASSENGER SEAT BELT PRETENSIONER CIRCUIT LOW	8O-125
B1B2D-1ST ROW PASSENGER SEAT BELT PRETENSIONER CIRCUIT HIGH	8O-129
B1B2E-1ST ROW PASSENGER SEAT BELT PRETENSIONER CIRCUIT OPEN	8O-133
B1B2F-1ST ROW PASSENGER SEAT BELT PRETENSIONER CIRCUIT SHORTED TOGETHER	8O-137
B1B70-UP-FRONT LEFT SATELLITE ACCELERATION SENSOR INTERNAL	8O-141
B1B71-UP-FRONT RIGHT SATELLITE ACCELERATION SENSOR INTERNAL	8O-146
B1B72-LEFT SIDE SATELLITE ACCELERATION SENSOR 1 INTERNAL	8O-151
B1B73-LEFT SIDE SATELLITE ACCELERATION SENSOR 2 INTERNAL	8O-156
B1B75-RIGHT SIDE SATELLITE ACCELERATION SENSOR 1 INTERNAL	8O-161
B1B76-RIGHT SIDE SATELLITE ACCELERATION SENSOR 2 INTERNAL	8O-166
B1B78-PASSENGER SEAT WEIGHT SENSOR 3 - LEFT FRONT PERFORMANCE	8O-171
B1B79-PASSENGER SEAT WEIGHT SENSOR 3 - LEFT FRONT INPUT CIRCUIT LOW	8O-175
B1B7A-PASSENGER SEAT WEIGHT SENSOR 3 - LEFT FRONT INPUT CIRCUIT HIGH	8O-181
B1B7D-PASSENGER SEAT WEIGHT SENSOR 2 - RIGHT FRONT PERFORMANCE	8O-186
B1B7E-PASSENGER SEAT WEIGHT SENSOR 2 - RIGHT FRONT INPUT CIRCUIT LOW	8O-190
B1B7F-PASSENGER SEAT WEIGHT SENSOR 2 - RIGHT FRONT INPUT CIRCUIT HIGH	8O-196
B1B82-PASSENGER SEAT WEIGHT SENSOR 4 - LEFT REAR PERFORMANCE	8O-201
B1B83-PASSENGER SEAT WEIGHT SENSOR 4 - LEFT REAR INPUT CIRCUIT LOW	8O-205
B1B84-PASSENGER SEAT WEIGHT SENSOR 4 - LEFT REAR INPUT CIRCUIT HIGH	8O-211
B1B87-PASSENGER SEAT WEIGHT SENSOR 1 - RIGHT REAR PERFORMANCE	8O-216
B1B88-PASSENGER SEAT WEIGHT SENSOR 1 - RIGHT REAR INPUT CIRCUIT LOW	8O-220
B1B89-PASSENGER SEAT WEIGHT SENSOR 1 - RIGHT REAR INPUT CIRCUIT HIGH	8O-226
B1B8C-DRIVER SEAT TRACK POSITION SENSOR CIRCUIT PERFORMANCE	8O-231
B1B8D-DRIVER SEAT TRACK POSITION SENSOR CIRCUIT LOW	8O-235
B1B8E-DRIVER SEAT TRACK POSITION SENSOR CIRCUIT HIGH	8O-241
B1B91-DRIVER SEAT TRACK POSITION SENSOR CONFIGURATION MISMATCH	8O-248
B1BA5-AIRBAG SQUIB CONFIGURATION MISMATCH	8O-251
B1BA6-OCCUPANT CLASSIFICATION UNDETERMINED	8O-252
B1BA7-OCCUPANT CLASSIFICATION SYSTEM VERIFICATION REQUIRED	8O-253
B1BA8-OCM SYSTEM OUT OF CALIBRATION/NOT CALIBRATED	8O-256
B1BB8-SRS WARNING INDICATOR STATUS MISMATCH	8O-257
B1BBA-PASSENGER SEAT WEIGHT SENSOR SUPPLY CIRCUIT	8O-259
B1BBB-PASSENGER SEAT WEIGHT SENSOR INPUTS SHORTED TOGETHER	8O-262
B1BBC-OCS NEGATIVE SYSTEM WEIGHT	8O-265
B1BBD-OCM CURRENT CONFIGURATION TABLE UNPROGRAMMED	8O-268
B1BC7-DEPLOYMENT DATA RECORD FULL	8O-269
B1BC8-PASSENGER SEAT WEIGHT SENSORS PERFORMANCE	8O-270

Description	Group-Page
B1D04–MIRROR ADJUST SWITCH INPUT CIRCUIT/PERFORMANCE – DRIVER DOOR MODULE	8N-60
B1D07–MIRROR ADJUST SWITCH INPUT CIRCUIT STUCK– DRIVER DOOR MODULE	8N-64
B1D09,B1D12–MIRROR POSITION SENSOR POWER SUPPLY CIRCUIT LOW – MEMORY MIRROR MODULE	8N-66
B1D0A,B1D13–MIRROR POSITION SENSOR POWER SUPPLY CIRCUIT HIGH – DOOR MODULE	8N-70
B1D0C,B1D15–MIRROR VERTICAL POSITION SENSOR INPUT CIRCUIT LOW – DOOR MODULE	8N-74
B1D0D,B1D16–MIRROR VERTICAL POSITION SENSOR INPUT CIRCUIT HIGH – DOOR MODULE	8N-78
B1D0F,B1D18–MIRROR HORIZONTAL POSITION SENSOR INPUT CIRCUIT LOW – DOOR MODULE	8N-82
B1D10,B1D19–MIRROR HORIZONTAL POSITION SENSOR INPUT CIRCUIT HIGH – DOOR MODULE	8N-86
B1D1E,B1D2A–MIRROR VERTICAL MOTOR CONTROL CIRCUIT/ PERFORMANCE – DOOR MODULE	8N-90
B1D22,B1D2E–MIRROR HORIZONTAL MOTOR CONTROL CIRCUIT/ PERFORMANCE – DOOR MODULE	8N-94
B1D4D–MEMORY SWITCH INPUT CIRCUIT STUCK – DOOR MODULE	8N-98
B1D62–POWER SEAT SWITCH STUCK	8N-121
B1D63–POWER SEAT SWITCH OPEN	8N-122
B1D6D–SEAT HORIZONTAL POSITION SENSOR CIRCUIT LOW	8N-126
B1D6E–SEAT HORIZONTAL POSITION SENSOR CIRCUIT HIGH	8N-129
B1D71–SEAT FRONT VERTICAL POSITION SENSOR CIRCUIT LOW	8N-131
B1D72–SEAT FRONT VERTICAL POSITION SENSOR CIRCUIT HIGH	8N-134
B1D75–SEAT REAR VERTICAL POSITION SENSOR CIRCUIT LOW	8N-136
B1D76–SEAT REAR VERTICAL POSITION SENSOR CIRCUIT HIGH	8N-139
B1D79–SEAT RECLINER POSITION SENSOR CIRCUIT LOW	8N-141
B1D7A–SEAT RECLINER POSITION SENSOR CIRCUIT HIGH	8N-144
B1D7B–SEAT HORIZONTAL MOTOR CONTROL CIRCUIT PERFORMANCE	8N-146
B1D7F–SEAT FRONT VERTICAL MOTOR CONTROL CIRCUIT PERFORMANCE	8N-151
B1D83–SEAT REAR VERTICAL MOTOR CONTROL CIRCUIT PERFORMANCE	8N-156
B1D87–SEAT BACKREST MOTOR CONTROL CIRCUIT PERFORMANCE	8N-161
B1D9B–SEAT HORIZONTAL FRONT STOP NOT LEARNED	8N-166
B2101-IGNITION RUN/START INPUT CIRCUIT LOW	8O-274
B2101-IGNITION RUN/START INPUT LOW	8Q-82
B2102-IGNITION RUN/START INPUT CIRCUIT HIGH	8O-278
B2102-IGNITION RUN/START INPUT HIGH	8Q-85
B2107-IGNITION SWITCH SENSE INPUT CIRCUIT/PERFORMANCE	8J-28
B2108-IGNITION SWITCH SENSE INPUT CIRCUIT LOW	8J-32
B2109-IGNITION SWITCH SENSE INPUT CIRCUIT HIGH	8J-35
B210A-SYSTEM VOLTAGE LOW	8Q-87
B210D-BATTERY VOLTAGE LOW (RSM)	8R-53
B210D-BATTERY VOLTAGE LOW – DDM/PDM	8N-273
B210D-BATTERY VOLTAGE LOW	8A-4
B210D-BATTERY VOLTAGE LOW	8E-4
B210D-BATTERY VOLTAGE LOW	8G-62
B210D-BATTERY VOLTAGE LOW	8N-101
B210D-BATTERY VOLTAGE LOW	8N-167
B210D-BATTERY VOLTAGE LOW	8N-217
B210D-BATTERY VOLTAGE LOW	8O-280
B210D-BATTERY VOLTAGE LOW	8Q-91
B210D-SYSTEM VOLTAGE HIGH	8Q-89
B210E-BATTERY VOLTAGE HIGH (RSM)	8R-54
B210E-BATTERY VOLTAGE HIGH – DDM/PDM	8N-274
B210E-BATTERY VOLTAGE HIGH	8A-5
B210E-BATTERY VOLTAGE HIGH	8E-5
B210E-BATTERY VOLTAGE HIGH	8G-64
B210E-BATTERY VOLTAGE HIGH	8N-102
B210E-BATTERY VOLTAGE HIGH	8N-169
B210E-BATTERY VOLTAGE HIGH	8N-219
B210E-BATTERY VOLTAGE HIGH	8O-284
B210E-BATTERY VOLTAGE HIGH	8Q-94
B2112-5 VOLT SUPPLY CIRCUIT LOW	8E-6
B2113-5 VOLT SUPPLY CIRCUIT HIGH	8E-8
B212C-IGNITION RUN/START INPUT CIRCUIT OPEN	8O-287
B212D-IGNITION RUN ONLY INPUT CIRCUIT OPEN	8O-293
B2201-CALIBRATION MISMATCH	8O-297
B2204-ECU CONFIGURATION MISMATCH	8Q-95
B2205-ORIGINAL VIN MISSING/ MISMATCH	8O-298
B2205-ORIGINAL VIN MISSING/ MISMATCH	8Q-96
B2206-CURRENT VIN MISSING/ MISMATCH	8E-10
B2206-CURRENT VIN MISSING/ MISMATCH	8O-299
B2206-CURRENT VIN MISSING/ MISMATCH	8Q-98
B2207-OCCUPANT RESTRAINT CONTROLLER INTERNAL 1	8O-302
B2208-OCCUPANT RESTRAINT CONTROLLER INTERNAL 2	8O-303
B2209-OCCUPANT RESTRAINT CONTROLLER INTERNAL 3	8O-304
B220A-OCCUPANT RESTRAINT CONTROLLER INTERNAL 4	8O-305
B220B-OCCUPANT RESTRAINT CONTROLLER FIRING STORED ENERGY	8O-306
B220C-OCCUPANT RESTRAINT CONTROLLER ACCELEROMETER 1 INTERNAL	8O-307
B220D-OCCUPANT RESTRAINT CONTROLLER ACCELEROMETER 2 INTERNAL	8O-308
B220F-OCCUPANT RESTRAINT CONTROLLER CONTROL DRIVER 1	8O-309
B2210-OCCUPANT RESTRAINT CONTROLLER CONTROL DRIVER 2	8O-310
B2211-RAIN SENSOR MODULE INITIALIZATION PERFORMANCE	8R-55
B2212-OCCUPANT CLASSIFICATION MODULE INTERNAL	8O-311
B2213–CCN INTERNAL	8J-39
B2215-FRONT CONTROL MODULE INTERNAL	8E-11
B2218, B2219–DRIVER/PASSENGER DOOR MODULE INTERNAL – DDM/PDM	8N-275
B2218,B2219-DOOR MODULE INTERNAL	8N-104
B221A-HEATED SEAT MODULE INTERNAL	8G-66
B221C-MEMORY SEAT MODULE INTERNAL	8N-171
B221D-(RSM) RAIN SENSOR MODULE INTERNAL	8R-56
B221E-RADIO INTERNAL	8A-130
B221F-AMPLIFIER INTERNAL	8A-6
B2224–SKREEM INTERNAL	8Q-99
B2227–SUNROOF ECU INTERNAL	8N-213
B2228-SKREEM INTERNAL - RKE RECEIVER	8Q-100
B2229-SKREEM INTERNAL - SKIM IMMOBILIZER	8Q-101
B222A-VEHICLE LINE MISMATCH	8Q-102
B222C-VEHICLE CONFIGURATION NOT PROGRAMMED	8E-12
B2235-LEFT FRONT HEADLAMP BALLAST ECU INTERNAL	8L-69
B2236-RIGHT FRONT HEADLAMP BALLAST ECU INTERNAL	8L-70
B2239-HID LEVELING TRANSLATOR ECU INTERNAL	8L-71
B223B-VEHICLE CONFIGURATION MISMATCH	8O-313
B223C-INTRUSION TRANSCEIVER MODULE INTERNAL	8Q-103
B223D-OCCUPANT CLASSIFICATION MODULE DTC PRESENT	8O-314
B2254-COLUMN LOCK MODULE INTERNAL	8Q-104
B2304-WIPER PARK SWITCH INPUT CIRCUIT LOW	8R-3
B2305-WIPER PARK SWITCH INPUT CIRCUIT HIGH	8R-6
B230D-REAR WIPER PARK SWITCH INPUT CIRCUIT LOW	8R-32
B230E-REAR WIPER PARK SWITCH INPUT CIRCUIT OPEN	8R-35
B2313-WIPER ON/OFF CONTROL CIRCUIT LOW	8R-8
B2314-WIPER ON/OFF CONTROL CIRCUIT HIGH	8R-11
B2315-WIPER ON/OFF CONTROL CIRCUIT OPEN	8R-13
B2317-WIPER HI/LOW CONTROL CIRCUIT LOW	8R-15
B2318-WIPER HI/LOW CONTROL CIRCUIT HIGH	8R-18
B2319-WIPER HI/LOW CONTROL CIRCUIT OPEN	8R-20
B231B-REAR WIPER MOTOR CONTROL CIRCUIT LOW	8R-37
B231C-REAR WIPER MOTOR CONTROL CIRCUIT HIGH	8R-40
B231D-REAR WIPER MOTOR CONTROL CIRCUIT OPEN	8R-42
B231F-FRONT/REAR WASHER MOTOR CONTROL CIRCUIT LOW	8R-22
B2320-FRONT/REAR WASHER MOTOR CONTROL CIRCUIT HIGH	8R-26

Description	Group-Page
B2321-FRONT/REAR WASHER MOTOR CONTROL CIRCUIT OPEN	8R-29
B2323-HEADLAMP WASHER MOTOR CONTROL CIRCUIT LOW	8R-44
B2324-HEADLAMP WASHER MOTOR CONTROL CIRCUIT HIGH	8R-47
B2325-HEADLAMP WASHER MOTOR CONTROL CIRCUIT OPEN	8R-49
B2328-WASHER FLUID LEVEL SENSOR INPUT CIRCUIT HIGH	8R-51
B2329-RAIN SENSOR OPTICAL PATH 1 PERFORMANCE	8R-57
B232A-RAIN SENSOR OPTICAL PATH 2 PERFORMANCE	8R-58
B232B-RAIN SENSOR OPTICAL PATH 3 PERFORMANCE	8R-59
B232C-RAIN SENSOR OPTICAL PATH 4 PERFORMANCE	8R-60
B2332–HORN SWITCH INPUT CIRCUIT/ PERFORMANCE	8H-3
B2336–HORN CONTROL CIRCUIT LOW – FCM	8H-7
B2337–HORN CONTROL CIRCUIT HIGH – FCM	8H-10
B2338–HORN CONTROL CIRCUIT OPEN – FCM	8H-13
BODY VERIFICATION TEST – VER 1	8E-272
C0077-LOW TIRE PRESSURE	22-17
C1501–TIRE PRESSURE SENSOR 1 INTERNAL	22-19
C1502–TIRE PRESSURE SENSOR 2 INTERNAL	22-22
C1503–TIRE PRESSURE SENSOR 3 INTERNAL	22-25
C1504–TIRE PRESSURE SENSOR 4 INTERNAL	22-28
C1505–TIRE PRESSURE SENSOR 5 INTERNAL	22-31
C1506–LEFT FRONT TIRE PRESSURE TRANSPONDER MODULE PERFORMANCE	22-34
C1507–RIGHT FRONT TIRE PRESSURE TRANSPONDER MODULE PERFORMANCE	22-39
C1509–RIGHT REAR TIRE PRESSURE TRANSPONDER MODULE PERFORMANCE	22-44
C150A–LEFT FRONT TIRE PRESSURE TRANSPONDER MODULE VOLTAGE HIGH	22-49
C150B–RIGHT FRONT TIRE PRESSURE TRANSPONDER MODULE VOLTAGE HIGH	22-52
C150C–RIGHT REAR TIRE PRESSURE TRANSPONDER MODULE VOLTAGE HIGH	22-55
NGC POWERTRAIN VERIFICATION TEST VER - 1	8E-285
NGC POWERTRAIN VERIFICATION TEST VER - 2	8E-286
NGC POWERTRAIN VERIFICATION TEST VER - 3	8E-287
NGC POWERTRAIN VERIFICATION TEST VER - 4	8E-288
NGC POWERTRAIN VERIFICATION TEST VER - 5	8E-290
NGC POWERTRAIN VERIFICATION TEST VER - 6	8E-291
POWER SEAT SYSTEM VERIFICATION TEST – VER 1	8N-183
SKREEM/SKIM VERIFICATION	8Q-123
TPM VERIFICATION	22-58
U0001-CAN C BUS	8E-13
U0019-CAN B BUS	8E-19
U0019-CAN B BUS	8O-315
U0019-CAN B BUS	8Q-107
U0019–CAN B BUS (ATC)	24-300
U0019–CAN B BUS (RSM)	8R-61
U0019–CAN B BUS – DRIVER DOOR MODULE	8N-105
U0019–CAN B BUS – HSM	8G-67
U0019–CAN B BUS – ITM	8Q-110
U0019–CAN B BUS – PASSENGER DOOR MODULE	8N-108
U0019–CAN B BUS-DDM/PDM	8N-276
U0019–CAN B BUS	8A-90
U0019–CAN B BUS	8J-40
U0019–CAN B BUS	8N-214
U0020-CAN B BUS OFF PERFORMANCE	8A-93
U0020-CAN B BUS OFF PERFORMANCE	8N-172
U0020-CAN B BUS OFF PERFORMANCE	8O-318
U0021-CAN B BUS (+) CIRCUIT OPEN	8N-175
U0022-CAN B BUS (+) CIRCUIT LOW	8N-176
U0022-CAN B BUS (+) CIRCUIT LOW	8O-321
U0023-CAN B BUS (+) CIRCUIT HIGH	8N-177
U0023-CAN B BUS (+) CIRCUIT HIGH	8O-321
U0024-CAN B BUS (-) CIRCUIT OPEN	8N-178
U0025-CAN B BUS (-) CIRCUIT LOW	8N-179
U0026-CAN B BUS (-) CIRCUIT HIGH	8N-180
U0026-CAN B BUS (-) CIRCUIT HIGH	8O-321
U0100-LOST COMMUNICATION WITH ECM/PCM	8E-24
U0101-LOST COMMUNICATION WITH TCM	8E-27
U0103-LOST COMMUNICATION WITH ELECTRIC GEAR SHIFT MODULE	8E-30
U0121-LOST COMMUNICATION WITH ANTI-LOCK BRAKE MODULE	8E-33
U0121-LOST COMMUNICATION WITH ANTI-LOCK BRAKE SYSTEM (ABS) CONTROL MODULE	8O-321
U0141-LOST COMMUNICATION WITH FRONT CONTROL MODULE	8O-321
U0141-LOST COMMUNICATION WITH FRONT CONTROL MODULE	8Q-113
U0141–LOST COMMUNICATION WITH FRONT CONTROL MODULE (ATC)	24-303
U0141–LOST COMMUNICATION WITH FRONT CONTROL MODULE	8A-95
U0141–LOST COMMUNICATION WITH FRONT CONTROL MODULE	8E-36
U0141–LOST COMMUNICATION WITH FRONT CONTROL MODULE	8G-70
U0141–LOST COMMUNICATION WITH FRONT CONTROL MODULE	8J-43
U0141–LOST COMMUNICATION WITH FRONT CONTROL MODULE	8N-111
U0141–LOST COMMUNICATION WITH FRONT CONTROL MODULE	8N-180
U0141–LOST COMMUNICATION WITH FRONT CONTROL MODULE	8N-213
U0141–LOST COMMUNICATION WITH FRONT CONTROL MODULE	8N-285
U0143-LOST COMMUNICATION WITH MULTI-PURPOSE MODULE (POLICE AND TAXI INTERFACE MODULE) (PTIM)	8E-39
U0146-LOST COMMUNICATION WITH CENTRAL GATEWAY	8Q-113
U0151-LOST COMMUNICATION WITH OCCUPANT RESTRAINT CONTROLLER (ORC)	8O-321
U0151-LOST COMMUNICATION WITH OCCUPANT RESTRAINT CONTROLLER	8G-70
U0151-LOST COMMUNICATION WITH OCCUPANT RESTRAINT CONTROLLER	8J-43
U0151-LOST COMMUNICATION WITH OCCUPANT RESTRAINT CONTROLLER	8N-111
U0151-LOST COMMUNICATION WITH OCCUPANT RESTRAINT CONTROLLER	8N-180
U0151-LOST COMMUNICATION WITH OCCUPANT RESTRAINT CONTROLLER	8N-285
U0151-LOST COMMUNICATION WITH OCCUPANT RESTRAINT CONTROLLER	8Q-113
U0151–LOST COMMUNICATION WITH OCCUPANT RESTRAINT CONTROLLER (ORC) (ATC)	24-303
U0151–LOST COMMUNICATION WITH OCCUPANT RESTRAINT CONTROLLER (ORC)	8E-42
U0154-LOST COMMUNICATION WITH OCCUPANT CLASSIFICATION MODULE	8G-70
U0154-LOST COMMUNICATION WITH OCCUPANT CLASSIFICATION MODULE	8N-111
U0154-LOST COMMUNICATION WITH OCCUPANT CLASSIFICATION MODULE	8N-180
U0154-LOST COMMUNICATION WITH OCCUPANT CLASSIFICATION MODULE	8N-285
U0154-LOST COMMUNICATION WITH OCCUPANT CLASSIFICATION MODULE	8O-321
U0154-LOST COMMUNICATION WITH OCCUPANT CLASSIFICATION MODULE	8Q-113
U0154–LOST COMMUNICATION WITH OCCUPANT CLASSIFICATION MODULE (ATC)	24-303
U0154–LOST COMMUNICATION WITH OCCUPANT CLASSIFICATION MODULE	8E-45
U0155-LOST COMMUNICATION WITH CLUSTER/CCN	8E-48
U0155-LOST COMMUNICATION WITH CLUSTER/CCN	8G-70
U0155-LOST COMMUNICATION WITH CLUSTER/CCN	8N-111
U0155-LOST COMMUNICATION WITH CLUSTER/CCN	8N-180
U0155-LOST COMMUNICATION WITH CLUSTER/CCN	8N-213
U0155-LOST COMMUNICATION WITH CLUSTER/CCN	8N-285
U0155-LOST COMMUNICATION WITH CLUSTER/CCN	8O-321
U0155-LOST COMMUNICATION WITH CLUSTER/CCN	8Q-113
U0155–LOST COMMUNICATION WITH CLUSTER/CCN (ATC)	24-303
U0156-LOST COMMUNICATION WITH EOM	8G-70
U0156-LOST COMMUNICATION WITH EOM	8N-111
U0156-LOST COMMUNICATION WITH EOM	8N-180
U0156-LOST COMMUNICATION WITH EOM	8N-285
U0156-LOST COMMUNICATION WITH EOM	8O-321
U0156–LOST COMMUNICATION WITH EOM (ATC)	24-303

Description	Group-Page
U0156–LOST COMMUNICATION WITH EOM	8E-51
U0159-LOST COMMUNICATION WITH PARK ASSIST CONTROL MODULE	8E-54
U0159-LOST COMMUNICATION WITH PARKING ASSIST CONTROL MODULE	8G-70
U0159-LOST COMMUNICATION WITH PARKING ASSIST CONTROL MODULE	8J-43
U0159-LOST COMMUNICATION WITH PARKING ASSIST CONTROL MODULE	8N-111
U0159-LOST COMMUNICATION WITH PARKING ASSIST CONTROL MODULE	8N-180
U0159-LOST COMMUNICATION WITH PARKING ASSIST CONTROL MODULE	8N-285
U0159–LOST COMMUNICATION WITH PARKING ASSIST CONTROL MODULE (ATC)	24-303
U0164-LOST COMMUNICATION WITH HVAC CONTROL MODULE	8E-57
U0164-LOST COMMUNICATION WITH HVAC CONTROL MODULE	8G-70
U0164-LOST COMMUNICATION WITH HVAC CONTROL MODULE	8J-43
U0164-LOST COMMUNICATION WITH HVAC CONTROL MODULE	8N-111
U0164-LOST COMMUNICATION WITH HVAC CONTROL MODULE	8N-180
U0164-LOST COMMUNICATION WITH HVAC CONTROL MODULE	8N-286
U0164-LOST COMMUNICATION WITH HVAC CONTROL MODULE	8O-322
U0167-LOST COMMUNICATION WITH INTRUSION TRANSCEIVER CONTROL MODULE	8E-60
U0167-LOST COMMUNICATION WITH INTRUSION TRANSCEIVER CONTROL MODULE	8J-43
U0168-LOST COMMUNICATION WITH VEHICLE SECURITY CONTROL MODULE (SKREEM/WCM)	8E-63
U0168-LOST COMMUNICATION WITH VEHICLE SECURITY CONTROL MODULE (SKREEM/WCM)	8G-70
U0168-LOST COMMUNICATION WITH VEHICLE SECURITY CONTROL MODULE (SKREEM/WCM)	8J-43
U0168-LOST COMMUNICATION WITH VEHICLE SECURITY CONTROL MODULE (SKREEM/WCM)	8N-111
U0168-LOST COMMUNICATION WITH VEHICLE SECURITY CONTROL MODULE (SKREEM/WCM)	8N-180
U0168-LOST COMMUNICATION WITH VEHICLE SECURITY CONTROL MODULE (SKREEM/WCM)	8N-286
U0168-LOST COMMUNICATION WITH VEHICLE SECURITY CONTROL MODULE (SKREEM/WCM)	8O-322
U0168–LOST COMMUNICATION WITH VEHICLE SECURITY CONTROL MODULE (SKREEM/WCM) (ATC)	24-304
U0169-LOST COMMUNICATION WITH SUNROOF CONTROL MODULE	8E-66
U0169-LOST COMMUNICATION WITH SUNROOF CONTROL MODULE	8G-70
U0169-LOST COMMUNICATION WITH SUNROOF CONTROL MODULE	8N-111
U0169-LOST COMMUNICATION WITH SUNROOF CONTROL MODULE	8N-112
U0169-LOST COMMUNICATION WITH SUNROOF CONTROL MODULE	8N-181
U0169-LOST COMMUNICATION WITH SUNROOF CONTROL MODULE	8N-286
U0169–LOST COMMUNICATION WITH SUNROOF CONTROL MODULE (ATC)	24-304
U0170-LOST COMMUNICATION W/UP-FRONT LEFT SATELLITE ACCELERATION SENSOR	8O-323
U0171-LOST COMMUNICATION W/UP-FRONT RIGHT SATELLITE ACCELERATION SENSOR	8O-328
U0172-LOST COMMUNICATION W/LEFT SIDE SATELLITE ACCELERATION SENSOR 1	8O-333
U0173-LOST COMMUNICATION W/LEFT SIDE SATELLITE ACCELERATION SENSOR 2	8O-338
U0175-LOST COMMUNICATION W/RIGHT SIDE SATELLITE ACCELERATION SENSOR 1	8O-343
U0176-LOST COMMUNICATION W/RIGHT SIDE SATELLITE ACCELERATION SENSOR 2	8O-348
U0181-LOST COMMUNICATION WITH HEADLAMP LEVELING TRANSLATOR	8E-69
U0181-LOST COMMUNICATION WITH HEADLAMP LEVELING TRANSLATOR	8G-71
U0181-LOST COMMUNICATION WITH HEADLAMP LEVELING TRANSLATOR	8N-286
U0181–LOST COMMUNICATION WITH HEADLAMP LEVEL TRANSLATOR	8N-181
U0181–LOST COMMUNICATION WITH HEADLAMP LEVELING TRANSLATOR (ATC)	24-304
U0184-LOST COMMUNICATION WITH RADIO	8E-72
U0184-LOST COMMUNICATION WITH RADIO	8G-71
U0184-LOST COMMUNICATION WITH RADIO	8J-43
U0184-LOST COMMUNICATION WITH RADIO	8N-112
U0184-LOST COMMUNICATION WITH RADIO	8N-181
U0184-LOST COMMUNICATION WITH RADIO	8N-286
U0184-LOST COMMUNICATION WITH RADIO	8O-353
U0184–LOST COMMUNICATION WITH RADIO (ATC)	24-304
U0186-LOST COMMUNICATION WITH AUDIO AMPLIFIER	8E-75
U0186-LOST COMMUNICATION WITH AUDIO AMPLIFIER	8G-71
U0186-LOST COMMUNICATION WITH AUDIO AMPLIFIER	8N-112
U0186-LOST COMMUNICATION WITH AUDIO AMPLIFIER	8N-181
U0186-LOST COMMUNICATION WITH AUDIO AMPLIFIER	8N-286
U0186-LOST COMMUNICATION WITH AUDIO AMPLIFIER	8N-286
U0186-LOST COMMUNICATION WITH AUDIO AMPLIFIER	8O-353
U0186–LOST COMMUNICATION WITH AUDIO AMPLIFIER (ATC)	24-304
U0193-LOST COMMUNICATION WITH TRAFFIC INFORMATION RECEIVER MODULE	8E-78
U0195-LOST COMMUNICATION WITH SDARS	8E-81
U0195-LOST COMMUNICATION WITH SDARS	8G-71
U0195-LOST COMMUNICATION WITH SDARS	8J-43
U0195-LOST COMMUNICATION WITH SDARS	8N-112
U0195-LOST COMMUNICATION WITH SDARS	8N-181
U0195-LOST COMMUNICATION WITH SDARS	8N-286
U0195-LOST COMMUNICATION WITH SDARS	8O-353
U0195–LOST COMMUNICATION WITH SDARS (ATC)	24-305
U0196-LOST COMMUNICATION WITH VEHICLE ENTERTAINMENT CONTROL MODULE (ATC)	24-305
U0196-LOST COMMUNICATION WITH VEHICLE ENTERTAINMENT CONTROL MODULE	8E-84
U0196-LOST COMMUNICATION WITH VEHICLE ENTERTAINMENT CONTROL MODULE	8O-353
U0197-LOST COMMUNICATION WITH HANDS FREE PHONE MODULE	8E-87
U0197-LOST COMMUNICATION WITH HANDS FREE PHONE MODULE	8J-43
U0197-LOST COMMUNICATION WITH HANDS FREE PHONE MODULE	8O-353
U0197-LOST COMMUNICATION WITH HANDS FREE PHONE	8N-112
U0197-LOST COMMUNICATION WITH HANDS FREE PHONE	8N-181
U0197-LOST COMMUNICATION WITH HFM	8G-71
U0197–LOST COMMUNICATION WITH HANDS FREE PHONE MODULE (ATC)	24-305
U0199-LOST COMMUNICATION WITH DRIVER DOOR MODULE	8E-90
U0199-LOST COMMUNICATION WITH DRIVER DOOR MODULE	8G-71
U0199-LOST COMMUNICATION WITH DRIVER DOOR MODULE	8N-181
U0199-LOST COMMUNICATION WITH DRIVER DOOR MODULE	8N-287
U0199-LOST COMMUNICATION WITH DRIVER DOOR MODULE	8O-353
U0199–LOST COMMUNICATION WITH DRIVER DOOR MODULE (ATC)	24-305
U0200-LOST COMMUNICATION WITH PASSENGER DOOR MODULE	8E-93
U0200-LOST COMMUNICATION WITH PASSENGER DOOR MODULE	8G-71
U0200-LOST COMMUNICATION WITH PASSENGER DOOR MODULE	8N-112
U0200-LOST COMMUNICATION WITH PASSENGER DOOR MODULE	8N-181
U0200-LOST COMMUNICATION WITH PASSENGER DOOR MODULE	8N-287
U0200-LOST COMMUNICATION WITH PASSENGER DOOR MODULE	8O-353
U0200–LOST COMMUNICATION WITH PASSENGER DOOR MODULE (ATC)	24-305
U0208-LOST COMMUNICATION WITH HEATED SEAT CONTROL MODULE	8E-96
U0208-LOST COMMUNICATION WITH HEATED SEAT CONTROL MODULE	8J-44
U0208-LOST COMMUNICATION WITH HEATED SEAT CONTROL MODULE	8N-112
U0208-LOST COMMUNICATION WITH HEATED SEAT CONTROL MODULE	8N-181

Description	Group-Page
U0208-LOST COMMUNICATION WITH HEATED SEAT CONTROL MODULE	8N-287
U0208-LOST COMMUNICATION WITH HEATED SEAT CONTROL MODULE	8O-353
U0208–LOST COMMUNICATION WITH HEATED SEAT CONTROL MODULE (ATC)	24-306
U0209-LOST COMMUNICATION WITH MEMORY SEAT CONTROL MODULE	8E-99
U0209-LOST COMMUNICATION WITH MEMORY SEAT CONTROL MODULE	8G-71
U0209-LOST COMMUNICATION WITH MEMORY SEAT CONTROL MODULE	8J-44
U0209-LOST COMMUNICATION WITH MEMORY SEAT CONTROL MODULE	8N-112
U0209-LOST COMMUNICATION WITH MEMORY SEAT CONTROL MODULE	8N-287
U0209-LOST COMMUNICATION WITH MEMORY SEAT CONTROL MODULE	8O-353
U0209–LOST COMMUNICATION WITH MEMORY SEAT CONTROL MODULE (ATC)	24-306
U0212-LOST COMMUNICATION WITH SCCM - CAN B	8E-102
U0212-LOST COMMUNICATION WITH SCCM - CAN B	8G-71
U0212-LOST COMMUNICATION WITH SCCM - CAN B	8N-112
U0212-LOST COMMUNICATION WITH SCCM - CAN B	8N-287
U0212-LOST COMMUNICATION WITH SCCM-CAN-B	8J-44
U0212–LOST COMMUNICATION WITH SCCM - CAN-B (ATC)	24-306
U0212–LOST COMMUNICATION WITH SCCM	8N-182
U0231-LOST COMMUNICATION WITH RAIN SENSING MODULE	8E-105
U0231-LOST COMMUNICATION WITH RAIN SENSING MODULE	8G-72
U0231-LOST COMMUNICATION WITH RAIN SENSING MODULE	8N-113
U0231-LOST COMMUNICATION WITH RAIN SENSING MODULE	8N-182
U0231-LOST COMMUNICATION WITH RAIN SENSING MODULE	8N-287
U0231–LOST COMMUNICATION WITH RAIN SENSING MODULE (ATC)	24-306
U1105-CAN B SIGNAL MISSING	8E-108
U1106-CAN C SIGNAL MISSING	8E-111
U1107-ECU IN SINGLE-WIRE MODE	8E-117
U1108-ADDITIONAL CAN B ECU DETECTED	8E-122
U110A-LOST COMMUNICATION WITH SCCM - CAN C	8E-123
U110D-LOST COMMUNICATION WITH SECURITY SIREN	8Q-114
U1414-IMPLAUSIBLE/MISSING ECU CONFIGURATION DATA	8O-361
U1415-IMPLAUSIBLE/MISSING VEHICLE CONFIGURATION DATA	8O-362
U1416-IMPLAUSIBLE SECURITY SIREN SIGNAL RECEIVED	8Q-118
*A/C HEATER CONTROL WILL NOT ENTER DIAGNOSTIC MODE (MTC)	24-307
*ALL DOORS FAIL TO LOCK	8N-32
*BOTH CAN C DIAGNOSTIC (+) AND CAN C DIAGNOSTIC (-) CIRCUITS OPEN	8E-141
*CAN C DIAGNOSTIC (+) AND/OR CAN C DIAGNOSTIC (-) CIRCUITS HIGH	8E-129
*CAN C DIAGNOSTIC (+) CIRCUIT LOW	8E-131
*CAN C DIAGNOSTIC (+) CIRCUIT OPEN	8E-139
*CAN C DIAGNOSTIC (+) SHORTED TO CAN C DIAGNOSTIC (-)	8E-135
*CAN C DIAGNOSTIC (-) CIRCUIT LOW	8E-133
*CAN C DIAGNOSTIC (-) CIRCUIT OPEN	8E-137
*DECKLID/LIFTGATE RELEASE INOPERATIVE	8N-24
*DIAGNOSIS AND CHECKOUT PROCEDURE FOR SEAT WEIGHT SENSORS	8O-354
*DRIVER DOOR LOCK INOPERATIVE	8N-43
*FRONT WINDOW MOVES ABOUT 3 INCHES AND QUITS	8N-288
*HVAC SYSTEM TEST (ATC)	24-314
*HVAC SYSTEM TEST (MTC)	24-317
*LEFT DOOR LOCKS INOPERATIVE – (LHD ONLY)	8N-40
*NO RESPONSE FROM ABS (ANTILOCK BRAKE MODULE)	8E-144
*NO RESPONSE FROM AMP (AMPLIFIER)	8E-148
*NO RESPONSE FROM CCN (CLUSTER)	8E-151
*NO RESPONSE FROM DDM (DRIVER DOOR MODULE)	8E-155
*NO RESPONSE FROM ECM (ENGINE CONTROL MODULE) - DIESEL	8E-158
*NO RESPONSE FROM EOM (ELECTRONIC OVERHEAD MODULE)	8E-161
*NO RESPONSE FROM ESM (ELECTRONIC SHIFT MODULE) (SHIFTER LEVER ASSEMBLY) - NAG1	8E-164
*NO RESPONSE FROM ESM (ELECTRONIC SHIFT MODULE) - (COLUMN NAG1)	8E-168
*NO RESPONSE FROM FCM (FRONT CONTROL MODULE)	8E-172
*NO RESPONSE FROM HFM (HANDS FREE MODULE)	8E-176
*NO RESPONSE FROM HIDT (HEADLAMP LEVELING MODULE)	8E-179
*NO RESPONSE FROM HSM (HEATED SEAT MODULE)	8E-182
*NO RESPONSE FROM HVAC (HEAT VENTILATION AND A/C) (ATC)	8E-185
*NO RESPONSE FROM ITM (INTRUSION TRANSCEIVER MODULE)	8E-188
*NO RESPONSE FROM LRSM (LIGHT/ RAIN SENSOR MODULE)	8E-191
*NO RESPONSE FROM MSMD (MEMORY SEAT MODULE)	8E-197
*NO RESPONSE FROM MULTI-PURPOSE MODULE (POLICE AND TAXI INTERFACE MODULE-PTIM)	8E-194
*NO RESPONSE FROM OCM (OCCUPANT CLASSIFICATION MODULE)	8E-200
*NO RESPONSE FROM ORC (OCCUPANT RESTRAINT CONTROLLER MODULE)	8E-204
*NO RESPONSE FROM PCM (POWERTRAIN CONTROL MODULE)	8E-208
*NO RESPONSE FROM PDM (PASSENGER DOOR MODULE)	8E-212
*NO RESPONSE FROM PTS (PARK ASSIST MODULE)	8E-215
*NO RESPONSE FROM RADIO	8E-218
*NO RESPONSE FROM SCM (STEERING CONTROL MODULE)	8E-224
*NO RESPONSE FROM SDAR (SATELLITE RECEIVER)	8E-221
*NO RESPONSE FROM SUNR (SUNROOF MOTOR/MODULE)	8E-227
*NO RESPONSE FROM TCM (TRANSMISSION CONTROL MODULE) - NAG1	8E-230
*NO RESPONSE FROM TCM (TRANSMISSION CONTROL MODULE) – NGC	8E-234
*NO RESPONSE FROM VES (MONITOR/ DVD MEDIA SYSTEM)	8E-236
*NO RESPONSE FROM WCM (WIRELESS CONTROL MODULE) – (SENTRY KEY REMOTE ENTRY MODULE)	8E-239
*OCS VERIFICATION TEST - VER 1	8O-358
*ONE PASSENGER DOOR LOCK INOPERATIVE	8N-46
*ORC VERIFICATION TEST - VER 1	8O-360
*PASSENGER DOORS FAIL TO UNLOCK	8N-35
*RIGHT DOOR LOCKS INOPERATIVE – (LHD ONLY)	8N-37
*STORED LOST COMMUNICATION DTCS	8E-126

CHASSIS DIAGNOSTICS

ABS INTERMITTENT CONDITION	5-208
ABS VERIFICATION TEST — VER 1	5-384
APS VERIFICATION TEST	5-383
APS-INTERMITTENT CONDITION	5-176
B1D4F-ADJUSTABLE PEDAL INHIBIT CIRCUIT LOW	5-177
B1D50-ADJUSTABLE PEDAL INHIBIT CIRCUIT HIGH	5-181
B1D51-ADJUSTABLE PEDAL INHIBIT CIRCUIT OPEN	5-184
B1D56–ADJUSTABLE PEDAL SENSOR CIRCUIT LOW	5-187
B1D57–ADJUSTABLE PEDAL SENSOR CIRCUIT HIGH	5-191
B1D5B–ADJUSTABLE PEDAL SWITCH CIRCUIT PERFORMANCE	5-194
B1D5C–ADJUSTABLE PEDAL SWITCH CIRCUIT STUCK FORWARD	5-198
B1D5D–ADJUSTABLE PEDAL SWITCH CIRCUIT STUCK REARWARD	5-201
B1D67–ADJUSTABLE PEDAL CONTROL CIRCUIT PERFORMANCE	5-204
C100A–LEFT FRONT WHEEL SPEED SENSOR CIRCUIT	5-209
C1011-LEFT FRONT WHEEL SPEED SENSOR SIGNAL ERRATIC PERFORMANCE	5-215
C1014-LEFT FRONT WHEEL SPEED COMPARATIVE PERFORMANCE	5-219
C1015–RIGHT FRONT WHEEL SPEED SENSOR CIRCUIT	5-222
C101C-RIGHT FRONT WHEEL SPEED SENSOR SIGNAL ERRATIC PERFORMANCE	5-228
C101F-RIGHT FRONT WHEEL SPEED COMPARATIVE PERFORMANCE	5-232
C1020–LEFT REAR WHEEL SPEED SENSOR CIRCUIT	5-235
C1027-LEFT REAR WHEEL SPEED SENSOR SIGNAL ERRATIC PERFORMANCE	5-241
C102A-LEFT REAR WHEEL SPEED COMPARATIVE PERFORMANCE	5-245
C102B–RIGHT REAR WHEEL SPEED SENSOR CIRCUIT	5-248

Description	Group-Page
C1032-RIGHT REAR WHEEL SPEED SENSOR SIGNAL ERRATIC PERFORMANCE	5-254
C1035-RIGHT REAR WHEEL SPEED COMPARATIVE PERFORMANCE	5-258
C1041-LEFT FRONT TONE WHEEL PERFORMANCE	5-261
C1042-RIGHT FRONT TONE WHEEL PERFORMANCE	5-262
C1043-LEFT REAR TONE WHEEL PERFORMANCE	5-263
C1044-RIGHT REAR TONE WHEEL PERFORMANCE	5-264
C1046–LEFT FRONT WHEEL PRESSURE PHASE MONITORING	5-265
C1047-RIGHT FRONT WHEEL PRESSURE PHASE MONITORING	5-268
C1048-LEFT REAR WHEEL PRESSURE PHASE MONITORING	5-271
C1049-RIGHT REAR WHEEL PRESSURE PHASE MONITORING	5-274
C1073-ABS PUMP MOTOR CONTROL CIRCUIT	5-277
C1078–TIRE REVOLUTIONS RANGE PERFORMANCE	5-281
C107C–BRAKE PEDAL SWITCH 1/2 STUCK	5-282
C107D-BRAKE PEDAL SWITCH 1/2 CORRELATION	5-286
C1210–G SENSOR INPUT CIRCUIT PERFORMANCE	5-290
C1219-STEERING ANGLE SENSOR ERRATIC PERFORMANCE	5-293
C121A–STEERING ANGLE SENSOR NOT INITIALIZED	5-297
C121C–TORQUE REQUEST SIGNAL DENIED	5-298
C121D-BRAKE PRESSURE SENSOR CIRCUIT	5-299
C121E-BRAKE PRESSURE SENSOR COMPARATIVE PERFORMANCE	5-300
C1231–DRIVE TEST: STEERING ANGLE SENSOR	5-301
C1232–DRIVE TEST: PRESSURE SENSOR	5-303
C1234–DRIVE TEST: SENSOR CLUSTER INSTALLATION	5-304
C1238-DRIVE TEST: UNSUCCESSFUL	5-305
C1239–EMISSIONS ROLLS TEST ACTIVE	5-305
C123A-ESP SYSTEM SENSORS CALIBRATION	5-306
C123B-ESP SYSTEM CONTROL TOO LONG	5-308
C123C-DYNAMICS SENSOR MOUNTING/ INSTALLATION PERFORMANCE	5-310
C123F–STEERING ANGLE SENSOR COMPARATIVE PERFORMANCE	5-313
C1240–STEERING ANGLE SENSOR OVERTRAVEL PERFORMANCE	5-316
C1242–G SENSOR INPUT SIGNAL PERFORMANCE	5-319
C1243–G SENSOR NOT INITIALIZED	5-320
C2100-BATTERY VOLTAGE LOW	5-321
C2101-BATTERY VOLTAGE HIGH	5-323
C2111-SENSOR SUPPLY VOLTAGE CIRCUIT LOW	5-325
C2112-SENSOR SUPPLY VOLTAGE CIRCUIT HIGH	5-327
C2114-DYNAMICS SENSOR SUPPLY VOLTAGE LOW	5-329
C2115-DYNAMICS SENSOR SUPPLY VOLTAGE HIGH	5-333
C2116-ABS PUMP MOTOR SUPPLY LOW VOLTAGE	5-335
C2200-ANTI-LOCK BRAKE MODULE INTERNAL	5-339
C2202-ORIGINAL VIN MISMATCH/ MISSING	5-341
C2204-DYNAMICS SENSOR INTERNAL	5-342
C2205-STEERING ANGLE SENSOR INTERNAL	5-345
C2206-VEHICLE CONFIGURATION MISMATCH	5-347
U0002–CAN C BUS OFF PERFORMANCE	5-348
U0100–LOST COMMUNICATION WITH ECM/PCM	5-352
U0101–LOST COMMUNICATION WITH TCM	5-354
U0125–LOST COMMUNICATION WITH DYNAMICS SENSOR	5-356
U0126–LOST COMMUNICATION WITH STEERING ANGLE SENSOR	5-360
U0141–LOST COMMUNICATION WITH FRONT CONTROL MODULE	5-362
U0146–LOST COMMUNICATION WITH CENTRAL GATEWAY	5-364
U0401–IMPLAUSIBLE DATA RECEIVED FROM ECM/PCM	5-366
U0429–IMPLAUSIBLE DATA RECEIVED FROM SCM	5-367
U1003–ESP CAN C BUS PERFORMANCE	5-368
U1104–CAN C BUS CRC PERFORMANCE	5-372
U140E–IMPLAUSIBLE VEHICLE CONFIGURATION DATA RECEIVED	5-376
U1501–IMPLAUSIBLE MESSAGE DATA LENGTH RECEIVED FROM ECM/PCM	5-378
U1502–IMPLAUSIBLE MESSAGE DATA LENGTH RECEIVED FROM TCM	5-380
U1503–IMPLAUSIBLE MESSAGE DATA LENGTH RECEIVED FROM FCM	5-382

POWERTRAIN DIAGNOSTICS

Description	Group-Page
B10B3 - CABIN HEATER 1 CONTROL CIRCUIT	9-1818
B10B7 - CABIN HEATER 2 CONTROL CIRCUIT	9-1820
B1138 - CABIN HEATER 3 CONTROL CIRCUIT LOW	9-1822
B1139 - CABIN HEATER 3 CONTROL CIRCUIT HIGH	9-1826
B113A - CABIN HEATER 3 CONTROL CIRCUIT OPEN	9-1830
B1C32- AIRBAG DEPLOYMENT DETECTED	9-1834
CHECKING THE HIGH-SIDE FUEL SYSTEM	9-1887
INTERMITTENT CONDITION	9-9
P0001 - FUEL QUANTITY CONTROL CIRCUIT/OPEN	9-1044
P0003 - FUEL QUANTITY CONTROL CIRCUIT LOW	9-1049
P0004 - FUEL QUANTITY CONTROL CIRCUIT HIGH	9-1054
P0016–CRANKSHAFT / CAMSHAFT TIMING MISALIGNMENT	9-10
P0030 - O2 SENSOR 1/1 HEATER CIRCUIT	9-1058
P0031 - O2 SENSOR 1/1 HEATER CIRCUIT LOW	9-1062
P0031-O2 SENSOR 1/1 HEATER CIRCUIT LOW	9-14
P0032 - O2 SENSOR 1/1 HEATER CIRCUIT HIGH	9-1065
P0032-O2 SENSOR 1/1 HEATER CIRCUIT HIGH	9-17
P0037-O2 SENSOR 1/2 HEATER CIRCUIT LOW	9-21
P0038-O2 SENSOR 1/2 HEATER CIRCUIT HIGH	9-24
P0045 - TURBOCHARGER BOOST CONTROL CIRCUIT/OPEN	9-1069
P0046 - TURBOCHARGER BOOST CONTROL CIRCUIT PERFORMANCE	9-1073
P0047 - TURBOCHARGER BOOST CONTROL CIRCUIT LOW	9-1078
P0048 - TURBOCHARGER BOOST CONTROL CIRCUIT HIGH	9-1082
P0051-O2 SENSOR 2/1 HEATER CIRCUIT LOW	9-28
P0052-O2 SENSOR 2/1 HEATER CIRCUIT HIGH	9-31
P0057-O2 SENSOR 2/2 HEATER CIRCUIT LOW	9-35
P0058-O2 SENSOR 2/2 HEATER CIRCUIT HIGH	9-38
P0069–MANIFOLD PRESSURE/ BAROMETRIC PRESSURE CORRELATION	9-1086
P006D-BAROMETRIC PRESSURE — INLET AIR PRESSURE CORRELATION	9-1088
P0070 - AMBIENT AIR TEMPERATURE SENSOR STUCK	9-1092
P0071-AMBIENT AIR TEMPERATURE SENSOR PERFORMANCE	9-42
P0072-AMBIENT AIR TEMPERATURE SENSOR CIRCUIT LOW	9-46
P0073–AMBIENT AIR TEMPERATURE SENSOR CIRCUIT HIGH	9-49
P0087-FUEL RAIL PRESSURE TOO LOW	9-1093
P0088-FUEL RAIL PRESSURE TOO HIGH	9-1097
P0089 - FUEL PRESSURE 1 CONTROL PERFORMANCE	9-1101
P0090 - FUEL PRESSURE 1 CONTROL CIRCUIT/OPEN	9-1106
P0091 - FUEL PRESSURE 1 CONTROL CIRCUIT LOW	9-1110
P0092 - FUEL PRESSURE 1 CONTROL CIRCUIT HIGH	9-1115
P0100-MASS AIR FLOW SENSOR	9-1119
P0102-MASS AIR FLOW SENSOR CIRCUIT LOW	9-1127
P0103-MASS AIR FLOW SENSOR CIRCUIT HIGH	9-1132
P0107-MANIFOLD ABSOLUTE PRESSURE SENSOR CIRCUIT LOW	9-53
P0108-MANIFOLD ABSOLUTE PRESSURE SENSOR CIRCUIT HIGH	9-58
P0111-INTAKE AIR TEMPERATURE SENSOR RATIONALITY	9-63
P0112-INTAKE AIR TEMPERATURE SENSOR CIRCUIT LOW	9-1137
P0112-INTAKE AIR TEMPERATURE SENSOR CIRCUIT LOW	9-67
P0113-INTAKE AIR TEMPERATURE SENSOR CIRCUIT HIGH	9-1141
P0113-INTAKE AIR TEMPERATURE SENSOR CIRCUIT HIGH	9-71
P0116-ENGINE COOLANT TEMPERATURE SENSOR PERFORMANCE	9-1146
P0116–ENGINE COOLANT TEMPERATURE SENSOR CIRCUIT PERFORMANCE	9-75

Description	Group-Page
P0117-ENGINE COOLANT TEMPERATURE SENSOR CIRCUIT LOW	9-1152
P0117-ENGINE COOLANT TEMPERATURE SENSOR CIRCUIT LOW	9-79
P0118-ENGINE COOLANT TEMPERATURE SENSOR CIRCUIT HIGH	9-1156
P0118-ENGINE COOLANT TEMPERATURE SENSOR CIRCUIT HIGH	9-83
P0121-THROTTLE POSITION SENSOR 1 PERFORMANCE	9-87
P0122-THROTTLE POSITION SENSOR 1 CIRCUIT LOW	9-92
P0123-THROTTLE POSITION SENSOR 1 CIRCUIT HIGH	9-97
P0125-INSUFFICIENT COOLANT TEMP FOR CLOSED-LOOP FUEL CONTROL	9-102
P0128-THERMOSTAT RATIONALITY	9-105
P0129-BAROMETRIC PRESSURE OUT-OF-RANGE LOW	9-115
P012C-TURBO INLET AIR PRESSURE SENSOR CIRCUIT LOW	9-1161
P012D-TURBO INLET AIR PRESSURE SENSOR CIRCUIT HIGH	9-1167
P0130-O2 SENSOR 1/1 CIRCUIT OPEN	9-1172
P0131-O2 SENSOR 1/1 CIRCUIT LOW	9-1176
P0131-O2 SENSOR 1/1 CIRCUIT LOW	9-121
P0132-O2 SENSOR 1/1 CIRCUIT HIGH	9-1180
P0132-O2 SENSOR 1/1 CIRCUIT HIGH	9-125
P0133-O2 SENSOR 1/1 SLOW RESPONSE	9-130
P0134-O2 SENSOR 1/1 SIGNAL INACTIVE	9-1184
P0135-O2 SENSOR 1/1 HEATER PERFORMANCE	9-1189
P0135-O2 SENSOR 1/1 HEATER PERFORMANCE	9-134
P0137-O2 SENSOR 1/2 CIRCUIT LOW	9-137
P0138-O2 SENSOR 1/2 CIRCUIT HIGH	9-141
P0139-O2 SENSOR 1/2 SLOW RESPONSE	9-146
P01404-EGR POSITION SENSOR RATIONALITY CLOSED	9-637
P0141-O2 SENSOR 1/2 HEATER PERFORMANCE	9-150
P0151-O2 SENSOR 2/1 CIRCUIT LOW	9-153
P0152-O2 SENSOR 2/1 CIRCUIT HIGH	9-157
P0153-O2 SENSOR 2/1 SLOW RESPONSE	9-162
P0155-O2 SENSOR 2/1 HEATER PERFORMANCE	9-166
P0157-O2 SENSOR 2/2 CIRCUIT LOW	9-169
P0158-O2 SENSOR 2/2 CIRCUIT HIGH	9-173
P0159-O2 SENSOR 2/2 SLOW RESPONSE	9-178
P0161-O2 SENSOR 2/2 HEATER PERFORMANCE	9-182
P0171-FUEL SYSTEM 1/1 LEAN	9-185
P0172-FUEL SYSTEM 1/1 RICH	9-192
P0174-FUEL SYSTEM 2/1 LEAN	9-198
P0175-FUEL SYSTEM 2/1 RICH	9-205
P0182-FUEL TEMPERATURE SENSOR CIRCUIT LOW	9-1193
P0183-FUEL TEMPERATURE SENSOR CIRCUIT HIGH	9-1197
P0192-FUEL RAIL PRESSURE SENSOR LOW	9-1202
P0193-FUEL RAIL PRESSURE SENSOR HIGH	9-1208
P0196–ENGINE OIL TEMPERATURE SENSOR CIRCUIT PERFORMANCE	9-211
P0197-ENGINE OIL TEMPERATURE SENSOR CIRCUIT LOW	9-1213
P0197-ENGINE OIL TEMPERATURE SENSOR CIRCUIT LOW	9-216
P0198-ENGINE OIL TEMPERATURE SENSOR CIRCUIT HIGH	9-1217
P0198-ENGINE OIL TEMPERATURE SENSOR CIRCUIT HIGH	9-219
P0201-FUEL INJECTOR 1 CIRCUIT / OPEN	9-1222
P0201-FUEL INJECTOR 1 CIRCUIT	9-223
P0202-FUEL INJECTOR 2 CIRCUIT / OPEN	9-1228
P0202-FUEL INJECTOR 2 CIRCUIT	9-227
P0203-FUEL INJECTOR 3 CIRCUIT / OPEN	9-1234
P0203-FUEL INJECTOR 3 CIRCUIT	9-231
P0204-FUEL INJECTOR 4 CIRCUIT / OPEN	9-1240
P0204-FUEL INJECTOR 4 CIRCUIT	9-235
P0205-FUEL INJECTOR 5 CIRCUIT / OPEN	9-1246
P0205-FUEL INJECTOR 5 CIRCUIT	9-239
P0206-FUEL INJECTOR 6 CIRCUIT / OPEN	9-1252
P0206-FUEL INJECTOR 6 CIRCUIT	9-243
P0207-FUEL INJECTOR 7 CIRCUIT	9-247
P0208-FUEL INJECTOR 8 CIRCUIT	9-251
P0221-THROTTLE POSITION SENSOR 2 PERFORMANCE	9-255
P0222-THROTTLE POSITION SENSOR 2 CIRCUIT LOW	9-260
P0223-THROTTLE POSITION SENSOR 2 CIRCUIT HIGH	9-266
P0234-TURBOCHARGER OVERBOOST CONDITION	9-1258
P0237-TURBO BOOST PRESSURE SENSOR CIRCUIT LOW	9-1261
P0238-TURBO BOOST PRESSURE SENSOR CIRCUIT HIGH	9-1267
P0261-FUEL INJECTOR 1 CIRCUIT LOW	9-1272
P0262-FUEL INJECTOR 1 CIRCUIT HIGH	9-1277
P0263-CYLINDER 1 CONTRIBUTION/ BALANCE	9-1282
P0264-FUEL INJECTOR 2 CIRCUIT LOW	9-1284
P0265-FUEL INJECTOR 2 CIRCUIT HIGH	9-1289
P0266-CYLINDER 2 CONTRIBUTION/ BALANCE	9-1294
P0267-FUEL INJECTOR 3 CIRCUIT LOW	9-1296
P0268-FUEL INJECTOR 3 CIRCUIT HIGH	9-1301
P0269-CYLINDER 3 CONTRIBUTION/ BALANCE	9-1306
P0270-FUEL INJECTOR 4 CIRCUIT LOW	9-1308
P0271-FUEL INJECTOR 4 CIRCUIT HIGH	9-1313
P0272-CYLINDER 4 CONTRIBUTION/ BALANCE	9-1318
P0273-FUEL INJECTOR 5 CIRCUIT LOW	9-1320
P0274-FUEL INJECTOR 5 CIRCUIT HIGH	9-1325
P0275-CYLINDER 5 CONTRIBUTION/ BALANCE	9-1330
P0276-FUEL INJECTOR 6 CIRCUIT LOW	9-1332
P0277-FUEL INJECTOR 6 CIRCUIT HIGH	9-1337
P0278-CYLINDER 6 CONTRIBUTION/ BALANCE	9-1342
P0299-TURBOCHARGER UNDERBOOST CONDITION	9-1344
P0300- MULTIPLE CYLINDER 1 MISFIRE	9-270
P0301-CYLINDER 1 MISFIRE	9-277
P0302-CYLINDER 2 MISFIRE	9-286
P0303-CYLINDER 3 MISFIRE	9-295
P0304-CYLINDER 4 MISFIRE	9-304
P0305-CYLINDER 5 MISFIRE	9-313
P0306-CYLINDER 6 MISFIRE	9-322
P0307-CYLINDER 7 MISFIRE	9-331
P0308-CYLINDER 8 MISFIRE	9-340
P0315-NO CRANK SENSOR LEARNED	9-349
P0325-KNOCK SENSOR 1 CIRCUIT	9-352
P0330-KNOCK SENSOR 2 CIRCUIT	9-356
P0335-CRANKSHAFT POSITION SENSOR CIRCUIT	9-1346
P0335-CRANKSHAFT POSITION SENSOR CIRCUIT	9-361
P0336-CRANKSHAFT POSITION SENSOR PERFORMANCE	9-1354
P0339-CRANKSHAFT POSITION SENSOR INTERMITTENT	9-369
P0340-CAMSHAFT POSITION SENSOR CIRCUIT	9-1362
P0340-CAMSHAFT POSITION SENSOR CIRCUIT	9-375
P0341-CAMSHAFT POSITION SENSOR PERFORMANCE	9-1370
P0344-CAMSHAFT POSITION SENSOR INTERMITTENT	9-383
P0401- EGR SYSTEM PERFORMANCE	9-1378
P0401-EGR SYSTEM PERFORMANCE	9-389
P0402- EGR EXCESSIVE FLOW DETECTED	9-1379
P0403-EGR SOLENOID CIRCUIT OPEN	9-1380
P0403-EGR SOLENOID CIRCUIT	9-393
P0404-EGR POSITION SENSOR PERFORMANCE	9-397
P0405-EGR POSITION SENSOR CIRCUIT LOW	9-401
P0406-EGR POSITION SENSOR CIRCUIT HIGH	9-405
P0407-EGR AIRFLOW THROTTLE POSITION SENSOR CIRCUIT LOW	9-1384
P0408-EGR AIRFLOW THROTTLE POSITION SENSOR CIRCUIT HIGH	9-1390
P0420-CATALYST 1/1 EFFICIENCY	9-410
P0430-CATALYST 2/1 EFFICIENCY	9-413
P0440-GENERAL EVAP SYSTEM FAILURE	9-416
P0441-EVAP PURGE SYSTEM PERFORMANCE	9-424
P0442-EVAP PURGE SYSTEM MEDIUM LEAK	9-428
P0443-EVAP PURGE SOLENOID CIRCUIT	9-434
P0452-NVLD PRESSURE SWITCH STUCK CLOSED	9-439
P0453-NVLD PRESSURE SWITCH STUCK OPEN	9-444
P0455-EVAP PURGE SYSTEM LARGE LEAK	9-448
P0456-EVAP PURGE SYSTEM SMALL LEAK	9-454
P0457-LOOSE FUEL CAP	9-460
P0460-FUEL LEVEL SENSOR 1 CIRCUIT	9-1395
P0461-FUEL LEVEL SENSOR 1 PERFORMANCE	9-466
P0462-FUEL LEVEL SENSOR 1 CIRCUIT LOW	9-470
P0462-FUEL LEVEL SENSOR 1 LOW CIRCUIT	9-1400
P0463-FUEL LEVEL SENSOR 1 CIRCUIT HIGH	9-474
P0463-FUEL LEVEL SENSOR 1 HIGH CIRCUIT	9-1404
P0471-EXHAUST PRESSURE SENSOR 1 PERFORMANCE	9-1408
P0472-EXHAUST PRESSURE SENSOR 1 LOW	9-1413

Description	Group-Page
P0473-EXHAUST PRESSURE SENSOR 1 HIGH	9-1419
P0480-COOLING FAN 1 CONTROL CIRCUIT	9-1424
P0480-COOLING FAN 1 CONTROL CIRCUIT	9-478
P0481-COOLING FAN 2 CONTROL CIRCUIT	9-1427
P0481-COOLING FAN 2 CONTROL CIRCUIT	9-481
P0487-EGR AIRFLOW THROTTLE CONTROL CIRCUIT A OPEN	9-1431
P0488-EGR AIRFLOW THROTTLE CONTROL CIRCUIT PERFORMANCE	9-1435
P0489-EGR CONTROL CIRCUIT LOW	9-1440
P0490-EGR CONTROL CIRCUIT HIGH	9-1444
P0498-NVLD CANISTER VENT VALVE SOLENOID CIRCUIT LOW	9-485
P0499-NVLD CANISTER VENT VALVE SOLENOID CIRCUIT HIGH	9-488
P0501-VEHICLE SPEED SENSOR 1 PERFORMANCE (EQUIPPED WITH ABS)	9-499
P0501-VEHICLE SPEED SENSOR 1 PERFORMANCE (NOT EQUIPPED WITH ABS)	9-493
P0503-VEHICLE SPEED SENSOR 1 ERRATIC (EQUIPPED WITH ABS)	9-502
P0503-VEHICLE SPEED SENSOR 1 ERRATIC (NOT EQUIPPED WITH ABS)	9-496
P0504-BRAKE SWITCH SIGNAL CIRCUITS PLAUSIBILITY WITH REDUNDANT CONTACT	9-1448
P0506-IDLE SPEED PERFORMANCE LOWER THAN EXCEPTED	9-505
P0507-IDLE SPEED PERFORMANCE HIGHER THAN EXCEPTED	9-507
P0513-INVALID SKIM KEY	9-1454
P0513-INVALID SKIM KEY	9-509
P0520-ENGINE OIL PRESSURE SENSOR CIRCUIT	9-512
P0521-ENGINE OIL PRESSURE SENSOR PERFORMANCE	9-516
P0522-ENGINE OIL PRESSURE SENSOR CIRCUIT LOW	9-1456
P0522-ENGINE OIL PRESSURE SENSOR CIRCUIT LOW	9-522
P0523-ENGINE OIL PRESSURE SENSOR CIRCUIT HIGH	9-1462
P0523-ENGINE OIL PRESSURE SENSOR CIRCUIT HIGH	9-526
P0524- ENGINE OIL PRESSURE IS TOO LOW	9-1467
P0524-ENGINE OIL PRESSURE TOO LOW	9-530
P0532-A/C PRESSURE SENSOR CIRCUIT LOW	9-536
P0533-A/C PRESSURE SENSOR CIRCUIT HIGH	9-540
P053A-CRANKCASE VENT HEATER CONTROL CIRCUIT OPEN	9-1469
P053B-CRANKCASE VENT HEATER CONTROL CIRCUIT LOW	9-1473
P053C-CRANKCASE VENT HEATER CONTROL CIRCUIT HIGH	9-1477
P0545-EXHAUST GAS TEMPERATURE SENSOR CIRCUIT LOW - BANK 1 SENSOR 1	9-1481
P0546-EXHAUST GAS TEMPERATURE SENSOR CIRCUIT HIGH - BANK 1 SENSOR 1	9-1485
P0551-POWER STEERING PRESSURE SWITCH PERFORMANCE	9-545
P0562-BATTERY VOLTAGE LOW	9-547
P0562-ECM VOLTAGE TOO LOW	9-1490
P0563-BATTERY VOLTAGE HIGH	9-552
P0563-ECM VOLTAGE TOO HIGH	9-1492
P0571-BRAKE SWITCH 1 PERFORMANCE	9-555
P0572-BRAKE SWITCH 1 STUCK ON	9-560
P0573-BRAKE SWITCH 1 STUCK OFF	9-564
P0578-SPEED CONTROL SWITCH 1 STUCK	9-1494
P0578-SPEED CONTROL SWITCH 1 STUCK	9-1512
P0578-SPEED CONTROL SWITCH 1 STUCK	9-1515
P0579-SPEED CONTROL SWITCH 1 PERFORMANCE	9-1497
P0579–SPEED CONTROL MULTIPLEXED SWITCH #1 PERFORMANCE	9-569
P0580-SPEED CONTROL SWITCH 1 CIRCUIT LOW	9-1500
P0580–SPEED CONTROL MULTIPLEXED SWITCH #1 LOW	9-572
P0581-SPEED CONTROL SWITCH 1 CIRCUIT HIGH	9-1503
P0585-SPEED CONTROL MULTIPLEXED SWITCH 1/2 CORRELATION	9-575
P0585-SPEED CONTROL SWITCH 1/2 CORRELATION	9-1506
P0590-SPEED CONTROL SWITCH 2 STUCK	9-1509
P0591–SPEED CONTROL MULTIPLEXED SWITCH PERFORMANCE	9-578
P0593-SPEED CONTROL SWITCH 2 CIRCUIT HIGH	9-1518
P0600-SERIAL COMMUNICATION LINK	9-581
P0601-INTERNAL MEMORY CHECKSUM INVALID	9-582
P0606-INTERNAL ECM PROCESSOR	9-583
P0607-ECU INTERNAL PERFORMANCE	9-1521
P060B-ETC A/D GROUND PERFORMANCE	9-584
P060D-ETC LEVEL 2 APP PERFORMANCE	9-585
P060E-ETC LEVEL 2 TPS PERFORMANCE	9-586
P060F-ETC LEVEL 2 ECT PERFORMANCE	9-587
P0610-ECU VEHICLE OPTIONS MISMATCH	9-1522
P0613-INTERNAL TRANSMISSION PROCESSOR	9-1523
P0615-STARTER CONTROL CIRCUIT/OPEN	9-1524
P0616-STARTER CONTROL CIRCUIT LOW	9-1528
P0617-STARTER CONTROL CIRCUIT HIGH	9-1531
P061A-ETC LEVEL 2 TORQUE PERFORMANCE	9-588
P061C-ETC LEVEL 2 RPM PERFORMANCE	9-589
P0622-GENERATOR FIELD CONTROL CIRCUIT	9-590
P0627-FUEL PUMP CONTROL CIRCUIT OPEN	9-1535
P0627-FUEL PUMP RELAY CIRCUIT	9-594
P0628-FUEL PUMP CONTROL CIRCUIT LOW	9-1539
P0629-FUEL PUMP CONTROL CIRCUIT HIGH	9-1542
P062C-ETC LEVEL 2 MPH PERFORMANCE	9-598
P0630-VIN NOT PROGRAMMED IN PCM	9-599
P0632-ODOMETER NOT PROGRAMMED IN PCM	9-600
P0633-SKIM KEY NOT PROGRAMMED IN PCM	9-601
P0642-SENSOR REFERENCE VOLTAGE 1 CIRCUIT LOW	9-1546
P0642-SENSOR REFERENCE VOLTAGE 1 CIRCUIT LOW	9-602
P0643-PRIMARY 5-VOLT SUPPLY CIRCUIT HIGH	9-604
P0643-SENSOR REFERENCE VOLTAGE 1 TOO HIGH	9-1550
P0645-A/C CLUTCH CONTROL CIRCUIT OPEN	9-1553
P0645-A/C CLUTCH RELAY CIRCUIT	9-606
P0646-A/C CLUTCH CONTROL CIRCUIT LOW	9-1557
P0647-A/C CLUTCH CONTROL CIRCUIT HIGH	9-1560
P0652-SENSOR REFERENCE VOLTAGE 2 CIRCUIT LOW	9-609
P0652-SENSOR REFERENCE VOLTAGE 2 TOO LOW	9-1564
P0653-SENSOR REFERENCE VOLTAGE 2 CIRCUIT HIGH	9-612
P0653-SENSOR REFERENCE VOLTAGE 2 TOO HIGH	9-1569
P0657–SOLENOID SUPPLY VOLTAGE CIRCUIT	9-1574
P065A- GENERATOR PERFORMANCE	9-1575
P0660–MANIFOLD TUNE VALVE SOLENOID CIRCUIT	9-614
P0671-CYLINDER 1 GLOW PLUG CIRCUIT	9-1577
P0672-CYLINDER 2 GLOW PLUG CIRCUIT	9-1580
P0673-CYLINDER 3 GLOW PLUG CIRCUIT	9-1583
P0674-CYLINDER 4 GLOW PLUG CIRCUIT	9-1586
P0675-CYLINDER 5 GLOW PLUG CIRCUIT	9-1589
P0676-CYLINDER 6 GLOW PLUG CIRCUIT	9-1592
P0685-AUTO SHUTDOWN RELAY CONTROL CIRCUIT	9-618
P0688-AUTO SHUTDOWN RELAY SENSE CIRCUIT LOW	9-622
P068A-ECM RELAY OFF TOO EARLY	9-1595
P068B-ECM RELAY OFF TOO LATE	9-1598
P0698-SENSOR REFERENCE VOLTAGE 3 CIRCUIT LOW	9-1601
P0699-SENSOR REFERENCE VOLTAGE 3 CIRCUIT HIGH	9-1604
P0700-TRANSMISSION CONTROL SYSTEM (MIL REQUEST)	9-1607
P0700-TRANSMISSION CONTROL SYSTEM (MIL REQUEST)	9-627
P0703-BRAKE SWITCH 2 PERFORMANCE	9-628
P0706-INPUT SPEED SENSOR 1/2 CORRELATION	9-1812
P0706-TRANSMISSION RANGE SENSOR RATIONALITY	9-1608
P0730-INCORRECT GEAR RATIO	9-1609
P0740–TCC OUT OF RANGE	9-1610
P0743–TCC SOLENOID CIRCUIT	9-1611
P0748–MODULATOR PRESSURE SOLENOID CIRCUIT	9-1612
P0753 1–2 / 4–5 SOLENOID CIRCUIT	9-1613
P0758 2–3 SOLENOID CIRCUIT	9-1614
P0763 3–4 SOLENOID CIRCUIT	9-1615
P0778–SHIFT PRESSURE SOLENOID CIRCUIT	9-1616
P0850-PARK/NEUTRAL SWITCH PERFORMANCE	9-633

Description	Group-Page
P1115-GENERAL TEMPERATURE RATIONALITY	9-634
P1411–CYLINDER 1 REACTIVATION CONTROL PERFORMANCE	9-641
P1414–CYLINDER 4 REACTIVATION CONTROL PERFORMANCE	9-645
P1416–CYLINDER 6 REACTIVATION CONTROL PERFORMANCE	9-649
P1417–CYLINDER 7 REACTIVATION CONTROL PERFORMANCE	9-653
P1451–DIESEL PARTICULATE FILTER SYSTEM PERFORMANCE	9-1617
P1452–DIFFERENTIAL PRESSURE SENSOR HOSE PERFORMANCE	9-1620
P1453–DIFFERENTIAL PRESSURE SENSOR HOSE BLOCKED	9-1623
P1454–DIFFERENTIAL PRESSURE SENSOR FLOW TOO HIGH	9-1626
P1501–VEHICLE SPEED SENSOR 1/2 CORRELATION — DRIVE WHEELS (EQUIPPED WITH ABS)	9-663
P1501–VEHICLE SPEED SENSOR 1/2 CORRELATION — DRIVE WHEELS (NOT EQUIPPED WITH ABS)	9-657
P1502–VEHICLE SPEED SENSOR 1/2 CORRELATION — NON DRIVE WHEELS (EQUIPPED WITH ABS)	9-666
P1502–VEHICLE SPEED SENSOR 1/2 CORRELATION — NON DRIVE WHEELS (NOT EQUIPPED WITH ABS)	9-660
P1521–INCORRECT ENGINE OIL TYPE	9-669
P1572-BRAKE SWITCH STUCK ON	9-670
P1573-BRAKE SWITCH STUCK OFF	9-674
P1593–SPEED CONTROL SWITCH 1/2 STUCK	9-679
P1603-PCM INTERNAL DUAL-PORT RAM COMMUNICATION FAILURE	9-682
P1604-PCM INTERNAL DUAL-PORT RAM READ/WRITE INTEGRITY FAILURE	9-684
P1607-PCM INTERNAL SHUTDOWN TIMER RATIONALITY	9-686
P1618-SENSOR REFERENCE VOLTAGE 1 CIRCUIT ERRATIC	9-688
P1628-SENSOR REFERENCE VOLTAGE 2 CIRCUIT ERRATIC	9-691
P1648-GLOW PLUG MODULE INTERNAL	9-1629
P1649-GLOW PLUG MODULE POWER SUPPLY CIRCUIT	9-1631
P1685-SKIM SYSTEM	9-1634
P1696-EEPROM MEMORY WRITE DENIED/INVALID	9-695
P1697-EMR (SRI) MILEAGE NOT STORED	9-697
P1897–PCM PROCESSOR	9-699
P2002–DIESEL PARTICULATE FILTER EFFICIENCY BELOW THRESHOLD	9-1635
P2008-INTAKE MANIFOLD RUNNER (SWIRL) CONTROL CIRCUIT OPEN	9-1638
P2008–SHORT RUNNER VALVE SOLENOID CIRCUIT	9-700
P2009-INTAKE MANIFOLD RUNNER (SWIRL) CONTROL CIRCUIT LOW	9-1642
P2010-INTAKE MANIFOLD RUNNER (SWIRL) CONTROL CIRCUIT HIGH	9-1646
P2032-EXHAUST GAS TEMPERATURE SENSOR CIRCUIT LOW - BANK 1 SENSOR 2	9-1650
P2033-EXHAUST GAS TEMPERATURE SENSOR CIRCUIT HIGH - BANK 1 SENSOR 2	9-1654
P2066-FUEL LEVEL SENSOR 2 PERFORMANCE	9-704
P2067-FUEL LEVEL SENSOR 2 CIRCUIT LOW	9-708
P2068-FUEL LEVEL SENSOR 2 CIRCUIT HIGH	9-712
P2072-ELECTRONIC THROTTLE CONTROL SYSTEM - ICE BLOCKAGE	9-716
P2080-EXHAUST GAS TEMPERATURE SENSOR CIRCUIT PERFORMANCE - BANK 1 SENSOR 1	9-1659
P2084-EXHAUST GAS TEMPERATURE SENSOR CIRCUIT PERFORMANCE - BANK 1 SENSOR 2	9-1665
P2097-DOWNSTREAM FUEL TRIM SYSTEM 1 LEAN	9-717
P2097-DOWNSTREAM FUEL TRIM SYSTEM 1 RICH	9-723
P2098-DOWNSTREAM FUEL TRIM SYSTEM 2 LEAN	9-729
P2099-DOWNSTREAM FUEL TRIM SYSTEM 2 RICH	9-735
P2100-ELECTRONIC THROTTLE CONTROL MOTOR CIRCUIT	9-741
P2101-ELECTRONIC THROTTLE CONTROL MOTOR PERFORMANCE	9-747
P2107-ELECTRONIC THROTTLE CONTROL MODULE PROCESSOR	9-749
P2108-ELECTRONIC THROTTLE CONTROL MODULE PERFORMANCE	9-750
P2110-ELECTRONIC THROTTLE CONTROL - FORCED LIMITED RPM	9-751
P2111-ELECTRONIC THROTTLE CONTROL - UNABLE TO CLOSE	9-756
P2112-ELECTRONIC THROTTLE CONTROL - UNABLE TO OPEN	9-761
P2115-ACCELERATOR PEDAL POSITION SENSOR 1 MINIMUM STOP PERFORMANCE	9-766
P2116-ACCELERATOR PEDAL POSITION SENSOR 2 MINIMUM STOP PERFORMANCE	9-767
P2118-ELECTRONIC THROTTLE CONTROL MOTOR CIRCUIT	9-768
P2121-ACCELERATOR PEDAL POSITION SENSOR 1 PERFORMANCE	9-1671
P2122-ACCELERATOR PEDAL POSITION SENSOR 1 CIRCUIT LOW	9-1677
P2122-ACCELERATOR PEDAL POSITION SENSOR 1 CIRCUIT LOW	9-774
P2123-ACCELERATOR PEDAL POSITION SENSOR 1 CIRCUIT HIGH	9-1682
P2123-ACCELERATOR PEDAL POSITION SENSOR 1 CIRCUIT HIGH	9-780
P2127-ACCELERATOR PEDAL POSITION SENSOR 2 CIRCUIT LOW	9-1687
P2127-ACCELERATOR PEDAL POSITION SENSOR 2 CIRCUIT LOW	9-785
P2128-ACCELERATOR PEDAL POSITION SENSOR 2 CIRCUIT HIGH	9-1692
P2128-ACCELERATOR PEDAL POSITION SENSOR 2 CIRCUIT HIGH	9-791
P2135-THROTTLE POSITION SENSOR 1/2 CORRELATION	9-795
P2138-ACCELERATOR PEDAL POSITION SENSOR 1 / 2 CORRELATION	9-1697
P2138-ACCELERATOR PEDAL POSITION SENSOR 1/2 CORRELATION	9-803
P213A-EGR AIRFLOW THROTTLE CONTROL CIRCUIT B OPEN	9-1700
P213C-EGR AIRFLOW THROTTLE CONTROL CIRCUIT B LOW	9-1704
P213D-EGR AIRFLOW THROTTLE CONTROL CIRCUIT B HIGH	9-1708
P2141-EGR AIRFLOW THROTTLE CONTROL CIRCUIT A LOW	9-1713
P2142-EGR AIRFLOW THROTTLE CONTROL CIRCUIT A HIGH	9-1717
P2146-FUEL INJECTOR GROUP 1 SUPPLY VOLTAGE CIRCUIT OPEN	9-1722
P2147-FUEL INJECTOR GROUP 1 SUPPLY VOLTAGE CIRCUIT LOW	9-1725
P2148-FUEL INJECTOR GROUP 1 SUPPLY VOLTAGE CIRCUIT HIGH	9-1729
P2149-FUEL INJECTOR GROUP 2 SUPPLY VOLTAGE CIRCUIT OPEN	9-1732
P2150-FUEL INJECTOR GROUP 2 SUPPLY VOLTAGE CIRCUIT LOW	9-1735
P2151-FUEL INJECTOR GROUP 2 SUPPLY VOLTAGE CIRCUIT HIGH	9-1739
P2161-VEHICLE SPEED SENSOR 2 ERRATIC (EQUIPPED WITH ABS)	9-812
P2161-VEHICLE SPEED SENSOR 2 ERRATIC (NOT EQUIPPED WITH ABS)	9-809
P2166-ACCELERATOR PEDAL POSITION SENSOR 1 MAXIMUM STOP PERFORMANCE	9-815
P2167-ACCELERATOR PEDAL POSITION SENSOR 2 MAXIMUM STOP PERFORMANCE	9-816
P2172-HIGH AIRFLOW/VACUUM LEAK DETECTED (INSTANTANEOUS ACCUMULATION)	9-817
P2173-HIGH AIRFLOW/VACUUM LEAK DETECTED (SLOW ACCUMULATION)	9-828
P2174-LOW AIRFLOW/RESTRICTION DETECTED (INSTANTANEOUS ACCUMULATION)	9-839
P2175-LOW AIRFLOW/RESTRICTION DETECTED (SLOW ACCUMULATION)	9-850
P2181-COOLING SYSTEM PERFORMANCE	9-861
P2231-O2 SENSOR 1/1 SIGNAL CIRCUIT SHORTED TO HEATER CIRCUIT	9-1742
P2237-O2 SENSOR 1/1 PUMP CELL CURRENT CIRCUIT OPEN	9-1747
P2238-O2 SENSOR 1/1 PUMP CELL CURRENT CIRCUIT LOW	9-1752
P2239-O2 SENSOR 1/1 PUMP CELL CURRENT CIRCUIT HIGH	9-1756
P2243-O2 SENSOR 1/1 REFERENCE VOLTAGE CIRCUIT OPEN	9-1760
P2244-O2 SENSOR 1/1 REFERENCE VOLTAGE PERFORMANCE	9-1765
P2245-O2 SENSOR 1/1 REFERENCE VOLTAGE CIRCUIT LOW	9-1770
P2246-O2 SENSOR 1/1 REFERENCE VOLTAGE CIRCUIT HIGH	9-1774
P2280 - AIR FILTER RESTRICTION	9-1778
P2299- BRAKE PEDAL POSITION/ ACCELERATOR PEDAL POSITION INCOMPATIBLE	9-1779
P2299-BRAKE PEDAL POSITION / ACCELERATOR PEDAL POSITION INCOMPATIBLE	9-867
P2302-IGNITION COIL 1 SECONDARY CIRCUIT- INSUFFICIENT IONIZATION	9-870
P2305-IGNITION COIL 2 SECONDARY CIRCUIT- INSUFFICIENT IONIZATION	9-875
P2308-IGNITION COIL 3 SECONDARY CIRCUIT- INSUFFICIENT IONIZATION	9-880

Description	Group-Page
P2311-IGNITION COIL 4 SECONDARY CIRCUIT- INSUFFICIENT IONIZATION	9-885
P2314-IGNITION COIL 5 SECONDARY CIRCUIT- INSUFFICIENT IONIZATION	9-890
P2317-IGNITION COIL 6 SECONDARY CIRCUIT- INSUFFICIENT IONIZATION	9-895
P2320-IGNITION COIL 7 SECONDARY CIRCUIT- INSUFFICIENT IONIZATION	9-900
P2323-IGNITION COIL 8 SECONDARY CIRCUIT- INSUFFICIENT IONIZATION	9-905
P242F–DIESEL PARTICULATE FILTER RESTRICTION — ASH ACCUMULATION	9-1781
P244B–DIESEL PARTICULATE FILTER DIFFERENTIAL PRESSURE TOO HIGH	9-1784
P2453-DIESEL PARTICULATE FILTER DIFFERENTIAL PRESSURE SENSOR CIRCUIT PERFORMANCE	9-1787
P2454-DIESEL PARTICULATE FILTER DIFFERENTIAL PRESSURE SENSOR CIRCUIT LOW	9-1793
P2455-DIESEL PARTICULATE FILTER DIFFERENTIAL PRESSURE SENSOR CIRCUIT HIGH	9-1799
P2503-CHARGING SYSTEM OUTPUT LOW	9-910
P2627-O2 SENSOR 1/1 PUMP CELL CURRENT TRIM CIRCUIT LOW	9-1804
P2628-O2 SENSOR 1/1 PUMP CELL CURRENT TRIM CIRCUIT HIGH	9-1808
P2A00-O2 SENSOR 1/1 CIRCUIT PERFORMANCE	9-1813
P3400-MDS RATIONALITY BANK 1	9-915
P3401-MDS SOLENOID 1 CIRCUIT	9-940
P3402-CYLINDER 1 DEACTIVATION CONTROL PERFORMANCE	9-917
P3425-MDS SOLENOID 4 CIRCUIT	9-948
P3426-CYLINDER 4 DEACTIVATION CONTROL PERFORMANCE	9-923
P3441-MDS SOLENOID 6 CIRCUIT	9-956
P3442-CYLINDER 6 DEACTIVATION CONTROL PERFORMANCE	9-929
P3449-MDS SOLENOID 7 CIRCUIT	9-964
P3450-CYLINDER 7 DEACTIVATION CONTROL PERFORMANCE	9-934
P3497-MDS RATIONALITY BANK 2	9-972
POWERTRAIN VERIFICATION TEST	9-1036
PRE-DIAGNOSTIC TROUBLESHOOTING PROCEDURE	9-1894
PRE-DIAGNOSTIC TROUBLESHOOTING PROCEDURE	9-7
U0001-CAN C BUS	9-974
U0101-LOST COMMUNICATION WITH TCM	9-976
U0101-LOST COMMUNICATION WITH TRANSMISSION CONTROL MODULE	9-1835
U0103-LOST COMMUNICATION WITH ELECTRIC GEAR SHIFT MODULE	9-1836
U0103-LOST COMMUNICATION WITH ELECTRIC GEAR SHIFT MODULE	9-977
U0114-LOST COMMUNICATION WITH FINAL DRIVE CONTROL MODULE	9-1841
U0121-LOST COMMUNICATION WITH ANTI-LOCK BRAKE MODULE	9-1842
U0121-LOST COMMUNICATION WITH ANTI-LOCK BRAKE MODULE	9-979
U0141-LOST COMMUNICATION WITH FRONT CONTROL MODULE	9-1843
U0141-LOST COMMUNICATION WITH FRONT CONTROL MODULE	9-981
U0155-LOST COMMUNICATION WITH CLUSTER/CCN	9-983
U0168-LOST COMMUNICATION WITH VEHICLE SECURITY CONTROL MODULE (SKREEM/WCM)	9-985
U0402-IMPLAUSIBLE DATA RECEIVED FROM TCM	9-1844
U0415-IMPLAUSIBLE DATA RECEIVED FROM ABS	9-1845
U0429-IMPLAUSIBLE DATA RECEIVED FROM SCM	9-1846
U1004-CAN C BUS TRANSMIT PERFORMANCE	9-1847
U1008-LIN 1 BUS	9-1848
U110A-LOST COMMUNICATION WITH SCCM - CAN - C	9-987
U110A-LOST COMMUNICATION WITH SCM - CAN-C	9-1852
U110C-NO FUEL LEVEL BUS MESSAGE RECEIVED	9-989
U110E-LOST AMBIENT TEMPERATURE MESSAGE	9-991
U110F-LOST FUEL VOLUME MESSAGE	9-993
U1110-LOST VEHICLE SPEED MESSAGE	9-995
U1113-LOST AC PRESSURE MESSAGE	9-1853
U1120-LOST WHEEL DISTANCE MESSAGE	9-997
U1132-GENERATOR COMMUNICATION	9-1837
U1132-GENERATOR COMMUNICATION	9-1854
U1403-IMPLAUSIBLE FUEL LEVEL SIGNAL	9-999
U1411-IMPLAUSIBLE FUEL VOLUME SIGNAL RECEIVED	9-1001
U1412-IMPLAUSIBLE VEHICLE SPEED SIGNAL RECEIVED	9-1003
U1417-IMPLAUSIBLE LEFT WHEEL DISTANCE SIGNAL RECEIVED	9-1006
U1418-IMPLAUSIBLE RIGHT WHEEL DISTANCE SIGNAL RECEIVED	9-1009
VERIFICATION TEST	9-1896
*5.7L INTERMITTENT NO CRANK CONDITION	9-1012
*CHECKING THE ACCELERATOR PEDAL POSITION SENSOR CALIBRATION	9-1871
*CHECKING THE BOOST PRESSURE SENSOR CALIBRATION	9-1874
*CHECKING THE BOOST PRESSURE SERVO MOTOR	9-1876
*CHECKING THE ECM POWER AND GROUND CIRCUITS	9-1889
*CHECKING THE EGR SYSTEM	9-1881
*CHECKING THE EGR THROTTLE VALVE	9-1884
*CHECKING THE ENGINE COOLANT TEMPERATURE SENSOR CALIBRATION	9-1879
*CHECKING THE ENGINE MECHANICAL SYSTEMS	9-1886
*CHECKING THE FUEL DELIVERY SYSTEM	9-1013
*ENGINE CRANKS BUT DOES NOT START	9-1019
*ENGINE CRANKS BUT WILL NOT START	9-1858
*ENGINE WILL NOT CRANK	9-1861
*FUEL PRESSURE LEAK DOWN	9-1022
*HARD START FUEL SYSTEM	9-1016
*INTERMITTENT DTC	9-1893
*LACK OF ENGINE POWER	9-1866
*NO CRANK CONDITION	9-1023
*NO RESPONSE WITH A NO START CONDITION	9-1027
*START AND STALL CONDITION	9-1033

TRANSMISSION DIAGNOSTICS

Description	Group-Page
42RLE - PRE-DIAGNOSTIC TROUBLESHOOTING PROCEDURE	21-651
42RLE TRANSMISSION VERIFICATION TEST - VER 1	21-652
NAG1 PRE-DIAGNOSTIC TROUBLESHOOTING PROCEDURE	21-218
NAG1 PRE-DIAGNOSTIC TROUBLESHOOTING PROCEDURE	21-260
NAG1 TRANSMISSION VERIFICATION TEST	21-219
NAG1 TRANSMISSION VERIFICATION TEST	21-261
P0122-TPS/APP CIRCUIT LOW	21-464
P0123-TPS/APP CIRCUIT HIGH	21-466
P0124-TPS/APP INTERMITTENT	21-468
P0218-HIGH TEMPERATURE OPERATION ACTIVATED	21-470
P0219–ENGINE OVERSPEED	21-4
P0562-BATTERY VOLTAGE LOW - ESM (COLUMN)	21-242
P0562-BATTERY VOLTAGE LOW - ESM	21-222
P0562-BATTERY VOLTAGE LOW	21-472
P0562-BATTERY VOLTAGE LOW	21-6
P0563-BATTERY VOLTAGE HIGH - ESM (COLUMN SHIFT)	21-245
P0563-BATTERY VOLTAGE HIGH - ESM	21-224
P0563-BATTERY VOLTAGE HIGH	21-11
P0602-CONTROL MODULE PROGRAMMING ERROR/NOT PROGRAMMED	21-14
P0602-CONTROL MODULE PROGRAMMING ERROR/NOT PROGRAMMED	21-477
P0604-INTERNAL CONTROL MODULE RAM	21-16
P0604-INTERNAL CONTROL MODULE RAM	21-478
P0605-INTERNAL CONTROL MODULE ROM	21-18
P0605-INTERNAL CONTROL MODULE ROM	21-479
P0607-ECU INTERNAL PERFORMANCE - ESM (COLUMN SHIFT)	21-247
P0607-ECU INTERNAL PERFORMANCE - ESM	21-225
P0613-INTERNAL TRANSMISSION PROCESSOR	21-20
P0613-INTERNAL TRANSMISSION PROCESSOR	21-480
P0642-SENSOR REFERENCE VOLTAGE 1 CIRCUIT LOW	21-22
P0643-SENSOR REFERENCE VOLTAGE 1 CIRCUIT HIGH	21-25
P0657-SOLENOID SUPPLY VOLTAGE CIRCUIT	21-28
P0706-TRANSMISSION RANGE SENSOR RATIONALITY	21-481
P0710-TRANSMISSION TEMPERATURE SENSOR CIRCUIT	21-32
P0711-TRANSMISSION TEMPERATURE SENSOR PERFORMANCE	21-492
P0712-TRANSMISSION TEMPERATURE SENSOR LOW	21-36
P0712-TRANSMISSION TEMPERATURE SENSOR LOW	21-495
P0713-TRANSMISSION TEMPERATURE SENSOR HIGH	21-499

Description	Group-Page
P0714-TRANSMISSION TEMPERATURE SENSOR INTERMITTENT	21-39
P0714-TRANSMISSION TEMPERATURE SENSOR INTERMITTENT	21-504
P0715-INPUT SPEED SENSOR 1 CIRCUIT	21-507
P0717-INPUT SPEED SENSOR 1 CIRCUIT NO SIGNAL	21-41
P0720-OUTPUT SPEED SENSOR CIRCUIT	21-513
P0725-ENGINE SPEED SENSOR CIRCUIT	21-519
P0730-INCORRECT GEAR RATIO	21-48
P0731-GEAR RATIO ERROR IN 1ST	21-49
P0731-GEAR RATIO ERROR IN 1ST	21-521
P0732-GEAR RATIO ERROR IN 2ND	21-51
P0732-GEAR RATIO ERROR IN 2ND	21-523
P0733-GEAR RATIO ERROR IN 3RD	21-525
P0733-GEAR RATIO ERROR IN 3RD	21-53
P0734-GEAR RATIO ERROR IN 4TH	21-527
P0734-GEAR RATIO ERROR IN 4TH	21-55
P0735-GEAR RATIO ERROR IN 5TH	21-57
P0736-GEAR RATIO ERROR IN REVERSE	21-529
P0740-TCC OUT OF RANGE	21-531
P0742-TORQUE CONVERTER CLUTCH STUCK ON	21-59
P0743-TCC SOLENOID CIRCUIT	21-62
P0748-MODULATOR PRESSURE SOLENOID CIRCUIT	21-66
P0750-LR SOLENOID CIRCUIT	21-533
P0752-1-2/4-5 SOLENOID	21-70
P0753-1-2/4-5 SOLENOID CIRCUIT	21-74
P0755-2/4 SOLENOID CIRCUIT	21-538
P0758-2-3 SOLENOID CIRCUIT	21-82
P0758-2-3 SOLENOID	21-78
P0760-OD SOLENOID CIRCUIT	21-543
P0762-3-4 SOLENOID	21-86
P0763-3-4 SOLENOID CIRCUIT	21-90
P0765-UD SOLENOID CIRCUIT	21-548
P0778-SHIFT PRESSURE SOLENOID CIRCUIT	21-94
P0841-LR PRESSURE SWITCH RATIONALITY	21-553
P0845-2/4 HYDRAULIC PRESSURE TEST	21-558
P0846-2/4 PRESSURE SWITCH RATIONALITY	21-564
P0868-LINE PRESSURE LOW	21-569
P0869-LINE PRESSURE HIGH	21-575
P0870-OD HYDRAULIC PRESSURE TEST	21-581
P0871-OD PRESSURE SWITCH RATIONALITY	21-587
P0882-TCM POWER INPUT LOW	21-592
P0884-POWER UP AT SPEED	21-602
P0890-SWITCHED BATTERY	21-603
P0891-TRANSMISSION RELAY ALWAYS ON	21-598
P0897-TRANSMISSION FLUID DETERIORATED	21-607
P0930-BTSI CONTROL CIRCUIT LOW - ESM (COLUMN SHIFT)	21-249
P0930-BTSI CONTROL CIRCUIT LOW - ESM	21-226
P0931-BTSI CONTROL CIRCUIT HIGH - ESM (COLUMN SHIFT)	21-252
P0931-BTSI CONTROL CIRCUIT HIGH - ESM	21-229
P0932-LINE PRESSURE SENSOR CIRCUIT	21-608
P0934-LINE PRESSURE SENSOR CIRCUIT LOW	21-611
P0935-LINE PRESSURE SENSOR CIRCUIT HIGH	21-616
P0944-LOSS OF HYDRAULIC PUMP PRIME	21-621
P0992-2/4/OD HYDRAULIC PRESSURE TEST	21-623
P1629-TCM INTERNAL - SOLENOID SUPPLY/ WATCHDOG	21-98
P1631-TCM INTERNAL- PROCESSOR CLOCK PERFORMANCE	21-100
P1632-TCM INTERNAL - TEST INTERNAL WATCHDOG PERFORMANCE	21-102
P1633-TCM INTERNAL - TEST EXTERNAL WATCHDOG PERFORMANCE	21-104
P1634-TCM INTERNAL- INTERNAL WATCHDOG PERFORMANCE	21-106
P1636-TCM INTERNAL- EXTERNAL WATCHDOG PERFORMANCE	21-108
P1637-TCM INTERNAL-EEPROM PERFORMANCE	21-110
P1638-TCM INTERNAL-CAN 1 RAM PERFORMANCE	21-112
P1639-TCM INTERNAL-CAN 2 RAM PERFORMANCE	21-114
P1644-INCORRECT VARIANT/ CONFIGURATION	21-116
P1684-BATTERY WAS DISCONNECTED	21-624
P1704-INPUT SPEED SENSOR 1 OVERSPEED	21-118
P1705-INPUT SPEED SENSOR 2 OVERSPEED	21-121
P1713-RESTRICTED MANUAL VALVE IN T2 RANGE	21-626
P1731-INCORRECT GEAR ENGAGED	21-124
P1745-TRANSMISSION LINE PRESSURE TOO HIGH FOR TOO LONG	21-627
P1775-SOLENOID SWITCH VALVE LATCHED IN TCC POSITION	21-628
P1776-SOLENOID SWITCH VALVE LATCHED IN LR POSITION	21-633
P1790-FAULT IMMEDIATELY AFTER SHIFT	21-638
P1794-SPEED SENSOR GROUND ERROR	21-639
P1797-MANUAL SHIFT OVERHEAT	21-642
P2638-TORQUE MANAGEMENT FEEDBACK SIGNAL PERFORMANCE	21-126
P2767-INPUT SPEED SENSOR 2 CIRCUIT NO SIGNAL	21-129
P2775-AUTOSTICK UPSHIFT SWITCH CIRCUIT PERFORMANCE - ESM (COLUMN SHIFT)	21-255
P2775-AUTOSTICK UPSHIFT SWITCH CIRCUIT PERFORMANCE - ESM	21-232
P2779-AUTOSTICK DOWNSHIFT SWITCH CIRCUIT PERFORMANCE - ESM (COLUMN SHIFT)	21-257
P2779-AUTOSTICK DOWNSHIFT SWITCH CIRCUIT PERFORMANCE - ESM	21-233
P2783-TORQUE CONVERTER TEMPERATURE TOO HIGH	21-136
P2784-INPUT SPEED SENSOR 1/2 CORRELATION	21-137
U0002 CAN C BUS OFF PERFORMANCE	21-643
U0002-CAN C BUS OFF PERFORMANCE - ESM (COLUMN SHIFT)	21-259
U0002-CAN C BUS OFF PERFORMANCE - ESM	21-234
U0002-CAN C BUS OFF PERFORMANCE	21-140
U0100 LOST COMMUNICATION WITH ECM/PCM	21-645
U0100-LOST COMMUNICATION WITH ECM/PCM - ESM (COLUMN SHIFT)	21-259
U0100-LOST COMMUNICATION WITH ECM/PCM - ESM	21-236
U0100-LOST COMMUNICATION WITH ECM/PCM	21-143
U0103-LOST COMMUNICATION WITH ELECTRIC GEAR SHIFT MODULE	21-146
U0121 LOST COMMUNICATION WITH ABS	21-647
U0121-LOST COMMUNICATION WITH ANTI-LOCK BRAKE MODULE - ESM (COLUMN SHIFT)	21-259
U0121-LOST COMMUNICATION WITH ANTI-LOCK BRAKE MODULE - ESM	21-238
U0121-LOST COMMUNICATION WITH ANTI-LOCK BRAKE MODULE	21-149
U0141 LOST COMMUNICATION WITH FCM	21-649
U0141-LOST COMMUNICATION WITH FRONT CONTROL MODULE - ESM (COLUMN SHIFT)	21-259
U0141-LOST COMMUNICATION WITH FRONT CONTROL MODULE - ESM	21-240
U0141-LOST COMMUNICATION WITH FRONT CONTROL MODULE	21-152
U0155-LOST COMMUNICATION WITH CLUSTER/CCN	21-155
U0164-LOST COMMUNICATION WITH HVAC CONTROL MODULE	21-158
U0401-IMPLAUSIBLE DATA RECEIVED FROM ECM/PCM	21-161
U0404-IMPLAUSIBLE DATA RECEIVED FROM ESM	21-163
U0415-IMPLAUSIBLE DATA RECEIVED FROM ABS	21-165
U0423-IMPLAUSIBLE DATA RECEIVED FROM CLUSTER/CCN	21-167
U0424-IMPLAUSIBLE DATA RECEIVED FROM HVAC CONTROL MODULE	21-169
U0431-IMPLAUSIBLE DATA FROM FCM	21-171
U110B-LOST ENGINE COOLANT MESSAGE	21-173
U1118-LOST ENGINE MESSAGE	21-176
U1119-LOST FCM MESSAGE	21-179
U1400-IMPLAUSIBLE TPS SIGNAL RECEIVED	21-182
U1401-IMPLAUSIBLE ENGINE SPEED SIGNAL RECEIVED	21-184
U1402-IMPLAUSIBLE ENGINE TEMPERATURE SIGNAL RECEIVED	21-186
U1404-IMPLAUSIBLE STATIC ENGINE TORQUE SIGNAL RECEIVED	21-188
U1405-IMPLAUSIBLE MINIMUM ENGINE TORQUE SIGNAL RECEIVED	21-190
U1406-IMPLAUSIBLE MAXIMUM ENGINE TORQUE SIGNAL RECEIVED	21-192
U1407-IMPLAUSIBLE ENGINE TORQUE REQUEST SIGNAL RECEIVED	21-194
U1408-IMPLAUSIBLE BRAKE SIGNAL RECEIVED	21-196
U1409-IMPLAUSIBLE LEFT FRONT WHEEL SPEED SIGNAL RECEIVED	21-198
U140A-IMPLAUSIBLE RIGHT FRONT WHEEL SPEED SIGNAL RECEIVED	21-200
U140B-IMPLAUSIBLE LEFT REAR WHEEL SPEED SIGNAL RECEIVED	21-202
U140C-IMPLAUSIBLE RIGHT REAR WHEEL SPEED SIGNAL RECEIVED	21-204

Description	Group-Page
U140D-IMPLAUSIBLE WHEEL SPEED SIGNALS RECEIVED	21-206
U140F-IMPLAUSIBLE ENGINE VARIANT DATA	21-208
U1410-IMPLAUSIBLE/MISSING FCM VARIANT DATA	21-210
U1507-IMPLAUSIBLE ENGINE TEMPERATURE MESSAGE DATA LENGTH RECEIVED	21-212
U1509-IMPLAUSIBLE ENGINE VARIANT MESSAGE DATA LENGTH RECEIVED	21-214
U150A-IMPLAUSIBLE FCM VARIANT MESSAGE DATA LENGTH RECEIVED	21-216
B122C-PTS SENSOR 7 CIRCUIT LOW	8B-4
B122E-PTS SENSOR 7 RING TIME TOO SHORT	8B-9
B122F-PTS SENSOR 7 RING TIME TOO LONG	8B-10
B1231-PTS SENSOR 8 CIRCUIT LOW	8B-11
B1233-PTS SENSOR 8 RING TIME TOO SHORT	8B-16
B1234-PTS SENSOR 8 RING TIME TOO LONG	8B-17
B1236-PTS SENSOR 9 CIRCUIT LOW	8B-18
B1238-PTS SENSOR 9 RING TIME TOO SHORT	8B-22
B1239-PTS SENSOR 9 RING TIME TOO LONG	8B-23
B123B-PTS SENSOR 10 CIRCUIT LOW	8B-24
B123D-PTS SENSOR 10 RING TIME TOO SHORT	8B-28
B123E-PTS SENSOR 10 RING TIME TOO LONG	8B-29
B1411-HFM LEFT AUDIO OUTPUT CIRCUIT LOW	8T-4
B1412-HFM LEFT AUDIO OUTPUT CIRCUIT HIGH	8T-8
B1415-HFM RIGHT AUDIO OUTPUT CIRCUIT LOW	8T-11
B1416-HFM RIGHT AUDIO OUTPUT CIRCUIT HIGH	8T-15
B1435-VOICE RECOGNITION/PHONE SWITCH INPUT CIRCUIT PERFORMANCE	8T-18
B1436-VOICE RECOGNITION/PHONE SWITCH INPUT CIRCUIT LOW	8T-20
B1437-VOICE RECOGNITION/PHONE SWITCH INPUT CIRCUIT HIGH	8T-23
B1438–VOICE RECOGNITION SWITCH STUCK	8T-27
B1439-PHONE SWITCH STUCK	8T-29
B1459-TELEMATICS MIRROR CONTROL CIRCUIT LOW	8T-34
B145A-TELEMATICS MIRROR CONTROL CIRCUIT HIGH	8T-31
B1489-STEERING WHEEL CONTROL AUDIO SWITCH CIRCUIT	19-29
B148A-STEERING WHEEL CONTROL MENU SWITCH CIRCUIT	19-33
B148B-STEERING WHEEL CONTROL UP SWITCH CIRCUIT	19-36
B148C-STEERING WHEEL CONTROL DOWN SWITCH CIRCUIT	19-40
B148D-STEERING WHEEL CONTROL SIDE SWITCH CIRCUIT	19-44
B148E-STEERING WHEEL CONTROL [+] SWITCH CIRCUIT	19-48
B148F-STEERING WHEEL CONTROL [-] SWITCH CIRCUIT	19-51

Description	Group-Page
B1490-STEERING WHEEL CONTROL C/T SWITCH CIRCUIT	19-54
B1492–GENERAL MICROPHONE PERFORMANCE	8T-37
B1693 — ACCESSORY DIMMING CONTROL CIRCUIT LOW	8M-46
B1694 — ACCESSORY DIMMING CONTROL CIRCUIT HIGH	8M-49
B17CF — EMERGENCY FLASHING LAMP REQUEST 1 CIRCUIT HIGH	8M-53
B17D2 — EMERGENCY FLASHING LAMP REQUEST 2 CIRCUIT HIGH	8M-57
B17D4 — HEADLAMP STATUS OUTPUT CIRCUIT LOW	8M-61
B17D5 — HEADLAMP STATUS OUTPUT CIRCUIT HIGH	8M-64
B19B4 — DRIVER DOOR AJAR OUTPUT CIRCUIT LOW	8M-68
B1A32-UNIVERSAL GARAGE DOOR SWITCH 1 STUCK	8M-143
B1A33-UNIVERSAL GARAGE DOOR SWITCH 2 STUCK	8M-144
B1A34-UNIVERSAL GARAGE DOOR SWITCH 3 STUCK	8M-145
B1A5D — PANIC ALARM ACTIVATION OUTPUT CIRCUIT LOW	8M-79
B1A5E — PANIC ALARM ACTIVATION STATUS CIRCUIT HIGH	8M-82
B1CC1 — DEPLOYMENT NOTIFICATION OUTPUT CIRCUIT LOW	8M-86
B1CC2 — DEPLOYMENT NOTIFICATION OUTPUT CIRCUIT HIGH	8M-90
B1D8D-STEERING COLUMN TELESCOPE POSITION SENSOR CIRCUIT LOW	19-63
B1D8E–STEERING COLUMN TELESCOPE POSITION SENSOR CIRCUIT HIGH	19-66
B1D91-STEERING COLUMN TILT POSITION SENSOR CIRCUIT LOW	19-71
B1D92–STEERING COLUMN TILT POSITION SENSOR CIRCUIT HIGH	19-74
B1D93–STEERING COLUMN TELESCOPE MOTOR CONTROL CIRCUIT PERFORMANCE	19-79
B1D97–STEERING COLUMN TILT MOTOR CONTROL CIRCUIT PERFORMANCE	19-86
B1DA0–STEERING COLUMN TILT SWITCH CIRCUIT STUCK	19-57
B1DA5–STEERING COLUMN TELESCOPE SWITCH CIRCUIT STUCK	19-60
B2100-IGNITION RUN/START INPUT CIRCUIT PERFORMANCE	8I-3
B2104-IGNITION UNLOCK RUN/START CONTROL CIRCUIT LOW	8I-6
B2105-IGNITION UNLOCK RUN/START CONTROL CIRCUIT HIGH	8I-9
B210D-BATTERY VOLTAGE LOW	8B-30
B210D-BATTERY VOLTAGE LOW	8M-95
B210E-BATTERY VOLTAGE HIGH	8B-31
B210E-BATTERY VOLTAGE HIGH	8M-98
B211E–IGNITION RUN/ACC/PAD CONTROL CIRCUIT LOW	8I-12
B211F–IGNITION RUN/ACC/PAD CONTROL CIRCUIT HIGH	8I-15
B2120–IGNITION RUN/ACC/PAD CONTROL CIRCUIT OPEN	8I-17
B2122-IGNITION RUN CONTROL CIRCUIT LOW	8I-20
B2123-IGNITION RUN CONTROL CIRCUIT HIGH	8I-24

Description	Group-Page
B2124-IGNITION RUN CONTROL CIRCUIT OPEN	8I-27
B2126-SENSOR SUPPLY VOLTAGE LOW	8B-32
B2127-SENSOR SUPPLY VOLTAGE HIGH	8B-36
B212A-PTS DISPLAY SUPPLY VOLTAGE LOW	8B-38
B2203–ROM CHECKSUM PERFORMANCE	8T-43
B2217 - EVIC/EOM/CMTC INTERNAL	8M-146
B2223-(HFM) HANDS FREE PHONE INTERNAL	8T-47
B2225–STEERING CONTROL MODULE INTERNAL	19-93
B222A-VEHICLE LINE MISMATCH	8B-42
B222A-VEHICLE LINE MISMATCH	8T-44
B222D - ECU UNABLE TO CONFIGURE / CONFIGURATION NOT LEARNED	8M-147
B222E–FLASH CHECKSUM PERFORMANCE	8T-45
B222F–FLASH WRITE PERFORMANCE	8T-46
B2230–RAM WRITE PERFORMANCE	8T-48
B2232-(PTS) PARKTRONICS INTERNAL	8B-43
B2234-(PTS) PARKTRONICS REAR DISPLAY INTERNAL	8B-44
B2331–VEHICLE NEEDS DEGAUSSED	8M-148
B2332–HORN SWITCH INPUT CIRCUIT/ PERFORMANCE	19-94
B237C — DATA COMMUNICATION RADIO INPUT CIRCUIT HIGH	8M-100
B237F — HORN MUTE REQUEST CIRCUIT HIGH	8M-104
B2381 — DRIVER SEAT BELT OUTPUT CIRCUIT LOW	8M-108
B2382 — DRIVER SEAT BELT OUTPUT CIRCUIT HIGH	8M-111
B2384 — HORN SWITCH OUTPUT CIRCUIT LOW	8M-115
B2385 — HORN SWITCH OUTPUT CIRCUIT HIGH	8M-118
C1088 — BRAKE LAMP SWITCH OUTPUT CIRCUIT LOW	8M-39
C1089 — BRAKE LAMP OUTPUT CIRCUIT HIGH	8M-42
C1219-STEERING ANGLE SENSOR ERRATIC PERFORMANCE	19-27
P0562-BATTERY VOLTAGE LOW	19-16
P0563-BATTERY VOLTAGE HIGH	19-19
P0585-SPEED CONTROL MULTIPLEXED SWITCH 1/2 CORRELATION	19-22
P1462 — FUEL LEVEL OUTPUT CIRCUIT LOW	8M-4
P1463 — FUEL LEVEL OUTPUT CIRCUIT HIGH	8M-7
P1504 — VEHICLE SPEED OUTPUT CIRCUIT LOW	8M-11
P1505 — VEHICLE SPEED OUTPUT CIRCUIT HIGH	8M-14
P1593–SPEED CONTROL SWITCH 1/2 STUCK	19-24
P164A — MIL OUTPUT CIRCUIT LOW	8M-18
P164B — MIL OUTPUT CIRCUIT HIGH	8M-21
P170A — PARK/NEUTRAL OUTPUT CIRCUIT LOW	8M-25
P170B — PARK/NEUTRAL OUTPUT CIRCUIT HIGH	8M-28
P170C — ENGINE RPM OUTPUT CIRCUIT LOW	8M-32
P170D — ENGINE RPM OUTPUT CIRCUIT HIGH	8M-35

Description	Group-Page
P19B5 — DRIVER DOOR AJAR OUTPUT CIRCUIT HIGH	8M-71
P1A5B — PANIC ALARM MUTE REQUEST CIRCUIT HIGH	8M-75
U0002–CAN C BUS OFF PERFORMANCE	19-98
U0019–CAN B BUS CIRCUIT	19-101
U0019–CAN B BUS	8M-149
U0019–CAN B BUS	8T-49
U0021 — CAN B BUS (+) CIRCUIT OPEN	8M-122
U0022 CAN B BUS (+) CIRCUIT LOW	8M-124
U0023 — CAN B BUS (+) CIRCUIT HIGH	8M-126
U0024 — CAN B BUS (-) CIRCUIT OPEN	8M-128
U0025 CAN B BUS (-) CIRCUIT LOW	8M-130
U0026 — CAN B BUS (-) CIRCUIT HIGH	8M-132
U0121–LOST COMMUNICATION WITH ANTI-LOCK BRAKE SYSTEM (ABS) CONTROL MODULE	19-104
U0141 — LOST COMMUNICATION WITH IPM (FCM/TIPM)	8M-134
U0141–LOST COMMUNICATION WITH FRONT CONTROL MODULE	19-105
U0141–LOST COMMUNICATION WITH FRONT CONTROL MODULE	8B-55
U0141–LOST COMMUNICATION WITH FRONT CONTROL MODULE	8M-152
U0141–LOST COMMUNICATION WITH FRONT CONTROL MODULE	8T-52
U0151 — LOST COMMUNICATION WITH OCCUPANT RESTRAINT CONTROLLER (ORC)	8M-134
U0151-LOST COMMUNICATION WITH OCCUPANT RESTRAINT CONTROLLER	8B-55
U0151-LOST COMMUNICATION WITH OCCUPANT RESTRAINT CONTROLLER	8M-152
U0151-LOST COMMUNICATION WITH OCCUPANT RESTRAINT CONTROLLER	8T-52
U0154-LOST COMMUNICATION WITH OCCUPANT CLASSIFICATION MODULE	8B-56
U0154-LOST COMMUNICATION WITH OCCUPANT CLASSIFICATION MODULE	8M-152
U0154-LOST COMMUNICATION WITH OCCUPANT CLASSIFICATION MODULE	8T-52
U0155-LOST COMMUNICATION WITH CLUSTER/CCN	8B-56
U0155-LOST COMMUNICATION WITH CLUSTER/CCN	8M-152
U0155-LOST COMMUNICATION WITH CLUSTER/CCN	8T-52
U0155–LOST COMMUNICATION WITH CLUSTER / CCN	19-106
U0156 — LOST COMMUNICATION WITH ELECTRONIC OVERHEAD MODULE	8M-134
U0156-LOST COMMUNICATION WITH EOM	8T-52
U0159-LOST COMMUNICATION WITH PARK ASSIST CONTROL MODULE	8M-134
U0159-LOST COMMUNICATION WITH PARKING ASSIST CONTROL MODULE	8B-56
U0159-LOST COMMUNICATION WITH PARKING ASSIST CONTROL MODULE	8M-152
U0159-LOST COMMUNICATION WITH PARKING ASSIST CONTROL MODULE	8T-52
U0164-LOST COMMUNICATION WITH HVAC CONTROL MODULE	8B-56
U0164-LOST COMMUNICATION WITH HVAC CONTROL MODULE	8M-134
U0164-LOST COMMUNICATION WITH HVAC CONTROL MODULE	8M-152
U0164-LOST COMMUNICATION WITH HVAC CONTROL MODULE	8T-52
U0167-LOST COMMUNICATION WITH INTRUSION TRANSCEIVER CONTROL MODULE	8B-56
U0167-LOST COMMUNICATION WITH INTRUSION TRANSCEIVER CONTROL MODULE	8M-134
U0167-LOST COMMUNICATION WITH INTRUSION TRANSCEIVER CONTROL MODULE	8M-152
U0168-LOST COMMUNICATION WITH VEHICLE SECURITY CONTROL MODULE (SKREEM/WCM)	8B-56
U0168-LOST COMMUNICATION WITH VEHICLE SECURITY CONTROL MODULE (SKREEM/WCM)	8M-134
U0168-LOST COMMUNICATION WITH VEHICLE SECURITY CONTROL MODULE (SKREEM/WCM)	8M-152
U0168-LOST COMMUNICATION WITH VEHICLE SECURITY CONTROL MODULE (SKREEM/WCM)	8T-52
U0169-LOST COMMUNICATION WITH SUNROOF CONTROL MODULE	8B-56
U0169-LOST COMMUNICATION WITH SUNROOF CONTROL MODULE	8M-152
U0169-LOST COMMUNICATION WITH SUNROOF CONTROL MODULE	8T-52
U0181-LOST COMMUNICATION WITH HEADLAMP LEVELING TRANSLATOR	8T-53
U0184-LOST COMMUNICATION WITH RADIO	8B-56
U0184-LOST COMMUNICATION WITH RADIO	8M-134
U0184-LOST COMMUNICATION WITH RADIO	8M-153
U0184-LOST COMMUNICATION WITH RADIO	8T-53
U0186-LOST COMMUNICATION WITH AUDIO AMPLIFIER	8B-57
U0186-LOST COMMUNICATION WITH AUDIO AMPLIFIER	8M-153
U0186-LOST COMMUNICATION WITH AUDIO AMPLIFIER	8T-53
U0195-LOST COMMUNICATION WITH SDARS	8B-57
U0195-LOST COMMUNICATION WITH SDARS	8M-135
U0195-LOST COMMUNICATION WITH SDARS	8M-153
U0195-LOST COMMUNICATION WITH SDARS	8T-53
U0196-LOST COMMUNICATION WITH VEHICLE ENTERTAINMENT CONTROL MODULE	8B-57
U0196-LOST COMMUNICATION WITH VEHICLE ENTERTAINMENT CONTROL MODULE	8M-153
U0196-LOST COMMUNICATION WITH VEHICLE ENTERTAINMENT CONTROL MODULE	8T-53
U0197-LOST COMMUNICATION WITH HANDS FREE PHONE MODULE	8B-57
U0197-LOST COMMUNICATION WITH HANDS FREE PHONE MODULE	8M-135
U0197-LOST COMMUNICATION WITH HANDS FREE PHONE MODULE	8M-153
U0199-LOST COMMUNICATION WITH DRIVER DOOR MODULE	8B-57
U0199-LOST COMMUNICATION WITH DRIVER DOOR MODULE	8M-153
U0199-LOST COMMUNICATION WITH DRIVER DOOR MODULE	8T-53
U0200-LOST COMMUNICATION WITH PASSENGER DOOR MODULE	8B-57
U0200-LOST COMMUNICATION WITH PASSENGER DOOR MODULE	8M-153
U0200-LOST COMMUNICATION WITH PASSENGER DOOR MODULE	8T-53
U0208-LOST COMMUNICATION WITH HEATED SEAT CONTROL MODULE	8B-57
U0208-LOST COMMUNICATION WITH HEATED SEAT CONTROL MODULE	8M-135
U0208-LOST COMMUNICATION WITH HEATED SEAT CONTROL MODULE	8M-153
U0208-LOST COMMUNICATION WITH HEATED SEAT CONTROL MODULE	8T-53
U0209-LOST COMMUNICATION WITH MEMORY SEAT CONTROL MODULE	8B-57
U0209-LOST COMMUNICATION WITH MEMORY SEAT CONTROL MODULE	8M-135
U0209-LOST COMMUNICATION WITH MEMORY SEAT CONTROL MODULE	8M-154
U0209-LOST COMMUNICATION WITH MEMORY SEAT CONTROL MODULE	8T-54
U0212-LOST COMMUNICATION WITH SCCM - CAN B	8T-54
U0212-LOST COMMUNICATION WITH SCCM-CAN-B	8B-58
U0212-LOST COMMUNICATION WITH SCCM-CAN-B	8M-154
U0212-LOST COMMUNICATION WITH STEERING COLUMN CONTROL MODULE	8M-135
U0212–LOST COMMUNICATION WITH STEERING COLUMN CONTROL MODULE	19-107
U0231-LOST COMMUNICATION WITH RAIN SENSING MODULE	8B-58
U0231-LOST COMMUNICATION WITH RAIN SENSING MODULE	8M-154
U0231-LOST COMMUNICATION WITH RAIN SENSING MODULE	8T-54
U0241-LOST COMMUNICATION WITH AUTO HIGHBEAM HEADLAMP CONTROL MODULE	8B-58
U0241-LOST COMMUNICATION WITH AUTO HIGHBEAM HEADLAMP CONTROL MODULE	8M-154
U0423-IMPLAUSIBLE DATA RECEIVED FROM CLUSTER/CCN	8B-45
U0431-IMPLAUSIBLE DATA RECEIVED FROM FCM	8B-47
U1002-PTS DISPLAY COMMUNICATION CIRCUIT LOW	8B-48
U1101-LOST COMMUNICATION WITH PTS DISPLAY	8B-52
U1109–LOST COMMUNICATION WITH LIN STEERING WHEEL CONTROLS	19-108

SERVICE MANUAL COMMENTS

What errors(s) have you found?

_____

_____

_____

_____

In order for us to assist you, please include as much details as possible when reporting an error

Comments / Suggestions

_____

_____

_____

_____

☐ **Dealership Technician**
Dealer Code: _____

Retail Customer ☐

Manual Title, Year, Number and Page: _____

_____

Your Name: _____

Address: _____

_____

_____

All comments become property of DaimlerChrysler and may be used without compensation.

(FOLD HERE)

NO POSTAGE
NECESSARY
IF MAILED
IN THE
UNITED
STATES

BUSINESS REPLY MAIL

FIRST CLASS MAIL PERMIT NO. 124 CENTER LINE, MI

POSTAGE WILL BE PAID BY ADDRESSEE

DaimlerChrysler Corporation
Dealer Technical Operations
800 Chrysler Drive
CIMS 486-02-76
Auburn Hills, MI 48326-2757

(FOLD HERE)